RUTHZIL TRATOR COMERCIAL DE PEÇAS LTDA 11 97083-6812 ROLANDO CITRANGULO

ABRIL 2014

PARTS MANUAL

HYSTER

H70FT
(N177)
S/N N177V01852M

This truck may contain certain non-production and/or special content. Every effort has been made to reflect that in this manual, but the user is well advised to refer to the special content information that pertains to this specific serial number truck. If so equipped, the special content information will be located in the last chapter of this manual.

CUSTOMER EDITION

HYSTER

N177V01852M
04/2014

©2014 HYSTER COMPANY

SECTIONS

1	FRAME
2	ENGINE ASSEMBLY - MAZDA
3	ENGINE ASSEMBLY - YANMAR
4	ENGINE ASSEMBLY-KUBOTA
5	FUEL SYSTEM - DIESEL
6	FUEL SYSTEM - GAS/LPG
7	ELECTRICAL SYSTEM
8	TRANSMISSION
9	DRIVE AXLE
10	STEERING SYSTEM
11	BRAKE SYSTEM
12	HYDRAULIC SYSTEM
13	MAST-TWO STAGE LIMITED FREE-LIFT
14	MAST-TWO STAGE FULL FREE-LIFT
15	MAST-THREE STAGE FULL FREE-LIFT
16	OPTIONS
17	FIELD CONVERSION KITS

This Parts Manual is divided into 18 major sections which are listed above. Quick reference to these sections can be made by placing the right thumb on the tab of the desired section, bending the book back and thumbing the pages to the corresponding tab.

18 NUMERICAL INDEX

This Parts Manual is divided into 18 major sections which are listed above. Quick reference to these sections can be made by placing the right thumb on the tab of the desired section, bending the book back and thumbing the pages to the corresponding tab.

TABLE OF CONTENTS

DESCRIPTION **PAGE**

A

ACCUMULATOR AND ATTACHING PARTS 16-10
ADD ON OPTION KITS 17-4
ADD ON TELEMETRY KITS 17-5
AIR CONDITIONER COMPRESSOR
KUBOTA 2.5 LPG 1-50
AIR FILTER ASSEMBLY
MAZDA 2.2L, GASOLINE AND LPG 6-8
YANMAR 2.6L AND 3.3L DIESEL 5-4
AIR INTAKE AND FILTER SYSTEM
KUBOTA 2.5L LPG 6-6
MAZDA 2.2L LPG 6-4
MAZDA 2.2L, GASOLINE 6-2
YANMAR 2.6L AND 3.3L DIESEL - WITHOUT AUXILIARY INTAKE SILENCER 5-2
AIR INTAKE SYSTEM
PRE-CLEANER AND DUCT 5-5
ALTERNATOR AND MOUNTING
YANMAR 2.6L AND 3.3L - DIESEL 7-20
ALTERNATOR AND PULLEY ASSEMBLY
KUBOTA 2.5L 4-38
ARMREST ASSEMBLY
MINI-LEVER MODULES - SEMI-SUSPENSION SEAT WITH HIP RESTRAINTS 1-40
MINI-LEVER MODULES - FULL SUSPENSION SEAT 1-42
ASSEMBLED ENGINE
MAZDA 2.2L, GASOLINE AND LPG 2-16
AUXILIARY ONE AND TWO
MANUAL CONTROL VALVE - THREE AND FOUR FUNCTION 12-30
AUXILIARY QUICK DISCONNECT MANIFOLD AND HOSES
THREE STAGE FULL FREE-LIFT (DUAL AUXILIARY WITH E-HYDRAULICS - THREE AND FOUR FUNCTION 16-30
THREE STAGE FULL FREE-LIFT (SINGLE AUXILIARY WITH E-HYDRAULICS - THREE FUNCTION 16-26
THREE STAGE FULL FREE-LIFT (SINGLE AUXILIARY WITH INTEGRAL SIDE-SHIFT AND E-HYDRAULICS) - FOUR FUNCTION 16-28
TWO STAGE LIMITED FREE-LIFT (DUAL AUXILIARY WITH E-HYDRAULICS) - THREE AND FOUR FUNCTION 16-24
TWO STAGE LIMITED FREE-LIFT (SINGLE AUXILIARY WITH E-HYDRAULICS) - THREE FUNCTION 16-20
TWO STAGE LIMITED FREE-LIFT (SINGLE AUXILIARY WITH INTEGRAL SIDE-SHIFT AND E-HYDRAULICS) - FOUR FUNCTION 16-22
AUXILIARY TUBES
THREE STAGE FULL FREE-LIFT - MANUAL AND E-HYDRAULICS VALVE WITH QUICK DISCONNECT 16-16
THREE STAGE FULL FREE-LIFT - MANUAL AND E-HYDRAULICS VALVE WITHOUT QUICK DISCONNECT 16-18
TWO STAGE LIMITED FREE LIFT - WITH MANUAL AND E-HYDRAULICS VALVE WITHOUT QUICK DISCONNECT 16-12
TWO STAGE LIMITED FREE LIFT - MANUAL AND E-HYDRAULIC VALVE WITH QUICK DISCONNECT 16-14

©2014 HYSTER COMPANY

TABLE OF CONTENTS (continued)

DESCRIPTION	PAGE
AUXILLIARY HOSES	
THREE STAGE FULL FREE LIFT - TWO STAGE LIMITED FREE-LIFT	12-13
AXLE HOUSING	
WET BRAKE	9-4
B	
BACK-UP ALARM	16-4
BATTERY CABLES	
2.5L LPG	7-26
BEVEL GEAR	
WET BRAKE	9-6
BRAKE ASSEMBLY	
DRY BRAKE	11-6
BRAKE COOLING SYSTEM	
SINGLE AND DUAL PEDAL WET BRAKE - WITH SINGLE SPEED TRANSMISSION	11-10
BRAKE LINKAGE	
DUAL PEDAL - DRY BRAKE	11-4
DUAL PEDAL - WET BRAKE	11-14
SINGLE PEDAL - DRY BRAKE	11-2
SINGLE PEDAL - WET BRAKE	11-12
BRAKE MASTER CYLINDER ASSEMBLY	
DRY BRAKE	11-9
WET BRAKE	11-16
BRAKE PEDAL CONVERSION KITS	17-2
C	
CAB	
AIR CONDITIONER	1-64
CONDENSER ASSEMBLY - CAB (WITH A/C)	1-82
FRAME AND ATTACHING PARTS - WITHOUT A/C	1-84
FRAME AND ATTACHING PARTS - CAB WITH A/C	1-86
HEATER	1-66
INTERIOR PANELS	1-80
LH DOOR	1-58
RH DOOR AND HEATER ASSEMBLY	1-60
SLIDING REAR WINDOW	1-78
WINDOW - LEFT HAND DOOR	1-74
WINDOW - RIGHT HAND DOOR	1-76
WINDOWS AND WINDOW WIPER SYSTEM	1-70
WITH A/C	1-54
WITHOUT A/C	1-52
CAB ATTACHING PARTS	
WITH A/C	1-56
CAB DOORS	
PVC	1-68
CAB WITH STEEL DOORS	
HEATER - WITHOUT A/C	1-63
CAMSHAFT AND DRIVE GEAR	
YANMAR 2.6L AND 3.3L - DIESEL	3-16

©2014 HYSTER COMPANY

TABLE OF CONTENTS (continued)

DESCRIPTION	PAGE
CAMSHAFT AND VALVES	
MAZDA 2.2L, GASOLINE AND LPG	2-22
CAMSHAFT ASSEMBLY	
KUBOTA 2.5L	4-46
CARRIAGE	
THREE STAGE FULL FREE-LIFT	15-30
TWO STAGE FULL FREE-LIFT	14-28
TWO STAGE LIMITED FREE-LIFT	13-16
CONTROL VALVE ASSEMBLY	
LOW PRESSURE	8-26
MANUAL CONTROL - THREE AND FOUR FUNCTION	12-24
CONTROL VALVE LOCKOUT GROUP	
MANUAL CONTROL VALVE	12-26
COOLING REPAIR KITS	17-2
COOLING SYSTEM	
KUBOTA 2.5L	4-6
MAZDA 2.2L, GASOLINE AND LPG, SQUARE WAVE RADIATOR - BASIC POWERSHIFT TRANSMISSION	2-2
MAZDA 2.2L, GASOLINE AND LPG, SQUARE WAVE RADIATOR - ELECTRONIC TRANSMISSION, EXTERNAL OIL COOLER, OR WET BRAKE	2-6
MAZDA 2.2L, GASOLINE SERPENTINE RADIATOR - BASIC POWERSHIFT TRANSMISSION	2-4
YANMAR 2.6L AND 3.3L, DIESEL, SQUARE WAVE RADIATOR - WITH INTERNAL OIL COOLER	3-2
YANMAR 2.6L AND 3.3L, DIESEL, SQUARE WAVE RADIATOR - WITH EXTERNAL OIL COOLER	3-4
COUNTER/REVERSE CLUTCH	
SINGLE SPEED TRANSMISSION	8-24
COUNTERWEIGHT	1-3
COVER ASSEMBLY	
KUBOTA 2.5L	4-30
COWL ELECTRICAL	
ELECTRO-HYDRAULIC	7-8
MANUAL HYDRAULIC - WITH OPERATOR PRESENCE SYSTEM	7-6
COWL MOUNT	1-18
CRANKSHAFT AND PISTON ASSEMBLY	
KUBOTA 2.5L	4-26
CRANKSHAFT AND PISTONS	
MAZDA 2.2L, GASOLINE AND LPG	2-24
YANMAR 2.6L AND 3.3L - DIESEL	3-18
CRANKSHAFT BEARING ASSEMBLY	
KUBOTA 2.5L	4-24
CYLINDER BLOCK	
MAZDA 2.2L, GASOLINE AND LPG	2-20
YANMAR 2.6 AND 3.3L - DIESEL	3-10
CYLINDER BLOCK ASSEMBLY	
KUBOTA 2.5L	4-12
CYLINDER HEAD	
MAZDA 2.2L, GASOLINE AND LPG	2-18
YANMAR 2.6L AND 3.3L - DIESEL	3-12
CYLINDER HEAD ASSEMBLY	
KUBOTA 2.5L	4-16

©2014 HYSTER COMPANY

TABLE OF CONTENTS (continued)

DESCRIPTION	PAGE
CYLINDER HEAD COVER ASSEMBLY	
KUBOTA 2.5L	4-18
D	
DASH PANEL AND STEERING COLUMN COVER	1-14
DIFFERENTIAL	
DRY BRAKE	9-22
WET BRAKE	9-8
DIPSTICK TUBE ASSEMBLY	
KUBOTA 2.5L	4-21
DIRECTIONAL CONTROL CONVERSION	17-2
DRIVE AXLE	
DRY BRAKE - SHEET 1 OF 3	9-16
DRY BRAKE - SHEET 2 OF 3	9-18
DRY BRAKE - SHEET 3 OF 3	9-20
DRIVE AXLE AND ATTACHING PARTS	
DRY BRAKE	9-14
WET BRAKE	9-2
DRIVE TIRE AND WHEEL	
PNEUMATIC RADIAL	9-28
SINGLE	9-24
WIDE TREAD	9-26
DUAL DRIVE WHEELS AND TIRES	9-30
E	
ECU ASSEMBLY	
KUBOTA 2.5L	4-44
E-HYDRAULIC CONTROL CONVERSION KITS	17-2
ELECTRICAL SYSTEM	
RH CHASSIS	7-4
ELECTRONIC PRESSURE REGULATOR ASSEMBLY	
MAZDA 2.2L LPG	6-24
ELECTRONIC PRESSURE REGULATOR KIT	
MAZDA 2.2L LPG	6-26
EMISSION CONTROL SYSTEM	
MAZDA 2.2L, GASOLINE	2-26
ENGINE COOLING	
YANMAR 2.6L AND 3.3L - DIESEL	3-26
ENGINE COOLING SYSTEM	
MAZDA 2.2L, GASOLINE AND LPG	2-42
ENGINE ELECTRICAL COMPONENTS	
MAZDA 2.2L, GASOLINE AND LPG	7-10
ENGINE ELECTRICAL SYSTEM	
YANMAR DIESEL	7-14
ENGINE FUEL SYSTEM	
MAZDA 2.2L, GASOLINE	2-30
ENGINE MOUNT	
KUBOTA 2.5L LPG	4-10
ENGINE MOUNTING	2-12

©2014 HYSTER COMPANY

TABLE OF CONTENTS (continued)

DESCRIPTION	PAGE
YANMAR 2.6 AND 3.3L	3-6
ENGINE WIRE HARNESS AND ATTACHING PARTS	
2.5L KUBOTA LPG - SINGLE SPEED TRANSMISSION	7-18
EXHAUST	
YANMAR 2.6 AND 3.3L DIESEL - WITHOUT CATALYTIC CONVERTER	3-30
EXHAUST MANIFOLD	
MAZDA 2.2L, GASOLINE AND LPG	2-32
EXHAUST MANIFOLD ASSEMBLY	
KUBOTA 2.5L	4-36
EXHAUST SYSTEM	
WITH CATALYTIC CONVERTER - KUBOTA 2.5L	4-4
EXHAUST SYSTEM WITH CATALYTIC CONVERTER	
MAZDA 2.2L, GASOLINE AND LPG	2-8
F	
FAN ASSEMBLY	
MAZDA	2-10
YANMAR 2.6 AND 3.3L	3-7
FAN PULLEY ASSEMBLY	
KUBOTA 2.5L	4-43
FENDER EXTENSIONS	1-16
FIRE EXTINGUISHER	16-8
FLANGE BREATHER ASSEMBLY	
KUBOTA 2.5L	4-28
FLOORPLATES AND COVERS	1-10
FLYWHEEL AND HOUSING	
2.2 L - GASOLINE AND LPG	2-14
YANMAR 2.6L AND 3.3L - DIESEL	3-8
FLYWHEEL HOUSING AND STARTER	
KUBOTA 2.5L LPG	4-8
FORK POSITIONER ASSEMBLY	16-50
FORKS	1-46
OPTIONAL	1-48
FREE-LIFT	
TWO STAGE FULL FREE- LIFT	14-16
FREE-LIFT CYLINDER	
THREE STAGE FULL FREE-LIFT	15-22
TWO STAGE FULL FREE- LIFT	14-20
FREE-LIFT CYLINDER AND ATTACHING PARTS	
THREE STAGE FULL FREE-LIFT	15-10
FUEL FILTER AND WATER SEPARATOR	
YANMAR 2.6L AND 3.3L - DIESEL	5-10
FUEL INJECTION SYSTEM	
YANMAR 2.6L AND 3.3L - DIESEL	5-8
FUEL PUMP AND SENDER	
MAZDA 2.2L, GASOLINE	6-14
FUEL SUPPLY SYSTEM	
MAZDA 2.2L LPG	6-16
MAZDA 2.2L, GASOLINE	6-12

©2014 HYSTER COMPANY

TABLE OF CONTENTS (continued)

DESCRIPTION	PAGE
FUEL SYSTEM	
KUBOTA 2.5L LPG	6-27
MAZDA 2.2L LPG	6-10
MAZDA 2.2L, GASOLINE	6-9
YANMAR 2.6L AND 3.3L - DIESEL	5-6
FUEL SYSTEM HOSES AND ATTACHING PARTS	
MAZDA 2.2L LPG	6-18
FUEL SYSTEM SENSORS	
MAZDA 2.2L LPG	7-12
FULL SUSPENSION SEAT	
RECLINER AND DAMPER KITS - SHEET 2 OF 3	1-36
SERVICE KITS FOR NON SWIVEL AND SWIVEL - SHEET 3 OF 3	1-38
WITH ELECTRO-HYDRAULIC CONTROLS - SHEET 1 OF 3	1-28
WITH MANUAL HYDRAULIC CONTROLS - SHEET 1 OF 3	1-32
G	
GEAR CASE ASSEMBLY	
KUBOTA 2.5L - 280 MM FAN HEIGHT	4-50
GEAR HOUSING	
YANMAR 2.6L AND 3.3L - DIESEL	3-22
GEAR PUMP ASSEMBLY	
HIGH PRESSURE	12-6
LOW PRESSURE - CHAIN DRIVE OPTION	12-4
H	
HAND LEVERS	
FOUR FUNCTION - WITH DETENTED LEVERS	12-20
FOUR FUNCTION - WITHOUT DETENTED LEVERS	12-22
THREE FUNCTION - WITH DETENTED LEVERS	12-16
THREE FUNCTION - WITHOUT DETENTED LEVERS	12-18
HEADER HOSE AND ATTACHING PARTS	
TWO STAGE LIMITED FREE-LIFT	13-12
HEADER HOSE CONVERSION KITS	
HEADER HOSES	
TWO STAGE FULL FREE-LIFT	14-24
HEADER HOSES AND ATTACHING PARTS	
THREE STAGE FULL FREE-LIFT - THREE AND F0UR FUNCTION	15-26
HEATER HOSE	
2.5L KUBOTA LPG	1-22
HEATER HOSES	
MAZDA, GASOLINE	1-19
MAZDA, LPG	1-20
YANMAR DIESEL	1-21
HOOD ASSEMBLY	1-6
HYDRAULIC CONTROL CONVERSIONS	
HYDRAULIC CONTROL VALVE	
ELECTRONIC VALVE ASSEMBLY - THREE AND FOUR FUNCTION	12-34
ELECTRONIC VALVE AUXILIARY ONE SECTION - THREE AND FOUR FUNCTION	12-42
ELECTRONIC VALVE AUXILIARY TWO SECTION - FOUR FUNCTION	12-44

©2014 HYSTER COMPANY

TABLE OF CONTENTS (continued)

DESCRIPTION	PAGE
ELECTRONIC VALVE INLET SECTION - THREE AND FOUR FUNCTION	12-36
ELECTRONIC VALVE TILT SECTION - THREE AND FOUR FUNCTION	12-40
HYDRAULIC CONTROL VALVE (ELECTRO-HYDRAULIC)	
THREE AND FOUR FUNCTION - POPPET VALVES	12-38
HYDRAULIC FILTER	12-8
HYDRAULIC HOSES	
LIFT, TILT, AND AUXILIARY	12-10
HYDRAULIC SUPPLY AND RETURN	
WITH ALUMINUM TRANSMISSION - WITH CHAIN DRIVE	12-2
I	
IGNITION COIL ASSEMBLY	
KUBOTA 2.5L	4-29
IMPACT SENSOR	7-34
INNER MAST	
THREE STAGE FULL FREE-LIFT	15-8
TWO STAGE FULL FREE- LIFT	14-4
TWO STAGE LIMITED FREE LIFT	13-4
INPUT/FORWARD CLUTCH	
SINGLE SPEED TRANSMISSION	8-22
INSTRUMENT CLUSTER	7-36
INTAKE AND EXHAUST MANIFOLD	
YANMAR 2.6L AND 3.3L - DIESEL	3-20
INTAKE MANIFOLD	
MAZDA 2.2L, GASOLINE	2-34
MAZDA 2.2L LPG	2-36
INTAKE MANIFOLD ASSEMBLY	
KUBOTA 2.5L	4-34
INTEGRAL SIDE-SHIFT	
FORK POSITIONER - TWO STAGE LIMITED FREE-LIFT	16-46
FORK POSITIONER - THREE STAGE FULL FREE-LIFT	16-48
INTEGRAL SIDE-SHIFT CARRIAGE	
THREE STAGE FULL FREE-LIFT	16-34
TWO STAGE FULL FREE-LIFT	16-38
TWO STAGE LIMITED FREE-LIFT	16-32
INTEGRAL SIDE-SHIFT CYLINDER	16-44
INTEGRAL SIDE-SHIFT HYDRAULIC HOSES	
THREE STAGE FULL FREE LIFT	16-41
TWO STAGE FULL FREE- LIFT	16-42
TWO STAGE LIMITED FREE-LIFT	16-40
INTERMEDIATE MAST	
THREE STAGE FULL FREE-LIFT	15-6
L	
LABELS	
EXTERIOR	1-90
HYDRAULIC CONTROL LABELS - MANUAL HYDRAULIC	1-94
INTERIOR	1-92
LIGHT KITS	17-3

©2014 HYSTER COMPANY

TABLE OF CONTENTS (continued)

DESCRIPTION	PAGE
LIGHTS	
STOP, TAIL, TURN, BACKUP, AND STROBE - WITH CAB	7-44
STOP, TAIL, TURN, BACKUP, AND STROBE - WITH OVERHEAD GUARD	7-46
LOAD BACKREST EXTENSION	1-44
LOAD WEIGH ELECTRICAL	7-32
LPG FUEL GROUP KUBOTA	
PREMIUM LOW FUEL SENSOR - SECTION 1 OF 2	6-33
PREMIUM LOW FUEL SENSOR - SECTION 2 OF 2	6-34
STANDARD LOW FUEL SENSOR - SECTION 1 OF 2	6-36
STANDARD LOW FUEL SENSOR - SECTION 2 OF 2	6-38
LPG TANK BRACKET	
SWING OUT	6-28
SWING OUT, DROP DOWN	6-30
LUBRICATION SYSTEM	
YANMAR 2.6L AND 3.3L - DIESEL	3-28
M	
MAIN LIFT	
TWO STAGE FULL FREE- LIFT	14-6
TWO STAGE LIMITED FREE LIFT	13-6
MAIN LIFT CYLINDER	
THREE STAGE FULL FREE-LIFT	15-18
TWO STAGE LIMITED FREE LIFT	13-8
MAIN LIFT CYLINDER - LH	
TWO STAGE FULL FREE- LIFT	14-12
MAIN LIFT CYLINDER - RH	
TWO STAGE FULL FREE- LIFT	14-8
MAIN LIFT CYLINDER AND ATTACHING PARTS	
THREE STAGE FULL FREE-LIFT	15-14
MAP SENSOR	
MAZDA 2.2L, LPG	2-28
MAST ELECTRICAL	7-30
MINI LEVER MODULE LABELS	
HYDRAULIC CONTROL FUNCTIONS	1-96
MINI-LEVER CONTROLS	
WITH ARMREST - THREE FUNCTION	7-38
WITH ARMREST - FOUR FUNCTION	7-40
MIRRORS	
WITH CAB	16-6
WITH OVERHEAD GUARD	16-7
MIXER AND THROTTLE BODY ASSEMBLY	
MAZDA 2.2L LPG	6-22
O	
OIL COOLER ASSEMBLY	
KUBOTA 2.5L - 280 MM FAN HEIGHT	4-37
OIL FILTER ASSEMBLY	
KUBOTA 2.5L	4-20

©2014 HYSTER COMPANY

TABLE OF CONTENTS (continued)

DESCRIPTION	PAGE
OIL PAN	
YANMAR 2.6L AND 3.3L - DIESEL	3-24
OIL PAN ASSEMBLY	
KUBOTA 2.5L	4-14
OIL PUMP AND FILTER	
MAZDA 2.2L, GASOLINE AND LPG	2-40
OIL PUMP ASSEMBLY	
KUBOTA 2.5L	4-22
OUTER MAST	
THREE STAGE FULL FREE LIFT	15-2
TWO STAGE FULL FREE LIFT	14-2
TWO STAGE LIMITED FREE-LIFT	13-2
OUTLET SECTION	
ELECTRONIC CONTROL VALVE - THREE AND FOUR FUNCTION	12-46
MANUAL CONTROL VALVE - THREE AND FOUR FUNCTION	12-32
OVERHEAD GUARD	1-4
P	
PARK BRAKE ASSEMBLY	11-18
PARKING BRAKE	
WET BRAKE	9-10
POWER DISTRIBUTION MODULE	7-24
R	
RAIN TOP	1-88
S	
SEALED ALTERNATOR AND MOUNTING	
YANMAR 2.6 AND 3.3L	7-22
SEAT	
NON SUSPENSION - WITH MANUAL HYDRAULIC CONTROLS	1-24
SEMI SUSPENSION - WITH MANUAL AND ELECTRO-HYDRAULIC CONTROLS	1-26
SEAT BELT SWITCH ADAPTER	7-42
SEAT CONVERSION KITS	17-2
STATOR SUPPORT HOUSING	8-20
STEER AXLE	10-12
STEER CYLINDER	10-14
STEER TIRES AND WHEELS	
H40-50FT	10-16
H40-70FT	10-18
STEERING COLUMN AND ATTACHING PARTS	
ISOLATED - DIESEL	10-3
NON-ISOLATED - GASOLINE AND LPG	10-2
STEERING COLUMN ASSEMBLY	
ISOLATED, DIESEL	10-6
NON-ISOLATED - GASOLINE AND LPG	10-4
STEERING CONTROL UNIT	10-8
STEERING LINES	10-10
STROBE LIGHT	
LED	16-2

©2014 HYSTER COMPANY

See Service Manual for service procedures.

TABLE OF CONTENTS (continued)

DESCRIPTION	PAGE
T	
THROTTLE BODY AND ATTACHING PARTS	
MAZDA 2.2L, GASOLINE	6-20
THROTTLE CABLE ASSEMBLY	
YANMAR 2.6L AND 3.3L - DIESEL	5-12
THROTTLE PEDAL ASSEMBLY AND ATTACHING PARTS	
MONOTROL	5-18
MONOTROL	6-42
STANDARD PEDAL	5-16
STANDARD PEDAL	6-40
THROTTLE POSITION SENSOR AND ATTACHING PARTS	
YANMAR 2.6L AND 3.3L DIESEL	5-14
TILT CYLINDER AND MAST INSTALLATION	12-48
TILT CYLINDERS	
H40-50FT	12-50
H60-70FT	12-52
TIMING GEAR COVER AND OIL PAN	
MAZDA 2.2L, GASOLINE AND LPG	2-38
TORQUE CONVERTER	
MAZDA	8-12
YANMAR AND KUBOTA ENGINES	8-13
TORQUE CONVERTER HOUSING AND ATTACHING PARTS	
SINGLE SPEED - ALUMINUM CHAIN DRIVE	8-18
TRANSMISSION COOLING	
KUBOTA 2.5L LPG - SQUARE WAVE WITHOUT OIL COOLER WITH SINGLE SPEED TRANSMISSION	8-10
MAZDA 2.2L, GASOLINE AND LPG - SERPENTINE AND SQUARE WAVE	8-2
MAZDA 2.2L, GASOLINE AND LPG - WITH AIR COOLER	8-4
YANMAR 2.6L AND 3.3L DIESEL - SQUARE WAVE WITHOUT AIR COOLER	8-6
YANMAR 2.6L AND 3.3L DIESEL - SQUARE WAVE WITH INTERNAL OIL COOLER	8-8
TRANSMISSION ELECTRICAL	
SINGLE SPEED	7-28
TRANSMISSION HOUSING AND ASSEMBLY	
SINGLE SPEED - ALUMINUM CHAIN DRIVE	8-16
TRANSMISSION MOUNT	
SINGLE SPEED - ALUMINUM CHAIN DRIVE	8-14
TREAD CONVERSION KITS	17-4
V	
VALVE AND ROCKER ARM ASSEMBLY	
KUBOTA 2.5L	4-32
VALVE ASSEMBLY, LIFT AND TILT	
MANUAL CONTROL VALVE - THREE AND FOUR FUNCTION	12-28
W	
WATER FLANGE AND THERMOSTAT ASSEMBLY	
KUBOTA 2.5L	4-40
WATER PUMP ASSEMBLY	
KUBOTA 2.5L	4-42

©2014 HYSTER COMPANY

TABLE OF CONTENTS (continued)

DESCRIPTION	PAGE
WEATHER PROTECTION KITS	17-2
WET BRAKES	9-11
WHEEL HUB	
WET BRAKE	9-12
WIRE HARNESS	
ADAPTER - LOW FUEL PRESSURE	7-120
AIR CONDITIONER	7-122
AIR CONDITIONING JUMPER	7-121
ALTERNATOR - DIESEL	7-124
ALTERNATOR TO BATTERY DISCONNECT SWITCH - KUBOTA 2.5L	7-130
COWL WITH FORWARD/REVERSE LEVER - WITHOUT RETURN TO SET TILT	7-104
COWL WITH FORWARD/REVERSE LEVER - WITH HYDRAULIC PUMP SOLENOID	7-108
COWL WITH MONOTROL PEDAL - WITH RETURN TO SET TILT	7-100
COWL WITH MONOTROL PEDAL - WITH HYDRAULIC PUMP SOLENOID	7-112
ELECTRONIC CONTROL VALVE - THREE FUNCTION	7-116
ELECTRONIC CONTROL VALVE - FOUR FUNCTION	7-118
ENGINE - YANMAR 2.6L AND 3.3L, DIESEL	7-96
LIGHTS WITH OVERHEAD GUARD	7-132
RH CHASSIS - MAZDA 2.2L	7-48
RH CHASSIS - KUBOTA 2.5L	7-60
RH CHASSIS - YANMAR 2.6L AND 3.3L, DIESEL	7-72
RH CHASSIS WITH SEAT BELT SEQUENCE MODULE - MAZDA 2.2L	7-54
RH CHASSIS WITH SEAT BELT SEQUENCE MODULE - KUBOTA 2.5L LPG	7-66
RH CHASSIS WITH SEAT BELT SEQUENCE MODULE - YANMAR 2.6L AND 3.3L, DIESEL	7-78
SEALED ALTERNATOR - YANMAR 2.6L AND 3.3L, DIESEL	7-126
TRANSMISSION - SINGLE SPEED	7-128
WIRE HARNESS (ENGINE)	
KUBOTA 2.5L LPG	7-92
MAZDA 2.2L LPG	7-88
MAZDA 2.2L, GASOLINE	7-84
WIRE HARNESS ASSEMBLY	
KUBOTA 2.5L	4-48

©2014 HYSTER COMPANY

ABBREVIATIONS QUICK REFERENCE SHEET

Listed below are abbreviations used in parts manuals to denote the following expressions:

TERM	DEFINITION
Amp	Amperes
AR	As Required
BDI	Battery Discharge Indicators
BWI	Brush Wear Indicator
CE	Communicator End
CRE	Corrosive Environment
D/B	Date Break
dbA	Decibel "A" Scale
DE	Drive End
ECH	Empty Container Handler
ECH-3	Empty Container Handler - 3 High Stacking
ECH-4	Empty Container Handler - 4 High Stacking
ECH-5	Empty Container Handler - 5 High Stacking
ECH-6	Empty Container Handler - 6 High Stacking
ECH-7	Empty Container Handler - 7 High Stacking
ECM	Electronic Control Module
ECN	Engineering Change Notice
EEPROM	Electrically Erasable Programmable Read Only Memory
EPA	US Environmental Protection Agency
EPROM	Electrically Programmable Read Only Memory

TERM	DEFINITION
FRE	Freezer Environment
in.	inches
LPG	Liquefied Petroleum Gas
MAP	Manifold Absolute Pressure
mm	millimeters
MSTS	Microprocessor Spark Timing System
NPT	National Pipe Threads
O/S	Oversize
PTO	Power Take Off
RPM	Revolutions per Minute
S/N	Serial Number
TMM	Truck Management Module
UL Type D	Diesel-Powered Safety Rating
UL Type DS	Diesel-Powered Safety Rating
UL Type E	Battery-Powered Safety Rating
UL Type EE	Battery-Powered Safety Rating
UL Type ES	Battery-Powered Safety Rating
UL Type G	Gasoline-Powered Safety Rating
UL Type GS	Gasoline-Powered Safety Rating
UL Type LP	Gas-Powered Safety Rating
UL Type LPS	LP Gas-Powered Safety Rating
U/S	Undersize
UL	Underwriters Laboratory
V	Volts

See Service Manual for service procedures.
©2014 HYSTER COMPANY

HOW TO USE THE ILLUSTRATED PARTS MANUAL

This parts manual describes and illustrates assemblies, subassemblies, and detail parts needed for service replacement.

The different constructions are indicated by keys and footnotes. The callouts correspond to descriptions found on the next page.

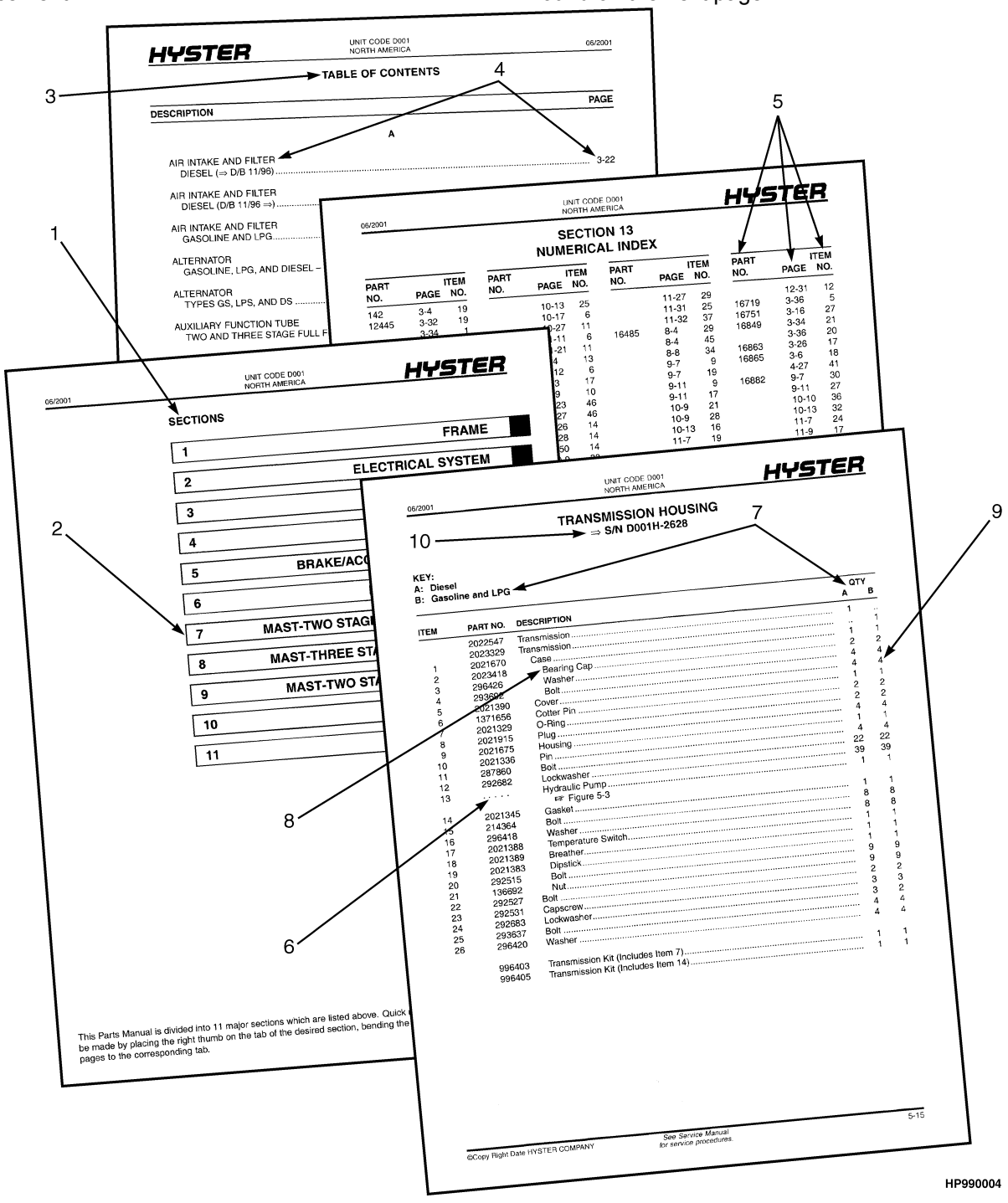

HOW TO FIND THE DESIRED PART NUMBER

WHEN THE PART NUMBER AND THE NEXT HIGHER ASSEMBLY IS NOT KNOWN:

1. Determine the function and application of the part required. Turn to the Sections Page. Choose the general area of reference most likely to include the part.
2. Turn to the section you chose. Use the Section Table of Contents to determine the assembly which would normally contain the part required. Then locate the part on the assembly breakdown page.

WHEN THE PART NUMBER IS NOT KNOWN AND THE NEXT HIGHER ASSEMBLY IS KNOWN:

3. Determine the assembly the required part is used on. Turn to the Table of Contents (Page i).
4. Locate the assembly the required part is used on and turn to the page indicated for that assembly. Then locate the part on the assembly breakdown page.

WHEN THE PART NUMBER IS KNOWN:

5. Use the Numerical Index (Page 18-1) to find the part number. Turn to the page listed and locate the part as indicated by the item number.

GENERAL:

The assembly breakdowns include part numbers, descriptions, quantities required, keys and footnotes to help in selecting correct parts.

6. Parts Supersession Information. Part numbers that have this history will be displayed in the parts list in the order that they were superseded (from oldest to newest). The superseded part numbers will be shown with a line through them.

   Five periods in the PART NO. column (. . . . .) indicate that the part is either *Not Serviced Separately* or there is a reference to another figure. A figure reference is denoted by a pointing hand followed by a figure number in the DESCRIPTION column (☞Figure 10)
7. Keys are used to show two or more similar assemblies, RH and LH assembly parts, etc. Select the appropriate key, "A", "B", "C", "D", or "E" and the corresponding quantity column to find the required parts. Two periods in the QTY column (..) indicate that the part is not used for that assembly.
8. Indented descriptions under the DESCRIPTION column are used to indicate assemblies and subparts of assemblies. In the example on the previous page, *BEARING CAP* (Item 2) is a subpart of the major assembly *CASE*.
9. Quantities shown are for one assembly. The quantities of the subpart *BEARING CAP* are indicated as two and two. This means two per *CASE* assembly.
10. Serial number breaks identify the most current parts information and are shown as follows:
    → S/N D001H2628
    Indicates last serial number affected.
    S/N D001H2629 →
    Indicates the first serial number affected.
    S/N D001H1553 ↔ S/N D001H3291
    Indicates a range of serial numbers affected.

    ECN numbers for pending serial numbers are shown to allow for the inclusion of the most current parts information and are identified as follows:
    → S/N Pending Per ECN 63243
    Indicates a pending serial number for last unit affected.
    S/N Pending Per ECN 63243 →
    Indicates a pending serial number for first unit affected.

    Date breaks are used to indicate when a change occurred but a subsequent serial number break was not recorded. This is an arbitrary date usually based on the ECN release and are identified as follows:
    → D/B 3/00
    Indicates that a change occurred sometime within that month for the item affected.
    D/B 3/00 →
    Indicates that a change occurred sometime within that month for the item affected.
    D/B 3/00 ↔ D/B 4/00
    Indicates a range of production dates of the item affected.

    Contact your local dealer for Hyster lift trucks for serial number information for items with a ECN or a date break.

ORDERING PARTS:

When ordering replacement parts, give the unit serial number, part number, name of part and quantity required.

For any further information on parts, service, or ordering, consult your local dealer for Hyster lift trucks.

©2014 HYSTER COMPANY

SERIAL NUMBER SPECIFIC MANUALS

SERIAL NUMBER SPECIFIC INFORMATION

This manual contains serial number specific parts information. Every effort has been made to provide you a manual that reflects your fork lift truck as it was manufactured. The serial number for your truck is shown on the front cover of this manual.

Parts that are specific to your truck are identified in **bold** lettering in the parts list. Parts that are not specific are in gray lettering. Entire figures that are not applicable to your truck are completely grayed out, these are also shown as grayed items in the Table of Contents. If an entire section was not applicable to your truck it was not included in this publication.

Please note that it is possible that not all items specific to your truck will be shown in bold lettering. In this case refer to the grayed items and the illustration for proper parts ordering. If a part still cannot be identified, please consult your local dealer for Hyster lift trucks.

Refer to the "How To Use The Illustrated Parts Manual" section for the basic use and functionality of this manual.

SPECIAL PARTS INFORMATION (SPI)

NOTE: This lift truck may contain special content. Every effort has been made to reflect that information in this manual. The user is advised to refer to the special content information that pertains to this specific serial number truck.

If your truck contains special content a Special Parts Information section is included as the last section of this manual. Use the section table of contents to locate. This section contains parts lists and drawings for the special content added to the lift truck.

When possible a SPI icon (S) will be placed in the parts list denoting that the part number has been replaced by a special equipment design part number. Please refer to the SPI section for information on these parts. The SPI icon in a table of contents is a quick reference showing which figures are part of the SPI section.

©2014 HYSTER COMPANY

IDENTIFICATION OF TRUCK SERIAL NUMBERS

X	OOO	X	OOOO	X
(1)	(2)	(3)	(4)	(5)

(1) and (2) The first letter and three numbers indicate the truck unit code.

(3) The second letter indicates the plant of manufacture.

(4) The four or five digit number indicates the production sequence number of the truck.

(5) The final letter indicates the year of manufacture starting with "A" in 1957, 1980, and 2003. The letters "I", "O", and "Q" will not be used.

For pending serial numbers contact your local dealer for Hyster lift trucks.

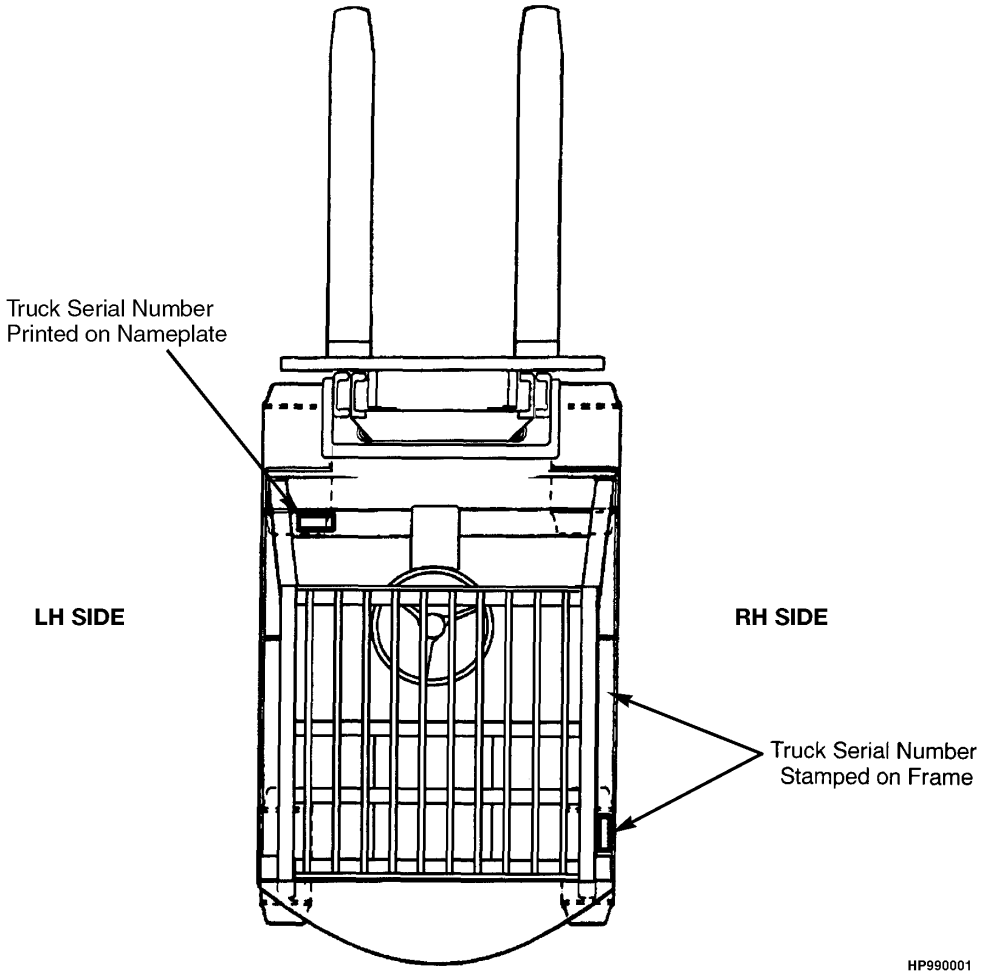

Parts referred to in this book as right or left hand parts are in accordance with the illustration above.

©2014 HYSTER COMPANY

IDENTIFICATION OF MAST SERIAL NUMBERS

X OOO X OOOO

(1) (2) (3) (4)

OOOO

(5)

(1) and (2) The first letter and number indicates the mast unit code.

(3) The second letter indicates the plant of manufacture.

(4) The four or five digit number indicates the production sequence number of the mast.

(5) Carriage travel in millimeters stamped just below the serial number.

Mast Group identification consists of mast unit code (1) and (2) plus carriage travel (5).

For pending production sequence numbers contact your local dealer for Hyster lift trucks.

LIFT EQUIPMENT IDENTIFICATION

1. Fork part number, capacity rating, plant code letter, and date of manufacture are stamped approximately six inches below the top of most forks.
2. The carriage group number is stamped on the right hand side of the top crossmember (pin type) or on the back of the right hand end of the bottom crossmember (hook type). A date code has two letters in line with or below the carriage group number.
3. The mast identification number has a unit code, a letter indicating the plant of manufacture, and a serial number. Underneath the production sequence number is a four digit number that indicates the carriage travel in millimeters.
4. Tilt and lift cylinder group numbers are stamped on the cylinder shell.

   Always refer to the group, serial, or part number when ordering service parts.

   Modification of masts and carriages by SPED (Special Products Engineering Department) are identified by a model prefix code beginning with the letter "S". contact your dealer for Hyster lift trucks for information on these assemblies.

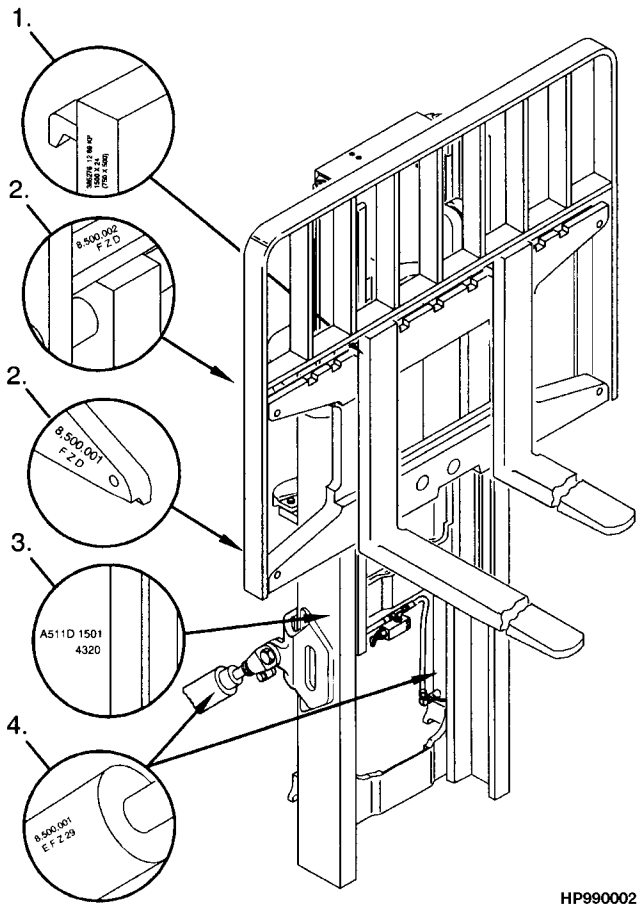

IDENTIFICATION OF ATTACHMENT AND SIDE-SHIFT CARRIAGE SERIAL NUMBERS

X OOO X OOOO

(1) (2) (3) (4)

(1) and (2) The first letter and three numbers indicate the attachment unit code.

(3) The second letter indicates the plant of manufacture.

(4) The four or five digit number indicates the production sequence number.

For pending production sequence numbers contact your local dealer for Hyster lift trucks.

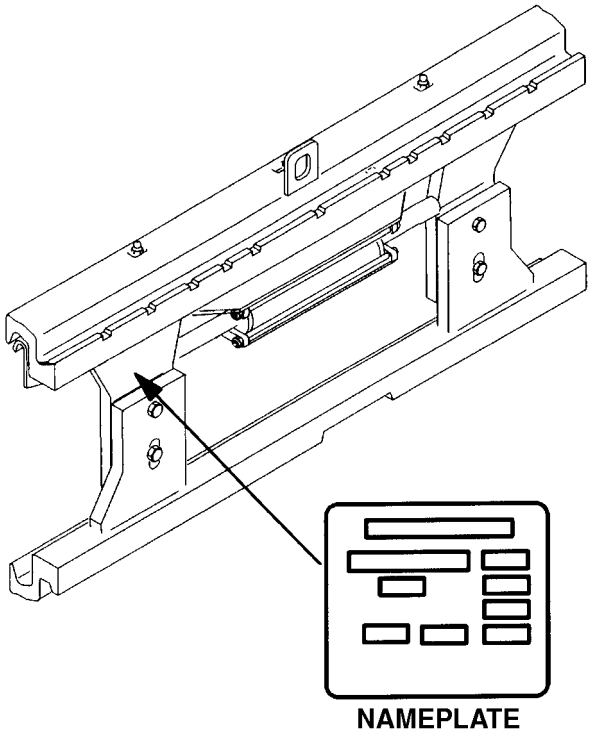

Side-shift carriages and attachments have nameplates. Use the serial number found on the nameplate to identify the attachment.

Always refer to the group, serial, or part number when ordering service parts.

Modifications of attachments and side-shift carriages by SPED (Special Products Engineering Department) are identified by a model prefix code beginning with the letter "S". Contact your dealer for Hyster lift trucks for information on these assemblies.

©2014 HYSTER COMPANY

PUBLICATIONS

Every new lift truck is provided with an OPERATING MANUAL. This manual has information that the operator must know for inspection and operation of the lift truck.

SERVICE MAINTENANCE MANUALS, which provide service and overhaul procedures, and PARTS MANUALS with complete replacement part identification, are available at a nominal fee from your Hyster dealer to assist users in effectively maintaining Hyster lift trucks in a safe, useful condition. See the list below for information on ordering specific publications for this model lift truck.

PUBLICATION	HYSTER PART NUMBER
Operating Manual	4102575
Service Manual (Complete)	4102923
Parts Manual	4102915

©2014 HYSTER COMPANY

NOTES

©2014 HYSTER COMPANY

1 FRAME

SECTION 1
FRAME

DESCRIPTION **PAGE**

AIR CONDITIONER COMPRESSOR
KUBOTA 2.5 LPG 1-50
ARMREST ASSEMBLY
MINI-LEVER MODULES - SEMI-SUSPENSION SEAT WITH HIP RESTRAINTS 1-40
MINI-LEVER MODULES - FULL SUSPENSION SEAT 1-42
CAB
AIR CONDITIONER 1-64
CONDENSER ASSEMBLY - CAB (WITH A/C) 1-82
FRAME AND ATTACHING PARTS - WITHOUT A/C 1-84
FRAME AND ATTACHING PARTS - CAB WITH A/C 1-86
HEATER 1-66
INTERIOR PANELS 1-80
LH DOOR 1-58
RH DOOR AND HEATER ASSEMBLY 1-60
SLIDING REAR WINDOW 1-78
WINDOW - LEFT HAND DOOR 1-74
WINDOW - RIGHT HAND DOOR 1-76
WINDOWS AND WINDOW WIPER SYSTEM 1-70
WITH A/C 1-54
WITHOUT A/C 1-52
CAB ATTACHING PARTS
WITH A/C 1-56
CAB DOORS
PVC 1-68
CAB WITH STEEL DOORS
HEATER - WITHOUT A/C 1-63
COUNTERWEIGHT 1-3
COWL MOUNT 1-18
DASH PANEL AND STEERING COLUMN COVER 1-14
FENDER EXTENSIONS 1-16
FLOORPLATES AND COVERS 1-10
FORKS 1-46
OPTIONAL 1-48
FULL SUSPENSION SEAT
RECLINER AND DAMPER KITS - SHEET 2 OF 3 1-36
SERVICE KITS FOR NON SWIVEL AND SWIVEL - SHEET 3 OF 3 1-38
WITH ELECTRO-HYDRAULIC CONTROLS - SHEET 1 OF 3 1-28
WITH MANUAL HYDRAULIC CONTROLS - SHEET 1 OF 3 1-32
HEATER HOSE
2.5L KUBOTA LPG 1-22
HEATER HOSES
MAZDA, GASOLINE 1-19
MAZDA, LPG 1-20
YANMAR DIESEL 1-21
HOOD ASSEMBLY 1-6
LABELS
EXTERIOR 1-90
HYDRAULIC CONTROL LABELS - MANUAL HYDRAULIC 1-94
INTERIOR 1-92

©2014 HYSTER COMPANY

SECTION 1
FRAME

DESCRIPTION	PAGE
LOAD BACKREST EXTENSION	1-44
MINI LEVER MODULE LABELS	
HYDRAULIC CONTROL FUNCTIONS	1-96
OVERHEAD GUARD	1-4
RAIN TOP	1-88
SEAT	
NON SUSPENSION - WITH MANUAL HYDRAULIC CONTROLS	1-24
SEMI SUSPENSION - WITH MANUAL AND ELECTRO-HYDRAULIC CONTROLS	1-26

©2014 HYSTER COMPANY

COUNTERWEIGHT (FIGURE 1-1)

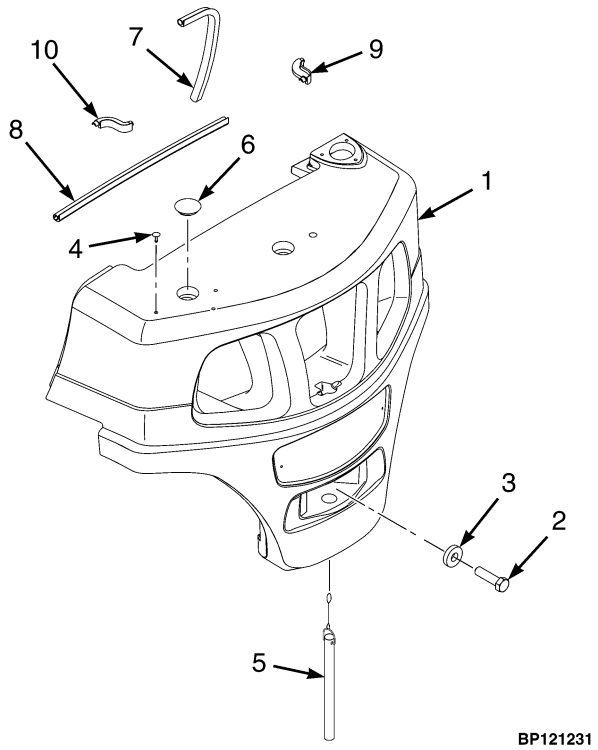

ITEM	PART NO.	DESCRIPTION	QTY
1	1649733	Counterweight (H40FT)	1
1	1649734	Counterweight (H50FT)	1
1	1649735	Counterweight (H60FT)	1
1	**1649736**	**Counterweight (H70FT)**	**1**
2	292607	Capscrew (H40FT)	1
2	**292612**	**Capscrew (H50-70FT)**	**1**
3	**1375214**	**Washer**	**1**
4	**1347045**	**Fastener (Gasoline and Diesel)**	**6**
5	**1643947**	**Tow Pin**	**1**
6	**2021395**	**Cap**	**2**
7	**1590279**	**Seal (Counterweight)**	**2**
8	**1590280**	**Seal (Counterweight)**	**1**
9	**1590152**	**Seal (RH)**	**1**
10	**1590153**	**Seal (LH)**	**1**

©2014 HYSTER COMPANY

OVERHEAD GUARD (FIGURE 1-2)

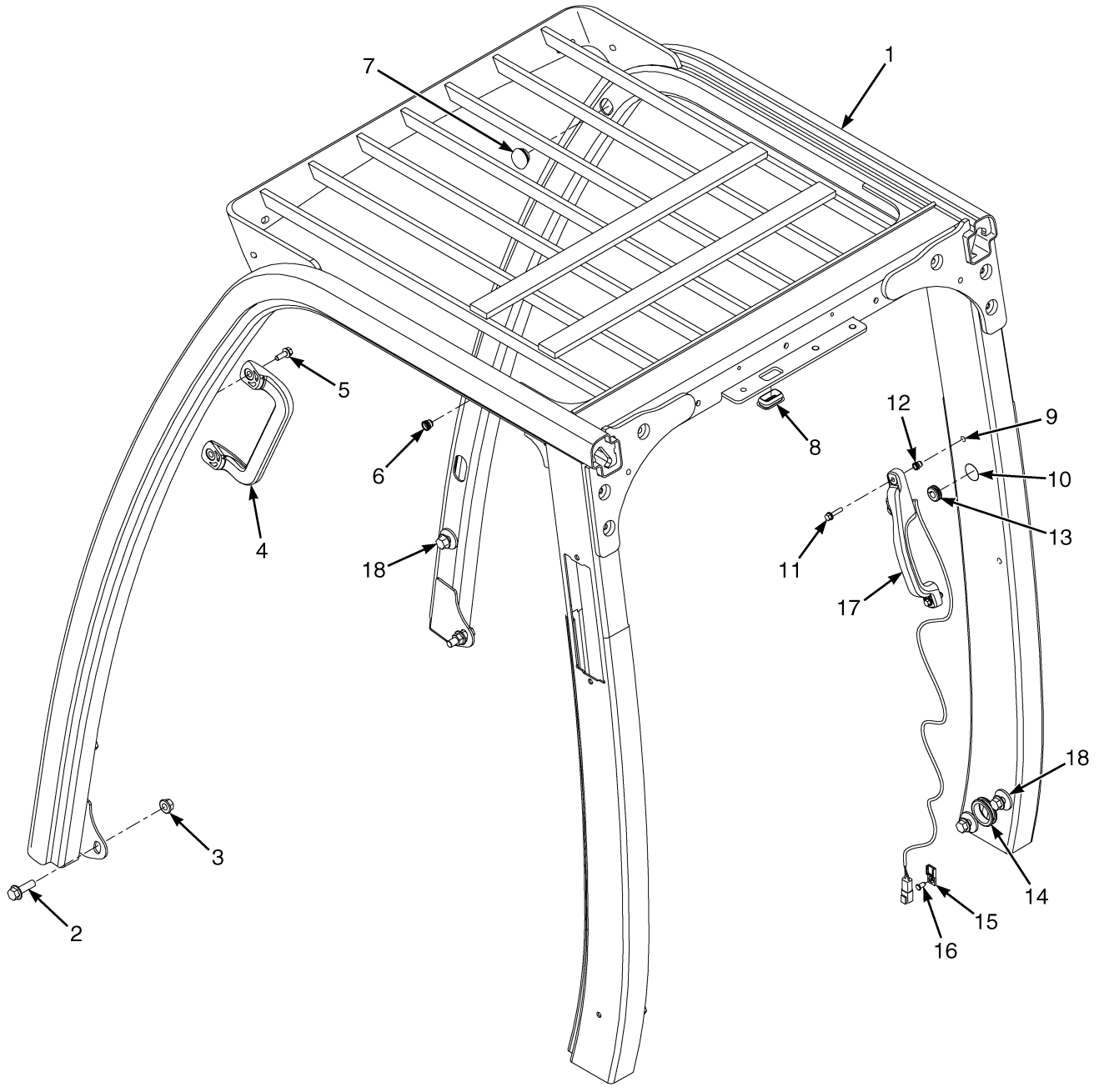

BP120689

©2014 HYSTER COMPANY

OVERHEAD GUARD

ITEM	PART NO.	DESCRIPTION	QTY
1	**b** 4051346	Overhead Guard (Standard)	1
1	**a** 4051347	Overhead Guard (Optional)	1
2	4035130	Capscrew	2
3	1528888	Nut (Shoulder)	2
4	1536813	Handle (Grab)	1
5	1583611	Capscrew	2
6	1531557	Insert	4
7	1558219	Grommet	2
8	1560671	Grommet	1
9	1494888	Plug	4
10	1599415	Plug	1
11	1586495	Capscrew	2
12	1531558	Insert	2
13	1598220	Grommet	1
14	362255	Grommet	1
15	1500912	Clip	1
16	1582464	Fastener	1
17	2070223	Handle (Assembly)	1
17	2069454	Handle	1
17	1566726	Push Button Switch	1
17	1493465	Connector (2 Pin)	1
17	1330414	Connector (Secondary Lock)	1
17	1330437	Terminal (Pin)	1
18	1527888	Capscrew	6
18	1566853	Capscrew (Optional)	6

FOOTNOTES:

a 82 in. Overhead Guard

b 85 in. Overhead Guard

©2014 HYSTER COMPANY

HOOD ASSEMBLY (FIGURE 1-3)

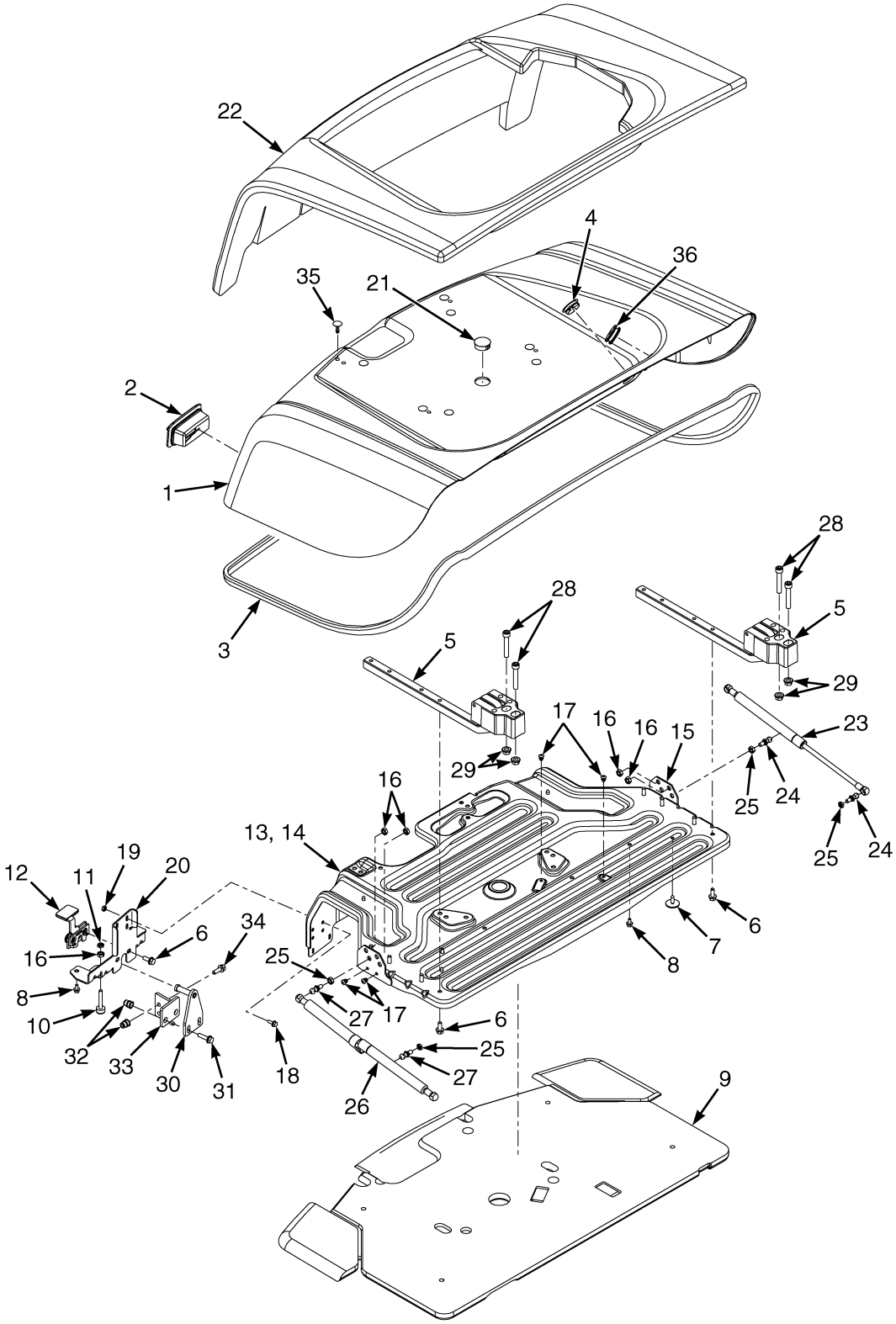

©2014 HYSTER COMPANY

HOOD ASSEMBLY

ITEM	PART NO.	DESCRIPTION	QTY
	a 4078242	Hood (Non-Vented) (With Overhead Guard)	1
	b 4016189	Hood (Non-Vented) (With Overhead Guard)	1
	a 4016191	Hood (Vented) (With Overhead Guard)	1
	b 4016190	Hood (Vented) (With Overhead Guard)	1
	4078244	**Hood (Non-Vented) (With Cab)**	**1**
	4078243	Hood (Vented) (With Cab)	1
1	**4015888**	**Hood (Non-Vented)**	**1**
1	4016100	Hood (Vented)	1
2	**1666732**	**Boot**	**1**
3	**1580652**	**Seal**	**1**
4	**1616379**	**Plug (Yellow)**	**1**
5	**1548618**	**Hinge**	**2**
6	**1527880**	**Capscrew**	**10**
7	**1304971**	**Fastener**	**4**
8	**1534417**	**Capscrew**	**6**
9	a 1624018	Hood Liner	1
9	4067373	Hood Liner	1
10	**1585581**	**Bumper (Hood)**	**2**
11	**329069**	**Nut**	**2**
12	**1387170**	**Latch**	**1**
13	4025274	Hood Reinforcement	1
14	1608876	Reinforcement	1
15	1608877	Bracket	2
16	364868	Nut	8
17	1608879	Capscrew	4
18	**1527876**	**Capscrew**	**4**
19	**1324360**	**Nut**	**4**
20	1672560	Plate	1
21	1585592	Plug	1
22	4009733	Blanket (Low Noise Hood)	1
22	**4009731**	**Blanket**	**1**
23	**1563497**	**Gas Spring (RH)**	**1**
24	**1563369**	**Ball Stud (RH)**	**2**
25	**329069**	**Nut**	**4**
26	**d 1563497**	**Gas Spring (LH)**	**1**
26	**c 4011435**	**Gas Spring (LH)**	**1**
27	**d 1563369**	**Ball Stud (LH)**	**2**
27	**c 4011397**	**Ball Stud (LH)**	**2**
28	**296032**	**Capscrew**	**4**
29	**1460477**	**Nut**	**4**
30	**1674131**	**Striker Bolt**	**1**
31	**1527881**	**Capscrew**	**2**
32	**1530243**	**Insert**	**4**
33	**1674030**	**Hood Support**	**1**
34	**1583611**	**Capscrew**	**2**
35	**1347045**	**Fastener**	**8**
36	**4031944**	**Grommet**	**1**

©2014 HYSTER COMPANY

FOOTNOTES:

a With Diesel Engine
b With Gasoline/LPG Engine
c With Lift and Latch Option
d Without Lift and Latch Option

©2014 HYSTER COMPANY

NOTES

©2014 HYSTER COMPANY

FLOORPLATES AND COVERS (FIGURE 1-4)

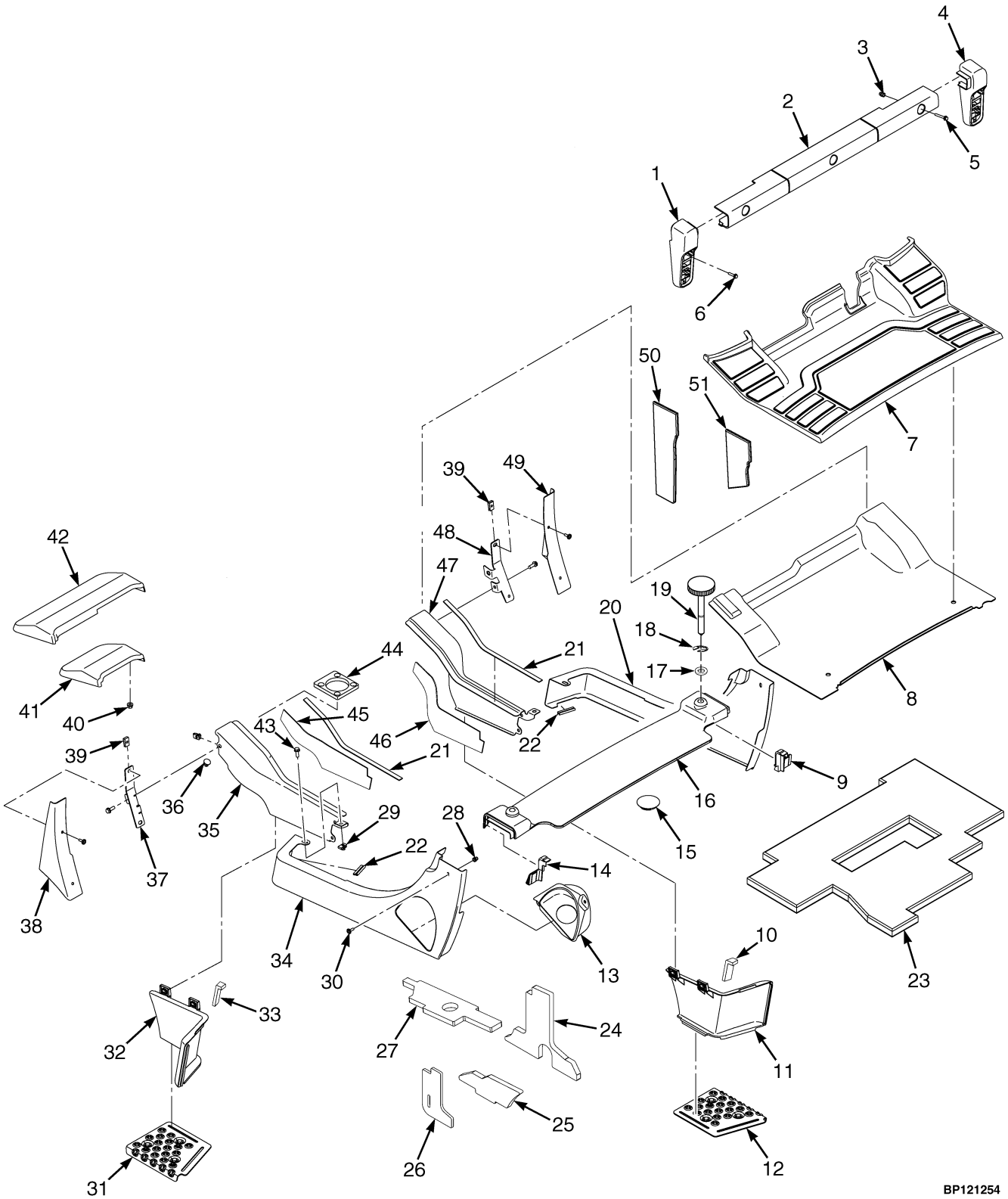

©2014 HYSTER COMPANY

FLOORPLATES AND COVERS

KEY:
A: With Cab
B: With Overhead Guard

NOTE: This parts list contains multiple truck configurations, refer to the KEY to choose the correct QTY column for your truck.

ITEM	PART NO.	DESCRIPTION	QTY A	QTY B
1	**2107958**	**Tail Light Base (LH)**	**1**	**1**
2	2069203	Cover (Rear)	..	1
3	**1531001**	**Insert**	**..**	**8**
3	**1531001**	**Insert**	**5**	**..**
4	**2107957**	**Tail Light Base (RH)**	**1**	**1**
5	1540643	Capscrew	3	3
6	**1586495**	**Capscrew**	**4**	**4**
7	**2071262**	**Floormat**	**1**	**1**
8	**1573774**	**Floorplate**	**1**	**1**
9	**2071198**	**Seal (RH)**	**1**	**1**
10	**1596624**	**Seal (RH)**	**1**	**1**
11	**2102559**	**Step Panel (RH)**	**1**	**1**
12	**1544415**	**Plate (RH)**	**1**	**1**
13	**a 1517656**	**Shield**	**1**	**1**
14	**2071197**	**Seal (LH)**	**1**	**1**
15	**b 2021395**	**Cap (Counterweight)**	**1**	**1**
16	1547466	Cover	..	1
16	1547467	Seal (LH)	..	1
16	1547468	Seal (RH)	..	1
17	320157	Washer	..	2
18	353206	Retaining Ring	..	2
19	1588247	Screw	..	2
20	**4027451**	**Panel (RH)**	**1**	**1**
21	**1564529**	**Seal**	**2**	**2**
22	**1582072**	**Trim Seal**	**2**	**2**
23	1707678	Liner	1	..
24	**1609707**	**Sound Liner**	**1**	**..**
25	**1609709**	**Sound Liner**	**1**	**..**
26	**1609708**	**Sound Liner**	**1**	**..**
27	**1609706**	**Sound Liner (Diesel)**	**1**	**..**
28	**1531558**	**Insert**	**6**	**6**
29	**a 1480237**	**Nut**	**23**	**23**
29	**b 1480237**	**Nut**	**21**	**21**
30	1530019	Screw	6	6
31	**1544413**	**Plate (LH)**	**1**	**1**
32	**2102558**	**Step Panel (LH)**	**1**	**1**
33	**1596625**	**Seal (LH)**	**1**	**1**
34	**a 4027456**	**Panel (Rear LH)**	**1**	**1**
34	**b** 4027457	Panel (Rear LH)	1	1
35	**1540860**	**Panel (LH)**	**1**	**1**
36	**1581079**	**Plug**	**4**	**4**
37	**1590145**	**Bracket (LH) (Fender Cover)**	**1**	**1**
38	**1563881**	**Cover (LH) (Fender)**	**1**	**1**
39	**1350215**	**Nut**	**4**	**4**

©2014 HYSTER COMPANY

FLOORPLATES AND COVERS

KEY:
A: With Cab
B: With Overhead Guard

NOTE: This parts list contains multiple truck configurations, refer to the KEY to choose the correct QTY column for your truck.

ITEM	PART NO.	DESCRIPTION	QTY A	QTY B
40	**1544153**	**Locknut (Standard Tread, Wide Tread)**	**4**	**4**
40	**1544153**	**Locknut (Dual Tread)**	**6**	**6**
41	**2069008**	**Mud Flap (Standard Tread)**	**2**	**2**
42	2069544	Mud Flap (LH, Wide Tread)	1	1
42	2069545	Mud Flap (RH, Wide Tread)	1	1
42	2069550	Mud Flap (LH, Dual Tread)	1	1
42	2069954	Mud Flap (RH, Dual Tread)	1	1
43	**a 1583611**	**Capscrew**	**23**	**23**
43	**b 1583611**	**Capscrew**	**21**	**21**
44	1691216	Seal (Wet Brake)	1	1
44	1580093	Seal (Dry Brake)	1	1
45	1597051	Damping Sheet (LH Front Panel)	1	1
46	1597070	Damping Sheet (RH Front Panel)	1	1
47	**1540870**	**Panel (RH)**	**1**	**1**
48	**1590147**	**Bracket (RH) (Fender Cover)**	**1**	**1**
49	**1563883**	**Cover (RH) (Fender)**	**1**	**1**
50	1708834	Liner	1	..
51	1708835	Liner	1	..

FOOTNOTES:

a Gasoline and Diesel

b LPG

©2014 HYSTER COMPANY

NOTES

©2014 HYSTER COMPANY

DASH PANEL AND STEERING COLUMN COVER (FIGURE 1-5)

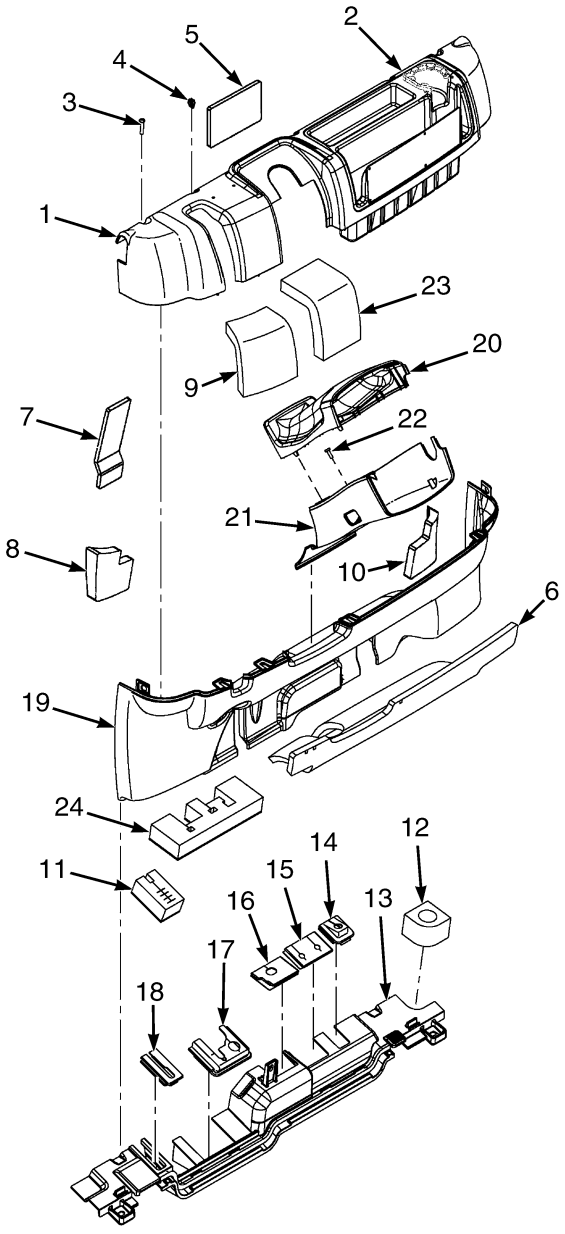

©2014 HYSTER COMPANY

DASH PANEL AND STEERING COLUMN COVER

KEY:
A: With Cab
B: With Overhead Guard

NOTE: This parts list contains multiple truck configurations, refer to the KEY to choose the correct QTY column for your truck.

ITEM	PART NO.	DESCRIPTION	QTY A	QTY B
1	**1517420**	**Dash Panel (Manual Valve)**	**1**	**1**
1	1517421	Dash Panel (Electronic Valve)	1	1
2	**2070975**	**Cup Holder**	**1**	**1**
3	2071261	Capscrew	5	5
4	**2065667**	**Clip**	**6**	**6**
5	**1616484**	**Sound Liner**	**1**	**..**
6	**1672722**	**Sound Liner**	**1**	**..**
7	**1616485**	**Sound Liner**	**1**	**..**
8	**1616480**	**Sound Liner**	**1**	**..**
9	**1672723**	**Sound Liner**	**1**	**..**
10	**1616481**	**Sound Liner**	**1**	**..**
11	**1705878**	**Liner**	**1**	**1**
12	**1530135**	**Grommet**	**1**	**1**
13	**1618992**	**Plate**	**1**	**1**
13	**1529427**	**Seal**	**1**	**1**
14	**2069464**	**Seal**	**1**	**..**
15	**2096903**	**Seal (Manual Valve)**	**1**	**..**
15	2065826	Seal (Electronic Valve)	1	..
16	**2096902**	**Seal (Manual Valve)**	**1**	**..**
16	2065827	Seal (Electronic Valve)	1	..
17	2065797	Seal	1	..
18	**2065796**	**Seal**	**1**	**..**
19	**2071595**	**Panel (Single Brake Pedal)**	**1**	**1**
19	2071596	Panel (Dual Brake Pedal)	1	1
20	**2098330**	**Cover (Steering Column Upper)**	**1**	**1**
21	**2065666**	**Cover (Steering Column Lower)**	**1**	**1**
22	**2027655**	**Screw**	**2**	**2**
23	**1672724**	**Sound Liner**	**1**	**..**
24	1705891	Liner (Dry Brake)	1	..
24	**1705892**	**Liner (Wet Brake)**	**1**	**..**

©2014 HYSTER COMPANY

FENDER EXTENSIONS (FIGURE 1-6)

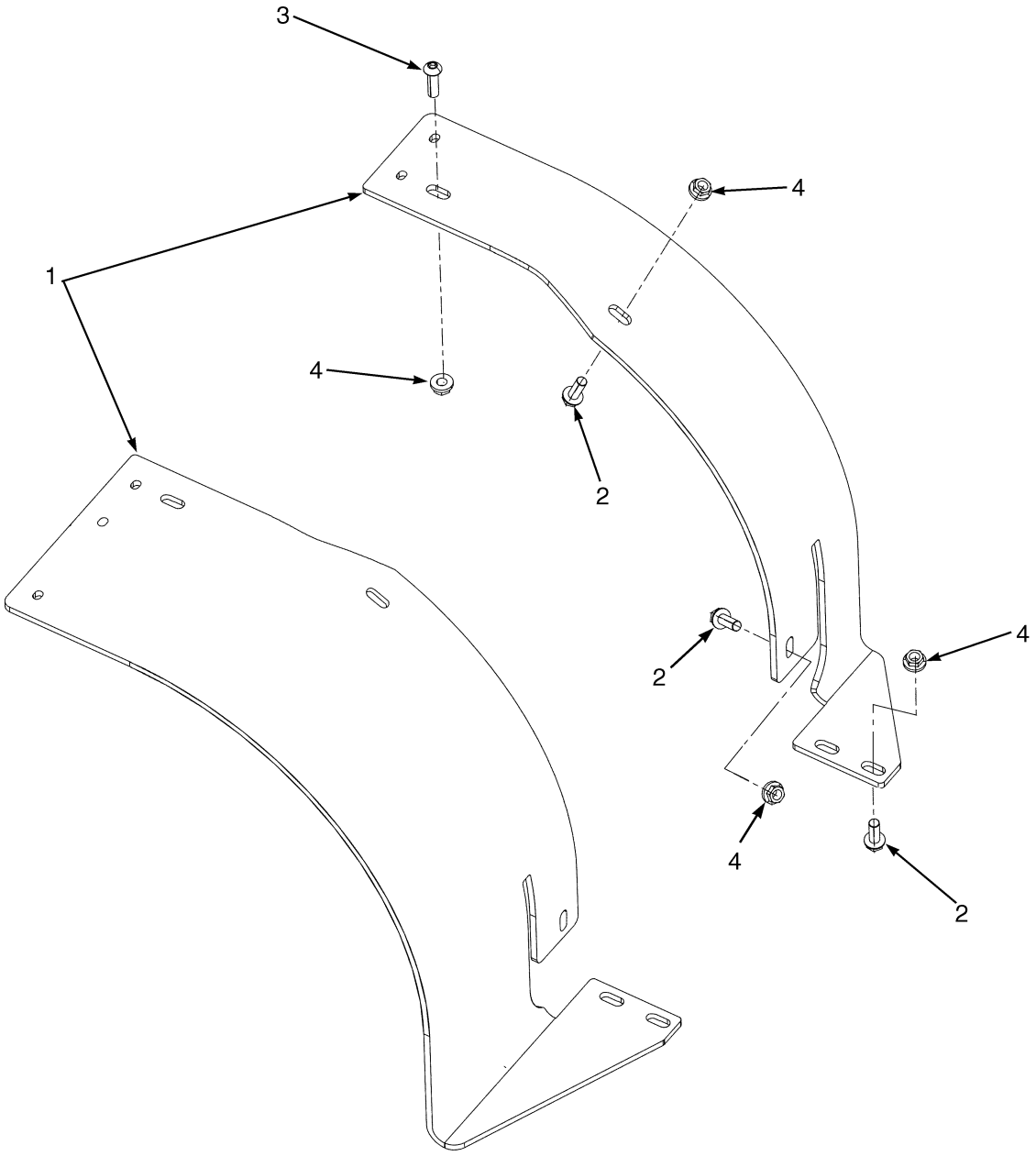

HP120835

©2014 HYSTER COMPANY

FENDER EXTENSIONS

ITEM	PART NO.	DESCRIPTION	QTY
1	1562359	Fender (Wide) (LH)	1
1	1562361	Fender (Dual) (LH)	1
1	1562360	Fender (Wide) (RH)	1
1	1562362	Fender (Dual) (RH)	1
2	1586630	Capscrew	8
3	2076289	Capscrew	2
4	1586432	Nut	10

©2014 HYSTER COMPANY

COWL MOUNT (FIGURE 1-7)

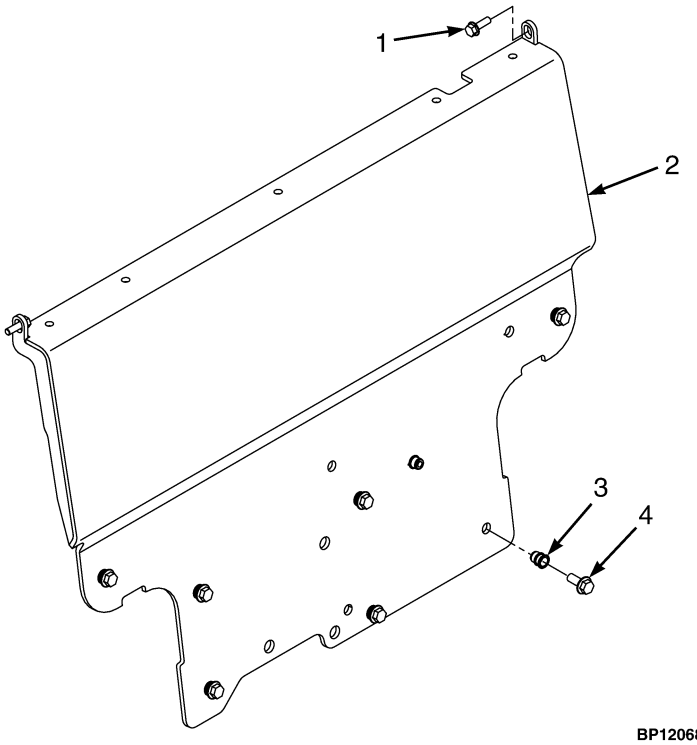

BP120684

ITEM	PART NO.	DESCRIPTION	QTY
1	**1583611**	**Capscrew**	**2**
1	**1510113**	**Capscrew (Optional)**	**2**
2	**4014340**	**Cowl**	**1**
3	**1640776**	**Insert**	**7**
3	1581567	Nut (Optional)	7
3	320160	Washer (Optional)	7
4	**1586629**	**Capscrew**	**7**

©2014 HYSTER COMPANY

HEATER HOSES (FIGURE 1-8)

MAZDA, GASOLINE

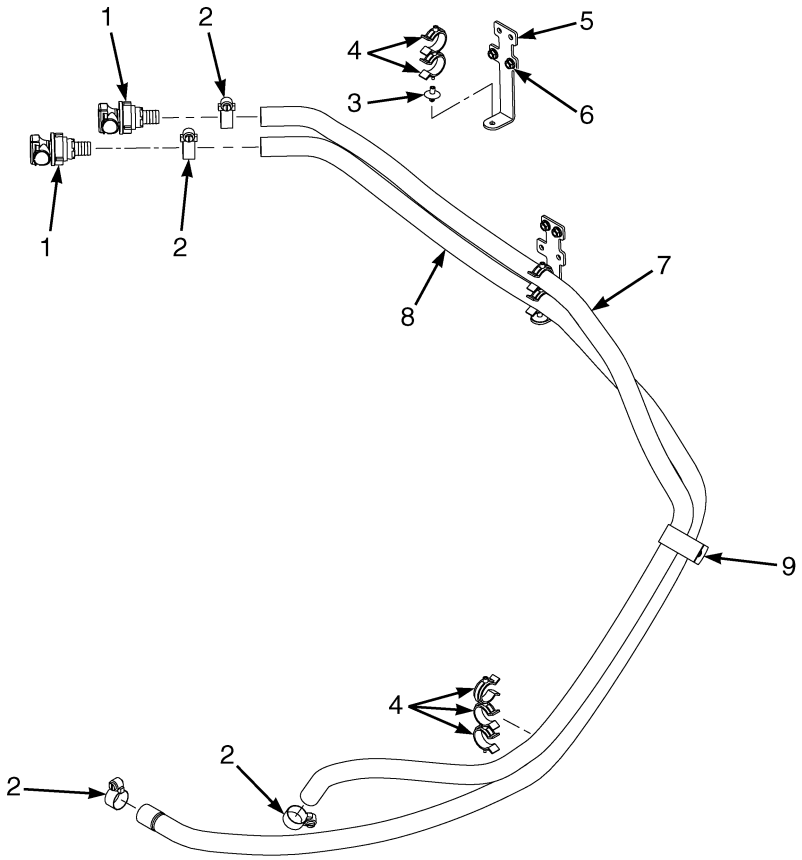

BP120966

ITEM	PART NO.	DESCRIPTION	QTY
1	**1598327**	**Connector (Female)**	**2**
2	**130845**	**Clamp**	**4**
3	**1543842**	**Clamp**	**2**
4	**1569465**	**Clamp (Swivel)**	**7**
5	**1588833**	**Bracket**	**2**
6	**1514429**	**Nut**	**4**
7	2071001	Hose	1
8	2071002	Hose	1
9	**1562648**	**Clip**	**1**

©2014 HYSTER COMPANY

HEATER HOSES (FIGURE 1-9)

MAZDA, LPG

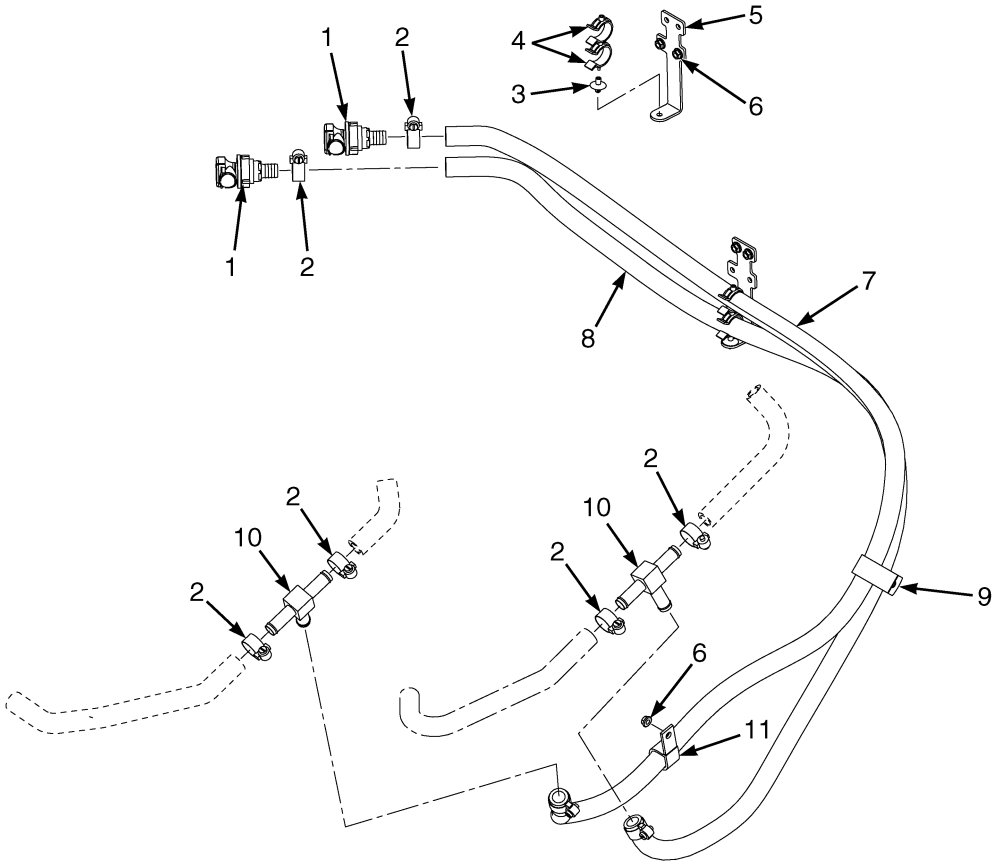

BP120967

ITEM	PART NO.	DESCRIPTION	QTY
1	**1598327**	**Connector (Female)**	**2**
2	**130845**	**Clamp**	**8**
3	**1543842**	**Clamp**	**2**
4	**1569465**	**Clamp (Swivel)**	**4**
5	**1588833**	**Bracket**	**2**
6	**1514429**	**Nut**	**5**
7	2098119	Hose	1
8	2098120	Hose	1
9	**1562648**	**Clip**	**1**
10	366000	Fitting	2
11	140612	Hose Clamp	1

©2014 HYSTER COMPANY

HEATER HOSES (FIGURE 1-10)

YANMAR DIESEL

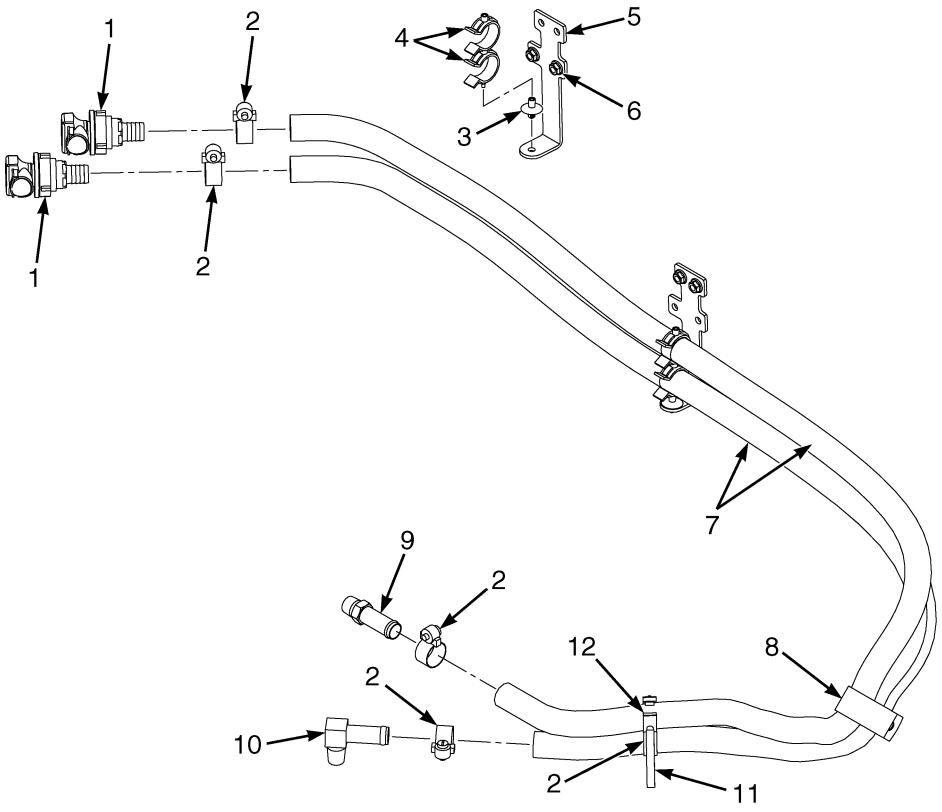

BP120970

ITEM	PART NO.	DESCRIPTION	QTY
1	1598327	Connector (Female)	2
2	130845	Clamp	4
3	1543842	Clamp	2
4	1569465	Clamp (Swivel)	5
5	1588833	Bracket	2
6	1514429	Nut	4
7	2070769	Hose	2
8	1562648	Clip	1
9	138710	Fitting	1
10	125305	Fitting	1
11	1502061	Clamp	1
12	1612617	Clamp (Swivel)	1

©2014 HYSTER COMPANY

HEATER HOSE (FIGURE 1-11)
2.5L KUBOTA LPG

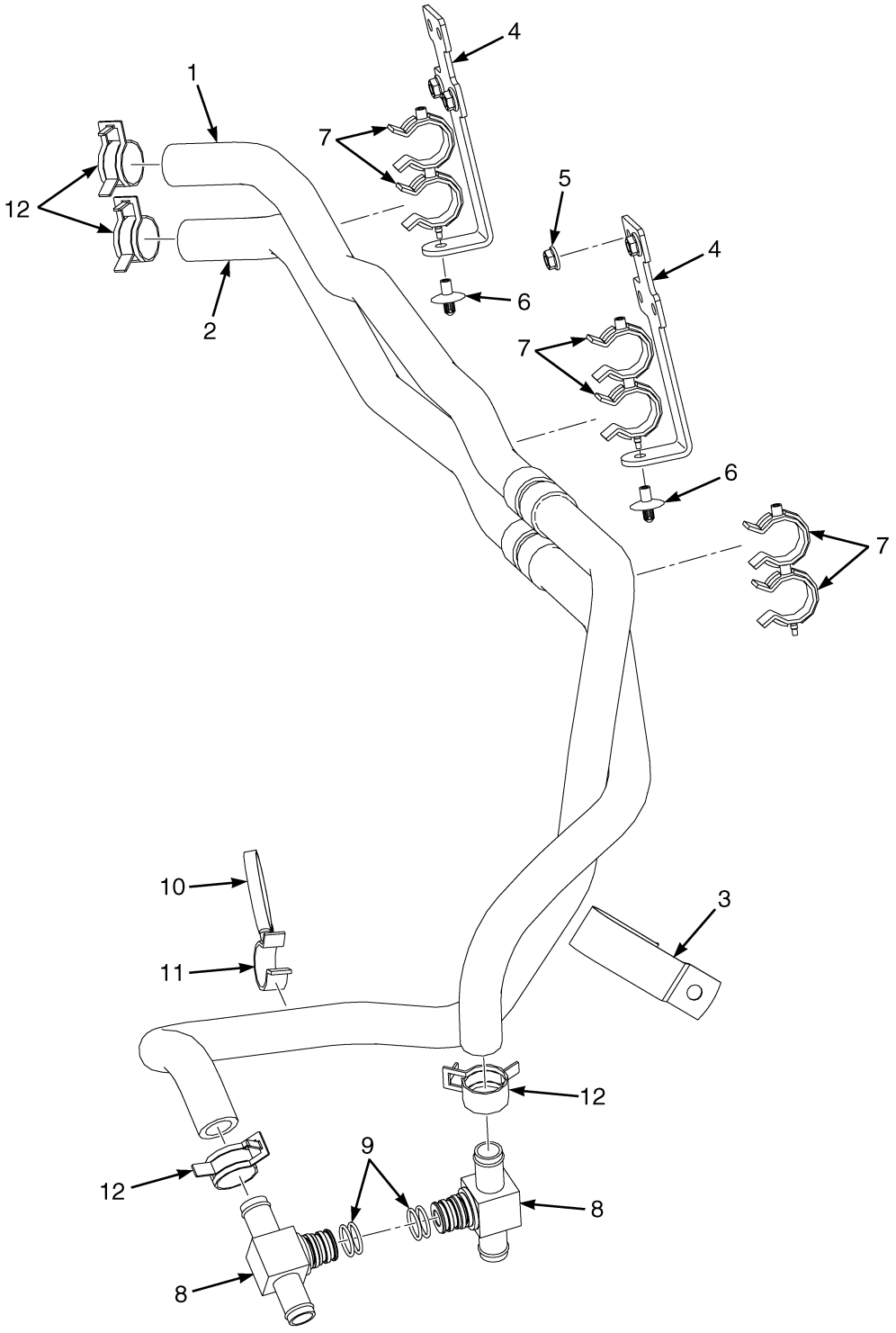

BP121261

©2014 HYSTER COMPANY

HEATER HOSE
2.5L KUBOTA LPG

ITEM	PART NO.	DESCRIPTION	QTY
1	4628918	Hose Assy	1
2	4628919	Hose Assy	1
3	1562648	Clip	1
4	1588833	Bracket	2
5	1514429	Nut	4
6	1543842	Clamp	2
7	1569465	Clamp (Swivel)	6
8	4066055	Fitting	2
9	118389	O-Ring	4
10	1502061	Clamp	1
11	1542436	Clamp (Swivel)	1
12	1501994	Hose Clamp	4

©2014 HYSTER COMPANY

SEAT (FIGURE 1-12)

NON SUSPENSION — WITH MANUAL HYDRAULIC CONTROLS

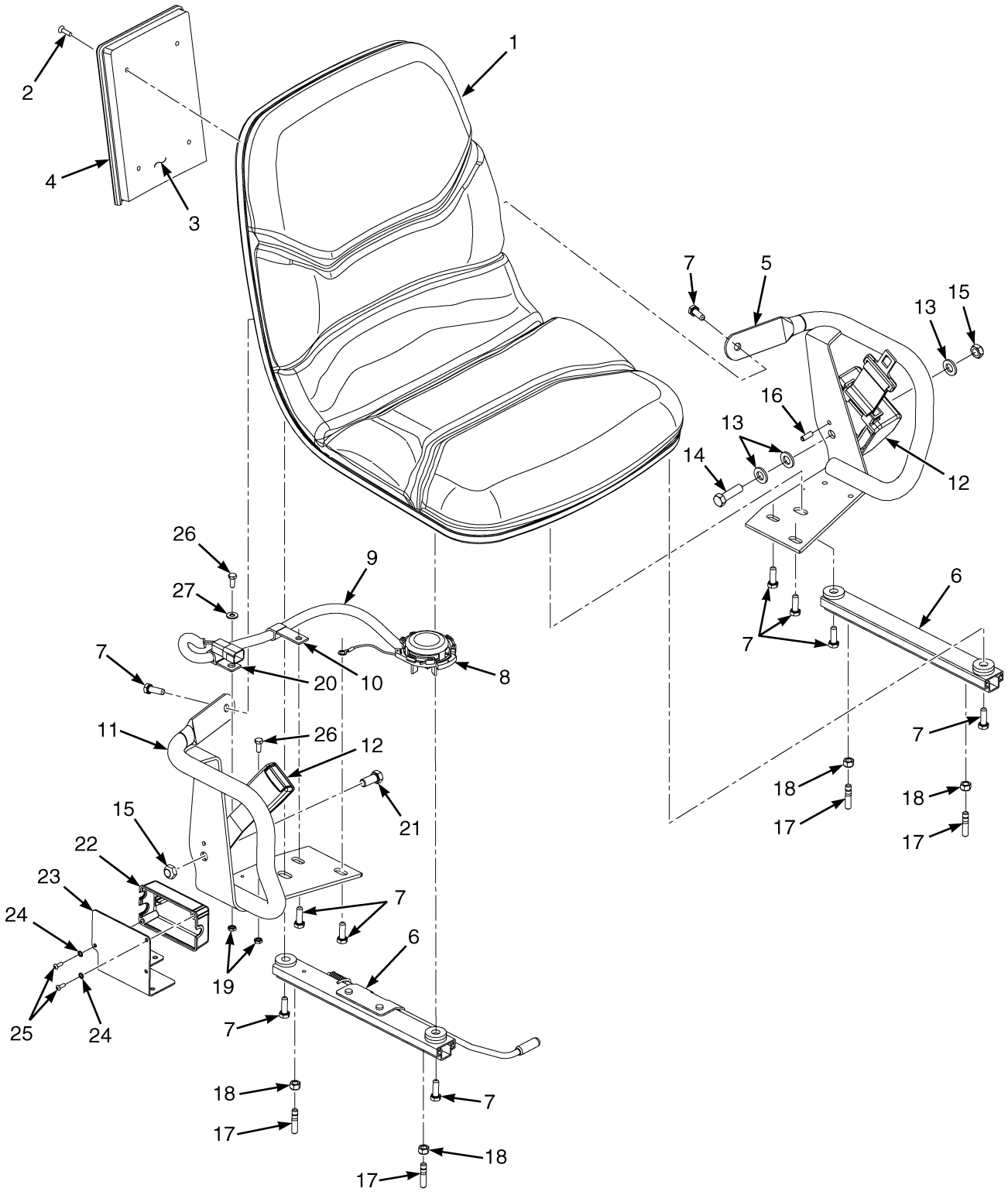

©2014 HYSTER COMPANY

SEAT

NON SUSPENSION – WITH MANUAL HYDRAULIC CONTROLS

ITEM	PART NO.	DESCRIPTION	QTY
	4615812	Seat-Non Suspension (Vinyl)	1
1	4615813	Seat-Non Suspension (Base)	1
2	296463	Screw	4
3	4030278	Box (Operator Manual Storage)	1
4	4030279	Cover (Manual Storage Box)	1
5	. . . . .	Hip Restraint (LH)	1
6	4618438	Seat Rail (Assembly)	2
7	136749	Screw	10
8	4615811	Sensor (Operator Presence)	1
9	4615969	Wire Harness (Operator Presence System)	1
10	1479453	Clamp	1
11	. . . . .	Hip Restraint (RH)	1
12	1598504	Kit-Seat Belt (Black)	1
12	1636120	Kit-Red Seat Belt	1
12	4053079	Seat Belt (High Visibility with Interlock)	1
13	1581852	Washer	3
14	221536	Capscrew	1
15	221353	Locknut	2
16	19901	Roll Pin	1
17	1677286	Stud	4
18	313828	Nut (M8 x 1.25)	4
19	1593334	Nut (M6 x 1)	2
20	272133	Clamp	1
21	221530	Capscrew	1
22	2107969	Cover (Seat-Side Electrical)	1
23	4007891	Cover Plate	1
24	296357	Washer	2
25	1694830	Capscrew (M4 x 0.7 x 12)	2
26	292500	Capscrew (M6 x 1 x 16)	2
27	15127	Washer	1

©2014 HYSTER COMPANY

SEAT (FIGURE 1-13)

SEMI SUSPENSION — WITH MANUAL AND ELECTRO-HYDRAULIC CONTROLS

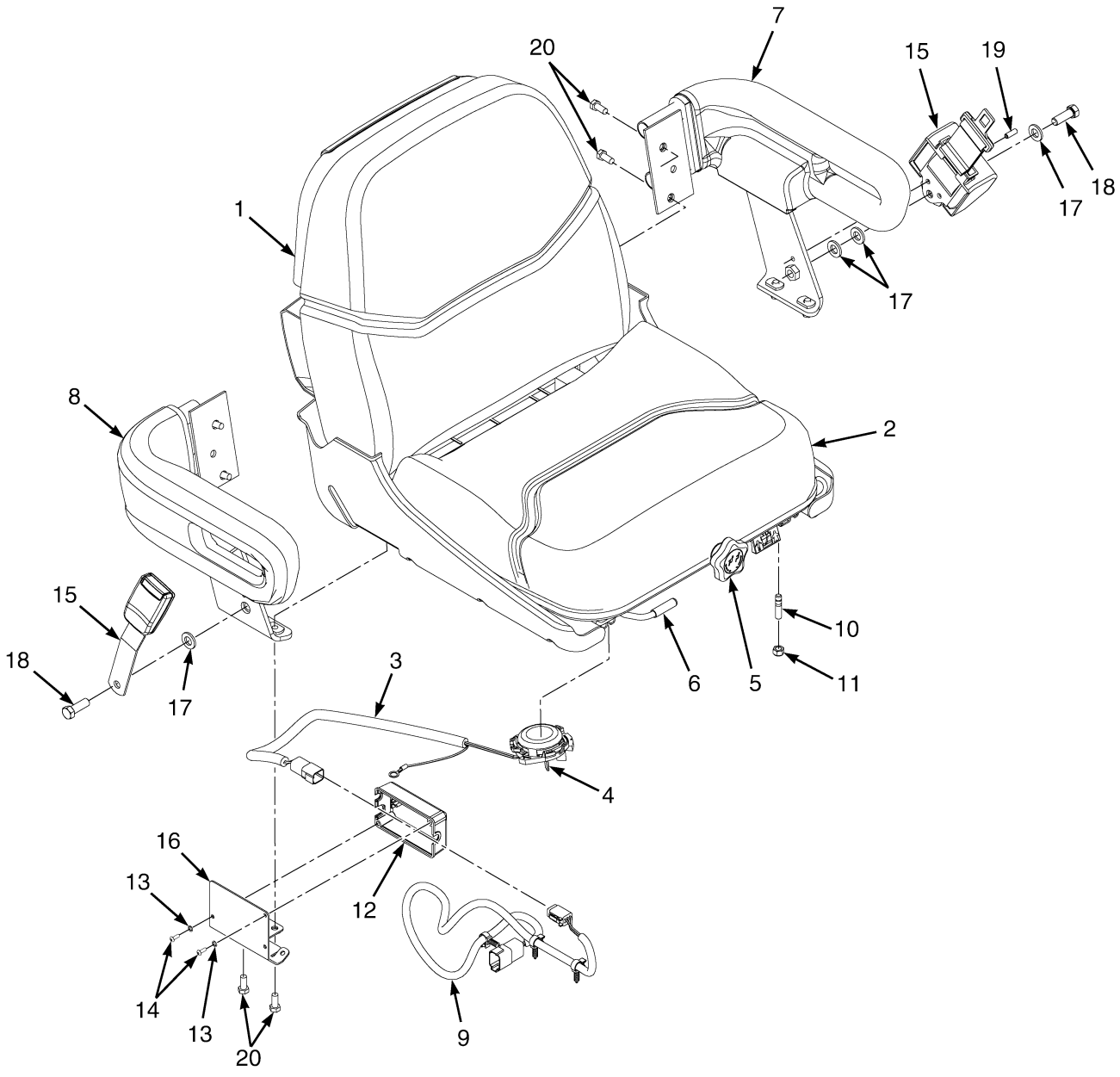

©2014 HYSTER COMPANY

SEAT

SEMI SUSPENSION – WITH MANUAL AND ELECTRO-HYDRAULIC CONTROLS

KEY:
A: w/ Electro-Hydraulic Control Arm
B: w/o Electro-Hydraulic Control Arm

ITEM	PART NO.	DESCRIPTION	QTY A	QTY B
	4005807	Seat-Semi Suspension (Vinyl)	1	..
	4005808	Seat-Semi Suspension (Cloth)	1	..
	4601836	Seat-Semi Suspension (Vinyl)	..	1
	4601837	Seat-Semi Suspension (Cloth)	..	1
1	**a** 1382111	Seat Cushion (Back Cushion) (Vinyl)	1	1
1	**a** 1382113	Seat Cushion (Back Cushion) (Cloth)	1	1
2	**a** 1382112	Seat Cushion (Vinyl)	1	1
2	**a** 1382114	Seat Cushion (Cloth)	1	1
3	**a** 1709876	Sensor (Operator Presence) (With Wire Harness)	1	1
4	**a** 4002682	Bracket (Operator Presence Sensor)	1	1
5	**a** 1563227	Knob	1	1
6	**a** 1690995	Kit-Seat Rail	1	1
7	**a** 1563224	Hip Restraint (LH)	1	1
8	**a** 1563225	Hip Restraint (RH)	..	1
9	**a** 4013095	Wire Harness	1	1
10	1677286	Stud	4	4
11	313828	Nut	4	4
12	2107969	Cover (Seat-Side Electrical)	1	1
13	296357	Washer	2	2
14	1694830	Capscrew	2	2
15	1636120	Kit-Red Seat Belt	1	1
15	1598504	Kit-Seat Belt (Black)	1	1
15	4053079	Seat Belt (High Visibility with Interlock)	1	1
16	4005805	Cover Plate (Seat Side Electrical)	1	..
16	4008420	Cover Plate (Seat Side Electrical)	..	1
17	1581852	Washer	5	4
18	221533	Capscrew	1	2
18	221530	Capscrew (RH)	1	..
19	19901	Roll Pin	1	1
20	. . . . .	Capscrew	8	8
	ab 1362049	Kit-Shock Absorber	1	1
	ab 1362058	Kit-Manual Holder	1	1
	bc 4041515	Seat Pan	..	1
	ab 4014598	Bracket (RH Armrest)	1	..
	b	Armrest w/ Electro-Hydraulic Mini-Levers (RH) (☞Figure 1-18)	1	..
	b 221353	Locknut (For use with Item 18)	1	..

FOOTNOTES:

a Included With Seat
b Not Illustrated
c Seat Pan is Part of Semi Suspension Seat P/N 4601836 and P/N 4601837

©2014 HYSTER COMPANY

FULL SUSPENSION SEAT (FIGURE 1-14)
WITH ELECTRO-HYDRAULIC CONTROLS — SHEET 1 OF 3

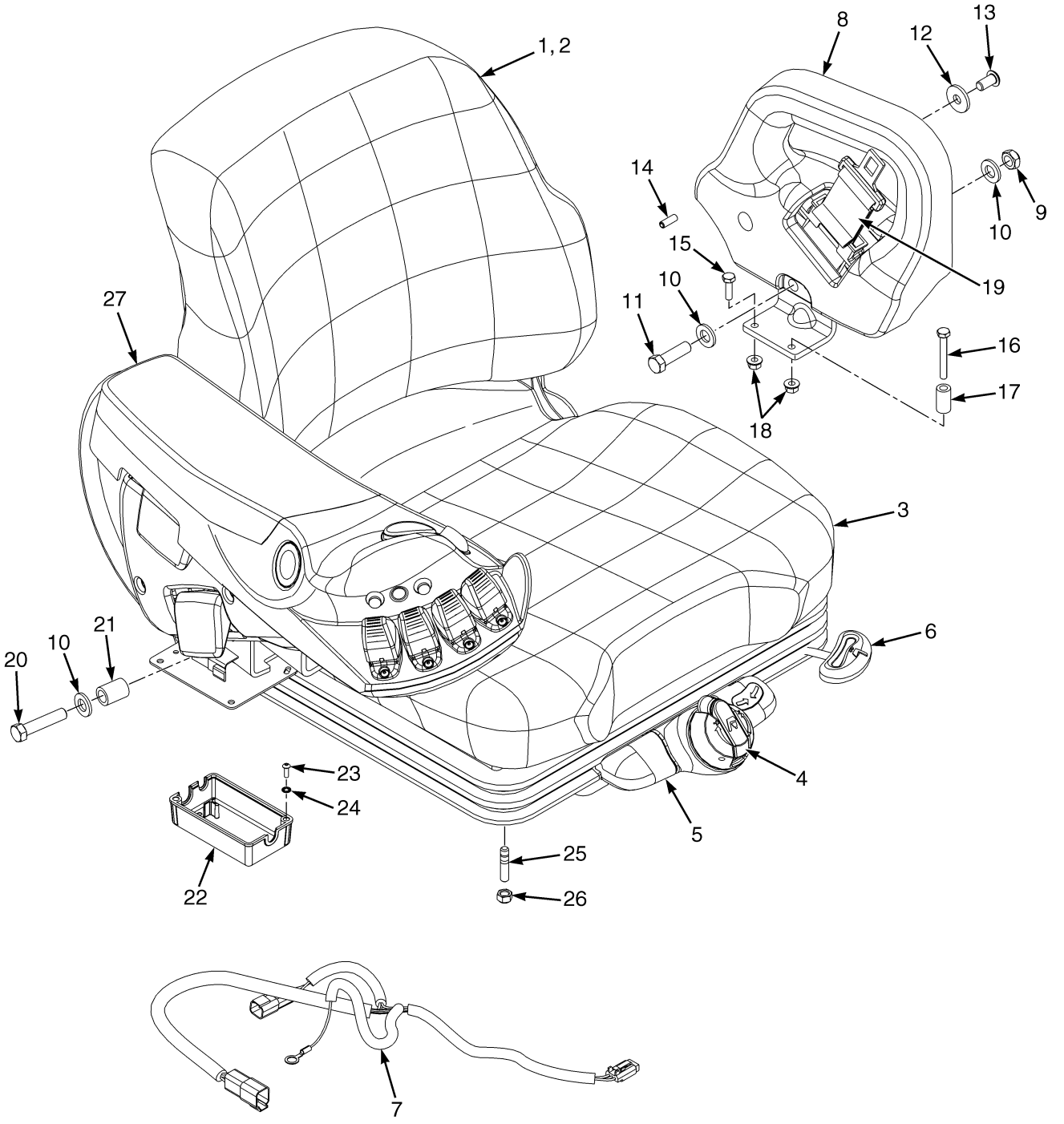

©2014 HYSTER COMPANY

FULL SUSPENSION SEAT
WITH ELECTRO-HYDRAULIC CONTROLS – SHEET 1 OF 3

ITEM	PART NO.	DESCRIPTION	QTY
	4603382	**Seat-Full Suspension (Vinyl) (Non-Swivel)**	**1**
	4603383	Seat-Full Suspension (Cloth) (Non-Swivel)	1
	4603384	Seat-Full Suspension (Vinyl) (Swivel)	1
	4603385	Seat-Full Suspension (Cloth) (Swivel)	1
1	**b 1703903**	**Kit-Cushion (Seat and Back, Vinyl)**	**1**
1	**b** 1703900	Kit-Cushion (Seat and Back, Cloth)	1
2	**b 1703901**	**Kit-Cushion (Back Cushion, Vinyl)**	**1**
2	**b** 1703898	Kit-Cushion (Back Cushion, Cloth)	1
2	**. . . . .**	**Back Cushion**	**1**
2	**. . . . .**	**Screw**	**2**
3	**b 1703902**	**Kit-Seat Cushion (Vinyl)**	**1**
3	**b** 1703899	Kit-Seat Cushion (Cloth)	1
3	**. . . . .**	**Seat Cushion**	**1**
3	**. . . . .**	**Spring**	**2**
3	**. . . . .**	**Cotter Pin**	**2**
4	**b 1703892**	**Kit-Weight Adjuster (☞Figure 1-17)**	**1**
5	**b 1703893**	**Kit-Service (Front Panel) (Non Swivel) (☞Figure 1-17)**	**1**
5	**b** 1703894	Kit-Service (Front Panel) (With Swivel) (☞Figure 1-17)	1
6	**b** 1703904	Kit-Seat Rail (With Swivel)	1
6	**. . . . .**	**Locking Rail**	**1**
6	**. . . . .**	**Slave Rail**	**1**
6	**. . . . .**	**Bolt**	**4**
6	**. . . . .**	**Nut**	**4**
7	**b 4013095**	**Wire Harness**	**1**
7	**b 1563208**	**Sensor (Operator Presence)**	**1**
8	**4612911**	**Armrest (Left-Hand Side)**	**1**
9	**221353**	**Locknut**	**1**
10	**1581852**	**Washer**	**AR**
11	**221536**	**Capscrew**	**1**
12	**1512536**	**Washer**	**1**
13	**18735**	**Screw**	**1**
14	**19901**	**Roll Pin**	**1**
15	**18462**	**Capscrew**	**1**
16	**18471**	**Capscrew**	**1**
17	**4007318**	**Spacer**	**1**
18	**169874**	**Nut**	**2**
19	1598504	Kit-Seat Belt (Black)	1
19	1636120	Kit-Red Seat Belt	1
19	4053079	Seat Belt (High Visibility with Interlock)	1
20	221542	Capscrew	1
21	1694700	Spacer	1
22	**2107969**	**Cover (Seat-Side Electrical)**	**1**
23	**1694830**	**Capscrew**	**2**
24	**296357**	**Washer**	**2**
25	**1677286**	**Stud**	**4**
26	**313828**	**Nut**	**4**
27	**. . . . .**	**Armrest With Electronic Controls (☞Figure 1-18)**	**1**
27	4005010	Armrest (Slider for Mini Lever) (☞Figure 1-16)	1
27	**. . . . .**	**Mini-Lever Modules (☞Figure 1-19)**	**1**
	bc 1470155	**Information Case (Kit)**	**1**

©2014 HYSTER COMPANY

FULL SUSPENSION SEAT
WITH ELECTRO-HYDRAULIC CONTROLS – SHEET 1 OF 3

ITEM	PART NO.	DESCRIPTION	QTY
	bc 4601499	Wire Harness (Seat Jumper)	1
	bc 4027341	**Bracket (Angle Controller) .....**	**1**
	bc 1703895	**Kit-Service Internal Tether-80 MM Travel .....**	**1**
	bc 1703896	Kit-Service Internal Tether-56 MM Travel	1
	bc 1703897	Kit-Service Internal Tether-40 MM Travel	1
	a 4036586	Kit -Seat Suspension without Swivel (Includes Items 4-5) (☞Figure 1-17).....	1
	a 4036587	Kit -Seat Suspension with Swivel (Includes Items 4-5) (☞Figure 1-17).....	1

FOOTNOTES:

a Also Includes Tether and 1703891 Kit-Recliner on Sheet 2
b Included With Seat
c Not Illustrated

©2014 HYSTER COMPANY

NOTES

©2014 HYSTER COMPANY

FULL SUSPENSION SEAT (FIGURE 1-15)
WITH MANUAL HYDRAULIC CONTROLS — SHEET 1 OF 3

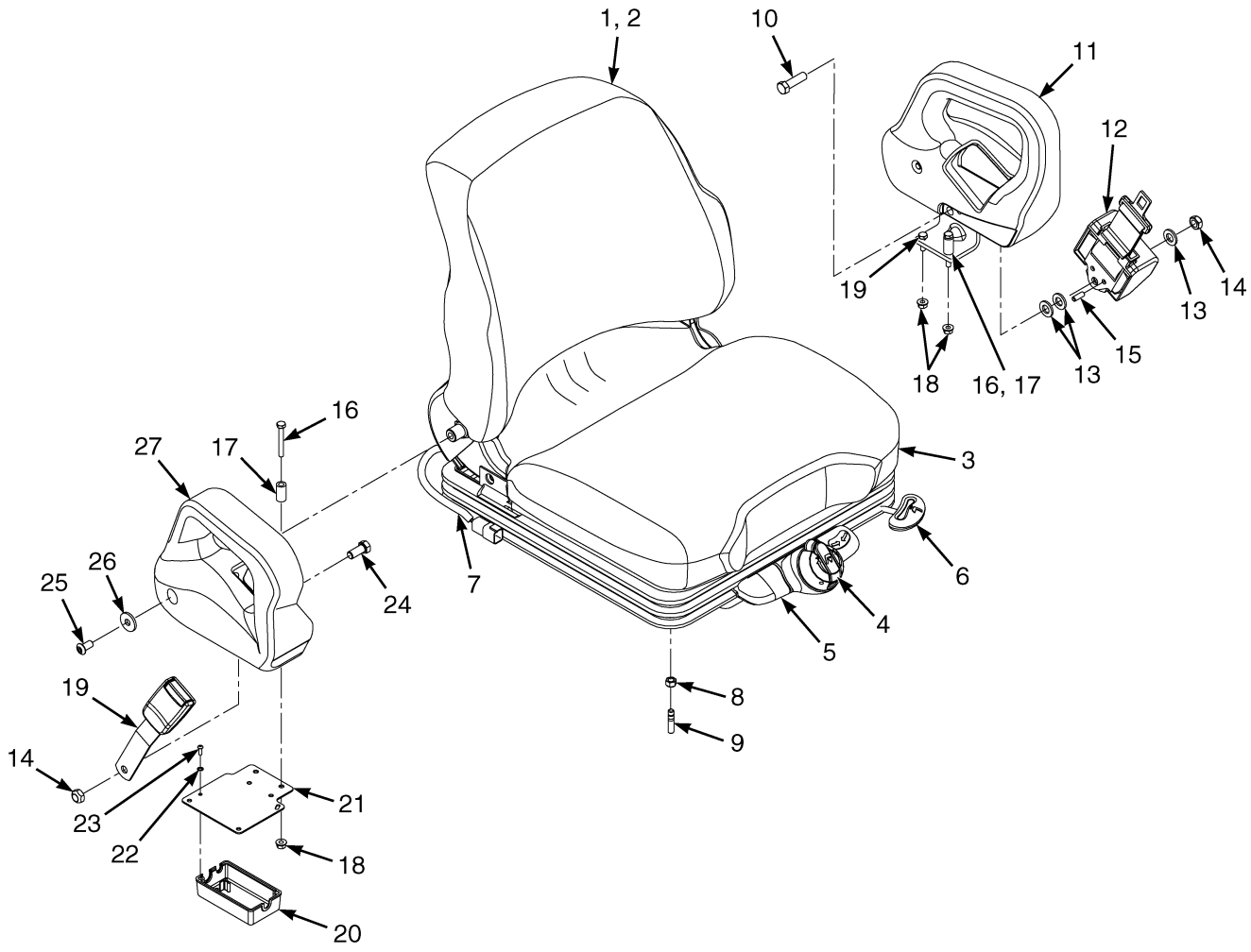

©2014 HYSTER COMPANY

FULL SUSPENSION SEAT
WITH MANUAL HYDRAULIC CONTROLS – SHEET 1 OF 3

ITEM	PART NO.	DESCRIPTION	QTY
	4603382	**Seat-Full Suspension (Vinyl) (Non-Swivel)**	**1**
	4603383	Seat-Full Suspension (Cloth) (Non-Swivel)	1
	4603384	Seat-Full Suspension (Vinyl) (Swivel)	1
	4603385	Seat-Full Suspension (Cloth) (Swivel)	1
1	**b** 1703900	Kit-Cushion (Seat and Back, Cloth)	1
1	**b 1703903**	**Kit-Cushion (Seat and Back, Vinyl)**	**1**
2	**b 1703901**	**Kit-Cushion (Back Cushion, Vinyl)**	**1**
2	**b** 1703898	Kit-Cushion (Back Cushion, Cloth)	1
2	**. . . . .**	**Back Cushion**	**1**
2	**. . . . .**	**Screw**	**2**
3	**b 1703902**	**Kit-Seat Cushion (Vinyl)**	**1**
3	**b** 1703899	Kit-Seat Cushion (Cloth)	1
3	**. . . . .**	**Seat Cushion**	**1**
3	**. . . . .**	**Spring**	**2**
3	**. . . . .**	**Cotter Pin**	**2**
4	**b 1703892**	**Kit-Weight Adjuster (☞Figure 1-17)**	**1**
5	**b 1703893**	**Kit-Service (Front Panel) (Non Swivel) (☞Figure 1-17)**	**1**
5	**b** 1703894	Kit-Service (Front Panel) (With Swivel) (☞Figure 1-17)	1
6	**b 4043082**	**Kit-Seat Rail**	**1**
6	**. . . . .**	**Locking Rail**	**1**
6	**. . . . .**	**Slave Rail**	**1**
6	**. . . . .**	**Bolt**	**4**
6	**. . . . .**	**Nut**	**4**
7	**b 4013095**	**Wire Harness**	**1**
7	**b 1563208**	**Sensor (Operator Presence)**	**1**
8	**313828**	**Nut**	**4**
9	**1677286**	**Stud**	**4**
10	**221536**	**Capscrew**	**1**
11	**4612911**	**Armrest (Left-Hand Side)**	**1**
12	1598504	Kit-Seat Belt (Black)	1
12	1636120	Kit-Red Seat Belt	1
12	4053079	Seat Belt (High Visibility with Interlock)	1
13	**1581852**	**Washer**	**AR**
14	**221353**	**Locknut**	**2**
15	**19901**	**Roll Pin**	**1**
16	**18471**	**Capscrew**	**2**
17	**4007318**	**Spacer**	**2**
18	**169874**	**Nut**	**4**
19	**18462**	**Capscrew**	**1**
20	**2107969**	**Cover (Seat-Side Electrical)**	**1**
21	**4004776**	**Cover Plate**	**1**
22	**296357**	**Washer**	**2**
23	**1694830**	**Capscrew**	**2**
24	**221530**	**Capscrew**	**1**
25	**18735**	**Screw**	**2**
26	**1512536**	**Washer**	**2**
27	**2099951**	**Armrest (Right-Hand Side)**	**1**
	bc 1470155	**Information Case (Kit)**	**1**
	bc 4601499	Wire Harness (Seat Jumper)	1
	bc 4027341	**Bracket (Angle Controller)**	**1**

©2014 HYSTER COMPANY

FULL SUSPENSION SEAT
WITH MANUAL HYDRAULIC CONTROLS – SHEET 1 OF 3

ITEM	PART NO.	DESCRIPTION	QTY
	bc 1703895	**Kit-Service Internal Tether-80 MM Travel**	**1**
	bc 1703896	Kit-Service Internal Tether-56 MM Travel	1
	bc 1703897	Kit-Service Internal Tether-40 MM Travel	1
	a 4036586	Kit -Seat Suspension without Swivel (Includes Items 4-5) (☞Figure 1-17)	1
	a 4036587	Kit -Seat Suspension with Swivel (Includes Items 4-5) (☞Figure 1-17)	1

FOOTNOTES:

a Also Includes Tether and 1703891 Kit-Recliner on Sheet 2
b Included With Seat
c Not Illustrated

©2014 HYSTER COMPANY

NOTES

©2014 HYSTER COMPANY

FULL SUSPENSION SEAT (FIGURE 1-16)
RECLINER AND DAMPER KITS — SHEET 2 OF 3

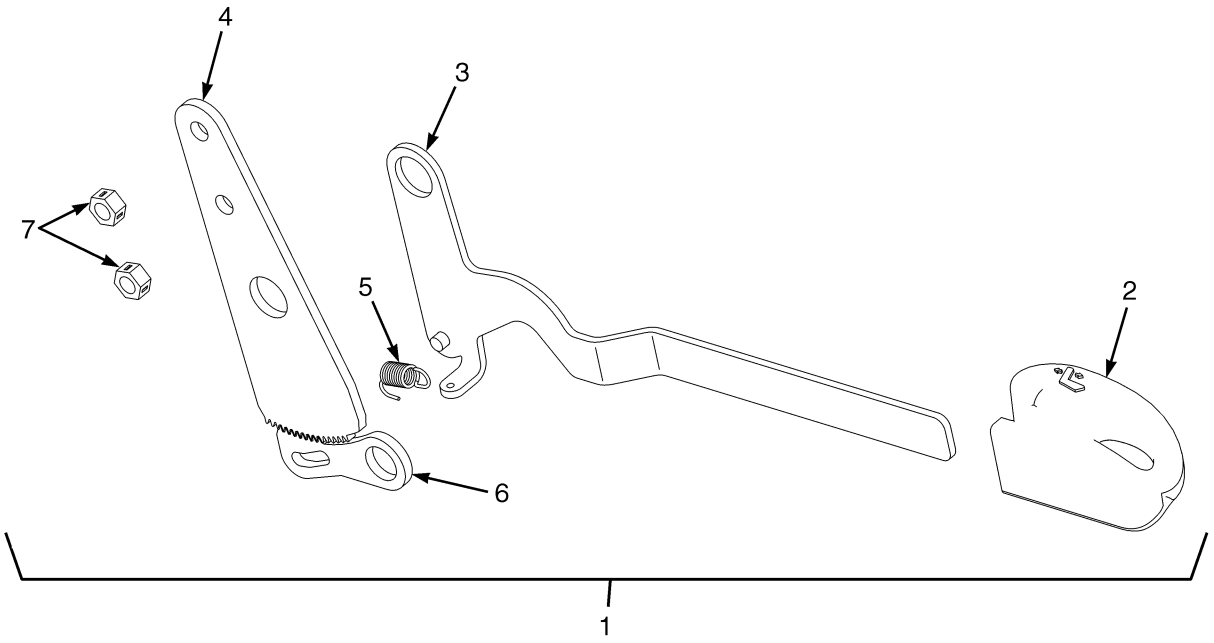

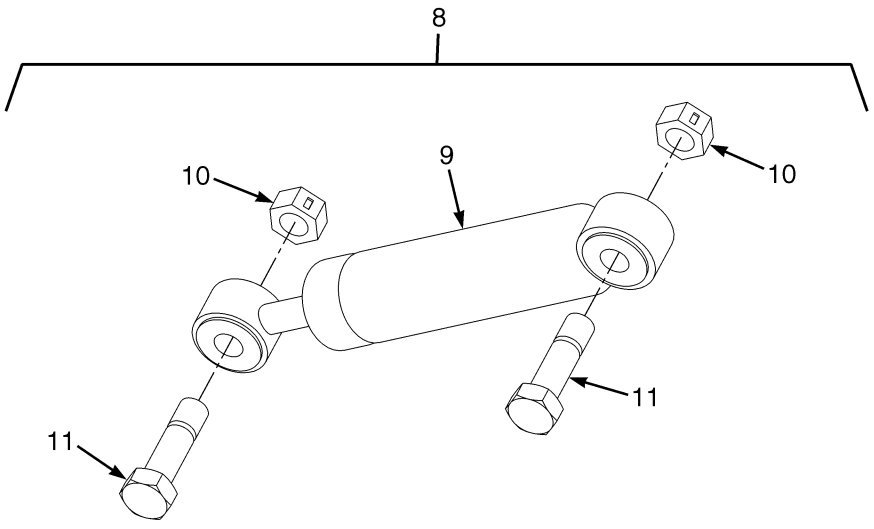

BP120646

©2014 HYSTER COMPANY

FULL SUSPENSION SEAT

RECLINER AND DAMPER KITS – SHEET 2 OF 3

ITEM	PART NO.	DESCRIPTION	QTY
1	b 1703891	Kit-Recliner (Back Seat Adjustment)	1
2	. . . . .	Knob	1
3	. . . . .	Lever	1
4	1482905	Plate	1
5	. . . . .	Spring	1
6	1482906	Latch	1
7	1367150	Nut	2
8	a 1703890	Kit-Damper Service	1
9	1584632	Damper	1
10	1367150	Nut	2
11	1584638	Bolt	2

FOOTNOTES:

a Included With Seat

b Included With Seat and Non Swivel/Swivel Sets

©2014 HYSTER COMPANY

FULL SUSPENSION SEAT (FIGURE 1-17)

SERVICE KITS FOR NON SWIVEL AND SWIVEL — SHEET 3 OF 3

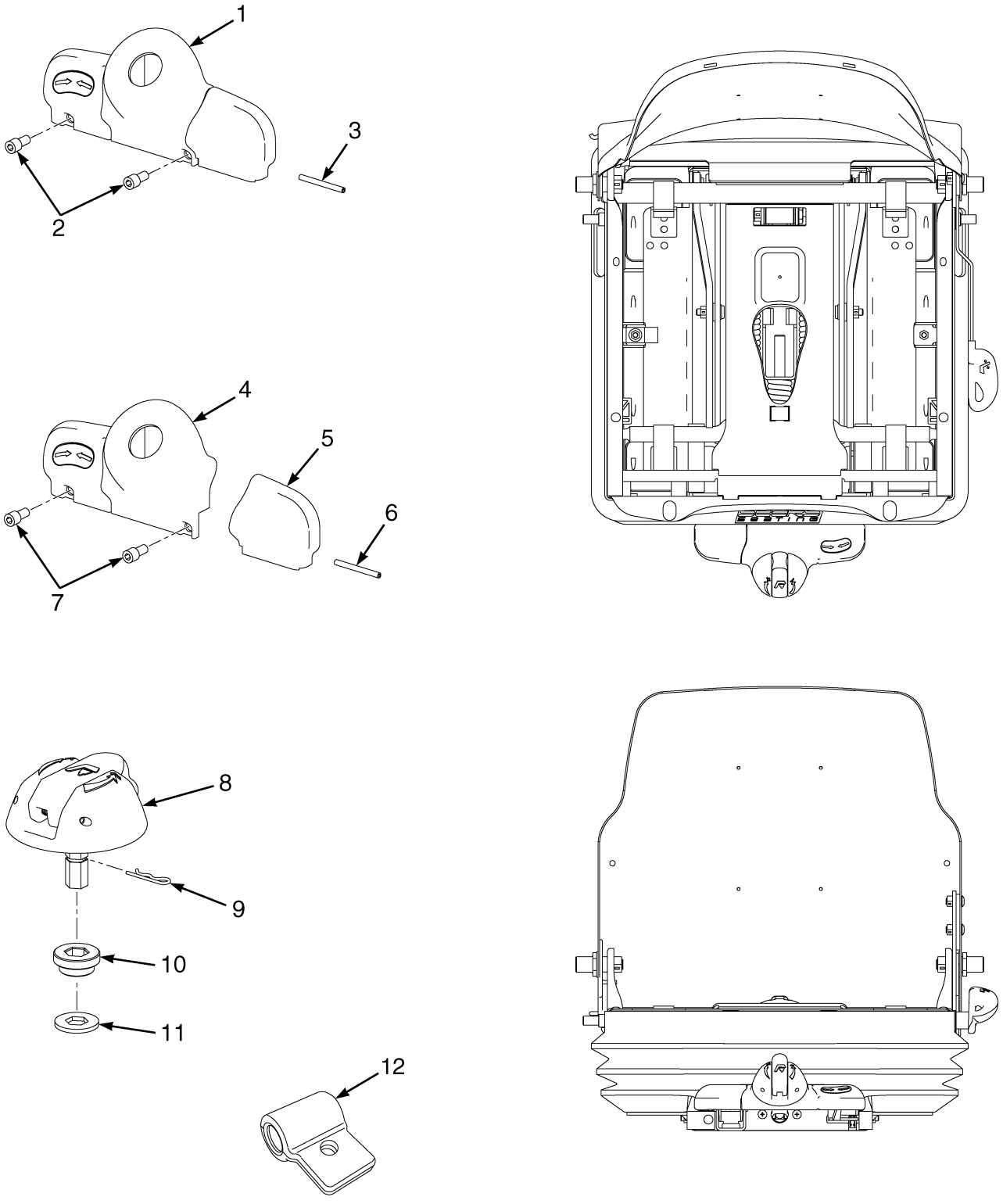

©2014 HYSTER COMPANY

FULL SUSPENSION SEAT

SERVICE KITS FOR NON SWIVEL AND SWIVEL – SHEET 3 OF 3

ITEM	PART NO.	DESCRIPTION	QTY
	a 4036586	Kit -Seat Suspension without Swivel	1
	a 4036587	Kit -Seat Suspension with Swivel	1
1	1703893	Kit-Service (Front Panel) (Non Swivel)	1
1	. . . . .	Front Panel	1
2	. . . . .	Capscrew	2
3	. . . . .	Roll Pin	1
4	1703894	Kit-Service (Front Panel) (With Swivel)	1
4	. . . . .	Front Panel	1
5	. . . . .	Swivel Knob	1
6	. . . . .	Roll Pin	1
7	. . . . .	Capscrew	2
8	1703892	Kit-Weight Adjuster	1
8	. . . . .	Knob	1
9	. . . . .	Cotter Pin	1
10	. . . . .	Bushing	1
11	. . . . .	Washer	1
12	4046492	Lever Spring Pull	2

FOOTNOTES:

a Also includes Recliner and Tether Kits

©2014 HYSTER COMPANY

ARMREST ASSEMBLY (FIGURE 1-18)

MINI-LEVER MODULES — SEMI-SUSPENSION SEAT WITH HIP RESTRAINTS

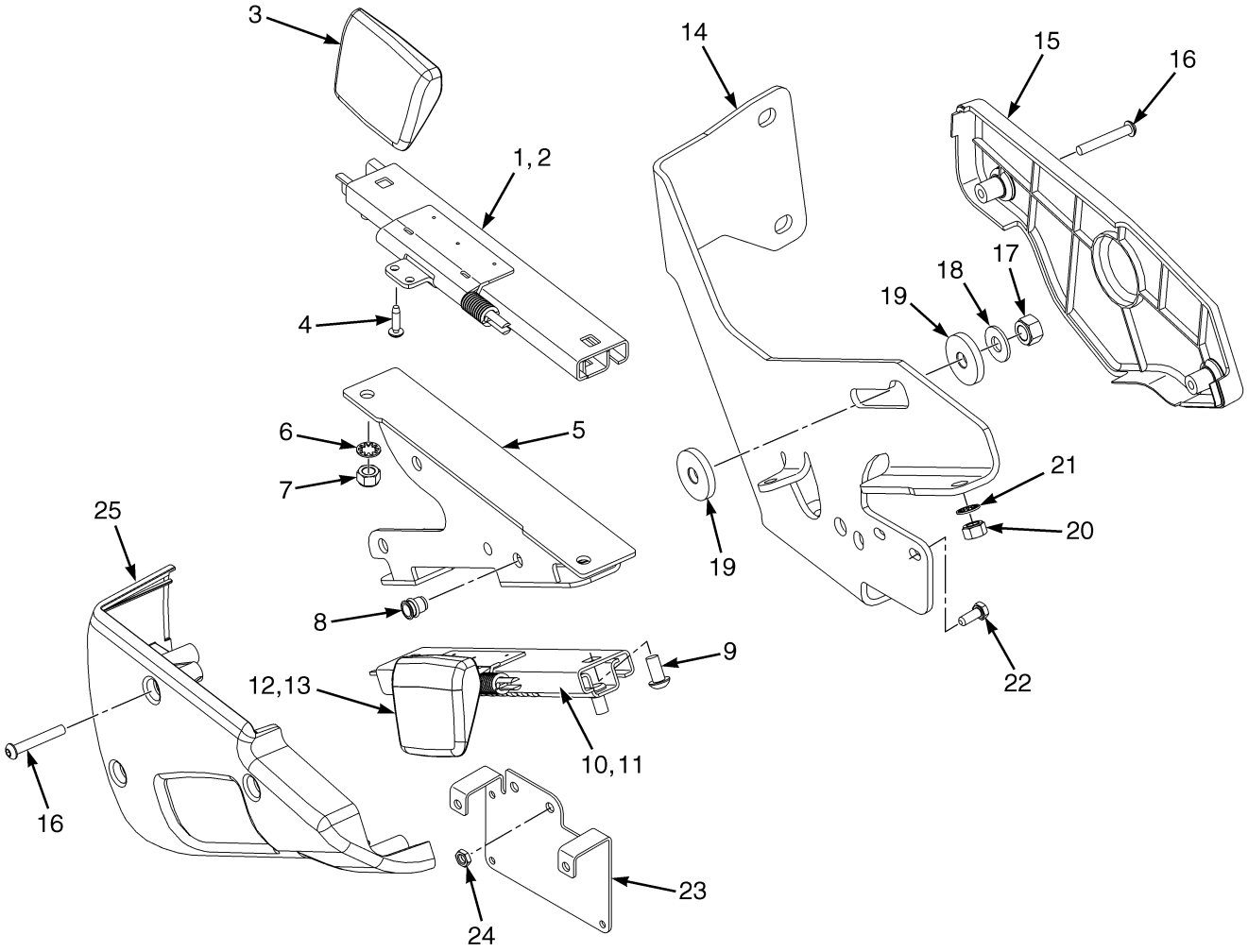

©2014 HYSTER COMPANY

ARMREST ASSEMBLY

MINI-LEVER MODULES – SEMI-SUSPENSION SEAT WITH HIP RESTRAINTS

ITEM	PART NO.	DESCRIPTION	QTY
	4005010	Armrest (Slider for Mini Lever)	1
1	. . . . .	Slider Assembly	1
2	1661511	Armrest (Slider)	1
3	1655865	Handle (Slider)	1
4	227157	Screw	2
5	4007052	Bracket Wldmt	1
6	296360	Washer	4
7	313828	Nut	4
8	1531558	Insert	3
9	296165	Capscrew	2
10	. . . . .	Slider Assembly	1
11	1661511	Armrest (Slider)	1
12	1655865	Handle (Slider)	1
13	227157	Screw	2
14	4004775	Bracket	1
15	4603493	Cover	1
16	2062875	Capscrew	5
17	316826	Nut	1
18	320160	Washer	1
19	1650640	Washer	2
20	313828	Nut	2
21	296360	Washer	2
22	292500	Capscrew	2
23	4005805	Cover Plate	1
24	1593334	Nut	2
25	4603492	Cover	1

©2014 HYSTER COMPANY

ARMREST ASSEMBLY (FIGURE 1-19)
MINI-LEVER MODULES — FULL SUSPENSION SEAT

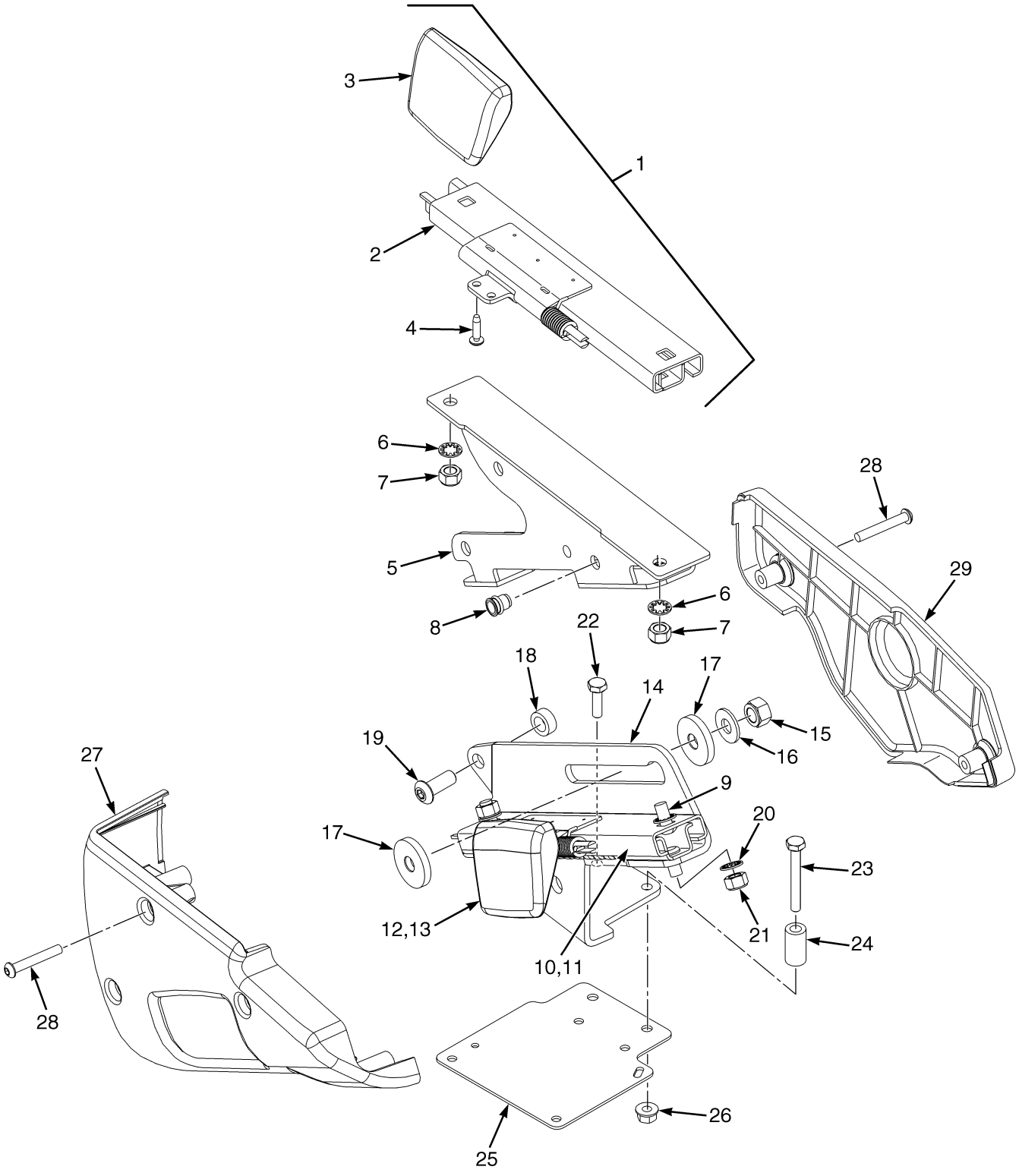

BP120701

©2014 HYSTER COMPANY

ARMREST ASSEMBLY
MINI-LEVER MODULES – FULL SUSPENSION SEAT

ITEM	PART NO.	DESCRIPTION	QTY
	4005010	Armrest (Slider for Mini Lever)	1
1	. . . . .	Slider Assembly	1
2	1661511	Armrest (Slider)	1
3	1655865	Handle (Slider)	1
4	227157	Screw	2
5	4007052	Bracket Wldmt	1
6	296360	Washer	4
7	313828	Nut	4
8	1531558	Insert	3
9	296165	Capscrew	2
10	. . . . .	Slider Assembly	1
11	1661511	Armrest (Slider)	1
12	1655865	Handle (Slider)	1
13	227157	Screw	2
14	4004775	Bracket	1
15	316826	Nut	1
16	320160	Washer	1
17	1650640	Washer	2
18	4007319	Spacer	1
19	18738	Capscrew	1
20	296360	Washer	2
21	313828	Nut	2
22	18462	Capscrew	1
23	18471	Capscrew	1
24	4007318	Spacer	1
25	4004776	Cover Plate	1
26	169874	Nut	2
27	4603492	Cover	1
28	2062875	Capscrew	5
29	4603493	Cover	1

©2014 HYSTER COMPANY

LOAD BACKREST EXTENSION (FIGURE 1-20)

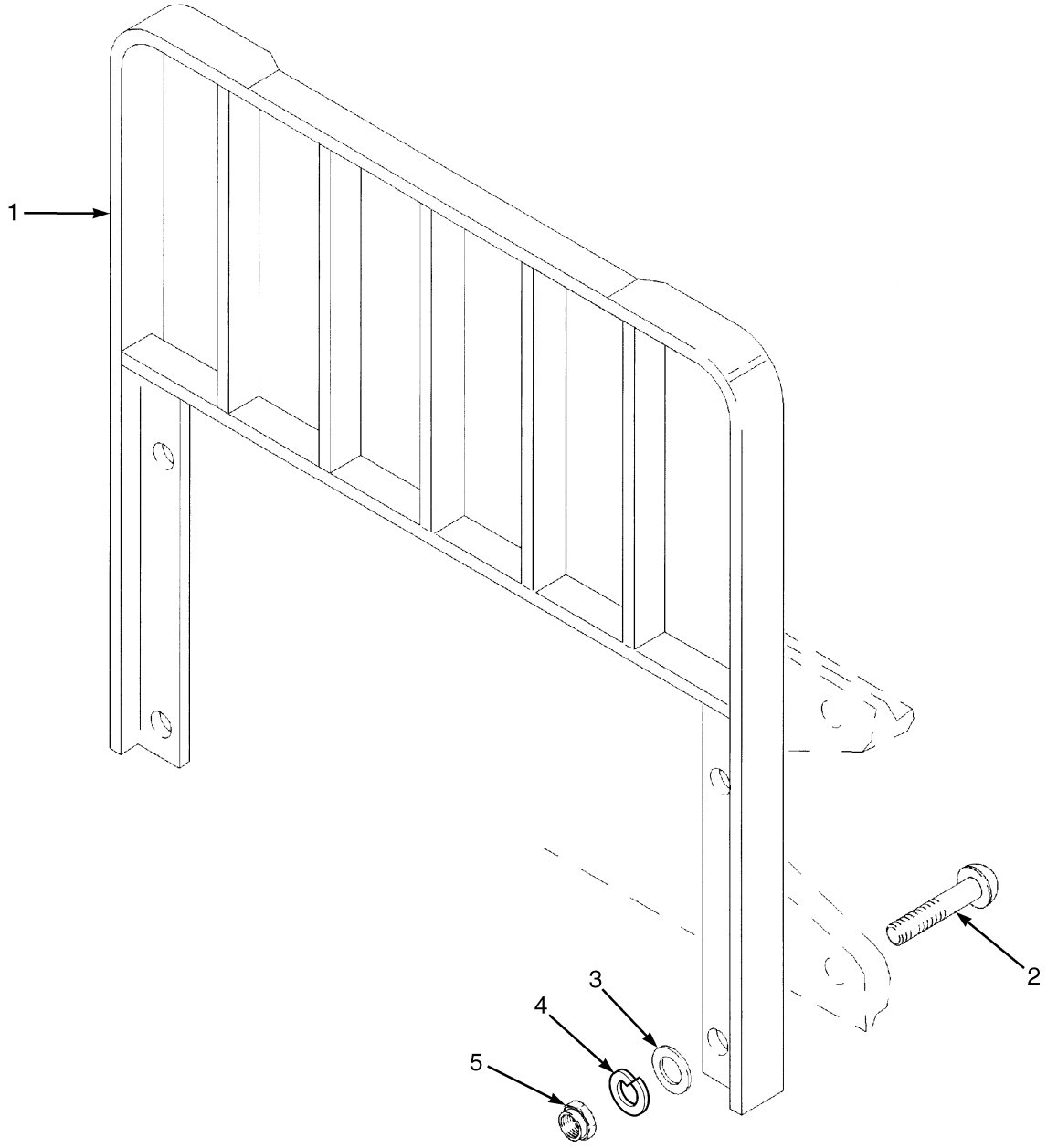

HP120836

©2014 HYSTER COMPANY

LOAD BACKREST EXTENSION

KEY:
A: For Use With Standard Carriage Only
B: For Use With Integral Side-Shift Carriage Only

NOTE: This parts list contains multiple truck configurations, refer to the KEY to choose the correct QTY column for your truck.

ITEM	PART NO.	DESCRIPTION	QTY A	QTY B
1	1663443	Load Backrest (Class II) (42 in.)	1	1
1	1663450	Load Backrest (Class II) (48 in.)	1	1
1	**1663460**	**Load Backrest (Class III) (42 in.)**	**1**	**1**
1	1663467	Load Backrest (Class III) (48 in.)	1	1
1	1663424	Load Backrest (Class III) (54 in.)	1	1
2	**1343990**	**Capscrew**	**4**	**..**
2	2034347	Capscrew	..	4
3	**221771**	**Washer**	**4**	**4**
4	296423	Washer (Optional)	4	4
5	**300937**	**Nut**	**4**	**4**

©2014 HYSTER COMPANY

FORKS (FIGURE 1-21)

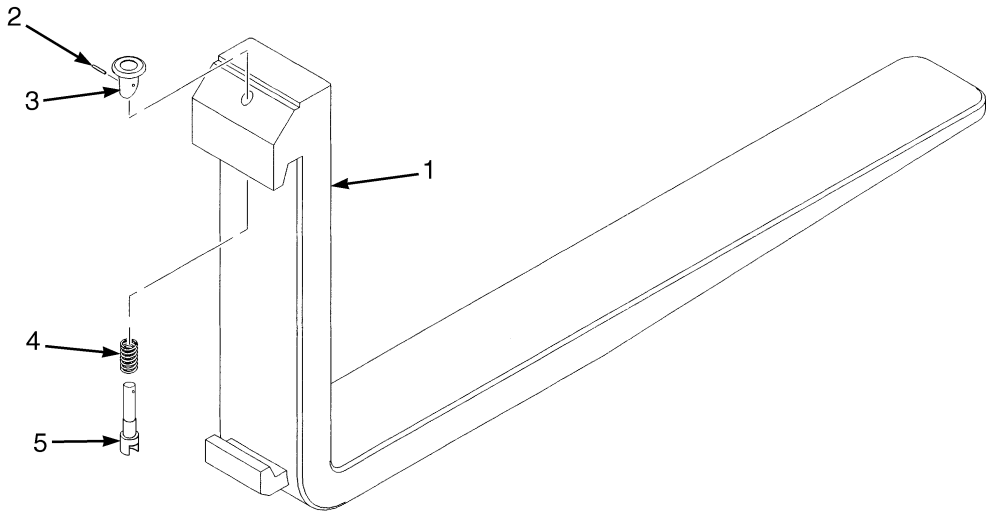

BP000187

KEY:
A: Standard Taper, Class II (3.9 in. x 1.6 in.)
B: Polished Full Bottom Taper, Class II (4.9 in. x 1.6 in.)
C: Standard Taper, Class III (4.9 in. x 2 in.)
D: Polished Full Bottom Taper, Class III (7.1 in. x 1.8 in.)

ITEM	PART NO.	DESCRIPTION	QTY A	QTY B	QTY C	QTY D
1	384211	Fork (36 in.)	2	..	..	..
1	1308093	Fork (40 in.)	2	..	..	..
1	384213	Fork (42 in.)	2	..	..	..
1	384214	Fork (48 in.)	2	..	..	..
1	384215	Fork (54 in.)	2	..	..	..
1	384216	Fork (60 in.)	2	..	..	..
1	1338087	Fork (36 in.)	..	2	..	..
1	1338088	Fork (42 in.)	..	2	..	..
1	1338089	Fork (48 in.)	..	2	..	..
1	367419	Fork (36 in.)	..	..	2	..
1	367420	Fork (42 in.)	..	..	2	..
1	367421	Fork (48 in.)	..	..	2	..
1	**367422**	**Fork (54 in.)**	**..**	**..**	**2**	**..**
1	367423	Fork (60 in.)	..	..	2	..
1	367424	Fork (72 in.)	..	..	2	..
1	1338097	Fork (42 in.)	..	..	..	2
1	1338098	Fork (48 in.)	..	..	..	2
1	1332745	Fork (54 in.)	..	..	..	2
2	**1523734**	**Pin**	**1**	**1**	**1**	**1**
3	**1523732**	**Knob**	**1**	**1**	**1**	**1**
4	1500782	Spring	1	1	..	..
4	**1500784**	**Spring**	**..**	**..**	**1**	**1**

©2014 HYSTER COMPANY

KEY:
A: Standard Taper, Class II (3.9 in. x 1.6 in.)
B: Polished Full Bottom Taper, Class II (4.9 in. x 1.6 in.)
C: Standard Taper, Class III (4.9 in. x 2 in.)
D: Polished Full Bottom Taper, Class III (7.1 in. x 1.8 in.)

ITEM	PART NO.	DESCRIPTION	QTY A	QTY B	QTY C	QTY D
5	1523733	Pin	1	1	..	..
5	**1523737**	**Pin .....**	**..**	**..**	**1**	**1**
	4033434	Kit-Latch (Class II) (Includes Items 2-5)	1	1	..	..
	4033435	**Kit-Latch (Class III) (Class III) (Includes Items 2-5) .....**	**..**	**..**	**1**	**1**

©2014 HYSTER COMPANY

FORKS (FIGURE 1-22)
OPTIONAL

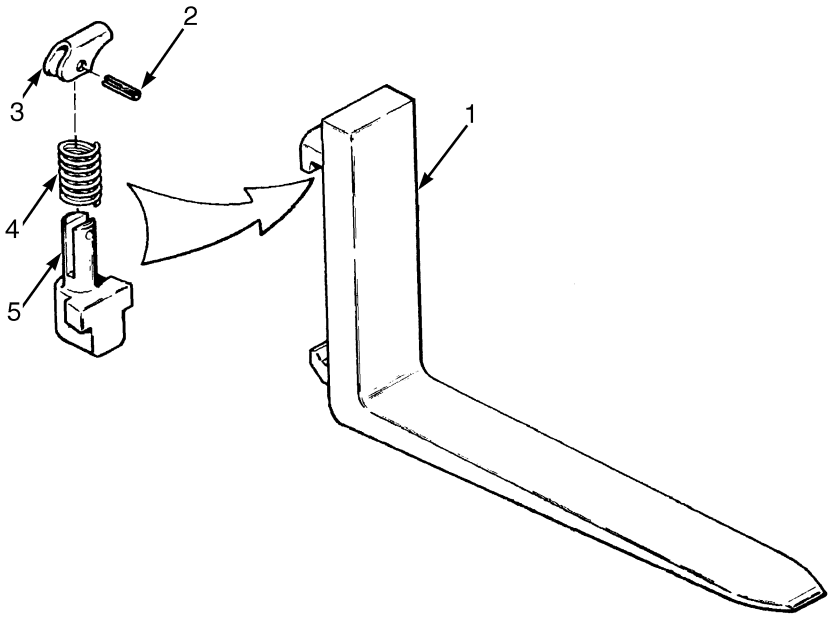

HP120793

KEY:
A: Standard Taper, Class II (4 in. x 1.5 in.)
B: Polished Full Bottom Taper, Class II (5 in. x 1.5 in)
C: Standard Taper, Class III (5 in. x 2 in.)
D: Polished Full Bottom Taper, Class III (7 in. x 1.75 in.)

ITEM	PART NO.	DESCRIPTION	QTY A	B	C	D
1	4083370	Fork (36 in.)	2	..	..	..
1	4083371	Fork (40 in.)	2	..	..	..
1	4083372	Fork (42 in.)	2	..	..	..
1	4083373	Fork (48 in.)	2	..	..	..
1	4083374	Fork (54 in.)	2	..	..	..
1	4083375	Fork (60 in.)	2	..	..	..
1	4083678	Fork (36 in.)	..	2	..	..
1	4083679	Fork (42 in.)	..	2	..	..
1	4083680	Fork (48 in.)	..	2	..	..
1	4083870	Fork (36 in.)	..	..	2	..
1	4083874	Fork (42 in.)	..	..	2	..
1	4083876	Fork (48 in.)	..	..	2	..
1	4083878	Fork (54 in)	..	..	2	..
1	4083881	Fork (60 in.)	..	..	2	..
1	4083883	Fork (72 in.)	..	..	2	..
1	4083686	Fork (42 in.)	..	..	..	2
1	4083687	Fork (48 in.)	..	..	..	2
1	4083688	Fork (54 in.)	..	..	..	2
2	4083647	Pin	1	1	1	1
3	4083646	Lever	1	1	1	1
4	4083648	Spring	1	1	1	1
5	4083649	Pin	1	1	..	..

©2014 HYSTER COMPANY

KEY:
A: Standard Taper, Class II (4 in. x 1.5 in.)
B: Polished Full Bottom Taper, Class II (5 in. x 1.5 in)
C: Standard Taper, Class III (5 in. x 2 in.)
D: Polished Full Bottom Taper, Class III (7 in. x 1.75 in.)

ITEM	PART NO.	DESCRIPTION	QTY A	QTY B	QTY C	QTY D
5	4083651	Pin	..	..	1	1
	4083888	Kit Fork Latch Mechanism (Class 2A) (Includes Items 2-5)	2	2	..	..
	4083889	Kit Fork Latch Mechanism (Class 3A) (Includes Items 2-5)	..	..	2	2

©2014 HYSTER COMPANY

AIR CONDITIONER COMPRESSOR (FIGURE 1-23)
KUBOTA 2.5 LPG

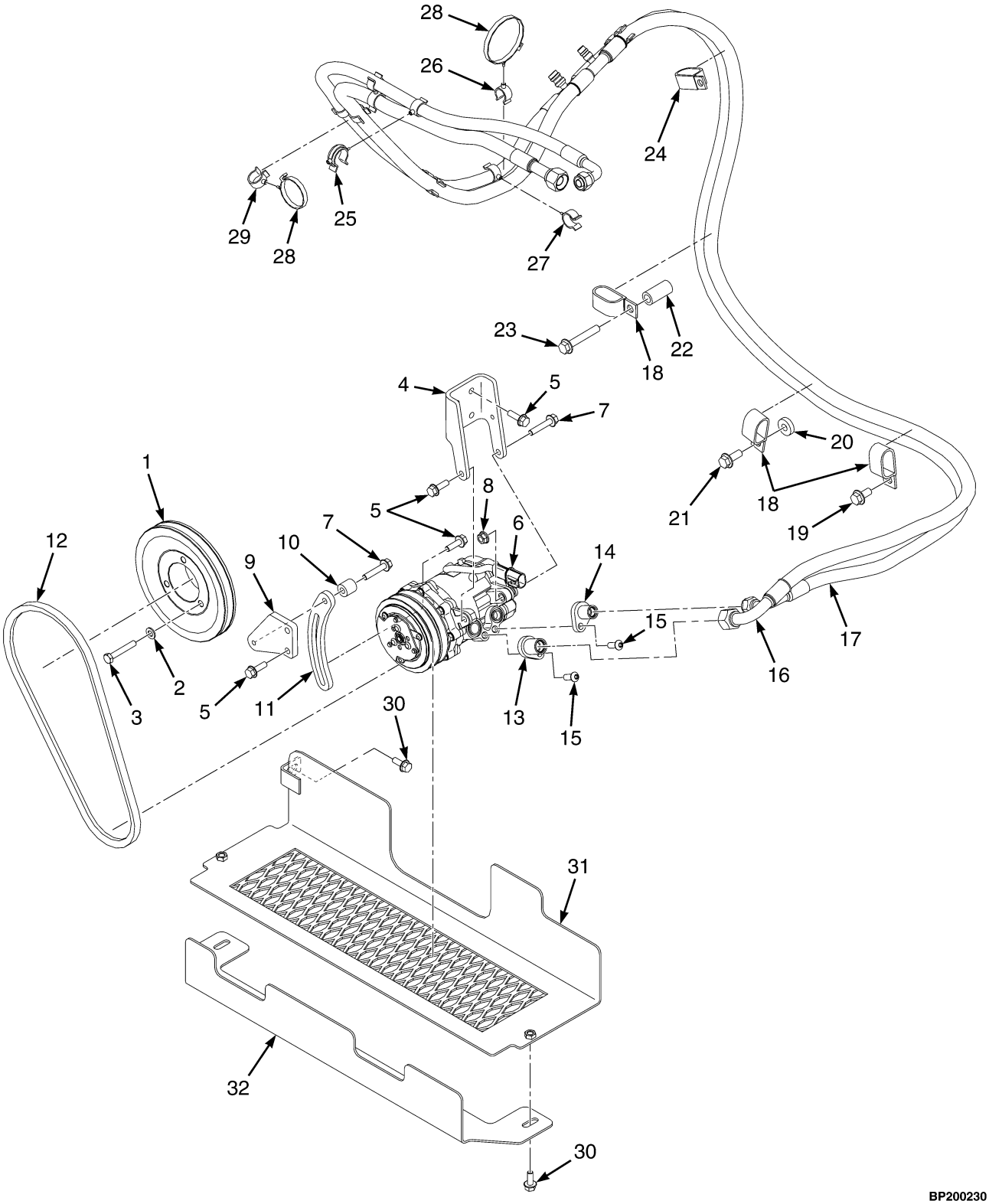

©2014 HYSTER COMPANY

AIR CONDITIONER COMPRESSOR
KUBOTA 2.5 LPG

ITEM	PART NO.	DESCRIPTION	QTY
1	4057449	Pulley	1
2	296418	Washer	3
3	293619	Capscrew	3
4	4077419	Bracket	1
5	1510113	Capscrew	8
6	4605389	Compressor Assembly, AC	1
7	1510114	Capscrew	2
8	1502543	Nut (Flange)	1
9	4077420	Bracket	1
10	1400125	Spacer	1
11	4077421	Plate	1
12	4628753	V-Belt	1
13	4005338	Adapter	1
14	4005339	Adapter	1
15	1597448	Capscrew	2
16	4628754	Hose Assy	1
17	4628755	Hose Assy	1
18	140660	Clamp	3
19	1527883	Capscrew	1
20	1303158	Bushing	1
21	1510117	Capscrew	1
22	1360538	Tube Assy	1
23	1527887	Capscrew	1
24	129684	Clamp	1
25	1569465	Clamp (Swivel)	1
26	1502059	Clamp (Swivel)	7
27	1502066	Clamp (Swivel)	5
28	1502061	Clamp	2
29	1502053	Clamp (Swivel)	1
30	1527880	Capscrew	3
31	4077993	Shield	1
32	4077997	Shield	1

©2014 HYSTER COMPANY

CAB (FIGURE 1-24)
WITHOUT A/C

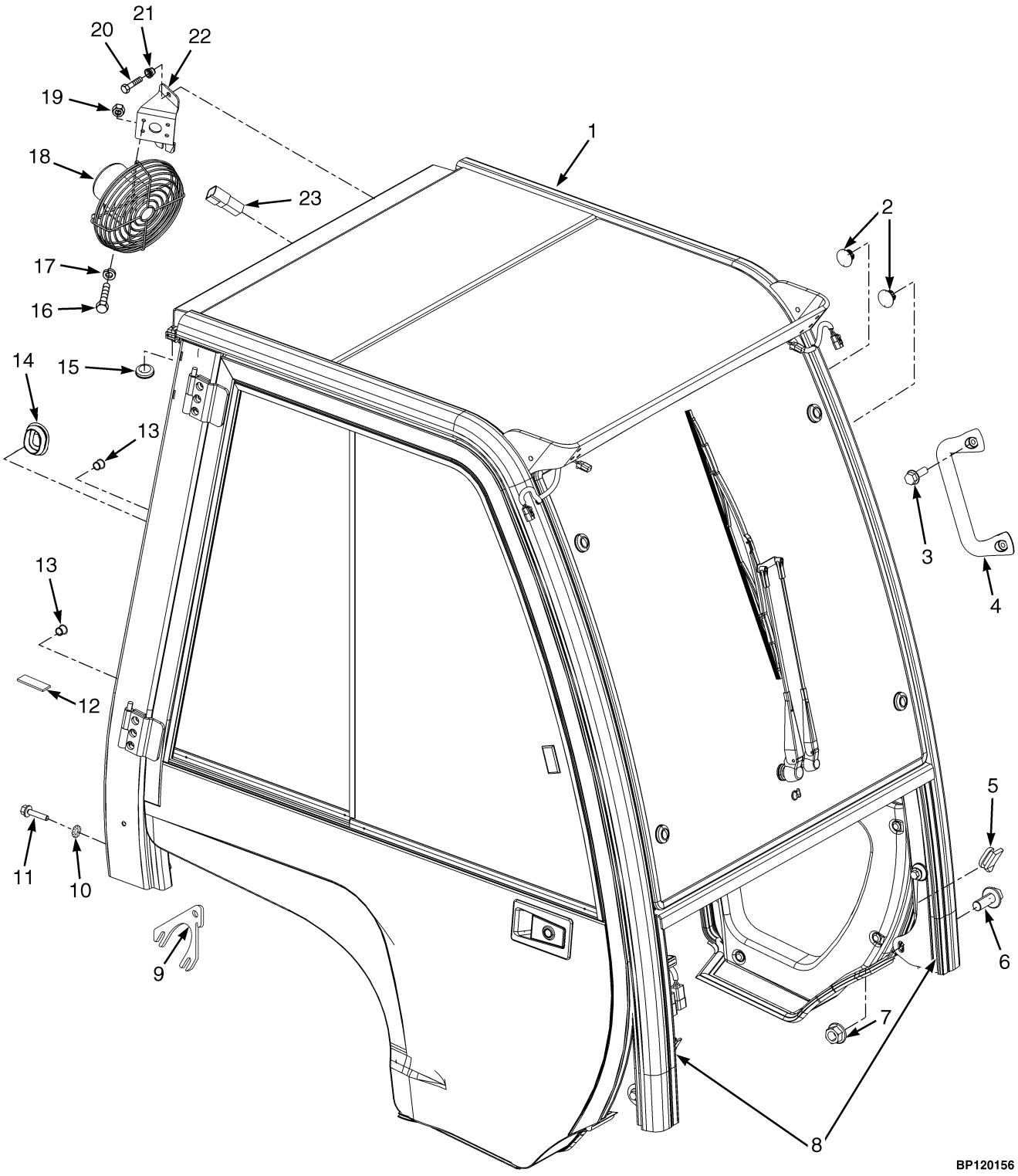

©2014 HYSTER COMPANY

CAB
WITHOUT A/C

KEY:
A: With Steel Doors
B: With PVC Doors

ITEM	PART NO.	DESCRIPTION	QTY A	QTY B
1	1652722	Cab (With Steel Doors) (☞Figure 1-27, ☞Figure 1-28, ☞Figure 1-29, ☞Figure 1-33, ☞Figure 1-37, ☞Figure 1-39)	1	..
1	1641660	Cab (With PVC Doors) (☞Figure 1-32, ☞Figure 1-37, ☞Figure 1-39)	..	1
2	1574301	Plug	6	8
3	1583611	Capscrew	8	4
4	1536813	Handle (Grab)	1	1
5	1589787	Seal	2	2
6	1527888	Capscrew	8	8
7	1528888	Nut (Shoulder)	2	2
8	4040607	Seal	2	2
9	1636853	Shim	2	2
10	296359	Washer	6	6
11	296157	Capscrew	6	6
12	1614686	Strip Seal (LH)	1	1
12	1614687	Strip Seal (RH)	1	1
13	1494888	Plug	4	2
14	1599415	Plug	1	1
15	1560671	Grommet	1	1
16	1565125	Screw	4	..
17	292678	Lockwasher	4	..
18	1359562	Fan Assembly	1	..
18	1311213	Fan	1	..
18	1330409	Connector	1	..
18	1330414	Connector (Secondary Lock)	1	..
18	1330437	Terminal (Pin)	2	..
19	1463912	Nut	4	..
20	1583611	Capscrew	2	..
21	1531557	Insert	2	..
22	1613734	Bracket	1	..
23	1351681	Connector	1	1
	a 1636647	Shim	AR	AR
	a 2070996	Grommet	1	1

FOOTNOTES:

a Not Illustrated

©2014 HYSTER COMPANY

CAB (FIGURE 1-25)
WITH A/C

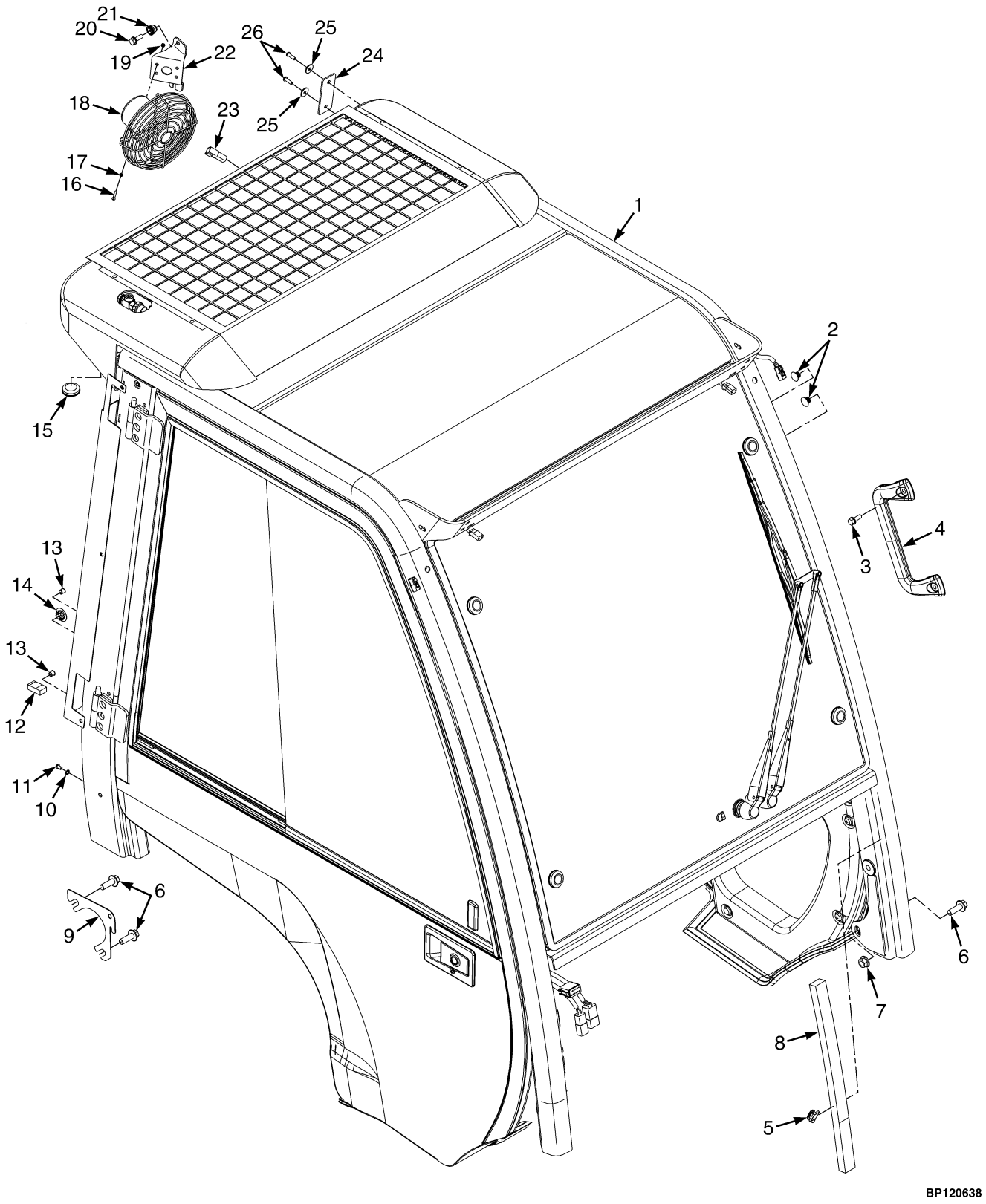

©2014 HYSTER COMPANY

CAB
WITH A/C

ITEM	PART NO.	DESCRIPTION	QTY
1	1683428	Cab (☞Figure 1-26, ☞Figure 1-27, ☞Figure 1-28, ☞Figure 1-33, ☞Figure 1-37, ☞Figure 1-40)	1
2	1574301	Plug	6
3	1583611	Capscrew	4
4	1536813	Handle (Grab)	1
5	1589787	Seal	2
6	1527888	Capscrew	8
7	1528888	Nut (Shoulder)	2
8	4040607	Seal	2
9	1636853	Shim	2
10	296359	Washer	6
11	296157	Capscrew	6
12	1614686	Strip Seal (LH)	1
12	1614687	Strip Seal (RH)	1
13	1494888	Plug	4
14	1599415	Plug	1
15	1560671	Grommet	1
16	1565125	Screw	4
17	292678	Lockwasher	4
18	1359562	Fan Assembly	1
18	1311213	Fan	1
18	1330409	Connector	1
18	1330414	Connector (Secondary Lock)	1
18	1330437	Terminal (Pin)	2
19	1463912	Nut	4
20	1583611	Capscrew	2
21	1531557	Insert	2
22	1613734	Bracket	1
23	1351681	Connector	1
24	1690075	Plate	2
25	1709980	Washer	4
26	1710006	Capscrew	4
	a 1636647	Shim	AR

FOOTNOTES:

a Not Illustrated

©2014 HYSTER COMPANY

CAB ATTACHING PARTS (FIGURE 1-26)
WITH A/C

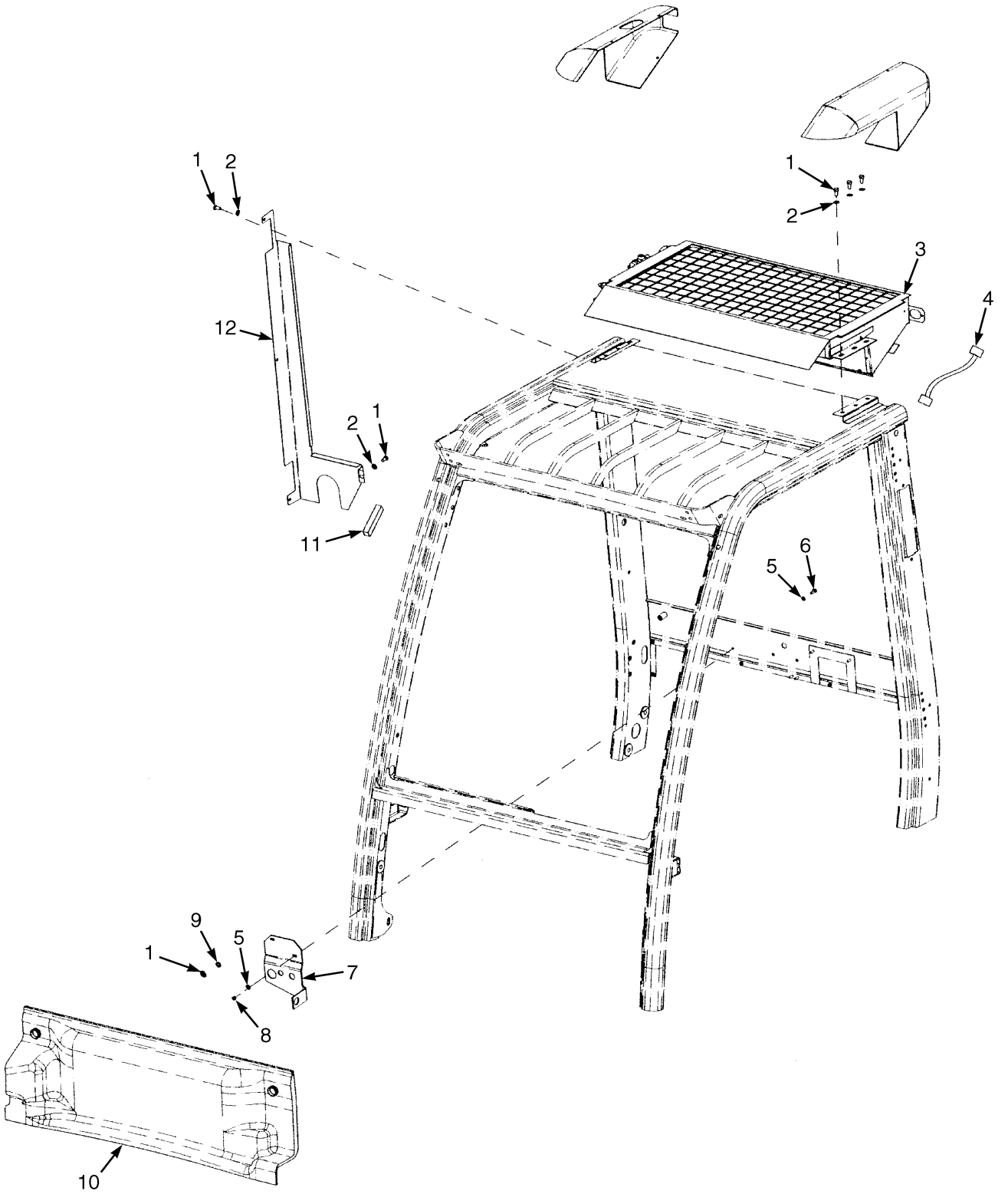

BP120640

©2014 HYSTER COMPANY

CAB ATTACHING PARTS
WITH A/C

ITEM	PART NO.	DESCRIPTION	QTY
	1683428	Cab	1
1	287851	Capscrew	9
2	320158	Washer	10
3	4007135	Condenser (☞Figure 1-38)	1
4	1701960	Wire Harness	2
5	320156	Washer	4
6	292501	Capscrew	2
7	1701959	Grommet	1
8	136687	Nut	2
9	239503	Nut	1
10	1688200	Cover	1
11	1498336	Edge Protector	1
12	1701958	Cover	1

©2014 HYSTER COMPANY

CAB (FIGURE 1-27)
LH DOOR

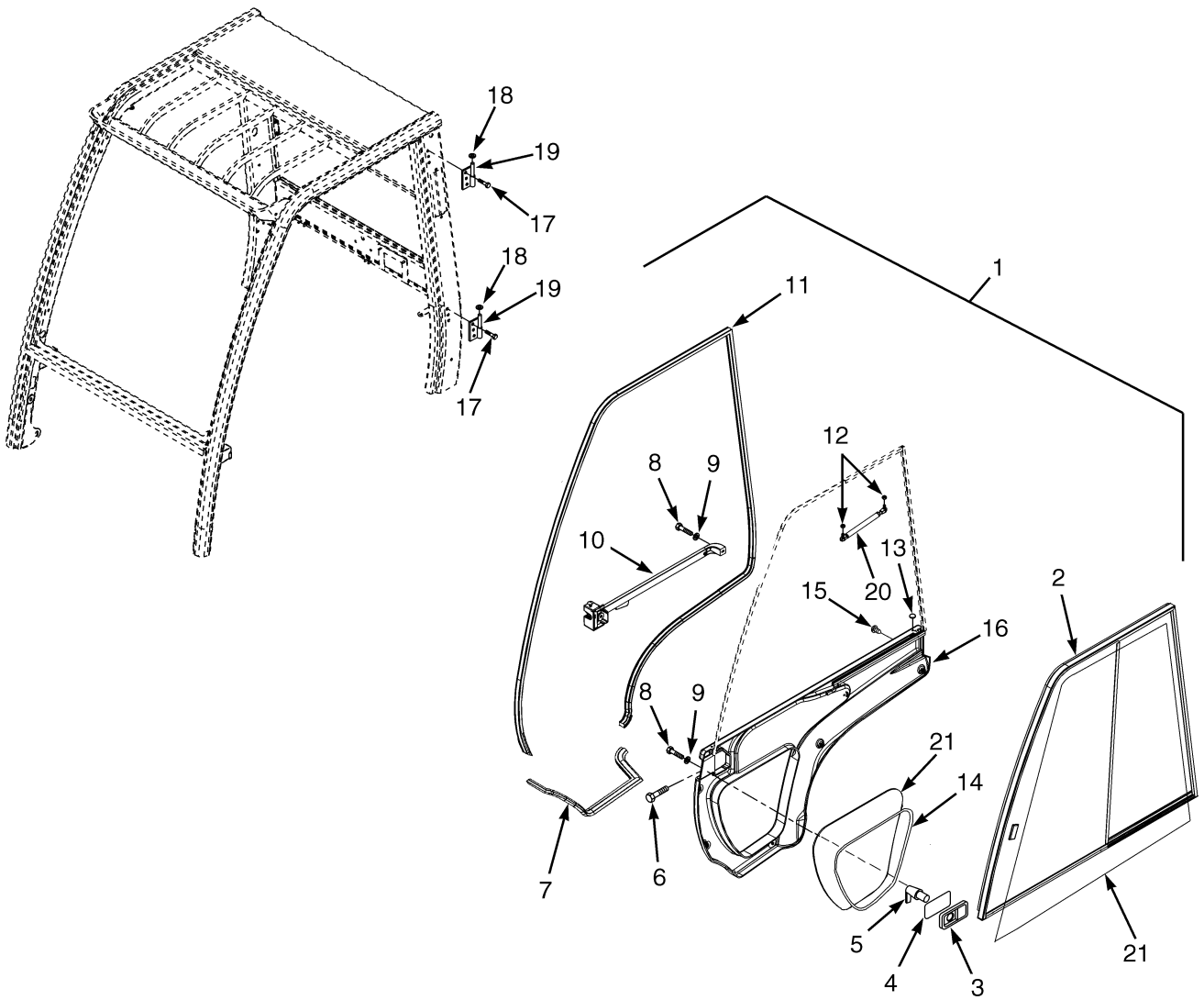

HP120861

©2014 HYSTER COMPANY

CAB
LH DOOR

KEY:
A: Standard Cab
B: Cab with A/C

NOTE: This parts list contains multiple truck configurations, refer to the KEY to choose the correct QTY column for your truck.

ITEM	PART NO.	DESCRIPTION	QTY A	QTY B
	1652722	Cab (Without A/C)	1	..
	1683428	Cab (With A/C)	..	1
1	1690931	Door (LH)	1	..
1	1598417	Door Assembly (LH)	..	1
1	1651814	Door Frame Weldment (LH)	..	1
2	1653967	Sliding Window Assembly (☞Figure 1-34)	1	1
3	1598393	Grip (Without Key)	1	1
4	1598394	Shim	1	1
5	1598392	Lever	1	1
6	296229	Capscrew	2	2
7	1393539	Seal	AR	..
7	1623391	Seal	..	AR
8	302047	Screw	5	3
8	1623393	Capscrew	..	2
9	320156	Washer	5	3
9	1651739	Rivet	..	2
10	1393479	Door Handle	1	1
11	1515337	Seal	AR	..
11	1393463	Seal	..	AR
12	316835	Nut	2	1
12	302400	Nut (Alternate Part)	2	2
12	1393472	Ball Stud	..	1
12	4009902	Ball Stud (Alternate Part)	2	2
13	1598390	Plug	2	..
13	1558034	Button	..	2
14	1598395	Window (Door, Lower, LH)	1	1
15	1598389	Fastener	5	3
15	1651739	Rivet	..	2
16	1653973	Cover (Door, LH)	1	1
17	1493308	Bolt	12	..
17	1674103	Screw	..	12
18	1468312	Washer	2	..
19	1503958	Hinge (LH)	2	..
20	1598397	Gas Spring	1	1
21	1558294	Seal	AR	..
	a 1598390	Plug	5	..
	a 1593629	Key (For Cab Door Grip)	2	1
	a 1506825	Strap Clamp	..	1

FOOTNOTES:

a Not Illustrated

©2014 HYSTER COMPANY

CAB (FIGURE 1-28)
RH DOOR AND HEATER ASSEMBLY

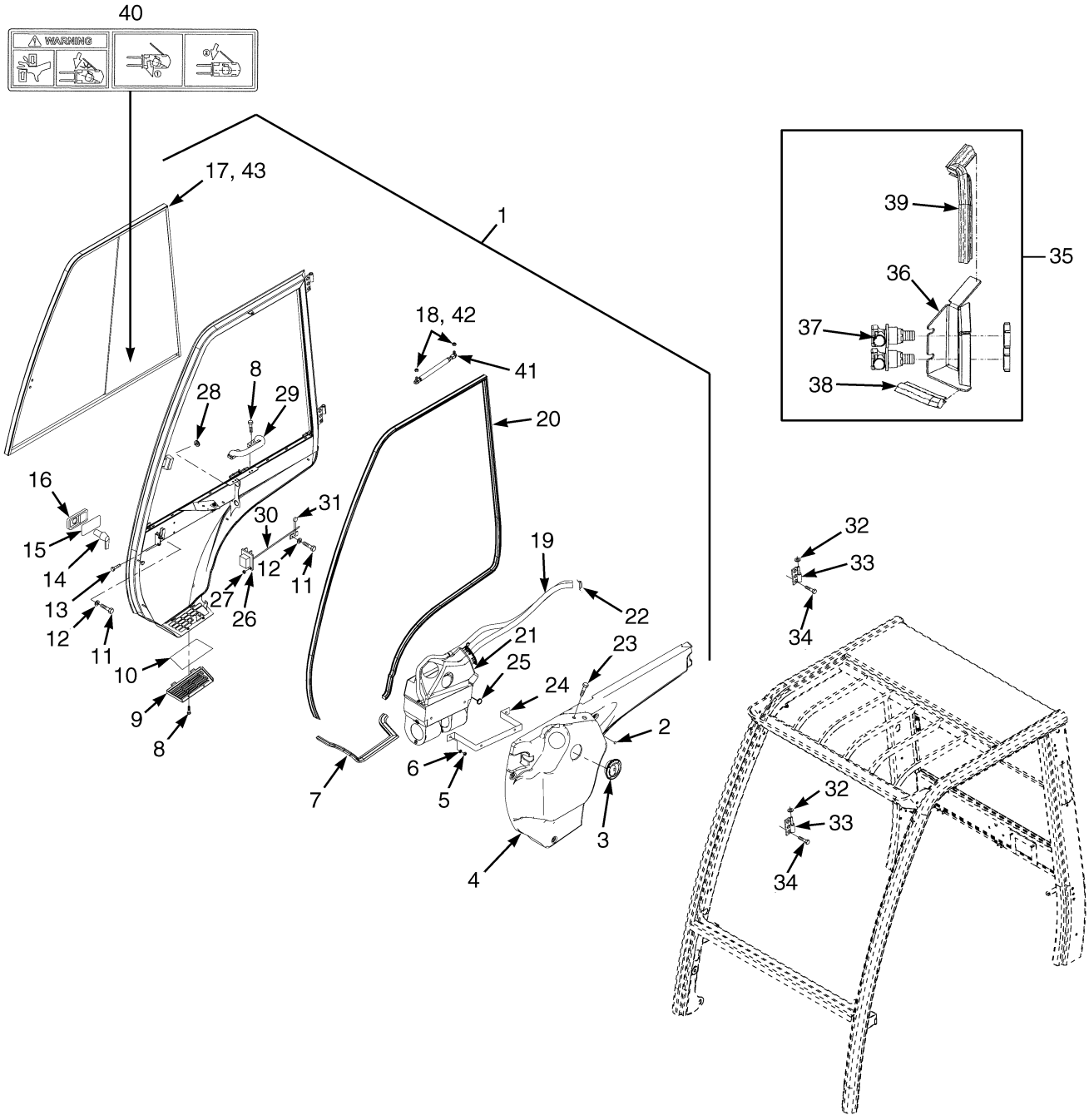

©2014 HYSTER COMPANY

CAB

RH DOOR AND HEATER ASSEMBLY

KEY:
A: Standard Cab
B: Cab With A/C

NOTE: This parts list contains multiple truck configurations, refer to the KEY to choose the correct QTY column for your truck.

ITEM	PART NO.	DESCRIPTION	QTY A	QTY B
	1652722	Cab (Without A/C)	1	..
	1683428	Cab (With A/C)	..	1
1	1690932	Door (RH)	1	..
1	1652426	Door (RH) (Weldment)	1	..
1	1701961	Door Assembly with Air Conditioner (RH)	..	1
2	1598389	Fastener	6	3
3	1598398	Louver (Air)	3	3
4	1653972	Cover (Door, RH)	1	..
4	1701964	Cover (Door, RH)	..	1
5	239503	Nut	2	2
6	320158	Washer	2	4
7	1393539	Seal	AR	..
7	1623391	Seal	..	AR
8	1598399	Screw	6	2
8	1701962	Screw	..	4
9	1598401	Bracket	1	1
10	1598400	Filter	1	1
11	302047	Screw	6	4
11	1623393	Capscrew	..	2
12	320156	Washer	6	6
13	296229	Capscrew	2	2
14	1598411	Lever	1	1
15	1598394	Shim	1	1
16	1598393	Grip (Without Key)	1	1
17	1653970	Sliding Window Assembly (☞Figure 1-35)	1	1
18	302400	Nut	2	2
19	1623400	Hose	AR	AR
20	1515337	Seal	AR	..
20	1393463	Seal	..	AR
21	1598404	Heater Assembly (☞Figure 1-31)	1	1
21	1701967	Air Conditioner (☞Figure 1-30)	..	1
22	1393499	Clamp	1	1
22	1674073	Clamp	..	4
23	1468318	Screw	4	4
24	1598669	Bracket	1	..
24	1701965	Bracket	..	1
25	1598390	Plug	5	..
26	1598412	Latch (RH)	1	1
27	1598408	Nut	2	2
28	1579116	Grommet	2	..
28	1646729	Grommet	..	2
29	4070545	Handle	1	1
30	1598409	Bar	1	1

©2014 HYSTER COMPANY

CAB
RH DOOR AND HEATER ASSEMBLY

KEY:
A: Standard Cab
B: Cab With A/C

NOTE: This parts list contains multiple truck configurations, refer to the KEY to choose the correct QTY column for your truck.

ITEM	PART NO.	DESCRIPTION	QTY A	QTY B
31	**1598410**	**Lever**	**1**	**1**
32	**1468312**	**Washer**	**2**	**2**
33	**1503959**	**Hinge (RH)**	**2**	**2**
34	1493308	Bolt	12	12
35	**1641494**	**Bulkhead**	**1**	**1**
36	**1643584**	**Bracket**	**1**	**1**
37	**1598327**	**Connector (Female)**	**2**	**2**
38	**1393539**	**Seal**	**AR**	**AR**
39	**1515337**	**Seal**	**AR**	**AR**
40	**a** 2081868	Label (Electronic Hydraulics)	1	1
41	**1598414**	**Gas Spring**	**1**	**1**
42	**1393472**	**Ball Stud**	**..**	**1**
42	**4009902**	**Ball Stud**	**2**	**2**
43	**1558294**	**Seal**	**..**	**AR**
	b 1593629	**Key (For Cab Door Grip)**	**2**	**2**
	b 1654298	**Knob (Water Valve) (For use with p/n 1598672)**	**1**	**1**
	b 1674109	**Kit-Repair (Glue)**	**1**	**..**
	b 1506825	**Strap Clamp**	**..**	**1**
	b 1598670	**Fitting (Male)**	**..**	**2**

FOOTNOTES:

a Electronic Hydraulics Only

b Not Illustrated

©2014 HYSTER COMPANY

CAB WITH STEEL DOORS (FIGURE 1-29)
HEATER — WITHOUT A/C

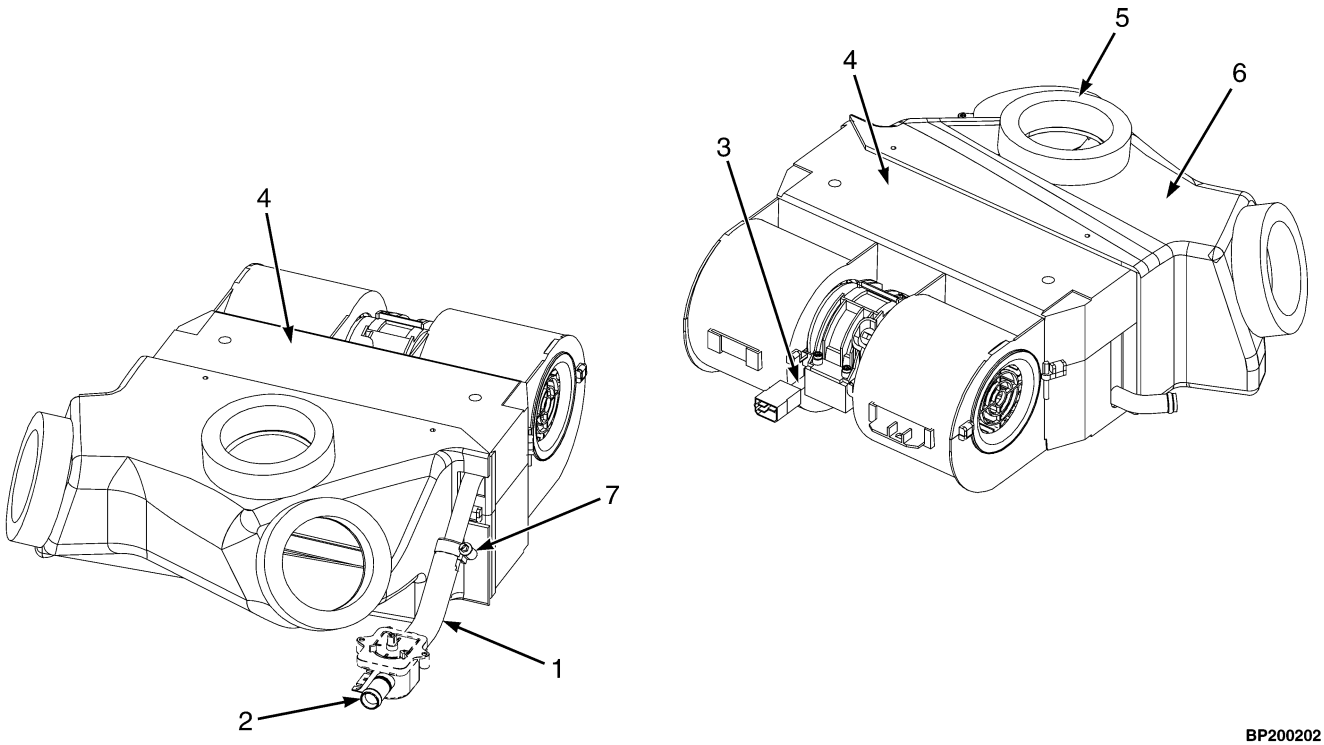

BP200202

ITEM	PART NO.	DESCRIPTION	QTY
	1598404	Heater Assembly (Sub Assembly)	1
1	1598674	Hose	AR
2	1598672	Valve (Water)	1
3	1598671	Wire Harness	1
4	1598675	Heater	1
4	4066968	Heater	1
4	4066969	Fan	1
4	1560643	Clamp	1
4	4066970	Resistor	1
4	4066971	Heat Exchanger	1
5	4066966	Valve	3
6	4066964	Vent	1
7	4066967	Clamp	2
	a 4066965	Valve	1
	a 1598673	Switch (Blower)	1
	a 1623402	Clip (Hose Clamp)	2

FOOTNOTES:

a Not Illustrated

©2014 HYSTER COMPANY

CAB (FIGURE 1-30)
AIR CONDITIONER

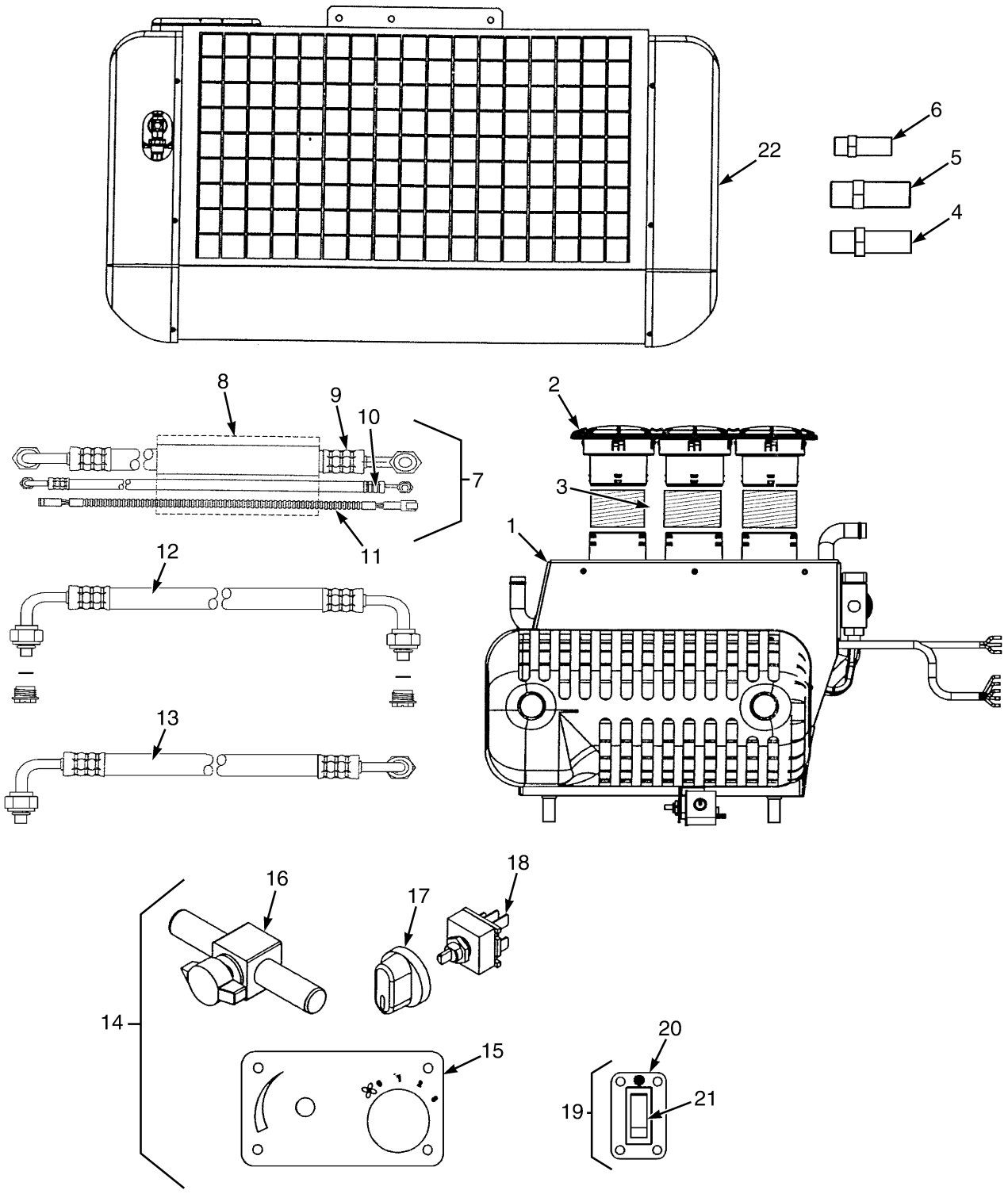

BP120634

©2014 HYSTER COMPANY

CAB
AIR CONDITIONER

ITEM	PART NO.	DESCRIPTION	QTY
	1701967	Air Conditioner	1
1	4004149	Heater (☞Figure 1-31)	1
2	4004150	Louver	3
3	4004154	Hose	3
4	4004153	Fitting	1
5	4004152	Fitting	1
6	4004151	Fitting	1
7	4004155	Hose Kit	1
8	4004157	Wrap	1
9	4004158	Hose Assy	1
10	4004159	Hose Assy	1
11	4004156	Wire Harness	1
12	4004160	Hose Assy	1
13	4004161	Hose Assy	1
14	4004162	Control Panel	1
15	4004163	Panel	1
16	4044163	Valve	1
17	1487957	Knob	1
18	1487956	Switch , Blower (with Nut)	1
19	4004166	Control Panel	1
20	4004167	Panel	1
21	4004168	Switch	1
22	4004165	Condenser (☞Figure 1-38)	1

©2014 HYSTER COMPANY

CAB (FIGURE 1-31)
HEATER

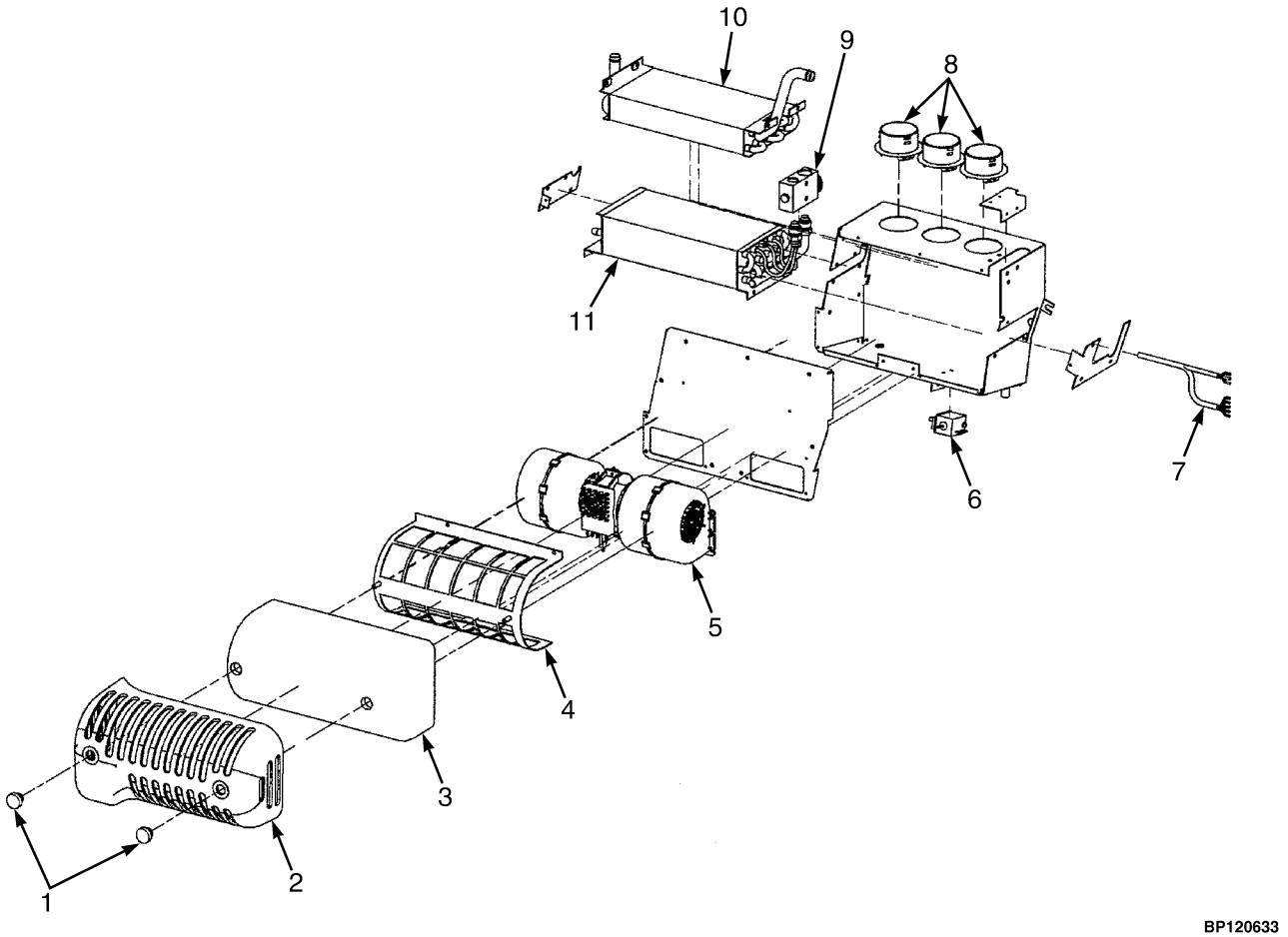

©2014 HYSTER COMPANY

CAB
HEATER

ITEM	PART NO.	DESCRIPTION	QTY
	4004149	**Heater**	**1**
1	**4004065**	**Knob**	**2**
2	**4004045**	**Cover**	**1**
3	**4004060**	**Filter**	**1**
4	**4004059**	**Filter**	**1**
5	**1661971**	**Heater (Blower)**	**1**
6	4003082	Thermostat	1
7	4060157	Wire Harness	1
8	**4004066**	**Hose Adapter**	**3**
9	**1487945**	**Valve (Block)**	**1**
10	**4004062**	**Heater**	**1**
11	**4004063**	**Evaporator**	**1**

©2014 HYSTER COMPANY

CAB DOORS (FIGURE 1-32)
PVC

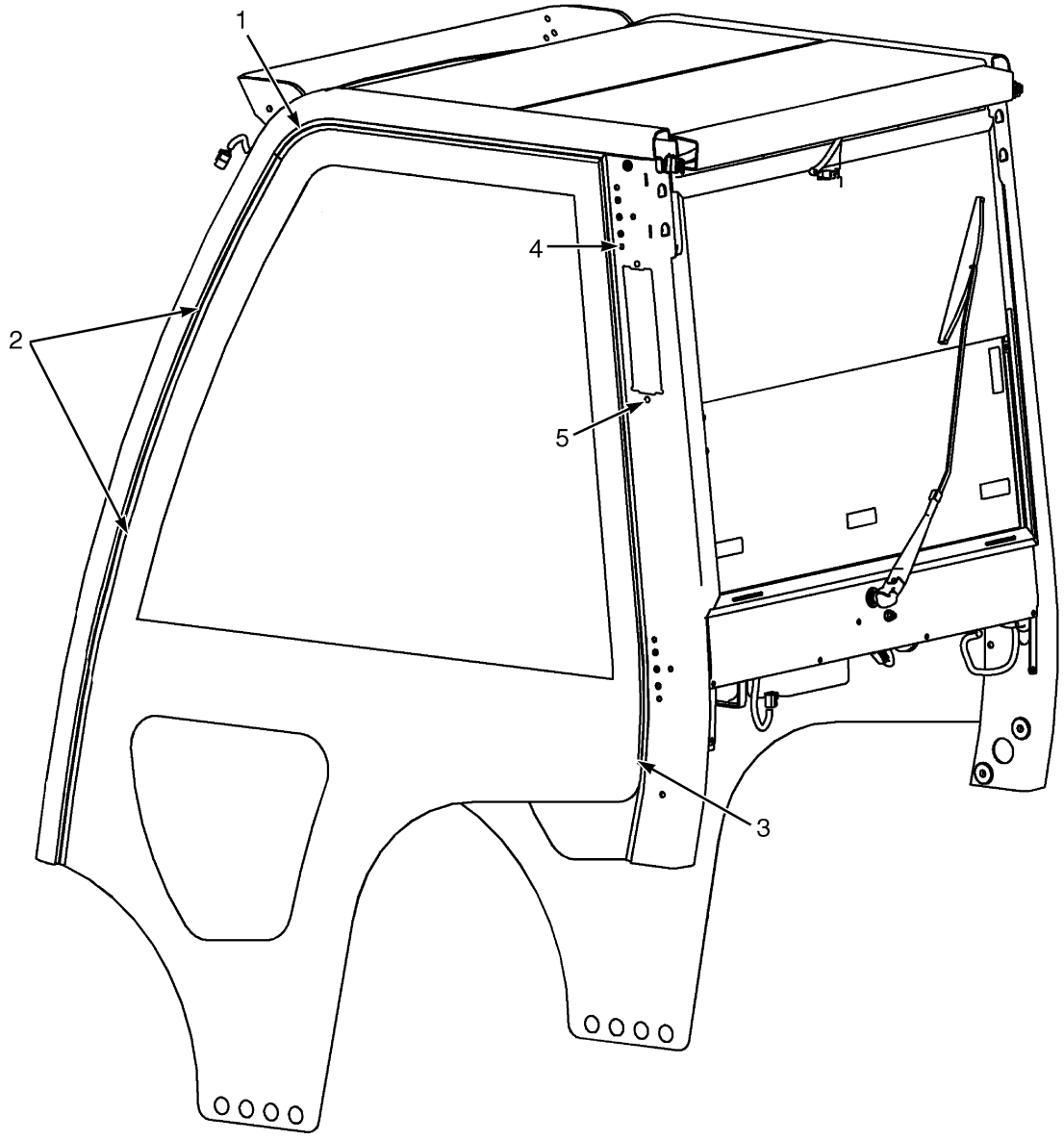

BP120196

©2014 HYSTER COMPANY

CAB DOORS
PVC

KEY:
A: Right Hand
B: Left Hand

ITEM	PART NO.	DESCRIPTION	QTY A	QTY B
	1641660	Cab	1	1
	1627180	Door Pvc	1	..
	1627176	Door Pvc	..	1
1	1627178	Molding (Top) (RH)	1	..
1	1627174	Molding (Top) (LH)	..	1
2	1627179	Molding (Front) (RH)	1	..
2	1627175	Molding (Front) (LH)	..	1
3	1627177	Molding (Back) (RH)	1	..
3	1627173	Molding (Back) (LH)	..	1
4	1363916	Plug	12	12
5	1599415	Plug	1	1
	1627172	Screw (Not Illustrated)	10	10

©2014 HYSTER COMPANY

CAB (FIGURE 1-33)
WINDOWS AND WINDOW WIPER SYSTEM

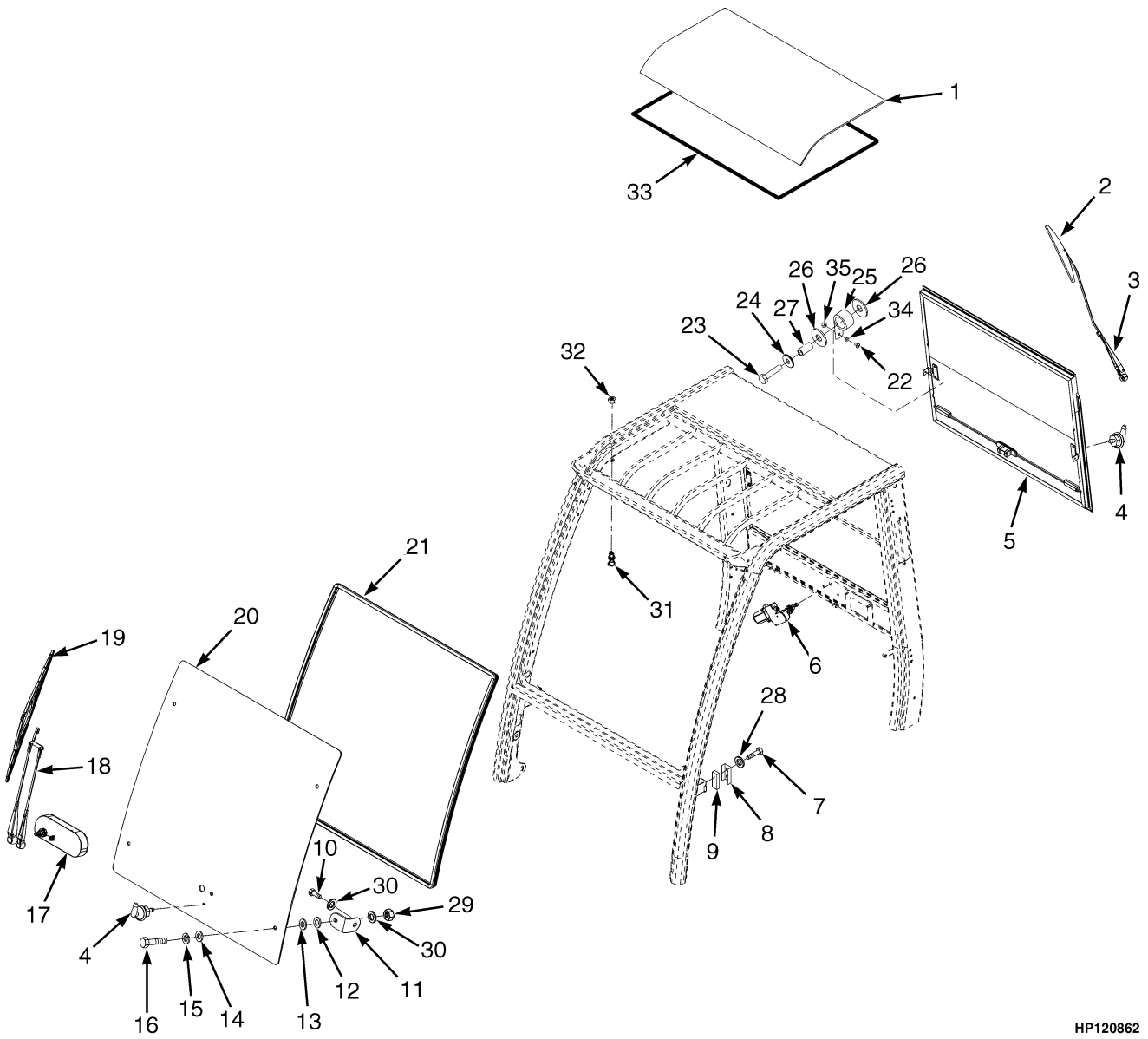

©2014 HYSTER COMPANY

CAB
WINDOWS AND WINDOW WIPER SYSTEM

ITEM	PART NO.	DESCRIPTION	QTY
	1652722	**Cab (Without A/C)**	**1**
	1641660	Cab (With PVC Doors)	1
	1683428	**Cab (With A/C)**	**1**
1	**1598293**	**Window (Roof)**	**1**
2	**1598297**	**Wiper Blade (Rear)**	**1**
3	**1598296**	**Wiper Arm (Rear)**	**1**
4	**1493336**	**Connector (Spray Nozzle)**	**2**
5	1598290	Sliding Window (Rear) (☞Figure 1-36)	1
5	1615998	Latch (Contains one center, two end latches and springs)	1
5	1615999	Spring	2
5	1615813	Bar	1
6	**1598295**	**Wiper Motor (Rear)**	**1**
6	**1645316**	**Kit-Wiper Motor**	**1**
6	**1645317**	**Kit-Wiper Motor**	**1**
7	1639003	Striker Bolt	2
7	**a 1653630**	**Striker Bolt**	**1**
8	1393541	Guard	2
8	**a 1674101**	**Spacer**	**2**
9	**1504953**	**Block (Tapped)**	**2**
10	**1623364**	**Capscrew**	**4**
11	**1598210**	**Bracket**	**4**
12	1598211	Washer	4
13	**1468317**	**Washer**	**4**
14	**1468316**	**Washer**	**4**
15	**1468315**	**Washer**	**4**
16	**1468314**	**Screw**	**4**
17	**b** 1598294	Wiper Motor (Front)	1
17	**b** 1645315	Kit-Front Wiper Motor Mounting	1
17	**c 1669224**	**Wiper Motor (Front)**	**1**
18	**b** 1598298	Wiper Arm (Front)	1
18	**c 1690933**	**Wiper Arm (Front)**	**1**
19	**b** 1598299	Wiper Blade (Front)	1
19	**c 1690934**	**Wiper Blade (Front)**	**1**
20	**b** 1598209	Front Window	1
20	**c 1667630**	**Front Window**	**1**
21	**1495441**	**Seal**	**AR**
22	**302019**	**Screw**	**2**
23	**1598291**	**Capscrew**	**2**
24	**1558052**	**Washer**	**2**
25	**1598302**	**Spring**	**2**
26	**1598301**	**Bushing**	**4**
27	**1623366**	**Sleeve**	**2**
28	**1571029**	**Washer**	**2**
29	**239503**	**Nut**	**4**
30	**320158**	**Washer**	**4**
31	**1393472**	**Ball Stud**	**2**
32	**316835**	**Nut**	**2**
33	1623377	Seal	AR
33	**a 1674088**	**Seal**	**AR**
34	**296415**	**Washer**	**2**

©2014 HYSTER COMPANY

CAB

WINDOWS AND WINDOW WIPER SYSTEM

ITEM	PART NO.	DESCRIPTION	QTY
35	292667	Nut	2
	1674109	Kit-Repair (Glue)	AR
	1667632	Cover	1

FOOTNOTES:

a Cab with A/C only
b Center Mounted Wiper Motor
c Off-Center Mounted Wiper Motor

©2014 HYSTER COMPANY

NOTES

©2014 HYSTER COMPANY

CAB (FIGURE 1-34)
WINDOW — LEFT HAND DOOR

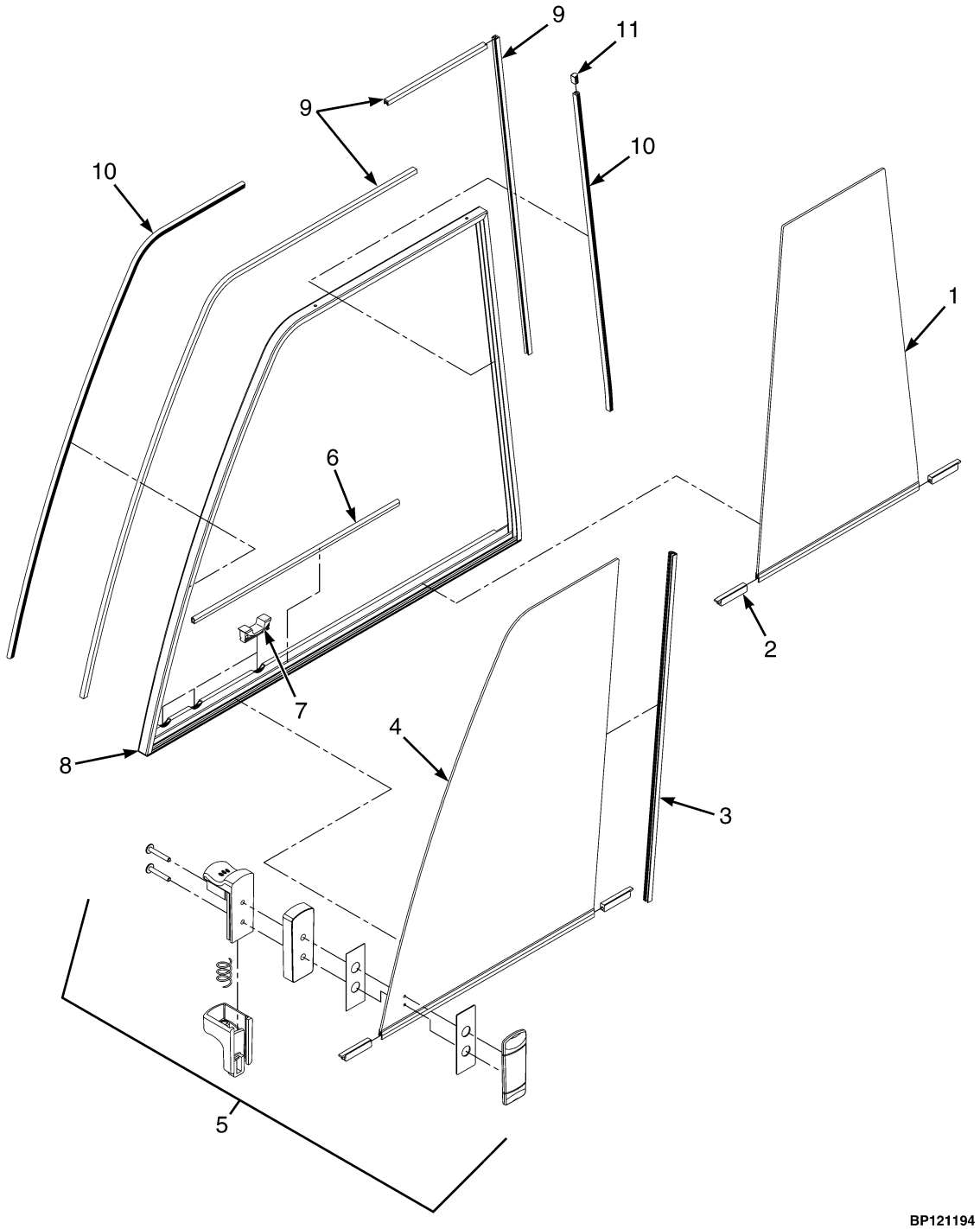

©2014 HYSTER COMPANY

CAB
WINDOW – LEFT HAND DOOR

ITEM	PART NO.	DESCRIPTION	QTY
	1653967	**Sliding Window (LH Door)**	**1**
1	4025618	Window	1
2	4009782	Guide	4
3	4025619	Bar (Sealing)	1
4	4025617	Window (Front)	1
5	**4013559**	**Latch**	**1**
6	**1498336**	**Edge Protector**	**AR**
7	4009779	Clip	3
8	**. . . . .**	**Window Frame**	**1**
9	1644804	Seal	AR
10	4009783	Seal	AR
11	1641640	Strip Seal	AR

©2014 HYSTER COMPANY

CAB (FIGURE 1-35)
WINDOW — RIGHT HAND DOOR

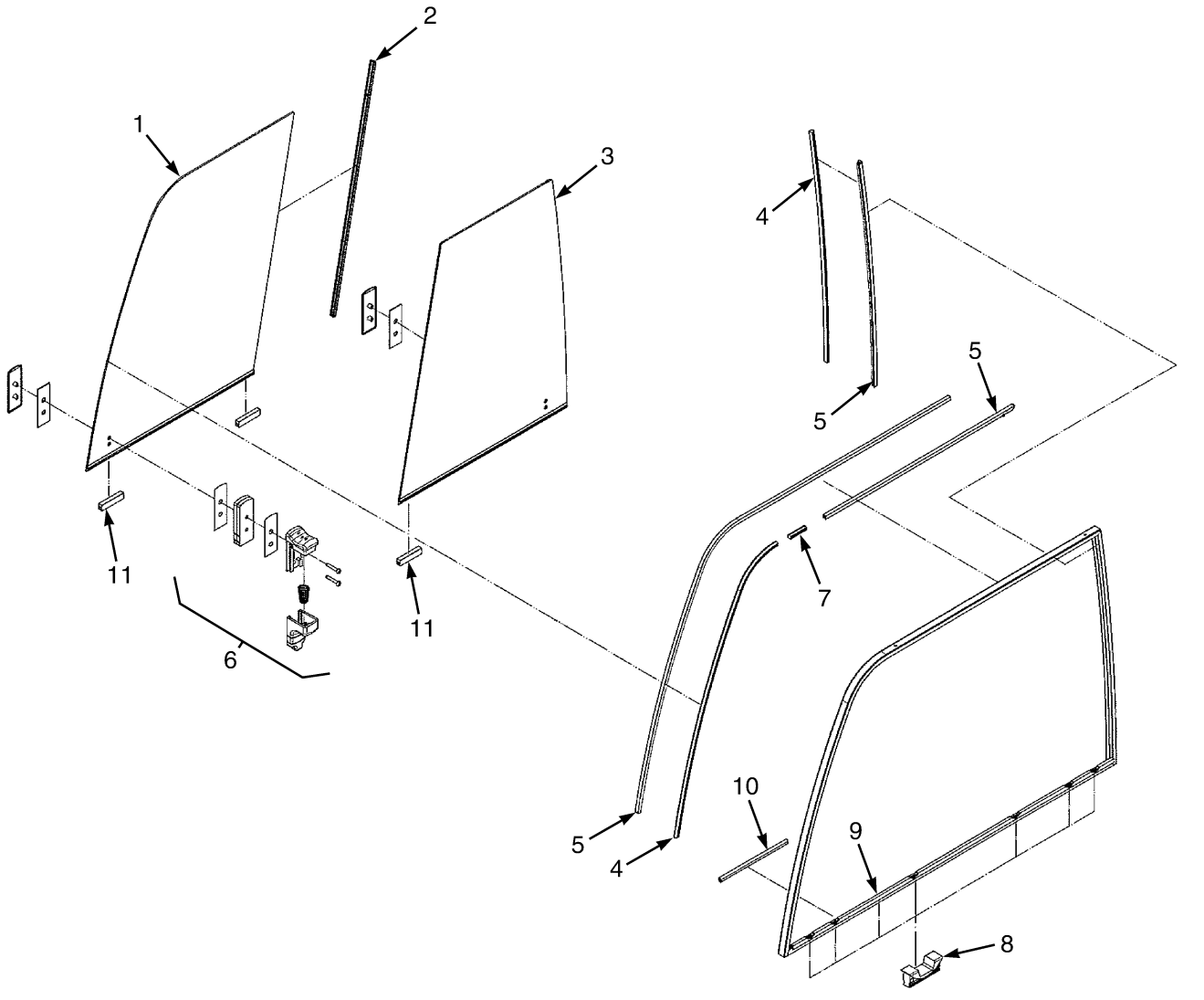

©2014 HYSTER COMPANY

CAB

WINDOW – RIGHT HAND DOOR

ITEM	PART NO.	DESCRIPTION	QTY
	1653970	**Sliding Window (RH)**	**1**
1	4024323	Front Window (Sliding)	1
2	4025619	Bar (Sealing)	1
3	4024324	Rear Window (Fixed)	1
4	4009783	Seal	AR
5	1644804	Seal	AR
6	**4013559**	**Latch**	**1**
7	1641640	Strip Seal	AR
8	4009779	Clip	3
9	**. . . . .**	**Window Frame**	**1**
10	**1498336**	**Edge Protector**	**AR**
11	4009782	Guide	4

©2014 HYSTER COMPANY

CAB (FIGURE 1-36)
SLIDING REAR WINDOW

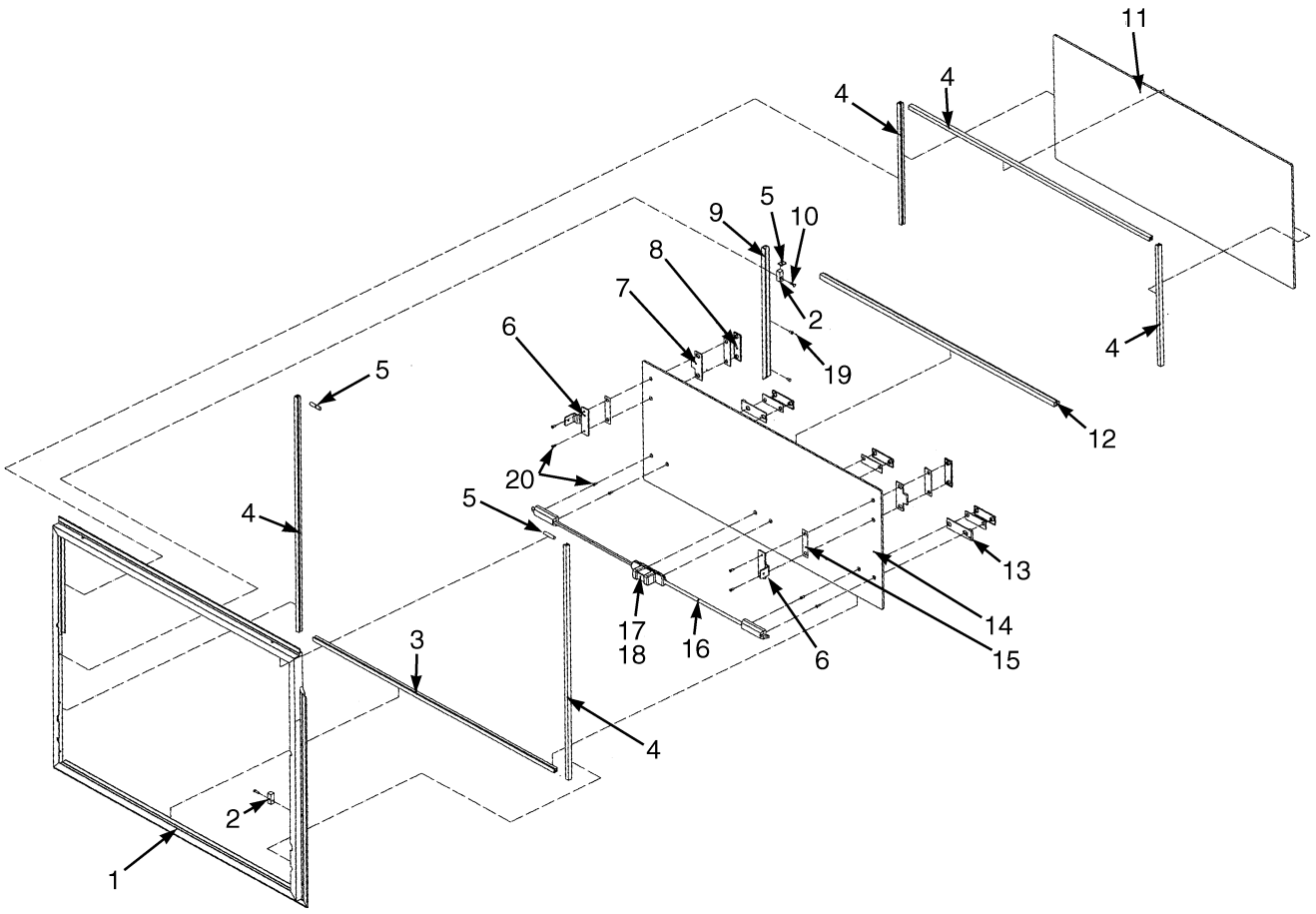

BP120365

©2014 HYSTER COMPANY

CAB
SLIDING REAR WINDOW

ITEM	PART NO.	DESCRIPTION	QTY
	1598290	Sliding Window	1
1	1670441	Frame	1
2	1670443	Bushing	2
3	1670424	Guide	1
4	1641637	Seal	AR
5	1641640	Strip Seal	AR
6	1670427	Stop	2
7	1670428	Pad	2
8	1670429	Plate	2
9	1670442	Rail	1
10	1670421	Screw	2
11	1670425	Glass (Rear Glass)	1
12	1670444	Seal	1
13	1670423	Pad	2
14	1670426	Glass (Sliding Glass)	1
15	1670440	Pad	2
16	1615813	Bar	2
17	1615998	Latch (Contains one center, two end latches and springs)	1
18	1615999	Spring	2
19	1670422	Screw	2
20	1670430	Screw	8

©2014 HYSTER COMPANY

CAB (FIGURE 1-37)
INTERIOR PANELS

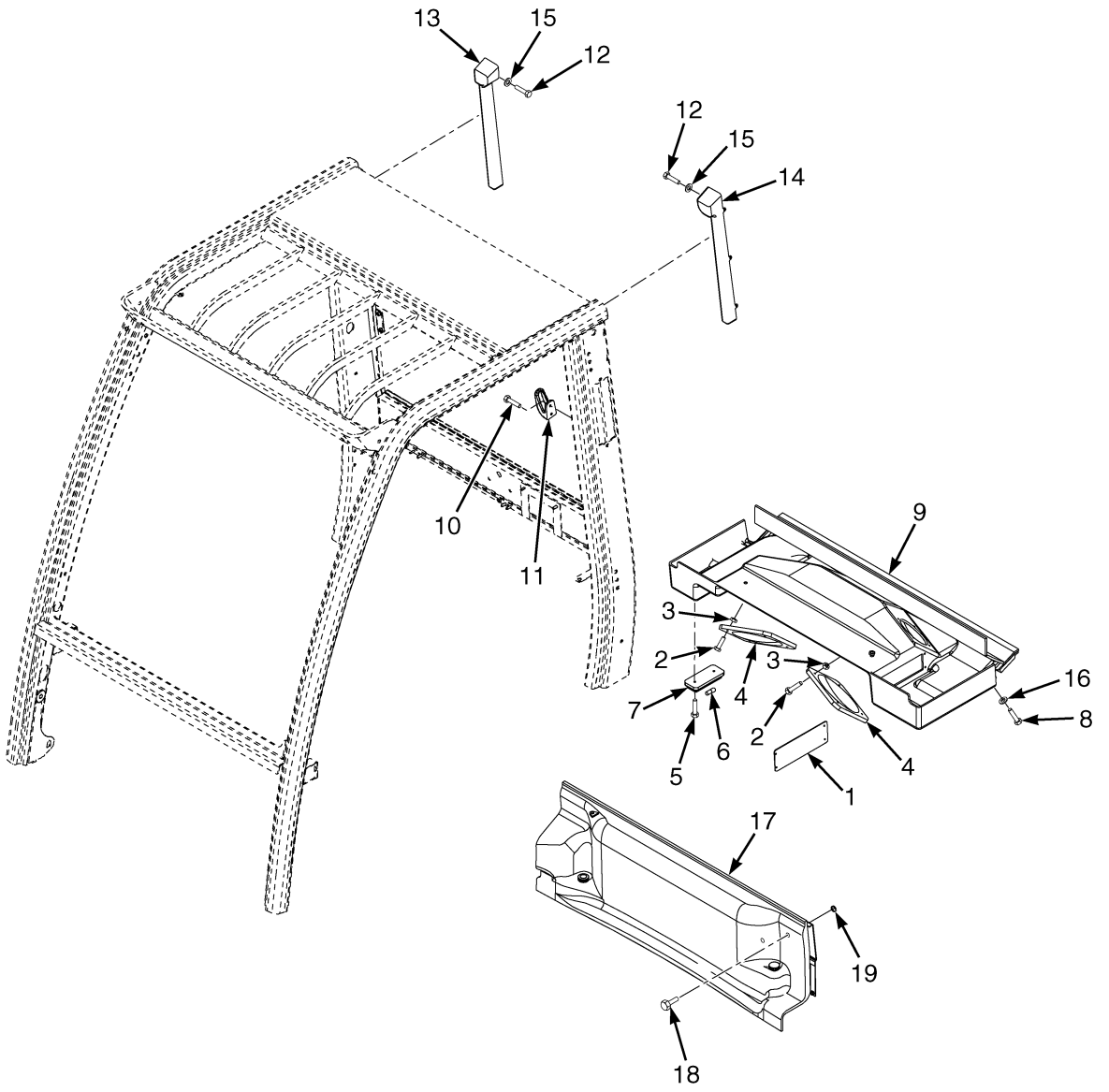

©2014 HYSTER COMPANY

CAB
INTERIOR PANELS

ITEM	PART NO.	DESCRIPTION	QTY
	1652722	**Cab (Without A/C)**	**1**
	1641660	Cab (With PVC Doors)	1
	1683428	**Cab (With A/C)**	**1**
1	1571628	Cover (Radio)	1
2	1468320	Screw	8
3	1598420	Nut	8
4	1598421	Cover (Speaker)	2
5	**1468319**	**Screw**	**2**
6	**1393527**	**Bulb**	**1**
7	**1393528**	**Dome Light**	**1**
8	**1623364**	**Capscrew**	**4**
9	**1598422**	**Headliner**	**1**
10	**1623370**	**Screw**	**2**
11	**1393458**	**Hanger**	**1**
12	**1468319**	**Screw**	**6**
13	**1598424**	**Support (RH)**	**1**
14	**1598425**	**Support (LH)**	**1**
15	**296415**	**Washer**	**6**
16	**296419**	**Washer**	**4**
17	**1641054**	**Cover (Radiator) (Without A/C)**	**1**
17	**1688198**	**Cover (Radiator) (With A/C)**	**1**
18	**4009578**	**Screw**	**2**
19	**1651739**	**Rivet**	**2**

©2014 HYSTER COMPANY

CAB (FIGURE 1-38)
CONDENSER ASSEMBLY — CAB (WITH A/C)

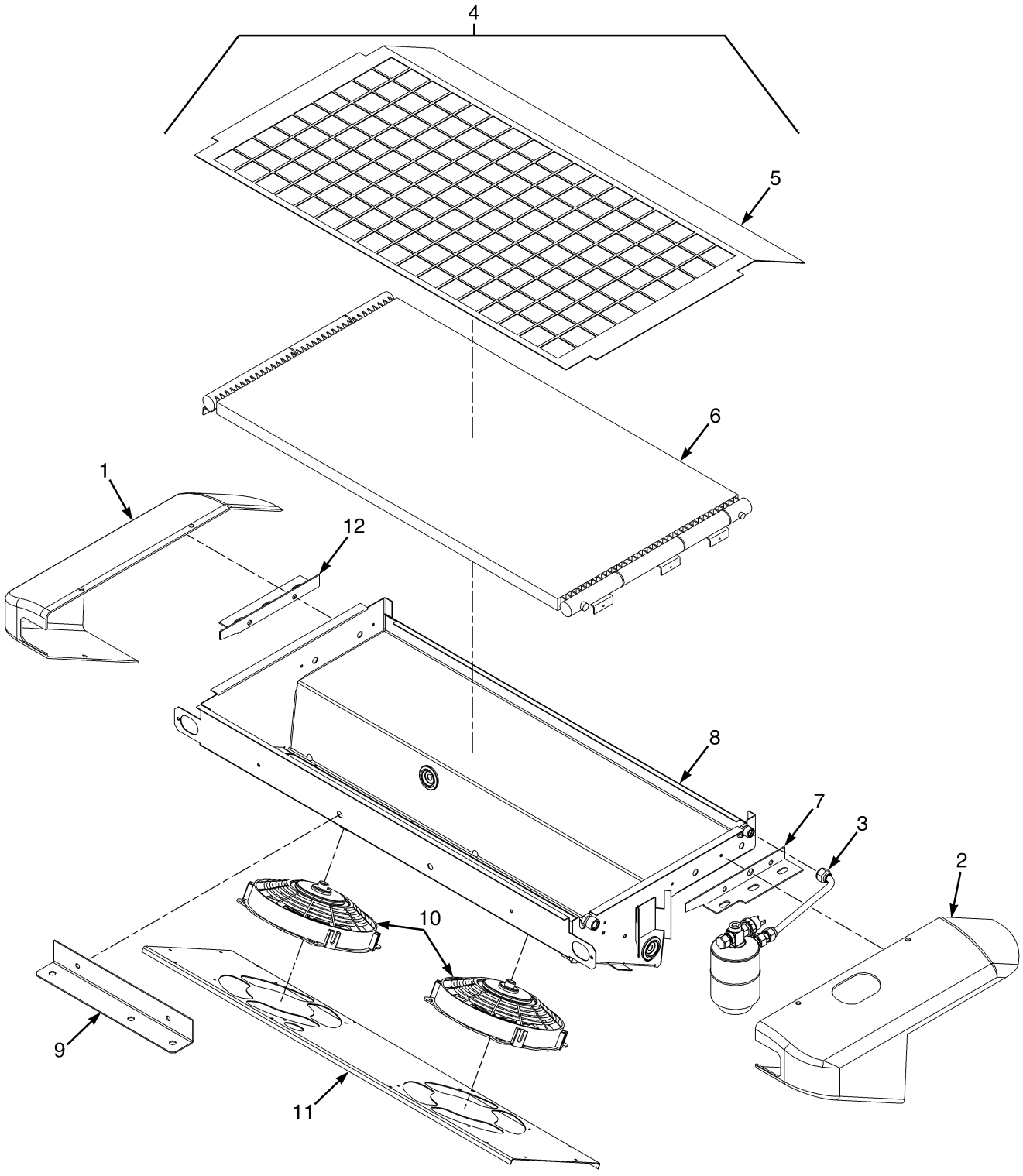

BP120637

©2014 HYSTER COMPANY

CAB

CONDENSER ASSEMBLY – CAB (WITH A/C)

ITEM	PART NO.	DESCRIPTION	QTY
1	4007133	Cover	1
2	4007132	Cover	1
3	4007134	Air Dryer	1
4	4007135	Condenser (Assembly)	1
5	4007145	Cover	1
6	4003079	Condenser	1
7	4007141	Bracket	1
8	4007139	Case	1
9	4007140	Bracket	1
10	4007138	Fan	2
11	4007143	Plate	1
12	4007144	Bracket	1
	a 4007142	Relay	1
	a 4002509	Cap	1
	a 4007147	Clip	1
	a 4002504	Clamp	1
	a 4007209	Wire Harness	1
	a 4007210	Wire Harness	1
	a 4007211	Wire Harness	1
	a 4007212	Filter	1
	a 4007213	Fuse	1

FOOTNOTES:

a Not Illustrated

©2014 HYSTER COMPANY

CAB (FIGURE 1-39)
FRAME AND ATTACHING PARTS — WITHOUT A/C

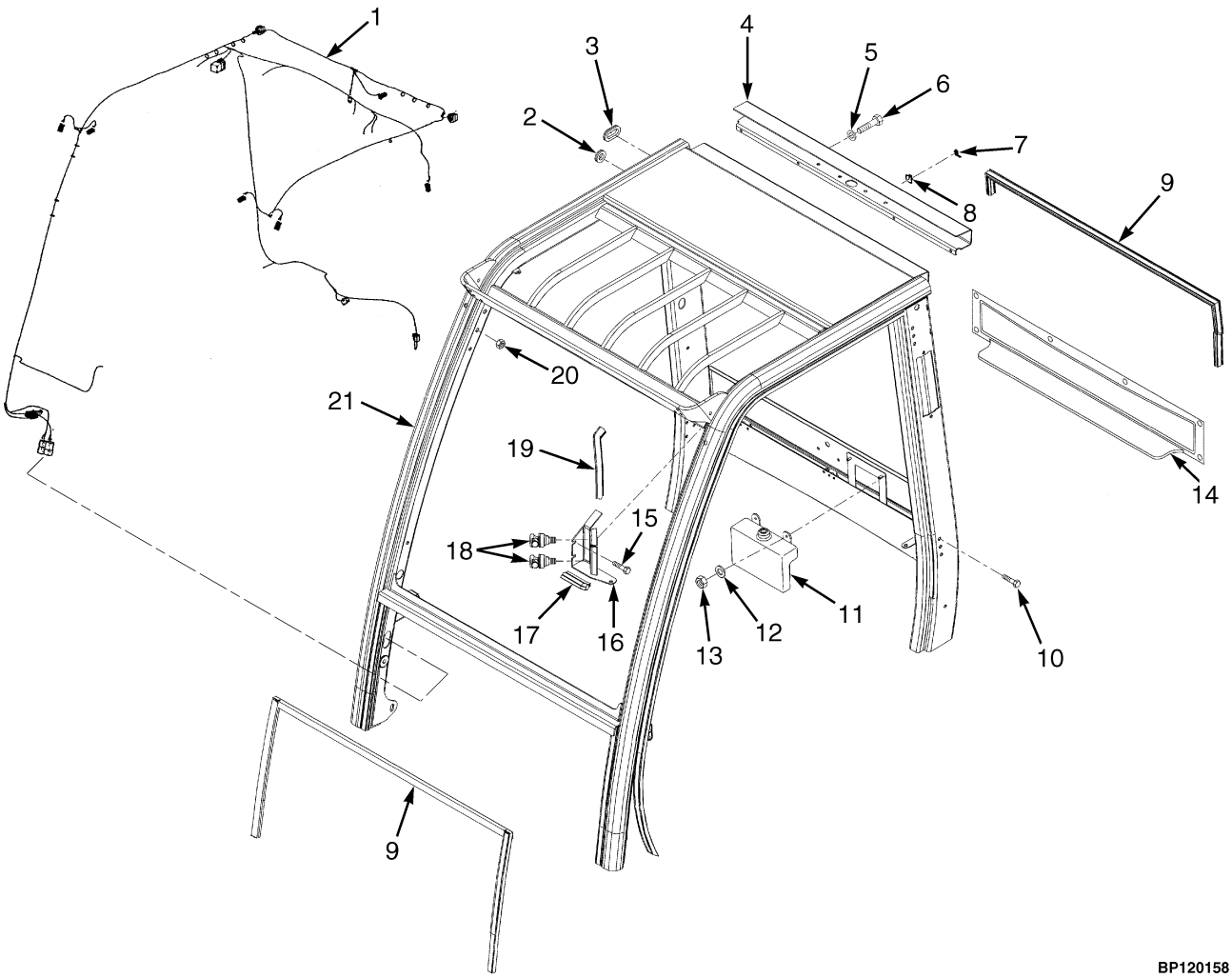

©2014 HYSTER COMPANY

CAB

FRAME AND ATTACHING PARTS – WITHOUT A/C

ITEM	PART NO.	DESCRIPTION	QTY
	1652722	**Cab (Without A/C)**	**1**
	1641660	Cab (With PVC Doors)	1
1	**1598333**	**Wire Harness**	**1**
1	**2044712**	**Relay (30 Amp)**	**1**
2	1579116	Grommet	2
3	**1598332**	**Grommet**	**3**
4	**1639004**	**Cover (Cable)**	**1**
5	**320158**	**Washer**	**4**
6	**136681**	**Capscrew**	**4**
7	**1558036**	**Clip**	**3**
8	**1393499**	**Clamp**	**3**
9	**1515337**	**Seal**	**AR**
10	1493308	Bolt	12
11	**1598329**	**Reservoir (Washer Bottle with Pump)**	**1**
12	**320156**	**Washer**	**7**
13	**136687**	**Nut**	**2**
14	**1598668**	**Cover (Rear)**	**1**
15	**a 1583611**	**Capscrew**	**2**
16	**a . . . . .**	**Heater Hose Bulkhead**	**1**
16	**a 1643584**	**Bracket**	**1**
16	**a 1393539**	**Seal**	**AR**
17	**1515337**	**Seal**	**AR**
18	**1598327**	**Connector (Female)**	**2**
19	**1614926**	**Strip Seal**	**1**
20	1468308	Nut	6
21	**. . . . .**	**Frame**	**1**

FOOTNOTES:

a With PVC Doors

©2014 HYSTER COMPANY

CAB (FIGURE 1-40)
FRAME AND ATTACHING PARTS — CAB WITH A/C

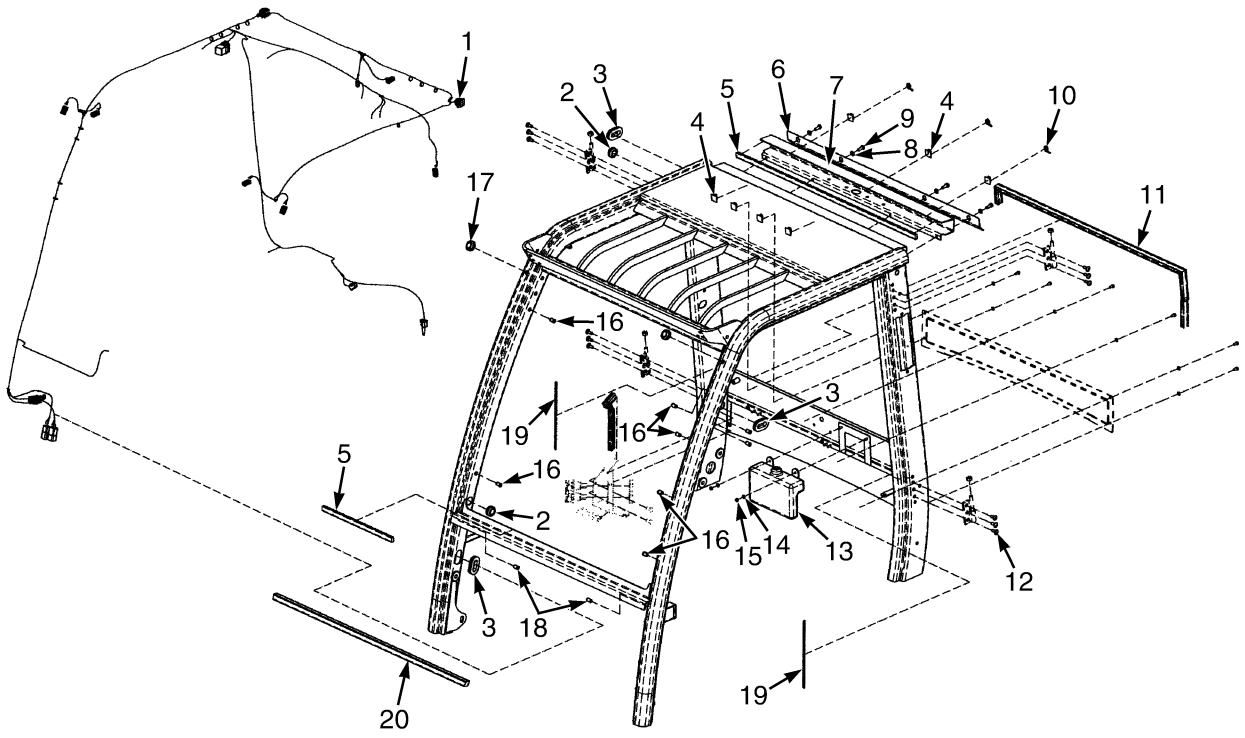

©2014 HYSTER COMPANY

CAB

FRAME AND ATTACHING PARTS – CAB WITH A/C

ITEM	PART NO.	DESCRIPTION	QTY
	1683428	Cab (With A/C)	1
1	1598333	Wire Harness	1
2	1646729	Grommet	2
3	1598332	Grommet	3
4	1558036	Clip	7
5	1646726	Seal	AR
6	1690936	Cover	1
7	1639004	Cover	1
8	. . . . .	Washer	4
9	136681	Capscrew	4
10	1393499	Clamp	3
11	1515337	Seal	AR
12	1674103	Screw	12
13	1598329	Reservoir (Washer Bottle with Pump)	1
13	1705156	Pump (Windshield Washer, 12V)	1
14	320156	Washer	2
15	136687	Nut	2
16	1674102	Rivet	9
17	1646728	Sleeve	2
18	. . . . .	Nut	1
19	1692589	Adhesive	AR
20	1674106	Seal	AR

©2014 HYSTER COMPANY

RAIN TOP (FIGURE 1-41)

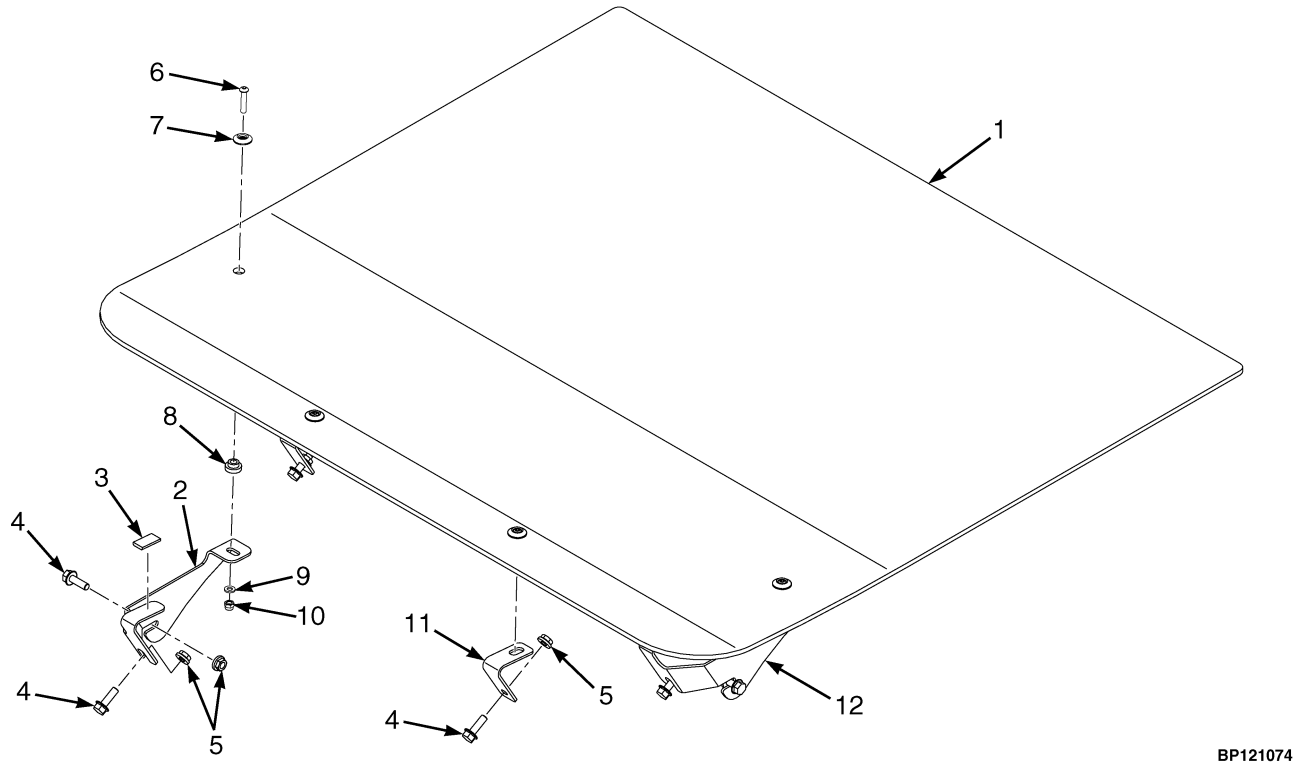

BP121074

ITEM	PART NO.	DESCRIPTION	QTY
1	4051334	Roof Panel	1
2	4050312	Bracket	1
3	4050311	Seal	2
4	4043638	Capscrew	6
5	1586430	Nut	6
6	1710007	Capscrew	4
7	1709980	Washer	4
8	261395	Bushing	4
9	1673754	Washer	4
10	4050426	Locknut	4
11	4050343	Bracket	2
12	4050313	Bracket	1

©2014 HYSTER COMPANY

NOTES

©2014 HYSTER COMPANY

LABELS (FIGURE 1-42)
EXTERIOR

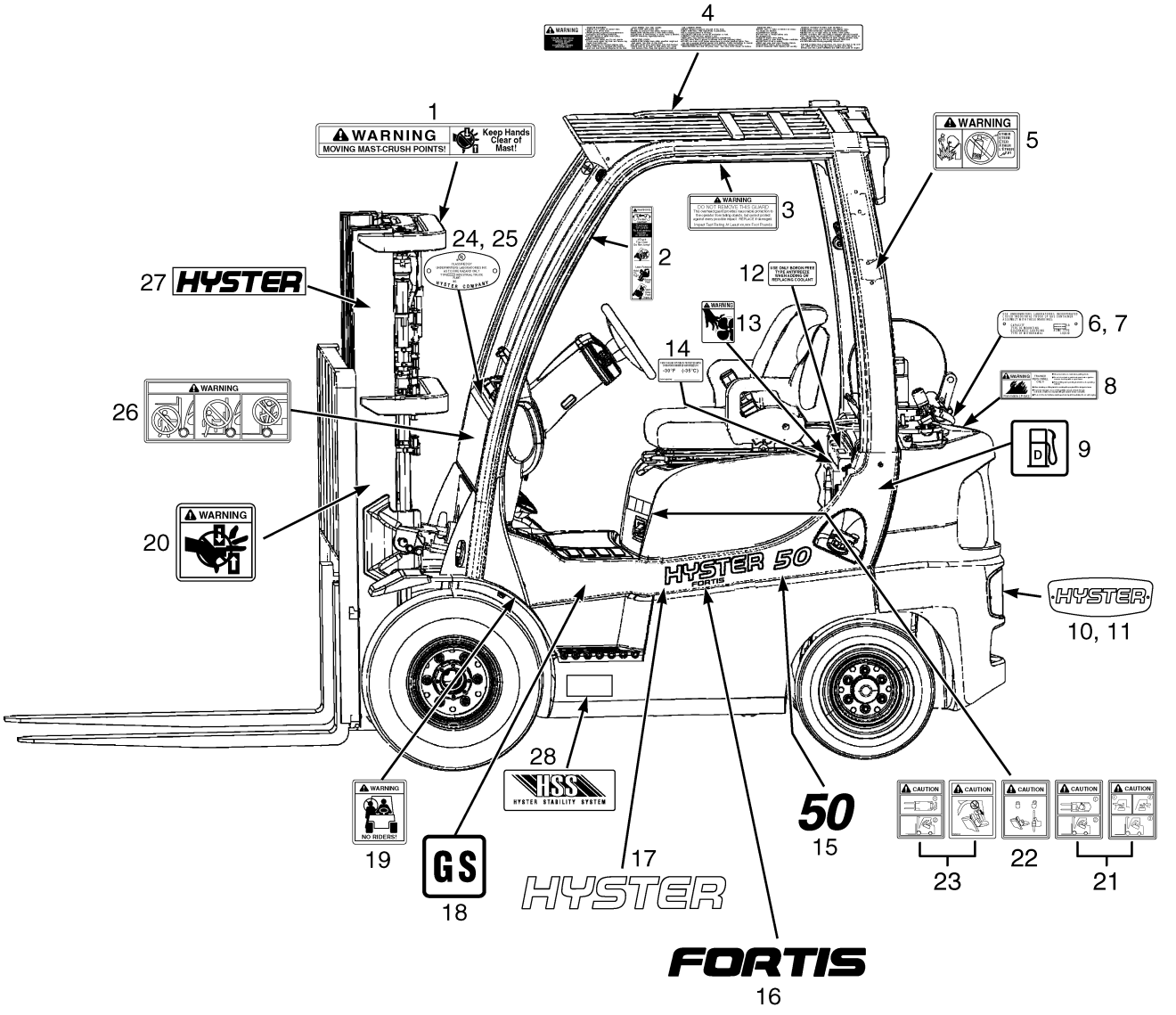

HP120855

©2014 HYSTER COMPANY

LABELS
EXTERIOR

ITEM	PART NO.	DESCRIPTION	QTY
1	1330919	Label (Mast Warning)	1
2	1330917	Label (Operator Restraint)	2
3	**a . . . . .**	**Label (Impact Rating)**	**1**
4	2073197	Label (Operator Warning)	1
5	**b** 2034459	Label (Ether Warning)	1
6	1501258	Nameplate (LP Tank)	1
7	**170658**	**Rivet**	**4**
8	1354171	Label (Flammable LPG)	1
9	2074255	Label (Unleaded Fuel Only)	1
9	**2074256**	**Label (Fuel Fill)**	**1**
10	1583609	Plate (Hyster Logo)	1
10	**1677428**	**Label (Hyster Logo)**	**1**
11	1566951	Fastener	2
12	1375676	Label (Boron-Free Antifreeze)	1
13	1345939	Label (Fan Warning)	2
14	**1354165**	**Label (Antifreeze)**	**2**
15	1586444	Label (Model 40)	2
15	1586447	Label (Model 50)	2
15	1586448	Label (Model 60)	2
15	**1586449**	**Label (Model 70)**	**2**
16	**1586439**	**Label (Fortis)**	**2**
17	**1586440**	**Label (Hyster)**	**2**
18	154065	Label (Type GS)	2
18	154066	Label (Type LPS)	2
18	154067	Label (Type DS)	2
19	1330920	Label (No Riders)	2
20	1335129	Label (Pinch Point)	2
21	**d** 2075615	Label (Hood Opening)	1
21	2082679	Label (Electronic Arm Caution)	1
22	2075418	Label (Locking Gas Spring)	1
23	**c** 2076169	Label (Swivel Seat)	1
24	**a . . . . .**	**Inspection Plate**	**1**
25	**170658**	**Rivet**	**2**
26	2075656	Label (Mast Warning)	2
27	**1562353**	**Label (Hyster)**	**2**
28	**4035750**	**Label (Stability System)**	**2**
	2109698	Label (Hydraulic Fluid Warning) (Not Illustrated)	1

FOOTNOTES:

a Contact Your Local Hyster Dealer
b Diesel Only
c For Vehicles With Swivel Seat Only
d LPG Only

©2014 HYSTER COMPANY

LABELS (FIGURE 1-43)
INTERIOR

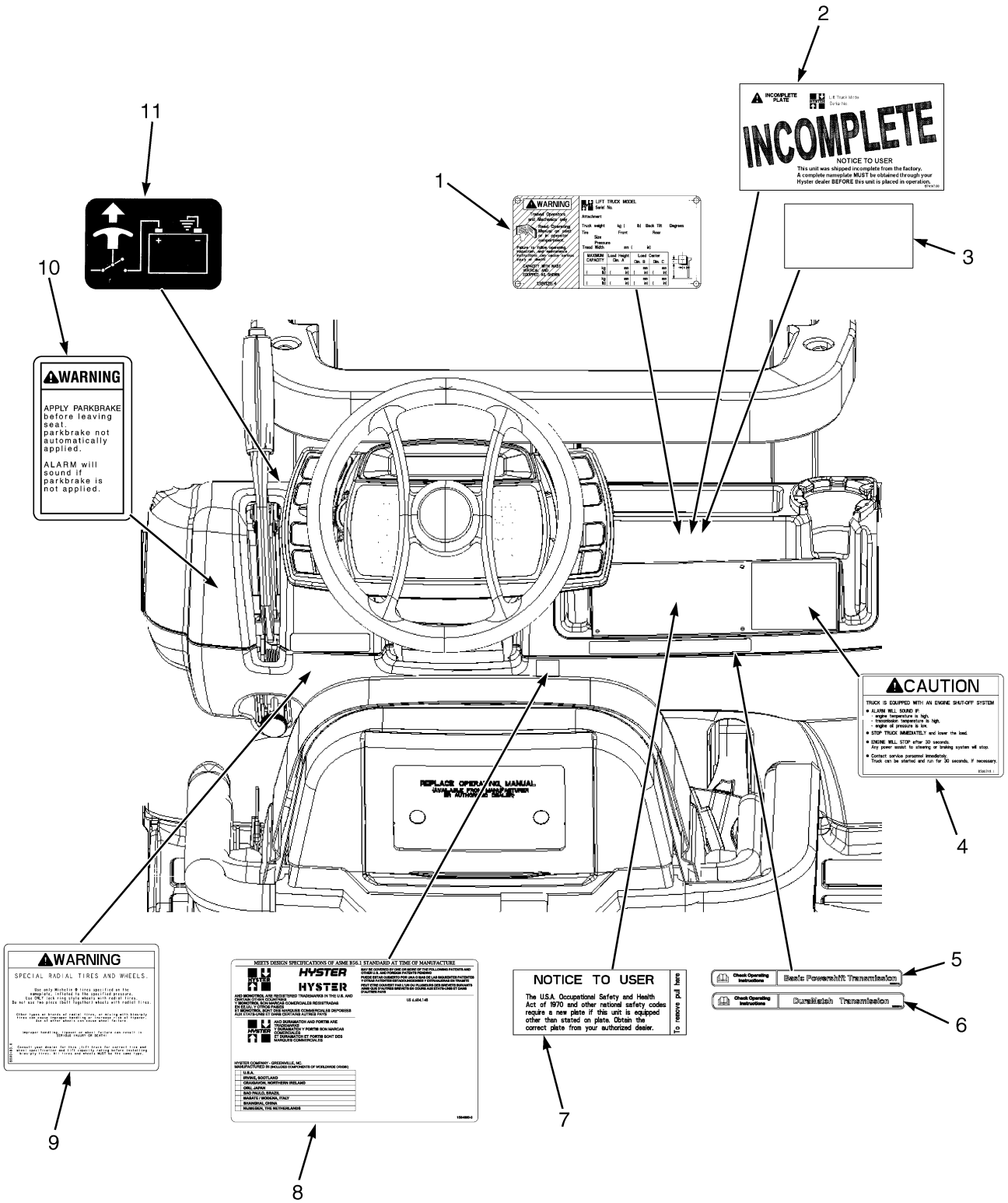

HP120856

©2014 HYSTER COMPANY

LABELS
INTERIOR

ITEM	PART NO.	DESCRIPTION	QTY
1	**b**	Nameplate	1
1	170658	Rivet	4
1	2307400	Rivet (Optional)	4
2	1574147	Nameplate (Incomplete Truck)	1
3	389688	Nameplate Cover	1
4	1385102	Label (Drive Train Protection)	1
5	**a** 1589377	Label (Basic Powershift Transmission)	1
6	**c** 1589397	Label (DuraMatch Transmission)	1
7	1335137	Nameplate (Complete Truck)	1
8	1534660	Label (Patents and Trademarks)	1
8	4612320	Label (Radial Tire Warning)	1
10	2074210	Label (Park Brake Warning)	1
11	1324480	Label (Battery Switch)	1

FOOTNOTES:

a Basic Transmission
b Contact Your Local Hyster Dealer
c Electric Transmission

©2014 HYSTER COMPANY

LABELS (FIGURE 1-44)
HYDRAULIC CONTROL LABELS — MANUAL HYDRAULIC

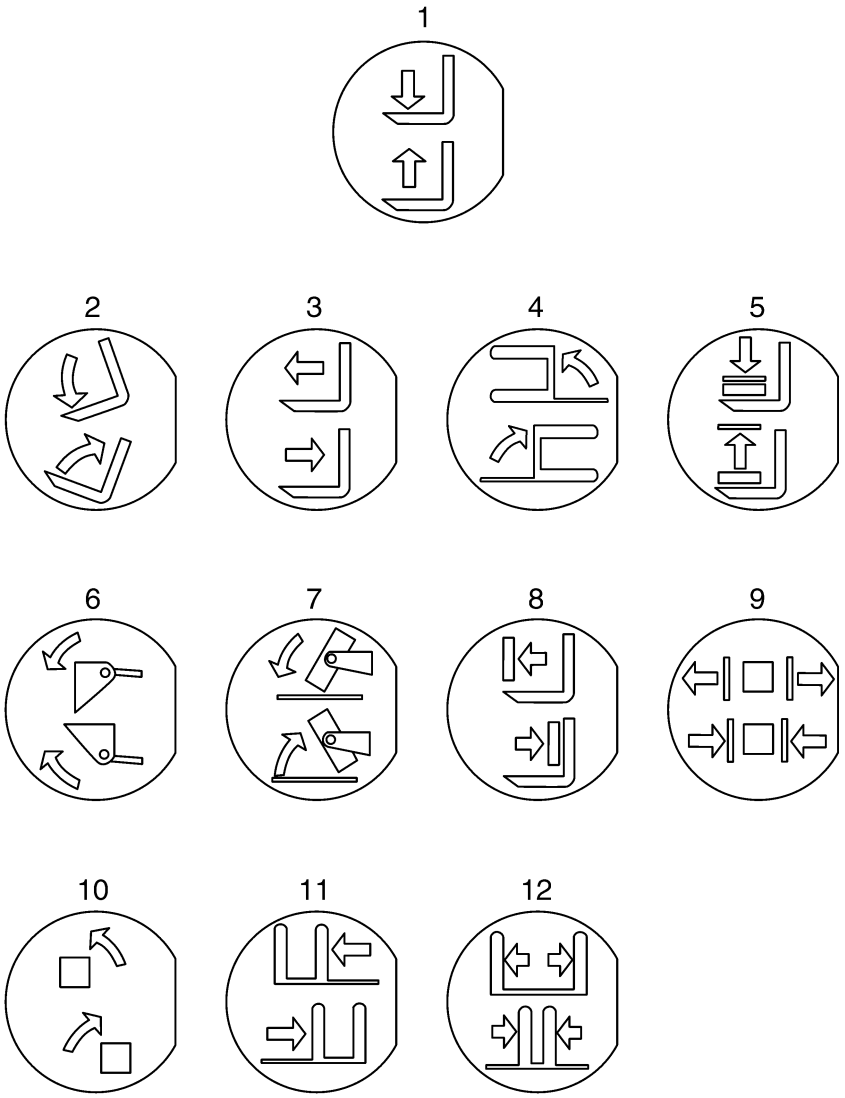

BP121111

©2014 HYSTER COMPANY

LABELS

HYDRAULIC CONTROL LABELS – MANUAL HYDRAULIC

ITEM	PART NO.	DESCRIPTION	QTY
1	**4034931**	**Lens with label (Hoist)**	**1**
2	**4034932**	**Lens with label (Tilt)**	**1**
3	4034933	Lens with label (Reach)	1
4	4034934	Lens with label (Swing)	1
5	4034935	Lens with label (Load Stabilizer)	1
6	4034936	Lens with label (Scoop)	1
7	4034937	Lens with label (Upender)	1
8	4034938	Lens with label (Push and Pull)	1
9	4034939	Lens with label (Clamp)	1
10	4034940	Lens with label (Rotate)	1
11	**4034941**	**Lens with label (Side-Shift)**	**1**
12	4034942	Lens with label (Fork Spread)	1
	a 2070655	Lens (Blank)	1

FOOTNOTES:

a Not Illustrated

©2014 HYSTER COMPANY

MINI LEVER MODULE LABELS (FIGURE 1-45)
HYDRAULIC CONTROL FUNCTIONS

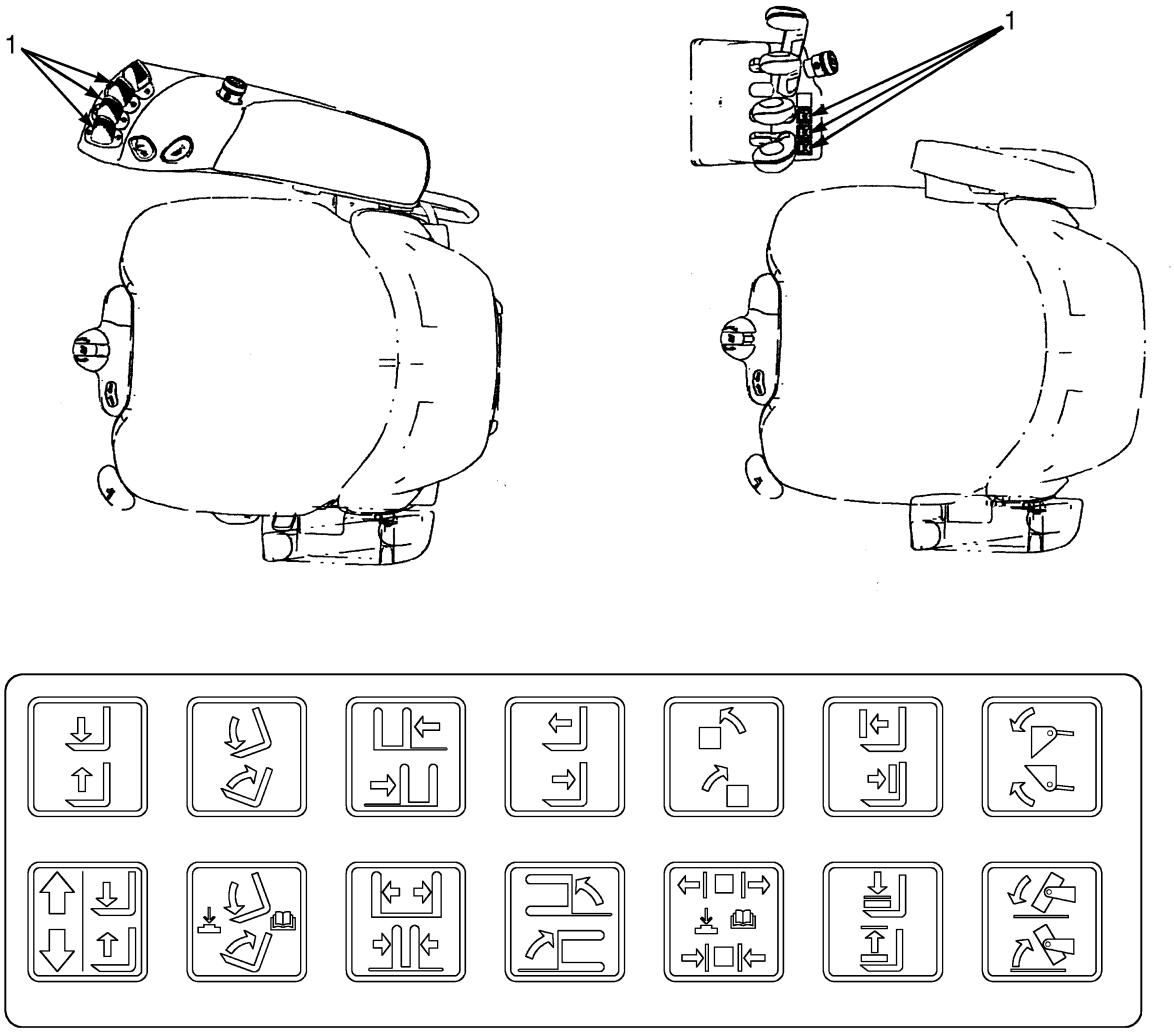

BP120427

©2014 HYSTER COMPANY

MINI LEVER MODULE LABELS
HYDRAULIC CONTROL FUNCTIONS

ITEM	PART NO.	DESCRIPTION	QTY
1	2102640	Label	1

©2014 HYSTER COMPANY

NOTES

©2014 HYSTER COMPANY

2 ENGINE ASSEMBLY - MAZDA

SECTION 2
ENGINE ASSEMBLY - MAZDA

DESCRIPTION	PAGE
ASSEMBLED ENGINE	
MAZDA 2.2L, GASOLINE AND LPG	2-16
CAMSHAFT AND VALVES	
MAZDA 2.2L, GASOLINE AND LPG	2-22
COOLING SYSTEM	
MAZDA 2.2L, GASOLINE AND LPG, SQUARE WAVE RADIATOR - BASIC POWERSHIFT TRANSMISSION	2-2
MAZDA 2.2L, GASOLINE AND LPG, SQUARE WAVE RADIATOR - ELECTRONIC TRANSMISSION, EXTERNAL OIL COOLER, OR WET BRAKE	2-6
MAZDA 2.2L, GASOLINE SERPENTINE RADIATOR - BASIC POWERSHIFT TRANSMISSION	2-4
CRANKSHAFT AND PISTONS	
MAZDA 2.2L, GASOLINE AND LPG	2-24
CYLINDER BLOCK	
MAZDA 2.2L, GASOLINE AND LPG	2-20
CYLINDER HEAD	
MAZDA 2.2L, GASOLINE AND LPG	2-18
EMISSION CONTROL SYSTEM	
MAZDA 2.2L, GASOLINE	2-26
ENGINE COOLING SYSTEM	
MAZDA 2.2L, GASOLINE AND LPG	2-42
ENGINE FUEL SYSTEM	
MAZDA 2.2L, GASOLINE	2-30
ENGINE MOUNTING	2-12
EXHAUST MANIFOLD	
MAZDA 2.2L, GASOLINE AND LPG	2-32
EXHAUST SYSTEM WITH CATALYTIC CONVERTER	
MAZDA 2.2L, GASOLINE AND LPG	2-8
FAN ASSEMBLY	
MAZDA	2-10
FLYWHEEL AND HOUSING	
2.2 L - GASOLINE AND LPG	2-14
INTAKE MANIFOLD	
MAZDA 2.2L, GASOLINE	2-34
MAZDA 2.2L LPG	2-36
MAP SENSOR	
MAZDA 2.2L, LPG	2-28
OIL PUMP AND FILTER	
MAZDA 2.2L, GASOLINE AND LPG	2-40
TIMING GEAR COVER AND OIL PAN	
MAZDA 2.2L, GASOLINE AND LPG	2-38

©2014 HYSTER COMPANY

COOLING SYSTEM (FIGURE 2-1)

MAZDA 2.2L, GASOLINE AND LPG, SQUARE WAVE RADIATOR — BASIC POWERSHIFT TRANSMISSION

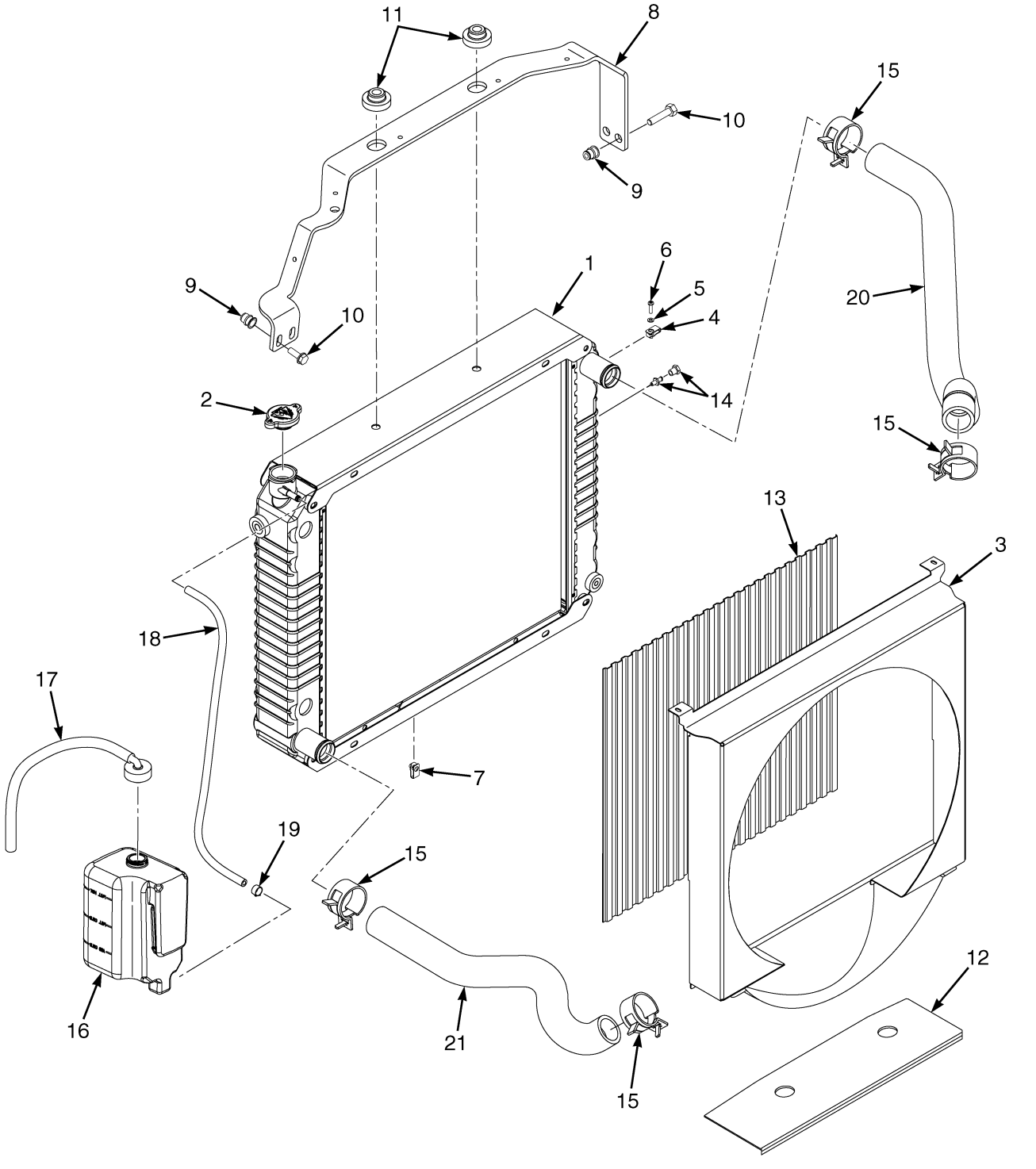

©2014 HYSTER COMPANY

COOLING SYSTEM

MAZDA 2.2L, GASOLINE AND LPG, SQUARE WAVE RADIATOR – BASIC POWERSHIFT TRANSMISSION

ITEM	PART NO.	DESCRIPTION	QTY
1	2056870	Radiator	1
1	1569079	Drain Valve (w/Thread Wrap)	1
2	**1352140**	**Radiator Cap**	**1**
3	1582074	Shroud	1
4	1535257	Nut	2
5	**320154**	**Washer**	**2**
6	**302020**	**Screw**	**2**
7	**1329271**	**Clip**	**2**
8	**4085712**	**Bracket**	**1**
9	**1530243**	**Insert**	**4**
10	**1527881**	**Capscrew**	**4**
11	**1529787**	**Isolator**	**4**
12	**1565692**	**Exhaust Shield**	**1**
13	1548497	Screen	1
14	**1531404**	**Sensor (Low Coolant Level)**	**1**
14	**a** 14385	Fitting	1
14	246108	Sealant	AR
15	**369804**	**Clamp**	**4**
16	**1633307**	**Reservoir**	**1**
17	**345455**	**Outlet Assembly**	**1**
17	**345453**	**Outlet (Reservoir)**	**1**
17	**345454**	**Cap**	**1**
17	**336550**	**Bushing**	**1**
17	**1663877**	**Hose**	**1**
18	**1567674**	**Hose**	**1**
19	**369815**	**Clamp**	**2**
20	2085255	Hose (Upper) (Gasoline)	1
20	2085041	Radiator Hose (Upper) (LPG)	1
21	2088675	Radiator Hose (Lower) (Gasoline and LPG)	1

FOOTNOTES:

a Without Low Coolant Level Sensor

©2014 HYSTER COMPANY

COOLING SYSTEM (FIGURE 2-2)

MAZDA 2.2L, GASOLINE SERPENTINE RADIATOR — BASIC POWERSHIFT TRANSMISSION

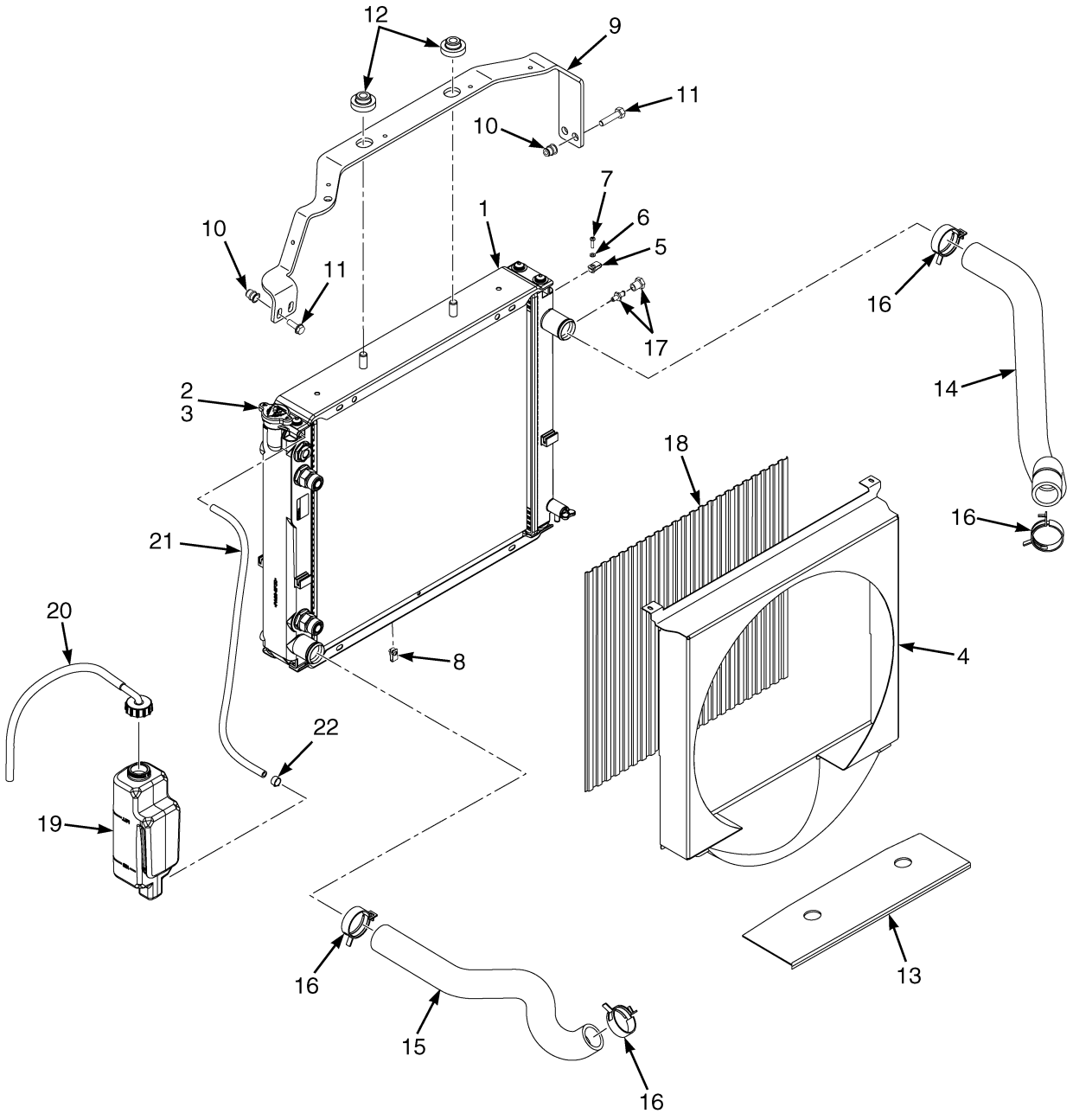

BP060030

©2014 HYSTER COMPANY

COOLING SYSTEM

MAZDA 2.2L, GASOLINE SERPENTINE RADIATOR – BASIC POWERSHIFT TRANSMISSION

ITEM	PART NO.	DESCRIPTION	QTY
1	2054879	Radiator	1
1	4606169	Fitting	2
2	1528495	Drain Plug	1
3	**1352140**	**Radiator Cap**	**1**
4	1593356	Shroud	1
5	1535257	Nut	2
6	**320154**	**Washer**	**2**
7	302023	Screw	2
8	**1329271**	**Clip**	**2**
9	1588508	Bracket (Radiator)	1
10	**1530243**	**Insert**	**4**
11	**1527881**	**Capscrew**	**4**
12	**1529787**	**Isolator**	**4**
13	1565691	Exhaust Shield	1
14	2085255	Hose (Upper) (Gasoline)	1
14	2085041	Radiator Hose (Upper) (LPG)	1
15	2088675	Radiator Hose (Lower) (Gasoline and LPG)	1
16	**369804**	**Clamp**	**4**
17	**1531404**	**Sensor (Low Coolant Level)**	**1**
17	**a** 14385	Fitting	1
17	246108	Sealant	AR
18	1548497	Screen	1
19	**1633307**	**Reservoir**	**1**
20	**345455**	**Outlet Assembly**	**1**
20	**336550**	**Bushing**	**1**
20	**345453**	**Outlet (Reservoir)**	**1**
20	**345454**	**Cap**	**1**
20	**1663877**	**Hose**	**1**
21	**1567674**	**Hose**	**1**
22	**369815**	**Clamp**	**2**

FOOTNOTES:

a Without Low Coolant Level Sensor

©2014 HYSTER COMPANY

COOLING SYSTEM (FIGURE 2-3)

MAZDA 2.2L, GASOLINE AND LPG, SQUARE WAVE RADIATOR — ELECTRONIC TRANSMISSION, EXTERNAL OIL COOLER, OR WET BRAKE

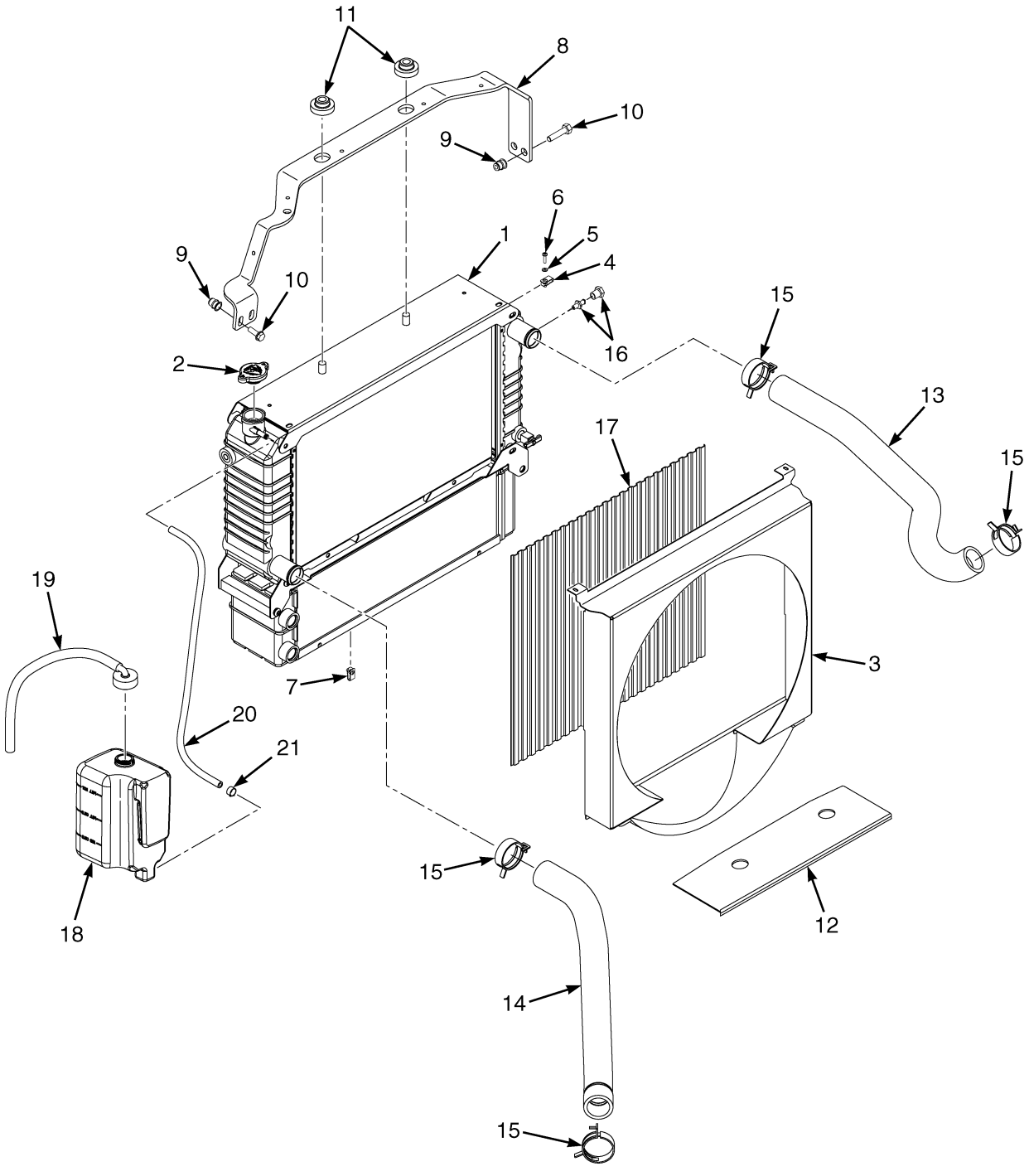

©2014 HYSTER COMPANY

COOLING SYSTEM

MAZDA 2.2L, GASOLINE AND LPG, SQUARE WAVE RADIATOR – ELECTRONIC TRANSMISSION, EXTERNAL OIL COOLER, OR WET BRAKE

ITEM	PART NO.	DESCRIPTION	QTY
1	4603553	Radiator (Assembly)	1
1	4038259	Radiator	1
1	4038263	Oil Cooler	1
1	4038264	Drain Valve	1
1	4038265	Nut	2
1	4038266	Bolt	8
1	4038267	Bolt	4
2	1352140	Radiator Cap	1
3	1582074	Shroud	1
4	1535257	Nut	2
5	320154	Washer	2
6	302020	Screw (M 4 x 0.7 x 10)	2
7	1329271	Clip	2
8	4085712	Bracket	1
9	1530243	Insert	4
10	1527881	Capscrew	4
11	1529787	Isolator	4
12	1565692	Exhaust Shield	1
13	2085254	Radiator Hose (Upper) (Gasoline)	1
13	2085042	Radiator Hose (Upper) (LPG)	1
14	2088676	Radiator Hose (Lower)	1
15	369804	Clamp	4
16	1531404	Sensor (Low Coolant Level)	1
16	**a** 14385	Fitting	1
16	246108	Sealant	AR
17	1582078	Screen	1
18	1633307	Reservoir	1
19	345455	Outlet Assembly	1
19	336550	Bushing	1
19	345453	Outlet (Reservoir)	1
19	345454	Cap	1
19	1663877	Hose	1
20	1567674	Hose	1
21	369815	Clamp	2

FOOTNOTES:

a Without Low Coolant Sensor

©2014 HYSTER COMPANY

EXHAUST SYSTEM WITH CATALYTIC CONVERTER (FIGURE 2-4)

MAZDA 2.2L, GASOLINE AND LPG

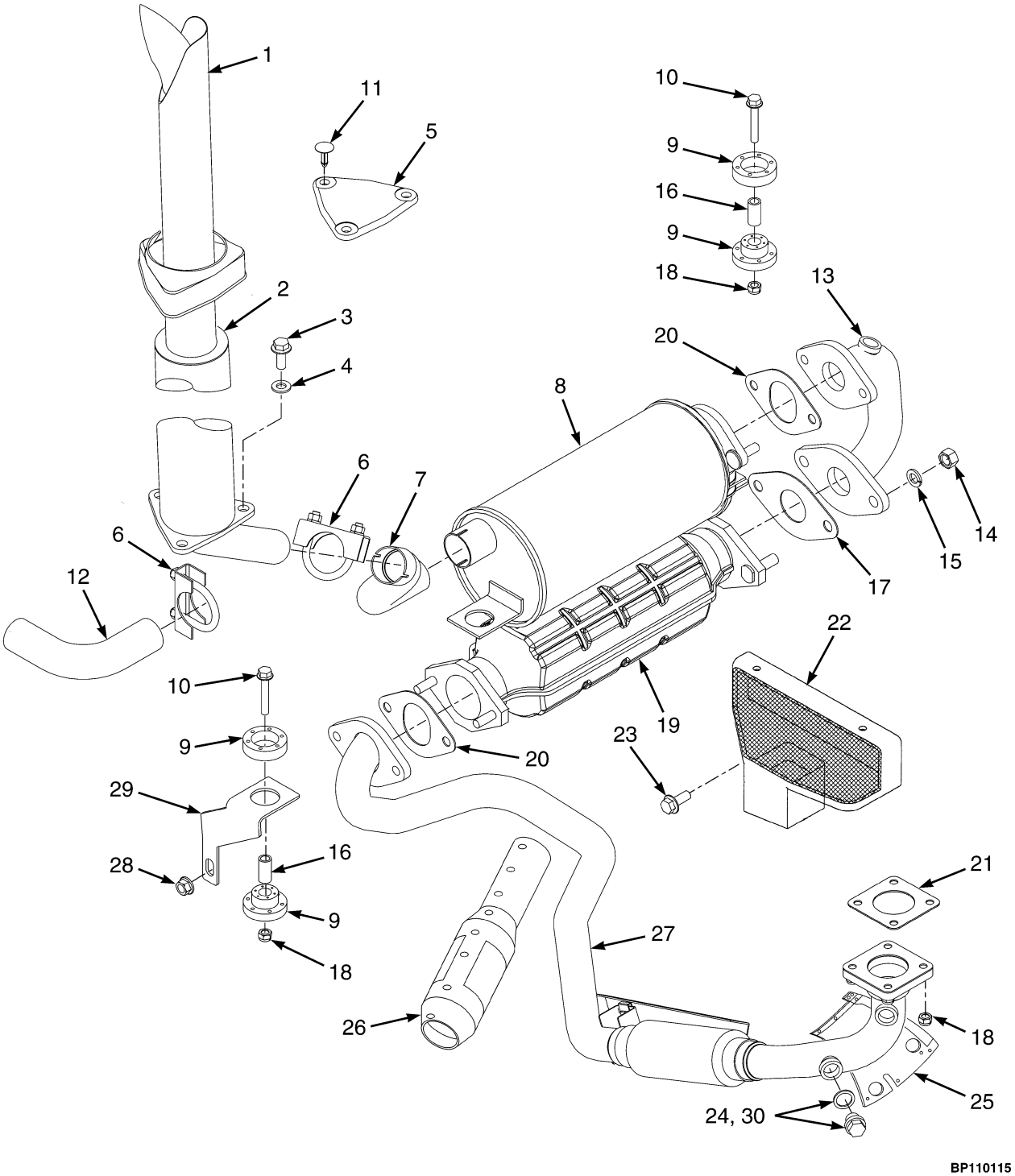

©2014 HYSTER COMPANY

EXHAUST SYSTEM WITH CATALYTIC CONVERTER
MAZDA 2.2L, GASOLINE AND LPG

KEY:
A: With Catalytic Converter
B: For Vehicles With Safety Option

NOTE: This parts list contains multiple truck configurations, refer to the KEY to choose the correct QTY column for your truck.

ITEM	PART NO.	DESCRIPTION	QTY A	QTY B
1	c 2021394	Cover	1	1
2	c 1646827	Tail Pipe	1	1
3	**c 1510117**	**Capscrew**	**3**	**3**
4	c 320159	Washer	3	3
5	**b 1533639**	**Cover**	**1**	**1**
6	**63117**	**Clamp**	**1**	**1**
7	c 1533863	Exhaust Pipe	1	1
8	2089895	Muffler (Crimped)	1	..
8	2089894	Muffler (Welded)	..	1
9	**1709996**	**Isolator**	**4**	**4**
10	**1510115**	**Capscrew**	**2**	**2**
11	**b 1347045**	**Fastener**	**1**	**1**
12	b 1589312	Exhaust Pipe	1	1
13	1636409	Exhaust Pipe	1	1
14	1469405	Nut	2	2
15	**292683**	**Lockwasher**	**2**	**2**
16	**1708371**	**Spacer**	**2**	**2**
17	1677491	Gasket	1	1
18	**1582222**	**Locknut**	**6**	**6**
19	4005681	Catalytic Converter	1	1
20	1677490	Gasket	2	2
21	1338308	Gasket	1	1
22	a 2084006	Cover (Manifold)	1	1
23	a 1528778	Capscrew	1	1
24	1396518	Plug	1	1
24	1509103	Ring (Copper)	1	1
24	1509104	Plug	1	1
25	a 2084003	Exhaust Wrap	1	1
26	a 2084005	Exhaust Wrap	1	1
27	1651606	Exhaust Pipe	1	1
27	4025054	Exhaust Pipe	1	1
28	**1460477**	**Nut**	**4**	**4**
29	1532523	Bracket	1	1
30	251979	Lubricant	AR	AR

FOOTNOTES:

a Paper Industry Applications
b With Counterweight Exhaust
c With Overhead Exhaust

©2014 HYSTER COMPANY

FAN ASSEMBLY (FIGURE 2-5)
MAZDA

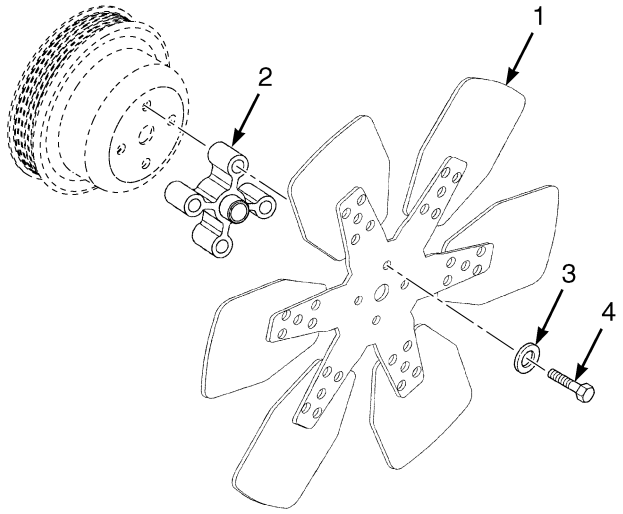

BP090418

ITEM	PART NO.	DESCRIPTION	QTY
1	1375642	Fan	1
2	1528140	Spacer	1
3	296418	Washer	4
4	293619	Capscrew	4

©2014 HYSTER COMPANY

NOTES

©2014 HYSTER COMPANY

ENGINE MOUNTING (FIGURE 2-6)

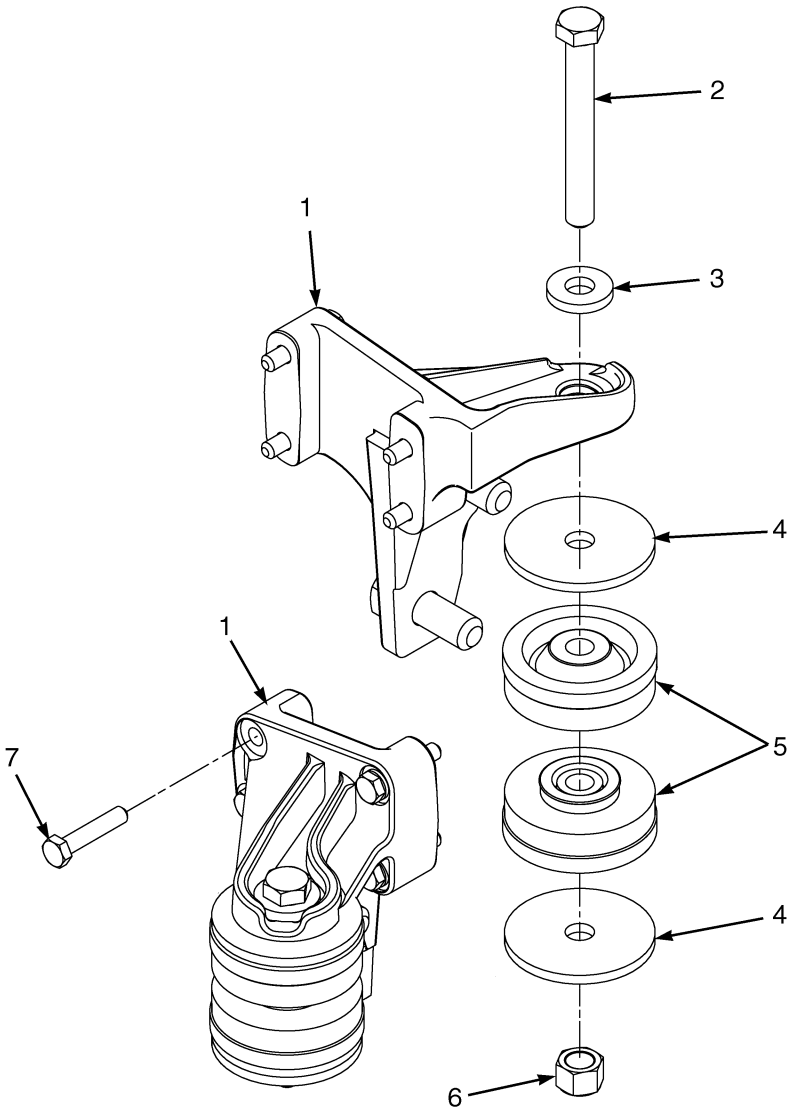

BP090163

©2014 HYSTER COMPANY

ENGINE MOUNTING

ITEM	PART NO.	DESCRIPTION	QTY
1	1557478	Mount (RH)	1
1	1557479	Mount (LH)	1
2	293698	Capscrew	2
3	1504075	Washer	2
4	1557737	Washer	4
5	2069951	Isolator	4
6	1565453	Nut (Flange)	2
7	1565150	Bolt (Flange)	8

©2014 HYSTER COMPANY

FLYWHEEL AND HOUSING (FIGURE 2-7)
2.2 L — GASOLINE AND LPG

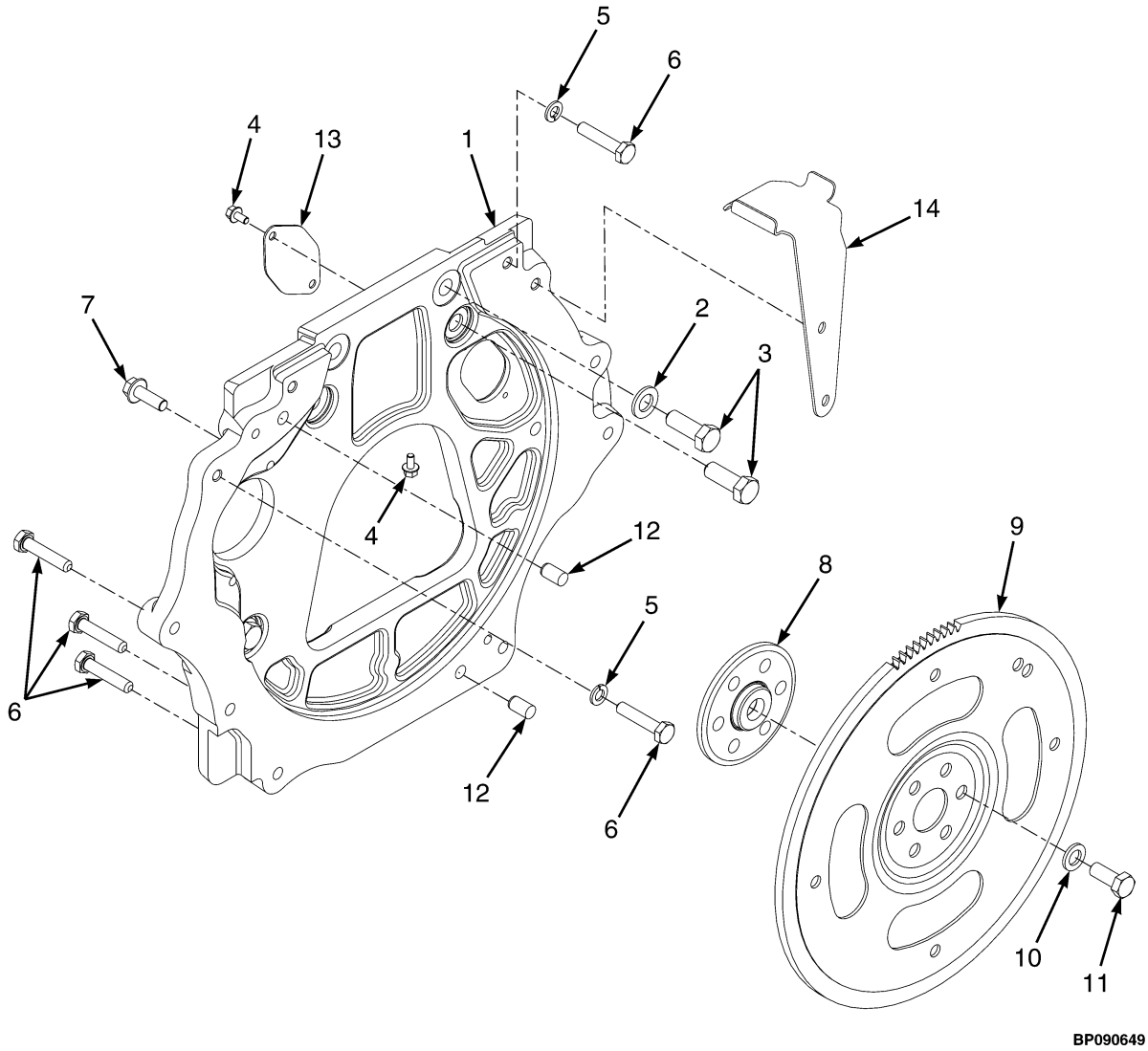

©2014 HYSTER COMPANY

FLYWHEEL AND HOUSING
2.2 L – GASOLINE AND LPG

ITEM	PART NO.	DESCRIPTION	QTY
1	1553266	Flywheel Housing	1
2	296424	Washer	6
3	2072918	Capscrew	6
4	1534417	Capscrew	5
5	292682	Lockwasher	10
6	292517	Capscrew	10
7	1527884	Capscrew	2
8	~~1506572~~		
	4101675	Hub	1
9	1605467	Flywheel (With Ring Gear)	1
9	1506607	Flywheel (With Ring Gear) (Alternate Part)	1
10	296422	Washer	6
11	1528415	Capscrew	6
12	303150	Dowel	2
13	1625999	Dust Cover	1
14	1658141	Drip Shield (Gasoline)	1

©2014 HYSTER COMPANY

ASSEMBLED ENGINE (FIGURE 2-8)
MAZDA 2.2L, GASOLINE AND LPG

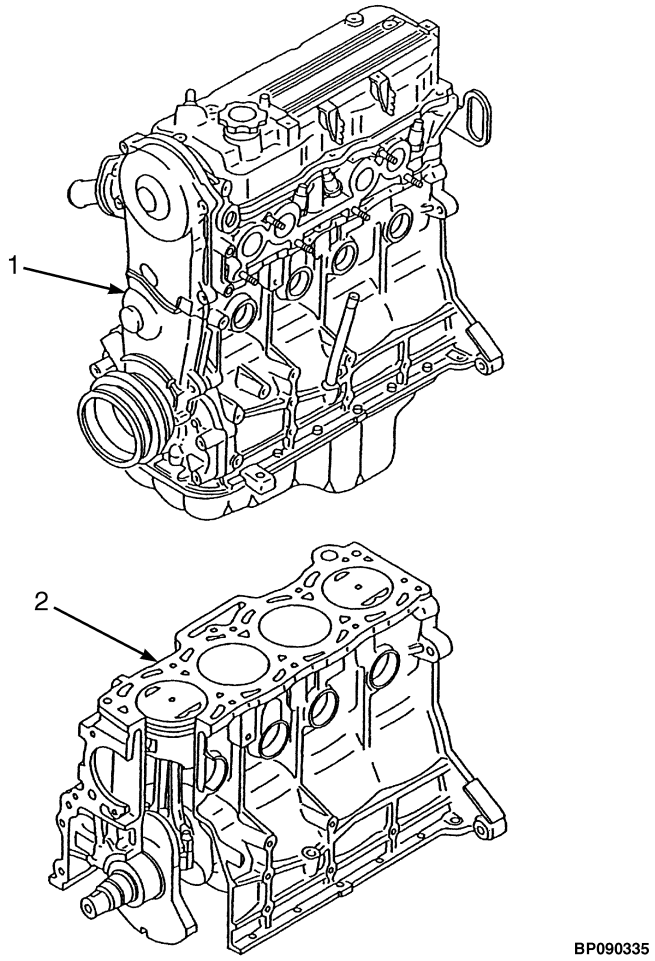

ITEM	PART NO.	DESCRIPTION	QTY
1	1652306	Long Block (Mazda 2.2L, Gasoline)	1
1	1652305	Long Block (Mazda 2.2L, LPG	1
2	1553652	Short Block (Mazda 2.2L, Gasoline)	1
2	1572388	Short Block (Mazda 2.2L, LPG	1

©2014 HYSTER COMPANY

NOTES

©2014 HYSTER COMPANY

CYLINDER HEAD (FIGURE 2-9)
MAZDA 2.2L, GASOLINE AND LPG

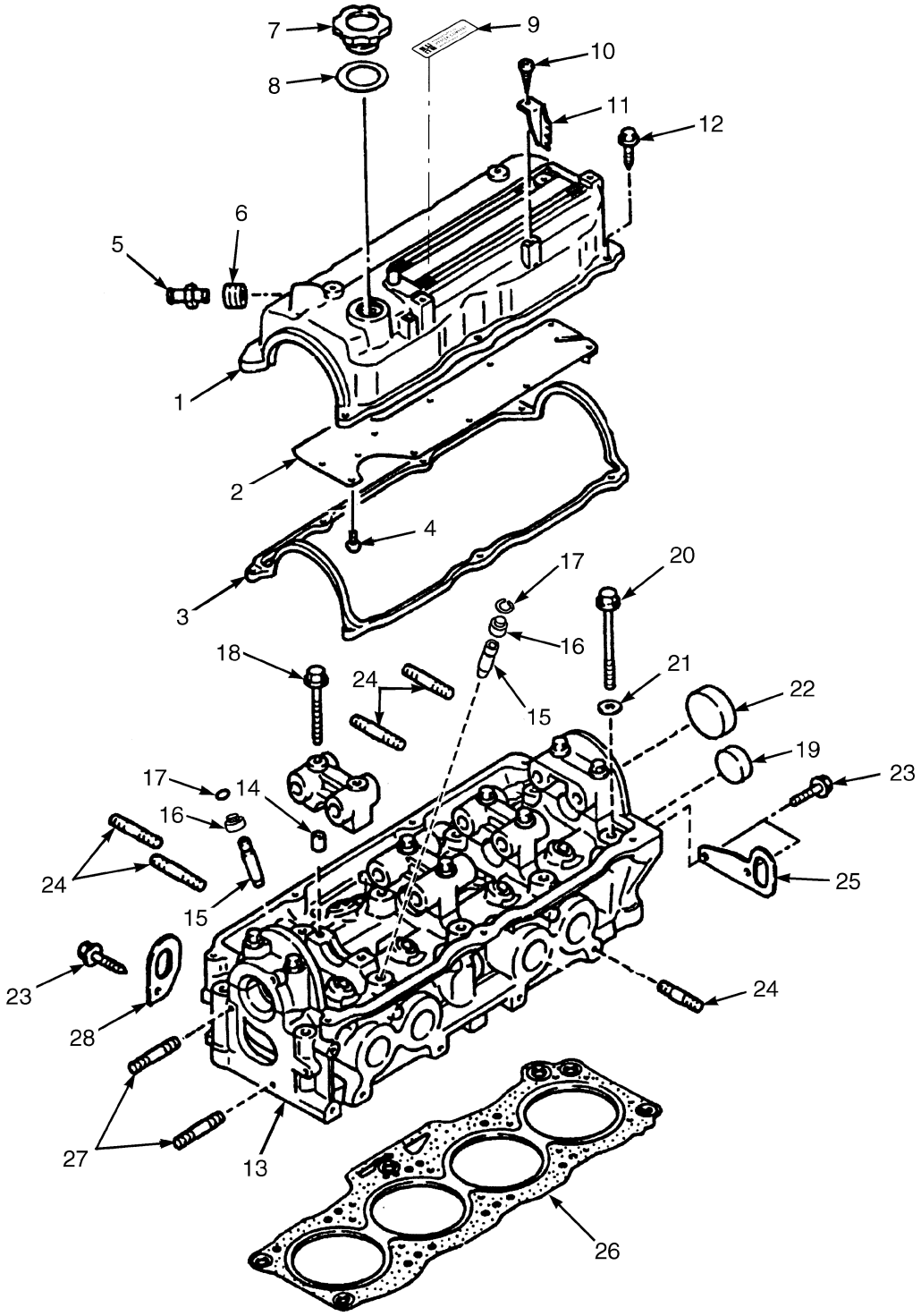

HP091088

©2014 HYSTER COMPANY

CYLINDER HEAD
MAZDA 2.2L, GASOLINE AND LPG

ITEM	PART NO.	DESCRIPTION	QTY
	1652306	Long Block (2.2L, Gasoline)	1
	1652305	Long Block (2.2L, LPG)	1
1	1360883	Engine Cover (LPG)	1
1	1553693	Engine Cover (Gasoline)	1
2	1360884	Plate	1
3	1360886	Gasket	1
4	2022655	Screw	10
5	1553692	PCV Valve	1
6	1360892	Seal	1
7	1360887	Cap	1
8	1360888	Gasket	1
9	. . . . .	Label	1
10	1362000	Screw	2
11	1360885	Bracket	2
12	1362001	Bolt	7
13	1360878	Cylinder Head	1
14	1362002	Pin	10
15	1360895	Guide	8
16	**b** 1361718	Seal (Inlet)	4
16	**a** 1361719	Seal (Exhaust)	4
17	1360879	Clip	1
18	1361894	Bolt	10
19	1362003	Plug	1
20	1360880	Bolt	10
21	1360881	Washer	10
22	1360882	Cap	8
23	1361898	Bolt	3
24	1361897	Stud	20
25	2314973	Hanger	1
26	2045321	Gasket (Cylinder Head)	1
27	1361899	Stud	2
28	1360890	Bracket	1

FOOTNOTES:

a Black

b Red/Brown

©2014 HYSTER COMPANY

CYLINDER BLOCK (FIGURE 2-10)
MAZDA 2.2L, GASOLINE AND LPG

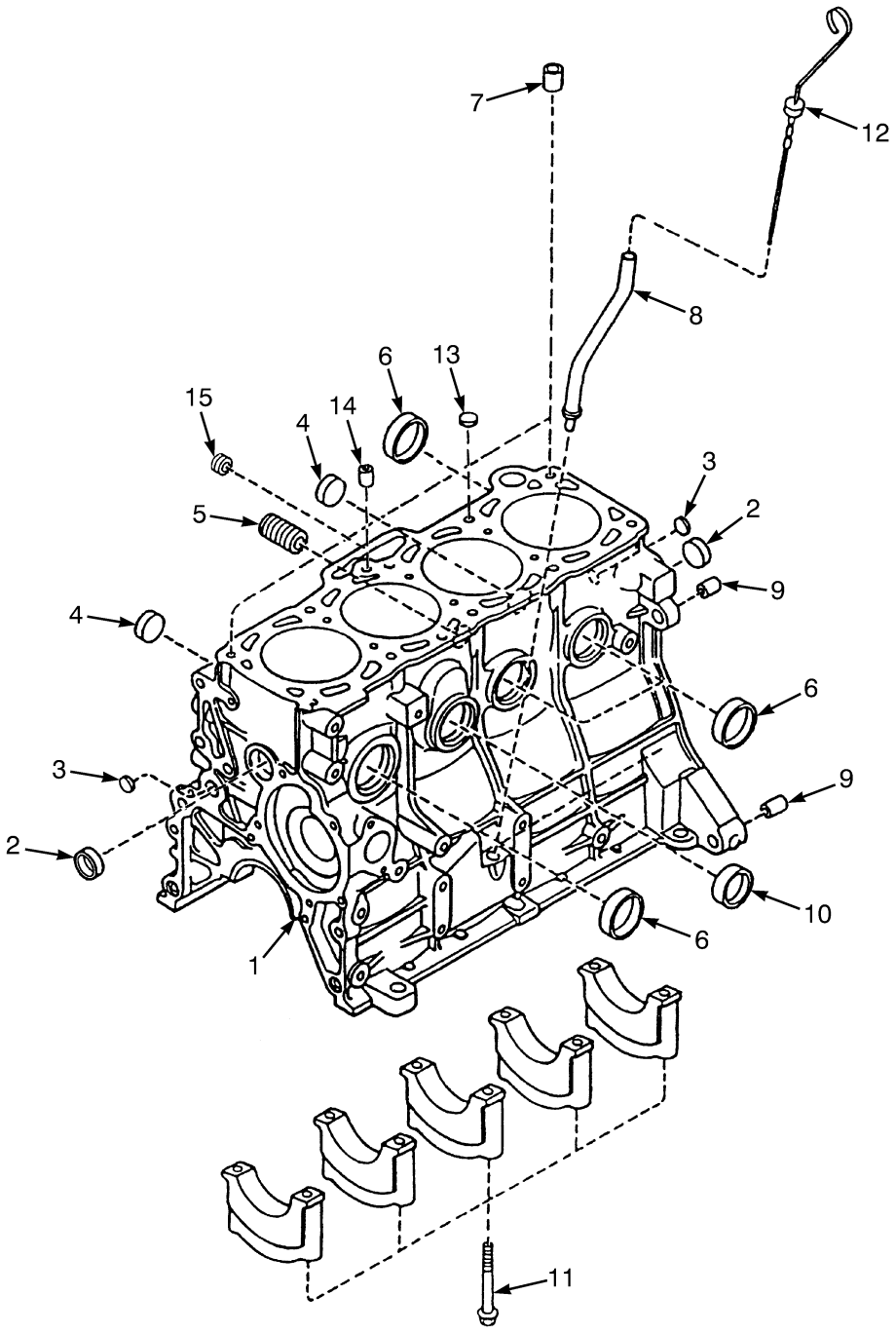

BP090328

©2014 HYSTER COMPANY

CYLINDER BLOCK
MAZDA 2.2L, GASOLINE AND LPG

ITEM	PART NO.	DESCRIPTION	QTY
	1652306	Long Block (2.2L, Gasoline)	1
	1652305	Long Block (2.2L, LPG)	1
	1553652	Short Block (2.2L, Gasoline)	1
	1572388	Short Block (2.2L, LPG)	1
1	1370744	Cylinder Block	1
2	1362009	Plug	1
3	1361675	Plug	2
4	1362005	Plug	2
5	1360898	Joint Fitting	1
6	1362003	Plug	4
7	1360896	Pin	2
8	1360899	Tube Assy	1
9	1362008	Pin	2
10	1362007	Plug	2
11	1361676	Bolt	10
12	1361677	Dipstick	1
13	2028927	Plug	1
14	2029081	Plug	2
15	1553708	Plug	2

©2014 HYSTER COMPANY

CAMSHAFT AND VALVES (FIGURE 2-11)

MAZDA 2.2L, GASOLINE AND LPG

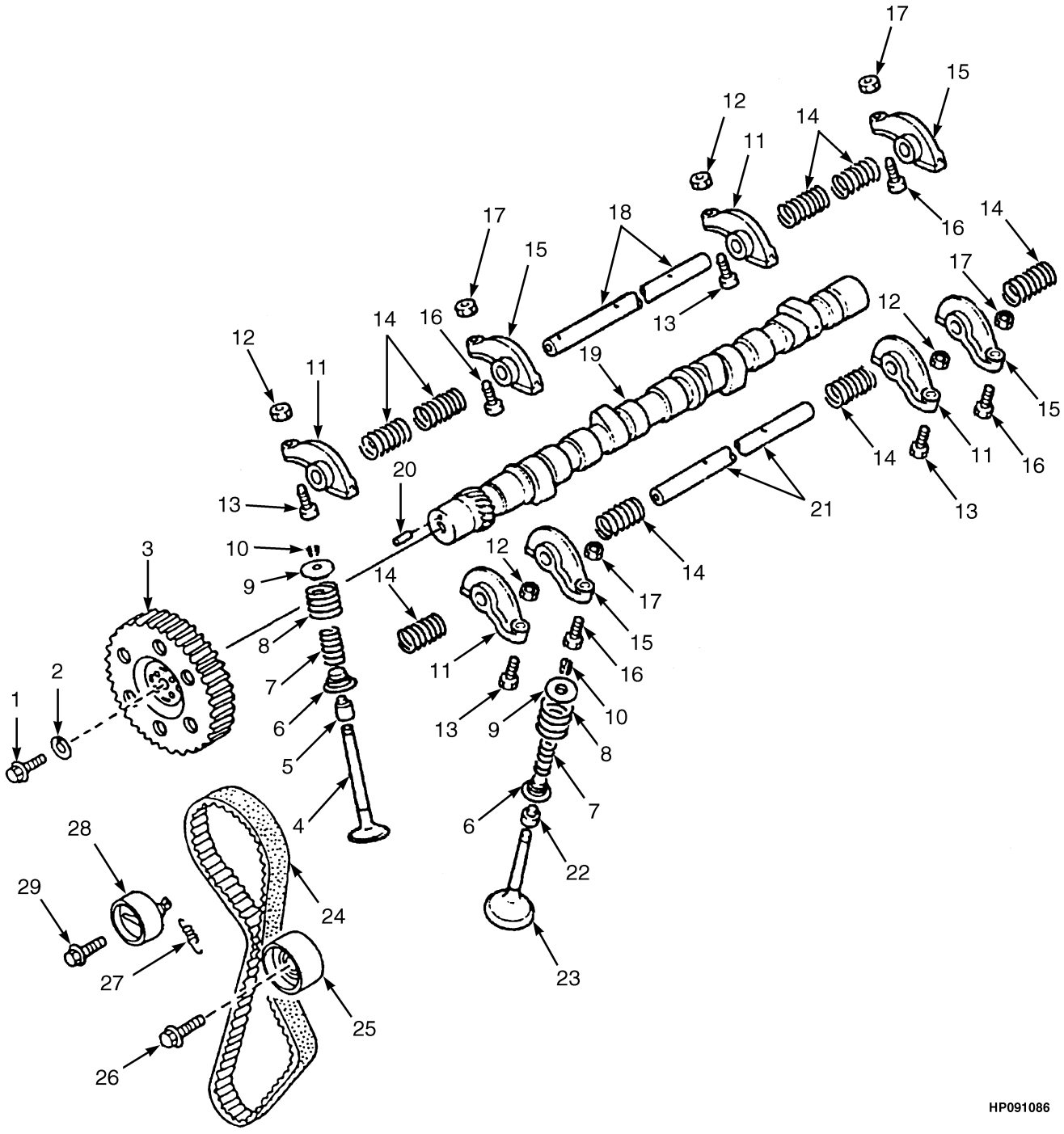

©2014 HYSTER COMPANY

CAMSHAFT AND VALVES
MAZDA 2.2L, GASOLINE AND LPG

ITEM	PART NO.	DESCRIPTION	QTY
	1652306	Long Block (2.2L, Gasoline)	1
	1652305	Long Block (2.2L, LPG)	1
1	1361736	Bolt	1
2	1361737	Washer	1
3	2029095	Pulley (Camshaft)	1
4	1361720	Inlet Valve (Intake)	4
5	1361718	Seal (Intake Red/Brown)	4
6	1361724	Valve Seat	8
7	1361723	Spring (Intake Valve)	8
8	1361722	Spring (Exhaust Valve)	8
9	1361721	Valve Seat	8
10	326612	Keeper	16
11	1361726	Rocker Arm	4
12	1361728	Nut	1
13	1361727	Screw	1
14	1361731	Spring	8
15	1361729	Rocker Arm	4
16	1361727	Screw	1
17	1361728	Nut	1
18	1361730	Shaft	1
19	1361734	Camshaft	1
20	1361717	Pin	1
21	1361732	Shaft	1
22	1361719	Seal (Exhaust Black)	4
23	1361725	Exhaust Valve	4
24	2028852	Timing Belt	1
25	2029098	Idler Pulley	1
26	1361884	Bolt	1
27	2029096	Spring	1
28	2029097	Belt Tensioner	1
29	1362016	Bolt	1

©2014 HYSTER COMPANY

CRANKSHAFT AND PISTONS (FIGURE 2-12)
MAZDA 2.2L, GASOLINE AND LPG

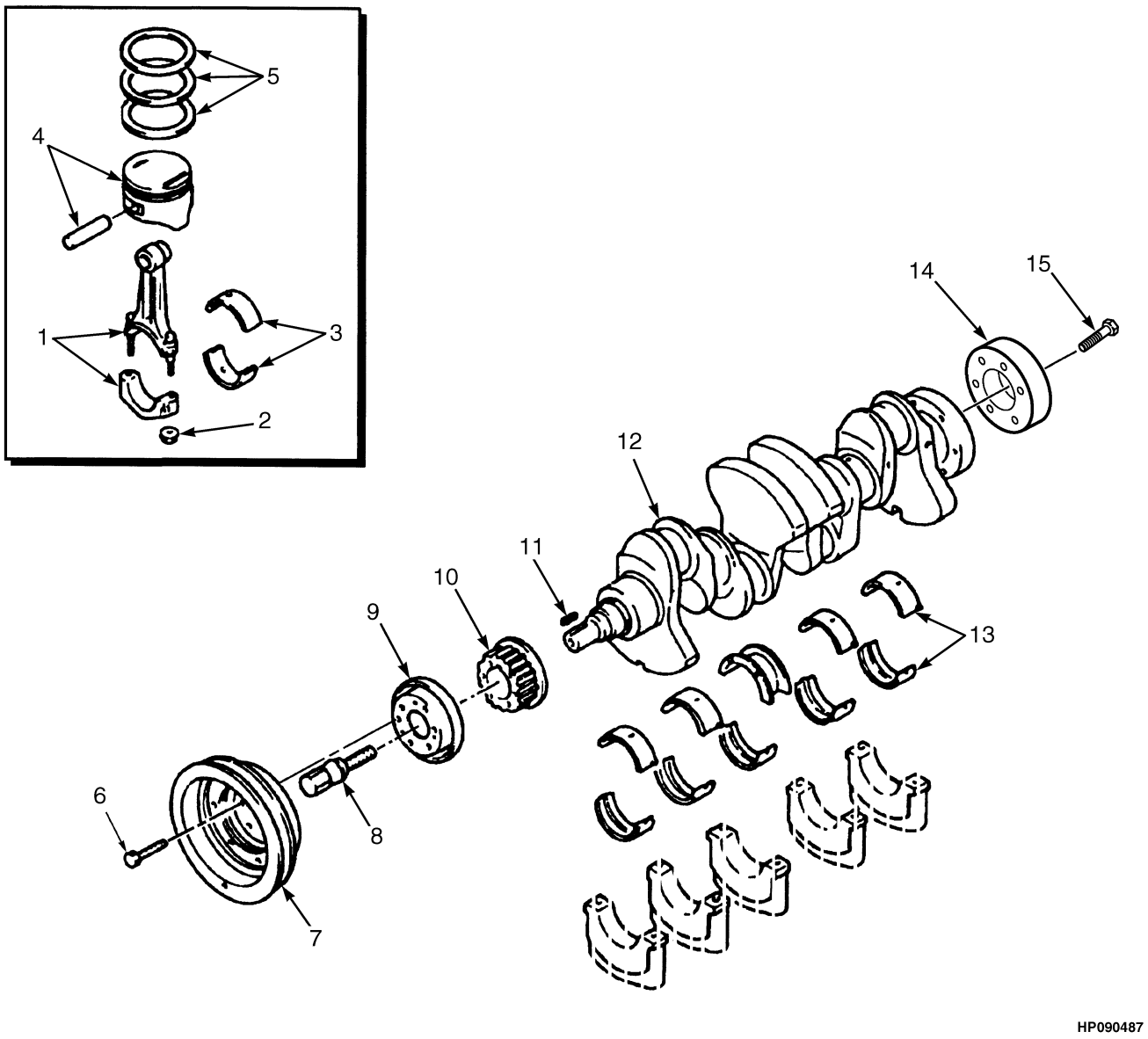

HP090487

©2014 HYSTER COMPANY

CRANKSHAFT AND PISTONS
MAZDA 2.2L, GASOLINE AND LPG

KEY:
A: Gasoline
B: LPG

ITEM	PART NO.	DESCRIPTION	QTY A	QTY B
	1652306	Long Block (2.2L, Gasoline)	1	..
	1652305	Long Block (2.2L, LPG)	..	1
1	2105972	Piston Rod	4	4
2	1361695	Nut	2	2
3	1361703	Piston Rod Bearing (Standard)	1	1
3	1361704	Piston Rod Bearing (0.25 mm)	1	1
3	1361705	Piston Rod Bearing (0.50 mm)	1	1
3	1361706	Piston Rod Bearing (0.75 mm)	1	1
4	1572594	Piston and Pin (Standard)	..	4
4	1370745	Piston and Pin (Standard)	4	..
4	1572596	Piston and Pin (0.50 mm)	..	4
4	1572598	Piston and Pin (0.25 mm)	..	4
4	2029093	Piston and Pin (0.25 mm)	4	..
4	2029094	Piston and Pin (0.50 mm)	4	..
5	1495473	Kit-Piston Ring (Standard)	1	1
5	1495475	Kit-Piston Ring (0.25 mm)	1	1
5	1495474	Kit-Piston Ring (0.50 mm)	1	1
6	1361700	Bolt	6	6
7	1553722	Crankshaft Pulley	1	..
8	2045034	Bolt	1	..
9	2045033	Plate	1	1
10	2045030	Pulley	1	1
11	1361697	Key	1	1
12	2045029	Crankshaft	1	1
13	1361710	Kit-Crankshaft Bearing (Standard)	1	1
13	1361713	Crankshaft Bearing (0.25 mm)	1	1
13	1361711	Crankshaft Bearing (0.50 mm)	1	1
13	1361712	Crankshaft Bearing (0.75 mm)	1	1
14	2021442	Plate	1	1
15	2021438	Bolt	1	1

©2014 HYSTER COMPANY

EMISSION CONTROL SYSTEM (FIGURE 2-13)
MAZDA 2.2L, GASOLINE

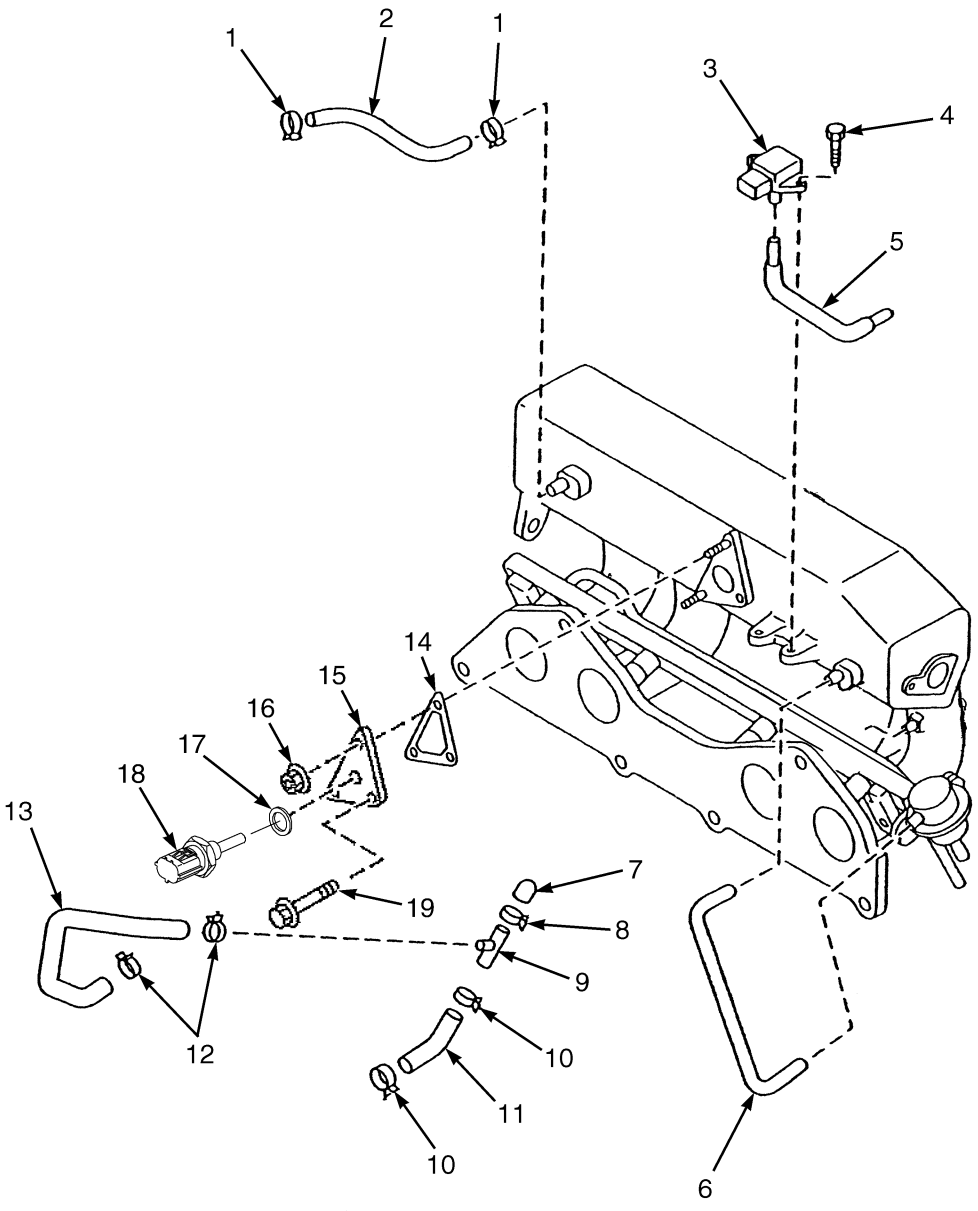

BP090424

©2014 HYSTER COMPANY

EMISSION CONTROL SYSTEM
MAZDA 2.2L, GASOLINE

ITEM	PART NO.	DESCRIPTION	QTY
1	1366933	Clamp	2
2	1553868	Hose (PCV)	1
3	1548352	Sensor (Boost, M.A.P.)	1
4	1582324	Screw	2
5	1495413	Hose	1
5	1574096	Tube	1
6	1553869	Tube	1
7	1574098	Cap	1
8	1573568	Clamp	1
9	1574097	Pipe (Air Intake Hose)	1
10	1573567	Clamp	2
11	1574099	Hose (Water)	1
12	1495429	Hose Clamp	2
13	1652399	Hose (Water)	1
14	1553871	Gasket	1
15	4605191	Spacer	1
16	2066629	Nut	2
17	1368886	Washer	1
18	1539962	Sensor (Air Temperature)	1
19	1362011	Bolt	1

©2014 HYSTER COMPANY

MAP SENSOR (FIGURE 2-14)
MAZDA 2.2L, LPG

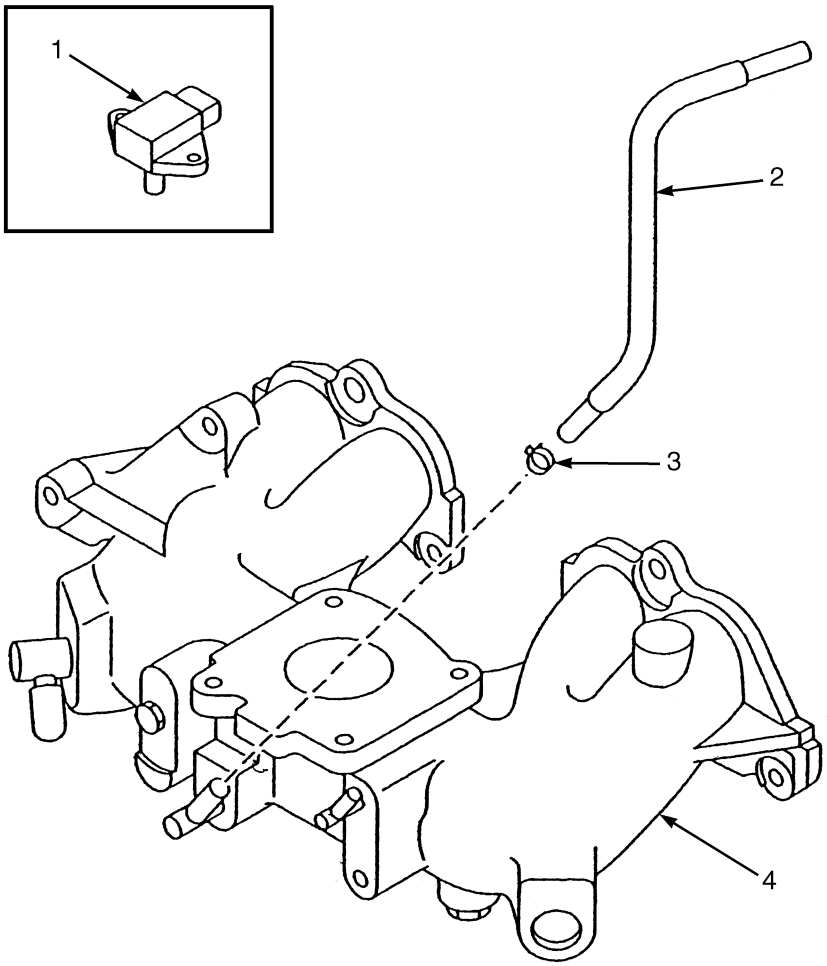

BP090334

ITEM	PART NO.	DESCRIPTION	QTY
1	1548352	Sensor (Boost, M.A.P.)	1
2	**a** 1652422	Hose (PCV)	1
2	**b** 2091232	Hose (PCV)	1
3	1361872	Clamp	1
4	1687035	Intake Manifold	1

FOOTNOTES:

a Gasoline

b LPG

©2014 HYSTER COMPANY

NOTES

©2014 HYSTER COMPANY

ENGINE FUEL SYSTEM (FIGURE 2-15)
MAZDA 2.2L, GASOLINE

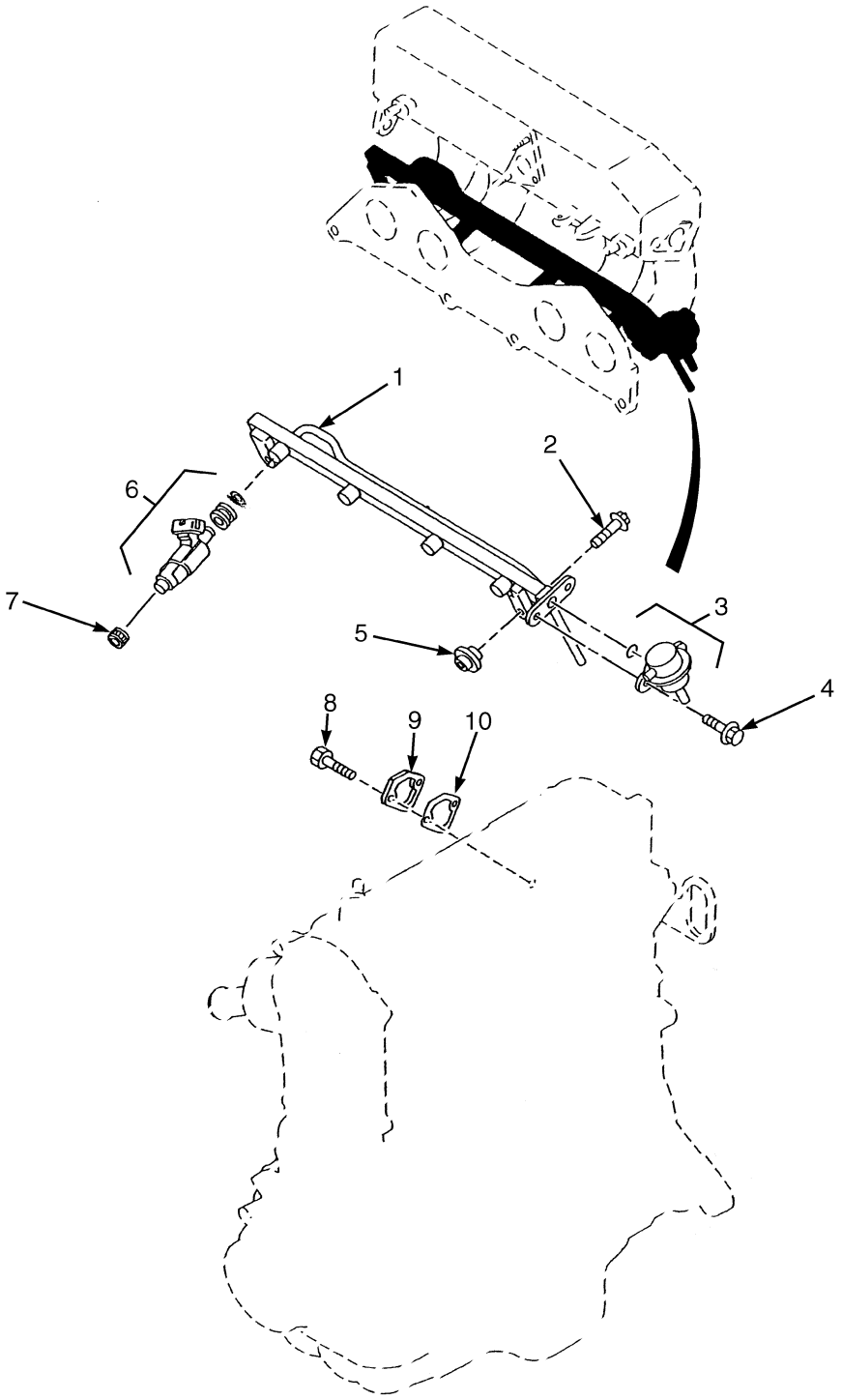

©2014 HYSTER COMPANY

ENGINE FUEL SYSTEM
MAZDA 2.2L, GASOLINE

KEY:
A: Gasoline
B: LPG

ITEM	PART NO.	DESCRIPTION	QTY A	QTY B
1	1553831	Manifold	1	..
2	1553839	Bolt	2	..
3	1553840	Pressure Regulator	1	..
3	1553841	O-Ring	1	..
4	1361893	Screw	2	..
5	1553830	Insulator	2	..
6	1553833	Injector	4	..
6	1553834	Grommet	1	..
6	1553835	O-Ring	1	..
7	1553837	Insulator	4	..
8	1361898	Bolt	2	2
9	1361749	Cover	2	2
10	1361756	Gasket	1	1

©2014 HYSTER COMPANY

EXHAUST MANIFOLD (FIGURE 2-16)
MAZDA 2.2L, GASOLINE AND LPG

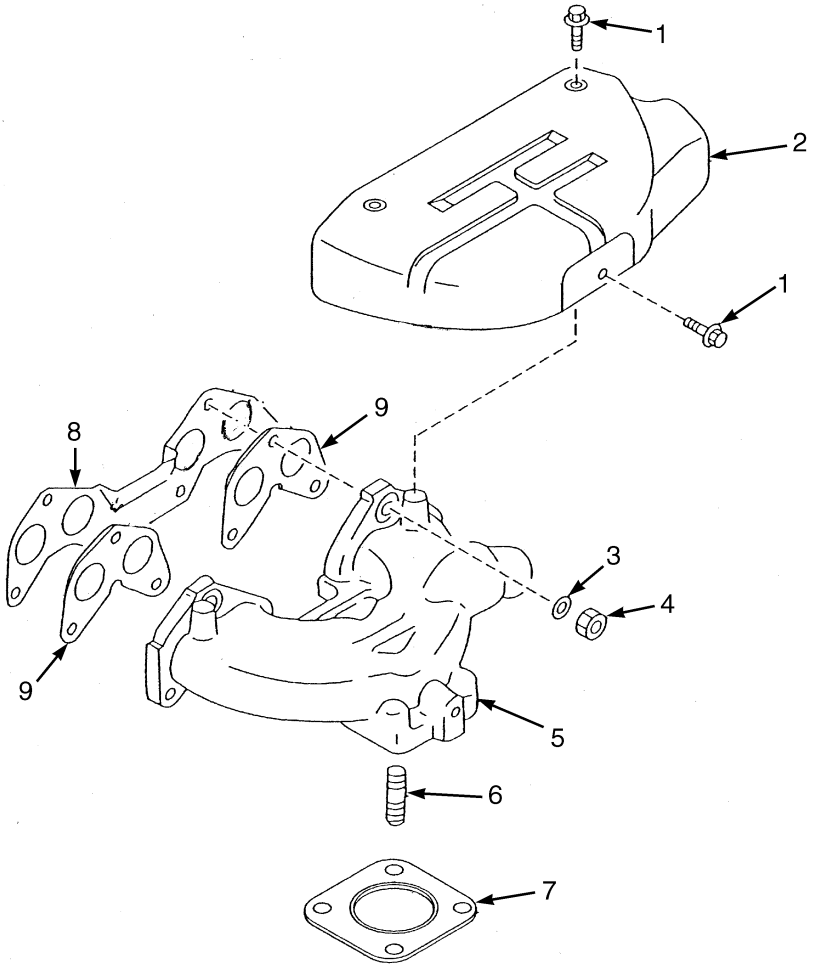

BP090330

ITEM	PART NO.	DESCRIPTION	QTY
1	1361898	Bolt	3
2	1370691	Cover	1
3	1370690	Washer	6
4	1361746	Nut	6
5	1370688	Exhaust Manifold	1
6	1361745	Stud	4
7	1338308	Gasket	1
8	1361747	Gasket	1
9	1370689	Gasket	2

©2014 HYSTER COMPANY

NOTES

©2014 HYSTER COMPANY

INTAKE MANIFOLD (FIGURE 2-17)
MAZDA 2.2L, GASOLINE

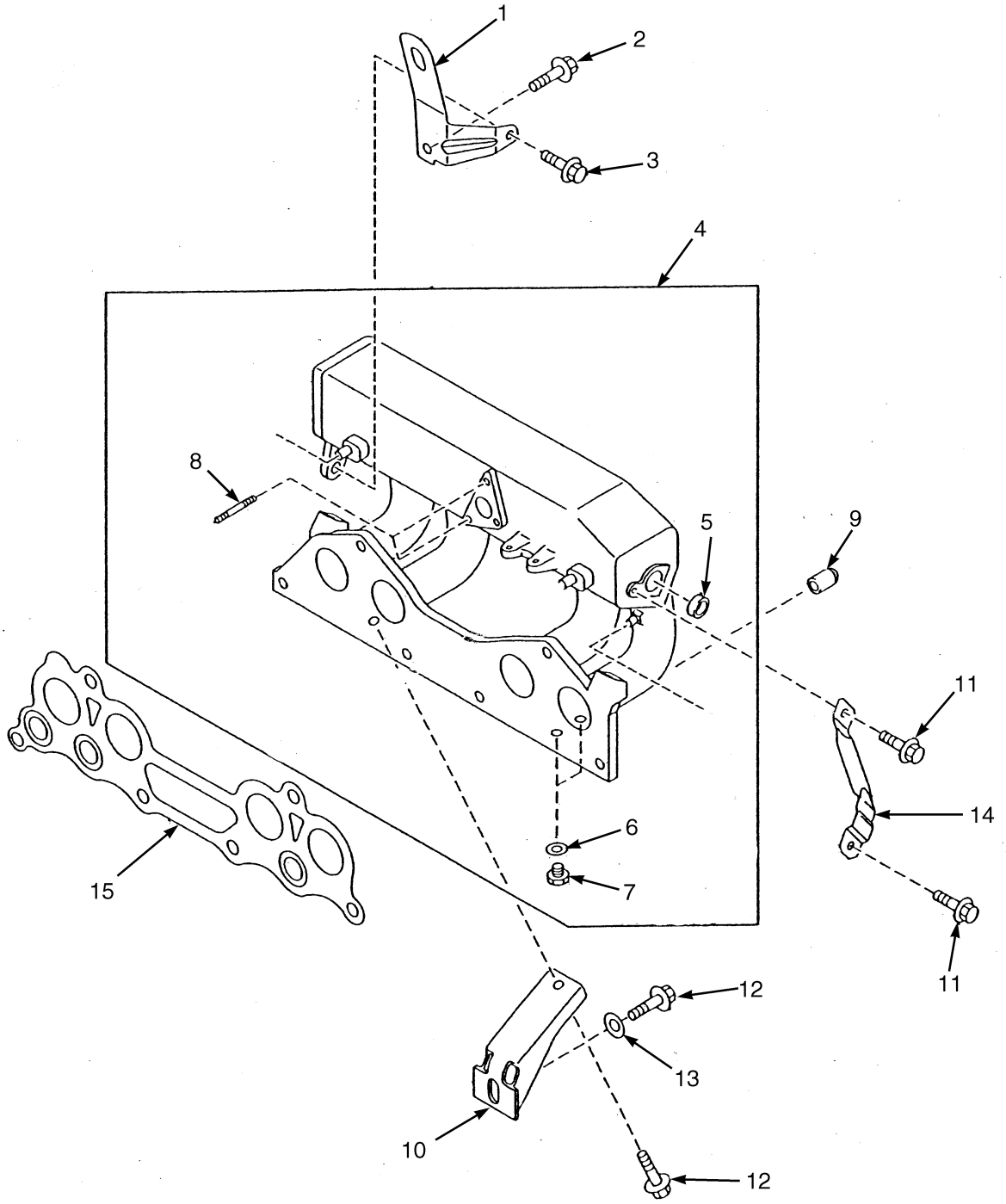

BP090331

©2014 HYSTER COMPANY

INTAKE MANIFOLD
MAZDA 2.2L, GASOLINE

ITEM	PART NO.	DESCRIPTION	QTY
1	1553779	Bracket	1
2	1361881	Bolt	1
3	324706	Bolt	2
4	1652327	Intake Manifold	1
5	1362005	Plug	1
6	1368743	Seal	2
7	1366902	Bolt	2
8	1553774	Stud	2
9	2023551	Cap	1
10	1553778	Bracket	1
11	1366874	Bolt	2
12	1370675	Bolt	1
13	1652328	Washer	1
14	1553777	Bracket	1
15	1553776	Gasket	1

©2014 HYSTER COMPANY

INTAKE MANIFOLD (FIGURE 2-18)
MAZDA 2.2L LPG

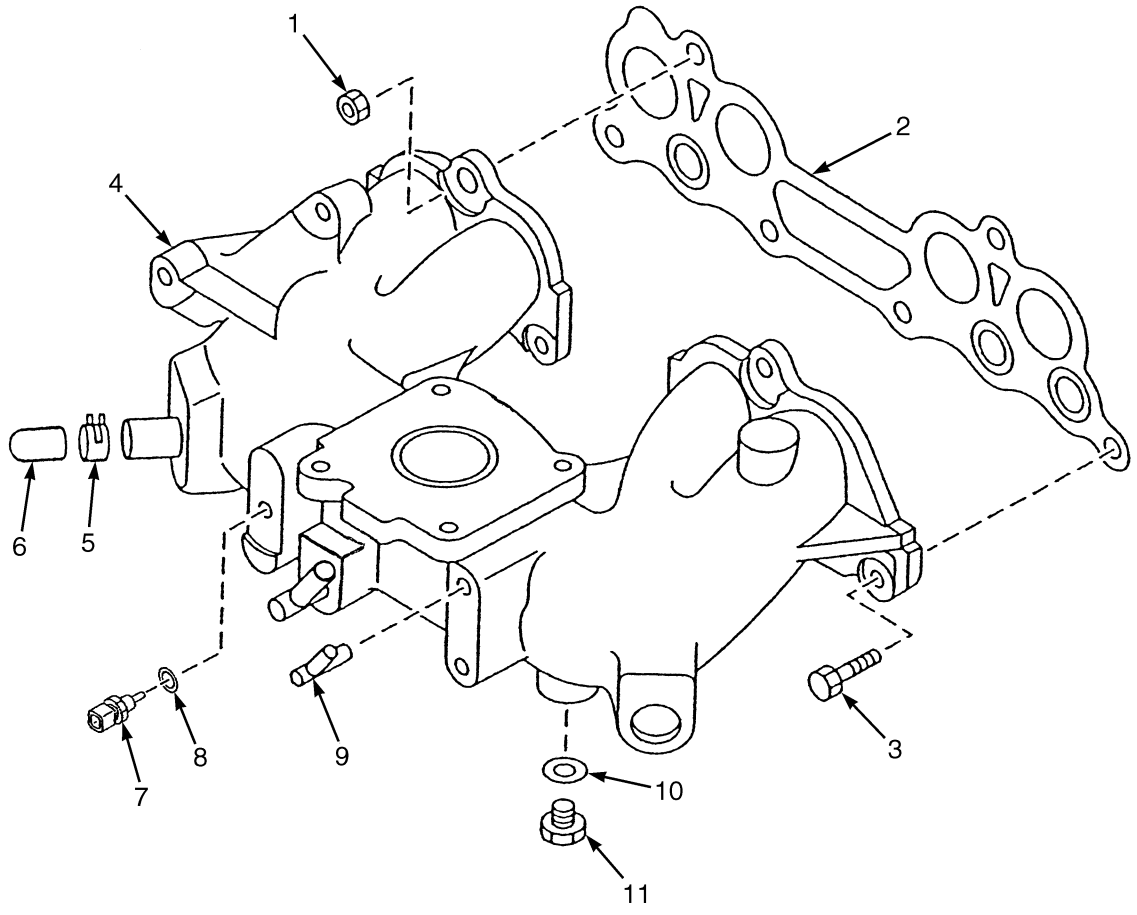

BP090332

©2014 HYSTER COMPANY

INTAKE MANIFOLD
MAZDA 2.2L LPG

ITEM	PART NO.	DESCRIPTION	QTY
1	326504	Nut	4
2	1553776	Gasket	1
3	1361885	Bolt	2
4	1687035	Intake Manifold	1
5	1573568	Clamp	1
6	1574098	Cap	1
7	1369861	Plug	1
8	1368886	Washer	1
9	1652334	Connector	1
10	1368743	Seal	1
11	1366902	Bolt	1

©2014 HYSTER COMPANY

TIMING GEAR COVER AND OIL PAN (FIGURE 2-19)
MAZDA 2.2L, GASOLINE AND LPG

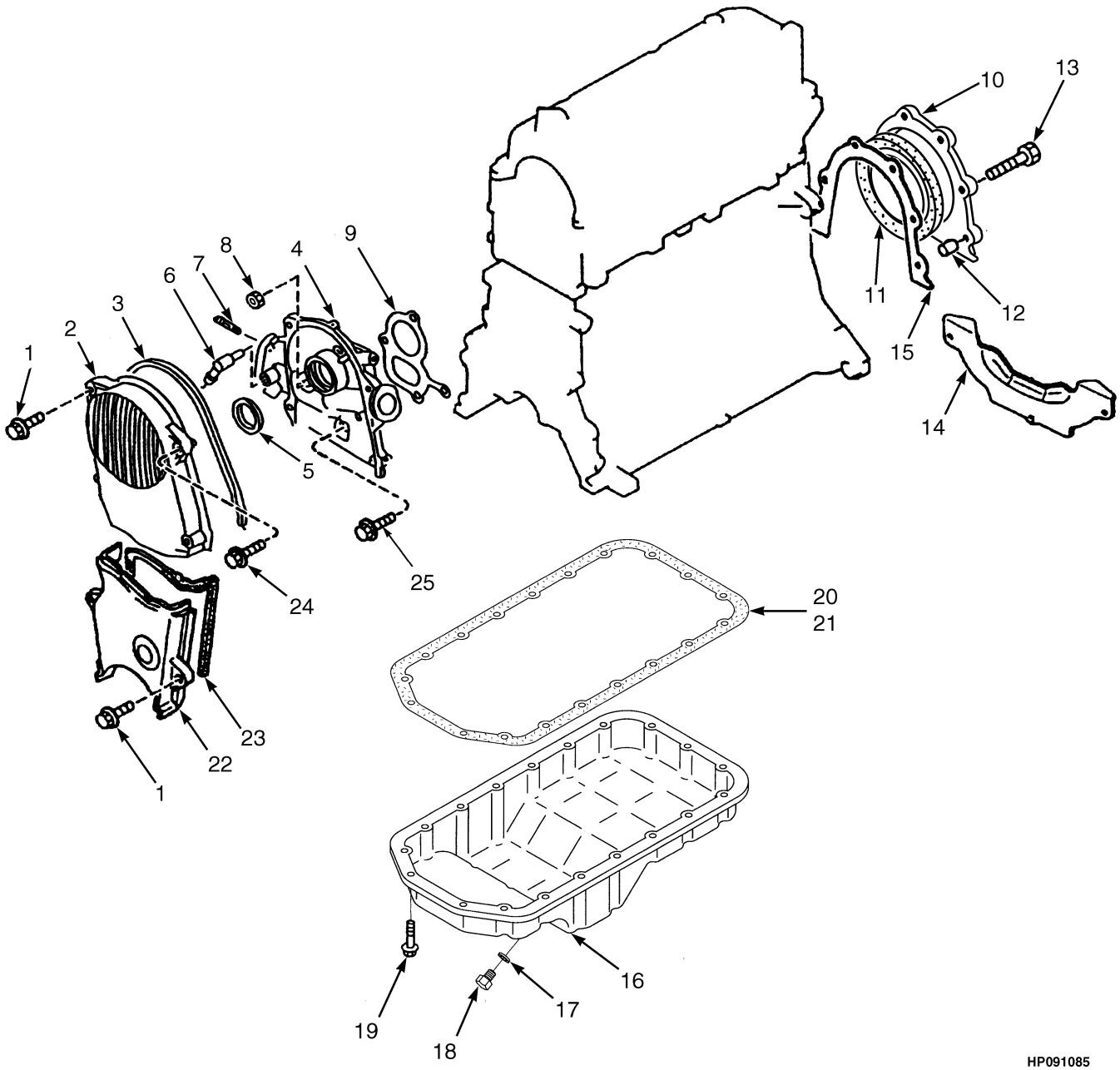

©2014 HYSTER COMPANY

TIMING GEAR COVER AND OIL PAN
MAZDA 2.2L, GASOLINE AND LPG

ITEM	PART NO.	DESCRIPTION	QTY
	1652306	Long Block (2.2L Gasoline)	1
	1652305	Long Block (2.2L, LPG)	1
1	1362001	Bolt	5
2	2029084	Cover (Upper Timing Belt)	1
3	2028854	Gasket	1
4	2051129	Housing	1
5	1361688	Oil Seal	1
6	1361692	Connector	1
7	1362012	Stud	2
8	326504	Nut	2
9	1361679	Gasket	1
10	1361689	Cover	1
11	1361691	Oil Seal (Rear)	1
12	1362010	Pin	2
13	1362011	Bolt	6
14	1371652	Cover	1
15	1361690	Gasket	1
16	2029082	Oil Pan	1
17	1362015	Gasket	1
18	1361681	Drain Plug	1
19	1370736	Capscrew	19
20	1361682	Gasket (Oil Pan)	1
21	4618898	Sealant	AR
22	2051128	Cover	1
23	2028853	Gasket	1
24	2029086	Bolt	1
25	1369993	Bolt	2
	2045036	Kit-Gasket (Includes Items 5, 9-11, 20, 23)	1

©2014 HYSTER COMPANY

OIL PUMP AND FILTER (FIGURE 2-20)
MAZDA 2.2L, GASOLINE AND LPG

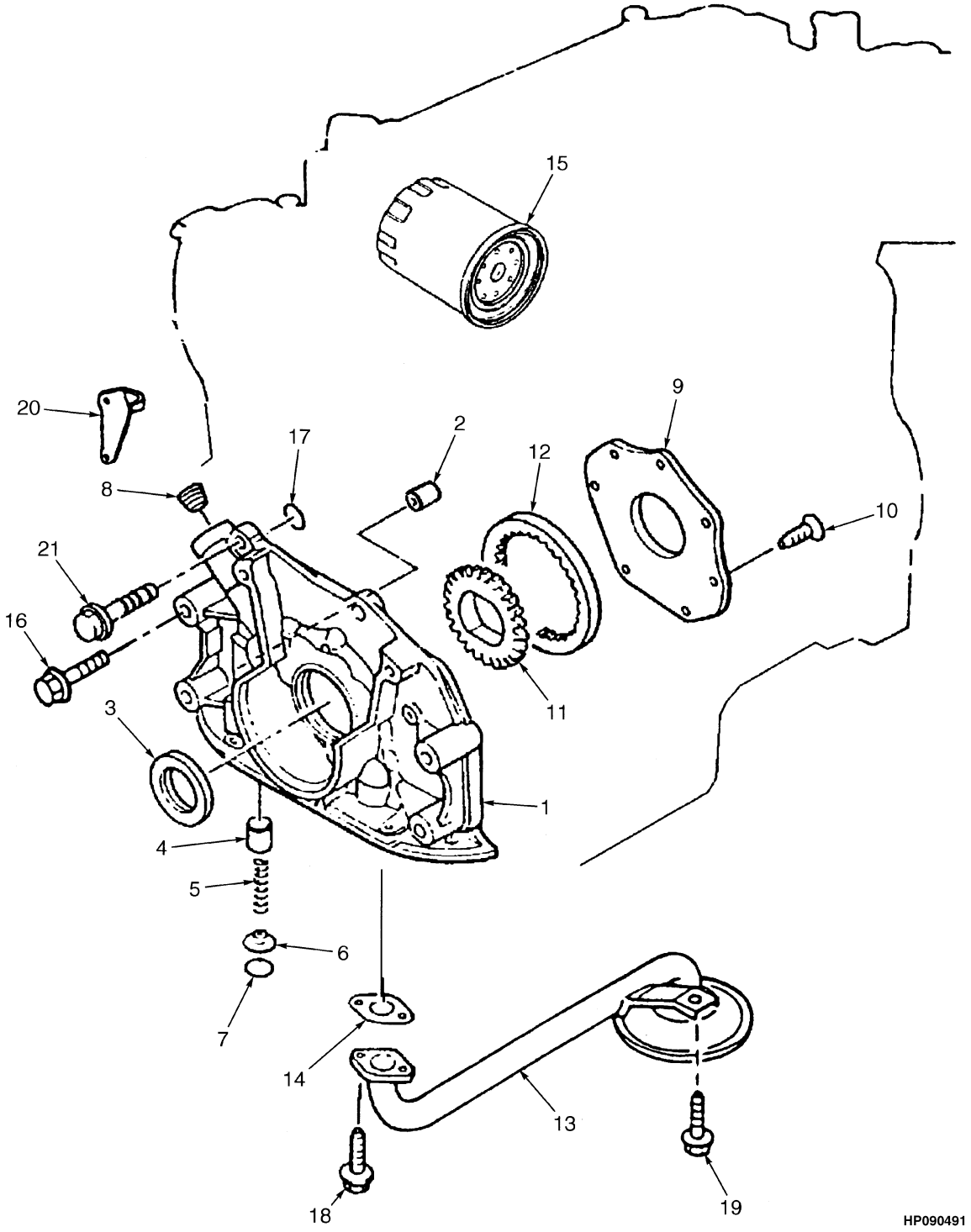

©2014 HYSTER COMPANY

OIL PUMP AND FILTER
MAZDA 2.2L, GASOLINE AND LPG

ITEM	PART NO.	DESCRIPTION	QTY
	1652306	Long Block (2.2L, Gasoline)	1
	1652305	Long Block (2.2L, LPG)	1
1	1455676	Engine Oil Pump	1
2	1361798	Pin (Timing Indicator)	2
3	1361688	Oil Seal	1
4	1455674	Plunger	1
5	326748	Spring	1
6	326749	Spring Seat	1
7	1361879	Snap Ring	1
8	1495426	Plug	1
9	2029100	Cover	1
10	1455677	Screw	7
11	2029101	Gear (Inner)	1
12	2029102	Gear (Outer)	1
13	1361806	Strainer	1
14	1361807	Gasket	1
15	333642	Oil Filter	1
16	2029103	Bolt	2
17	1361801	O-Ring	1
18	1361878	Screw	2
19	1361868	Screw	1
20	1495427	Pin (Top Indicator)	1
21	1361875	Screw	3

©2014 HYSTER COMPANY

ENGINE COOLING SYSTEM (FIGURE 2-21)

MAZDA 2.2L, GASOLINE AND LPG

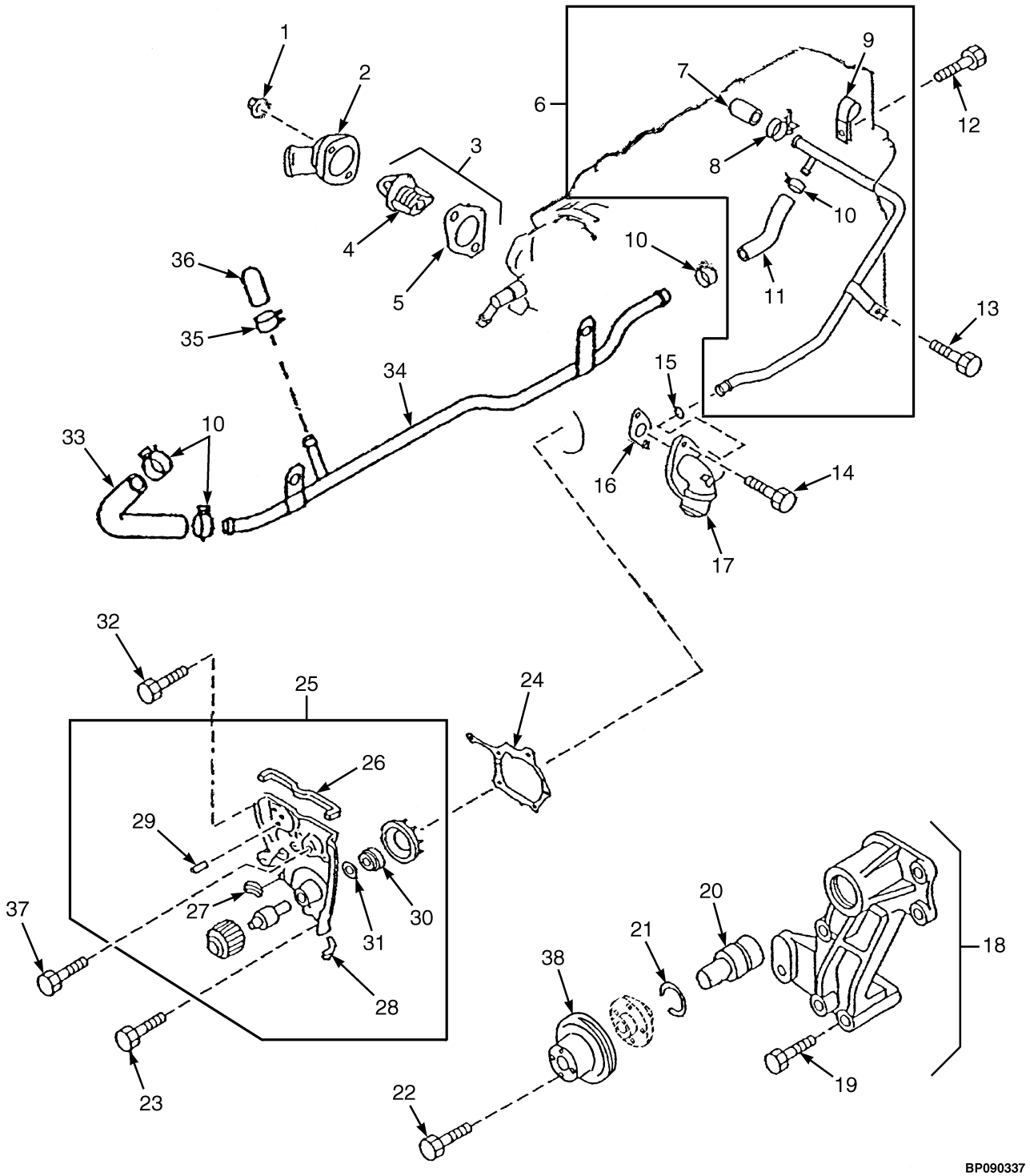

©2014 HYSTER COMPANY

ENGINE COOLING SYSTEM
MAZDA 2.2L, GASOLINE AND LPG

KEY:
A: Mazda 2.2L Gasoline
B: Mazda 2.2L LPG

ITEM	PART NO.	DESCRIPTION	QTY A	QTY B
	1652305	Long Block	1	..
	1652306	Long Block	..	1
1	326504	Nut	2	2
2	1361821	Cover	1	1
3	1495428	Thermostat	1	1
4	2082929	Thermostat	1	1
5	1367191	Gasket	1	1
6	2045024	Pipe (Water)	1	1
7	1361836	Cap	1	1
8	1573568	Clamp	1	1
9	1361826	Clip	1	1
10	1361873	Clamp	4	4
11	2029108	Radiator Hose (Water)	1	1
12	1361898	Bolt	1	1
13	2022309	Bolt	1	1
14	1361875	Screw	2	2
15	1361827	O-Ring	1	1
16	2029120	Gasket (Inlet)	1	1
17	2029112	Adapter	1	1
18	4053018	Bracket (Fan)	1	1
19	2045026	Screw	3	3
20	2029116	Shaft Bearing (Fan)	3	1
21	2045025	Clip	1	1
22	324706	Bolt	4	4
23	2087756	Bolt	5	5
24	2028645	Gasket	1	1
25	2078488	Water Pump	1	1
26	2029107	Seal	1	1
27	2029105	Seal	1	1
28	2029106	Seal	3	3
29	1361880	Stud	1	1
30	1361814	Seal	1	1
31	2045319	Baffle	1	1
32	2087757	Bolt	1	1
33	1361825	Radiator Hose	1	1
34	1361823	Pipe (Water Bypass)	..	1
34	1652425	Pipe (Water Bypass)	1	..
35	1495429	Hose Clamp	..	1
36	1361790	Cap	..	1
37	1361884	Bolt	1	1
38	1573179	Fan Pulley	1	1

©2014 HYSTER COMPANY

NOTES

©2014 HYSTER COMPANY

3 ENGINE ASSEMBLY - YANMAR

SECTION 3
ENGINE ASSEMBLY - YANMAR

DESCRIPTION	PAGE
CAMSHAFT AND DRIVE GEAR	
YANMAR 2.6L AND 3.3L - DIESEL	3-16
COOLING SYSTEM	
YANMAR 2.6L AND 3.3L, DIESEL, SQUARE WAVE RADIATOR - WITH INTERNAL OIL COOLER	3-2
YANMAR 2.6L AND 3.3L, DIESEL, SQUARE WAVE RADIATOR - WITH EXTERNAL OIL COOLER	3-4
CRANKSHAFT AND PISTONS	
YANMAR 2.6L AND 3.3L - DIESEL	3-18
CYLINDER BLOCK	
YANMAR 2.6 AND 3.3L - DIESEL	3-10
CYLINDER HEAD	
YANMAR 2.6L AND 3.3L - DIESEL	3-12
ENGINE COOLING	
YANMAR 2.6L AND 3.3L - DIESEL	3-26
ENGINE MOUNTING	
YANMAR 2.6 AND 3.3L	3-6
EXHAUST	
YANMAR 2.6 AND 3.3L DIESEL - WITHOUT CATALYTIC CONVERTER	3-30
FAN ASSEMBLY	
YANMAR 2.6 AND 3.3L	3-7
FLYWHEEL AND HOUSING	
YANMAR 2.6L AND 3.3L - DIESEL	3-8
GEAR HOUSING	
YANMAR 2.6L AND 3.3L - DIESEL	3-22
INTAKE AND EXHAUST MANIFOLD	
YANMAR 2.6L AND 3.3L - DIESEL	3-20
LUBRICATION SYSTEM	
YANMAR 2.6L AND 3.3L - DIESEL	3-28
OIL PAN	
YANMAR 2.6L AND 3.3L - DIESEL	3-24

©2014 HYSTER COMPANY

COOLING SYSTEM (FIGURE 3-1)

YANMAR 2.6L AND 3.3L, DIESEL, SQUARE WAVE RADIATOR — WITH INTERNAL OIL COOLER

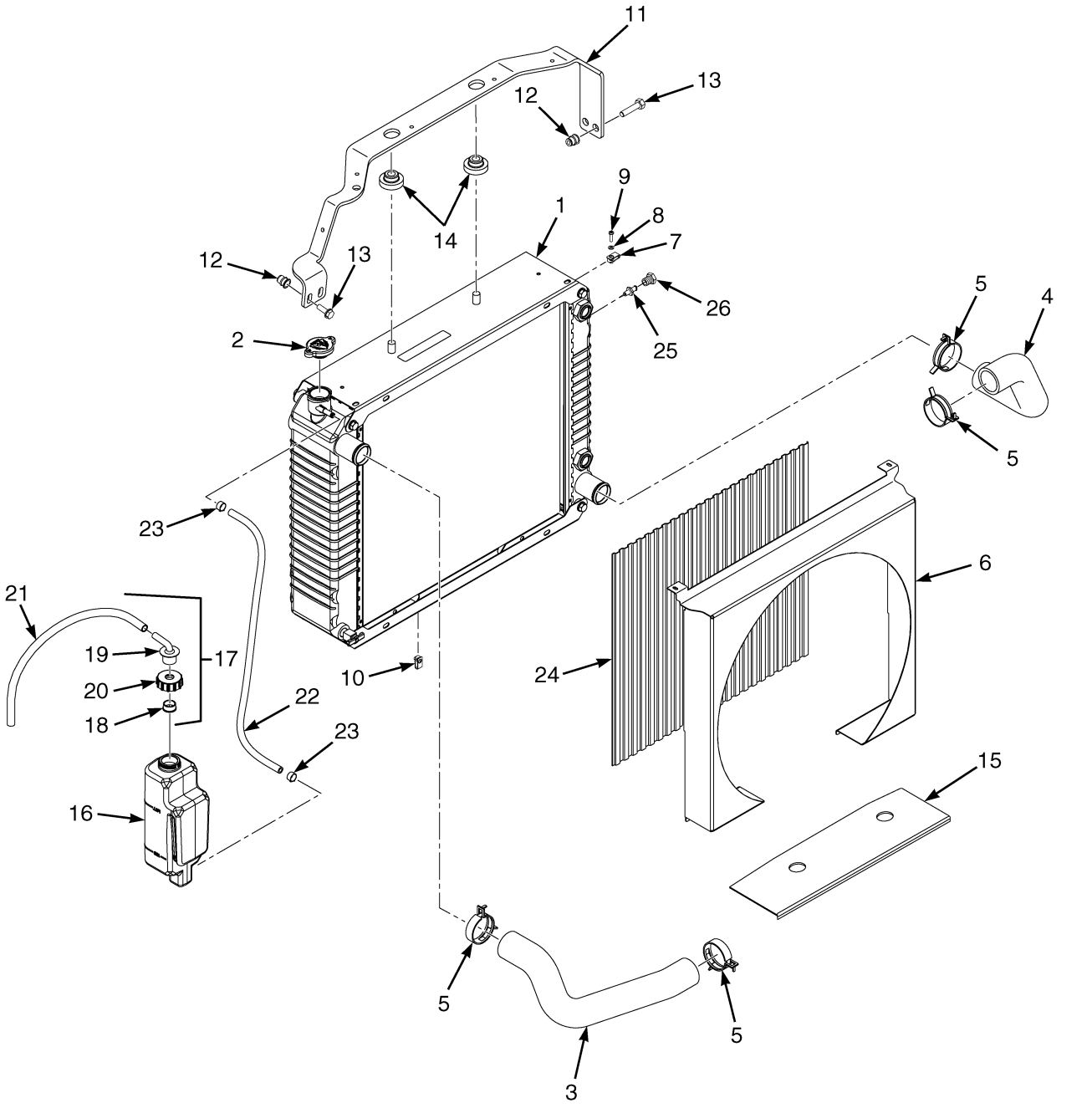

©2014 HYSTER COMPANY

COOLING SYSTEM

YANMAR 2.6L AND 3.3L, DIESEL, SQUARE WAVE RADIATOR – WITH INTERNAL OIL COOLER

ITEM	PART NO.	DESCRIPTION	QTY
1	**a** 2089141	Radiator	1
1	1569079	Drain Valve (w/Thread Wrap)	1
1	**b** 4603552	Radiator (Assembly)	1
1	4038260	Radiator	1
1	4038264	Drain Valve	1
1	4038265	Nut	2
1	4038266	Bolt	8
2	1352140	Radiator Cap	1
3	**b** 2085104	Radiator Hose (Upper)	1
3	**a** 2087215	Radiator Hose (Upper)	1
4	**b** 2070072	Radiator Hose (Lower)	1
4	**a** 2087216	Radiator Hose (Lower)	1
5	369804	Clamp	4
6	1622236	Shroud	1
7	1535257	Nut	2
8	320154	Washer	2
9	302020	Screw	2
10	1329271	Clip	2
11	4085712	Bracket	1
12	1530243	Insert	4
13	1527881	Capscrew	4
14	1529787	Isolator	4
15	1565692	Exhaust Shield	1
16	1633307	Reservoir	1
17	345455	Outlet Assembly	1
18	336550	Bushing	1
19	345453	Outlet (Reservoir)	1
20	345454	Cap	1
21	1663877	Hose	1
22	1567674	Hose	1
23	369815	Clamp	2
24	**a** 1548497	Screen	1
24	**b** 4077917	Screen	1
25	1531404	Sensor (Low Coolant Level)	1
26	**c** 14385	Fitting	1

FOOTNOTES:

a 2.6L with Basic Transmission
b 3.3L with Basic Transmission
c Without Low Coolant Level Sensor

©2014 HYSTER COMPANY

COOLING SYSTEM (FIGURE 3-2)

YANMAR 2.6L AND 3.3L, DIESEL, SQUARE WAVE RADIATOR — WITH EXTERNAL OIL COOLER

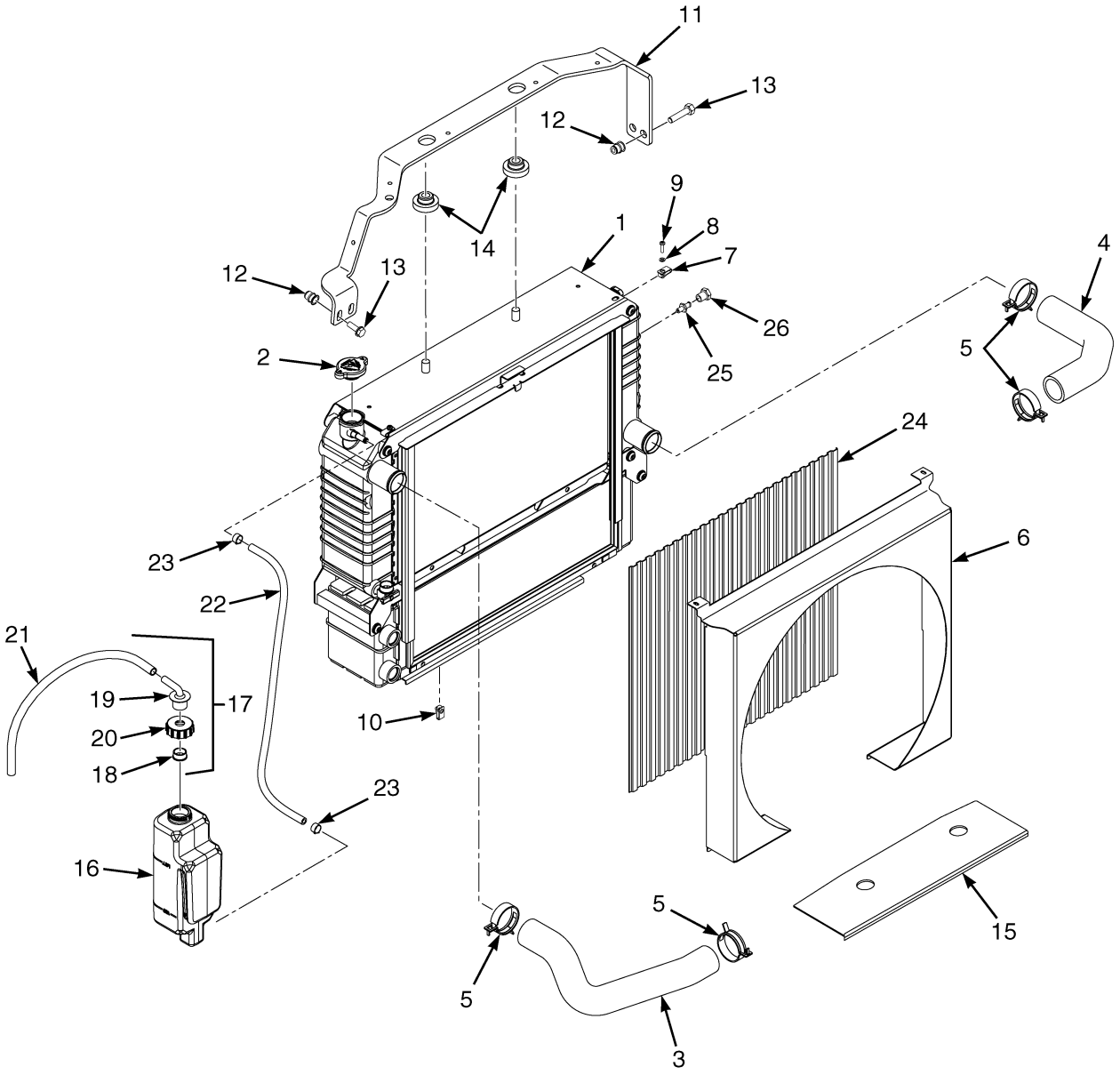

©2014 HYSTER COMPANY

COOLING SYSTEM

YANMAR 2.6L AND 3.3L, DIESEL, SQUARE WAVE RADIATOR – WITH EXTERNAL OIL COOLER

ITEM	PART NO.	DESCRIPTION	QTY
1	4603554	Radiator (Assembly)	1
1	4038258	Radiator	1
1	4038263	Oil Cooler	1
1	4038264	Drain Valve	1
1	4038265	Nut	2
1	4038266	Bolt	8
1	4038267	Bolt	4
2	1352140	Radiator Cap	1
3	2085104	Radiator Hose (Upper)	1
4	2069688	Radiator Hose (Lower)	1
5	369804	Clamp	4
6	1622236	Shroud	1
7	1535257	Nut	2
8	320154	Washer	2
9	302020	Screw	2
10	1329271	Clip	2
11	4085712	Bracket	1
12	1530243	Insert	4
13	1527881	Capscrew	4
14	1529787	Isolator	4
15	1565692	Exhaust Shield	1
16	1633307	Reservoir	1
17	345455	Outlet Assembly	1
18	336550	Bushing	1
19	345453	Outlet (Reservoir)	1
20	345454	Cap	1
21	1663877	Hose	1
22	1567674	Hose	1
23	369815	Clamp	2
24	**a** 1548497	Screen	1
24	**b** 4077917	Screen	1
25	1531404	Sensor (Low Coolant Level)	1
26	**c** 14385	Fitting	1

FOOTNOTES:

a 2.6L with Basic Transmission
b 3.3L with Basic Transmission
c Without Low Coolant Level Sensor

ENGINE MOUNTING (FIGURE 3-3)

YANMAR 2.6 AND 3.3L

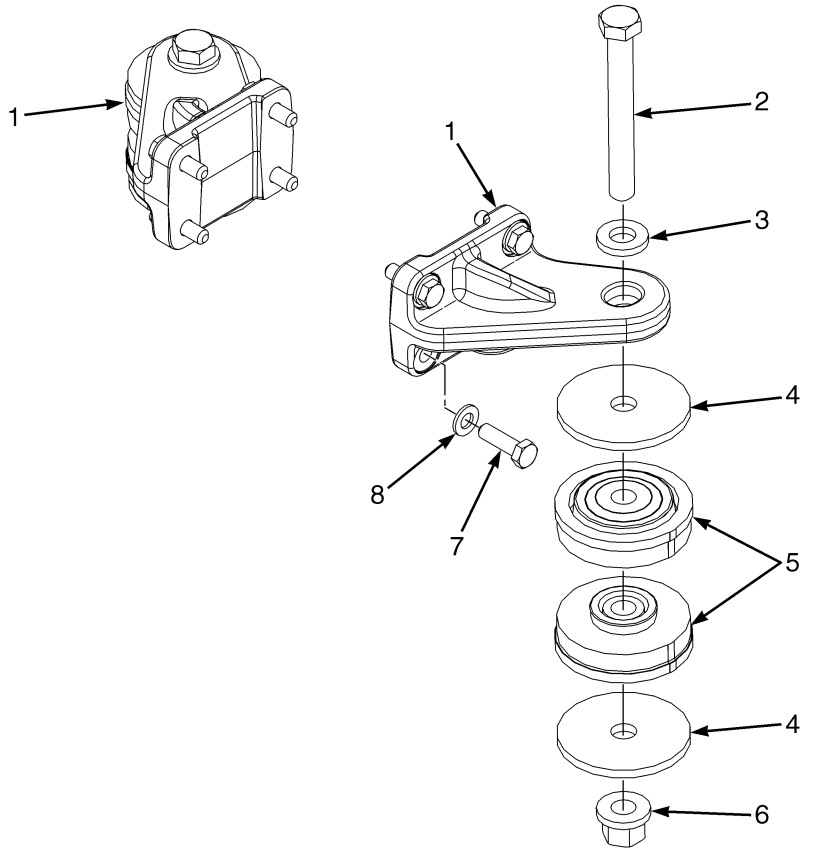

BP090419

ITEM	PART NO.	DESCRIPTION	QTY
1	1557767	Mount	2
2	293698	Capscrew	2
3	1504075	Washer	2
4	1557737	Washer	4
5	2069951	Isolator	4
6	1565453	Nut (Flange)	2
7	293630	Capscrew	8
8	296420	Washer	8

©2014 HYSTER COMPANY

FAN ASSEMBLY (FIGURE 3-4)
YANMAR 2.6 AND 3.3L

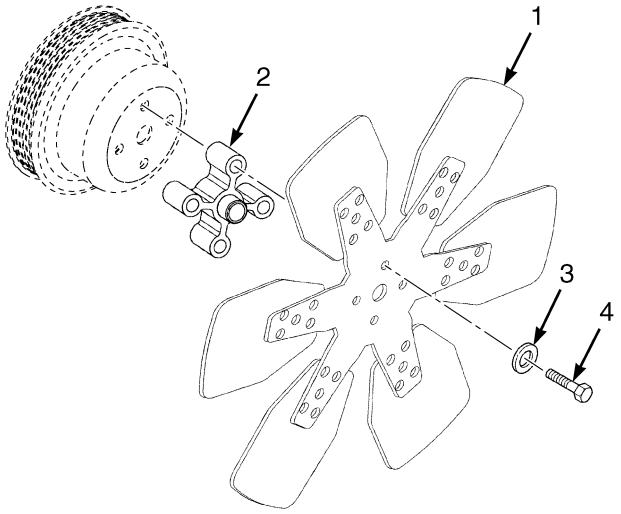

BP090418

ITEM	PART NO.	DESCRIPTION	QTY
1	**2085570**	**Fan (Pusher) (3.3L)**	**1**
1	4620536	Fan (Pusher) (2.6L)	1
2	**1539154**	**Spacer**	**1**
3	**296418**	**Washer**	**4**
4	**293623**	**Capscrew**	**4**

FLYWHEEL AND HOUSING (FIGURE 3-5)

YANMAR 2.6L AND 3.3L — DIESEL

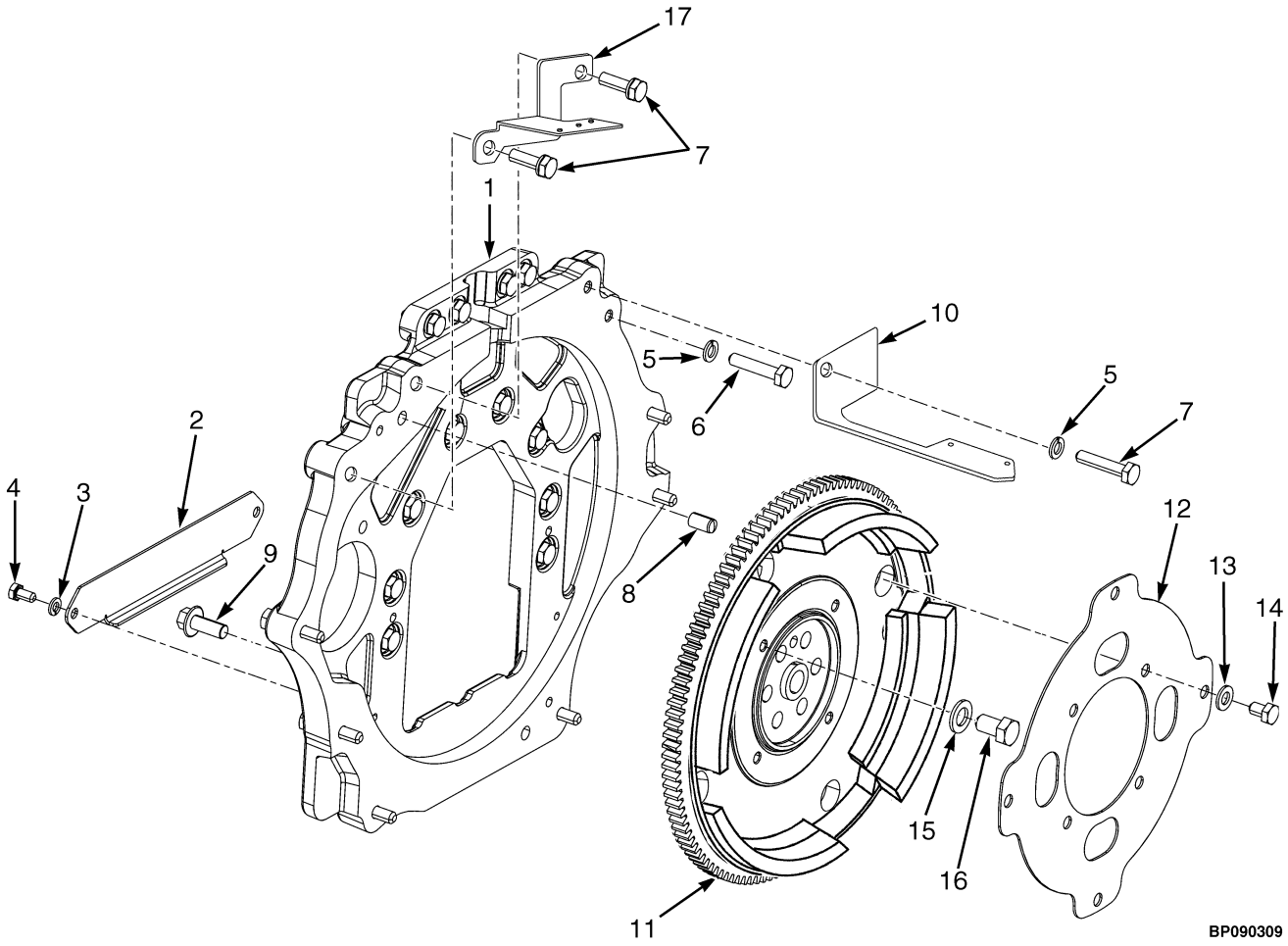

©2014 HYSTER COMPANY

FLYWHEEL AND HOUSING

YANMAR 2.6L AND 3.3L – DIESEL

ITEM	PART NO.	DESCRIPTION	QTY
1	1553265	Housing	1
2	1522363	Cover	1
3	292681	Lockwasher	2
4	287851	Capscrew	2
5	292682	Lockwasher	22
6	136985	Capscrew	12
7	292517	Capscrew	10
8	303150	Dowel	2
9	1528889	Capscrew	2
10	1653569	Bracket	1
11	1707341	Flywheel Assembly	1
11	1506604	Starter Ring Gear	1
12	1531806	Flex Plate	1
13	296420	Washer	4
14	293626	Capscrew	4
15	296424	Washer	6
16	1550747	Capscrew	6
17	1623093	Bracket	1
	a 1625999	Dust Cover	1
	a 1534417	Capscrew (Dust Cover)	2

FOOTNOTES:

a Not Illustrated

©2014 HYSTER COMPANY

CYLINDER BLOCK (FIGURE 3-6)
YANMAR 2.6 AND 3.3L — DIESEL

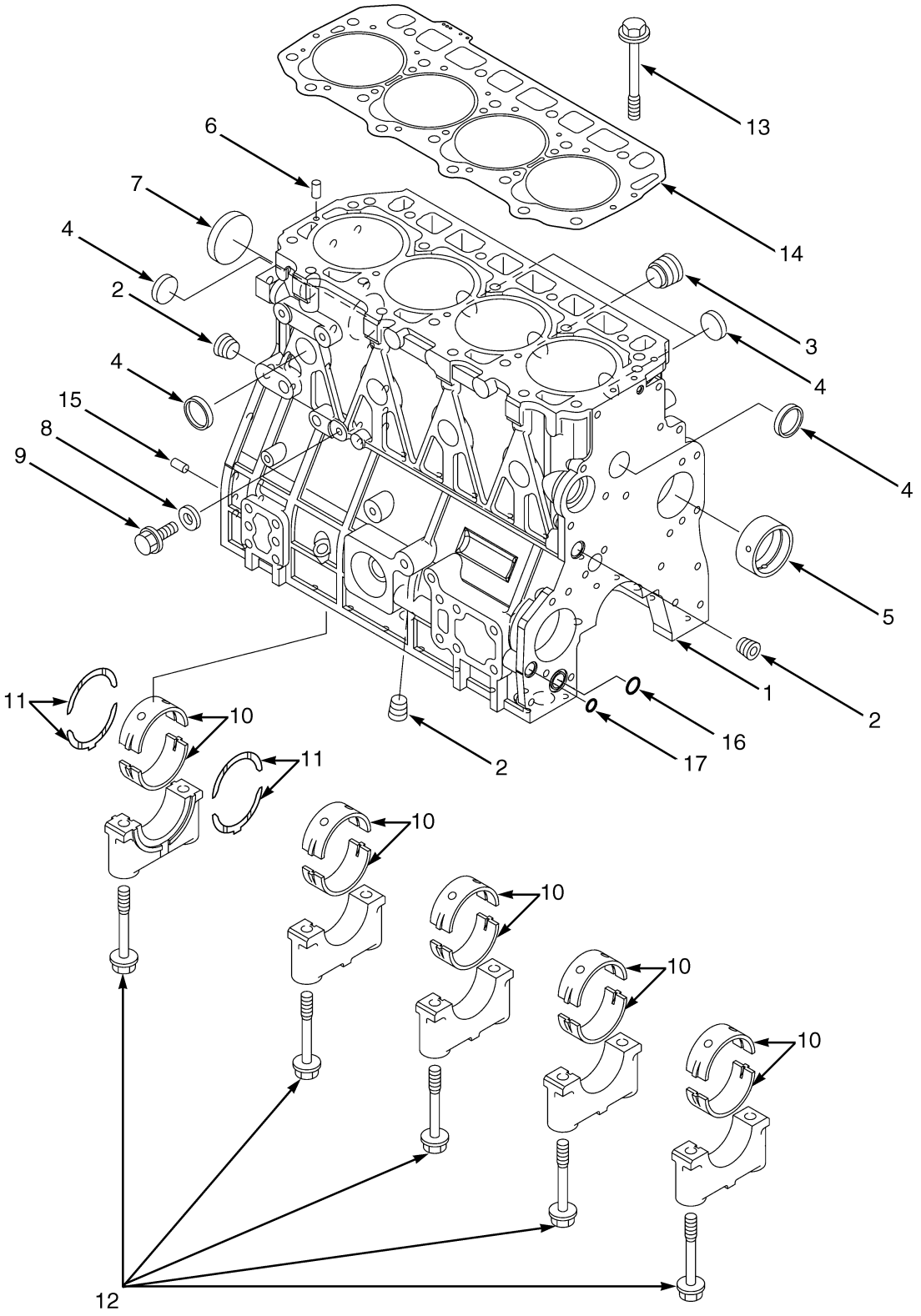

©2014 HYSTER COMPANY

CYLINDER BLOCK
YANMAR 2.6 AND 3.3L – DIESEL

ITEM	PART NO.	DESCRIPTION	QTY
	4619937	Engine Assy-Diesel (Yanmar 2.6L)	1
	4619939	Engine Assy-Diesel (Yanmar 3.3L)	1
	4626066	Engine Assy-Diesel (Yanmar 2.6L Non-Emissions)	1
	4626064	**Engine Assy-Diesel (Yanmar 3.3L Non-Emissions)**	**1**
1	2091237	Short Block (Non-Emissions) (2.6/3.3L)	1
1	1599440	Cylinder Block (2.6L)	1
1	1689742	Cylinder Block (3.3L)	1
2	1599441	Plug	3
3	1599442	Plug	1
4	1599451	Plug	8
5	1599444	Bushing	1
6	1599446	Cotter Pin	2
7	1599449	Plug	1
8	1599445	Washer	1
9	1599448	Bolt	1
10	2092548	Kit-Crankshaft Bearing (Standard)	5
10	2092549	Kit-Bearing (U/S 0.25)	5
11	2092552	Kit-Thrust Bearing (Standard)	2
11	2092553	Kit-Thrust Bearing (U/S 0.25)	2
12	1599443	Bolt	10
13	1599454	Bolt	18
14	1599455	Cylinder Head Gasket (2.6L/3.3L)	1
14	4000453	Cylinder Head Gasket (1.0MM Over Size) (2.6L)	1
14	4000454	Cylinder Head Gasket (0.8MM Option) (2.6L)	1
15	1599458	Pin	2
16	1599468	O-Ring	1
17	1599469	O-Ring	1
	1600085	Kit-Gasket (Complete Engine) (Includes Items 8, 16-17)	1
	1599898	Kit-Gasket (2.6L Engine Complete) (Includes Items 8, 14, 16-17)	1
	1689744	Kit-Gasket (Complete Engine) (3.3L) (Includes Items 8, 16-17)	1

©2014 HYSTER COMPANY

CYLINDER HEAD (FIGURE 3-7)

YANMAR 2.6L AND 3.3L — DIESEL

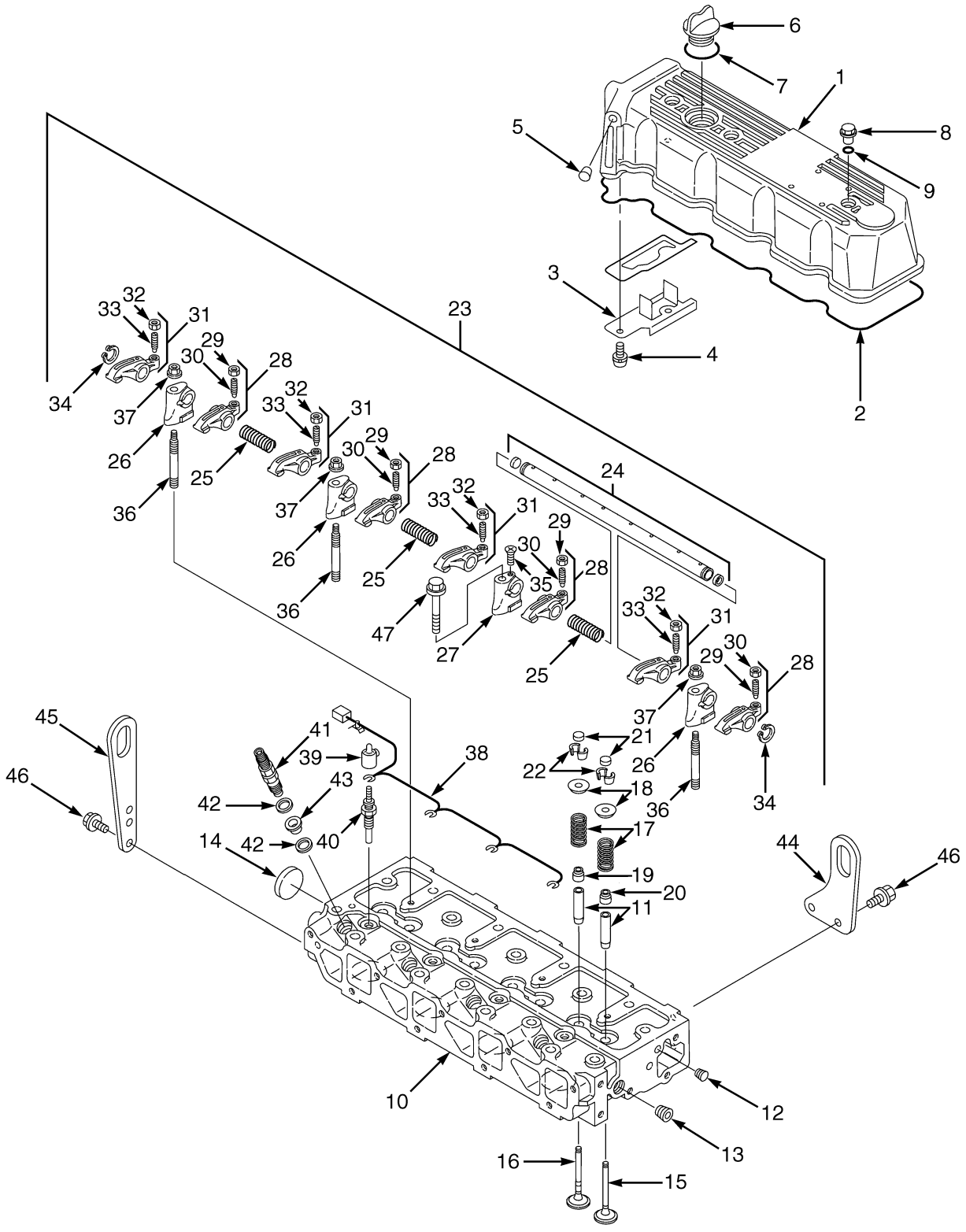

BP090184

©2014 HYSTER COMPANY

CYLINDER HEAD
YANMAR 2.6L AND 3.3L – DIESEL

ITEM	PART NO.	DESCRIPTION	QTY
	4619937	Engine Assy-Diesel (Yanmar 2.6L)	1
	4619939	Engine Assy-Diesel (Yanmar 3.3L)	1
	4626066	Engine Assy-Diesel (Yanmar 2.6L Non-Emissions)	1
	4626064	**Engine Assy-Diesel (Yanmar 3.3L Non-Emissions)**	**1**
1	1599545	Engine Cover	1
2	1599546	Gasket	1
3	1599547	Plate	1
4	1599548	Screw	2
5	1599549	Plug	1
6	1599463	Cap (Oil Fill)	1
7	1599464	O-Ring	1
8	1599544	Plug	3
9	1599550	O-Ring	3
10	1599488	Cylinder Head Assembly (2.6L)	1
10	1600273	Cylinder Head (3.3L)	1
11	1599525	Guide	8
12	1599526	Plug	1
13	1599441	Plug	1
14	1599528	Plug	1
15	1599489	Inlet Valve	4
16	1599516	Exhaust Valve	4
17	1599517	Spring	8
18	1599518	Retainer	8
19	1599519	Seal (Exhaust Valve)	4
20	1599520	Seal (Intake Valve)	4
21	1599521	Cap	8
22	1599529	Retainer	8
23	1599530	Support Assembly (Rocker Arm)	1
24	1599531	Shaft	1
25	1599532	Spring	3
26	1599533	Support	3
27	1599534	Support	1
28	1599535	Kit-Rocker Arm	4
29	1599536	Screw	1
30	1599537	Nut	1
31	1599538	Kit-Rocker Arm	4
32	1599536	Screw	1
33	1599537	Nut	1
34	1599539	Retaining Ring	2
35	1599540	Screw	1
36	1599541	Stud	3
37	1599542	Nut	3
38	1599553	Connector (Glow Plug)	1
38	**2084316**	**Connector (Glow Plug) (3.3L Non Emission)**	**1**
39	1599557	Cover	4
40	**1599552**	**Glow Plug**	**4**
41	1599819	Nozzle	1
42	1599523	Gasket	8
43	1599522	Protector	4
44	1599487	Lifting Eye	1

©2014 HYSTER COMPANY

CYLINDER HEAD

YANMAR 2.6L AND 3.3L – DIESEL

ITEM	PART NO.	DESCRIPTION	QTY
45	1599486	Lifting Eye	1
46	1599470	Bolt	4
47	1599555	Bolt	1
	1600085	Kit-Gasket (Complete Engine) (3.3L) (Includes Items 2, 7, 9, 19-20, 42-43)	1
	1599898	Kit-Gasket (2.6L Engine Complete) (Includes Items 2, 7, 9, 19-20, 42-43)	1
	1689744	Kit-Gasket (Complete Engine) (3.3L) (Includes Items 2, 7, 19-20, 42-43)	1

©2014 HYSTER COMPANY

NOTES

©2014 HYSTER COMPANY

CAMSHAFT AND DRIVE GEAR (FIGURE 3-8)

YANMAR 2.6L AND 3.3L — DIESEL

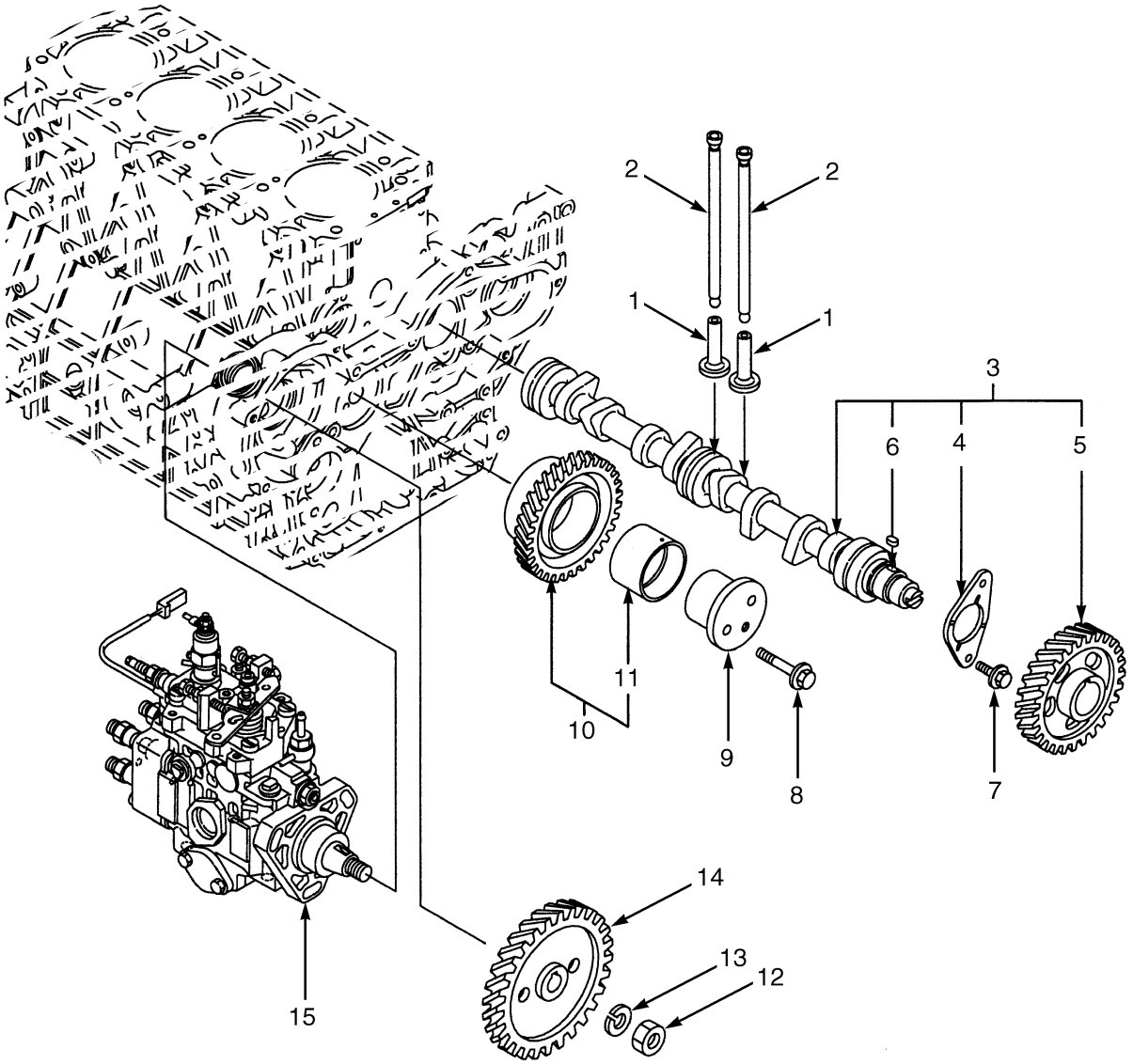

BP090186

©2014 HYSTER COMPANY

CAMSHAFT AND DRIVE GEAR

YANMAR 2.6L AND 3.3L – DIESEL

ITEM	PART NO.	DESCRIPTION	QTY
	4619937	Engine Assy-Diesel (Yanmar 2.6L)	1
	4619939	Engine Assy-Diesel (Yanmar 3.3L)	1
	4626066	Engine Assy-Diesel (Yanmar 2.6L Non-Emissions)	1
	4626064	**Engine Assy-Diesel (Yanmar 3.3L Non-Emissions)**	**1**
1	1599569	Tappet	8
2	1599570	Push Rod	8
3	1599571	Camshaft	1
3	2084317	Camshaft (2.6L Non Emission)	1
4	1599572	Retainer	1
5	1599573	Gear	1
5	2084318	Gear	1
6	1599574	Key	1
7	1599470	Bolt	2
8	1599579	Bolt	2
9	1599576	Shaft	1
10	**4021292**	**Idler Gear**	**1**
10	2084319	Gear (2.6L Non Emission)	1
11	**1599578**	**Bushing**	**1**
12	1599582	Locknut	1
13	1599581	Spring Washer	1
14	1599580	Gear	1
15	1708457	Fuel Pump Assembly (Injection 2.6L)	1
15	1599901	Injection Pump (2.6L Non Emission)	1
	1689747	Fuel Pump (Injection 3.3L)	1

©2014 HYSTER COMPANY

CRANKSHAFT AND PISTONS (FIGURE 3-9)

YANMAR 2.6L AND 3.3L — DIESEL

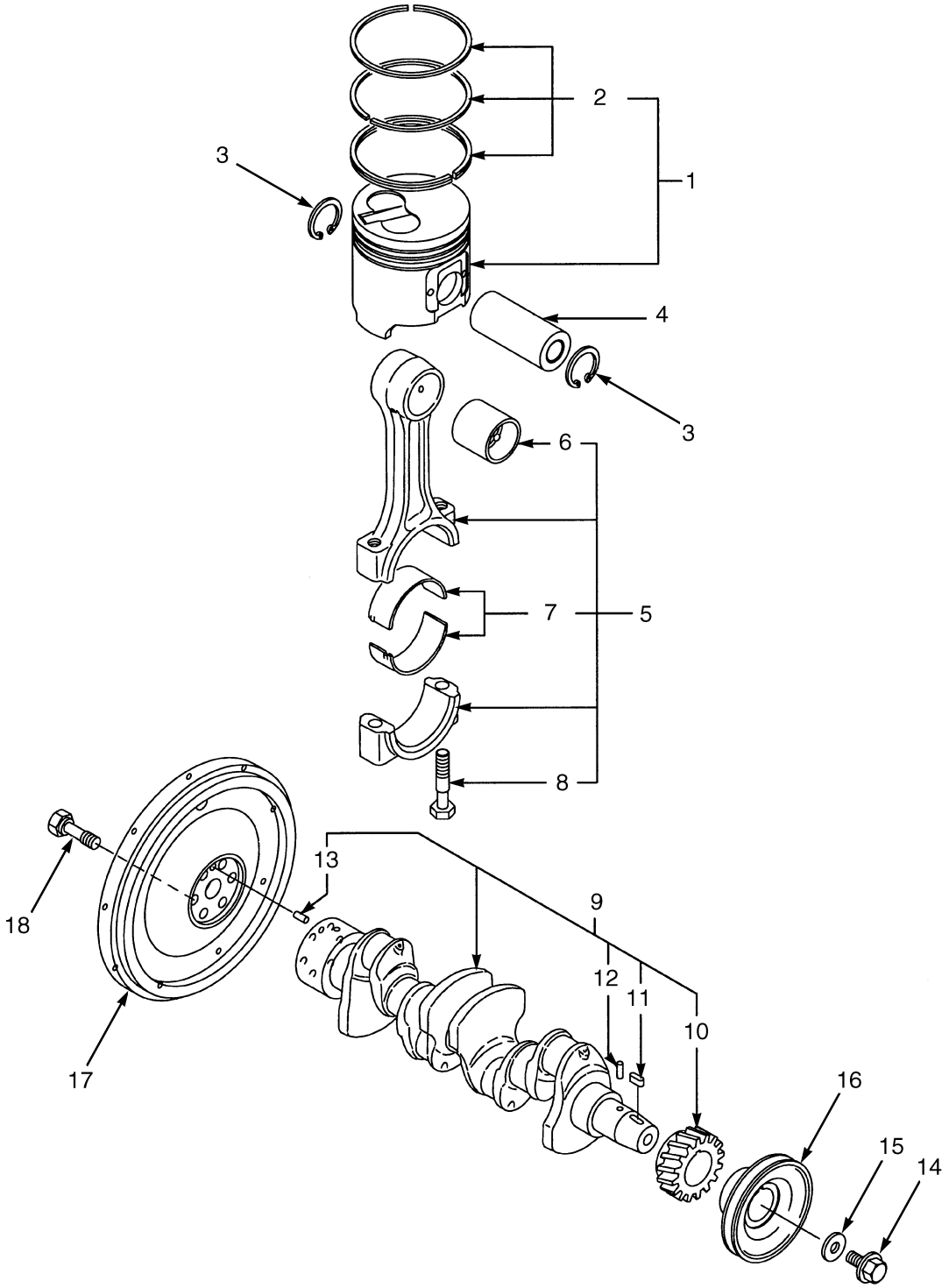

BP090187

©2014 HYSTER COMPANY

CRANKSHAFT AND PISTONS

YANMAR 2.6L AND 3.3L – DIESEL

ITEM	PART NO.	DESCRIPTION	QTY
	4619937	Engine Assy-Diesel (Yanmar 2.6L)	1
	4619939	Engine Assy-Diesel (Yanmar 3.3L)	1
	4626066	Engine Assy-Diesel (Yanmar 2.6L Non-Emissions)	1
	4626064	**Engine Assy-Diesel (Yanmar 3.3L Non-Emissions)**	**1**
1	1599592	Piston (With Standard Rings) (2.6L)	4
1	1600276	Piston (With Standard Rings) (3.3L)	4
1	1599600	Kit-Piston (O/S 0.25 with Rings) (2.6L)	4
1	1600278	Piston (O/S 0.25 with Rings) (3.3L)	4
2	1599593	Kit-Piston Ring (Standard) (2.6L)	1
2	1600277	Kit-Piston Ring (Standard) (3.3L)	1
2	1599601	Kit-Piston Ring (O/S 0.25) (2.6L)	1
2	1600279	Kit-Piston Ring (O/S 0.25) (3.3L)	1
3	1599595	Snap Ring	8
4	1599594	Pin	4
5	1599596	Piston Rod	4
6	1599597	Bushing	1
7	2092550	Piston Rod Bearing (Standard)	1
7	**2092551**	**Bearing (U/S 0.25)**	**4**
8	1599598	Bolt	2
9	1599583	Crankshaft (2.6L)	1
9	1600275	Crankshaft (3.3L)	1
9	2084321	Crankshaft (2.6L Non Emission)	1
10	1599584	Gear	1
10	2084322	Gear (2.6L Non Emission)	1
11	1599574	Key	1
12	1599585	Pin	1
13	1599586	Pin	1
14	1599590	Bolt	1
15	1599589	Washer	1
16	1599588	Pulley	1
17	**1707341**	**Flywheel**	**1**
18	1599591	Bolt	6

©2014 HYSTER COMPANY

INTAKE AND EXHAUST MANIFOLD (FIGURE 3-10)

YANMAR 2.6L AND 3.3L — DIESEL

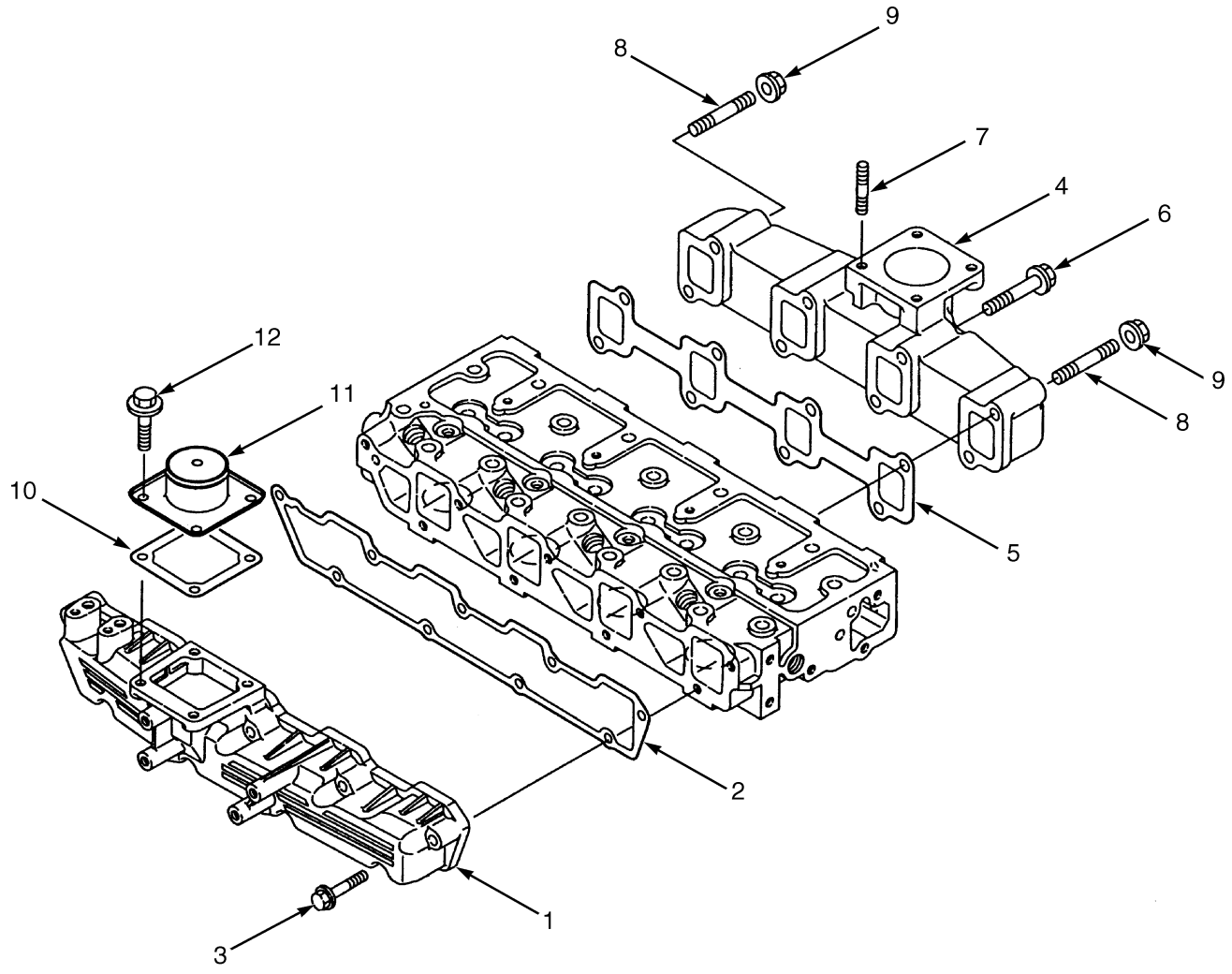

BP090185

©2014 HYSTER COMPANY

INTAKE AND EXHAUST MANIFOLD

YANMAR 2.6L AND 3.3L – DIESEL

ITEM	PART NO.	DESCRIPTION	QTY
	4619937	Engine Assy-Diesel (Yanmar 2.6L)	1
	4619939	Engine Assy-Diesel (Yanmar 3.3L)	1
	4626066	Engine Assy-Diesel (Yanmar 2.6L Non-Emissions)	1
	4626064	**Engine Assy-Diesel (Yanmar 3.3L Non-Emissions)**	**1**
1	1599556	Intake Manifold	1
2	1599543	Gasket	1
3	1599475	Bolt	9
4	1599559	Exhaust Manifold	1
5	1599560	Gasket	1
6	1599561	Bolt	9
7	1599562	Stud	4
8	1599563	Stud	2
9	2068378	Nut	2
10	1599565	Gasket	1
11	1599567	Adapter	1
12	1599568	Bolt	4
	1599898	Kit-Gasket (2.6L Engine Complete) (Includes Items 2, 5, 10)	1
	1600085	Kit-Gasket (Complete Engine) (3.3L) (Includes Items 2, 5, 10)	1
	1689744	Kit-Gasket (Complete Engine) (3.3L) (Includes Items 2, 5, 10)	1

©2014 HYSTER COMPANY

GEAR HOUSING (FIGURE 3-11)
YANMAR 2.6L AND 3.3L — DIESEL

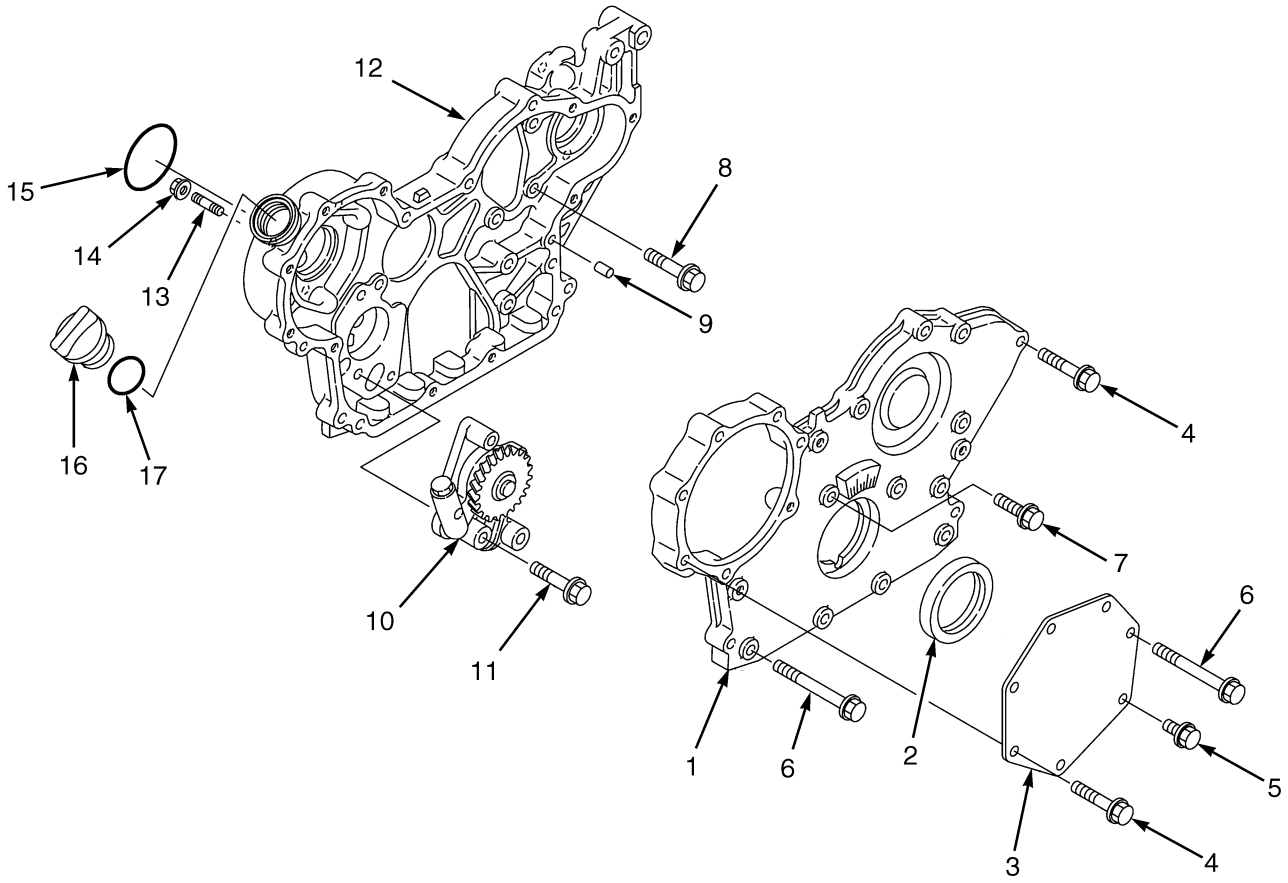

BP090182

©2014 HYSTER COMPANY

GEAR HOUSING

YANMAR 2.6L AND 3.3L – DIESEL

ITEM	PART NO.	DESCRIPTION	QTY
	4619937	Engine Assy-Diesel (Yanmar 2.6L)	1
	4619939	Engine Assy-Diesel (Yanmar 3.3L)	1
	4626066	Engine Assy-Diesel (Yanmar 2.6L Non-Emissions)	1
	4626064	**Engine Assy-Diesel (Yanmar 3.3L Non-Emissions)**	**1**
1	1599459	Cover	1
1	**2101708**	**Gear Cover Assembly (2.6L Non Emission)**	**1**
2	1599460	Oil Seal	1
2	**2100927**	**Oil Seal (2.6L Non Emission)**	**1**
3	1599461	Cover	1
4	1599473	Bolt	10
5	1599470	Bolt	1
6	1599476	Bolt	7
7	1599472	Bolt	1
8	1599471	Bolt	3
9	1599458	Pin	4
10	1599466	Engine Oil Pump	1
11	1599475	Bolt	1
12	1599465	Cover	1
13	1599467	Stud	3
14	2068378	Nut	3
15	1599462	O-Ring	1
16	1599463	Cap (Oil Fill)	1
17	1599464	O-Ring	1
	1599478	**Gasket (Liquid)**	**AR**
	2084312	Gasket (Liquid)	1
	1600085	Kit-Gasket (Complete Engine) (Includes Items 15, 17)	1
	1599898	Kit-Gasket (2.6L Engine Complete) (Includes Items 15, 17)	1
	1689744	Kit-Gasket (Complete Engine) (3.3L) (Includes Items 15, 17)	1

©2014 HYSTER COMPANY

OIL PAN (FIGURE 3-12)
YANMAR 2.6L AND 3.3L — DIESEL

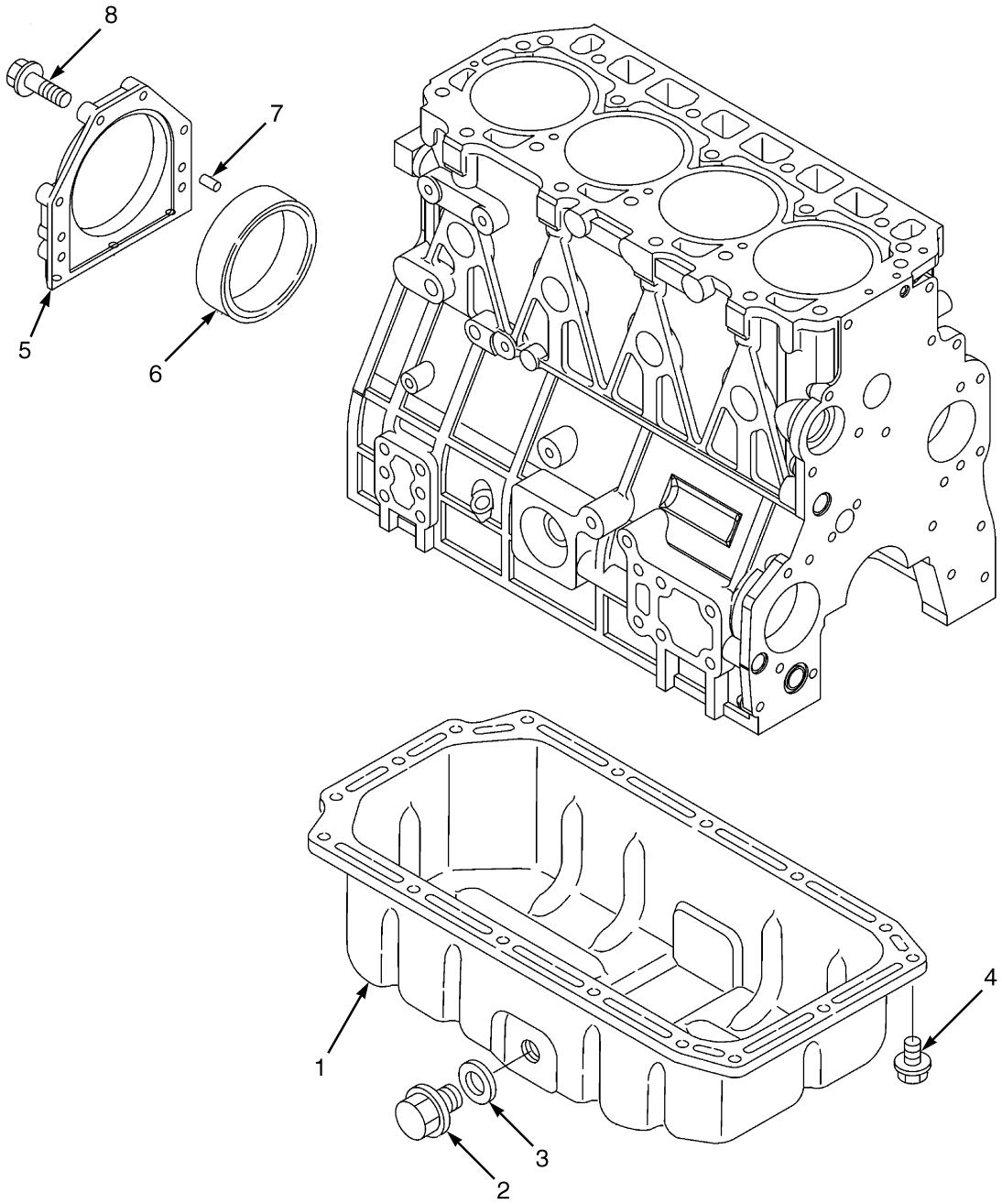

BP090183

©2014 HYSTER COMPANY

OIL PAN

YANMAR 2.6L AND 3.3L – DIESEL

ITEM	PART NO.	DESCRIPTION	QTY
	4619937	Engine Assy-Diesel (Yanmar 2.6L)	1
	4619939	Engine Assy-Diesel (Yanmar 3.3L)	1
	4626066	Engine Assy-Diesel (Yanmar 2.6L Non-Emissions)	1
	4626064	**Engine Assy-Diesel (Yanmar 3.3L Non-Emissions)**	**1**
1	1599479	Oil Pan	1
2	1599480	Drain Plug	1
3	1599481	Oil Seal	1
4	1599448	Bolt	16
5	1599483	Case (2.6L)	1
5	4068194	Case (3.3L)	1
6	1707826	Seal	1
7	1599458	Pin	2
8	1599485	Bolt	6
	2084312	Gasket (Silicone Not Illustrated)	AR
	1600085	Kit-Gasket (Complete Engine) (Includes Items 3, 9)	1
	1599898	Kit-Gasket (2.6L Engine Complete) (Includes Items 3, 9)	1
	1689744	Kit-Gasket (Complete Engine) (3.3L) (Includes Items 3, 9)	1

©2014 HYSTER COMPANY

ENGINE COOLING (FIGURE 3-13)
YANMAR 2.6L AND 3.3L — DIESEL

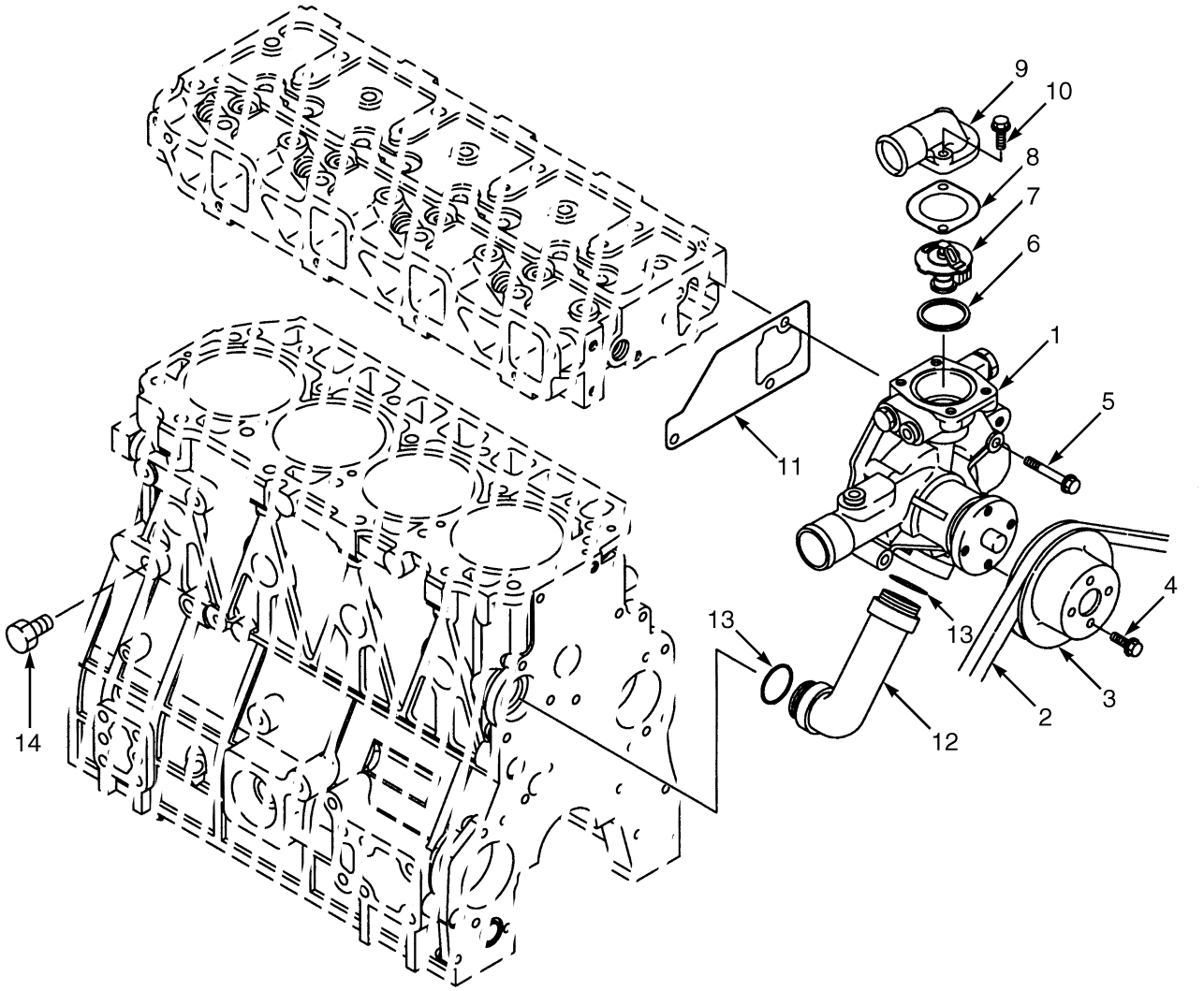

BP090193

©2014 HYSTER COMPANY

ENGINE COOLING

YANMAR 2.6L AND 3.3L – DIESEL

ITEM	PART NO.	DESCRIPTION	QTY
	4619937	Engine Assy-Diesel (Yanmar 2.6L)	1
	4619939	Engine Assy-Diesel (Yanmar 3.3L)	1
	4626066	Engine Assy-Diesel (Yanmar 2.6L Non-Emissions)	1
	4626064	**Engine Assy-Diesel (Yanmar 3.3L Non-Emissions)**	**1**
1	1599804	Water Pump	1
1	1599799	Cover	1
1	1599840	Gasket	1
1	1599815	Gasket	1
1	**1600086**	**Seal**	**1**
1	1599844	Ball	1
1	1599899	Bolt	2
1	1599817	Screw	3
2	**1581441**	**V-Belt**	**1**
3	**1616427**	**Water Pump Pulley (2.6 and 3.3L Non Emission)**	**1**
3	1599795	Water Pump Pulley (2.6L)	1
3	**1616427**	**Water Pump Pulley (3.3L)**	**1**
4	1599448	Bolt	4
5	1599579	Bolt	3
6	1597709	Gasket	1
7	4068202	Thermostat	1
8	1597710	Gasket	1
9	1599798	Cover	1
10	1599801	Bolt	1
11	1599803	Gasket	1
12	1599797	Pipe	1
13	1599807	O-Ring	2
14	1599802	Drain Plug	2
	1599898	Kit-Gasket (2.6L Engine Complete) (Includes Items 11-13)	1
	1600085	Kit-Gasket (Complete Engine) (Includes Items 11-13)	1
	1689744	Kit-Gasket (Complete Engine) (3.3L) (Includes Items 11, 13)	1

©2014 HYSTER COMPANY

LUBRICATION SYSTEM (FIGURE 3-14)

YANMAR 2.6L AND 3.3L — DIESEL

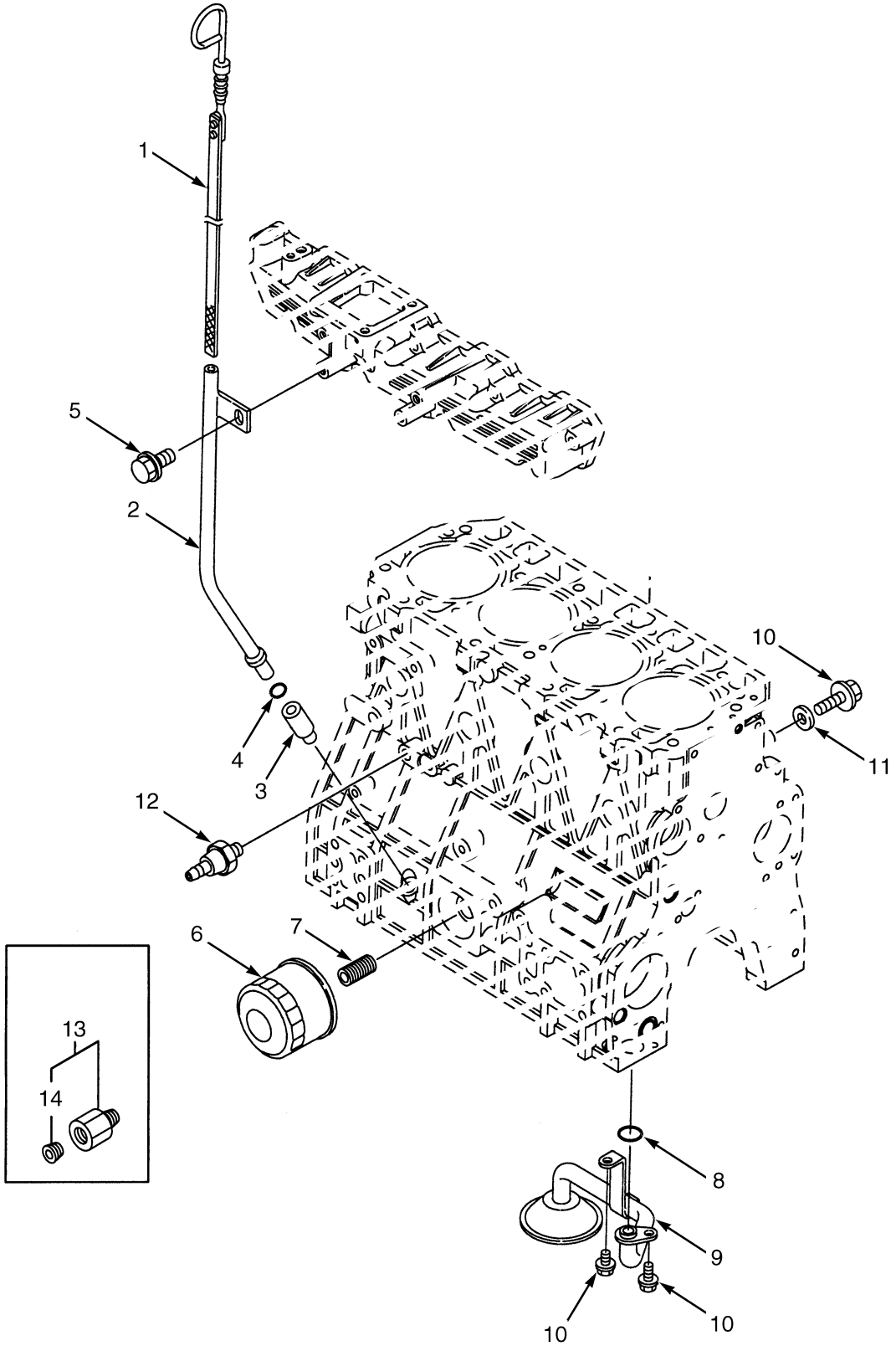

©2014 HYSTER COMPANY

LUBRICATION SYSTEM
YANMAR 2.6L AND 3.3L – DIESEL

ITEM	PART NO.	DESCRIPTION	QTY
	4619937	Engine Assy-Diesel (Yanmar 2.6L)	1
	4619939	Engine Assy-Diesel (Yanmar 3.3L)	1
	4626066	Engine Assy-Diesel (Yanmar 2.6L Non-Emissions)	1
	4626064	**Engine Assy-Diesel (Yanmar 3.3L Non-Emissions)**	**1**
1	1599604	Dipstick	1
2	1599606	Dipstick Tube	1
3	1599605	Guide	1
4	1599607	O-Ring	1
5	1599470	Bolt	1
6	**2077983**	**Oil Filter**	**1**
7	1599610	Stud	1
8	1599468	O-Ring	1
9	1599611	Pipe	1
10	1599448	Bolt	3
11	1599445	Washer	1
12	1599613	Pressure Switch (Oil Pressure)	1
13	1599616	Plug (Oil Pressure Sensor)	1
14	**. . . . .**	**Plug**	**1**
	1599898	Kit-Gasket (2.6L Engine Complete) (Includes Items 4, 8, 11)	1
	1600085	Kit-Gasket (Complete Engine) (Includes Items 4, 8, 11)	1
	1689744	Kit-Gasket (Complete Engine) (3.3L) (Includes Items 4, 8, 11)	1

©2014 HYSTER COMPANY

EXHAUST (FIGURE 3-15)
YANMAR 2.6 AND 3.3L DIESEL — WITHOUT CATALYTIC CONVERTER

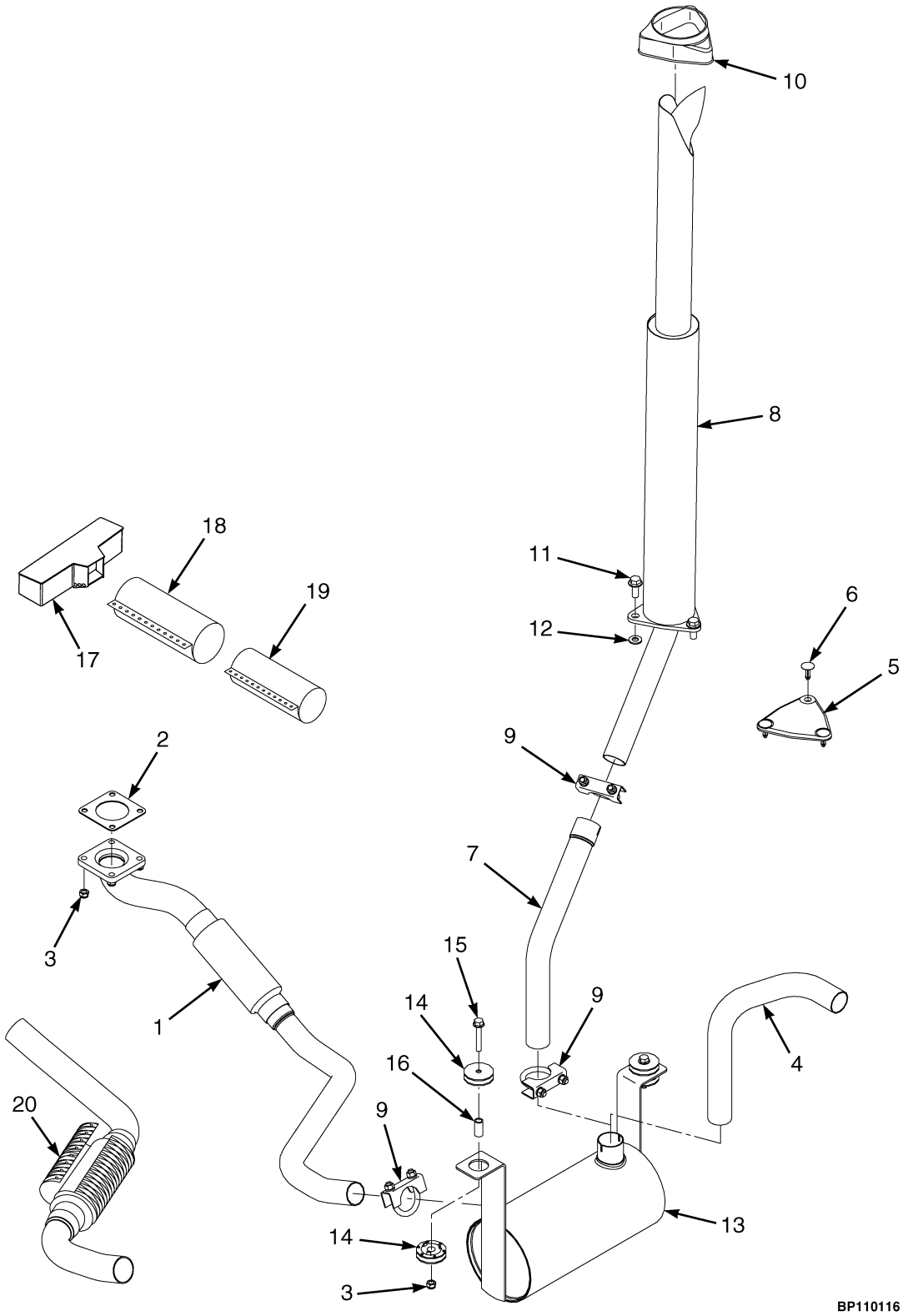

©2014 HYSTER COMPANY

EXHAUST

YANMAR 2.6 AND 3.3L DIESEL – WITHOUT CATALYTIC CONVERTER

KEY:
A: Tail Pipe
B: Overhead Exhaust

NOTE: This parts list contains multiple truck configurations, refer to the KEY to choose the correct QTY column for your truck.

ITEM	PART NO.	DESCRIPTION	QTY A	QTY B
1	**1589630**	**Exhaust Pipe**	**1**	**1**
2	**1532363**	**Gasket**	**1**	**1**
3	**1582222**	**Locknut**	**6**	**6**
4	**1586967**	**Exhaust Pipe**	**1**	**..**
4	1625173	Exhaust Pipe (Diffuser) (DS)	1	..
5	**1533639**	**Cover**	**1**	**..**
6	**1347045**	**Fastener**	**3**	**..**
7	1567020	Exhaust Pipe	..	1
8	1646827	Tail Pipe	..	1
9	**63117**	**Clamp**	**2**	**3**
10	2021394	Cover	..	1
11	**1510117**	**Capscrew**	**..**	**3**
12	320159	Washer	..	3
13	**2075554**	**Muffler (Exhaust)**	**1**	**1**
14	**1709996**	**Isolator**	**4**	**4**
15	**1510115**	**Capscrew**	**2**	**2**
16	**1708371**	**Spacer**	**2**	**2**
17	2084000	Exhaust Wrap (Yanmar Manifold)	1	1
18	2084002	Wrap (With Snaps)	1	1
19	2084001	Wrap (With Snaps)	1	1
20	2073024	Wrap (Flex Joint)	1	1

©2014 HYSTER COMPANY

NOTES

©2014 HYSTER COMPANY

4 ENGINE ASSEMBLY-KUBOTA

SECTION 4
ENGINE ASSEMBLY-KUBOTA

DESCRIPTION **PAGE**

ALTERNATOR AND PULLEY ASSEMBLY
KUBOTA 2.5L 4-38
CAMSHAFT ASSEMBLY
KUBOTA 2.5L 4-46
COOLING SYSTEM
KUBOTA 2.5L 4-6
COVER ASSEMBLY
KUBOTA 2.5L 4-30
CRANKSHAFT AND PISTON ASSEMBLY
KUBOTA 2.5L 4-26
CRANKSHAFT BEARING ASSEMBLY
KUBOTA 2.5L 4-24
CYLINDER BLOCK ASSEMBLY
KUBOTA 2.5L 4-12
CYLINDER HEAD ASSEMBLY
KUBOTA 2.5L 4-16
CYLINDER HEAD COVER ASSEMBLY
KUBOTA 2.5L 4-18
DIPSTICK TUBE ASSEMBLY
KUBOTA 2.5L 4-21
ECU ASSEMBLY
KUBOTA 2.5L 4-44
ENGINE MOUNT
KUBOTA 2.5L LPG 4-10
EXHAUST MANIFOLD ASSEMBLY
KUBOTA 2.5L 4-36
EXHAUST SYSTEM
WITH CATALYTIC CONVERTER - KUBOTA 2.5L 4-4
FAN PULLEY ASSEMBLY
KUBOTA 2.5L 4-43
FLANGE BREATHER ASSEMBLY
KUBOTA 2.5L 4-28
FLYWHEEL HOUSING AND STARTER
KUBOTA 2.5L LPG 4-8
GEAR CASE ASSEMBLY
KUBOTA 2.5L - 280 MM FAN HEIGHT 4-50
IGNITION COIL ASSEMBLY
KUBOTA 2.5L 4-29
INTAKE MANIFOLD ASSEMBLY
KUBOTA 2.5L 4-34
OIL COOLER ASSEMBLY
KUBOTA 2.5L - 280 MM FAN HEIGHT 4-37
OIL FILTER ASSEMBLY
KUBOTA 2.5L 4-20
OIL PAN ASSEMBLY
KUBOTA 2.5L 4-14
OIL PUMP ASSEMBLY
KUBOTA 2.5L 4-22
VALVE AND ROCKER ARM ASSEMBLY

©2014 HYSTER COMPANY

SECTION 4
ENGINE ASSEMBLY-KUBOTA

DESCRIPTION **PAGE**

KUBOTA 2.5L 4-32
WATER FLANGE AND THERMOSTAT ASSEMBLY
KUBOTA 2.5L 4-40
WATER PUMP ASSEMBLY
KUBOTA 2.5L 4-42
WIRE HARNESS ASSEMBLY
KUBOTA 2.5L 4-48

©2014 HYSTER COMPANY

NOTES

©2014 HYSTER COMPANY

EXHAUST SYSTEM (FIGURE 4-1)
WITH CATALYTIC CONVERTER — KUBOTA 2.5L

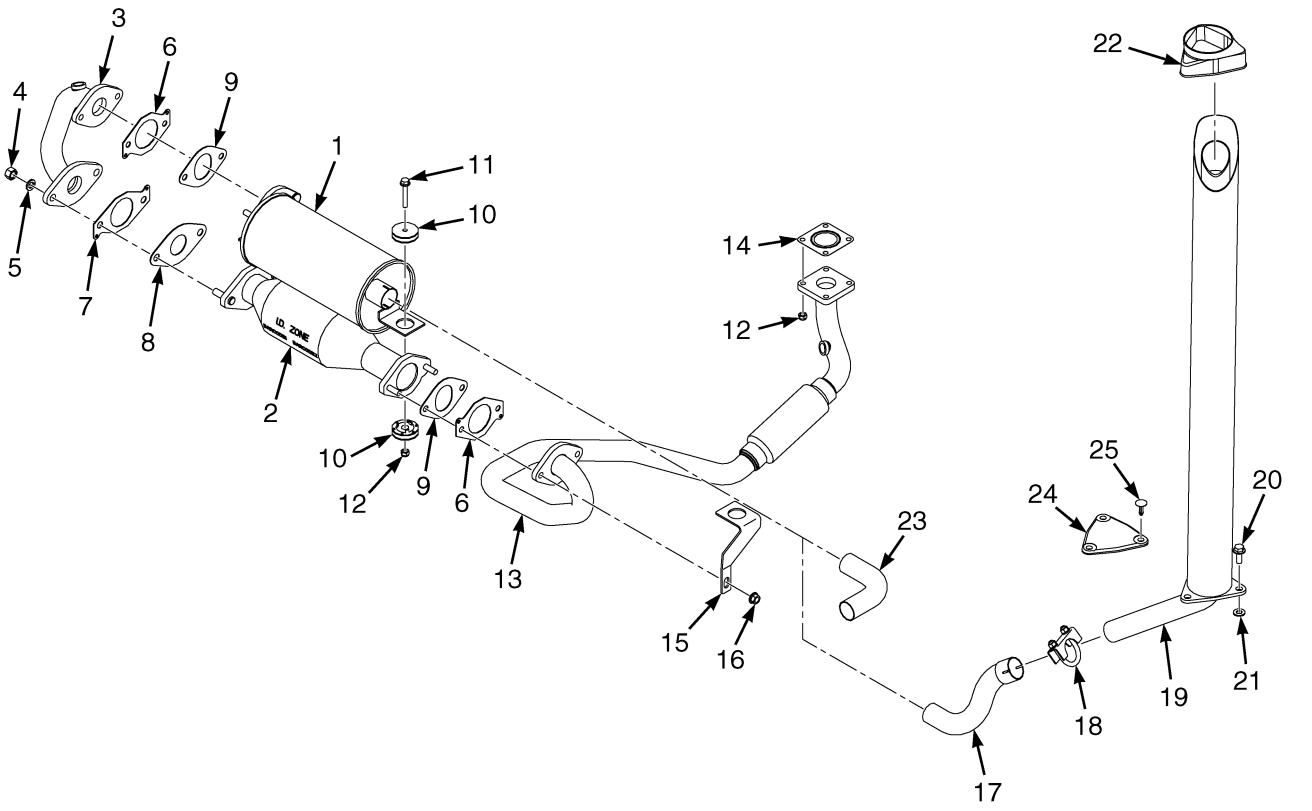

BP110122

©2014 HYSTER COMPANY

EXHAUST SYSTEM
WITH CATALYTIC CONVERTER – KUBOTA 2.5L

ITEM	PART NO.	DESCRIPTION	QTY
1	2089895	Muffler (Crimped)	1
2	4634086	Catalytic Converter	1
3	1636410	Exhaust Pipe	1
4	1469405	Nut	2
5	292683	Lockwasher	2
6	4098977	Gasket	2
7	4098976	Gasket	1
8	1469379	Gasket	1
9	1547712	Gasket	2
10	1709996	Isolator	4
11	1510115	Capscrew	2
12	1582222	Locknut	6
13	4057302	Exhaust Pipe	1
14	4064158	Gasket	1
15	1532523	Bracket	1
16	1460477	Nut	4
17	1533863	Exhaust Pipe	1
18	63117	Clamp	1
19	4051418	Tail Pipe	1
20	1510117	Capscrew	3
21	320159	Washer	3
22	2021394	Cover	1
23	**a** 1589312	Exhaust Pipe	1
24	**a** 1533639	Cover	1
25	**a** 1347045	Fastener	3

FOOTNOTES:

a Used without Overhead Exhaust

©2014 HYSTER COMPANY

COOLING SYSTEM (FIGURE 4-2)
KUBOTA 2.5L

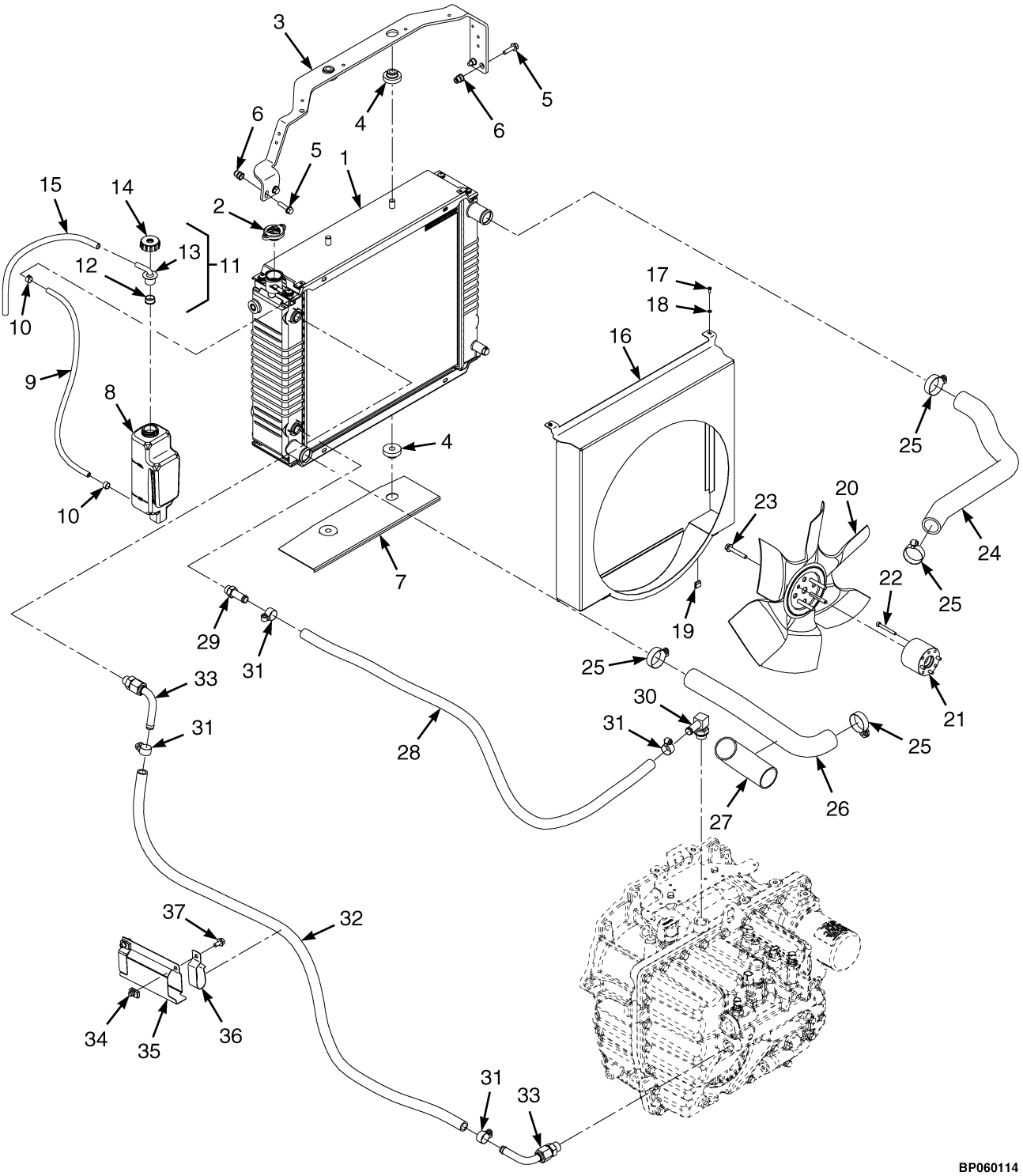

©2014 HYSTER COMPANY

COOLING SYSTEM
KUBOTA 2.5L

ITEM	PART NO.	DESCRIPTION	QTY
1	4606206	Radiator Assembly	1
1	4038261	Radiator	1
1	4038264	Drain Valve	1
1	4038265	Nut	2
1	4038266	Bolt	8
2	1352140	Radiator Cap	1
3	4085712	Bracket	1
4	1529787	Isolator	4
5	1527881	Capscrew	4
6	1530243	Insert	4
7	1565692	Exhaust Shield	1
8	1633307	Reservoir	1
9	1567674	Hose	1
10	369815	Clamp	2
11	345455	Outlet Assembly	1
12	336550	Bushing	1
13	345453	Outlet (Reservoir)	1
14	345454	Cap	1
15	1663877	Hose	1
16	~~4057288~~		
	4103431	Shroud	1
17	302020	Screw	2
18	320154	Washer	2
19	1329271	Clip	2
20	4618615	Fan	1
21	4057285	Adapter	1
22	296001	Capscrew	4
23	1510115	Capscrew	4
24	4622454	Radiator Hose	1
25	369804	Clamp	4
26	4625301	Radiator Hose	1
27	4633941	Wrap	1
28	2110024	Hose	1
29	1673198	Fitting	1
30	222512	Fitting	1
31	130845	Clamp	4
32	2109869	Hose	1
33	2109875	Tube Assy	2
34	1480237	Nut	2
35	4079256	Heat Shield	1
36	1562648	Clip	2
37	1527879	Capscrew	2

©2014 HYSTER COMPANY

FLYWHEEL HOUSING AND STARTER (FIGURE 4-3)
KUBOTA 2.5L LPG

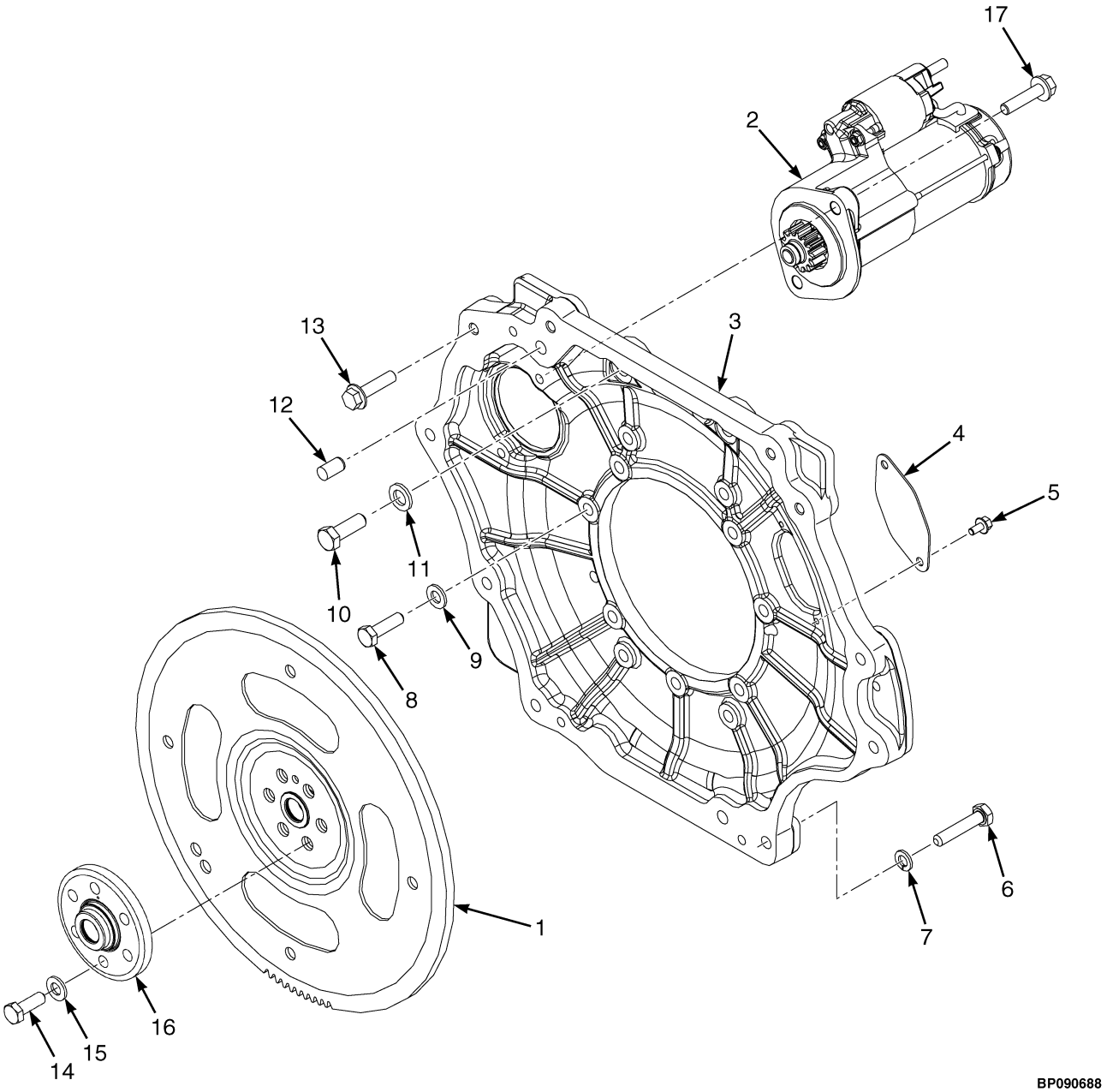

©2014 HYSTER COMPANY

FLYWHEEL HOUSING AND STARTER
KUBOTA 2.5L LPG

ITEM	PART NO.	DESCRIPTION	QTY
1	4056821	Flywheel	1
2	4060226	Starter	1
3	4056820	Flywheel Housing	1
4	1625999	Dust Cover	1
5	1534417	Capscrew	2
6	292517	Capscrew	6
7	292682	Lockwasher	6
8	1329258	Capscrew	11
9	296420	Washer	11
10	399898	Capscrew	2
11	296422	Washer	2
12	303150	Dowel	2
13	1512403	Capscrew	4
14	4630631	Capscrew	6
15	296422	Washer	6
16	4056823	Adapter	1
17	1527884	Capscrew	2

©2014 HYSTER COMPANY

ENGINE MOUNT (FIGURE 4-4)
KUBOTA 2.5L LPG

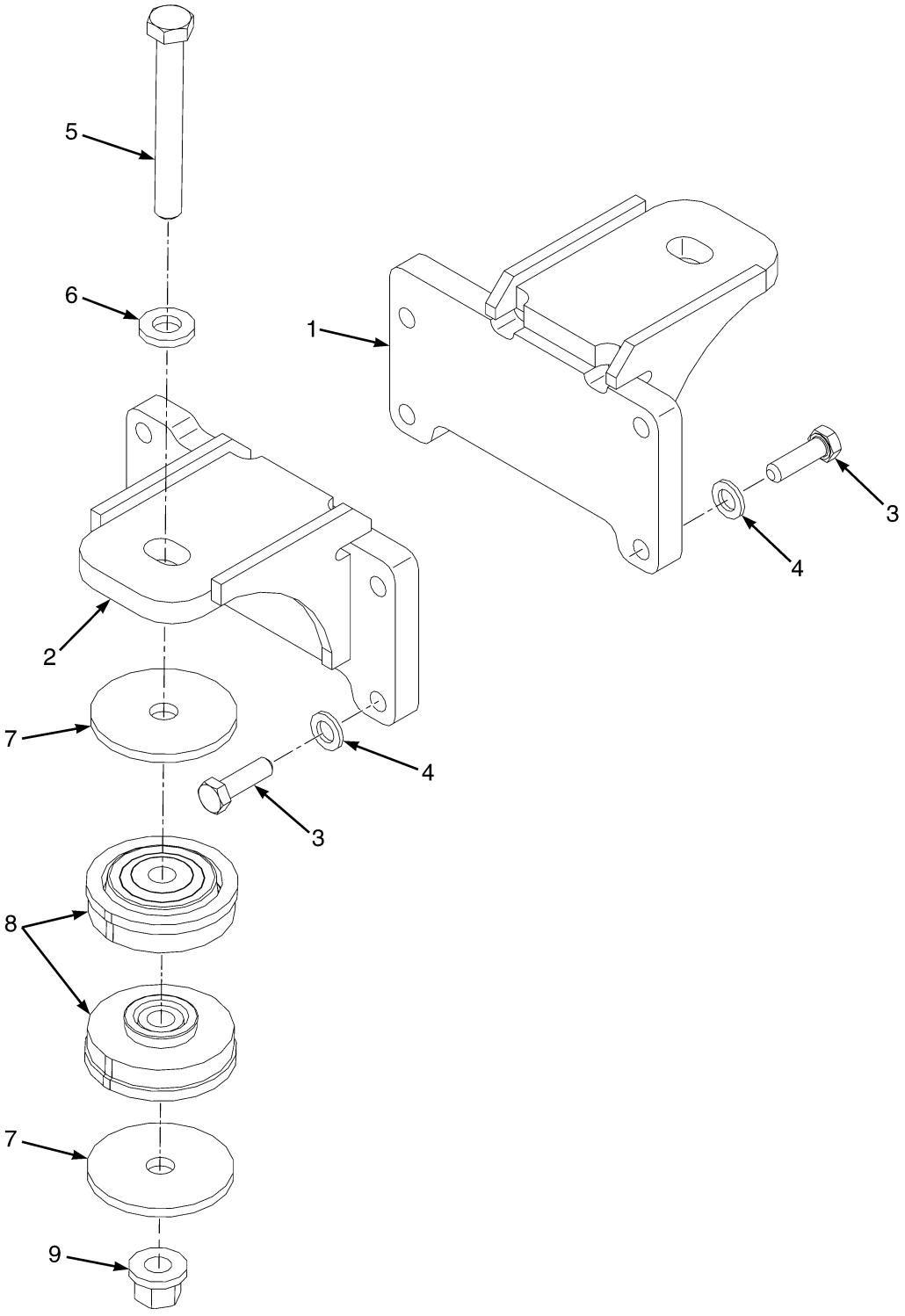

©2014 HYSTER COMPANY

ENGINE MOUNT
KUBOTA 2.5L LPG

ITEM	PART NO.	DESCRIPTION	QTY
1	4065020	Motor Mount (RH)	1
2	4065021	Motor Mount (LH)	1
3	300794	Capscrew	8
4	296422	Washer	8
5	293698	Capscrew	2
6	1504075	Washer	2
7	1557737	Washer	4
8	2069951	Isolator	4
9	1565453	Nut (Flange)	2

©2014 HYSTER COMPANY

CYLINDER BLOCK ASSEMBLY (FIGURE 4-5)
KUBOTA 2.5L

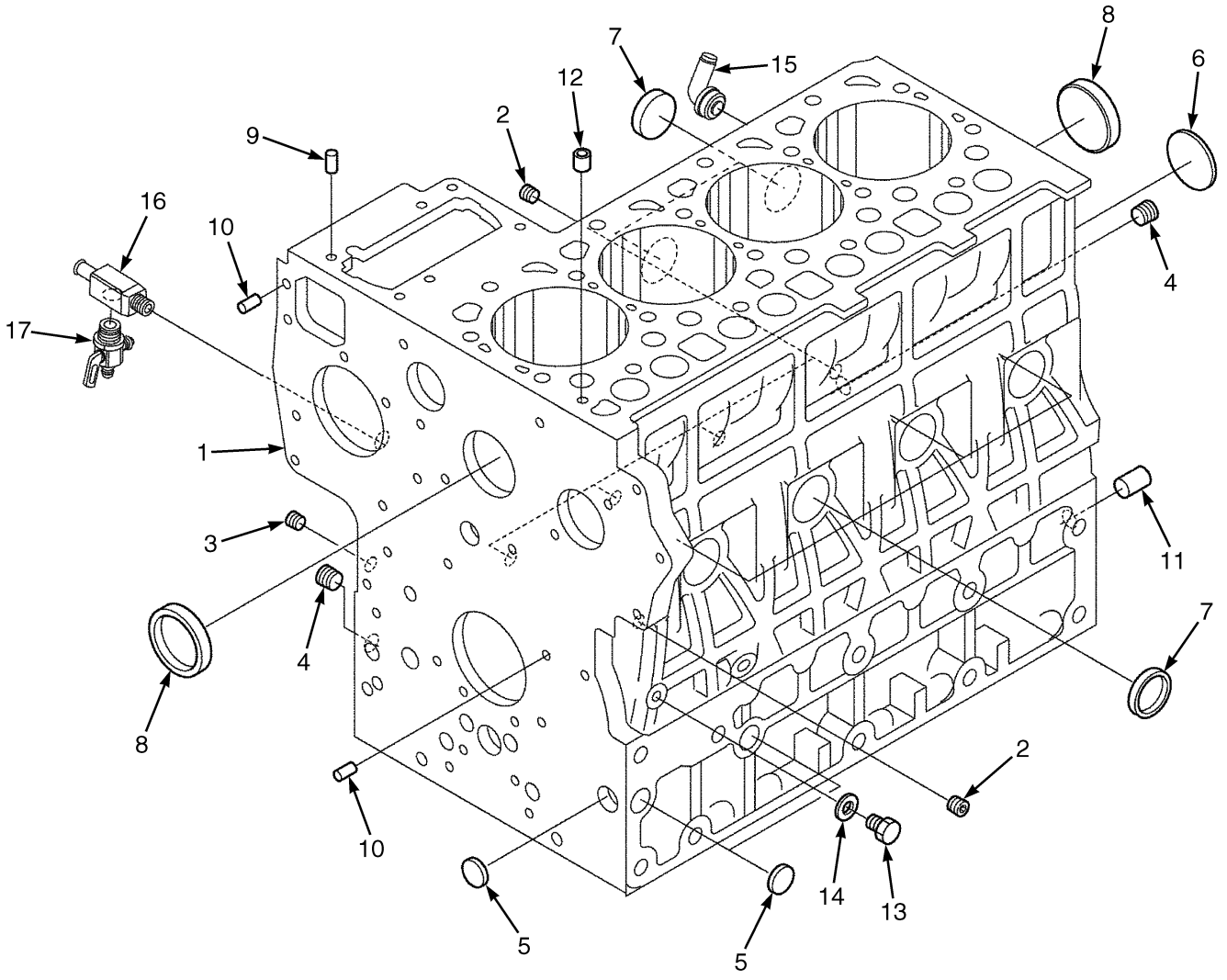

BP090657

©2014 HYSTER COMPANY

CYLINDER BLOCK ASSEMBLY
KUBOTA 2.5L

ITEM	PART NO.	DESCRIPTION	QTY
	4625769	Engine Assy	1
1	4096797	Engine Block	1
2	4041906	Plug	6
3	4096798	Plug	1
4	4096799	Plug	2
5	4096801	Plug	3
6	4096802	Plug	1
7	4041910	Cap (Sealing)	5
8	4041911	Cap (Sealing)	2
9	4042343	Pin	1
10	4096806	Pin	2
11	4096807	Pin	1
12	4041920	Pin	1
13	4096809	Plug	1
14	. . . . .	Gasket	1
15	4041925	Pipe Joint	1
16	4096810	Drain Valve	1
17	4096811	Fitting	1

©2014 HYSTER COMPANY

OIL PAN ASSEMBLY (FIGURE 4-6)
KUBOTA 2.5L

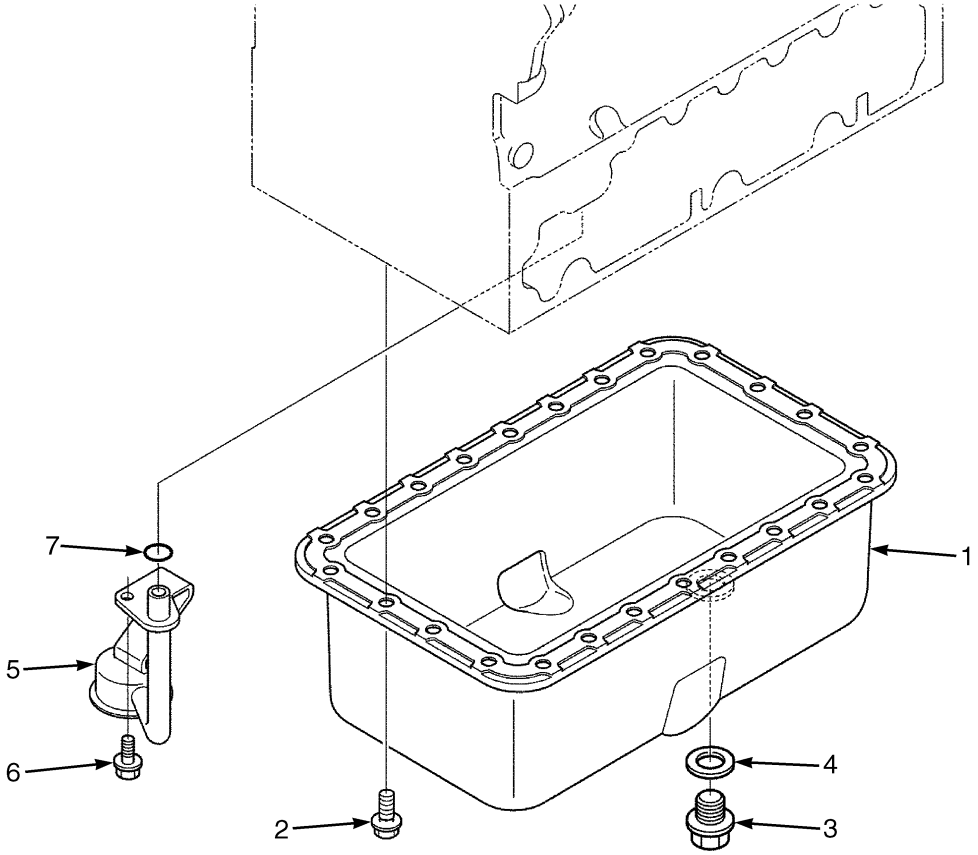

BP090658

ITEM	PART NO.	DESCRIPTION	QTY
	4625769	Engine Assy	1
1	4096803	Oil Pan	1
2	4096804	Bolt	24
3	4041938	Drain Plug	1
4	4051083	Gasket	1
5	4096805	Strainer	1
6	4042035	Bolt	1
7	4050915	O-Ring	1

©2014 HYSTER COMPANY

NOTES

©2014 HYSTER COMPANY

CYLINDER HEAD ASSEMBLY (FIGURE 4-7)
KUBOTA 2.5L

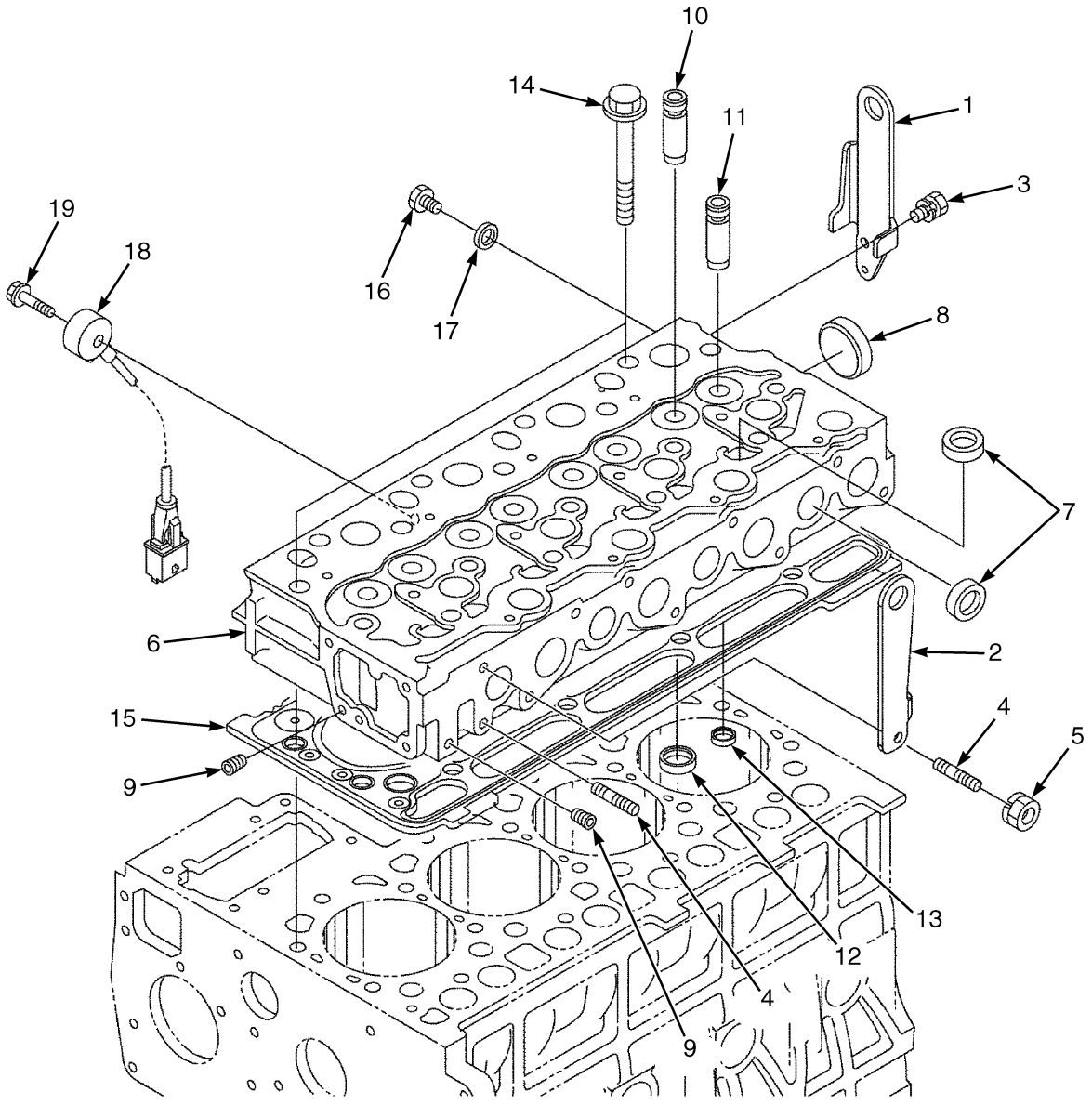

BP090659

©2014 HYSTER COMPANY

CYLINDER HEAD ASSEMBLY
KUBOTA 2.5L

ITEM	PART NO.	DESCRIPTION	QTY
	4625769	Engine Assy	1
1	4096808	Lifting Eye	1
2	4096812	Lifting Eye	1
3	4096813	Bolt	1
4	4042342	Stud	2
5	4096814	Nut	1
6	4096815	Cylinder Head	1
7	4041950	Cap	12
8	4041951	Cap	1
9	4096816	Plug	2
10	4096817	Guide	4
11	4096818	Guide	4
12	4096819	Valve Seat	4
13	4096820	Valve Seat	4
14	4096823	Plug	1
15	4096822	Cylinder Head Gasket	1
16	4096821	Bolt	10
17	4096824	Washer	1
18	4096825	Sensor	1
19	4096826	Bolt	1

©2014 HYSTER COMPANY

CYLINDER HEAD COVER ASSEMBLY (FIGURE 4-8)
KUBOTA 2.5L

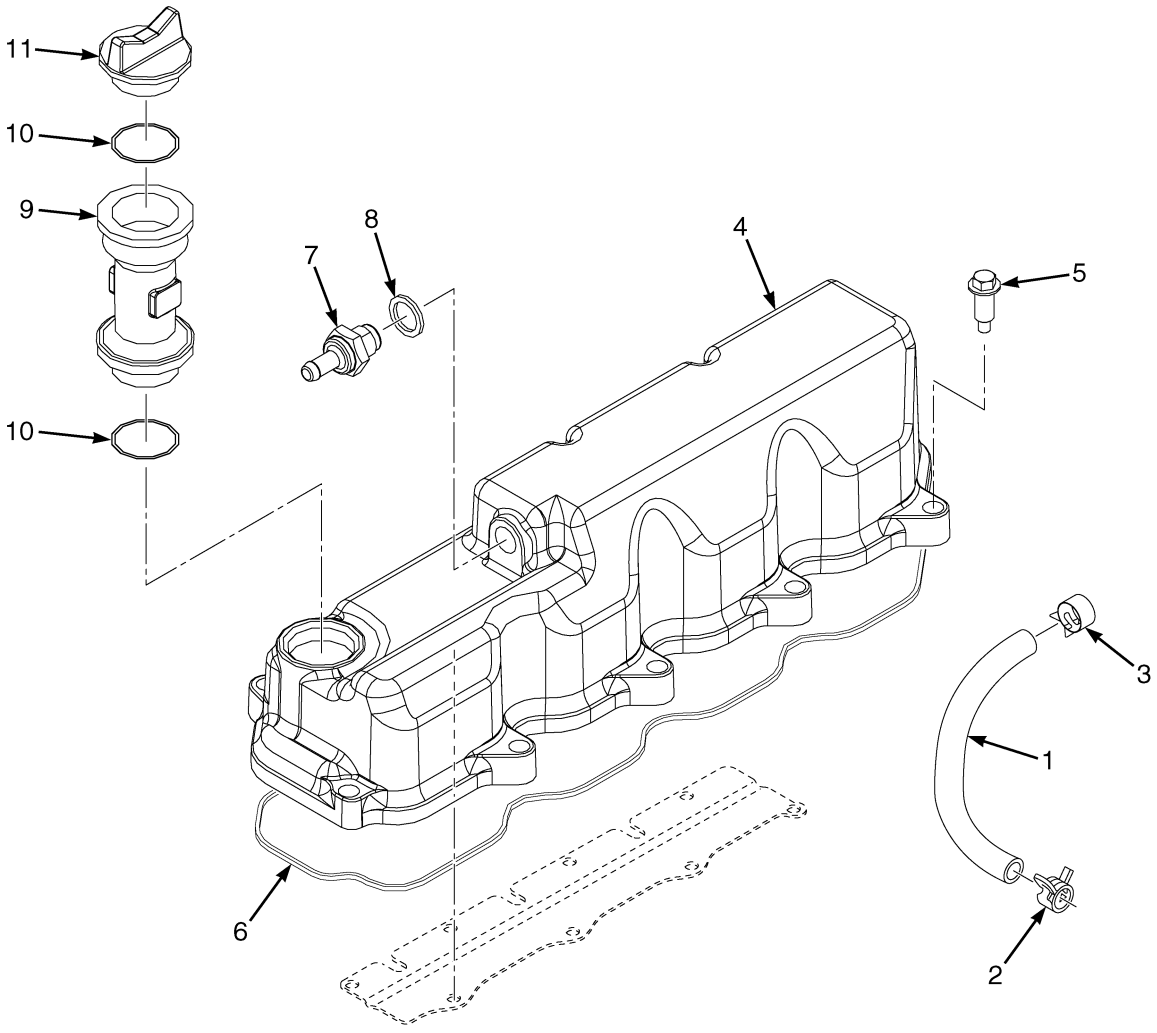

BP090660

©2014 HYSTER COMPANY

CYLINDER HEAD COVER ASSEMBLY
KUBOTA 2.5L

ITEM	PART NO.	DESCRIPTION	QTY
	4625769	Engine Assy	1
1	4096842	Tube	1
2	4096843	Hose Clamp	1
3	4096844	Hose Clamp	1
4	4096845	Engine Cover	1
5	4096872	Bolt	10
6	4096871	Gasket	1
7	4096870	Pcv Valve	1
8	4042050	Packing (O-Ring)	1
9	4096873	Flange	1
10	4042131	O-Ring	2
11	4042130	Plug	1

©2014 HYSTER COMPANY

OIL FILTER ASSEMBLY (FIGURE 4-9)
KUBOTA 2.5L

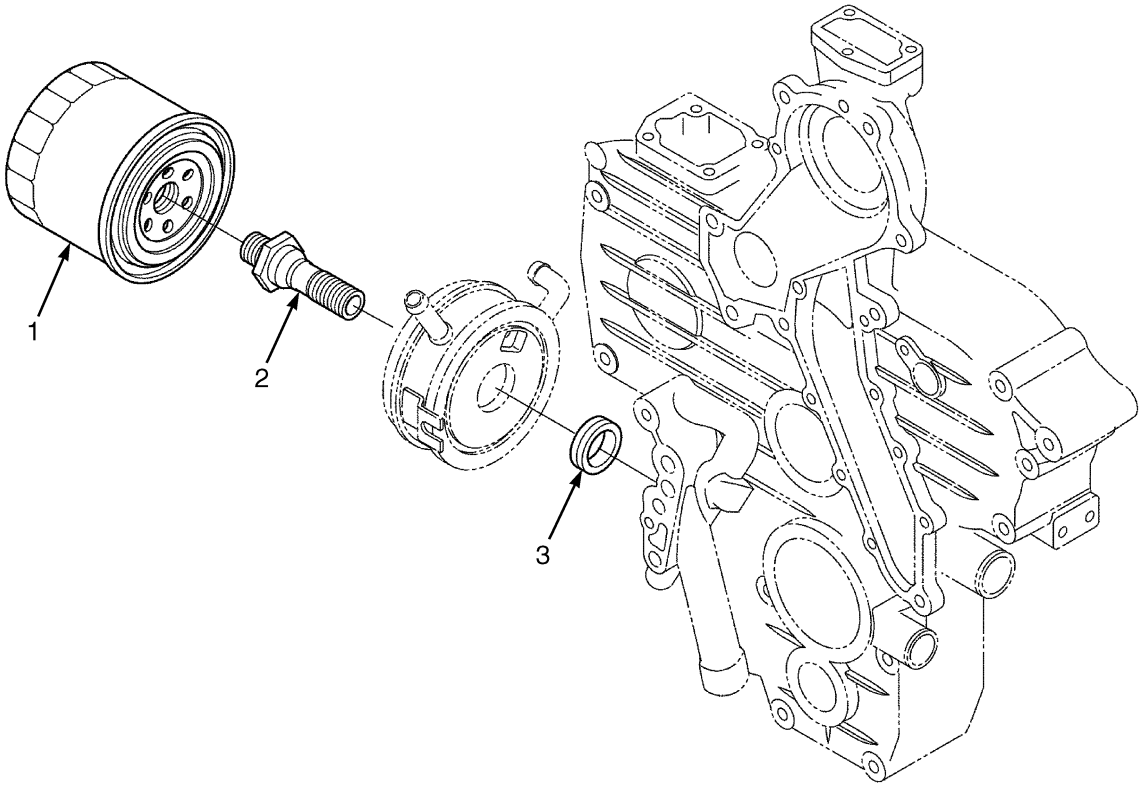

BP090661

ITEM	PART NO.	DESCRIPTION	QTY
	4625769	Engine Assy	1
1	4096874	Oil Filter	1
2	4096875	Connector	1
3	4096876	Collar	1

©2014 HYSTER COMPANY

DIPSTICK TUBE ASSEMBLY (FIGURE 4-10)
KUBOTA 2.5L

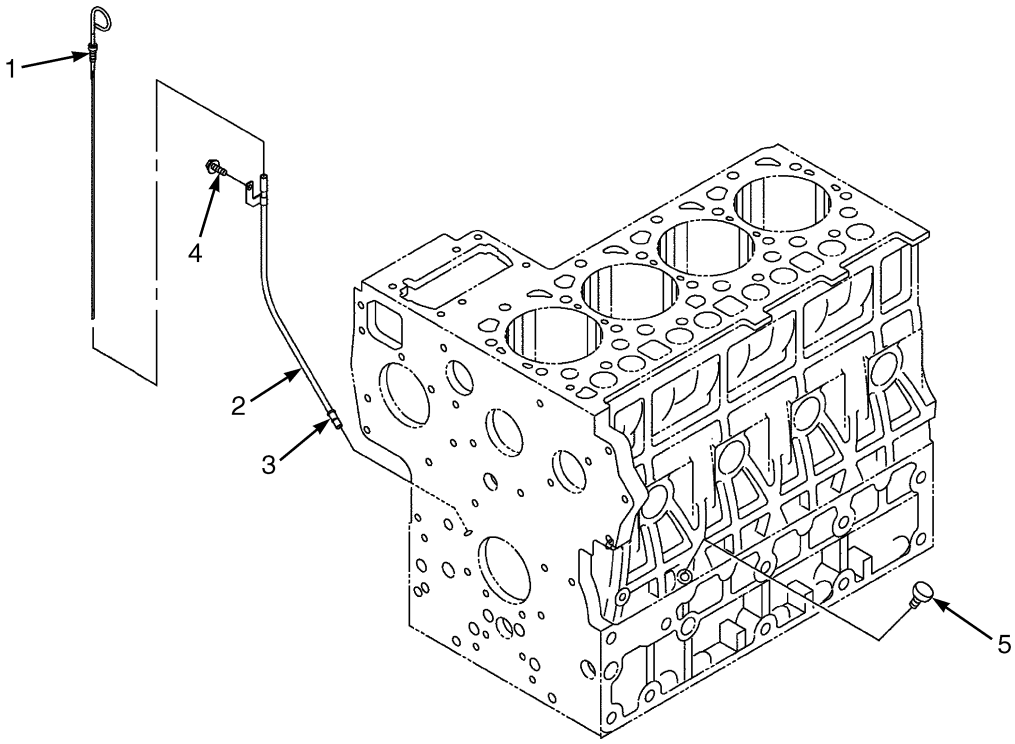

BP090662

ITEM	PART NO.	DESCRIPTION	QTY
	4625769	Engine Assy	1
1	4096877	Dipstick	1
2	4096878	Dipstick Tube	1
3	4042233	O-Ring	1
4	4042059	Bolt	1
5	4042234	Plug	1

OIL PUMP ASSEMBLY (FIGURE 4-11)

KUBOTA 2.5L

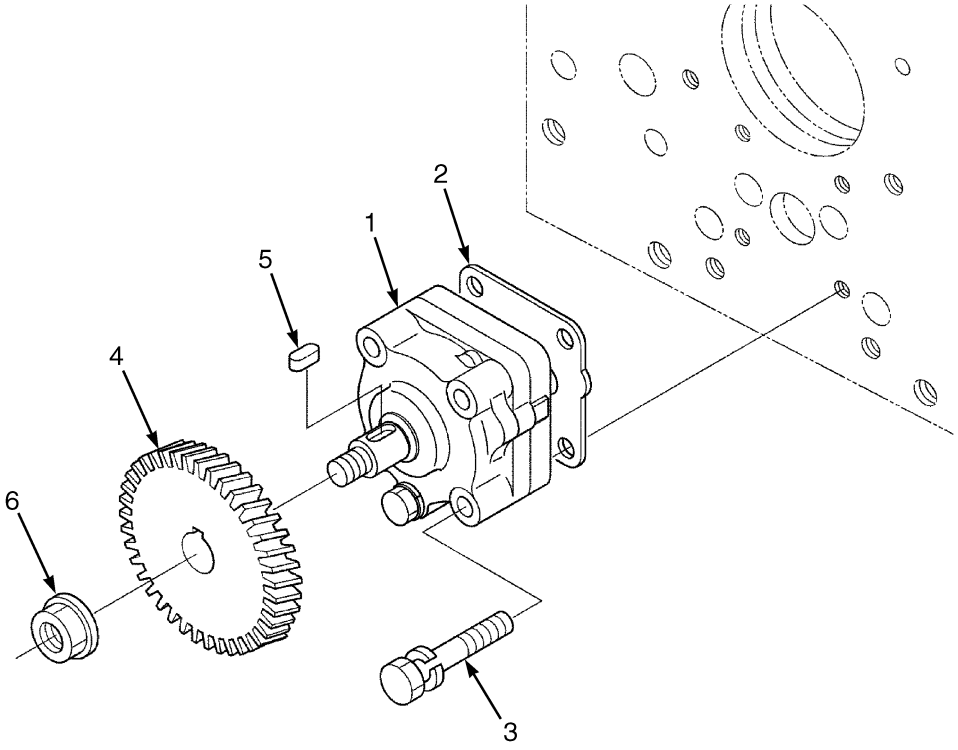

BP090663

ITEM	PART NO.	DESCRIPTION	QTY
	4625769	Engine Assy	1
1	4096879	Oil Pump	1
2	4096880	Gasket	1
3	4096881	Bolt	4
4	4096882	Gear	1
5	4096883	Key	1
6	4096884	Nut	1

©2014 HYSTER COMPANY

NOTES

©2014 HYSTER COMPANY

CRANKSHAFT BEARING ASSEMBLY (FIGURE 4-12)
KUBOTA 2.5L

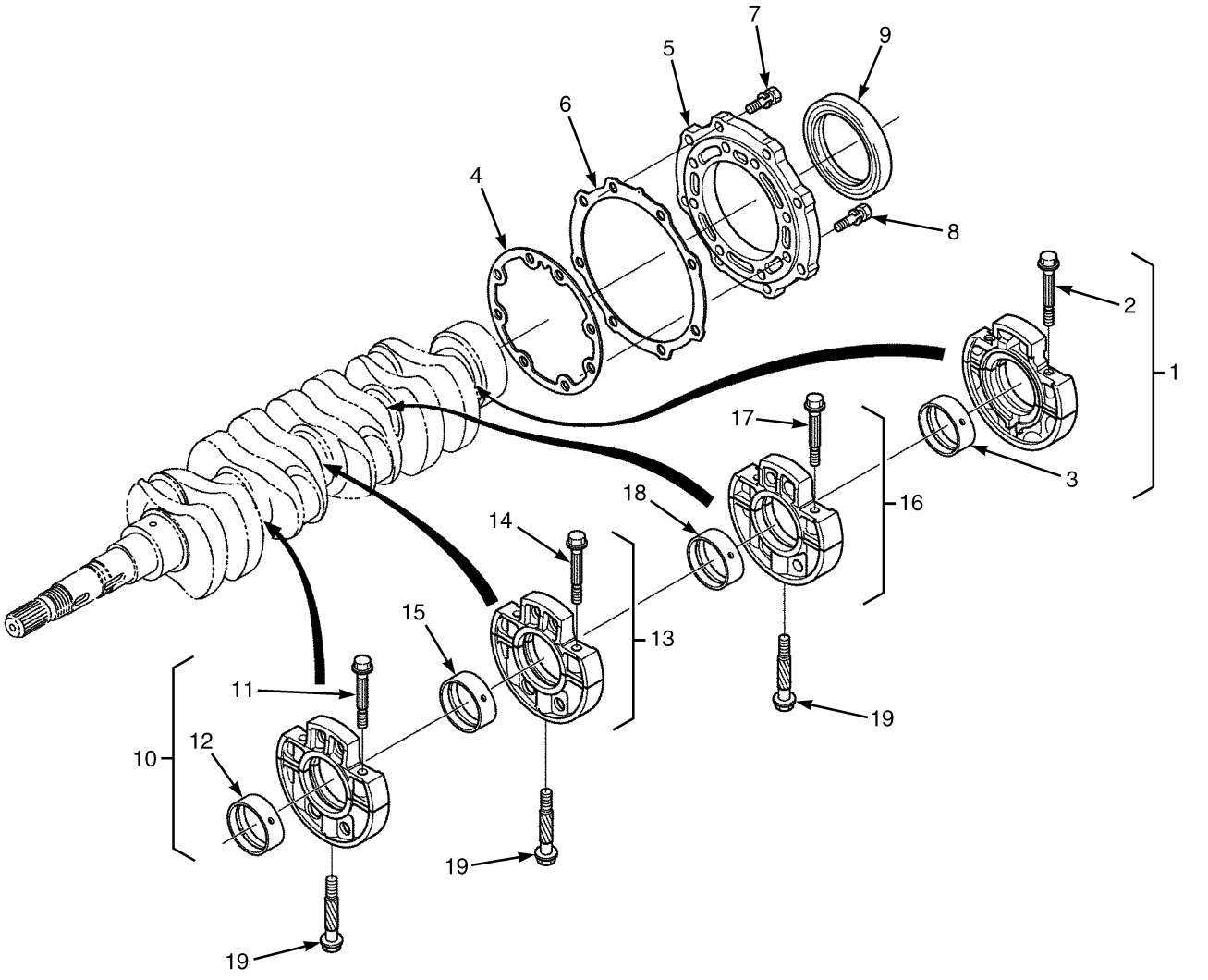

BP090664

©2014 HYSTER COMPANY

CRANKSHAFT BEARING ASSEMBLY
KUBOTA 2.5L

ITEM	PART NO.	DESCRIPTION	QTY
	4625769	Engine Assy	1
1	4096885	Case (Bearing Case Assembly)	1
2	4096886	Bolt	2
3	4096887	Crankshaft Bearing	2
4	4096888	Gasket	1
5	4096889	Cover	1
6	4096890	Gasket	1
7	4096891	Bolt	8
8	4096892	Bolt	8
9	4096893	Oil Seal	1
10	4096894	Case (Bearing Case Assembly)	1
11	4096886	Bolt	2
12	4096887	Crankshaft Bearing	2
13	4096895	Case (Bearing Case Assembly)	1
14	4096886	Bolt	2
15	4096887	Crankshaft Bearing	2
16	4096896	Case (Bearing Case Assembly)	1
17	4096886	Bolt	2
18	4096887	Crankshaft Bearing	2
19	4096897	Bolt	3
	a 4096898	Crankshaft Bearing (.20mm)	8
	a 4096899	Crankshaft Bearing (.40mm)	8

FOOTNOTES:

a Not Illustrated

©2014 HYSTER COMPANY

CRANKSHAFT AND PISTON ASSEMBLY (FIGURE 4-13)

KUBOTA 2.5L

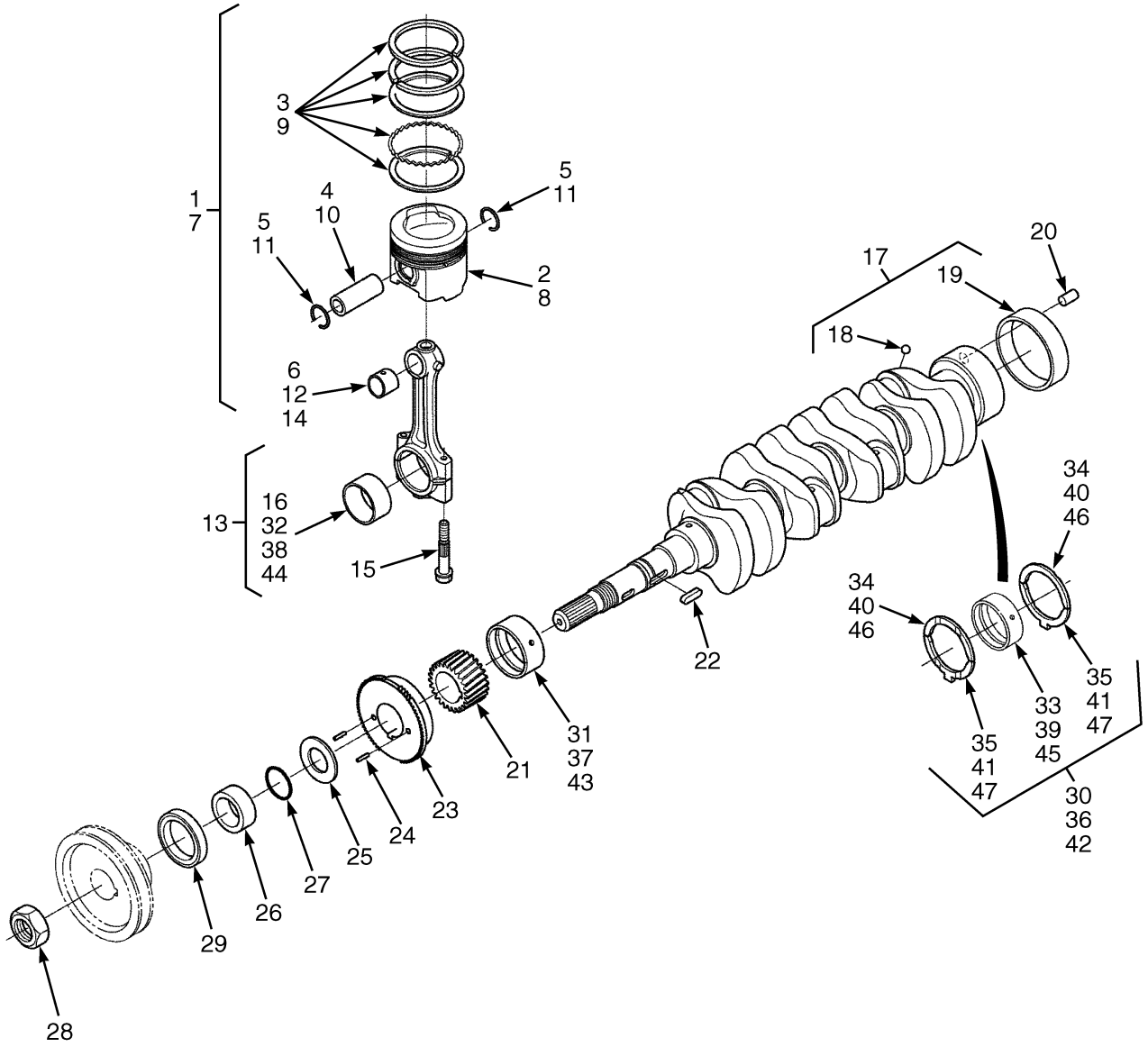

©2014 HYSTER COMPANY

CRANKSHAFT AND PISTON ASSEMBLY
KUBOTA 2.5L

ITEM	PART NO.	DESCRIPTION	QTY
	4625769	Engine Assy	1
1	4097200	Kit-Piston (Standard)	4
2	4096909	Piston	1
3	4096911	Kit-Piston Ring	1
4	4096913	Pin	1
5	4096914	Retaining Ring	2
6	4096916	Bushing	1
7	4097201	Kit-Piston (+.25mm)	4
8	4096910	Piston	1
9	4096912	Kit-Piston Ring	1
10	4096913	Pin	1
11	4096914	Retaining Ring	2
12	4096916	Bushing	1
13	4096915	Kit-Piston Rod	4
14	4096916	Bushing	1
15	4097172	Bolt	2
16	4097173	Piston Rod Bearing	2
17	4097176	Crankshaft	1
18	61141	Ball	4
19	4097178	Bushing	1
20	4097177	Pin	1
21	4097179	Gear	1
22	4097180	Key	1
23	4097181	Gear	1
24	4097182	Pin	2
25	4097183	Slinger	1
26	4097184	Collar	1
27	4097185	O-Ring	1
28	4097186	Nut	1
29	4097196	Oil Seal	1
30	4097197	Kit-Crankshaft Bearing (Standard)	1
31	4097187	Crankshaft Bearing	1
32	4097173	Piston Rod Bearing	8
33	4096887	Crankshaft Bearing	8
34	4097190	Thrust Washer	2
35	4097193	Thrust Washer	2
36	4097198	Kit-Crankshaft Bearing (-.20mm / +.20mm)	1
37	4097188	Crankshaft Bearing	1
38	4097174	Piston Rod Bearing	8
39	4096898	Crankshaft Bearing	8
40	4097191	Thrust Washer	2
41	4097194	Thrust Washer	2
42	4097199	Kit-Crankshaft Bearing	1
43	4097189	Crankshaft Bearing	1
44	4097175	Piston Rod Bearing	8
45	4096899	Crankshaft Bearing	8
46	4097192	Thrust Washer	2
47	4097195	Thrust Washer	2

©2014 HYSTER COMPANY

FLANGE BREATHER ASSEMBLY (FIGURE 4-14)

KUBOTA 2.5L

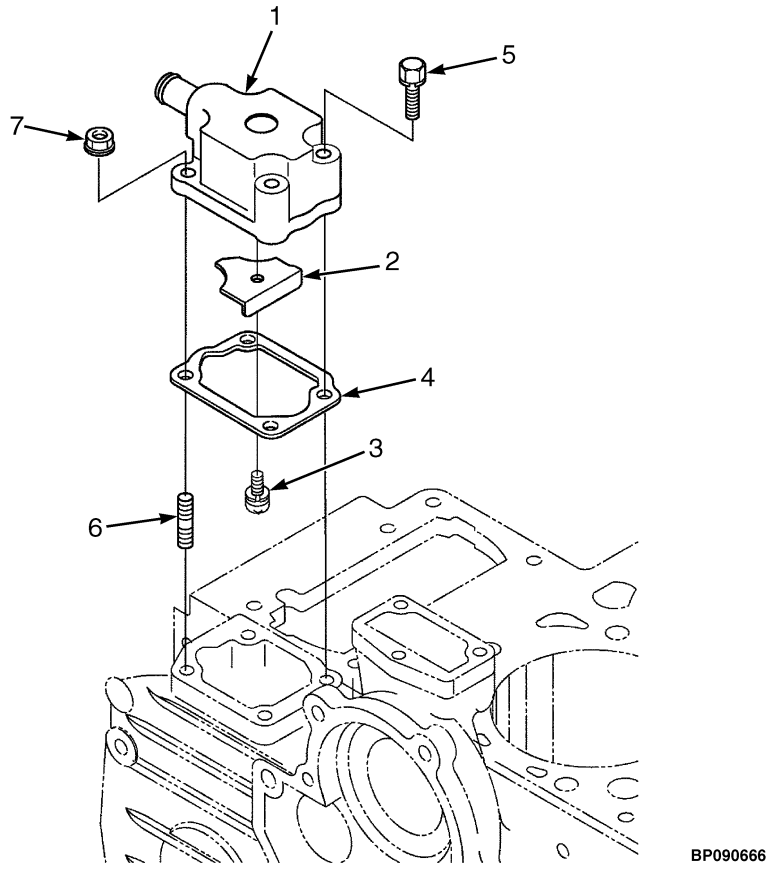

ITEM	PART NO.	DESCRIPTION	QTY
	4625769	Engine Assy	1
1	4097202	Flange	1
2	4097203	Plate	1
3	4097204	Screw	1
4	4097205	Gasket	1
5	4097206	Bolt	2
6	4097207	Stud	2
7	4050851	Nut (Flange)	2

©2014 HYSTER COMPANY

IGNITION COIL ASSEMBLY (FIGURE 4-15)
KUBOTA 2.5L

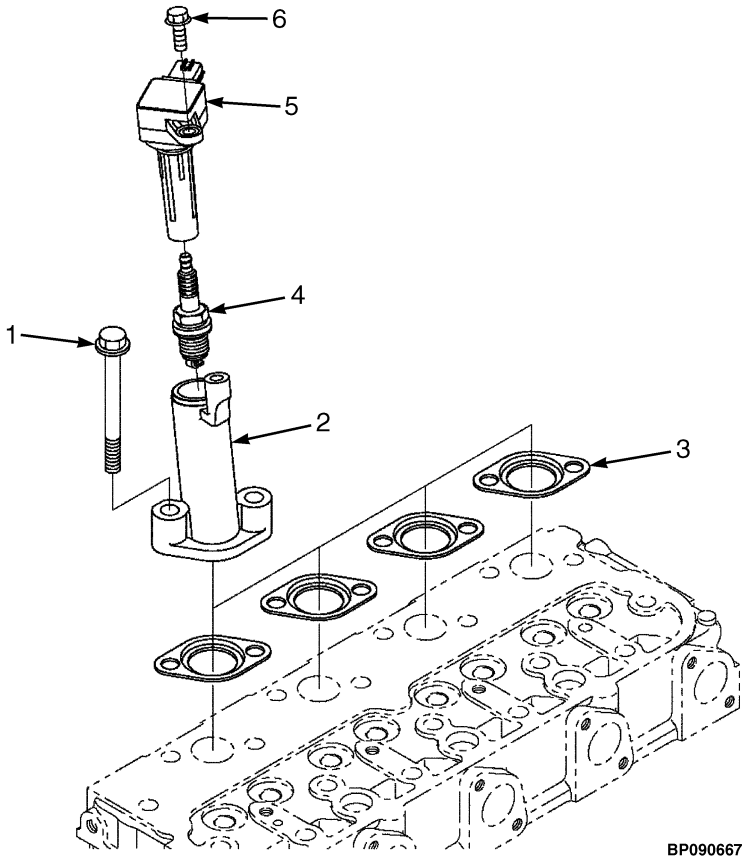

ITEM	PART NO.	DESCRIPTION	QTY
	4625769	Engine Assy	1
1	4097208	Bolt	8
2	4097209	Flange	4
3	4097210	Gasket	4
4	4097211	Spark Plug	4
5	4097212	Ignition Coil	4
6	4041991	Bolt	4

COVER ASSEMBLY (FIGURE 4-16)
KUBOTA 2.5L

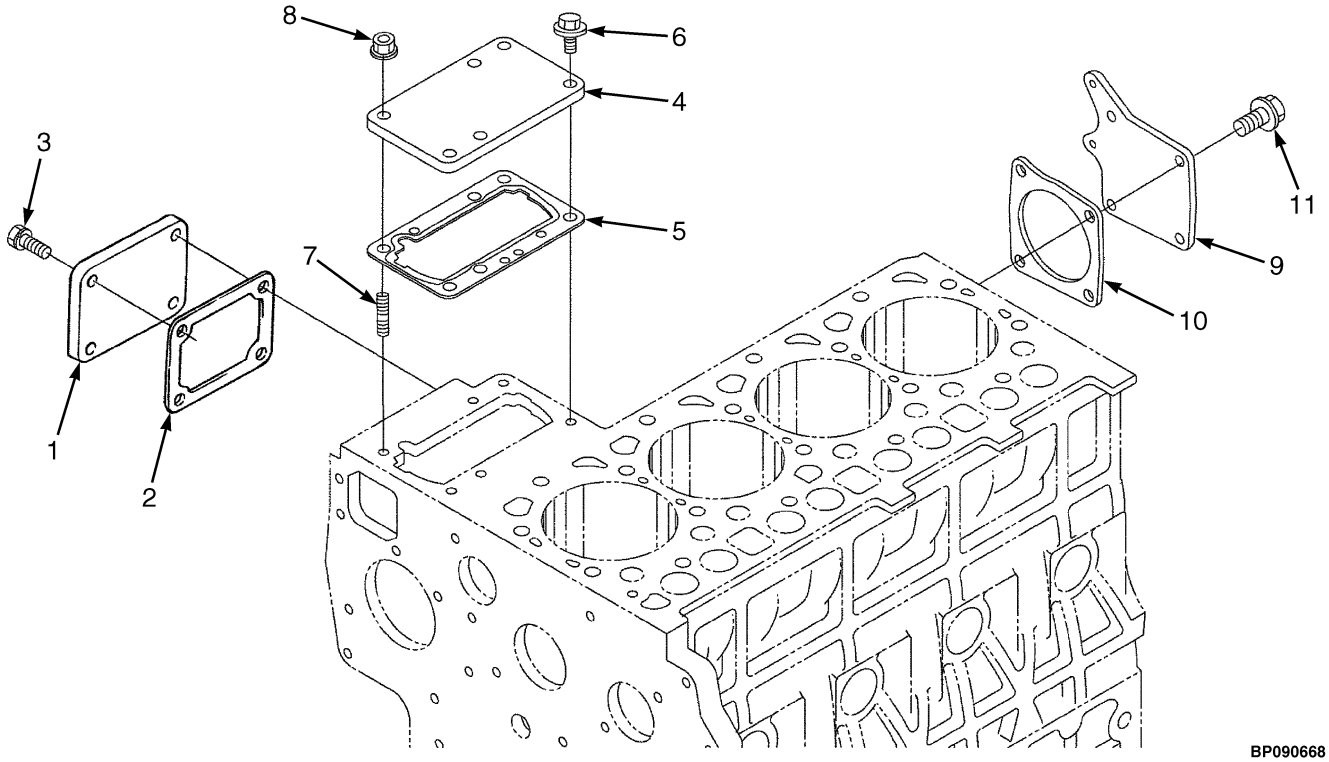

BP090668

ITEM	PART NO.	DESCRIPTION	QTY
	4625769	Engine Assy	1
1	4097213	Cover	1
2	4097214	Gasket	1
3	4097215	Bolt	4
4	4097216	Cover	1
5	4097217	Shim	1
6	4096813	Bolt	5
7	4042342	Stud	1
8	4041946	Nut	1
9	4097218	Cover	1
10	4097219	Gasket	1
11	4041992	Bolt	4

©2014 HYSTER COMPANY

NOTES

©2014 HYSTER COMPANY

VALVE AND ROCKER ARM ASSEMBLY (FIGURE 4-17)

KUBOTA 2.5L

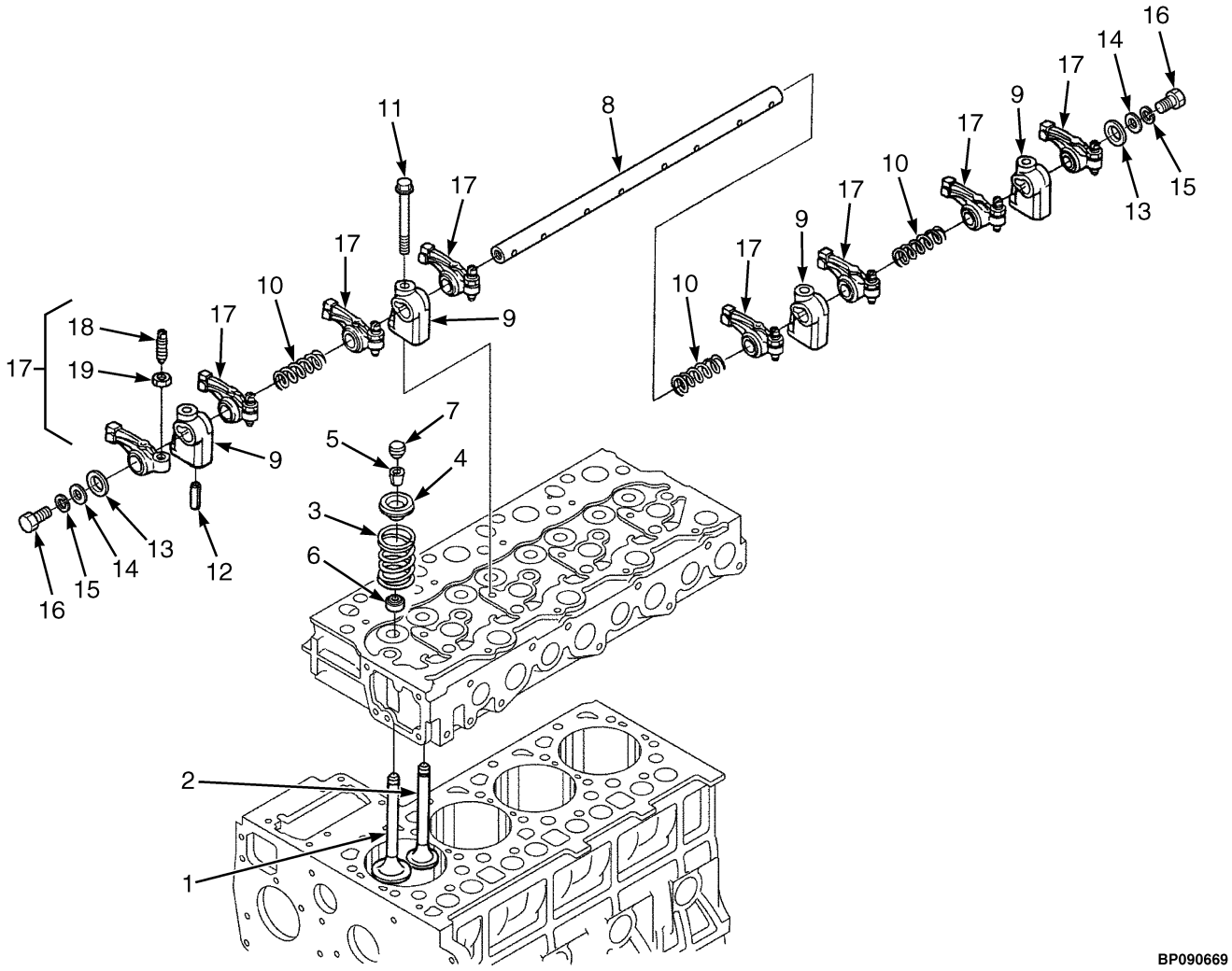

©2014 HYSTER COMPANY

VALVE AND ROCKER ARM ASSEMBLY
KUBOTA 2.5L

ITEM	PART NO.	DESCRIPTION	QTY
1	4097485	Inlet Valve	4
2	4097486	Exhaust Valve	4
3	4097487	Spring	8
4	4042122	Retainer	8
5	~~4097922~~		
	4042129	Collar	16
6	4097488	Seal (Exhaust)	4
6	4101858	Seal (Intake)	4
7	4097489	Cap	8
8	4097490	Shaft	1
9	4097491	Bracket	4
10	4097492	Spring	3
11	4042198	Bolt	4
12	4042096	Pin (Spring)	1
13	4050859	Washer	2
14	4097493	Washer	2
15	4097467	Lockwasher	2
16	4097494	Bolt	2
17	4097495	Rocker Arm	8
18	4042155	Screw	1
19	4042103	Nut	1

©2014 HYSTER COMPANY

INTAKE MANIFOLD ASSEMBLY (FIGURE 4-18)
KUBOTA 2.5L

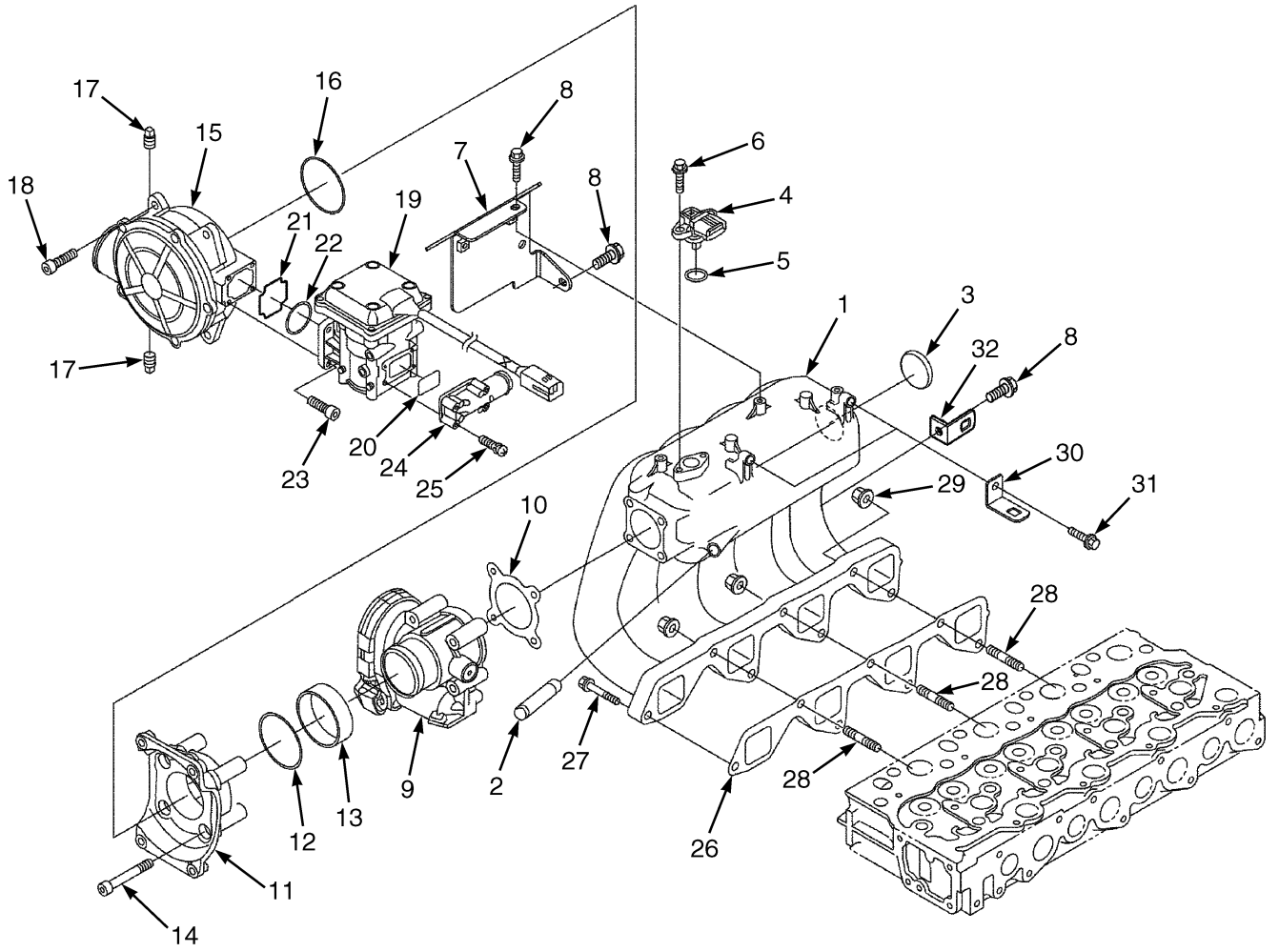

©2014 HYSTER COMPANY

INTAKE MANIFOLD ASSEMBLY
KUBOTA 2.5L

ITEM	PART NO.	DESCRIPTION	QTY
1	4097496	Intake Manifold	1
2	4097497	Joint	1
3	4041951	Cap	1
4	4097498	Sensor	1
5	4097499	O-Ring	1
6	4097500	Bolt	2
7	4097501	Bracket	1
8	4042059	Bolt	3
9	4097613	Throttle Body	1
10	4097614	Gasket	1
11	4097615	Adapter	1
12	4097616	O-Ring	1
13	4097617	Spacer	1
14	4097618	Bolt	4
15	4097619	Mixer-LPG	1
16	4097620	Seal	1
17	4097621	Plug	2
18	4097622	Bolt	4
19	4097623	Regulator	1
20	4097624	Seal	1
21	4097625	Seal	1
22	4097626	Seal	1
23	4097627	Bolt	4
24	4097628	Flange	1
25	4097629	Screw	4
26	4097630	Gasket	1
27	4042067	Bolt	4
28	4097631	Bolt	3
29	4041946	Nut	3
30	4097632	Bracket	2
31	4041992	Bolt	2
32	4097690	Bracket	1

©2014 HYSTER COMPANY

EXHAUST MANIFOLD ASSEMBLY (FIGURE 4-19)
KUBOTA 2.5L

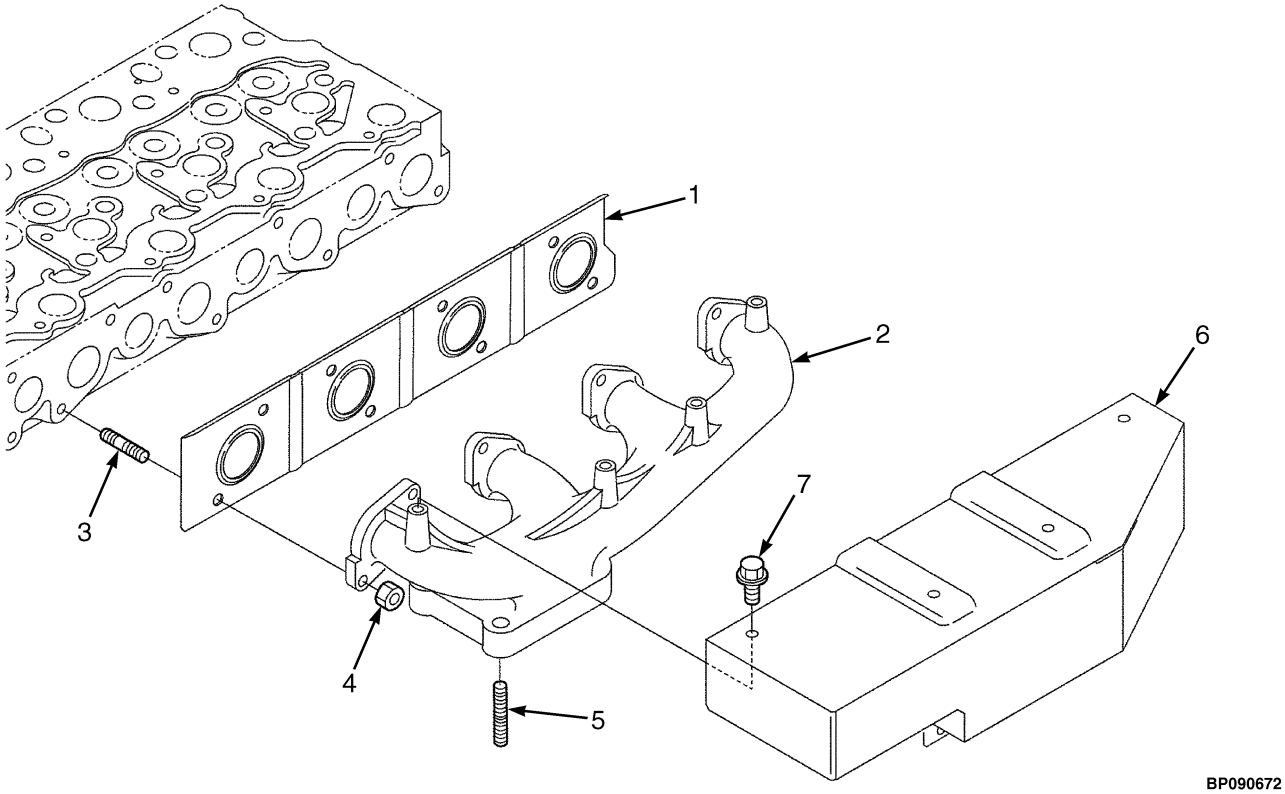

BP090672

ITEM	PART NO.	DESCRIPTION	QTY
1	4097695	Gasket	1
2	4097694	Exhaust Manifold	1
3	4097696	Stud	8
4	4051053	Nut	8
5	4054757	Stud	4
6	4097697	Cover	1
7	4042035	Bolt	6

©2014 HYSTER COMPANY

OIL COOLER ASSEMBLY (FIGURE 4-20)
KUBOTA 2.5L — 280 MM FAN HEIGHT

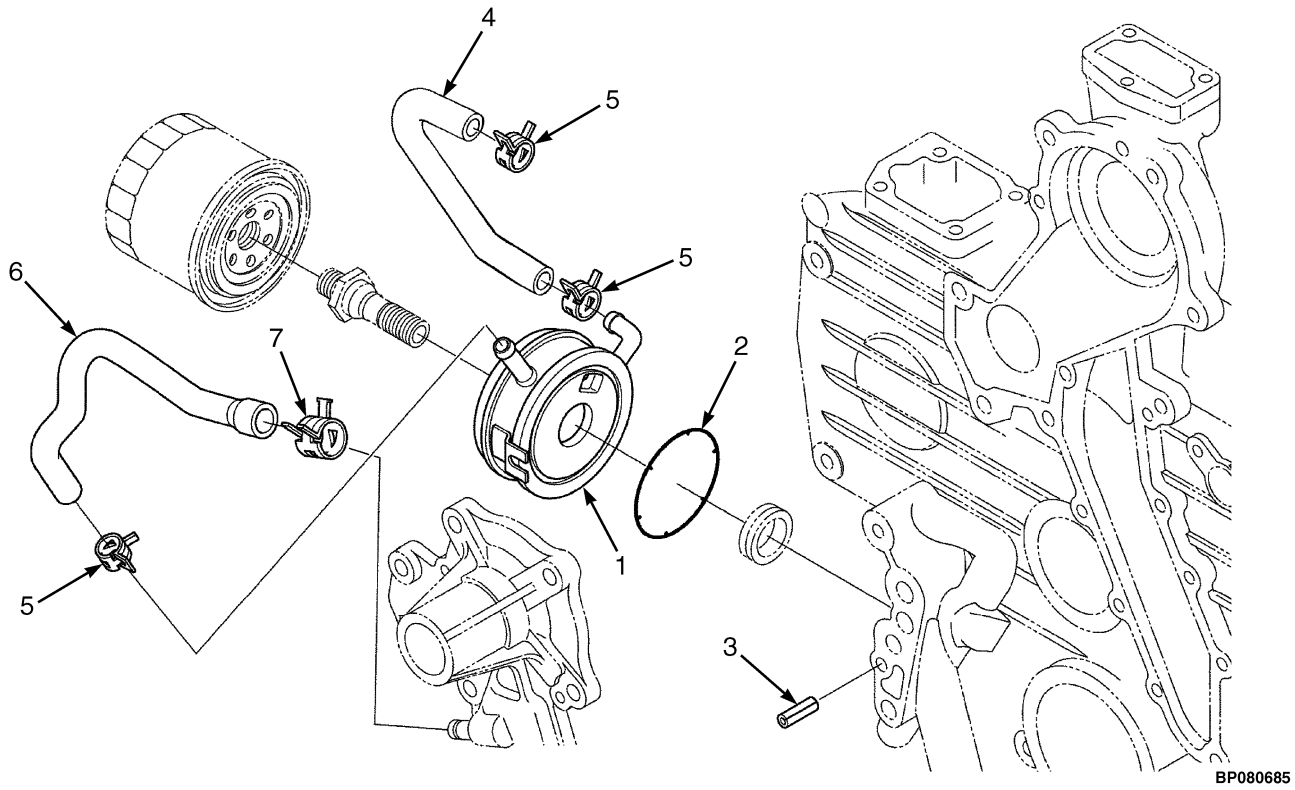

ITEM	PART NO.	DESCRIPTION	QTY
1	4097698	Oil Cooler	1
2	4097699	O-Ring	1
3	4097699	O-Ring	1
4	4097701	Hose	1
5	4097702	Hose Clamp	3
6	4097923	Hose	1
7	4042015	Hose Clamp	1

ALTERNATOR AND PULLEY ASSEMBLY (FIGURE 4-21)

KUBOTA 2.5L

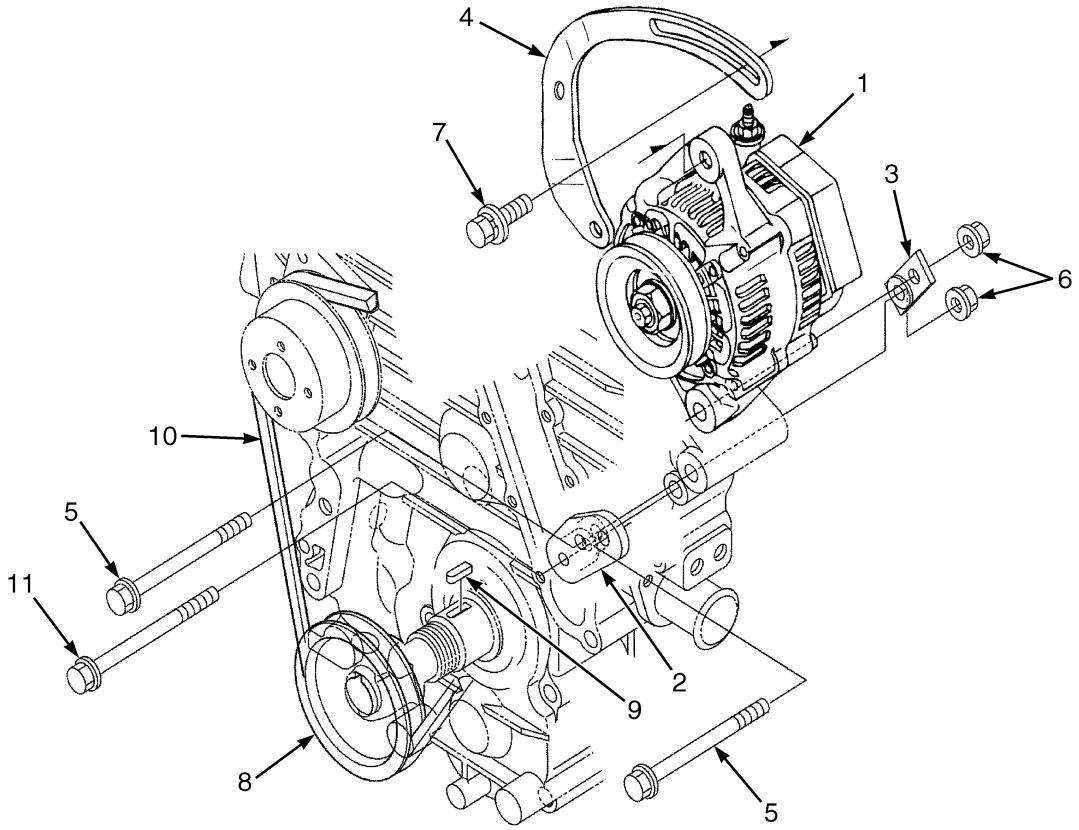

BP090674

ITEM	PART NO.	DESCRIPTION	QTY
1	4097220	Alternator	1
2	4097221	Bracket	1
3	4097452	Bracket	1
4	4097453	Bracket	1
5	4097454	Bolt	2
6	4042108	Nut	2
7	4097459	Bolt	1
8	4097455	Pulley	1
9	4097456	Key	1
10	4097916	Belt	1
11	4097458	Bolt	1

©2014 HYSTER COMPANY

NOTES

©2014 HYSTER COMPANY

WATER FLANGE AND THERMOSTAT ASSEMBLY (FIGURE 4-22)
KUBOTA 2.5L

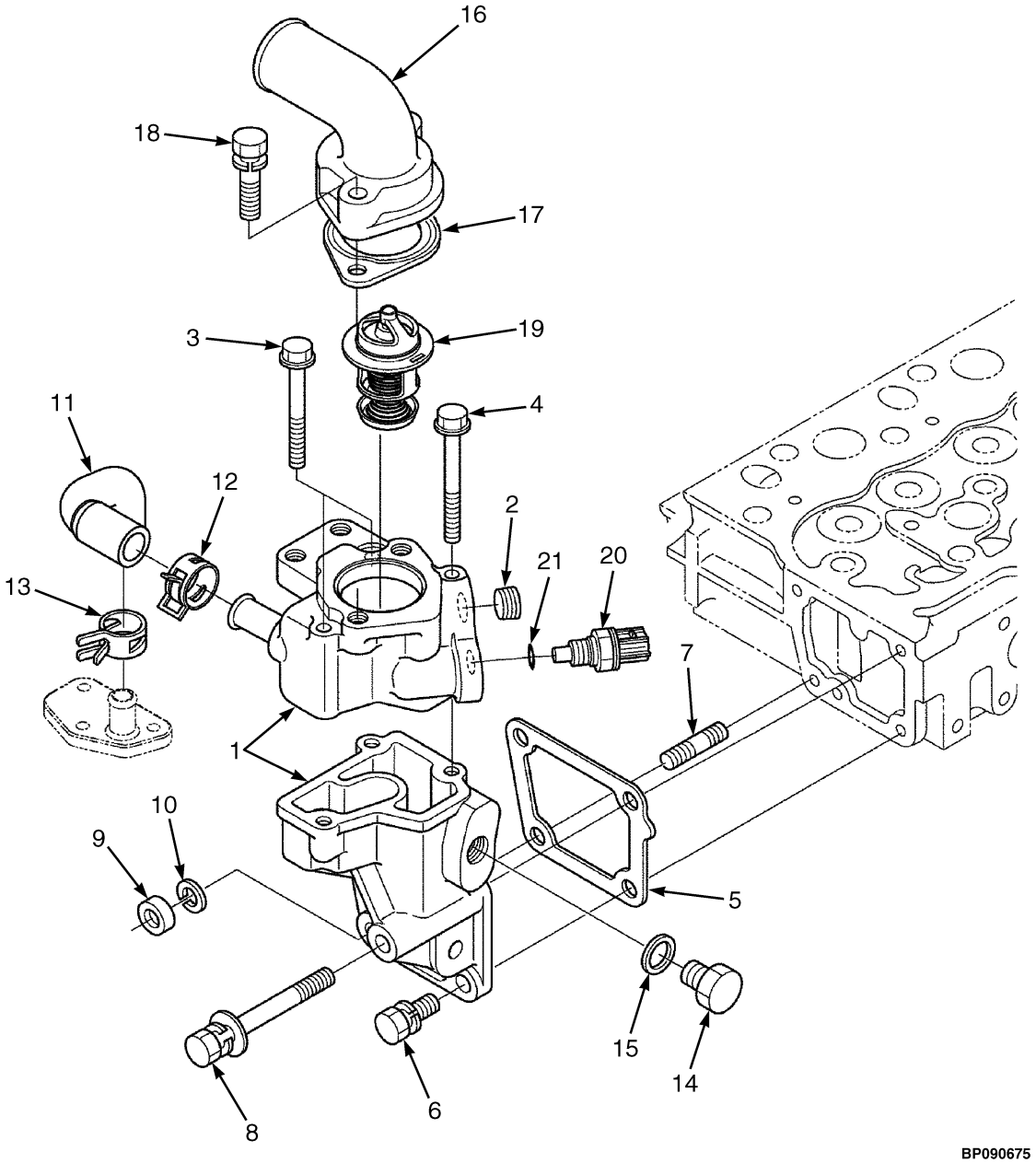

©2014 HYSTER COMPANY

WATER FLANGE AND THERMOSTAT ASSEMBLY
KUBOTA 2.5L

ITEM	PART NO.	DESCRIPTION	QTY
1	4097460	Flange	1
2	4042049	Plug	1
3	4097461	Bolt	2
4	4097462	Bolt	1
5	4097463	Gasket	1
6	4097464	Bolt	2
7	4041945	Stud	1
8	4097465	Bolt	1
9	4097466	Nut	1
10	4097467	Lockwasher	1
11	4097917	Hose	1
12	4097469	Hose Clamp	1
13	4097470	Hose Clamp	1
14	4051044	Drain Plug	1
15	4051045	Gasket	1
16	4097471	Thermostat Housing	1
17	4097472	Gasket	1
18	4097473	Bolt	2
19	4097474	Thermostat	1
20	4042056	Sensor (Water Temperature)	1
21	4097475	O-Ring	1

©2014 HYSTER COMPANY

WATER PUMP ASSEMBLY (FIGURE 4-23)
KUBOTA 2.5L

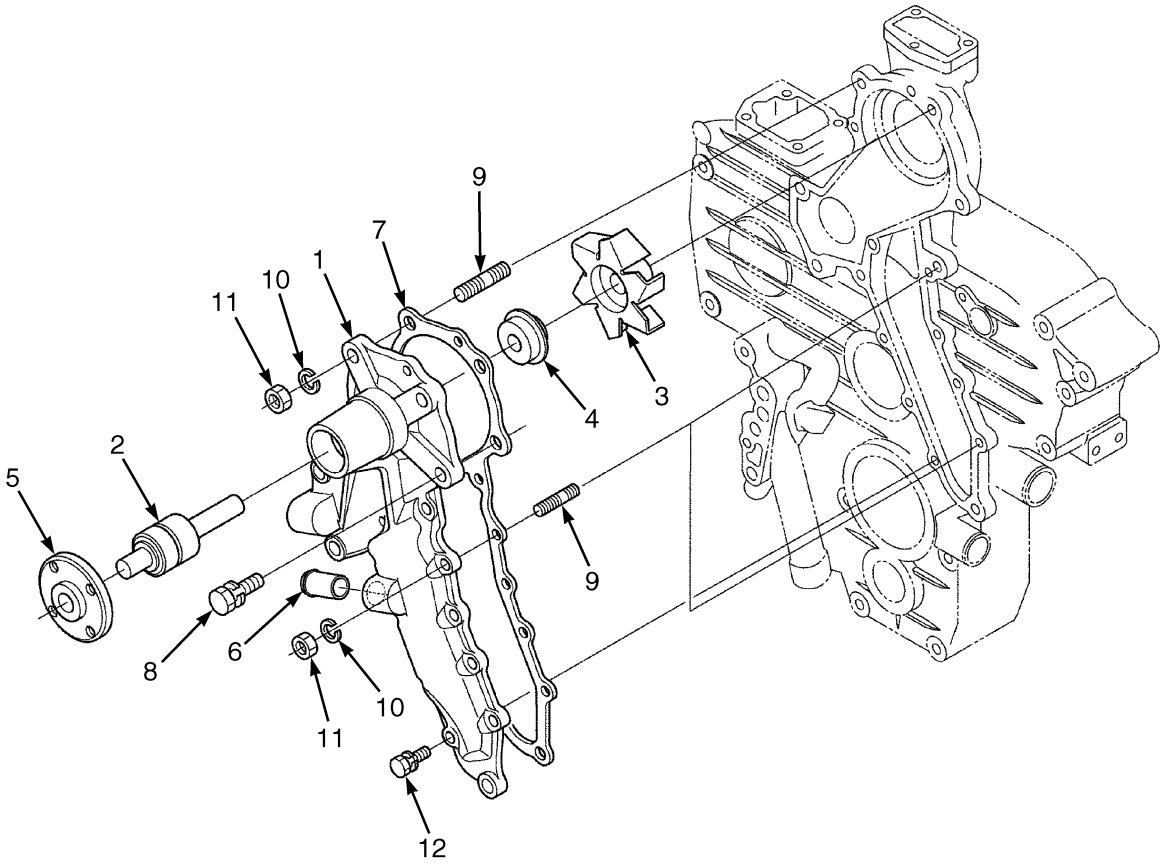

BP090676

ITEM	PART NO.	DESCRIPTION	QTY
1	4097918	Water Pump	1
2	4097477	Bearing	1
3	4097478	Impeller	1
4	4097919	Seal	1
5	4097480	Flange	1
6	4097920	Joint	1
7	4097921	Gasket	1
8	4096892	Bolt	3
9	4097483	Bolt	1
10	4097467	Lockwasher	1
11	4097466	Nut	1
12	4041991	Bolt	..

©2014 HYSTER COMPANY

FAN PULLEY ASSEMBLY (FIGURE 4-24)
KUBOTA 2.5L

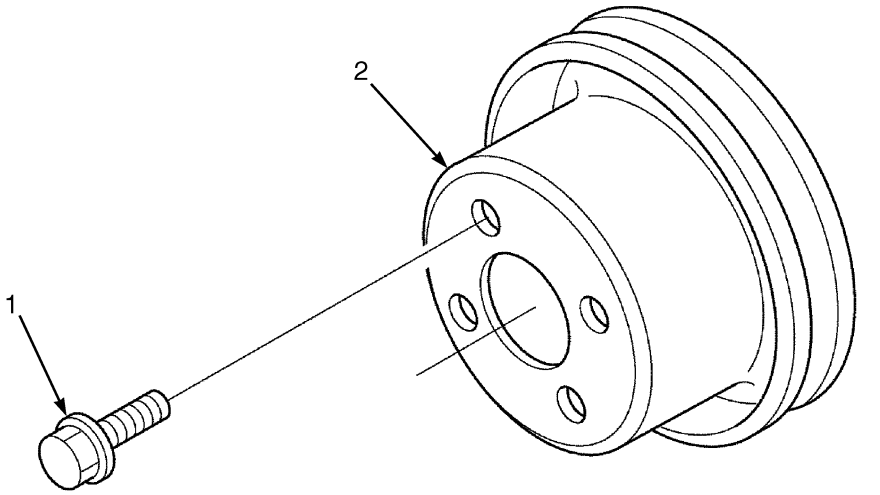

ITEM	PART NO.	DESCRIPTION	QTY
1	4042059	Bolt	4
2	4097484	Fan Pulley	1

ECU ASSEMBLY (FIGURE 4-25)
KUBOTA 2.5L

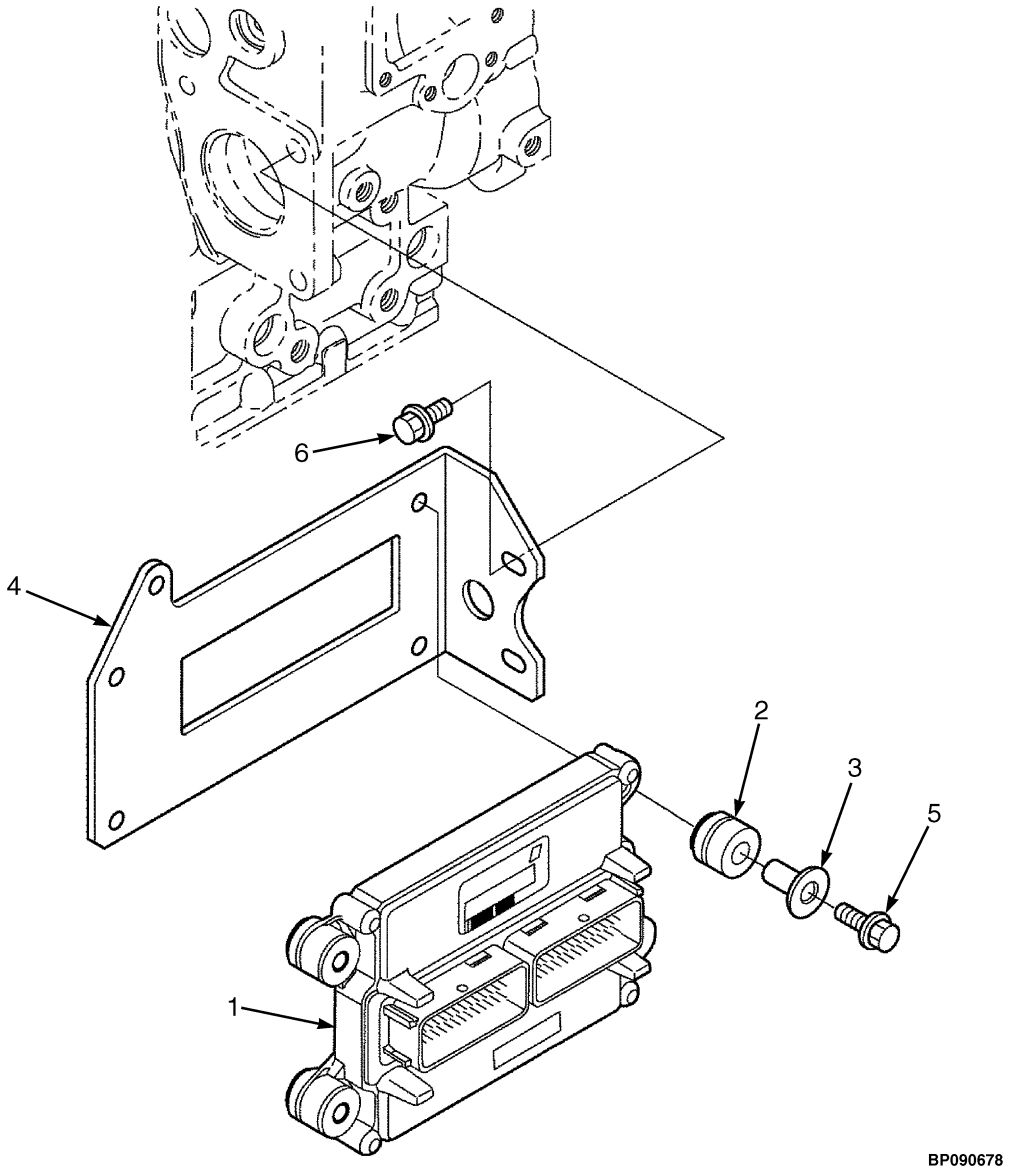

©2014 HYSTER COMPANY

ECU ASSEMBLY
KUBOTA 2.5L

ITEM	PART NO.	DESCRIPTION	QTY
1	4097924	Engine Control Module	1
2	4097871	Rubber Mount	4
3	4097872	Spacer	4
4	4097873	Bracket	1
5	4097874	Bolt	4
6	4054753	Bolt (Flange)	3

©2014 HYSTER COMPANY

CAMSHAFT ASSEMBLY (FIGURE 4-26)
KUBOTA 2.5L

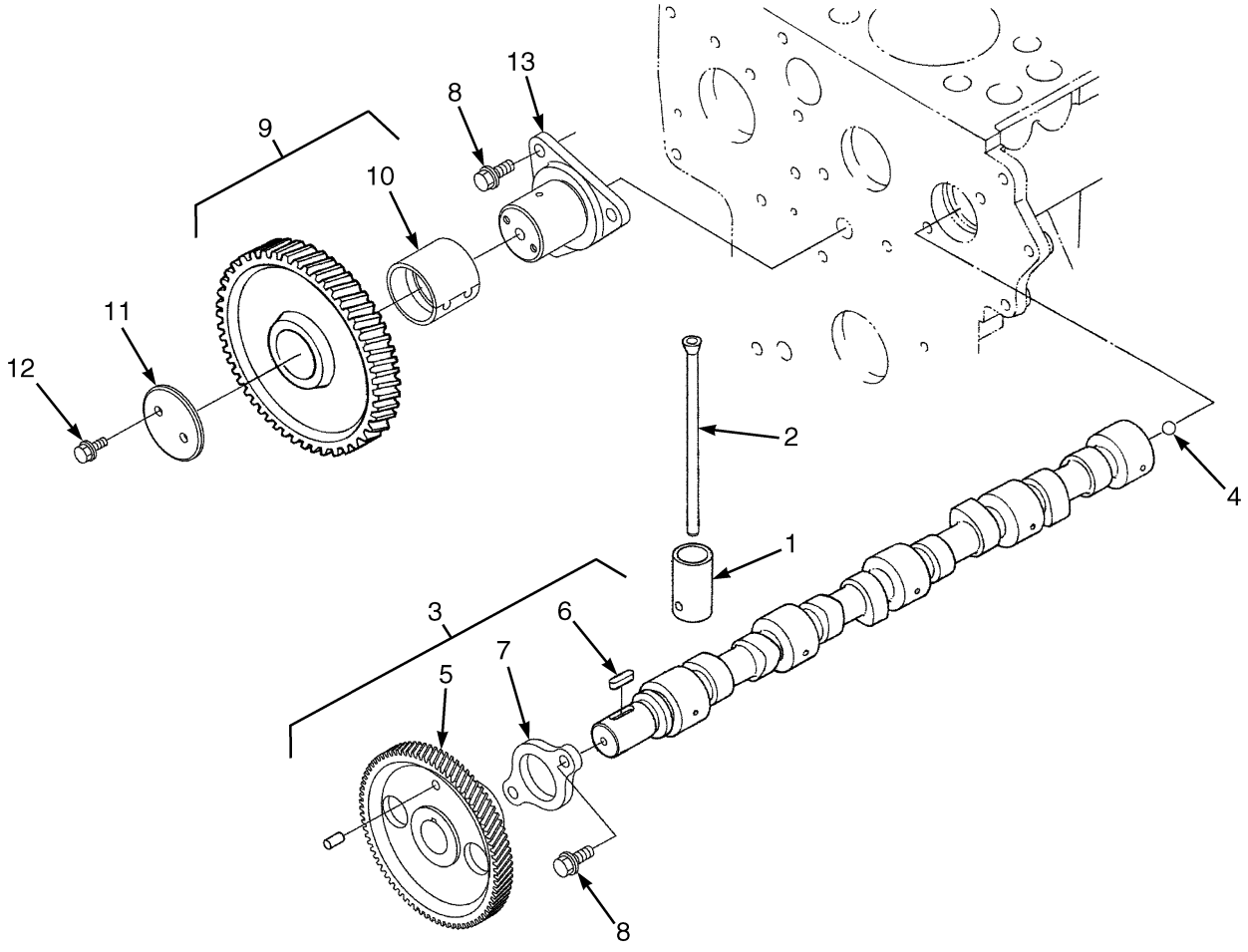

BP090679

©2014 HYSTER COMPANY

CAMSHAFT ASSEMBLY
KUBOTA 2.5L

ITEM	PART NO.	DESCRIPTION	QTY
1	4042134	Tappet	8
2	4096900	Push Rod	8
3	4096901	Camshaft	1
4	61141	Ball	1
5	4096902	Gear	1
6	4096903	Key	1
7	4096904	Stop	1
8	4041992	Bolt	5
9	4096905	Idler Gear	1
10	4096907	Bushing	1
11	4096906	Collar	1
12	4054753	Bolt (Flange)	2
13	4096908	Shaft	1

©2014 HYSTER COMPANY

WIRE HARNESS ASSEMBLY (FIGURE 4-27)
KUBOTA 2.5L

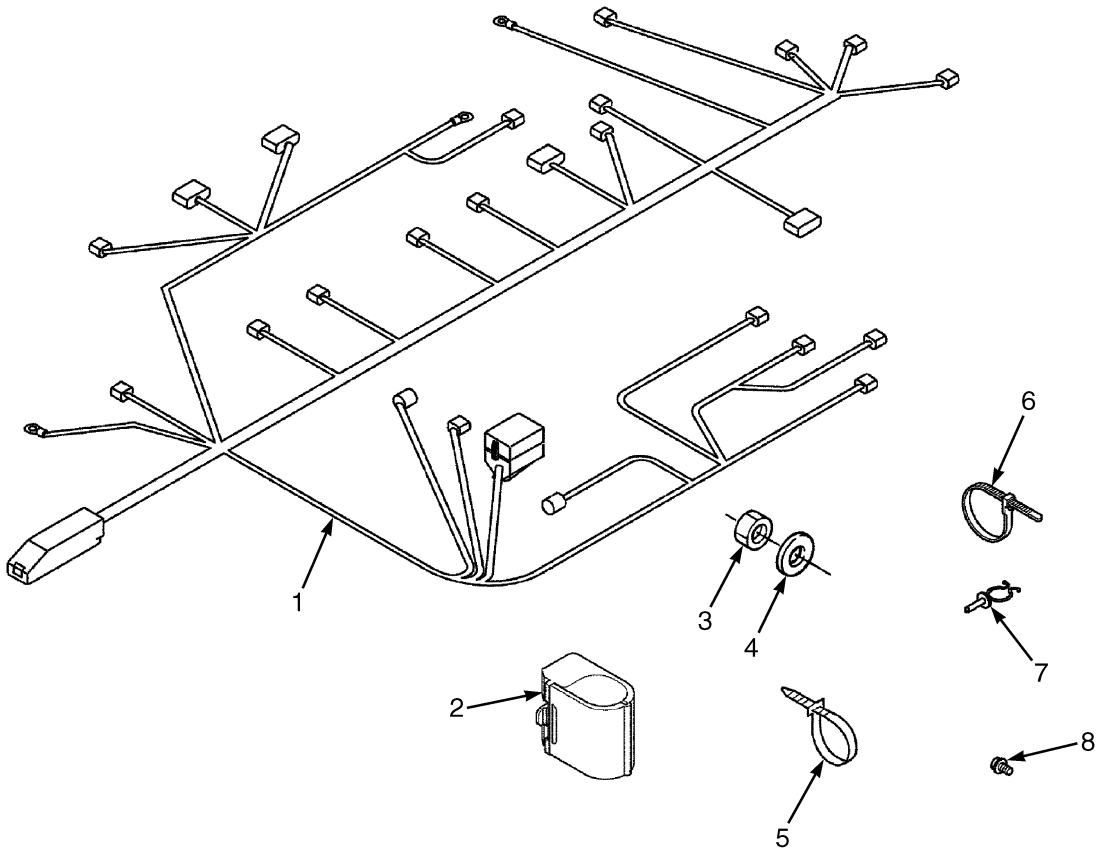

BP090680

ITEM	PART NO.	DESCRIPTION	QTY
1	4629050	Wire Harness (Engine)	1
2	~~4097704~~		
	4027764	Clamp	3
3	4050900	Nut	1
4	4097705	Lockwasher	1
5	4097706	Strap Clamp	4
6	4097707	Strap Clamp	1
7	4097708	Clamp	1
8	4042035	Bolt	2

©2014 HYSTER COMPANY

NOTES

©2014 HYSTER COMPANY

GEAR CASE ASSEMBLY (FIGURE 4-28)
KUBOTA 2.5L — 280 MM FAN HEIGHT

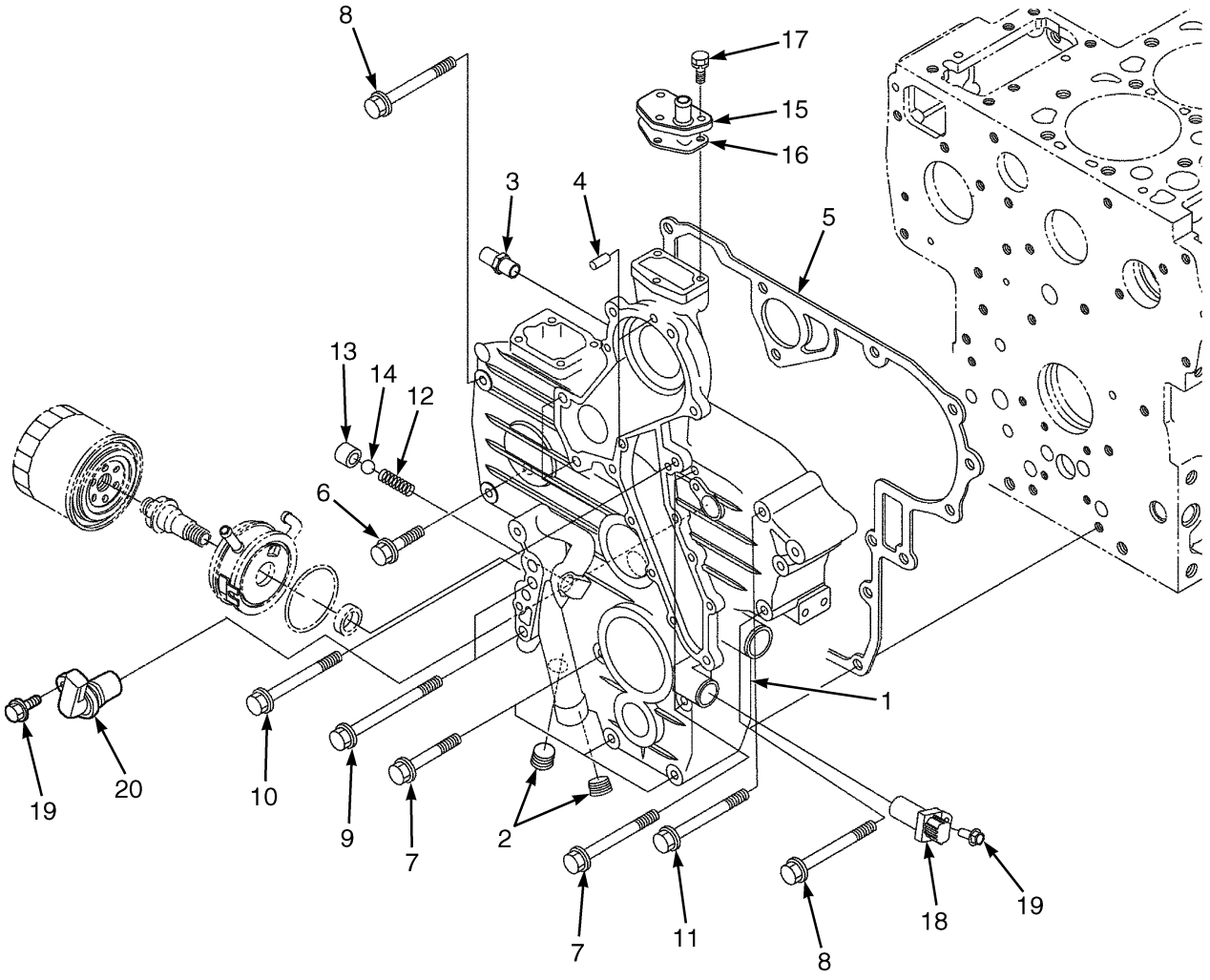

©2014 HYSTER COMPANY

GEAR CASE ASSEMBLY
KUBOTA 2.5L – 280 MM FAN HEIGHT

ITEM	PART NO.	DESCRIPTION	QTY
1	4097889	Case	1
2	4042321	Plug	2
3	4041928	Joint (Water)	1
4	4096806	Pin	2
5	4096828	Gasket	1
6	4041997	Bolt	1
7	4096829	Bolt	5
8	4096830	Bolt	2
9	4096831	Bolt	2
10	4042324	Bolt	3
11	4096832	Bolt	1
12	4096833	Spring	1
13	4096834	Valve Seat	1
14	4096835	Ball	1
15	4097890	Flange	1
16	4096838	Gasket	1
17	4097891	Bolt	3
18	4096840	Sensor	1
19	4041991	Bolt	2
20	4096841	Sensor	1

©2014 HYSTER COMPANY

NOTES

©2014 HYSTER COMPANY

5 FUEL SYSTEM - DIESEL

SECTION 5
FUEL SYSTEM - DIESEL

DESCRIPTION	PAGE
AIR FILTER ASSEMBLY	
YANMAR 2.6L AND 3.3L DIESEL	5-4
AIR INTAKE AND FILTER SYSTEM	
YANMAR 2.6L AND 3.3L DIESEL - WITHOUT AUXILIARY INTAKE SILENCER	5-2
AIR INTAKE SYSTEM	
PRE-CLEANER AND DUCT	5-5
FUEL FILTER AND WATER SEPARATOR	
YANMAR 2.6L AND 3.3L - DIESEL	5-10
FUEL INJECTION SYSTEM	
YANMAR 2.6L AND 3.3L - DIESEL	5-8
FUEL SYSTEM	
YANMAR 2.6L AND 3.3L - DIESEL	5-6
THROTTLE CABLE ASSEMBLY	
YANMAR 2.6L AND 3.3L - DIESEL	5-12
THROTTLE PEDAL ASSEMBLY AND ATTACHING PARTS	
MONOTROL	5-18
STANDARD PEDAL	5-16
THROTTLE POSITION SENSOR AND ATTACHING PARTS	
YANMAR 2.6L AND 3.3L DIESEL	5-14

©2014 HYSTER COMPANY

AIR INTAKE AND FILTER SYSTEM (FIGURE 5-1)

YANMAR 2.6L AND 3.3L DIESEL — WITHOUT AUXILIARY INTAKE SILENCER

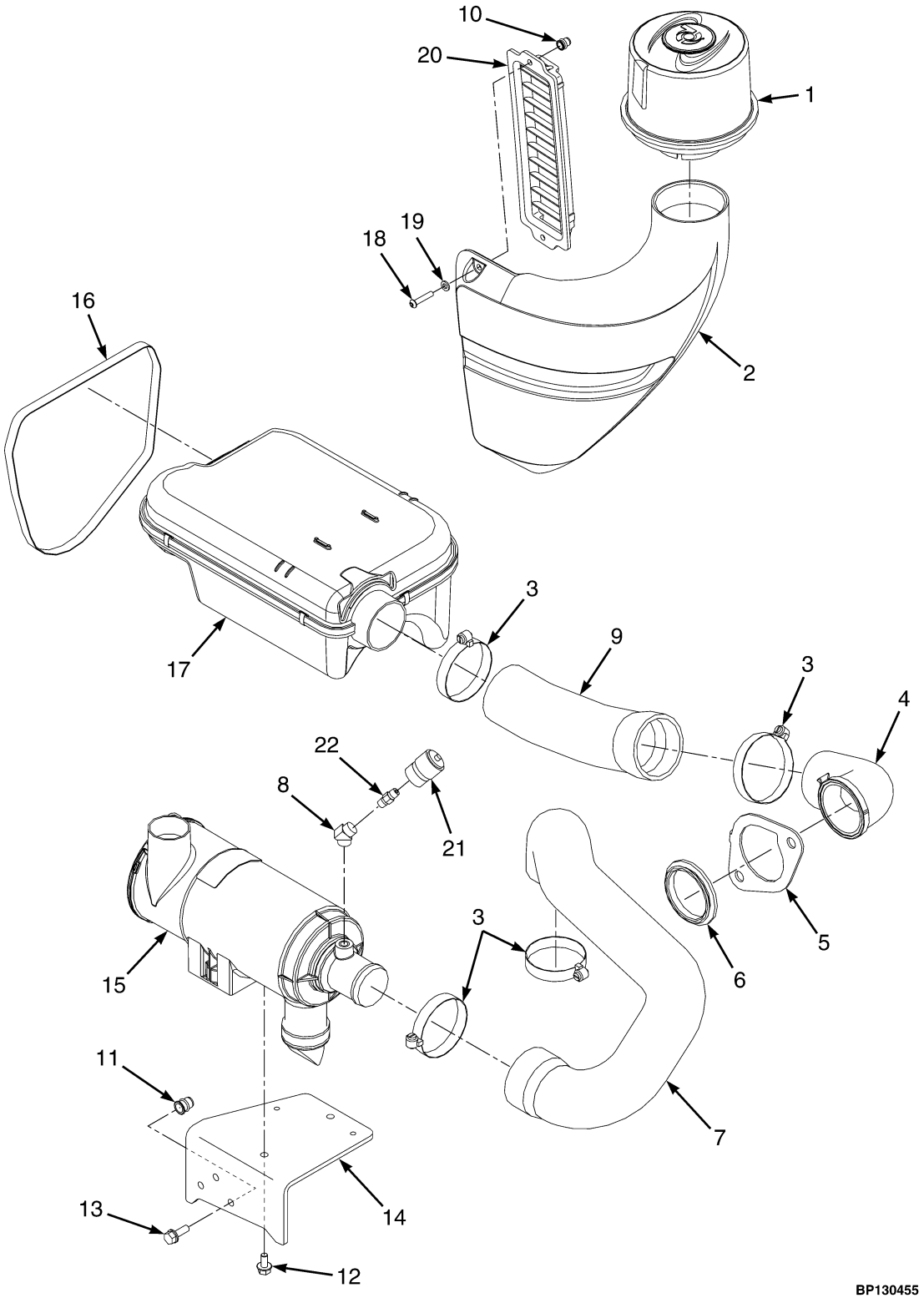

©2014 HYSTER COMPANY

AIR INTAKE AND FILTER SYSTEM

YANMAR 2.6L AND 3.3L DIESEL – WITHOUT AUXILIARY INTAKE SILENCER

ITEM	PART NO.	DESCRIPTION	QTY
1	1501888	Pre-Cleaner (☞Figure 5-3)	1
2	1677793	Air Duct	1
3	**1394008**	**Hose Clamp**	**4**
4	**1581438**	**Elbow**	**1**
5	**1581439**	**Retainer (Elbow)**	**1**
6	**1502079**	**Grommet**	**1**
7	**2075783**	**Hose (Clean Air)**	**1**
8	17652	Fitting	1
9	**1565212**	**Hose (Dirty Air)**	**1**
10	**1531558**	**Insert**	**2**
11	**1530243**	**Insert**	**3**
12	**1527879**	**Capscrew**	**2**
13	**1583611**	**Capscrew**	**3**
14	**4034386**	**Bracket**	**1**
15	**4612945**	**Air Filter (☞Figure 5-2)**	**1**
16	**1636797**	**Strap**	**1**
17	**2102226**	**Silencer**	**1**
17	**2092848**	**Clip**	**6**
17	**15871**	**O-Ring**	**1**
18	2071261	Capscrew	2
19	1506738	Washer	2
20	**2067476**	**Grill**	**1**
21	165991	Indicator (Restriction)	1
22	**16150**	**Fitting**	**1**
	a 1704793	End Plug (OHG Leg)	1
	a 1677833	Screw (Pre-Cleaner Mounting)	3

FOOTNOTES:

a Not Illustrated

©2014 HYSTER COMPANY

AIR FILTER ASSEMBLY (FIGURE 5-2)

YANMAR 2.6L AND 3.3L DIESEL

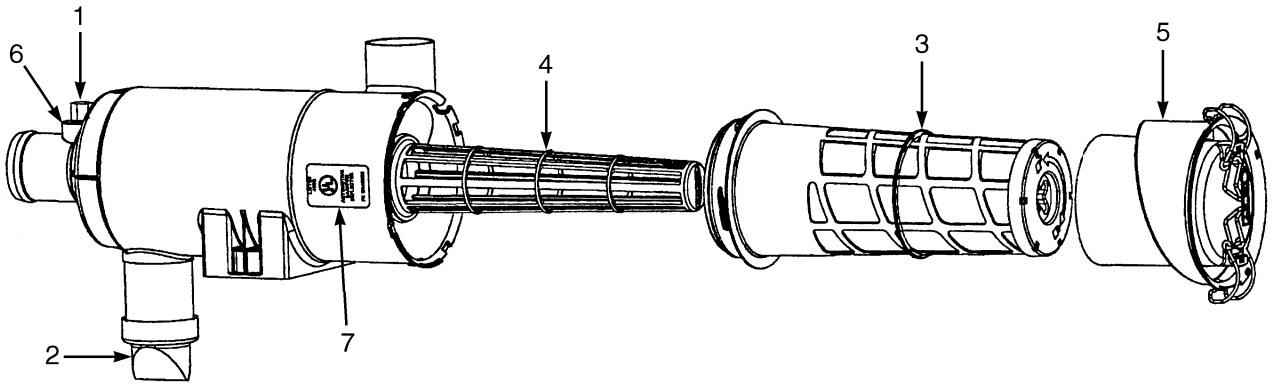

HP091227

ITEM	PART NO.	DESCRIPTION	QTY
	4612945	Air Filter	1
1	141331	Cap	1
2	374923	Valve	1
3	1574111	Filter Element	1
4	1574260	Liner (With O-Ring)	1
5	1687933	Cover	1
6	4030497	Connector (Pipe Nipple)	1
	2095889	Label (Air Filter Installation)	1

©2014 HYSTER COMPANY

AIR INTAKE SYSTEM (FIGURE 5-3)
PRE-CLEANER AND DUCT

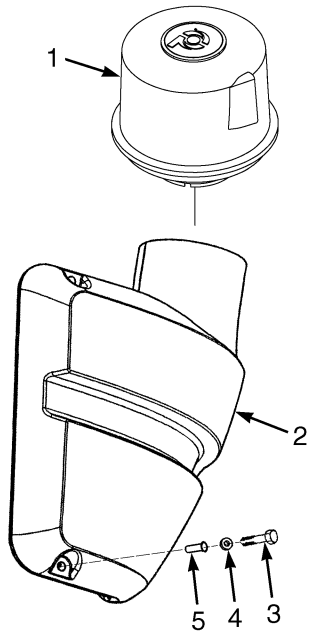

BP130092

ITEM	PART NO.	DESCRIPTION	QTY
1	1501888	Pre-Cleaner	1
2	1677793	Air Duct	1
3	2071261	Capscrew	2
4	1506738	Washer	2
5	1531558	Insert	2
	a 1677833	Screw (Pre-Cleaner Mounting)	1
	a 1704793	End Plug (OHG Leg)	1

FOOTNOTES:

a Not Illustrated

©2014 HYSTER COMPANY

FUEL SYSTEM (FIGURE 5-4)
YANMAR 2.6L AND 3.3L — DIESEL

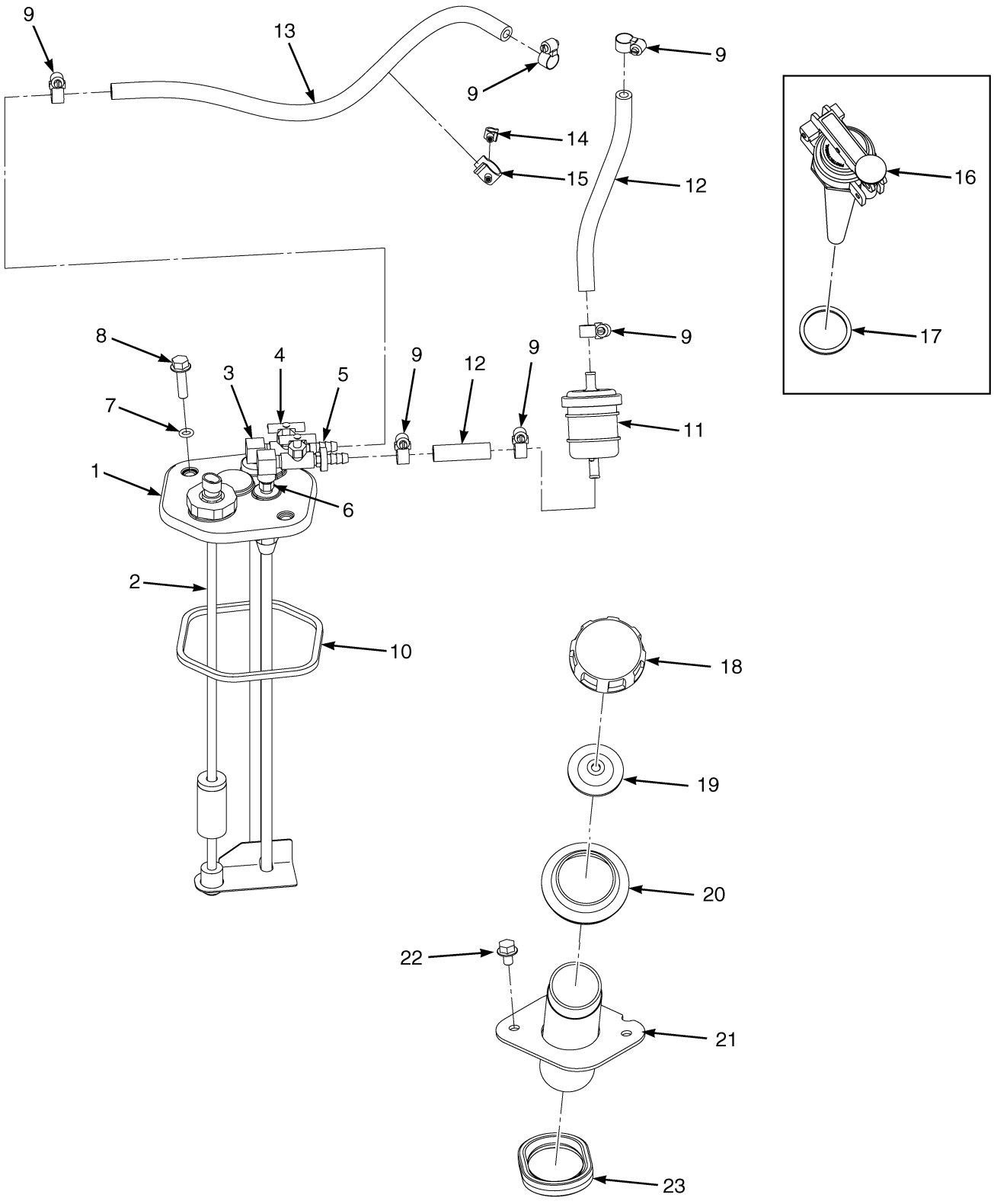

©2014 HYSTER COMPANY

FUEL SYSTEM

YANMAR 2.6L AND 3.3L – DIESEL

ITEM	PART NO.	DESCRIPTION	QTY
1	1532532	Fuel Sender Assembly	1
2	1501811	Fuel Sender	1
3	17650	Fitting	1
4	87446	Drain Valve (Shut-Off)	2
5	309651	Fitting	2
6	16151	Fitting	1
7	353000	O-Ring	2
8	1527881	Capscrew	2
9	168718	Clamp	6
10	1528893	Quad Ring	1
11	4617767	Fuel Filter (Alternate Part)	1
12	1610852	Hose	2
13	260878	Hose	1
14	1542440	Clamp (Swivel)	1
15	1543691	Clamp (Swivel)	1
16	a 1579677	Fuel Cap	1
17	a 2021685	Gasket	1
18	b 2081840	Fuel Cap	1
19	b 2021683	Gasket	1
20	1528608	Grommet	1
21	1564392	Pipe (Fill)	1
22	1529366	Capscrew	2
23	1593391	Seal	1

FOOTNOTES:

a DS Models Only

b Standard Models Only

©2014 HYSTER COMPANY

FUEL INJECTION SYSTEM (FIGURE 5-5)

YANMAR 2.6L AND 3.3L — DIESEL

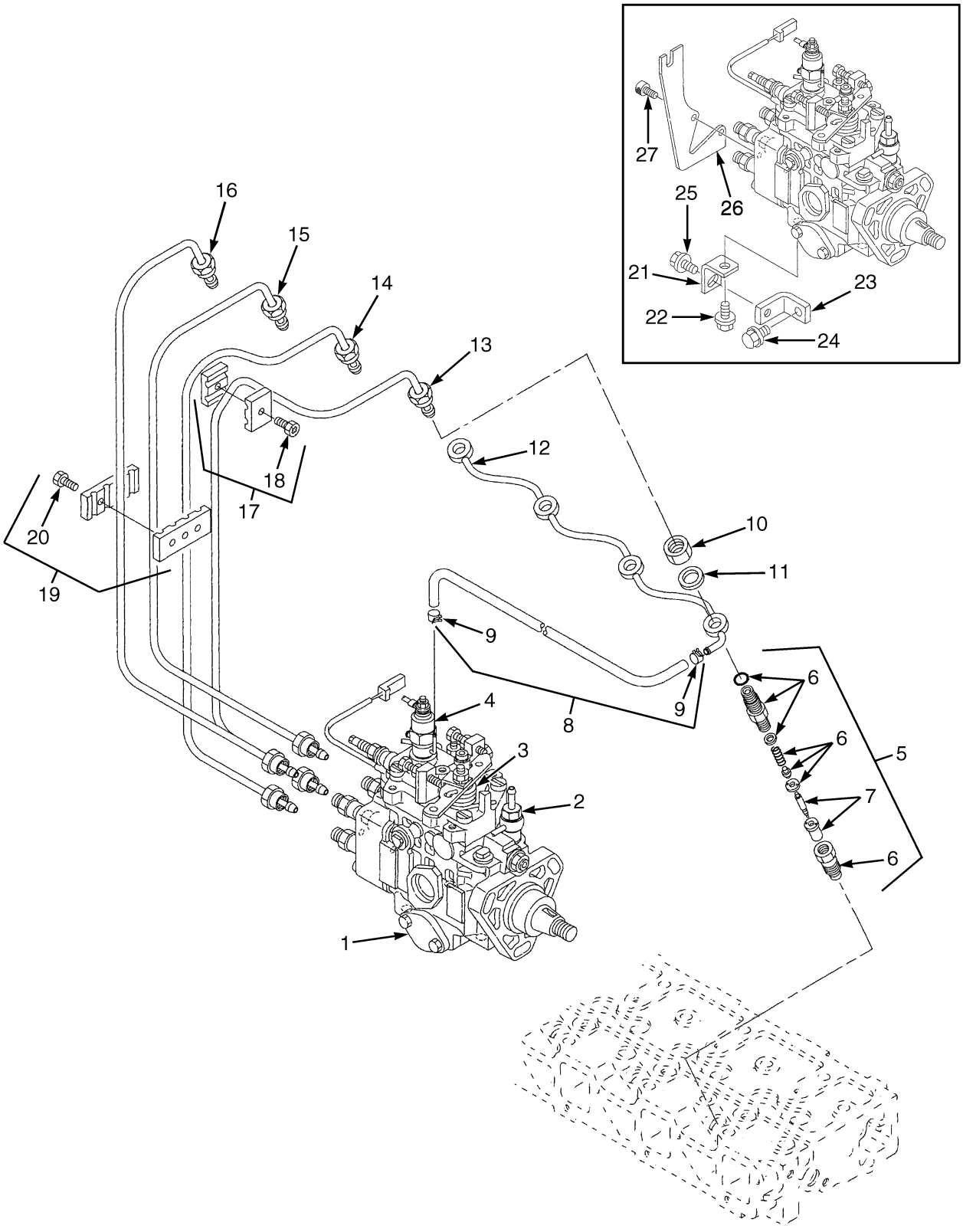

BP090190

©2014 HYSTER COMPANY

FUEL INJECTION SYSTEM
YANMAR 2.6L AND 3.3L – DIESEL

ITEM	PART NO.	DESCRIPTION	QTY
	4619937	Engine Assy-Diesel (Yanmar 2.6L)	1
	4619939	Engine Assy-Diesel (Yanmar 3.3L)	1
	4626066	Engine Assy-Diesel (Yanmar 2.6L Non-Emissions)	1
	4626064	**Engine Assy-Diesel (Yanmar 3.3L Non-Emissions)**	**1**
1	1599901	Injection Pump (2.6L)	1
1	1708457	Fuel Pump Assembly (Injection 2.6L) (Alternate Part)	1
1	1600084	Injection Pump (3.3L)	1
1	1689747	Fuel Pump (Injector 3.3L)	1
2	1608616	Solenoid (Fuel Shut-Off)	1
2	1608617	O-Ring	1
3	4021384	Spring (Yanmar 2.6L) (Alternate Part)	1
4	1597644	Solenoid Valve (Cold Start)	1
4	1600093	O-Ring	1
5	1599818	Injector	4
5	1689746	Shim	1
6	1599820	Retainer	1
7	1599819	Nozzle	1
8	1599828	Tube Assy	1
9	1599829	Clamp	2
10	1599832	Nut	4
11	1599831	Gasket	4
12	1599830	Tube Assy (Fuel Return)	1
13	1599827	Tube Assy (#4)	1
14	1599826	Tube Assy (#3)	1
15	1599825	Tube Assy (#2)	1
16	1599824	Tube Assy (#1)	1
17	1599821	Retainer	2
18	1599822	Bolt	1
19	1599823	Retainer	1
20	1599822	Bolt	2
21	1599909	Retainer	1
22	1599911	Bolt	1
23	1599910	Bracket	1
24	1599913	Bolt	1
25	1599912	Bolt	1
26	1599907	Bracket	1
27	1599908	Bolt	2
	1599898	Kit-Gasket (2.6L Engine Complete) (Includes Items 11)	1
	1600085	Kit-Gasket (Complete Engine) (Includes Items 11)	1
	1689744	Kit-Gasket (Complete Engine) (3.3L) (Includes Items 11)	1

©2014 HYSTER COMPANY

FUEL FILTER AND WATER SEPARATOR (FIGURE 5-6)

YANMAR 2.6L AND 3.3L — DIESEL

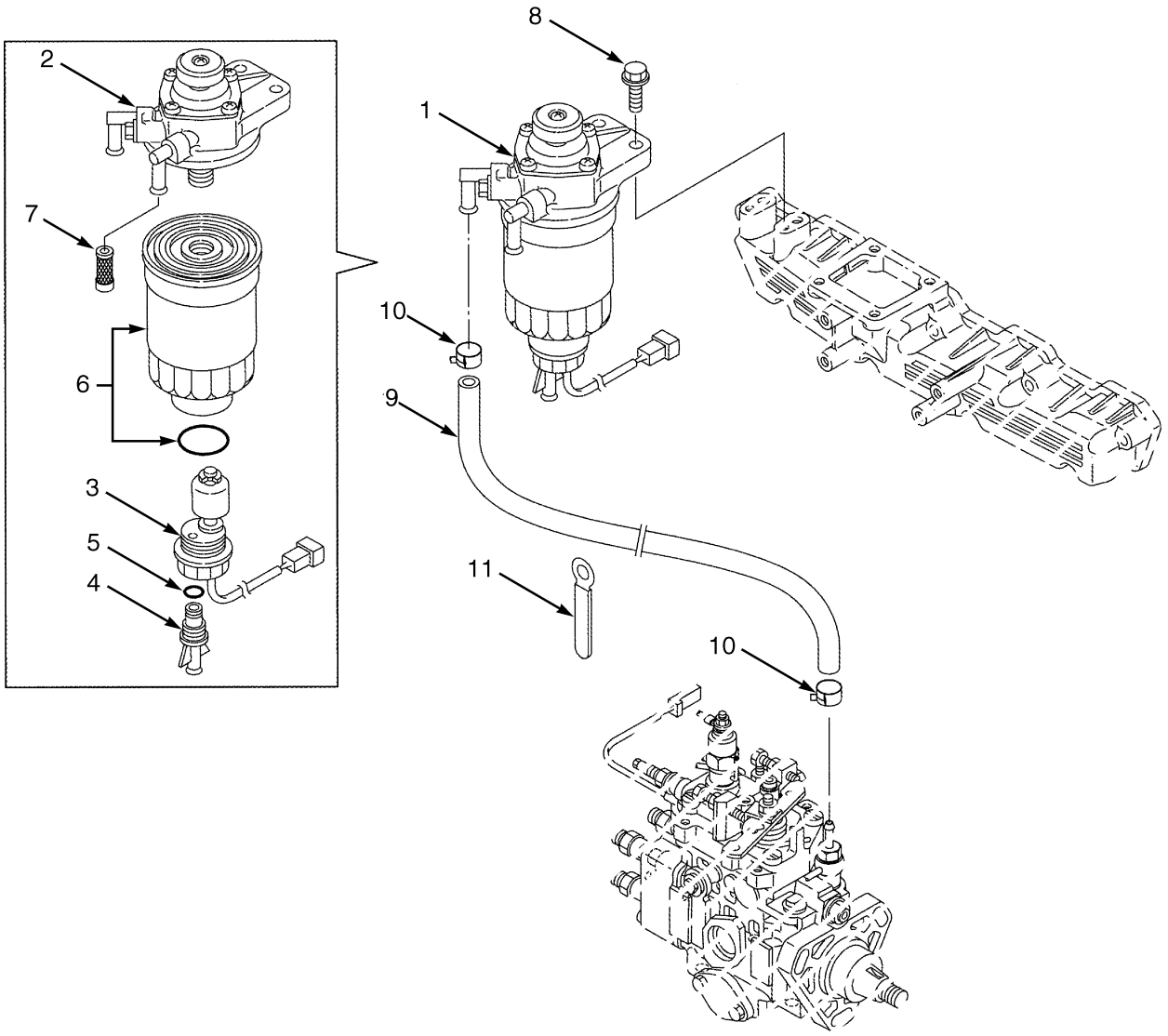

BP090212

©2014 HYSTER COMPANY

FUEL FILTER AND WATER SEPARATOR

YANMAR 2.6L AND 3.3L – DIESEL

ITEM	PART NO.	DESCRIPTION	QTY
	4619937	Engine Assy-Diesel (Yanmar 2.6L)	1
	4619939	Engine Assy-Diesel (Yanmar 3.3L)	1
	4626066	Engine Assy-Diesel (Yanmar 2.6L Non-Emissions)	1
	4626064	**Engine Assy-Diesel (Yanmar 3.3L Non-Emissions)**	**1**
1	1599833	Fuel Filter (2.6L)	1
1	2084448	Fuel Filter (3.3L)	1
2	1599834	Body (Primer Pump) (2.6L)	1
2	2084449	Filter Head (3.3L)	1
3	1599835	Sensor (2.6L)	1
3	2084450	Sensor (3.3L)	1
4	1599836	Drain Plug (2.6L)	1
4	2084451	Plug (3.3L)	1
5	1599837	O-Ring (2.6L)	1
5	2084452	O-Ring (3.3L)	1
6	1330033	Fuel Filter (Cartridge 10 micron) (2.6L)	1
6	2084453	Element Assy	1
7	1599839	Filter (2.6L)	1
8	1599801	Bolt	2
9	1599841	Tube Assy	1
10	1599842	Clamp	2
11	1599843	Clamp	2

©2014 HYSTER COMPANY

THROTTLE CABLE ASSEMBLY (FIGURE 5-7)

YANMAR 2.6L AND 3.3L — DIESEL

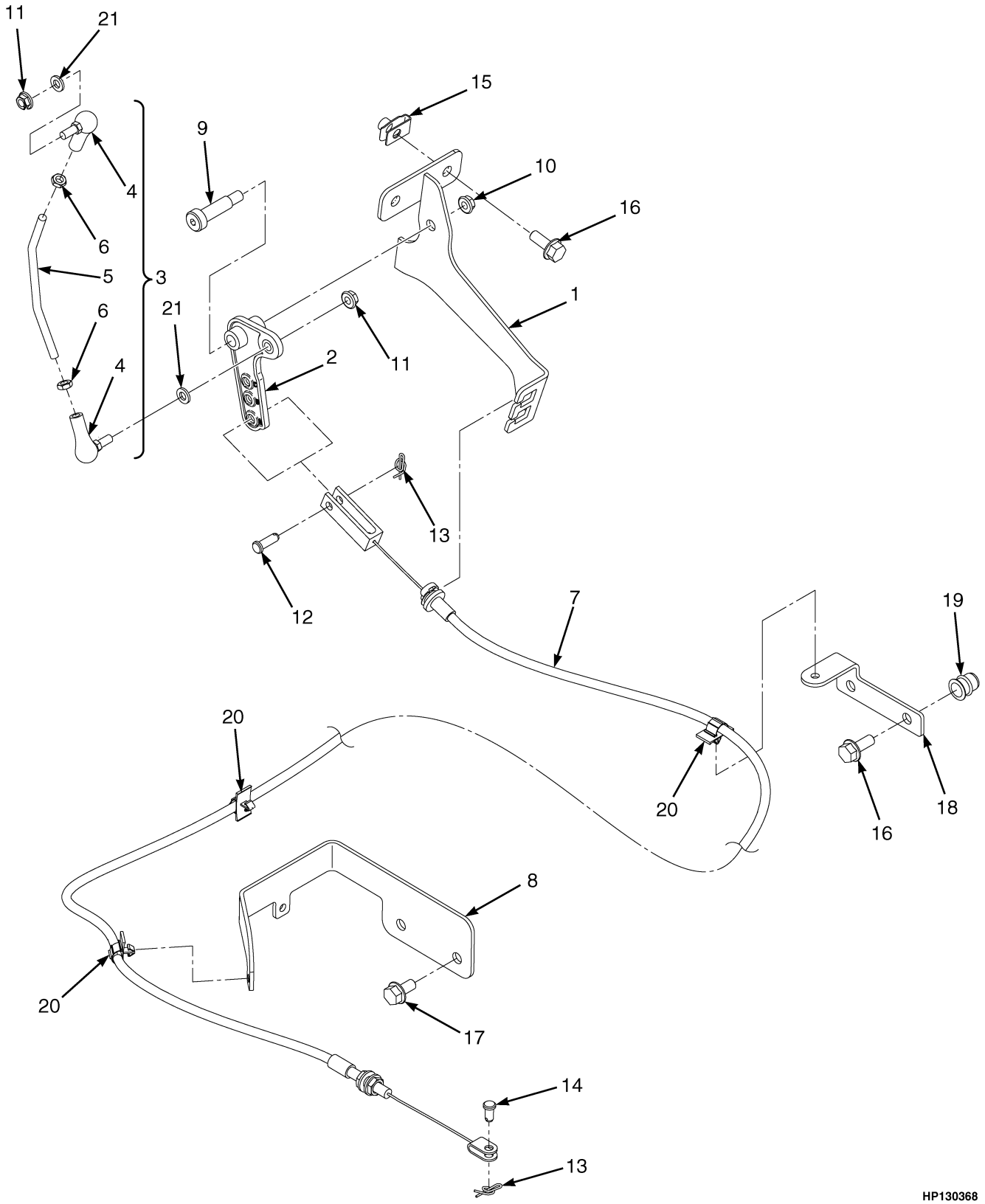

©2014 HYSTER COMPANY

THROTTLE CABLE ASSEMBLY

YANMAR 2.6L AND 3.3L – DIESEL

ITEM	PART NO.	DESCRIPTION	QTY
1	1609374	Bracket (Throttle Cable)	1
2	1538162	Bellcrank	1
3	1538782	Push Rod Assembly	1
4	2027949	Ball Joint	2
5	1538490	Push Rod	1
6	2308541	Nut	2
7	2067396	Throttle Cable	1
8	1542500	Bracket	1
9	1399802	Bolt	1
10	302400	Nut	1
11	1514429	Nut	2
12	126	Pin	1
13	1517361	Locking Ring Cotter Pin	2
14	128263	Pin	1
15	1480237	Nut	2
16	1510113	Capscrew	1
17	1527879	Capscrew	4
18	1542082	Bracket	1
19	1530243	Insert	2
20	1562088	Clip	3
21	320156	Washer	2

©2014 HYSTER COMPANY

THROTTLE POSITION SENSOR AND ATTACHING PARTS (FIGURE 5-8)

YANMAR 2.6L AND 3.3L DIESEL

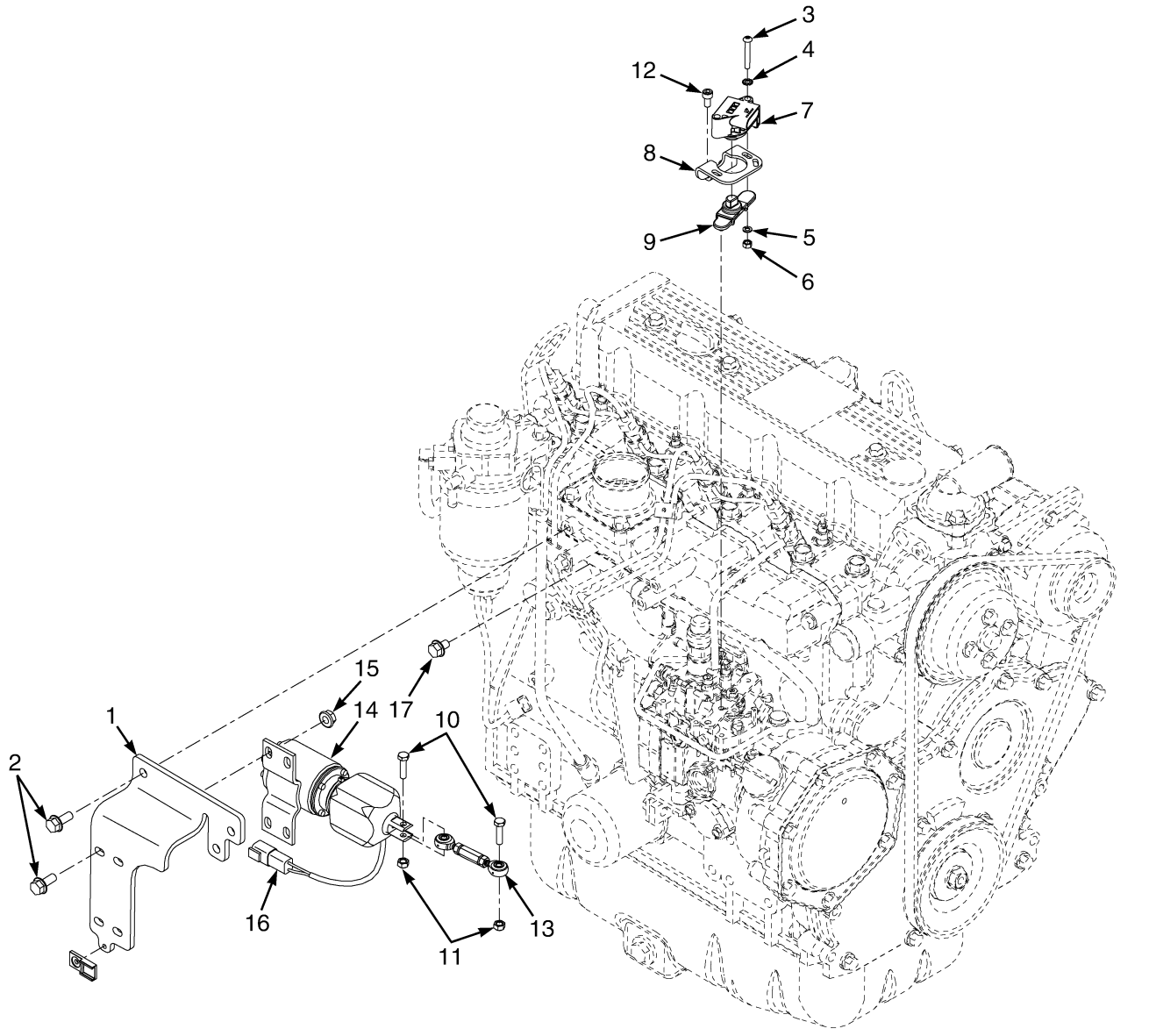

©2014 HYSTER COMPANY

THROTTLE POSITION SENSOR AND ATTACHING PARTS

YANMAR 2.6L AND 3.3L DIESEL

ITEM	PART NO.	DESCRIPTION	QTY
1	~~1709997~~		
	4097551	Bracket	1
2	**1527880**	**Capscrew**	**7**
3	**1553897**	**Capscrew**	**2**
4	**296378**	**Washer**	**2**
5	**292679**	**Washer**	**2**
6	**292668**	**Nut**	**2**
7	**2080376**	**Sensor (Hall Throttle Postion)**	**1**
8	**1616491**	**Bracket**	**1**
9	**2078335**	**Rotor**	**1**
10	**287816**	**Capscrew**	**2**
11	**302399**	**Nut**	**2**
12	**293762**	**Capscrew**	**2**
13	**1695108**	**Linkage**	**1**
14	**2107187**	**Actuator**	**1**
15	**1502543**	**Nut (Flange)**	**4**
16	**1500912**	**Clip**	**1**
16	**1344124**	**Fastener**	**1**
17	**1529366**	**Capscrew**	**2**

©2014 HYSTER COMPANY

THROTTLE PEDAL ASSEMBLY AND ATTACHING PARTS (FIGURE 5-9)

STANDARD PEDAL

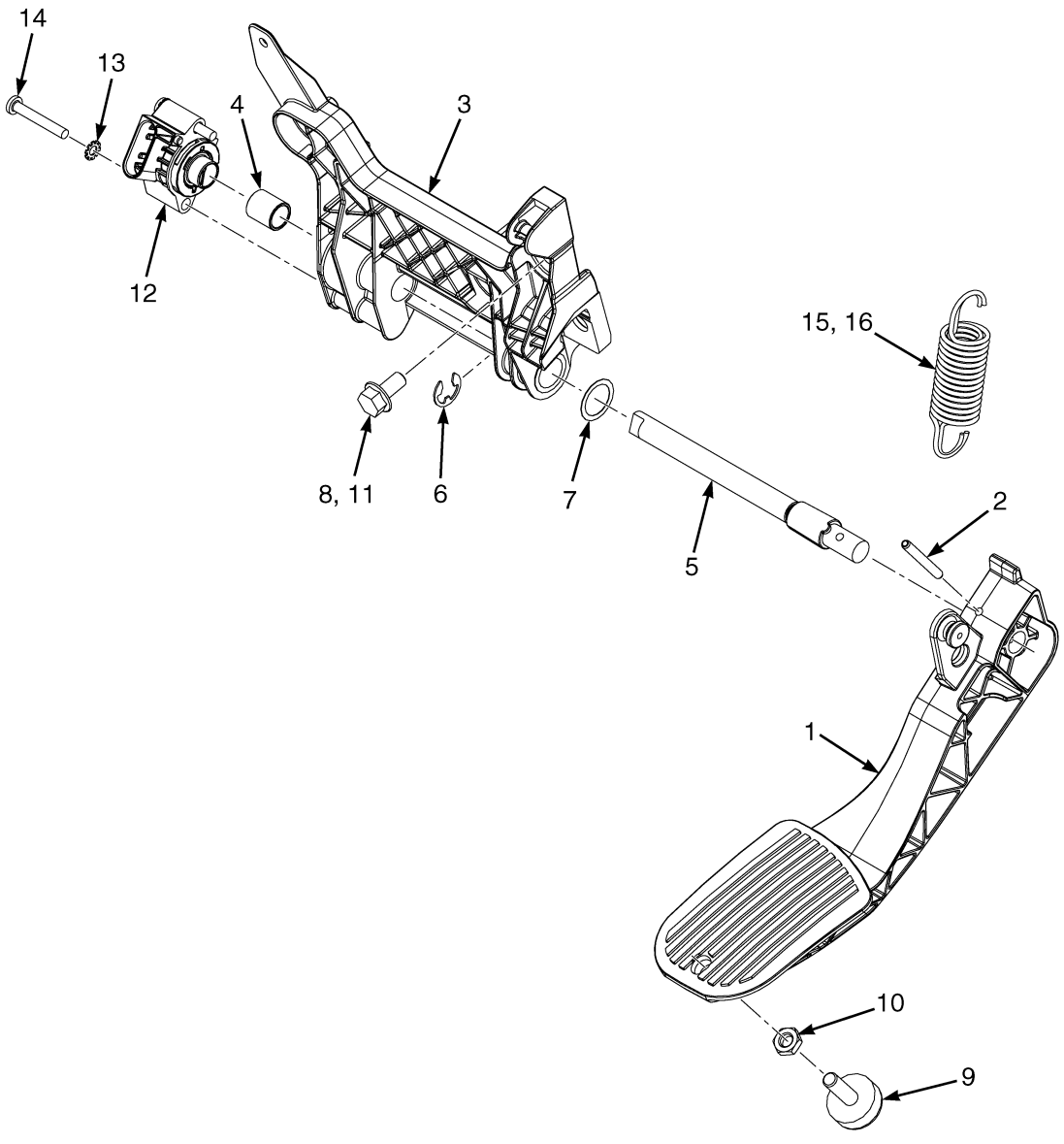

BP130362

©2014 HYSTER COMPANY

THROTTLE PEDAL ASSEMBLY AND ATTACHING PARTS
STANDARD PEDAL

ITEM	PART NO.	DESCRIPTION	QTY
1	2071181	Pedal (Standard)	1
2	302443	Roll Pin	1
3	1538488	Throttle Plate	1
3	1654411	Throttle Plate	1
3	4051924	Base Assembly (Throttle)	1
3	4615964	Molding	1
4	1524267	Bushing	1
5	1521005	Shaft	1
5	1654754	Shaft	1
6	1530971	E-Ring	1
7	1654156	Shim	AR
8	1527879	Capscrew	3
9	1530311	Screw (Stop)	1
10	329069	Nut	1
11	251099	Loctite	AR
12	2063842	Sensor (Hall Throttle Position)	1
13	296378	Washer	2
14	1564752	Capscrew	2
15	1582301	Spring (Inner)	1
16	1582300	Spring (Outer)	1

©2014 HYSTER COMPANY

THROTTLE PEDAL ASSEMBLY AND ATTACHING PARTS (FIGURE 5-10)

MONOTROL

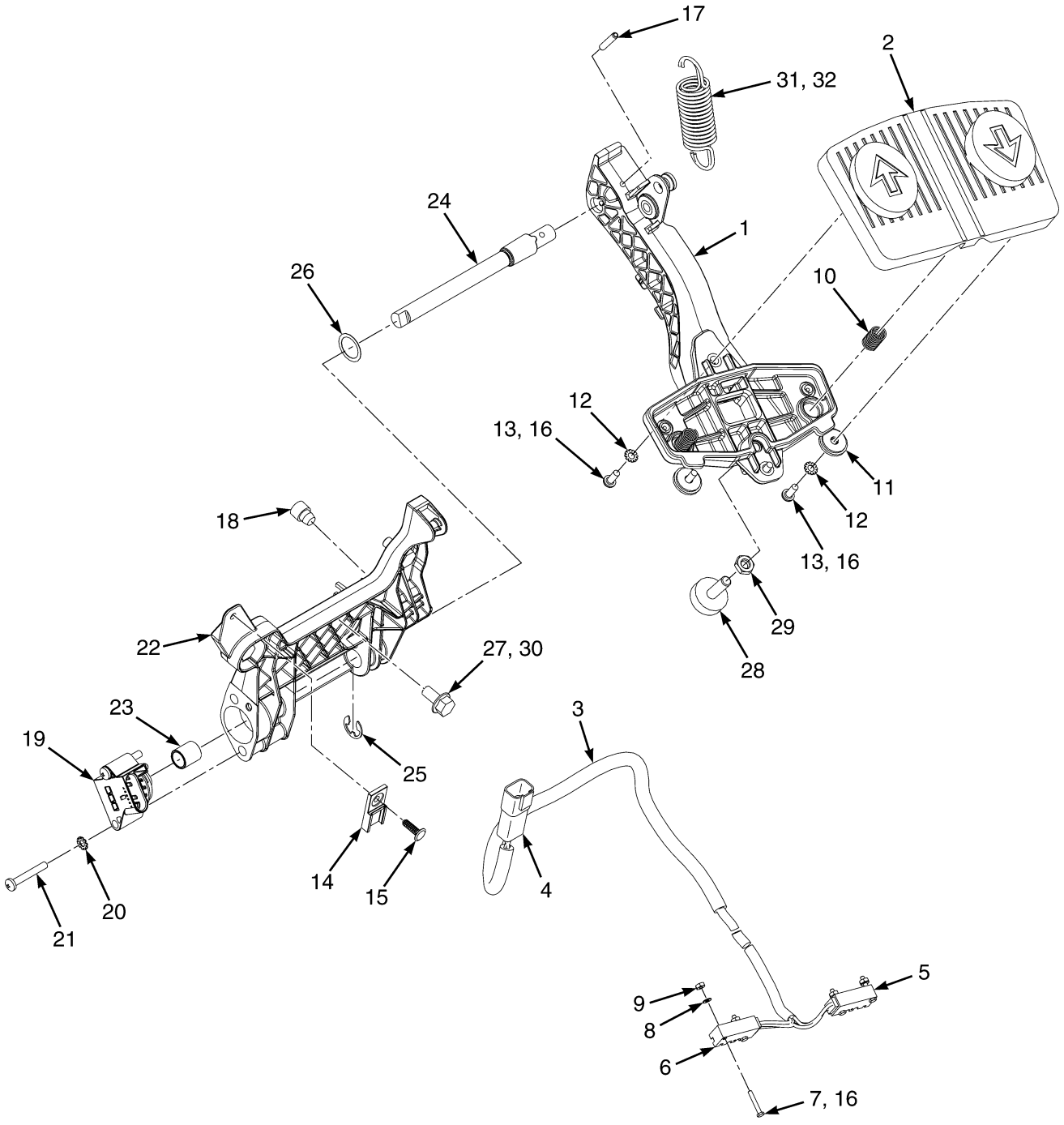

©2014 HYSTER COMPANY

THROTTLE PEDAL ASSEMBLY AND ATTACHING PARTS
MONOTROL

ITEM	PART NO.	DESCRIPTION	QTY
	4051938	**Pedal Assy (Monotrol)**	**1**
1	2074702	Pedal	1
2	1340470	Pad	1
3	**~~2072782~~**		
	4634485	**Wire Harness**	**1**
4	**. . . . .**	**Connector Assembly (To Cowl Harness)**	**1**
4	**1489655**	**Connector (4 Way)**	**1**
4	**1330416**	**Connector**	**1**
4	**1531312**	**Terminal**	**4**
5	**. . . . .**	**Switch (Reverse)**	**1**
6	**. . . . .**	**Switch (Forward)**	**1**
7	220428	Screw	4
8	53162	Lockwasher	4
9	16865	Nut	4
10	325699	Spring	2
11	4040523	Washer (Bonded)	2
12	15931	Lockwasher	2
13	16708	Screw	2
14	**1500912**	**Clip**	**1**
15	**1582464**	**Fastener**	**1**
16	360387	Loctite	AR
17	**302437**	**Roll Pin**	**1**
18	**4031769**	**Isolator (Throttle Pedal)**	**1**
19	**2063842**	**Sensor (Hall Throttle Position) (To Cowl Harness)**	**1**
20	**296378**	**Washer**	**2**
21	**1564752**	**Capscrew**	**2**
22	**4051924**	**Base Assembly (Throttle)**	**1**
22	4615964	Molding	1
23	1524267	Bushing	1
24	**1654754**	**Shaft**	**1**
25	**1530971**	**E-Ring**	**1**
26	**1654156**	**Shim**	**AR**
27	**1527879**	**Capscrew**	**3**
28	**1530311**	**Screw (Stop)**	**1**
29	**329069**	**Nut**	**1**
30	251099	Loctite	AR
31	**1582301**	**Spring (Inner)**	**1**
32	**1582300**	**Spring (Outer)**	**1**

©2014 HYSTER COMPANY

NOTES

©2014 HYSTER COMPANY

6 FUEL SYSTEM - GAS/LPG

SECTION 6
FUEL SYSTEM - GAS/LPG

DESCRIPTION	PAGE
AIR FILTER ASSEMBLY	
MAZDA 2.2L, GASOLINE AND LPG	6-8
AIR INTAKE AND FILTER SYSTEM	
KUBOTA 2.5L LPG	6-6
MAZDA 2.2L LPG	6-4
MAZDA 2.2L, GASOLINE	6-2
ELECTRONIC PRESSURE REGULATOR ASSEMBLY	
MAZDA 2.2L LPG	6-24
ELECTRONIC PRESSURE REGULATOR KIT	
MAZDA 2.2L LPG	6-26
FUEL PUMP AND SENDER	
MAZDA 2.2L, GASOLINE	6-14
FUEL SUPPLY SYSTEM	
MAZDA 2.2L LPG	6-16
MAZDA 2.2L, GASOLINE	6-12
FUEL SYSTEM	
KUBOTA 2.5L LPG	6-27
MAZDA 2.2L LPG	6-10
MAZDA 2.2L, GASOLINE	6-9
FUEL SYSTEM HOSES AND ATTACHING PARTS	
MAZDA 2.2L LPG	6-18
LPG FUEL GROUP KUBOTA	
PREMIUM LOW FUEL SENSOR - SECTION 1 OF 2	6-33
PREMIUM LOW FUEL SENSOR - SECTION 2 OF 2	6-34
STANDARD LOW FUEL SENSOR - SECTION 1 OF 2	6-36
STANDARD LOW FUEL SENSOR - SECTION 2 OF 2	6-38
LPG TANK BRACKET	
SWING OUT	6-28
SWING OUT, DROP DOWN	6-30
MIXER AND THROTTLE BODY ASSEMBLY	
MAZDA 2.2L LPG	6-22
THROTTLE BODY AND ATTACHING PARTS	
MAZDA 2.2L, GASOLINE	6-20
THROTTLE PEDAL ASSEMBLY AND ATTACHING PARTS	
MONOTROL	6-42
STANDARD PEDAL	6-40

©2014 HYSTER COMPANY

AIR INTAKE AND FILTER SYSTEM (FIGURE 6-1)
MAZDA 2.2L, GASOLINE

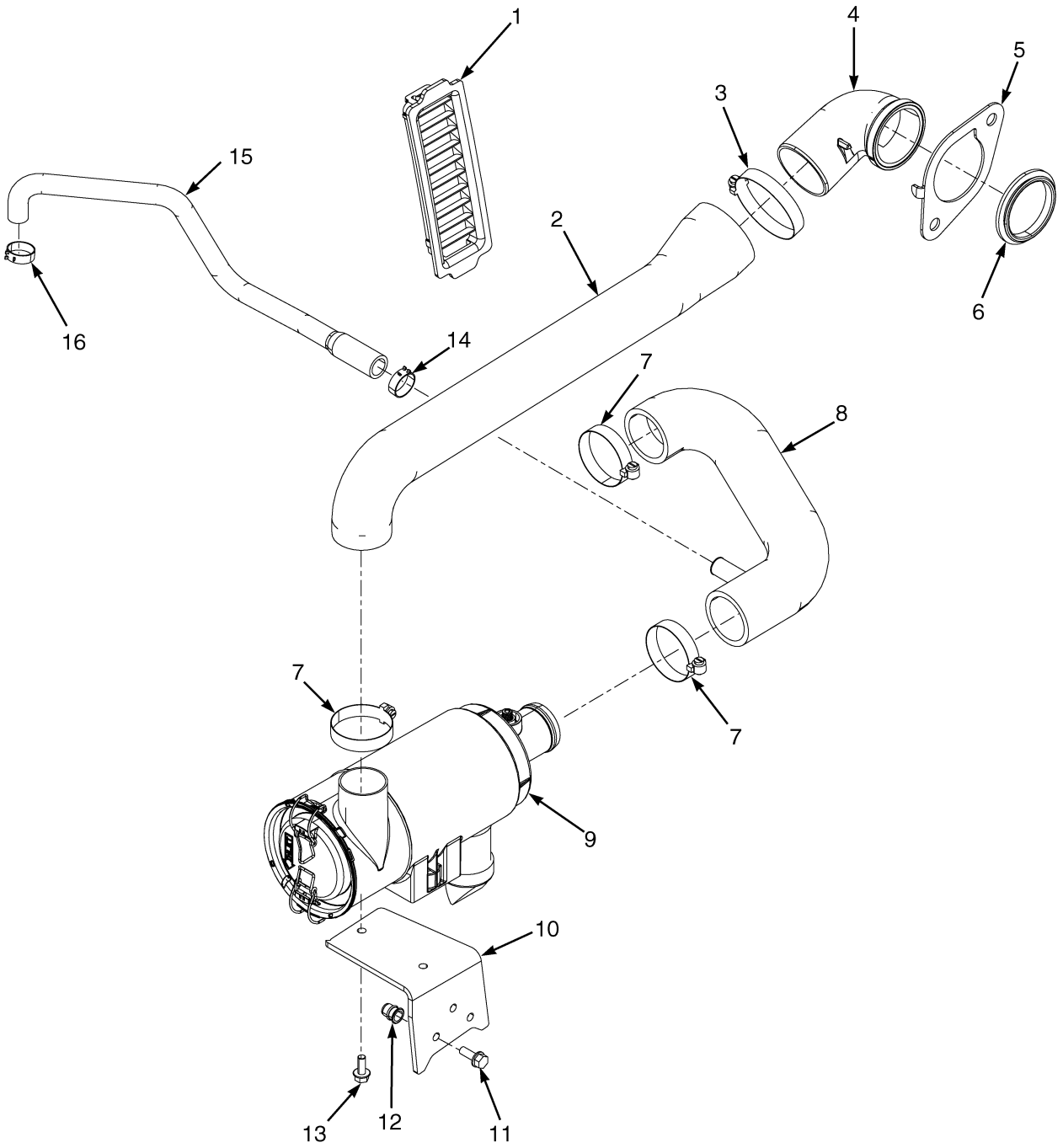

BP130255

©2014 HYSTER COMPANY

AIR INTAKE AND FILTER SYSTEM
MAZDA 2.2L, GASOLINE

ITEM	PART NO.	DESCRIPTION	QTY
1	2067476	Grill	1
2	1502034	Hose (Dirty Air)	1
3	1394008	Hose Clamp	1
4	1581438	Elbow (Dirty Air)	1
5	1581439	Retainer	1
6	1502079	Grommet	1
7	112989	Hose Clamp	3
8	2084251	Hose (Clean Air)	1
9	4611248	Air Filter (☞Figure 6-4)	1
10	1501848	Bracket	1
11	1583611	Capscrew	3
12	1530243	Insert	3
13	1527879	Capscrew	2
14	1452463	Hose Clamp	1
15	1652422	Hose (PCV)	1
16	353199	Clamp	1

©2014 HYSTER COMPANY

AIR INTAKE AND FILTER SYSTEM (FIGURE 6-2)
MAZDA 2.2L LPG

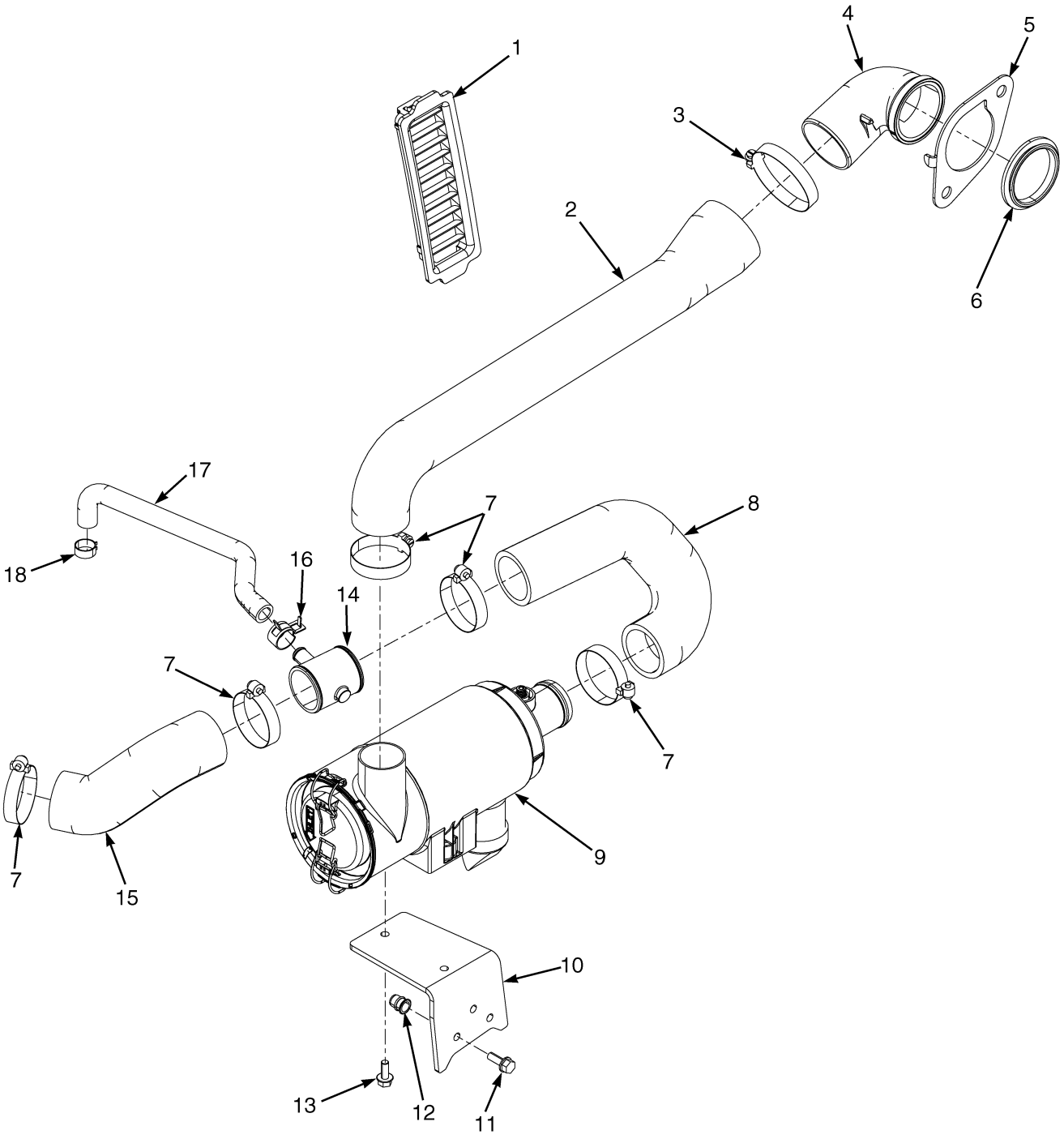

BP130254

©2014 HYSTER COMPANY

AIR INTAKE AND FILTER SYSTEM
MAZDA 2.2L LPG

ITEM	PART NO.	DESCRIPTION	QTY
1	2067476	Grill (Air Inlet)	1
2	1502034	Hose (Dirty Air)	1
3	1394008	Hose Clamp	1
4	1581438	Elbow (Dirty Air)	1
5	1581439	Retainer	1
6	1502079	Grommet	1
7	112989	Hose Clamp	5
8	2085260	Hose (Clean Air)	1
9	4611248	Air Filter (☞Figure 6-4)	1
10	1501848	Bracket	1
11	1583611	Capscrew	3
12	1530243	Insert	3
13	1527879	Capscrew	2
14	1640814	Coupler (Clean Air)	1
15	2085421	Hose (Clean Air)	1
16	1501994	Hose Clamp	1
17	2091232	Hose (PCV)	1
18	1452463	Hose Clamp	1

©2014 HYSTER COMPANY

AIR INTAKE AND FILTER SYSTEM (FIGURE 6-3)
KUBOTA 2.5L LPG

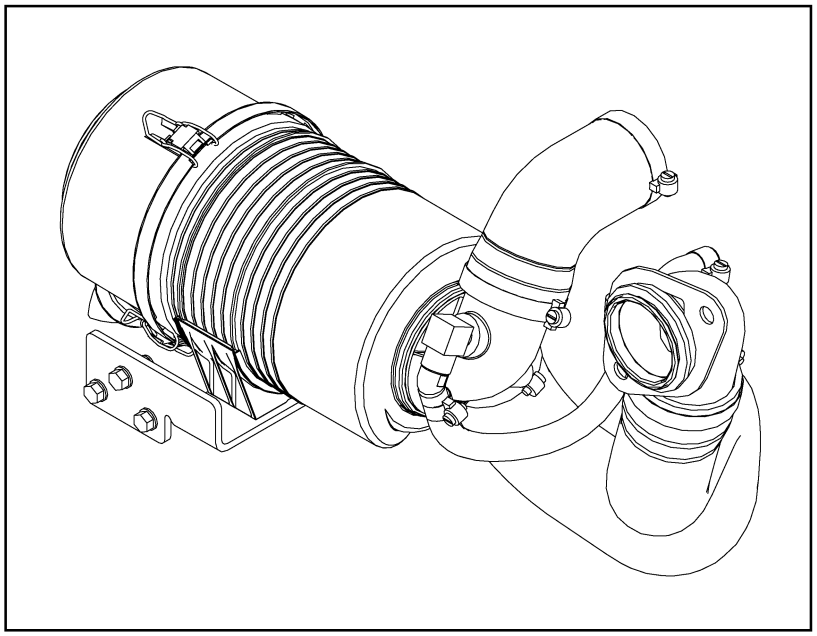

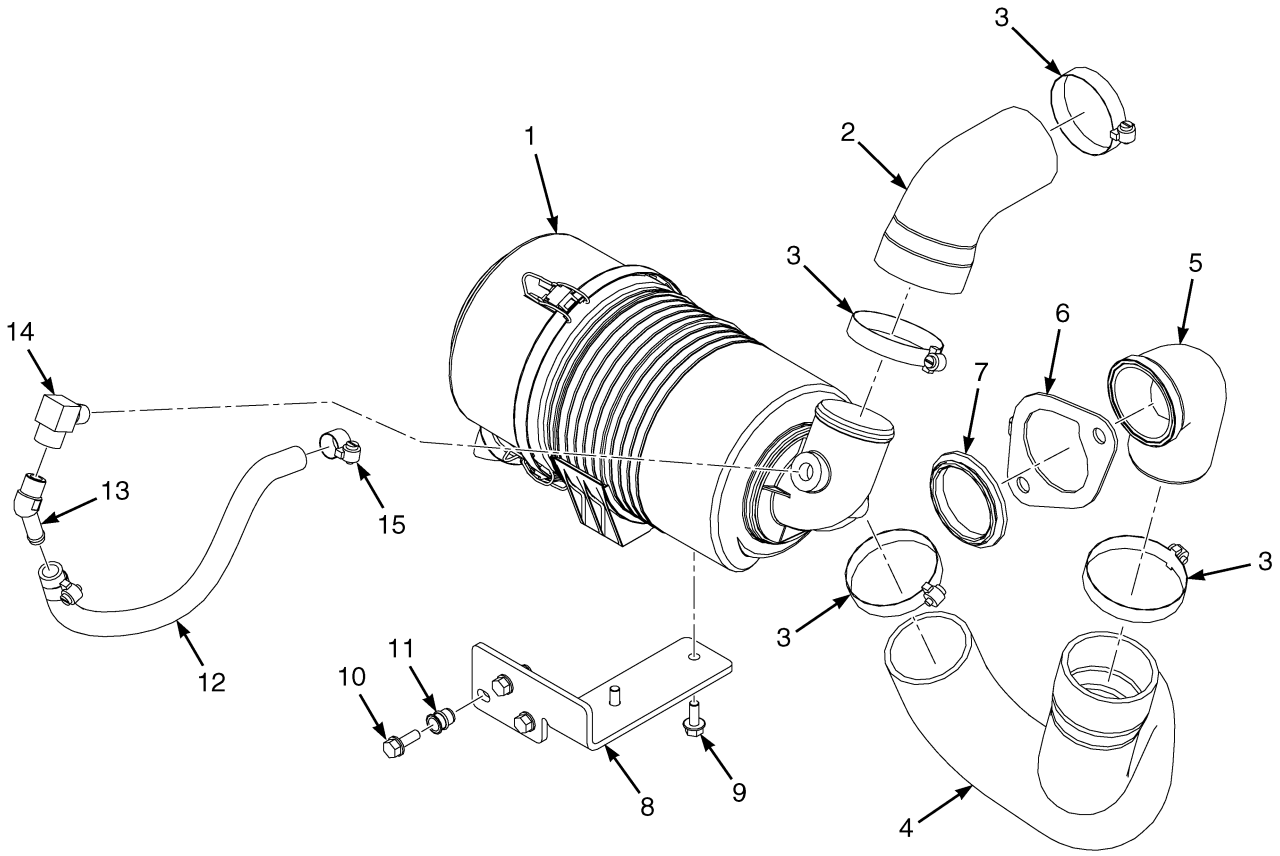

BP130440

©2014 HYSTER COMPANY

AIR INTAKE AND FILTER SYSTEM
KUBOTA 2.5L LPG

ITEM	PART NO.	DESCRIPTION	QTY
1	4623647	Air Filter	1
1	1377081	Cover	1
1	1452112	Filter Element	1
1	1377080	Filter Element	1
1	374923	Valve	1
2	4630920	Hose	1
3	1394008	Hose Clamp	4
4	4626640	Hose	1
5	4078122	Elbow	1
6	1581439	Retainer	1
7	1502079	Grommet	1
8	4069504	Bracket	1
9	1527880	Capscrew	2
10	1583611	Capscrew	3
11	1530243	Insert	3
12	4628517	Hose	1
13	16764	Fitting	1
14	16143	Fitting	1
15	130845	Clamp	2

©2014 HYSTER COMPANY

AIR FILTER ASSEMBLY (FIGURE 6-4)
MAZDA 2.2L, GASOLINE AND LPG

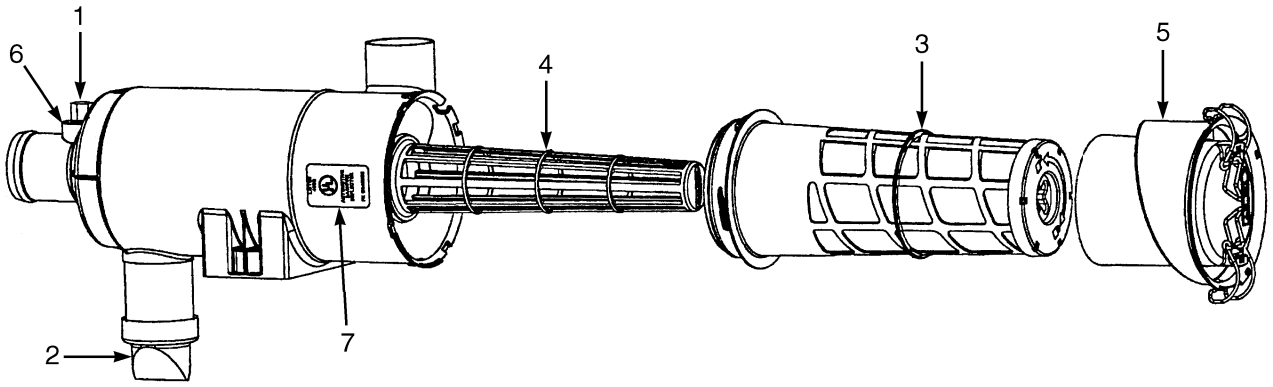

HP091227

ITEM	PART NO.	DESCRIPTION	QTY
	4611248	Air Filter	1
1	141331	Cap	1
2	374923	Valve	1
3	1559418	Filter Element	1
4	1559419	Guide (With O-Ring) (Liner Assy)	1
5	1559420	Cover	1
6	4030497	Connector (Pipe Nipple)	1
7	2095889	Label (Air Filter Installation)	1

©2014 HYSTER COMPANY

FUEL SYSTEM (FIGURE 6-5)
MAZDA 2.2L, GASOLINE

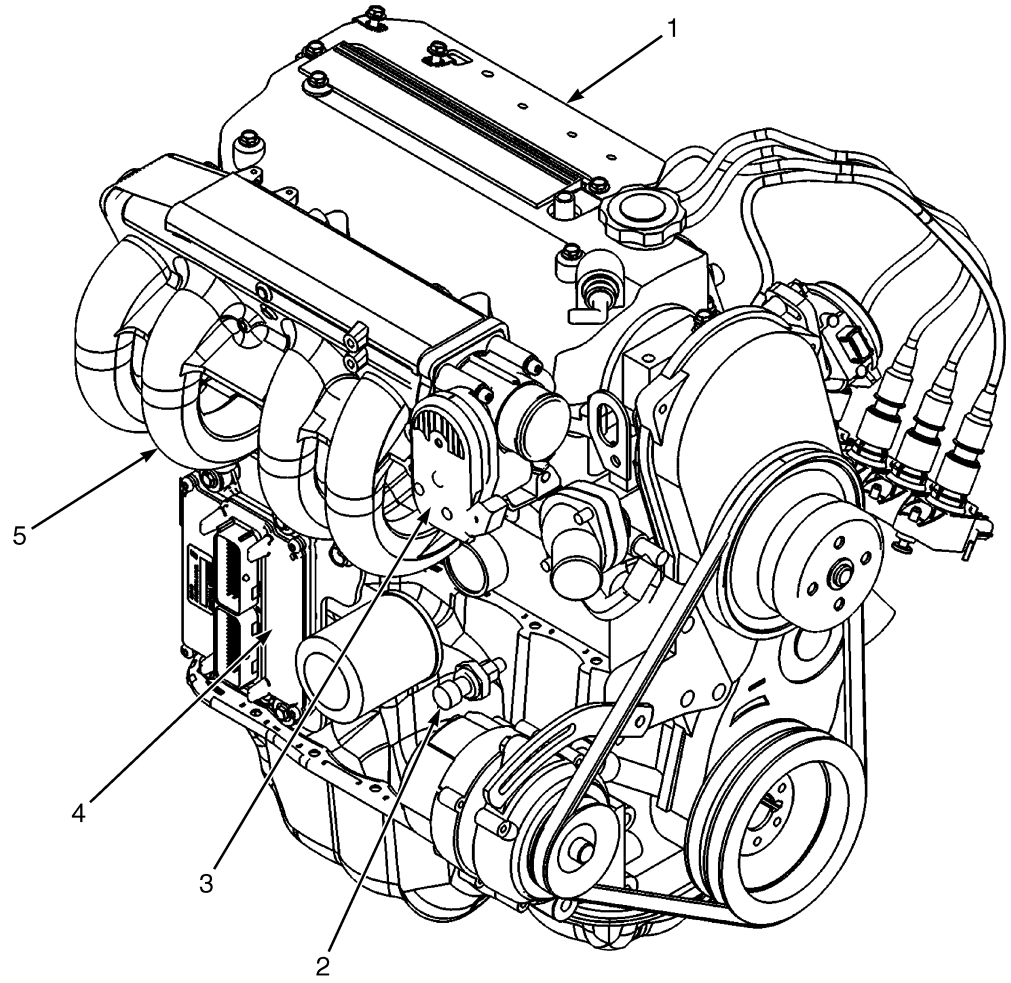

BP130249

ITEM	PART NO.	DESCRIPTION	QTY
1	1650507	Bracket (Relay)	1
2	4016652	Pressure Transducer (Oil)	1
2	1650506	Adapter	1
3	1650404	Throttle Body	1
4	4603434	Engine Control Module (2.2L, Gasoline)	1
5	4001804	Sensor (Temperature)	1

©2014 HYSTER COMPANY

FUEL SYSTEM (FIGURE 6-6)
MAZDA 2.2L LPG

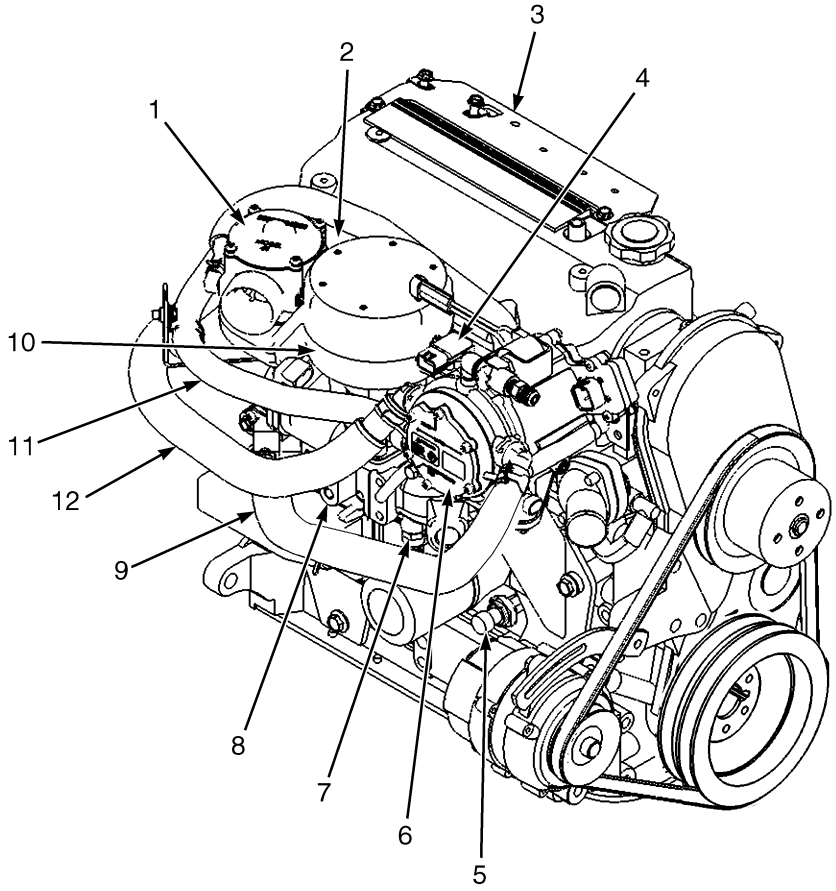

BP130244

ITEM	PART NO.	DESCRIPTION	QTY
1	1650758	Mixer	1
2	1539962	Sensor (Air Temperature)	1
3	1650507	Bracket (Relay)	1
4	1548352	Sensor (Boost, M.A.P.) (Boost)	1
5	4016652	Pressure Transducer (Oil)	1
5	1650506	Adapter	1
6	~~1701813~~		
	1650764	Pressure Regulator (EPR)	1
7	4001804	Sensor (Temperature)	1
8	4603432	Engine Control Module	1
9	1650784	Hose (RH) (Cooling)	1
10	1650404	Throttle Body	1
11	1650781	Hose	1
12	1687184	Hose	1

©2014 HYSTER COMPANY

NOTES

©2014 HYSTER COMPANY

FUEL SUPPLY SYSTEM (FIGURE 6-7)

MAZDA 2.2L, GASOLINE

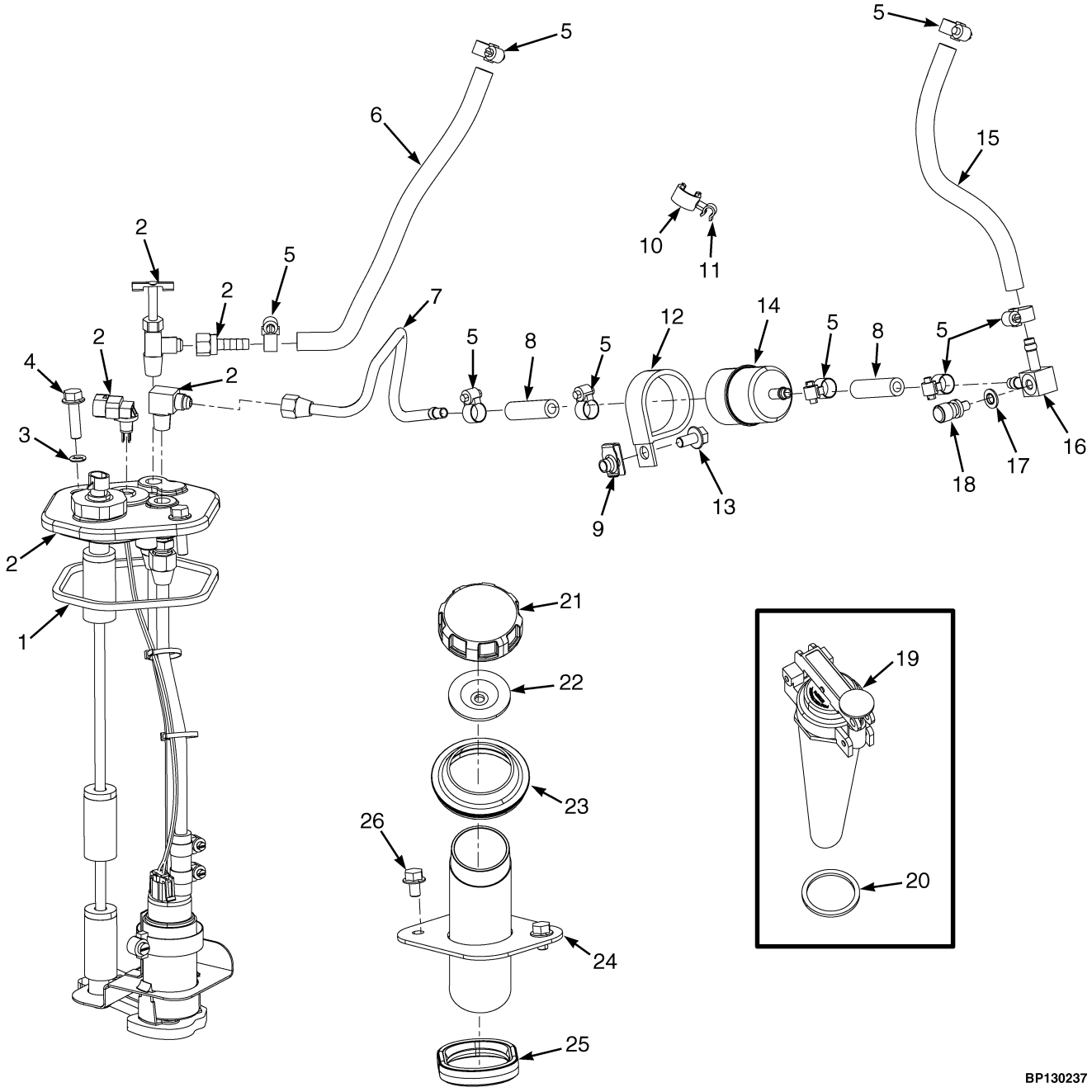

©2014 HYSTER COMPANY

FUEL SUPPLY SYSTEM
MAZDA 2.2L, GASOLINE

ITEM	PART NO.	DESCRIPTION	QTY
1	1528893	Quad Ring	1
2	1634894	Fuel Sender	1
3	353000	O-Ring	2
4	1527881	Capscrew	2
5	168718	Clamp	8
6	2076792	Hose	1
7	1550600	Tube	1
8	2062587	Hose	2
9	1480237	Nut	1
10	1543698	Clamp (Swivel)	1
11	1542440	Clamp (Swivel)	1
12	1316496	Clamp	1
13	1527879	Capscrew	1
14	1304950	Fuel Filter	1
15	2072764	Hose	1
16	1547848	Fitting	1
17	1339438	Seal	1
18	1345991	Pressure Valve	1
19	1579677	Fuel Cap	1
20	2021685	Gasket	1
21	1579677	Fuel Cap	1
22	2021685	Gasket	1
23	1528608	Grommet	1
24	1564392	Pipe (Fill)	1
25	1593391	Seal	1
26	1529366	Capscrew	2

©2014 HYSTER COMPANY

FUEL PUMP AND SENDER (FIGURE 6-8)
MAZDA 2.2L, GASOLINE

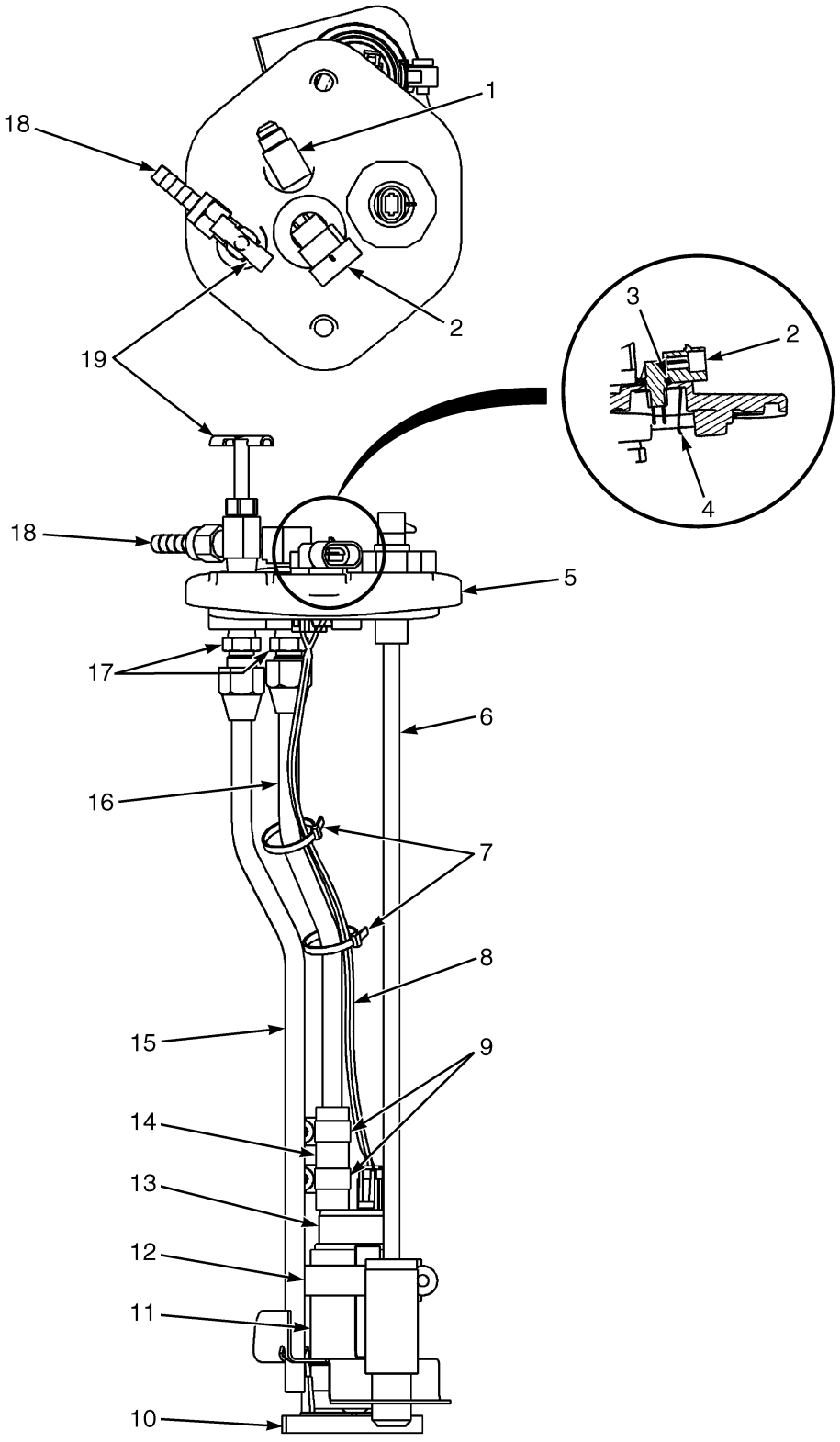

©2014 HYSTER COMPANY

FUEL PUMP AND SENDER
MAZDA 2.2L, GASOLINE

ITEM	PART NO.	DESCRIPTION	QTY
	1634894	Fuel Sender	1
1	21195	Fitting	1
2	1371149	Connector	1
3	1330325	O-Ring	1
4	1330326	Nut	1
5	1527311	Cover	1
6	1501811	Fuel Sender	1
7	114312	Strap Clamp	1
8	1632224	Wire Harness (Fuel Pump)	1
9	168718	Clamp	2
10	1634456	Strainer	1
11	1644624	Isolator	1
12	369804	Clamp	1
13	1634455	Fuel Pump	1
14	2089368	Hose	1
15	1632179	Tube	1
16	2089239	Tube	1
17	16134	Fitting	2
18	1568998	Fitting	1
19	43883	Drain Valve (Shut-Off)	1

©2014 HYSTER COMPANY

FUEL SUPPLY SYSTEM (FIGURE 6-9)
MAZDA 2.2L LPG

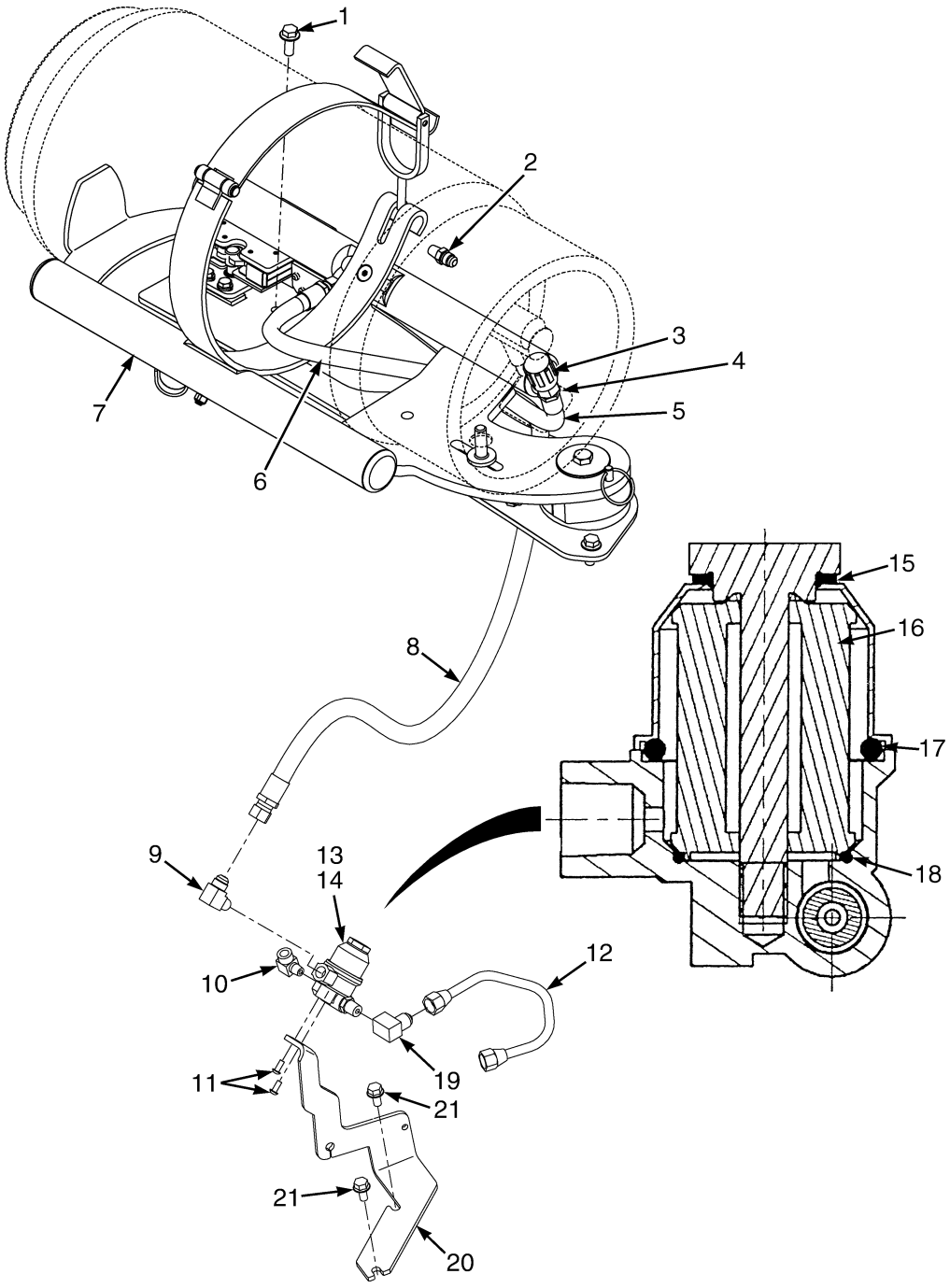

HP130431

©2014 HYSTER COMPANY

FUEL SUPPLY SYSTEM
MAZDA 2.2L LPG

ITEM	PART NO.	DESCRIPTION	QTY
1	1586013	Capscrew	4
2	16134	Fitting	1
3	97999	Fitting	1
4	16863	Fitting	1
5	4619095	Hose Assy (Swing Out)	1
5	4619574	Hose Assy (Drop Down)	1
6	4619094	Hose Assy	1
7	4067494	LPG Tank Bracket (Swing Out/Drop Down) (☞Figure 6-17)	1
7	4067492	LPG Tank Bracket (Swing Out) (☞Figure 6-16)	1
8	2072300	Hose Assy	1
8	2090418	Hose Assy (Optional)	1
9	14358	Fitting	1
10	**b** 16151	Fitting	1
10	**a** 14349	Fitting (Pipe Plug) (Not Shown)	1
11	296152	Capscrew	2
12	2090361	Hose Assy	1
13	2105803	Fuel Filter (LPG)	1
14	1689544	Kit-Filter Element	1
16	**c**	Filter Element	1
17	. . . . .	O-Ring	1
17	. . . . .	Seal	1
18	. . . . .	O-Ring	1
19	**b** 14372	Fitting	1
20	4000330	Bracket	1
21	1529366	Capscrew	2
	ac 1662253	Sensor (Vapor)	1
	c 1501970	Pressure Switch (Low Fuel)	1

FOOTNOTES:

a For use only with premium low fuel sensor.
b For use only without premium low fuel sensor.
c Not Illustrated

FUEL SYSTEM HOSES AND ATTACHING PARTS (FIGURE 6-10)

MAZDA 2.2L LPG

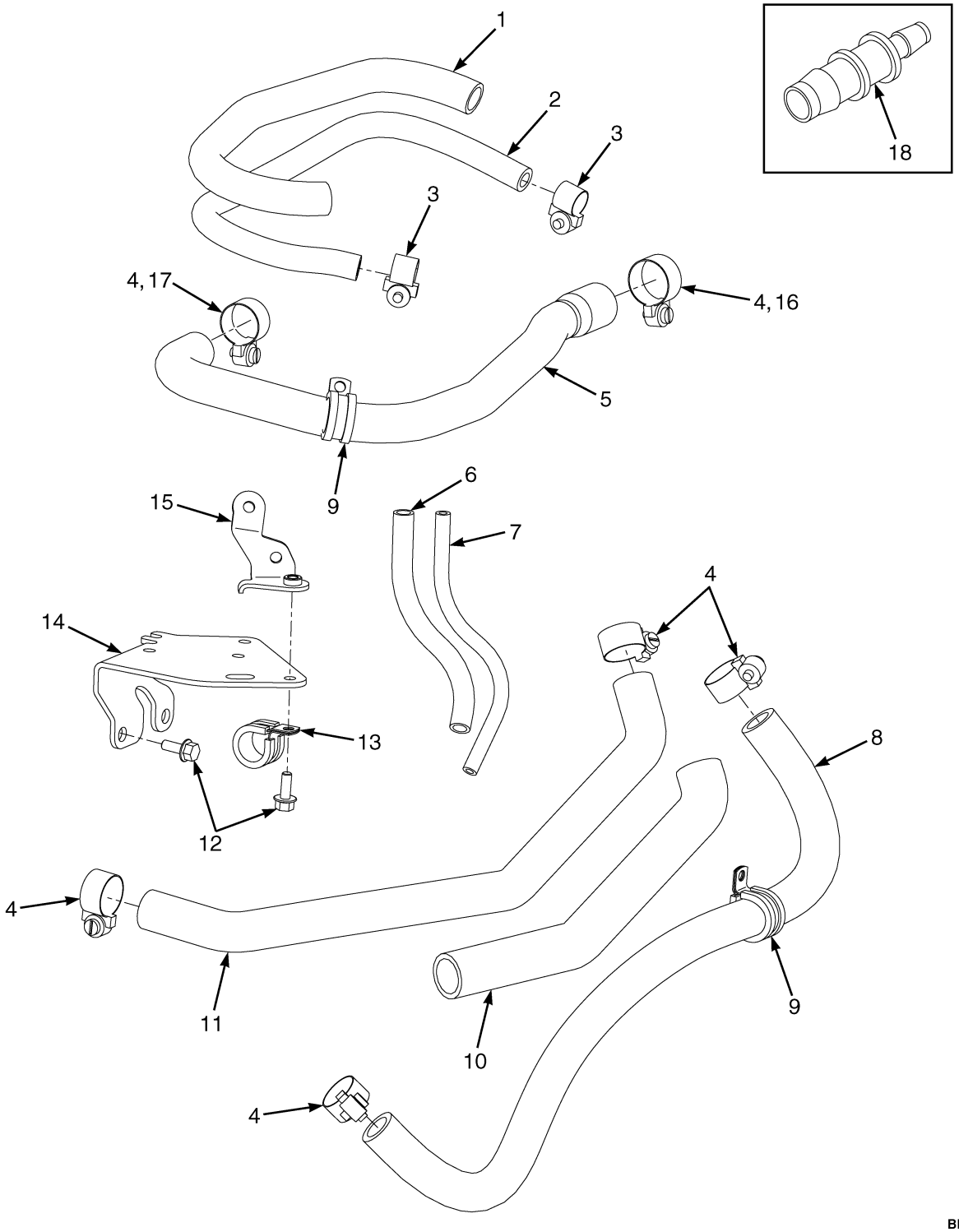

©2014 HYSTER COMPANY

FUEL SYSTEM HOSES AND ATTACHING PARTS
MAZDA 2.2L LPG

ITEM	PART NO.	DESCRIPTION	QTY
1	1650780	Hose Conduit	1
2	1650779	Hose (Vacuum Balance)	1
3	1614770	Hose Clamp	2
4	4015021	Hose Clamp	4
5	1650781	Hose (Fuel)	1
6	1650791	Hose Conduit	1
7	1650785	Hose (Vacuum)	1
8	1650784	Hose (RH) (Cooling) (5/8")	1
8	**a** 1650786	Hose (RH) (Cooling) (3/8")	1
9	1653901	Clamp	2
10	1653904	Hose Conduit	1
11	1650784	Hose (RH) (Cooling) (5/8")	1
11	1687184	Hose (5.8")	1
12	1558432	Bolt	2
13	1653900	Clamp	1
14	1650762	Bracket	1
15	1650789	Bracket	1
16	4015023	Hose Clamp	1
17	4015022	Hose Clamp	1
18	**b** 1682884	Adapter (3/8 " to 5/8")	1

FOOTNOTES:

a Not Shown

b Used between hoses 1650786 and 1650784

©2014 HYSTER COMPANY

THROTTLE BODY AND ATTACHING PARTS (FIGURE 6-11)

MAZDA 2.2L, GASOLINE

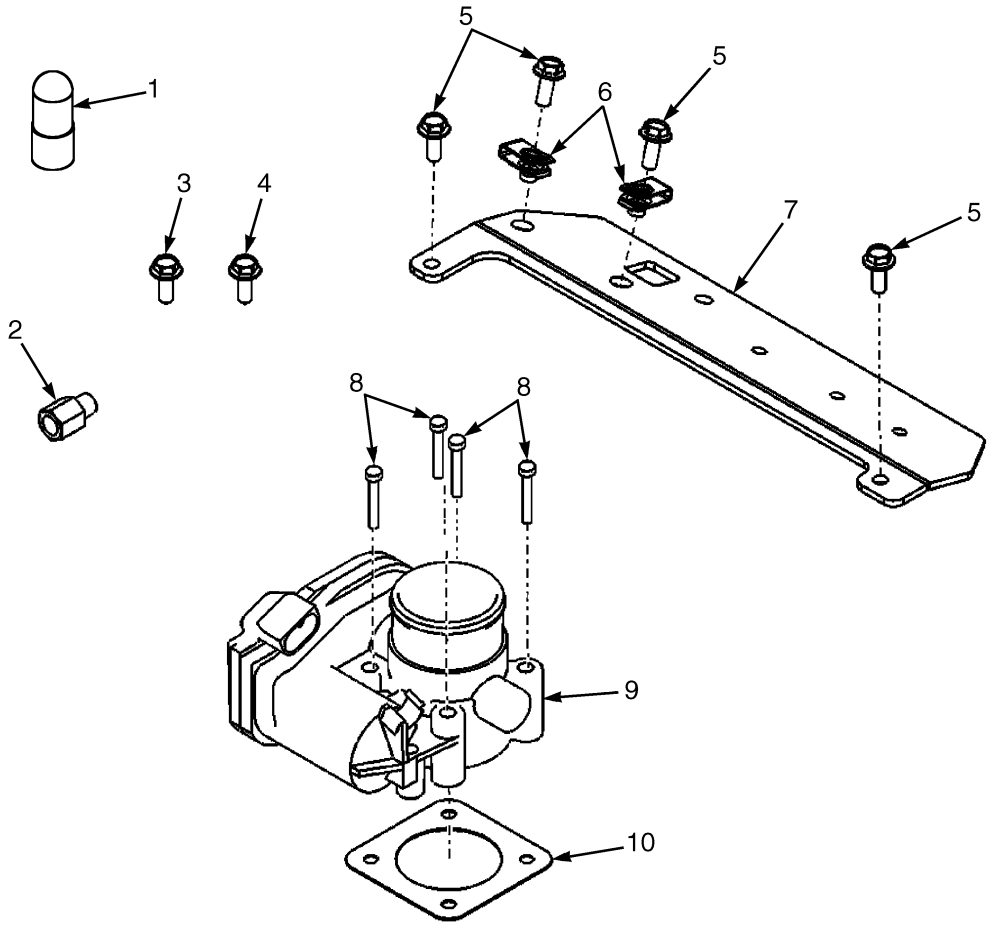

BP130250

ITEM	PART NO.	DESCRIPTION	QTY
1	1655241	Cap (For Unused Manifold Fitting)	1
2	1650506	Adapter	1
3	1650508	Screw	4
4	1650868	Screw	1
5	1558432	Bolt	4
6	1650402	Nut	1
7	1650507	Bracket (Relay)	1
8	1650505	Bolt	4
9	1650404	Throttle Body	1
10	1650504	Gasket (Throttle Body)	1

©2014 HYSTER COMPANY

NOTES

©2014 HYSTER COMPANY

MIXER AND THROTTLE BODY ASSEMBLY (FIGURE 6-12)

MAZDA 2.2L LPG

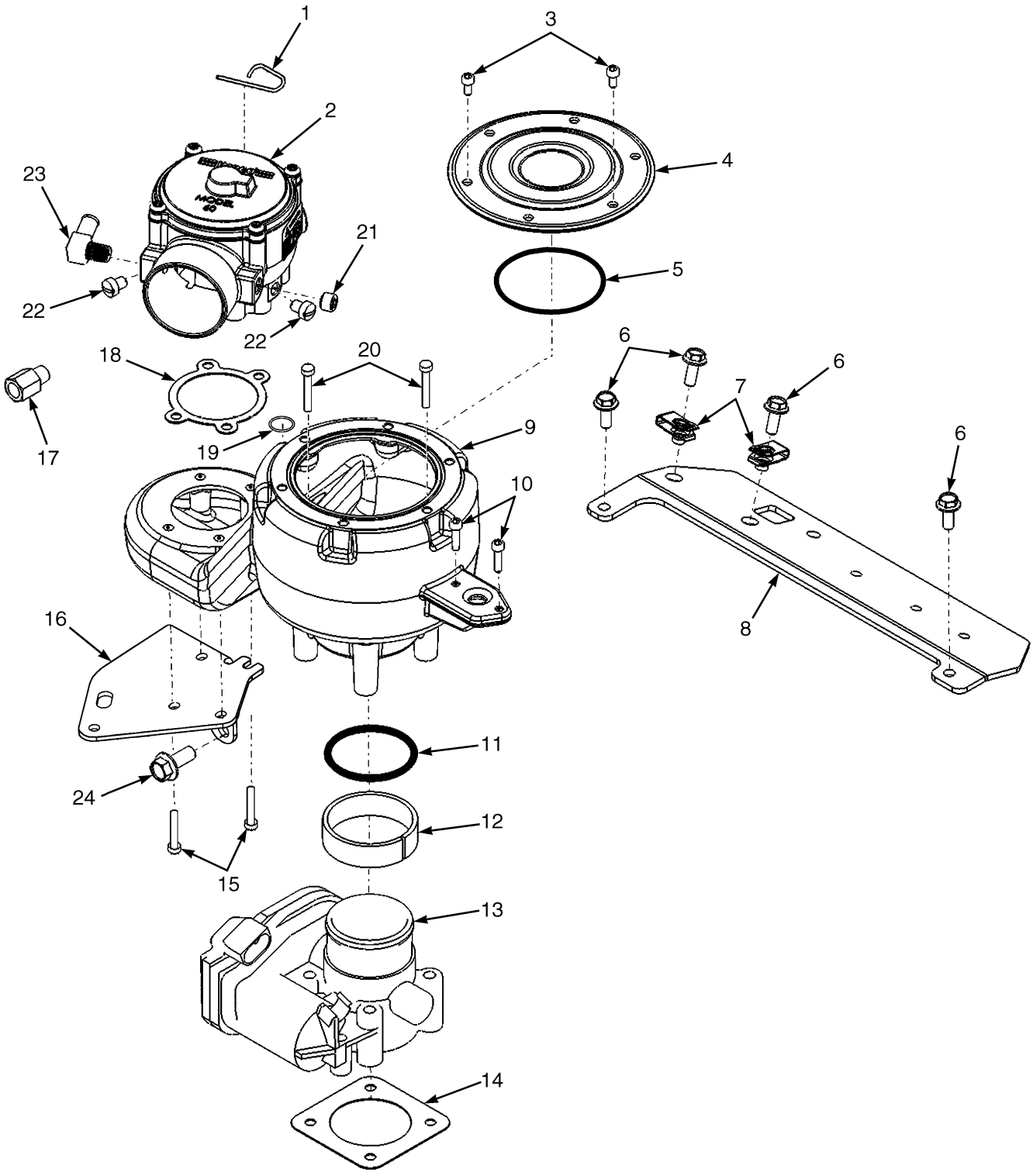

©2014 HYSTER COMPANY

MIXER AND THROTTLE BODY ASSEMBLY
MAZDA 2.2L LPG

ITEM	PART NO.	DESCRIPTION	QTY
1	1558161	Pin	1
2	1650758	Mixer	1
3	296508	Screw	6
4	1650760	Cover	1
5	1650400	O-Ring	1
6	1558432	Bolt	6
7	1650402	Nut	2
8	1650507	Bracket (Relay)	1
9	1650761	Adapter	1
10	1558170	Screw	2
11	1650405	O-Ring	1
12	1650407	Sleeve	1
13	1650404	Throttle Body	1
14	1650504	Gasket (Throttle Body)	1
15	1650757	Screw	4
16	1650762	Bracket	1
17	1650506	Adapter	1
18	204787	Gasket	1
19	1650403	Seal	1
20	1682881	Screw	4
21	1682882	Plug	1
22	326926	Screw	2
23	1361164	Fitting	1
24	1682883	Screw	1

©2014 HYSTER COMPANY

ELECTRONIC PRESSURE REGULATOR ASSEMBLY (FIGURE 6-13)

MAZDA 2.2L LPG

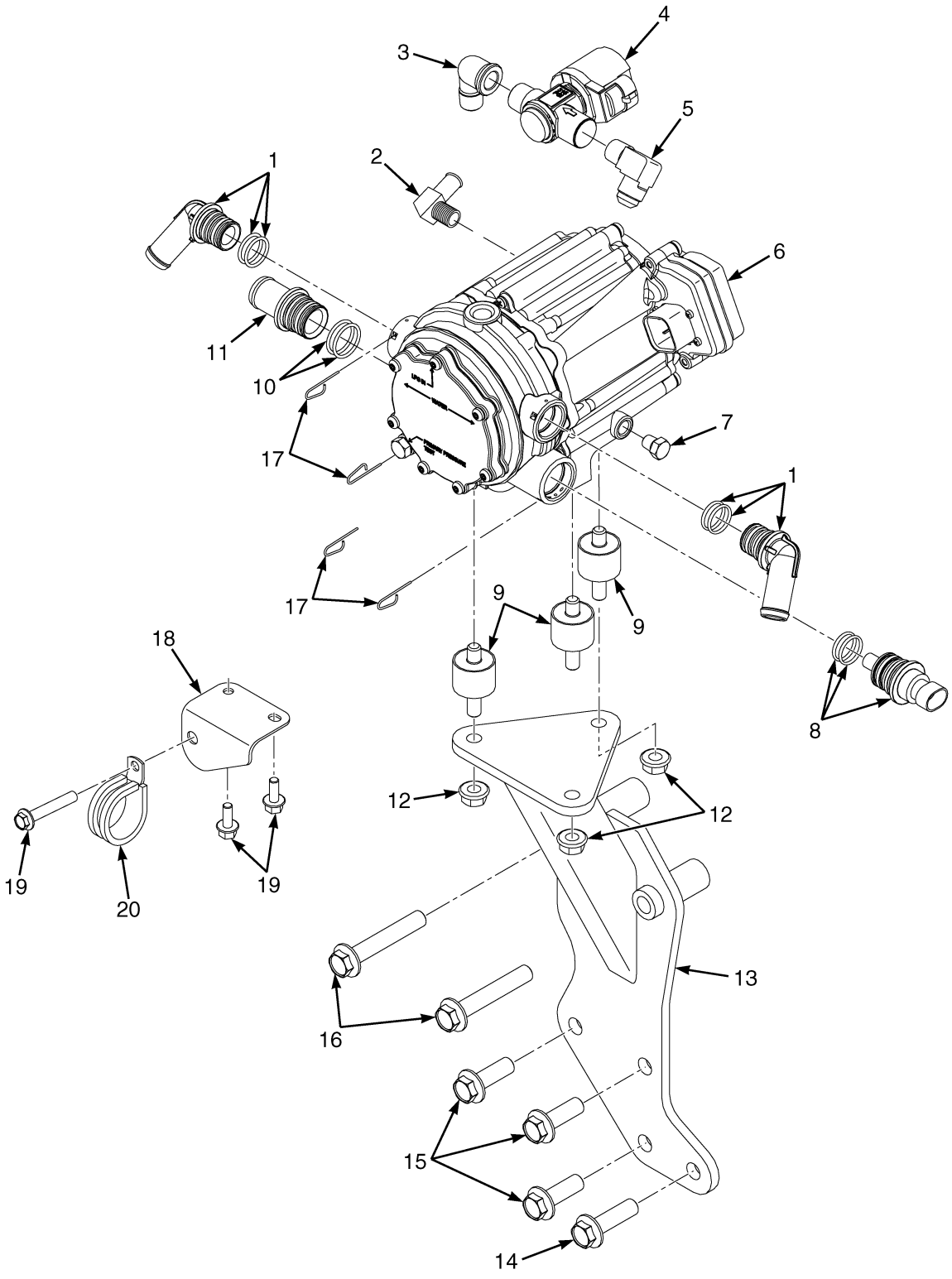

©2014 HYSTER COMPANY

ELECTRONIC PRESSURE REGULATOR ASSEMBLY
MAZDA 2.2L LPG

ITEM	PART NO.	DESCRIPTION	QTY
1	1558176	Fitting	2
2	1361164	Fitting	1
3	1650769	Fitting	1
4	4040480	LPG Lock-Off	1
5	1650770	Fitting	1
6	~~1701813~~		
	1650764	Pressure Regulator	1
6	1650778	Kit-Repair (EPR) (☞Figure 6-14)	1
7	1682882	Plug	1
8	1672800	Sensor	1
8	1650777	O-Ring	2
9	1650766	Mount (Vibration)	3
10	1603857	O-Ring	2
11	1650763	Fitting	1
12	1502543	Nut (Flange)	3
13	1650772	Bracket	1
14	1650767	Screw	1
15	1650870	Screw	3
16	1650773	Screw	2
17	1558161	Pin	4
18	1653902	Bracket	1
19	1527876	Capscrew	3
20	1653900	Clamp	1
	4043883	Kit-Valve (LPG Shutoff) (Includes Items 4)	1

©2014 HYSTER COMPANY

ELECTRONIC PRESSURE REGULATOR KIT (FIGURE 6-14)

MAZDA 2.2L LPG

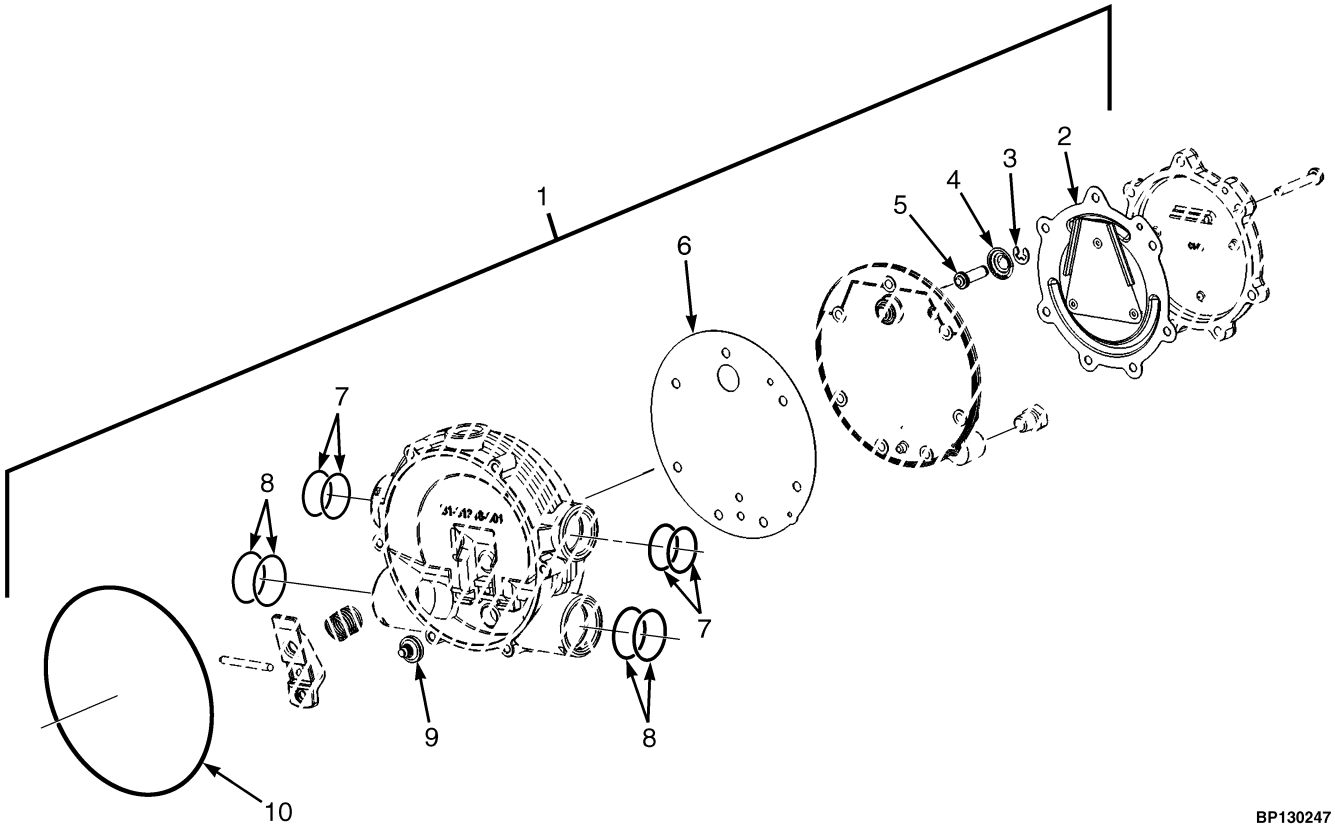

BP130247

ITEM	PART NO.	DESCRIPTION	QTY
1	~~1701813~~		
	1650764	Pressure Regulator	1
2	. . . . .	Diaphram (Not Serviced Seperately)	1
3	1455304	E-Ring (Primary)	1
4	. . . . .	Spring (Not Serviced Seperately)	1
5	1458764	Pin (Primary)	1
6	1375033	Gasket (Body Secondary)	1
7	. . . . .	O-Ring (Not Serviced Seperately)	4
8	1603857	O-Ring	4
9	. . . . .	Seat (Not Serviced Seperately)	1
10	. . . . .	Clamp Plate Seal (Not Serviced Seperately)	1
	1650778	Kit-Repair (EPR)	1

©2014 HYSTER COMPANY

FUEL SYSTEM (FIGURE 6-15)
KUBOTA 2.5L LPG

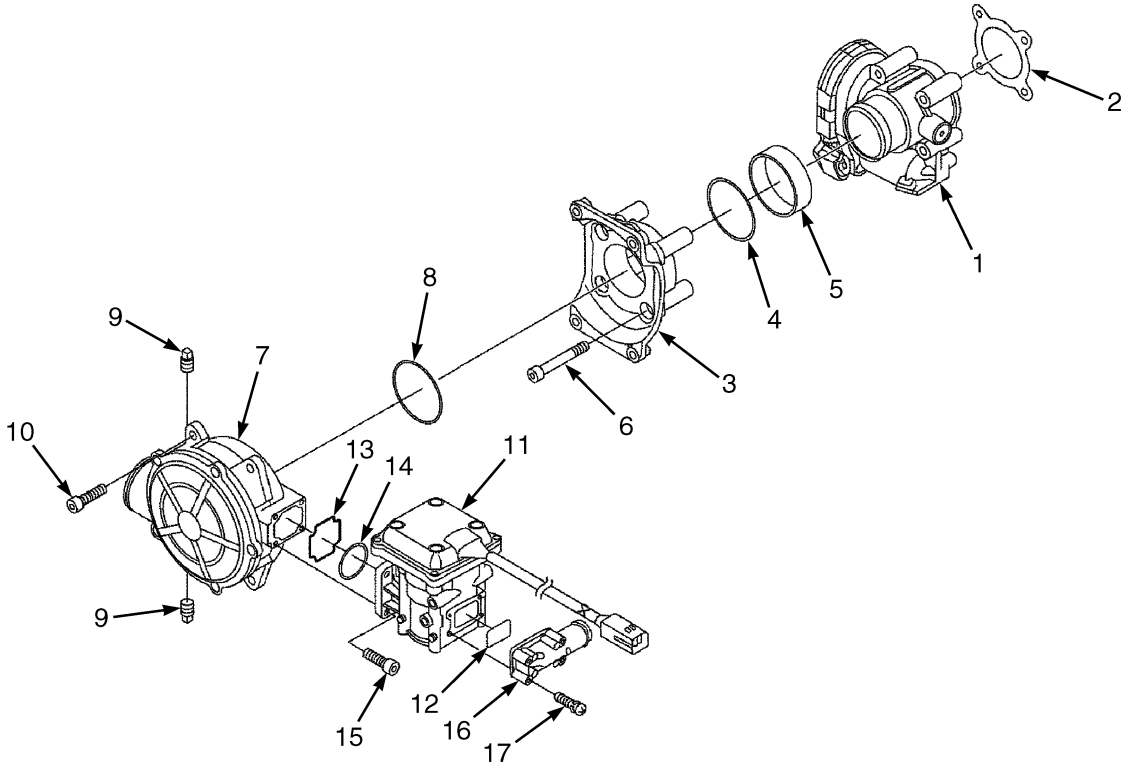

BP130445

ITEM	PART NO.	DESCRIPTION	QTY
	4625769	Engine Assy (280mm Fan Height)	1
1	4097613	Throttle Body	1
2	4097614	Gasket	1
3	4097615	Adapter	1
4	4097616	O-Ring	1
5	4097617	Spacer	1
6	4097618	Bolt	4
7	4097619	Mixer-LPG	1
8	4097620	Seal	1
9	4097621	Plug	2
10	4097622	Bolt	4
11	4097623	Regulator	1
12	4097624	Seal	1
13	4097625	Seal	1
14	4097626	Seal	1
15	4097627	Bolt	4
16	4097628	Flange	1
17	4097629	Screw	4

©2014 HYSTER COMPANY

LPG TANK BRACKET (FIGURE 6-16)
SWING OUT

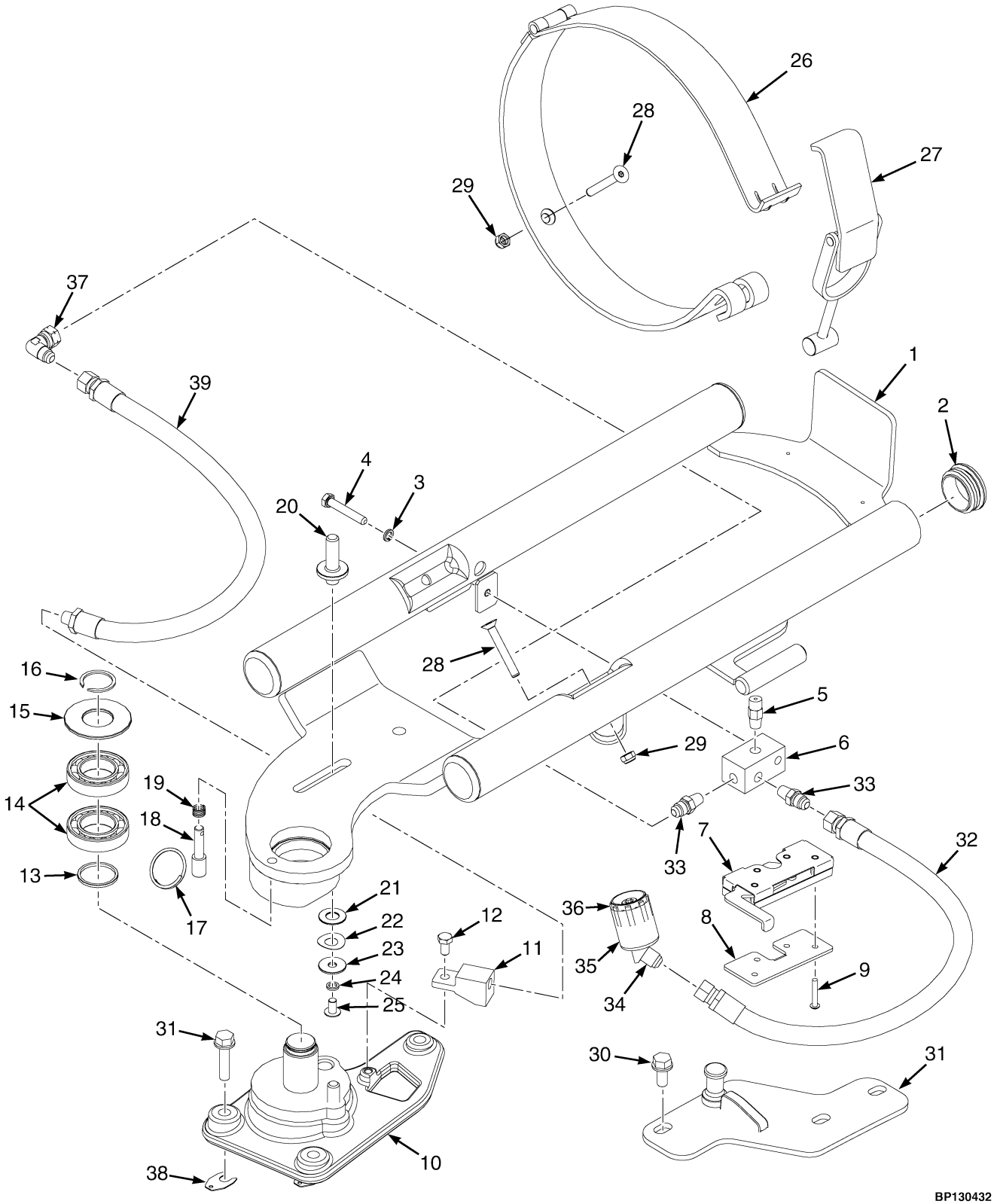

©2014 HYSTER COMPANY

LPG TANK BRACKET
SWING OUT

ITEM	PART NO.	DESCRIPTION	QTY
1	4067492	LPG Tank Bracket	1
2	1398099	Plug	4
3	1581898	Washer	1
4	1581583	Capscrew	1
5	101809	Relief Valve	1
6	4048941	Fitting (LPG Bulkhead Rear)	1
7	1656325	Latch	1
8	1649565	Plate	1
9	4054932	Capscrew	4
10	1584083	Bracket Wldmt	1
11	1525451	Fitting	1
12	1581579	Capscrew	1
13	1568853	Thrust Washer	1
14	184451	Ball Bearing	2
15	1568839	Washer (Pivot)	1
16	34507	Snap Ring	1
17	1534672	Ring	1
18	1615956	Pin	1
19	1528903	Spring	1
20	4029506	Pin (Alignment)	1
21	4029538	Washer	1
22	4029920	Washer	1
23	4032291	Washer	1
24	4032292	Spacer	1
25	4031146	Capscrew	1
26	1613749	Strap	1
27	1613755	Latch	1
28	1581733	Capscrew	2
29	1581739	Nut	2
30	1586013	Capscrew	3
31	1682758	Striker	1
32	4619095	Hose Assy	1
33	16134	Fitting	2
34	16863	Fitting	1
35	2071517	Sleeve	1
36	97999	Fitting	1
37	4051434	Fitting (Elbow)	1
38	1688803	Shim	3
39	4619094	Hose Assy	1
	a 246108	Sealant	AR
	a 1687376	Sealant (Alternate Part)	AR

FOOTNOTES:

a Not Illustrated

©2014 HYSTER COMPANY

LPG TANK BRACKET (FIGURE 6-17)
SWING OUT, DROP DOWN

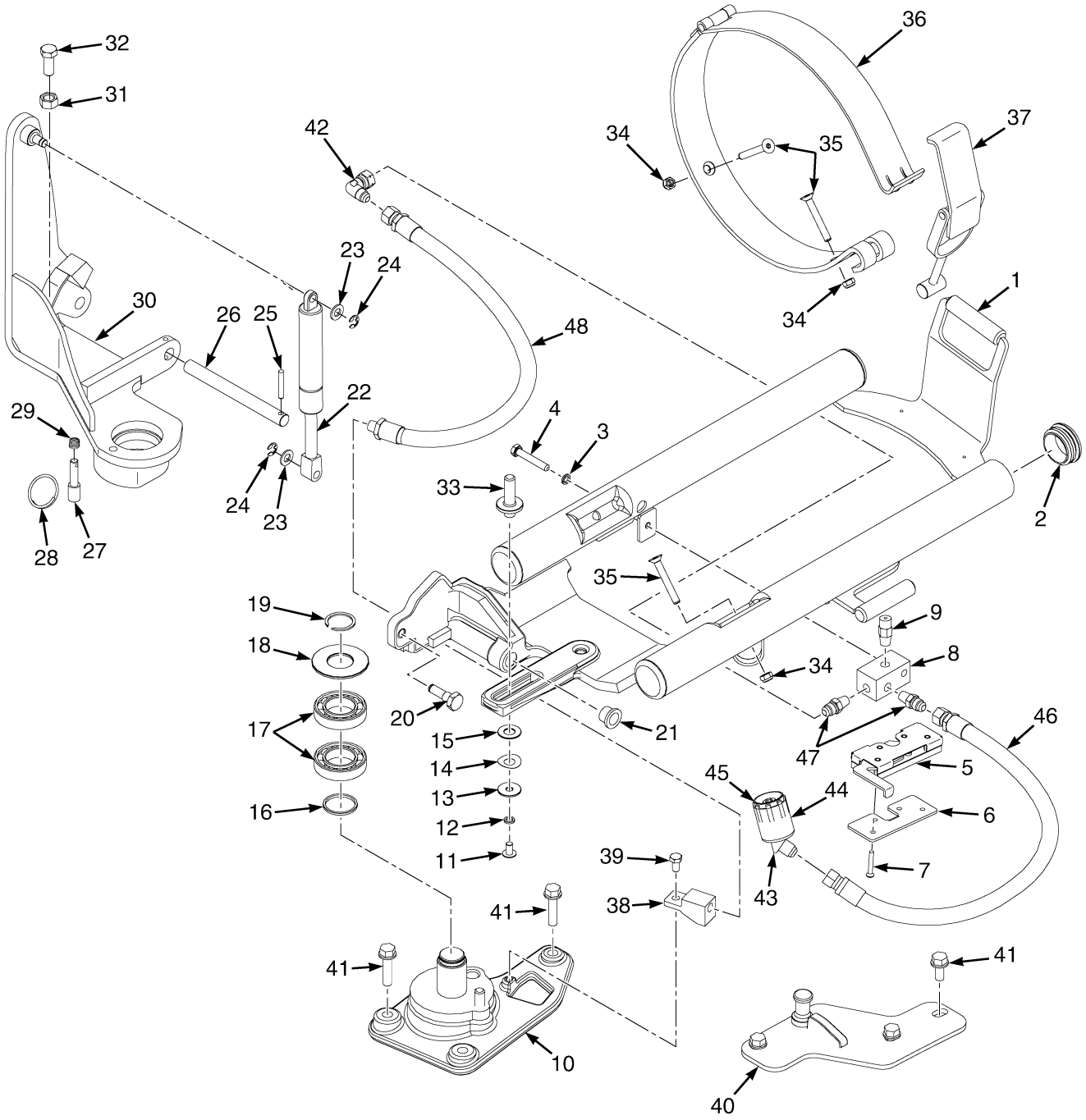

BP130431

©2014 HYSTER COMPANY

LPG TANK BRACKET
SWING OUT, DROP DOWN

ITEM	PART NO.	DESCRIPTION	QTY
1	4067494	LPG Tank Bracket	1
2	1398099	Plug	4
3	1581898	Washer	1
4	1581583	Capscrew	1
5	1656325	Latch	1
6	1649565	Plate	1
7	4054932	Capscrew	4
8	4048941	Fitting (LPG Bulkhead Rear)	1
9	101809	Relief Valve	1
10	1584083	Bracket Wldmt (Shaft)	1
11	4031146	Capscrew	1
12	4032292	Spacer	1
13	4032291	Washer	1
14	4029920	Washer	1
15	4029538	Washer	1
16	1568853	Thrust Washer	1
17	184451	Ball Bearing	2
18	1568839	Washer (Pivot)	1
19	34507	Snap Ring	1
20	1525478	Pin	1
21	1581888	Bushing	2
22	1402414	Gas Spring	1
23	1581557	Washer	2
24	1525442	E-Ring	2
25	302468	Roll Pin	1
26	1581887	Shaft	1
27	1615956	Pin	1
28	1534672	Ring	1
29	1528903	Spring	1
30	1615671	Pivot	1
30	1627827	Pivot (Cast) (Optional)	1
30	1688719	Bracket Wldmt (Optional)	1
31	1581848	Nut	1
32	1586022	Capscrew	1
33	4029506	Pin (Alignment)	1
34	1581739	Nut	2
35	1581733	Capscrew	2
36	1613749	Strap	1
37	1613755	Latch	1
38	1525451	Fitting	1
39	1581579	Capscrew	1
40	1682758	Striker	1
41	1586013	Capscrew	6
42	4051434	Fitting (Elbow)	1
43	16863	Fitting	1
44	2071517	Sleeve	1
45	97999	Fitting	1
46	4619574	Hose Assy	1
47	16134	Fitting	2
48	4619094	Hose Assy	1

©2014 HYSTER COMPANY

LPG TANK BRACKET
SWING OUT, DROP DOWN

ITEM	PART NO.	DESCRIPTION	QTY
	a 246108	Sealant	AR
	a 1687376	Sealant	AR
	a 264134	Loctite	AR

FOOTNOTES:

a Not Illustrated

©2014 HYSTER COMPANY

LPG FUEL GROUP KUBOTA (FIGURE 6-18)

PREMIUM LOW FUEL SENSOR — SECTION 1 OF 2

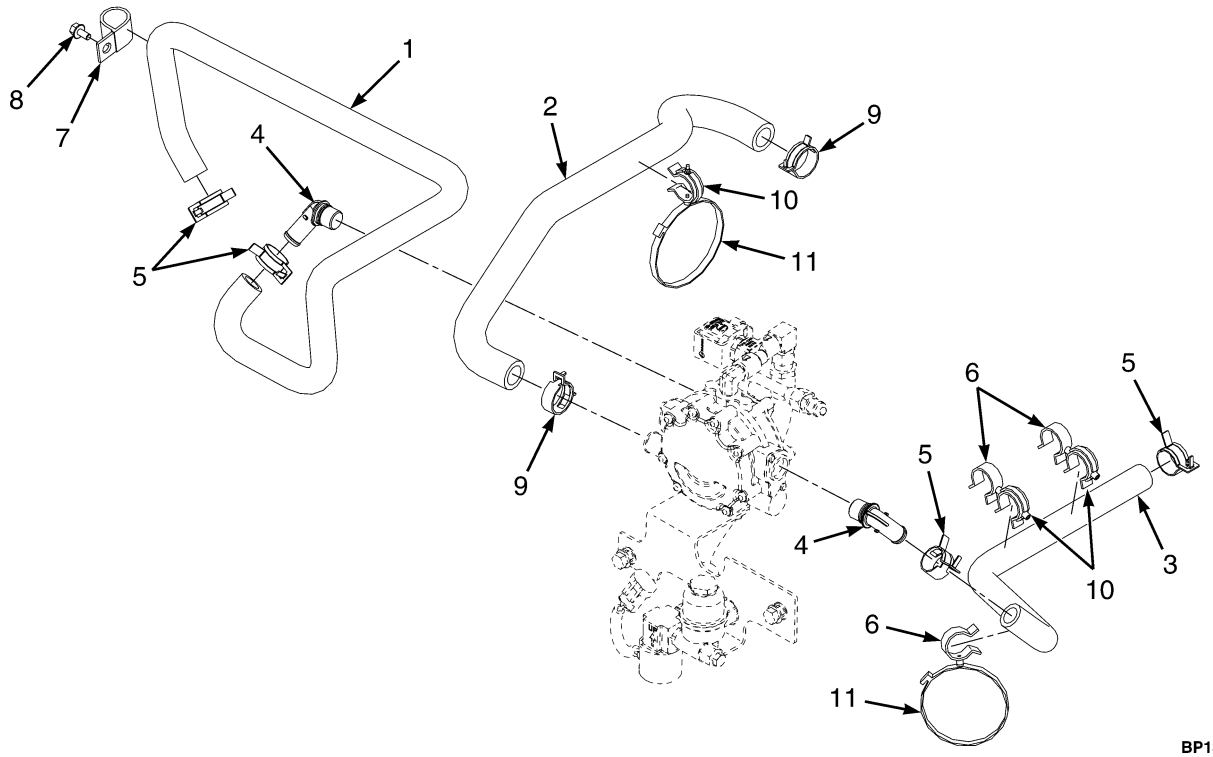

ITEM	PART NO.	DESCRIPTION	QTY
1	4625186	Hose	1
2	4628717	Hose	1
3	4625259	Hose	1
4	4064288	Elbow	2
5	1501994	Hose Clamp	4
6	1542436	Clamp (Swivel)	3
7	153069	Clamp	1
8	1534417	Capscrew	1
9	1502009	Hose Clamp	2
10	1569465	Clamp (Swivel)	3
11	1502061	Clamp	2

LPG FUEL GROUP KUBOTA (FIGURE 6-19)
PREMIUM LOW FUEL SENSOR — SECTION 2 OF 2

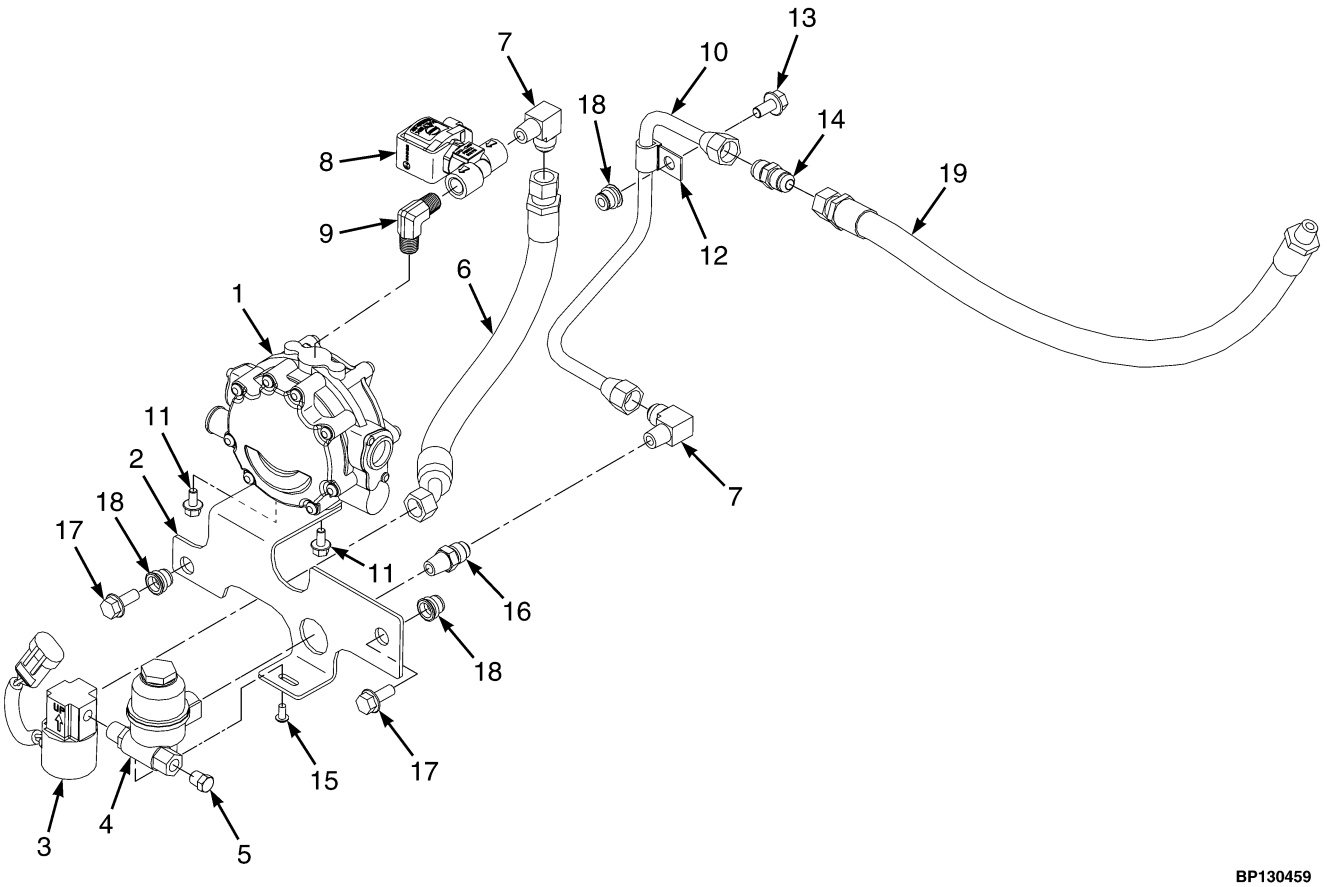

BP130459

©2014 HYSTER COMPANY

LPG FUEL GROUP KUBOTA

PREMIUM LOW FUEL SENSOR – SECTION 2 OF 2

ITEM	PART NO.	DESCRIPTION	QTY
1	4624999	LPG Converter	1
1	4040288	Kit-Regulator Repair	1
2	4089169	Bracket	1
3	1662253	Sensor	1
4	2105803	Fuel Filter (LPG)	1
5	14349	Fitting (Pipe Plug)	1
6	4631193	Hose Assy	1
7	14358	Fitting	2
8	4099352	LPG Lock-Off	1
9	4019019	Fitting	1
10	4630953	Tube Assy	1
11	1534417	Capscrew	2
12	164488	Clamp	1
13	1527879	Capscrew	1
14	14310	Fitting	1
15	296151	Capscrew	2
16	16134	Fitting	1
17	1527880	Capscrew	2
18	1531557	Insert	2
19	4630278	Hose Assy	1

©2014 HYSTER COMPANY

LPG FUEL GROUP KUBOTA (FIGURE 6-20)
STANDARD LOW FUEL SENSOR — SECTION 1 OF 2

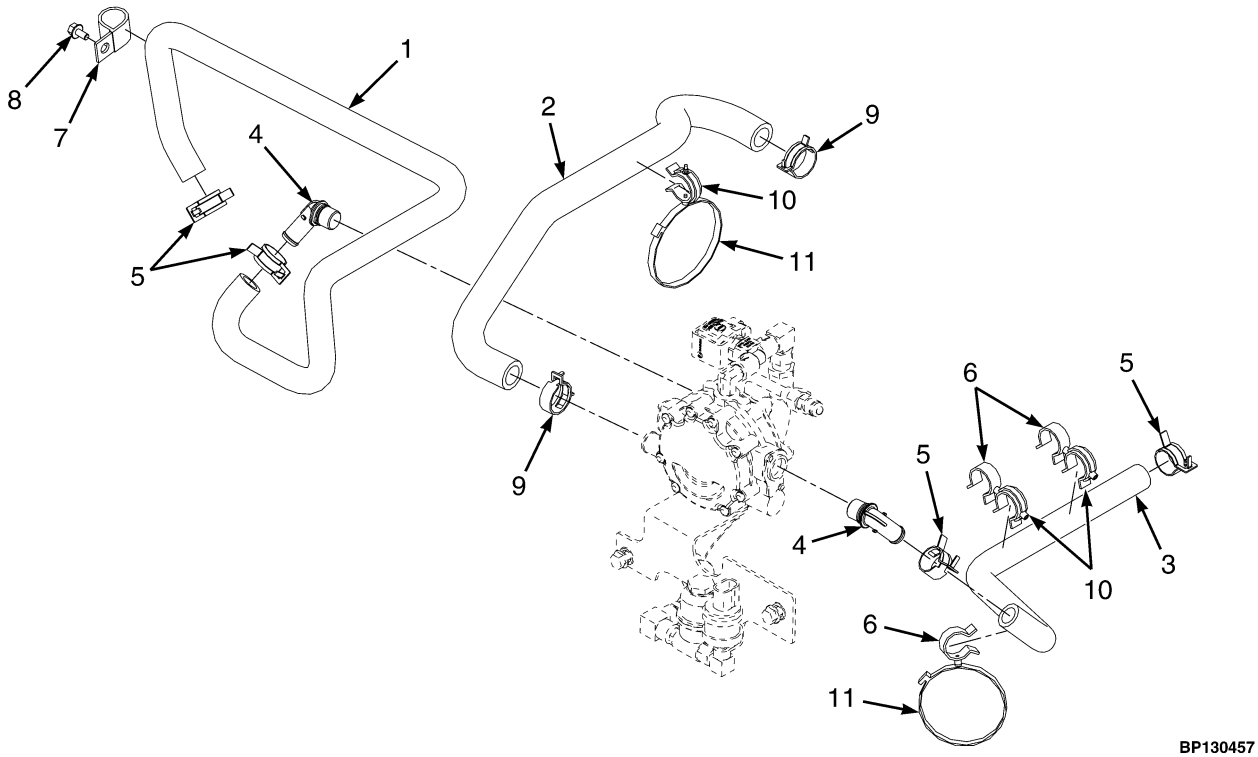

ITEM	PART NO.	DESCRIPTION	QTY
1	4625186	Hose	1
2	4628717	Hose	1
3	4625259	Hose	1
4	4064288	Elbow	2
5	1501994	Hose Clamp	4
6	1542436	Clamp (Swivel)	3
7	153069	Clamp	1
8	1534417	Capscrew	1
9	1502009	Hose Clamp	2
10	1569465	Clamp (Swivel)	3
11	1502061	Clamp	2

©2014 HYSTER COMPANY

NOTES

©2014 HYSTER COMPANY

LPG FUEL GROUP KUBOTA (FIGURE 6-21)
STANDARD LOW FUEL SENSOR — SECTION 2 OF 2

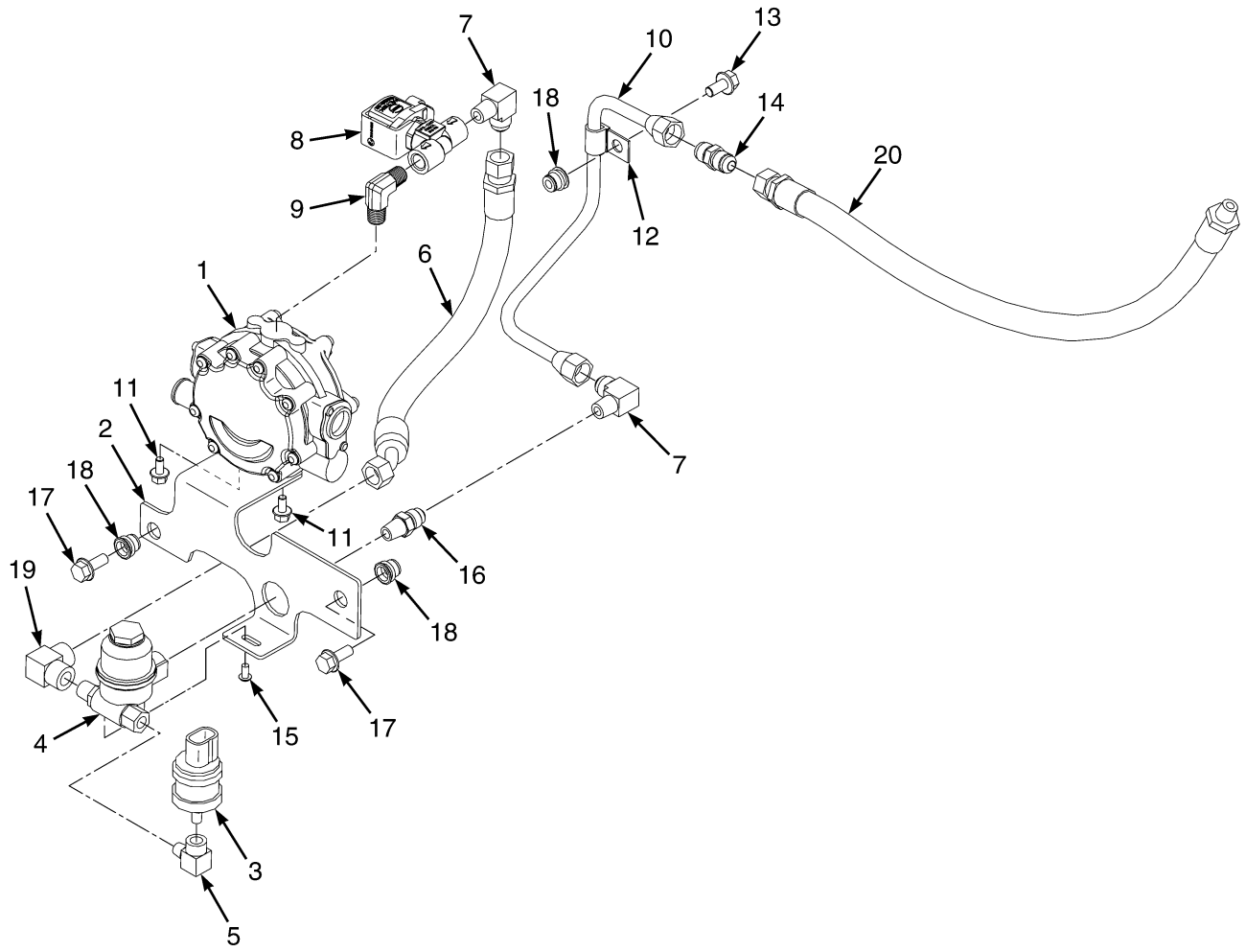

©2014 HYSTER COMPANY

LPG FUEL GROUP KUBOTA

STANDARD LOW FUEL SENSOR – SECTION 2 OF 2

ITEM	PART NO.	DESCRIPTION	QTY
1	4624999	LPG Converter	1
1	4040288	Kit-Regulator Repair	1
2	4089169	Bracket	1
3	1501970	Pressure Switch (Low Fuel)	1
4	2105803	Fuel Filter (LPG)	1
5	16151	Fitting	1
6	4631193	Hose Assy	1
7	14358	Fitting	2
8	4099352	LPG Lock-Off	1
9	4019019	Fitting	1
10	4630953	Tube Assy	1
11	1534417	Capscrew	2
12	164488	Clamp	1
13	1527879	Capscrew	1
14	14310	Fitting	1
15	296151	Capscrew	2
16	16134	Fitting	1
17	1527880	Capscrew	2
18	1531557	Insert	2
19	17350	Fitting	1
20	4630278	Hose Assy	1

©2014 HYSTER COMPANY

THROTTLE PEDAL ASSEMBLY AND ATTACHING PARTS (FIGURE 6-22)

STANDARD PEDAL

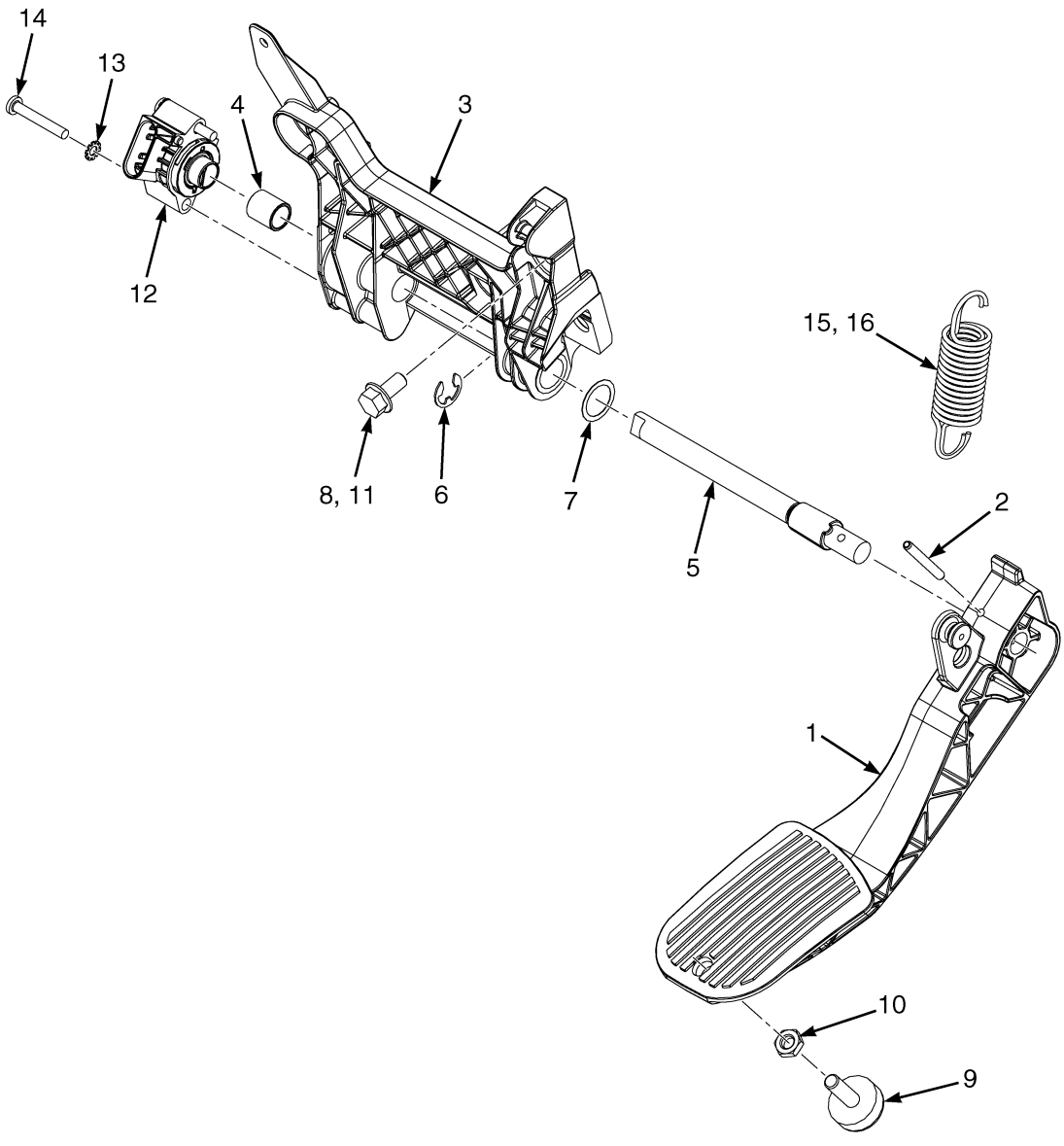

BP130362

©2014 HYSTER COMPANY

THROTTLE PEDAL ASSEMBLY AND ATTACHING PARTS
STANDARD PEDAL

ITEM	PART NO.	DESCRIPTION	QTY
1	2071181	Pedal (Standard)	1
2	302443	Roll Pin	1
3	1538488	Throttle Plate	1
3	1654411	Throttle Plate	1
3	4051924	Base Assembly (Throttle)	1
3	4615964	Molding	1
4	1524267	Bushing	1
5	1521005	Shaft	1
5	1654754	Shaft	1
6	1530971	E-Ring	1
7	1654156	Shim	AR
8	1527879	Capscrew	3
9	1530311	Screw (Stop)	1
10	329069	Nut	1
11	251099	Loctite	AR
12	2063842	Sensor (Hall Throttle Position)	1
13	296378	Washer	2
14	1564752	Capscrew	2
15	1582301	Spring (Inner)	1
16	1582300	Spring (Outer)	1

©2014 HYSTER COMPANY

THROTTLE PEDAL ASSEMBLY AND ATTACHING PARTS (FIGURE 6-23)

MONOTROL

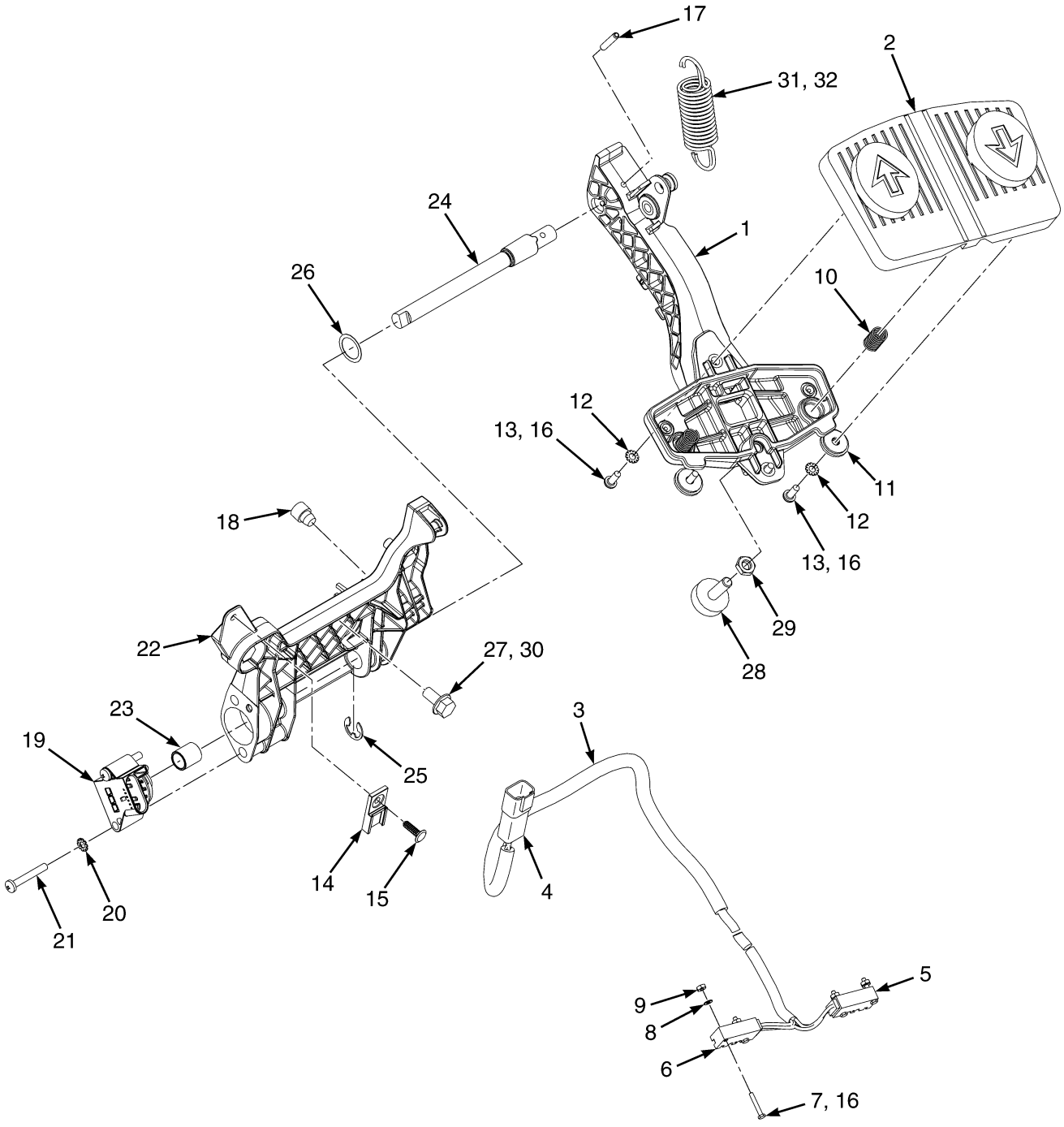

©2014 HYSTER COMPANY

THROTTLE PEDAL ASSEMBLY AND ATTACHING PARTS
MONOTROL

ITEM	PART NO.	DESCRIPTION	QTY
	4051938	**Pedal Assy (Monotrol)**	**1**
1	2074702	Pedal	1
2	1340470	Pad	1
3	~~**2072782**~~		
	4634485	**Wire Harness**	**1**
4	**. . . . .**	**Connector Assembly (To Cowl Harness)**	**1**
4	**1489655**	**Connector (4 Way)**	**1**
4	**1330416**	**Connector**	**1**
4	**1531312**	**Terminal**	**4**
5	**. . . . .**	**Switch (Reverse)**	**1**
6	**. . . . .**	**Switch (Forward)**	**1**
7	220428	Screw	4
8	53162	Lockwasher	4
9	16865	Nut	4
10	325699	Spring	2
11	4040523	Washer (Bonded)	2
12	15931	Lockwasher	2
13	16708	Screw	2
14	**1500912**	**Clip**	**1**
15	**1582464**	**Fastener**	**1**
16	360387	Loctite	AR
17	**302437**	**Roll Pin**	**1**
18	**4031769**	**Isolator (Throttle Pedal)**	**1**
19	**2063842**	**Sensor (Hall Throttle Position) (To Cowl Harness)**	**1**
20	**296378**	**Washer**	**2**
21	**1564752**	**Capscrew**	**2**
22	**4051924**	**Base Assembly (Throttle)**	**1**
22	4615964	Molding	1
23	1524267	Bushing	1
24	**1654754**	**Shaft**	**1**
25	**1530971**	**E-Ring**	**1**
26	**1654156**	**Shim**	**AR**
27	**1527879**	**Capscrew**	**3**
28	**1530311**	**Screw (Stop)**	**1**
29	**329069**	**Nut**	**1**
30	251099	Loctite	AR
31	**1582301**	**Spring (Inner)**	**1**
32	**1582300**	**Spring (Outer)**	**1**

©2014 HYSTER COMPANY

NOTES

©2014 HYSTER COMPANY

7 ELECTRICAL SYSTEM

SECTION 7
ELECTRICAL SYSTEM

DESCRIPTION	PAGE
ALTERNATOR AND MOUNTING	
YANMAR 2.6L AND 3.3L - DIESEL	7-20
BATTERY CABLES	
2.5L LPG	7-26
COWL ELECTRICAL	
ELECTRO-HYDRAULIC	7-8
MANUAL HYDRAULIC - WITH OPERATOR PRESENCE SYSTEM	7-6
ELECTRICAL SYSTEM	
RH CHASSIS	7-4
ENGINE ELECTRICAL COMPONENTS	
MAZDA 2.2L, GASOLINE AND LPG	7-10
ENGINE ELECTRICAL SYSTEM	
YANMAR DIESEL	7-14
ENGINE WIRE HARNESS AND ATTACHING PARTS	
2.5L KUBOTA LPG - SINGLE SPEED TRANSMISSION	7-18
FUEL SYSTEM SENSORS	
MAZDA 2.2L LPG	7-12
IMPACT SENSOR	7-34
INSTRUMENT CLUSTER	7-36
LIGHTS	
STOP, TAIL, TURN, BACKUP, AND STROBE - WITH CAB	7-44
STOP, TAIL, TURN, BACKUP, AND STROBE - WITH OVERHEAD GUARD	7-46
LOAD WEIGH ELECTRICAL	7-32
MAST ELECTRICAL	7-30
MINI-LEVER CONTROLS	
WITH ARMREST - THREE FUNCTION	7-38
WITH ARMREST - FOUR FUNCTION	7-40
POWER DISTRIBUTION MODULE	7-24
SEALED ALTERNATOR AND MOUNTING	
YANMAR 2.6 AND 3.3L	7-22
SEAT BELT SWITCH ADAPTER	7-42
TRANSMISSION ELECTRICAL	
SINGLE SPEED	7-28
WIRE HARNESS	
ADAPTER - LOW FUEL PRESSURE	7-120
AIR CONDITIONER	7-122
AIR CONDITIONING JUMPER	7-121
ALTERNATOR - DIESEL	7-124
ALTERNATOR TO BATTERY DISCONNECT SWITCH - KUBOTA 2.5L	7-130
COWL WITH FORWARD/REVERSE LEVER - WITHOUT RETURN TO SET TILT	7-104
COWL WITH FORWARD/REVERSE LEVER - WITH HYDRAULIC PUMP SOLENOID	7-108
COWL WITH MONOTROL PEDAL - WITH RETURN TO SET TILT	7-100
COWL WITH MONOTROL PEDAL - WITH HYDRAULIC PUMP SOLENOID	7-112
ELECTRONIC CONTROL VALVE - THREE FUNCTION	7-116
ELECTRONIC CONTROL VALVE - FOUR FUNCTION	7-118
ENGINE - YANMAR 2.6L AND 3.3L, DIESEL	7-96
LIGHTS WITH OVERHEAD GUARD	7-132
RH CHASSIS - MAZDA 2.2L	7-48
RH CHASSIS - KUBOTA 2.5L	7-60

©2014 HYSTER COMPANY

SECTION 7
ELECTRICAL SYSTEM

DESCRIPTION **PAGE**

RH CHASSIS - YANMAR 2.6L AND 3.3L, DIESEL 7-72
RH CHASSIS WITH SEAT BELT SEQUENCE MODULE - MAZDA 2.2L 7-54
RH CHASSIS WITH SEAT BELT SEQUENCE MODULE - KUBOTA 2.5L LPG 7-66
RH CHASSIS WITH SEAT BELT SEQUENCE MODULE - YANMAR 2.6L AND 3.3L, DIESEL 7-78
SEALED ALTERNATOR - YANMAR 2.6L AND 3.3L, DIESEL 7-126
TRANSMISSION - SINGLE SPEED 7-128
WIRE HARNESS (ENGINE)
KUBOTA 2.5L LPG 7-92
MAZDA 2.2L LPG 7-88
MAZDA 2.2L, GASOLINE 7-84

©2014 HYSTER COMPANY

NOTES

©2014 HYSTER COMPANY

ELECTRICAL SYSTEM (FIGURE 7-1)
RH CHASSIS

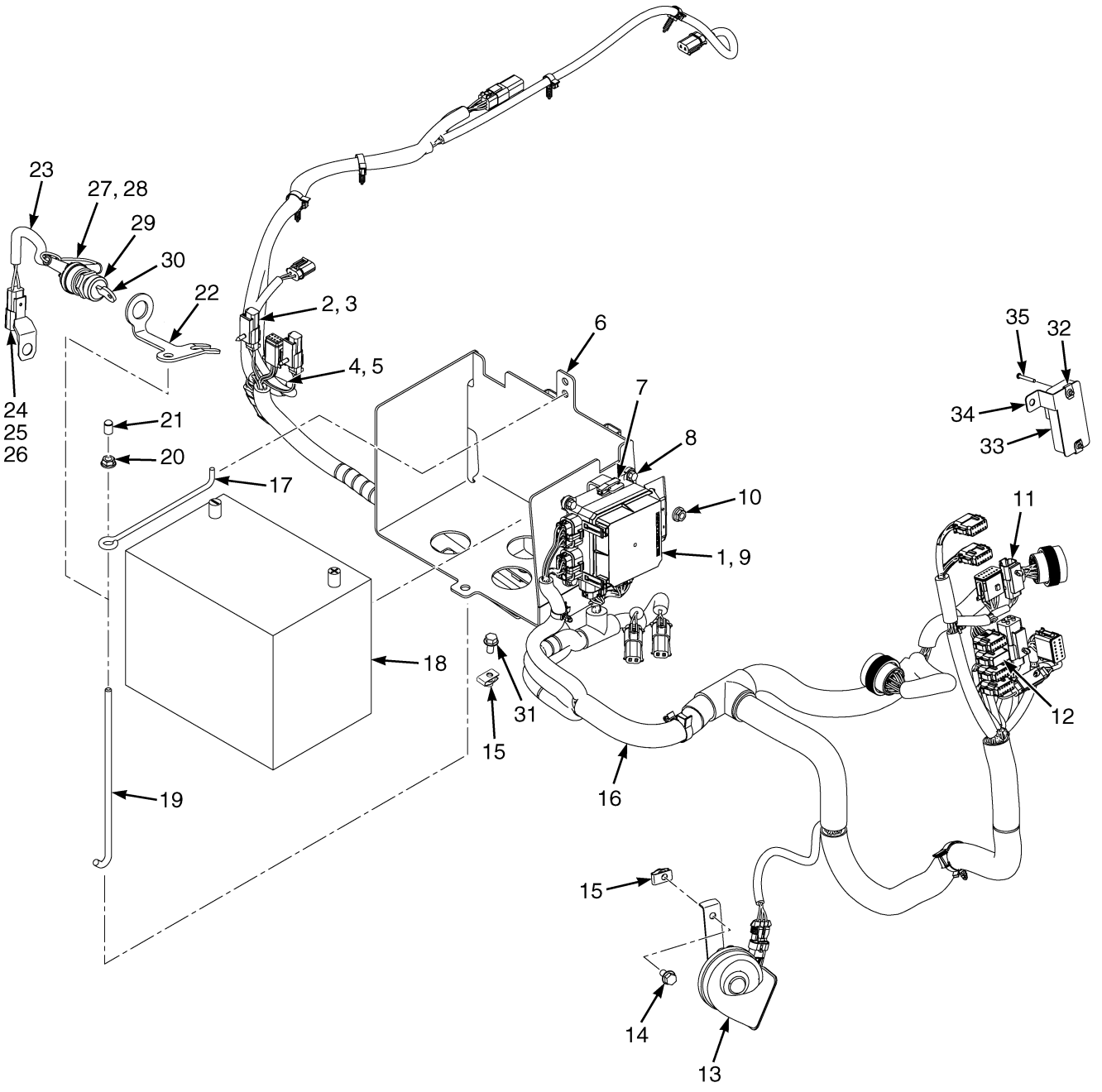

BP081740

©2014 HYSTER COMPANY

ELECTRICAL SYSTEM
RH CHASSIS

ITEM	PART NO.	DESCRIPTION	QTY
1	**2090613**	**Fuse Box (PDM) (☞Figure 7-10)**	**1**
2	**1582464**	**Fastener**	**6**
3	1582442	Clip	1
4	**1617080**	**Bracket (Hood Switch)**	**1**
5	**1529366**	**Capscrew**	**1**
6	**2090661**	**Battery Tray (Plastic)**	**1**
7	**1402883**	**Fuse Puller**	**1**
8	**1534417**	**Capscrew**	**4**
9	**1559928**	**Seal**	**1**
10	**1502543**	**Nut (Flange)**	**1**
11	**1500912**	**Clip**	**6**
12	**a** 1593331	Connector	1
13	**4077726**	**Horn (Electronic)**	**1**
14	**1527879**	**Capscrew**	**4**
15	**1480237**	**Nut**	**4**
16	4620357	Wire Harness (Chassis) (Mazda 2.2L) (☞Figure 7-22)	1
16	4630231	Wire Harness (Chassis) (Kubota 2.5L) (☞Figure 7-24)	1
16	**4629784**	**Wire Harness (Chassis) (Yanmar 2.6L, 3.3L) (☞Figure 7-26)**	**1**
16	**b** 4635221	Wire Harness (Chassis) (Mazda 2.2L) (☞Figure 7-23)	1
16	**b** 4635258	Wire Harness (Chassis) (Kubota 2.5L) (☞Figure 7-25)	1
16	**b** 4635288	Wire Harness (Chassis) (Yanmar 2.6L, 3.3L) (☞Figure 7-27)	1
17	**1641368**	**Link (Battery Hold Down)**	**1**
18	1383331	Start Battery Wet (GAS/LPG)	1
18	**1643936**	**Start Battery Wet (Diesel)**	**1**
19	**2065745**	**Link (Battery Hold Down)**	**1**
20	**1502543**	**Nut (Flange)**	**1**
20	**296380**	**Washer (Use above item 17)**	**1**
21	**1540805**	**Cap**	**1**
22	1582337	Bracket	1
23	2058110	Wire Harness (Remote Keyswitch)	1
24	1493465	Connector (2 Pin)	1
25	**1330414**	**Connector (Secondary Lock)**	**2**
26	**1330437**	**Terminal (Pin)**	**2**
27	1497433	Ring Terminal	2
28	190383	Boot	2
29	2058111	Ignition Switch	1
30	262798	Key Set	1
31	**1527880**	**Capscrew**	**3**
32	**1537551**	**Nut (Clip)**	**2**
33	4634955	Control Module (Seat Belt Sequence)	1
34	4102512	Bracket	1
35	1672692	Screw	1

FOOTNOTES:

a For Use With Kubota And Mazda Engines Only

b With Seat Belt Sequence Module

©2014 HYSTER COMPANY

COWL ELECTRICAL (FIGURE 7-2)
MANUAL HYDRAULIC — WITH OPERATOR PRESENCE SYSTEM

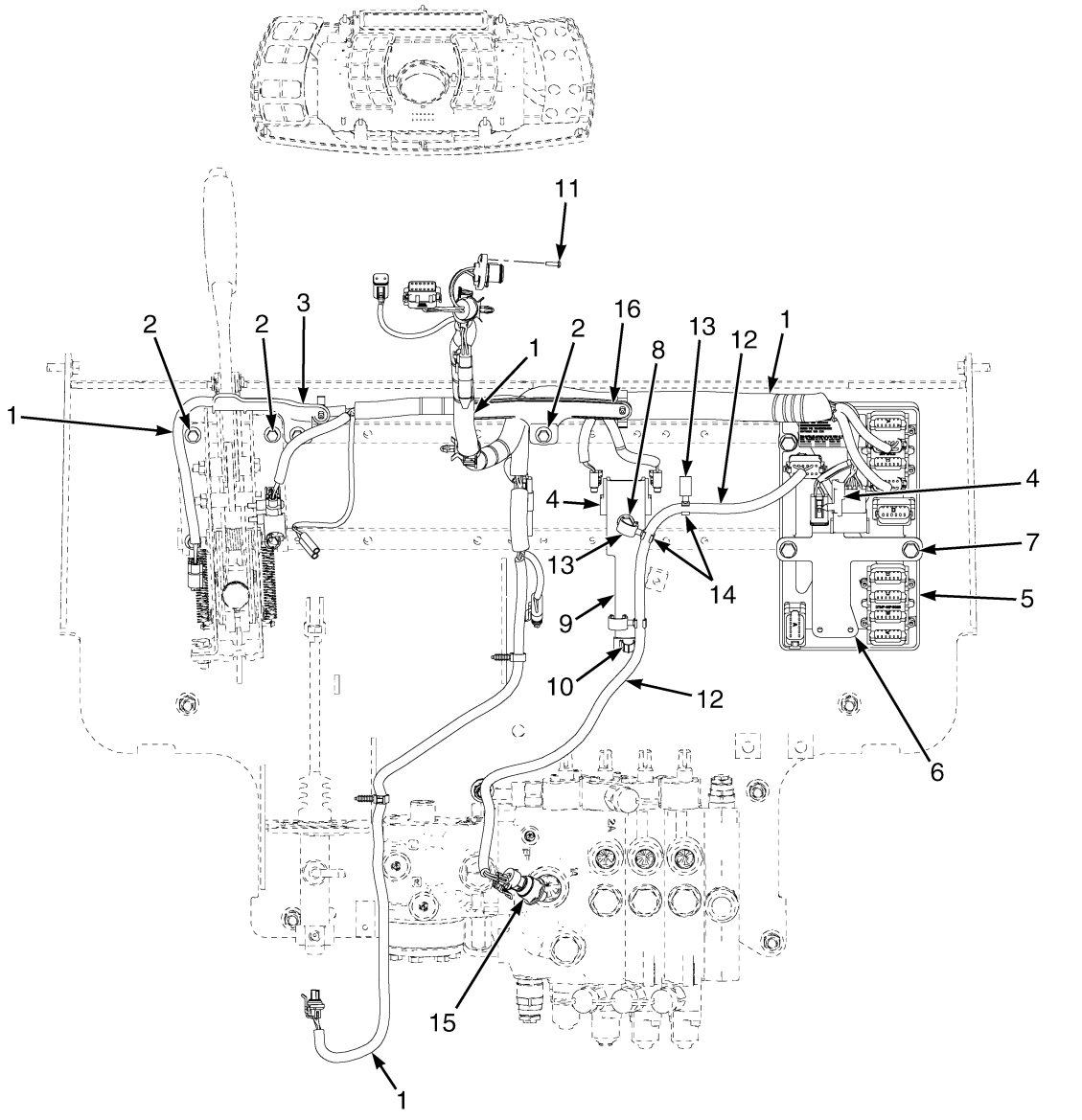

©2014 HYSTER COMPANY

COWL ELECTRICAL

MANUAL HYDRAULIC – WITH OPERATOR PRESENCE SYSTEM

ITEM	PART NO.	DESCRIPTION	QTY
1	**4603281**	**Wire Harness (Cowl with Monotrol Pedal) (☞Figure 7-35)**	**1**
1	4603282	Wire Harness (Cowl with Forward/Reverse Lever) (☞Figure 7-34)	1
2	**4011940**	**Capscrew**	**2**
3	**2111004**	**Bracket (Left Hand)**	**1**
4	**1500912**	**Clip (With Monotrol)**	**4**
4	**1500912**	**Clip (Without Forward/Reverse Lever)**	**3**
4	**1582464**	**Fastener (With Monotrol)**	**4**
4	**1582464**	**Fastener (Without Forward/Reverse Lever)**	**3**
5	**b** 2068342	Vehicle System Manager (VSM) (w/ Manual Hydraulics)	1
5	**a 2068344**	**Vehicle System Manager (VSM) (w/ Cab and Manual or Electro-Hydraulics)**	**1**
6	**1582465**	**Bracket**	**1**
7	**1510115**	**Capscrew**	**3**
8	**1528482**	**Capscrew**	**1**
8	**1398062**	**Nut (Fold Over)**	**1**
9	**1684542**	**Bracket**	**1**
10	**1562088**	**Clip**	**2**
11	**1554902**	**Screw**	**2**
12	2079326	Wire Harness (Load Weigh)	1
13	1606544	Clamp	3
14	1573549	Clamp	3
15	1606735	Sensor (Load Sensing)	1
16	**2111005**	**Bracket (Right Hand)**	**1**

FOOTNOTES:

a With Cab

b With Overhead Guard

©2014 HYSTER COMPANY

COWL ELECTRICAL (FIGURE 7-3)
ELECTRO-HYDRAULIC

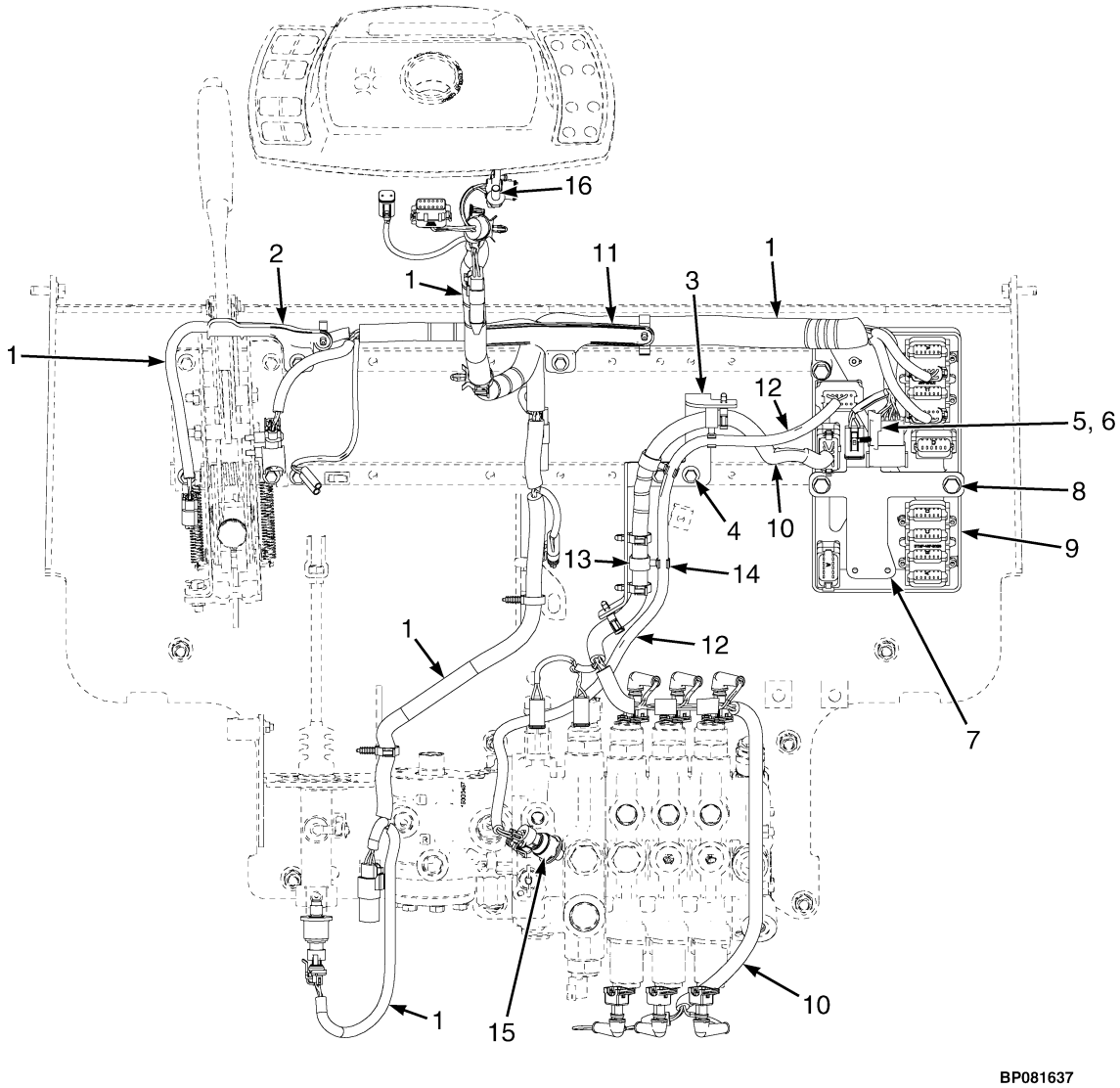

©2014 HYSTER COMPANY

ITEM	PART NO.	DESCRIPTION	QTY
1	4603283	Wire Harness (Cowl With Monotrol Pedal) (☞Figure 7-32)	1
1	4603280	Wire Harness (Cowl with Forward Reverse) (☞Figure 7-33)	1
2	**2111004**	**Bracket (Left Hand)**	**1**
3	1531975	Bracket	1
4	**4011940**	**Capscrew**	**2**
5	**1500912**	**Clip**	**3**
6	**1582464**	**Fastener**	**3**
7	**1582465**	**Bracket**	**1**
8	**1510115**	**Capscrew**	**3**
9	**d** 2068343	Vehicle System Manager (VSM) (w/ Electro-Hydraulics)	1
9	**c 2068344**	**Vehicle System Manager (VSM) (w/ Cab and Manual or Electro-Hydraulics)**	**1**
10	**a** 2058909	Wire Harness (Control Valve) (Four Function) (☞Figure 7-37)	1
10	**b** 2060198	Wire Harness (Control Valve) (Three Function) (☞Figure 7-36)	1
11	**2111005**	**Bracket (Right Hand)**	**1**
12	2079326	Wire Harness (Load Weigh)	1
13	1606544	Clamp	3
14	1573549	Clamp	3
15	1606735	Sensor (Load Sensing)	1
16	**1554902**	**Screw**	**2**

FOOTNOTES:

a Four Function
b Three Function
c With Cab
d With Overhead Guard

©2014 HYSTER COMPANY

ENGINE ELECTRICAL COMPONENTS (FIGURE 7-4)
MAZDA 2.2L, GASOLINE AND LPG

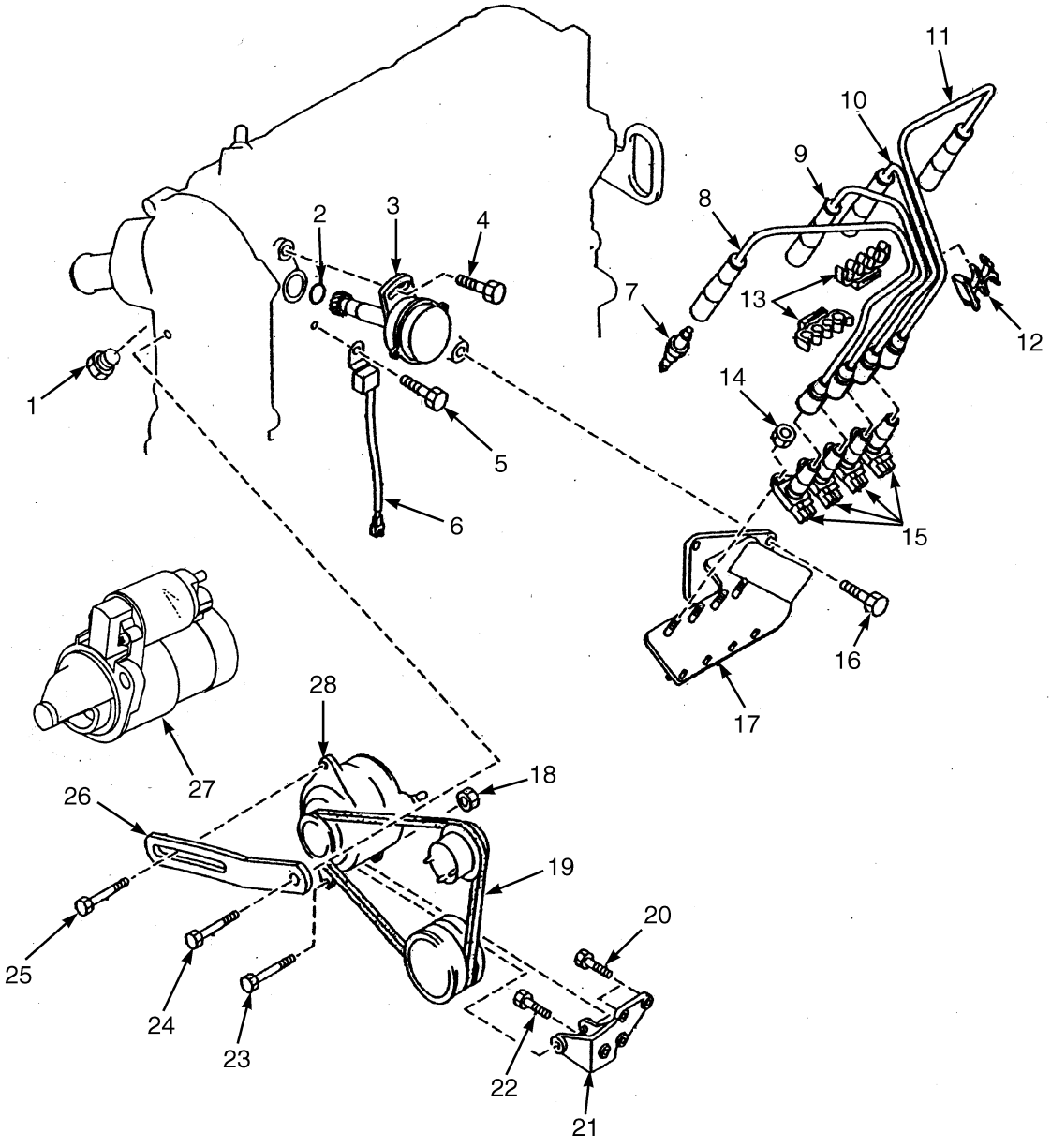

BP080563

©2014 HYSTER COMPANY

ENGINE ELECTRICAL COMPONENTS
MAZDA 2.2L, GASOLINE AND LPG

ITEM	PART NO.	DESCRIPTION	QTY
1	1553708	Plug	1
2	326850	O-Ring	1
3	1652471	Camshaft Position Sensor	1
4	1361895	Bolt	1
5	1361898	Bolt	1
6	1652473	Condenser	1
7	1361837	Spark Plug	4
8	1652467	Ignition Cable	1
9	1652468	Ignition Cable	1
10	1652469	Ignition Cable	1
11	1652470	Ignition Cable	1
12	1652462	Support (Spark Plug Wires)	1
13	1652461	Support (Spark Plug Wires)	2
14	2066629	Nut	1
15	1652458	Ignition Coil	4
16	1652457	Bolt	2
17	1652459	Bracket (Ignition Coil)	1
18	1361890	Nut	1
19	1495412	V-Belt	1
20	1361891	Bolt	3
21	1361846	Bracket	1
22	1361888	Bolt	1
23	1368844	Bolt	1
24	1361881	Bolt	1
25	326898	Bolt	1
26	1361845	Strap	1
27	1534424	Starter	1
28	1450928	Alternator (G And LP)	1
28	1361861	Pulley	1
28	1394001	Alternator (Sealed) (GS And LPS)	1
	a 1527884	Capscrew (Starter Mounting)	2
	1652460	Kit-Ignition Cable (Includes Items 8-11, 30)	1

FOOTNOTES:

a Not Illustrated

©2014 HYSTER COMPANY

FUEL SYSTEM SENSORS (FIGURE 7-5)

MAZDA 2.2L LPG

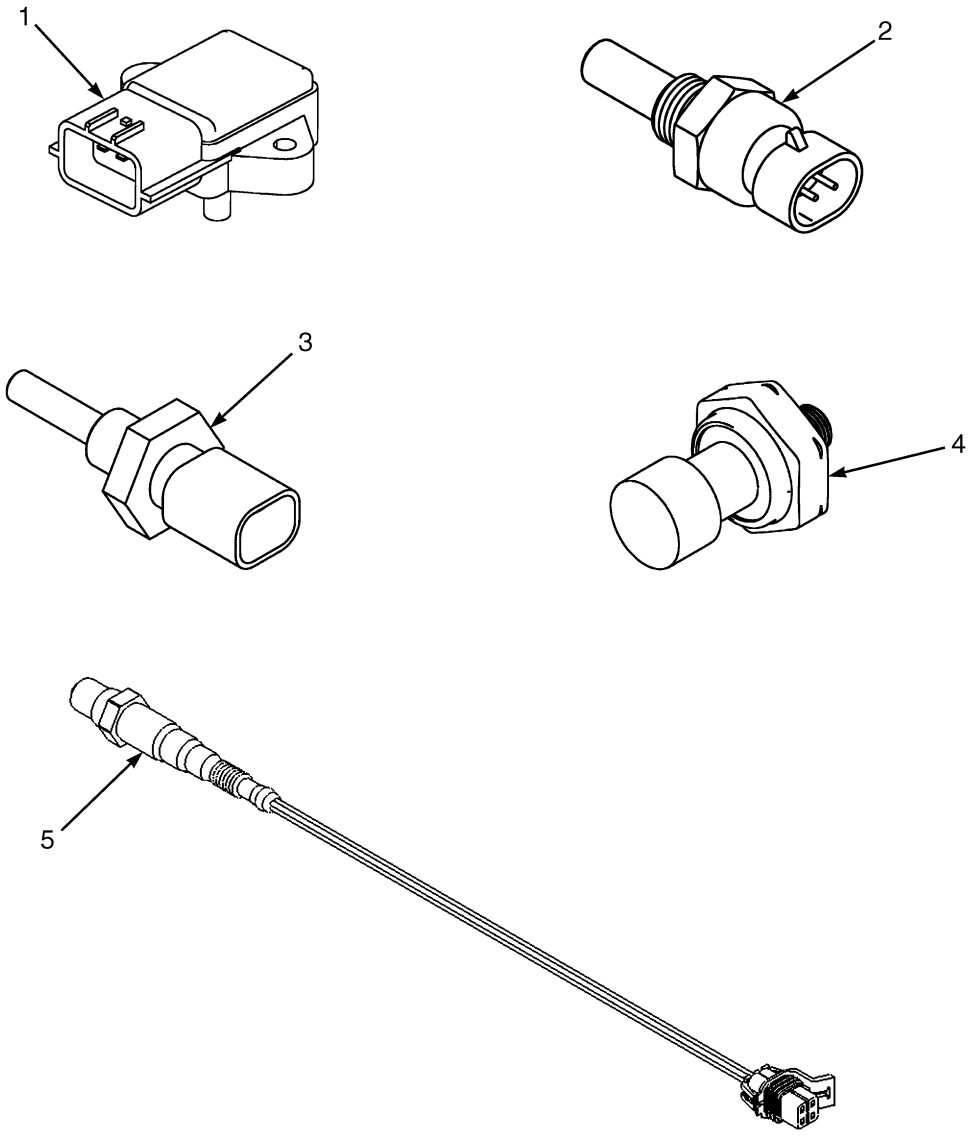

BP080544

ITEM	PART NO.	DESCRIPTION	QTY
1	1548352	Sensor (Boost, M.A.P.) (Boost)	1
2	1539962	Sensor (Air Temperature)	1
3	**1515654**	**Temperature Sensor**	**1**
3	4001804	Sensor (Temperature)	1
4	4016652	Pressure Transducer	1
5	1646456	Sensor (Oxygen)	2

©2014 HYSTER COMPANY

NOTES

©2014 HYSTER COMPANY

ENGINE ELECTRICAL SYSTEM (FIGURE 7-6)
YANMAR DIESEL

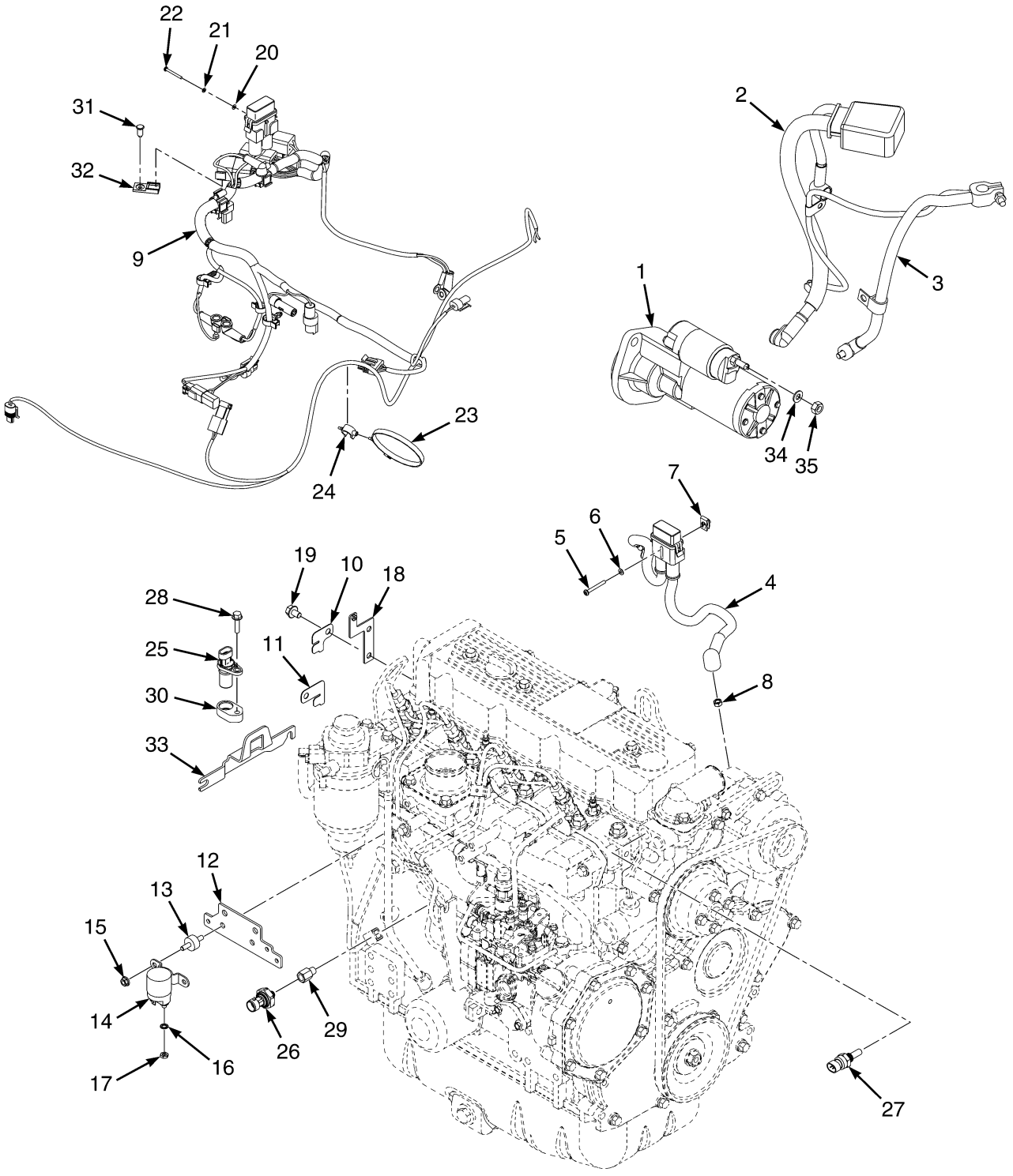

HP081653

©2014 HYSTER COMPANY

ENGINE ELECTRICAL SYSTEM
YANMAR DIESEL

ITEM	PART NO.	DESCRIPTION	QTY
1	1599845	Starter Assembly	1
1	**. . . . .**	**Armature Assembly**	**1**
1	1599847	Ball Bearing	1
1	1599848	Ball Bearing	1
1	**. . . . .**	**Coil Assembly**	**1**
1	1599850	Screw	1
1	1599851	Brush	2
1	**. . . . .**	**Holder Assembly**	**1**
1	1599851	Brush	2
1	1599853	Brush Spring	4
1	1599855	Magnetic Switch	1
1	**. . . . .**	**Gear Case Assembly**	**1**
1	1599860	Pinion (Assembly)	1
1	1599861	Shaft	1
1	1599862	Stopper Kit	1
1	1599863	Clutch	1
1	1599864	Ball Bearing	1
1	1599865	Ball Bearing	1
1	1599866	Retainer	1
1	1599867	Housing	1
2	**2107181**	**Battery Cable (Positive)**	**1**
2	**1357268**	**Battery Cable (Red)**	**1**
2	**1357535**	**Wire (Bulk) (Red)**	**1**
2	**148792**	**Terminal**	**1**
2	**16079**	**Terminal**	**1**
2	**806426**	**E-Ring**	**1**
2	**1536304**	**Boot**	**1**
2	**204223**	**Boot**	**1**
2	**1566146**	**Boot**	**1**
3	**2069226**	**Battery Cable (Negative)**	**1**
3	**16078**	**Battery Cable**	**1**
3	**1357533**	**Wire-Bulk (Black)**	**1**
3	**148789**	**Terminal**	**1**
3	**16079**	**Terminal**	**1**
3	**1564044**	**E-Ring**	**1**
3	**128408**	**Clamp**	**1**
3	**806426**	**E-Ring**	**1**
4	**2065098**	**Wire Harness (Alternator) (☞Figure 7-41)**	**1**
5	**302027**	**Screw**	**1**
6	**320154**	**Washer**	**1**
7	**1537551**	**Nut (Clip)**	**1**
8	**136687**	**Nut**	**1**
9	**2087191**	**Wire Harness (Powertrain Yanmar) (☞Figure 7-31)**	**1**
10	1532761	Clip	1
11	**1532759**	**Clip**	**1**
12	**1582151**	**Bracket (Glow Plug Relay)**	**1**
13	**1527562**	**Rubber Mount**	**2**
14	**1454967**	**Relay (Fuel Lift Pump, Starter Solenoid and Glow Plug)**	**1**
15	**1514429**	**Nut**	**2**
16	**296379**	**Washer**	**2**

©2014 HYSTER COMPANY

ENGINE ELECTRICAL SYSTEM
YANMAR DIESEL

ITEM	PART NO.	DESCRIPTION	QTY
17	1560678	Nut	2
18	1582150	Bracket (Glow Plug Fuse)	1
19	1529366	Capscrew	4
20	320152	Washer	1
21	292676	Lockwasher	1
22	302015	Screw	1
23	1502061	Clamp (Swivel)	1
24	1542439	Clamp (Swivel)	1
25	1541231	Sensor (Input Speed, TISS)	1
26	1566654	Pressure Transducer Sensor (Oil Pressure)	1
27	1515654	Temperature Sensor	1
28	1527878	Capscrew	1
29	367224	Adapter	1
30	1591454	Bracket (Speed Sensor)	1
31	1582464	Fastener	3
32	1500912	Clip	3
33	1594055	Bracket	1
34	296380	Washer	2
35	1502543	Nut (Flange)	1

©2014 HYSTER COMPANY

NOTES

©2014 HYSTER COMPANY

ENGINE WIRE HARNESS AND ATTACHING PARTS (FIGURE 7-7)

2.5L KUBOTA LPG — SINGLE SPEED TRANSMISSION

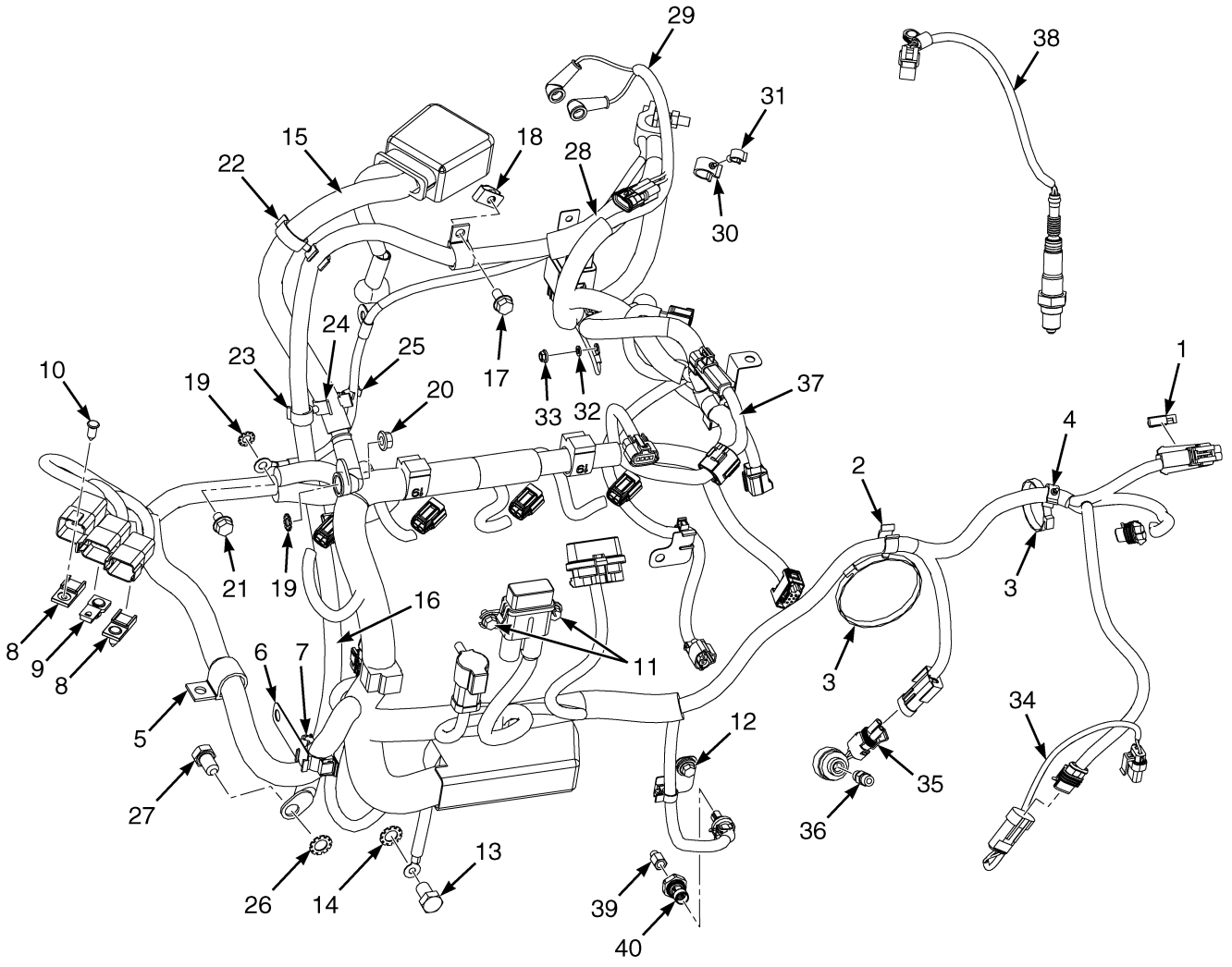

BP081690

©2014 HYSTER COMPANY

ENGINE WIRE HARNESS AND ATTACHING PARTS
2.5L KUBOTA LPG – SINGLE SPEED TRANSMISSION

ITEM	PART NO.	DESCRIPTION	QTY
1	1520513	Clip	1
2	1502059	Clamp (Swivel)	1
3	1502061	Clamp	2
4	1542439	Clamp (Swivel)	1
5	153069	Clamp	1
6	1570327	Bracket	1
7	1532777	Clip	1
8	1500912	Clip	1
9	1531480	Clip	1
10	1582464	Fastener	3
11	1534417	Capscrew	3
12	1476421	Washer	2
13	4034828	Capscrew	1
14	296382	Washer	1
15	4634489	Battery Cable (Positive)	1
15	4634490	Battery Cable (Positive) (LPS)	1
16	4628917	Battery Cable (Negative)	1
17	1527879	Capscrew	1
18	1480237	Nut	1
19	296380	Washer	2
20	1502543	Nut (Flange)	1
21	1529366	Capscrew	1
22	1542436	Clamp (Swivel)	1
23	1543698	Clamp (Swivel)	1
24	4078947	Clamp	1
25	1542440	Clamp (Swivel)	1
26	296382	Washer	1
27	4034828	Capscrew	1
28	4099378	Wrap	1
29	4629051	Wire Harness (Alternator) (☞Figure 7-44)	1
30	1543698	Clamp (Swivel)	1
31	1561871	Clamp (Swivel)	1
32	292679	Washer	1
33	1565407	Nut	1
34	4602843	Wire Harness (Adapter) (☞Figure 7-38)	1
35	1529257	Sensor (Air Flow Restriction)	1
36	16150	Fitting	1
37	4629050	Wire Harness (Engine) (LPG) (☞Figure 7-30)	1
38	4104893	Sensor (O2)	1
39	367224	Adapter	1
40	1566654	Pressure Transducer Sensor (Oil Pressure)	1

©2014 HYSTER COMPANY

ALTERNATOR AND MOUNTING (FIGURE 7-8)

YANMAR 2.6L AND 3.3L — DIESEL

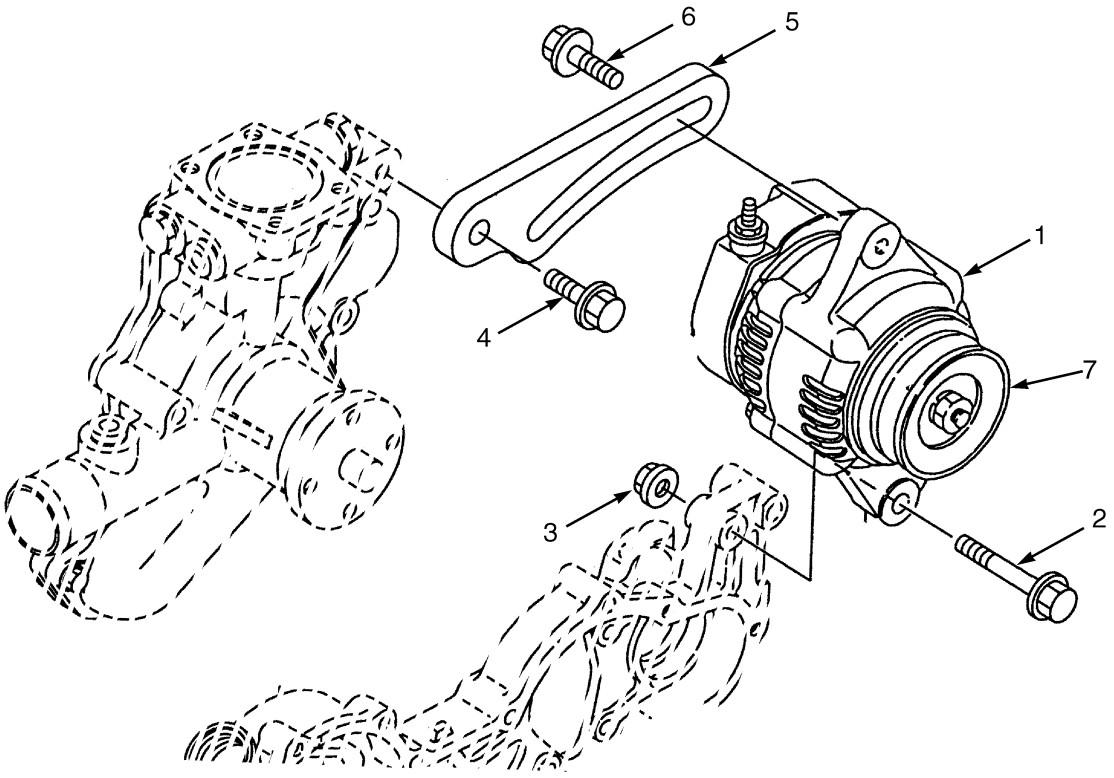

BP080337

ITEM	PART NO.	DESCRIPTION	QTY
1	1599869	Alternator	1
1	1599873	Ball Bearing	1
1	1599874	Plate	1
1	1599875	Screw	4
1	1599876	Stud	2
1	1599877	Rotator Assembly	1
1	1599878	Ball Bearing	1
1	1599879	Cover	1
2	1599893	Bolt	1
3	1599894	Nut	1
4	1599897	Bolt	1
5	1599895	Bracket	1
6	1599896	Bolt	1
7	1599870	Pulley	1

©2014 HYSTER COMPANY

NOTES

©2014 HYSTER COMPANY

SEALED ALTERNATOR AND MOUNTING (FIGURE 7-9)

YANMAR 2.6 AND 3.3L

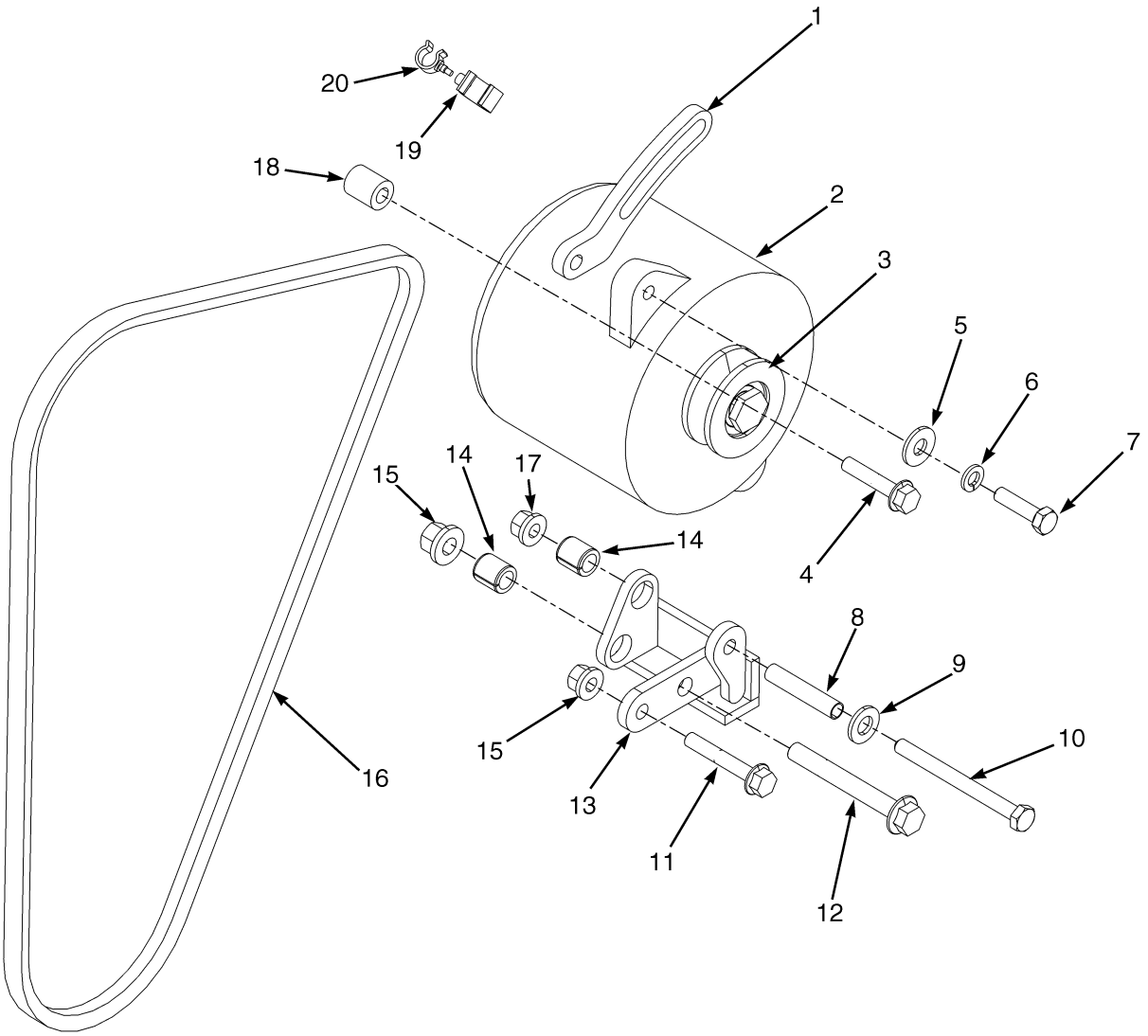

BP080422

©2014 HYSTER COMPANY

SEALED ALTERNATOR AND MOUNTING
YANMAR 2.6 AND 3.3L

ITEM	PART NO.	DESCRIPTION	QTY
1	1608865	Strap (Alternator)	1
2	1598645	Alternator (Sealed)	1
3	1608928	Pulley	1
4	1510114	Capscrew	1
5	15175	Lockwasher	1
6	15155	Lockwasher	1
7	18498	Capscrew	1
8	1537422	Spacer	1
9	320159	Washer	1
10	346656	Capscrew	1
11	1510116	Capscrew	1
12	1617600	Capscrew	1
13	1617614	Bracket Wldmt	1
14	1345014	Sleeve	2
15	1544153	Locknut	2
16	2080581	V-Belt	1
17	1544154	Flange Locknut	1
18	1615860	Spacer	1
19	1606544	Clamp	1
20	1573549	Clamp	1

©2014 HYSTER COMPANY

POWER DISTRIBUTION MODULE (FIGURE 7-10)

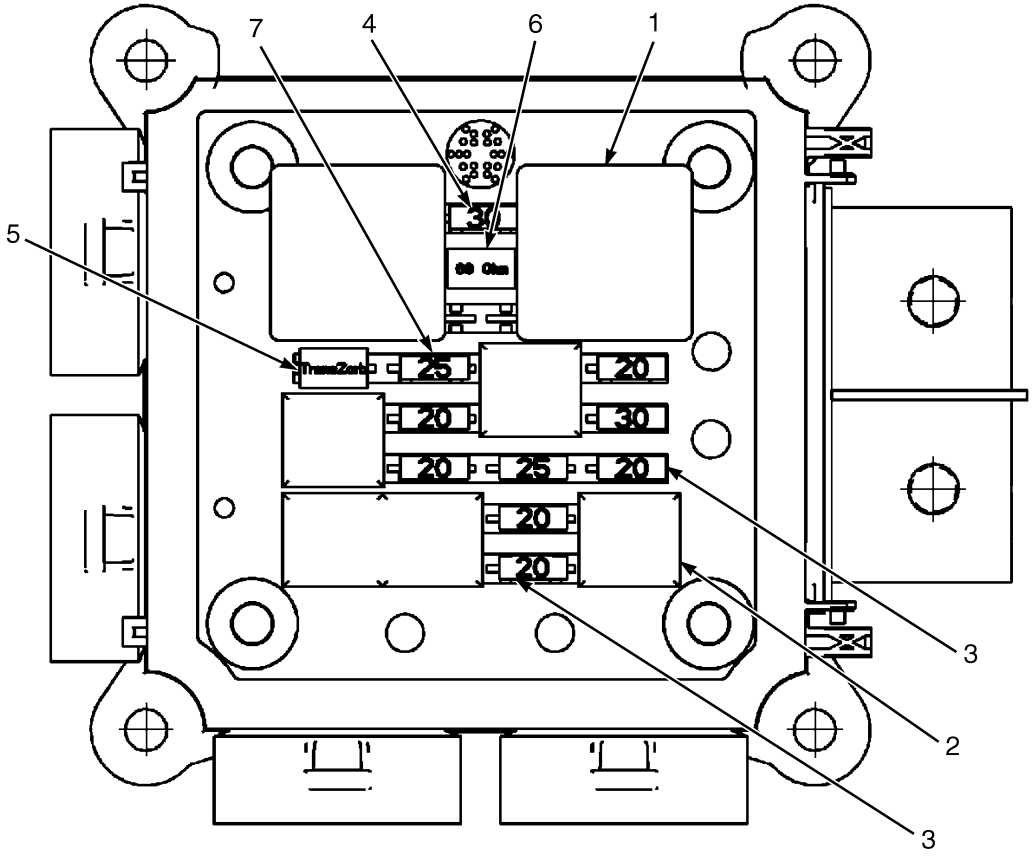

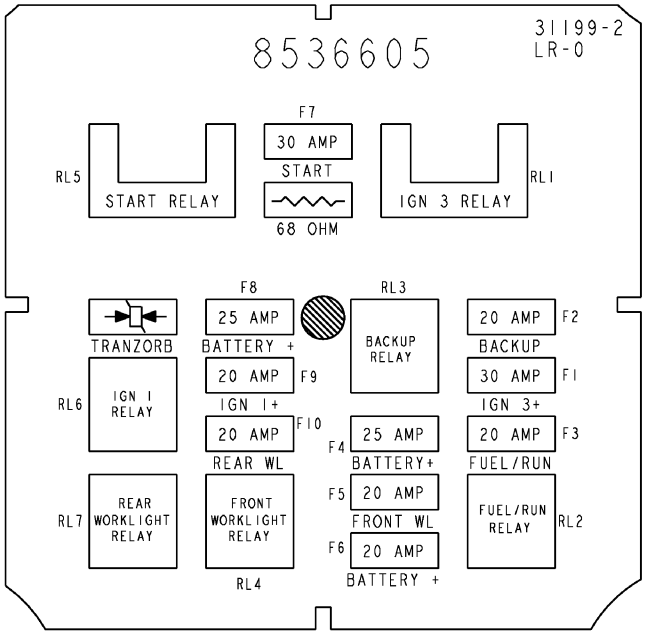

BP080485

©2014 HYSTER COMPANY

POWER DISTRIBUTION MODULE

ITEM	PART NO.	DESCRIPTION	QTY
	2090613	**Fuse Box (PDM)**	**1**
1	**2044712**	**Relay (30 Amp)**	**2**
2	1528315	Relay (20 Amp)	5
3	1528132	Fuse (20 Amp)	6
4	1528133	Fuse (30 Amp)	2
5	1528630	Semiconductor	1
6	1528631	Resistor (68 Ohm, 5 Watt)	1
7	1544255	Fuse (25 Amp)	2
	a 4046933	**Fuse Box Cover**	**1**

FOOTNOTES:

a Not Illustrated

©2014 HYSTER COMPANY

BATTERY CABLES (FIGURE 7-11)
2.5L LPG

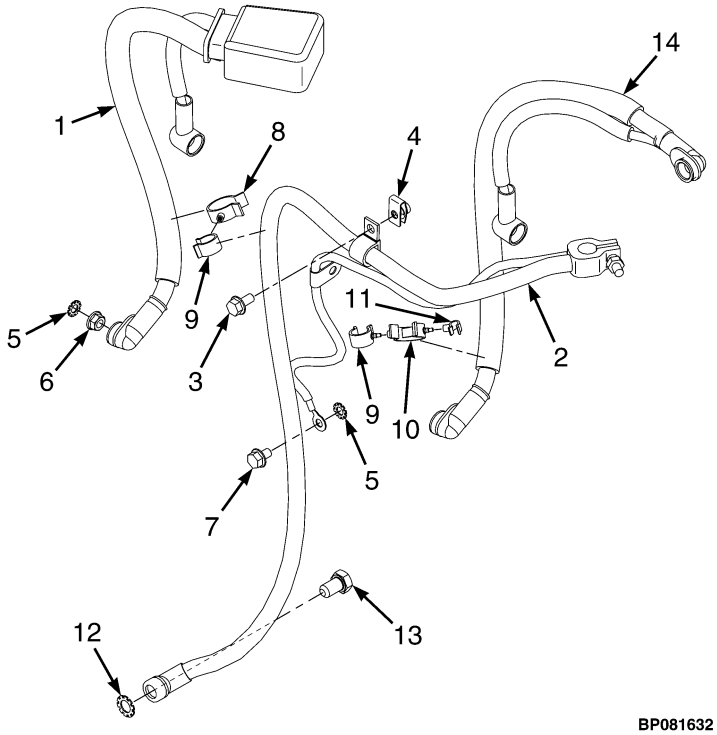

BP081632

ITEM	PART NO.	DESCRIPTION	QTY
1	4634489	Battery Cable (Positive)	1
2	4628917	Battery Cable (Negative)	1
3	1527879	Capscrew	1
4	1480237	Nut	1
5	296380	Washer	2
6	1502543	Nut (Flange)	1
7	1529366	Capscrew	1
8	1542436	Clamp (Swivel)	1
9	1543698	Clamp (Swivel)	1
10	4078947	Clamp	1
11	1542440	Clamp (Swivel)	1
12	296382	Washer	1
13	4034828	Capscrew	1
14	**a** 4634490	Battery Cable (Positive) (LPS)	1

FOOTNOTES:

a Used on Lift Trucks Equipped with LPS

©2014 HYSTER COMPANY

NOTES

©2014 HYSTER COMPANY

TRANSMISSION ELECTRICAL (FIGURE 7-12)
SINGLE SPEED

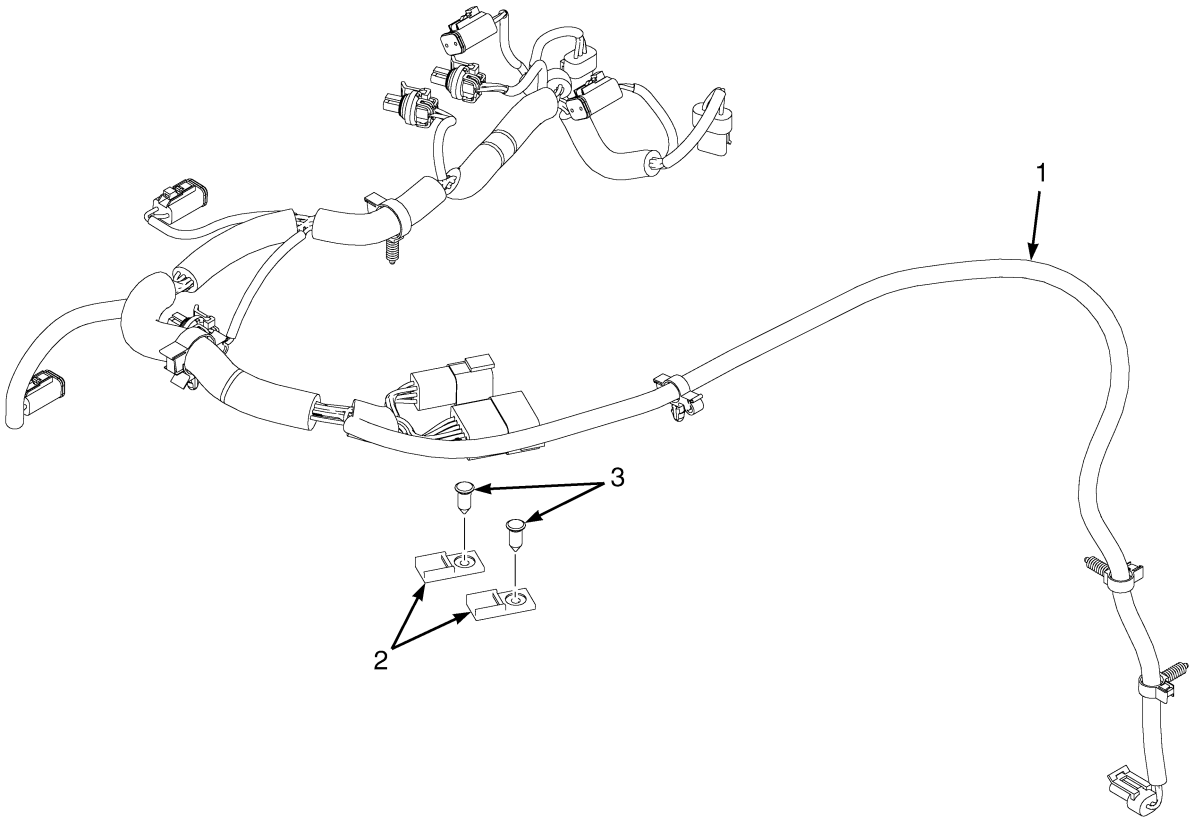

BP081633

©2014 HYSTER COMPANY

TRANSMISSION ELECTRICAL
SINGLE SPEED

ITEM	PART NO.	DESCRIPTION	QTY
1	2105959	Wire Harness (Transmission) (☞Figure 7-43)	1
2	1500912	Clip	2
3	1582464	Fastener	2

©2014 HYSTER COMPANY

MAST ELECTRICAL (FIGURE 7-13)

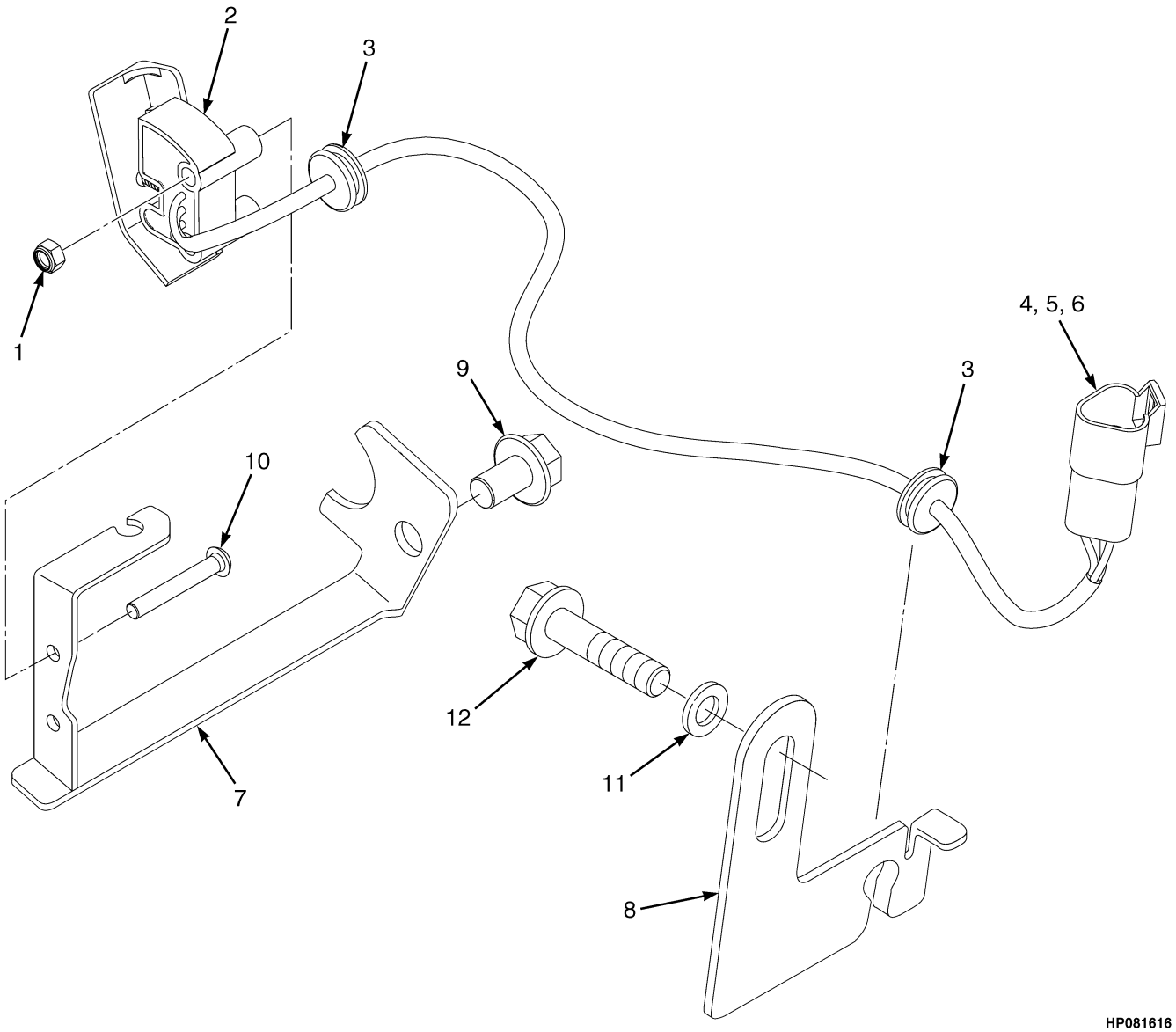

ITEM	PART NO.	DESCRIPTION	QTY
1	302398	Locknut	2
2	1589621	Sensor (Mast Position)	1
3	98644	Grommet	2
4	1493466	Connector	1
5	1330415	Connector	1
6	1330437	Terminal (Pin)	3
7	1592071	Bracket Wldmt	1
8	1595731	Bracket	1
9	1615163	Capscrew	1
10	1553897	Capscrew	2
11	1626478	Washer	1
12	1658075	Capscrew	1

©2014 HYSTER COMPANY

NOTES

©2014 HYSTER COMPANY

LOAD WEIGH ELECTRICAL (FIGURE 7-14)

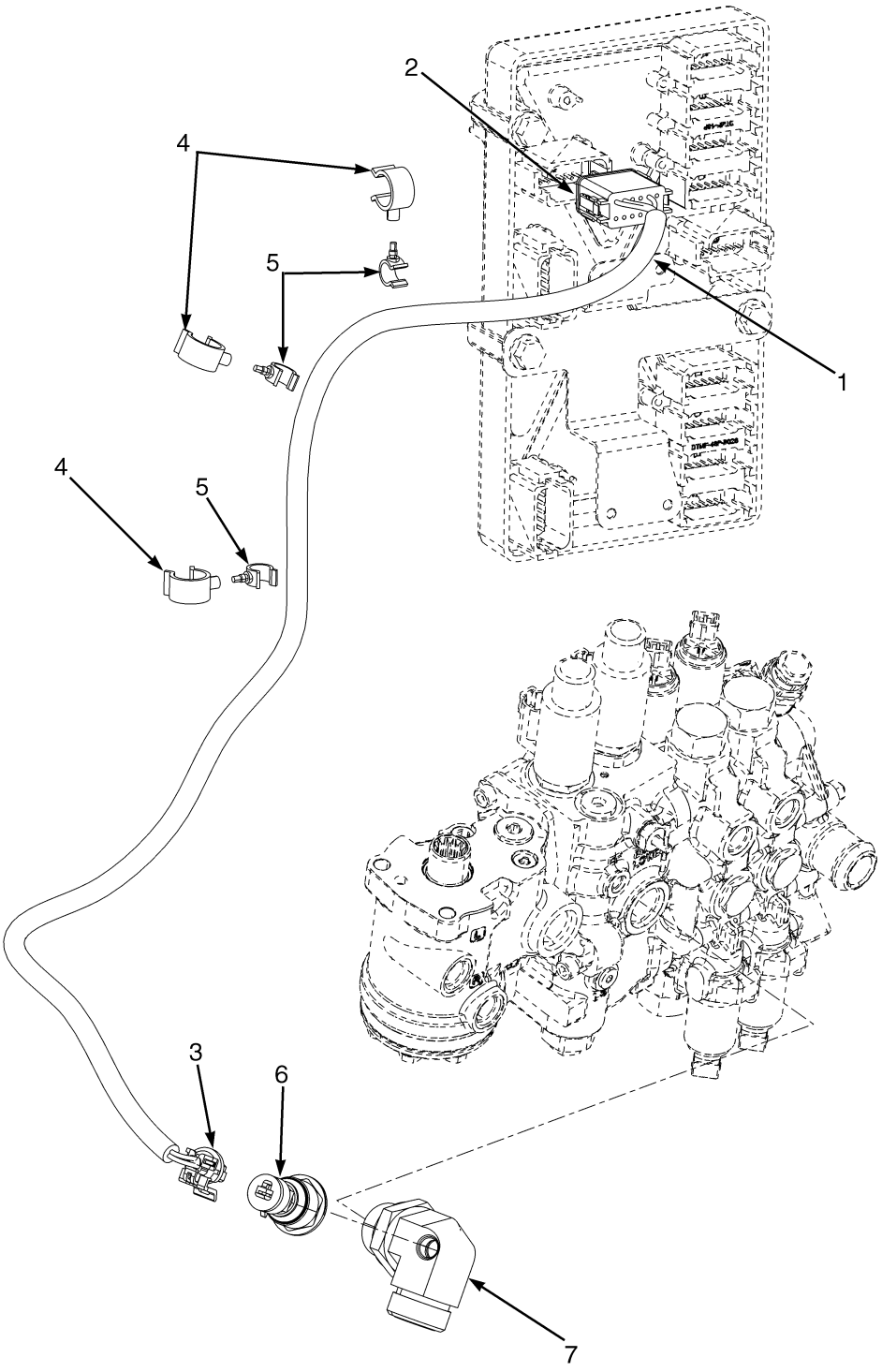

©2014 HYSTER COMPANY

LOAD WEIGH ELECTRICAL

ITEM	PART NO.	DESCRIPTION	QTY
1	2079326	Wire Harness (Load Weigh)	1
2	1525565	Connector	1
2	1500913	Connector	1
2	1330438	Terminal (Socket)	3
2	1484377	Plug	9
3	1603021	Connector	1
3	1603236	Connector (Secondary Lock)	1
3	1548517	Terminal (Socket)	3
3	1548519	Seal	3
4	1606544	Clamp	3
5	1573549	Clamp	3
6	1606735	Sensor (Load Sensing)	1
7	1605768	Fitting (Load Weigh Display)	1

©2014 HYSTER COMPANY

IMPACT SENSOR (FIGURE 7-15)

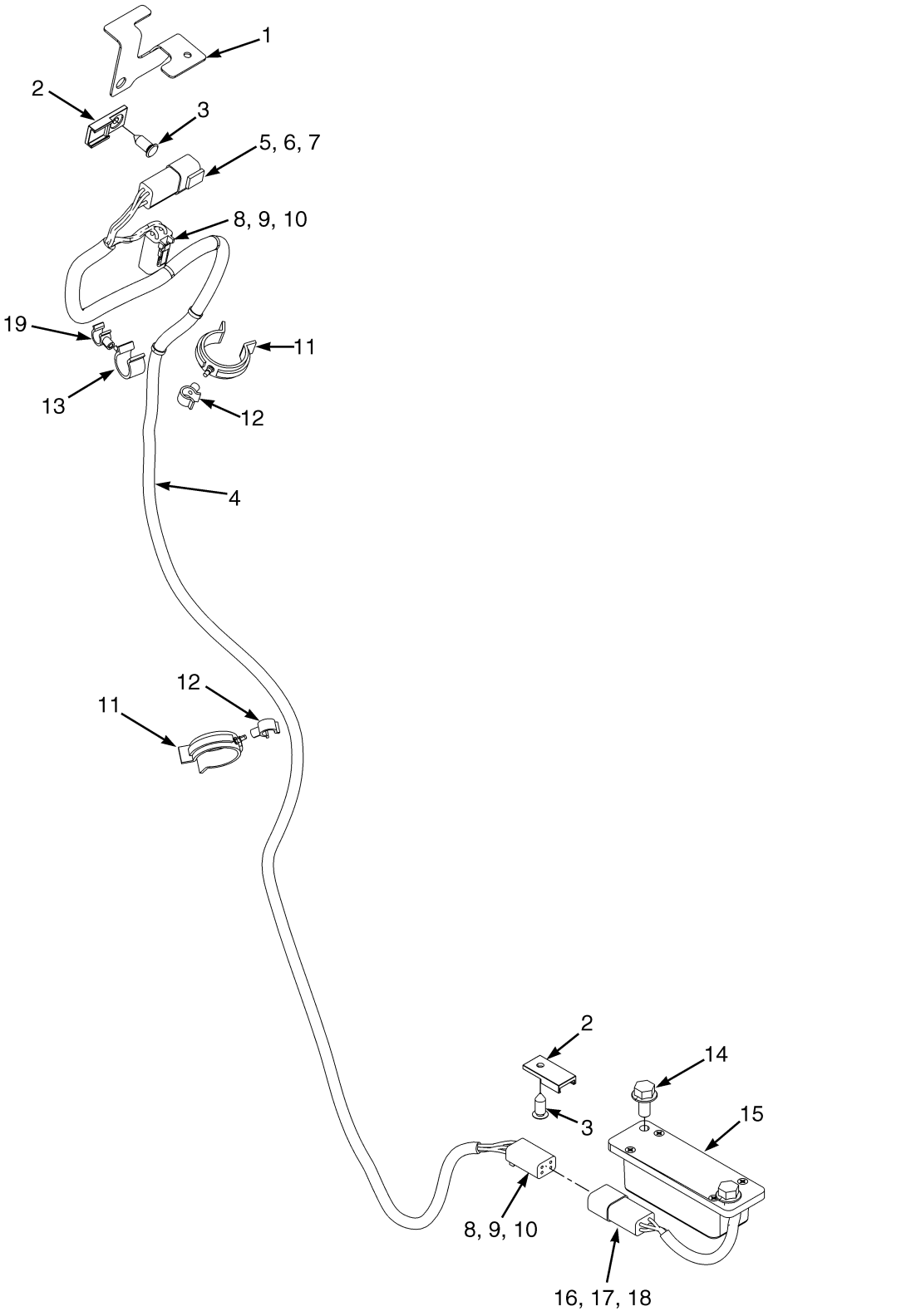

©2014 HYSTER COMPANY

IMPACT SENSOR

ITEM	PART NO.	DESCRIPTION	QTY
1	1535166	Bracket	1
2	1500912	Clip	2
3	1582464	Fastener	2
3	2100710	Fastener (Alternate Part)	1
4	2079281	Wire Harness (Impact Sensor)	1
5	1489655	Connector (4 Way)	1
6	1330416	Connector	1
7	1330437	Terminal (Pin)	4
8	1489656	Connector (4-Way)	2
9	1489657	Connector	2
10	1330438	Terminal (Socket)	8
11	1561759	Clamp (Swivel)	2
12	1542439	Clamp (Swivel)	2
13	1502055	Clamp (Swivel)	1
14	287851	Capscrew	2
14	320157	Washer	2
15	2079843	Sensor (Impact)	1
16	1489655	Connector (4 Way)	1
17	1330416	Connector	1
18	1330433	Terminal	4
19	1502053	Clamp (Swivel)	1

©2014 HYSTER COMPANY

INSTRUMENT CLUSTER (FIGURE 7-16)

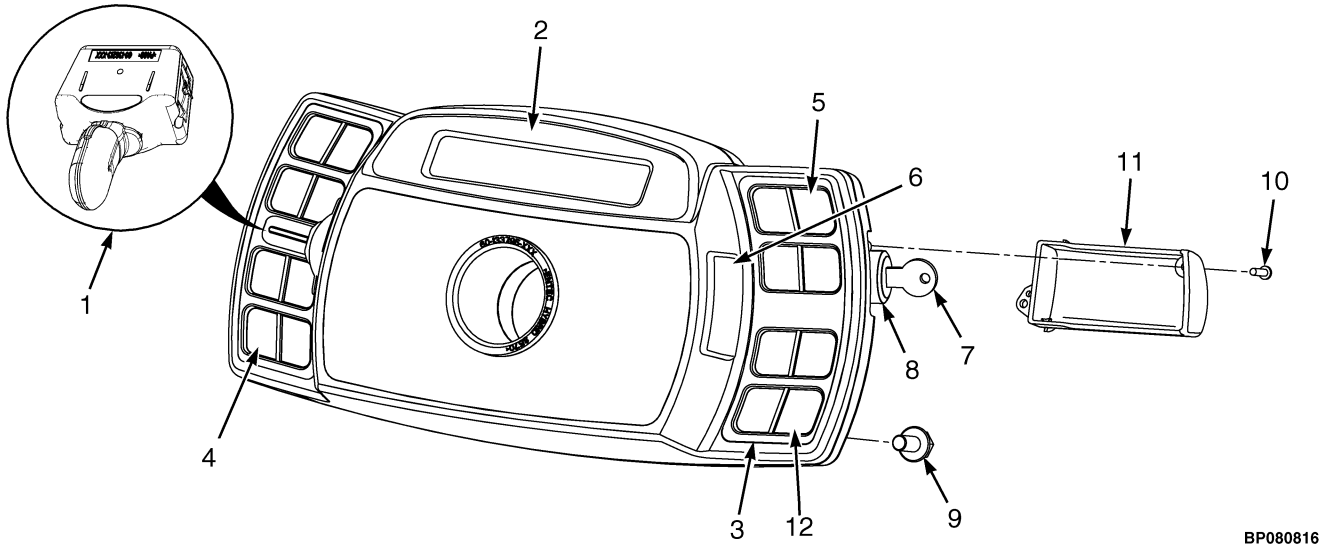

KEY:
A: Standard Ignition Switch - With Cab
B: Standard Ignition Switch - With Overhead Guard

NOTE: This parts list contains multiple truck configurations, refer to the KEY to choose the correct QTY column for your truck.

ITEM	PART NO.	DESCRIPTION	QTY A	QTY B
1	4604594	Lever (Detent Forward and Reverse)	1	1
2	2076695	Display	..	1
2	**2076696**	**Display**	**1**	**..**
3	**2066485**	**Bezel**	**1**	**1**
4	2069431	Label (Blank) (LH Instrument Cluster)	..	1
4	**2066483**	**Label (LH Instrument Cluster)**	**1**	**..**
5	**b 2066482**	**Label (RH Display)**	**1**	**1**
6	**2060032**	**Cover (Without Turn Signals)**	**1**	**1**
6	**a 4604595**	**Lever (Turn Signal Lever)**	**1**	**1**
7	**c** 262798	Key Set	1	1
8	**c 2057948**	**Ignition Switch (Without Keys)**	**1**	**1**
8	**d** 2058111	Ignition Switch (Assembly) (☞Figure 7-1)	1	1
9	**1527879**	**Capscrew**	**4**	**4**
10	**d 1554902**	**Screw**	**5**	**5**
11	**d** 2060033	Cover	1	1
12	**2066484**	**Label (RH Display, All Options)**	**1**	**1**

FOOTNOTES:

a Not Illustrated
b Remove Panels From Overlay As Required For Truck Configuaration.
c Start With Key Switch
d Start with Push Button and Remote Key Switch

©2014 HYSTER COMPANY

NOTES

©2014 HYSTER COMPANY

MINI-LEVER CONTROLS (FIGURE 7-17)
WITH ARMREST — THREE FUNCTION

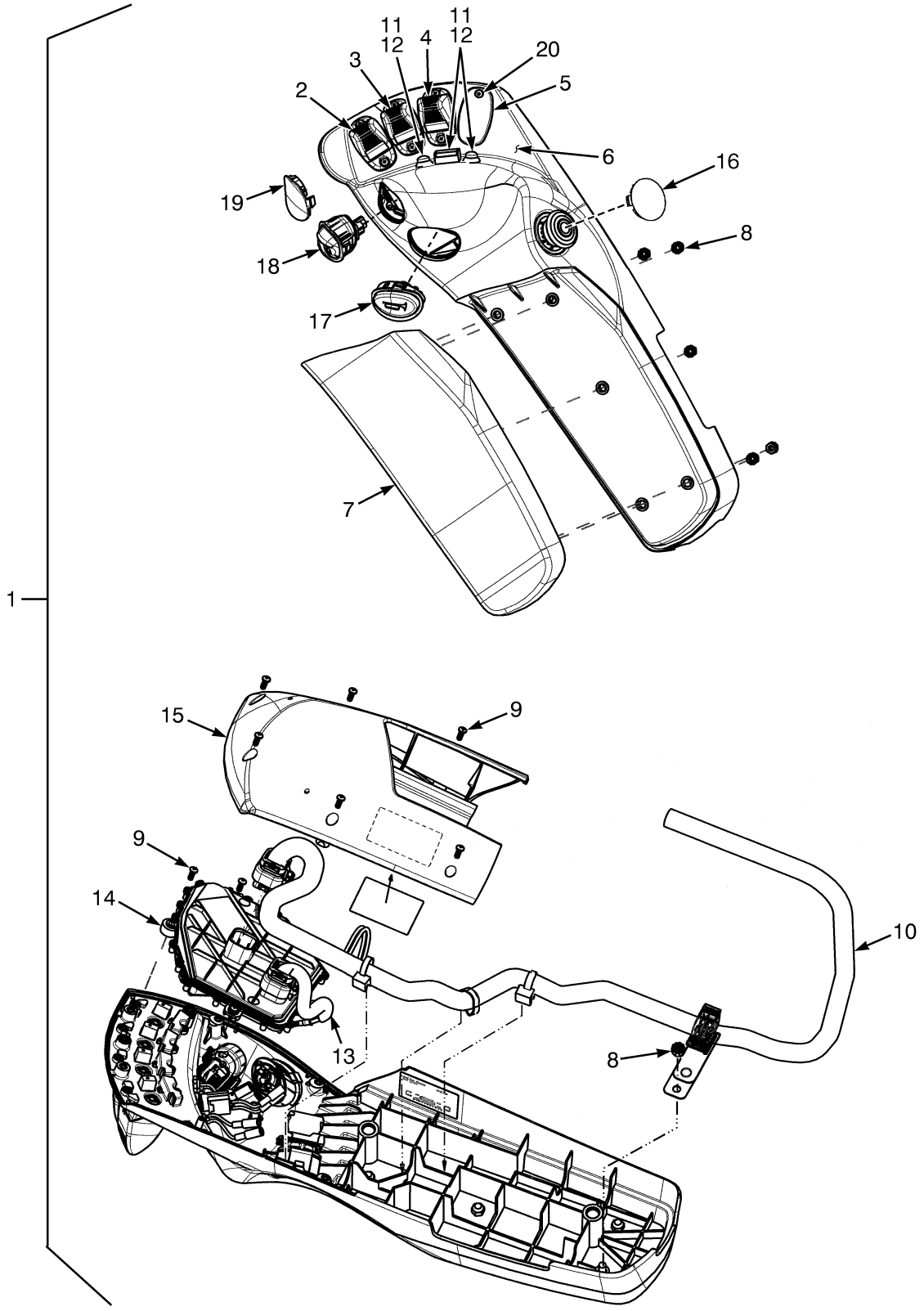

©2014 HYSTER COMPANY

MINI-LEVER CONTROLS
WITH ARMREST – THREE FUNCTION

KEY:
A: Without Directional Control Switch
B: With Directional Control Switch

ITEM	PART NO.	DESCRIPTION	QTY A	QTY B
1	4601093	Mini-Lever Assembly	1	..
1	**d** 4601265	Mini-Lever Assembly	1	..
1	**b** 4601097	Mini-Lever Assembly	1	..
1	**c** 4601099	Mini-Lever Assembly	1	..
1	4601101	Mini-Lever Assembly	..	1
1	**d** 4601103	Mini-Lever Assembly	..	1
1	**b** 4601105	Mini-Lever Assembly	..	1
1	**c** 4601107	Mini-Lever Assembly	..	1
2	. . . . .	Lever Position 1	1	1
2	2110791	Lever (Single Function)	1	1
3	. . . . .	Lever Position 2	1	1
3	2110791	Lever (Single Function)	1	1
3	**b** 2110793	Lever (With Override)	1	1
4	. . . . .	Lever Position 3	1	1
4	2110791	Lever (Single Function)	1	1
4	**d** 2110792	Lever (Clamping)	1	1
5	2108249	Plug	1	1
6	2111799	Armrest (Without Push Buttons)	1	1
6	**bd** 4603439	Armrest (With Push Buttons)	1	1
7	2111769	Cushion (Armrest)	1	1
8	1709587	Nut	5	5
9	1698449	Capscrew	6	6
10	4605336	Wire Harness	1	1
11	**ad** 1704528	Push Button (Position 3)	1	1
11	**ac** 1704528	Push Button (Position 2 and 3)	2	2
11	**ab** 1704528	Push Button (Position 2)	1	1
12	**d** 1705359	Cover (Push Button)	1	1
12	**c** 1705359	Cover (Push Button)	1	1
13	1704529	Wire Harness (Forward/Reverse Switch in the MLM) (Push Buttons)	1	1
14	4605337	Printed Circuit Board	1	1
15	2111800	Cover (Bottom Armrest)	1	1
16	4601120	Plug	1	1
17	2111770	Horn Button	1	1
18	2110943	Switch (Directional Control)	..	1
19	2110942	Plug (Directional Control Switch)	1	..
20	1698449	Capscrew	8	8

FOOTNOTES:

a Not all Lift Trucks may have all the switches and buttons shown.
b Return to Set Tilt
c Three Function Clamp with Return to Set Tilt
d With Clamping

©2014 HYSTER COMPANY

MINI-LEVER CONTROLS (FIGURE 7-18)

WITH ARMREST — FOUR FUNCTION

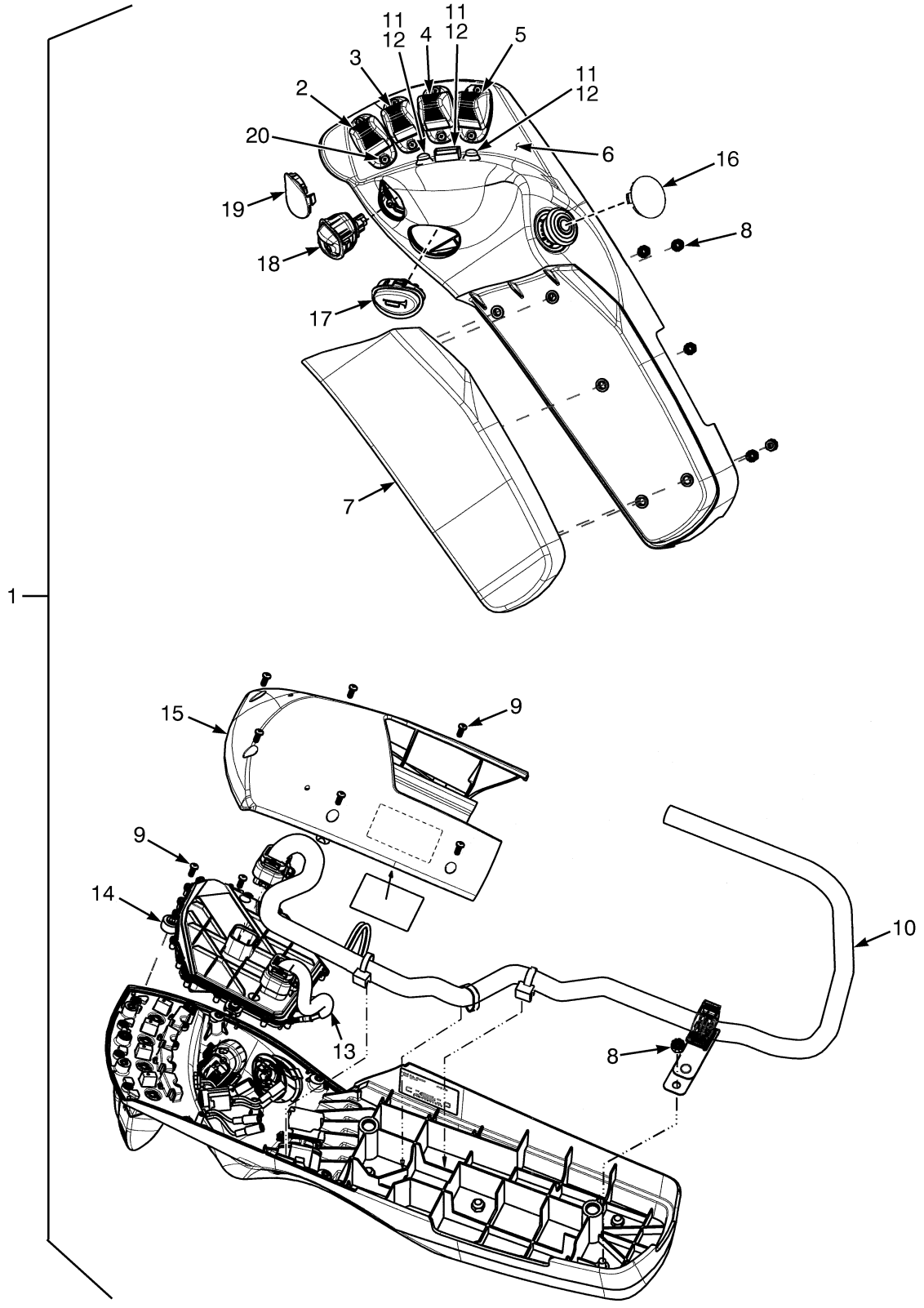

©2014 HYSTER COMPANY

MINI-LEVER CONTROLS
WITH ARMREST – FOUR FUNCTION

KEY:
A: Without Directional Control Switch
B: With Directional Control Switch

ITEM	PART NO.	DESCRIPTION	QTY A	QTY B
1	4601094	Mini-Lever Assembly	1	..
1	**b** 4601096	Mini-Lever Assembly	1	..
1	**d** 4601098	Mini-Lever Assembly	1	..
1	**c** 4601100	Mini-Lever Assembly	1	..
1	4601102	Mini-Lever Assembly	..	1
1	**b** 4601104	Mini-Lever Assembly	..	1
1	**d** 4601106	Mini-Lever Assembly	..	1
1	**c** 4601108	Mini-Lever Assembly	..	1
2	. . . . .	Lever Position 1	1	1
2	2110791	Lever (Single Function)	1	1
3	. . . . .	Lever Position 2	1	1
3	2110791	Lever (Single Function)	1	1
3	**c** 2110793	Lever (With Override)	1	1
4	. . . . .	Lever Position 3	1	1
4	2110791	Lever (Single Function)	1	1
5	. . . . .	Lever Position 4	1	1
5	2110791	Lever (Single Function)	1	1
5	**bc** 2110792	Lever (Clamping)	1	1
6	2111799	Armrest (Without Push Buttons)	1	1
6	**bcd** 4603439	Armrest (With Push Buttons)	1	1
7	2111769	Cushion (Armrest)	1	1
8	1709587	Nut	5	5
9	1698449	Capscrew	6	6
10	4605336	Wire Harness	1	1
11	**ab** 1704528	Push Button	1	1
11	**ac** 1704528	Push Button	2	2
12	**b** 1705359	Cover (Push Button)	2	2
12	**c** 1705359	Cover (Push Button)	1	1
13	1704529	Wire Harness (Forward/Reverse Switch in the MLM) (Push Buttons)	1	1
14	4605337	Printed Circuit Board	1	1
15	2111800	Cover (Bottom Armrest)	1	1
16	4601120	Plug	1	1
17	2111770	Horn Button	1	1
18	2110943	Switch (Directional Control)	..	1
19	2110942	Plug (Directional Control Switch)	1	..
20	1698449	Capscrew	8	8

FOOTNOTES:

a Not all Lift Trucks may have all the switches and buttons shown.
b With Clamping
c With Clamping and Return to Set Tilt
d With Return to Set Tilt

©2014 HYSTER COMPANY

SEAT BELT SWITCH ADAPTER (FIGURE 7-19)

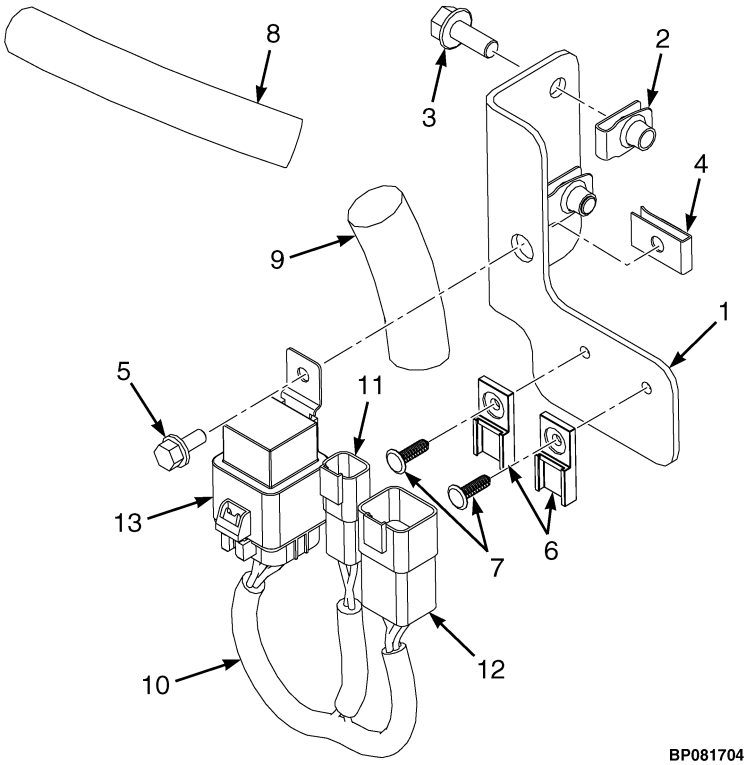

ITEM	PART NO.	DESCRIPTION	QTY
1	4052234	Bracket	1
2	1480237	Nut	2
3	1527880	Capscrew	2
4	1566420	Nut (Foldover)	1
5	1693371	Capscrew	1
6	1500912	Clip	2
7	1582464	Fastener	2
8	4099377	Wrap	1
9	4099378	Wrap	1
10	4620425	Wire Harness	1
11	. . . . .	Connector Assembly (Seat Belt Switch Harness)	1
11	1493465	Connector (2 Pin)	1
11	1330414	Connector (Secondary Lock)	1
11	1363885	Terminal (Pin)	2
12	. . . . .	Connector Assembly (RH Chassis Harness)	1
12	4047669	Connector	1
12	1514598	Connector	1
12	866401	Terminal	4
13	. . . . .	Connector Assembly (Relay)	1
13	4030503	Connector	1
13	1330283	Terminal	4
13	1323581	Plug	1
13	4039364	Relay (With Diode)	1

©2014 HYSTER COMPANY

NOTES

©2014 HYSTER COMPANY

LIGHTS (FIGURE 7-20)
STOP, TAIL, TURN, BACKUP, AND STROBE — WITH CAB

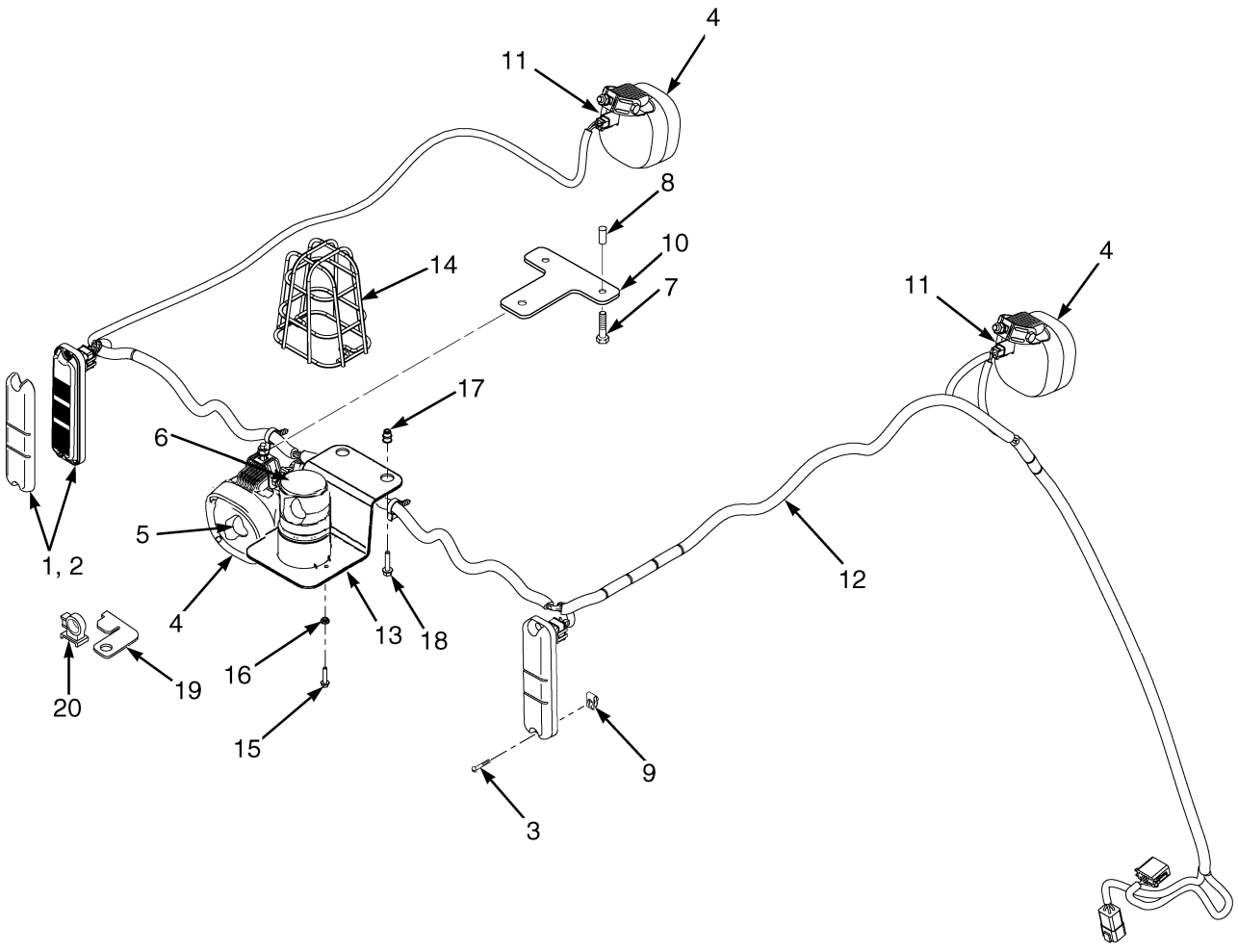

HP081649

©2014 HYSTER COMPANY

LIGHTS

STOP, TAIL, TURN, BACKUP, AND STROBE – WITH CAB

ITEM	PART NO.	DESCRIPTION	QTY
1	2056824	Brake/Backup Light (Stop,Turn,Tail, And Back-Up)	2
1	. . . . .	Tail Light Base (☞Figure 1-4)	1
2	2056826	Reflector (Tail)	2
3	1565125	Screw	4
4	2098083	Work Light (Rear) (Halogen)	1
4	2107382	Head/Work Light (Rear) (LED)	1
4	2098084	Work Light (RH Front) (Halogen)	1
4	2107383	Head/Work Light (RH Front) (LED)	1
4	2098085	Work Light (LH Front) (Halogen)	1
4	2107384	Head/Work Light (LH Front) (LED)	1
5	2098082	Bulb (Halogen)	1
6	1654013	Strobe Light Assembly (☞Figure 16-1)	1
6	1652290	Strobe Light (Amber LED)	1
7	1586495	Capscrew	2
8	1531558	Insert	2
9	1537551	Nut (Clip)	4
10	1698541	Bracket (Alternate Part)	1
11	1351682	Connector (End Cap)	2
12	1598333	Wire Harness	1
12	a 2044712	Relay (30 Amp)	1
13	1565076	Bracket Wldmt	1
14	1302024	Guard (Strobe Light)	1
15	1586759	Capscrew	2
16	1586428	Nut	2
17	1531558	Insert	2
18	1586495	Capscrew	2
19	1532759	Clip	1
20	1532775	Clip	1

FOOTNOTES:

a Not Illustrated

©2014 HYSTER COMPANY

LIGHTS (FIGURE 7-21)
STOP, TAIL, TURN, BACKUP, AND STROBE — WITH OVERHEAD GUARD

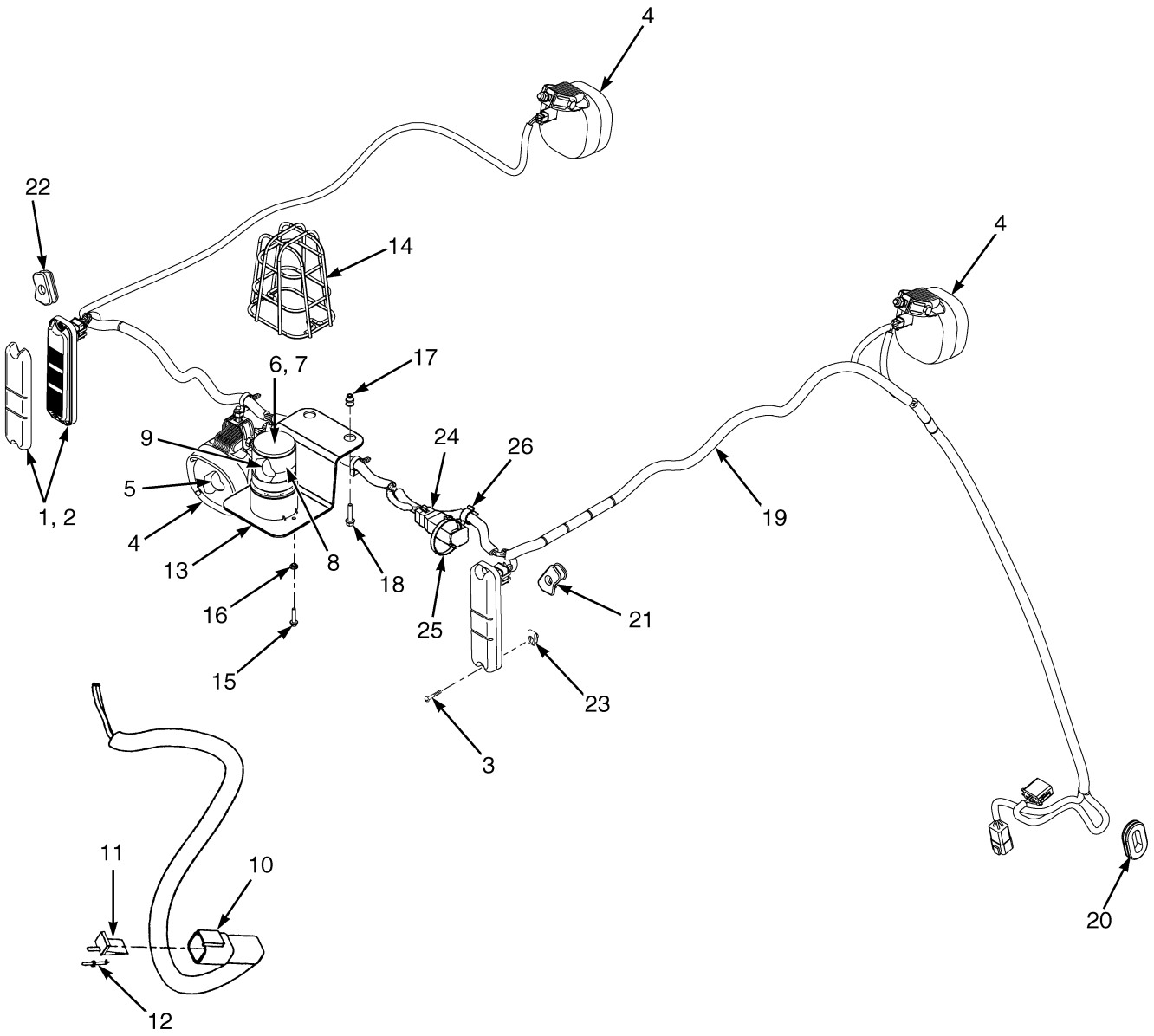

HP081633

©2014 HYSTER COMPANY

LIGHTS

STOP, TAIL, TURN, BACKUP, AND STROBE – WITH OVERHEAD GUARD

ITEM	PART NO.	DESCRIPTION	QTY
1	**2056824**	**Brake/Backup Light (Stop,Turn,Tail, And Back-Up)**	**2**
1	**. . . . .**	**Tail Light Base (☞Figure 1-4)**	**2**
2	2056826	Reflector (Tail)	2
3	**1565125**	**Screw**	**4**
4	2098083	Work Light (Rear) (Halogen)	1
4	**2107382**	**Head/Work Light (Rear) (LED)**	**1**
4	2098084	Work Light (RH Front) (Halogen)	1
4	**2107383**	**Head/Work Light (RH Front) (LED)**	**1**
4	2098085	Work Light (LH Front) (Halogen)	1
4	**2107384**	**Head/Work Light (LH Front) (LED)**	**1**
5	2098082	Bulb (Halogen)	1
6	**1654013**	**Strobe Light Assembly (☞Figure 16-1)**	**1**
7	1652290	Strobe Light (Amber LED)	1
8	1673755	Lens	1
9	1673704	Lamp	1
10	1561559	Connector (2 Pin)	1
11	1561755	Connector (Secondary Lock)	1
12	**1463138**	**Terminal Pin**	**2**
13	**1565076**	**Bracket Wldmt**	**1**
14	**1302024**	**Guard (Strobe Light)**	**1**
15	**1586759**	**Capscrew**	**2**
16	**1586428**	**Nut**	**2**
17	**1531001**	**Insert**	**2**
18	**1586495**	**Capscrew**	**2**
19	2098385	Wire Harness (Lights) (☞Figure 7-45)	1
20	1539584	Grommet	1
21	1560447	Grommet (RH Tail Light)	1
22	1560448	Grommet (LH Tail Light)	1
23	**1537551**	**Nut (Clip)**	**4**
24	2095895	Wire Harness	1
24	1514597	Connector	1
24	1514598	Connector	1
24	1484709	Terminal (Pin)	4
24	1634047	Resistor	3
25	1644398	Clamp (Swivel)	1
26	1606544	Clamp	1

©2014 HYSTER COMPANY

WIRE HARNESS (FIGURE 7-22)

RH CHASSIS — MAZDA 2.2L

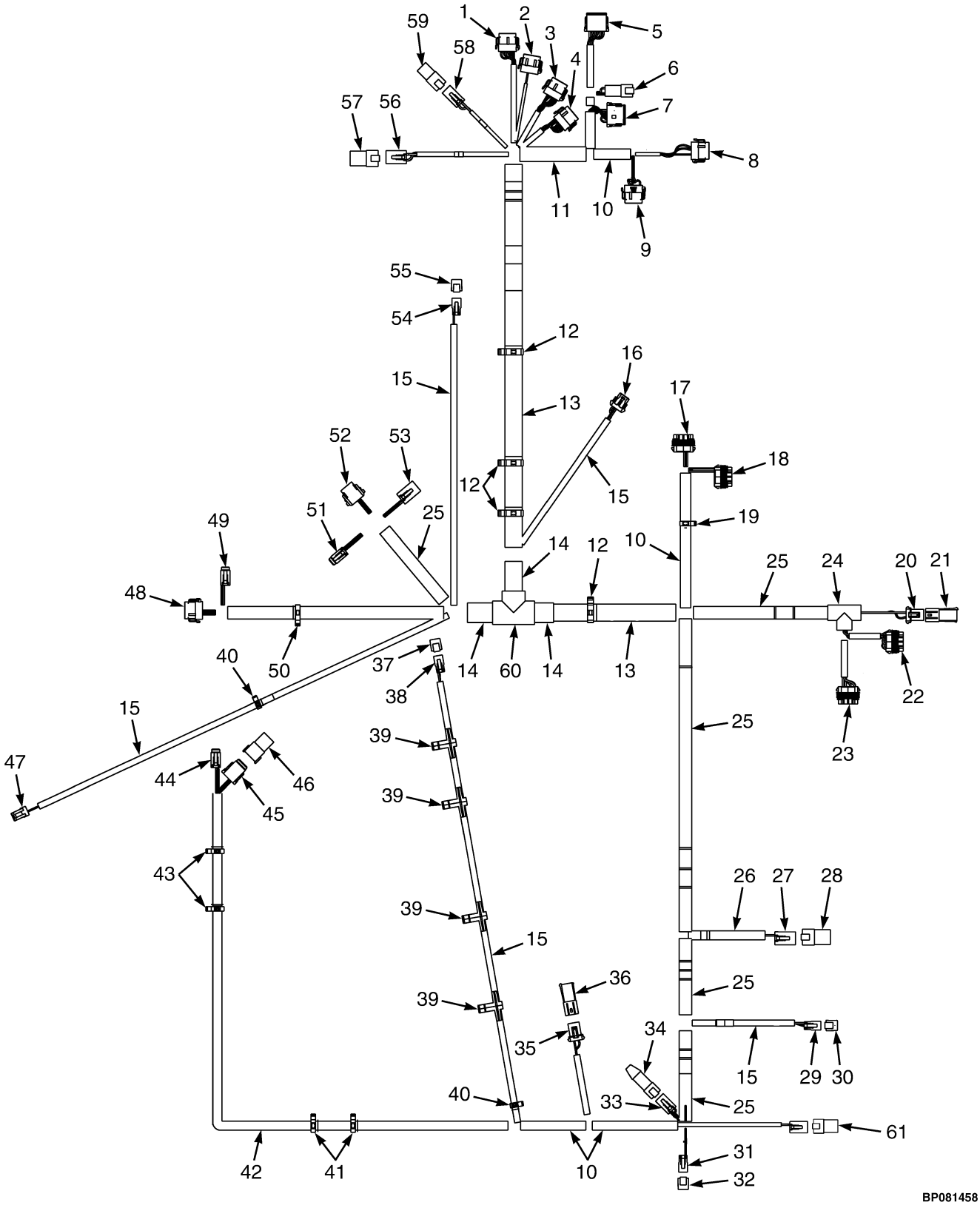

©2014 HYSTER COMPANY

WIRE HARNESS
RH CHASSIS – MAZDA 2.2L

ITEM	PART NO.	DESCRIPTION	QTY
	4620357	Wire Harness (Chassis)	1
1	. . . . .	Connector Assembly (Vehicle System Manager)	1
1	1525570	Connector	1
1	1463139	Terminal	8
1	1484377	Plug	4
1	1530037	Connector (Secondary Lock)	1
2	. . . . .	Connector Assembly (Vehicle System Manager)	1
2	1525569	Connector	1
2	1484377	Plug	10
2	1463139	Terminal	2
2	1530037	Connector (Secondary Lock)	1
3	. . . . .	Connector Assembly (Vehicle System Manager)	1
3	1525568	Connector	1
3	1463139	Terminal	7
3	1484377	Plug	5
3	1530037	Connector (Secondary Lock)	1
4	. . . . .	Connector Assembly (Vehicle System Manager)	1
4	1525567	Connector	1
4	1463139	Terminal	9
4	1484377	Plug	3
4	1530037	Connector (Secondary Lock)	1
5	. . . . .	Connector Assembly (Vehicle System Manager)	1
5	1525563	Connector	1
5	1363886	Terminal (Socket)	4
5	1330438	Terminal (Socket)	8
5	1500913	Connector (Secondary Lock)	1
6	. . . . .	Connector Assembly (Cowl Harness)	1
6	1489655	Connector (4 Way)	1
6	1330437	Terminal (Pin)	4
6	1330416	Connector	1
7	. . . . .	Connector Assembly (Cowl Harness)	1
7	1493428	Connector (12-Way)	1
7	1330438	Terminal (Socket)	10
7	1484377	Plug	2
7	1500913	Connector (Secondary Lock)	1
8	. . . . .	Connector Assembly (Vehicle System Manager)	1
8	1525567	Connector	1
8	1484377	Plug	9
8	1463139	Terminal	3
8	1529046	Connector (Secondary Lock)	1
9	. . . . .	Connector Assembly (Vehicle System Manager)	1
9	1525569	Connector	1
9	1463139	Terminal	9
9	1484377	Plug	3
9	1529046	Connector (Secondary Lock)	1
10	275496	Conduit	AR
11	275498	Conduit	AR
12	1534282	Clip	4
13	1540388	Conduit	AR
14	275499	Conduit	AR

©2014 HYSTER COMPANY

WIRE HARNESS
RH CHASSIS – MAZDA 2.2L

ITEM	PART NO.	DESCRIPTION	QTY
15	275493	Conduit	AR
16	. . . . .	Connector Assembly (Horn)	1
16	1476064	Connector	1
16	1330355	Terminal	3
16	1330356	Seal	2
16	1476108	Wire Seal	1
16	1476109	Connector Lock	1
17	. . . . .	Connector Assembly (Power Distribution Module)	1
17	1521184	Connector	1
17	1327164	Seal	1
17	1330281	Terminal	6
17	1521989	Terminal	1
17	1323579	Seal	5
17	1402888	Seal	2
17	1521188	Lock	1
18	. . . . .	Connector Assembly (Power Distribution Module)	1
18	1521183	Connector	1
18	1330281	Terminal	4
18	1327164	Seal	1
18	1323579	Seal	7
18	1521989	Terminal	1
18	1521188	Lock	1
19	1534828	Clip	1
20	. . . . .	Connector Assembly (Hydraulic Filter)	1
20	1329152	Plug	1
20	1330281	Terminal	2
20	1402888	Seal	2
20	1329151	Terminal (Secondary Lock)	1
21	. . . . .	Connector Assembly (End Cap)	1
21	1329150	Connector	1
21	1327164	Seal	2
21	1329151	Terminal (Secondary Lock)	1
22	. . . . .	Connector Assembly (Power Distribution Module)	1
22	1521185	Connector	1
22	1330281	Terminal	5
22	1521989	Terminal	2
22	1327164	Seal	1
22	1323579	Seal	7
22	1521188	Lock	1
23	. . . . .	Connector Assembly (Power Distribution Module)	1
23	1521186	Connector	1
23	1521989	Terminal	7
23	1323579	Seal	7
23	1327164	Seal	1
23	1521188	Lock	1
24	1531490	Conduit	1
25	275497	Conduit	AR
26	275495	Conduit	AR
27	. . . . .	Connector Assembly (Accessory 2)	1
27	1514602	Connector	1

©2014 HYSTER COMPANY

WIRE HARNESS
RH CHASSIS – MAZDA 2.2L

ITEM	PART NO.	DESCRIPTION	QTY
27	1554359	Terminal	3
27	1330439	Plug	1
27	1514603	Connector (Secondary Lock)	1
28	. . . . .	Connector Assembly (End Cap)	1
28	1514597	Connector	1
28	1330439	Plug	4
29	. . . . .	Connector Assembly (Hood Switch/Key Switch)	1
29	1490242	Connector (2 Way)	1
29	1330438	Terminal (Socket)	1
29	1490243	Connector	1
30	1626727	Connector (End Cap)	1
31	. . . . .	Connector Assembly (Alternate Horn Button)	1
31	1490242	Connector (2 Way)	1
31	1330438	Terminal (Socket)	2
31	1490243	Connector	1
32	1626727	Connector (End Cap)	1
33	. . . . .	Connector Assembly (Bus Terminal)	1
33	1489656	Connector (4-Way)	1
33	1330438	Terminal (Socket)	4
33	1489657	Connector (Secondary Lock)	1
34	1531973	Connector (End Cap)	1
35	. . . . .	Connector Assembly (Coolant Level)	1
35	1329152	Plug	1
35	1330281	Terminal	2
35	1402888	Seal	2
35	1329151	Terminal (Secondary Lock)	1
36	. . . . .	Connector Assembly (End Cap)	1
36	1493428	Connector (12-Way)	1
36	1327164	Seal	2
36	1329151	Terminal (Secondary Lock)	1
37	1626727	Connector (End Cap)	1
38	. . . . .	Connector Assembly (Back-Up Alarm)	1
38	1490242	Connector (2 Way)	1
38	1330438	Terminal (Socket)	2
38	1490243	Connector	1
39	1587778	Clip	4
40	1509888	Clip	2
41	1509890	Clip	2
42	1699754	Conduit	AR
43	1509890	Clip	2
44	. . . . .	Connector Assembly (Seat Harness)	1
44	1531973	Connector	1
44	1463139	Terminal	4
44	1484377	Plug	2
44	1531974	Connector (Secondary Lock)	1
45	. . . . .	Connector Assembly (MLM Harness)	1
45	1541991	Connector	1
45	1463139	Terminal	5
45	1484377	Plug	3
45	1541992	Connector (Secondary Lock)	1

©2014 HYSTER COMPANY

WIRE HARNESS
RH CHASSIS – MAZDA 2.2L

ITEM	PART NO.	DESCRIPTION	QTY
46	. . . . .	Connector Assembly (Endcap)	1
46	1541988	Connector (8 Pin)	1
46	1484377	Plug	8
47	. . . . .	Connector Assembly (Hydraulic Temp)	1
47	1402868	Connector	1
47	1323576	Terminal	2
48	. . . . .	Connector Assembly (Transmission Harness)	1
48	1525567	Connector	1
48	1463139	Terminal	11
48	1484377	Plug	1
48	1529046	Connector (Secondary Lock)	1
49	. . . . .	Connector Assembly (Transmission Harness)	1
49	1531973	Connector	1
49	1463139	Terminal	6
49	1531974	Connector (Secondary Lock)	1
50	1500899	Clip	1
51	. . . . .	Connector Assembly (Engine Harness)	1
51	1531973	Connector	1
51	1463139	Terminal	6
51	1531974	Connector (Secondary Lock)	1
52	. . . . .	Connector Assembly (Engine Harness)	1
52	1502625	Connector	1
52	1330438	Terminal (Socket)	8
52	1502626	Connector (Secondary Lock)	1
53	. . . . .	Connector Assembly (Engine Harness)	1
53	1514602	Connector	1
53	1554359	Terminal	3
53	1330439	Plug	1
53	1514603	Connector (Secondary Lock)	1
54	. . . . .	Connector Assembly (Hydraulic Solenoid)	1
54	1490242	Connector (2 Way)	1
54	1330438	Terminal (Socket)	2
54	1490243	Connector	1
55	1626727	Connector (End Cap)	1
56	. . . . .	Connector Assembly (Lights/Cab Harness)	1
56	1514602	Connector	1
56	1554359	Terminal	4
56	1514603	Connector (Secondary Lock)	1
57	. . . . .	Connector Assembly (End Cap)	1
57	1514597	Connector	1
57	1330439	Plug	4
58	. . . . .	Connector Assembly (Accessory 1)	1
58	1545202	Connector	1
58	1554359	Terminal	2
58	1546697	Connector	1
59	. . . . .	Connector Assembly (End Cap)	1
59	1480187	Connector	1
60	1531492	T-Fitting	1
61	. . . . .	Connector Assembly (Seat Switch Harness)	1
61	1632865	Connector	1

©2014 HYSTER COMPANY

WIRE HARNESS
RH CHASSIS – MAZDA 2.2L

ITEM	PART NO.	DESCRIPTION	QTY
61	1514603	Connector	1
61	1554359	Terminal	4

©2014 HYSTER COMPANY

WIRE HARNESS (FIGURE 7-23)

RH CHASSIS WITH SEAT BELT SEQUENCE MODULE — MAZDA 2.2L

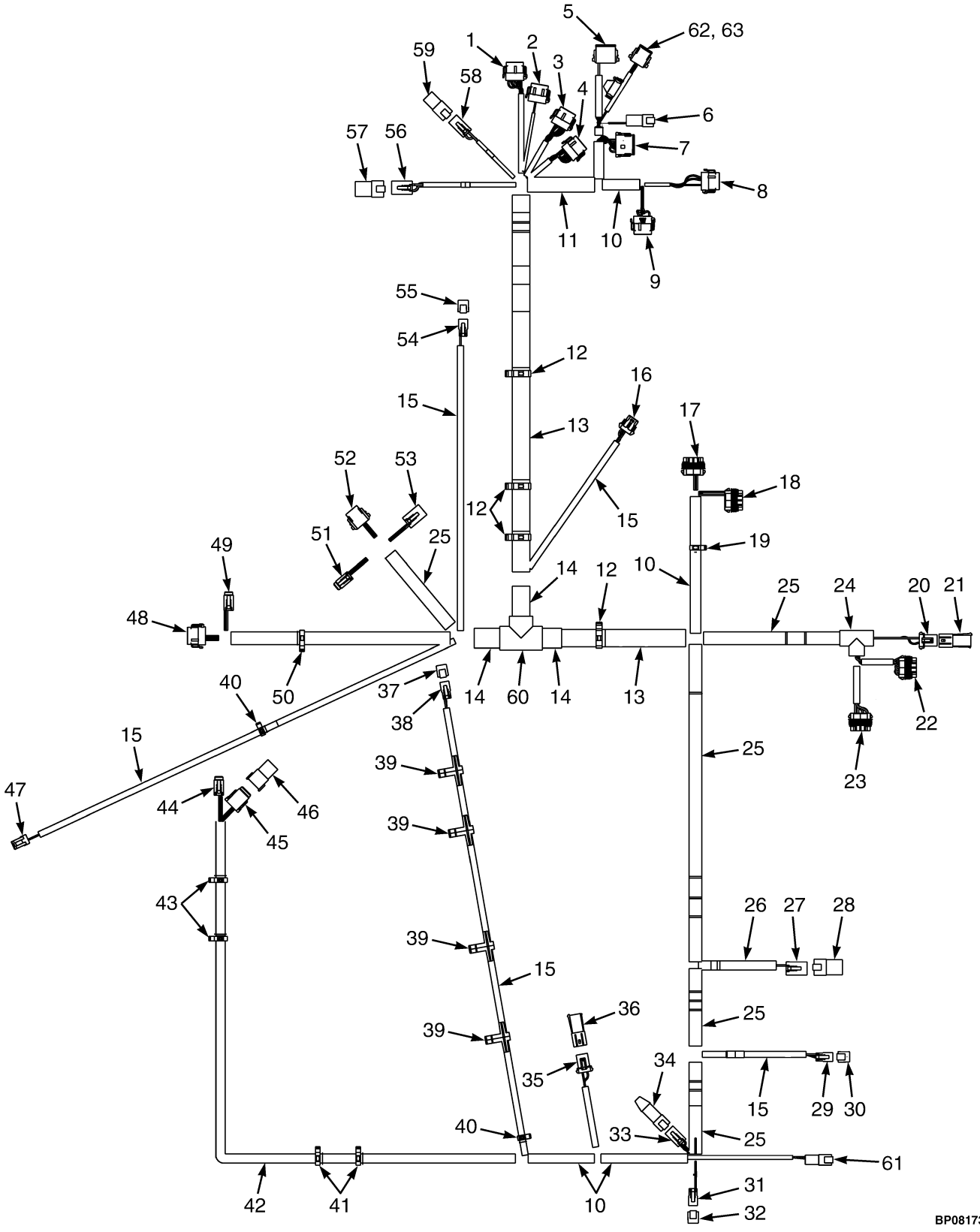

©2014 HYSTER COMPANY

WIRE HARNESS

RH CHASSIS WITH SEAT BELT SEQUENCE MODULE – MAZDA 2.2L

ITEM	PART NO.	DESCRIPTION	QTY
	4635221	Wire Harness (Chassis)	1
1	. . . . .	Connector Assembly (Vehicle System Manager)	1
1	1525570	Connector	1
1	1463139	Terminal	8
1	1484377	Plug	4
1	1530037	Connector (Secondary Lock)	1
2	. . . . .	Connector Assembly (Vehicle System Manager)	1
2	1525569	Connector	1
2	1484377	Plug	10
2	1463139	Terminal	2
2	1530037	Connector (Secondary Lock)	1
3	. . . . .	Connector Assembly (Vehicle System Manager)	1
3	1525568	Connector	1
3	1463139	Terminal	7
3	1484377	Plug	5
3	1530037	Connector (Secondary Lock)	1
4	. . . . .	Connector Assembly (Vehicle System Manager)	1
4	1525567	Connector	1
4	1463139	Terminal	9
4	1484377	Plug	3
4	1530037	Connector (Secondary Lock)	1
5	. . . . .	Connector Assembly (Vehicle System Manager)	1
5	1525563	Connector	1
5	1363886	Terminal (Socket)	4
5	1330438	Terminal (Socket)	8
5	1500913	Connector	1
6	. . . . .	Connector Assembly (Cowl Harness)	1
6	1489655	Connector (4 Way)	1
6	1330437	Terminal (Pin)	4
6	1330416	Connector	1
7	. . . . .	Connector Assembly (Cowl Harness)	1
7	1493428	Connector (12-Way)	1
7	1330438	Terminal (Socket)	10
7	1484377	Plug	2
7	1500913	Connector	1
8	. . . . .	Connector Assembly (Vehicle System Manager)	1
8	1525567	Connector	1
8	1484377	Plug	9
8	1463139	Terminal	3
8	1529046	Connector (Secondary Lock)	1
9	. . . . .	Connector Assembly (Vehicle System Manager)	1
9	1525569	Connector	1
9	1463139	Terminal	9
9	1484377	Plug	3
9	1529046	Connector (Secondary Lock)	1
10	275496	Conduit	AR
11	275498	Conduit	AR
12	1534282	Clip	4
13	1540388	Conduit	AR
14	275499	Conduit	AR

©2014 HYSTER COMPANY

WIRE HARNESS

RH CHASSIS WITH SEAT BELT SEQUENCE MODULE – MAZDA 2.2L

ITEM	PART NO.	DESCRIPTION	QTY
15	275493	Conduit	AR
16	. . . . .	Connector Assembly (Horn)	1
16	1476064	Connector	1
16	1330355	Terminal	3
16	1330356	Seal	2
16	1476108	Wire Seal	1
16	1476109	Connector Lock	1
17	. . . . .	Connector Assembly (Power Distribution Module)	1
17	1521184	Connector	1
17	1327164	Seal	1
17	1330281	Terminal	6
17	1521989	Terminal	1
17	1323579	Seal	5
17	1402888	Seal	2
17	1521188	Lock	1
18	. . . . .	Connector Assembly (Power Distribution Module)	1
18	1521183	Connector	1
18	1330281	Terminal	4
18	1327164	Seal	1
18	1323579	Seal	7
18	1521989	Terminal	1
18	1521188	Lock	1
19	1534828	Clip	1
20	. . . . .	Connector Assembly (Hydraulic Filter)	1
20	1329152	Plug	1
20	1330281	Terminal	2
20	1402888	Seal	2
20	1329151	Terminal	1
21	. . . . .	Connector Assembly (End Cap)	1
21	1329150	Connector	1
21	1327164	Seal	2
21	1329151	Terminal	1
22	. . . . .	Connector Assembly (Power Distribution Module)	1
22	1521185	Connector	1
22	1330281	Terminal	5
22	1521989	Terminal	2
22	1327164	Seal	1
22	1323579	Seal	7
22	1521188	Lock	1
23	. . . . .	Connector Assembly (Power Distribution Module)	1
23	1521186	Connector	1
23	1521989	Terminal	7
23	1323579	Seal	7
23	1327164	Seal	1
23	1521188	Lock	1
24	1531490	Conduit	1
25	275497	Conduit	AR
26	275495	Conduit	AR
27	. . . . .	Connector Assembly (Accessory 2)	1
27	1514602	Connector	1

©2014 HYSTER COMPANY

WIRE HARNESS

RH CHASSIS WITH SEAT BELT SEQUENCE MODULE – MAZDA 2.2L

ITEM	PART NO.	DESCRIPTION	QTY
27	1554359	Terminal	3
27	1330439	Plug	1
27	1514603	Connector	1
28	. . . . .	Connector Assembly (End Cap)	1
28	1514597	Connector	1
28	1330439	Plug	4
29	. . . . .	Connector Assembly (Hood Switch/Key Switch)	1
29	1490242	Connector (2 Way)	1
29	1330438	Terminal (Socket)	1
29	1490243	Connector	1
30	1626727	Connector (End Cap)	1
31	. . . . .	Connector Assembly (Alternate Horn Button)	1
31	1490242	Connector (2 Way)	1
31	1330438	Terminal (Socket)	2
31	1490243	Connector	1
32	1626727	Connector (End Cap)	1
33	. . . . .	Connector Assembly (Bus Terminal)	1
33	1489656	Connector (4-Way)	1
33	1330438	Terminal (Socket)	4
33	1489657	Connector (Secondary Lock)	1
34	1531973	Connector (End Cap)	1
35	. . . . .	Connector Assembly (Coolant Level)	1
35	1329152	Plug	1
35	1330281	Terminal	2
35	1402888	Seal	2
35	1329151	Terminal	1
36	. . . . .	Connector Assembly (End Cap)	1
36	1493428	Connector (12-Way)	1
36	1327164	Seal	2
36	1329151	Terminal	1
37	1626727	Connector (End Cap)	1
38	. . . . .	Connector Assembly (Back-Up Alarm)	1
38	1490242	Connector (2 Way)	1
38	1330438	Terminal (Socket)	2
38	1490243	Connector	1
39	1587778	Clip	4
40	1509888	Clip	2
41	1509890	Clip	2
42	1699754	Conduit	AR
43	1509890	Clip	2
44	. . . . .	Connector Assembly (Seat Harness)	1
44	1531973	Connector	1
44	1463139	Terminal	4
44	1484377	Plug	2
44	1531974	Connector	1
45	. . . . .	Connector Assembly (MLM Harness)	1
45	1541991	Connector	1
45	1463139	Terminal	5
45	1484377	Plug	3
45	1541992	Connector (Secondary Lock)	1

©2014 HYSTER COMPANY

WIRE HARNESS

RH CHASSIS WITH SEAT BELT SEQUENCE MODULE – MAZDA 2.2L

ITEM	PART NO.	DESCRIPTION	QTY
46	. . . . .	Connector Assembly (Endcap)	1
46	1541988	Connector (8 Pin)	1
46	1484377	Plug	8
47	. . . . .	Connector Assembly (Hydraulic Temp)	1
47	1402868	Connector	1
47	1323576	Terminal	2
48	. . . . .	Connector Assembly (Transmission Harness)	1
48	1525567	Connector	1
48	1463139	Terminal	11
48	1484377	Plug	1
48	1529046	Connector (Secondary Lock)	1
49	. . . . .	Connector Assembly (Transmission Harness)	1
49	1531973	Connector	1
49	1463139	Terminal	6
49	1531974	Connector	1
50	1500899	Clip	1
51	. . . . .	Connector Assembly (Engine Harness)	1
51	1531973	Connector	1
51	1463139	Terminal	6
51	1531974	Connector	1
52	. . . . .	Connector Assembly (Engine Harness)	1
52	1502625	Connector	1
52	1330438	Terminal (Socket)	8
52	1502626	Connector (Secondary Lock)	1
53	. . . . .	Connector Assembly (Engine Harness)	1
53	1514602	Connector	1
53	1554359	Terminal	3
53	1330439	Plug	1
53	1514603	Connector	1
54	. . . . .	Connector Assembly (Hydraulic Solenoid)	1
54	1490242	Connector (2 Way)	1
54	1330438	Terminal (Socket)	2
54	1490243	Connector	1
55	1626727	Connector (End Cap)	1
56	. . . . .	Connector Assembly (Lights/Cab Harness)	1
56	1514602	Connector	1
56	1554359	Terminal	4
56	1514603	Connector	1
57	. . . . .	Connector Assembly (End Cap)	1
57	1514597	Connector	1
57	1330439	Plug	4
58	. . . . .	Connector Assembly (Accessory 1)	1
58	1545202	Connector	1
58	1554359	Terminal	2
58	1546697	Connector	1
59	. . . . .	Connector Assembly (End Cap)	1
59	1480187	Connector	1
60	1531492	T-Fitting	1
61	. . . . .	Connector Assembly (Seat Switch Harness)	1
61	1493465	Connector (2 Pin)	1

©2014 HYSTER COMPANY

WIRE HARNESS

RH CHASSIS WITH SEAT BELT SEQUENCE MODULE – MAZDA 2.2L

ITEM	PART NO.	DESCRIPTION	QTY
61	1330414	Connector (Secondary Lock)	1
61	1330437	Terminal (Pin)	2
62	. . . . .	Connector Assembly (Seat Belt Sequence Module)	1
62	1502625	Connector	1
62	1502626	Connector (Secondary Lock)	1
62	1330438	Terminal (Socket)	6
62	1484377	Plug	2
63	1602431	Fuse Holder	1
63	1498044	Fuse (5 Amp)	1

©2014 HYSTER COMPANY

WIRE HARNESS (FIGURE 7-24)
RH CHASSIS — KUBOTA 2.5L

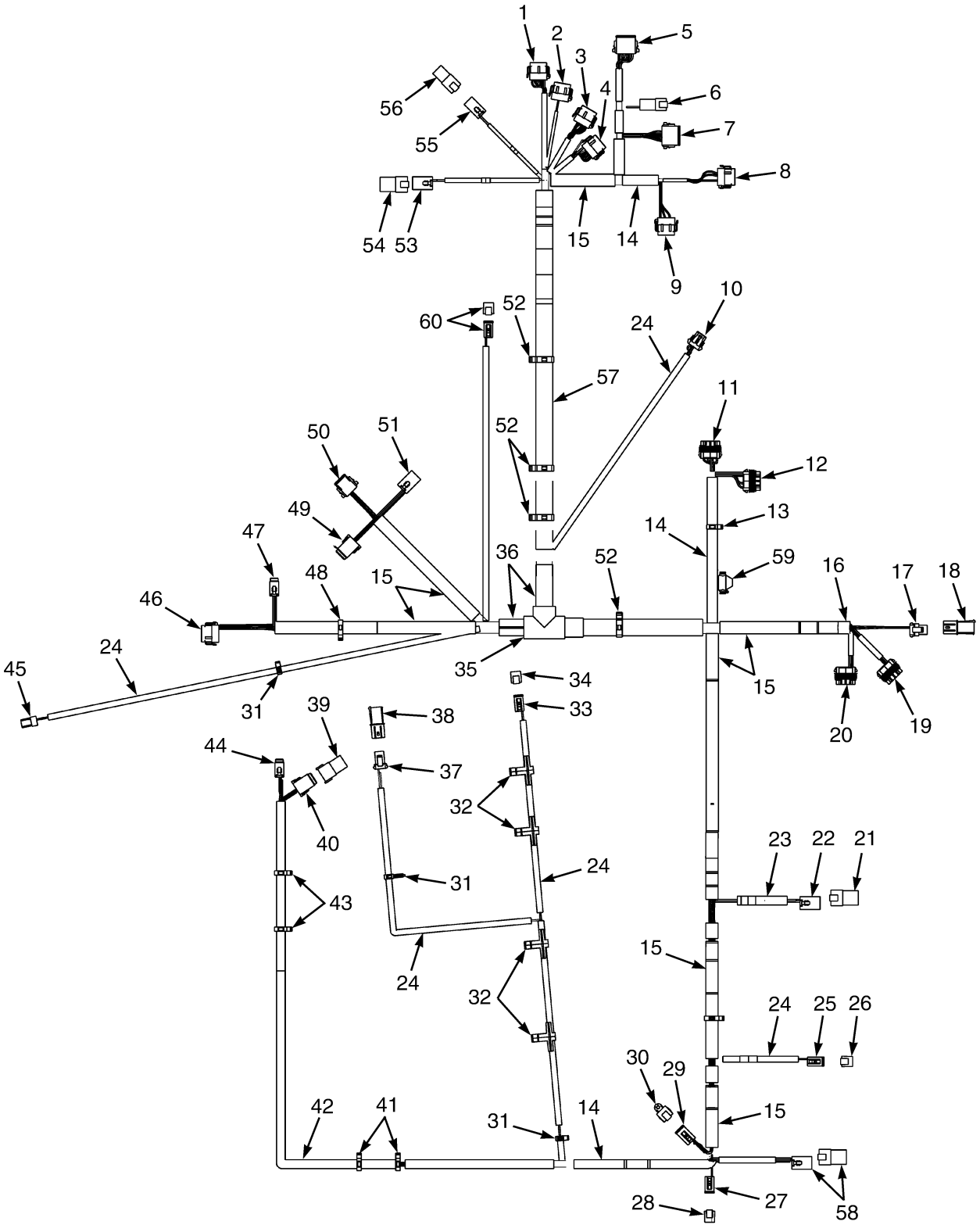

©2014 HYSTER COMPANY

WIRE HARNESS
RH CHASSIS – KUBOTA 2.5L

ITEM	PART NO.	DESCRIPTION	QTY
	4630231	Wire Harness (Chassis)	1
1	. . . . .	Connector Assembly (Vehicle System Manager)	1
1	1525570	Connector	1
1	1463139	Terminal	8
1	1484377	Plug	4
1	1530037	Connector (Secondary Lock)	1
2	. . . . .	Connector Assembly (Vehicle System Manager)	1
2	1525569	Connector	1
2	1463139	Terminal	12
2	1530037	Connector (Secondary Lock)	1
3	. . . . .	Connector Assembly (Vehicle System Manager)	1
3	1525568	Connector	1
3	1463139	Terminal	9
3	1484377	Plug	3
3	1530037	Connector (Secondary Lock)	1
4	. . . . .	Connector Assembly (Vehicle System Manager)	1
4	1525567	Connector	1
4	1463139	Terminal	9
4	1484377	Plug	3
4	1530037	Connector (Secondary Lock)	1
5	. . . . .	Connector Assembly (Vehicle System Manager)	1
5	1525563	Connector	1
5	1330438	Terminal (Socket)	8
5	1363886	Terminal (Socket)	4
5	1500913	Connector (Secondary Lock)	1
6	. . . . .	Connector Assembly (To Cowl Harness)	1
6	1489655	Connector (4 Way)	1
6	1330437	Terminal (Pin)	4
6	1330416	Connector	1
7	. . . . .	Connector Assembly (To Cowl Harness)	1
7	1493428	Connector (12-Way)	1
7	1330438	Terminal (Socket)	9
7	1484377	Plug	3
7	1500913	Connector (Secondary Lock)	1
8	. . . . .	Connector Assembly (Vehicle System Manager)	1
8	1525567	Connector	1
8	1463139	Terminal	3
8	1484377	Plug	9
8	1529046	Connector (Secondary Lock)	1
9	. . . . .	Connector Assembly (Vehicle System Manager)	1
9	1525569	Connector	1
9	1463139	Terminal	9
9	1484377	Plug	3
9	1529046	Connector (Secondary Lock)	1
10	. . . . .	Connector Assembly (Horn)	1
10	1476064	Connector	1
10	1476109	Connector Lock	1
10	1330356	Seal	2
10	1330355	Terminal	3
10	1476108	Wire Seal	1

©2014 HYSTER COMPANY

WIRE HARNESS
RH CHASSIS – KUBOTA 2.5L

ITEM	PART NO.	DESCRIPTION	QTY
11	. . . . .	Connector Assembly (Power Distribution Module)	1
11	1521184	Connector	1
11	1323579	Seal	5
11	1327164	Seal	2
11	1330281	Terminal	5
11	1521989	Terminal	1
11	1402888	Seal	1
11	1521188	Lock	1
12	. . . . .	Connector Assembly (Power Distribution Module)	1
12	1521183	Connector	1
12	1323579	Seal	7
12	1327164	Seal	1
12	1330281	Terminal	4
12	1521989	Terminal	3
12	1521188	Lock	1
13	1534828	Clip	1
14	275496	Conduit	AR
15	275497	Conduit	AR
16	1531490	Conduit	1
17	. . . . .	Connector Assembly (Hydraulic Filter)	1
17	1329152	Plug	1
17	1329151	Terminal	1
17	1330281	Terminal	2
17	1402888	Seal	2
18	. . . . .	Connector Assembly (End Cap)	1
18	1329150	Connector	1
18	1327164	Seal	2
18	1329151	Terminal	1
19	. . . . .	Connector Assembly (Power Distribution Module)	1
19	1521185	Connector	1
19	1521188	Lock	1
19	1323579	Seal	8
19	1521989	Terminal	2
19	1330281	Terminal	6
20	. . . . .	Connector Assembly (Power Distribution Module)	1
20	1521186	Connector	1
20	1521188	Lock	1
20	1323579	Seal	7
20	1327164	Seal	1
20	1521989	Terminal	7
21	. . . . .	Connector Assembly (End Cap)	1
21	4047669	Connector	1
21	1330439	Plug	4
22	. . . . .	Connector Assembly (Accessory 2)	1
22	1632865	Connector	1
22	1514603	Connector	1
22	1330439	Plug	1
22	1554359	Terminal	3
23	275495	Conduit	AR
24	275493	Conduit	AR

©2014 HYSTER COMPANY

WIRE HARNESS
RH CHASSIS – KUBOTA 2.5L

ITEM	PART NO.	DESCRIPTION	QTY
25	. . . . .	Connector Assembly (Key Switch)	1
25	1490242	Connector (2 Way)	1
25	1490243	Connector	1
25	1330438	Terminal (Socket)	2
26	1626727	Connector (End Cap)	1
27	. . . . .	Connector Assembly (To Alternate Horn Button)	1
27	1490242	Connector (2 Way)	1
27	1490243	Connector	1
27	1330438	Terminal (Socket)	1
28	1626727	Connector (Endcap)	1
29	. . . . .	Connector Assembly (To Bus Terminal 2)	1
29	1489656	Connector (4-Way)	1
29	1489657	Connector	1
29	1330438	Terminal (Socket)	4
30	4036523	Plug	1
31	1509888	Clip	3
32	1587778	Clip	4
33	. . . . .	Connector Assembly (To Back-Up Alarm Harness)	1
33	1490242	Connector (2 Way)	1
33	1490243	Connector	1
33	1330438	Terminal (Socket)	2
34	1626727	Connector (Endcap)	1
35	1531492	T-Fitting	1
36	275499	Conduit	AR
37	. . . . .	Connector Assembly (Coolant Level)	1
37	4052151	Connector	1
37	1329151	Terminal	1
37	1330281	Terminal	2
37	1402888	Seal	2
38	. . . . .	Connector Assembly (Endcap)	1
38	1329150	Connector	1
38	1329151	Terminal	1
38	1327164	Seal	2
39	. . . . .	Connector Assembly (Endcap)	1
39	1541988	Connector (8 Pin)	1
39	1484377	Plug	8
40	. . . . .	Connector Assembly (To MLM Harness)	1
40	1541991	Connector	1
40	1541992	Connector	1
40	1463139	Terminal	5
40	1484377	Plug	3
41	1509890	Clip	2
42	1699754	Conduit	AR
43	1509890	Clip	2
44	1587778	Clip	4
44	. . . . .	Connector Assembly (To Seat Harness)	1
44	1531973	Connector	1
44	1531974	Connector	1
44	1463139	Terminal	4
44	1484377	Plug	2

©2014 HYSTER COMPANY

WIRE HARNESS
RH CHASSIS – KUBOTA 2.5L

ITEM	PART NO.	DESCRIPTION	QTY
45	. . . . .	Connector Assembly (Hydraulic Temp)	1
45	1402868	Connector	1
45	1323576	Terminal	2
46	. . . . .	Connector Assembly (To Transmission Harness)	1
46	1525567	Connector	1
46	1529046	Connector (Lock)	1
46	1463139	Terminal	11
46	1484377	Plug	1
47	. . . . .	Connector Assembly (To Transmission Harness)	1
47	1531973	Connector	1
47	1531974	Connector	1
47	1463139	Terminal	6
48	1500899	Clip	1
49	. . . . .	Connector Assembly (To Engine Harness)	1
49	1493428	Connector (12-Way)	1
49	1330438	Terminal (Socket)	11
49	1484377	Plug	1
49	1500913	Connector (Secondary Lock)	1
50	. . . . .	Connector Assembly (To Engine Harness)	1
50	1502625	Connector	1
50	1330438	Terminal (Socket)	8
50	1502626	Connector (Secondary Lock)	1
51	. . . . .	Connector Assembly (To Engine Harness)	1
51	1632865	Connector	1
51	1554359	Terminal	3
51	1330439	Plug	1
51	1514603	Connector	1
52	1534282	Clip	4
53	. . . . .	Connector Assembly (To Lights/Cab Harness)	1
53	1632865	Connector	1
53	1514603	Connector	1
53	1554359	Terminal	4
54	. . . . .	Connector Assembly (Endcap)	1
54	4060737	Connector	1
54	1330439	Plug	4
55	. . . . .	Connector Assembly (Acc 1)	1
55	4047664	Connector	1
55	1554359	Terminal	2
55	1546697	Connector (Secondary Lock)	1
56	. . . . .	Connector Assembly	1
56	4060737	Connector	1
56	1330439	Plug	2
57	1540388	Conduit	AR
58	. . . . .	Connector Assembly (Seat Switch Harness)	1
58	1632865	Connector	1
58	1514603	Connector	1
58	1554359	Terminal	4
59	1602431	Fuse Holder	1
60	. . . . .	Connector Assembly (Hydraulic Solenoid)	1
60	1490242	Connector (2 Way)	1

©2014 HYSTER COMPANY

WIRE HARNESS

RH CHASSIS – KUBOTA 2.5L

ITEM	PART NO.	DESCRIPTION	QTY
60	1490243	Connector	1
60	1330438	Terminal (Socket)	2
60	1626727	Connector (End Cap)	1

©2014 HYSTER COMPANY

WIRE HARNESS (FIGURE 7-25)

RH CHASSIS WITH SEAT BELT SEQUENCE MODULE — KUBOTA 2.5L LPG

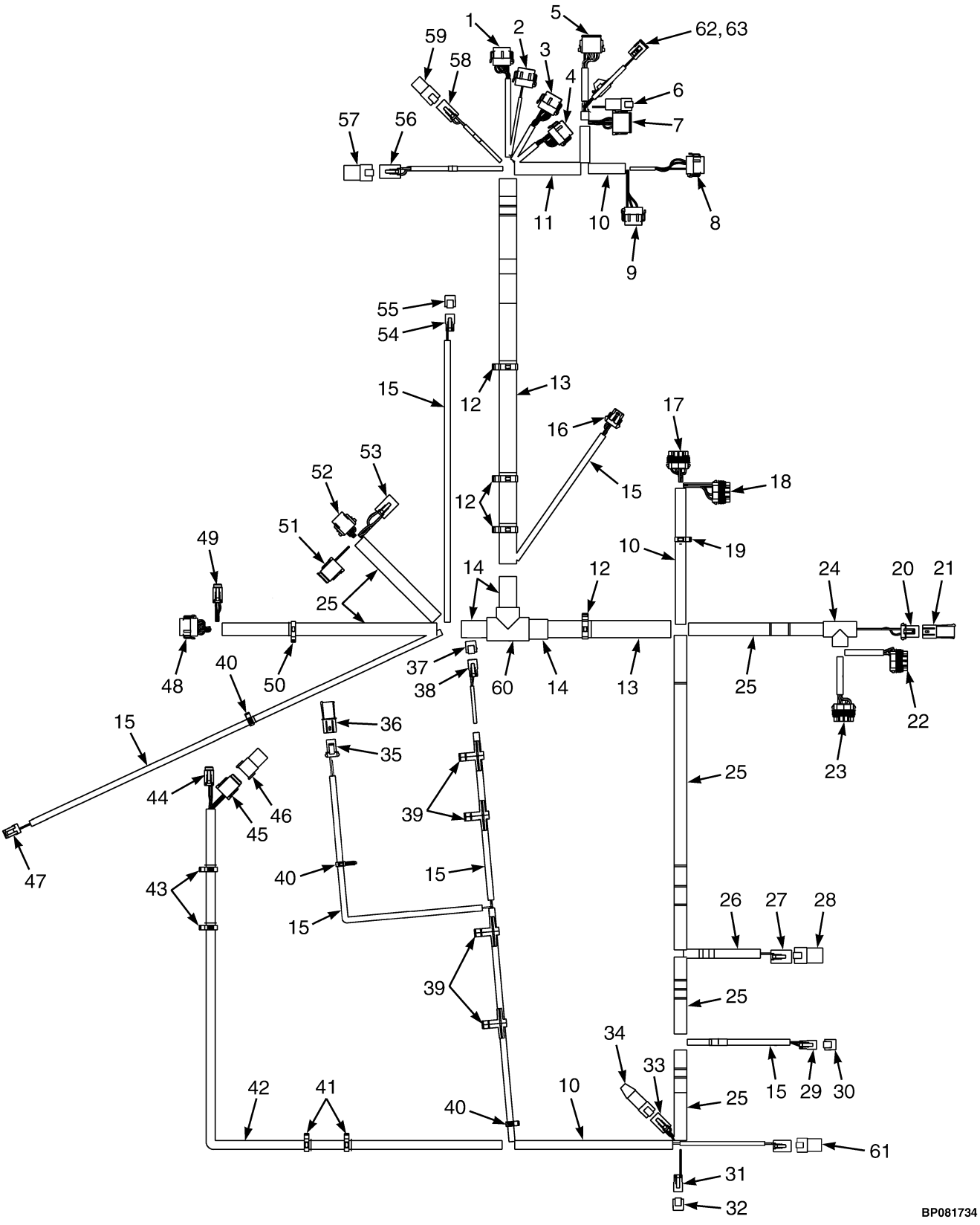

©2014 HYSTER COMPANY

WIRE HARNESS

RH CHASSIS WITH SEAT BELT SEQUENCE MODULE – KUBOTA 2.5L LPG

ITEM	PART NO.	DESCRIPTION	QTY
	4635258	Wire Harness (Chassis)	1
1	. . . . .	Connector Assembly (Vehicle System Manager)	1
1	1525570	Connector	1
1	1463139	Terminal	8
1	1484377	Plug	4
1	1530037	Connector (Secondary Lock)	1
2	. . . . .	Connector Assembly (Vehicle System Manager)	1
2	1525569	Connector	1
2	1484377	Plug	10
2	1463139	Terminal	2
2	1530037	Connector (Secondary Lock)	1
3	. . . . .	Connector Assembly (Vehicle System Manager)	1
3	1525568	Connector	1
3	1463139	Terminal	7
3	1484377	Plug	5
3	1530037	Connector (Secondary Lock)	1
4	. . . . .	Connector Assembly (Vehicle System Manager)	1
4	1525567	Connector	1
4	1463139	Terminal	9
4	1484377	Plug	3
4	1530037	Connector (Secondary Lock)	1
5	. . . . .	Connector Assembly (Vehicle System Manager)	1
5	1525563	Connector	1
5	1363886	Terminal (Socket)	4
5	1330438	Terminal (Socket)	8
5	1500913	Connector	1
6	. . . . .	Connector Assembly (Cowl Harness)	1
6	1489655	Connector (4 Way)	1
6	1330437	Terminal (Pin)	4
6	1330416	Connector	1
7	. . . . .	Connector Assembly (Cowl Harness)	1
7	1493428	Connector (12-Way)	1
7	1330438	Terminal (Socket)	10
7	1484377	Plug	2
7	1500913	Connector	1
8	. . . . .	Connector Assembly (Vehicle System Manager)	1
8	1525567	Connector	1
8	1484377	Plug	9
8	1463139	Terminal	3
8	1529046	Connector (Secondary Lock)	1
9	. . . . .	Connector Assembly (Vehicle System Manager)	1
9	1525569	Connector	1
9	1463139	Terminal	3
9	1484377	Plug	9
9	1529046	Connector (Secondary Lock)	1
10	275496	Conduit	AR
11	275497	Conduit	AR
12	1534282	Clip	4
13	1540388	Conduit	AR
14	275499	Conduit	AR

©2014 HYSTER COMPANY

WIRE HARNESS

RH CHASSIS WITH SEAT BELT SEQUENCE MODULE – KUBOTA 2.5L LPG

ITEM	PART NO.	DESCRIPTION	QTY
15	275493	Conduit	AR
16	. . . . .	Connector Assembly (Horn)	1
16	1476064	Connector	1
16	1330355	Terminal	3
16	1330356	Seal	2
16	1476108	Wire Seal	1
16	1476109	Connector Lock	1
17	. . . . .	Connector Assembly (Power Distribution Module)	1
17	1521184	Connector	1
17	1327164	Seal	1
17	1330281	Terminal	6
17	1521989	Terminal	1
17	1323579	Seal	5
17	1402888	Seal	2
17	1521188	Lock	1
18	. . . . .	Connector Assembly (Power Distribution Module)	1
18	1521183	Connector	1
18	1330281	Terminal	4
18	1327164	Seal	1
18	1323579	Seal	7
18	1521989	Terminal	3
18	1521188	Lock	1
19	1534828	Clip	1
20	. . . . .	Connector Assembly (Hydraulic Filter)	1
20	1329152	Plug	1
20	1330281	Terminal	2
20	1402888	Seal	2
20	1329151	Terminal	1
21	. . . . .	Connector Assembly (End Cap)	1
21	1329150	Connector	1
21	1327164	Seal	2
21	1329151	Terminal	1
22	. . . . .	Connector Assembly (Power Distribution Module)	1
22	1521185	Connector	1
22	1330281	Terminal	5
22	1521989	Terminal	3
22	1323579	Seal	8
22	1521188	Lock	1
23	. . . . .	Connector Assembly (Power Distribution Module)	1
23	1521186	Connector	1
23	1521989	Terminal	7
23	1323579	Seal	7
23	1327164	Seal	1
23	1521188	Lock	1
24	1531490	Conduit	1
25	275497	Conduit	AR
26	275495	Conduit	AR
27	. . . . .	Connector Assembly (Accessory 2)	1
27	1514602	Connector	1
27	1554359	Terminal	3

©2014 HYSTER COMPANY

WIRE HARNESS

RH CHASSIS WITH SEAT BELT SEQUENCE MODULE – KUBOTA 2.5L LPG

ITEM	PART NO.	DESCRIPTION	QTY
27	1330439	Plug	1
27	1514603	Connector	1
28	. . . . .	Connector Assembly (End Cap)	1
28	1514597	Connector	1
28	1330439	Plug	4
29	. . . . .	Connector Assembly (Hood Switch/Key Switch)	1
29	1490242	Connector (2 Way)	1
29	1330438	Terminal (Socket)	1
29	1490243	Connector	1
30	1626727	Connector (End Cap)	1
31	. . . . .	Connector Assembly (Alternate Horn Button)	1
31	1490242	Connector (2 Way)	1
31	1330438	Terminal (Socket)	2
31	1490243	Connector	1
32	1626727	Connector (End Cap)	1
33	. . . . .	Connector Assembly (Bus Terminal)	1
33	1489656	Connector (4-Way)	1
33	1330438	Terminal (Socket)	4
33	1489657	Connector (Secondary Lock)	1
34	1531973	Connector (End Cap)	1
35	. . . . .	Connector Assembly (Coolant Level)	1
35	1329152	Plug	1
35	1330281	Terminal	2
35	1402888	Seal	2
35	1329151	Terminal	1
36	. . . . .	Connector Assembly (End Cap)	1
36	1493428	Connector (12-Way)	1
36	1327164	Seal	2
36	1329151	Terminal	1
37	1626727	Connector (End Cap)	1
38	. . . . .	Connector Assembly (Back-Up Alarm)	1
38	1490242	Connector (2 Way)	1
38	1330438	Terminal (Socket)	2
38	1490243	Connector	1
39	1587778	Clip	4
40	1509888	Clip	2
41	1509890	Clip	2
42	1699754	Conduit	AR
43	1509890	Clip	2
44	. . . . .	Connector Assembly (Seat Harness)	1
44	1531973	Connector	1
44	1463139	Terminal	4
44	1484377	Plug	2
44	1531974	Connector	1
45	. . . . .	Connector Assembly (MLM Harness)	1
45	1541991	Connector	1
45	1463139	Terminal	5
45	1484377	Plug	3
45	1541992	Connector (Secondary Lock)	1
46	. . . . .	Connector Assembly (Endcap)	1

©2014 HYSTER COMPANY

WIRE HARNESS

RH CHASSIS WITH SEAT BELT SEQUENCE MODULE – KUBOTA 2.5L LPG

ITEM	PART NO.	DESCRIPTION	QTY
46	1541988	Connector (8 Pin)	1
46	1484377	Plug	8
47	. . . . .	Connector Assembly (Hydraulic Temp)	1
47	1402868	Connector	1
47	1323576	Terminal	2
48	. . . . .	Connector Assembly (Transmission Harness)	1
48	1525567	Connector	1
48	1463139	Terminal	11
48	1484377	Plug	1
48	1529046	Connector (Secondary Lock)	1
49	. . . . .	Connector Assembly (Transmission Harness)	1
49	1531973	Connector	1
49	1463139	Terminal	6
49	1531974	Connector	1
50	1500899	Clip	1
51	. . . . .	Connector Assembly (Engine Harness)	1
51	1541991	Connector	1
51	1463139	Terminal	8
51	1541992	Connector (Secondary Lock)	1
52	. . . . .	Connector Assembly (Engine Harness)	1
52	1502625	Connector	1
52	1330438	Terminal (Socket)	8
52	1484377	Plug	1
52	1502626	Connector (Secondary Lock)	1
53	. . . . .	Connector Assembly (Engine Harness)	1
53	1514602	Connector	1
53	1554359	Terminal	4
53	1514603	Connector	1
54	. . . . .	Connector Assembly (Hydraulic Solenoid)	1
54	1490242	Connector (2 Way)	1
54	1330438	Terminal (Socket)	2
54	1490243	Connector	1
55	1626727	Connector (End Cap)	1
56	. . . . .	Connector Assembly (Lights/Cab Harness)	1
56	1514602	Connector	1
56	1554359	Terminal	4
56	1514603	Connector	1
57	. . . . .	Connector Assembly (End Cap)	1
57	1514597	Connector	1
57	1330439	Plug	4
58	. . . . .	Connector Assembly (Accessory 1)	1
58	1545202	Connector	1
58	1554359	Terminal	2
58	1546697	Connector	1
59	. . . . .	Connector Assembly (End Cap)	1
59	1480187	Connector	1
60	1531492	T-Fitting	1
61	. . . . .	Connector Assembly (Seat Switch Harness)	1
61	1493465	Connector (2 Pin)	1
61	1330414	Connector (Secondary Lock)	1

©2014 HYSTER COMPANY

WIRE HARNESS

RH CHASSIS WITH SEAT BELT SEQUENCE MODULE – KUBOTA 2.5L LPG

ITEM	PART NO.	DESCRIPTION	QTY
61	1330437	Terminal (Pin)	2
62	. . . . .	Connector Assembly (Seat Belt Sequence Module)	1
62	1502625	Connector	1
62	1502626	Connector	1
62	1330438	Terminal (Socket)	6
62	1484377	Plug	2
63	1602431	Fuse Holder	1
63	1498044	Fuse (5 Amp)	1

©2014 HYSTER COMPANY

WIRE HARNESS (FIGURE 7-26)

RH CHASSIS — YANMAR 2.6L AND 3.3L, DIESEL

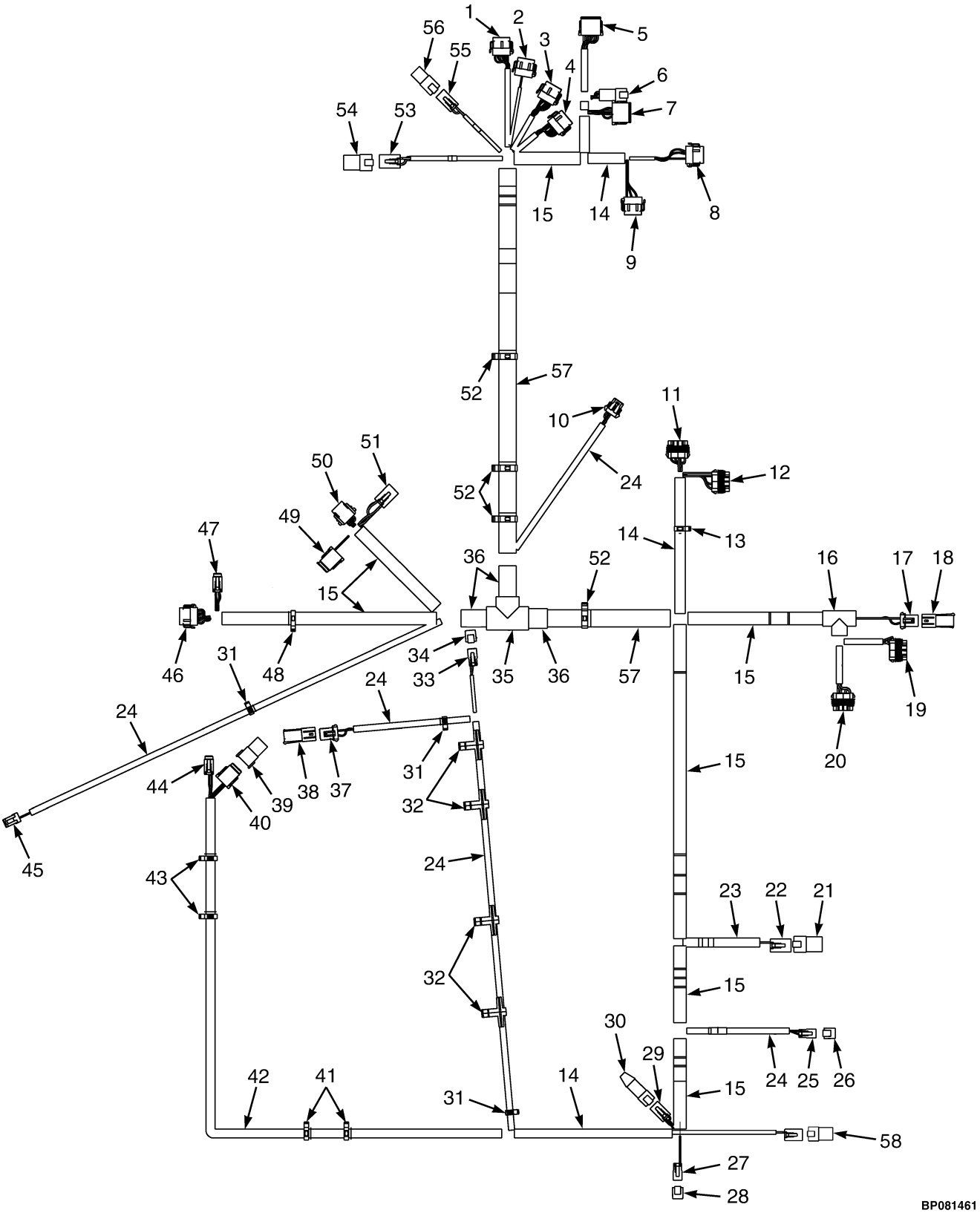

©2014 HYSTER COMPANY

WIRE HARNESS

RH CHASSIS – YANMAR 2.6L AND 3.3L, DIESEL

ITEM	PART NO.	DESCRIPTION	QTY
	4629784	Wire Harness (Chassis)	1
1	. . . . .	Connector Assembly (Vehicle System Manager)	1
1	1525570	Connector	1
1	1463139	Terminal	8
1	1484377	Plug	4
1	1530037	Connector (Secondary Lock)	1
2	. . . . .	Connector Assembly (Vehicle System Manager)	1
2	1525569	Connector	1
2	1463139	Terminal	12
2	1530037	Connector (Secondary Lock)	1
3	. . . . .	Connector Assembly (Vehicle System Manager)	1
3	1525568	Connector	1
3	1463139	Terminal	9
3	1484377	Plug	3
3	1530037	Connector (Secondary Lock)	1
4	. . . . .	Connector Assembly (Vehicle System Manager)	1
4	1525567	Connector	1
4	1463139	Terminal	9
4	1484377	Plug	3
4	1530037	Connector (Secondary Lock)	1
5	. . . . .	Connector Assembly (Vehicle System Manager)	1
5	1525563	Connector	1
5	1330438	Terminal (Socket)	8
5	1363886	Terminal (Socket)	4
5	1500913	Connector (Secondary Lock)	1
6	. . . . .	Connector Assembly (To Cowl Harness)	1
6	1489655	Connector (4 Way)	1
6	1330437	Terminal (Pin)	4
6	1330416	Connector	1
7	. . . . .	Connector Assembly (To Cowl Harness)	1
7	1493428	Connector (12-Way)	1
7	1330438	Terminal (Socket)	9
7	1484377	Plug	3
7	1500913	Connector (Secondary Lock)	1
8	. . . . .	Connector Assembly (Vehicle System Manager)	1
8	1525567	Connector	1
8	1463139	Terminal	3
8	1484377	Plug	9
8	1529046	Connector (Secondary Lock)	1
9	. . . . .	Connector Assembly (Vehicle System Manager)	1
9	1525569	Connector	1
9	1463139	Terminal	9
9	1484377	Plug	3
9	1529046	Connector (Secondary Lock)	1
10	. . . . .	Connector Assembly (Horn)	1
10	1476064	Connector	1
10	1476109	Connector Lock	1
10	1330356	Seal	2
10	1330355	Terminal	3
10	1476108	Wire Seal	1

©2014 HYSTER COMPANY

WIRE HARNESS

RH CHASSIS – YANMAR 2.6L AND 3.3L, DIESEL

ITEM	PART NO.	DESCRIPTION	QTY
11	. . . . .	Connector Assembly (Power Distribution Module)	1
11	1521184	Connector	1
11	1323579	Seal	5
11	1327164	Seal	2
11	1330281	Terminal	5
11	1521989	Terminal	1
11	1402888	Seal	1
11	1521188	Lock	1
12	. . . . .	Connector Assembly (Power Distribution Module)	1
12	1521183	Connector	1
12	1323579	Seal	7
12	1327164	Seal	1
12	1330281	Terminal	4
12	1521989	Terminal	3
12	1521188	Lock	1
13	1534828	Clip	1
14	275496	Conduit	AR
15	275497	Conduit	AR
16	1531490	Conduit	1
17	. . . . .	Connector Assembly (Hydraulic Filter)	1
17	1329152	Plug	1
17	1329151	Terminal	1
17	1330281	Terminal	2
17	1402888	Seal	2
18	. . . . .	Connector Assembly (End Cap)	1
18	1329150	Connector	1
18	1327164	Seal	2
18	1329151	Terminal	1
19	. . . . .	Connector Assembly (Power Distribution Module)	1
19	1521185	Connector	1
19	1521188	Lock	1
19	1323579	Seal	8
19	1521989	Terminal	2
19	1330281	Terminal	6
20	. . . . .	Connector Assembly (Power Distribution Module)	1
20	1521186	Connector	1
20	1521188	Lock	1
20	1323579	Seal	7
20	1327164	Seal	1
20	1521989	Terminal	7
21	. . . . .	Connector Assembly (End Cap)	1
21	4047669	Connector	1
21	1330439	Plug	4
22	. . . . .	Connector Assembly (Accessory 2)	1
22	1632865	Connector	1
22	1514603	Connector	1
22	1330439	Plug	1
22	1554359	Terminal	3
23	275495	Conduit	AR
24	275493	Conduit	AR

©2014 HYSTER COMPANY

WIRE HARNESS

RH CHASSIS – YANMAR 2.6L AND 3.3L, DIESEL

ITEM	PART NO.	DESCRIPTION	QTY
25	. . . . .	Connector Assembly (Key Switch)	1
25	1490242	Connector (2 Way)	1
25	1490243	Connector	1
25	1330438	Terminal (Socket)	2
26	1626727	Connector (End Cap)	1
27	. . . . .	Connector Assembly (To Alternate Horn Button)	1
27	1490242	Connector (2 Way)	1
27	1490243	Connector	1
27	1330438	Terminal (Socket)	1
28	1626727	Connector (Endcap)	1
29	. . . . .	Connector Assembly (To Bus Terminal 2)	1
29	1489656	Connector (4-Way)	1
29	1489657	Connector	1
29	1330438	Terminal (Socket)	4
30	1525577	Connector (With Resistor)	1
31	1509888	Clip	3
32	1587778	Clip	4
33	. . . . .	Connector Assembly (To Back-Up Alarm Harness)	1
33	1490242	Connector (2 Way)	1
33	1490243	Connector	1
33	1330438	Terminal (Socket)	2
34	1626727	Connector (Endcap)	1
35	1531492	T-Fitting	1
36	275499	Conduit	AR
37	. . . . .	Connector Assembly (Coolant Level)	1
37	4052151	Connector	1
37	1329151	Terminal	1
37	1330281	Terminal	2
37	1402888	Seal	2
38	. . . . .	Connector Assembly (Endcap)	1
38	1329150	Connector	1
38	1329151	Terminal	1
38	1327164	Seal	2
39	. . . . .	Connector Assembly (Endcap)	1
39	1541988	Connector (8 Pin)	1
39	1484377	Plug	8
40	. . . . .	Connector Assembly (To MLM Harness)	1
40	1541991	Connector	1
40	1541992	Connector	1
40	1463139	Terminal	5
40	1484377	Plug	3
41	1509890	Clip	2
42	1699754	Conduit	AR
43	1509890	Clip	2
44	1587778	Clip	4
44	. . . . .	Connector Assembly (To Seat Harness)	1
44	1531973	Connector	1
44	1531974	Connector	1
44	1463139	Terminal	4
44	1484377	Plug	2

©2014 HYSTER COMPANY

WIRE HARNESS

RH CHASSIS – YANMAR 2.6L AND 3.3L, DIESEL

ITEM	PART NO.	DESCRIPTION	QTY
45	. . . . .	Connector Assembly (Hydraulic Temp)	1
45	1402868	Connector	1
45	1323576	Terminal	2
46	. . . . .	Connector Assembly (To Transmission Harness)	1
46	1525567	Connector	1
46	1529046	Connector (Lock)	1
46	1463139	Terminal	11
46	1484377	Plug	1
47	. . . . .	Connector Assembly (To Transmission Harness)	1
47	1531973	Connector	1
47	1531974	Connector	1
47	1463139	Terminal	6
48	1500899	Clip	1
49	. . . . .	Connector Assembly (To Engine Harness)	1
49	1493428	Connector (12-Way)	1
49	1330438	Terminal (Socket)	11
49	1484377	Plug	1
49	1500913	Connector (Secondary Lock)	1
50	. . . . .	Connector Assembly (To Engine Harness)	1
50	1541991	Connector	1
50	1463139	Terminal	8
50	1541992	Connector (Secondary Lock)	1
51	. . . . .	Connector Assembly (To Engine Harness)	1
51	1632865	Connector	1
51	1554359	Terminal	3
51	1330439	Plug	1
51	1514603	Connector	1
52	1534282	Clip	4
53	. . . . .	Connector Assembly (To Lights/Cab Harness)	1
53	1632865	Connector	1
53	1514603	Connector	1
53	1554359	Terminal	4
54	. . . . .	Connector Assembly (Endcap)	1
54	4060737	Connector	1
54	1330439	Plug	4
55	. . . . .	Connector Assembly (Acc 1)	1
55	4047664	Connector	1
55	1554359	Terminal	2
55	1546697	Connector (Secondary Lock)	1
56	. . . . .	Connector Assembly	1
56	4060737	Connector	1
56	1330439	Plug	2
57	1540388	Conduit	AR
58	. . . . .	Connector Assembly (Seat Switch Harness)	1
58	1632865	Connector	1
58	1514603	Connector	1
58	1554359	Terminal	4
58	4047669	Connector (End Cap)	1

©2014 HYSTER COMPANY

NOTES

©2014 HYSTER COMPANY

WIRE HARNESS (FIGURE 7-27)

RH CHASSIS WITH SEAT BELT SEQUENCE MODULE — YANMAR 2.6L AND 3.3L, DIESEL

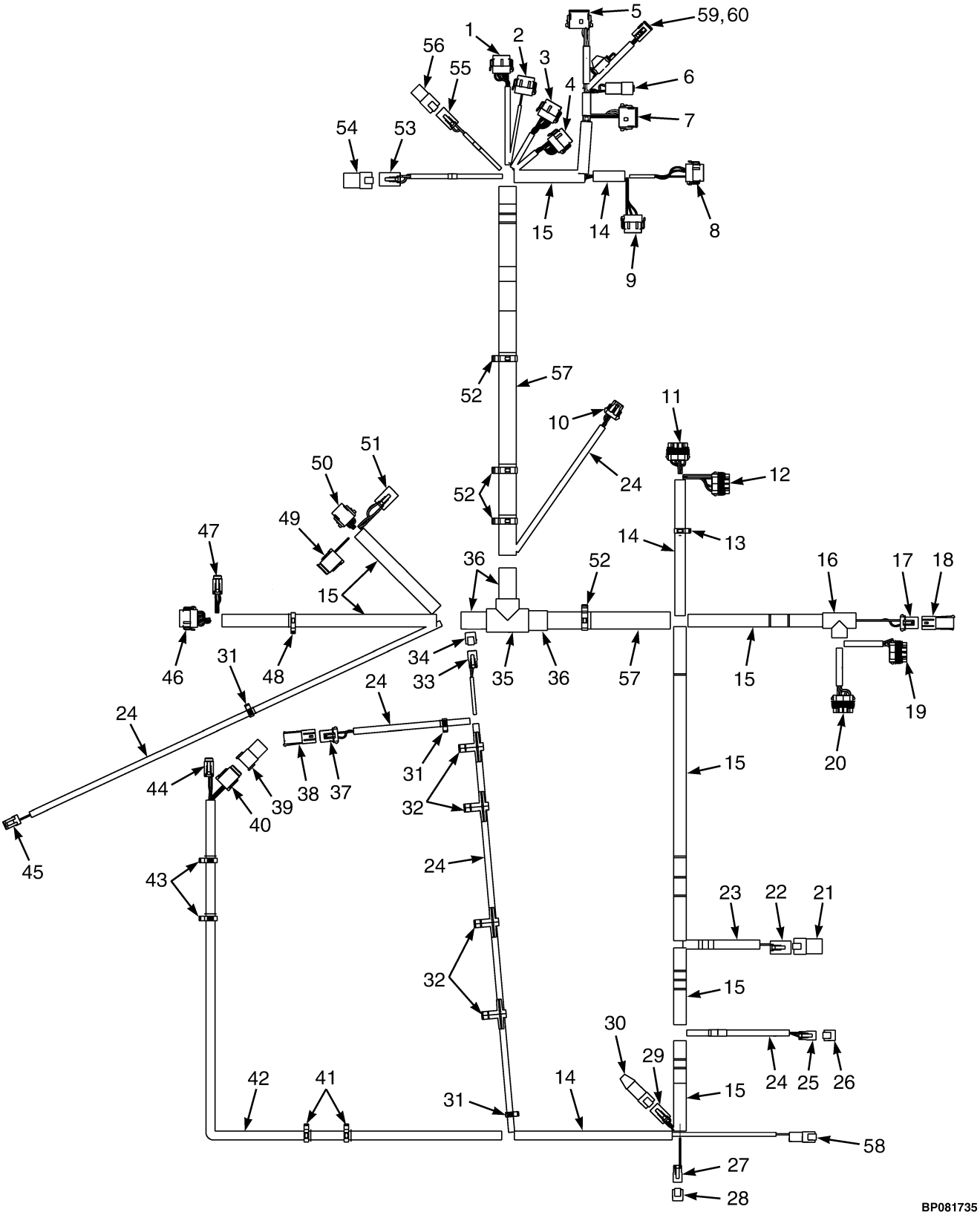

©2014 HYSTER COMPANY

WIRE HARNESS

RH CHASSIS WITH SEAT BELT SEQUENCE MODULE – YANMAR 2.6L AND 3.3L, DIESEL

ITEM	PART NO.	DESCRIPTION	QTY
	4635288	Wire Harness (Chassis)	1
1	. . . . .	Connector Assembly (Vehicle System Manager)	1
1	1525570	Connector	1
1	1463139	Terminal	8
1	1484377	Plug	4
1	1530037	Connector (Secondary Lock)	1
2	. . . . .	Connector Assembly (Vehicle System Manager)	1
2	1525569	Connector	1
2	1463139	Terminal	12
2	1530037	Connector (Secondary Lock)	1
3	. . . . .	Connector Assembly (Vehicle System Manager)	1
3	1525568	Connector	1
3	1463139	Terminal	9
3	1484377	Plug	3
3	1530037	Connector (Secondary Lock)	1
4	. . . . .	Connector Assembly (Vehicle System Manager)	1
4	1525567	Connector	1
4	1463139	Terminal	9
4	1484377	Plug	3
4	1530037	Connector (Secondary Lock)	1
5	. . . . .	Connector Assembly (Vehicle System Manager)	1
5	1525563	Connector	1
5	1330438	Terminal (Socket)	8
5	1363886	Terminal (Socket)	4
5	1500913	Connector	1
6	. . . . .	Connector Assembly (To Cowl Harness)	1
6	1489655	Connector (4 Way)	1
6	1330437	Terminal (Pin)	4
6	1330416	Connector	1
7	. . . . .	Connector Assembly (To Cowl Harness)	1
7	1493428	Connector (12-Way)	1
7	1330438	Terminal (Socket)	9
7	1484377	Plug	3
7	1500913	Connector	1
8	. . . . .	Connector Assembly (Vehicle System Manager)	1
8	1525567	Connector	1
8	1463139	Terminal	3
8	1484377	Plug	9
8	1529046	Connector (Secondary Lock)	1
9	. . . . .	Connector Assembly (Vehicle System Manager)	1
9	1525569	Connector	1
9	1463139	Terminal	9
9	1484377	Plug	3
9	1529046	Connector (Secondary Lock)	1
10	. . . . .	Connector Assembly (Horn)	1
10	1476064	Connector	1
10	1476109	Connector Lock	1
10	1330356	Seal	2
10	1330355	Terminal	3
10	1476108	Wire Seal	1

©2014 HYSTER COMPANY

WIRE HARNESS

RH CHASSIS WITH SEAT BELT SEQUENCE MODULE – YANMAR 2.6L AND 3.3L, DIESEL

ITEM	PART NO.	DESCRIPTION	QTY
11	. . . . .	Connector Assembly (Power Distribution Module)	1
11	1521184	Connector	1
11	1323579	Seal	5
11	1327164	Seal	2
11	1330281	Terminal	5
11	1521989	Terminal	1
11	1402888	Seal	1
11	1521188	Lock	1
12	. . . . .	Connector Assembly (Power Distribution Module)	1
12	1521183	Connector	1
12	1323579	Seal	7
12	1327164	Seal	1
12	1330281	Terminal	4
12	1521989	Terminal	3
12	1521188	Lock	1
13	1534828	Clip	1
14	275496	Conduit	AR
15	275497	Conduit	AR
16	1531490	Conduit	1
17	. . . . .	Connector Assembly (Hydraulic Filter)	1
17	1329152	Plug	1
17	1329151	Terminal	1
17	1330281	Terminal	2
17	1402888	Seal	2
18	. . . . .	Connector Assembly (End Cap)	1
18	1329150	Connector	1
18	1327164	Seal	2
18	1329151	Terminal	1
19	. . . . .	Connector Assembly (Power Distribution Module)	1
19	1521185	Connector	1
19	1521188	Lock	1
19	1323579	Seal	8
19	1521989	Terminal	2
19	1330281	Terminal	6
20	. . . . .	Connector Assembly (Power Distribution Module)	1
20	1521186	Connector	1
20	1521188	Lock	1
20	1323579	Seal	7
20	1327164	Seal	1
20	1521989	Terminal	7
21	. . . . .	Connector Assembly (End Cap)	1
21	1514597	Connector	1
21	1330439	Plug	4
22	. . . . .	Connector Assembly (Accessory 2)	1
22	1514602	Connector	1
22	1514603	Connector	1
22	1330439	Plug	1
22	1554359	Terminal	3
23	275495	Conduit	AR
24	275493	Conduit	AR

©2014 HYSTER COMPANY

WIRE HARNESS

RH CHASSIS WITH SEAT BELT SEQUENCE MODULE – YANMAR 2.6L AND 3.3L, DIESEL

ITEM	PART NO.	DESCRIPTION	QTY
25	. . . . .	Connector Assembly (Key Switch)	1
25	1490242	Connector (2 Way)	1
25	1490243	Connector	1
25	1330438	Terminal (Socket)	2
26	1626727	Connector (End Cap)	1
27	. . . . .	Connector Assembly (To Alternate Horn Button)	1
27	1490242	Connector (2 Way)	1
27	1490243	Connector	1
27	1330438	Terminal (Socket)	1
28	1626727	Connector (Endcap)	1
29	. . . . .	Connector Assembly (To Bus Terminal 2)	1
29	1489656	Connector (4-Way)	1
29	1489657	Connector	1
29	1330438	Terminal (Socket)	4
30	1525577	Connector (With Resistor)	1
31	1509888	Clip	3
32	1587778	Clip	4
33	. . . . .	Connector Assembly (To Back-Up Alarm Harness)	1
33	1490242	Connector (2 Way)	1
33	1490243	Connector	1
33	1330438	Terminal (Socket)	2
34	1626727	Connector (Endcap)	1
35	1531492	T-Fitting	1
36	275499	Conduit	AR
37	. . . . .	Connector Assembly (Coolant Level)	1
37	1329152	Plug	1
37	1329151	Terminal	1
37	1330281	Terminal	2
37	1402888	Seal	2
38	. . . . .	Connector Assembly (Endcap)	1
38	1329150	Connector	1
38	1329151	Terminal	1
38	1327164	Seal	2
39	. . . . .	Connector Assembly (Endcap)	1
39	1541988	Connector (8 Pin)	1
39	1484377	Plug	8
40	1514597	Connector	1
40	1330439	Plug	4
40	. . . . .	Connector Assembly (To MLM Harness)	1
40	1541991	Connector	1
40	1541992	Connector	1
40	1463139	Terminal	5
40	1484377	Plug	3
41	1509890	Clip	2
42	1699754	Conduit	AR
43	1509890	Clip	2
44	1587778	Clip	4
44	. . . . .	Connector Assembly (To Seat Harness)	1
44	1531973	Connector	1
44	1531974	Connector	1

©2014 HYSTER COMPANY

WIRE HARNESS

RH CHASSIS WITH SEAT BELT SEQUENCE MODULE – YANMAR 2.6L AND 3.3L, DIESEL

ITEM	PART NO.	DESCRIPTION	QTY
44	1463139	Terminal	4
44	1484377	Plug	2
45	. . . . .	Connector Assembly (Hydraulic Temp)	1
45	1402868	Connector	1
45	1323576	Terminal	2
46	. . . . .	Connector Assembly (To Transmission Harness)	1
46	1525567	Connector	1
46	1529046	Connector	1
46	1463139	Terminal	11
46	1484377	Plug	1
47	. . . . .	Connector Assembly (To Transmission Harness)	1
47	1531973	Connector	1
47	1531974	Connector	1
47	1463139	Terminal	6
48	1500899	Clip	1
49	. . . . .	Connector Assembly (To Engine Harness)	1
49	1493428	Connector (12-Way)	1
49	1330438	Terminal (Socket)	11
49	1484377	Plug	1
49	1500913	Connector	1
50	. . . . .	Connector Assembly (To Engine Harness)	1
50	1541991	Connector	1
50	1463139	Terminal	8
50	1541992	Connector (Secondary Lock)	1
51	. . . . .	Connector Assembly (To Engine Harness)	1
51	1514602	Connector	1
51	1554359	Terminal	3
51	1330439	Plug	1
51	1514603	Connector	1
52	1534282	Clip	4
53	. . . . .	Connector Assembly (To Lights/Cab Harness)	1
53	1514602	Connector	1
53	1514603	Connector	1
53	1554359	Terminal	4
54	. . . . .	Connector Assembly (Endcap)	1
54	1514597	Connector	1
54	1330439	Plug	4
55	. . . . .	Connector Assembly (Acc 1)	1
55	1545202	Connector	1
55	1554359	Terminal	2
55	1546697	Connector (Secondary Lock)	1
56	. . . . .	Connector Assembly	1
56	1480187	Connector	1
56	1330439	Plug	2
57	1540388	Conduit	AR
58	. . . . .	Connector Assembly (Seat Switch Harness)	1
58	1493465	Connector (2 Pin)	1
58	1330414	Connector (Secondary Lock)	1
58	1330437	Terminal (Pin)	2
59	. . . . .	Connector Assembly (Seat Belt Sequence Module)	1

©2014 HYSTER COMPANY

WIRE HARNESS

RH CHASSIS WITH SEAT BELT SEQUENCE MODULE – YANMAR 2.6L AND 3.3L, DIESEL

ITEM	PART NO.	DESCRIPTION	QTY
59	1502625	Connector	1
59	1502626	Connector (Secondary Lock)	1
59	1330438	Terminal (Socket)	6
59	1484377	Plug	2
60	1602431	Fuse Holder	1
60	1498044	Fuse (5 Amp)	1

©2014 HYSTER COMPANY

WIRE HARNESS (ENGINE) (FIGURE 7-28)
MAZDA 2.2L, GASOLINE

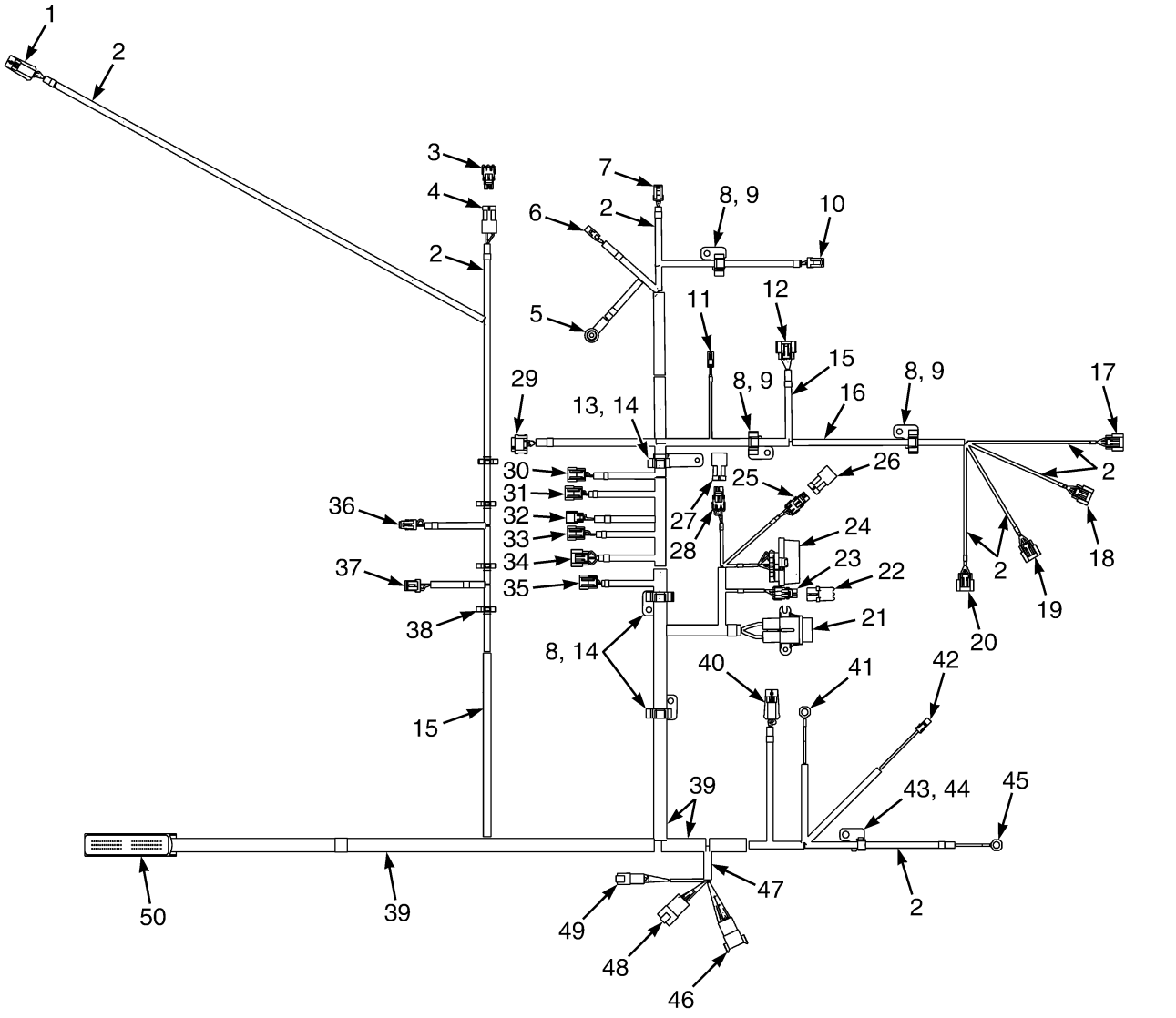

©2014 HYSTER COMPANY

WIRE HARNESS (ENGINE)
MAZDA 2.2L, GASOLINE

ITEM	PART NO.	DESCRIPTION	QTY
	4605855	Wire Harness	1
1	1705171	Kit-Connector (Post Catalytic 02 Sensor)	1
1	1476108	Wire Seal	4
1	1498424	Housing	1
1	1650797	Lock	1
1	1653508	Terminal (Gold)	4
1	1520513	Clip	1
2	275493	Conduit	AR
3	1705176	Kit-Connector (Air Filter Restriction Sensor Cap)	1
3	1465468	Connector	1
3	1327164	Seal	2
4	1705175	Kit-Connector (Air Filter Restriction Indicator)	1
4	1465469	Connector	1
4	1323578	Terminal	2
4	1491821	Terminal	2
5	1705189	Kit-Connector (Alternator) (B+)	1
5	1567694	Ring Terminal	1
5	1656059	Boot	1
6	1705188	Kit-Connector (Alternator) (Alternator)	1
6	1308259	Connector Body	1
7	1705177	Kit-Connector (Oil Pressure Sensor)	1
7	1327957	Connector	1
7	1532571	Terminal	3
8	1532761	Clip	5
9	1532775	Clip	3
10	1705173	Kit-Connector (Engine Coolant Temperature)	1
10	1323586	Connector	1
10	1532571	Terminal	2
11	1705186	Kit-Connector (Ignition Suppressor)	1
11	1641935	Connector	1
12	1705187	Kit-Connector (Distributor) (Cam Sensor)	1
12	1656060	Sensor	1
13	1558226	Clip	1
14	1532778	Clip	3
15	275496	Conduit	AR
16	275496	Conduit	AR
17	4045488	Kit-Connector Ignition Coil (Coil #1)	1
17	1641932	Connector	1
18	4045488	Kit-Connector Ignition Coil (Coil #2)	1
18	1641932	Connector	1
19	4045488	Kit-Connector Ignition Coil (Coil #3)	1
19	1641932	Connector	1
20	4045488	Kit-Connector Ignition Coil (Coil #4)	1
20	1641932	Connector	1
21	. . . . .	Connector Assembly (Alternator)	1
21	1543553	Fuse Holder	1
21	1497235	Fuse Holder	1
21	1454829	Fuse (60 Amp)	1
21	1454827	Seal	2
21	1520543	Terminal	2

©2014 HYSTER COMPANY

WIRE HARNESS (ENGINE)
MAZDA 2.2L, GASOLINE

ITEM	PART NO.	DESCRIPTION	QTY
22	1705199	Kit-Connector (To ECU Interface)	1
22	1641945	Spacer	1
22	1641947	Cap	1
23	1705166	Kit-Connector (ECM Test Port)	1
23	1650522	Terminal	4
23	1650523	Terminal	4
23	1641944	Connector	1
24	1705200	Kit-Connector (Mini Fuses)	1
24	1327164	Seal	2
24	1327959	Connector	1
24	1330297	Lock	4
24	1641938	Clip	1
24	1491818	Seal	4
24	1330281	Terminal	4
24	1650526	Cap	1
24	1498420	Terminal	4
25	. . . . .	Connector Assembly	1
25	1491818	Seal	2
25	1465468	Connector	1
25	1504197	Terminal	2
25	1498420	Terminal	2
26	1705184	Kit-Connector (Diagnostic)	1
26	1327164	Seal	2
26	1465469	Connector	1
27	. . . . .	Connector Assembly (Fuel Test Port)	1
27	1327164	Seal	2
27	1465469	Connector	1
28	4045488	Kit-Connector Ignition Coil (Fuel Test Port)	1
28	1491818	Seal	2
28	1465468	Connector	1
28	1498420	Terminal	2
28	1504197	Terminal	2
29	1705195	Kit-Connector (Throttle) (Bosch Throttle)	1
29	1533810	Seal	6
29	1569973	Connector Body	1
29	1610975	Terminal	6
30	1705170	Kit-Connector (Injector #2)	1
30	1647724	Connector	1
30	1650529	Seal	2
31	1705169	Kit-Connector (Injector #1)	1
31	1647724	Connector	1
31	1650529	Seal	2
32	1705174	Kit-Connector (Intake Air Temperature Sensor)	1
32	1641948	Spacer	1
32	1482651	Connector Body	1
33	1705168	Kit-Connector (Injector #4)	1
33	1647724	Connector	1
33	1650529	Seal	2
34	1705172	Kit-Connector (MAP Sensor) (Map Sensor)	1
34	1641938	Clip	1

©2014 HYSTER COMPANY

WIRE HARNESS (ENGINE)
MAZDA 2.2L, GASOLINE

ITEM	PART NO.	DESCRIPTION	QTY
34	1560441	Connector Body	1
34	1561144	Spacer	1
35	1705167	Kit-Connector (Injector #3)	1
35	1647724	Connector	1
35	1650529	Seal	2
36	1705179	Kit-Connector (Fuel Level Sensor)	1
36	1476077	Connector	1
36	1323576	Terminal	2
37	1705196	Kit-Connector (Fuel Pump)	1
37	1519611	Connector	1
38	1402816	Clip	4
39	275498	Conduit	AR
40	1705180	Kit-Connector (Pre-Catalytic O2 Sensor)	1
40	1476108	Wire Seal	4
40	1498424	Housing	1
40	1650797	Lock	1
40	1653508	Terminal (Gold)	4
40	1520513	Clip	1
41	1705190	Kit-Connector (Starter B+)	1
41	1402890	Ring Terminal	1
42	1705185	Kit-Connector (Starter)	1
42	1581313	Connector	1
42	1581315	Terminal	1
43	1558228	Clip	1
44	1532774	Clip	1
45	1705178	Kit-Connector (Ring Terminal) (Block Ground)	1
45	1402890	Ring Terminal	1
46	1705181	Kit-Connector (Chassis)	1
46	1531480	Clip	1
46	1330437	Terminal (Pin)	8
46	1330413	Connector (8 Pin)	1
46	1330418	Connector	1
47	275497	Conduit	AR
48	1705183	Kit-Connector (Chassis)	1
48	1500912	Clip	1
48	1514597	Connector	1
48	1330439	Plug	1
48	1484709	Terminal (Pin)	3
48	1514598	Connector	1
49	1705182	Kit-Connector (Chassis)	1
49	1530960	Connector	1
49	1530961	Connector (Secondary Lock)	1
49	1500912	Clip	1
49	1463138	Terminal Pin	6
50	. . . . .	Connector Assembly (ECU Connector)	1
50	1641949	Connector	1
50	1641950	Cover	1
50	1641952	Cam	1
50	1653510	Terminal (Gold)	41

©2014 HYSTER COMPANY

WIRE HARNESS (ENGINE) (FIGURE 7-29)

MAZDA 2.2L LPG

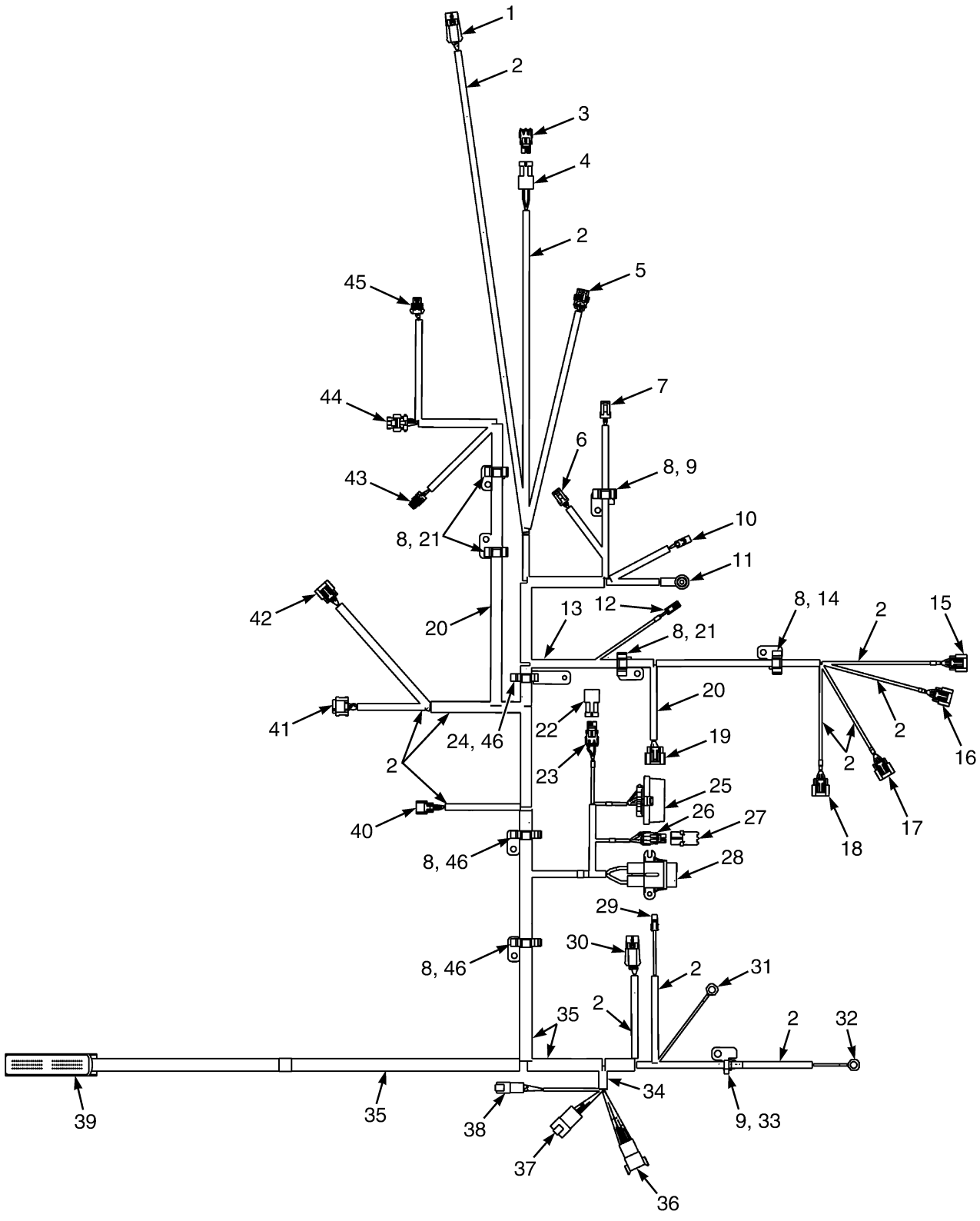

BP080942

©2014 HYSTER COMPANY

WIRE HARNESS (ENGINE)
MAZDA 2.2L LPG

ITEM	PART NO.	DESCRIPTION	QTY
	4605854	Wire Harness (Engine)	1
1	1705171	Kit-Connector (Post Catalytic 02 Sensor)	1
1	1476108	Wire Seal	4
1	1498424	Housing	1
1	1650797	Lock	1
1	1653508	Terminal (Gold)	4
2	275493	Conduit	AR
3	1705176	Kit-Connector (Cap)	1
3	1327164	Seal	2
3	1465468	Connector	1
4	1705175	Kit-Connector (Air Filter Restriction Indicator)	1
4	1465469	Connector	1
4	1323578	Terminal	2
4	1491821	Terminal	2
5	. . . . .	Connector Assembly LPG OPTEC (Sensor)	1
5	1547629	Connector (3 Way)	1
5	1323579	Seal	3
5	1508232	Terminal (Pin)	3
6	1705177	Kit-Connector (Oil Pressure Sensor)	1
6	1327957	Connector	1
6	1532571	Terminal	3
7	1705173	Kit-Connector (Engine Coolant Temperature)	1
7	1323586	Connector	1
8	1532761	Clip	7
9	1532774	Clip	2
10	1705188	Kit-Connector (Alternator)	1
10	1308259	Connector Body	1
11	1705189	Kit-Connector (Alternator) (B+)	1
11	1567694	Ring Terminal	1
11	1656059	Boot	1
12	1705186	Kit-Connector (Ignition Suppressor)	1
12	1641935	Connector	1
13	275496	Conduit	AR
14	1532775	Clip	1
15	4045488	Kit-Connector Ignition Coil (Coil #1)	1
15	1641932	Connector	1
15	1689241	Terminal	2
15	1689242	Terminal	1
15	4016131	Bracket	1
15	4016937	Strap Clamp	1
16	4045488	Kit-Connector Ignition Coil (Coil #2)	1
16	1641932	Connector	1
16	1689241	Terminal	2
16	1689242	Terminal	1
16	4016131	Bracket	1
16	4016937	Strap Clamp	1
17	4045488	Kit-Connector Ignition Coil (Coil #3)	1
17	1641932	Connector	1
17	1689241	Terminal	2
17	1689242	Terminal	1

©2014 HYSTER COMPANY

WIRE HARNESS (ENGINE)
MAZDA 2.2L LPG

ITEM	PART NO.	DESCRIPTION	QTY
17	4016131	Bracket	1
17	4016937	Strap Clamp	1
18	4045488	Kit-Connector Ignition Coil (Coil #4)	1
18	1641932	Connector	1
18	1689241	Terminal	2
18	1689242	Terminal	1
18	4016131	Bracket	1
18	4016937	Strap Clamp	1
19	1705187	Kit-Connector (Distributor) (Cam Sensor)	1
19	1656060	Sensor	1
20	275494	Conduit	AR
21	1532776	Clip	3
22	. . . . .	Connector Assembly (ECU Test Port Cap)	1
22	1465469	Connector	1
22	1327164	Seal	2
22	1520513	Clip	1
23	. . . . .	Connector Assembly (ECU Test Port Connector)	1
23	1465468	Connector	1
23	1498420	Terminal	2
23	1520513	Clip	1
24	1558226	Clip	1
25	1705200	Kit-Connector (Mini Fuses)	1
25	1327164	Seal	2
25	1327959	Connector	1
25	1330297	Lock	1
25	1491818	Seal	4
25	1641937	Cap	1
25	1330281	Terminal	4
25	1641938	Clip	1
26	1705166	Kit-Connector (ECM Test Port)	1
26	1641945	Spacer	1
26	1650522	Terminal	4
26	1705166	Kit-Connector (ECM Test Port)	1
26	1641944	Connector	1
27	1705199	Kit-Connector (ECU Interface)	1
27	1641947	Cap	1
28	. . . . .	Connector Assembly (Alternator)	1
28	1454827	Seal	1
28	1497235	Fuse Holder	1
28	1543553	Fuse Holder	1
28	1520543	Terminal	2
29	1705185	Kit-Connector (Starter)	1
29	1581313	Connector	1
29	1581315	Terminal	1
30	1705180	Kit-Connector (Pre-Catalytic O2 Sensor)	1
30	1476108	Wire Seal	4
30	1498424	Housing	1
30	1650797	Lock	1
30	1653508	Terminal (Gold)	4
31	1402890	Ring Terminal (Starter B+)	1

©2014 HYSTER COMPANY

WIRE HARNESS (ENGINE)
MAZDA 2.2L LPG

ITEM	PART NO.	DESCRIPTION	QTY
32	1402890	Ring Terminal (Block Ground)	1
33	1558228	Clip	1
34	275497	Conduit	AR
35	275498	Conduit	AR
36	1705181	Kit-Connector (Chassis)	1
36	1330413	Connector (8 Pin)	1
36	1330418	Connector	1
36	1531480	Clip	1
36	1500912	Clip	1
36	1330437	Terminal (Pin)	8
37	1705183	Kit-Connector (Chassis)	1
37	1330439	Plug	1
37	1500912	Clip	1
37	1514597	Connector	1
37	1514598	Connector	1
37	1484709	Terminal (Pin)	3
38	1705182	Kit-Connector (Chassis)	1
38	1530960	Connector	1
38	1530961	Connector (Secondary Lock)	1
38	1500912	Clip	1
38	1514598	Connector	1
38	1463138	Terminal Pin	6
39	. . . . .	Connector Assembly (ECU Connector)	1
39	1641949	Connector	1
39	1641950	Cover	1
39	1641952	Cam	1
39	1653510	Terminal (Gold)	43
40	1705174	Kit-Connector (Intake Air Temperature Sensor)	1
40	1482651	Connector Body	1
40	1641948	Spacer	1
41	1705195	Kit-Connector (Throttle) (Bosch Throttle)	1
41	1533810	Seal	6
41	1569973	Connector Body	1
41	1610975	Terminal	6
42	1705172	Kit-Connector (MAP Sensor) (Map Sensor)	1
42	1560441	Connector Body	1
42	1561144	Spacer	1
43	. . . . .	Connector Assembly (Fuel Temperature Sensor)	1
43	1402607	Electrical Connector	1
43	1323576	Terminal	2
44	1695371	Connector (EPR)	1
44	1641934	Connector	1
44	2035276	Connector (Socket Female)	5
45	. . . . .	Connector Assembly (LPG Fuel Shutoff)	1
45	1508206	Connector (2 Way)	1
45	2060555	Wire Seal	5
45	1508232	Terminal (Pin)	2
46	1532778	Clip	3

©2014 HYSTER COMPANY

WIRE HARNESS (ENGINE) (FIGURE 7-30)

KUBOTA 2.5L LPG

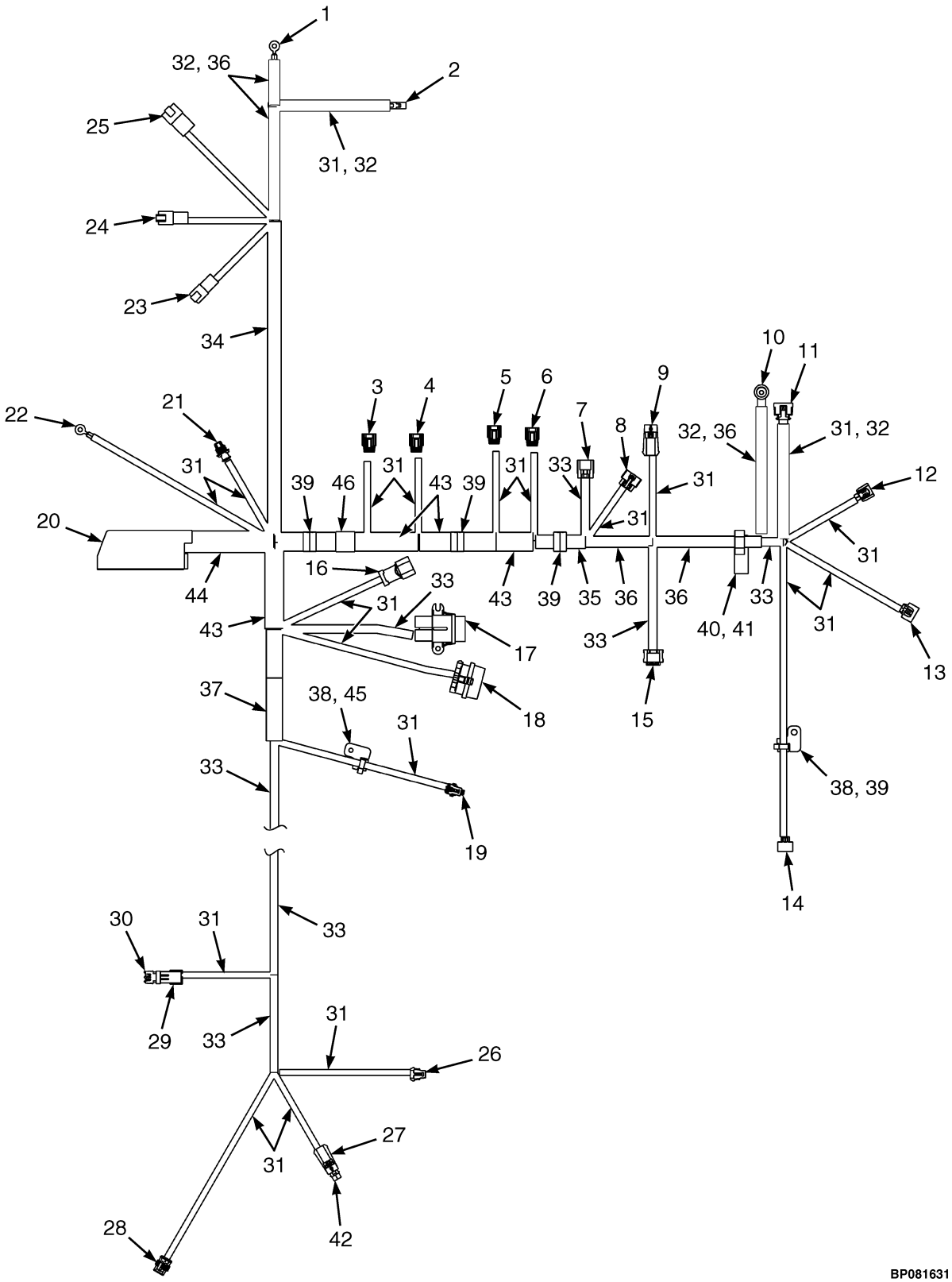

©2014 HYSTER COMPANY

WIRE HARNESS (ENGINE)
KUBOTA 2.5L LPG

ITEM	PART NO.	DESCRIPTION	QTY
	4629050	Wire Harness (Engine) (2.5L LPG)	1
1	148614	E-Ring (Starter B+)	1
2	. . . . .	Connector Assembly (Starter Solenoid)	1
2	1324311	Terminal	1
3	. . . . .	Connector Assembly (Coil-Cylinder #4)	1
3	4612988	Connector	1
3	4612978	Terminal	2
3	4614516	Wire Seal	2
4	. . . . .	Connector Assembly (Coil-Cylinder #3)	1
4	4612988	Connector	1
4	4612978	Terminal	2
4	4614516	Wire Seal	2
5	. . . . .	Connector Assembly (Coil-Cylinder #2)	1
5	4612988	Connector	1
5	4612978	Terminal	2
5	4614516	Wire Seal	2
6	. . . . .	Connector Assembly (Coil-Cylinder #1)	1
6	4612988	Connector	1
6	4612978	Terminal	2
6	4614516	Wire Seal	2
7	. . . . .	Connector Assembly (DEPR)	1
7	4612836	Connector	1
7	2070512	Plug	1
7	2314741	Terminal	5
7	2061333	Wire Seal	5
8	. . . . .	Connector Assembly (TMAP)	1
8	4074909	Connector	1
9	. . . . .	Connector Assembly (HT O2 Sensor)	1
9	1498424	Housing	1
9	1650797	Lock (Secondary)	1
9	1330355	Terminal	4
9	1476108	Wire Seal	4
10	. . . . .	Connector Assembly (Alternator B+)	1
10	148614	E-Ring	1
10	1520864	Boot	1
11	. . . . .	Connector Assembly (Alternator Conn.)	1
11	4614847	Connector	1
11	4613008	Terminal	2
11	4613009	Plug	1
11	4614848	Wire Seal	2
12	. . . . .	Connector Assembly (ENG CLT Sensor)	1
12	4028633	Connector	1
12	2314741	Terminal	2
12	2061333	Wire Seal	2
13	. . . . .	Connector Assembly (Cam Sensor)	1
13	4043880	Connector	1
13	1476598	Terminal	2
13	1476599	Seal	2
14	. . . . .	Connector Assembly (Crank Sensor)	1
14	4074625	Connector	1

©2014 HYSTER COMPANY

WIRE HARNESS (ENGINE)
KUBOTA 2.5L LPG

ITEM	PART NO.	DESCRIPTION	QTY
14	4613138	Terminal	1
14	2314782	Wire Seal	2
15	. . . . .	Connector Assembly (Bosch Throttle)	1
15	1569973	Connector Body	1
15	1525596	Terminal	6
15	1533810	Seal	6
16	. . . . .	Connector Assembly (Diagnostic)	1
16	1641944	Connector	1
16	1641945	Spacer	1
16	1641947	Cap	1
17	. . . . .	Connector Assembly (Alt 70 Amp Fuse)	1
17	1543553	Fuse Holder	1
17	1520543	Terminal	2
17	1454827	Seal	2
18	. . . . .	Connector Assembly (Fuse Holder)	1
18	1327959	Connector	1
18	1330297	Lock (Secondary)	1
18	1330281	Terminal	4
18	1327164	Seal	2
18	1402888	Seal	1
18	1323579	Seal	3
19	. . . . .	Connector Assembly (Oil Pressure)	1
19	1603021	Connector	1
19	1548517	Terminal (Socket)	3
19	1548519	Seal	3
20	. . . . .	Connector Assembly (ECM)	1
20	1641949	Connector	1
20	1607549	Terminal	33
20	4025685	Plug	52
20	4023295	Terminal	4
21	. . . . .	Connector Assembly (Knock Sensor)	1
21	4074907	Connector	1
21	1402814	Terminal	2
21	1562649	Seal	2
22	. . . . .	Connector Assembly (Ground)	1
23	. . . . .	Connector Assembly (To RH Chassis Harness)	1
23	1514597	Connector	1
23	1514598	Connector (Secondary)	1
23	1484709	Terminal (Pin)	1
23	866401	Terminal	2
23	1330439	Plug	1
24	. . . . .	Connector Assembly (To RH Chassis Harness)	1
24	1330413	Connector (8 Pin)	1
24	1330418	Connector	1
24	1330437	Terminal (Pin)	6
24	1330439	Plug	2
25	. . . . .	Connector Assembly (To RH Chassis Harness)	1
25	1330413	Connector (8 Pin)	1
25	1330418	Connector	1
25	1330437	Terminal (Pin)	6

©2014 HYSTER COMPANY

WIRE HARNESS (ENGINE)
KUBOTA 2.5L LPG

ITEM	PART NO.	DESCRIPTION	QTY
25	1330439	Plug	2
26	. . . . .	Connector Assembly (Lock-Off)	1
26	1539872	Connector	1
26	1330355	Terminal	2
26	1476108	Wire Seal	2
27	. . . . .	Connector Assembly (HT 02 Sensor 2)	1
27	1498424	Housing	1
27	1650797	Lock (Secondary)	1
27	1330355	Terminal	4
27	1476108	Wire Seal	4
28	. . . . .	Connector Assembly (LPG Low Pressure)	1
28	1547629	Connector (3 Way)	1
28	1508232	Terminal (Pin)	3
28	2060555	Wire Seal	3
29	. . . . .	Connector Assembly (Air Filter RES IND)	1
29	1465469	Connector	1
29	1323578	Terminal	2
29	1402888	Seal	2
30	. . . . .	Connector Assembly (End Cap)	1
30	1465468	Connector	1
30	1327164	Seal	2
31	275493	Conduit	AR
32	. . . . .	Sleeve	AR
33	275494	Conduit	AR
34	275497	Conduit	AR
35	275495	Conduit	AR
36	275496	Conduit	AR
37	275498	Conduit	AR
38	1532774	Clip	2
39	~~4097704~~		
	4027764	Clamp	3
40	1532776	Clip	2
41	1532762	Clip	1
42	1483329	Connector Body	1
43	1540388	Conduit	AR
44	275499	Conduit	AR
45	1558227	Clip	1

©2014 HYSTER COMPANY

WIRE HARNESS (FIGURE 7-31)
ENGINE — YANMAR 2.6L AND 3.3L, DIESEL

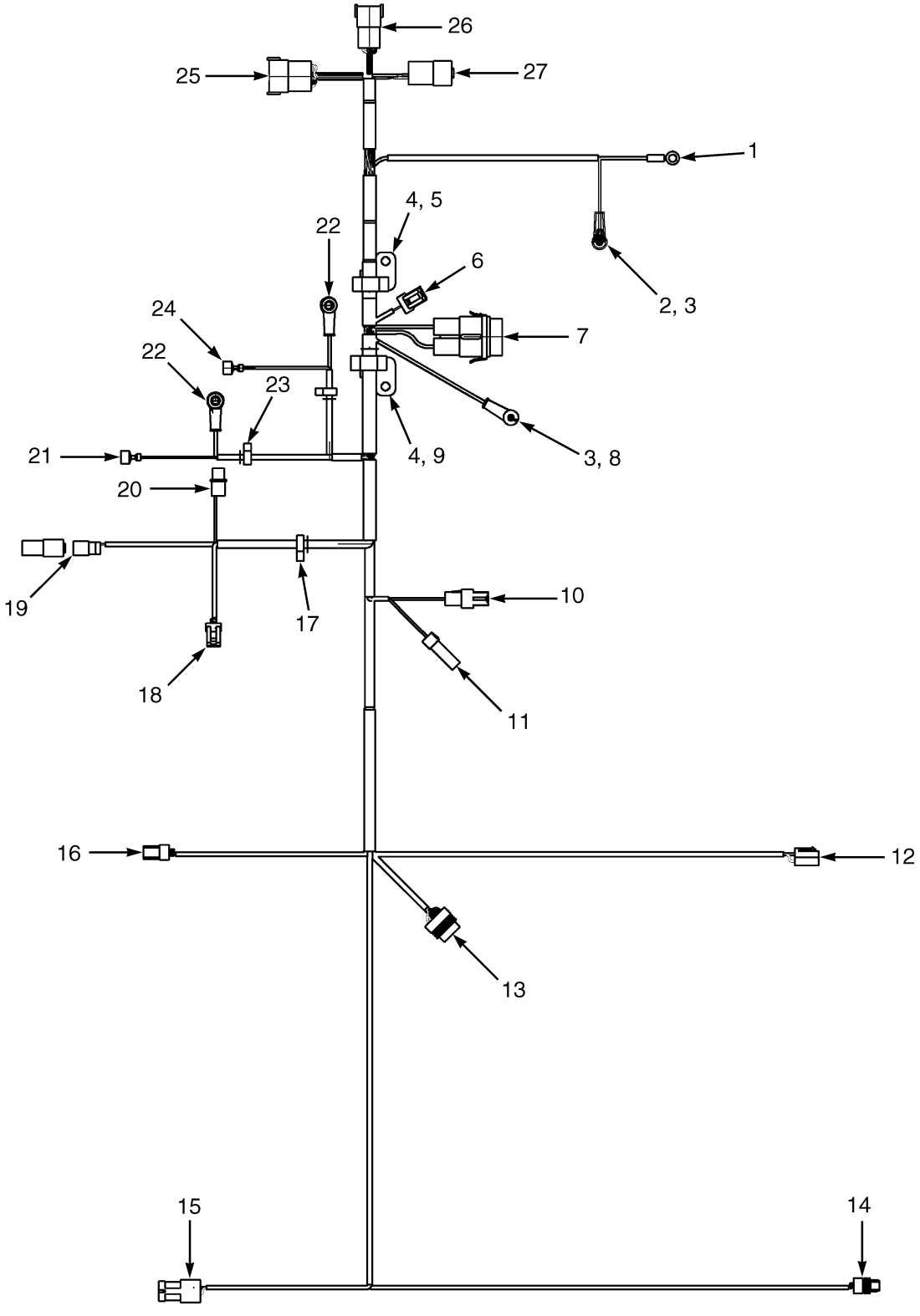

©2014 HYSTER COMPANY

WIRE HARNESS
ENGINE – YANMAR 2.6L AND 3.3L, DIESEL

ITEM	PART NO.	DESCRIPTION	QTY
	2087191	**Wire Harness**	**1**
1	148611	E-Ring (Starter Stud)	1
2	1559049	Ring Terminal (Glow Plug)	1
3	190382	Boot	2
4	1532776	Clip	2
5	1532761	Clip	1
6	**. . . . .**	**Connector Assembly (Engine RPM Sensor)**	**1**
6	**1546673**	**Connector**	**1**
6	**1323576**	**Terminal**	**3**
7	**. . . . .**	**Connector Assembly (Fuse 60 Amp)**	**1**
7	**1454860**	**Connector Body**	**1**
7	1382695	Fuse Connector	2
7	1382694	Fuse Connector	2
7	**1454829**	**Fuse (60 Amp)**	**1**
7	**1454862**	**Cover (With Seal)**	**1**
8	**148609**	**E-Ring (Glow Plug)**	**1**
9	**1532759**	**Clip**	**1**
10	1582484	Connector (Fuel Shut-off Solenoid)	1
11	1582486	Connector (Cold Start Aid)	1
12	**. . . . .**	**Connector Assembly (Alternator)**	**1**
12	1547368	Connector Body	1
12	1565098	Terminal	1
13	**. . . . .**	**Connector Assembly (Throttle Position Sensor)**	**1**
13	1525584	Connector	1
13	1532571	Terminal	6
14	**. . . . .**	**Connector Assembly (Fuel Level Sensor)**	**1**
14	1476077	Connector	1
14	**1323576**	**Terminal**	**2**
15	**. . . . .**	**Connector Assembly (Air Filter Sensor)**	**1**
15	1465469	Connector	1
15	1323578	Terminal	2
15	**1402888**	**Seal**	**2**
16	**. . . . .**	**Connector Assembly (Water Temperature Sensor)**	**1**
16	1323586	Connector	1
16	**1323576**	**Terminal**	**2**
17	1500901	Clip	1
18	**. . . . .**	**Connector Assembly (Low Engine Oil Pressure Switch)**	**1**
18	1327957	Connector	1
18	1532571	Terminal	3
19	**. . . . .**	**Connector Assembly (Pull Actuator)**	**1**
19	1330419	Connector	1
19	1330436	Terminal	2
19	1330424	Connector (Secondary Lock)	1
19	1351681	Connector	1
20	1547369	Connector Body (Fuel Filter Water Separator)	1
21	**1402849**	**Connector Body (Relay Signal 86)**	**1**
22	**1560015**	**E-Ring**	**1**
22	190383	Boot	1
23	**1509888**	**Clip**	**2**
24	325789	Terminal	2

©2014 HYSTER COMPANY

WIRE HARNESS

ENGINE – YANMAR 2.6L AND 3.3L, DIESEL

ITEM	PART NO.	DESCRIPTION	QTY
25	**. . . . .**	**Connector Assembly (Engine to Chassis)**	**1**
25	1500925	Connector	1
25	**1330437**	**Terminal (Pin)**	**11**
25	**1484377**	**Plug**	**1**
25	1352603	Secondary Lock	1
26	**. . . . .**	**Connector Assembly (Engine to Chassis)**	**1**
26	**1541988**	**Connector (8 Pin)**	**1**
26	**1463138**	**Terminal Pin**	**8**
26	1541989	Connector	1
27	**. . . . .**	**Connector Assembly (Engine to Chassis)**	**1**
27	1514598	Connector	1
27	**1330439**	**Plug**	**1**
27	1484709	Terminal (Pin)	3
27	1514597	Connector	1

©2014 HYSTER COMPANY

NOTES

©2014 HYSTER COMPANY

WIRE HARNESS (FIGURE 7-32)
COWL WITH MONOTROL PEDAL — WITH RETURN TO SET TILT

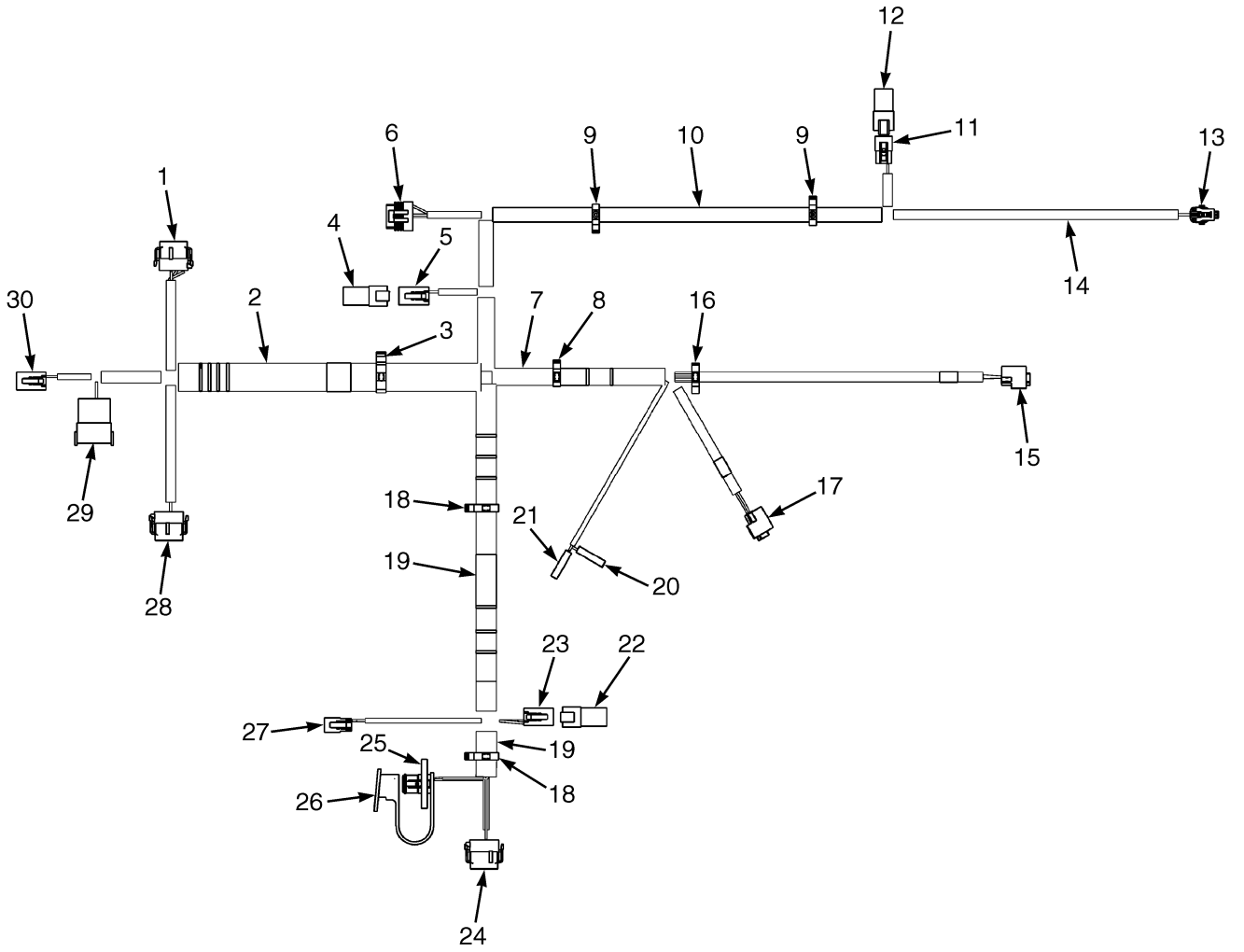

BP080916

©2014 HYSTER COMPANY

WIRE HARNESS

COWL WITH MONOTROL PEDAL – WITH RETURN TO SET TILT

ITEM	PART NO.	DESCRIPTION	QTY
	4603283	Wire Harness	1
1	. . . . .	Connector Assembly (Vehicle System Manager)	1
1	1525568	Connector	1
1	1529046	Connector	1
1	1463139	Terminal	11
1	1484377	Plug	1
2	1540388	Conduit	AR
3	1534282	Clip	1
4	. . . . .	Connector Assembly (Endcap)	1
4	1525573	Connector	1
5	. . . . .	Connector Assembly (To Monotrol Pedal Harness)	1
5	1489656	Connector (4-Way)	1
5	1489657	Connector	1
5	1330438	Terminal (Socket)	4
6	. . . . .	Connector Assembly (Accelerator Pedal Sensor)	1
6	1525584	Connector	1
6	1532571	Terminal	6
7	275496	Conduit	AR
8	1534828	Clip	1
9	1509890	Clip	2
10	275495	Conduit	AR
11	. . . . .	Connector Assembly (To Mast Harness)	1
11	1330438	Terminal (Socket)	3
11	1463194	Connector (Secondary Lock)	1
11	1484397	Connector (3-Way)	1
12	. . . . .	Connector Assembly) (Endcap)	1
12	1351682	Connector (End Cap)	1
13	. . . . .	Connector Assembly (Brake Pressure)	1
13	1603021	Connector	1
13	1603236	Connector (Secondary Lock)	1
13	1548517	Terminal (Socket)	3
13	1548519	Seal	3
14	275493	Conduit	AR
15	. . . . .	Connector Assembly (Brake Pedal)	1
15	1700460	Connector	1
15	1700461	Terminal	3
16	1402816	Clip	2
17	. . . . .	Connector Assembly (Park Brake)	1
17	1700460	Connector	1
17	1700461	Terminal	3
18	1500899	Clip	2
19	275497	Conduit	AR
20	. . . . .	Connector Assembly (Brake Fluid)	1
20	1566227	Terminal	1
20	1566076	Seal	1
21	. . . . .	Connector Assembly (Brake Fluid)	1
21	1566227	Terminal	1
21	1566076	Seal	1
22	. . . . .	Connector Assembly (Endcap w/ Resistor)	1
22	1525577	Connector (With Resistor)	1

©2014 HYSTER COMPANY

WIRE HARNESS

COWL WITH MONOTROL PEDAL – WITH RETURN TO SET TILT

ITEM	PART NO.	DESCRIPTION	QTY
23	. . . . .	Connector Assembly (Bus Terminal 1)	1
23	1489656	Connector (4-Way)	1
23	1489657	Connector	1
23	1330438	Terminal (Socket)	4
24	. . . . .	Connector Assembly (Display)	1
24	1525567	Connector	1
24	1529046	Connector	1
24	1463139	Terminal	5
24	1484377	Plug	7
25	. . . . .	Connector Assembly (J1939 Diagnostic)	1
25	1566116	Connector	1
25	1532664	Connector	1
25	1330438	Terminal (Socket)	3
26	. . . . .	Connector Assembly (Dust Cap)	1
26	1566117	Dust Cap (For Diagnostic Cable)	1
27	. . . . .	Connector Assembly (Horn Button)	1
27	1490242	Connector (2 Way)	1
27	1490243	Connector	1
27	1330438	Terminal (Socket)	2
28	. . . . .	Connector Assembly (Vehicle System Manager)	1
28	1525570	Connector	1
28	1529046	Connector	1
28	1463139	Terminal	7
28	1484377	Plug	5
29	. . . . .	Connector Assembly (To Right Hand Chassis Harness)	1
29	1500925	Connector	1
29	1352603	Secondary Lock	1
29	1330437	Terminal (Pin)	10
29	1484377	Plug	2
30	. . . . .	Connector Assembly	1
30	1489656	Connector (4-Way)	1
30	1489657	Connector	1
30	1330438	Terminal (Socket)	4

©2014 HYSTER COMPANY

NOTES

©2014 HYSTER COMPANY

WIRE HARNESS (FIGURE 7-33)

COWL WITH FORWARD/REVERSE LEVER — WITHOUT RETURN TO SET TILT

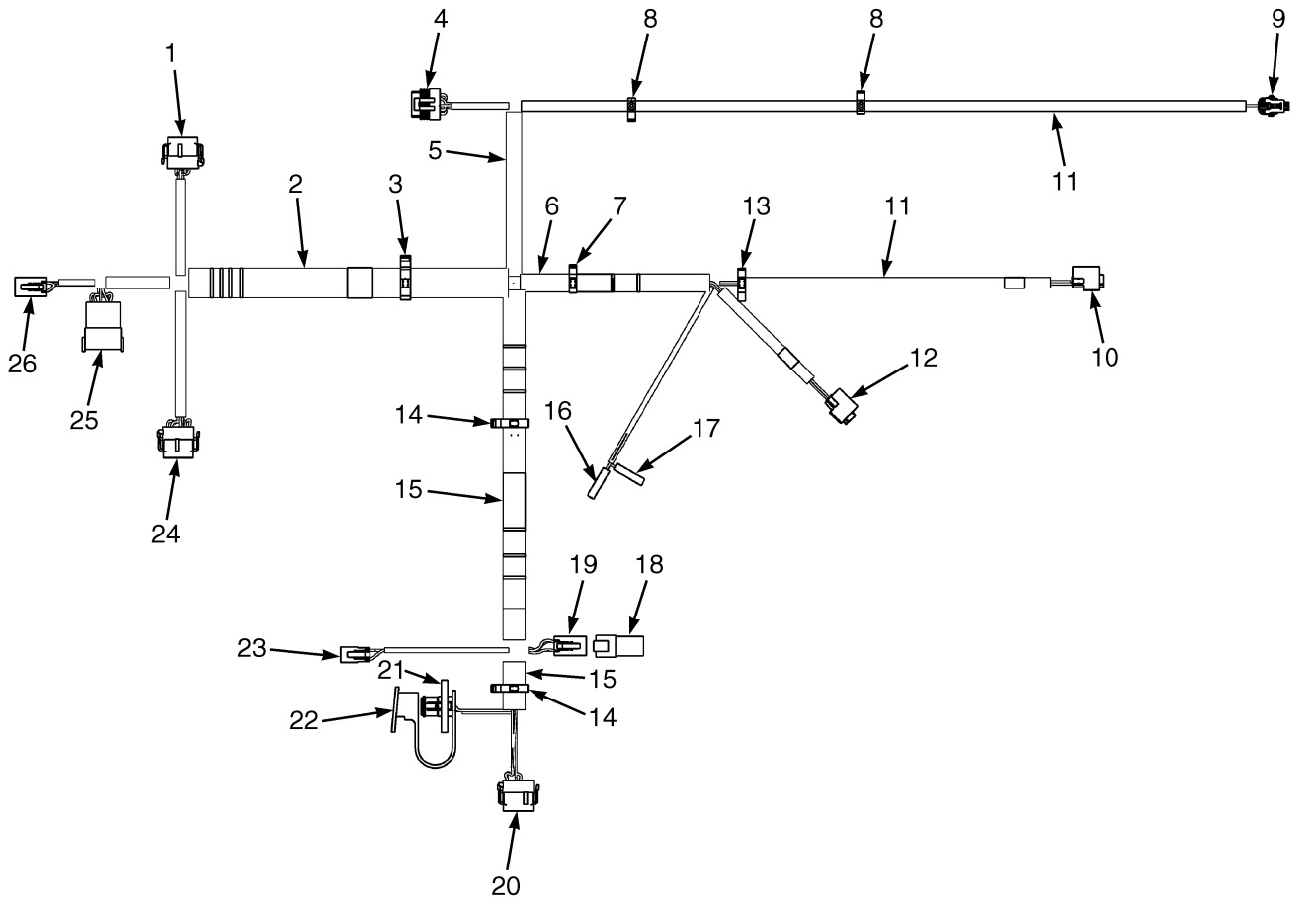

BP080917

©2014 HYSTER COMPANY

WIRE HARNESS

COWL WITH FORWARD/REVERSE LEVER – WITHOUT RETURN TO SET TILT

ITEM	PART NO.	DESCRIPTION	QTY
	4603280	Wire Harness	1
1	. . . . .	Connector Assembly (Vehicle System Manager)	1
1	1525568	Connector	1
1	1529046	Connector	1
1	1463139	Terminal	7
1	1484377	Plug	5
2	1540388	Conduit	AR
3	1534282	Clip	1
4	. . . . .	Connector Assembly (Accelerator Pedal Sensor)	1
4	1525584	Connector	1
4	1532571	Terminal	6
5	275495	Conduit	AR
6	275496	Conduit	AR
7	1534828	Clip	1
8	1509888	Clip	2
9	. . . . .	Connector Assembly (Brake Pressure)	1
9	1603021	Connector	1
9	1603236	Connector (Secondary Lock)	1
9	1548517	Terminal (Socket)	3
9	1548519	Seal	3
10	. . . . .	Connector Assembly (Brake Pedal)	1
10	1700460	Connector	1
10	1700461	Terminal	3
11	275493	Conduit	AR
12	. . . . .	Connector Assembly (Park Brake)	1
12	1700460	Connector	1
12	1700461	Terminal	3
13	1402816	Clip	1
14	1500899	Clip	2
15	275497	Conduit	AR
16	. . . . .	Connector Assembly (Brake Fluid)	1
16	1324310	Terminal	1
16	1324309	Sleeve	1
17	. . . . .	Connector Assembly (Brake Fluid)	1
17	1324310	Terminal	1
17	1324309	Sleeve	1
18	. . . . .	Connector Assembly (Endcap w/ Resistor)	1
18	1525577	Connector (With Resistor)	1
19	. . . . .	Connector Assembly (Bus Terminal 1)	1
19	1489656	Connector (4-Way)	1
19	1489657	Connector	1
19	1330438	Terminal (Socket)	4
20	. . . . .	Connector Assembly (Display)	1
20	1525567	Connector	1
20	1529046	Connector	1
20	1463139	Terminal	5
20	1484377	Plug	7
21	. . . . .	Connector Assembly (J1939 Diagnostic)	1
21	1566116	Connector	1
21	1532664	Connector	1

©2014 HYSTER COMPANY

WIRE HARNESS

COWL WITH FORWARD/REVERSE LEVER – WITHOUT RETURN TO SET TILT

ITEM	PART NO.	DESCRIPTION	QTY
21	1330438	Terminal (Socket)	3
22	. . . . .	Connector Assembly (Dust Cap)	1
22	1566117	Dust Cap (For Diagnostic Cable)	1
23	. . . . .	Connector Assembly (Horn Button)	1
23	1490242	Connector (2 Way)	1
23	1490243	Connector	1
23	1330438	Terminal (Socket)	2
24	. . . . .	Connector Assembly (Vehicle System Manager)	1
24	1525570	Connector	1
24	1529046	Connector	1
24	1463139	Terminal	7
24	1484377	Plug	5
25	. . . . .	Connector Assembly (To Right Hand Chassis Harness)	1
25	1500925	Connector	1
25	1352603	Secondary Lock	1
25	1330437	Terminal (Pin)	7
25	1484377	Plug	5
26	. . . . .	Connector Assembly (To Right Hand Chassis Harness)	1
26	1489657	Connector	1
26	1489656	Connector (4-Way)	1
26	1330438	Terminal (Socket)	4

©2014 HYSTER COMPANY

NOTES

©2014 HYSTER COMPANY

WIRE HARNESS (FIGURE 7-34)

COWL WITH FORWARD/REVERSE LEVER — WITH HYDRAULIC PUMP SOLENOID

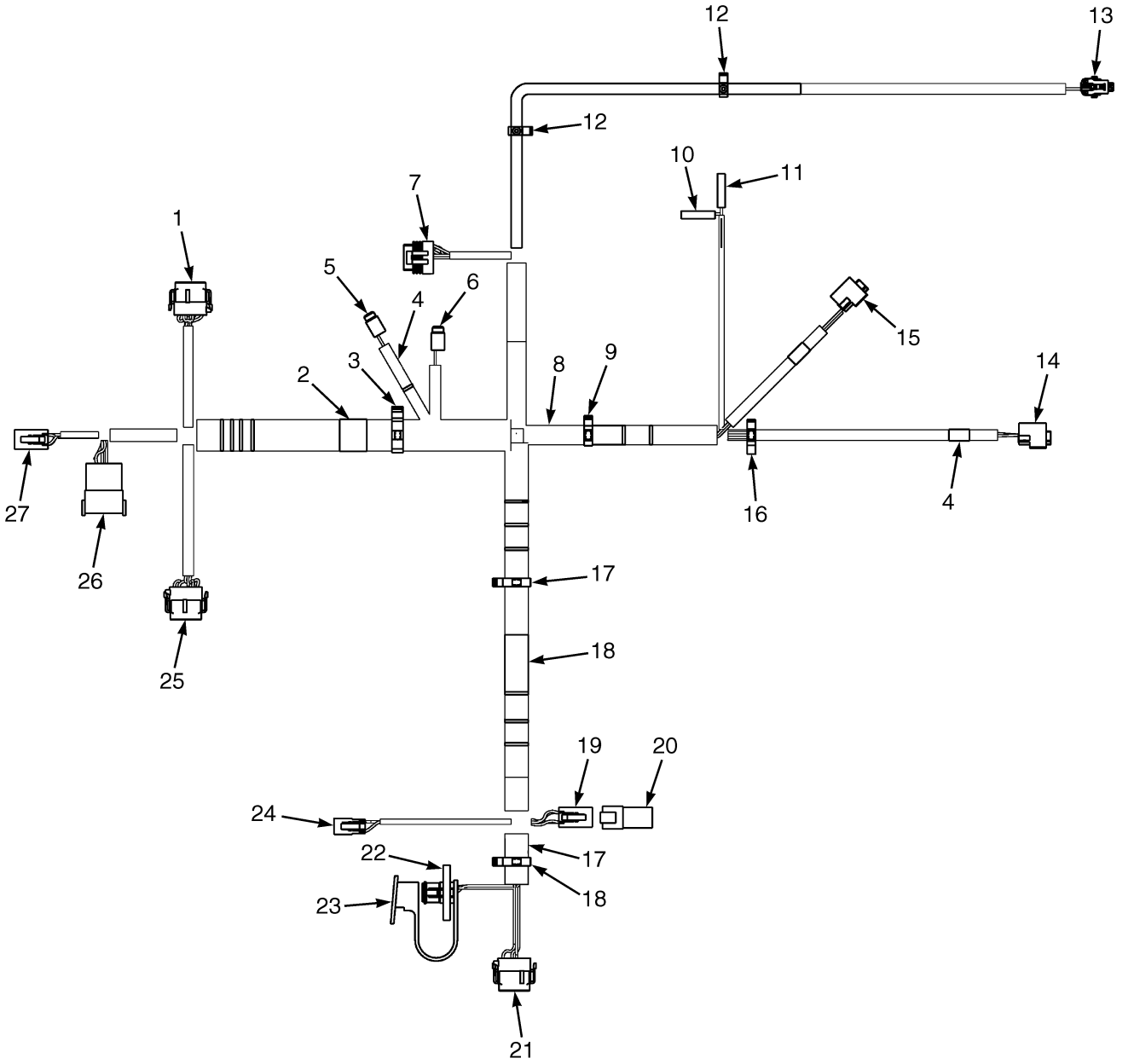

BP080919

©2014 HYSTER COMPANY

WIRE HARNESS

COWL WITH FORWARD/REVERSE LEVER – WITH HYDRAULIC PUMP SOLENOID

ITEM	PART NO.	DESCRIPTION	QTY
	4603282	Wire Harness	1
1	. . . . .	Connector Assembly (Vehicle System Manager)	1
1	1525568	Connector	1
1	1529046	Connector	1
1	1463139	Terminal	8
1	1484377	Plug	4
2	1540388	Conduit	AR
3	1534282	Clip	1
4	275493	Conduit	AR
5	. . . . .	Connector Assembly (Hydraulic Lockout Solenoid #2)	1
5	1484557	Connector (2 Socket)	1
5	1484558	Connector	1
5	1463139	Terminal	2
6	. . . . .	Connector Assembly (Hydraulic Lockout Solenoid #1)	1
6	1484557	Connector (2 Socket)	1
6	1484558	Connector	1
6	1463139	Terminal	2
7	. . . . .	Connector Assembly (Accelerator Pedal Sensor)	1
7	1525584	Connector	1
7	1532571	Terminal	6
8	275496	Conduit	AR
9	1534828	Clip	1
10	. . . . .	Connector Assembly (Brake Fluid)	1
10	1324310	Terminal	1
10	1324309	Sleeve	1
11	. . . . .	Connector Assembly (Brake Fluid)	1
11	1324310	Terminal	1
11	1324309	Sleeve	1
12	1509888	Clip	2
13	. . . . .	Connector Assembly (Brake Pressure)	1
13	1603021	Connector	1
13	1603236	Connector (Secondary Lock)	1
13	1548517	Terminal (Socket)	3
13	1548519	Seal	3
14	. . . . .	Connector Assembly (Brake Pedal)	1
14	1700460	Connector	1
14	1700461	Terminal	3
15	. . . . .	Connector Assembly (Park Brake)	1
15	1700460	Connector	1
15	1700461	Terminal	3
16	1402816	Clip	1
17	1500899	Clip	2
18	275497	Conduit	AR
19	. . . . .	Connector Assembly (Bus Terminal 1)	1
19	1489656	Connector (4-Way)	1
19	1489657	Connector	1
19	1330438	Terminal (Socket)	4
20	. . . . .	Connector Assembly (Endcap w/ Resistor)	1
20	1525577	Connector (With Resistor)	1
21	. . . . .	Connector Assembly (Display)	1

©2014 HYSTER COMPANY

WIRE HARNESS

COWL WITH FORWARD/REVERSE LEVER – WITH HYDRAULIC PUMP SOLENOID

ITEM	PART NO.	DESCRIPTION	QTY
21	1525567	Connector	1
21	1529046	Connector	1
21	1463139	Terminal	5
21	1484377	Plug	7
22	. . . . .	Connector Assembly (J1939 Diagnostic)	1
22	1566116	Connector	1
22	1532664	Connector	1
22	1330438	Terminal (Socket)	3
23	. . . . .	Connector Assembly (Dust Cap)	1
23	1566117	Dust Cap (For Diagnostic Cable)	1
24	. . . . .	Connector Assembly (Horn Button)	1
24	1490242	Connector (2 Way)	1
24	1490243	Connector	1
24	1330438	Terminal (Socket)	1
25	. . . . .	Connector Assembly (Vehicle System Manager)	1
25	1525570	Connector	1
25	1529046	Connector	1
25	1463139	Terminal	7
25	1484377	Plug	5
26	. . . . .	Connector Assembly (To Right Hand Chassis Harness)	1
26	1500925	Connector	1
26	1352603	Secondary Lock	1
26	1330437	Terminal (Pin)	7
26	1484377	Plug	5
27	. . . . .	Connector Assembly (To Right Hand Chassis Harness)	1
27	1489656	Connector (4-Way)	1
27	1489657	Connector	1
27	1330438	Terminal (Socket)	4

©2014 HYSTER COMPANY

NOTES

©2014 HYSTER COMPANY

WIRE HARNESS (FIGURE 7-35)
COWL WITH MONOTROL PEDAL — WITH HYDRAULIC PUMP SOLENOID

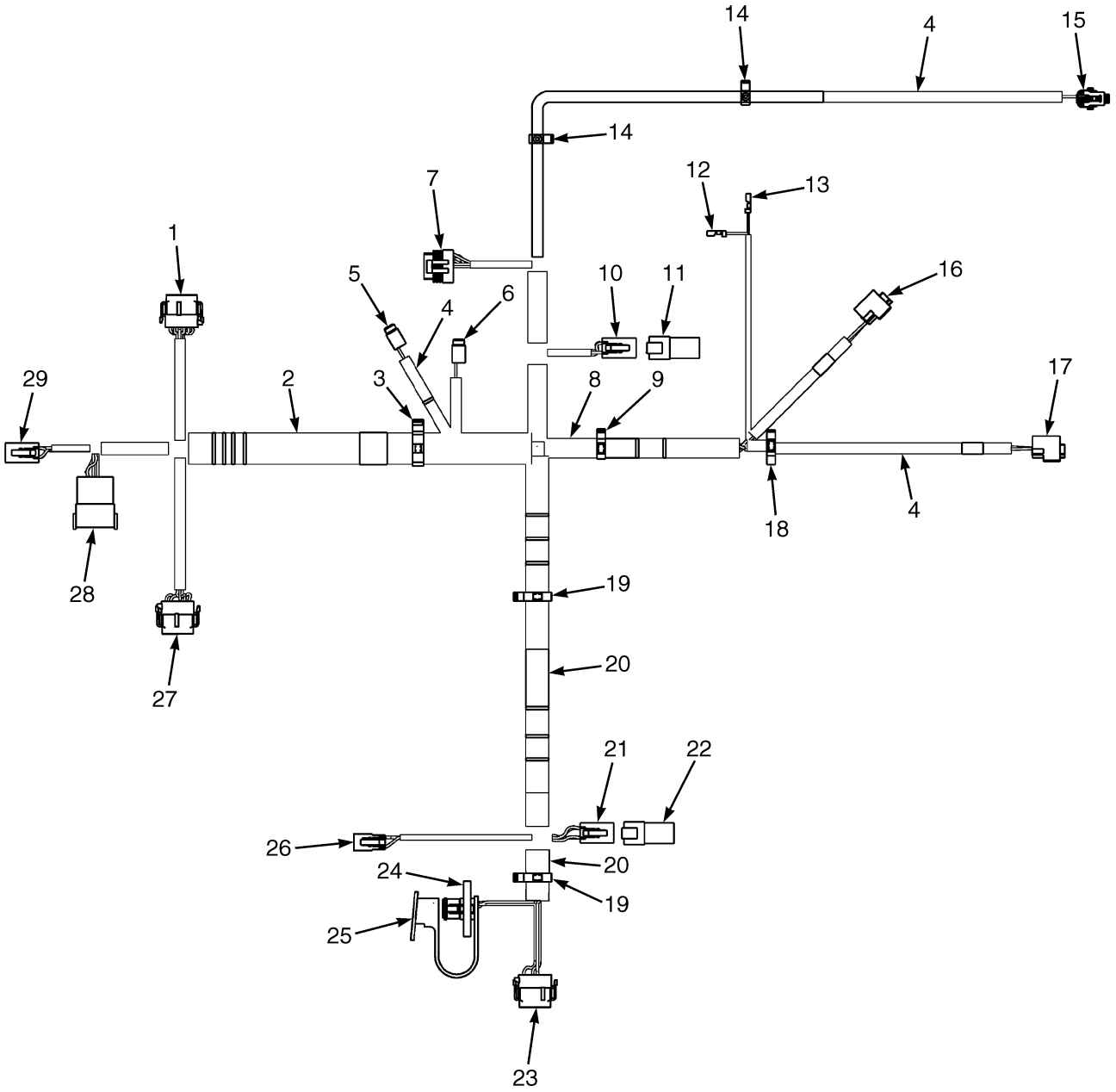

BP080918

©2014 HYSTER COMPANY

WIRE HARNESS

COWL WITH MONOTROL PEDAL – WITH HYDRAULIC PUMP SOLENOID

ITEM	PART NO.	DESCRIPTION	QTY
	4603281	Wire Harness	1
1	. . . . .	Connector Assembly (Vehicle System Manager)	1
1	1525568	Connector	1
1	1529046	Connector	1
1	1463139	Terminal	12
2	1540388	Conduit	AR
3	1534282	Clip	1
4	275493	Conduit	AR
5	. . . . .	Connector Assembly (Hydraulic Lockout Solenoid #2)	1
5	1484557	Connector (2 Socket)	1
5	1484558	Connector	1
5	1463139	Terminal	1
6	. . . . .	Connector Assembly (Hydraulic Lockout Solenoid 1)	1
6	1484557	Connector (2 Socket)	1
6	1484558	Connector	1
6	1463139	Terminal	2
7	. . . . .	Connector Assembly (Accelerator Pedal Sensor)	1
7	1525584	Connector	1
7	1532571	Terminal	6
8	275496	Conduit	AR
9	1534828	Clip	1
10	. . . . .	Connector Assembly (Monotrol Harness)	1
10	1489656	Connector (4-Way)	1
10	1489657	Connector	1
10	1330438	Terminal (Socket)	4
11	. . . . .	Connector Assembly (Endcap)	1
11	1525573	Connector	1
12	. . . . .	Connector Assembly (Brake Fluid)	1
12	1566227	Terminal	1
12	1324309	Sleeve	1
13	. . . . .	Connector Assembly (Brake Fluid)	1
13	1566227	Terminal	1
13	1324309	Sleeve	1
14	1509888	Clip	2
15	. . . . .	Connector Assembly (Brake Pressure)	1
15	1603021	Connector	1
15	1603236	Connector (Secondary Lock)	1
15	1548517	Terminal (Socket)	3
15	1548519	Seal	3
16	. . . . .	Connector Assembly (Park Brake)	1
16	1700460	Connector	1
16	1700461	Terminal	3
17	. . . . .	Connector Assembly (Brake Pedal)	1
17	1700460	Connector	1
17	1700461	Terminal	3
18	1402816	Clip	1
19	1500899	Clip	2
20	275497	Conduit	AR
21	. . . . .	Connector Assembly (Bus Terminal 1)	1
21	1489656	Connector (4-Way)	1

©2014 HYSTER COMPANY

WIRE HARNESS

COWL WITH MONOTROL PEDAL – WITH HYDRAULIC PUMP SOLENOID

ITEM	PART NO.	DESCRIPTION	QTY
21	1489657	Connector	1
21	1330438	Terminal (Socket)	4
22	. . . . .	Connector Assembly (Endcap w/ Resistor)	1
22	1525577	Connector (With Resistor)	1
23	. . . . .	Connector Assembly (Display)	1
23	1525567	Connector	1
23	1529046	Connector	1
23	1463139	Terminal	5
23	1484377	Plug	7
24	. . . . .	Connector Assembly (J1939 Diagnostic)	1
24	1566116	Connector	1
24	1532664	Connector	1
24	1330438	Terminal (Socket)	3
25	. . . . .	Connector Assembly (Dustcap)	1
25	1566117	Dust Cap (For Diagnostic Cable)	1
26	. . . . .	Connector Assembly (Horn Button)	1
26	1490242	Connector (2 Way)	1
26	1490243	Connector	1
26	1330438	Terminal (Socket)	2
27	. . . . .	Connector Assembly (Vehicle System Manager)	1
27	1525570	Connector	1
27	1529046	Connector	1
27	1463139	Terminal	7
27	1484377	Plug	5
28	. . . . .	Connector Assembly (To Right Hand Chassis Harness)	1
28	1500925	Connector	1
28	1352603	Secondary Lock	1
28	1330437	Terminal (Pin)	7
28	1484377	Plug	5
29	. . . . .	Connector Assembly (To Right Hand Chassis Harness)	1
29	1489656	Connector (4-Way)	1
29	1489657	Connector	1
29	1330438	Terminal (Socket)	4

©2014 HYSTER COMPANY

NOTES

©2014 HYSTER COMPANY

WIRE HARNESS (FIGURE 7-36)
ELECTRONIC CONTROL VALVE — THREE FUNCTION

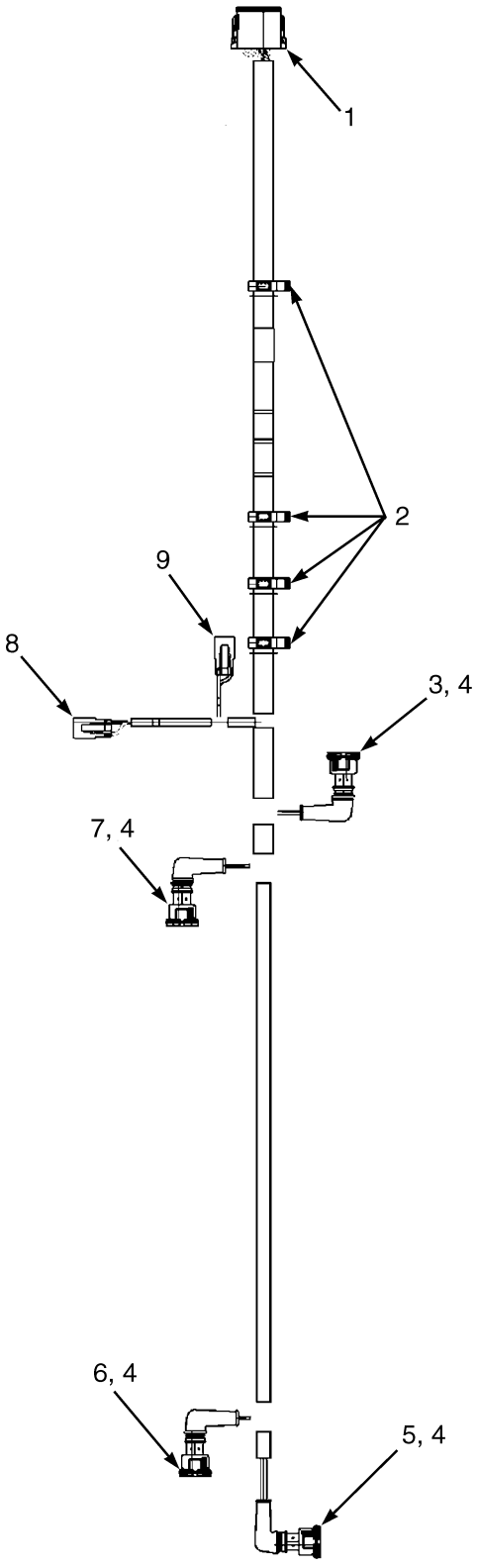

HP081569

©2014 HYSTER COMPANY

WIRE HARNESS
ELECTRONIC CONTROL VALVE – THREE FUNCTION

ITEM	PART NO.	DESCRIPTION	QTY
	2060198	Wire Harness (Control Valve)	1
1	. . . . .	Connector Assembly (Vehicle System Manager)	1
1	1525564	Connector	1
1	1330438	Terminal (Socket)	9
1	1330439	Plug	3
1	1525564	Connector	1
1	1500913	Connector	1
2	1402815	Clip	4
3	. . . . .	Connector Assembly (2A Tilt)	1
3	1531162	Connector	1
3	1562649	Seal	2
3	1402814	Terminal	2
4	190383	Boot	4
5	. . . . .	Connector Assembly (2B Tilt)	1
5	1531162	Connector	1
5	1562649	Seal	2
5	1402814	Terminal	2
6	. . . . .	Connector Assembly (3B Auxiliary 1)	1
6	1493435	Connector (2-Way)	1
6	1562649	Seal	2
6	1402814	Terminal	2
7	. . . . .	Connector Assembly (3A Auxiliary 1)	1
7	1493435	Connector (2-Way)	1
7	1562649	Seal	2
7	1402814	Terminal	2
8	. . . . .	Connector Assembly (Lift)	1
8	1490242	Connector (2 Way)	1
8	1330438	Terminal (Socket)	2
8	1490243	Connector	1
9	. . . . .	Connector Assembly (Lower)	1
9	1490242	Connector (2 Way)	1
9	1330438	Terminal (Socket)	2
9	1490243	Connector	1

©2014 HYSTER COMPANY

WIRE HARNESS (FIGURE 7-37)
ELECTRONIC CONTROL VALVE — FOUR FUNCTION

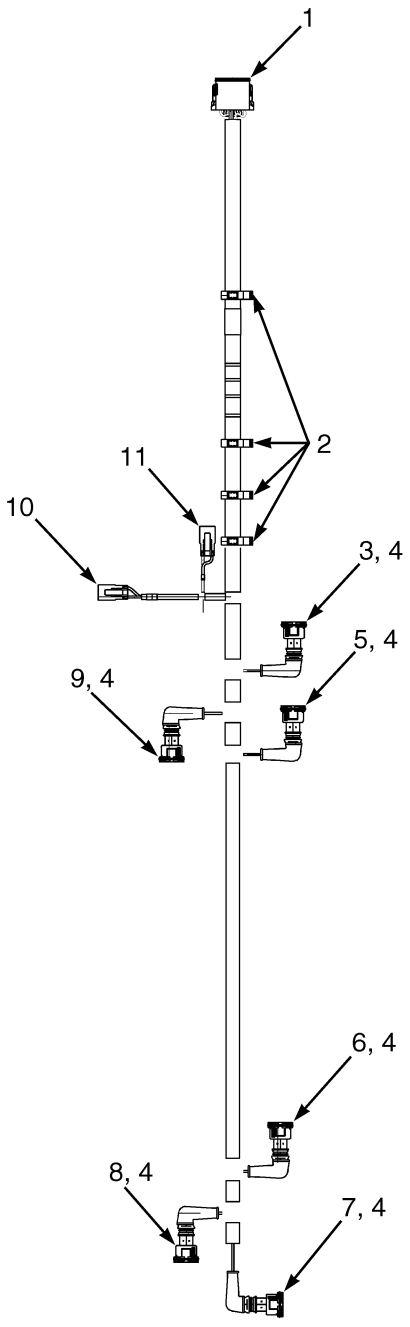

HP081568

©2014 HYSTER COMPANY

WIRE HARNESS
ELECTRONIC CONTROL VALVE – FOUR FUNCTION

ITEM	PART NO.	DESCRIPTION	QTY
	2058909	Wire Harness (Control Valve)	1
1	. . . . .	Connector Assembly (Vehicle System Manager)	1
1	1525564	Connector	1
1	1330438	Terminal (Socket)	12
1	1500913	Connector	1
2	1402815	Clip	4
3	. . . . .	Connector Assembly (2A Tilt)	1
3	1531162	Connector	1
3	1562649	Seal	2
3	1402814	Terminal	2
4	190383	Boot	6
5	1493447	Connector (4A Auxiliary 2)	1
5	1562649	Seal	2
5	1402814	Terminal	2
6	1493447	Connector (4B Auxiliary 2)	1
6	1562649	Seal	2
6	1402814	Terminal	2
7	. . . . .	Connector Assembly (2B Tilt)	1
7	1531162	Connector	1
7	1562649	Seal	2
7	1402814	Terminal	2
8	. . . . .	Connector Assembly (3B Auxiliary 1)	1
8	1493435	Connector (2-Way)	1
8	1562649	Seal	2
8	1402814	Terminal	2
9	. . . . .	Connector Assembly (3A Auxiliary 1)	1
9	1493435	Connector (2-Way)	1
9	1562649	Seal	2
9	1402814	Terminal	2
10	. . . . .	Connector Assembly (Lift)	1
10	1490242	Connector (2 Way)	1
10	1330438	Terminal (Socket)	2
10	1490243	Connector	1
11	. . . . .	Connector Assembly (Lower)	1
11	1490242	Connector (2 Way)	1
11	1330438	Terminal (Socket)	2
11	1490243	Connector	1

©2014 HYSTER COMPANY

WIRE HARNESS (FIGURE 7-38)
ADAPTER — LOW FUEL PRESSURE

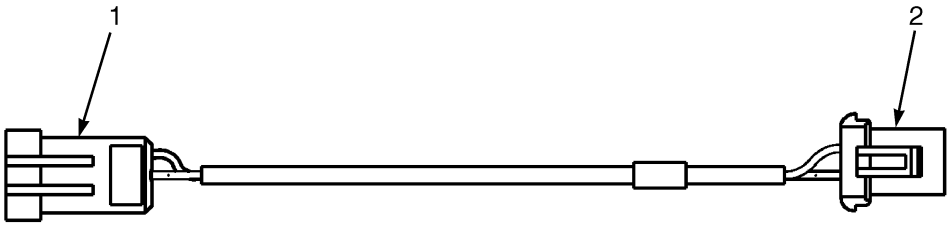

HP082028

ITEM	PART NO.	DESCRIPTION	QTY
	4602843	Wire Harness	1
1	. . . . .	Connector Assembly (To LH Chassis Harness)	1
1	2795583	Connector (3 Way)	1
1	2787350	Pin Terminal	2
1	2069381	Plug	1
1	2060555	Wire Seal	2
2	. . . . .	Connector Assembly (Low LPG Switch)	1
2	1329152	Plug	1
2	1329151	Terminal	1
2	1330281	Terminal	2
2	1402888	Seal	2

©2014 HYSTER COMPANY

WIRE HARNESS (FIGURE 7-39)
AIR CONDITIONING JUMPER

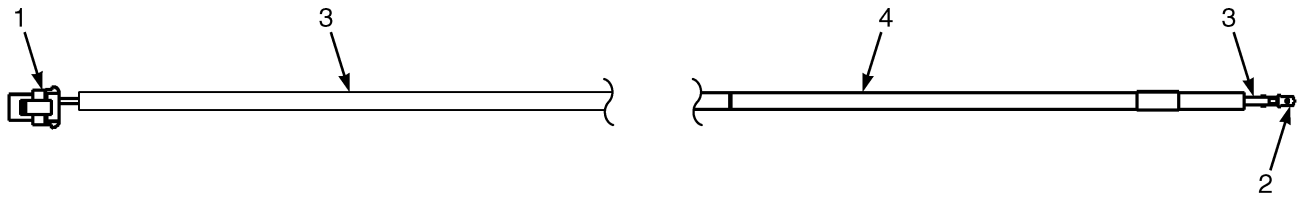

BP081675

ITEM	PART NO.	DESCRIPTION	QTY
	4631126	Wire Harness (Jumper)	1
1	. . . . .	Connector Assembly (To Compressor Clutch)	1
1	1329152	Plug (Connector)	1
1	1329151	Terminal (Secondary Lock)	1
1	1327164	Seal	1
1	1521989	Terminal	1
1	1329147	Seal	1
2	. . . . .	Connector Assembly (To AC Harness)	1
2	129892	Terminal (Connector)	1
3	175944	Heat Shrink	AR
4	275493	Conduit	AR

©2014 HYSTER COMPANY

WIRE HARNESS (FIGURE 7-40)
AIR CONDITIONER

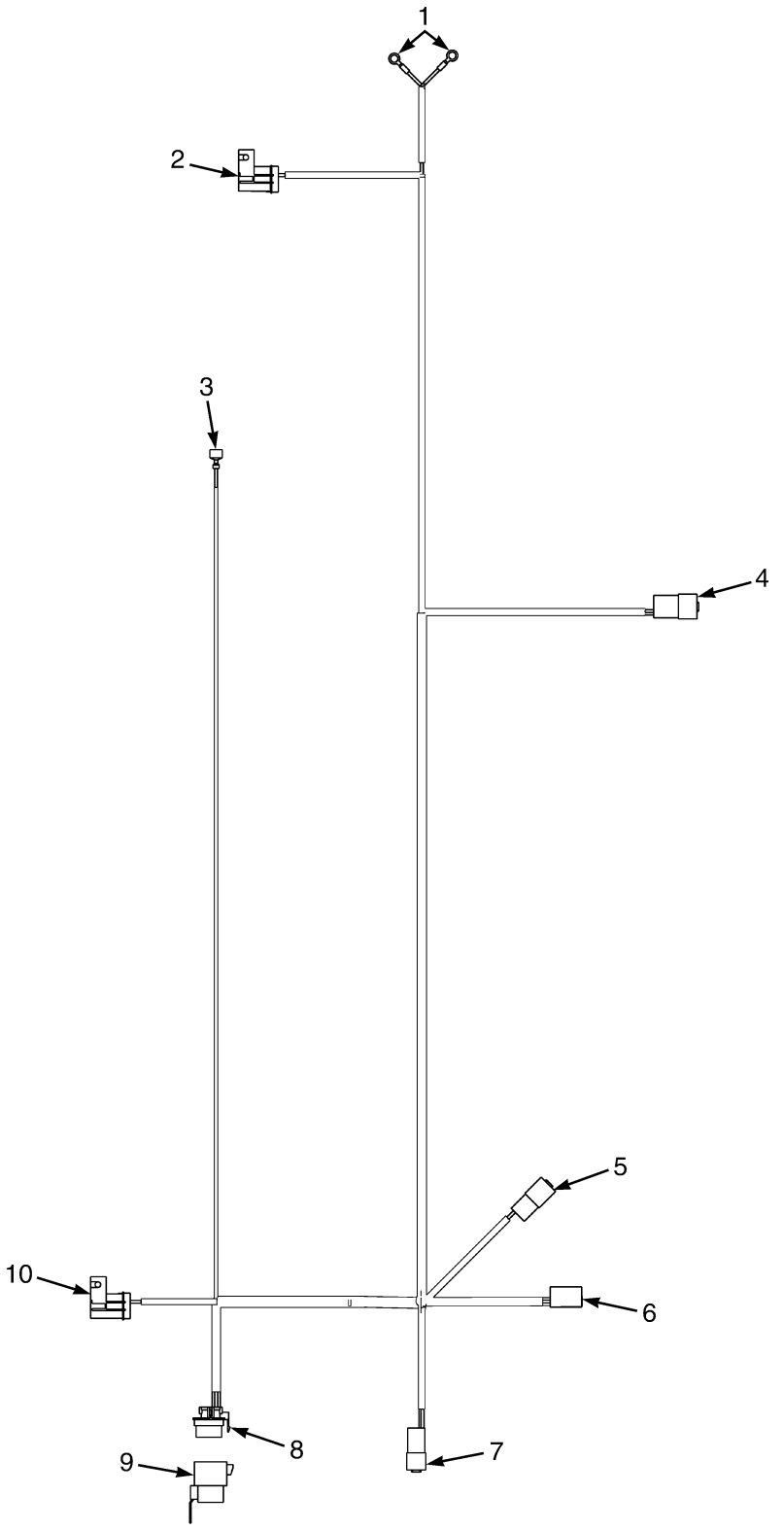

©2014 HYSTER COMPANY

WIRE HARNESS
AIR CONDITIONER

ITEM	PART NO.	DESCRIPTION	QTY
	4609701	**Wire Harness (Air Conditioning)**	**1**
1	148606	E-Ring	2
2	**. . . . .**	**Connector Assembly (Compressor Clutch)**	**1**
2	1330292	Connector	1
2	1330293	Cover (Fuse)	1
2	1330283	Terminal	2
2	1300134	Fuse (25 Amp)	1
3	1310142	Terminal Housing (Blue)	1
4	**. . . . .**	**Connector Assembly (CRP18S to CPS18)**	**1**
4	1514597	Connector	1
4	1514598	Connector (Secondary Lock)	1
4	866401	Terminal	3
4	**1330439**	**Plug**	**1**
5	**. . . . .**	**Connector Assembly (To Condenser)**	**1**
5	1480187	Connector	1
5	1480188	Connector (Secondary Lock)	1
5	866401	Terminal	2
6	**. . . . .**	**Connector Assembly (To RH Door Harness)**	**1**
6	1514602	Connector	1
6	**1514603**	**Connector (Secondary Lock)**	**1**
6	**1554359**	**Terminal**	**4**
7	**. . . . .**	**Connector Assembly (To Condenser)**	**1**
7	1330411	Connector	1
7	**1330416**	**Connector**	**1**
7	1330433	Terminal	1
7	1330435	Terminal	2
7	**1330439**	**Plug**	**1**
8	**. . . . .**	**Connector Assembly (CPS99S)**	**1**
8	1461744	Connector Body	1
8	**1327164**	**Seal**	**1**
8	1375797	Terminal	4
8	1329147	Seal	4
8	1498483	Sealant	1
9	1461743	Relay	1
10	**. . . . .**	**Connector Assembly (Fuse Holder)**	**1**
10	1330292	Connector	1
10	1330293	Cover (Fuse)	1
10	1330283	Terminal	2
10	370646	Fuse (5 Amp)	1

©2014 HYSTER COMPANY

WIRE HARNESS (FIGURE 7-41)
ALTERNATOR — DIESEL

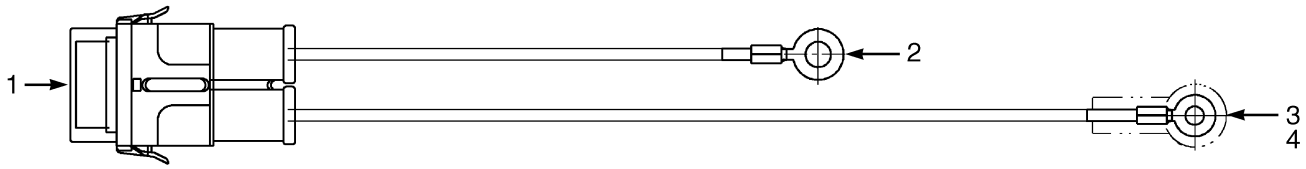

BP080476

ITEM	PART NO.	DESCRIPTION	QTY
	2065098	Wire Harness (Alternator)	1
1	. . . . .	Connector Assembly	1
1	1454827	Seal	2
1	1454828	Terminal	2
1	1454829	Fuse (60 Amp)	1
1	1454860	Connector Body	1
1	1454862	Cover (With Seal)	1
2	1566145	E-Ring (To PDM)	1
3	1560015	E-Ring (To Alternator)	1
4	1566146	Boot	1

©2014 HYSTER COMPANY

NOTES

©2014 HYSTER COMPANY

WIRE HARNESS (FIGURE 7-42)
SEALED ALTERNATOR — YANMAR 2.6L AND 3.3L, DIESEL

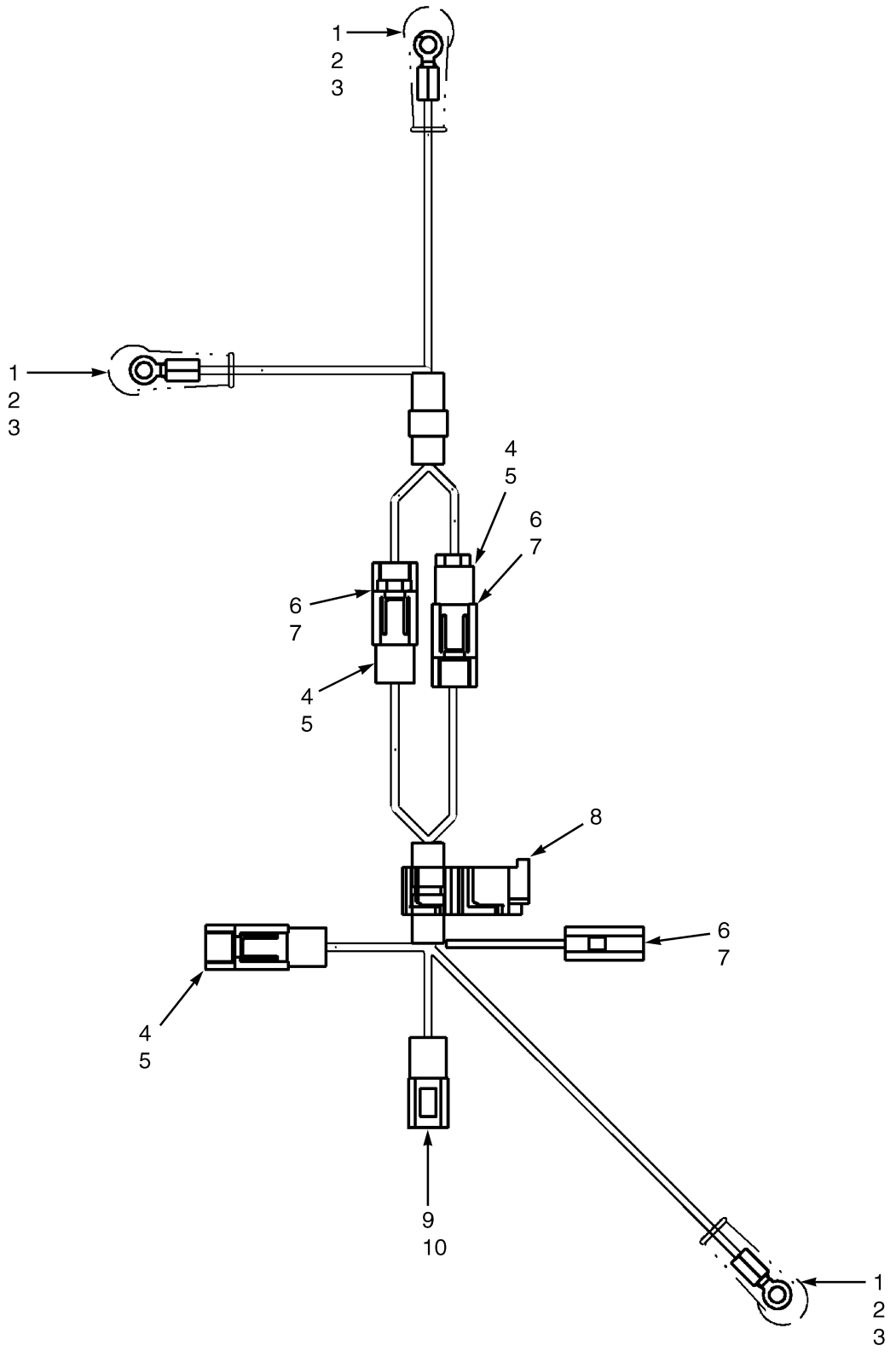

©2014 HYSTER COMPANY

WIRE HARNESS

SEALED ALTERNATOR – YANMAR 2.6L AND 3.3L, DIESEL

ITEM	PART NO.	DESCRIPTION	QTY
	2084810	Wire Harness (Alternator)	1
1	1582218	E-Ring	3
2	190383	Boot	3
3	175944	Heat Shrink	AR
4	181045	Connector Body	3
5	134810	Terminal	3
6	181046	Connector Body	3
7	1561117	Terminal	3
8	1579403	Clip	1
9	1308260	Connector Body	1
10	314773	Terminal	2

©2014 HYSTER COMPANY

WIRE HARNESS (FIGURE 7-43)
TRANSMISSION — SINGLE SPEED

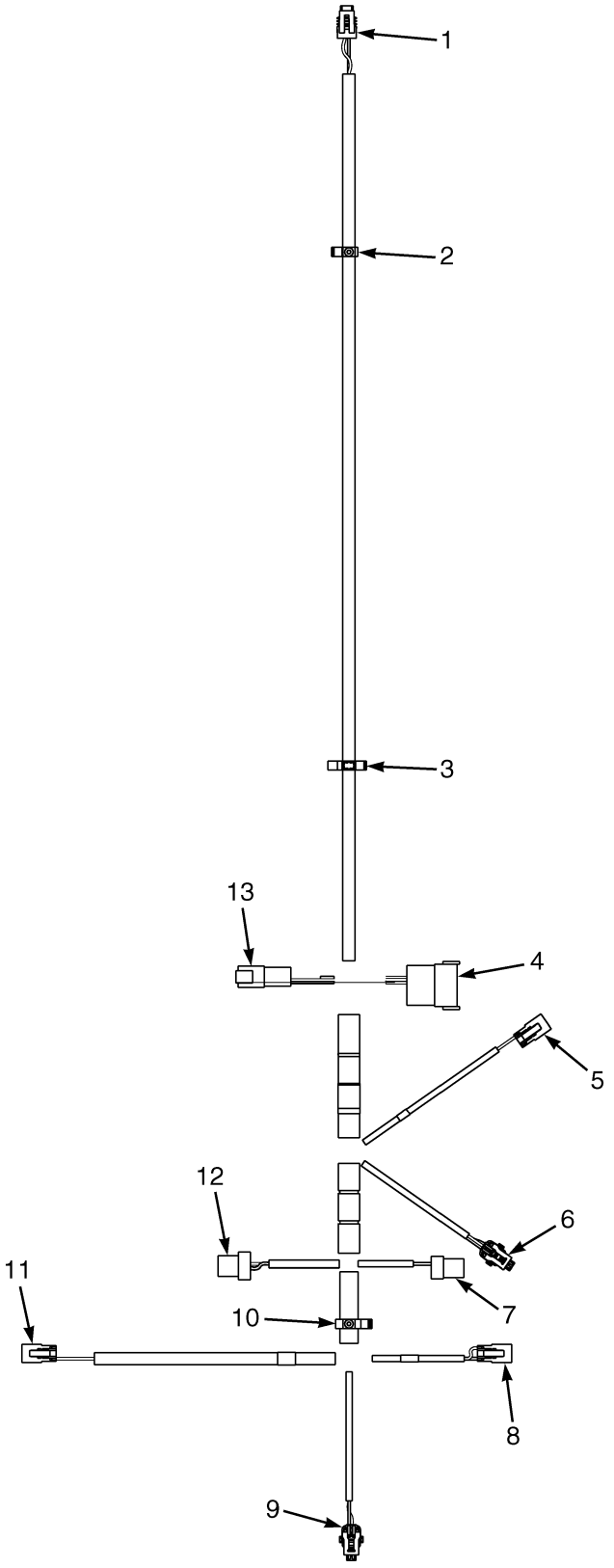

©2014 HYSTER COMPANY

WIRE HARNESS
TRANSMISSION – SINGLE SPEED

ITEM	PART NO.	DESCRIPTION	QTY
	2105959	Wire Harness (Transmission)	1
1	. . . . .	Connector Assembly (Transmission Temperature)	1
1	4009253	Connector	1
1	1323576	Terminal	2
2	1509888	Clip	1
3	1402816	Clip	1
4	. . . . .	Connector Assembly (RH Chassis Harness)	1
4	1623280	Connector	1
4	1623281	Connector	1
4	1463138	Terminal Pin	10
4	1484377	Plug	2
5	. . . . .	Connector Assembly (Clutch Forward 1)	1
5	1490242	Connector (2 Way)	1
5	1490243	Connector	1
5	1330438	Terminal (Socket)	2
6	. . . . .	Connector Assembly (Forward 1 Pressure)	1
6	1603021	Connector	1
6	1603236	Connector (Secondary Lock)	1
6	1548517	Terminal (Socket)	3
6	1548519	Seal	3
7	. . . . .	Connector Assembly (Turbine Shaft RPM)	1
7	1546673	Connector	1
7	1323576	Terminal	3
8	. . . . .	Connector Assembly (Transmission Check Valve)	1
8	1490242	Connector (2 Way)	1
8	1490243	Connector	1
8	1330438	Terminal (Socket)	2
9	. . . . .	Connector Assembly (Reverse 1 Pressure)	1
9	1603021	Connector	1
9	1603236	Connector (Secondary Lock)	1
9	1548517	Terminal (Socket)	3
9	1548519	Seal	3
10	1509890	Clip	1
11	. . . . .	Connector Assembly (Clutch Reverse 1)	1
11	1490242	Connector (2 Way)	1
11	1490243	Connector	1
11	1330438	Terminal (Socket)	2
12	. . . . .	Connector Assembly (Tail Shaft RPM - Toss)	1
12	1558156	Connector	1
12	1323576	Terminal	4
13	. . . . .	Connector Assembly (RH Chassis Harness)	1
13	1530960	Connector	1
13	1530961	Connector (Secondary Lock)	1
13	1463138	Terminal Pin	4
13	1484377	Plug	2

©2014 HYSTER COMPANY

WIRE HARNESS (FIGURE 7-44)
ALTERNATOR TO BATTERY DISCONNECT SWITCH — KUBOTA 2.5L

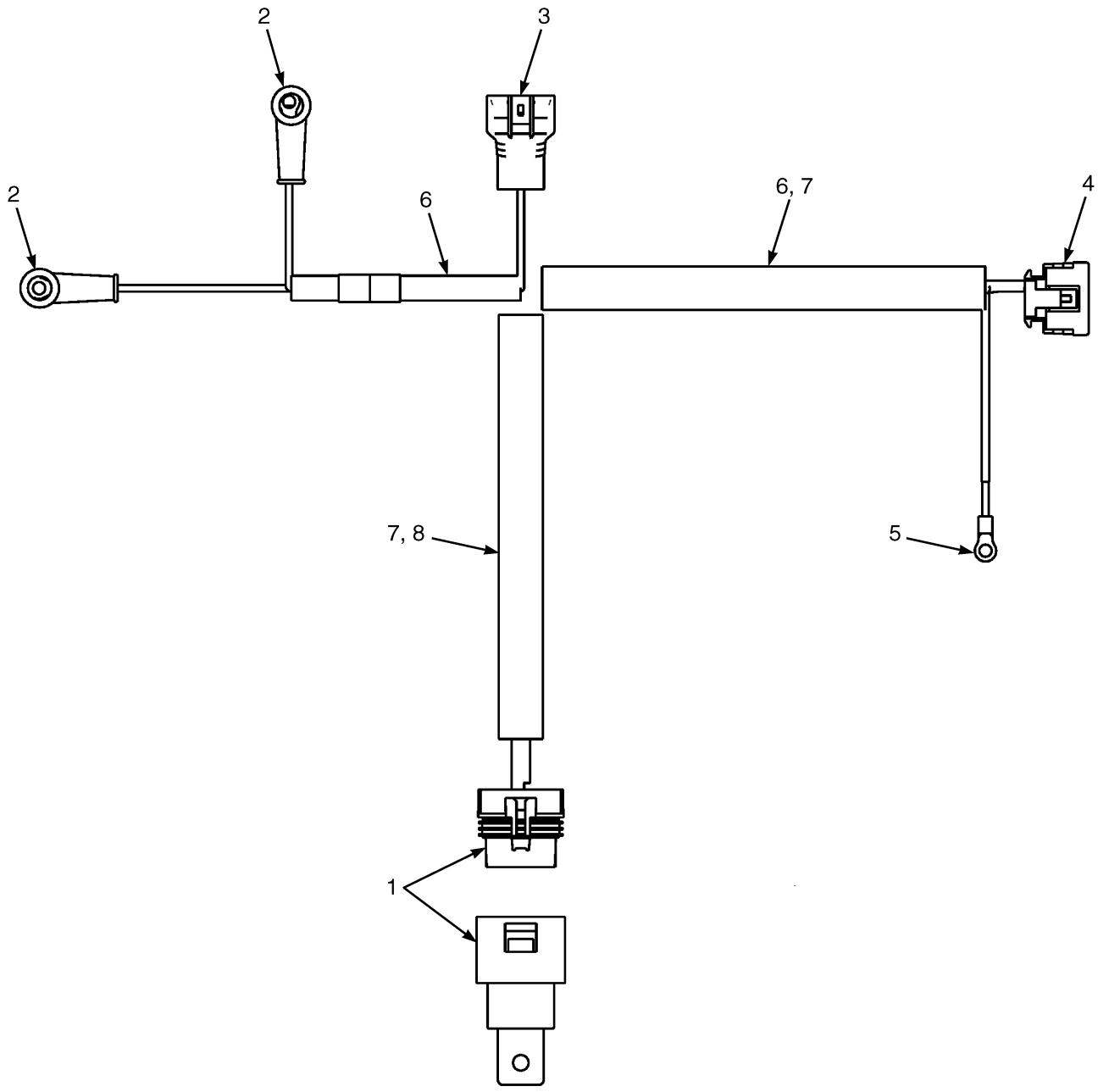

©2014 HYSTER COMPANY

WIRE HARNESS

ALTERNATOR TO BATTERY DISCONNECT SWITCH – KUBOTA 2.5L

ITEM	PART NO.	DESCRIPTION	QTY
	4629051	Wire Harness (Disconnect)	1
1	. . . . .	Connector Assembly (Disconnect Switch Relay)	1
1	4030503	Connector	1
1	1330283	Terminal	5
1	4039364	Relay (With Diode)	1
2	. . . . .	Connector Assembly (Disconnect Switch)	2
2	4051383	Terminal	1
2	190383	Boot	1
3	. . . . .	Connector Assembly (Engine Harness)	1
3	4614828	Connector (3 Pin)	1
3	4614811	Terminal	2
3	4613009	Plug	1
3	4614848	Wire Seal	1
4	. . . . .	Connector Assembly (Alternator)	1
4	4614847	Connector	1
4	4614813	Terminal	2
4	4613009	Plug	1
4	4614848	Wire Seal	2
5	4051383	Terminal (Alternator Ground)	1
6	275493	Conduit	AR
7	. . . . .	Sleeve	AR
8	275494	Conduit	AR

©2014 HYSTER COMPANY

WIRE HARNESS (FIGURE 7-45)
LIGHTS WITH OVERHEAD GUARD

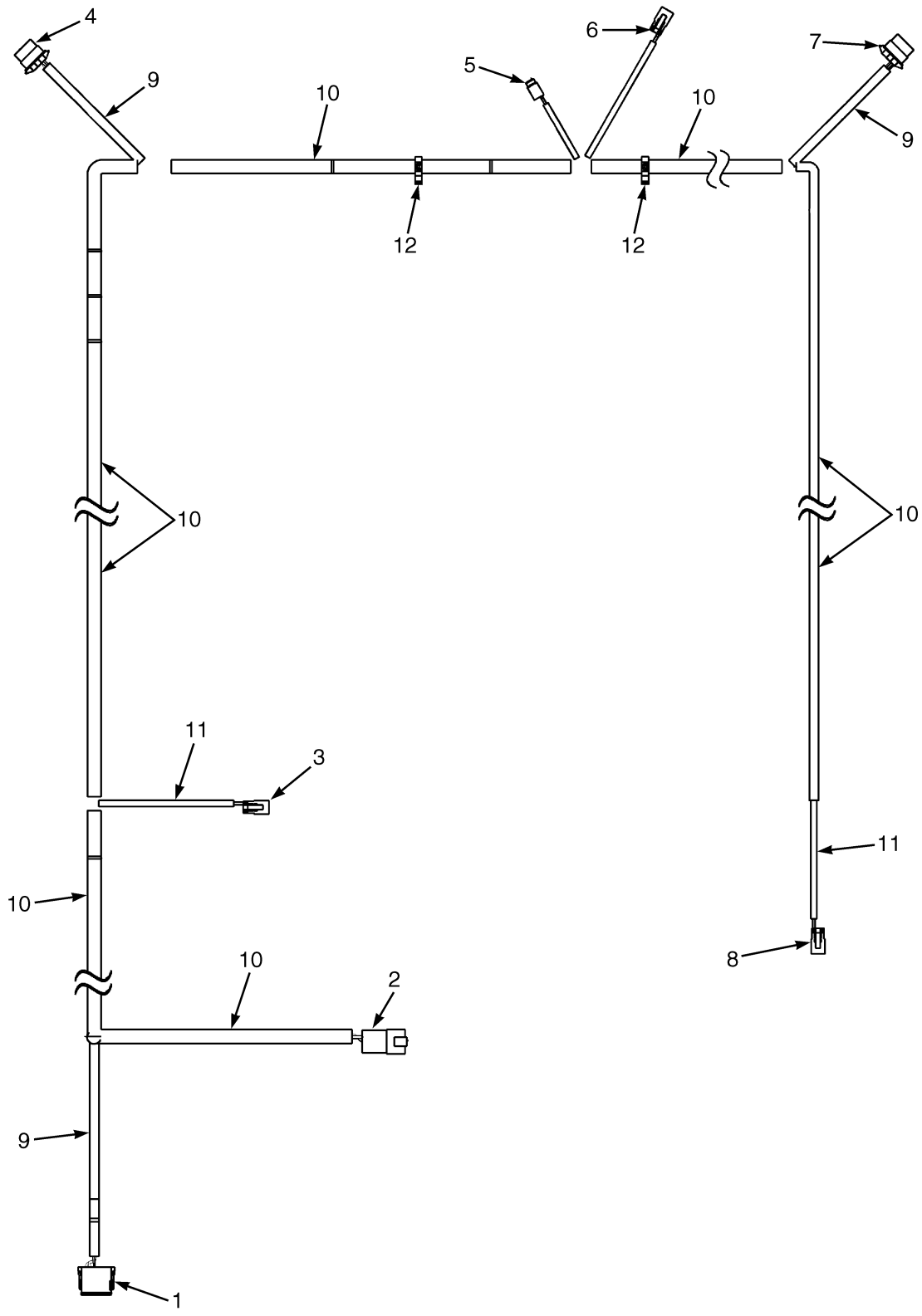

©2014 HYSTER COMPANY

WIRE HARNESS
LIGHTS WITH OVERHEAD GUARD

ITEM	PART NO.	DESCRIPTION	QTY
	2098385	Wire Harness (Lights)	1
1	. . . . .	Connector Assembly (Vehicle System Management)	1
1	1525566	Connector	1
1	1500913	Connector	1
1	1330438	Terminal (Socket)	3
1	1484377	Plug	9
2	. . . . .	Connector Assembly (RH Chassis)	1
2	1514597	Connector	1
2	1514598	Connector	1
2	1484709	Terminal (Pin)	4
3	. . . . .	Connector Assembly (RH Front Work Light)	1
3	1490242	Connector (2 Way)	1
3	1490243	Connector	1
3	1363886	Terminal (Socket)	2
4	. . . . .	Connector Assembly (RH Rear Signal)	1
4	1531486	Connector	1
4	930591	Connector	1
4	1330355	Terminal	4
4	1330356	Seal	1
4	1482668	Plug (Cavity Plug)	2
4	1476108	Wire Seal	3
5	. . . . .	Connector Assembly (Strobe)	1
5	1484557	Connector (2 Socket)	1
5	1484558	Connector	1
5	1463139	Terminal	2
6	. . . . .	Connector Assembly (Rear Work Light)	1
6	1490242	Connector (2 Way)	1
6	1490243	Connector	1
6	1363886	Terminal (Socket)	2
7	. . . . .	Connector Assembly (LH Rear Signal)	1
7	1531486	Connector	1
7	930591	Connector	1
7	1330355	Terminal	4
7	1330356	Seal	1
7	1482668	Plug (Cavity Plug)	2
7	1476108	Wire Seal	3
8	. . . . .	Connector Assembly (LH Front Work Light)	1
8	1490242	Connector (2 Way)	1
8	1490243	Connector	1
8	1363886	Terminal (Socket)	2
9	275493	Conduit	AR
10	275495	Conduit	AR
11	175944	Heat Shrink	AR
12	1509890	Clip	2

©2014 HYSTER COMPANY

NOTES

©2014 HYSTER COMPANY

8 TRANSMISSION

SECTION 8
TRANSMISSION

DESCRIPTION	PAGE
CONTROL VALVE ASSEMBLY	
LOW PRESSURE	8-26
COUNTER/REVERSE CLUTCH	
SINGLE SPEED TRANSMISSION	8-24
INPUT/FORWARD CLUTCH	
SINGLE SPEED TRANSMISSION	8-22
STATOR SUPPORT HOUSING	8-20
TORQUE CONVERTER	
MAZDA	8-12
YANMAR AND KUBOTA ENGINES	8-13
TORQUE CONVERTER HOUSING AND ATTACHING PARTS	
SINGLE SPEED - ALUMINUM CHAIN DRIVE	8-18
TRANSMISSION COOLING	
KUBOTA 2.5L LPG - SQUARE WAVE WITHOUT OIL COOLER WITH SINGLE SPEED TRANSMISSION	8-10
MAZDA 2.2L, GASOLINE AND LPG - SERPENTINE AND SQUARE WAVE	8-2
MAZDA 2.2L, GASOLINE AND LPG - WITH AIR COOLER	8-4
YANMAR 2.6L AND 3.3L DIESEL - SQUARE WAVE WITHOUT AIR COOLER	8-6
YANMAR 2.6L AND 3.3L DIESEL - SQUARE WAVE WITH INTERNAL OIL COOLER	8-8
TRANSMISSION HOUSING AND ASSEMBLY	
SINGLE SPEED - ALUMINUM CHAIN DRIVE	8-16
TRANSMISSION MOUNT	
SINGLE SPEED - ALUMINUM CHAIN DRIVE	8-14

©2014 HYSTER COMPANY

TRANSMISSION COOLING (FIGURE 8-1)
MAZDA 2.2L, GASOLINE AND LPG — SERPENTINE AND SQUARE WAVE

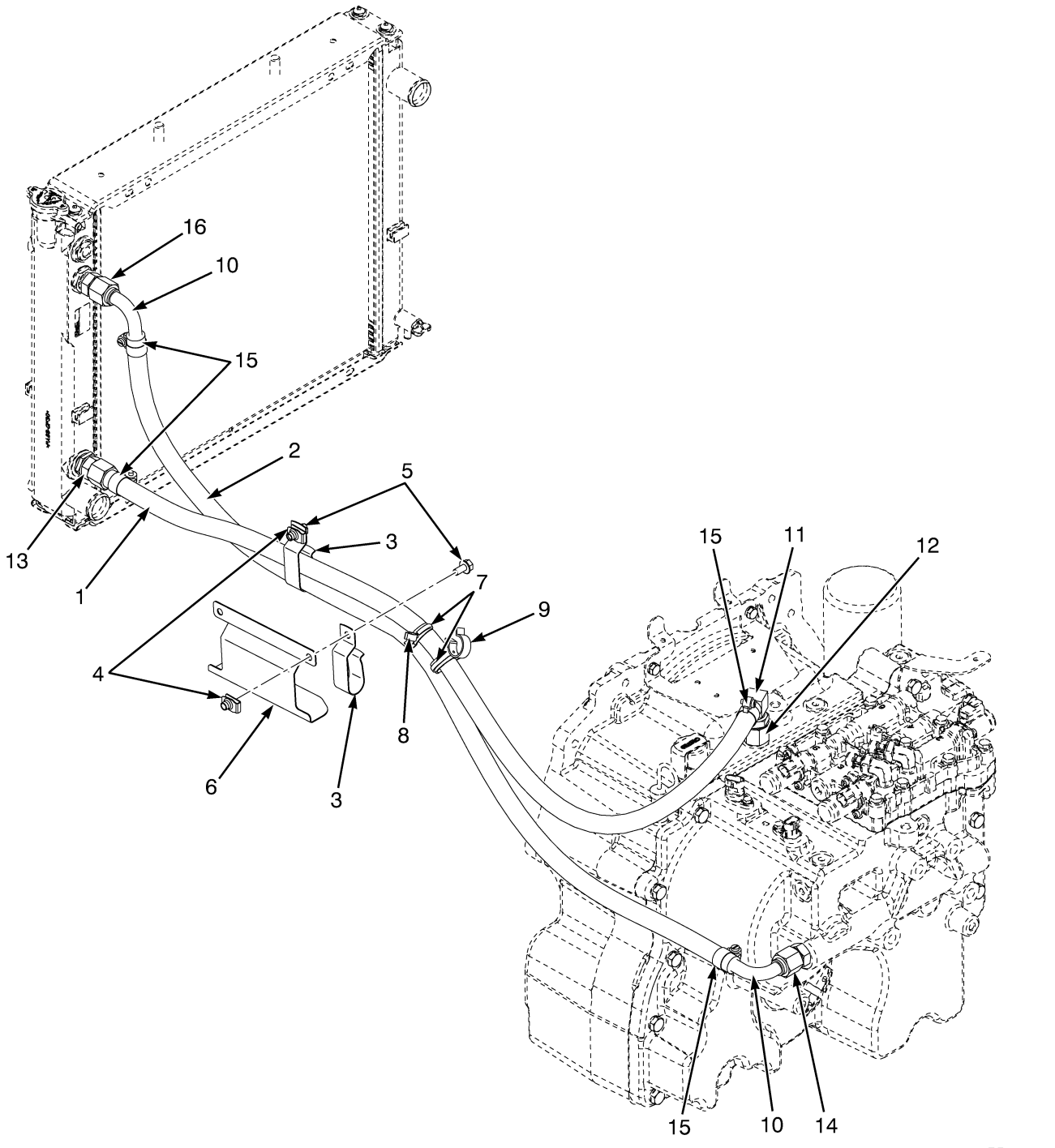

©2014 HYSTER COMPANY

TRANSMISSION COOLING

MAZDA 2.2L, GASOLINE AND LPG – SERPENTINE AND SQUARE WAVE

KEY:
A: With square wave radiator
B: With serpentine radiator

NOTE: This parts list contains multiple truck configurations, refer to the KEY to choose the correct QTY column for your truck.

ITEM	PART NO.	DESCRIPTION	QTY A	QTY B
1	**2110024**	**Hose**	**1**	**1**
2	2109870	Hose	..	1
2	2109869	Hose	1	..
3	**1562648**	**Clip**	**2**	**2**
4	**1480237**	**Nut**	**2**	**2**
5	**1527879**	**Capscrew**	**2**	**2**
6	**1616979**	**Heat Shield**	**1**	**1**
7	**1569465**	**Clamp (Swivel)**	**2**	**2**
8	1561871	Clamp (Swivel)	1	1
9	1542436	Clamp (Swivel)	1	1
10	**2109875**	**Tube Assy**	**2**	**2**
11	**222512**	**Fitting**	**1**	**1**
11	**16485**	**O-Ring**	**1**	**1**
12	1691525	Adapter	1	1
13	1673198	Fitting	1	..
13	222493	Fitting	1	..
13	**16484**	**O-Ring**	**1**	**..**
13	1691916	Fitting	..	1
14	**1486749**	**Fitting**	**1**	**1**
15	**130845**	**Clamp**	**4**	**4**
16	1565127	Fitting	1	..

©2014 HYSTER COMPANY

TRANSMISSION COOLING (FIGURE 8-2)
MAZDA 2.2L, GASOLINE AND LPG — WITH AIR COOLER

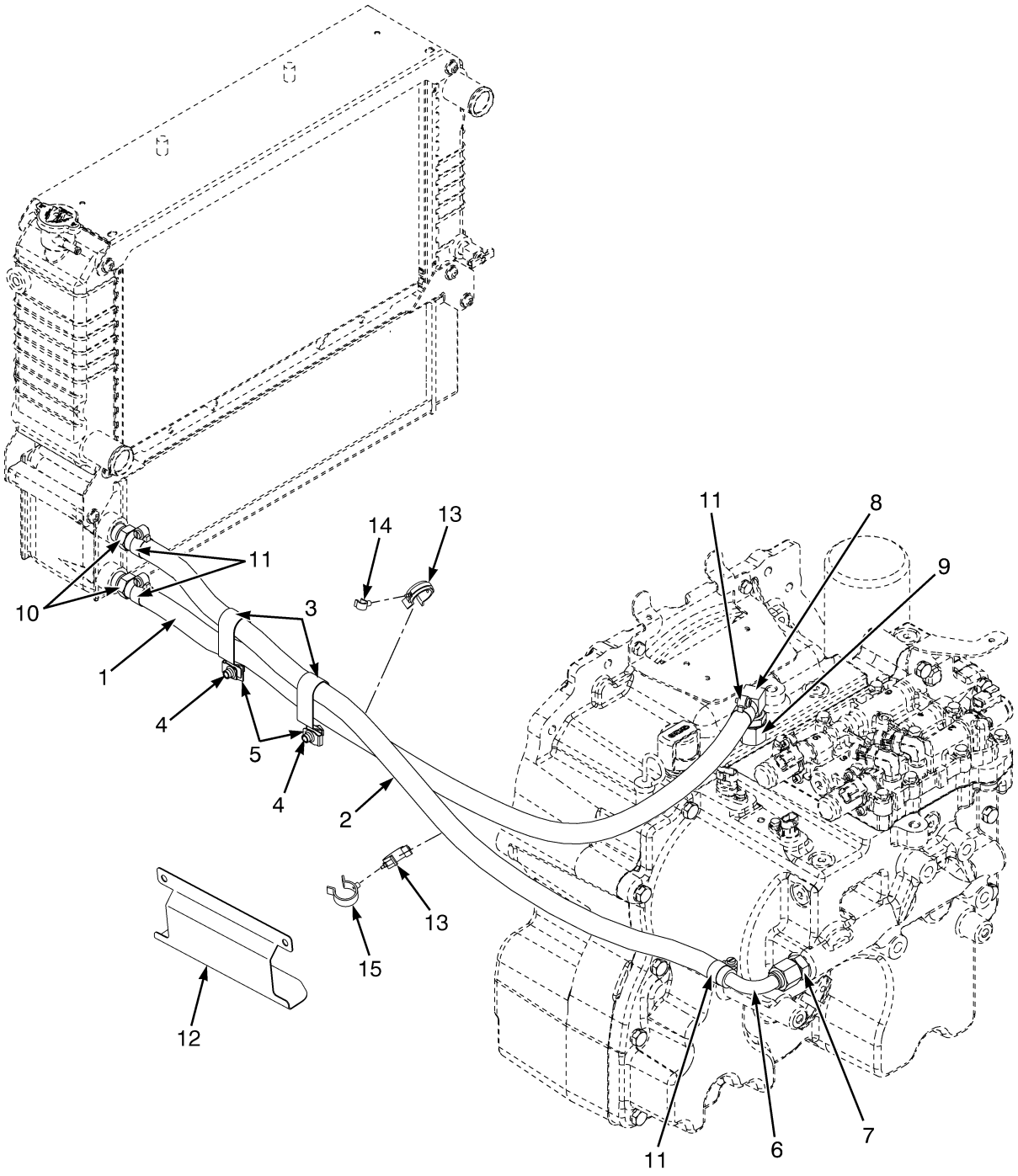

BP240176

©2014 HYSTER COMPANY

TRANSMISSION COOLING

MAZDA 2.2L, GASOLINE AND LPG – WITH AIR COOLER

ITEM	PART NO.	DESCRIPTION	QTY
1	2107524	Hose	1
2	2110024	Hose	1
3	1562648	Clip	2
4	1527879	Capscrew	2
5	1480237	Nut	2
6	2109875	Tube Assy	1
7	1486749	Fitting	1
8	222512	Fitting	1
9	1691525	Adapter	1
10	17223	Fitting	2
10	16485	O-Ring	1
11	130845	Clamp	4
12	1616979	Heat Shield	1
13	1569465	Clamp (Swivel)	2
14	1561871	Clamp (Swivel)	1
15	1542436	Clamp (Swivel)	1

©2014 HYSTER COMPANY

TRANSMISSION COOLING (FIGURE 8-3)

YANMAR 2.6L AND 3.3L DIESEL — SQUARE WAVE WITHOUT AIR COOLER

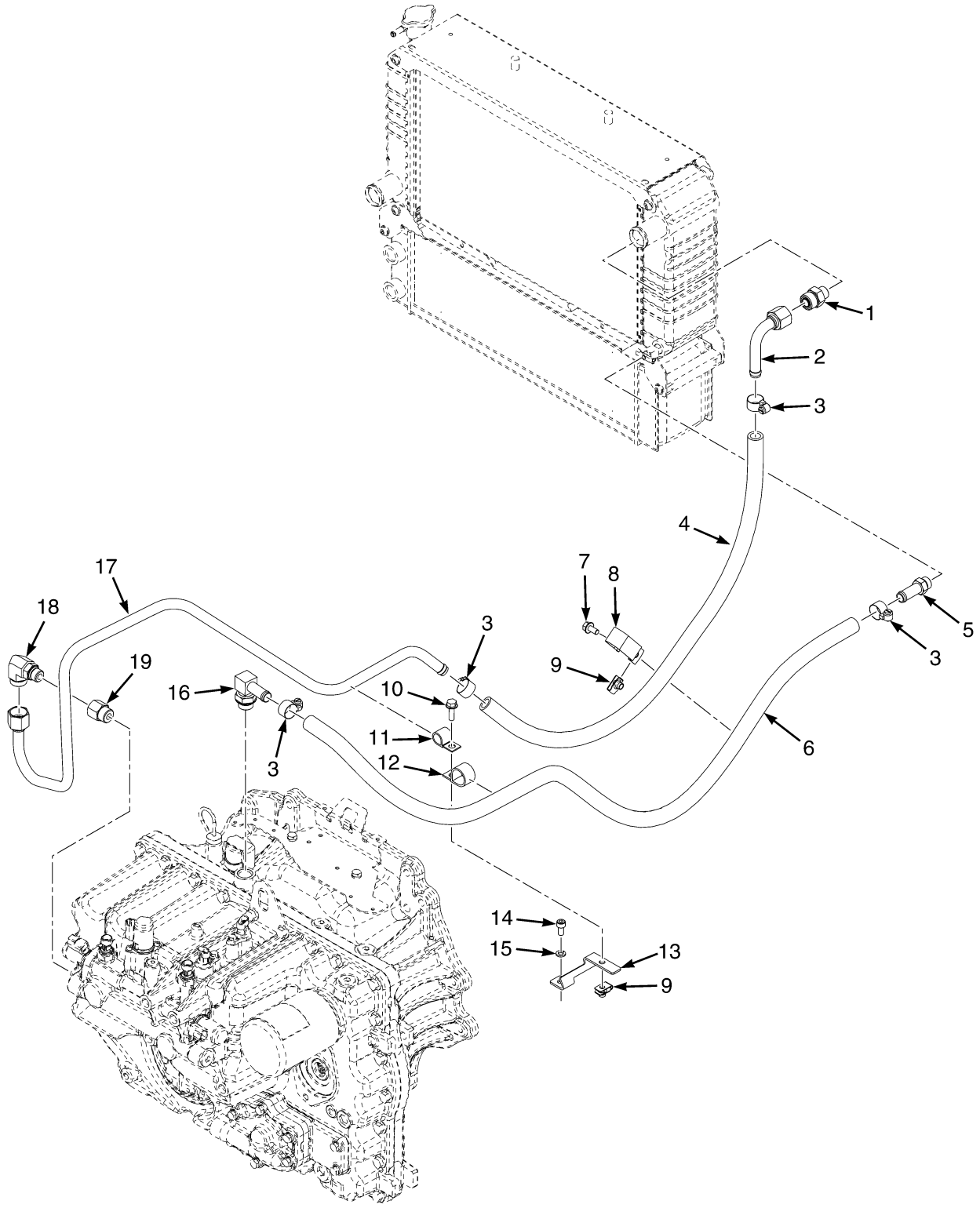

©2014 HYSTER COMPANY

TRANSMISSION COOLING

YANMAR 2.6L AND 3.3L DIESEL – SQUARE WAVE WITHOUT AIR COOLER

ITEM	PART NO.	DESCRIPTION	QTY
1	1565127	Fitting	1
2	2109875	Tube Assy	1
3	130845	Clamp	4
4	2107727	Hose	1
5	1673198	Fitting	1
6	2109869	Hose	1
7	1527879	Capscrew	1
8	1562648	Clip	1
9	1480237	Nut	2
10	1510113	Capscrew	1
11	128408	Clamp	1
12	178119	Clamp	1
13	1694547	Bracket	1
14	296009	Capscrew	1
15	292681	Lockwasher	1
16	222512	Fitting	1
17	4612847	Tube Assy	1
18	1487068	Fitting	1
19	239222	Connector	1

©2014 HYSTER COMPANY

TRANSMISSION COOLING (FIGURE 8-4)

YANMAR 2.6L AND 3.3L DIESEL — SQUARE WAVE WITH INTERNAL OIL COOLER

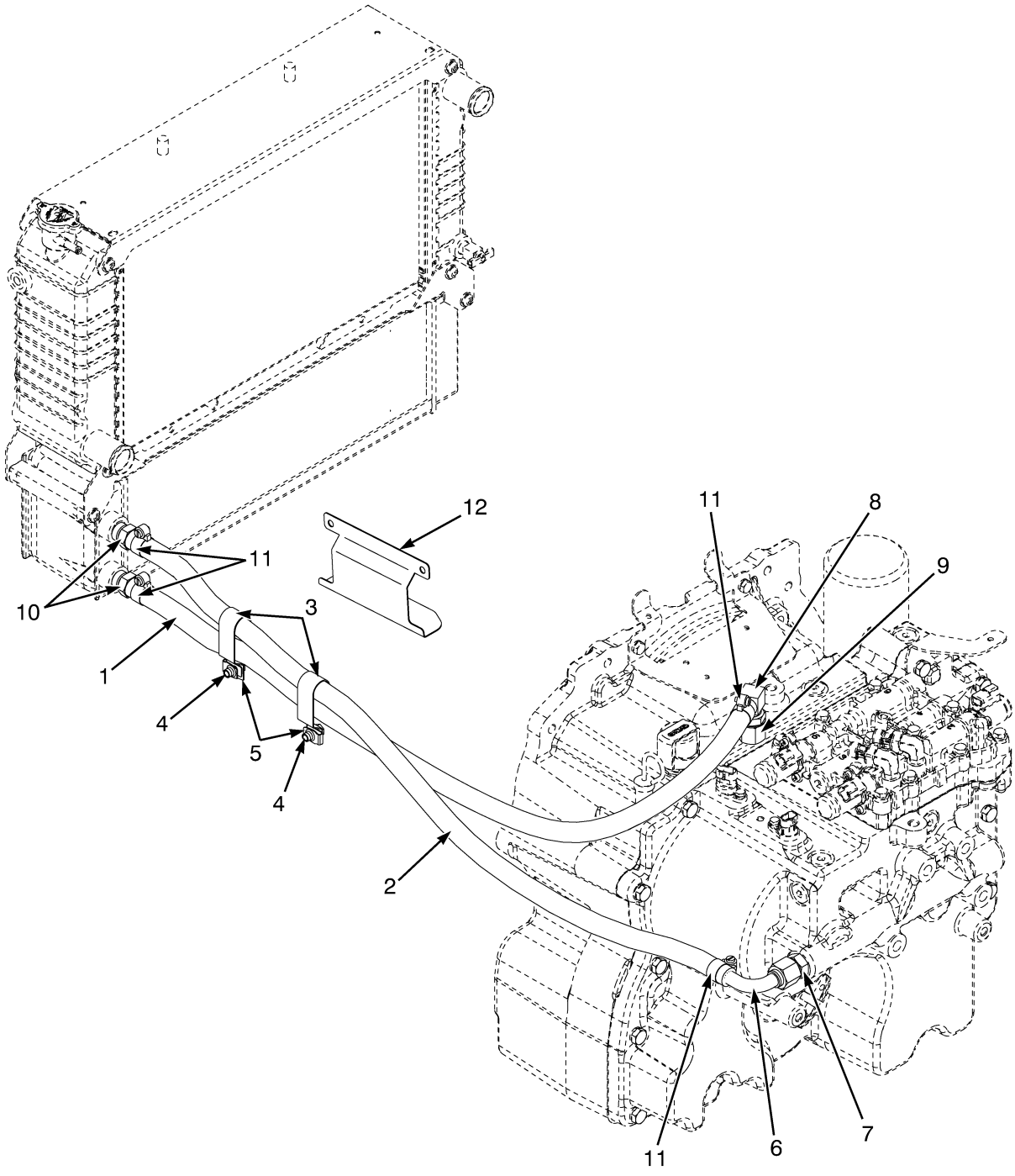

©2014 HYSTER COMPANY

TRANSMISSION COOLING

YANMAR 2.6L AND 3.3L DIESEL – SQUARE WAVE WITH INTERNAL OIL COOLER

ITEM	PART NO.	DESCRIPTION	QTY
1	a 2107524	Hose	1
2	2110024	Hose	1
3	1562648	Clip	2
4	1527879	Capscrew	2
5	1480237	Nut (Foldover)	2
6	2109875	Tube Assy	1
6	1487165	Fitting	1
7	1486749	Fitting	1
8	222512	Fitting	1
8	16485	O-Ring	1
9	1691525	Adapter (Alternate)	1
10	17223	Fitting	2
10	16485	O-Ring	1
11	130845	Clamp	4
12	1616979	Heat Shield	1

FOOTNOTES:

a With Square Wave Radiator

©2014 HYSTER COMPANY

TRANSMISSION COOLING (FIGURE 8-5)

KUBOTA 2.5L LPG — SQUARE WAVE WITHOUT OIL COOLER WITH SINGLE SPEED TRANSMISSION

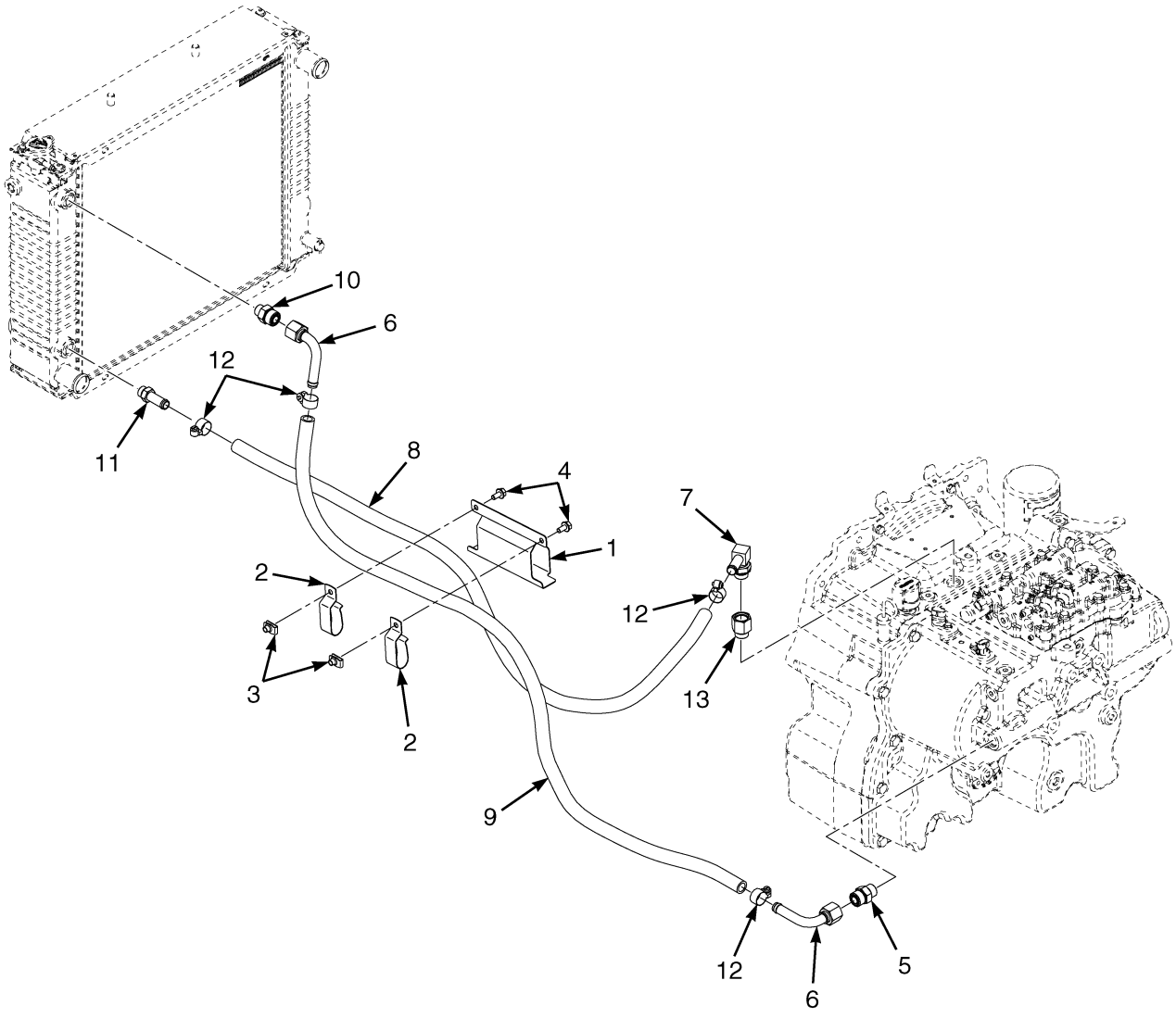

©2014 HYSTER COMPANY

TRANSMISSION COOLING

KUBOTA 2.5L LPG – SQUARE WAVE WITHOUT OIL COOLER WITH SINGLE SPEED TRANSMISSION

ITEM	PART NO.	DESCRIPTION	QTY
1	4079256	Heat Shield	1
2	**1562648**	**Clip**	**2**
3	**1480237**	**Nut**	**2**
4	**1527879**	**Capscrew**	**2**
5	**1486749**	**Fitting**	**1**
6	**2109875**	**Tube Assy**	**1**
7	**222512**	**Fitting**	**1**
8	**2110024**	**Hose**	**1**
9	2109869	Hose	1
10	1565127	Fitting	1
11	1673198	Fitting	1
12	**130845**	**Clamp**	**4**
13	1691525	Adapter (Alternate)	1

©2014 HYSTER COMPANY

TORQUE CONVERTER (FIGURE 8-6)
MAZDA

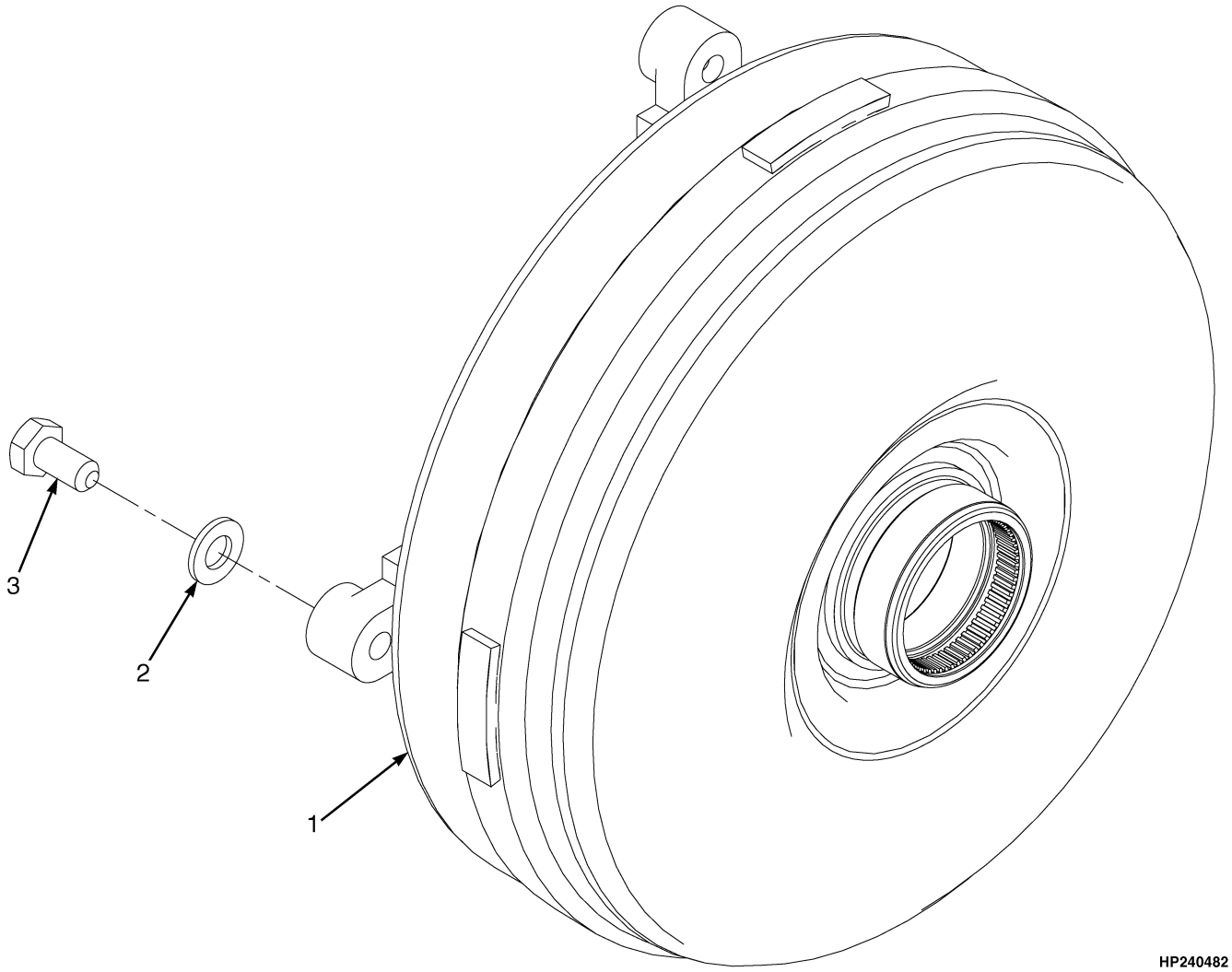

HP240482

ITEM	PART NO.	DESCRIPTION	QTY
1	1553122	Torque Converter	1
2	296420	Washer	4
3	1541921	Capscrew	4
	360387	Loctite	AR
	251979	Lubricant	AR

©2014 HYSTER COMPANY

TORQUE CONVERTER (FIGURE 8-7)
YANMAR AND KUBOTA ENGINES

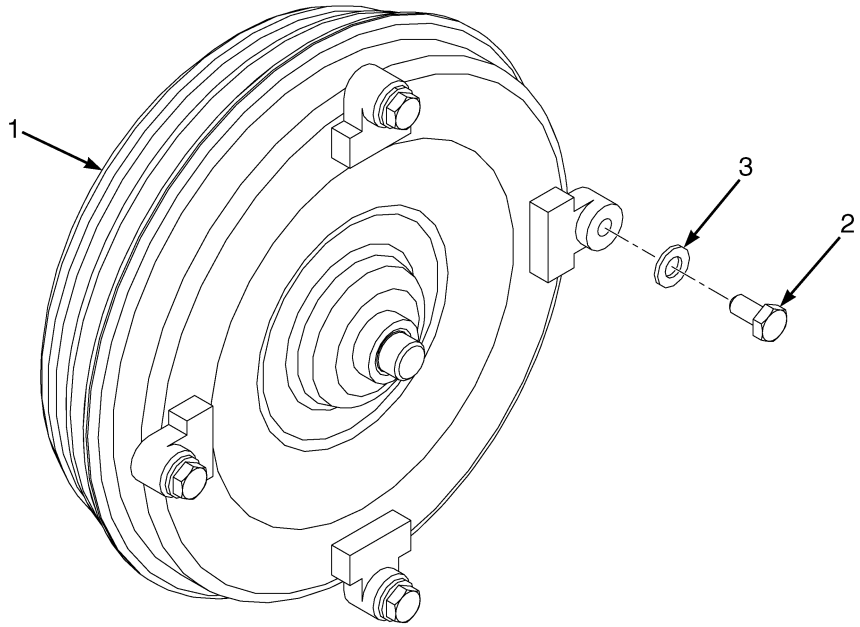

BP080656

ITEM	PART NO.	DESCRIPTION	QTY
1	1553123	Torque Converter	1
2	1541921	Capscrew	4
3	296420	Washer	4

TRANSMISSION MOUNT (FIGURE 8-8)
SINGLE SPEED — ALUMINUM CHAIN DRIVE

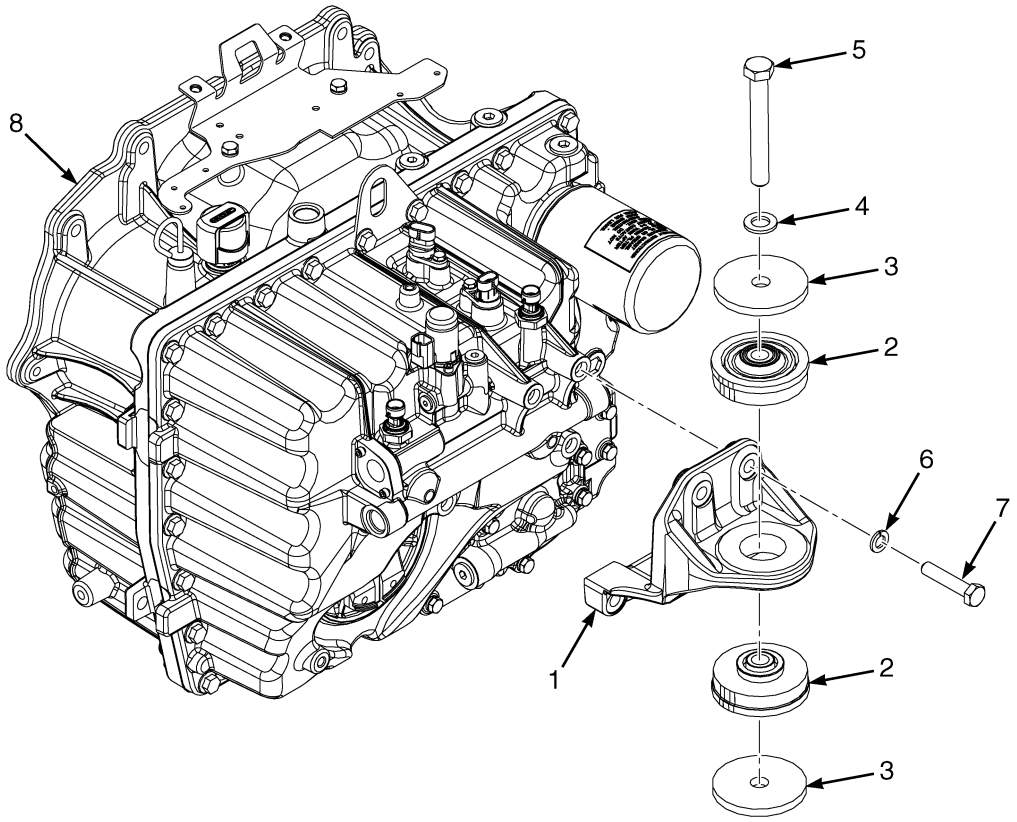

BP240237

ITEM	PART NO.	DESCRIPTION	QTY
1	1697665	Bracket	1
2	2070147	Isolator	2
3	4085524	Washer	2
4	320165	Washer	1
5	293697	Capscrew	1
6	292683	Lockwasher	4
7	292531	Capscrew	4
8	4043334	Transmission Assy	1
	264134	Loctite	AR

©2014 HYSTER COMPANY

NOTES

©2014 HYSTER COMPANY

TRANSMISSION HOUSING AND ASSEMBLY (FIGURE 8-9)

SINGLE SPEED — ALUMINUM CHAIN DRIVE

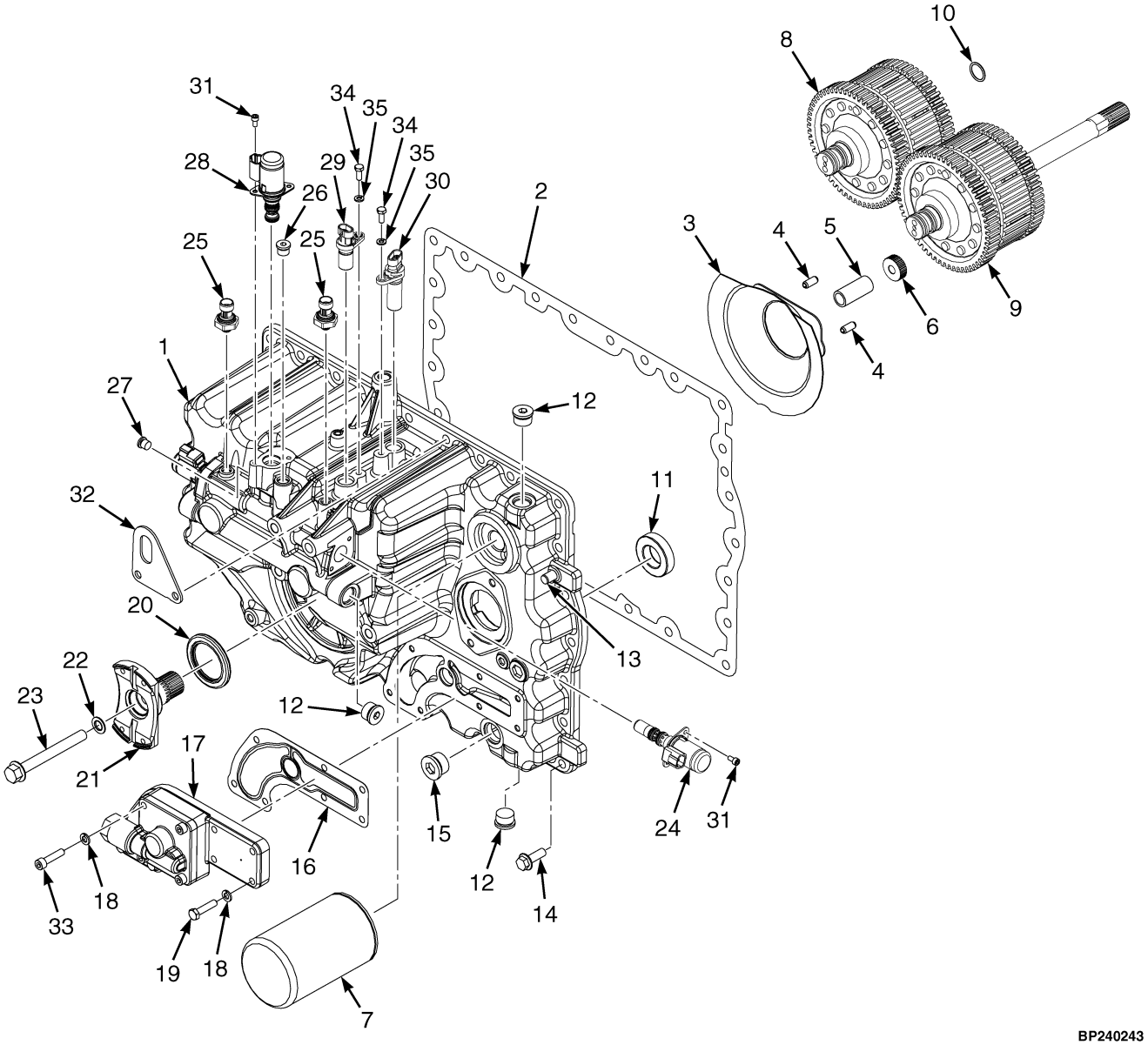

©2014 HYSTER COMPANY

TRANSMISSION HOUSING AND ASSEMBLY

SINGLE SPEED – ALUMINUM CHAIN DRIVE

ITEM	PART NO.	DESCRIPTION	QTY
	4043334	Transmission Assy	1
1	4025209	Transmission Housing	1
2	1702335	Gasket	1
3	1688435	Cover	1
4	173056	Roll Pin	2
5	1636645	Spacer	1
6	1516849	Nut	1
7	4020588	Transmission Filter	1
8	1676324	Clutch Pack (Reverse) (☞Figure 8-13)	1
9	1676323	Clutch Pack (Forward) (☞Figure 8-12)	1
10	118361	O-Ring	1
11	44306	Ball Bearing	2
12	233693	Fitting	3
13	303150	Dowel	1
14	1527884	Capscrew	26
15	222444	Fitting	1
16	1702336	Gasket	1
17	4614678	Charge Pump	1
18	292681	Lockwasher	7
19	293615	Capscrew	4
20	1547447	Oil Seal	1
21	1655880	Yoke	1
22	86229	Seal	1
23	1654651	Flange Head Capscrew	1
24	1660500	Solenoid Valve (Proportional Value)	2
25	2070263	Pressure Transducer	2
26	~~1579809~~		
	222443	Fitting	1
27	222442	Fitting	1
28	1520660	Solenoid (Transmisison Enable) (Valve)	1
29	1541231	Sensor (Input Speed, TISS)	1
30	1541232	Sensor (Output Speed, TOSS)	1
31	293741	Capscrew	6
32	4025106	Bracket (Lifting Eye)	1
33	293622	Capscrew	3
34	292500	Capscrew	2
35	292680	Washer	2

©2014 HYSTER COMPANY

TORQUE CONVERTER HOUSING AND ATTACHING PARTS (FIGURE 8-10)

SINGLE SPEED — ALUMINUM CHAIN DRIVE

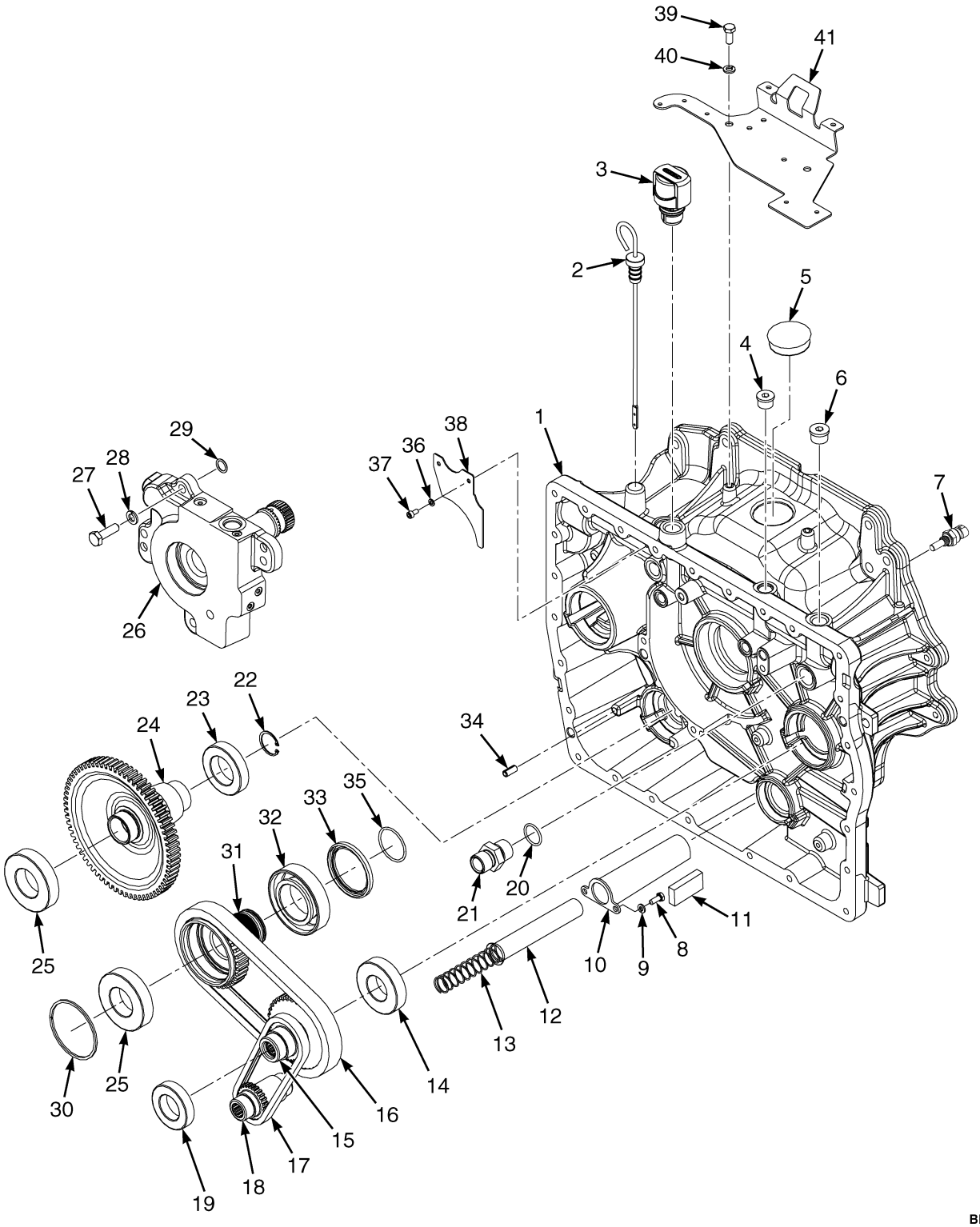

BP240244

©2014 HYSTER COMPANY

TORQUE CONVERTER HOUSING AND ATTACHING PARTS

SINGLE SPEED – ALUMINUM CHAIN DRIVE

ITEM	PART NO.	DESCRIPTION	QTY
	4043334	Transmission Assy	1
1	4016150	Converter Housing	1
2	1624401	Dipstick	1
3	1632741	Breather	1
4	~~1589792~~		
	235691	Fitting	1
5	1703644	Plug	1
6	233693	Fitting	3
7	1515654	Temperature Sensor	1
8	292500	Capscrew	2
9	292680	Washer	2
10	1702520	Cover (Suction Screen)	1
11	334560	Magnet	1
12	334450	Screen	1
13	1688598	Spring	1
14	43207	Ball Bearing	1
15	4016152	Sprocket (Driven)	1
16	4020467	Drive Chain	1
17	4020466	Drive Chain	1
18	4010318	Sprocket (Driven)	1
19	44307	Ball Bearing	1
20	39375	O-Ring	1
21	1558515	Fitting	1
22	58916	Snap Ring	1
23	44308	Ball Bearing	1
24	1684389	Transmission Gear (Output)	1
25	43208	Ball Bearing	2
26	1675647	Housing (Stator Support Assembly) (☞Figure 8-11)	1
27	287860	Capscrew	4
28	292682	Lockwasher	4
29	104681	O-Ring	2
30	1544218	Sealing Ring	1
31	4016151	Sprocket (Driving)	1
32	1544216	Bearing	1
33	1544217	Oil Seal (Torque Converter)	1
34	303150	Dowel	1
35	145481	O-Ring	1
36	292679	Washer	2
37	293741	Capscrew	2
38	4020311	Plate	1
39	136681	Capscrew	2
40	292681	Lockwasher	2
41	4026774	Cover (Converter Housing)	1

©2014 HYSTER COMPANY

STATOR SUPPORT HOUSING (FIGURE 8-11)

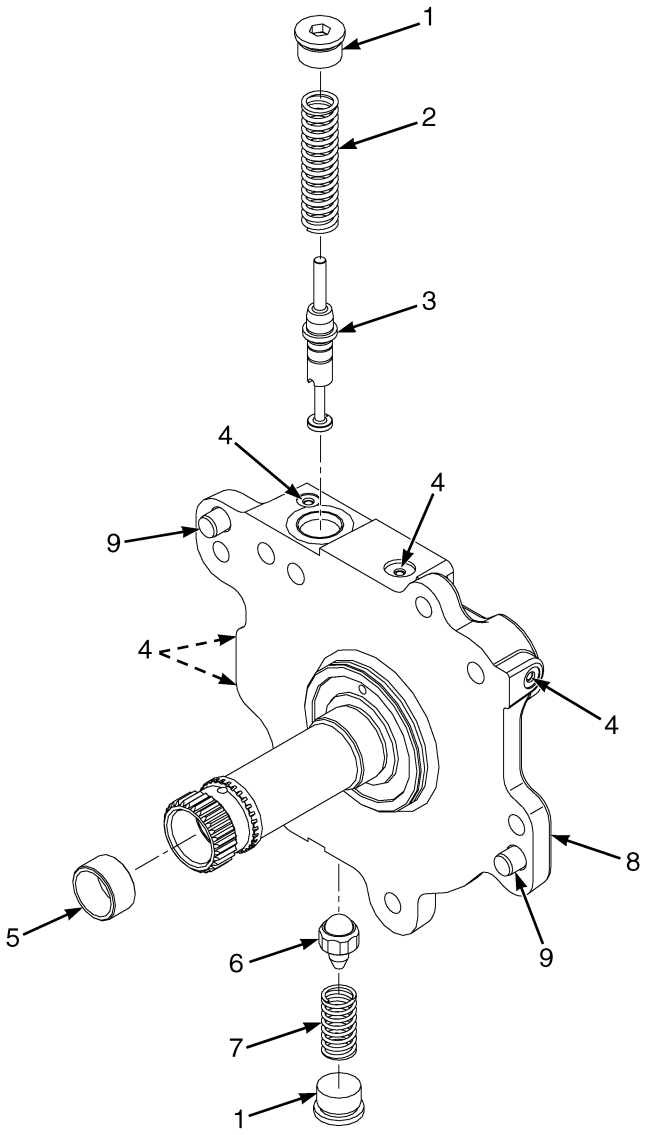

BP240196

©2014 HYSTER COMPANY

STATOR SUPPORT HOUSING

ITEM	PART NO.	DESCRIPTION	QTY
	1675647	Housing Stator Support	1
1	233693	Fitting	2
1	16485	O-Ring	1
2	1676327	Spring	1
3	1676326	Spool	1
4	. . . . .	Plug	5
5	1516826	Bushing	1
6	63081	Ball	1
7	1676328	Spring	1
8	. . . . .	Body	1

©2014 HYSTER COMPANY

INPUT/FORWARD CLUTCH (FIGURE 8-12)
SINGLE SPEED TRANSMISSION

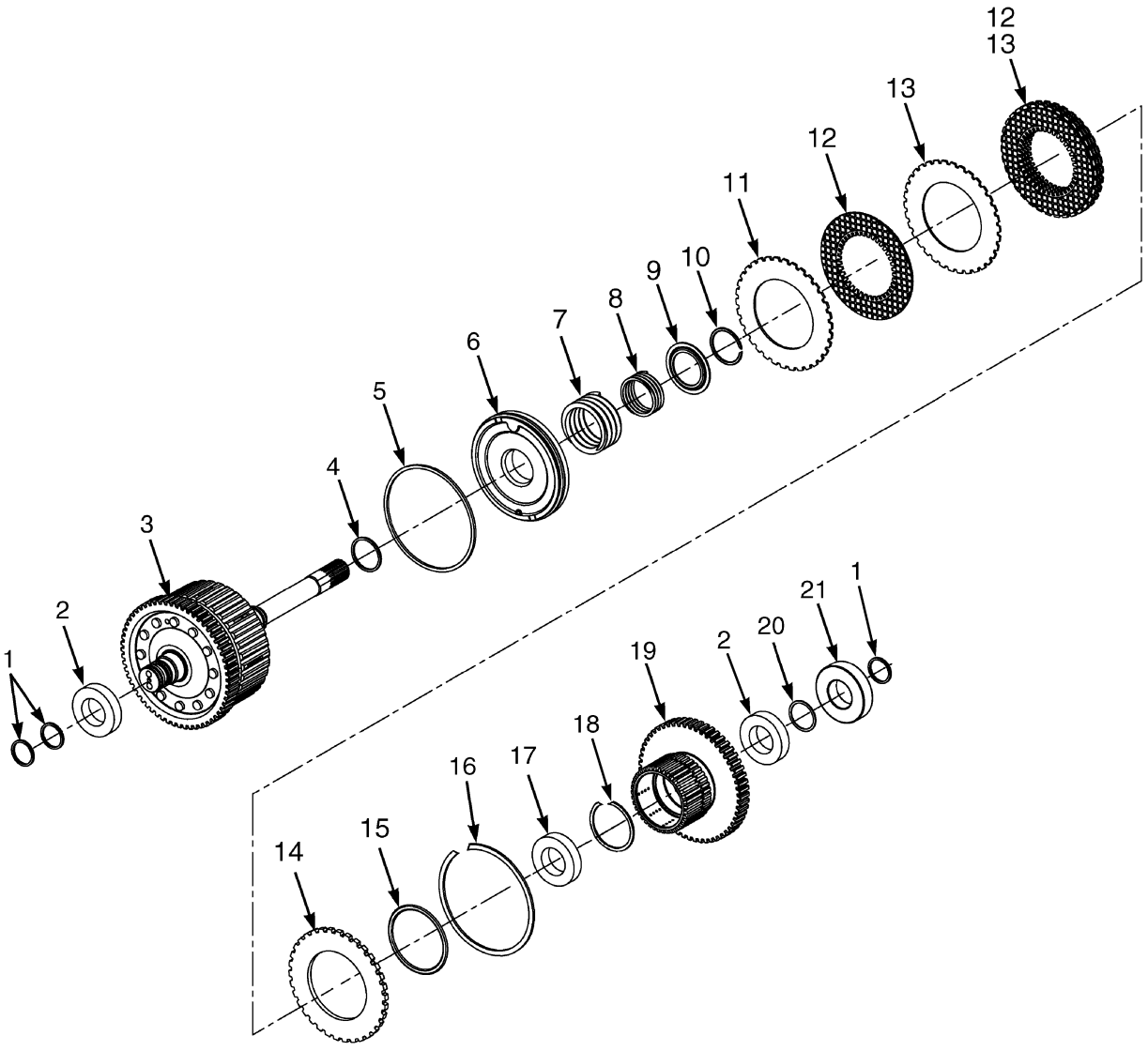

BP240240

©2014 HYSTER COMPANY

INPUT/FORWARD CLUTCH
SINGLE SPEED TRANSMISSION

ITEM	PART NO.	DESCRIPTION	QTY
	1676323	**Clutch Pack**	**1**
1	**. . . . .**	**Ring Seal**	**3**
2	**4025477**	**Ball Bearing**	**2**
3	4053208	Shaft	1
4	**. . . . .**	**Ring Seal**	**1**
5	**. . . . .**	**Ring Seal**	**1**
6	**2085129**	**Piston**	**1**
7	**1581108**	**Spring**	**1**
8	**1581098**	**Spring**	**1**
9	**1581099**	**Spring Guide**	**1**
10	**1581100**	**Snap Ring**	**1**
11	**. . . . .**	**Conical Plate**	**1**
12	**. . . . .**	**Friction Plate**	**5**
13	**. . . . .**	**Separator Plate**	**4**
14	**1537449**	**Pressure Plate (6.0 mm)**	**1**
15	**. . . . .**	**O-Ring**	**1**
16	**1537450**	**Snap Ring**	**1**
17	**124603**	**Ball Bearing**	**1**
18	**1581107**	**Snap Ring**	**2**
19	**4007889**	**Clutch Gear**	**1**
20	**1537459**	**Snap Ring**	**1**
21	**43207**	**Ball Bearing**	**1**
	1543102	Kit-Clutch Pack Plates (Includes Items 11-13)	1
	1595425	**Kit-Clutch Pack Seals (Includes Items 1, 4-5, 15)**	**1**

©2014 HYSTER COMPANY

COUNTER/REVERSE CLUTCH (FIGURE 8-13)
SINGLE SPEED TRANSMISSION

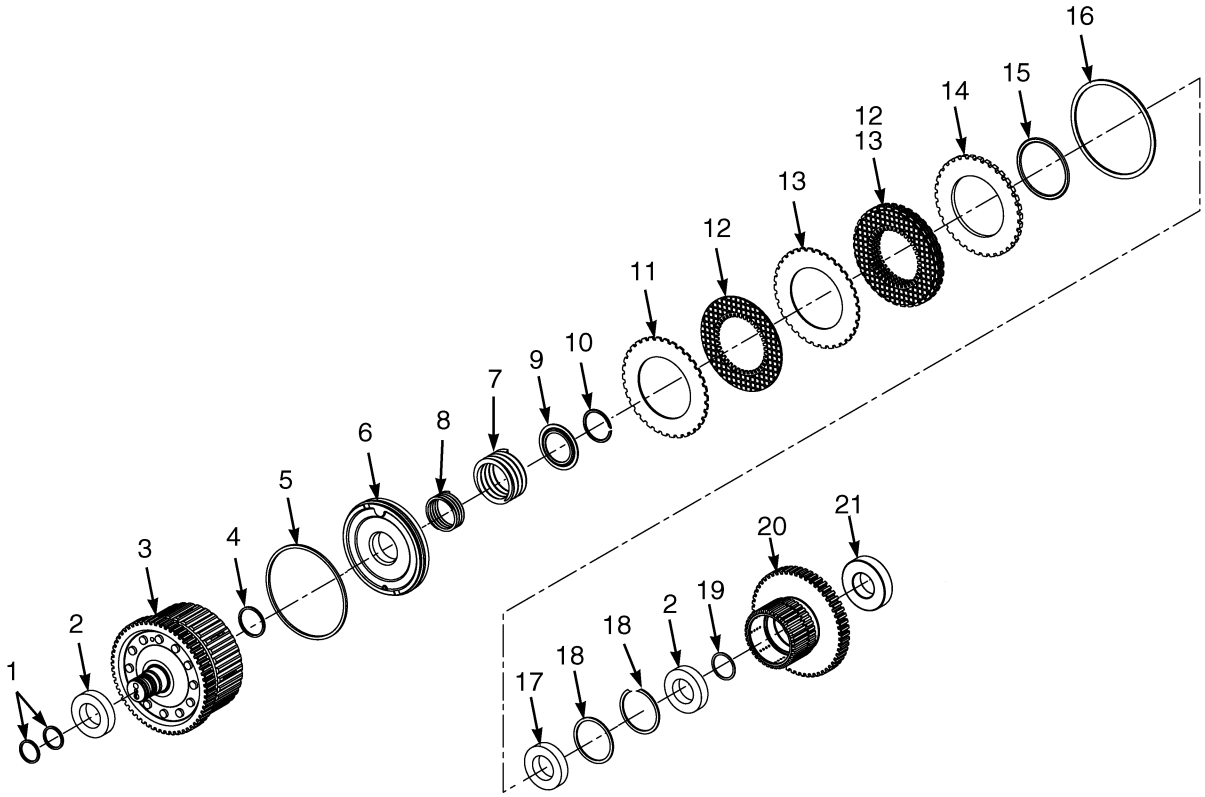

©2014 HYSTER COMPANY

COUNTER/REVERSE CLUTCH
SINGLE SPEED TRANSMISSION

ITEM	PART NO.	DESCRIPTION	QTY
	1676324	**Clutch Pack**	**1**
1	**. . . . .**	**Seal**	**2**
2	**4025477**	**Ball Bearing**	**2**
3	**4007888**	**Shaft**	**1**
4	**. . . . .**	**Seal**	**1**
5	**. . . . .**	**Seal**	**1**
6	**2085129**	**Piston**	**1**
7	**1581108**	**Spring**	**1**
8	**1581098**	**Spring**	**1**
9	**1581099**	**Spring Guide**	**1**
10	**1581100**	**Snap Ring**	**1**
11	**. . . . .**	**Conical Plate**	**1**
12	**. . . . .**	**Friction Plate**	**5**
13	**. . . . .**	**Separator Plate**	**4**
14	**1543094**	**Pressure Plate (5.8 mm)**	**1**
15	**. . . . .**	**O-Ring**	**1**
16	**1537450**	**Snap Ring**	**1**
17	**124603**	**Ball Bearing**	**1**
18	**1581107**	**Snap Ring**	**1**
19	**1537459**	**Snap Ring**	**1**
20	**4007889**	**Clutch Gear**	**1**
21	**43207**	**Ball Bearing**	**1**
	1543102	Kit-Clutch Pack Plates (Includes Items 11-13)	1
	1595425	**Kit-Clutch Pack Seals (Includes Items 1, 4-5)**	**1**

©2014 HYSTER COMPANY

CONTROL VALVE ASSEMBLY (FIGURE 8-14)
LOW PRESSURE

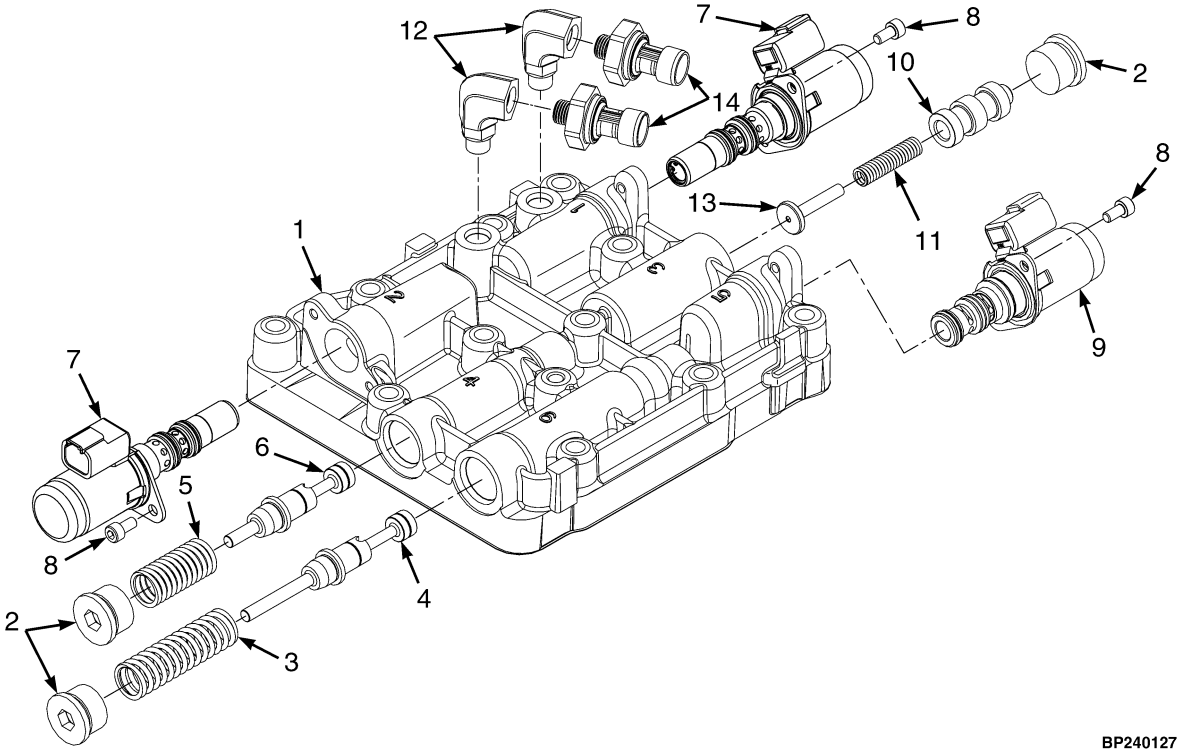

BP240127

ITEM	PART NO.	DESCRIPTION	QTY
	1665205	Valve (Low Pressure)	1
1	. . . . .	Body	1
2	233693	Fitting	3
2	16485	O-Ring	1
3	1550561	Spring	1
4	1610746	Spool	1
5	1514138	Spring	1
6	1544759	Spool	1
7	1660500	Solenoid Valve	2
7	1650819	Kit-Seal	1
8	293741	Capscrew	6
9	1520660	Solenoid (Transmisison Enable)	1
10	1590865	Spool (Cut-Off)	1
11	1590866	Return Spring	1
12	1545546	Fitting	2
13	1590839	Spool (Stop)	1
14	2070263	Pressure Transducer	2

©2014 HYSTER COMPANY

9 DRIVE AXLE

SECTION 9
DRIVE AXLE

DESCRIPTION	PAGE
AXLE HOUSING	
WET BRAKE	9-4
BEVEL GEAR	
WET BRAKE	9-6
DIFFERENTIAL	
DRY BRAKE	9-22
WET BRAKE	9-8
DRIVE AXLE	
DRY BRAKE - SHEET 1 OF 3	9-16
DRY BRAKE - SHEET 2 OF 3	9-18
DRY BRAKE - SHEET 3 OF 3	9-20
DRIVE AXLE AND ATTACHING PARTS	
DRY BRAKE	9-14
WET BRAKE	9-2
DRIVE TIRE AND WHEEL	
PNEUMATIC RADIAL	9-28
SINGLE	9-24
WIDE TREAD	9-26
DUAL DRIVE WHEELS AND TIRES	9-30
PARKING BRAKE	
WET BRAKE	9-10
WET BRAKES	9-11
WHEEL HUB	
WET BRAKE	9-12

©2014 HYSTER COMPANY

DRIVE AXLE AND ATTACHING PARTS (FIGURE 9-1)
WET BRAKE

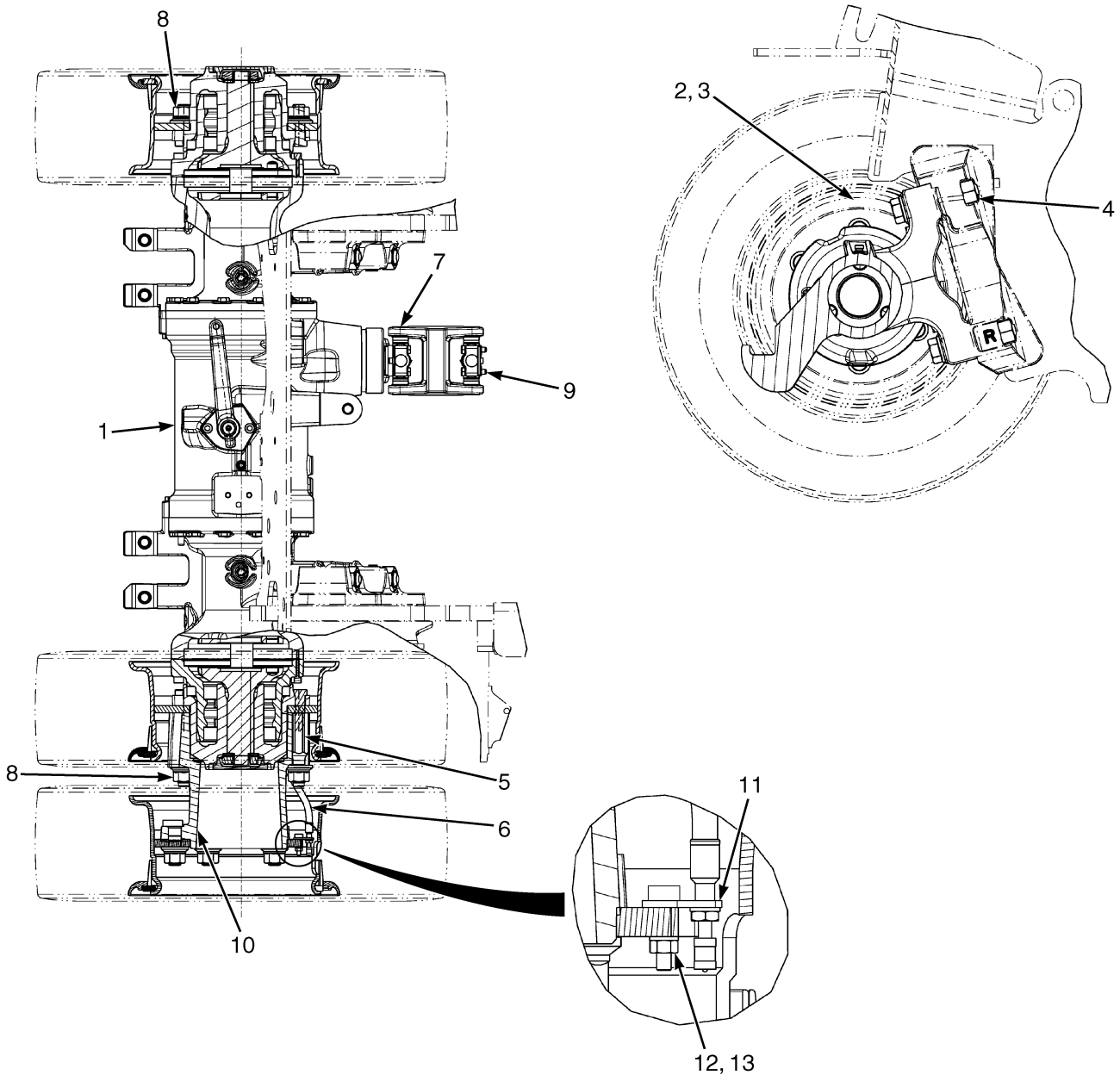

BP070188

©2014 HYSTER COMPANY

DRIVE AXLE AND ATTACHING PARTS
WET BRAKE

KEY:
A: Single Wheel
B: Dual Wheel

ITEM	PART NO.	DESCRIPTION	QTY A	QTY B
1	**a** 4633063	Drive Axle (14.52 Overall Ratio) (☞Figure 9-2, ☞Figure 9-3, ☞Figure 9-4)	1	1
1	**b** 4633065	Drive Axle (12.79 Overall Ratio) (☞Figure 9-2, ☞Figure 9-3, ☞Figure 9-4)	1	1
2	296434	Washer	4	4
3	293733	Capscrew	4	4
4	292660	Nut	4	4
5	1545401	Stud (Adapter)	..	12
6	1583169	Extension (Valve)	..	2
7	293616	Capscrew	8	8
8	1537133	Wheel Nut	12	12
9	1600539	Drive Shaft	1	1
9	1566462	Universal Joint	2	2
9	1611535	Coupling	1	1
10	1613386	Wheel Hub	..	2
10	1613383	Hub	..	1
10	1532337	Wheel Stud	..	6
10	1589867	Wheel Hub (☞Figure 9-7)	2	..
10	1532337	Wheel Stud	6	..
11	1584690	Bracket	..	2
12	136687	Nut	..	2
13	292680	Washer	..	2

FOOTNOTES:

a Mazda Engine 2.2L, Kubota 2.5L (LPG), Yanmar 2.6L (Single Speed)

b Yanmar 3.3L (Single Speed)

©2014 HYSTER COMPANY

AXLE HOUSING (FIGURE 9-2)
WET BRAKE

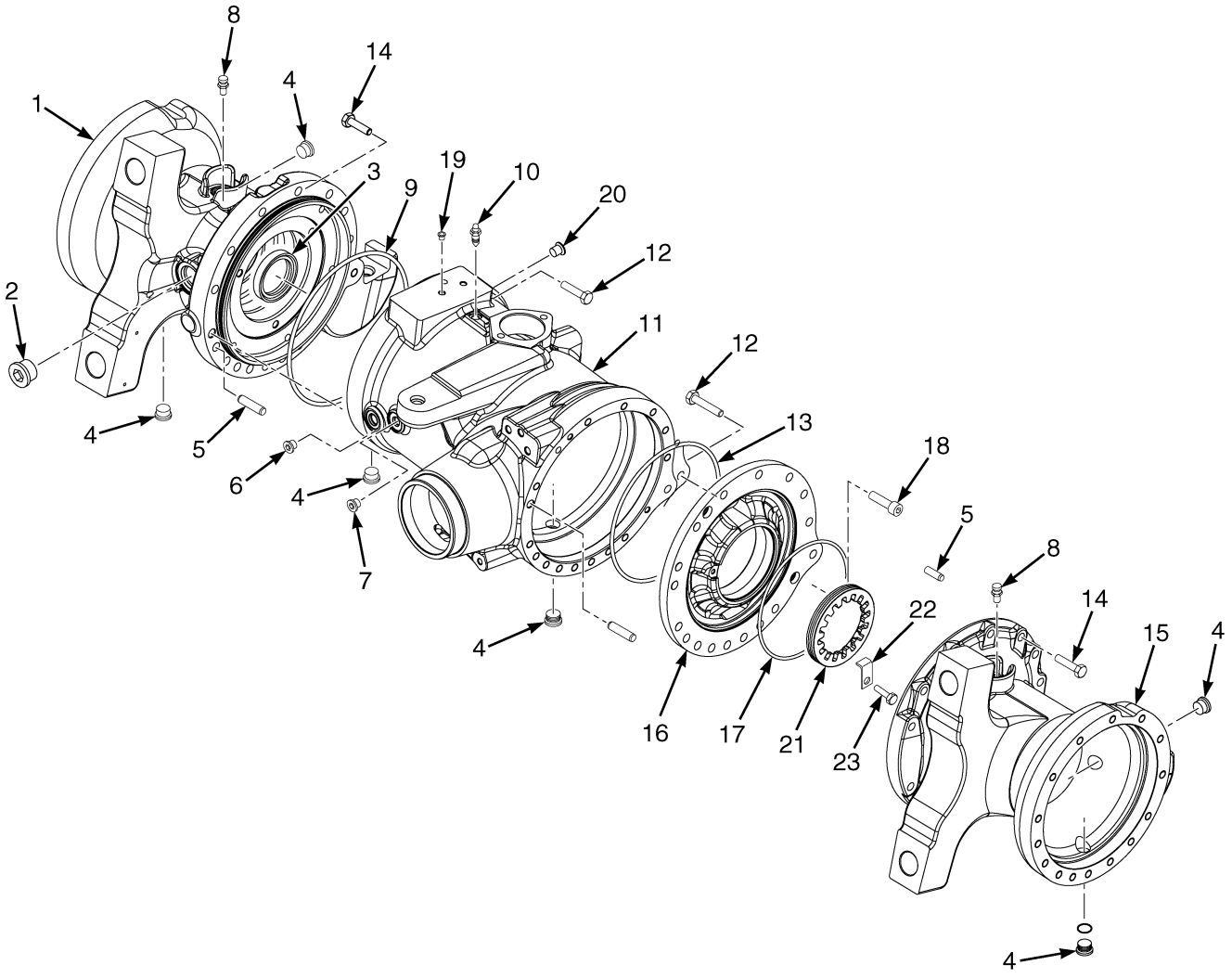

©2014 HYSTER COMPANY

AXLE HOUSING
WET BRAKE

ITEM	PART NO.	DESCRIPTION	QTY
	a 4633063	Drive Axle (14.52 Overall Ratio)	1
	b 4633065	Drive Axle (12.79 Overall Ratio)	1
1	4073332	Drive Axle Housing (LH)	1
2	1589790	Plug	1
3	1589814	Sealing Ring	1
4	4104388	Plug	6
5	1589793	Pin	2
6	1589796	Plug	1
7	1589797	Plug	1
8	4073333	Breather	2
9	1589798	O-Ring	1
10	1557383	Breather (Bleeder)	1
11	4104389	Drive Axle Housing (Center Section)	1
12	1589807	Bolt	2
13	1589801	O-Ring	1
14	1589806	Bolt	30
15	4073334	Drive Axle Housing (RH)	1
16	4073335	Support	1
17	1589805	O-Ring	1
18	1589808	Capscrew	2
19	1589809	Plug	1
20	1589810	Plug	3
21	1589811	Nut	1
22	1589812	Plate (Locking)	1
23	1589813	Bolt	1

FOOTNOTES:

a Mazda Engine 2.2L, Kubota 2.5L (LPG), Yanmar 2.6L (Single Speed)

b Yanmar 3.3L (Single Speed)

©2014 HYSTER COMPANY

BEVEL GEAR (FIGURE 9-3)
WET BRAKE

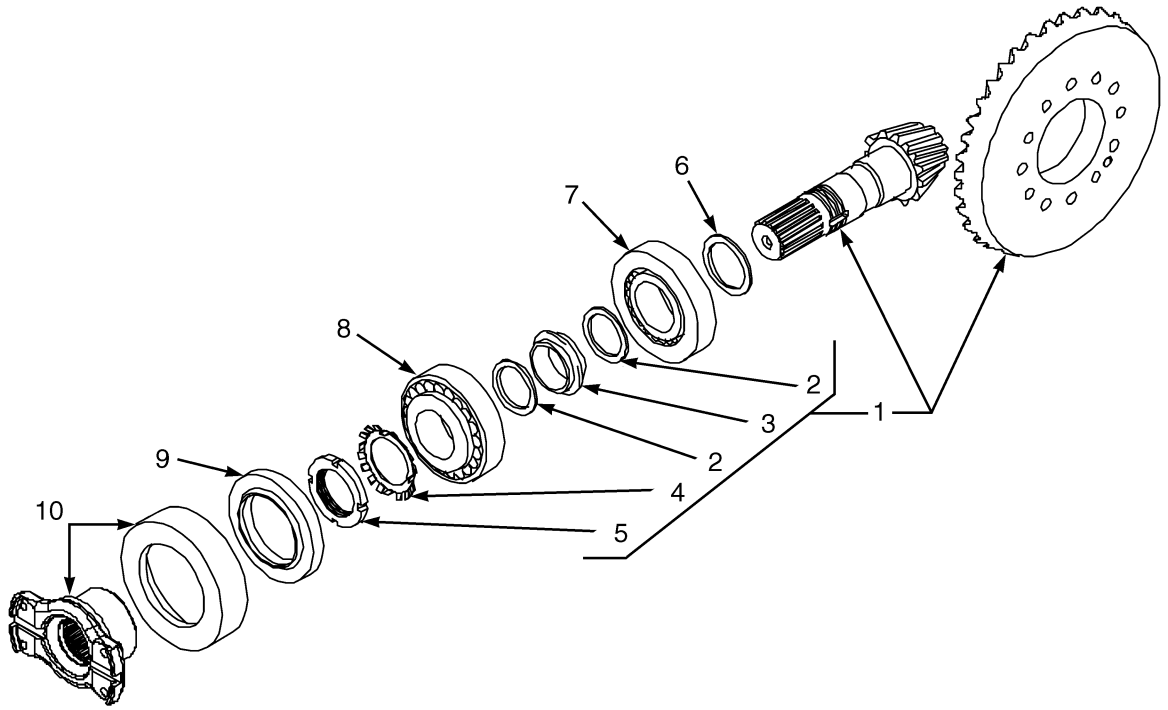

BP070020

©2014 HYSTER COMPANY

BEVEL GEAR
WET BRAKE

ITEM	PART NO.	DESCRIPTION	QTY
	a 4633063	Drive Axle (14.52 Overall Ratio)	1
	b 4633065	Drive Axle (12.79 Overall Ratio)	1
1	1590206	Kit-Gear and Pinion (14.52 Overall Ratio)	1
1	1590204	Kit-Gear and Pinion (12.79 Overall Ratio)	1
2	1589816	Washer	2
3	1589817	Spacer	1
4	1589818	Washer	1
5	1589819	Nut	1
6	4073346	Shim (1.6mm)	AR
6	4073347	Shim (1.7mm)	AR
6	4073348	Shim (1.8mm)	AR
6	4073349	Shim (1.9 mm)	AR
6	1589820	Shim (2.0 mm)	AR
6	1589821	Shim (2.1 mm)	AR
6	1589822	Shim (2.2 mm)	AR
6	1589823	Shim (2.3 mm)	AR
6	1589824	Shim (2.4 mm)	AR
6	1589825	Shim (2.5 mm)	AR
6	1589826	Shim (2.6 mm)	AR
6	1589827	Shim (2.7 mm)	AR
6	1589828	Shim (2.8 mm)	AR
7	1589829	Bearing	1
8	1589830	Bearing	1
9	1589831	Sealing Ring	1
10	1589832	Flange (Input)	1

FOOTNOTES:

a Mazda Engine 2.2L, Kubota 2.5L (LPG), Yanmar 2.6L (Single Speed)

b Yanmar 3.3L (Single Speed)

©2014 HYSTER COMPANY

DIFFERENTIAL (FIGURE 9-4)
WET BRAKE

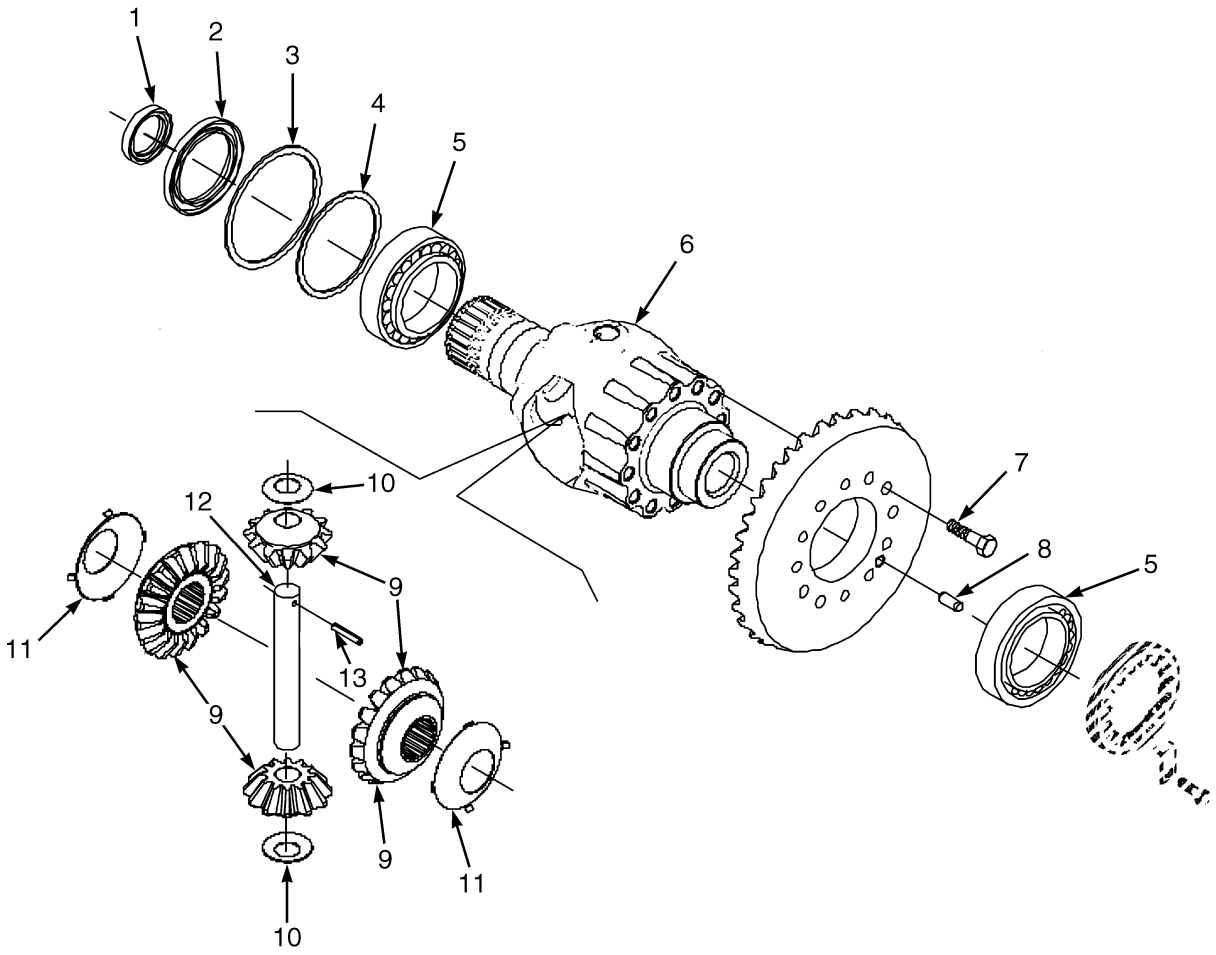

BP070022

©2014 HYSTER COMPANY

DIFFERENTIAL
WET BRAKE

ITEM	PART NO.	DESCRIPTION	QTY
	a 4633063	Drive Axle (14.52 Overall Ratio)	1
	b 4633065	Drive Axle (12.79 Overall Ratio)	1
1	1589833	Sealing Ring	1
2	1589834	Sealing Ring	1
3	1610522	Spacer	1
4	1589835	Shim (0.5 mm)	AR
4	1589836	Shim (0.3 mm)	AR
4	1589837	Shim (0.1 mm)	AR
4	1589838	Shim (0.05 mm)	AR
5	1557445	Bearing	2
6	1589839	Differential Housing	1
7	1589840	Bolt	12
8	1589841	Pin	1
9	1589842	Gear Set	1
10	1589843	Thrust Washer	2
11	1589844	Thrust Washer	2
12	1589845	Drive Shaft	1
13	1589846	Dowel	1

FOOTNOTES:

a Mazda Engine 2.2L, Kubota 2.5L (LPG), Yanmar 2.6L (Single Speed)

b Yanmar 3.3L (Single Speed)

©2014 HYSTER COMPANY

PARKING BRAKE (FIGURE 9-5)

WET BRAKE

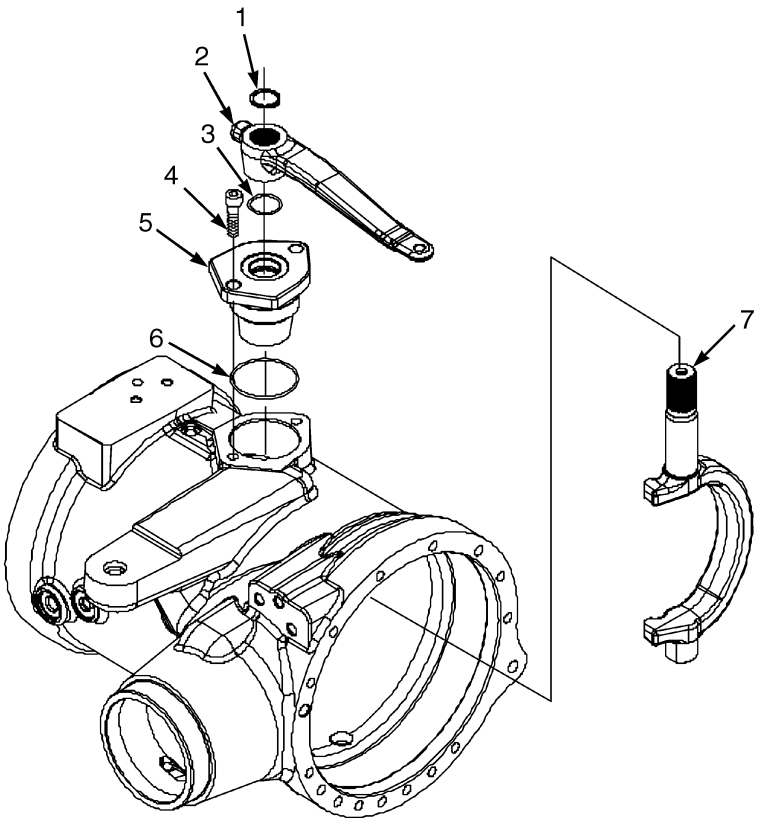

BP070023

ITEM	PART NO.	DESCRIPTION	QTY
	a 4633063	Drive Axle (14.52 Overall Ratio)	1
	b 4633065	Drive Axle (12.79 Overall Ratio)	1
1	1589847	Snap Ring	1
2	1589848	Parking Brake Lever	1
3	39374	O-Ring	1
4	1589850	Bolt	2
5	1589851	Flange	1
6	39389	O-Ring	1
7	1589853	Shaft	1

FOOTNOTES:

a Mazda Engine 2.2L, Kubota 2.5L (LPG), Yanmar 2.6L (Single Speed)

b Yanmar 3.3L (Single Speed)

©2014 HYSTER COMPANY

WET BRAKES (FIGURE 9-6)

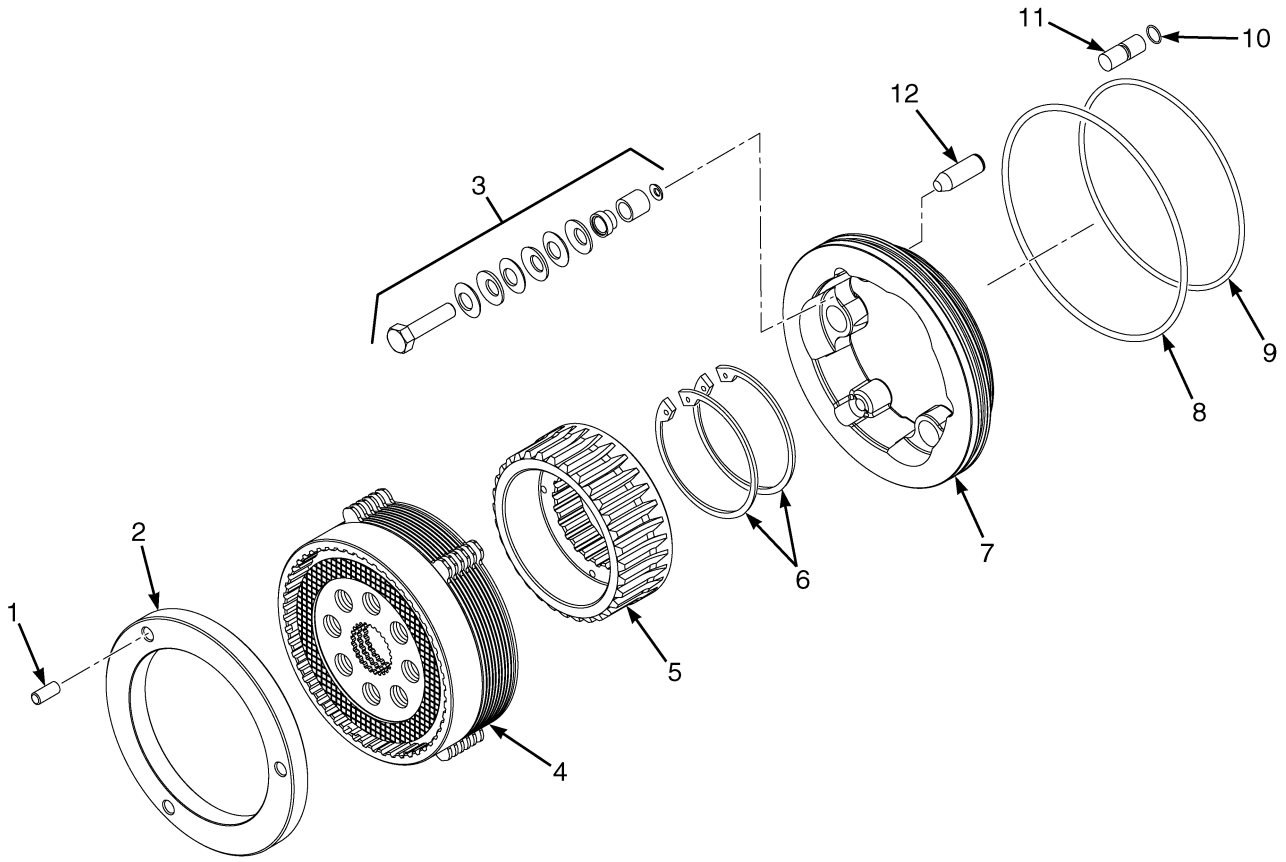

ITEM	PART NO.	DESCRIPTION	QTY
	a 4633063	Drive Axle (14.52 Overall Ratio)	1
	b 4633065	Drive Axle (12.79 Overall Ratio)	1
1	1610516	Pin	3
2	1610521	Drive Plate	1
3	1610510	Kit-Self Adjusting (Services All 3 Adjusters)	1
4	4052336	Brake Assy	1
5	1610512	Hub (Spline)	1
6	1610514	Snap Ring	2
7	4104395	Piston	1
8	1589857	O-Ring	1
9	1610508	O-Ring	1
10	1589860	O-Ring	2
11	1589861	Pin	2
12	4104405	Pin	3

FOOTNOTES:

a Mazda Engine 2.2L, Kubota 2.5L (LPG), Yanmar 2.6L (Single Speed)

b Yanmar 3.3L (Single Speed)

©2014 HYSTER COMPANY

WHEEL HUB (FIGURE 9-7)
WET BRAKE

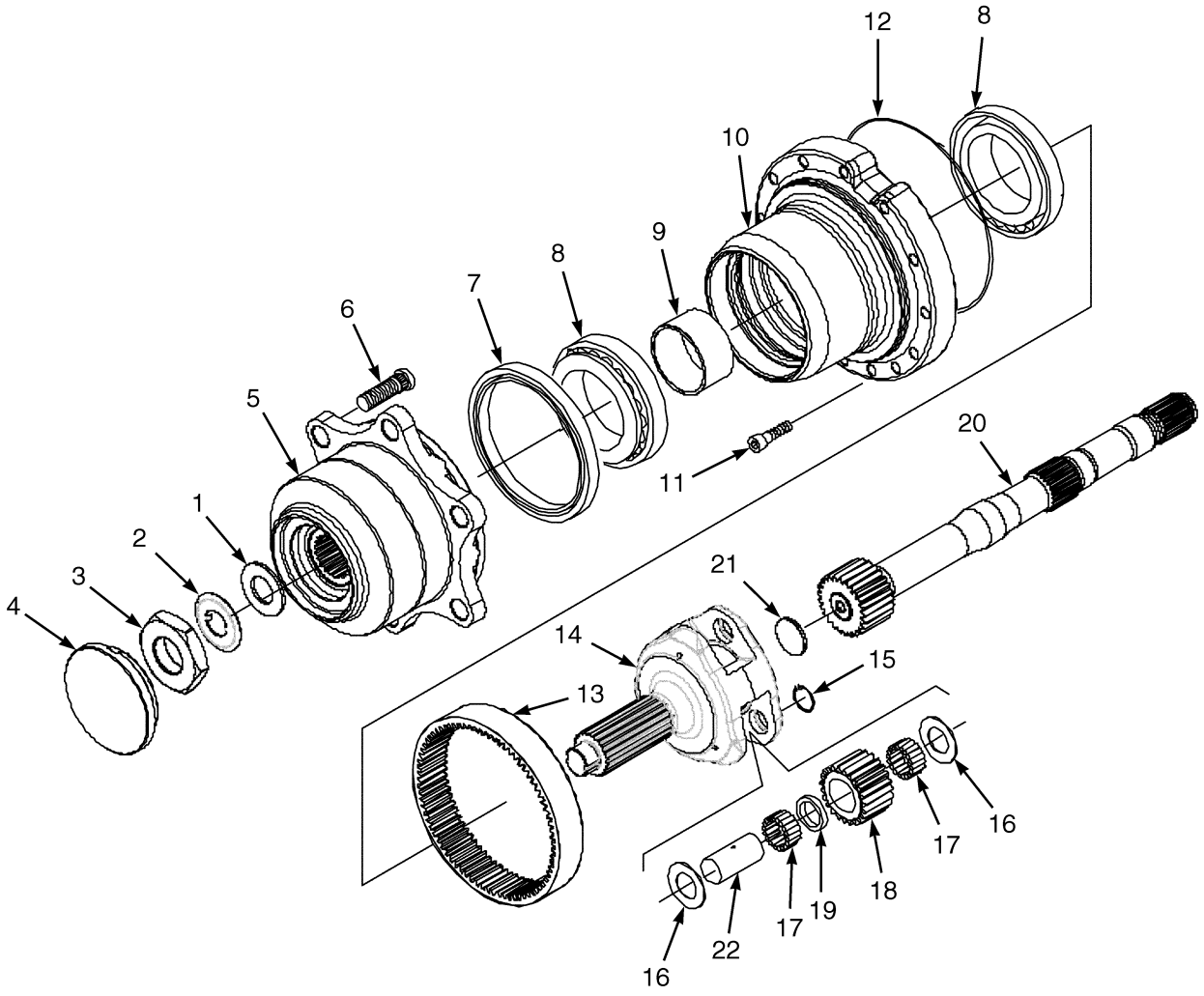

BP0700025

©2014 HYSTER COMPANY

WHEEL HUB
WET BRAKE

ITEM	PART NO.	DESCRIPTION	QTY
	a 4633063	Drive Axle (14.52 Overall Ratio)	1
	b 4633065	Drive Axle (12.79 Overall Ratio)	1
1	1613375	Washer	2
2	1613376	Thrust Washer	2
3	1613377	Nut	2
4	1613378	Plug	2
5	1589867	Wheel Hub	2
6	1589868	Stud	6
7	1589869	Sealing Ring	2
8	1589870	Bearing (Outer)	2
8	4047385	Bearing (Inner)	2
9	1613380	Spacer	2
10	4073365	Support	2
11	1589873	Bolt	30
12	1589874	O-Ring	2
13	1589875	Ring Gear	2
14	1589876	Carrier	2
15	1613381	Snap Ring	6
16	1589878	Thrust Washer	12
17	1589879	Needle Bearing	28
18	1589880	Gear	6
19	1589881	Spacer	6
20	1589886	Axle Shaft (RH)	1
20	1589887	Axle Shaft (LH)	1
21	1613382	Washer	2
22	1589924	Shaft	6

FOOTNOTES:

a Mazda Engine 2.2L, Kubota 2.5L (LPG), Yanmar 2.6L (Single Speed)

b Yanmar 3.3L (Single Speed)

©2014 HYSTER COMPANY

DRIVE AXLE AND ATTACHING PARTS (FIGURE 9-8)
DRY BRAKE

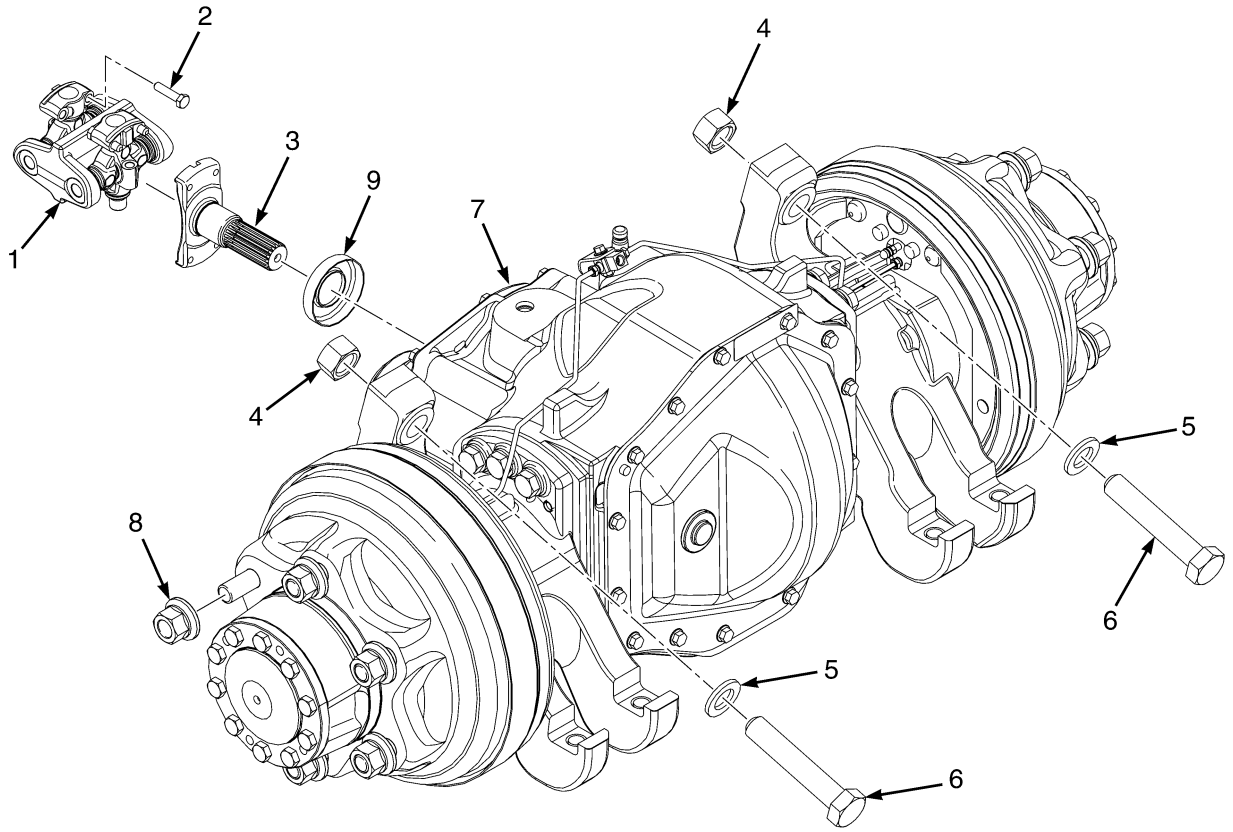

BP070133

©2014 HYSTER COMPANY

DRIVE AXLE AND ATTACHING PARTS
DRY BRAKE

ITEM	PART NO.	DESCRIPTION	QTY
1	1547757	Drive Shaft	1
2	293616	Capscrew	8
3	1517673	Shaft	1
4	292660	Nut	4
5	296434	Washer	4
6	293733	Capscrew	4
7	4624290	Drive Axle (2.17 Gear Ratio) (☞Figure 9-9, ☞Figure 9-10, ☞Figure 9-11)	1
7	4624291	Drive Axle (2.48 Gear Ratio) (☞Figure 9-9, ☞Figure 9-10, ☞Figure 9-11)	1
8	1537133	Wheel Nut	12
9	1516534	Dust Cover	1
9	4000205	Dust Cover (Alternate Part)	1

©2014 HYSTER COMPANY

DRIVE AXLE (FIGURE 9-9)
DRY BRAKE — SHEET 1 OF 3

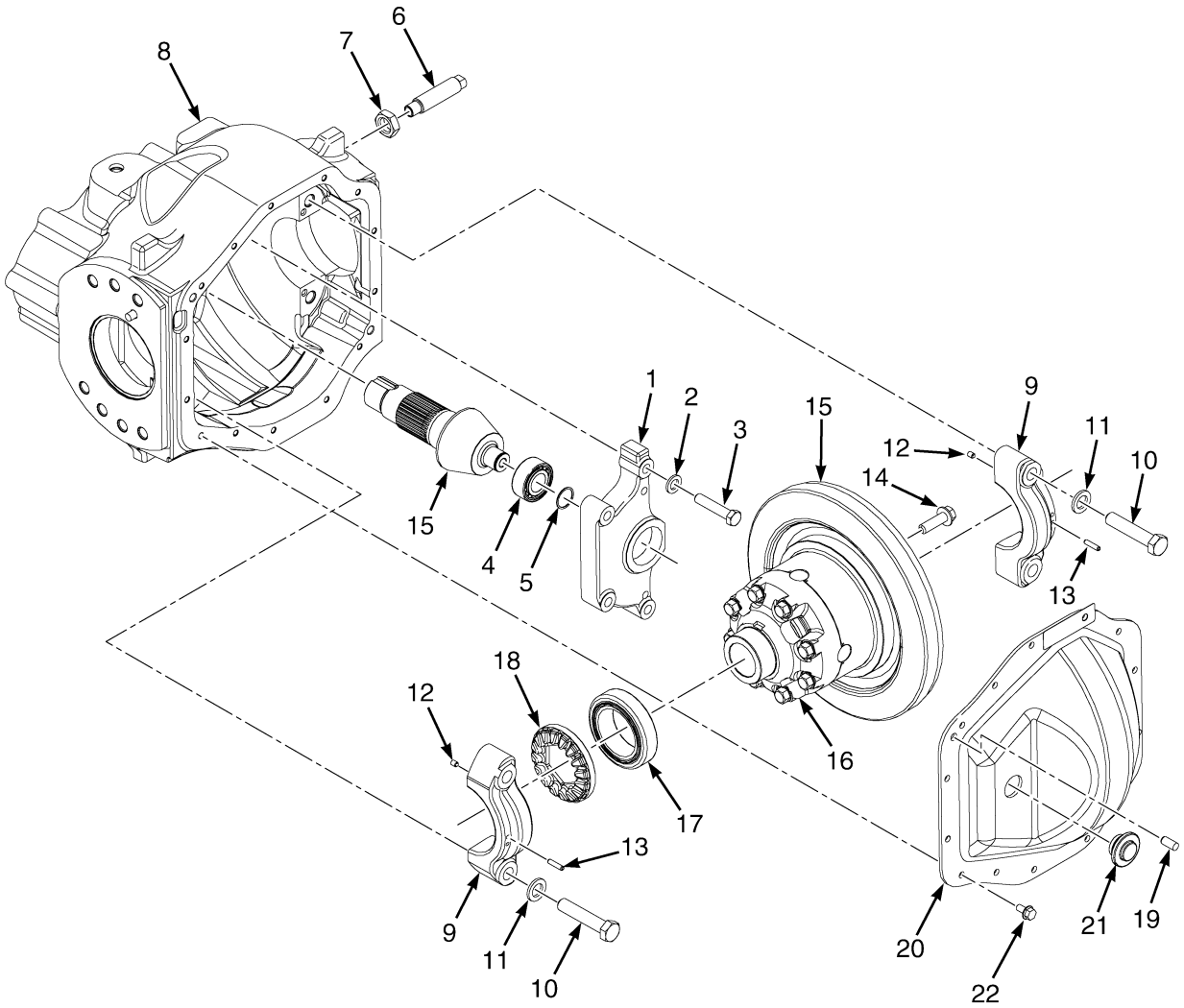

©2014 HYSTER COMPANY

DRIVE AXLE

DRY BRAKE – SHEET 1 OF 3

ITEM	PART NO.	DESCRIPTION	QTY
	4624290	Drive Axle (2.17 Gear Ratio) (☞Figure 9-10, ☞Figure 9-11)	1
	4624291	Drive Axle (2.48 Gear Ratio) (☞Figure 9-10, ☞Figure 9-11)	1
1	1512561	Support	1
2	296422	Washer	4
3	293651	Capscrew	4
4	135158	Bearing	1
5	320264	Snap Ring	1
6	1583732	Thrust Screw	1
7	296137	Nut	1
8	1656333	Drive Axle Housing (Center)	1
9	. . . . .	Bearing Cap	2
10	293692	Capscrew	4
11	296426	Washer	4
12	234038	Dowel	4
13	15242	Cotter Pin	2
14	2029436	Bolt	14
15	2067965	Gear and Pinion (Hypoid)	1
16	2067962	Differential (☞Figure 9-12)	1
17	1375488	Bearing Set	2
17	2027661	Roller Bearing (Optional)	2
18	1652926	Retainer	2
19	302385	Dowel	7
20	1532735	Cover (Center)	1
21	1516075	Plug	1
22	1527879	Capscrew	15
	a 264159	Adhesive	AR
	a 383789	Thread Sealant	AR

FOOTNOTES:

a Not Illustrated

©2014 HYSTER COMPANY

DRIVE AXLE (FIGURE 9-10)
DRY BRAKE — SHEET 2 OF 3

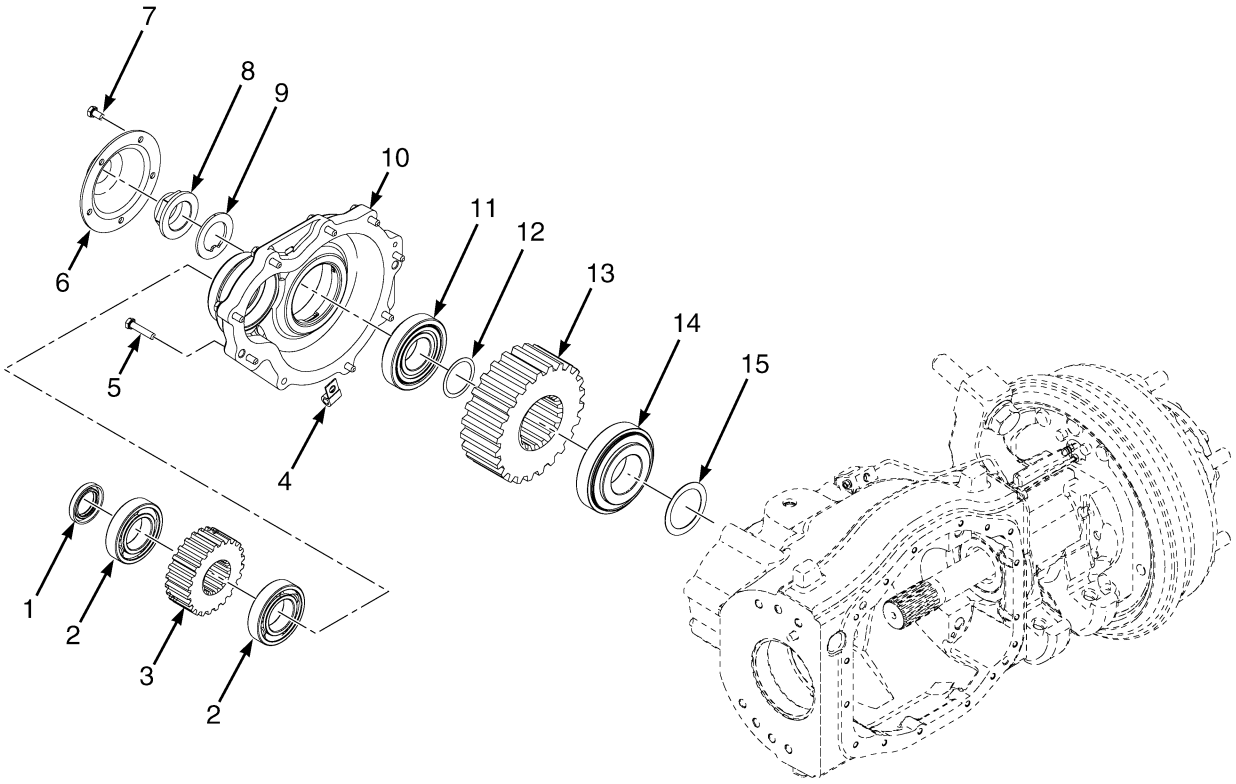

BP070135

©2014 HYSTER COMPANY

DRIVE AXLE
DRY BRAKE – SHEET 2 OF 3

ITEM	PART NO.	DESCRIPTION	QTY
	4624290	Drive Axle (2.17 Gear Ratio) (☞Figure 9-9, ☞Figure 9-11)	1
	4624291	Drive Axle (2.48 Gear Ratio) (☞Figure 9-9, ☞Figure 9-11)	1
1	1522377	Oil Seal	1
2	1523479	Ball Bearing	2
3	1517578	Gear (2.17 Gear Ratio) (Drive)	1
3	1516530	Gear (2.49 Gear Ratio) (Drive)	1
4	2075120	Clamp	2
4	164488	Clamp	2
5	1510114	Capscrew	9
6	1516536	Cover (Pinion)	1
7	1527879	Capscrew	5
8	2026861	Nut	1
9	1530588	Washer	1
10	1516535	Housing	1
11	2022352	Tapered Roller Bearing	1
11	1578978	Tapered Roller Bearing	1
12	1516335	Shim (0.019 in.)	AR
12	1516331	Shim (0.004 in.)	AR
12	1516332	Shim (0.005 in.)	AR
12	1516333	Shim (0.007 in.)	AR
12	1516334	Shim (0.009 in.)	AR
13	1517576	Gear (2.17 Gear Ratio) (Driven)	1
13	1516526	Gear (2.48 Gear Ratio) (Driven)	1
14	2028862	Tapered Roller Bearing	1
14	1578981	Tapered Roller Bearing	1
15	1520755	Shim (0.04 in.)	AR
15	1569912	Shim (0.008 in.)	AR
15	1569913	Shim (0.009 in.)	AR
15	1520752	Shim (0.012 in.)	AR
15	1569914	Shim (0.014 in.)	AR
15	1520753	Shim (0.016 in.)	AR
15	1569915	Shim (0.018 in.)	AR
15	1520754	Shim (0.19 in.)	AR

©2014 HYSTER COMPANY

DRIVE AXLE (FIGURE 9-11)
DRY BRAKE — SHEET 3 OF 3

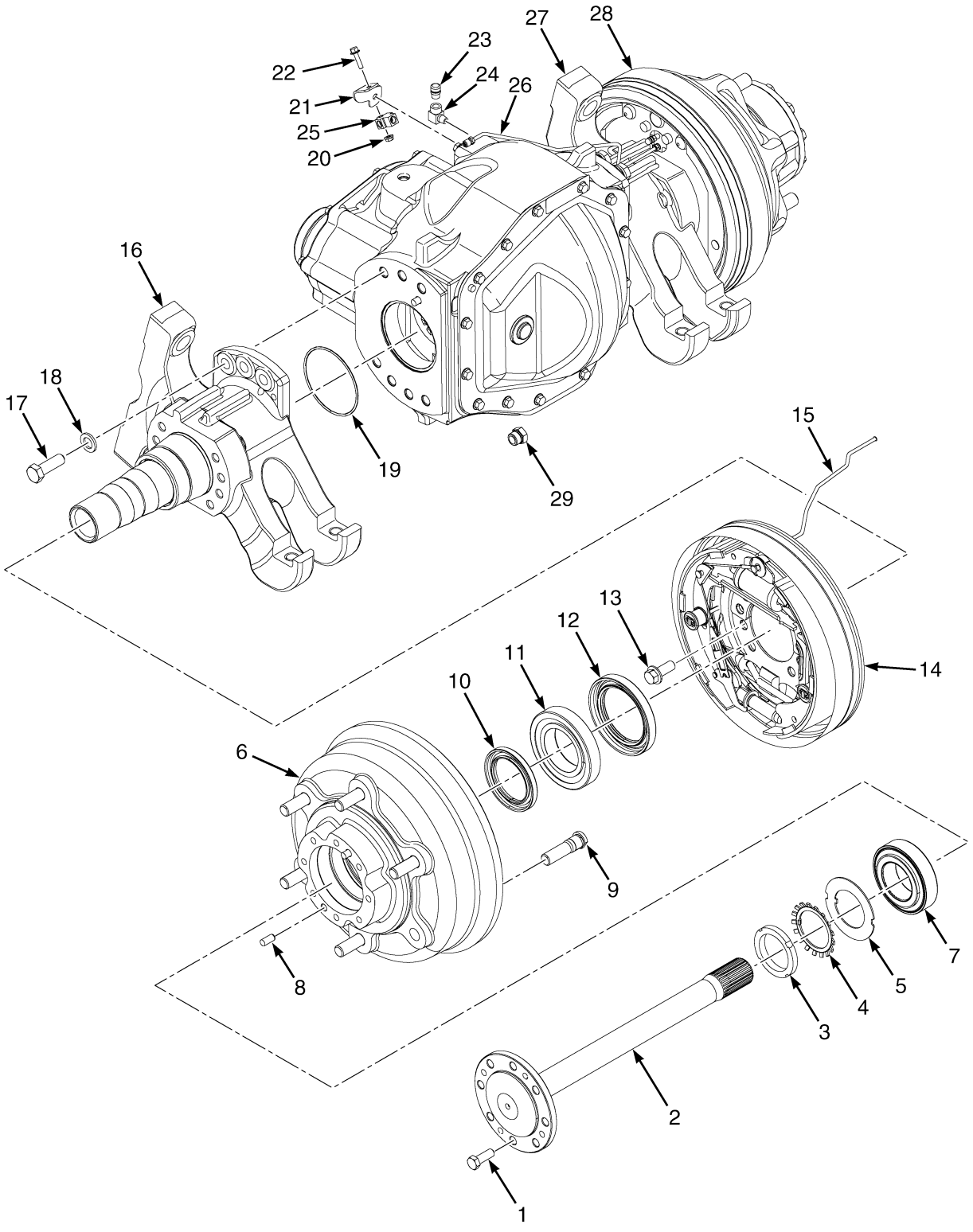

©2014 HYSTER COMPANY

DRIVE AXLE
DRY BRAKE – SHEET 3 OF 3

ITEM	PART NO.	DESCRIPTION	QTY
	4624290	Drive Axle (2.17 Gear Ratio) (☞Figure 9-9, ☞Figure 9-10)	1
	4624291	Drive Axle (2.48 Gear Ratio) (☞Figure 9-9, ☞Figure 9-10)	1
1	293646	Capscrew	20
2	1532708	Axle Shaft	2
3	2028145	Nut	2
4	2027756	Lockwasher	2
5	1515219	Washer	2
6	1634451	Hub Assembly	2
6	1614672	Hub	1
7	2027663	Bearing Set (Tapered)	1
8	302385	Dowel	2
9	1532337	Wheel Stud	6
10	2028621	Oil Seal	1
11	2027662	Bearing Set (Tapered)	1
12	2027817	Oil Seal	1
13	1327246	Bolt	16
14	1579455	Brake Assembly (RH) (☞Figure 11-3)	1
15	4613341	Tube Assy (RH Brake Line)	1
16	4061321	Hanger (RH)	1
17	293686	Capscrew	14
18	296426	Washer	14
19	2027828	O-Ring	2
20	1514429	Nut	1
21	1618311	Bracket	1
22	1527878	Capscrew	1
23	21420	Breather	1
24	16151	Fitting	1
25	1641351	Fitting	1
26	2063265	Tube Assy (LH, Brake line)	1
27	4061320	Hanger (LH)	1
28	1579454	Brake Assembly (LH) (☞Figure 11-3)	1
29	1521809	Drain Plug	1

©2014 HYSTER COMPANY

DIFFERENTIAL (FIGURE 9-12)
DRY BRAKE

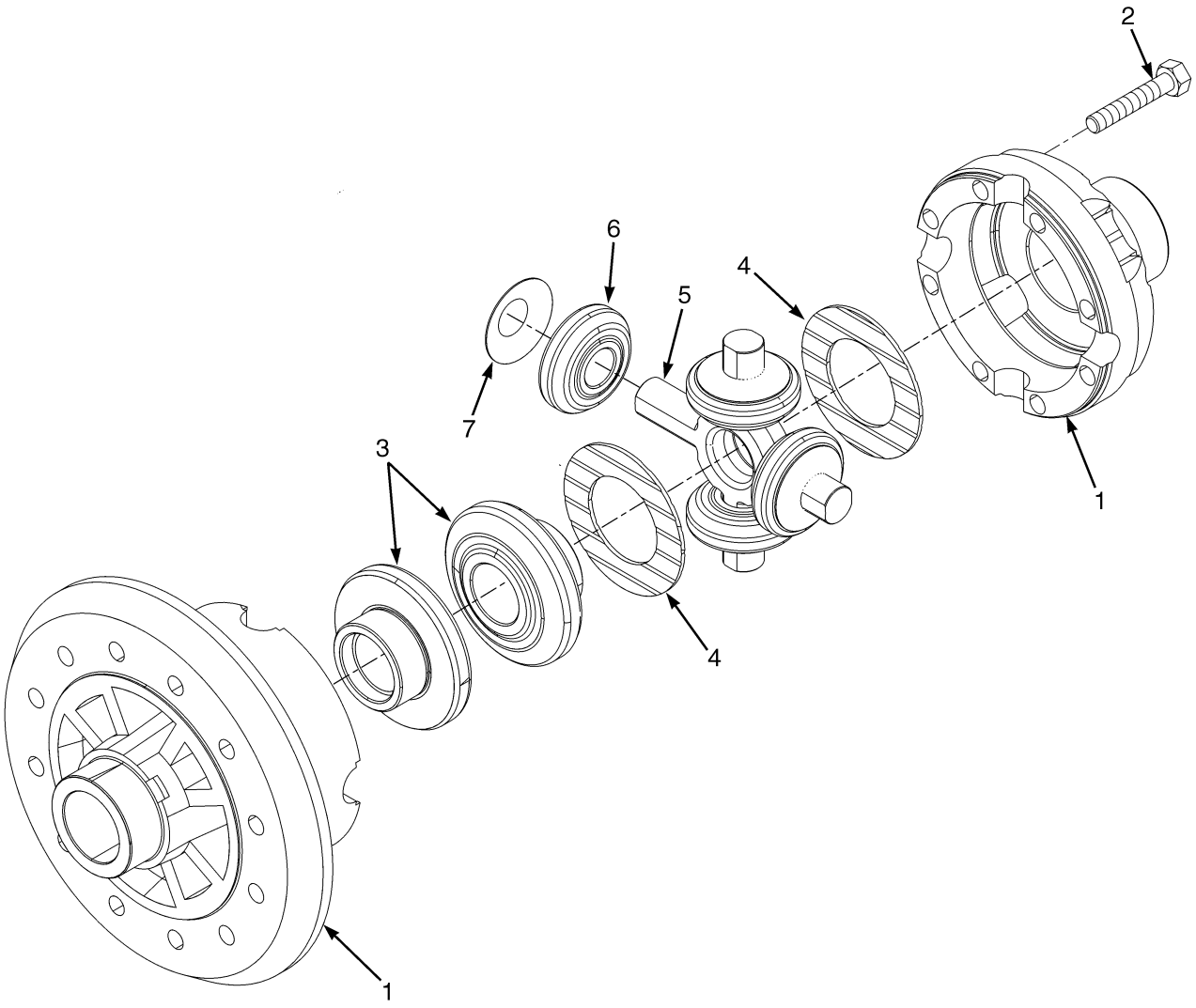

BP070055

©2014 HYSTER COMPANY

DIFFERENTIAL
DRY BRAKE

ITEM	PART NO.	DESCRIPTION	QTY
	2067962	Differential	1
1	. . . . .	Case Set	1
2	1565327	Bolt	8
3	. . . . .	Gear (Side)	2
4	. . . . .	Washer (Side)	2
5	2029383	Spider	1
6	. . . . .	Gear (Pinion)	4
7	. . . . .	Washer (Pinion)	4
	1606532	Kit-Gear (Includes Items 3, 6)	1
	1565324	Kit-Washer (Includes Items 4, 7)	1

©2014 HYSTER COMPANY

DRIVE TIRE AND WHEEL (FIGURE 9-13)

SINGLE

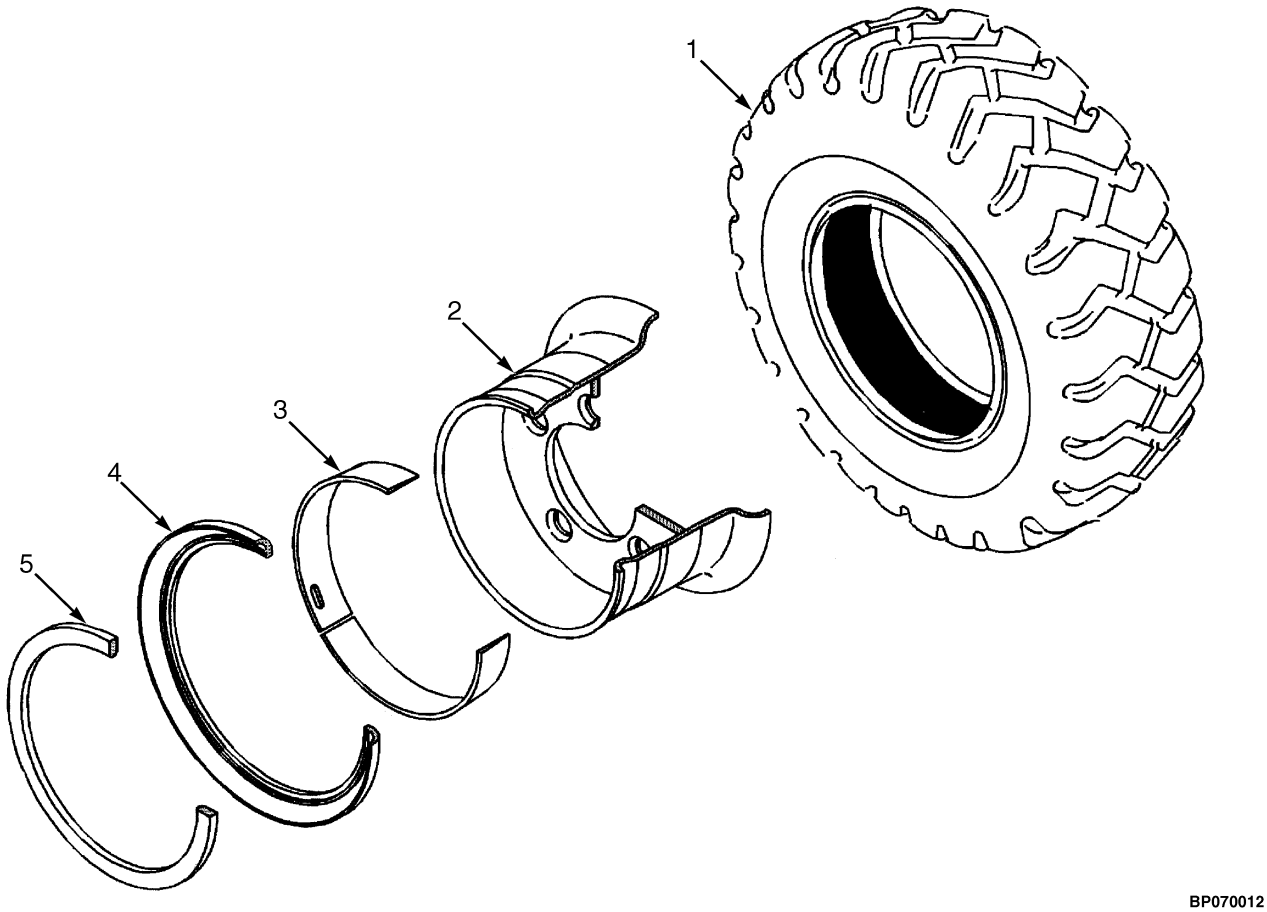

BP070012

KEY:
A: 7.00 X 12 14 Pneumatic (H40-50)
B: 28 X 9 15 Pneumatic (H40-70)

NOTE: This parts list contains multiple truck configurations, refer to the KEY to choose the correct QTY column for your truck.

ITEM	PART NO.	DESCRIPTION	QTY A	QTY B
1	1543060	Tire	2	..
1	1543070	Tire (Monarch) (Solid)	2	..
1	1654009	Tire (Solid) (Alternate Part)	2	..
1	**1543061**	**Tire (Trell)**	**..**	**2**
1	1543071	Tire (Solid)	..	2
1	1603485	Tire (Non-Marking)	2	..
1	1603486	Tire (Non-Marking)	..	2
2	2070073	Wheel Assy (5.00 x 12)	2	..
2	**2070074**	**Wheel Assy (7.00 x 15)**	**..**	**2**
3	1584694	Wedge Band	1	..
3	**1584695**	**Wedge Band**	**..**	**1**
4	161890	Wheel Side Ring	1	..
4	**160653**	**Wheel Side Ring**	**..**	**1**
5	161889	Wheel Lock Ring	1	..

©2014 HYSTER COMPANY

KEY:
A: 7.00 X 12 14 Pneumatic (H40-50)
B: 28 X 9 15 Pneumatic (H40-70)

NOTE: This parts list contains multiple truck configurations, refer to the KEY to choose the correct QTY column for your truck.

ITEM	PART NO.	DESCRIPTION	QTY A	QTY B
5	980542	Wheel Lock Ring	..	1

DRIVE TIRE AND WHEEL (FIGURE 9-14)
WIDE TREAD

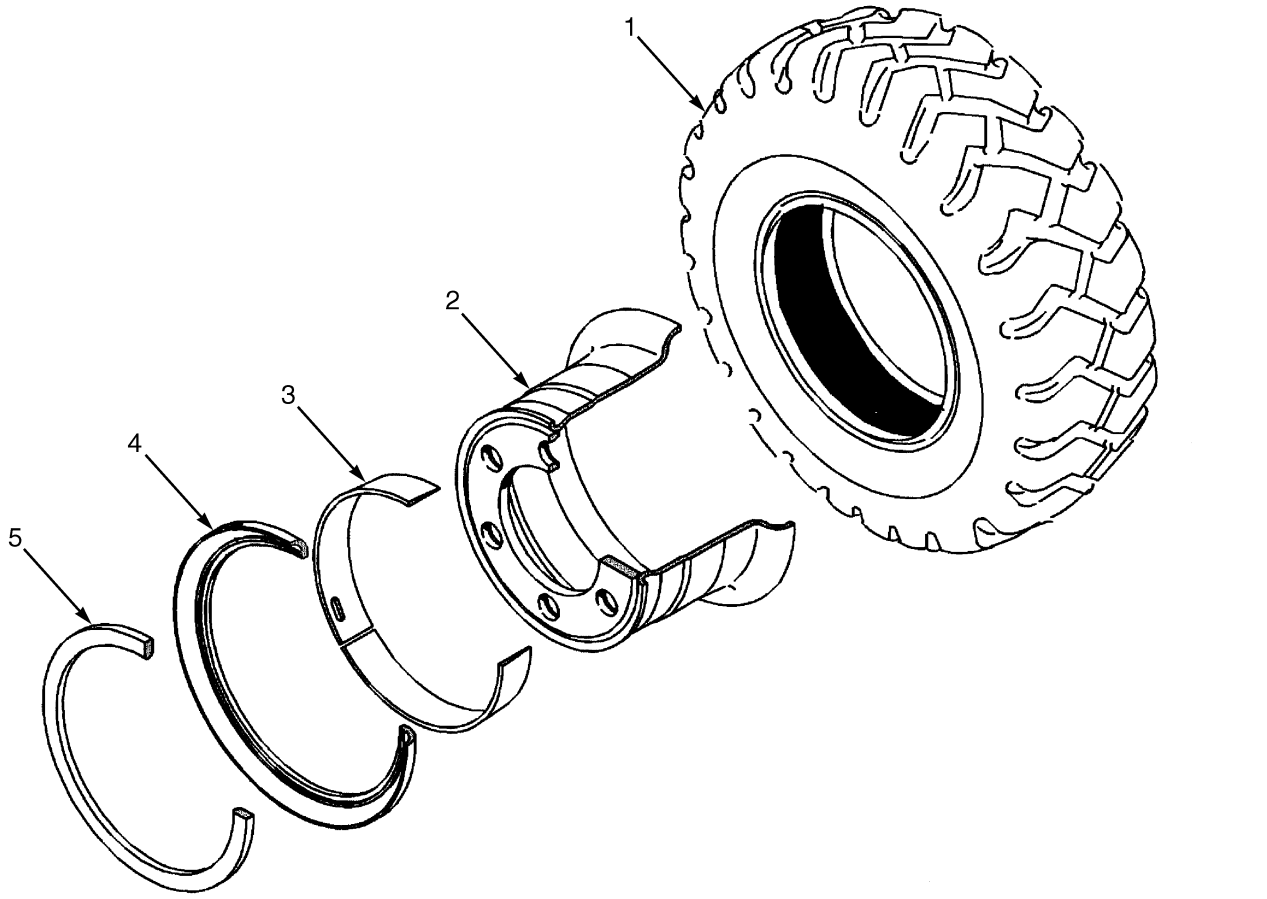

BP070013

KEY:
A: 7.00 x 12 14 (H40-50)
B: 28 x 9-15 14 (H40-70)

NOTE: This parts list contains multiple truck configurations, refer to the KEY to choose the correct QTY column for your truck.

ITEM	PART NO.	DESCRIPTION	QTY A	QTY B
1	1543060	Tire (Pneumatic)	2	..
1	1543070	Tire (Monarch) (Solid Pneumatic)	2	..
1	1654009	Tire (Solid Pneumatic) (Alternate Part)	2	..
1	**1543061**	**Tire (Trell) (Pneumatic)**	**..**	**2**
1	1543071	Tire (Solid Pneumatic)	..	2
1	1603485	Tire (Non-Marking)	2	..
1	1603486	Tire (Non-Marking)	..	2
2	2070075	Rim (5.00 x 12)	2	..
2	2070076	Wheel Assy (7.00 x 15)	..	2
3	1584694	Wedge Band	1	..
3	**1584695**	**Wedge Band**	**..**	**1**
4	161890	Wheel Side Ring	1	..
4	**160653**	**Wheel Side Ring**	**..**	**1**
5	161889	Wheel Lock Ring	1	..

©2014 HYSTER COMPANY

KEY:
A: 7.00 x 12 14 (H40-50)
B: 28 x 9-15 14 (H40-70)

NOTE: This parts list contains multiple truck configurations, refer to the KEY to choose the correct QTY column for your truck.

ITEM	PART NO.	DESCRIPTION	QTY A	QTY B
5	980542	Wheel Lock Ring	..	1

DRIVE TIRE AND WHEEL (FIGURE 9-15)
PNEUMATIC RADIAL

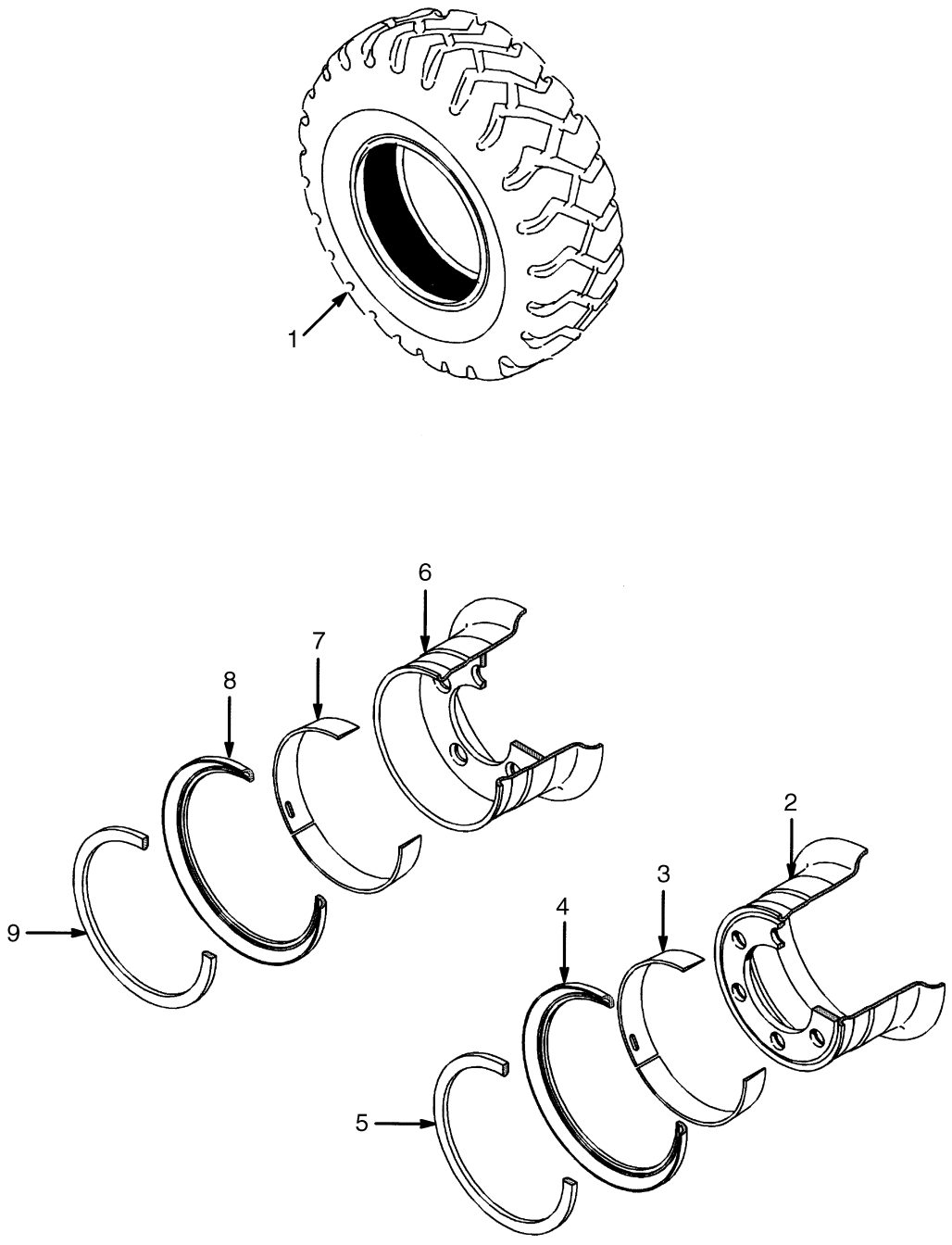

©2014 HYSTER COMPANY

DRIVE TIRE AND WHEEL
PNEUMATIC RADIAL

KEY:
A: 7.00 R12 Pneumatic Radial (H40-50)
B: 225/75 R15 Pneumatic Radial (H40-70)

NOTE: This parts list contains multiple truck configurations, refer to the KEY to choose the correct QTY column for your truck.

ITEM	PART NO.	DESCRIPTION	QTY A	QTY B
1	1471829	Pneumatic Tire	2	..
1	1471591	Tubeless Bead Seal	1	..
1	1358179	Pneumatic Tire	1	..
1	1471922	Tubeless Bead Seal Valve	1	..
1	1471835	Pneumatic Tire	..	2
1	1462617	Tubeless Bead Seal	..	1
1	1358183	Pneumatic Tire (Michelin XZM)	..	1
1	1471922	Tubeless Bead Seal Valve	..	1
1	4029270	Tire Assembly (Conti RT20)	2	..
1	4029457	Tire	1	..
1	4029482	Seal (Tubeless Sealing Ring)	1	..
1	4029271	Tire Assembly (Conti RT20)	..	2
1	4029458	Tire	..	1
1	4029483	Seal (Tubeless Sealing Ring)	..	1
2	2070073	Wheel Assy (5.00 x 12)	2	..
2	2070075	Rim (5.00 x 12) (Wide Tread)	2	..
3	1584694	Wedge Band	1	..
4	161890	Wheel Side Ring	1	..
5	161889	Wheel Lock Ring	1	..
6	**2070074**	**Wheel Assy (7.00 x 15)**	**..**	**2**
6	2070076	Wheel Assy (7.00 x 15) (Wide Tread)	..	2
7	**1584695**	**Wedge Band**	**..**	**1**
8	**160653**	**Wheel Side Ring**	**..**	**1**
9	**980542**	**Wheel Lock Ring**	**..**	**1**

©2014 HYSTER COMPANY

DUAL DRIVE WHEELS AND TIRES (FIGURE 9-16)

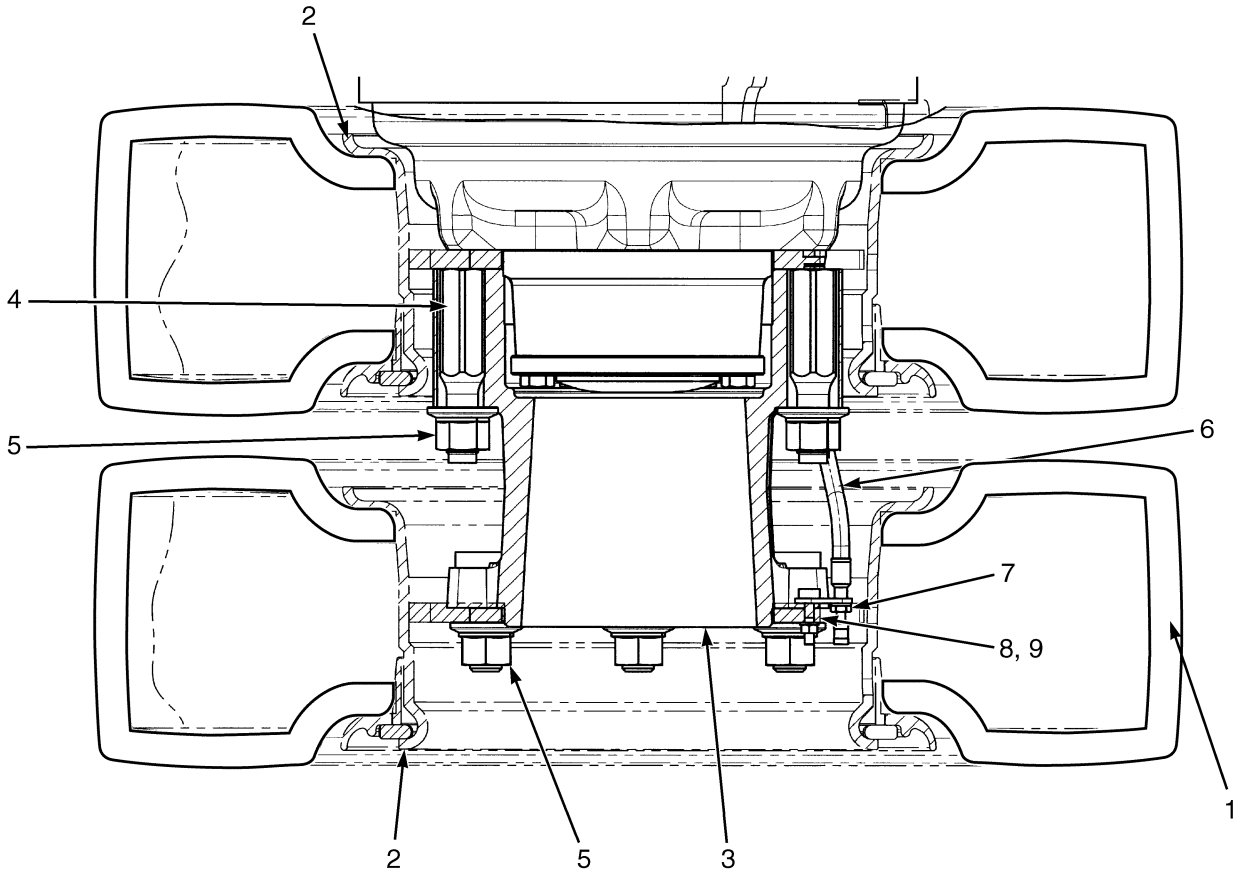

HP070054

©2014 HYSTER COMPANY

DUAL DRIVE WHEELS AND TIRES

ITEM	PART NO.	DESCRIPTION	QTY
1	1543070	Tire (Monarch) (Solid Pneumatic)	4
1	1654009	Tire (Solid Pneumatic) (Alternate Part)	4
1	1543060	Tire (Pneumatic)	4
1	1603485	Tire (Non-Marking)	4
2	2075454	Rim Assembly (5.00 x 12)	4
2	2075455	Rim (Dual Wheel)	1
2	161889	Wheel Lock Ring	1
2	1584694	Wedge Band	1
2	161890	Wheel Side Ring	1
3	1613386	Wheel Hub	2
3	1532337	Wheel Stud	6
3	1613383	Hub	1
4	1545401	Stud	12
5	1537133	Wheel Nut	12
6	1583169	Extension	2
7	1584690	Bracket	2
8	136687	Nut	2
9	292680	Washer	2

©2014 HYSTER COMPANY

NOTES

©2014 HYSTER COMPANY

10 STEERING SYSTEM

SECTION 10
STEERING SYSTEM

DESCRIPTION	PAGE
STEER AXLE	10-12
STEER CYLINDER	10-14
STEER TIRES AND WHEELS	
H40-50FT	10-16
H40-70FT	10-18
STEERING COLUMN AND ATTACHING PARTS	
ISOLATED - DIESEL	10-3
NON-ISOLATED - GASOLINE AND LPG	10-2
STEERING COLUMN ASSEMBLY	
ISOLATED, DIESEL	10-6
NON-ISOLATED - GASOLINE AND LPG	10-4
STEERING CONTROL UNIT	10-8
STEERING LINES	10-10

©2014 HYSTER COMPANY

STEERING COLUMN AND ATTACHING PARTS (FIGURE 10-1)
NON-ISOLATED — GASOLINE AND LPG

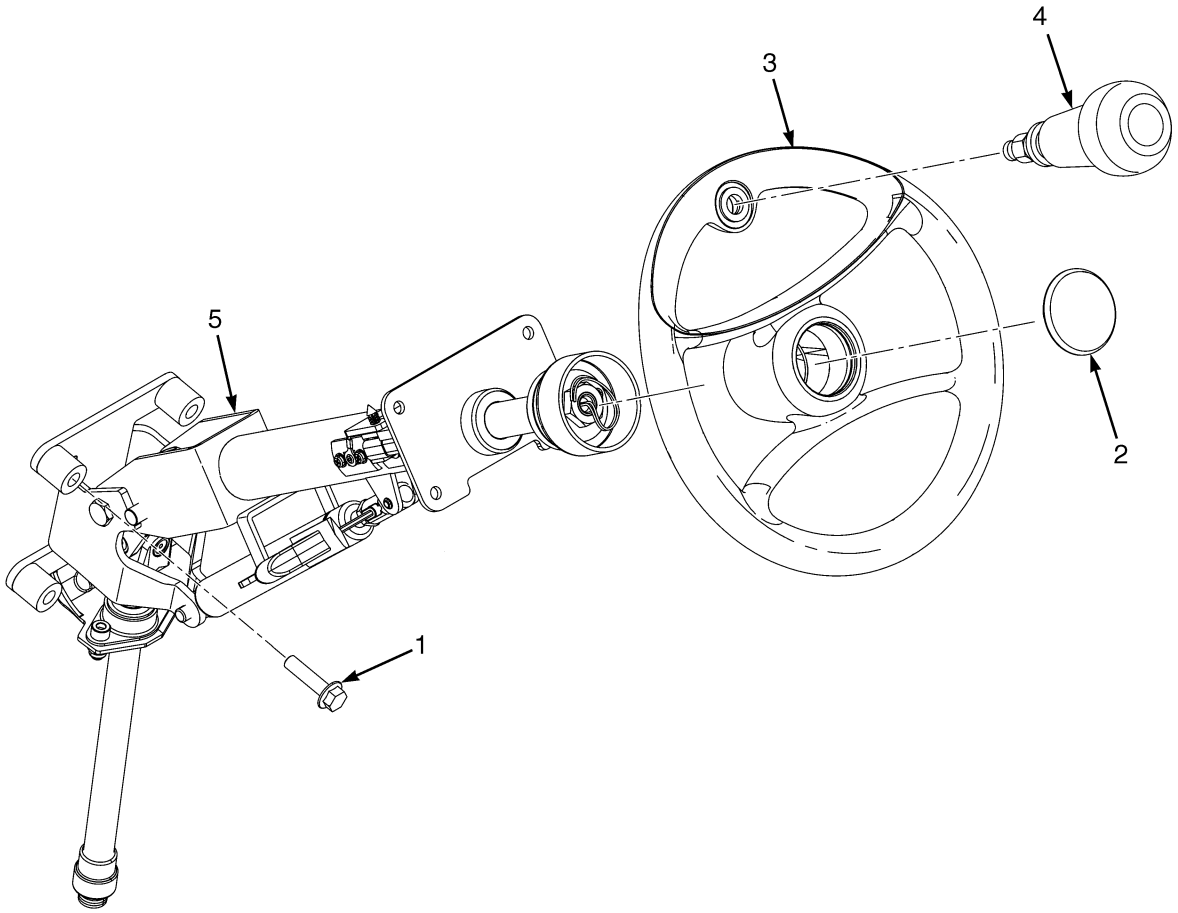

ITEM	PART NO.	DESCRIPTION	QTY
1	1512403	Capscrew	4
2	**a** 1608622	Horn Button	1
3	1551839	Steering Wheel (Without Spinner Knob)	1
3	1531563	Steering Wheel (With Spinner)	1
4	1586109	Knob Assembly	1
5	4023450	Steering Column (☞Figure 10-3)	1

FOOTNOTES:

a Service with Horn Replacement Kit 1642089

©2014 HYSTER COMPANY

STEERING COLUMN AND ATTACHING PARTS (FIGURE 10-2)
ISOLATED — DIESEL

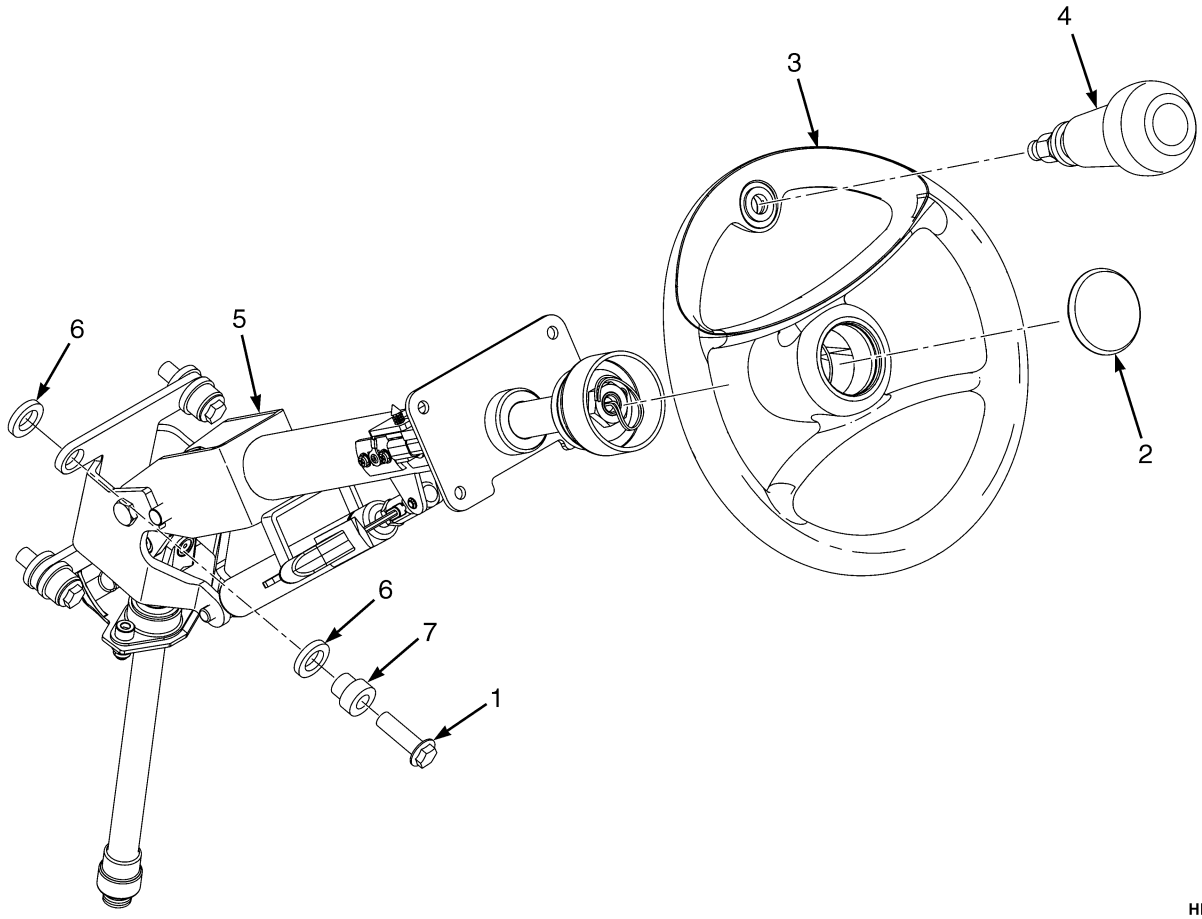

HP220499

ITEM	PART NO.	DESCRIPTION	QTY
1	1512403	Capscrew	4
2	a 1608622	Horn Button	1
3	1551839	Steering Wheel (Without Spinner Knob)	1
3	1531563	Steering Wheel (With Spinner)	1
4	1586109	Knob Assembly	1
5	4611791	Steering Column (☞Figure 10-4)	1
6	2079369	Isolator	8
7	1606750	Spacer	4

FOOTNOTES:

a Service with Horn Replacement Kit 1642089

©2014 HYSTER COMPANY

STEERING COLUMN ASSEMBLY (FIGURE 10-3)
NON-ISOLATED — GASOLINE AND LPG

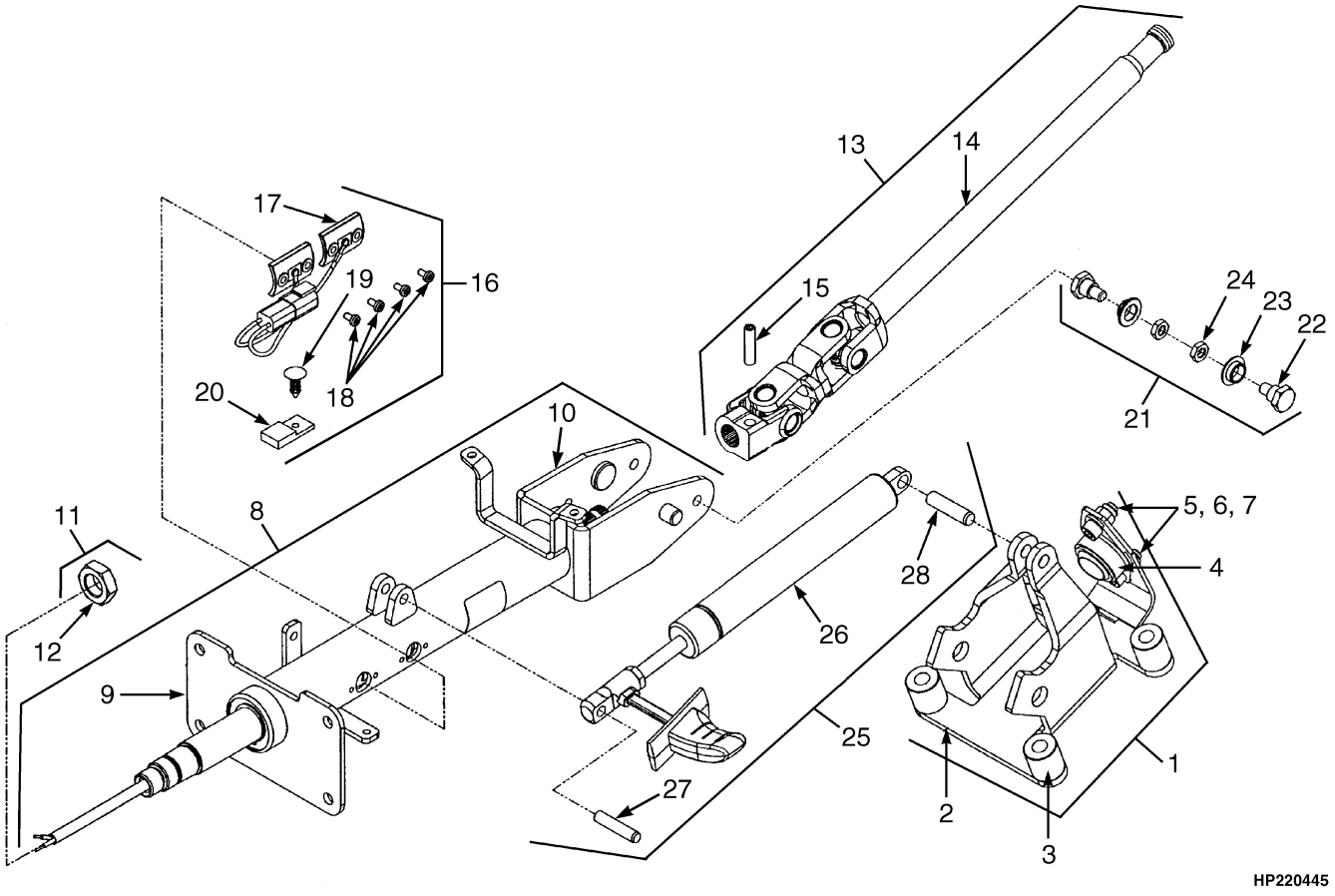

©2014 HYSTER COMPANY

STEERING COLUMN ASSEMBLY
NON-ISOLATED – GASOLINE AND LPG

ITEM	PART NO.	DESCRIPTION	QTY
	4023450	Steering Column (Gasoline and LPG)	1
1	1562509	Kit-Support (Gasoline and LPG)	1
2	. . . . .	Support	1
3	. . . . .	Spacer (Gasoline and LPG Only)	4
4	. . . . .	Joint	1
5	. . . . .	Nut	2
6	. . . . .	Washer	2
7	. . . . .	Screw	2
8	4028642	Kit (Shaft Upper)	1
9	. . . . .	Shaft Assembly (Upper)	1
10	. . . . .	Housing Assembly	1
11	1562492	Kit-Nut	1
12	. . . . .	Nut	2
13	1562493	Kit-Shaft (Lower)	1
14	. . . . .	Shaft Assembly (Lower)	1
15	. . . . .	Pin	1
16	1562496	Kit-Contact	1
17	. . . . .	Contact Assembly (Horn)	1
18	. . . . .	Screw	4
19	. . . . .	Fastener	1
20	. . . . .	Connector	1
21	1562501	Kit-Pivot (Lower)	1
22	. . . . .	Bolt (Pivot)	2
23	. . . . .	Bushing	2
24	. . . . .	Nut	2
25	1562505	Kit-Gas Spring	1
26	. . . . .	Gas Spring	1
27	. . . . .	Pin	1
28	. . . . .	Pin	1

©2014 HYSTER COMPANY

STEERING COLUMN ASSEMBLY (FIGURE 10-4)
ISOLATED, DIESEL

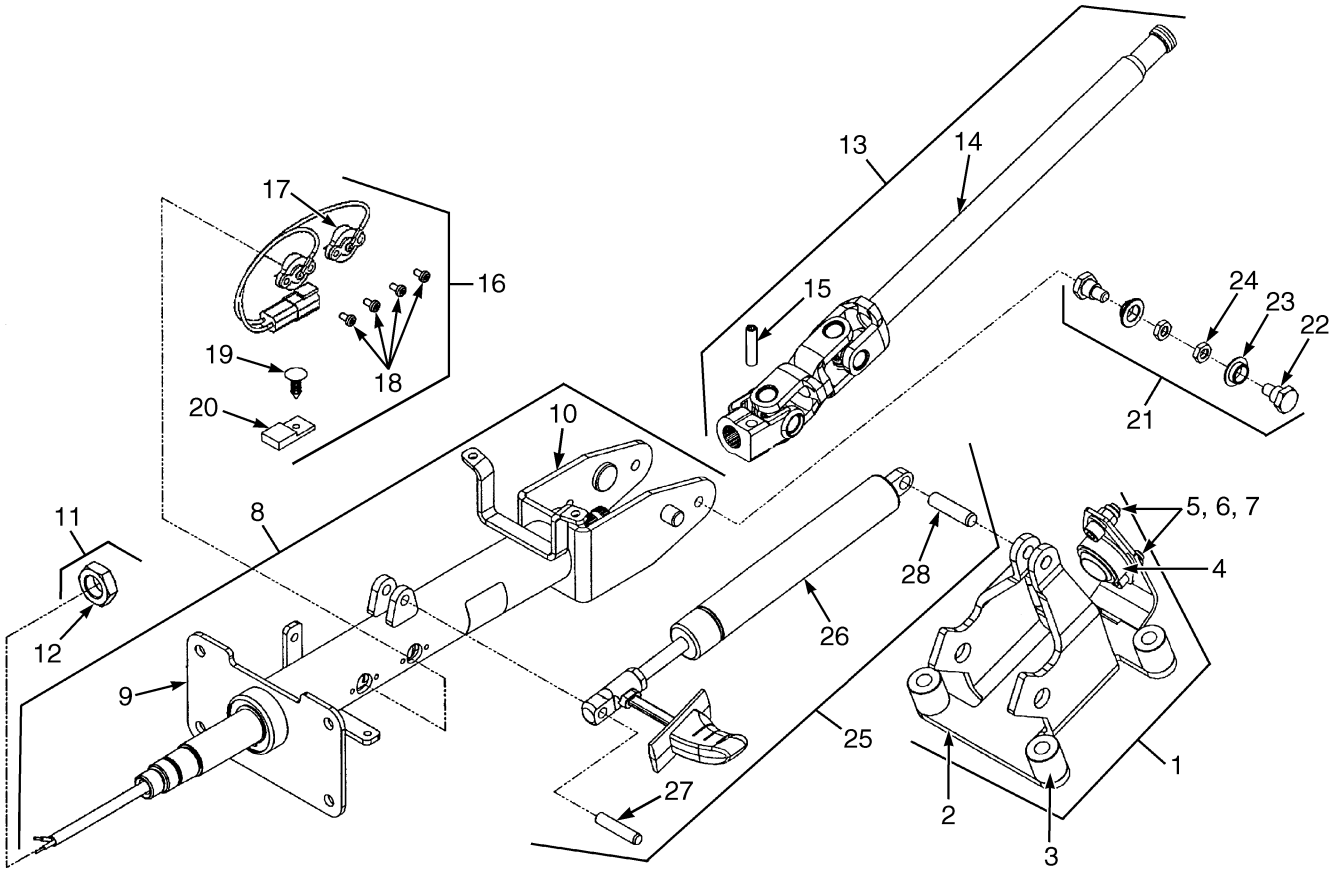

BP220224

©2014 HYSTER COMPANY

STEERING COLUMN ASSEMBLY
ISOLATED, DIESEL

ITEM	PART NO.	DESCRIPTION	QTY
	4611791	Steering Column	1
1	4038672	Kit-Support	1
2	. . . . .	Support	1
3	. . . . .	Spacer	4
4	. . . . .	Joint	1
5	. . . . .	Nut	2
6	. . . . .	Washer	2
7	. . . . .	Screw	2
8	4038673	Kit-Shaft (Upper)	1
9	. . . . .	Shaft Assembly (Upper)	1
10	. . . . .	Housing Assembly	1
11	4038674	Kit-Nut	1
12	. . . . .	Nut	2
13	4038675	Kit-Shaft (Lower)	1
14	. . . . .	Shaft Assembly (Lower)	1
15	. . . . .	Pin	1
16	4038676	Kit-Contact	1
17	. . . . .	Contact Assembly (Horn)	1
18	. . . . .	Screw	4
19	. . . . .	Fastener	1
20	. . . . .	Connector	1
21	4038677	Kit Pivot (Lower)	1
22	. . . . .	Bolt (Pivot)	2
23	. . . . .	Bushing	2
24	. . . . .	Nut	2
25	4038678	Kit-Gas Spring	1
26	. . . . .	Gas Spring	1
27	. . . . .	Pin	1
28	. . . . .	Pin	1

©2014 HYSTER COMPANY

STEERING CONTROL UNIT (FIGURE 10-5)

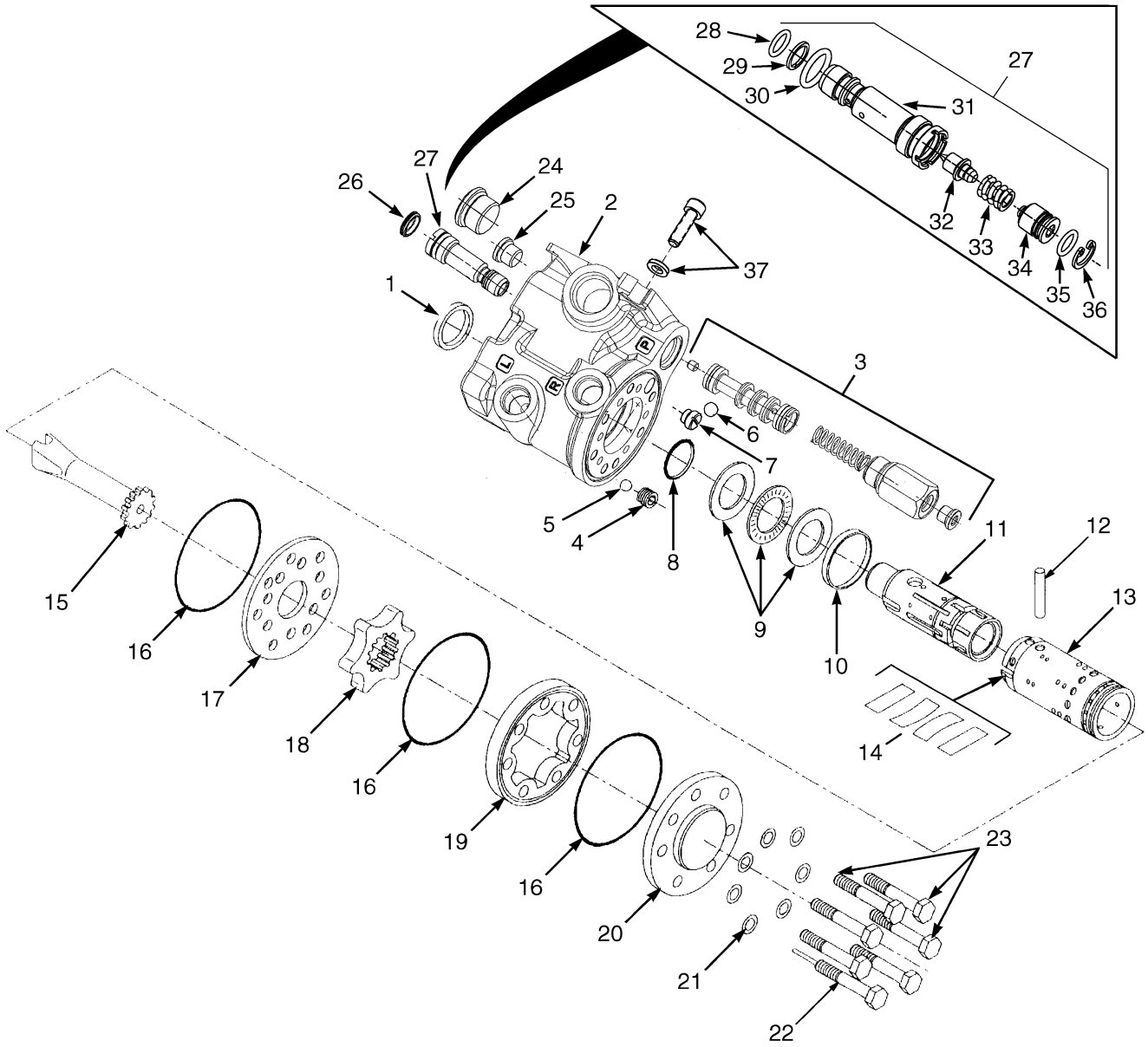

BP220056

©2014 HYSTER COMPANY

STEERING CONTROL UNIT

ITEM	PART NO.	DESCRIPTION	QTY
	2063117	Steering Control Unit (H40-60FT)	1
	2063118	**Steering Control Unit (H70FT)**	**1**
1	. . . . .	**Dust Seal**	**1**
2	. . . . .	**Housing**	**1**
3	. . . . .	**Relief Valve**	**1**
4	. . . . .	**Bushing**	**1**
5	. . . . .	**Check Ball**	**1**
6	. . . . .	**Check Ball**	**1**
7	. . . . .	**Seat**	**1**
8	. . . . .	**O-Ring**	**1**
9	. . . . .	**Bearing Set**	**1**
10	. . . . .	**Ring**	**1**
11	. . . . .	**Spool**	**1**
12	. . . . .	**Pin**	**1**
13	. . . . .	**Sleeve**	**1**
14	. . . . .	**Spring Set**	**1**
15	. . . . .	**Shaft**	**1**
16	. . . . .	**O-Ring**	**3**
17	. . . . .	**Plate**	**1**
18	. . . . .	**Gear Set**	**1**
19	. . . . .	**Gear Ring**	**1**
20	. . . . .	**Cover**	**1**
21	. . . . .	**Washer**	**7**
22	. . . . .	**Special Screw**	**2**
23	. . . . .	**Capscrew**	**5**
24	. . . . .	**Priority Valve Plug**	**1**
25	. . . . .	**Diagnostic Plug (Supply Pressure)**	**1**
26	. . . . .	**Cap**	**1**
27	. . . . .	**System Relief Valve**	**1**
28	. . . . .	**O-Ring**	**1**
29	. . . . .	**Back-Up Ring**	**1**
30	. . . . .	**O-Ring**	**1**
31	. . . . .	**Cartridge**	**1**
32	. . . . .	**Seat**	**1**
33	. . . . .	**Spring**	**1**
34	. . . . .	**Plug**	**1**
35	. . . . .	**Anti-Tamper Ring**	**1**
36	. . . . .	**Snap Ring**	**1**
37	1581858	Kit-Capscrew	1
38	1579908	Kit-Seal (Steering Control Unit) (Includes Items 1, 8, 16, 21, 28-30, 34)	1

©2014 HYSTER COMPANY

STEERING LINES (FIGURE 10-6)

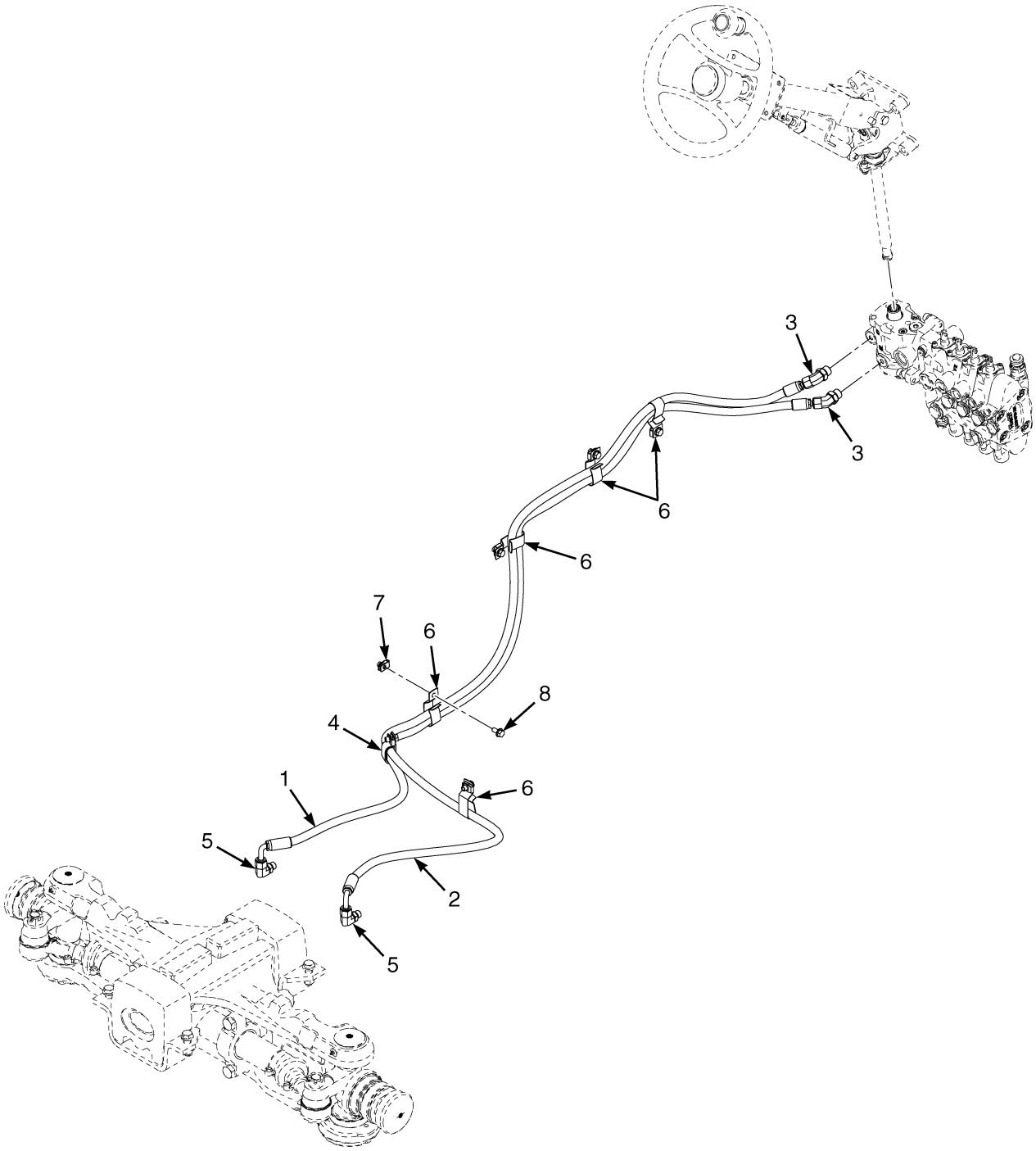

©2014 HYSTER COMPANY

STEERING LINES

ITEM	PART NO.	DESCRIPTION	QTY
1	2104068	Hose Assy (H40-60FT)	1
1	2104070	Hose Assy (H70FT)	1
2	2103497	Hose Assy (H40-60FT)	1
2	2104069	Hose Assy (H70FT)	1
3	4022958	Fitting	2
4	110322	Clamp	1
4	203230	Clamp (Optional)	1
5	1487063	Fitting	2
6	1544157	Clip	5
7	1480237	Nut	6
8	1527879	Capscrew	6

©2014 HYSTER COMPANY

STEER AXLE (FIGURE 10-7)

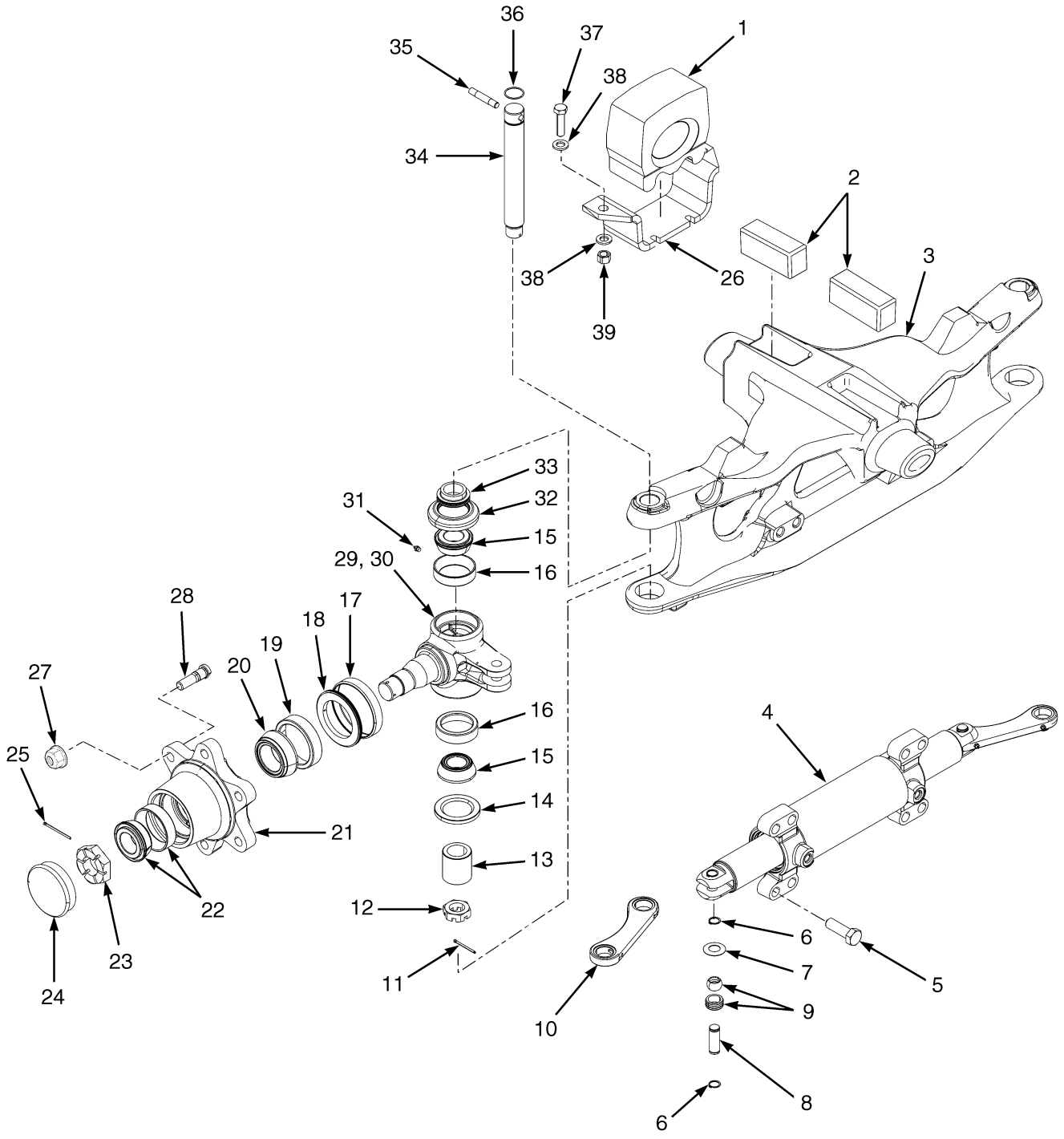

BP220311

©2014 HYSTER COMPANY

STEER AXLE

ITEM	PART NO.	DESCRIPTION	QTY
1	1525354	Rubber Mount	2
2	1388838	Rubber Mount	2
3	1537400	Steering Axle	1
4	2071096	Steering Cylinder (☞Figure 10-8)	1
5	293686	Capscrew	8
6	58903	Snap Ring	8
7	300752	Spherical Washer	8
8	1568271	Pin	4
9	300751	Bushing	4
10	381298	Tie Rod	2
11	15225	Cotter Pin	2
12	249289	Nut	2
13	300766	Sleeve	2
14	98525	Oil Seal	2
15	156195	Bearing Cone	4
16	156194	Bearing Cup	4
17	164639	Wear Sleeve	2
18	44542	Seal	2
19	163970	Bearing Cup	2
20	30273	Bearing Cone	2
21	1537667	Hub	2
22	1375469	Bearing Set	2
22	4006722	Bearing Set (Optional)	1
23	1383777	Nut	2
24	69029	Cap	2
25	15227	Cotter Pin	2
26	1543254	Plate	2
27	1517836	Wheel Nut	12
28	1502276	Wheel Stud	12
29	1310599	Spindle (LH)	1
30	1315425	Spindle (RH)	1
31	13957	Grease Fitting	6
32	264973	Seal	2
33	300767	Spacer	2
34	300765	King Pin	2
35	226986	Pin	2
36	39352	O-Ring	2
37	293648	Capscrew	4
38	320161	Washer	8
39	300937	Nut	4
	1374815	Bearing Set (Includes Items 15-16)	4
	4006720	Bearing Set (Optional) (Includes Items 15-16)	4
	4006667	Bearing Set (Includes Items 19-20)	2
	4006721	Bearing Set (Optional) (Includes Items 19-20)	2

©2014 HYSTER COMPANY

STEER CYLINDER (FIGURE 10-8)

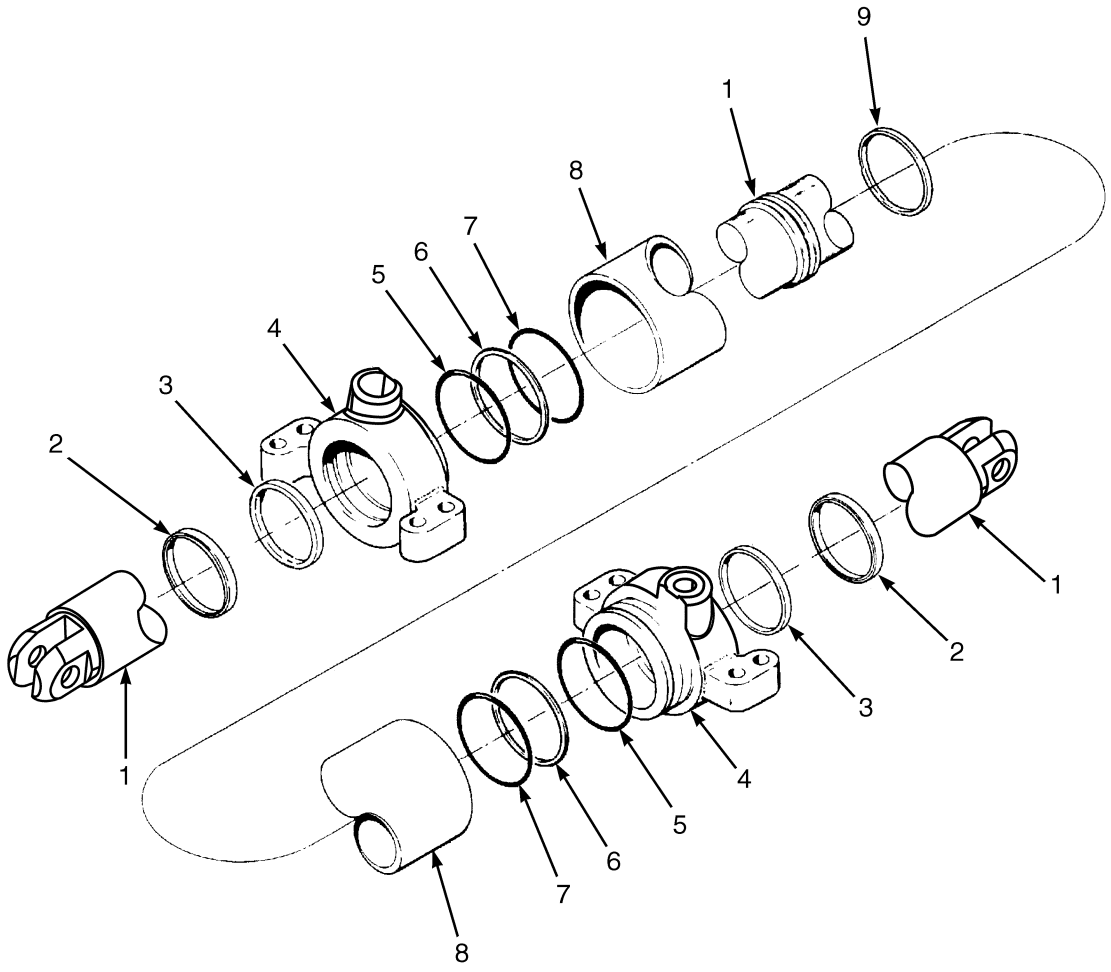

BP220070

©2014 HYSTER COMPANY

STEER CYLINDER

ITEM	PART NO.	DESCRIPTION	QTY
	2071096	**Steering Cylinder**	**1**
1	**375634**	**Cylinder Rod**	**1**
2	**2071094**	**Rod Wiper**	**2**
3	**1380092**	**Rod Seal**	**2**
4	**1561008**	**End Cap**	**1**
5	**268619**	**O-Ring**	**2**
6	**147973**	**Back-Up Ring**	**2**
7	**118358**	**O-Ring**	**2**
8	**375635**	**Tube Wldmt-Cylinder**	**1**
9	**2044371**	**Piston Seal**	**1**
	1566700	Kit-Seal (Includes Items 2-3, 5-7, 9)	1

©2014 HYSTER COMPANY

STEER TIRES AND WHEELS (FIGURE 10-9)
H40-50FT

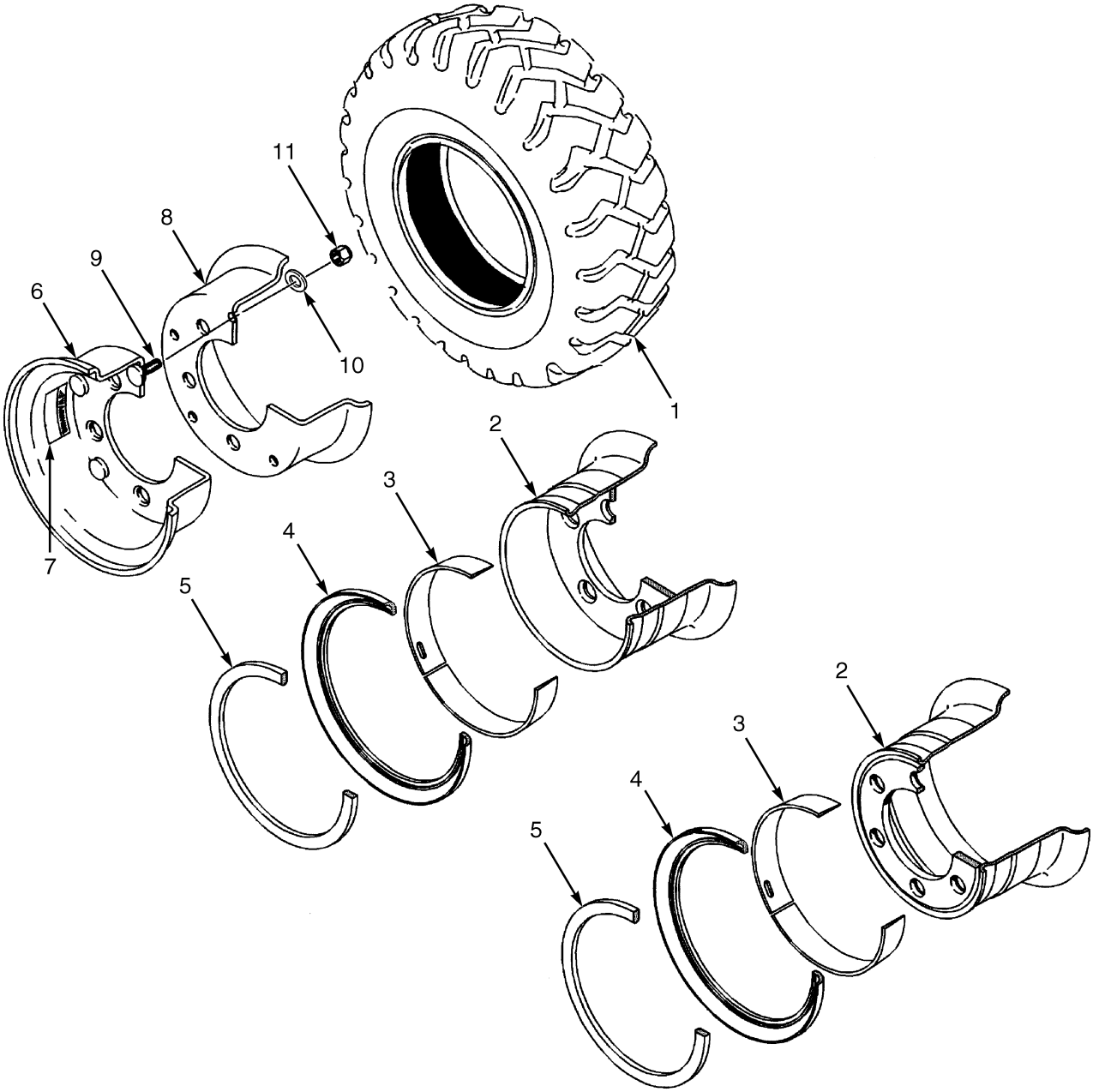

BP220065

©2014 HYSTER COMPANY

STEER TIRES AND WHEELS
H40-50FT

KEY:
A: 6.00 x 9.00 Pneumatic
B: 6.00 x 9 Radial
C: 6.00 x 9-12 PR

ITEM	PART NO.	DESCRIPTION	QTY A	QTY B	QTY C
1	1543059	Tire	..	..	2
1	1543069	Tire	2	..	..
1	1688697	Solid Pneumatic Tire (Alternate Part)	2	..	..
1	1603489	Tire (Non-Marking)	2	..	..
1	1471837	Pneumatic Tire	..	2	..
1	1358177	Pneumatic Tire (Michelin XZM)	..	2	..
1	1462615	Tubeless Bead Seal	..	1	..
1	1471921	Tubeless Bead Seal Valve	..	1	..
1	4029268	Tire Assembly (Conti RT20)	..	2	..
1	4029455	Tire	..	1	..
1	4029480	Seal (Tubeless Sealing Ring)	..	1	..
2	2070081	Rim (4.00 x 9)	2	2	..
2	2070083	Rim	2	2	..
3	1584693	Ring-Tapered Bead Seat	1	1	..
4	161885	Wheel Side Ring	1	1	..
5	161884	Wheel Lock Ring	1	1	..
6	2092535	Wheel Assy (4.00 x 9)	..	..	2
6	. . . . .	Outer Wheel	..	..	1
7	288638	Label (Warning)	..	..	2
8	. . . . .	Inner Wheel	..	..	1
9	2021575	Wheel Stud	..	..	12
10	292683	Lockwasher	..	..	12
11	303119	Nut	..	..	12

©2014 HYSTER COMPANY

STEER TIRES AND WHEELS (FIGURE 10-10)

H40-70FT

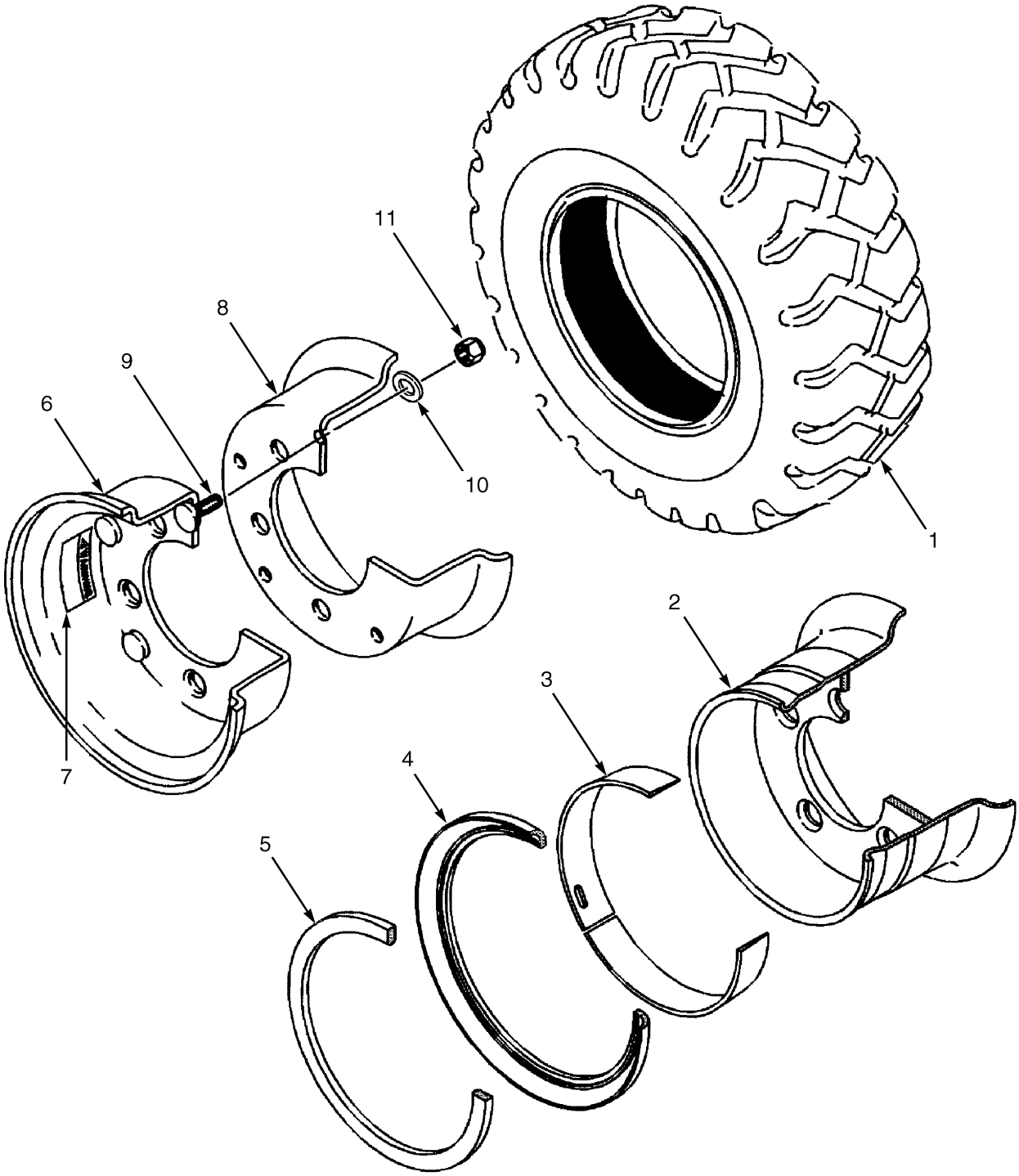

BP220066

©2014 HYSTER COMPANY

STEER TIRES AND WHEELS
H40-70FT

KEY:
A: 6.50 x 10 Pneumatic
B: 6.50 R10 Radial
C: 6.50 x 10-12 Two Piece Wheel

ITEM	PART NO.	DESCRIPTION	QTY A	QTY B	QTY C
1	1539636	Solid Pneumatic Tire	2	..	..
1	1544234	Solid Pneumatic Tire (6.50x10/5.0) (Alternate Part)	2	..	..
1	**1544232**	**Pneumatic Tire (6.50 x 10-12PR)**	**..**	**..**	**2**
1	1603490	Tire (Non-Marking 6.50x10/5.0)	2	..	..
1	1471832	Pneumatic Tire (6.5 R10 Pneu Radial)	..	2	..
1	1462616	Tubeless Bead Seal	..	1	..
1	1358178	Pneumatic Tire (Michelin XZM 6.50 R10)	..	1	..
1	1471922	Tubeless Bead Seal Valve	..	1	..
1	4029269	Tire Assembly (Conti RT20)	..	2	..
1	4029456	Tire	..	1	..
1	4029481	Seal (Tubeless Sealing Ring)	..	1	..
2	2067044	Wheel Assy (5.00 x 10)	2	2	..
3	1580427	Wedge Band	1	1	..
4	1580426	Wheel Side Ring	1	1	..
5	161894	Wheel Lock Ring	1	1	..
6	2092536	Wheel Assy (5.00 x 10)	..	..	2
6	**. . . . .**	**Outer Wheel**	**..**	**..**	**2**
7	288638	Label (Warning)	..	..	2
8	**. . . . .**	**Inner Wheel**	**..**	**..**	**2**
8	288638	Label (Warning)	..	..	2
9	**2027618**	**Wheel Stud**	**..**	**..**	**12**
10	**292685**	**Lockwasher**	**..**	**..**	**12**
11	**292600**	**Nut**	**..**	**..**	**12**

©2014 HYSTER COMPANY

NOTES

©2014 HYSTER COMPANY

11 BRAKE SYSTEM

SECTION 11
BRAKE SYSTEM

DESCRIPTION	PAGE
BRAKE ASSEMBLY	
DRY BRAKE	11-6
BRAKE COOLING SYSTEM	
SINGLE AND DUAL PEDAL WET BRAKE - WITH SINGLE SPEED TRANSMISSION	11-10
BRAKE LINKAGE	
DUAL PEDAL - DRY BRAKE	11-4
DUAL PEDAL - WET BRAKE	11-14
SINGLE PEDAL - DRY BRAKE	11-2
SINGLE PEDAL - WET BRAKE	11-12
BRAKE MASTER CYLINDER ASSEMBLY	
DRY BRAKE	11-9
WET BRAKE	11-16
PARK BRAKE ASSEMBLY	11-18

©2014 HYSTER COMPANY

BRAKE LINKAGE (FIGURE 11-1)
SINGLE PEDAL — DRY BRAKE

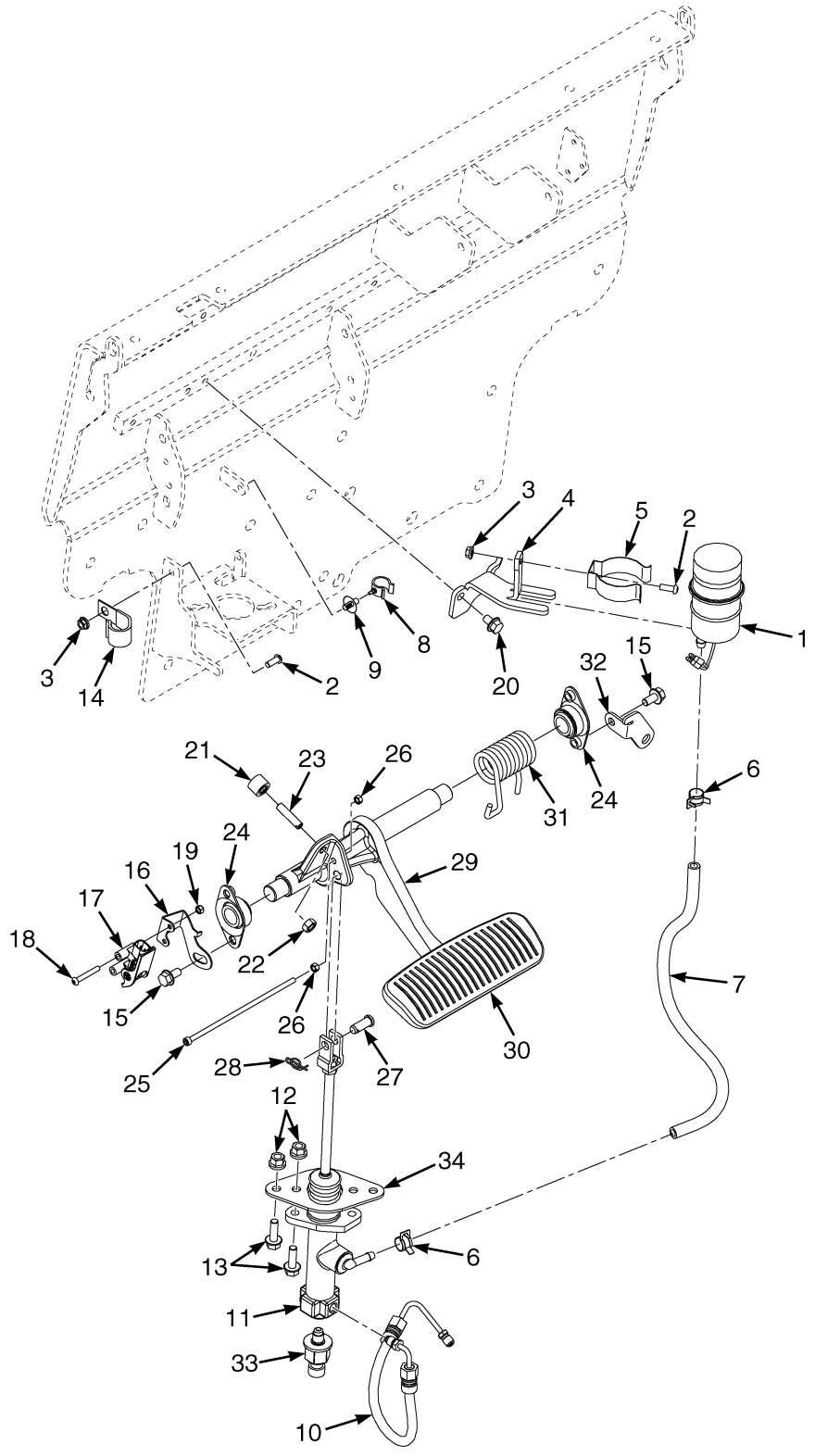

BP040238

©2014 HYSTER COMPANY

BRAKE LINKAGE
SINGLE PEDAL – DRY BRAKE

ITEM	PART NO.	DESCRIPTION	QTY
1	2314223	Reservoir	1
1	2021341	Cap	1
1	2077604	Tank	1
1	2021343	Packing	1
2	1510126	Screw (Button Head)	2
3	1514429	Nut	2
4	1699992	Mount	1
5	2021353	Holder	1
6	1502003	Hose Clamp	2
7	1531569	Hose	1
8	1543698	Clamp (Swivel)	1
9	1543842	Clamp	1
10	2059937	Hose Assy	1
11	1536724	Master Cylinder (☞Figure 11-4)	1
12	1544153	Locknut	4
13	1510113	Capscrew	4
14	325897	Clamp	1
15	1527879	Capscrew	2
16	1688503	Mount	1
17	1683486	Sensor (Brake Position)	1
18	1701768	Screw	2
19	302398	Locknut	2
20	4011940	Capscrew	1
21	1556475	Bumper	1
22	239503	Nut	1
23	1534871	Bolt	1
24	1585575	Bushing	2
25	1704902	Capscrew	1
26	292668	Nut	2
27	1375391	Pin (Rod End)	1
28	1351689	Locking Cotter Pin	1
29	1707008	Brake Pedal	1
30	1570298	Rubber Pad	1
31	1568075	Spring (RH)	1
32	4053949	Plate	1
33	1590033	Transducer (Brake Pressure)	1
34	4014682	Adapter (Master Cylinder)	1
	2064554	Loctite	1

©2014 HYSTER COMPANY

BRAKE LINKAGE (FIGURE 11-2)
DUAL PEDAL — DRY BRAKE

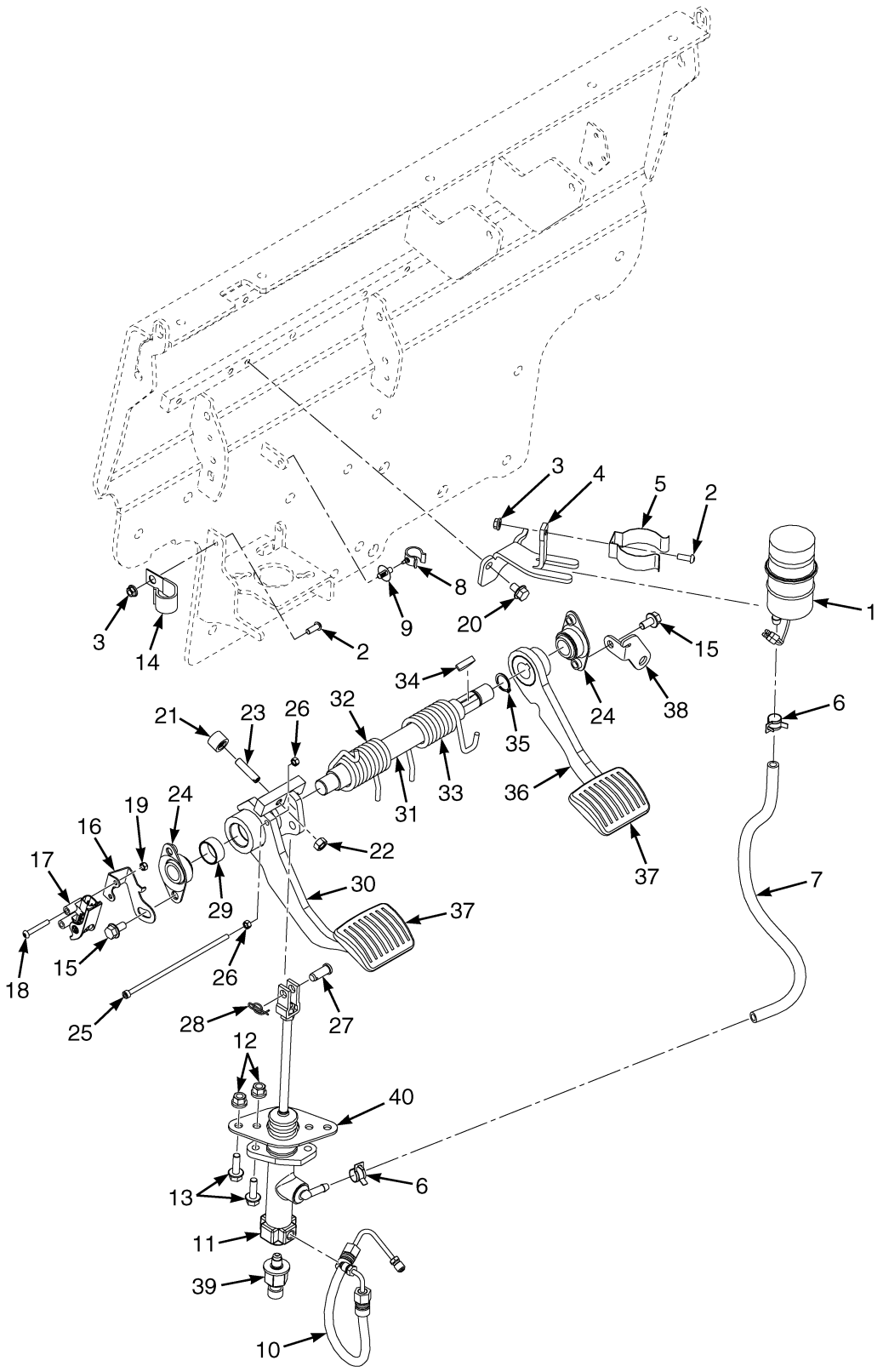

©2014 HYSTER COMPANY

BRAKE LINKAGE
DUAL PEDAL – DRY BRAKE

ITEM	PART NO.	DESCRIPTION	QTY
1	**2314223**	**Reservoir**	**1**
1	**2021341**	**Cap**	**1**
1	**2077604**	**Tank**	**1**
1	**2021343**	**Packing**	**1**
2	**1510126**	**Screw (Button Head)**	**2**
3	**1514429**	**Nut**	**2**
4	**1699992**	**Mount**	**1**
5	**2021353**	**Holder**	**1**
6	1502003	Hose Clamp	2
7	1531569	Hose	1
8	1543698	Clamp (Swivel)	1
9	**1543842**	**Clamp**	**1**
10	2059937	Hose Assy	1
11	1536724	Master Cylinder (☞Figure 11-4)	1
12	**1544153**	**Locknut**	**4**
13	**1510113**	**Capscrew**	**4**
14	325897	Clamp	1
15	**1527879**	**Capscrew**	**2**
16	**1688503**	**Mount**	**1**
17	**1683486**	**Sensor (Brake Position)**	**1**
18	1701768	Screw	2
19	**302398**	**Locknut**	**2**
20	**4011940**	**Capscrew**	**1**
21	**1556475**	**Bumper**	**1**
22	**239503**	**Nut**	**1**
23	**1534871**	**Bolt**	**1**
24	**1585575**	**Bushing**	**2**
25	1704901	Capscrew	1
26	**292668**	**Nut**	**2**
27	**1375391**	**Pin (Rod End)**	**1**
28	**1351689**	**Locking Cotter Pin**	**1**
29	244540	Bushing	2
30	1701771	Inching Pedal (Left Hand)	1
31	1568253	Crank	1
32	1568077	Spring (LH)	1
33	1568076	Spring (RH)	1
34	206	Woodruff Key	1
35	12929	Snap Ring	1
36	1568256	Brake Pedal (RH)	1
37	1570300	Pad	1
38	**4053949**	**Plate**	**1**
39	**1590033**	**Transducer (Brake Pressure)**	**1**
40	4014682	Adapter (Master Cylinder)	1
	a 2111171	Wire Harness (Jumper) (Position Sensor/Cowl Harness)	1
	2064554	Loctite	1

FOOTNOTES:

a Not Illustrated

©2014 HYSTER COMPANY

BRAKE ASSEMBLY (FIGURE 11-3)
DRY BRAKE

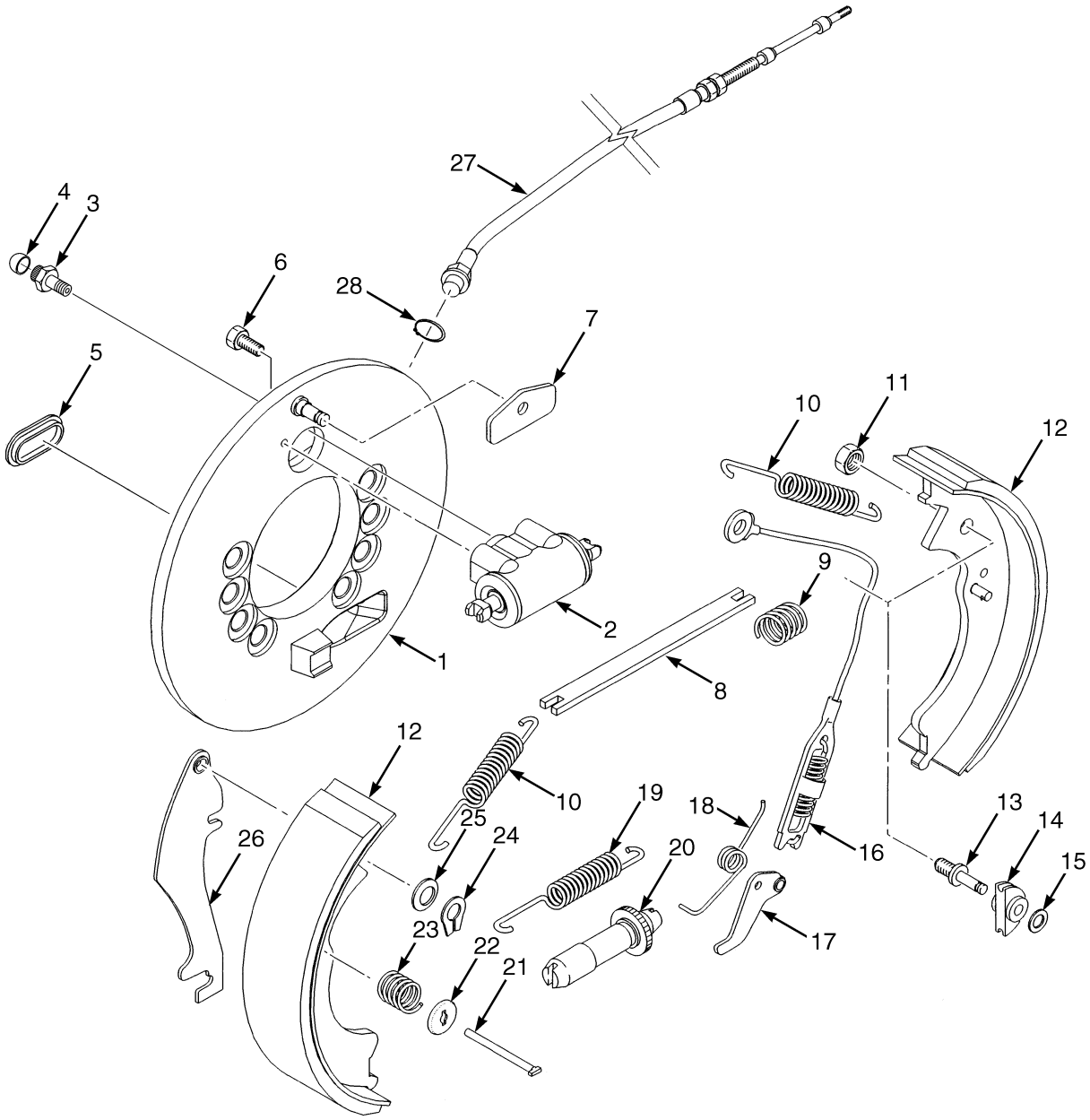

BP040047

©2014 HYSTER COMPANY

BRAKE ASSEMBLY
DRY BRAKE

KEY:
A: RH
B: LH

ITEM	PART NO.	DESCRIPTION	QTY A	QTY B
	1579455	Brake Assembly (With Cable and Dust Shield)	1	..
	1579454	Brake Assembly (With Cable and Dust Shield)	..	1
	1606086	Brake Assembly (Without Cable)	1	..
	1606085	Brake Assembly (Without Cable)	..	1
1	1606088	Backplate	1	..
1	1606087	Backplate	..	1
2	1565290	Wheel Cylinder	1	1
2	1334647	Kit-Repair Wheel Cylinder	1	1
3	1361503	Bleeder Screw	1	1
4	1361504	Cap	1	1
5	1334642	Cover	1	1
6	1565303	Bolt	2	2
7	2037343	Wear Plate	1	1
8	1360796	Bracket	1	..
8	1361507	Strut	..	1
9	1360797	Spring	1	1
10	. . . . .	Spring	1	1
11	. . . . .	Nut	1	1
12	1565314	Kit-Brake Shoe	1	..
12	1565313	Kit-Brake Shoe	..	1
13	. . . . .	Pin	1	1
14	1334644	Sheave	1	1
15	1361500	Washer	1	1
16	. . . . .	Cable and Spring Assembly	1	1
17	2037518	Lever	1	..
17	2037517	Lever	..	1
18	. . . . .	Spring	1	1
19	2037340	Spring	1	1
20	1600492	Adjuster	1	..
20	1600491	Adjuster	..	1
21	2037323	Pin	1	1
22	2037341	Cup	1	1
23	. . . . .	Spring	1	1
24	1338916	Retainer	1	1
25	1338917	Washer	1	1
26	. . . . .	Park Brake Lever	1	1
27	1565305	Parking Brake Cable	1	..
27	1600493	Parking Brake Cable	..	1
28	1361502	Snap Ring	1	1
	1565316	Kit-Spring (Includes Items 10)	1	1
	1565310	Kit-Adjuster (RH) (Includes Items 16-19)	1	..
	1565309	Kit-Adjuster (LH) (Includes Items 16-19)	..	1
	1565311	Kit-Repair Parking Brake (LH) (Includes Items 8-9, 24-26)	..	1
	1565312	Kit-Park Brake (RH) (Includes Items 8-9, 24-26)	1	..

©2014 HYSTER COMPANY

BRAKE ASSEMBLY
DRY BRAKE

KEY:
A: RH
B: LH

ITEM	PART NO.	DESCRIPTION	QTY A	QTY B
	1565315	Kit-Hold Down (Includes Items 21-23)	1	1

©2014 HYSTER COMPANY

BRAKE MASTER CYLINDER ASSEMBLY (FIGURE 11-4)

DRY BRAKE

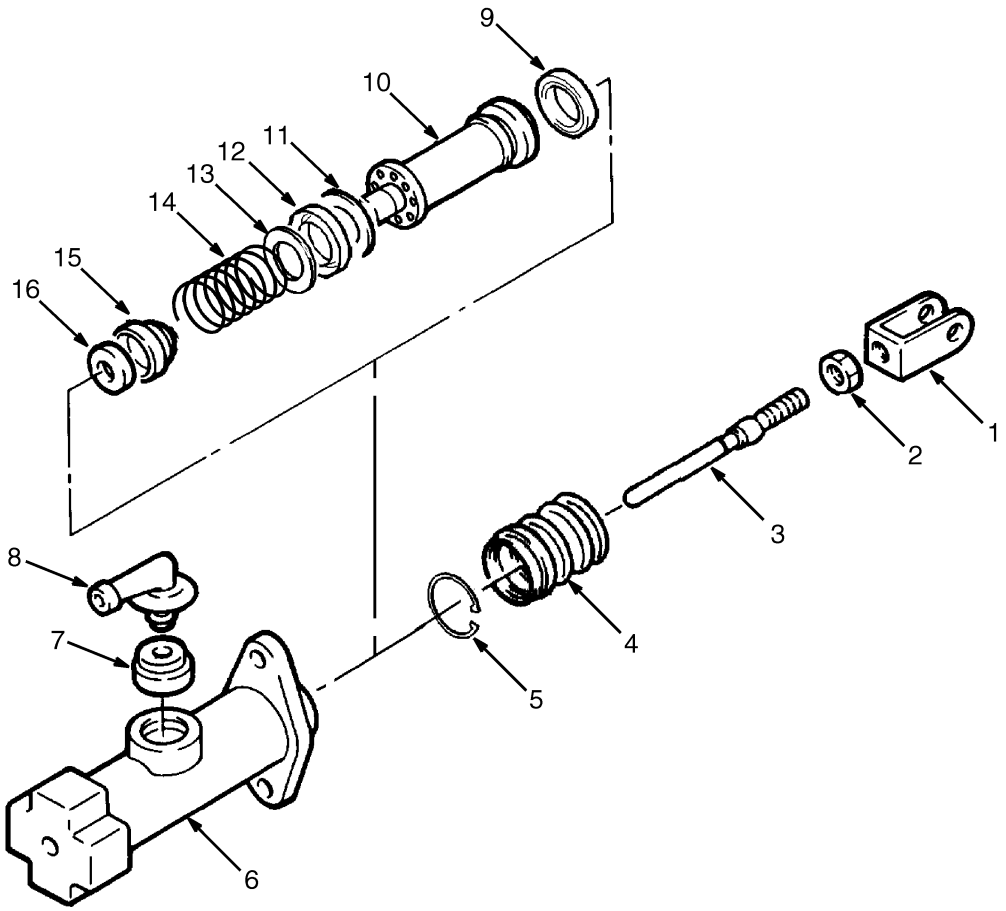

BP040123

ITEM	PART NO.	DESCRIPTION	QTY
	1536724	Master Cylinder	1
1	2041520	Yoke	1
2	1566142	Nut	1
3	1566141	Push Rod	1
4	. . . . .	Boot	1
5	. . . . .	Snap Ring	1
6	. . . . .	Housing	1
7	1566144	Gasket	1
8	1566143	Fitting	1
9	. . . . .	Seal	1
10	. . . . .	Piston	1
11	. . . . .	Spacer	1
12	. . . . .	Piston Cup	1
13	. . . . .	Retainer	1
14	. . . . .	Spring	1
15	. . . . .	Check Valve	1
16	. . . . .	Valve Seat	1
	1566131	Kit-Repair Master Cylinder (Includes Items 4-5, 9-15)	1

©2014 HYSTER COMPANY

BRAKE COOLING SYSTEM (FIGURE 11-5)

SINGLE AND DUAL PEDAL WET BRAKE — WITH SINGLE SPEED TRANSMISSION

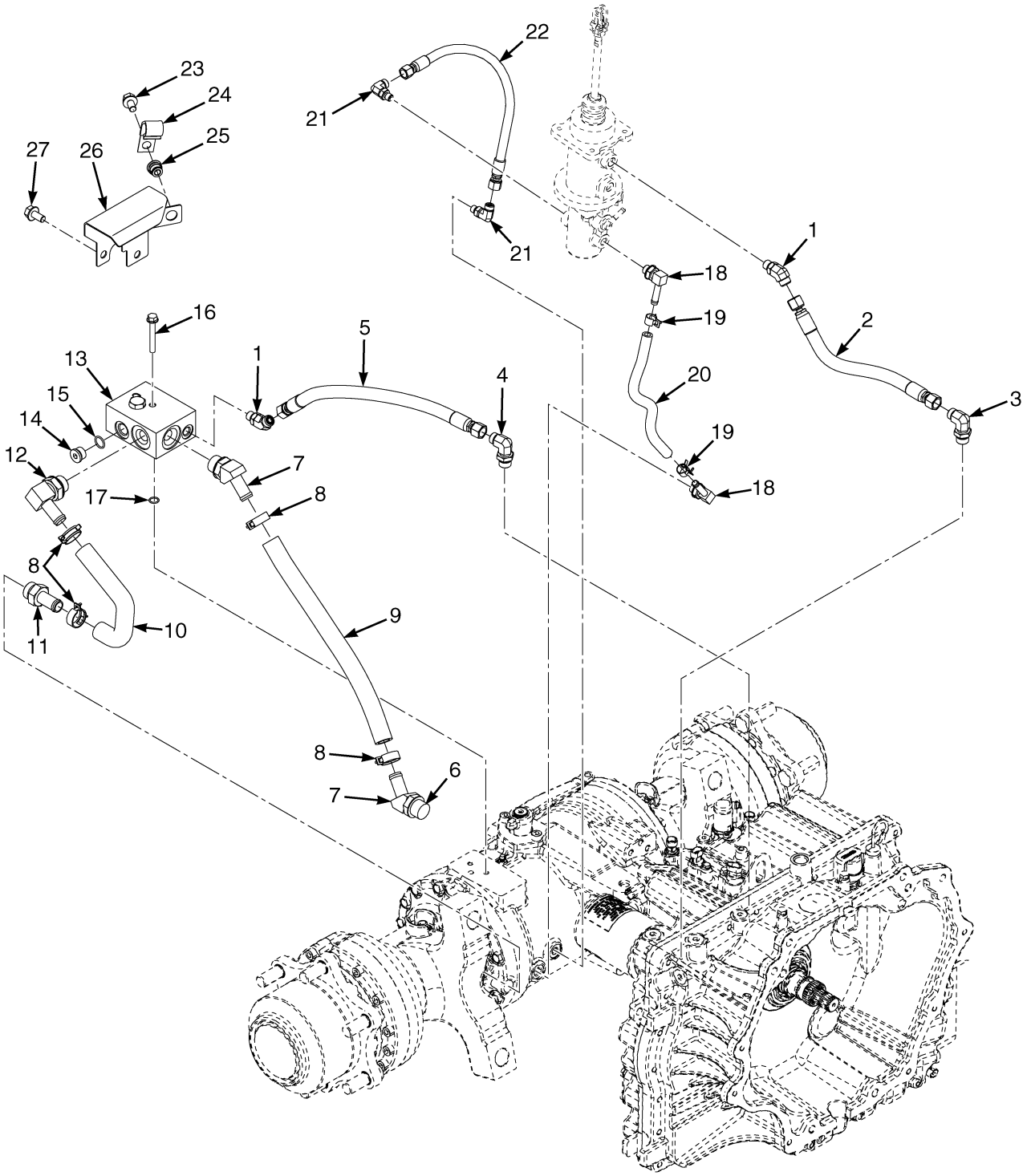

©2014 HYSTER COMPANY

BRAKE COOLING SYSTEM

SINGLE AND DUAL PEDAL WET BRAKE – WITH SINGLE SPEED TRANSMISSION

ITEM	PART NO.	DESCRIPTION	QTY
1	1516199	Fitting	2
2	2095227	Hose Assy	1
3	1487062	Fitting	1
4	1487061	Fitting	1
5	2110267	Hose Assy (To Torque Converter)	1
6	4002394	Fitting	1
7	222505	Fitting	2
8	1502009	Hose Clamp	4
9	4612188	Hose Assy	1
10	2072897	Hose (Coolant Wet Disc Brake)	1
11	17758	Fitting	1
11	16486	O-Ring	2
12	17775	Fitting	1
12	16486	O-Ring	2
13	4607793	Manifold	1
14	. . . . .	Fitting	1
15	. . . . .	O-Ring	1
16	1510116	Capscrew	2
17	265731	O-Ring	1
18	17221	Fitting	2
19	1569616	Hose Clamp	2
20	2083928	Hose	1
21	1487058	Fitting	2
22	2083955	Hose Assy	1
23	1613324	Capscrew	1
24	325804	Clamp	1
25	1531557	Insert	1
26	1588577	Bracket	1
27	1527879	Capscrew	2

©2014 HYSTER COMPANY

BRAKE LINKAGE (FIGURE 11-6)
SINGLE PEDAL — WET BRAKE

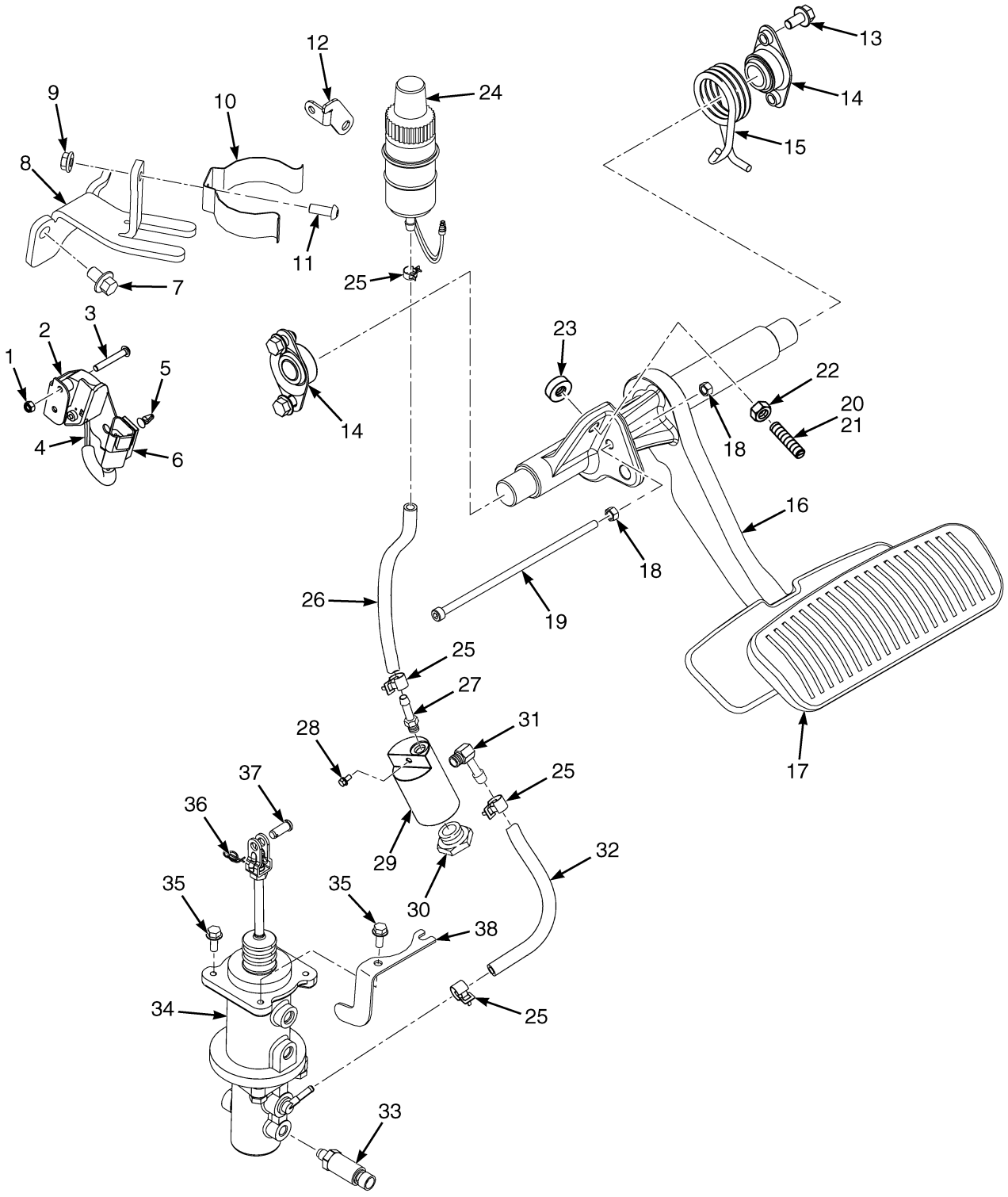

©2014 HYSTER COMPANY

BRAKE LINKAGE
SINGLE PEDAL – WET BRAKE

ITEM	PART NO.	DESCRIPTION	QTY
1	302398	Locknut	2
2	1688503	Mount	1
3	1553897	Capscrew	2
4	1683486	Sensor (Brake Position)	1
5	1564526	Clip (Key Hole)	1
6	1500912	Clip	1
7	4011940	Capscrew	1
8	1699992	Mount	1
9	1514429	Nut	1
10	2021353	Holder	1
11	1510126	Screw (Button Head)	1
12	4053949	Plate	1
13	1527879	Capscrew	4
14	1585575	Bushing	2
15	1568075	Spring (RH)	1
16	4014374	Brake Pedal	1
17	1570298	Rubber Pad	1
18	292668	Nut	2
19	1704902	Capscrew	1
20	1534871	Bolt	1
21	2064554	Loctite	AR
22	239503	Nut	1
23	1556475	Bumper	1
24	1646439	Reservoir	1
24	2077604	Tank	1
24	1645381	Diaphragm	1
24	1646397	Cap	1
25	166857	Clamp	4
25	168718	Clamp (Optional)	4
26	2092888	Hose	1
27	222491	Fitting	1
27	16481	O-Ring	1
28	1527876	Capscrew	1
29	2092613	Cylinder Block	1
30	233683	Fitting	1
30	16487	O-Ring	1
31	222509	Fitting	1
31	16481	O-Ring	1
32	117989	Hose	1
33	1590033	Transducer (Brake Pressure)	1
34	1703607	Master Cylinder (☞Figure 11-8)	1
35	1527880	Capscrew	4
36	1351689	Locking Cotter Pin	1
37	1375391	Pin (Rod End)	1
38	1670905	Bracket	1

©2014 HYSTER COMPANY

BRAKE LINKAGE (FIGURE 11-7)
DUAL PEDAL — WET BRAKE

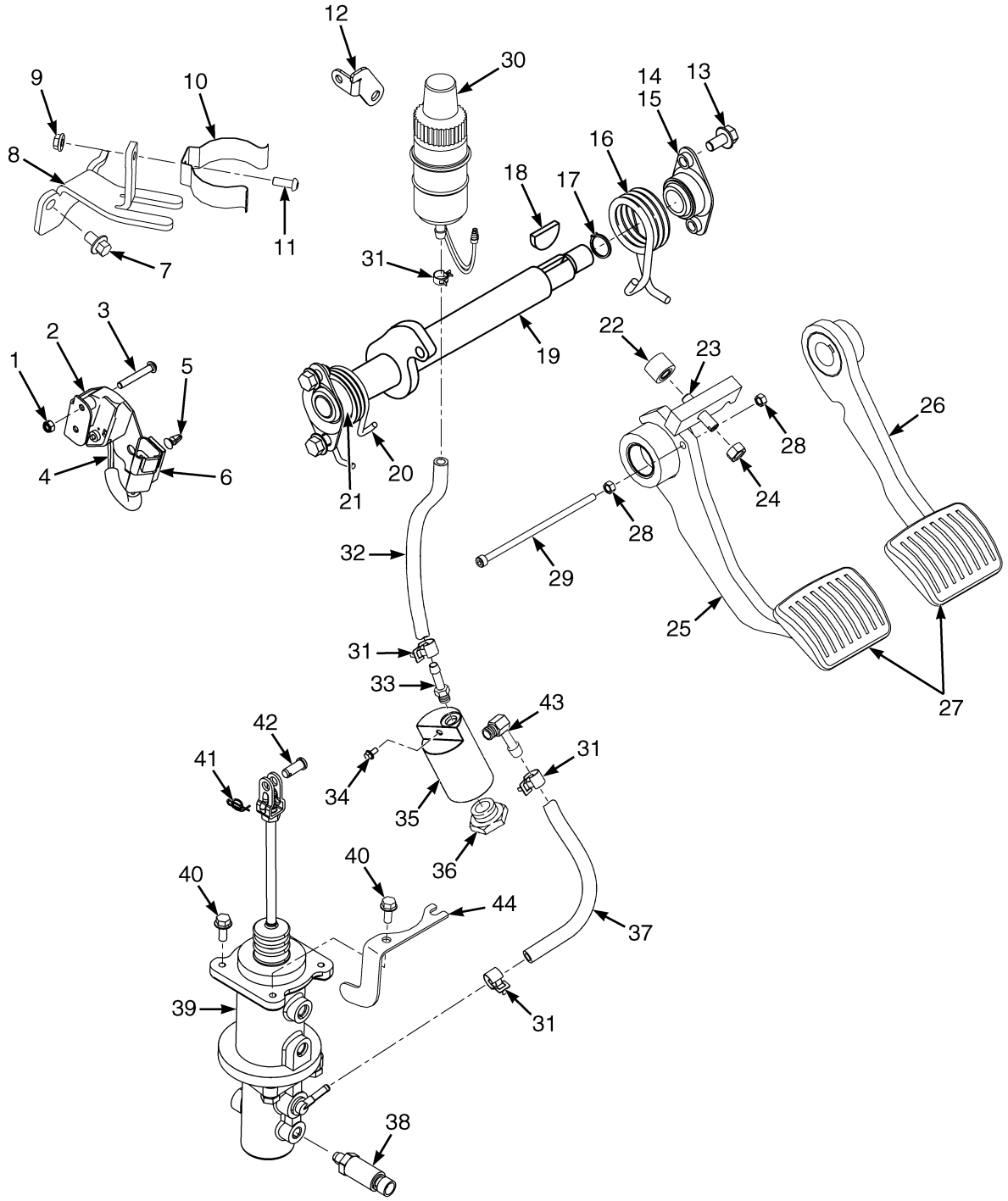

©2014 HYSTER COMPANY

BRAKE LINKAGE
DUAL PEDAL – WET BRAKE

ITEM	PART NO.	DESCRIPTION	QTY
1	302398	Locknut	2
2	1688503	Mount	1
3	1553897	Capscrew	2
4	1683486	Sensor (Brake Position)	1
5	1564526	Clip (Key Hole)	1
6	1500912	Clip	1
7	4011940	Capscrew	1
8	1699992	Mount	1
9	1514429	Nut	1
10	2021353	Holder	1
11	1510126	Screw (Button Head)	1
12	4053949	Plate	1
13	1527879	Capscrew	4
14	1585575	Bushing	2
15	2064554	Loctite	AR
16	1568076	Spring (RH)	1
17	12929	Snap Ring	1
18	206	Woodruff Key	2
19	1579028	Crank	1
20	1568077	Spring (LH)	1
21	244540	Bushing	2
22	1556475	Bumper	1
23	1534871	Bolt	1
24	239503	Nut	1
25	1701771	Inching Pedal (Left Hand) (Inching)	1
26	1568256	Brake Pedal (RH)	1
27	1570300	Pad	1
28	292668	Nut	2
29	1704901	Capscrew	1
30	1646439	Reservoir	1
31	166857	Clamp	4
31	168718	Clamp (Optional)	4
32	2092888	Hose	1
33	222491	Fitting	1
33	16481	O-Ring	1
34	1527876	Capscrew	1
35	2092613	Cylinder Block	1
36	233683	Fitting	1
36	16487	O-Ring	1
37	117989	Hose	1
38	1590033	Transducer (Brake Pressure)	1
39	1703607	Master Cylinder (☞Figure 11-8)	1
40	1527880	Capscrew	4
41	1351689	Locking Cotter Pin	1
42	1375391	Pin (Rod End)	1
43	222509	Fitting	1
43	16481	O-Ring	1
44	1670905	Bracket	1

©2014 HYSTER COMPANY

BRAKE MASTER CYLINDER ASSEMBLY (FIGURE 11-8)

WET BRAKE

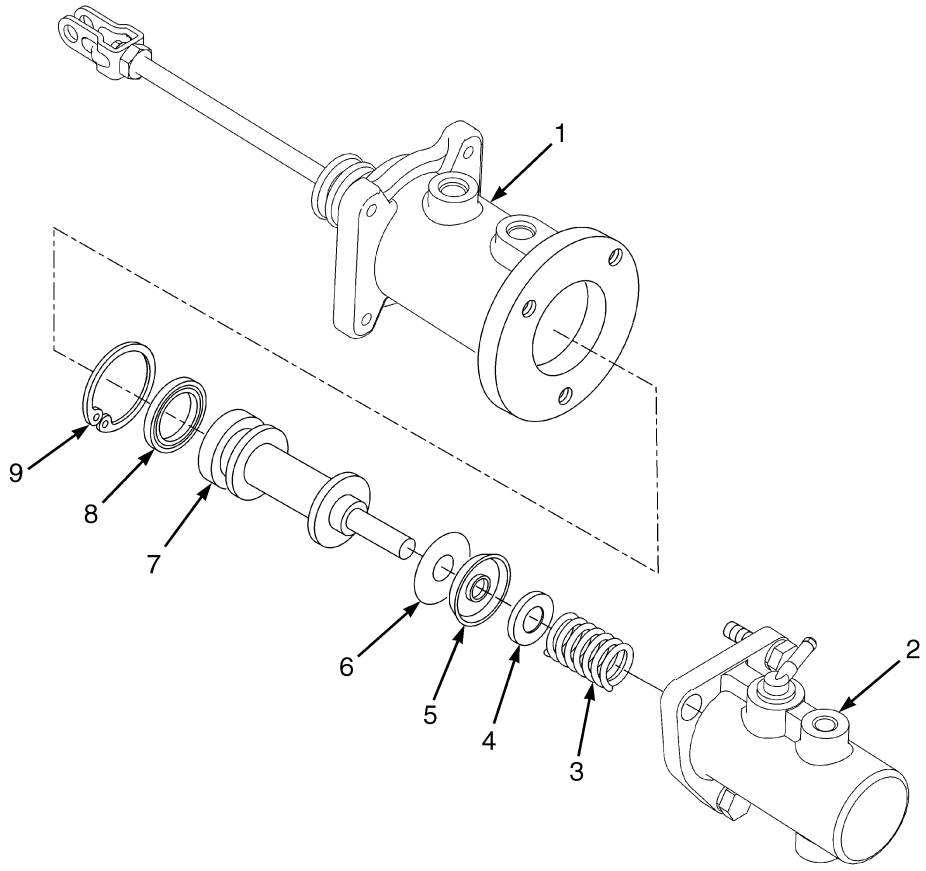

BP040065

ITEM	PART NO.	DESCRIPTION	QTY
	1703607	**Master Cylinder (38.1 Bore)**	**1**
1	1670332	Brake Booster	1
1	1692229	Kit-Repair Brake Booster	1
2	1670334	Master Cylinder	1
2	**. . . . .**	**Housing**	**1**
3	**. . . . .**	**Spring**	**1**
4	**. . . . .**	**Retainer**	**1**
5	**. . . . .**	**Seal (Pressure)**	**1**
6	**. . . . .**	**Washer**	**1**
7	**. . . . .**	**Piston**	**1**
8	**. . . . .**	**Seal (Retaining)**	**1**
9	**. . . . .**	**Snap Ring**	**1**
	a 1620023	Kit-Repair Major-Master Cyl (38.1 Bore) (Includes Items 4, 6-7, 9)	1
	1620024	Kit-Repair Minor-Master Cyl (38.1 Bore) (Includes Items 3, 5, 8)	1

FOOTNOTES:

a Includes Minor Repair Kit

©2014 HYSTER COMPANY

NOTES

©2014 HYSTER COMPANY

PARK BRAKE ASSEMBLY (FIGURE 11-9)

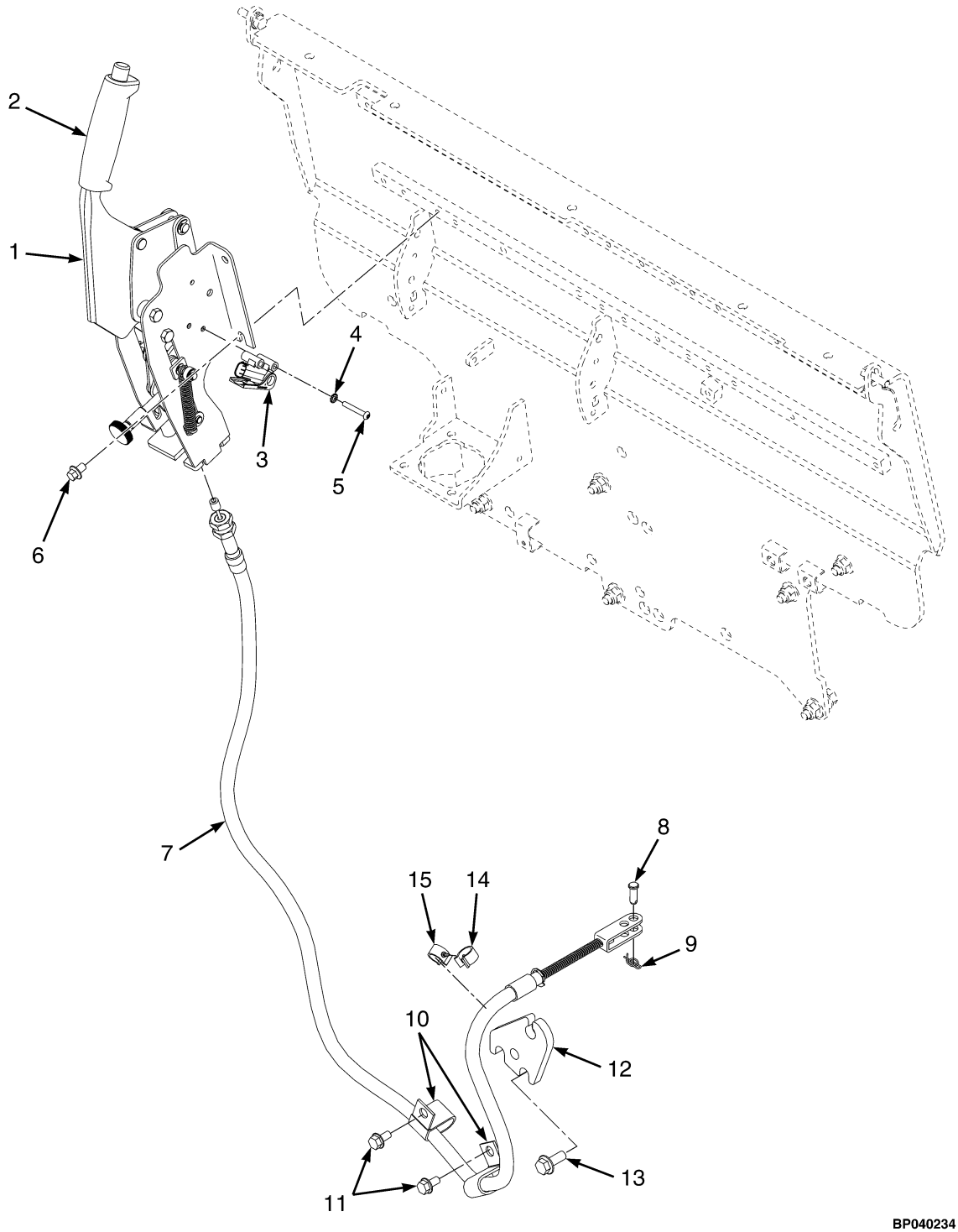

©2014 HYSTER COMPANY

PARK BRAKE ASSEMBLY

KEY:
A: Without Cab - Dry Brakes, Two Cable High Force
B: With Cab - Dry Brakes, Two Cable High Force
C: Without Cab - Wet Brakes, One Cable Low Force
D: With Cab - Wet Brakes, One Cable Low Force

ITEM	PART NO.	DESCRIPTION	QTY A	B	C	D
1	4039373	Parking Brake Assembly	1	..	..	..
1	4039374	Parking Brake Assembly	..	1	..	..
1	4039375	Parking Brake Assembly	..	..	1	..
1	**4039376**	**Parking Brake Assembly**	**..**	**..**	**..**	**1**
2	4039366	Parking Brake Lever	1	..	..	..
2	4039367	Parking Brake Lever	..	1	..	..
2	4039368	Parking Brake Lever	..	..	1	..
2	4039369	Parking Brake Lever	..	..	..	1
2	1583915	Grip	1	..	..	..
3	**1683486**	**Sensor (Brake Position)**	**1**	**1**	**1**	**1**
4	**296378**	**Washer**	**2**	**2**	**2**	**2**
5	1701768	Screw	2	2	2	2
6	**4011940**	**Capscrew**	**4**	**4**	**4**	**4**
7	**a 4611578**	**Parking Brake Cable**	**..**	**..**	**1**	**1**
8	**240724**	**Pin (Rod End)**	**..**	**..**	**1**	**1**
9	**1530010**	**Lockring (Cotter Pin)**	**..**	**..**	**1**	**1**
10	**1326653**	**Clamp**	**..**	**..**	**2**	**2**
11	**1527879**	**Capscrew**	**..**	**..**	**2**	**2**
12	**1657226**	**Plate (Cable Mount)**	**..**	**..**	**1**	**1**
13	**1510117**	**Capscrew**	**..**	**..**	**3**	**3**
14	1543698	Clamp (Swivel)	..	..	1	1
15	1606544	Clamp	..	..	1	1

FOOTNOTES:

a For Dry Brake Cables See Dry Brake Assembly

©2014 HYSTER COMPANY

NOTES

©2014 HYSTER COMPANY

12 HYDRAULIC SYSTEM

SECTION 12
HYDRAULIC SYSTEM

DESCRIPTION **PAGE**

AUXILIARY ONE AND TWO
MANUAL CONTROL VALVE - THREE AND FOUR FUNCTION 12-30
AUXILLIARY HOSES
THREE STAGE FULL FREE LIFT - TWO STAGE LIMITED FREE-LIFT 12-13
CONTROL VALVE ASSEMBLY
MANUAL CONTROL - THREE AND FOUR FUNCTION 12-24
CONTROL VALVE LOCKOUT GROUP
MANUAL CONTROL VALVE 12-26
GEAR PUMP ASSEMBLY
HIGH PRESSURE 12-6
LOW PRESSURE - CHAIN DRIVE OPTION 12-4
HAND LEVERS
FOUR FUNCTION - WITH DETENTED LEVERS 12-20
FOUR FUNCTION - WITHOUT DETENTED LEVERS 12-22
THREE FUNCTION - WITH DETENTED LEVERS 12-16
THREE FUNCTION - WITHOUT DETENTED LEVERS 12-18
HYDRAULIC CONTROL VALVE
ELECTRONIC VALVE ASSEMBLY - THREE AND FOUR FUNCTION 12-34
ELECTRONIC VALVE AUXILIARY ONE SECTION - THREE AND FOUR FUNCTION 12-42
ELECTRONIC VALVE AUXILIARY TWO SECTION - FOUR FUNCTION 12-44
ELECTRONIC VALVE INLET SECTION - THREE AND FOUR FUNCTION 12-36
ELECTRONIC VALVE TILT SECTION - THREE AND FOUR FUNCTION 12-40
HYDRAULIC CONTROL VALVE (ELECTRO-HYDRAULIC)
THREE AND FOUR FUNCTION - POPPET VALVES 12-38
HYDRAULIC FILTER 12-8
HYDRAULIC HOSES
LIFT, TILT, AND AUXILIARY 12-10
HYDRAULIC SUPPLY AND RETURN
WITH ALUMINUM TRANSMISSION - WITH CHAIN DRIVE 12-2
OUTLET SECTION
ELECTRONIC CONTROL VALVE - THREE AND FOUR FUNCTION 12-46
MANUAL CONTROL VALVE - THREE AND FOUR FUNCTION 12-32
TILT CYLINDER AND MAST INSTALLATION 12-48
TILT CYLINDERS
H40-50FT 12-50
H60-70FT 12-52
VALVE ASSEMBLY, LIFT AND TILT
MANUAL CONTROL VALVE - THREE AND FOUR FUNCTION 12-28

©2014 HYSTER COMPANY

HYDRAULIC SUPPLY AND RETURN (FIGURE 12-1)
WITH ALUMINUM TRANSMISSION — WITH CHAIN DRIVE

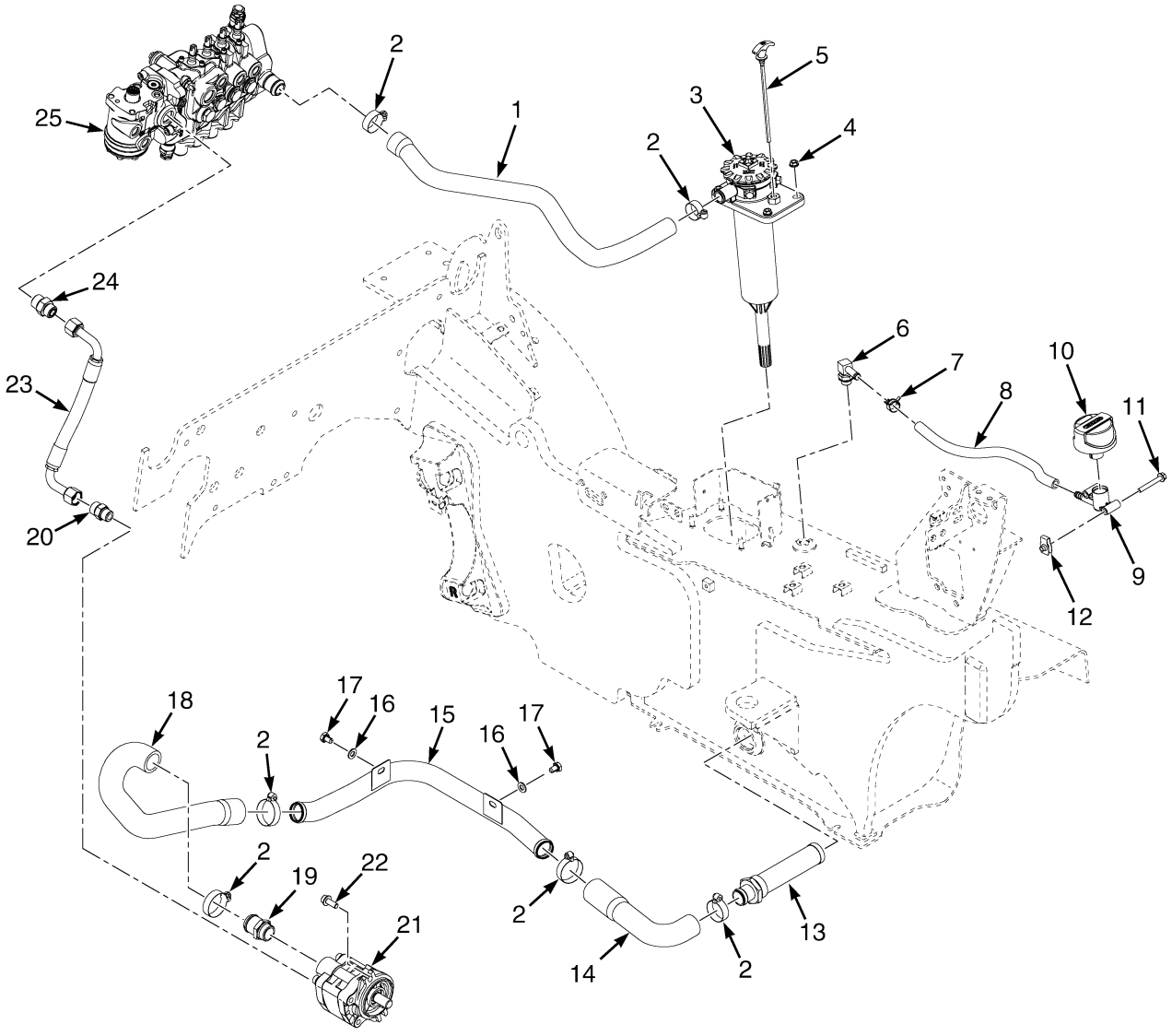

©2014 HYSTER COMPANY

HYDRAULIC SUPPLY AND RETURN
WITH ALUMINUM TRANSMISSION – WITH CHAIN DRIVE

ITEM	PART NO.	DESCRIPTION	QTY
1	2111369	Hose (Hydraulic Return 3 Function Valve)	1
1	2111370	Hose (Hydraulic Return 4 Function Valve)	1
2	369804	Clamp	6
3	. . . . .	Hydraulic Filter (☞Figure 12-4)	1
4	1502543	Nut (Flange)	2
5	2060751	Dipstick	1
6	222510	Fitting	1
7	1502007	Hose Clamp	1
8	1502123	Hose	1
8	127918	Hose (Optional)	1
9	1582160	Adapter (Breather)	1
10	1582161	Breather	1
11	1510116	Capscrew	2
12	1393879	Nut	2
13	1624904	Strainer	1
13	16984	O-Ring	1
14	4605974	Hose	1
15	4026661	Tube Assy	1
16	296420	Washer	2
17	292513	Capscrew	2
18	4605946	Hose	1
19	1568199	Adapter (Suction)	1
20	c 1486749	Fitting	1
20	b 4028685	Adapter	1
21	. . . . .	Gear Pump (☞Figure 12-2, ☞Figure 12-3)	1
22	1564515	Capscrew	2
23	c 4612085	Hose Assy	1
23	b 4611861	Hose Assy	1
24	1486751	Fitting	1
24	b 4028686	Adapter	1
25	. . . . .	Hydraulic Control Valve (☞Figure 12-11, ☞Figure 12-17)	1
	264159	Adhesive	AR
	a 1528481	Plug (With O-Ring for Drain) (Hydraulic Tank Drain)	1

FOOTNOTES:

a Not Illustrated
b With Quick-lock Option
c Without Quick-lock Option

©2014 HYSTER COMPANY

GEAR PUMP ASSEMBLY (FIGURE 12-2)
LOW PRESSURE — CHAIN DRIVE OPTION

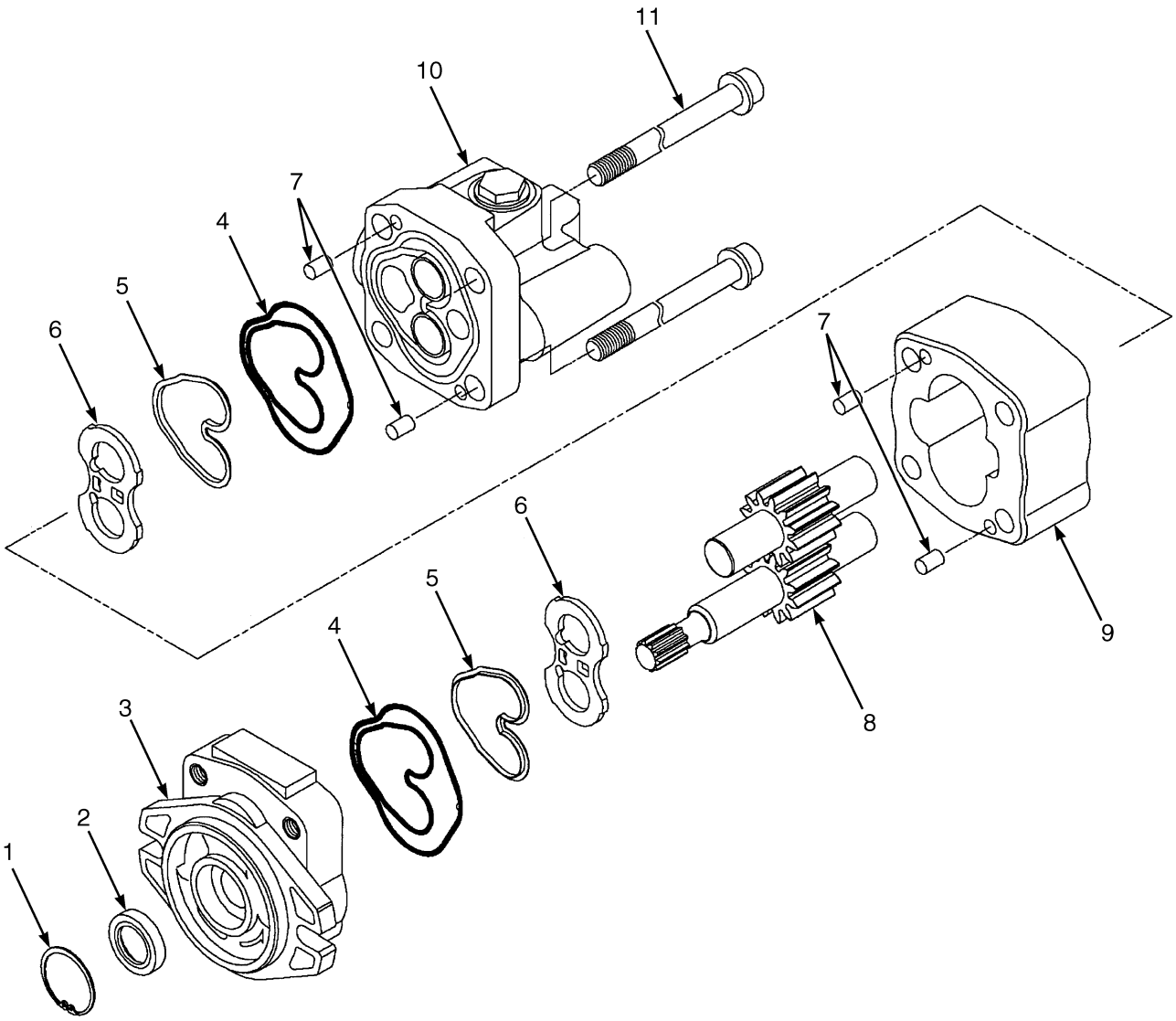

BP150098

©2014 HYSTER COMPANY

GEAR PUMP ASSEMBLY
LOW PRESSURE – CHAIN DRIVE OPTION

KEY:
A: Mazda (2.2L Gasoline and LPG)
B: Yanmar (2.6L and 3.3L Diesel)
C: Kubota (2.5L LPG)

ITEM	PART NO.	DESCRIPTION	QTY A	QTY B	QTY C
	2067800	Gear Pump (24.0 cc/Rev)	1	..	..
	2067802	Gear Pump (29.4 cc/Rev)	..	1	..
	2074230	Gear Pump (25.7 cc/Rev)	..	..	1
1	. . . . .	Snap Ring	1	1	1
2	. . . . .	Oil Seal	1	1	1
3	1581536	Flange	1	1	1
4	. . . . .	Back-Up Seal	2	2	2
5	. . . . .	Plate Seal	2	2	2
6	1578673	Side Plate	2	2	2
7	1578672	Dowel	4	4	4
8	1581537	Gear Set	1	..	..
8	1581534	Gear Set	..	1	..
8	1584987	Gear Set	..	..	1
8	. . . . .	Drive Gear	1	1	1
8	. . . . .	Driven Gear	1	1	1
9	. . . . .	Gear Plate	1	1	1
10	1581535	Cover	1	1	1
11	1578671	Screw	4	..	4
11	1578693	Screw	..	4	..
	1465140	Kit-Seal (Includes Items 1-2, 4-5)	1	1	1

©2014 HYSTER COMPANY

GEAR PUMP ASSEMBLY (FIGURE 12-3)
HIGH PRESSURE

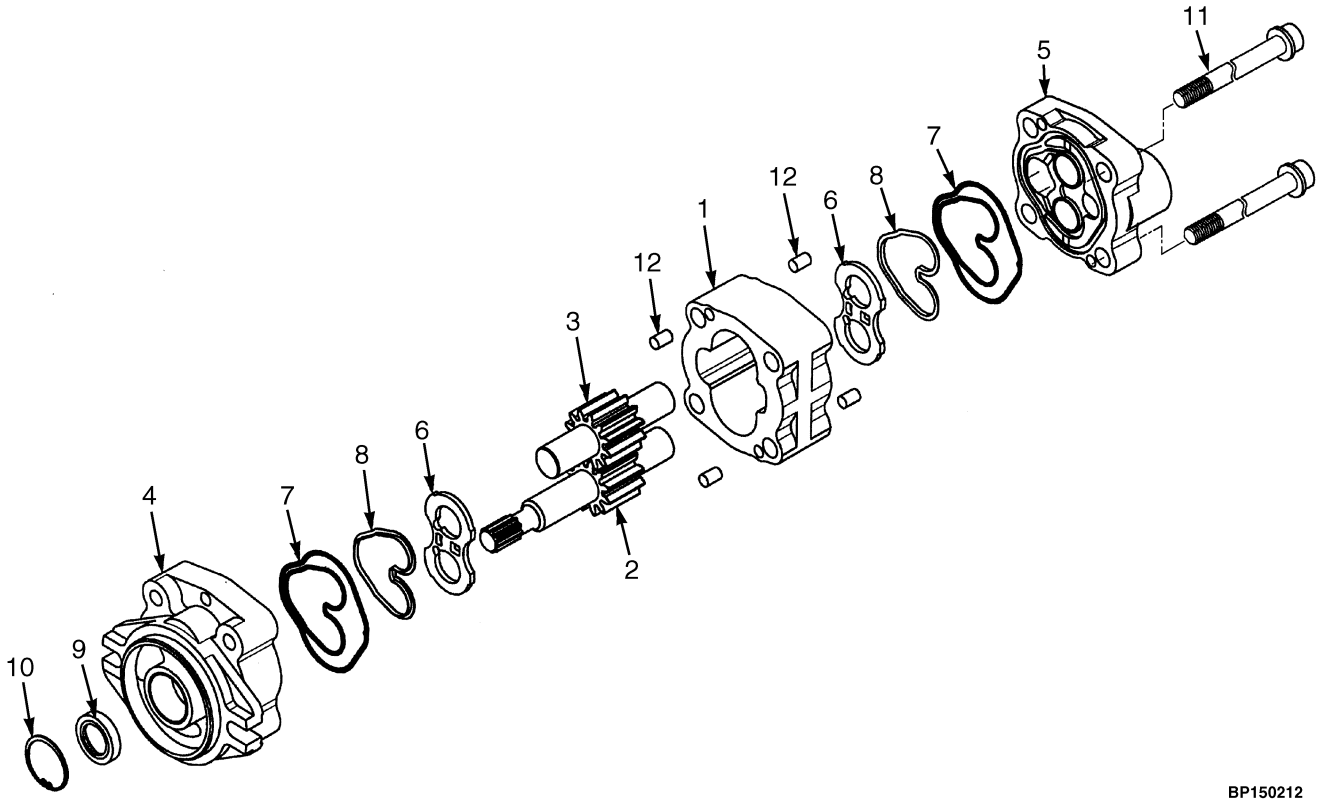

©2014 HYSTER COMPANY

GEAR PUMP ASSEMBLY
HIGH PRESSURE

KEY:
A: Mazda (2.2L LPG)
B: Kubota (2.5L LPG)
C: Yanmar (2.6L and 3.0L, 3.3L Diesel)

ITEM	PART NO.	DESCRIPTION	QTY A	QTY B	QTY C
	2098695	Gear Pump (24.0 cc/Rev)	1	..	..
	2098694	Gear Pump (25.7 cc/Rev)	..	1	..
	2098693	**Gear Pump (29.4 cc/Rev)**	**..**	**..**	**1**
1	**. . . . .**	**Gear Plate**	**1**	**..**	**..**
1	**. . . . .**	**Gear Plate**	**..**	**1**	**..**
1	**. . . . .**	**Gear Plate**	**..**	**..**	**1**
2	**. . . . .**	**Drive Gear**	**1**	**..**	**..**
2	**. . . . .**	**Drive Gear**	**..**	**1**	**..**
2	**. . . . .**	**Drive Gear**	**..**	**..**	**1**
3	**. . . . .**	**Driven Gear**	**1**	**..**	**..**
3	**. . . . .**	**Driven Gear**	**..**	**1**	**..**
3	**. . . . .**	**Driven Gear**	**..**	**..**	**1**
4	**1581536**	**Flange**	**1**	**1**	**1**
5	**1578665**	**Cover**	**1**	**1**	**1**
6	**1578673**	**Side Plate**	**2**	**2**	**2**
7	**. . . . .**	**Plate Seal**	**2**	**2**	**2**
8	**. . . . .**	**Back-Up Ring**	**2**	**2**	**2**
9	**. . . . .**	**Oil Seal**	**1**	**1**	**1**
10	**. . . . .**	**Snap Ring**	**1**	**1**	**1**
11	1578671	Screw	4	4	..
11	**1578693**	**Screw**	**..**	**..**	**4**
12	**1578672**	**Dowel**	**4**	**4**	**4**
	1581537	Gear Set (Includes Items 2-3)	1	..	..
	1584987	Gear Set (Includes Items 2-3)	..	1	..
	1581534	**Gear Set (Includes Items 2-3)**	**..**	**..**	**1**
	1465140	**Kit-Seal (Includes Items 7-10)**	**1**	**1**	**1**

©2014 HYSTER COMPANY

HYDRAULIC FILTER (FIGURE 12-4)

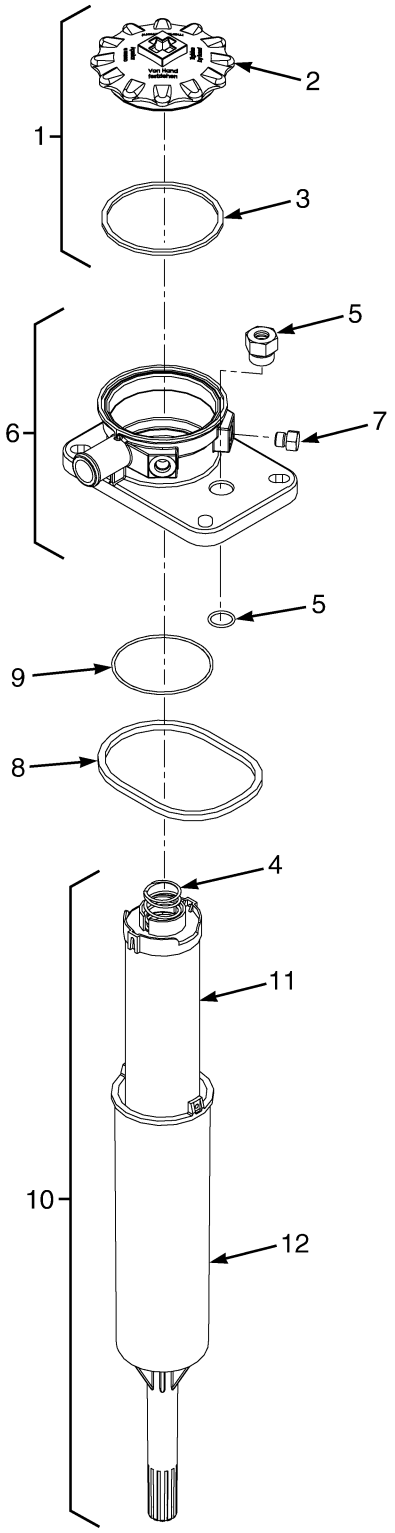

BP150355

©2014 HYSTER COMPANY

HYDRAULIC FILTER

ITEM	PART NO.	DESCRIPTION	QTY
	4000256	Hydraulic Filter Assembly	1
1	1708700	Cap Assembly	1
2	1570339	Lid	1
3	1705548	O-Ring	1
4	1570340	Spring	1
5	4003067	Dipstick Holder	1
5	. . . . .	O-ring	1
6	4000257	Hydraulic Filter Head Assembly	1
7	14591	Plug	2
7	16481	O-Ring	1
8	. . . . .	Quad Ring (Tank Sealing)	1
9	. . . . .	O-Ring (Element)	1
10	4000258	Hydraulic Filter (Bowl Assembly)	1
11	. . . . .	Element	1
12	1570347	Filter Can (Bowl)	1
	1708596	Kit-Seal (Includes Items 3, 5, 8-9)	1
	1707194	Kit-Filter Element and Cap Seal (Includes Items 9, 11)	1

©2014 HYSTER COMPANY

HYDRAULIC HOSES (FIGURE 12-5)
LIFT, TILT, AND AUXILIARY

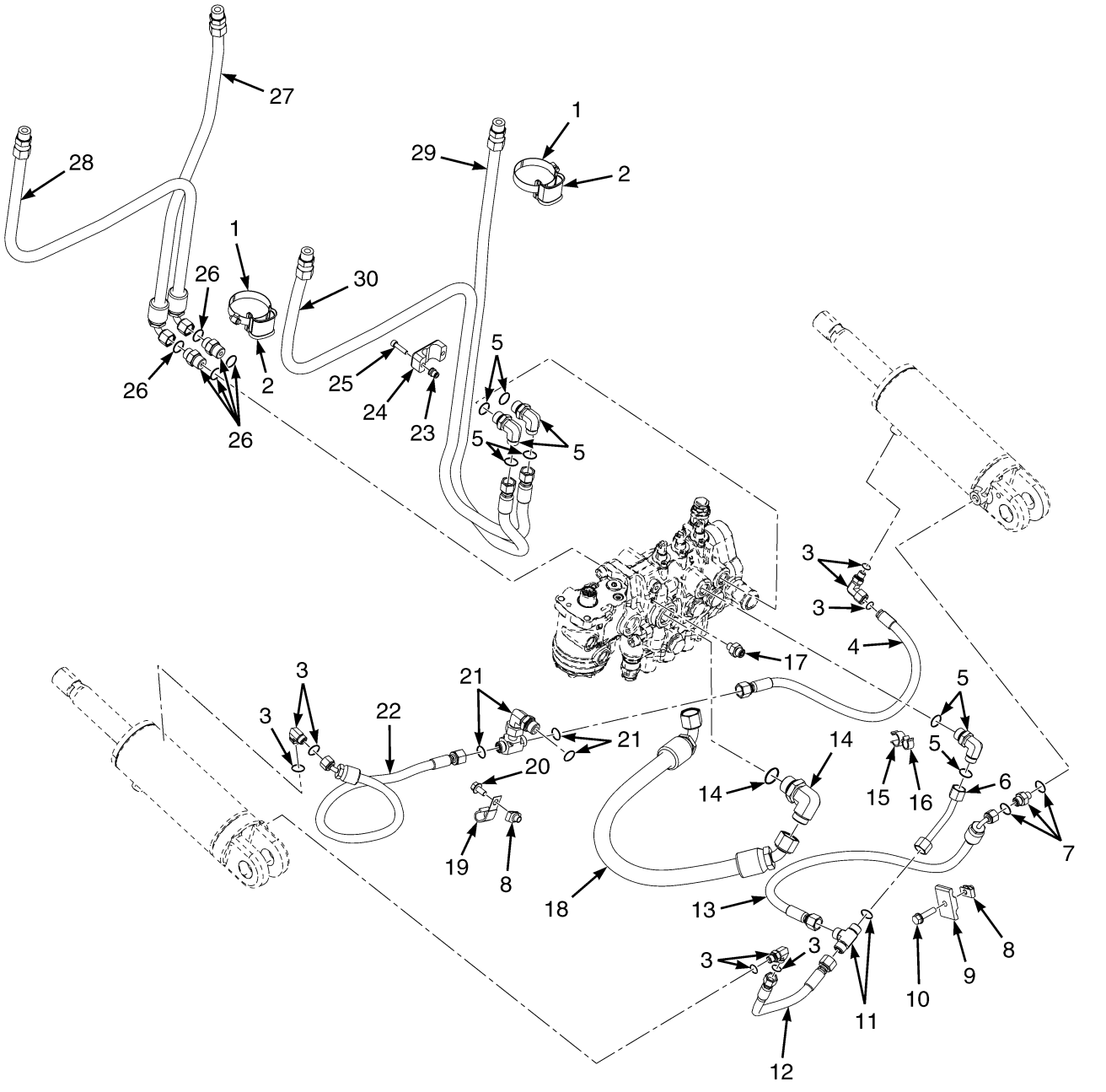

HP150984

©2014 HYSTER COMPANY

HYDRAULIC HOSES
LIFT, TILT, AND AUXILIARY

KEY:
A: Three Function
B: Four Function

NOTE: This parts list contains multiple truck configurations, refer to the KEY to choose the correct QTY column for your truck.

ITEM	PART NO.	DESCRIPTION	QTY A	QTY B
1	1617657	Clamp	1	1
2	1477996	Hose Clamp	1	1
3	**1487058**	**Fitting**	**3**	**3**
3	1527813	O-Ring	3	3
3	**16481**	**O-Ring**	**3**	**3**
4	**2066783**	**Hose Assy**	**1**	**1**
5	**1487061**	**Fitting (Electronic Valve)**	**3**	**3**
5	265787	O-Ring	1	1
5	**16484**	**O-Ring**	**1**	**1**
5	**1487061**	**Fitting (Manual Valve)**	**1**	**1**
5	265787	O-Ring	1	1
5	**16484**	**O-Ring**	**1**	**1**
5	**1516201**	**Fitting (Manual Valve)**	**1**	**1**
5	**265731**	**O-Ring**	**1**	**1**
5	**16484**	**O-Ring**	**1**	**1**
6	4606301	Tube Assy (Electronic Valve)	1	1
6	**4604147**	**Tube Assy (Manual Valve)**	**1**	**1**
7	**1486737**	**Fitting**	**1**	**1**
7	**16481**	**O-Ring**	**1**	**1**
7	**16483**	**O-Ring**	**1**	**1**
8	**1480237**	**Nut**	**2**	**2**
9	**1359620**	**Clamp**	**1**	**1**
10	**1586627**	**Capscrew**	**1**	**1**
11	**1522425**	**Fitting**	**1**	**1**
11	265787	O-Ring	1	1
12	**4606302**	**Hose Assy**	**1**	**1**
13	**4606303**	**Hose Assy**	**1**	**1**
14	**1487069**	**Fitting**	**1**	**1**
14	1605768	Fitting (Load Weigh Display)	1	1
14	**252729**	**O-Ring**	**1**	**1**
15	1502055	Clamp (Swivel)	1	1
16	1502059	Clamp (Swivel)	1	1
17	**2061646**	**Fitting (Diagnostic)**	**1**	**1**
18	2070148	Hose Assy (Main Mast To Lowering Control Valve)	1	1
19	**325804**	**Clamp**	**1**	**1**
20	**1613324**	**Capscrew**	**1**	**1**
21	**1488464**	**Fitting**	**1**	**1**
21	265787	O-Ring	2	2
22	**2074325**	**Hose Assy**	**1**	**1**
23	**1531558**	**Insert**	**2**	**..**
24	**1360386**	**Clamp (Double Hose)**	**1**	**..**
25	**293796**	**Capscrew**	**2**	**..**
26	**1486742**	**Fitting**	**2**	**2**

©2014 HYSTER COMPANY

HYDRAULIC HOSES
LIFT, TILT, AND AUXILIARY

KEY:
A: Three Function
B: Four Function

NOTE: This parts list contains multiple truck configurations, refer to the KEY to choose the correct QTY column for your truck.

ITEM	PART NO.	DESCRIPTION	QTY A	QTY B
26	265787	O-Ring	2	2
26	**16484**	**O-Ring**	**2**	**2**
27	**a** 2065051	Hose Assy	1	..
27	**b 4624925**	**Hose Assy (☞Figure 12-14)**	**1**	**..**
28	**a** 2065052	Hose Assy	..	1
28	**b 4624925**	**Hose Assy (☞Figure 12-14)**	**..**	**1**
29	**a** 2073495	Hose Assy	1	..
29	**b 4624924**	**Hose Assy (☞Figure 12-14)**	**1**	**..**
30	**a** 2073496	Hose Assy	..	1
30	**b** 4624926	Hose Assy (☞Figure 12-14)	..	1

FOOTNOTES:

a Two Stage Full Free-Lift Shown

b Two Stage LFL and Three Stage FFL

©2014 HYSTER COMPANY

AUXILLIARY HOSES (FIGURE 12-6)
THREE STAGE FULL FREE LIFT — TWO STAGE LIMITED FREE-LIFT

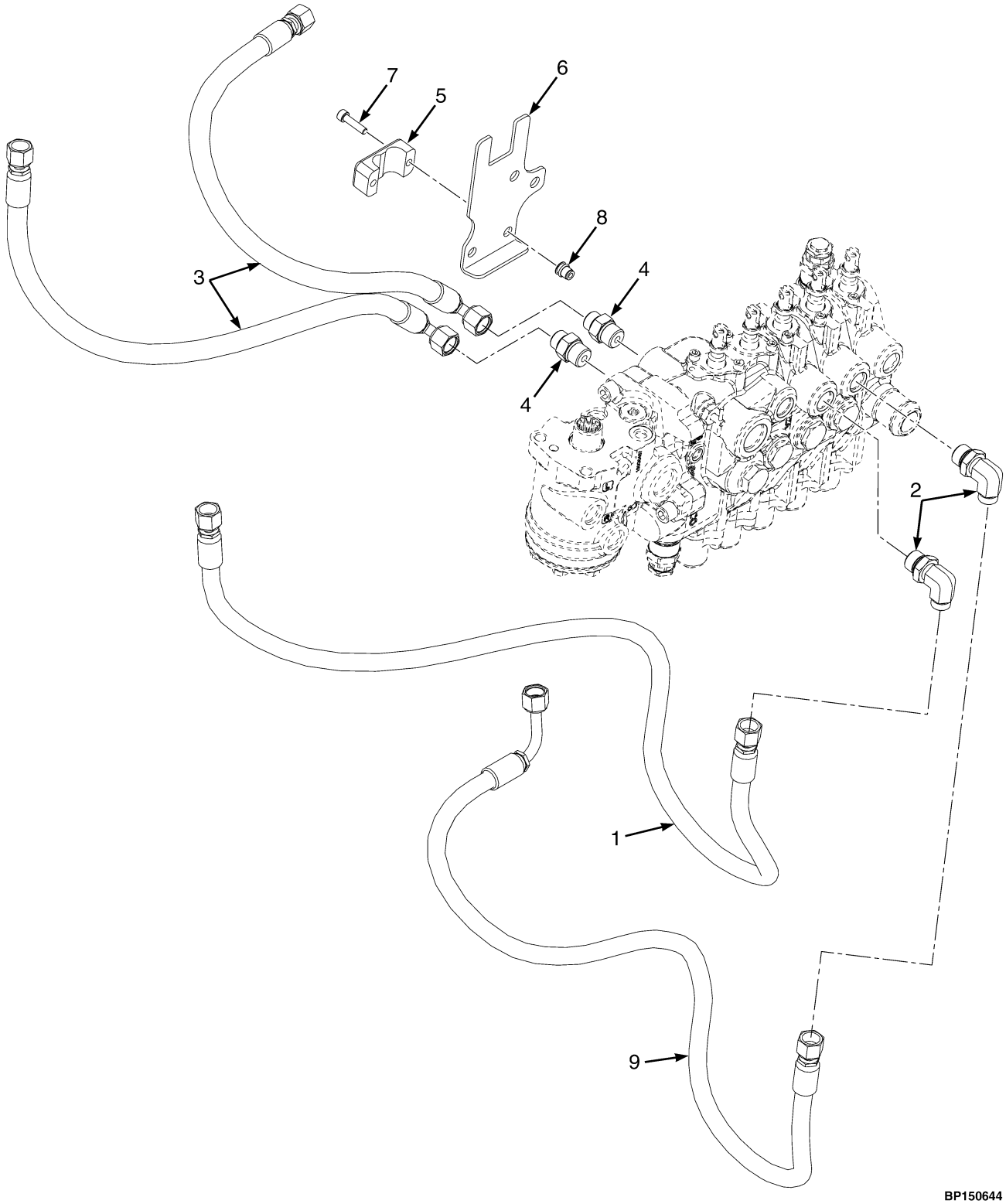

KEY:
A: Three Function
B: Four Function

NOTE: This parts list contains multiple truck configurations, refer to the KEY to choose the correct QTY column for your truck.

ITEM	PART NO.	DESCRIPTION	QTY A	QTY B
1	**4624924**	**Hose Assy**	**1**	**1**
2	**1487061**	**Fitting**	**1**	**2**
3	**4624925**	**Hose Assy**	**1**	**2**
4	**1486742**	**Fitting**	**1**	**2**
5	**1360386**	**Clamp (Double Hose)**	**1**	**1**
6	**4064677**	**Plate**	**1**	**1**
7	**293796**	**Capscrew**	**2**	**2**
8	**1531558**	**Insert**	**2**	**2**
9	4624926	Hose Assy	..	1

©2014 HYSTER COMPANY

NOTES

©2014 HYSTER COMPANY

HAND LEVERS (FIGURE 12-7)
THREE FUNCTION — WITH DETENTED LEVERS

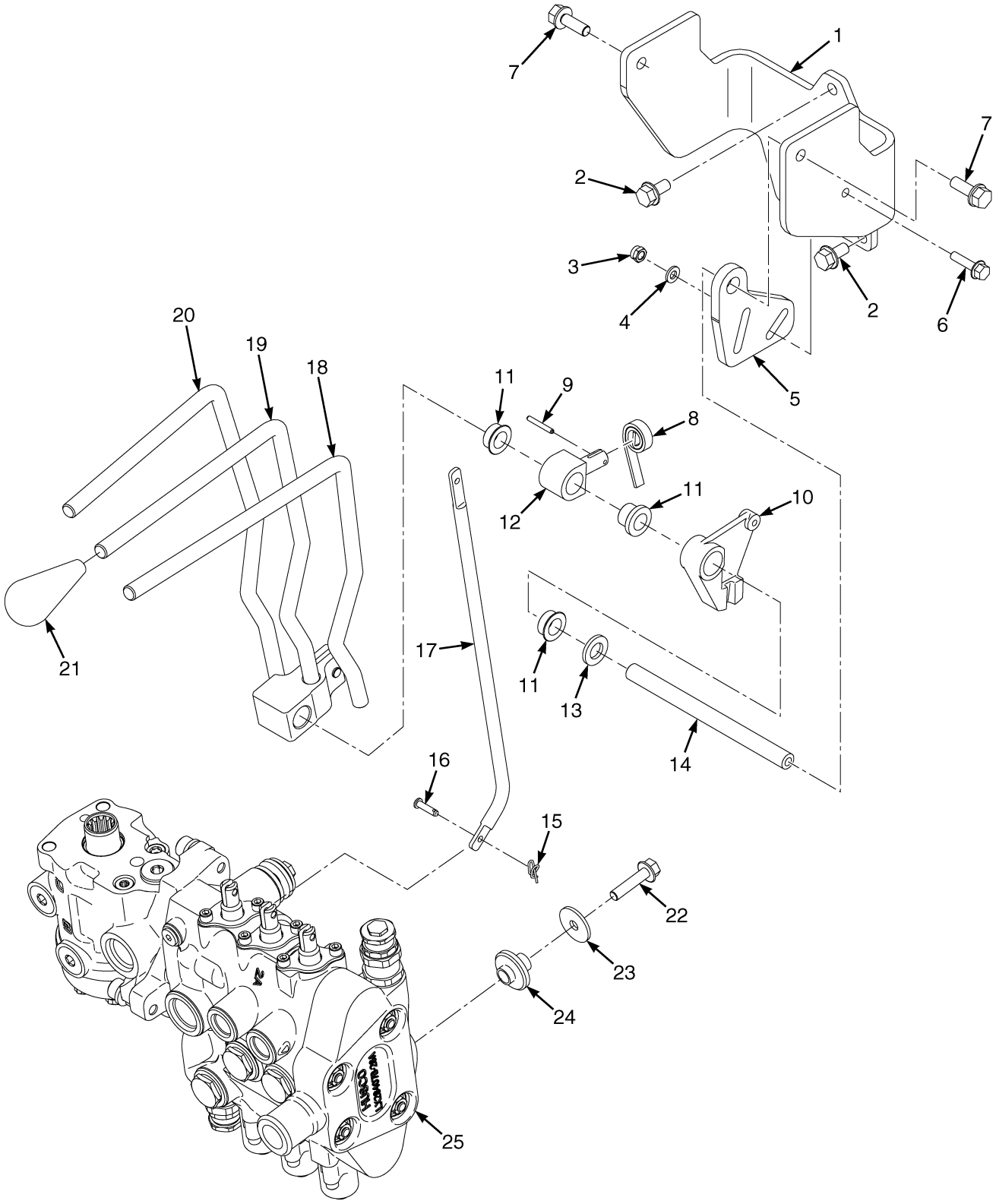

©2014 HYSTER COMPANY

HAND LEVERS

THREE FUNCTION – WITH DETENTED LEVERS

ITEM	PART NO.	DESCRIPTION	QTY
1	1670194	Bracket	1
2	1527879	Capscrew	3
3	316834	Nut	1
4	320156	Washer	1
5	1670677	Plate	1
6	1527878	Capscrew	1
7	1583611	Capscrew	2
8	175861	Spring	1
9	302428	Roll Pin	1
10	1542546	Lever	2
11	1564747	Bushing	10
12	306113	Pin (Selector)	1
13	320161	Washer	3
14	1670195	Shaft (Pivot)	1
15	1517361	Locking Ring Cotter Pin	6
16	309109	Pin	6
17	1662420	Link	3
18	2099398	Lever (Auxiliary One and Two)	1
19	2099394	Lever (Tilt)	1
20	2099393	Lever (Lift)	1
21	4038182	Knob	3
22	1586627	Capscrew	3
23	1346752	Washer	3
24	2063991	Isolator	3
25	4629069	Hyd Control Valve (Manual) (H40-60FT) (☞Figure 12-11)	1
25	4629073	Hyd Control Valve (Manual) (H70FT) (☞Figure 12-11)	1

©2014 HYSTER COMPANY

HAND LEVERS (FIGURE 12-8)

THREE FUNCTION — WITHOUT DETENTED LEVERS

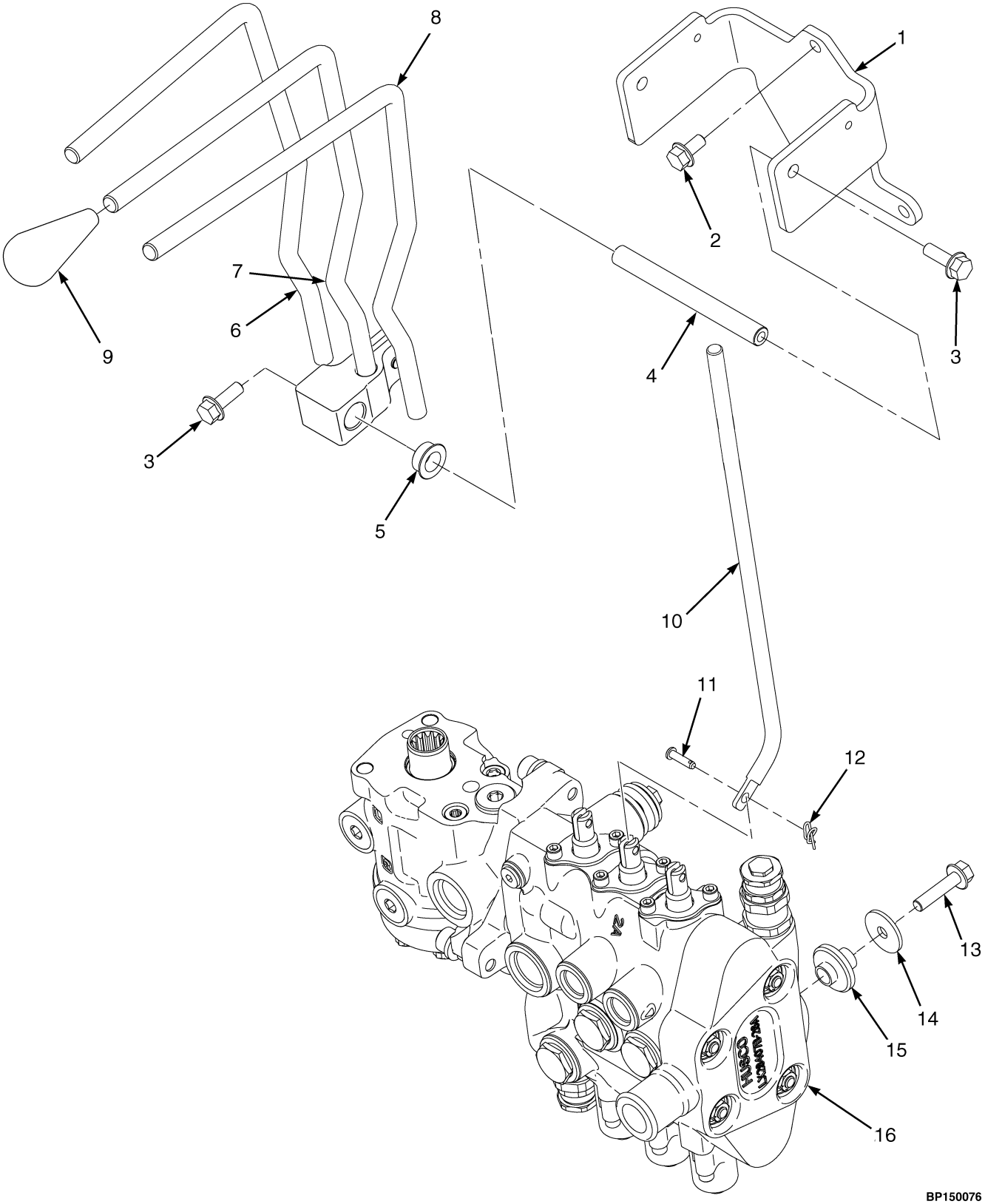

©2014 HYSTER COMPANY

HAND LEVERS

THREE FUNCTION – WITHOUT DETENTED LEVERS

ITEM	PART NO.	DESCRIPTION	QTY
1	1665746	Bracket	1
2	1527879	Capscrew	3
3	1583611	Capscrew	2
4	1670292	Shaft	1
5	1564747	Bushing	6
6	2099393	Lever (Lift)	1
7	2099394	Lever (Tilt)	1
8	2099395	Lever (Auxiliary One)	1
9	4038182	Knob	3
10	1662420	Link	3
11	309109	Pin	6
12	1517361	Locking Ring Cotter Pin	6
13	1586627	Capscrew	3
14	1346752	Washer	3
15	2063991	Isolator	3
16	4629069	Hyd Control Valve (Manual) (H40-60FT) (☞Figure 12-11)	1
16	4629073	Hyd Control Valve (Manual) (H70FT) (☞Figure 12-11)	1

©2014 HYSTER COMPANY

HAND LEVERS (FIGURE 12-9)
FOUR FUNCTION — WITH DETENTED LEVERS

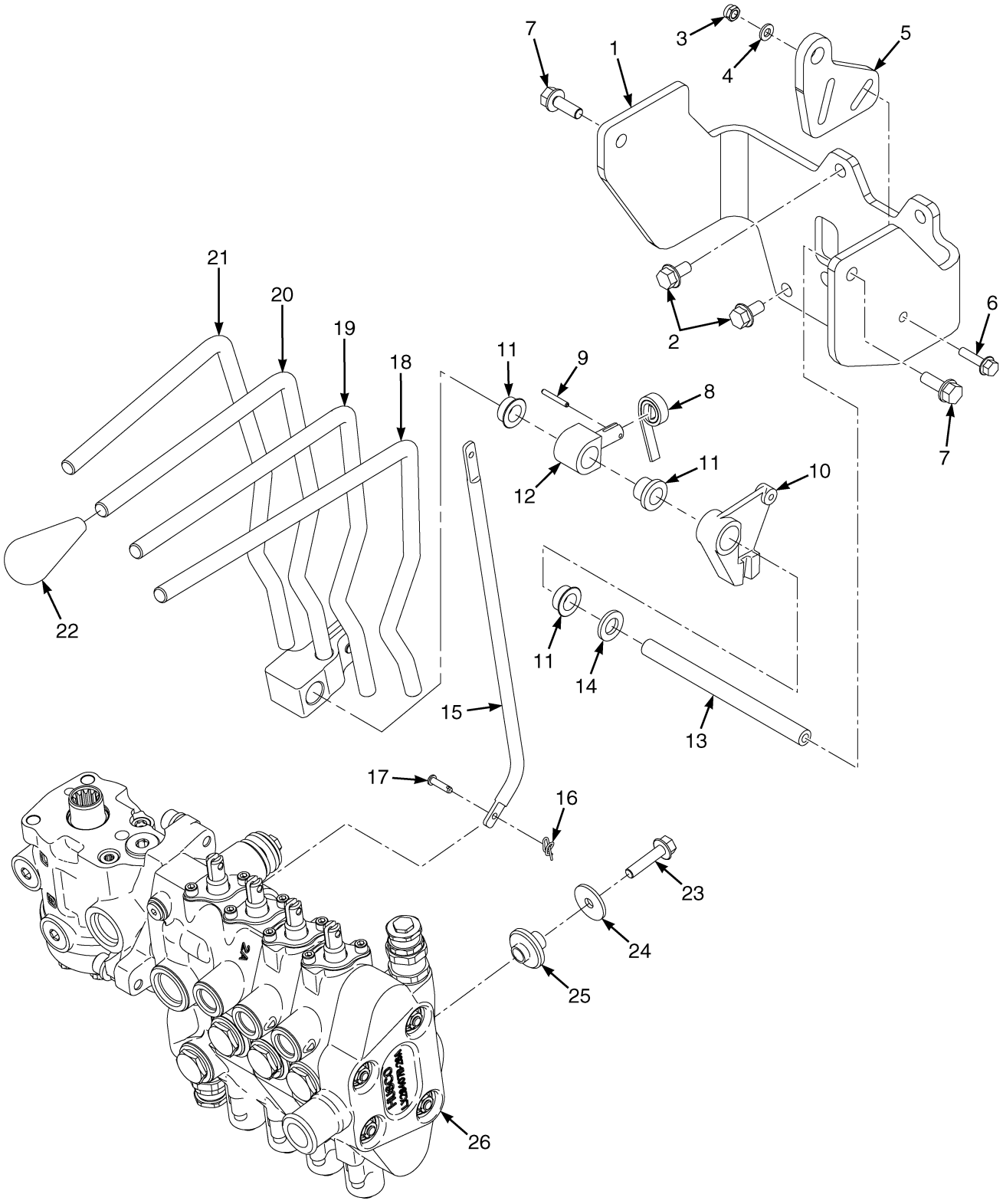

BP150483

©2014 HYSTER COMPANY

HAND LEVERS
FOUR FUNCTION – WITH DETENTED LEVERS

ITEM	PART NO.	DESCRIPTION	QTY
1	1665748	Bracket	1
2	1527879	Capscrew	4
3	316834	Nut	1
4	320156	Washer	1
5	1670677	Plate	1
6	1527878	Capscrew	1
7	1583611	Capscrew	2
8	175861	Spring	1
9	302428	Roll Pin	1
10	1542546	Lever	2
11	1564747	Bushing	12
12	306113	Pin (Selector)	1
13	1670196	Shaft	1
14	320161	Washer	3
15	1662420	Link	4
16	1517361	Locking Ring Cotter Pin	8
17	309109	Pin	8
18	2099397	Lever (Auxiliary Two and Three)	1
19	2099395	Lever (Auxiliary One)	1
20	2099394	Lever (Tilt)	1
21	2099393	Lever (Lift)	1
22	4038182	Knob	4
22	2070655	Lens (Blank)	1
23	1586627	Capscrew	3
24	1346752	Washer	3
25	2063991	Isolator	3
26	4629071	Hyd Control Valve (Manual) (H40-60FT) (☞Figure 12-11)	1
26	4629075	Hyd Control Valve (Manual) (H70FT) (☞Figure 12-11)	1

©2014 HYSTER COMPANY

HAND LEVERS (FIGURE 12-10)
FOUR FUNCTION — WITHOUT DETENTED LEVERS

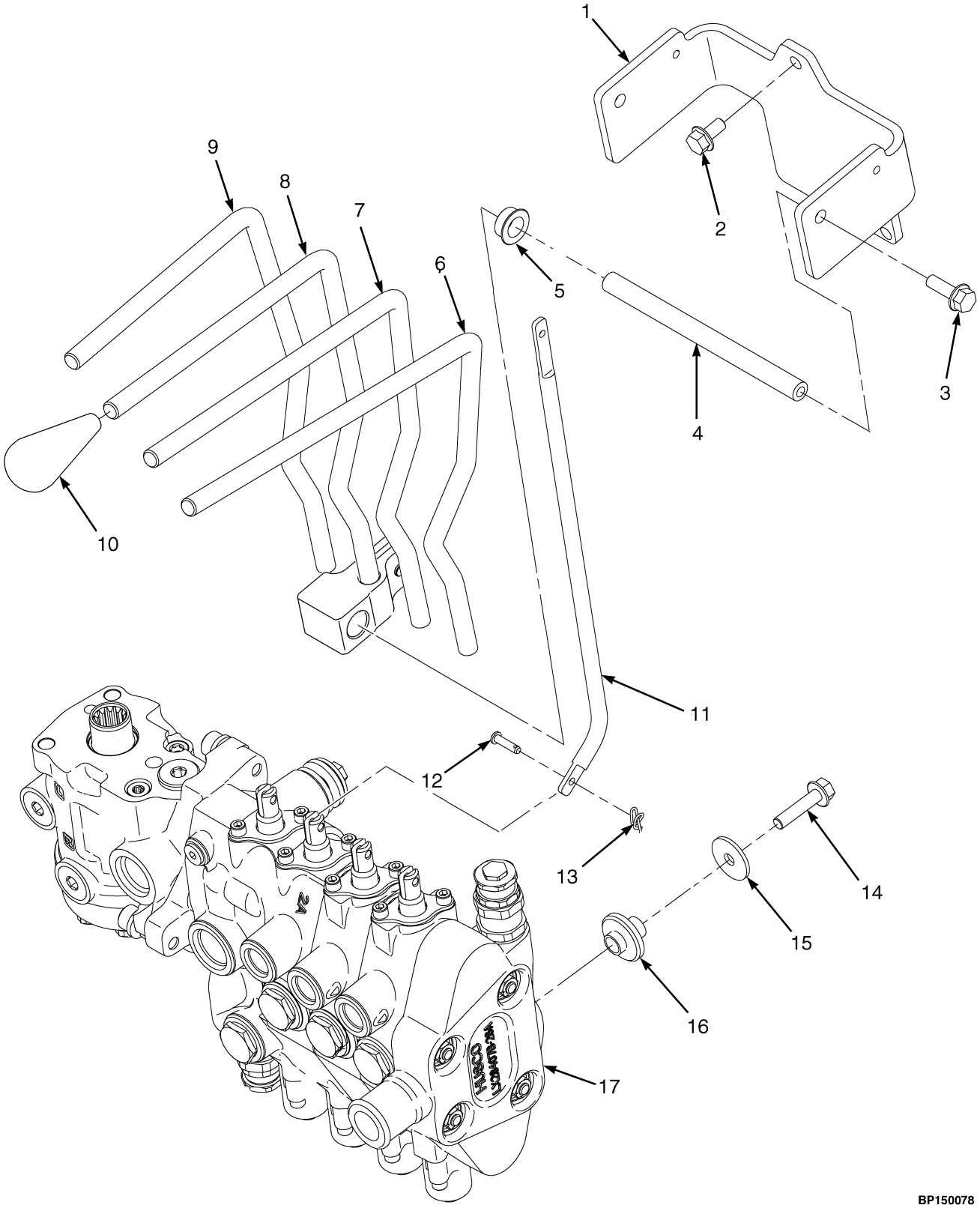

©2014 HYSTER COMPANY

HAND LEVERS
FOUR FUNCTION – WITHOUT DETENTED LEVERS

ITEM	PART NO.	DESCRIPTION	QTY
1	1665747	Bracket	1
2	1527879	Capscrew	3
3	1583611	Capscrew	2
4	1670293	Shaft	1
5	1564747	Bushing	8
6	2099396	Lever (Auxiliary Two)	1
7	2099395	Lever (Auxiliary One)	1
8	2099394	Lever (Tilt)	1
9	2099393	Lever (Lift)	1
10	4038182	Knob	4
10	2070655	Lens (Blank)	1
11	1662420	Link	4
12	309109	Pin	8
13	1517361	Locking Ring Cotter Pin	8
14	1586627	Capscrew	3
15	1346752	Washer	3
16	2063991	Isolator	3
17	4629071	Hyd Control Valve (Manual) (H40-60FT) (☞Figure 12-11)	1
17	4629075	Hyd Control Valve (Manual) (H70FT) (☞Figure 12-11)	1

©2014 HYSTER COMPANY

CONTROL VALVE ASSEMBLY (FIGURE 12-11)
MANUAL CONTROL — THREE AND FOUR FUNCTION

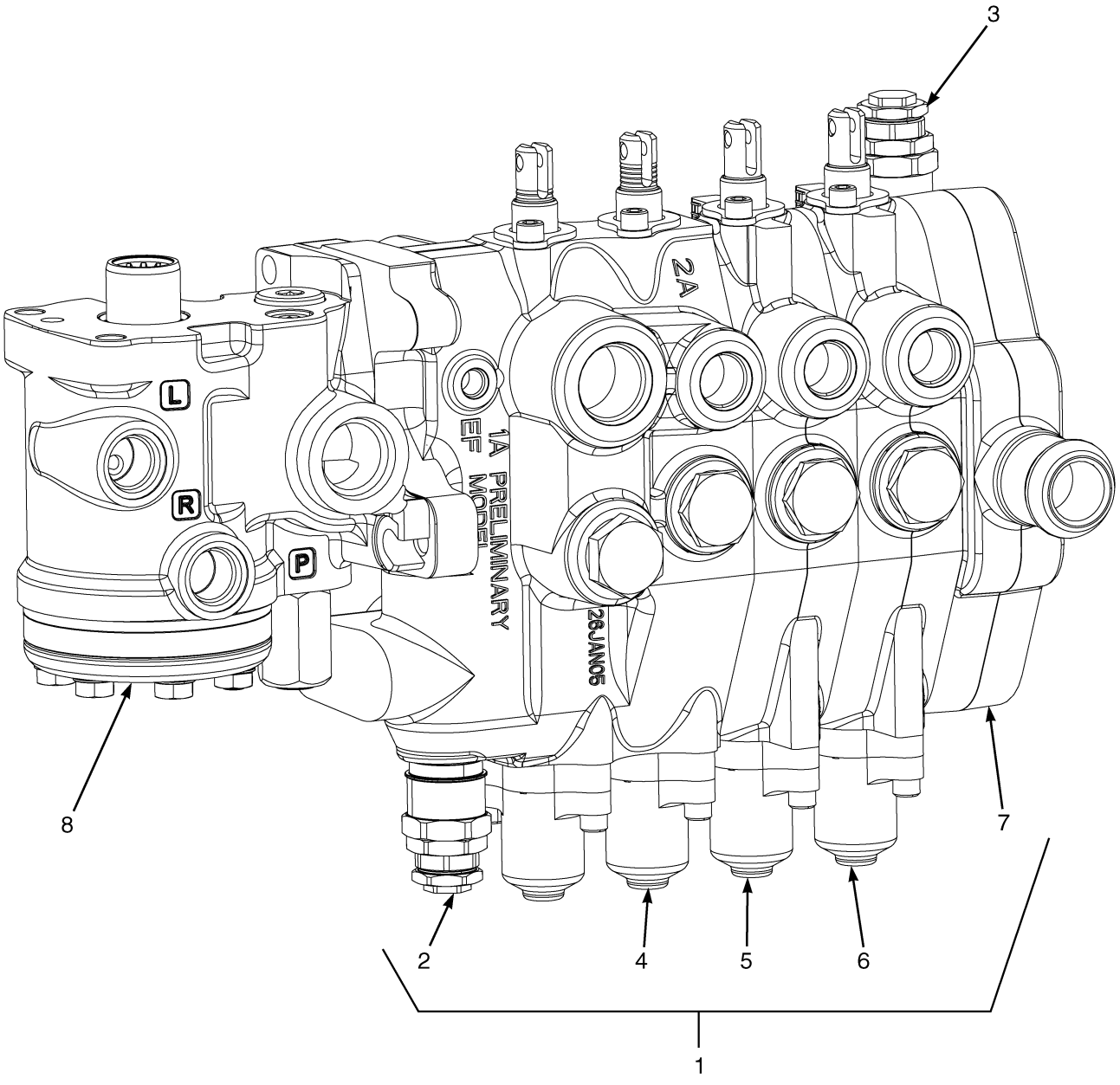

©2014 HYSTER COMPANY

CONTROL VALVE ASSEMBLY
MANUAL CONTROL – THREE AND FOUR FUNCTION

KEY:
A: H40-60FT
B: H70FT

NOTE: This parts list contains multiple truck configurations, refer to the KEY to choose the correct QTY column for your truck.

ITEM	PART NO.	DESCRIPTION	QTY A	QTY B
	4629069	Hyd Control Valve (Manual) (3 Function)	1	..
	4629071	Hyd Control Valve (Manual) (4 Function)	1	..
	4629073	**Hyd Control Valve (Manual) (3 Function)**	**..**	**1**
	4629075	Hyd Control Valve (Manual) (4 Function)	..	1
1	1580146	Kit-Seal (Three Function)	1	..
1	4629077	Hyd Control Valve (3 Function)	1	..
1	1670434	Kit-Seal (Three Function)	1	..
1	1580148	Kit-Seal (Four Function)	1	..
1	4626786	Hyd Control Valve (4 Function)	1	..
1	1670054	Kit-Seal (Four Function)	1	..
1	1580146	Kit-Seal (Three Function)	..	1
1	4629078	Hyd Control Valve (3 Function)	..	1
1	1670434	Kit-Seal (Three Function)	..	1
1	1580148	Kit-Seal (Four Function)	..	1
1	4629079	Hyd Control Valve (4 Function)	..	1
1	1670054	Kit-Seal (Four Function)	..	1
2	4098672	Relief Valve (Main)	1	..
2	1578748	Relief Valve (3400 PSI) (Main)	..	1
2	1580097	Kit-Seal and Spring	1	1
3	1578707	Relief Valve (Secondary) (2250 PSI)	1	1
3	1580131	Kit-Seal and Spring	1	1
4	4088047	Valve Section (Lift And Tilt) (☞Figure 12-13)	1	1
5	4087334	Valve Section (3 Function) (☞Figure 12-13)	1	1
6	4087335	Valve Section (4 Function) (☞Figure 12-14)	1	1
7	1578746	Valve Section (Outlet Section) (☞Figure 12-15)	1	1
8	2063117	Steering Control Unit (☞Figure 10-5)	1	..
8	**2063118**	**Steering Control Unit (☞Figure 10-5)**	**..**	**1**

©2014 HYSTER COMPANY

CONTROL VALVE LOCKOUT GROUP (FIGURE 12-12)
MANUAL CONTROL VALVE

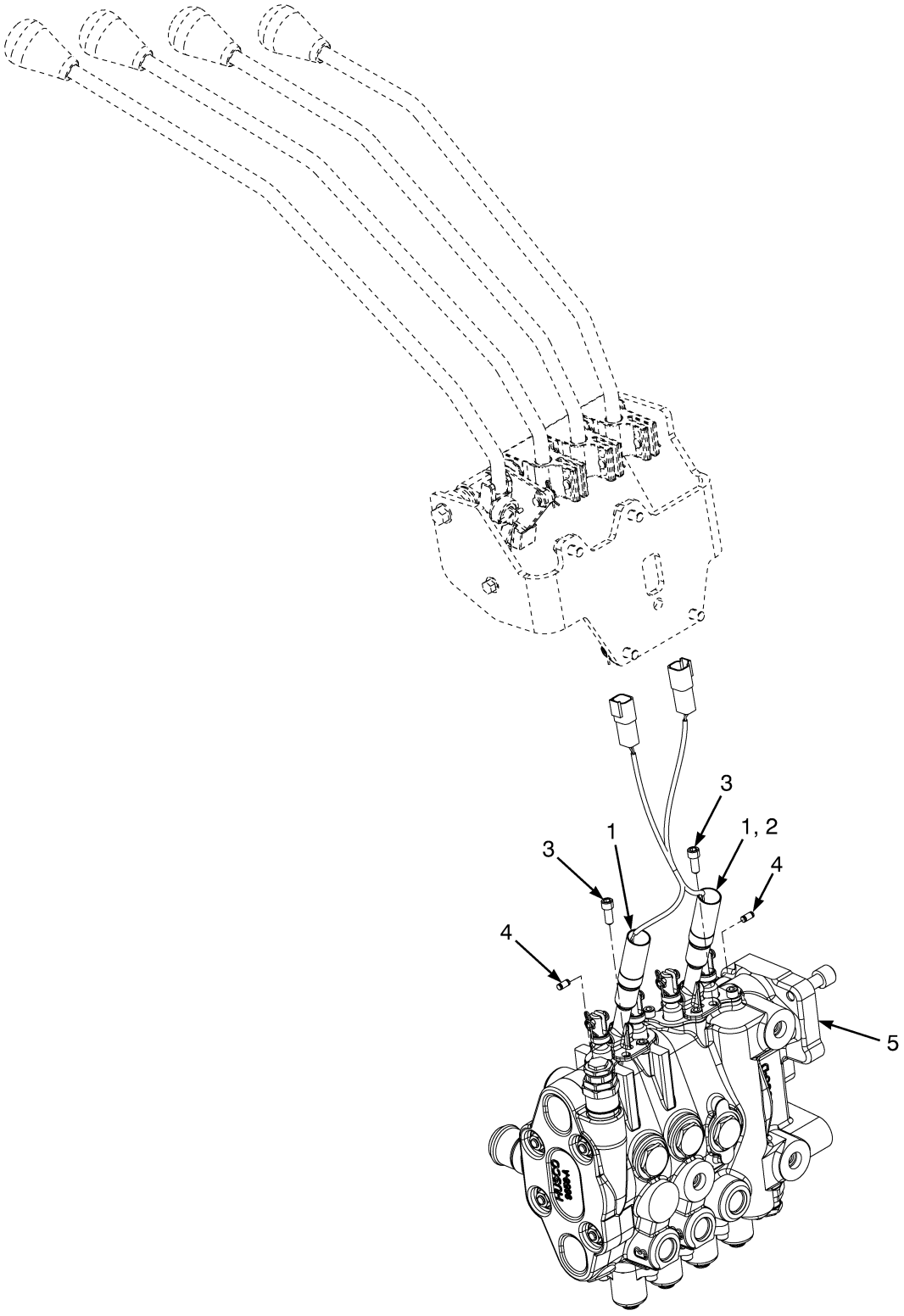

©2014 HYSTER COMPANY

CONTROL VALVE LOCKOUT GROUP
MANUAL CONTROL VALVE

KEY:
A: 3 Function
B: 4 Function

NOTE: This parts list contains multiple truck configurations, refer to the KEY to choose the correct QTY column for your truck.

ITEM	PART NO.	DESCRIPTION	QTY A	QTY B
1	1683529	Solenoid Assembly (Double Function)	1	2
2	1683621	Solenoid Assembly (Single Function)	1	..
3	18748	Capscrew	4	4
4	1670413	Needle Roller	3	4
5	. . . . .	Manual Control Valve (☞Figure 12-11).....	1	1

©2014 HYSTER COMPANY

VALVE ASSEMBLY, LIFT AND TILT (FIGURE 12-13)
MANUAL CONTROL VALVE — THREE AND FOUR FUNCTION

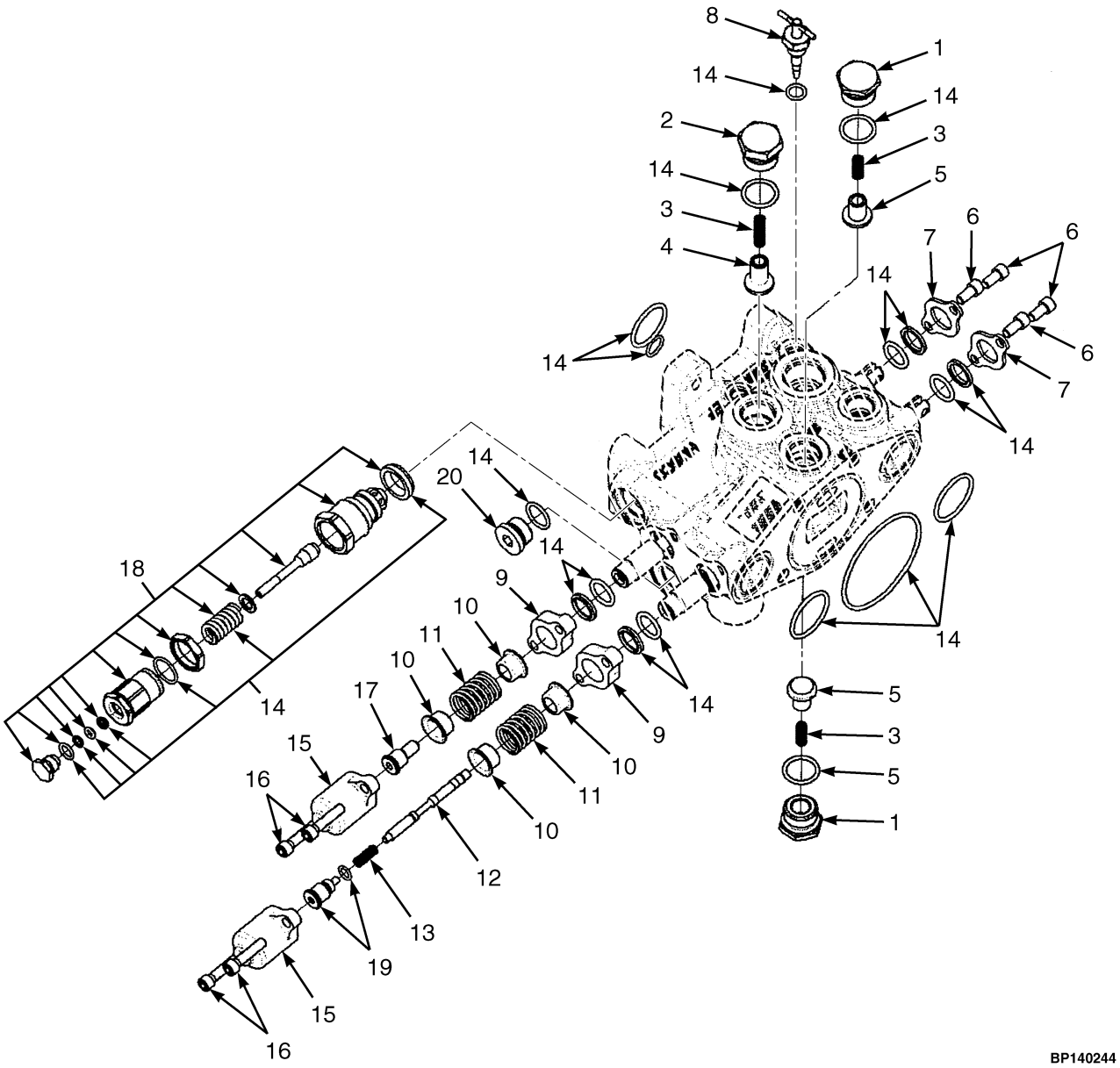

©2014 HYSTER COMPANY

VALVE ASSEMBLY, LIFT AND TILT
MANUAL CONTROL VALVE – THREE AND FOUR FUNCTION

ITEM	PART NO.	DESCRIPTION	QTY
	4088047	Valve Section (Lift And Tilt)	1
1	1578713	Plug Assembly	2
2	1578940	Plug	1
3	77442	Spring	3
4	1578943	Poppet	1
5	77443	Poppet	2
6	16706	Screw	4
7	188515	Plate	2
8	1670522	Kit-Valve (Manual Lower Assembly)	1
9	1560682	Plate	2
10	320289	Spring Seat	4
11	1581860	Spring	2
12	1581861	Piston	1
13	341462	Spring	1
14	1670434	Kit-Seal (Three Function)	1
14	1670054	Kit-Seal (Four Function)	1
14	1670445	Kit-Seal (Lift and Tilt)	1
15	1560681	Cap	2
16	1578705	Capscrew	4
17	4088044	Spool End	1
18	4098672	Relief Valve (Main) (Low Relief)	1
18	1578748	Relief Valve (3400 PSI) (Main) (High Relief)	1
19	4088045	Spool End	1
20	1569602	Plug Assembly	2
	1580097	Kit-Seal and Spring	1

©2014 HYSTER COMPANY

AUXILIARY ONE AND TWO (FIGURE 12-14)
MANUAL CONTROL VALVE — THREE AND FOUR FUNCTION

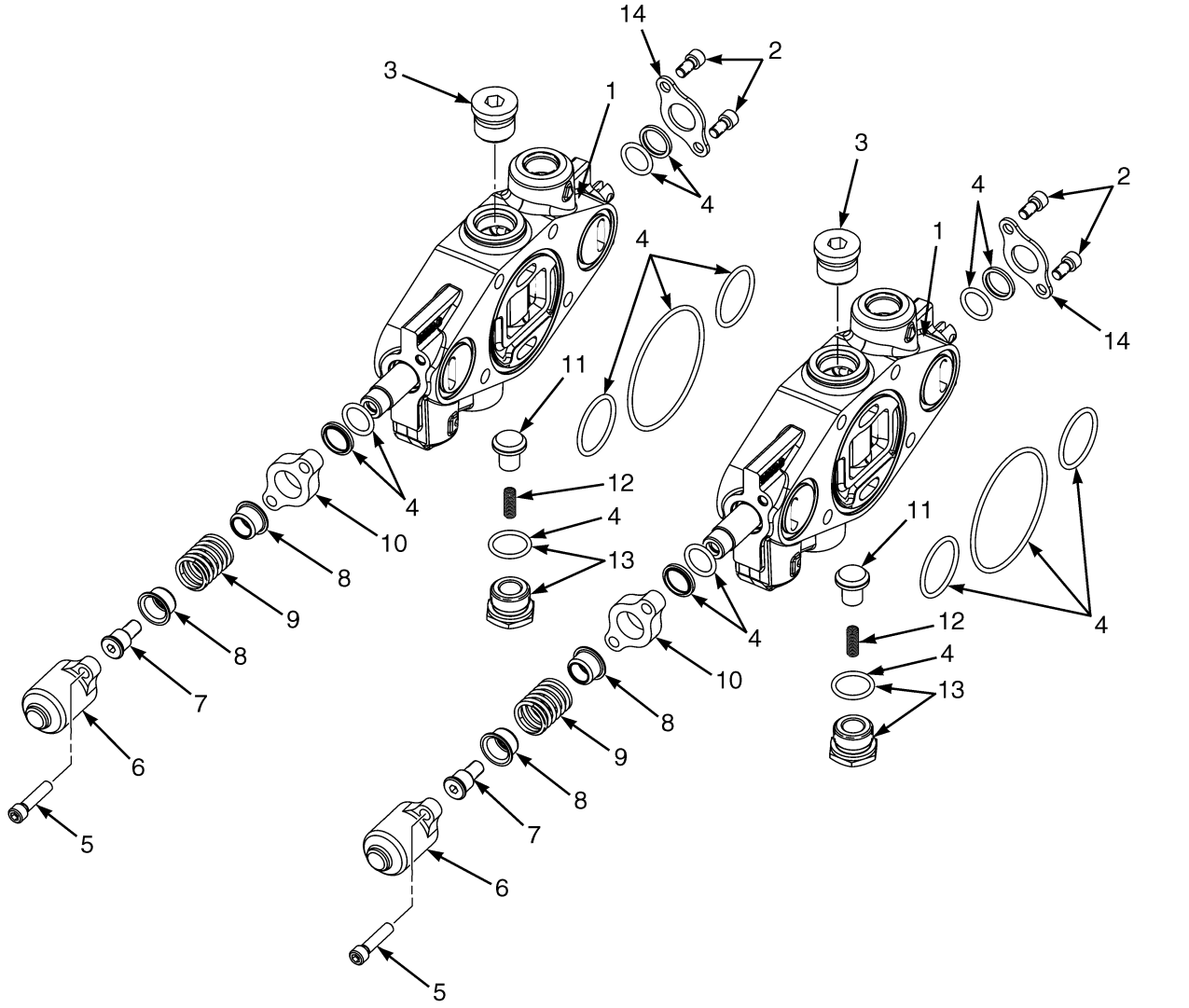

BP140119

©2014 HYSTER COMPANY

AUXILIARY ONE AND TWO
MANUAL CONTROL VALVE – THREE AND FOUR FUNCTION

KEY:
A: Three Function
B: Four Function

ITEM	PART NO.	DESCRIPTION	QTY A	QTY B
1	4087334	Valve Section	1	1
1	4087335	Valve Section	..	1
2	16706	Screw	2	4
3	4031469	Plug Assembly	1	1
4	1580147	Kit-Seal (Auxiliary Functions)	1	1
5	1578705	Capscrew	2	4
6	1560681	Cap	1	2
7	4088045	Spool End	1	2
8	320289	Spring Seat	2	4
9	1581860	Spring	1	2
10	1560682	Plate	1	2
11	77443	Poppet	1	2
12	77442	Spring	1	2
13	1578713	Plug Assembly	1	2
14	188515	Plate	1	2
	1670434	Kit-Seal (Three Function)	1	..
	1670054	Kit-Seal (Four Function)	..	1

©2014 HYSTER COMPANY

OUTLET SECTION (FIGURE 12-15)
MANUAL CONTROL VALVE — THREE AND FOUR FUNCTION

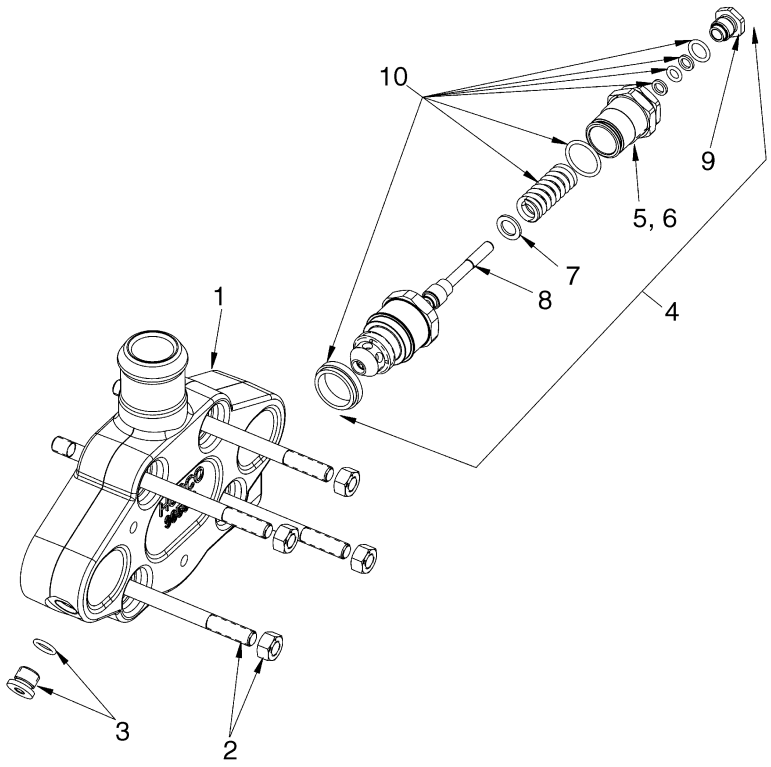

BP140048

ITEM	PART NO.	DESCRIPTION	QTY
1	1578746	Valve Section (Outlet Section)	1
2	1580155	Kit-Tie Rod (Three Function)	1
2	1580156	Kit-Tie Rod (Four Function)	1
2	15055	Nut	4
3	1578712	Plug Assembly	1
3	204128	Plug	1
4	1578707	Relief Valve (Secondary) (2250 PSI)	1
5	. . . . .	Nut	1
6	. . . . .	Screw	1
7	. . . . .	Washer	1
8	. . . . .	Poppet	1
9	. . . . .	Plug	1
10	1580131	Kit-Seal and Spring	1

©2014 HYSTER COMPANY

NOTES

©2014 HYSTER COMPANY

HYDRAULIC CONTROL VALVE (FIGURE 12-16)
ELECTRONIC VALVE ASSEMBLY — THREE AND FOUR FUNCTION

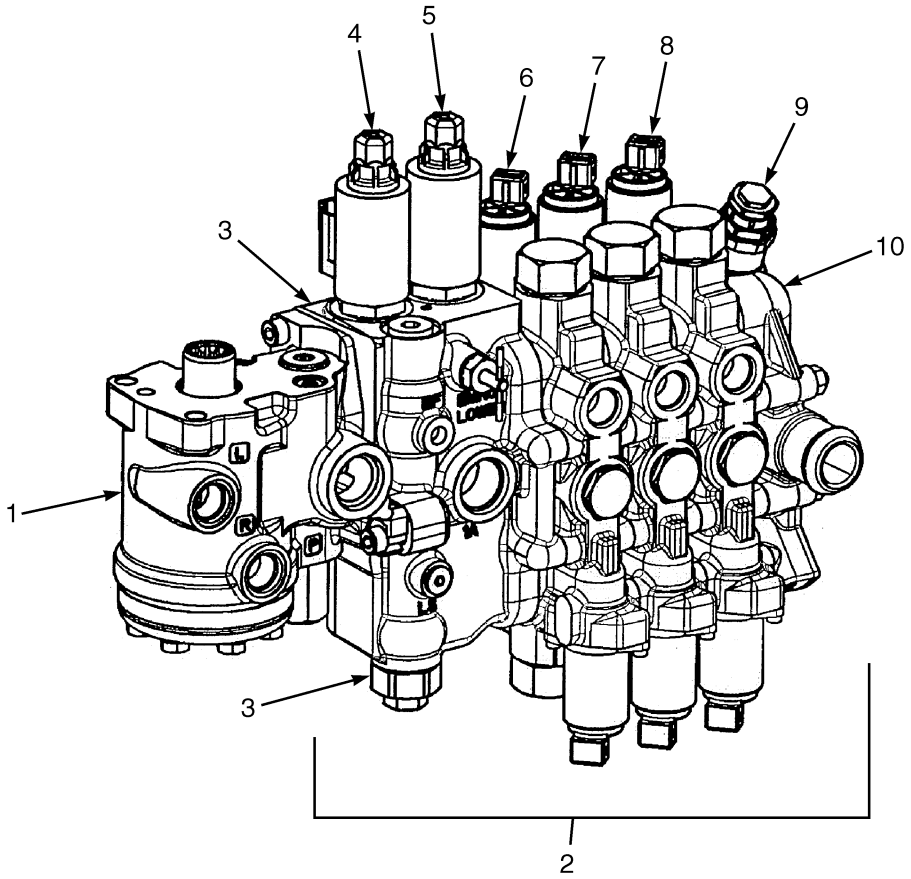

BP140112

©2014 HYSTER COMPANY

HYDRAULIC CONTROL VALVE

ELECTRONIC VALVE ASSEMBLY – THREE AND FOUR FUNCTION

KEY:

A: Three Function Valve, Low Relief
B: Four Function Valve, Low Relief
C: Three Function Valve, High Relief
D: Four Function Valve, High Relief

ITEM	PART NO.	DESCRIPTION	QTY A	B	C	D
	4629133	Hyd Valve W/Assembled Parts (E-Hydraulics Valve)	1	..	..	..
	4629135	Hyd Valve W/Assembled Parts (E-Hydraulics Valve)	..	1	..	..
	4629137	Hyd Valve W/Assembled Parts (E-Hydraulics Valve)	..	..	1	..
	4629139	Hyd Valve W/Assembled Parts (E-Hydraulics Valve)	..	..	..	1
1	2063117	Steering Control Unit	1	1	..	..
1	2063118	Steering Control Unit	..	..	1	1
2	4629142	Hyd Control Valve (E-Hydraulics)	1	..	..	..
2	4629143	Hyd Control Valve (E-Hydraulics)	..	1	..	..
2	4629144	Hyd Control Valve (E-Hydraulics)	..	..	1	..
2	4629145	Hyd Control Valve (E-Hydraulics)	..	..	..	1
3	1664485	Valve Section (Inlet) (☞Figure 12-17)	1	1	..	..
3	1578706	Relief Valve (Main)	1	1	..	..
3	1664486	Valve Section (Inlet) (☞Figure 12-17)	..	..	1	1
3	1578753	Relief Valve (Main)	..	..	1	1
4	1590113	Poppet Valve (☞Figure 12-18)	1	1	1	1
5	1699589	Poppet Valve (☞Figure 12-18)	1	1	1	1
6	1708295	Valve Section (Tilt) (☞Figure 12-19)	1	1	1	1
7	1708263	Valve Section (Aux. 1) (☞Figure 12-20)	1	1	1	1
8	1708294	Valve Section (Aux. 2) (☞Figure 12-21)	1	1	1	1
9	1578707	Relief Valve (Secondary) (2250 PSI)	1	1	1	1
10	1708262	Valve Section (Outlet) (☞Figure 12-22)	1	1	1	1
	1578909	Kit-Seal (Master 3 Function)	1	..	1	..
	1578908	Kit-Seal (Master 4 Function)	..	1	..	1
	1578715	Kit-Tie Rod	1	..	1	..
	1580151	Kit-Tie Rod	..	1	..	1

©2014 HYSTER COMPANY

HYDRAULIC CONTROL VALVE (FIGURE 12-17)

ELECTRONIC VALVE INLET SECTION — THREE AND FOUR FUNCTION

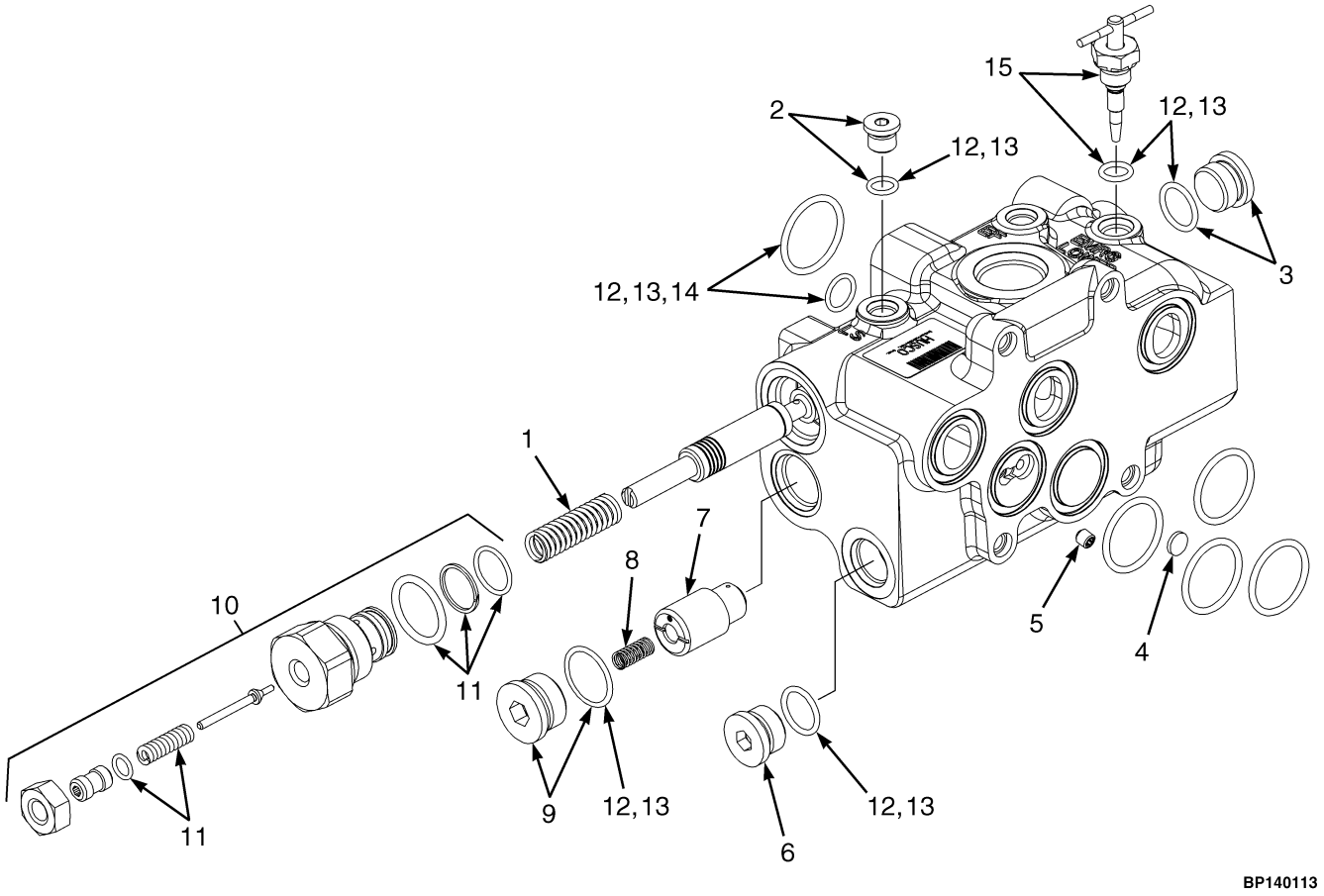

©2014 HYSTER COMPANY

HYDRAULIC CONTROL VALVE

ELECTRONIC VALVE INLET SECTION – THREE AND FOUR FUNCTION

KEY:
A: 3 Function Valve
B: 4 Function Valve

ITEM	PART NO.	DESCRIPTION	QTY A	QTY B
	1664485	Valve Section (Inlet)	1	..
	1664486	Valve Section (Inlet)	..	1
1	1578881	Spring	1	1
2	1578712	Plug Assembly	1	1
3	1569602	Plug	1	1
4	1578875	Shuttle Valve	1	1
5	1578888	Setscrew	1	1
6	1569602	Plug	1	1
7	1586280	Poppet	1	1
8	1578876	Spring	1	1
9	1578714	Plug Assembly	1	1
10	1578706	Relief Valve (Main)	1	..
10	1578753	Relief Valve (Main)	..	1
11	1580132	Kit-Relief Valve	1	1
12	1578909	Kit-Seal (Master 3 Function)	1	1
13	1578904	Kit-Seal (Inlet)	1	1
14	1578911	Kit-Seal (Steering Control Unit Interface)	1	1
15	1581862	Kit-Valve (Manual Lowering)	1	1

©2014 HYSTER COMPANY

HYDRAULIC CONTROL VALVE (ELECTRO-HYDRAULIC) (FIGURE 12-18)

THREE AND FOUR FUNCTION — POPPET VALVES

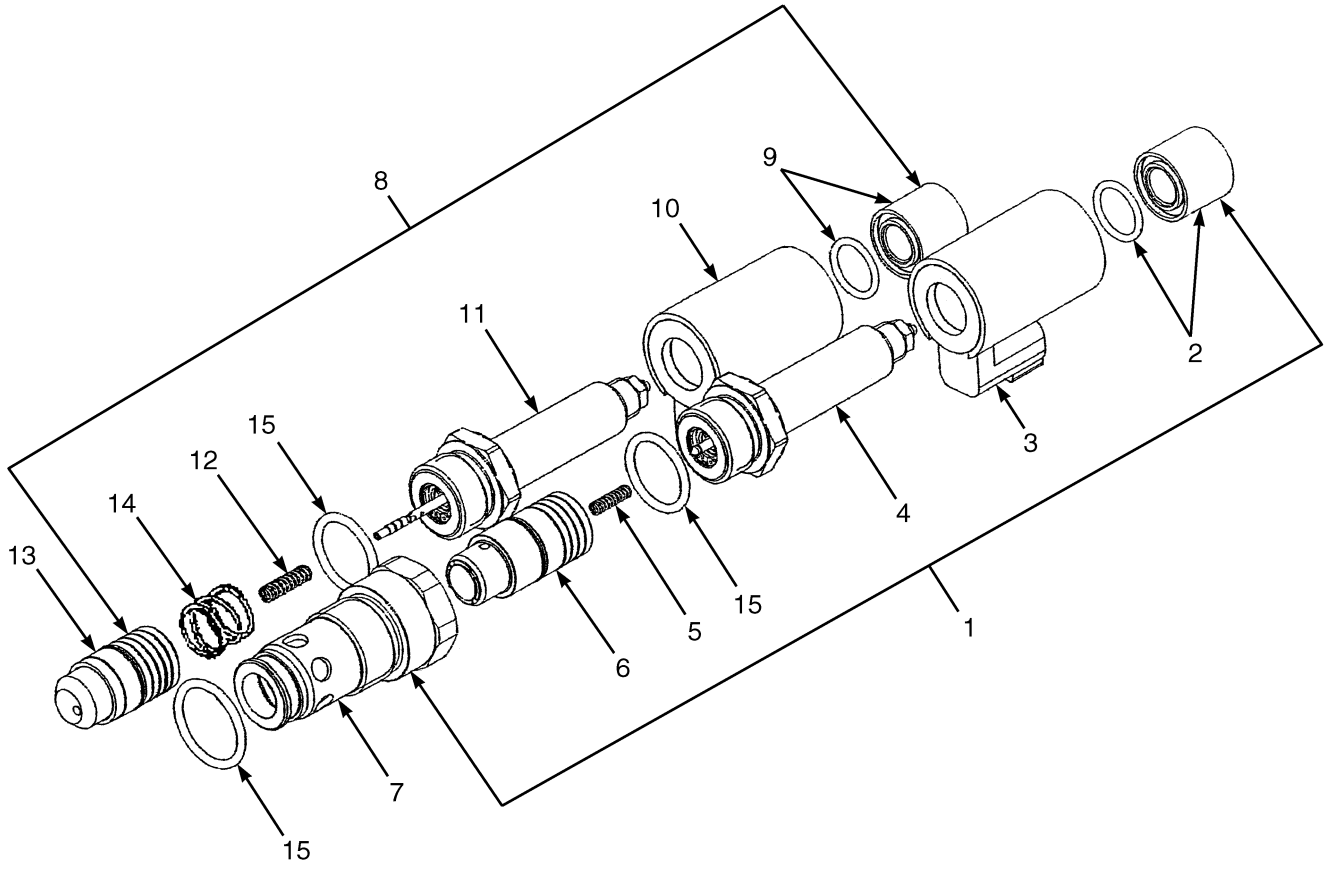

BP140250

©2014 HYSTER COMPANY

HYDRAULIC CONTROL VALVE (ELECTRO-HYDRAULIC)
THREE AND FOUR FUNCTION – POPPET VALVES

ITEM	PART NO.	DESCRIPTION	QTY
1	1699589	Poppet Valve (Lower)	1
2	1629163	Nut	1
3	1578710	Coil	1
4	1578918	Tube Assy (Solenoid)	1
5	1578934	Spring	1
6	1699591	Poppet Valve	1
7	1586020	Sleeve	1
8	1590113	Poppet Valve (Lift)	1
9	1629163	Nut	1
10	1578710	Coil	1
11	1629161	Tube Assy (Solenoid)	1
12	1657846	Spring	1
13	1629158	Poppet Valve	1
14	4098456	Spring	1
15	1586279	Kit-Seal (Electro Hydraulic Poppet Valve)	1

©2014 HYSTER COMPANY

HYDRAULIC CONTROL VALVE (FIGURE 12-19)
ELECTRONIC VALVE TILT SECTION — THREE AND FOUR FUNCTION

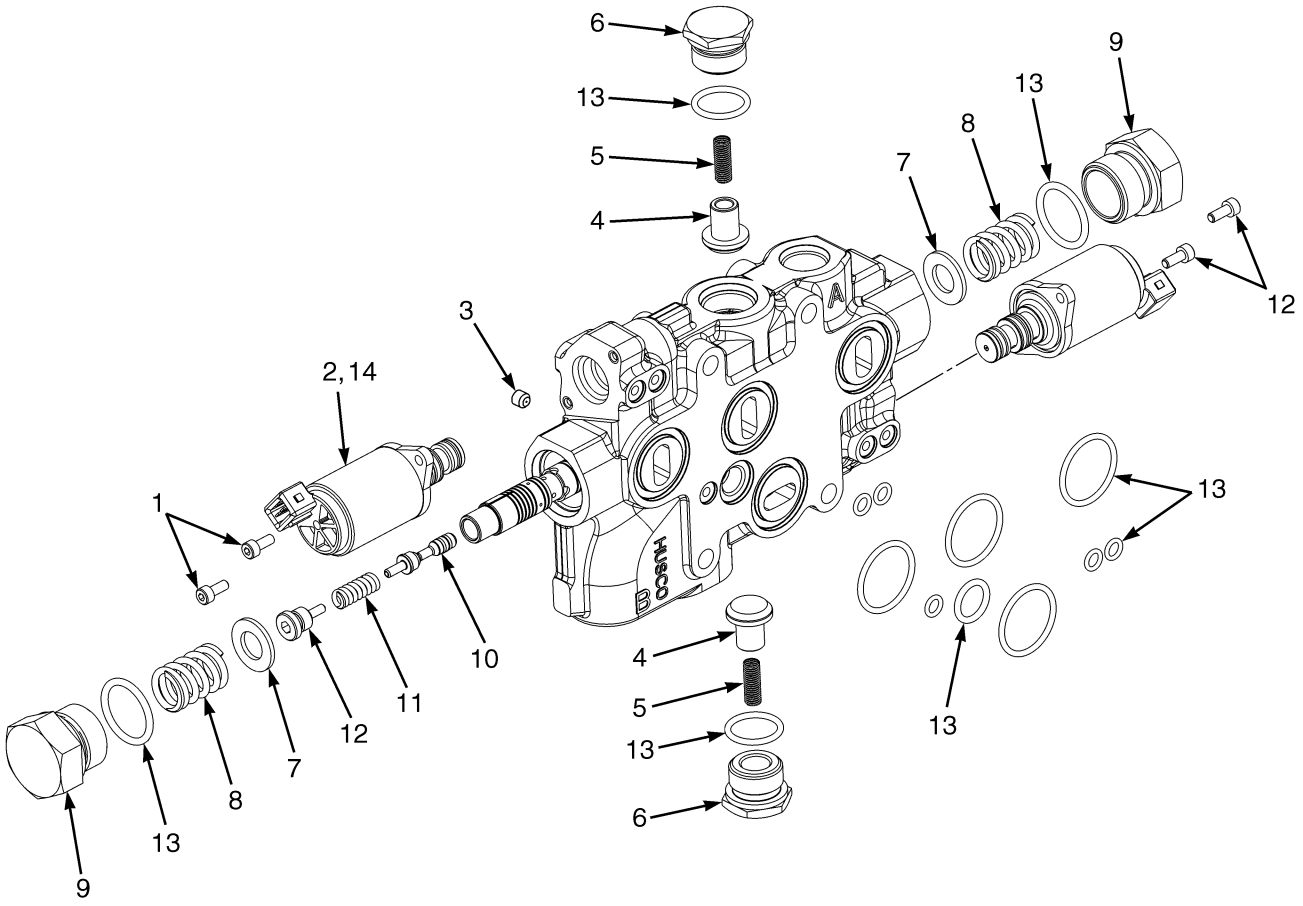

©2014 HYSTER COMPANY

HYDRAULIC CONTROL VALVE

ELECTRONIC VALVE TILT SECTION – THREE AND FOUR FUNCTION

ITEM	PART NO.	DESCRIPTION	QTY
	1708295	Valve Section (Tilt)	1
1	1664395	Capscrew	4
2	1578711	Valve (Pressure Reducing)	2
3	1578887	Setscrew	1
4	77443	Poppet	2
5	77442	Spring	2
6	1578713	Plug Assembly	2
7	1578883	Washer	2
8	1578882	Spring	2
9	1578889	Plug	2
10	1580099	Piston and Rod	1
11	1580759	Spring	1
12	1580760	Spool End	1
13	1578905	Kit-Seal (Tilt)	1
14	1687534	Kit-Seal (Solenoid Pressure Reducing)	1

©2014 HYSTER COMPANY

HYDRAULIC CONTROL VALVE (FIGURE 12-20)

ELECTRONIC VALVE AUXILIARY ONE SECTION — THREE AND FOUR FUNCTION

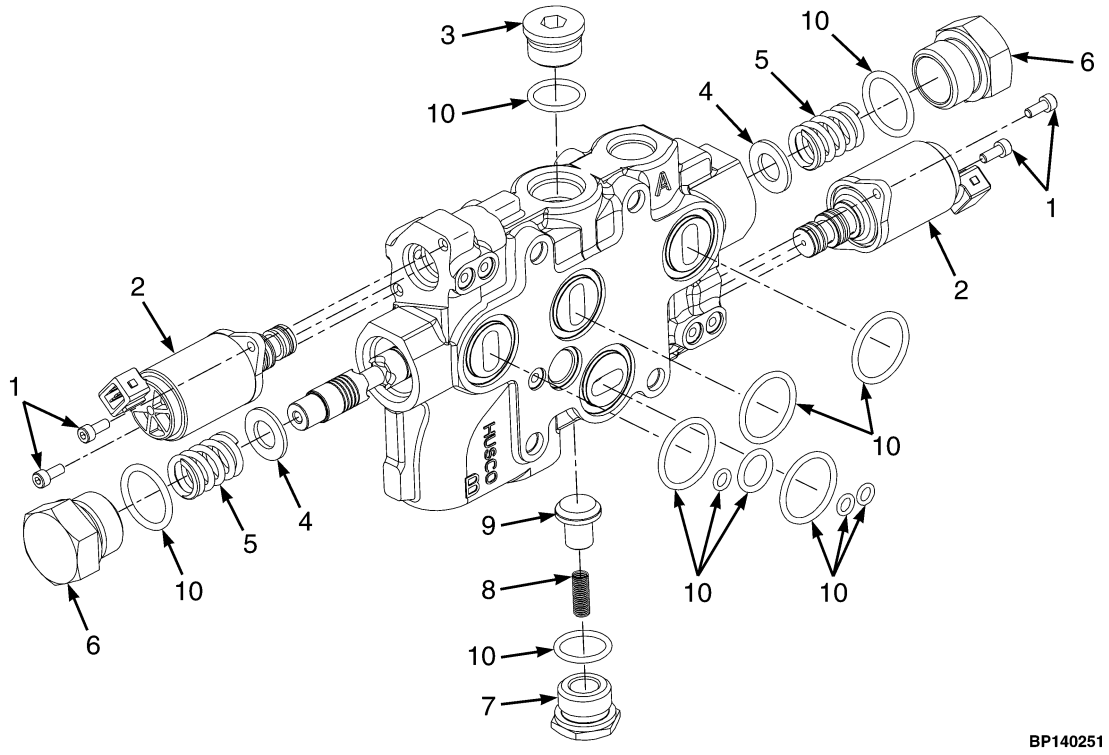

©2014 HYSTER COMPANY

HYDRAULIC CONTROL VALVE

ELECTRONIC VALVE AUXILIARY ONE SECTION – THREE AND FOUR FUNCTION

ITEM	PART NO.	DESCRIPTION	QTY
	1708263	Valve Section (Aux. 1)	1
1	1664395	Capscrew	4
2	1578711	Valve (Pressure Reducing)	2
2	1687534	Kit-Seal (Solenoid Pressure Reducing)	1
3	4031469	Plug Assembly	1
4	1578883	Washer	2
5	1578882	Spring	2
6	1578889	Plug	2
7	1578713	Plug Assembly	1
8	77442	Spring	2
9	77443	Poppet	2
10	1578906	Kit-Seal (Auxiliary Section)	1

©2014 HYSTER COMPANY

HYDRAULIC CONTROL VALVE (FIGURE 12-21)
ELECTRONIC VALVE AUXILIARY TWO SECTION — FOUR FUNCTION

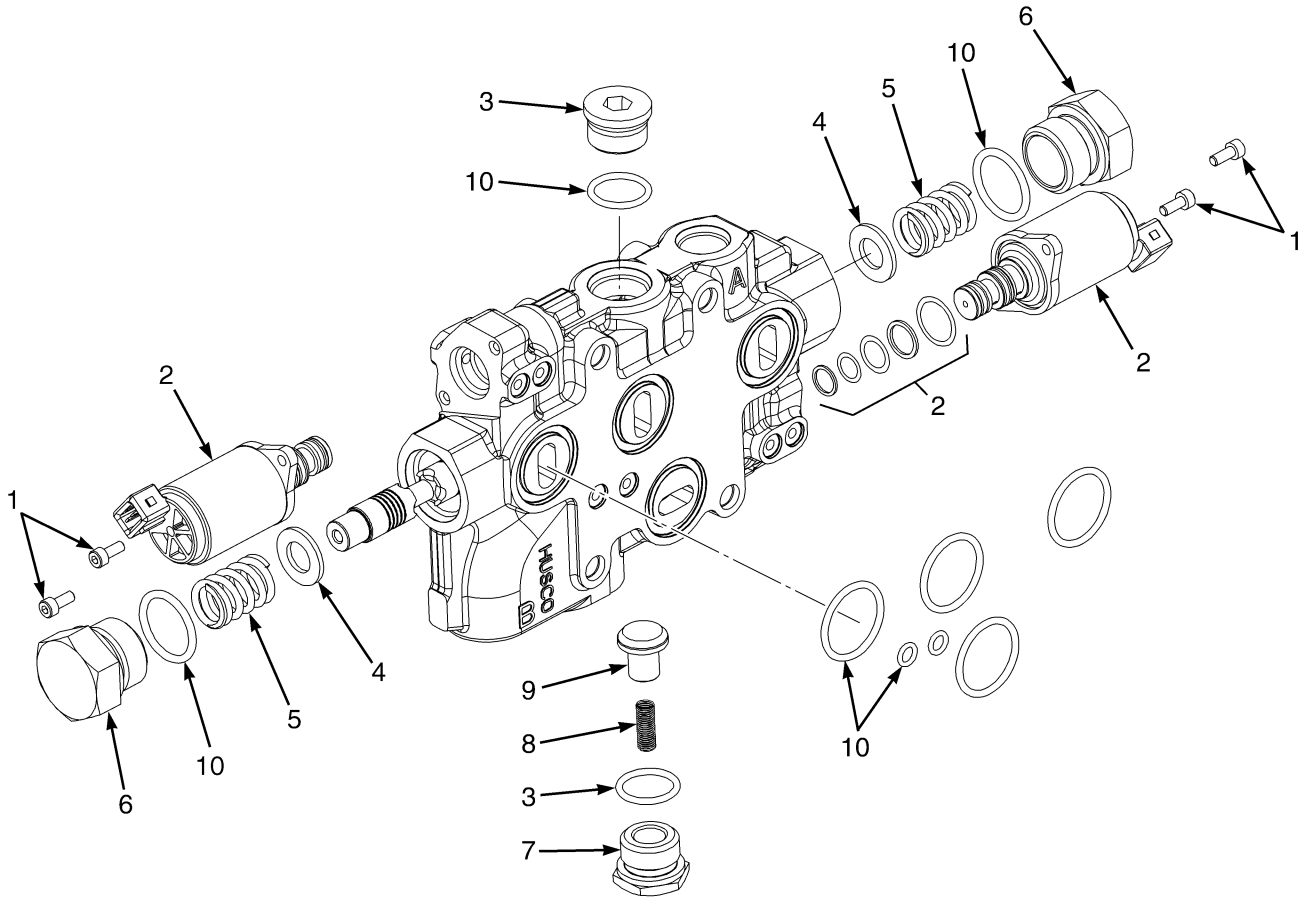

BP140116

©2014 HYSTER COMPANY

HYDRAULIC CONTROL VALVE

ELECTRONIC VALVE AUXILIARY TWO SECTION – FOUR FUNCTION

ITEM	PART NO.	DESCRIPTION	QTY
	1708294	Valve Section (Aux. 2)	1
1	1664395	Capscrew	4
2	1578711	Valve (Pressure Reducing)	2
2	1687534	Kit-Seal (Solenoid Pressure Reducing)	1
3	1578714	Plug Assembly	1
4	1578883	Washer	2
5	1578882	Spring	2
6	1578889	Plug	2
7	1578713	Plug Assembly	1
8	77442	Spring	2
9	77443	Poppet	2
10	1578907	Kit-Seal (Auxiliary Section)	1

©2014 HYSTER COMPANY

OUTLET SECTION (FIGURE 12-22)
ELECTRONIC CONTROL VALVE — THREE AND FOUR FUNCTION

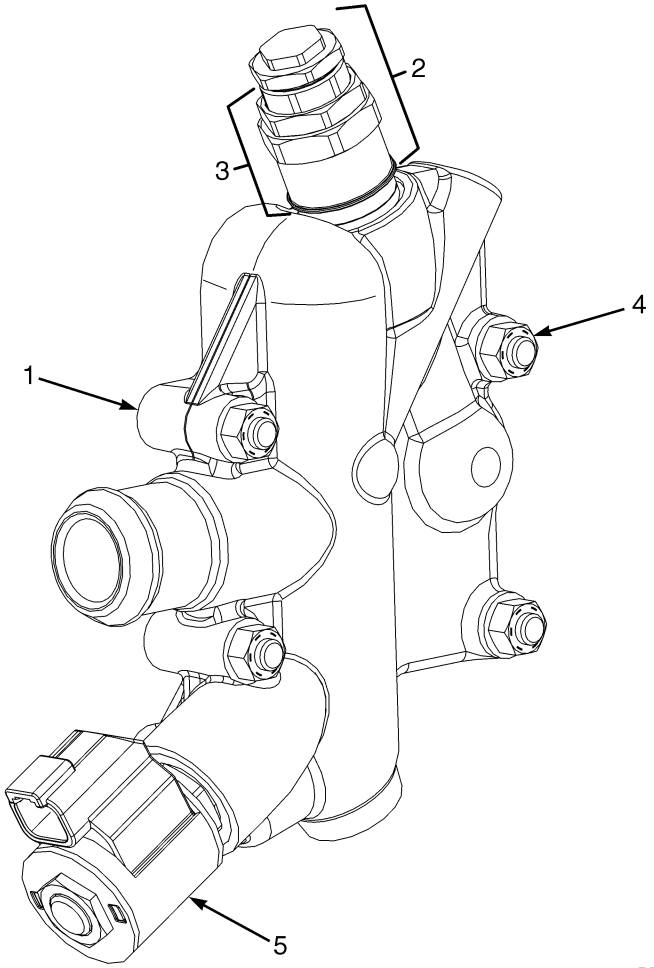

©2014 HYSTER COMPANY

OUTLET SECTION
ELECTRONIC CONTROL VALVE – THREE AND FOUR FUNCTION

ITEM	PART NO.	DESCRIPTION	QTY
1	1708262	Valve Section (Outlet)	1
2	1578707	Relief Valve (Secondary) (2250 PSI)	1
3	1580131	Kit-Seal and Spring	1
4	1578715	Kit-Tie Rod (Three Function)	1
4	1580151	Kit-Tie Rod (Four Function)	1
5	1678165	Solenoid Valve	1

©2014 HYSTER COMPANY

TILT CYLINDER AND MAST INSTALLATION (FIGURE 12-23)

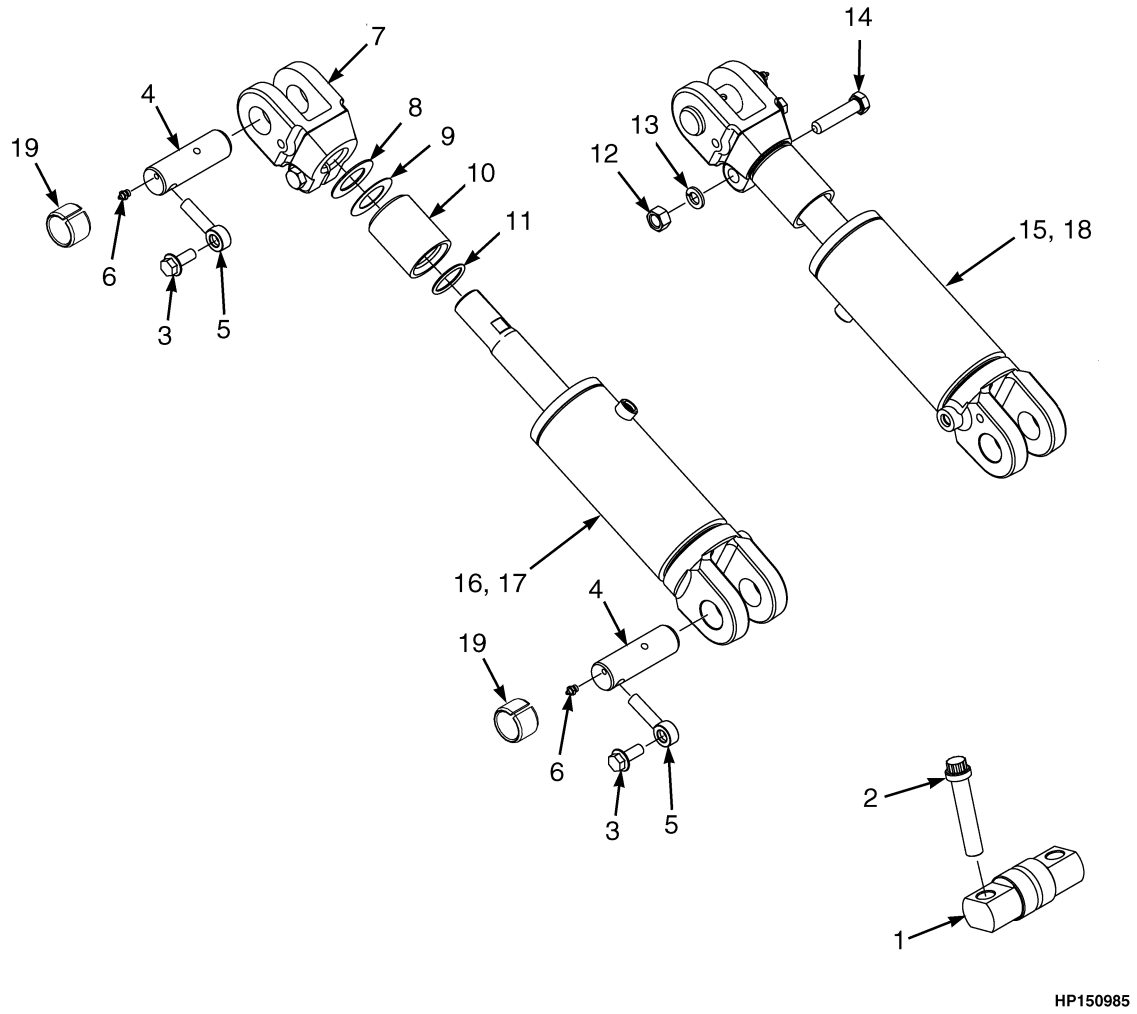

©2014 HYSTER COMPANY

TILT CYLINDER AND MAST INSTALLATION

KEY:
A: H40-50FT
B: H60-70FT

NOTE: This parts list contains multiple truck configurations, refer to the KEY to choose the correct QTY column for your truck.

ITEM	PART NO.	DESCRIPTION	QTY A	QTY B
1	**1514269**	**Pin (Mast Mounting)**	**2**	**2**
2	**1520290**	**Capscrew**	**4**	**4**
3	**1586013**	**Capscrew**	**4**	**4**
4	**1533493**	**Pin**	**4**	**4**
5	**1533494**	**Pin Anchor**	**4**	**4**
6	**16040**	**Grease Fitting (Mast End)**	**2**	**2**
6	**16040**	**Grease Fitting (Truck End)**	**2**	**2**
7	**bcd** 1544118	Rod End	2	..
7	**a** 1544120	Rod End	2	..
7	**bcd 1544119**	**Rod End**	**..**	**2**
7	**a** 1544121	Rod End	..	2
8	**cd** 134675	Shim	4	..
8	**cd 142247**	**Shim**	**..**	**4**
9	**cd** 1325119	Shim	4	..
9	**cd 1325120**	**Shim**	**..**	**4**
10	**d** 1544122	Spacer	2	..
10	**c** 192877	Spacer	2	..
10	**d 1544123**	**Spacer**	**..**	**2**
10	**c** 1544124	Spacer	..	2
11	**cd** 55434	O-Ring	4	..
11	**cd 60563**	**O-Ring**	**..**	**4**
12	**1581848**	**Nut**	**2**	**2**
13	**1581852**	**Washer**	**2**	**2**
14	**1597381**	**Capscrew**	**2**	**2**
15	2069187	Tilt Cylinder (RH) (☞Figure 12-24)	1	..
16	2069188	Tilt Cylinder (LH) (☞Figure 12-24)	1	..
17	**2069186**	**Tilt Cylinder (LH) (☞Figure 12-25)**	**..**	**1**
18	**2069189**	**Tilt Cylinder (RH) (☞Figure 12-25)**	**..**	**1**
19	**300982**	**Bushing**	**4**	**4**

FOOTNOTES:

a 10° Forward/6° Back
b 6° Forward/10° Back
c 6° Forward/5° Back
d 6° Forward/6° Back

©2014 HYSTER COMPANY

TILT CYLINDERS (FIGURE 12-24)
H40-50FT

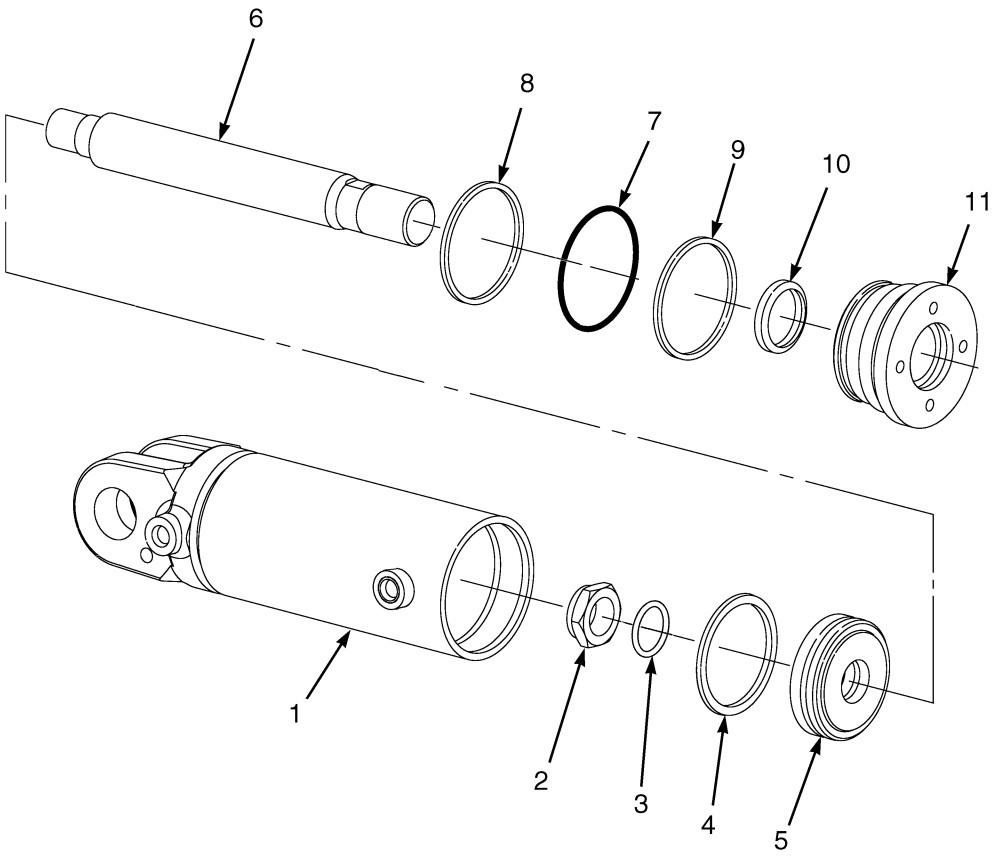

HP150974

©2014 HYSTER COMPANY

TILT CYLINDERS

H40-50FT

ITEM	PART NO.	DESCRIPTION	QTY
	2069187	Tilt Cylinder (RH)	1
	2069188	Tilt Cylinder (LH)	1
1	2076537	Tube Wldmt-Cylinder (RH)	1
1	2076541	Tube Wldmt-Cylinder (LH)	1
2	2302899	Locknut	1
3	39374	O-Ring	1
4	2044370	Piston Seal	1
5	1338741	Piston	1
6	2076539	Cylinder Rod	1
7	46388	O-Ring	1
8	154375	Back-Up Ring	1
9	1381082	Rod Seal	1
10	1383062	Rod Wiper	1
11	1338744	Gland	1
	1492644	Kit-Seal (Includes Items 3-4, 7-10)	1

©2014 HYSTER COMPANY

TILT CYLINDERS (FIGURE 12-25)
H60-70FT

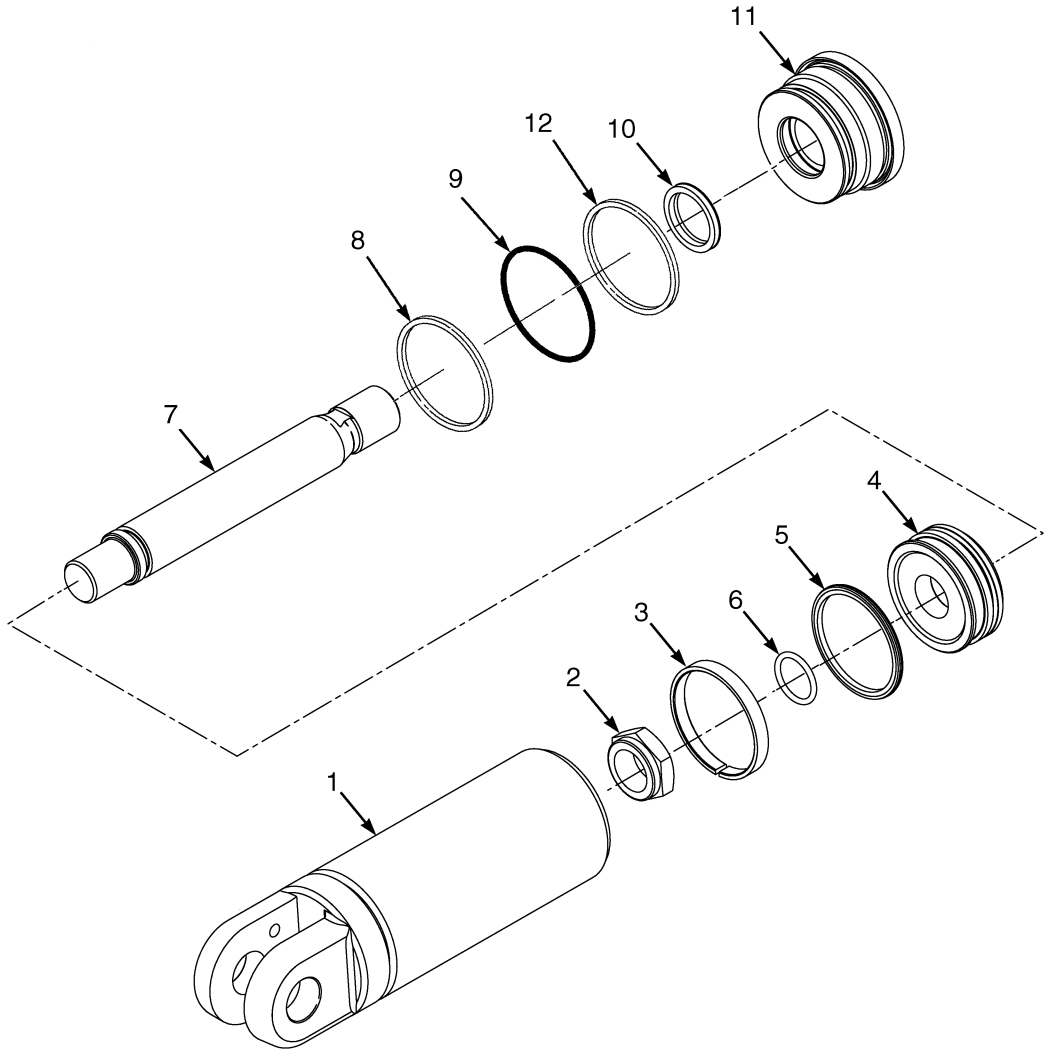

HP150975

©2014 HYSTER COMPANY

TILT CYLINDERS

H60-70FT

ITEM	PART NO.	DESCRIPTION	QTY
	2069186	**Tilt Cylinder (LH)**	**1**
	2069189	**Tilt Cylinder (RH)**	**1**
1	**2076536**	**Tube Wldmt-Cylinder (RH)**	**1**
1	**2076540**	**Tube Wldmt-Cylinder (LH)**	**1**
2	**2070018**	**Locknut**	**1**
3	**199852**	**Wear Ring**	**1**
4	**1381078**	**Piston**	**1**
5	**2044371**	**Piston Seal**	**1**
6	**237812**	**O-Ring**	**1**
7	**2076538**	**Cylinder Rod**	**1**
8	**268619**	**O-Ring**	**1**
9	**147973**	**Back-Up Ring**	**1**
10	**1383063**	**Rod Wiper**	**1**
11	**1527520**	**Gland**	**1**
12	**1381083**	**Rod Seal**	**1**
	1527719	Kit-Seal (Tilt Cylinder) (Includes Items 3, 5-6, 8-10, 12)	1

©2014 HYSTER COMPANY

NOTES

©2014 HYSTER COMPANY

13 MAST-TWO STAGE LIMITED FREE-LIFT

SECTION 13
MAST-TWO STAGE LIMITED FREE-LIFT

DESCRIPTION	PAGE
CARRIAGE	
TWO STAGE LIMITED FREE-LIFT	13-16
HEADER HOSE AND ATTACHING PARTS	
TWO STAGE LIMITED FREE-LIFT	13-12
INNER MAST	
TWO STAGE LIMITED FREE LIFT	13-4
MAIN LIFT	
TWO STAGE LIMITED FREE LIFT	13-6
MAIN LIFT CYLINDER	
TWO STAGE LIMITED FREE LIFT	13-8
OUTER MAST	
TWO STAGE LIMITED FREE-LIFT	13-2

©2014 HYSTER COMPANY

OUTER MAST (FIGURE 13-1)
TWO STAGE LIMITED FREE-LIFT

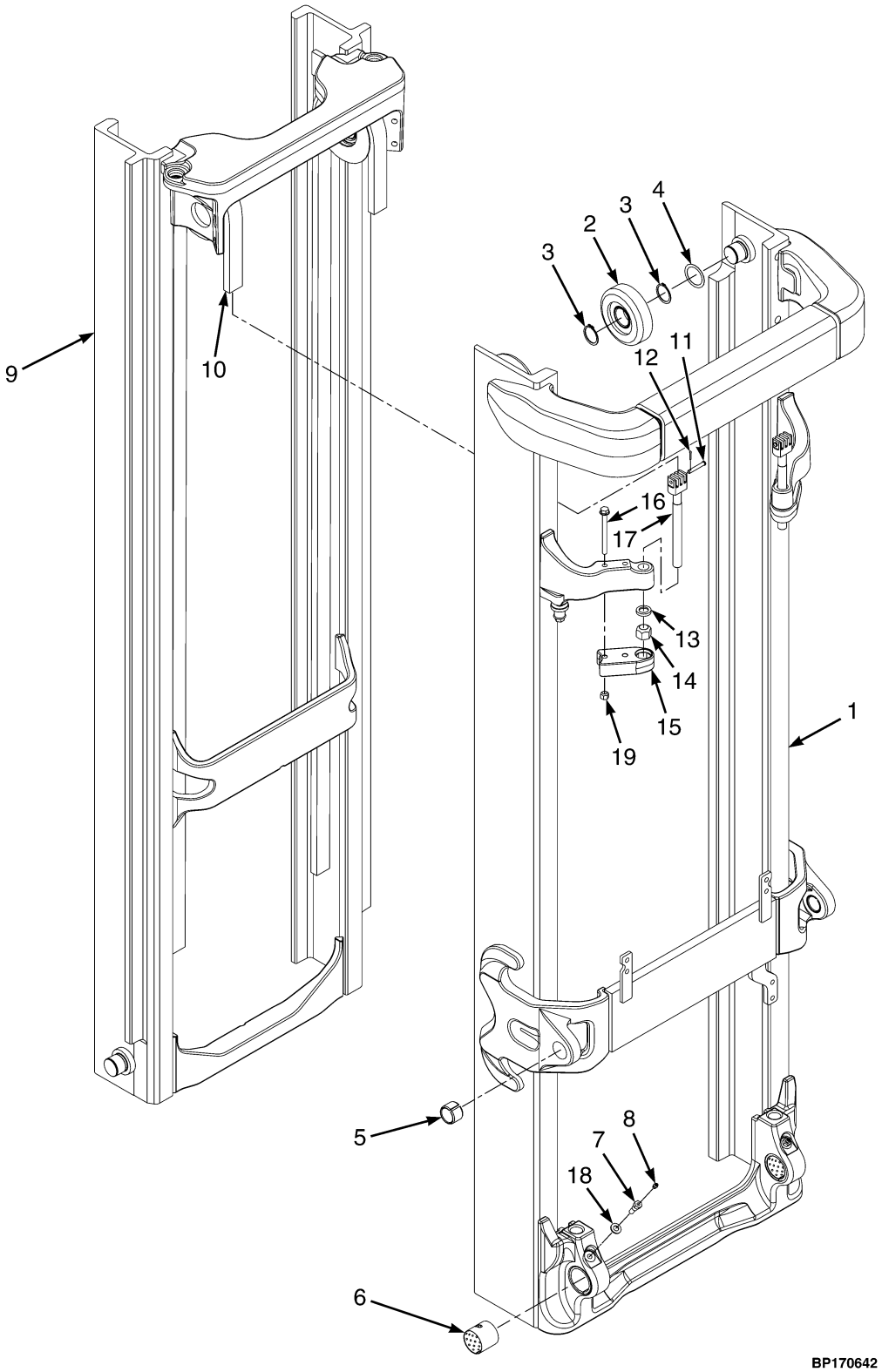

©2014 HYSTER COMPANY

OUTER MASK
TWO STAGE LIMITED FREE-LIFT

H40-50FT

ITEM	DESCRIPTION 1 2 3 4	LIFT HEIGHT TO BOTTOM OF FORKS
		3252 mm (128.0 in.)
	Mast Group Number	F507 3252
	Mast Assy	4627975
1	Outer Mast	4053747

H60-70FT

ITEM	DESCRIPTION 1 2 3 4	LIFT HEIGHT TO BOTTOM OF FORKS
		3159 mm (124.4 in.)
	Mast Group Number	F562 3159
	Mast Assy	4627957
1	Outer Mast	4053748

ITEM	PART NO.	DESCRIPTION	QTY
	a	Mast Assy	1
1	**a**	Outer Mast	1
2	1333396	Load Roller ("B") (111.48/111.22)	2
2	1395168	Load Roller ("A") (111.10/110.84) (Optional)	2
3	58901	Snap Ring	2
3	1374797	Snap Ring (Optional)	2
4	129387	Shim (0.020 in.)	AR
5	300982	Bushing	2
6	4033414	Bushing (Bronze)	2
7	4033412	Capscrew	2
8	13957	Grease Fitting	2
9	. . . . .	Inner Mast (☞Figure 13-2)	1
10	. . . . .	Chain (☞Figure 13-2)	1
11	1514866	Pin	2
12	15211	Cotter Pin	2
13	297649	Ring	2
14	4031973	Nut	2
15	4051079	Restraint	2
16	4082846	Capscrew	2
17	4072717	Chain Anchor (H40-50FT)	2
17	4072704	Chain Anchor (H60-70FT)	2
18	1581557	Washer	2
19	1581566	Nut	4

FOOTNOTES:

a Refer to Table

©2014 HYSTER COMPANY

INNER MAST (FIGURE 13-2)
TWO STAGE LIMITED FREE LIFT

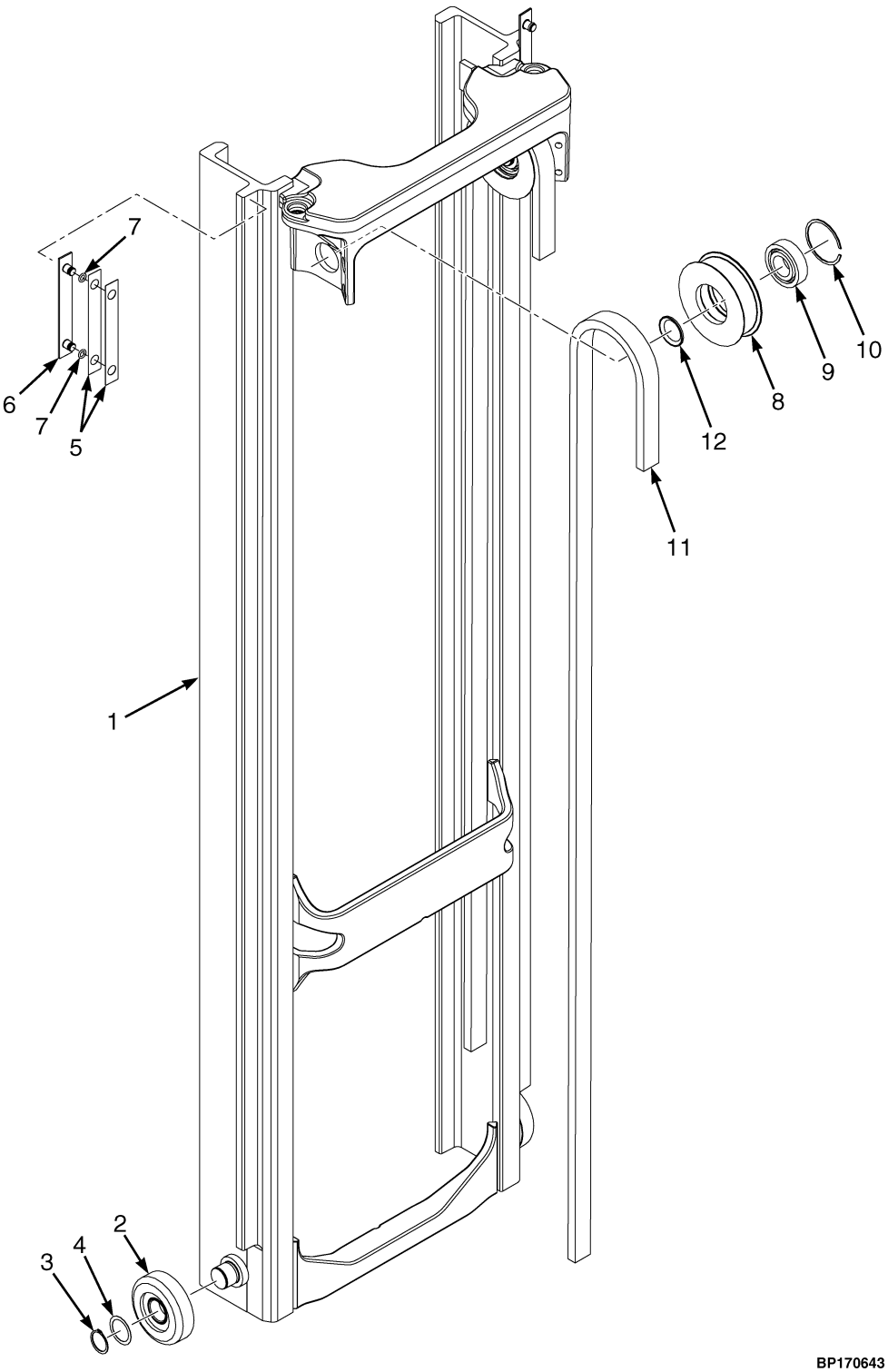

©2014 HYSTER COMPANY

INNER MAST
TWO STAGE LIMITED FREE LIFT

H40-50FT

ITEM	DESCRIPTION 1 2 3 4	LIFT HEIGHT TO BOTTOM OF FORKS
		3252 mm (128.0 in.)
	Mast Group Number	F507 3252
	Mast Assy	4627975
1	Inner Mast	4054062
11	Chain	129361

H60-70FT

ITEM	DESCRIPTION 1 2 3 4	LIFT HEIGHT TO BOTTOM OF FORKS
		3159 mm (124.4 in.)
	Mast Group Number	F562 3159
	Mast Assy	4627957
1	Inner Mast	4054063
11	Chain	1342126

ITEM	PART NO.	DESCRIPTION	QTY
	a	Mast Assy	1
1	**a**	Inner Mast	1
2	1333396	Load Roller ("B") (111.48/111.22)	2
2	1395168	Load Roller ("A") (111.10/110.84) (Optional)	2
3	58901	Snap Ring	2
3	1374797	Snap Ring (Optional)	2
4	129387	Shim (0.020 in.)	AR
5	131716	Shim (0.020 in.)	2
5	131715	Shim (0.007 in.) (Optional)	2
6	215211	Wear Strip	2
7	104506	O-Ring	4
8	4054944	Chain Sheave Assembly (H40-50FT)	2
8	4048508	Chain Sheave Assembly (H60-70FT)	2
8	4054945	Chain Sheave (H40-50FT)	1
8	4046499	Chain Sheave (H60-70FT)	1
9	1378699	Ball Bearing	1
10	37752	Snap Ring	1
11	**a**	Chain	1
12	335661	Spacer	2

FOOTNOTES:

a Refer to Table

©2014 HYSTER COMPANY

MAIN LIFT (FIGURE 13-3)
TWO STAGE LIMITED FREE LIFT

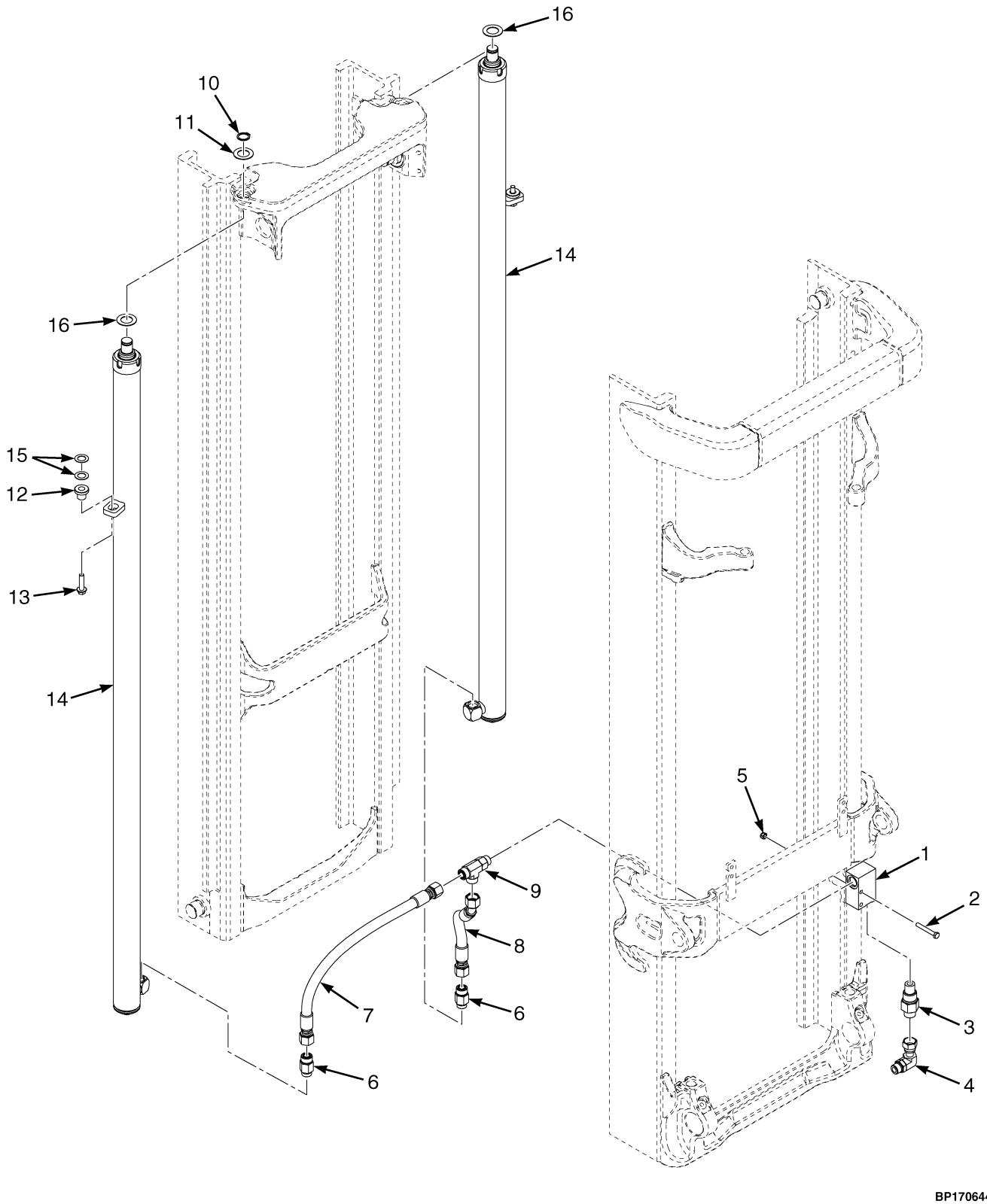

©2014 HYSTER COMPANY

MAIN LIFT
TWO STAGE LIMITED FREE LIFT

ITEM	PART NO.	DESCRIPTION	QTY
1	4058916	Housing (Lowering Control)	1
2	1581836	Capscrew	2
3	2062651	Lowering Control Valve (H40-50FT)	1
3	2062652	Lowering Control Valve (H60-70FT)	1
4	1486773	Fitting	1
5	1581566	Nut	2
6	2062686	Hyd Velocity Fuse (H40-50FT)	2
6	2062687	Hyd Velocity Fuse (H60-70FT)	2
7	4620151	Hose Assy (LH)	1
8	4620152	Hose Assy (RH)	1
9	1592853	Fitting	1
10	131358	Snap Ring	2
11	1333382	Washer (0.060 in.)	2
12	4054558	Isolator	2
13	4029051	Capscrew	2
14	. . . . .	Main Cylinder (☞Figure 13-4)	2
15	1581557	Washer	4
16	1354915	Washer (0.010 in.)	2
16	1354916	Washer (0.030 in.)	2
16	1354917	Washer (0.060 in.)	2

©2014 HYSTER COMPANY

MAIN LIFT CYLINDER (FIGURE 13-4)
TWO STAGE LIMITED FREE LIFT

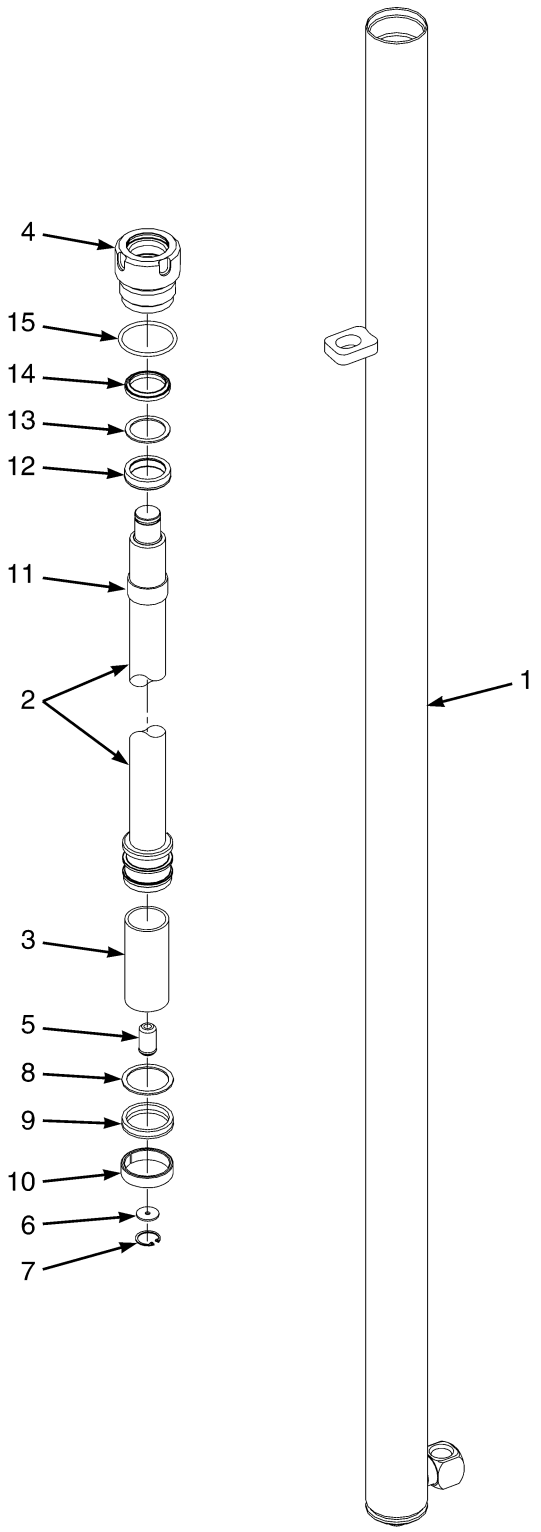

©2014 HYSTER COMPANY

MAIN LIFT CYLINDER
TWO STAGE LIMITED FREE LIFT

H40-50FT

ITEM	DESCRIPTION 1 2 3 4	LIFT HEIGHT TO BOTTOM OF FORKS
		3252 mm (128.0 in.)
	Mast Group Number	F507 3252
	Cylinder Group Number	8607406
	Lift Cylinder	4625308
1	Tube Wldmt-Cylinder	4064606
2	Cylinder Rod	1355158

H60-70FT

ITEM	DESCRIPTION 1 2 3 4	LIFT HEIGHT TO BOTTOM OF FORKS
		3159 mm (124.4 in.)
	Mast Group Number	F562 3159
	Cylinder Group Number	8607506
	Lift Cylinder	4625340
1	Tube Wldmt-Cylinder	4064636
2	Cylinder Rod	1355371
3	Spacer	1355711

KEY:
A: H40-50FT
B: H60-70FT

ITEM	PART NO.	DESCRIPTION	QTY A	QTY B
	a	Lift Cylinder	1	1
1	**a**	Tube Wldmt-Cylinder	1	1
2	**a**	Cylinder Rod	1	1
3	**a**	Spacer	..	1
4	4615847	Gland	1	..
4	4615848	Gland	..	1
5	257913	Check Valve	1	1
6	297531	Washer	1	1
6	637635	Washer (Optional)	1	1
7	187388	Snap Ring	1	1
8	638246	Back-Up Ring	1	..
8	335012	Back-Up Ring	..	1

©2014 HYSTER COMPANY

MAIN LIFT CYLINDER
TWO STAGE LIMITED FREE LIFT

KEY:
A: H40-50FT
B: H60-70FT

ITEM	PART NO.	DESCRIPTION	QTY A	QTY B
9	1381064	Piston Seal	1	..
9	1381063	Piston Seal	..	1
10	1356750	Wear Ring	1	..
10	1356751	Wear Ring	..	1
11	322902	Wear Ring	1	1
12	1356749	Rod Seal	1	1
13	322824	Back-Up Ring	1	1
14	1383063	Rod Wiper	1	1
15	92861	O-Ring	1	..
15	59229	O-Ring	..	1
	4623973	Kit-Seal (Includes Items 8-15)	1	..
	4623974	Kit-Seal (Includes Items 8-15)	..	1

FOOTNOTES:

a Refer to Table

©2014 HYSTER COMPANY

NOTES

©2014 HYSTER COMPANY

HEADER HOSE AND ATTACHING PARTS (FIGURE 13-5)
TWO STAGE LIMITED FREE-LIFT

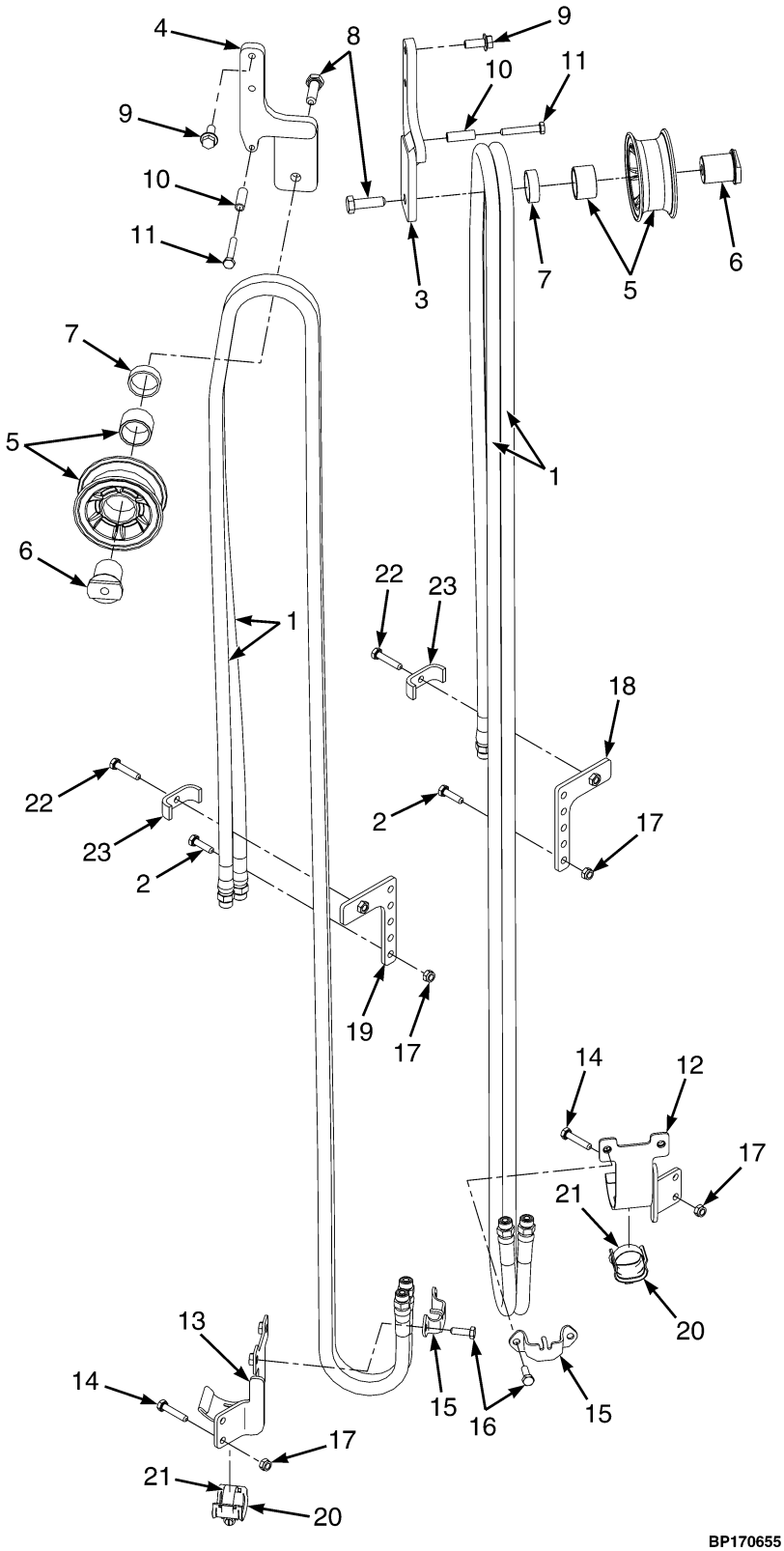

©2014 HYSTER COMPANY

HEADER HOSE AND ATTACHING PARTS
TWO STAGE LIMITED FREE-LIFT

H40-50FT

ITEM	DESCRIPTION 1 2 3 4	LIFT HEIGHT TO BOTTOM OF FORKS
		3252 mm (128.0 in.)
	Mast Group Number	F507 3252
1	Header Hose	4628135

H60-70FT

ITEM	DESCRIPTION 1 2 3 4	LIFT HEIGHT TO BOTTOM OF FORKS
		3159 mm (124.4 in.)
	Mast Group Number	F562 3159
1	Header Hose	4628136

KEY:
A: Three Function
B: Four Function

ITEM	PART NO.	DESCRIPTION	QTY A	QTY B
1	a	Header Hose	2	4
2	1696161	Capscrew	2	4
3	4051290	Bracket Wldmt	1	1
4	4058915	Bracket Wldmt	..	1
5	4048781	Hose Sheave	1	2
6	4013268	Stubshaft	1	2
7	4051293	Spacer	1	2
8	1581591	Capscrew	1	2
9	4043636	Capscrew	2	4
10	4013273	Spacer (Thin Wall)	1	2
11	1581583	Capscrew	1	2
12	4058930	Bracket Wldmt	1	1
13	4058935	Bracket Wldmt	..	1
14	1581582	Capscrew	2	4
15	4059830	Clamp	1	2
16	1581581	Capscrew	2	4
17	1581566	Nut	4	8
18	4093657	Plate Wldmt (LH)	1	1
19	4093656	Plate Wldmt (RH)	..	1
20	1477996	Hose Clamp	1	2
21	369804	Clamp	1	2
22	292508	Capscrew	2	4
23	1345348	Clamp	1	2

©2014 HYSTER COMPANY

FOOTNOTES:

a Refer to Table

©2014 HYSTER COMPANY

NOTES

©2014 HYSTER COMPANY

CARRIAGE (FIGURE 13-6)
TWO STAGE LIMITED FREE-LIFT

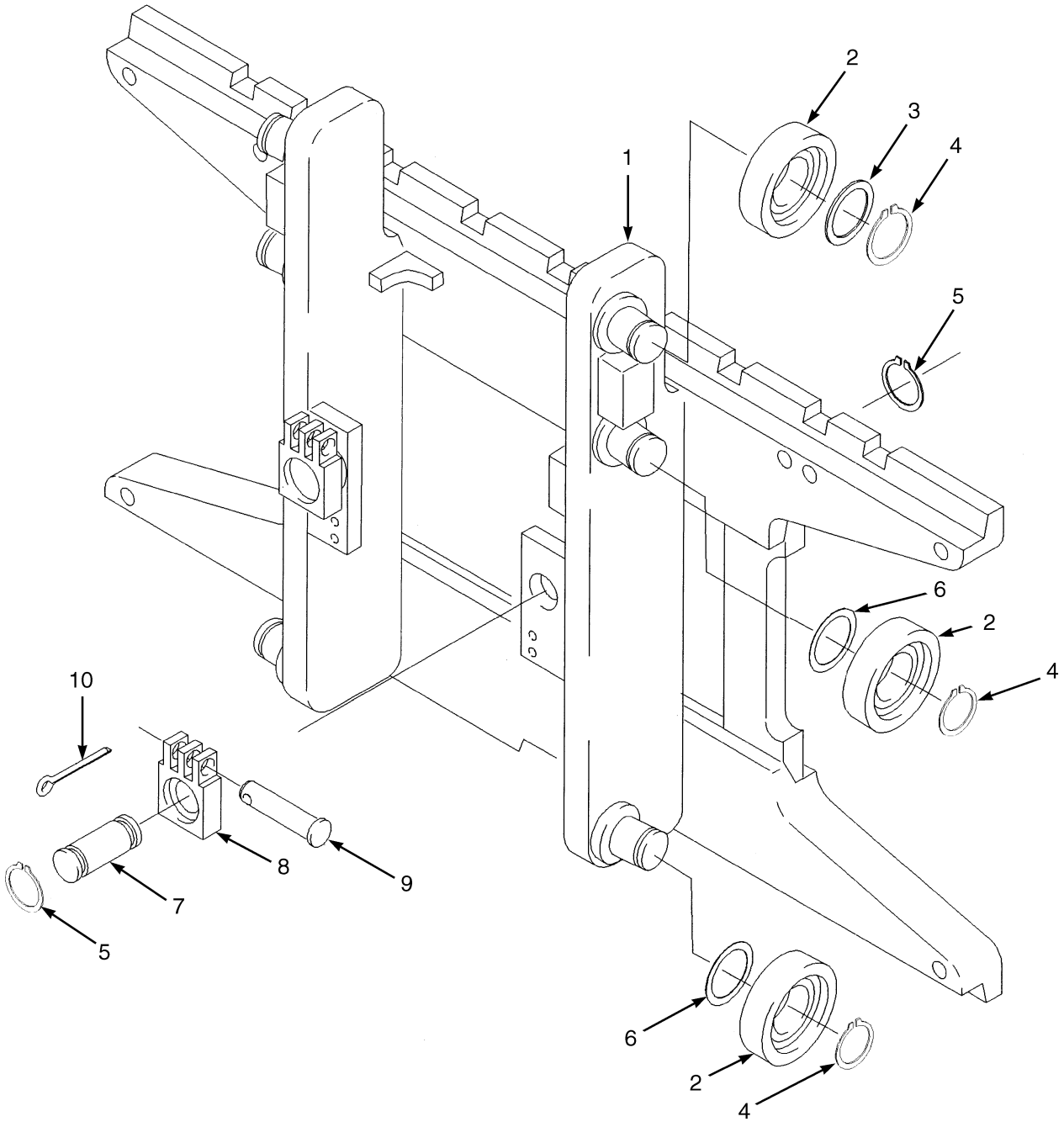

HP290013

©2014 HYSTER COMPANY

CARRIAGE
TWO STAGE LIMITED FREE-LIFT

KEY:
A: H40-50FT
B: H60-70FT

ITEM	PART NO.	DESCRIPTION	QTY A	QTY B
	4625586	Carriage (42 in.)	1	..
	4625594	Carriage (42 in.)	..	1
1	4065173	Carriage Wldmt (42 in.)	1	..
1	4065200	Carriage Wldmt (42 in.)	..	1
1	1345264	Stubshaft	6	6
2	1345219	Load Roller ("B") (111.48/111.22)	6	6
3	366116	Spacer	2	2
4	12891	Snap Ring	6	6
5	131358	Snap Ring	4	4
6	1345263	Shim (0.020 in.)	AR	AR
7	1353408	Pin	2	2
8	1369345	Chain Anchor (Dual Hole)	2	..
8	1504010	Chain Anchor (Single Hole) (Optional)	2	..
8	1369344	Chain Anchor (Dual Hole)	..	2
8	1504012	Chain Anchor (Single Hole) (Optional)	..	2
9	1514866	Pin	2	2
10	15211	Cotter Pin	2	2
	a 386422	Snap Ring	6	6

FOOTNOTES:

a Not Illustrated

©2014 HYSTER COMPANY

NOTES

©2014 HYSTER COMPANY

SECTION 14
MAST-TWO STAGE FULL FREE-LIFT

DESCRIPTION **PAGE**

CARRIAGE
TWO STAGE FULL FREE-LIFT 14-28
FREE-LIFT
TWO STAGE FULL FREE- LIFT 14-16
FREE-LIFT CYLINDER
TWO STAGE FULL FREE- LIFT 14-20
HEADER HOSES
TWO STAGE FULL FREE-LIFT 14-24
INNER MAST
TWO STAGE FULL FREE- LIFT 14-4
MAIN LIFT
TWO STAGE FULL FREE- LIFT 14-6
MAIN LIFT CYLINDER - LH
TWO STAGE FULL FREE- LIFT 14-12
MAIN LIFT CYLINDER - RH
TWO STAGE FULL FREE- LIFT 14-8
OUTER MAST
TWO STAGE FULL FREE LIFT 14-2

©2014 HYSTER COMPANY

OUTER MAST (FIGURE 14-1)
TWO STAGE FULL FREE LIFT

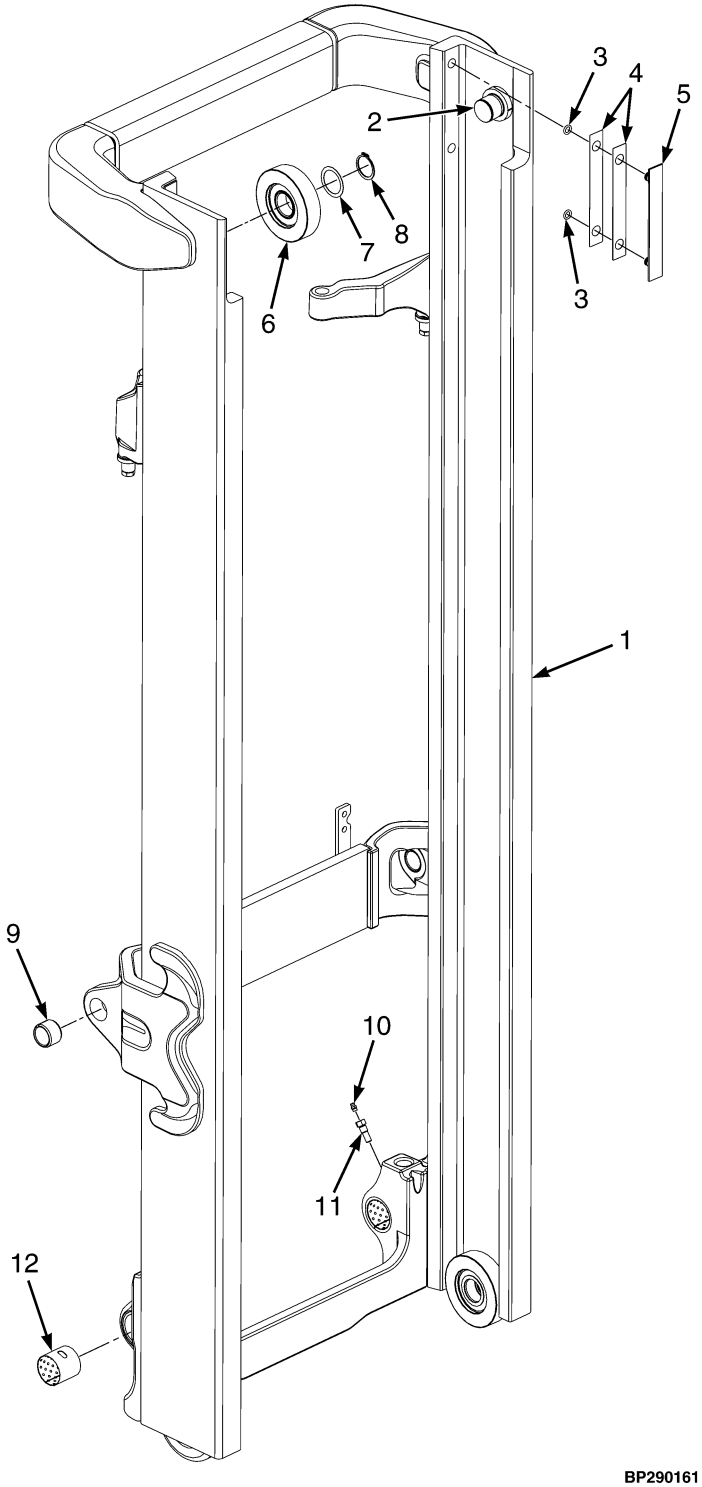

©2014 HYSTER COMPANY

OUTER MAST
TWO STAGE FULL FREE LIFT

E509

ITEM	DESCRIPTION 1 2 3 4	LIFT HEIGHT TO BOTTOM OF FORKS
		3262 mm (128.4 in.)
	Mast Group Number	E509 3262
	Mast Assy	4624667
1	Outer Mast	4062954

E564

ITEM	DESCRIPTION 1 2 3 4	LIFT HEIGHT TO BOTTOM OF FORKS	
		3060 mm (120.5 in.)	3260 mm (128.3 in.)
	Mast Group Number	E564 3060	E564 3260
	Mast Assy	4624725	4624729
1	Outer Mast	4062954	4062956

ITEM	PART NO.	DESCRIPTION	QTY
	a	Mast Assy	1
1	**a**	Outer Mast	1
2	1345216	Stubshaft	2
3	104506	O-Ring	4
4	131716	Shim (0.020 in.)	AR
4	131715	Shim (0.007 in.) (Optional)	AR
5	215211	Wear Strip	2
6	1395168	Load Roller ("A") (111.10/110.84)	2
6	1333396	Load Roller ("B") (111.48/111.22)	2
6	1333397	Load Roller ("C") (112.62/112.36)	2
7	129387	Shim (0.020 in.)	2
8	58901	Snap Ring	2
9	300982	Bushing	2
10	13957	Grease Fitting	2
11	4033412	Capscrew (Lube)	2
12	4033414	Bushing	2

FOOTNOTES:

a Refer to Table

©2014 HYSTER COMPANY

INNER MAST (FIGURE 14-2)
TWO STAGE FULL FREE- LIFT

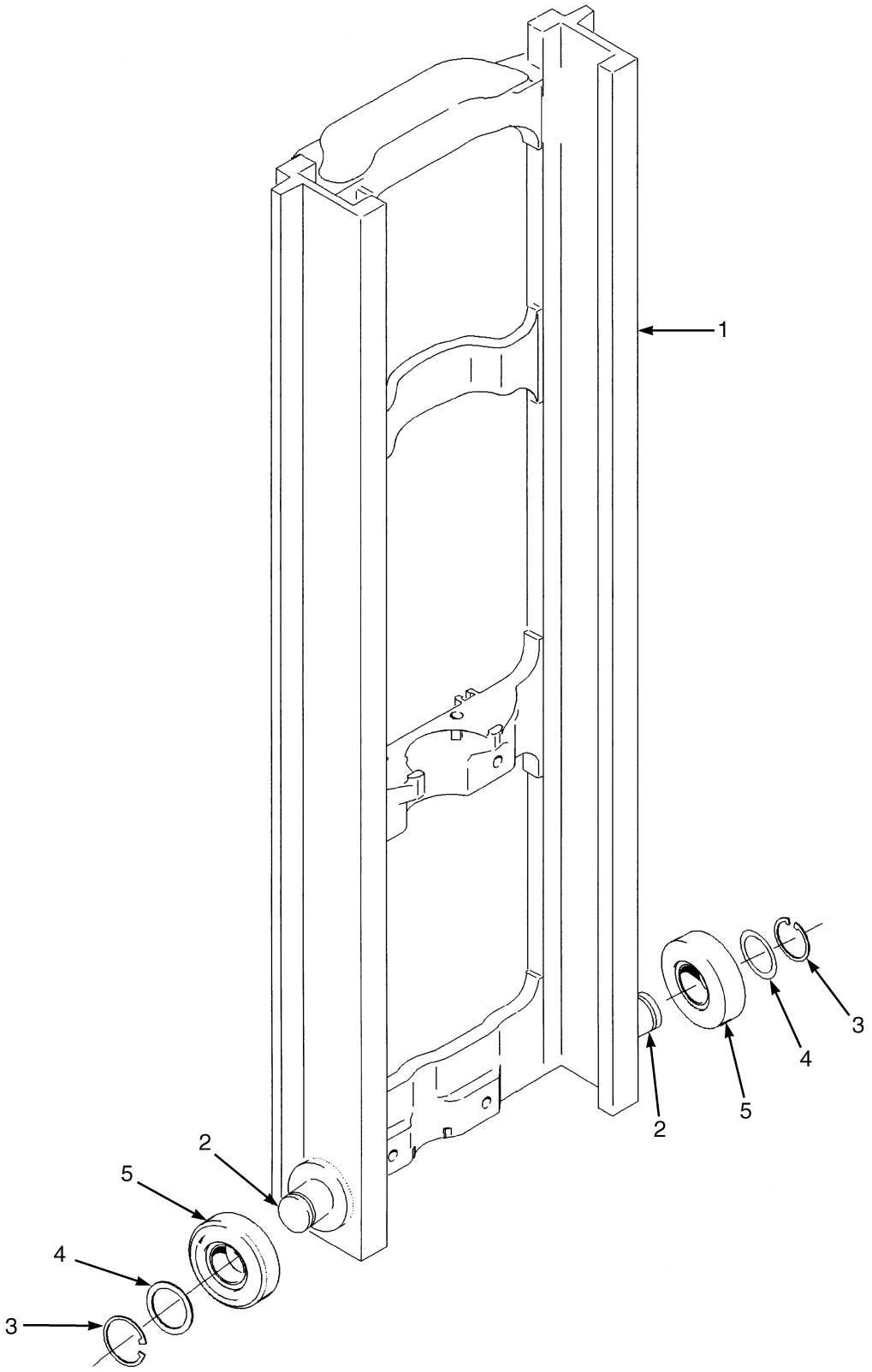

HP290005

©2014 HYSTER COMPANY

INNER MAST
TWO STAGE FULL FREE- LIFT

E509

ITEM	DESCRIPTION 1 2 3 4	LIFT HEIGHT TO BOTTOM OF FORKS
		3262 mm (128.4 in.)
	Mast Group Number	E509 3262
	Mast Assy	4624667
1	Inner Mast	1342477

E564

ITEM	DESCRIPTION 1 2 3 4	LIFT HEIGHT TO BOTTOM OF FORKS	
		3060 mm (120.5 in.)	3260 mm (128.3 in.)
	Mast Group Number	E564 3060	E564 3260
	Mast Assy	4624725	4624729
1	Inner Mast	1342477	1342479

ITEM	PART NO.	DESCRIPTION	QTY
	a	Mast Assy	1
1	**a**	Inner Mast	1
2	1345216	Stubshaft	2
3	58901	Snap Ring	2
4	129387	Shim (0.020 in.)	AR
5	1395168	Load Roller ("A") (111.10/110.84)	2
5	1333396	Load Roller ("B") (111.48/111.22)	2
5	1333397	Load Roller ("C") (112.62/112.36)	2

FOOTNOTES:

a Refer to Table

©2014 HYSTER COMPANY

MAIN LIFT (FIGURE 14-3)
TWO STAGE FULL FREE- LIFT

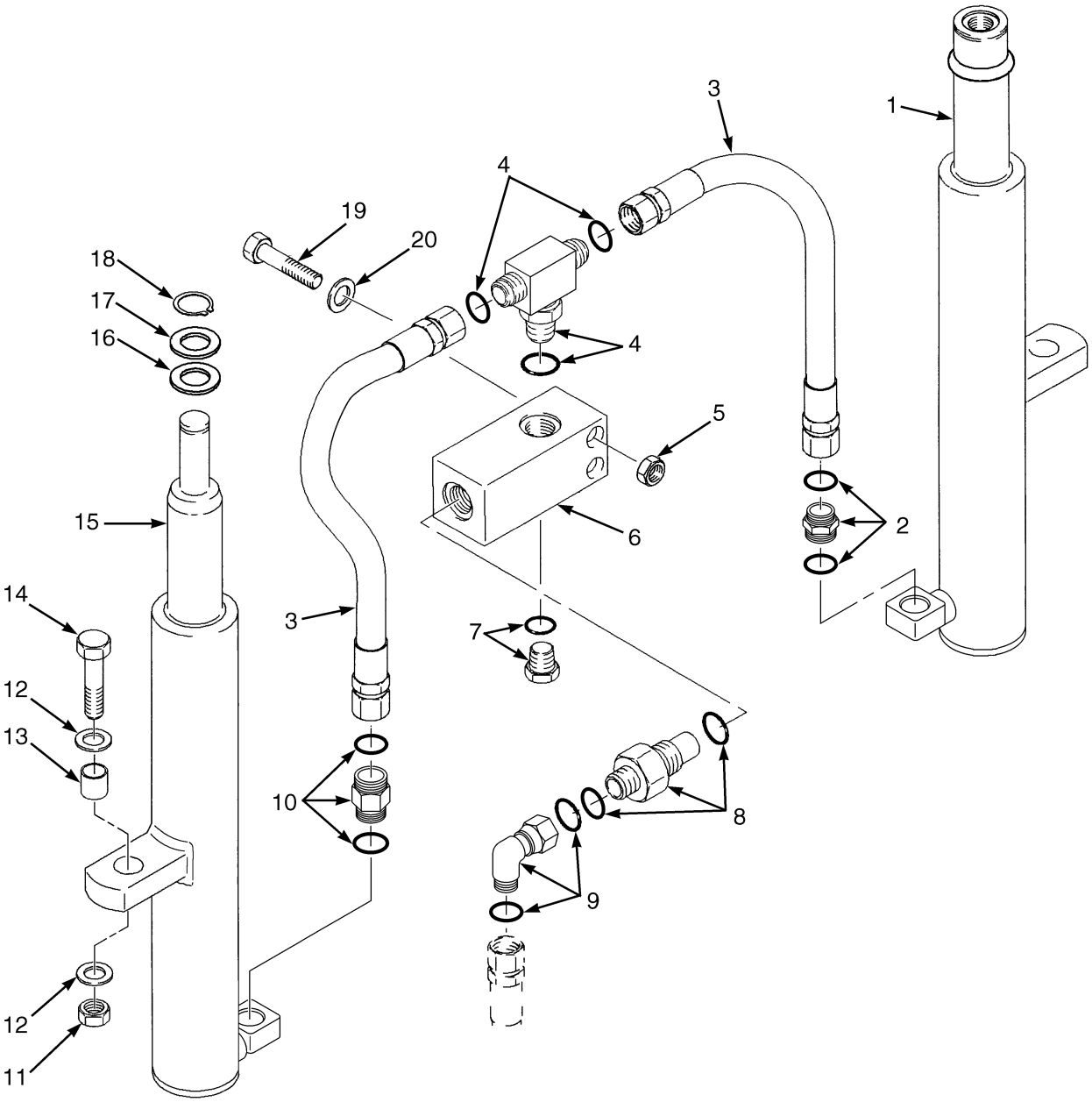

HP290006

©2014 HYSTER COMPANY

MAIN LIFT
TWO STAGE FULL FREE- LIFT

ITEM	PART NO.	DESCRIPTION	QTY
1	. . . . .	Main Lift Cylinder (LH) (☞Figure 14-5)	1
2	1486749	Fitting	1
3	1481097	Hose Assy	2
4	1532650	Fitting	1
5	1581566	Nut	2
6	1379687	Housing (Lowering Control)	1
7	14603	Plug	1
7	16486	O-Ring	1
8	2062651	Lowering Control Valve (H40-50FT E509-3262mm)	1
8	2062652	Lowering Control Valve (H60-70FT E562-3060 and 3260 mm)	1
8	280154	O-Ring	1
8	252729	O-Ring	1
9	1486773	Fitting	1
10	2062686	Hyd Velocity Fuse (H40-50FT E509-3262 mm)	1
10	2062687	Hyd Velocity Fuse (H60-70FT E564-3060 and 3260 mm)	1
11	1581849	Nut	2
12	1581852	Washer	4
13	323090	Spacer	2
14	1581829	Capscrew	2
15	. . . . .	Main Lift Cylinder (RH) (☞Figure 14-4)	1
16	1354915	Washer (0.010 in.)	AR
16	1354916	Washer (0.030 in.)	AR
16	1354917	Washer (0.060 in.)	AR
17	1333382	Washer (0.060 in.)	1
18	131358	Snap Ring	1
19	1581835	Capscrew	2
20	1581556	Washer	2

©2014 HYSTER COMPANY

MAIN LIFT CYLINDER - RH (FIGURE 14-4)
TWO STAGE FULL FREE- LIFT

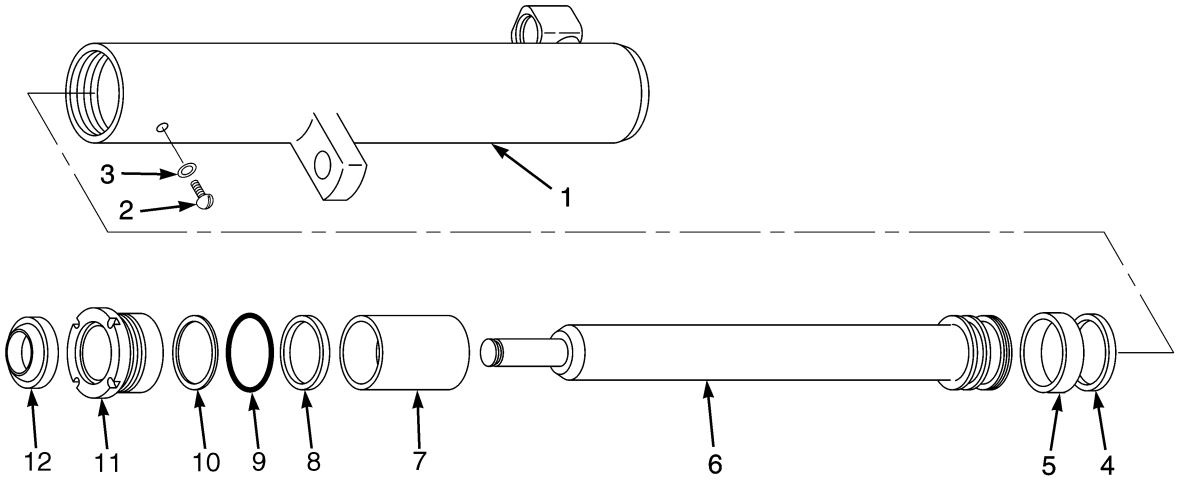

HP171367

©2014 HYSTER COMPANY

MAIN LIFT CYLINDER - RH
TWO STAGE FULL FREE- LIFT

RIGHT HAND

ITEM	DESCRIPTION 1 2 3 4	LIFT HEIGHT TO BOTTOM OF FORKS
		3262 mm (128.4 in.)
	Mast Group Number	E509 3262
	Cylinder Group Number	8518609
	Cylinder Assy	2058651
1	Tube Wldmt-Cylinder	2058536
6	Cylinder Rod	1358940
7	Spacer	----

RIGHT HAND

ITEM	DESCRIPTION 1 2 3 4	LIFT HEIGHT TO BOTTOM OF FORKS	
		3262 mm (128.4 in.)	3060 mm (120.5 in.)
	Mast Group Number	E564 3060	E564 3260
	Cylinder Group Number	8518659	8518661
	Cylinder Assy	2060422	2060424
1	Tube Wldmt-Cylinder	2058536	2058538
6	Cylinder Rod	1358940	1358942
7	Spacer	2073159	2073159

ITEM	PART NO.	DESCRIPTION	QTY
	a	Cylinder Assy	1
1	**a**	Tube Wldmt-Cylinder	1
2	295649	Screw	1
3	190887	Sealing Ring	1
4	1356748	Piston Ring	1
5	1356747	Wear Ring	1
6	**a**	Cylinder Rod	1
7	**a**	Spacer	1
8	1381095	Rod Seal	1
9	59229	O-Ring	1
10	147972	Back-Up Ring	1
11	1355713	Gland	1
12	1319668	Rod Wiper	1
	1496922	Kit-Seal (Includes Items 3, 5, 8-10, 12)	1

©2014 HYSTER COMPANY

FOOTNOTES:

a Refer to Table

©2014 HYSTER COMPANY

NOTES

©2014 HYSTER COMPANY

MAIN LIFT CYLINDER - LH (FIGURE 14-5)
TWO STAGE FULL FREE- LIFT

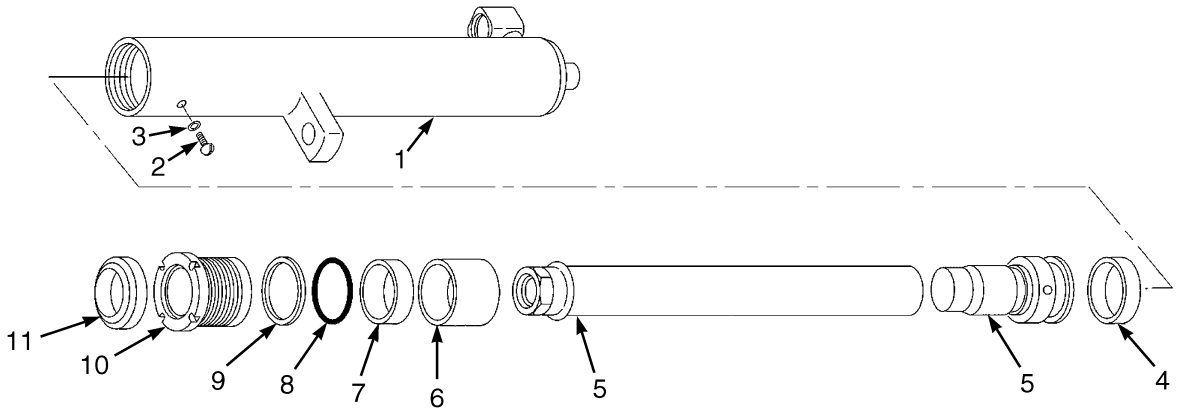

HP171366

©2014 HYSTER COMPANY

MAIN LIFT CYLINDER - LH
TWO STAGE FULL FREE- LIFT

LEFT HAND

ITEM	DESCRIPTION 1 2 3 4	LIFT HEIGHT TO BOTTOM OF FORKS
		3262 mm (128.4 in.)
	Mast Group Number	E509 3262
	Cylinder Group Number	8518509
	Cylinder Assy	2058619
1	Tube Wldmt-Cylinder	2058500
5	Cylinder Rod Assembly	1355929
6	Spacer	----

LEFT HAND

ITEM	DESCRIPTION 1 2 3 4	LIFT HEIGHT TO BOTTOM OF FORKS	
		3262 mm (128.4 in.)	3060 mm (120.5 in.)
	Mast Group Number	E564 3060	E564 3260
	Cylinder Group Number	8518559	8518561
	Cylinder Assy	2058823	2058825
1	Tube Wldmt-Cylinder	2058500	2058502
5	Cylinder Rod Assembly	1355929	1355941
6	Spacer	2073159	2073159

ITEM	PART NO.	DESCRIPTION	QTY
	a	Cylinder Assy	1
1	**a**	Tube Wldmt-Cylinder	1
2	295649	Screw	1
3	190887	Sealing Ring	1
4	1356747	Wear Ring	1
5	**a**	Cylinder Rod Assembly	1
5	1355930	Cylinder Rod (E509-3262 mm, E564-3060 mm)	1
5	1355936	Rod Assy (E564-3260 mm)	1
5	2064464	Piston	1
6	**a**	Spacer	1
7	1381095	Rod Seal	1
8	59229	O-Ring	1
9	147972	Back-Up Ring	1

©2014 HYSTER COMPANY

MAIN LIFT CYLINDER - LH
TWO STAGE FULL FREE- LIFT

ITEM	PART NO.	DESCRIPTION	QTY
10	1355713	Gland	1
11	1319668	Rod Wiper	1
	1496922	Kit-Seal (Includes Items 3-4, 7-9, 11)	1

FOOTNOTES:

a Refer to Table

©2014 HYSTER COMPANY

NOTES

©2014 HYSTER COMPANY

FREE-LIFT (FIGURE 14-6)
TWO STAGE FULL FREE- LIFT

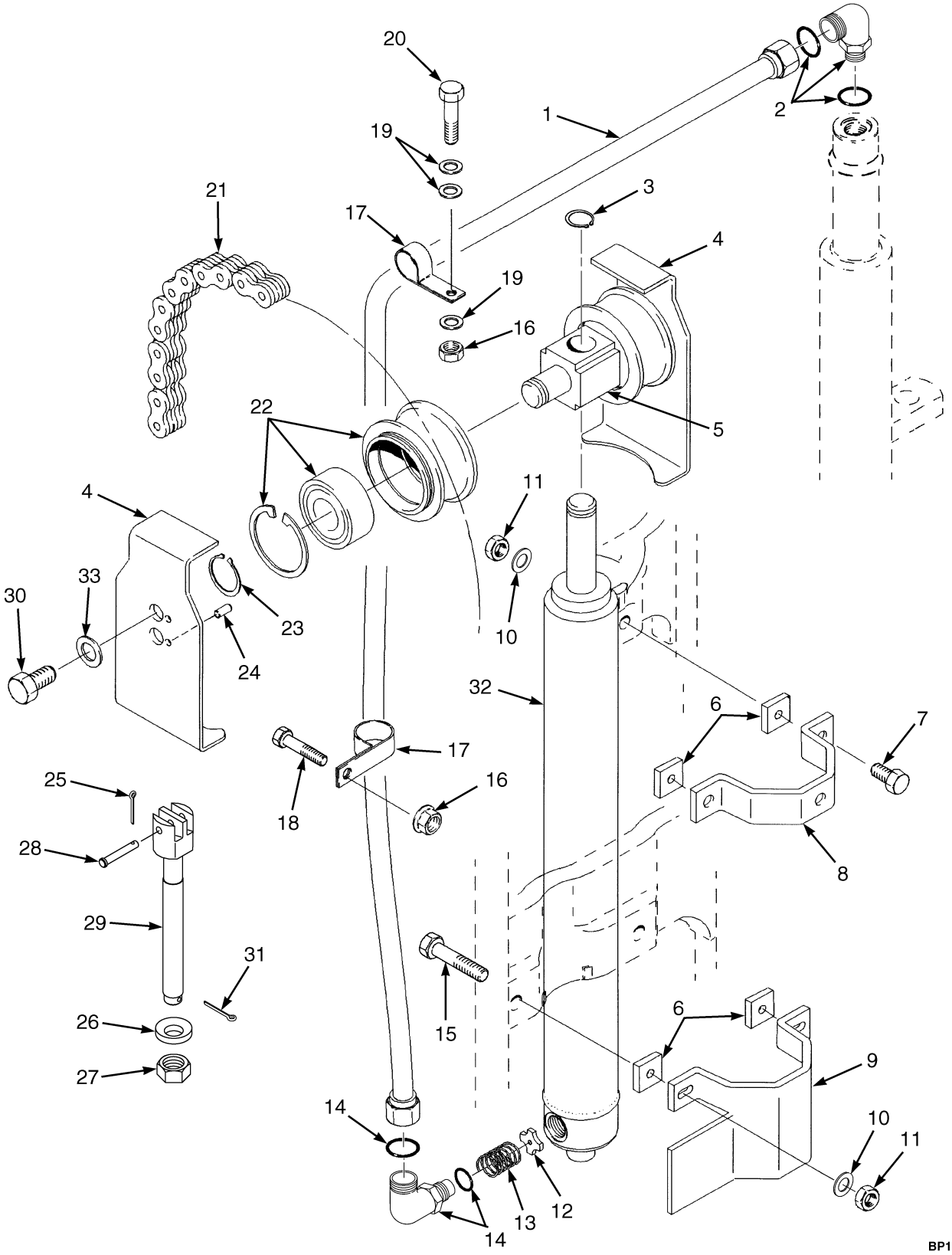

©2014 HYSTER COMPANY

FREE-LIFT
TWO STAGE FULL FREE- LIFT

E509

ITEM	DESCRIPTION 1 2 3 4	LIFT HEIGHT TO BOTTOM OF FORKS
		3262 mm (128.4 in.)
	Mast Group Number	E509 3262
	Mast Assy	4624667
1	Tube Assy	1481742
21	Chain	180177

E564

ITEM	DESCRIPTION 1 2 3 4	LIFT HEIGHT TO BOTTOM OF FORKS	
		3060 mm (120.5 in.)	3260 mm (128.3 in.)
	Mast Group Number	E564 3060	E564 3260
	Mast Assy	4624725	4624729
1	Tube Assy	1481742	1481744
21	Chain	1342377	1342117

ITEM	PART NO.	DESCRIPTION	QTY
	a	Mast Assy	1
1	**a**	Tube Assy	1
2	1481090	Fitting	1
3	131358	Snap Ring	1
4	1395285	Chain Guard	2
5	1378690	Crosshead	1
6	1354902	Spacer (H60-70FT)	4
7	1581828	Capscrew	2
8	1465504	Tie Down	1
9	1354967	Bracket Wldmt	1
10	1581559	Washer	4
11	1581849	Nut	4
12	356505	Washer	1
13	154355	Spring	1
14	1481096	Fitting	1
15	1581827	Capscrew	2
16	1581567	Nut	2
17	178119	Clamp	2
18	1581587	Capscrew	1
19	1581557	Washer	3
20	1581841	Capscrew	1
21	**a**	Chain	2
22	1379682	Chain Sheave Assembly (H40-50FT)	2
22	1379683	Chain Sheave Assembly (H60-70FT)	2
22	1378693	Chain Sheave	1

©2014 HYSTER COMPANY

FREE-LIFT
TWO STAGE FULL FREE- LIFT

ITEM	PART NO.	DESCRIPTION	QTY
22	37752	Snap Ring	1
22	1378699	Ball Bearing	1
23	304526	Snap Ring	3
24	302461	Roll Pin	2
25	15211	Cotter Pin	2
26	297649	Ring	2
27	161003	Nut	2
28	1514866	Pin	2
29	1369357	Chain Anchor (H40-50FT)	2
29	1369356	Chain Anchor (H60-70FT)	2
30	1581590	Capscrew	2
31	15223	Cotter Pin	2
32	. . . . .	Free-Lift Cylinder (☞Figure 14-7)	1
33	1581852	Washer	2

FOOTNOTES:

a Refer to Table

©2014 HYSTER COMPANY

NOTES

©2014 HYSTER COMPANY

FREE-LIFT CYLINDER (FIGURE 14-7)
TWO STAGE FULL FREE- LIFT

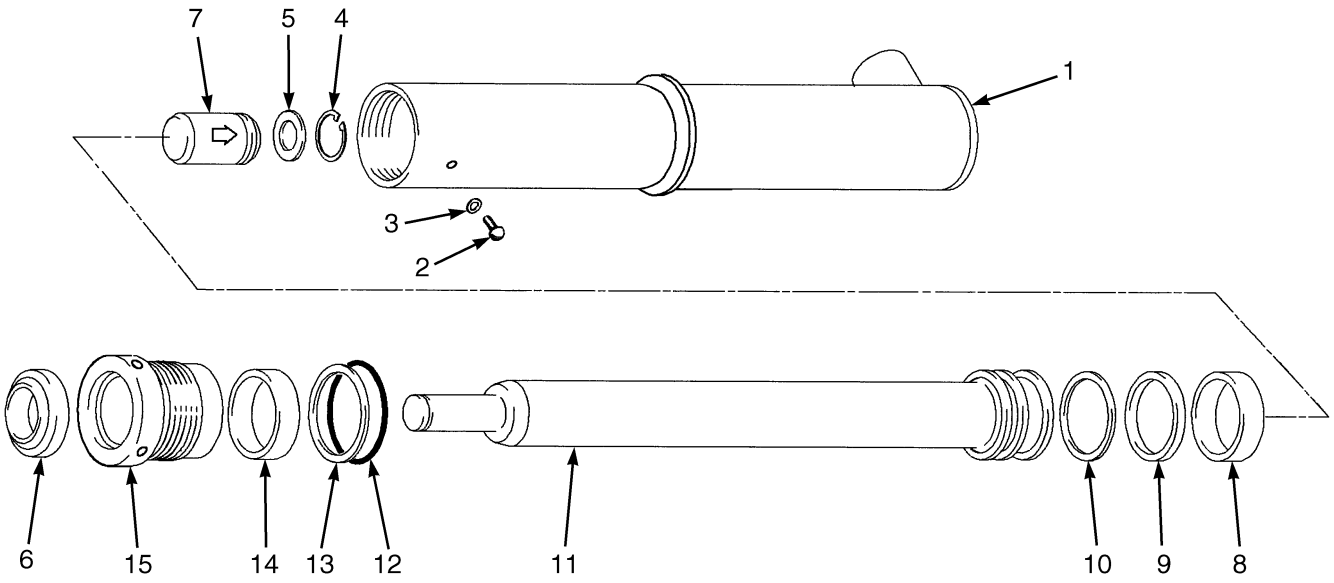

BP170667

©2014 HYSTER COMPANY

FREE-LIFT CYLINDER
TWO STAGE FULL FREE- LIFT

E509

ITEM	DESCRIPTION 1 2 3 4	LIFT HEIGHT TO BOTTOM OF FORKS
		3262 mm (128.4 in.)
	Mast Group Number	E509 3262
	Cylinder Group Number	8514559
	Cylinder Assy	2053796
1	Tube Wldmt-Cylinder	2058213
11	Cylinder Rod	1356569

E564

ITEM	DESCRIPTION 1 2 3 4	LIFT HEIGHT TO BOTTOM OF FORKS	
		3060 mm (120.5 in.)	3260 mm (128.3 in.)
	Mast Group Number	E564 3060	E564 3260
	Cylinder Group Number	8518709	8518711
	Cylinder Assy	2058326	2058328
1	Tube Wldmt-Cylinder	2058252	2063691
11	Cylinder Rod	1356688	1356694

ITEM	PART NO.	DESCRIPTION	QTY
	a	Cylinder Assy	1
1	**a**	Tube Wldmt-Cylinder	1
2	1361302	Screw	1
3	190887	Sealing Ring	1
4	187388	Snap Ring	1
5	297531	Washer	1
6	1463105	Rod Wiper	1
7	297538	Check Valve	1
8	1358972	Wear Ring (H40-50FT)	1
8	636941	Wear Ring (H60-70FT)	1
9	2013088	Rod Seal (H40-50FT)	1
9	309062	Rod Seal (H60-70FT)	1
10	2013089	Back-Up Ring (H40-50FT)	1
10	637565	Back-Up Ring (H60-70FT)	1
11	**a**	Cylinder Rod	1
12	90263	O-Ring (H40-50FT)	1
12	15880	O-Ring (H60-70FT)	1
13	147973	Back-Up Ring (H40-50FT)	1

©2014 HYSTER COMPANY

FREE-LIFT CYLINDER
TWO STAGE FULL FREE- LIFT

ITEM	PART NO.	DESCRIPTION	QTY
13	164840	Back-Up Ring (H60-70FT)	1
14	1622946	Rod Seal	1
15	1356292	Gland (H40-50FT)	1
15	1356661	Gland (H60-70FT)	1
	1358969	Kit-Seal (H40-50FT) (Includes Items 3, 6, 8-10, 12-14)	1
	1356662	Kit-Seal (H60-70FT) (Includes Items 3, 6, 8-10, 12-14)	1

FOOTNOTES:

a Refer to Table

©2014 HYSTER COMPANY

NOTES

©2014 HYSTER COMPANY

HEADER HOSES (FIGURE 14-8)

TWO STAGE FULL FREE-LIFT

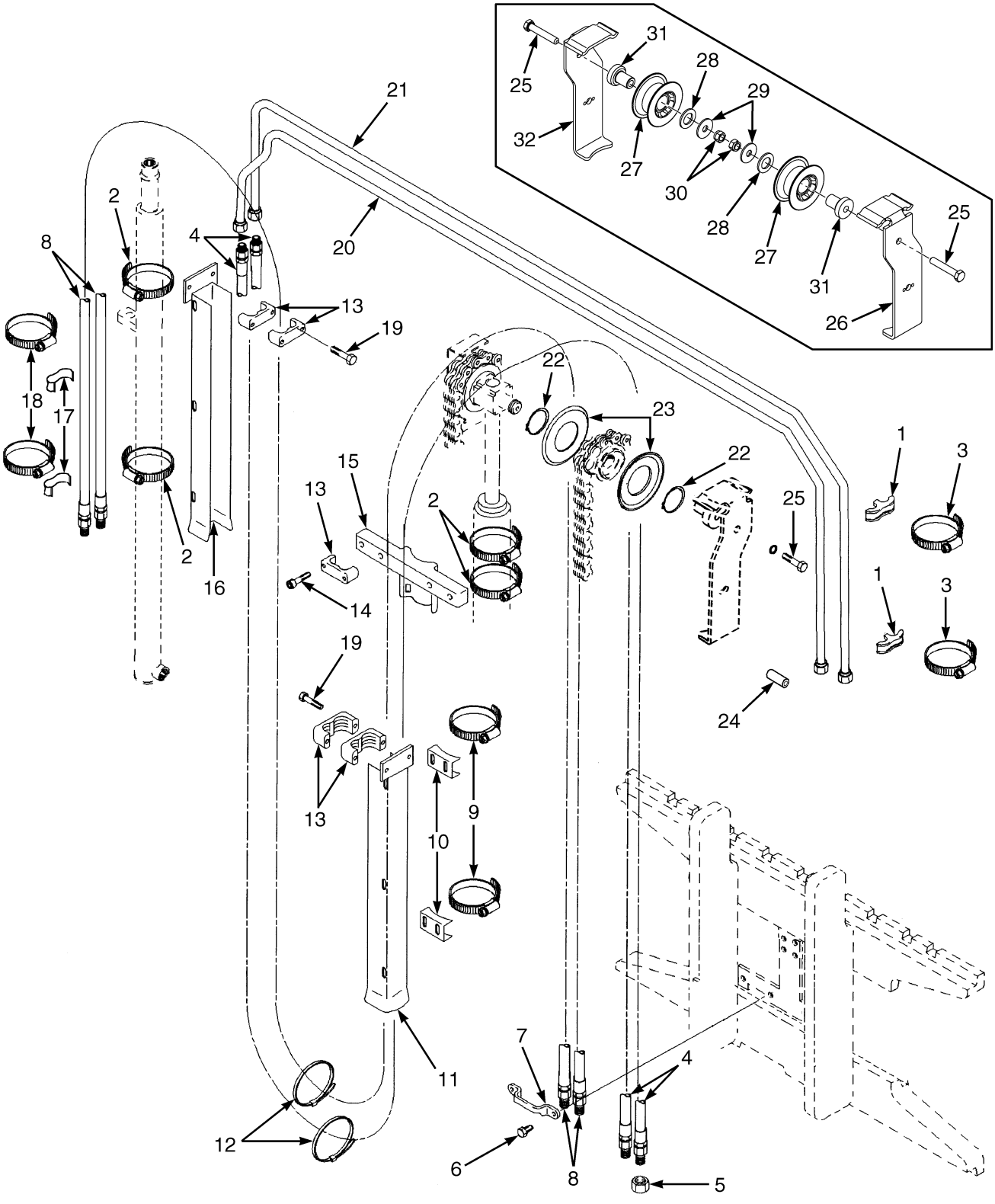

©2014 HYSTER COMPANY

HEADER HOSES
TWO STAGE FULL FREE-LIFT

E509

ITEM	DESCRIPTION 1 2 3 4	LIFT HEIGHT TO BOTTOM OF FORKS
		3262 mm (128.4 in.)
	Mast Group Number	E509 3262
4	Hose Assy (To Side Shift)	2065211
8	Hose Assy (To Mast)	2065241
20	Tube Assy	2065030
21	Tube Assy	2065001

E564

ITEM	DESCRIPTION 1 2 3 4	LIFT HEIGHT TO BOTTOM OF FORKS	
		3060 mm (120.5 in.)	3260 mm (128.3 in.)
	Mast Group Number	E564 3060	E564 3260
4	Hose Assy (To Side Shift)	2065211	2065213
8	Hose Assy (To Mast)	2065241	2065243
20	Tube Assy	2065030	2065032
21	Tube Assy	2065001	2065003

KEY:
A: Three Function
B: Four Function

ITEM	PART NO.	DESCRIPTION	QTY A	QTY B
1	1606855	Spacer	2	2
2	1360507	Clamp	6	6
3	1617658	Clamp	2	2
4	**a**	Hose Assy (To Side Shift)	2	2
5	1529015	Cap	2	4
6	1597448	Capscrew	2	4
7	4008020	Clamp	1	2
8	**a**	Hose Assy (To Mast)	..	2
9	1360508	Clamp	2	2
10	1345423	Clamp	2	2
11	1481232	Hose Guard (RH)	1	1
12	137852	Strap Clamp	1	2
13	1360386	Clamp (Double Hose)	3	6
14	1581741	Capscrew	2	4
15	1354918	Bracket	1	1

©2014 HYSTER COMPANY

HEADER HOSES
TWO STAGE FULL FREE-LIFT

KEY:
A: Three Function
B: Four Function

ITEM	PART NO.	DESCRIPTION	QTY A	QTY B
17	1477996	Hose Clamp	..	2
18	1617657	Clamp	..	2
19	1581842	Capscrew	4	8
20	**a**	Tube Assy	1	1
21	**a**	Tube Assy	1	1
22	1345204	Snap Ring (Spiral Retaining Ring)	2	4
23	1345199	Hose Guide	2	4
24	302461	Roll Pin	2	4
25	1581830	Capscrew	1	2
26	1395292	Bracket (LH)	..	1
27	4041194	Hose Sheave	1	2
28	4064560	Spacer	1	2
29	1345190	Washer	1	2
30	1581849	Nut	1	2
31	1396406	Stubshaft	1	2
32	1395291	Bracket (RH)	1	1

FOOTNOTES:

a Refer to Table

©2014 HYSTER COMPANY

NOTES

©2014 HYSTER COMPANY

CARRIAGE (FIGURE 14-9)
TWO STAGE FULL FREE-LIFT

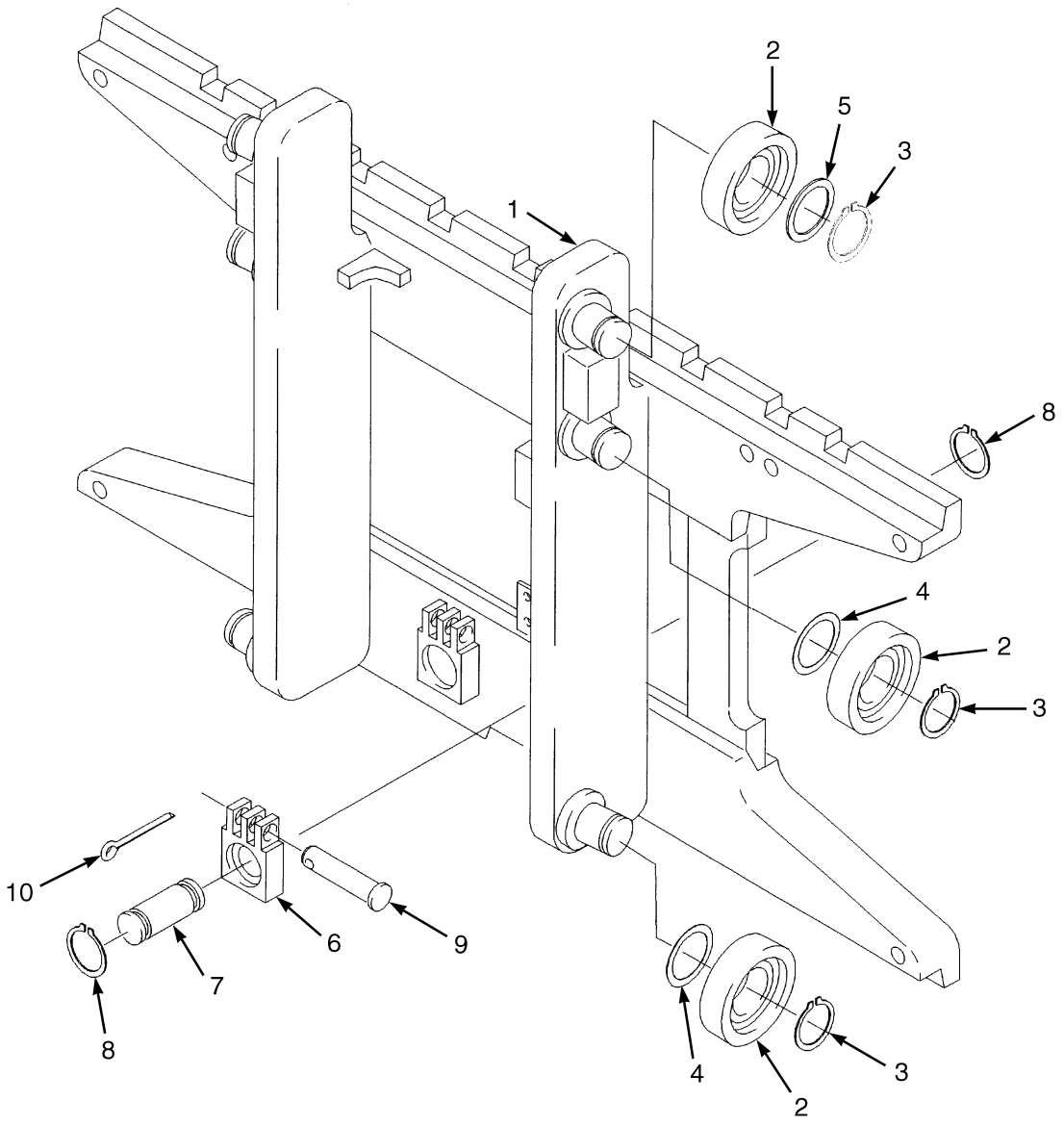

HP290012

©2014 HYSTER COMPANY

CARRIAGE
TWO STAGE FULL FREE-LIFT

KEY:
A: H40-50FT (E509)
B: H60-70FT (E564)

ITEM	PART NO.	DESCRIPTION	QTY A	QTY B
	1343844	Carriage	1	..
	1477683	Carriage	..	1
1	1345239	Carriage Wldmt	1	..
1	1477932	Carriage Wldmt	..	1
1	1345264	Stubshaft	6	6
2	1345219	Load Roller ("B") (111.48/111.22)	6	6
3	12891	Snap Ring	6	6
4	1345263	Shim (0.020 in.)	AR	AR
5	366116	Spacer	2	2
6	1369345	Chain Anchor (Dual Hole)	2	..
6	1504010	Chain Anchor (Single Hole) (Optional)	2	..
6	1369344	Chain Anchor (Dual Hole)	..	2
6	1504012	Chain Anchor (Single Hole) (Optional)	..	2
7	317735	Pin	2	2
8	131358	Snap Ring	4	4
9	1514866	Pin	2	2
10	15211	Cotter Pin	2	2
	a 386422	Snap Ring	6	6

FOOTNOTES:

a Not Illustrated

©2014 HYSTER COMPANY

NOTES

©2014 HYSTER COMPANY

SECTION 15
MAST-THREE STAGE FULL FREE-LIFT

DESCRIPTION **PAGE**

CARRIAGE
THREE STAGE FULL FREE-LIFT 15-30
FREE-LIFT CYLINDER
THREE STAGE FULL FREE-LIFT 15-22
FREE-LIFT CYLINDER AND ATTACHING PARTS
THREE STAGE FULL FREE-LIFT 15-10
HEADER HOSES AND ATTACHING PARTS
THREE STAGE FULL FREE-LIFT - THREE AND F0UR FUNCTION 15-26
INNER MAST
THREE STAGE FULL FREE-LIFT 15-8
INTERMEDIATE MAST
THREE STAGE FULL FREE-LIFT 15-6
MAIN LIFT CYLINDER
THREE STAGE FULL FREE-LIFT 15-18
MAIN LIFT CYLINDER AND ATTACHING PARTS
THREE STAGE FULL FREE-LIFT 15-14
OUTER MAST
THREE STAGE FULL FREE LIFT 15-2

©2014 HYSTER COMPANY

OUTER MAST (FIGURE 15-1)
THREE STAGE FULL FREE LIFT

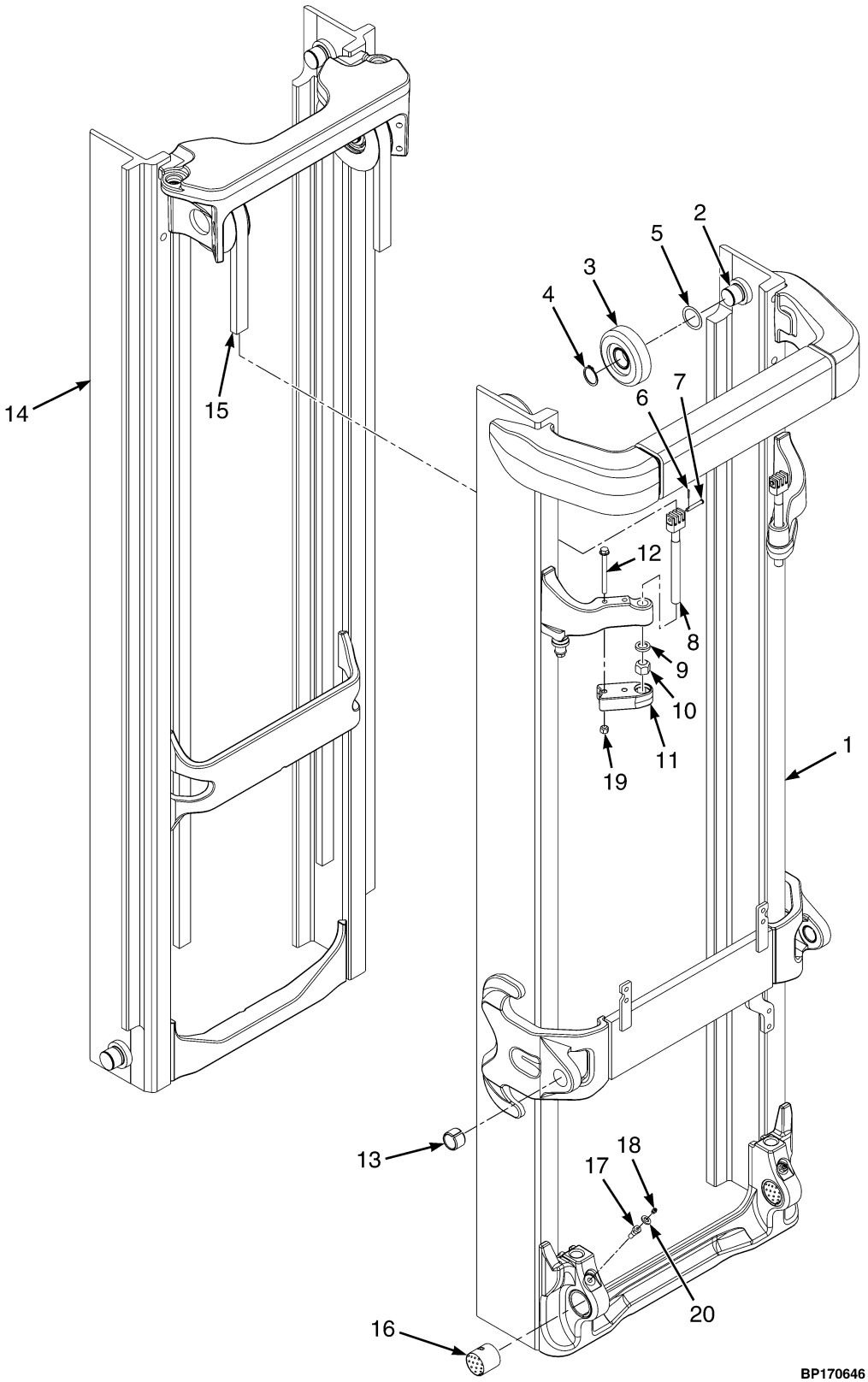

©2014 HYSTER COMPANY

OUTER MAST
THREE STAGE FULL FREE LIFT

H40-50FT

ITEM	DESCRIPTION 1 2 3 4	LIFT HEIGHT TO BOTTOM OF FORKS				
		4310 mm (169.7 in.)	4760 mm (187.4 in.)	4910 mm (193.3 in.)	5060 mm (199.2 in.)	5510 mm (216.9 in.)
	Mast Group Number	F508 4310	F508 4760	F508 4910	F508 5060	F508 5510
	Mast Assy	4623097	4623100	4623101	4623102	4623105
1	Outer Mast	4053744	4053746	4053747	4053749	4053752

H60-70FT

ITEM	DESCRIPTION 1 2 3 4	LIFT HEIGHT TO BOTTOM OF FORKS			
		4568 mm (179.8 in.)	4718 mm (185.7 in.)	5318 mm (209.4 in.)	5768 mm (227.1 in.)
	Mast Group Number	F563 4568	F563 4718	F563 5318	F563 5768
	Mast Assy	4623081	4623082	4623086	4623089
1	Outer Mast	4053747	4053749	4053753	**4053756**

ITEM	PART NO.	DESCRIPTION	QTY
	a	Mast Assy	1
1	a	Outer Mast	1
2	1345216	Stubshaft	2
3	1333396	Load Roller ("B") (111.48/111.22)	2
3	1395168	Load Roller ("A") (111.10/110.84) (Optional)	2
4	58901	Snap Ring	2
4	1374797	Snap Ring (Optional)	2
5	129387	Shim (0.020 in.)	AR
6	15211	Cotter Pin	2
7	1514866	Pin	2
8	4072717	Chain Anchor (H40-50FT)	2
8	4072704	Chain Anchor (H60-70FT)	2
9	297649	Ring	2
10	4031973	Nut	2
11	4051079	Restraint	2
12	4069407	Capscrew	4
13	300982	Bushing	2
14	. . . . .	Intermediate Mast (☞Figure 15-2)	1
15	. . . . .	Chain (☞Figure 15-2)	2
16	4033414	Bushing	2
17	4033412	Capscrew	2
18	13957	Grease Fitting	2
18	16041	Grease Fitting (Optional)	2
19	1581566	Nut	4
20	1581557	Washer	2

©2014 HYSTER COMPANY

FOOTNOTES:

a Refer to Table

©2014 HYSTER COMPANY

NOTES

©2014 HYSTER COMPANY

INTERMEDIATE MAST (FIGURE 15-2)
THREE STAGE FULL FREE-LIFT

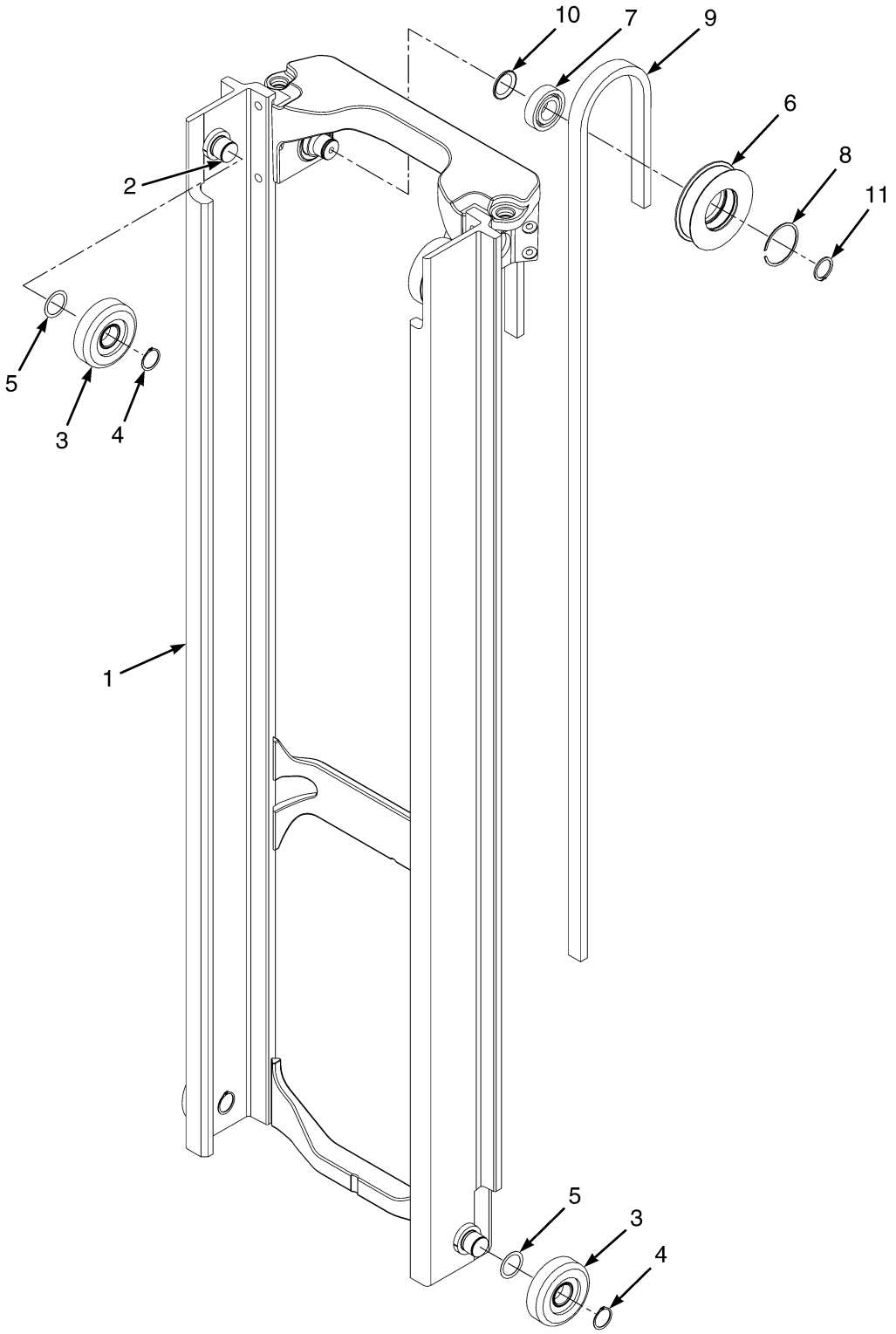

©2014 HYSTER COMPANY

INTERMEDIATE MAST
THREE STAGE FULL FREE-LIFT

H40-50FT

ITEM	DESCRIPTION 1 2 3 4	LIFT HEIGHT TO BOTTOM OF FORKS				
		4310 mm (169.7 in.)	4760 mm (187.4 in.)	4910 mm (193.3 in.)	5060 mm (199.2 in.)	5510 mm (216.9 in.)
	Mast Group Number	F508 4310	F508 4760	F508 4910	F508 5060	F508 5510
	Mast Assy	4623097	4623100	4623101	4623102	4623105
1	Intermediate Mast	4053806	4053808	4053809	4053810	4053813
9	Chain	88441	180137	129361	88446	180176

H60-70FT

ITEM	DESCRIPTION 1 2 3 4	LIFT HEIGHT TO BOTTOM OF FORKS			
		4568 mm (179.8 in.)	4718 mm (185.7 in.)	5318 mm (209.4 in.)	5768 mm (227.1 in.)
	Mast Group Number	F563 4568	F563 4718	F563 5318	F563 5768
	Mast Assy	4623081	4623082	4623086	4623089
1	Intermediate Mast	4053809	4053810	4053814	4053817
9	Chain	1342384	1342385	1342131	1342134

ITEM	PART NO.	DESCRIPTION	QTY
	a	Mast Assy	1
1	**a**	Intermediate Mast	1
2	1345216	Stubshaft	4
3	1333396	Load Roller ("B") (111.48/111.22)	4
3	1395168	Load Roller ("A") (111.10/110.84) (Optional)	4
4	58901	Snap Ring	8
4	1374797	Snap Ring (Optional)	8
5	129387	Shim (0.020 in.)	AR
6	4054944	Chain Sheave Assembly (H40-50FT)	2
6	4048508	Chain Sheave Assembly (H60-70FT)	2
6	4054945	Chain Sheave (H40-50FT)	1
6	4046499	Chain Sheave (H60-70FT)	1
7	1378699	Ball Bearing	1
8	37752	Snap Ring	1
9	**a**	Chain	2
10	335661	Spacer	2
11	304526	Snap Ring	2

FOOTNOTES:

a Refer to Table

©2014 HYSTER COMPANY

INNER MAST (FIGURE 15-3)
THREE STAGE FULL FREE-LIFT

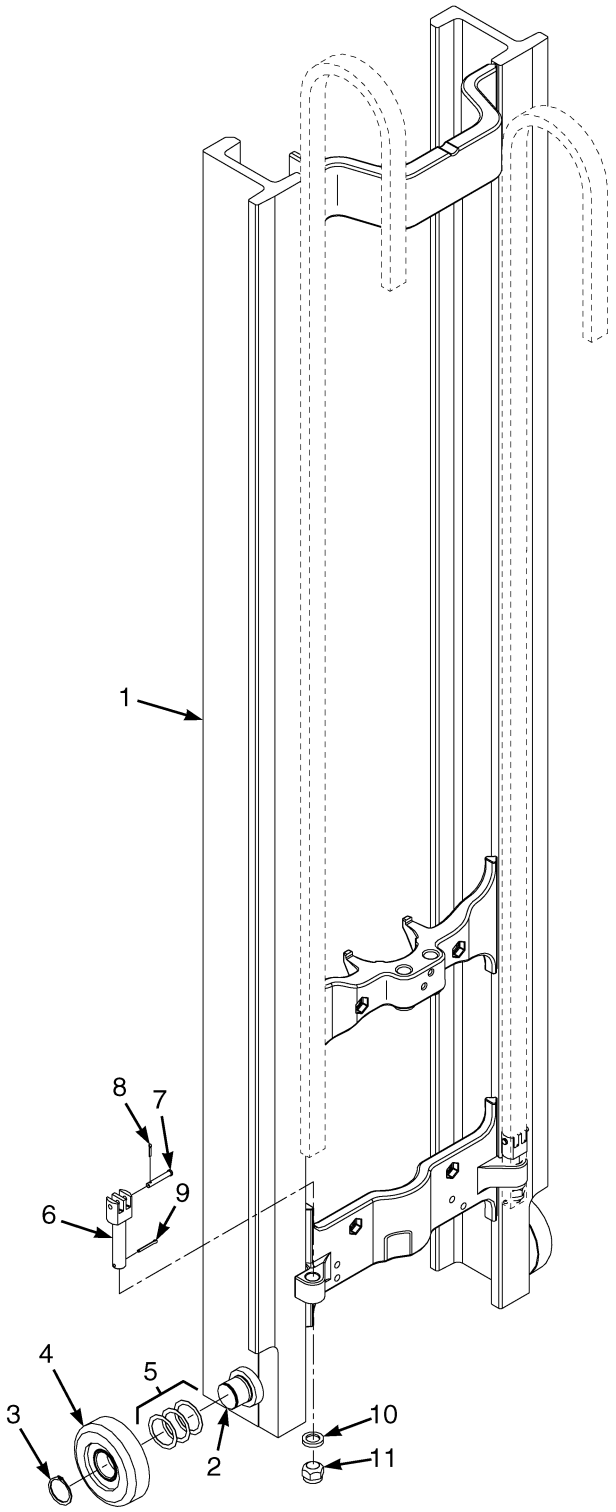

©2014 HYSTER COMPANY

INNER MAST
THREE STAGE FULL FREE-LIFT

H40-50FT

ITEM	DESCRIPTION 1 2 3 4	LIFT HEIGHT TO BOTTOM OF FORKS				
		4310 mm (169.7 in.)	4760 mm (187.4 in.)	4910 mm (193.3 in.)	5060 mm (199.2 in.)	5510 mm (216.9 in.)
	Mast Group Number	F508 4310	F508 4760	F508 4910	F508 5060	F508 5510
	Mast Assy	4623097	4623100	4623101	4623102	4623105
1	Inner Mast	4053838	4053840	4053841	4053842	4053845

H60-70FT

ITEM	DESCRIPTION 1 2 3 4	LIFT HEIGHT TO BOTTOM OF FORKS			
		4568 mm (179.8 in.)	4718 mm (185.7 in.)	5318 mm (209.4 in.)	5768 mm (227.1 in.)
	Mast Group Number	F563 4568	F563 4718	F563 5318	F563 5768
	Mast Assy	4623081	4623082	4623086	4623089
1	Inner Mast	4053841	4053842	4053846	4053849

ITEM	PART NO.	DESCRIPTION	QTY
	a	Mast Assy	1
1	**a**	Inner Mast	1
2	1345216	Stubshaft	2
3	58901	Snap Ring	2
3	1374797	Snap Ring (Optional)	2
4	1333396	Load Roller ("B") (111.48/111.22)	2
4	1395168	Load Roller ("A") (111.10/110.84) (Optional)	2
5	129387	Shim (0.020 in.)	AR
6	1365140	Chain Anchor (H40-50FT)	2
6	1333329	Chain Anchor (H60-70FT)	2
7	1514866	Pin	2
8	15211	Cotter Pin	2
9	15223	Cotter Pin	2
10	297649	Ring	2
11	161003	Nut	2

FOOTNOTES:

a Refer to Table

©2014 HYSTER COMPANY

FREE-LIFT CYLINDER AND ATTACHING PARTS (FIGURE 15-4)

THREE STAGE FULL FREE-LIFT

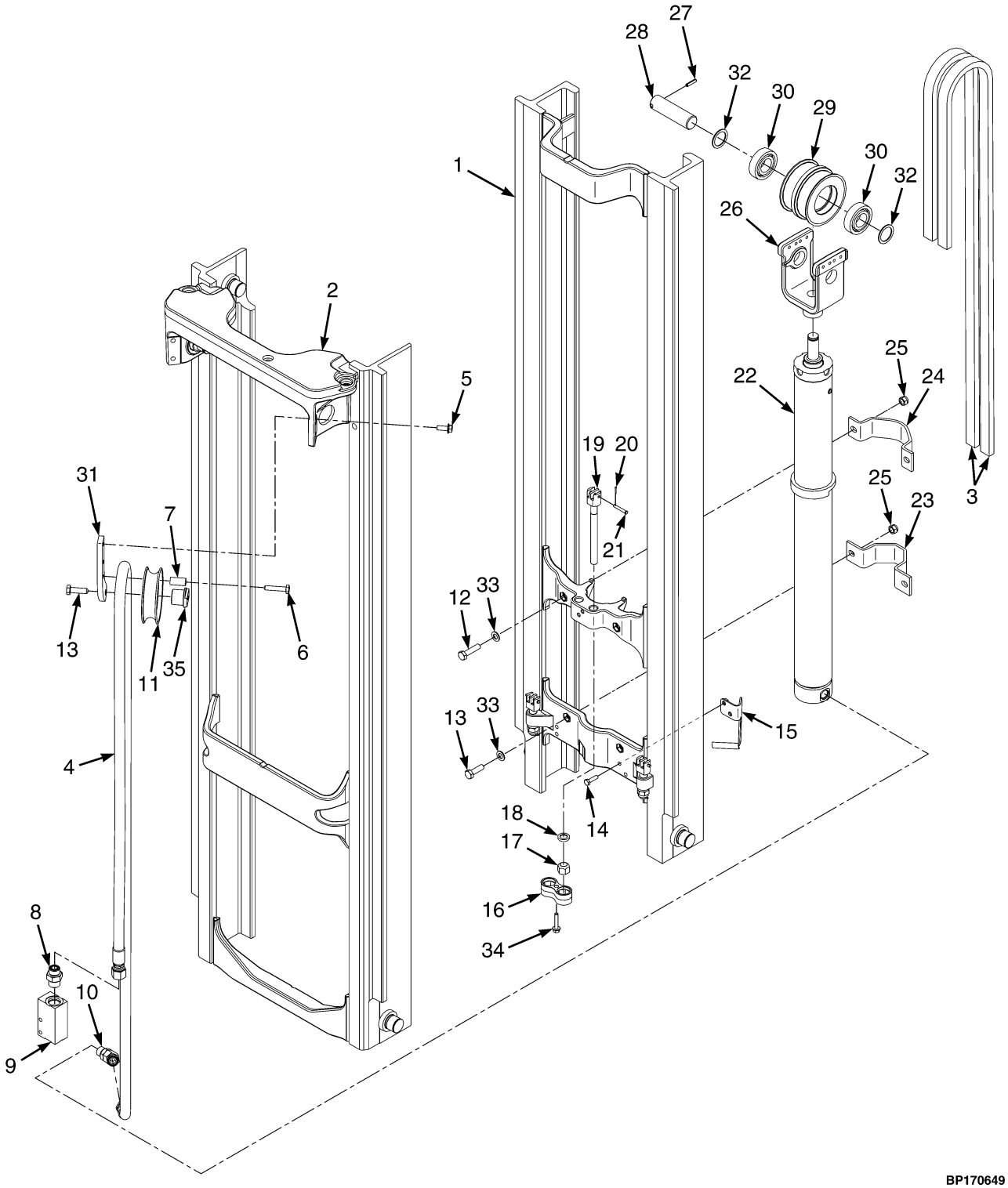

©2014 HYSTER COMPANY

FREE-LIFT CYLINDER AND ATTACHING PARTS
THREE STAGE FULL FREE-LIFT

H40-50FT

ITEM	DESCRIPTION 1 2 3 4	LIFT HEIGHT TO BOTTOM OF FORKS				
		4310 mm (169.7 in.)	4760 mm (187.4 in.)	4910 mm (193.3 in.)	5060 mm (199.2 in.)	5510 mm (216.9 in.)
	Mast Group Number	F508 4310	F508 4760	F508 4910	F508 5060	F508 5510
	Mast Assy	4623097	4623100	4623101	4623102	4623105
3	Chain	180217	164474	986559	337174	320076
4	Hose Assy	4623611	4623613	4623614	4623615	4623618

H60-70FT

ITEM	DESCRIPTION 1 2 3 4	LIFT HEIGHT TO BOTTOM OF FORKS			
		4568 mm (179.8 in.)	4718 mm (185.7 in.)	5318 mm (209.4 in.)	5768 mm (227.1 in.)
	Mast Group Number	F563 4568	F563 4718	F563 5318	F563 5768
	Mast Assy	4623081	4623082	4623086	4623089
3	Chain	1342122	1342124	1342129	1342130
4	Hose Assy	4623614	4623615	4623619	4623622

ITEM	PART NO.	DESCRIPTION	QTY
	b	Mast Assy	1
1	. . . . .	Inner Mast (☞Figure 15-3)	1
2	. . . . .	Intermediate Mast (☞Figure 15-2)	1
3	**b**	Chain	2
4	**b**	Hose Assy	1
5	4043636	Capscrew	2
6	1598660	Capscrew	1
7	1660415	Spacer (Thin Wall)	1
8	1486751	Fitting	1
9	4055582	Housing	1
10	1516205	Fitting	1
11	4048782	Hose Sheave	1
12	1581827	Capscrew	2
13	1581591	Capscrew	2
14	1696161	Capscrew	2
15	4051074	Bracket Wldmt	1
16	4052568	Restraint	1
17	4031973	Nut	2
18	297649	Ring	2
19	4072717	Chain Anchor (H40-50FT)	2
19	4072704	Chain Anchor (H60-70FT)	2
20	15211	Cotter Pin	2
21	1514866	Pin	2
22	. . . . .	Free-Lift Cylinder (☞Figure 15-7)	1
23	4057313	Clamp	1

©2014 HYSTER COMPANY

FREE-LIFT CYLINDER AND ATTACHING PARTS
THREE STAGE FULL FREE-LIFT

ITEM	PART NO.	DESCRIPTION	QTY
24	4057611	Clamp	1
25	1581849	Nut	4
26	4055072	Crosshead	1
27	302465	Roll Pin	1
28	4046548	Pin	1
29	4052261	Chain Sheave (Assembly)	1
29	4049031	Chain Sheave	1
30	1378699	Ball Bearing	2
31	4049173	Plate	1
32	1354902	Spacer	2
33	1581559	Washer	4
34	4069407	Capscrew	1
35	4013267	Stubshaft	1
	ac 4059843	Bracket	1
	ac 1581579	Capscrew	4

FOOTNOTES:

a Not Illustrated
b Refer to Table
c Without Header Hose

©2014 HYSTER COMPANY

NOTES

©2014 HYSTER COMPANY

MAIN LIFT CYLINDER AND ATTACHING PARTS (FIGURE 15-5)

THREE STAGE FULL FREE-LIFT

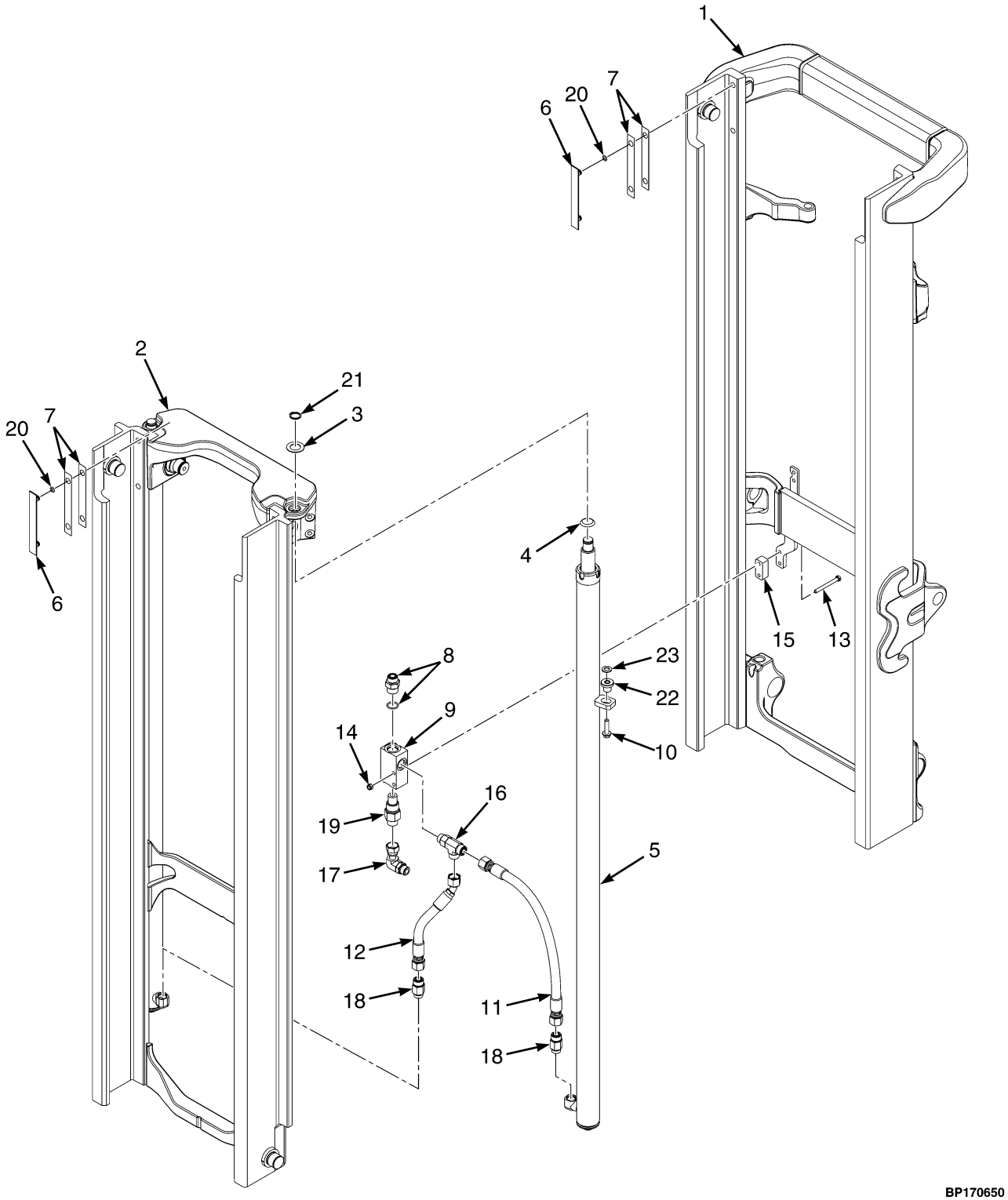

©2014 HYSTER COMPANY

MAIN LIFT CYLINDER AND ATTACHING PARTS
THREE STAGE FULL FREE-LIFT

H40-50FT

ITEM	DESCRIPTION 1 2 3 4	LIFT HEIGHT TO BOTTOM OF FORKS				
		4310 mm (169.7 in.)	4760 mm (187.4 in.)	4910 mm (193.3 in.)	5060 mm (199.2 in.)	5510 mm (216.9 in.)
	Mast Group Number	F508 4310	F508 4760	F508 4910	F508 5060	F508 5510
	Mast Assy	4623097	4623100	4623101	4623102	4623105

H60-70FT

ITEM	DESCRIPTION 1 2 3 4	LIFT HEIGHT TO BOTTOM OF FORKS			
		4568 mm (179.8 in.)	4718 mm (185.7 in.)	5318 mm (209.4 in.)	5768 mm (227.1 in.)
	Mast Group Number	F563 4568	F563 4718	F563 5318	F563 5768
	Mast Assy	4623081	4623082	4623086	4623089

ITEM	PART NO.	DESCRIPTION	QTY
	a	Mast Assy	1
1	. . . . .	Outer Mast	1
2	. . . . .	Intermediate Mast (☞Figure 15-2)	1
3	1333382	Washer (0.060 in.)	2
4	1354915	Washer (0.010 in.)	2
4	1354916	Washer (0.030 in.)	2
4	1354917	Washer (0.060 in.)	2
5	. . . . .	Main Lift Cylinder (☞Figure 15-6)	2
6	215211	Wear Strip	2
7	131716	Shim (0.020 in.)	4
7	131715	Shim (0.007 in.)	4
8	1486751	Fitting	1
9	4055582	Housing (Lowering Control)	1
10	4029051	Capscrew	2
11	4620151	Hose Assy	1
12	4620152	Hose Assy	1
13	4065168	Capscrew	2
14	1581566	Nut	2
15	4065167	Spacer	1
16	1592853	Fitting	1
17	1486773	Fitting	1
18	2062686	Hyd Velocity Fuse (H40-50FT)	2
18	2062687	Hyd Velocity Fuse (H60-70FT)	2
18	16485	O-Ring	1
18	252729	O-Ring	1
19	2062651	Lowering Control Valve (H40-50FT)	1
19	2062652	Lowering Control Valve (H60-70FT)	1
19	16982	O-Ring	1
19	252729	O-Ring	1
20	104506	O-Ring	4

©2014 HYSTER COMPANY

MAIN LIFT CYLINDER AND ATTACHING PARTS
THREE STAGE FULL FREE-LIFT

ITEM	PART NO.	DESCRIPTION	QTY
21	131358	Snap Ring	2
22	4054558	Isolator	2
23	1581557	Washer	4

FOOTNOTES:

a Refer to Table

©2014 HYSTER COMPANY

NOTES

©2014 HYSTER COMPANY

MAIN LIFT CYLINDER (FIGURE 15-6)
THREE STAGE FULL FREE-LIFT

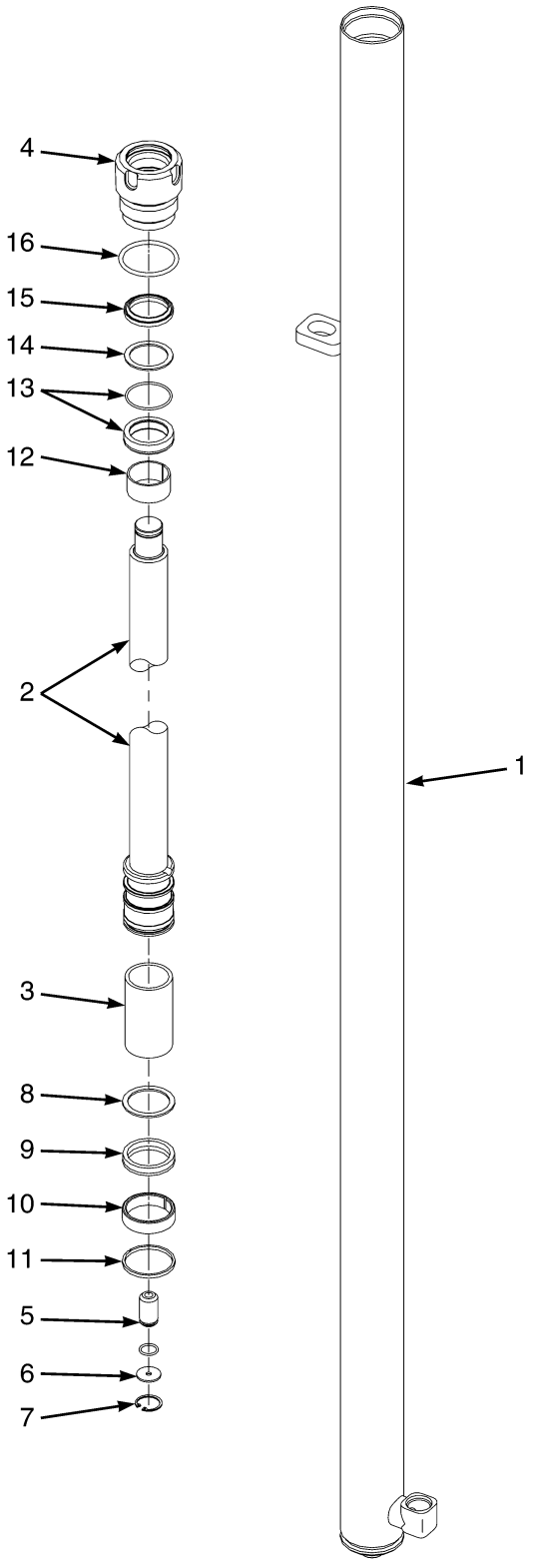

©2014 HYSTER COMPANY

MAIN LIFT CYLINDER
THREE STAGE FULL FREE-LIFT

H40-50FT

ITEM	DESCRIPTION 1 2 3 4	LIFT HEIGHT TO BOTTOM OF FORKS				
		4310 mm (169.7 in.)	4760 mm (187.4 in.)	4910 mm (193.3 in.)	5060 mm (199.2 in.)	5510 mm (216.9 in.)
	Mast Group Number	F508 4310	F508 4760	F508 4910	F508 5060	F508 5510
	Cylinder Group Number	8607223	8607207	8607208	8607209	8607212
	Lift Cylinder	4630373	4616167	4615883	4615884	4615886
1	Tube Wldmt-Cylinder	4041105	4041107	4041108	4041109	4041112
2	Cylinder Rod	1355591	1355599	1355603	1355607	1355620
3	Spacer	1355610	----	----	1355610	1355610

H60-70FT

ITEM	DESCRIPTION 1 2 3 4	LIFT HEIGHT TO BOTTOM OF FORKS			
		4568 mm (179.8 in.)	4718 mm (185.7 in.)	5318 mm (209.4 in.)	5768 mm (227.1 in.)
	Mast Group Number	F563 4568	F563 4718	F563 5318	F563 5768
	Cylinder Group Number	8607308	8607309	8607313	8607316
	Lift Cylinder	4615905	4615906	4615910	4615913
1	Tube Wldmt-Cylinder	4041238	4041239	4041243	4041246
2	Cylinder Rod	1355745	1355749	1355762	1355775
3	Spacer	2046164	2073087	2077818	2077818

KEY:
A: H40-50FT
B: H60-70FT

ITEM	PART NO.	DESCRIPTION	QTY A	QTY B
	a	Lift Cylinder	1	1
1	**a**	Tube Wldmt-Cylinder	1	1
2	**a**	Cylinder Rod	1	1
3	**a**	Spacer	1	1
4	4615847	Gland (H40-50FT)	1	..
4	4615848	Gland (H60-70FT)	..	1
5	257913	Check Valve	1	1
6	297531	Washer	1	1
6	637635	Washer (Optional)	1	1
7	187388	Snap Ring	1	1
8	638246	Back-Up Ring	1	..

©2014 HYSTER COMPANY

MAIN LIFT CYLINDER
THREE STAGE FULL FREE-LIFT

KEY:
A: H40-50FT
B: H60-70FT

ITEM	PART NO.	DESCRIPTION	QTY A	QTY B
8	335012	Back-Up Ring	..	1
9	1381064	Piston Seal	1	..
9	1381063	Piston Seal	..	1
10	1356750	Wear Ring	1	..
10	1356751	Wear Ring	..	1
11	1360127	Piston Ring	1	..
11	1356748	Piston Ring	..	1
12	322902	Wear Ring	1	1
13	1356749	Rod Seal	1	1
14	322824	Back-Up Ring	1	1
15	1383063	Rod Wiper	1	1
16	92861	O-Ring	1	..
16	59229	O-Ring	..	1
	4623973	Kit-Seal (Includes Items 8-16)	1	..
	4623974	Kit-Seal (Includes Items 8-16)	..	1

FOOTNOTES:

a Refer to Table

©2014 HYSTER COMPANY

NOTES

©2014 HYSTER COMPANY

FREE-LIFT CYLINDER (FIGURE 15-7)
THREE STAGE FULL FREE-LIFT

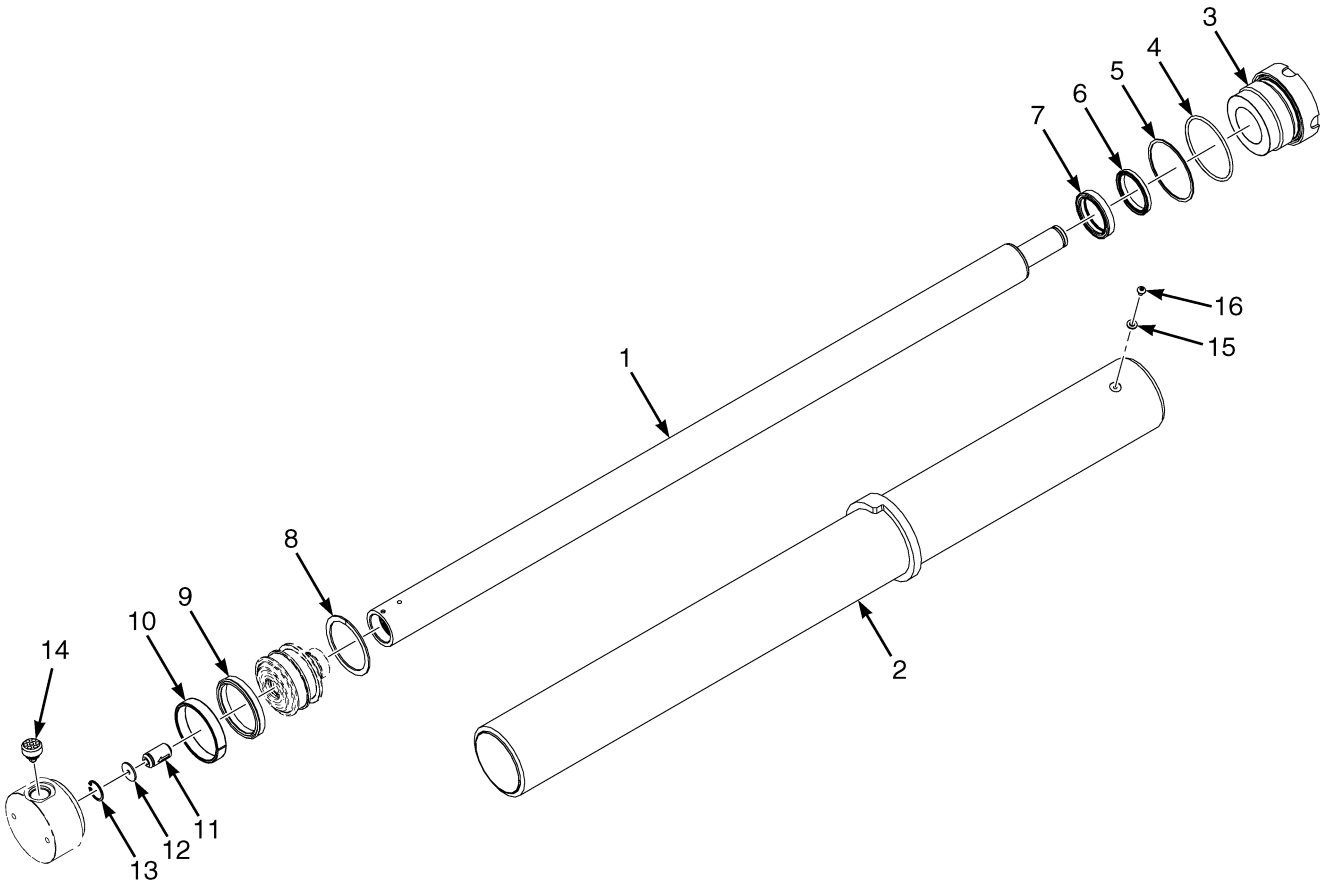

©2014 HYSTER COMPANY

FREE-LIFT CYLINDER
THREE STAGE FULL FREE-LIFT

H40-50FT

ITEM	DESCRIPTION 1 2 3 4	LIFT HEIGHT TO BOTTOM OF FORKS				
		4310 mm (169.7 in.)	4760 mm (187.4 in.)	4910 mm (193.3 in.)	5060 mm (199.2 in.)	5510 mm (216.9 in.)
	Mast Group Number	**F508 4310**	**F508 4760**	**F508 4910**	**F508 5060**	**F508 5510**
	Cylinder Group Number	**8607255**	**8607257**	**8607258**	**8607260**	**8607263**
	Free Lift Cylinder	4617958	4617961	4617962	4617964	4617967
1	Cylinder Rod	4046235	4046237	4046238	4046240	4046243
2	Tube Wldmt-Cylinder	4046205	4046207	4046208	4046210	4046213

H60-70FT

ITEM	DESCRIPTION 1 2 3 4	LIFT HEIGHT TO BOTTOM OF FORKS			
		4568 mm (179.8 in.)	4718 mm (185.7 in.)	5318 mm (209.4 in.)	5768 mm (227.1 in.)
	Mast Group Number	**F563 4568**	**F563 4718**	**F563 5318**	**F563 5768**
	Cylinder Group Number	**8607358**	**8607360**	**8607365**	**8607368**
	Free Lift Cylinder	4618057	4618059	4618064	4618067
1	Cylinder Rod	4046308	4046310	4046315	4046318
2	Tube Wldmt-Cylinder	4046268	4046270	4046275	4046278

KEY:
A: H40-50FT
B: H60-70FT

ITEM	PART NO.	DESCRIPTION	QTY A	QTY B
	b	Free Lift Cylinder	1	1
1	**b**	Cylinder Rod	1	1
2	**b**	Tube Wldmt-Cylinder	1	1
3	1356292	Gland	1	..
3	1356661	Gland	..	1
4	90263	O-Ring	1	..
4	133920	O-Ring	..	1
5	147973	Back-Up Ring	1	..
5	154358	Back-Up Ring	..	1
6	1463105	Rod Wiper	1	1
7	1622946	Rod Seal	1	1
8	2013089	Back-Up Ring	1	..
8	637565	Back-Up Ring	..	1

©2014 HYSTER COMPANY

FREE-LIFT CYLINDER
THREE STAGE FULL FREE-LIFT

KEY:
A: H40-50FT
B: H60-70FT

ITEM	PART NO.	DESCRIPTION	QTY A	QTY B
9	2013088	Rod Seal	1	..
9	309062	Rod Seal	..	1
10	1358972	Wear Ring	1	..
10	636941	Wear Ring	..	1
11	297538	Check Valve	1	1
12	297531	Washer	1	1
12	637635	Washer (Optional)	1	1
13	187388	Snap Ring	1	1
14	4055505	Flow Valve	1	..
14	4055506	Flow Valve	..	1
15	190887	Sealing Ring	1	1
16	1361302	Screw	1	1
	a 190580	O-Ring	1	1
	1358969	Kit-Seal (Includes Items 4-10, 15)	1	..
	1356662	Kit-Seal (Includes Items 4-10, 15)	..	1

FOOTNOTES:

a Not Illustrated

b Refer to Table

©2014 HYSTER COMPANY

NOTES

©2014 HYSTER COMPANY

HEADER HOSES AND ATTACHING PARTS (FIGURE 15-8)

THREE STAGE FULL FREE-LIFT — THREE AND F0UR FUNCTION

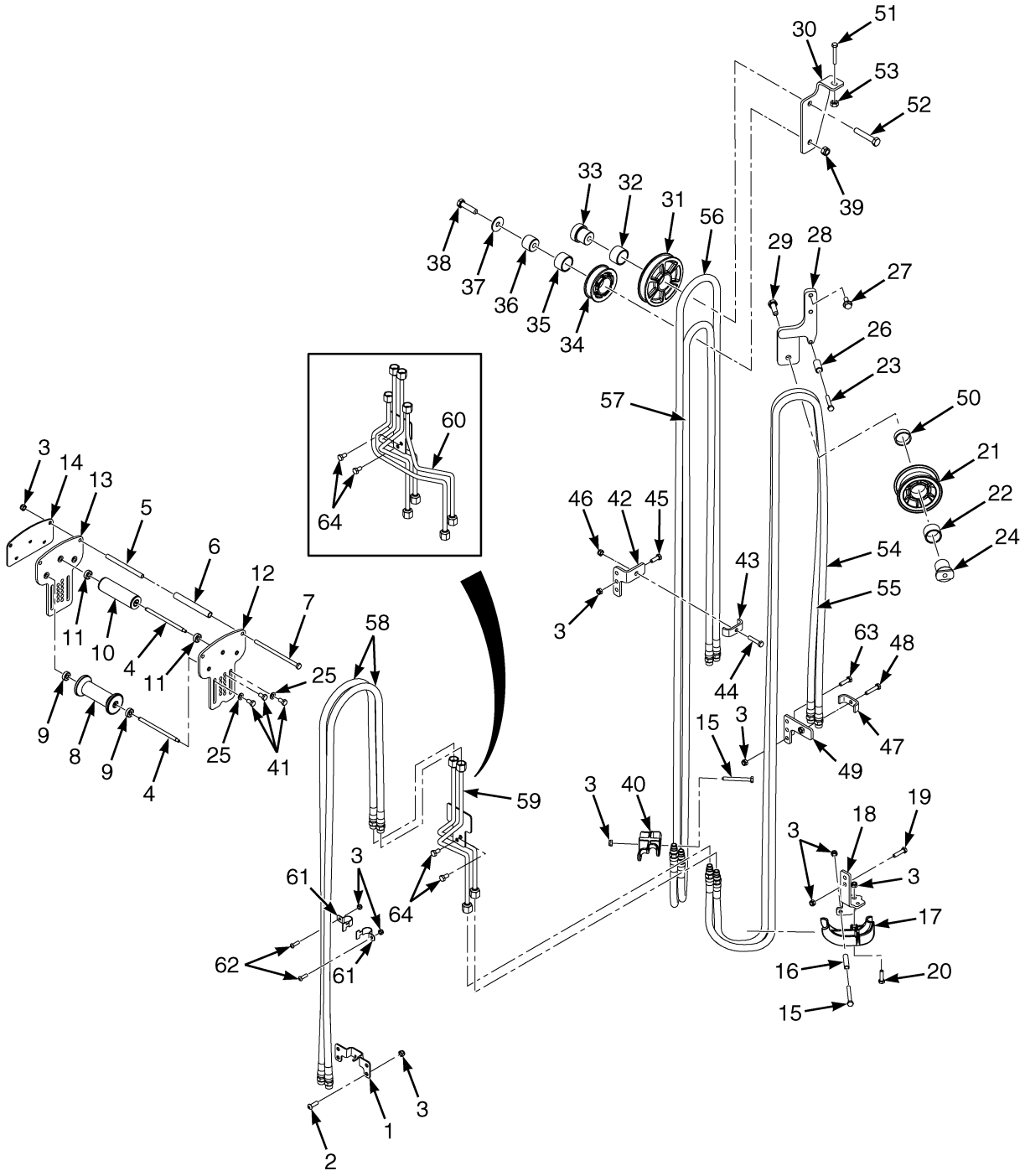

BP170653

©2014 HYSTER COMPANY

HEADER HOSES AND ATTACHING PARTS
THREE STAGE FULL FREE-LIFT – THREE AND F0UR FUNCTION

H40-50FT

ITEM	DESCRIPTION 1 2 3 4	LIFT HEIGHT TO BOTTOM OF FORKS				
		4310 mm (169.7 in.)	4760 mm (187.4 in.)	4910 mm (193.3 in.)	5060 mm (199.2 in.)	5510 mm (216.9 in.)
	Mast Group Number	F508 4310	F508 4760	F508 4910	F508 5060	F508 5510
54	Header Hose	4624113	4624115	4624116	4624117	4624120
55	Header Hose	4624173	4624175	4624176	4624177	4624180
56	Header Hose	4624133	4624135	4624136	4624137	4624140
57	Header Hose	4624153	4624155	4624156	4624157	4624160
58	Header Hose	4624213	4624215	4624216	4624217	4624100

H60-70FT

ITEM	DESCRIPTION 1 2 3 4	LIFT HEIGHT TO BOTTOM OF FORKS			
		4568 mm (179.8 in.)	4718 mm (185.7 in.)	5318 mm (209.4 in.)	5768 mm (227.1 in.)
	Mast Group Number	F563 4568	F563 4718	F563 5318	F563 5768
54	Header Hose	4624116	4624117	4624121	4624124
55	Header Hose	4624176	4624177	4624181	4624184
56	Header Hose	4624136	4624137	4624141	4624144
57	Header Hose	4624156	4624157	4624161	4624164
58	Header Hose	4624216	4624217	4624101	4624104

KEY:
A: Three Function
B: Four Function

ITEM	PART NO.	DESCRIPTION	QTY A	QTY B
1	4055683	Hose Clamp	1	1
2	1597448	Capscrew	2	2
3	1581566	Nut	10	15
4	4049213	Rod	3	3
5	4056718	Roller	2	2
6	4049218	Roller	2	2
7	4061309	Capscrew	2	2
8	4055608	Roller	2	2
9	4032665	Ball Bearing	2	2
10	4055800	Roller	1	1
11	4032665	Ball Bearing	2	2
12	4056125	Plate (LH)	1	1
13	4056126	Plate (RH)	1	1
14	4051460	Plate	1	1
15	4016370	Capscrew	1	2

©2014 HYSTER COMPANY

HEADER HOSES AND ATTACHING PARTS
THREE STAGE FULL FREE-LIFT – THREE AND F0UR FUNCTION

KEY:
A: Three Function
B: Four Function

ITEM	PART NO.	DESCRIPTION	QTY A	QTY B
16	1301703	Spacer (Thin Wall)	1	1
17	4622150	Casting	1	1
18	4050421	Bracket	1	1
19	1596420	Capscrew	2	2
20	1696161	Capscrew	3	3
21	4048781	Hose Sheave	1	1
22	4050091	Bushing	1	1
23	1581583	Capscrew	1	1
24	4013268	Stubshaft	1	1
25	4081768	Washer	4	4
26	4020913	Spacer	1	1
27	4043636	Capscrew	2	2
28	4051290	Bracket Wldmt	1	1
29	1581591	Capscrew	1	1
30	4049172	Bracket	..	1
31	4048784	Hose Sheave	..	1
32	4050091	Bushing	..	1
33	4051885	Stubshaft	..	1
34	4048783	Hose Sheave	..	1
35	4050091	Bushing	..	1
36	4048778	Stubshaft	..	1
37	1345190	Washer	..	1
38	1581827	Capscrew	..	1
39	1581849	Nut	..	1
40	4057777	Bracket	..	1
41	1581580	Capscrew	6	6
42	4086521	Plate Wldmt	..	1
43	1345348	Clamp	..	1
44	292508	Capscrew	..	1
45	1581581	Capscrew	..	2
46	1581566	Nut	..	5
47	1345348	Clamp	1	1
48	292508	Capscrew	2	2
49	4093654	Plate Wldmt	1	1
50	4051293	Spacer	1	1
51	1626461	Capscrew	..	1
52	1581830	Capscrew	..	1
53	1581567	Nut	..	1
54	**c**	Header Hose	1	1
55	**c**	Header Hose	1	1
56	**c**	Header Hose	..	1
57	**c**	Header Hose	..	1
58	**c**	Header Hose	2	4
59	**a** 4084720	Tube Assembly	1	..
59	**b** 4084721	Tube Assembly	1	..

©2014 HYSTER COMPANY

HEADER HOSES AND ATTACHING PARTS
THREE STAGE FULL FREE-LIFT – THREE AND F0UR FUNCTION

KEY:
A: Three Function
B: Four Function

ITEM	PART NO.	DESCRIPTION	QTY A	QTY B
60	**b** 4084722	Tube Assembly	..	1
60	**a** 4084719	Tube Assembly	..	1
61	4082001	Clamp	..	2
62	1597448	Capscrew	..	2
63	1696161	Capscrew	..	2
64	1581579	Capscrew	2	2

FOOTNOTES:

a For Lift heights 6110/5768 mm (240.5/227.0 in.) and below.
b For Lift heights 6260/5918 mm (246.4/233.0 in.) and above.
c Refer to Table

©2014 HYSTER COMPANY

CARRIAGE (FIGURE 15-9)
THREE STAGE FULL FREE-LIFT

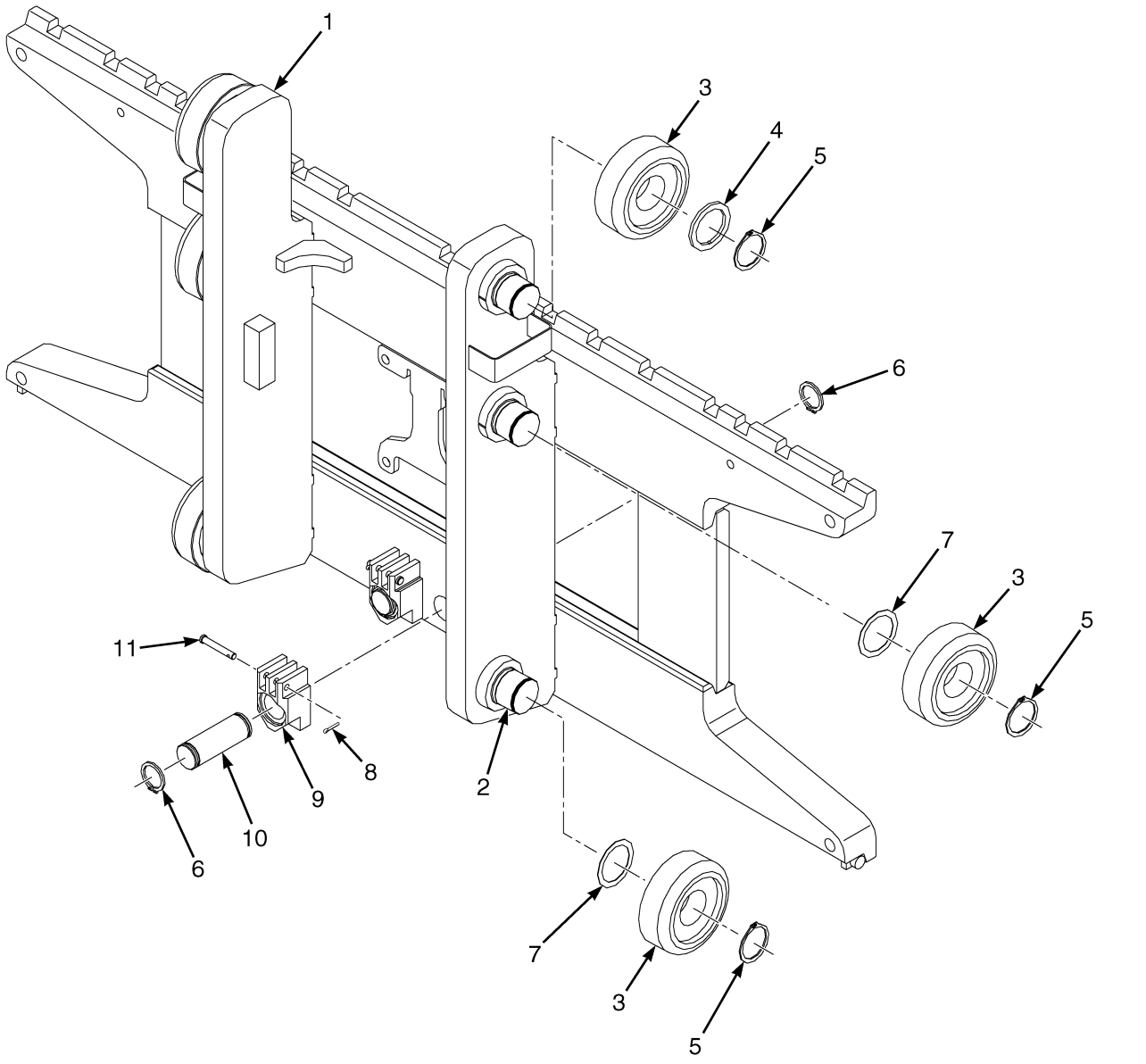

BP170680

©2014 HYSTER COMPANY

CARRIAGE
THREE STAGE FULL FREE-LIFT

KEY:
A: H40-50FT
B: H60-70FT

ITEM	PART NO.	DESCRIPTION	QTY A	QTY B
	4621631	Carriage Assembly (42 in.)	1	..
	4621637	Carriage Assembly (42 in.)	..	1
1	4055430	Carriage Wldmt (42 in.)	1	..
1	4055473	Carriage Wldmt (42 in.)	..	1
2	1345216	Stubshaft	6	6
3	1333399	Load Roller ("B") (3.63 in./3.62 in.)	6	6
3	1393142	Load Roller ("B") (3.24 in.) (Optional)	6	6
3	1395174	Load Roller ("A") (3.22 in.) (Optional)	6	6
3	1395176	Load Roller ("A") (3.23 in.) (Optional)	6	6
4	366115	Spacer	2	2
5	58901	Snap Ring	6	6
5	**a** 1374797	Snap Ring (Optional)	6	6
6	131358	Snap Ring	4	4
7	129387	Shim (0.020 in.)	AR	AR
8	1514866	Pin (Chain Anchor)	2	2
9	1369345	Chain Anchor (Dual Hole)	2	..
9	1504010	Chain Anchor (Single Hole) (Optional)	2	..
9	1369344	Chain Anchor (Dual Hole)	..	2
9	1504012	Chain Anchor (Single Hole) (Optional)	..	2
10	317735	Pin	2	2
11	15211	Cotter Pin	2	2

FOOTNOTES:

a Not Illustrated

©2014 HYSTER COMPANY

NOTES

©2014 HYSTER COMPANY

SECTION 16
OPTIONS

DESCRIPTION **PAGE**

ACCUMULATOR AND ATTACHING PARTS 16-10
AUXILIARY QUICK DISCONNECT MANIFOLD AND HOSES
- THREE STAGE FULL FREE-LIFT (DUAL AUXILIARY WITH E-HYDRAULICS - THREE AND FOUR FUNCTION 16-30
- THREE STAGE FULL FREE-LIFT (SINGLE AUXILIARY WITH E-HYDRAULICS - THREE FUNCTION 16-26
- THREE STAGE FULL FREE-LIFT (SINGLE AUXILIARY WITH INTEGRAL SIDE-SHIFT AND E-HYDRAULICS) - FOUR FUNCTION 16-28
- TWO STAGE LIMITED FREE-LIFT (DUAL AUXILIARY WITH E-HYDRAULICS) - THREE AND FOUR FUNCTION 16-24
- TWO STAGE LIMITED FREE-LIFT (SINGLE AUXILIARY WITH E-HYDRAULICS) - THREE FUNCTION 16-20
- TWO STAGE LIMITED FREE-LIFT (SINGLE AUXILIARY WITH INTEGRAL SIDE-SHIFT AND E-HYDRAULICS) - FOUR FUNCTION 16-22

AUXILIARY TUBES
- THREE STAGE FULL FREE-LIFT - MANUAL AND E-HYDRAULICS VALVE WITH QUICK DISCONNECT 16-16
- THREE STAGE FULL FREE-LIFT - MANUAL AND E-HYDRAULICS VALVE WITHOUT QUICK DISCONNECT 16-18
- TWO STAGE LIMITED FREE LIFT - WITH MANUAL AND E-HYDRAULICS VALVE WITHOUT QUICK DISCONNECT 16-12
- TWO STAGE LIMITED FREE LIFT - MANUAL AND E-HYDRAULIC VALVE WITH QUICK DISCONNECT 16-14

BACK-UP ALARM 16-4
FIRE EXTINGUISHER 16-8
FORK POSITIONER ASSEMBLY 16-50
INTEGRAL SIDE-SHIFT
- FORK POSITIONER - TWO STAGE LIMITED FREE-LIFT 16-46
- FORK POSITIONER - THREE STAGE FULL FREE-LIFT 16-48

INTEGRAL SIDE-SHIFT CARRIAGE
- THREE STAGE FULL FREE-LIFT 16-34
- TWO STAGE FULL FREE-LIFT 16-38
- TWO STAGE LIMITED FREE-LIFT 16-32

INTEGRAL SIDE-SHIFT CYLINDER 16-44
INTEGRAL SIDE-SHIFT HYDRAULIC HOSES
- THREE STAGE FULL FREE LIFT 16-41
- TWO STAGE FULL FREE- LIFT 16-42
- TWO STAGE LIMITED FREE-LIFT 16-40

MIRRORS
- WITH CAB 16-6
- WITH OVERHEAD GUARD 16-7

STROBE LIGHT
- LED 16-2

©2014 HYSTER COMPANY

STROBE LIGHT (FIGURE 16-1)
LED

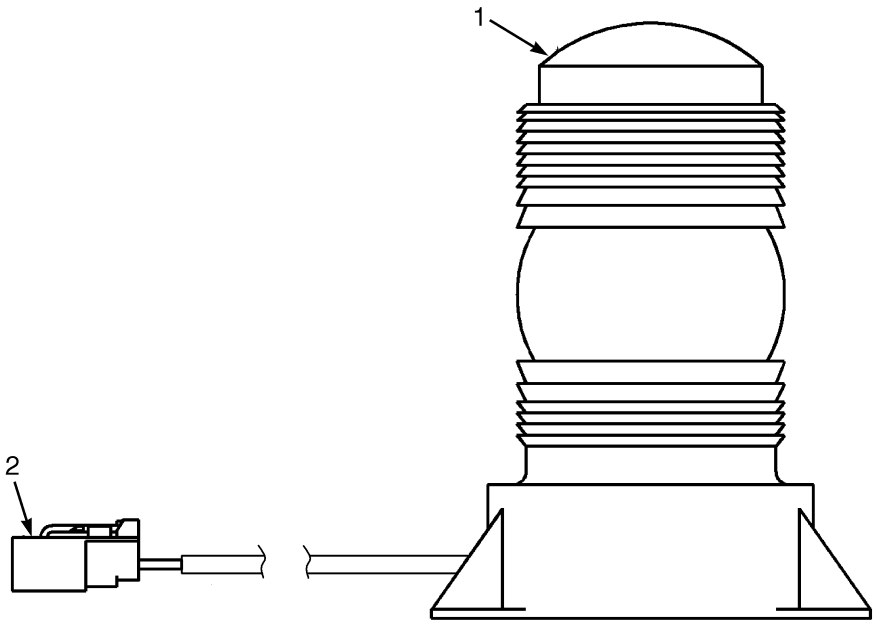

BP000363

ITEM	PART NO.	DESCRIPTION	QTY
	1654013	**Strobe Light Assembly**	**1**
1	1652290	Strobe Light (Amber LED)	1
2	**1463138**	**Terminal Pin**	**2**
2	1561559	Connector (2 Pin)	1
2	1561755	Connector (Secondary Lock)	1

©2014 HYSTER COMPANY

NOTES

©2014 HYSTER COMPANY

BACK-UP ALARM (FIGURE 16-2)

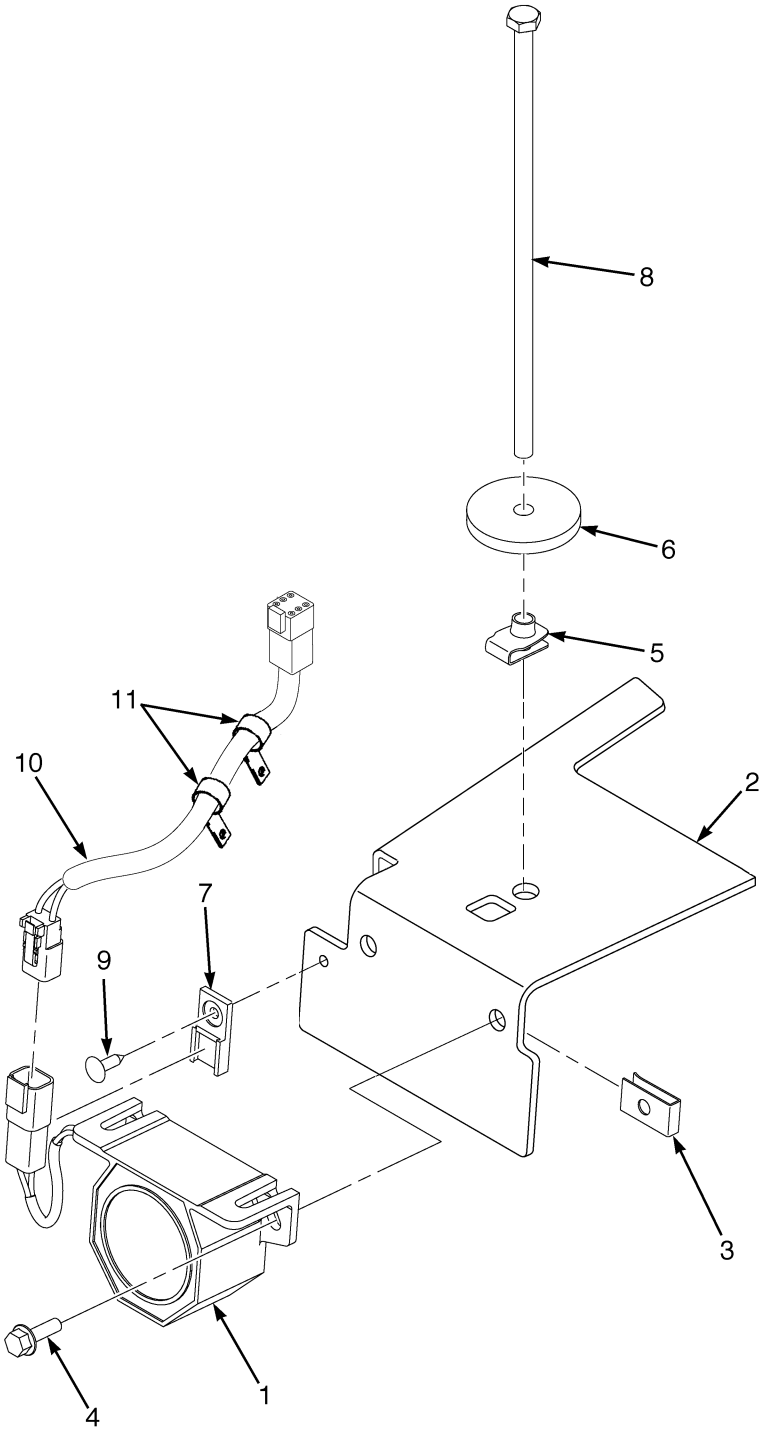

HP000897

©2014 HYSTER COMPANY

BACK-UP ALARM

ITEM	PART NO.	DESCRIPTION	QTY
1	**2064929**	**Back-Up Alarm (82-102 dbA)**	**1**
2	**1589195**	**Bracket**	**1**
3	**1350215**	**Nut**	**2**
4	**1527877**	**Capscrew**	**2**
5	**1480237**	**Nut**	**1**
6	**1547756**	**Washer**	**1**
7	**1500912**	**Clip**	**1**
8	**1543982**	**Capscrew**	**1**
9	**1582464**	**Fastener**	**1**
10	**2078883**	**Wire Harness (Back-Up Alarm) (To RH Chassis) (2-Pin Connector)**	**1**
10	1402923	Connector	1
10	1330417	Connector	1
10	**1490242**	**Connector (2 Way)**	**1**
10	**1490243**	**Connector**	**1**
10	**1330437**	**Terminal (Pin)**	**2**
10	**1330438**	**Terminal (Socket)**	**2**
10	**1330439**	**Plug**	**4**
10	2070771	Wire Harness (Back-Up Alarm) (To RH Chassis) (6-Pin Connector)	1
10	1493465	Connector (2 Pin)	1
10	**1330414**	**Connector (Secondary Lock)**	**1**
10	**1490242**	**Connector (2 Way)**	**1**
10	**1490243**	**Connector**	**1**
10	**1330437**	**Terminal (Pin)**	**1**
10	**1330438**	**Terminal (Socket)**	**2**
11	**1509888**	**Clip**	**2**

©2014 HYSTER COMPANY

MIRRORS (FIGURE 16-3)
WITH CAB

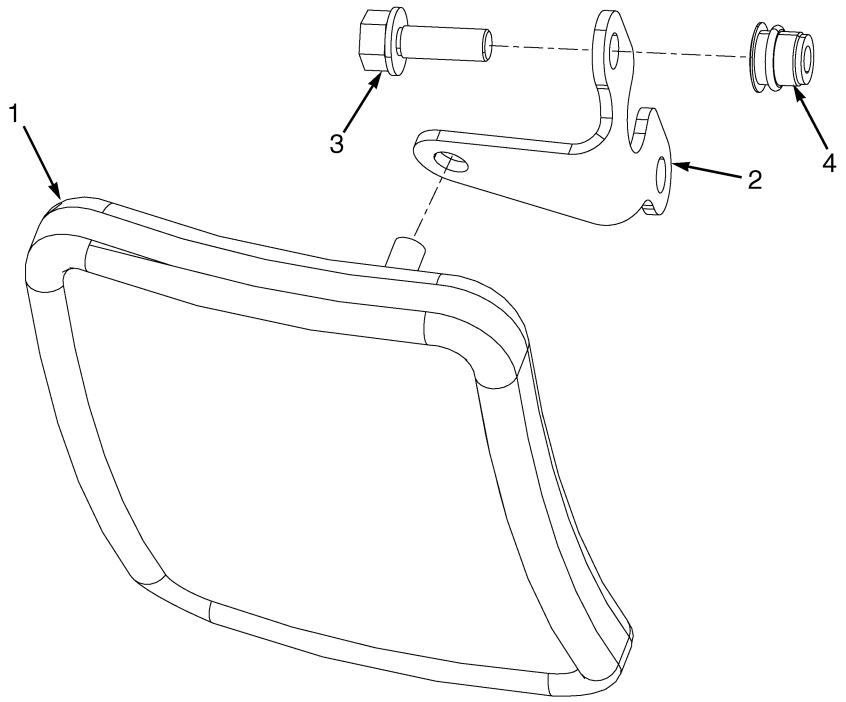

HP000896

ITEM	PART NO.	DESCRIPTION	QTY
1	4009488	Mirror	2
2	1579412	Bracket	2
3	1583611	Capscrew	4
4	1531557	Insert	4

©2014 HYSTER COMPANY

MIRRORS (FIGURE 16-4)
WITH OVERHEAD GUARD

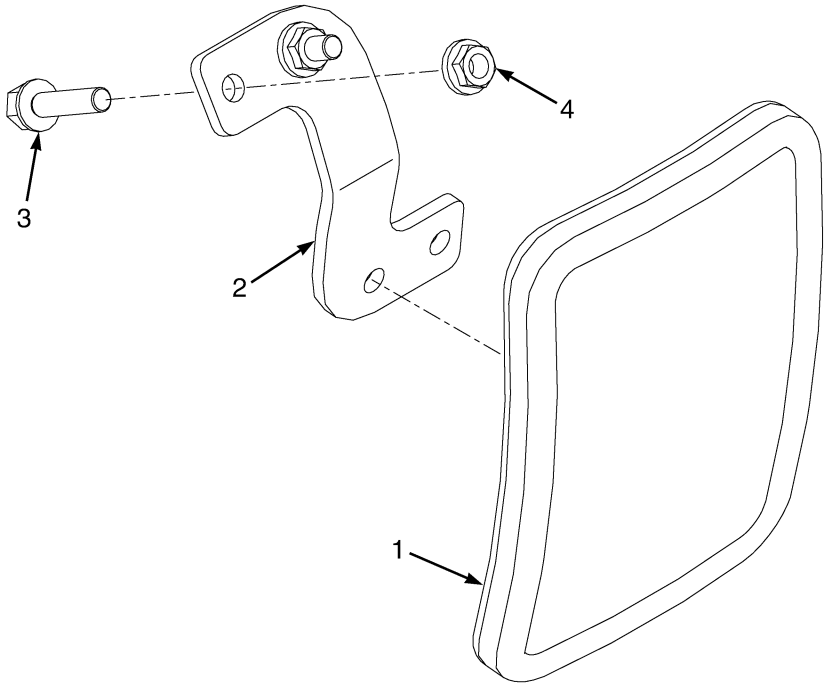

BP000540

ITEM	PART NO.	DESCRIPTION	QTY
1	**4009488**	**Mirror**	**2**
2	1656215	Bracket (RH)	1
2	1656216	Bracket (LH)	1
3	**1583611**	**Capscrew**	**4**
4	1586430	Nut	4

FIRE EXTINGUISHER (FIGURE 16-5)

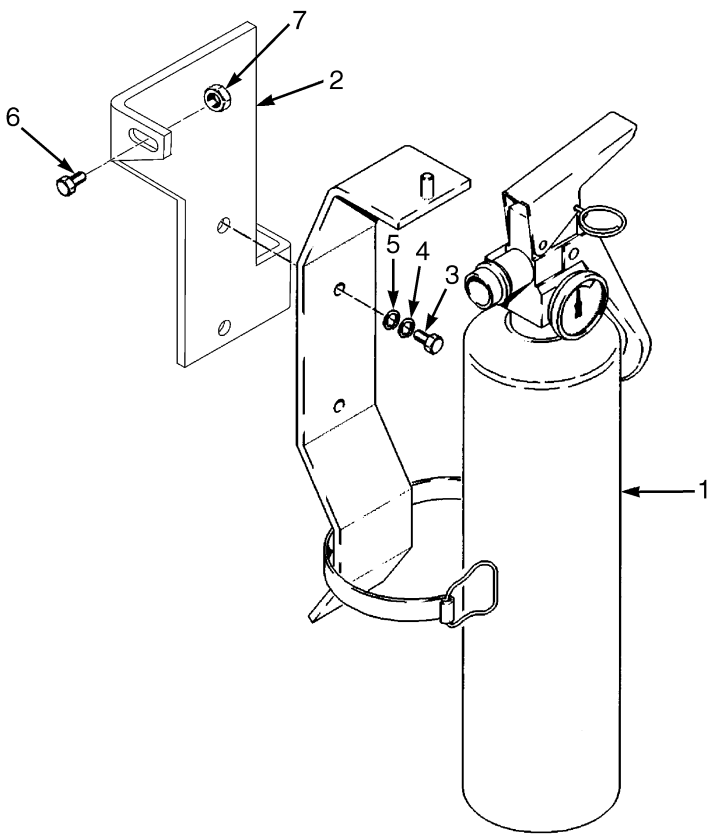

BP000252

ITEM	PART NO.	DESCRIPTION	QTY
1	146540	Fire Extinguisher Assembly	1
1	1561749	Bracket	1
2	1582141	Bracket	1
3	296507	Screw	2
4	292679	Washer	2
5	320155	Washer	2
6	1583611	Capscrew	1
7	1502543	Nut (Flange)	1

©2014 HYSTER COMPANY

NOTES

©2014 HYSTER COMPANY

ACCUMULATOR AND ATTACHING PARTS (FIGURE 16-6)

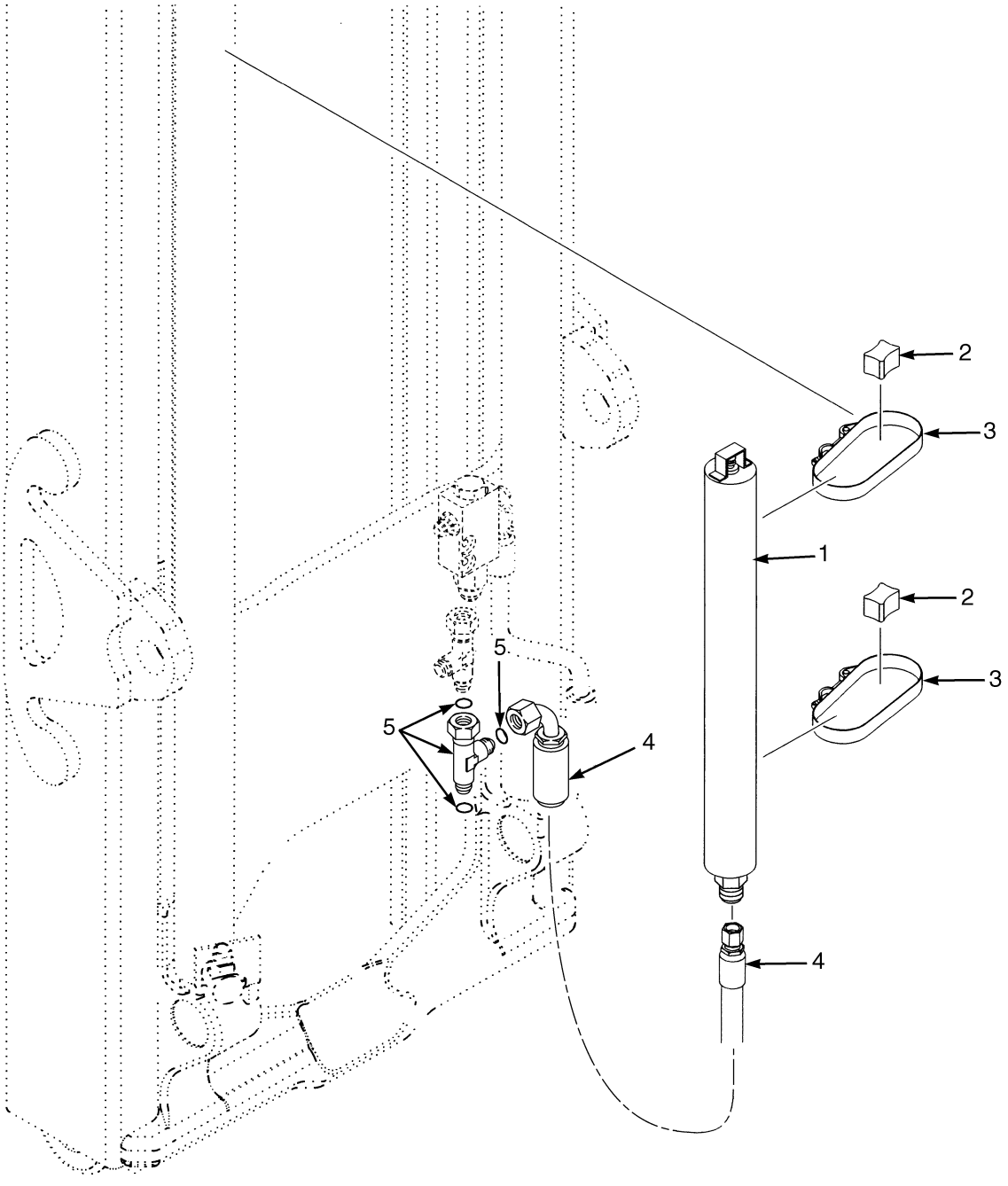

©2014 HYSTER COMPANY

ACCUMULATOR AND ATTACHING PARTS

ITEM	PART NO.	DESCRIPTION	QTY
1	1629185	Accumulator	1
1	1695807	Accumulator (Alternate Part)	1
2	1609864	Spacer	2
3	4031653	Strap Clamp	2
4	2073766	Hose Assy	1
5	1487096	Fitting	1
5	252729	O-Ring	3

©2014 HYSTER COMPANY

AUXILIARY TUBES (FIGURE 16-7)

TWO STAGE LIMITED FREE LIFT — WITH MANUAL AND E-HYDRAULICS VALVE WITHOUT QUICK DISCONNECT

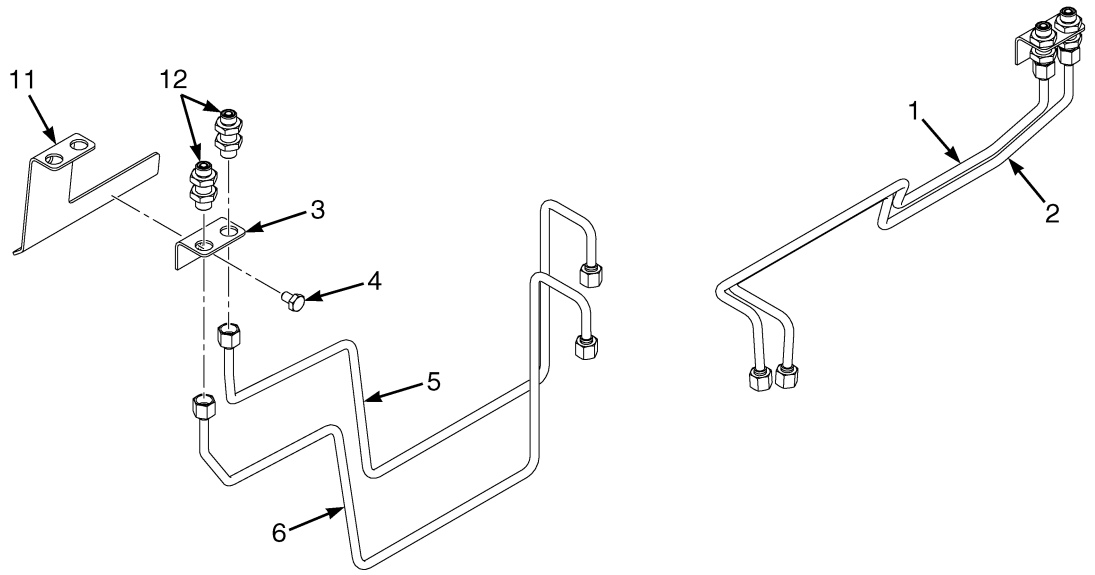

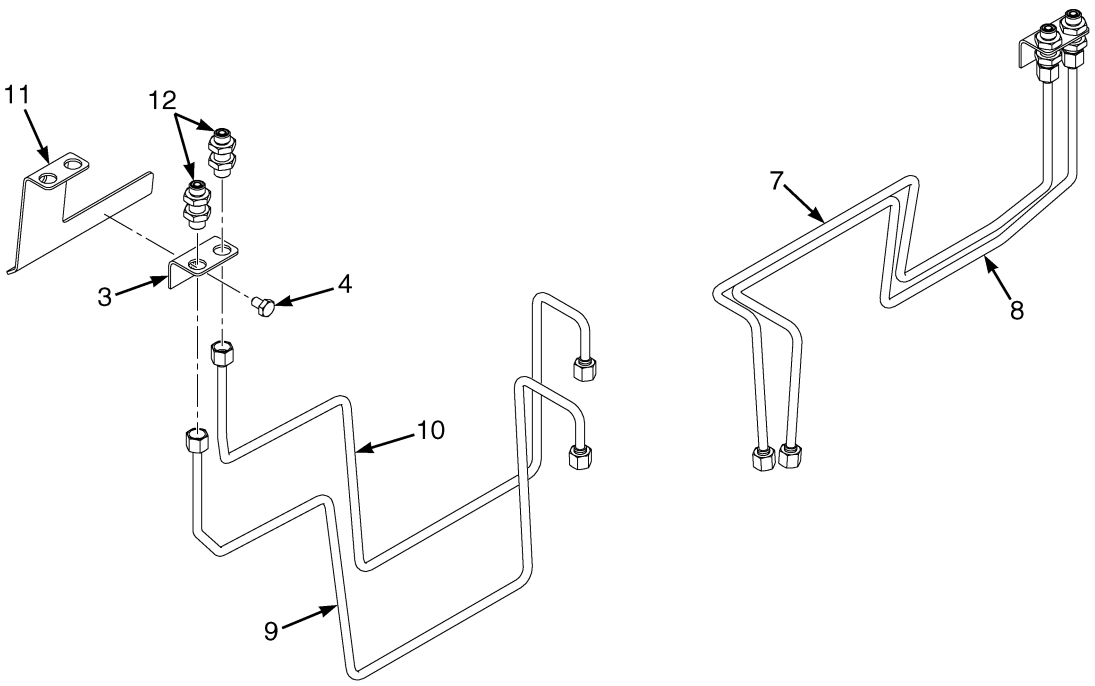

BP000843

©2014 HYSTER COMPANY

AUXILIARY TUBES

TWO STAGE LIMITED FREE LIFT – WITH MANUAL AND E-HYDRAULICS VALVE WITHOUT QUICK DISCONNECT

KEY:
A: H40-50FT (F507)
B: H60-70FT (F562)

ITEM	PART NO.	DESCRIPTION	QTY A	QTY B
1	**d** 4628202	Tube Assy	1	..
2	**d** 4628203	Tube Assy	1	..
3	1550070	Bracket	1	2
4	1658934	Capscrew	1	2
5	**a** 4628200	Tube Assy	1	..
6	**a** 4628201	Tube Assy	1	..
7	**d** 4628206	Tube Assy	..	1
8	**d** 4628207	Tube Assy	..	1
9	**a** 4628204	Tube Assy	..	1
10	**a** 4628205	Tube Assy	..	1
11	**b** 4060493	Bracket (LH)	..	1
11	**b** 4060492	Bracket (LH)	1	..
12	1528573	Fitting	2	4
13	**c** 1529015	Cap	2	4

FOOTNOTES:

a Four Function
b Integral Side-Shift Carriage
c Not Illustrated
d Three Function

©2014 HYSTER COMPANY

AUXILIARY TUBES (FIGURE 16-8)

TWO STAGE LIMITED FREE LIFT — MANUAL AND E-HYDRAULIC VALVE WITH QUICK DISCONNECT

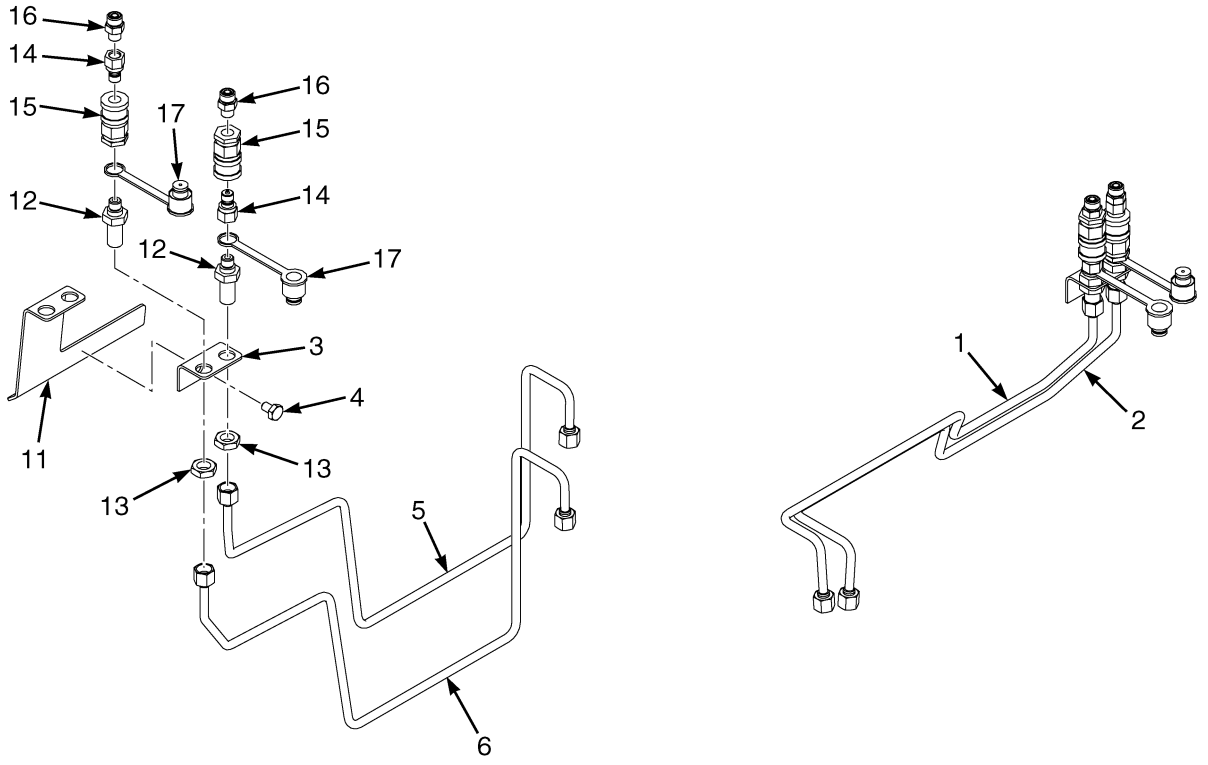

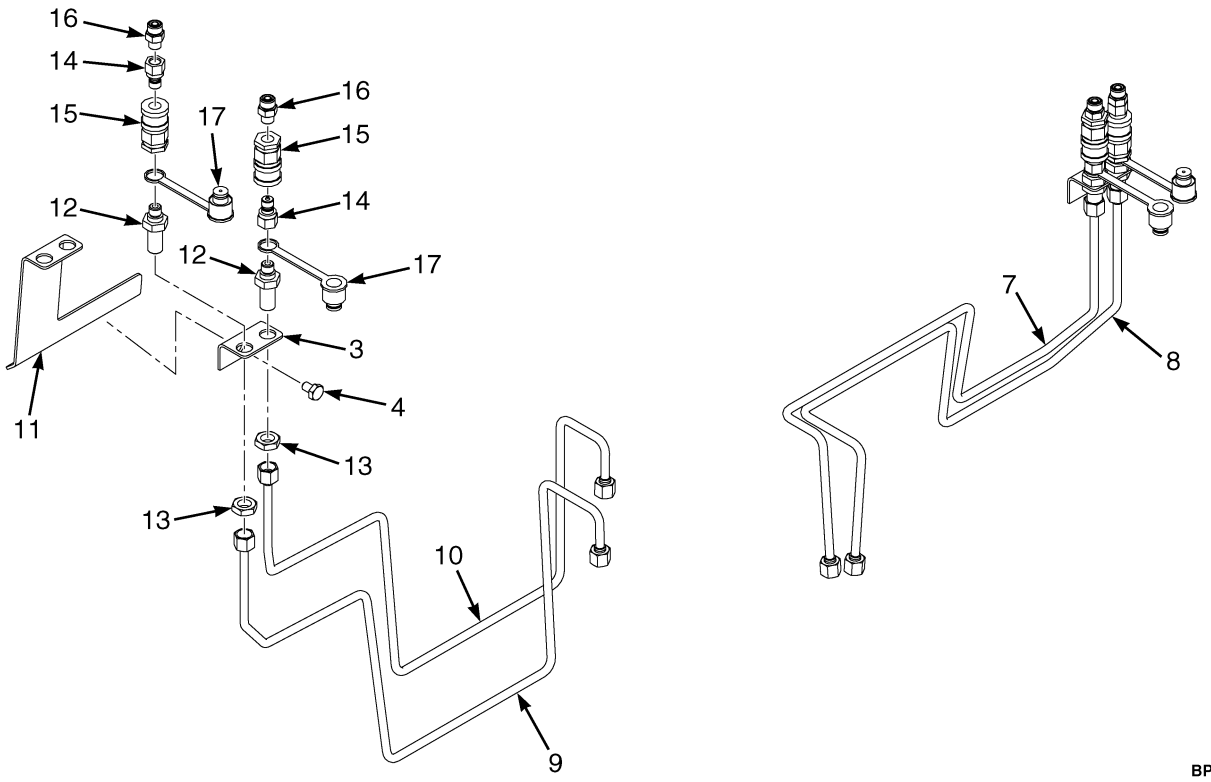

BP000844

©2014 HYSTER COMPANY

AUXILIARY TUBES

TWO STAGE LIMITED FREE LIFT – MANUAL AND E-HYDRAULIC VALVE WITH QUICK DISCONNECT

KEY:
A: H40-50FT (F507)
B: H60-70FT (F562)

ITEM	PART NO.	DESCRIPTION	QTY A	QTY B
1	**e** 4628202	Tube Assy	1	..
2	**e** 4628203	Tube Assy	1	..
3	1550070	Bracket	1	2
4	1658934	Capscrew	1	2
5	**b** 4628200	Tube Assy	1	..
6	**b** 4628201	Tube Assy	1	..
7	**e** 4628206	Tube Assy	..	1
8	**e** 4628207	Tube Assy	..	1
9	**b** 4628204	Tube Assy	..	1
10	**b** 4628205	Tube Assy	..	1
11	**c** 4060493	Bracket (LH)	..	1
11	**c** 4060492	Bracket (LH)	1	..
12	**d** 1708364	Bulkhead (Fitting)	2	2
12	**a** 1708364	Bulkhead (Fitting)	4	4
13	**d** 1528602	Locknut	2	2
13	**a** 1528602	Locknut	4	4
14	**d** 1483663	Quick Disconnect Fitting	2	2
14	**a** 1483663	Quick Disconnect Fitting	4	4
15	**d** 1483664	Fitting	2	2
15	**a** 1483664	Fitting	4	4
16	**d** 1486740	Fitting	2	2
16	**a** 1486740	Fitting	4	4
17	**d** 1483661	Dust Cap	2	2
17	**a** 1483661	Dust Cap	4	4

FOOTNOTES:

a Dual Auxiliary Option
b Four Function
c Integral Side-Shift Carriage
d Single Auxiliary Option
e Three Function

©2014 HYSTER COMPANY

AUXILIARY TUBES (FIGURE 16-9)

THREE STAGE FULL FREE-LIFT — MANUAL AND E-HYDRAULICS VALVE WITH QUICK DISCONNECT

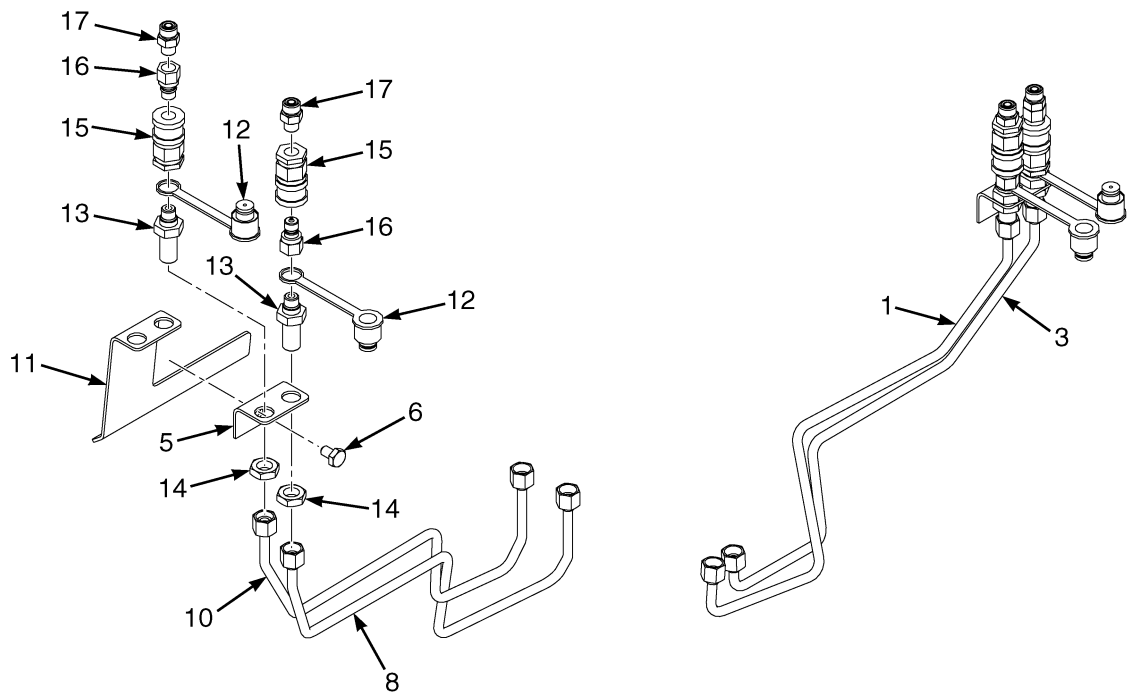

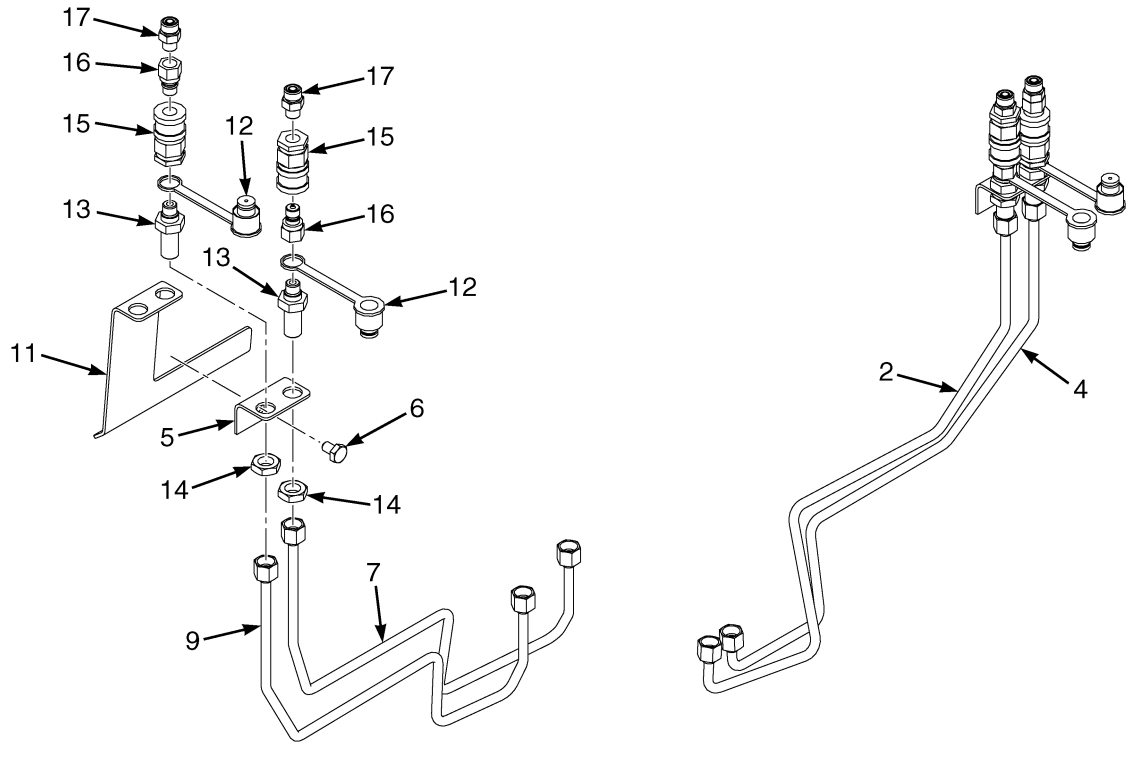

BP000861

©2014 HYSTER COMPANY

AUXILIARY TUBES

THREE STAGE FULL FREE-LIFT – MANUAL AND E-HYDRAULICS VALVE WITH QUICK DISCONNECT

KEY:
A: H40-50FT (F508)
B: H60-70FT (F563)

ITEM	PART NO.	DESCRIPTION	QTY A	QTY B
1	**e** 4624525	Tube Assy	1	..
2	**e** 4624527	Tube Assy	..	1
3	**e** 4624524	Tube Assy	1	..
4	**e** 4624526	Tube Assy	..	1
5	1550070	Bracket	2	2
6	1658934	Capscrew	2	2
7	**b** 4624501	Tube Assy	1	..
8	**b** 4624503	Tube Assy	..	1
9	**b** 4624502	Tube Assy	1	..
10	**b** 4624504	Tube Assy	..	1
11	**c** 4060492	Bracket	2	..
11	**c** 4060493	Bracket	..	2
12	**d** 1483661	Dust Cap	2	2
12	**a** 1483661	Dust Cap	4	4
13	**d** 1708364	Bulkhead (Fitting)	2	2
13	**a** 1708364	Bulkhead (Fitting)	4	4
14	**d** 1528602	Locknut	2	2
14	**a** 1528602	Locknut	4	4
15	**d** 1483663	Quick Disconnect Fitting	2	2
15	**a** 1483663	Quick Disconnect Fitting	4	4
16	**d** 1483664	Fitting	2	2
16	**a** 1483664	Fitting	4	4
17	**d** 1486740	Fitting	2	2
17	**a** 1486740	Fitting	4	4

FOOTNOTES:

a Dual Auxiliary
b Four Function
c Integral Side-Shift
d Single Auxiliary
e Three Function

©2014 HYSTER COMPANY

AUXILIARY TUBES (FIGURE 16-10)

THREE STAGE FULL FREE-LIFT — MANUAL AND E-HYDRAULICS VALVE WITHOUT QUICK DISCONNECT

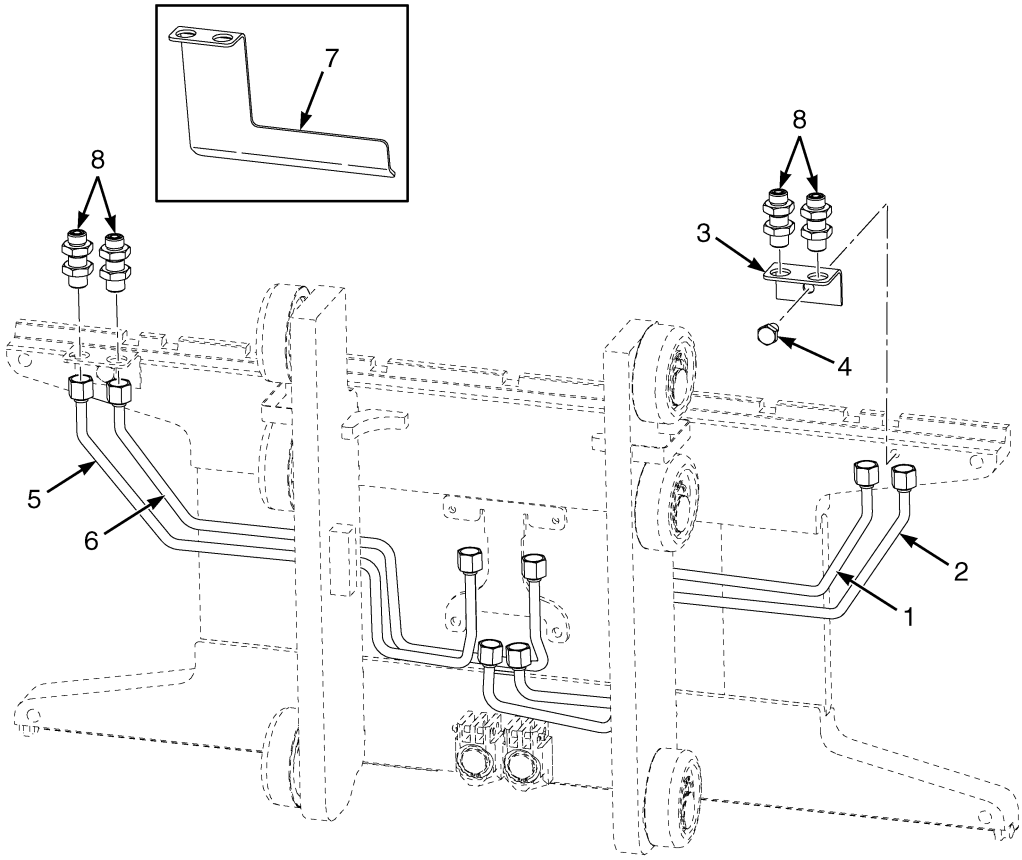

©2014 HYSTER COMPANY

AUXILIARY TUBES

THREE STAGE FULL FREE-LIFT – MANUAL AND E-HYDRAULICS VALVE WITHOUT QUICK DISCONNECT

KEY:
A: H40-50FT (F508)
B: H60-70FT (F563)

ITEM	PART NO.	DESCRIPTION	QTY A	QTY B
1	**f** 4624525	Tube Assy	1	..
1	**f** 4624527	Tube Assy	..	1
2	**f** 4624524	Tube Assy	1	..
2	**f** 4624526	Tube Assy	..	1
3	1550070	Bracket	2	2
4	1658934	Capscrew	2	2
5	**b** 4624501	Tube Assy	1	..
5	**b** 4624503	Tube Assy	..	1
6	**b** 4624502	Tube Assy	1	..
6	**b** 4624504	Tube Assy	..	1
7	**c** 4060492	Bracket	2	..
7	**c** 4060493	Bracket	..	2
8	**e** 1528573	Fitting	2	2
8	**a** 1528573	Fitting	4	4
	de 1529015	Cap	2	2
	ad 1529015	Cap	4	4

FOOTNOTES:

a Dual Auxiliary
b Four Function
c Integral Side-Shift
d Not Illustrated
e Single Auxiliary
f Three Function

©2014 HYSTER COMPANY

AUXILIARY QUICK DISCONNECT MANIFOLD AND HOSES (FIGURE 16-11)

TWO STAGE LIMITED FREE-LIFT (SINGLE AUXILIARY WITH E-HYDRAULICS) — THREE FUNCTION

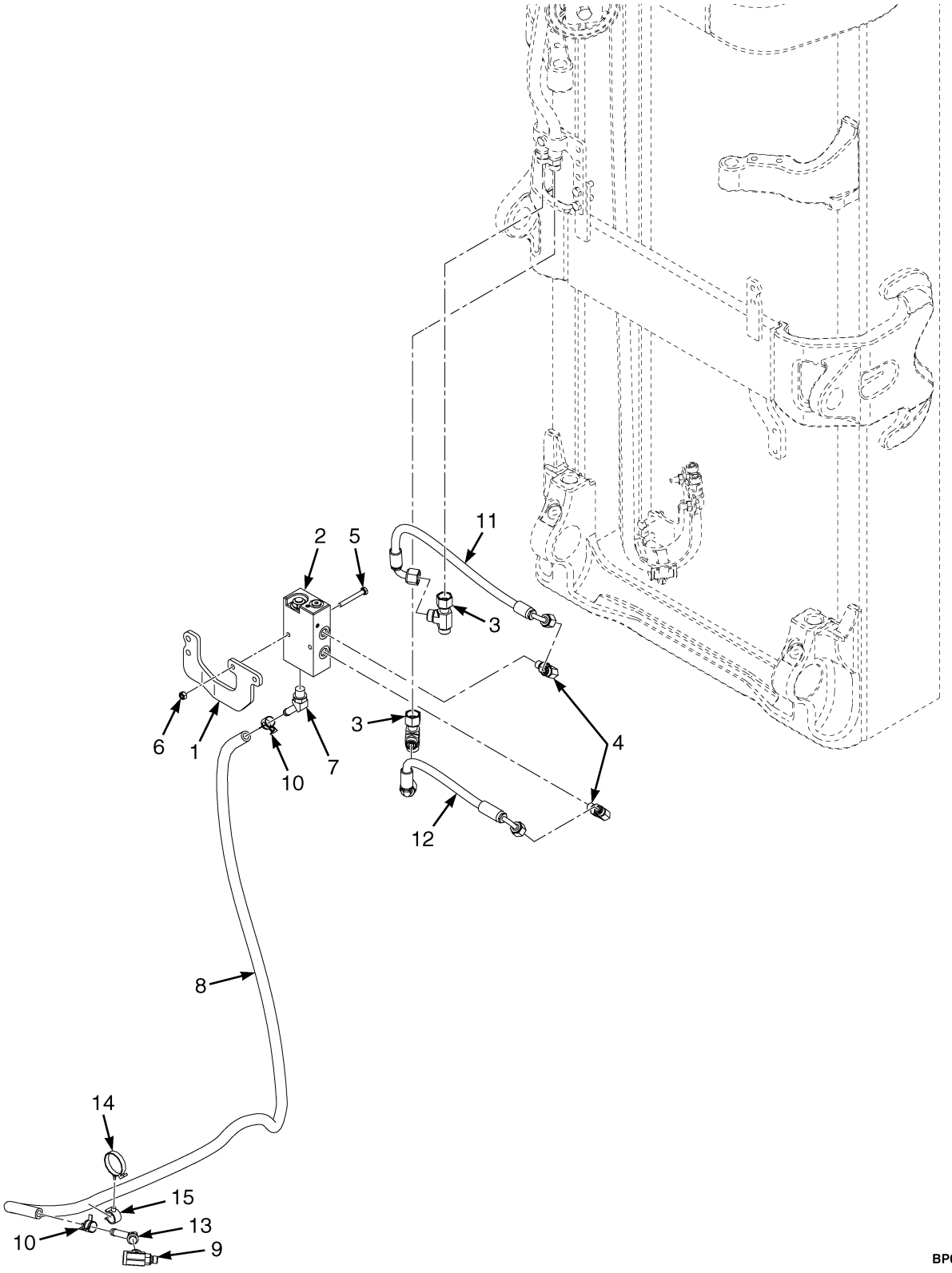

©2014 HYSTER COMPANY

AUXILIARY QUICK DISCONNECT MANIFOLD AND HOSES

TWO STAGE LIMITED FREE-LIFT (SINGLE AUXILIARY WITH E-HYDRAULICS) – THREE FUNCTION

ITEM	PART NO.	DESCRIPTION	QTY
1	4067017	Bracket	1
2	2111754	Valve	1
3	1487097	Fitting	2
4	1487058	Fitting	2
5	292505	Capscrew	2
6	302399	Nut	2
7	222501	Fitting	1
8	4626477	Hose Assy	1
9	4606305	T-Fitting	1
10	1569616	Hose Clamp	2
11	4626472	Hose Assy	1
12	4626473	Hose Assy	1
13	222500	Fitting	1
14	1644398	Clamp (Swivel)	1
15	1606544	Clamp	1

©2014 HYSTER COMPANY

AUXILIARY QUICK DISCONNECT MANIFOLD AND HOSES (FIGURE 16-12)

TWO STAGE LIMITED FREE-LIFT (SINGLE AUXILIARY WITH INTEGRAL SIDE-SHIFT AND E-HYDRAULICS) — FOUR FUNCTION

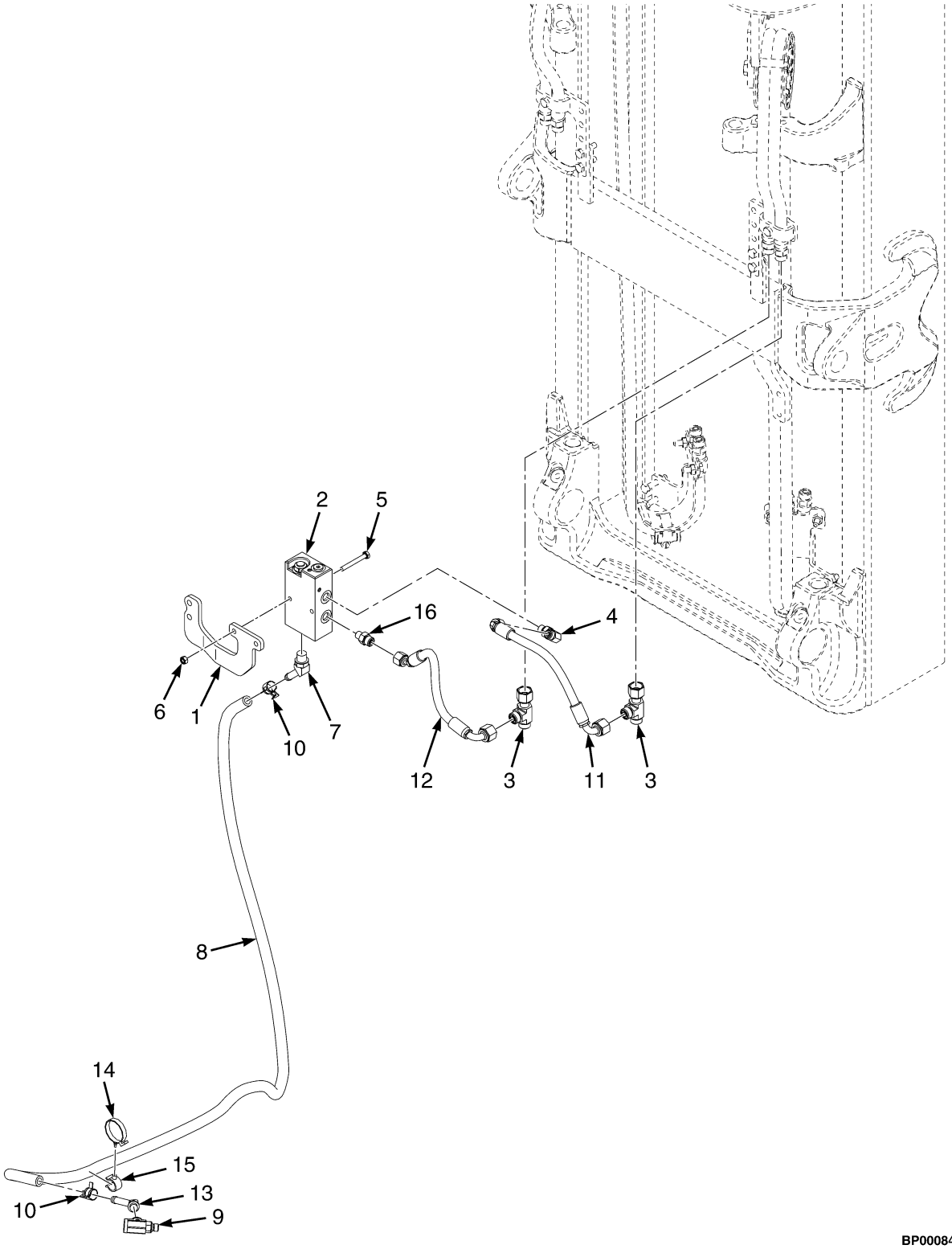

©2014 HYSTER COMPANY

AUXILIARY QUICK DISCONNECT MANIFOLD AND HOSES

TWO STAGE LIMITED FREE-LIFT (SINGLE AUXILIARY WITH INTEGRAL SIDE-SHIFT AND E-HYDRAULICS) – FOUR FUNCTION

ITEM	PART NO.	DESCRIPTION	QTY
1	4067017	Bracket	1
2	2111754	Valve	1
3	1487097	Fitting	2
4	1487058	Fitting	1
5	292505	Capscrew	2
6	302399	Nut	2
7	222501	Fitting	1
8	4626477	Hose Assy	1
9	4606305	T-Fitting	1
10	1569616	Hose Clamp	2
11	4628430	Hose Assy	1
12	4628431	Hose Assy	1
13	222500	Fitting	1
14	1644398	Clamp (Swivel)	1
15	1606544	Clamp	1
16	1486737	Fitting	1

©2014 HYSTER COMPANY

AUXILIARY QUICK DISCONNECT MANIFOLD AND HOSES (FIGURE 16-13)

TWO STAGE LIMITED FREE-LIFT (DUAL AUXILIARY WITH E-HYDRAULICS) — THREE AND FOUR FUNCTION

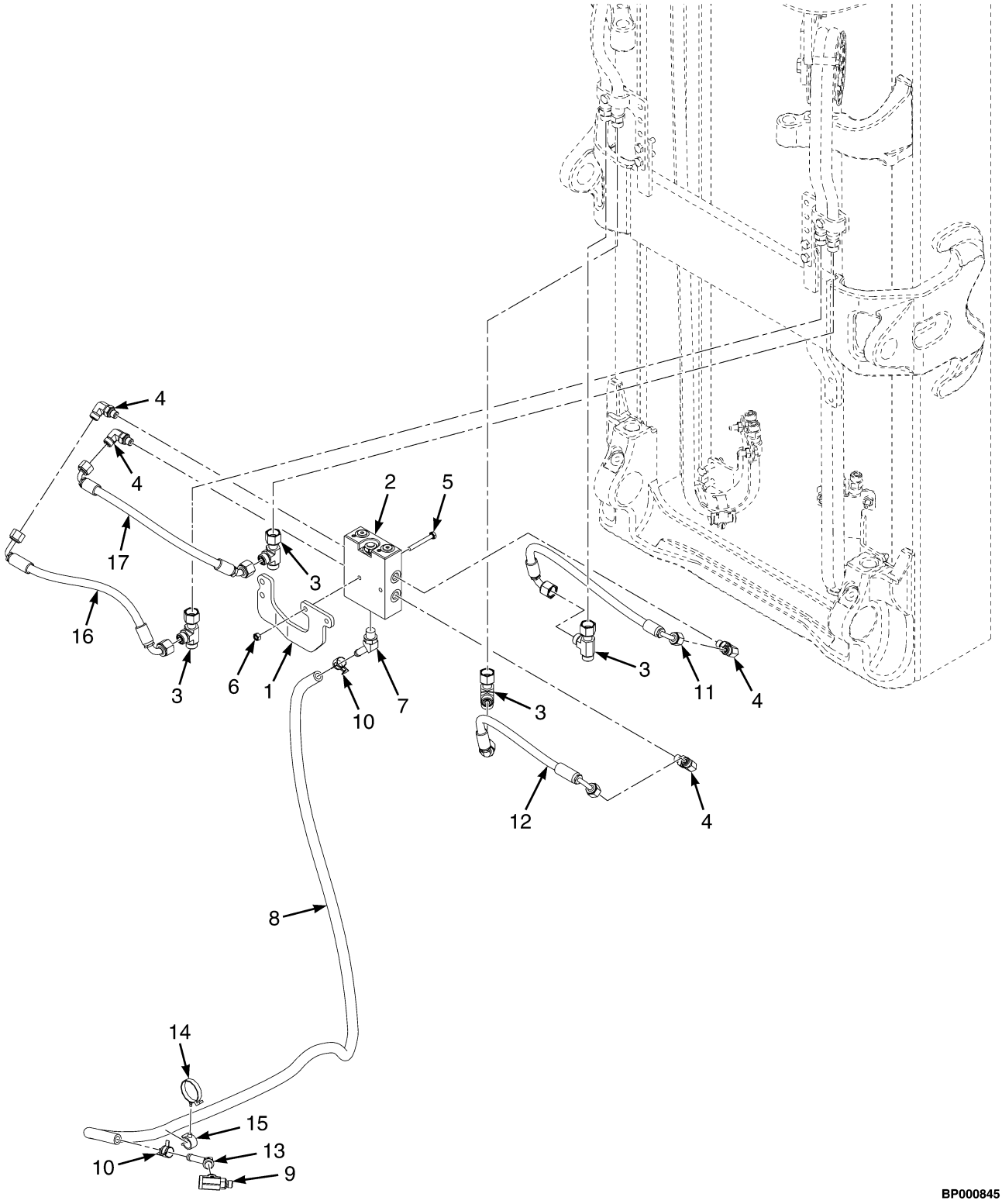

©2014 HYSTER COMPANY

AUXILIARY QUICK DISCONNECT MANIFOLD AND HOSES

TWO STAGE LIMITED FREE-LIFT (DUAL AUXILIARY WITH E-HYDRAULICS) – THREE AND FOUR FUNCTION

ITEM	PART NO.	DESCRIPTION	QTY
1	4067017	Bracket	1
2	2111755	Valve	1
3	1487097	Fitting	4
4	1487058	Fitting	4
5	292505	Capscrew	2
6	302399	Nut	2
7	222501	Fitting	1
8	4626477	Hose Assy	1
9	4606305	T-Fitting	1
10	1569616	Hose Clamp	2
11	4626472	Hose Assy	1
12	4626473	Hose Assy	1
13	222500	Fitting	1
14	1644398	Clamp (Swivel)	1
15	1606544	Clamp	1
16	4628269	Hose Assy	1
17	4628268	Hose Assy	1

©2014 HYSTER COMPANY

AUXILIARY QUICK DISCONNECT MANIFOLD AND HOSES (FIGURE 16-14)

THREE STAGE FULL FREE-LIFT (SINGLE AUXILIARY WITH E-HYDRAULICS — THREE FUNCTION

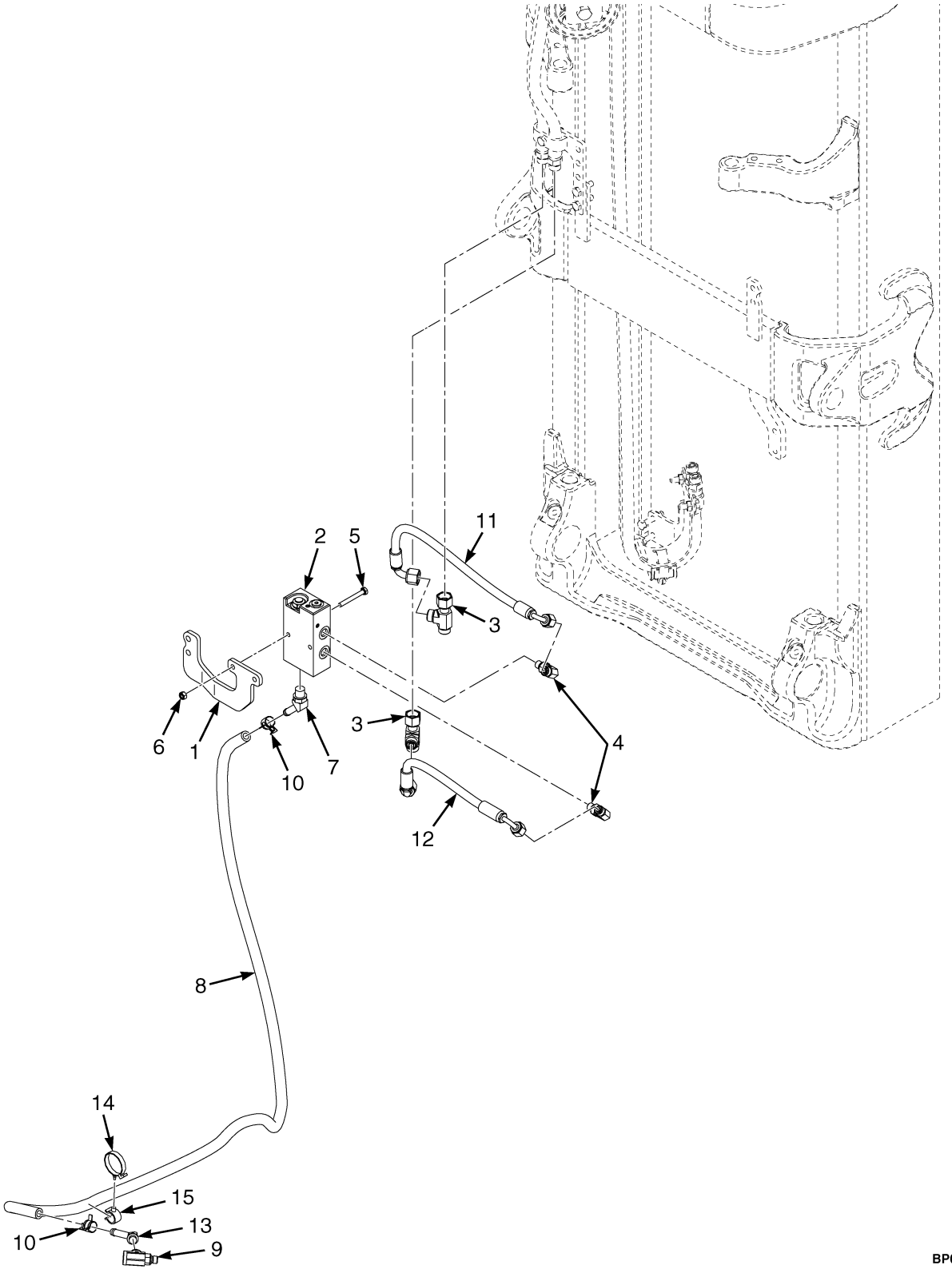

©2014 HYSTER COMPANY

AUXILIARY QUICK DISCONNECT MANIFOLD AND HOSES

THREE STAGE FULL FREE-LIFT (SINGLE AUXILIARY WITH E-HYDRAULICS – THREE FUNCTION

ITEM	PART NO.	DESCRIPTION	QTY
1	4067017	Bracket	1
2	2111754	Valve	1
3	1487097	Fitting	2
4	1487058	Fitting	2
5	292505	Capscrew	2
6	302399	Nut	2
7	222501	Fitting	1
8	4626477	Hose Assy	1
9	4606305	T-Fitting	1
10	1569616	Hose Clamp	2
11	4626472	Hose Assy	1
12	4626473	Hose Assy	1
13	222500	Fitting	1
14	1644398	Clamp (Swivel)	1
15	1606544	Clamp	1

©2014 HYSTER COMPANY

AUXILIARY QUICK DISCONNECT MANIFOLD AND HOSES (FIGURE 16-15)

THREE STAGE FULL FREE-LIFT (SINGLE AUXILIARY WITH INTEGRAL SIDE-SHIFT AND E-HYDRAULICS) — FOUR FUNCTION

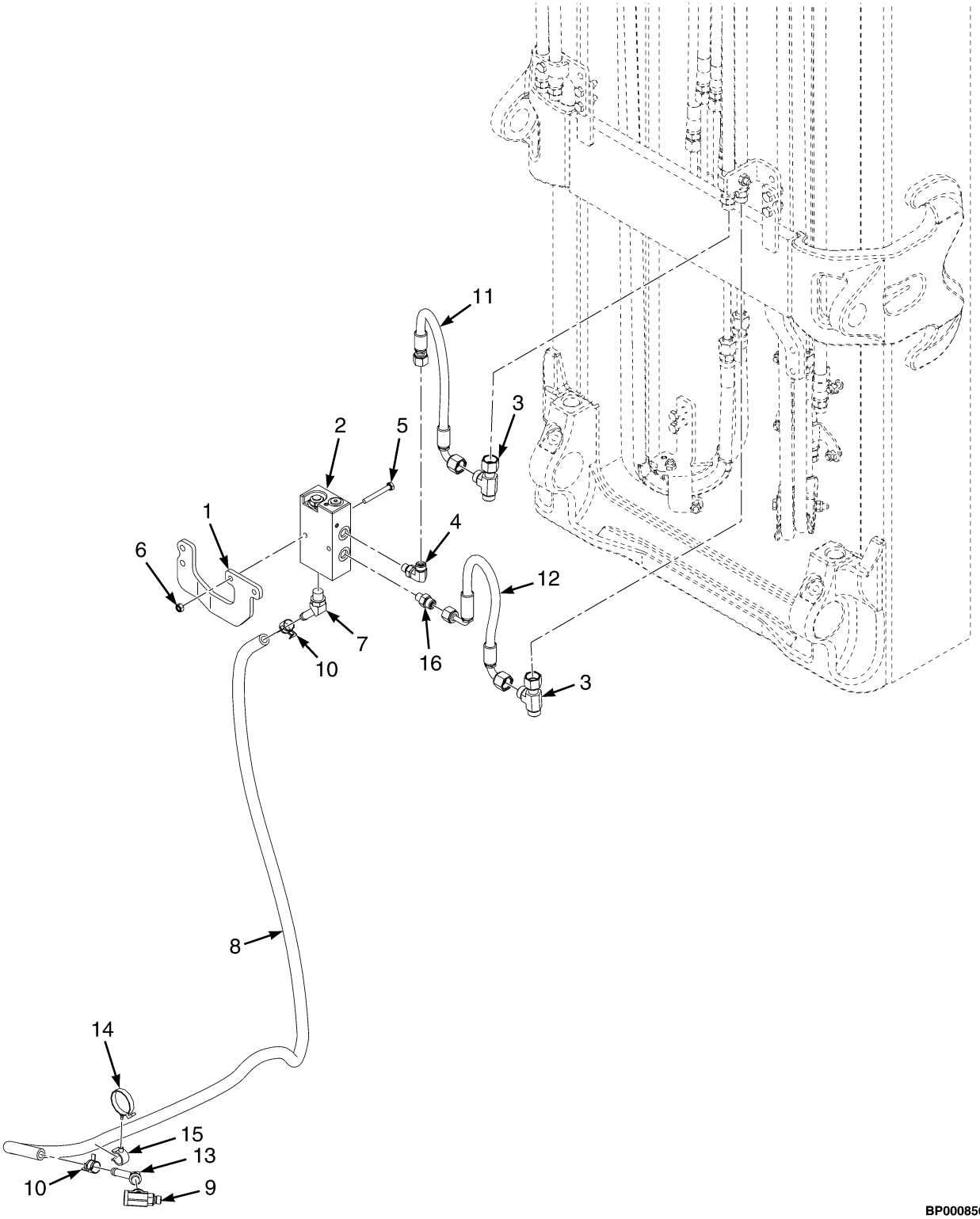

©2014 HYSTER COMPANY

AUXILIARY QUICK DISCONNECT MANIFOLD AND HOSES

THREE STAGE FULL FREE-LIFT (SINGLE AUXILIARY WITH INTEGRAL SIDE-SHIFT AND E-HYDRAULICS) – FOUR FUNCTION

ITEM	PART NO.	DESCRIPTION	QTY
1	4067017	Bracket	1
2	2111754	Valve	1
3	1487097	Fitting	2
4	1487058	Fitting	1
5	292505	Capscrew	2
6	302399	Nut	2
7	222501	Fitting	1
8	4626477	Hose Assy	1
9	4606305	T-Fitting	1
10	1569616	Hose Clamp	2
11	4626238	Hose Assy	1
12	4626239	Hose Assy	1
13	222500	Fitting	1
14	1644398	Clamp (Swivel)	1
15	1606544	Clamp	1
16	1486737	Fitting	1

©2014 HYSTER COMPANY

AUXILIARY QUICK DISCONNECT MANIFOLD AND HOSES (FIGURE 16-16)

THREE STAGE FULL FREE-LIFT (DUAL AUXILIARY WITH E-HYDRAULICS — THREE AND FOUR FUNCTION

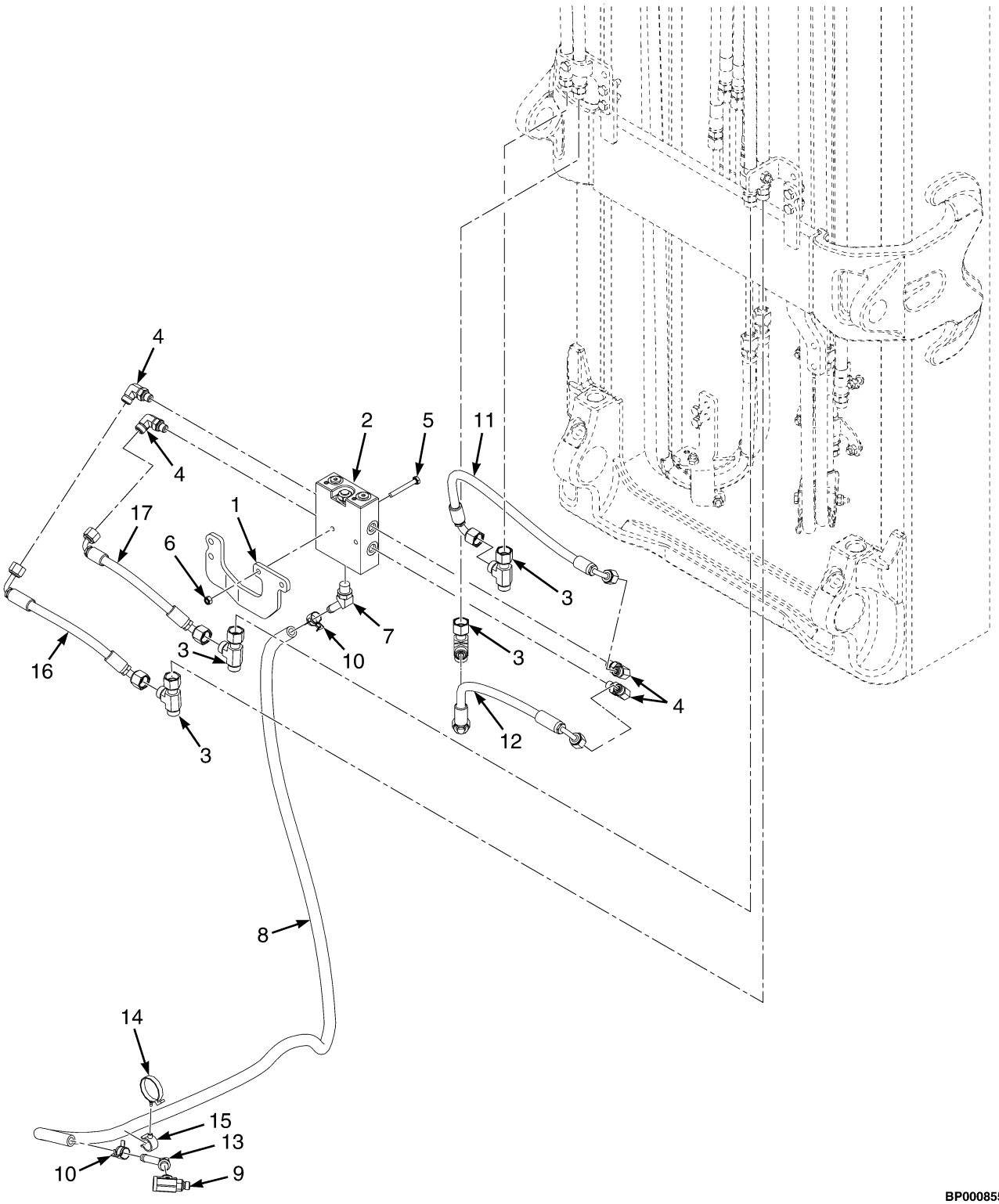

©2014 HYSTER COMPANY

AUXILIARY QUICK DISCONNECT MANIFOLD AND HOSES

THREE STAGE FULL FREE-LIFT (DUAL AUXILIARY WITH E-HYDRAULICS – THREE AND FOUR FUNCTION

ITEM	PART NO.	DESCRIPTION	QTY
1	4067017	Bracket	1
2	2111755	Valve	1
3	1487097	Fitting	4
4	1487058	Fitting	4
5	292505	Capscrew	2
6	302399	Nut	2
7	222501	Fitting	1
8	4626477	Hose Assy	1
9	4606305	T-Fitting	1
10	1569616	Hose Clamp	2
11	4626472	Hose Assy	1
12	4626473	Hose Assy	1
13	222500	Fitting	1
14	1644398	Clamp (Swivel)	1
15	1606544	Clamp	1
16	4626474	Hose Assy	1
17	4626475	Hose Assy	1

©2014 HYSTER COMPANY

INTEGRAL SIDE-SHIFT CARRIAGE (FIGURE 16-17)

TWO STAGE LIMITED FREE-LIFT

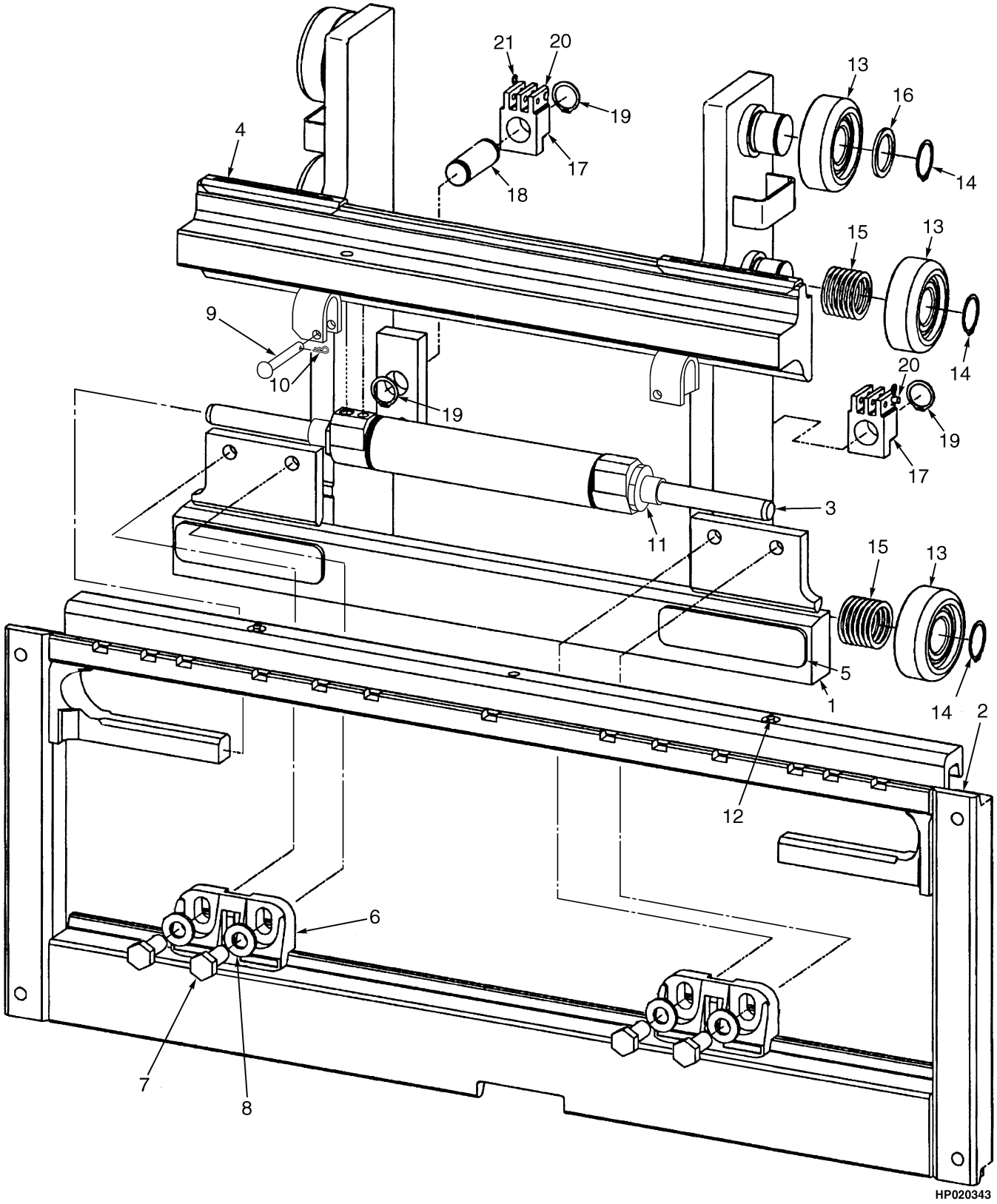

©2014 HYSTER COMPANY

INTEGRAL SIDE-SHIFT CARRIAGE
TWO STAGE LIMITED FREE-LIFT

KEY:
A: H40-50FT (F507)
B: H60-70FT (F563)

NOTE: This parts list contains multiple truck configurations, refer to the KEY to choose the correct QTY column for your truck.

ITEM	PART NO.	DESCRIPTION	QTY A	QTY B
	4625591	Side-Shift Carriage (42 in.)	1	..
	4625592	Side-Shift Carriage (48 in.)	1	..
	4625598	**Side-Shift Carriage (42 in.)**	**..**	**1**
	4625600	Side-Shift Carriage (48 in.)	..	1
1	4065188	Carriage Wldmt (42 in. and 48 in.)	1	..
1	**4065214**	**Carriage Wldmt (42 in. and 48 in.)**	**..**	**1**
2	4033955	Frame (Outer) (42 in.)	1	..
2	4033958	Frame Wldmt (48 in.) (Outer)	1	..
2	**4033960**	**Frame (Outer) (42 in.)**	**..**	**1**
2	4033957	Frame Wldmt (48 in.) (Outer)	..	1
3	2043528	Sideshift Cylinder Assembly (☞Figure 16-23)	1	..
3	**2043529**	**Sideshift Cylinder Assembly (☞Figure 16-23)**	**..**	**1**
4	2043531	Bearing Strip (Upper)	2	..
4	**2043532**	**Bearing (Upper)**	**..**	**2**
5	2043533	Bearing Strip (Lower)	2	..
5	**2043534**	**Bearing (Lower)**	**..**	**2**
6	**4611363**	**Hook**	**2**	**2**
7	**1581833**	**Capscrew**	**4**	**4**
8	**1581854**	**Washer**	**4**	**4**
9	**1401746**	**Pin**	**2**	**2**
10	**18832**	**Cotter Pin**	**2**	**2**
11	**1498326**	**Shim**	**3**	**3**
12	**16041**	**Grease Fitting**	**2**	**2**
13	**1345219**	**Load Roller ("B") (111.48/111.22)**	**6**	**6**
14	**12891**	**Snap Ring**	**6**	**6**
14	386422	Snap Ring (Optional)	6	6
15	**1345263**	**Shim (0.020 in.)**	**28**	**28**
16	**366116**	**Spacer**	**2**	**2**
17	1369345	Chain Anchor (Dual Hole)	2	..
17	1504010	Chain Anchor (Single Hole) (Optional)	2	..
17	1369344	Chain Anchor (Dual Hole)	..	2
17	**1504012**	**Chain Anchor (Single Hole) (Optional)**	**..**	**2**
18	**1353408**	**Pin**	**2**	**2**
18	317735	Pin (48 in.)	2	2
19	**131358**	**Snap Ring**	**4**	**4**
20	**1514866**	**Pin**	**2**	**2**
21	**15211**	**Cotter Pin**	**2**	**2**
	a 4611880	Carriage (42 in.) (Fork Positioner) (☞Figure 16-26)	1	..
	a 4611882	Carriage (42 in.) (Fork Positioner) (☞Figure 16-26)	..	1

FOOTNOTES:

a Not Illustrated

©2014 HYSTER COMPANY

INTEGRAL SIDE-SHIFT CARRIAGE (FIGURE 16-18)
THREE STAGE FULL FREE-LIFT

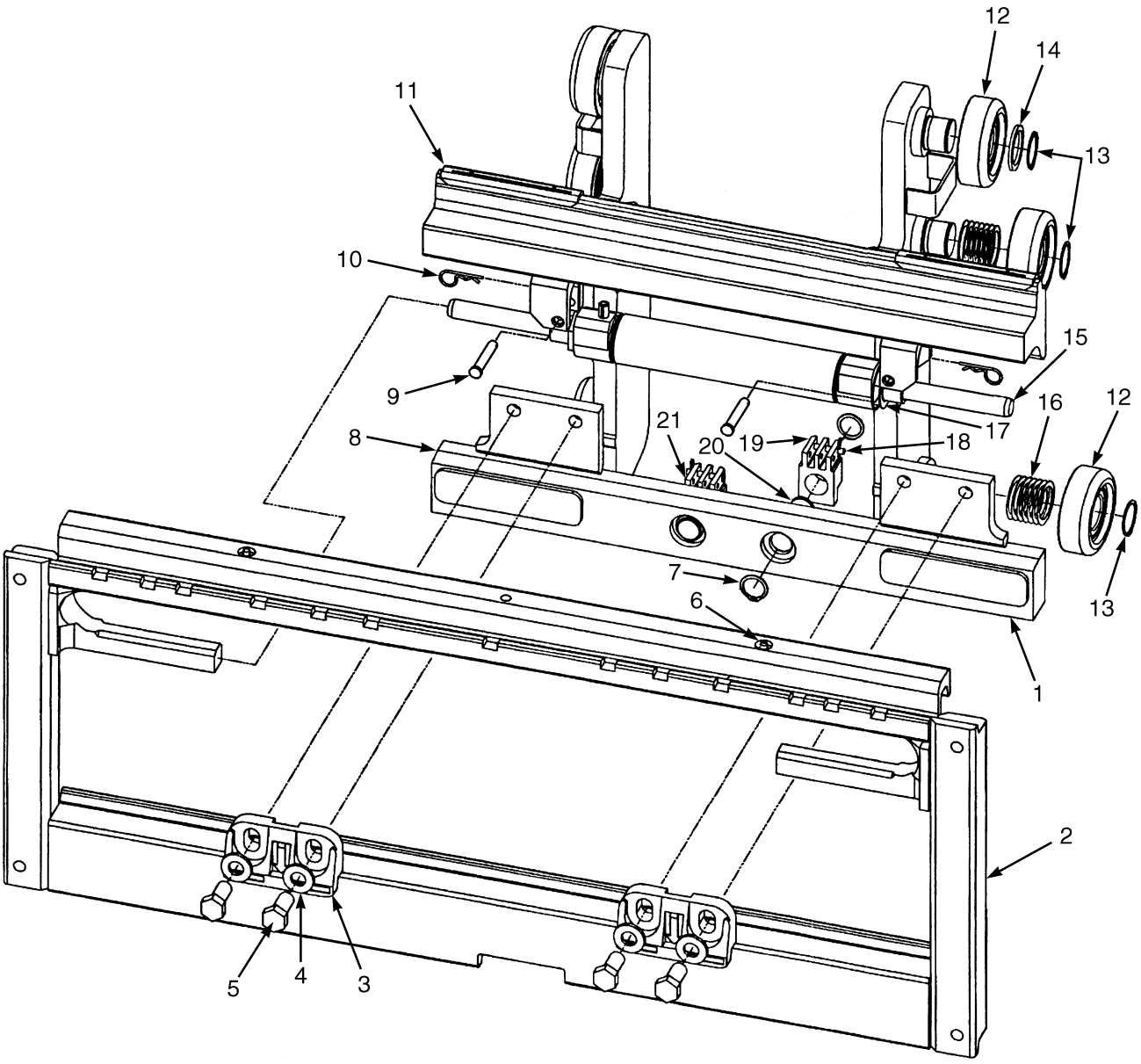

HP020344

©2014 HYSTER COMPANY

INTEGRAL SIDE-SHIFT CARRIAGE
THREE STAGE FULL FREE-LIFT

KEY:
A: H40-50FT (F508)
B: H60-70FT (F563)

ITEM	PART NO.	DESCRIPTION	QTY A	QTY B
	4617799	Side-Shift Carriage (42 in.)	1	..
	4621636	Side-Shift Carriage (48 in.)	1	..
	4617798	Side-Shift Carriage (42 in.)	..	1
	4621641	Side-Shift Carriage (48 in.)	..	1
	4621643	Side-Shift Carriage (54 in.)	..	1
1	4046434	Carriage Wldmt (42 in. and 48 in.) (Inner)	1	..
1	4046468	Carriage Wldmt (42 in. and 48 in.) (Inner)	..	1
1	4055468	Carriage Wldmt (54 in.) (Inner)	..	1
2	4033955	Frame (Outer) (42 in.)	1	..
2	4033958	Frame Wldmt (48 in.) (Outer)	1	..
2	4033960	Frame (Outer) (42 in.)	..	1
2	4033957	Frame Wldmt (48 in.) (Outer)	..	1
2	4033956	Frame Wldmt (Outer) (54 in.)	..	1
3	4611363	Hook	2	2
4	1581854	Washer	4	4
5	1581833	Capscrew	4	4
6	16041	Grease Fitting	2	2
7	131358	Snap Ring	4	4
8	2043533	Bearing Strip (Lower)	2	..
8	2043534	Bearing (Lower)	..	2
9	1401746	Pin	2	2
10	18832	Cotter Pin	2	2
11	2043531	Bearing Strip (Upper)	2	..
11	2043532	Bearing (Upper)	..	2
12	1333399	Load Roller ("B") (3.63 in./3.62 in.)	6	6
13	58901	Snap Ring	6	6
14	366115	Spacer	2	2
15	2043528	Sideshift Cylinder Assembly (☞Figure 16-23)	1	..
15	2043529	Sideshift Cylinder Assembly (☞Figure 16-23)	..	1
16	129387	Shim (0.020 in.)	28	28
17	1498326	Shim	3	3
18	1514866	Pin	2	2
19	1369345	Chain Anchor (Dual Hole)	2	..
19	1504010	Chain Anchor (Single Hole) (Optional)	2	..
19	1369344	Chain Anchor (Dual Hole)	..	2
19	1504012	Chain Anchor (Single Hole) (Optional)	..	2
20	317735	Pin	2	2
21	15211	Cotter Pin	2	2
	a 1374797	Snap Ring	6	6
	a 1345216	Stubshaft	6	6
	a 4611880	Carriage (42 in.) (Fork Positioner) (☞Figure 16-26)	1	..
	a 4611882	Carriage (42 in.) (Fork Positioner) (☞Figure 16-26)	..	1

©2014 HYSTER COMPANY

FOOTNOTES:

a Not Illustrated

©2014 HYSTER COMPANY

NOTES

©2014 HYSTER COMPANY

INTEGRAL SIDE-SHIFT CARRIAGE (FIGURE 16-19)
TWO STAGE FULL FREE-LIFT

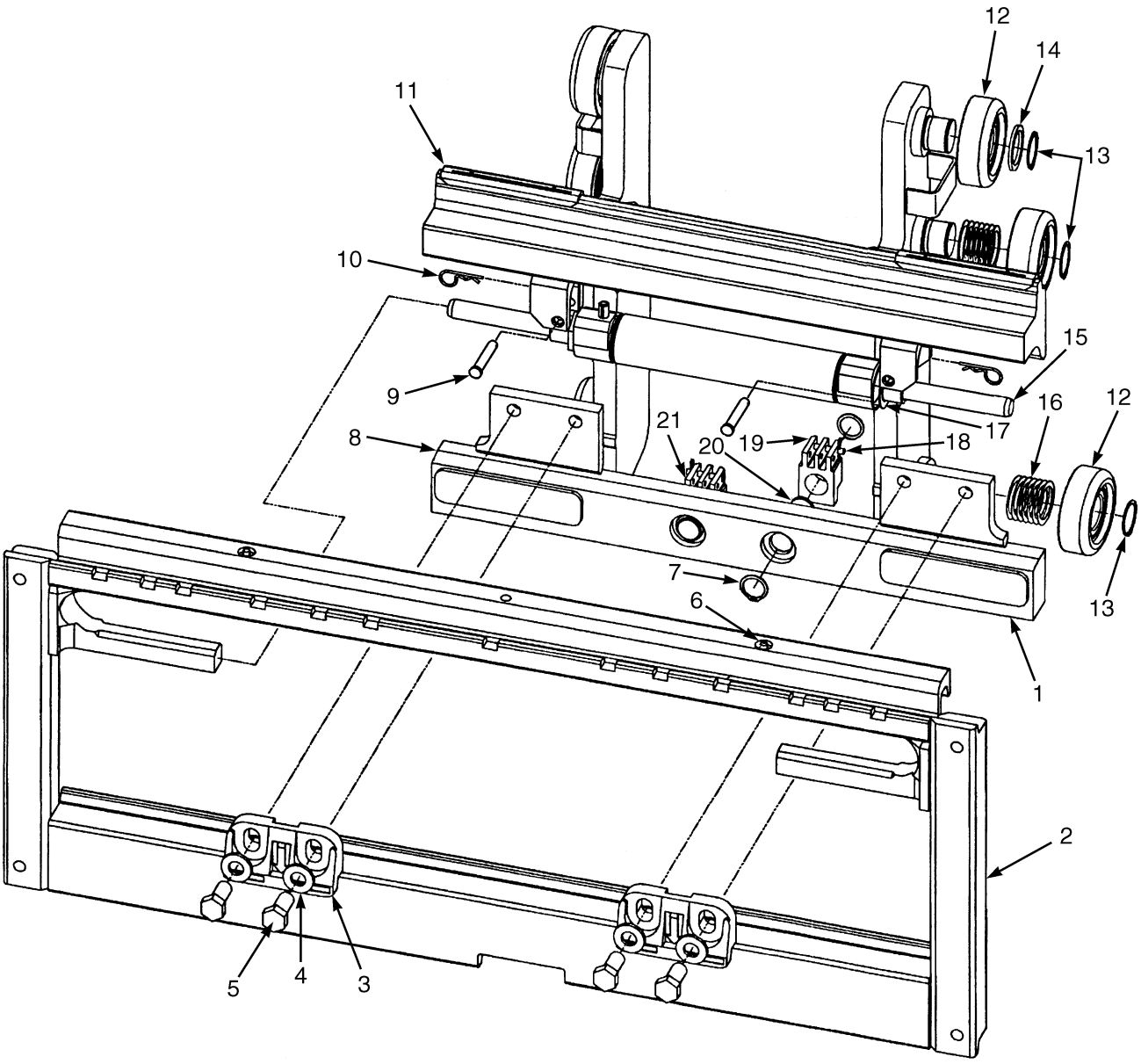

HP020344

©2014 HYSTER COMPANY

INTEGRAL SIDE-SHIFT CARRIAGE
TWO STAGE FULL FREE-LIFT

KEY:
A: H40-50FT (E509)
B: H60-70FT (E564)

ITEM	PART NO.	DESCRIPTION	QTY A	QTY B
	1486183	Side-Shift Carriage (42 in.)	1	..
	1486186	Side-Shift Carriage (48 in.)	1	..
	1477944	Side-Shift Carriage (42 in.)	..	1
	1477946	Side-Shift Carriage (48 in.)	..	1
1	1489003	Carriage Wldmt (Inner) (42 in., 48 in.)	1	..
1	1477938	Frame (Inner) (42 in., 48 in.)	..	1
2	4033955	Frame (Outer) (42 in.)	1	..
2	4033958	Frame Wldmt (48 in.)	1	..
2	4033960	Frame (Outer) (42 in.)	..	1
2	4033957	Frame Wldmt (48 in.)	..	1
3	4611363	Hook	2	2
4	296426	Washer	4	4
5	226458	Capscrew	4	2
6	16041	Grease Fitting	2	2
7	131358	Snap Ring	4	4
8	2043533	Bearing Strip (Lower)	2	..
8	2043534	Bearing (Lower)	..	2
9	1401746	Pin	2	2
10	18832	Cotter Pin	2	2
11	2043531	Bearing Strip (Upper)	2	..
11	2043532	Bearing (Upper)	..	2
12	1345219	Load Roller ("B") (111.48/111.22)	6	6
13	12891	Snap Ring	6	6
13	**a** 386422	Snap Ring (Optional)	6	6
14	366116	Spacer	2	2
15	2043528	Sideshift Cylinder Assembly (☞Figure 16-23)	1	..
15	2043529	Sideshift Cylinder Assembly (☞Figure 16-23)	..	1
16	1345263	Shim (0.020 in.)	28	28
17	1498326	Shim	3	3
18	1514866	Pin	2	2
19	1369345	Chain Anchor (Dual Hole)	2	..
19	1504010	Chain Anchor (Single Hole) (Optional)	2	..
19	1369344	Chain Anchor (Dual Hole)	..	2
19	1504012	Chain Anchor (Single Hole) (Optional)	..	2
20	317735	Pin	2	2
21	15211	Cotter Pin	2	2
	a 4611880	Carriage (42 in.) (Fork Positioner) (☞Figure 16-26)	1	..
	a 4611882	Carriage (42 in.) (Fork Positioner) (☞Figure 16-26)	..	1

FOOTNOTES:

a Not Illustrated

©2014 HYSTER COMPANY

INTEGRAL SIDE-SHIFT HYDRAULIC HOSES (FIGURE 16-20)
TWO STAGE LIMITED FREE-LIFT

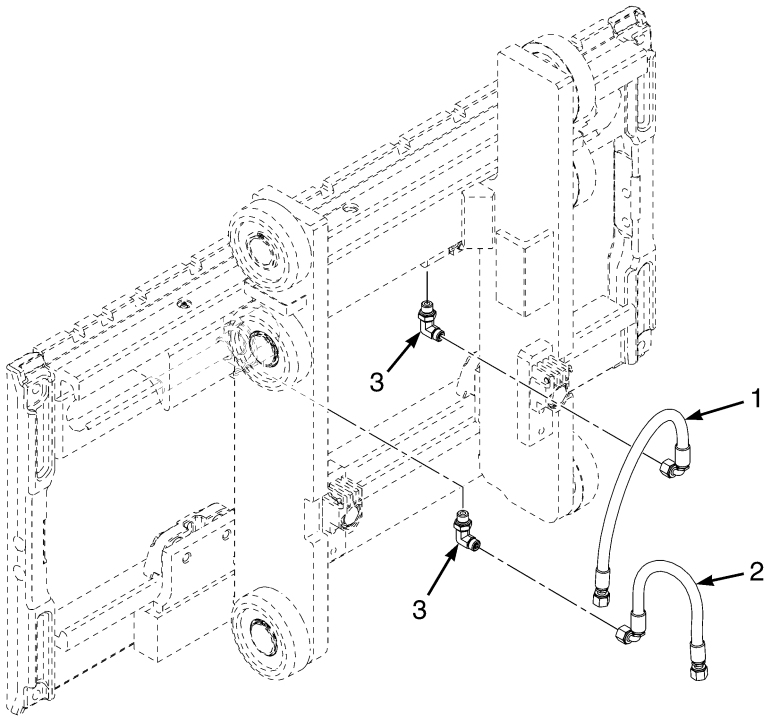

BP000832

ITEM	PART NO.	DESCRIPTION	QTY
1	4626625	Hose Assy	1
2	4626626	Hose Assy	1
3	1487059	Fitting	2

©2014 HYSTER COMPANY

INTEGRAL SIDE-SHIFT HYDRAULIC HOSES (FIGURE 16-21)
THREE STAGE FULL FREE LIFT

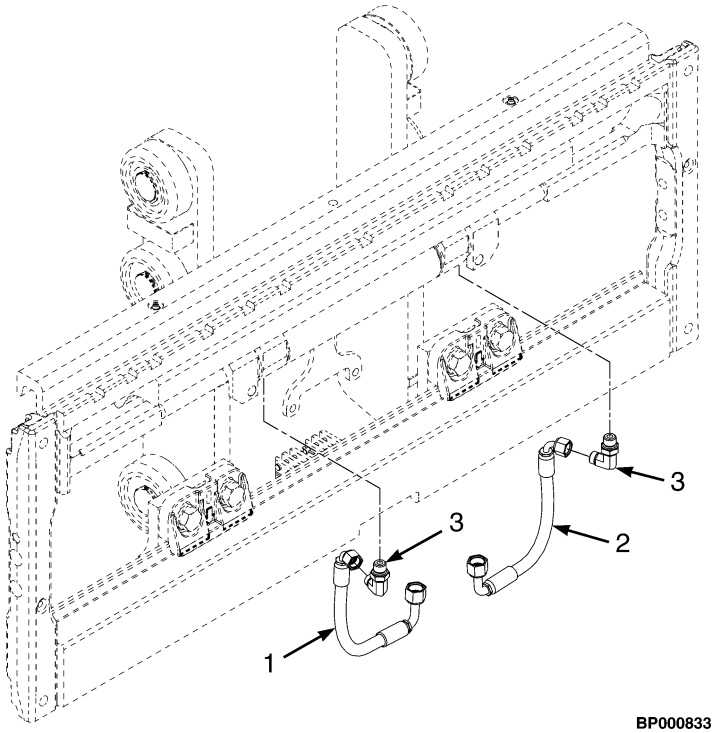

KEY:
A: H40-50FT (F508)
B: H60-70FT (F563)

ITEM	PART NO.	DESCRIPTION	QTY A	QTY B
1	4623988	Hose Assy	1	..
1	4623990	Hose Assy	..	1
2	4623989	Hose Assy	1	..
2	4623991	Hose Assy	..	1
3	1487059	Fitting	2	2

©2014 HYSTER COMPANY

INTEGRAL SIDE-SHIFT HYDRAULIC HOSES (FIGURE 16-22)
TWO STAGE FULL FREE- LIFT

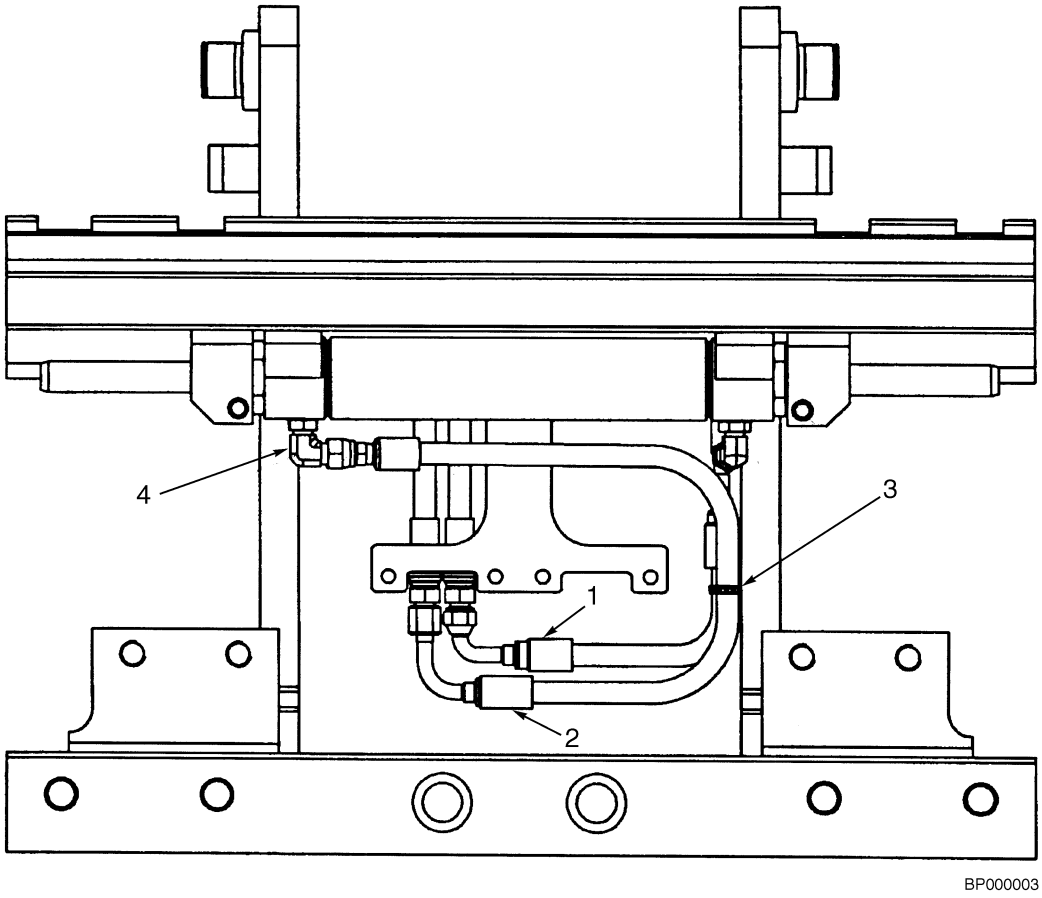

KEY:
A: H40-50FT (E509)
B: H60-70FT (E564)

ITEM	PART NO.	DESCRIPTION	QTY A	QTY B
1	4612128	Hose Assy	1	..
1	4612129	Hose Assy	..	1
2	4612127	Hose Assy	1	..
2	4612130	Hose Assy	..	1
3	114312	Strap Clamp	1	1
4	1487059	Fitting	2	2

©2014 HYSTER COMPANY

NOTES

©2014 HYSTER COMPANY

INTEGRAL SIDE-SHIFT CYLINDER (FIGURE 16-23)

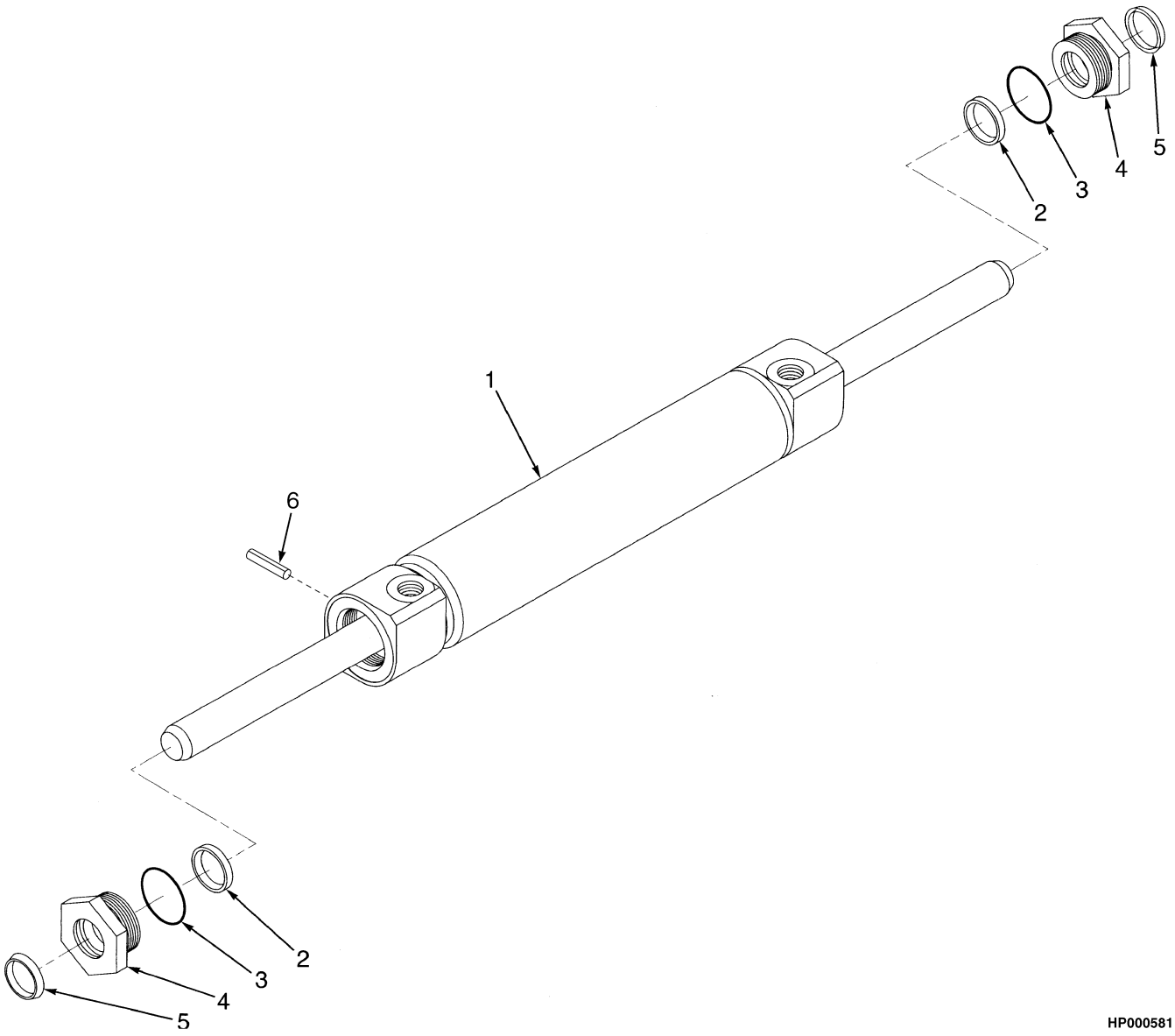

©2014 HYSTER COMPANY

INTEGRAL SIDE-SHIFT CYLINDER

ITEM	PART NO.	DESCRIPTION	QTY
	2043528	Sideshift Cylinder Assembly (H40-50FT)	1
	2043529	**Sideshift Cylinder Assembly (H60-70FT)**	**1**
1	1489016	Sideshift Cylinder	1
2	**1489037**	**Rod Seal**	**2**
3	**1489035**	**O-Ring**	**2**
4	**1498325**	**Retainer**	**2**
5	**1489039**	**Rod Wiper**	**2**
6	**302487**	**Roll Pin**	**1**
	1503096	Kit-Seal (Includes Items 2-3, 5)	1

©2014 HYSTER COMPANY

INTEGRAL SIDE-SHIFT (FIGURE 16-24)
FORK POSITIONER — TWO STAGE LIMITED FREE-LIFT

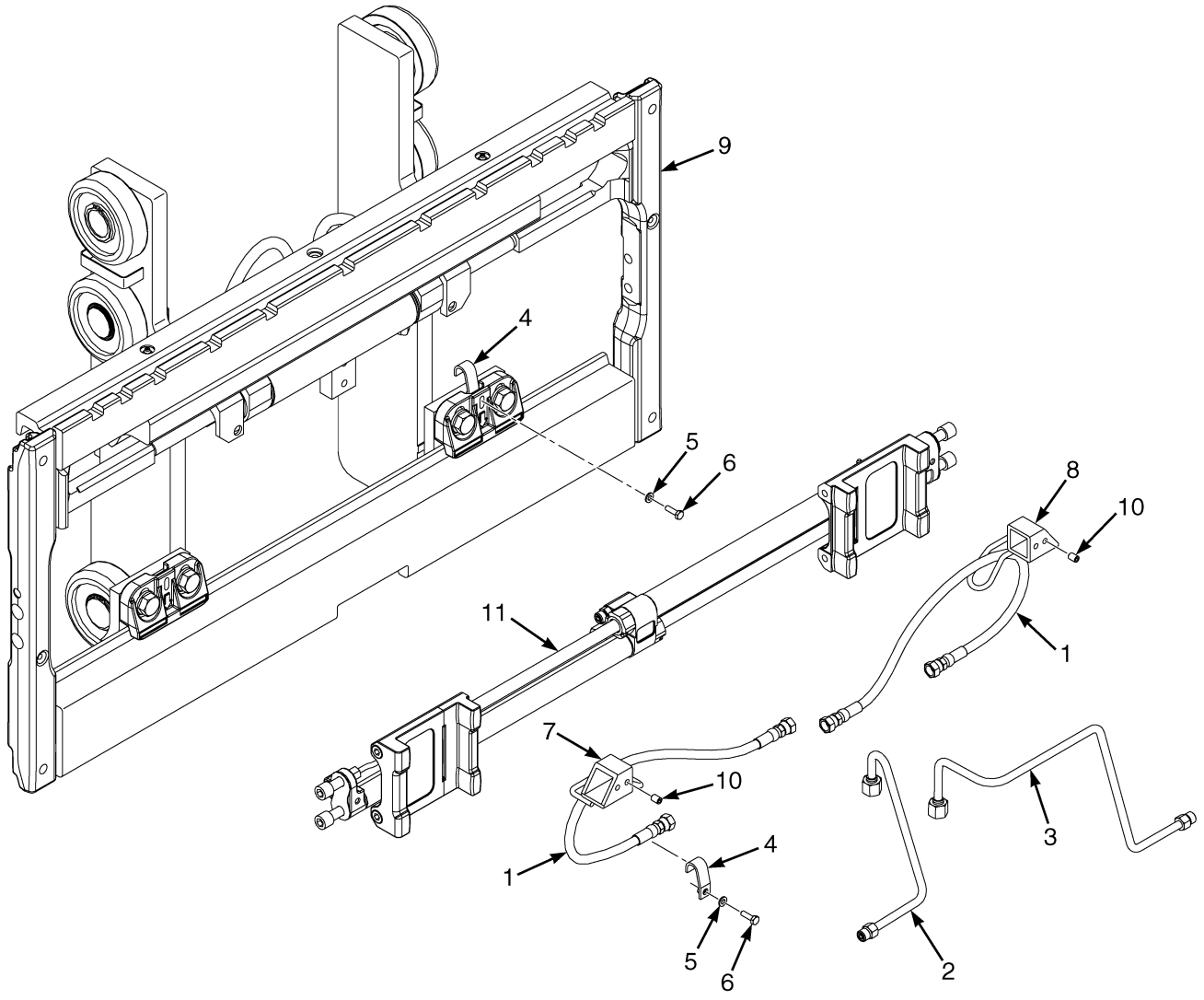

BP000831

©2014 HYSTER COMPANY

INTEGRAL SIDE-SHIFT
FORK POSITIONER – TWO STAGE LIMITED FREE-LIFT

KEY:
A: H40-50FT(F507)
B: H60-70FT (F562)

ITEM	PART NO.	DESCRIPTION	QTY A	QTY B
1	4611913	Hose Assy	2	2
2	4626768	Tube Assy	1	..
2	4626772	Tube Assy	..	1
3	4626769	Tube Assy	1	..
3	4626773	Tube Assy	..	1
4	4050817	Bracket Wldmt	2	2
5	1673754	Washer	2	2
6	1670032	Capscrew	2	2
7	4061318	Guide (Hose) (LH)	1	1
8	4061319	Guide (Hose) (RH)	1	1
9	. . . . .	Carriage Assembly (☞Figure 16-17)	1	1
10	4055634	Setscrew	4	4
11	4611880	Carriage (42 in.) (Fork Positioner) (☞Figure 16-26)	1	..
11	4611882	Carriage (42 in.) (Fork Positioner) (☞Figure 16-26)	..	1
11	4034634	Kit-Service Cylinder	1	1

©2014 HYSTER COMPANY

INTEGRAL SIDE-SHIFT (FIGURE 16-25)
FORK POSITIONER — THREE STAGE FULL FREE-LIFT

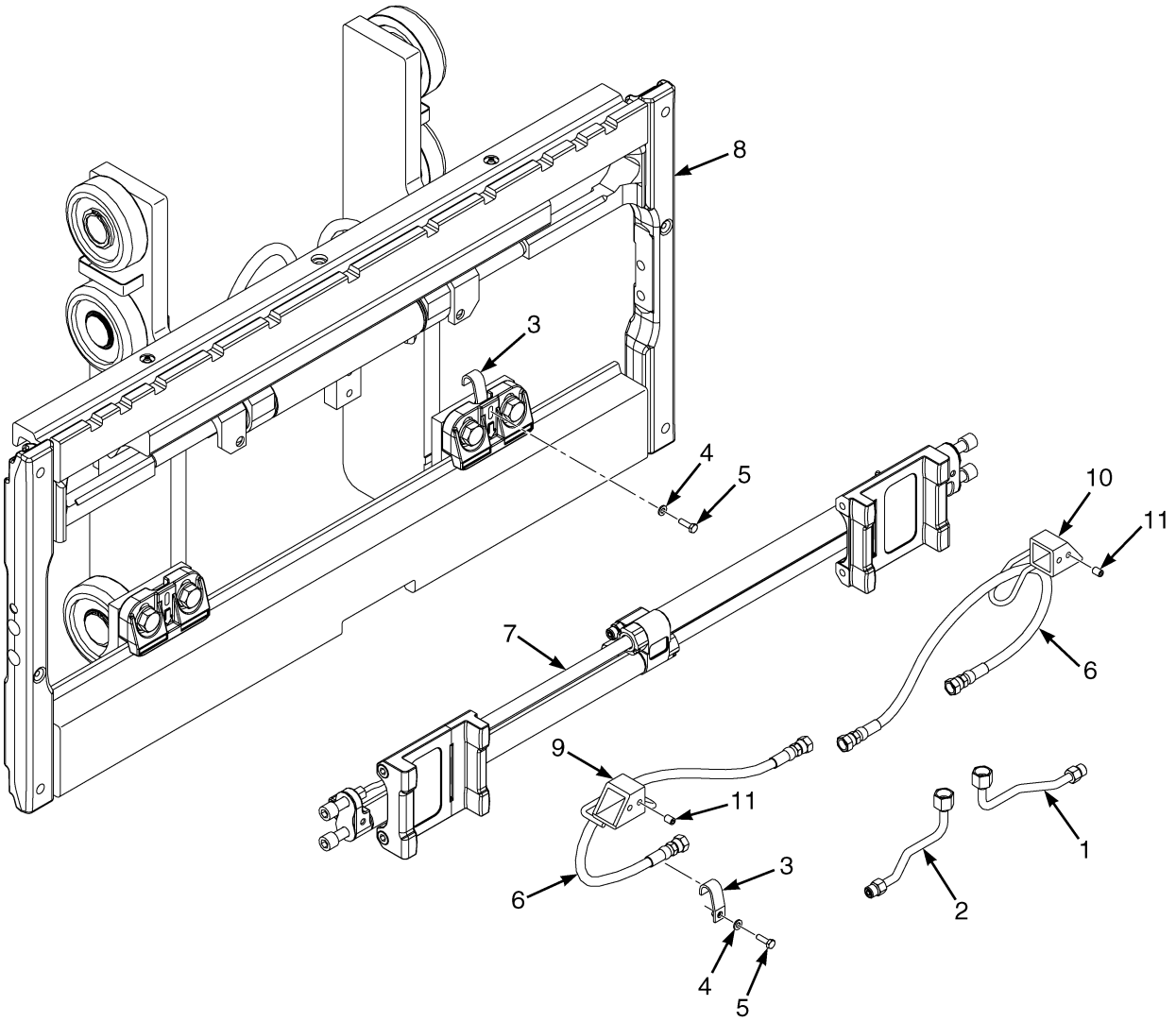

BP020071

©2014 HYSTER COMPANY

INTEGRAL SIDE-SHIFT
FORK POSITIONER – THREE STAGE FULL FREE-LIFT

KEY:
A: H40-50FT (F508)
B: H60-70FT (F563)

ITEM	PART NO.	DESCRIPTION	QTY A	QTY B
1	4633850	Tube Assy (LH)	1	..
1	4633852	Tube Assy (LH)	..	1
2	4633851	Tube Assy (RH)	1	..
2	4633853	Tube Assy (RH)	..	1
3	4050817	Bracket Wldmt	2	2
4	1673754	Washer	2	2
5	1670032	Capscrew	2	2
6	4611913	Hose Assy	2	..
6	4622266	Hose Assy	..	2
7	4611880	Carriage (42 in.) (Fork Positioner) (☞Figure 16-26)	1	..
7	4611882	Carriage (42 in.) (Fork Positioner) (☞Figure 16-26)	..	1
7	4034634	Kit-Service Cylinder	1	1
7	4034635	Kit-Bearing	1	1
8	. . . . .	Carriage Assembly (☞Figure 16-18)	1	1
9	4061319	Guide (Hose) (RH)	1	1
10	4061318	Guide (Hose) (LH)	1	1
11	4055634	Setscrew	4	4

©2014 HYSTER COMPANY

FORK POSITIONER ASSEMBLY (FIGURE 16-26)

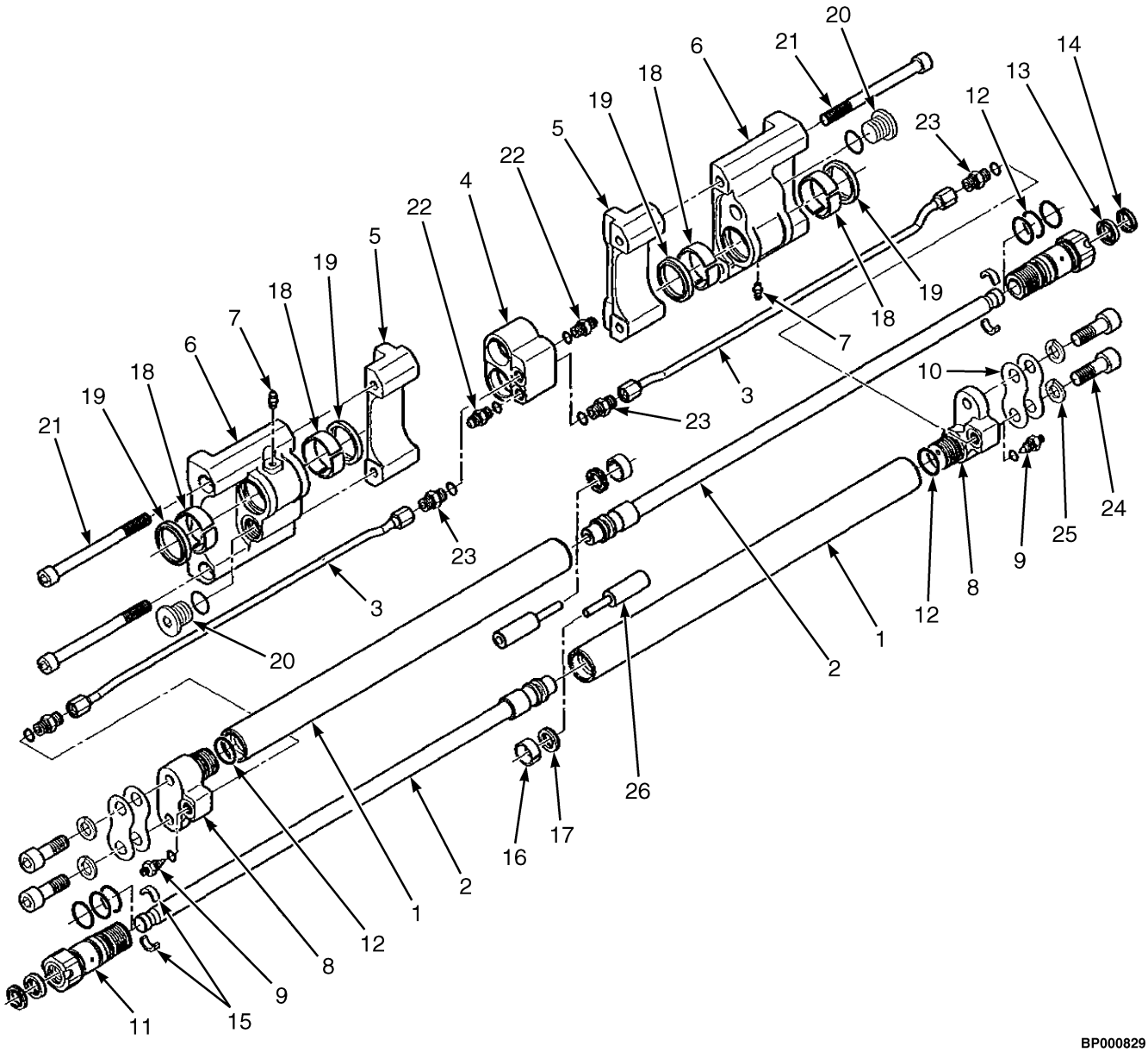

©2014 HYSTER COMPANY

FORK POSITIONER ASSEMBLY

ITEM	PART NO.	DESCRIPTION	QTY
	4611880	Carriage (42 in.) (H40-50FT)	1
	4611882	Carriage (42 in.) (H60-70FT)	1
1	. . . . .	Cylinder Shell	2
2	. . . . .	Cylinder Rod	2
3	4084993	Tube	2
4	. . . . .	Mainfold	1
5	. . . . .	Inner Carrier	2
6	. . . . .	Outer Carrier	2
7	4063703	Grease Fitting	1
8	. . . . .	Cylinder Head End	2
9	4063717	Fitting	2
10	4084991	Shim	4
11	. . . . .	Retainer	2
12	. . . . .	O-Ring	8
13	. . . . .	Rod Seal	2
14	. . . . .	Rod Wiper	2
15	. . . . .	Keeper	4
16	. . . . .	Piston Wear Ring	2
17	. . . . .	Piston Seal	2
18	. . . . .	Composite Bearing	4
19	. . . . .	Wiper	4
20	. . . . .	Plug	2
21	. . . . .	Capscrew	4
22	4063717	Fitting	4
23	4063718	Fitting	4
24	. . . . .	Capscrew	4
25	4065036	Lockwasher	4
26	4084441	Spacer	2
	4034634	Kit-Service Cylinder (Includes Items 12-14, 16-17)	1
	4034635	Kit-Bearing (Includes Items 18-19)	1

©2014 HYSTER COMPANY

NOTES

©2014 HYSTER COMPANY

SECTION 17
FIELD CONVERSION KITS

DESCRIPTION	PAGE
ADD ON OPTION KITS	17-4
ADD ON TELEMETRY KITS	17-5
BRAKE PEDAL CONVERSION KITS	17-2
COOLING REPAIR KITS	17-2
DIRECTIONAL CONTROL CONVERSION	17-2
E-HYDRAULIC CONTROL CONVERSION KITS	17-2
HEADER HOSE CONVERSION KITS	
THREE STAGE FULL FREE-LIFT - F508 SERIES MAST	17-6
THREE STAGE FULL FREE LIFT - F563 SERIES MAST	17-7
TWO STAGE FULL FREE- LIFT - E509/E564 SERIES MAST	17-9
TWO STAGE LIMITED FREE- LIFT - F507/F562 SERIES MAST	17-8
HYDRAULIC CONTROL CONVERSIONS	
MANUAL HYDRAULICS	17-3
LIGHT KITS	17-3
SEAT CONVERSION KITS	17-2
TREAD CONVERSION KITS	17-4
WEATHER PROTECTION KITS	17-2

©2014 HYSTER COMPANY

SEAT CONVERSION KITS

DESCRIPTION	PART NUMBER
Kit-Seat-Full Susp Swivel (Vinyl w/o E-Hydraulic Controls)	**a**4060577
Kit-Seat-Full Susp Swivel (Cloth w/o E-Hydraulic Controls)	**a**4060578

FOOTNOTES:
a Do not use with Low Overhead Guard

WEATHER PROTECTION KITS

DESCRIPTION	PART NUMBER
Kit-Front Screen W Wiper	1616498
Kit-Top Screen	1616501
Kit-Rear Screen	1650489
Kit-Door	1650490
Kit-Heater	1659013
Kit-Radiator Screen (Cold Climate)	1662532

COOLING REPAIR KITS

DESCRIPTION	PART NUMBER
Kit-Repair Yanmar 3.3 DL with Radiator Screen Cooling Kit	1651176
Kit-Repair Yanmar 3.3 DL without Radiator Screen Cooling Kit	1652379

BRAKE PEDAL CONVERSION KITS

DESCRIPTION	PART NUMBER
Kit-Dual Brake Pedal With Dry Brakes	1601231
Kit-Dual Brake Pedal With Wet Brakes	1601232
Kit-Brake (Single to Dual Pedal Inch Brake, Dry)	4007019
Kit-Brake (Dual Pedal, Wet)	4016148

DIRECTIONAL CONTROL CONVERSION

DESCRIPTION	PART NUMBER
Kit-Fwd/Rev Lever to Monotrol	**a**1625467
Kit-Monotrol to Fwd/Rev Lever	**a**1583198
Kit-Conversion Ctrl Switch to Monotrol	4040531

FOOTNOTES:
a Kit requires Software that must be Dealer installed.

E-HYDRAULIC CONTROL CONVERSION KITS

©2014 HYSTER COMPANY

E-HYDRAULIC CONTROL CONVERSION KITS (CONTINUED)

DESCRIPTION	PART NUMBER
Kit-Mini Lever Conv 3 Way (Without Lockout to with Lockout)	**a**1701683
Kit-Mini Lever Conv 3 Way (With Lockout to without Lockout)	**a**1701682
Kit-Mini Lever Conv 3 Way (without Clamp to 4 way without Clamp)	**a**4014170
Kit-Mini Lever Conv 3 Way (without Clamp to 4 Way with Clamp)	**a**4014171
Kit-Mini Lever Conv 4 Way (With Lockout to without Lockout)	**a**1701684
Kit-Mini Lever Conv 4 Way (Without Lockout to with Lockout)	**a**1701685

FOOTNOTES:
a Kits require software that must be dealer installed.

HYDRAULIC CONTROL CONVERSIONS
MANUAL HYDRAULICS

DESCRIPTION	PART NUMBER
Kit-Manual Lever Conv 3 Way (without Clamp to 3 Way with Clamp)	1677913
Kit-Manual Lever Conv 3 Way (without Clamping to 4 Way without Clamping)	4087349
Kit-Manual Lever Conv 3 Way (without Clamping to 4 Way without Clamping)	4087965

LIGHT KITS

DESCRIPTION	PART NUMBER
Kit-Light (Halogen Front Drive/Rear Work Light, with Harness and Overhead Guard)	**a**1583707
Kit-Light (Front Drive/Rear Work lights, w/o Harness, with Overhead Guard)	**a**1583708
Kit-Light (Strobe -Flash Tube with Other Lights and Overhead Guard, with Harness)	1583709
Kit-Light (Strobe, Flash Tube with Other Lights and Overhead Guard, w/o Harness)	1583710
Kit-Light (Brake/Tail/Back-up Lights with Harness, with Overhead Guard)	**a**1583711
Kit-Light (Brake/Tail/Back-up Lights w/o Harness with Overhead Guard)	**a**1583712
Kit-Strobe Light (Amber Strobe with Cab)	1625728
Kit-Light (LED Strobe with other lights for Overhead Guard, w/o Harness)	1655205
Kit-Light (LED Strobe w/o Other Lights for Overhead Guard with Harness)	1655204
Kit-Strobe Light (Amber Strobe LED Light with Cab)	1655298
Kit-Worklight (Mast w/Overhead Guard)	4023814
Kit-Worklight (Mast w/Overhead Guard 1-2T Cushion)	4023815
Kit-Worklight (Mast w/Cab)	4023816
Kit-Worklight (Mast)	4023817
Kit-Front Drive/Rear Worklight (LED w/o Other Lights for Overhead Guard with Harness)	**a**1700244
Kit-Front Drive/Rear Worklight (LED with other lights for Overhead Guard, w/o Harness)	**a**1700245

FOOTNOTES:

©2014 HYSTER COMPANY

a Requires software that must be Dealer installed

TREAD CONVERSION KITS

DESCRIPTION	PART NUMBER
Kit-Wide Tread (7.00x12 P Monarch Tires)	1617916
Kit-Wide Tread (28x9P Monarch or 225/75 Radial Tire)	1617917
Kit-Single to Dual Drive Wheel (7.00 x 12 Pneu Tires)	1618087
Kit-Single to Dual Drive Wheel (7.00 x 12 Solid Tires)	1618088

ADD ON OPTION KITS

DESCRIPTION	PART NUMBER
Kit-Air Intake W Pre-Cleaner	1583815
Kit-Powertrain Protection (English - US Language)	**a**1585854
Kit-Accumulator	1585425
Kit-Fire Extinguisher (Without Cab)	1580126
Kit-Fire Extinguisher (With Cab)	1635618
Kit-Back-Up Alarm (87 DB(A))	1612229
Kit-Back-Up Alarm (97 DB(A))	1612230
Kit-Back-Up Alarm (102 DB(A))	1612231
Kit-Back-Up Alarm (107 DB(A))	1612232
Kit-Back-Up Alarm (82-102 DB(A))	1612233
Kit-Keyswitch to Pushbutton (Pushbutton Start with Remote Key Switch)	**a**1624521
Kit-Impact Monitoring (With Immediate Shutdown)	**a**1629135
Kit-Electronic Monitoring	**a**1629208
Kit-Impact Monitoring (With 30 Second Shutdown)	**a**1637768
Kit-Load Weight on Display (Use with E-Hydraulics Only)	**a**1618217
Kit-Red Seat Belt (High Visibility)	1636120
Kit Liner w/secondary filter, 4", Diesel	1670584
Kit Liner w/secondary filter, 5", Diesel	1670585
Kit-Sensor (Low LPG Fuel) (Mazda Engines)	**a**4007942
Kit-Lifting Eye (LPG)	1602394
Kit-Lifting Eye (Diesel or Gasoline Fuel)	1602395
Kit-Mirror (With Overhead Guard)	1581968
Kit-Mirror (Dual Mirrors For Cab)	1602398
Kit-Oil Cooler (3rd Function)	1689549
Kit-Oil Cooler (4th Function)	1689550

FOOTNOTES:

©2014 HYSTER COMPANY

a Kits require software that must be dealer installed

ADD ON TELEMETRY KITS

DESCRIPTION	PART NUMBER
Telemetry Kit (FM1 W/GSM Cellular)	4063806
Telemetry Kit (FM1 W/WIFI)	4063807
Telemetry Kit (IC-Interlock-Hyster)	4075952
Telemetry Kit (W/ISO Prox Card Reader)	4063836
Telemetry Kit (HID Standard Prox Card Reader)	4063837
Telemetry Kit (W/IClass/MiFare Prox Card Reader)	4063838
Telemetry Kit (Hyster Check List)	4063829

©2014 HYSTER COMPANY

HEADER HOSE CONVERSION KITS

THREE STAGE FULL FREE-LIFT — F508 SERIES MAST

THREE TO FOUR FUNCTION

DESCRIPTION	LIFT HEIGHT TO BOTTOM OF FORKS				
	4310 mm (169.7 in.)	4760 mm (187.4 in.)	4910 mm (193.3 in.)	5060 mm (199.2 in.)	5510 mm (216.9 in.)
Mast Group Number	**F508 4310**	**F508 4760**	**F508 4910**	**F508 5060**	**F508 5510**
Kit-Hose Group 3 TO 4 Way	4074119	4074128	4074131	4074134	4074143

TWO TO FOUR FUNCTION

DESCRIPTION	LIFT HEIGHT TO BOTTOM OF FORKS				
	4310 mm (169.7 in.)	4760 mm (187.4 in.)	4910 mm (193.3 in.)	5060 mm (199.2 in.)	5510 mm (216.9 in.)
Mast Group Number	**F508 4310**	**F508 4760**	**F508 4910**	**F508 5060**	**F508 5510**
Kit-Hose Group 2 TO 4 Way	4074120	4074129	4074132	4074135	4074144

TWO TO THREE FUNCTION

DESCRIPTION	LIFT HEIGHT TO BOTTOM OF FORKS				
	4310 mm (169.7 in.)	4760 mm (187.4 in.)	4910 mm (193.3 in.)	5060 mm (199.2 in.)	5510 mm (216.9 in.)
Mast Group Number	**F508 4310**	**F508 4760**	**F508 4910**	**F508 5060**	**F508 5510**
Kit-Hose Group 2 TO 3 Way	4074118	4074127	4074130	4074133	4074142

©2014 HYSTER COMPANY

HEADER HOSE CONVERSION KITS

THREE STAGE FULL FREE LIFT — F563 SERIES MAST

THREE TO FOUR FUNCTION

DESCRIPTION	LIFT HEIGHT TO BOTTOM OF FORKS			
	4568 mm (179.8 in.)	4718 mm (185.7 in.)	5318 mm (209.4 in.)	5768 mm (227.1 in.)
Mast Group Number	**F563 4568**	**F563 4718**	**F563 5318**	**F563 5768**
Kit-Hose Group 3 TO 4 Way	4074131	4074134	4074146	4074155

TWO TO FOUR FUNCTION

DESCRIPTION	LIFT HEIGHT TO BOTTOM OF FORKS			
	4568 mm (179.8 in.)	4718 mm (185.7 in.)	5318 mm (209.4 in.)	5768 mm (227.1 in.)
Mast Group Number	**F563 4568**	**F563 4718**	**F563 5318**	**F563 5768**
Kit-Hose Group 2 TO 4 Way	4074132	4074135	4074147	4074156

TWO TO THREE FUNCTION

DESCRIPTION	LIFT HEIGHT TO BOTTOM OF FORKS			
	4568 mm (179.8 in.)	4718 mm (185.7 in.)	5318 mm (209.4 in.)	5768 mm (227.1 in.)
Mast Group Number	**F563 4568**	**F563 4718**	**F563 5318**	**F563 5768**
Kit-Hose Group 2 TO 3 Way	4074130	4074133	4074145	4074154

©2014 HYSTER COMPANY

HEADER HOSE CONVERSION KITS

TWO STAGE LIMITED FREE- LIFT — F507/F562 SERIES MAST

THREE TO FOUR FUNCTION

DESCRIPTION	LIFT HEIGHT TO BOTTOM OF FORKS	
	3159 mm (124.4 in.)	3252 mm (128.0 in.)
Mast Group Number	**F562 3159**	**F507 3252**
Kit-Hose Group 3 TO 4 Way	4090210	4090207

TWO TO FOUR FUNCTION

DESCRIPTION	LIFT HEIGHT TO BOTTOM OF FORKS	
	3159 mm (124.4 in.)	3252 mm (128.0 in.)
Mast Group Number	**F562 3159**	**F507 3252**
Kit-Hose Group 2 TO 4 Way	4090211	4090208

TWO TO THREE FUNCTION

DESCRIPTION	LIFT HEIGHT TO BOTTOM OF FORKS	
	3159 mm (124.4 in.)	3252 mm (128.0 in.)
Mast Group Number	**F562 3159**	**F507 3252**
Kit-Hose Group 2 TO 3 Way	4090209	4090206

©2014 HYSTER COMPANY

HEADER HOSE CONVERSION KITS

TWO STAGE FULL FREE- LIFT — E509/E564 SERIES MAST

THREE TO FOUR FUNCTION

DESCRIPTION	LIFT HEIGHT TO BOTTOM OF FORKS		
	3060 mm (120.5 in.)	3260 mm (128.3 in.)	3262 mm (128.4 in.)
Mast Group Number	**E564 3060**	**E564 3260**	**E509 3262**
Kit-Hose Group 3 to 4 Way	1585074	1585077	1585074

TWO TO FOUR FUNCTION

DESCRIPTION	LIFT HEIGHT TO BOTTOM OF FORKS		
	3060 mm (120.5 in.)	3260 mm (128.3 in.)	3262 mm (128.4 in.)
Mast Group Number	**E564 3060**	**E564 3260**	**E509 3262**
Kit-Hose Group 2 to 4 Way	1585075	1585078	1585075

TWO TO THREE FUNCTION

DESCRIPTION	LIFT HEIGHT TO BOTTOM OF FORKS		
	3060 mm (120.5 in.)	3260 mm (128.3 in.)	3262 mm (128.4 in.)
Mast Group Number	**E564 3060**	**E564 3260**	**E509 3262**
Kit-Hose Group 2 to 3 Way	1585073	1585076	1585073

©2014 HYSTER COMPANY

NOTES

©2014 HYSTER COMPANY

18 NUMERICAL INDEX

SECTION 18
NUMERICAL INDEX

PART NO.	PAGE	ITEM
126	5-13	12
206	11-5	34
	11-15	18
12891	13-17	4
	14-29	3
	16-33	14
	16-39	13
12929	11-5	35
	11-15	17
13957	10-13	31
	13-3	8
	14-3	10
	15-3	18
14310	6-35	14
	6-39	14
14349	6-17	10
	6-35	5
14358	6-17	9
	6-35	7
	6-39	7
14372	6-17	19
14385	2-3	14
	2-5	17
	2-7	16
	3-3	26
	3-5	26
14591	12-9	7
14603	14-7	7
15055	12-32	2
15127	1-25	27
15155	7-23	6
15175	7-23	5
15211	13-3	12
	13-17	10
	14-18	25
	14-29	10
	15-3	6
	15-9	8
	15-11	20
	15-31	11
	16-33	21
	16-35	21
	16-39	21
15223	14-18	31
	15-9	9
15225	10-13	11
15227	10-13	25
15242	9-17	13
15871	5-3	17
15880	14-21	12
15931	5-19	12
	6-43	12
16040	12-49	6
	12-49	6
16041	15-3	18
	16-33	12
	16-35	6
	16-39	6
16078	7-15	3
16079	7-15	2
	7-15	3
16134	6-15	17
	6-17	2
	6-29	33
	6-31	47
	6-35	16
	6-39	16
16143	6-7	14
16150	5-3	22
	7-19	36
16151	5-7	6
	6-17	10
	6-39	5
	9-21	24
16481	11-13	27
	11-13	31
	11-15	33
	11-15	43
	12-9	7
	12-11	3
	12-11	7
16483	12-11	7
16484	8-3	13
	12-11	5
	12-11	5
	12-11	5
	12-12	26
16485	8-3	11
	8-5	10
	8-9	8
	8-9	10
	8-21	1
	8-26	2
	15-15	18
16486	11-11	11
	11-11	12
	14-7	7
16487	11-13	30
	11-15	36
16706	12-29	6
	12-31	2
16708	5-19	13
	6-43	13
16764	6-7	13
16863	6-17	4
	6-29	34
	6-31	43
16865	5-19	9
	6-43	9
16982	15-15	19
16984	12-3	13
17221	11-11	18
17223	8-5	10
	8-9	10
17350	6-39	19
17650	5-7	3
17652	5-3	8
17758	11-11	11
17775	11-11	12
18462	1-29	15
	1-33	19
	1-43	22
18471	1-29	16
	1-33	16
	1-43	23
18498	7-23	7
18735	1-29	13
	1-33	25
18738	1-43	19
18748	12-27	3
18832	16-33	10
	16-35	10
	16-39	10
19901	1-25	16
	1-27	19
	1-29	14
	1-33	15
21195	6-15	1
21420	9-21	23
30273	10-13	20
34507	6-29	16
	6-31	19
37752	13-5	10
	14-18	22
	15-7	8
39352	10-13	36
39374	9-10	3
	12-51	3
39375	8-19	20
39389	9-10	6
43207	8-19	14
	8-23	21
	8-25	21
43208	8-19	25
43883	6-15	19
44306	8-17	11
44307	8-19	19
44308	8-19	23
44542	10-13	18
46388	12-51	7
53162	5-19	8
	6-43	8
55434	12-49	11
58901	13-3	3
	13-5	3
	14-3	8
	14-5	3
	15-3	4
	15-7	4
	15-9	3
	15-31	5
	16-35	13
58903	10-13	6
58916	8-19	22
59229	13-10	15
	14-9	9
	14-13	8
	15-20	16
60563	12-49	11
61141	4-27	18
	4-47	4
63081	8-21	6
63117	2-9	6
	3-31	9
	4-5	18
69029	10-13	24
77442	12-29	3
	12-31	12
	12-41	5
	12-43	8
	12-45	8
77443	12-29	5
	12-31	11
	12-41	4
	12-43	9
	12-45	9

©2014 HYSTER COMPANY

NUMERICAL INDEX (continued)

PART NO.	PAGE	ITEM
86229	8-17	22
87446	5-7	4
88441	15-7	9
88446	15-7	9
90263	14-21	12
	15-23	4
92861	13-10	15
	15-20	16
97999	6-17	3
	6-29	36
	6-31	45
98525	10-13	14
98644	7-30	3
101809	6-29	5
	6-31	9
104506	13-5	7
	14-3	3
	15-15	20
104681	8-19	29
110322	10-11	4
112989	6-3	7
	6-5	7
114312	6-15	7
	16-42	3
117989	11-13	32
	11-15	37
118358	10-15	7
118361	8-17	10
118389	1-23	9
124603	8-23	17
	8-25	17
125305	1-21	10
127918	12-3	8
128263	5-13	14
128408	7-15	3
	8-7	11
129361	13-5	11
	15-7	9
129387	13-3	4
	13-5	4
	14-3	7
	14-5	4
	15-3	5
	15-7	5
	15-9	5
	15-31	7
	16-35	16
129684	1-51	24
129892	7-121	2
130845	1-19	2
	1-20	2
	1-21	2
	4-7	31
	6-7	15
	8-3	15
	8-5	11
	8-7	3
	8-9	11
	8-11	12
131358	13-7	10
	13-17	5
	14-7	18
	14-17	3
	14-29	8
	15-16	21
	15-31	6
	16-33	19
	16-35	7
	16-39	7
131715	13-5	5
	14-3	4
	15-15	7
131716	13-5	5
	14-3	4
	15-15	7
133920	15-23	4
134675	12-49	8
134810	7-127	5
135158	9-17	4
136681	1-85	6
	1-87	9
	8-19	39
136687	1-57	8
	1-85	13
	1-87	15
	7-15	8
	9-3	12
	9-31	8
136749	1-25	7
136985	3-9	6
137852	14-25	12
138710	1-21	9
140612	1-20	11
140660	1-51	18
141331	5-4	1
	6-8	1
142247	12-49	8
145481	8-19	35
146540	16-8	1
147972	14-9	10
	14-13	9
147973	10-15	6
	12-53	9
	14-21	13
	15-23	5
148606	7-123	1
148609	7-97	8
148611	7-97	1
148614	7-93	1
	7-93	10
148789	7-15	3
148792	7-15	2
153069	6-33	7
	6-36	7
	7-19	5
154065	1-91	18
154066	1-91	18
154067	1-91	18
154355	14-17	13
154358	15-23	5
154375	12-51	8
156194	10-13	16
156195	10-13	15
160653	9-24	4
	9-26	4
	9-29	8
161003	14-18	27
	15-9	11
161884	10-17	5
161885	10-17	4
161889	9-24	5
	9-26	5
	9-29	5
	9-31	2
161890	9-24	4
	9-26	4
	9-29	4
	9-31	2
161894	10-19	5
163970	10-13	19
164474	15-11	3
164488	6-35	12
	6-39	12
	9-19	4
164639	10-13	17
164840	14-22	13
165991	5-3	21
166857	11-13	25
	11-15	31
168718	5-7	9
	6-13	5
	6-15	9
	11-13	25
	11-15	31
169874	1-29	18
	1-33	18
	1-43	26
170658	1-91	7
	1-91	25
	1-93	1
173056	8-17	4
175861	12-17	8
	12-21	8
175944	7-121	3
	7-127	3
	7-133	11
178119	8-7	12
	14-17	17
180137	15-7	9
180176	15-7	9
180177	14-17	21
180217	15-11	3
181045	7-127	4
181046	7-127	6
184451	6-29	14
	6-31	17
187388	13-9	7
	14-21	4
	15-19	7
	15-24	13
188515	12-29	7
	12-31	14
190382	7-97	3
190383	7-5	28
	7-97	22
	7-117	4
	7-119	4
	7-127	2
	7-131	2
190580	15-24	
190887	14-9	3
	14-13	3
	14-21	3
	15-24	15
192877	12-49	10
199852	12-53	3
203230	10-11	4
204128	12-32	3
204223	7-15	2
204787	6-23	18
215211	13-5	6
	14-3	5
	15-15	6
220428	5-19	7
	6-43	7
221353	1-25	15
	1-27	
	1-29	9

©2014 HYSTER COMPANY

NUMERICAL INDEX (continued)

PART NO.	PAGE	ITEM
	1-33	14
221530	1-25	21
	1-27	18
	1-33	24
221533	1-27	18
221536	1-25	14
	1-29	11
	1-33	10
221542	1-29	20
221771	1-45	3
222442	8-17	27
222443	8-17	26
222444	8-17	15
222491	11-13	27
	11-15	33
222493	8-3	13
222500	16-21	13
	16-23	13
	16-25	13
	16-27	13
	16-29	13
	16-31	13
222501	16-21	7
	16-23	7
	16-25	7
	16-27	7
	16-29	7
	16-31	7
222505	11-11	7
222509	11-13	31
	11-15	43
222510	12-3	6
222512	4-7	30
	8-3	11
	8-5	8
	8-7	16
	8-9	8
	8-11	7
226458	16-39	5
226986	10-13	35
227157	1-41	4
	1-41	13
	1-43	4
	1-43	13
233683	11-13	30
	11-15	36
233693	8-17	12
	8-19	6
	8-21	1
	8-26	2
234038	9-17	12
235691	8-19	4
237812	12-53	6
239222	8-7	19
239503	1-57	9
	1-61	5
	1-71	29
	11-3	22
	11-5	22
	11-13	22
	11-15	24
240724	11-19	8
244540	11-5	29
	11-15	21
246108	2-3	14
	2-5	17
	2-7	16
	6-29	
	6-32	
249289	10-13	12
251099	5-17	11
	5-19	30
	6-41	11
	6-43	30
251979	2-9	30
	8-12	
252729	12-11	14
	14-7	8
	15-15	18
	15-15	19
	16-11	5
257913	13-9	5
	15-19	5
260878	5-7	13
261395	1-88	8
262798	7-5	30
	7-36	7
264134	6-32	
	8-14	
264159	9-17	
	12-3	
264973	10-13	32
265731	11-11	17
	12-11	5
265787	12-11	5
	12-11	5
	12-11	11
	12-11	21
	12-12	26
268619	10-15	5
	12-53	8
272133	1-25	20
275493	7-50	15
	7-56	15
	7-62	24
	7-68	15
	7-74	24
	7-80	24
	7-85	2
	7-89	2
	7-95	31
	7-101	14
	7-105	11
	7-109	4
	7-113	4
	7-121	4
	7-131	6
	7-133	9
275494	7-90	20
	7-95	33
	7-131	8
275495	7-50	26
	7-56	26
	7-62	23
	7-68	26
	7-74	23
	7-80	23
	7-95	35
	7-101	10
	7-105	5
	7-133	10
275496	7-49	10
	7-55	10
	7-62	14
	7-67	10
	7-74	14
	7-80	14
	7-85	15
	7-85	16
	7-89	13
	7-95	36
	7-101	7
	7-105	6
	7-109	8
	7-113	8
275497	7-50	25
	7-56	25
	7-62	15
	7-67	11
	7-68	25
	7-74	15
	7-80	15
	7-87	47
	7-91	34
	7-95	34
	7-101	19
	7-105	15
	7-109	18
	7-113	20
275498	7-49	11
	7-55	11
	7-87	39
	7-91	35
	7-95	37
275499	7-49	14
	7-55	14
	7-63	36
	7-67	14
	7-75	36
	7-81	36
	7-95	44
280154	14-7	8
287816	5-15	10
287851	1-57	1
	3-9	4
	7-35	14
287860	8-19	27
288638	10-17	7
	10-19	7
	10-19	8
292500	1-25	26
	1-41	22
	8-17	34
	8-19	8
292501	1-57	6
292505	16-21	5
	16-23	5
	16-25	5
	16-27	5
	16-29	5
	16-31	5
292508	13-13	22
	15-28	44
	15-28	48
292513	12-3	17
292517	2-15	6
	3-9	7
	4-9	6
292531	8-14	7
292600	10-19	11
292607	1-3	2
292612	1-3	2
292660	9-3	4
	9-15	4
292667	1-72	35
292668	5-15	6
	11-3	26
	11-5	26

©2014 HYSTER COMPANY

NUMERICAL INDEX (continued)

PART NO.	PAGE	ITEM
	11-13	18
	11-15	28
292676	7-16	21
292678	1-53	17
	1-55	17
292679	5-15	5
	7-19	32
	8-19	36
	16-8	4
292680	8-17	35
	8-19	9
	9-3	13
	9-31	9
292681	3-9	3
	8-7	15
	8-17	18
	8-19	40
292682	2-15	5
	3-9	5
	4-9	7
	8-19	28
292683	2-9	15
	4-5	5
	8-14	6
	10-17	10
292685	10-19	10
293615	8-17	19
293616	9-3	7
	9-15	2
293619	1-51	3
	2-10	4
293622	8-17	33
293623	3-7	4
293626	3-9	14
293630	3-6	7
293646	9-21	1
293648	10-13	37
293651	9-17	3
293686	9-21	17
	10-13	5
293692	9-17	10
293697	8-14	5
293698	2-13	2
	3-6	2
	4-11	5
293733	9-3	3
	9-15	6
293741	8-17	31
	8-19	37
	8-26	8
293762	5-15	12
293796	12-11	25
	12-14	7
295649	14-9	2
	14-13	2
296001	4-7	22
296009	8-7	14
296032	1-7	28
296137	9-17	7
296151	6-35	15
	6-39	15
296152	6-17	11
296157	1-53	11
	1-55	11
296165	1-41	9
	1-43	9
296229	1-59	6
	1-61	13
296357	1-25	24
	1-27	13
	1-29	24
	1-33	22
296359	1-53	10
	1-55	10
296360	1-41	6
	1-41	21
	1-43	6
	1-43	20
296378	5-15	4
	5-17	13
	5-19	20
	6-41	13
	6-43	20
	11-19	4
296379	7-15	16
296380	7-5	20
	7-16	34
	7-19	19
	7-26	5
296382	7-19	14
	7-19	26
	7-26	12
296415	1-71	34
	1-81	15
296418	1-51	2
	2-10	3
	3-7	3
296419	1-81	16
296420	3-6	8
	3-9	13
	4-9	9
	8-12	2
	8-13	3
	12-3	16
296422	2-15	10
	4-9	11
	4-9	15
	4-11	4
	9-17	2
296423	1-45	4
296424	2-15	2
	3-9	15
296426	9-17	11
	9-21	18
	16-39	4
296434	9-3	2
	9-15	5
296463	1-25	2
296507	16-8	3
296508	6-23	3
297531	13-9	6
	14-21	5
	15-19	6
	15-24	12
297538	14-21	7
	15-24	11
297649	13-3	13
	14-18	26
	15-3	9
	15-9	10
	15-11	18
300751	10-13	9
300752	10-13	7
300765	10-13	34
300766	10-13	13
300767	10-13	33
300794	4-11	3
300937	1-45	5
	10-13	39
300982	12-49	19
	13-3	5
	14-3	9
	15-3	13
302015	7-16	22
302019	1-71	22
302020	2-3	6
	2-7	6
	3-3	9
	3-5	9
	4-7	17
302023	2-5	7
302027	7-15	5
302047	1-59	8
	1-61	11
302385	9-17	19
	9-21	8
302398	7-30	1
	11-3	19
	11-5	19
	11-13	1
	11-15	1
302399	5-15	11
	16-21	6
	16-23	6
	16-25	6
	16-27	6
	16-29	6
	16-31	6
302400	1-59	12
	1-61	18
	5-13	10
302428	12-17	9
	12-21	9
302437	5-19	17
	6-43	17
302443	5-17	2
	6-41	2
302461	14-18	24
	14-26	24
302465	15-12	27
302468	6-31	25
302487	16-45	6
303119	10-17	11
303150	2-15	12
	3-9	8
	4-9	12
	8-17	13
	8-19	34
304526	14-18	23
	15-7	11
306113	12-17	12
	12-21	12
309062	14-21	9
	15-24	9
309109	12-17	16
	12-19	11
	12-21	17
	12-23	12
309651	5-7	5
313828	1-25	18
	1-27	11
	1-29	26
	1-33	8
	1-41	7
	1-41	20
	1-43	7
	1-43	21
314773	7-127	10

©2014 HYSTER COMPANY

NUMERICAL INDEX (continued)

PART NO.	PAGE	ITEM
316826	1-41	17
	1-43	15
316834	12-17	3
	12-21	3
316835	1-59	12
	1-71	32
317735	14-29	7
	15-31	10
	16-33	18
	16-35	20
	16-39	20
320076	15-11	3
320152	7-16	20
320154	2-3	5
	2-5	6
	2-7	5
	3-3	8
	3-5	8
	4-7	18
	7-15	6
320155	16-8	5
320156	1-57	5
	1-59	9
	1-61	12
	1-85	12
	1-87	14
	5-13	21
	12-17	4
	12-21	4
320157	1-11	17
	7-35	14
320158	1-57	2
	1-61	6
	1-71	30
	1-85	5
320159	2-9	4
	3-31	12
	4-5	21
	7-23	9
320160	1-18	3
	1-41	18
	1-43	16
320161	10-13	38
	12-17	13
	12-21	14
320165	8-14	4
320264	9-17	5
320289	12-29	10
	12-31	8
322824	13-10	13
	15-20	14
322902	13-10	11
	15-20	12
323090	14-7	13
324706	2-35	3
	2-43	22
325699	5-19	10
	6-43	10
325789	7-97	24
325804	11-11	24
	12-11	19
325897	11-3	14
	11-5	14
326504	2-37	1
	2-39	8
	2-43	1
326612	2-23	10
326748	2-41	5
326749	2-41	6
326850	7-11	2
326898	7-11	25
326926	6-23	22
329069	1-7	11
	1-7	25
	5-17	10
	5-19	29
	6-41	10
	6-43	29
333642	2-41	15
334450	8-19	12
334560	8-19	11
335012	13-9	8
	15-20	8
335661	13-5	12
	15-7	10
336550	2-3	17
	2-5	20
	2-7	19
	3-3	18
	3-5	18
	4-7	12
337174	15-11	3
341462	12-29	13
345453	2-3	17
	2-5	20
	2-7	19
	3-3	19
	3-5	19
	4-7	13
345454	2-3	17
	2-5	20
	2-7	19
	3-3	20
	3-5	20
	4-7	14
345455	2-3	17
	2-5	20
	2-7	19
	3-3	17
	3-5	17
	4-7	11
346656	7-23	10
353000	5-7	7
	6-13	3
353199	6-3	16
353206	1-11	18
356505	14-17	12
360387	5-19	16
	6-43	16
	8-12	
362255	1-5	14
364868	1-7	16
366000	1-20	10
366115	15-31	4
	16-35	14
366116	13-17	3
	14-29	5
	16-33	16
	16-39	14
367224	7-16	29
	7-19	39
367419	1-46	1
367420	1-46	1
367421	1-46	1
367422	1-46	1
367423	1-46	1
367424	1-46	1
369804	2-3	15
	2-5	16
	2-7	15
	3-3	5
	3-5	5
	4-7	25
	6-15	12
	12-3	2
	13-13	21
369815	2-3	19
	2-5	22
	2-7	21
	3-3	23
	3-5	23
	4-7	10
370646	7-123	10
374923	5-4	2
	6-7	1
	6-8	2
375634	10-15	1
375635	10-15	8
381298	10-13	10
383789	9-17	
384211	1-46	1
384213	1-46	1
384214	1-46	1
384215	1-46	1
384216	1-46	1
386422	13-17	
	14-29	
	16-33	14
	16-39	13
389688	1-93	3
399898	4-9	10
636941	14-21	8
	15-24	10
637565	14-21	10
	15-23	8
637635	13-9	6
	15-19	6
	15-24	12
638246	13-9	8
	15-19	8
806426	7-15	2
	7-15	3
866401	7-42	12
	7-94	23
	7-123	4
	7-123	5
930591	7-133	4
	7-133	7
980542	9-25	5
	9-27	5
	9-29	9
986559	15-11	3
1300134	7-123	2
1301703	15-28	16
1302024	7-45	14
	7-47	14
1303158	1-51	20
1304950	6-13	14
1304971	1-7	7
1308093	1-46	1
1308259	7-85	6
	7-89	10
1308260	7-127	9
1310142	7-123	3
1310599	10-13	29
1311213	1-53	18
	1-55	18
1315425	10-13	30

©2014 HYSTER COMPANY

NUMERICAL INDEX (continued)

PART NO.	PAGE	ITEM
1316496	6-13	12
1319668	14-9	12
	14-14	11
1323576	7-52	47
	7-58	47
	7-64	45
	7-70	47
	7-76	45
	7-82	45
	7-87	36
	7-91	43
	7-97	6
	7-97	14
	7-97	16
	7-129	1
	7-129	7
	7-129	12
1323578	7-85	4
	7-89	4
	7-95	29
	7-97	15
1323579	7-50	17
	7-50	18
	7-50	22
	7-50	23
	7-56	17
	7-56	18
	7-56	22
	7-56	23
	7-62	11
	7-62	12
	7-62	19
	7-62	20
	7-68	17
	7-68	18
	7-68	22
	7-68	23
	7-74	11
	7-74	12
	7-74	19
	7-74	20
	7-80	11
	7-80	12
	7-80	19
	7-80	20
	7-89	5
	7-94	18
1323581	7-42	13
1323586	7-85	10
	7-89	7
	7-97	16
1324309	7-105	16
	7-105	17
	7-109	10
	7-109	11
	7-113	12
	7-113	13
1324310	7-105	16
	7-105	17
	7-109	10
	7-109	11
1324311	7-93	2
1324360	1-7	19
1324480	1-93	11
1325119	12-49	9
1325120	12-49	9
1326653	11-19	10
1327164	7-50	17
	7-50	18
	7-50	21
	7-50	22
	7-50	23
	7-51	36
	7-56	17
	7-56	18
	7-56	21
	7-56	22
	7-56	23
	7-57	36
	7-62	11
	7-62	12
	7-62	18
	7-62	20
	7-63	38
	7-68	17
	7-68	18
	7-68	21
	7-68	23
	7-69	36
	7-74	11
	7-74	12
	7-74	18
	7-74	20
	7-75	38
	7-80	11
	7-80	12
	7-80	18
	7-80	20
	7-81	38
	7-85	3
	7-86	24
	7-86	26
	7-86	27
	7-89	3
	7-90	22
	7-90	25
	7-94	18
	7-95	30
	7-121	1
	7-123	8
1327246	9-21	13
1327957	7-85	7
	7-89	6
	7-97	18
1327959	7-86	24
	7-90	25
	7-94	18
1329147	7-121	1
	7-123	8
1329150	7-50	21
	7-56	21
	7-62	18
	7-63	38
	7-68	21
	7-74	18
	7-75	38
	7-80	18
	7-81	38
1329151	7-50	20
	7-50	21
	7-51	35
	7-51	36
	7-56	20
	7-56	21
	7-57	35
	7-57	36
	7-62	17
	7-62	18
	7-63	37
	7-63	38
	7-68	20
	7-68	21
	7-69	35
	7-69	36
	7-74	17
	7-74	18
	7-75	37
	7-75	38
	7-80	17
	7-80	18
	7-81	37
	7-81	38
	7-120	2
	7-121	1
1329152	7-50	20
	7-51	35
	7-56	20
	7-57	35
	7-62	17
	7-68	20
	7-69	35
	7-74	17
	7-80	17
	7-81	37
	7-120	2
	7-121	1
1329258	4-9	8
1329271	2-3	7
	2-5	8
	2-7	7
	3-3	10
	3-5	10
	4-7	19
1330033	5-11	6
1330281	7-50	17
	7-50	18
	7-50	20
	7-50	22
	7-51	35
	7-56	17
	7-56	18
	7-56	20
	7-56	22
	7-57	35
	7-62	11
	7-62	12
	7-62	17
	7-62	19
	7-63	37
	7-68	17
	7-68	18
	7-68	20
	7-68	22
	7-69	35
	7-74	11
	7-74	12
	7-74	17
	7-74	19
	7-75	37
	7-80	11
	7-80	12
	7-80	17
	7-80	19
	7-81	37
	7-86	24
	7-90	25
	7-94	18
	7-120	2

©2014 HYSTER COMPANY

NUMERICAL INDEX (continued)

PART NO.	PAGE	ITEM
1330283	7-42	13
	7-123	2
	7-123	10
	7-131	1
1330292	7-123	2
	7-123	10
1330293	7-123	2
	7-123	10
1330297	7-86	24
	7-90	25
	7-94	18
1330325	6-15	3
1330326	6-15	4
1330355	7-50	16
	7-56	16
	7-61	10
	7-68	16
	7-73	10
	7-79	10
	7-93	9
	7-95	26
	7-95	27
	7-133	4
	7-133	7
1330356	7-50	16
	7-56	16
	7-61	10
	7-68	16
	7-73	10
	7-79	10
	7-133	4
	7-133	7
1330409	1-53	18
	1-55	18
1330411	7-123	7
1330413	7-87	46
	7-91	36
	7-94	24
	7-94	25
1330414	1-5	17
	1-53	18
	1-55	18
	7-5	25
	7-42	11
	7-59	61
	7-70	61
	7-82	58
	16-5	10
1330415	7-30	5
1330416	5-19	4
	6-43	4
	7-35	6
	7-35	17
	7-49	6
	7-55	6
	7-61	6
	7-67	6
	7-73	6
	7-79	6
	7-123	7
1330417	16-5	10
1330418	7-87	46
	7-91	36
	7-94	24
	7-94	25
1330419	7-97	19
1330424	7-97	19
1330433	7-35	18
	7-123	7
1330435	7-123	7
1330436	7-97	19
1330437	1-5	17
	1-53	18
	1-55	18
	7-5	26
	7-30	6
	7-35	7
	7-49	6
	7-55	6
	7-59	61
	7-61	6
	7-67	6
	7-71	61
	7-73	6
	7-79	6
	7-82	58
	7-87	46
	7-91	36
	7-94	24
	7-94	25
	7-98	25
	7-102	29
	7-106	25
	7-110	26
	7-114	28
	16-5	10
	16-5	10
1330438	7-33	2
	7-35	10
	7-49	5
	7-49	7
	7-51	29
	7-51	31
	7-51	33
	7-51	38
	7-52	52
	7-52	54
	7-55	5
	7-55	7
	7-57	29
	7-57	31
	7-57	33
	7-57	38
	7-58	52
	7-58	54
	7-59	62
	7-61	5
	7-61	7
	7-63	25
	7-63	27
	7-63	29
	7-63	33
	7-64	49
	7-64	50
	7-65	60
	7-67	5
	7-67	7
	7-69	29
	7-69	31
	7-69	33
	7-69	38
	7-70	52
	7-70	54
	7-71	62
	7-73	5
	7-73	7
	7-75	25
	7-75	27
	7-75	29
	7-75	33
	7-76	49
	7-79	5
	7-79	7
	7-81	25
	7-81	27
	7-81	29
	7-81	33
	7-82	49
	7-83	59
	7-101	5
	7-101	11
	7-102	23
	7-102	25
	7-102	27
	7-102	30
	7-105	19
	7-106	21
	7-106	23
	7-106	26
	7-109	19
	7-110	22
	7-110	24
	7-110	27
	7-113	10
	7-114	21
	7-114	24
	7-114	26
	7-114	29
	7-117	1
	7-117	8
	7-117	9
	7-119	1
	7-119	10
	7-119	11
	7-129	5
	7-129	8
	7-129	11
	7-133	1
	16-5	10
	16-5	10
1330439	7-51	27
	7-51	28
	7-52	53
	7-52	57
	7-57	27
	7-57	28
	7-58	53
	7-58	57
	7-62	21
	7-62	22
	7-64	51
	7-64	54
	7-64	56
	7-69	27
	7-69	28
	7-70	57
	7-74	21
	7-74	22
	7-76	51
	7-76	54
	7-76	56
	7-80	21
	7-80	22
	7-81	40
	7-82	51
	7-82	54
	7-82	56
	7-87	48

©2014 HYSTER COMPANY

NUMERICAL INDEX (continued)

PART NO.	PAGE	ITEM
	7-91	37
	7-94	23
	7-94	24
	7-95	25
	7-98	27
	7-117	1
	7-123	4
	7-123	7
	16-5	10
1330917	1-91	2
1330919	1-91	1
1330920	1-91	19
1332745	1-46	1
1333329	15-9	6
1333382	13-7	11
	14-7	17
	15-15	3
1333396	13-3	2
	13-5	2
	14-3	6
	14-5	5
	15-3	3
	15-7	3
	15-9	4
1333397	14-3	6
	14-5	5
1333399	15-31	3
	16-35	12
1334642	11-7	5
1334644	11-7	14
1334647	11-7	2
1335129	1-91	20
1335137	1-93	7
1338087	1-46	1
1338088	1-46	1
1338089	1-46	1
1338097	1-46	1
1338098	1-46	1
1338308	2-9	21
	2-32	7
1338741	12-51	5
1338744	12-51	11
1338916	11-7	24
1338917	11-7	25
1339438	6-13	17
1340470	5-19	2
	6-43	2
1342117	14-17	21
1342122	15-11	3
1342124	15-11	3
1342126	13-5	11
1342129	15-11	3
1342130	15-11	3
1342131	15-7	9
1342134	15-7	9
1342377	14-17	21
1342384	15-7	9
1342385	15-7	9
1342477	14-5	1
	14-5	1
1342479	14-5	1
1343844	14-29	
1343990	1-45	2
1344124	5-15	16
1345014	7-23	14
1345190	14-26	29
	15-28	37
1345199	14-26	23
1345204	14-26	22
1345216	14-3	2
	14-5	2
	15-3	2
	15-7	2
	15-9	2
	15-31	2
	16-35	
1345219	13-17	2
	14-29	2
	16-33	13
	16-39	12
1345239	14-29	1
1345263	13-17	6
	14-29	4
	16-33	15
	16-39	16
1345264	13-17	1
	14-29	1
1345348	13-13	23
	15-28	43
	15-28	47
1345423	14-25	10
1345939	1-91	13
1345991	6-13	18
1346752	12-17	23
	12-19	14
	12-21	24
	12-23	15
1347045	1-3	4
	1-7	35
	2-9	11
	3-31	6
	4-5	25
1350215	1-11	39
	16-5	3
1351681	1-53	23
	1-55	23
	7-97	19
1351682	7-45	11
	7-101	12
1351689	11-3	28
	11-5	28
	11-13	36
	11-15	41
1352140	2-3	2
	2-5	3
	2-7	2
	3-3	2
	3-5	2
	4-7	2
1352603	7-98	25
	7-102	29
	7-106	25
	7-110	26
	7-114	28
1353408	13-17	7
	16-33	18
1354165	1-91	14
1354171	1-91	8
1354902	14-17	6
	15-12	32
1354915	13-7	16
	14-7	16
	15-15	4
1354916	13-7	16
	14-7	16
	15-15	4
1354917	13-7	16
	14-7	16
	15-15	4
1354918	14-25	15
1354967	14-17	9
1355158	13-9	2
1355371	13-9	2
1355591	15-19	2
1355599	15-19	2
1355603	15-19	2
1355607	15-19	2
1355610	15-19	3
	15-19	3
	15-19	3
1355620	15-19	2
1355711	13-9	3
1355713	14-9	11
	14-14	10
1355745	15-19	2
1355749	15-19	2
1355762	15-19	2
1355775	15-19	2
1355929	14-13	5
	14-13	5
1355930	14-13	5
1355936	14-13	5
1355941	14-13	5
1356292	14-22	15
	15-23	3
1356569	14-21	11
1356661	14-22	15
	15-23	3
1356662	14-22	
	15-24	
1356688	14-21	11
1356694	14-21	11
1356747	14-9	5
	14-13	4
1356748	14-9	4
	15-20	11
1356749	13-10	12
	15-20	13
1356750	13-10	10
	15-20	10
1356751	13-10	10
	15-20	10
1357268	7-15	2
1357533	7-15	3
1357535	7-15	2
1358177	10-17	1
1358178	10-19	1
1358179	9-29	1
1358183	9-29	1
1358940	14-9	6
	14-9	6
1358942	14-9	6
1358969	14-22	
	15-24	
1358972	14-21	8
	15-24	10
1359562	1-53	18
	1-55	18
1359620	12-11	9
1360127	15-20	11
1360386	12-11	24
	12-14	5
	14-25	13
1360507	14-25	2
1360508	14-25	9
1360538	1-51	22
1360796	11-7	8
1360797	11-7	9

©2014 HYSTER COMPANY

NUMERICAL INDEX (continued)

PART NO.	PAGE	ITEM
1360878	2-19	13
1360879	2-19	17
1360880	2-19	20
1360881	2-19	21
1360882	2-19	22
1360883	2-19	1
1360884	2-19	2
1360885	2-19	11
1360886	2-19	3
1360887	2-19	7
1360888	2-19	8
1360890	2-19	28
1360892	2-19	6
1360895	2-19	15
1360896	2-21	7
1360898	2-21	5
1360899	2-21	8
1361164	6-23	23
	6-25	2
1361302	14-21	2
	15-24	16
1361500	11-7	15
1361502	11-7	28
1361503	11-7	3
1361504	11-7	4
1361507	11-7	8
1361675	2-21	3
1361676	2-21	11
1361677	2-21	12
1361679	2-39	9
1361681	2-39	18
1361682	2-39	20
1361688	2-39	5
	2-41	3
1361689	2-39	10
1361690	2-39	15
1361691	2-39	11
1361692	2-39	6
1361695	2-25	2
1361697	2-25	11
1361700	2-25	6
1361703	2-25	3
1361704	2-25	3
1361705	2-25	3
1361706	2-25	3
1361710	2-25	13
1361711	2-25	13
1361712	2-25	13
1361713	2-25	13
1361717	2-23	20
1361718	2-19	16
	2-23	5
1361719	2-19	16
	2-23	22
1361720	2-23	4
1361721	2-23	9
1361722	2-23	8
1361723	2-23	7
1361724	2-23	6
1361725	2-23	23
1361726	2-23	11
1361727	2-23	13
	2-23	16
1361728	2-23	12
	2-23	17
1361729	2-23	15
1361730	2-23	18
1361731	2-23	14
1361732	2-23	21
1361734	2-23	19
1361736	2-23	1
1361737	2-23	2
1361745	2-32	6
1361746	2-32	4
1361747	2-32	8
1361749	2-31	9
1361756	2-31	10
1361790	2-43	36
1361798	2-41	2
1361801	2-41	17
1361806	2-41	13
1361807	2-41	14
1361814	2-43	30
1361821	2-43	2
1361823	2-43	34
1361825	2-43	33
1361826	2-43	9
1361827	2-43	15
1361836	2-43	7
1361837	7-11	7
1361845	7-11	26
1361846	7-11	21
1361861	7-11	28
1361868	2-41	19
1361872	2-28	3
1361873	2-43	10
1361875	2-41	21
	2-43	14
1361878	2-41	18
1361879	2-41	7
1361880	2-43	29
1361881	2-35	2
	7-11	24
1361884	2-23	26
	2-43	37
1361885	2-37	3
1361888	7-11	22
1361890	7-11	18
1361891	7-11	20
1361893	2-31	4
1361894	2-19	18
1361895	7-11	4
1361897	2-19	24
1361898	2-19	23
	2-31	8
	2-32	1
	2-43	12
	7-11	5
1361899	2-19	27
1362000	2-19	10
1362001	2-19	12
	2-39	1
1362002	2-19	14
1362003	2-19	19
	2-21	6
1362005	2-21	4
	2-35	5
1362007	2-21	10
1362008	2-21	9
1362009	2-21	2
1362010	2-39	12
1362011	2-27	19
	2-39	13
1362012	2-39	7
1362015	2-39	17
1362016	2-23	29
1362049	1-27	
1362058	1-27	
1363885	7-42	11
1363886	7-49	5
	7-55	5
	7-61	5
	7-67	5
	7-73	5
	7-79	5
	7-133	3
	7-133	6
	7-133	8
1363916	1-69	4
1365140	15-9	6
1366874	2-35	11
1366902	2-35	7
	2-37	11
1366933	2-27	1
1367150	1-37	7
	1-37	10
1367191	2-43	5
1368743	2-35	6
	2-37	10
1368844	7-11	23
1368886	2-27	17
	2-37	8
1369344	13-17	8
	14-29	6
	15-31	9
	16-33	17
	16-35	19
	16-39	19
1369345	13-17	8
	14-29	6
	15-31	9
	16-33	17
	16-35	19
	16-39	19
1369356	14-18	29
1369357	14-18	29
1369861	2-37	7
1369993	2-39	25
1370675	2-35	12
1370688	2-32	5
1370689	2-32	9
1370690	2-32	3
1370691	2-32	2
1370736	2-39	19
1370744	2-21	1
1370745	2-25	4
1371149	6-15	2
1371652	2-39	14
1374797	13-3	3
	13-5	3
	15-3	4
	15-7	4
	15-9	3
	15-31	5
	16-35	
1374815	10-13	
1375033	6-26	6
1375214	1-3	3
1375391	11-3	27
	11-5	27
	11-13	37
	11-15	42
1375469	10-13	22
1375488	9-17	17
1375642	2-10	1
1375676	1-91	12
1375797	7-123	8
1377080	6-7	1

©2014 HYSTER COMPANY

NUMERICAL INDEX (continued)

PART NO.	PAGE	ITEM
1377081	6-7	1
1378690	14-17	5
1378693	14-17	22
1378699	13-5	9
	14-18	22
	15-7	7
	15-12	30
1379682	14-17	22
1379683	14-17	22
1379687	14-7	6
1380092	10-15	3
1381063	13-10	9
	15-20	9
1381064	13-10	9
	15-20	9
1381078	12-53	4
1381082	12-51	9
1381083	12-53	12
1381095	14-9	8
	14-13	7
1382111	1-27	1
1382112	1-27	2
1382113	1-27	1
1382114	1-27	2
1382694	7-97	7
1382695	7-97	7
1383062	12-51	10
1383063	12-53	10
	13-10	14
	15-20	15
1383331	7-5	18
1383777	10-13	23
1385102	1-93	4
1387170	1-7	12
1388838	10-13	2
1393142	15-31	3
1393458	1-81	11
1393463	1-59	11
	1-61	20
1393472	1-59	12
	1-62	42
	1-71	31
1393479	1-59	10
1393499	1-61	22
	1-85	8
	1-87	10
1393527	1-81	6
1393528	1-81	7
1393539	1-59	7
	1-61	7
	1-62	38
	1-85	16
1393541	1-71	8
1393879	12-3	12
1394001	7-11	28
1394008	5-3	3
	6-3	3
	6-5	3
	6-7	3
1395168	13-3	2
	13-5	2
	14-3	6
	14-5	5
	15-3	3
	15-7	3
	15-9	4
1395174	15-31	3
1395176	15-31	3
1395285	14-17	4
1395291	14-26	32
1395292	14-26	26
1396406	14-26	31
1396518	2-9	24
1398062	7-7	8
1398099	6-29	2
	6-31	2
1399802	5-13	9
1400125	1-51	10
1401746	16-33	9
	16-35	9
	16-39	9
1402414	6-31	22
1402607	7-91	43
1402814	7-94	21
	7-117	3
	7-117	5
	7-117	6
	7-117	7
	7-119	3
	7-119	5
	7-119	6
	7-119	7
	7-119	8
	7-119	9
1402815	7-117	2
	7-119	2
1402816	7-87	38
	7-101	16
	7-105	13
	7-109	16
	7-113	18
	7-129	3
1402849	7-97	21
1402868	7-52	47
	7-58	47
	7-64	45
	7-70	47
	7-76	45
	7-82	45
1402883	7-5	7
1402888	7-50	17
	7-50	20
	7-51	35
	7-56	17
	7-56	20
	7-57	35
	7-62	11
	7-62	17
	7-63	37
	7-68	17
	7-68	20
	7-69	35
	7-74	11
	7-74	17
	7-75	37
	7-80	11
	7-80	17
	7-81	37
	7-94	18
	7-95	29
	7-97	15
	7-120	2
1402890	7-87	41
	7-87	45
	7-90	31
	7-91	32
1402923	16-5	10
1450928	7-11	28
1452112	6-7	1
1452463	6-3	14
	6-5	18
1454827	7-85	21
	7-90	28
	7-94	17
	7-124	1
1454828	7-124	1
1454829	7-85	21
	7-97	7
	7-124	1
1454860	7-97	7
	7-124	1
1454862	7-97	7
	7-124	1
1454967	7-15	14
1455304	6-26	3
1455674	2-41	4
1455676	2-41	1
1455677	2-41	10
1458764	6-26	5
1460477	1-7	29
	2-9	28
	4-5	16
1461743	7-123	9
1461744	7-123	8
1462615	10-17	1
1462616	10-19	1
1462617	9-29	1
1463105	14-21	6
	15-23	6
1463138	7-47	12
	7-87	49
	7-91	38
	7-98	26
	7-129	4
	7-129	13
	16-2	2
1463139	7-49	1
	7-49	2
	7-49	3
	7-49	4
	7-49	8
	7-49	9
	7-51	44
	7-51	45
	7-52	48
	7-52	49
	7-52	51
	7-55	1
	7-55	2
	7-55	3
	7-55	4
	7-55	8
	7-55	9
	7-57	44
	7-57	45
	7-58	48
	7-58	49
	7-58	51
	7-61	1
	7-61	2
	7-61	3
	7-61	4
	7-61	8
	7-61	9
	7-63	40
	7-63	44
	7-64	46
	7-64	47

See Service Manual for service procedures.
©2014 HYSTER COMPANY

NUMERICAL INDEX (continued)

PART NO.	PAGE	ITEM
	7-67	1
	7-67	2
	7-67	3
	7-67	4
	7-67	8
	7-67	9
	7-69	44
	7-69	45
	7-70	48
	7-70	49
	7-70	51
	7-73	1
	7-73	2
	7-73	3
	7-73	4
	7-73	8
	7-73	9
	7-75	40
	7-75	44
	7-76	46
	7-76	47
	7-76	50
	7-79	1
	7-79	2
	7-79	3
	7-79	4
	7-79	8
	7-79	9
	7-81	40
	7-82	44
	7-82	46
	7-82	47
	7-82	50
	7-101	1
	7-102	24
	7-102	28
	7-105	1
	7-105	20
	7-106	24
	7-109	1
	7-109	5
	7-109	6
	7-110	21
	7-110	25
	7-113	1
	7-113	5
	7-113	6
	7-114	23
	7-114	27
	7-133	5
1463194	7-101	11
1463912	1-53	19
	1-55	19
1465140	12-5	
	12-7	
1465468	7-85	3
	7-86	25
	7-86	28
	7-89	3
	7-90	23
	7-95	30
1465469	7-85	4
	7-86	26
	7-86	27
	7-89	4
	7-90	22
	7-95	29
	7-97	15
1465504	14-17	8
1468308	1-85	20
1468312	1-59	18
	1-62	32
1468314	1-71	16
1468315	1-71	15
1468316	1-71	14
1468317	1-71	13
1468318	1-61	23
1468319	1-81	5
	1-81	12
1468320	1-81	2
1469379	4-5	8
1469405	2-9	14
	4-5	4
1470155	1-29	
	1-33	
1471591	9-29	1
1471829	9-29	1
1471832	10-19	1
1471835	9-29	1
1471837	10-17	1
1471921	10-17	1
1471922	9-29	1
	9-29	1
	10-19	1
1476064	7-50	16
	7-56	16
	7-61	10
	7-68	16
	7-73	10
	7-79	10
1476077	7-87	36
	7-97	14
1476108	7-50	16
	7-56	16
	7-61	10
	7-68	16
	7-73	10
	7-79	10
1476109	7-50	16
	7-56	16
	7-61	10
	7-68	16
	7-73	10
	7-79	10
1476421	7-19	12
1476598	7-93	13
1476599	7-93	13
1477683	14-29	
1477932	14-29	1
1477938	16-39	1
1477944	16-39	
1477946	16-39	
1477996	12-11	2
	13-13	20
	14-26	17
1479453	1-25	10
1480187	7-52	59
	7-58	59
	7-70	59
	7-82	56
	7-123	5
1480188	7-123	5
1480237	1-11	29
	1-11	29
	4-7	34
	5-13	15
	6-13	9
	7-5	15
	7-19	18
	7-26	4
	7-42	2
	8-3	4
	8-5	5
	8-7	9
	8-9	5
	8-11	3
	10-11	7
	12-11	8
	16-5	5
1481090	14-17	2
1481096	14-17	14
1481097	14-7	3
1481232	14-25	11
1481742	14-17	1
	14-17	1
1481744	14-17	1
1482651	7-86	32
	7-91	40
1482668	7-133	4
	7-133	7
1482905	1-37	4
1482906	1-37	6
1483329	7-95	42
1483661	16-15	17
	16-15	17
	16-17	12
	16-17	12
1483663	16-15	14
	16-15	14
	16-17	15
	16-17	15
1483664	16-15	15
	16-15	15
	16-17	16
	16-17	16
1484377	7-33	2
	7-49	1
	7-49	2
	7-49	3
	7-49	4
	7-49	7
	7-49	8
	7-49	9
	7-51	44
	7-51	45
	7-52	46
	7-52	48
	7-55	1
	7-55	2
	7-55	3
	7-55	4
	7-55	7
	7-55	8
	7-55	9
	7-57	44
	7-57	45
	7-58	46
	7-58	48
	7-59	62

©2014 HYSTER COMPANY

NUMERICAL INDEX (continued)

PART NO.	PAGE	ITEM
	7-61	1
	7-61	3
	7-61	4
	7-61	7
	7-61	8
	7-61	9
	7-63	39
	7-63	40
	7-63	44
	7-64	46
	7-64	49
	7-67	1
	7-67	2
	7-67	3
	7-67	4
	7-67	7
	7-67	8
	7-67	9
	7-69	44
	7-69	45
	7-70	46
	7-70	48
	7-70	52
	7-71	62
	7-73	1
	7-73	3
	7-73	4
	7-73	7
	7-73	8
	7-73	9
	7-75	39
	7-75	40
	7-75	44
	7-76	46
	7-76	49
	7-79	1
	7-79	3
	7-79	4
	7-79	7
	7-79	8
	7-79	9
	7-81	39
	7-81	40
	7-82	44
	7-82	46
	7-82	49
	7-83	59
	7-98	25
	7-101	1
	7-102	24
	7-102	28
	7-102	29
1484397	7-101	11
1484557	7-109	5
1484558	7-109	5
1484709	7-47	24
1486183	16-39	
1486186	16-39	
1486737	12-11	7
1486740	16-15	16
1486742	12-11	26
1486749	8-3	14
1486751	12-3	24
1486773	13-7	4
	7-105	1
	7-105	20
	7-106	24
	7-106	25
	7-109	1
	7-110	21
	7-110	25
	7-110	26
	7-114	23
	7-114	27
	7-114	28
	7-129	4
	7-129	13
	7-133	1
	7-113	5
	7-113	6
	7-133	5
	7-109	6
	7-113	5
	7-113	6
	7-133	5
	7-87	48
	7-91	37
	7-94	23
	7-98	27
	7-133	2
	16-23	16
	16-29	16
	16-15	16
	16-15	16
	16-17	17
	16-17	17
	12-11	26
	12-14	4
	8-5	7
	8-9	7
	8-11	5
	12-3	20
	14-7	2
	12-3	24
	15-11	8
	15-15	8
	13-7	4
	14-7	9
	15-15	17
1487058	11-11	21
	12-11	3
	16-21	4
	16-23	4
	16-25	4
	16-27	4
	16-29	4
	16-31	4
1487059	16-40	3
	16-41	3
	16-42	4
1487061	11-11	4
	12-11	5
	12-11	5
	12-14	2
1487062	11-11	3
1487063	10-11	5
1487068	8-7	18
1487069	12-11	14
1487096	16-11	5
1487097	16-21	3
	16-23	3
	16-25	3
	16-27	3
	16-29	3
	16-31	3
1487165	8-9	6
1487945	1-67	9
1487956	1-65	18
1487957	1-65	17
1488464	12-11	21
1489003	16-39	1
1489016	16-45	1
1489035	16-45	3
1489037	16-45	2
1489039	16-45	5
1489655	5-19	4
	6-43	4
	7-35	5
	7-35	16
	7-49	6
	7-55	6
	7-61	6
	7-67	6
	7-73	6
	7-79	6
1489656	7-35	8
	7-51	33
	7-57	33
	7-63	29
	7-69	33
	7-75	29
	7-81	29
	7-101	5
	7-102	23
	7-102	30
	7-105	19
	7-106	26
	7-109	19
	7-110	27
	7-113	10
	7-113	21
	7-114	29
1489657	7-35	9
	7-51	33
	7-57	33
	7-63	29
	7-69	33
	7-75	29
	7-81	29
	7-101	5
	7-102	23
	7-102	30
	7-105	19
	7-106	26
	7-109	19
	7-110	27
	7-113	10
	7-114	21
	7-114	29
1490242	7-51	29
	7-51	31
	7-51	38
	7-52	54
	7-57	29
	7-57	31
	7-57	38
	7-58	54
	7-63	25
	7-63	27
	7-63	33
	7-64	60
	7-69	29
	7-69	31
	7-69	38
	7-70	54
	7-75	25
	7-75	27
	7-75	33
	7-81	25
	7-81	27
	7-81	33

©2014 HYSTER COMPANY

NUMERICAL INDEX (continued)

PART NO.	PAGE	ITEM
	7-102	27
	7-106	23
	7-110	24
	7-114	26
	7-117	8
	7-117	9
	7-119	10
	7-119	11
	7-129	5
	7-129	8
	7-129	11
	7-133	3
	7-133	6
	7-133	8
	16-5	10
	16-5	10
1490243	7-51	29
	7-51	31
	7-51	38
	7-52	54
	7-57	29
	7-57	31
	7-57	38
	7-58	54
	7-63	25
	7-63	27
	7-63	33
	7-65	60
	7-69	29
	7-69	31
	7-69	38
	7-70	54
	7-75	25
	7-75	27
	7-75	33
	7-81	25
	7-81	27
	7-81	33
	7-102	27
	7-106	23
	7-110	24
	7-114	26
	7-117	8
	7-117	9
	7-119	10
	7-119	11
	7-129	5
	7-129	8
	7-129	11
	7-133	3
	7-133	6
	7-133	8

PART NO.	PAGE	ITEM
	16-5	10
	16-5	10
1491818	7-86	24
	7-86	25
	7-86	28
	7-90	25
1491821	7-85	4
	7-89	4
1492644	12-51	
1493308	1-59	17
	1-62	34
	1-85	10
1493336	1-71	4
1493428	7-49	7
	7-51	36
	7-55	7
	7-57	36
	7-61	7
	7-64	49
	7-67	7
	7-69	36
	7-73	7
	7-76	49
	7-79	7
	7-82	49
1493435	7-117	6
	7-117	7
	7-119	8
	7-119	9
1493447	7-119	5
	7-119	6
1493465	1-5	17
	7-5	24
	7-42	11
	7-58	61
	7-70	61
	7-82	58
	16-5	10
1493466	7-30	4
1494888	1-5	9
	1-53	13
	1-55	13
1495412	7-11	19
1495413	2-27	5
1495426	2-41	8
1495427	2-41	20
1495428	2-43	3
1495429	2-27	12
	2-43	35
1495441	1-71	21
1495473	2-25	5
1495474	2-25	5

PART NO.	PAGE	ITEM
1495475	2-25	5
1496922	14-9	
	14-14	
1497235	7-85	21
	7-90	28
1497433	7-5	27
1498044	7-59	63
	7-71	63
	7-83	60
1498325	16-45	4
1498326	16-33	11
	16-35	17
	16-39	17
1498336	1-57	11
	1-75	6
	1-77	10
1498420	7-86	24
	7-86	25
	7-86	28
	7-90	23
1498424	7-85	1
	7-87	40
	7-89	1
	7-90	30
	7-93	9
	7-95	27
1498483	7-123	8
1500782	1-46	4
1500784	1-46	4
1500899	7-52	50
	7-58	50
	7-64	48
	7-70	50
	7-76	48
	7-82	48
	7-101	18
	7-105	14
	7-109	17
	7-113	19
1500901	7-97	17
1500912	1-5	15
	5-15	16
	5-19	14
	6-43	14
	7-5	11
	7-7	4
	7-7	4
	7-9	5
	7-16	32
	7-19	8
	7-29	2
	7-35	2

PART NO.	PAGE	ITEM
	7-42	6
	7-87	48
	7-87	49
	7-91	36
	7-91	37
	7-91	38
	11-13	6
	11-15	6
	16-5	7
1500913	7-33	2
	7-49	5
	7-49	7
	7-55	5
	7-55	7
	7-61	5
	7-61	7
	7-64	49
	7-67	5
	7-67	7
	7-73	5
	7-73	7
	7-76	49
	7-79	5
	7-79	7
	7-82	49
	7-117	1
	7-119	1
	7-133	1
1500925	7-98	25
	7-102	29
	7-106	25
	7-110	26
	7-114	28
1501258	1-91	6
1501811	5-7	2
	6-15	6
1501848	6-3	10
	6-5	10
1501888	5-3	1
	5-5	1
1501970	6-17	
	6-39	3
1501994	1-23	12
	6-5	16
	6-33	5
	6-36	5
1502003	11-3	6
	11-5	6
1502007	12-3	7
1502009	6-33	9
	6-36	9
	11-11	8

©2014 HYSTER COMPANY

NUMERICAL INDEX (continued)

PART NO.	PAGE	ITEM
1502034	6-3	2
	6-5	2
1502053	1-51	29
	7-35	19
1502055	7-35	13
	12-11	15
1502059	1-51	26
	7-19	2
	12-11	16
1502061	1-21	11
	1-23	10
	1-51	28
	6-33	11
	6-36	11
	7-16	23
	7-19	3
1502066	1-51	27
1502079	5-3	6
	6-3	6
	6-5	6
	6-7	7
1502123	12-3	8
1502276	10-13	28
1502543	1-51	8
	5-15	15
	6-25	12
	7-5	10
	7-5	20
	7-16	35
	7-19	20
	7-26	6
	12-3	4
	16-8	7
1502625	7-52	52
	7-58	52
	7-59	62
	7-64	50
	7-70	52
	7-71	62
	7-83	59
1502626	7-52	52
	7-58	52
	7-59	62
	7-64	50
	7-70	52
	7-71	62
	7-83	59
1503096	16-45	
1503958	1-59	19
1503959	1-62	33
1504010	13-17	8
	14-29	6
	15-31	9
	16-33	17
	16-35	19
	16-39	19
1504012	13-17	8
	14-29	6
	15-31	9
	16-33	17
	16-35	19
	16-39	19
1504075	2-13	3
	3-6	3
	4-11	6
1504197	7-86	25
	7-86	28
1504953	1-71	9
1506604	3-9	11
1506607	2-15	9
1506738	5-3	19
	5-5	4
1506825	1-59	
	1-62	
1508206	7-91	45
1508232	7-89	5
	7-91	45
	7-95	28
1509103	2-9	24
1509104	2-9	24
1509888	7-51	40
	7-57	40
	7-63	31
	7-69	40
	7-75	31
	7-81	31
	7-97	23
	7-105	8
	7-109	12
	7-113	14
	7-129	2
	16-5	11
1509890	7-51	41
	7-51	43
	7-57	41
	7-57	43
	7-63	41
	7-63	43
	7-69	41
	7-69	43
	7-75	41
	7-75	43
	7-81	41
	7-81	43
	7-101	9
	7-129	10
	7-133	12
1510113	1-18	1
	1-51	5
	5-13	16
	8-7	10
	11-3	13
	11-5	13
1510114	1-51	7
	7-23	4
	9-19	5
1510115	2-9	10
	3-31	15
	4-5	11
	4-7	23
	7-7	7
	7-9	8
1510116	7-23	11
	11-11	16
	12-3	11
1510117	1-51	21
	2-9	3
	3-31	11
	4-5	20
	11-19	13
1510126	11-3	2
	11-5	2
	11-13	11
	11-15	11
1512403	4-9	13
	10-2	1
	10-3	1
1512536	1-29	12
	1-33	26
1512561	9-17	1
1514138	8-26	5
1514269	12-49	1
1514429	1-19	6
	1-20	6
	1-21	6
	1-23	5
	5-13	11
	7-15	15
	9-21	20
	11-3	3
	11-5	3
	11-13	9
	11-15	9
1514597	7-47	24
	7-51	28
	7-52	57
	7-57	28
	7-58	57
	7-69	28
	7-70	57
	7-80	21
	7-81	40
	7-82	54
	7-87	48
	7-91	37
	7-94	23
	7-98	27
	7-123	4
	7-133	2
1514598	7-42	12
	7-47	24
	7-87	48
	7-91	37
	7-91	38
	7-94	23
	7-98	27
	7-123	4
	7-133	2
1514602	7-50	27
	7-52	53
	7-52	56
	7-56	27
	7-58	53
	7-58	56
	7-68	27
	7-70	53
	7-70	56
	7-80	22
	7-82	51
	7-82	53
	7-123	6
1514603	7-51	27
	7-52	53
	7-52	56
	7-53	61
	7-57	27
	7-58	53
	7-58	56
	7-62	22
	7-64	51
	7-64	53
	7-64	58
	7-69	27
	7-70	53
	7-70	56
	7-74	22
	7-76	51
	7-76	53

See Service Manual for service procedures.
©2014 HYSTER COMPANY

NUMERICAL INDEX (continued)

PART NO.	PAGE	ITEM
	7-76	58
	7-80	22
	7-82	51
	7-82	53
	7-123	6
1514866	13-3	11
	13-17	9
	14-18	28
	14-29	9
	15-3	7
	15-9	7
	15-11	21
	15-31	8
	16-33	20
	16-35	18
	16-39	18
1515219	9-21	5
1515337	1-59	11
	1-61	20
	1-62	39
	1-85	9
	1-85	17
	1-87	11
1515654	7-12	3
	7-16	27
	8-19	7
1516075	9-17	21
1516199	11-11	1
1516201	12-11	5
1516205	15-11	10
1516331	9-19	12
1516332	9-19	12
1516333	9-19	12
1516334	9-19	12
1516335	9-19	12
1516526	9-19	13
1516530	9-19	3
1516534	9-15	9
1516535	9-19	10
1516536	9-19	6
1516826	8-21	5
1516849	8-17	6
1517361	5-13	13
	12-17	15
	12-19	12
	12-21	16
	12-23	13
1517420	1-15	1
1517421	1-15	1
1517576	9-19	13
1517578	9-19	3
1517656	1-11	13
1517673	9-15	3
1517836	10-13	27
1519611	7-87	37
1520290	12-49	2
1520513	7-19	1
	7-85	1
	7-87	40
	7-90	22
	7-90	23
1520543	7-85	21
	7-90	28
	7-94	17
1520660	8-17	28
	8-26	9
1520752	9-19	15
1520753	9-19	15
1520754	9-19	15
1520755	9-19	15
1520864	7-93	10
1521005	5-17	5
	6-41	5
1521183	7-50	18
	7-56	18
	7-62	12
	7-68	18
	7-74	12
	7-80	12
1521184	7-50	17
	7-56	17
	7-62	11
	7-68	17
	7-74	11
	7-80	11
1521185	7-50	22
	7-56	22
	7-62	19
	7-68	22
	7-74	19
	7-80	19
1521186	7-50	23
	7-56	23
	7-62	20
	7-68	23
	7-74	20
	7-80	20
1521188	7-50	17
	7-50	18
	7-50	22
	7-50	23
	7-56	17
	7-56	18
	7-56	22
	7-56	23
	7-62	11
	7-62	12
	7-62	19
	7-62	20
	7-68	17
	7-68	18
	7-68	22
	7-68	23
	7-74	11
	7-74	12
	7-74	19
	7-74	20
	7-80	11
	7-80	12
	7-80	19
	7-80	20
	7-121	1
1522363	3-9	2
1522377	9-19	1
1522425	12-11	11
1523479	9-19	2
1523732	1-46	3
1523733	1-47	5
1523734	1-46	2
1523737	1-47	5
1524267	5-17	4
	5-19	23
	6-41	4
	6-43	23
1525354	10-13	1
1525442	6-31	24
1525451	6-29	11
	6-31	38
1525478	6-31	20
1525563	7-49	5
	7-55	5
	7-61	5
	7-67	5
	7-73	5
	7-79	5
1525564	7-117	1
	7-117	1
	7-119	1
1525565	7-33	2
1525566	7-133	1
1525567	7-49	4
	7-49	8
	7-52	48
	7-55	4
	7-55	8
	7-58	48
	7-61	4
	7-61	8
	7-64	46
	7-67	4
	7-67	8
	7-70	48
	7-73	4
	7-73	8
	7-76	46
	7-79	4
	7-79	8
	7-82	46
	7-102	24
	7-105	20
	7-110	21
	7-114	23
1525568	7-49	3
	7-55	3
	7-61	3
	7-67	3
	7-73	3
	7-79	3
	7-101	1
	7-105	1
	7-109	1
	7-113	1
1525569	7-49	2

©2014 HYSTER COMPANY

NUMERICAL INDEX (continued)

PART NO.	PAGE	ITEM
	7-49	9
	7-55	2
	7-55	9
	7-61	2
	7-61	9
	7-67	2
	7-67	9
	7-73	2
	7-73	9
	7-79	2
	7-79	9
1525570	7-49	1
	7-55	1
	7-61	1
	7-67	1
	7-73	1
	7-79	1
	7-102	28
	7-106	24
	7-110	25
	7-114	27
1525573	7-101	4
	7-113	11
1525577	7-75	30
	7-81	30
	7-101	22
	7-105	18
	7-109	20
	7-114	22
1525584	7-97	13
	7-101	6
	7-105	4
	7-109	7
	7-113	7
1525596	7-94	15
1527311	6-15	5
1527520	12-53	11
1527562	7-15	13
1527719	12-53	
1527813	12-11	3
1527876	1-7	18
	6-25	19
	11-13	28
	11-15	34
1527877	16-5	4
1527878	7-16	28
	9-21	22
	12-17	6
	12-21	6
1527879	4-7	37
	5-3	12
	5-13	17
	5-17	8
	5-19	27
	6-3	13
	6-5	13
	6-13	13
	6-35	13
	6-39	13
	6-41	8
	6-43	27
	7-5	14
	7-19	17
	7-26	3
	7-36	9
	8-3	5
	8-5	4
	8-7	7
	8-9	4
	8-11	4
	9-17	22
	9-19	7
	10-11	8
	11-3	15
	11-5	15
	11-11	27
	11-13	13
	11-15	13
	11-19	11
	12-17	2
	12-19	2
	12-21	2
	12-23	2
1527880	1-7	6
	1-51	30
	5-15	2
	6-7	9
	6-35	17
	6-39	17
	7-5	31
	7-42	3
	11-13	35
	11-15	40
1527881	1-7	31
	2-3	10
	2-5	11
	2-7	10
	3-3	13
	3-5	13
	4-7	5
	5-7	8
	6-13	4
1527883	1-51	19
1527884	2-15	7
	4-9	17
	7-11	
	8-17	14
1527887	1-51	23
1527888	1-5	18
	1-53	6
	1-55	6
1528132	7-25	3
1528133	7-25	4
1528140	2-10	2
1528315	7-25	2
1528415	2-15	11
1528481	12-3	
1528482	7-7	8
1528495	2-5	2
1528573	16-13	12
	16-19	8
	16-19	8
1528602	16-15	13
	16-15	13
	16-17	14
	16-17	14
1528608	5-7	20
	6-13	23
1528630	7-25	5
1528631	7-25	6
1528778	2-9	23
1528888	1-5	3
	1-53	7
	1-55	7
1528889	3-9	9
1528893	5-7	10
	6-13	1
1528903	6-29	19
	6-31	29
1529015	14-25	5
	16-13	13
	16-19	
	16-19	
1529046	7-49	8
	7-49	9
	7-52	48
	7-55	8
	7-55	9
	7-58	48
	7-61	8
	7-61	9
	7-64	46
	7-67	8
	7-67	9
	7-70	48
	7-73	8
	7-73	9
	7-76	46
	7-79	8
	7-79	9
	7-82	46
	7-101	1
	7-102	24
	7-102	28
	7-105	1
	7-105	20
	7-106	24
	7-109	1
	7-110	21
	7-110	25
	7-113	1
	7-114	23
	7-114	27
1529257	7-19	35
1529366	5-7	22
	5-15	17
	6-13	26
	6-17	21
	7-5	5
	7-16	19
	7-19	21
	7-26	7
1529427	1-15	13
1529787	2-3	11
	2-5	12
	2-7	11
	3-3	14
	3-5	14
	4-7	4
1530010	11-19	9
1530019	1-11	30
1530037	7-49	1
	7-49	2
	7-49	3
	7-49	4
	7-55	1
	7-55	2
	7-55	3
	7-55	4
	7-61	1
	7-61	2
	7-61	3
	7-61	4
	7-67	1
	7-67	2
	7-67	3
	7-67	4
	7-73	1

©2014 HYSTER COMPANY

NUMERICAL INDEX (continued)

PART NO.	PAGE	ITEM
	7-73	2
	7-73	3
	7-73	4
	7-79	1
	7-79	2
	7-79	3
	7-79	4
1530135	1-15	12
1530243	1-7	32
	2-3	9
	2-5	10
	2-7	9
	3-3	12
	3-5	12
	4-7	6
	5-3	11
	5-13	19
	6-3	12
	6-5	12
	6-7	11
1530311	5-17	9
	5-19	28
	6-41	9
	6-43	28
1530588	9-19	9
1530960	7-87	49
	7-91	38
	7-129	13
1530961	7-87	49
	7-91	38
	7-129	13
1530971	5-17	6
	5-19	25
	6-41	6
	6-43	25
1531001	1-11	3
	1-11	3
	7-47	17
1531162	7-117	3
	7-117	5
	7-119	3
	7-119	7
1531312	5-19	4
	6-43	4
1531404	2-3	14
	2-5	17
	2-7	16
	3-3	25
	3-5	25
1531480	7-19	9
	7-87	46
	7-91	36
1531486	7-133	4
	7-133	7
1531490	7-50	24
	7-56	24
	7-62	16
	7-68	24
	7-74	16
	7-80	16
1531492	7-52	60
	7-58	60
	7-63	35
	7-70	60
	7-75	35
	7-81	35
1531557	1-5	6
	1-53	21
	1-55	21
	6-35	18
	6-39	18
	11-11	25
	16-6	4
1531558	1-5	12
	1-11	28
	1-41	8
	1-43	8
	5-3	10
	5-5	5
	7-45	8
	7-45	17
	12-11	23
	12-14	8
1531563	10-2	3
	10-3	3
1531569	11-3	7
	11-5	7
1531806	3-9	12
1531973	7-51	34
	7-51	44
	7-52	49
	7-52	51
	7-57	34
	7-57	44
	7-58	49
	7-58	51
	7-63	44
	7-64	47
	7-69	34
	7-69	44
	7-70	49
	7-75	44
	7-76	47
	7-81	44
	7-82	47
1531974	7-51	44
	7-52	49
	7-52	51
	7-57	44
	7-58	49
	7-58	51
	7-63	44
	7-64	47
	7-69	44
	7-70	49
	7-75	44
	7-76	47
	7-81	44
	7-82	47
1531975	7-9	3
1532337	9-3	10
	9-3	10
	9-21	9
	9-31	3
1532363	3-31	2
1532523	2-9	29
	4-5	15
1532532	5-7	1
1532571	7-85	7
	7-85	10
	7-89	6
	7-97	13
	7-97	18
	7-101	6
	7-105	4
	7-109	7
	7-113	7
1532650	14-7	4
1532664	7-102	25
	7-105	21
	7-110	22
	7-114	24
1532708	9-21	2
1532735	9-17	20
1532759	7-15	11
	7-45	19
	7-97	9
1532761	7-15	10
	7-85	8
	7-89	8
	7-97	5
1532762	7-95	41
1532774	7-87	44
	7-89	9
	7-95	38
1532775	7-45	20
1532776	7-90	21
	7-95	40
	7-97	4
1532777	7-19	7
1532778	7-85	14
	7-91	46
1533493	12-49	4
1533494	12-49	5
1533639	2-9	5
	3-31	5
	4-5	24
1533810	7-86	29
	7-91	41
	7-94	15
1533863	2-9	7
	4-5	17
1534282	7-49	12
	7-55	12
	7-64	52
	7-67	12
	7-76	52
	7-82	52
	7-101	3
	7-105	3
	7-109	3
	7-113	3
1534417	1-7	8
	2-15	4
	3-9	
	4-9	5
	6-33	8
	6-35	11
	6-36	8
	6-39	11
	7-5	8
	7-19	11
1534424	7-11	27
1534660	1-93	8
1534672	6-29	17
	6-31	28
1534828	7-50	19
	7-56	19
	7-62	13
	7-68	19
	7-74	13
	7-80	13
	7-101	8
	7-105	7
	7-109	9
	7-113	9

©2014 HYSTER COMPANY

NUMERICAL INDEX (continued)

PART NO.	PAGE	ITEM
1534871	11-3	23
	11-5	23
	11-13	20
	11-15	23
1535166	7-35	1
1535257	2-3	4
	2-5	5
	2-7	4
	3-3	7
	3-5	7
1536304	7-15	2
1536724	11-3	11
	11-5	11
	11-9	
1536813	1-5	4
	1-53	4
	1-55	4
1537133	9-3	8
	9-15	8
	9-31	5
1537400	10-13	3
1537422	7-23	8
1537449	8-23	14
1537450	8-23	16
	8-25	16
1537459	8-23	20
	8-25	19
1537551	7-5	32
	7-15	7
	7-45	9
	7-47	23
1537667	10-13	21
1538162	5-13	2
1538488	5-17	3
	6-41	3
1538490	5-13	5
1538782	5-13	3
1539154	3-7	2
1539584	7-47	20
1539636	10-19	1
1539872	7-95	26
1539962	2-27	18
	6-10	2
	7-12	2
1540388	7-49	13
	7-55	13
	7-64	57
	7-67	13
	7-76	57
	7-82	57
	7-95	43
	7-101	2
	7-105	2
	7-109	2
	7-113	2
1540643	1-11	5
1540805	7-5	21
1540860	1-11	35
1540870	1-12	47
1541231	7-16	25
	8-17	29
1541232	8-17	30
1541921	8-12	3
	8-13	2
1541988	7-52	46
	7-58	46
	7-63	39
	7-70	46
	7-75	39
	7-81	39
	7-98	26
1541989	7-98	26
1541991	7-51	45
	7-57	45
	7-63	40
	7-69	45
	7-70	51
	7-75	40
	7-76	50
	7-81	40
	7-82	50
1541992	7-51	45
	7-57	45
	7-63	40
	7-69	45
	7-70	51
	7-75	40
	7-76	50
	7-81	40
	7-82	50
1542082	5-13	18
1542436	1-23	11
	6-33	6
	6-36	6
	7-19	22
	7-26	8
	8-3	9
	8-5	15
1542439	7-16	24
	7-19	4
	7-35	12
1542440	5-7	14
	6-13	11
	7-19	25
	7-26	11
1542500	5-13	8
1542546	12-17	10
	12-21	10
1543059	10-17	1
1543060	9-24	1
	9-26	1
	9-31	1
1543061	9-24	1
	9-26	1
1543069	10-17	1
1543070	9-24	1
	9-26	1
	9-31	1
1543071	9-24	1
	9-26	1
1543094	8-25	14
1543102	8-23	
	8-25	
1543254	10-13	26
1543553	7-85	21
	7-90	28
	7-94	17
1543691	5-7	15
1543698	6-13	10
	7-19	23
	7-19	30
	7-26	9
	11-3	8
	11-5	8
	11-19	14
1543842	1-19	3
	1-20	3
	1-21	3
	1-23	6
	11-3	9
	11-5	9
1543982	16-5	8
1544118	12-49	7
1544119	12-49	7
1544120	12-49	7
1544121	12-49	7
1544122	12-49	10
1544123	12-49	10
1544124	12-49	10
1544153	1-12	40
	1-12	40
	7-23	15
	11-3	12
	11-5	12
1544154	7-23	17
1544157	10-11	6
1544216	8-19	32
1544217	8-19	33
1544218	8-19	30
1544232	10-19	1
1544234	10-19	1
1544255	7-25	7
1544413	1-11	31
1544415	1-11	12
1544759	8-26	6
1545202	7-52	58
	7-58	58
	7-70	58
	7-82	55
1545401	9-3	5
	9-31	4
1545546	8-26	12
1546673	7-97	6
	7-129	7
1546697	7-52	58
	7-58	58
	7-64	55
	7-70	58
	7-76	55
	7-82	55
1547368	7-97	12
1547369	7-97	20
1547447	8-17	20
1547466	1-11	16
1547467	1-11	16
1547468	1-11	16
1547629	7-89	5
	7-95	28
1547712	4-5	9
1547756	16-5	6
1547757	9-15	1
1547848	6-13	16
1548352	2-27	3
	2-28	1
	6-10	4
	7-12	1
1548497	2-3	13
	2-5	18
	3-3	24
	3-5	24
1548517	7-33	3
	7-94	19
	7-101	13
	7-105	9
	7-109	13
	7-113	15
	7-129	6
	7-129	9

See Service Manual for service procedures.
©2014 HYSTER COMPANY

NUMERICAL INDEX (continued)

PART NO.	PAGE	ITEM
1548519	7-33	3
	7-94	19
	7-101	13
	7-105	9
	7-109	13
	7-113	15
	7-129	6
	7-129	9
1548618	1-7	5
1550070	16-13	3
	16-15	3
	16-17	5
	16-19	3
1550561	8-26	3
1550600	6-13	7
1550747	3-9	16
1551839	10-2	3
	10-3	3
1553122	8-12	1
1553123	8-13	1
1553265	3-9	1
1553266	2-15	1
1553652	2-16	2
	2-21	
1553692	2-19	5
1553693	2-19	1
1553708	2-21	15
	7-11	1
1553722	2-25	7
1553774	2-35	8
1553776	2-35	15
	2-37	2
1553777	2-35	14
1553778	2-35	10
1553779	2-35	1
1553830	2-31	5
1553831	2-31	1
1553833	2-31	6
1553834	2-31	6
1553835	2-31	6
1553837	2-31	7
1553839	2-31	2
1553840	2-31	3
1553841	2-31	3
1553868	2-27	2
1553869	2-27	6
1553871	2-27	14
1553897	5-15	3
	7-30	10
	11-13	3
	11-15	3
1554359	7-51	27
	7-52	53
	7-52	56
	7-52	58
	7-53	61
	7-57	27
	7-58	53
	7-58	56
	7-58	58
	7-62	22
	7-64	51
	7-64	53
	7-64	55
	7-64	58
	7-68	27
	7-70	53
	7-70	56
	7-70	58
	7-74	22
	7-76	51
	7-76	53
	7-76	55
	7-76	58
	7-80	22
	7-82	51
	7-82	53
	7-82	55
	7-123	6
1554902	7-7	11
	7-9	16
	7-36	10
1556475	11-3	21
	11-5	21
	11-13	23
	11-15	22
1557383	9-5	10
1557445	9-9	5
1557478	2-13	1
1557479	2-13	1
1557737	2-13	4
	3-6	4
	4-11	7
1557767	3-6	1
1558034	1-59	13
1558036	1-85	7
	1-87	4
1558052	1-71	24
1558156	7-129	12
1558161	6-23	1
	6-25	17
1558170	6-23	10
1558176	6-25	1
1558219	1-5	7
1558226	7-85	13
	7-90	24
1558227	7-95	45
1558228	7-87	43
	7-91	33
1558294	1-59	21
	1-62	43
1558432	6-19	12
	6-20	5
	6-23	6
1558515	8-19	21
1559049	7-97	2
1559418	6-8	3
1559419	6-8	4
1559420	6-8	5
1559928	7-5	9
1560015	7-97	22
	7-124	3
1560441	7-87	34
	7-91	42
1560447	7-47	21
1560448	7-47	22
1560643	1-63	4
1560671	1-5	8
	1-53	15
	1-55	15
1560678	7-16	17
1560681	12-29	15
	12-31	6
1560682	12-29	9
	12-31	10
1561008	10-15	4
1561117	7-127	7
1561144	7-87	34
	7-91	42
1561559	7-47	10
	16-2	2
1561749	16-8	1
1561755	7-47	11
	16-2	2
1561759	7-35	11
1561871	7-19	31
	8-3	8
	8-5	14
1562088	5-13	20
	7-7	10
1562353	1-91	27
1562359	1-17	1
1562360	1-17	1
1562361	1-17	1
1562362	1-17	1
1562492	10-5	11
1562493	10-5	13
1562496	10-5	16
1562501	10-5	21
1562505	10-5	25
1562509	10-5	1
1562648	1-19	9
	1-20	9
	1-21	8
	1-23	3
	4-7	36
	8-3	3
	8-5	3
	8-7	8
	8-9	3
	8-11	2
1562649	7-94	21
	7-117	3
	7-117	5
	7-117	6
	7-117	7
	7-119	3
	7-119	5
	7-119	6
	7-119	7
	7-119	8
	7-119	9
1563208	1-29	7
	1-33	7
1563224	1-27	7
1563225	1-27	8
1563227	1-27	5
1563369	1-7	24
	1-7	27
1563497	1-7	23
	1-7	26
1563881	1-11	38
1563883	1-12	49
1564044	7-15	3
1564392	5-7	21
	6-13	24
1564515	12-3	22
1564526	11-13	5
	11-15	5
1564529	1-11	21
1564747	12-17	11
	12-19	5
	12-21	11
	12-23	5
1564752	5-17	14
	5-19	21
	6-41	14
	6-43	21

©2014 HYSTER COMPANY

NUMERICAL INDEX (continued)

PART NO.	PAGE	ITEM
1565076	7-45	13
	7-47	13
1565098	7-97	12
1565125	1-53	16
	1-55	16
	7-45	3
	7-47	3
1565127	8-3	16
	8-7	1
	8-11	10
1565150	2-13	7
1565212	5-3	9
1565290	11-7	2
1565303	11-7	6
1565305	11-7	27
1565309	11-7	
1565310	11-7	
1565311	11-7	
1565312	11-7	
1565313	11-7	12
1565314	11-7	12
1565315	11-8	
1565316	11-7	
1565324	9-23	
1565327	9-23	2
1565407	7-19	33
1565453	2-13	6
	3-6	6
	4-11	9
1565691	2-5	13
1565692	2-3	12
	2-7	12
	3-3	15
	3-5	15
	4-7	7
1566076	7-101	20
	7-101	21
1566116	7-102	25
	7-105	21
	7-110	22
	7-114	24
1566117	7-102	26
	7-106	22
	7-110	23
	7-114	25
1566131	11-9	
1566141	11-9	3
1566142	11-9	2
1566143	11-9	8
1566144	11-9	7
1566145	7-124	2
1566146	7-15	2
	7-124	4
1566227	7-101	20
	7-101	21
	7-113	12
	7-113	13
1566420	7-42	4
1566462	9-3	9
1566654	7-16	26
	7-19	40
1566700	10-15	
1566726	1-5	17
1566853	1-5	18
1566951	1-91	11
1567020	3-31	7
1567674	2-3	18
	2-5	21
	2-7	20
	3-3	22
	3-5	22
	4-7	9
1567694	7-85	5
	7-89	11
1568075	11-3	31
	11-13	15
1568076	11-5	33
	11-15	16
1568077	11-5	32
	11-15	20
1568199	12-3	19
1568253	11-5	31
1568256	11-5	36
	11-15	26
1568271	10-13	8
1568839	6-29	15
	6-31	18
1568853	6-29	13
	6-31	16
1568998	6-15	18
1569079	2-3	1
	3-3	1
1569465	1-19	4
	1-20	4
	1-21	4
	1-23	7
	1-51	25
	6-33	10
	6-36	10
	8-3	7
	8-5	13
1569602	12-29	20
	12-37	3
	12-37	6
1569616	11-11	19
	16-21	10
	16-23	10
	16-25	10
	16-27	10
	16-29	10
	16-31	10
1569912	9-19	15
1569913	9-19	15
1569914	9-19	15
1569915	9-19	15
1569973	7-86	29
	7-91	41
	7-94	15
1570298	11-3	30
	11-13	17
1570300	11-5	37
	11-15	27
1570327	7-19	6
1570339	12-9	2
1570340	12-9	4
1570347	12-9	12
1571029	1-71	28
1571628	1-81	1
1572388	2-16	2
	2-21	
1572594	2-25	4
1572596	2-25	4
1572598	2-25	4
1573179	2-43	38
1573549	7-7	14
	7-9	14
	7-23	20
	7-33	5
1573567	2-27	10
1573568	2-27	8
	2-37	5
	2-43	8
1573774	1-11	8
1574096	2-27	5
1574097	2-27	9
1574098	2-27	7
	2-37	6
1574099	2-27	11
1574111	5-4	3
1574147	1-93	2
1574260	5-4	4
1574301	1-53	2
	1-55	2
1578665	12-7	5
1578671	12-5	11
	12-7	11
1578672	12-5	7
	12-7	12
1578673	12-5	6
	12-7	6
1578693	12-5	11
	12-7	11
1578705	12-29	16
	12-31	5
1578706	12-35	3
	12-37	10
1578707	12-25	3
	12-32	4
	12-35	9
	12-47	2
1578710	12-39	3
	12-39	10
1578711	12-41	2
	12-43	2
	12-45	2
1578712	12-32	3
	12-37	2
1578713	12-29	1
	12-31	13
	12-41	6
	12-43	7
	12-45	7
1578714	12-37	9
	12-45	3
1578715	12-35	
	12-47	4
1578746	12-25	7
	12-32	1
1578748	12-25	2
	12-29	18
1578753	12-35	3
	12-37	10
1578875	12-37	4
1578876	12-37	8
1578881	12-37	1
1578882	12-41	8
	12-43	5
	12-45	5
1578883	12-41	7
	12-43	4
	12-45	4
1578887	12-41	3
1578888	12-37	5
1578889	12-41	9
	12-43	6
	12-45	6
1578904	12-37	13
1578905	12-41	13

See Service Manual for service procedures.
©2014 HYSTER COMPANY

NUMERICAL INDEX (continued)

PART NO.	PAGE	ITEM
1578906	12-43	10
1578907	12-45	10
1578908	12-35	
1578909	12-35	
	12-37	12
1578911	12-37	14
1578918	12-39	4
1578934	12-39	5
1578940	12-29	2
1578943	12-29	4
1578978	9-19	11
1578981	9-19	14
1579028	11-15	19
1579116	1-61	28
	1-85	2
1579403	7-127	8
1579412	16-6	2
1579454	9-21	28
	11-7	
1579455	9-21	14
	11-7	
1579677	5-7	16
	6-13	19
	6-13	21
1579908	10-9	38
1580093	1-12	44
1580097	12-25	2
	12-29	
1580099	12-41	10
1580131	12-25	3
	12-32	10
	12-47	3
1580132	12-37	11
1580146	12-25	1
	12-25	1
1580147	12-31	4
1580148	12-25	1
	12-25	1
1580151	12-35	
	12-47	4
1580155	12-32	2
1580156	12-32	2
1580426	10-19	4
1580427	10-19	3
1580652	1-7	3
1580759	12-41	11
1580760	12-41	12
1581079	1-11	36
1581098	8-23	8
	8-25	8
1581099	8-23	9
	8-25	9
1581100	8-23	10
	8-25	10
1581107	8-23	18
	8-25	18
1581108	8-23	7
	8-25	7
1581313	7-87	42
	7-90	29
1581315	7-87	42
	7-90	29
1581438	5-3	4
	6-3	4
	6-5	4
1581439	5-3	5
	6-3	5
	6-5	5
	6-7	6
1581441	3-27	2
1581534	12-5	8
	12-7	
1581535	12-5	10
1581536	12-5	3
	12-7	4
1581537	12-5	8
	12-7	
1581556	14-7	20
1581557	6-31	23
	13-3	18
	13-7	15
	14-17	19
	15-3	20
	15-16	23
1581559	14-17	10
	15-12	33
1581566	13-3	19
	13-7	5
	13-13	17
	14-7	5
	15-3	19
	15-15	14
	15-27	3
	15-28	46
1581567	1-18	3
	14-17	16
	15-28	53
1581579	6-29	12
	6-31	39
	15-12	
	15-29	64
1581580	15-28	41
1581581	13-13	16
	15-28	45
1581582	13-13	14
1581583	6-29	4
	6-31	4
	13-13	11
	15-28	23
1581587	14-17	18
1581590	14-18	30
1581591	13-13	8
	15-11	13
	15-28	29
1581733	6-29	28
	6-31	35
1581739	6-29	29
	6-31	34
1581741	14-25	14
1581827	14-17	15
	15-11	12
	15-28	38
1581828	14-17	7
1581829	14-7	14
1581830	14-26	25
	15-28	52
1581833	16-33	7
	16-35	5
1581835	14-7	19
1581836	13-7	2
1581841	14-17	20
1581842	14-26	19
1581848	6-31	31
	12-49	12
1581849	14-7	11
	14-17	11
	14-26	30
	15-12	25
	15-28	39
1581852	1-25	13
	1-27	17
	1-29	10
	1-33	13
	12-49	13
	14-7	12
	14-18	33
1581854	16-33	8
	16-35	4
1581858	10-9	37
1581860	12-29	11
	12-31	9
1581861	12-29	12
1581862	12-37	15
1581887	6-31	26
1581888	6-31	21
1581898	6-29	3
	6-31	3
1582072	1-11	22
1582074	2-3	3
	2-7	3
1582078	2-7	17
1582141	16-8	2
1582150	7-16	18
1582151	7-15	12
1582160	12-3	9
1582161	12-3	10
1582218	7-127	1
1582222	2-9	18
	3-31	3
	4-5	12
1582300	5-17	16
	5-19	32
	6-41	16
	6-43	32
1582301	5-17	15
	5-19	31
	6-41	15
	6-43	31
1582324	2-27	4
1582337	7-5	22
1582442	7-5	3
1582464	1-5	16
	5-19	15
	6-43	15
	7-5	2
	7-7	4
	7-7	4
	7-9	6
	7-16	31
	7-19	10
	7-29	3
	7-35	3
	7-42	7
	16-5	9
1582465	7-7	6
	7-9	7
1582484	7-97	10
1582486	7-97	11
1583169	9-3	6
	9-31	6
1583609	1-91	10
1583611	1-5	5
	1-7	34
	1-12	43
	1-12	43
	1-18	1
	1-53	3
	1-53	20

©2014 HYSTER COMPANY

NUMERICAL INDEX (continued)

PART NO.	PAGE	ITEM
	1-55	3
	1-55	20
	1-85	15
	5-3	13
	6-3	11
	6-5	11
	6-7	10
	12-17	7
	12-19	3
	12-21	7
	12-23	3
	16-6	3
	16-7	3
	16-8	6
1583732	9-17	6
1583915	11-19	2
1584083	6-29	10
	6-31	10
1584632	1-37	9
1584638	1-37	11
1584690	9-3	11
	9-31	7
1584693	10-17	3
1584694	9-24	3
	9-26	3
	9-29	3
	9-31	2
1584695	9-24	3
	9-26	3
	9-29	7
1584987	12-5	8
	12-7	
1585073		
1585074		
1585075		
1585076		
1585077		
1585078		
1585575	11-3	24
	11-5	24
	11-13	14
	11-15	14
1585581	1-7	10
1585592	1-7	21
1586013	6-17	1
	6-29	30
	6-31	41
	12-49	3
1586020	12-39	7
1586022	6-31	32
1586109	10-2	4
	10-3	4
1586279	12-39	15
1586280	12-37	7
1586428	7-45	16
	7-47	16
1586430	1-88	5
	16-7	4
1586432	1-17	4
1586439	1-91	16
1586440	1-91	17
1586444	1-91	15
1586447	1-91	15
1586448	1-91	15
1586449	1-91	15
1586495	1-5	11
	1-11	6
	7-45	7
	7-45	18
	7-47	18
1586627	12-11	10
	12-17	22
	12-19	13
	12-21	23
	12-23	14
1586629	1-18	4
1586630	1-17	2
1586759	7-45	15
	7-47	15
1586967	3-31	4
1587778	7-51	39
	7-57	39
	7-63	32
	7-63	44
	7-69	39
	7-75	32
	7-75	44
	7-81	32
	7-81	44
1588247	1-11	19
1588508	2-5	9
1588577	11-11	26
1588833	1-19	5
	1-20	5
	1-21	5
	1-23	4
1589195	16-5	2
1589312	2-9	12
	4-5	23
1589377	1-93	5
1589397	1-93	6
1589621	7-30	2
1589630	3-31	1
1589787	1-53	5
	1-55	5
1589790	9-5	2
1589793	9-5	5
1589796	9-5	6
1589797	9-5	7
1589798	9-5	9
1589801	9-5	13
1589805	9-5	17
1589806	9-5	14
1589807	9-5	12
1589808	9-5	18
1589809	9-5	19
1589810	9-5	20
1589811	9-5	21
1589812	9-5	22
1589813	9-5	23
1589814	9-5	3
1589816	9-7	2
1589817	9-7	3
1589818	9-7	4
1589819	9-7	5
1589820	9-7	6
1589821	9-7	6
1589822	9-7	6
1589823	9-7	6
1589824	9-7	6
1589825	9-7	6
1589826	9-7	6
1589827	9-7	6
1589828	9-7	6
1589829	9-7	7
1589830	9-7	8
1589831	9-7	9
1589832	9-7	10
1589833	9-9	1
1589834	9-9	2
1589835	9-9	4
1589836	9-9	4
1589837	9-9	4
1589838	9-9	4
1589839	9-9	6
1589840	9-9	7
1589841	9-9	8
1589842	9-9	9
1589843	9-9	10
1589844	9-9	11
1589845	9-9	12
1589846	9-9	13
1589847	9-10	1
1589848	9-10	2
1589850	9-10	4
1589851	9-10	5
1589853	9-10	7
1589857	9-11	8
1589860	9-11	10
1589861	9-11	11
1589867	9-3	10
	9-13	5
1589868	9-13	6
1589869	9-13	7
1589870	9-13	8
1589873	9-13	11
1589874	9-13	12
1589875	9-13	13
1589876	9-13	14
1589878	9-13	16
1589879	9-13	17
1589880	9-13	18
1589881	9-13	19
1589886	9-13	20
1589887	9-13	20
1589924	9-13	22
1590033	11-3	33
	11-5	39
	11-13	33
	11-15	38
1590113	12-35	4
	12-39	8
1590145	1-11	37
1590147	1-12	48
1590152	1-3	9
1590153	1-3	10
1590204	9-7	1
1590206	9-7	1
1590279	1-3	7
1590280	1-3	8
1590839	8-26	13
1590865	8-26	10
1590866	8-26	11
1591454	7-16	30
1592071	7-30	7
1592853	13-7	9
	15-15	16
1593331	7-5	12
1593334	1-25	19
	1-41	24
1593356	2-5	4
1593391	5-7	23
	6-13	25
1593629	1-59	
	1-62	
1594055	7-16	33
1595425	8-23	
	8-25	

See Service Manual for service procedures.
©2014 HYSTER COMPANY

NUMERICAL INDEX (continued)

PART NO.	PAGE	ITEM
1595731	7-30	8
1596420	15-28	19
1596624	1-11	10
1596625	1-11	33
1597051	1-12	45
1597070	1-12	46
1597381	12-49	14
1597448	1-51	15
	14-25	6
	15-27	2
	15-29	62
1597644	5-9	4
1597709	3-27	6
1597710	3-27	8
1598209	1-71	20
1598210	1-71	11
1598211	1-71	12
1598220	1-5	13
1598290	1-71	5
	1-79	
1598291	1-71	23
1598293	1-71	1
1598294	1-71	17
1598295	1-71	6
1598296	1-71	3
1598297	1-71	2
1598298	1-71	18
1598299	1-71	19
1598301	1-71	26
1598302	1-71	25
1598327	1-19	1
	1-20	1
	1-21	1
	1-62	37
	1-85	18
1598329	1-85	11
	1-87	13
1598332	1-85	3
	1-87	3
1598333	1-85	1
	1-87	1
	7-45	12
1598389	1-59	15
	1-61	2
1598390	1-59	13
	1-59	
	1-61	25
1598392	1-59	5
1598393	1-59	3
	1-61	16
1598394	1-59	4
	1-61	15
1598395	1-59	14
1598397	1-59	20
1598398	1-61	3
1598399	1-61	8
1598400	1-61	10
1598401	1-61	9
1598404	1-61	21
	1-63	
1598408	1-61	27
1598409	1-61	30
1598410	1-62	31
1598411	1-61	14
1598412	1-61	26
1598414	1-62	41
1598417	1-59	1
1598420	1-81	3
1598421	1-81	4
1598422	1-81	9
1598424	1-81	13
1598425	1-81	14
1598504	1-25	12
	1-27	15
	1-29	19
	1-33	12
1598645	7-23	2
1598660	15-11	6
1598668	1-85	14
1598669	1-61	24
1598670	1-62	
1598671	1-63	3
1598672	1-63	2
1598673	1-63	
1598674	1-63	1
1598675	1-63	4
1599415	1-5	10
	1-53	14
	1-55	14
	1-69	5
1599440	3-11	1
1599441	3-11	2
	3-13	13
1599442	3-11	3
1599443	3-11	12
1599444	3-11	5
1599445	3-11	8
	3-29	11
1599446	3-11	6
1599448	3-11	9
	3-25	4
	3-27	4
	3-29	10
1599449	3-11	7
1599451	3-11	4
1599454	3-11	13
1599455	3-11	14
1599458	3-11	15
	3-23	9
	3-25	7
1599459	3-23	1
1599460	3-23	2
1599461	3-23	3
1599462	3-23	15
1599463	3-13	6
	3-23	16
1599464	3-13	7
	3-23	17
1599465	3-23	12
1599466	3-23	10
1599467	3-23	13
1599468	3-11	16
	3-29	8
1599469	3-11	17
1599470	3-14	46
	3-17	7
	3-23	5
	3-29	5
1599471	3-23	8
1599472	3-23	7
1599473	3-23	4
1599475	3-21	3
	3-23	11
1599476	3-23	6
1599478	3-23	
1599479	3-25	1
1599480	3-25	2
1599481	3-25	3
1599483	3-25	5
1599485	3-25	8
1599486	3-14	45
1599487	3-13	44
1599488	3-13	10
1599489	3-13	15
1599516	3-13	16
1599517	3-13	17
1599518	3-13	18
1599519	3-13	19
1599520	3-13	20
1599521	3-13	21
1599522	3-13	43
1599523	3-13	42
1599525	3-13	11
1599526	3-13	12
1599528	3-13	14
1599529	3-13	22
1599530	3-13	23
1599531	3-13	24
1599532	3-13	25
1599533	3-13	26
1599534	3-13	27
1599535	3-13	28
1599536	3-13	29
	3-13	32
1599537	3-13	30
	3-13	33
1599538	3-13	31
1599539	3-13	34
1599540	3-13	35
1599541	3-13	36
1599542	3-13	37
1599543	3-21	2
1599544	3-13	8
1599545	3-13	1
1599546	3-13	2
1599547	3-13	3
1599548	3-13	4
1599549	3-13	5
1599550	3-13	9
1599552	3-13	40
1599553	3-13	38
1599555	3-14	47
1599556	3-21	1
1599557	3-13	39
1599559	3-21	4
1599560	3-21	5
1599561	3-21	6
1599562	3-21	7
1599563	3-21	8
1599565	3-21	10
1599567	3-21	11
1599568	3-21	12
1599569	3-17	1
1599570	3-17	2
1599571	3-17	3
1599572	3-17	4
1599573	3-17	5
1599574	3-17	6
	3-19	11
1599576	3-17	9
1599578	3-17	11
1599579	3-17	8
	3-27	5
1599580	3-17	14
1599581	3-17	13
1599582	3-17	12
1599583	3-19	9
1599584	3-19	10

©2014 HYSTER COMPANY

NUMERICAL INDEX (continued)

PART NO.	PAGE	ITEM
1599585	3-19	12
1599586	3-19	13
1599588	3-19	16
1599589	3-19	15
1599590	3-19	14
1599591	3-19	18
1599592	3-19	1
1599593	3-19	2
1599594	3-19	4
1599595	3-19	3
1599596	3-19	5
1599597	3-19	6
1599598	3-19	8
1599600	3-19	1
1599601	3-19	2
1599604	3-29	1
1599605	3-29	3
1599606	3-29	2
1599607	3-29	4
1599610	3-29	7
1599611	3-29	9
1599613	3-29	12
1599616	3-29	13
1599795	3-27	3
1599797	3-27	12
1599798	3-27	9
1599799	3-27	1
1599801	3-27	10
	5-11	8
1599802	3-27	14
1599803	3-27	11
1599804	3-27	1
1599807	3-27	13
1599815	3-27	1
1599817	3-27	1
1599818	5-9	5
1599819	3-13	41
	5-9	7
1599820	5-9	6
1599821	5-9	17
1599822	5-9	18
	5-9	20
1599823	5-9	19
1599824	5-9	16
1599825	5-9	15
1599826	5-9	14
1599827	5-9	13
1599828	5-9	8
1599829	5-9	9
1599830	5-9	12
1599831	5-9	11
1599832	5-9	10
1599833	5-11	1
1599834	5-11	2
1599835	5-11	3
1599836	5-11	4
1599837	5-11	5
1599839	5-11	7
1599840	3-27	1
1599841	5-11	9
1599842	5-11	10
1599843	5-11	11
1599844	3-27	1
1599845	7-15	1
1599847	7-15	1
1599848	7-15	1
1599850	7-15	1
1599851	7-15	1
	7-15	1
1599853	7-15	1
1599855	7-15	1
1599860	7-15	1
1599861	7-15	1
1599862	7-15	1
1599863	7-15	1
1599864	7-15	1
1599865	7-15	1
1599866	7-15	1
1599867	7-15	1
1599869	7-20	1
1599870	7-20	7
1599873	7-20	1
1599874	7-20	1
1599875	7-20	1
1599876	7-20	1
1599877	7-20	1
1599878	7-20	1
1599879	7-20	1
1599893	7-20	2
1599894	7-20	3
1599895	7-20	5
1599896	7-20	6
1599897	7-20	4
1599898	3-11	
	3-14	
	3-21	
	3-23	
	3-25	
	3-27	
	3-29	
	5-9	
1599899	3-27	1
1599901	3-17	15
	5-9	1
1599907	5-9	26
1599908	5-9	27
1599909	5-9	21
1599910	5-9	23
1599911	5-9	22
1599912	5-9	25
1599913	5-9	24
1600084	5-9	1
1600085	3-11	
	3-14	
	3-21	
	3-23	
	3-25	
	3-27	
	3-29	
	5-9	
1600086	3-27	1
1600093	5-9	4
1600273	3-13	10
1600275	3-19	9
1600276	3-19	1
1600277	3-19	2
1600278	3-19	1
1600279	3-19	2
1600491	11-7	20
1600492	11-7	20
1600493	11-7	27
1600539	9-3	9
1602431	7-59	63
	7-64	59
	7-71	63
	7-83	60
1603021	7-33	3
	7-94	19
	7-101	13
	7-105	9
	7-109	13
	7-113	15
	7-129	6
	7-129	9
1603236	7-33	3
	7-101	13
	7-105	9
	7-109	13
	7-113	15
	7-129	6
	7-129	9
1603485	9-24	1
	9-26	1
	9-31	1
1603486	9-24	1
	9-26	1
1603489	10-17	1
1603490	10-19	1
1603857	6-25	10
	6-26	8
1605467	2-15	9
1605768	7-33	7
	12-11	14
1606085	11-7	
1606086	11-7	
1606087	11-7	1
1606088	11-7	1
1606532	9-23	
1606544	7-7	13
	7-9	13
	7-23	19
	7-33	4
	7-47	26
	11-19	15
	16-21	15
	16-23	15
	16-25	15
	16-27	15
	16-29	15
	16-31	15
1606735	7-7	15
	7-9	15
	7-33	6
1606750	10-3	7
1606855	14-25	1
1607549	7-94	20
1608616	5-9	2
1608617	5-9	2
1608622	10-2	2
	10-3	2
1608865	7-23	1
1608876	1-7	14
1608877	1-7	15
1608879	1-7	17
1608928	7-23	3
1609374	5-13	1
1609706	1-11	27
1609707	1-11	24
1609708	1-11	26
1609709	1-11	25
1609864	16-11	2
1610508	9-11	9
1610510	9-11	3
1610512	9-11	5
1610514	9-11	6
1610516	9-11	1
1610521	9-11	2
1610522	9-9	3

©2014 HYSTER COMPANY

NUMERICAL INDEX (continued)

PART NO.	PAGE	ITEM
1610746	8-26	4
1610852	5-7	12
1610975	7-86	29
	7-91	41
1611535	9-3	9
1612617	1-21	12
1613324	11-11	23
	12-11	20
1613375	9-13	1
1613376	9-13	2
1613377	9-13	3
1613378	9-13	4
1613380	9-13	9
1613381	9-13	15
1613382	9-13	21
1613383	9-3	10
	9-31	3
1613386	9-3	10
	9-31	3
1613734	1-53	22
	1-55	22
1613749	6-29	26
	6-31	36
1613755	6-29	27
	6-31	37
1614672	9-21	6
1614686	1-53	12
	1-55	12
1614687	1-53	12
	1-55	12
1614770	6-19	3
1614926	1-85	19
1615163	7-30	9
1615671	6-31	30
1615813	1-71	5
	1-79	16
1615860	7-23	18
1615956	6-29	18
	6-31	27
1615998	1-71	5
	1-79	17
1615999	1-71	5
	1-79	18
1616379	1-7	4
1616427	3-27	3
	3-27	3
1616480	1-15	8
1616481	1-15	10
1616484	1-15	5
1616485	1-15	7
1616491	5-15	8
1616979	8-3	6
	8-5	12
	8-9	12
1617080	7-5	4
1617600	7-23	12
1617614	7-23	13
1617657	12-11	1
	14-26	18
1617658	14-25	3
1618311	9-21	21
1618992	1-15	13
1620023	11-16	
1620024	11-16	
1622236	3-3	6
	3-5	6
1622946	14-22	14
	15-23	7
1623093	3-9	17
1623280	7-129	4
1623281	7-129	4
1623364	1-71	10
	1-81	8
1623366	1-71	27
1623370	1-81	10
1623377	1-71	33
1623391	1-59	7
	1-61	7
1623393	1-59	8
	1-61	11
1623400	1-61	19
1623402	1-63	
1624018	1-7	9
1624401	8-19	2
1624904	12-3	13
1625173	3-31	4
1625999	2-15	13
	3-9	
	4-9	4
1626461	15-28	51
1626478	7-30	11
1626727	7-51	30
	7-51	32
	7-51	37
	7-52	55
	7-57	30
	7-57	32
	7-57	37
	7-58	55
	7-63	26
	7-63	28
	7-63	34
	7-65	60
	7-69	30
	7-69	32
	7-69	37
	7-70	55
	7-75	26
	7-75	28
	7-75	34
	7-81	26
	7-81	28
	7-81	34
1627172	1-69	
1627173	1-69	3
1627174	1-69	1
1627175	1-69	2
1627176	1-69	
1627177	1-69	3
1627178	1-69	1
1627179	1-69	2
1627180	1-69	
1627827	6-31	30
1629158	12-39	13
1629161	12-39	11
1629163	12-39	2
	12-39	9
1629185	16-11	1
1632179	6-15	15
1632224	6-15	8
1632741	8-19	3
1632865	7-52	61
	7-62	22
	7-64	51
	7-64	53
	7-64	58
	7-74	22
	7-76	51
	7-76	53
	7-76	58
1633307	2-3	16
	2-5	19
	2-7	18
	3-3	16
	3-5	16
	4-7	8
1634047	7-47	24
1634451	9-21	6
1634455	6-15	13
1634456	6-15	10
1634894	6-13	2
	6-15	
1636120	1-25	12
	1-27	15
	1-29	19
	1-33	12
1636409	2-9	13
1636410	4-5	3
1636645	8-17	5
1636647	1-53	
	1-55	
1636797	5-3	16
1636853	1-53	9
	1-55	9
1639003	1-71	7
1639004	1-85	4
	1-87	7
1640776	1-18	3
1640814	6-5	14
1641054	1-81	17
1641351	9-21	25
1641368	7-5	17
1641494	1-62	35
1641637	1-79	4
1641640	1-75	11
	1-77	7
	1-79	5
1641660	1-53	1
	1-69	
	1-71	
	1-81	
	1-85	
1641932	7-85	17
	7-85	18
	7-85	19
	7-85	20
	7-89	15
	7-89	16
	7-89	17
	7-90	18
1641934	7-91	44
1641935	7-85	11
	7-89	12
1641937	7-90	25
1641938	7-86	24
	7-86	34
	7-90	25
1641944	7-86	23
	7-90	26
	7-94	16
1641945	7-86	22
	7-90	26
	7-94	16
1641947	7-86	22
	7-90	27
	7-94	16
1641948	7-86	32
	7-91	40

©2014 HYSTER COMPANY

NUMERICAL INDEX (continued)

PART NO.	PAGE	ITEM
1641949	7-87	50
	7-91	39
	7-94	20
1641950	7-87	50
	7-91	39
1641952	7-87	50
	7-91	39
1643584	1-62	36
	1-85	16
1643936	7-5	18
1643947	1-3	5
1644398	7-47	25
	16-21	14
	16-23	14
	16-25	14
	16-27	14
	16-29	14
	16-31	14
1644624	6-15	11
1644804	1-75	9
	1-77	5
1645315	1-71	17
1645316	1-71	6
1645317	1-71	6
1645381	11-13	24
1646397	11-13	24
1646439	11-13	24
	11-15	30
1646456	7-12	5
1646726	1-87	5
1646728	1-87	17
1646729	1-61	28
	1-87	2
1646827	2-9	2
	3-31	8
1647724	7-86	30
	7-86	31
	7-86	33
	7-87	35
1649565	6-29	8
	6-31	6
1649733	1-3	1
1649734	1-3	1
1649735	1-3	1
1649736	1-3	1
1650400	6-23	5
1650402	6-20	6
	6-23	7
1650403	6-23	19
1650404	6-9	3
	6-10	10
	6-20	9
	6-23	13
1650405	6-23	11
1650407	6-23	12
1650504	6-20	10
	6-23	14
1650505	6-20	8
1650506	6-9	2
	6-10	5
	6-20	2
	6-23	17
1650507	6-9	1
	6-10	3
	6-20	7
	6-23	8
1650508	6-20	3
1650522	7-86	23
	7-90	26
1650523	7-86	23
1650526	7-86	24
1650529	7-86	30
	7-86	31
	7-86	33
1650640	1-41	19
	1-43	17
1650757	6-23	15
1650758	6-10	1
	6-23	2
1650760	6-23	4
1650761	6-23	9
1650762	6-19	14
	6-23	16
1650763	6-25	11
1650764	6-10	6
	6-25	6
	6-26	1
1650766	6-25	9
1650767	6-25	14
1650769	6-25	3
1650770	6-25	5
1650772	6-25	13
1650773	6-25	16
1650777	6-25	8
1650778	6-25	6
	6-26	
1650779	6-19	2
1650780	6-19	1
1650781	6-10	11
	6-19	5
1650784	6-10	9
	6-19	8
	6-19	11
1650785	6-19	7
1650786	6-19	8
1650789	6-19	15
1650791	6-19	6
1650797	7-85	1
	7-87	40
	7-89	1
	7-90	30
	7-93	9
	7-95	27
1650819	8-26	7
1650868	6-20	4
1650870	6-25	15
1651606	2-9	27
1651739	1-59	9
	1-59	15
	1-81	19
1651814	1-59	1
1652290	7-45	6
	7-47	7
	16-2	1
1652305	2-16	1
	2-19	
	2-21	
	2-23	
	2-25	
	2-39	
	2-41	
	2-43	
1652306	2-16	1
	2-19	
	2-21	
	2-23	
	2-25	
	2-39	
	2-41	
	2-43	
1652327	2-35	4
1652328	2-35	13
1652334	2-37	9
1652399	2-27	13
1652422	2-28	2
	6-3	15
1652425	2-43	34
1652426	1-61	1
1652457	7-11	16
1652458	7-11	15
1652459	7-11	17
1652460	7-11	
1652461	7-11	13
1652462	7-11	12
1652467	7-11	8
1652468	7-11	9
1652469	7-11	10
1652470	7-11	11
1652471	7-11	3
1652473	7-11	6
1652722	1-53	1
	1-59	
	1-61	
	1-71	
	1-81	
	1-85	
1652926	9-17	18
1653508	7-85	1
	7-87	40
	7-89	1
	7-90	30
1653510	7-87	50
	7-91	39
1653569	3-9	10
1653630	1-71	7
1653900	6-19	13
	6-25	20
1653901	6-19	9
1653902	6-25	18
1653904	6-19	10
1653967	1-59	2
	1-75	
1653970	1-61	17
	1-77	
1653972	1-61	4
1653973	1-59	16
1654009	9-24	1
	9-26	1
	9-31	1
1654013	7-45	6
	7-47	6
	16-2	
1654156	5-17	7
	5-19	26
	6-41	7
	6-43	26
1654298	1-62	
1654411	5-17	3
	6-41	3
1654651	8-17	23
1654754	5-17	5
	5-19	24
	6-41	5
	6-43	24
1655241	6-20	1
1655865	1-41	3
	1-41	12

See Service Manual for service procedures.
©2014 HYSTER COMPANY

NUMERICAL INDEX (continued)

PART NO.	PAGE	ITEM
	1-43	3
	1-43	12
1655880	8-17	21
1656059	7-85	5
	7-89	11
1656060	7-85	12
	7-90	19
1656215	16-7	2
1656216	16-7	2
1656325	6-29	7
	6-31	5
1656333	9-17	8
1657226	11-19	12
1657846	12-39	12
1658075	7-30	12
1658141	2-15	14
1658934	16-13	4
	16-15	4
	16-17	6
	16-19	4
1660415	15-11	7
1660500	8-17	24
	8-26	7
1661511	1-41	2
	1-41	11
	1-43	2
	1-43	11
1661971	1-67	5
1662253	6-17	
	6-35	3
1662420	12-17	17
	12-19	10
	12-21	15
	12-23	11
1663424	1-45	1
1663443	1-45	1
1663450	1-45	1
1663460	1-45	1
1663467	1-45	1
1663877	2-3	17
	2-5	20
	2-7	19
	3-3	21
	3-5	21
	4-7	15
1664395	12-41	1
	12-43	1
	12-45	1
1664485	12-35	3
	12-37	
1664486	12-35	3
	12-37	
1665205	8-26	
1665746	12-19	1
1665747	12-23	1
1665748	12-21	1
1666732	1-7	2
1667630	1-71	20
1667632	1-72	
1669224	1-71	17
1670032	16-47	6
	16-49	5
1670054	12-25	1
	12-25	1
	12-29	14
	12-31	
1670194	12-17	1
1670195	12-17	14
1670196	12-21	13
1670292	12-19	4
1670293	12-23	4
1670332	11-16	1
1670334	11-16	2
1670413	12-27	4
1670421	1-79	10
1670422	1-79	19
1670423	1-79	13
1670424	1-79	3
1670425	1-79	11
1670426	1-79	14
1670427	1-79	6
1670428	1-79	7
1670429	1-79	8
1670430	1-79	20
1670434	12-25	1
	12-25	1
	12-29	14
	12-31	
1670440	1-79	15
1670441	1-79	1
1670442	1-79	9
1670443	1-79	2
1670444	1-79	12
1670445	12-29	14
1670522	12-29	8
1670677	12-17	5
	12-21	5
1670905	11-13	38
	11-15	44
1672560	1-7	20
1672692	7-5	35
1672722	1-15	6
1672723	1-15	9
1672724	1-15	23
1672800	6-25	8
1673198	4-7	29
	8-3	13
	8-7	5
	8-11	11
1673704	7-47	9
1673754	1-88	9
	16-47	5
	16-49	4
1673755	7-47	8
1674030	1-7	33
1674073	1-61	22
1674088	1-71	33
1674101	1-71	8
1674102	1-87	16
1674103	1-59	17
	1-87	12
1674106	1-87	20
1674109	1-62	
	1-72	
1674131	1-7	30
1675647	8-19	26
	8-21	
1676323	8-17	9
	8-23	
1676324	8-17	8
	8-25	
1676326	8-21	3
1676327	8-21	2
1676328	8-21	7
1677286	1-25	17
	1-27	10
	1-29	25
	1-33	9
1677428	1-91	10
1677490	2-9	20
1677491	2-9	17
1677793	5-3	2
	5-5	2
1677833	5-3	
	5-5	
1678165	12-47	5
1682758	6-29	31
	6-31	40
1682881	6-23	20
1682882	6-23	21
	6-25	7
1682883	6-23	24
1682884	6-19	18
1683428	1-55	1
	1-57	
	1-59	
	1-61	
	1-71	
	1-81	
	1-87	
1683486	11-3	17
	11-5	17
	11-13	4
	11-15	4
	11-19	3
1683529	12-27	1
1683621	12-27	2
1684389	8-19	24
1684542	7-7	9
1687035	2-28	4
	2-37	4
1687184	6-10	12
	6-19	11
1687376	6-29	
	6-32	
1687534	12-41	14
	12-43	2
	12-45	2
1687933	5-4	5
1688198	1-81	17
1688200	1-57	10
1688435	8-17	3
1688503	11-3	16
	11-5	16
	11-13	2
	11-15	2
1688598	8-19	13
1688697	10-17	1
1688719	6-31	30
1688803	6-29	38
1689241	7-89	15
	7-89	16
	7-89	17
	7-90	18
1689242	7-89	15
	7-89	16
	7-89	17
	7-90	18
1689544	6-17	14
1689742	3-11	1
1689744	3-11	
	3-14	
	3-21	
	3-23	
	3-25	
	3-27	
	3-29	
	5-9	

©2014 HYSTER COMPANY

NUMERICAL INDEX (continued)

PART NO.	PAGE	ITEM
1689746	5-9	5
1689747	3-17	
	5-9	1
1690075	1-55	24
1690931	1-59	1
1690932	1-61	1
1690933	1-71	18
1690934	1-71	19
1690936	1-87	6
1690995	1-27	6
1691216	1-12	44
1691525	8-3	12
	8-5	9
	8-9	9
	8-11	13
1691916	8-3	13
1692229	11-16	1
1692589	1-87	19
1693371	7-42	5
1694547	8-7	13
1694700	1-29	21
1694830	1-25	25
	1-27	14
	1-29	23
	1-33	23
1695108	5-15	13
1695371	7-91	44
1695807	16-11	1
1696161	13-13	2
	15-11	14
	15-28	20
	15-29	63
1697665	8-14	1
1698449	7-39	9
	7-39	20
	7-41	9
	7-41	20
1698541	7-45	10
1699589	12-35	5
	12-39	1
1699591	12-39	6
1699754	7-51	42
	7-57	42
	7-63	42
	7-69	42
	7-75	42
	7-81	42
1699992	11-3	4
	11-5	4
	11-13	8
	11-15	8
1700460	7-101	15
	7-101	17
	7-105	10
	7-105	12
	7-109	14
	7-109	15
	7-113	16
	7-113	17
1700461	7-101	15
	7-101	17
	7-105	10
	7-105	12
	7-109	14
	7-109	15
	7-113	16
	7-113	17
1701768	11-3	18
	11-5	18
	11-19	5
1701771	11-5	30
	11-15	25
1701958	1-57	12
1701959	1-57	7
1701960	1-57	4
1701961	1-61	1
1701962	1-61	8
1701964	1-61	4
1701965	1-61	24
1701967	1-61	21
	1-65	
1702335	8-17	2
1702336	8-17	16
1702520	8-19	10
1703607	11-13	34
	11-15	39
	11-16	
1703644	8-19	5
1703890	1-37	8
1703891	1-37	1
1703892	1-29	4
	1-33	4
	1-39	8
1703893	1-29	5
	1-33	5
	1-39	1
1703894	1-29	5
	1-33	5
	1-39	4
1703895	1-30	
	1-34	
1703896	1-30	
	1-34	
1703897	1-30	
	1-34	
1703898	1-29	2
	1-33	2
1703899	1-29	3
	1-33	3
1703900	1-29	1
	1-33	1
1703901	1-29	2
	1-33	2
1703902	1-29	3
	1-33	3
1703903	1-29	1
	1-33	1
1703904	1-29	6
1704528	7-39	11
	7-39	11
	7-39	11
	7-41	11
	7-41	11
1704529	7-39	13
	7-41	13
1704793	5-3	
	5-5	
1704901	11-5	25
	11-15	29
1704902	11-3	25
	11-13	19
1705156	1-87	13
1705166	7-86	23
	7-90	26
	7-90	26
1705167	7-87	35
1705168	7-86	33
1705169	7-86	31
1705170	7-86	30
1705171	7-85	1
	7-89	1
1705172	7-86	34
	7-91	42
1705173	7-85	10
	7-89	7
1705174	7-86	32
	7-91	40
1705175	7-85	4
	7-89	4
1705176	7-85	3
	7-89	3
1705177	7-85	7
	7-89	6
1705178	7-87	45
1705179	7-87	36
1705180	7-87	40
	7-90	30
1705181	7-87	46
	7-91	36
1705182	7-87	49
	7-91	38
1705183	7-87	48
	7-91	37
1705184	7-86	26
1705185	7-87	42
	7-90	29
1705186	7-85	11
	7-89	12
1705187	7-85	12
	7-90	19
1705188	7-85	6
	7-89	10
1705189	7-85	5
	7-89	11
1705190	7-87	41
1705195	7-86	29
	7-91	41
1705196	7-87	37
1705199	7-86	22
	7-90	27
1705200	7-86	24
	7-90	25
1705359	7-39	12
	7-39	12
	7-41	12
	7-41	12
1705548	12-9	3
1705878	1-15	11
1705891	1-15	24
1705892	1-15	24
1707008	11-3	29
1707194	12-9	
1707341	3-9	11
	3-19	17
1707678	1-11	23
1707826	3-25	6
1708262	12-35	10
	12-47	1
1708263	12-35	7
	12-43	
1708294	12-35	8
	12-45	
1708295	12-35	6
	12-41	
1708364	16-15	12
	16-15	12
	16-17	13
	16-17	13

See Service Manual for service procedures.
©2014 HYSTER COMPANY

NUMERICAL INDEX (continued)

PART NO.	PAGE	ITEM
1708371	2-9	16
	3-31	16
1708457	3-17	15
	5-9	1
1708596	12-9	
1708700	12-9	1
1708834	1-12	50
1708835	1-12	51
1709587	7-39	8
	7-41	8
1709876	1-27	3
1709980	1-55	25
	1-88	7
1709996	2-9	9
	3-31	14
	4-5	10
1710006	1-55	26
1710007	1-88	6
2013088	14-21	9
	15-24	9
2013089	14-21	10
	15-23	8
2021341	11-3	1
	11-5	1
2021343	11-3	1
	11-5	1
2021353	11-3	5
	11-5	5
	11-13	10
	11-15	10
2021394	2-9	1
	3-31	10
	4-5	22
2021395	1-3	6
	1-11	15
2021438	2-25	15
2021442	2-25	14
2021575	10-17	9
2021683	5-7	19
2021685	5-7	17
	6-13	20
	6-13	22
2022309	2-43	13
2022352	9-19	11
2022655	2-19	4
2023551	2-35	9
2026861	9-19	8
2027618	10-19	9
2027655	1-15	22
2027661	9-17	17
2027662	9-21	11
2027663	9-21	7
2027756	9-21	4
2027817	9-21	12
2027828	9-21	19
2027949	5-13	4
2028145	9-21	3
2028621	9-21	10
2028645	2-43	24
2028852	2-23	24
2028853	2-39	23
2028854	2-39	3
2028862	9-19	14
2028927	2-21	13
2029081	2-21	14
2029082	2-39	16
2029084	2-39	2
2029086	2-39	24
2029093	2-25	4
2029094	2-25	4
2029095	2-23	3
2029096	2-23	27
2029097	2-23	28
2029098	2-23	25
2029100	2-41	9
2029101	2-41	11
2029102	2-41	12
2029103	2-41	16
2029105	2-43	27
2029106	2-43	28
2029107	2-43	26
2029108	2-43	11
2029112	2-43	17
2029116	2-43	20
2029120	2-43	16
2029383	9-23	5
2029436	9-17	14
2034347	1-45	2
2034459	1-91	5
2035276	7-91	44
2037323	11-7	21
2037340	11-7	19
2037341	11-7	22
2037343	11-7	7
2037517	11-7	17
2037518	11-7	17
2041520	11-9	1
2043528	16-33	3
	16-35	15
	16-39	15
	16-45	
2043529	16-33	3
	16-35	15
	16-39	15
	16-45	
2043531	16-33	4
	16-35	11
	16-39	11
2043532	16-33	4
	16-35	11
	16-39	11
2043533	16-33	5
	16-35	8
	16-39	8
2043534	16-33	5
	16-35	8
	16-39	8
2044370	12-51	4
2044371	10-15	9
	12-53	5
2044712	1-85	1
	7-25	1
	7-45	12
2045024	2-43	6
2045025	2-43	21
2045026	2-43	19
2045029	2-25	12
2045030	2-25	10
2045033	2-25	9
2045034	2-25	8
2045036	2-39	
2045319	2-43	31
2045321	2-19	26
2046164	15-19	3
2051128	2-39	22
2051129	2-39	4
2053796	14-21	
2054879	2-5	1
2056824	7-45	1
	7-47	1
2056826	7-45	2
	7-47	2
2056870	2-3	1
2057948	7-36	8
2058110	7-5	23
2058111	7-5	29
	7-36	8
2058213	14-21	1
2058252	14-21	1
2058326	14-21	
2058328	14-21	
2058500	14-13	1
	14-13	1
2058502	14-13	1
2058536	14-9	1
	14-9	1
2058538	14-9	1
2058619	14-13	
2058651	14-9	
2058823	14-13	
2058825	14-13	
2058909	7-9	10
	7-119	
2059937	11-3	10
	11-5	10
2060032	7-36	6
2060033	7-36	11
2060198	7-9	10
	7-117	
2060422	14-9	
2060424	14-9	
2060555	7-91	45
	7-95	28
	7-120	1
2060751	12-3	5
2061333	7-93	7
	7-93	12
2061646	12-11	17
2062587	6-13	8
2062651	13-7	3
	14-7	8
	15-15	19
2062652	13-7	3
	14-7	8
	15-15	19
2062686	13-7	6
	14-7	10
	15-15	18
2062687	13-7	6
	14-7	10
	15-15	18
2062875	1-41	16
	1-43	28
2063117	10-9	
	12-25	8
	12-35	1
2063118	10-9	
	12-25	8
	12-35	1
2063265	9-21	26
2063691	14-21	1
2063842	5-17	12
	5-19	19
	6-41	12
	6-43	19
2063991	12-17	24
	12-19	15
	12-21	25

©2014 HYSTER COMPANY

NUMERICAL INDEX (continued)

PART NO.	PAGE	ITEM
	12-23	16
2064464	14-13	5
2064554	11-3	
	11-5	
	11-13	21
	11-15	15
2064929	16-5	1
2065001	14-26	21
	14-26	21
2065003	14-26	21
2065030	14-26	20
	14-26	20
2065032	14-26	20
2065051	12-12	27
2065052	12-12	28
2065098	7-15	4
	7-124	
2065211	14-25	4
	14-25	4
2065213	14-25	4
2065241	14-25	8
	14-25	8
2065243	14-25	8
2065666	1-15	21
2065667	1-15	4
2065745	7-5	19
2065796	1-15	18
2065797	1-15	17
2065826	1-15	15
2065827	1-15	16
2066482	7-36	5
2066483	7-36	4
2066484	7-36	12
2066485	7-36	3
2066629	2-27	16
	7-11	14
2066783	12-11	4
2067044	10-19	2
2067396	5-13	7
2067476	5-3	20
	6-3	1
	6-5	1
2067800	12-5	
2067802	12-5	
2067962	9-17	16
	9-23	
2067965	9-17	15
2068342	7-7	5
2068343	7-9	9
2068344	7-7	5
	7-9	9
2068378	3-21	9
	3-23	14
2069008	1-12	41
2069186	12-49	17
	12-53	
2069187	12-49	15
	12-51	
2069188	12-49	16
	12-51	
2069189	12-49	18
	12-53	
2069203	1-11	2
2069226	7-15	3
2069381	7-120	1
2069431	7-36	4
2069454	1-5	17
2069464	1-15	14
2069544	1-12	42
2069545	1-12	42
2069550	1-12	42
2069688	3-5	4
2069951	2-13	5
	3-6	5
	4-11	8
2069954	1-12	42
2070018	12-53	2
2070072	3-3	4
2070073	9-24	2
	9-29	2
2070074	9-24	2
	9-29	6
2070075	9-26	2
	9-29	2
2070076	9-26	2
	9-29	6
2070081	10-17	2
2070083	10-17	2
2070147	8-14	2
2070148	12-11	18
2070223	1-5	17
2070263	8-17	25
	8-26	14
2070512	7-93	7
2070655	1-95	
	12-21	22
	12-23	10
2070769	1-21	7
2070771	16-5	10
2070975	1-15	2
2070996	1-53	
2071001	1-19	7
2071002	1-19	8
2071094	10-15	2
2071096	10-13	4
	10-15	
2071181	5-17	1
	6-41	1
2071197	1-11	14
2071198	1-11	9
2071261	1-15	3
	5-3	18
	5-5	3
2071262	1-11	7
2071517	6-29	35
	6-31	44
2071595	1-15	19
2071596	1-15	19
2072300	6-17	8
2072764	6-13	15
2072897	11-11	10
2072918	2-15	3
2073024	3-31	20
2073087	15-19	3
2073159	14-9	7
	14-9	7
	14-13	6
	14-13	6
2073197	1-91	4
2073495	12-12	29
2073496	12-12	30
2073766	16-11	4
2074210	1-93	10
2074230	12-5	
2074255	1-91	9
2074256	1-91	9
2074325	12-11	22
2074702	5-19	1
	6-43	1
2075120	9-19	4
2075418	1-91	22
2075454	9-31	2
2075455	9-31	2
2075554	3-31	13
2075615	1-91	21
2075656	1-91	26
2075783	5-3	7
2076169	1-91	23
2076289	1-17	3
2076536	12-53	1
2076537	12-51	1
2076538	12-53	7
2076539	12-51	6
2076540	12-53	1
2076541	12-51	1
2076695	7-36	2
2076696	7-36	2
2076792	6-13	6
2077604	11-3	1
	11-5	1
	11-13	24
2077818	15-19	3
	15-19	3
2077983	3-29	6
2078335	5-15	9
2078488	2-43	25
2078883	16-5	10
2079281	7-35	4
2079326	7-7	12
	7-9	12
	7-33	1
2079369	10-3	6
2079843	7-35	15
2080376	5-15	7
2080581	7-23	16
2081840	5-7	18
2081868	1-62	40
2082679	1-91	21
2082929	2-43	4
2083928	11-11	20
2083955	11-11	22
2084000	3-31	17
2084001	3-31	19
2084002	3-31	18
2084003	2-9	25
2084005	2-9	26
2084006	2-9	22
2084251	6-3	8
2084312	3-23	
	3-25	
2084316	3-13	38
2084317	3-17	3
2084318	3-17	5
2084319	3-17	10
2084321	3-19	9
2084322	3-19	10
2084448	5-11	1
2084449	5-11	2
2084450	5-11	3
2084451	5-11	4
2084452	5-11	5
2084453	5-11	6
2084810	7-127	
2085041	2-3	20
	2-5	14
2085042	2-7	13
2085104	3-3	3
	3-5	3

See Service Manual for service procedures.
©2014 HYSTER COMPANY

NUMERICAL INDEX (continued)

PART NO.	PAGE	ITEM
2085129	8-23	6
	8-25	6
2085254	2-7	13
2085255	2-3	20
	2-5	14
2085260	6-5	8
2085421	6-5	15
2085570	3-7	1
2087191	7-15	9
	7-97	
2087215	3-3	3
2087216	3-3	4
2087756	2-43	23
2087757	2-43	32
2088675	2-3	21
	2-5	15
2088676	2-7	14
2089141	3-3	1
2089239	6-15	16
2089368	6-15	14
2089894	2-9	8
2089895	2-9	8
	4-5	1
2090361	6-17	12
2090418	6-17	8
2090613	7-5	1
	7-25	
2090661	7-5	6
2091232	2-28	2
	6-5	17
2091237	3-11	1
2092535	10-17	6
2092536	10-19	6
2092548	3-11	10
2092549	3-11	10
2092550	3-19	7
2092551	3-19	7
2092552	3-11	11
2092553	3-11	11
2092613	11-13	29
	11-15	35
2092848	5-3	17
2092888	11-13	26
	11-15	32
2095227	11-11	2
2095889	5-4	
	6-8	7
2095895	7-47	24
2096902	1-15	16
2096903	1-15	15
2098082	7-45	5
	7-47	5
2098083	7-45	4
	7-47	4
2098084	7-45	4
	7-47	4
2098085	7-45	4
	7-47	4
2098119	1-20	7
2098120	1-20	8
2098330	1-15	20
2098385	7-47	19
	7-133	
2098693	12-7	
2098694	12-7	
2098695	12-7	
2099393	12-17	20
	12-19	6
	12-21	21
	12-23	9
2099394	12-17	19
	12-19	7
	12-21	20
	12-23	8
2099395	12-19	8
	12-21	19
	12-23	7
2099396	12-23	6
2099397	12-21	18
2099398	12-17	18
2099951	1-33	27
2100710	7-35	3
2100927	3-23	2
2101708	3-23	1
2102226	5-3	17
2102558	1-11	32
2102559	1-11	11
2102640	1-97	1
2103497	10-11	2
2104068	10-11	1
2104069	10-11	2
2104070	10-11	1
2105803	6-17	13
	6-35	4
	6-39	4
2105959	7-29	1
	7-129	
2105972	2-25	1
2107181	7-15	2
2107187	5-15	14
2107382	7-45	4
	7-47	4
2107383	7-45	4
	7-47	4
2107384	7-45	4
	7-47	4
2107524	8-5	1
	8-9	1
2107727	8-7	4
2107957	1-11	4
2107958	1-11	1
2107969	1-25	22
	1-27	12
	1-29	22
	1-33	20
2108249	7-39	5
2109698	1-91	
2109869	4-7	32
	8-3	2
	8-7	6
	8-11	9
2109870	8-3	2
2109875	4-7	33
	8-3	10
	8-5	6
	8-7	2
	8-9	6
	8-11	6
2110024	4-7	28
	8-3	1
	8-5	2
	8-9	2
	8-11	8
2110267	11-11	5
2110791	7-39	2
	7-39	3
	7-39	4
	7-41	2
	7-41	3
	7-41	4
	7-41	5
2110792	7-39	4
	7-41	5
2110793	7-39	3
	7-41	3
2110942	7-39	19
	7-41	19
2110943	7-39	18
	7-41	18
2111004	7-7	3
	7-9	2
2111005	7-7	16
	7-9	11
2111171	11-5	
2111369	12-3	1
2111370	12-3	1
2111754	16-21	2
	16-23	2
	16-27	2
	16-29	2
2111755	16-25	2
	16-31	2
2111769	7-39	7
	7-41	7
2111770	7-39	17
	7-41	17
2111799	7-39	6
	7-41	6
2111800	7-39	15
	7-41	15
2302899	12-51	2
2307400	1-93	1
2308541	5-13	6
2314223	11-3	1
	11-5	1
2314741	7-93	7
	7-93	12
2314782	7-94	14
2314973	2-19	25
2787350	7-120	1
2795583	7-120	1
4000205	9-15	9
4000256	12-9	
4000257	12-9	6
4000258	12-9	10
4000330	6-17	20
4000453	3-11	14
4000454	3-11	14
4001804	6-9	5
	6-10	7
	7-12	3
4002394	11-11	6
4002504	1-83	
4002509	1-83	
4002682	1-27	4
4003067	12-9	5
4003079	1-83	6
4003082	1-67	6
4004045	1-67	2
4004059	1-67	4
4004060	1-67	3
4004062	1-67	10
4004063	1-67	11
4004065	1-67	1
4004066	1-67	8
4004149	1-65	1
	1-67	
4004150	1-65	2

©2014 HYSTER COMPANY

NUMERICAL INDEX (continued)

PART NO.	PAGE	ITEM
4004151	1-65	6
4004152	1-65	5
4004153	1-65	4
4004154	1-65	3
4004155	1-65	7
4004156	1-65	11
4004157	1-65	8
4004158	1-65	9
4004159	1-65	10
4004160	1-65	12
4004161	1-65	13
4004162	1-65	14
4004163	1-65	15
4004165	1-65	22
4004166	1-65	19
4004167	1-65	20
4004168	1-65	21
4004775	1-41	14
	1-43	14
4004776	1-33	21
	1-43	25
4005010	1-29	27
	1-41	
	1-43	
4005338	1-51	13
4005339	1-51	14
4005681	2-9	19
4005805	1-27	16
	1-41	23
4005807	1-27	
4005808	1-27	
4006667	10-13	
4006720	10-13	
4006721	10-13	
4006722	10-13	22
4007052	1-41	5
	1-43	5
4007132	1-83	2
4007133	1-83	1
4007134	1-83	3
4007135	1-57	3
	1-83	4
4007138	1-83	10
4007139	1-83	8
4007140	1-83	9
4007141	1-83	7
4007142	1-83	
4007143	1-83	11
4007144	1-83	12
4007145	1-83	5
4007147	1-83	
4007209	1-83	
4007210	1-83	
4007211	1-83	
4007212	1-83	
4007213	1-83	
4007318	1-29	17
	1-33	17
	1-43	24
4007319	1-43	18
4007888	8-25	3
4007889	8-23	19
	8-25	20
4007891	1-25	23
4008020	14-25	7
4008420	1-27	16
4009253	7-129	1
4009488	16-6	1
	16-7	1
4009578	1-81	18
4009731	1-7	22
4009733	1-7	22
4009779	1-75	7
	1-77	8
4009782	1-75	2
	1-77	11
4009783	1-75	10
	1-77	4
4009902	1-59	12
	1-62	42
4010318	8-19	18
4011397	1-7	27
4011435	1-7	26
4011940	7-7	2
	7-9	4
	11-3	20
	11-5	20
	11-13	7
	11-15	7
	11-19	6
4013095	1-27	9
	1-29	7
	1-33	7
4013267	15-12	35
4013268	13-13	6
	15-28	24
4013273	13-13	10
4013559	1-75	5
	1-77	6
4014340	1-18	2
4014374	11-13	16
4014598	1-27	
4014682	11-3	34
	11-5	40
4015021	6-19	4
4015022	6-19	17
4015023	6-19	16
4015888	1-7	1
4016100	1-7	1
4016131	7-89	15
	7-89	16
	7-90	17
	7-90	18
4016150	8-19	1
4016151	8-19	31
4016152	8-19	15
4016189	1-7	
4016190	1-7	
4016191	1-7	
4016370	15-27	15
4016652	6-9	2
	6-10	5
	7-12	4
4016937	7-89	15
	7-89	16
	7-90	17
	7-90	18
4019019	6-35	9
	6-39	9
4020311	8-19	38
4020466	8-19	17
4020467	8-19	16
4020588	8-17	7
4020913	15-28	26
4021292	3-17	10
4021384	5-9	3
4022958	10-11	3
4023295	7-94	20
4023450	10-2	5
	10-5	
4024323	1-77	1
4024324	1-77	3
4025054	2-9	27
4025106	8-17	32
4025209	8-17	1
4025274	1-7	13
4025477	8-23	2
	8-25	2
4025617	1-75	4
4025618	1-75	1
4025619	1-75	3
	1-77	2
4025685	7-94	20
4026661	12-3	15
4026774	8-19	41
4027341	1-30	
	1-33	
4027451	1-11	20
4027456	1-11	34
4027457	1-11	34
4027764	4-48	2
	7-95	39
4028633	7-93	12
4028642	10-5	8
4028685	12-3	20
4028686	12-3	24
4029051	13-7	13
	15-15	10
4029268	10-17	1
4029269	10-19	1
4029270	9-29	1
4029271	9-29	1
4029455	10-17	1
4029456	10-19	1
4029457	9-29	1
4029458	9-29	1
4029480	10-17	1
4029481	10-19	1
4029482	9-29	1
4029483	9-29	1
4029506	6-29	20
	6-31	33
4029538	6-29	21
	6-31	15
4029920	6-29	22
	6-31	14
4030278	1-25	3
4030279	1-25	4
4030497	5-4	6
	6-8	6
4030503	7-42	13
	7-131	1
4031146	6-29	25
	6-31	11
4031469	12-31	3
	12-43	3
4031653	16-11	3
4031769	5-19	18
	6-43	18
4031944	1-7	36
4031973	13-3	14
	15-3	10
	15-11	17
4032291	6-29	23
	6-31	13
4032292	6-29	24
	6-31	12
4032665	15-27	9

See Service Manual for service procedures.
©2014 HYSTER COMPANY

NUMERICAL INDEX (continued)

PART NO.	PAGE	ITEM
	15-27	11
4033412	13-3	7
	14-3	11
	15-3	17
4033414	13-3	6
	14-3	12
	15-3	16
4033434	1-47	
4033435	1-47	
4033955	16-33	2
	16-35	2
	16-39	2
4033956	16-35	2
4033957	16-33	2
	16-35	2
	16-39	2
4033958	16-33	2
	16-35	2
	16-39	2
4033960	16-33	2
	16-35	2
	16-39	2
4034386	5-3	14
4034634	16-47	11
	16-49	7
	16-51	
4034635	16-49	7
	16-51	
4034828	7-19	13
	7-19	27
	7-26	13
4034931	1-95	1
4034932	1-95	2
4034933	1-95	3
4034934	1-95	4
4034935	1-95	5
4034936	1-95	6
4034937	1-95	7
4034938	1-95	8
4034939	1-95	9
4034940	1-95	10
4034941	1-95	11
4034942	1-95	12
4035130	1-5	2
4035750	1-91	28
4036523	7-63	30
4036586	1-30	
	1-34	
	1-39	
4036587	1-30	
	1-34	
	1-39	
4038182	12-17	21
	12-19	9
	12-21	22
	12-23	10
4038258	3-5	1
4038259	2-7	1
4038260	3-3	1
4038261	4-7	1
4038263	2-7	1
	3-5	1
4038264	2-7	1
	3-3	1
	3-5	1
	4-7	1
4038265	2-7	1
	3-3	1
	3-5	1
	4-7	1
4038266	2-7	1
	3-3	1
	3-5	1
	4-7	1
4038267	2-7	1
	3-5	1
4038672	10-7	1
4038673	10-7	8
4038674	10-7	11
4038675	10-7	13
4038676	10-7	16
4038677	10-7	21
4038678	10-7	25
4039364	7-42	13
	7-131	1
4039366	11-19	2
4039367	11-19	2
4039368	11-19	2
4039369	11-19	2
4039373	11-19	1
4039374	11-19	1
4039375	11-19	1
4039376	11-19	1
4040288	6-35	1
	6-39	1
4040480	6-25	4
4040523	5-19	11
	6-43	11
4040607	1-53	8
	1-55	8
4041105	15-19	1
4041107	15-19	1
4041108	15-19	1
4041109	15-19	1
4041112	15-19	1
4041194	14-26	27
4041238	15-19	1
4041239	15-19	1
4041243	15-19	1
4041246	15-19	1
4041515	1-27	
4041906	4-13	2
4041910	4-13	7
4041911	4-13	8
4041920	4-13	12
4041925	4-13	15
4041928	4-51	3
4041938	4-14	3
4041945	4-41	7
4041946	4-30	8
	4-35	29
4041950	4-17	7
4041951	4-17	8
	4-35	3
4041991	4-29	6
	4-42	12
	4-51	19
4041992	4-30	11
	4-35	31
	4-47	8
4041997	4-51	6
4042015	4-37	7
4042035	4-14	6
	4-36	7
	4-48	8
4042049	4-41	2
4042050	4-19	8
4042056	4-41	20
4042059	4-21	4
	4-35	8
	4-43	1
4042067	4-35	27
4042096	4-33	12
4042103	4-33	19
4042108	4-38	6
4042122	4-33	4
4042129	4-33	5
4042130	4-19	11
4042131	4-19	10
4042134	4-47	1
4042155	4-33	18
4042198	4-33	11
4042233	4-21	3
4042234	4-21	5
4042321	4-51	2
4042324	4-51	10
4042342	4-17	4
	4-30	7
4042343	4-13	9
4043082	1-33	6
4043334	8-14	8
	8-17	
	8-19	
4043636	13-13	9
	15-11	5
	15-28	27
4043638	1-88	4
4043880	7-93	13
4043883	6-25	
4044163	1-65	16
4045488	7-85	17
	7-85	18
	7-85	19
	7-85	20
	7-86	28
	7-89	15
	7-89	16
	7-89	17
	7-90	18
4046205	15-23	2
4046207	15-23	2
4046208	15-23	2
4046210	15-23	2
4046213	15-23	2
4046235	15-23	1
4046237	15-23	1
4046238	15-23	1
4046240	15-23	1
4046243	15-23	1
4046268	15-23	2
4046270	15-23	2
4046275	15-23	2
4046278	15-23	2
4046308	15-23	1
4046310	15-23	1
4046315	15-23	1
4046318	15-23	1
4046434	16-35	1
4046468	16-35	1
4046492	1-39	12
4046499	13-5	8
	15-7	6
4046548	15-12	28
4046933	7-25	
4047385	9-13	8
4047664	7-64	55
	7-76	55
4047669	7-42	12

©2014 HYSTER COMPANY

NUMERICAL INDEX (continued)

PART NO.	PAGE	ITEM
	7-62	21
	7-74	21
	7-76	58
4048508	13-5	8
	15-7	6
4048778	15-28	36
4048781	13-13	5
	15-28	21
4048782	15-11	11
4048783	15-28	34
4048784	15-28	31
4048941	6-29	6
	6-31	8
4049031	15-12	29
4049172	15-28	30
4049173	15-12	31
4049213	15-27	4
4049218	15-27	6
4050091	15-28	22
	15-28	32
	15-28	35
4050311	1-88	3
4050312	1-88	2
4050313	1-88	12
4050343	1-88	11
4050421	15-28	18
4050426	1-88	10
4050817	16-47	4
	16-49	3
4050851	4-28	7
4050859	4-33	13
4050900	4-48	3
4050915	4-14	7
4051044	4-41	14
4051045	4-41	15
4051053	4-36	4
4051074	15-11	15
4051079	13-3	15
	15-3	11
4051083	4-14	4
4051290	13-13	3
	15-28	28
4051293	13-13	7
	15-28	50
4051334	1-88	1
4051346	1-5	1
4051347	1-5	1
4051383	7-131	2
	7-131	5
4051418	4-5	19
4051434	6-29	37
	6-31	42
4051460	15-27	14
4051885	15-28	33
4051924	5-17	3
	5-19	22
	6-41	3
	6-43	22
4051938	5-19	
	6-43	
4052151	7-63	37
	7-75	37
4052234	7-42	1
4052261	15-12	29
4052336	9-11	4
4052568	15-11	16
4053018	2-43	18
4053079	1-25	12
	1-27	15
	1-29	19
	1-33	12
4053208	8-23	3
4053744	15-3	1
4053746	15-3	1
4053747	13-3	1
	15-3	1
	15-3	1
4053748	13-3	1
4053749	15-3	1
	15-3	1
4053752	15-3	1
4053753	15-3	1
4053756	15-3	1
4053806	15-7	1
4053808	15-7	1
4053809	15-7	1
	15-7	1
4053810	15-7	1
	15-7	1
4053813	15-7	1
4053814	15-7	1
4053817	15-7	1
4053838	15-9	1
4053840	15-9	1
4053841	15-9	1
	15-9	1
4053842	15-9	1
	15-9	1
4053845	15-9	1
4053846	15-9	1
4053849	15-9	1
4053949	11-3	32
	11-5	38
	11-13	12
	11-15	12
4054062	13-5	1
4054063	13-5	1
4054558	13-7	12
	15-16	22
4054753	4-45	6
	4-47	12
4054757	4-36	5
4054932	6-29	9
	6-31	7
4054944	13-5	8
	15-7	6
4054945	13-5	8
	15-7	6
4055072	15-12	26
4055430	15-31	1
4055468	16-35	1
4055473	15-31	1
4055505	15-24	14
4055506	15-24	14
4055582	15-11	9
	15-15	9
4055608	15-27	8
4055634	16-47	10
	16-49	11
4055683	15-27	1
4055800	15-27	10
4056125	15-27	12
4056126	15-27	13
4056718	15-27	5
4056820	4-9	3
4056821	4-9	1
4056823	4-9	16
4057285	4-7	21
4057302	4-5	13
4057313	15-11	23
4057449	1-51	1
4057611	15-12	24
4057777	15-28	40
4058915	13-13	4
4058916	13-7	1
4058930	13-13	12
4058935	13-13	13
4059830	13-13	15
4059843	15-12	
4060157	1-67	7
4060226	4-9	2
4060492	16-13	11
	16-15	11
	16-17	11
	16-19	7
4060493	16-13	11
	16-15	11
	16-17	11
	16-19	7
4060737	7-64	54
	7-64	56
	7-76	54
	7-76	56
4061309	15-27	7
4061318	16-47	7
	16-49	10
4061319	16-47	8
	16-49	9
4061320	9-21	27
4061321	9-21	16
4062954	14-3	1
	14-3	1
4062956	14-3	1
4063703	16-51	7
4063717	16-51	9
	16-51	22
4063718	16-51	23
4064158	4-5	14
4064288	6-33	4
	6-36	4
4064560	14-26	28
4064606	13-9	1
4064636	13-9	1
4064677	12-14	6
4065020	4-11	1
4065021	4-11	2
4065036	16-51	25
4065167	15-15	15
4065168	15-15	13
4065173	13-17	1
4065188	16-33	1
4065200	13-17	1
4065214	16-33	1
4066055	1-23	8
4066964	1-63	6
4066965	1-63	
4066966	1-63	5
4066967	1-63	7
4066968	1-63	4
4066969	1-63	4
4066970	1-63	4
4066971	1-63	4
4067017	16-21	1
	16-23	1
	16-25	1
	16-27	1
	16-29	1
	16-31	1

See Service Manual for service procedures.
©2014 HYSTER COMPANY

NUMERICAL INDEX (continued)

PART NO.	PAGE	ITEM
4067373	1-7	9
4067492	6-17	7
	6-29	1
4067494	6-17	7
	6-31	1
4068194	3-25	5
4068202	3-27	7
4069407	15-3	12
	15-12	34
4069504	6-7	8
4070545	1-61	29
4072704	13-3	17
	15-3	8
	15-11	19
4072717	13-3	17
	15-3	8
	15-11	19
4073332	9-5	1
4073333	9-5	8
4073334	9-5	15
4073335	9-5	16
4073346	9-7	6
4073347	9-7	6
4073348	9-7	6
4073349	9-7	6
4073365	9-13	10
4074118		
4074119		
4074120		
4074127		
4074128		
4074129		
4074130		
4074131		
4074132		
4074133		
4074134		
4074135		
4074142		
4074143		
4074144		
4074145		
4074146		
4074147		
4074154		
4074155		
4074156		
4074625	7-93	14
4074907	7-94	21
4074909	7-93	8
4077419	1-51	4
4077420	1-51	9
4077421	1-51	11
4077726	7-5	13
4077917	3-3	24
	3-5	24
4077993	1-51	31
4077997	1-51	32
4078122	6-7	5
4078242	1-7	
4078243	1-7	
4078244	1-7	
4078947	7-19	24
	7-26	10
4079256	4-7	35
	8-11	1
4081768	15-28	25
4082001	15-29	61
4082846	13-3	16
4083370	1-48	1
4083371	1-48	1
4083372	1-48	1
4083373	1-48	1
4083374	1-48	1
4083375	1-48	1
4083646	1-48	3
4083647	1-48	2
4083648	1-48	4
4083649	1-48	5
4083651	1-49	5
4083678	1-48	1
4083679	1-48	1
4083680	1-48	1
4083686	1-48	1
4083687	1-48	1
4083688	1-48	1
4083870	1-48	1
4083874	1-48	1
4083876	1-48	1
4083878	1-48	1
4083881	1-48	1
4083883	1-48	1
4083888	1-49	
4083889	1-49	
4084441	16-51	26
4084719	15-29	60
4084720	15-28	59
4084721	15-28	59
4084722	15-29	60
4084991	16-51	10
4084993	16-51	3
4085524	8-14	3
4085712	2-3	8
	2-7	8
	3-3	11
	3-5	11
	4-7	3
4086521	15-28	42
4087334	12-25	5
	12-31	1
4087335	12-25	6
	12-31	1
4088044	12-29	17
4088045	12-29	19
	12-31	7
4088047	12-25	4
	12-29	
4089169	6-35	2
	6-39	2
4090206		
4090207		
4090208		
4090209		
4090210		
4090211		
4093654	15-28	49
4093656	13-13	19
4093657	13-13	18
4096797	4-13	1
4096798	4-13	3
4096799	4-13	4
4096801	4-13	5
4096802	4-13	6
4096803	4-14	1
4096804	4-14	2
4096805	4-14	5
4096806	4-13	10
	4-51	4
4096807	4-13	11
4096808	4-17	1
4096809	4-13	13
4096810	4-13	16
4096811	4-13	17
4096812	4-17	2
4096813	4-17	3
	4-30	6
4096814	4-17	5
4096815	4-17	6
4096816	4-17	9
4096817	4-17	10
4096818	4-17	11
4096819	4-17	12
4096820	4-17	13
4096821	4-17	16
4096822	4-17	15
4096823	4-17	14
4096824	4-17	17
4096825	4-17	18
4096826	4-17	19
4096828	4-51	5
4096829	4-51	7
4096830	4-51	8
4096831	4-51	9
4096832	4-51	11
4096833	4-51	12
4096834	4-51	13
4096835	4-51	14
4096838	4-51	16
4096840	4-51	18
4096841	4-51	20
4096842	4-19	1
4096843	4-19	2
4096844	4-19	3
4096845	4-19	4
4096870	4-19	7
4096871	4-19	6
4096872	4-19	5
4096873	4-19	9
4096874	4-20	1
4096875	4-20	2
4096876	4-20	3
4096877	4-21	1
4096878	4-21	2
4096879	4-22	1
4096880	4-22	2
4096881	4-22	3
4096882	4-22	4
4096883	4-22	5
4096884	4-22	6
4096885	4-25	1
4096886	4-25	2
	4-25	11
	4-25	14
	4-25	17
4096887	4-25	3
	4-25	12
	4-25	15
	4-25	18
	4-27	33
4096888	4-25	4
4096889	4-25	5
4096890	4-25	6
4096891	4-25	7
4096892	4-25	8
	4-42	8
4096893	4-25	9
4096894	4-25	10
4096895	4-25	13

©2014 HYSTER COMPANY

NUMERICAL INDEX (continued)

PART NO.	PAGE	ITEM
4096896	4-25	16
4096897	4-25	19
4096898	4-25	
	4-27	39
4096899	4-25	
	4-27	45
4096900	4-47	2
4096901	4-47	3
4096902	4-47	5
4096903	4-47	6
4096904	4-47	7
4096905	4-47	9
4096906	4-47	11
4096907	4-47	10
4096908	4-47	13
4096909	4-27	2
4096910	4-27	8
4096911	4-27	3
4096912	4-27	9
4096913	4-27	4
	4-27	10
4096914	4-27	5
	4-27	11
4096915	4-27	13
4096916	4-27	6
	4-27	12
	4-27	14
4097172	4-27	15
4097173	4-27	16
	4-27	32
4097174	4-27	38
4097175	4-27	44
4097176	4-27	17
4097177	4-27	20
4097178	4-27	19
4097179	4-27	21
4097180	4-27	22
4097181	4-27	23
4097182	4-27	24
4097183	4-27	25
4097184	4-27	26
4097185	4-27	27
4097186	4-27	28
4097187	4-27	31
4097188	4-27	37
4097189	4-27	43
4097190	4-27	34
4097191	4-27	40
4097192	4-27	46
4097193	4-27	35
4097194	4-27	41
4097195	4-27	47
4097196	4-27	29
4097197	4-27	30
4097198	4-27	36
4097199	4-27	42
4097200	4-27	1
4097201	4-27	7
4097202	4-28	1
4097203	4-28	2
4097204	4-28	3
4097205	4-28	4
4097206	4-28	5
4097207	4-28	6
4097208	4-29	1
4097209	4-29	2
4097210	4-29	3
4097211	4-29	4
4097212	4-29	5
4097213	4-30	1
4097214	4-30	2
4097215	4-30	3
4097216	4-30	4
4097217	4-30	5
4097218	4-30	9
4097219	4-30	10
4097220	4-38	1
4097221	4-38	2
4097452	4-38	3
4097453	4-38	4
4097454	4-38	5
4097455	4-38	8
4097456	4-38	9
4097458	4-38	11
4097459	4-38	7
4097460	4-41	1
4097461	4-41	3
4097462	4-41	4
4097463	4-41	5
4097464	4-41	6
4097465	4-41	8
4097466	4-41	9
	4-42	11
4097467	4-33	15
	4-41	10
	4-42	10
4097469	4-41	12
4097470	4-41	13
4097471	4-41	16
4097472	4-41	17
4097473	4-41	18
4097474	4-41	19
4097475	4-41	21
4097477	4-42	2
4097478	4-42	3
4097480	4-42	5
4097483	4-42	9
4097484	4-43	2
4097485	4-33	1
4097486	4-33	2
4097487	4-33	3
4097488	4-33	6
4097489	4-33	7
4097490	4-33	8
4097491	4-33	9
4097492	4-33	10
4097493	4-33	14
4097494	4-33	16
4097495	4-33	17
4097496	4-35	1
4097497	4-35	2
4097498	4-35	4
4097499	4-35	5
4097500	4-35	6
4097501	4-35	7
4097551	5-15	1
4097613	4-35	9
	6-27	1
4097614	4-35	10
	6-27	2
4097615	4-35	11
	6-27	3
4097616	4-35	12
	6-27	4
4097617	4-35	13
	6-27	5
4097618	4-35	14
	6-27	6
4097619	4-35	15
	6-27	7
4097620	4-35	16
	6-27	8
4097621	4-35	17
	6-27	9
4097622	4-35	18
	6-27	10
4097623	4-35	19
	6-27	11
4097624	4-35	20
	6-27	12
4097625	4-35	21
	6-27	13
4097626	4-35	22
	6-27	14
4097627	4-35	23
	6-27	15
4097628	4-35	24
	6-27	16
4097629	4-35	25
	6-27	17
4097630	4-35	26
4097631	4-35	28
4097632	4-35	30
4097690	4-35	32
4097694	4-36	2
4097695	4-36	1
4097696	4-36	3
4097697	4-36	6
4097698	4-37	1
4097699	4-37	2
	4-37	3
4097701	4-37	4
4097702	4-37	5
4097705	4-48	4
4097706	4-48	5
4097707	4-48	6
4097708	4-48	7
4097871	4-45	2
4097872	4-45	3
4097873	4-45	4
4097874	4-45	5
4097889	4-51	1
4097890	4-51	15
4097891	4-51	17
4097916	4-38	10
4097917	4-41	11
4097918	4-42	1
4097919	4-42	4
4097920	4-42	6
4097921	4-42	7
4097923	4-37	6
4097924	4-45	1
4098456	12-39	14
4098672	12-25	2
	12-29	18
4098976	4-5	7
4098977	4-5	6
4099352	6-35	8
	6-39	8
4099377	7-42	8
4099378	7-19	28
	7-42	9
4101675	2-15	8
4101858	4-33	6
4102512	7-5	34
4103431	4-7	16
4104388	9-5	4
4104389	9-5	11

©2014 HYSTER COMPANY

NUMERICAL INDEX (continued)

PART NO.	PAGE	ITEM
4104395	9-11	7
4104405	9-11	12
4104893	7-19	38
4601093	7-39	1
4601094	7-41	1
4601096	7-41	1
4601097	7-39	1
4601098	7-41	1
4601099	7-39	1
4601100	7-41	1
4601101	7-39	1
4601102	7-41	1
4601103	7-39	1
4601104	7-41	1
4601105	7-39	1
4601106	7-41	1
4601107	7-39	1
4601108	7-41	1
4601120	7-39	16
	7-41	16
4601265	7-39	1
4601499	1-30	
	1-33	
4601836	1-27	
4601837	1-27	
4602843	7-19	34
	7-120	
4603280	7-9	1
	7-105	
4603281	7-7	1
	7-113	
4603282	7-7	1
	7-109	
4603283	7-9	1
	7-101	
4603382	1-29	
	1-33	
4603383	1-29	
	1-33	
4603384	1-29	
	1-33	
4603385	1-29	
	1-33	
4603432	6-10	8
4603434	6-9	4
4603439	7-39	6
	7-41	6
4603492	1-41	25
	1-43	27
4603493	1-41	15
	1-43	29
4603552	3-3	1
4603553	2-7	1
4603554	3-5	1
4604147	12-11	6
4604594	7-36	1
4604595	7-36	6
4605191	2-27	15
4605336	7-39	10
	7-41	10
4605337	7-39	14
	7-41	14
4605389	1-51	6
4605854	7-89	
4605855	7-85	
4605946	12-3	18
4605974	12-3	14
4606169	2-5	1
4606206	4-7	1
4606301	12-11	6
4606302	12-11	12
4606303	12-11	13
4606305	16-21	9
	16-23	9
	16-25	9
	16-27	9
	16-29	9
	16-31	9
4607793	11-11	13
4609701	7-123	
4611248	6-3	9
	6-5	9
	6-8	
4611363	16-33	6
	16-35	3
	16-39	3
4611578	11-19	7
4611791	10-3	5
	10-7	
4611861	12-3	23
4611880	16-33	
	16-35	
	16-39	
	16-47	11
	16-49	7
	16-51	
4611882	16-33	
	16-35	
	16-39	
	16-47	11
	16-49	7
	16-51	
4611913	16-47	1
	16-49	6
4612085	12-3	23
4612127	16-42	2
4612128	16-42	1
4612129	16-42	1
4612130	16-42	2
4612188	11-11	9
4612320	1-93	8
4612836	7-93	7
4612847	8-7	17
4612911	1-29	8
	1-33	11
4612945	5-3	15
	5-4	
4612978	7-93	3
	7-93	4
	7-93	5
	7-93	6
4612988	7-93	3
	7-93	4
	7-93	5
	7-93	6
4613008	7-93	11
4613009	7-93	11
	7-131	3
	7-131	4
4613138	7-94	14
4613341	9-21	15
4614516	7-93	3
	7-93	4
	7-93	5
	7-93	6
4614678	8-17	17
4614811	7-131	3
4614813	7-131	4
4614828	7-131	3
4614847	7-93	11
	7-131	4
4614848	7-93	11
	7-131	3
	7-131	4
4615811	1-25	8
4615812	1-25	
4615813	1-25	1
4615847	13-9	4
	15-19	4
4615848	13-9	4
	15-19	4
4615883	15-19	
4615884	15-19	
4615886	15-19	
4615905	15-19	
4615906	15-19	
4615910	15-19	
4615913	15-19	
4615964	5-17	3
	5-19	22
	6-41	3
	6-43	22
4615969	1-25	9
4616167	15-19	
4617767	5-7	11
4617798	16-35	
4617799	16-35	
4617958	15-23	
4617961	15-23	
4617962	15-23	
4617964	15-23	
4617967	15-23	
4618057	15-23	
4618059	15-23	
4618064	15-23	
4618067	15-23	
4618438	1-25	6
4618615	4-7	20
4618898	2-39	21
4619094	6-17	6
	6-29	39
	6-31	48
4619095	6-17	5
	6-29	32
4619574	6-17	5
	6-31	46
4619937	3-11	
	3-13	
	3-17	
	3-19	
	3-21	
	3-23	
	3-25	
	3-27	
	3-29	
	5-9	
	5-11	
4619939	3-11	
	3-13	
	3-17	
	3-19	
	3-21	
	3-23	
	3-25	
	3-27	
	3-29	
	5-9	
	5-11	

©2014 HYSTER COMPANY

NUMERICAL INDEX (continued)

PART NO.	PAGE	ITEM
4620151	13-7	7
	15-15	11
4620152	13-7	8
	15-15	12
4620357	7-5	16
	7-49	
4620425	7-42	10
4620536	3-7	1
4621631	15-31	
4621636	16-35	
4621637	15-31	
4621641	16-35	
4621643	16-35	
4622150	15-28	17
4622266	16-49	6
4622454	4-7	24
4623081	15-3	
	15-7	
	15-9	
	15-11	
	15-15	
4623082	15-3	
	15-7	
	15-9	
	15-11	
	15-15	
4623086	15-3	
	15-7	
	15-9	
	15-11	
	15-15	
4623089	15-3	
	15-7	
	15-9	
	15-11	
	15-15	
4623097	15-3	
	15-7	
	15-9	
	15-11	
	15-15	
4623100	15-3	
	15-7	
	15-9	
	15-11	
	15-15	
4623101	15-3	
	15-7	
	15-9	
	15-11	
	15-15	
4623102	15-3	
	15-7	
	15-9	
	15-11	
4623105	15-3	
	15-7	
	15-9	
	15-11	
	15-15	
4623611	15-11	4
4623613	15-11	4
4623614	15-11	4
	15-11	4
4623615	15-11	4
	15-11	4
4623618	15-11	4
4623619	15-11	4
4623622	15-11	4
4623647	6-7	1
4623973	13-10	
	15-20	
4623974	13-10	
	15-20	
4623988	16-41	1
4623989	16-41	2
4623990	16-41	1
4623991	16-41	2
4624100	15-28	58
4624101	15-28	58
4624104	15-28	58
4624113	15-28	54
4624115	15-28	54
4624116	15-28	54
	15-28	54
4624117	15-28	54
	15-28	54
4624120	15-28	54
4624121	15-28	54
4624124	15-28	54
4624133	15-28	56
4624135	15-28	56
4624136	15-28	56
	15-28	56
4624137	15-28	56
	15-28	56
4624140	15-28	56
4624141	15-28	56
4624144	15-28	56
4624153	15-28	57
4624155	15-28	57
4624156	15-28	57
	15-28	57
4624157	15-28	57
	15-28	57
4624160	15-28	57
4624161	15-28	57
4624164	15-28	57
4624173	15-28	55
4624175	15-28	55
4624176	15-28	55
	15-28	55
4624177	15-28	55
	15-28	55
4624180	15-28	55
4624181	15-28	55
4624184	15-28	55
4624213	15-28	58
4624215	15-28	58
4624216	15-28	58
	15-28	58
4624217	15-28	58
	15-28	58
4624290	9-15	7
	9-17	
	9-19	
	9-21	
4624291	9-15	7
	9-17	
	9-19	
	9-21	
4624501	16-17	7
	16-19	5
4624502	16-17	9
	16-19	6
4624503	16-17	8
	16-19	5
4624504	16-17	10
	16-19	6
4624524	16-17	3
	16-19	2
4624525	16-17	1
	16-19	1
4624526	16-17	4
	16-19	2
4624527	16-17	2
	16-19	1
4624667	14-3	
	14-5	
	14-17	
4624725	14-3	
	14-5	
	14-17	
4624729	14-3	
	14-5	
	14-17	
4624924	12-12	29
	12-14	1
4624925	12-12	27
	12-12	28
	12-14	3
4624926	12-12	30
	12-14	9
4624999	6-35	1
	6-39	1
4625186	6-33	1
	6-36	1
4625259	6-33	3
	6-36	3
4625301	4-7	26
4625308	13-9	
4625340	13-9	
4625586	13-17	
4625591	16-33	
4625592	16-33	
4625594	13-17	
4625598	16-33	
4625600	16-33	
4625769	4-13	
	4-14	
	4-17	
	4-19	
	4-20	
	4-21	
	4-22	
	4-25	
	4-27	
	4-28	
	4-29	
	4-30	
	6-27	
4626064	3-11	
	3-13	
	3-17	
	3-19	
	3-21	
	3-23	
	3-25	
	3-27	
	3-29	
	5-9	
	5-11	
4626066	3-11	
	3-13	
	3-17	
	3-19	
	3-21	

See Service Manual for service procedures.
©2014 HYSTER COMPANY

NUMERICAL INDEX (continued)

PART NO.	PAGE	ITEM
	3-23	
	3-25	
	3-27	
	3-29	
	5-9	
	5-11	
4626238	16-29	11
4626239	16-29	12
4626472	16-21	11
	16-25	11
	16-27	11
	16-31	11
4626473	16-21	12
	16-25	12
	16-27	12
	16-31	12
4626474	16-31	16
4626475	16-31	17
4626477	16-21	8
	16-23	8
	16-25	8
	16-27	8
	16-29	8
	16-31	8
4626625	16-40	1
4626626	16-40	2
4626640	6-7	4
4626768	16-47	2
4626769	16-47	3
4626772	16-47	2
4626773	16-47	3
4626786	12-25	1
4627957	13-3	
	13-5	
4627975	13-3	
	13-5	
4628135	13-13	1
4628136	13-13	1
4628200	16-13	5
	16-15	5
4628201	16-13	6
	16-15	6
4628202	16-13	1
	16-15	1
4628203	16-13	2
	16-15	2
4628204	16-13	9
	16-15	9
4628205	16-13	10
	16-15	10
4628206	16-13	7
	16-15	7
4628207	16-13	8
	16-15	8
4628268	16-25	17
4628269	16-25	16
4628430	16-23	11
4628431	16-23	12
4628517	6-7	12
4628717	6-33	2
	6-36	2
4628753	1-51	12
4628754	1-51	16
4628755	1-51	17
4628917	7-19	16
	7-26	2
4628918	1-23	1
4628919	1-23	2
4629050	4-48	1
	7-19	37
	7-93	
4629051	7-19	29
	7-131	
4629069	12-17	25
	12-19	16
	12-25	
4629071	12-21	26
	12-23	17
	12-25	
4629073	12-17	25
	12-19	16
	12-25	
4629075	12-21	26
	12-23	17
	12-25	
4629077	12-25	1
4629078	12-25	1
4629079	12-25	1
4629133	12-35	
4629135	12-35	
4629137	12-35	
4629139	12-35	
4629142	12-35	2
4629143	12-35	2
4629144	12-35	2
4629145	12-35	2
4629784	7-5	16
	7-73	
4630231	7-5	16
	7-61	
4630278	6-35	19
	6-39	20
4630373	15-19	
4630631	4-9	14
4630920	6-7	2
4630953	6-35	10
	6-39	10
4631126	7-121	
4631193	6-35	6
	6-39	6
4633063	9-3	1
	9-5	
	9-7	
	9-9	
	9-10	
	9-11	
	9-13	
4633065	9-3	1
	9-5	
	9-7	
	9-9	
	9-10	
	9-11	
	9-13	
4633850	16-49	1
4633851	16-49	2
4633852	16-49	1
4633853	16-49	2
4633941	4-7	27
4634086	4-5	2
4634485	5-19	3
	6-43	3
4634489	7-19	15
	7-26	1
4634490	7-19	15
	7-26	14
4634955	7-5	33
4635221	7-5	16
	7-55	
4635258	7-5	16
	7-67	
4635288	7-5	16
	7-79	

©2014 HYSTER COMPANY

NUMERICAL INDEX (continued)

NOTES

©2014 HYSTER COMPANY


HYSTER