RUTHZIL TRATOR COMERCIAL DE PEÇAS LTDA 11 97083-6812 ROLANDO

PARTS MANUAL

HYSTER 1999

CHALLENGER H70, 80, 90,100, & 110XL H90XLS (G5)

CUSTOMER EDITION

HYSTER

897526
11/99

©1999 HYSTER COMPANY

ILLUSTRATED CONTENTS

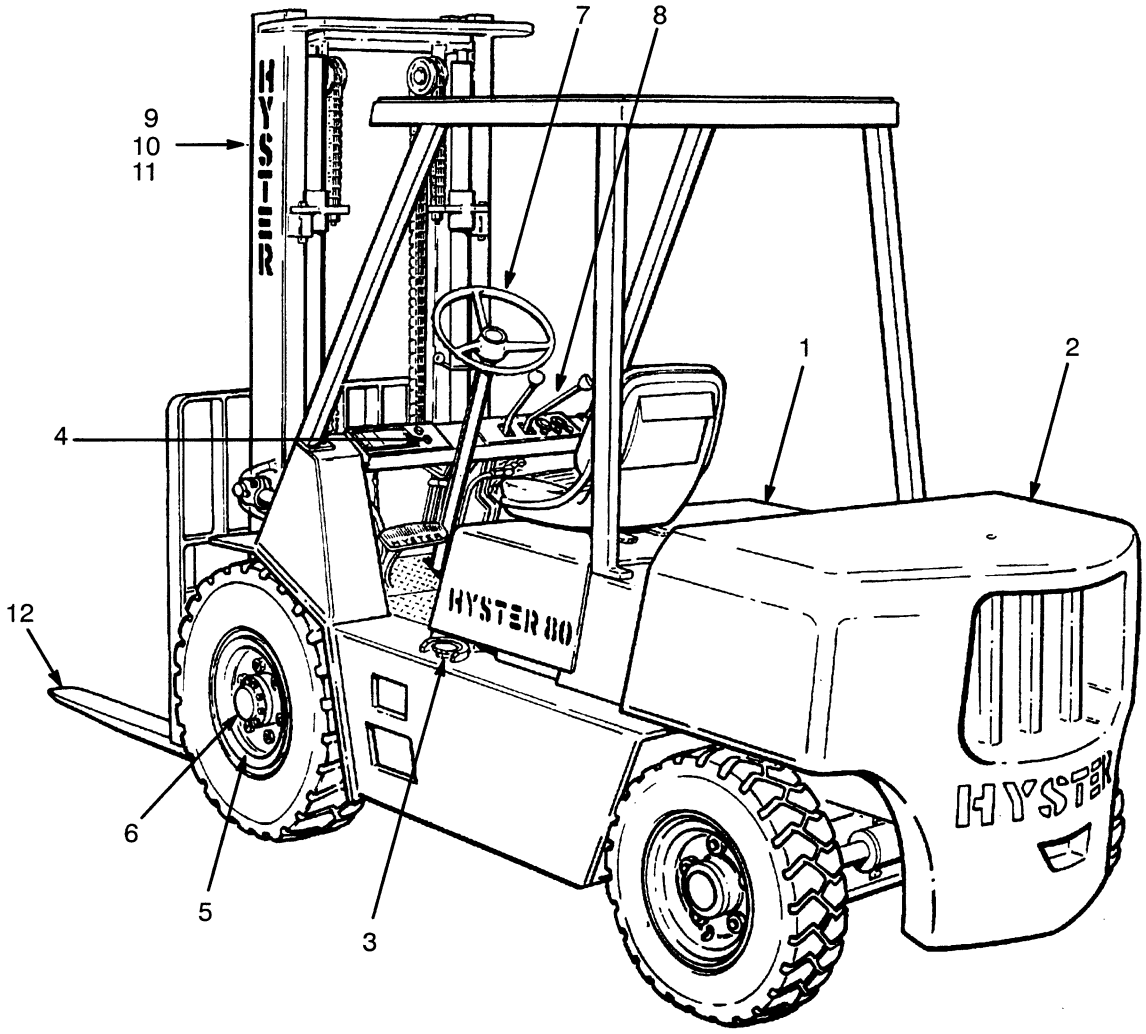

REF	ITEM	PAGE
1	FRAME	5
2	ENGINE	17
3	FUEL SYSTEM	121
4	ELECTRICAL SYSTEM	173
5	TRANSMISSION	251
6	BRAKE SYSTEM	285
7	STEERING SYSTEM	299
8	HYDRAULIC SYSTEM	309
9	MAST — VISTA TWO-STAGE LIMITED FREE-LIFT (A510)	335
10	MAST — VISTA THREE-STAGE FULL FREE-LIFT (A511)	355
10	MAST — VISTA TWO-STAGE FULL FREE-LIFT (A512)	381
11	OPTIONAL EQUIPMENT	411
12	NUMERICAL INDEX	457

©1999 HYSTER COMPANY

See Service Manual for service procedures

TABLE OF CONTENTS

DESCRIPTION **PAGE NO.**

A

AIR FILTER (Figure 85)
STANDARD ..... Page 166

AIR FILTER (Figure 86)
HEAVY DUTY GASOLINE AND LPG ..... Page 168

AIR FILTER (Figure 87)
HEAVY DUTY DIESEL ..... Page 170

ALTERNATOR (Figure 103)
DELCO BRAND ..... Page 212

ALTERNATOR (Figure 102)
TYPES GS, LPS AND DS
LAST USED ON S/N G005D-10596 ..... Page 208

ALTERNATOR (Figure 104)
GASOLINE , LPG AND DIESEL
FIRST USED ON S/N G005D-10279 ..... Page 216

ALTERNATOR (Figure 105)
PRESTOLITE BRAND ..... Page 218

ALTERNATOR (Figure 106)
PRESTOLITE BRAND
GS, LPS, DS
FIRST USED ON S/N G005D-10597 ..... Page 220

ALTERNATOR MOUNTING (Figure 107)
DIESEL 1004.42
WITH LOW EMISSIONS ..... Page 221

B

BACK-UP ALARM (Figure 228) ..... Page 454

BRAKE (Figure 142)
LAST USED ON S/N G00D-8496 ..... Page 292

BRAKE (Figure 143)
FIRST USED ON S/N G00D-8497 ..... Page 294

BRAKE BOOSTER & MASTER CYLINDER (Figure 144) ..... Page 296

BRAKE LINKAGE (Figure 140)
OIL CLUTCH ..... Page 288

BRAKE LINKAGE (Figure 141)
POWERSHIFT ..... Page 290

©1999 HYSTER COMPANY

TABLE OF CONTENTS

DESCRIPTION **PAGE NO.**

C

CAB (Figure 224) ..... Page 448

CAMSHAFT & OIL PAN (Figure 30)
GASOLINE & LPG
5LM 1995 SERIES ENGINE ..... Page 60

CAMSHAFT AND CRANKSHAFT (Figure 17)
GASOLINE & LPG
2KM 1992 SERIES ENGINE ..... Page 34

CAMSHAFT AND CRANKSHAFT (Figure 21)
GASOLINE & LPG
3KM 1993 SERIES ENGINE ..... Page 42

CAMSHAFT AND OIL PAN (Figure 38)
GASOLINE AND LPG
2000 SERIES ENGINE ..... Page 76

CAMSHAFT AND OIL PAN (Figure 26)
GASOLINE & LPG
4LM 1994 SERIES ENGINE ..... Page 52

CAMSHAFT AND OIL SUMP (Figure 37)
GASOLINE AND LPG ..... Page 74

CARBURETOR (Figure 67)
LPG
LAST USED ON S/N G005D-7759
(INCLUDING S/N 7830-7832, 7834-7837, 7840 AND 7841),
EXCEPT S/N G005D-7710 ..... Page 138

CARBURETOR (Figure 68)
LPG
FIRST USED ON S/N G005D-7760
(EXCEPT S/N 7830-7832, 7834-7837, 7840 AND 7841)
AND INCLUDES S/N G005D-7710 ..... Page 140

CARRIAGE (Figure 182)
THREE-STAGE FFL ..... Page 372

CARRIAGE (Figure 183)
THREE-STAGE FFL
H90-100XL ATTACHMENT ..... Page 374

CARRIAGE (Figure 167)
TWO-STAGE LFL ..... Page 346

CARRIAGE (Figure 168)
TWO-STAGE LFL
H90-100XL ATTACHMENT ..... Page 348

©1999 HYSTER COMPANY

TABLE OF CONTENTS

DESCRIPTION **PAGE NO.**

C (Continued)

CARRIAGE (Figure 197)
TWO-STAGE FFL ..... Page 402

CARRIAGE (Figure 198)
TWO-STAGE FFL
H90-100XL ATTACHMENT ..... Page 404

CHARGE PUMP (Figure 153)
OIL CLUTCH ..... Page 316

CHARGE PUMP HYDRAULICS (Figure 152)
OIL CLUTCH ..... Page 314

CLUTCH CONTROL LINKAGE (Figure 125)
OIL CLUTCH ..... Page 262

CLUTCH (Figure 124)
OIL CLUTCH ..... Page 260

CLUTCH PACK (Figure 130)
POWERSHIFT ..... Page 270

CLUTCH PEDAL (Figure 123)
OIL CLUTCH ..... Page 258

CONTROL VALVE ATTACHING PARTS (Figure 156)
TWO FUNCTION ..... Page 322

CONTROL VALVE ATTACHING PARTS (Figure 158)
THREE FUNCTION ..... Page 326

CONTROL VALVE ATTACHING PARTS (Figure 160)
FOUR FUNCTION ..... Page 330

CONTROL VALVE (Figure 157)
TWO FUNCTION ..... Page 324

CONTROL VALVE (Figure 159)
THREE FUNCTION ..... Page 328

CONTROL VALVE (Figure 161)
FOUR FUNCTION ..... Page 332

COOLANT PUMP (Figure 49)
DIESEL (WITHOUTLOW EMISSIONS)
LAST USED ON S/N G005D-11942 ..... Page 98

COOLANT PUMP (Figure 57)
DIESEL (WITH LOW EMISSIONS)
FIRST USED ON S/N G005D-11942,
LAST USED ON ENGINE S/N U892125D ..... Page 114

©1999 HYSTER COMPANY

TABLE OF CONTENTS

DESCRIPTION **PAGE NO.**

C (Continued)

COOLING SYSTEM (Figure 12)
GASOLINE AND LPG ..... Page 24

COOLING SYSTEM (Figure 40)
DIESEL ..... Page 80

COUNTERWEIGHT (Figure 7) ..... Page 13

CRANKSHAFT AND PISTONS (Figure 43)
DIESEL (WITHOUTLOW EMISSIONS)
LAST USED ON S/N G005D-11942 ..... Page 86

CRANKSHAFT AND PISTONS (Figure 52)
DIESEL (WITH LOW EMISSIONS)
FIRST USED ON S/N G005D-11942 ..... Page 104

CYLINDER BLOCK (Figure 15)
GASOLINE & LPG
2KM 1992 SERIES ENGINE ..... Page 30

CYLINDER BLOCK (Figure 19)
GASOLINE & LPG
3KM 1993 SERIES ENGINE ..... Page 38

CYLINDER BLOCK (Figure 23)
GASOLINE & LPG
4LM 1994 SERIES ENGINE ..... Page 46

CYLINDER BLOCK (Figure 27)
GASOLINE & LPG
5LM 1995 SERIES ENGINE ..... Page 54

CYLINDER BLOCK (Figure 31)
GASOLINE AND LPG ..... Page 62

CYLINDER BLOCK (Figure 32)
GASOLINE AND LPG
2000 SERIES ENGINE ..... Page 64

CYLINDER BLOCK (Figure 41)
DIESEL (WITHOUTLOW EMISSIONS)
LAST USED ON S/N G005D-11942 ..... Page 82

CYLINDER BLOCK (Figure 50)
DIESEL (WITH LOW EMISSIONS)
FIRST USED ON S/N G005D-11942 ..... Page 100

CYLINDER HEAD (Figure 16)
GASOLINE & LPG
2KM 1992 SERIES ENGINE ..... Page 32

©1999 HYSTER COMPANY

TABLE OF CONTENTS

DESCRIPTION **PAGE NO.**

C (Continued)

CYLINDER HEAD (Figure 20)
GASOLINE & LPG
3KM 1993 SERIES ENGINE ..... Page 40

CYLINDER HEAD (Figure 24)
GASOLINE & LPG
4LM 1994 SERIES ENGINE ..... Page 49

CYLINDER HEAD (Figure 28)
GASOLINE & LPG
5LM 1995 SERIES ENGINE ..... Page 56

CYLINDER HEAD (Figure 33)
GASOLINE AND LPG ..... Page 66

CYLINDER HEAD (Figure 34)
GASOLINE AND LPG
2000 SERIES ENGINE ..... Page 68

CYLINDER HEAD (Figure 42)
DIESEL (WITHOUTLOW EMISSIONS)
LAST USED ON S/N G005D-11942 ..... Page 84

CYLINDER HEAD (Figure 51)
DIESEL (WITH LOW EMISSIONS)
FIRST USED ON S/N G005D-11942 ..... Page 102

D

DIFFERENTIAL (Figure 138) ..... Page 282

DISTRIBUTOR (Figure 96) ..... Page 196

DISTRIBUTOR (Figure 97) ..... Page 197

DRIVE AXLE (Figure 137) ..... Page 280

DUAL FUEL CONVERSION KIT (Figure 63)
GAS TO LPG ..... Page 130

E

ELECTRICAL (Figure 90)
LPG
FIRST USED ON S/N G005D-13154 ..... Page 184

ELECTRICAL (Figure 91)
GASOLINE
FIRST USED ON S/N G005D-11942 ..... Page 186

©1999 HYSTER COMPANY

TABLE OF CONTENTS

DESCRIPTION PAGE NO.

E (Continued)

ELECTRICAL SYSTEM (Figure 88)
GASOLINE AND LPG
LAST USED ON S/N G005D-13153 ..... Page 176

ELECTRICAL SYSTEM (Figure 89)
GASOLINE AND LPG
FIRST USED ON S/N G005D-13154 ..... Page 180

ELECTRICAL SYSTEM (Figure 98)
DIESEL
LAST USED ON S/N G005D-13393 ..... Page 198

ELECTRICAL SYSTEM (Figure 99)
DIESEL
FIRST USED ON S/N GOO5D-13394 ..... Page 200

ENGINE CONTROL, CONTINUED (Figure 95)
GASOLINE
FIRST USED ON S/N G005D-14736, INCLUDING G005D-14584 ..... Page 194

ENGINE CONTROL (Figure 92)
LPG ..... Page 188

ENGINE CONTROL (Figure 93)
GASOLINE
USED ON S/N G005D-13154 THRU G005D-14735,
EXCEPT G005D-14584 ..... Page 190

ENGINE CONTROL (Figure 94)
GASOLINE
FIRST USED ON S/N G005D-14736, INCLUDING G005D-14584 ..... Page 192

ENGINE HARNESS (Figure 115)
GASOLINE
FIRST USED ON S/N G005D-51476, G005D-51484 PILOT TRUCK ... Page 238

ENGINE MOUNTS (Figure 10) ..... Page 21

EXHAUST (Figure 59)
..... Page 118

F

FIRE EXTINGUISHER (Figure 219) ..... Page 439

FLOORPLATES AND FENDERS (Figure 5) ..... Page 10

FLYWHEEL HOUSING (Figure 11) ..... Page 22

©1999 HYSTER COMPANY

TABLE OF CONTENTS

DESCRIPTION **PAGE NO.**

F (Continued)

FORKS (Figure 169)
HOOK TYPE ..... Page 350

FORKS (Figure 170)
HOOK TYPE ..... Page 351

FORKS (Figure 171)
PIN TYPE ..... Page 352

FORKS (Figure 172)
BLOCK TYPE
48 INCH CARRIAGE ..... Page 353

FORKS (Figure 173)
BLOCK TYPE
62 INCH CARRIAGE ..... Page 354

FORKS (Figure 184)
HOOK TYPE ..... Page 376

FORKS (Figure 185)
HOOK TYPE ..... Page 377

FORKS (Figure 186)
PIN TYPE ..... Page 378

FORKS (Figure 187)
BLOCK TYPE
48 INCH CARRIAGE ..... Page 379

FORKS (Figure 188)
BLOCK TYPE
62 INCH CARRIAGE ..... Page 380

FORKS (Figure 199)
HOOK TYPE ..... Page 406

FORKS (Figure 200)
HOOK TYPE ..... Page 407

FORKS (Figure 201)
PIN TYPE ..... Page 408

FORKS (Figure 202)
BLOCK TYPE
48 INCH CARRIAGE ..... Page 409

FORKS (Figure 203)
BLOCK TYPE
62 INCH CARRIAGE ..... Page 410

©1999 HYSTER COMPANY

TABLE OF CONTENTS

DESCRIPTION **PAGE NO.**

F (Continued)

FORWARD AND REVERSE SWITCH (Figure 133)
POWERSHIFT ..... Page 276

FORWARD LINKAGE AND REVERSE SHIFT LEVER (Figure 132)
POWERSHIFT ..... Page 274

FREE LIFT (Figure 178)
THREE-STAGE FFL ..... Page 364

FREE LIFT (Figure 192)
TWO-STAGE FFL ..... Page 388

FREE-LIFT CYLINDER (Figure 195)
TWO-STAGE FFL ..... Page 396

FREE-LIFT CYLINDER (Figure 180)
THREE-STAGE FFL ..... Page 368

FUEL (Figure 62)
LPG
FIRST USED ON S/N G005D-7760
(EXCEPT S/N 7830-7832, 7834-7837, 7840 AND 7841)
AND INCLUDES S/N G005D-7710 ..... Page 128

FUEL SYSTEM (Figure 61)
LPG
LAST USED ON S/N G005D-7759
(INCLUDING S/N 7830-7832, 7834-7837, 7840 AND 7841),
EXCEPT S/N G005D-7710 ..... Page 126

FUEL SYSTEM (Figure 65)
GASOLINE ..... Page 134

FUEL TANK (Figure 60)
GASOLINE ..... Page 124

FUEL TANK (Figure 64)
DIESEL ..... Page 132

FUEL TANK (Figure 66)
LPG ..... Page 136

G

GAUGE CLUSTER (Figure 101) ..... Page 207

GOVERNOR (Figure 69) ..... Page 142

©1999 HYSTER COMPANY

TABLE OF CONTENTS

DESCRIPTION **PAGE NO.**

H

HAND PUMP (Figure 147) ..... Page 305

HEADER HOSES (Figure 166)
TWO-STAGE LIMITED FREE LIFT MAST ..... Page 344

HEADER HOSES (Figure 181)
THREE-STAGE FULL FREE LIFT MAST ..... Page 370

HEADER HOSES (Figure 196)
TWO-STAGE FULL FREE LIFT MAST ..... Page 398

HEATER (Figure 225) ..... Page 450

HIGH PRESSURE FUEL INJECTION & PUMP (Figure 83)
WITHOUTLOW EMISSIONS
LAST USED ON S/N G005A-10666 ..... Page 162

HIGH PRESSURE FUEL INJECTION & PUMP (Figure 84)
WITH LOW EMISSIONS
FIRST USED ON S/N G005A-10667 ..... Page 164

HOOD (Figure 4) ..... Page 8

HYDRAULIC PUMP (Figure 154) ..... Page 319

HYDRAULIC SYSTEM (Figure 150)
TANK CONNECTIONS & LINES ..... Page 310

HYDRAULIC SYSTEM (Figure 151) ..... Page 312

I

INNER MAST (Figure 163)
TWO-STAGE LFL ..... Page 338

INNER MAST (Figure 176)
THREE-STAGE FFL ..... Page 360

INNER MAST (Figure 190)
TWO-STAGE FFL ..... Page 384

INSTRUMENT PANEL (Figure 100) ..... Page 204

INTERMEDIATE MAST (Figure 175)
THREE-STAGE FFL ..... Page 358

©1999 HYSTER COMPANY

TABLE OF CONTENTS

DESCRIPTION **PAGE NO.**

L

LABELS AND PAINT (Figure 8) ..... Page 14

LIFT CYLINDER (Figure 165)
TWO-STAGE LFL ..... Page 342

LIFT EYE (Figure 220) ..... Page 440

LIFT PUMP (Figure 78)
DIESEL (WITHOUT LOW EMISSIONS)
LAST USED ON S/N G005A-10666 ..... Page 154

LIFT PUMP (Figure 79)
DIESEL (WITH LOW EMISSIONS)
FIRST USED ON S/N G005A-10667 ..... Page 155

LIGHTS (Figure 223) ..... Page 446

LOAD BACKREST EXTENSION (Figure 9) ..... Page 16

LOCK-OFF FILTER (Figure 70)
LPG ..... Page 143

LOW PRESSURE FUEL INJECTION (Figure 81)
WITHOUTLOW EMISSIONS
LAST USED ON S/N G005A-10666 ..... Page 158

LOW PRESSURE FUEL INJECTION (Figure 82)
WITH LOW EMISSIONS
FIRST USED ON S/N G005A-10667 ..... Page 160

LPG CONVERTER (Figure 71)
LAST USED ON S/N G005D-2849 ..... Page 144

LPG CONVERTER (Figure 72)
USED ON S/N G005D-2850 THRU S/N g005d-11516 ..... Page 145

LPG CONVERTER (Figure 73)
FIRST USED ON S/N g005d-11517 ..... Page 146

M

MAIN LIFT CYLINDER (Figure 193)
TWO-STAGE FFL
LAST USED ON S/N PENDING PER ECN 85020-76 ..... Page 390

MAIN LIFT CYLINDER (Figure 194)
VISTA 2 STAGE-FFL
FIRST USED ON S/N PENDING PER ECN 85020-76 ..... Page 392

©1999 HYSTER COMPANY

TABLE OF CONTENTS

DESCRIPTION **PAGE NO.**

M (Continued)

MAIN LIFT (Figure 164)
TWO-STAGE LFL ..... Page 340

MAIN LIFT (Figure 177)
THREE-STAGE FFL ..... Page 362

MAIN LIFT (Figure 191)
TWO-STAGE FFL ..... Page 386

MAIN-LIFT CYLINDER (Figure 179)
THREE-STAGE FFL ..... Page 366

MANIFOLDS (Figure 48)
DIESEL (WITHOUTLOW EMISSIONS)
LAST USED ON S/N G005D-11942 ..... Page 96

MANIFOLDS (Figure 56)
DIESEL (WITH LOW EMISSIONS)
FIRST USED ON S/N G005D-11942 ..... Page 112

MONOTROL PEDAL (Figure 135)
POWERSHIFT ..... Page 278

O

OIL FILTER (Figure 44)
DIESEL ..... Page 88

OIL PAN AND PUMP (Figure 46)
DIESEL (WITHOUTLOW EMISSIONS)
LAST USED ON S/N G005D-11942 ..... Page 92

OIL PAN AND PUMP (Figure 54)
DIESEL (WITH LOW EMISSIONS)
FIRST USED ON S/N G005D-11942 ..... Page 108

OIL PUMP (Figure 18)
GASOLINE & LPG
2KM 1992 SERIES ENGINE ..... Page 36

OIL PUMP (Figure 22)
GASOLINE & LPG
3KM 1993 SERIES ENGINE ..... Page 44

OIL PUMP (Figure 39)
GASOLINE & LPG
4LM 1994, 5LM 1995, 1996 THRU 2000 SERIES ENGINE ..... Page 78

OUTER MAST (Figure 162)
TWO-STAGE LFL ..... Page 336

©1999 HYSTER COMPANY

TABLE OF CONTENTS

DESCRIPTION **PAGE NO.**

O (Continued)

OUTER MAST (Figure 174)
THREE-STAGE FFL ..... Page 356

OUTER MAST (Figure 189)
TWO-STAGE FFL ..... Page 382

OVERHEAD GUARD (Figure 6) ..... Page 12

P

PARK BRAKE (Figure 139) ..... Page 286

S

SEAT (Figure 3) ..... Page 6

SERPENTINE BELT DRIVE (Figure 13)
GASOLINE AND LPG
USED ON S/N G005D-4578 THRU G005D-7759
(INCLUDING S/N 7830-7832, 7834-7837,7840, AND 7841)
EXCEPT S/N G005D-7710 ..... Page 26

SERPENTINE BELT DRIVE (Figure 14)
GASOLINE AND LPG
FIRST USED ON S/N G005D-7760
(EXCEPT S/N 7830-7832, 7834-7837, 7840, AND 7841)
AND INCLUDES S/N G005D-7710 ..... Page 28

SIDESHIFT CARRIAGE (Figure 205)
THREE-STAGE FFL AND TWO-STAGE FFL MASTS
PIN TYPE
H70-80XL & H90XLS ..... Page 416

SIDESHIFT CARRIAGE (Figure 204)
TWO-STAGE LIMITED FREE LIFT MAST
PIN TYPE
H70-80XL & H90XLS ..... Page 414

SIDESHIFT CARRIAGE (Figure 206)
PIN TYPE
H90-110XL ..... Page 418

SIDESHIFT CARRIAGE (Figure 209)
HOOK TYPE
TWO-STAGE LFL MAST ..... Page 422

SIDESHIFT CARRIAGE (Figure 210)
HOOK TYPE
THREE-STAGE FULL FREE LIFT MAST ..... Page 424

SIDESHIFT CARRIAGE (Figure 211)
HOOK TYPE
TWO-STAGE FULL FREE LIFT MAST ..... Page 426

©1999 HYSTER COMPANY

TABLE OF CONTENTS

DESCRIPTION **PAGE NO.**

S (Continued)

SIDESHIFT CARRIAGE (Figure 212)
SERIES 1356000 ..... Page 428

SIDESHIFT CYLINDER (Figure 207)
PIN TYPE
IDENTIFY BY PART NUMBER ..... Page 420

SIDESHIFT CYLINDER (Figure 208)
PIN TYPE
IDENTIFY BY PART NUMBER ..... Page 421

SIDESHIFT CYLINDER (Figure 213)
HOOK TYPE ..... Page 430

SIDESHIFT CYLINDER (Figure 214)
SERIES 1360000 ..... Page 431

SOUND LINER (Figure 227) ..... Page 453

SPEED REDUCER (Figure 131) ..... Page 272

STARTER (Figure 108)
GASOLINE AND LPG
LAST USED ON DATE BREAK 8/95 ..... Page 223

STARTER (Figure 109)
GASOLINE AND LPG
USED ON S/N DATE BREAK 8/95 THRU G005D-7759
(INCLUDING S/N 7830-7832, 7834-7837, 7840 AND 7841)
EXCEPT S/N G005D-7710 ..... Page 224

STARTER (Figure 110)
GASOLINE AND LPG
FIRST USED ON S/N G005D-7760
(EXCEPT S/N 7830-7832, 7834-7837, 7840 AND 7841)
INCLUDING S/N G005D-7710 ..... Page 226

STARTER (Figure 111)
DIESEL ..... Page 228

STARTER (Figure 112)
DIESEL
(OPTIONAL) ..... Page 230

STEERING AXLE (Figure 148) ..... Page 306

STEERING COLUMN (Figure 146) ..... Page 302

STEERING CYLINDER (Figure 149) ..... Page 308

©1999 HYSTER COMPANY

TABLE OF CONTENTS

DESCRIPTION **PAGE NO.**

S (Continued)

STEERING (Figure 145)
HYDRAULIC LINES ..... Page 301

STROBE LIGHT (Figure 221)
MEDIUM INTENSITY ..... Page 442

STROBE LIGHT (Figure 222)
HIGH INTENSITY ..... Page 444

T

THROTTLE BODY INJECTOR (Figure 74) ..... Page 148

THROTTLE LINKAGE (Figure 75) ..... Page 150

THROTTLE PEDAL (Figure 76)
OIL CLUTCH AND POWERSHIFT WITH
FORWARD/REVERSE LEVER ..... Page 152

THROTTLE PEDAL (Figure 77)
POWERSHIFT WITH MONOTROL PEDAL ..... Page 153

TILT CYLINDER (Figure 155) ..... Page 320

TIMING GEAR (Figure 45)
DIESEL (WITHOUTLOW EMISSIONS)
LAST USED ON S/N G005D-11942 ..... Page 90

TIMING GEAR (Figure 53)
DIESEL (WITH LOW EMISSIONS)
FIRST USED ON S/N G005D-11942 ..... Page 106

TIRES AND WHEELS (Figure 215)
SINGLE DRIVE WHEEL
H70-80XL & H90XLS
LEMMERZ BRAND WHEELS ..... Page 432

TIRES AND WHEELS (Figure 216)
SINGLE DRIVE WHEEL
ADVANCE BRAND WHEELS ..... Page 434

TIRES AND WHEELS (Figure 217)
DUAL DRIVE WHEEL
H70-80XL & H90XLS ..... Page 436

TIRES AND WHEELS (Figure 218)
STEER WHEEL ..... Page 438

TORQUE CONVERTER (Figure 129)
POWERSHIFT ..... Page 269

©1999 HYSTER COMPANY

TABLE OF CONTENTS

DESCRIPTION **PAGE NO.**

T (Continued)

TRANSMISSION CONTROL VALVE (Figure 126)
POWERSHIFT WITH MONOTROL PEDAL ..... Page 264

TRANSMISSION CONTROL VALVE (Figure 127)
POWERSHIFT WITH FORWARD/REVERSE LEVER ..... Page 266

TRANSMISSION (Figure 128)
POWERSHIFT ..... Page 268

TRANSMISSION GEARS (Figure 121)
OIL CLUTCH ..... Page 254

TRANSMISSION HOUSING (Figure 122)
OIL CLUTCH ..... Page 256

TRANSMISSION PIPING (Figure 134)
POWERSHIFT ..... Page 277

U

UNIVERSAL JOINT (Figure 136) ..... Page 279

V

VALVE COVER AND INLET MANIFOLD (Figure 36)
GASOLINE AND LPG
2000 SERIES ENGINE ..... Page 72

VALVE COVER AND INTAKE MANIFOLD (Figure 25)
GASOLINE & LPG
4LM 1994 SERIES ENGINE ..... Page 50

VALVE COVER AND ROCKER SHAFT (Figure 47)
DIESEL (WITHOUTLOW EMISSIONS)
LAST USED ON S/N G005D-11942 ..... Page 94

VALVE COVER AND ROCKER SHAFT (Figure 55)
DIESEL (WITH LOW EMISSIONS)
FIRST USED ON S/N G005D-11942 ..... Page 110

VALVE COVER (Figure 35)
AND INLET MANIFOLD
GASOLINE AND LPG ..... Page 70

VALVE COVERS & INLET MANIFOLD (Figure 29)
GASOLINE & LPG
5LM 1995 SERIES ENGINE ..... Page 58

©1999 HYSTER COMPANY

TABLE OF CONTENTS

DESCRIPTION **PAGE NO.**

W

WATER FILTER AND SEPARATOR (Figure 80)
DIESEL ..... Page 156

WATER PUMP (Figure 58)
DIESEL (WITH LOW EMISSIONS)
FIRST USED ON ENGINE S/N U892126D ..... Page 116

WIPERS AND DEFROSTER FAN (Figure 226) ..... Page 452

WIRE HARNESS (Figure 113)
GOVERNOR ..... Page 233

WIRE HARNESS (Figure 114)
MAIN ENGINE GAS LAST USED ON S/N G005D-51475, G005D-51483 PILOT TRUCK
(SHEET 1 of 4) ..... Page 234

WIRE HARNESS (Figure 116)
ENGINE LPG ..... Page 242

WIRE HARNESS (Figure 117)
OIL CLUTCH ..... Page 245

WIRE HARNESS (Figure 118)
MAIN INSTRUMENT ..... Page 246

WIRE HARNESS (Figure 119)
NEUTRAL START WITH FORWARD/REVERSE LEVER ..... Page 248

WIRE HARNESS (Figure 120)
NEUTRAL START WITH MONOTROL PEDAL ..... Page 249

©1999 HYSTER COMPANY

ABBREVIATIONS QUICK REFERENCE SHEET

Listed Below Are Abbreviations Used In Parts Manuals To Denote The Following Expressions:

2-STG	Two Stage Mast
3-STG	Three Stage Mast
4-STG	Four Stage Mast
Amp	Amperes
AR	As Required
BCS	Box Car Special
BWI	Brush Wear Indicator
CE	Commutator End
CRE	Corrosive Environment
dbA	Decibel "A" Scale
DE	Drive End
EC or ECH	Empty Container Handler Europe Empty Container Handler U.S.
EC-3 ECH-3	Empty Container Handler-3 High Stacking
EC-4 ECH-4	Empty Container Handler-4 High Stacking
EC-5 ECH-5	Empty Container Handler-5 High Stacking
EC-6 ECH-6	Empty Container Handler-6 High Stacking
EC-7 ECH-7	Empty Container Handler-7 High Stacking
ECM	Electronic Control Module
ECN	Engineering Change Notice
EEPROM	Electrically Erasable Programable Read Only Memory
EPROM	Electrically Programable Read Only Memory
EGR	Exhaust Gas Recirculation
FFL	Full Free Lift
FLT	Fork Lift Truck
FRE	Freezer Environment
in.	inches
I.D.	Inside Diameter
LFL	Limited Free Lift
LPG	Liquified Petroleum Gas
MAP	Manifold Absolute Pressure
mm	millimeters
MSTS	Microprocessor Spark Timing System

NC	Normally Closed
NDE	Not Drive End (Commutator End)
NFL	No Free Lift
NI	Not Illustrated
NO	Normally Open
NPT	National Pipe Threads
NS	Neutral Start
OC	Oil Clutch Transmission
O.D.	Outside Diameter
O/S	Oversize
PS	Powershift Transmission
PTO	Power Take Off
RPM	Revolutions per Minute
S/N	Serial Number
SFL	Semi-Free Lift
TMM	Truck Management Module
Type D	UL Type D, Diesel-Powered Safety Rating
Type DS	UL Type DS, Diesel-Powered Safety Rating
Type E	UL Type E, Battery Powered Safety Rating
Type EE	UL Type EE, Battery-Powered Safety Rating
Type ES	UL Type ES, Battery-Powered Safety Rating
Type G	UL Type G, Gasoline-Powered Safety Rating
Type GS	UL Type GS, Gasoline-Powered Safety Rating
Type LP	UL Type LP, LP Gas-Powered Safety Rating
Type LPS	UL Type LPS, LP Gas-Powered Safety Rating
U/S	Undersize
UL	Underwriters Laboratory
UK	United Kingdom
U.S.	United States
V	Volts
Xmsn	Transmission

NOTES

HOW TO USE THE ILLUSTRATED PARTS MANUAL

This parts manual describes and illustrates assemblies, subassemblies, and detail parts needed for service replacement.

The different constructions are indicated by keys, symbols and footnotes.

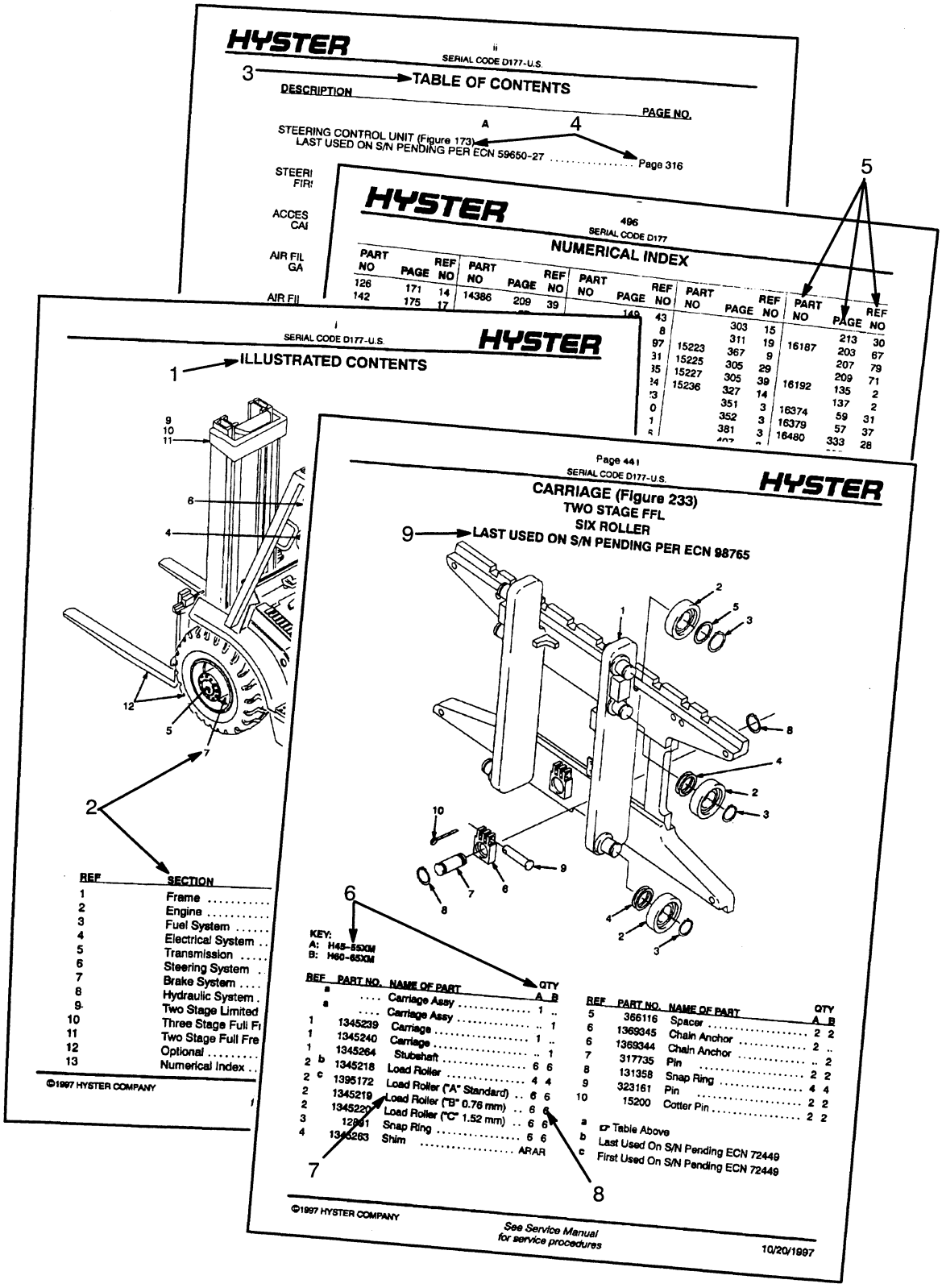

HOW TO FIND THE DESIRED PART NUMBER

WHEN THE PART NUMBER AND THE NEXT HIGHER ASSEMBLY IS NOT KNOWN:

1. Determine the function and application of the part required. Turn to the illustrated index page immediately behind the front cover. Choose the general area of reference most likely to include the part.
2. Find the page number for the reference number you choose and turn to that page. Use the division index to determine the assembly which would normally contain the part required. Then locate the part on the assembly breakdown page.

WHEN THE PART NUMBER IS NOT KNOWN AND THE NEXT HIGHER ASSEMBLY IS KNOWN:

3. Determine the assembly the required part is used on. Turn to the Master Index immediately following the Illustrated Index.
4. Locate the assembly the required part is used on and turn to the page indicated for that assembly. Then locate the part on the assembly breakdown page.

WHEN THE PART NUMBER IS KNOWN:

5. Use the numerical index at the back of the manual to find the part number. Turn to the figure listed and locate the part as indicated by the reference number.

GENERAL:

The assembly breakdowns include part numbers, description, quantities required, keys and footnotes to help in selecting the correct parts.

6. Keys are used to show effective serial numbers for two or more similar assemblies, RH and LH assembly parts, etc. Select the appropriate key, "A", "B", "C" or "D" and the corresponding quantity column to find the required parts.
7. Indented descriptions under "Name of Part" are used to indicate assemblies and sub-parts of assemblies. In the example, *LOAD ROLLER* (Item 7) is a subpart of the major assembly *CARRIAGE*.
8. Quantities shown are for one assembly. The quantities of the subpart *LOAD ROLLER* are indicated as six and six. This means six per *CARRIAGE* assembly.
9. Engineering change notice (ECN) numbers for pending serial numbers are shown to allow for the inclusion of the most current parts information. Contact your local dealer for Hyster lift trucks for serial number information listed by ECN number.
10. Additional fork lengths are available. Contact your dealer for Hyster lift trucks.

ORDERING PARTS:

When ordering replacement parts, give the unit serial number, part number, name of part and quantity required.

For any further information on parts, service, or ordering, consult your local dealer for Hyster lift trucks.

IDENTIFICATION OF TRUCK SERIAL NUMBERS

X (1) OOO (2) X (3) OOOO (4) X (5)

(1) & (2) The first letter and three numbers indicate the truck model code.

(3) The second letter indicates the plant of manufacture.

(4) The four or five digit number series indicates the serial number of the truck.

(5) The final letter indicates the year of manufacture starting with "A" in 1957 and 1980. The letters "I", "O", and "Q" will not be used.

For pending serial numbers contact your local dealer for Hyster lift trucks.

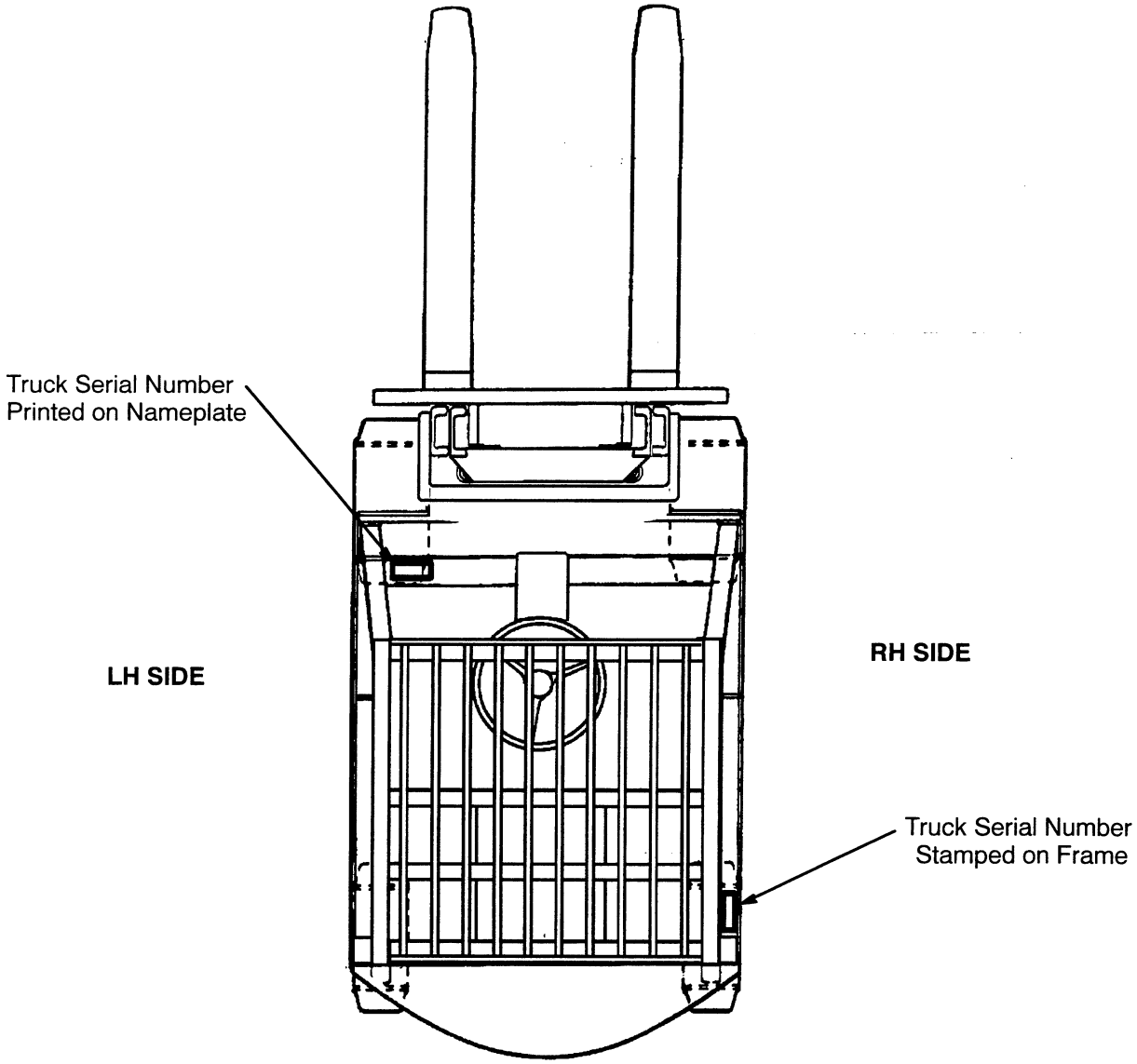

Parts referred to in this book as right or left hand parts are in accordance with the illustration above.

IDENTIFICATION OF MAST SERIAL NUMBERS

X (1) 000 (2) X (3) 0000 (4)
0000 (5)

(1) & (2) The first letter and number indicates the mast model code.

(3) The second letter indicates the plant of manufacture.

(4) The four or five digit number series indicates the serial number of the mast.

(5) Lift Height in Millimeters stamped just below the serial number

Mast Group Identification consists of mast unit code (1) & (2) plus lift height (5).

For pending serial numbers contact your local dealer for Hyster lift trucks.

LIFT EQUIPMENT IDENTIFICATION

1. Fork part number, capacity rating, plant code letter and date of manufacture are stamped approximately six inches below the top of most forks.
2. The carriage group number is stamped on the right hand side of the top crossmember (pin type) or on the back of the right hand end of the bottom crossmember (hook type). A date code has two letters in line with or below the carriage group number.
3. The mast identification number has a model code, a letter indicating the plant of manufacture, and a serial number. Underneath the serial number is a four digit number that indicates the total lift height for the mast in millimeters.
4. Tilt and lift cylinder group numbers are stamped on the cylinder shell.

   Always refer to the group, serial or part number when ordering service parts.

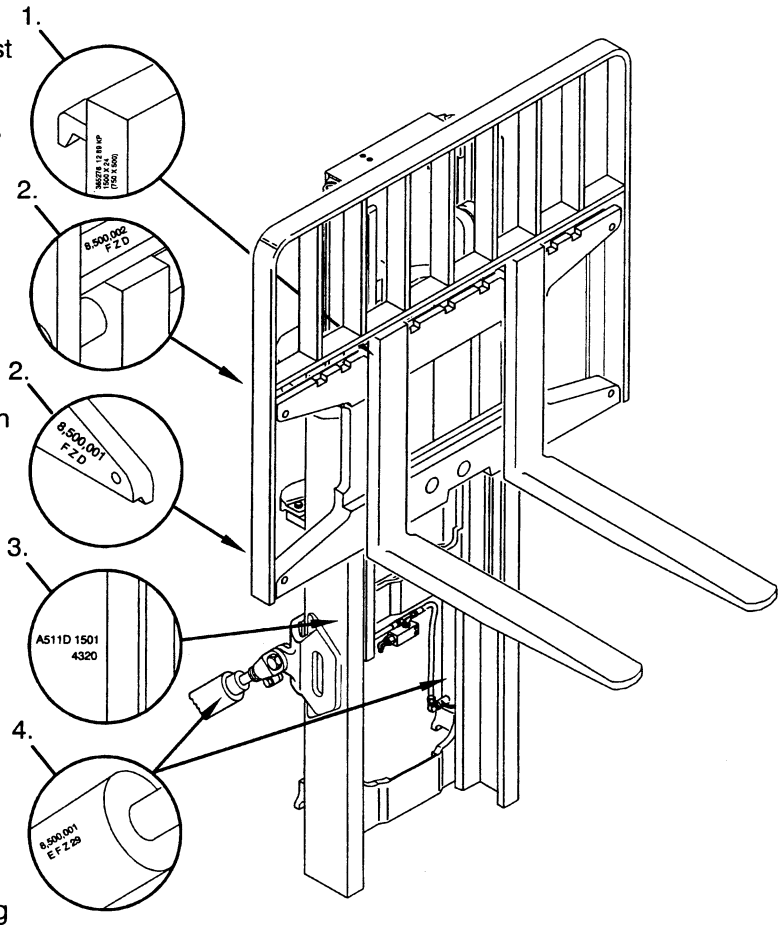

Modification of masts and carriages by SPED (Special Products Engineering Department) are identified by a model prefix code beginning with the letter "S". Contact your dealer for Hyster lift trucks for information on these assemblies.

IDENTIFICATION OF ATTACHMENT AND SIDE-SHIFT CARRIAGE SERIAL NUMBERS

X 000 X 0000
(1) (2) (3) (4)

(1) & (2) The first letter and three numbers indicate the attachment model code.

(3) The second letter indicates the plant of manufacture.

(4) The four or five digit number series indicates the serial number.

For pending serial numbers contact your local dealer for Hyster lift trucks.

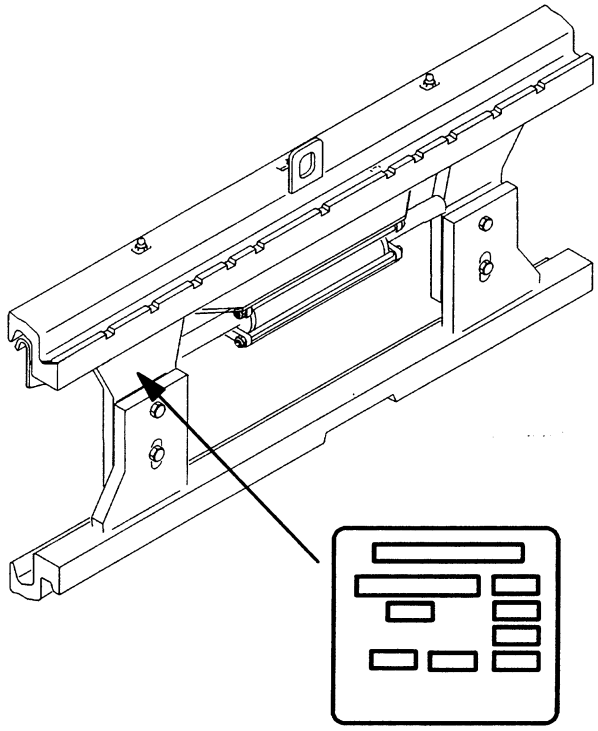

NAMEPLATE

Side-Shift Carriages and Attachments have nameplates. Use the serial number found on the nameplate to identify the attachment.

Always refer to the group, serial or part number when ordering service parts.

Modifications of attachments and side-shift carriages by SPED (Special Products Engineering Department) are identified by a model prefix code beginning with the letter "S". Contact your dealer for Hyster lift trucks for information on these assemblies.

FRAME

COUNTERWEIGHT (Figure 7) ..... Page 13

FLOORPLATES AND FENDERS (Figure 5) ..... Page 10

HOOD (Figure 4) ..... Page 8

LABELS AND PAINT (Figure 8) ..... Page 14

LOAD BACKREST EXTENSION (Figure 9) ..... Page 16

OVERHEAD GUARD (Figure 6) ..... Page 12

SEAT (Figure 3) ..... Page 6

©1999 HYSTER COMPANY

SEAT (FIGURE 3)

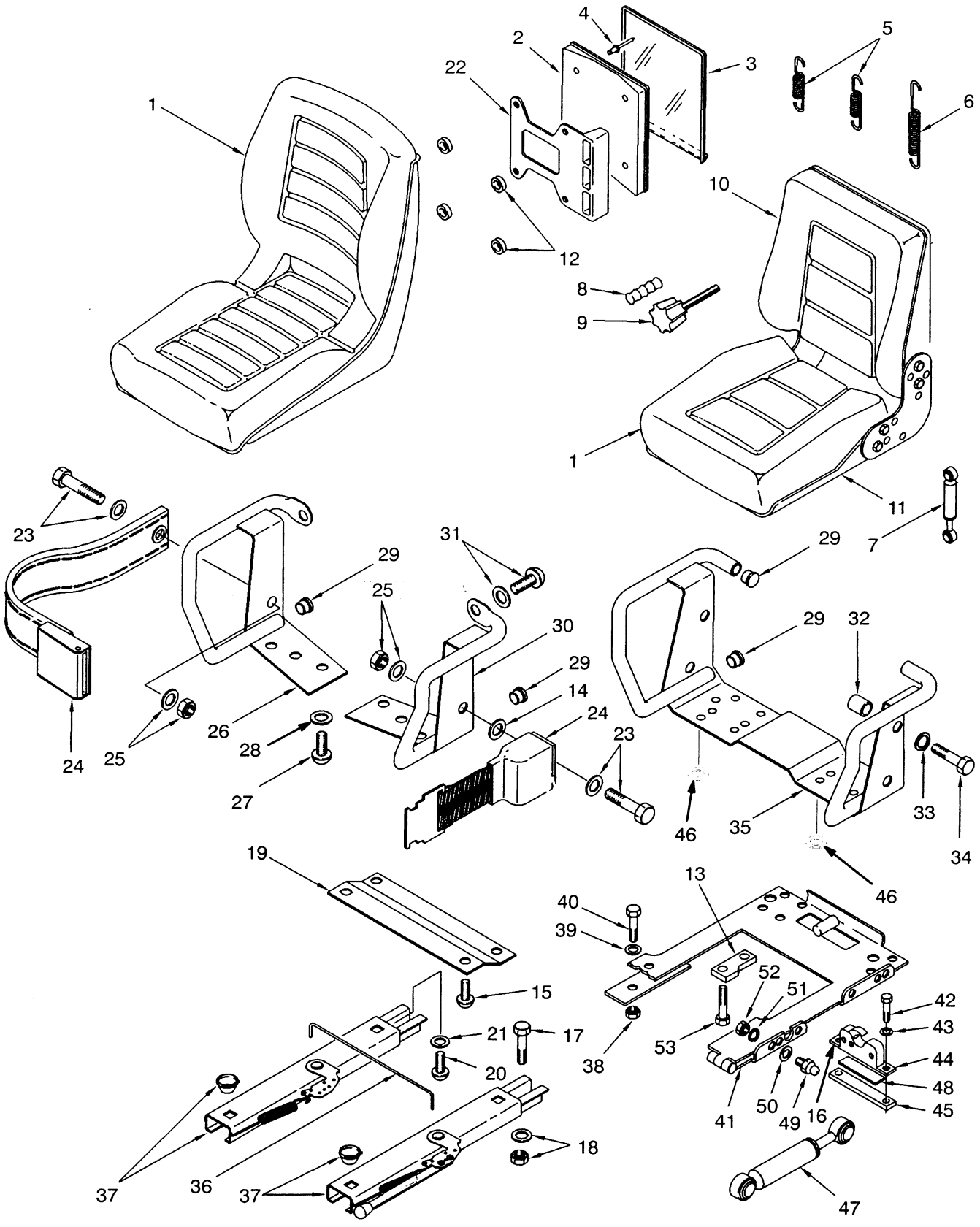

©1999 HYSTER COMPANY

See Service Manual
for service procedures

SEAT

KEY:
A: Standard
B: Suspension

REF	PART NO.	NAME OF PART	QTY A	QTY B
1	364911	Seat	1	..
1	1345826	Seat	..	1
2	335988	Information Base	1	..
2	335989	Information Base	..	1
3	335991	Cover	1	1
4	222029	Rivet	4	..
4	222030	Rivet	..	4
5	326364	Coil Spring	..	2
6	326363	Tension Spring	..	1
7	326978	Shock Absorber	..	1
8	326362	Knob	..	1
9	326365	Adjustment Spindle	..	1
10	326361	Cushion (Back)	..	1
11	326360	Cushion (Seat)	..	1
12	1326337	Spacer	..	4
13	306187	Bumper (LPG)	2	2
14	379182	Spacer (LPG)	4	..
15	18731	Capscrew	4	..
15	18728	Capscrew (LPG)	4	..
15	18727	Capscrew	..	4
16	251099	Adhesive	AR	AR
17	16374	Capscrew	4	4
18	15175	Washer	4	4
18	145639	Locknut	4	4
19	353731	Plate	2	..
20	186261	Capscrew	4	..
21	15155	Washer	4	..
22	381954	Bumper	1	1
23	379199	Capscrew	2	2
23	379697	Washer	2	2
24	1374750	Belt	1	1
25	379697	Washer	2	2
25	379698	Nut	2	2
26	364807	Restraint, RH	1	..
27	18727	Capscrew	4	..
28	18515	Washer	4	..
29	364854	Plug	2	4
30	364808	Restraint, LH	1	..
31	379198	Washer	2	..
32	364848	Spacer	..	2
33	379675	Washer	..	2
34	379674	Capscrew	..	2
35	364847	Restraint	..	1
36	1300107	Rod	1	1
37	335553	Rail, LH (Gas And Diesel)	1	1
37	383116	Rail, LH (LPG)	1	1
37	383116	Rail, RH (Gas And Diesel)	1	1
37	1300108	Rail, RH (LPG)	1	1
38	145639	Locknut	8	8
39	15175	Washer	4	4
40	16836	Capscrew	4	4
41	1314355	Kit-Seat Hinge	1	1
42	221418	Capscrew	4	4
43	15127	Washer	2	2
44	1304957	Latch	1	1
45	1346321	Plate	1	1
46	1334790	Spacer	..	4
47	364976	Gas Spring (LPG)	1	..
47	380320	Gas Spring (LPG)	..	1
48	364940	Shim (LPG)	AR	AR
49	379190	Ball Stud (LPG)	2	2
50	320157	Washer (LPG)	2	2
51	292681	Lockwasher (LPG)	2	2
52	329069	Nut (LPG)	2	2
53	1367837	Screw (LPG)	2	2
54	251099	Adhesive	AR	AR

©1999 HYSTER COMPANY

HOOD (FIGURE 4)

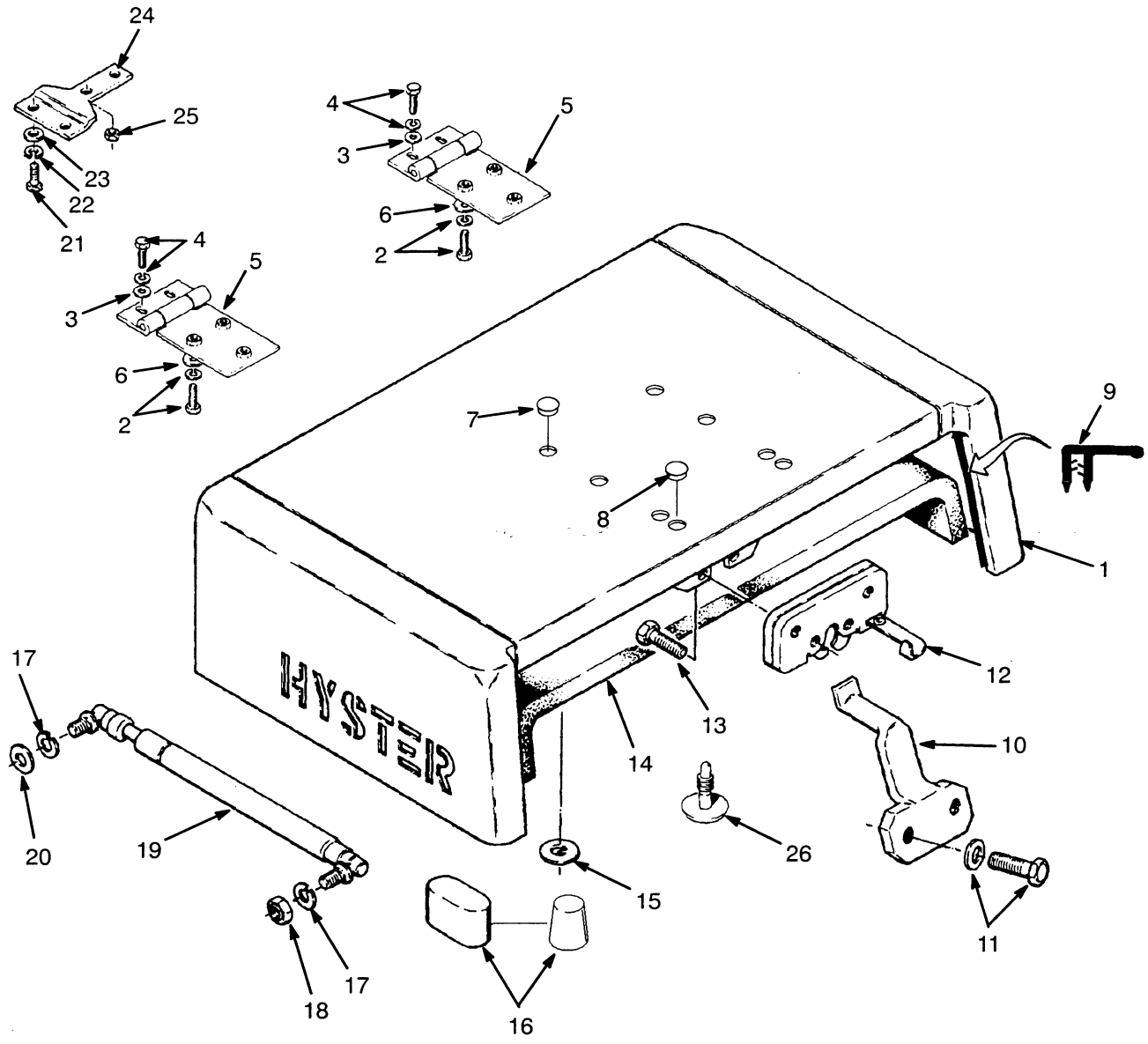

HOOD

REF		PART NO.	NAME OF PART	QTY
1	a	1337441	Hood	1
1	b	1386219	Hood	1
2		292514	Capscrew	6
2		292681	Lockwasher	6
3		320157	Washer	4
4		292681	Lockwasher	4
4		136681	Capscrew	4
5		1331039	Hinge	2
6		1300117	Washer	6
7		1307737	Plug (Gas And Diesel)	4
8		1338175	Plug (LPG)	4
9		353204	Trim	AR
10		364861	Striker	1
11		302334	Capscrew	2
11		320160	Washer	2
12		364857	Latch	1
13		199563	Capscrew	4
14	c	1456791	Hood Liner (With Noise Reduction)	1
14	d	1456792	Hood Liner	1

REF	PART NO.	NAME OF PART	QTY
14	353191	Tape (Per Foot)	AR
15	246788	Washer	13
16	1320610	Bumper	2
17	292681	Lockwasher	2
18	303117	Nut	1
19	353021	Gas Spring	1
20	320157	Washer	2
21	287854	Capscrew	4
22	292682	Lockwasher	4
23	320159	Washer	4
24	1328885	Plate	2
25	239503	Nut	4
26	1304971	Fastener	13

a Last Used On S/N G005A-5162
b First Used On S/N G005A-5163
c With Noise Reduction
d Without Noise Reduction

©1999 HYSTER COMPANY

FLOORPLATES AND FENDERS (FIGURE 5)

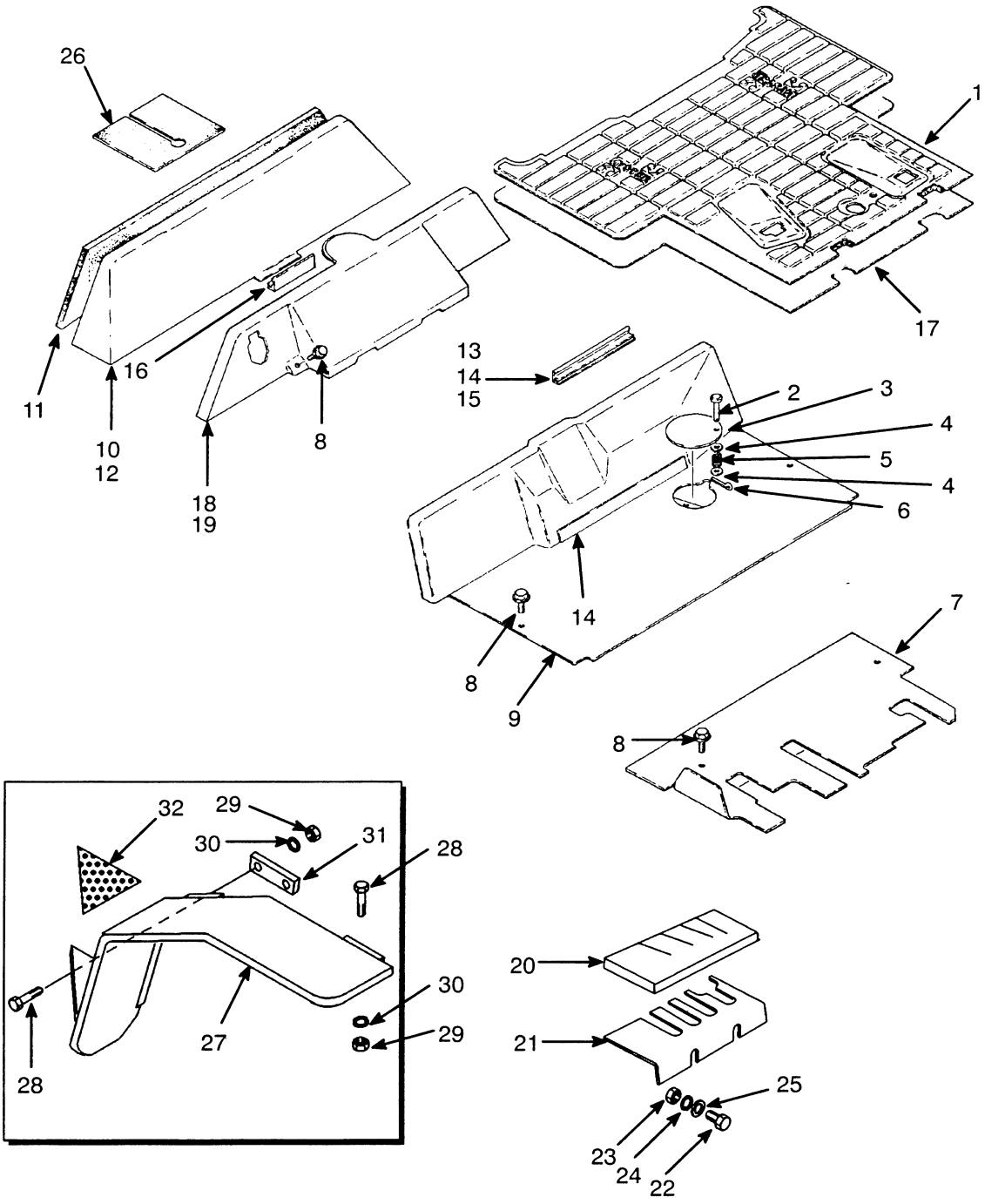

©1999 HYSTER COMPANY

FLOORPLATES AND FENDERS

KEY:
A: Oil Clutch
B: Powershift

REF		PART NO.	NAME OF PART	QTY A	QTY B
1	a	1323399	Floor Mat	1	1
1	a	1358623	Floor Mat	..	1
2		177590	Pin	1	1
3		313815	Plate	1	1
4		320157	Washer	2	2
5		137122	Spring	1	1
6		15212	Pin	1	1
7		1323398	Floorplate	1	..
7		1323397	Floorplate	..	1
8		329067	Screw	6	6
9		1323677	Floorplate	1	1
9		1339809	Liner	1	1
9		246780	Mat, RH	1	1
10	bc	1360160	Cover	1	1
10	ab	1357901	Cover	1	1
10	d	1357900	Cover	1	1
11	bc	1356999	Sound Liner	1	1
11	d	1356998	Sound Liner	1	1
12	b	353185	Cover	1	1
12		246788	Washer	5	5
13		353188	Trim	AR	AR
14		288762	Foam Tape	AR	AR
15		288394	Sealant	AR	AR
16		353204	Trim	AR	AR
17		1339815	Barrier	..	1
18	b	1358624	Cover	1	1
19	b	280644	Button	2	2
20		1300244	Foam	..	1
21		1300245	Bracket (Some Earlier Models)	..	1
22		136749	Capscrew	..	2
23		239503	Nut	..	2
24		292681	Lockwasher	..	2
25		320157	Washer	..	2
26		1339816	Liner	1	1
27	eg	1302390	Fender, RH	1	1
27	eg	1302391	Fender, LH	1	1
27	fg	1302392	Fender, RH	1	1
27	fg	1302393	Fender, LH	1	1
28	g	293647	Capscrew	8	8
29	g	292656	Nut	8	8
30	g	292683	Lockwasher	8	8
31	g	1302398	Plate	2	2
32	g	1303200	Anti-Slip Tread, RH	1	1
32	g	1303201	Anti-Slip Tread, LH	1	1

a Without Noise Reduction
b Overhead Exhaust
c With Noise Reduction
d Counterweight Exhaust
e H70-80XL And H90XLS
f H90-110XL
g Dual Drive Wheels

©1999 HYSTER COMPANY

OVERHEAD GUARD (FIGURE 6)

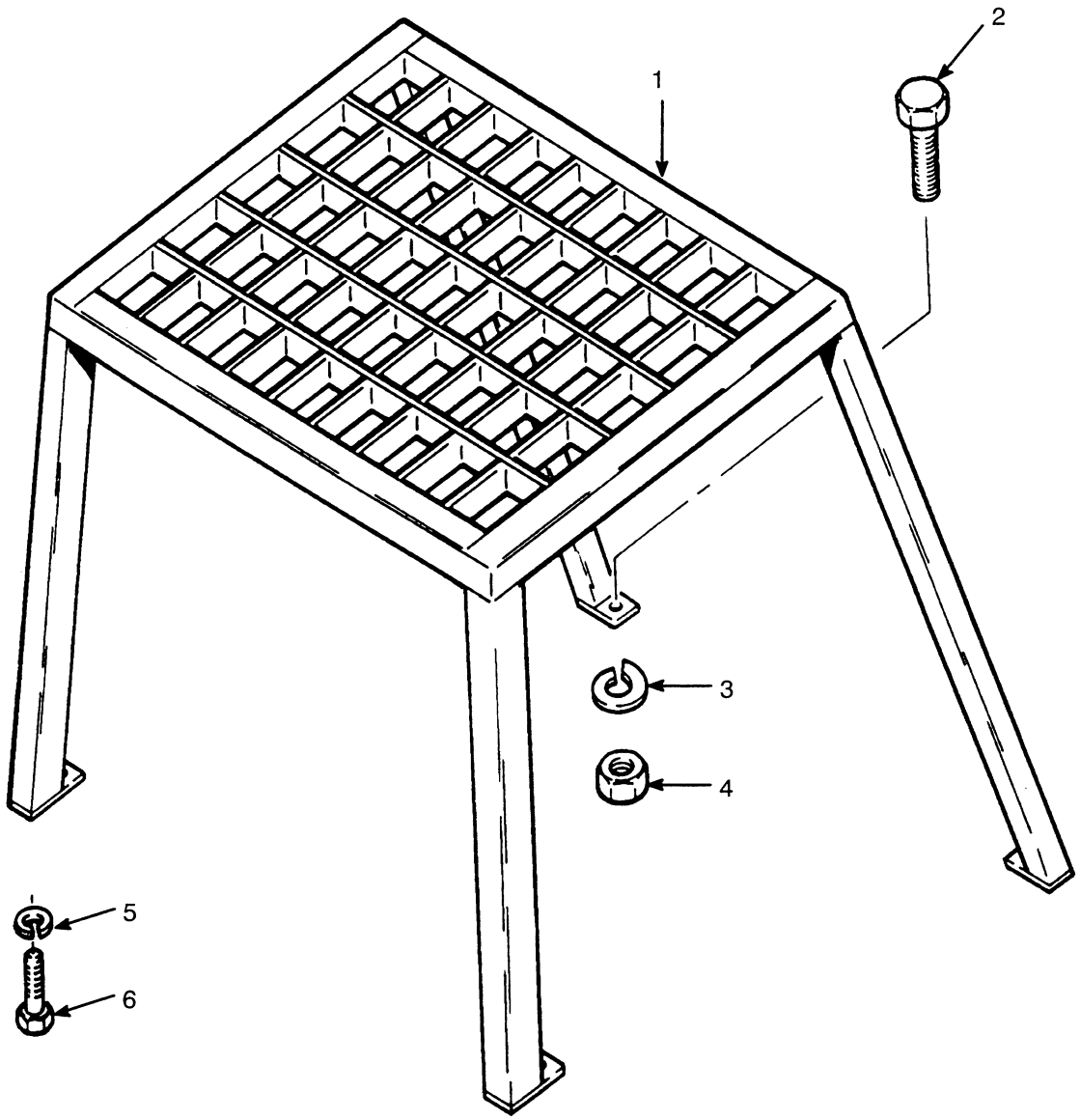

REF	PART NO.	NAME OF PART	QTY
1	1312043	Overhead Guard	1
2	293647	Capscrew	4
3	292683	Lockwasher	4
4	216877	Nut	2
5	292685	Lockwasher	2
6	226458	Capscrew	2

©1999 HYSTER COMPANY

COUNTERWEIGHT (FIGURE 7)

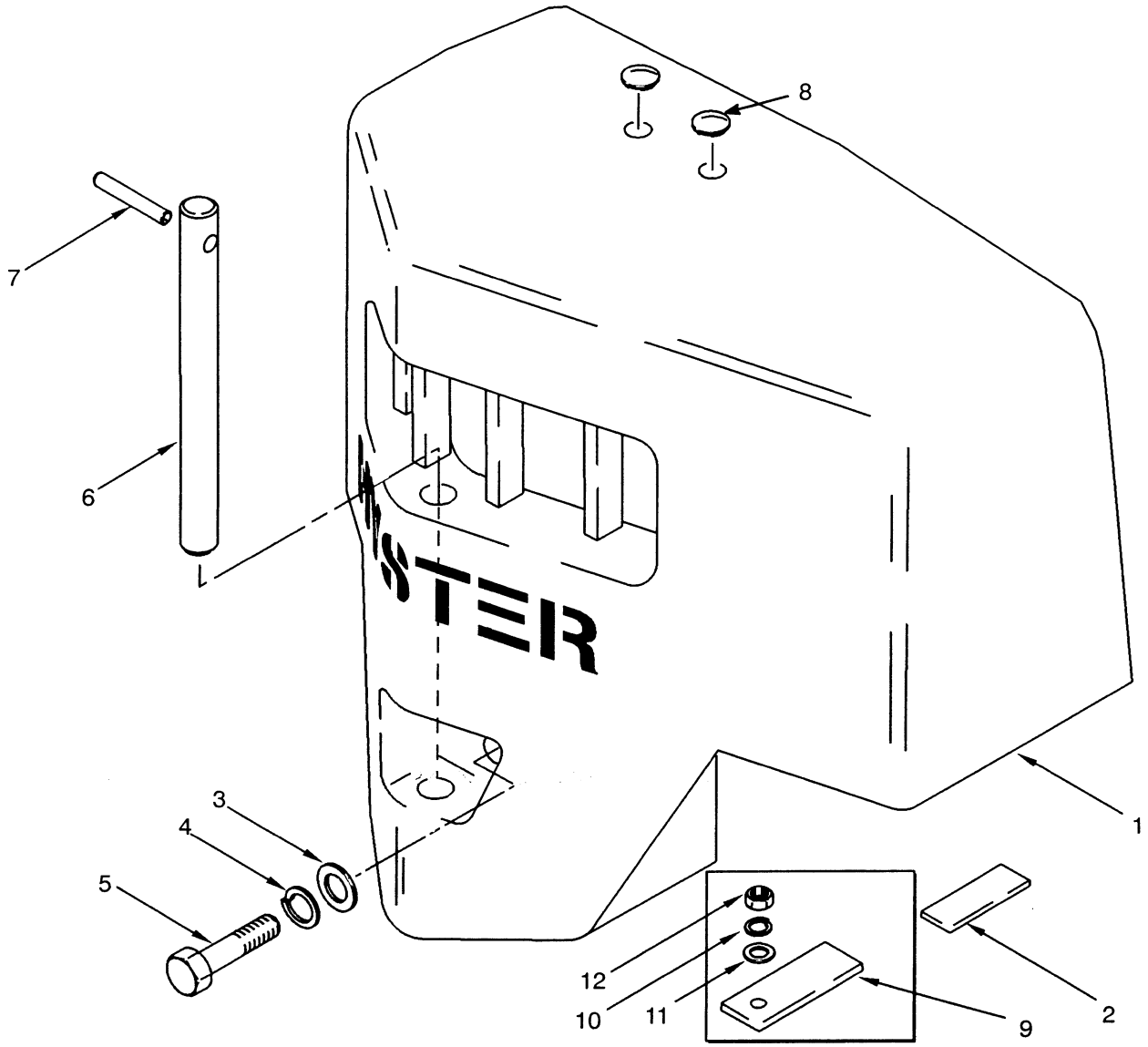

REF		PART NO.	NAME OF PART	QTY
1		1343969	Counterweight (H70XL)	1
1		1343970	Counterweight (H80XL)	1
1		1343971	Counterweight (H90XL)	1
1		1343974	Counterweight (H90XLS)	1
1		1343972	Counterweight (H100XL)	1
1		1343973	Counterweight (H110XL)	1
2	a	352909	Plate	AR
2	a	353191	Tape	AR
3		149531	Washer	1
4		15168	Washer	1
5		17387	Capscrew (H70, 80XL)	1

REF		PART NO.	NAME OF PART	QTY
5		141596	Bolt (H90-110XL, 90XLS)	1
6		302492	Pin	1
7		387473	Pin	1
8		1337734	Plug	2
9	b	1383792	Shim	AR
10	b	292681	Lockwasher	2
11	b	320158	Washer	2
12	b	292654	Nut	2

a Last Used On S/N G5D-9851
b First Used On S/N G5D-9852

©1999 HYSTER COMPANY

LABELS AND PAINT (FIGURE 8)

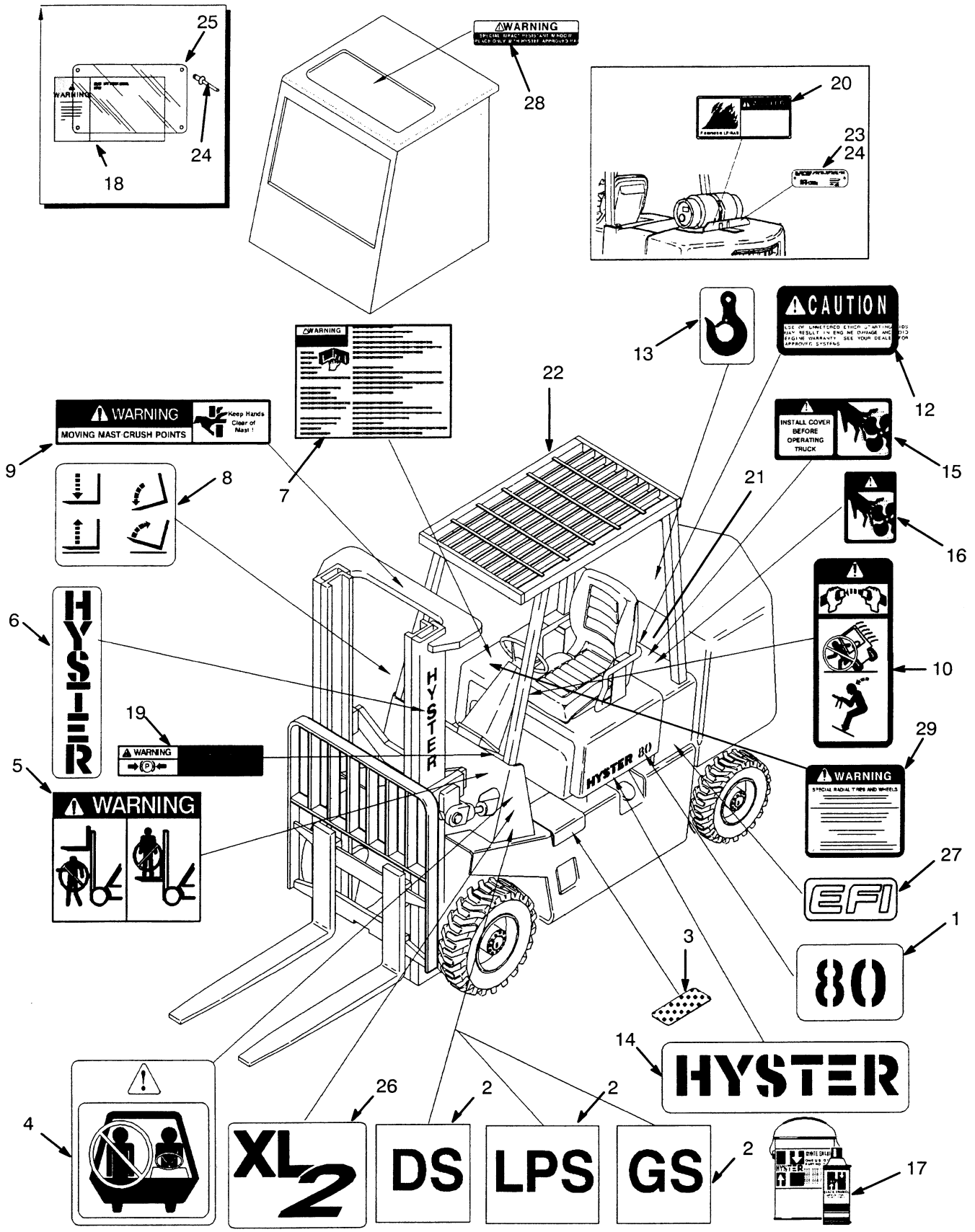

LABELS AND PAINT

REF	PART NO.	NAME OF PART	QTY
1	380325	Label-Model 70	2
1	380326	Label-Model 80	2
1	380327	Label-Model 90	2
1	380328	Label-Model 100	2
1	380329	Label-Model 110	2
2	154067	Label-DS	2
2	154066	Label-LPS	2
2	154065	Label-GS	2
3	1319860	Tread-Slip Resistant	2
4	1330920	Label-No Riders	2
5	1338178	Label-Mast Warning	2
6	1344132	Label-Hyster	2
6	1345836	Label-Hyster (Optional)	2
7	1336605	Label-Operator Warning	1
8	369573	Label-Lift/Tilt	1
9	1330919	Label-Mast Warning	1
10	1330917	Label-Tipover Warning	2
11	....	Label-Auxiliary (See Chart)	AR
12	2034459	Label-Ether Warning	1
13	316448	Label-Lift Eye	3
14	1325273	Label-Hyster	2
15	1325271	Label-Fan	1
16	1345939	Label-Fan	1
17	1345809	Paint-Nugget Yellow (Spray)	AR
17	1345808	Paint-Nugget Yellow (1 Gal)	AR
17	1344901	Paint-Low Gloss Black (Spray)	AR
17	1344902	Paint-Low Gloss Black (1 Gal)	AR
17	316844	Paint-Red Spray	AR
17	328626	Paint-Hi-Temp. Black (Spray)	AR
17	1346270	Paint-Black Powder (Spray)	AR
18	....	Nameplate (Contact Dealer)	1
19	1335146	Label-Park Brake	1
20	8504324	Label-LPG Flammability	1
21	1354165	Label-Antifreeze	1
22	1339844	Plate-Impact Test	1
23	329029	Label-LPG Tank Ident	1
24	170658	Rivet	4
25	389694	Cover	1
26	1346853	Label-XL2	2
26	1359706	Label-XL2 (Optional For Black Cab)	2
27	1345998	Label-EFI	2
28 [a]	1308050	Label-Impact Resistant	1
29	1374549	Label-Radial Tire Warning	1

[a] With Cab

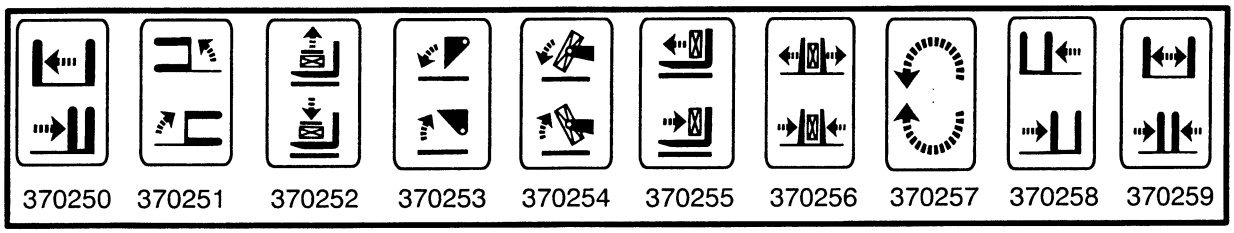

©1999 HYSTER COMPANY

LOAD BACKREST EXTENSION (FIGURE 9)

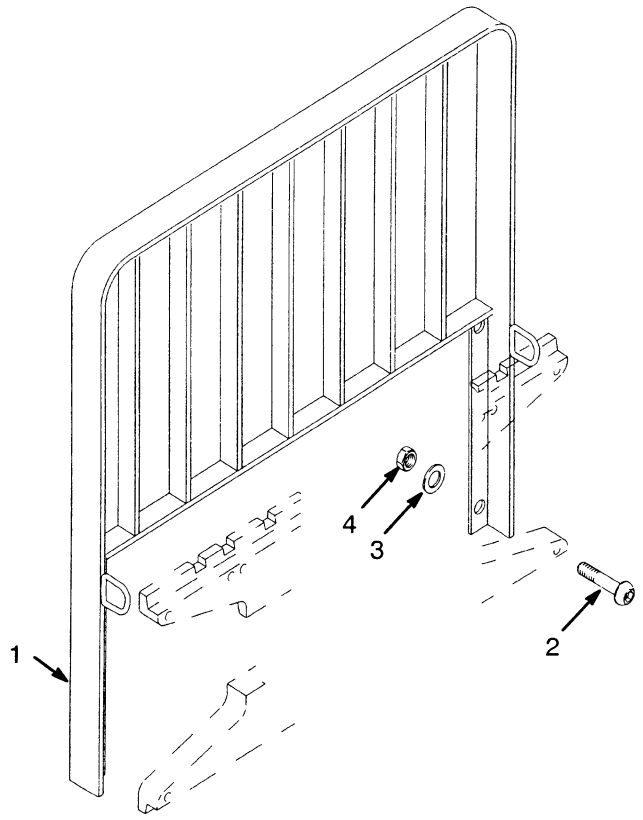

REF-NO	PART	HOOK TYPE FORKS				PIN TYPE FORKS	
		Model	Standard	Polished, Full-Bottom Tapered	QTY	Standard	QTY
1	Extension 42 in 42 in	 70-80XL 90-120XL	 1338645 327439	1345267	 1 1	.....	.....
	Extension 48 in 48 in	 70-80XL 90-120XL	 1365778 294295	1376365	1	 66487A 66487A	 1 1
	Extension 54 in	70-80XL	1370641	1376360	1	.....	.....
	Extension 60 in 60 in	 70-80XL 90-120XL	 1376358 312430	1376359	1	.....	.....
	Extension 62 in	.....	.....	.....	.....	[b] 207016	1
2	Capscrew	.....	1354923	1354923	4	1354923	1
3	Washer	....	221771 [a] 296423	221771 [a] 296423	4	221771 [a] 296423	1
4	Nut	.....	300937	300937	4	300937	1

[a] Optional

[b] Not Available on Three-Stage Full Free Lift Mast

©1999 HYSTER COMPANY

ENGINE

CAMSHAFT & OIL PAN (Figure 30)
GASOLINE & LPG
5LM 1995 SERIES ENGINE ..... Page 60

CAMSHAFT AND CRANKSHAFT (Figure 17)
GASOLINE & LPG
2KM 1992 SERIES ENGINE ..... Page 34

CAMSHAFT AND CRANKSHAFT (Figure 21)
GASOLINE & LPG
3KM 1993 SERIES ENGINE ..... Page 42

CAMSHAFT AND OIL PAN (Figure 38)
GASOLINE AND LPG
2000 series engine ..... Page 76

CAMSHAFT AND OIL PAN (Figure 26)
GASOLINE & LPG
4LM 1994 SERIES ENGINE ..... Page 52

CAMSHAFT AND OIL SUMP (Figure 37)
GASOLINE AND LPG ..... Page 74

COOLANT PUMP (Figure 49)
DIESEL (WITHOUT LOW EMISSIONS)
LAST USED ON S/N G005D-11942 ..... Page 98

COOLANT PUMP (Figure 57)
DIESEL (WITH LOW EMISSIONS)
FIRST USED ON S/N G005D-11942,
LAST USED ON ENGINE S/N U892125D ..... Page 114

COOLING SYSTEM (Figure 12)
GASOLINE AND LPG ..... Page 24

COOLING SYSTEM (Figure 40)
DIESEL ..... Page 80

CRANKSHAFT AND PISTONS (Figure 43)
DIESEL (WITHOUT LOW EMISSIONS)
LAST USED ON S/N G005D-11942 ..... Page 86

CRANKSHAFT AND PISTONS (Figure 52)
DIESEL (WITH LOW EMISSIONS)
FIRST USED ON S/N G005D-11942 ..... Page 104

CYLINDER BLOCK (Figure 15)
GASOLINE & LPG
2KM 1992 SERIES ENGINE ..... Page 30

©1999 HYSTER COMPANY

ENGINE (Continued)

CYLINDER BLOCK (Figure 19)
GASOLINE & LPG
3KM 1993 SERIES ENGINE ..... Page 38

CYLINDER BLOCK (Figure 23)
GASOLINE & LPG
4LM 1994 SERIES ENGINE ..... Page 46

CYLINDER BLOCK (Figure 27)
GASOLINE & LPG
5LM 1995 SERIES ENGINE ..... Page 54

CYLINDER BLOCK (Figure 31)
GASOLINE AND LPG ..... Page 62

CYLINDER BLOCK (Figure 32)
GASOLINE AND LPG
2000 series engine ..... Page 64

CYLINDER BLOCK (Figure 41)
DIESEL (WITHOUT LOW EMISSIONS)
LAST USED ON S/N G005D-11942 ..... Page 82

CYLINDER BLOCK (Figure 50)
DIESEL (WITH LOW EMISSIONS)
FIRST USED ON S/N G005D-11942 ..... Page 100

CYLINDER HEAD (Figure 16)
GASOLINE & LPG
2KM 1992 SERIES ENGINE ..... Page 32

CYLINDER HEAD (Figure 20)
GASOLINE & LPG
3KM 1993 SERIES ENGINE ..... Page 40

CYLINDER HEAD (Figure 24)
GASOLINE & LPG
4LM 1994 SERIES ENGINE ..... Page 49

CYLINDER HEAD (Figure 28)
GASOLINE & LPG
5LM 1995 SERIES ENGINE ..... Page 56

CYLINDER HEAD (Figure 33)
GASOLINE AND LPG ..... Page 66

CYLINDER HEAD (Figure 34)
GASOLINE AND LPG
2000 SERIES ENGINE ..... Page 68

©1999 HYSTER COMPANY

ENGINE (Continued)

CYLINDER HEAD (Figure 42)
DIESEL (WITHOUT LOW EMISSIONS)
LAST USED ON S/N G005D-11942 ..... Page 84

CYLINDER HEAD (Figure 51)
DIESEL (WITH LOW EMISSIONS)
FIRST USED ON S/N G005D-11942 ..... Page 102

ENGINE MOUNTS (Figure 10) ..... Page 21

EXHAUST (Figure 59) ..... Page 118

FLYWHEEL HOUSING (Figure 11) ..... Page 22

MANIFOLDS (Figure 48)
DIESEL (WITHOUT LOW EMISSIONS)
LAST USED ON S/N G005D-11942 ..... Page 96

MANIFOLDS (Figure 56)
DIESEL (WITH LOW EMISSIONS)
FIRST USED ON S/N G005D-11942 ..... Page 112

OIL FILTER (Figure 44)
DIESEL ..... Page 88

OIL PAN AND PUMP (Figure 46)
DIESEL (WITHOUT LOW EMISSIONS)
LAST USED ON S/N G005D-11942 ..... Page 92

OIL PAN AND PUMP (Figure 54)
DIESEL (WITH LOW EMISSIONS)
FIRST USED ON S/N G005D-11942 ..... Page 108

OIL PUMP (Figure 18)
GASOLINE & LPG
2KM 1992 SERIES ENGINE ..... Page 36

OIL PUMP (Figure 22)
GASOLINE & LPG
3KM 1993 SERIES ENGINE ..... Page 44

OIL PUMP (Figure 39)
GASOLINE & LPG
4LM 1994, 5LM 1995, 1996 THRU 2000 SERIES ENGINE ..... Page 78

SERPENTINE BELT DRIVE (Figure 13)
GASOLINE AND LPG
USED ON S/N G005D-4578 THRU G005D-7759
(INCLUDING S/N 7830-7832, 7834-7837,7840, AND 7841)
EXCEPT S/N G005D-7710 ..... Page 26

©1999 HYSTER COMPANY

ENGINE (Continued)

SERPENTINE BELT DRIVE (Figure 14)
GASOLINE AND LPG
FIRST USED ON S/N G005D-7760
(EXCEPT S/N 7830-7832, 7834-7837, 7840, AND 7841)
AND INCLUDES S/N G005D-7710 ..... Page 28

TIMING GEAR (Figure 45)
DIESEL (WITHOUT LOW EMISSIONS)
LAST USED ON S/N G005D-11942 ..... Page 90

TIMING GEAR (Figure 53)
DIESEL (WITH LOW EMISSIONS)
FIRST USED ON S/N G005D-11942 ..... Page 106

VALVE COVER AND INLET MANIFOLD (Figure 36)
GASOLINE AND LPG
2000 series engine ..... Page 72

VALVE COVER AND INTAKE MANIFOLD (Figure 25)
GASOLINE & LPG
4LM 1994 SERIES ENGINE ..... Page 50

VALVE COVER AND ROCKER SHAFT (Figure 47)
DIESEL (WITHOUT LOW EMISSIONS)
LAST USED ON S/N G005D-11942 ..... Page 94

VALVE COVER AND ROCKER SHAFT (Figure 55)
DIESEL (WITH LOW EMISSIONS)
FIRST USED ON S/N G005D-11942 ..... Page 110

VALVE COVER (Figure 35)
AND INLET MANIFOLD
GASOLINE AND LPG ..... Page 70

VALVE COVERS & INLET MANIFOLD (Figure 29)
GASOLINE & LPG
5LM 1995 SERIES ENGINE ..... Page 58

WATER PUMP (Figure 58)
DIESEL (WITH LOW EMISSIONS)
FIRST USED ON ENGINE S/N U892126D ..... Page 116

©1999 HYSTER COMPANY

ENGINE MOUNTS (FIGURE 10)

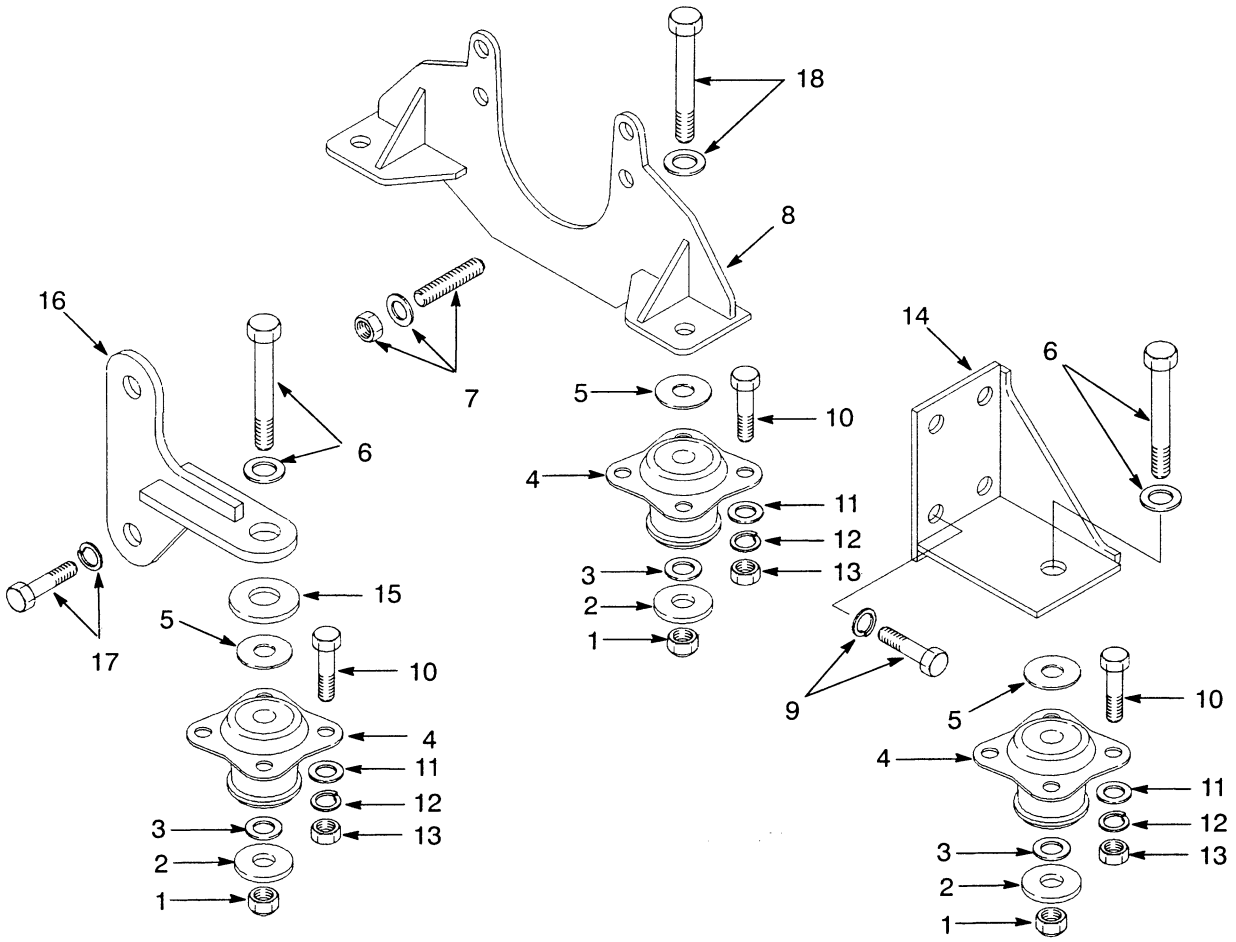

KEY:
A: Gasoline/LPG
B: Diesel

REF		PART NO.	NAME OF PART	QTY A	QTY B
1		300937	Nut	4	4
2		370263	Washer	4	4
3		320161	Washer	4	4
4	c	353005	Mount	4	4
4	d	1388597	Mount	4	4
5	c	353006	Washer	4	4
5	d	2021238	Washer	6	6
6		292540	Capscrew	2	2
6		300932	Washer	2	2
7		372006	Stud	4	..
7		226414	Adhesive	AR	AR
7		221767	Washer	4	..
7		139743	Locknut	4	..
8	a	1315428	Bracket	1	..
8	b	1383350	Bracket	1	..
9		292527	Capscrew	..	8
9		292683	Washer	..	8
9		313022	Sealant	AR	AR

REF	PART NO.	NAME OF PART	QTY A	QTY B
10	221500	Capscrew	8	8
11	221767	Washer	8	8
12	292682	Lockwasher	8	8
13	221708	Nut	8	8
14	377354	Bracket	..	2
15	340796	Washer	AR	AR
16	1302248	Bracket	2	2
17	292560	Capscrew	4	4
17	292685	Lockwasher	4	4
18	292539	Capscrew	2	2
18	300932	Washer	2	2

a Last Used On S/N G005D-7759 (Including S/N 7830-7832, 7834-7837, 7840 And 7841) Except S/N G005D-7710

b First Used On S/N G005D-7760 (Except For S/N7830-7832, 7834-7837, 7840 And 7841) And Includes S/N G005D-7710

c Last Used On S/N G005D-9539

d First Used On S/N G005D-9540

©1999 HYSTER COMPANY

FLYWHEEL HOUSING (FIGURE 11)

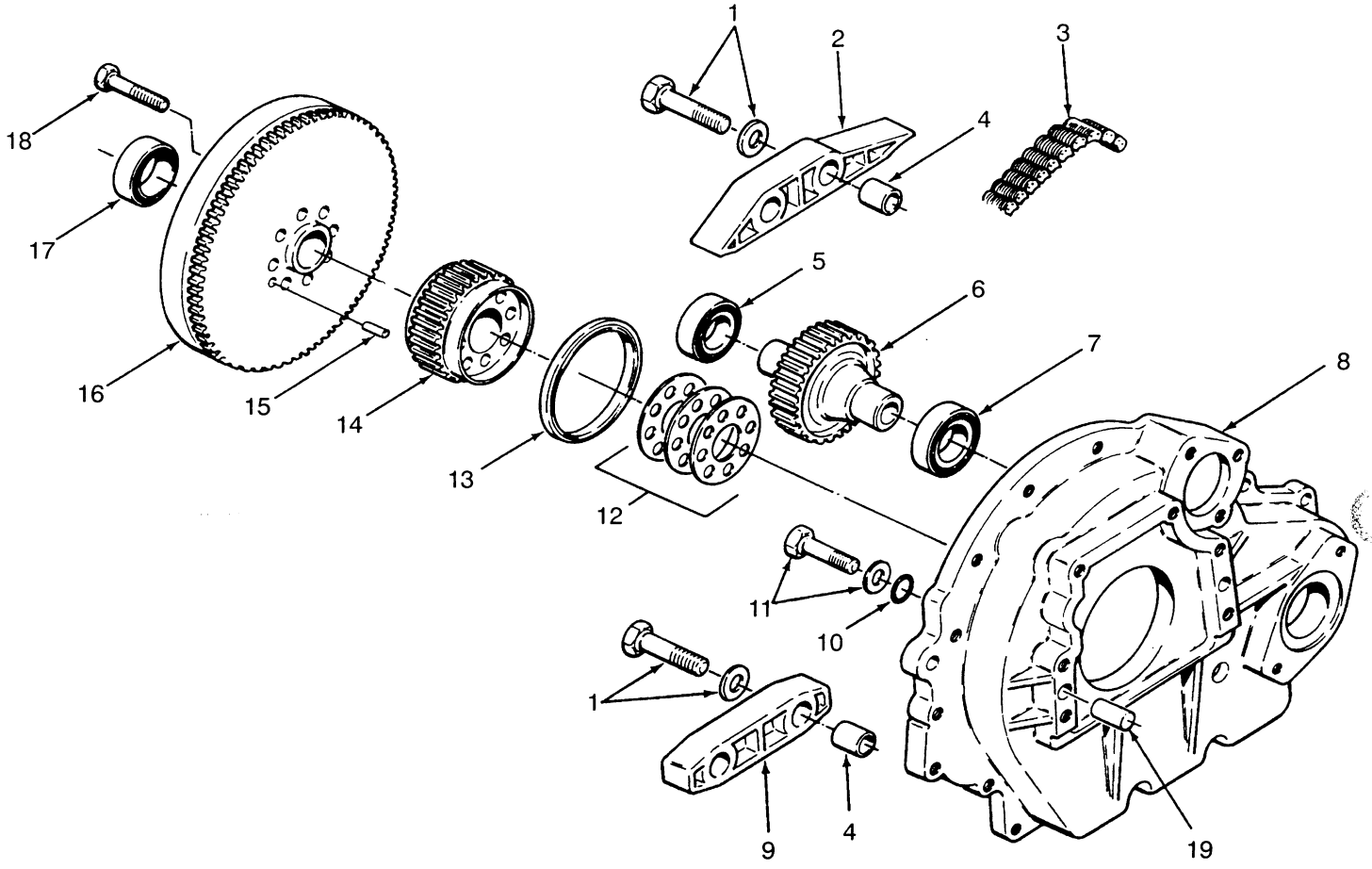

©1999 HYSTER COMPANY

FLYWHEEL HOUSING

KEY:
A: Gasoline/LPG
B: Diesel

REF	PART NO.	NAME OF PART	QTY A	QTY B
1	176640	Capscrew	4	4
1	320157	Washer	4	4
2	245262	Snubber (Top)	1	1
3	259660	Chain	1	1
4	344992	Spacer	4	4
5	43206	Bearing	1	..
5	128470	Bearing	..	1
6	344984	Sprocket	1	1
7	41207	Bearing	1	1
8	373081	Housing	1	..
8	1383224	Housing (Optional)	1	..
8	370699	Housing	..	1
9	344991	Snubber	1	1
10	184924	O-Ring	6	6
11	221506	Capscrew	6	..
11	293634	Capscrew	..	6
11	261379	Washer	6	..
11	221767	Washer	..	6
12	373086	Shim (0.005 in)	AR	..
12	373087	Shim (007 in)	AR	..
12	373088	Shim (0.020 in)	AR	..
12	193212	Shim (0.005 in)	..	AR
12	193213	Shim (007 in)	..	AR
12	193214	Shim (0.020 in)	..	AR
13	373105	Seal	1	..
13	355521	Seal	..	1
14	373083	Sprocket	1	..
14	344982	Sprocket	..	1
15	222727	Dowel Pin	1	..
16	350151	Flywheel (Oil Clutch)	1	..
16 c	1352282	Flywheel (Powershift) (2200 RPM)	1	..
16 e	1459401	Flywheel (Powershift) (2200 RPM)	1	..
16 c	350152	Flywheel (Powershift) (2500 RPM)	1	..
16 e	1459400	Flywheel (Powershift) (2500 RPM)	1	..
16 a	352476	Flywheel (Oil Clutch)	..	1
16 b	1454602	Flywheel (Oil Clutch)	..	1
16	1352285	Flywheel (Powershift) (2200) RPM)	..	1
16 a	344357	Flywheel (Powershift) (2500) RPM)	..	1
16 a	1454600	Flywheel (Powershift) (2500) RPM)	..	1
16	195856	Ring Gear	1	1
17	43205	Ball Bearing (Powershift)	1	1
18	344993	Bolt	6	..
18	193219	Bolt	..	6
19	186420	Dowel Pin	..	2

a Last Used On S/N G005D-11495
b First Used On S/N G005D-11496
c Last Used On S/N G005D-12988
e First Used On S/N G005D-12989

©1999 HYSTER COMPANY

COOLING SYSTEM (FIGURE 12)

GASOLINE AND LPG

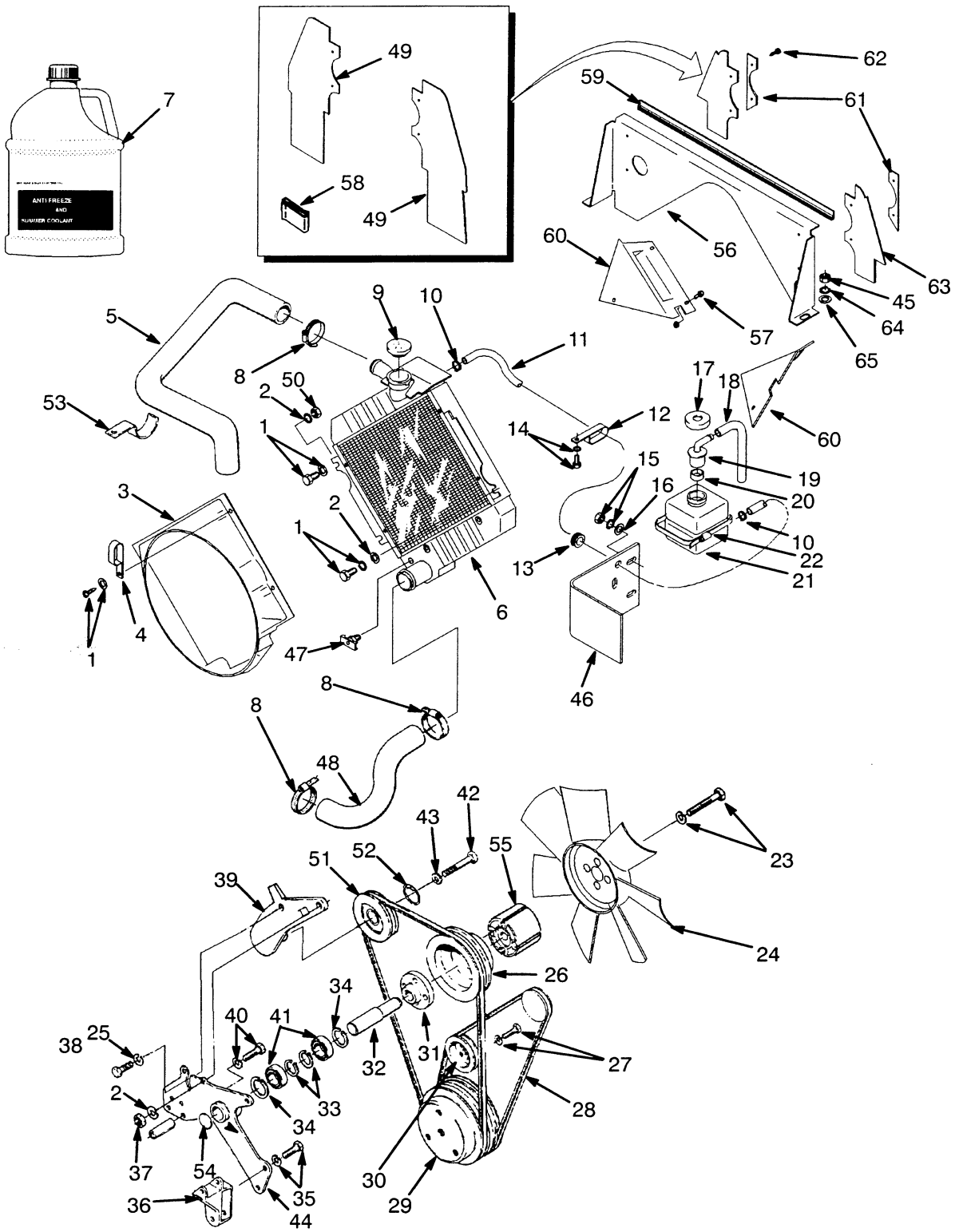

COOLING SYSTEM

GASOLINE AND LPG

REF		PART NO.	NAME OF PART	QTY
1		136985	Capscrew	3
1		292682	Lockwasher	3
2		320159	Washer	4
3		1343926	Shroud	1
3		1343962	Shroud (Metal, Optional)	1
4		128259	Clamp (Some Early Models)	1
5		1360152	Hose	1
6	h	1387260	Radiator	1
6	j	1452142	Radiator	1
7		3002338	Anti-Freeze, 1 Gallon	AR
8		119236	Clamp	4
9		178899	Radiator Cap	1
10		353310	Clamp	2
11		1305436	Tube	1
12		124297	Clamp	1
13		279737	Grommet	1
14		16073	Capscrew	3
14		15127	Lockwasher	3
15		239503	Nut	2
15		292681	Lockwasher	2
16		320158	Washer	2
17		345454	Cap	1
18		339735	Hose	1
19		345453	Outlet	1
20		336550	Bushing	1
21		344432	Reservoir	1
22		340204	Strap	1
23		136750	Capscrew	4
23		292681	Lockwasher	4
24	e	1356963	Fan (Pusher)	1
25		292682	Washer	2
26	e	1356962	Pulley	1
27		16818	Capscrew	4
27		292681	Lockwasher	4
28	e	353393	V-Belt	2
29	e	350070	Pulley	1
30	e	373121	Pulley	1
31	e	1356964	Spacer	1
32	e	374034	Shaft	1
32		257291	Adhesive	AR
33	e	160996	Snap Ring	2
34		12928	Snap Ring	2
35		18547	Capscrew	2
35		15156	Lockwasher	2
36	e	344351	Mount	1
37		15056	Nut	3
38		18549	Capscrew	1
39	eg	1359100	Bracket	1
40		18542	Capscrew	3
40		15156	Washer	1
41		128469	Ball Bearing	2
42		16828	Capscrew	1
42		15156	Lockwasher	1
43		15134	Washer	1
44	e	1328888	Bracket	1
45	bc	239503	Nut	6
46		352609	Bracket	1
47		12815	Drain Valve	1
48	e	352490	Hose	1
48	f	1380854	Hose	1
49		1358603	Seal (Optional)	2
49	c	1343937	Seal	2
50		136692	Nut	2
51	eg	1359103	Idler Assembly	1
51		1359102	Idler Pulley	1
51		3002793	Bearing	1
51		12928	Snap Ring	2
52	g	54123	Snap Ring	2
53		1305166	Clamp	1
54		1305150	Plug	1
55	e	1356961	Extension	1
56	d	1339820	Baffle	1
57		1301177	Screw	1
58		1343927	Clip	2
58		1329271	Clip (For Optional Shroud)	2
59		1343320	Trim	1
60	bc	1343300	Baffle, LH	1
60	bc	1343301	Baffle, RH	1
61		1357930	Retainer	4
62		1301177	Screw	4
63	a	1358604	Radiator Seal	2
64	bc	292681	Lockwasher	6
65	bc	320159	Washer	6

a H90-110XL
b H90XLS
c H70-80XL
d Without Noise Reduction
e Last Used On S/N G005D-4577 (☞ Figure 13)
f First Used On S/N G005D-4578
g Included in Idler Pulley Kit 1359104
h Last Used On S/N G005D-10472
j First Used On S/N G005D-10473

©1999 HYSTER COMPANY

SERPENTINE BELT DRIVE (FIGURE 13)

GASOLINE AND LPG

USED ON S/N G005D-4578 THRU G005D-7759

(INCLUDING S/N 7830-7832, 7834-7837,7840, AND 7841) EXCEPT S/N G005D-7710

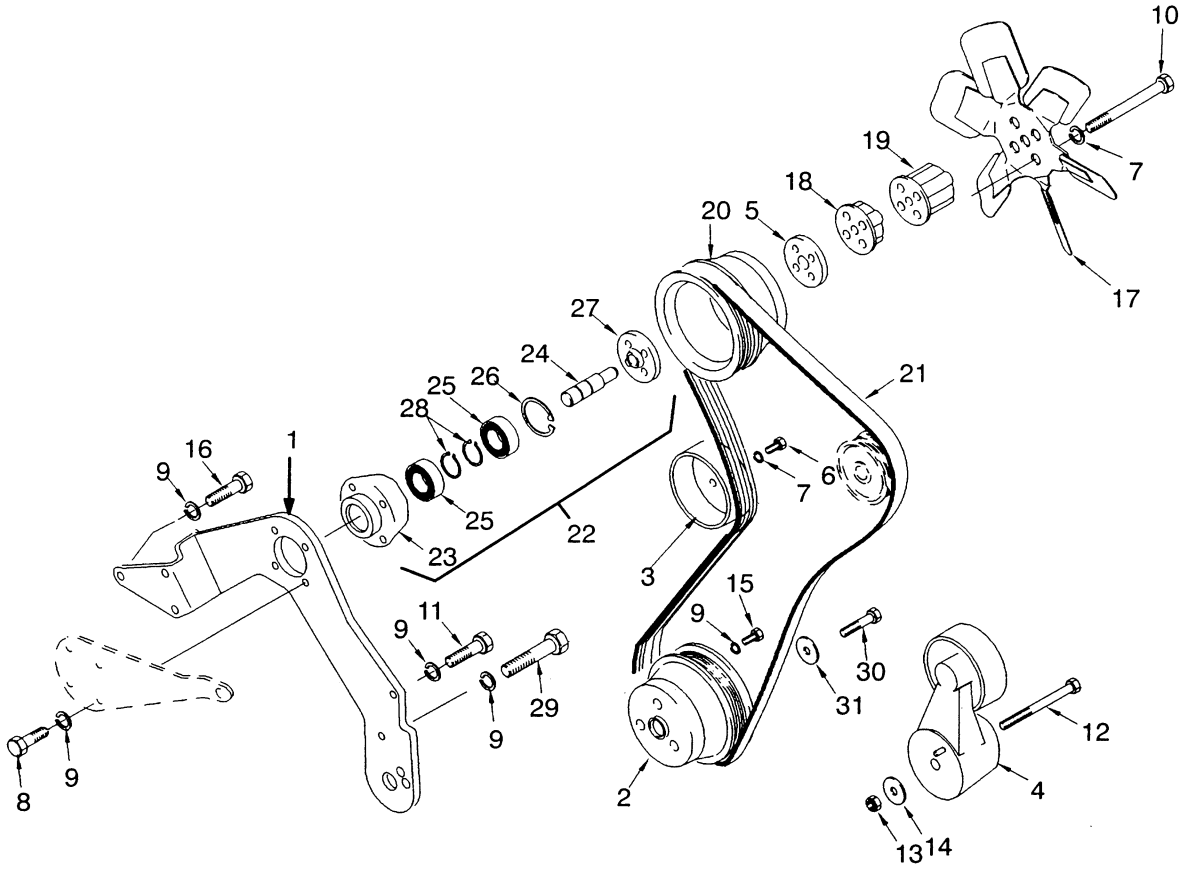

REF		PART NO.	NAME OF PART	QTY
1		1377741	Bracket	1
2		1377750	Pulley	1
3		1377735	Pulley (Water Pump)	1
4		1377752	Tensioner	1
5		1377736	Spacer	1
6		136681	Capscrew	4
7		292681	Lockwasher	8
8		287860	Capscrew	4
9		292682	Lockwasher	12
10		18525	Capscrew	4
11		18547	Capscrew	1
12		292524	Capscrew	1
13		316826	Nut	1
14		1377774	Washer	1
15		16634	Capscrew	3
16		16805	Capscrew	3
17	a	1374774	Fan	1
17	b	1454560	Fan	1

REF	PART NO.	NAME OF PART	QTY
18	1377781	Spacer (Fan)	1
19	1377791	Spacer (Fan)	1
20	1377762	Pulley	1
21	1377755	Belt	1
22	....	Fan Mount Assy	1
23	1377745	Hub	1
24	1377749	Shaft	1
25	128469	Bearing	2
26	12928	Snap Ring	1
27	172885	Spacer	1
27	257291	Adhesive	AR
28	131357	Snap Ring	2
28	160996	Snap Ring (Optional)	2
29	18549	Capscrew	1
30	221544	Capscrew	1
31	1305165	Washer	1

a Last Used On S/N G005D-11448

b First Used On S/N G005D-11449

©1999 HYSTER COMPANY

NOTE

©1999 HYSTER COMPANY

SERPENTINE BELT DRIVE (FIGURE 14)

GASOLINE AND LPG

FIRST USED ON S/N G005D-7760 (EXCEPT S/N 7830-7832, 7834-7837, 7840, AND 7841) AND INCLUDES S/N G005D-7710

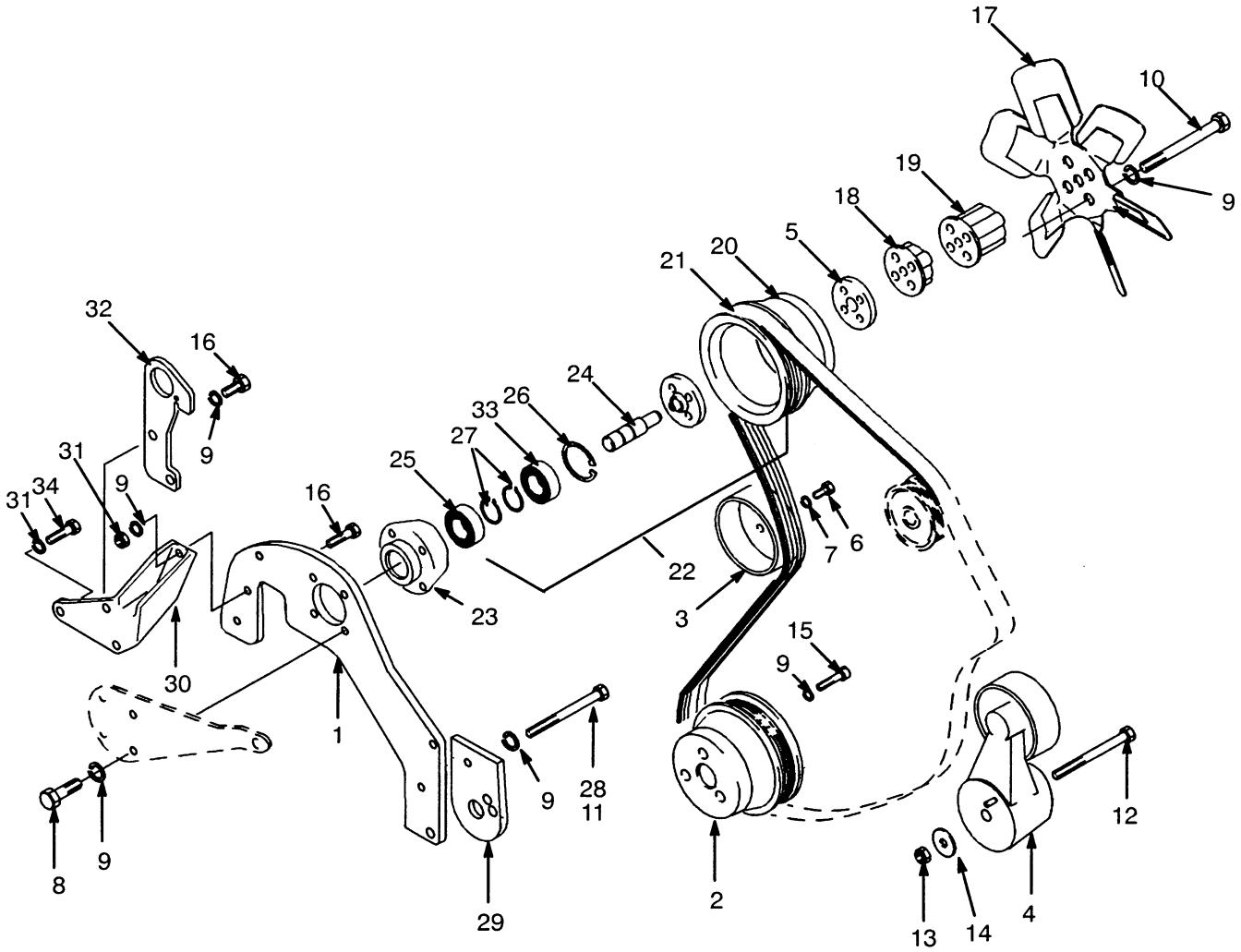

©1999 HYSTER COMPANY

SERPENTINE BELT DRIVE

GASOLINE AND LPG

FIRST USED ON S/N G005D-7760 (EXCEPT S/N 7830-7832, 7834-7837, 7840, AND 7841) AND INCLUDES S/N G005D-7710

REF		PART NO.	NAME OF PART	QTY
1		1383225	Plate	1
2		1377750	Pulley	1
3		1383204	Pulley (Water Pump)	1
4		1377752	Tensioner	1
5		1377736	Spacer	1
6		136681	Capscrew	4
7		292681	Lockwasher	8
8		287860	Capscrew	4
9		292682	Lockwasher	14
10	c	18525	Capscrew	4
10	d	18529	Capscrew	4
11		18547	Capscrew	1
12		292524	Capscrew	1
13		316826	Nut	1
14		320159	Washer	1
15		16634	Capscrew	3
16		16815	Capscrew	3
17	e	1374774	Fan	1
17	f	1454560	Fan	1
18	c	1377781	Spacer (Fan) (25.4 mm)	1
19	c	1377791	Spacer (Fan) (38.10 mm)	1
19	d	1453247	Spacer (Fan) (76.0 mm)	1
20		1377762	Pulley	1
21		1377755	Belt	1
22	a	1377742	Fan Mount Assy	1
22	b	1389344	Fan Mount Assy	1
22	g	1459008	Fan Mount Assy	1
23		1377745	Hub	1
24	a	1377749	Shaft	1
24	b	1389340	Shaft	1
24	g	1459007	Shaft	1
25	b	128469	Bearing	1
25	g	1459011	Bearing	1
26		12928	Snap Ring	1
27		160996	Snap Ring	2
28		18549	Capscrew	1
29		1383226	Plate	1
30	a	1384333	Fan Bracket	1
30	b	1389346	Fan Bracket	1
31		15056	Nut	3
32		1383228	Plate	1
33		124668	Bearing	1
34		16816	Capscrew	2

a Last Used On S/N G005D-8330
b First Used On S/N G005D-8331 Thru S/N G005D-13791
c Last Used On S/N G005D-10675
d First Used On S/N G005D-10676
e Last Used On S/N G005D-11448
f First Used On S/N G005D-11449
g First Used On S/N G005D-13791

©1999 HYSTER COMPANY

CYLINDER BLOCK (FIGURE 15)

GASOLINE & LPG

2KM 1992 SERIES ENGINE

PARTS-SERVICE GRAM	
Item	Gram
24, 25	A-A-92

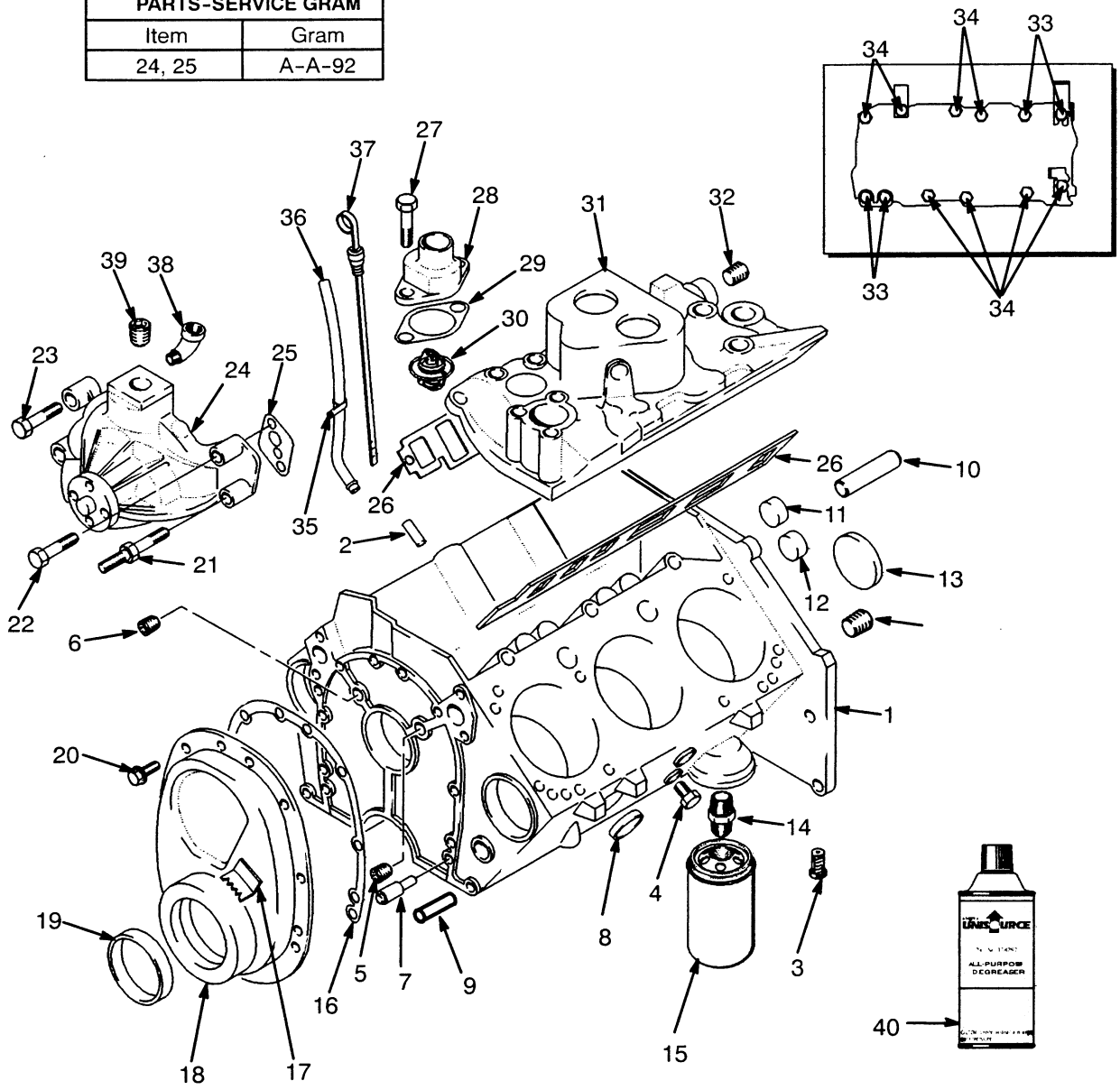

CYLINDER BLOCK

GASOLINE & LPG

2KM 1992 SERIES ENGINE

REF	PART NO.	NAME OF PART	QTY
	1331603	Engine	1
1	1343167	Engine Subassembly	1
2	159977	Pin	4
3	1358156	Bypass Valve	1
4	274232	Plug	4
5	1335498	Plug	1
6	388302	Plug	1
7	263844	Pin	2
8	169718	Plug	8
9	263844	Pin	2
10	1335499	Pin	2
11	1335216	Plug	1
12	375601	Pin	1
13	263788	Plug (Rear)	1
14	375587	Fitting	1
15	1320000	Oil Filter	1
16	375590	Joint	1
17	375589	Indicator	1
18	1347918	Cover	1
19	326359	Gasket	1
20	370169	Screw & Washer	10
21	263827	Stud	1
22	185768	Capscrew	1
23	221506	Capscrew	1
24	381355	Water Pump	1
24	369748	Washer	6
24	133469	Capscrew	6
24	1335494	Joint	1
24	1339962	Bearing	1
25	263828	Joint	2
26	1338675	Kit-Gasket	1
27	161195	Capscrew	2
28	1343168	Water Outlet	1
29	1330725	Gasket	1
30	231522	Thermostat (180° F)	1
31	1338224	Intake Manifold	1
32	375595	Plug	4
33	1335241	Plug	4
34	375597	Bolt	8
35	133696	Clamp	1
36	369139	Tube	1
36	288394	Sealant	AR
37	388514	Dipstick	1
38	19521	Fitting (Gasoline)	1
39	15962	Plug	1
40	178297	Degreaser	AR

©1999 HYSTER COMPANY

CYLINDER HEAD (FIGURE 16)

GASOLINE & LPG

2KM 1992 SERIES ENGINE

PARTS-SERVICE GRAM	
ITEM	GRAM
4 & 29	A-A-93

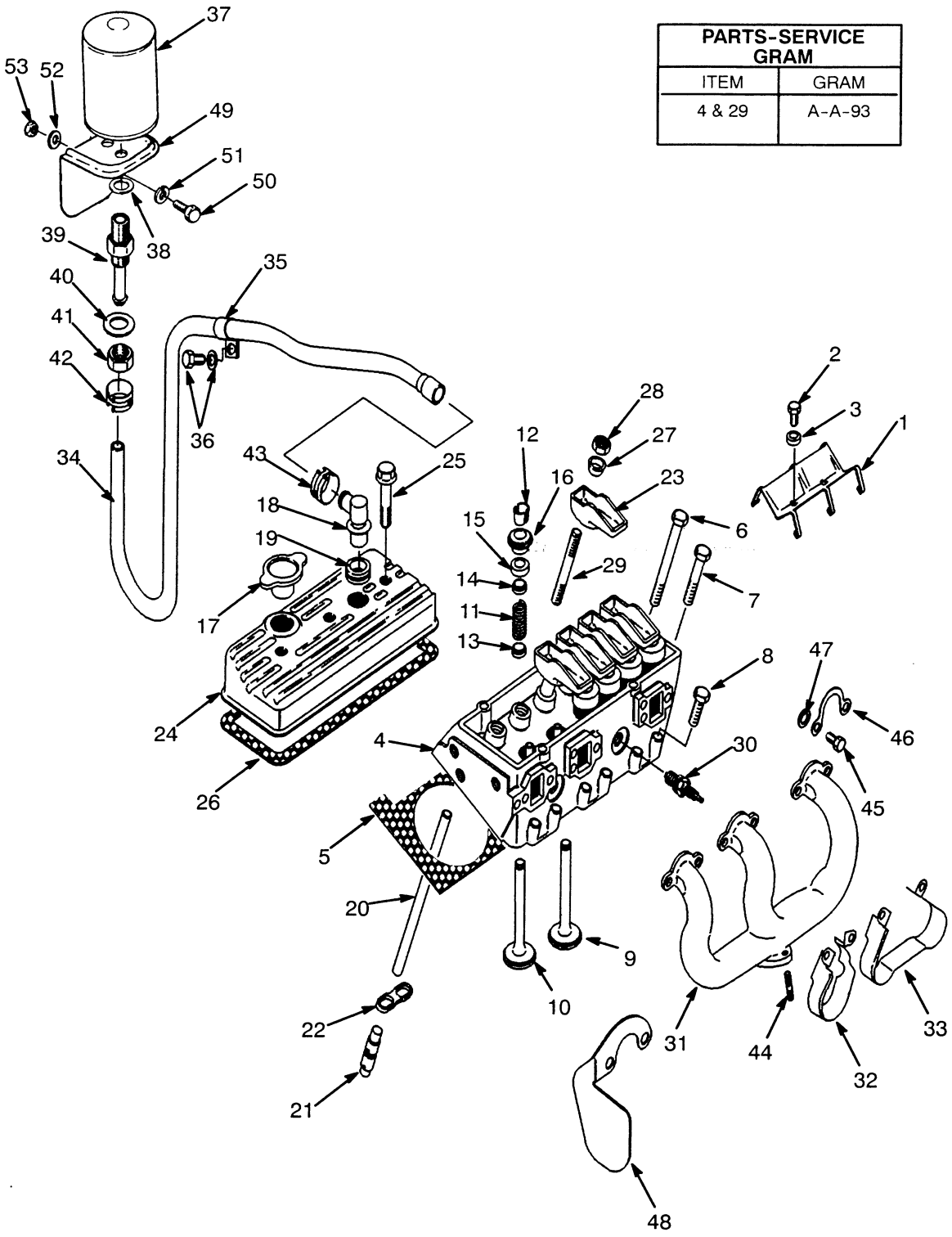

CYLINDER HEAD

GASOLINE & LPG

2KM 1992 SERIES ENGINE

REF		PART NO.	NAME OF PART	QTY
		1331603	Engine	1
		1343167	Engine Subassembly	1
1		1335063	Retainer	1
2		16374	Capscrew	4
3		197068	Washer	4
4		1367479	Cylinder Head	2
5	a	1386190	Gasket	2
6		375567	Bolt (3.75 in)	10
7		375568	Bolt (3.00 in)	4
8		263847	Bolt (1.75 in)	12
9		375557	Intake Valve (Standard)	6
9		375558	Intake Valve (0.003 in O/S)	6
9		375559	Intake Valve (0.015 in O/S)	6
9		375560	Intake Valve (0.030 in O/S)	6
10		265512	Exhaust Valve (Standard)	6
10		254384	Exhaust Valve (0.015 in O/S)	6
11		263748	Valve Spring	12
12		263750	Valve Keeper	24
13		375564	Seal (Intake Valve)	6
13		375565	Seal (Exhaust Valve)	6
14	a	145173	Seal	12
15		314539	Valve Stem Shield	12
16		149867	Rotator (Exhaust Valve)	6
16		312948	Cap (Intake Valve)	6
17		1369490	Oil Filler Cap	1
17		1369481	Oil Filler Cap (Optional)	1
18		321734	PCV Valve	1
19		1339961	Grommet	1
20		388356	Push Rod	12
21		1343902	Hydraulic Valve Lifter	12
22		1335062	Restrictor	6
23		1307964	Rocker Arm	12
24		1334422	Valve Cover, RH	1
24		375617	Valve Cover, LH	1
25		1335215	Bolt	4
26	a	375620	Gasket	2
27		281097	Ball	12
28		370150	Nut	12
29		1360868	Stud	12
30	b	197888	Spark Plug	6
31		1317472	Exhaust Manifold	2
32		1316494	Shield	2
33		1316488	Shield	2
34		1337871	Hose	1
35		325897	Clamp	1
36		292515	Capscrew	1
36		15162	Washer	1
37		1350036	Filter	1
38		1300152	Washer	1
39		379400	Fitting	1
40		15162	Lockwasher	1
41		14761	Nut	1
42		379405	Clamp	1
43		353199	Clamp	1
44		352903	Stud	6
45		16379	Capscrew	11
46		366686	Lockplate	6
47		1304392	Washer	12
48		352952	Shield	1
49		186998	Bracket	1
50		292501	Capscrew	2
51		320156	Washer	2
52		292680	Lockwasher	2
53		136687	Nut	2

a Included in Gasket Kit 1312809

b Included in Major Tune-Up Kits 996337 & 996340

©1999 HYSTER COMPANY

CAMSHAFT AND CRANKSHAFT (FIGURE 17)

GASOLINE & LPG

2KM 1992 SERIES ENGINE

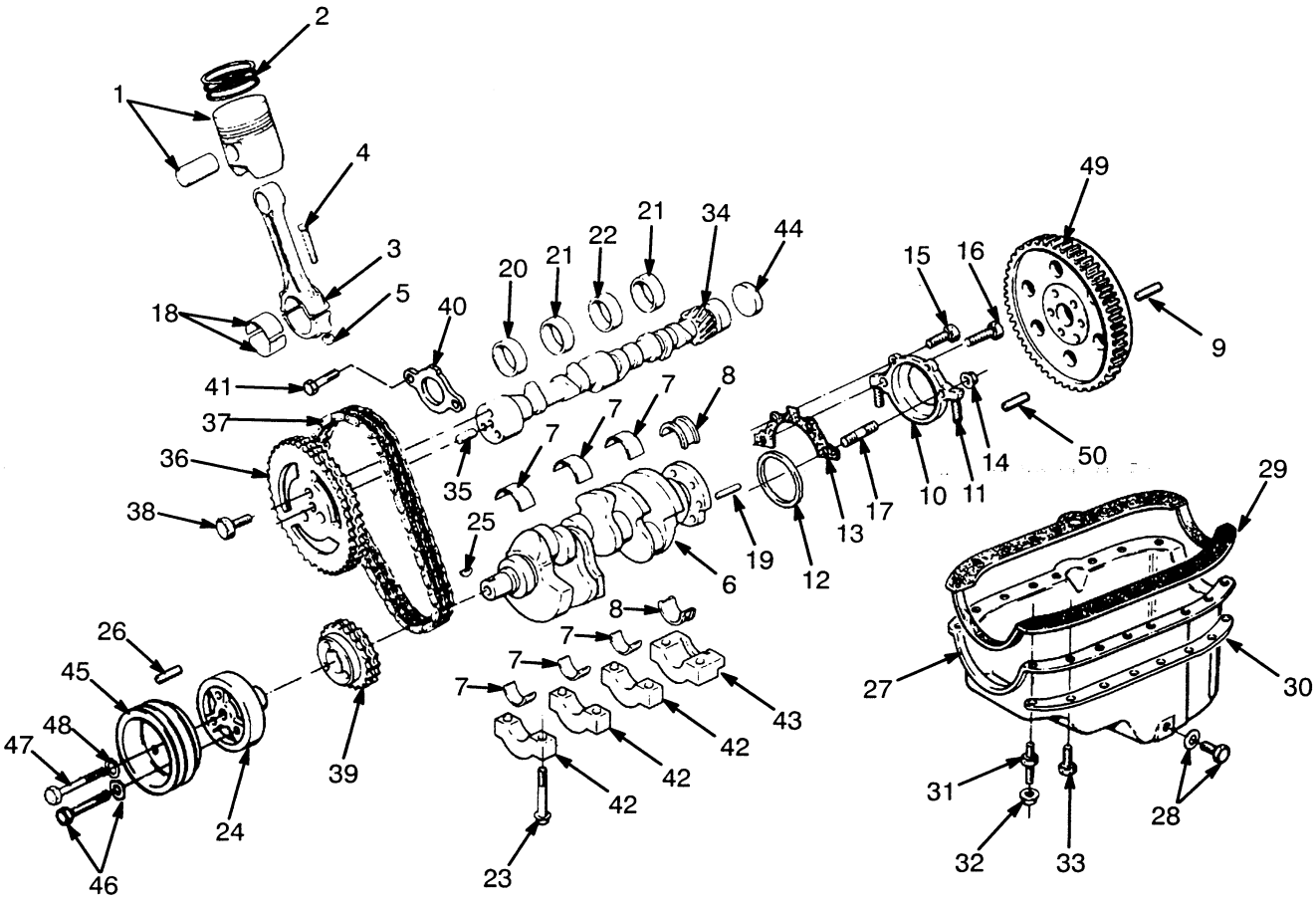

CAMSHAFT AND CRANKSHAFT

GASOLINE & LPG

2KM 1992 SERIES ENGINE

REF	PART NO.	NAME OF PART	QTY
	1331603	Engine	1
	1343167	Engine Subassembly	1
1	1374309	Piston (Standard)	6
1	1339969	Piston (0.005 in O/S)	6
1	1339970	Piston (0.030 in O/S)	6
2	306774	Piston Ring (Standard)	6
2	375550	Piston Ring (0.030 in O/S)	6
3	1360179	Connecting Rod	6
4	1360182	Bolt (Connecting Rod)	2
5	1375954	Nut (Connecting Rod)	2
6	375570	Crankshaft	1
7	375551	Bearing (Standard)	1
7	1324015	Bearing (0.010 in O/S)	1
7	1324016	Bearing (0.020 O/S)	1
7	1324017	Bearing (0.030 in O/S)	1
7	1324018	Bearing (0.040 in O/S)	1
8	1307958	Bearing (Standard)	1
8	1309839	Bearing (0.010 in O/S)	1
8	263765	Bearing (0.020 in O/S)	1
9	375601	Pin	1
10	1335227	Retainer	1
11	388364	Stud	2
12	1335228	Seal	1
13	1335212	Gasket	1
14	1335226	Nut	1
15	375575	Bolt	2
16	375602	Bolt	1
17	388364	Stud	1
18	375579	Bearing (Standard)	6
18	1324011	Bearing (0.010 in O/S)	6
18	1324012	Bearing (0.020 in O/S)	6
18	1324013	Bearing (0.030 in O/S)	6
18	1324014	Bearing (0.040 in O/S)	6
19	375571	Pin	1
20	301955	Bearing	1
21	301956	Bearing	2
22	301957	Bearing	1
23	263842	Bolt	8
24	1339967	Damper	1
25	1335057	Key	1
26	1338222	Pin	1
27	1306676	Oil Sump	1
28	308624	Drain Plug	1
28	388305	Gasket	1
29	375582	Gasket	1
30	1339971	Brace, LH	1
30	1339972	Brace, RH	1
31	388364	Stud	2
32	375584	Nut	4
33	16378	Capscrew	14
34	1342625	Camshaft	1
35	263844	Pin	1
36	1339974	Sprocket	1
37	375616	Timing Chain	1
38	221453	Capscrew	3
39	375615	Sprocket (Crankshaft)	1
40	1335064	Retainer (Camshaft)	1
41	1339963	Bolt	2
42	....	Bearing Cap	3
43	....	Bearing Cap	1
44	263788	Plug	1
45	350070	Pulley	1
46	16634	Capscrew	3
46	15156	Lockwasher	3
47	221544	Capscrew	1
48	1305165	Washer	1
49	....	Flywheel	1
		☞ Figure 11	
50	388364	Stud	1

©1999 HYSTER COMPANY

OIL PUMP (FIGURE 18)

GASOLINE & LPG

2KM 1992 SERIES ENGINE

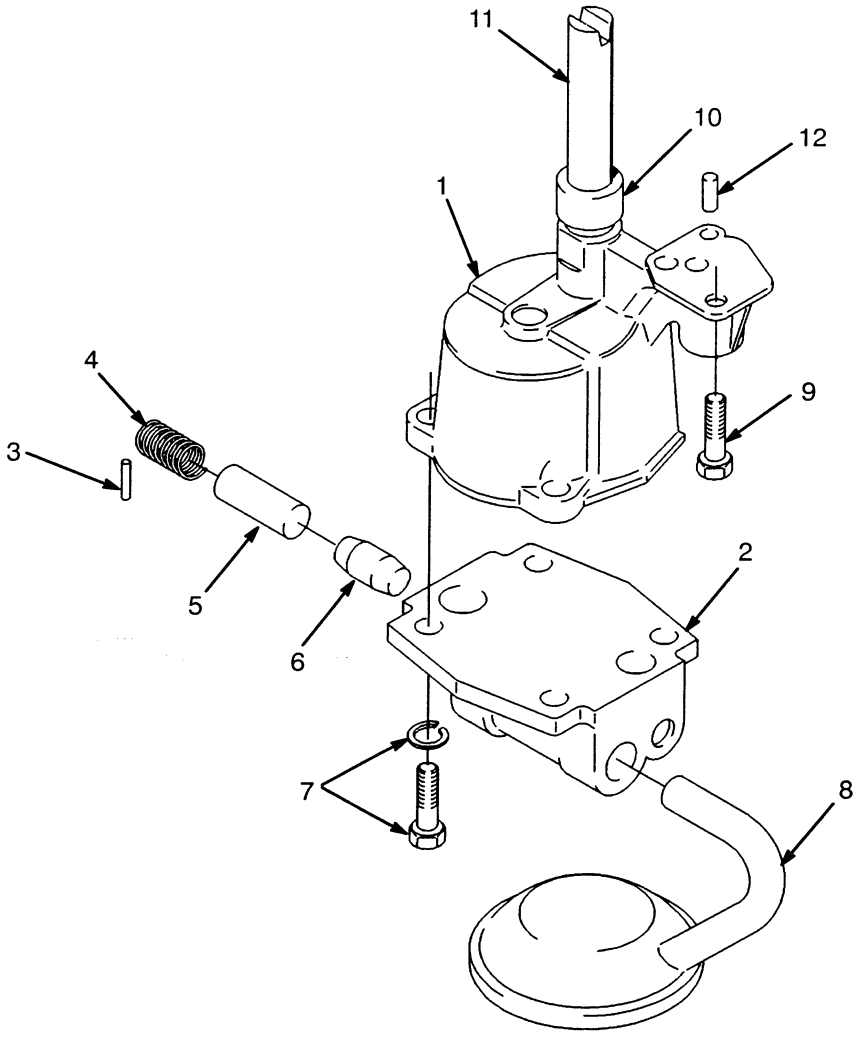

REF	PART NO.	NAME OF PART	QTY
1	1307962	Oil Pump	1
2	1304786	Cover	1
3	1330453	Pin	1
4	145177	Spring	1
5	268573	Regulator Valve	1
6	1338223	Stop	1
7	1333541	Screw & Washer	4
8	375585	Screen	1
9	388306	Bolt	1
10	263795	Retainer	1
11	263794	Shaft	1
12	263844	Pin	1

©1999 HYSTER COMPANY

NOTE

©1999 HYSTER COMPANY

CYLINDER BLOCK (FIGURE 19)

GASOLINE & LPG

3KM 1993 SERIES ENGINE

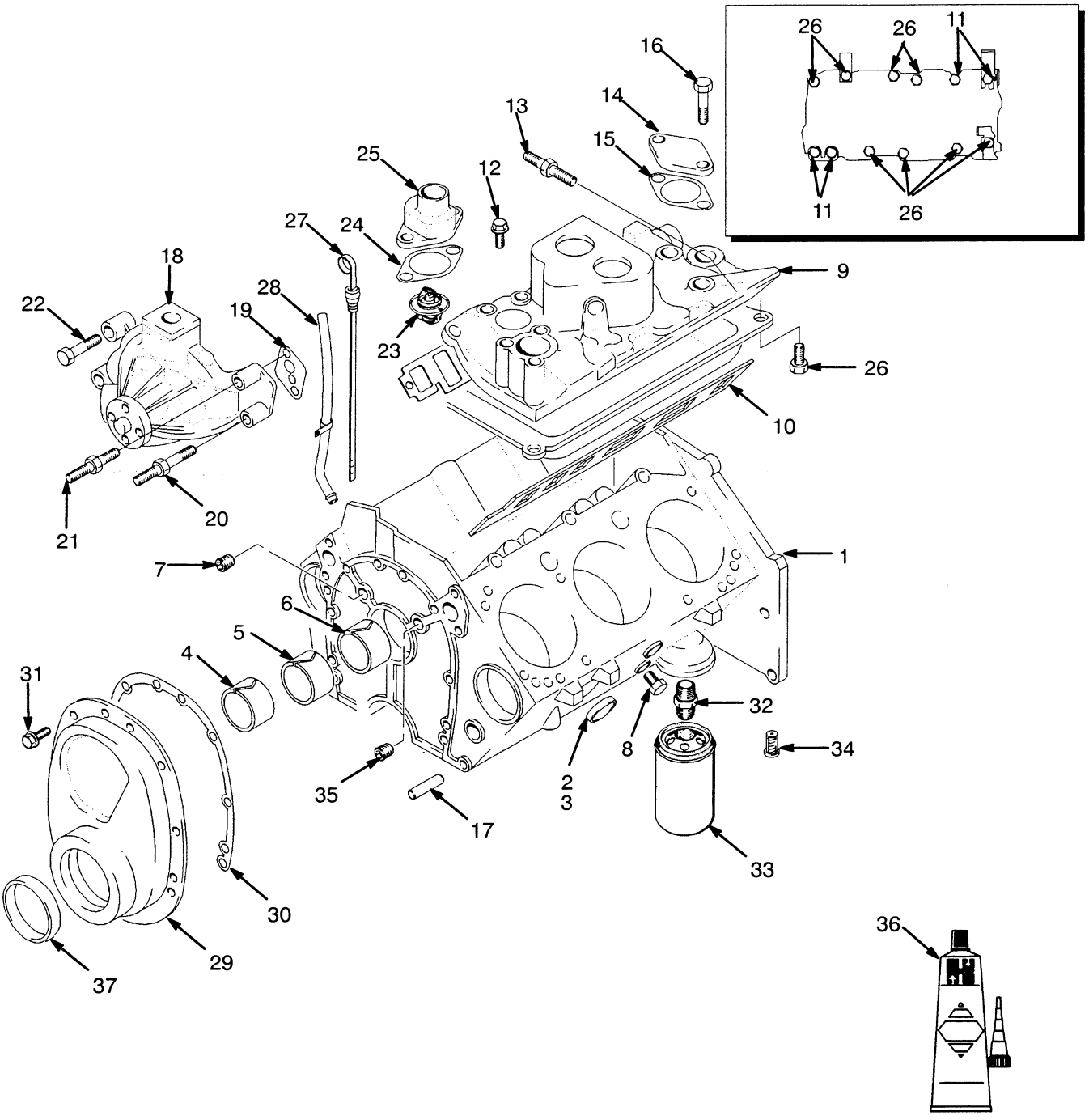

CYLINDER BLOCK

GASOLINE & LPG

3KM 1993 SERIES ENGINE

REF	PART NO.	NAME OF PART	QTY
	1356929	Engine	1
1	1371221	Cylinder Block	1
2	169718	Plug	8
3	1371222	Plug	8
4	301955	Bearing (Camshaft)	2
5	301956	Bearing (Camshaft)	1
6	301957	Bearing (Camshaft)	1
7	388302	Plug	2
8	274232	Plug	4
9	1374111	Manifold (Intake)	1
10	....	Gasket, RH	1
10	....	Gasket, LH	1
11	1335241	Plug	2
12	1335488	Bolt	1
13	375598	Stud	2
14	1374112	Cover (EGR Valve)	1
15	1374113	Gasket (EGR Valve)	1
16	1371232	Bolt (EGR Valve)	2
17	263844	Pin	6
18	381355	Water Pump	1
19	263828	Gasket	2
20	221506	Capscrew	1
21	185768	Capscrew	1
22	263827	Stud	1
23	1374109	Thermostat (180° F)	1
24	1374110	Seal	1
25	1371229	Water Outlet	1
26	375597	Bolt	8
27	388514	Dipstick	1
28	369139	Tube (Dipstick)	1
29	1347918	Cover	1
30	326359	Gasket	1
31	1374108	Screw	10
32	375587	Fitting (Oil Filter)	1
33	1320000	Oil Filter	1
34	1358156	Bypass Valve	1
35	1358079	Plug	1
36	288394	Sealant	AR
37	326359	Seal	1

©1999 HYSTER COMPANY

CYLINDER HEAD (FIGURE 20)

GASOLINE & LPG

3KM 1993 SERIES ENGINE

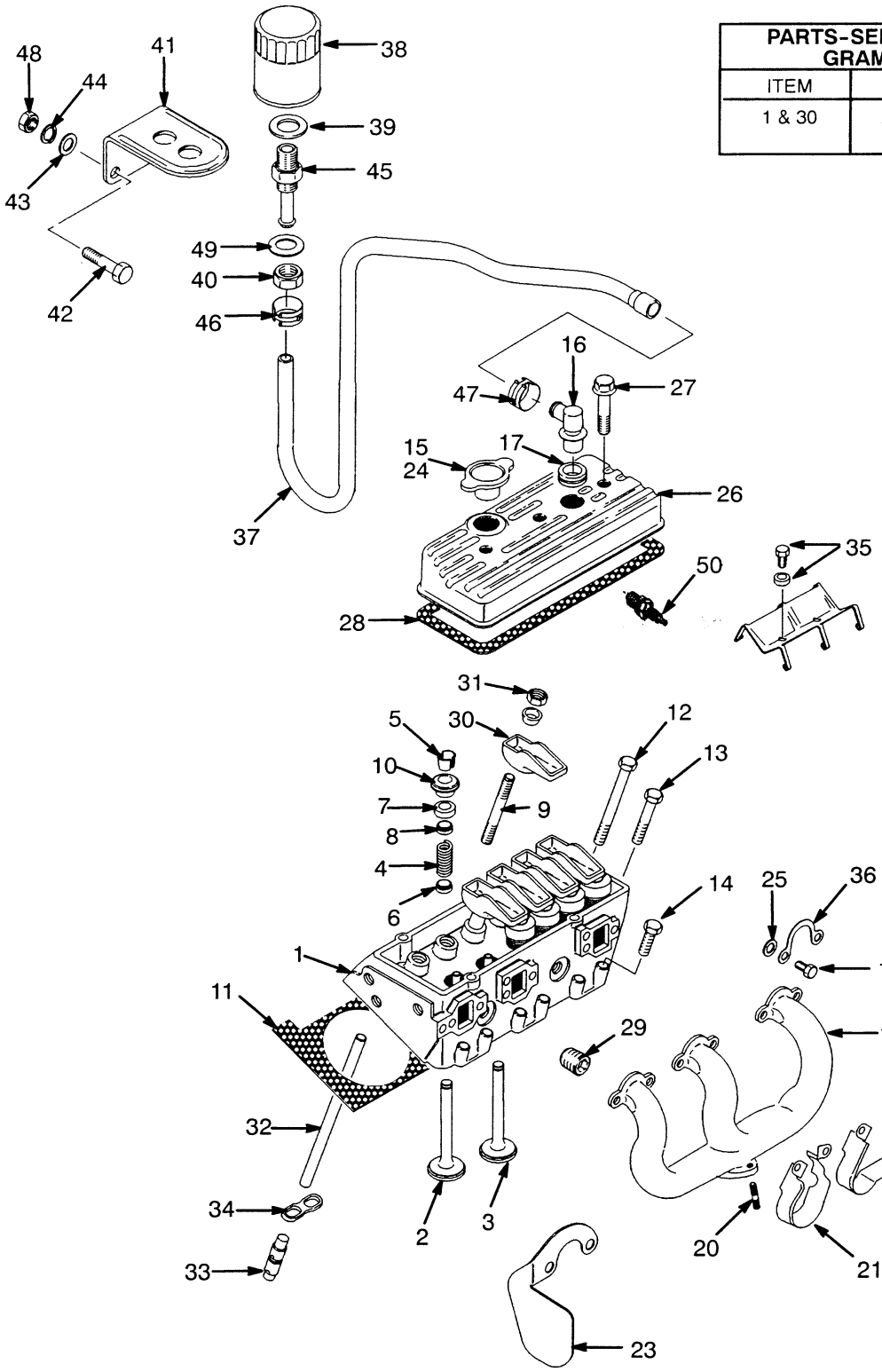

PARTS-SERVICE GRAM	
ITEM	GRAM
1 & 30	A-A-93

CYLINDER HEAD

GASOLINE & LPG

3KM 1993 SERIES ENGINE

REF	PART NO.	NAME OF PART	QTY
	1356929	Engine	1
1	1454596	Cylinder Head	1
2	375557	Intake Valve (Standard)	6
3	1374105	Exhaust Valve (Standard)	6
4	263748	Spring (Valve)	12
5	263750	Key (Valve)	24
6	375564	Seal (Intake)	6
7	145173	Seal	12
8	314539	Shield (Valve Stem)	12
9	1358677	Stud	12
10	149867	Rotator	6
10	312948	Cap	6
11	1386190	Gasket	2
12	375567	Bolt (3.75 in)	10
13	375568	Bolt (3.00 in)	4
14	263847	Bolt (1.75 in)	12
15	1369481	Cap	1
16	321734	Breather (Valve Assy)	1
17	1339961	Grommet	2
18	1317472	Manifold (Exhaust)	2
19	16379	Capscrew	11
20	352903	Stud	6
21	1316494	Shield	2
22	1316488	Shield (Spark Plug)	2
23	352952	Heat Shield	1
24	1369485	Cover	1
25	1304392	Washer	12
26	1334422	Cover, RH	1
26	375617	Cover, LH	1
27	1358047	Screw	12
28	375620	Gasket (Valve Cover)	2
29	1331341	Plug	5
30	1307964	Rocker Arm	12
31	1358043	Nut (Rocker Arm)	12
32	388356	Push Rod	12
33	1343902	Lifter	12
34	1374115	Guide	6
35	1371233	Bolt	4
36	366686	Lock	6
37	1337872	Hose (Breather)	1
38	1350036	Filter	1
39	1300152	Washer	1
40	14761	Nut	1
41	186998	Bracket	1
42	292501	Capscrew	2
43	320156	Washer	2
44	292680	Washer	2
45	379400	Fitting	1
46	379405	Clamp	1
47	353199	Clamp	1
48	136687	Nut	2
49	15162	Washer	1
50	197888	Spark Plug	6

©1999 HYSTER COMPANY

CAMSHAFT AND CRANKSHAFT (FIGURE 21)

GASOLINE & LPG

3KM 1993 SERIES ENGINE

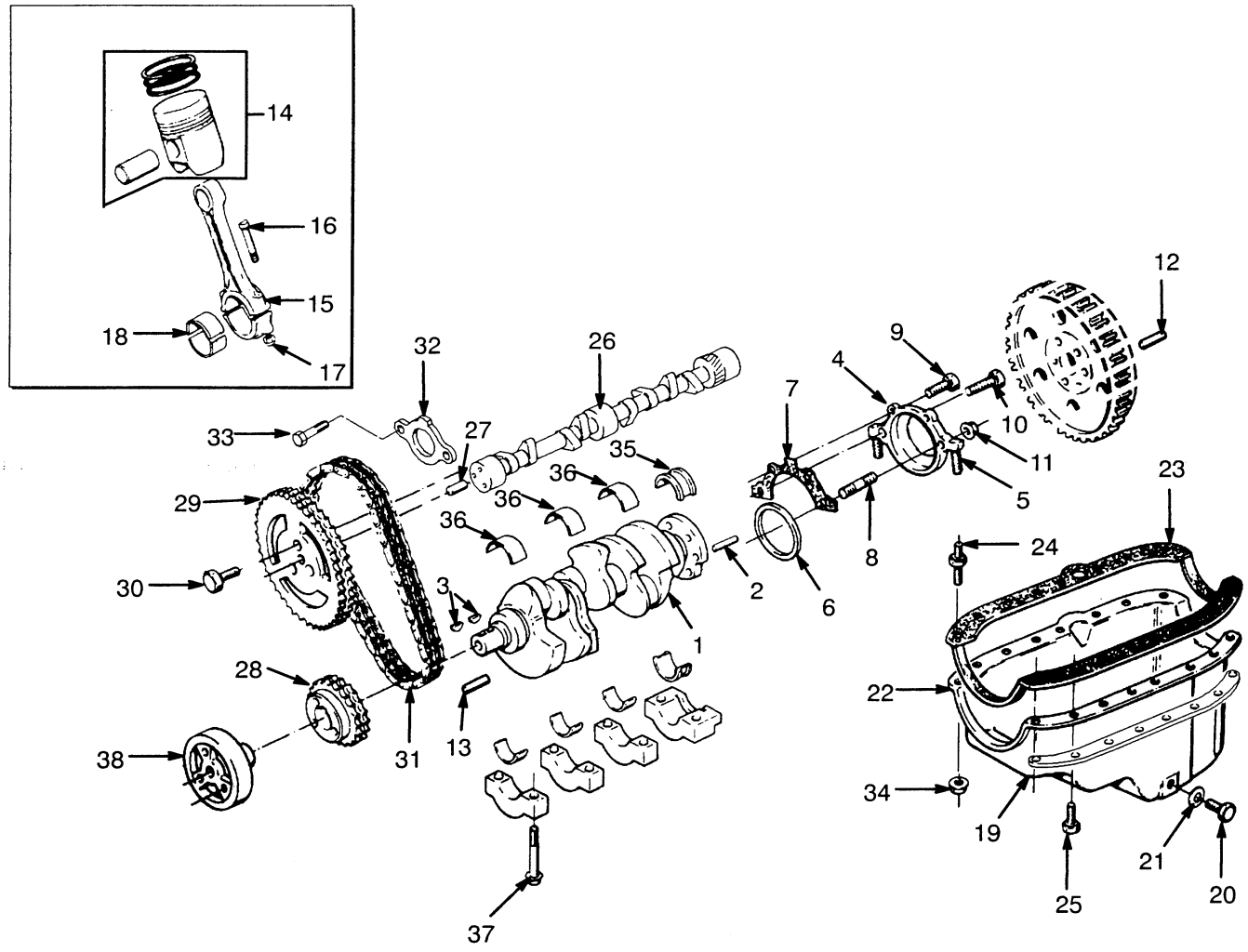

©1999 HYSTER COMPANY

CAMSHAFT AND CRANKSHAFT

GASOLINE & LPG

3KM 1993 SERIES ENGINE

REF	PART NO.	NAME OF PART	QTY
	1356929	Engine	1
1	375570	Crankshaft	1
2	375571	Pin	1
3	1335057	Key	2
4	1335227	Retainer Assembly	1
5	375574	Stud	2
6	1335228	Seal	1
6	375555	Seal (Optional)	1
7	1335212	Gasket	1
8	388364	Stud	1
9	375575	Bolt	2
10	375602	Bolt	1
11	1335226	Nut	2
12	375601	Pin	1
13	1338222	Pin	1
14	1362121	Kit-Piston (Standard)	1
14	1362122	Piston Ring Set	1
14	1374309	Piston	1
14	1380307	Kit-Piston (0.030 in O/S)	1
14	1362123	Piston Ring Set	1
14	1339970	Piston	1
14	1362120	Kit-Piston (Hi-Limit)	1
14	1362122	Piston Ring Set	1
14	1374123	Piston (Hi-Limit)	1
15	1360179	Connecting Rod	1
16	1360182	Screw	2
17	221708	Nut	2
18	375579	Bearing (Standard)	1
18	1324011	Bearing (0.010 in O/S)	1
18	1324012	Bearing (0.020 in O/S)	1
18	1324013	Bearing (0.030 in O/S)	1
18	1324014	Bearing (0.040 in O/S)	1
19	1306676	Oil Sump	1
20	308624	Screw	1
21	388305	Gasket	1
22	1339972	Oil Pan, RH (Reinforced)	1
22	1339971	Oil Pan,LH, (Reinforced)	1
23	375582	Gasket	1
24	375574	Stud	2
25	16378	Capscrew	16
26	1374114	Camshaft	1
27	263844	Pin	1
28	375615	Sprocket	1
29	1339974	Sprocket	1
30	221453	Capscrew	3
31	375616	Chain (Timing)	1
32	1335064	Retainer	1
33	1339963	Bolt	2
35	375551	Bearing (Standard)	1
36	1324015	Bearing (0.010 in O/S)	1
36	1324016	Bearing (0.020 in O/S)	1
36	1324017	Bearing (0.030 in O/S)	1
36	1324018	Bearing (0.040 in O/S)	1
37	263842	Bolt	8
38	1339967	Damper	1
34	375584	Nut	2

©1999 HYSTER COMPANY

OIL PUMP (FIGURE 22)

GASOLINE & LPG

3KM 1993 SERIES ENGINE

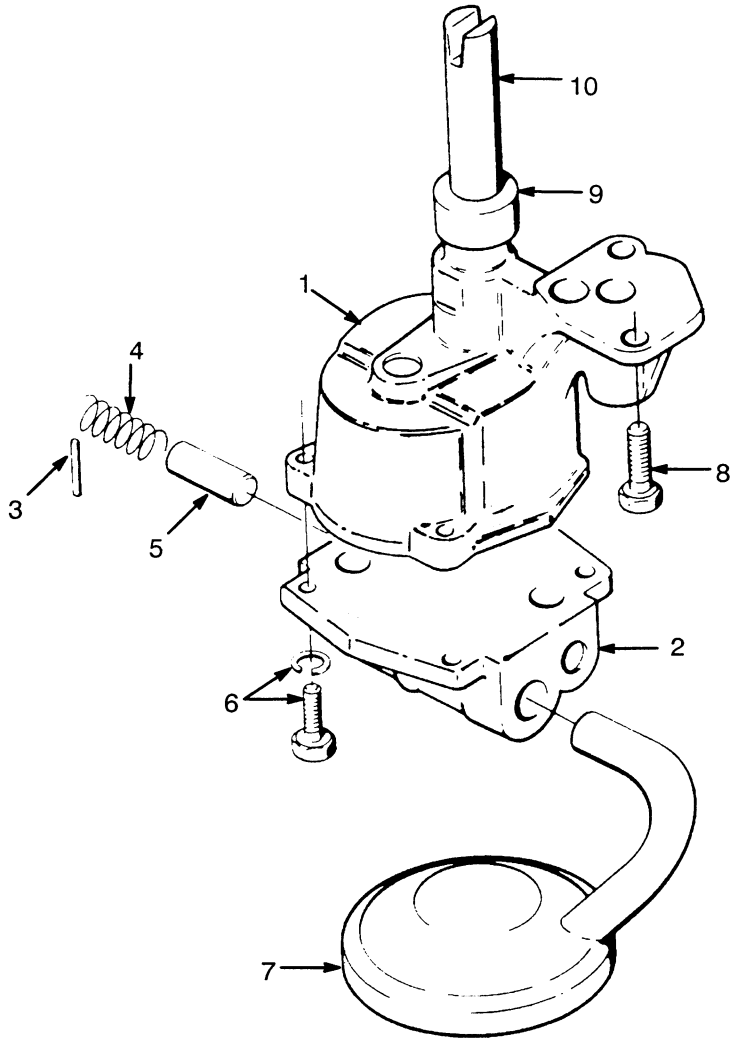

REF	PART NO.	NAME OF PART	QTY
1	1304785	Oil Pump	1
2	1306678	Cover	1
3	149845	Pin	1
4	388352	Spring	1
5	268573	Regulator Valve	1
6	16709	Screw	4
6	15154	Lockwasher	4
7	375585	Screen	1
8	388306	Bolt	1
9	263795	Retainer	1
10	263794	Shaft	1

©1999 HYSTER COMPANY

NOTES

©1999 HYSTER COMPANY

CYLINDER BLOCK (FIGURE 23)

GASOLINE & LPG

4LM 1994 SERIES ENGINE

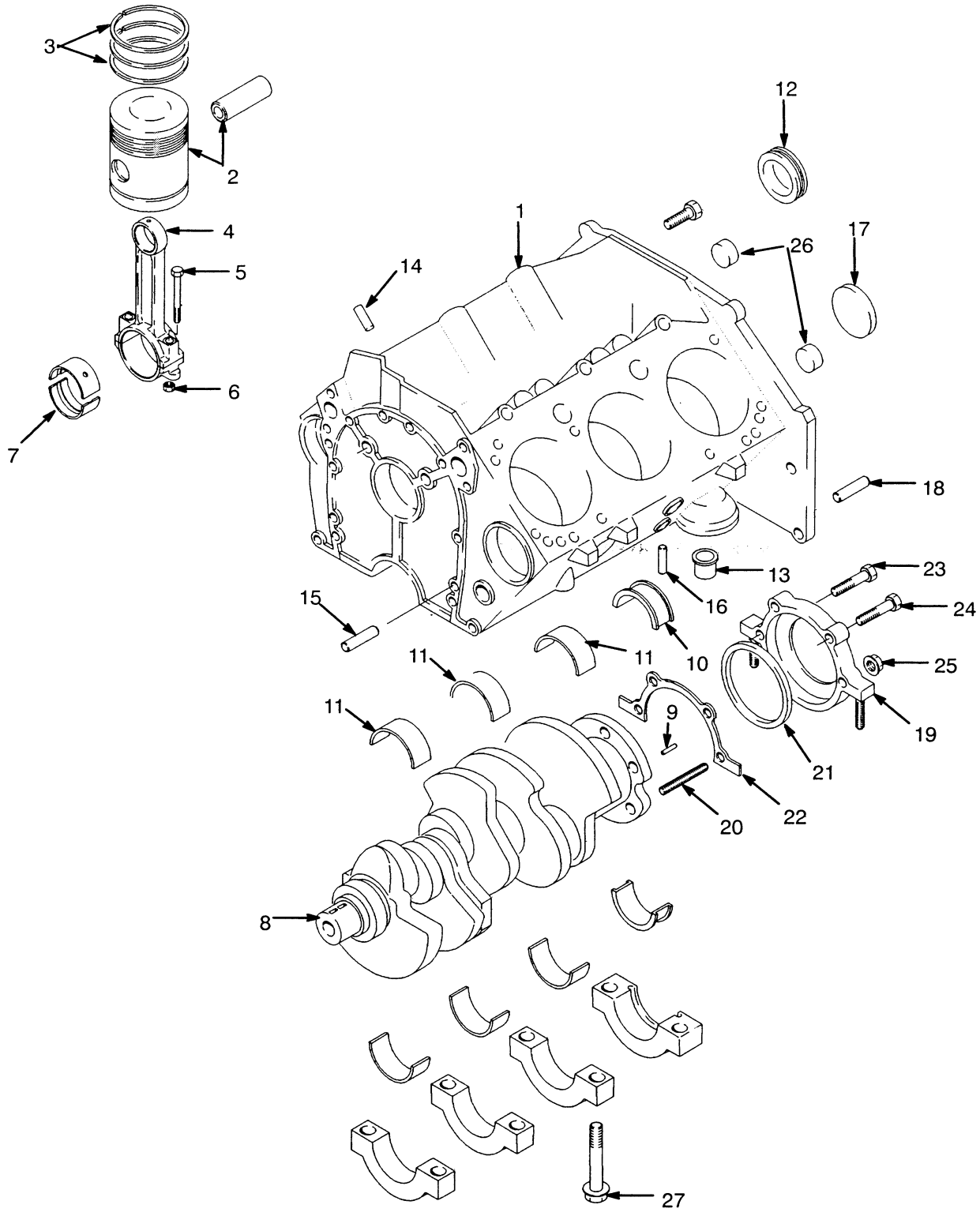

©1999 HYSTER COMPANY

CYLINDER BLOCK

GASOLINE & LPG

4LM 1994 SERIES ENGINE

REF		PART NO.	NAME OF PART	QTY
		1369493	Engine	1
		1374249	Cylinder Block	1
1		....	Cylinder Block	1
2		1374309	Piston (Standard)	6
2	a	1374310	Piston (Hi-Limit)	6
3		1374308	Piston Ring (Standard)	1
3	a	1374311	Piston Ring (0.030 in O/S)	1
4		1360179	Connecting Rod	6
5		1360182	Screw	2
6		1375954	Nut	2
7		375579	Kit-Bearing (Standard)	6
7	a	1324011	Bearing (0.010 in O/S)	6
7	a	1324012	Bearing (0.020 in O/S)	6
7	a	1324013	Bearing (0.030 in O/S)	6
7	a	1324014	Bearing (0.040 in O/S)	6
8		375570	Crankshaft	1
9		375571	Pin	1
10		375551	Bearing (Standard)	1
11	a	1324015	Bearing (0.010 in O/S)	1
11	a	1324016	Bearing (0.020 in O/S)	1
11	a	1324017	Bearing (0.030 in O/S)	1
11	a	1324018	Bearing (0.040 in O/S)	1
12		1374314	Bearing (Shaft)	1
13		1358156	Bypass Valve	1
14		159977	Pin	2
15		263844	Pin	1
16		375601	Pin	1
17		1374313	Plug	1
18		1335499	Pin	1
19		1335227	Retainer Assembly	1
20		388364	Stud	2
21		1335228	Seal	1
22		1335212	Gasket	1
23		375575	Bolt	1
24		375602	Bolt	1
25		388313	Nut	1
26		274232	Plug	2
27		263842	Bolt	8

a Optional

©1999 HYSTER COMPANY

NOTES

©1999 HYSTER COMPANY

CYLINDER HEAD (FIGURE 24)

GASOLINE & LPG

4LM 1994 SERIES ENGINE

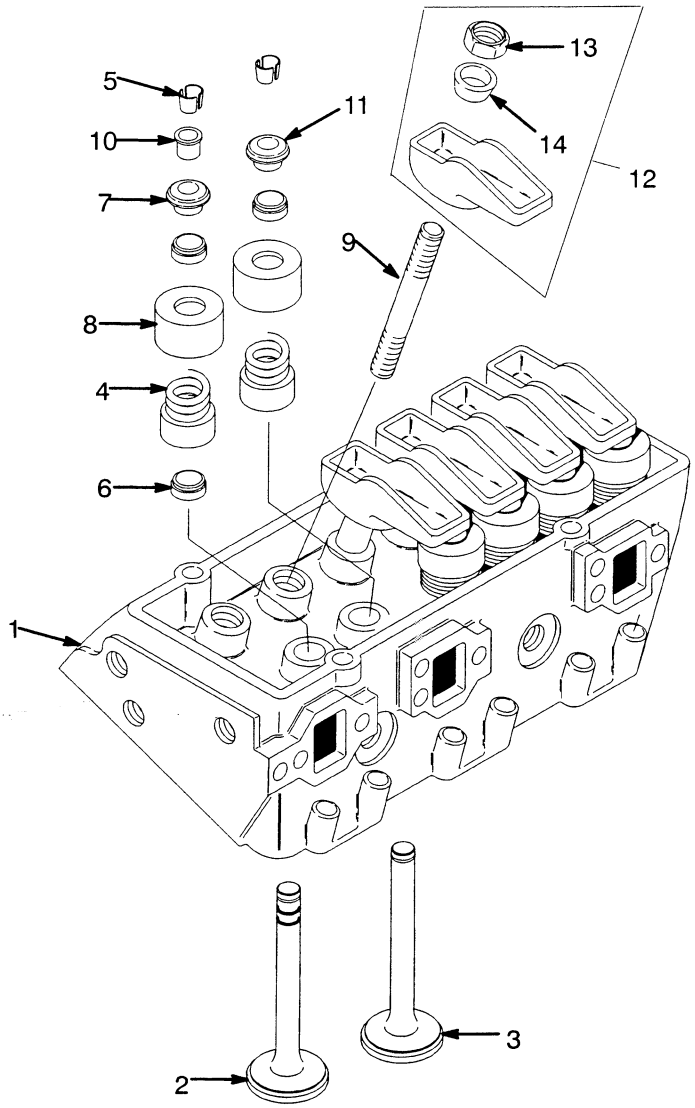

REF	PART NO.	NAME OF PART	QTY
	1369493	Engine	1
1	1374258	Cylinder Head	2
2	1374286	Intake Valve (Standard)	6
3	1374105	Exhaust Valve (Standard)	6
3	1374287	Exhaust Valve (0.015 in O/S)	6
4	263748	Spring	12
5	263750	Key	24
6	375564	Seal	12
7	145173	Seal	12
8	314539	Shield	12
9	1358677	Stud	12
10	149867	Rotator	12
11	312948	Cap	12
12	1367478	Kit-Rocker Arm	1
13	1358043	Nut	1
14	....	Ball	1

©1999 HYSTER COMPANY

VALVE COVER AND INTAKE MANIFOLD (FIGURE 25)

GASOLINE & LPG

4LM 1994 SERIES ENGINE

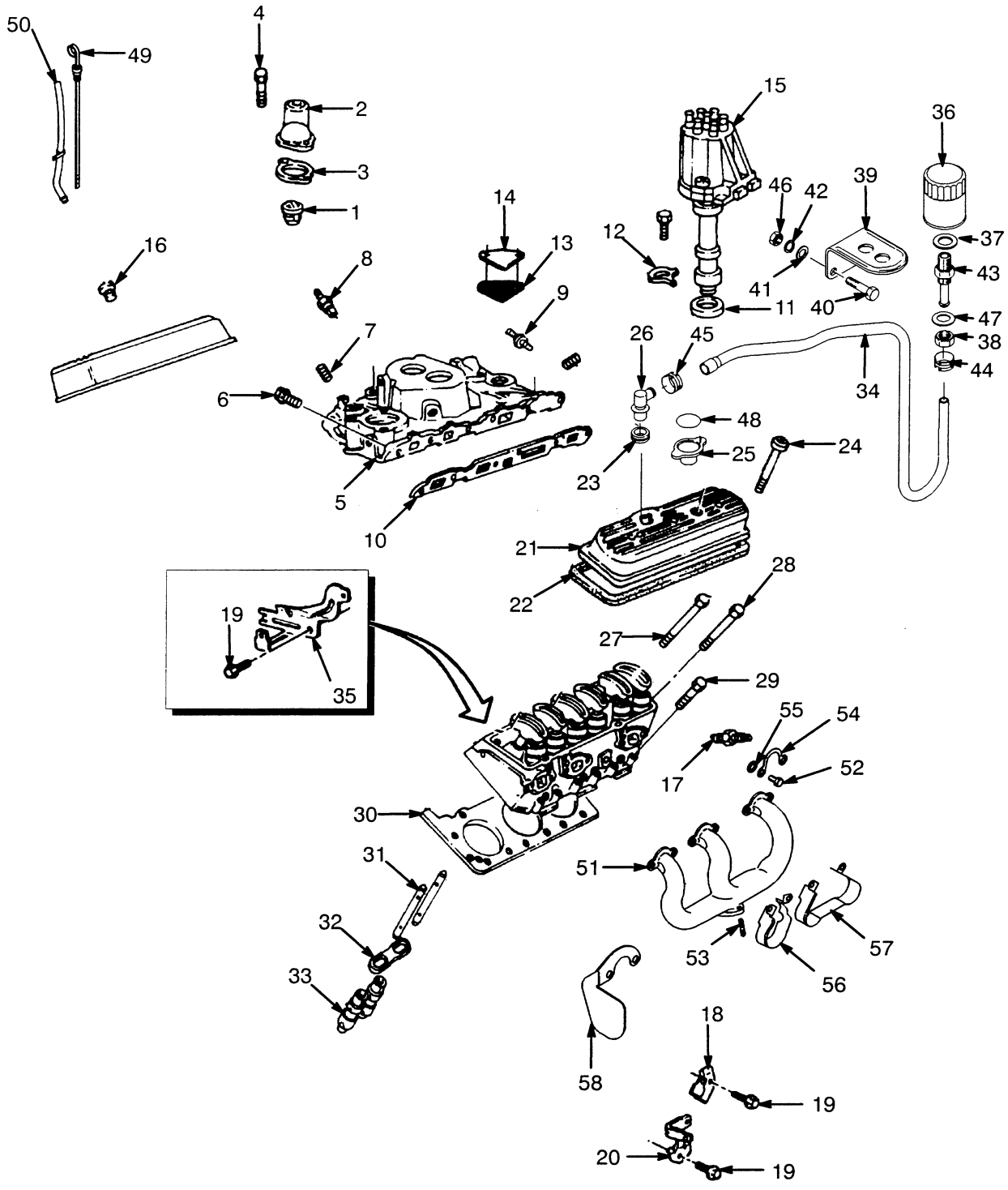

VALVE COVER AND INTAKE MANIFOLD

GASOLINE & LPG

4LM 1994 SERIES ENGINE

REF		PART NO.	NAME OF PART	QTY
		1369493	Engine	1
1		1374109	Thermostat (180° F)	1
2		1371229	Water Outlet	1
3		1374110	Seal	1
4		375597	Bolt	10
5		1374111	Manifold (Intake)	1
6		388308	Bolt	1
7		1335241	Plug	1
8		1314381	Coolant Sensor	1
9		375598	Stud	2
10		1376889	Kit-Gasket (Intake Manifold)	1
11		1334423	Gasket	1
12		1335497	Clamp	1
13		1374113	Gasket (EGR Valve)	1
14		1374112	Cover (EGR Valve)	1
15		....	Distributor Assy	1
			☞ Figure 97	
16		1374288	Grommet	2
17	a	1375925	Spark Plug	6
18		1327907	Support	1
19		370169	Screw & Lockwasher	3
20		1374324	Support	1
21		1374291	Cover, RH	1
21		1374292	Cover, LH	1
22		1374293	Gasket (Valve Cover)	2
23		1374288	Grommet	3
24		1374289	Bolt	6
25		1374290	Cap	1
26		321734	PCV Valve	1
27		375567	Bolt (3.75 in)	10
28		375568	Bolt (3.00 in)	4
29		263847	Bolt (1.75 in)	12
30		1386190	Gasket (Cylinder Head)	2
31		388356	Push Rod	12
32		1374115	Guide	6
33		1343902	Lifter	12
34		379403	Hose	1
35		298132	Clamp	1
36		1350036	Filter	1
37		1300152	Washer	1
38		14761	Nut	1
39		186998	Bracket	1
40		292501	Capscrew	1
41		320156	Washer	1
42		292680	Washer	1
43		379400	Fitting	1
44		379405	Clamp	1
45		353199	Clamp	1
46		136687	Nut	1
47		15162	Washer	1
48		1369485	Cover	1
49		388514	Dipstick	1
50		369139	Tube (Dipstick)	1
51		1380802	Manifold (Exhaust)	2
52		16379	Capscrew	11
53		352903	Stud	6
54		366686	Lock-Bolt	6
55		1304392	Washer	12
56		1316494	Shield	2
57		1316488	Shield (Spark Plug)	2
58		352952	Heat Shield	1

a Included in Major Tune-Up Kits 996337 & 996340

©1999 HYSTER COMPANY

CAMSHAFT AND OIL PAN (FIGURE 26)

GASOLINE & LPG

4LM 1994 SERIES ENGINE

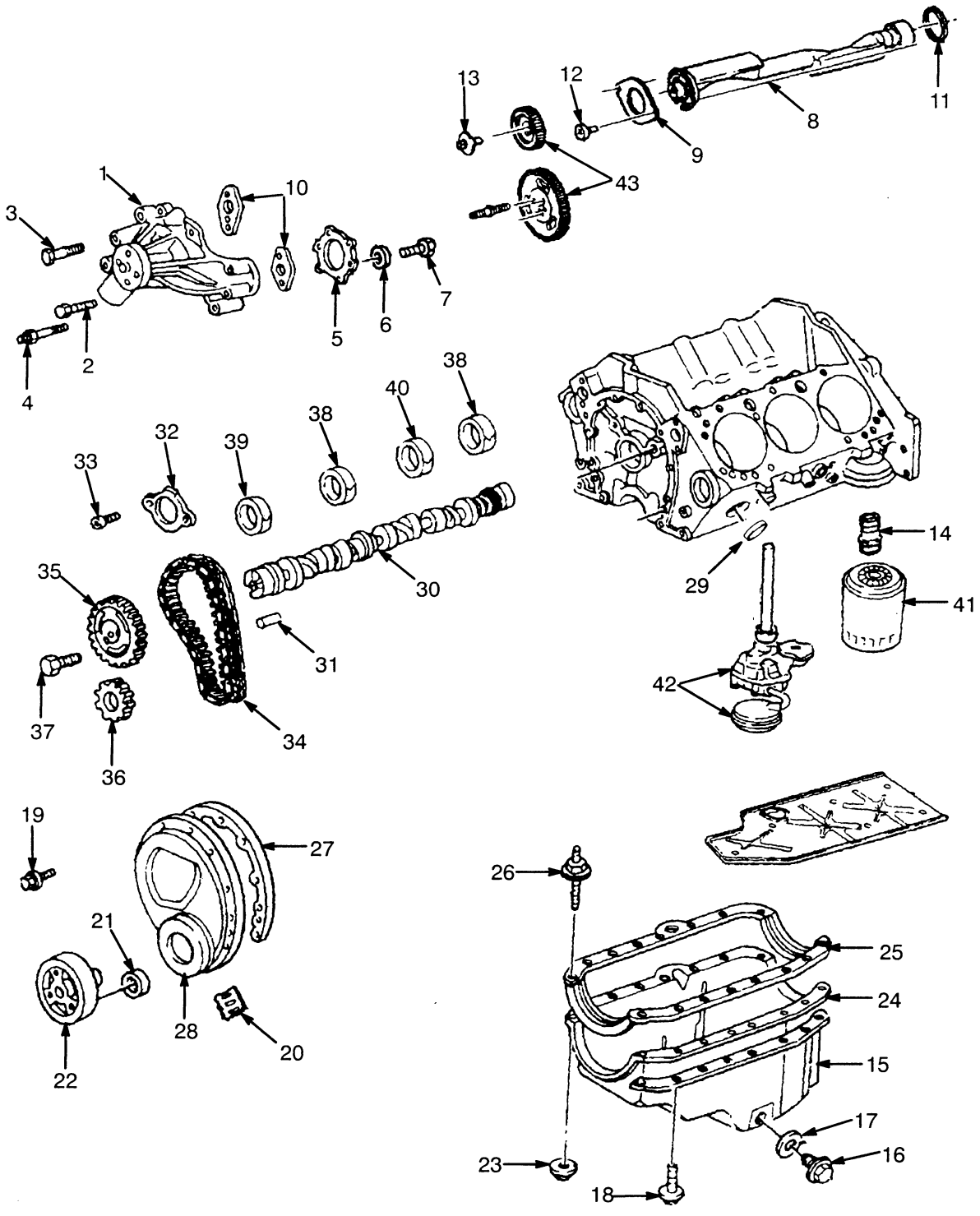

©1999 HYSTER COMPANY

CAMSHAFT AND OIL PAN

GASOLINE & LPG

4LM 1994 SERIES ENGINE

REF	PART NO.	NAME OF PART	QTY
	1369493	Engine	1
1	381355	Water Pump	1
2	1335240	Bolt	2
3	1374307	Bolt	2
4	263827	Stud	1
5	1374306	Gasket (Water Pump)	1
6	369748	Washer	1
7	133469	Capscrew	5
8	1374312	Shaft	1
9	1374326	Retainer	1
10	263828	Gasket	2
11	1374313	Plug	1
12	1339963	Bolt	2
13	1374317	Bolt	1
14	375587	Fitting (Oil Filter)	1
15	1306676	Oil Sump	1
16	308624	Screw	1
17	388305	Gasket	1
18	1376876	Bolt	16
19	1374108	Bolt	10
20	375589	Indicator	1
21	326359	Seal	1
22	1374304	Balancer	1
23	375584	Nut	4
24	1339972	Reinforced Oil Sump, RH	1
24	1339971	Reinforced Oil Sump, LH	1
25	375582	Gasket	1
26	375574	Stud	2
27	1374302	Gasket	1
28	1374303	Cover	1
29	159971	Plug	8
30	1374296	Camshaft	1
31	1374297	Pin	2
32	1374298	Retainer	1
33	1374299	Bolt	2
34	375616	Chain	1
35	1374300	Sprocket	1
36	375615	Sprocket	1
37	1374301	Bolt	1
38	301955	Bearing (Camshaft)	2
39	301956	Bearing (Camshaft)	1
40	301957	Bearing (Camshaft)	1
41	1320000	Oil Filter	1
42	....	Oil Pump	1
		☞ Figure 39	
43	1374315	Kit-Gear (Balancer)	1

©1999 HYSTER COMPANY

CYLINDER BLOCK (FIGURE 27)

GASOLINE & LPG

5LM 1995 SERIES ENGINE

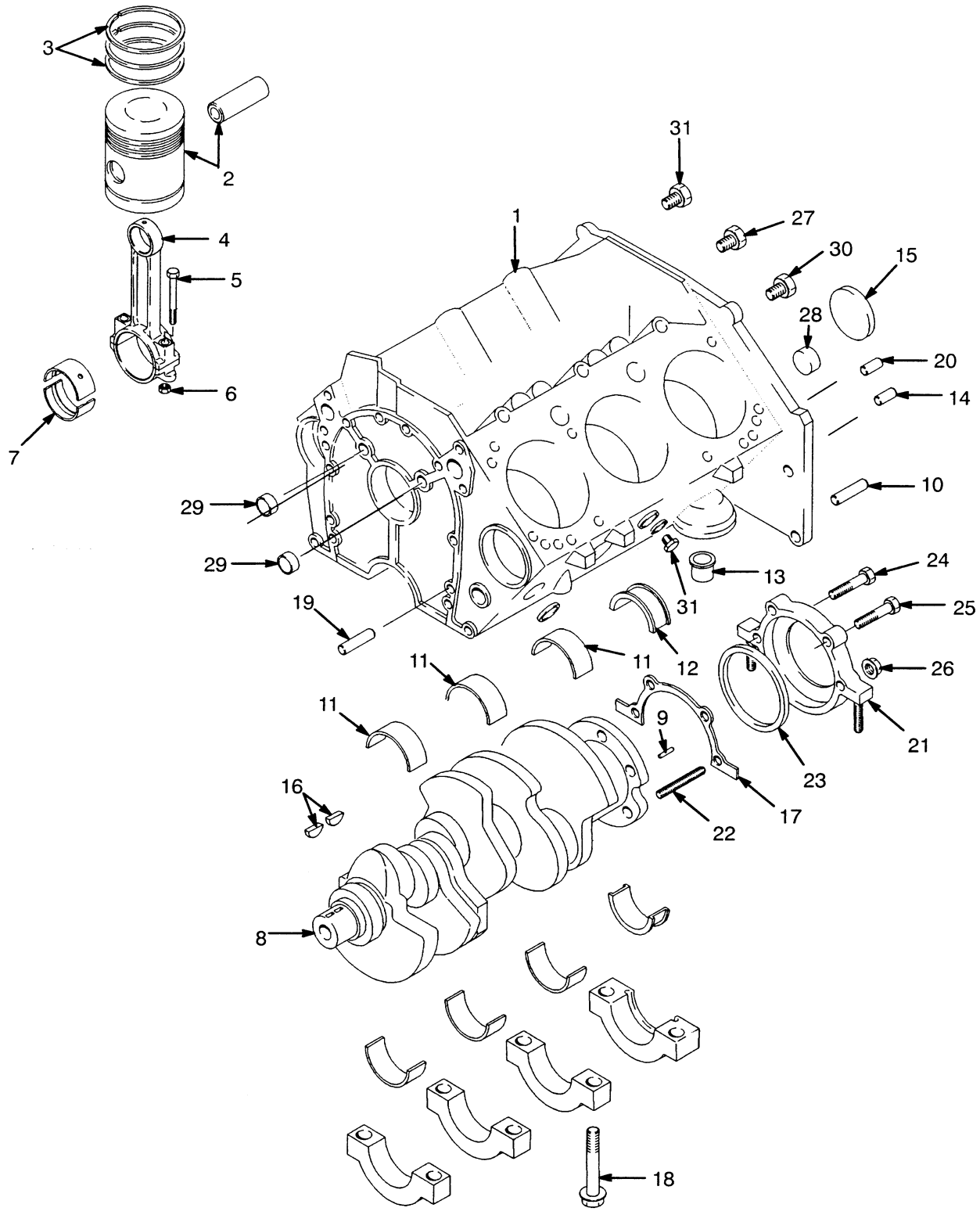

©1999 HYSTER COMPANY

CYLINDER BLOCK

GASOLINE & LPG

5LM 1995 SERIES ENGINE

REF	PART NO.	NAME OF PART	QTY
	1377796	Engine	1
	1377785	Short Block Assy	1
1	....	Block Assy	1
2	1374309	Piston Assy (Standard)	6
2	1380307	Piston Assy (0.030 in.)	6
3	1374308	Piston Ring (Standard)	1
3	1374311	Piston Ring (0.030 in.)	1
4	1360179	Connecting Rod	6
5	1360182	Bolt	2
6	1375954	Nut	2
7	375579	Kit-Bearing (Standard)	6
7	1324011	Kit-Bearing (0.010 in.)	6
7	1324012	Kit-Bearing (0.020 in.)	6
7	1324013	Kit-Bearing (0.030 in.)	6
7	1324014	Kit-Bearing (0.040 in.)	6
8	1377106	Crankshaft	1
9	375571	Pin	1
10	1335499	Pin	2
11	375551	Crankshaft Bearing Set (Standard)	1
11	1324015	Crankshaft Bearing Set (0.010 in.)	1
11	1324016	Crankshaft Bearing Set (0.020 in.)	1
11	1324017	Crankshaft Bearing Set (0.030 in.)	1
11	1324018	Crankshaft Bearing Set (0.040 in.)	1
12	1307958	Crankshaft Bearing Set (Rear, Standard)	1
13	1358156	Oil By-Pass Valve	1
14	159977	Pin	4
15	1374313	Plug	1
16	1335057	Key	2
17	1335212	Gasket	1
18	263842	Bolt	8
19	263844	Pin	2
20	375601	Pin	1
21	1335227	Retainer Assembly	1
22	388364	Stud	2
23	1335228	Seal	1
24	375575	Bolt	1
25	375602	Bolt	1
26	1335226	Nut	1
27	274232	Plug, RH (1/4 NPT)	1
27	1331341	Plug, LH (3/8 NPT)	1
28	159971	Plug	8
29	1358079	Plug, LH	1
29	388302	Plug, RH	1
30	1331341	Plug	1
31	274232	Plug	3

©1999 HYSTER COMPANY

CYLINDER HEAD (FIGURE 28)

GASOLINE & LPG

5LM 1995 SERIES ENGINE

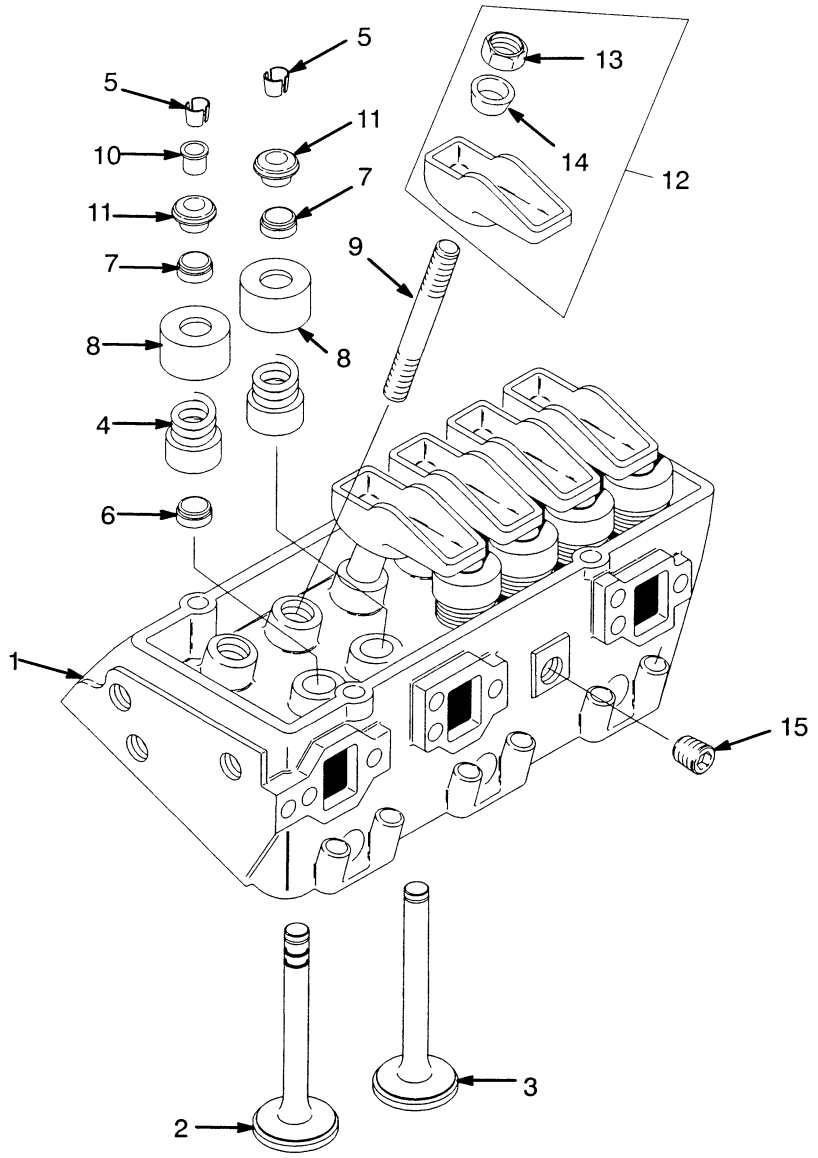

REF		PART NO.	NAME OF PART	QTY
		1377796	Engine	1
1		1374258	Cylinder Head	2
2		375557	Inlet Valve (Standard)	6
3		1374105	Exhaust Valve (Standard)	6
4		263748	Spring	12
5		263750	Key	24
6	a	1389977	Seal	6
7	a	145173	Valve Seal	12
8		314539	Shield	12

REF	PART NO.	NAME OF PART	QTY
9	1358677	Stud	12
10	149867	Rotator Assy	12
11	312948	Cap	12
12	1367478	Kit-Rocker Arm	1
13	1358043	Nut	12
14	....	Ball	12
15	388359	Plug	1

a Included In Top Gasket Kit 1383905

©1999 HYSTER COMPANY

NOTES

©1999 HYSTER COMPANY

VALVE COVERS & INLET MANIFOLD (FIGURE 29)

GASOLINE & LPG

5LM 1995 SERIES ENGINE

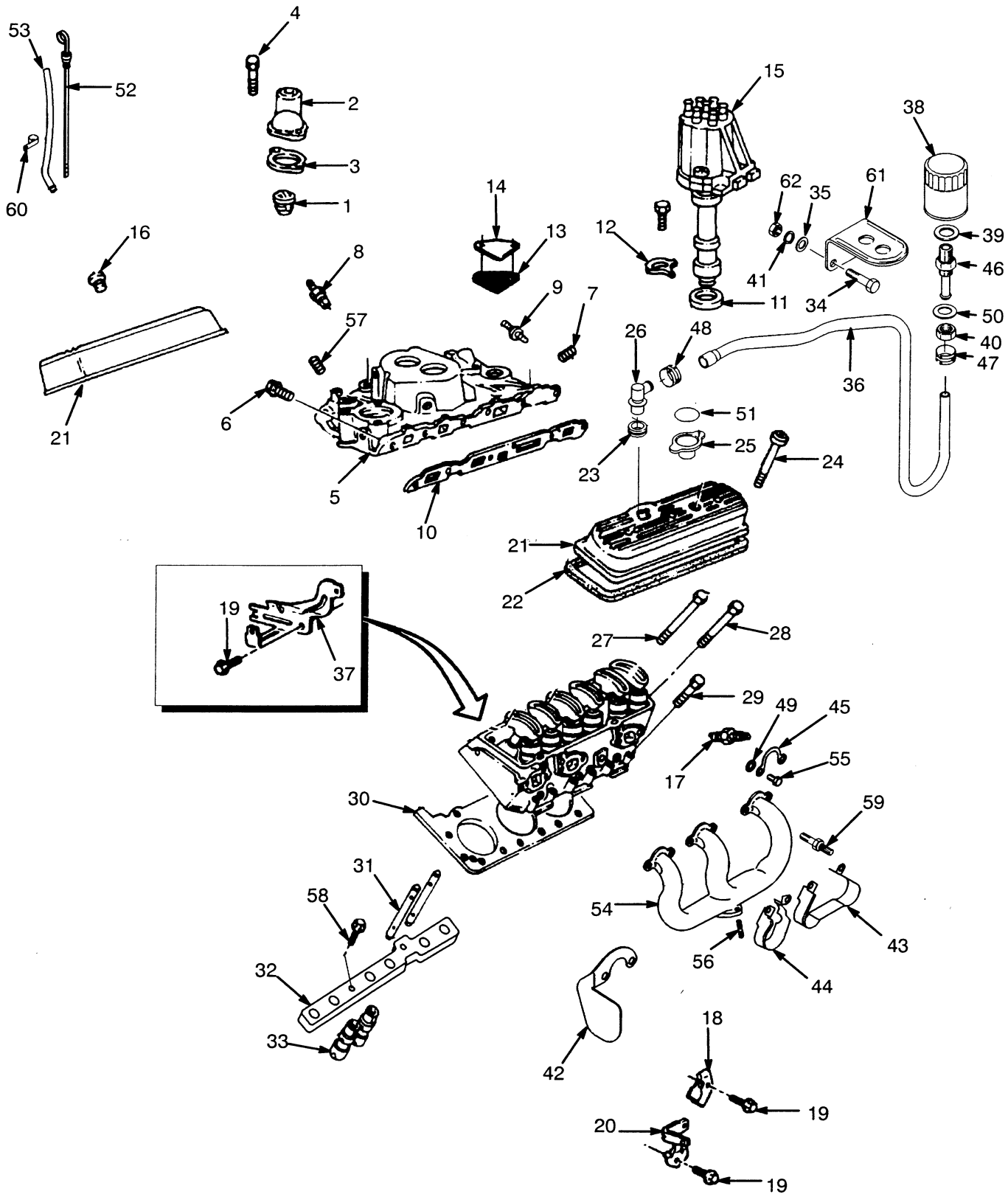

VALVE COVERS & INLET MANIFOLD

GASOLINE & LPG

5LM 1995 SERIES ENGINE

REF		PART NO.	NAME OF PART	QTY
		1377796	Engine	1
1		1374109	Thermostat	1
2		1371229	Water Outlet	1
3	a	1374110	Gasket	1
4		375597	Bolt	2
5		1374111	Inlet Manifold	1
6		388308	Bolt	1
7		388359	Plug	1
8		1314381	Coolant Sensor	1
9		375598	Stud	4
10	a	1389976	Gasket (Inlet Manifold)	2
11	a	1334423	Gasket (Ignition Timer)	1
12		1335497	Clamp	1
13		1374113	Gasket (EGR Valve)	1
14		1374112	Cover (EGR Valve)	1
15		....	Distributor Assy ☞ Figure 96	1
16		1383904	Grommet	6
17	b	1375925	Spark Plug	6
18		1327907	Support	1
19		370169	Screw & Lockwasher	3
20		1374324	Support	1
21		1374291	Cover, LH	1
21		1374292	Cover, RH	1
22	a	1374293	Gasket (Valve Cover)	2
23		1374288	Grommet	3
24		1374289	Bolt	6
25		1374290	Cap	1
26		321734	PCV Valve	1
27		1377792	Bolt (3.75 in.)	10
28		1377793	Bolt (3.15 in.)	4
29		1377794	Bolt (1.75 in.)	12
30	a	1386190	Gasket (Cylinder Head)	2
31		388356	Push Rod	12
32		1374115	Guide	2
33		1343902	Lifter	12
34		136749	Capscrew	2
35		320157	Washer	2
36		1337871	Hose	1
37		1374324	Retainer	1
38		1350036	Breather	1
39		1300152	Washer	1
40		14761	Nut	1
41		292681	Lockwasher	2
42		352952	Heat Shield	1
43		1316488	Shield (Spark Plug)	2
44		1316494	Shield	2
45		366686	Lock (Exhaust Manifold Bolt)	6
46		379400	Fitting	1
47		379405	Clamp	1
48		353199	Clamp	1
49		1304392	Washer	12
50		15162	Washer	1
51		1369485	Cover	1
52		388514	Dipstick	1
53		369139	Tube (Dipstick)	1
53		288394	Sealant	AR
54		1380802	Manifold (Exhaust)	2
55		16379	Capscrew	11
56		352903	Stud	6
57		1335241	Plug	1
58		1371233	Bolt	4
59		1378932	Stud	1
60		133696	Clamp	1
61		186998	Bracket	1
62		239503	Nut	2

a Included In Top Gasket Kit 1383905

b Included in Major Tune-Up Kits 996337 & 996340

©1999 HYSTER COMPANY

CAMSHAFT & OIL PAN (FIGURE 30)

GASOLINE & LPG

5LM 1995 SERIES ENGINE

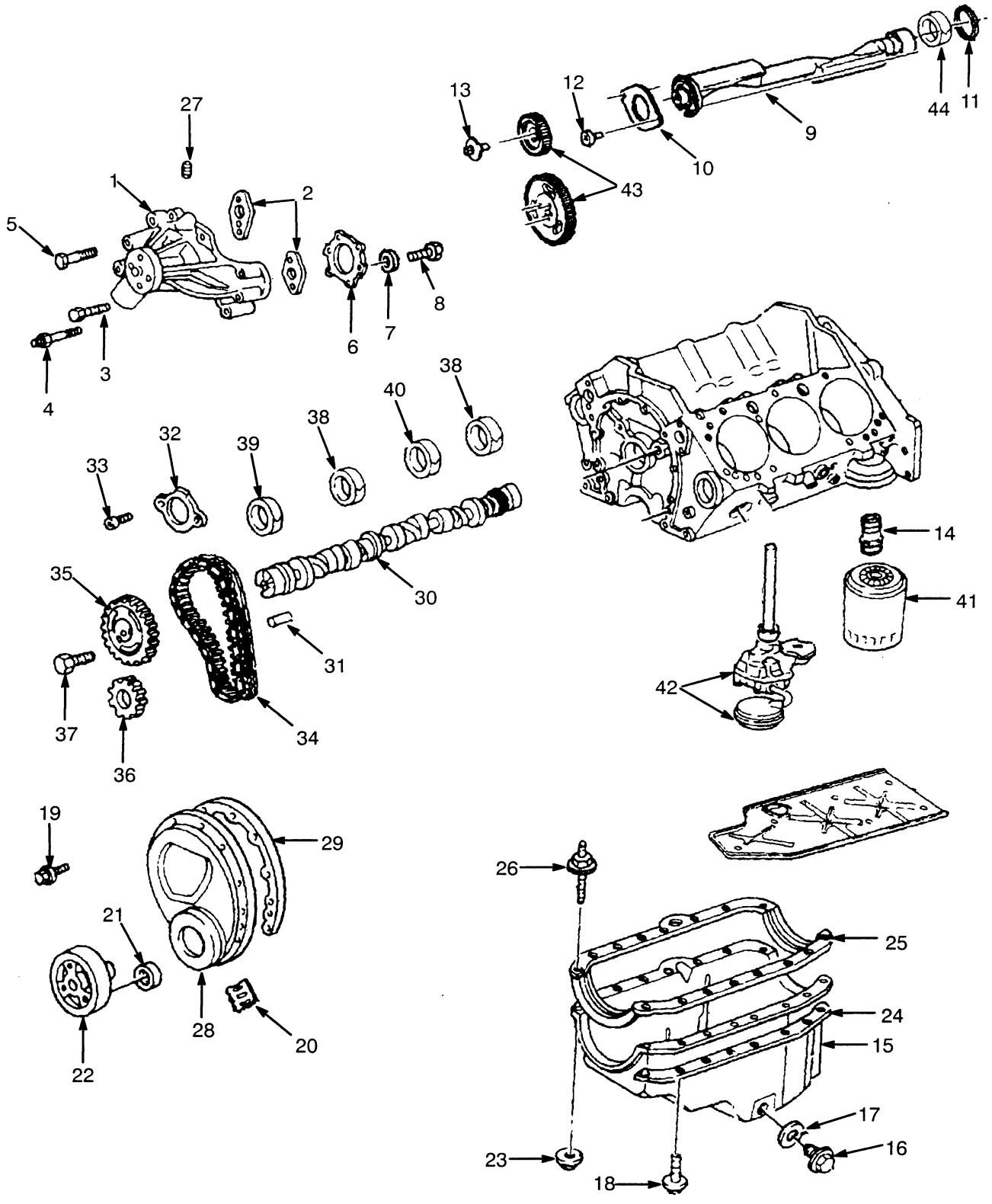

CAMSHAFT & OIL PAN

GASOLINE & LPG

5LM 1995 SERIES ENGINE

REF	PART NO.	NAME OF PART	QTY
	1377796	Engine	1
1	1377786	Water Pump	1
2	263828	Gasket	2
3	1374307	Bolt	2
4	263827	Stud	2
5	1335240	Bolt	1
6	1335494	Gasket (Water Pump)	1
7	369748	Washer	1
8	370169	Capscrew	5
9	1374312	Shaft (Balancer)	1
10	1374326	Retainer	1
11	1374313	Plug	1
12	1339963	Bolt	2
13	1374317	Bolt	1
14	375587	Fitting (Oil Filter)	1
15	1306676	Oil Pan Assy	1
16	308624	Screw	1
17	388305	Gasket	1
18	1376876	Bolt	16
19	1377103	Bolt	10
20	375589	Pointer	1
21	1377104	Seal	1
22	1358085	Balancer	1
23	1360178	Nut	4
24	1339972	Reinforcement, RH	1
24	1339971	Reinforcement, LH	1
25	375582	Oil Pan Gasket	1
26	388364	Stud	2
27	15303	Plug	1
28	1377787	Cover	1
29	....	Gasket	1
30	1374296	Camshaft	1
31	1374297	Pin	2
32	1374298	Retainer	1
33	1374299	Bolt	2
34	375616	Chain	1
35	1374300	Sprocket	1
36	375615	Sprocket	1
37	1374301	Bolt	1
38	301955	Bearing (Camshaft)	2
39	301956	Bearing (Camshaft)	1
40	301957	Bearing (Camshaft)	1
41	1320000	Oil Filter	1
42	....	Oil Pump Assy	1
		☞ Figure 39	
43	1374315	Kit-Gear (Balancer)	1
44	1374314	Bearing	1

©1999 HYSTER COMPANY

CYLINDER BLOCK (FIGURE 31)

GASOLINE AND LPG

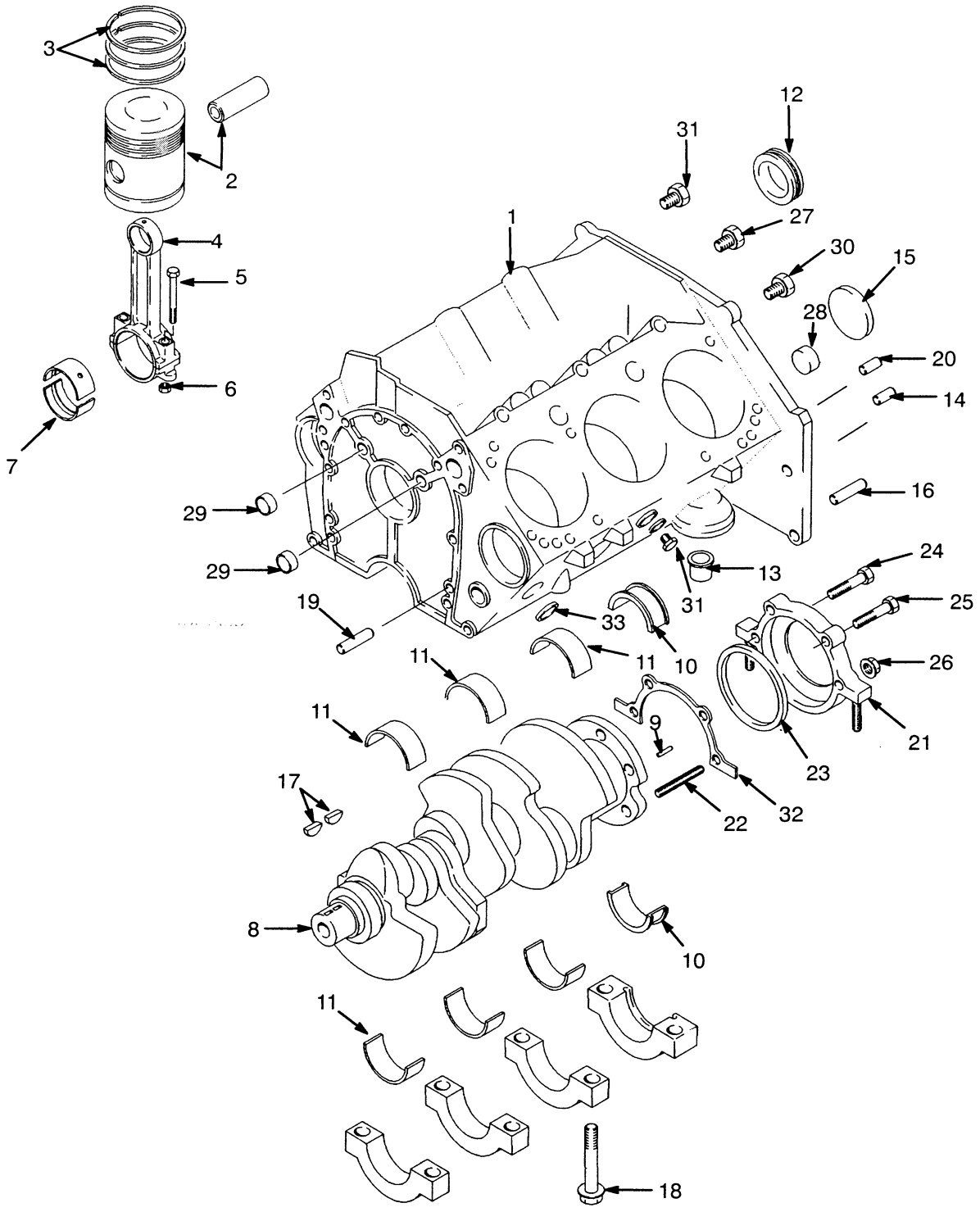

©1999 HYSTER COMPANY

CYLINDER BLOCK

GASOLINE AND LPG

Key
A: 6LX 1996 Series Engine
B: 7LX 1997 And 8LX 1998 Series Engine
C: 9LX 1999 Series Engine

Ref	Part No.	Name Of Part	Qty A	Qty B	Qty C
	1380300	Engine (6LX)	1	..	..
	1393582	Engine (7LX)	..	1	..
	1453581	Engine (8LX)	..	1	..
	1459646	Engine (9LX)	..	..	1
1	1389099	Short (Block Assy)	1	1	..
1	1460385	Short (Block Assy)	..	..	1
2	1390759	Kit-Piston and Pin (Standard)	6	6	6
2	1390760	Kit-Piston and Pin (0,5 mm)	6	6	6
3	1390761	Kit-Piston Ring (Standard)	6	6	6
3	1390765	Kit-Piston Ring (0,5 mm)	6	6	6
4	1360179	Connecting Rod	6	6	6
5	1360182	Bolt	2	2	2
6	1375954	Nut	2	2	2
7	1390770	Kit-Bearing (Standard)	6	6	6
7	375580	Kit-Bearing (0,014 in.)	6	6	6
8	1377106	Crankshaft	1	1	..
8	1460386	Crankshaft	..	..	1
9	375571	Pin	1	1	1
10	1307958	Kit-Crankshaft Bearings (Rear Standard)	1	1	..
10	1390773	Kit-Crankshaft Bearings (Rear 0,001 in.)	1	1	1
10	1390774	Kit-Crankshaft Bearings (Rear 0,002 in.)	1	1	..
10	1309839	Kit-Crankshaft Bearings (Rear 0,010 in.)	1	1	..
11	375551	Kit-Crankshaft Bearings (Standard)	1	1	..
11	1460737	Kit-Crankshaft Bearings (Standard)	..	..	3
11	1390771	Kit-Crankshaft Bearings (0,001 in.)	3	3	..
11	1390772	Kit-Crankshaft Bearings (0,002 in.)	3	3	..
11	263758	Kit-Crankshaft Bearings (0,010 in.)	3	3	..
11	263759	Kit-Crankshaft Bearings (0,020 in.)	3	3	..
11	1460738	Kit-Crankshaft Bearings (0,020 in)	..	..	3
12	1374314	Bearing (Shaft RR)	1	1	1
13	1358156	Oil Bypass Valve	1	1	1
14	159977	Pin	4	4	4
15	1374313	Plug	1	1	1
16	1335499	Pin	2	2	2
17	1335057	Key	2	..	..
17	1451319	Key	..	2	2
18	263842	Bolt	10	10	10
19	263844	Pin	2	..	..
19	1451329	Pin	..	2	..
19	1450941	Pin	..	..	2
20	375601	Pin	1	1	1
21	1335227	Retainer Assy	1	..	..
21	1450554	Retainer Assy	..	1	..
21	1460330	Retainer Assy	..	..	1
22	388364	Stud	2	..	..
22	1450555	Stud	..	2	2
23	1335228	Seal	1	..	..
23	1450556	Seal	..	1	..
23	1460331	Seal	..	..	1
24	375575	Bolt	1	1	1
25	375602	Bolt	1	1	1
26	1335226	Nut	1	1	1
27	274232	Plug, RH (1/4 NPT)	1	1	1
27	1331341	Plug, LH (3/8 NPT)	1	1	1
28	159971	Plug	6	6	6
29	1358079	Plug, LH	1	1	1
29	388302	Plug, RH	1	1	1
30	1331341	Plug	1	1	1
31	274232	Plug	3	3	3
32	1335212	Joint	1	1	1
33	169718	Plug	5	5	5

©1999 HYSTER COMPANY

CYLINDER BLOCK (FIGURE 32)

GASOLINE AND LPG

2000 SERIES ENGINE

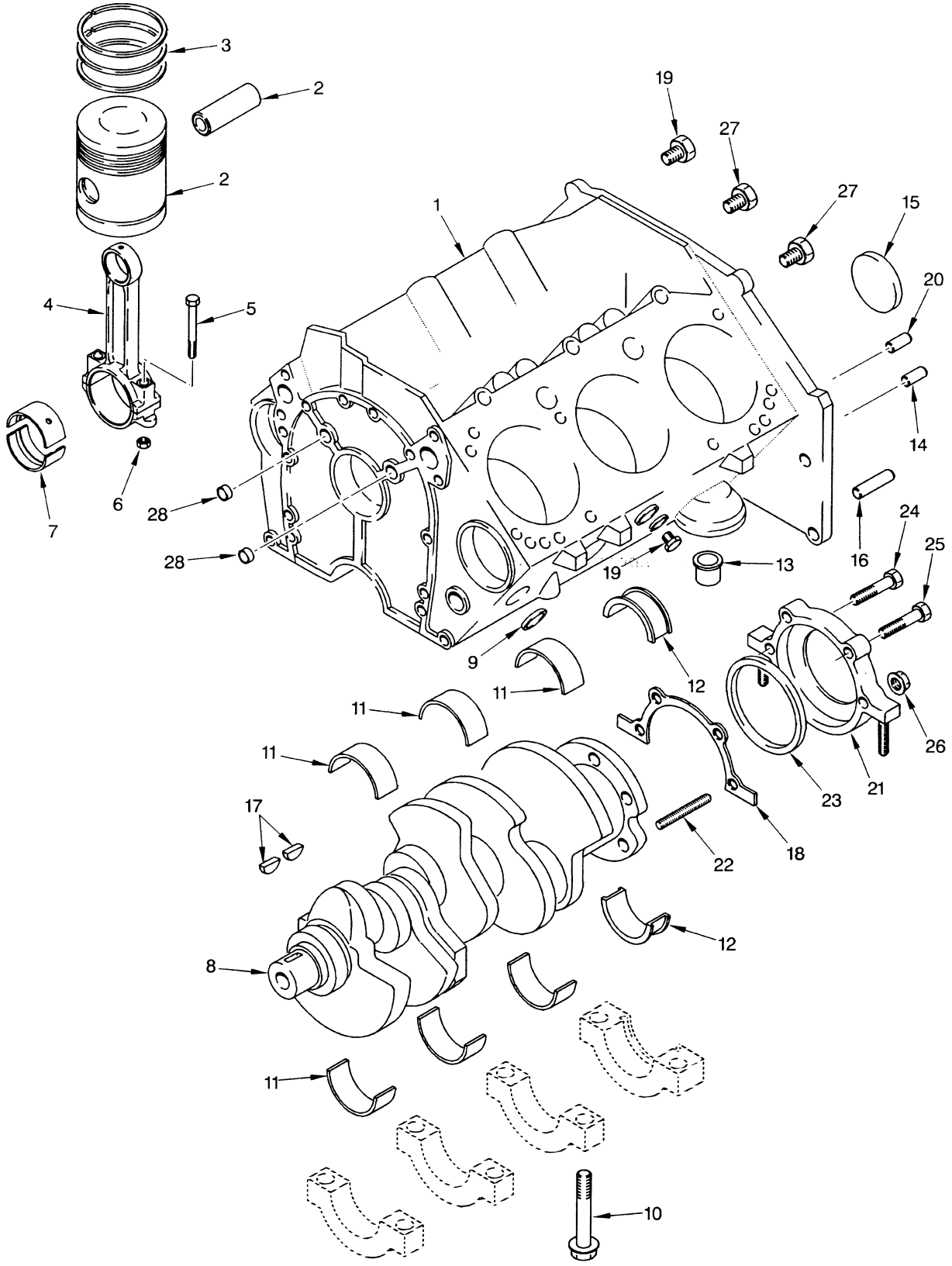

CYLINDER BLOCK

GASOLINE AND LPG

2000 SERIES ENGINE

Ref	Part No.	Name Of Part	Qty
	1467584	Engine	1
1	1460385	Short (Block)	1
2	1390759	Kit-Piston And Pin (Std)	6
2	1390760	Kit-Piston And Pin (0.5 mm)	6
3	1390761	Kit-Piston Ring (Std)	6
3	1390765	Kit-Piston Ring (0.5 mm)	6
4	1360179	Connecting Rod	6
5	1360182	Bolt	2
6	1330450	Nut	2
7	1390770	Kit-Bearing (Std)	6
7	375580	Kit-Bearing (0.014 mm)	6
8	1460386	Crankshaft	1
9	159971	Plug	5
10	263842	Bolt	10
11	1460737	Bearing Set (Crankshaft Std)	3
11	1460738	Bearing Set (Crankshaft 0.020 In)	3
12	1390773	Bearing Set (Crankshaft)	1
13	1358156	Bypass Valve	1
14	159977	Pin	4
15	1374313	Plug	1
16	1335499	Pin	2
17	1451319	Key	1
18	1335212	Gasket	1
19	274232	Plug	5
20	375601	Pin	1
21	1460330	Retainer Assy	1
22	1450555	Stud	2
23	1460331	Seal	1
24	375575	Bolt	2
25	375602	Bolt	1
26	1335226	Nut	1
27	1331341	Plug	3
28	1358079	Plug (LH)	3
28	388302	Plug (RH)	2

©1999 HYSTER COMPANY

CYLINDER HEAD (FIGURE 33)

GASOLINE AND LPG

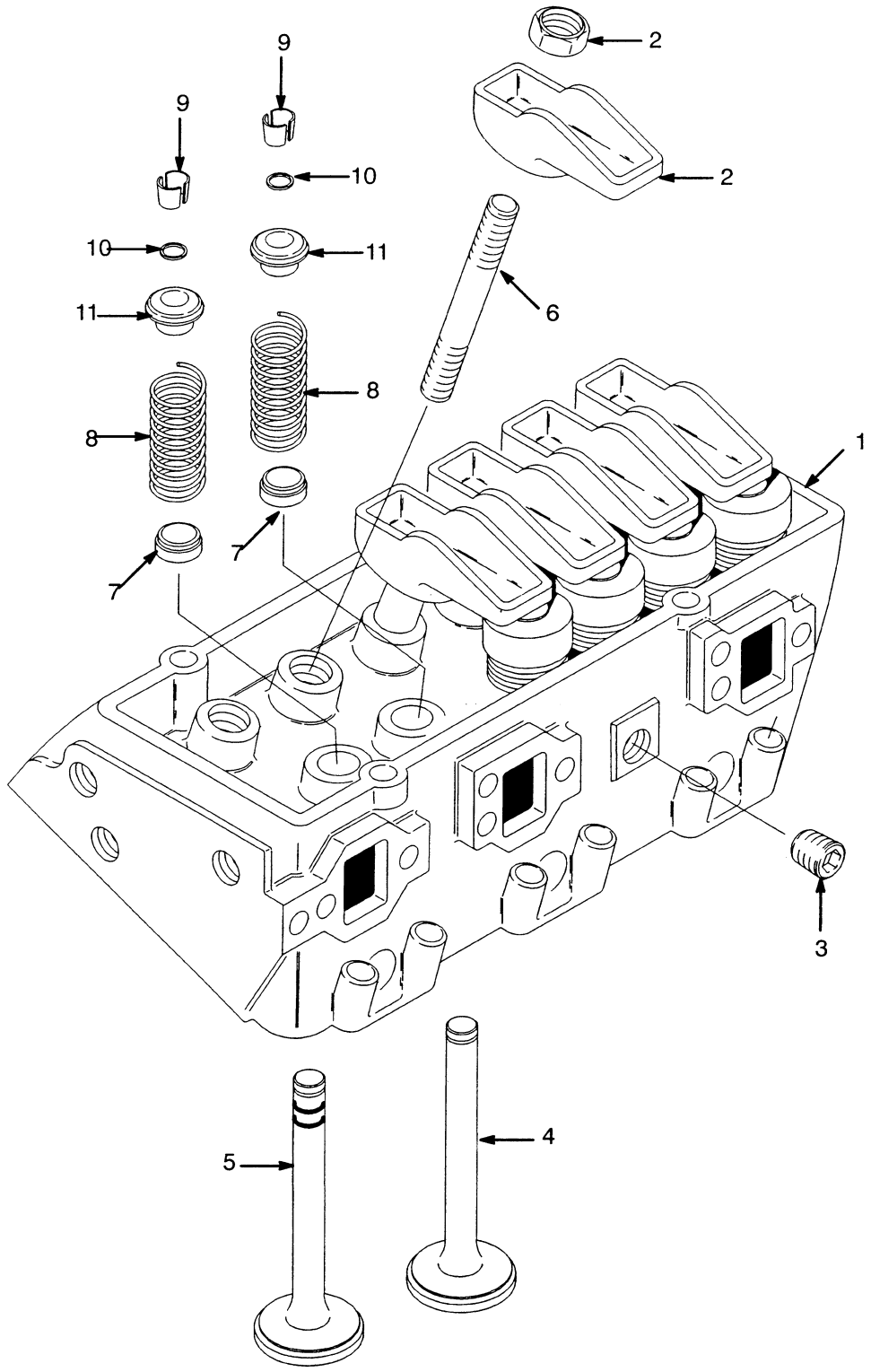

©1999 HYSTER COMPANY

CYLINDER HEAD

GASOLINE AND LPG

Key
A: 6LX 1996 Series Engine
B: 7LX 1997 And 8LX 1998 Series Engine
C: 9LX 1999 Series Engine

Ref	Part No.	Name Of Part	Qty A	Qty B	Qty C
	1380300	Engine (6LX)	1	..	..
	1393582	Engine (7LX)	..	1	..
	1453581	Engine (8LX)	..	1	..
	1459646	Engine (9LX)	..	..	1
1	1386196	Cylinder Head	2	..	..
1	1451323	Cylinder Head	..	2	2
2	1367478	Kit-Rocker Arm	12	12	12
2	1358043	Nut	1	1	1
3	388359	Plug	1	1	..
4	1386194	Exhaust Valve	6	6	6
5	1386195	Inlet Valve	6	6	6
6	358677	Stud	12	12	12
7	1386197	Seal	12	12	12
8	1386198	Spring	12	12	12
9	1377110	Collet	24	24	24
10	1460384	Seal	..	..	12
11	1393127	Cap	..	..	12

©1999 HYSTER COMPANY

CYLINDER HEAD (FIGURE 34)

GASOLINE AND LPG

2000 SERIES ENGINE

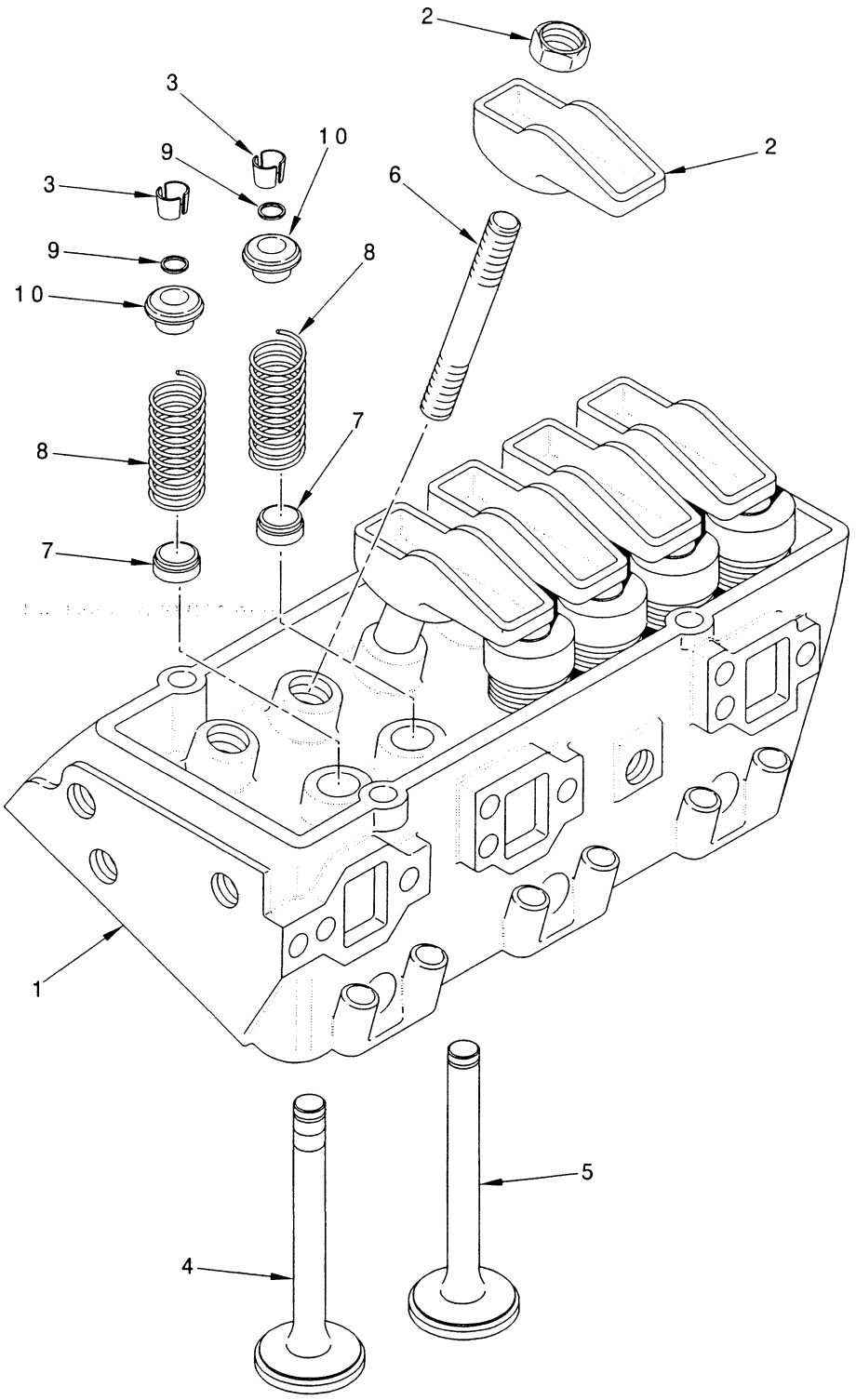

©1999 HYSTER COMPANY

CYLINDER HEAD
GASOLINE AND LPG
2000 SERIES ENGINE

Ref	Part No.	Name Of Part	Qty
	1467584	Engine	1
1	1471557	Cylinder Head	2
2	1471555	Kit-Rocker Arm	12
2	1358043	Nut	1
3	1377110	Key	24
4	1386194	Exhaust Valve	6
5	1386195	Inlet Valve	6
6	1389051	Bolt	4
7	1386197	Seal	12
8	1386198	Spring	12
9	1460384	Seal	12
10	1393127	Cap	12

©1999 HYSTER COMPANY

VALVE COVER (FIGURE 35)
AND INLET MANIFOLD
GASOLINE AND LPG

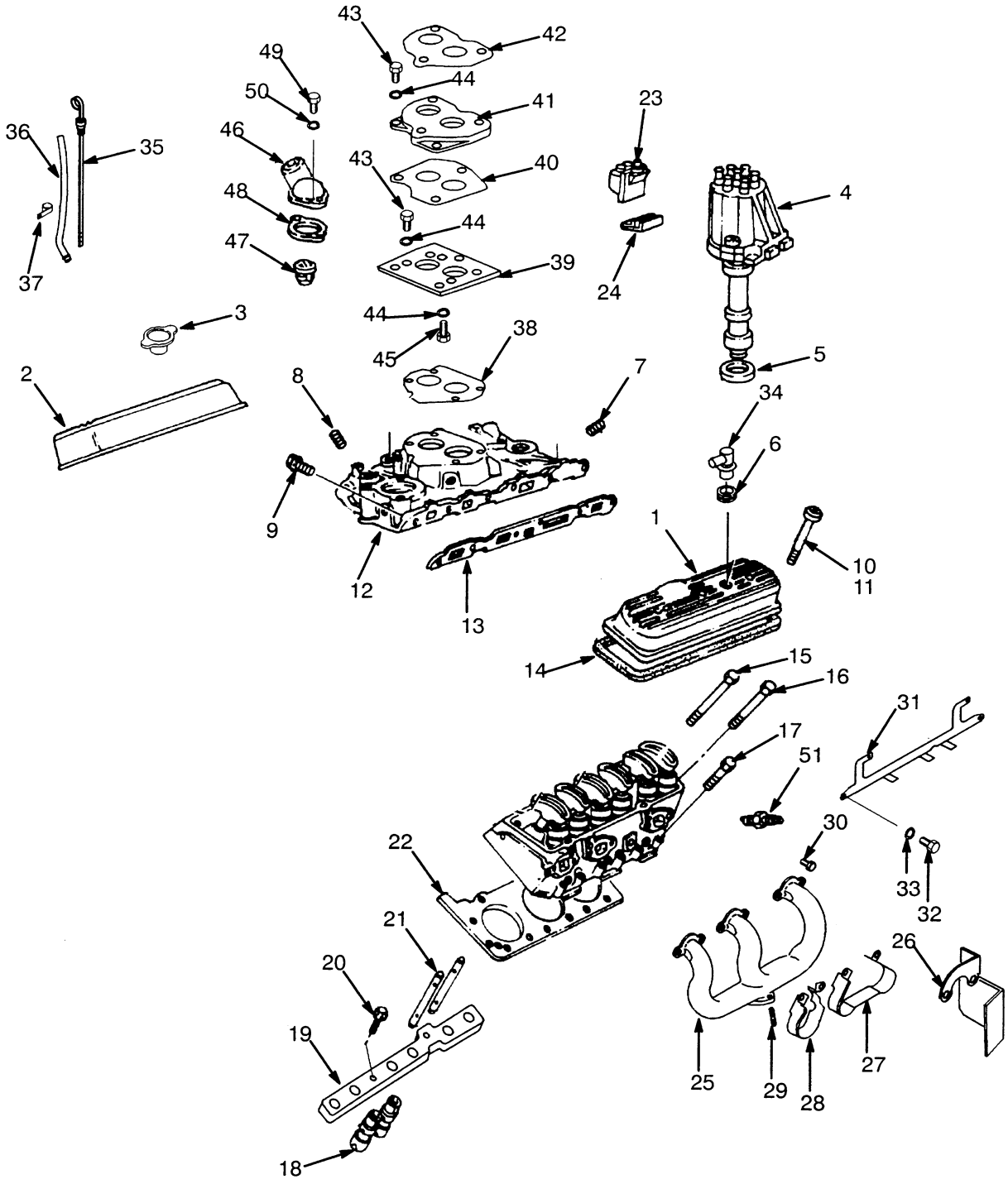

VALVE COVER
AND INLET MANIFOLD
GASOLINE AND LPG

Key
A: 6LX 1996 Series Engine
B: 7LX 1997 And 8LX 1998 Series Engine
C: 9LX 1999 Series Engine

Ref	Part No.	Name Of Part	Qty A	Qty B	Qty C
	1380300	Engine (6LX)	1	..	..
	1393582	Engine (7LX)	..	1	..
	1453581	Engine (8LX)	..	1	..
	1459646	Engine (9LX)	..	..	1
1	1386185	Valve Cover, RH	1	1	1
2	1389102	Valve Cover, LH	1	1	1
3	1374290	Oil Fill Cap	1	1	1
4	....	Distributor	1	1	1
		☞ Figure 97			
5	1334423	Joint	1	1	1
6	1374288	Grommet	3	3	3
7	1331341	Plug Assy	3	3	3
8	1335241	Plug (Water Outlet)	1	1	1
9	1389093	Bolt	8	8	8
10	1383904	Grommet	6	6	6
11	1374289	Bolt	6	6	6
12	1386186	Inlet Manifold	1	1	1
13	1386187	Joint	2	2	2
14	1374293	Joint	2	2	2
15	1377792	Bolt	10	10	10
16	1377792	Bolt	4	4	..
16	1377793	Bolt	..	..	4
17	1377794	Bolt	10	10	10
18	1386188	Valve Lifter	12	12	12
19	1389050	Guide	2	2	2
20	1389051	Bolt	4	4	4
21	1386189	Push Rod	12	12	12
22	1386190	Joint (Cylinder Head)	2	2	2
23	1386191	Ignition Coil	1	1	1
23	1371237	Bolt	2	2	..
24	1389103	Bracket (Upper)	1	1	..
24	1389105	Bracket (Lower)	1	1	1
25	1380802	Exhaust Manifold	2	2	2
26	352952	Heat Shield	1	1	1
27	1316488	Shield (Spark Plug)	2	2	2
28	1316494	Shield (Spark Plug)	2	2	2
29	1384349	Stud	6	6	6
30	1383257	Bolt	12	12	12
31	1383241	Support	2	2	2
32	133469	Hex Head Bolt	4	4	4
33	15154	Washer	4	4	4
34	379407	Fitting	1	1	1
35	388514	Dipstick	1	1	1
36	369139	Tube	1	1	1
37	133696	Clamp	1	1	1
38	1383237	Joint	1	1	1
39	1383211	Plate (Lower)	1	1	1
40	1383213	Joint	1	1	1
41	1383239	Spacer	1	1	1
42	1333806	Joint	1	1	1
43	16836	Hex Head Bolt	7	7	7
44	15155	Washer	10	10	10
45	16394	Screw	1	1	1
46	1371229	Water Outlet	1	1	1
47	231522	Thermostat	1	..	..
47	1450643	Thermostat	..	1	1
48	1330725	Joint	1	1	1
49	16598	Screw	2	2	2
50	15156	Washer	2	2	2
51	1389133	Spark Plug	6	6	6
51	1452376	Spark Plug (Optional)	6	6	6

©1999 HYSTER COMPANY

VALVE COVER AND INLET MANIFOLD (FIGURE 36)

GASOLINE AND LPG

2000 SERIES ENGINE

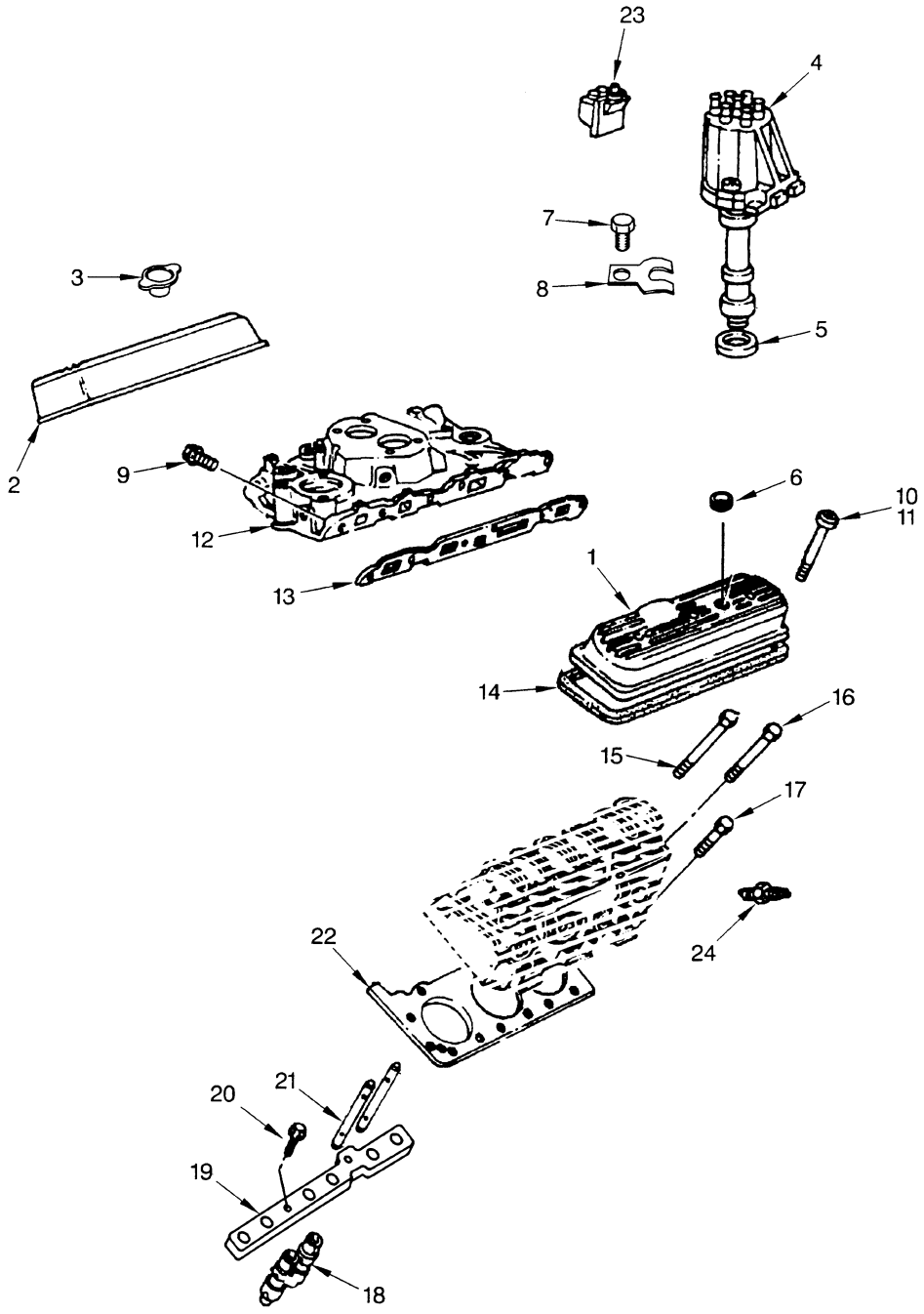

©1999 HYSTER COMPANY

VALVE COVER AND INLET MANIFOLD

GASOLINE AND LPG

2000 SERIES ENGINE

Ref	Part No.	Name Of Part	Qty
	1467584	Engine	1
1	1386185	Valve Cover (RH)	1
2	1389102	Valve Cover (LH)	1
3	1374290	Cap (Oil)	1
4	....	Distributor Assy ☞ Figure 97	1
5	1334423	Gasket	1
6	1374288	Grommet	3
7	375597	Bolt	1
8	1335497	Clamp	1
9	1389093	Bolt	8
10	1383904	Grommet	6
11	1374289	Bolt	6
12	1386186	Manifold (Inlet)	1
13	1386187	Gasket	2
14	1374293	Gasket	2
15	1377792	Bolt	10
16	1377793	Bolt	4
17	1377794	Bolt	10
18	1471559	Valve Lifter	12
19	1389050	Guide	2
20	1389051	Bolt	4
21	1386189	Push Rod	12
22	1386190	Gasket	2
23	1386191	Ignition Coil	1
24	1389133	Spark Plug	6
24	1452376	Spark Plug (Optional)	6

©1999 HYSTER COMPANY

CAMSHAFT AND OIL SUMP (FIGURE 37)

GASOLINE AND LPG

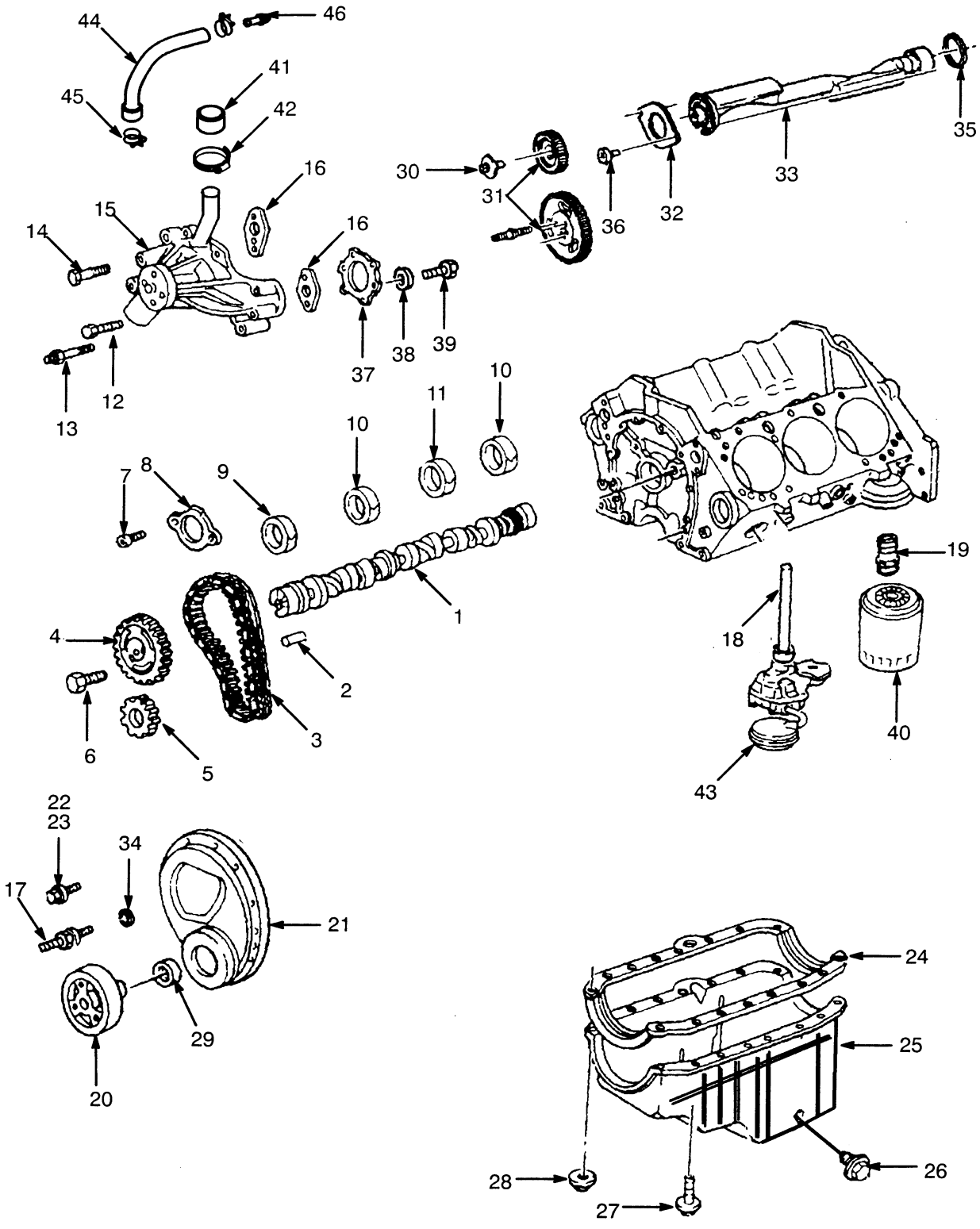

CAMSHAFT AND OIL SUMP

GASOLINE AND LPG

Key
A: 6LX 1996 Series Engine
B: 7LX 1997 Series Engine
C: 8LX 1998 Series Engine
D: 9LX 1999 Series Engine

Ref	Part No.	Name Of Part	Qty A	B	C	D
	1380300	Engine (6LX)	1	..	..	..
	1393582	Engine (7LX)	..	1	..	..
	1453581	Engine (8LX)	..	..	1	..
	1459646	Engine (9LX)	..	..	..	1
1	1374296	Camshaft	1	1	..	..
1	1456111	Camshaft	..	..	1	1
2	1374297	Pin	2	2	2	2
3	375616	Chain	1	..	..	..
3	1450792	Chain	..	1	1	1
4	1374300	Sprocket	1	1	1	1
5	375615	Sprocket	1	1	1	1
6	1374301	Bolt	3	3	3	3
7	1374299	Bolt	2	2	2	2
8	1374298	Retainer	1	1	1	1
9	301955	Bearing (Camshaft)	1	1	..	..
9	1454955	Bearing (Camshaft)	..	..	1	1
10	301956	Bearing (Camshaft)	2	2	..	..
10	1454956	Bearing (Camshaft)	..	..	2	2
11	301957	Bearing (Camshaft)	1	1	..	..
11	1454957	Bearing (Camshaft)	..	..	1	1
12	1374307	Bolt	2	..	..	..
12	1383257	Bolt	..	4	4	4
13	263827	Bolt	2	..	..	..
14	1335240	Bolt	1	..	..	..
15	1389100	Water Pump	1	1	1	1
16	263828	Joint	2	2	2	2
17	159977	Pin	6	6	6	6
18	....	Oil Pump	1	1	1	1
		☞ Figure 39				
19	375587	Fitting (Oil Filter)	1	1	1	1
20	1386178	Damper	1	1	1	1
21	1386180	Cover	1	1	1	1
22	1386179	Bolt	3	3	3	3
23	1377103	Bolt	2	2	2	2
24	1386184	Joint (Oil Sump)	1	1	1	1
25	1389104	Oil Sump	1	1	1	1
26	1460757	Screw	1	1	1	..
26	1460757	Screw	..	..	..	1
26	388305	Joint	1	1	1	..
26	1460758	Joint	..	..	..	1
27	1386183	Bolt	10	10	10	10
28	1360178	Nut	2	2	2	2
29	1377104	Seal	1	1	1	1
30	1374317	Bolt	6	6	6	6
31	1374315	Kit-Gear (Balancer)	1	1	1	1
32	1374326	Retainer	1	1	1	1
33	1377107	Shaft (Balancer)	1	1	1	1
34	1374313	Plug	1	1	1	1
35	1374314	Bearing	1	1	1	1
36	1339963	Bolt	2	2	2	2
37	1335494	Joint	1	1	1	..
37	1460322	Joint	..	..	..	1
38	369748	Washer	10	10	10	10
39	1374108	Bolt	10	10	10	10
40	1320000	Oil Filter	1	1	1	1
41	1383263	Cap	1	1	1	1
42	130845	Clamp	1	1	1	1
43	1386177	Screen (Oil Pump)	1	..	..	1
43	1451320	Screen (Oil Pump)	..	1	1	..
44	1392547	Hose	1	1	1	..
45	1392548	Clamp	2	2	2	2
46	1393350	Nipple	1	1	1	1

©1999 HYSTER COMPANY

CAMSHAFT AND OIL PAN (FIGURE 38)

GASOLINE AND LPG

2000 SERIES ENGINE

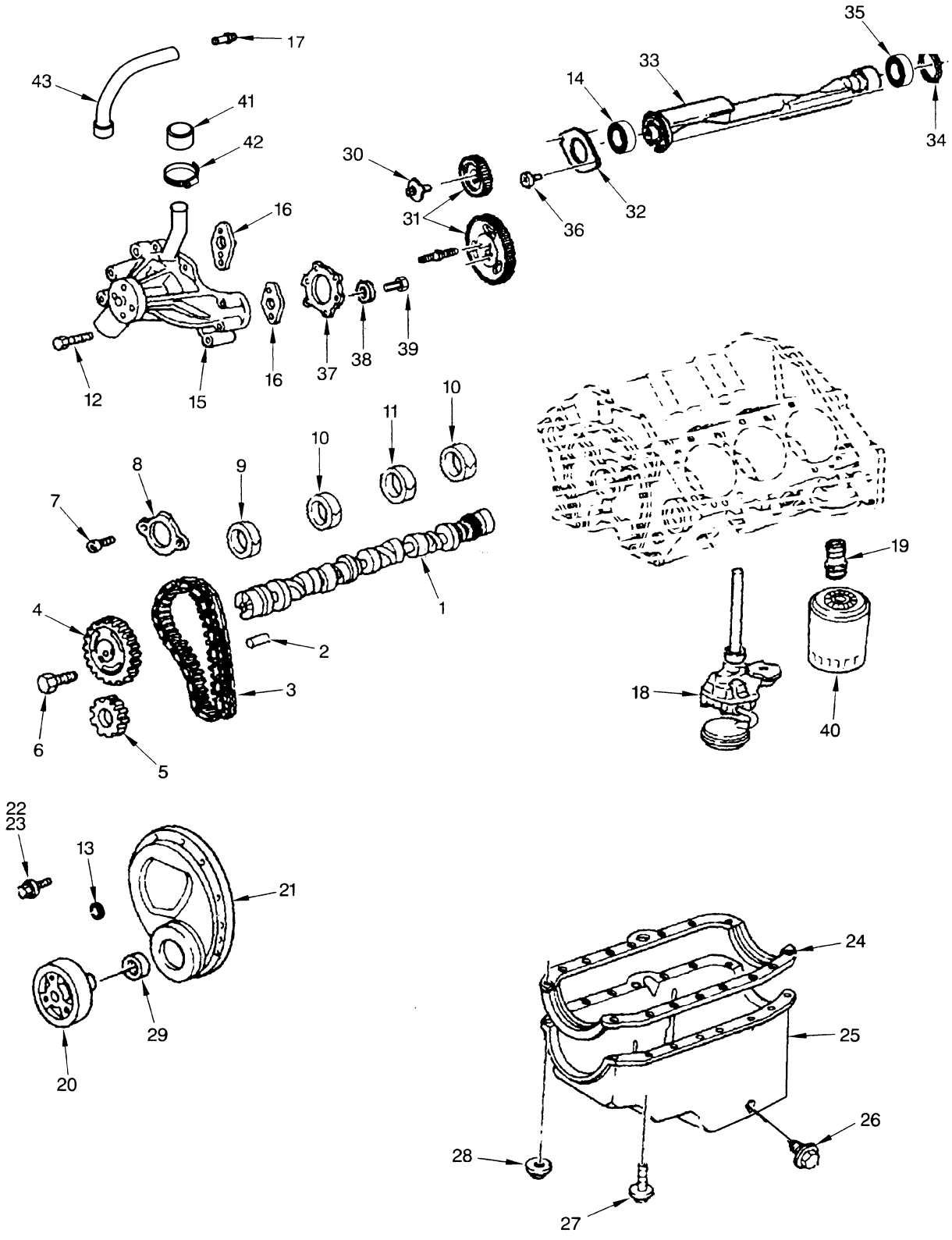

CAMSHAFT AND OIL PAN

GASOLINE AND LPG

2000 SERIES ENGINE

Ref	Part No.	Name Of Part	Qty
	1467584	Engine	1
1	1456111	Camshaft	1
2	1374297	Pin	1
3	1471556	Chain Kit	1
4	.....	Sprocket	1
5	.....	Sprocket	1
6	1374301	Bolt	3
7	1334299	Bolt	2
8	1374298	Retainer	1
9	1454955	Bearing	2
10	1454956	Bearing	2
11	1454957	Bearing	1
12	1383257	Bolt	4
13	1384092	Grommet	1
14	1451321	Bearing	1
15	1389100	Water Pump	1
16	263828	Gasket	2
17	1393350	Nipple	1
18	....	Oil Pump	1
		☞ Figure 39	
19	375587	Fitting	1
20	1386178	Damper	1
21	1386180	Cover	1
22	1386179	Bolt	3
23	1377103	Bolt	2
24	1386184	Gasket	1
25	1471558	Oil Pan	1
26	1460757	Screw	1
26	1460758	Seal	1
27	1386183	Bolt	10
28	1360178	Nut	2
29	1377104	Seal	1
30	1374317	Bolt	6
31	1374315	Kit-Gear	1
32	1374326	Retainer	1
33	1377107	Shaft	1
34	1374313	Plug	1
35	1374314	Bearing	1
36	1339963	Bolt	2
37	1460322	Gasket	1
38	369748	Washer	5
39	1374108	Bolt	10
40	1320000	Oil Filter	1
40	2038072	Oil Filter (Optional)	1
41	1383263	Cap	1
42	130845	Clamp	1
43	1460332	Hose	1

©1999 HYSTER COMPANY

OIL PUMP (FIGURE 39)

GASOLINE & LPG

4LM 1994, 5LM 1995, 1996 THRU 2000 SERIES ENGINE

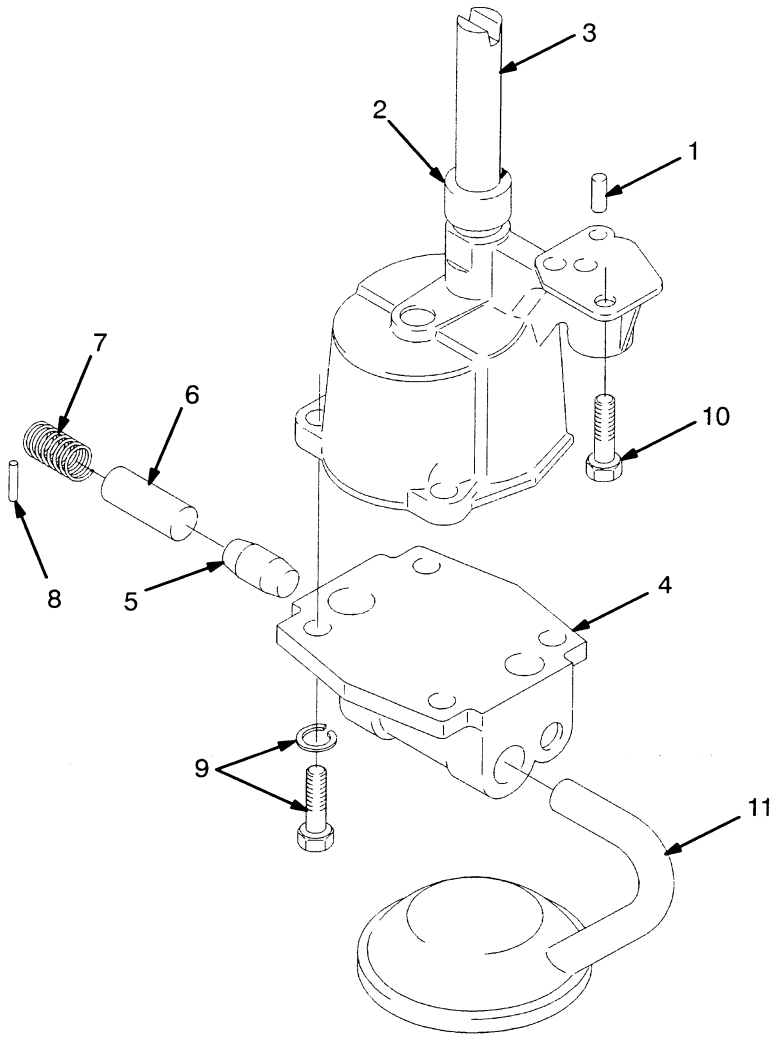

REF	PART NO.	NAME OF PART	QTY
	1386176	Oil Pump	1
1	263844	Pin	2
2	263795	Retainer	1
3	263794	Shaft	1
4	1374319	Cover	1
5	1338223	Oil Pressure Stop Valve	1
6	268573	Pressure Regulator Valve	1
7	1374320	Spring	1
8	1330453	Pin	1
9	1333541	Screw and Washer	2

REF		PART NO.	NAME OF PART	QTY
10		388306	Bolt	1
11	a	1374321	Screen-Oil Pump	1
11	b	1386177	Screen-Oil Pump	1
11	c	1451320	Screen-Oil Pump	1

a 1994 And 1995 Series Engine
b 1996 Series Engine
c 1997,1998, 1999 Series Engine

©1999 HYSTER COMPANY

NOTES

©1999 HYSTER COMPANY

COOLING SYSTEM (FIGURE 40)

DIESEL

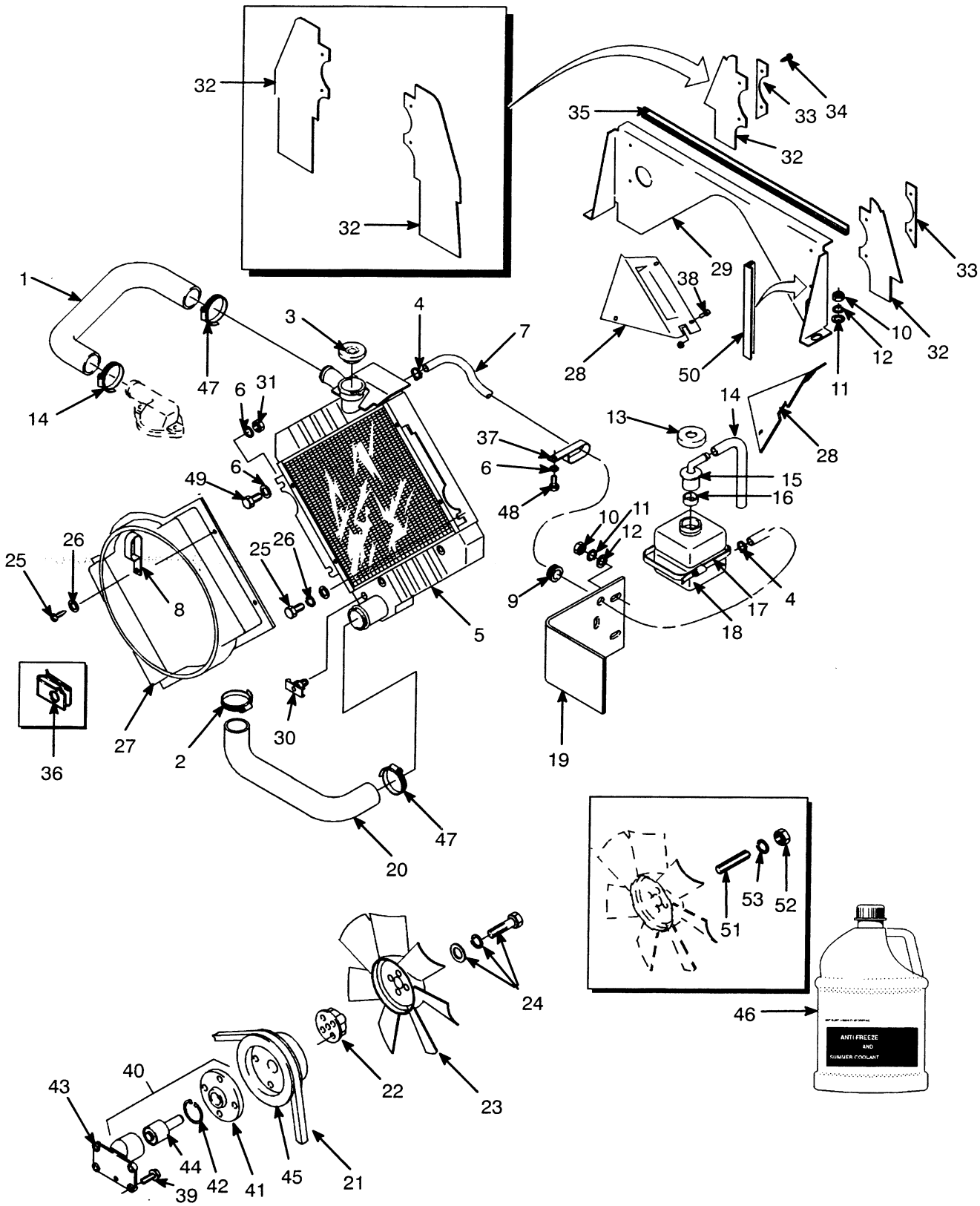

COOLING SYSTEM

DIESEL

REF		PART NO.	NAME OF PART	QTY
1		377334	Hose	1
2		112989	Clamp	1
3		178899	Cap (Radiator)	1
4		353310	Clamp	2
5	d	1387260	Radiator	1
5	e	1452142	Radiator	1
5		1339821	Radiator (Optional)	1
6		15127	Washer	3
7		1305436	Tube	1
8		128259	Clamp	1
9		279737	Grommet	1
10		239503	Nut	4
11		292681	Lockwasher	4
12		320158	Flatwasher	4
13		345454	Cap	1
14		339735	Hose	1
15		345453	Outlet	1
16		336550	Bushing	1
17		340204	Strap	1
18		344432	Reservoir	1
19		352609	Bracket	1
20		1322236	Hose	1
21	f	377332	Fan Belt (Without Low Emissions)	2
21	g	107195	Fan Belt (With Low Emissions)	2
22	a	1343968	Spacer (Without Low Emissions)	1
22	bf	1378427	Spacer (Without Low Emissions)	1
22	g	1455579	Spacer (With Low Emissions)	1
23	a	1343308	Fan	1
23	b	1373924	Fan	1
24	f	136703	Capscrew (Without Low Emissions)	4
24	f	292681	Lockwasher (Without Low Emissions)	4
24	f	320157	Flatwasher (Without Low Emissions)	4
25		136985	Capscrew	3
25		292682	Lockwasher	3
26		320159	Washer	3
27		1456479	Shroud	1
27		1456480	Shroud (Optional)	1
28		1343300	Baffle (LH, H70-80XL & 90XLS)	1
28		1343301	Baffle, RH (H90-110XL)	1
29		1339820	Baffle (Without Noise Reduction)	1
29		1356992	Baffle (With Noise Reduction)	1
30		12815	Drain Valve	1
31		136692	Nut	2
32		1343937	Seal (H70-80XL)	1
32		1358604	Seal (H90-110XL)	1
32		1358603	Seal (Optional) (H70-110XL)	1
33		1357930	Retainer	1
34		1301177	Screw	4
35		1343320	Trim	1
36		1343927	Clip	2
36		1329271	Clip (For Optional Shroud)	2
37		124297	Clamp	2
38		1301177	Screw	1
39	c	1343174	Screw	4
40	c	1347275	Housing Assembly (Without Low Emissions)	1
40	h	1456516	Housing Assembly (With Low Emissions)	1
41		....	Hub	1
42	c	982328	Snap Ring	2
43		....	Housing	1
44		....	Bearing	1
45	f	377395	Pulley (Without Low Emissions)	1
45	g	1455577	Pulley (With Low Emissions)	1
46		3002338	Antifreeze (1 Gallon)	1
46		3002323	Antifreeze (55 Gallons)	1
47		119236	Clamp	3
48		124119	Screw	1
49		16073	Capscrew	2
50		1343321	Trim (H90XL)	2
51	g	287750	Stud (With Low Emissions)	4
52	g	....	Locknut (With Low Emissions)	4
53	g	292681	Washer (With Low Emissions)	4

a Last Used on S/N G005D-4371
b First Used on S/N G005D-4372
c Included With Engines 377323 and 1343305
d Last Used on S/N G005D-10472
e First Used on S/N G005D-10473
f Last Used on S/N G005D-11941
g First Used on S/N G005D-11942
h Included With Engine 1453203

©1999 HYSTER COMPANY

CYLINDER BLOCK (FIGURE 41)

DIESEL (WITHOUT LOW EMISSIONS)

LAST USED ON S/N G005D-11942

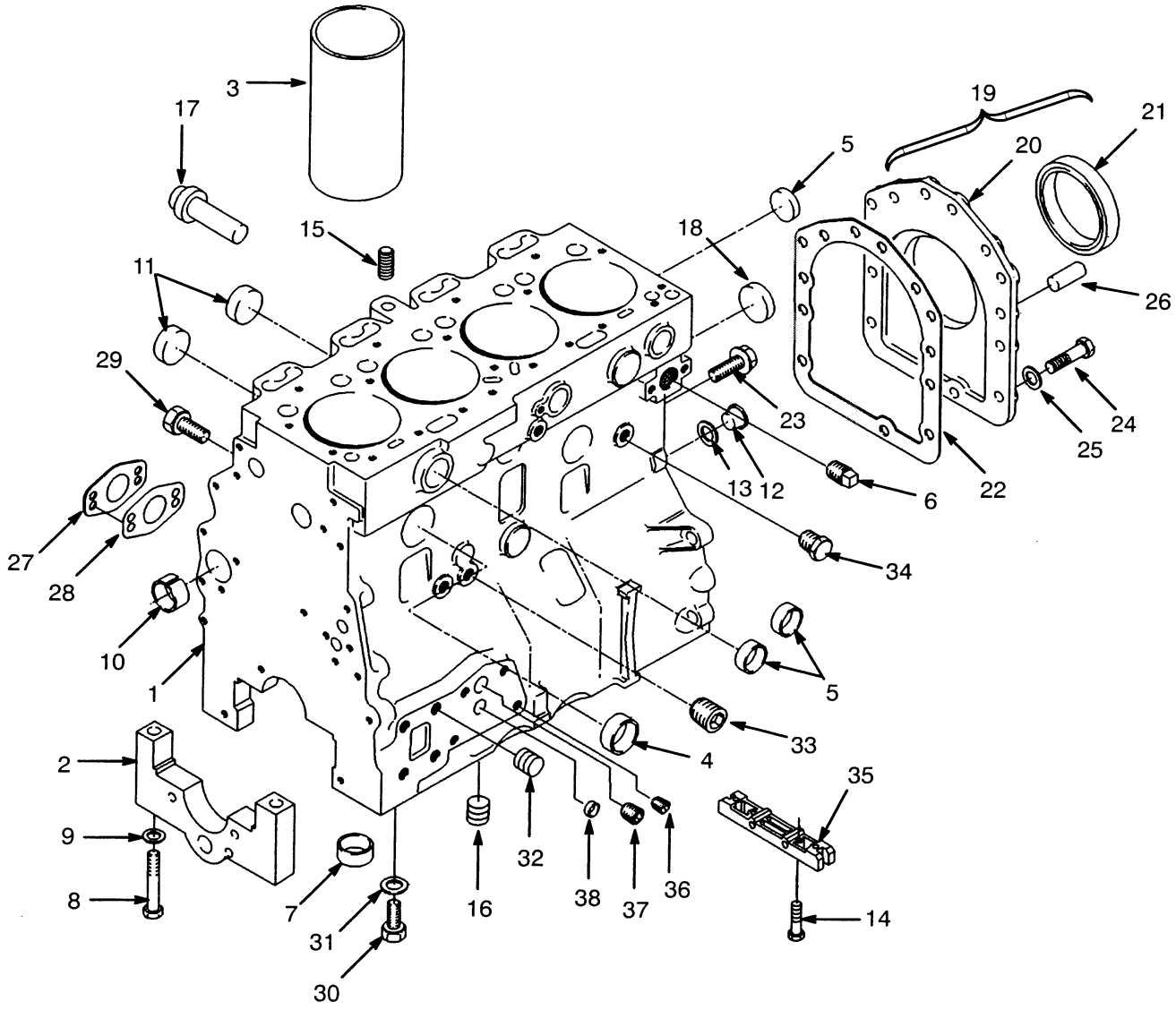

©1999 HYSTER COMPANY

CYLINDER BLOCK

DIESEL (WITHOUT LOW EMISSIONS)

LAST USED ON S/N G005D-11942

KEY:
A: Oil Clutch
B: Powershift

REF		PART NO.	NAME OF PART	QTY A	QTY B
		377323	Engine	1	..
		1343305	Engine	..	1
1		1391776	Kit-Cylinder Block	1	1
2		....	Bearing Cap	5	5
3	b	1305696	Liner	4	4
4	b	349377	Plug	1	1
4	b	1390126	Plug	1	1
5	b	980727	Plug	6	6
6	b	15304	Fitting	1	1
7	b	99576	Thimble	10	10
8	b	16794	Capscrew	10	10
9	b	301836	Washer	10	10
10	b	257603	Bushing	1	1
11	b	385531	Plug	6	6
12	b	161385	Plug	1	1
13	b	984632	Washer	1	1
14		1307875	Screw	8	8
15		992393	Plug	1	1
16		170748	Plug	1	1
17		365854	Plug	1	1
18		1388387	Plug	1	1
19		1369077	Housing	1	1
20		....	Cover	1	1
21		350397	Seal	1	1
22	a	1379734	Gasket	1	1
23		386459	Screw	10	10
24		1369081	Screw	2	2
25		328043	Washer	2	2
26		158139	Dowel Pin	2	2
27		1305698	Plate	1	1
28	ab	1345784	Gasket	1	1
29	b	1306349	Screw	2	2
30	b	16372	Capscrew	4	4
31		152605	Spacer	4	4
32		1306341	Plug	4	4
33		15483	Fitting	2	1
34		245800	Plug	1	1
35	c	1319537	Bridge Piece	1	1
35	d	1450136	Bridge Piece	1	1
36		1318904	Plug	2	2
37		15314	Plug	1	1
38		158017	Plug	1	1

a Included In Bottom Gasket Kit 1371723
b Included in Cylinder Block Kit 1391776
c Last Used On Engine S/N U503404S
d First Used On Engine S/N U503405S

Service Note: Service Up To Date Code 1/31/94 With (2) 1369081 Screws And (2) 328043 Washers. Service Date Code 2/1/94 And Up With (2) 1382061 Screws.

©1999 HYSTER COMPANY

CYLINDER HEAD (FIGURE 42)

DIESEL (WITHOUT LOW EMISSIONS)

LAST USED ON S/N G005D-11942

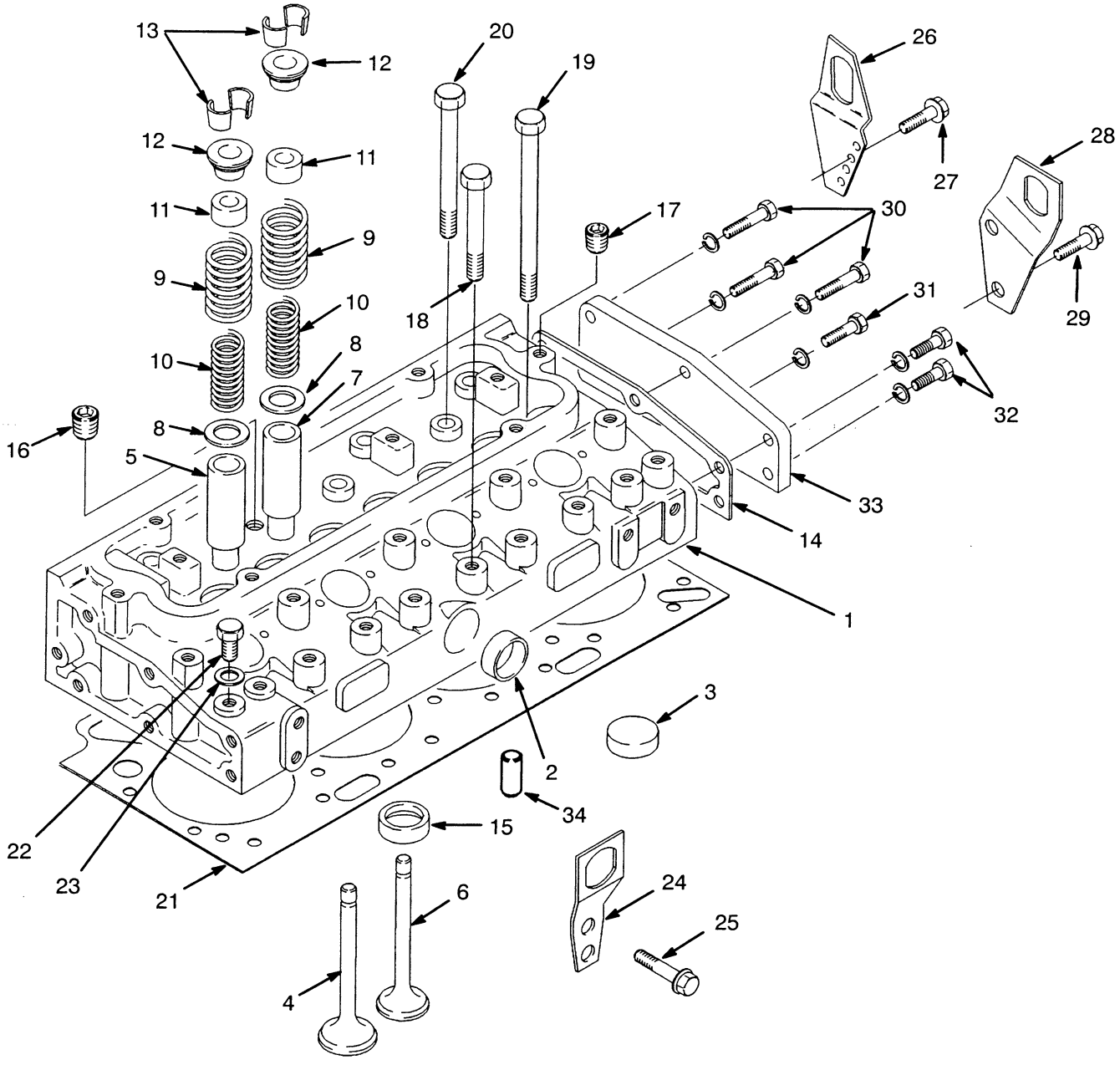

©1999 HYSTER COMPANY

CYLINDER HEAD

DIESEL (WITHOUT LOW EMISSIONS)

LAST USED ON S/N G005D-11942

KEY:
A: Oil Clutch
B: Powershift

REF		PART NO.	NAME OF PART	QTY A	QTY B
		377323	Engine	1	..
		1343305	Engine	..	1
1	c	1315755	Head	1	1
1	ed	.....	Cylinder Head	1	1
2	e	980727	Plug	1	1
3	e	349380	Plug	4	4
4	e	1305711	Valve (Intake, Standard)	4	4
5	e	1382073	Guide	4	4
6	e	371536	Valve (Exhaust, Standard)	4	4
7	e	1305714	Guide	4	4
8	e	99569	Washer	8	8
9	e	1305715	Spring	8	8
10	e	1305716	Spring	8	8
11	aeb	187004	Seal	8	8
12	e	1305717	Cap	8	8
13	e	99571	Keeper	16	16
14	ab	1369074	Gasket	1	1
15	e	1305709	Insert	4	4
16	e	15962	Fitting	1	1
17	e	15302	Fitting	4	4
18	e	195342	Screw	8	8
19	e	361336	Screw	2	2
20	e	195343	Screw	12	12
21	abc	1323017	Gasket	1	1
21	d	1388444	Gasket	1	1
22		992025	Plug	1	1
23		986475	Washer	1	1
24		1306346	Plate	1	1
25		1307910	Screw	4	4
26		1306347	Plate	1	1
27		1306371	Screw	2	2
28		1315750	Plate	1	1
29		1315499	Screw	1	1
30		1307881	Capscrew	3	3
31		386459	Capscrew	1	1
32		1306371	Capscrew	2	2
33		1306199	Plate	1	1
34	d	162288	Dowel Pin	2	2

a Included In Top Gasket Kit 1371731
Last Used On Engine S/N U600869W

b Included In Top Gasket Kit 1391225
First Used On Engine S/N U600870W

c Last Used On Engine S/N U707726AW

d First Used On Engine S/N U707727

e Included In Kit 1456064

Note: Engine 1343305 Used Top Gasket Kit 1391225 Only.

©1999 HYSTER COMPANY

CRANKSHAFT AND PISTONS (FIGURE 43)

DIESEL (WITHOUT LOW EMISSIONS)

LAST USED ON S/N G005D-11942

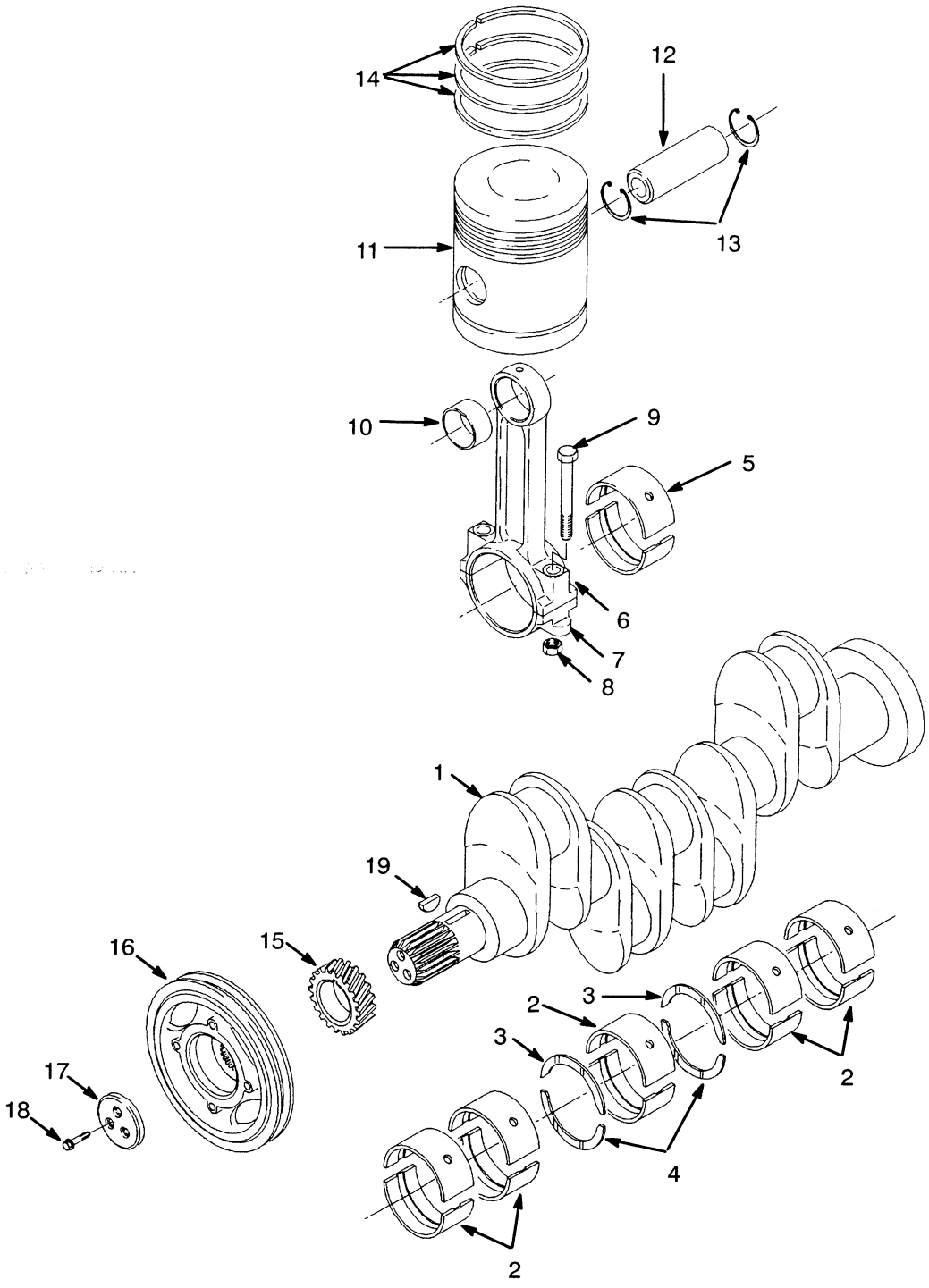

©1999 HYSTER COMPANY

CRANKSHAFT AND PISTONS

DIESEL (WITHOUT LOW EMISSIONS)

LAST USED ON S/N G005D-11942

KEY:
A: Oil Clutch
B: Powershift

REF		PART NO.	NAME OF PART	QTY A	QTY B
		377323	Engine	1	..
		1343305	Engine	..	1
1	a	271299	Crankshaft/Bearing	1	1
2	a	161425	Bearing (Main, Standard)	1	1
2		161429	Bearing (Main, .010 in)	1	1
2		161430	Bearing (Main, .020 in)	1	1
2		161431	Bearing (Main, .030 in)	1	1
3	a	842799	Washer (Standard)	2	2
3		161296	Washer (.007 in)	2	2
4	a	842800	Washer (Standard)	2	2
4		161297	Washer (.007 in)	2	2
5	a	161426	Rod Bearing (Standard.)	1	1
5		161432	Rod Bearing (0.010 in)	1	1
5		161433	Rod Bearing (0.020 in)	1	1
5		161434	Rod Bearing (0.030 in)	1	1
6		161440	Connector Rod	4	4
6		1458329	Thimble	2	2
7		....	Cap	1	1
8		99663	Nut	2	2
9		161648	Bolt	2	2
10		99668	Bushing	1	1
11	b	1459456	Kit-Piston	4	4
12		....	Pin	1	1
13		992003	Snap Ring	2	2
14	b	1459457	Kit-Ring	4	4
15		1305706	Gear	1	1
16		1306193	Pulley	1	1
17		1306194	Block	1	1
18		302713	Screw	3	3
19		99610	Key	1	1

a Crankshaft/Bearing Includes Standard Size Bearings And Thrust Washers

b Up To Engine S/N U797494C Serive With Piston Kit-1382564 And Ring Kit 1309832

©1999 HYSTER COMPANY

OIL FILTER (FIGURE 44)

DIESEL

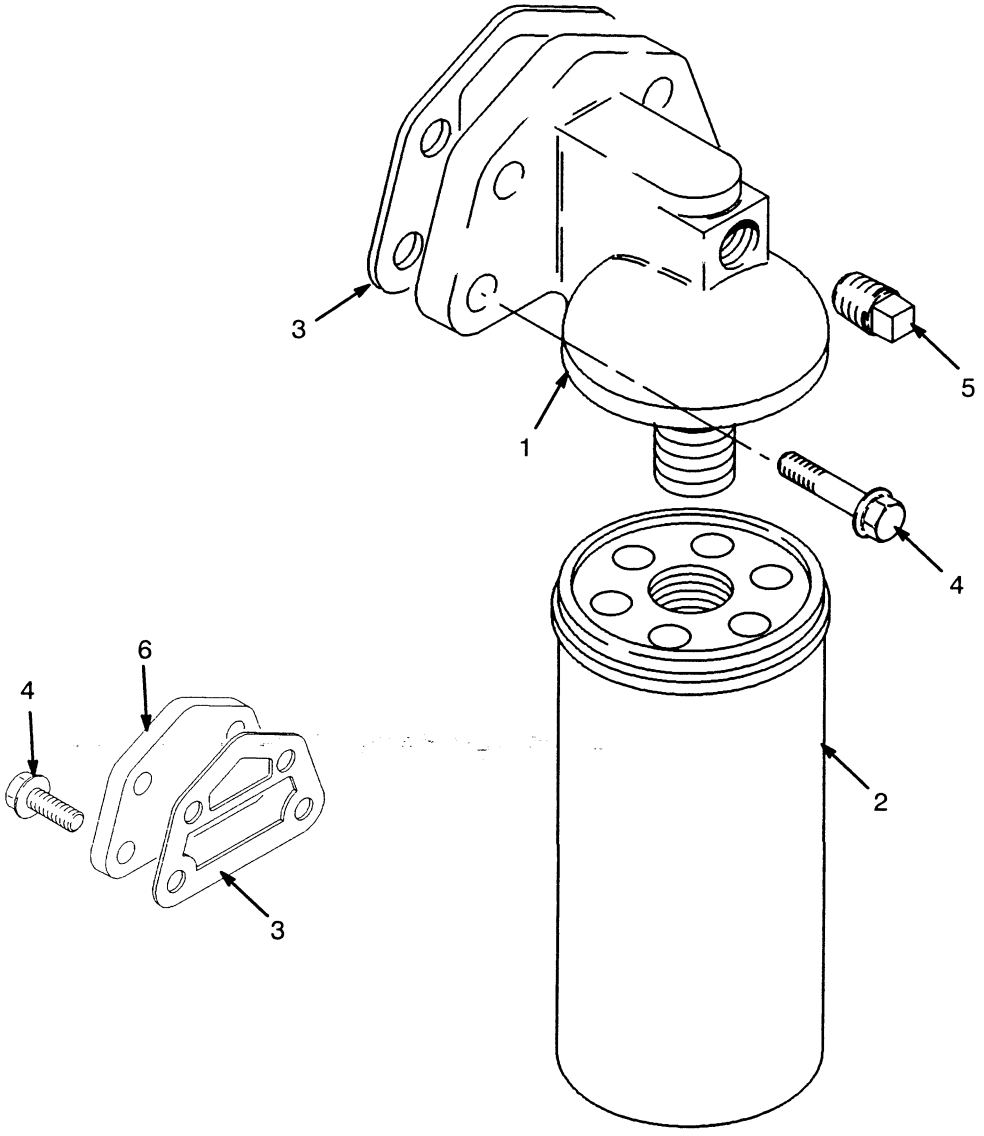

KEY:
A: Oil Clutch
B: Powershift (Last Used On S/N G005D-11942)
C: Powershift (First Used On S/N G005D-11942)

REF		PART NO.	NAME OF PART	QTY A	QTY B	QTY C
		377323	Engine	1	..	..
		1343305	Engine	..	1	..
		1453203	Engine	..	..	1
1		1315767	Filter Head	1	1	1
2		195852	Filter Element	1	1	1
3		1345800	Gasket	1	1	..
3		1345800	Gasket	..	..	1
4	b	1307915	Screw	4	4	4
4	a	1307893	Screw	4	4	..
5		15304	Fitting	1	1	..
5		15314	Fitting	..	..	1
6	c	1374982	Plate	1	1	1

a Last Used On Engine S/N U646744Y
b First Used On Engine S/N U646745Y
c Included in Cylinder Block Kit 1391776

©1999 HYSTER COMPANY

NOTES

©1999 HYSTER COMPANY

TIMING GEAR (FIGURE 45)

DIESEL (WITHOUT LOW EMISSIONS)

LAST USED ON S/N G005D-11942

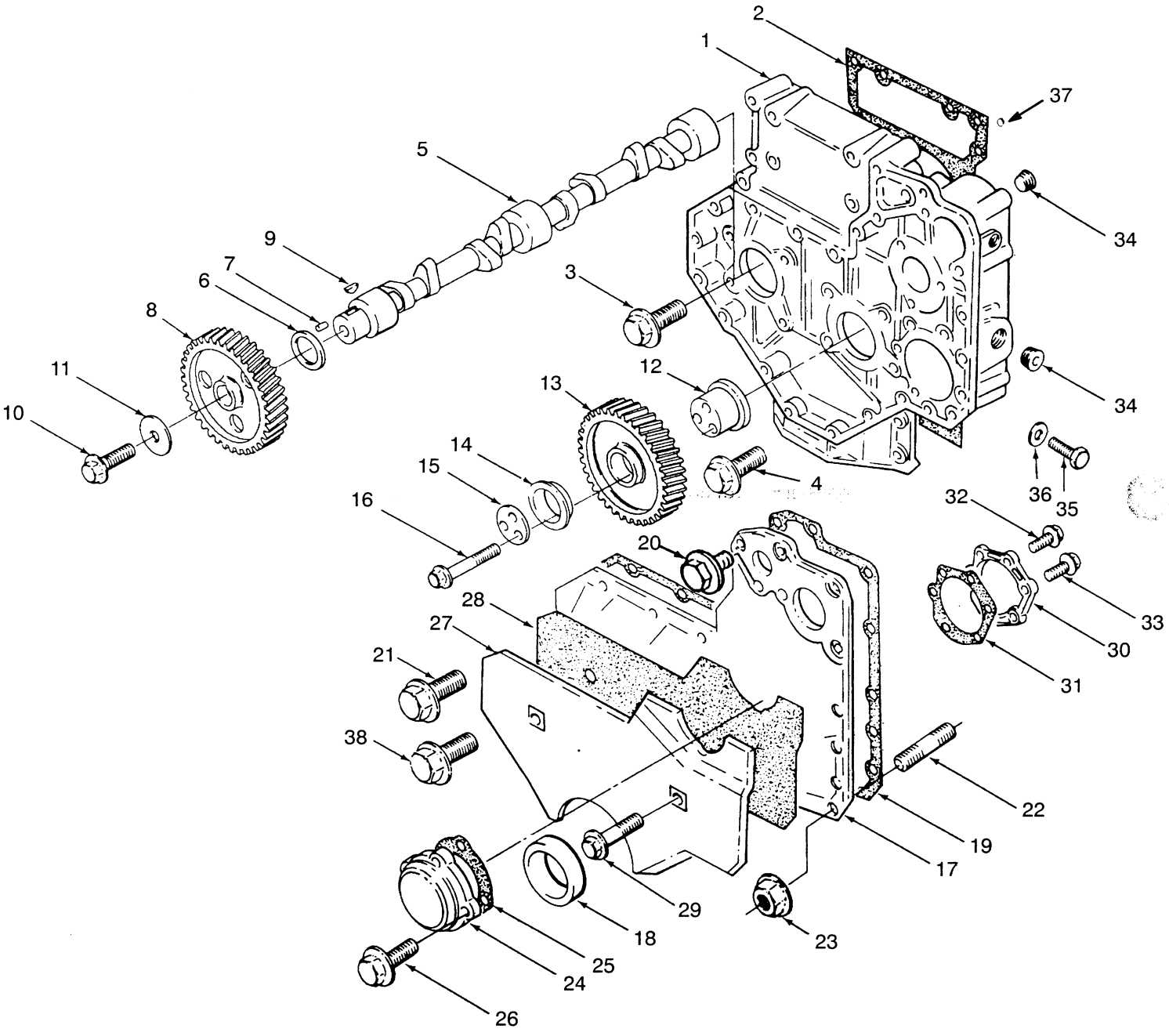

©1999 HYSTER COMPANY

TIMING GEAR

DIESEL (WITHOUT LOW EMISSIONS)

LAST USED ON S/N G005D-11942

KEY:
A: Oil Clutch
B: Powershift

REF		PART NO.	NAME OF PART	QTY A	QTY B
		377323	Engine	1	..
		1343305	Engine	..	1
1		1460191	Case	1	1
1		1371704	Plug	1	1
2	a	1345787	Gasket	1	1
3		386459	Screw	8	8
4		1306354	Screw	4	4
5		1458319	Camshaft	1	1
6		303758	Washer	1	1
7		298096	Dowel	1	1
8		1382481	Gear	1	1
9		99610	Key (Woodruff)	1	1
10		1306355	Screw	1	1
11		1306364	Washer	1	1
12		229875	Hub (Idler Gear)	1	1
13		1306030	Gear	1	1
14		983484	Bushing	1	1
15		1382479	Plate	1	1
16		1306356	Screw	3	3
17		1306031	Cover	1	1
18		350399	Seal	1	1
19	a	1357736	Gasket	1	1
20		1306357	Screw	6	6
21		1306358	Screw	1	1
22		1306033	Stud	2	2
23		1306359	Nut	2	2
24		1306034	Cover	1	1
25	a	1345790	Gasket	1	1
26		1306360	Screw	4	4
27		1306036	Shield	1	1
28		1306037	Damper	1	1
29		1306361	Screw	2	2
30		1456511	Plate	1	1
31	a	1329660	Gasket	1	1
32		1465392	Screw	5	5
33		1306354	Screw	1	1
34		15962	Fitting	3	3
35		1306219	Plug	1	1
36		101985	Washer	1	1
37		1311072	Plug	1	1
38		1306362	Screw	6	6

a Included In Bottom Gasket Kit 1371723

©1999 HYSTER COMPANY

OIL PAN AND PUMP (FIGURE 46)

DIESEL (WITHOUT LOW EMISSIONS)

LAST USED ON S/N G005D-11942

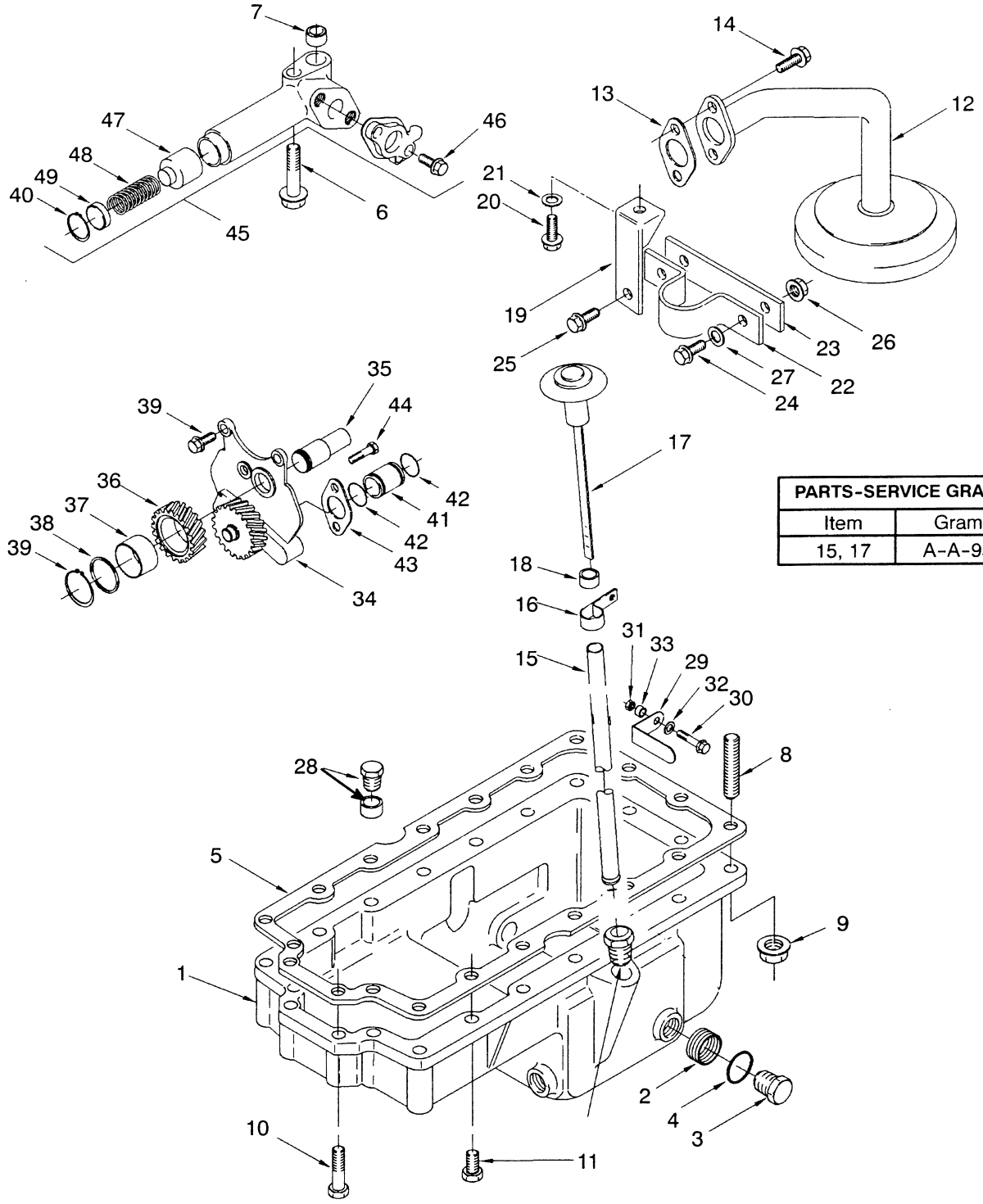

PARTS-SERVICE GRAM	
Item	Gram
15, 17	A-A-95

OIL PAN AND PUMP

DIESEL (WITHOUT LOW EMISSIONS)

LAST USED ON S/N G005D-11942

KEY:
A: Oil Clutch
B: Powershift

REF		PART NO.	NAME OF PART	QTY A	QTY B
		377323	Engine	1	..
		1343305	Engine	..	1
1		1306137	Sump	1	1
2		266465	Insert	2	2
3		377976	Plug	2	2
4		1306374	O-Ring	2	2
5	a	328013	Gasket	1	1
6		1306368	Screw	1	1
7		1454315	Thimble	2	2
8		1307876	Stud	2	2
9		1306359	Nut	2	2
10	d	1307878	Screw	6	6
10	e	1318965	Screw	6	6
11		386459	Screw	12	12
12		1306140	Pipe	1	1
13	a	1344921	Gasket	1	1
14		1307879	Screw	2	2
15	b	1306141	Tube	1	1
15	c	1385702	Tube	1	1
16		1306142	Clamp	1	1
17	b	1342594	Dipstick	1	1
17	c	1385701	Dipstick	1	1
18		1306145	Seal	1	1
19		1306146	Bracket	1	1
20		1307881	Screw	1	1
21		296418	Washer	1	1
22		1306147	Clip	1	1
23		1306148	Plate	1	1
24		1307882	Screw	1	1
25		1307883	Screw	1	1
26		1307884	Nut	2	2
27		1307885	Washer	1	1
28		1377908	Plug	1	1
29		1306176	Bracket	1	1
30		1307886	Screw	1	1
31		1307887	Nut	1	1
32		293780	Washer	1	1
33		245781	Spacer	1	1
34		1306039	Oil Pump	1	1
35		1380755	Shaft	1	1
36		1306040	Gear	1	1
37		1306041	Bushing	1	1
38		385847	Washer	1	1
39		328047	Snap Ring	1	1
40		1306328	Snap Ring	1	1
41		1306042	Pipe	1	1
42		1306363	O-Ring	2	2
43		1306043	Flange	1	1
44		1306358	Screw	2	2
45		1315494	Relief Valve	1	1
46		1306367	Screw	3	3
47		301749	Spool	1	1
48		1306047	Spring	1	1
49		301751	Cap	1	1

a Included In Bottom Gasket Kit 1371723

b Last Used On Engine S/N U690784A
Replace Both Tube And Dipstick with New Tube And Dipstick

c First Used On Engine S/N U690785A

d Last Used On Engine S/N U503404S

e First Used On Engine S/N U503405S

©1999 HYSTER COMPANY

VALVE COVER AND ROCKER SHAFT (FIGURE 47)

DIESEL (WITHOUT LOW EMISSIONS)

LAST USED ON S/N G005D-11942

PARTS-SERVICE GRAM	
Item	Gram
1,2,3,4	A-A-97

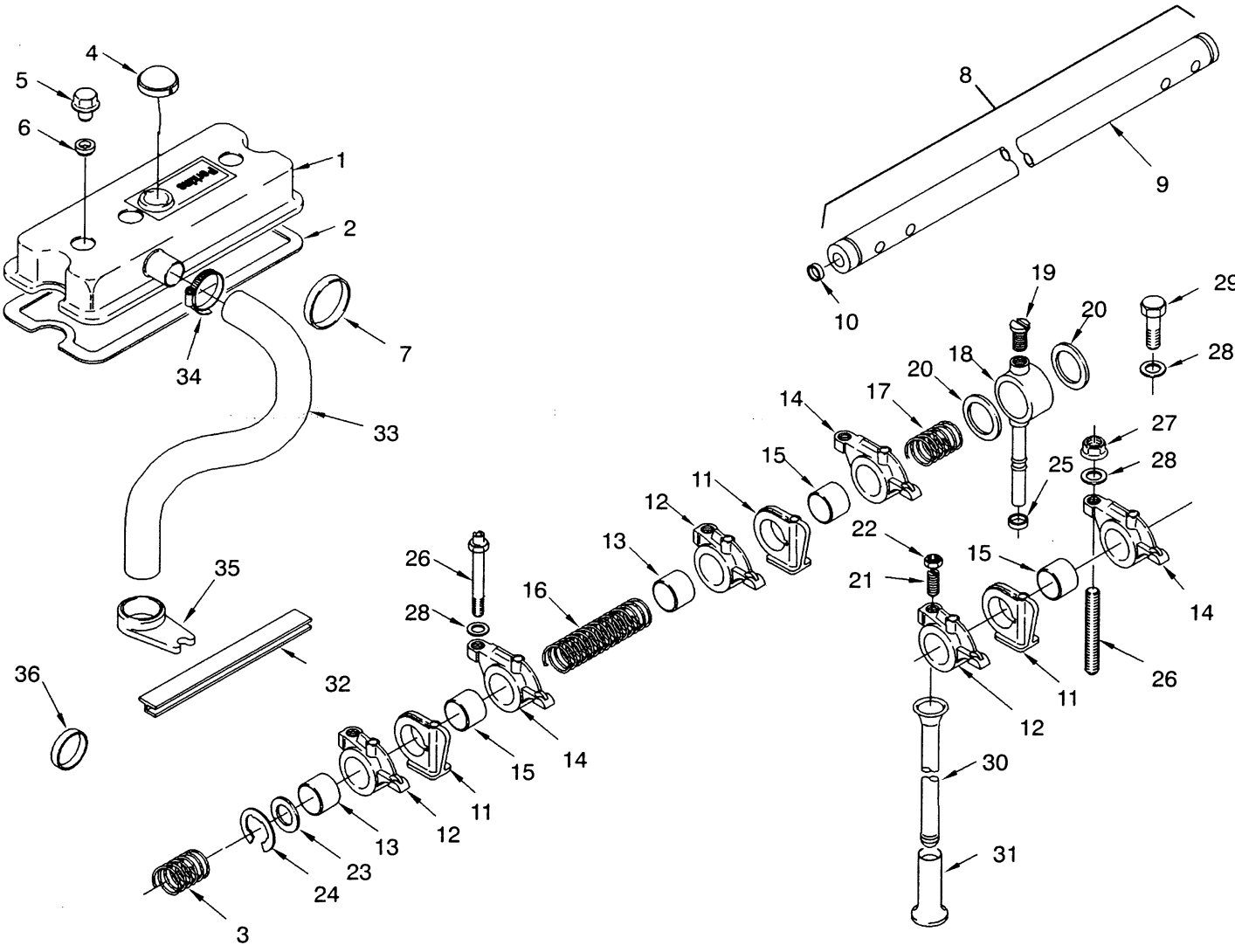

©1999 HYSTER COMPANY

See Service Manual
for service procedures

VALVE COVER AND ROCKER SHAFT

DIESEL (WITHOUT LOW EMISSIONS)

LAST USED ON S/N G005D-11942

KEY:
A: Oil Clutch
B: Powershift

REF		PART NO.	NAME OF PART	QTY A	QTY B
		377323	Engine	1	..
		1343305	Engine	..	1
1	b	1315495	Cover	1	..
1	c	1390148	Cover	1	1
2	ab	1306179	Gasket	1	..
2	cd	1390147	Gasket	1	1
3		358506	Spring	1	1
4	b	1306180	Cap	1	1
4	c	1306180	Cap	1	1
4	b	1391246	Seal	1	1
4	c	1391246	Seal	1	1
5		1307888	Nut	3	3
6	e	301775	Bushing	3	3
6	e	1380245	Seal	3	3
6	e	1371711	Shim	3	3
7		385531	Plug	1	1
8		1305720	Shaft	1	1
9		1305721	Rocker Shaft	1	1
10		990429	Plug	1	1
11		1370947	Bracket	4	4
12		1458331	Lever, RH	4	4
13		161454	Bushing	1	1
14		1458332	Lever, LH	4	4
15		161454	Bushing	1	1
16		99722	Spring (Long)	2	2
17		99723	Spring (Short)	2	2
18		1374980	Connector	1	1
18		1370948	Screw	1	1
19		360816	Screw	1	1
20		367394	Shim	2	2
21		1466859	Screw	8	8
22		15026	Nut	8	8
23		377945	Washer	2	2
24		99725	Snap Ring	1	1
25		158187	Sleeve	1	1
26		1306351	Stud	4	4
27		216877	Nut	4	4
28		1306352	Washer	4	4
29		1306353	Screw	1	1
30		99728	Push Rod	8	8
31		224248	Tappet	8	8
32	b	1306183	Seal	1	1
33		1315496	Pipe	1	1
34		130845	Clamp	1	1
35		301785	Bracket	1	1
36		1306182	Plug	1	1

a Included In Top Gasket Kit 1371731
Last Used On Engine S/N U600869W

b Last Used On Engine S/N U600869W

c First Used On Engine S/N U600870W

d Included In Top Gasket Kit 1391225
First Used On Engine S/N U600870W

e Service 301775 with 1380245 and 1371711

Note: Engine 1343305 Used Top Gasket Kit 1391225 Only.

©1999 HYSTER COMPANY

MANIFOLDS (FIGURE 48)

DIESEL (WITHOUT LOW EMISSIONS)

LAST USED ON S/N G005D-11942

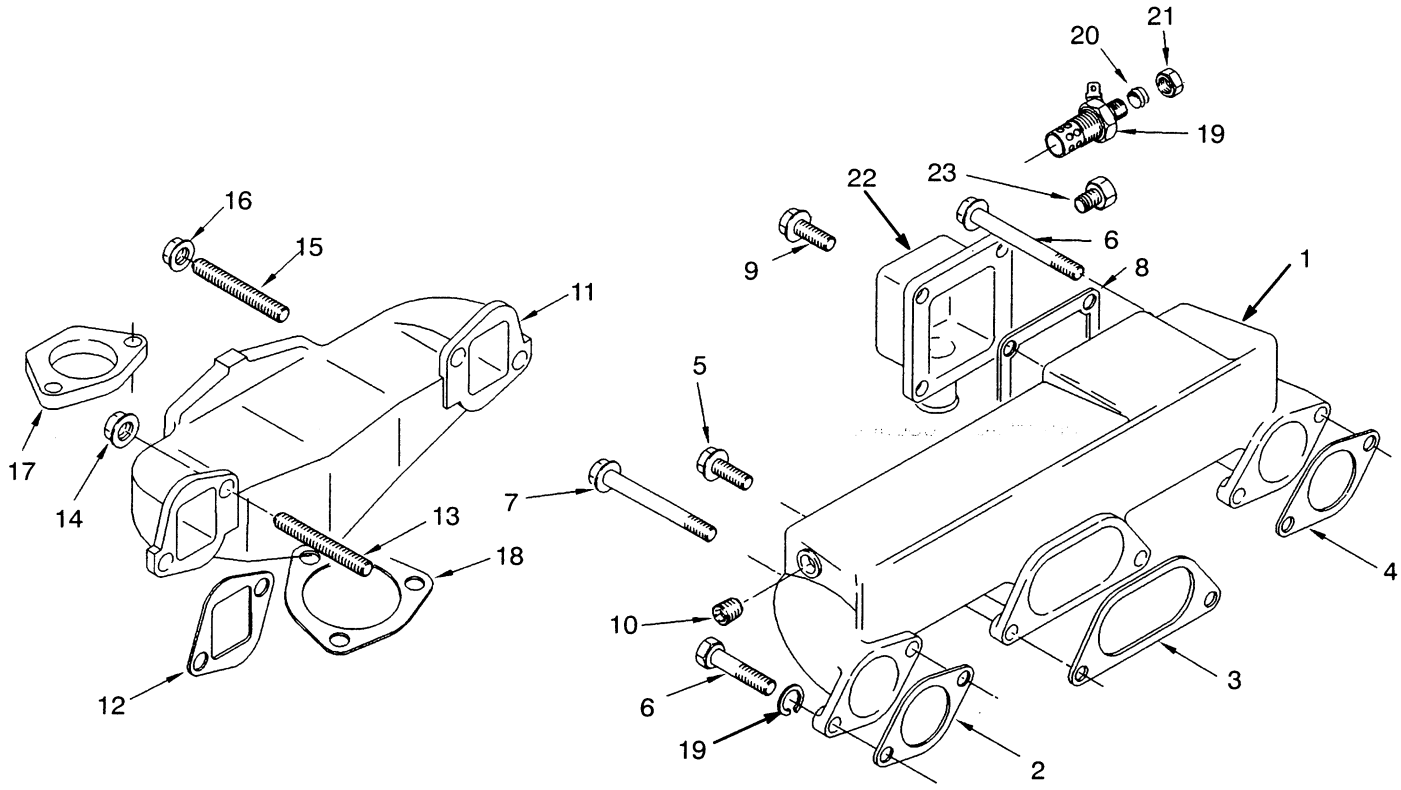

©1999 HYSTER COMPANY

MANIFOLDS

DIESEL (WITHOUT LOW EMISSIONS)

LAST USED ON S/N G005D-11942

KEY:
A: Oil Clutch
B: Powershift

REF		PART NO.	NAME OF PART	QTY A	QTY B
		377323	Engine	1	..
		1343305	Engine	..	1
1		1306222	Intake Manifold	1	1
2	ab	361312	Gasket	1	1
3	ab	361313	Gasket	1	1
4	ab	361314	Gasket	1	1
5		1307915	Screw	4	4
6		1307916	Screw	1	1
7		1307917	Screw	1	1
8	ab	1345794	Gasket	1	1
9		1306358	Screw	4	4
10		15483	Fitting	1	1
11		1306223	Exhaust Manifold	1	1
12	ab	1371733	Gasket	2	2
13		1459730	Stud	4	4
14		1306370	Nut	4	4
15		1307877	Stud	3	3
16		1306370	Nut	3	3
17		1306224	Flange	1	1
18		1355319	Gasket	1	1
19		245885	Heater	1	1
20		152608	Olive	1	1
21		152609	Nut	1	1
22		377358	Elbow (Intake)	1	1
23		14349	Fitting	1	1

a Included In Top Gasket Kit 1371731
Last Used On Engine S/N U600869W

b Included In Top Gasket Kit 1391225
First Used On Engine S/N U600870W

Note: Engine 1343305 Used Top Gasket Kit 1391225 Only.

©1999 HYSTER COMPANY

COOLANT PUMP (FIGURE 49)

DIESEL (WITHOUT LOW EMISSIONS)

LAST USED ON S/N G005D-11942

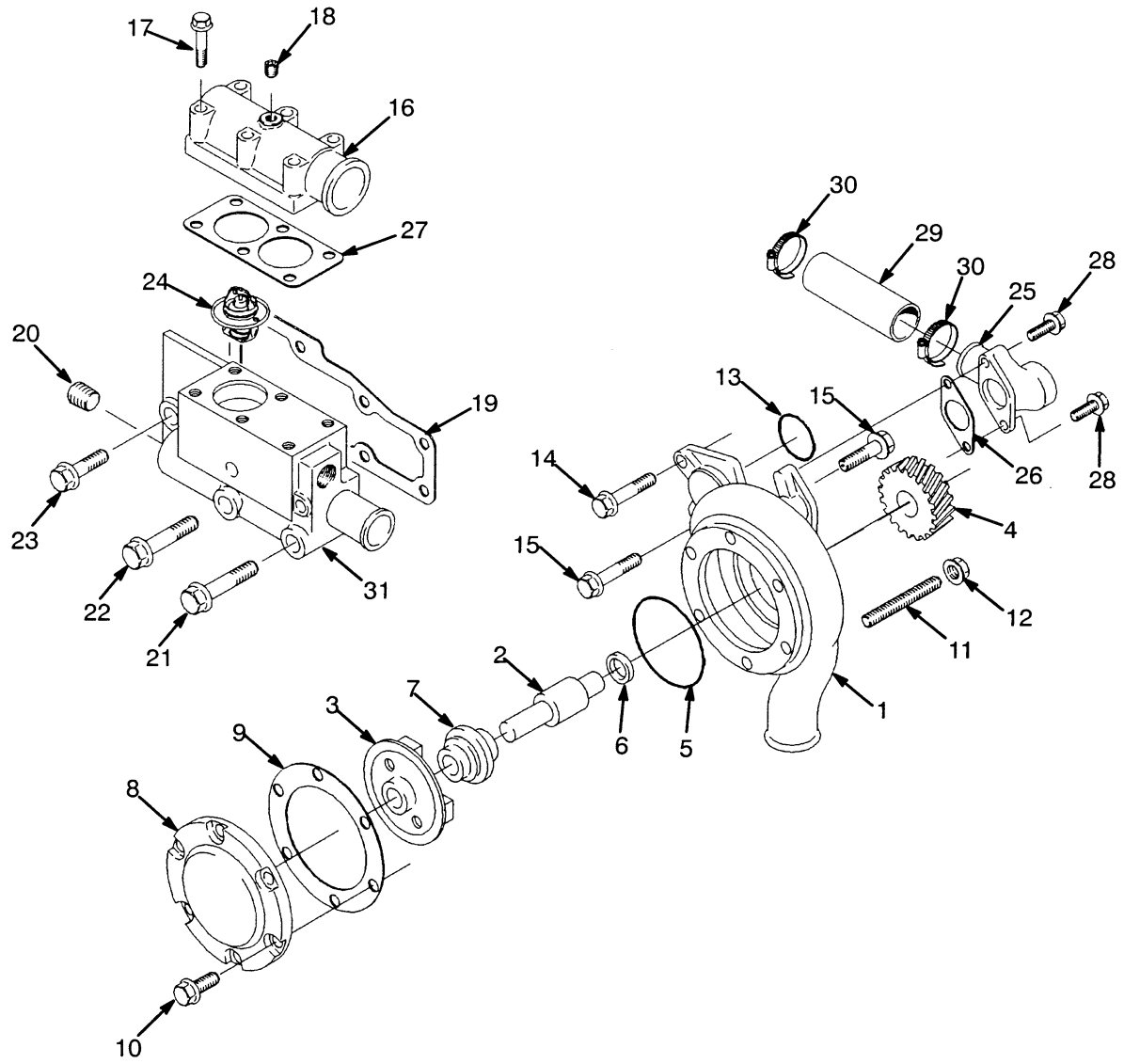

©1999 HYSTER COMPANY

See Service Manual
for service procedures

COOLANT PUMP

DIESEL (WITHOUT LOW EMISSIONS)

LAST USED ON S/N G005D-11942

KEY:
A: Oil Clutch
B: Powershift

REF		PART NO.	NAME OF PART	QTY A	QTY B
		377323	Engine	1	..
		1343305	Engine	..	1
1	a	1323449	Pump (Coolant)	1	1
1	b	1458267	Pump (Coolant)	1	1
1		....	Body	1	1
2	c	....	Shaft	1	1
3	c	....	Impeller	1	1
4		1306200	Gear	1	..
5	c	1307902	Seal	1	1
6	c	1307903	Seal	1	1
7	c	1388376	Seal	1	1
8		1306201	Cover	1	1
9	cd	1345785	Gasket	1	1
10		1307900	Screw	6	6
11		1307901	Stud	3	3
12		1306359	Nut	3	3
13	c	1466858	O-Ring	1	1
14		1307895	Screw	2	2
15		1306373	Screw	2	2
16	h	1306208	Connector	1	1
17		1307909	Screw	4	4
18		349378	Plug	1	1
19	ef	1345798	Gasket	1	1
20		15962	Fitting	2	2
21		1307897	Screw	2	2
22		1307895	Screw	1	1
23		1307898	Screw	2	2
24		301793	Thermostat (180° F)	1	1
25		1306205	Connector	1	1
26	ef	1345791	Gasket	1	1
27	ef	1345792	Gasket	1	1
28		1306358	Screw	2	2
29		1309831	Kit - Hose	1	1
30		119236	Clamp	2	2
31		1306203	Housing	1	1

a Last Used On 377323 Engine S/N U595629W And On 1343305 Engine S/N U610206X. Use Repair Kit 1306197 or Replace With Coolant Pump 1369042.

b First Used On 377323 Engine S/N U595630W And 1343305 Engine S/N U610207X. Use Repair Kit 1458268

c Included In Repair Kit 1458268

d Included In Bottom Gasket Kit 1371723

e Included In Top Gasket Kit 1371731 Last Used On 377323 And 1343305 Engine S/N U600869W

f Included In Top Gasket Kit 1391225 First Used On 377323 And 1343305 Engine S/N U600870W

h Cast Iron Connection P/N 1306208 Must Be Serviced With Gasket P/N 1345792 And Screw P/N 1307898, Or With Composite Connection P/N 1450388 Plus O-Ring P/N 1450389

Note: Engine 1343305 Used Top Gasket Kit 1391225 Only.

©1999 HYSTER COMPANY

CYLINDER BLOCK (FIGURE 50)

DIESEL (WITH LOW EMISSIONS)

FIRST USED ON S/N G005D-11942

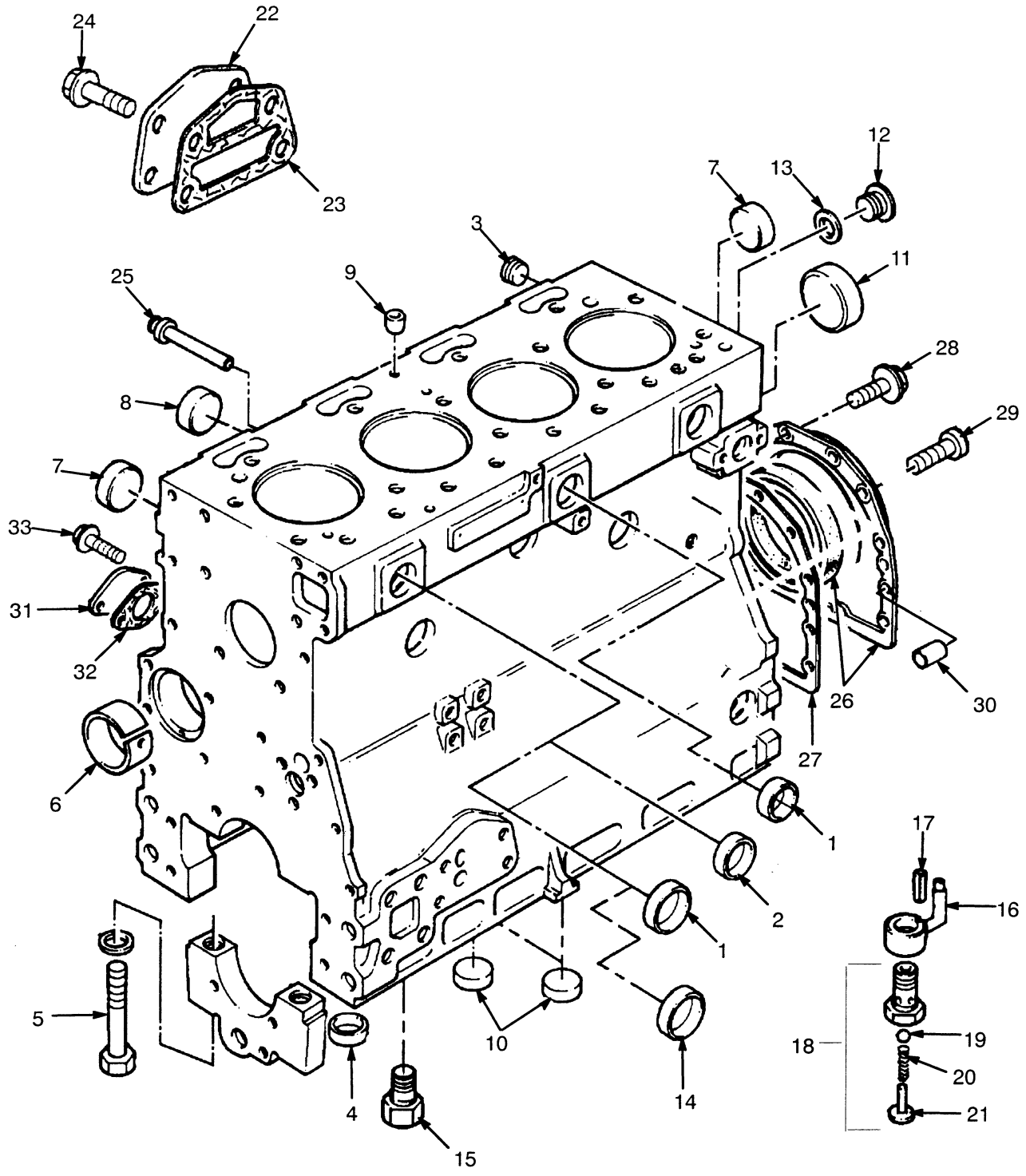

©1999 HYSTER COMPANY

CYLINDER BLOCK

DIESEL (WITH LOW EMISSIONS)

FIRST USED ON S/N G005D-11942

REF		PART NO.	NAME OF PART	QTY
		1453203	Engine	1
		1456789	Short Engine	1
1	a	980727	Plug	6
2	a	349377	Plug	1
3	a	15304	Fitting	2
4	a	995576	Thimble	10
5	a	16794	Capscrew	10
6	a	1451625	Bushing	1
7	a	385531	Plug	6
8	a	161383	Plug	3
9	a	992393	Plug	1
10	a	245800	Plug	2
11	a	1388387	Plug	1
12	a	1456695	Plug	1
13	a	984632	Washer	1
14	a	1456694	Plug	1
15	a	1456698	Plug	3
16	a	1456697	Jet	1
17	a	1456696	Dowel	1
18	a	1311054	Valve	1
19	a	1311055	Ball	1
20	a	1311056	Spring	1
21	a	1311057	Retainer	1
22	a	1374982	Plate	1
23	ab	1345800	Gasket	1
24	a	1307893	Screw	4
25		365854	Plug	1
26		1369077	Housing Assy	1
26		350397	Oil Seal (Rear)	1
27	b	1379734	Gasket	1
28		386459	Screw	12
29		1382061	Screw	2
30		158139	Dowel	2
31		1305698	Plate	1
32	b	1345784	Gasket	1
33		1306349	Screw	1

a Included In Cylinder Block Kit 1456693
b Included In Bottom Gasket Kit 1456509

©1999 HYSTER COMPANY

CYLINDER HEAD (FIGURE 51)

DIESEL (WITH LOW EMISSIONS)

FIRST USED ON S/N G005D-11942

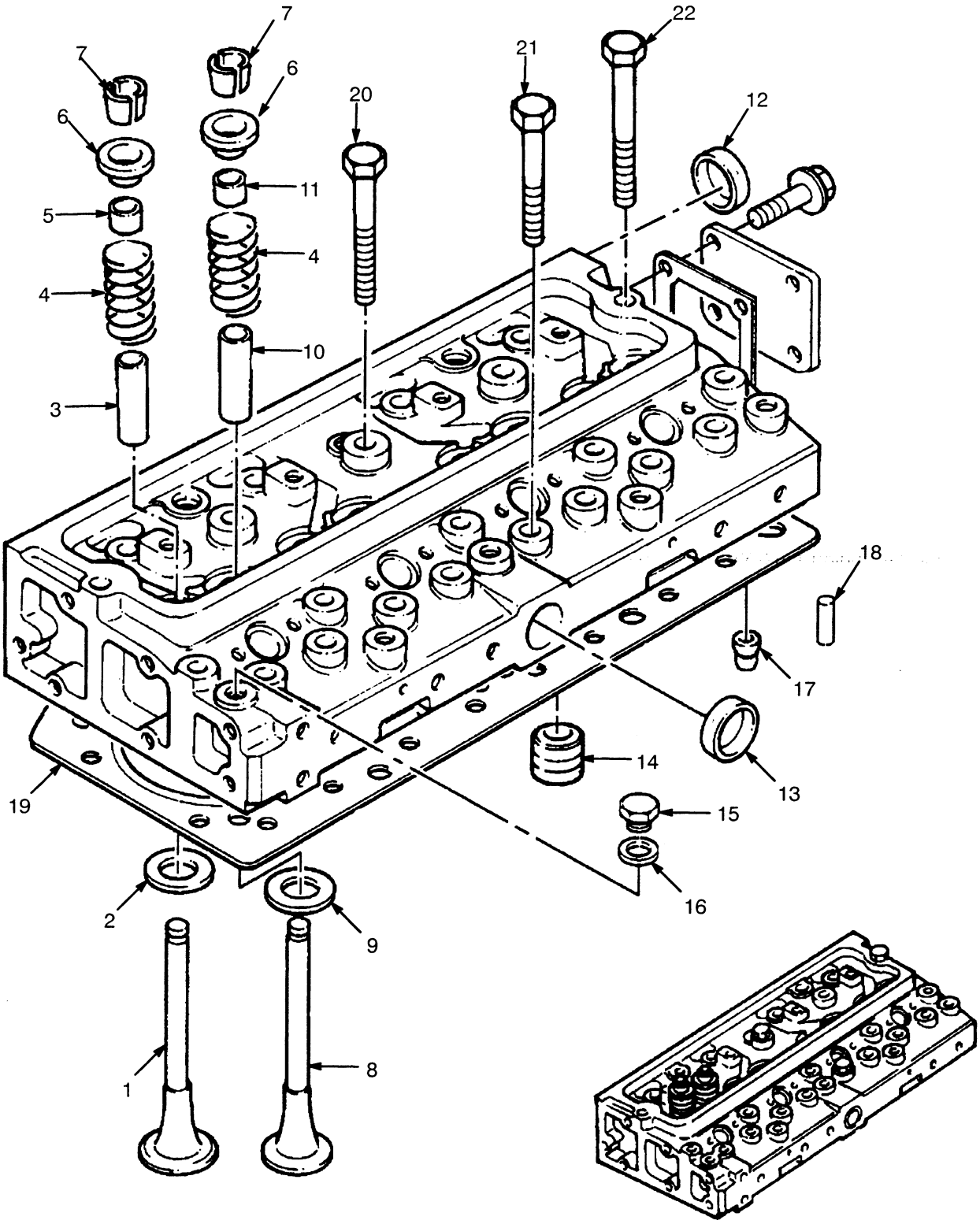

©1999 HYSTER COMPANY

CYLINDER HEAD

DIESEL (WITH LOW EMISSIONS)

FIRST USED ON S/N G005D-11942

REF		PART NO.	NAME OF PART	QTY
		1453203	Engine	1
1	a	1456702	Valve (Inlet)	4
2	a	1456707	Insert	4
3	a	1456703	Guide (Valve)	4
4	a	1456705	Spring	8
5	ab	1456706	Seal (Inlet)	4
6	a	1451633	Cap	8
7	a	1451636	Collet	16
8	a	1456709	Valve (Exhaust)	4
9	a	1456708	Insert	4
10	a	1456704	Guide (Valve)	8
11	ab	1451630	Seal	4
12	a	385531	Plug	4
13	a	980727	Plug	1
14	a	15314	Fitting	4
15	a	992025	Plug	1
16	a	986475	Washer	1
17	a	1454176	Dowel	2
18		1456711	Screw	2
19	b	1460567	Head Gasket	1
20		1456713	Screw	8
21		1456714	Screw	12
22		1456715	Screw	1

a Included In Cylinder Head Kit 1456716
b Included In Top Gasket Kit 1456508

©1999 HYSTER COMPANY

CRANKSHAFT AND PISTONS (FIGURE 52)

DIESEL (WITH LOW EMISSIONS)

FIRST USED ON S/N G005D-11942

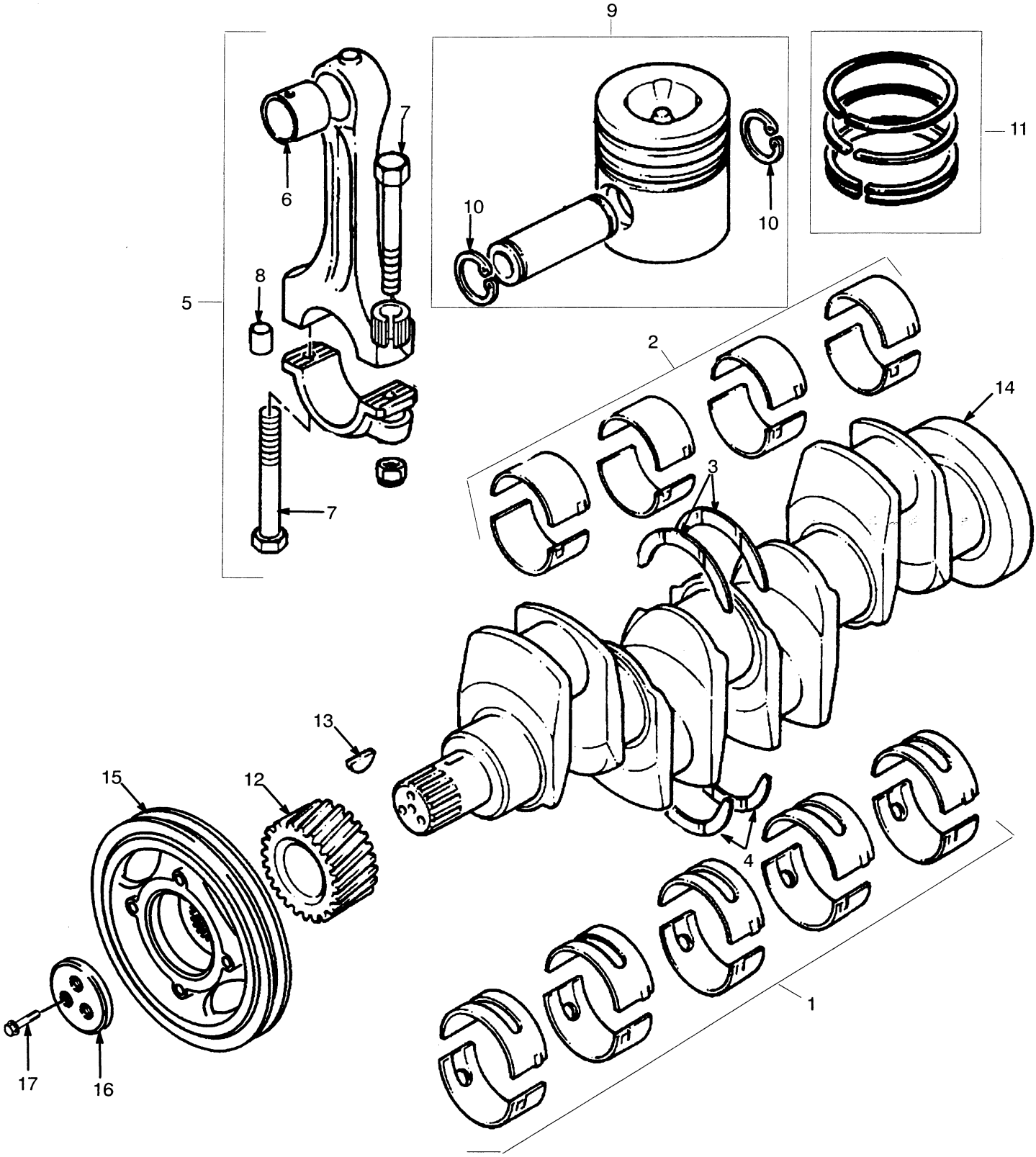

©1999 HYSTER COMPANY

CRANKSHAFT AND PISTONS

DIESEL (WITH LOW EMISSIONS)

FIRST USED ON S/N G005D-11942

REF		PART NO.	NAME OF PART	QTY
		1453203	Engine	1
1	ab	161425	Main Bearing (Standard)	1
1		161429	Bearing (Main, 0.010 in)	1
1		161430	Bearing (Main, 0.020 in)	1
1		161431	Bearing (Main, 0.030 in)	1
2	b	1305699	Bearing-Rod (Standard)	1
2		1305701	Bearing-Rod (0.010 in.)	1
2		1305702	Bearing-Rod (0.020 in)	1
2		1305703	Bearing-Rod (0.030 in)	1
3	ab	842799	Washer (Standard)	2
3		161296	Washer (0.007 in)	2
4	ab	842800	Washer (Standard)	2
4		161297	Washer (0.007 in)	2
5		1451601	Connecting Rod Kit	4
6		1451602	Bush	1
7		161433	Bolt	2
8		161434	Dowel Pin	2
9		1456700	Piston Kit (Standard)	4
9		1461713	Piston Kit (0.5 mm)	4
9		1461714	Piston Kit (1.0 mm)	4
10		1451606	Snap Ring	2
11		1456701	Kit-Piston Ring (Standard)	4
11		1461715	Kit-Piston Ring (0.5 mm)	4
11		1461716	Kit-Piston Ring (1.0 mm)	4
12		1305706	Gear	1
13		99610	Key	1
14		1456699	Crankshaft Assy	1
15		1306193	Pully	1
16		1306194	Block	1
17		302713	Screw	3

a Crankshaft/Bearing Includes Standard Size Bearings And Thrust Washers

b Included With Crankshaft Assy

©1999 HYSTER COMPANY

TIMING GEAR (FIGURE 53)

DIESEL (WITH LOW EMISSIONS)

FIRST USED ON S/N G005D-11942

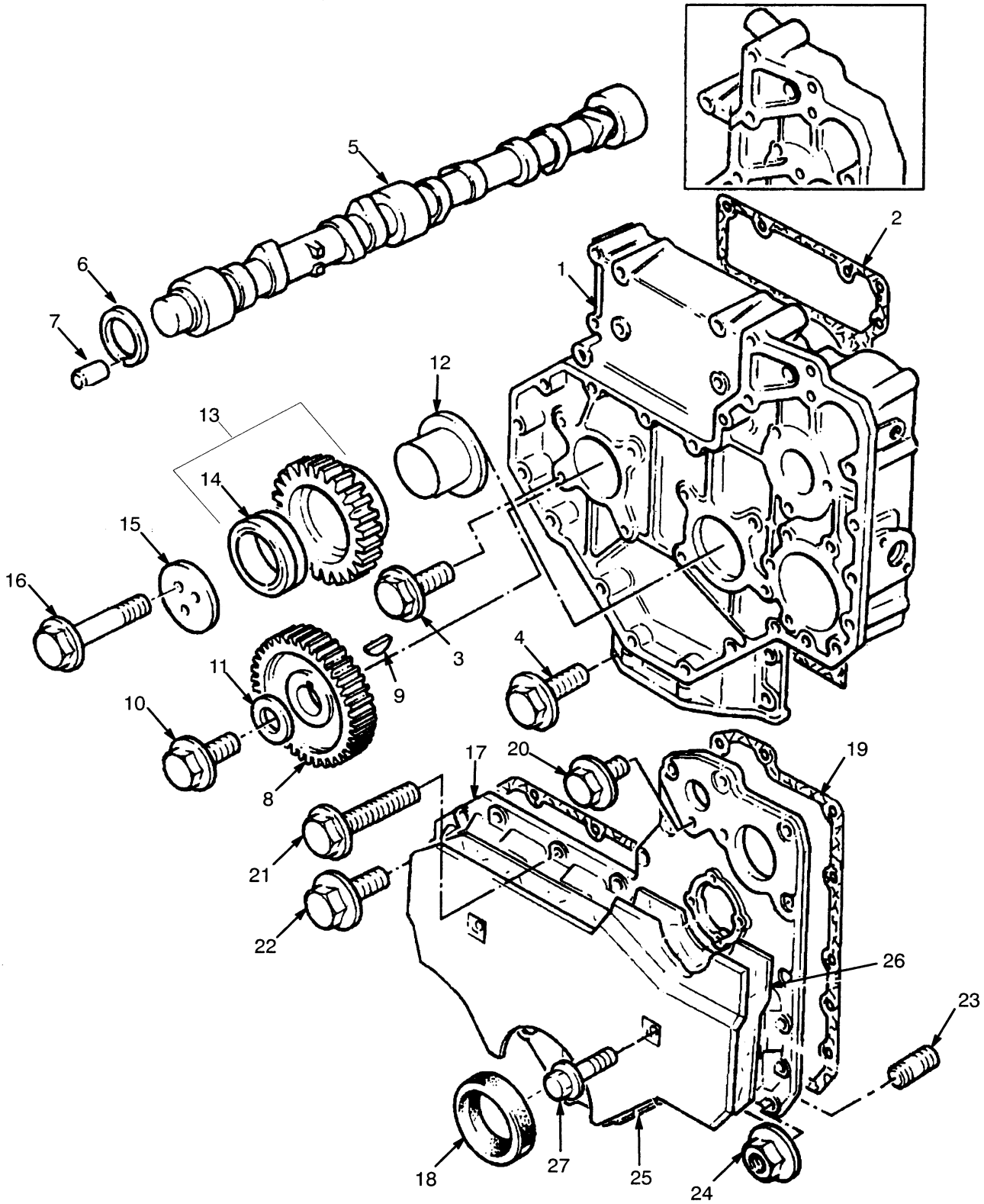

©1999 HYSTER COMPANY

TIMING GEAR

DIESEL (WITH LOW EMISSIONS)

FIRST USED ON S/N G005D-11942

REF		PART NO.	NAME OF PART	QTY
		1453203	Engine	1
1		1456721	Case	1
2	a	1345787	Gasket	1
3		386459	Screw	8
4		1306354	Screw	4
5		1456722	Camshaft	1
6		303758	Washer	1
7		298096	Dowel	1
8		1382481	Gear	1
9		99610	Key (Woodruff)	1
10		1328565	Screw	1
11		1306364	Washer	1
12		229875	Hub (Idler Gear)	1
13		1306030	Gear	1
14		983484	Bushing	1
15		1382479	Plate	1
16		1306356	Screw	3
17		1456723	Cover	1
18		350399	Seal	1
19	a	1456724	Gasket	1
20		1306357	Screw	6
21		1306358	Screw	1
22		1306362	Screw	6
23		1306369	Stud	2
24		1306359	Nut	2
25		1451650	Shield	1
26		1451651	Damper	1
27		1306361	Screw	2

a Included In Bottom Gasket Kit 1456509

©1999 HYSTER COMPANY

OIL PAN AND PUMP (FIGURE 54)

DIESEL (WITH LOW EMISSIONS)

FIRST USED ON S/N G005D-11942

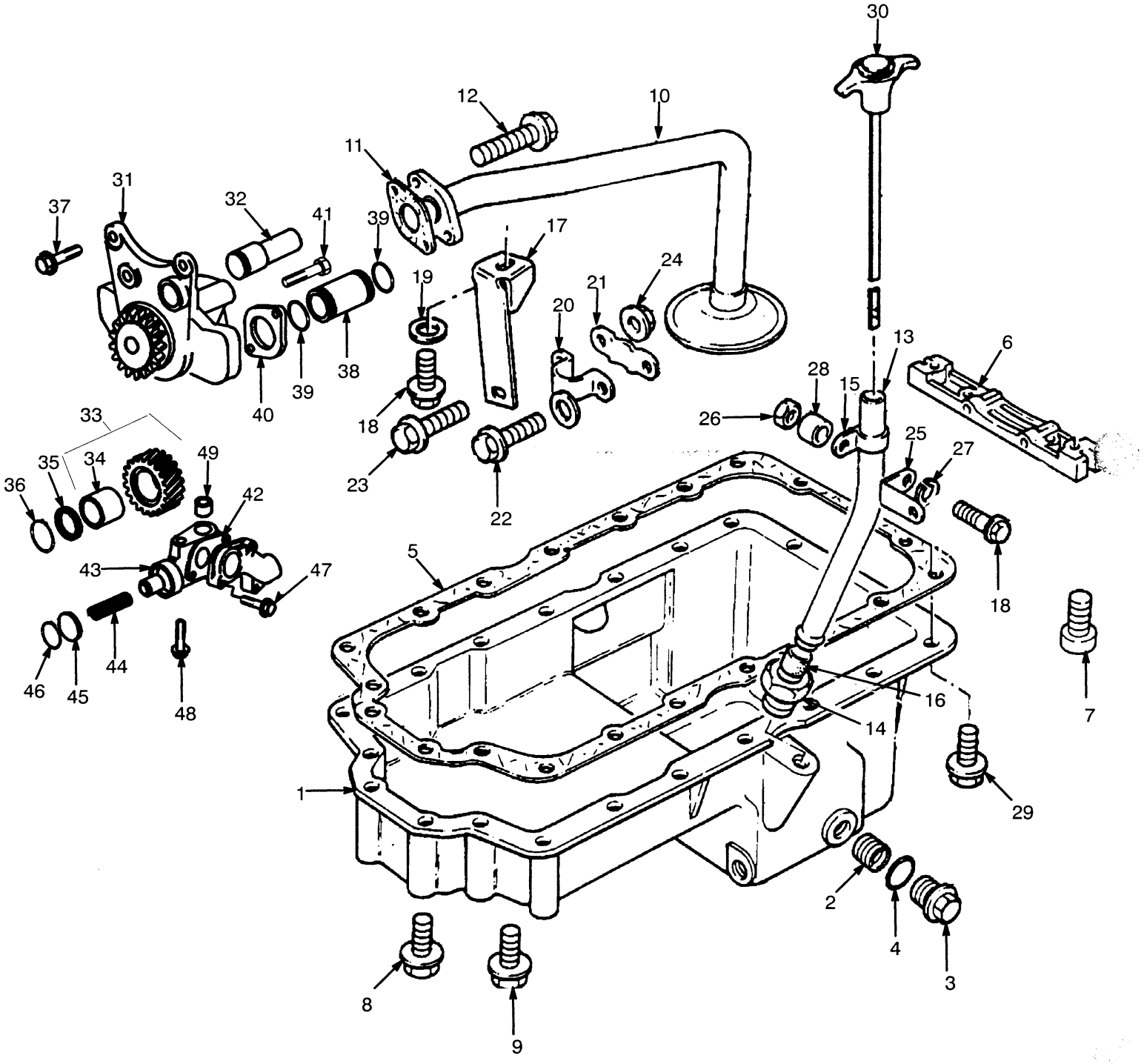

©1999 HYSTER COMPANY

OIL PAN AND PUMP

DIESEL (WITH LOW EMISSIONS)

FIRST USED ON S/N G005D-11942

REF		PART NO.	NAME OF PART	QTY
		1453203	Engine	1
1		1306137	Sump	1
2		266465	Insert	2
3		377976	Plug	2
4		1306374	O-Ring	2
5	a	1371717	Gasket	1
6		1450136	Bridge	1
7		1307875	Screw	2
8		1318965	Screw	6
9		386459	Screw	12
10		1306140	Pipe	1
11		1344921	Gasket	1
12		1307879	Screw	2
13		1385702	Tube	1
14		1307880	Nut	1
15		1386142	Clip	1
16		1306143	Olive	1
17		1306146	Bracket	1
18		1307881	Screw	2
19		1305766	Washer	1
20		1306147	Clip	1
21		1306148	Plate	1
22		1307882	Screw	1
23		1307883	Screw	1
24		1307884	Nut	1
25		1306176	Bracket	1
26		1307887	Nut	1
27		293780	Washer	1
28		245781	Spacer	1
29		1307894	Screw	1
30		1305701	Dipstick	1
31		1306039	Oil Pump	1
32		1380755	Shaft	1
33		1306040	Gear	1
34		1306041	Bush	1
35		385847	Washer	1
36		328047	Snap Ring	1
37		1306362	Screw	3
38		1306047	Pipe	1
39		1306363	O-Ring	2
40		1306043	Flange	1
41		1306358	Screw	2
42		1305494	Relief Valve	1
43		301749	Plunger	1
44		1306047	Spring	1
45		301751	Cap	1
46		1306328	Snap Ring	1
47		1306367	Screw	3
48		1306368	Screw	1
49		1454315	Thimble	1

a Included In Bottom Gasket Kit 1456509

©1999 HYSTER COMPANY

VALVE COVER AND ROCKER SHAFT (FIGURE 55)

DIESEL (WITH LOW EMISSIONS)

FIRST USED ON S/N G005D-11942

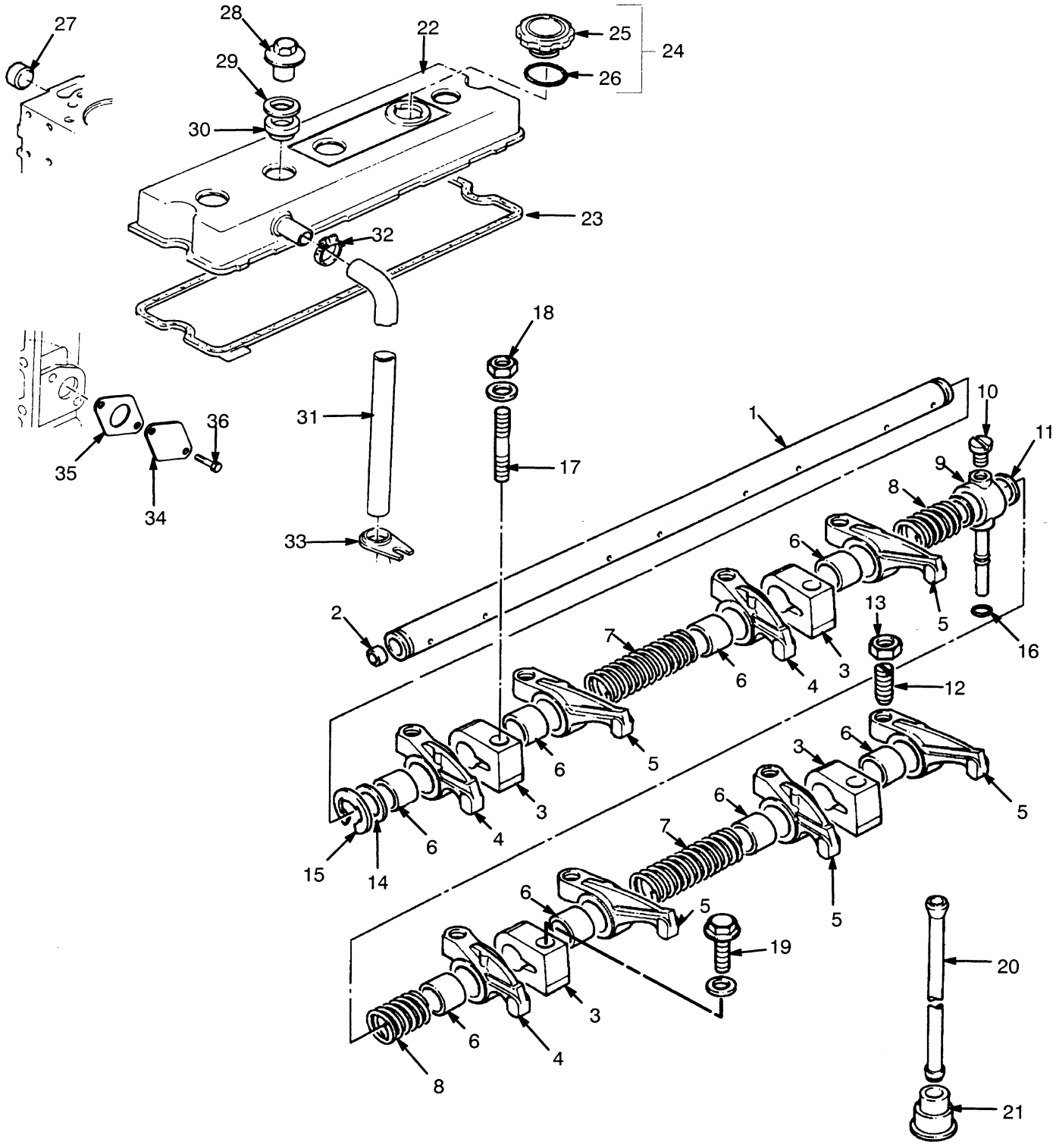

VALVE COVER AND ROCKER SHAFT

DIESEL (WITH LOW EMISSIONS)

FIRST USED ON S/N G005D-11942

REF		PART NO.	NAME OF PART	QTY
		1453203	Engine	1
		1456717	Rocker Shaft Assy	1
1		1456718	Rocker Shaft	1
2		990429	Plug	2
3		1370947	Bracket	4
4		1451645	Rocker Arm, LH	4
5		1451643	Rocker Arm, RH	4
6		1451644	Bushing	3
7		99722	Spring	2
8		99723	Spring	2
9		1374980	Connection	1
10		1370948	Screw	1
11		367394	Shim	2
12		1466859	Screw	8
13		15026	Nut	8
14		1451642	Washer	2
15		99725	Snap Ring	1
16	a	158187	Olive (Rubber)	1
17		1306351	Stud	3
18		1370949	Nut	3
19		1306353	Screw	1
20		997728	Rod	8
21		224248	Tappet	8
22		1456738	Cover Assy	1
23	a	1456741	Gasket	1
24		1391246	Cap Assy	1
25		....	Cap	1
26		1380247	O-Ring	1
27		161383	Plug	1
28		1380763	Nut	3
29		15125	Washer	3
30		1380245	Seal	3
31		1315496	Pipe	1
32		1380250	Clip	1
33		301785	Bracket	1
34		1306186	Plate	1
35	b	1380251	Gasket	1
36		386459	Screw	2

a Included In Top Gasket Kit 1456508

b Included In Bottom Gasket Kit 1456509

©1999 HYSTER COMPANY

MANIFOLDS (FIGURE 56)

DIESEL (WITH LOW EMISSIONS)

FIRST USED ON S/N G005D-11942

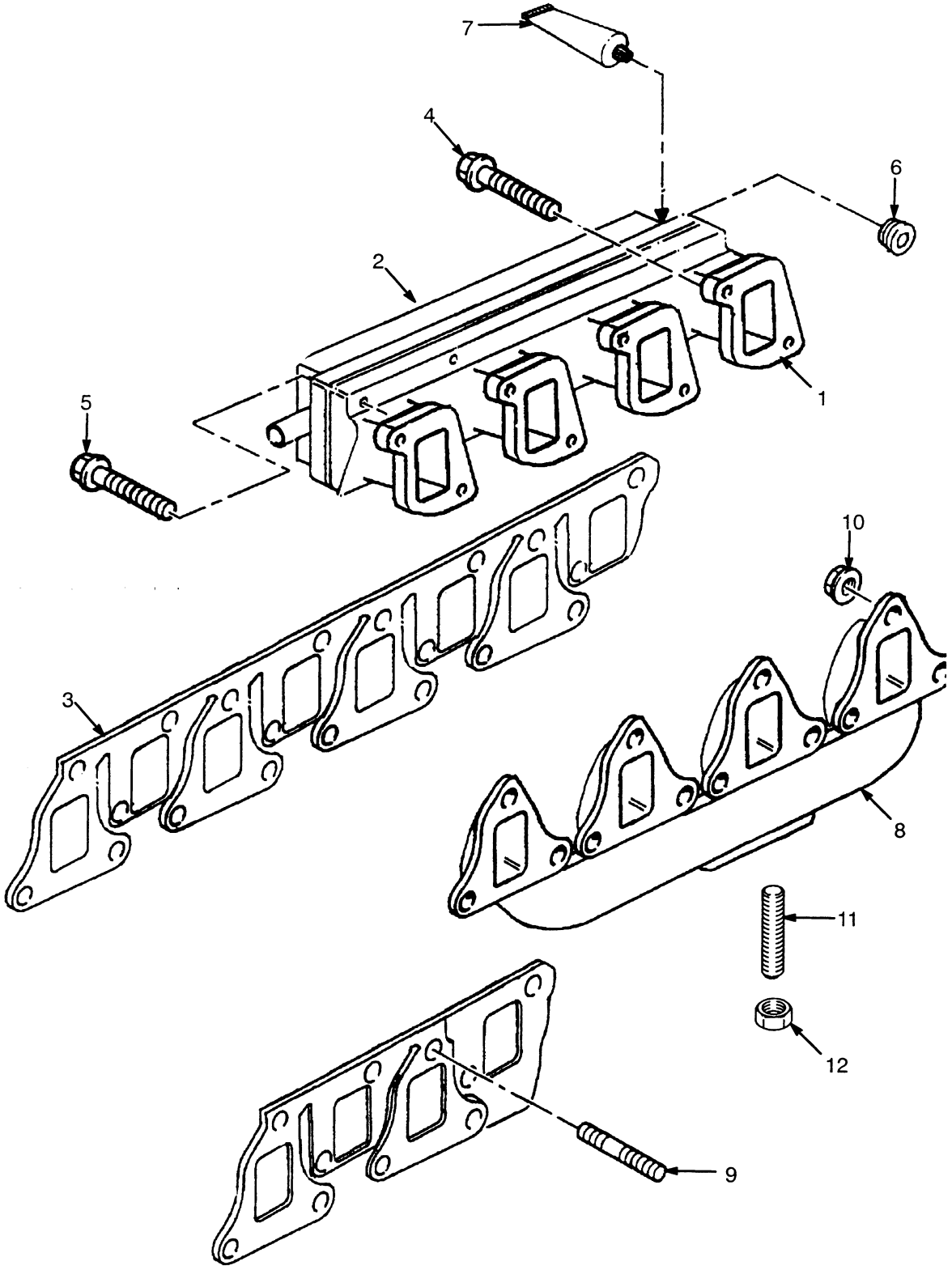

©1999 HYSTER COMPANY

MANIFOLDS

DIESEL (WITH LOW EMISSIONS)

FIRST USED ON S/N G005D-11942

REF		PART NO.	NAME OF PART	QTY
		1453203	Engine	1
1		1456749	Intake Manifold	1
2		1460562	Manifold	1
3	a	1456751	Gasket	1
4		1456752	Screw	8
5		1456753	Screw	8
6		982155	Plug	1
7		1456754	Sealant	AR
8		1456755	Manifold (Exhaust)	1
9		1307918	Stud	12
10		1456756	Nut	12
11		1307877	Stud	3
12		1456370	Nut	3

a Included In Top Gasket Kit 1456508

©1999 HYSTER COMPANY

COOLANT PUMP (FIGURE 57)

DIESEL (WITH LOW EMISSIONS)

FIRST USED ON S/N G005D-11942, LAST USED ON ENGINE S/N U892125D

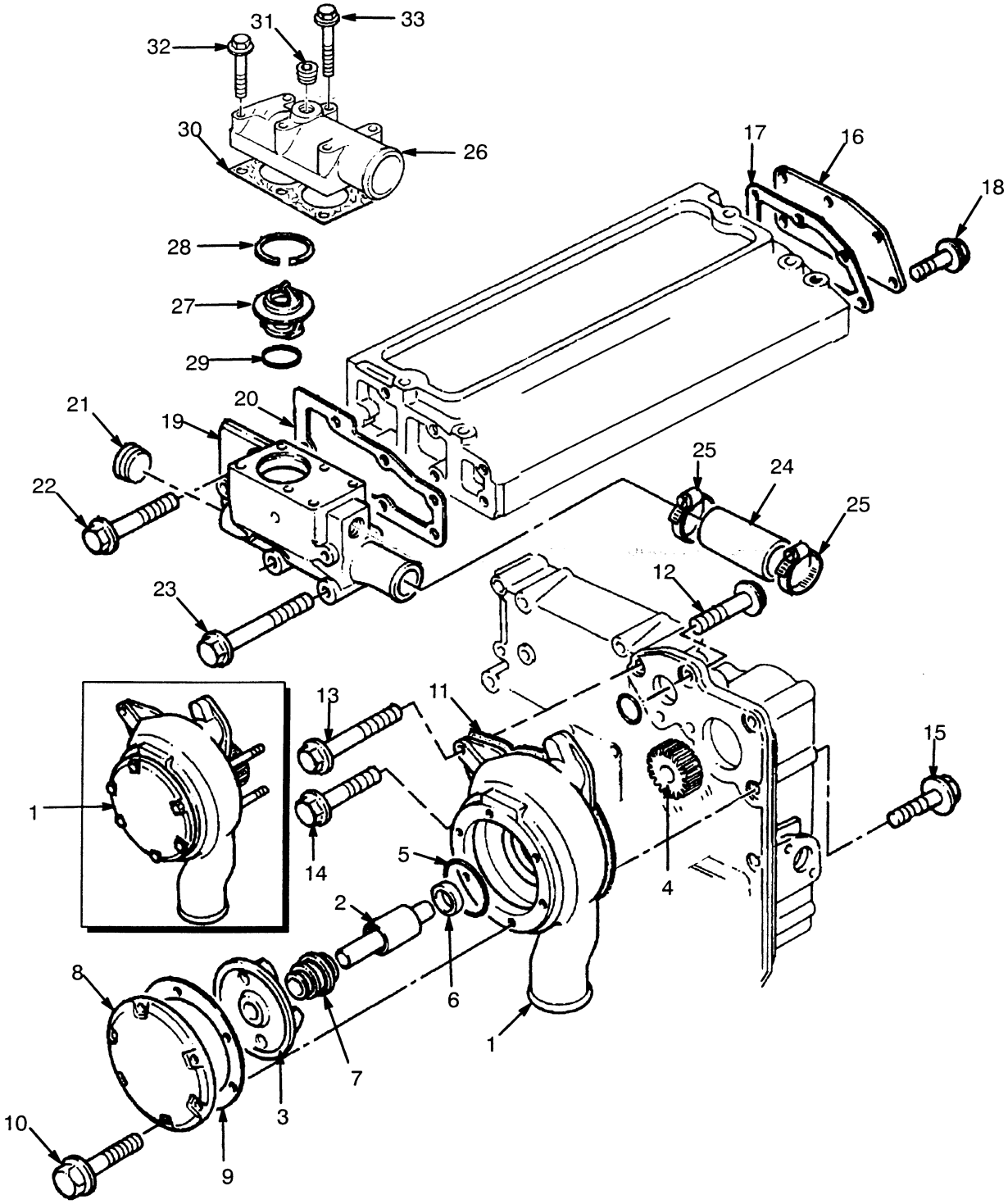

©1999 HYSTER COMPANY

WATER PUMP

DIESEL (WITH LOW EMISSIONS)

FIRST USED ON S/N G005D-11942, LAST USED ON ENGINE S/N U892125D

REF		PART NO.	NAME OF PART	QTY
		1453205	Engine	1
1		1460454	Water Pump (Before 6/99)	1
1	c	1465895	Water Pump (6/99 and Up)	1
1		....	Body	1
2		....	Shaft	1
3		....	Impeller	1
4		....	Gear	..
5		....	Seal	1
6		....	Seal	1
7		....	Seal	1
8		....	Cover	1
9		....	Gasket	1
10		....	Screw	6
11	b	1451733	Gasket	1
12		1307908	Screw	4
13		1315497	Screw	1
14		1307894	Screw	3
15		1307909	Screw	2
16		1456742	Plate	1
17	a	1451739	Gasket	1
18		1307881	Screw	3
19		1465171	Housing	1
20	a	1451735	Gasket	1
21		15962	Fitting	1
22		1318968	Screw	3
23		1307898	Screw	3
24		1456746	Hose	1
25		1456747	Clip	2
26		1451741	Connection	1
27		1456745	Thermostat (180°)	1
28		1451738	Ring	1
29	a	1451737	O-Ring	1
30	a	1451742	Gasket	1
31		349378	Plug	1
32		1318921	Screw	2
33		386459	Screw	2

a Included In Top Gasket Kit 1456508
b Included In Bottom Gasket Kit 1456509
c Repair And Replace Gasket With Kit 1465896

©1999 HYSTER COMPANY

WATER PUMP (FIGURE 58)

DIESEL (WITH LOW EMISSIONS)

FIRST USED ON ENGINE S/N U892126D

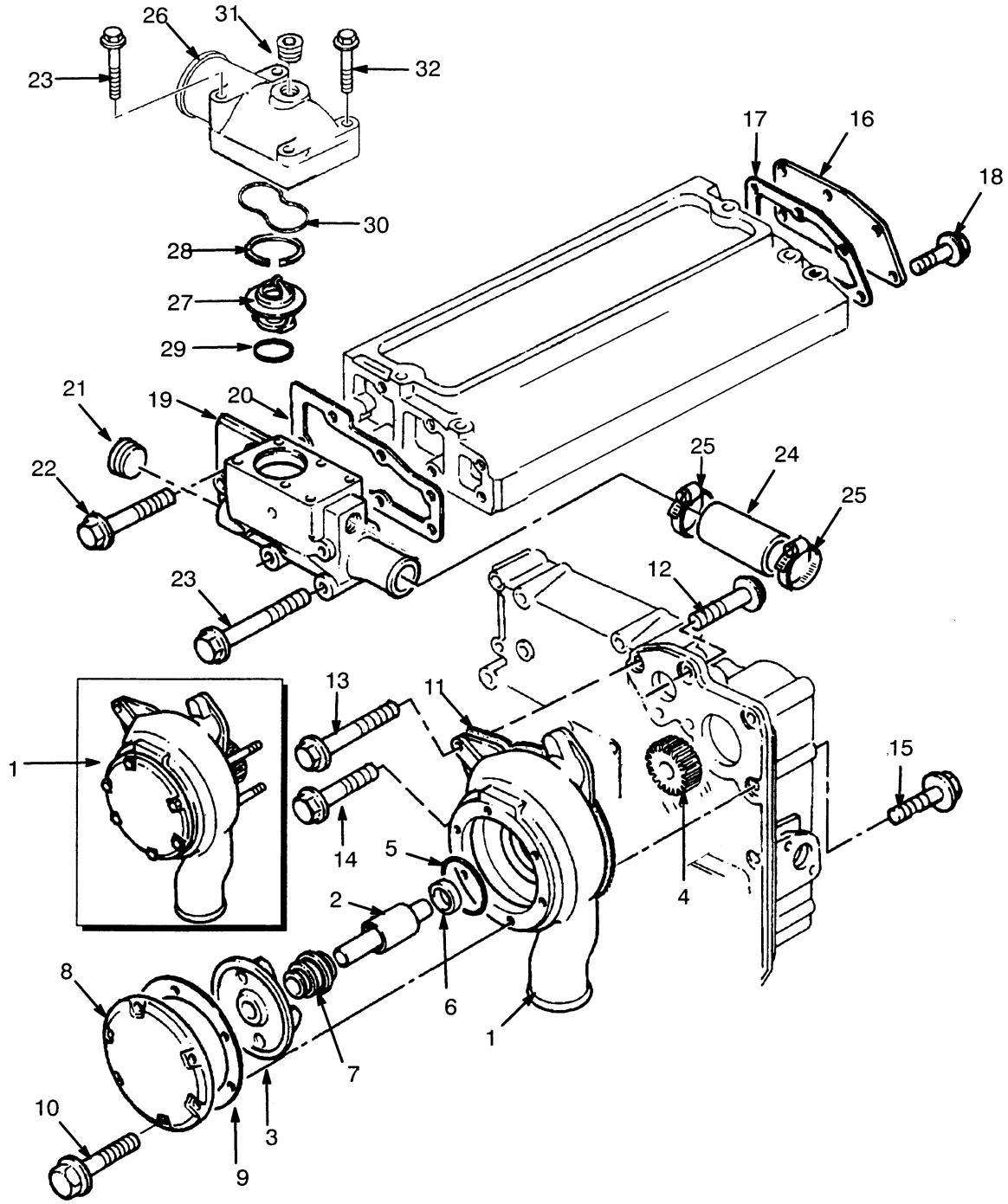

©1999 HYSTER COMPANY

WATER PUMP

DIESEL (WITH LOW EMISSIONS)

FIRST USED ON ENGINE S/N U892126D

REF		PART NO.	NAME OF PART	QTY
		1453205	Engine	1
1	c	1465895	Water Pump	1
1		....	Body	1
2		....	Shaft	1
3		....	Impeller	1
4		....	Gear	..
5		....	Seal	1
6		....	Seal	1
7		....	Seal	1
8		....	Cover	1
9		....	Gasket	1
10		....	Screw	6
11	b	1451733	Gasket	1
12		1307908	Screw	4
13		1315497	Screw	1
14		1307894	Screw	3
15		1307909	Screw	2
16		1456742	Plate	1
17	a	1451739	Gasket	1
18		1307881	Screw	3
19		1465171	Housing	1
20	a	1451735	Gasket	1
21		15962	Fitting	1
22		1318968	Screw	3
23		1307898	Screw	3
24		1456746	Hose	1
25		1456747	Clip	2
26		1465803	Connection Assy	1
27		1456745	Thermostat (180°)	1
28		1465812	Ring	1
29		1451737	O-Ring	1
30		1465810	O-Ring	1
31		1465811	Plug	1
32		1306358	Screw	2

a Included In Top Gasket Kit 1456508

b Included In Bottom Gasket Kit 1456509

c Repair And Replace Gasket With Kit 1465896

©1999 HYSTER COMPANY

EXHAUST (FIGURE 59)

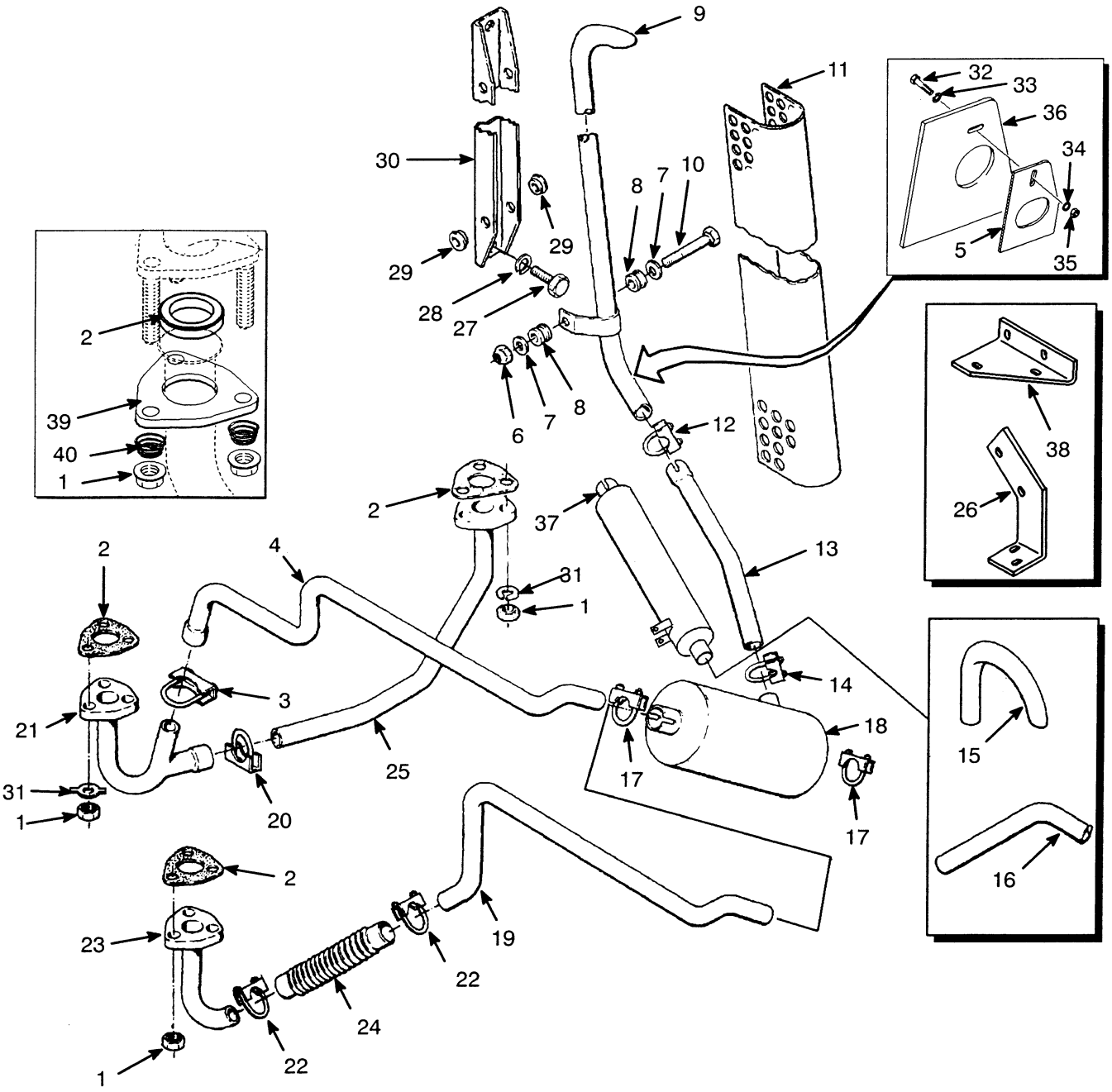

EXHAUST

KEY:
A: Gasoline & LPG Counterweight Exhaust
B: Diesel Counterweight Exhaust
C: Gasoline & LPG Overhead Exhaust
D: Diesel Overhead Exhaust

Ref		Part No.	Name Of Part	QTY A	B	C	D
1	g	16526	Nut	12	..	12	..
1	h	192077	Nut	6	..	6	..
1		1306370	Nut	..	3	..	3
2	g	88145	Gasket	2	..	2	..
2	h	1338258	Seal Assembly	2	..	2	..
2	k	1355319	Gasket	..	1	..	1
2	m	1329525	Gasket	..	1	..	1
3		30370	Clamp	1	..	1	..
4		352899	Exhaust Pipe	1	..	1	..
5	b	1343310	Plate (Cover, Without Cab)	..	..	1	1
5	a	1361673	Plate (Cover, Without Cab)	..	..	1	1
6		313828	Nut	..	..	4	4
7		320157	Washer	..	..	4	4
8		292883	Step Bushing	4	4	..	..
8		328385	Grommet (Without Cab)	..	..	4	4
9		1456615	Exhaust Pipe (Without Cab)	..	..	1	1
9	bc	1456612	Exhaust Pipe	..	..	1	1
9	a	1352698	Exhaust Pipe (Without Cab)	..	..	1	1
10		292512	Capscrew	..	..	2	2
10	a	136750	Capscrew (Without Cab)	..	..	2	2
11	b	305488	Shield (Without Cab)	..	..	1	1
11	bc	300101	Shield (With Cab)	..	..	1	1
11	a	1356975	Exhaust Shield (Without Cab)	..	..	1	1
11	ac	1361665	Exhaust Shield (With Cab)	..	..	1	1
12		30368	Clamp	..	..	1	1
13	b	1456617	Exhaust Pipe	..	..	1	1
13	a	1356977	Exhaust Pipe (Without Cab)	..	..	1	1
13	ad	1352695	Exhaust Pipe (Without Cab)	..	..	1	1
13	ae	1352696	Exhaust Pipe (Without Cab)	..	..	1	1
14		30370	Clamp	1	1	1	1
15	d	353102	Tail Pipe	1	1	..	..
16	e	353103	Tail Pipe	1	1	..	..
17		30370	Clamp	2	2	2	2
18		353303	Muffler	1	1	1	1
18		1314219	Muffler (GS, DS, & LPS)	1	1	..	..
18	a	1337430	Muffler	..	..	1	1
19	ad	1358576	Exhaust Pipe (Without Cab)	..	..	1	..
19	ae	1358577	Exhaust Pipe (Without Cab)	..	..	1	..
19	ad	1352692	Exhaust Pipe (Without Cab)	..	..	..	1
19	ae	1352693	Exhaust Pipe (Without Cab)	..	..	..	1
20		68968	Clamp (Exhaust)	1	..	1	..
21	g	352901	Exhaust Pipe	1	..	1	..
21	h	1383248	Exhaust Pipe	1	..	1	..
22		63116	Clamp	..	2	..	2
23		377328	Exhaust Pipe	..	1	..	1
24		292841	Tube (Exhaust)	..	1	..	1
25	g	1330287	Exhaust Pipe	..	1	..	1
25	h	1383247	Exhaust Pipe	..	1	..	1
26	a	1367808	Bracket (Without Cab)	..	..	1	1
27	c	283149	Capscrew	..	..	2	2
28	c	292681	Lockwasher	..	..	2	2
29	ac	1356976	Spacer (Bushing, Without Cab)	..	..	4	4

©1999 HYSTER COMPANY

EXHAUST

KEY:
A: Gasoline & LPG Counterweight Exhaust
B: Diesel Counterweight Exhaust
C: Gasoline & LPG Overhead Exhaust
D: Diesel Overhead Exhaust

Ref		Part No.	Name Of Part	QTY A	B	C	D
30	c	1360158	Bracket	..	..	1	1
31	f	1369003	Lockplate	6	6	6	6
32		136681	Capscrew (Without Cab)	..	..	1	1
33		296418	Washer (Without Cab)	..	..	2	2
34		292681	Lockwasher (Without Cab)	..	..	1	1
35		191534	Nut	4	4	4	4
36		1361673	Plate (Cover, Without Cab)	..	..	1	1
36	a	1358582	Plate (Cover, Without Cab, Some Early Models)	..	..	1	1
37	a	1352276	Silencer (Without Cab)	..	..	1	1
38	ad	1352277	Bracket (Without Cab)	..	..	1	1
38	ae	1352691	Bracket (Without Cab)	..	..	1	1
39	h	1380805	Flange	1	..	1	..
39	h	1380806	Flange (Optional)	1	..	1	..
40	h	1380803	Spring	6	..	6	..

Ref	Part No.	Name Of Part	QTY A	B	C	D
a	With Noise Reduction					
b	Without Noise Reduction					
c	With Cab					
d	H70-80XL H90XLS					
e	H90-110XL					
f	Used On S/N G005D-2918 Thru G005D-7759 (Including S/N 7830-7832, 7834-7837 7840 And 7841) Except S/N G005D-7710					
g	Last Used On S/N G005D-7759 (Including S/N 7830-7832, 7834-7837 7840 And 7841) Except S/N G005D-7710					
h	First Used On S/N G005D-7760 (Except S/N 7830-7832, 7834-7837 7840 And 7841) And Includes S/N G005D-7710					
k	DSL 1004.4					
m	DSL 4.248.2					

©1999 HYSTER COMPANY

FUEL SYSTEM

AIR FILTER (Figure 85)
STANDARD ..... Page 166

AIR FILTER (Figure 86)
HEAVY DUTY GASOLINE AND LPG ..... Page 168

AIR FILTER (Figure 87)
HEAVY DUTY DIESEL ..... Page 170

CARBURETOR (Figure 67)
LPG
LAST USED ON S/N G005D-7759
(INCLUDING S/N 7830-7832, 7834-7837, 7840 AND 7841),
EXCEPT S/N G005D-7710 ..... Page 138

CARBURETOR (Figure 68)
LPG
FIRST USED ON S/N G005D-7760
(EXCEPT S/N 7830-7832, 7834-7837, 7840 AND 7841)
AND INCLUDES S/N G005D-7710 ..... Page 140

DUAL FUEL CONVERSION KIT (Figure 63)
GAS TO LPG ..... Page 130

FUEL (Figure 62)
LPG
FIRST USED ON S/N G005D-7760
(EXCEPT S/N 7830-7832, 7834-7837, 7840 AND 7841)
AND INCLUDES S/N G005D-7710 ..... Page 128

FUEL SYSTEM (Figure 61)
LPG
LAST USED ON S/N G005D-7759
(INCLUDING S/N 7830-7832, 7834-7837, 7840 AND 7841),
EXCEPT S/N G005D-7710 ..... Page 126

FUEL SYSTEM (Figure 65)
GASOLINE ..... Page 134

FUEL TANK (Figure 60)
GASOLINE ..... Page 124

FUEL TANK (Figure 64)
DIESEL ..... Page 132

©1999 HYSTER COMPANY

FUEL SYSTEM

FUEL TANK (Figure 66)
LPG ..... Page 136

GOVERNOR (Figure 69) ..... Page 142

HIGH PRESSURE FUEL INJECTION & PUMP (Figure 83)
WITHOUT LOW EMISSIONS
LAST USED ON S/N g005a-10666 ..... Page 162

HIGH PRESSURE FUEL INJECTION & PUMP (Figure 84)
WITH LOW EMISSIONS
FIRST USED ON S/N g005a-10667 ..... Page 164

LIFT PUMP (Figure 78)
DIESEL (Without LOW EMISSIONS)
LAST USED ON S/N g005a-10666 ..... Page 154

LIFT PUMP (Figure 79)
DIESEL (WITH LOW EMISSIONS)
FIRST USED ON S/N g005a-10667 ..... Page 155

LOCK-OFF FILTER (Figure 70)
LPG ..... Page 143

LOW PRESSURE FUEL INJECTION (Figure 81)
WITHOUT LOW EMISSIONS
LAST USED ON S/N G005A-10666 ..... Page 158

LOW PRESSURE FUEL INJECTION (Figure 82)
WITH LOW EMISSIONS
FIRST USED ON S/N G005A-10667 ..... Page 160

LPG CONVERTER (Figure 71)
LAST USED ON S/N G005D-2849 ..... Page 144

LPG CONVERTER (Figure 72)
USED ON S/N G005D-2850 THRU S/N G005D-11516 ..... Page 145

LPG CONVERTER (Figure 73)
FIRST USED ON S/N G005D-11517 ..... Page 146

THROTTLE BODY INJECTOR (Figure 74) ..... Page 148

THROTTLE LINKAGE (Figure 75) ..... Page 150

©1999 HYSTER COMPANY

FUEL SYSTEM

THROTTLE PEDAL (Figure 76)
OIL CLUTCH AND POWERSHIFT WITH
FORWARD/REVERSE LEVER ..... Page 152

THROTTLE PEDAL (Figure 77)
POWERSHIFT WITH MONOTROL PEDAL ..... Page 153

WATER FILTER AND SEPARATOR (Figure 80)
DIESEL ..... Page 156

©1999 HYSTER COMPANY

FUEL TANK (FIGURE 60)

GASOLINE

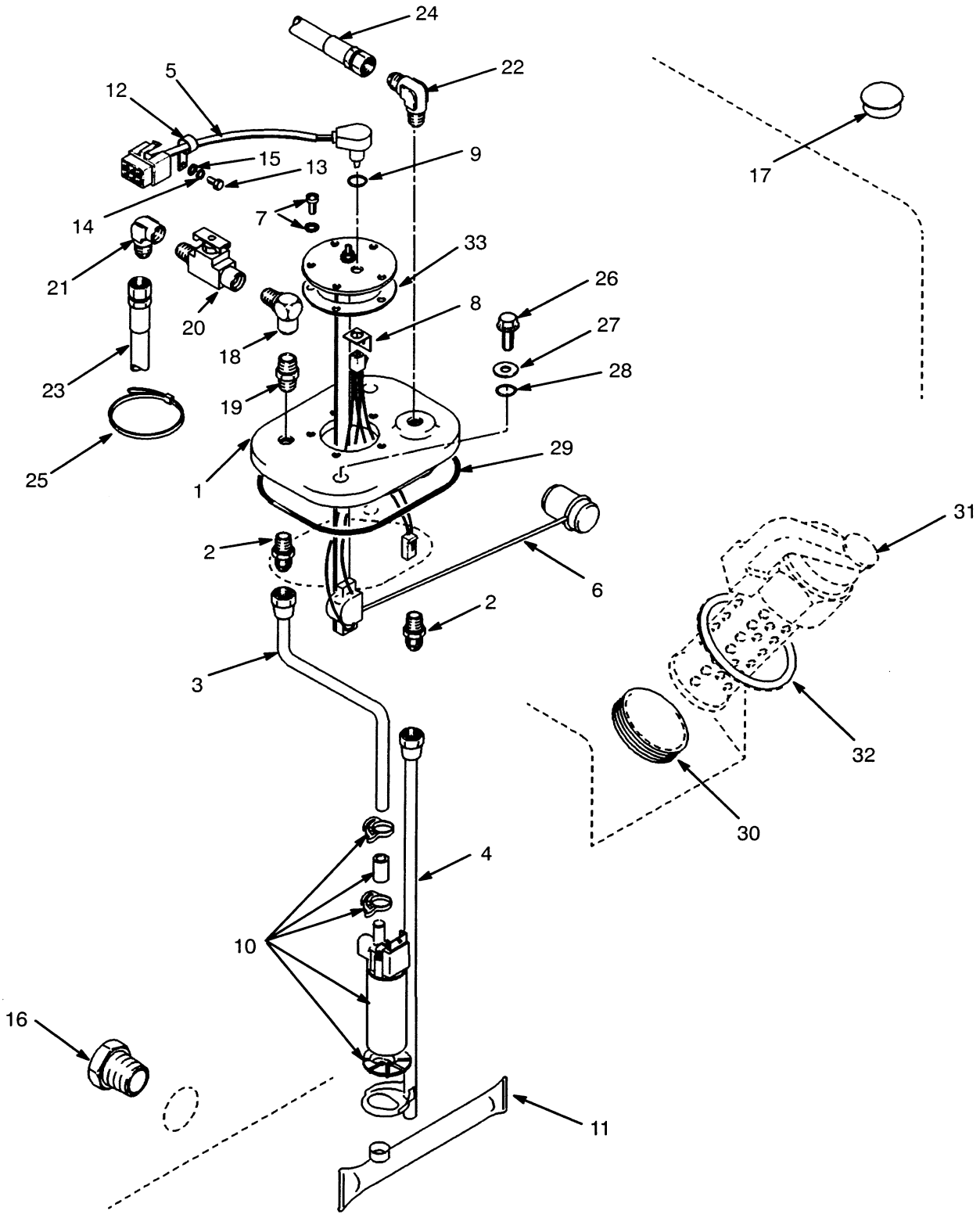

©1999 HYSTER COMPANY

FUEL TANK

GASOLINE

REF	PART NO.	NAME OF PART	QTY
1	1336169	Tank Cover	1
2	14303	Fitting	2
3	1330305	Tube	1
4	1331602	Pipe	1
5	1330383	Harness	1
6	1333842	Sender	1
6	1377072	Gasket	1
7	16708	Screw	5
7	350483	Seal Washer	5
8	1330326	Clip	1
9	1330325	O-Ring	1
10	1330324	Kit-Fuel Pump Repair	1
11	1327961	Fuel Strainer	1
12	188631	Clamp	1
13	287805	Capscrew	1
14	292681	Lockwasher	1
15	320157	Washer	1
16	14385	Fitting	1
17	1332607	Plug	1
18	17314	Fitting	1
19	16167	Fitting	1
20	16190	Shut-Off Valve	1
21	14372	Fitting	1
22	42213	Fitting	1
23	1333836	Hose (Supply)	1
24	1333837	Hose (Return)	1
25	2004005	Strap Clamp	2
26	329067	Screw	2
27	320157	Washer	2
28	353000	O-Ring	2
29	353106	Ring (Square)	1
30	298831	Cap	1
31	63899	Protectoseal Cap (Optional)	1
32	138880	Shim (.020 in Optional)	AR
33	1377072	Gasket	1

©1999 HYSTER COMPANY

FUEL SYSTEM (FIGURE 61)

LPG

LAST USED ON S/N G005D-7759 (INCLUDING S/N 7830-7832, 7834-7837, 7840 AND 7841), EXCEPT S/N G005D-7710

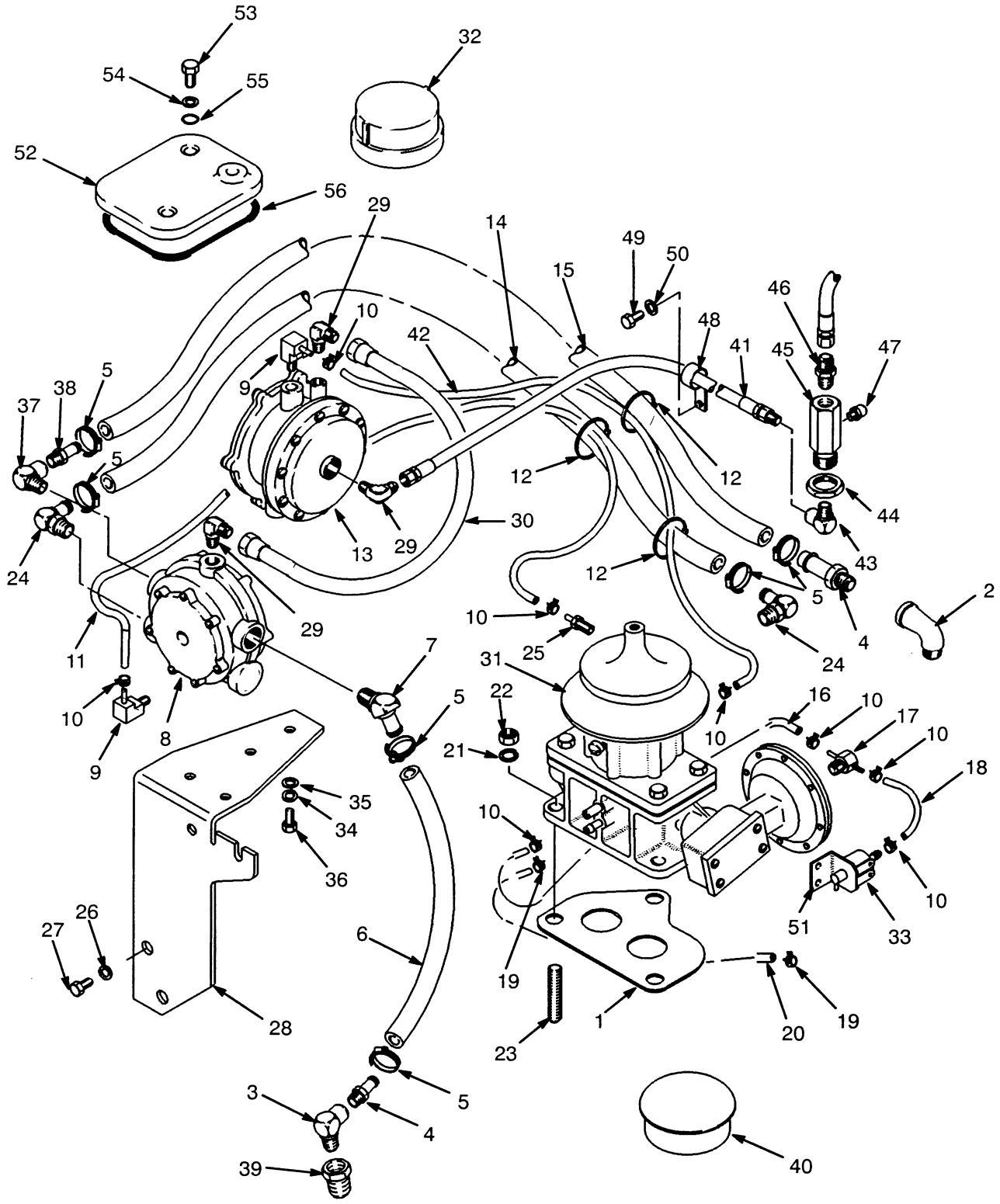

FUEL SYSTEM

LPG

LAST USED ON S/N G005D-7759 (INCLUDING S/N 7830-7832, 7834-7837, 7840 AND 7841), EXCEPT S/N G005D-7710

REF		PART NO.	NAME OF PART	QTY
1		1333806	Gasket	1
2		15337	Fitting	1
3		12818	Fitting	1
4		16156	Fitting	2
5		130845	Clamp	6
6		212355	Hose	1
7		1336135	Fitting	1
8		....	Converter Assembly	1
			☞ Figure 71 & Figure 72	
9		175347	Fitting	2
10		366473	Clamp	7
11		1336136	Hose	1
12		273775	Strap Clamp	4
13		....	Fuel Lock And Filter	1
			☞ Figure 70	
14		1336137	Hose	1
15		154594	Hose	1
16		1330396	Hose	1
17		346346	Fitting (Oil Clutch)	1
17	c	1374758	Fitting (Powershift)	1
17	d	1380601	Fitting (Powershift)	1
18		1360841	Hose	1
19		369815	Clamp	2
20		1330397	Hose	1
21		292681	Washer	3
22		15055	Nut	3
23		295308	Stud	3
24		201800	Fitting	2
25		191805	Fitting	1
26		292682	Washer	2
27		16598	Capscrew	2
28		1331622	Bracket	1
29		14358	Fitting	2
30		352781	Tube	1

REF		PART NO.	NAME OF PART	QTY
31		....	Carburetor	1
			☞ Figure 67	
32		17817	Cap	1
33		1345677	Governor Valve	1
34		292680	Lockwasher	4
35		320156	Washer	4
36		18460	Capscrew	4
37		16143	Fitting	1
38		138710	Fitting	1
39		12832	Fitting	1
40		1315411	Plug	1
41		113012	Hose	1
42		1336136	Hose	1
43		14358	Fitting	1
44		15034	Nut	1
45		1325033	Fitting	1
46		16134	Fitting	1
47		101809	Relief Valve	1
48	a	154278	Clamp	1
48	b	1327214	Clamp	1
49	a	292513	Capscrew	1
50	a	292682	Washer	1
51		1345676	Bracket	1
52		1320865	Cover	1
53		329067	Screw	2
54		320157	Washer	2
55		353000	O-Ring	2
56		353106	Square Ring	1

a Old Production
b Recent Production
c Last Used On S/N G005D-5019
d First Used On S/N G005D-5020

©1999 HYSTER COMPANY

FUEL (FIGURE 62)

LPG

FIRST USED ON S/N G005D-7760 (EXCEPT S/N 7830-7832, 7834-7837, 7840 AND 7841) AND INCLUDES S/N G005D-7710

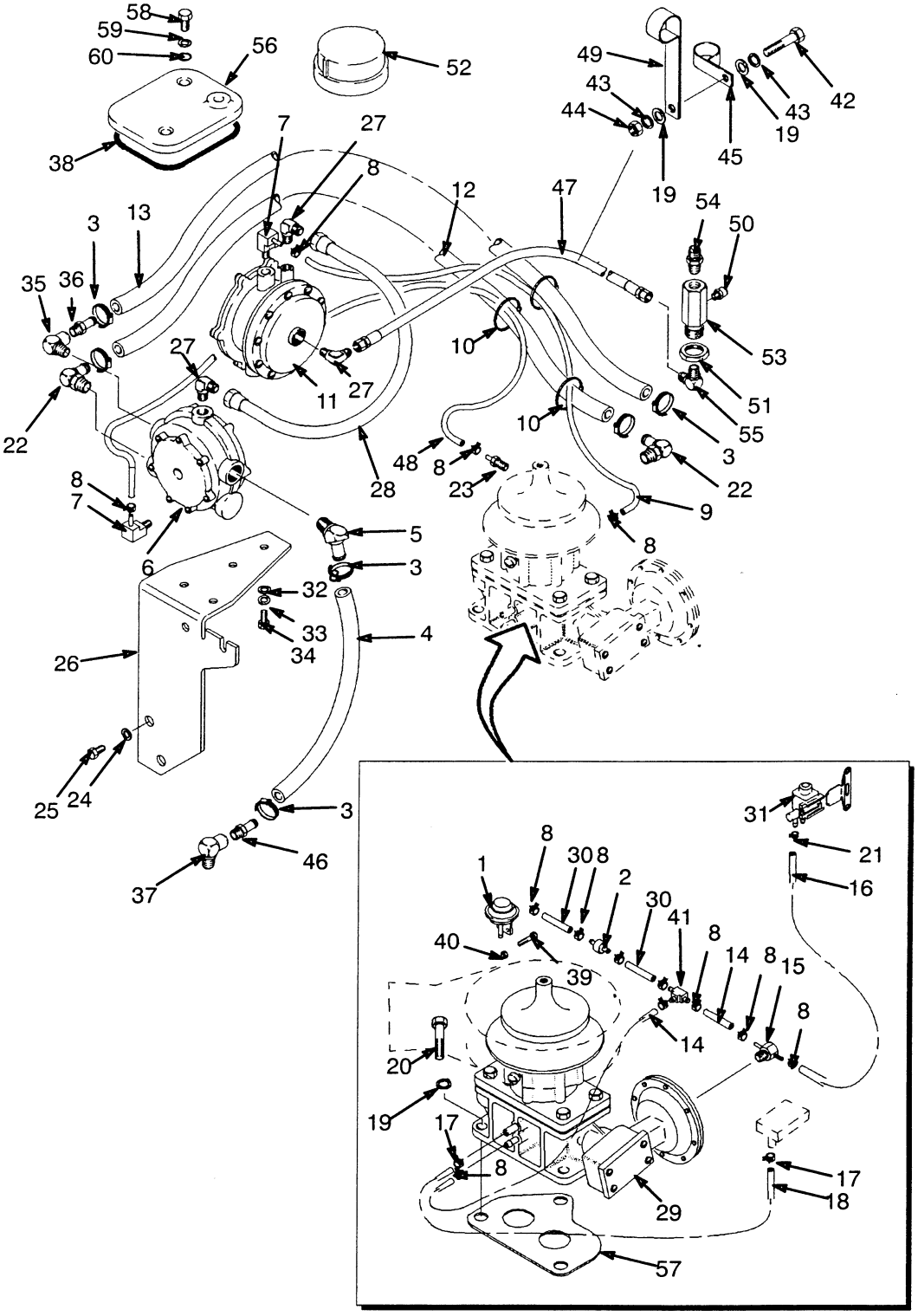

FUEL
LPG
FIRST USED ON S/N G005D-7760 (EXCEPT S/N 7830-7832, 7834-7837, 7840 AND 7841) AND INCLUDES S/N G005D-7710

REF		PART NO.	NAME OF PART	QTY
1		1346872	Actuator	1
2		1350400	Valve	1
3		130845	Clamp	6
4	a	78462	Hose	1
4	b	164289	Hose	1
5	a	102898	Fitting	1
5	b	201808	Fitting	1
6		....	Converter Assy ☞ Figure 72	1
7		175347	Fitting	2
8		366473	Clamp	13
9		1336136	Hose	1
10		129563	Clamp	5
11		....	Fuel Lock & Filter ☞ Figure 70	1
12		1336137	Hose	1
13		125793	Hose	1
14		372002	Hose	2
15		346346	Fitting Special (LP/OC)	1
15		1380601	Fitting Special (LP/PS)	1
16		1360841	Hose	1
17		353310	Clamp	3
18		1330397	Hose	1
19		292681	Washer	5
20		18496	Capscrew	3
21		369815	Clamp	1
22		201800	Fitting	2
23		191805	Fitting	2
24		292682	Washer	2
25		16598	Capscrew	2
26		1383305	Bracket	1
27		14358	Fitting	2
28		352781	Tube Assembly	1
29		....	Carburetor Assembly ☞ Figure 68	1
30		1333808	Hose	2
31		1345677	Solenoid Valve	1
32		15154	Washer	4
33		15127	Washer	4
34		18460	Capscrew	4
35		16143	Fitting	1
36		138710	Fitting	1
37		1383267	Fitting Special	1
38		353106	Ring-Square	1
39		302244	Screw	2
40		316825	Nut	2
41		1383209	Tee Fitting	1
42		293615	Capscrew	1
43		296418	Washer	2
44		239503	Nut	1
45	a	178119	Clamp Insulated	1
45	b	128408	Clamp Insulated	1
46	a	222473	Fitting	1
46	b	141776	Fitting	1
47		113012	Hose Assembly	1
48		1336136	Hose	1
49		1327214	Clamp	1
50		101809	Relief Valve	1
51		15034	Nut	1
52		17817	Fitting	1
53		1361670	Bulkhead Fitting	1
54		16134	Fitting	1
55		14358	Fitting	1
56		1320865	Cover	1
57		1333806	Gasket	1
58		329067	Screw	2
59		320157	Washer	2
60		353000	O-Ring	2

a Last Used On S/N G005D-9451
b First Used On S/N G005D-9452

©1999 HYSTER COMPANY

DUAL FUEL CONVERSION KIT (FIGURE 63)

GAS TO LPG

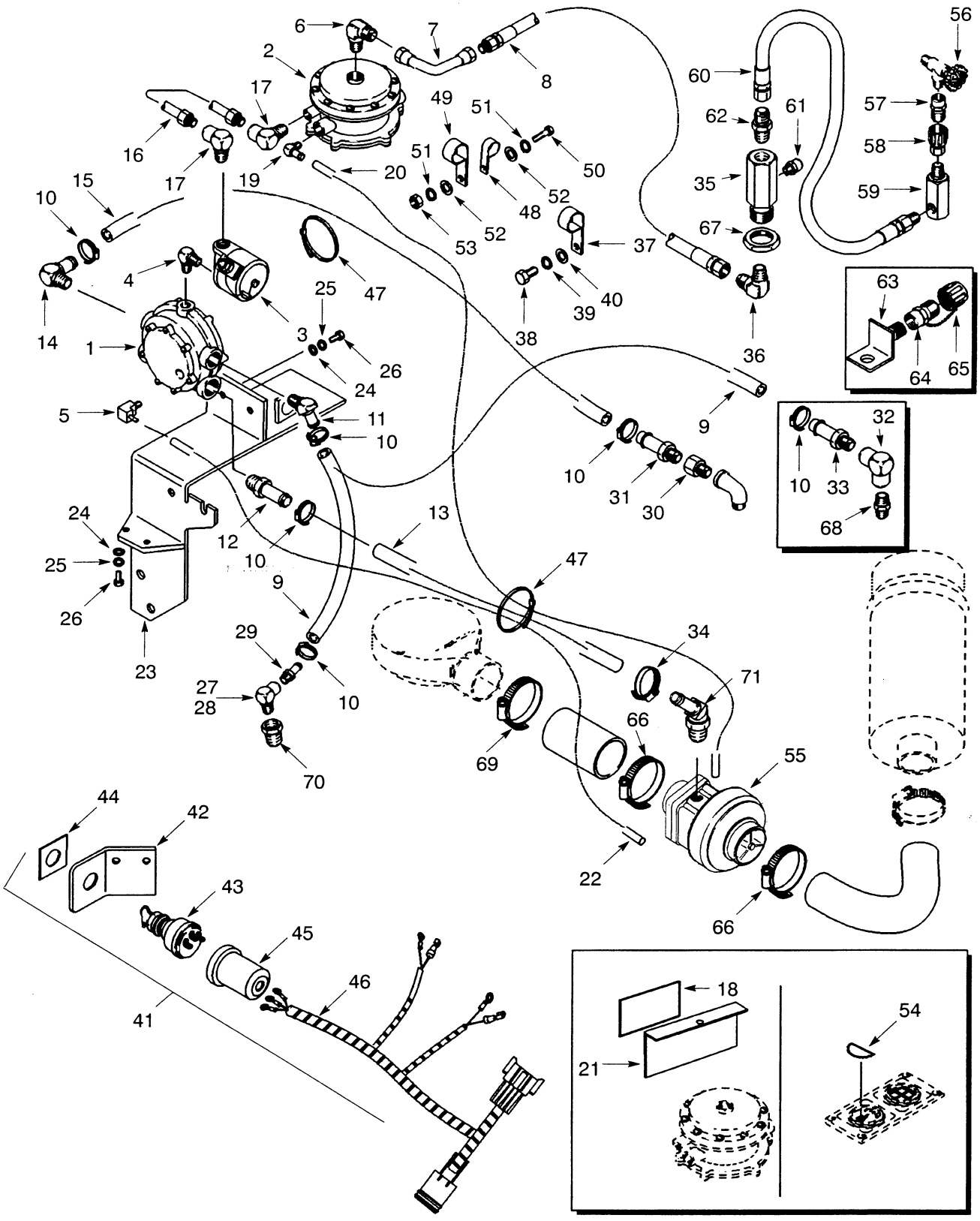

DUAL FUEL CONVERSION KIT
GAS TO LPG

REF		PART NO.	NAME OF PART	QTY
1	a	....	Convertor	1
			☞ Figure 72	
2	a	....	Fuel Lock And Filter	1
			☞ Figure 70	
3	a	864745	Solenoid Valve	1
4	a	16841	Fitting	1
5	a	175347	Fitting	1
6	a	14358	Fitting	1
7		864853	Tube Assembly	1
8		864780	Hose Assembly	1
9	a	78462	Hose	1
10	a	130845	Clamp	3
11	a	16764	Fitting	1
12	a	16156	Fitting	1
13	a	864752	Hose	1
14	a	125305	Fitting	1
15	a	139919	Hose	1
16	a	864744	Tube Assembly	1
17	a	14273	Fitting	2
18	a	864779	Label	1
19	a	86851	Fitting	1
20	a	864751	Hose	1
21	a	1358327	Plate	1
22	a	372009	Hose	1
23	a	864749	Bracket	1
24	a	15127	Washer	4
25	a	15154	Washer	4
26	a	18460	Capscrew	4
27		273338	Thread Sealant	1
28	c	16116	Fitting	1
29	c	16764	Fitting	1
30	c	12845	Fitting	1
31	c	16156	Fitting	1
32	d	12817	Fitting	1
33	d	138710	Fitting	1
34		366473	Clamp	2
35	b	1325033	Fitting	1
36		14358	Fitting	1
37	c	154278	Clamp	1
38	c	292513	Capscrew	1
39	c	292682	Lockwasher	7
40	c	320159	Washer	1
41		864760	Fuel Selector Assembly	1
42		864761	Bracket	1
43		1369470	Switch	1
44		864763	Nameplate	1
45		864764	Boot	1
46		864735	Harness	1
47		129563	Strap Clamp	5
48	d	178119	Clamp	1
49	d	1327214	Clamp	1
50	d	293615	Capscrew	1
51	d	292681	Lockwasher	3
52	d	320157	Washer	4
53	d	239503	Nut	2
54		864740	Label	1
55		864753	Mixer Assembly	1
56		233908	Valve Assembly	1
57		124010	Fitting	1
58		97999	Fitting	1
59		1327554	Fitting	1
60		1335292	Hose Assembly	1
61	b	101809	Relief Valve	1
62	b	16134	Fitting	1
63		864736	Bracket	1
64		864737	Connector	1
65		1369737	Cap	1
66		112989	Clamp	2
67	b	15034	Nut	1
68	b	12831	Fitting	1
69		2033817	Clamp	1
70		1336135	Fitting	1
71		127852	Fitting	1

a Included With Lockoff And Regulator Assembly 864750

b Included With Bulkhead Fitting Assembly 1359673

c For Use Up To Pre-1996 Model Engine Only

d For Use With 1996 And Up Engine Only

©1999 HYSTER COMPANY

FUEL TANK (FIGURE 64)

DIESEL

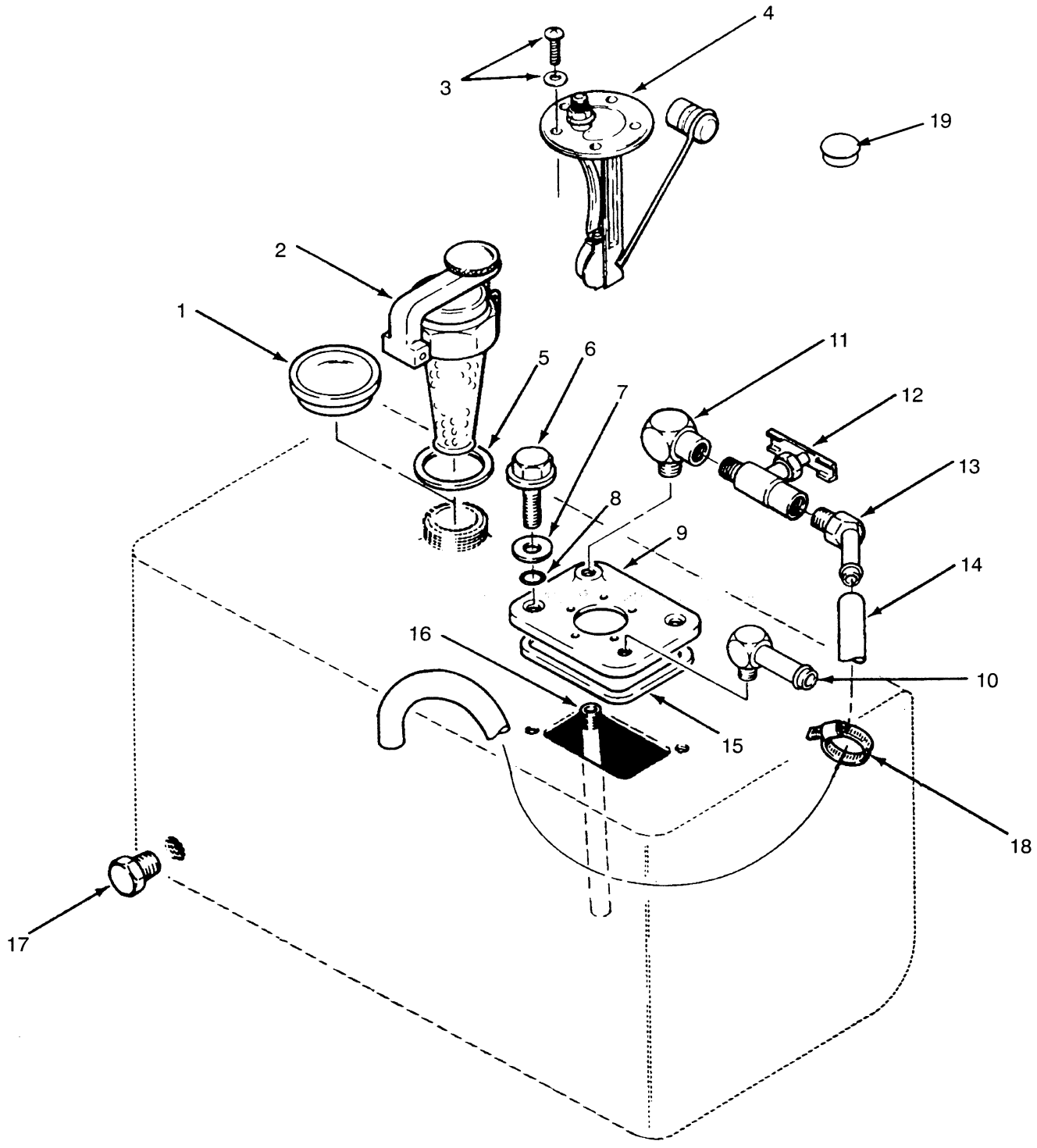

©1999 HYSTER COMPANY

FUEL TANK

DIESEL

REF	PART NO.	NAME OF PART	QTY
1	298832	Cap	1
2	63899	Protectoseal Cap (Optional)	1
3	16708	Screw	2
3	350483	Seal/Washer	2
4	305594	Fuel Sender	1
5	138880	Shim (.020, Optional)	AR
6	329067	Screw	2
7	320157	Washer	2
8	353000	O-Ring	2
9	1350922	Cover	2
10	17343	Fitting	2
11	17736	Fitting	1
12	16190	Needle Valve	1
13	1316809	Fitting	1
14	1303194	Hose	1
15	353106	Seal	1
16	1320915	Pipe	1
17	14385	Fitting	1
18	168718	Clamp	4
19	1332607	Plug	1

©1999 HYSTER COMPANY

FUEL SYSTEM (FIGURE 65)

GASOLINE

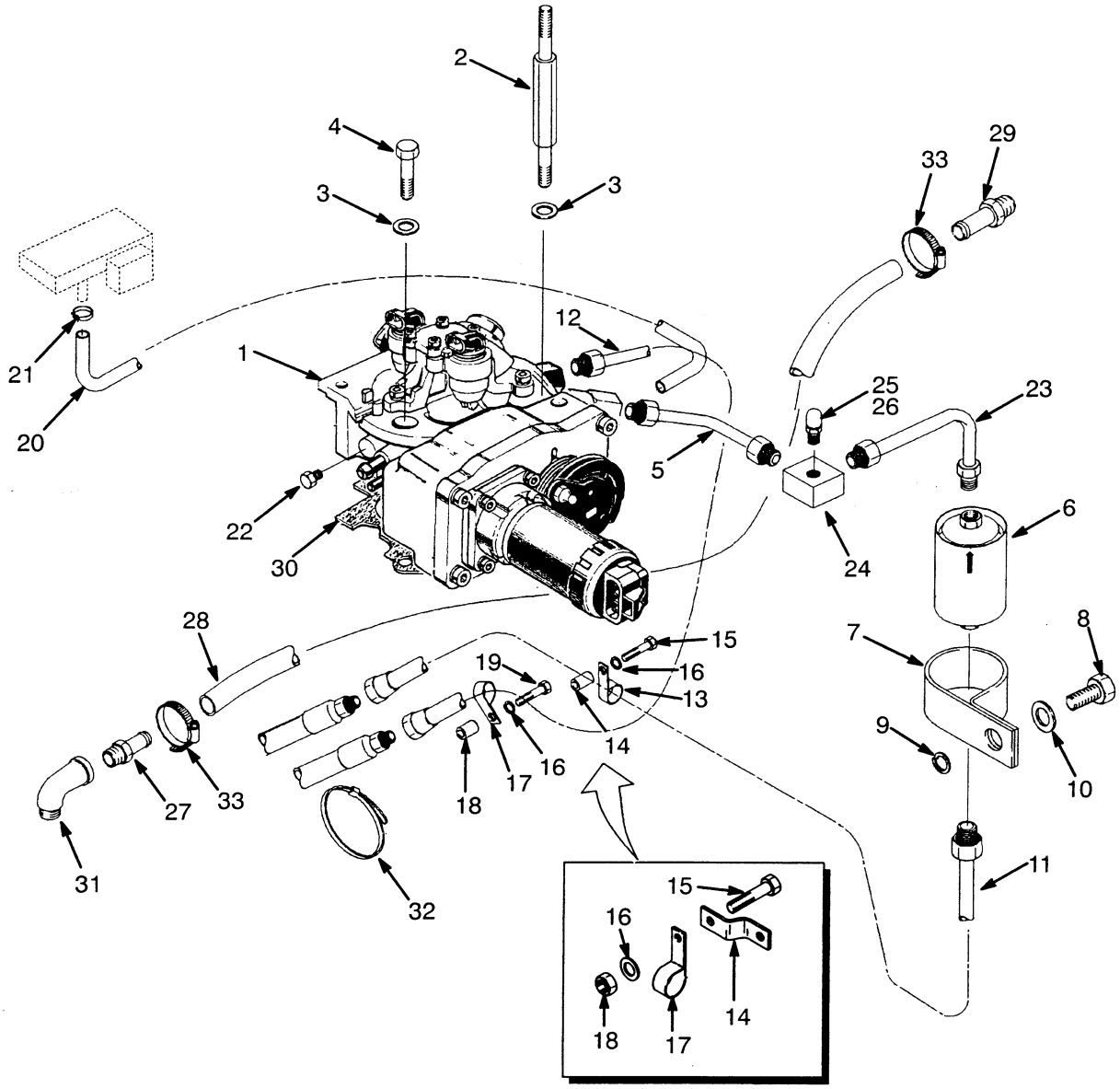

©1999 HYSTER COMPANY

FUEL SYSTEM

GASOLINE

REF		PART NO.	NAME OF PART	QTY
1		....	Throttle Body Injector	1
			☞ Figure 74	
2		1327970	Stud	2
3		109919	Seal/Washer	3
4		16782	Capscrew	1
5		1339423	Tube Assembly	1
6		1330342	Fuel Filter	1
7		176451	Clamp	1
8		136681	Capscrew	1
9		320158	Washer	1
10		292681	Lockwasher	1
11	c	1333828	Tube	1
11	d	1383271	Tube	1
12	c	1333829	Tube	1
12	d	1383231	Tube	1
13		164488	Clamp	1
14	e	325463	Spacer (18 mm, Zinc)	1
14	f	1459978	Bracket	1
15	e	16816	Capscrew	1
15	f	176640	Capscrew	1
16	e	15156	Washer	2
16	f	320157	Washer	2
17		198675	Clamp (Some Early Models)	1
18	e	1337382	Spacer (10 mm, Zinc)	1
18	f	302400	Nut	1
18	e	1345979	Spacer (10 mm, Steel)	1
19		16828	Capscrew	1
20		1333807	Silicon Hose	1
21		353310	Clamp	1
22		1333825	Plug	2
23	c	1339424	Tube Assembly	1
23	d	1383230	Tube Assembly	1
24		1339425	Fitting	1
25		1345991	Pressure Valve Assembly	1
26		1339438	Seal/Washer	1
27	c	222473	Fitting	1
28	a	1358729	Hose Assembly	1
28	bc	1367710	Hose Assembly	1
29	c	17177	Fitting (45°)	1
30		1333806	Gasket	1
31	c	15337	Fitting	1
32	c	2004005	Strap Clamp	2
33	c	130845	Clamp	2

a Used On S/N G005D-1914

b Used On S/N G005D-1915

c Last Used On S/N G005D-7759 (Including S/N 7830-7832, 7834-7837, 7840 And 7841) Except S/N G005D-7710

d First Used On S/N G005D-7760 (Except For S/N 7830-7832, 7834-7837, 7840 And 7841) And Includes S/N G005D-7710

e Last Used On S/N G005D-13153

f First Used On S/N G005D-13154

©1999 HYSTER COMPANY

FUEL TANK (FIGURE 66)

LPG

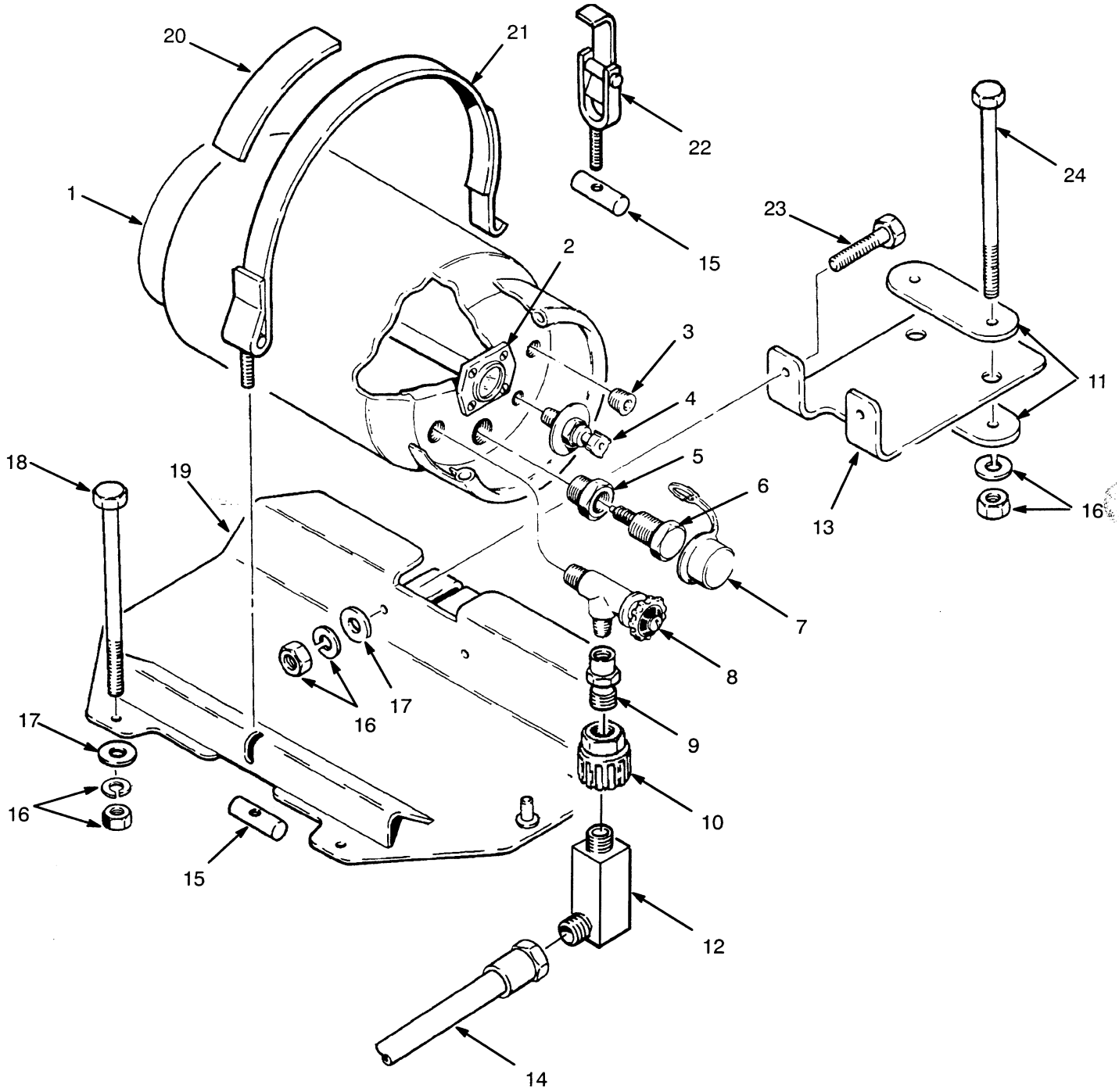

©1999 HYSTER COMPANY

FUEL TANK

LPG

REF		PART NO.	NAME OF PART	QTY
1		125789	Tank	1
2	a	344230	Float Gauge	1
2	b	1332401	Gauge	1
3		15963	Fitting	1
4		197038	Gauge	1
4	c	344232	Gauge With Dip Tube	1
5		344228	Adapter	1
6		200170	Relief Valve	1
7		200172	Rain Cap	1
8		233908	Valve	1
9		124010	Coupler	1
10		97999	Disconnect	1
11		352753	Spacer	2
12		1327554	Fitting	1
13		353024	Bracket (H70-80XL)	1
13		353025	Bracket (H90-100XL)	1
13		1300745	Bracket (H90XLS)	1
13		353317	Bracket (H110XL)	1
14		1325037	Hose (Factory)	1
14		1335292	Kit-Hose (Field Conversion)	1
15		147294	Nut	2
16		136692	Nut	6
16		292682	Lockwasher	6
17		296420	Washer	4
18		292525	Capscrew	2
19		1327216	Bracket (LPG)	1
20		341788	Bumper	1
21		306008	Strap	1
22		196297	Latch	1
23		287860	Capscrew	2
24		176801	Capscrew (H70-100XL, H90XLS)	2
24		334421	Capscrew (H110XL)	2

a Screw In Type, $1\ ^{-1}/_{4}$ NPT

b Screw In Type, $^{3}/_{4}$ NPT

c Optional With Removable Dip Tube

©1999 HYSTER COMPANY

CARBURETOR (FIGURE 67)

LPG

LAST USED ON S/N G005D-7759 (INCLUDING S/N 7830-7832, 7834-7837, 7840 AND 7841), EXCEPT S/N G005D-7710

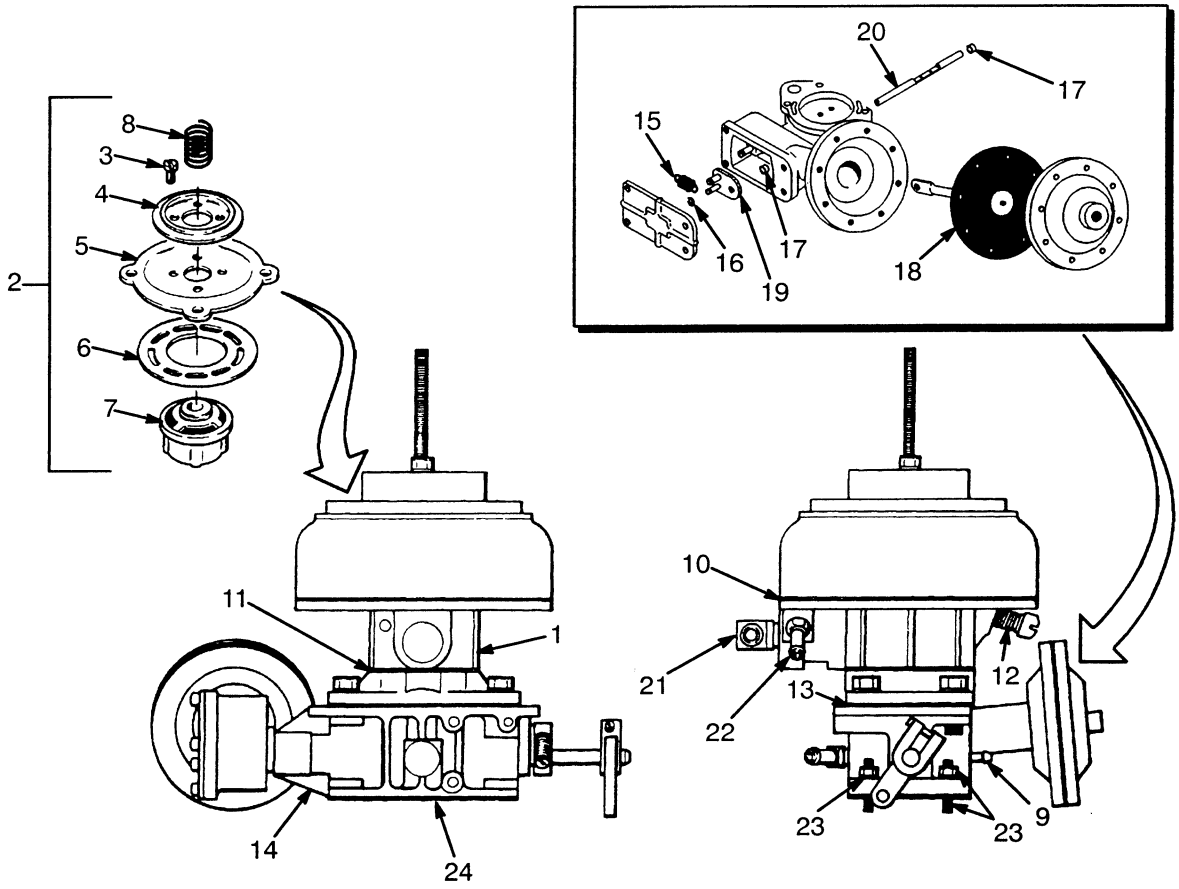

PARTS-SERVICE GRAM	
Item	Gram
Carburetor	E-B-26
Carburetor	E-B-27

REF	PART NO.	NAME OF PART	QTY
	1331600	Carburetor (LPG)	1
1	374712	Mixer Assembly	1
2	204782	Valve/Diaphragm	1
3	....	Screw	4
4	....	Back-Up Plate	1
5	....	Diaphragm	1
6	....	Ring (Air Valve)	1
7	....	Valve	1
8	....	Spring	1
9	372115	Fitting	1
10	261963	Gasket	1
11	204787	Gasket	1
12	214117	Spring	1
13	374714	Gasket	1

REF	PART NO.	NAME OF PART	QTY
14	1342990	Governor	1
15	374710	Spring	1
16	374709	Ring	1
17	374708	Bearing	2
18	1339102	Diaphragm	1
19	374706	Lever	1
20	1339103	Throttle Shaft	1
21	201800	Fitting	2
22	191805	Fitting	1
23	295308	Stud	4
23	15055	Nut	4
23	292681	Lockwasher	4
24	1333806	Gasket	1

©1999 HYSTER COMPANY

NOTES

©1999 HYSTER COMPANY

CARBURETOR (FIGURE 68)

LPG

FIRST USED ON S/N G005D-7760 (EXCEPT S/N 7830-7832, 7834-7837, 7840 AND 7841) AND INCLUDES S/N G005D-7710

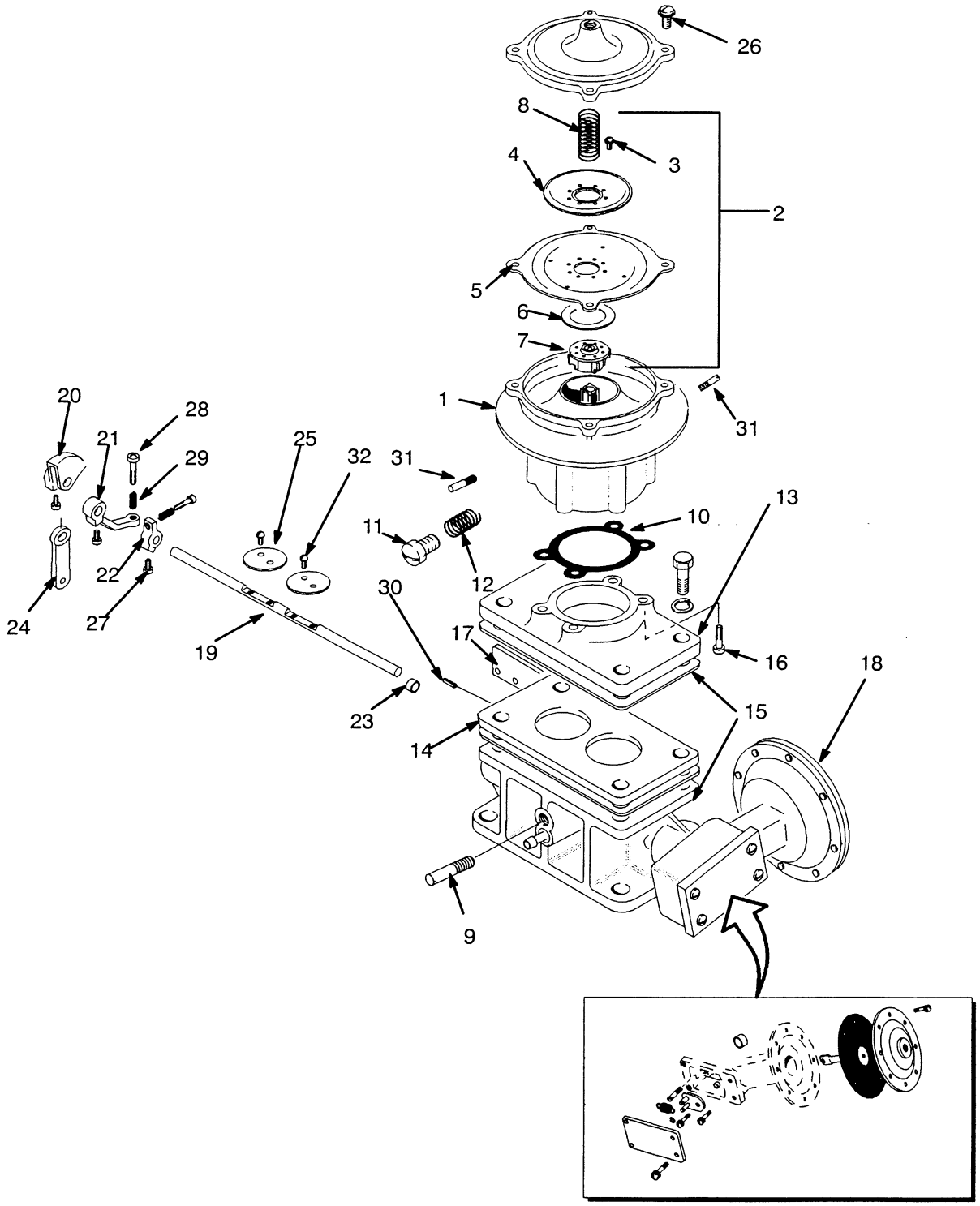

©1999 HYSTER COMPANY

CARBURETOR
LPG
FIRST USED ON S/N G005D-7760 (EXCEPT S/N 7830-7832, 7834-7837, 7840 AND 7841) AND INCLUDES S/N G005D-7710

REF	PART NO.	NAME OF PART	QTY
	1383200	Carburetor	1
1	374712	Mixer Assembly	1
2	204782	Valve & Diaphragm Kit	1
3	....	Screw	4
4	....	Back-Up Plate	1
5	....	Diaphragm	1
6	....	Ring (Air Valve)	1
7	....	Valve	1
8	....	Spring	1
9	372115	Fitting	1
10	204787	Gasket	1
11	214117	Spring-Idle Screw	1
12	374713	Spring	1
13	....	Adapter	1
14	261963	Gasket	1
15	374714	Gasket	2
16	....	Bolt	4
17	1383265	Bracket-Idle Up	1
18	1385673	Governor Assembly	1
19	1383264	Throttle Shaft	1
20	1342997	Clamp	1
21	1358241	Lever	1
22	....	Lever Assembly	1
23	374708	Bearing	2
24	....	Floating Lever	1
25	....	Throttle Plate	2
26	132473	Screw	4
27	204790	Screw	3
28	1374057	Screw	1
29	204824	Spring-Idle Stop	1
30	....	Roll Pin	1
31	326926	Screw	2
32	1393165	Screw	4

©1999 HYSTER COMPANY

GOVERNOR (FIGURE 69)

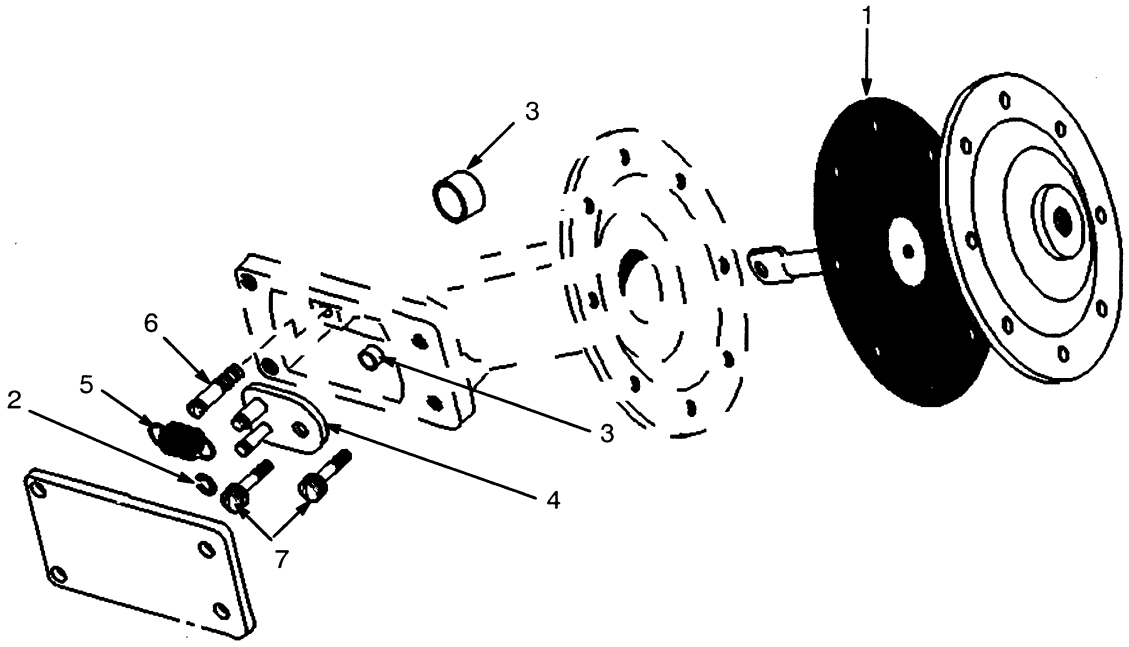

REF	PART NO.	NAME OF PART	QTY
	1385673	Governor	1
1	1339102	Diaphragm Assembly	1
2	374709	Snap Ring	1
3	374708	Bearing	2
4	374706	Lever Assembly	1
5	374710	Spring	1
6	....	Pin-Return Spring	1
7	204790	Screw	2

©1999 HYSTER COMPANY

LOCK-OFF FILTER (FIGURE 70)

LPG

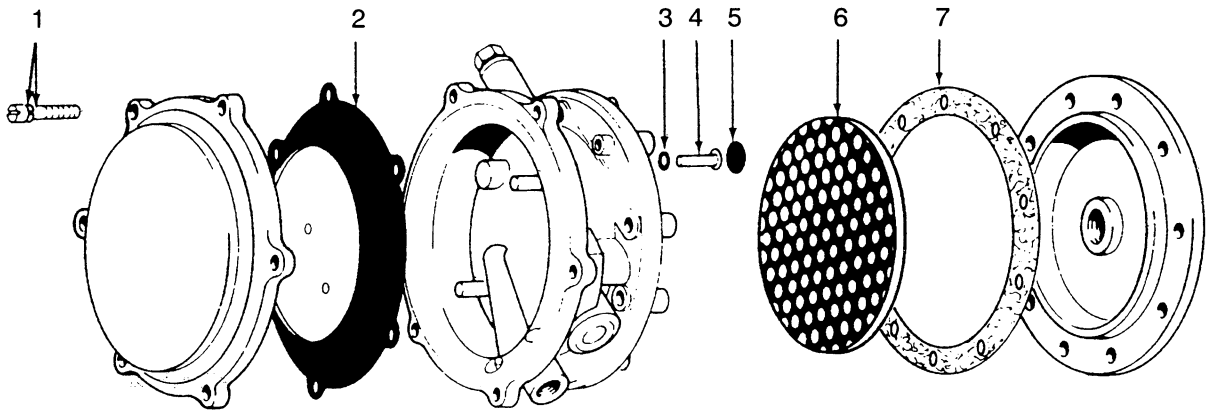

REF		PART NO.	NAME OF PART	QTY
		258321	Lock-Off Filter	1
1	a	....	Screw	6
1	a	....	Washer	6
2	a	....	Diaphragm	1
3	a	....	O-Ring	1
4	a	16731	Screw	2
5	a	....	Valve Seat	1
6	a	....	Filter	1
7	a	....	Gasket	1

a Included In Repair Kit 263958

©1999 HYSTER COMPANY

LPG CONVERTER (FIGURE 71)

LAST USED ON S/N G005D-2849

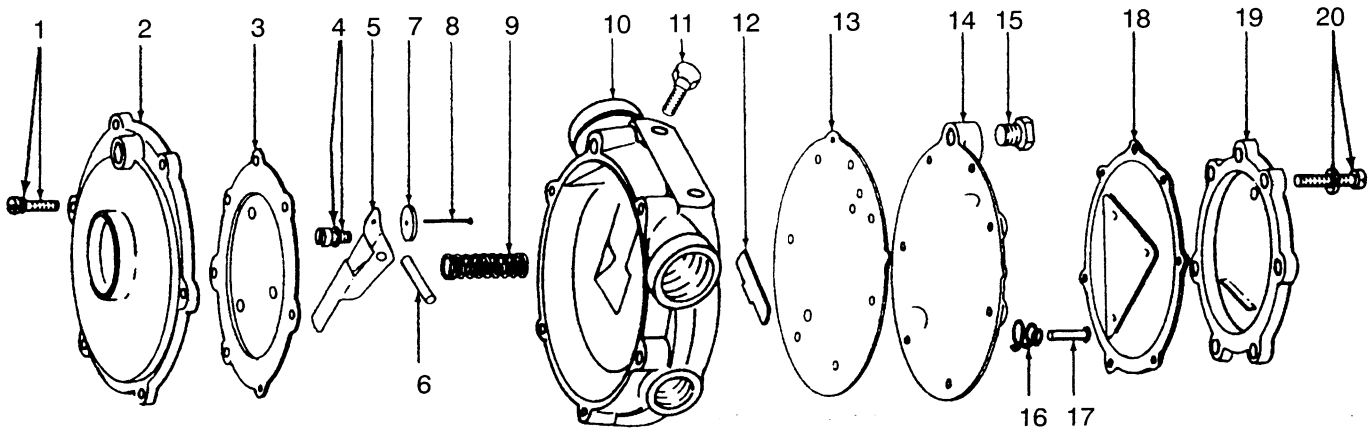

REF		PART NO.	NAME OF PART	QTY
		196193	Converter Assembly	1
1	a	....	Capscrew	6
1		....	Lockwasher	6
2		....	Cover	1
3	a	....	Diaphragm	1
4	a	....	Screw	1
4		....	Lockwasher	1
5		204829	Lever	1
6		204830	Pin	1
7	a	....	Seat	1
8	a	....	Pin	1
9		204831	Spring	1
10		....	Body	1
11		....	Screw	2

REF		PART NO.	NAME OF PART	QTY
11		....	Lockwasher	2
12	a	....	Seat	1
13	a	....	Gasket	1
14		....	Plate	1
15		....	Fitting	1
16		204835	Spring	1
17	a	....	Pin	1
18	a	....	Diaphragm	1
19		....	Cover	1
20	a	....	Screw	7
20		....	Lockwasher	7

a Included In Repair Kit 204837

©1999 HYSTER COMPANY

LPG CONVERTER (FIGURE 72)

USED ON S/N G005D-2850 THRU S/N G005D-11516

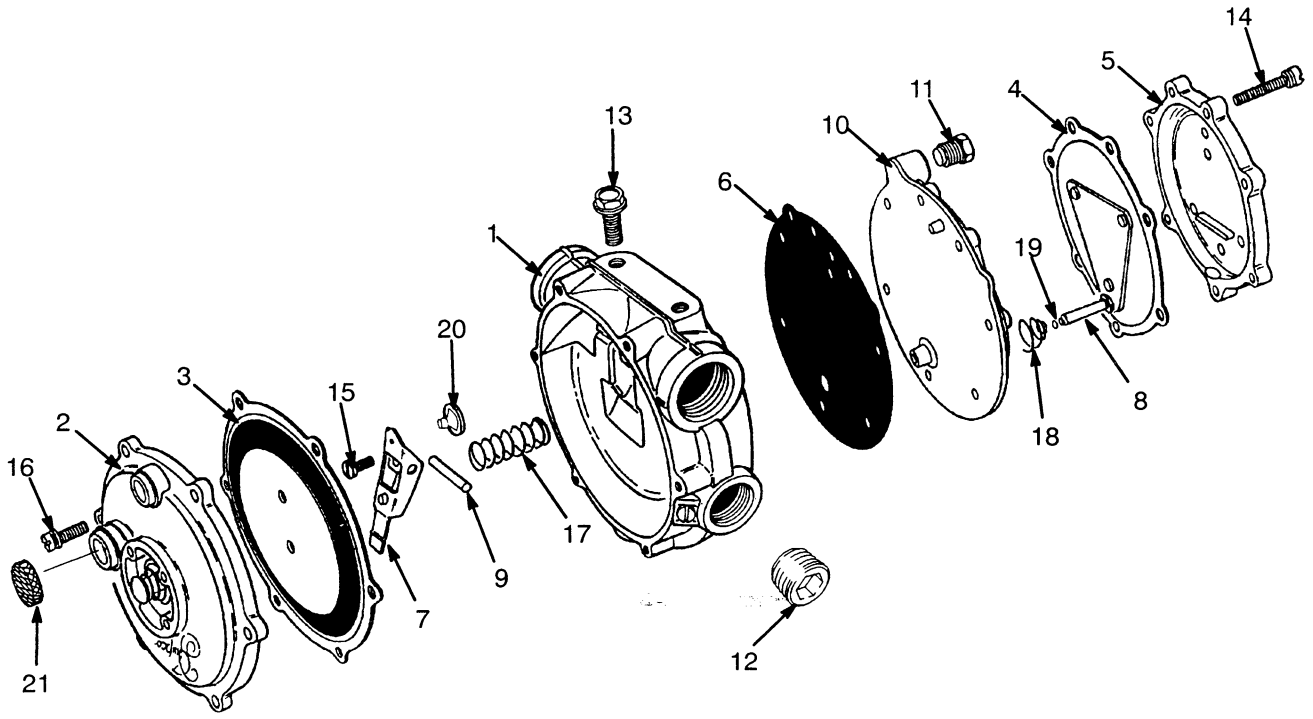

REF		PART NO.	NAME OF PART	QTY
		1369571	Converter Assembly	1
1		1375027	Body	1
2		....	Cover	1
3	a	1375047	Diaphragm (Secondary)	1
4	a	....	Diaphragm (Primary)	1
5		1375037	Cover (Primary)	1
6	a	....	Gasket	1
7		....	Lever (Secondary)	1
8	a	1376429	Pin	1
9		204830	Pin	1
10		1375029	Plate	1
11		1357749	Plug	1
12		1357707	Plug	1

REF		PART NO.	NAME OF PART	QTY
13		1369065	Screw	2
14	a	1450126	Screw	7
15	a	16719	Screw	1
16	a	1450126	Screw	6
17		1375030	Spring	1
18		204831	Spring	1
19		....	Seal	1
20	a	....	Seat	1
21		1367597	Screen	1

a Included In Repair Kit 1375031

©1999 HYSTER COMPANY

LPG CONVERTER (FIGURE 73)

FIRST USED ON S/N G005D-11517

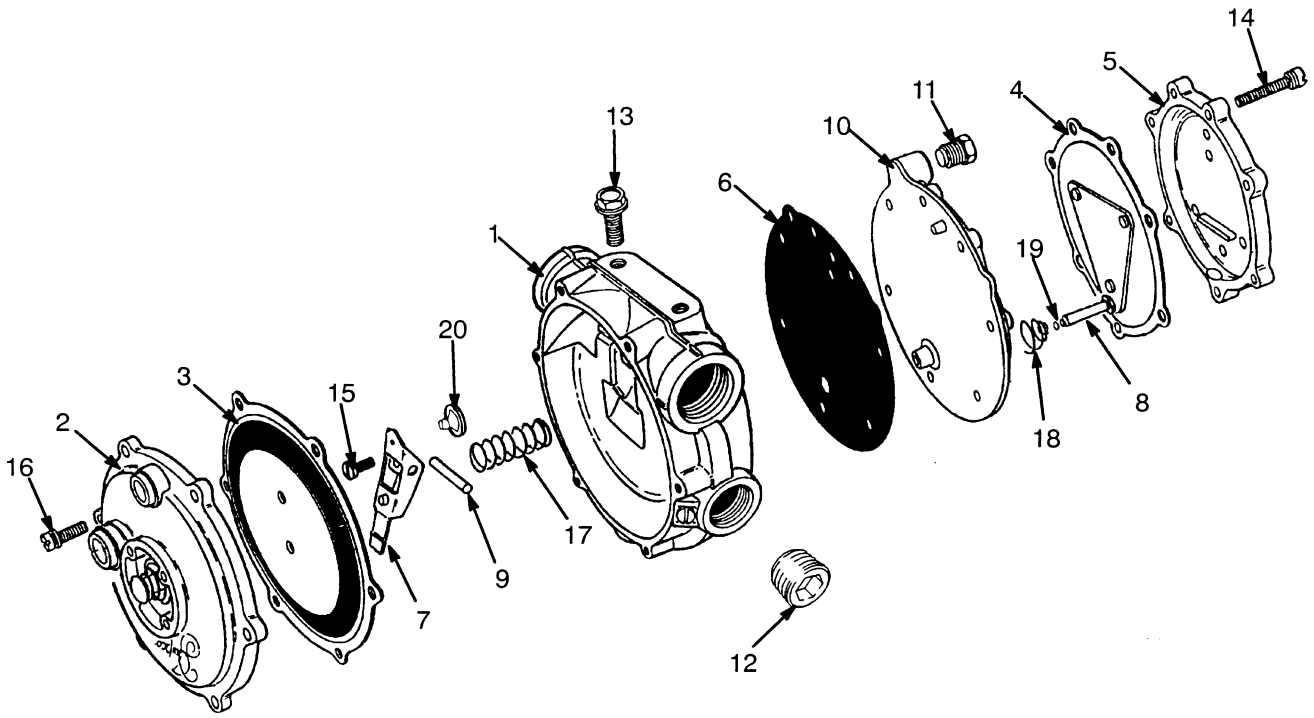

REF		PART NO.	NAME OF PART	QTY
		1453772	Converter Assembly	1
1		1455310	Body	1
2		1455309	Cover	1
3	a	....	Diaphragm (Secondary)	1
4	a	....	Diaphragm (Primary)	1
5		1375037	Cover (Primary)	1
6	a	....	Gasket	1
7		1357746	Lever (Secondary)	1
8	a	148764	Pin	1
9		204830	Pin	1
10		1375029	Plate	1
11		1357749	Plug	1

REF		PART NO.	NAME OF PART	QTY
12		1357707	Plug	1
13		1369065	Screw	2
14		1455307	Screw	7
15		1455306	Screw	1
16		1450126	Screw	6
17		1455305	Spring	1
18		204831	Spring	1
19	a	.....	E-ring	1
20	a	....	Seat	1

a Included In Repair Kit 1459717

©1999 HYSTER COMPANY

NOTES

©1999 HYSTER COMPANY

THROTTLE BODY INJECTOR (FIGURE 74)

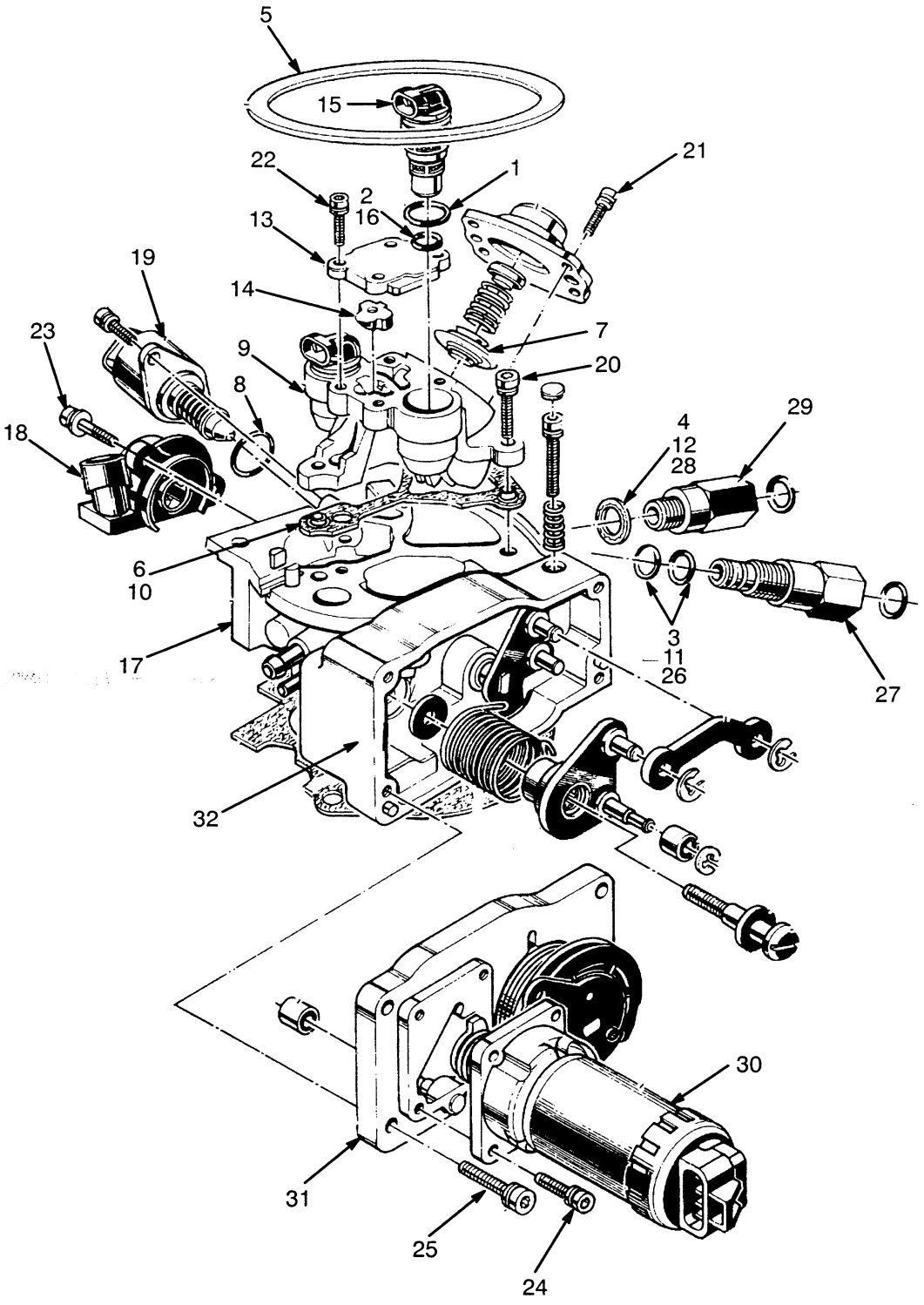

©1999 HYSTER COMPANY

THROTTLE BODY INJECTOR

REF		PART NO.	NAME OF PART	QTY
		1327950	Throttle Body Injector	1
		1337973	Kit-Throttle Body Injector	1
1		....	O-Ring (Upper Injector)	2
2		....	O-Ring (Lower Injector)	2
3		....	O-Ring (Fuel Inlet Nut)	2
4		....	Gasket (Fuel Outlet)	1
5		....	Gasket (Air Cleaner)	1
6		....	Gasket (Fuel Meter Body)	1
7		....	Pressure Regulating Diaphragm	1
8		....	O-Ring (IAC Valve)	1
9		1337974	Kit-Fuel Meter	1
9		....	Fuel Meter Assembly	1
10		....	Gasket (Fuel Meter Body)	1
11		....	O-Ring (Fuel Inlet Nut)	2
12		....	Gasket (Fuel Outlet)	1
13		1337975	Kit-Fuel Meter Body	1
13		....	Cover (Fuel Meter Body)	1
14		....	Block (Fuel Vapor)	1
15	a	1337976	Kit-Fuel Injector	1
15		....	Injector Assembly	1
16		....	O-Ring (Lower Injector)	2
17		1337977	Kit-Throttle Body	1
17		....	Throttle Body Assembly	1
18		1337978	Kit-Throttle Position Sensor	1
18		....	Sensor (Throttle Position)	1
19		1337979	Kit-Idle Air Control	1
19		....	Control Valve (Idle Air)	1
20		1337980	Kit-Screw Assortment	1
20		....	Screw (Fuel Mtr. Body)	3
21		....	Screw (Regulator Cover)	4
22		....	Screw (Fuel Meter Cover)	4
23		....	Screw (Throttle Position Sensor Mount)	2
24		....	Screw (Drive Motor Mount)	4
25		....	Screw (Motor Plate Mount)	4
26		1337981	Kit-Fuel Inlet/Outlet Pack	1
26		....	O-Ring (Fuel Inlet Nut)	2
27		....	Nut (Fuel Inlet)	1
28		....	Gasket (Fuel Outlet Fitting)	1
29		....	Fitting (Fuel Outlet)	1
30		1337982	Kit-Drive Motor	1
30		1396573	Drive Motor	1
30		.....	Spring	1
31		1337983	Kit-Throttle Drive	1
31		....	Drive Assembly (Throttle)	1
32		1337984	Kit-Governor Service	1

a Remanufactured Injector Kit P/N 1450481

©1999 HYSTER COMPANY

THROTTLE LINKAGE (FIGURE 75)

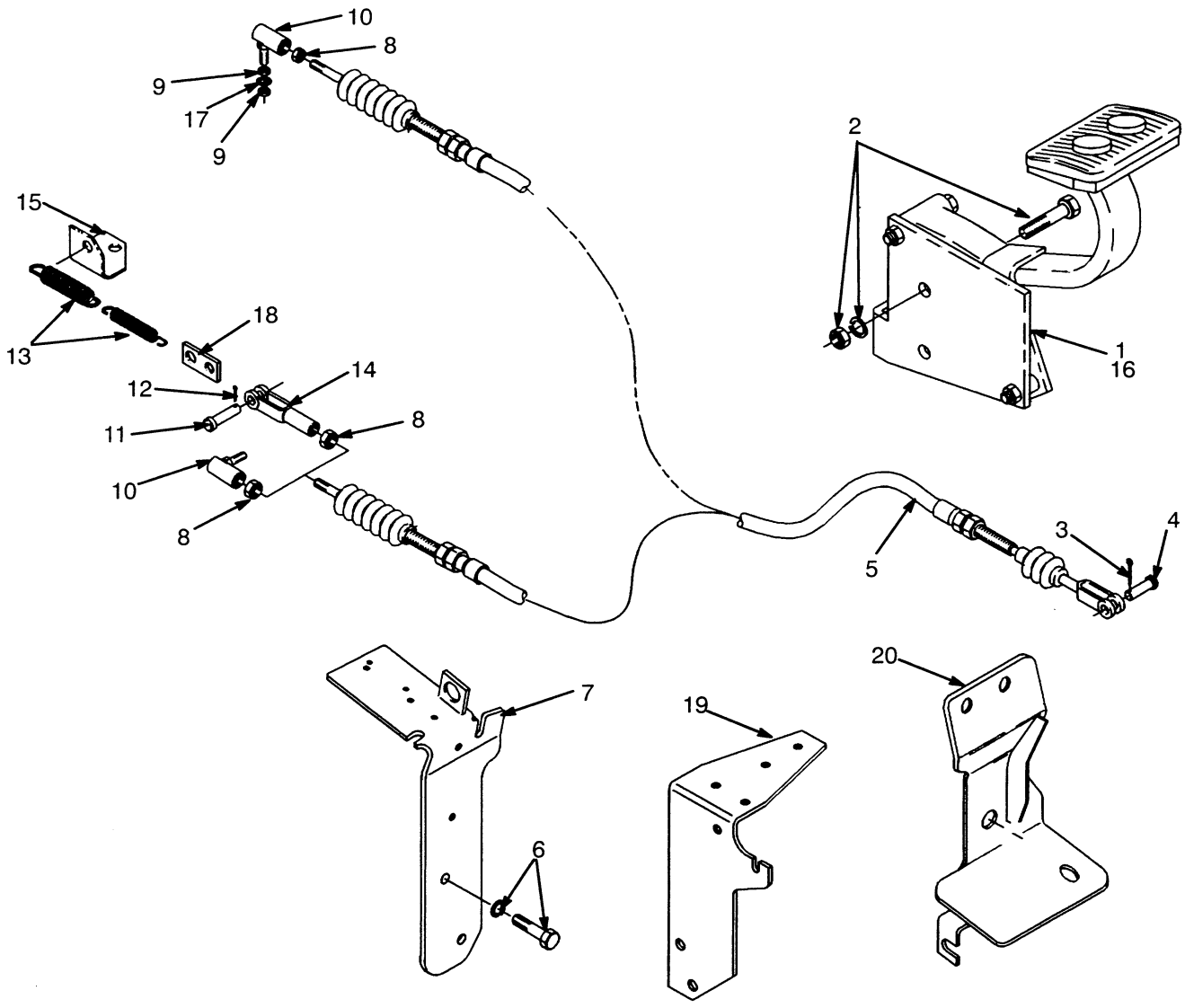

©1999 HYSTER COMPANY

THROTTLE LINKAGE

KEY:
A: Gasoline
B: LPG
C: Diesel

REF		PART NO.	NAME OF PART	QTY A	B	C
1		....	Throttle Pedal	1	1	1
			☞ Figure 76 & Figure 77			
2		136985	Capscrew	2	2	2
2		136692	Nut	2	2	2
2		292682	Lockwasher	2	2	2
3		15212	Pin	1	1	1
4		162836	Rod-End Pin	1	1	1
5	a	1339917	Cable	1	1	1
5	b	1383274	Cable	1	1	1
6		16598	Capscrew	2	..	..
6		292682	Lockwasher	2	..	..
7	e	1336133	Bracket	1	..	..
7	f	1461409	Bracket	1	..	..
8		15002	Nut	1	1	2
9		15024	Nut	..	..	2
10		161252	Ball Joint	1	..	1
11		126	Pin	..	1	..
12		15200	Cotter Pin	..	1	..
13		1330272	Spring (0.819 in, OD)	..	1	..
13		1330273	Spring (0.600 in, OD)	..	1	..
14		314809	Rod End	..	1	..
15	a	1337884	Bracket	..	1	..
16		137852	Clamp	..	..	1
17		15923	Washer	..	..	1
18	a	1345022	Plate	..	1	..
18	b	1383250	Link	..	1	..
19		352782	Bracket	..	1	..
20	c	1313835	Bracket (Without Low Emissions)	..	..	1
20	d	1454335	Bracket (With Low Emssions)	..	..	1

a Last Used On S/N G005D-7759 (Including S/N 7830-7832, 7834-7837, 7840 And 7841) Except S/N G005D-7710

b First Used On S/N G005D-7760 (Except For S/N 7830-7832, 7834-7837, 7840 And 7841) And Includes S/N G005D-7710

c Last Used On S/N G005D-11941

d First Used On S/N G005D-11942

e Last Used On S/N G005D-14735, Except For S/N G005D-14584

f First Used On G005D-14736 And Includes S/N G005D-14584

©1999 HYSTER COMPANY

THROTTLE PEDAL (FIGURE 76)

OIL CLUTCH AND POWERSHIFT WITH FORWARD/REVERSE LEVER

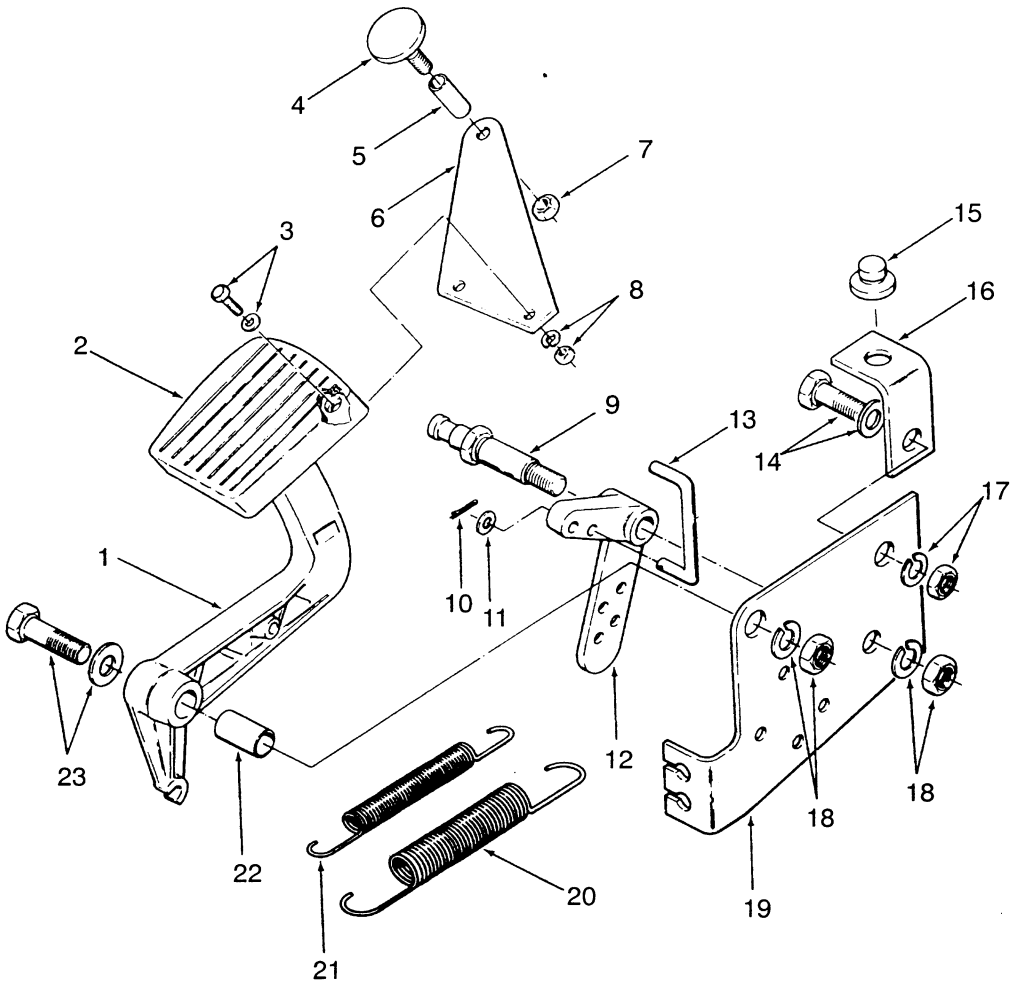

REF		PART NO.	NAME OF PART	QTY
1		352499	Pedal	1
2		352885	Pad	1
3	a	302248	Screw	2
3	a	320155	Washer	2
4	a	118051	Pad	1
5	a	352942	Mount	1
6	a	352944	Plate	1
7	a	239503	Nut	1
8	a	292679	Lockwasher	2
8	a	292668	Nut	2
9		352485	Shaft	1
10		15200	Cotter Pin	1
11		320156	Washer	1
12		353164	Crank	1
13		353129	Rod	1

REF	PART NO.	NAME OF PART	QTY
14	287854	Capscrew	1
14	320160	Washer	1
15	353195	Bumper	1
16	353159	Bracket	1
17	292682	Lockwasher	1
17	296128	Nut	1
18	292682	Lockwasher	2
18	136692	Nut	2
19	352482	Bracket	1
20	353142	Spring (0.760 in, OD)	1
21	353143	Spring (0.530 in, OD)	1
22	325708	Tube	1
23	292521	Capscrew	1
23	320160	Washer	1

a Auxiliary Throttle Pedal

©1999 HYSTER COMPANY

THROTTLE PEDAL (FIGURE 77)

POWERSHIFT WITH MONOTROL PEDAL

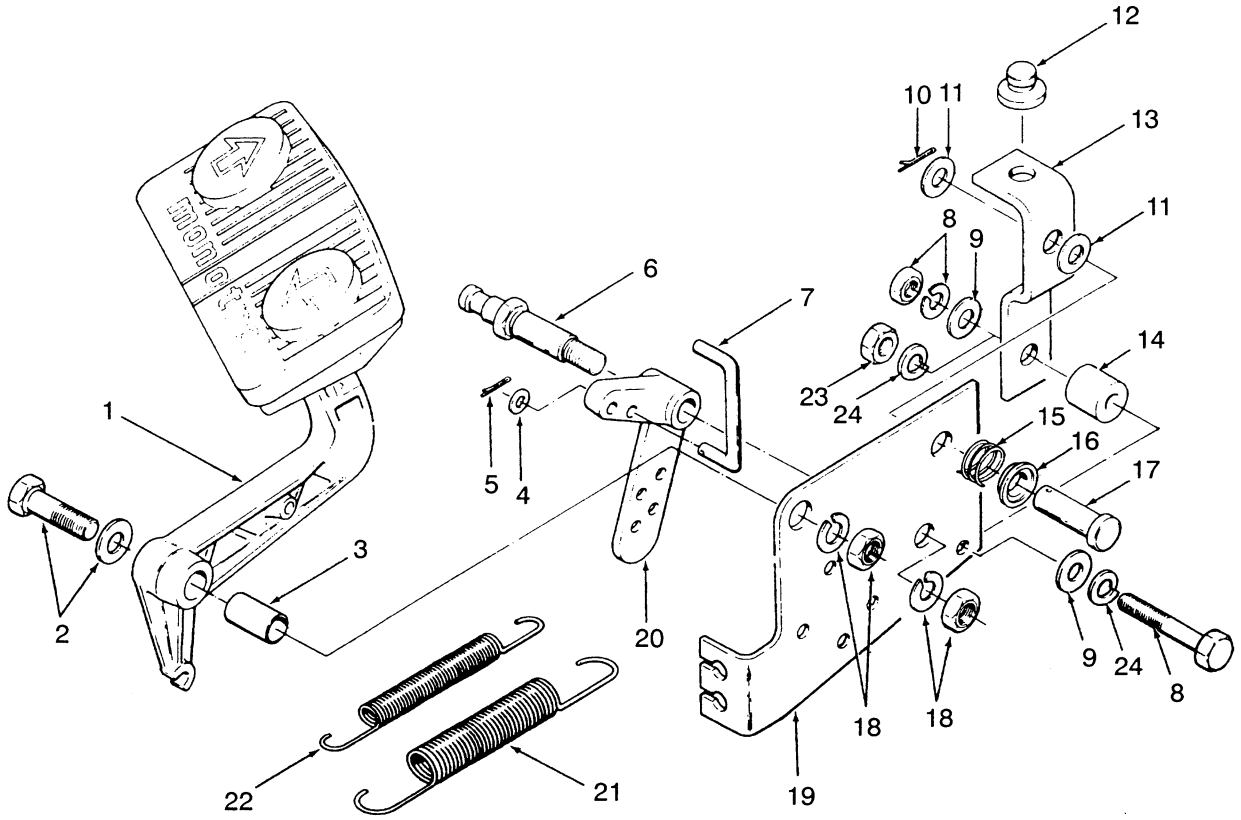

REF	PART NO.	NAME OF PART	QTY
1	....	Pedal	1
		☞ Figure 135	
2	292523	Capscrew	1
2	320160	Washer	1
3	353141	Tube	1
4	320156	Washer	1
5	15200	Cotter Pin	1
6	352485	Shaft	1
7	353129	Rod	1
8	287851	Capscrew	1
9	320158	Washer	1
10	15212	Pin	1
11	320160	Washer	2
12	353195	Bumper	1

REF	PART NO.	NAME OF PART	QTY
13	352950	Bracket	1
14	353453	Mount	1
15	353172	Spring	1
16	353230	Cap	1
17	142	Pin	1
18	292682	Lockwasher	2
18	136692	Nut	2
19	352482	Bracket	1
20	353164	Crank	1
21	353142	Spring (0.760 in, OD)	1
22	353143	Spring (0.530 in, OD)	1
23	239503	Nut	1
24	292681	Lockwasher	2

©1999 HYSTER COMPANY

LIFT PUMP (FIGURE 78)

DIESEL (WITHOUT LOW EMISSIONS)

LAST USED ON S/N G005A-10666

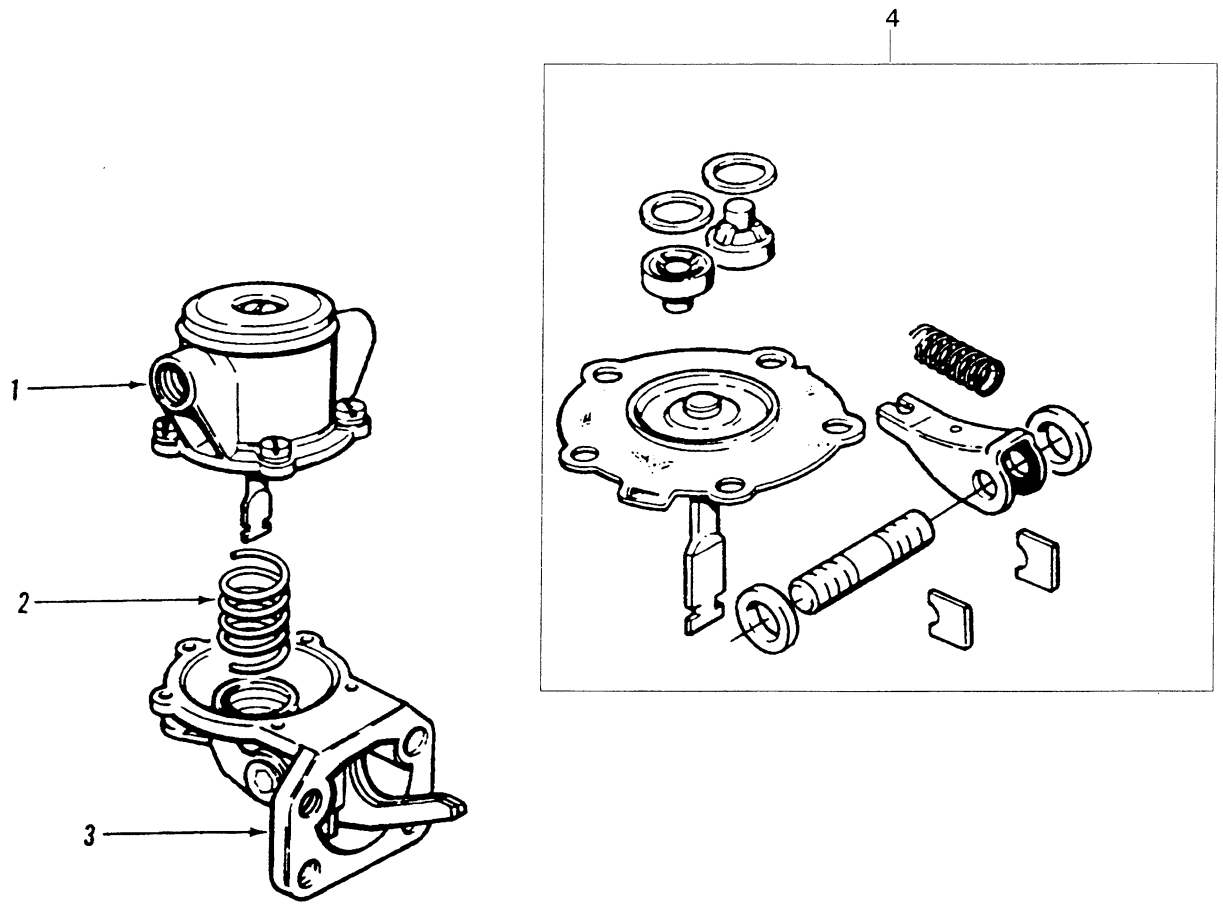

REF	PART NO.	NAME OF PART	QTY
	377323	Engine (Oil Clutch)	1
	1343305	Engine (Powershift)	1
	1380760	Lift Pump	1
1	....	Body	1
2	....	Spring	1
3	....	Body	1
4	1380761	Kit-Repair	1

©1999 HYSTER COMPANY

LIFT PUMP (FIGURE 79)

DIESEL (WITH LOW EMISSIONS)

FIRST USED ON S/N G005A-10667

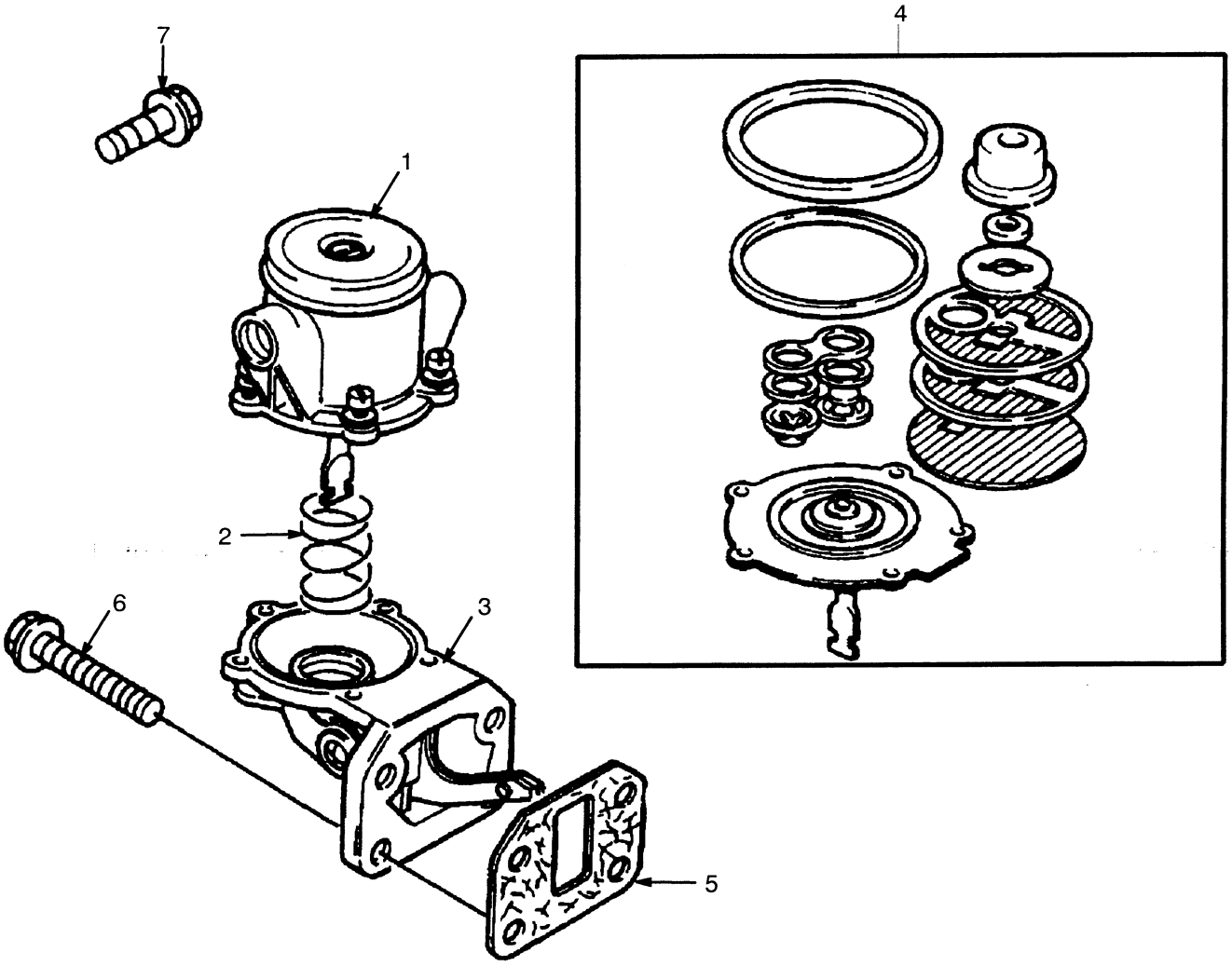

REF	PART NO.	NAME OF PART	QTY
	1453203	Engine (Powershift)	1
	1456338	Lift Pump	1
1	....	Cover	1
2	....	Spring	1
3	....	Body	1

REF	PART NO.	NAME OF PART	QTY
4	1456518	Kit-Repair	1
5	1382562	Gasket	1
6	1307894	Screw	4
7	386459	Screw	1

©1999 HYSTER COMPANY

See Service Manual
for service procedures

WATER FILTER AND SEPARATOR (FIGURE 80)

DIESEL

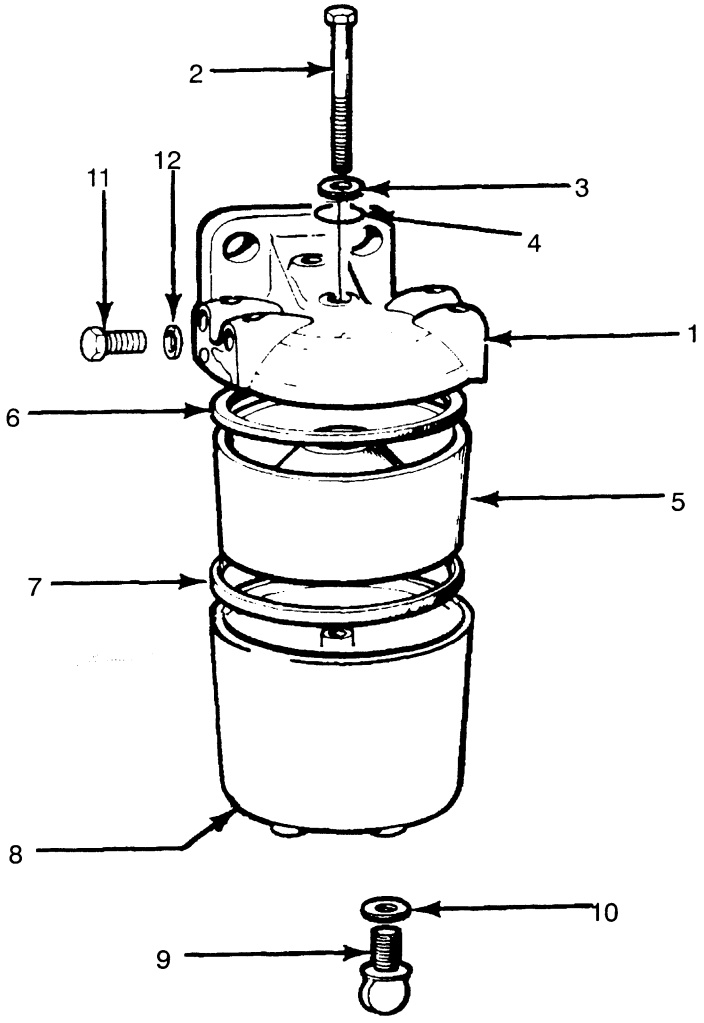

REF	PART NO.	NAME OF PART	QTY
	271047	Filter	1
1	272273	Filter Head	1
2	256219	Bolt	1
3	256220	Washer	1
4	168914	Seal	1
5	177407	Filter Element	1
6	292781	Seal Ring (Bottom)	1
7	292782	Seal Ring (Top)	1
8	271443	Base	1
9	271448	Drain Plug	1
10	271449	Washer	1
11	170688	Plug	2
12	272274	Washer	1

©1999 HYSTER COMPANY

NOTES

©1999 HYSTER COMPANY

LOW PRESSURE FUEL INJECTION (FIGURE 81)

WITHOUT LOW EMISSIONS

LAST USED ON S/N G005A-10666

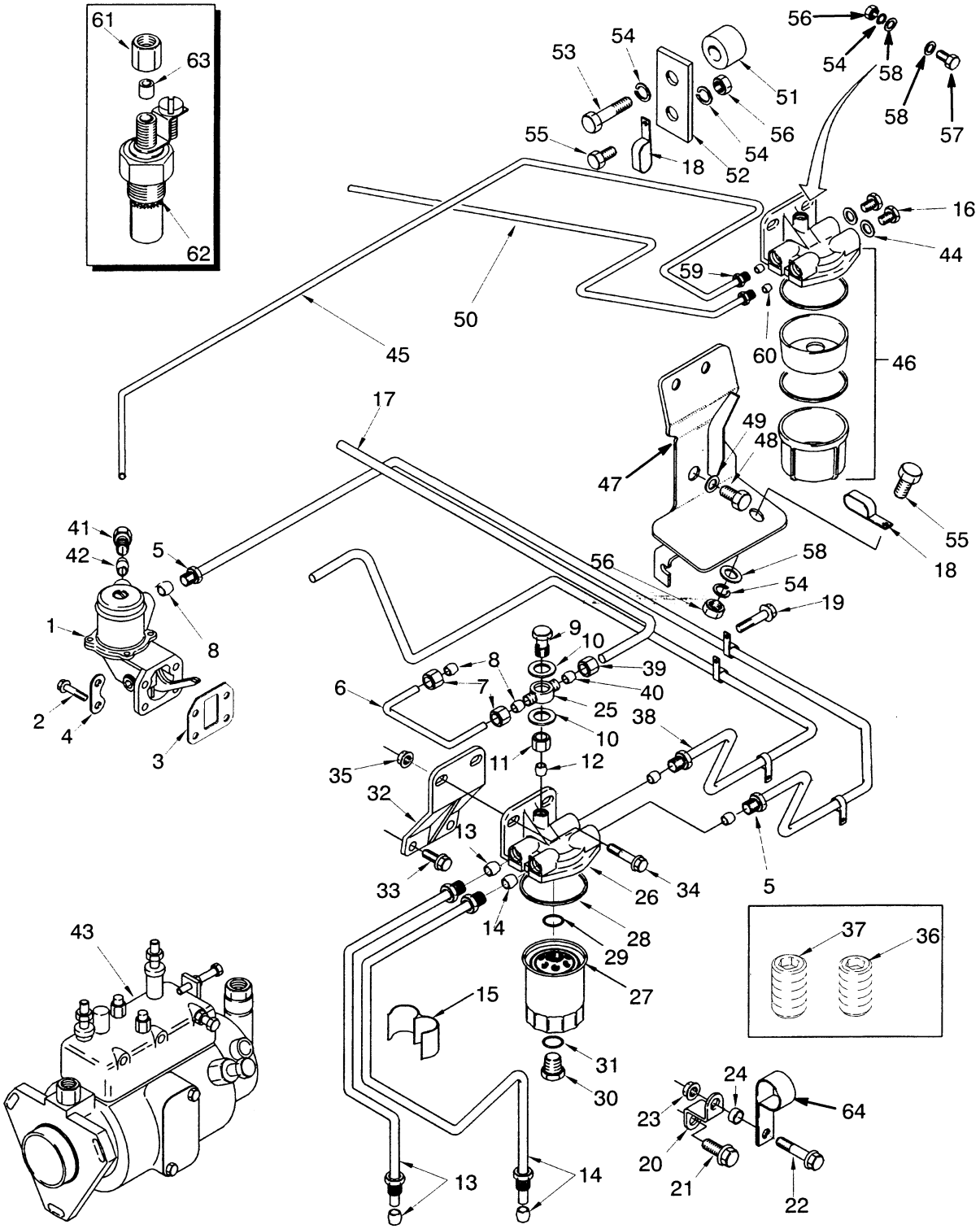

LOW PRESSURE FUEL INJECTION

WITHOUT LOW EMISSIONS

LAST USED ON S/N G005A-10666

REF		PART NO.	NAME OF PART	QTY
		377323	Engine (Oil Clutch)	1
		1343305	Engine (Power Shift)	1
1		....	Lift Pump	1
			☞ Figure 78	
2		1307894	Screw	4
3	b	1382562	Gasket	1
4		273324	Plate	2
5		1307919	Pipe	1
5		158187	Sleeve	2
5		271320	Clip	1
5		145587	Clip	1
6		1307920	Pipe	1
7		152609	Nut	2
8		152608	Sleeve	2
9		983346	Bolt	1
10		983348	Washer	2
11		16118	Fitting	1
12		16114	Fitting	1
13		1307889	Pipe	1
13		158187	Sleeve	2
14		1307921	Pipe	1
14		158187	Sleeve	2
15		1468313	Clip	2
16		173941	Plug	2
17		377374	Tube	1
18		191828	Clamp	3
19		386459	Screw	1
20		1308000	Bracket	1
21		1307883	Screw	1
22		1308001	Screw	1
23		1307884	Nut	1
24		1308002	Washer	1
25		1308003	Connector	1
26		1306345	Fuel Filter	1
27	a	....	Element	1
28	a	....	Seal	1
29	a	....	Seal	1
30	a	1308005	Plug	1
31	a	1308006	Washer	1
32		1308004	Bracket	1
33		1306371	Screw	2
34		1307913	Screw	2
35		1307891	Nut	2
36		15314	Fitting	1
37		15962	Fitting	1
38		1315753	Pipe	1
39		152609	Nut	1
40		152608	Sleeve	1
41		16100	Fitting	1
42		16177	Fitting	1
43		....	Injection Pump	1
			☞ Figure 83	
44		981260	Washer	2
45		377399	Tube	1
46		....	Water Seperator	1
			☞ Figure 80	
46		292781	Sealing Ring (Bottom)	1
46		292782	Sealing Ring (Top)	1
47		1313835	Bracket	1
48		287854	Capscrew	2
49		292682	Lockwasher	2
50		377378	Tube	1
51		381879	Spacer	1
52		381880	Bracket	1
53		132861	Capscrew	1
54		292681	Lockwasher	5
55		136681	Capscrew	2
56		239503	Nut	4
57		176640	Capscrew	2
58		320157	Washer	5
59		985222	Nut	3
60		16114	Fitting	3
61		152609	Nut	1
62		245885	Heater	1
63		152608	Sleeve	1
64		145587	Clamp	1

a Included In Element Kit 1306331
b Incuded In Bottom Gasket Kit 1371723
c Last Used On S/N G005A-10666
d First Used On S/N G005A-10667

©1999 HYSTER COMPANY

LOW PRESSURE FUEL INJECTION (FIGURE 82)

WITH LOW EMISSIONS

FIRST USED ON S/N G005A-10667

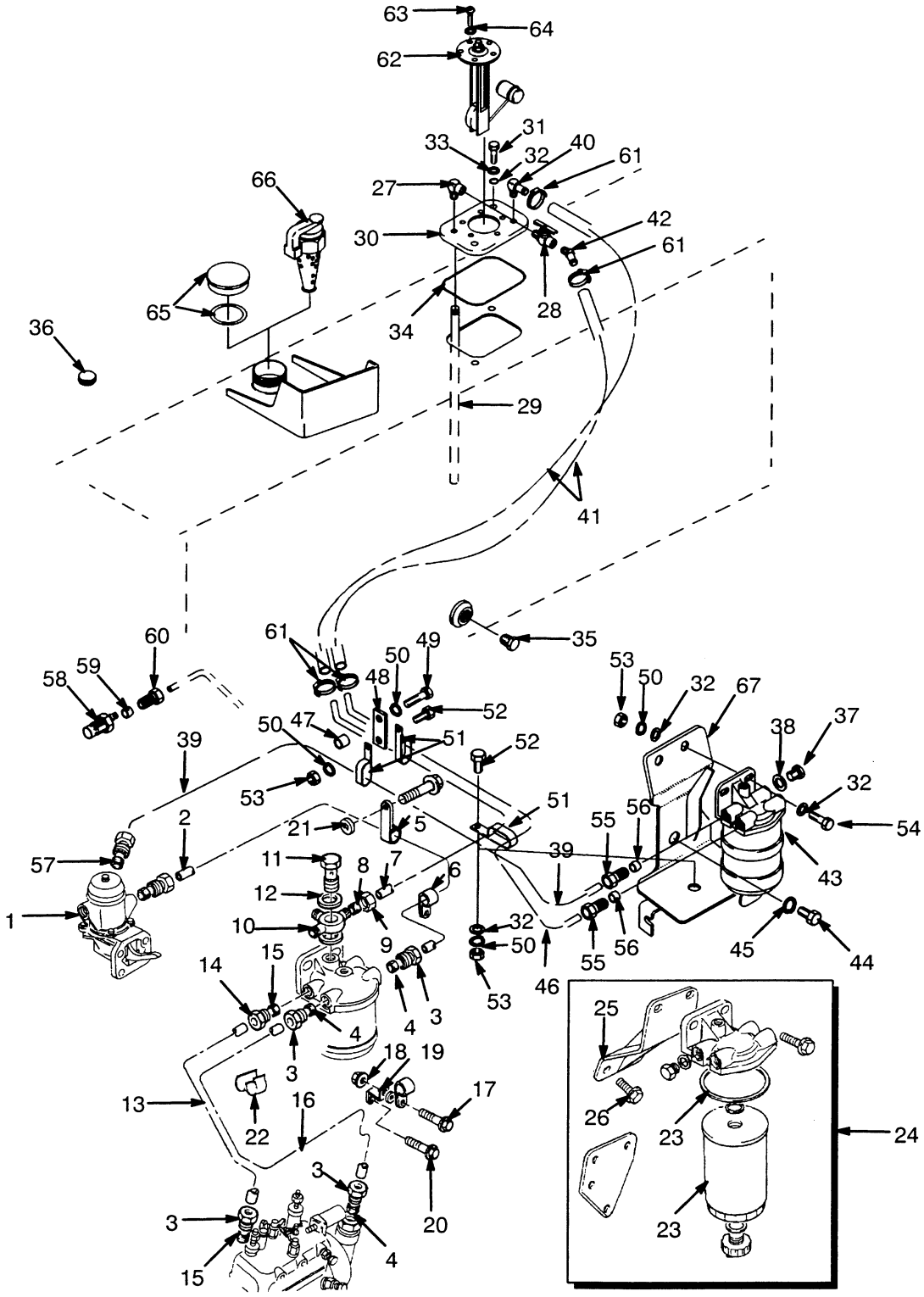

LOW PRESSURE FUEL INJECTION
WITH LOW EMISSIONS
FIRST USED ON S/N G005A-10667

REF	PART NO.	NAME OF PART	QTY
	1453203	Engine (Power Shift)	1
1	....	Lift Pump	1
		☞ Figure 79	
2	1456519	Pipe	1
3	16100	Fitting	4
4	167023	Sleeve	4
5	1456520	Clip	1
6	1456521	Clip	1
7	1454144	Tube	1
8	16114	Fitting	2
9	16118	Olive	1
10	1451770	Connection	1
11	1456522	Bolt	1
12	1456524	Washer	2
13	1456525	Pipe	1
14	16100	Fitting	2
15	167023	Sleeve	2
16	1456527	Pipe	1
17	1308001	Screw	1
18	1307884	Nut	1
19	1308000	Bracket	1
20	1307883	Screw	1
21	1308002	Washer	1
22	1456528	Clip	1
23	1306345	Fuel Filter	1
24	1306331	Kit-Filter Element	1
25	1308004	Bracket	1
26	1306371	Screw	2
27	17736	Fitting	1
28	16190	Shut-Off Valve	1
29	1320915	Pipe-Fuel	1
30	1350922	Cover-Fuel Tank	1
31	329067	Screw	2
32	320157	Washer	7
33	353000	O-Ring	2
34	353106	Seal	1
35	14385	Fitting	1
36	1332607	Plug	1
37	173941	Plug	2
38	981260	Washer	2
39	1458426	Tube	1
40	17343	Fitting	1
41	1303194	Hose	2
42	1316809	Fitting	1
43	....	Water Seperator	1
		☞ Figure 80	
44	287854	Capscrew	2
45	292682	Lockwasher	2
46	377378	Tube	1
47	381879	Spacer	1
48	381880	Bracket	1
49	132861	Capscrew	1
50	292681	Lockwasher	5
51	191828	Clamp	3
52	136681	Capscrew	2
53	239503	Nut	4
54	176640	Capscrew	2
55	985222	Nut	4
56	16100	Fitting	2
57	16177	Fitting	2
58	245885	Heater Induction	1
59	152608	Olive	1
60	152609	Union Nut	1
61	168718	Clamp	4
62	305594	Fuel Gauge	1
63	16708	Screw	5
64	350483	Washer	1
65	298832	Cap-Fuel	1
66 [a]	63899	Cap-Fuel	1
66 [a]	138880	Shim	1
67	1454335	Bracket	1

[a] DS

©1999 HYSTER COMPANY

HIGH PRESSURE FUEL INJECTION & PUMP (FIGURE 83)

WITHOUT LOW EMISSIONS

LAST USED ON S/N G005A-10666

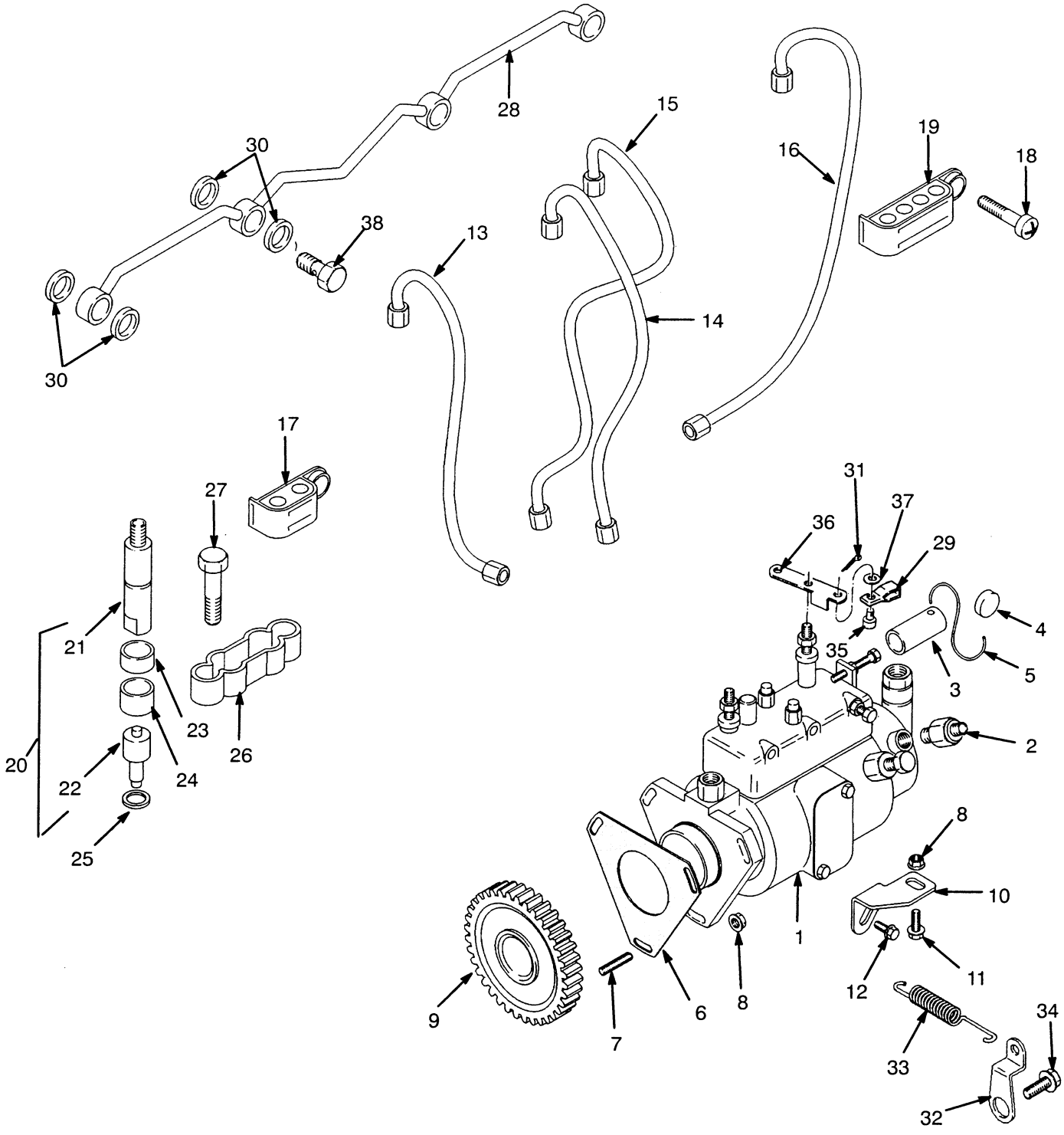

©1999 HYSTER COMPANY

See Service Manual
for service procedures

HIGH PRESSURE FUEL INJECTION & PUMP

WITHOUT LOW EMISSIONS

LAST USED ON S/N G005A-10666

REF		PART NO.	NAME OF PART	QTY
		377323	Engine (Oil Clutch)	1
		1343305	Engine (Power Shift)	1
1	d	1343055	Injection Pump	1
1	e	1385724	Injection Pump	1
2		1306329	Solenoid	1
2		39346	O-Ring	1
3		1371708	Sleeve	1
4		151315	Seal	1
5		151316	Lock Wire	1
6	a	1371720	Gasket	1
7		1456726	Stud	3
8		1306359	Nut	4
9		1306049	Gear	1
10		1306125	Bracket	1
11		386459	Screw	1
12		1306371	Screw	1
13	b	1306126	Pipe (#1)	1
13	c	1388381	Pipe (#1)	1
14	b	1306127	Pipe (#2)	1
14	c	1388382	Pipe (#2)	1
15	b	1306128	Pipe (#3)	1
15	c	1388383	Pipe (#3)	1
16	b	1306129	Pipe (#4)	1
16	c	1388384	Pipe (#4)	1
17		1388385	Clip	2
18		1306372	Screw	3
19		1388386	Clip	1
20		1306132	Injector	4
21		1306133	Holder	1
22		1306134	Nozzle	1
23		359144	Spacer	4
24	f	359145	Seal	4
25	f	99756	Washer	4
26		1306135	Clamp	4
27		1306373	Screw	8
28		1306136	Pipe	1
29		377997	Rod End	1
30		985567	Washer	8
31		15200	Cotter PIn	1
32		1306334	Bracket	1
33		1315751	Spring	1
34		1306354	Screw	1
35		161542	Pin	1
36	d	158193	Lever (Throttle)	1
36	e	1385720	Lever (Throttle)	1
37		257438	Washer	1
38		983340	Bolt	4

a Included In Bottom Gasket 1371723
b Last Used On Engine S/N U679765Y
c First Used On Engine S/N U679766Y
d Last Used On Engine S/N U645308Y
e First Used On Engine S/N U645309Y
f Included In Top Gasket Kit 1371731

©1999 HYSTER COMPANY

HIGH PRESSURE FUEL INJECTION & PUMP (FIGURE 84)

WITH LOW EMISSIONS

FIRST USED ON S/N G005A-10667

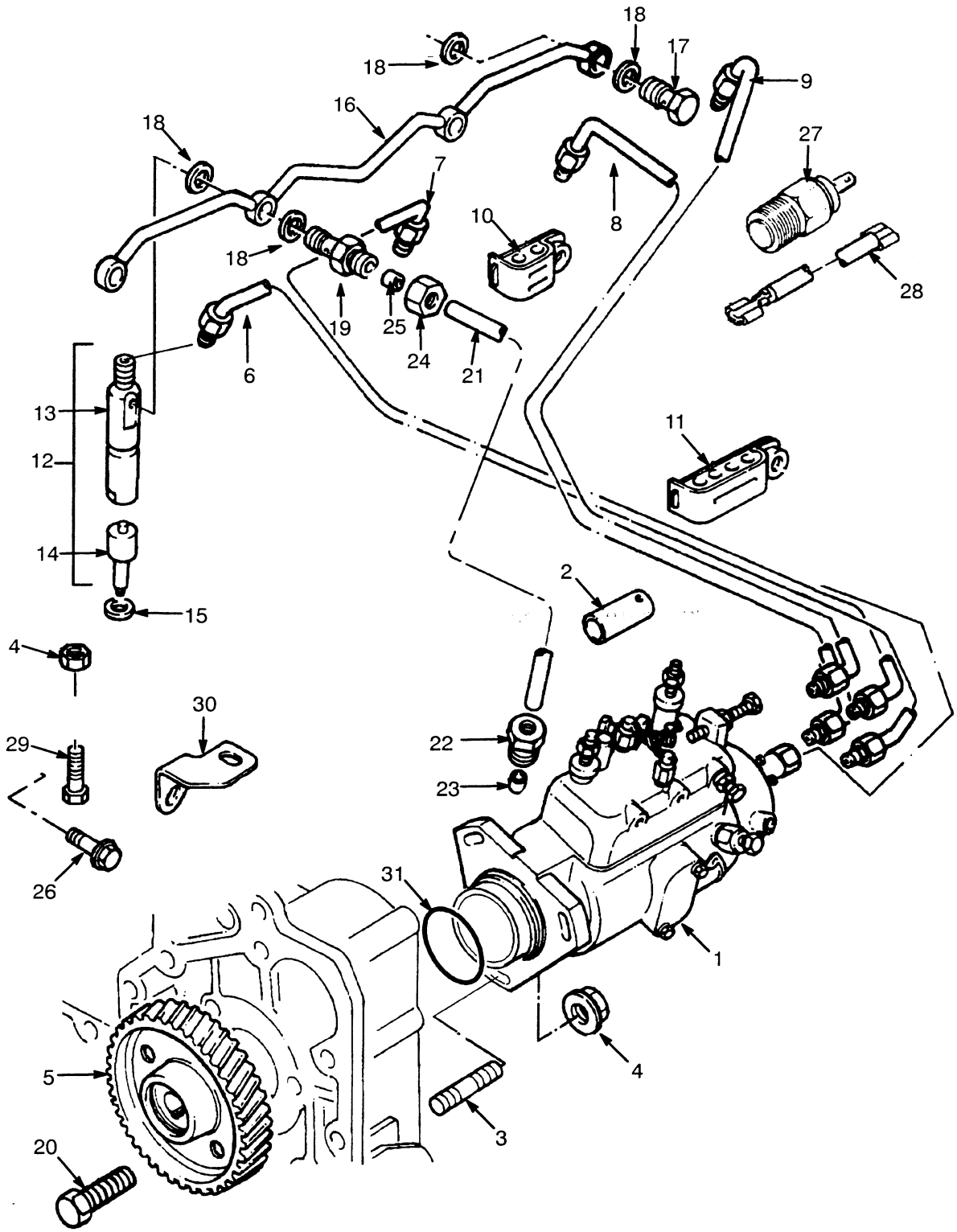

©1999 HYSTER COMPANY

HIGH PRESSURE FUEL INJECTION & PUMP

WITH LOW EMISSIONS

FIRST USED ON S/N G005A-10667

REF	PART NO.	NAME OF PART	QTY
	1453203	Engine (Power Shift)	1
1	1463664	Injection Pump	1
1	1460572	O-Ring	1
1	1306329	Solenoid	1
2	1453314	Cap	1
3	1456726	Stud	3
4	1306359	Nut	4
5	1456727	Gear (Fuel Pump)	1
6	1456728	Pipe (#1)	1
7	1456729	Pipe (#2)	1
8	1456730	Pipe (#3)	1
9	1456731	Pipe (#4)	1
10	1388385	Clip	2
11	1388386	Clip	1
12	1456732	Atomiser	4
13	1456733	Holder	1
14	1456734	Nozzle	1
15	1451669	Washer	4
16	1456735	Pipe (Leak Off)	1
17	1451672	Bolt	3
18	1451673	Washer	8
19	1451674	Connection	1
20	1307881	Screw	4
21	1456736	Pipe (Air)	1
22	1311070	Nut	1
23	1306337	Olive	1
24	152609	Nut	1
25	152608	Olive	1
26	386459	Screw	1
27	1451656	Sender	1
28	1453154	Lead	1
29	1306371	Screw	1
30	1453315	Bracket	1
31	1460572	Quad Ring	1

©1999 HYSTER COMPANY

AIR FILTER (FIGURE 85)

STANDARD

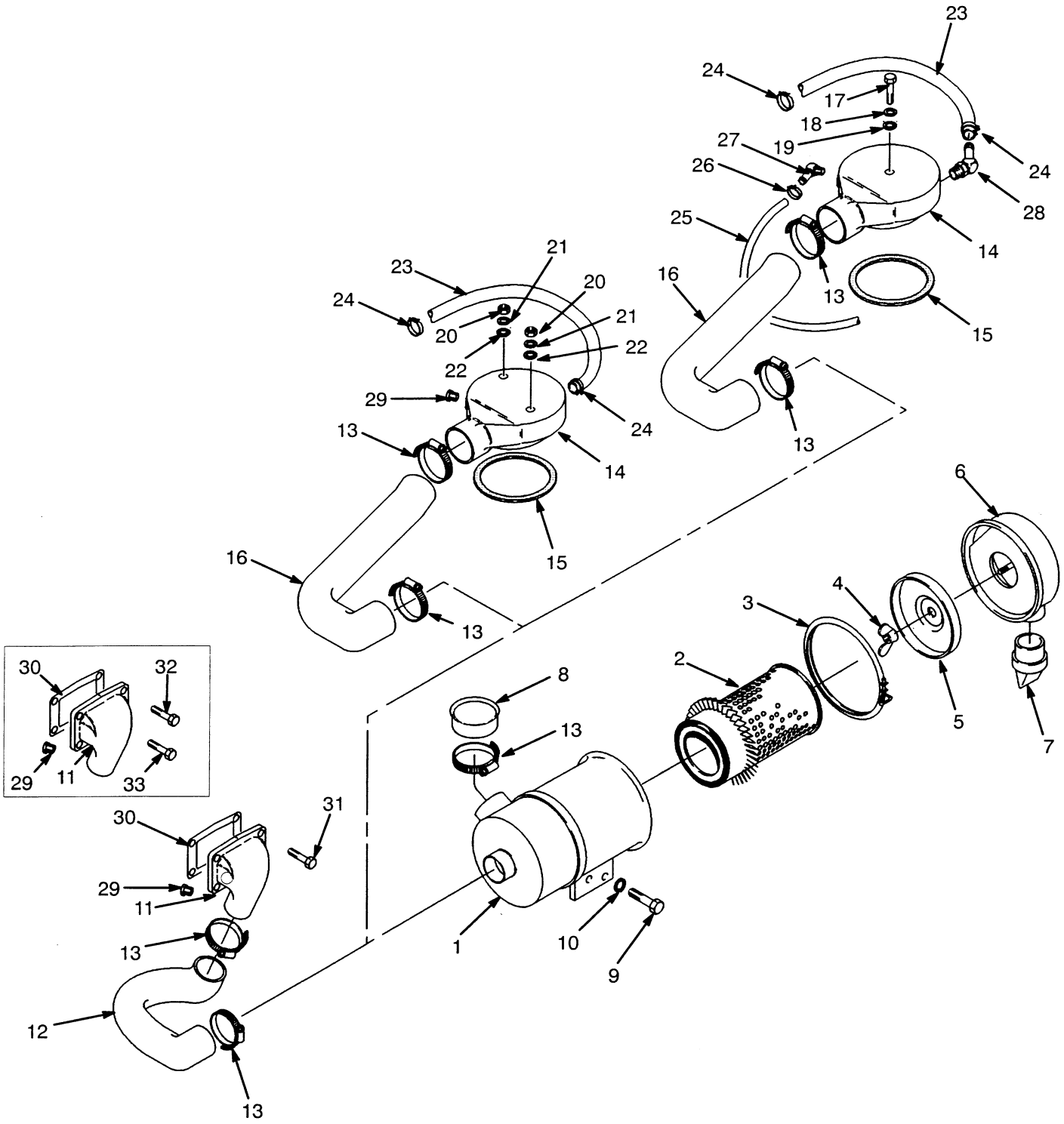

AIR FILTER

STANDARD

KEY:
A: Gasoline
B: LPG
C: Diesel

REF		PART NO.	NAME OF PART	QTY A	B	C
1		344446	Air Filter	1	1	1
2		379411	Filter Element	1	1	1
3		290734	Clamp	1	1	1
4		125847	Nut	1	1	1
5		290735	Baffle	1	1	1
6		374922	Cup	1	1	1
7		374923	Valve	1	1	1
8		344445	Boot	1	1	1
9		287854	Capscrew	2	2	2
10		292682	Lockwasher	2	2	2
11		377358	Connection (Manifold) (Without Low Emissions)	..	..	1
11	c	1454674	Connection (Manifold) (WithLow Emissions)	..	..	1
12		377324	Hose (Intake) (Without Low Emissions)	..	..	1
12	c	1455215	Hose (Intake) (WithLow Emissions)	..	..	1
13		2033817	Clamp	3	3	3
14		1330323	Cover (Air)	1	..	..
14		1307266	Cover (Air)	..	1	..
15		1345993	Gasket	1	1	..
16	a	1330347	Hose (Intake)	1	1	..
16	b	1384347	Hose (Intake)	1	1	..
17		18465	Capscrew	..	1	..
18		18500	Washer	..	1	..
19		183661	Seal Washer	..	1	..
20		15055	Nut	2	..	..
21		320157	Washer	2	..	..
22		109919	Seal Washer	2	..	..
23		85777	Hose	1	1	..
24		353198	Clamp	2	2	..
25		1333807	Hose (Silicone)	..	1	..
26		353310	Clamp	..	2	..
27		17343	Fitting	..	1	..
28		16694	Fitting	..	1	..
29		14349	Plug	1	..	1
30		1345794	Gasket (Without Low Emissions)	..	..	1
30	c	1345795	Gasket (WithLow Emissions)	..	..	1
31		1306358	Capscrew (Without Low Emissions)	..	..	4
32	c	293614	Capscrew (WithLow Emissions)	..	..	4
33	c	293625	Capscrew (WithLow Emissions)	..	..	4

a Last Used On S/N G005D-7759 (Including 7830-32, 7834-37, 7840, 7841)
b First Used On S/N G005D-7760 (Except 7830-32, 7834-37, 7840, 7841)
c First Used On S/N G005D-11942

©1999 HYSTER COMPANY

AIR FILTER (FIGURE 86)

HEAVY DUTY GASOLINE AND LPG

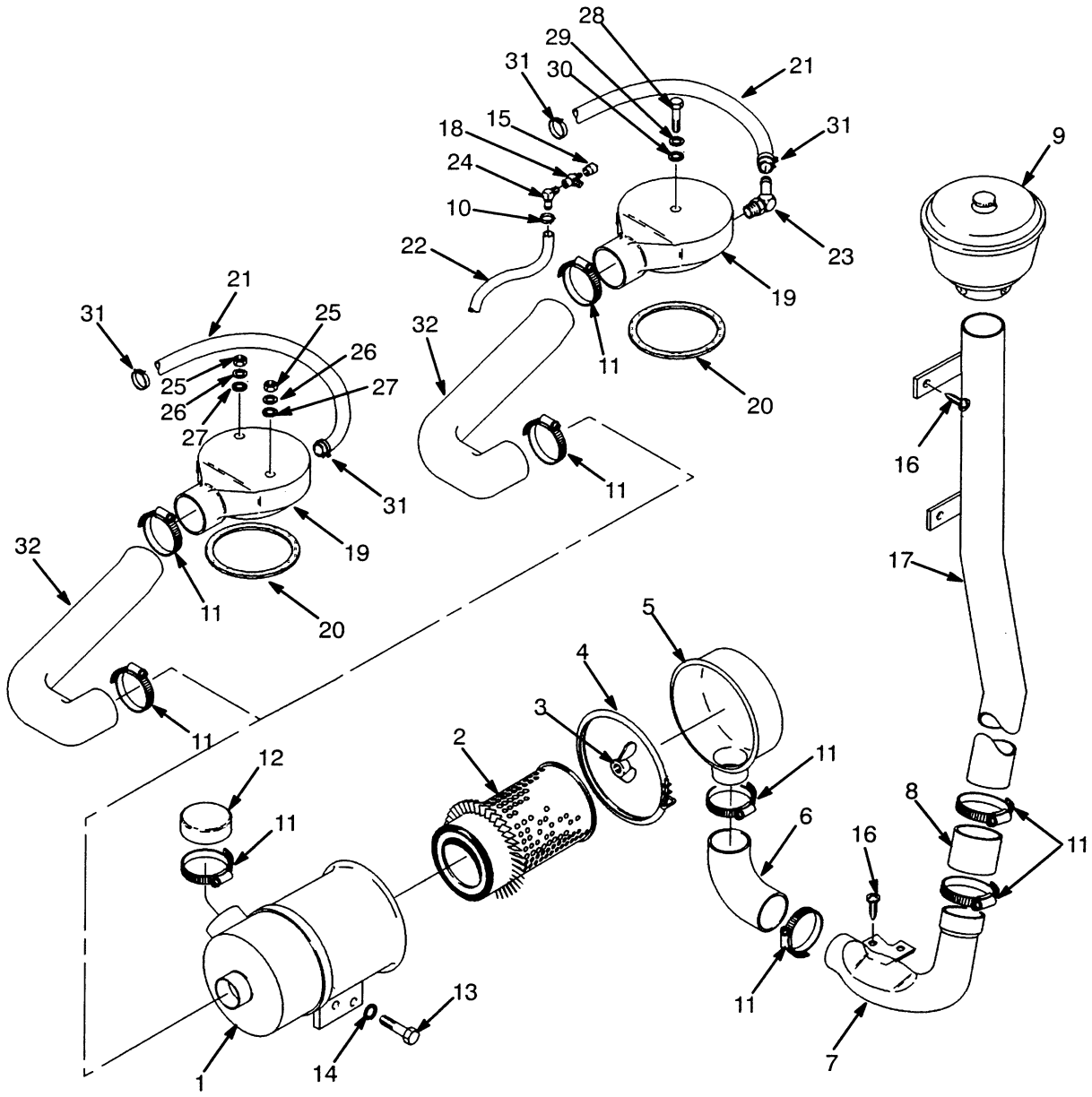

©1999 HYSTER COMPANY

AIR FILTER

HEAVY DUTY GASOLINE AND LPG

KEY:
A: Gasoline
B: LPG

REF		PART NO.	NAME OF PART	QTY A	QTY B
1		....	Air Filter	1	1
			☞ ☞ Figure 79		
2		305080	Element	1	1
3		125847	Nut	1	1
4		290734	Clamp	1	1
5		1302137	Cap	1	1
6		1302141	Elbow	1	1
7		1302142	Tube	1	1
8		1302143	Hose	1	1
9	c	291974	Pre-Filter	1	1
9	c	1374205	Cover	1	1
9	c	1374206	Body	1	1
9	c	1374207	Sleeve	1	1
9	d	1301167	Pre-Cleaner	1	1
9	d	328753	Cover	1	1
9	d	1313904	Sleeve	1	1
9	d	328754	Body	1	1
9		115696	Clamp	1	1
10		353310	Clamp	..	2
11		2033817	Clamp	7	7
12		1302144	Cap	1	1
13		287854	Capscrew	2	2
14		292682	Lockwasher	2	2
15		295440	Indicator (Restrictor)	1	1
16		329067	Screw	4	4
17	c	1302148	Tube	1	1
17	d	1456663	Tube	1	1
18		17650	Fitting	1	..
18		17671	Fitting	..	1
19		1330323	Cover	1	..
19		1307266	Cover	..	1
20		1345993	Gasket	1	..
21		85777	Hose	1	1
22		1333807	Hose (Silicone)	..	1
23		16694	Fitting	..	1
24		16746	Fitting	..	1
25		15055	Nut	2	..
26		109919	Seal Washer	2	..
27		18515	Washer	2	..
28		18465	Capscrew	..	1
29		183661	Seal Washer	..	1
30		18515	Washer	..	1
31		353198	Clamp	2	2
32	a	1330347	Hose (Intake)	1	1
32	b	1384347	Hose (Intake)	1	1

a Last Used On S/N G005D-7759 (Including 7830-32, 7834-37, 7840, 7841)
b First Used On S/N G005D-7760 (Except 7830-32, 7834-37, 7840, 7841)
c Last Used On S/N G005A-10666
d First Used On S/N G005A-10667

©1999 HYSTER COMPANY

AIR FILTER (FIGURE 87)

HEAVY DUTY DIESEL

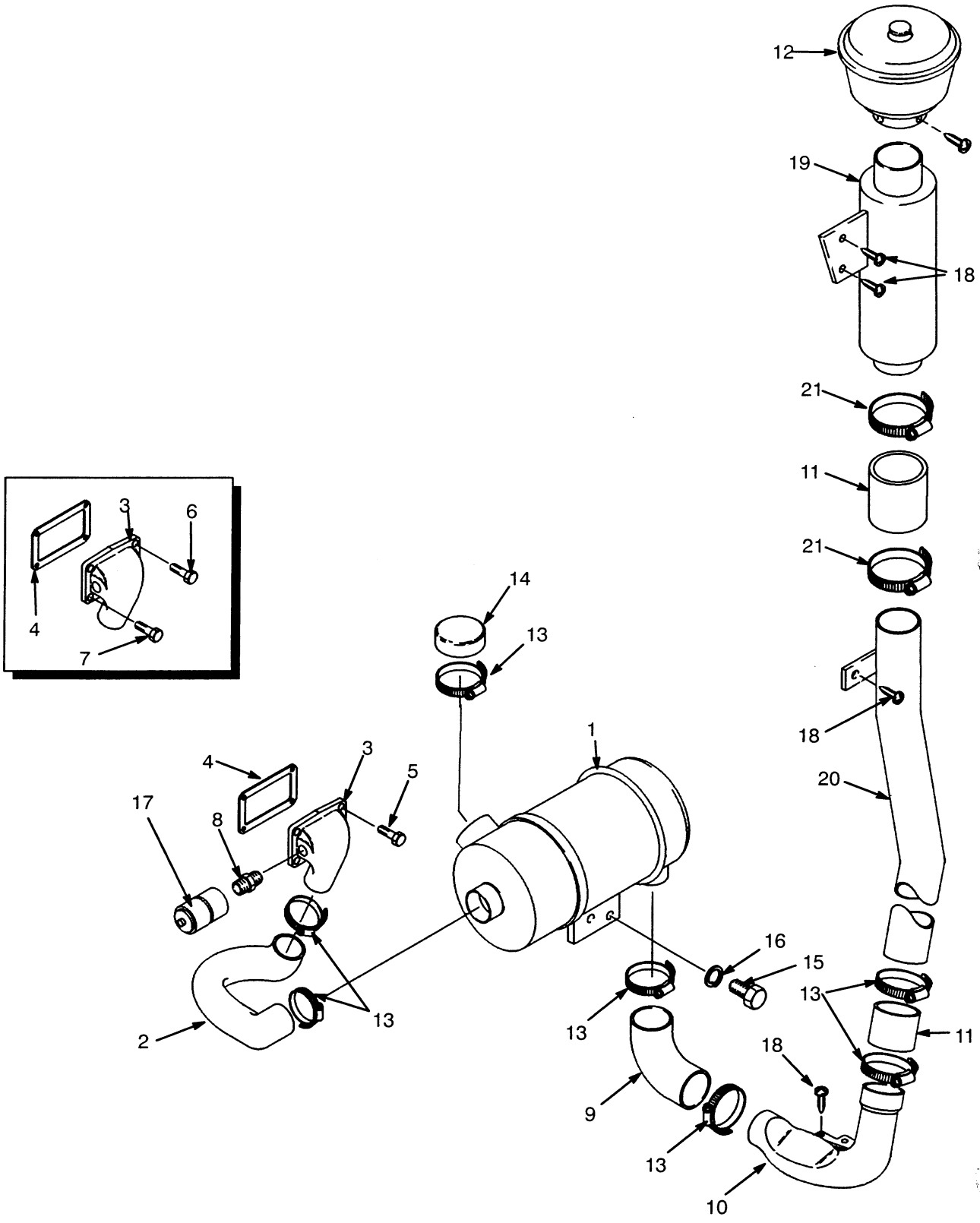

AIR FILTER

HEAVY DUTY DIESEL

REF		PART NO.	NAME OF PART	QTY
1		1379505.	Air Filter Assy	1
2		377324	Hose (Without Low Emissions)	1
2		1455215	Hose (With Low Emissions)	1
3		377358	Connection Manifold Without low Emissions)	1
3		1454674	Connection Manifold (WithLow Emissions)	1
4		1345794	Gasket (Without Low Emissions)	1
4		1345795	Gasket (With Low Emissions)	1
5		1306358	Capscrew (Without Low Emissions)	4
6		293614	Capscrew (With Low Emissions)	2
7		293625	Capscrew (With Low Emissions	2
8		16150	Adaptor	1
9		1302141	Elbow	1
10		1302142	Tube	1
11		1302143	Hose	1
12	a	291974	Pre-Cleaner	1
12	b	1301167	Pre-Cleaner	1
12		328753	Cover	1
12		1313904	Sleeve	1
12		328754	Body	1
13		2033817	Clamp	7
14		1302144	Cap	1
15		287854	Capscrew	2
16		292682	Washer	2
17		295440	Indicator	2
18		329067	Screw	6
19	a	1302379	Silencer	1
19	b	1456515	Silencer	1
20	a	1302145	Tube	1
20	b	1456510	Tube	1
21		115696	Clamp	2

a Last Used On S/N G005A-10666
b First Used On S/N G005A-10667

©1999 HYSTER COMPANY

NOTES

©1999 HYSTER COMPANY

ELECTRICAL SYSTEM

ALTERNATOR (Figure 103)
DELCO BRAND ..... Page 212

ALTERNATOR (Figure 102)
TYPES GS, LPS AND DS
LAST USED ON S/N G005D-10596 ..... Page 208

ALTERNATOR (Figure 104)
GASOLINE , LPG AND DIESEL
FIRST USED ON S/N G005D-10279 ..... Page 216

ALTERNATOR (Figure 105)
PRESTOLITE BRAND ..... Page 218

ALTERNATOR (Figure 106)
PRESTOLITE BRAND
GS, LPS, DS
FIRST USED ON S/N G005D-10597 ..... Page 220

ALTERNATOR MOUNTING (Figure 107)
DIESEL 1004.42
WITH LOW EMISSIONS ..... Page 221

DISTRIBUTOR (Figure 96) ..... Page 196

DISTRIBUTOR (Figure 97) ..... Page 197

ELECTRICAL (Figure 90)
LPG
FIRST USED ON S/N G005D-13154 ..... Page 184

ELECTRICAL (Figure 91)
GASOLINE
FIRST USED ON S/N G005D-11942 ..... Page 186

ELECTRICAL SYSTEM (Figure 88)
GASOLINE AND LPG
LAST USED ON S/N G005D-13153 ..... Page 176

ELECTRICAL SYSTEM (Figure 89)
GASOLINE AND LPG
FIRST USED ON S/N G005D-13154 ..... Page 180

ELECTRICAL SYSTEM (Figure 98)
DIESEL
LAST USED ON S/N G005D-13393 ..... Page 198

©1999 HYSTER COMPANY

ELECTRICAL SYSTEM (CONTINUED)

ELECTRICAL SYSTEM (Figure 99)
DIESEL
FIRST USED ON S/N G005D-13394 ..... Page 200

ENGINE CONTROL, CONTINUED (Figure 95)
GASOLINE
FIRST USED ON S/N G005D-14736, INCLUDING G005D-14584 ..... Page 194

ENGINE CONTROL (Figure 92)
LPG ..... Page 188

ENGINE CONTROL (Figure 93)
GASOLINE
USED ON S/N G005D-13154 THRU G005D-14735,
EXCEPT G005D-14584 ..... Page 190

ENGINE CONTROL (Figure 94)
GASOLINE
FIRST USED ON S/N G005D-14736, Including G005D-14584 ..... Page 192

ENGINE HARNESS (Figure 115)
GASOLINE
FIRST USED ON S/N G005D-51476, G005D-51484 PILOT TRUCK ... Page 238

GAUGE CLUSTER (Figure 101) ..... Page 207

INSTRUMENT PANEL (Figure 100) ..... Page 204

STARTER (Figure 108)
GASOLINE AND LPG
LAST USED ON DATE BREAK 8/95 ..... Page 223

STARTER (Figure 109)
GASOLINE And LPG
USED ON S/N DATE BREAK 8/95 THRU G005D-7759
(INCLUDING S/N 7830-7832, 7834-7837, 7840 AND 7841)
EXCEPT S/N G005D-7710 ..... Page 224

STARTER (Figure 110)
GASOLINE AND LPG
FIRST USED ON S/N G005D-7760
(EXCEPT S/N 7830-7832, 7834-7837, 7840 AND 7841)
INCLUDING S/N G005D-7710 ..... Page 226

STARTER (Figure 111)
DIESEL ..... Page 228

©1999 HYSTER COMPANY

ELECTRICAL SYSTEM (CONTINUED)

STARTER (Figure 112)
DIESEL
(OPTIONAL) ..... Page 230

WIRE HARNESS (Figure 113)
GOVERNOR ..... Page 233

WIRE HARNESS (Figure 114)
MAIN ENGINE GAS LAST USED ON S/N G005D-51475,
G005D-51483 PILOT TRUCK
(SHEET 1 of 4) ..... Page 234

WIRE HARNESS (Figure 116)
ENGINE LPG ..... Page 242

WIRE HARNESS (Figure 117)
OIL CLUTCH ..... Page 245

WIRE HARNESS (Figure 118)
MAIN INSTRUMENT ..... Page 246

WIRE HARNESS (Figure 119)
NEUTRAL START WITH FORWARD/REVERSE LEVER ..... Page 248

WIRE HARNESS (Figure 120)
NEUTRAL START WITH MONOTROL PEDAL ..... Page 249

©1999 HYSTER COMPANY

ELECTRICAL SYSTEM (FIGURE 88)

GASOLINE AND LPG

LAST USED ON S/N G005D-13153

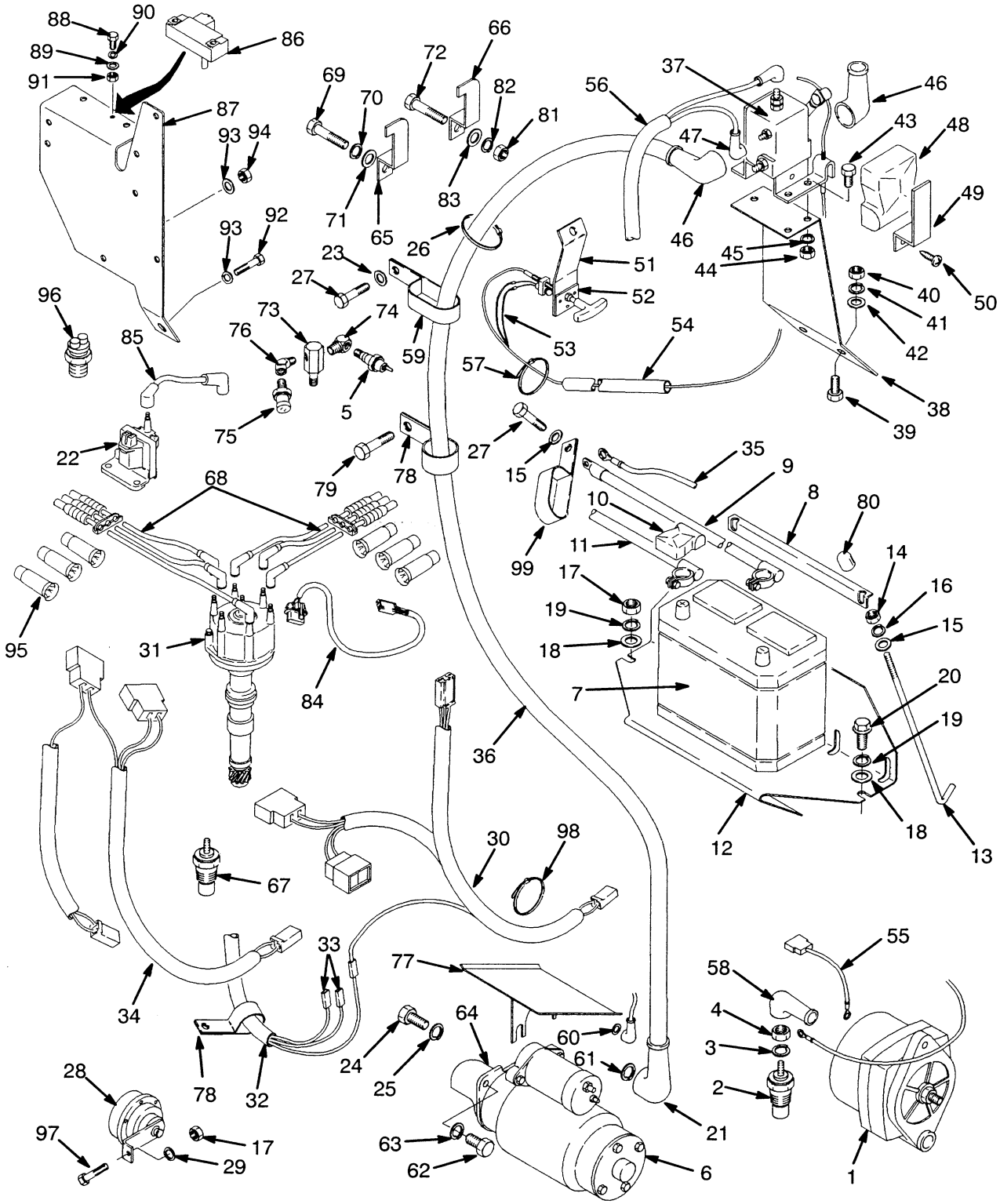

©1999 HYSTER COMPANY

ELECTRICAL SYSTEM

GASOLINE AND LPG

LAST USED ON S/N G005D-13153

REF		PART NO.	NAME OF PART	QTY
1		....	Alternator	1
			☞ Figure 102 Thru Figure 105	
2		1333827	Sender (Water Temperature)	1
3		15152	Lockwasher	1
4		15002	Nut	1
5		366687	Pressure Switch (Engine Oil)	1
6	d	....	Starter	1
			☞ Figure 108	
6	e	....	Starter	1
			☞ Figure 109	
6	f	....	Starter	1
			☞ Figure 110	
7		1383331	Battery (Wet)	1
7		177894	Battery (Dry)	1
8		309152	Bracket	1
9		381802	Cable (Negative)	1
10		257241	Cover	1
11	k	1383288	Cable (Positive)	1
11	m	1383289	Cable (Positive)	1
11	m	275498	Conduit (.750 I.D.)	1
11	ck	1383284	Cable (Positive)	1
11	cm	1383285	Cable (Positive)	1
11	m	275498	Conduit (.750 I.D.)	1
12		1333805	Tray	1
13		309124	Rod	2
14		136687	Nut	2
15		320156	Washer	2
16		292680	Lockwasher	2
17		239503	Nut	1
18		320158	Washer	2
19		292681	Lockwasher	2
20		329067	Screw	1
21		204223	Cover	1
22		1331331	Coil	1
23		320156	Washer	1
24		18535	Capscrew	1
25		15156	Lockwasher	1
26		273775	Strap Clamp	2
27		292501	Capscrew	1

REF		PART NO.	NAME OF PART	QTY
28		1383778	Horn	1
28		296406	Washer (Ground)	1
29		292681	Washer	1
30		....	Harness (Neutral Start With Monotrol Pedal)	1
			☞ Figure 120	
31		....	Distributor	1
			☞ Figure 96 And Figure 97	
32		....	Harness (Oil Clutch)	1
			☞ Figure 117	
33		181045	Connector (Neutral Start With Monotrol Pedal)	2
34		....	Harness (Neutral Start) (With Forward And Reverse)	1
34			☞ Figure 119	
35		353145	Ground Wire	1
36	c	1337843	Cable	1
37	c	353305	Switch	1
38	c	1337831	Bracket	1
39	c	292514	Capscrew	2
40	c	136692	Nut	2
41	c	292682	Lockwasher	2
42	c	320159	Washer	2
43	c	292501	Capscrew	3
44	c	136687	Nut	3
45	c	292680	Lockwasher	3
46	c	204223	Cover	2
47	c	190383	Cover	2
48	c	257241	Cover	1
49	c	111763	Clamp	1
51		353256	Bracket	1
52	c	17173	Rivet	2
53	c	353306	Wire	1
54	c	275496	Conduit	AR
55	c	353257	Wire	1
56	a	353258	Harness	1
56	b	1374437	Harness	1
57		129563	Strap Clamp	7

CONTINUED ON NEXT PAGE

©1999 HYSTER COMPANY

ELECTRICAL SYSTEM

GASOLINE AND LPG

LAST USED ON S/N G005D-13153

REF		PART NO.	NAME OF PART	QTY
58		190383	Boot	2
59		198675	Clamp	1
60		18500	Washer	2
61		292682	Lockwasher	1
62		16828	Capscrew	3
63		15156	Lockwasher	3
64		313022	Sealant	AR
65		350190	Support	1
66		1327907	Support	1
67		190252	Pressure Switch	1
68	h	1346150	Harness, LH	1
68	g	1354180	Harness, LH (High Temperature Kit)	1
68	h	1346151	Harness, RH	1
69		16598	Capscrew	1
70		15156	Lockwasher	1
71		320156	Washer	1
72		287816	Capscrew	1
73		1330341	Fitting	1
74		1339443	Fitting	1
75		1330353	Sender (Oil Pressure)	1
76		12821	Fitting	1
77		1337415	Shield	1
78		128408	Clamp	2
79		292515	Capscrew	2
80		1326939	Cap	2
81		136687	Nut	1
82		296379	Washer (Toothed)	1
83		320156	Washer	1
84		1351987	Wire Assembly (Primary)	1
85	k	1343900	Wire Assembly (Coil)	1
85	m	1452904	Wire Assembly (Coil)	1
86		1314387	Sensor (MAP)	1
87	e	1333830	Bracket (MAP)	1
87	f	1459272	Bracket (MAP)	1
88		302251	Screw	2
89		320155	Washer	2
90		292679	Lockwasher	2
91		292668	Nut	2
92		16598	Capscrew	2
93		15156	Lockwasher	2
94		15056	Nut	1
95		1351171	Heat Shield (High Temperature Wire Kit)	6
96		1314381	Sensor (Coolant Temperature)	1
97		136749	Capscrew	1
98		129563	Strap Clamp	1
99		176910	Clamp (Insulated)	1

a Last Used On S/N G005D-3337 (LPG), G005D -3408 (Gasoline)

b First Used On S/N G005D-3338 (LPG), G005D-3409 (Gasoline)

c Type GS And LPS

d Last Used On Date Break 8/95

e Used On Date Break 8/95 Thru S/N G005D-7759 (Including 7830-32, 7834-37, 7840, 7841) Except S/N G005D-7710

f First Used On S/N G005D-7760 (Except 7830-32, 7834-37, 7840, 7841) And Including S/N G005D-7710

g Included In Major Tune-Up Kit 996340 And 996342

h Included In Major Tune-Up Kit 996337

k Last Used On S/N G005D-10804

m First Used On S/N G005D-10805

©1999 HYSTER COMPANY

NOTES

©1999 HYSTER COMPANY

ELECTRICAL SYSTEM (FIGURE 89)

GASOLINE AND LPG

FIRST USED ON S/N G005D-13154

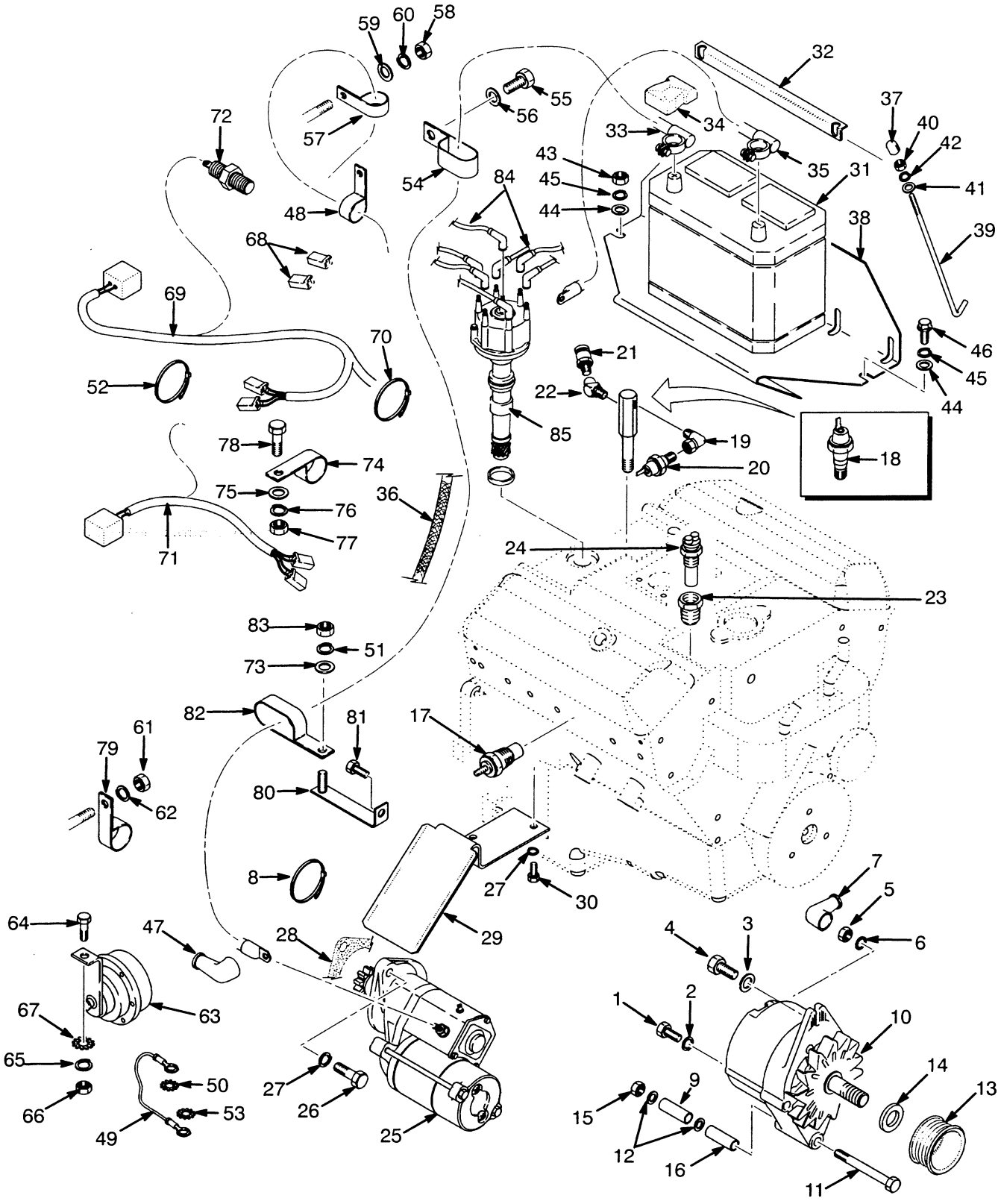

ELECTRICAL SYSTEM

GASOLINE AND LPG

FIRST USED ON S/N G005D-13154

REF		PART NO.	NAME OF PART	QTY
1		287851	Capscrew	1
2		292681	Lockwasher	1
3		350818	Washer	1
4		329067	Screw	1
5		136687	Nut	1
6		296359	Washer	1
7		157065	Boot	1
8		114312	Strap Clamp	2
9		189338	Spacer	1
10		....	Alternator	1
			☞ Figure 104	
11		18548	Capscrew	1
12		261379	Washer	2
13		1377751	Pulley	1
14		1377738	Spacer	1
15		139743	Nut	1
16		305100	Sleeve	1
17		1333827	Water Temperature Sender	1
18	a	1383346	Oil Pressure Switch	1
19	a	1339443	Elbow	1
20		366687	Pressure Switch	1
21	a	1330353	Oil Pressure Sender	1
22	a	12821	Fitting	1
23		16116	Fitting	1
24		1314381	Coolant Sensor	1
25		....	Starter Motor	1
			☞ Figure 110	
26	a	16828	Capscrew	2
27	a	15156	Washer	4
28	a	264159	Adhesive	AR
29	a	1384332	Dripshield	1
30	a	16597	Capscrew	2
31		1383331	Battery (Wet)	1
32		309152	Battery Holddown	1
33		381802	Battery Cable	1
34		257241	Boot	1
35		1383289	Battery Cable	1
36		275496	Conduit	AR
37		1326939	Cap	2
38		1459741	Battery Tray	1
39		309124	Link	2
40		136687	Nut	2
41		320156	Washer	2
42		292680	Lockwasher	2
43		239503	Nut	1
44		320158	Washer	2
45		292681	Lockwasher	2
46		329067	Screw	1
47		204223	Boot	1
48	a	128408	Clamp	1
49		353145	Ground Wire	1
50		296407	Washer	1
50		296361	Washer (Optional)	1
51		292682	Lockwasher	1
52		129563	Strap Clamp	2
53		296408	Washer	1
54		176910	Clamp	1
55	a	292501	Capscrew	1
56		320156	Washer	1
57	a	89220	Clamp	1
58	a	136692	Nut	1
59	a	320159	Washer	1
60	a	292682	Lockwasher	1
61		239503	Nut	1
62		292681	Lockwasher	1
63		1383778	Horn	1
64		136749	Capscrew	1
65		292681	Lockwasher	1
66		239503	Nut	1
67		296406	Washer	1
68	c	181045	Connector Body	2
69	ce	....	Wire Harness (Neutral Start)	1
			☞ Figure 120	
69	d	....	Wire Harness (Neutral Start)	1
			☞ Figure 119	
70	c	129563	Strap Clamp	2
71	f	....	Wire Harness (Oil Clutch)	1
			☞ Figure 117	
72	f	190252	Pressure Switch	1

CONTINUED ON NEXT PAGE

©1999 HYSTER COMPANY

ELECTRICAL SYSTEM

GASOLINE AND LPG

FIRST USED ON S/N G005D-13154

REF		PART NO.	NAME OF PART	QTY
73		320154	Washer	1
74	f	101625	Clamp	2
75	f	320159	Washer	1
76	f	292682	Washer	1
77	f	136692	Nut	1
78	f	136985	Capscrew	1
79	f	146047	Clamp	1
80		1337841	Bracket	1
81		292515	Capscrew	1
82	a	119074	Clamp	1
83		136692	Nut	1
84	h	1346150	Harness, LH	1
84	g	1354180	Harness, LH, (High Temperature Kit)	1
84	h	1346151	Harness, RH	1
85		....	Distributor	1

☞ Figure 96 And Figure 97

a Gasoline
b LPG
c Monotrol Pedal
d Forward/Reverse Lever
e Powershift
f Oil Clutch
g Included in Major Tune-Up Kit 996340 And 996342
h Included in Major Tune-Up Kit 996337

©1999 HYSTER COMPANY

NOTES

©1999 HYSTER COMPANY

ELECTRICAL (FIGURE 90)

LPG

FIRST USED ON S/N G005D-13154

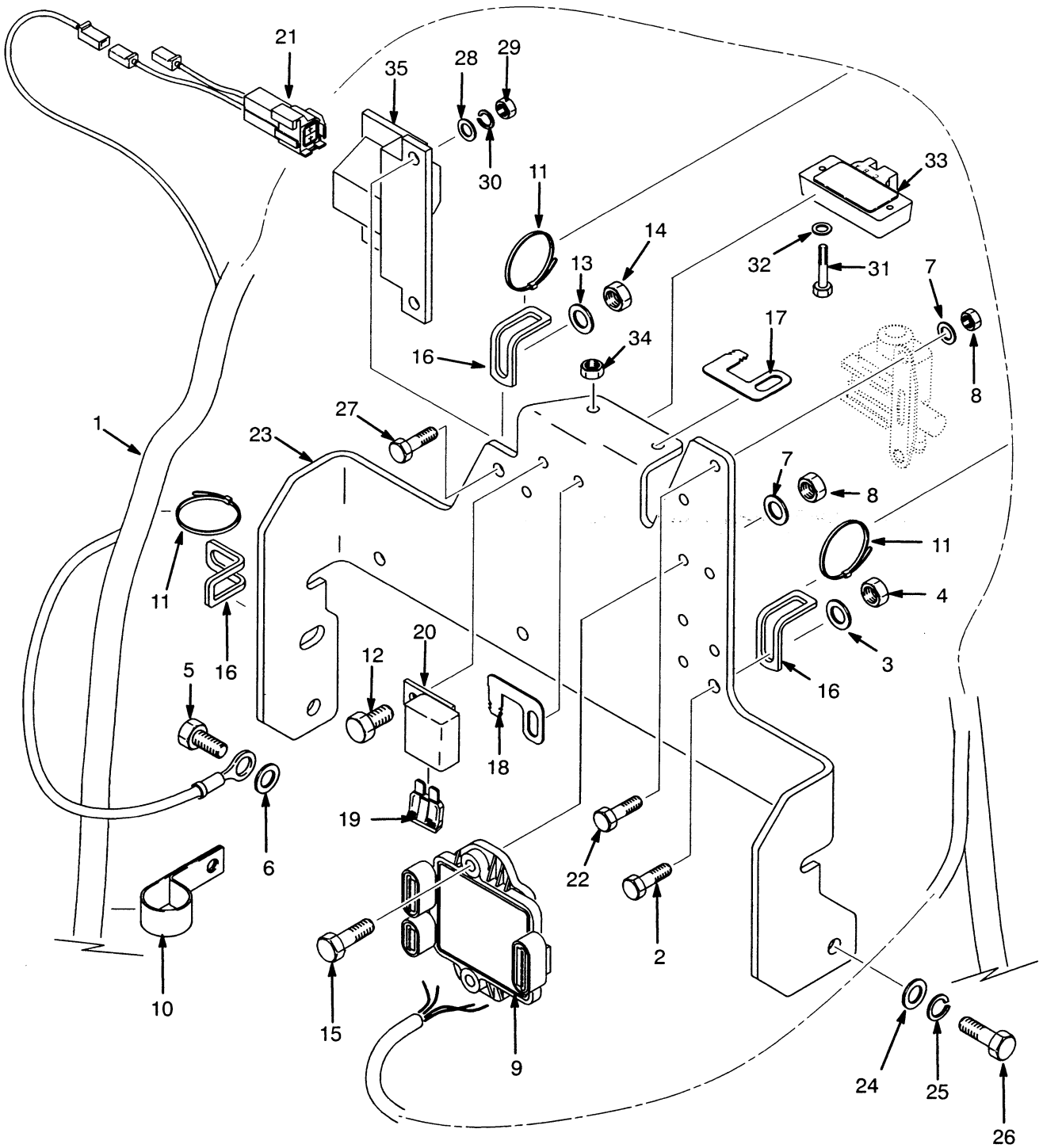

©1999 HYSTER COMPANY

ELECTRICAL

LPG

FIRST USED ON S/N G005D-13154

Ref		Part No.	Name Of Part	Qty
1		2035710	Wire Harness (LPG)	1
2		136681	Capscrew	1
3		320158	Washer	1
4		302400	Nut	1
5		16805	Capscrew	1
6		15156	Washer	1
7		320156	Washer	4
8		302399	Nut	4
9		8504287	MSTS Controller Assy	1
9		1459032	MSTS Controller	1
9	a	1357062	MSTS Controller (2100 RPM)	1
9	a	1357061	MSTS Controller (2300 RPM)	1
9	a	1357063	MSTS Controller (1900 RPM)	1
10		325897	Clamp	1
11		129563	Strap	AR
12		302247	Screw	2
13		320155	Washer	2
14		302398	Nut	2
15		292502	Capscrew	2
16		1385873	Strap	3
17		1376661	Clip	1
18		1339444	Clip	1
19		370647	Fuse (10 Amp)	2
20		1330293	Cover (Fuse)	1
21		1339403	Plug Assy	1
22		292501	Capscrew	2
23		1459272	Bracket	1
24		15134	Washer	3
25		15156	Washer	3
26		16805	Capscrew	3
27		176640	Capscrew	2
28		320158	Washer	2
29		239503	Nut	2
30		292681	Washer	2
31		302251	Screw	2
32		320155	Washer	2
33		1314387	MAP Sensor	1
34		302398	Nut	2
35		1386191	Ignition Coil Assy	1

a Reduced Travel Speed Kits

©1999 HYSTER COMPANY

ELECTRICAL (FIGURE 91)

GASOLINE

FIRST USED ON S/N G005D-11942

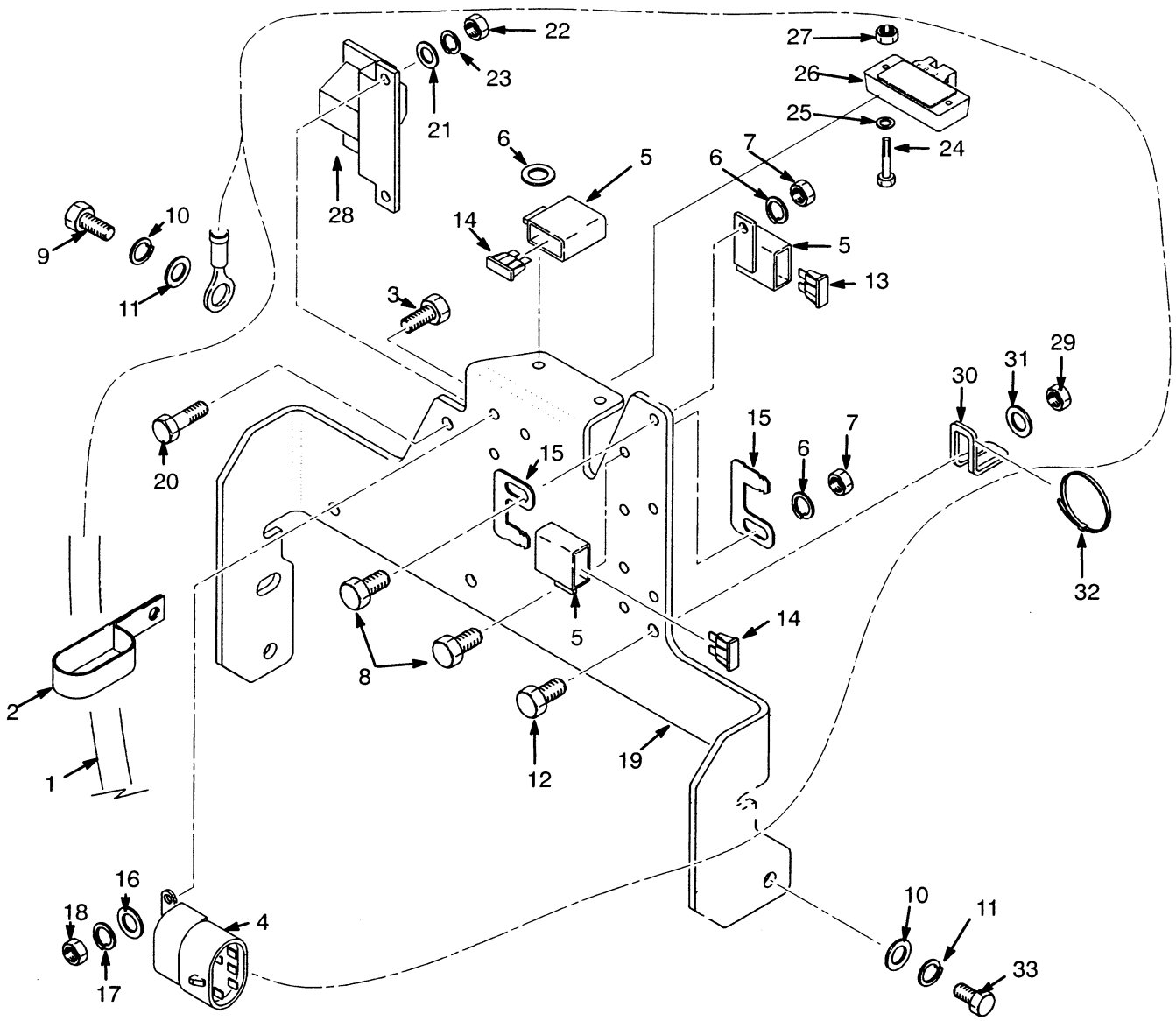

©1999 HYSTER COMPANY

ELECTRICAL

GASOLINE

FIRST USED ON S/N G005D-11942

Ref	Part No.	Name Of Part	Qty
1	1383277	Wire Harness	1
2	325897	Clamp	1
3	287816	Capscrew	2
4	1330301	Relay (Fuel Pump)	1
5	1330293	Cover (Fuse)	3
6	320155	Washer	3
7	302398	Nut	2
8	302247	Screw	2
9	16598	Capscrew	1
10	15134	Washer	5
11	15156	Washer	7
12	136681	Capscrew	1
13	1337828	Fuse (3 Amp)	1
14	370647	Fuse (10 Amp)	2
15	1339444	Clip	2
16	320156	Washer	2
17	292680	Washer	2
18	136687	Nut	2
19	1459272	Bracket	1
20	176640	Capscrew	2
21	320158	Washer	2
22	239503	Nut	2
23	292681	Washer	2
24	302251	Screw	2
25	320155	Washer	2
26	1314387	MAP Sensor	1
27	302398	Nut	2
28	1386191	Ignition Coil Assy	1
29	302400	Nut	1
30	1385873	Clamp	1
31	320158	Washer	1
32	129563	Strap	AR
33	16805	Capscrew	3

©1999 HYSTER COMPANY

ENGINE CONTROL (FIGURE 92)

LPG

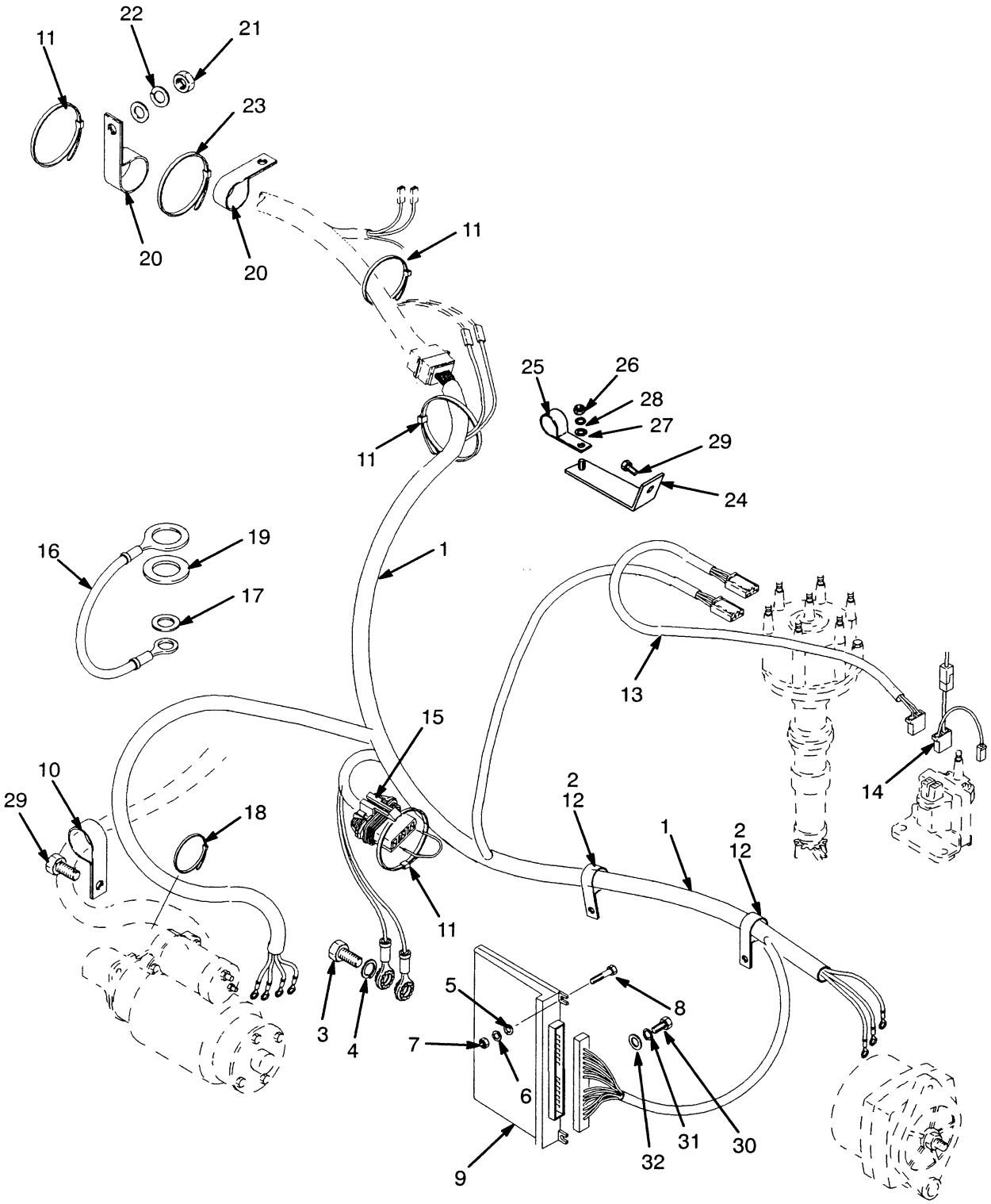

©1999 HYSTER COMPANY

ENGINE CONTROL

LPG

REF		PART NO.	NAME OF PART	QTY
1		....	Harness	1
			☞ Figure 116	
2		370281	Clamp	2
3		16805	Capscrew	1
4		15156	Lockwasher	1
5		320156	Washer	3
6		292680	Lockwasher	3
7		136687	Nut	3
8		292501	Capscrew	3
8	ac	1335000	Controller (MSTS)	1
9	d	1460765	Controller (MSTS)	1
9	bc	1383269	Controller (MSTS)	1
9	d	1460766	Controller (MSTS)	1
10		1337844	Clamp	1
11		273775	Strap Clamp	4
12		288394	Sealant	AR
13		275494	Conduit	AR
14		1339403	Plug Assembly (Coil)	1
15		1323584	Connector (Timing)	1
16		353145	Wire Assembly	1
17		296407	Washer	1
18		129563	Strap Clamp	2
19		296408	Washer	1
20		146047	Clamp	2
21		239503	Nut	1
22		292681	Lockwasher	1
23		114312	Clamp	1
24		1337841	Bracket	1
25		136516	Clamp	1
26		136692	Nut	1
27		320159	Washer	1
28		292682	Washer	1
29		292515	Capscrew	2
30		302243	Screw	1
31		292679	Lockwasher	1
32		320155	Flatwasher	1

a 1995 5LM Series Engine
b 1996 6LX And 1997 7LX Series Engiine
c Last Used On S/N G005D-13153
d First Used On S/N G005D-13154

©1999 HYSTER COMPANY

ENGINE CONTROL (FIGURE 93)

GASOLINE

USED ON S/N G005D-13154 THRU G005D-14735, EXCEPT G005D-14584

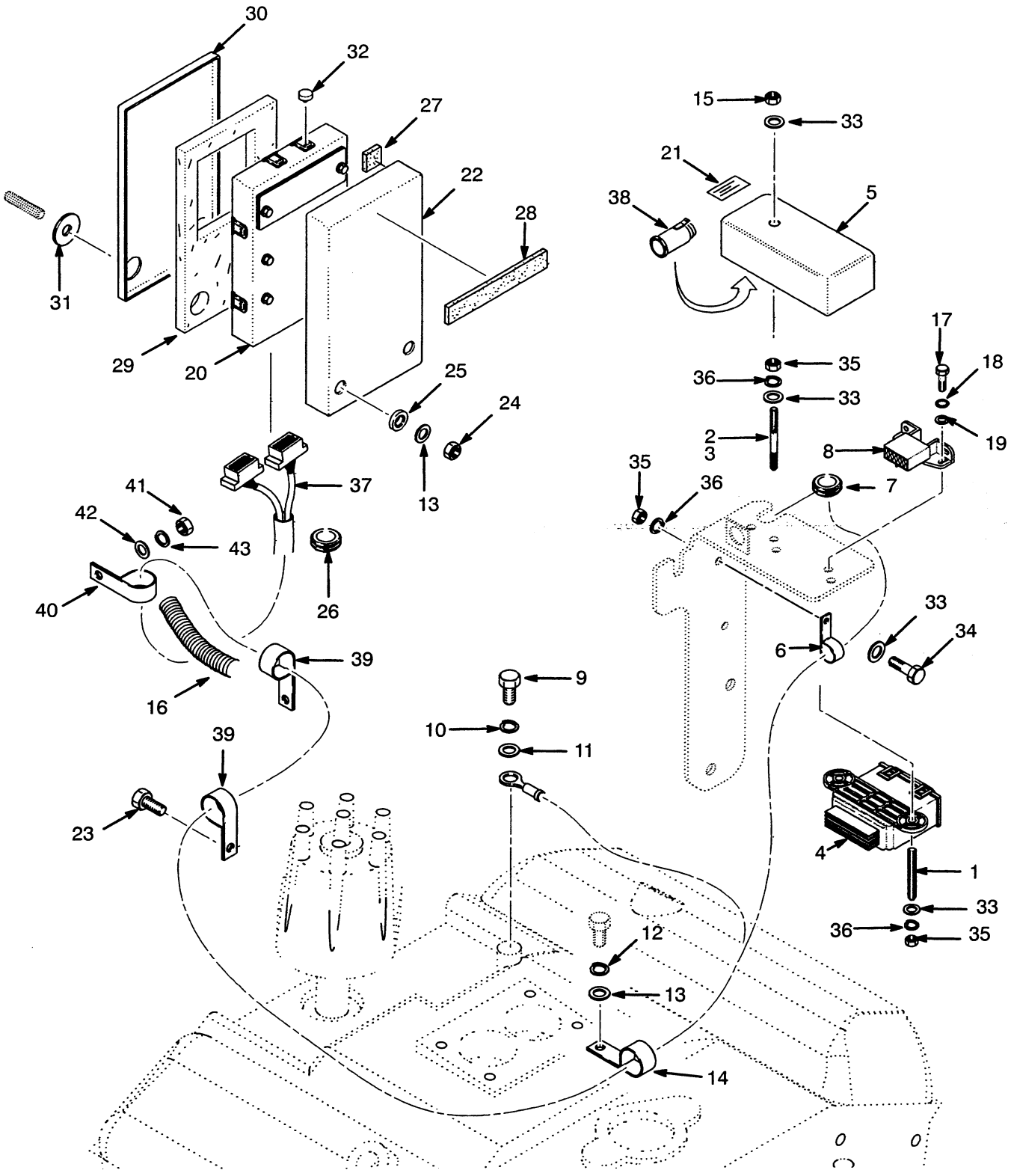

ENGINE CONTROL

GASOLINE

USED ON S/N G005D-13154 THRU G005D-14735, EXCEPT G005D-14584

REF	PART NO.	NAME OF PART	QTY
1	1339463	Stud	1
2	1337799	Stud	1
3	251099	Sealant	AR
4	1327951	Module (Governor)	1
5	1339434	Cover	1
6	136516	Clamp	1
7	1337798	Grommet	1
8	1327956	Connector	1
9	18496	Capscrew	1
10	15155	Lockwasher	1
11	18515	Washer	1
12	15156	Lockwasher	2
13	15134	Washer	4
14	124359	Clamp	1
15	302399	Nut	1
16	275498	Conduit	AR
17	220489	Screw	2
18	15916	Lockwasher (Toothed)	2
19	197067	Washer	2
20	1383299	ECM Assembly	1
21	1339459	Label	AR
22	1334983	Housing (ECM)	1
23	292515	Capscrew	1
24	230886	Nut	2
25	185793	Isolator	2
26	1345988	Grommet	1
27	1345985	Isolator	4
28	1336865	Isolator	1
29	1345984	Pad	1
30	1345983	Cover	1
31	1345987	Washer	1
32	1345986	Bumper	6
33	320156	Washer	4
34	287816	Capscrew	1
35	136687	Nut	3
36	292680	Lockwasher	3
37	1383275	Wire Harness	1
37	1450037	Wire Harness (GS)	1
38	1339436	Power Connector	1
39	128408	Clamp	2
40	89220	Clamp	1
41	136692	Nut	1
42	320159	Washer	1
43	292682	Lockwasher	1

©1999 HYSTER COMPANY

ENGINE CONTROL (FIGURE 94)

GASOLINE

FIRST USED ON S/N G005D-14736, INCLUDING G005D-14584

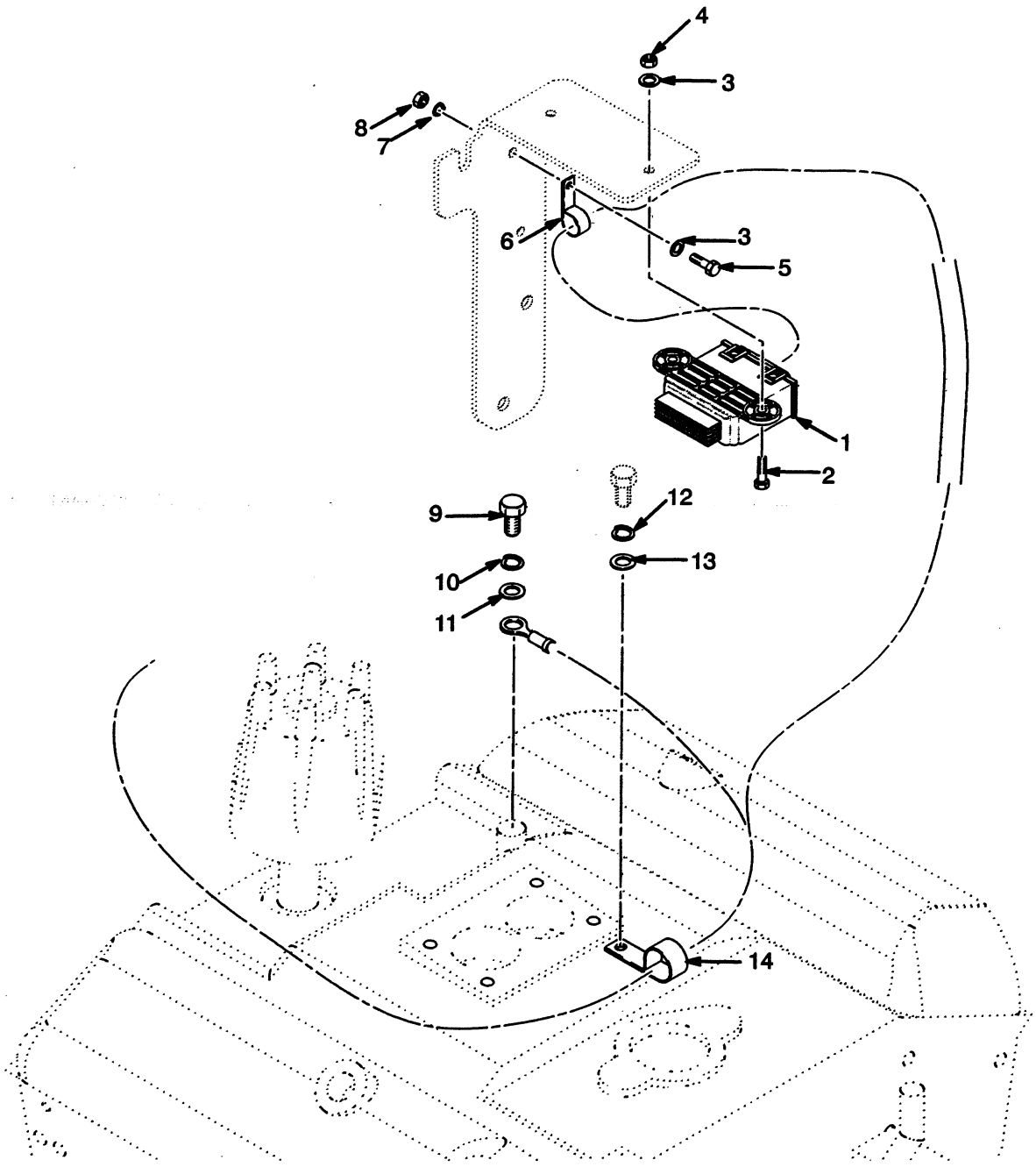

©1999 HYSTER COMPANY

ENGINE CONTROL

GASOLINE

FIRST USED ON S/N G005D-14736, INCLUDING G005D-14584

REF	PART NO.	NAME OF PART	QTY
1	1327951	Module (Governor)	1
2	292501	Screw	2
3	320156	Washer	4
4	302399	Nut	2
5	287816	Capscrew	1
6	164488	Clamp	1
7	292680	Lockwasher	1
8	136687	Nut	1
9	18496	Capscrew	1
10	15155	Lockwasher	1
11	18515	Washer	1
12	15156	Lockwasher	2
13	15134	Washer	4
14	124359	Clamp	1

©1999 HYSTER COMPANY

ENGINE CONTROL, CONTINUED (FIGURE 95)

GASOLINE

FIRST USED ON S/N G005D-14736, INCLUDING G005D-14584

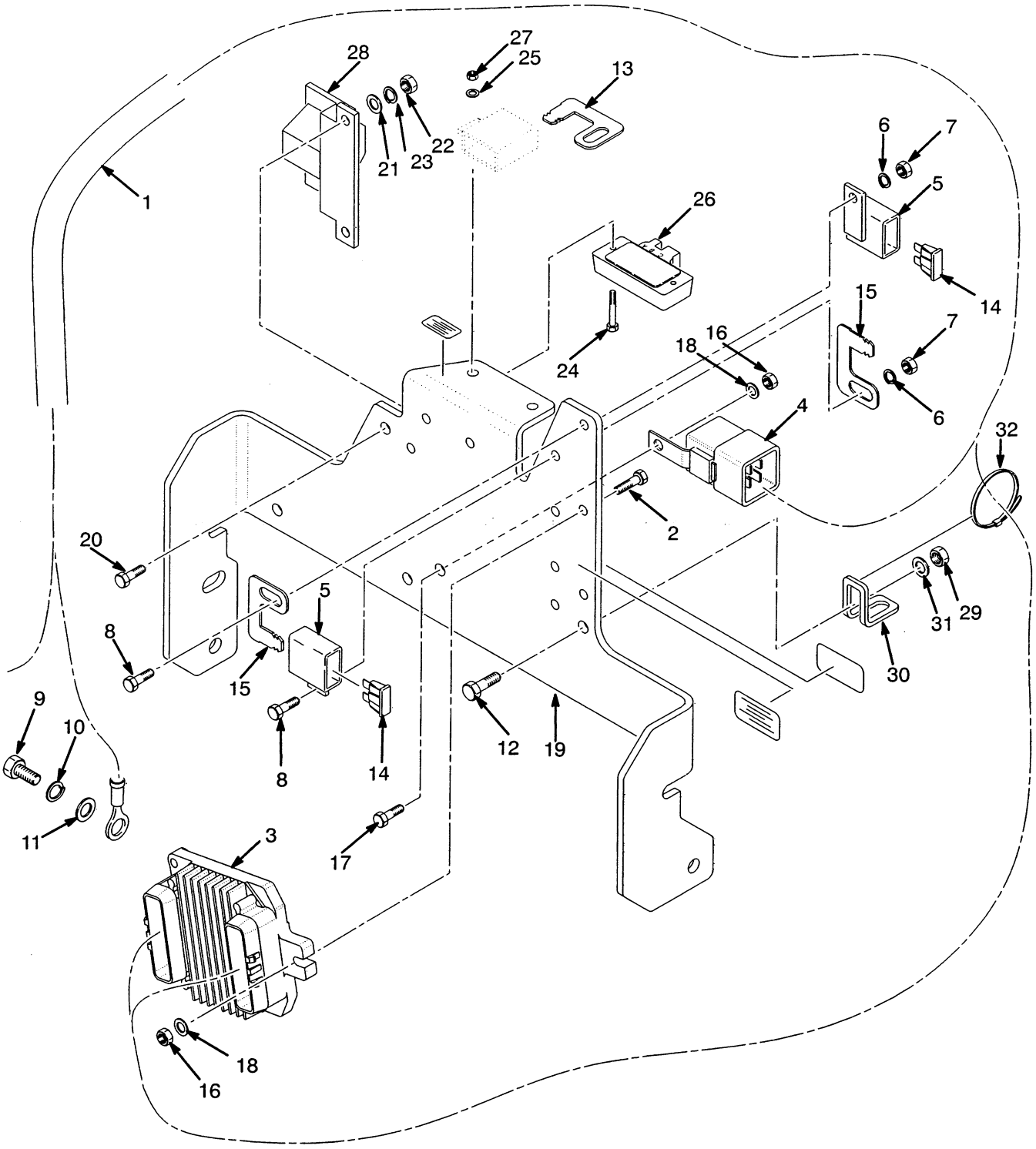

ENGINE CONTROL, CONTINUED

GASOLINE

FIRST USED ON S/N G005D-14736, INCLUDING G005D-14584

Ref	Part No.	Name Of Part	Qty
1	2036694	Wire Harness (Gasoline)	1
		☞ Figure 115	
2	292502	Screw	3
3	2036699	Electronic Control Module Assy	1
4	1461743	Relay (Fuel Pump)	1
5	1330293	Cover (Fuse)	2
6	320155	Washer	2
7	302398	Nut	2
8	302247	Screw	2
9	16598	Capscrew	1
10	15134	Washer	2
11	15156	Washer	2
12	136681	Capscrew	1
13	1376661	Clip	1
14	370647	Fuse (10 Amp)	2
15	1339444	Clip	2
16	302399	Nut	3
17	292501	Screw	3
18	320156	Washer	3
19	1460774	Bracket	1
20	176640	Capscrew	2
21	320158	Washer	1
22	239503	Nut	2
23	292681	Washer	2
24	302251	Screw	2
25	320155	Washer	2
26	1314387	MAP Sensor	1
27	302398	Nut	2
28	1386191	Ignition Coil Assy	1
29	302400	Nut	1
30	1385873	Clamp	1
31	320158	Washer	1
32	129563	Strap	AR

©1999 HYSTER COMPANY

DISTRIBUTOR (FIGURE 96)

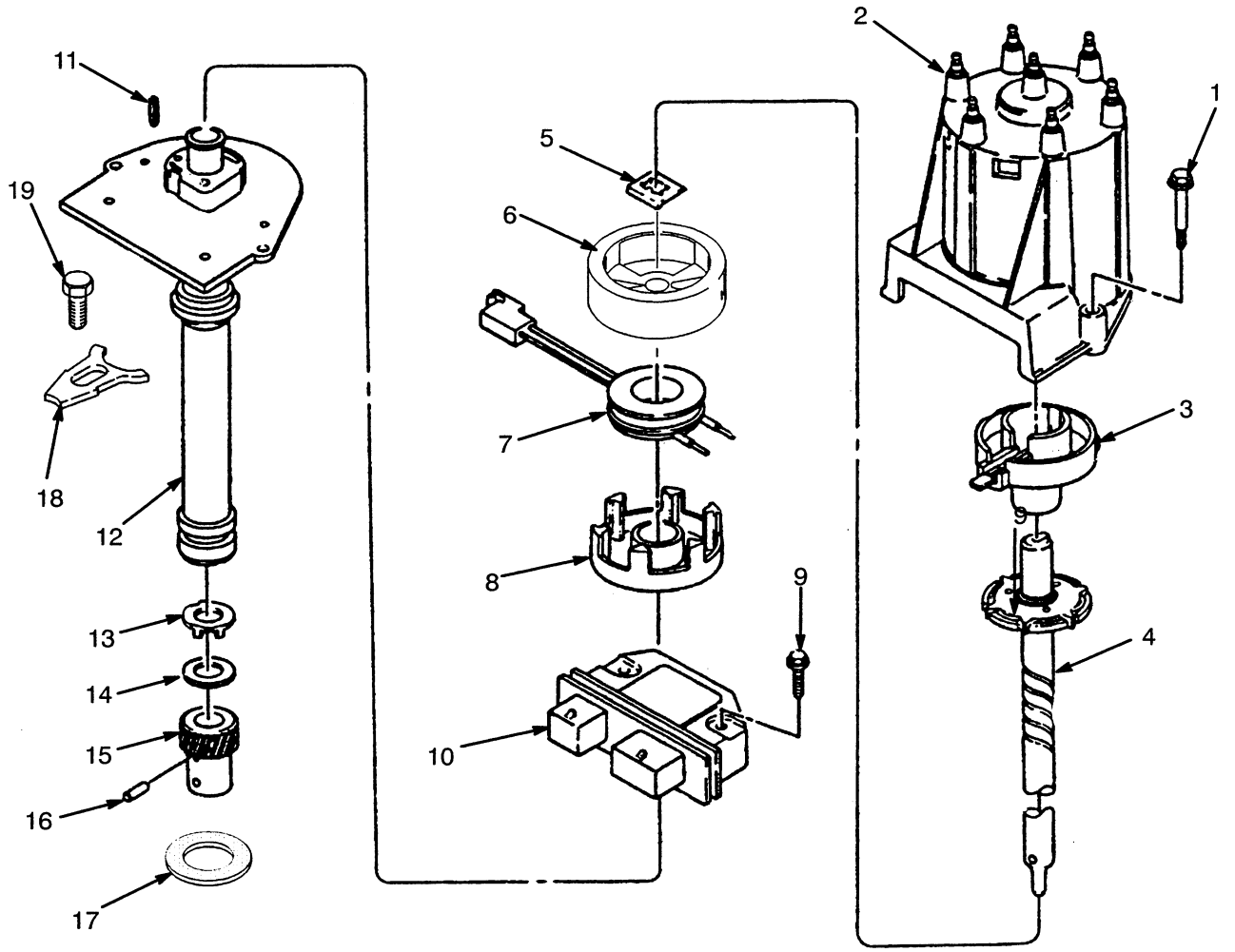

KEY:
A: 2KM 1992 Series Engine
B: 3KM 1993 And 5LM 1995 Series Engine

REF		PART NO.	NAME OF PART	QTY A	QTY B
		1342627	Distributor	1	..
		1371235	Distributor	..	1
1		1334401	Screw	1	1
2	a	1342528	Cap	1	1
3	a	1342529	Rotor	1	1
4		1342530	Shaft Assembly	1	1
5		1342535	Retainer	1	1
6		1342534	Shield	1	1
7		1342533	Coil	1	1
8		1342536	Pole (Stationary)	1	1
9		1334408	Bolt	2	2
10		1342531	Module	1	1
11		1334410	Pin	1	1
12		1342532	Housing	1	1
13		274403	Tang Washer	1	1
14		1342525	Washer	1	1
15		1342526	Gear	1	1
16		19870	Pin	1	1
17		1334423	Gasket	1	1
18		301966	Clamp	1	1
19		375597	Bolt	1	1

a Included In Major Tune-Up Kits 996211 And 996337 And 996340

©1999 HYSTER COMPANY

DISTRIBUTOR (FIGURE 97)

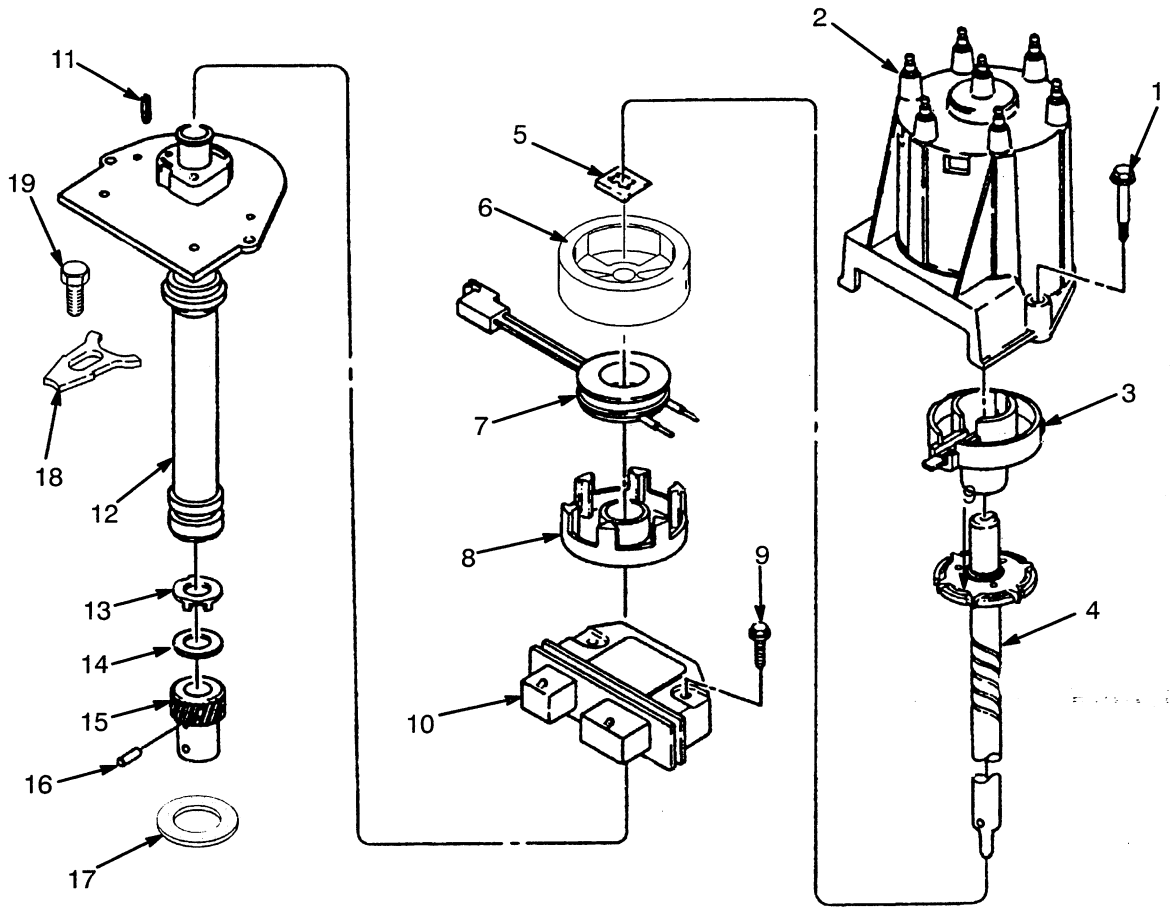

KEY:
A: 4LM 1994 Series Engine
B: 6LX 1996, 7LX 1997 8LX 1998, 9LX 1999, And 2000 Series Engine

REF	PART NO.	NAME OF PART	QTY A	QTY B
	1374322	Distributor	1	..
	1450869	Distributor	..	1
1	1334401	Screw	2	2
2	1342528	Cap	1	..
2	1451315	Cap	..	1
3	1374329	Rotor	1	1
4	1374328	Shaft Assembly	1	1
5	1334406	Retainer	1	1
6	1342534	Shield	1	1
7	1374331	Coil	1	1
8	1374330	Pole (Stationary)	1	1
9	1334408	Bolt	2	2
10	1374332	Module	1	1
11	1334410	Pin	1	1
12	1374333	Housing	1	1
13	274403	Washer	1	1
14	1342525	Washer	1	1
15	1342526	Gear	1	..
15	1451316	Gear	..	1
16	19870	Pin	1	1
17	1334423	Gasket	1	1
18	301966	Clamp	1	1
19	375597	Bolt	1	1

©1999 HYSTER COMPANY

ELECTRICAL SYSTEM (FIGURE 98)

DIESEL

LAST USED ON S/N G005D-13393

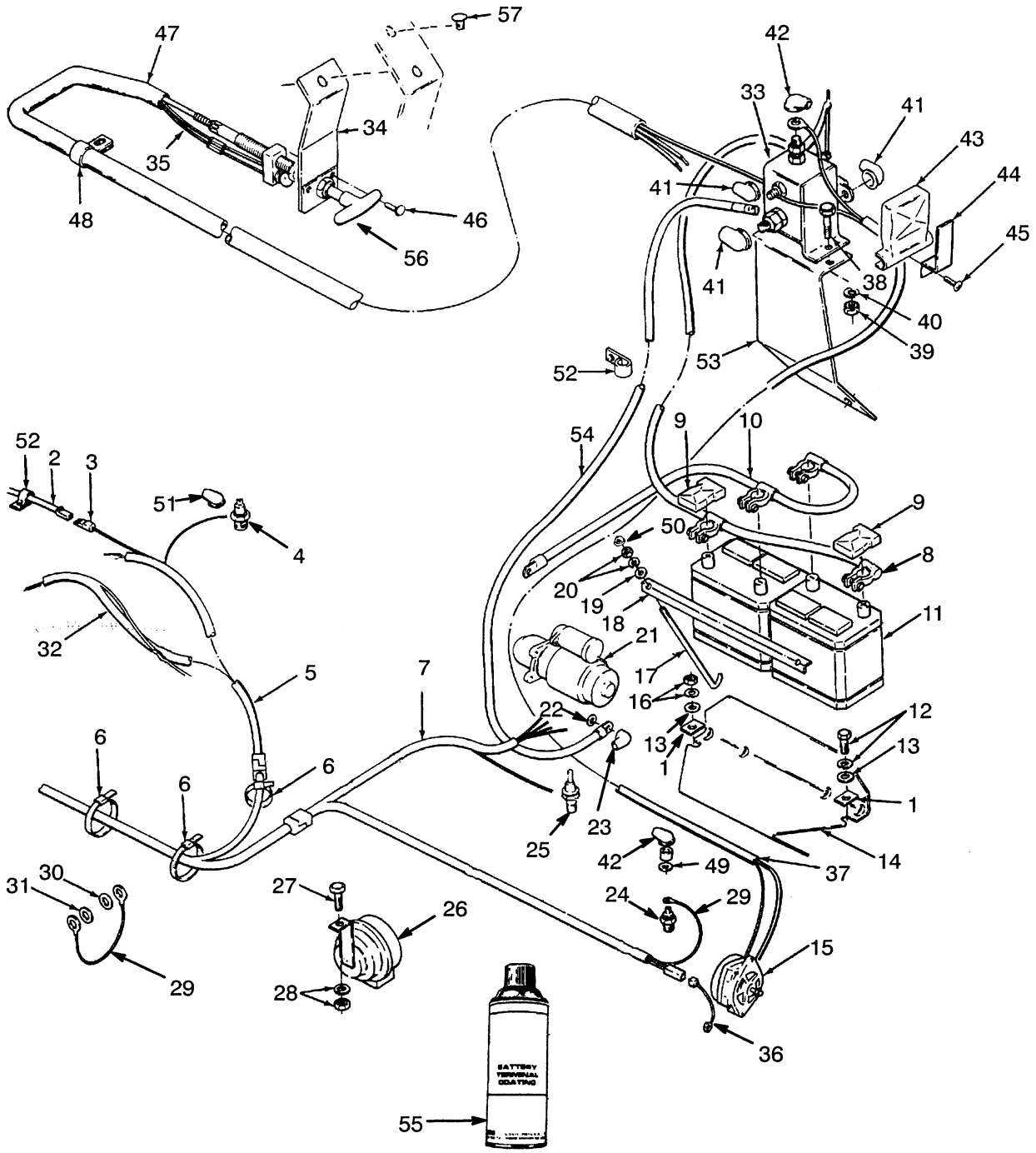

ELECTRICAL SYSTEM

DIESEL

LAST USED ON S/N G005D-13393

KEY:
A: Oil Clutch
B: Powershift With Monotrol Pedal
C: Powershift With Forward/Reverse Lever

REF		PART NO.	NAME OF PART	QTY A	B	C
1		389109	Washer	2	2	2
2		....	Wire Harness	..	1	..
			☞ Figure 135			
3		181045	Connector	..	2	..
4		190252	Switch (Oil Pressure)	1	..	..
5		1309090	Harness	1	..	..
6		129563	Strap/Clamp	4	5	4
7		1322637	Harness	1	1	1
8	b	350141	Battery Cable (Positive)	1	1	1
8	a	1310556	Battery Cable (Positive)	1	1	1
9		257241	Boot	2	2	2
10	b	381922	Battery Cable (Negative)	1	1	1
10	a	1310557	Battery Cable (Negative)	1	1	1
11		1383331	Battery (Wet)	2	2	2
11		146938	Battery (Wet) (Optional)	2	2	2
11		177894	Battery (Dry)	2	2	2
12		329067	Screw	1	1	1
12		292681	Lockwasher	2	2	2
13		320158	Lockwasher	2	2	2
14		1333805	Tray	1	1	1
15		....	Alternator	1	1	1
			☞ Figure 102 Thru Figure 105			
16		239503	Nut	1	1	1
16		320157	Washer	1	1	1
17		309124	Link	2	2	2
18		352597	Holder	1	1	1
19		292680	Lockwasher	2	2	2
20		320156	Washer	2	2	2
20		136687	Nut	2	2	2
21		....	Starter	1	1	1
			☞ Figure 111			
22		292682	Lockwasher	1	1	1
23		204223	Boot	1	1	1
24		1319175	Sender (Temperature)	1	1	1
25		190252	Switch (Pressure)	1	1	1
26		1383778	Horn	1	1	1
27		136749	Capscrew	1	1	1
28		292681	Lockwasher	1	1	1
28		239503	Nut	1	1	1
29		353145	Wire	1	1	1
30		296407	Washer	1	1	1
30		296361	Lockwasher (Optional)	1	1	1
31		296408	Washer	1	1	1
32		1312682	Harness	..	..	1
32		1312681	Harness	..	1	..
33	ab	353305	Switch	1	1	1
34	a	353256	Bracket	1	1	1
35	ab	353306	Wire	1	1	1
36	ab	353257	Wire	1	1	1
37	ad	1450027	Harness (Without Low Emissions)	1	1	1
37	d	1322637	Harness (Without Low Emissions)	1	1	1
37	e	1453666	Harness (With Low Emissions)	1	1	1
37	ae	1453665	Harness (With Low Emissions)	1	1	1
38	a	292501	Capscrew	3	3	3
39	a	136687	Nut	3	3	3
40	a	292680	Lockwasher	3	3	3
41	a	204223	Boot	AR	AR	AR
42	a	190383	Boot	AR	AR	AR
43	ab	257241	Boot	1	1	1
44	ab	111763	Clamp	1	1	1
45	ab	134102	Screw	1	1	1
46	ab	17173	Rivet	2	2	1
47	ab	275496	Conduit	AR	AR	AR
48	ab	273775	Clamp	8	8	8
49	a	18500	Washer	AR	AR	AR
50		1326939	Cap	2	2	2
51	a	190383	Boot	3	3	3
52		132972	Clamp	1	1	1
53	ac	377379	Bracket	1	1	1
54	a	1310557	Cable	1	1	1
55		178296	Battery Terminal Coating	AR	..	..
56		1392552	Cable (Battery Disconnect)	1	1	1
57		309663	Plug	1	1	1

a Type DS
b Last Used On S/N G005D-8580
c First Used On S/N G005D-8581
d Last Used On S/N G005A-10666
e First Used On S/N G005A-10667

©1999 HYSTER COMPANY

ELECTRICAL SYSTEM (FIGURE 99)

DIESEL

FIRST USED ON S/N G005D-13394

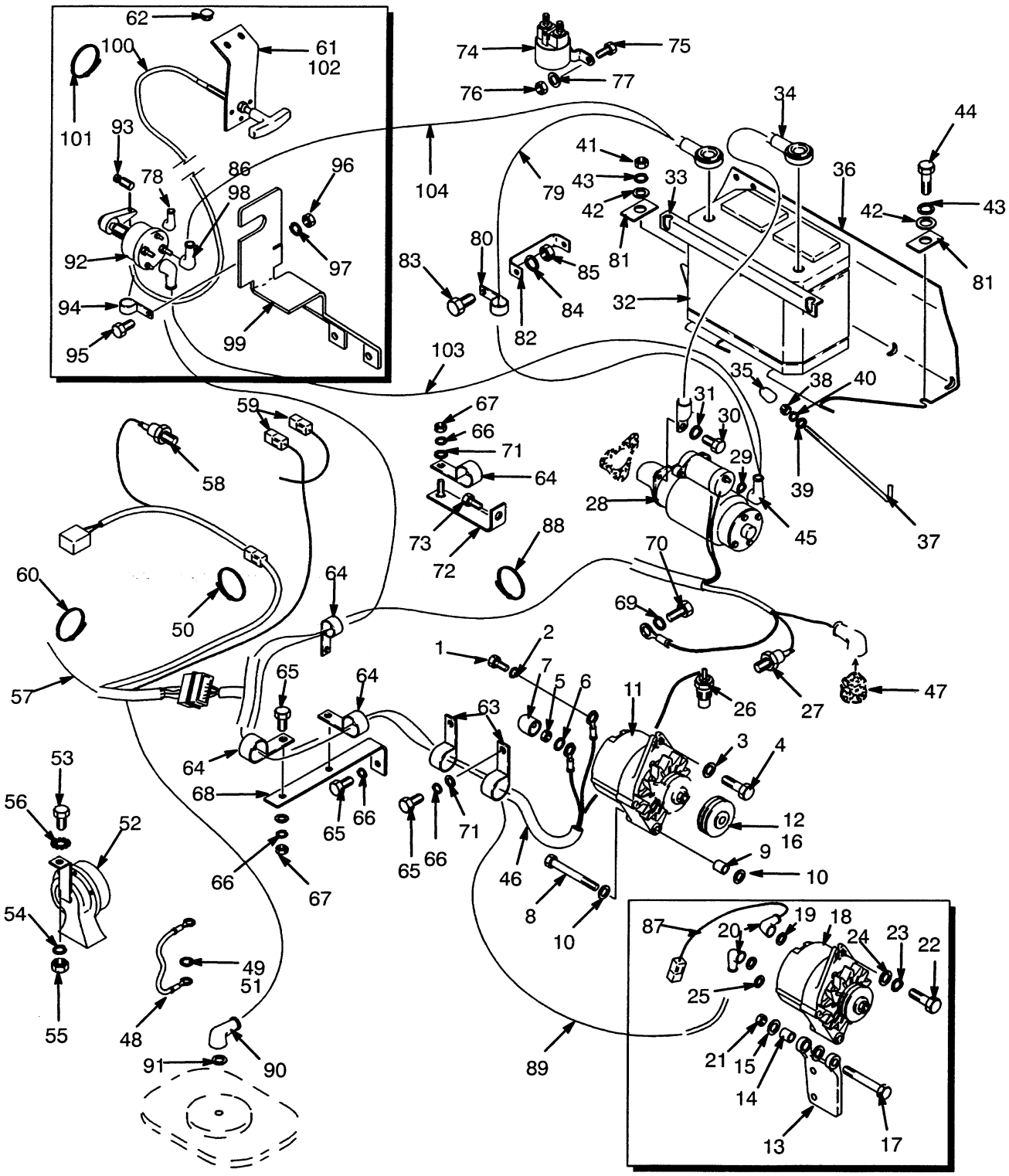

ELECTRICAL SYSTEM

DIESEL

FIRST USED ON S/N G005D-13394

KEY:
A: Oil Clutch
B: Powershift With Monotrol Pedal
C: Powershift With Forward/Reverse Lever

REF		PART NO.	NAME OF PART	QTY A	B	C
1		136681	Capscrew	1	1	1
2		292681	Lockwasher	1	1	1
3		350818	Washer	1	1	1
4		329067	Screw	1	1	1
5		136687	Nut	1	1	1
6		296359	Lockwasher	1	1	1
7		157065	Boot	1	1	1
8		292523	Capscrew	1	1	1
9		1345014	Sleeve	1	1	1
10		1318306	Washer	2	2	2
11		....	Alternator	2	2	2
			☞ Figure 104			
12		1310277	Pulley	1	1	1
13	a	1345024	Bracket	1	1	1
14	a	1306216	Sleeve	1	1	1
15	a	1318306	Washer	2	2	2
16	a	1392220	Pulley	1	1	1
17	a	18546	Capscrew	1	1	1
18	a	....	Alternator	1	1	1
			☞ Figure 106			
19	a	18500	Washer	2	2	2
20	a	190383	Boot	2	2	2
21	a	139743	Nut	1	1	1
22	a	18497	Capscrew	1	1	1
23	a	18515	Washer	1	1	1
24	a	15155	Washer	1	1	1
25	a	15127	Washer	1	1	1
26		1319175	Temperature Sender	1	1	1
26		246108	Sealant	AR	AR	AR
27		190252	Pressure Switch	1	1	1
28		....	Starter	1	1	1
			☞ Figure 111			
29		292682	Lockwasher	1	1	1
30		16828	Capscrew	3	3	3
30		16815	Capscrew	3	3	3
31		15156	Washer	3	3	3
31		264159	Adhesive	AR	AR	AR
32		379596	Battery (Wet)	1	1	1
33		1459742	Hold Down (Battery)	1	1	1
34		1459774	Battery Cable (Negative)	1	1	1
35		1326939	Cap	2	2	2
36		1459741	Battery Tray	1	1	1
37		309124	Link	2	2	2
38		136687	Nut	2	2	2
39		320166	Washer	2	2	2
40		292680	Lockwasher	2	2	2
41		239503	Nut	1	1	1
42		320158	Washer	2	2	2
43		292681	Lockwasher	2	2	2
44		329067	Screw	1	1	1
45		204223	Boot	1	1	1
46	a	1452866	Engine Harness	1	1	1
46		1452865	Engine Harness	1	1	1
47		322784	Compound	AR	AR	AR
48		353145	Ground Wire	1	1	1
49		296407	Washer	1	1	1
49		296361	Washer (Optional)	1	1	1
50		129563	Strap Clamp	4	4	4
51		296408	Washer	1	1	1
52		1383778	Horn	1	1	1
53		136749	Capscrew	1	1	1
54		292681	Lockwasher	1	1	1
55		239503	Nut	1	1	1
56		296406	Washer	1	1	1
57		1309090	Harness (Neutral Start)	1	..	..
57		1312681	Harness (Neutral Start)	..	1	..
57		1312682	Harness (Neutral Start)	..	..	1
58		190252	Pressure Switch (N.C.)	1	..	..
59		181045	Connector	..	2	..
60		129663	Strap Clamp	..	1	..
61	a	353256	Bracket	1	1	1
62	a	309663	Plug	1	1	1
63		128408	Clamp	2	2	2
64		298132	Clamp	4	4	4
65		292514	Capscrew	5	5	5

a Type DS

Continued On Next Page

©1999 HYSTER COMPANY

ELECTRICAL SYSTEM

DIESEL

FIRST USED ON S/N G005D-13394

KEY:
A: Oil Clutch
B: Powershift With Monotrol Pedal
C: Powershift With Forward/Reverse Lever

REF		PART NO.	NAME OF PART	QTY A	B	C
66		292682	Lockwasher	6	6	6
67		136692	Nut	3	3	3
68		1455154	Bracket	1	1	1
69		292681	Lockwasher	1	1	1
70		287851	Capscrew	1	1	1
71		320159	Washer	3	3	3
72		1337841	Bracket	1	1	1
73		292515	Capscrew	1	1	1
74		1454967	Relay	1	1	1
75		292500	Capscrew	2	2	2
76		313805	Nut	4	4	4
77		320156	Washer	4	4	4
78		190382	Boot	2	2	2
79		1459773	Battery Cable (Positive)	1	1	1
80		132972	Clamp	1	1	1
81		389109	Washer	2	2	2
82		1379499	Bracket	1	1	1
83		292500	Capscrew	1	1	1
84		292680	Lockwasher	1	1	1
85		136687	Nut	1	1	1
86	a	190383	Boot	3	3	3
87	a	353257	Wire Assy	1	1	1
88	a	129563	Strap Clamp	6	6	6
89	a	1450018	Harness (Disconnect Switch)	1	1	1
90	a	190383	Boot	2	2	2
91	a	18500	Washer	2	2	2
92	a	1324518	Switch	1	1	1
93	a	154565	Wire-Stop	1	1	1
94	a	1329910	Clamp	1	1	1
95	a	292501	Capscrew	1	1	1
96	a	136687	Nut	1	1	1
97	a	292680	Lockwasher	1	1	1
98	a	204223	Boot	2	2	2
99	a	1454977	Bracket	1	1	1
100	a	1392552	Control Cable	1	1	1
101	a	129563	Strap Clamp	2	2	2
102	a	1324480	Label-Battery Switch	1	1	1
103	a	111722	Battery Cable (Positive)	1	1	1
104	a	1459775	Battery Cable (Positive)	1	1	1

a Type DS

©1999 HYSTER COMPANY

NOTES

©1999 HYSTER COMPANY

INSTRUMENT PANEL (FIGURE 100)

PARTS-SERVICE GRAM	
ITEM	GRAM
47	E-E-45

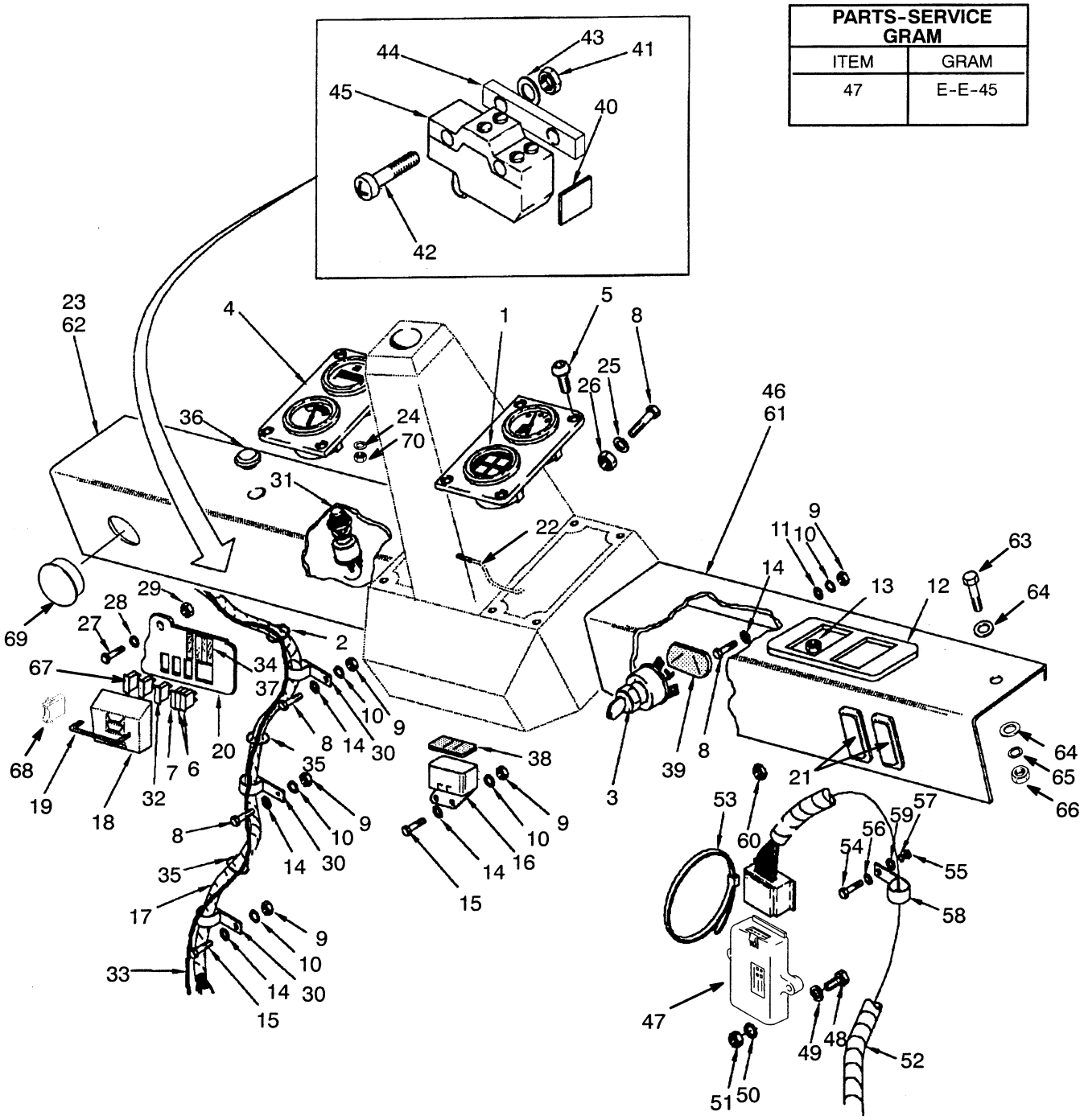

INSTRUMENT PANEL

REF	PART NO.	NAME OF PART	QTY
1	....	Gauge Cluster, RH	1
		☞ Figure 101	
2	137852	Strap Clamp	1
3	379902	Switch (Ignition)	1
3	1337197	Key	2
4	....	Gauge Cluster, LH	1
		☞ Figure 101	
5	370676	Screw And Nut	8
6	370646	Fuse (5 Amp, Older Units)	2
7	1310630	Fuse (15 Amp)	1
8	292502	Capscrew	6
9	136687	Nut	8
10	292680	Lockwasher	8
11	197068	Washer	3
12	352985	Bezel	1
13	352987	Nut	2
14	296359	Washer	8
15	292501	Capscrew	6
16	157554	Horn Relay	1
17	.....	Harness (Main Instrument)	1
		☞ Figure 118	
18	370863	Cover	1
19	370864	Latch	1
20	1337886	Bracket (Gasoline And LPG)	1
20	1320659	Bracket (Diesel)	1
21	374046	Plug	2
22	1346733	Wire	1
23	1343946	Panel, LH	1
24	16743	Washer	1
25	320156	Washer	2
26	302399	Nut	1
27	16836	Capscrew	1
28	15155	Washer	1
29	376397	Retainer	1
30	89220	Clamp	3
31	370776	Switch (Diesel)	1
32	370648	Fuse (20 Amp, Diesel)	1
33	1322652	Harness (Diesel, Cold Start Aid)	1
34	1323597	Label (Fuses, Diesel)	1
35	273775	Strap/Clamp (Diesel)	3
36	350498	Plug (Gasoline And LPG)	1
37	1383791	Label (Fuses, Gasoline And LPG)	1
38	272155	Cover, (Relay, Type GS, LPS, And DS)	1
39	379903	Cover	1
40	387869	Cover	2
41	15049	Nut (Monotrol Pedal)	2
42	123991	Screw (Monotrol Pedal)	2
43	138573	Lockwasher (Monotrol Pedal)	2
44	316132	Spacer (Monotrol Pedal)	1
45	370868	Switch (Monotrol Pedal)	1
46	1343948	Panel (Without Cab)	1
47	1357942	Controller (LPG) (2200 RPM)	1
47	1335001	Controller (LPG) (2500 RPM)	1
48	302250	Screw (LPG)	2
49	197067	Washer (LPG)	4
50	292679	Lockwasher (LPG)	2
51	292668	Nut (LPG)	2
52	....	Harness (Governor)	1
		☞ Figure 113	
53	114312	Strap Clamp (LPG)	1
54	292501	Capscrew (LPG)	1
55	136687	Nut (LPG)	1
56	296359	Washer (LPG)	1
57	292680	Lockwasher (LPG)	1
58	146047	Clamp (LPG)	1
59	320156	Washer (LPG)	3
60	302399	Nut (LPG)	1
61	1343949	Panel (RH, With Cab)	1
62	1343947	Panel (LH, With Cab)	1
63	1324996	Capscrew (With Cab)	1
64	1300117	Washer (With Cab)	4
65	292681	Lockwasher (With Cab)	2
66	239503	Nut (With Cab)	2
67	1300057	Fuse (7.5 Amp, Gasoline And LPG)	1
68	381846	Fuse Holder (Gasoline And LPG)	1
69	1331037	Plug	1

©1999 HYSTER COMPANY

NOTES

©1999 HYSTER COMPANY

GAUGE CLUSTER (FIGURE 101)

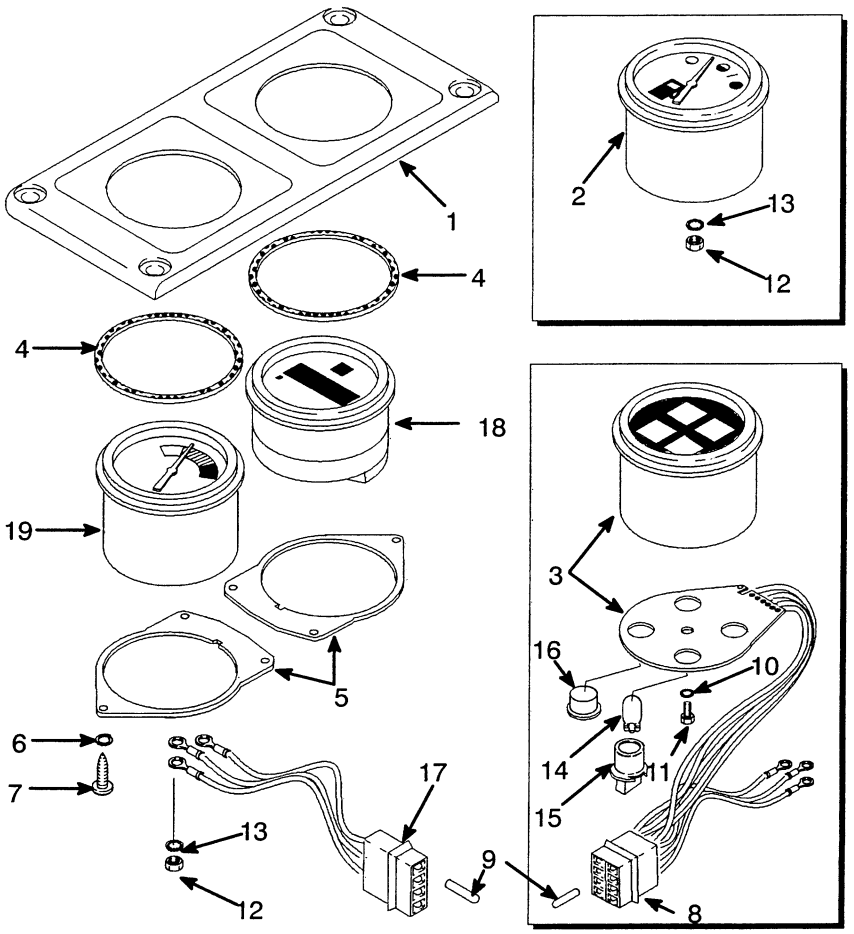

KEY:
A: Right Hand Side: Gasoline
B: Right Hand Side: Diesel
C: Right Hand Side: LPG
D: Left Hand Side

REF	PART NO.	NAME OF PART	QTY A	B	C	D
	1346708	Gauge Cluster	1	..	..	..
	1346745	Gauge Cluster	..	1	..	..
	370473	Gauge Cluster	..	..	1	..
	8504117	Gauge Cluster (Optional)	..	..	1	..
	1324313	Gauge Cluster	..	..	..	1
	8504095	Gauge Cluster (Optional)	..	..	..	1
1	1312473	Bezel	1	1	..	1
1	1312474	Bezel	..	..	1	..
1	1458291	Bezel	..	..	1	..
2	1312344	Gauge (Fuel)	1	1	..	..
3	1312345	Light Cluster And Harness	..	1	1	..
3	1347952	Light Cluster And Harness	1	..	..	..
4	1312339	Gasket	2	2	1	2
5	1312340	Bracket	2	2	1	2
6	18419	Lockwasher	6	6	3	6
7	227131	Screw	6	6	3	6
8	1317393	Connector	1	1	1	..
9	367966	Pin	8	6	5	3
10	15916	Lockwasher	1	1	1	..
11	185806	Screw	1	1	1	..
12	15049	Nut	3	3	..	3
13	16743	Lockwasher	3	3	..	3
14	1320001	Bulb	4	3	4	..
15	1317394	Socket	4	3	4	..
16	1312348	Plug	..	1	..	..
17	367953	Connector	..	..	..	1
18	1312337	Hourmeter	..	..	..	1
19	1329414	Gauge (Temperature)	..	..	..	1

©1999 HYSTER COMPANY

ALTERNATOR (FIGURE 102)

TYPES GS, LPS AND DS

LAST USED ON S/N G005D-10596

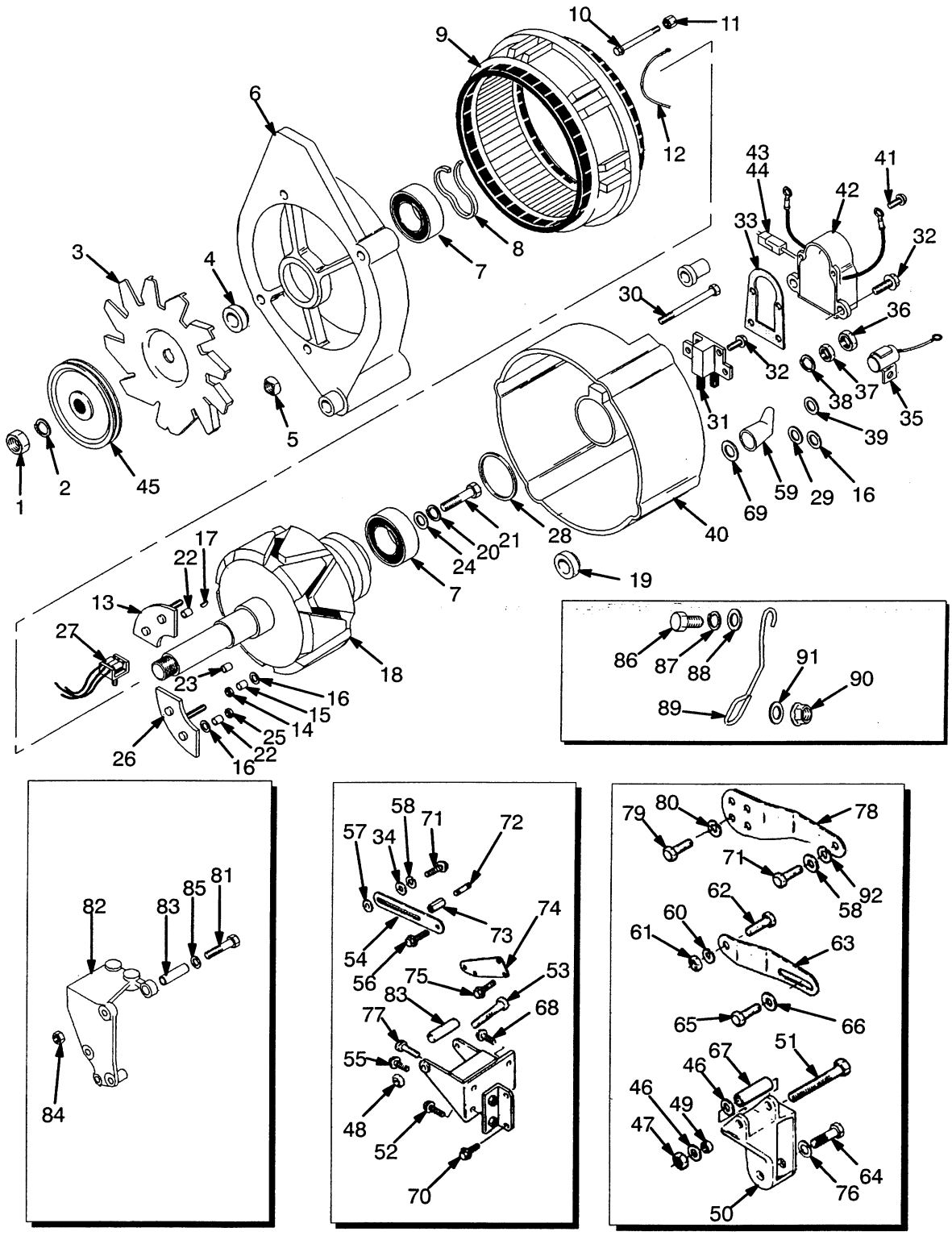

ALTERNATOR

TYPES GS, LPS, AND DS

LAST USED ON S/N G005D-10596

KEY:
A: Gasoline And LPG
B: Diesel

REF		PART NO.	NAME OF PART	QTY A	QTY B
		353273	Alternator	1	1
1		248147	Nut-Hex	1	1
2		246943	Lockwasher	1	1
3		248127	Fan	1	1
4		226580	Spacer-Fan	1	1
5		248148	Nut-Square	3	3
6		....	Housing	1	1
7		248128	Bearing	2	2
8		248129	Retainer (Detainer)	1	1
9		382633	Stator	1	1
10		255073	Bolt	1	1
11		226589	Insulator	1	1
12		382638	Cable	1	1
13		382635	Diode-Negative	1	1
14		15052	Nut-Hex	4	4
15		382644	Sleeve	1	1
16		248143	Washer	5	5
17		246944	Key	1	1
18		382632	Rotor	1	1
19		248137	Ring-Slip	1	1
20		246940	Washer	3	3
21		248149	Screw-Hex	1	1
22		248141	Sleeve-19/32	2	2
23		382643	Sleeve	1	1
24		15152	Lockwasher	3	3
25		382646	Nut	2	2
26		382636	Diode-Positive	1	1
27		382639	Diode-Field	1	1
28		382634	Retainer	1	1
29		382642	Washer	2	2
30		382641	Bolt	4	4
31		248134	Brush	1	1
32		246938	Screw	4	4
33		382637	Gasket	1	1
34		18515	Washer	1	1
35		382647	Capacitor	1	1
36		248145	Locknut	3	3
37		248146	Nut-Hex	2	2
38		246942	Lockwasher	2	2
39		382645	Insulator	1	1
40		....	Housing	1	1
41		18082	Capscrew	2	2
42		382640	Regulator	1	1
43		181046	Connector	1	1
44		134812	Connector	1	1
45	a	353294	Pulley	1	..
45	b	1377768	Pulley	1	..
45		353291	Pulley	..	1
46		261379	Washer	2	..
47		139743	Locknut	1	..
48		1307907	Nut	..	1
49		189338	Spacer	1	..
50	a	344351	Bracket	1	..
50	b	1377765	Bracket	1	..
51		18548	Capscrew	1	..
52		1307898	Screw	..	2
53		1307906	Screw	..	1
54		1306214	Lever	..	1
55		1307914	Screw	..	2
56		1307910	Screw	..	1
57		1310283	Spacer	..	1
58		15155	Lockwasher	1	1
59		190383	Cover	4	4
60	a	292682	Lockwasher	1	..

CONTINUED ON NEXT PAGE

©1999 HYSTER COMPANY

ALTERNATOR

TYPES GS, LPS, AND DS

LAST USED ON S/N G005D-10596

KEY:
A: Gasoline And LPG
B: Diesel

REF		PART NO.	NAME OF PART	QTY A	QTY B
61	a	136692	Nut	1	..
62	a	136985	Capscrew	1	..
63	a	344358	Strap	1	..
64		18547	Capscrew	2	..
65		176640	Capscrew	1	..
66		320157	Washer (Cone)	1	..
67		305100	Sleeve	1	..
68		1307908	Screw	..	1
69		18500	Washer	3	3
70		1307909	Screw	..	2
71		18497	Screw	1	1
72		1307911	Stud	..	1
73		1315498	Nut	..	1
74		1306215	Plate	..	1
75		1307913	Screw	..	1
76		292682	Lockwasher	2	..
77		1318968	Screw	..	2
78	b	1377747	Strap	1	..
79	b	287860	Capscrew	4	..
80	b	292682	Lockwasher	4	..
81		18546	Capscrew	..	1
82		1345024	Bracket	..	1
83		1306216	Sleeve	..	1
84		139743	Locknut	..	1
85		1318306	Washer	..	2
86		136681	Capscrew	..	1
86	a	136681	Capscrew	1	..
86	b	176640	Capscrew	1	..
87		292681	Lockwasher	1	1
88	b	320158	Washer	1	..
89	b	1377777	Brace	1	..
90	b	192077	Locknut	1	..
91	b	15176	Washer	1	..

a Last Used On S/N G005D-4577
b First Used On S/N G005D-4578

©1999 HYSTER COMPANY

NOTES

©1999 HYSTER COMPANY

ALTERNATOR (FIGURE 103)

DELCO BRAND

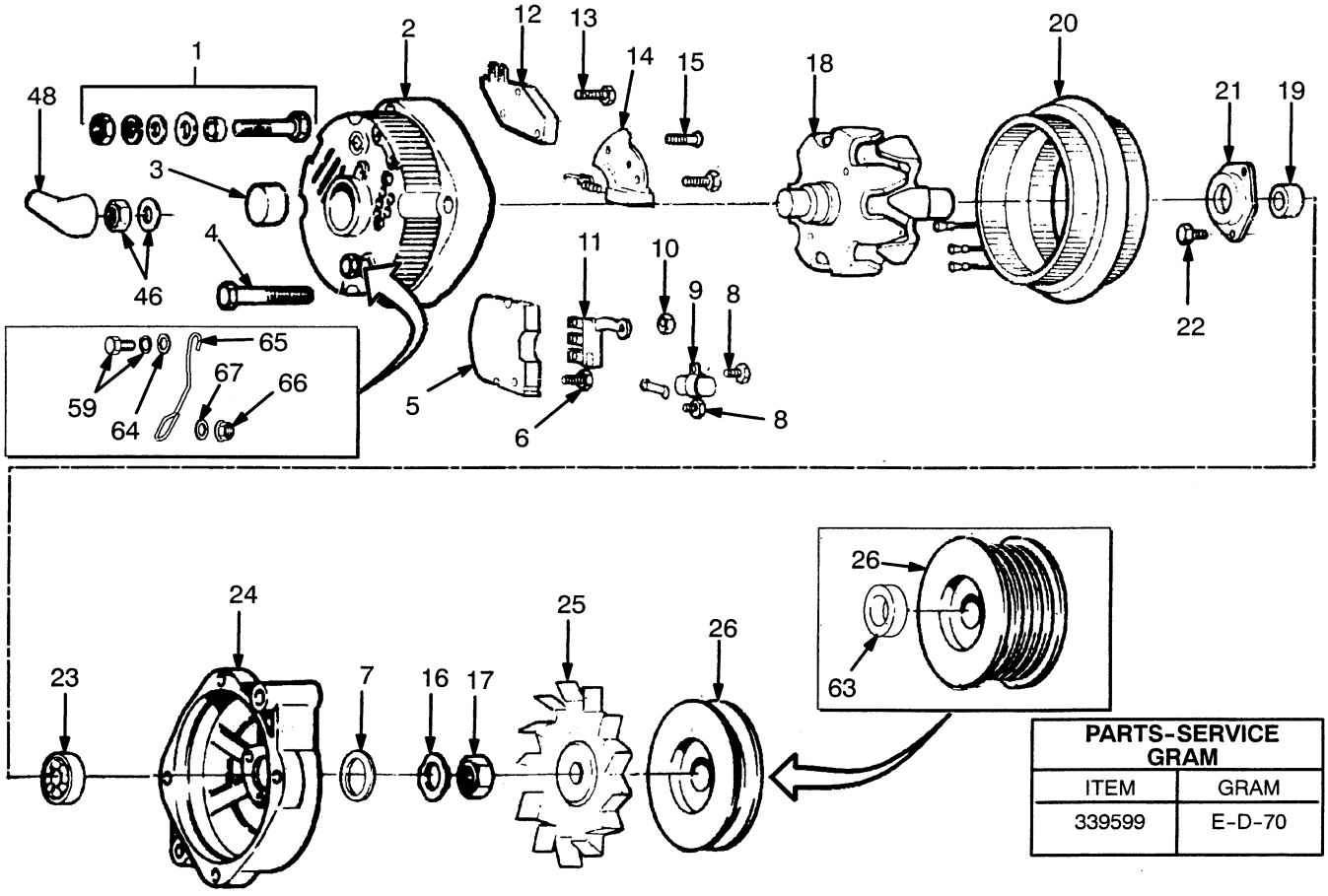

PARTS-SERVICE GRAM	
ITEM	GRAM
339599	E-D-70

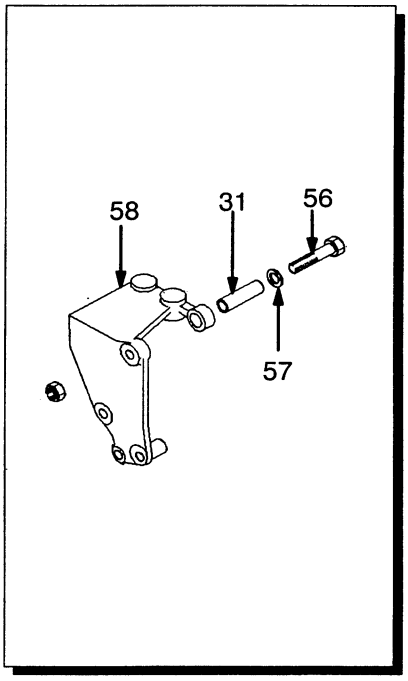

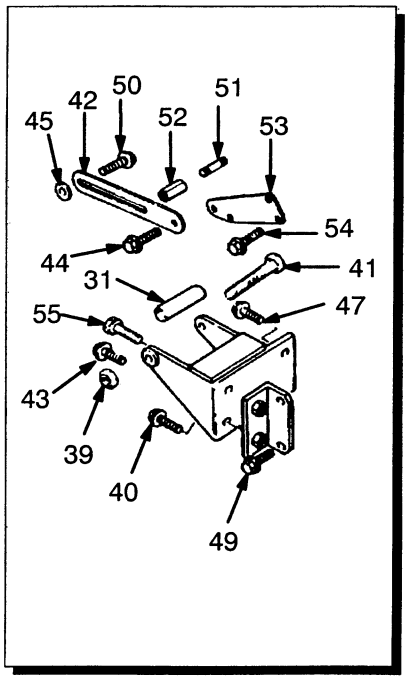

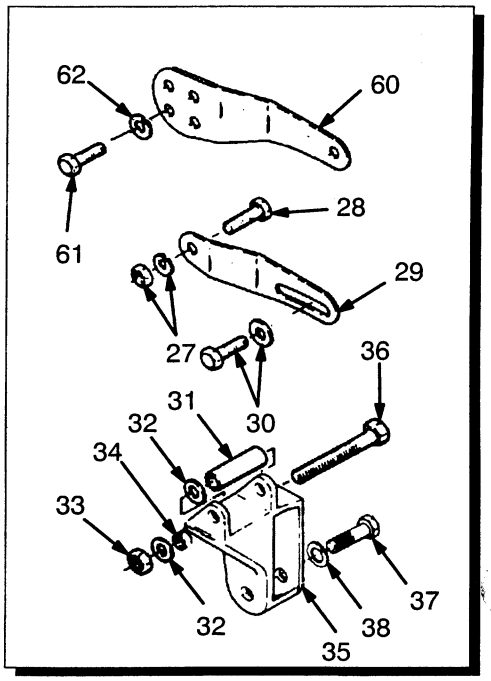

©1999 HYSTER COMPANY

ALTERNATOR

DELCO BRAND

KEY:
A: Gasoline And LPG
B: Diesel

REF		PART NO.	NAME OF PART	QTY A	QTY B
	ab	339599	Alternator	1	1
1	b	310081	Kit-Battery Terminal	1	1
2	b	343038	Frame (CE)	1	1
3	b	128838	Bearing	1	1
4	b	128852	Bolt	4	4
5	b	343031	Rectifier	1	1
6	b	343032	Screw And Washer	1	1
7	b	322177	Collar	1	1
8	b	198410	Screw	2	2
9	b	198401	Capacitor	2	2
10	b	15039	Nut	3	3
11	b	343040	Diode Trio	1	1
12	b	290303	Voltage Regulator	1	1
13	b	343042	Screw	1	1
14	b	343041	Brush Assy	1	1
14	b	334970	Brush Spring	2	2
15	b	268356	Screw	2	2
16	b	128835	Washer	1	1
17	b	55580	Nut	1	1
18	b	343046	Rotor	1	1
19	b	343029	Collar	1	1
20	b	343039	Stator	1	1
21	b	202003	Retainer	1	1
22	b	344234	Screw	3	3
23	b	290509	Bearing	1	1
24	b	343033	Frame (DE)	1	1
25	b	126358	Fan	1	1
26	c	208483	Pulley	1	..
26	d	1377751	Pulley	1	..
26		1310277	Pulley	..	1
27	c	136692	Nut	1	..
27	c	292682	Lockwasher	1	..
28	c	136985	Capscrew	1	..
29	c	344358	Strap	1	..
30		176640	Capscrew	1	..
30		320157	Washer	1	..
31		305100	Sleeve	1	..
31		1345014	Sleeve	..	1
32		261379	Washer	2	..
33		139743	Locknut	1	..
34		189338	Spacer	1	..
35	c	344351	Bracket	1	..
35	efh	1377765	Bracket	1	..
35	g	1383229	Bracket	1	..
36		18548	Capscrew	1	..
37		18549	Capscrew	1	..
38		292682	Lockwasher	2	..
39		1307907	Nut	..	1
40		1307898	Screw	..	2
41		1307906	Screw	..	1
42		1306214	Lever	..	1
43		1307914	Screw	..	2
44		1307910	Screw	..	1
45		296418	Washer	..	1
46		136687	Nut	1	1
46		296359	Washer	1	1
47		1307908	Screw	..	1
48		157065	Cover	1	1
49		1307909	Screw	..	2
50		1306358	Screw	..	1
51		1307911	Stud	..	1
52		1315498	Nut	..	1
53		1306215	Plate	..	1
54		1307913	Screw	..	1
55		1318968	Screw	..	2
56		292523	Capscrew	..	1
57		1318306	Washer	..	1
58		1345024	Bracket	..	1

CONTINUED ON NEXT PAGE

©1999 HYSTER COMPANY

ALTERNATOR

DELCO BRAND

KEY:
A: Gasoline And LPG
B: Diesel

REF		PART NO.	NAME OF PART	QTY A	QTY B
59		136681	Capscrew	..	1
59	c	136681	Capscrew	1	..
59	d	176640	Capscrew	1	..
59		292681	Lockwasher	1	1
60	f	1377747	Strap	1	..
60	g	1389337	Strap	1	..
61	d	287860	Capscrew	4	..
62	d	292682	Lockwasher	4	..
63	d	1377738	Spacer	1	..
64	d	320158	Washer	1	..
65	d	1377777	Brace	1	..
66	d	192077	Locknut	1	..
67	d	15176	Washer	1	..

a Remanuafactured Alternator 3020077
b Last Used On S/N G005D-10278
c Last Used On S/N G005D-4577
d Used On S/N G005D-4578 thru G005D-7759 Including S/N 7830-7832, 7834-7837, 7840-And 7841, Except G005D-7710
e First Used On S/N G005D-7760, Except S/N G005D-7830-7832, 7834-7837, 7840-7841 Includes G005D-7710
f Last Used On S/N G005D-9571
g First Used On S/N G005D-9572
h Service With Kit 1389349

©1999 HYSTER COMPANY

NOTES

©1999 HYSTER COMPANY

ALTERNATOR (FIGURE 104)

GASOLINE , LPG AND DIESEL

FIRST USED ON S/N G005D-10279

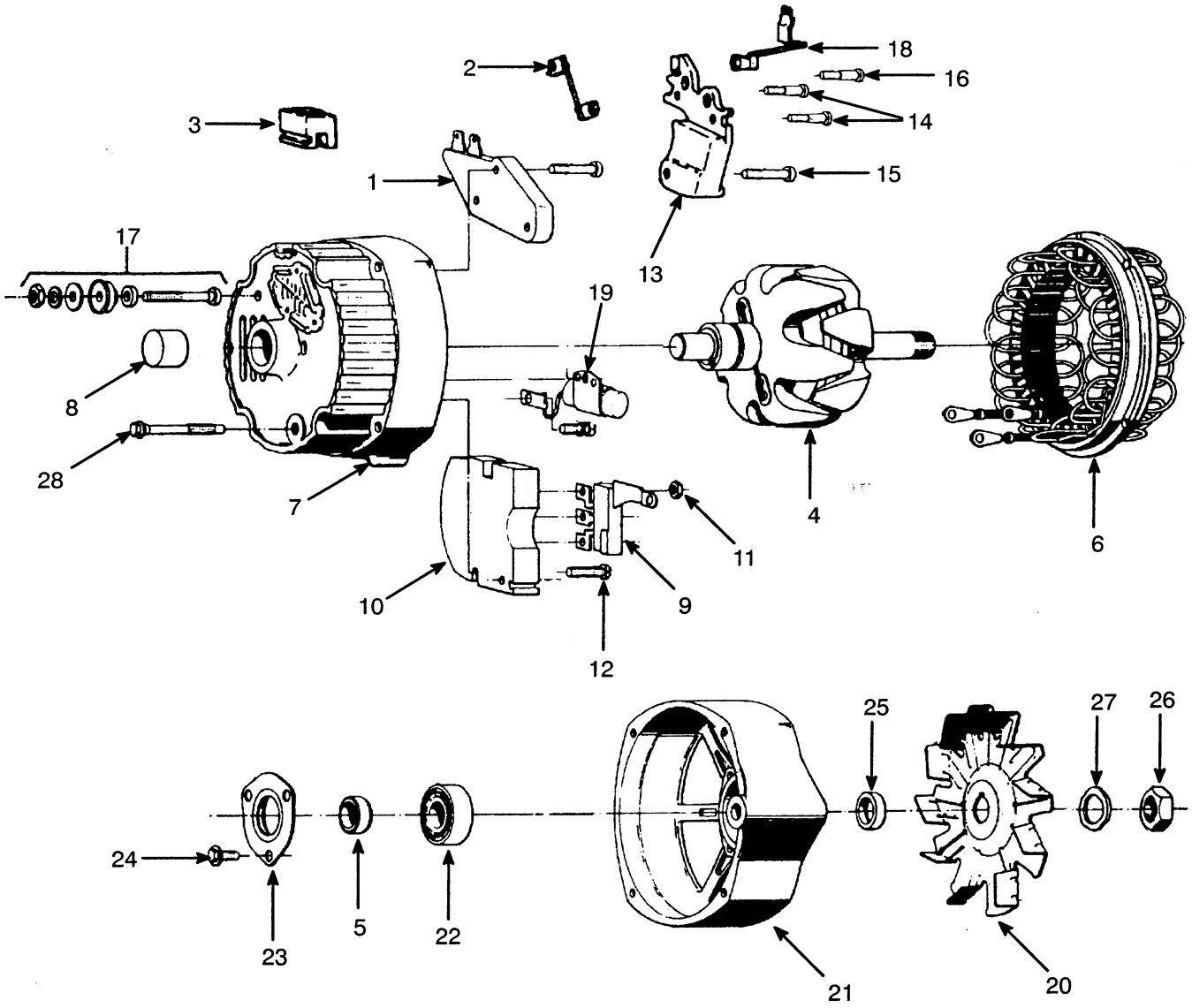

©1999 HYSTER COMPANY

ALTERNATOR

GASOLINE, LPG AND DIESEL

FIRST USED ON S/N G005D-10279

REF	PART NO.	NAME OF PART	QTY
	1358911	Alternator	1
1	290303	Regulator	1
2	1377067	Resistor	1
3	274648	Boot	1
4	1377047	Rotor	1
5	343029	Collar (DE)	1
6	1377048	Stator	1
7	310085	Frame (CE)	1
8	290508	Bearing (CE)	1
9	223095	Diode Trio	1
10	343031	Rectifier Bridge	1
11	1344274	Nut	3
12	343032	Screw And Washer	1
13	290300	Brush Holder	1
13	1377050	Brush Spring	2
14	268356	Screw (Brush)	2
15	290369	Screw (Brush Holder)	1
16	290370	Screw (Brush Holder)	1
17	310081	Kit-Terminal	1
18	344233	Terminal Relay	1
19	1377052	Capacitor	1
20	1377051	Fan	1
21	1377049	Frame	1
22	290509	Ball Bearing	1
23	1377053	Plate	1
24	344234	Screw (Retaining Plate)	3
25	310088	Collar (DE)	1
26	55580	Nut	1
27	128835	Lock Washer	1
28	128852	Bolt	4

©1999 HYSTER COMPANY

ALTERNATOR (FIGURE 105)

PRESTOLITE BRAND

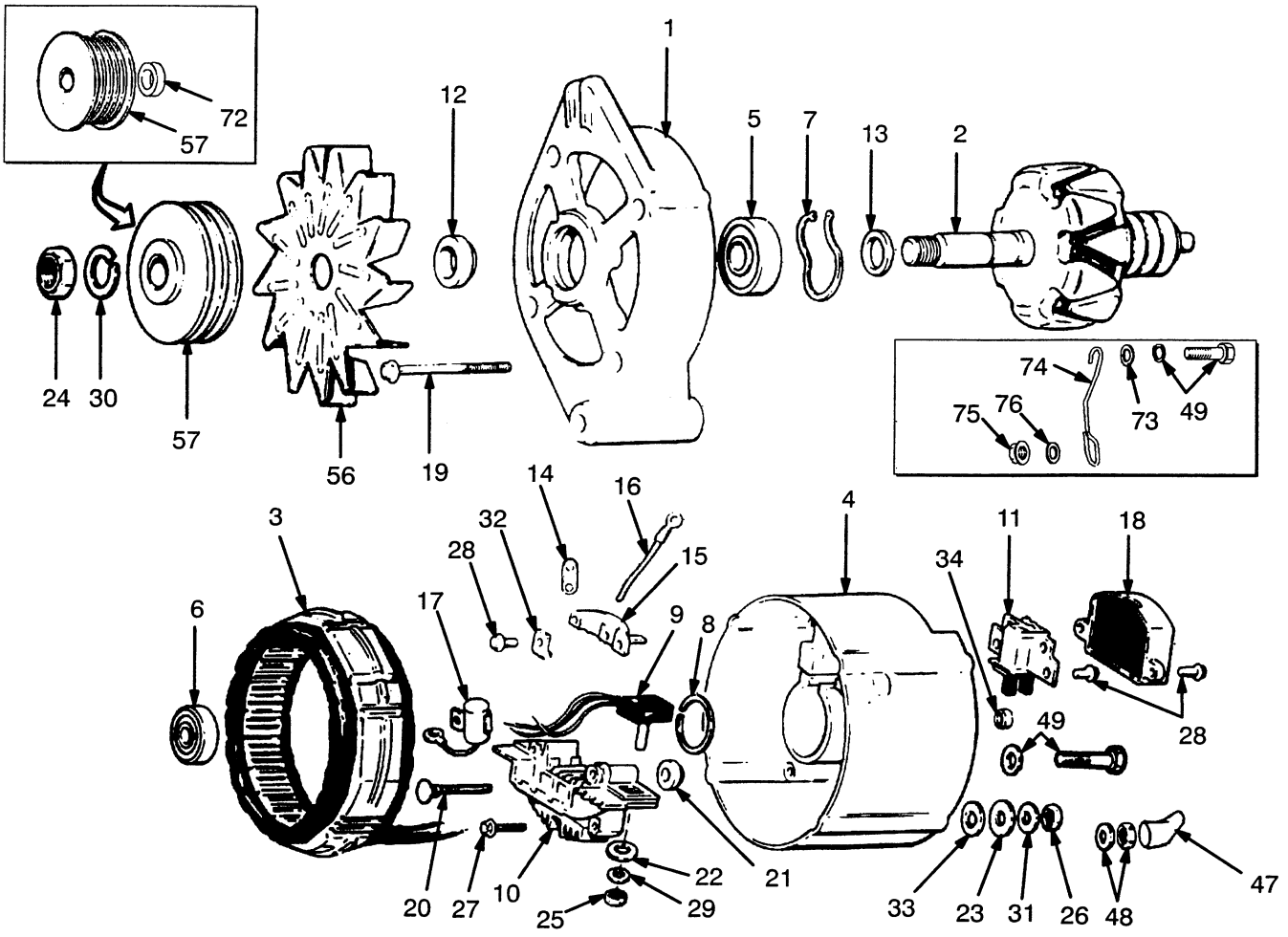

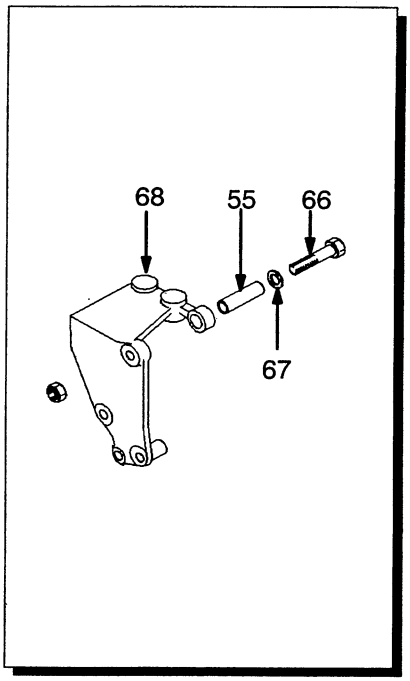

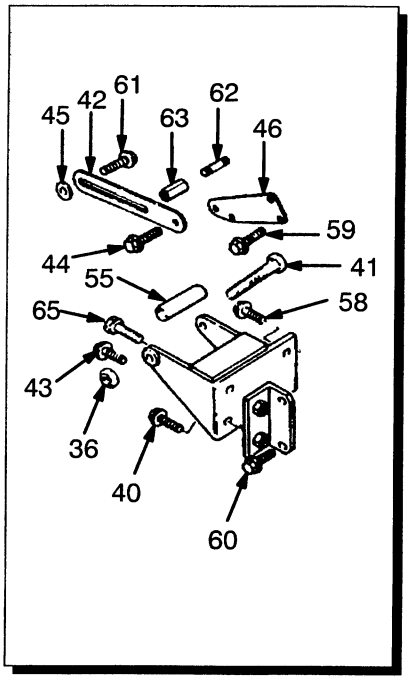

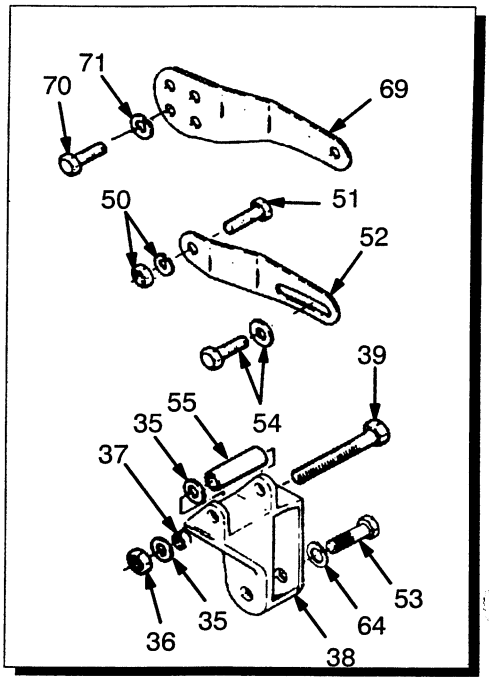

©1999 HYSTER COMPANY

ALTERNATOR

PRESTOLITE BRAND

KEY:
A: Gasoline And LPG
B: Diesel

REF		PART NO.	NAME OF PART	QTY A	QTY B
	a	385656	Alternator	1	1
1		....	Housing (Front)	1	1
2		386069	Rotor	1	1
3		386070	Stator	1	1
4		....	Housing	1	1
5		248128	Bearing	1	1
6		386071	Bearing	1	1
7		248129	Retainer	1	1
8		226577	Retainer (Rear)	1	1
9		386072	Diode	1	1
10		386073	Diode	1	1
11		386074	Brush	1	1
12		386400	Spacer	1	1
13		386401	Spacer	1	1
14		386402	Terminal	1	1
15		386403	Terminal	1	1
16		386404	Cable	1	1
17		386405	Capacitor	1	1
18		386406	Regulator	1	1
19		387493	Bolt	4	4
20		387494	Bolt	1	1
21		386407	Insulator	1	1
22		197067	Washer	1	1
23		387489	Washer	1	1
24		248147	Nut	1	1
25		15052	Nut	1	1
26		387492	Nut	1	1
27		387487	Screw	2	2
28		387488	Screw	10	10
29		15152	Lockwasher	1	1
30		246943	Lockwasher	1	1
31		387490	Washer	1	1
32		387491	Clamp	2	2
33		382642	Insulator	2	2
34		133481	Tubing	1	1
35		261379	Washer	2	..
36		139743	Locknut	1	..
36		1307907	Nut	..	1
37		189338	Spacer	1	..
38	b	344351	Bracket	1	..
38	c	1377765	Bracket	1	..
39		18548	Capscrew	1	..
40		1307898	Screw	..	2
41		1307906	Screw	..	1
42		1306214	Lever	..	1
43		1307914	Screw	..	2
44		1307910	Screw	..	1
45		296418	Washer	..	1
46		1306215	Plate	..	1
47		157065	Cover	1	1
48		136687	Nut	1	1
48		296359	Washer	1	1
49		136681	Capscrew And Washer	..	1
49	b	136681	Capscrew And Washer	1	..
49	c	176640	Capscrew And Washer	1	..
49		292681	Lockwasher	1	1
50	b	292682	Lockwasher	1	..
50	b	136692	Nut	1	..
51	b	136985	Capscrew	1	..
52	b	344358	Strap	1	..
53		18549	Capscrew	1	..
54		176640	Capscrew	1	..
54		320157	Washer	1	..
55		305100	Sleeve	1	..
55		1345014	Sleeve	..	1
56		126358	Fan	1	1
57	b	208483	Pulley	1	..
57	c	1377751	Pulley	1	..
57		1310277	Pulley	..	1
58		1307908	Screw	..	1
59		1307913	Screw	..	1
60		1307909	Screw	..	2
61		1306358	Screw	..	1
62		1307911	Stud	..	1
63		1315498	Nut	..	1
64		292682	Lockwasher	2	..
65		1318968	Screw	..	2
66		292523	Capscrew	..	1
67		1318306	Washer	..	1
68		1345024	Bracket	..	1
69	c	1377747	Strap	1	..
69	d	1389337	Strap	1	..
70	c	287860	Capscrew	4	..
71	c	292682	Lockwasher	4	..
72	c	1377738	Spacer	1	..
73	c	320158	Washer	1	..
74	c	1377777	Brace	1	..
75	c	192077	Locknut	1	..
76	c	15176	Washer	1	..

a Remanufactured Alternator 3020077
b Last Used On S/N G005D-4577
c Used On S/N G005D-4578 Thru G005D-8330
d First Used On S/N G005D-8331

©1999 HYSTER COMPANY

ALTERNATOR (FIGURE 106)

PRESTOLITE BRAND

GS, LPS, DS

FIRST USED ON S/N G005D-10597

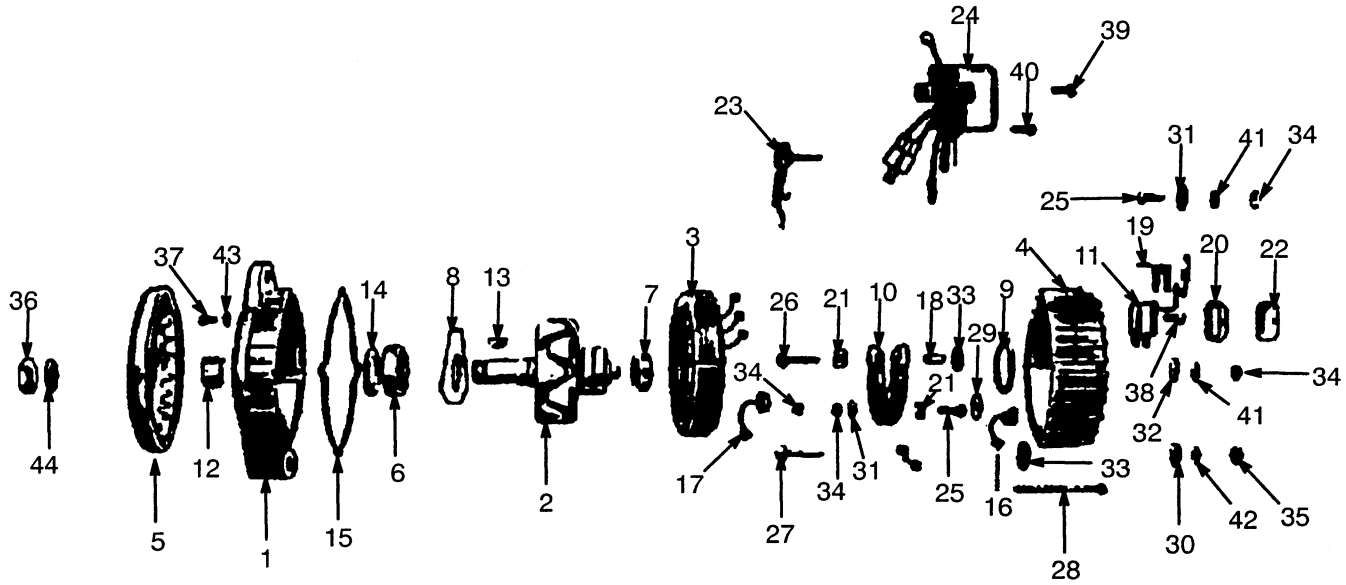

REF	PART NO.	NAME OF PART	QTY
	1394001	Alternator	1
1	1453351	Housing (Front)	1
2	1453681	Rotor Assy	1
3	1453682	Stator Assy	1
4	295802	Housing (Rear)	1
5	225673	Fan	1
6	248128	Bearing (Front/Rear)	1
7	386071	Bearing (Rear)	1
8	226576	Retainer (Front)	1
9	1371211	Retainer (Rear	1
10	226578	Heat Sink	1
11	2022534	Brush Assy	1
12	1453352	Spacer (Fan)	1
13	1453354	Woodruff Key	1
14	1453358	Seal (Front)	1
15	226582	Gasket	1
16	226583	Diode (Negative)	1
17	226584	Diode (Positive)	1
18	1371212	Insulator	1
19	2022535	Insulator	1
20	1453387	Gasket (Cover)	1
21	1371214	Insulating Square	1
22	2022538	Cover (Brush)	1
23	2022532	Diode (Field)	1

REF	PART NO.	NAME OF PART	QTY
24	1453386	Voltage Regulator	1
25	1453361	Bolt	3
26	1453362	Bolt	1
27	1453363	Bolt	1
28	1453364	Bolt	4
29	1453365	Insulator	3
30	1453366	Insulator (Round)	1
31	1453367	Insulator (Washer)	4
32	1453368	Insulator (Washer	1
33	1453369	Insulator (Washer	1
33	1453370	Insulator (Washer	1
33	1453371	Insulator (Washer)	1
34	1453680	Nut	2
34	1453373	Nut	3
35	1328516	Nut	1
36	1453375	Nut	1
37	1453376	Screw	3
38	1453377	Screw	2
39	1328521	Screw	2
40	1453379	Screw	2
41	1453381	Washer	2
42	1453382	Washer	1
43	1453383	Lockwasher	1
44	1453385	Lockwasher	1

©1999 HYSTER COMPANY

ALTERNATOR MOUNTING (FIGURE 107)

DIESEL 1004.42

WITH LOW EMISSIONS

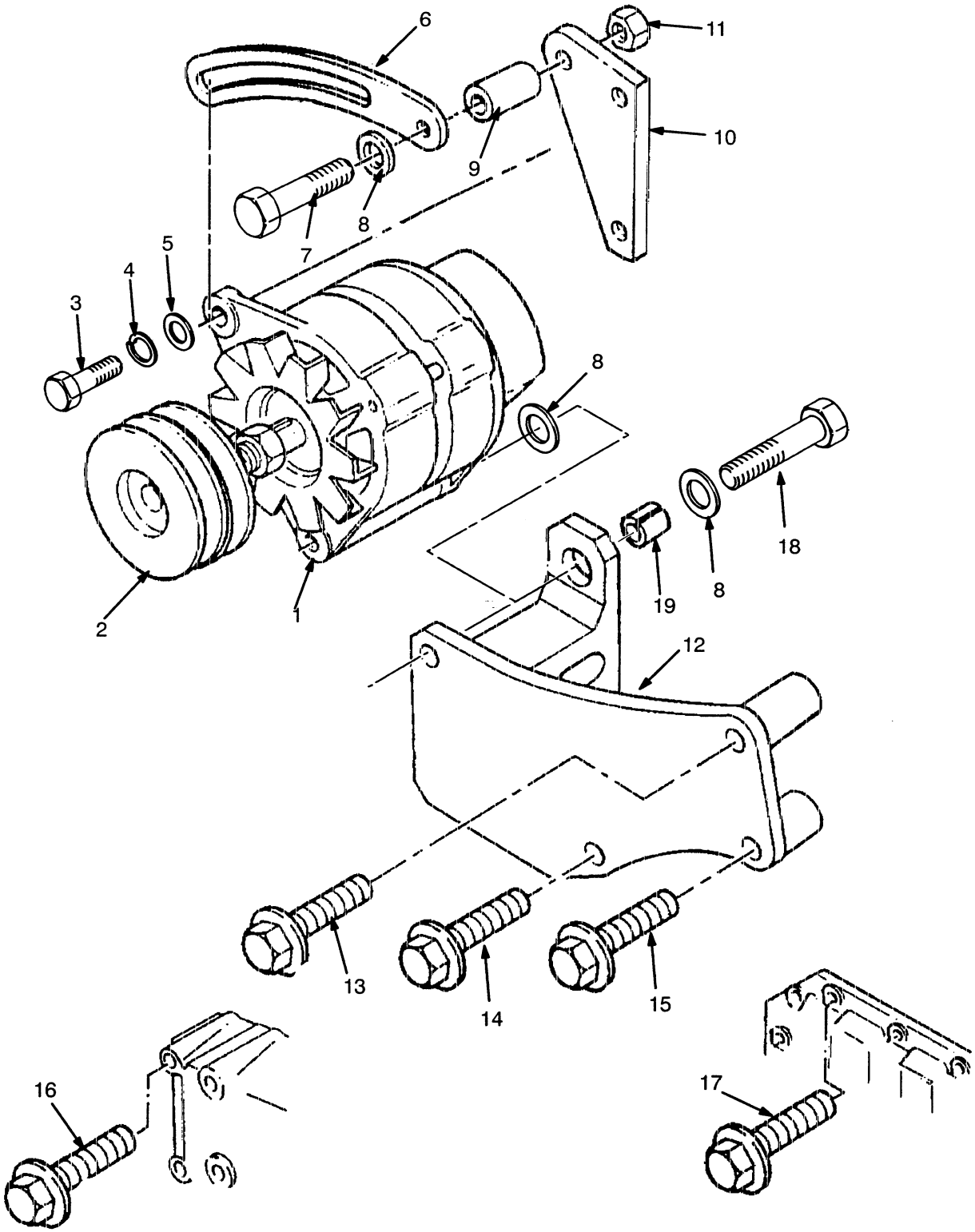

©1999 HYSTER COMPANY

See Service Manual
for service procedures

ALTERNATOR MOUNTING

DIESEL 1004.42

WITH LOW EMISSIONS

Ref	Part No.	Name Of Part	Qty
1	.....	Alternator	1
		☞ Figure 105, Figure 106	
2	1310277	Pulley	1
3	176640	Capscrew	1
4	292681	Lockwasher	1
5	320157	Washer	1
6	1451743	Lever	1
7	1382963	Screw	1
8	1318306	Washer	3
9	1451744	Spacer	1
10	1451746	Bracket	1
11	1451745	Nut	1
12	1456744	Bracket	1
13	1307914	Screw	2
14	1451758	Screw	1
15	1315497	Screw	1
16	1306357	Screw	1
17	1306362	Screw	1
18	292523	Capscrew	1
19	1345014	Sleeve	1

©1999 HYSTER COMPANY

STARTER (FIGURE 108)

GASOLINE AND LPG

LAST USED ON DATE BREAK 8/95

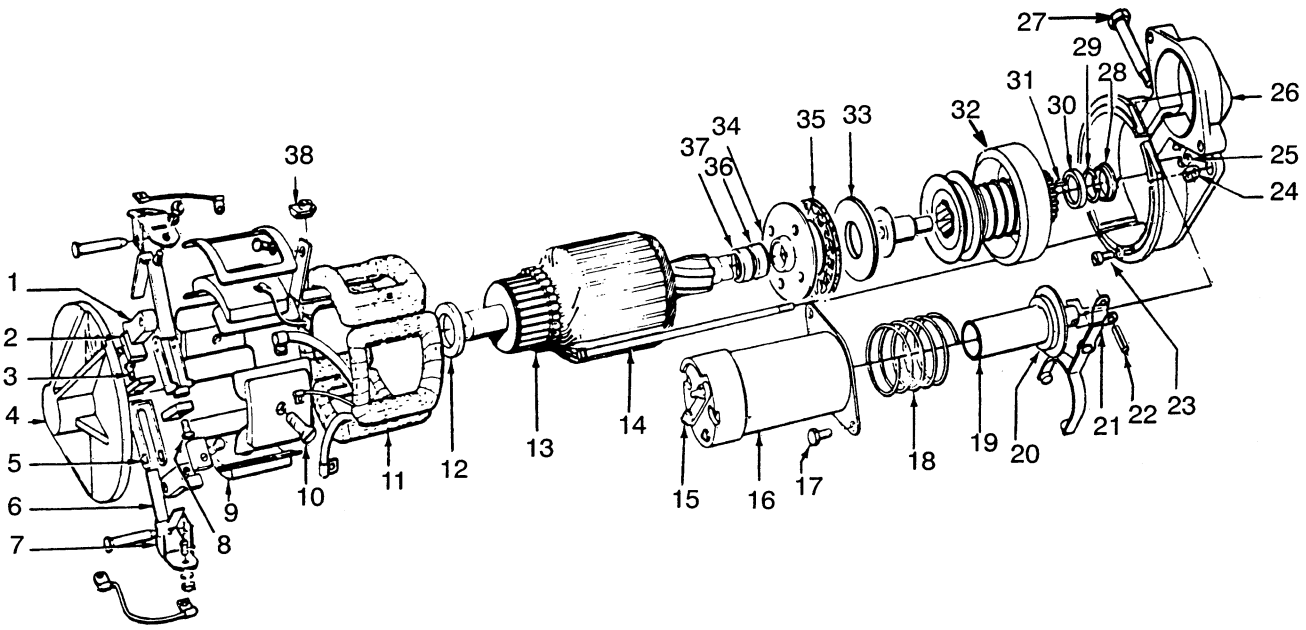

REF	PART NO.	NAME OF PART	QTY
a	353221	Starter	1
1	354478	Brush Holder	2
2	236066	Brush	4
3	227097	Screw	2
4	288917	Frame-CE	1
5	88572	Brush Holder	2
6	236069	Brush Spring	2
7	236070	Kit-Bracket	2
8	164507	Screw	2
9	289050	Pole Shoe	4
10	168665	Screw	4
11	1344707	Field Coil	1
12	373136	Washer	1
13	378432	Armature	1
14	88567	Bolt	2
15	220493	Screw	1
16	339188	Solenoid	1
17	16848	Screw	2
18	236074	Spring	1
19	1344710	Plunger	1
20	354492	Cover	1

REF	PART NO.	NAME OF PART	QTY
21	130676	Shift Lever	1
22	354485	Pin (Slotted)	1
23	378434	Screw/Washer	4
24	164514	Nut	1
25	164513	Washer	2
26	142741	Housing (DE)	1
26	142552	Bushing (.628 in OD)	1
27	236078	Stud	1
28	172813	Washer	1
29	236081	Retainer Ring	1
30	236082	Collar	1
31	378435	Pin	1
32	1309438	Drive	1
33	55978	Washer	1
34	123675	Bearing	1
35	131173	Gasket	1
36	131172	Bushing	1
37	88035	Oil Seal	1
38	277094	Grommet	1

a Remanufactured Starter 3012612

©1999 HYSTER COMPANY

STARTER (FIGURE 109)

GASOLINE AND LPG

USED ON S/N DATE BREAK 8/95 THRU G005D-7759

(INCLUDING S/N 7830-7832, 7834-7837, 7840 AND 7841)

EXCEPT S/N G005D-7710

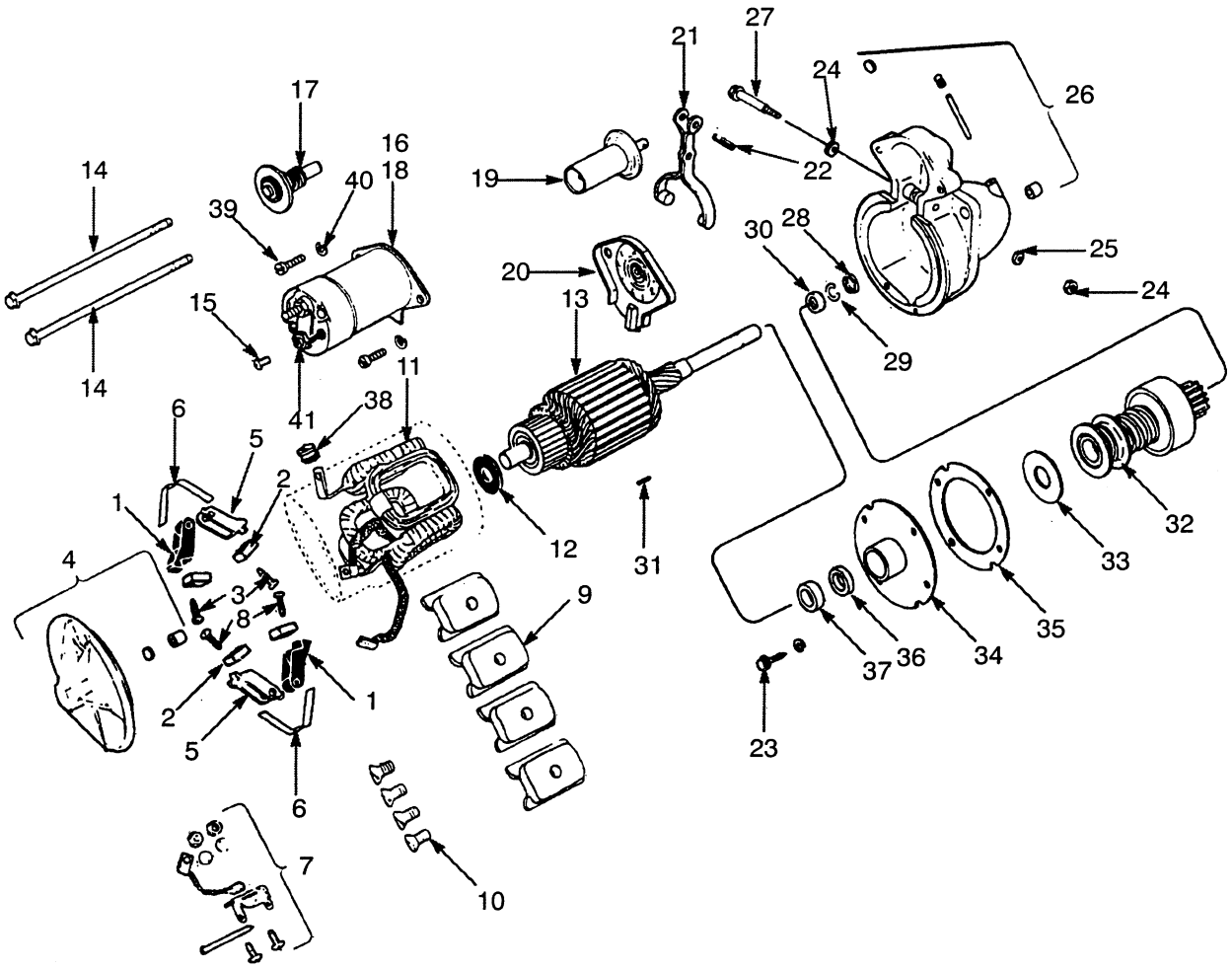

STARTER

GASOLINE AND LPG

USED ON S/N DATE BREAK 8/95 THRU G005D-7759

(INCLUDING S/N 7830-7832, 7834-7837, 7840 AND 7841)

EXCEPT S/N G005D-7710

REF	PART NO.	NAME OF PART	QTY
	1383779	Starter	1
1	354478	Brush Holder	2
2	236066	Brush	4
3	227097	Screw	2
4	288917	Frame-CE	1
5	88572	Brush Holder	2
6	236069	Brush Spring	2
7	236070	Kit-Bracket	2
8	164507	Screw	2
9	289050	Shoe-Pole	4
10	168665	Screw	4
11	1344707	Field Coil	1
12	373136	Washer	1
13	378432	Armature	1
14	88567	Bolt	2
15	378433	Screw	1
16	339188	Solenoid	1
17	339187	Contact Assy Switch	1
18	255724	Spring	1
19	1344710	Plunger	1
20	354492	Cover	1
21	130676	Shift Lever	1
22	354485	Slotted Pin	1
23	378434	Screw/Washer	4
24	164514	Nut	1
25	164513	Washer	2
26	142741	Housing-DE	1
26	142552	Bushing	1
27	236078	Stud	1
28	172813	Washer	1
29	236081	Retainer Ring	1
30	236082	Collar	1
31	378435	Pin	1
32	1309438	Drive	1
33	55978	Washer	1
34	123675	Bearing	1
35	131173	Gasket	1
36	131172	Bushing	1
37	88035	Oil Seal	1
38	277094	Grommet	1
39	1344712	Screw	2
40	1389115	Nut	2
41	354487	Nut	1

©1999 HYSTER COMPANY

STARTER (FIGURE 110)

GASOLINE AND LPG

FIRST USED ON S/N G005D-7760

(EXCEPT S/N 7830-7832, 7834-7837, 7840 AND 7841)

INCLUDING S/N G005D-7710

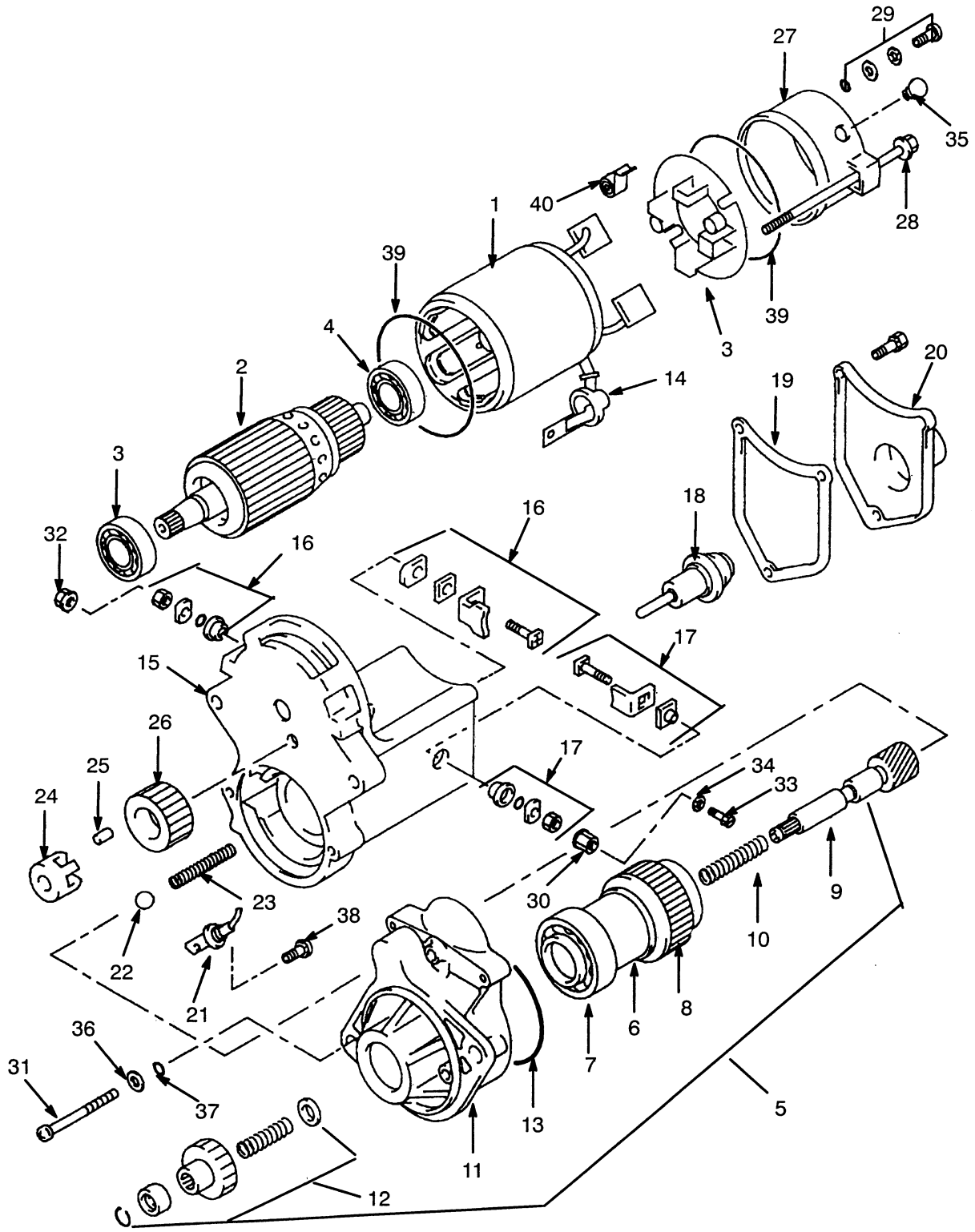

©1999 HYSTER COMPANY

STARTER

GASOLINE AND LPG

FIRST USED ON S/N G005D-7760

(EXCEPT S/N 7830-7832, 7834-7837, 7840 AND 7841)

INCLUDING S/N G005D-7710

REF		PART NO.	NAME OF PART	QTY
		1383240	Starter	1
1		1390149	Yoke Assy	1
1		.....	Brushes	2
2		1390152	Armature Assy	1
3		1390168	Ball Bearing	1
3		1453889	Ball Bearing (Optional)	1
4		1390169	Ball Bearing	1
5		1453546	Clutch Assy With Housing	1
6	a	....	Clutch	1
7	a	....	Bearing	1
8	a	....	Ball Bearing	1
9	a	....	Shaft	1
10	a	....	Spring	1
11	a	....	Housing Assy	1
12	a	....	Kit-Pinion	1
13		1459303	Seal	1
14		1390173	Cover	1
15		1465586	Switch Assy	1
16		1465587	Kit-Terminal M	1
17		1453551	Kit Terminal C	1
18		1391238	Plunger Assy	1
19		1391239	Gasket	1
20		1391240	Cover	1
21		1391241	Bolt-Sub Assy, Terminal	1
22		324637	Steel Ball	1
22		1453890	Steel Ball (Optional)	1
23		1390158	Spring	1
24		1390157	Retainer	1
25		324634	Roller	5
26		1390156	Pinion	1
27		1391243	Frame	1
28		1390161	Bolt	2
29		1390162	Screw	2
30		1390165	Nut	1
31		1390160	Screw	2
32		1390172	Nut	1
33		1390166	Bolt	1
34		1391244	Washer	2
35		1390171	Cover	1
36		1390163	Washer	2
37		1390164	O-Ring	2
38		1390167	Screw And Washer	1
39		1390170	O-Ring	1
40		1390159	Spring	1

a Service With Complete 1453546 Clutch Assy With Housing

©1999 HYSTER COMPANY

STARTER (FIGURE 111)

DIESEL

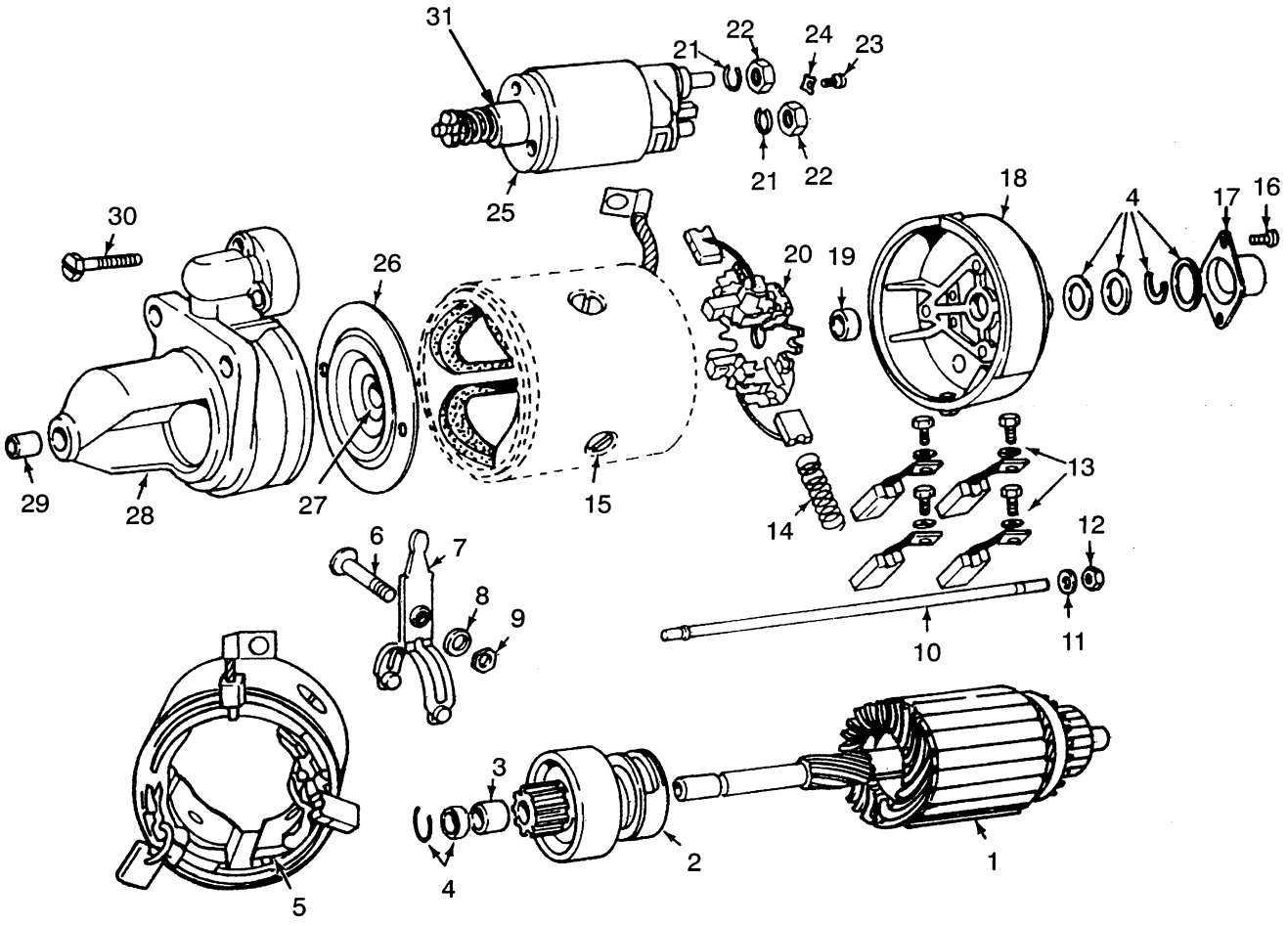

©1999 HYSTER COMPANY

STARTER

DIESEL

REF	PART NO.	NAME OF PART	QTY
	326460	Starter	1
1	1356843	Armature	1
2	329299	Drive	1
3	329283	Bushing	2
4	1356848	Kit-Armature Attaching	1
5	1357350	Field Coil	1
6	1455828	Screw	1
7	1357351	Lever	1
8	329377	Washer	1
9	329378	Nut	1
10	329285	Stud	2
11	296417	Washer	2
12	136687	Nut	2
13	329295	Set-Brush	1
14	329384	Spring	4
15	335888	Screw	4
16	1356845	Screw	2
17	329291	Capsule	1
18	329289	Housing (CE)	1
19	329290	Bushing	1
20	329296	Brush Holder	1
21	335889	Lockwasher	2
22	296128	Nut	2
23	1356847	Screw	1
24	329293	Lock Plate	1
25	335892	Solenoid	1
26	329298	Bearing Support	1
27	335884	Bushing	1
27	335890	Seal	1
27	335886	Seal	1
28	329386	Housing (DE)	1
29	152542	Bushing	1
30	1356844	Screw	3
31	1356849	Cap	1

a Remanufactured Starter 3001265

©1999 HYSTER COMPANY

STARTER (FIGURE 112)

DIESEL

(OPTIONAL)

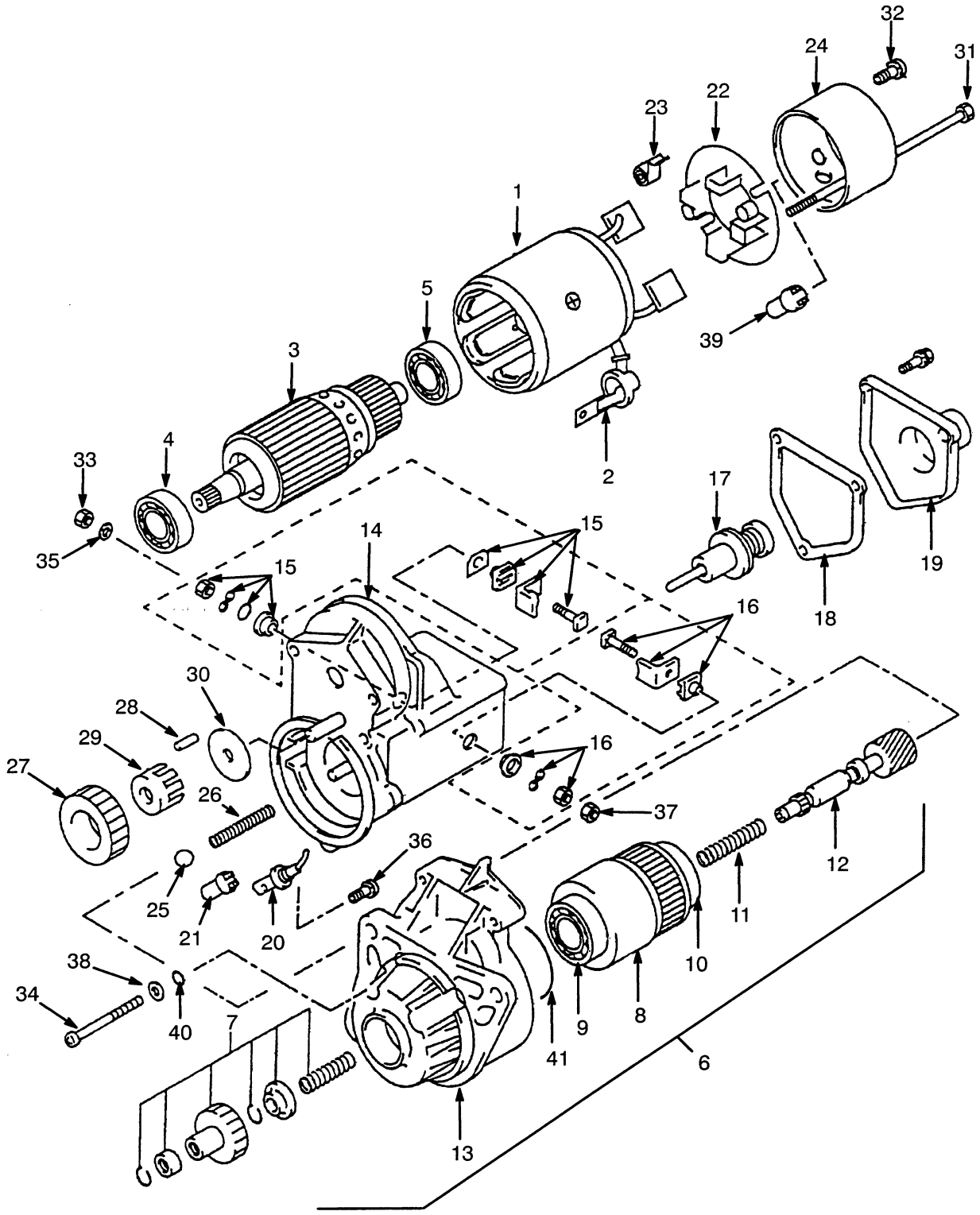

©1999 HYSTER COMPANY

STARTER
DIESEL
(OPTIONAL)

Ref	Part No.	Name Of Part	Qty
	1453060	Starter	1
1	142233	Yoke Assy	1
2	1462234	Cover	1
3	1462236	Armature Assy	1
4	1462237	Ball Bearing	1
5	1462240	Ball Bearing	1
6	1462241	Clutch Assy	1
7	....	Pinion Kit	1
8	....	Clutch Sub Assy	1
9	....	Ball Bearing (Front)	1
10	....	Ball Bearing (Rear)	1
11	....	Spring	1
12	....	Shaft	1
13	....	Housing	1
14	1463075	Switch Assy	1
15	1463076	Terminal Kit	1
16	1462251	Terminal Kit	1
17	1463077	Plunger Sub Assy	1
18	1462253	Gasket	1
19	1462254	Cover	1
20	1462255	Terminal	1
21	1462256	Bushing	1
22	1462257	Holder Assy	1
23	1462258	Spring	4
24	1463078	Cover	1
25	1462260	Ball	1
26	1462261	Spring	1
27	1462262	Pinion	1
28	1462263	Roller	5
29	1462264	Bearing Retainer	1
30	1462265	Snap Retainer	1
31	1462266	Bolt	2
32	1462267	Screw And Washer	2
33	1462270	Nut	1
34	1367106	Screw	3
35	1462271	Lockwasher	1
36	1390167	Screw And Washer	1
37	1462273	Nut	1
38	1390163	Washer	3
39	1367107	Cover	1
40	1390164	O-Ring	3
41	1462272	Seal	1

©1999 HYSTER COMPANY

NOTES

©1999 HYSTER COMPANY

WIRE HARNESS (FIGURE 113)

GOVERNOR

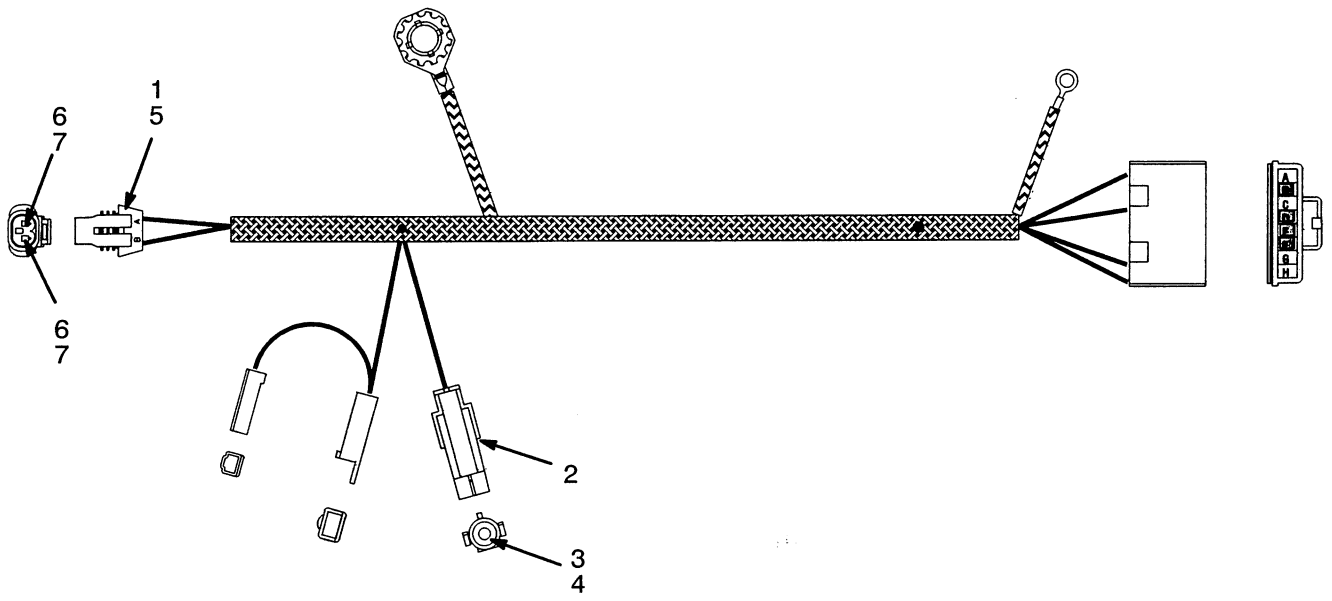

REF	PART NO.	NAME OF PART	QTY
	1345698	Harness	1
1	1345689	Connector (Solenoid Valve)	1
2	1330298	Connector (Engine)	1
3	1323579	Seal	1
4	1334999	Terminal	1
5	1345690	Lock	1
6	1330355	Terminal	2
7	1330356	Seal	2

©1999 HYSTER COMPANY

WIRE HARNESS (FIGURE 114)

MAIN ENGINE GAS LAST USED ON S/N G005D-51475, G005D-51483 PILOT TRUCK

(SHEET 1 OF 4)

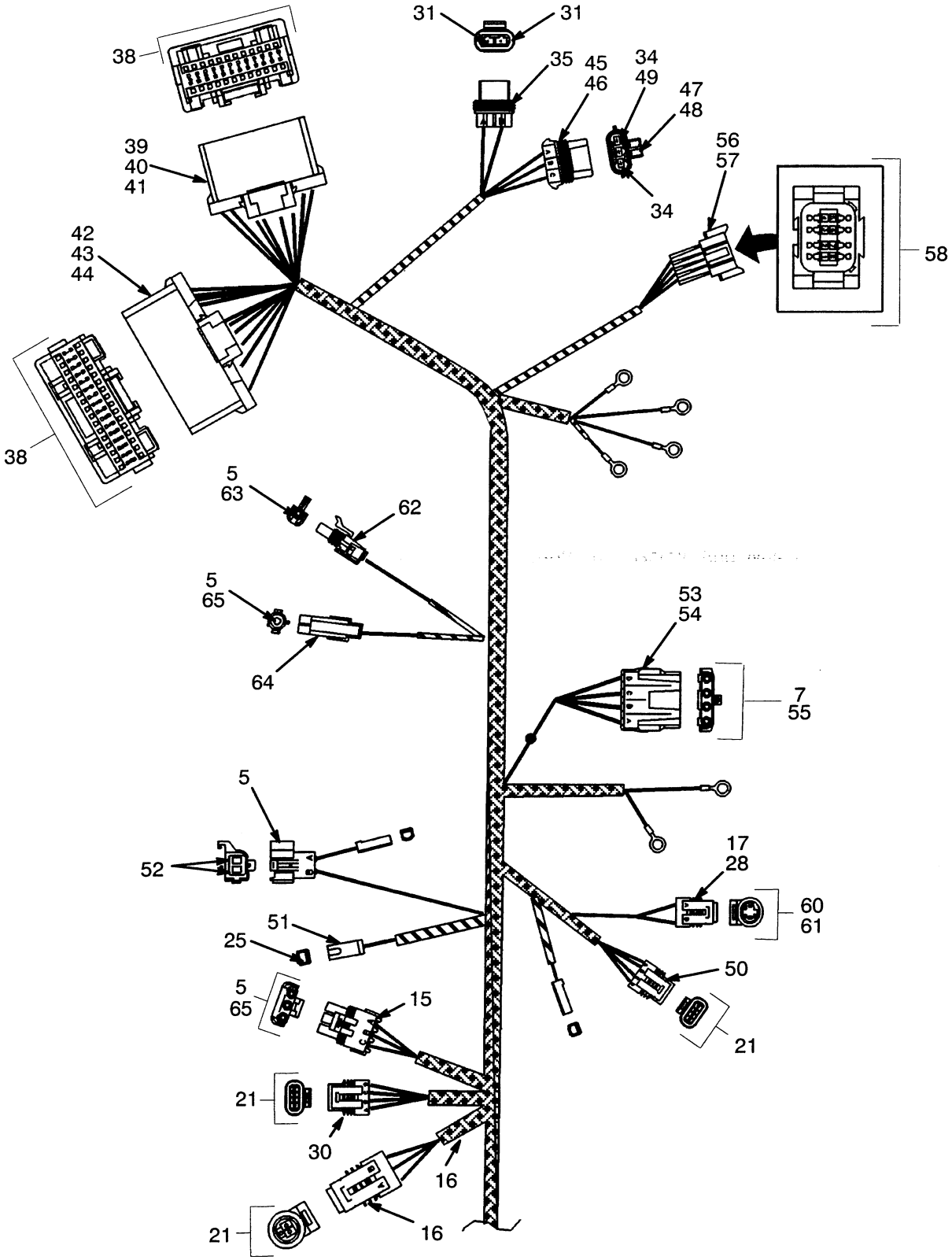

©1999 HYSTER COMPANY

WIRE HARNESS

MAIN ENGINE GAS LAST USED ON S/N G005D-51475, G005D-51483 PILOT TRUCK

(SHEET 2 OF 4)

REF	PART NO.	NAME OF PART	QTY
	1369500	Harness	1
1	1327164	Plug (Cavity)	2
2	1327959	Connector (Governor Controller)	1
3	1330297	Lock	1
4	1330281	Terminal	3
5	1323579	Seal	9
6	1329148	Terminal	6
7	1329147	Seal	12
8	1327956	Connector (Diagnostic Control)	1
9	1330279	Terminal	3
10	1330294	Lock	1
11	1339447	Terminal (Engine Ground)	1
12	1339446	Connector (Engine Ground)	1
13	1339448	Terminal	1
14	1327959	Connector (Governor Motor)	1
15	1327958	Connector (MAP Sensor)	1
16	1327957	Connector (Throttle Position)	1
17	1330354	Connector (Oil Pressure)	1
18	1330284	Plug (Connector)	1
19	1330295	Lock	1
20	1323586	Connector (Coolant Temperature)	1
21	1323576	Terminal	13
22	1327960	Connector (Injector #1)	1
23	1330296	Terminal	4
24	1327960	Connector (Injector #2)	1
25	370730	Terminal	1
26	245996	Connector (Alternator Field Volts)	1
27	134812	Fitting	4
28	236900	Terminal	1
29	1330292	Connector (Fuel Pump Fuse)	1
30	1314393	Plug Assy (Idle Air)	1
31	1330283	Terminal	10
32	1330302	Connector (Fuel Pump Relay)	1
33	1330303	Lock	1
34	1330304	Terminal	5
35	1330292	Connector (Starter)	1
36	1330292	Connector (ECM Fuse)	1
37	1330292	Connector (Crank Fuse)	1
38	1330277	Terminal	28
39	1327963	Connector (ECM)	1
40	1327964	Lock	1
41	1327965	Lock	1
42	1327966	Connector (ECM)	1
43	1327967	Lock	1
44	1327968	Lock	1
45	1337389	Connector (Frame)	1
46	1337384	Lock	1
47	1337390	Terminal	1
48	1337387	Seal	1
49	1337386	Seal	2
50	1323575	Connector (Spark Timing)	2
51	1301720	Connector (Coolant Gauge)	1
52	1314393	Plug Assy (Ignition Coil And Mechanical Tachometer)	1
53	1334998	Connector (Fuel Pump And Fuel Level)	1
54	1337789	Lock	1
55	1334999	Terminal	4
56	1330413	Connector (Frame)	1
57	1330418	Lock	1
58	1330433	Terminal	8
59	1330357	Lock	1
60	1330355	Terminal	2
61	1330356	Seal	2
62	1330299	Connector (Set Timing)	1
63	1323583	Terminal	1
64	1330298	Connector (Set Timing)	1
65	1323578	Terminal	4

©1999 HYSTER COMPANY

WIRE HARNESS (FIGURE 109 CONTINUED)

MAIN ENGINE GAS LAST USED ON S/N G005D-51475, G005D-51483 PILOT TRUCK

(SHEET 3 OF 4)

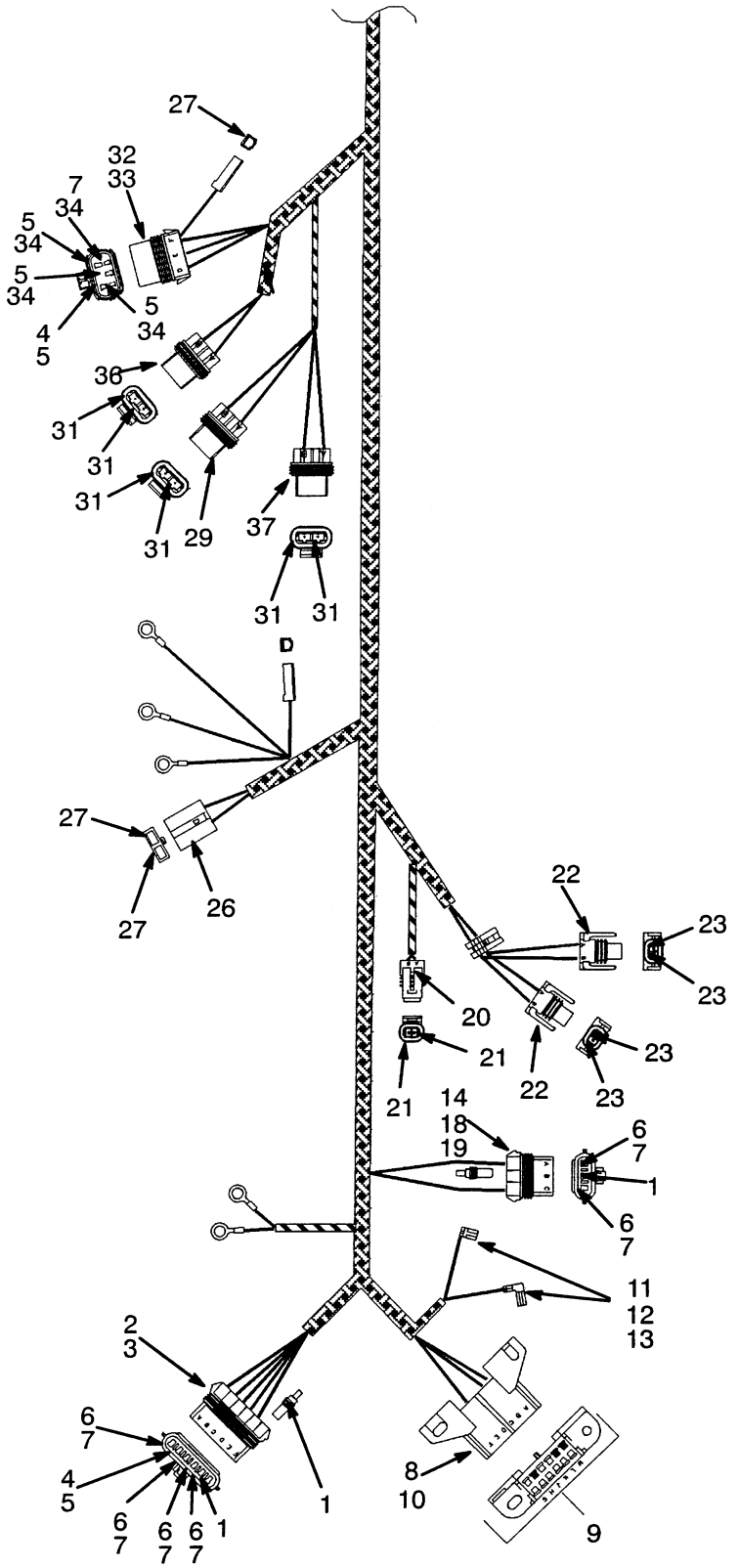

WIRE HARNESS

MAIN ENGINE GAS LAST USED ON S/N G005D-51475, G005D-51483 PILOT TRUCK

(SHEET 4 OF 4)

REF	PART NO.	NAME OF PART	QTY
	1369500	Harness	1
1	1327164	Plug (Cavity)	2
2	1327959	Connector (Governor Controller)	1
3	1330297	Lock	1
4	1330281	Terminal	3
5	1323579	Seal	9
6	1329148	Terminal	6
7	1329147	Seal	12
8	1327956	Connector (Diagnostic Control)	1
9	1330279	Terminal	3
10	1330294	Lock	1
11	1339447	Terminal (Engine Ground)	1
12	1339446	Connector (Engine Ground)	1
13	1339448	Terminal	1
14	1327959	Connector (Governor Motor)	1
15	1327958	Connector (MAP Sensor)	1
16	1327957	Connector (Throttle Position)	1
17	1330354	Connector (Oil Pressure)	1
18	1330284	Plug (Connector)	1
19	1330295	Lock	1
20	1323586	Connector (Coolant Temperature)	1
21	1323576	Terminal	13
22	1327960	Connector (Injector #1)	1
23	1330296	Terminal	4
24	1327960	Connector (Injector #2)	1
25	370730	Terminal	1
26	245996	Connector (Alternator Field Volts)	1
27	134812	Fitting	4
28	236900	Terminal	1
29	1330292	Connector (Fuel Pump Fuse)	1
30	1314393	Plug Assy (Idle Air)	1
31	1330283	Terminal	10
32	1330302	Connector (Fuel Pump Relay)	1
33	1330303	Lock	1
34	1330304	Terminal	5
35	1330292	Connector (Starter)	1
36	1330292	Connector (ECM Fuse)	1
37	1330292	Connector (Crank Fuse)	1
38	1330277	Terminal	28
39	1327963	Connector (ECM)	1
40	1327964	Lock	1
41	1327965	Lock	1
42	1327966	Connector (ECM)	1
43	1327967	Lock	1
44	1327968	Lock	1
45	1337389	Connector (Frame)	1
46	1337384	Lock	1
47	1337390	Terminal	1
48	1337387	Seal	1
49	1337386	Seal	2
50	1323575	Connector (Spark Timing)	2
51	1301720	Connector (Coolant Gauge)	1
52	1314393	Plug Assy (Ignition Coil And Mechanical Tachometer)	1
53	1334998	Connector (Fuel Pump And Fuel Level)	1
54	1337789	Lock	1
55	1334999	Terminal	4
56	1330413	Connector (Frame)	1
57	1330418	Lock	1
58	1330433	Terminal	8
59	1330357	Lock	1
60	1330355	Terminal	2
61	1330356	Seal	2
62	1330299	Connector (Set Timing)	1
63	1323583	Terminal	1
64	1330298	Connector (Set Timing)	1
65	1323578	Terminal	4

©1999 HYSTER COMPANY

ENGINE HARNESS (FIGURE 115)

GASOLINE

FIRST USED ON S/N G005D-51476, G005D-51484 PILOT TRUCK

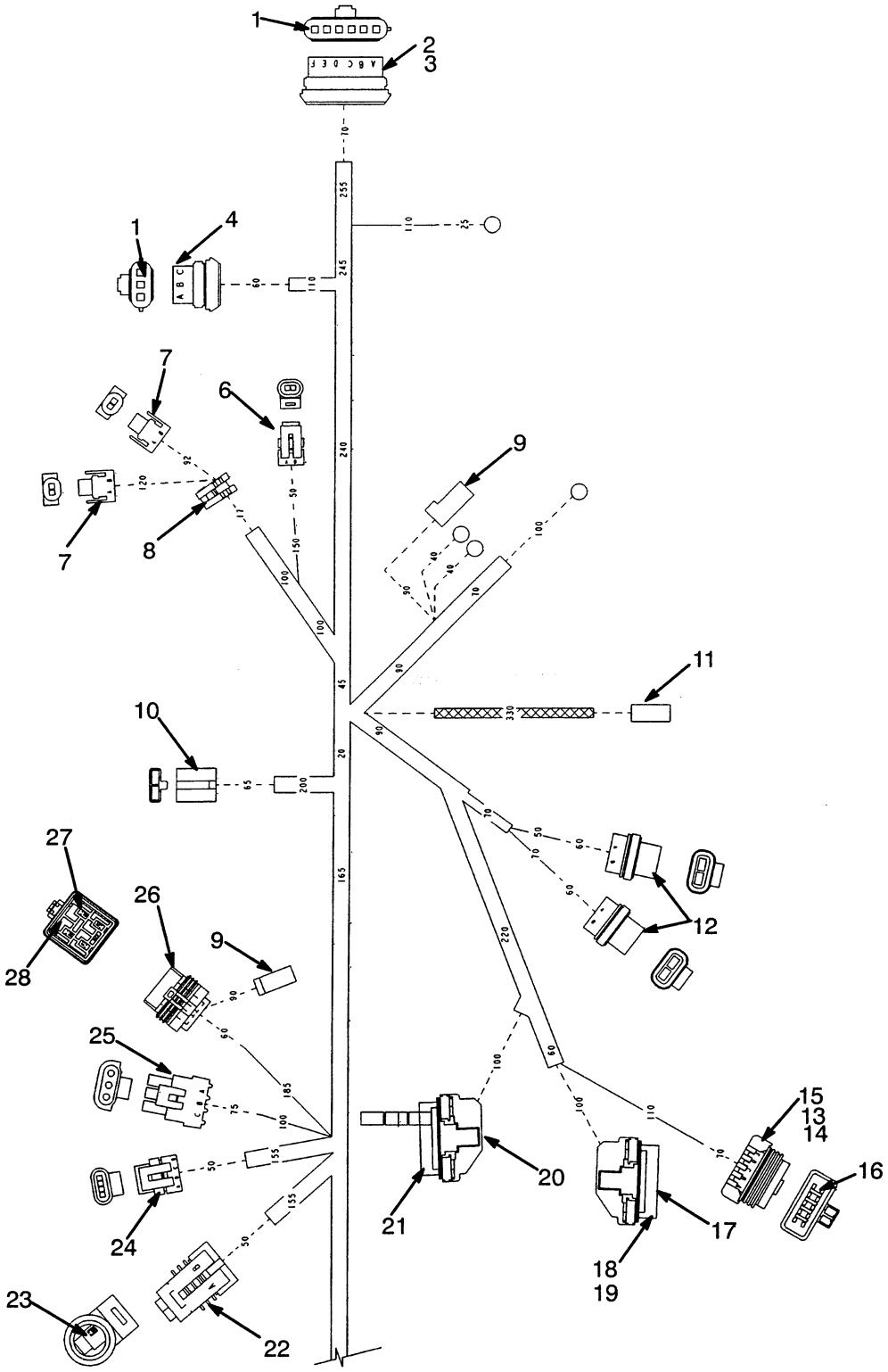

©1999 HYSTER COMPANY

ENGINE HARNESS

GASOLINE

FIRST USED ON S/N G005D-51476, G005D-51484 PILOT TRUCK

Ref	Part No.	Name Of Part	Qty
	2036694	Harness	1
1	1327164	Plug	4
2	1327959	Connector	1
3	1330297	Lock	1
4	1330284	Connector	1
5	1330295	Lock	1
6	1323586	Connector	1
7	1376619	Connector	2
8	1330291	Grommet	1
9	181046	Connector Body	2
10	245996	Connector Body	1
11	1330357	Connector	1
12	1330292	Plug	2
13	1376617	Plug	1
14	1376619	Lock	1
15	1376618	Receptical	1
16	1351139	Cavity Plug	15
17	1350223	TPA Black	1
18	1350220	Connector	2
19	1350221	Seal	2
20	1350222	TPA Clear	1
21	1350219	Relief, RH	1
22	1327957	Connector	1
23	1323576	Terminal	3
24	1323575	Connector	1
25	1327958	Connector	1
26	1461744	Connector	1
27	1323579	Seal	15
28	1375797	Terminal	3

©1999 HYSTER COMPANY

ENGINE HARNESS (FIGURE 110, CONTINUED)

GASOLINE

FIRST USED ON S/N G005D-51476, G005D-51484 PILOT TRUCK

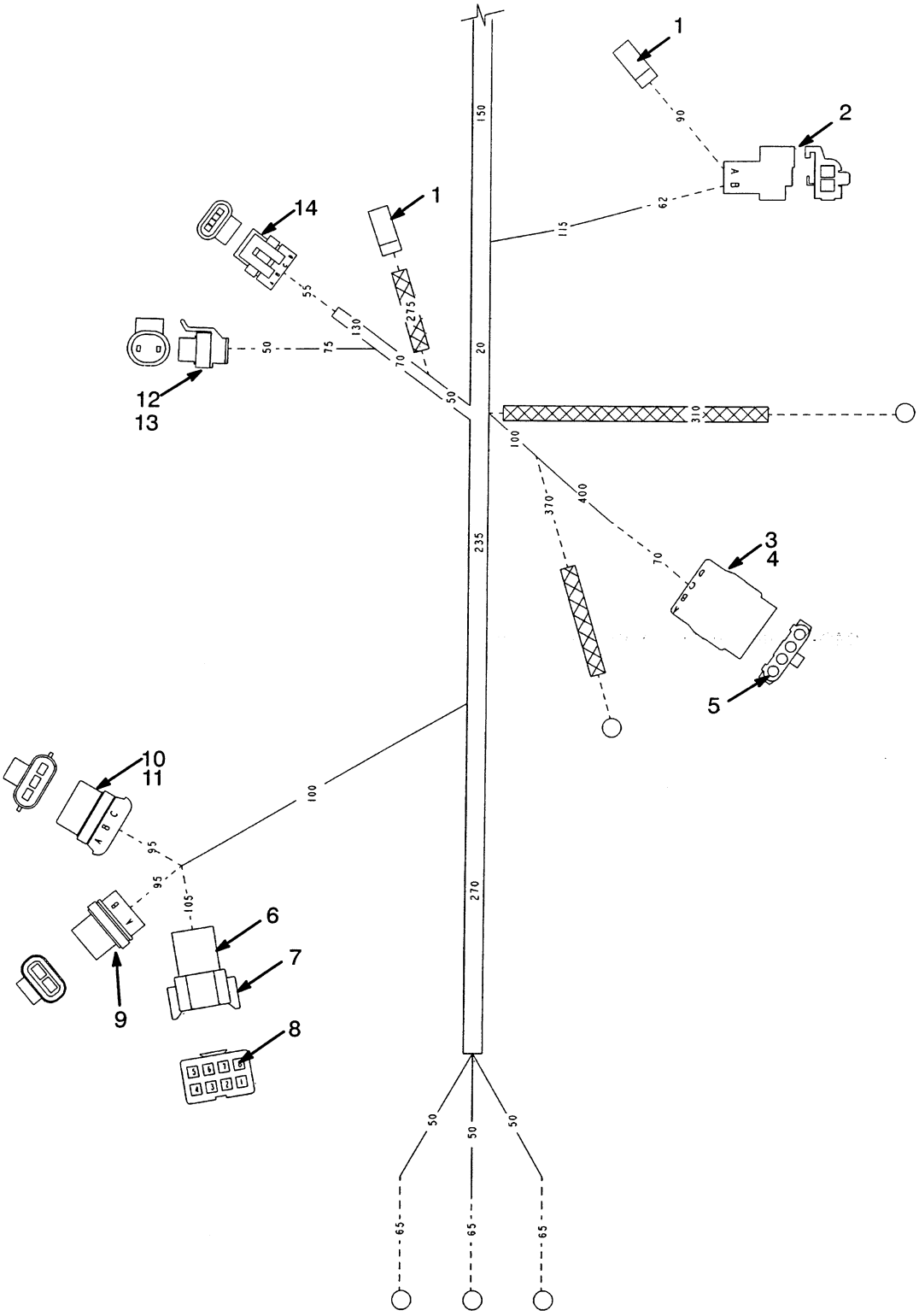

©1999 HYSTER COMPANY

ENGINE HARNESS

GASOLINE

FIRST USED ON S/N G005D-51476, G005D-51484 PILOT TRUCK

Ref	Part No.	Name Of Part	Qty
	2036694	Harness	1
1	181046	Connector	2
2	1314393	Plug Assy	1
3	1334998	Receptical	1
4	1337789	Wedgelock	1
5	1323579	Seal	4
6	1330413	Receptical	1
7	1330418	Lock	1
8	1330437	Pin	8
9	1330292	Connector	1
10	1337389	Connector	1
11	1337384	Lock	1
12	1330354	Connector	1
13	1330357	Lock	1
14	1323575	Plug	1

©1999 HYSTER COMPANY

WIRE HARNESS (FIGURE 116)

ENGINE LPG

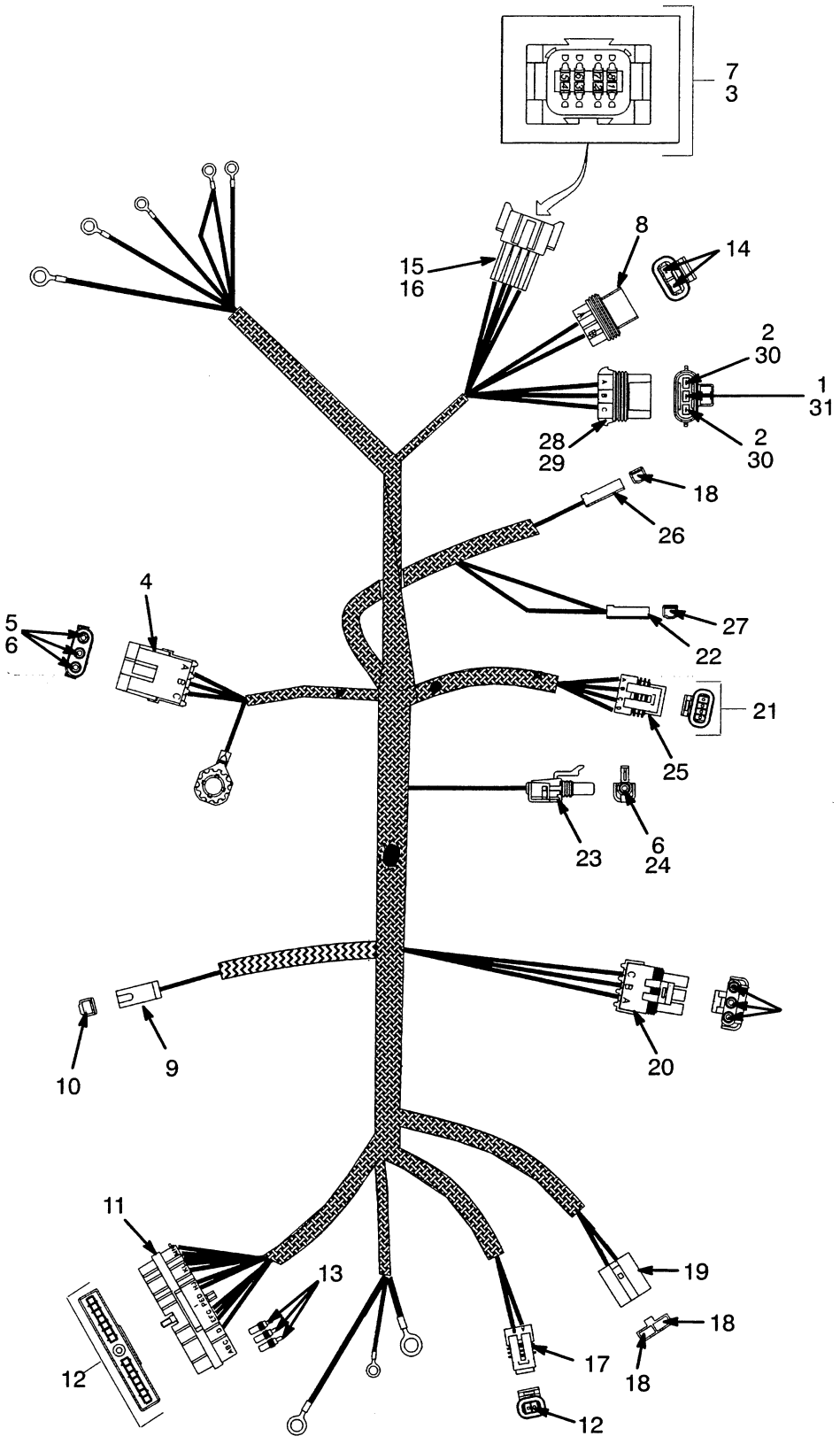

©1999 HYSTER COMPANY

WIRE HARNESS

ENGINE LPG

REF	PART NO.	NAME OF PART	QTY
	1369515	Harness	1
1	1337390	Terminal	1
2	1330304	Terminal	2
3	1330439	Plug	4
4	1323582	Connector (Initial Timing)	1
5	1323578	Terminal	6
6	1323579	Seal	7
7	1330437	Terminal (Frame)	4
7	1330433	Terminal (Optional)	4
8	1336172	Connector (Frame)	1
9	1301720	Connector (Water Temperature)	1
10	370730	Terminal	1
11	1323580	Connector (MSTS Controller)	1
12	1323576	Terminal	17
13	1323581	Plug	3
14	1330283	Terminal	2
15	1330413	Connector (Frame)	1
16	1330418	Lock	1
17	1323586	Connector (Temperature Sensor)	1
18	134812	Terminal	3
19	245996	Connector (Alternator)	1
20	1327958	Connector (MAP Sensor)	1
21	1323576	Terminal (Distributor)	1
22	181046	Connector (Governor Harness)	1
23	1330299	Connector (Governor Harness)	1
24	1336173	Terminal	1
25	1323575	Connector (Distributor)	1
26	181046	Connector (Oil Pressure)	2
27	134811	Terminal	1
28	1337389	Connector (Frame)	1
29	1337384	Lock	1
30	1337386	Seal	1
31	1337388	Seal	1

©1999 HYSTER COMPANY

NOTES

©1999 HYSTER COMPANY

WIRE HARNESS (FIGURE 117)

OIL CLUTCH

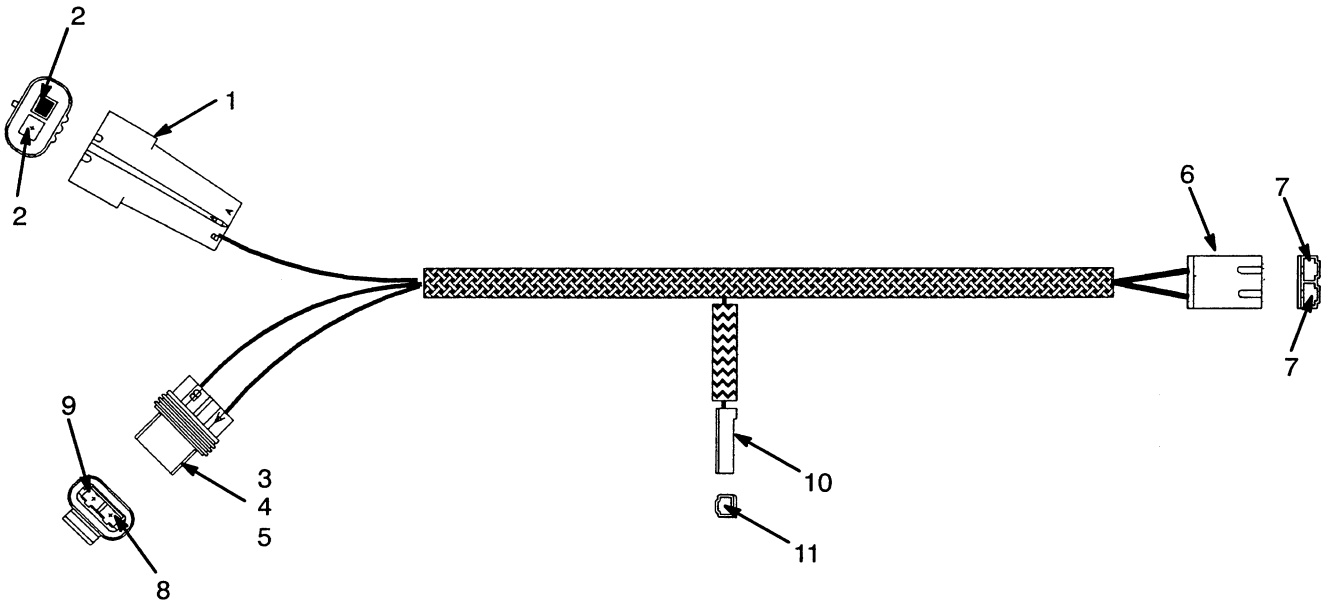

REF	PART NO.	NAME OF PART	QTY
	1339466	Harness	..
1	1330292	Connector (Panel)	1
2	1330283	Terminal	2
3	1336870	Connector (Panel)	1
4	1336874	Seal	1
5	1336871	Lock	1
6	346330	Connector (Neutral Start)	1
7	370730	Fitting	2
8	1337392	Terminal	1
9	1337391	Plug	2
10	181046	Connector (Oil Clutch Lube Pressure)	1
11	134812	Fitting	1

©1999 HYSTER COMPANY

WIRE HARNESS (FIGURE 118)

MAIN INSTRUMENT

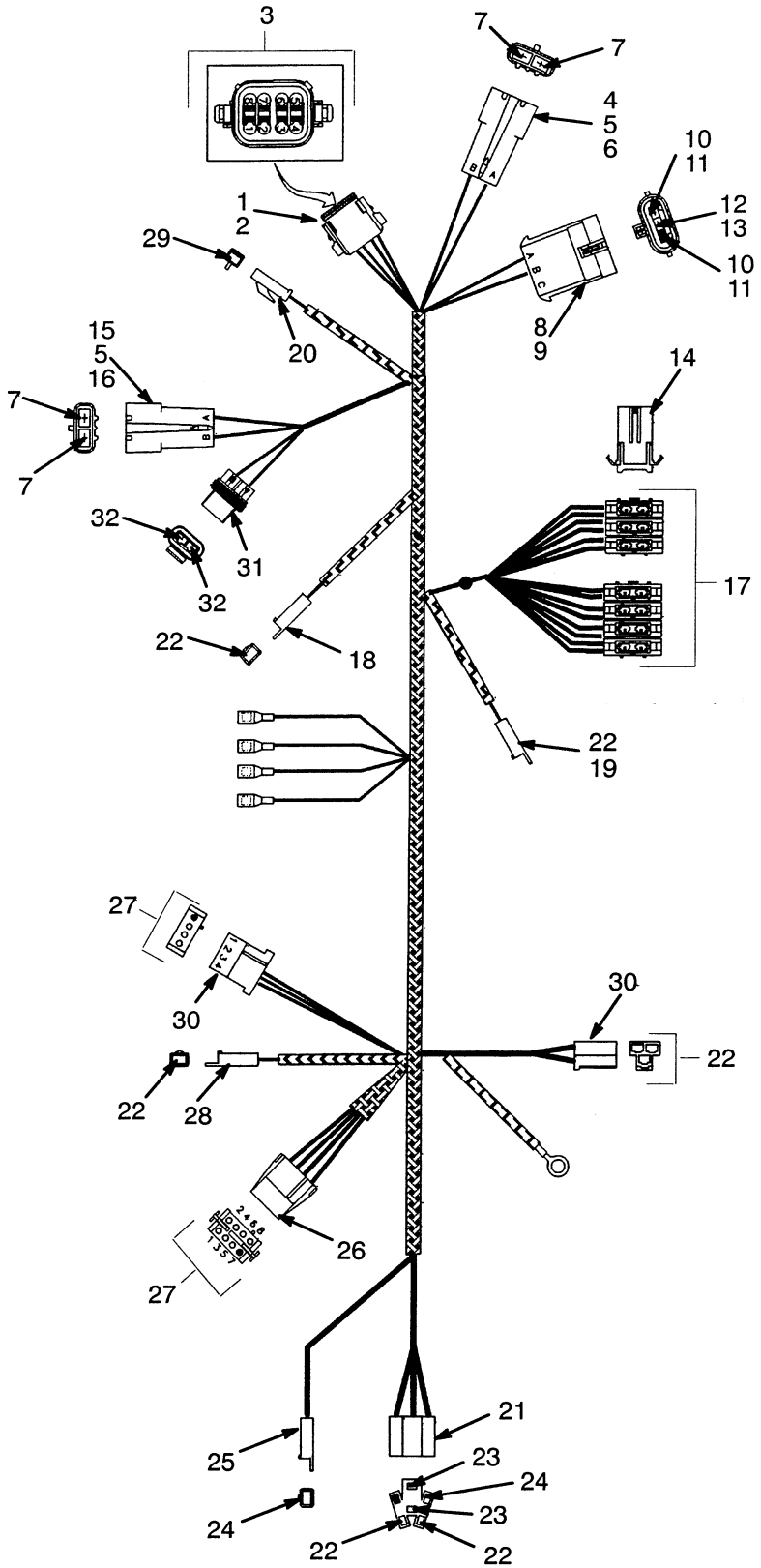

©1999 HYSTER COMPANY

WIRE HARNESS

MAIN INSTRUMENT

REF	PART NO.	NAME OF PART	QTY
	1343963	Harness (LPG/Gasoline)	1
	1343964	Harness (Diesel)	1
1	1330423	Connector (Engine Harness)	1
2	1330429	Lock	1
3	1330438	Terminal	8
3	1330434	Terminal (Optional)	8
4	1336870	Connector (Engine Harness)	2
5	1336874	Seal	2
6	1336871	Lock	2
7	1337392	Terminal	4
8	1337383	Connector (Engine Harness)	1
9	1337384	Lock	1
10	1336872	Terminal	2
11	1337386	Seal	2
12	1337385	Terminal	1
13	1337388	Seal	1
14	381846	Socket	1
15	1336870	Connector (Neutral Start)	1
16	1336871	Lock	1
17	381847	Terminal (Instrument Panel And Fuses)	12
18	277446	Connector (Horn)	1
19	181046	Connector (Cab)	1
20	181045	Connector (Monotrol Pedal)	1
20	313381	Fitting (Optional)	1
21	370728	Connector (Ignition Switch)	1
22	134812	Fitting	8
23	141462	Fitting	2
24	134811	Fitting	2
25	181046	Connector (Ignition Switch)	2
26	370727	Connector (RH Cluster)	1
27	367968	Fitting	10
28	129889	Connector (Horn Button)	1
29	134810	Terminal	1
30	126319	Connector (Horn Relay)	1
31	1330292	Connector (Neutral Start)	1
32	1330283	Fitting	2

©1999 HYSTER COMPANY

WIRE HARNESS (FIGURE 119)

NEUTRAL START WITH FORWARD/REVERSE LEVER

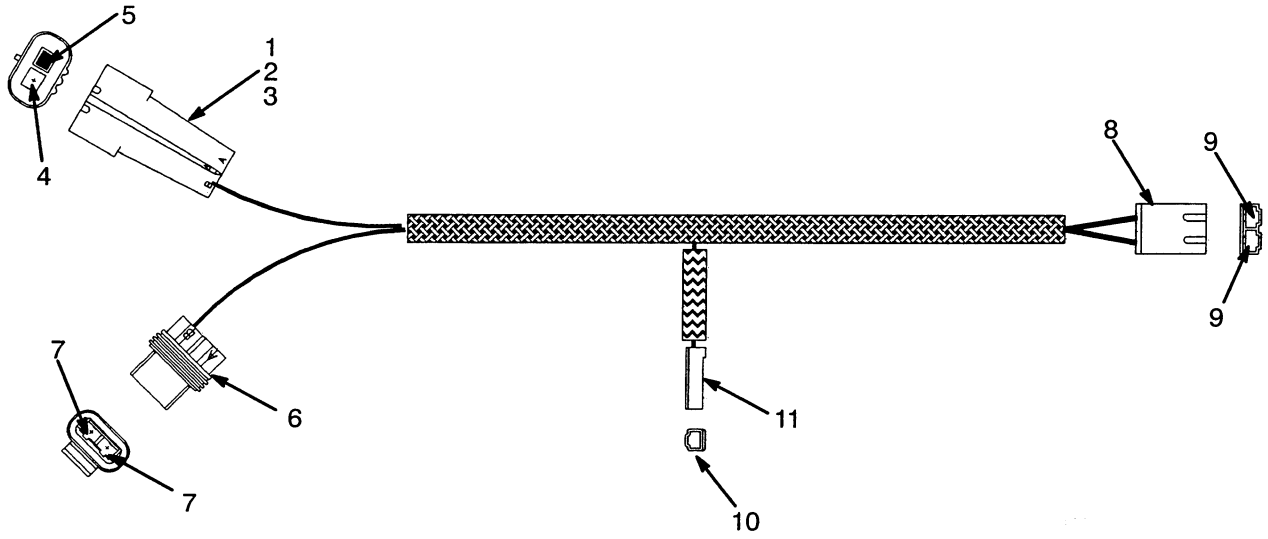

REF	PART NO.	NAME OF PART	QTY
	1335849	Harness	1
1	1336870	Receptacle (Panel Harness)	1
2	1336874	Seal	1
3	1336871	Lock	1
4	1337392	Fitting	1
5	1337391	Plug	1
6	1330292	Connector (Panel Harness)	1
7	1330283	Terminal	2
8	346330	Connector (Neutral Start)	1
9	370730	Fitting	2
10	134812	Terminal	1
11	181046	Connector (Transmission Temperature Switch)	1

©1999 HYSTER COMPANY

WIRE HARNESS (FIGURE 120)

NEUTRAL START WITH MONOTROL PEDAL

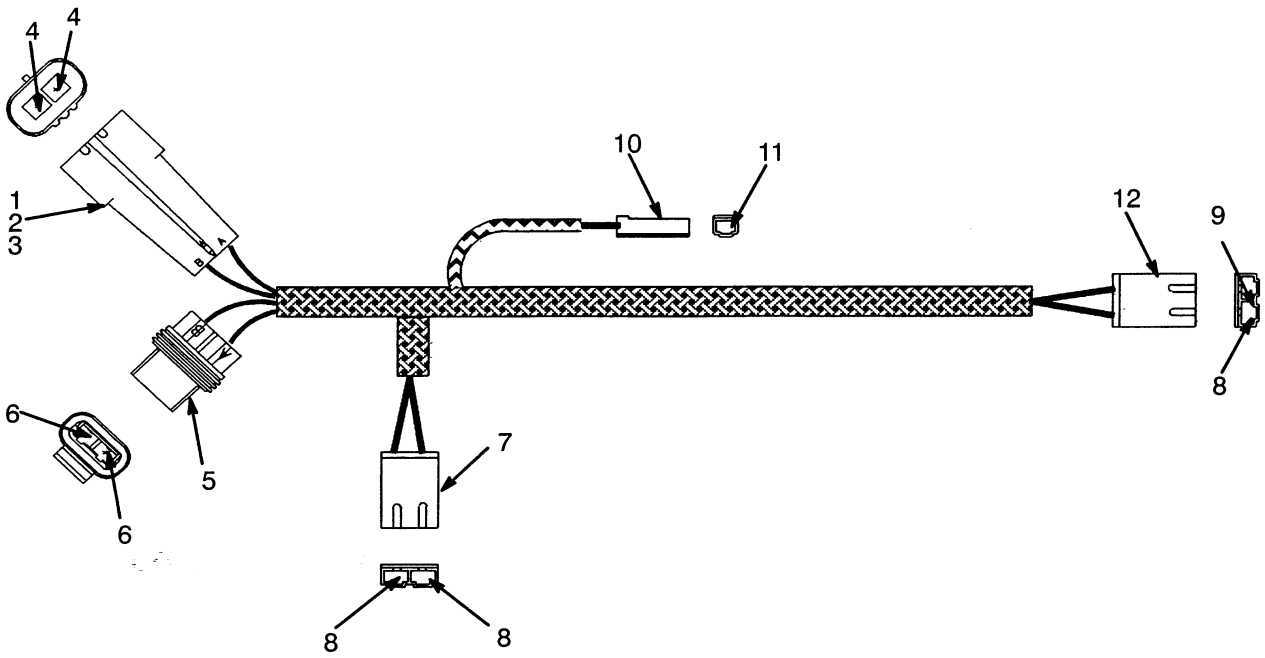

REF	PART NO.	NAME OF PART	QTY
	1335848	Harness	1
1	1336870	Connector (Panel Harness)	1
2	1336874	Seal	1
3	1336871	Lock	1
4	1337392	Terminal	2
5	1330292	Connector (Panel Harness)	1
6	1330283	Terminal	2
7	346330	Connector (Service Brake)	1
8	370730	Terminal	3
9	1322673	Terminal	1
10	181046	Connector (Transmission Temperature Switch)	1
11	134812	Terminal	1
12	346330	Connector (Neutral Start)	1

©1999 HYSTER COMPANY

NOTES

©1999 HYSTER COMPANY

TRANSMISSION

CLUTCH CONTROL LINKAGE (Figure 125)
OIL CLUTCH ..... Page 262

CLUTCH (Figure 124)
OIL CLUTCH ..... Page 260

CLUTCH PACK (Figure 130)
POWERSHIFT ..... Page 270

CLUTCH PEDAL (Figure 123)
OIL CLUTCH ..... Page 258

DIFFERENTIAL (Figure 138) ..... Page 282

DRIVE AXLE (Figure 137) ..... Page 280

FORWARD AND REVERSE SWITCH (Figure 133)
POWERSHIFT ..... Page 276

FORWARD LINKAGE AND REVERSE SHIFT LEVER (Figure 132)
POWERSHIFT ..... Page 274

MONOTROL PEDAL (Figure 135)
POWERSHIFT ..... Page 278

SPEED REDUCER (Figure 131) ..... Page 272

TORQUE CONVERTER (Figure 129)
POWERSHIFT ..... Page 269

TRANSMISSION CONTROL VALVE (Figure 126)
POWERSHIFT WITH MONOTROL PEDAL ..... Page 264

TRANSMISSION CONTROL VALVE (Figure 127)
POWERSHIFT WITH FORWARD/REVERSE LEVER ..... Page 266

TRANSMISSION (Figure 128)
POWERSHIFT ..... Page 268

TRANSMISSION GEARS (Figure 121)
OIL CLUTCH ..... Page 254

©1999 HYSTER COMPANY

TRANSMISSION (CONTINUED)

TRANSMISSION HOUSING (Figure 122)
OIL CLUTCH ..... Page 256

TRANSMISSION PIPING (Figure 134)
POWERSHIFT ..... Page 277

UNIVERSAL JOINT (Figure 136) ..... Page 279

©1999 HYSTER COMPANY

NOTES

©1999 HYSTER COMPANY

TRANSMISSION GEARS (FIGURE 121)

OIL CLUTCH

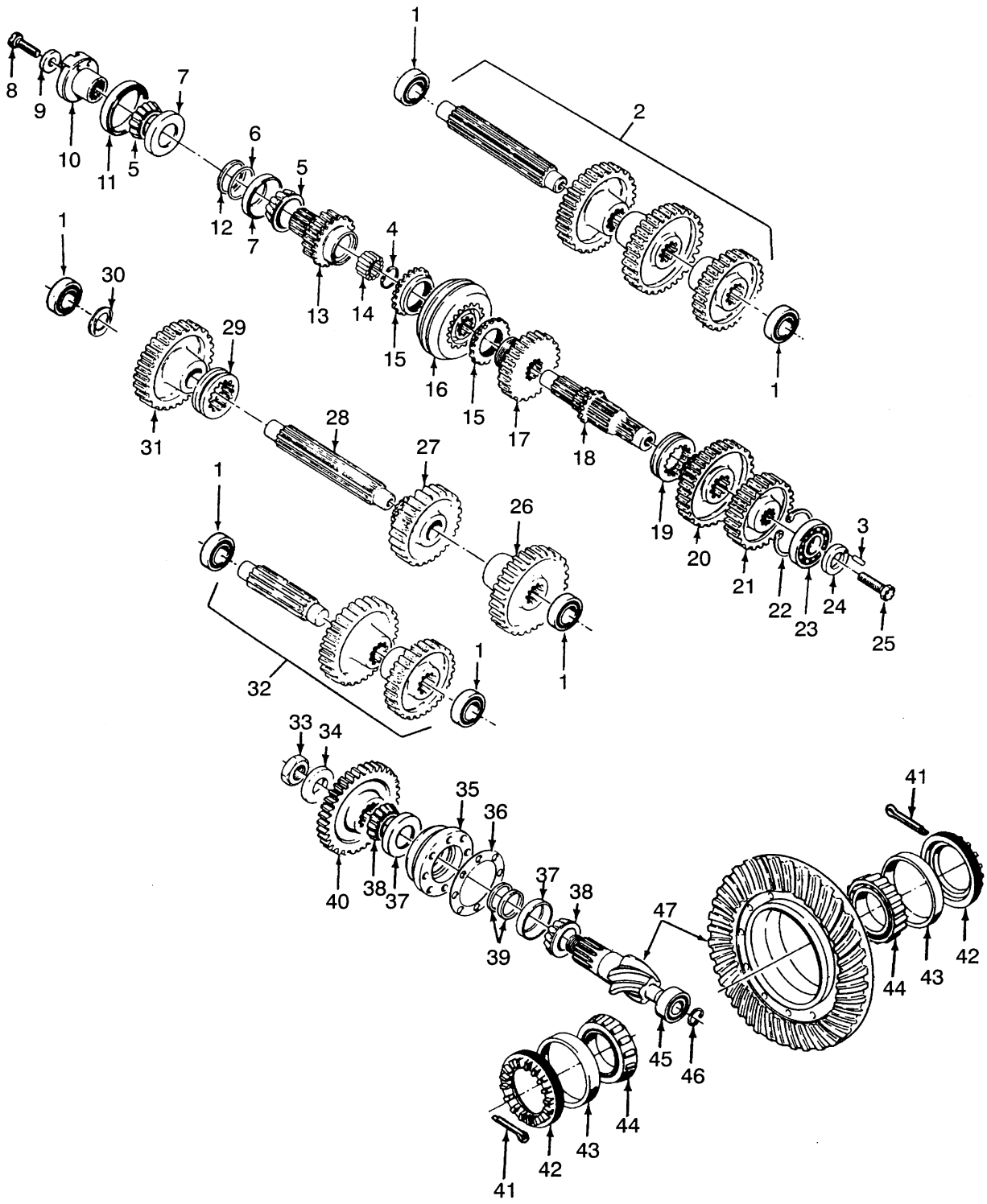

TRANSMISSION GEARS

OIL CLUTCH

REF	PART NO.	NAME OF PART	QTY
	1322631	Transmission	1
1	352407	Bearing	6
2	352361	Countershaft	1
3	18882	Groove Pin	1
4	53688	Snap Ring	1
5	289651	Bearing Cone	2
6	289655	Shim (0.005 in)	AR
6	289654	Shim (0.007 in)	AR
6	289653	Shim (0.002 in)	AR
7	289649	Bearing Cup	2
8	289867	Bolt	1
9	289661	Retainer	1
10	352384	Yoke	1
11	139499	Oil Seal	1
12	289652	Spacer	1
13	289662	Input Gear	1
14	53753	Bearing	16
15	307412	Ring	2
16	307411	Synchronizer	1
17	307409	Gear/Bushing	1
17	307406	Bushing	1
18	352402	Input Shaft	1
19	289666	Clutch	1
20	289667	Gear	1
20	143181	Bushing (Split)	1
21	289671	Gear (Output)	1
22	67551	Snap Ring	1
22	352497	Snap Ring	1
23	41308	Bearing	1
24	289673	Washer (Retainer)	1
25	289867	Bolt	1
26	289695	Gear	1
27	289692	Gear	1
27	143181	Bushing (Split)	1
28	352370	Shaft	1
29	289689	Clutch	1
30	289685	Washer	1
31	289686	Gear	1
32	352342	Gear	1
33	238751	Nut	1
34	66284	Washer	1
35	352326	Bearing Carrier	1
36	352335	Shim (0.127 mm)	AR
36	352334	Shim (0.178 mm)	AR
36	352333	Shim (0.508 mm)	AR
37	200972	Bearing Cup	2
38	30174	Bearing Cone	2
39	202568	Spacer (0.238 mm)	AR
39	202569	Spacer (0.239 mm)	AR
39	202570	Spacer (0.240 mm)	AR
39	202571	Spacer (0.241 mm)	AR
39	202572	Spacer (0.242 mm)	AR
39	202573	Spacer (0.243 mm)	AR
39	202575	Spacer (0.255 mm)	AR
39	202576	Spacer (0.261 mm)	AR
39	202577	Spacer (0.267 mm)	AR
39	202578	Spacer (0.273 mm)	AR
39	271866	Spacer (0.279 mm)	AR
39	271867	Spacer (0.285 mm)	AR
39	271868	Spacer (0.291 mm)	AR
39	271869	Spacer (0.297 mm)	AR
39	271870	Spacer (0.303 mm)	AR
40	289704	Gear	1
41	86008	Cotter Pin	2
42	234034	Nut	2
43	230413	Bearing Cup	2
44	30161	Bearing Cone	2
45	296844	Bearing	1
46	240683	Snap Ring	1
47	....	Ring Gear And Pinion	1
		☞ Figure 138	

©1999 HYSTER COMPANY

TRANSMISSION HOUSING (FIGURE 122)

OIL CLUTCH

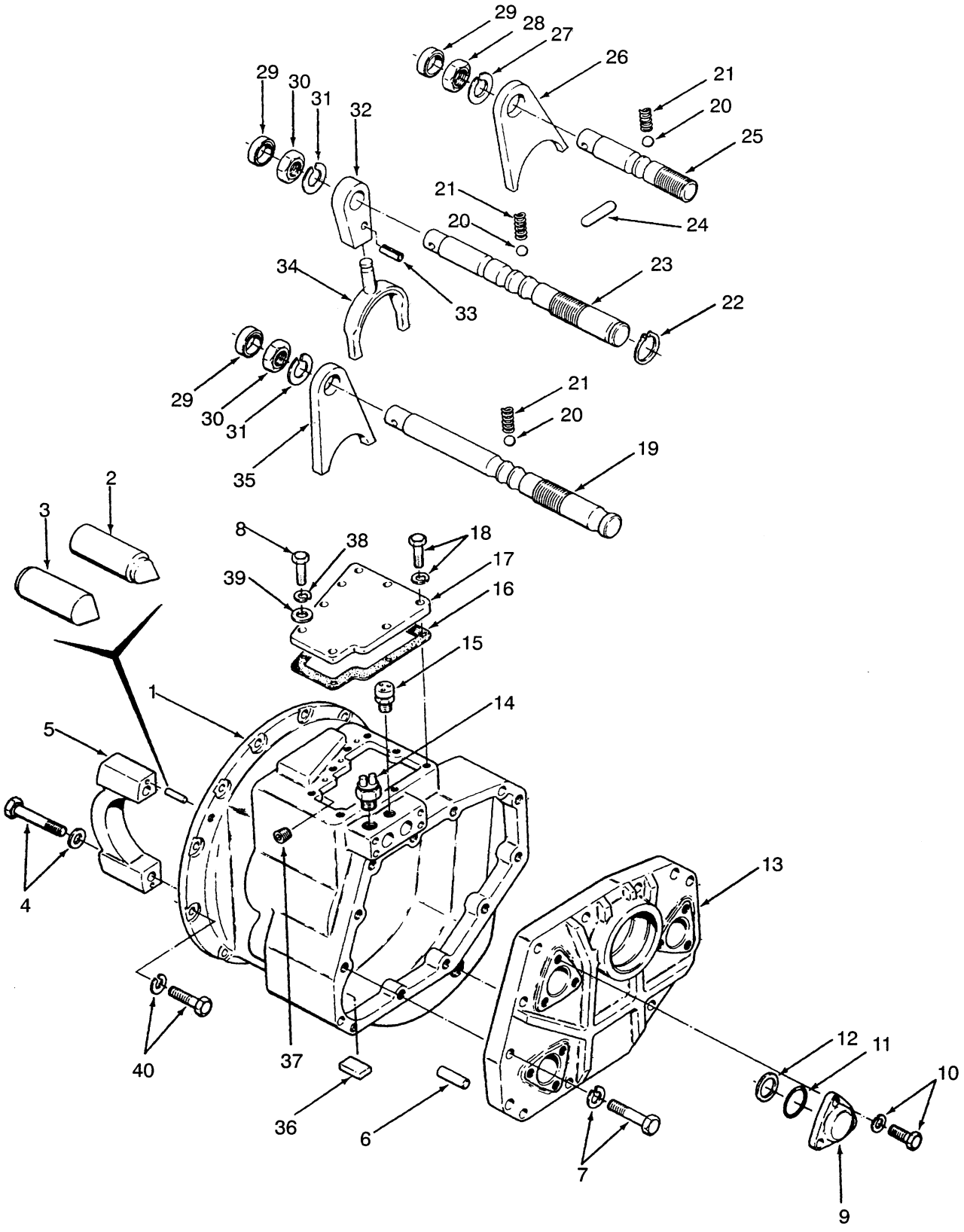

©1999 HYSTER COMPANY

TRANSMISSION HOUSING

OIL CLUTCH

REF	PART NO.	NAME OF PART	QTY
	1322631	Transmission	1
1	352373	Housing	1
2	234038	Dowel Pin	4
3	334413	Dowel Pin	4
4	293696	Capscrew	4
4	296426	Flatwasher	4
5	....	Bearing Cap	2
6	352406	Pin	2
7	292682	Lockwasher	11
7	302338	Screw	11
8	136985	Capscrew	1
9	289642	Bearing Cover	3
10	302338	Screw	9
10	320159	Washer	9
11	39675	O-Ring	3
12	289762	Shim (.005 in)	AR
12	289761	Shim (.007 in)	AR
12	289760	Shim (.020 in)	AR
13	352375	Cover	1
13	264159	Adhesive	AR
14	1388574	Switch (Temperature)	1
15	21420	Plug (Breather)	1
16	352387	Gasket	1
17	353430	Cover	1
18	287854	Capscrew	7
18	292682	Lockwasher	7

REF	PART NO.	NAME OF PART	QTY
19	352390	Rail (Forward/Reverse)	1
20	21278	Ball	3
21	289823	Spring	3
22	131358	Snap Ring	1
23	352389	Range Rail	1
24	313130	Pin	1
25	352391	Rail (Low)	1
26	289717	Fork (Low)	1
27	15934	Lockwasher	1
28	15034	Nut	1
29	145752	Seal	3
30	15036	Nut	2
30	226414	Adhesive	AR
31	15936	Lockwasher	2
32	289713	Fork Holder	1
33	71153	Spring Pin	1
34	289711	Fork	1
35	289715	Fork (Forward/Reverse)	1
36	334560	Magnet	1
36	226414	Adhesive	AR
37	349378	Plug	1
38	292682	Lockwasher	1
39	320159	Washer	1
40	292683	Lockwasher	12
40	293646	Capscrew	12
40	313022	Sealant	AR

©1999 HYSTER COMPANY

CLUTCH PEDAL (FIGURE 123)

OIL CLUTCH

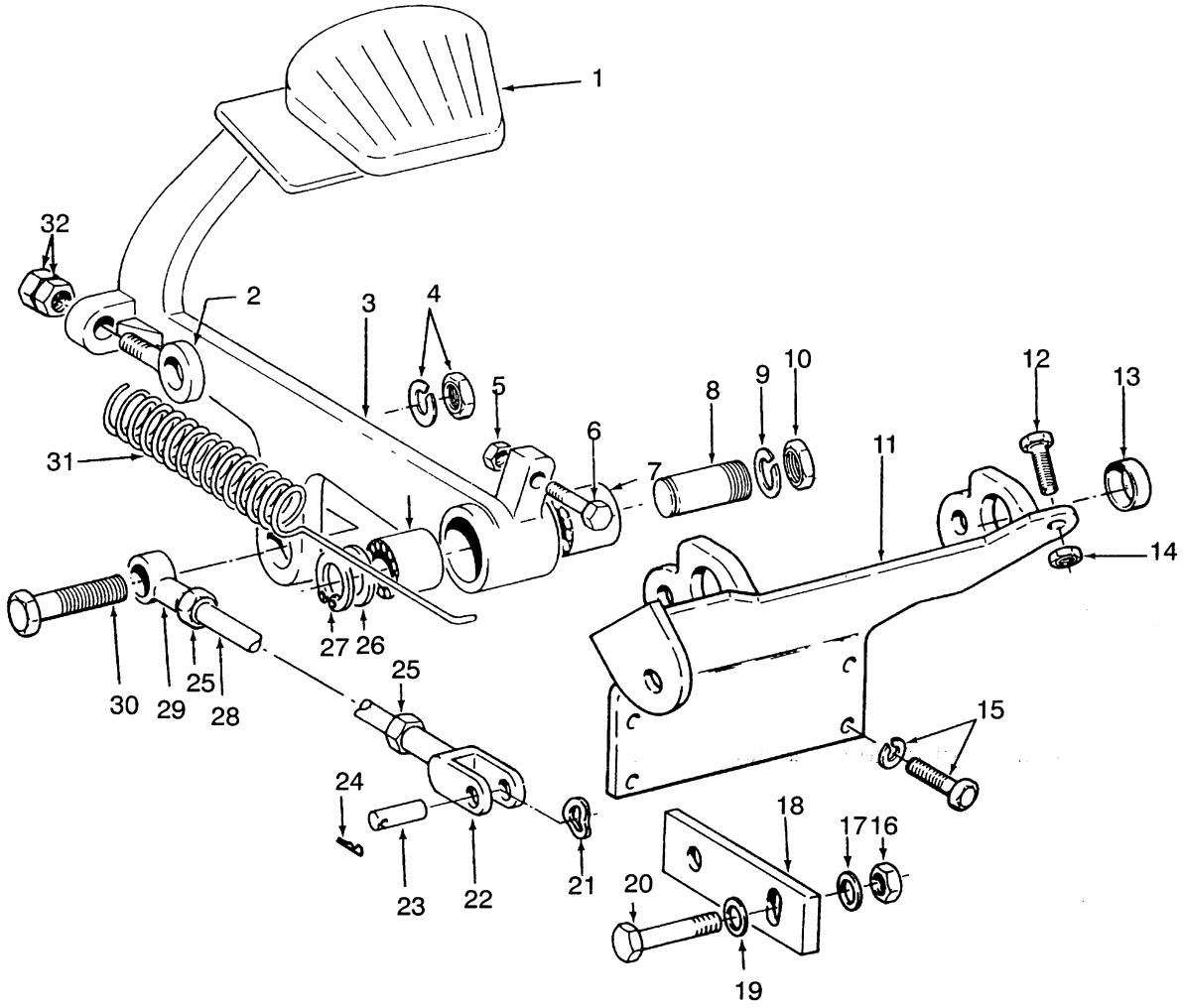

REF	PART NO.	NAME OF PART	QTY
1	132690	Pad	1
2	289580	Eyebolt	1
3	352823	Pedal	1
4	15158	Lockwasher	1
4	15058	Nut	1
5	216877	Nut	1
6	292529	Capscrew	1
7	245105	Bearing	2
8	352788	Stub Shaft	1
9	292687	Lockwasher	1
10	292620	Nut	1
11	352805	Bracket	1
11	288394	Sealant	AR
12	292529	Capscrew	1
13	270632	Bushing	2
14	296130	Nut	1
15	287860	Capscrew	4
15	292682	Lockwasher	4

REF	PART NO.	NAME OF PART	QTY
16	316826	Nut	1
17	352992	Spacer	1
18	304462	Plate	1
19	296421	Washer	1
20	287860	Capscrew	1
21	253274	Spring Washer	2
22	152	Rod End	1
23	153	Pin	1
24	15223	Cotter Pin	1
25	15028	Nut	2
26	38979	Washer	1
27	131358	Snap Ring	1
28	48324	Link	1
29	352831	Rod End	1
30	18590	Capscrew	1
31	289579	Spring	1
32	15086	Nut	2

©1999 HYSTER COMPANY

NOTES

©1999 HYSTER COMPANY

CLUTCH (FIGURE 124)

OIL CLUTCH

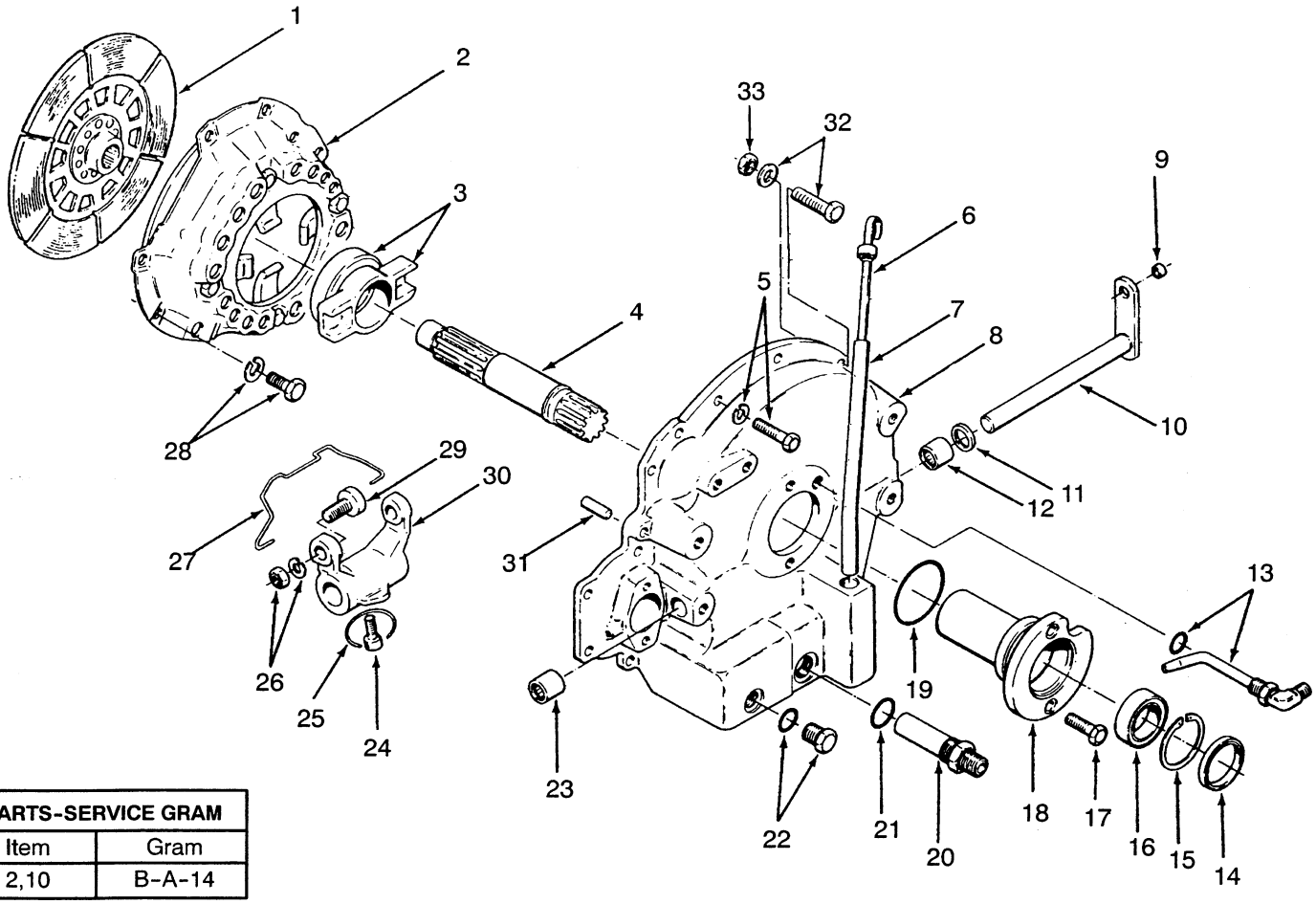

PARTS-SERVICE GRAM	
Item	Gram
2,10	B-A-14

©1999 HYSTER COMPANY

CLUTCH

OIL CLUTCH

REF		PART NO.	NAME OF PART	QTY
1		1350030	Drive Plate	1
2	a	304444	Cover (Clutch)	1
2	b	1382307	Cover (Clutch)	1
3		366706	Carrier	1
3		230303	Bearing	1
4		292851	Clutch Shaft	1
5		287860	Capscrew	15
5		292682	Lockwasher	15
6		352468	Dipstick	1
7		352466	Tube (Dipstick)	1
8	a	352413	Housing (Clutch)	1
8	b	1381905	Housing (Clutch)	1
9		321027	Bushing	1
10	a	352780	Crank	1
10	b	1381907	Crank	1
11		145753	Oil Seal	1
11		257291	Adhesive	AR
12	a	176356	Needle Bearing	1
12	b	231001	Needle Bearing	1
13		290995	Nozzle	1
13		16483	O-Ring	1
14		44503	Oil Seal	1
15		12921	Snap Ring	1
16		44307	Bearing	1
17		302335	Screw	2
18		352455	Carrier	1
19		39369	O-Ring	1
20		289505	Screen	1
21		16487	O-Ring	1
22		14594	Fitting	1
22		16483	O-Ring	1
23		69017	Bearing	1
23		257291	Adhesive	AR
24		27936	Screw	1
25		67355	Wire	AR
26		15026	Nut	2
26		15156	Lockwasher	2
27		176429	Spring	1
28		277826	Capscrew	8
28		15156	Lockwasher	8
29		172048	Cam Follower	2
30		366705	Yoke	1
31		186420	Dowel Pin	2
32		292517	Capscrew	1
32		292682	Lockwasher	1
33		136692	Nut	1

a Last Used On S/N G5D-6372

b First Used On S/N G5D-6373

©1999 HYSTER COMPANY

CLUTCH CONTROL LINKAGE (FIGURE 125)

OIL CLUTCH

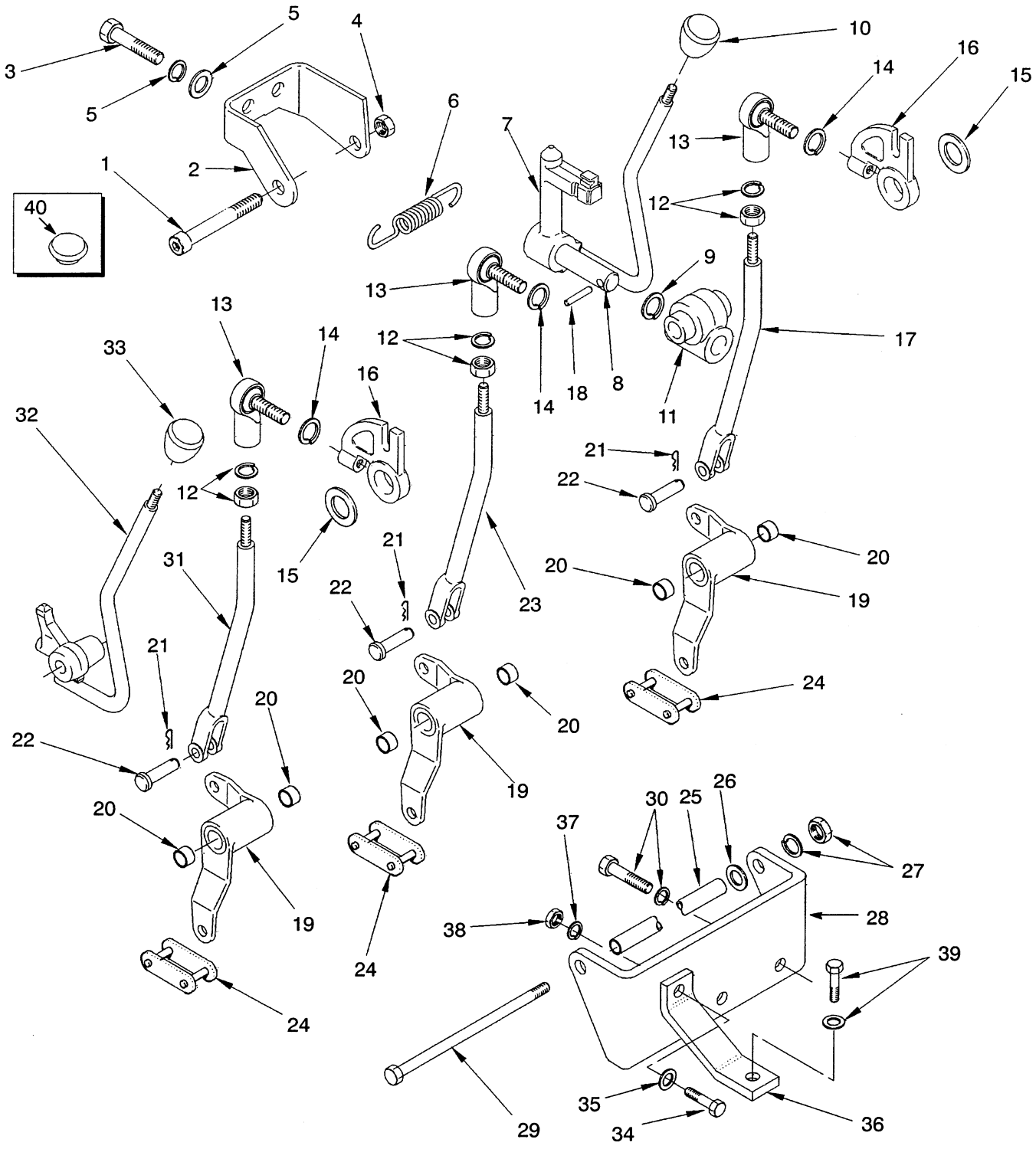

CLUTCH CONTROL LINKAGE

OIL CLUTCH

REF	PART NO.	NAME OF PART	QTY
1	253171	Screw	1
2	1324998	Bracket	1
3	136985	Capscrew	2
4	222671	Nut	1
5	292682	Lockwasher	2
5	320160	Washer	2
6	289743	Spring	1
7	1320102	Lever	1
8	289733	Pin	1
9	289742	Lockwasher	1
10	154899	Knob	1
11	289740	Pivot (Lever)	1
12	15026	Nut	5
12	292682	Lockwasher	5
13	186866	Rod End, RH	3
14	15156	Lockwasher	3
15	289744	Washer	2
16	289738	Crank	2
17	1312678	Link	1
18	19976	Pin (Slotted)	1
19	352441	Crank	3
20	28294	Bushing	2
21	15223	Cotter Pin	3
22	153	Pin	3
23	1312679	Link	1
24	289749	Link (Connector)	3
25	352481	Sleeve	1
26	116848	Shim (.020 in)	AR
27	15056	Nut	1
27	292682	Lockwasher	1
28	1310595	Bracket	1
29	18249	Capscrew	1
30	292682	Lockwasher	2
30	292514	Capscrew	2
31	1312680	Link	1
32	1320100	Lever	1
33	154878	Knob (Forward/Reverse)	1
34	136749	Capscrew	1
35	320157	Washer	1
36	1310582	Bracket	1
37	292681	Lockwasher	1
38	239503	Nut	1
39	136985	Capscrew	1
39	320159	Washer	1
40	1344124	Plug	2

©1999 HYSTER COMPANY

TRANSMISSION CONTROL VALVE (FIGURE 126)

POWERSHIFT WITH MONOTROL PEDAL

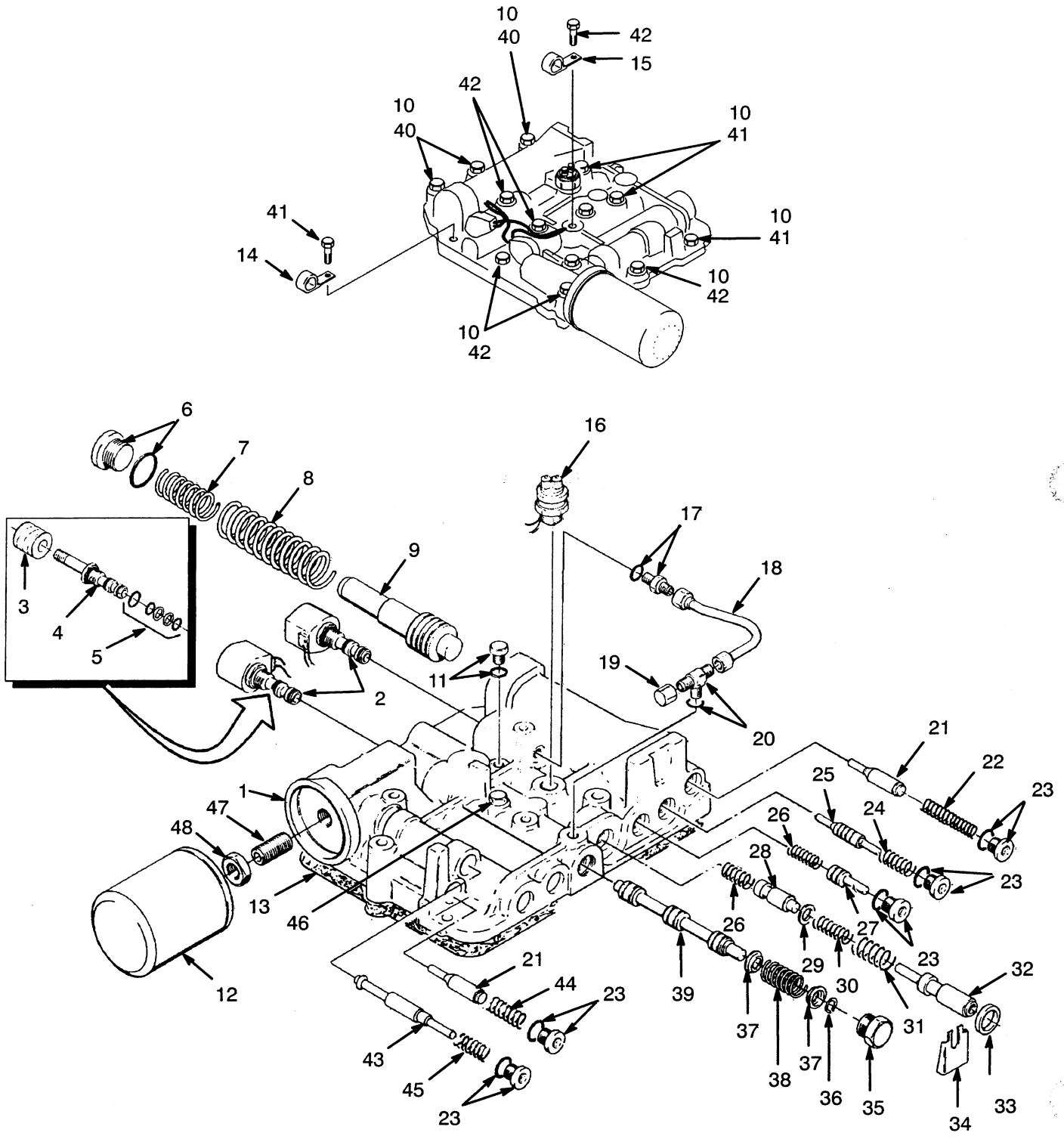

TRANSMISSION CONTROL VALVE

POWERSHIFT WITH MONOTROL

REF		PART NO.	NAME OF PART	QTY
		1322641	Valve	1
1		1313752	Body	1
2		1390609	Solenoid Valve	2
3		1300498	Coil	1
3		1452595	Coil	1
4		1312331	Cartridge	1
4		1452596	Cartridge	1
5		1300486	Kit-Seal	1
5		1393160	Kit-Seal	1
6		200659	Adapter	1
6		16982	O-Ring	1
7		346637	Spring (Inner)	1
8		346636	Spring (Outer)	1
9		346788	Spool	1
10		320157	Lockwasher	12
11		14591	Adapter	1
11		16481	O-Ring	1
12	a	1328691	Filter	1
13		1337801	Gasket	1
14		325897	J-Clamp	1
15		186480	J-Clamp	1
16		1322668	Switch	1
17		16538	Fitting	1
17		16481	O-Ring	1
18		346654	Tube	1
19		16923	Fitting	1
20		16574	Fitting	1
20		16481	O-Ring	1
21		334524	Spool	2
22		1313774	Spring	1
23		235691	Fitting	5
23	a	16484	O-Ring	1

REF		PART NO.	NAME OF PART	QTY
24		346805	Spring	1
25		346634	Spool (Trimmer)	1
26		334543	Spring	2
27		346806	Spool	1
28		346813	Spool	1
29		296418	Washer	1
30		346643	Spring (Inching)	1
31		334531	Spring	1
32		346734	Spool (Inching)	1
33		334500	Oil Seal	1
34		346647	Stop (Inching)	1
35		346653	Plug (Forward/Reverse)	1
36		346650	Snap Ring	1
37		346648	Cap (Spring)	2
38		346645	Spring (Center)	1
39		346644	Spool (Forward/Reverse)	1
40		136704	Capscrew	6
41		292508	Capscrew	3
42		346656	Capscrew	3
43		346768	Spool (Pack)	1
44		346640	Spring	1
45		346770	Spring (Pack)	1
46		14591	Adapter	1
46		16481	O-Ring	1
47		181766	Fitting	1
48		15032	Nut	1

a Included In Overhaul Kit 996192

NOTE: Parts Shown Above Are Transmission Components

©1999 HYSTER COMPANY

TRANSMISSION CONTROL VALVE (FIGURE 127)

POWERSHIFT WITH FORWARD/REVERSE LEVER

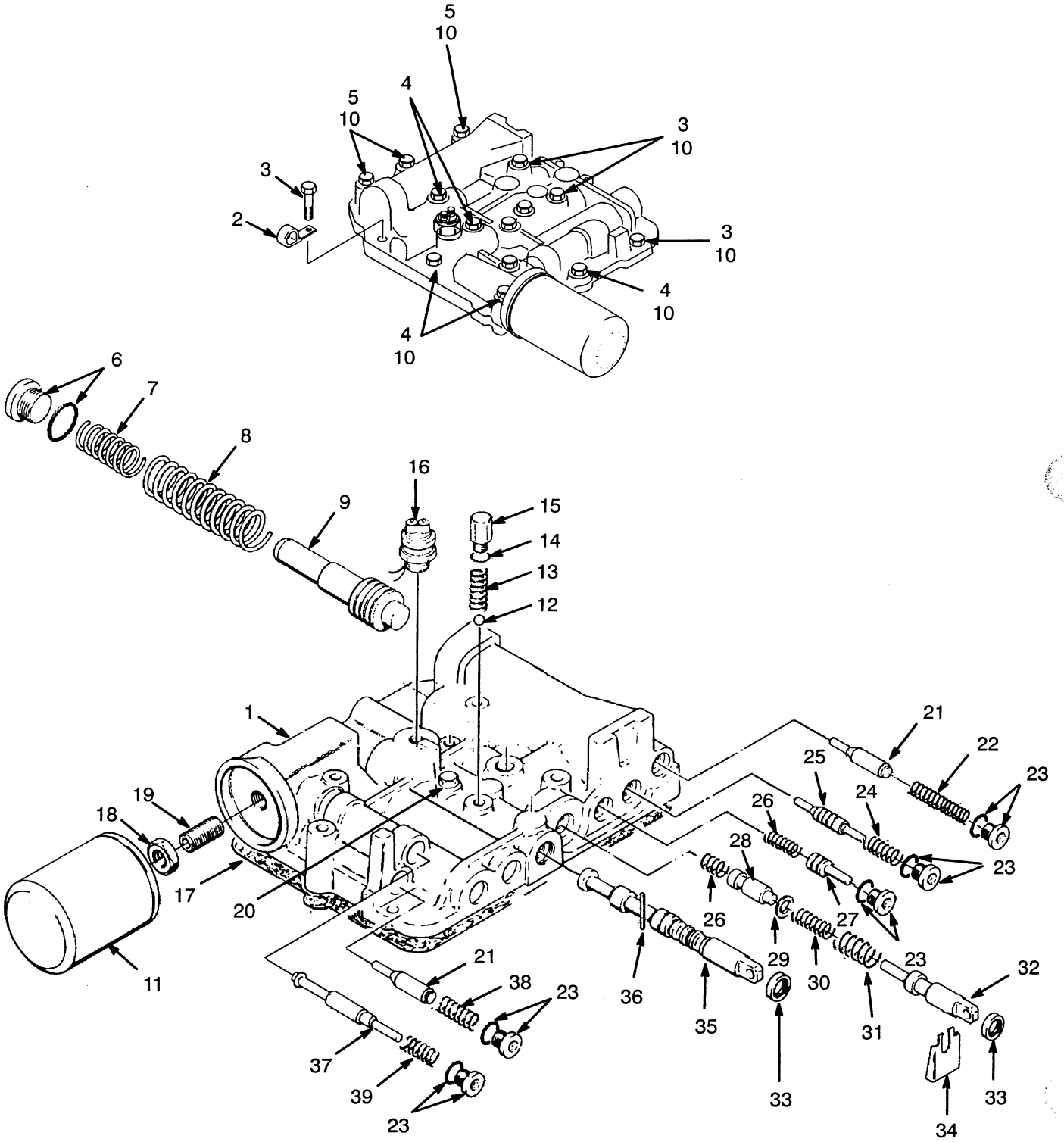

TRANSMISSION CONTROL VALVE

POWERSHIFT WITH FORWARD/REVERSE LEVER

REF		PART NO.	NAME OF PART	QTY
		1322642	Valve	1
1		1313755	Body	1
2		325897	Clamp	1
3		136704	Capscrew	6
4		292508	Capscrew	3
5		346656	Capscrew	3
6		200659	Adapter	1
6		16982	O-Ring	1
7		346637	Spring (Inner)	1
8		346636	Spring (Outer)	1
9		346788	Spool	1
10		320157	Lockwasher	12
11	a	1328691	Filter	1
12		55280	Ball	1
13		334513	Spring	1
14		16482	O-Ring	1
15		334515	Plug	1
16		1322668	Switch	1
17		1337801	Gasket	1
18		15032	Nut	1
19		181766	Fitting	1
20		14591	Adapter	1
20		16481	O-Ring	1
21		334524	Spool	2
22		1313774	Spring	1
23		235691	Fitting	5
23	a	16484	O-Ring	1
24		346805	Spring	1
25		346634	Spool (Trimmer)	1
26		334543	Spring	2
27		346806	Spool	1
28		346813	Spool	1
29		296418	Washer	1
30		346643	Spring (Inching)	1
31		334531	Spring	1
32		346734	Spool (Inching)	1
33		334500	Oil Seal	1
34		346647	Inching Stop	1
35		1337816	Spool	1
36		221989	Pin (Slotted)	1
37		346768	Spool (Pack)	1
38		346640	Spring	1
39		346770	Spring (Pack)	1

a Included In Overhaul Kit 996192

NOTE: Parts Shown Above Are Transmission Components

©1999 HYSTER COMPANY

TRANSMISSION (FIGURE 128)

POWERSHIFT

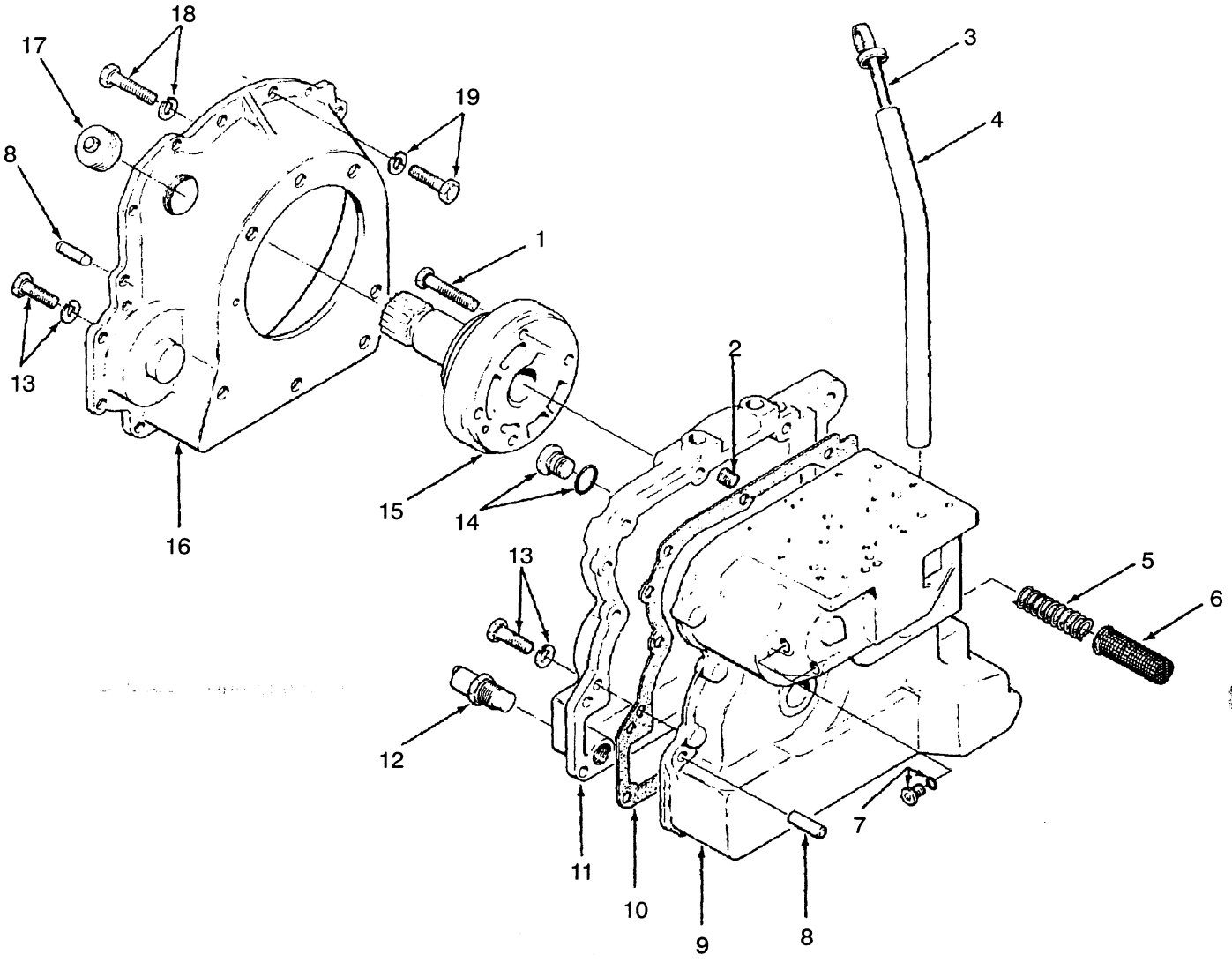

REF		PART NO.	NAME OF PART	QTY
	a	1352293	Transmission (2200 RPM)	1
	a	1322665	Transmission (2500 RPM)	1
	b	1352294	Transmission (2200 RPM)	1
	b	1322666	Transmission (2500 RPM)	1
1		292517	Capscrew	4
2		15483	Fitting	2
3		352468	Dipstick	1
4		352466	Tube (Dipstick)	1
5		346681	Spring	1
6		346680	Screen	1
7		222443	Adapter	2
7	c	16483	O-Ring	1
8		186420	Dowel Pin	4
9		1309808	Housing	1
10	c	346705	Gasket	1
11		1313767	Cover	1

REF		PART NO.	NAME OF PART	QTY
12		1322627	Switch (Temperature)	1
13		136985	Capscrew	16
13		292682	Lockwasher	16
14		188210	Fitting	1
14	c	16983	O-Ring	1
15	c	1320018	Charge Pump	1
16		1386933	Housing	1
17		346762	Plug	1
18		292524	Capscrew	1
18		292682	Lockwasher	4
19		287860	Capscrew	15
19		292682	Lockwasher	15

a Monotrol Pedal
b Forward/Reverse Lever
c Included In Overhaul Kit 996192

©1999 HYSTER COMPANY

TORQUE CONVERTER (FIGURE 129)

POWERSHIFT

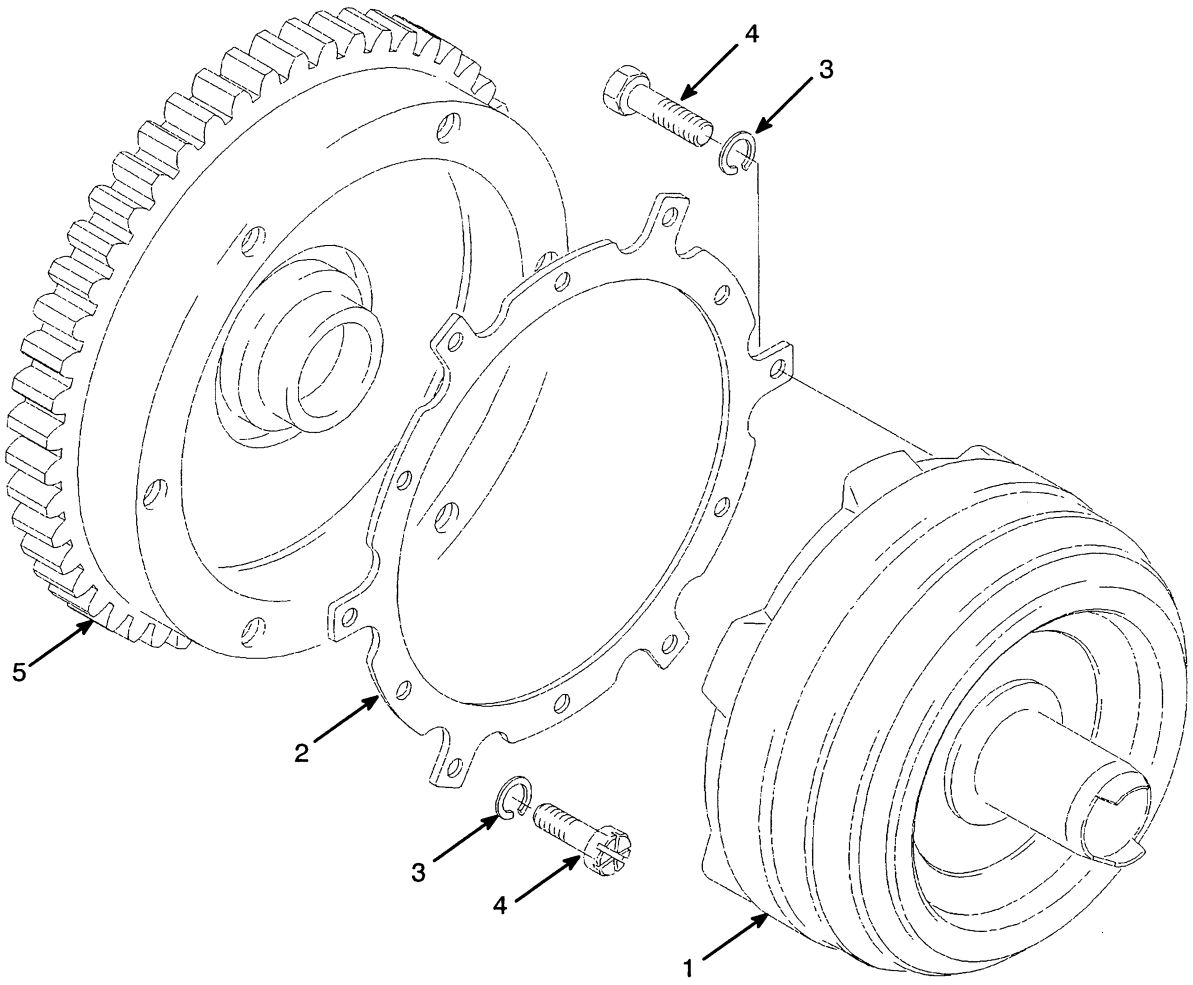

REF	PART NO.	NAME OF PART	QTY
1	1383785	Torque Converter (2200 RPM)	1
1	344343	Torque Converter (2500 RPM)	1
2	1343307	Plate (2200 RPM)	1
2	304464	Plate (2500 RPM)	1
3	261379	Washer	8
4	15942	Bolt	8
5	.....	Flywheel	1
		☞ Figure 11	

©1999 HYSTER COMPANY

CLUTCH PACK (FIGURE 130)

POWERSHIFT

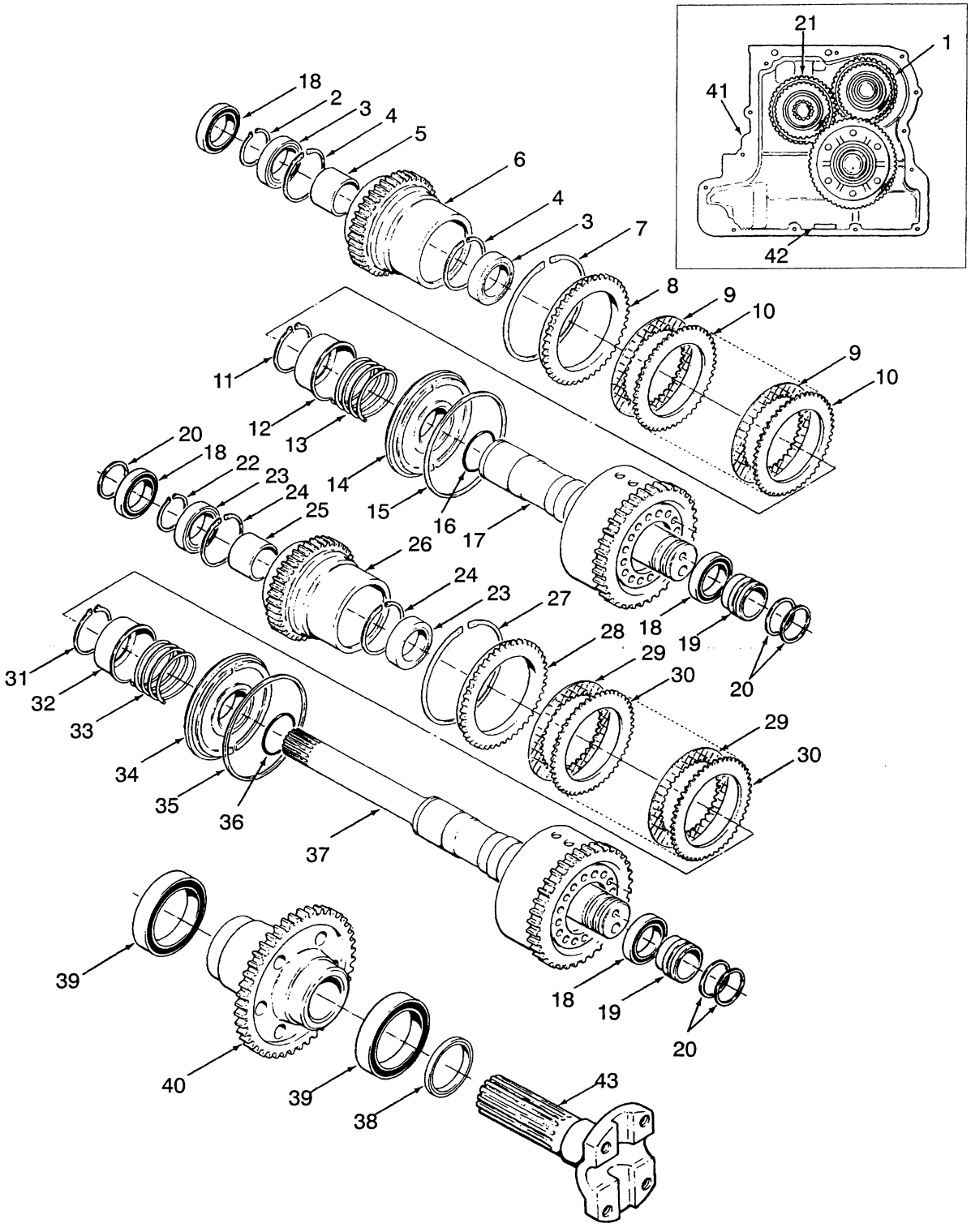

CLUTCH PACK
POWERSHIFT

REF		PART NO.	NAME OF PART	QTY
	a	1352293	Transmission (2200 RPM)	1
	a	1322665	Transmission (2500 RPM)	1
	b	1352294	Transmission (2200 RPM)	1
	b	1322666	Transmission (2500 RPM)	1
1		1352292	Clutch (2200 RPM)	1
1		346834	Clutch (2500 RPM)	1
2	c	346675	Snap Ring	1
3		124606	Bearing	2
4	c	12894	Snap Ring	2
5		346615	Spacer	1
6		1337427	Gear (2200 RPM)	1
6		346832	Gear (2500 RPM)	1
7	c	334475	Snap Ring	1
8	c	334442	Pressure Plate	1
9		346796	Friction Plate	8
10	c	334417	Separator Plate	8
11	c	334480	Snap Ring	1
12		346624	Cup	1
13	c	346671	Spring	1
14		334439	Piston	1
15	c	334402	Seal	1
16		346795	O-Ring	1
17		346718	Shaft (Forward)	1
18	c	41208	Ball Bearing	4
19	c	346716	Bushing	2
20	c	346677	Seal Ring	5
21		1352291	Clutch (Input) (2200 RPM)	1
21		346831	Clutch (Input) (2500 RPM)	1
22		346675	Snap Ring	1
23	c	124606	Bearing	2
24		12894	Snap Ring	2
25		346615	Spacer	1
26		1337427	Gear (2200 RPM)	1
26		346832	Gear (2500 RPM)	1
27		334475	Snap Ring	1
28		334442	Pressure Plate	1
29	c	346796	Friction Plate	8
30		334417	Separator Plate	8
31		334480	Snap Ring	1
32		346624	Cup	1
33		346671	Spring	1
34		334439	Piston	1
35		334402	Seal	1
36	c	346795	O-Ring	1
37		346709	Shaft (Input)	1
38	c	44503	Oil Seal	1
39	c	44314	Ball Bearing	2
40		1337428	Gear (Output) (2200 RPM)	1
40		346721	Gear (Output) (2500 RPM)	1
41		....	Housing ☞ Figure 128	1
42		334560	Magnet	1
42	c	313022	Adhesive	AR
43		346723	Yoke	1

a Monotrol Pedal
b Forward/Reverse Lever
c Included In Overhaul Kit 996192

©1999 HYSTER COMPANY

SPEED REDUCER (FIGURE 131)

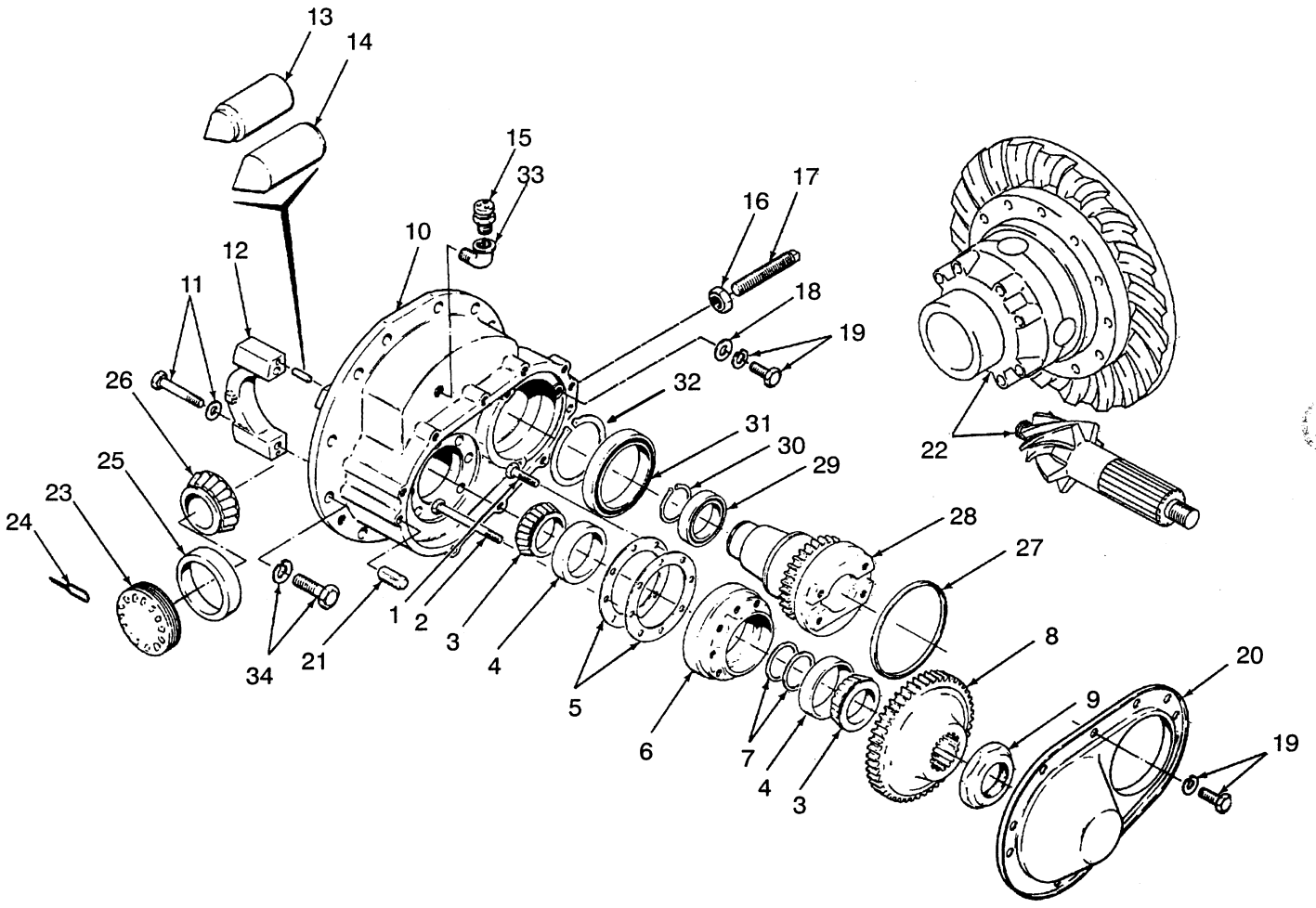

©1999 HYSTER COMPANY

SPEED REDUCER

KEY:
A: H70-80XL And H90XLS
B: H90-110XL

REF	PART NO.	NAME OF PART	QTY A	QTY B
	1352688	Speed Reducer	1	..
	1352689	Speed Reducer	..	1
1	293645	Capscrew	3	3
2	293660	Capscrew	5	5
3	30174	Bearing Cone	2	2
4	200972	Bearing Cup	2	2
5	352335	Shim (0.127 mm)	ARAR	
5	352334	Shim (0.178 mm)	ARAR	
5	352333	Shim (0.508 mm)	ARAR	
6	352326	Carrier	1	1
7	202568	Spacer (0.238 mm)	ARAR	
7	202569	Spacer (0.239 mm)	ARAR	
7	202570	Spacer (0.240 mm)	ARAR	
7	202571	Spacer (0.241 mm)	ARAR	
7	202572	Spacer (0.242 mm)	ARAR	
7	202573	Spacer (0.243 mm)	ARAR	
7	202575	Spacer (0.255 mm)	ARAR	
7	202576	Spacer (0.261 mm)	ARAR	
7	202577	Spacer (0.267 mm)	ARAR	
7	202578	Spacer (0.273 mm)	ARAR	
7	271866	Spacer (0.279 mm)	ARAR	
7	271867	Spacer (0.285 mm)	ARAR	
7	271868	Spacer (0.291 mm)	ARAR	
7	271869	Spacer (0.297 mm)	ARAR	
7	271870	Spacer (0.303 mm)	ARAR	
8	1352281	Gear	1	1
9	352317	Nut	1	1
9	226414	Adhesive	ARAR	
10	352336	Housing	1	1
11	293696	Capscrew	4	4
11	296426	Flatwasher	4	4
12	....	Bearing Cap	2	2
13	234038	Dowel Pin	4	4
14	334413	Dowel Pin	4	4
15	21420	Plug (Breather)	1	1
16	296136	Nut	1	1
17	352321	Screw (Thrust)	1	1
18	320157	Washer	3	3
19	292681	Lockwasher	13	13
19	287851	Capscrew	13	13
20	352862	Cover	1	1
20	288394	Sealant	ARAR	
21	310566	Pin	2	2
22	....	Ring Gear And Pinion ☞ Figure 138	1	1
23	352366	Nut	2	..
23	234034	Nut	..	2
24	86008	Cotter Pin	2	2
25	230413	Bearing Cup	2	2
26	271479	Bearing Cone	2	..
26	30161	Bearing Cone	..	2
27	352369	Oil Seal	1	1
28	352329	Shaft (Input)	1	1
29	43207	Ball Bearing	1	1
30	58901	Snap Ring	1	1
31	43216	Bearing	1	1
32	307276	Snap Ring	1	1
33	15378	Fitting	1	1
34	293646	Capscrew	12	12
34	292683	Lockwasher	12	12
34	313022	Sealant	ARAR	

©1999 HYSTER COMPANY

FORWARD LINKAGE AND REVERSE SHIFT LEVER (FIGURE 132)

POWERSHIFT

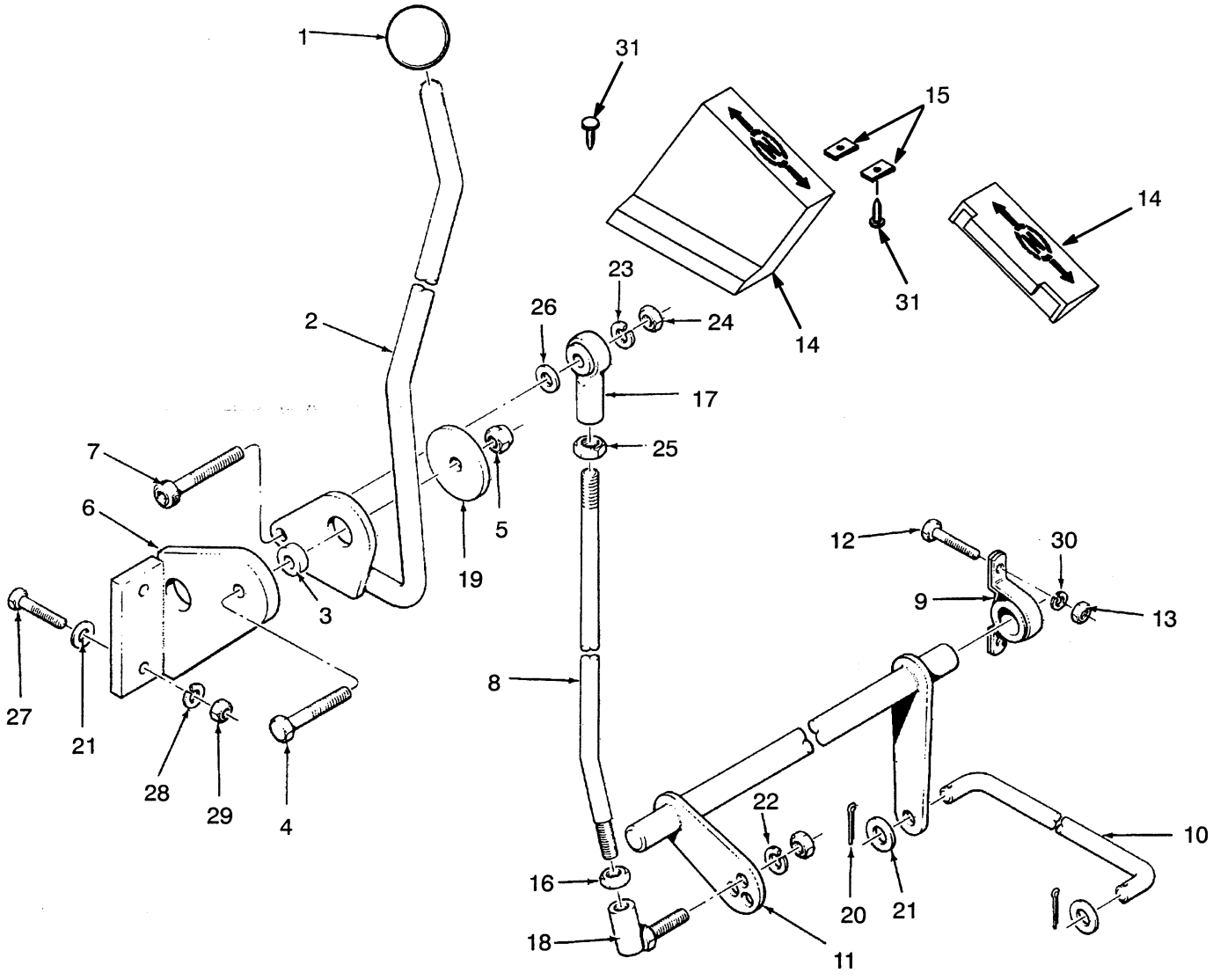

©1999 HYSTER COMPANY

FORWARD LINKAGE AND REVERSE SHIFT LEVER

POWERSHIFT

REF	PART NO.	NAME OF PART	QTY
1	370624	Knob	1
2	1344063	Shift Lever	1
3	1303158	Bushing	1
4	292515	Capscrew	1
5	316826	Nut	1
6	1310986	Bracket	1
7	16316	Capscrew	1
8	1311021	Rod	1
9	313859	Bearing	2
10	1308342	Link	1
11	1309098	Shaft	1
12	292501	Capscrew	4
13	136687	Nut	4
14	1344058	Indicator	1
15	1344062	Nut	2
16	15025	Nut	2
17	161652	Rod End	1
18	157593	Ball Joint	1
19	1300139	Washer	1
20	18828	Cotter Pin	2
21	320157	Washer	4
22	15155	Lockwasher	1
23	15156	Lockwasher	1
24	15056	Nut	1
25	15026	Nut	1
26	15134	Washer	1
27	176640	Capscrew	2
28	292681	Lockwasher	2
29	239503	Nut	2
30	292680	Lockwasher	4
31	1301284	Screw	2

©1999 HYSTER COMPANY

FORWARD AND REVERSE SWITCH (FIGURE 133)

POWERSHIFT

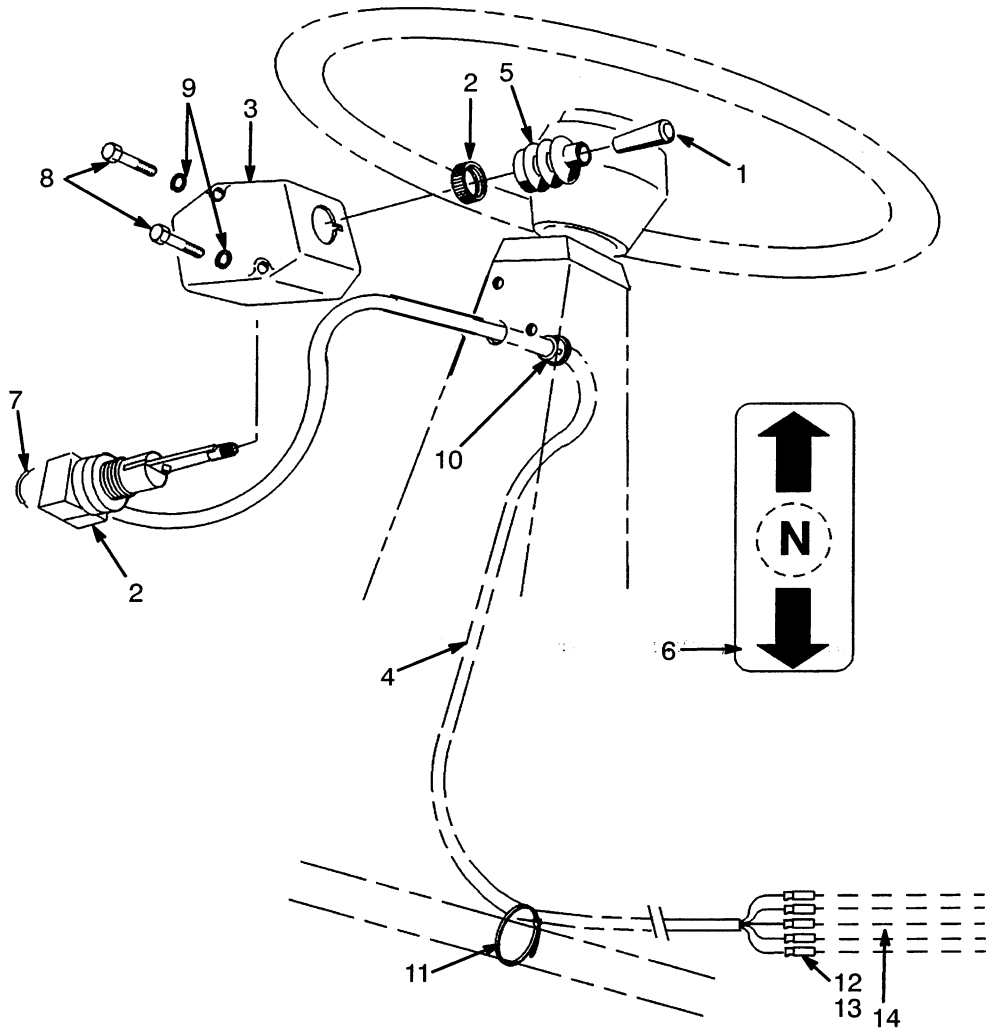

REF	PART NO.	NAME OF PART	QTY
	1308334	Lever (Forward/Reverse)	1
1	289143	Handle	1
2	1324744	Switch	1
2	....	Nut	1
3	1308325	Housing	1
4	1308332	Harness	1
5	289166	Boot	1
6	309684	Label (F/R Lever)	1
7	1324737	Wire	1
8	337239	Capscrew	2
9	292680	Lockwasher	2
10	286901	Bushing	1
11	2004005	Strap Clamp	30
12	134812	Connector	5
13	181046	Insulator	5
14	1324664	Harness	1

©1999 HYSTER COMPANY

TRANSMISSION PIPING (FIGURE 134)

POWERSHIFT

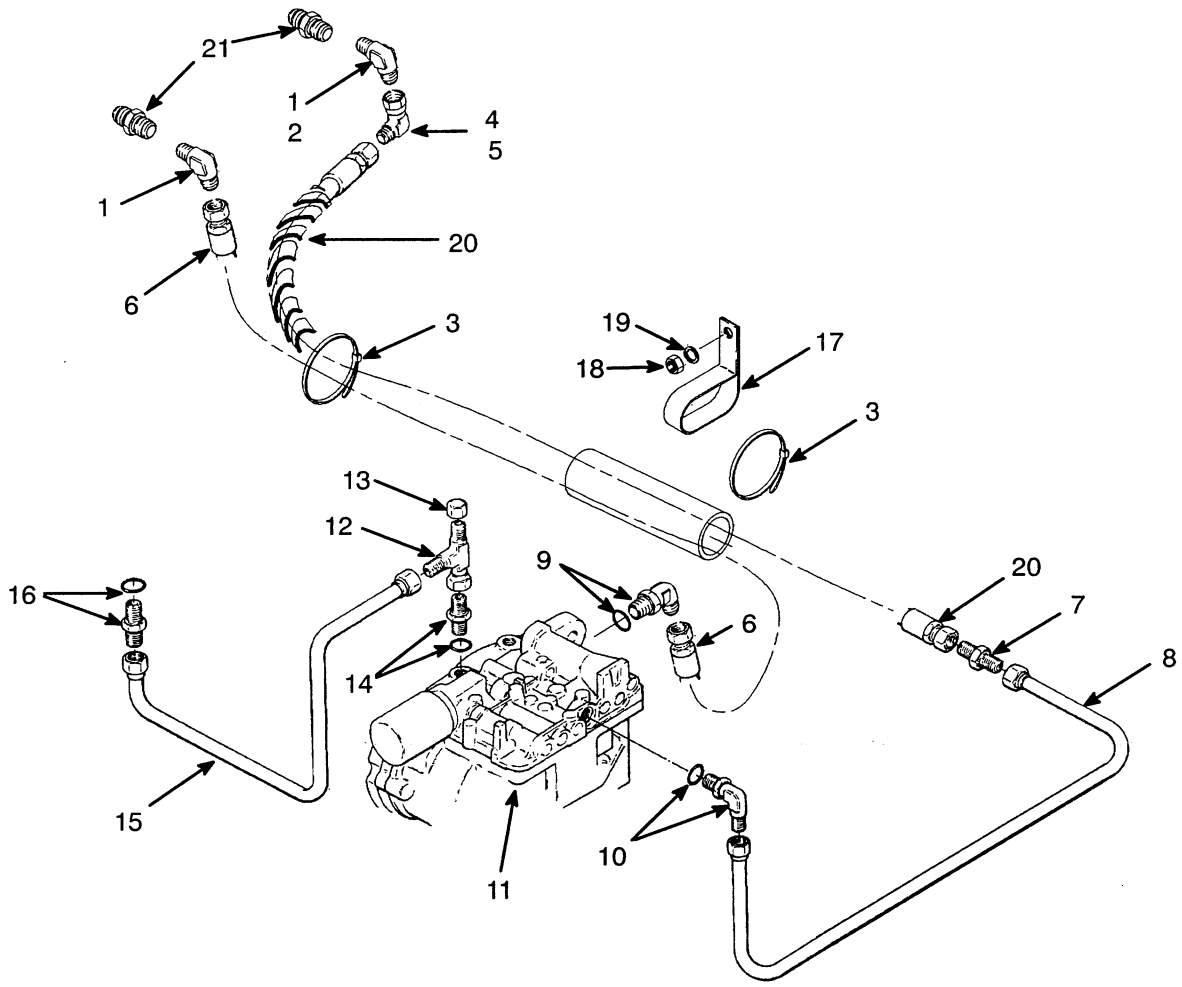

REF		PART NO.	NAME OF PART	QTY
1	a	66997	Fitting	2
2	b	201787	Fitting	1
3		273775	Strap Clamp	2
4	ac	17039	Fitting (Some Earlier Models)	1
4	a	16882	Fitting	1
5	c	16882	Fitting	1
6		1326928	Hose	1
7		14693	Fitting	1
8		352749	Tube	1
9		16569	Fitting	1
9		16485	O-Ring	1
10		16560	Fitting	1
10		16485	O-Ring	1
11		....	Control Valve ☞ Figure 127	1
12		17059	Fitting	1

REF		PART NO.	NAME OF PART	QTY
13		16923	Fitting	1
14		222381	Fitting	1
14		16484	O-Ring	1
15		352892	Tube	1
16		222380	Fitting	1
16		16482	O-Ring	1
17		1326652	Clamp	1
18		239503	Nut	1
19		292681	Lockwasher	1
20	a	1331038	Hose	1
20	c	1326928	Hose	1
21	b	14681	Fitting	2

a H70-80XL And H90XLS
b H90-110XL
c Last Used on S/N G5D-2525

©1999 HYSTER COMPANY

MONOTROL PEDAL (FIGURE 135)

POWERSHIFT

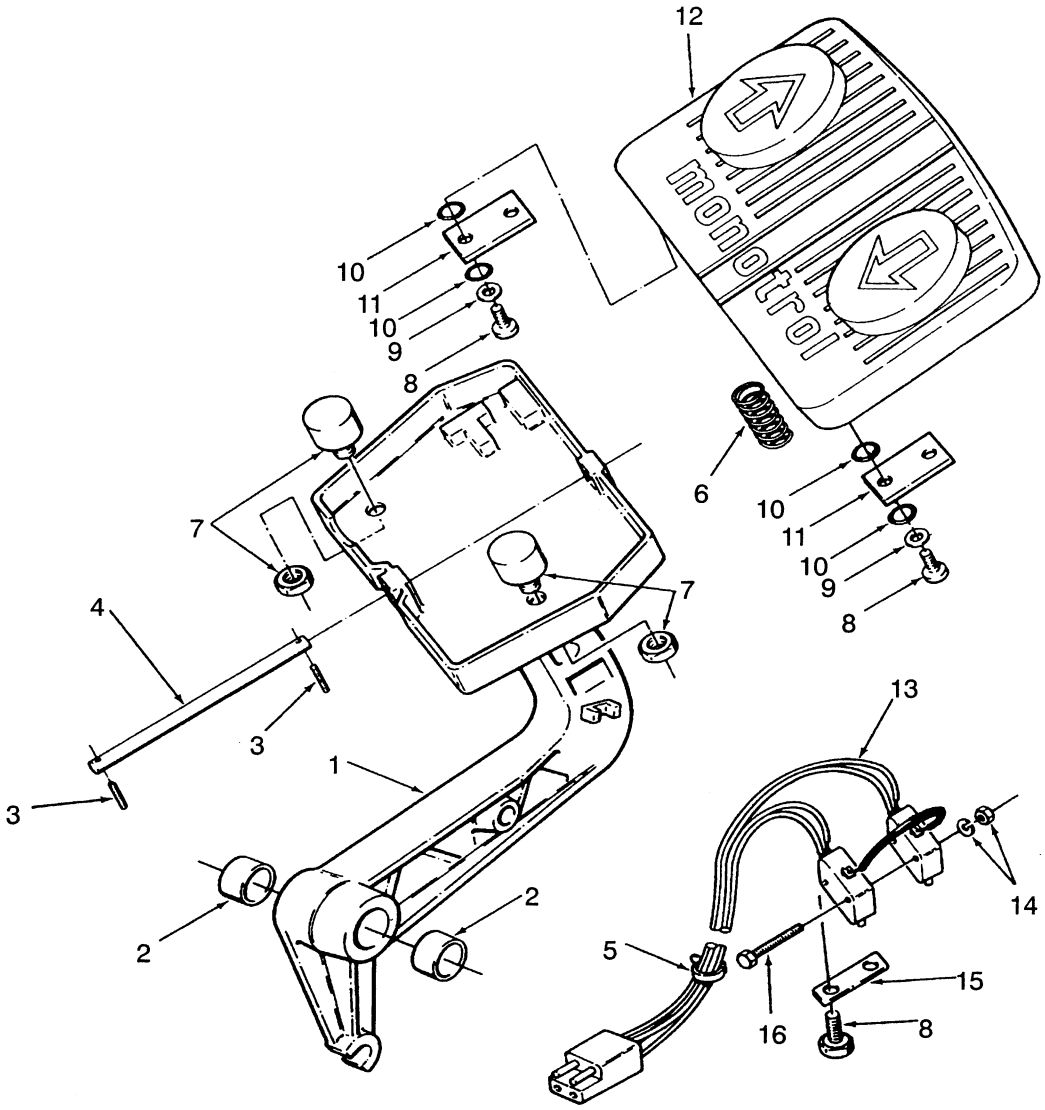

REF	PART NO.	NAME OF PART	QTY
	353398	Pedal	1
1	353397	Pedal	1
2	135685	Bushing	2
3	220932	Screw	2
3	360387	Adhesive	AR
4	353154	Pin	1
5	114312	Strap Clamp	3
6	353168	Spring	1
7	353422	Magnet	2
7	353432	Nut (Jam)	2

REF	PART NO.	NAME OF PART	QTY
8	352969	Screw	6
9	353448	Washer	4
10	57568	O-Ring	8
11	359207	Plate	2
12	353175	Pad	1
13	353220	Switch/Harness	1
14	53162	Lockwasher	2
14	16865	Nut	2
15	353165	Retainer	1
16	220434	Screw	2

©1999 HYSTER COMPANY

See Service Manual
for service procedures

UNIVERSAL JOINT (FIGURE 136)

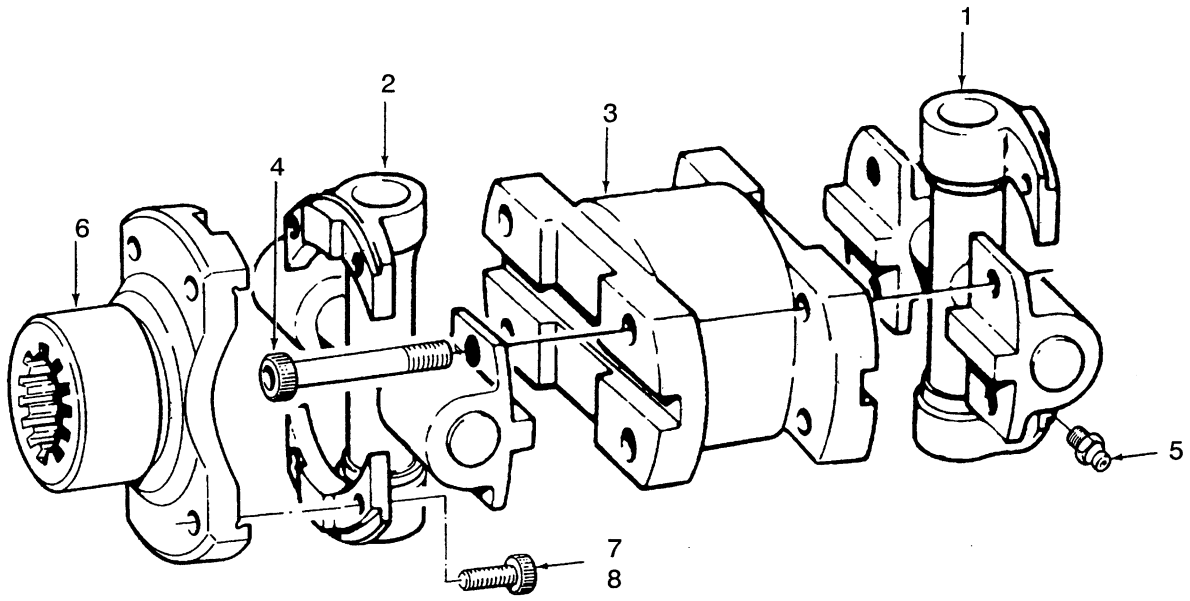

KEY:
A: Oil Clutch
B: Powershift

REF	PART NO.	NAME OF PART	QTY A	QTY B
	289720	Universal Joint	1	..
	289799	Universal Joint	..	1
1	253997	Spider/Bearing	1	..
1	323228	Spider/Bearing	..	1
2	253996	Spider/Bearing	1	..
2	323229	Spider/Bearing	..	1
3	316234	Yoke	1	..
3	53073	Yoke	..	1
4	1318322	Capscrew	4	..
4	1318320	Capscrew	..	4
5	16041	Grease Fitting	2	..
5	358053	Grease Fitting	..	2
6	289721	Yoke	1	..
6	289724	Plug	1	..
7	226414	Adhesive	AR	AR
8	237265	Capscrew	8	..
8	221503	Capscrew	..	8

©1999 HYSTER COMPANY

DRIVE AXLE (FIGURE 137)

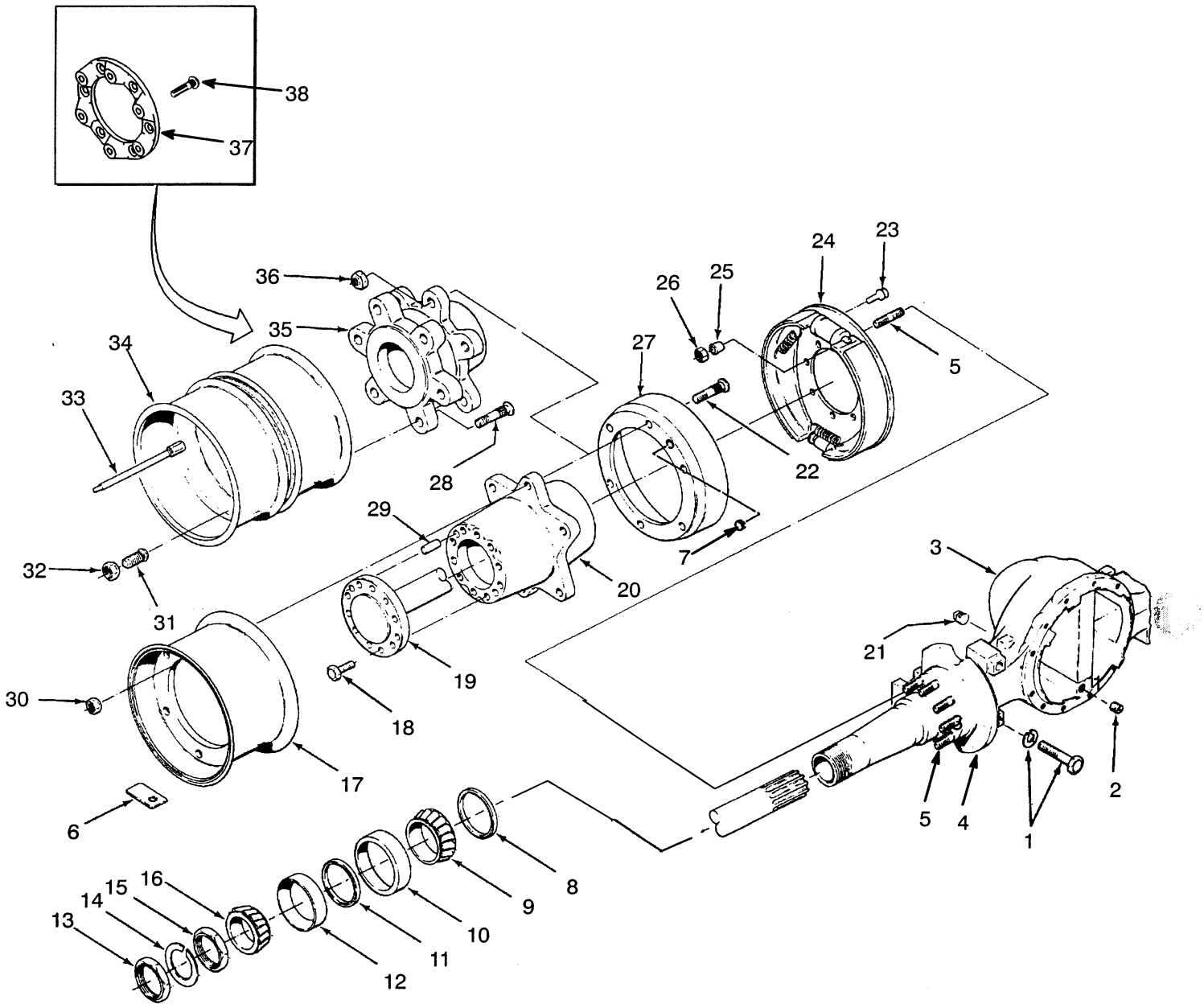

DRIVE AXLE

KEY:
A: H70-80XL And H90XLS Single Wheel
B: H70-80XL And H90XLS Dual Wheel
C: H90-110XL Single Wheel
D: H90-110XL Dual Wheel

Ref		Part No.	Name Of Part	QTY A	B	C	D
1		352234	Capscrew	4	4	4	4
1		221780	Washer	4	4	4	4
2		15290	Fitting	1	1	1	1
3		1304380	Axle	1	1	..	..
3		1304381	Axle	..	..	1	1
3		....	Housing	1	1	..	..
3		....	Housing	..	..	1	1
4		....	Spindle	2	2	2	2
4		....	Seal	2	2	2	2
5		158359	Stud	14	14	14	14
6	a	336555	Plate	2	..	2	..
7		1343732	Plug	2	2	2	2
8		1328682	Seal	2	2	2	2
9		352219	Bearing Cone	2	2	2	2
10		30232	Bearing Cup	2	2	2	2
11		87382	Oil Seal	2	2	2	2
12		30232	Bearing Cup	2	..	2	..
12		230324	Bearing Cup	..	2	..	2
13		352177	Locknut	2	2	2	2
14		116067	Lockwasher	2	2	2	2
15		352182	Locknut	2	2	2	2
16		352219	Bearing Cone	2	..	2	..
16		230325	Bearing Cone	..	2	..	2
17		....	Wheel (Single)	2	..	2	..
			☞ Figure 215, Figure 216				
18		293685	Capscrew	20	20	20	20
19	b	352150	Axle Shaft	2	2	..	..
19	c	352184	Axle Shaft	2	2	..	..
19		352150	Axle Shaft	..	..	2	2
20		1328694	Hub	2	..	2	..
21		15303	Fitting	1	1	1	1
21	d	15315	Fitting	1	1	1	1
22		178264	Bolt (4.12 in)	12	..	12	..
22		54622	Stud (2.38 in)	..	12	..	12
23		28340	Screw	2	2	2	2
24		....	Brake	2	2	2	2
			☞ Figure 142				
25		153778	Thimble	14	14	14	14
26		278326	Nut	14	14	14	14
27		1343733	Drum	2	2	2	2
28		125743	Bolt	..	12	..	12
29		352220	Dowel Pin	4	4	4	4
30		11276	Nut	12	..	12	..
31		11287	Nut	..	12	..	12
32		11286	Nut	..	12	..	12
33		49189	Valve Extension	..	2	..	2
34		....	Wheel (Dual)	..	4	..	4
			☞ Figure 217				
35		1328693	Hub (Dual)	..	2	..	2
36		248320	Locknut	..	12	..	12
37	e	1309078	Adapter	..	2	..	2
38	e	141720	Bolt	..	6	..	6

a 16 And 18 Ply Tires
b Oil Clutch
c Powershift
d Optional
e Dual Wheel Conversion

©1999 HYSTER COMPANY

DIFFERENTIAL (FIGURE 138)

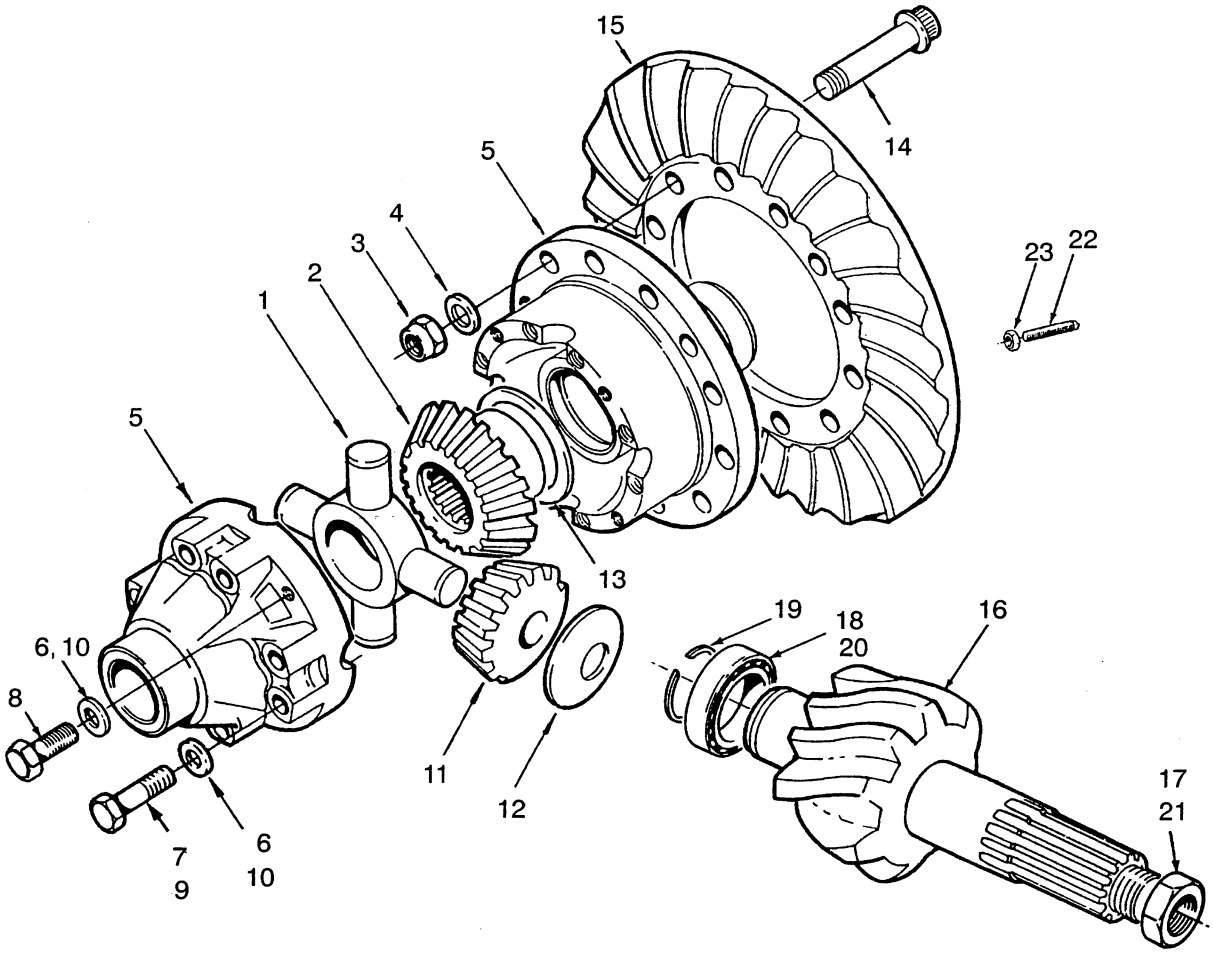

©1999 HYSTER COMPANY

DIFFERENTIAL

KEY:
A: H70-80XL, H90XLS Powershift
B: H90-110XL Powershift
C: H70-110XL Oil Clutch
D: H70-110XL Oil Clutch-Optional

Ref		Part No.	Name Of Part	QTY A	B	C	D
	a	352166	Differential (5.286:1)	1	..	..	..
	a	352169	Differential (6.167:1)	..	1	..	..
		332837	Differential (7.200:1)	..	..	1	..
		217822	Differential (7.500:1)	..	..	..	1
1	b	372924	Spider	1	..	..	..
1	d	350384	Spider	..	1	1	..
1	c	....	Spider	..	..	..	1
2	b	373128	Gear	2	..	..	..
2	d	350389	Gear	..	2	2	..
2	c	....	Gear	..	..	..	2
3		358098	Nut	12	12	12	12
4		221771	Washer	12	12	12	..
4		88587	Washer	..	..	..	12
5		....	Housing	1	1	1	..
5		162864	Case	..	..	..	1
6		88587	Washer	..	..	..	12
7		280579	Capscrew (3.0 in.)	..	..	..	8
8		280578	Capscrew (2.0 in.)	..	..	..	4
8	d	366701	Capscrew	4	4	4	..
9	bd	372106	Bolt	8	8	8	..
10	bd	221771	Washer	12	12	12	..
11	b	373127	Gear	4	..	..	..
11	d	350388	Gear	..	4	4	..
11	c	....	Gear	..	..	..	4
12		373126	Thrust Washer	4	..	..	..
12	db	350387	Washer	..	4	4	..
12	c	234071	Washer	..	..	..	4
13	db	350383	Washer	2	2	2	..
13	c	234069	Washer	..	..	..	2
14		366701	Capscrew	12	12	12	..
14		277265	Bolt	..	..	..	12
15		352167	Gear/Pinion	1	..	..	..
15		352170	Gear/Pinion	..	1	..	..
15		350391	Gear/Pinion (7.200:1)	..	..	1	..
15		326946	Gear/Pinion (7.500:1)	..	..	..	1
16		....	Pinion	1	1	1	1
17		326947	Nut	..	..	..	1
18		296844	Bearing	..	..	..	1
19		240683	Snap Ring	..	..	..	1
19	a	240683	Snap Ring	1	1	1	..
20	a	296844	Bearing	1	1	1	..
21	a	352317	Nut	1	1	..	..
21		226414	Adhesive	AR	AR	AR	AR
21		238751	Nut	..	..	1	..
22		289710	Thrust Screw	..	..	1	1
23		15034	Nut	..	..	1	1

a Included With Speed Reducer 352761 And 352762 or 1352688 And 1352689

b Included In Differential Kit 352168, Used On Differential 352166

c Included In Spider Kit 321275

d Included In Differential Kit 352191, Used On Differentials 352169 And 332837

©1999 HYSTER COMPANY

NOTE

©1999 HYSTER COMPANY

BRAKE SYSTEM

BRAKE (Figure 142)
LAST USED ON S/N G00D-8496 ..... Page 292

BRAKE (Figure 143)
FIRST USED ON S/N G00D-8497 ..... Page 294

BRAKE BOOSTER & MASTER CYLINDER (Figure 144) ..... Page 296

BRAKE LINKAGE (Figure 140)
OIL CLUTCH ..... Page 288

BRAKE LINKAGE (Figure 141)
POWERSHIFT ..... Page 290

PARK BRAKE (Figure 139) ..... Page 286

©1999 HYSTER COMPANY

PARK BRAKE (FIGURE 139)

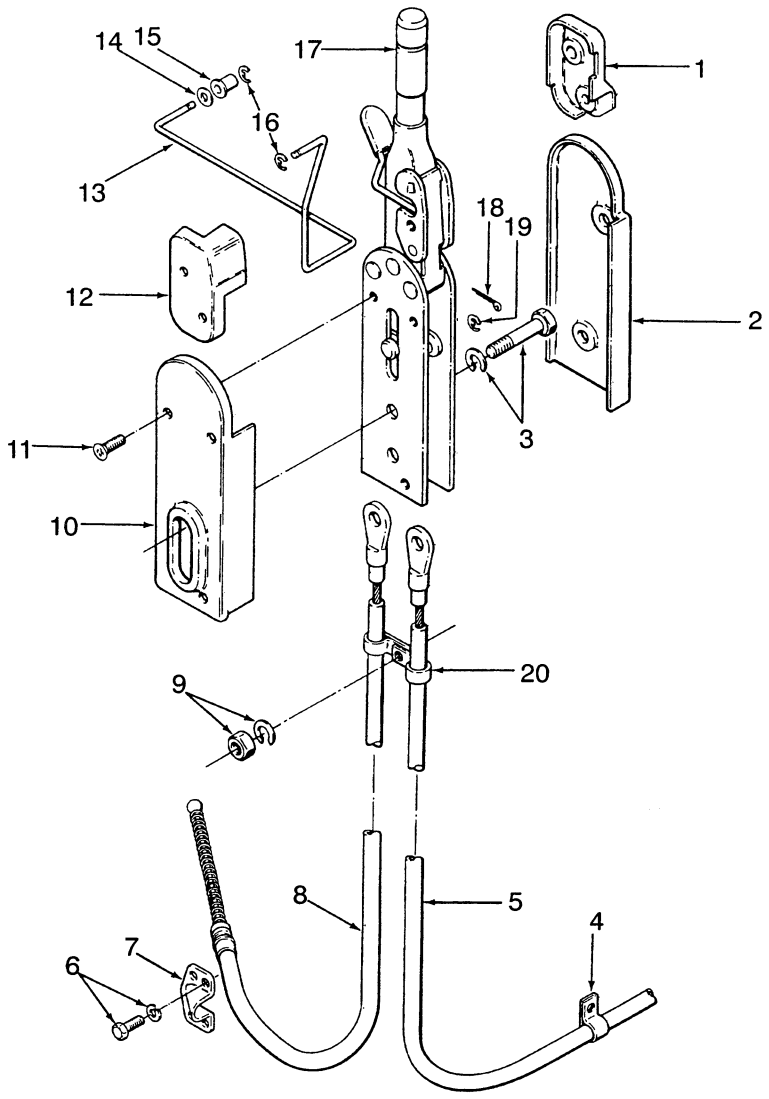

REF		PART NO.	NAME OF PART	QTY
1		353011	Cover	1
2		353009	Cover	1
3		292508	Capscrew	2
3		292681	Lockwasher	2
4		136516	Clamp	1
5	b	1350029	Cable (RH)	1
5	c	1460795	Cable (RH)	1
6		124119	Screw	4
6		15154	Lockwasher	4
7		339589	Clamp	2
8	b	1350028	Cable (LH)	1
8	c	1460794	Cable (LH)	1
9		239503	Nut	1
9		292681	Lockwasher	1
10		353010	Cover	1

REF		PART NO.	NAME OF PART	QTY
11		1328688	Screw	7
12		353012	Cover	1
13	a	1347322	Link	1
14	a	15172	Washer	2
15	a	352605	Bearing	1
16	a	352575	Ring	2
17		352931	Brake Lever	1
18		15200	Cotter Pin	1
19		353206	Snap Ring	2
20		353304	Clamp	1

a Powershift With Monotrol Pedal
b Last Used On S/N G00D-14043
c First Used On S/N G00D-14044

©1999 HYSTER COMPANY

NOTE

©1999 HYSTER COMPANY

BRAKE LINKAGE (FIGURE 140)

OIL CLUTCH

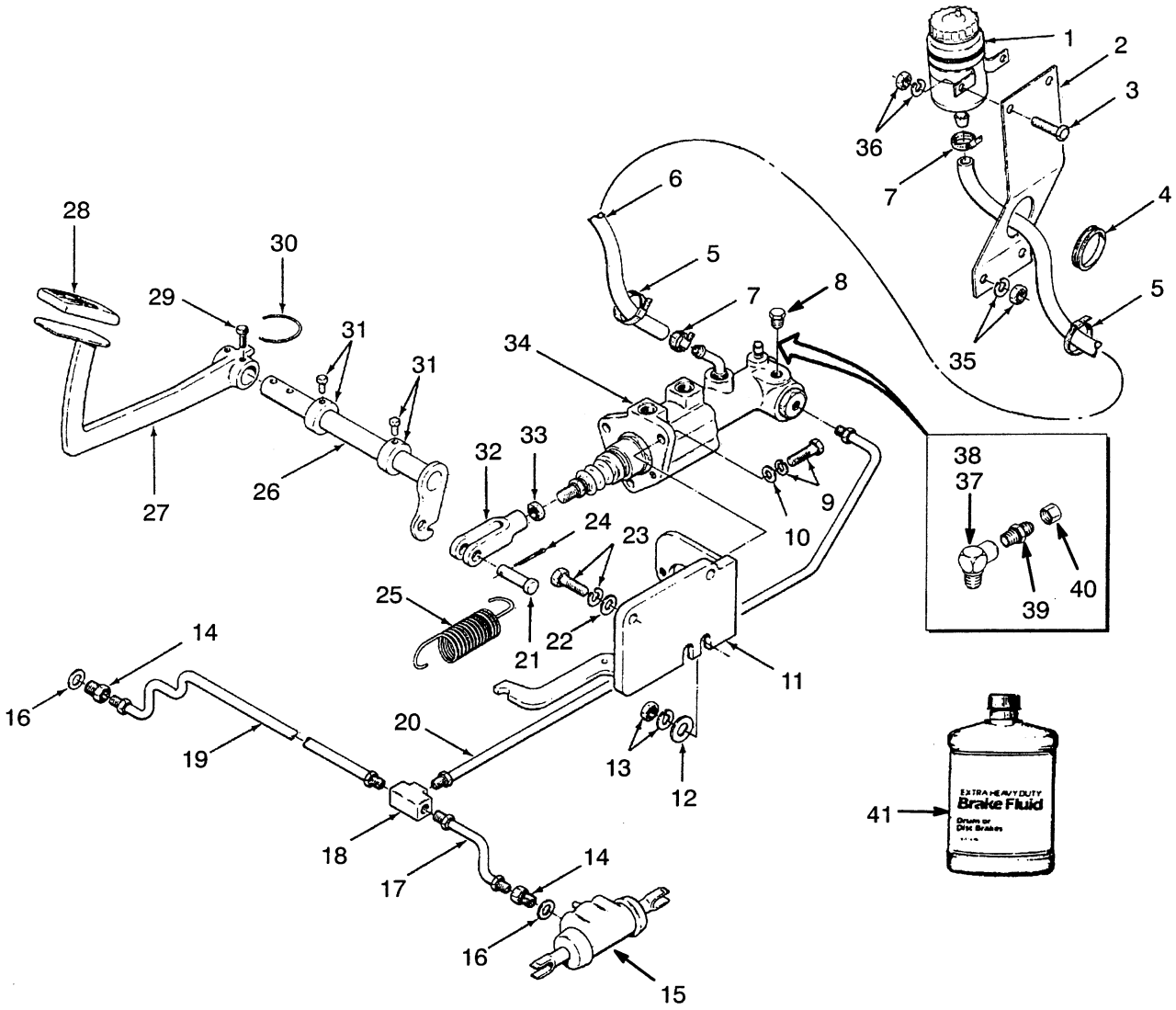

©1999 HYSTER COMPANY

See Service Manual
for service procedures

BRAKE LINKAGE

OIL CLUTCH

REF		PART NO.	NAME OF PART	QTY
1		1300155	Reservoir	1
1		317741	Clamp	1
1		1308534	Cap	1
2	a	1300156	Bracket	1
2	b	1454976	Bracket	1
3		287817	Screw	2
4		339711	Grommet	1
5		114312	Strap Clamp	2
6		352747	Hose	1
7		353311	Clamp	2
8		14349	Fitting	1
9		136985	Capscrew	3
9		292682	Lockwasher	3
10		320159	Washer	3
11		352792	Bracket	1
12		352787	Washer	2
13		292681	Lockwasher	2
13		329069	Nut	2
14		352930	Adapter	2
15		....	Wheel Cylinder	2
			☞ Figure 142	
16		29344	Gasket	2
17		352868	Tube	1
18		14955	Fitting	1
19		352869	Tube	1
20		352720	Tube	1
21		150	Pin	1
22		296423	Washer	2
23		292683	Lockwasher	2
23		292529	Capscrew	2
24		15212	Pin	1
25		352504	Spring	1
26		352799	Shaft	1
27		352835	Pedal	1
28		114496	Pad	1
29		27936	Screw	2
30		67355	Locking Wire	1
31		352826	Collar	2
31		16200	Setscrew	1
32		149	Rod End	1
33		15027	Nut	1
34		....	Booster & Master Cylinder Assy.	1
			☞ Figure 144	
35		239503	Nut	2
35		292681	Lockwasher	2
36		292680	Lockwasher	2
36		136687	Nut	2
37		14349	Fitting	2
38		16151	Fitting (Optional)	2
39		16124	Fitting (Optional)	2
40		281700	Nut (Optional)	2
41		357956	Brake Fluid (1 Gal)	AR

a Last Used On S/N G005D-11495

b First Used On S/N G005D-11496

©1999 HYSTER COMPANY

BRAKE LINKAGE (FIGURE 141)

POWERSHIFT

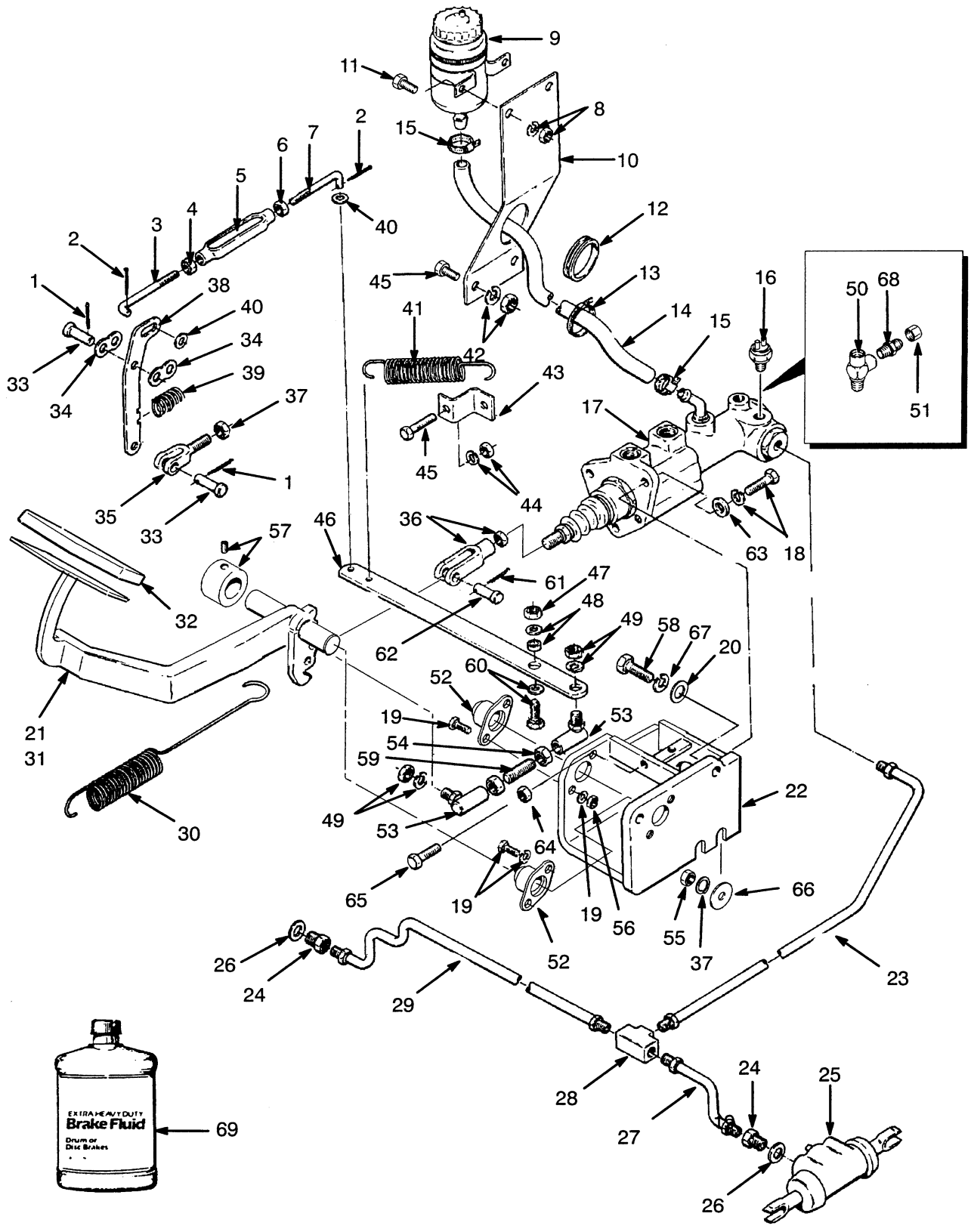

BRAKE LINKAGE

POWERSHIFT

REF		PART NO.	NAME OF PART	QTY
1		15212	Cotter Pin	3
2		221877	Cotter Pin	2
3		353226	Link (LH)	1
4		222119	Nut (Jam)	1
5		353093	Turnbuckle	1
6		15000	Nut	1
7		353225	Link (RH)	1
8		136687	Nut	2
8		292680	Lockwasher	2
9		1300155	Reservoir	1
9		317741	Clamp	1
10		352744	Bracket	1
10	c	1300156	Bracket	1
10	d	1454976	Bracket	1
11		292501	Capscrew	2
12		339711	Grommet	1
13		114312	Strap Clamp	2
14		352747	Hose	1
15		353311	Clamp	2
16	a	14349	Fitting	1
16	b	387867	Switch (Pressure)	1
17		....	Brake Booster	1
			☞ Figure 144	
18		287860	Capscrew	3
18		292682	Lockwasher	3
19		136985	Capscrew	4
19		292682	Lockwasher	4
20		296423	Washer	2
21		1312717	Pedal	1
22		1312706	Bracket	1
23		352720	Tube	1
24		352930	Adapter	2
25		....	Wheel Cylinder	2
			☞ Figure 142	
26		29344	Gasket	2
27		352868	Tube	1
28		14955	Fitting	1
29		352869	Tube	1
30		1312709	Spring	1
31		352839	Pedal	1
32		139051	Pad	2
33		139	Pin	3
34		352572	Plate	2
35		352486	Yoke	1
35		273338	Thread Sealant	AR
36		149	Rod End	1
36		15027	Nut	1
37		329069	Nut	1
38		352492	Plate	1
39		352884	Spring	1
40		15127	Washer	2
41		353222	Spring	1
42		292681	Lockwasher	2
42		239503	Nut	2
43		352493	Bracket	1
44		136692	Nut	1
44		292682	Lockwasher	1
45		292518	Capscrew	1
46		1314242	Plate	1
47		316826	Nut	1
48		221767	Washer	2
48		353224	Bushing	1
49		15026	Nut	2
49		15156	Lockwasher	2
50		16125	Fitting (Optional)	1
51		281700	Fitting (Optional)	1
52		1303114	Bearing	2
53		119758	Ball Joint	2
54		15026	Nut	2
55		329069	Nut	2
56		136692	Nut	5
57		352826	Collar	1
57		16200	Screw	1
58		292529	Capscrew	2
59		340215	Link	1
60		136985	Capscrew	1
60		221767	Washer	1
61		15212	Pin	1
62		150	Pin	1
63		320159	Washer	3
64		296130	Nut	1
65		246001	Capscrew	1
66		352787	Washer	2
67		292683	Washer	2
68		16124	Fitting (Optional)	1
69		26758	Brake Fluid (12 oz)	AR
69		357973	Brake Fluid (1 qt)	AR
69		357956	Brake Fluid (1 gal)	AR

a Forward/Reverse Lever
b Monotrol Pedal
c Last Used On S/N G005D-11495
d First Used On S/N G005D-11496

©1999 HYSTER COMPANY

BRAKE (FIGURE 142)

LAST USED ON S/N G00D-8496

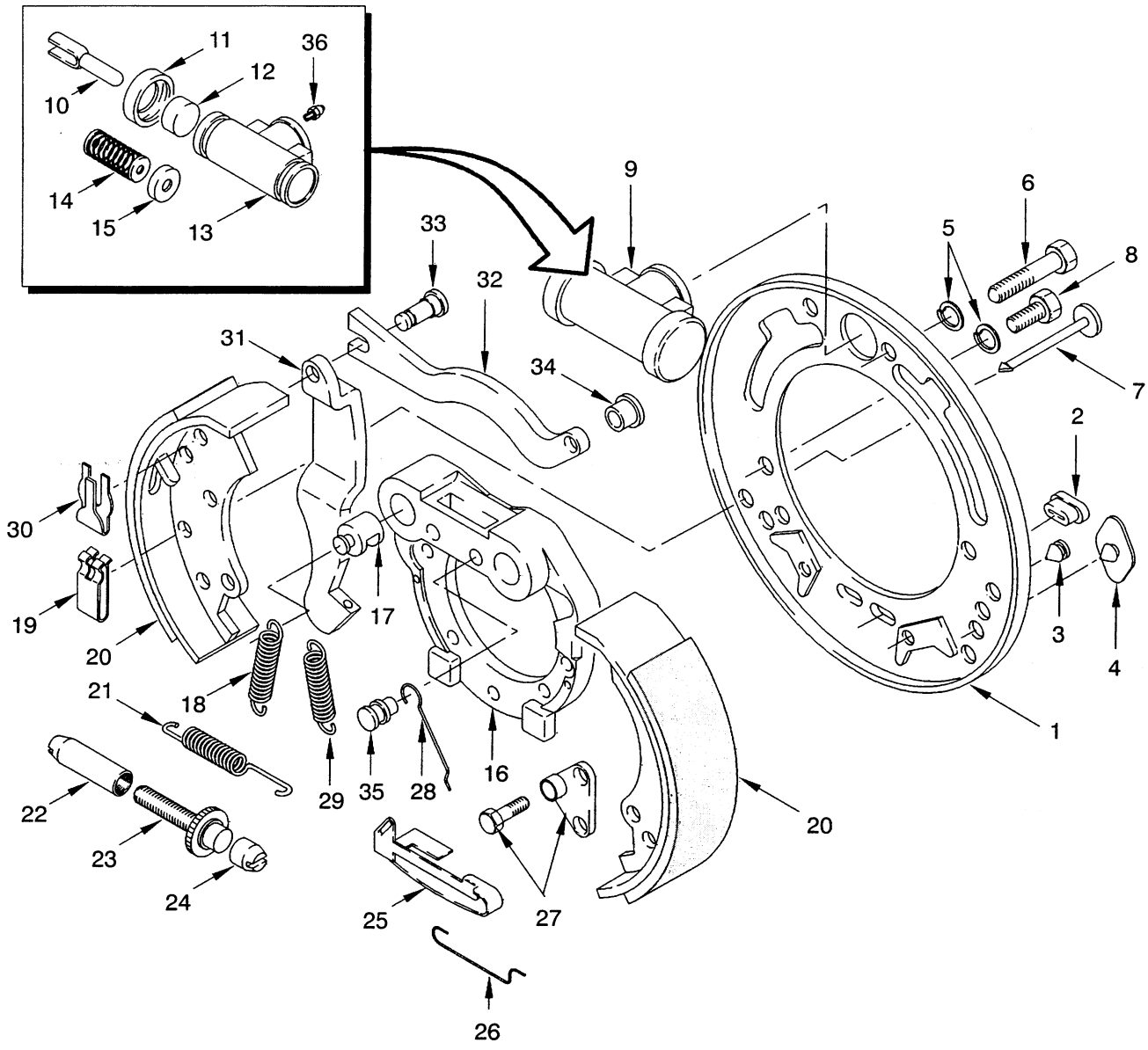

©1999 HYSTER COMPANY

See Service Manual
for service procedures

BRAKE

LAST USED ON S/N G00D-8496

KEY:
A: Right Hand
B: Left Hand

REF		PART NO.	NAME OF PART	QTY A	QTY B
		1336321	Brake	1	..
		1336322	Brake	..	1
1		351828	Kit-Plate	1	1
2	a	200084	Plug	2	2
3		358092	Plug	2	2
4		358093	Plug	2	2
5		15155	Lockwasher	4	4
6		221453	Capscrew	2	2
7	b	....	Rod	3	3
8		221451	Capscrew	2	2
9	a	200141	Wheel Cylinder	1	1
10		....	Push Rod	2	2
11	c	....	Cover	2	2
12		....	Piston	2	2
13		....	Wheel Cylinder	1	1
14		....	Spring	1	1
15	c	....	Cup	2	2
16		1300287	Spider	1	..
16		1300286	Spider	..	1
17		200157	Anchor Pin	2	2
18	d	....	Spring	2	2
19	b	....	Clip	3	3
20	a	1383782	Shoe & Lining	2	2
21	a	162138	Spring	1	1
22	e	....	Nut	1	..
22	f	....	Nut	..	1
23	e	....	Bolt	1	..
23	f	....	Bolt	..	1
24	e	....	Sleeve	1	..
24	f	....	Sleeve	..	1
25	a	162145	Lever	..	1
25	a	162144	Lever	1	..
26	a	162146	Link (Actuator)	1	1
27		162984	Screw/Link	1	..
27		162983	Screw/Link	..	1
28	a	162147	Link (Anchor)	1	1
29	d	....	Spring	2	2
30		200147	Clip	2	2
31		200149	Lever	1	..
31		200148	Lever	..	1
32		200146	Link	1	..
32		200145	Link	..	1
33		1303788	Pin	2	2
34		1303789	Pin	1	1
35		249297	Pin	1	1
36		28340	Bleeder Screw	1	1

a Included In Brake Overhaul Kit 996026
b Included In Retainer Kit 321779
c Included In Repair Kit 200160
d Included In Retainer Kit 321780
e Included In Star Wheel Kit 162139
f Included In Star Wheel Kit 162140

©1999 HYSTER COMPANY

BRAKE (FIGURE 143)

FIRST USED ON S/N G00D-8497

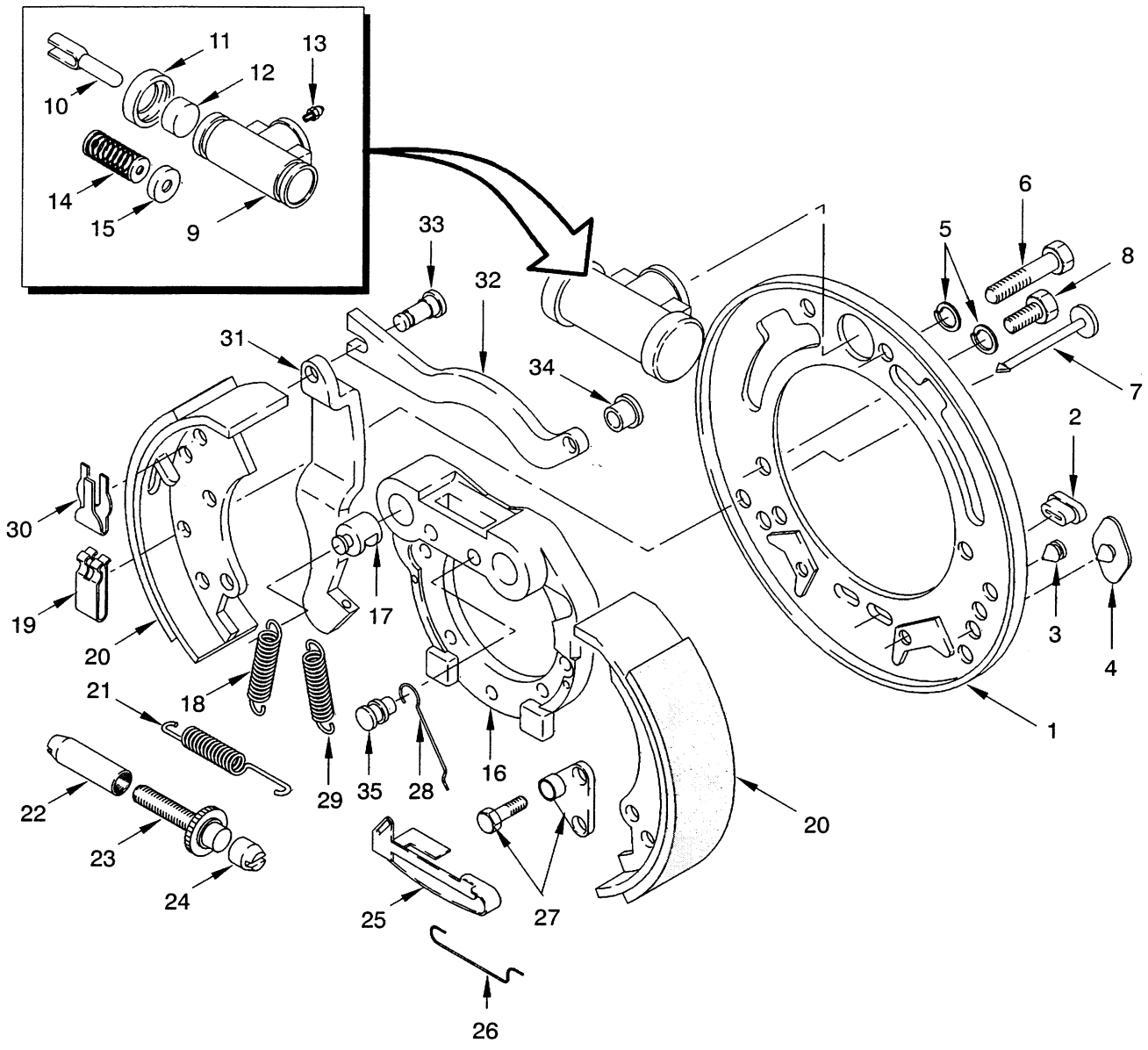

©1999 HYSTER COMPANY

See Service Manual
for service procedures

BRAKE

FIRST USED ON S/N G00D-8497

KEY:
A: Right Hand
B: Left Hand

REF		PART NO.	NAME OF PART	QTY A	QTY B
		1383780	Brake	1	..
		1383781	Brake	..	1
1	f	1337621	Backing Plate Assy	1	1
2	af	200084	Plug	2	2
3	f	358092	Plug	2	2
4	f	358093	Plug	2	2
5	f	15155	Lockwasher	4	4
6	f	221455	Capscrew	2	2
7	b	....	Rod	3	3
8	f	221451	Capscrew	2	2
9	fae	1337622	Wheel Cylinder	1	1
10	e	....	Push Rod	2	2
11	ce	....	Cover	2	2
12	e	....	Piston	2	2
13	e	28340	Bleeder Screw	1	1
14	e	....	Spring	1	1
15	ce	....	Cup	2	2
16	f	1337620	Spider	1	1
17		200157	Anchor Pin	2	2
18	d	....	Spring	2	2
19	b	....	Clip	3	3
20	a	1383782	Shoe & Lining	2	2
21	a	162138	Spring	1	1
22		1338485	Nut	1	..
22		1338489	Nut	..	1
23		1338484	Bolt	1	..
23		1338490	Bolt	..	1
24		1338486	Sleeve	1	..
25	a	162145	Lever	1	..
25	a	162144	Lever	..	1
26	a	162146	Link (Actuator)	1	1
27		162983	Screw/Link	1	..
27		162983	Screw/Link	..	1
28	a	162147	Link (Anchor)	1	1
29	d	....	Spring	2	2
30		200147	Clip	2	2
31		200149	Lever	1	..
31		200148	Lever	..	1
32		200146	Link	1	..
32		200145	Link	..	1
33		1303788	Pin	2	2
34		1303789	Pin	1	1
35		249297	Pin	1	1

a Included In Brake Overhaul Kit 996026
b Included In Retainer Kit 321779
c Included In Repair Kit 200160 A
d Included In Retainer Kit 321780
e Included In Cylinder Kit 200141
f Included In Spider Assy 1453038

©1999 HYSTER COMPANY

BRAKE BOOSTER & MASTER CYLINDER (FIGURE 144)

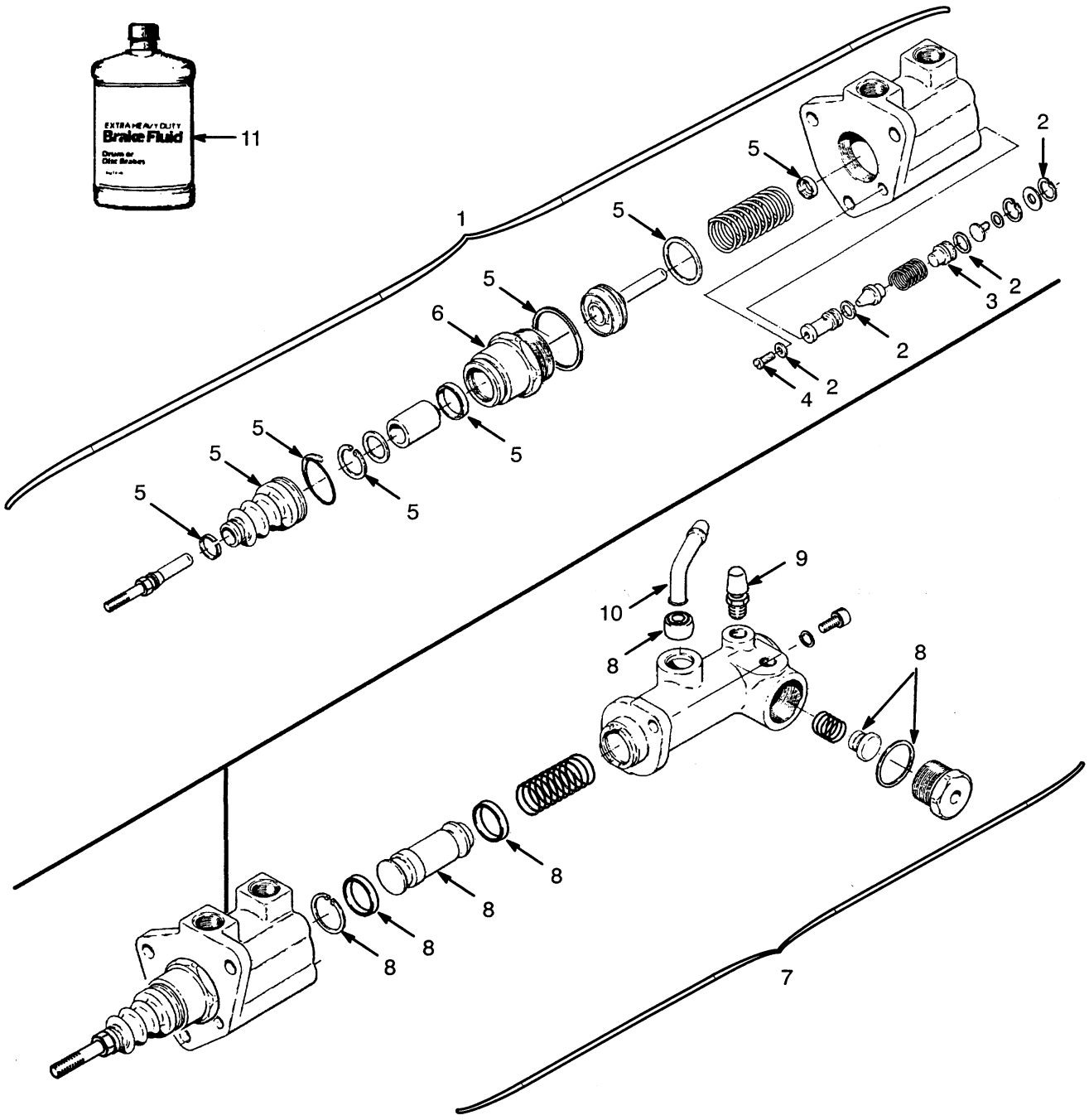

BRAKE BOOSTER & MASTER CYLINDER

REF	PART NO.	NAME OF PART	QTY
	1357470	Booster & Master Cylinder Assy	1
1	1300279	Booster Assembly	1
2	375653	Kit-Booster Repair	1
3	....	Piston	1
4	....	Screw	1
5	1308542	Kit-Booster Repair	1
6	....	Crown Piece	1
7	1358206	Master Cylinder Assembly	1
8	1369004	Kit-Master Cylinder Repair	1
9	385669	Bleeder Screw	1
10	3049156	Fitting	1
11	26758	Brake Fluid (12 oz)	AR
11	357973	Brake Fluid (1 qt)	AR
11	357956	Brake Fluid (1 gal)	AR

©1999 HYSTER COMPANY

NOTE

©1999 HYSTER COMPANY

STEERING SYSTEM

HAND PUMP (Figure 147) ..... Page 305

STEERING AXLE (Figure 148) ..... Page 306

STEERING COLUMN (Figure 146) ..... Page 302

STEERING CYLINDER (Figure 149) ..... Page 308

STEERING (Figure 145)
HYDRAULIC LINES ..... Page 301

©1999 HYSTER COMPANY

NOTE

©1999 HYSTER COMPANY

STEERING (FIGURE 145)

HYDRAULIC LINES

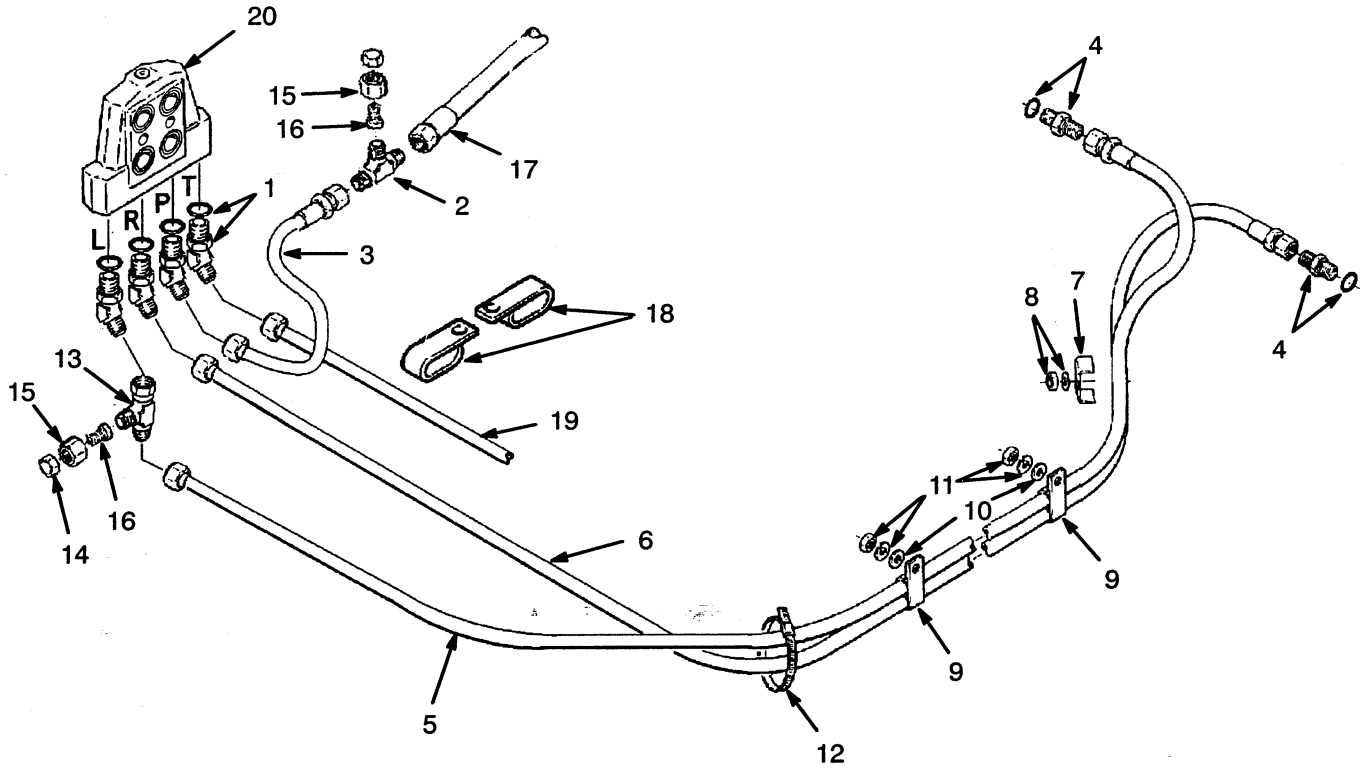

REF		PART NO.	NAME OF PART	QTY
1		....	Fitting	4
			☞ Figure 146	
2		14560	Fitting	1
3		69238	Hose	1
4		16540	Fitting	2
4		16483	O-Ring	1
5	a	1312490	Hose	1
5	b	1312491	Hose	1
6	b	1312490	Hose	1
6	a	1322646	Hose	1
7		353497	Clamp	1
8		239503	Nut	1
8		292681	Lockwasher	1
9		140660	Clamp	2
10		320157	Washer	2

REF	PART NO.	NAME OF PART	QTY
11	292681	Lockwasher	2
11	239503	Nut	2
12	129563	Clamp	1
13	16577	Fitting	1
14	16923	Fitting	2
15	14489	Fitting	2
16	17776	Fitting	2
17	1318479	Hose	1
18	129684	Clamp	2
19	1322645	Hose	1
20	....	Valve Block	1
		☞ Figure 146	

a H90-110XL

b H70-80XL & H90XLS

©1999 HYSTER COMPANY

STEERING COLUMN (FIGURE 146)

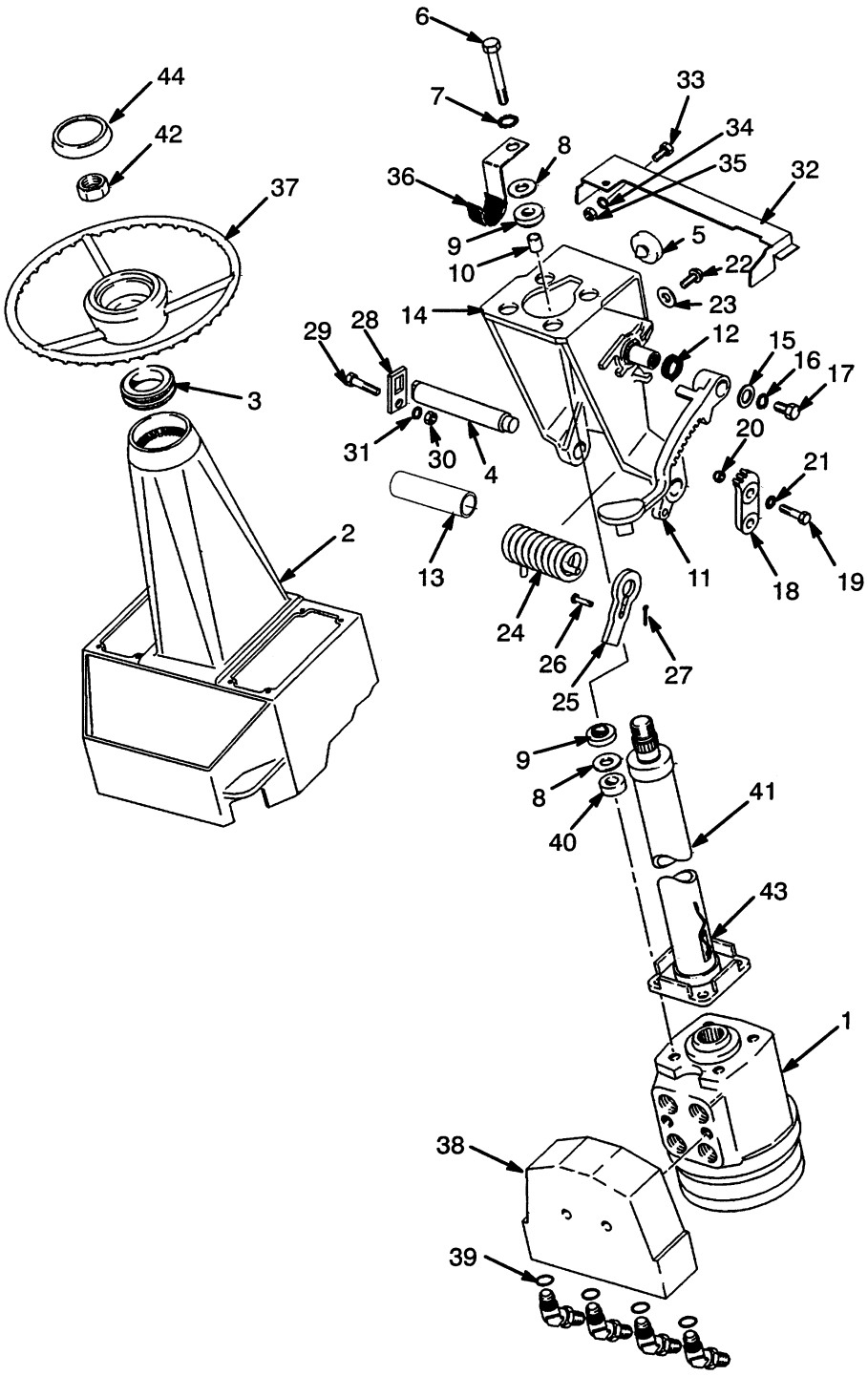

©1999 HYSTER COMPANY

STEERING COLUMN

REF	PART NO.	NAME OF PART	QTY
1	....	Hand Pump	1
		☞ Figure 147	
2	1336570	Steering Pod	1
3	1336465	Grommet	1
4	1336479	Shaft	1
5	1344148	Bumper	1
6	16376	Capscrew	4
7	15920	Washer	4
8	1334790	Washer	8
9	1336468	Isolator	8
10	1336503	Spacer	4
11	1336480	Latch	1
12	1336483	Spring	1
13	1350404	Bushing	1
14	1344055	Bracket	1
15	296442	Washer	1
16	292683	Lockwasher	1
17	132860	Capscrew	1
18	1336474	Latch Plate	1
19	287860	Capscrew	2
20	316826	Nut	2
21	296421	Washer	2
22	1346863	Capscrew	2
23	1346862	Washer	2
24	1346861	Spring	1
25	1336476	Tensioner	1
26	930775	Rod-End Pin	1
27	15203	Pin	1
28	1336472	Plate	1
29	136749	Capscrew	1
30	239503	Nut	1
31	293780	Washer	1
32	1336481	Cover	1
33	292500	Capscrew	2
34	292680	Washer	2
35	136687	Nut	2
36	1344054	Clamp	1
37	352955	Steering Wheel	1
38	352431	Valve Block Assembly	1
39	17196	Fitting	4
39	16484	O-Ring	4
40	1300165	Spacer	4
41	1312733	Steering Column	1
42	345423	Nut	1
43	362816	Kit-Contact	1
44	371666	Horn Button	1

©1999 HYSTER COMPANY

NOTE

©1999 HYSTER COMPANY

HAND PUMP (FIGURE 147)

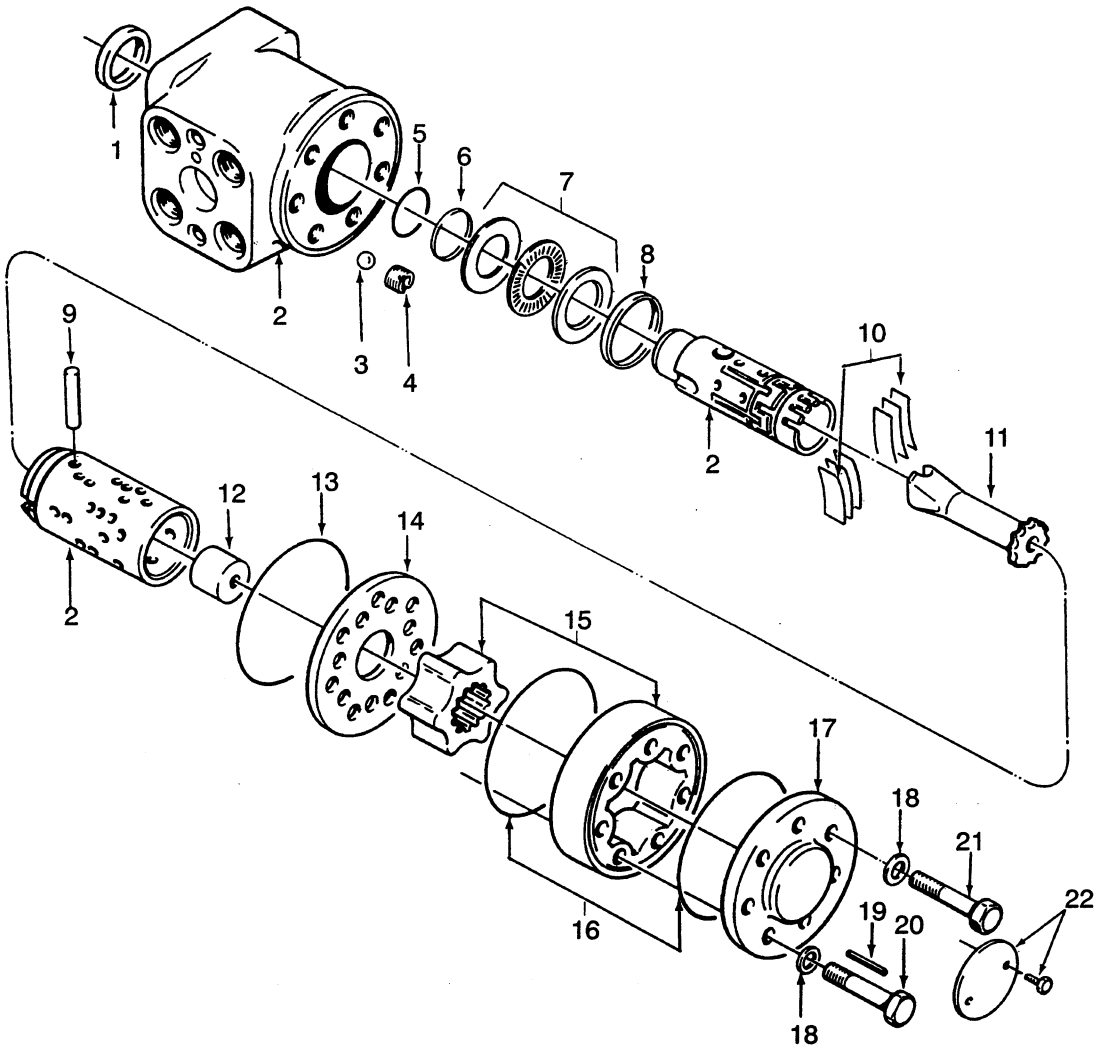

REF		PART NO.	NAME OF PART	QTY
		357288	Hand Pump	1
1	a	....	Seal Ring	1
2		....	Housing	1
2		....	Spool/Sleeve	1
3		345408	Ball	1
4		345409	Bushing	1
5	a	....	O-Ring	1
6	a	....	Ring	1
7		345410	Set-Bearing	1
8		345411	Ring	1
9		345412	Cross Pin	1
10		345413	Set-Spring	1
11		345414	Shaft	1
12		366067	Spacer	1

REF		PART NO.	NAME OF PART	QTY
13	a	....	O-Ring	1
14		345416	Plate	1
15		366068	Set-Gear	1
16	a	....	O-Ring	2
17		345424	Cover	1
18	a	....	Washer	7
19		345418	Pin	1
20		366069	Screw	1
21		371344	Screw	6
22		....	Plate	1
22		....	Screw	2

a Included In Seal Kit 345421

©1999 HYSTER COMPANY

STEERING AXLE (FIGURE 148)

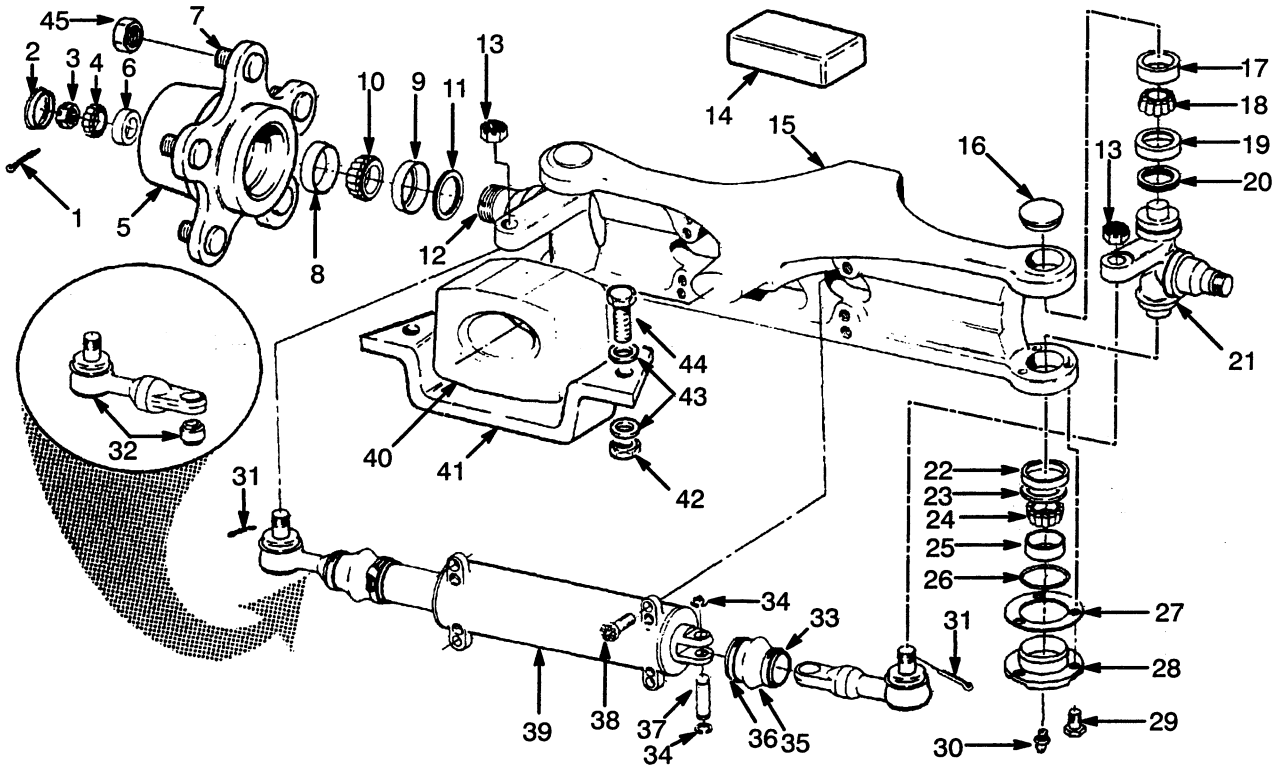

STEERING AXLE

REF		PART NO.	NAME OF PART	QTY
1	a	15227	Cotter Pin	2
2		69029	Hub Cap	2
3		1383777	Nut	2
4	a	30289	Bearing Cone	2
5		238228	Hub	2
6	a	30019	Bearing Cup	1
7		25723	Stud	5
8	a	30147	Bearing Cup	1
9	a	164639	Wear Sleeve	1
10	a	230315	Bearing Cone	2
11	a	44542	Oil Seal	2
12		286162	Spindle (LH)	1
13		21189	Nut	2
14	b	352205	Mount	1
15		352172	Steer Axle	1
16		185860	Plug	2
16		288394	Sealant	AR
17	a	230421	Bearing Cup	2
18	a	153715	Bearing Cone	2
19	a	153717	Wear Sleeve	2
20	a	153716	Seal	2
21		286161	Spindle (RH)	1
22	a	266733	Seal	2
23	a	266728	Seal	2
24	a	135657	Bearing Cone	2
25	a	135658	Bearing Cup	2
26	a	39678	O-Ring	2
27	a	185856	Shim (.005 in)	AR
27	a	185857	Shim (.007 in)	AR
27	a	185858	Shim (.020 in)	AR
28		266735	Bearing Cap	2
29		293628	Capscrew	6
30		13957	Grease Fitting	2
31		15225	Cotter Pin	2
32		185870	Tie Rod	2
32	a	185872	Bushing	1
33		127045	Clamp	2
34	a	58903	Snap Ring	4
35		185869	Cover	2
36		119236	Clamp	2
37	a	326498	Pin	2
38		293686	Capscrew	8
39		....	Steering Cylinder ☞ Figure 149	1
40		1343831	Mount	2
41		324858	Plate	2
42		300937	Nut	4
43		320161	Washer	8
44		293648	Capscrew	4
45		11276	Nut	10
45		15224	Pin	10

a Included In Steer Axle Kit 996024
b H90XLS & H90-110XL

©1999 HYSTER COMPANY

STEERING CYLINDER (FIGURE 149)

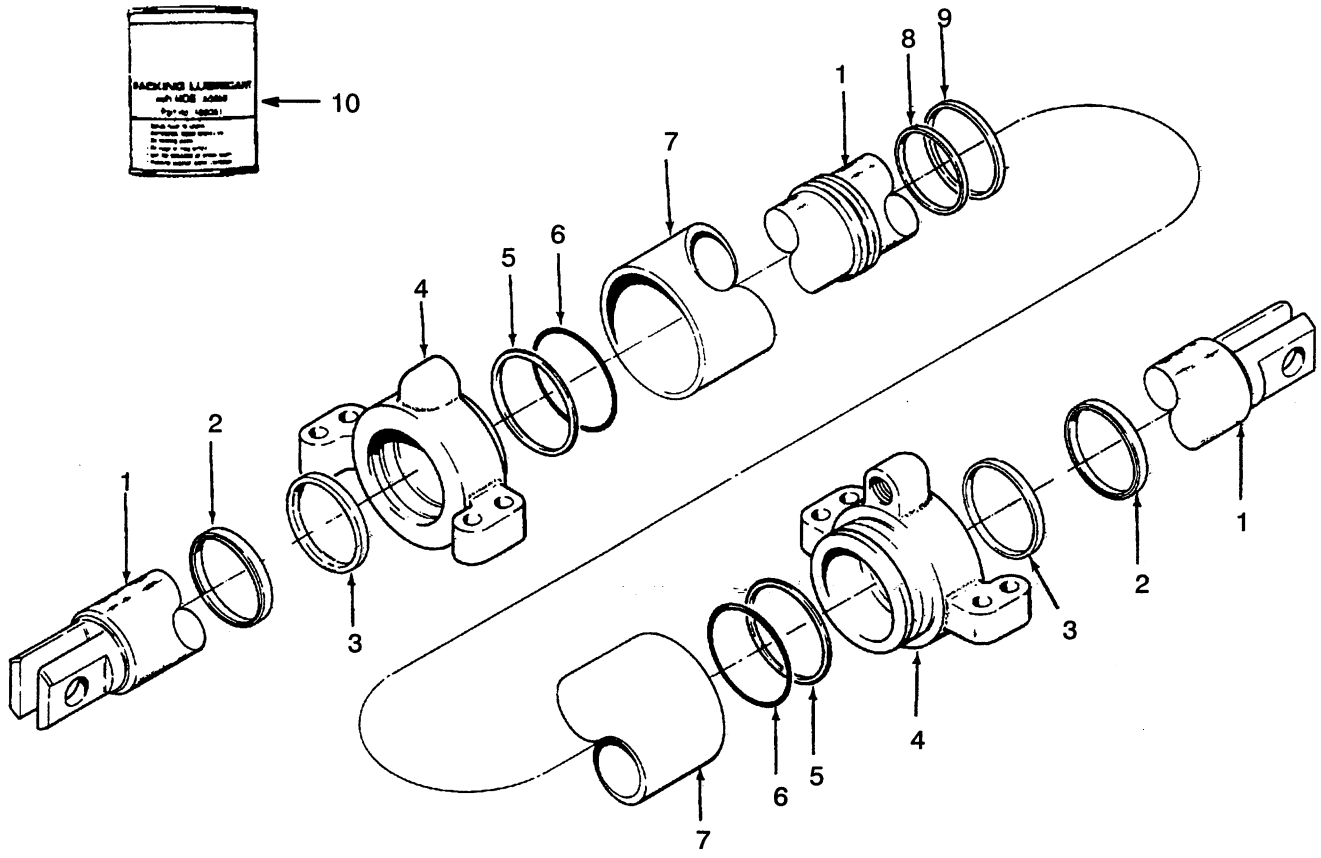

REF		PART NO.	NAME OF PART	QTY
		352198	Steering Cylinder	1
1		352200	Piston Rod	1
2	a	203071	Wiper	2
3	a	210183	Seal (Rod)	2
4		352203	Cap	2
5	a	270015	Back-Up Ring	2
6	a	79981	O-Ring	2
7		352199	Shell	1
8	a	304056	Ring	1
9	a	1380885	Piston Ring	1
10		186061	Packing Lubricant	AR

a Included In Seal Kit 1302759

©1999 HYSTER COMPANY

HYDRAULIC SYSTEM

CHARGE PUMP (Figure 153)
OIL CLUTCH ..... Page 316

CHARGE PUMP HYDRAULICS (Figure 152)
OIL CLUTCH ..... Page 314

CONTROL VALVE ATTACHING PARTS (Figure 156)
TWO FUNCTION ..... Page 322

CONTROL VALVE ATTACHING PARTS (Figure 158)
THREE FUNCTION ..... Page 326

CONTROL VALVE ATTACHING PARTS (Figure 160)
FOUR FUNCTION ..... Page 330

CONTROL VALVE (Figure 157)
TWO FUNCTION ..... Page 324

CONTROL VALVE (Figure 159)
THREE FUNCTION ..... Page 328

CONTROL VALVE (Figure 161)
FOUR FUNCTION ..... Page 332

HYDRAULIC PUMP (Figure 154) ..... Page 319

HYDRAULIC SYSTEM (Figure 150)
TANK CONNECTIONS & LINES ..... Page 310

HYDRAULIC SYSTEM (Figure 151) ..... Page 312

TILT CYLINDER (Figure 155) ..... Page 320

©1999 HYSTER COMPANY

HYDRAULIC SYSTEM (FIGURE 150)

TANK CONNECTIONS & LINES

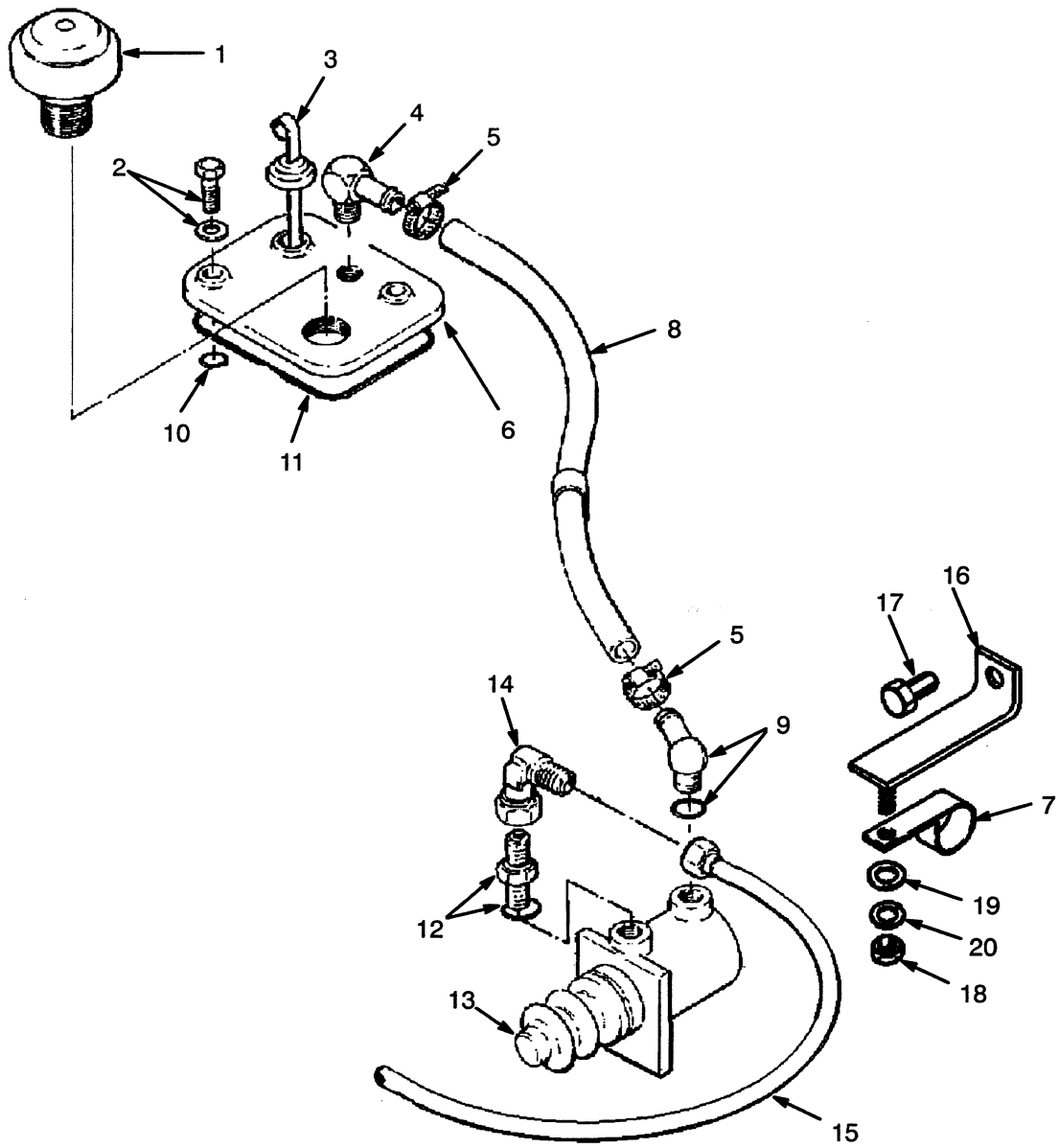

©1999 HYSTER COMPANY

HYDRAULIC SYSTEM

TANK CONNECTIONS & LINES

REF	PART NO.	NAME OF PART	QTY
1	353302	Breather	1
2	329067	Screw	2
2	320157	Washer	2
3	352534	Dipstick	1
4	102898	Fitting	1
5	166857	Clamp	2
6	305587	Cover (Tank)	1
7	325897	Clamp	1
8	120857	Hose	1
9	222510	Fitting	1
9	16484	O-Ring	1
10	353000	O-Ring	2
11	353106	Seal	1
12	16541	Fitting	1
12	16484	O-Ring	1
13	....	Brake Booster	1
		☞ Figure 144	
14	16883	Fitting	1
15	1322645	Hose	1
16	1337841	Bracket	1
17	292515	Capscrew	1
18	136692	Nut	1
19	320159	Washer	1
20	292682	Lockwasher	1

©1999 HYSTER COMPANY

HYDRAULIC SYSTEM (FIGURE 151)

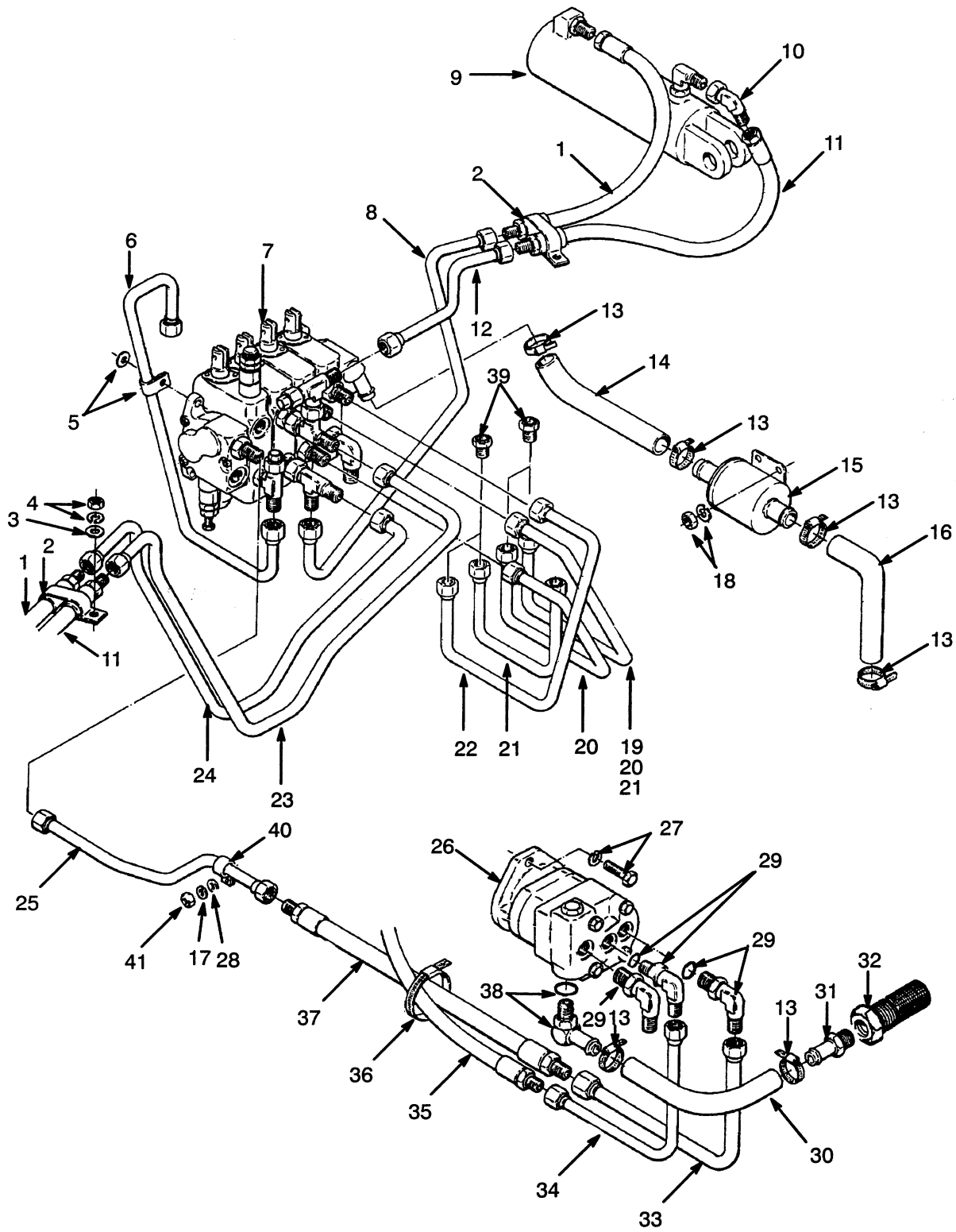

HYDRAULIC SYSTEM

KEY:
A: Two Function
B: Three Function
C: Four Function

REF		PART NO.	NAME OF PART	A	B	C
1		352725	Hose	2	2	2
2		251994	Clamp	2	2	2
3		320157	Washer	8	8	8
4		239503	Nut	8	8	8
4		292681	Lockwasher	8	8	8
5		298132	Clamp	1	1	1
5		320159	Washer	1	1	1
6		352715	Tube	1	1	1
7		....	Control Valve	1	..	..
			☞ Figure 157			
7		....	Control Valve	..	1	..
			☞ Figure 159			
7		....	Control Valve	..	..	1
			☞ Figure 161			
8		352879	Tube	1	1	1
9		....	Tilt Cylinder	2	2	2
			☞ Figure 155			
10		16999	Fitting	2	2	2
11		352724	Hose	2	2	2
12		352880	Tube	1	1	1
13		127045	Clamp	6	6	6
14		119433	Hose	1	1	1
15	a	1327917	Hydraulic Oil Filter	1	1	1
15	b	1360557	Hydraulic Oil Filter	1	..	..
16		352696	Hose	1	1	1
17		292681	Lockwasher	1	1	1
18		239503	Nut	2	2	2
18		292681	Lockwasher	2	2	2
19		1391314	Tube	..	1	1
20		1391313	Tube	..	1	1
21		352718	Tube	..	..	1
22		353447	Tube	..	..	1
23		352878	Tube	1	1	1
24		352877	Tube	1	1	1
25		352700	Tube	1	1	1
26		....	Hydraulic Pump	1	1	1
			☞ Figure 154			
26		313022	Sealant	AR	AR	AR
27		15158	Lockwasher	2	2	2
27		18588	Capscrew	2	2	2
28		320157	Washer	1	1	1
29		16561	Fitting	2	2	2
29		16486	O-Ring	1	1	1
30		352925	Hose	1	1	1
31		17241	Fitting	1	1	1
32		352563	Screen	1	1	1
33		352924	Tube	1	1	1
34		352923	Tube	1	1	1
35		1318479	Hose	1	1	1
36		129563	Clamp	1	1	1
37		352934	Hose	1	1	1
38		213619	Fitting	1	1	1
38		16983	O-Ring	1	1	1
39		16935	Fitting	..	2	2
40		298132	Clamp	1	1	1
41		239503	Nut	1	1	1

a Last Used S/N G005D-2076
b First Used S/N G005D-2077

©1999 HYSTER COMPANY

CHARGE PUMP HYDRAULICS (FIGURE 152)

OIL CLUTCH

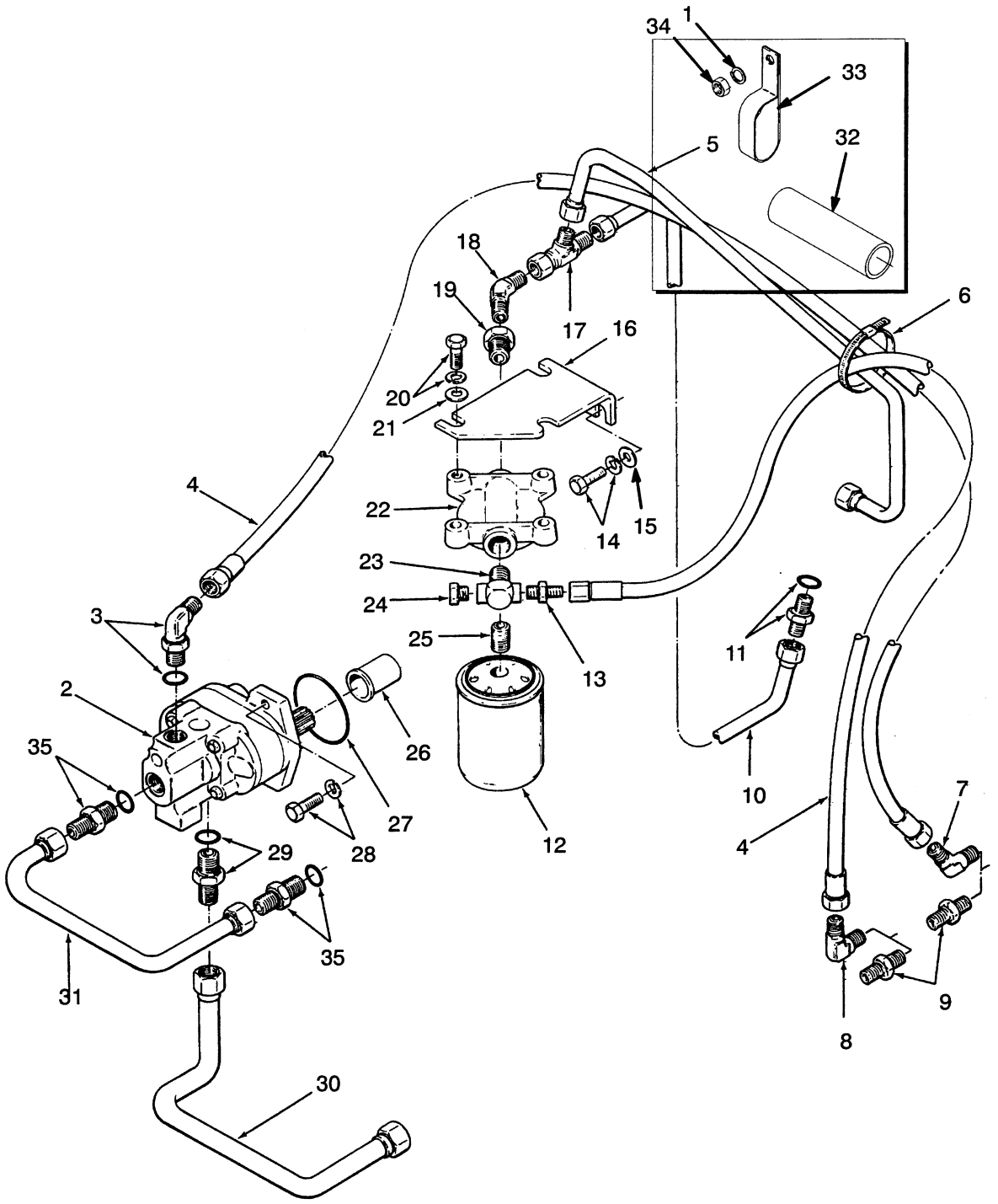

©1999 HYSTER COMPANY

CHARGE PUMP HYDRAULICS

OIL CLUTCH

REF		PART NO.	NAME OF PART	QTY
1	a	292681	Lockwasher	1
2		....	Charge Pump	1
			☞ Figure 153	
3		16567	Fitting	1
3		16483	O-Ring	1
4		1303546	Hose	2
5		352846	Tube	1
6		273775	Strap/Clamp	6
7	a	16999	Fitting	1
7	b	16883	Fitting	1
8		16883	Fitting	1
9		14677	Fitting	2
10		352849	Tube	1
11		16539	Fitting	1
11		16482	O-Ring	1
12		1328692	Filter	1
12		1332885	Gasket	1
13		14677	Fitting	1
14		287854	Capscrew	2
14		292682	Lockwasher	2
15		15134	Washer	2
16		352845	Bracket	1
17		17060	Fitting	1
18		17333	Fitting	1
19		69815	Fitting	1
20		16805	Capscrew	3
20		15156	Lockwasher	3
21		15134	Washer	3
22		297864	Base (Filter)	1
23		17666	Fitting	1
24		12844	Fitting	1
25		181766	Fitting	1
25		226414	Adhesive	AR
26		352467	Adapter	1
27		140465	O-Ring	1
27		313022	Sealant	AR
28		16828	Capscrew	2
28		15156	Lockwasher	2
29		142682	Fitting	1
29		16485	O-Ring	1
30		352847	Tube	1
31		352848	Tube	1
32	a	1358120	Sleeve	1
33	a	1326653	Clamp (Insulated)	1
34	a	239503	Nut	1
35		16541	Fitting	2
35		16484	O-Ring	1

a H70-80XL & H90XLS
b H90-110XL

©1999 HYSTER COMPANY

CHARGE PUMP (FIGURE 153)

OIL CLUTCH

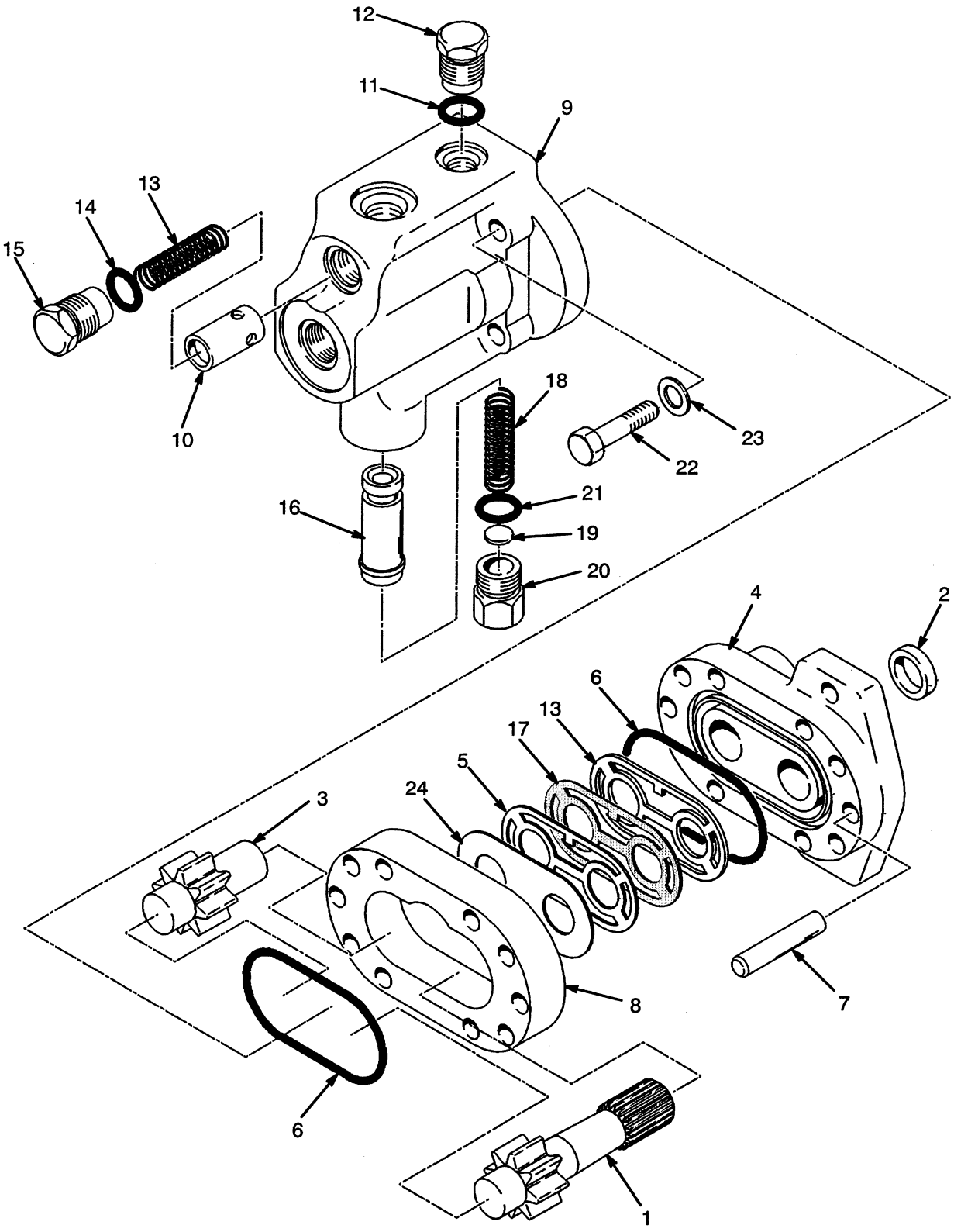

©1999 HYSTER COMPANY

TRANSMISSION PUMP

OIL CLUTCH

REF		PART NO.	NAME OF PART	QTY
		283721	Charge Pump	1
1		323475	Drive Gear	1
2	a	373962	Seal	1
3		323476	Driven Gear	1
4		323447	Cover (Front)	1
5	a	239624	Heat Shield	1
6	a	373963	O-Ring	2
7		222706	Dowel Pin	2
8		323448	Section (Center)	1
9		323449	Cover (Back)	1
10		323479	Control Spool	1
11	a	373964	O-Ring	1
12		222442	Fitting	1
13	a	323480	Spring	1
14	a	373965	O-Ring	1
15		323481	Control Cap	1
16		323482	Spool	1
17	a	239623	Gasket	1
18		323483	Spring	1
19		323484	Shim	AR
20		323485	Valve Cap	1
21	a	373966	O-Ring	1
22		18516	Capscrew	4
23		239635	Washer	4
24	a	239625	Plate	1

a Included In Repair Kit 323629

©1999 HYSTER COMPANY

NOTES

©1999 HYSTER COMPANY

HYDRAULIC PUMP (FIGURE 154)

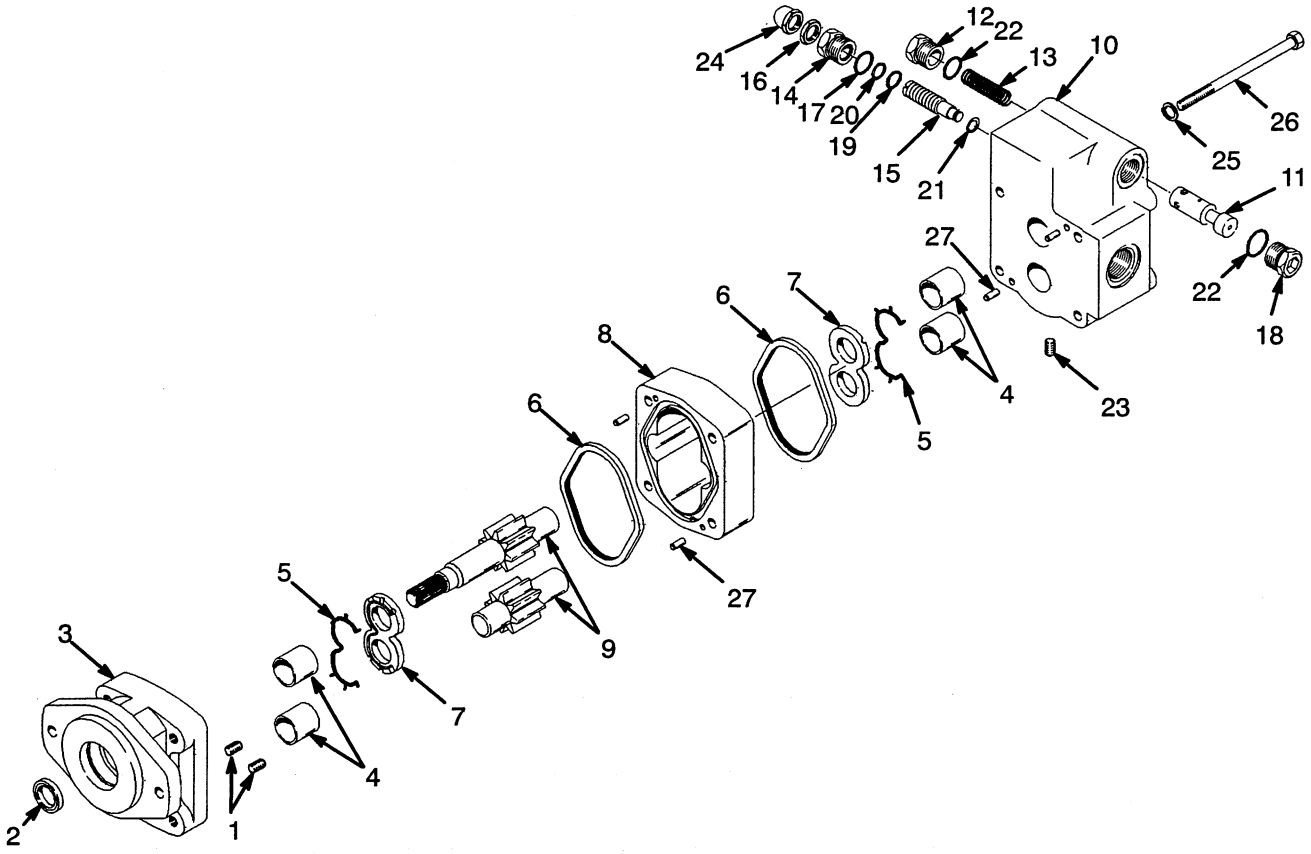

KEY:
A: With Oil Clutch
B: With Power Shift

REF		PART NO.	NAME OF PART	QTY A	QTY B
		353473	Pump	1	..
		1343967	Pump	..	1
1		176159	Plug	2	2
2	ab	....	Seal	1	1
3		385856	Cover	1	1
4		1327501	Bushing	1	1
5	b	372112	Seal	2	2
6	a	....	Seal	2	2
7	b	1466398	Kit-Thrust Plate	2	2
8		372110	Housing	1	..
8		1358678	Housing	..	1
9		372113	Shaft/Gear	1	..
9		1358679	Shaft/Gear	..	1
10		372109	End (Port)	1	1
11		....	Spool	1	1
12		1327503	Retainer	1	1
13		1327504	Spring	1	1
14	a	1327505	Cartridge	1	1
15		1327506	Screw	1	1
16		1327507	Nut	1	1
17		1327508	O-Ring	1	1
18		1327509	Plug	1	1
19		104681	O-Ring	1	1
20		1327511	Back-Up Ring	1	1
21		1327512	Snap Ring	1	1
22		1327513	O-Ring	2	2
23		1358860	Plug	1	1
24		1327515	Nut	1	1
25		176167	Washer	4	4
26		14997	Capscrew	4	4
27		1151722	Dowel Pin	4	4

a Included In Seal Kit 1307449 (For Pump 353473)

b Included In Seal Kit 1358680 (For Pump 1343967)

©1999 HYSTER COMPANY

TILT CYLINDER (FIGURE 155)

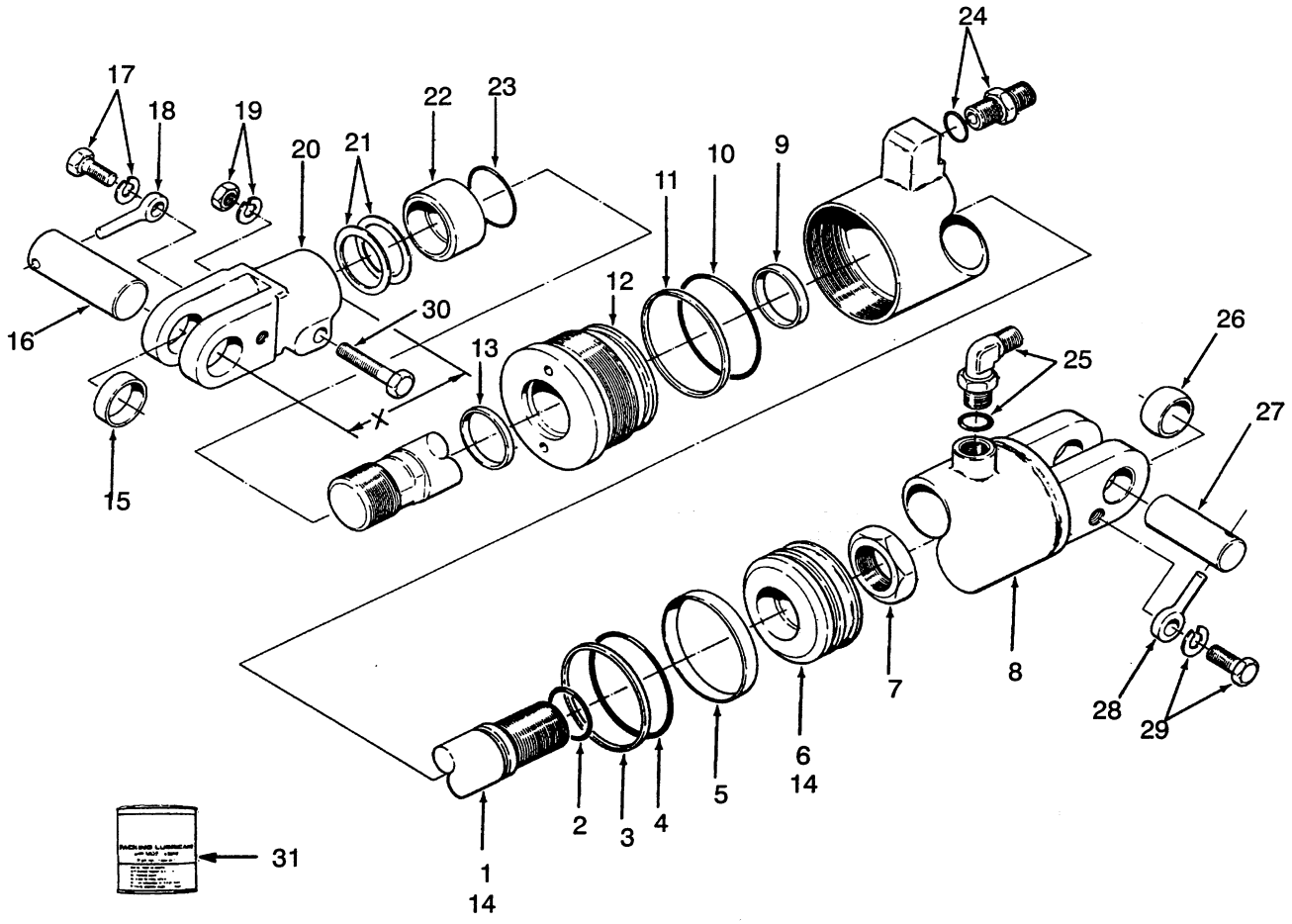

©1999 HYSTER COMPANY

TILT CYLINDER

REF		PART NO.	NAME OF PART	QTY
		352240	Cylinder	2
1		352248	Rod (Optional)	1
2	a	199917	O-Ring (Optional)	1
3	a	1380886	Piston Seal	1
4	a	15882	O-Ring	1
5	a	352287	Ring	1
6		352247	Piston (Optional)	1
7		2036547	Locknut (Optional)	1
8		352283	Shell	1
9	a	215924	Seal	1
10	a	46629	O-Ring	1
11	a	270330	Back-Up Ring	1
12		352245	Cap	1
13	a	193554	Rod Wiper	1
14		387059	Rod/Piston	1
15		192429	Bushing	2
16		248465	Pin	2
17		169268	Capscrew	2
17		15158	Lockwasher	2

REF	PART NO.	NAME OF PART	QTY
18	241079	Anchor	2
19	221711	Nut	2
19	15158	Lockwasher	2
20	....	Rod End (See Chart below)	2
21	192830	Shim (.060 in)	AR
22	304443	Spacer	2
23	15869	O-Ring	2
24	16540	Fitting	2
24	16483	O-Ring	1
25	16558	Fitting	2
25	16483	O-Ring	1
26	192429	Bushing	2
27	248465	Pin	2
28	241079	Anchor	2
29	292527	Capscrew	2
29	292683	Lockwasher	2
30	18590	Capscrew	2
31	186061	Packing Lubricant	AR

a Included In Seal Kit 1322225

ROD END	MEASUREMENT X	TILT (DEGREES)
248462	3.19 inches	6 Forward
352288	5.59 inches	11 Forward

©1999 HYSTER COMPANY

CONTROL VALVE ATTACHING PARTS (FIGURE 156)

TWO FUNCTION

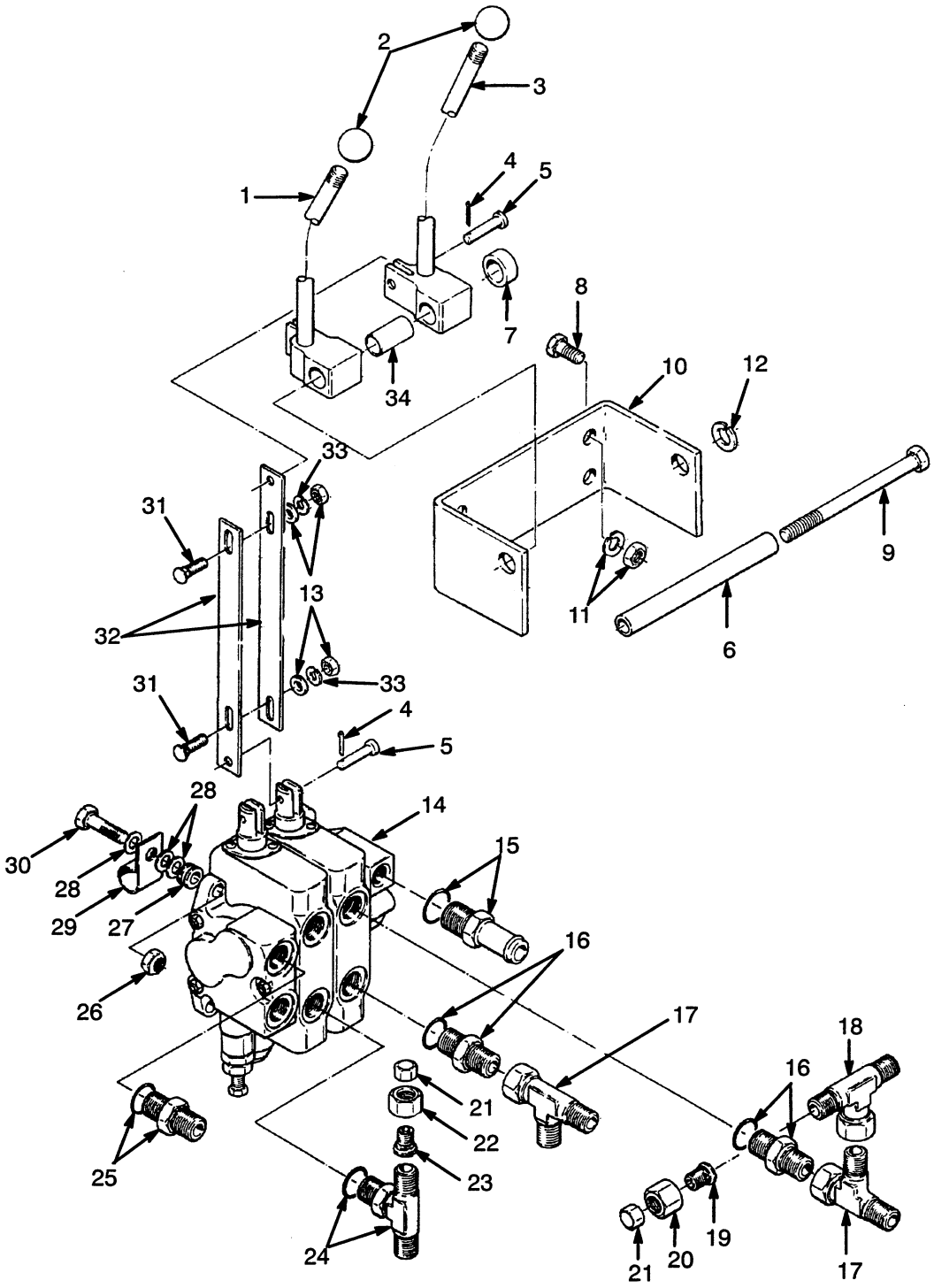

©1999 HYSTER COMPANY

CONTROL VALVE ATTACHING PARTS

TWO FUNCTION

REF	PART NO.	NAME OF PART	QTY
1	1324350	Lift Lever	1
2	308993	Knob	2
3	1324352	Tilt Lever	1
4	15200	Cotter Pin	4
5	309109	Pin	4
6	1305174	Shaft (Pivot)	1
7	1309475	Collar	1
8	292500	Capscrew	4
9	136681	Capscrew	2
9	1328930	Capscrew	1
10	1309491	Bracket (Mounting)	1
11	292680	Lockwasher	4
11	136687	Nut	4
12	292681	Lockwasher	2
13	15127	Washer	4
13	15054	Nut	4
14	....	Control Valve	1
		☞ Figure 157	
15	89056	Fitting	1
15	16486	O-Ring	1
16	16745	Fitting	2
16	16484	O-Ring	1
17	17061	Fitting	2
18	17049	Fitting	1
19	17776	Fitting	1
20	14489	Fitting	1
21	16923	Fitting	2
22	167261	Fitting	1
23	17779	Fitting	1
24	186995	Fitting	1
24	16485	O-Ring	1
25	142682	Fitting	1
25	16485	O-Ring	1
26	316826	Nut	3
27	91946	Grommet	3
28	320159	Washer	5
29	298132	Clamp	1
30	292517	Capscrew	3
31	15937	Bolt	4
32	325729	Plate	4
33	15154	Lockwasher	4
34	1328698	Bushing	2

©1999 HYSTER COMPANY

CONTROL VALVE (FIGURE 157)

TWO FUNCTION

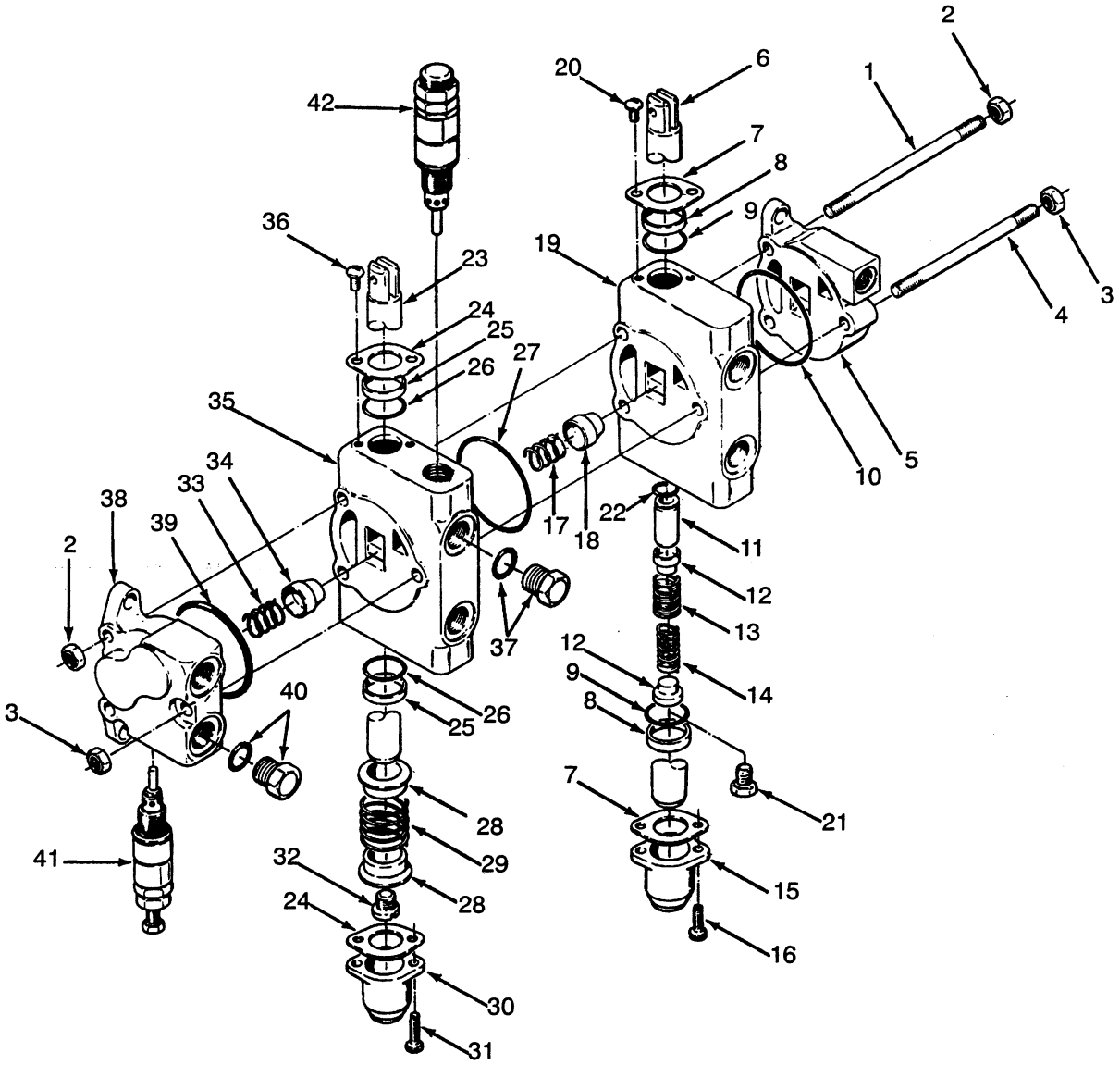

CONTROL VALVE

TWO FUNCTION

REF		PART NO.	NAME OF PART	QTY
		352420	Valve	1
1	a	....	Tie Rod	2
2	a	....	Nut	4
3	a	....	Nut	2
4	a	....	Tie Rod	1
5		372918	Module	1
6		372917	Module	1
6		....	Spool	1
7		205121	Plate	2
8	b	....	Wiper	2
9	b	....	O-Ring	2
10		57664	O-Ring	1
11		....	Piston	1
12		320289	Seat	2
13		188517	Spring	1
14		341462	Spring	1
15		188519	Cap	1
16		12949	Capscrew	2
17		205123	Spring	1
18		205120	Poppet	1
19		....	Housing	1
20		16706	Screw	2
21		386015	End	1
21		320291	Capscrew	1
22		16480	O-Ring	1
23		372916	Module	1
23		....	Spool	1
24		205121	Plate	2

REF		PART NO.	NAME OF PART	QTY
25	b	....	Wiper	2
26	b	....	O-Ring	2
27		57664	O-Ring	1
28		188516	Seat	2
29		188517	Spring	1
30		188519	Cap	1
31		12949	Capscrew	2
32		188518	End (Spool)	1
33		205123	Spring	1
34		205120	Poppet	1
35		....	Housing	1
36		16706	Screw	2
37		233693	Fitting	1
37		188486	Plug	1
37		16485	O-Ring	1
38		362104	Section (Inlet)	1
39		57664	O-Ring	1
40		233693	Fitting	1
40		188486	Plug	1
40		16485	O-Ring	1
41		350485	Relief Valve	1
41		305071	Kit-Seal	1
42		378424	Valve	1
42		1309419	Kit-Seal	1

a Included In Tie Rod Kit 328890

b Included In Seal Kit 339315 (Seals 1 Unit)

©1999 HYSTER COMPANY

CONTROL VALVE ATTACHING PARTS (FIGURE 158)

THREE FUNCTION

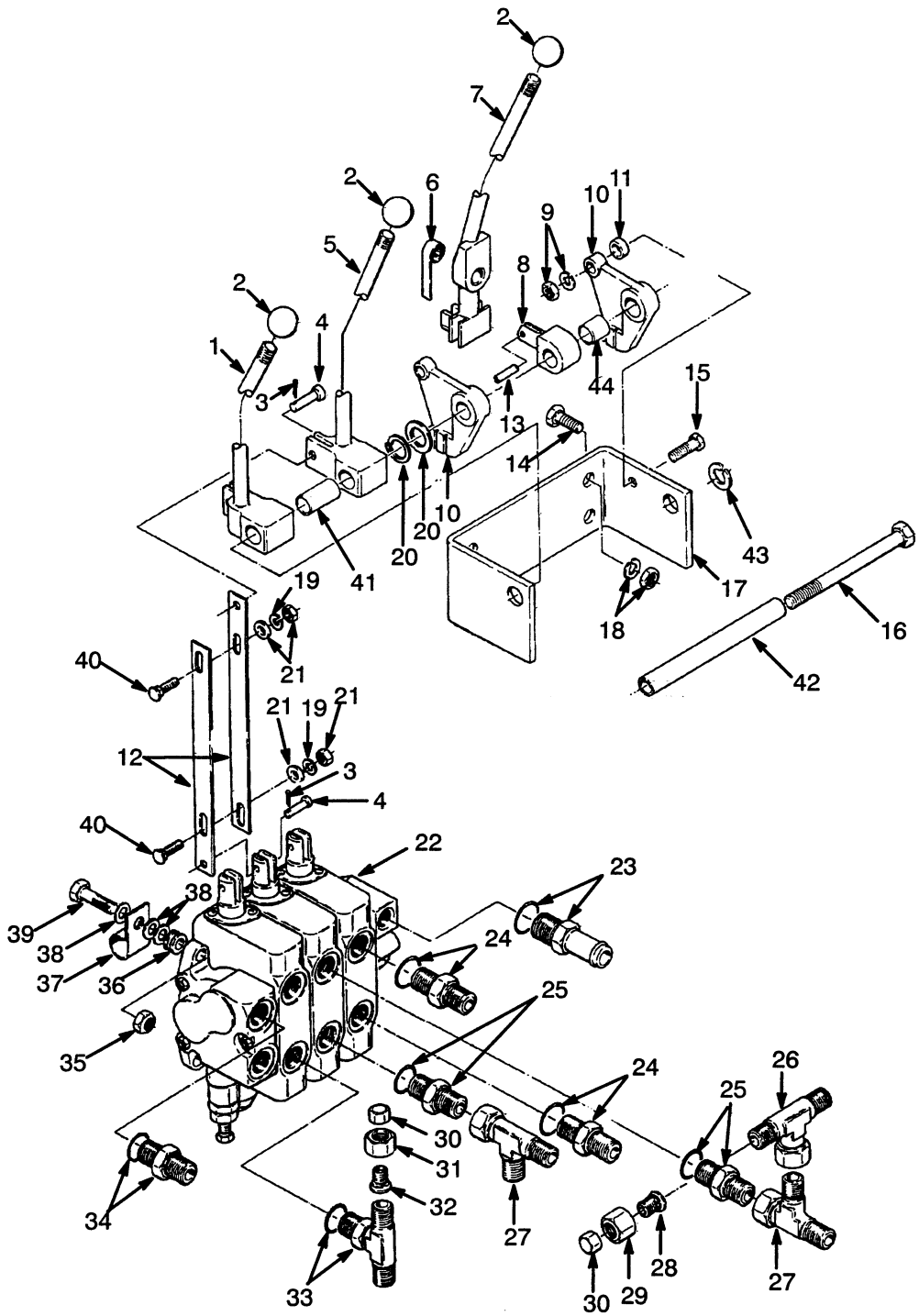

CONTROL VALVE ATTACHING PARTS

THREE FUNCTION

REF	PART NO.	NAME OF PART	QTY
1	1324350	Lift Lever	1
2	308993	Knob	3
3	15200	Cotter Pin	6
4	309109	Pin	6
5	1324352	Tilt Lever	1
6	175861	Spring	1
7	306117	Lever	1
8	306113	Pin	1
9	230881	Locknut	1
9	15163	Lockwasher	1
10	306111	Lever	2
11	306118	Spacer	1
12	325729	Plate	6
13	302428	Pin	1
14	292500	Capscrew	4
15	18085	Capscrew	1
16	1328930	Capscrew	2
17	1309491	Bracket	1
18	136687	Nut	4
18	292680	Lockwasher	4
19	15154	Lockwasher	6
20	1328696	Shim (0.50 mm)	AR
20	1309479	Shim (0.25 mm)	AR
21	15054	Nut	6
21	15127	Washer	6
22	....	Control Valve	1
		☞ Figure 159	

REF	PART NO.	NAME OF PART	QTY
23	89056	Fitting	1
23	16486	O-Ring	1
24	206150	Fitting	2
24	16484	O-Ring	1
25	16745	Fitting	2
25	16484	O-Ring	1
26	17049	Fitting	1
27	17061	Fitting	2
28	17776	Fitting	1
29	14489	Fitting	1
30	16923	Fitting	2
31	167261	Fitting	1
32	17779	Fitting	1
33	186995	Fitting	1
33	16485	O-Ring	1
34	142682	Fitting	1
34	16485	O-Ring	1
35	316826	Nut	3
36	91946	Grommet	3
37	298132	Clamp	1
38	320159	Washer	5
39	292517	Capscrew	3
40	15937	Bolt	6
41	1328698	Bushing	2
42	1305174	Shaft (Pivot)	1
43	292681	Lockwasher	2
44	1328697	Bushing	3

©1999 HYSTER COMPANY

CONTROL VALVE (FIGURE 159)

THREE FUNCTION

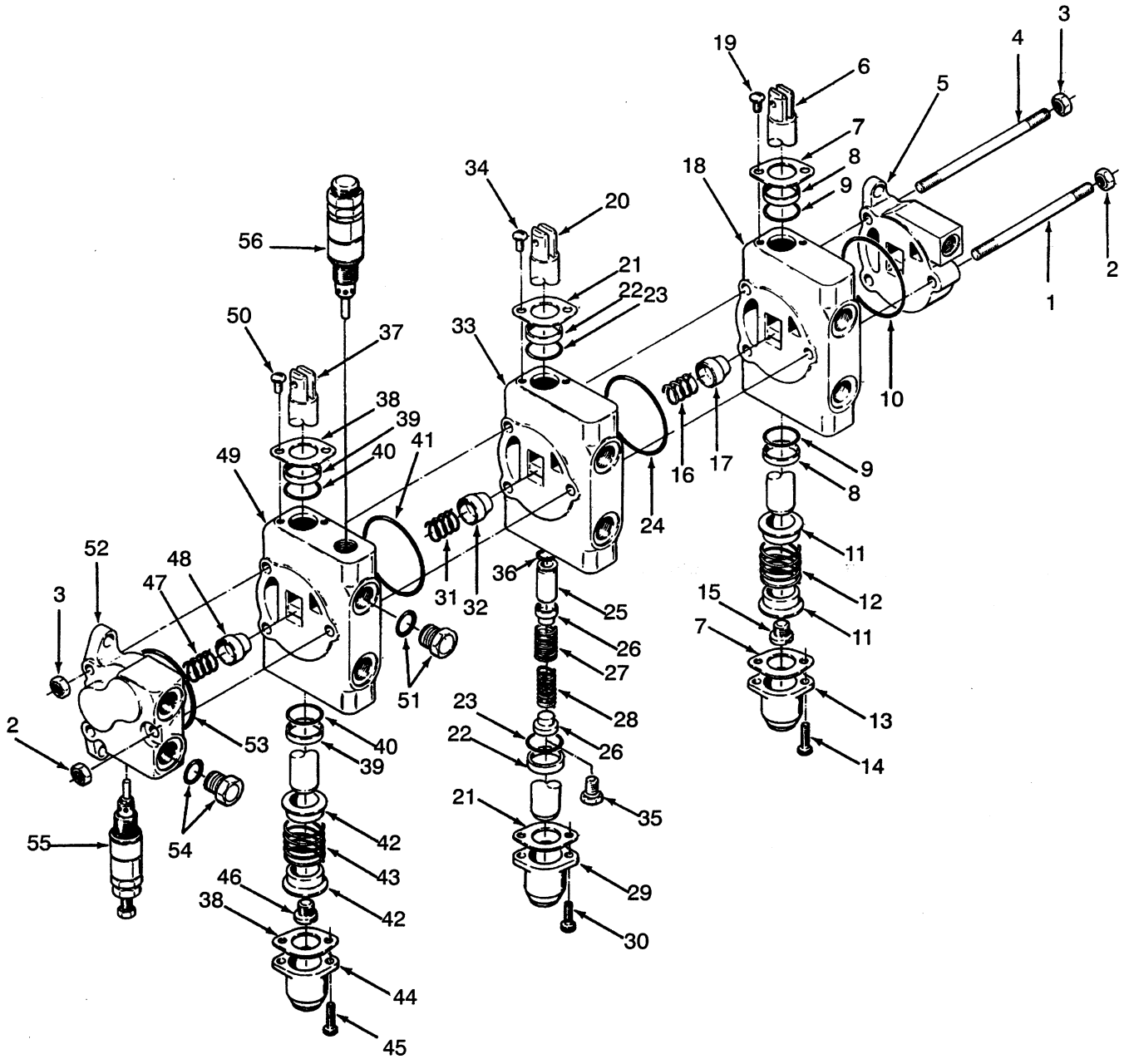

©1999 HYSTER COMPANY

CONTROL VALVE
THREE FUNCTION

REF		PART NO.	NAME OF PART	QTY
		352421	Valve	1
1	a	....	Tie Rod	1
2	a	....	Nut	2
3	a	....	Nut	4
4	a	....	Tie Rod	2
5		372918	Module	1
6		373148	Module	1
6		....	Spool	1
7		205121	Plate	2
8	b	....	Wiper	2
9	b	....	O-Ring	2
10		57664	O-Ring	1
11		188516	Seat	2
12		188517	Spring	1
13		188519	Cap	1
14		12949	Capscrew	2
15		188518	End (Spool)	1
16		205123	Spring	1
17		205120	Poppet	1
18		....	Housing	1
19		16706	Screw	2
20		372917	Module	1
20		....	Spool	1
21		205121	Plate	2
22	b	....	Wiper	2
23	b	....	O-Ring	2
24		57664	O-Ring	1
25		....	Piston	1
26		320289	Seat	2
27		188517	Spring	1
28		341462	Spring	1
29		188519	Cap	1
30		12949	Capscrew	2
31		205123	Spring	1
32		205120	Poppet	1

REF		PART NO.	NAME OF PART	QTY
33		....	Housing	1
34		16706	Screw	2
35		386015	End	1
35		320291	Capscrew	1
36		16480	O-Ring	1
37		372916	Module	1
37		....	Spool	1
38		205121	Plate (Seal)	2
39	b	....	Wiper	2
40	b	....	O-Ring	2
41		57664	O-Ring	1
42		188516	Seat (Spring)	2
43		188517	Spring	1
44		188519	Cap	1
45		12949	Capscrew	2
46		188518	End (Spool)	1
47		205123	Spring	1
48		205120	Poppet	1
49		....	Housing	1
50		16706	Screw	2
51		233693	Fitting	1
51		188486	Plug	1
51		16485	O-Ring	1
52		362104	Section (Inlet)	1
53		57664	O-Ring	1
54		233693	Fitting	1
54		188486	Plug	1
54		16485	O-Ring	1
55		350485	Relief Valve	1
55		305071	Kit-Seal	1
56		378424	Valve	1
56		1309419	Kit-Seal	1

a Included In Tie Rod Kit 328891

b Included In Seal Kit 339315 (Seals One)

©1999 HYSTER COMPANY

CONTROL VALVE ATTACHING PARTS (FIGURE 160)

FOUR FUNCTION

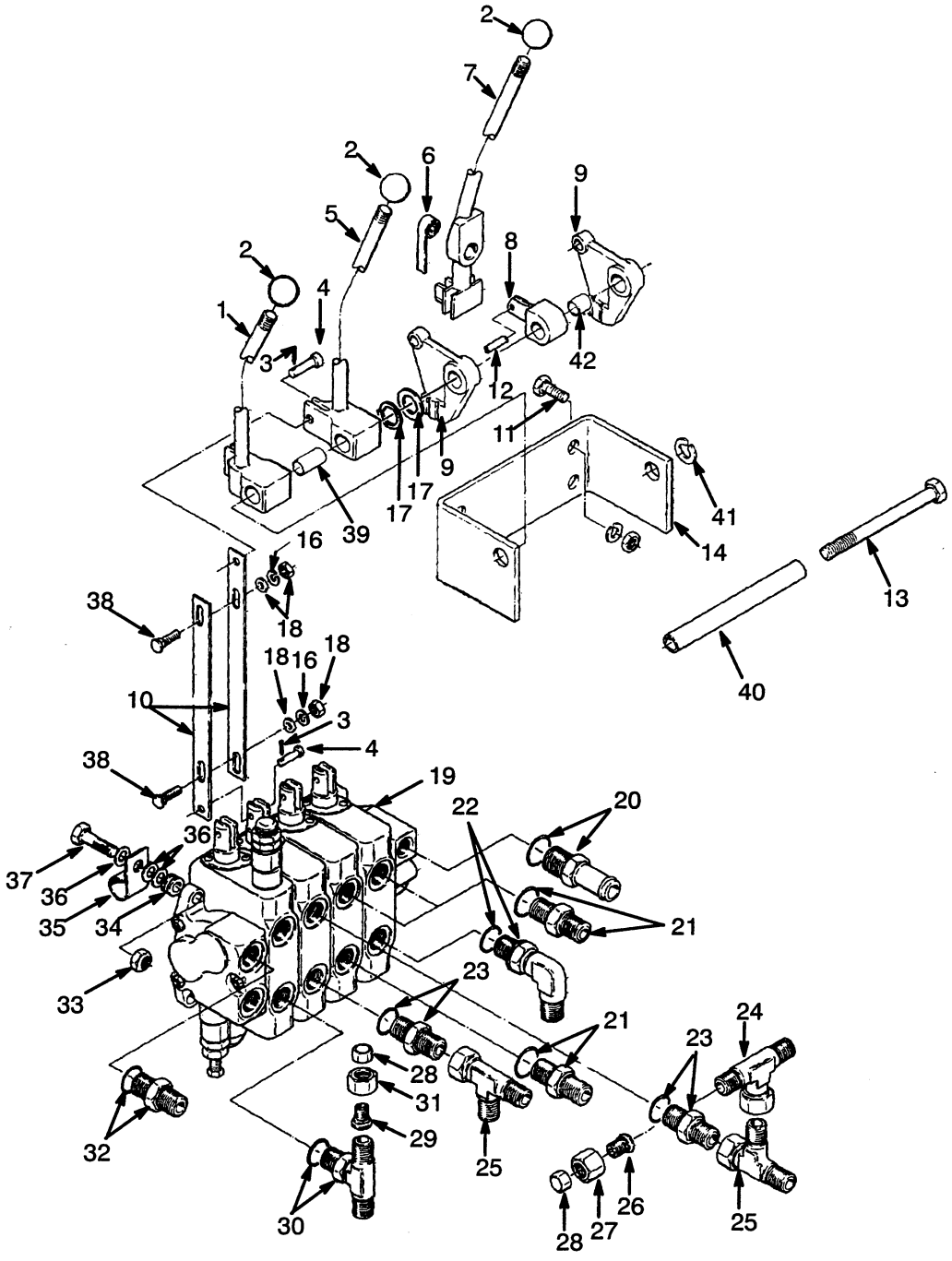

CONTROL VALVE ATTACHING PARTS

FOUR FUNCTION

REF	PART NO.	NAME OF PART	QTY
1	1324350	Lift Lever	1
2	308993	Knob	3
3	15200	Cotter Pin	8
4	309109	Pin	8
5	1324352	Tilt Lever	1
6	175861	Spring	1
7	306117	Lever	1
8	306113	Pin	1
9	306111	Lever	2
10	325729	Plate	8
11	292500	Capscrew	4
12	302428	Pin	1
13	1328930	Capscrew	1
14	1309491	Bracket	1
15	136687	Nut	4
15	292680	Lockwasher	4
16	15154	Lockwasher	8
17	1328696	Shim (0.50 mm)	AR
17	1309479	Shim (0.25 mm)	AR
18	15054	Nut	8
18	15127	Washer	8
19	....	Control Valve	1
		☞ Figure 161	
20	89056	Fitting	1
20	16486	O-Ring	1
21	206150	Fitting	3
21	16484	O-Ring	1
22	17197	Fitting	1
22	16484	O-Ring	1
23	16745	Fitting	2
23	16484	O-Ring	1
24	17049	Fitting	1
25	17061	Fitting	2
26	17776	Fitting	1
27	14489	Fitting	1
28	16923	Fitting	2
29	17779	Fitting	1
30	186995	Fitting	1
30	16485	O-Ring	1
31	167261	Fitting	1
32	142682	Fitting	1
32	16485	O-Ring	1
33	316826	Nut	3
34	91946	Grommet	3
35	298132	Clamp	1
36	320159	Washer	5
37	292517	Capscrew	3
38	15937	Bolt	8
39	1328698	Bushing	2
40	1305174	Shaft (Pivot)	1
41	292681	Lockwasher	2
42	1328697	Bushing	3

©1999 HYSTER COMPANY

CONTROL VALVE (FIGURE 161)

FOUR FUNCTION

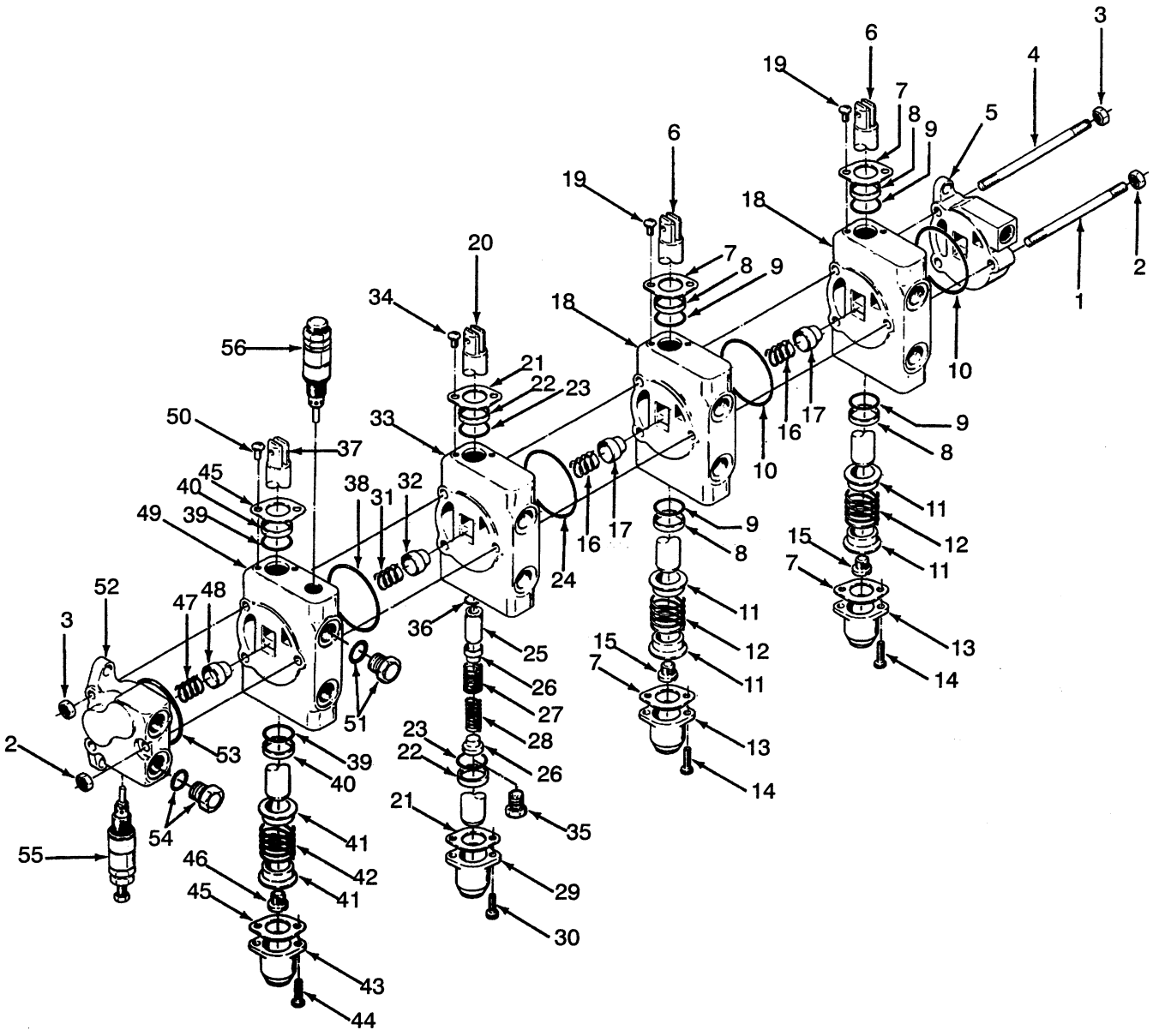

CONTROL VALVE

FOUR FUNCTION

REF		PART NO.	NAME OF PART	QTY
		352422	Control Valve	1
1	a	....	Tie Rod	1
2	a	....	Nut	2
3	a	....	Nut	4
4	a	....	Tie Rod	2
5		372918	Module	1
6		373148	Module	2
6		....	Spool	1
7		205121	Plate	2
8	b	....	Wiper	2
9	b	....	O-Ring	2
10		57664	O-Ring	1
11		188516	Seat	2
12		188517	Spring	1
13		188519	Cap	1
14		12949	Capscrew	2
15		188518	End (Spool)	1
16		205123	Spring	1
17		205120	Poppet	1
18		....	Housing	1
19		16706	Screw	2
20		372917	Module	1
20		....	Spool	1
21		205121	Plate	2
22	b	....	Wiper	2
23	b	....	O-Ring	2
24		57664	O-Ring	1
25		....	Piston	1
26		320289	Seat	2
27		188517	Spring	1
28		341462	Spring	1
29		188519	Cap	1
30		12949	Capscrew	2
31		205123	Spring	1
32		205120	Poppet	1

REF		PART NO.	NAME OF PART	QTY
33		....	Housing	1
34		16706	Screw	2
35		386015	End	1
35		320291	Capscrew	1
36		16480	O-Ring	1
37		372916	Module	1
37		....	Spool	1
38		57664	O-Ring	1
39	b	....	O-Ring	2
40	b	....	Wiper	2
41		188516	Seat (Spring)	2
42		188517	Spring	1
43		188519	Cap	1
44		12949	Capscrew	2
45		205121	Plate	2
46		188518	End (Spool)	1
47		205123	Spring	1
48		205120	Poppet	1
49		....	Housing	1
50		16706	Screw	2
51		233693	Fitting	1
51		188486	Plug	1
51		16485	O-Ring	1
52		362104	Section (Inlet)	1
53		57664	O-Ring	1
54		233693	Fitting	1
54		188486	Plug	1
54		16485	O-Ring	1
55		350485	Relief Valve	1
55		305071	Kit-Seal	1
56		378424	Valve	1
56		1309419	Kit-Seal	1

a Included In Tie Rod Kit 328892

b Included In Seal Kit 339315 (Seals One Unit)

©1999 HYSTER COMPANY

NOTE

©1999 HYSTER COMPANY

TWO-STAGE LIMITED FREE LIFT MAST
(A510)

CARRIAGE (Figure 167)
TWO-STAGE LFL ..... Page 346

CARRIAGE (Figure 168)
TWO-STAGE LFL
H90-100XL ATTACHMENT ..... Page 348

FORKS (Figure 169)
HOOK TYPE ..... Page 350

FORKS (Figure 170)
HOOK TYPE ..... Page 351

FORKS (Figure 171)
PIN TYPE ..... Page 352

FORKS (Figure 172)
BLOCK TYPE
48 INCH CARRIAGE ..... Page 353

FORKS (Figure 173)
BLOCK TYPE
62 INCH CARRIAGE ..... Page 354

HEADER HOSES (Figure 166)
TWO-STAGE LIMITED FREE LIFT MAST ..... Page 344

INNER MAST (Figure 163)
TWO-STAGE LFL ..... Page 338

LIFT CYLINDER (Figure 165)
TWO-STAGE LFL ..... Page 342

MAIN LIFT (Figure 164)
TWO-STAGE LFL ..... Page 340

OUTER MAST (Figure 162)
TWO-STAGE LFL ..... Page 336

©1999 HYSTER COMPANY

OUTER MAST (FIGURE 162)

TWO-STAGE LFL

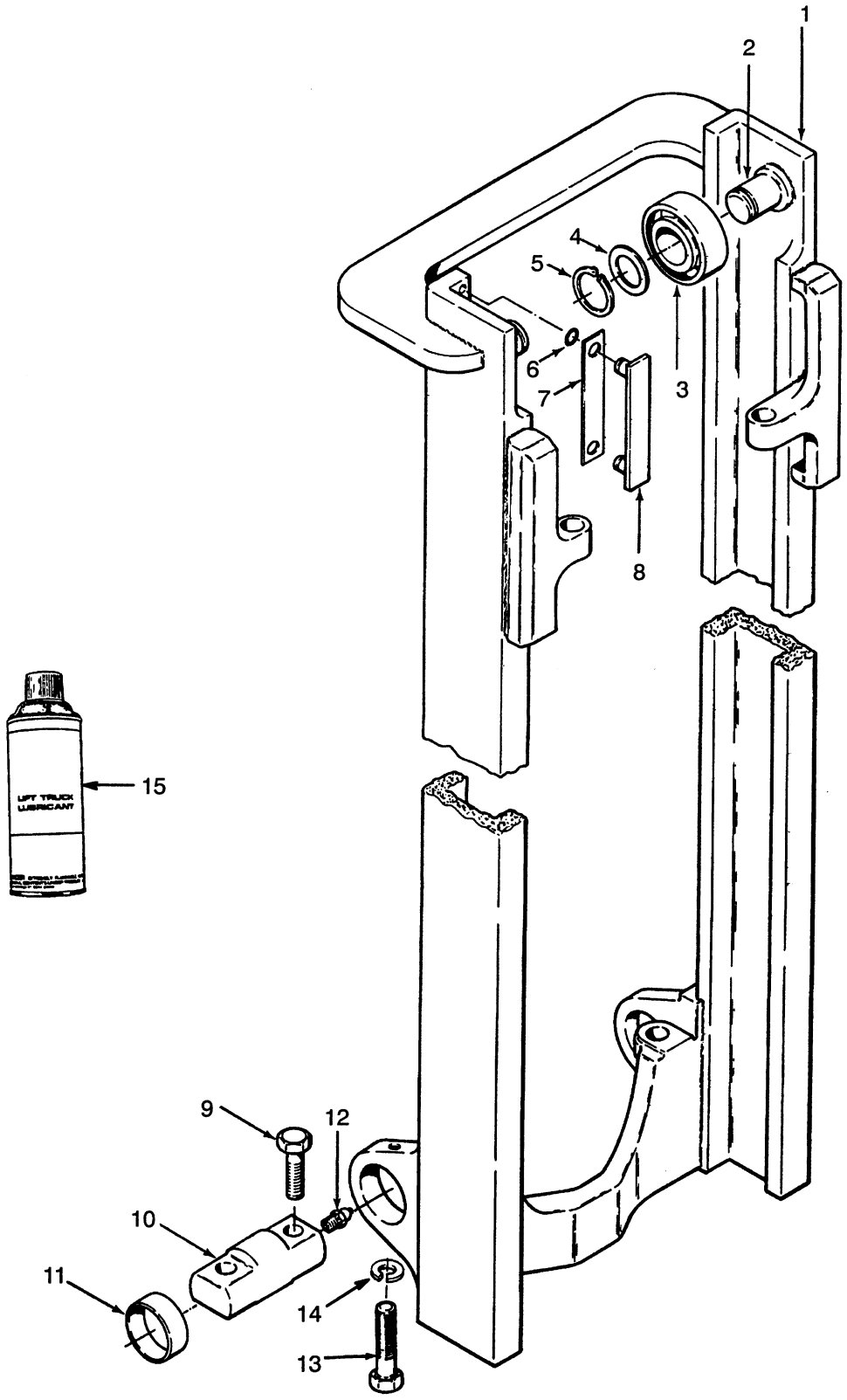

©1999 HYSTER COMPANY

OUTER MAST

TWO-STAGE LFL

H70-80XL & H90XLS

REF NO	NAME OF PART 1 2 3 4	LIFT HEIGHT TO BOTTOM OF FORKS					
		119.0 in (3020 mm)	143.5 in (3650 mm)	167.5 in (4250 mm)	195.0 in (4950 mm)	218.5 in (5550 mm)	242.0 in (6150 mm)
	MAST GROUP NUMBER	**A510-3020**	**A510-3650**	**A510-4250**	**A510-4950**	**A510-5550**	**A510-6150**
	Mast	341239	341240	341241	367135	367136	379800
1	Outer Mast	341157	341158	341159	366534	366535	380640

H90-110XL

REF NO	NAME OF PART 1 2 3 4	LIFT HEIGHT TO BOTTOM OF FORKS					
		108.5 in (2760 mm)	133.5 in (3390 mm)	157.0 in (3990 mm)	184.5 in (4690 mm)	208.0 in (5290 mm)	232.0 in (5890 mm)
	MAST GROUP NUMBER	**A510-2760**	**A510-3390**	**A510-3990**	**A510-4690**	**A510-5290**	**A510-5890**
	Mast	341242	341243	341244	379801	379802	379803
1	Outer Mast	341157	341158	341159	366534	366535	380640

REF		PART NO.	NAME OF PART	QTY
	a	....	Mast	1
1	a	....	Outer Mast	1
2		341144	Stub Shaft	2
3	b	1333649	Load Roller (A, Standard Size)	2
3	b	1343002	Load Roller (B, 0.030 in Oversize, Optional)	AR
3	b	1343003	Load Roller (C, 0.060 in Oversize, Optional)	AR
4		126765	Shim (0.020 in)	AR
5		187489	Snap Ring	2
6		104506	O-Ring	4
7		161273	Shim (0.020 in)	AR
7		161272	Shim (0.007 in) (Optional)	AR
8		104264	Bearing Strip	2
9		293698	Capscrew	4
10		352178	Pin	2
11		360569	Bushing	2
12		16001	Fitting	2
13		292589	Capscrew	2
14		296430	Washer	2
15		171351	Lubricant	AR

a See Charts Above

b The Letter Is Stamped On The Inside Face Of The Load Roller

©1999 HYSTER COMPANY

INNER MAST (FIGURE 163)

TWO-STAGE LFL

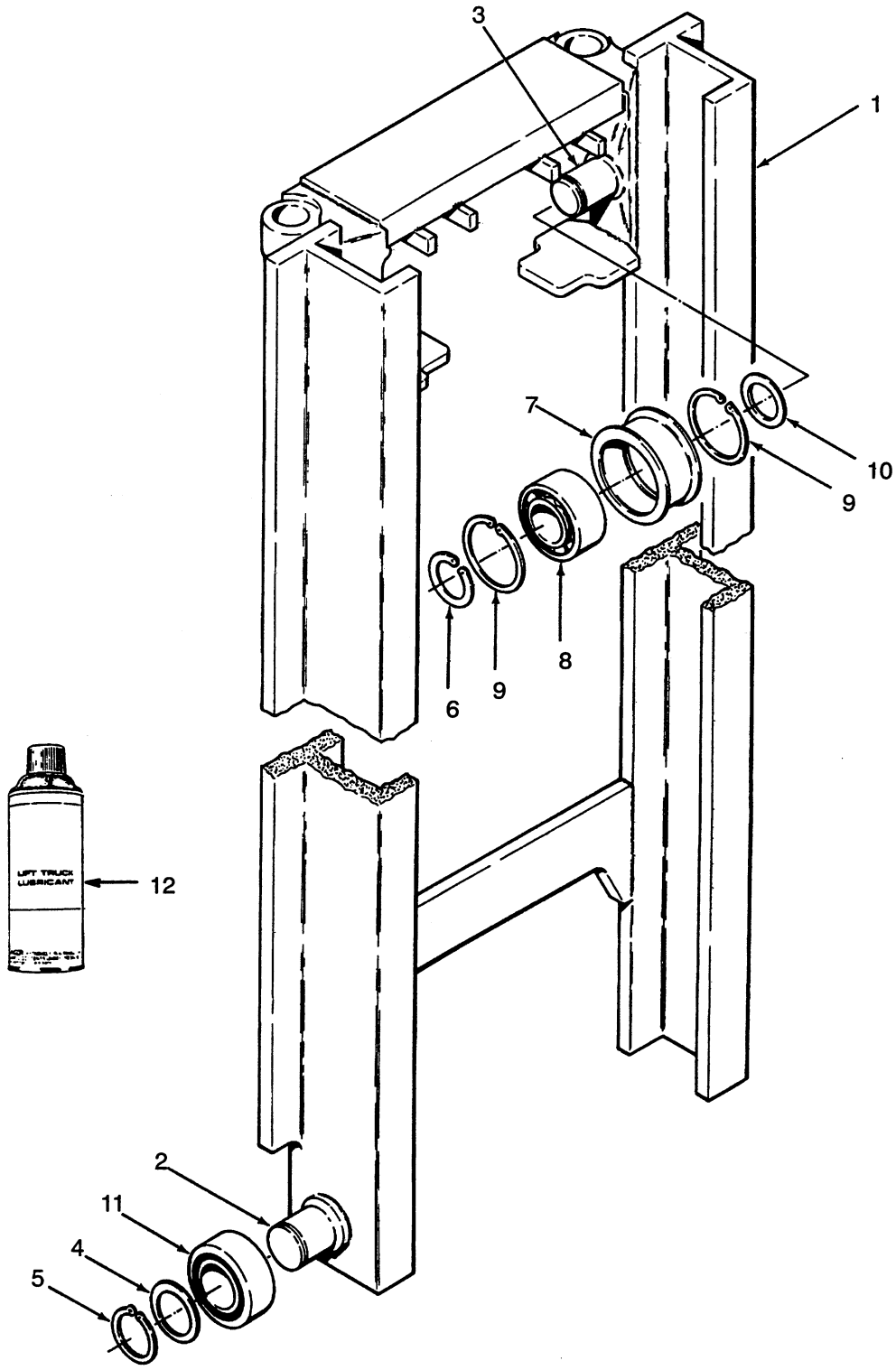

©1999 HYSTER COMPANY

INNER MAST

TWO-STAGE LFL

H70-80XL & H90XLS

REF NO	NAME OF PART 1 2 3 4	LIFT HEIGHT TO BOTTOM OF FORKS					
		119.0 in (3020 mm)	143.5 in (3650 mm)	167.5 in (4250 mm)	195.0 in (4950 mm)	218.5 in (5550 mm)	242.0 in (6150 mm)
	MAST GROUP NUMBER	**A510-3020**	**A510-3650**	**A510-4250**	**A510-4950**	**A510-5550**	**A510-6150**
	Mast	341239	341240	341241	367135	367136	379800
1	Inner Mast	341165	341166	341167	367125	367126	380646

H90-110XL

REF NO	NAME OF PART 1 2 3 4	LIFT HEIGHT TO BOTTOM OF FORKS					
		108.5 in (2760 mm)	133.5 in (3390 mm)	157.0 in (3990 mm)	184.5 in (4690 mm)	208.0 in (5290 mm)	232.0 in (5890 mm)
	MAST GROUP NUMBER	**A510-2760**	**A510-3390**	**A510-3990**	**A510-4690**	**A510-5290**	**A510-5890**
	Mast	341242	341243	341244	379801	379802	379803
1	Inner Mast	341165	341166	341167	367125	367126	380646

REF		PART NO.	NAME OF PART	QTY
	a	....	Mast	1
1	a	....	Inner Mast	1
2		341144	Stub Shaft	2
3		368183	Stub Shaft, RH	1
3		368184	Stub Shaft, LH	1
4		126765	Shim (.020 in)	AR
5		187489	Snap Ring	2
6		12891	Snap Ring	2
7		319782	Sheave	2
8		334932	Bearing	1
9		59625	Snap Ring	2
10		327804	Spacer	2
11	b	1333649	Load Roller (A, Standard)	2
11	b	1343002	Load Roller (B, .030 in)	AR
11	b	1343003	Load Roller (C, .060 in)	AR
12		171351	Lubricant	AR

a See Charts Above

b The Letter Is Stamped On The Inside Face Of The Load Roller

©1999 HYSTER COMPANY

MAIN LIFT (FIGURE 164)

TWO-STAGE LFL

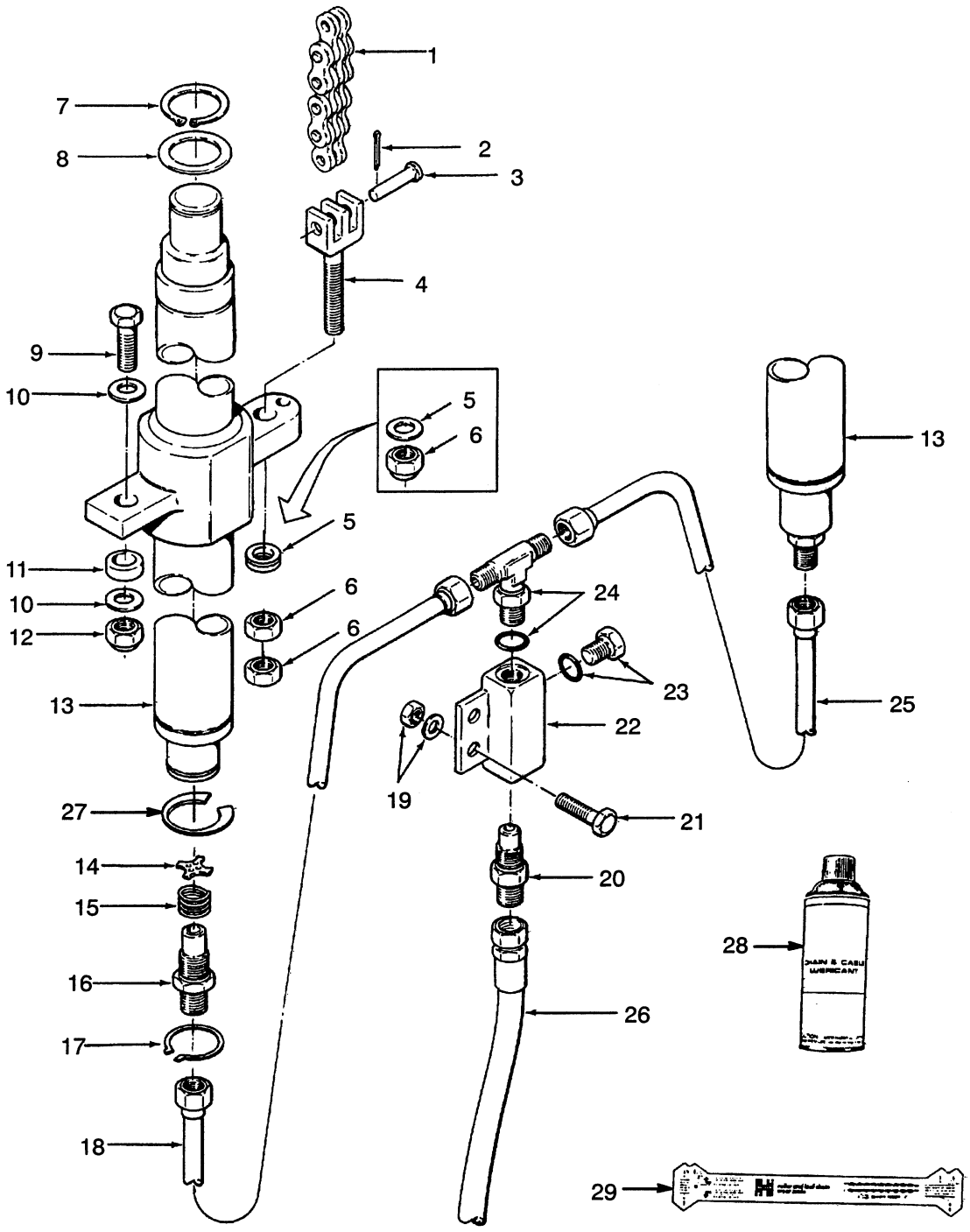

©1999 HYSTER COMPANY

MAIN LIFT

TWO-STAGE LFL

H70-80XL & H90XLS

REF NO	NAME OF PART 1 2 3 4	LIFT HEIGHT TO BOTTOM OF FORKS					
		119.0 in (3020 mm)	143.5 in (3650 mm)	167.5 in (4250 mm)	195.0 in (4950 mm)	218.5 in (5550 mm)	242.0 in (6150 mm)
	MAST GROUP NUMBER	**A510-3020**	**A510-3650**	**A510-4250**	**A510-4950**	**A510-5550**	**A510-6150**
	Mast	341239	341240	341241	367135	367136	379800
1	Lift Chain	182342	191072	191076	371357	327869	388409

H90-110XL

REF NO	NAME OF PART 1 2 3 4	LIFT HEIGHT TO BOTTOM OF FORKS					
		108.5 in (2760 mm)	133.5 in (3390 mm)	157.0 in (3990 mm)	184.5 in (4690 mm)	208.0 in (5290 mm)	232.0 in (5890 mm)
	MAST GROUP NUMBER	**A510-2760**	**A510-3390**	**A510-3990**	**A510-4690**	**A510-5290**	**A510-5890**
	Mast	341242	341243	341244	379801	379802	379803
1	Lift Chain	338646	347243	152407	339875	151611	388410

KEY:
A: H70-80XL & H90XLS
B: H90-110XL

REF		PART NO.	NAME OF PART	QTY A	QTY B
	a	....	Mast	1	1
1	a	....	Lift Chain	2	2
2		15222	Cotter Pin	2	2
3		327591	Pin	2	..
3		339932	Pin	..	2
4		1331990	Chain Anchor	2	..
4		1331991	Chain Anchor	..	2
5		1332704	Spherical Washer	2	2
6		221717	Nut	4	4
7		304523	Snap Ring	2	2
8		332061	Washer	2	2
9		292589	Capscrew	2	2
10		296431	Washer	4	4
11		351565	Spacer	2	2
12		316829	Nut	2	2
13		....	Lift Cylinder ☞ Figure 165	2	2
14		373286	Washer	2	2
15		120938	Spring	2	2
16		184799	Fitting	2	2
17		351350	Snap Ring	AR	AR
18		373269	Tube, RH	1	1
19		316826	Nut	2	2
19		320159	Washer	2	2
20		315262	Control Valve	1	..
20		16982	O-Ring	1	..
20	b	319891	Control Valve	1	..
20		16982	O-Ring	1	..
20		319891	Control Valve	..	1
20		16982	O-Ring	..	1
21		136985	Capscrew	2	2
22		368221	Housing	1	1
23		14603	Adapter	1	1
23		16486	O-Ring	1	1
24		274518	Fitting	1	1
24		16484	O-Ring	1	1
25		373268	Tube, LH	1	1
26		385498	Hose	1	1
27		1344750	Shim (0.75 mm)	AR	AR
28		171350	Chain & Cable Lubricant	AR	AR
29		599737	Chain Wear Scale	AR	AR

a See Charts Above
b 6150 mm 242.0 inch Lift

©1999 HYSTER COMPANY

LIFT CYLINDER (FIGURE 165)

TWO-STAGE LFL

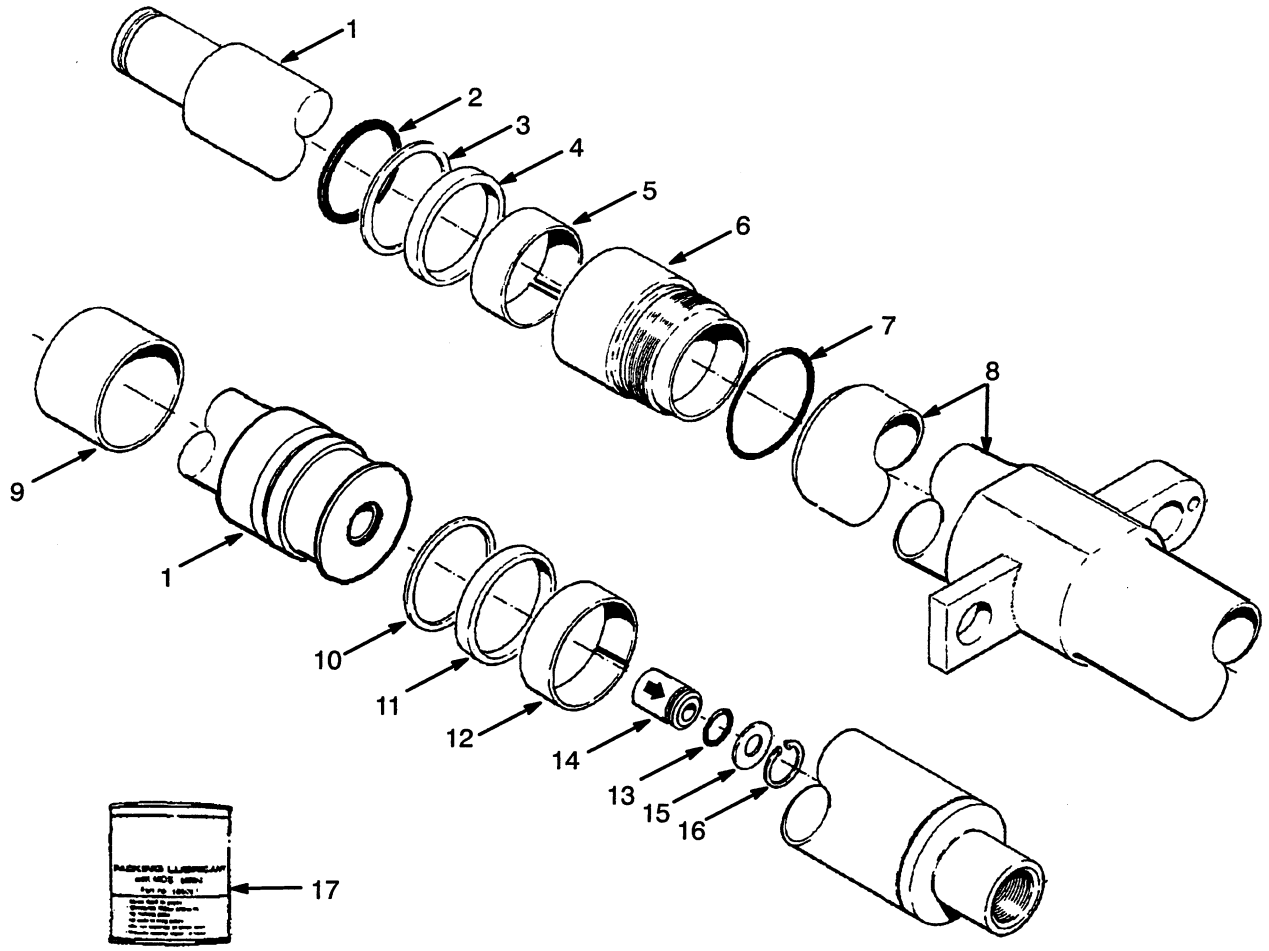

©1999 HYSTER COMPANY

LIFT CYLINDER

TWO-STAGE LFL

H70-80XL & H90XLS

REF NO	NAME OF PART 1 2 3 4	LIFT HEIGHT TO BOTTOM OF FORKS					
		119.0 in (3020 mm)	143.5 in (3650 mm)	167.5 in (4250 mm)	195.0 in (4950 mm)	218.5 in (5550 mm)	242.0 in (6150 mm)
	Lift Cylinder	1331307	1331308	1331309	1331310	1331311	1331318
1	Rod/Piston	351547	351548	351549	366546	366547	381102
8	Shell	351569	351570	351571	366542	366543	381094
9	Spacer	.....	.....	.....	367139	367140	381110

H90-110XL

REF NO	NAME OF PART 1 2 3 4	LIFT HEIGHT TO BOTTOM OF FORKS					
		108.5 in (2760 mm)	133.5 in (3390 mm)	157.0 in (3990 mm)	184.5 in (4690 mm)	208.0 in (5290 mm)	232.0 in (5890 mm)
	Lift Cylinder	1331312	1331313	1331314	1331315	1331316	1331317
1	Rod/Piston	351550	351551	351552	381100	381101	381102
8	Shell	351572	351573	351574	381092	381093	381094
9	Spacer	351576	351576	351576	381111	388408	381112

KEY:
A: H70-80XL & H90XLS
B: H90-110XL

REF		PART NO.	NAME OF PART	QTY A	QTY B
	a	....	Lift Cylinder	2	2
1	a	....	Rod	1	1
2		1310371	Wiper	1	..
2		1329784	Wiper	..	1
3	b	638249	Back-Up Ring	1	..
3	cd	638250	Back-Up Ring	1	..
3	d	638250	Back-Up Ring	..	1
4	b	270077	Seal	1	..
4	cd	201829	Seal	1	..
4	d	201829	Seal	..	1
5	b	215425	Wear Ring	1	..
5	cd	215301	Wear Ring	1	..
5	d	215301	Wear Ring	..	1
6		1329785	Retainer	1	..
6		1329786	Retainer	..	1
7	b	57664	O-Ring	1	..
7	d	15879	O-Ring	..	1
8	a	....	Shell	1	1
9	a	....	Spacer	1	1
10	b	638249	Back-Up Ring	1	..
10	cd	351532	Back-Up Ring	1	..
10	d	351532	Back-Up Ring	..	1
11	b	270077	Seal	2	1
11	cd	358300	Seal	1	..
11	d	358300	Seal	..	1
12	b	297532	Wear Ring	1	..
12	cd	351531	Wear Ring	1	..
12	d	351531	Wear Ring	..	1
13	bd	39348	O-Ring	1	1
14		257913	Valve	1	1
15		297531	Washer	1	1
15		637635	Washer (Optional)	1	1
16		187388	Snap Ring	1	1
17		186061	Packing Lubricant	ARAR	

a See Chart Above
b Included In Seal Kit 1332563
c 242.0 Inch Lift
d Included In Seal Kit 1332564

©1999 HYSTER COMPANY

HEADER HOSES (FIGURE 166)

TWO-STAGE LIMITED FREE LIFT MAST

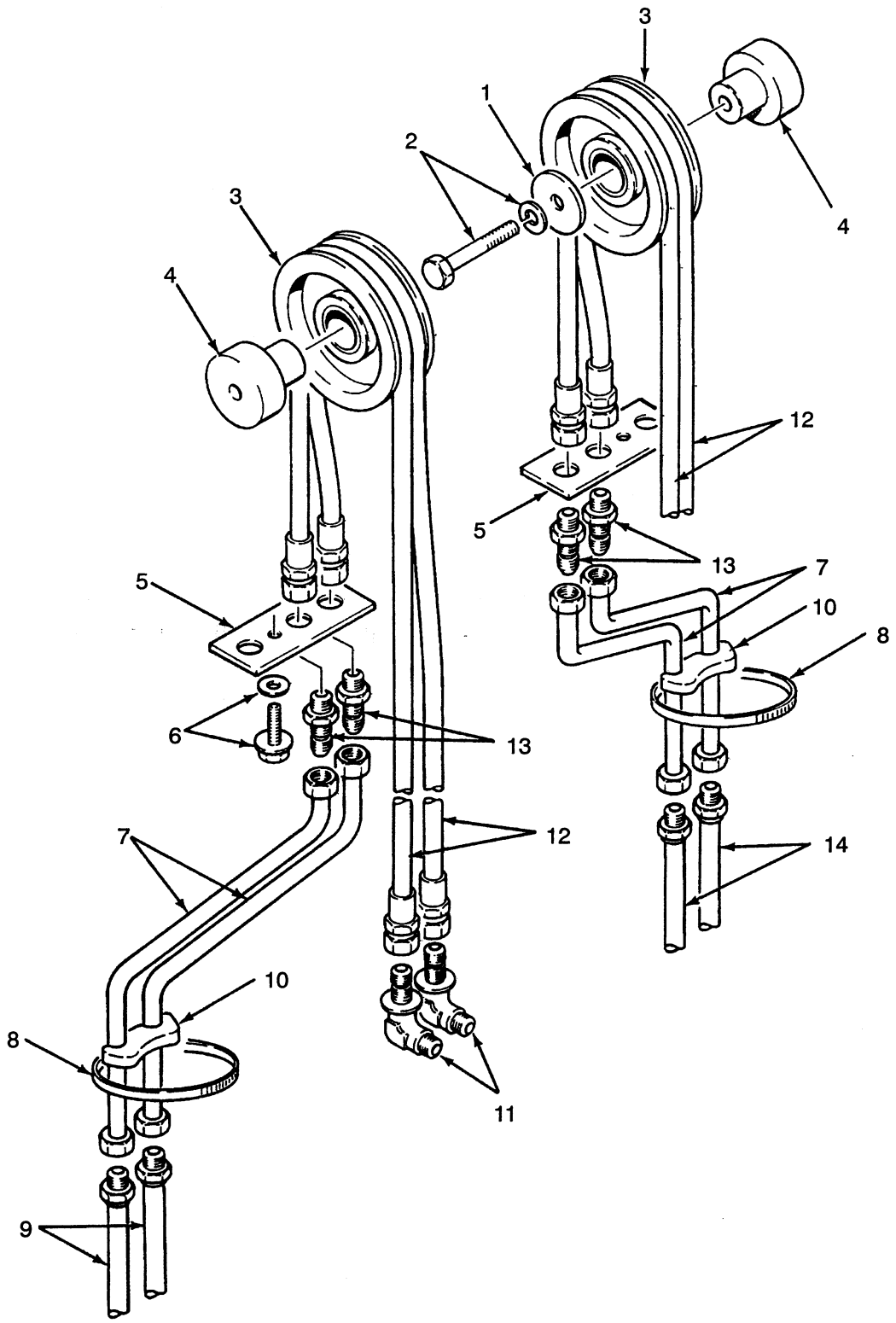

©1999 HYSTER COMPANY

HEADER HOSES

TWO-STAGE LIMITED FREE LIFT MAST

H70-80XL & H90XLS

REF NO	NAME OF PART 1 2 3 4	LIFT HEIGHT TO BOTTOM OF FORKS					
		119.0 in (3020 mm)	143.5 in (3650 mm)	167.5 in (4250 mm)	195.0 in (4950 mm)	218.5 in (5550 mm)	242.0 in (6150 mm)
	MAST GROUP NUMBER	**A510-3020**	**A510-3650**	**A510-4250**	**A510-4950**	**A510-5550**	**A510-6150**
7	Tube	368194	368195	368196	368197	368198	388462
12	Hose	371350	371351	371352	371353	371354	389913

H90-110XL

REF NO	NAME OF PART 1 2 3 4	LIFT HEIGHT TO BOTTOM OF FORKS					
		108.5 in (2760 mm)	133.5 in (3390 mm)	157.0 in (3990 mm)	184.5 in (4690 mm)	208.0 in (5290 mm)	232.0 in (5890 mm)
	MAST GROUP NUMBER	**A510-2760**	**A510-3390**	**A510-3990**	**A510-4690**	**A510-5290**	**A510-5890**
7	Tube	384567	384568	384569	388463	388464	388465
12	Hose	371350	371351	371352	371353	371354	389913

KEY:
A: Three Function Control Valve
B: Four Function Control Valve

REF		PART NO.	NAME OF PART	QTY A	QTY B
1		300932	Washer	1	2
2		292535	Capscrew	1	2
2		292683	Lockwasher	1	2
3		1332705	Sheave/Bushing	1	2
3		332057	Bushing	1	1
4		357529	Stub Shaft	1	2
5		1301924	Plate	1	2
6		320159	Washer	1	2
6		351668	Screw	1	2
7	a	....	Tube	2	4
8		78286	Clamp	2	4
9		367149	Hose	2	2
10		340054	Spacer	2	4
11		16458	Fitting	2	4
12	a	....	Hose	2	4
13		16449	Fitting	2	4
14		367150	Hose	..	2

a See Chart Above

©1999 HYSTER COMPANY

CARRIAGE (FIGURE 167)

TWO-STAGE LFL

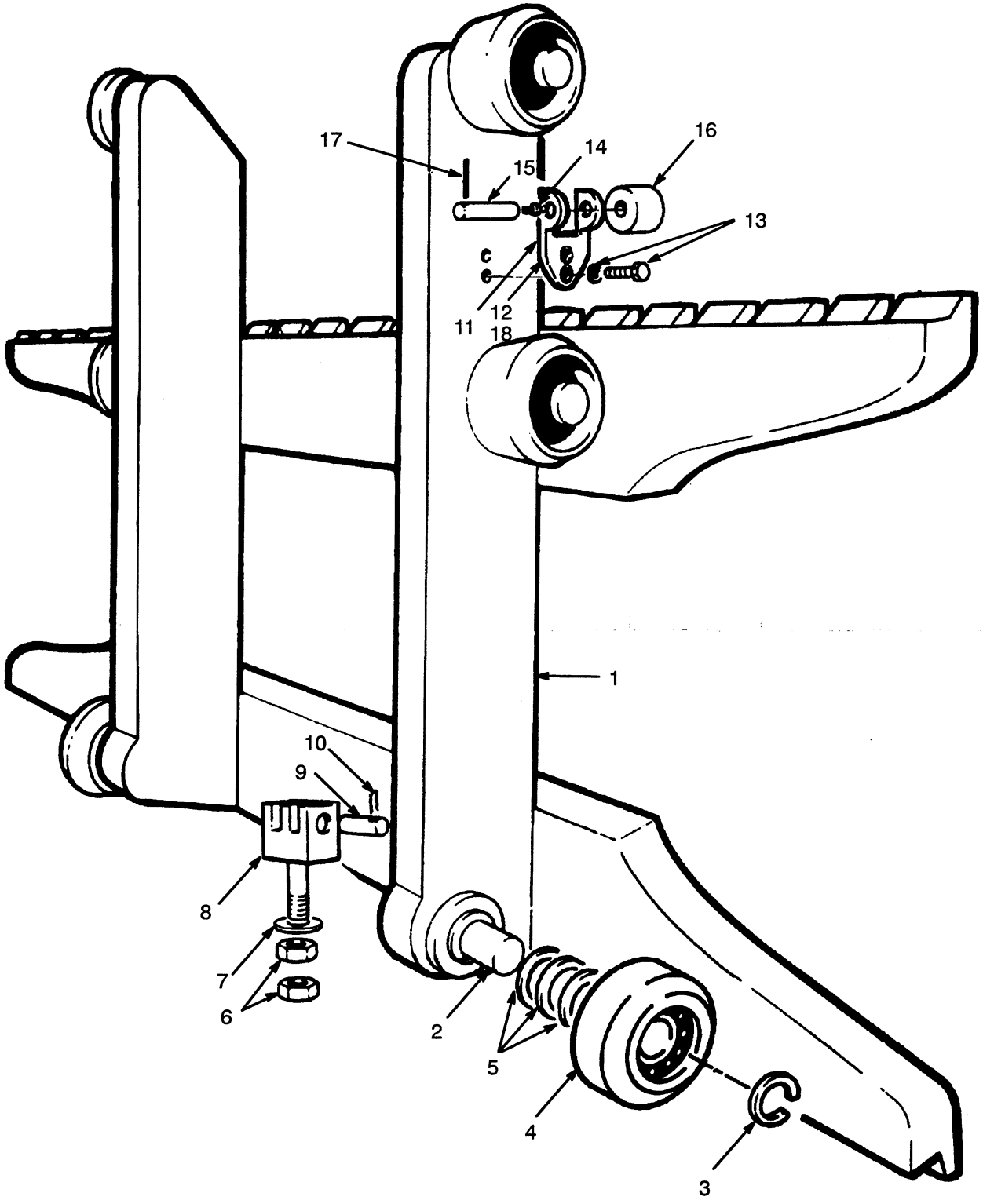

©1999 HYSTER COMPANY

CARRIAGE

TWO-STAGE LFL

KEY:
A: H70 - 90XL
B: H90 - 110XL

REF		PART NO.	NAME OF PART	QTY A	QTY B
		1379233	Carriage (48 in)	1	..
		1379235	Carriage (60 in)	1	..
		341236	Carriage (48 in)	..	1
		341237	Carriage (60 in)	..	1
1		1379234	Frame (48 in)	1	..
1		1379236	Frame (60 in)	1	..
1		341207	Frame (48 in)	..	1
1		341198	Frame (60 in)	..	1
2		341144	Stub Shaft	6	6
3		187489	Ring - Snap	6	6
4	a	1333648	Load Roller (A, Standard Size)	6	6
4	a	1343010	Load Roller (B, 0.030 in Oversize, Optional)	AR	AR
4	a	1343011	Load Roller (C, 0.060 in Oversize, Optional)	AR	AR
5		126765	Shim (.020 in)	AR	AR
6		221717	Nut	4	4
7		1332704	Base Ring	2	2
8		351666	Chain Anchor	2	..
8		351667	Chain Anchor	..	2
9		327591	Pin	2	..
9		339932	Pin	..	2
10		15222	Cotter Pin	2	2
11		192424	Shim (0.030 in, Optional)	..	AR
11		192425	Shim (0.062 In, Optional)	..	AR
12		244008	Bracket (Roller, Optional)	..	2
13		292528	Capscrew (Optional)	..	4
13		292683	Lockwasher (Optional)	..	4
14		16009	Grease Fitting (Optional)	..	2
15		244009	Pin (Optional)	..	2
16		244005	Roller(Optional)	..	2
17		66333	Spring Pin (Optional)	..	2
18		366116	Spacer	AR	AR

a The Letter Is Stamped On The Inside Face Of The Load Roller

©1999 HYSTER COMPANY

CARRIAGE (FIGURE 168)

TWO-STAGE LFL

H90-100XL ATTACHMENT

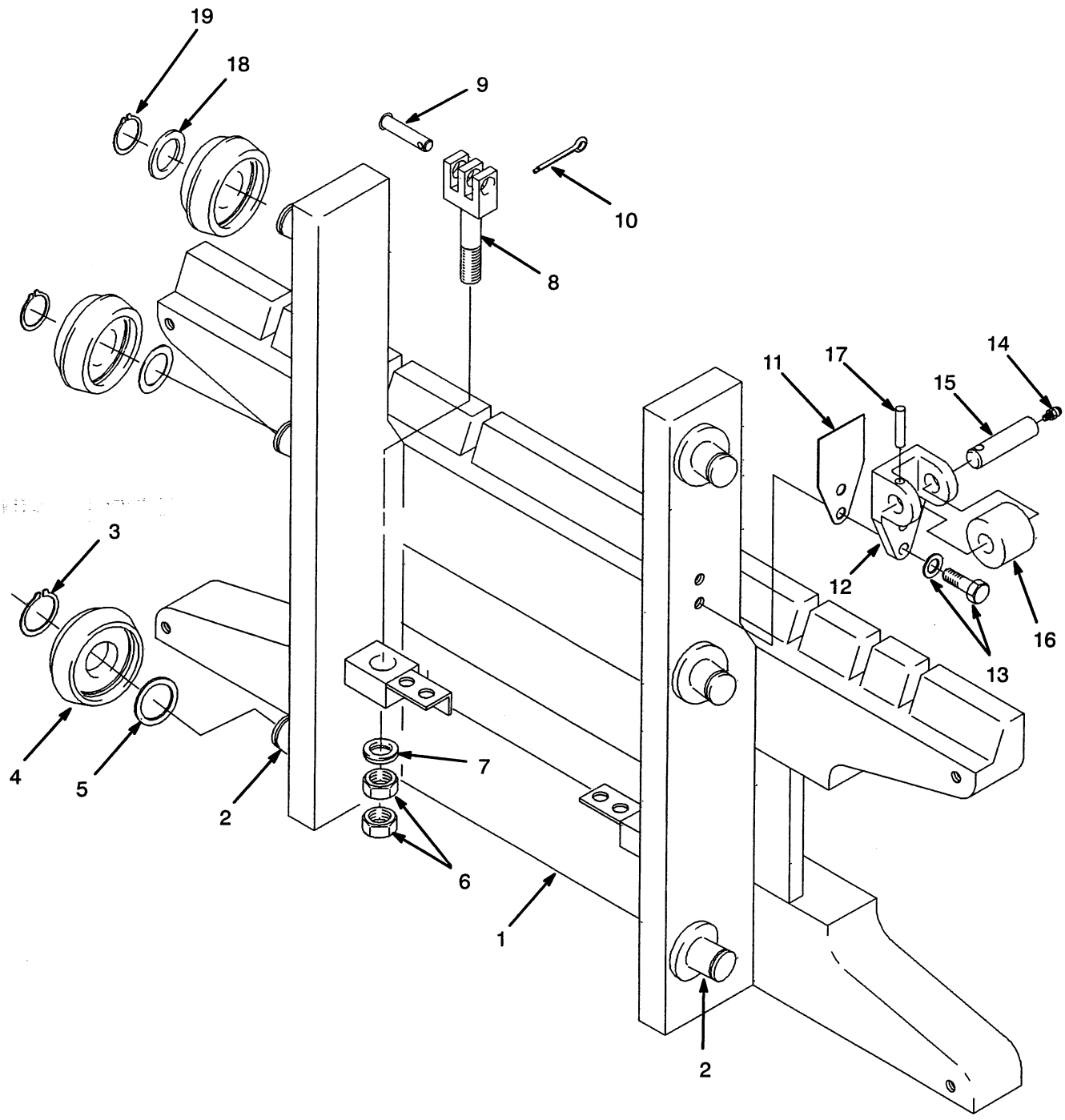

©1999 HYSTER COMPANY

CARRIAGE

TWO-STAGE LFL

H90-100XL ATTACHMENT

REF		PART NO.	NAME OF PART	QTY
		1379237	Carriage (42 in)	1
1		1379238	Frame (42 in)	1
2		341144	Stub Shaft	6
3		187489	Snap Ring	6
4	a	1333648	Load Roller (A, Standard Size)	6
4	a	1343010	Load Roller (B, 0.030 in Oversize, Optional)	AR
4	a	1343011	Load Roller (C, 0.060 in Oversize, Optional)	AR
5		126765	Shim (.020 in)	AR
6		221717	Nut	2
7		1332704	Base Ring	2
8		351667	Chain Anchor	2
9		339932	Pin	2
10		15222	Cotter Pin	2
11		192424	Shim (0.030 in)	AR
11		192425	Shim (0.062 in)	AR
12		244008	Bracket (Roller)	2
13		292528	Capscrew	4
13		292683	Lockwasher	4
14		16009	Grease Fitting	2
15		244009	Pin	2
16		244005	Roller	2
17		66333	Spring Pin	2
18		366116	Spacer	2
19		187489	Snap Ring	2

a The Letter Is Stamped On The Inside Face Of The Load Roller

©1999 HYSTER COMPANY

FORKS (FIGURE 169)

HOOK TYPE

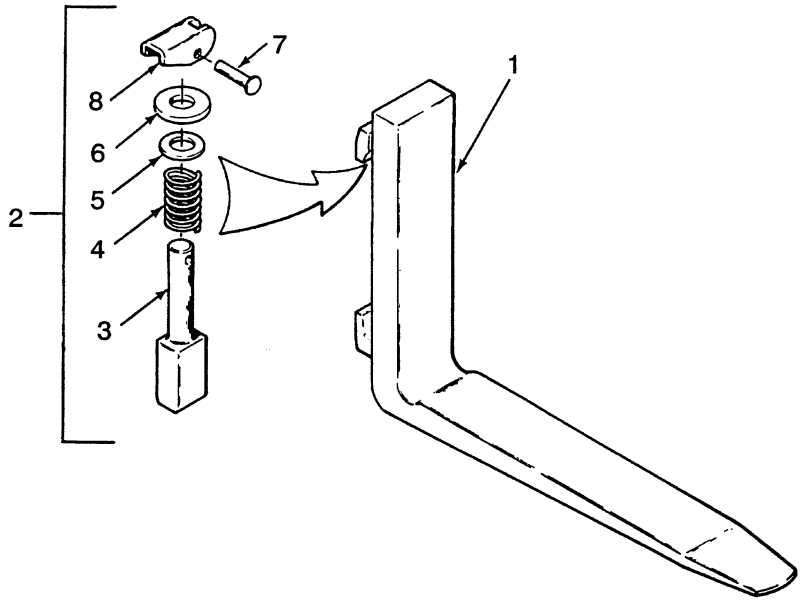

REF NO	NAME OF PART 1 2 3 4	STANDARD TAPER			FULL BOTTOM TAPER	QTY
		H70-80XL, H90XLS	[a] H90-100XL	H90-110XL	H70-80XL & H90XLS	
		PART NO.				
1	Fork					
	36 inch	367419	..	..	..	2
	42 inch	367420	..	..	1338097	2
	47.5 inch	..	..	..	1338098	2
	48 inch	367421	..	1333001	..	2
	54 inch	367422	..	1333002	..	2
	60 inch	367423	..	1333003	..	2
	72 inch	367424	..	1333004	..	2
2	Latch	332378	332378	332378	332378	1
3	Pin	332377	332377	332377	332377	1
4	Spring	141852	141852	141852	141852	1
5	Washer	195436	195436	195436	195436	1
6	Washer	157001	157001	157001	157001	1
7	Rivet	141853	141853	141853	141853	1
8	Handle	141856	141856	141856	141856	1

[a] Attachment Carriage

©1999 HYSTER COMPANY

FORKS (FIGURE 170)

HOOK TYPE

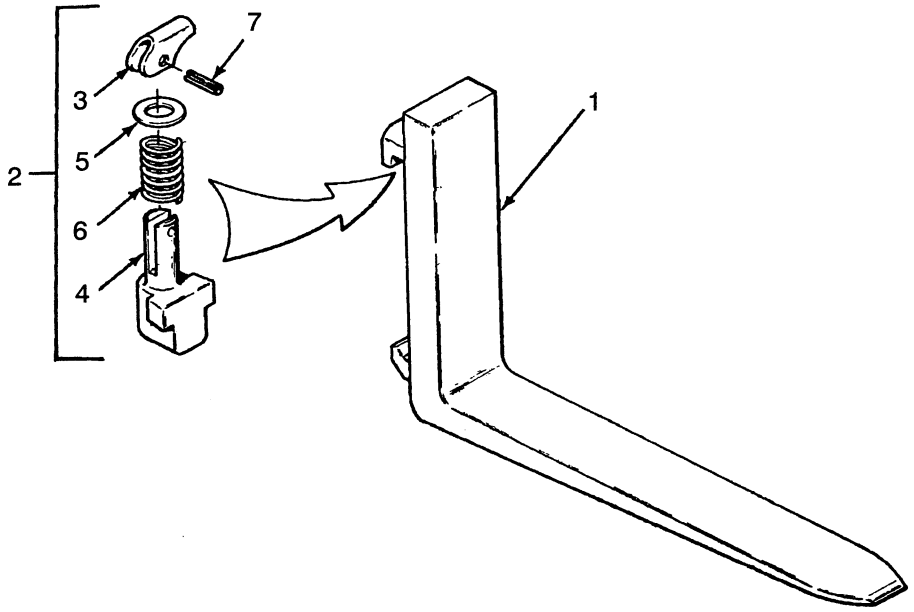

REF NO	NAME OF PART 1 2 3 4	STANDARD TAPER			FULL BOTTOM TAPER	QTY
		H70-80XL, H90XLS	[a] H90-100XL	H90-110XL	H70-80XL & H90XLS	
		PART NO.				
1	Fork					
	36 inch	367419	..	..	..	2
	42 inch	367420	..	..	1338097	2
	47.5 inch	..	..	..	1338098	2
	48 inch	367421	1333046	1333001	..	2
	54 inch	367422	1333047	1333002	1332745	2
	60 inch	367423	1333048	1333003	..	2
	72 inch	367424	1333049	1333004	..	2
2	Latch	369796	369796	369797	369796	1
3	Handle	368706	368706	368706	368706	1
4	Pin	71153	71153	71153	71153	1
5	Washer	368707	368707	368707	368707	1
6	Spring	368705	368705	368705	368705	1
7	Pin	368703	368703	368703	368703	1

[a] Attachment Carriage

©1999 HYSTER COMPANY

FORKS (FIGURE 171)

PIN TYPE

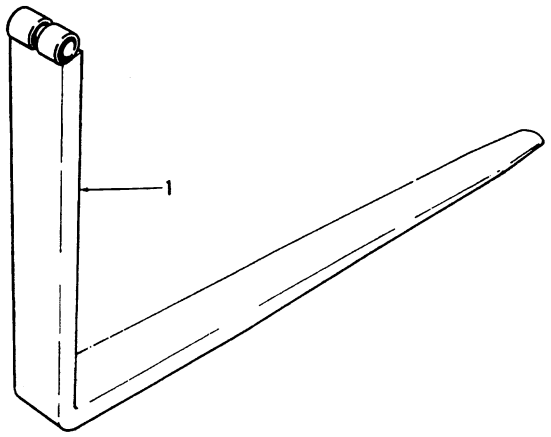

REF NO	NAME OF PART 1 2 3 4	STANDARD TAPER		FULL BOTTOM TAPER	QTY
		H70-80XL, H90XLS	H90-100XL	H70-80XL & H90XLS	
		PART NO.			
1	Fork				
	42 inch	367425	..	1338100	2
	47.5 inch	..	..	1338101	2
	48 inch	367427	1333120	..	2
	54 inch	367430	1333107	1338102	2
	60 inch	367432	1333110	..	2
	72 inch	367435	1333113	..	2
	96 inch	..	1333117	..	2

©1999 HYSTER COMPANY

FORKS (FIGURE 172)

BLOCK TYPE

48 INCH CARRIAGE

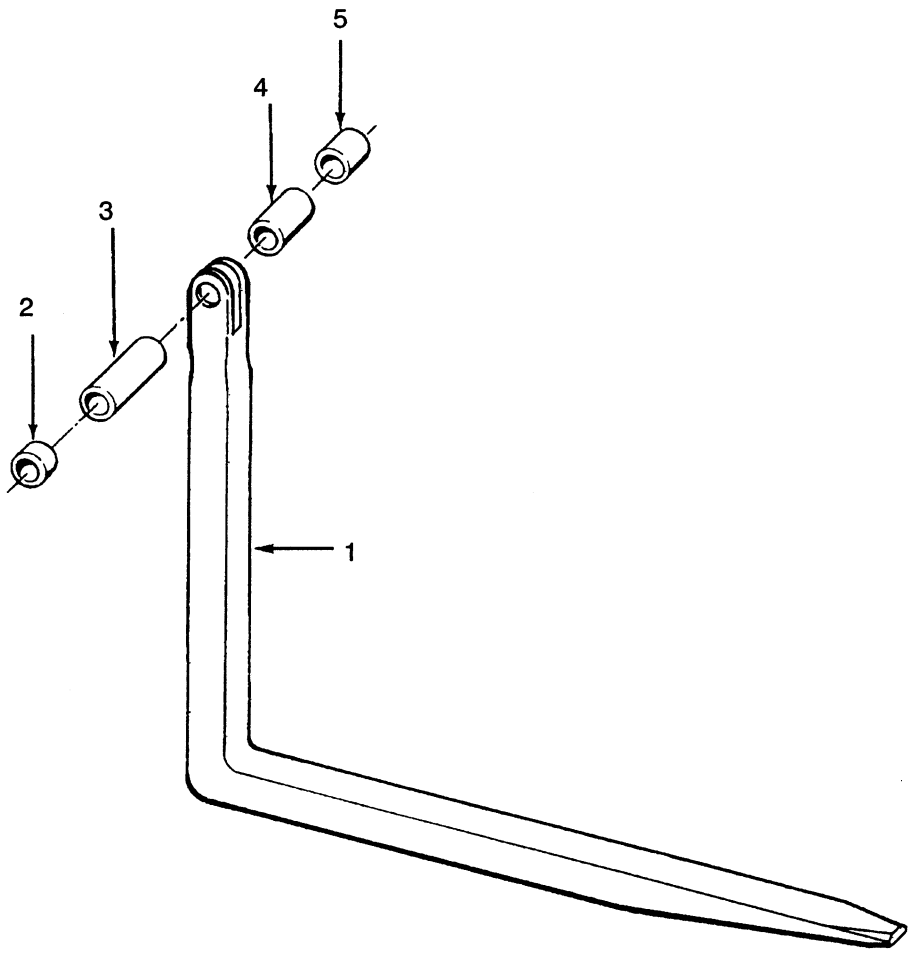

REF		PART NO.	NAME OF PART	QTY
1		368719	Fork (38 in)	6
1		368720	Fork (45-5/8 in)	6
2	a	171489	Hose (1-5/8 in)	2
3	a	171488	Hose (4-1/4 in)	2
4	a	373453	Hose	2
5	a	373454	Hose	1

a Included In Spacer Kit 171504

©1999 HYSTER COMPANY

FORKS (FIGURE 173)

BLOCK TYPE

62 INCH CARRIAGE

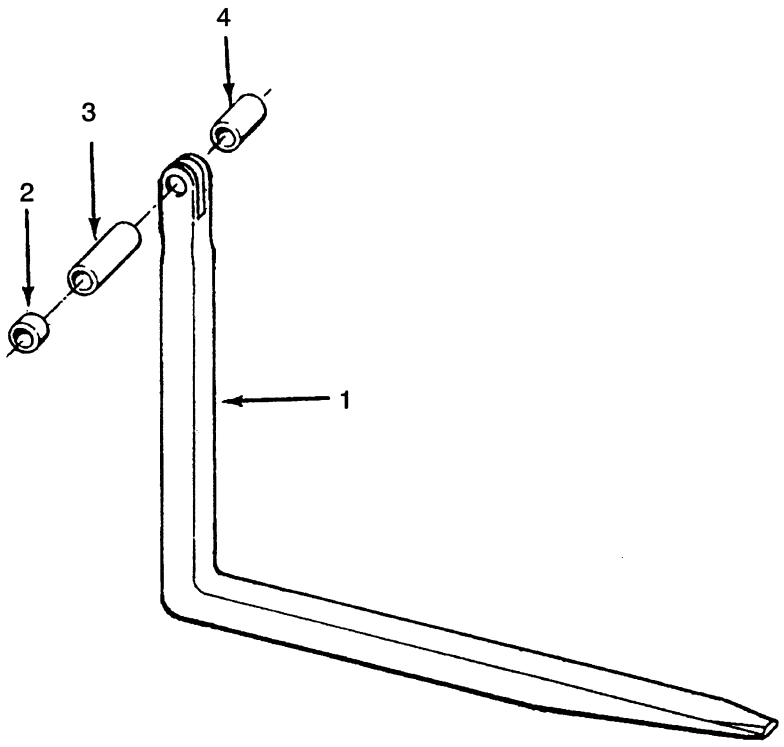

REF	PART NO.	NAME OF PART	QTY
1	368719	Fork (38 in)	8
1	368720	Fork (45-5/8 in)	8
2	171489	Hose (1-5/8 in)	2
3	171490	Hose (3-1/4 in)	2
4	171488	Hose (4-1/4 in)	4

©1999 HYSTER COMPANY

THREE-STAGE FULL FREE LIFT MAST
(A511)

CARRIAGE (Figure 182)
THREE-STAGE FFL ..... Page 372

CARRIAGE (Figure 183)
THREE-STAGE FFL
H90-100XL ATTACHMENT ..... Page 374

FORKS (Figure 184)
HOOK TYPE ..... Page 376

FORKS (Figure 185)
HOOK TYPE ..... Page 377

FORKS (Figure 186)
PIN TYPE ..... Page 378

FORKS (Figure 187)
BLOCK TYPE
48 INCH CARRIAGE ..... Page 379

FORKS (Figure 188)
BLOCK TYPE
62 INCH CARRIAGE ..... Page 380

FREE LIFT (Figure 178)
THREE-STAGE FFL ..... Page 364

FREE-LIFT CYLINDER (Figure 180)
THREE-STAGE FFL ..... Page 368

HEADER HOSES (Figure 181)
THREE-STAGE FULL FREE LIFT MAST ..... Page 370

INNER MAST (Figure 176)
THREE-STAGE FFL ..... Page 360

INTERMEDIATE MAST (Figure 175)
THREE-STAGE FFL ..... Page 358

MAIN LIFT (Figure 177)
THREE-STAGE FFL ..... Page 362

MAIN-LIFT CYLINDER (Figure 179)
THREE-STAGE FFL ..... Page 366

OUTER MAST (Figure 174)
THREE-STAGE FFL ..... Page 356

©1999 HYSTER COMPANY

OUTER MAST (FIGURE 174)

THREE-STAGE FFL

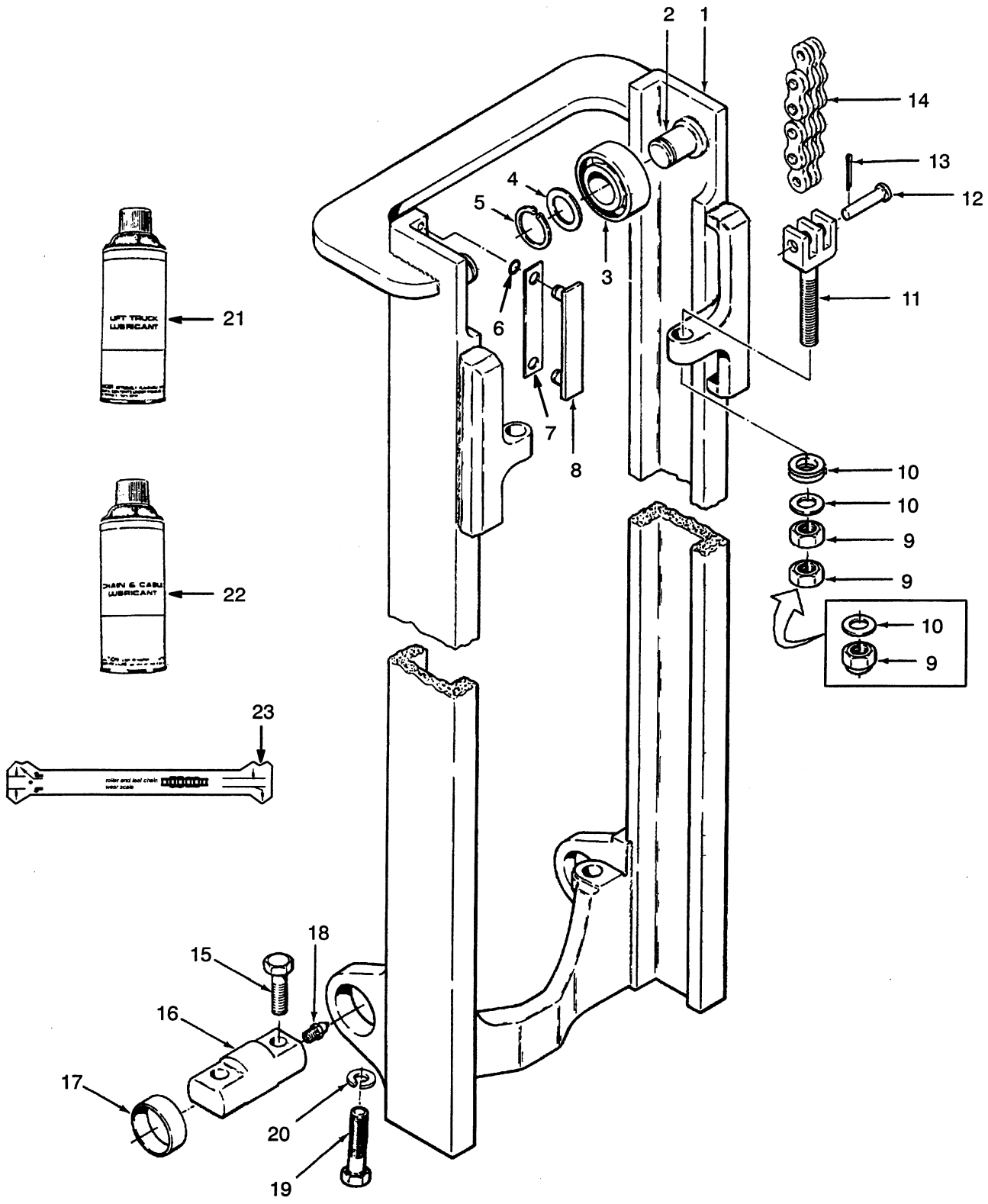

OUTER MAST

THREE-STAGE FFL

H70-80XL & H90XLS

REF NO	NAME OF PART 1 2 3 4	LIFT HEIGHT TO BOTTOM OF FORKS				
		170.0 in	192.0 in	204.5 in	216.5 in	234.5 in
	MAST GROUP NUMBER	A511-4320	A511-4880	A511-5200	A511-5500	A511-5950
	Mast	348127	1317704	1317705	1317706	388419
1	Outer Mast	341160	383869	341161	341162	380641
14	Main Lift Chain	243974	182342	194607	191085	191089

H90-110XL

REF NO	NAME OF PART 1 2 3 4	LIFT HEIGHT TO BOTTOM OF FORKS				
		160.0 in	182.0 in	194.5 in	206.5 in	224.0 in
	MAST GROUP NUMBER	A511-4060	A511-4620	A511-4940	A511-5240	A511-5690
	Mast	348130	1317708	1317709	1317710	388420
1	Outer Mast	341160	383869	341161	341162	380641
14	Main Lift Chain	357580	338647	152404	339934	347245

KEY:
A: H70-80XL & H90XLS
B: H90-110XL

REF		PART NO.	NAME OF PART	QTY A	QTY B
	a	....	Mast	1	1
1	a	....	Outer Mast	1	1
2		341144	Stub Shaft	2	2
3	b	1333649	Load Roller (A, Standard Size)	2	2
3	b	1343002	Load Roller (B, .030 in Oversize, Optional)	ARAR	
3	b	1343003	Load Roller (C, .060 in Oversize, Optional)		ARAR
4		126765	Shim (.020 in)	ARAR	
5		187489	Snap Ring	2	2
6		104506	O-Ring	4	4
7		161273	Shim (.020 in)	ARAR	
7		161272	Shim (0.007 in) (Optional)	ARAR	
8		104264	Bearing Strip	2	2
9		221717	Nut	4	4
10		1332704	Washer Set (Spherical)	2	2
11		1331990	Chain Anchor	2	..
11		1331991	Chain Anchor	..	2
12		327591	Pin	2	..
12		339932	Pin	..	2
13		15222	Cotter Pin	2	2
14	a	....	Chain	2	2
15		293698	Capscrew	4	4
16		352178	Pin	2	2
17		360569	Bushing	2	2
18		16001	Fitting	2	2
19		292589	Capscrew	2	2
20		296430	Washer	2	2
21		171350	Chain & Cable Lubricant	ARAR	
22		171351	Lubricant	ARAR	
23		599737	Chain Wear Scale	ARAR	

a See Charts Above
b The Letter Is Stamped On The Inside Face Of The Load Roller

©1999 HYSTER COMPANY

INTERMEDIATE MAST (FIGURE 175)

THREE-STAGE FFL

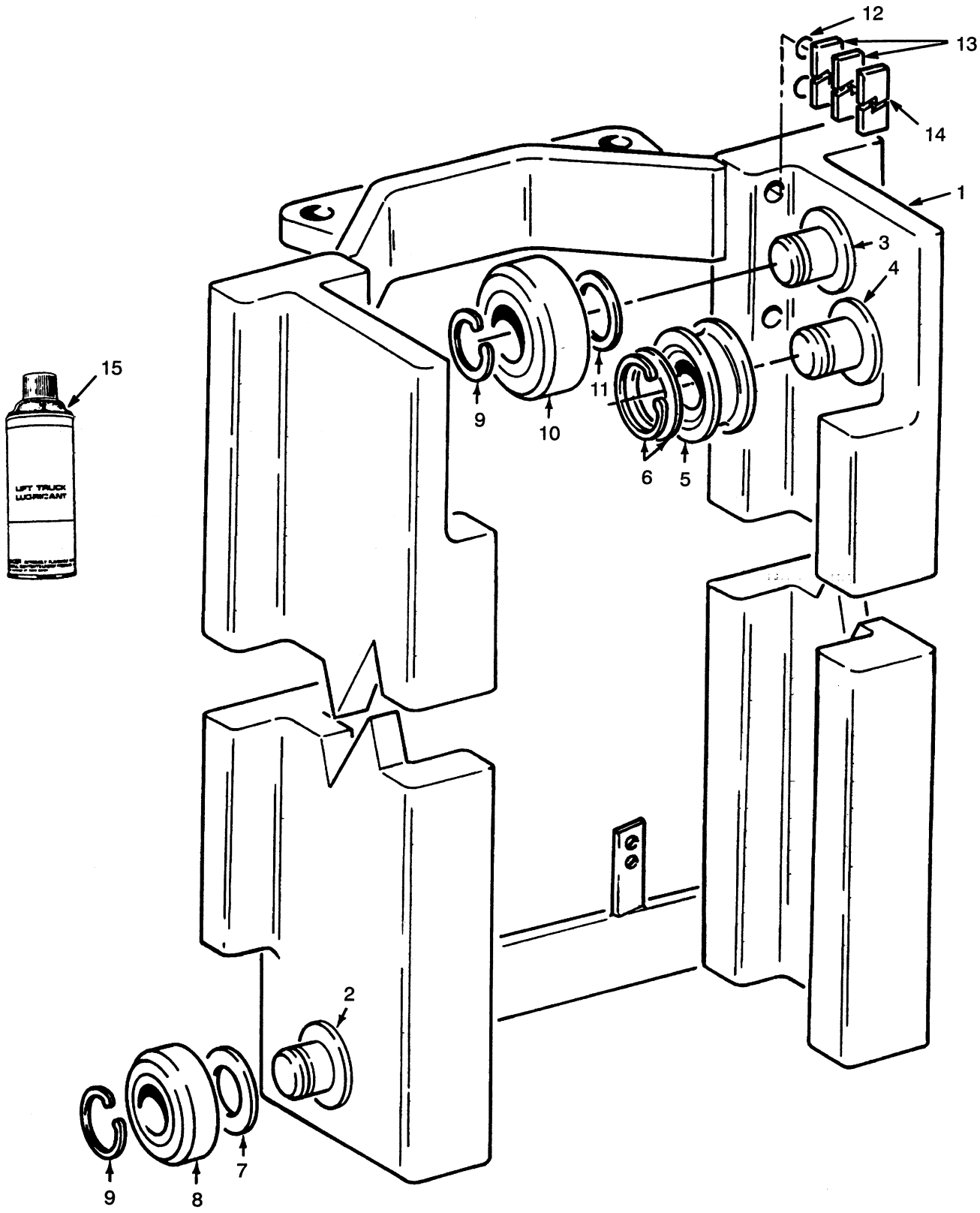

©1999 HYSTER COMPANY

INTERMEDIATE MAST
THREE-STAGE FFL

H70-80XL & H90XLS

REF NO	NAME OF PART 1 2 3 4	LIFT HEIGHT TO BOTTOM OF FORKS				
		170.0 inch	192.0 inch	204.5 inch	216.5 inch	234.5 inch
	MAST GROUP NUMBER	**A511-4320**	**A511-4880**	**A511-5200**	**A511-5500**	**A511-5950**
	Mast	348127	1317704	1317705	1317706	388419
1	Intermediate Mast	1307618	1307619	1307620	1307621	381078

H90-110XL

REF NO	NAME OF PART 1 2 3 4	LIFT HEIGHT TO BOTTOM OF FORKS				
		160.0 inch	182.0 inch	194.5 inch	206.5 inch	224.0 inch
	MAST GROUP NUMBER	**A511-4060**	**A511-4620**	**A511-4940**	**A511-5240**	**A511-5690**
	Mast	348130	1317708	1317709	1317710	388420
1	Intermediate Mast	1307618	1307619	1307620	1307621	381078

REF		PART NO.	NAME OF PART	QTY
	a	....	Mast	1
1	a	....	Intermediate Mast	1
2		341144	Stub Shaft	2
3		332051	Stub Shaft	2
4		332052	Stub Shaft	2
5		339927	Chain Sheave	2
6		304526	Snap Ring	2
6		335907	Washer	2
7		126765	Shim (.020 in)	AR
8	b	1333649	Load Roller (A, Standard Size)	2
8	b	1343002	Load Roller (B, 0.030 in Oversize, Optional)	AR
8	b	1343003	Load Roller (C, 0.060 in Oversize, Optional)	AR
9		187489	Snap Ring	4
10	b	1333648	Load Roller (A, Standard Size)	2
10	b	1343010	Load Roller (B, 0.030 in Oversize, Optional)	AR
10	b	1343011	Load Roller (C, 0.060 in Oversize, Optional)	AR
11		126765	Shim (.020 in)	AR
12		104506	O-Ring	4
13		131716	Shim (0.020 in)	AR
13		131715	Shim (0.007 in) (Optional)	AR
14		215211	Bearing Strip	2
15		171351	Lubricant	AR

a See Charts Above

b The Letter Is Stamped On The Inside Face Of The Load Roller

©1999 HYSTER COMPANY

INNER MAST (FIGURE 176)

THREE-STAGE FFL

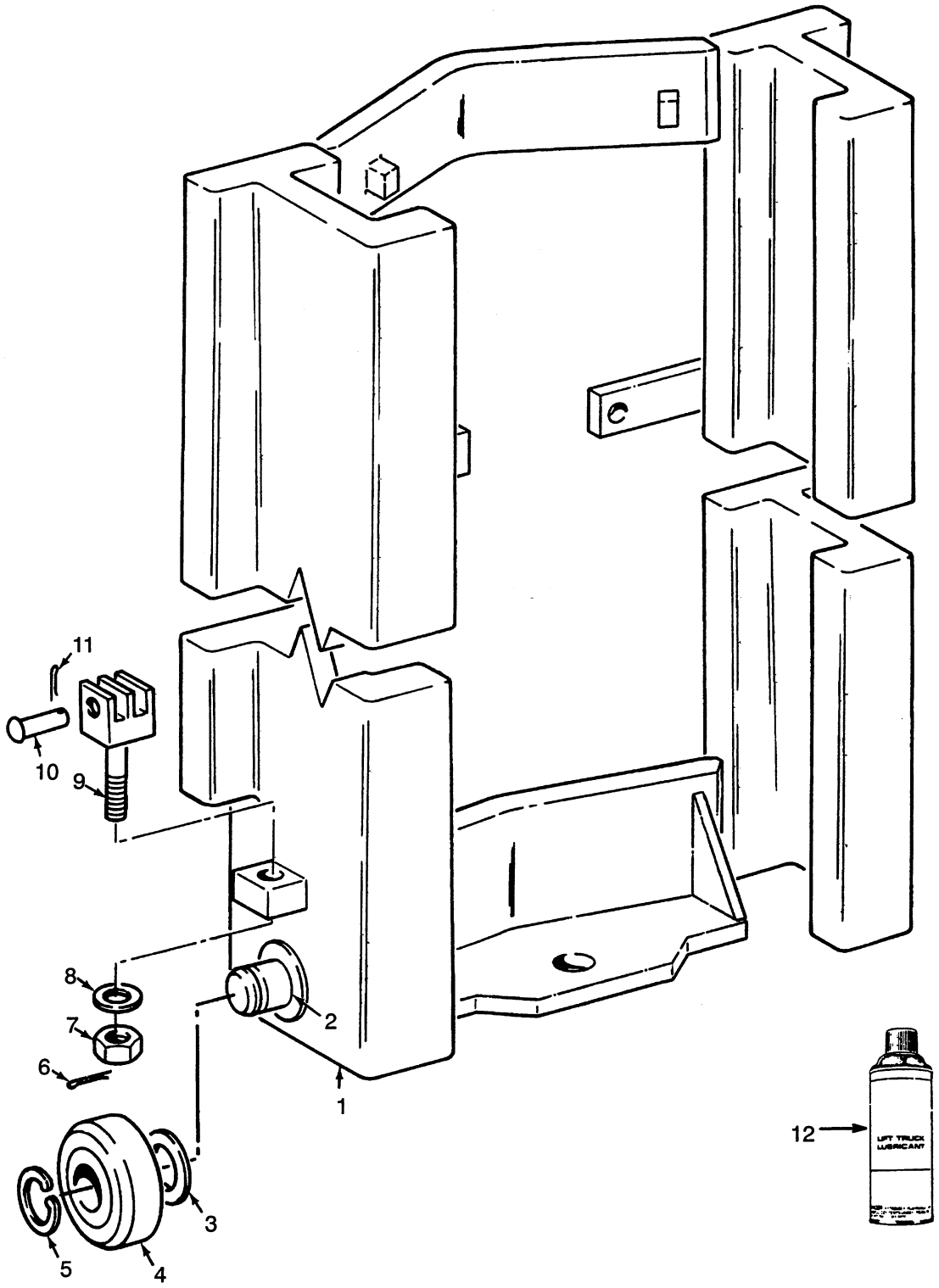

©1999 HYSTER COMPANY

INNER MAST

THREE-STAGE FFL

H70-90XL & H90XLS

REF NO	REF NO	LIFT HEIGHT TO BOTTOM OF FORKS				
		170.0 inch	192.0 inch	204.5 inch	216.5 inch	234.5 inch
	MAST GROUP NUMBER	**A511-4320**	**A511-4880**	**A511-5200**	**A511-5500**	**A511-5950**
	Mast	348127	1317704	1317705	1317706	388419
1	Inner Mast	1301930	1317700	1317701	1317702	1301934

H90-110XL

REF NO	NAME OF PART 1 2 3 4	LIFT HEIGHT TO BOTTOM OF FORKS				
		160.0 inch	182.0 inch	194.5 inch	206.5 inch	224.0 inch
	MAST GROUP NUMBER	**A511-4060**	**A511-4620**	**A511-4940**	**A511-5240**	**A511-5690**
	Mast	348130	1317708	1317709	1317710	388420
1	Inner Mast	1301930	1317700	1317701	1317702	1301934

KEY:
A: H70-80XL & H90XLS
B: H90-110XL

REF		PART NO.	NAME OF PART	QTY A	QTY B
	a	....	Mast	1	1
1	a	....	Inner Mast	1	1
2		318182	Stub Shaft	2	2
3		126765	Shim (0.020 in)	AR	AR
4	b	1333648	Load Roller (A, Standard Size)	2	2
4	b	1343010	Load Roller (B, 0.030 in Oversize, Optional)	AR	AR
4	b	1343011	Load Roller (C, 0.060 in Oversize, Optional)	AR	AR
5		187489	Snap Ring	2	2
6		15224	Cotter Pin	2	2
7		182377	Nut	2	2
8		182376	Base Ring	2	2
9		351666	Chain Anchor	2	..
9		351667	Chain Anchor	..	2
10		327591	Pin	2	..
10		339932	Pin	..	2
11		15222	Cotter Pin	2	2
12		171351	Lubricant	AR	AR

a See Charts Above

b The Letter Is Stamped On The Inside Face Of The Load Roller .

©1999 HYSTER COMPANY

MAIN LIFT (FIGURE 177)

THREE-STAGE FFL

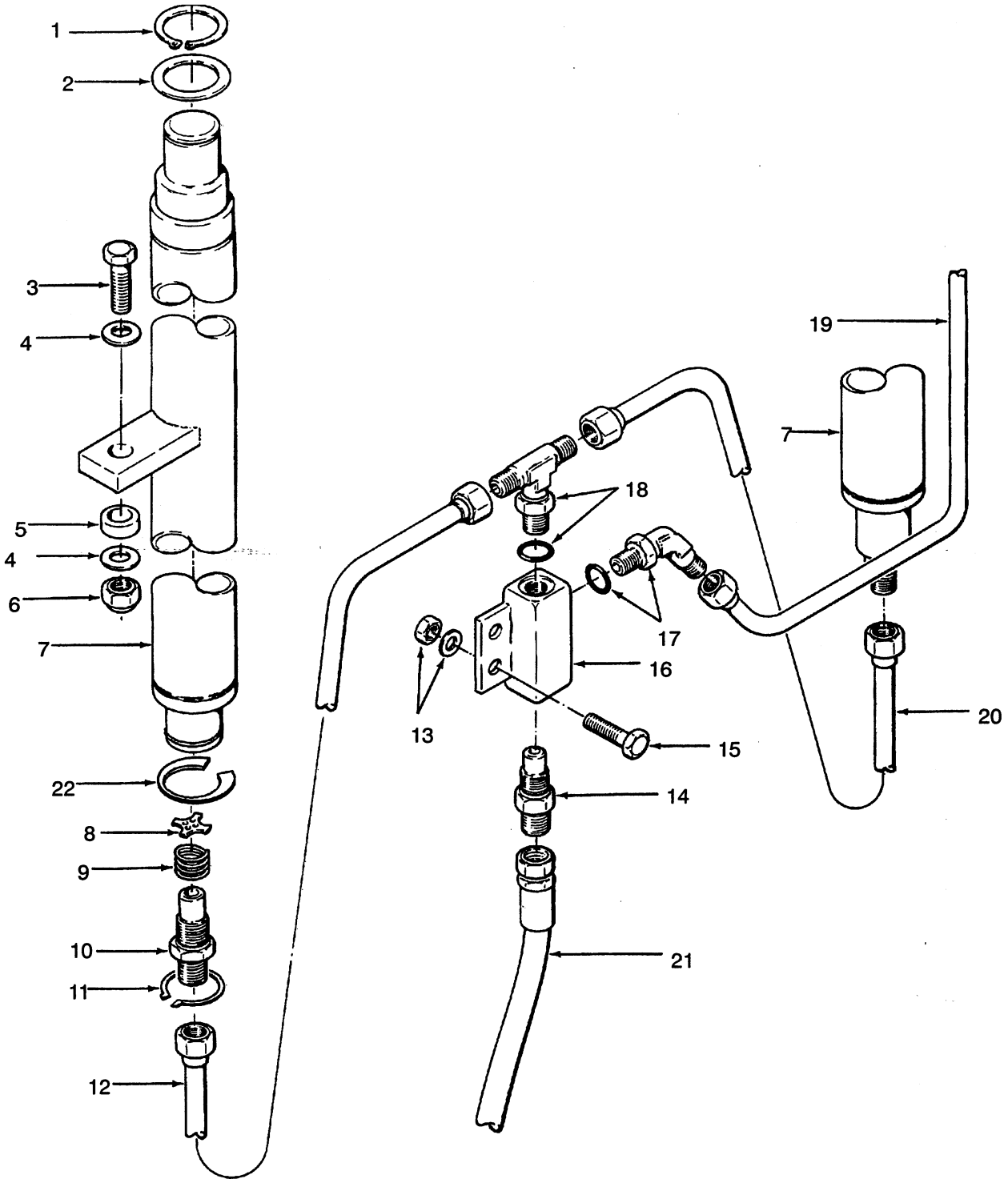

©1999 HYSTER COMPANY

MAIN LIFT

THREE-STAGE FFL

H70-80XL & H90XLS

REF NO	NAME OF PART 1 2 3 4	LIFT HEIGHT TO BOTTOM OF FORKS				
		170.0 inch	192.0 inch	204.5 inch	216.5 inch	234.5 inch
	MAST GROUP NUMBER	A511-4320	A511-4880	A511-5200	A511-5500	A511-5950
	Mast	348127	1317704	1317705	1317706	388419
19	Tube	357538	384598	357539	357540	388450

H90-110XL

REF NO	NAME OF PART 1 2 3 4	LIFT HEIGHT TO BOTTOM OF FORKS				
		160.0 inch	182.0 inch	194.5 inch	206.5 inch	224.0 inch
	MAST GROUP NUMBER	A511-4060	A511-4620	A511-4940	A511-5240	A511-5690
	Mast	348130	1317708	1317709	1317710	388420
19	Tube	357538	384598	357539	357540	388450

KEY:
A: H70-80XL & H90XLS
B: H90-110XL

REF	PART NO.	NAME OF PART	QTY A	QTY B
a	....	Mast (See Charts Above)	1	1
1	304523	Snap Ring	2	2
2	332061	Washer	2	2
3	292589	Capscrew	2	2
4	296431	Washer	4	4
5	351565	Spacer	2	2
6	316829	Nut	2	2
7	....	Main Lift Cylinder ☞ Figure 179	2	2
8	373286	Washer	2	2
9	120938	Spring	2	2
10	184799	Fitting	2	2
11	351350	Snap Ring	2	2
12	373269	Tube, RH	1	1
13	316826	Nut	2	2
13	320159	Washer	2	2
14	315262	Control Valve	1	..
14	319891	Control Valve	..	1
15	136985	Capscrew	2	2
16	368221	Housing	1	1
17	222392	Fitting	1	1
17	16486	O-Ring	1	1
18	274518	Fitting	1	1
18	16484	O-Ring	1	1
19 a	....	Tube (See Charts)	1	1
20	373268	Tube, LH	1	1
21	385498	Hose	1	1
22	1344750	Shim (0 .75 mm)	ARAR	

a See Charts Above

©1999 HYSTER COMPANY

FREE LIFT (FIGURE 178)

THREE-STAGE FFL

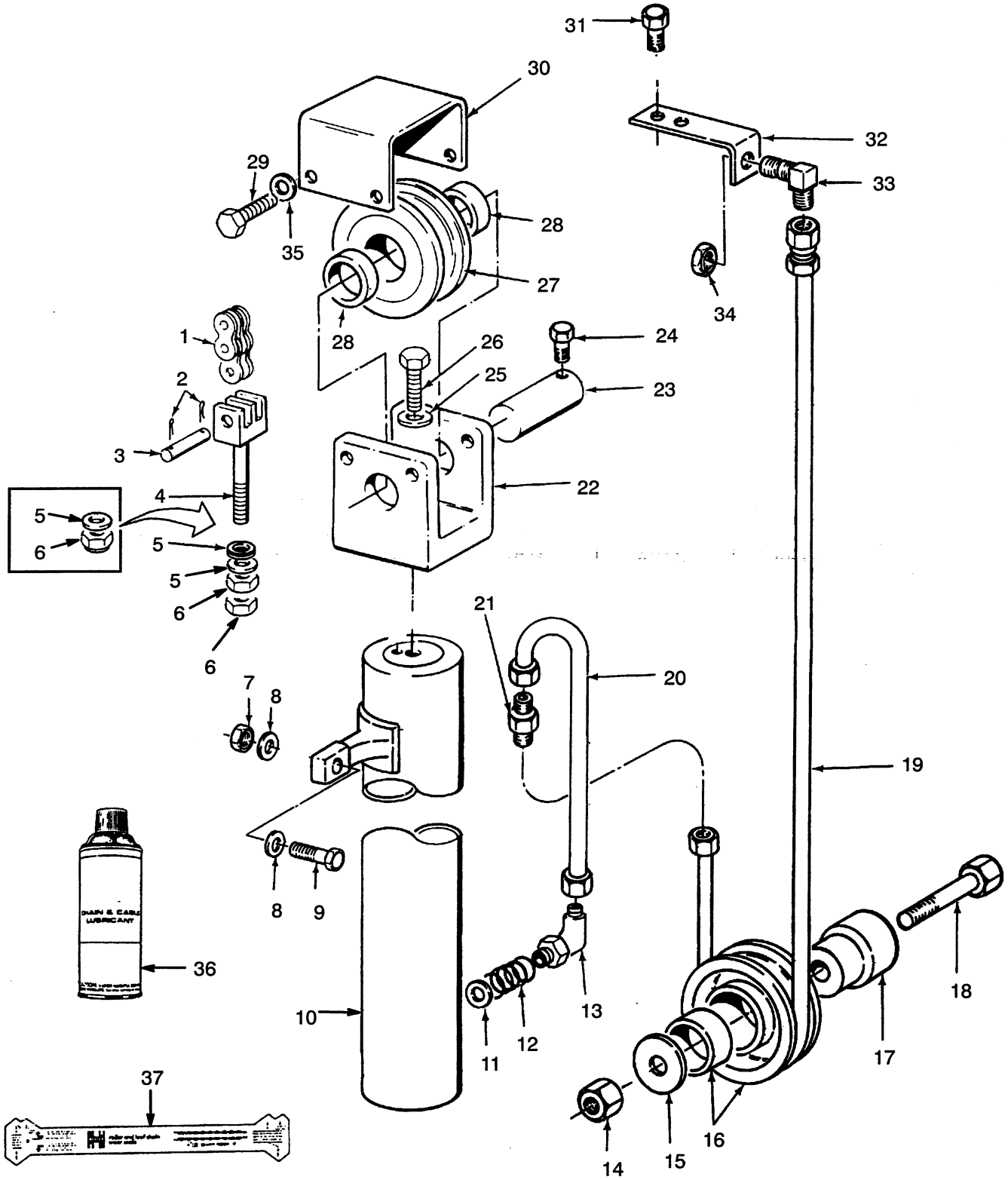

FREE LIFT

THREE-STAGE FFL

H70-80XL & H90XLS

REF NO	NAME OF PART 1 2 3 4	LIFT HEIGHT TO BOTTOM OF FORKS				
		70.0 inch	192.0 inch	204.5 inch	216.5 inch	234.5 inch
	MAST GROUP NUMBER	A511-4320	A511-4880	A511-5200	A511-5500	A511-5950
	Mast	348127	1317704	1317705	1317706	388419
1	Free-Lift Chain	182319	191081	182342	182331	182342
19	Hose	371372	384597	371373	371374	388449

H90-110XL

REF NO	NAME OF PART 1 2 3 4	LIFT HEIGHT TO BOTTOM OF FORKS				
		160.0 inch	182.0 inch	194.5 inch	206.5 inch	224.0 inch
	MAST GROUP NUMBER	A511-4060	A511-4620	A511-4940	A511-5240	A511-5690
	Mast	348130	1317708	1317709	1317710	388420
1	Free-Lift Chain	339897	338646	366106	338646	366106
19	Hose	371372	384597	371373	371374	388449

KEY:
A: H70-80XL & H90XLS
B: H90-110XL

REF		PART NO.	NAME OF PART	QTY A	QTY B
	a	....	Mast	1	1
1	a	....	Free-Lift Chain	2	2
2		15222	Cotter Pin	2	2
3		327591	Pin	2	..
3		339932	Pin	..	2
4		1331990	Chain Anchor	2	..
4		1331991	Chain Anchor	..	2
5		1332704	Washer Set (Spherical)	2	2
6		221717	Nut	4	4
7		316829	Nut	2	2
8		296431	Washer	4	4
9		292589	Capscrew	2	2
10		....	Free-Lift Cylinder	1	1
			☞ Figure 180		
11		385499	Washer	1	1
12		111975	Spring	1	1
13		318297	Fitting	1	1
14		316826	Nut	1	1
15		86936	Flatwasher	1	1
16		341246	Sheave	1	1
16		136045	Bushing	1	1
17		357572	Stub Shaft	1	1
18		292517	Capscrew	1	1
19	a	....	Hose	1	1
20		357549	Tube	1	1
21		318260	Fitting	1	1
22		368171	Crosshead	1	1
23		318139	Pin	1	1
24		302105	Screw	1	1
25		292685	Lockwasher	2	2
26		292562	Capscrew	2	2
27		355044	Sheave	1	1
27		126764	Bearing	2	2
27		40667	Snap Ring	2	2
28		297573	Spacer	2	2
29		292514	Screw	4	4
30		357573	Guard	1	1
31		351668	Screw	2	2
32		356390	Bracket	1	1
33		318251	Fitting	1	1
34		14765	Nut	1	1
35		292682	Washer	4	4
36		171350	Chain & Cable Lubricant	ARAR	
37		599737	Chain Wear Scale	ARAR	

a See Charts Above

©1999 HYSTER COMPANY

MAIN-LIFT CYLINDER (FIGURE 179)

THREE-STAGE FFL

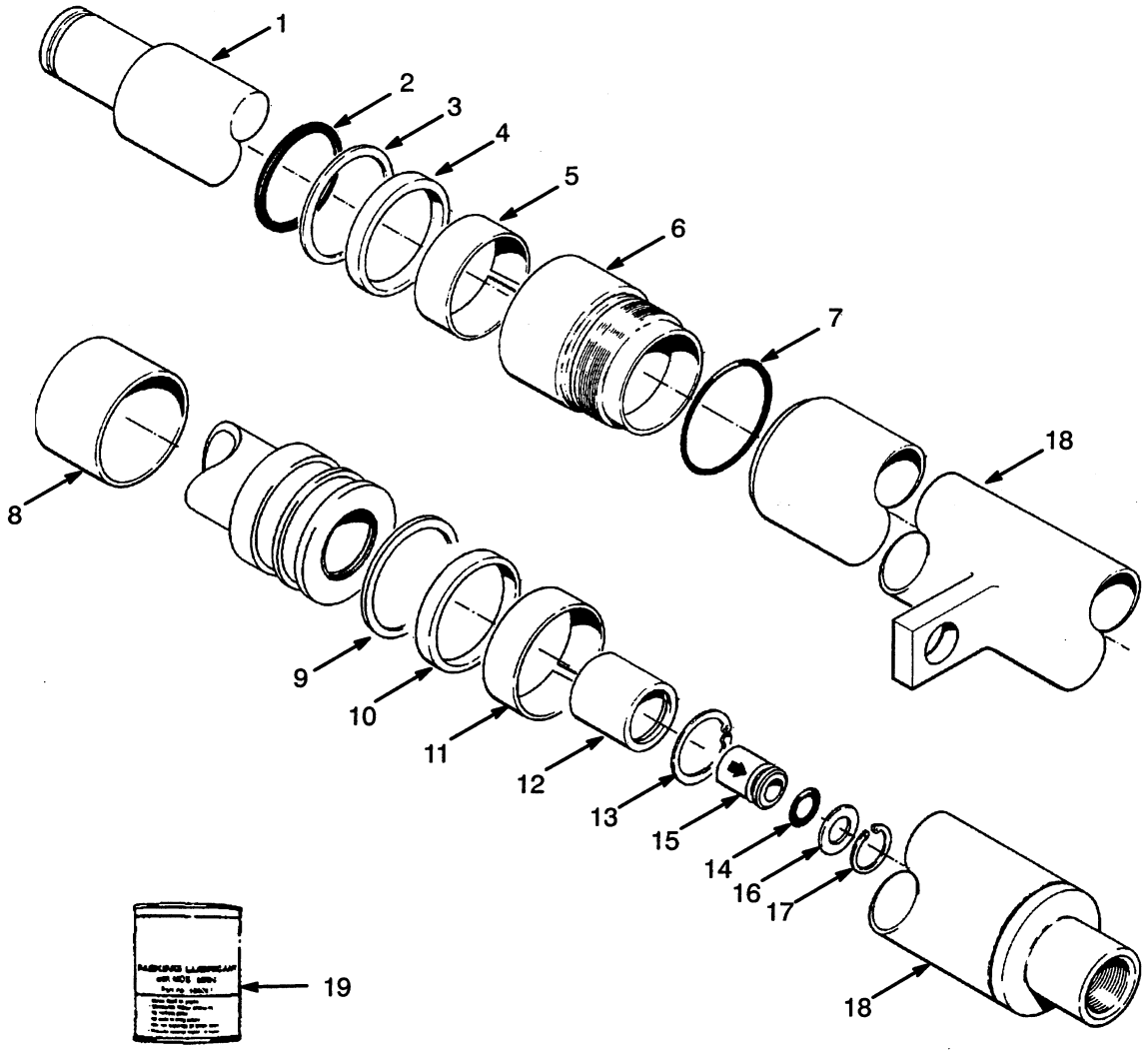

©1999 HYSTER COMPANY

MAIN-LIFT CYLINDER
THREE-STAGE FFL

H70-80XL & H90XLS

REF NO	NAME OF PART 1 2 3 4	LIFT HEIGHT TO BOTTOM OF FORKS				
		170.0 inch	192.0 inch	204.5 inch	216.5 inch	234.5 inch
	Main-Lift Cylinder	1331319	1331322	1331320	1331321	1331323
1	Rod/Piston	351650	384587	351651	351652	388429
8	Spacer	....	351673	351673	351673	381113
18	Shell	351656	384585	351657	351658	388425

H90-110XL

REF NO	NAME OF PART 1 2 3 4	LIFT HEIGHT TO BOTTOM OF FORKS				
		160.0 inch	182.0 inch	194.5 inch	206.5 inch	224.0 inch
	Main-Lift Cylinder	1332558	1332561	1332559	1332560	1332562
1	Rod/Piston	351653	384559	351654	351655	388430
8	Spacer	351674	351675	351675	351675	381114
18	Shell	351659	384557	351660	351661	388426

KEY:
A: H70-80XL & H90XLS
B: H90-110XL

REF		PART NO.	NAME OF PART	QTY A	QTY B
	a	....	Main-Lift Cylinder	2	2
1	a	....	Rod	1	1
2	b	1310371	Wiper	1	..
2	c	1329784	Wiper	..	1
3	b	638249	Back-Up Ring	1	..
3	c	638250	Back-Up Ring	..	1
4	b	270077	Seal	1	..
4	c	201829	Seal	..	1
5	b	215425	Wear Ring	1	..
5	c	215301	Wear Ring	..	1
6		1329785	Retainer	1	..
6		1329786	Retainer	..	1
7	b	154375	O-Ring	1	..
7	c	15879	O-Ring	..	1
8	a	....	Spacer	1	1
9	b	638249	Back-Up Ring	1	..
9	c	351532	Back-Up	..	1
10	b	270077	Seal	1	..
10	c	358300	Seal	..	1
11	b	297532	Wear Ring	1	..
11	c	351531	Wear Ring	..	1
12		1310339	Piston	1	1
13	bc	187388	Snap Ring	1	1
14	bc	15860	O-Ring	1	1
15		297530	Check Valve	1	1
16		297531	Washer	1	1
17	bc	58916	Snap Ring	1	1
18	a	....	Shell	1	1
19		186061	Packing Lubricant	ARAR	

a See Charts Above
b Included In Seal Kit 1332563
c Included In Seal Kit 1332564

©1999 HYSTER COMPANY

FREE-LIFT CYLINDER (FIGURE 180)

THREE-STAGE FFL

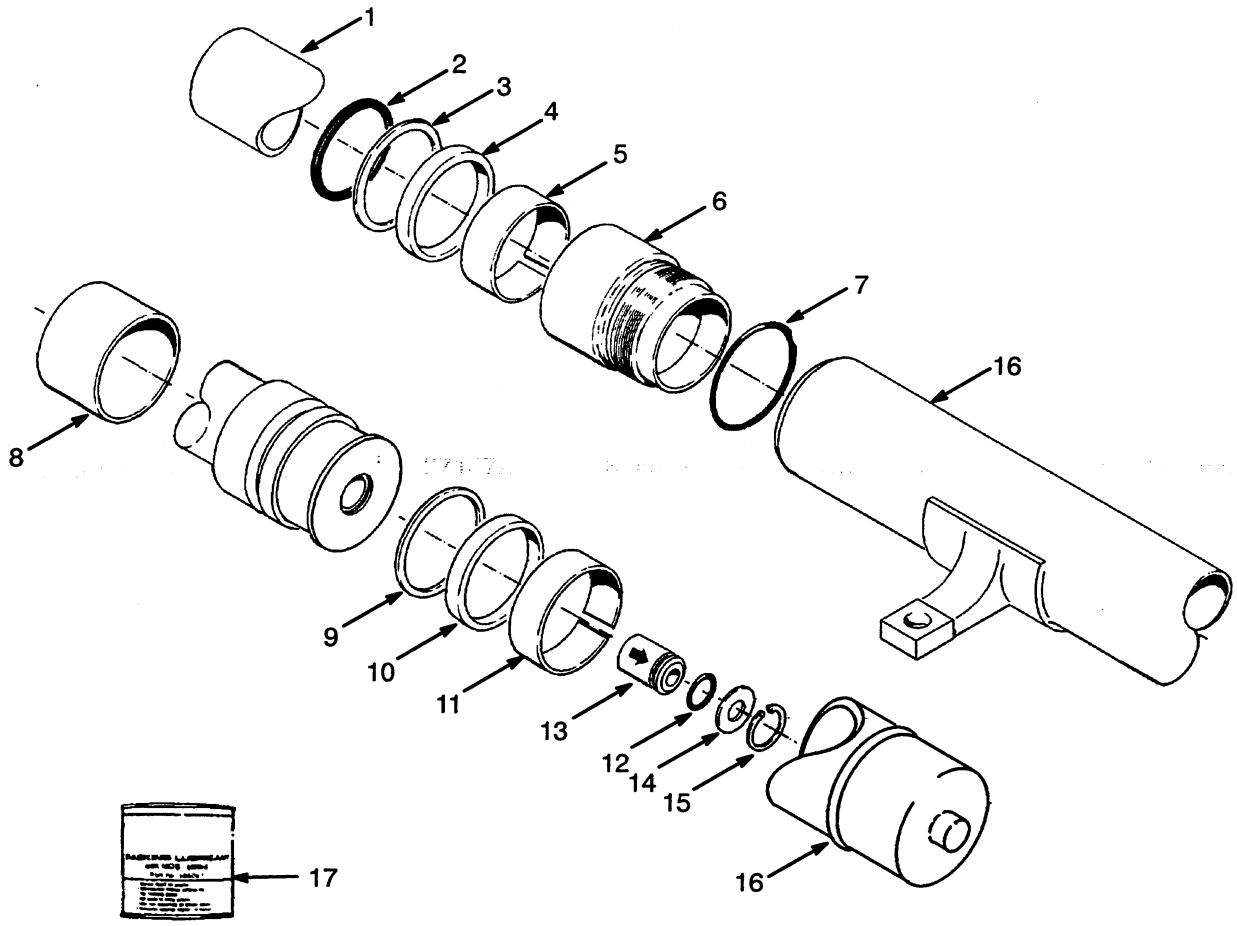

©1999 HYSTER COMPANY

FREE-LIFT CYLINDER
THREE-STAGE FFL

H70-80XL & H90XLS

REF NO	NAME OF PART 1 2 3 4	LIFT HEIGHT TO BOTTOM OF FORKS				
		170.0 inch	192.0 inch	204.5 inch	216.5 inch	234.5 inch
	Free-Lift Cylinder	351626	1317695	1317696	1317697	388434
1	Rod/Piston	351593	384590	351594	351622	388436
16	Shell	351614	1317687	1317683	1317684	388440

H90-110XL

REF NO	NAME OF PART 1 2 3 4	LIFT HEIGHT TO BOTTOM OF FORKS				
		160.0 inch	182.0 inch	194.5 inch	206.5 inch	224.0 inch
	Free-Lift Cylinder	351637	1317691	1317692	1317693	388435
1	Rod/Piston	351633	384563	351634	351635	388437
16	Shell	360293	1317689	1317685	1317686	388441

KEY:
A: H70-80XL & H90XLS
B: H90-110XL

REF		PART NO.	NAME OF PART	QTY A	QTY B
	a	....	Free-Lift Cylinder	2	2
1	a	....	Rod/Piston	1	1
2	b	636858	Wiper Ring	1	1
3	bc	638292	Back-Up Ring	1	1
4	bc	637161	Seal	1	1
5	bc	215345	Wear Ring	1	1
6		351618	Retainer	1	..
6		351619	Retainer	..	1
7	b	46629	O-Ring	1	..
7	c	15885	O-Ring	..	1
8		357598	Spacer	..	1
9	b	638253	Back-Up Ring	1	..
9	c	638253	Back-Up Ring	..	1
10	b	637162	Seal	1	..
10	c	637164	Seal	..	1
11	b	636950	Wear Ring	1	..
11	c	636952	Wear Ring	..	1
12	bc	39348	O-Ring	1	1
13		257913	Valve	1	1
14		637635	Washer	1	1
15		187388	Snap Ring	1	1
16	a	....	Shell	1	1
17		186061	Packing Lubricant	ARAR	

a See Charts Above
b Included In Seal Kit 1302768
c Included In Seal Kit 1302767

©1999 HYSTER COMPANY

HEADER HOSES (FIGURE 181)

THREE-STAGE FULL FREE LIFT MAST

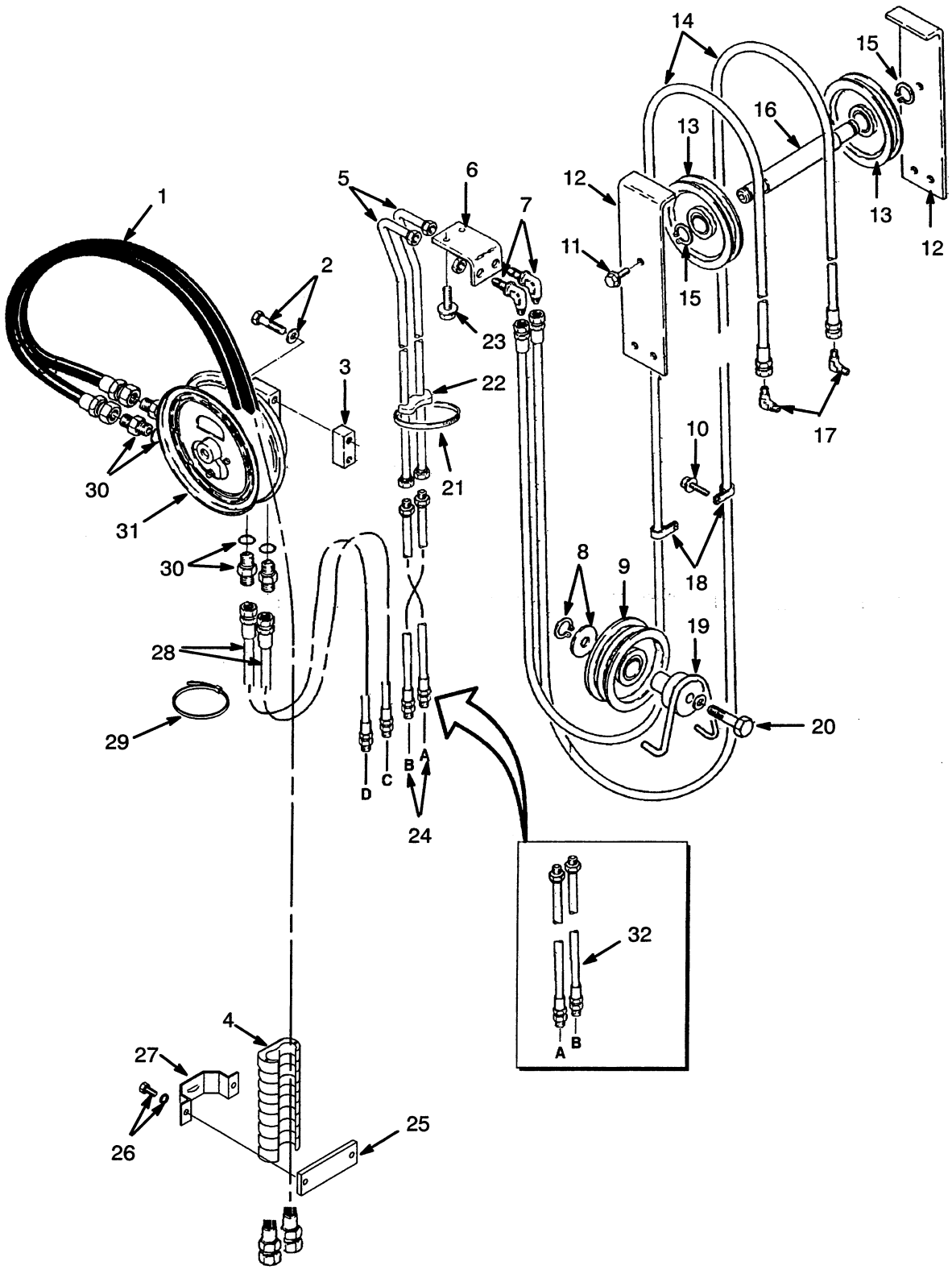

©1999 HYSTER COMPANY

See Service Manual
for service procedures

11/2/99

HEADER HOSES

THREE-STAGE FULL FREE LIFT MAST

H70-80XL & H90XLS

REF NO	NAME OF PART 1 2 3 4	LIFT HEIGHT TO BOTTOM OF FORKS				
		70.0 inch	192.0 inch	204.5 inch	216.5 inch	234.5 inch
	MAST GROUP NUMBER	A511-4320	A511-4880	A511-5200	A511-5500	A511-5950
5	Tube	357532	388466	357533	357534	388468
14	Hose	389906	389907	389908	389909	389910
28	Hose	360444	388470	367157	367158	388471

H90-110XL

REF NO	NAME OF PART 1 2 3 4	LIFT HEIGHT TO BOTTOM OF FORKS				
		160.0 inch	182.0 inch	194.5 inch	206.5 inch	224.0 inch
	MAST GROUP NUMBER	A511-4060	A511-4620	A511-4940	A511-5240	A511-5690
5	Tube	384570	388467	384571	384572	388469
14	Hose	389906	389907	389908	389909	389910
28	Hose	360444	388470	367157	367158	388471

KEY:
A: Three Function Control Valve
B: Four Function Control Valve

REF		PART NO.	NAME OF PART	QTY A	QTY B
1		367162	Hose	..	1
1	a	386647	Hose	..	1
2		292535	Capscrew	..	2
2		320161	Washer	..	2
3		1307623	Plate	..	1
4		358286	Strain Relief	..	1
5	b	....	Tube	2	2
6		388453	Plate	1	1
7		16459	Fitting	2	2
8		58902	Snap Ring	1	1
8		320157	Flat Washer	1	1
9		1332705	Sheave Assembly	1	1
9		332057	Bushing	1	1
10		351668	Screw	2	2
11		351668	Screw	2	2
12		368173	Plate	2	2
13		297647	Sheave	2	2
14	b	....	Hose	2	2
15		248212	Snap Ring	2	2
16		368172	Shaft	1	1
17		16458	Fitting	2	2
18		101625	Clamp	2	2
19		1307643	Stub Shaft	1	1
20		136985	Capscrew	1	1
21		78286	Clamp	2	2
22		340054	Spacer	2	2
23		351668	Screw	2	2
24		1301925	Hose	..	2
25		356431	Plate	1	..
25		1312874	Plate	..	1
26		16870	Capscrew	..	2
26		15156	Lockwasher	..	2
27		358287	Bracket	..	1
28	b	....	Hose	..	2
29		273775	Clamp	..	2
30		16541	Fitting	..	4
30		16484	O-Ring	..	1
31		358289	Hose Reel	..	1
31		1390556	Hose Reel (Optional)	..	1
31		672563	Seal Kit	..	1
32		1301925	Hose	2	..

a 234.5 inch & 224.0 inch Lifts
b See Chart Above

©1999 HYSTER COMPANY

CARRIAGE (FIGURE 182)

THREE-STAGE FFL

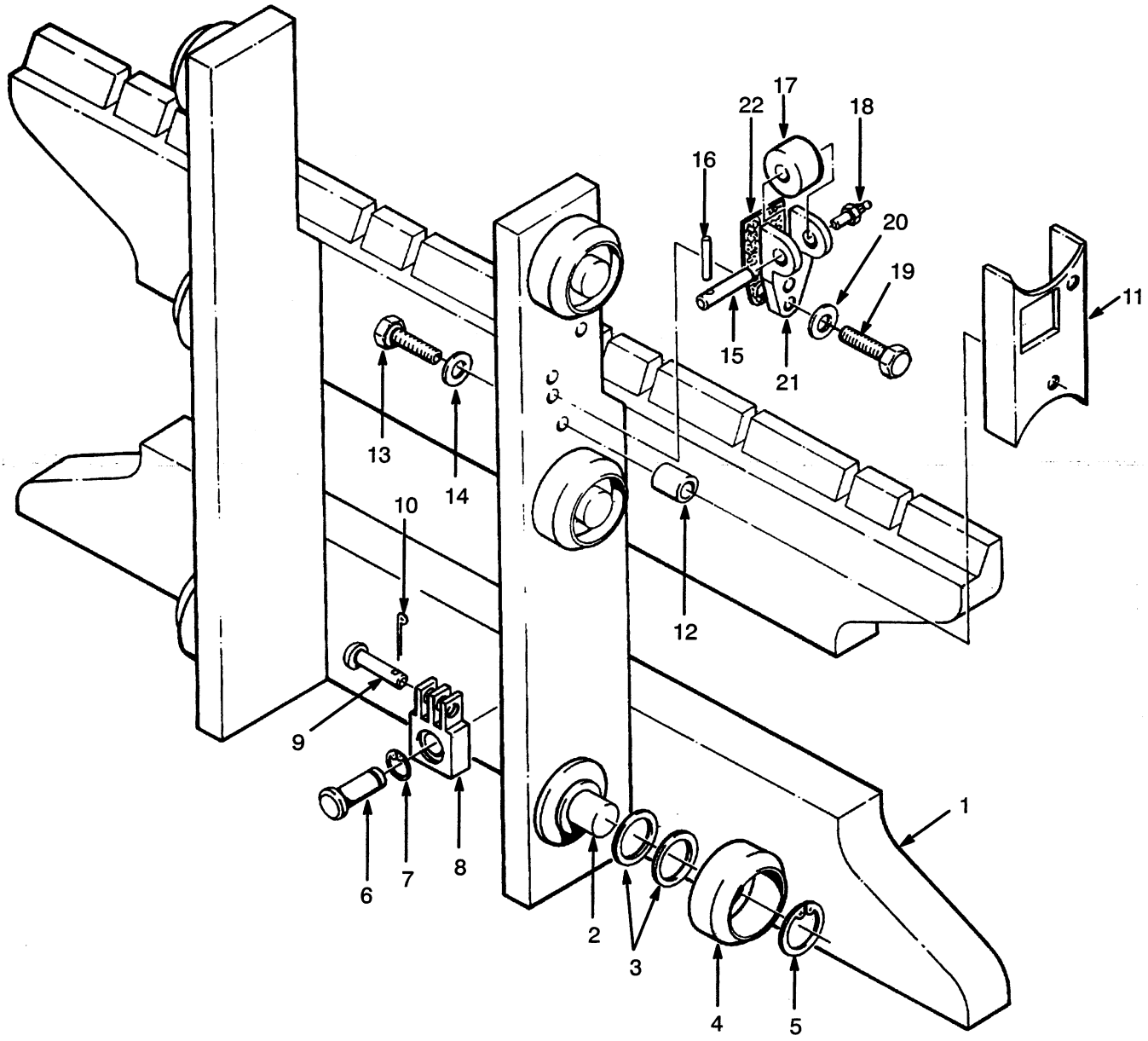

©1999 HYSTER COMPANY

CARRIAGE

THREE-STAGE FFL

KEY:
A: H70-80XL & H90XLS
B: H90-110XL

REF		PART NO.	NAME OF PART	QTY A	QTY B
		1379241	Carriage (48 in)	1	..
		1379245	Carriage (60 in)	1	..
		1313821	Carriage (48 in)	..	1
		1317723	Carriage (60 in)	..	1
1		1379242	Frame (48 in)	1	..
1		1379246	Frame (60 in)	1	..
1		1313819	Frame (48 in)	..	1
1		1312126	Frame (60 in)	..	1
2		341144	Stub Shaft	6	6
3		126765	Shim (0.020 in)	AR	AR
4	a	1333648	Load Roller (A, Standard Size)	6	6
4	a	1343010	Load Roller (B, 0.030 in Oversize, Optional)	AR	AR
4	a	1343011	Load Roller (C, 0.060 in Oversize, Optional)	AR	AR
5		187489	Snap Ring	6	6
6		320327	Pin	2	2
7		131358	Snap Ring	2	2
8		357579	Chain Anchor	2	..
8		341558	Chain Anchor	..	2
9		327591	Pin	2	..
9		339932	Pin	..	2
10		15222	Cotter Pin	2	2
11		319322	Guard, RH	1	1
11		319323	Guard, LH	1	1
12		317292	Spacer	4	4
13		18518	Capscrew	4	4
14		15155	Lockwasher	4	4
15		244009	Pin	..	2
16		66333	Spring Pin	..	2
17		244005	Roller	..	2
18		16001	Grease Fitting	..	2
19		18518	Capscrew, LH	..	3
19		18516	Capscrew, RH	..	1
20		15155	Lockwasher	..	4
21		244008	Bracket	..	2
22		366116	Spacer	..	2

[a] The Letter Is Stamped On The Inside Face Of The Load Roller

©1999 HYSTER COMPANY

CARRIAGE (FIGURE 183)

THREE-STAGE FFL

H90-100XL ATTACHMENT

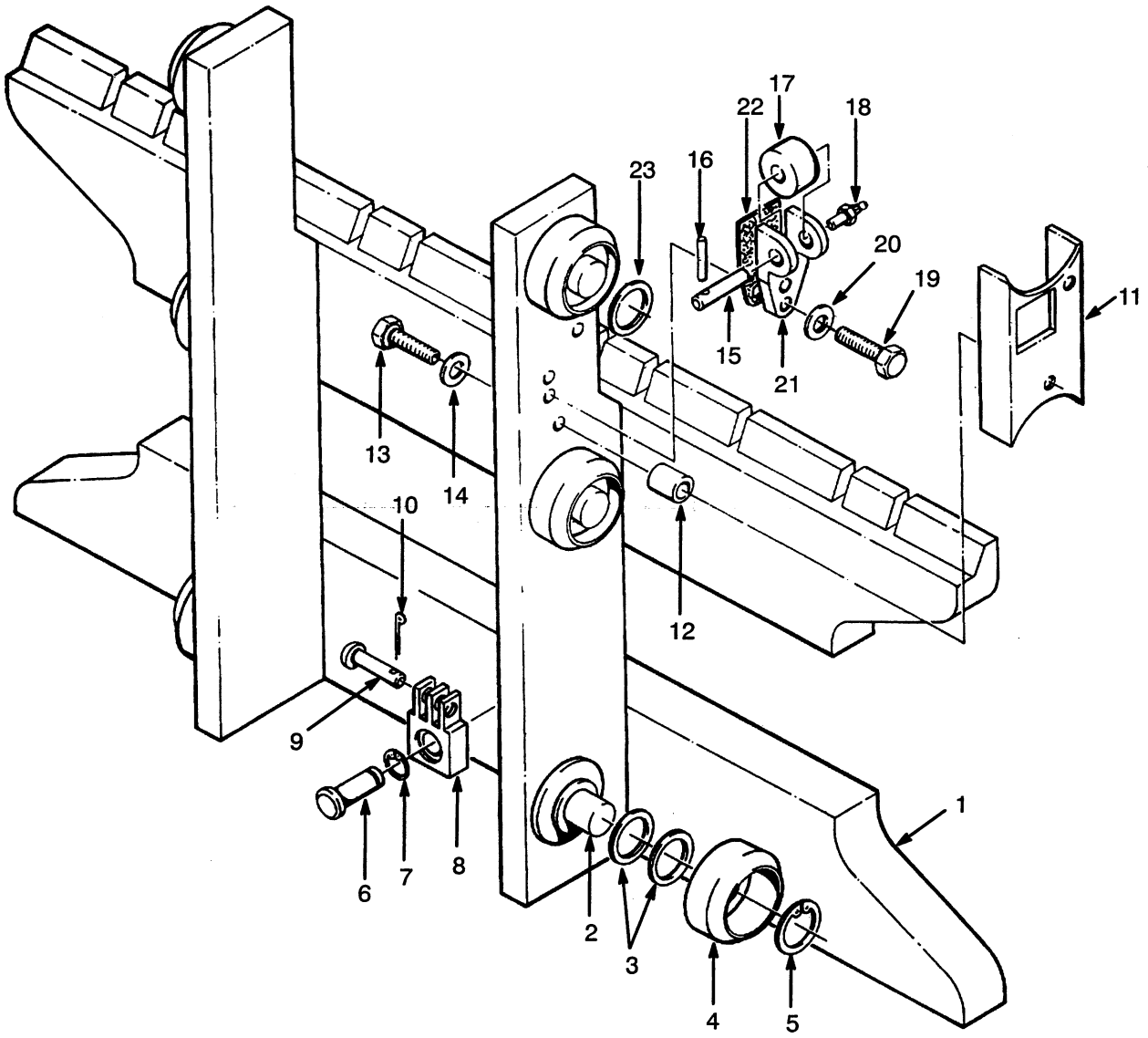

©1999 HYSTER COMPANY

CARRIAGE

THREE-STAGE FFL

H90-100XL ATTACHMENT

REF		PART NO.	NAME OF PART	QTY
		1379247	Carriage (42 in)	1
1		1379248	Frame (42 in)	1
2		341144	Stub Shaft	6
3		126765	Shim (0.020 in)	AR
4	a	1333648	Load Roller (A, Standard Size)	6
4	a	1343010	Load Roller (B, 0.030 in Oversize, Optional)	AR
4	a	1343011	Load Roller (C, 0.060 in Oversize, Optional)	AR
5		187489	Snap Ring	6
6		320327	Pin	2
7		131358	Snap Ring	2
8		341558	Chain Anchor	2
9		339932	Pin	2
10		15222	Cotter Pin	2
11		319322	Guard, RH	1
11		319323	Guard, LH	1
12		317292	Spacer	4
13		18518	Capscrew	4
14		15155	Lockwasher	4
15		244009	Pin	2
16		66333	Spring Pin	2
17		244005	Roller	2
18		16001	Grease Fitting	2
19		292528	Capscrew	4
20		292683	Lockwasher	4
21		244008	Roller Bracket	2
22		192424	Shim (0.030 in)	AR
22		192425	Shim (0.062 in)	AR
23		366116	Spacer	2

a The Letter Is Stamped On The Inside Face Of The Load Roller .

©1999 HYSTER COMPANY

FORKS (FIGURE 184)

HOOK TYPE

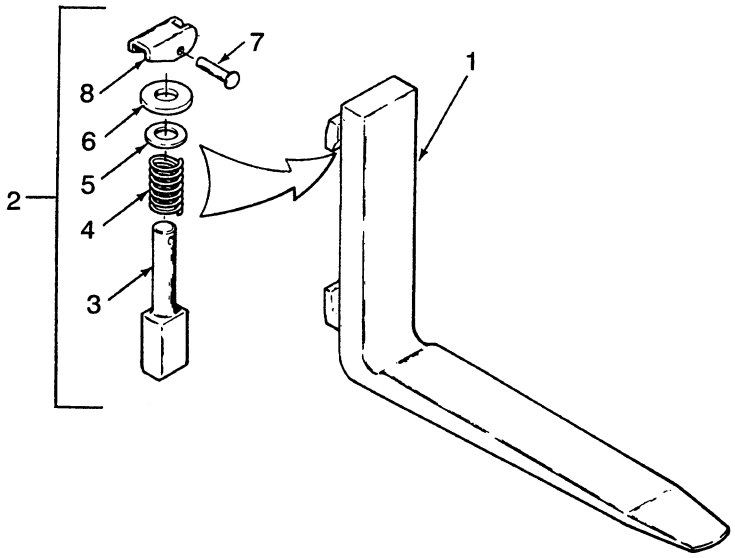

REF NO	NAME OF PART 1 2 3 4	STANDARD TAPER			FULL BOTTOM TAPER	QTY
		H70-80XL, H90XLS	[a] H90-100XL	H90-110XL	H70-80XL & H90XLS	
		PART NO.				
1	Fork					
	36 inch	367419	..	..	..	2
	42 inch	367420	..	..	1338097	2
	47.5 inch	..	..	..	1338098	2
	48 inch	367421	..	1333001	..	2
	54 inch	367422	..	1333002	..	2
	60 inch	367423	..	1333003	..	2
	72 inch	367424	..	1333004	..	2
2	Latch	332378	332378	332378	332378	1
3	Pin	332377	332377	332377	332377	1
4	Spring	141852	141852	141852	141852	1
5	Washer	195436	195436	195436	195436	1
6	Washer	157001	157001	157001	157001	1
7	Rivet	141853	141853	141853	141853	1
8	Handle	141856	141856	141856	141856	1

[a] Attachment Carriage

©1999 HYSTER COMPANY

FORKS (FIGURE 185)

HOOK TYPE

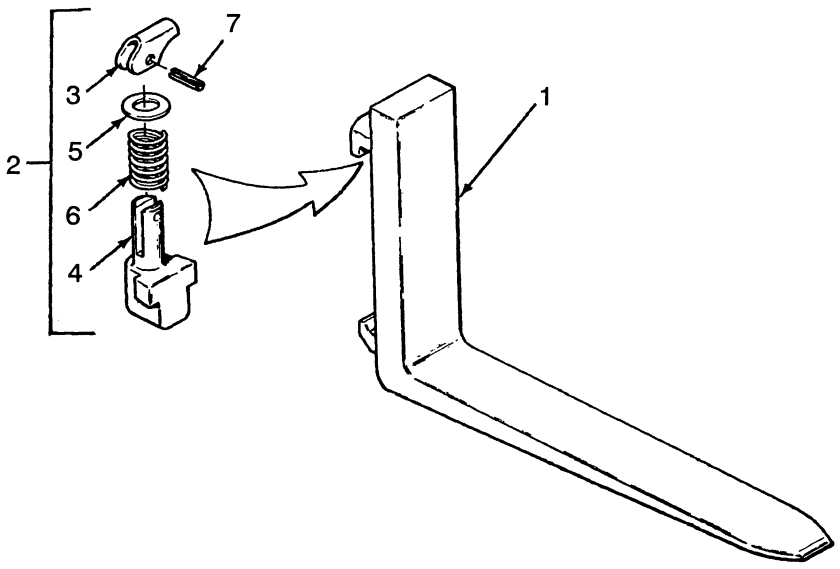

REF NO	NAME OF PART 1 2 3 4	STANDARD TAPER			FULL BOTTOM TAPER	QTY
		H70-80XL, H90XLS	[a] H90-100XL	H90-110XL	H70-80XL & H90XLS	
		PART NO.				
1	Fork					
	36 inch	367419	..	..	..	2
	42 inch	367420	..	..	1338097	2
	47.5 inch	..	..	..	1338098	2
	48 inch	367421	1333046	1333001	..	2
	54 inch	367422	1333047	1333002	1332745	2
	60 inch	367423	1333048	1333003	..	2
	72 inch	367424	1333049	1333004	..	2
2	Latch	369796	369796	369797	369796	1
3	Handle	368706	368706	368706	368706	1
4	Pin	71153	71153	71153	71153	1
5	Washer	368707	368707	368707	368707	1
6	Spring	368705	368705	368705	368705	1
7	Pin	368703	368703	368703	368703	1

[a] Attachment Carriage

©1999 HYSTER COMPANY

FORKS (FIGURE 186)

PIN TYPE

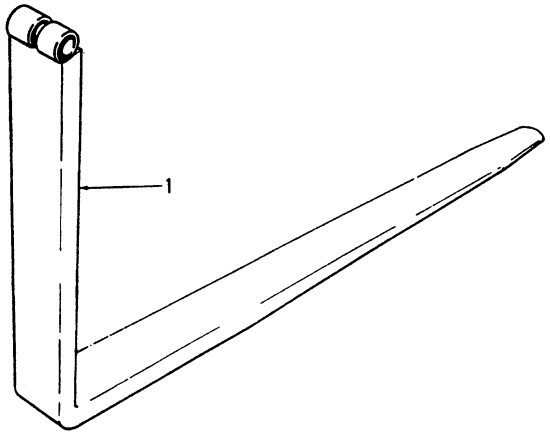

REF NO	NAME OF PART 1 2 3 4	STANDARD TAPER		FULL BOTTOM TAPER	QTY
		H70-80XL, H90XLS	H90-100XL	H70-80XL & H90XLS	
		PART NO.			
1	Fork				
	42 inch	367425	..	1338100	2
	47.5 inch	..	..	1338101	2
	48 inch	367427	1333120	..	2
	54 inch	367430	1333107	1338102	2
	60 inch	367432	1333110	..	2
	72 inch	367435	1333113	..	2
	96 inch	..	1333117	..	2

©1999 HYSTER COMPANY

FORKS (FIGURE 187)

BLOCK TYPE

48 INCH CARRIAGE

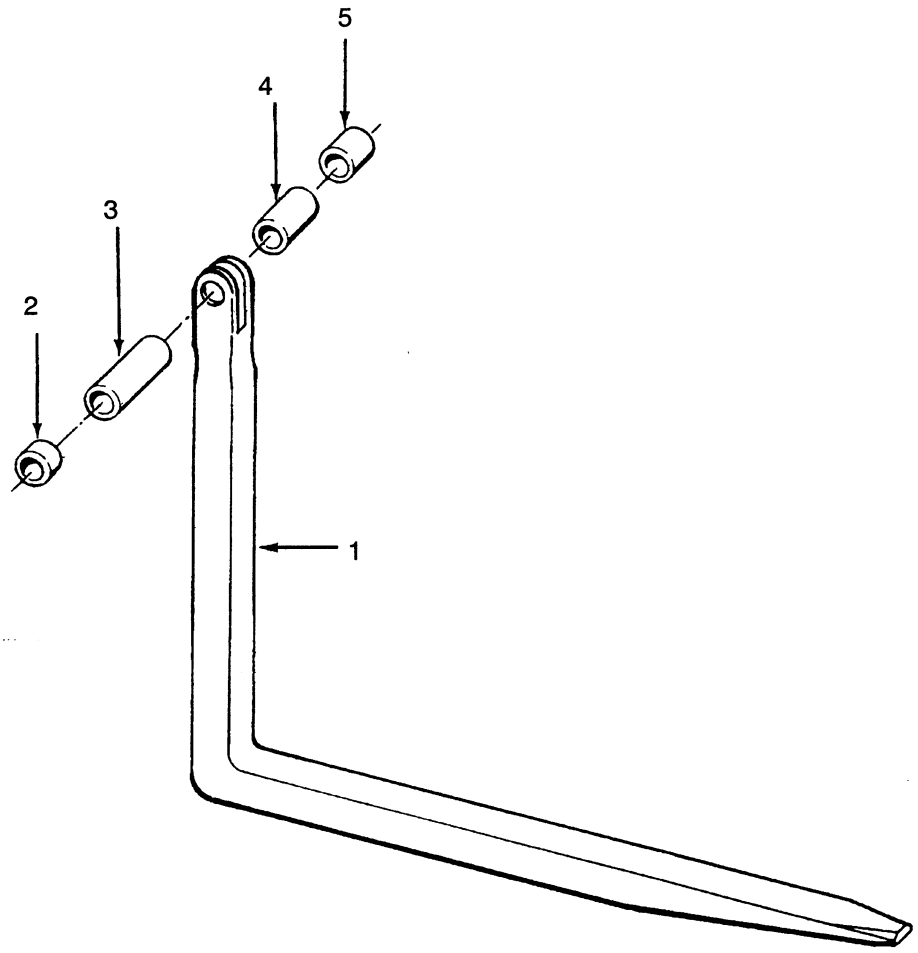

REF		PART NO.	NAME OF PART	QTY
1		368719	Fork (38 in)	6
1		368720	Fork (45-5/8 in)	6
2	a	171489	Hose (1-5/8 in)	2
3	a	171488	Hose (4-1/4 in)	2
4	a	373453	Hose	2
5	a	373454	Hose	1

a Included In Spacer Kit 171504

©1999 HYSTER COMPANY

FORKS (FIGURE 188)

BLOCK TYPE

62 INCH CARRIAGE

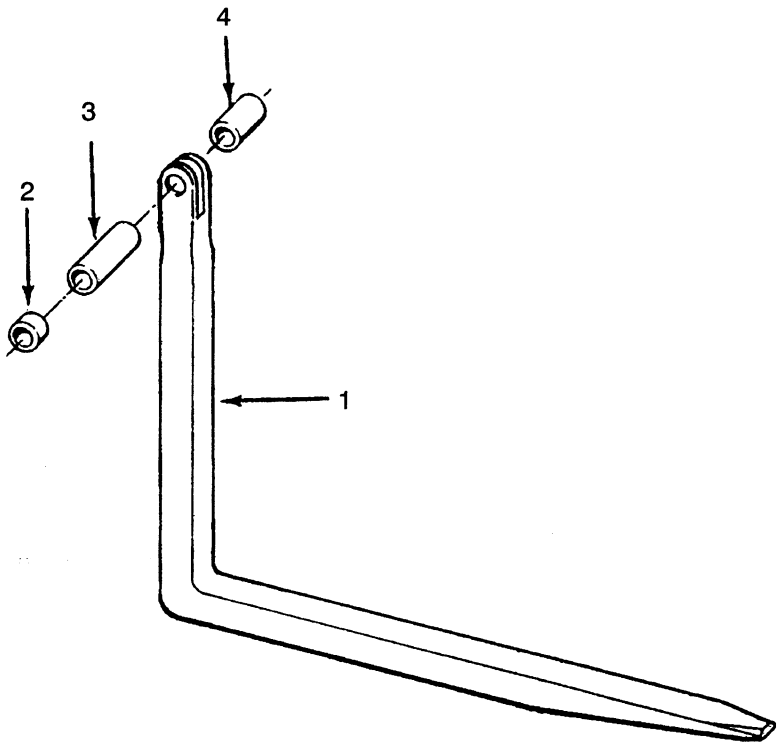

REF	PART NO.	NAME OF PART	QTY
1	368719	Fork (38 in)	8
1	368720	Fork (45-5/8 in)	8
2	171489	Hose (1-5/8 in)	2
3	171490	Hose (3-1/4 in)	2
4	171488	Hose (4-1/4 in)	4

©1999 HYSTER COMPANY

TWO-STAGE FULL FREE LIFT MAST
(A512)

CARRIAGE (Figure 197)
TWO-STAGE FFL ..... Page 402

CARRIAGE (Figure 198)
TWO-STAGE FFL
H90-100XL ATTACHMENT ..... Page 404

FORKS (Figure 199)
HOOK TYPE ..... Page 406

FORKS (Figure 200)
HOOK TYPE ..... Page 407

FORKS (Figure 201)
PIN TYPE ..... Page 408

FORKS (Figure 202)
BLOCK TYPE
48 INCH CARRIAGE ..... Page 409

FORKS (Figure 203)
BLOCK TYPE
62 INCH CARRIAGE ..... Page 410

FREE LIFT (Figure 192)
TWO-STAGE FFL ..... Page 388

FREE-LIFT CYLINDER (Figure 195)
TWO-STAGE FFL ..... Page 396

HEADER HOSES (Figure 196)
TWO-STAGE FULL FREE LIFT MAST ..... Page 398

INNER MAST (Figure 190)
TWO-STAGE FFL ..... Page 384

MAIN LIFT CYLINDER (Figure 193)
TWO-STAGE FFL
LAST USED ON S/N PENDING PER ECN 85020-76 ..... Page 390

MAIN LIFT CYLINDER (Figure 194)
VISTA 2 STAGE-FFL
FIRST USED ON S/N PENDING PER ECN 85020-76 ..... Page 392

MAIN LIFT (Figure 191)
TWO-STAGE FFL ..... Page 386

OUTER MAST (Figure 189)
TWO-STAGE FFL ..... Page 382

©1999 HYSTER COMPANY

OUTER MAST (FIGURE 189)

TWO-STAGE FFL

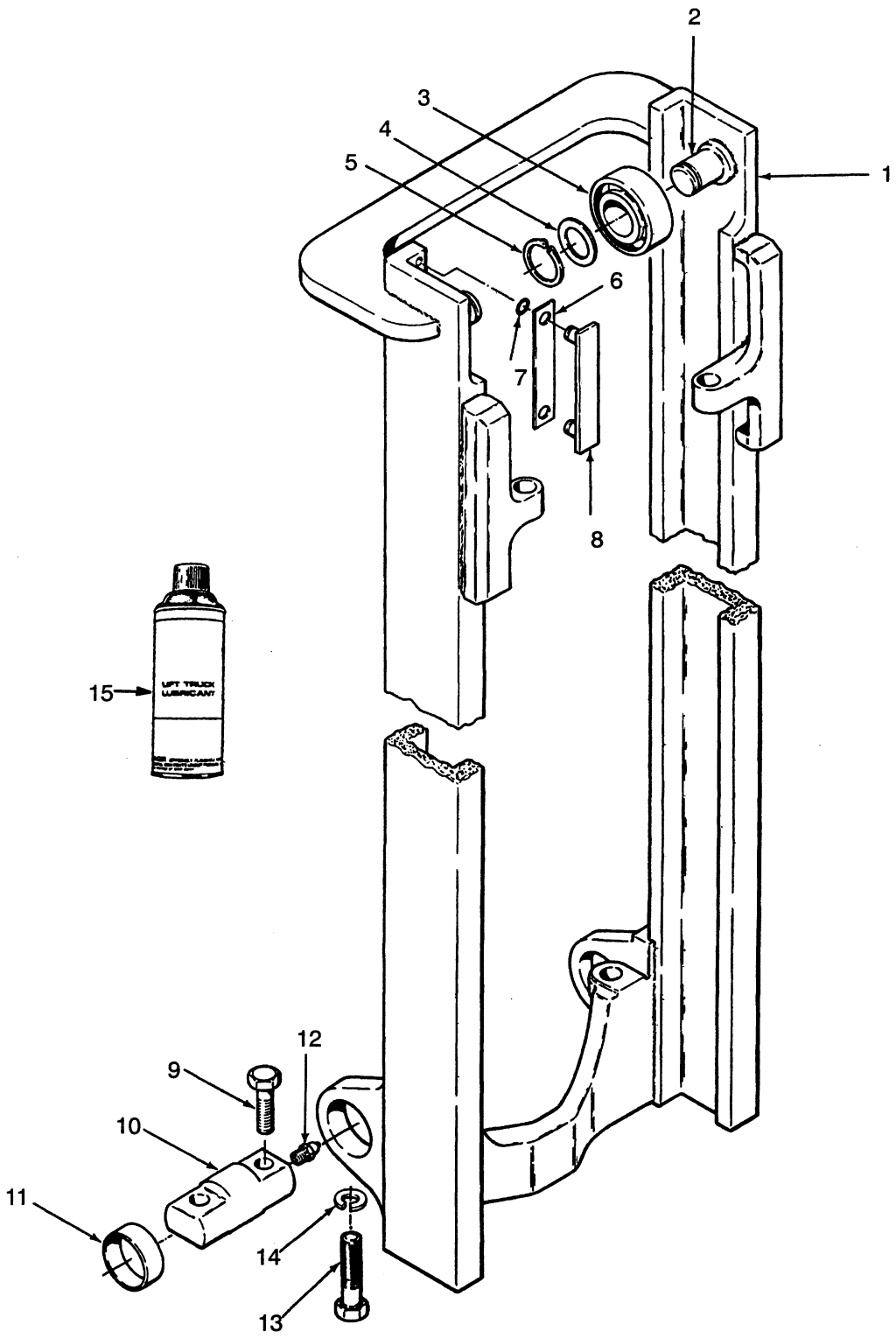

©1999 HYSTER COMPANY

OUTER MAST

TWO-STAGE FFL

H70-80XL & H90XLS

REF NO	NAME OF PART 1 2 3 4	LIFT HEIGHT TO BOTTOM OF FORKS	
		119.0 inch	143.5 inch
	MAST GROUP NUMBER	**A512-3020**	**A512-3650**
	Mast	1306513	1306514
1	Outer Mast	341157	341158

H90-110XL

REF NO	NAME OF PART 1 2 3 4	LIFT HEIGHT TO BOTTOM OF FORKS	
		108.5 inch	133.5 inch
	MAST GROUP NUMBER	**A512-2760**	**A512-3390**
	Mast	1306515	1306516
1	Outer Mast	341157	341158

REF		PART NO.	NAME OF PART	QTY
	a	....	Mast	1
1	a	....	Outer Mast	1
2		341144	Stub Shaft	2
3	b	1333649	Load Roller (A, Standard Size)	2
3	b	1343002	Load Roller (B, 0.030 in Oversize, Optional)	AR
3	b	1343003	Load Roller (C, 0.060 in Oversize, Optional)	AR
4		126765	Shim (0.020 in)	AR
5		187489	Snap Ring	2
6		161273	Shim (0.020 in)	AR
6		161272	Shim (0.007 in) (Optional)	AR
7		104506	O-Ring	4
8		104264	Bearing Strip	2
9		293698	Capscrew	2
10		352178	Pin	2
11		360569	Bushing	2
12		16001	Fitting	2
13		292589	Capscrew	2
14		296430	Washer	2
15		171351	Lubricant	AR

a See Charts Above

b The Letter Is Stamped On The Inside Face Of The Load Roller

©1999 HYSTER COMPANY

INNER MAST (FIGURE 190)

TWO-STAGE FFL

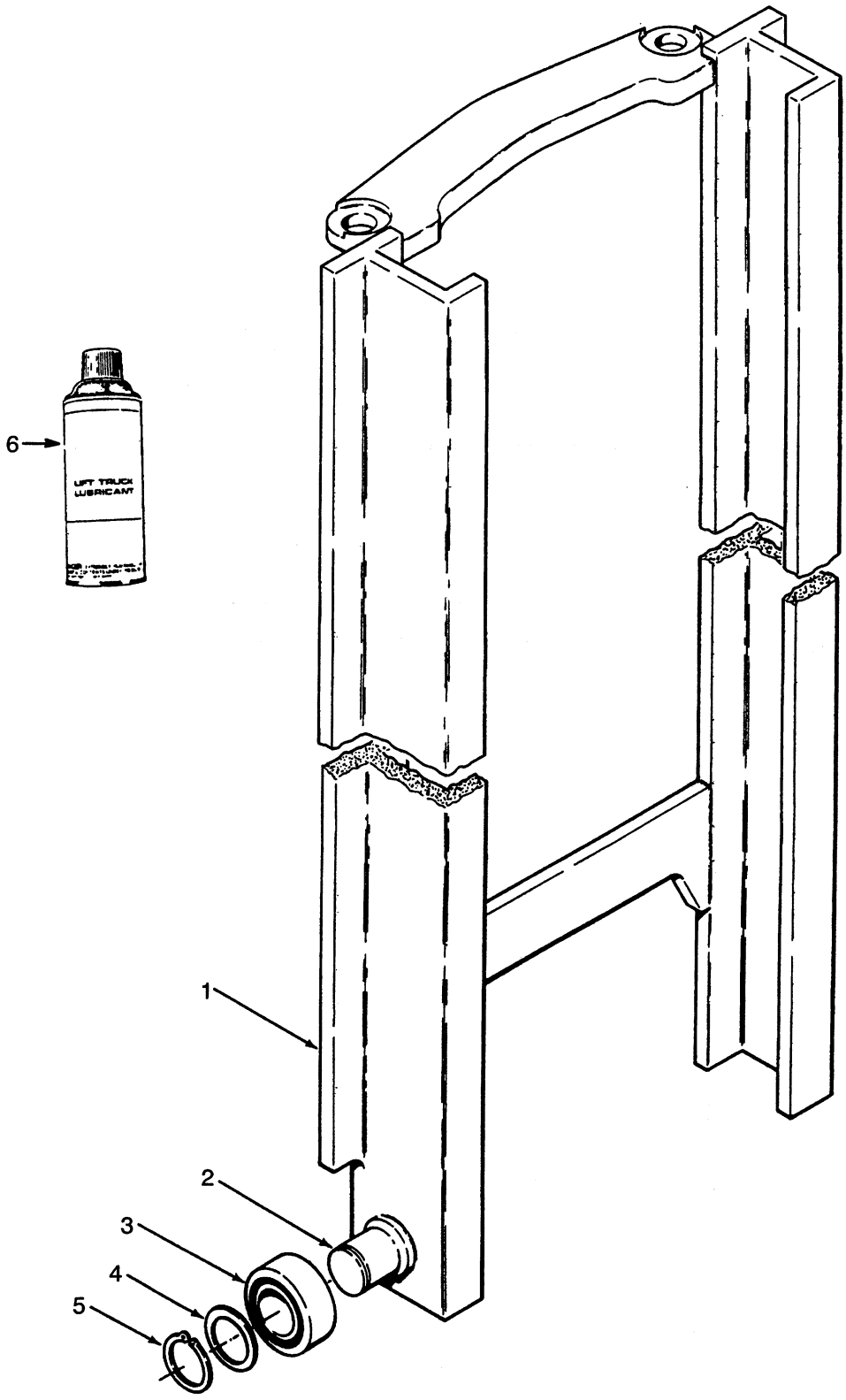

©1999 HYSTER COMPANY

INNER MAST

TWO-STAGE FFL

H70-80XL & H90XLS

REF NO	NAME OF PART 1 2 3 4	LIFT HEIGHT TO BOTTOM OF FORKS	
		119.0 inch	143.5 inch
	MAST GROUP NUMBER	**A512-3020**	**A512-3650**
	Mast	1306513	1306514
1	Inner Mast	357686	357687

H90-110XL

REF NO	NAME OF PART 1 2 3 4	LIFT HEIGHT TO BOTTOM OF FORKS	
		108.5 inch	133.5 inch
	MAST GROUP NUMBER	**A512-2760**	**A512-3390**
	Mast	1306515	1306516
1	Inner Mast	357686	357687

REF		PART NO.	NAME OF PART	QTY
	a	....	Mast	1
1	a	....	Inner Mast	1
2		341144	Stub Shaft	2
3	b	1333649	Load Roller (A, Standard Size)	2
3	b	1343002	Load Roller (B, 0.030 in Oversize, Optional)	AR
3	b	1343003	Load Roller (C, 0.060 in Oversize, Optional)	AR
4		126765	Shim (0.020 in)	AR
5		187489	Snap Ring	2
6		171351	Lubricant	AR

a See Charts Above

b The Letter Is Stamped On The Inside Face Of The Load Roller.

©1999 HYSTER COMPANY

MAIN LIFT (FIGURE 191)

TWO-STAGE FFL

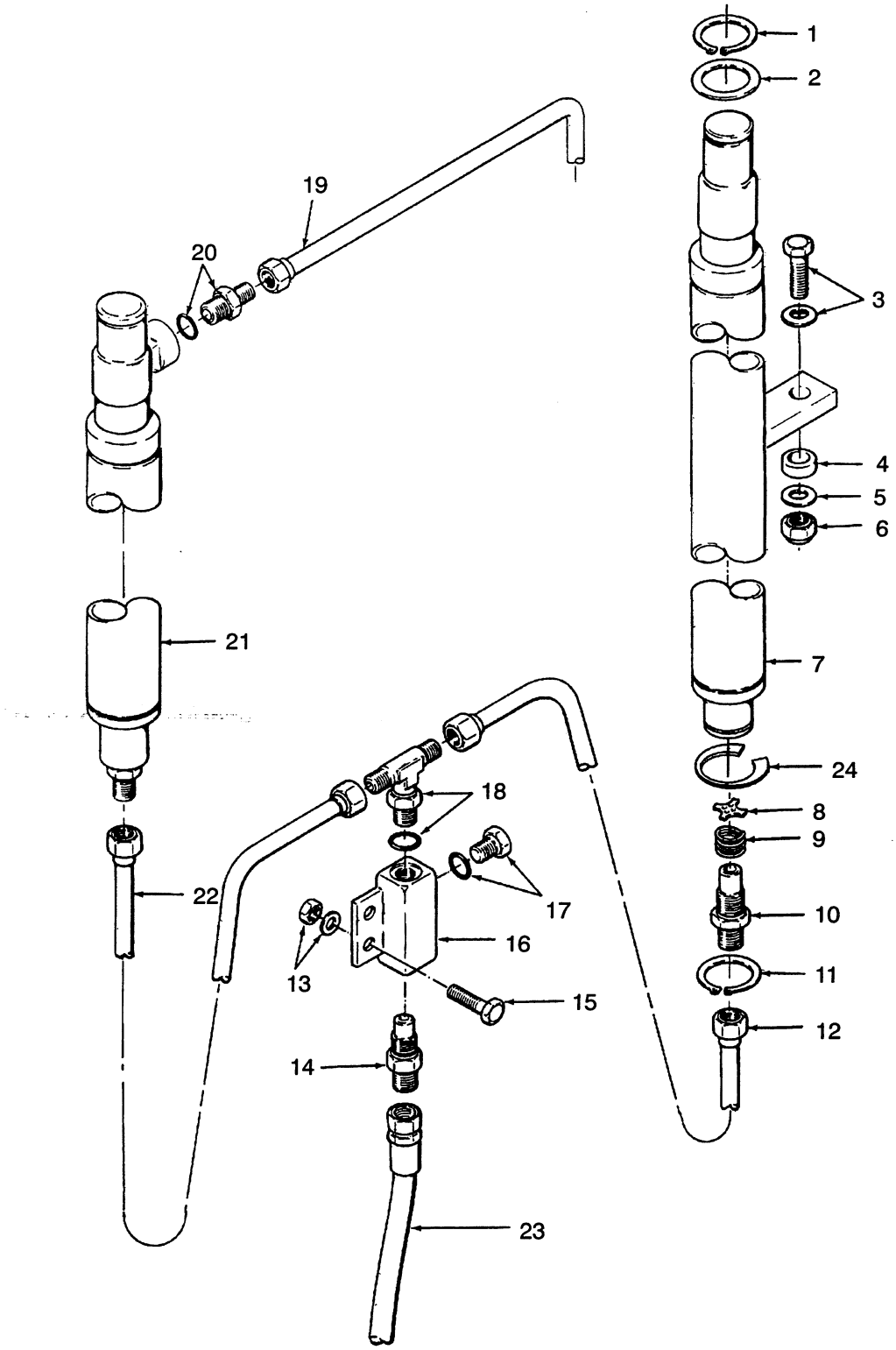

©1999 HYSTER COMPANY

MAIN LIFT

TWO-STAGE FFL

H70-80XL & H90XLS

REF NO	NAME OF PART 1 2 3 4	LIFT HEIGHT TO BOTTOM OF FORKS	
		119.0 inch	143.5 inch
	MAST GROUP NUMBER	**A512-3020**	**A512-3650**
	Mast	1306513	1306514
19	Tube	1301943	1301944

H90-110XL

REF NO	NAME OF PART 1 2 3 4	LIFT HEIGHT TO BOTTOM OF FORKS	
		108.5 inch	133.5 inch
	MAST GROUP NUMBER	**A512-2760**	**A512-3390**
	Mast	1306515	1306516
19	Tube	1301943	1301944

KEY:
A: H70-80XL & H90XLS
B: H90-110XL

REF		PART NO.	NAME OF PART	QTY A	QTY B
	a	....	Mast	1	1
1		304523	Snap Ring	2	2
2		332061	Washer	2	2
3		292589	Capscrew	2	2
3		296431	Washer	2	2
4		351565	Spacer	2	2
5		296431	Washer	2	2
6		316829	Nut	2	2
7		.....	Cylinder, RH. ☞ Figure 193	1	1
8		373286	Washer	1	1
9		120938	Spring	1	1
10		184799	Fitting	2	2
11		351350	Snap Ring	AR	AR
12		373269	Tube, RH	1	1
13		316826	Nut	2	2
13		320159	Washer	2	2
14		315262	Lowering Control Valve	1	..
14		319891	Lowering Control Valve	..	1
15		136985	Capscrew	2	2
16		368221	Housing	1	1
17		14603	Adapter	1	1
17		16486	O-Ring	1	1
18		274518	Fitting	1	1
18		16484	O-Ring	1	1
19	a	....	Tube	1	1
20		16544	Fitting	1	1
20		16487	O-Ring	1	1
21		....	Cylinder, LH ☞ Figure 193	1	1
22		373268	Tube, LH	1	1
23		385498	Hose	1	1
24		1344750	Shim	AR	AR

a See Charts Above

©1999 HYSTER COMPANY

FREE LIFT (FIGURE 192)

TWO-STAGE FFL

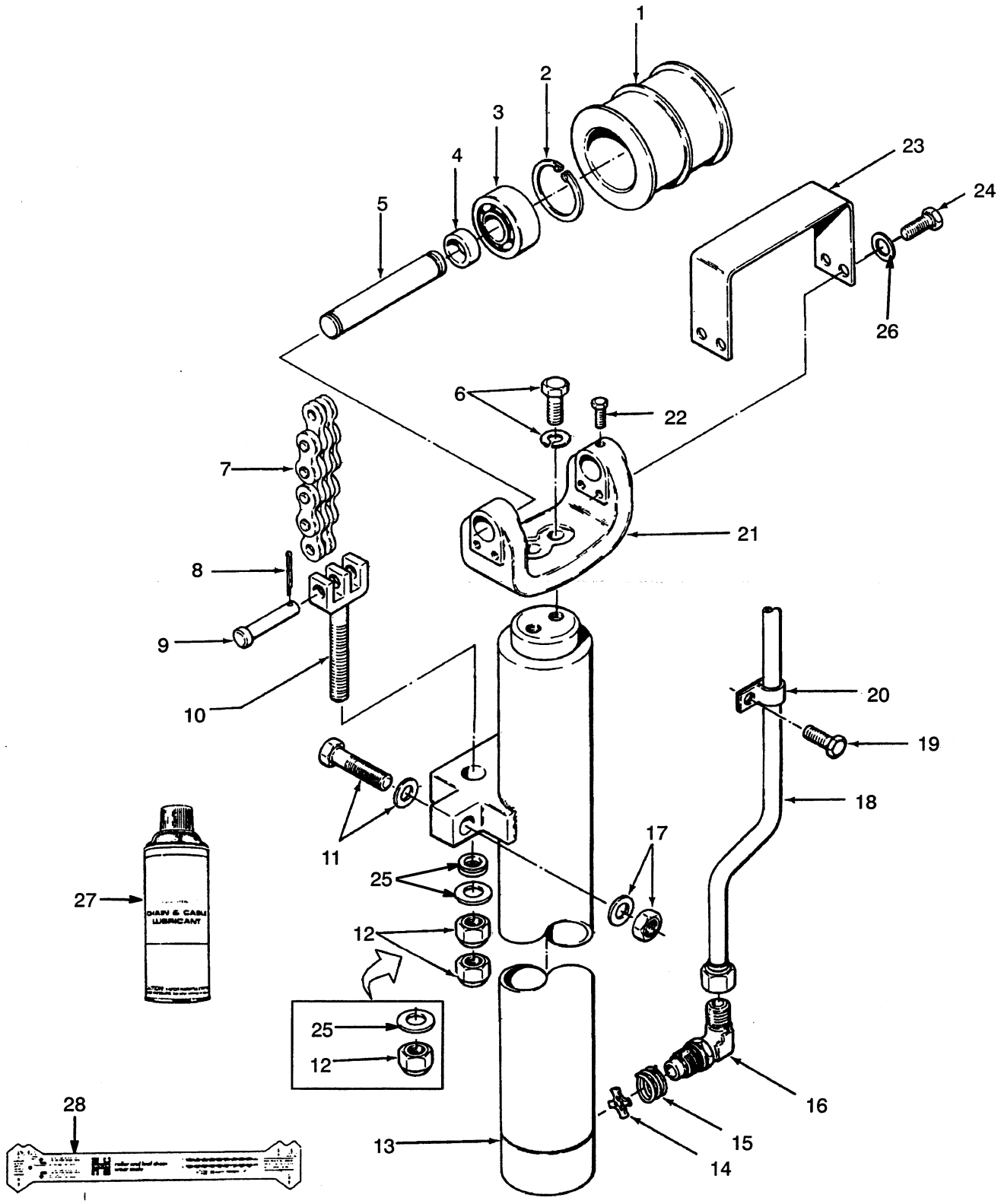

FREE LIFT

TWO-STAGE FFL

H70-80XL & H90XLS

REF NO	NAME OF PART 1 2 3 4	LIFT HEIGHT TO BOTTOM OF FORKS	
		119.0 inch	143.5 inch
	MAST GROUP NUMBER	**A512-3020**	**A512-3650**
	Mast	1306513	1306514
7	Free-Lift Chain	182319	182331

H90-110XL

REF NO	NAME OF PART 1 2 3 4	LIFT HEIGHT TO BOTTOM OF FORKS	
		108.5 inch	133.5 inch
	MAST GROUP NUMBER	**A512-2760**	**A512-3390**
	Mast	1306515	1306516
7	Free-Lift Chain	339897	339933

KEY:
A: H70-80XL & H90XLS
B: H90-110XL

REF		PART NO.	NAME OF PART	QTY A	QTY B
	a	....	Mast	1	1
1		355044	Sheave	1	1
2		40667	Snap Ring	2	2
3		126764	Bearing	2	2
4		297573	Spacer	2	2
5		318139	Pin	1	1
6		292562	Capscrew	2	2
6		292685	Lockwasher	2	2
7	a	....	Free-Lift Chain	2	2
8		15222	Cotter Pin	2	2
9		327591	Pin	2	..
9		339932	Pin	..	2
10		1331990	Chain Anchor	2	..
10		1331991	Chain Anchor	..	2
11		292589	Capscrew	2	2
11		296431	Washer	2	2
12		221717	Nut	4	4
13		....	Free-Lift Cylinder	1	1
			☞ NO TAG		

REF	PART NO.	NAME OF PART	QTY A	QTY B
14	373287	Washer	1	1
15	111975	Spring	1	1
16	318297	Fitting	1	1
17	296431	Washer	2	2
17	316829	Nut	2	2
18	....	Tube	1	1
		☞ Figure 191		
19	351668	Screw	1	1
20	178119	Clamp	1	1
21	368171	Crosshead	1	1
22	302105	Screw	1	1
23	357573	Guard	1	1
24	292514	Screw	4	4
25	1332704	Washer Set	2	2
26	292682	Washer	4	4
27	171350	Chain & Cable Lubricant	ARAR	
28	599737	Chain Wear Scale	ARAR	

a See Charts Above

©1999 HYSTER COMPANY

MAIN LIFT CYLINDER (FIGURE 193)

TWO-STAGE FFL

LAST USED ON S/N PENDING PER ECN 85020-76

PARTS-SERVICE GRAM	
ITEM	GRAM
1329778 1329780	J-F-11

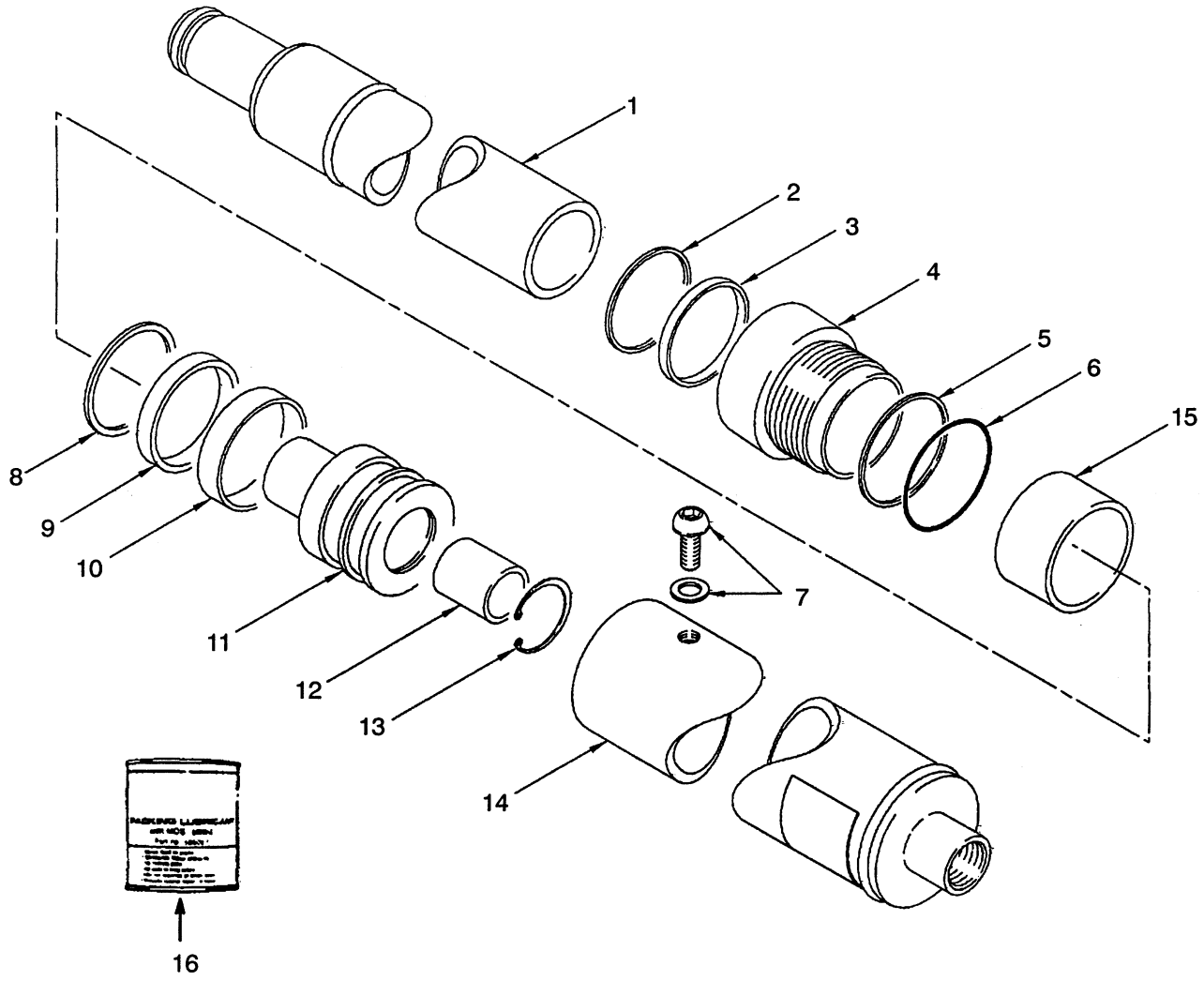

©1999 HYSTER COMPANY

MAIN LIFT CYLINDER

TWO-STAGE FFL

LAST USED ON S/N PENDING PER ECN 85020-76

H70-80XL & H90XLS

REF NO	NAME OF PART 1 2 3 4	LIFT HEIGHT TO BOTTOM OF FORKS	
		119.0 inch	143.5 inch
	Cylinder, RH Cylinder, LH	1329771 1329773	1329772 1329774
1	Rod, RH Rod, LH	357641 357645	357642 357646
14	Shell	351371	351372

H90-110XL

REF NO	NAME OF PART 1 2 3 4	LIFT HEIGHT TO BOTTOM OF FORKS	
		108.5 inch	133.5 inch
	Cylinder, RH Cylinder, LH	1329767 1329769	1329768 1329770
1	Rod, RH Rod, LH	357643 357647	357644 357648
14	Shell	351371	351372

KEY:
A: H70-80XL & H90XLS
B: H90-110XL

REF		PART NO.	NAME OF PART	QTY A	QTY B
	a	....	Main-Lift Cylinder	2	2
1	a	....	Rod	1	1
2	b	636854	Wiper	1	..
2	c	203371	Wiper	..	1
3	b	1310373	Seal	1	..
3	c	1310374	Seal	..	1
4		1310376	Retainer	1	..
4		357667	Retainer	..	1
5	bc	276627	Back-Up Ring	1	1
6	bc	198518	O-Ring	1	1
7		295649	Capscrew	1	1
7	bc	190887	Seal	1	1
8	bc	638249	Back-Up Ring	1	1
9	bc	270077	Seal	1	1
10	bc	297532	Wear Ring	1	1
11		357664	Piston	1	1
11		226414	Adhesive	ARAR	
12		1310339	Piston	1	1
13		58916	Snap Ring	1	1
14	a	....	Shell	1	1
15		357626	Spacer	..	1
16		186061	Packing Lubricant	ARAR	

a See Charts Above
b Included In Seal Kit 1329778
c Included In Seal Kit 1329780

©1999 HYSTER COMPANY

MAIN LIFT CYLINDER (FIGURE 194)

VISTA 2 STAGE-FFL

FIRST USED ON S/N PENDING PER ECN 85020-76

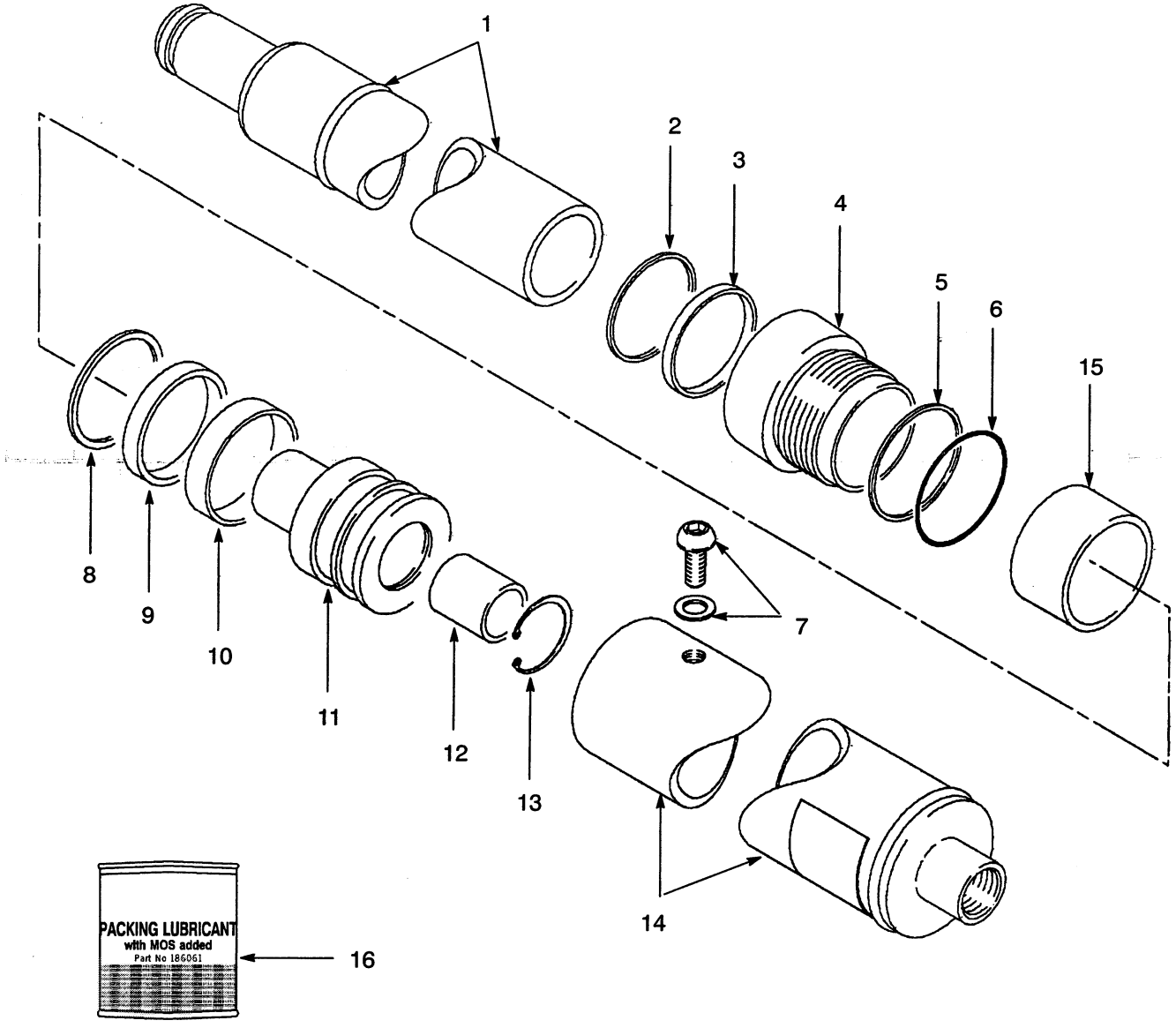

MAIN LIFT CYLINDER

VISTA 2 STAGE-FFL

FIRST USED ON S/N PENDING PER ECN 85020-76

H70-80XL & H90XLS

REF NO.	NAME OF PART	LIFT HEIGHT TO BOTTOM OF FORK	
		(3020 mm) 119.0 in.	(3650 mm) 143.5 in.
	Group Number Cylinder-LH	8603631 bc2037560	8603633 bc2037562
	Group Number Cylinder-RH	8603632 bc2037561	8603634 bc2037563
1	Rod-LH Rod-RH	bc357645 bc357641	bc357646 bc357642
14	Shell	bc351371	bc351372

H90-110XL

First Used On S/N A512D-1660 (108.5 in) And A512E-1951 (133.5 in)

REF NO.	NAME OF PART	LIFT HEIGHT TO BOTTOM OF FORK	
		(2760 mm) 108.5 in.	(3390 mm) 133.5 in.
	Group Number Cylinder-LH	8605803 bc2037566	8605801 bc2037564
	Group Number Cylinder-RH	8605804 bc2037567	8605802 bc2037565
1	Rod-LH Rod-RH	bc357647 bc357643	bc357648 bc357644
14	Shell	bc351371	bc351372

©1999 HYSTER COMPANY

MAIN LIFT CYLINDER

VISTA 2 STAGE-FFL

FIRST USED ON S/N S/N PENDING PER ECN 85020-76

KEY:
A: E70-80XL
B: E100-120XL

Ref		Part No.	Name Of Part	QTY A	QTY B
	a	....	Goup Number	1	1
	a	....	Cylinder, RH	1	1
	a	....	Goup Number	1	1
	a	....	Cylinder, LH	1	1
1	a	....	Rod	1	1
2	d	1310370	Wiper	1	..
2	e	1310371	Wiper	..	1
3	d	1310373	Seal	1	..
3	e	1310374	Seal	..	1
4		1464164	Retainer	1	..
4		2033498	Retainer	..	1
5	g	166659	Back-Up Ring	1	1
6	g	198518	O-Ring	1	1
7		295649	Capscrew	1	1
7	g	190887	Seal	1	1
8	g	638249	Back-Up Ring	1	1
9	g	270077	Seal	1	1
10		297532	Wear Ring	1	1
11		357664	Piston (Free Lift)	AR	AR
11		264134	Adhesive sealant	AR	AR
12		1310339	Piston (Floating)	1	1
13		58916	Snap Ring	1	1
14	a	....	Shell	1	1
15		357626	Spacer	..	1
16		186061	Lubricant	AR	AR

a ☞ Tables Above
b 380000 Series Masts
c 1306000 Series Masts
d Included In Seal Kit 1464326
e Included In Seal Kit 2033499
g Included In All The Above Seal Kits

©1999 HYSTER COMPANY

NOTES

©1999 HYSTER COMPANY

FREE-LIFT CYLINDER (FIGURE 195)

TWO-STAGE FFL

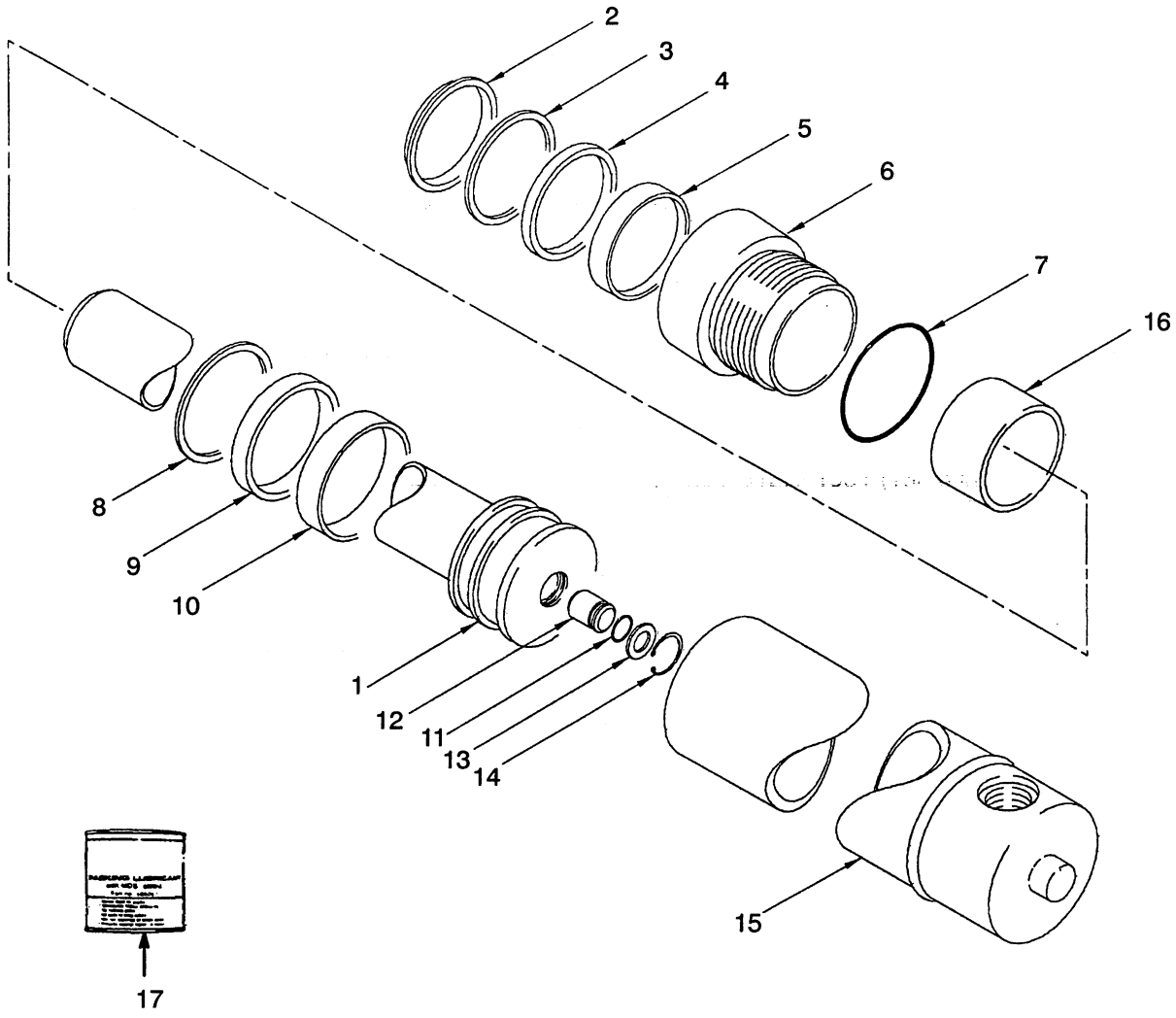

©1999 HYSTER COMPANY

FREE-LIFT CYLINDER
TWO-STAGE FFL

H70-80XL & H90XLS

REF NO	NAME OF PART 1 2 3 4	LIFT HEIGHT TO BOTTOM OF FORKS	
		119.0 inch	143.5 inch
	Free-Lift Cylinder	357677	357678
1	Rod/Piston	351593	351594
15	Shell	357673	357674

H90-110XL

REF NO	NAME OF PART 1 2 3 4	LIFT HEIGHT TO BOTTOM OF FORKS	
		108.5 inch	133.5 inch
	Free-Lift Cylinder	357679	357680
1	Rod/Piston	351633	351634
15	Shell	357675	357676

KEY:
A: H70-80XL & H90XLS
B: H90-110XL

REF		PART NO.	NAME OF PART	QTY A	QTY B
	a	....	Free-Lift Cylinder	1	1
1	a	....	Rod/Piston	1	1
2	bc	636858	Wiper Ring	1	1
3	bc	638292	Back-Up Ring	1	1
4	bc	637161	Seal	1	1
5	bc	215345	Wear Ring	1	1
6		351618	Retainer	1	..
6		351619	Retainer	..	1
7	b	46629	O-Ring	1	..
7	c	15885	O-Ring	..	1
8	b	636071	Back-Up Ring	1	..
8	bc	638253	Back-Up Ring	..	1
9	b	637162	Seal	1	..
9	c	637164	Seal	..	1
10	bc	636950	Wear Ring	1	..
10	c	636952	Wear Ring	..	1
11	bc	39348	O-Ring	1	1
12		658947	Valve	1	1
13		637635	Washer	1	1
14		187388	Snap Ring	1	1
15	a	....	Shell	1	1
16		357598	Spacer	..	1
17		186061	Packing Lubricant	ARAR	

a See Charts Above
b Included In Seal Kit 1302768
c Included In Seal Kit 1302767

©1999 HYSTER COMPANY

HEADER HOSES (FIGURE 196)

TWO-STAGE FULL FREE LIFT MAST

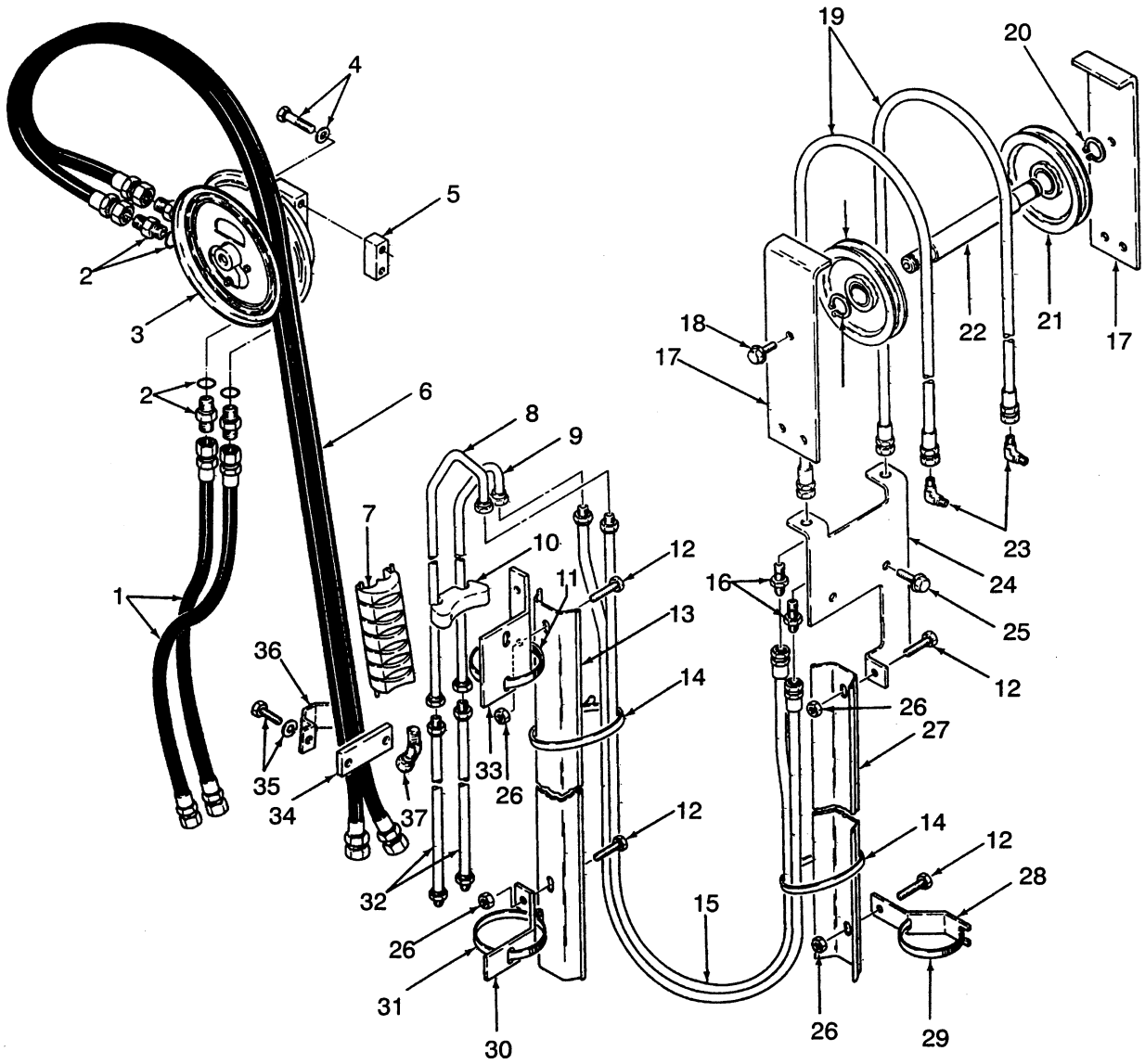

©1999 HYSTER COMPANY

HEADER HOSES

TWO-STAGE FULL FREE LIFT MAST

H70-80XL & H90XLS

REF NO	NAME OF PART 1 2 3 4	LIFT HEIGHT TO BOTTOM OF FORKS	
		119.0 inch	143.5 inch
	MAST GROUP NUMBER	**A512-3020**	**A512-3650**
1	Hose	360444	367157
8	Tube	357592	357593
9	Tube	357595	357596
13	Channel	358281	358282
15	Hose	358295	358296
19	Hose	358293	358294
27	Channel	1307611	1307612

H90-110XL

REF NO	NAME OF PART 1 2 3 4	LIFT HEIGHT TO BOTTOM OF FORKS	
		108.5 inch	133.5 inch
	MAST GROUP NUMBER	**A512-2760**	**A512-3390**
1	Hose	360444	367157
8	Tube	357592	357593
9	Tube	357595	357596
13	Channel	358281	358282
15	Hose	358295	358296
19	Hose	358293	358294
27	Channel	1307611	1307612

CONTINUED ON THE NEXT PAGE

©1999 HYSTER COMPANY

HEADER HOSES

TWO-STAGE FULL FREE LIFT MAST

KEY:
A: Three Function Control Valve
B: Four Function Control Valve

REF		PART NO.	NAME OF PART	QTY A	QTY B
1	a	....	Hose	..	2
2		16541	Fitting	..	4
2		16484	O-Ring	..	1
3		358289	Hose Reel	..	1
3		1390556	Hose Reel (Optional)	..	1
3		672563	Kit-Seal	..	1
4		292535	Capscrew	..	2
4		320161	Washer	..	2
5		323165	Plate	..	1
6		367162	Hose	..	1
7		358286	Strain Relief	..	1
8	a	....	Tube	1	1
9	a	....	Tube	1	1
10		340054	Spacer	2	2
11		78286	Clamp	2	2
12		287851	Capscrew	4	4
13	a	....	Channel	1	1
14		129563	Strap/Clamp	2	2
15	a	....	Hose	1	1
16		16448	Fitting	2	2
17		368173	Plate	2	2
18		351668	Screw	2	2
19	a	....	Hose	2	2
20		248212	Snap Ring	2	2
21		297647	Sheave	2	2
22		368172	Shaft	1	1
23		16458	Fitting	2	2
24		341308	Plate	1	1
25		351668	Screw	2	2
26		313828	Nut	4	4
27	a	....	Channel	1	1
28		357583	Bracket	1	1
29		227220	Clamp	1	1
30		351369	Bracket	1	1
31		115696	Clamp	2	2
32		367149	Hose	2	2
33		341324	Bracket	1	1
34		356431	Plate	..	1
35		16870	Capscrew	..	2
35		15156	Lockwasher	..	2
36		358287	Bracket	..	1
37	b	17039	Fitting	2	2

a See Charts Above
b 11 Degree Forward Tilt

©1999 HYSTER COMPANY

NOTES

©1999 HYSTER COMPANY

CARRIAGE (FIGURE 197)

TWO-STAGE FFL

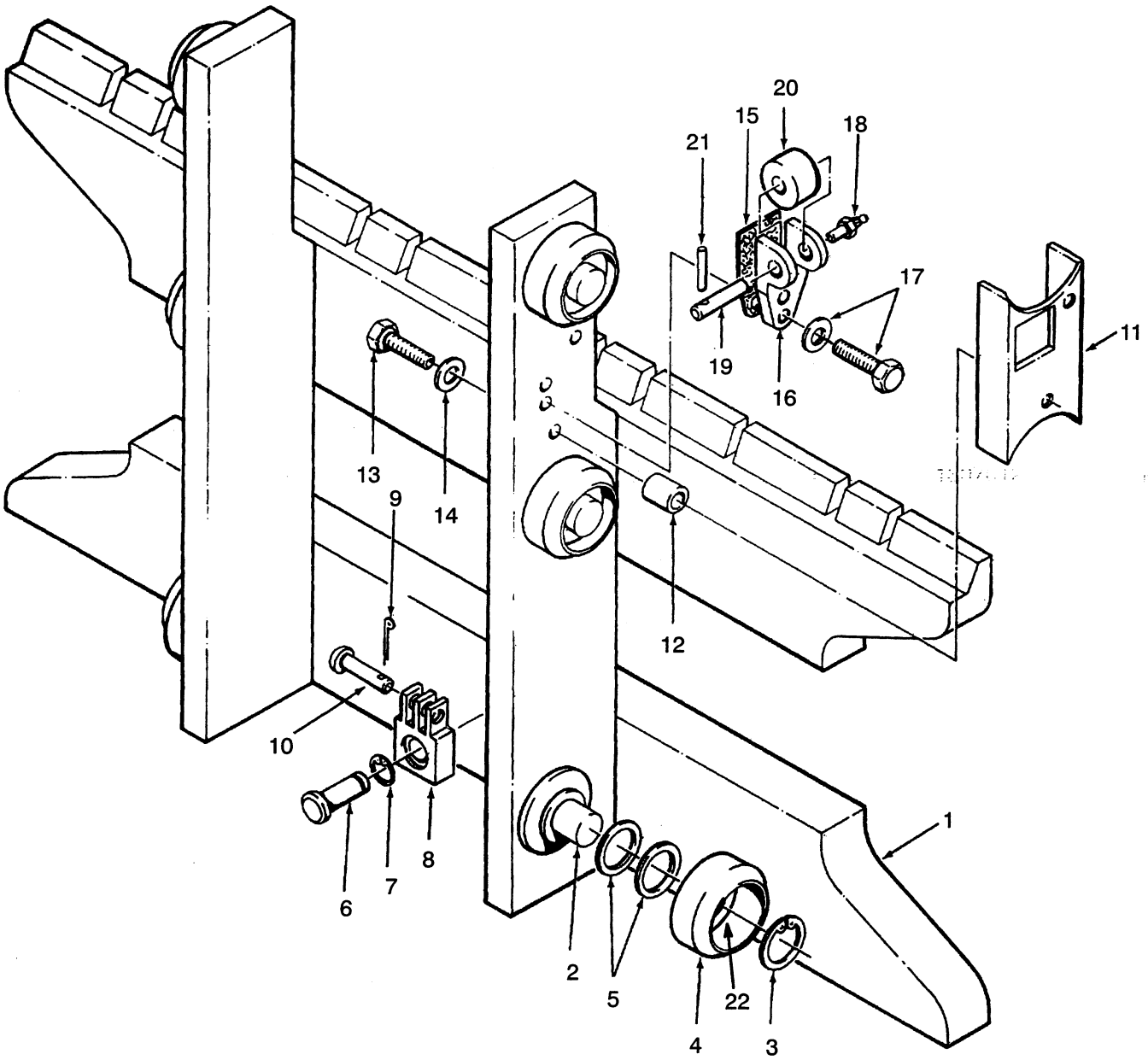

©1999 HYSTER COMPANY

CARRIAGE

TWO-STAGE FFL

KEY:
A: H70-80XL & H90XLS
B: H90-110XL

REF		PART NO.	NAME OF PART	QTY A	QTY B
		1379259	Carriage (48 in)	1	..
		358321	Carriage (48 in)	..	1
1		1379260	Frame (48 in)	1	..
1		362283	Frame (48 in)	..	1
2		341144	Stub Shaft	6	6
3		187489	Snap Ring	6	6
4		1333648	Load Roller (A,		
	a		Standard Size)	6	6
4	a	1343010	Load Roller (B, 0.030, in Oversize, Optional)	AR	AR
4	a	1343011	Load Roller (C, 0.060 in Oversize, Optional)	AR	AR
5		126765	Shim (0.020 in)	AR	AR
6		320327	Pin	2	2
7		131358	Snap Ring	2	2
8		357579	Chain Anchor	2	..
8		341558	Chain Anchor	..	2
9		15222	Cotter Pin	2	2
10		327591	Pin	2	..
10		339932	Pin	..	2
11		319322	Guard, RH	1	1
11		319323	Guard, LH	1	1
12		317292	Spacer	4	4
13		18518	Capscrew	4	4
14		15155	Lockwasher	4	4
15		192424	Shim (.030 in, Optional)	..	AR
15		192425	Shim (.062 in, Optional)	..	AR
16		244008	Bracket (Roller, Optional)	..	2
17		292683	Lockwasher (Optional)	..	4
17		292528	Capscrew (Optional)	..	4
18		16001	Grease Fitting (Optional)	..	2
19		244009	Pin (Optional)	..	2
20		244005	Roller (Optional)	..	2
21		66333	Spring Pin (Optional)	..	2
22		366116	Spacer	2	2

a The Letter Is Stamped On The Inside Face Of The Load Roller

©1999 HYSTER COMPANY

CARRIAGE (FIGURE 198)

TWO-STAGE FFL

H90-100XL ATTACHMENT

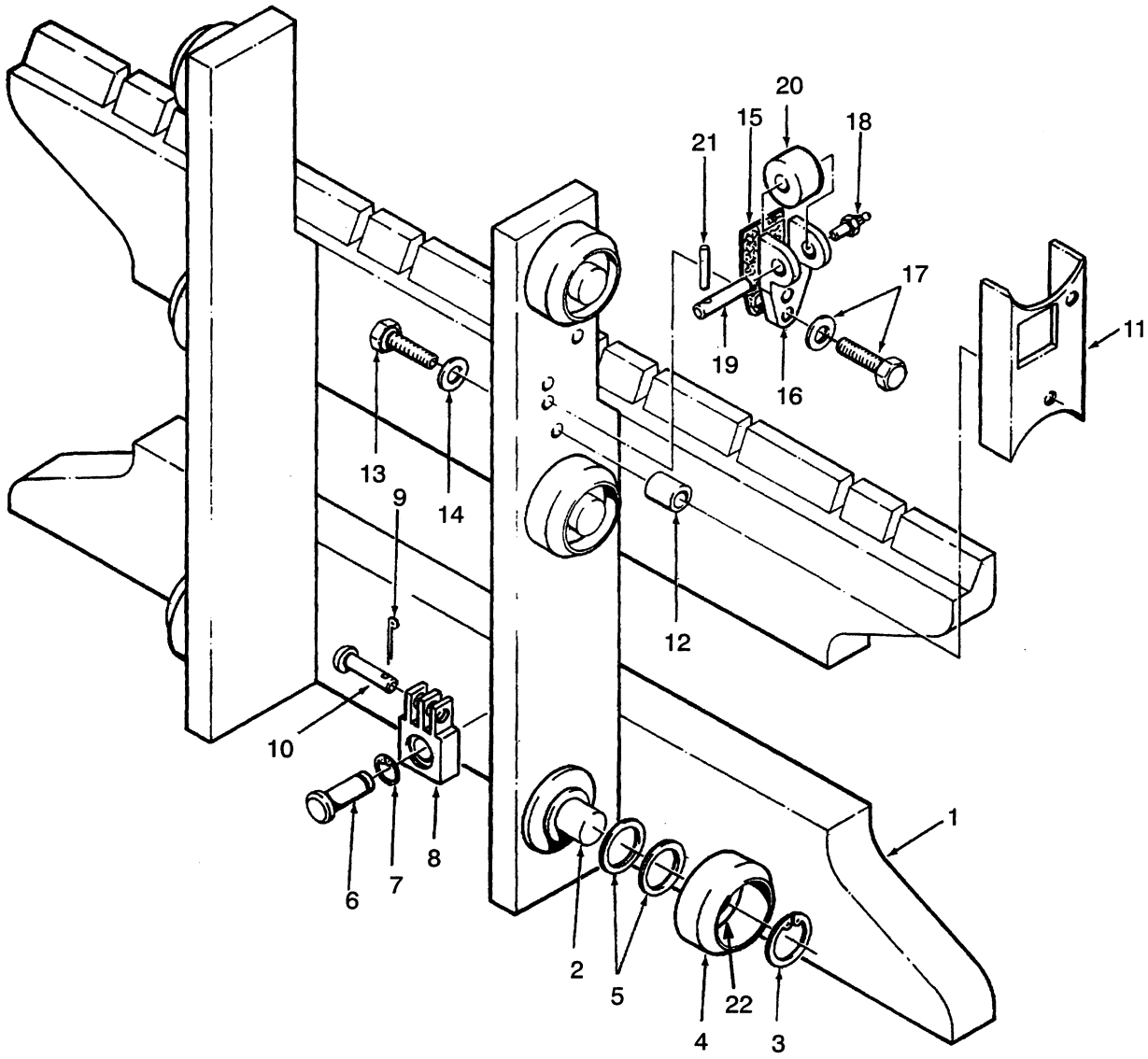

©1999 HYSTER COMPANY

CARRIAGE

TWO-STAGE FFL

H90-100XL ATTACHMENT

REF		PART NO.	NAME OF PART	QTY
		1379261	Carriage	1
1		1379262	Frame	1
2		341144	Stub Shaft	6
3		187489	Snap Ring	6
4	a	1333648	Load Roller (A, Standard Size)	6
4	a	1343010	Load Roller (B, 0.030 in Oversize, Optional)	AR
4	a	1343011	Load Roller (C, 0.060 in Oversize, Optional)	AR
5		126765	Shim (0.020 in)	AR
6		320327	Pin	2
7		131358	Snap Ring	2
8		341558	Chain Anchor	2
9		15222	Cotter Pin	2
10		339932	Pin	2
11		319322	Guard, RH	1
11		319323	Guard, LH	1
12		317292	Spacer	4
13		18518	Capscrew	4
14		15155	Lockwasher	4
15		192424	Shim (0.030 in)	AR
15		192425	Shim (0.062 in)	AR
16		244008	Roller Bracket	2
17		292683	Lockwasher	4
17		292528	Capscrew	4
18		16009	Grease Fitting	2
19		244009	Pin	2
20		244005	Roller	2
21		66333	Spring Pin	2
22		366116	Spacer	2

a The Letter Is Stamped On The Inside Face Of The Load Roller.

©1999 HYSTER COMPANY

FORKS (FIGURE 199)

HOOK TYPE

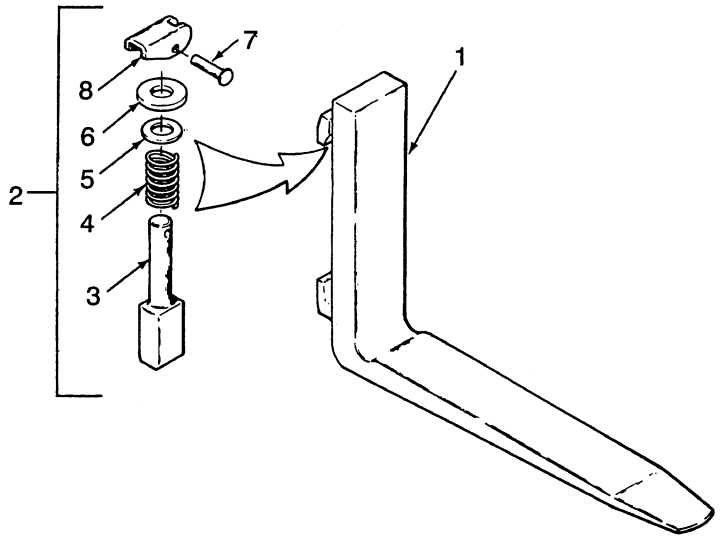

REF NO	NAME OF PART 1 2 3 4	STANDARD TAPER			FULL BOTTOM TAPER	QTY
		H70-80XL, H90XLS	[a] H90-100XL	H90-110XL	H70-80XL & H90XLS	
1	Fork					
	36 inch	367419	..	..	..	2
	42 inch	367420	..	..	1338097	2
	47.5 inch	..	..	..	1338098	2
	48 inch	367421	..	1333001	..	2
	54 inch	367422	..	1333002	..	2
	60 inch	367423	..	1333003	..	2
	72 inch	367424	..	1333004	..	2
2	Latch	332378	332378	332378	332378	1
3	Pin	332377	332377	332377	332377	1
4	Spring	141852	141852	141852	141852	1
5	Washer	195436	195436	195436	195436	1
6	Washer	157001	157001	157001	157001	1
7	Rivet	141853	141853	141853	141853	1
8	Handle	141856	141856	141856	141856	1

[a] Attachment Carriage

©1999 HYSTER COMPANY

FORKS (FIGURE 200)

HOOK TYPE

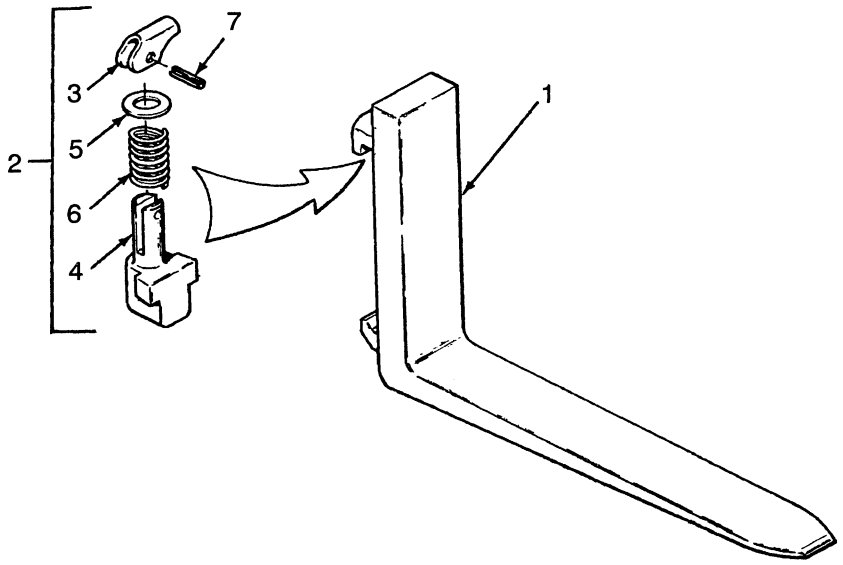

REF NO	NAME OF PART 1 2 3 4	STANDARD TAPER			FULL BOTTOM TAPER	QTY
		H70-80XL, H90XLS	[a] H90-100XL	H90-110XL	H70-80XL & H90XLS	
1	Fork					
	36 inch	367419	..	..	..	2
	42 inch	367420	..	..	1338097	2
	47.5 inch	..	..	..	1338098	2
	48 inch	367421	1333046	1333001	..	2
	54 inch	367422	1333047	1333002	1332745	2
	60 inch	367423	1333048	1333003	..	2
	72 inch	367424	1333049	1333004	..	2
2	Latch	369796	369796	369797	369796	1
3	Handle	368706	368706	368706	368706	1
4	Pin	71153	71153	71153	71153	1
5	Washer	368707	368707	368707	368707	1
6	Spring	368705	368705	368705	368705	1
7	Pin	368703	368703	368703	368703	1

[a] Attachment Carriage

©1999 HYSTER COMPANY

FORKS (FIGURE 201)

PIN TYPE

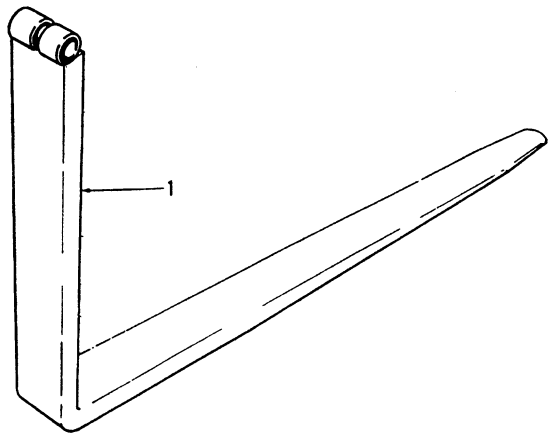

REF NO	NAME OF PART 1 2 3 4	STANDARD TAPER		FULL BOTTOM TAPER	QTY
		H70-80XL, H90XLS	H90-100XL	H70-80XL & H90XLS	
1	Fork				
	42 inch	367425	..	1338100	2
	47.5 inch	..	..	1338101	2
	48 inch	367427	1333120	..	2
	54 inch	367430	1333107	1338102	2
	60 inch	367432	1333110	..	2
	72 inch	367435	1333113	..	2
	96 inch	..	1333117	..	2

©1999 HYSTER COMPANY

FORKS (FIGURE 202)

BLOCK TYPE

48 INCH CARRIAGE

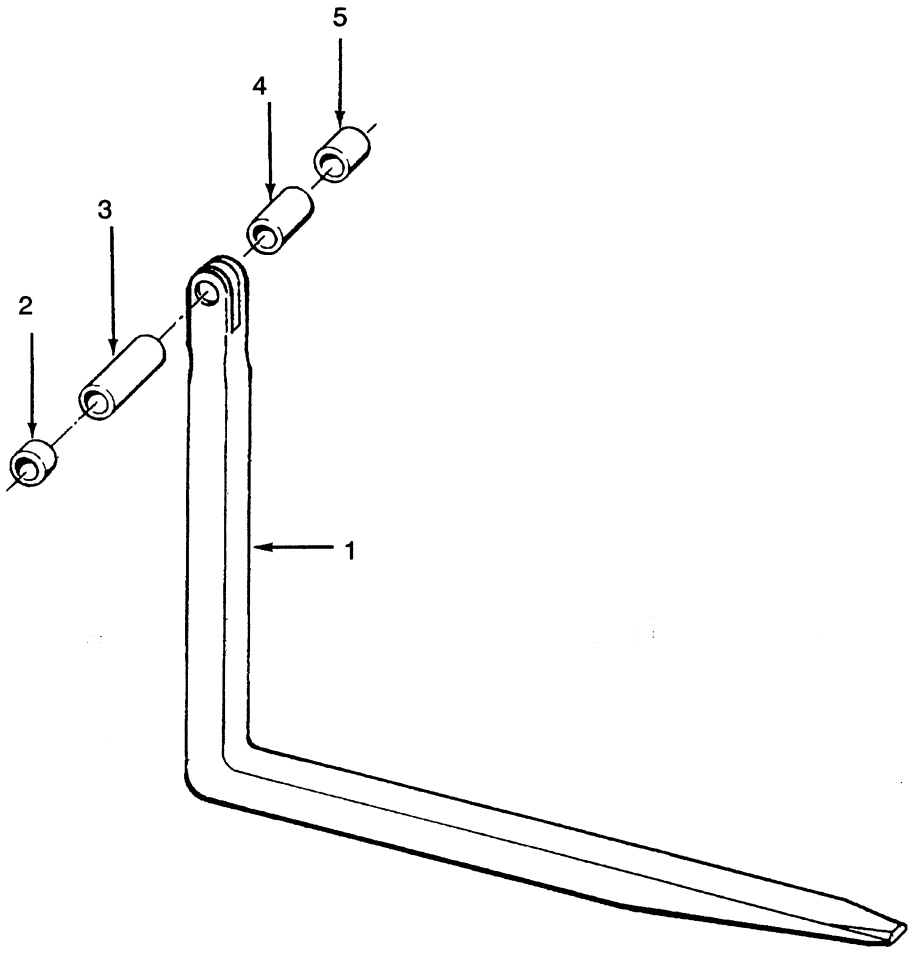

REF		PART NO.	NAME OF PART	QTY
1		368719	Fork (38 in)	6
1		368720	Fork (45-5/8 in)	6
2	a	171489	Hose (1-5/8 in)	2
3	a	171488	Hose (4-1/4 in)	2

REF		PART NO.	NAME OF PART	QTY
4	a	373453	Hose	2
5	a	373454	Hose	1

a Included In Spacer Kit 171504

©1999 HYSTER COMPANY

FORKS (FIGURE 203)
BLOCK TYPE
62 INCH CARRIAGE

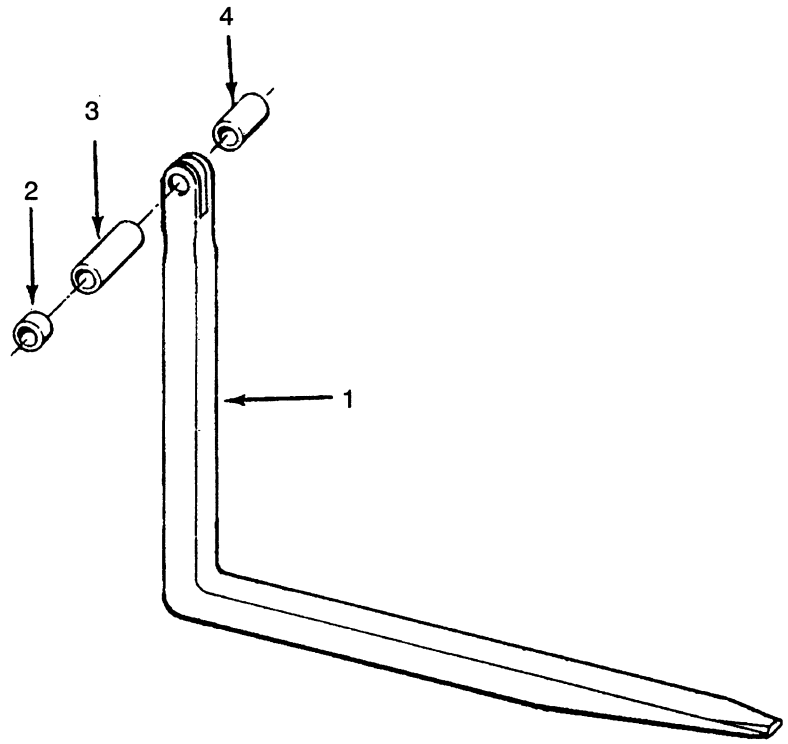

REF	PART NO.	NAME OF PART	QTY
1	368719	Fork (38 in)	8
1	368720	Fork (45-5/8 in)	8
2	171489	Hose (1-5/8 in)	2
3	171490	Hose (3-1/4 in)	2
4	171488	Hose (4-1/4 in)	4

©1999 HYSTER COMPANY

OPTIONAL EQUIPMENT

BACK-UP ALARM (Figure 228) ..... Page 454

CAB (Figure 224) ..... Page 448

FIRE EXTINGUISHER (Figure 219) ..... Page 439

HEATER (Figure 225) ..... Page 450

LIFT EYE (Figure 220) ..... Page 440

LIGHTS (Figure 223) ..... Page 446

SIDESHIFT CARRIAGE (Figure 205)
THREE-STAGE FFL AND TWO-STAGE FFL MASTS
PIN TYPE
H70-80XL & H90XLS ..... Page 416

SIDESHIFT CARRIAGE (Figure 204)
TWO-STAGE LIMITED FREE LIFT MAST
PIN TYPE
H70-80XL & H90XLS ..... Page 414

SIDESHIFT CARRIAGE (Figure 206)
PIN TYPE
H90-110XL ..... Page 418

SIDESHIFT CARRIAGE (Figure 209)
HOOK TYPE
TWO-STAGE LFL MAST ..... Page 422

SIDESHIFT CARRIAGE (Figure 210)
HOOK TYPE
THREE-STAGE FULL FREE LIFT MAST ..... Page 424

SIDESHIFT CARRIAGE (Figure 211)
HOOK TYPE
TWO-STAGE FULL FREE LIFT MAST ..... Page 426

SIDESHIFT CARRIAGE (Figure 212)
SERIES 1356000 ..... Page 428

SIDESHIFT CYLINDER (Figure 207)
PIN TYPE
IDENTIFY BY PART NUMBER ..... Page 420

©1999 HYSTER COMPANY

OPTIONAL EQUIPMENT (Continued)

SIDESHIFT CYLINDER (Figure 208)
PIN TYPE
IDENTIFY BY PART NUMBER ..... Page 421

SIDESHIFT CYLINDER (Figure 213)
HOOK TYPE ..... Page 430

SIDESHIFT CYLINDER (Figure 214)
SERIES 1360000 ..... Page 431

SOUND LINER (Figure 227) ..... Page 453

STROBE LIGHT (Figure 221)
MEDIUM INTENSITY ..... Page 442

STROBE LIGHT (Figure 222)
HIGH INTENSITY ..... Page 444

TIRES AND WHEELS (Figure 215)
SINGLE DRIVE WHEEL
H70-80XL & H90XLS
LEMMERZ BRAND WHEELS ..... Page 432

TIRES AND WHEELS (Figure 216)
SINGLE DRIVE WHEEL
ADVANCE BRAND WHEELS ..... Page 434

TIRES AND WHEELS (Figure 217)
DUAL DRIVE WHEEL
H70-80XL & H90XLS ..... Page 436

TIRES AND WHEELS (Figure 218)
STEER WHEEL ..... Page 438

WIPERS AND DEFROSTER FAN (Figure 226) ..... Page 452

©1999 HYSTER COMPANY

NOTES

©1999 HYSTER COMPANY

SIDESHIFT CARRIAGE (FIGURE 204)

TWO-STAGE LIMITED FREE LIFT MAST

PIN TYPE

H70-80XL & H90XLS

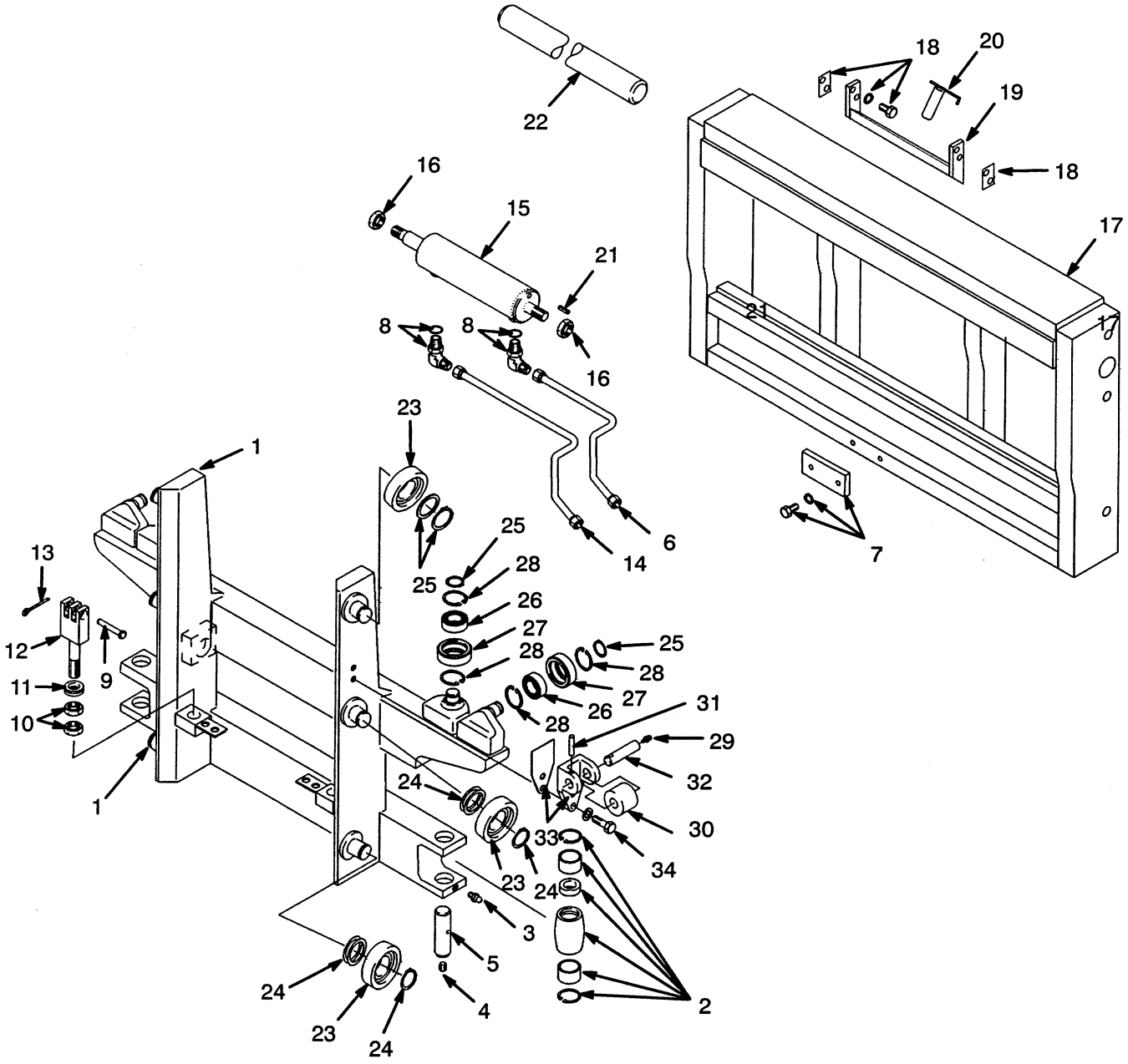

SIDESHIFT CARRIAGE

TWO-STAGE LIMITED FREE LIFT MAST

PIN TYPE

H70-80XL & H90XLS

KEY:
A: 48 Inch Carriage
B: 62 Inch Carriage

REF	PART NO.	NAME OF PART	QTY A	QTY B
	357617	Carriage (48 in)	1	..
	357618	Carriage (62 in)	..	1
1	357606	Frame (48 in)	1	..
1	357607	Frame (62 in)	..	1
1	341144	Stub Shaft	6	6
2	161278	Roller	2	2
2	161280	Bearing	2	2
2	161281	Spacer	1	1
2	161282	Snap Ring	2	2
2	161283	Seal	2	2
3	16006	Grease Fitting	2	2
4	15483	Fitting	2	2
5	161285	Pin	2	2
6	387032	Tube	1	..
6	387033	Tube	..	1
7	116692	Plate	1	2
7	15158	Lockwasher	2	4
7	37562	Screw	2	4
8	96521	Fitting	2	2
8	16483	O-Ring	1	1
9	327591	Pin	2	2
10	182377	Nut	2	2
11	182376	Base Ring	2	2
12	351666	Chain Anchor	2	2
13	15222	Cotter Pin	2	2
14	387035	Tube	1	..
14	387036	Tube	..	1
15	....	Sideshift Cylinder	1	1
		☞ Figure 207 & Figure 208		
16	246709	Locknut	2	2
17	297101	Apron (48 in)	1	..
17	171430	Apron (62 in)	..	1
18	131896	Shim (.028 in)	ARAR	
18	16691	Capscrew	8	8
18	15155	Lockwasher	8	8
19	294895	Bar	2	..
19	171477	Bar	..	2
20	297102	Lock Pin	2	..
20	129004	Lock Pin	..	2
20	69197	Spring	1	1
20	61141	Ball	1	1
21	19868	Spring Pin	1	1
22	66467	Pin	2	..
22	171481	Pin	..	2
23 [a]	1333648	Load Roller (A, Standard Size)	6	6
23 [a]	1343010	Load Roller (B, .030 in Oversize, Optional)	ARAR	
23 [a]	1343011	Load Roller (C, .060 in Oversize, Optional)	ARAR	
24	126765	Shim (.020 in)	ARAR	
24	187489	Snap Ring	6	6
25	34507	Snap Ring	4	4
25	366116	Spacer	4	4
26	129002	Bearing	4	4
27	129003	Roller	4	4
28	24702	Snap Ring	8	8
29	16001	Fitting	2	2
30	244005	Roller	2	2
31	66333	Spring Pin	2	2
32	244009	Pin	2	2
33	244008	Roller Bracket	2	2
33	192425	Shim (.062 in)	ARAR	
33	192424	Shim (.030 in)	ARAR	
34	292528	Capscrew	4	4
34	292683	Lockwasher	4	4

[a] The Letter Is Stamped On The Inside Face Of The Load Roller

©1999 HYSTER COMPANY

SIDESHIFT CARRIAGE (FIGURE 205)

THREE-STAGE FFL AND TWO-STAGE FFL MASTS

PIN TYPE

H70-80XL & H90XLS

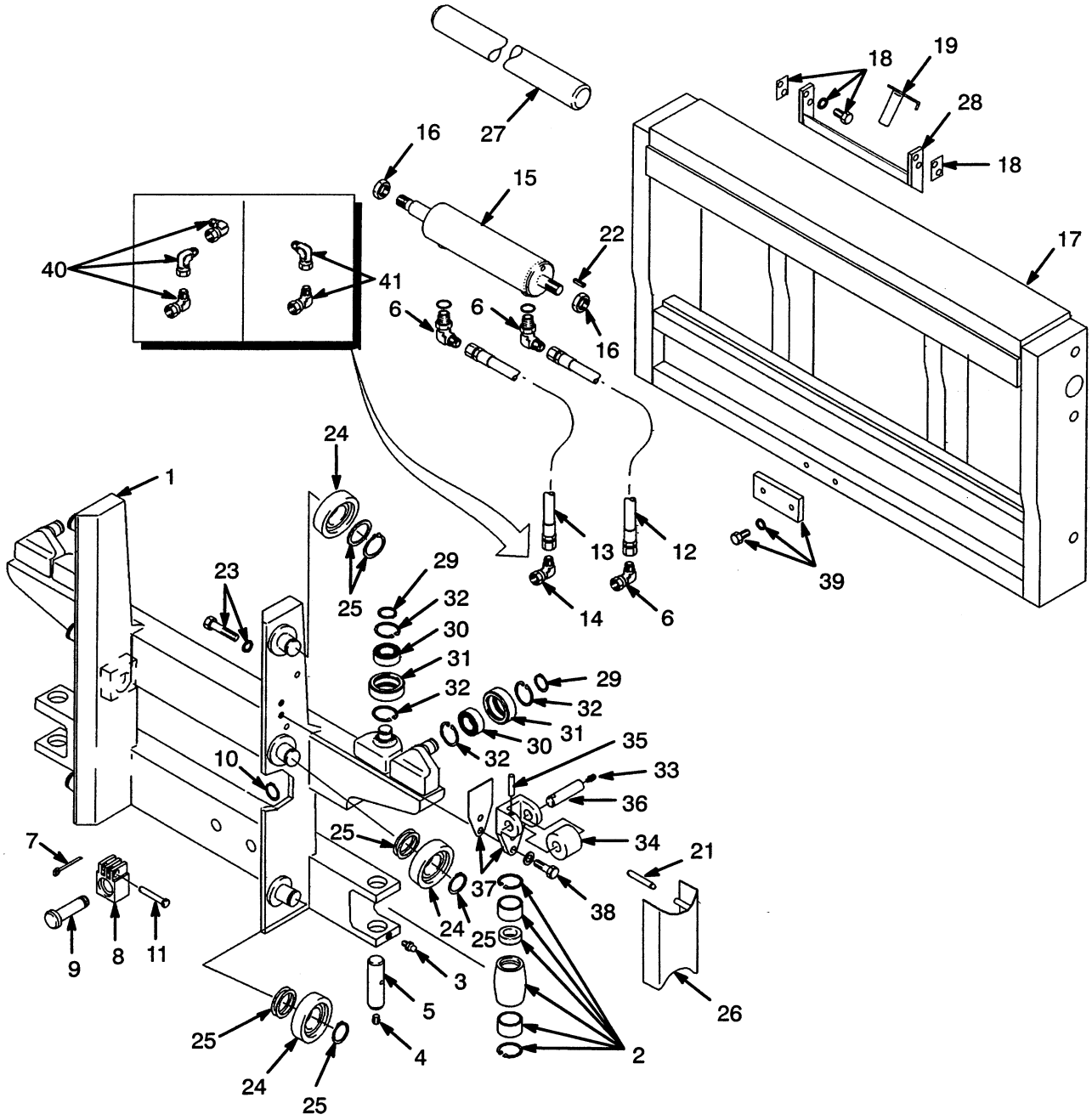

©1999 HYSTER COMPANY

SIDESHIFT CARRIAGE

THREE-STAGE FFL & TWO-STAGE FFL MASTS

PIN TYPE

H70-80XL & H90XLS

KEY:
A: 48 Inch Carriage
B: 62 Inch Carriage

REF		PART NO.	NAME OF PART	QTY A	QTY B
	a	373225	Carriage (48 in)	1	..
	b	368156	Carriage (48 in)	1	..
	b	368157	Carriage (62 in)	..	1
1	a	373233	Frame (48 in)	1	..
1	b	341302	Frame (48 in)	1	..
1	b	341303	Frame (62 in)	..	1
1		341144	Stub Shaft	6	6
2		161278	Roller	2	2
2		161280	Bearing	2	2
2		161281	Spacer	1	1
2		161282	Snap Ring	2	2
2		161283	Seal	2	2
3		16006	Grease Fitting	2	2
4		15483	Fitting	2	2
5		161285	Pin	2	2
6		16989	Fitting	3	3
7		15222	Cotter Pin	2	2
8		357579	Chain Anchor	2	2
9		320327	Pin	2	2
10		131358	Snap Ring	2	2
11		327591	Pin	2	2
12		1307614	Hose	1	..
12		135788	Hose	..	1
13		1307615	Hose	1	..
13		95733	Hose	..	1
14	b	16989	Fitting	..	1
15		....	Sideshift Cylinder	1	1
			☞ Figure 207 & Figure 208		
16		246709	Locknut	2	2
17		297101	Apron (48 in)	1	..
17		171430	Apron (62 in)	..	1
18		16691	Capscrew	8	8
18		15155	Lockwasher	8	8
18		131896	Shim (.028 in)	2	2
19		297102	Lock Pin	2	..
19		129004	Lock Pin	..	2
19		69197	Spring	1	1
19		61141	Ball	1	1
20		319323	Guard.LH (Not Shown) See Ref 26	1	1
21		317292	Spacer	4	4
22		19868	Spring Pin	1	1
23		18518	Capscrew	4	4
23		15155	Lockwasher	4	4
24	c	1333648	Load Roller (A, Standard Size)	6	6
24	c	1343010	Load Roller (B, 0.030 in Oversize, Optional)	ARAR	
24	c	1343011	Load Roller (C, 0.060 in Oversize, Optional)	ARAR	
25		126765	Shim (.020 in)	ARAR	
25		366116	Spacer	2	2
25		187489	Snap Ring	6	6
26		319322	Guard, RH	1	1
27		66467	Pin	2	..
27		171481	Pin	..	2
28		294895	Bar	2	..
28		171477	Bar	..	2
29		34507	Snap Ring	4	4
30		129002	Bearing	4	4
31		129003	Roller	4	4
32		24702	Snap Ring	8	8
33		16001	Fitting	2	2
34		244005	Roller	2	2
35		66333	Spring Pin	2	2
36		244009	Pin	2	2
37		244008	Roller Bracket	2	2
37		192424	Shim (0.030 in)	ARAR	
37		192425	Shim (0.062 in)	ARAR	
38		292528	Capscrew	4	4
38		292683	Lockwasher	4	4
39		37562	Screw	2	4
39		15158	Lockwasher	2	4
39		116692	Plate	1	2
40	b	16989	Fitting	3	..
41	a	16989	Fitting	2	..

a Two-Stage Full Free Lift Mast
b Three-Stage Full Free Lift Mast
c The Letter Is Stamped On The Inside Face Of The Load Roller.

©1999 HYSTER COMPANY

SIDESHIFT CARRIAGE (FIGURE 206)

PIN TYPE

H90-110XL

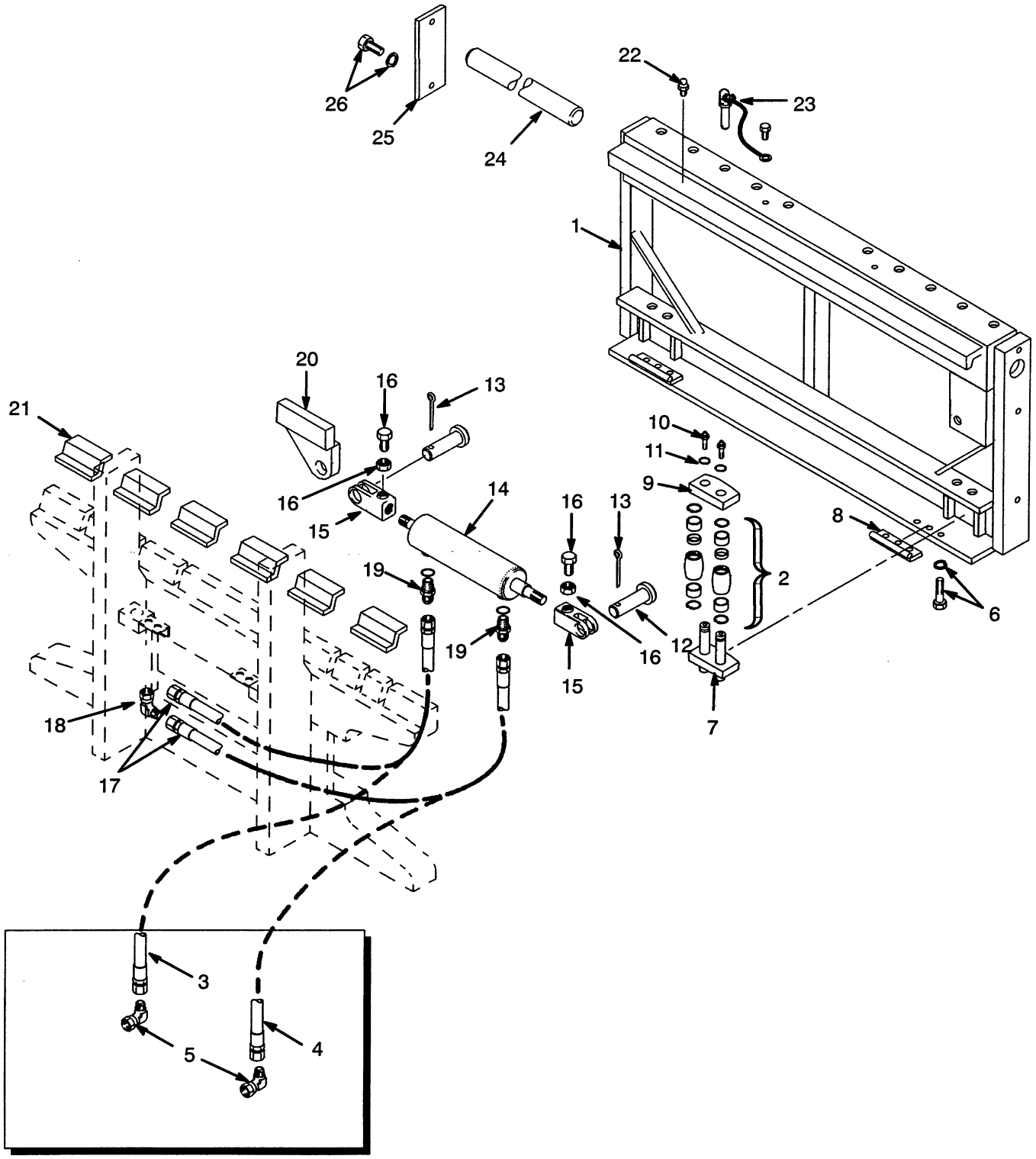

©1999 HYSTER COMPANY

SIDESHIFT CARRIAGE

PIN TYPE

H90-110XL

KEY:
A: 48 Inch Carriage
B: 62 Inch Carriage

REF		PART NO.	NAME OF PART	QTY A	QTY B
		313662	Carriage (48 in)	1	..
		313663	Carriage (62 in)	..	1
1		313654	Frame (48 in)	1	..
1		313656	Frame (62 in)	..	1
2		161278	Roller	4	4
2		161280	Bearing	2	2
2		161281	Spacer	1	1
2		161282	Snap Ring	2	2
2		161283	Seal	2	2
3	a	62742	Hose	1	1
4	a	95733	Hose	1	1
5	a	16989	Fitting	2	2
6		16829	Capscrew	6	6
6		15158	Lockwasher	6	6
7		312444	Pin	2	2
8		322096	Retainer	2	2
9		312442	Plate	2	2
10		16008	Grease Fitting	4	4
11		131358	Snap Ring	4	4
12		178	Pin	2	2
13		15234	Cotter Pin	2	2
14		....	Side-Shift Cylinder ☞ Figure 207 & Figure 208	1	1
15		119695	Rod End	2	2
16		16828	Capscrew	2	2
16		15086	Nut	2	2
17	b	198833	Hose	2	2
18	b	16989	Fitting	2	2
19		131460	Fitting	2	2
19		16483	O-Ring	1	1
20		332988	Bracket	1	1
21		313658	Bearing	6	6
22		16001	Fitting	2	2
23		117329	Lock Pin	2	2
24		308180	Pin	2	..
24		308182	Pin	..	2
25		66468	Keeper Plate	2	2
26		16804	Capscrew	4	4
26		15160	Lockwasher	4	4

a Two-Stage Limited Free Lift Mast

b Two-Stage Full Free Lift And Three-Stage Full Free Lift Masts

©1999 HYSTER COMPANY

SIDESHIFT CYLINDER (FIGURE 207)

PIN TYPE

IDENTIFY BY PART NUMBER

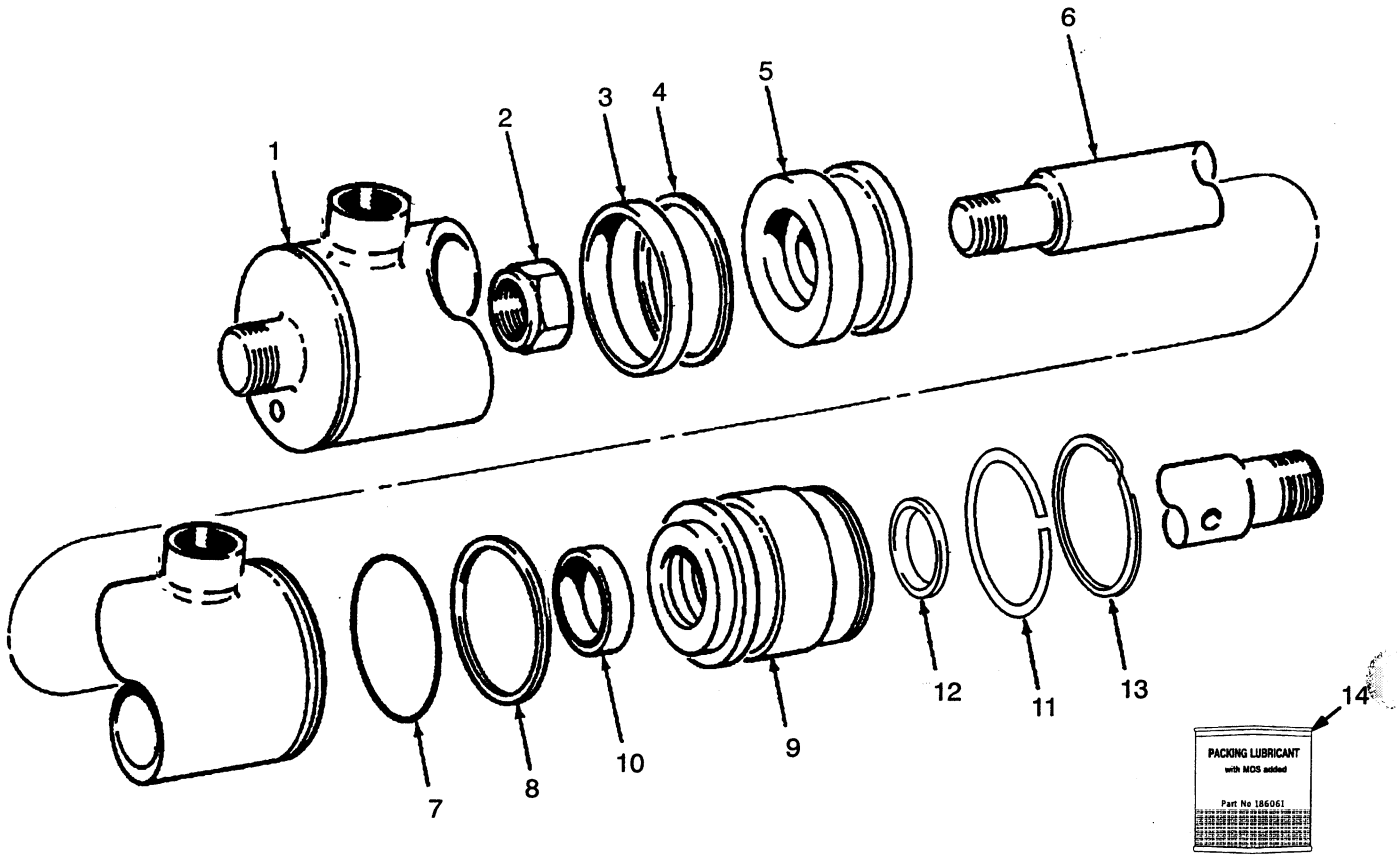

REF		PART NO.	NAME OF PART	QTY
		1325116	Cylinder	1
1		333645	Shell	1
2		43299	Nut	1
3	a	270077	Seal	1
4	a	638249	Back-Up Ring	1
5		332795	Piston	1
6		333646	Rod	1
7	a	59229	O-Ring	1
8	a	615130	Back-Up Ring	1
9		1332506	Retainer	1
10	a	239145	Seal	1
11		332797	Retaining Ring	1
12	a	636852	Wiper	1
13		12960	Snap Ring	1
14		186061	Packing Lubricant	AR

a Included In Repair Kit 332798

©1999 HYSTER COMPANY

SIDESHIFT CYLINDER (FIGURE 208)

PIN TYPE

IDENTIFY BY PART NUMBER

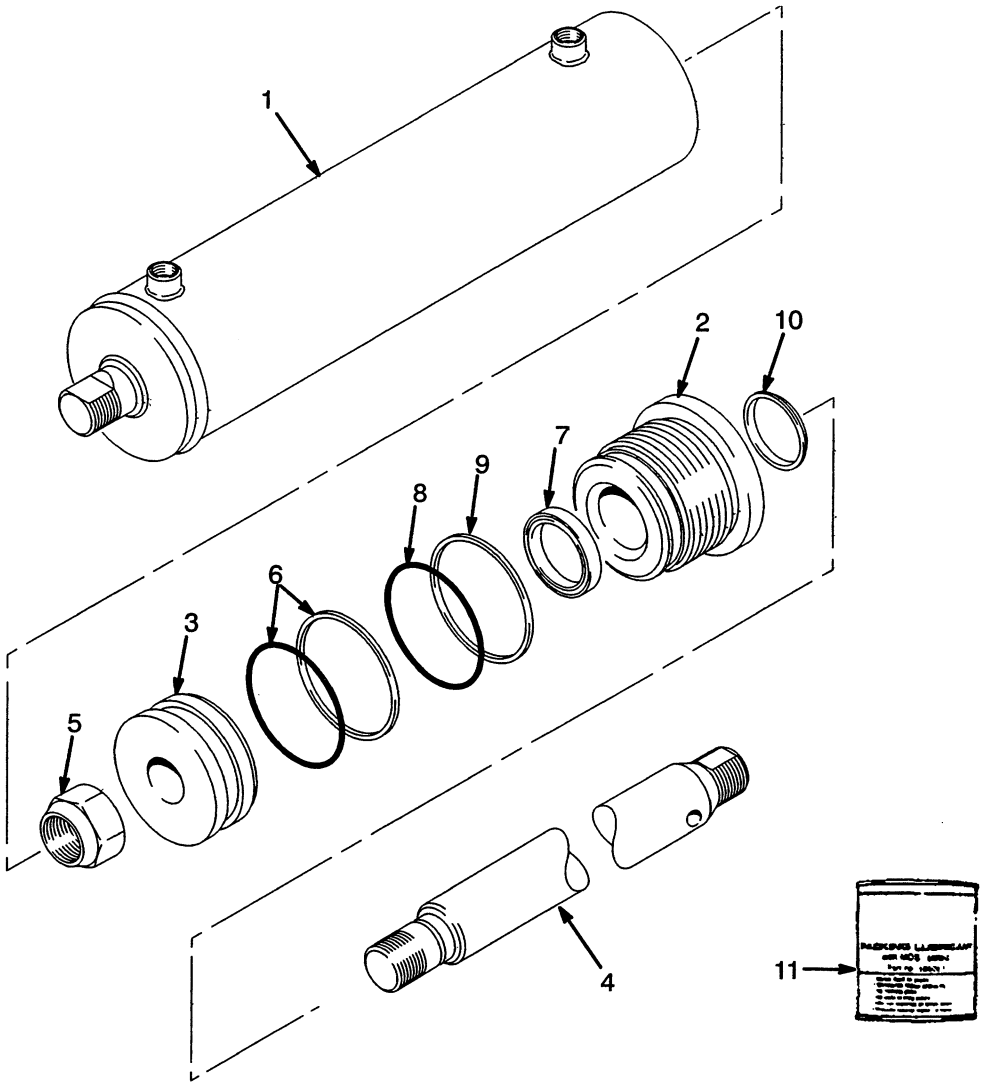

REF		PART NO.	NAME OF PART	QTY
		2013098	Cylinder Assembly	1
1		1338746	Tube	1
2		1338747	Gland	1
3		1338748	Piston	1
4		1338749	Rod	1
5		2306366	Locknut	1
6	a	1351184	Seal Set	1
7	a	1351185	Rod Seal	1
8	a	59229	O-Ring	1
9	a	615130	Back-Up Ring	1
10	a	1351186	Rod Wiper	1
11		186061	Packing Lubricant	AR

a Included In Seal Kit 1351175

©1999 HYSTER COMPANY

SIDESHIFT CARRIAGE (FIGURE 209)

HOOK TYPE

TWO-STAGE LFL MAST

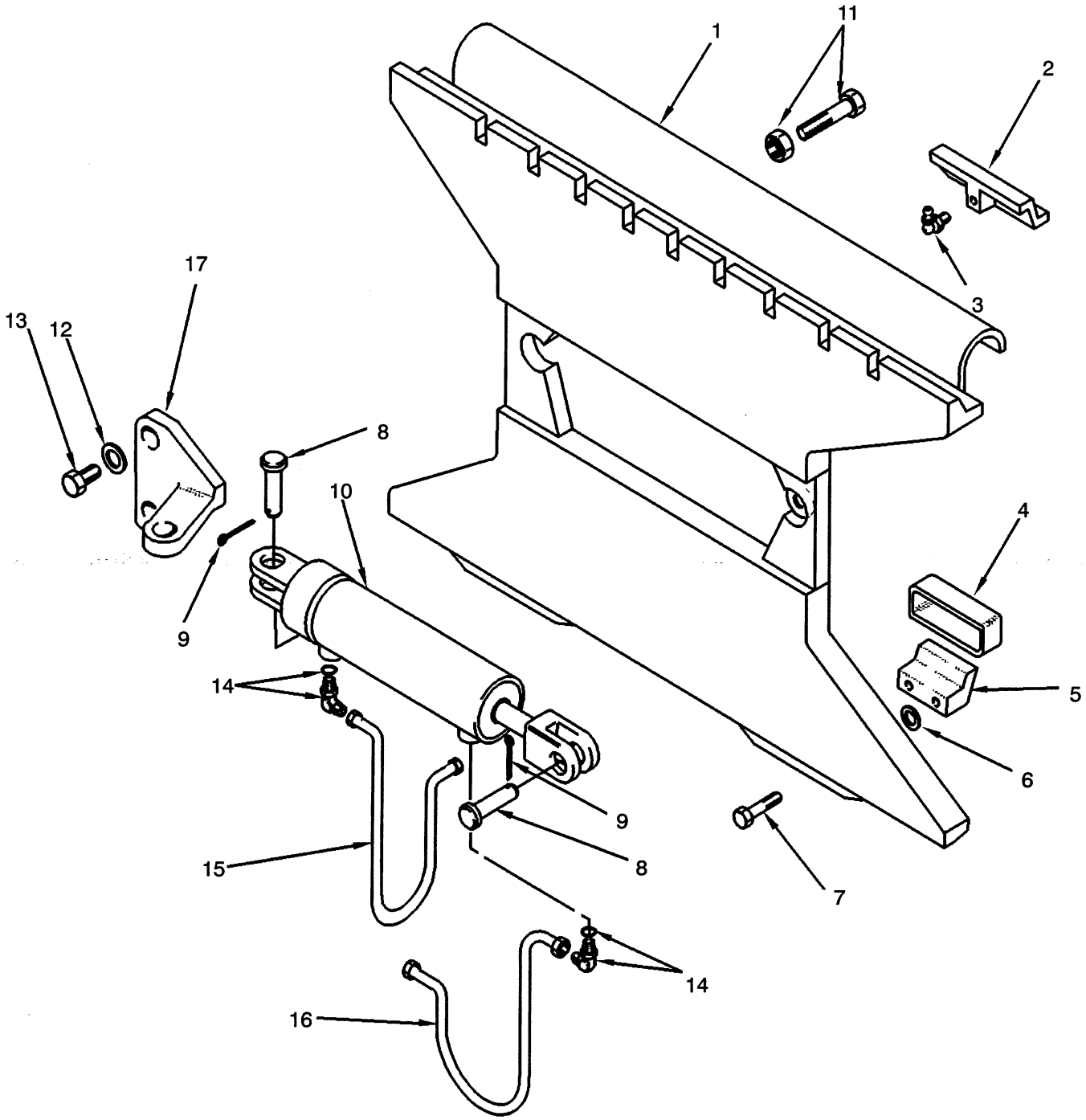

©1999 HYSTER COMPANY

SIDESHIFT CARRIAGE

HOOK TYPE

TWO-STAGE LFL MAST

KEY:
A: 42 Inch Carriage
B: 48 Inch Carriage

REF		PART NO.	NAME OF PART	QTY A	QTY B
		1319662	Carriage (42 in)	1	..
		1319663	Carriage (48 in)	..	1
1		1312674	Apron (42 in)	1	..
1		1312673	Apron (48 in)	..	1
2		373472	Bearing	4	4
3		16046	Grease Fitting	4	4
4		351458	Bearing Block	2	2
5		343961	Carriage Hook	2	2
6		296426	Washer	4	4
7		1307610	Capscrew	4	4
8		172	Rod-End Pin	2	2
9		15234	Cotter Pin	2	2
10		....	Sideshift Cylinder ☞ Figure 213	1	1
11		292582	Capscrew	2	2
11		296136	Nut	2	2
12		296430	Washer	2	2
13		332462	Capscrew	2	2
14		96521	Fitting	2	2
14		16483	O-Ring	1	1
15	a	379805	Tube, RH	1	1
15	b	385494	Tube, RH	1	1
16	a	379804	Tube, LH	1	1
16	b	385493	Tube, LH	1	1
17		1301948	Bracket	1	1

a H70-80XL & H90XLS
b H90-100XL

©1999 HYSTER COMPANY

SIDESHIFT CARRIAGE (FIGURE 210)

HOOK TYPE

THREE-STAGE FULL FREE LIFT MAST

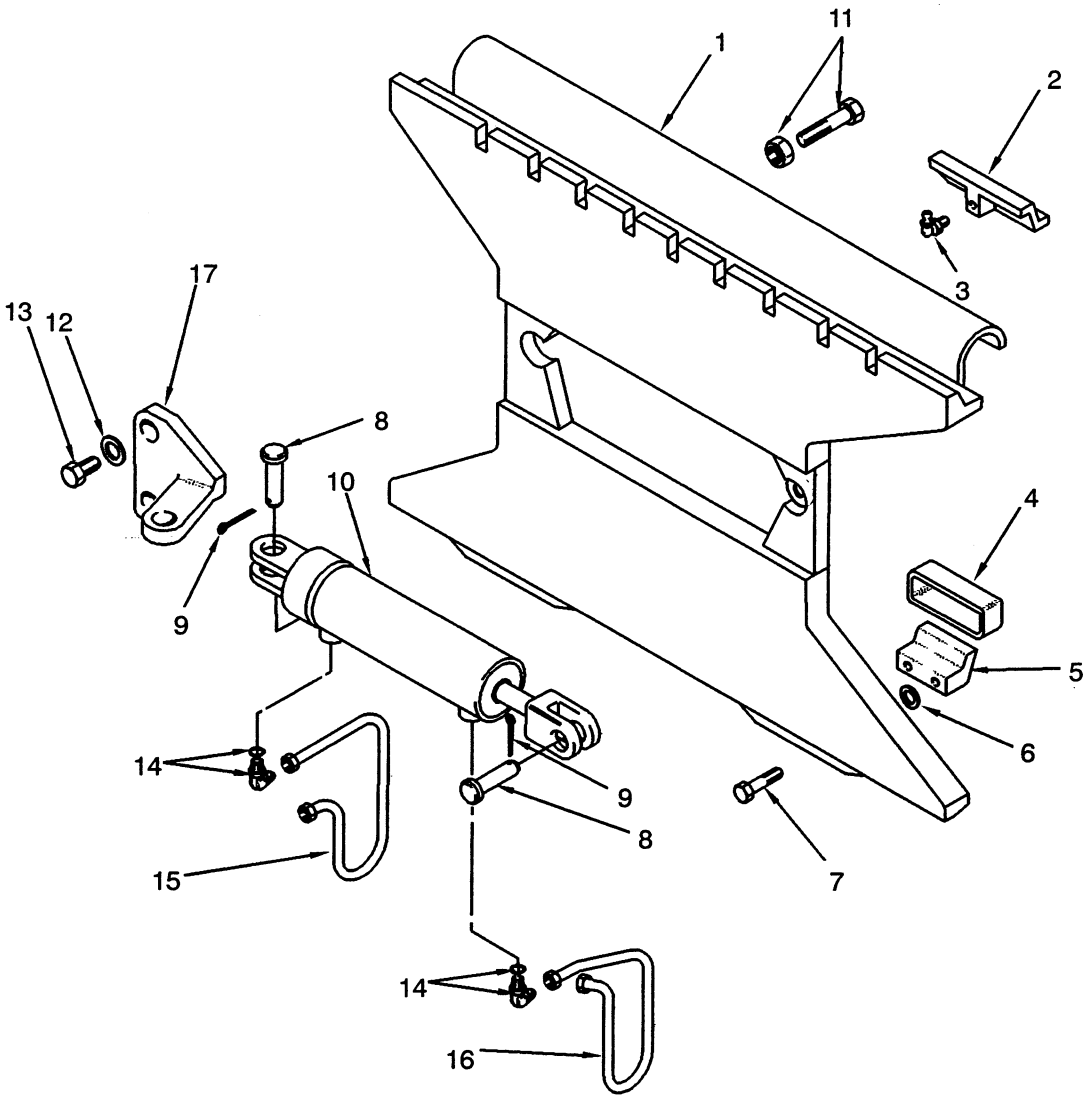

©1999 HYSTER COMPANY

SIDESHIFT CARRIAGE

HOOK TYPE

THREE-STAGE FULL FREE LIFT MAST

KEY:
A: 42 Inch Carriage
B: 48 Inch Carriage

REF	PART NO.	NAME OF PART	QTY A	QTY B
	1319662	Carriage (42 in)	1	..
	1319663	Carriage (48 in)	..	1
1	1312674	Apron (42 in)	1	..
1	1312673	Apron (48 in)	..	1
2	373472	Bearing	4	4
3	16046	Grease Fitting	4	4
4	351458	Bearing Block	2	2
5	343961	Hook	2	2
6	296426	Flatwasher	4	4
7	1307610	Capscrew	4	4
8	172	Rod End Pin	2	2
9	15234	Cotter Pin	2	2
10	....	Sideshift Cylinder ☞ Figure 213	1	1
11	292582	Capscrew	2	2
11	296136	Nut	2	2
12	296430	Washer	2	2
13	332462	Capscrew	2	2
14	96521	Fitting	2	2
14	16483	O-Ring	1	1
15	379807	Tube	1	1
16	1300700	Tube	1	1
17	377654	Bracket	1	1

©1999 HYSTER COMPANY

SIDESHIFT CARRIAGE (FIGURE 211)

HOOK TYPE

TWO-STAGE FULL FREE LIFT MAST

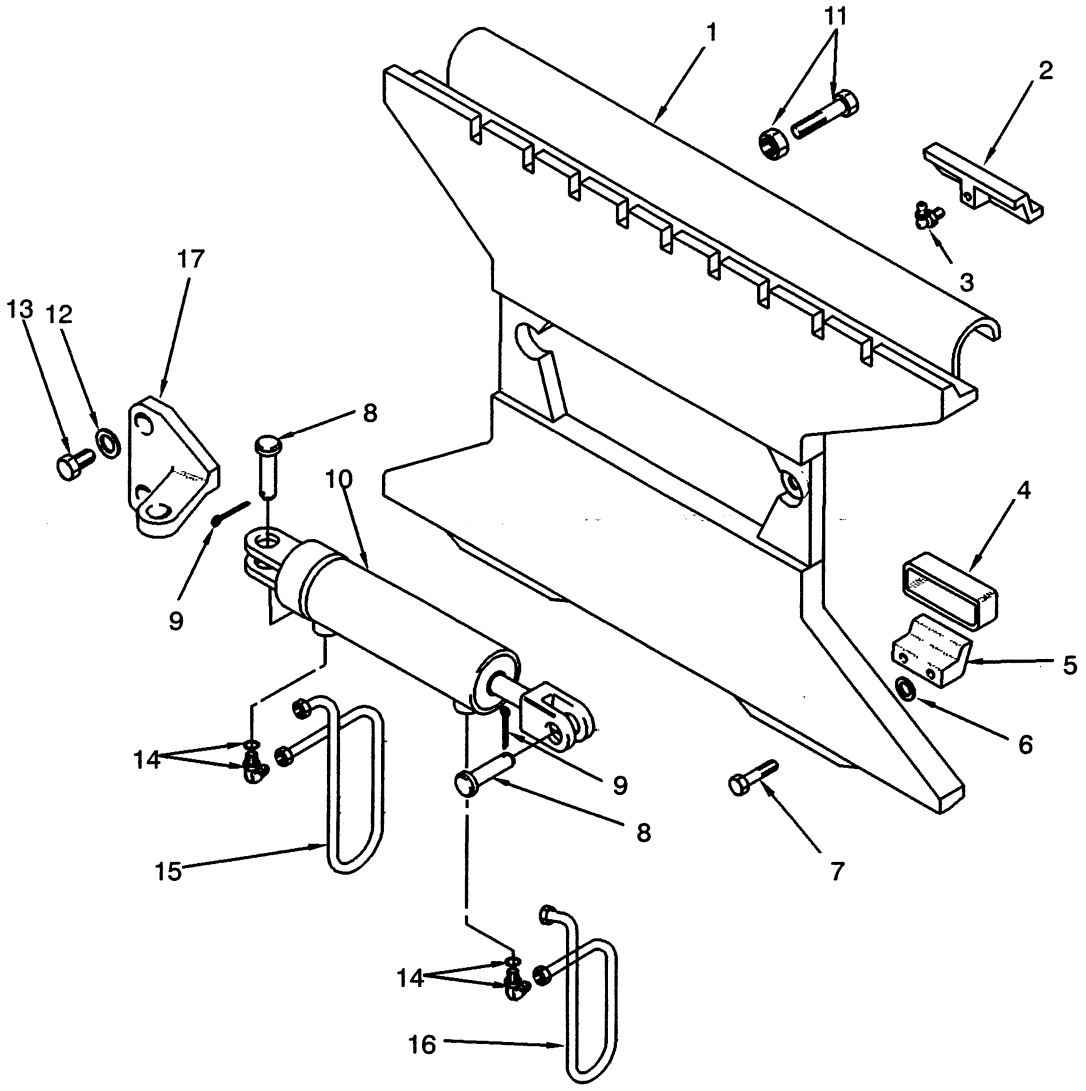

©1999 HYSTER COMPANY

SIDESHIFT CARRIAGE

HOOK TYPE

TWO-STAGE FULL FREE LIFT MAST

KEY:
A: 42 Inch Carriage
B: 48 Inch Carriage

REF		PART NO.	NAME OF PART	QTY A	QTY B
		1319662	Carriage (42 in)	1	..
		1319663	Carriage (48 in)	..	1
1		1312674	Apron (42 in)	1	..
1		1312673	Apron (48 in)	..	1
2		373472	Bearing	4	4
3		16046	Grease Fitting	4	4
4		351458	Bearing Block	2	2
5		343961	Hook	2	2
6		296426	Flatwasher	4	4
7		1307610	Capscrew	4	4
8		172	Rod-End Pin	2	2
9		15234	Cotter Pin	2	2
10		....	Sideshift Cylinder ☞ Figure 213	1	1
11		292582	Capscrew	2	2
11		296136	Nut	2	2
12		296430	Washer	2	2
13		332462	Capscrew	2	2
14		96521	Fitting	2	2
14		16483	O-Ring	1	1
15	a	379809	Tube	1	1
15	b	1301915	Tube	1	1
16	a	379808	Tube	1	1
16	b	1301914	Tube	1	1
17		1301948	Bracket	1	1

a H70-80XL & H90XLS
b H90-100XL Attachment

©1999 HYSTER COMPANY

SIDESHIFT CARRIAGE (FIGURE 212)

SERIES 1356000

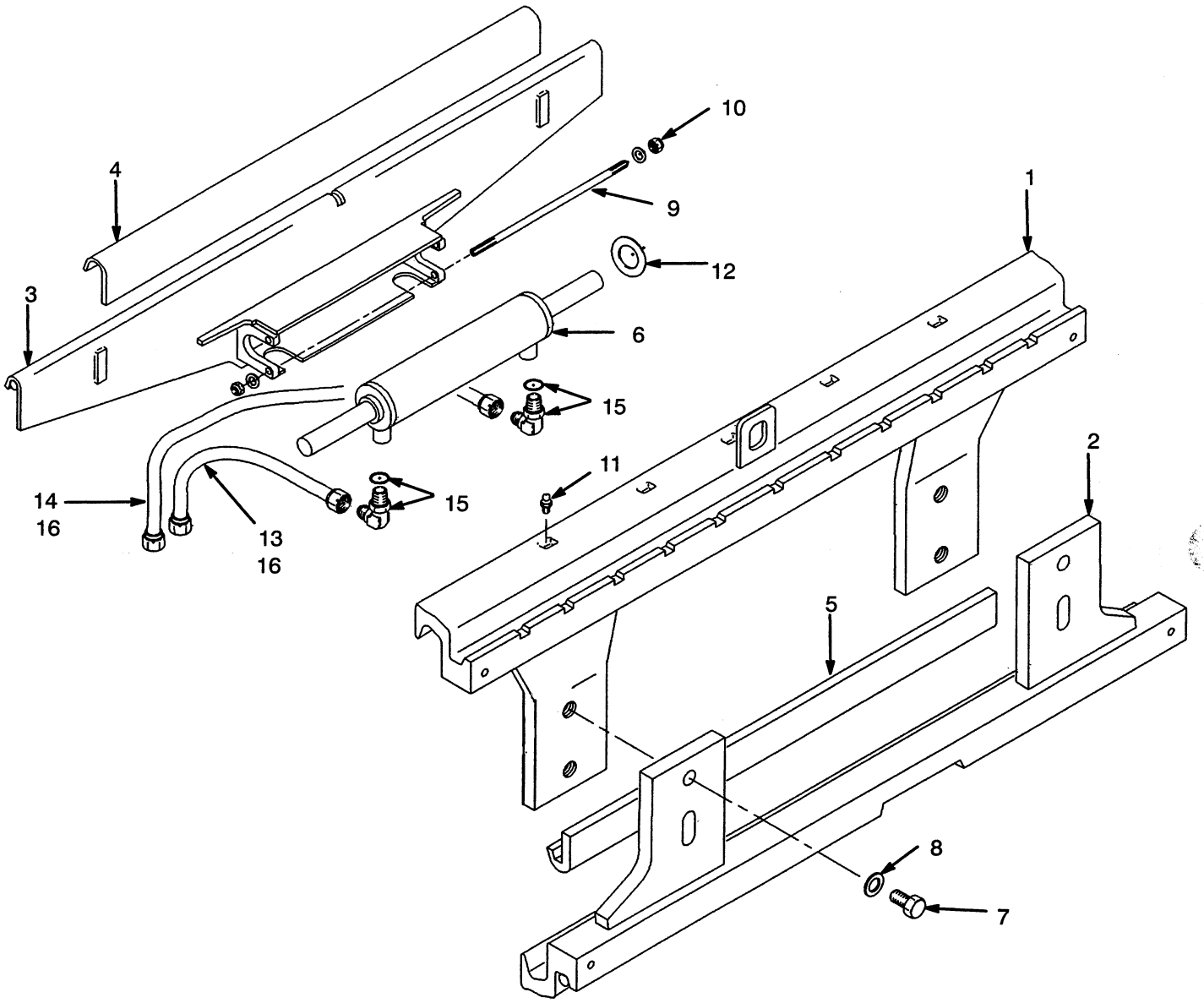

©1999 HYSTER COMPANY

See Service Manual
for service procedures

SIDESHIFT CARRIAGE

SERIES 1356000

REF		PART NO.	NAME OF PART	QTY
	e	1356882	Carriage (42 in)	1
	f	1399048	Carriage (42 in)	1
	e	1356883	Carriage (48 in)	1
	f	1399052	Carriage (48 in)	1
		1360302	Carriage (60 in)	1
1		1355547	Weldment (Top, 42 in)	1
1		1355548	Weldment (Top, 48 in)	1
1		1360300	Weldment (Top, 60 in)	1
2		1378072	Weldment (Bottom, 42 in)	1
2	f	1396431	Shim	6
2		1378075	Weldment (Bottom, 48 in)	1
2	f	1396434	Shim	6
2		1368078	Weldment (Bottom, 60 in)	1
2	f	1396437	Shim	6
3	e	1397277	Support (42 in)	1
3	f	1399023	Support (42 in)	1
3	e	1397280	Support (48 in)	1
3	f	1399026	Support (48 in)	1
3		1397282	Support (60 in)	1
4	e	1356902	Bearing (Top, 42 in)	1
4	f	1396471	Bearing (Top, 42 in)	1
4	e	1356903	Bearing (Top, 48 in)	1
4	f	1396475	Bearing (Top, 48 in)	1
4		1360303	Bearing (Top, 60 in)	1
5		1378082	Bearing (Bottom, 42 in)	1
5		1356897	Bearing (Bottom, 48 in)	1
5		1356898	Bearing (Bottom, 60 in)	1

REF		PART NO.	NAME OF PART	QTY
6		.....	Sideshift Cylinder ☞ Figure 214	1
7		1360229	Capscrew	4
8		296435	Flatwasher	4
9		1371289	Capscrew	2
9		1358809	Threaded Rod (Optional)	2
10		313828	Nut	2
11		16041	Grease Fitting	5
12		1358821	Shim (0.020 in)	4
13	a	1360236	Hose	1
14	a	1360237	Hose	1
15		201779	Fitting	2
15		16481	O-Ring	1
16	bc	136023[4]	Hose	2
16	d	1360235	Hose	2

a 2-Stage Limited Free Lift

b 3-Stage Full Free Lift

c 2-Stage Full Free Lift (H70-80XL & H90XLS)

d 2-Stage Full Free Lift (H90-100XL)

e Last Used On S/N A510D-9390,A511D-9390, A512D-9390
(Excluding 9391, 9394, 9395, And 9397)
(Including 9392, 9393, And 9396)

f First Used On S/N A510D-9391, A511D-9391, A512D-9391
(Including 9394, 9395, And 9397)
(Excluding 9392, 9393, And 9396)

©1999 HYSTER COMPANY

SIDESHIFT CYLINDER (FIGURE 213)

HOOK TYPE

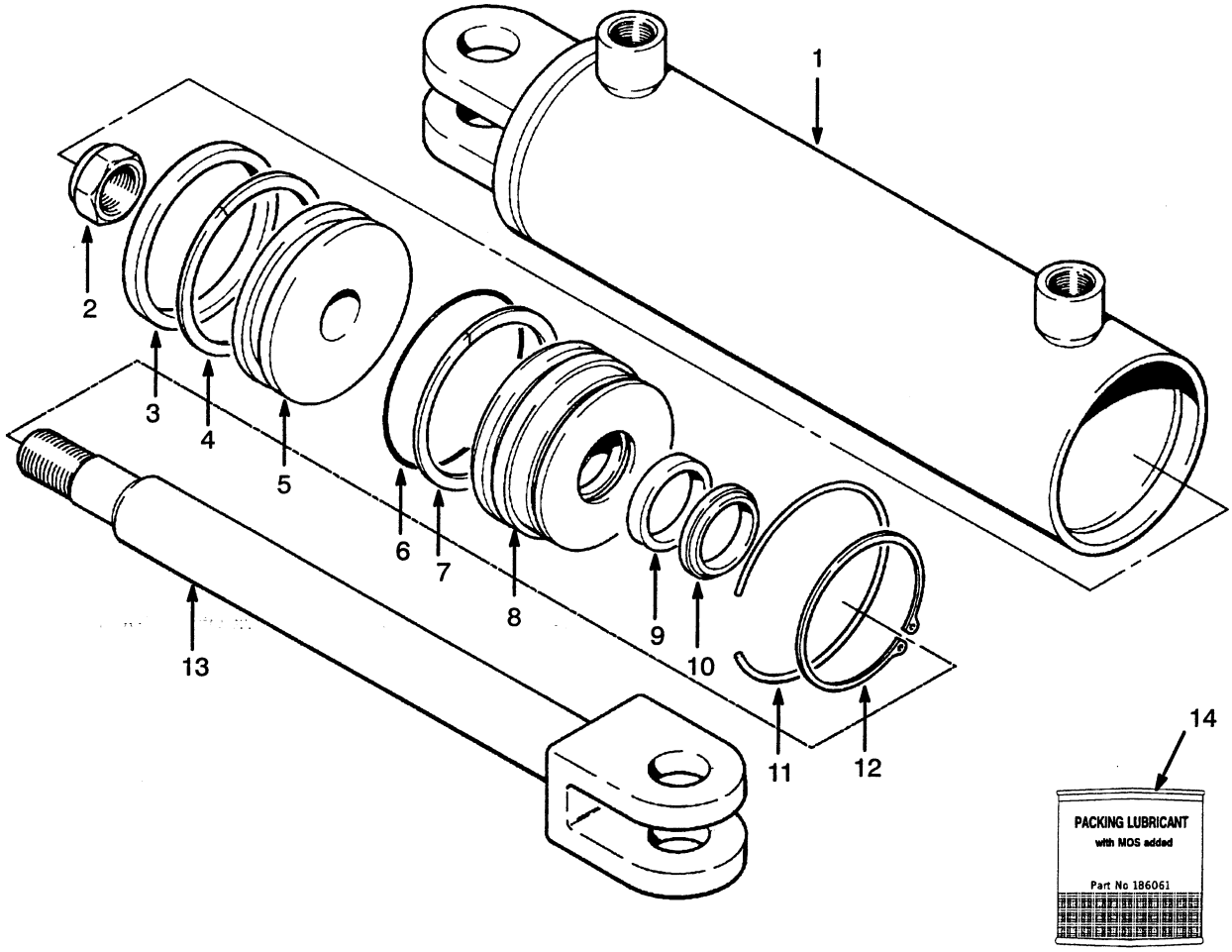

REF		PART NO.	NAME OF PART	QTY
		347713	Cylinder	1
1		347719	Shell	1
2		248320	Locknut	1
3	a	215904	Seal	1
4	a	215929	Back-Up Ring	1
5		347714	Piston	1
6	a	57664	O-Ring	1
7	a	276627	Back-Up Ring	1
8		347715	Retainer	1
9	a	239145	Rod Seal	1
10	a	636852	Wiper Ring	1
11		348035	Ring	1
12		12917	Snap Ring	1
13		347721	Rod	1
14		186061	Packing Lubricant	AR

a Included in Repair Kit 375322

©1999 HYSTER COMPANY

SIDESHIFT CYLINDER (FIGURE 214)

SERIES 1360000

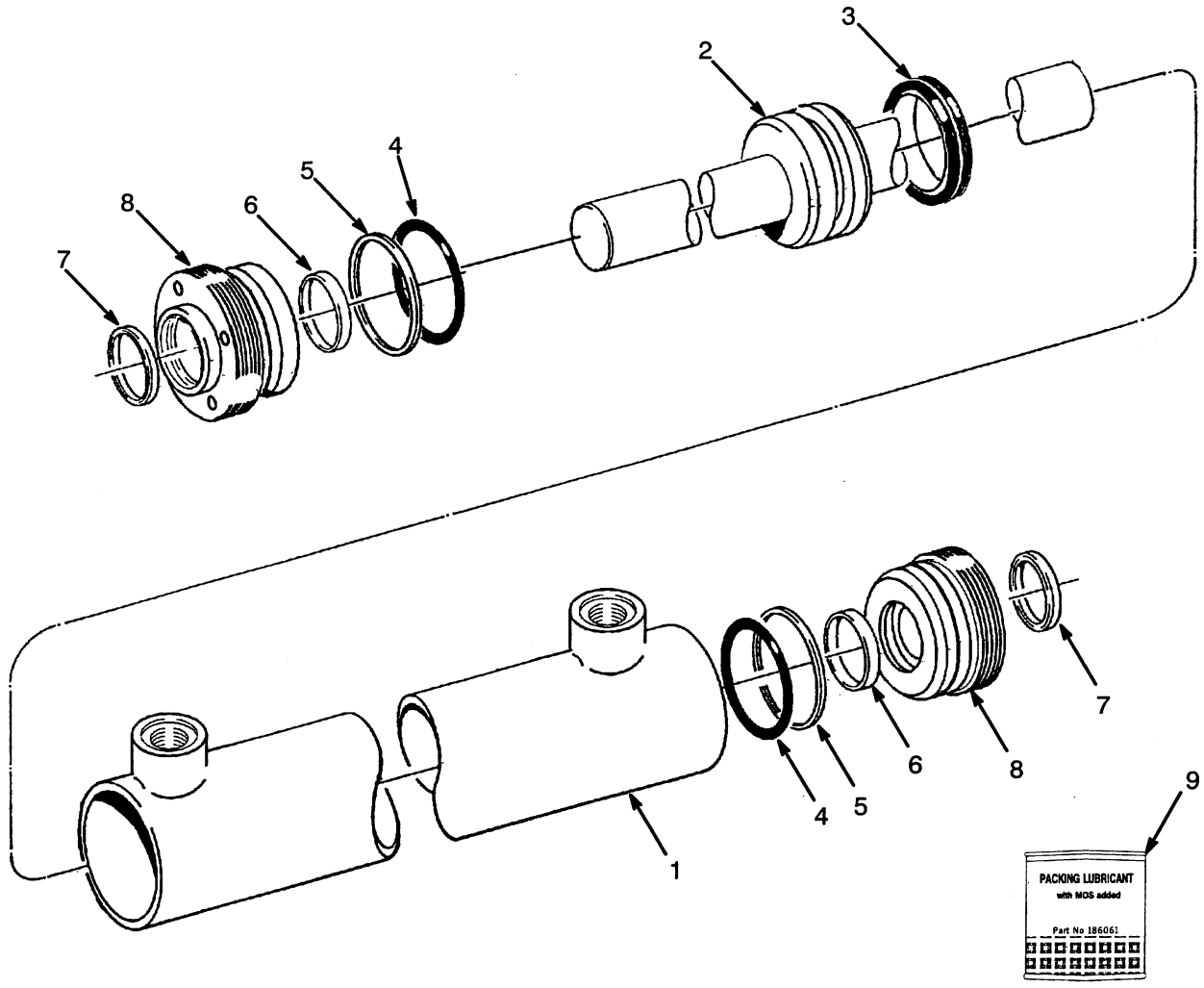

REF		PART NO.	NAME OF PART	QTY
		1360126	Cylinder	1
1		2304345	Shell	1
2		2303634	Rod	1
3		1351184	Seal	1
4	a	59229	O-Ring	2
5	a	615130	Back-Up Ring	2
6	a	294643	Seal	2
7	a	636851	Wiper	2
8		2306283	Gland	2
9		186061	Packing Lubricant	AR

a Included in Seal Kit 2307647

©1999 HYSTER COMPANY

TIRES AND WHEELS (FIGURE 215)

SINGLE DRIVE WHEEL

H70-80XL & H90XLS

LEMMERZ BRAND WHEELS

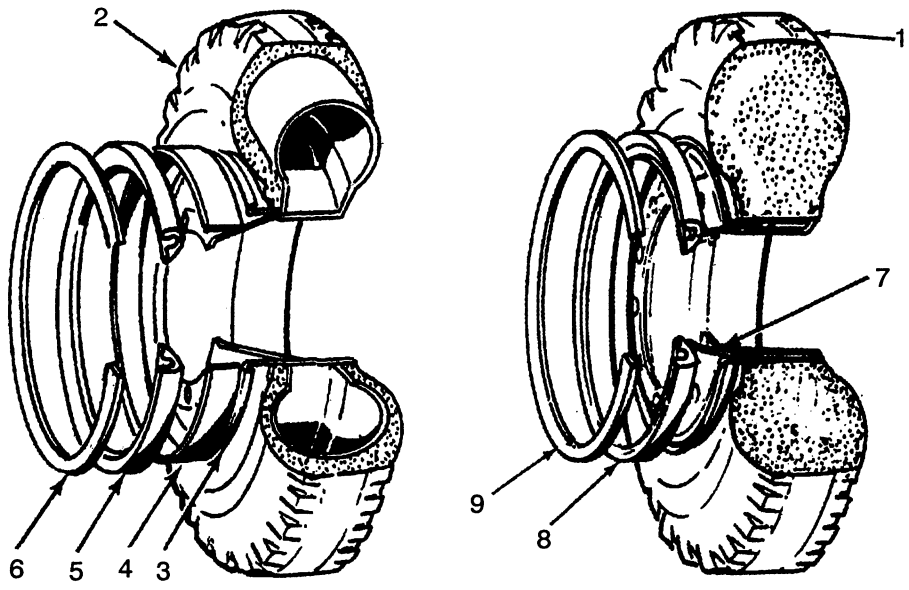

DO NOT MIX ADVANCE AND LEMMERZ WHEELS OR COMPONENTS ON ANY ONE UNIT

REF NO	NAME OF PART 1 2 3 4	250 x 15 SOLID	[b] 250 x 15 16 PLY	[c] 250 x 15 18 PLY	250/70 R15 RADIAL	QTY
		PART NO.				
1	Tire (Standard Hardness)	352266	..	..	..	2
2	Tire/Tube	..	352268	..	1337744	2
	Tire	..	352269	1302127	1358184	1
	Tube	..	352270	352270	1358195	1
	Flap	..			1358016	1
	Washer		..	..	1376007	2
3	Wheel 7.50 x 15	[a] 1308865	[a] 352186	[a] 352186	[a] 1308865	2
4	Shoulder Ring	806557	806557	806557	806557	1
5	Side Ring	321124	321124	321124	321124	1
6	Lock Ring	321123	321123	321123	321123	1
7	Wheel 7.50 x 15	[a] 1309083	..	..	..	2
8	Side Ring	321124	..	..	..	1
9	Lock Ring	321123	..	..	..	1

[a] The Part Number is Stamped on The Wheel
[b] H70-80XL
[c] H90XLS

©1999 HYSTER COMPANY

TIRES AND WHEELS

SINGLE DRIVE WHEEL

LEMMERZ BRAND WHEELS

H90-110XL

DO NOT MIX ADVANCE AND LEMMERZ WHEELS OR COMPONENTS ON ANY ONE UNIT

REF NO	NAME OF PART 1 2 3 4	300 x 15 SOLID	300 x 15 18 PLY	315/70 R15 RADIAL	QTY
		PART NO.			
1	Tire (Standard Hardness)	336123	..	..	2
2	Tire/Tube	..	321043	1337745	2
	Tire	..	321044	1358185	1
	Tube	..	321045	1358192	1
	Flap	..	..	1358016	1
	Washer		..	.1376007	2
3	Wheel 8.00 x 15	[a] 1308866	[a] 352185	[a] 1308866	2
4	Shoulder Ring	806557	806557	806557	1
5	Side Ring	321124	321124	321124	1
6	Lock Ring	321123	321123	321123	1
7	Wheel 8.00 x 15	[a] 1309084	..	..	2
8	Side Ring	321124	..	..	1
9	Lock Ring	321123	..	..	1

[a] The Part Number is Stamped on The Wheel

©1999 HYSTER COMPANY

TIRES AND WHEELS (FIGURE 216)

SINGLE DRIVE WHEEL

ADVANCE BRAND WHEELS

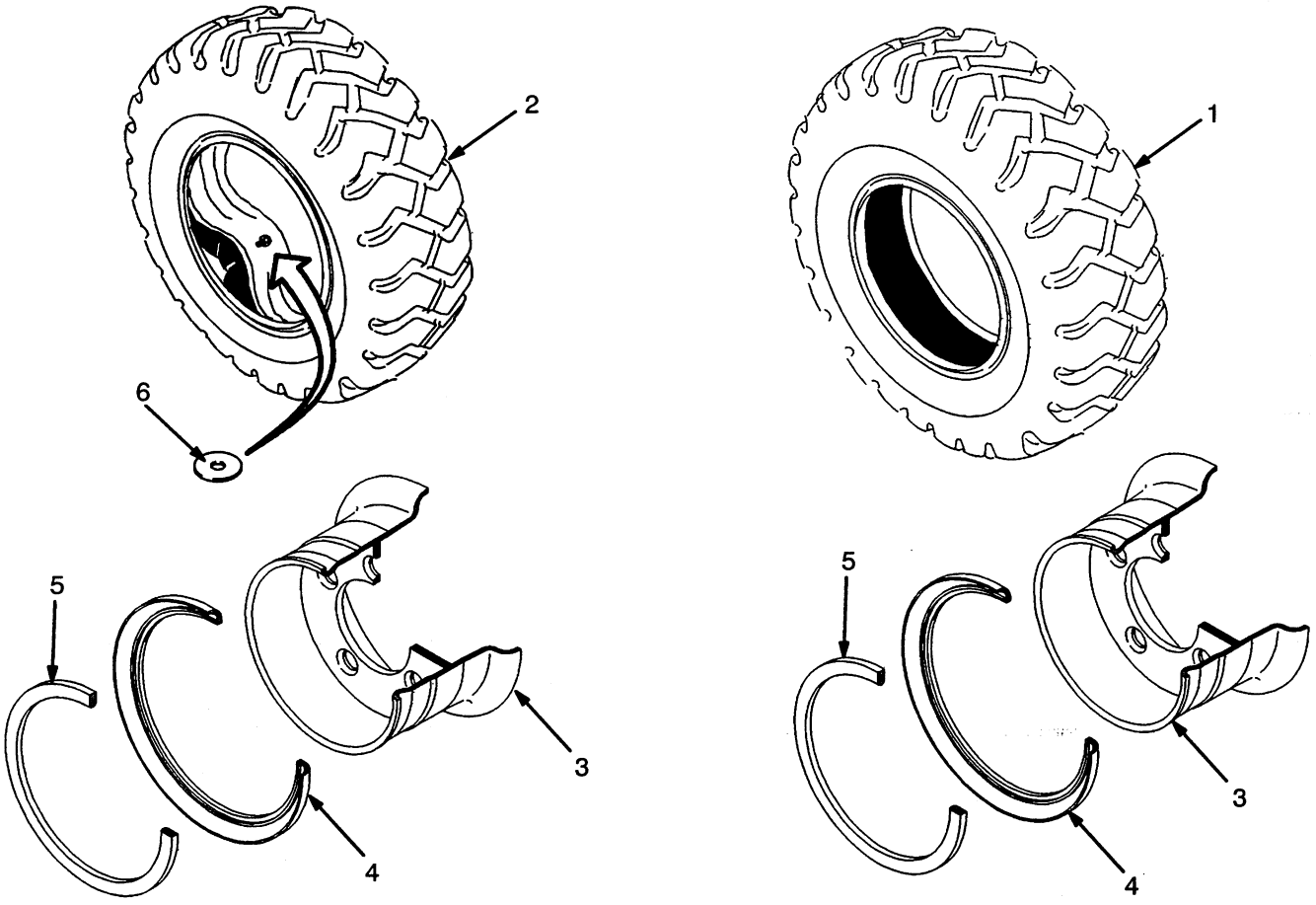

DO NOT MIX ADVANCE AND LEMMERZ WHEELS OR COMPONENTS ON ANY ONE UNIT

REF NO	NAME OF PART 1 2 3 4	250 x 15 SOLID	[b] 250 x 15 16 PLY	[c] 250 x 15 18 PLY	QTY
		PART NO.			
1	Tire (Standard Hardness)	352266	..	..	2
2	Tire/Tube	..	352268	..	2
	Tire	..	352269	1302127	1
	Tube	..	352270	352270	1
3	Wheel 7.50 x 15	[a] 1342668	[a] 1342668	[a] 1342668	2
4	Side Ring	322637	322637	322637	1
5	Lock Ring	322638	322638	322638	1

[a] The Part Number is Stamped on The Wheel

[b] H70-80XL

[c] H90XLS

©1999 HYSTER COMPANY

TIRES AND WHEELS

SINGLE DRIVE WHEEL

ADVANCE BRAND WHEELS

H90-110XL

DO NOT MIX ADVANCE AND LEMMERZ WHEELS OR COMPONENTS ON ANY ONE UNIT

REF NO	NAME OF PART 1 2 3 4	300 x 15 SOLID	300 x 15 18 PLY	315/70 R15 RADIAL	QTY
		PART NO.			
1	Tire (Standard Hardness)	336123	..	..	2
2	Tire/Tube	..	321043	1337745	2
	Tire	..	321044	1358185	1
	Tube	..	321045	1358192	1
	Flap	..	..	1358016	1
3	Wheel 8.00 x 15	[a] 1342669	[a] 1342669	[a] 1342669	2
4	Side Ring	322637	322637	322637	1
5	Lock Ring	322638	322638	322638	1
6	Washer		..	1376007	2

REF NO	NAME OF PART 1 2 3 4	250/70 R15 RADIAL	QTY
1	Tire (Standard Hardness)		2
2	Tire/Tube	1337744	2
	Tire	1358184	1
	Tube	1358195	1
	Flap	1358016	1
3	Wheel 8.00 x 15	[a] 1342668	2
4	Side Ring	322637	1
5	Lock Ring	322638	1
6	Washer	1376007	2

[a] The Part Number is Stamped on The Wheel

©1999 HYSTER COMPANY

TIRES AND WHEELS (FIGURE 217)

DUAL DRIVE WHEEL

H70-80XL & H90XLS

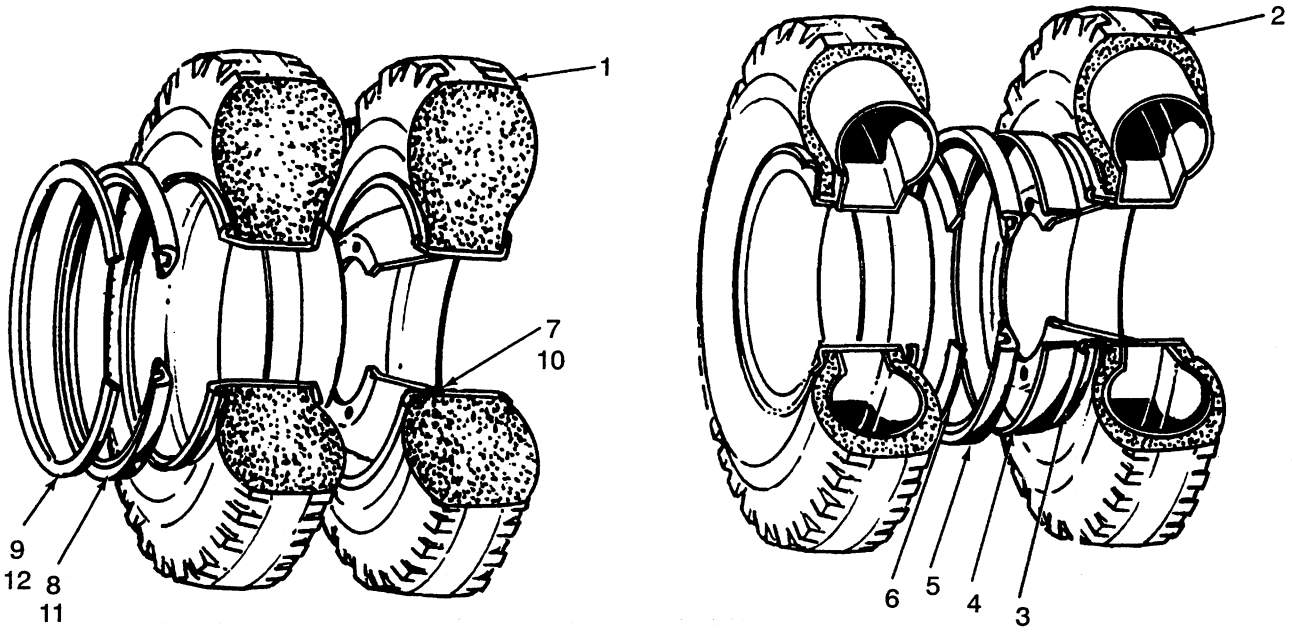

REF NO	NAME OF PART 1 2 3 4	7.00 x 15 SOLID	29 x 8 - 15 18 PLY	QTY
		PART NO.		
1	Tire (Standard Hardness)	174214	..	4
2	Tire/Tube	..	137134	4
	Tire	..	137135	1
	Tube	..	137136	1
	Flap	..	..	1
	Washer			1
3	Wheel 5.50 x 15	[a] 340293	[a] 340293	4
4	Shoulder Ring	806557	806557	1
5	Side Ring	980541	980541	1
6	Lock Ring	980542	980542	1
7	Wheel 5.50 x 15	[a] 352279	..	4
8	Side Ring	980541	..	1
9	Lock Ring	980542	..	1
10	Wheel 5.50 x 15	[a] 1305123	[a] 1305123	4
11	Side Ring	322637	322637	1
12	Lock Ring	322638	322638	1

[a] The Part Number is Stamped on The Wheel

©1999 HYSTER COMPANY

TIRES AND WHEELS

DUAL DRIVE WHEEL

H90-110XL

REF NO	NAME OF PART 1 2 3 4	7.50 x 15 SOLID	8.25 x 15 SOLID	7.50 x 15 10 PLY	8.25 x 15 12 PLY	8.25 R15 RADIAL	QTY
		PART NO.					
1	Tire (Standard Hardness)	174212	237050	..	..	..	4
2	Tire/Tube	..	..	130612	130616	1357303	4
	Tire	..	..	68498	129846	1358182	1
	Tube	..	..	11280	25722	1358191	1
	Flap	..	..	..	..	1358016	1
	Washer					1376007	1
3	Wheel 5.50 x 15	[a] 340293	..	[a] 340293	..	..	4
	Wheel 6.50 x 15	..	[a] 340292	..	[a] 340292	[a] 340292	4
4	Shoulder Ring	806557	806557	806557	806557	806557	1
5	Side Ring	980541	980541	980541	980541	980541	1
6	Lock Ring	980542	980542	980542	980542	980542	1
7	Wheel 5.50 x 15	[a] 352279	..	..	..	..	4
	Wheel 6.50 x 15	..	[a] 350060	..	..	..	4
8	Side Ring	980541	980541	..	..	..	1
9	Lock Ring	980542	980542	..	..	..	1
10	Wheel 5.50 x 15	[a] 1305123	..	[a] 1305123	..	..	4
	Wheel 6.50 x 15	..	[a] 1305120	..	[a] 1305120	[a] 1305120	4
11	Side Ring	322637	322637	322637	322637	322637	1
12	Lock Ring	322638	322638	322638	322638	322638	1

[a] The Part Number is Stamped on The Wheel

©1999 HYSTER COMPANY

TIRES AND WHEELS (FIGURE 218)

STEER WHEEL

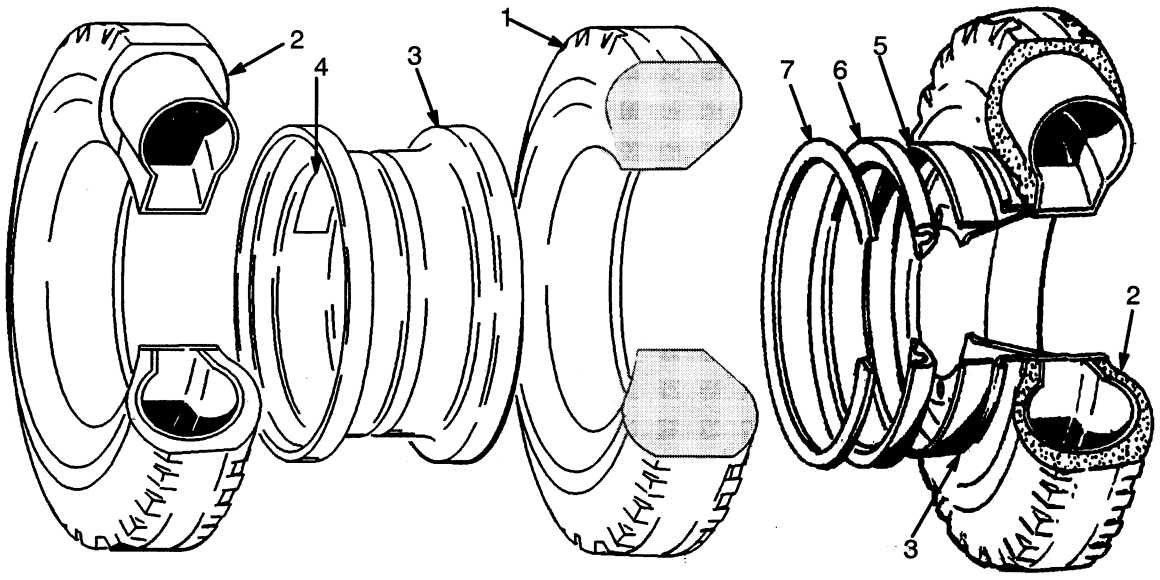

REF NO	NAME OF PART 1 2 3 4	7.00 x 12 SOLID	7.00 x 12 12 PLY	7.00 R12 RADIAL	QTY
		PART NO.			
1	Tire (Standard Hardness)	174209	..	..	2
2	Tire/Tube	..	878727	1337743	2
	Tire	..	878728	1358179	1
	Tube	..	45737	1358190	1
	Flap	..	..	1358019	1
	Washer			1376007	1
3	Wheel 5.00 x 12	[a] 45725 A	[a] 45725 A	[a] 343831	2
4	Warning Label	288638	288638	288638	1
5	Shoulder Ring	..	..	806556	1
6	Side Ring	..	..	161890	1
7	Lock Ring	..	..	161889	1

[a] The Part Number is Stamped on The Wheel

©1999 HYSTER COMPANY

FIRE EXTINGUISHER (FIGURE 219)

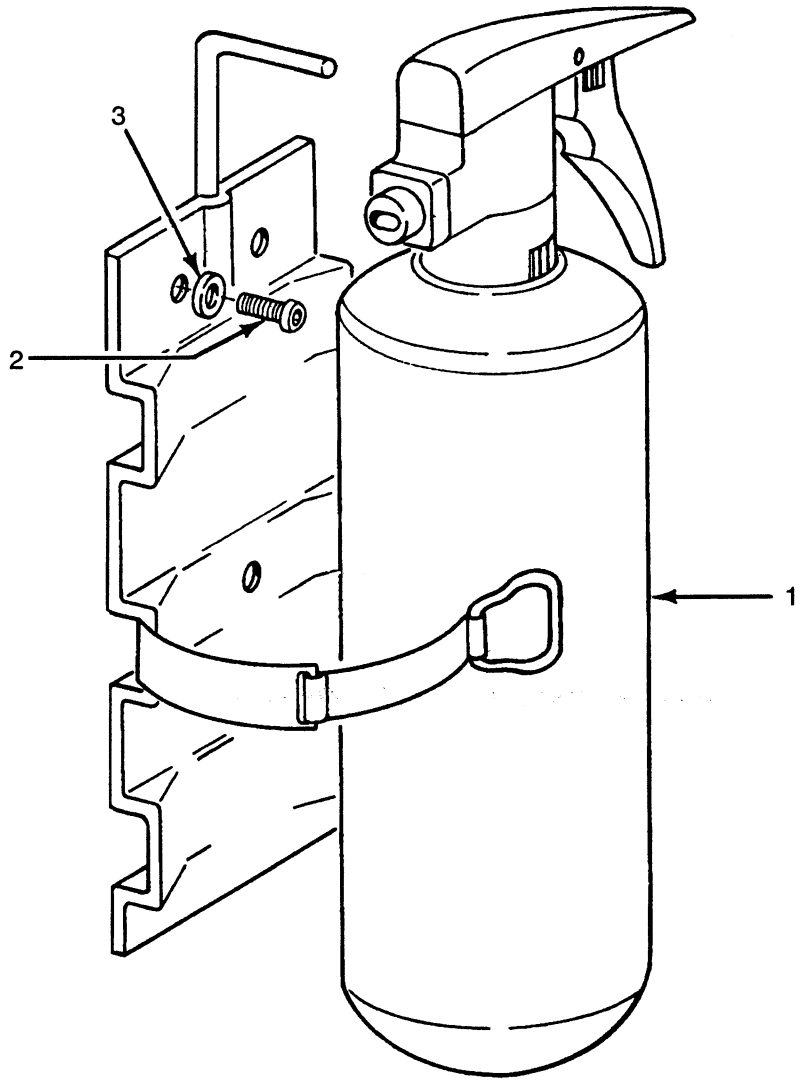

REF	PART NO.	NAME OF PART	QTY
1	146540	Extinguisher	1
2	227180	Screw	3
3	15923	Washer	3

©1999 HYSTER COMPANY

LIFT EYE (FIGURE 220)

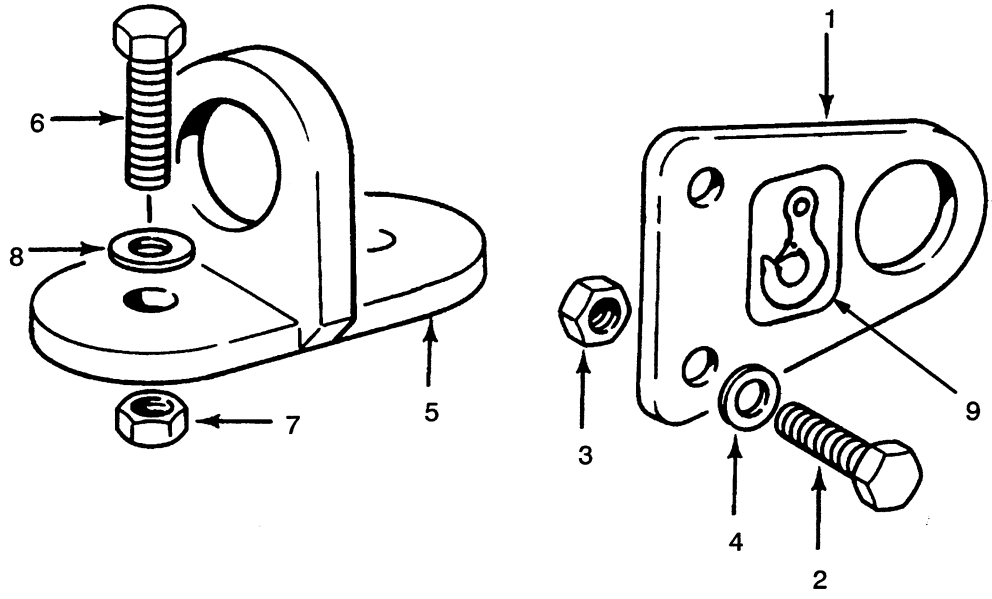

KEY:
A: Without Cab
B: With Cab

REF		PART NO.	NAME OF PART	QTY A	QTY B
1		316129	Lifting Plate	2	..
1		353477	Lifting Eye	..	2
2		293706	Capscrew	4	4
3		316829	Nut	4	4
4		296430	Washer	8	8
5		353023	Lifting Eye	1	1
6	a	353460	Capscrew	2	2
6	b	230688	Capscrew	2	2
7		127156	Locknut	2	2
8		221780	Washer	2	2
9		316448	Label	3	3

a H70-100XL
b H110XL

©1999 HYSTER COMPANY

NOTE

©1999 HYSTER COMPANY

STROBE LIGHT (FIGURE 221)

MEDIUM INTENSITY

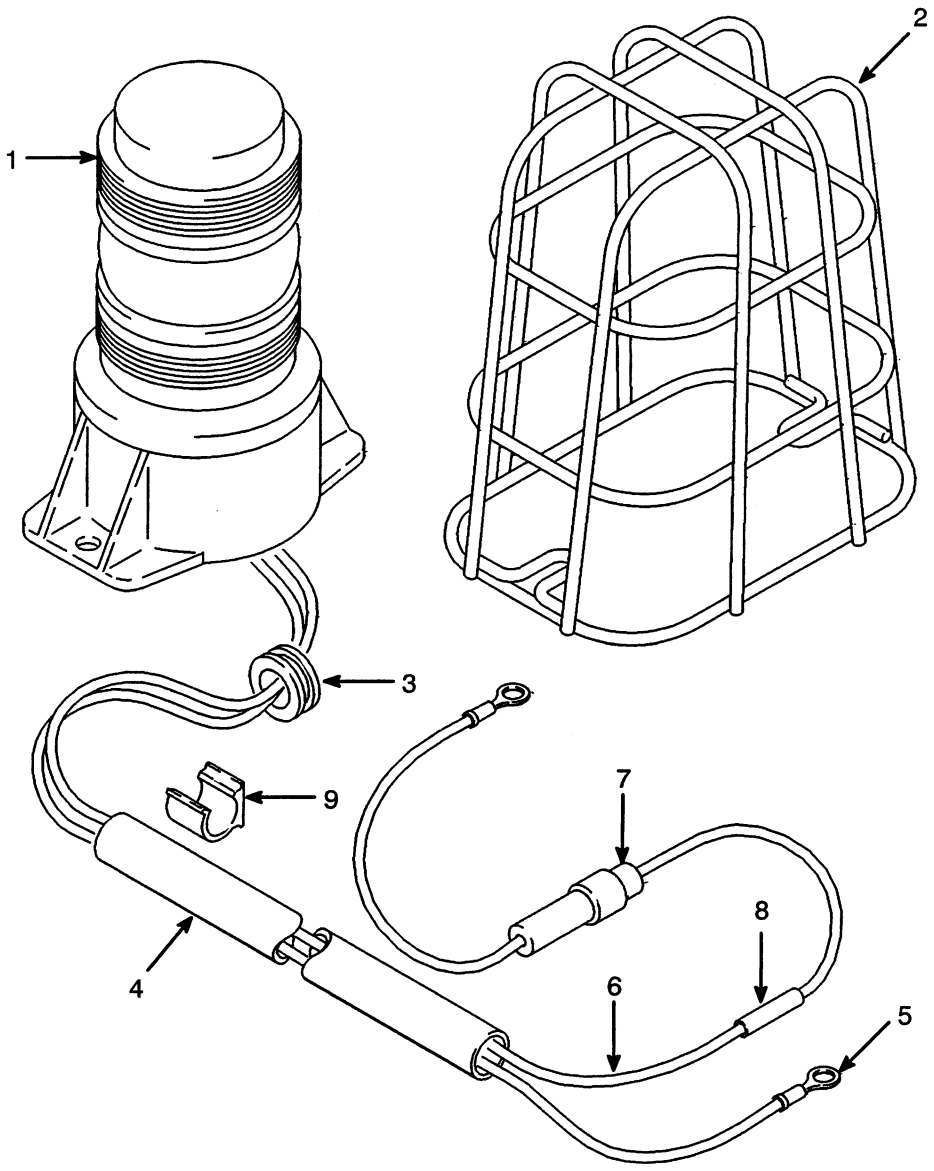

©1999 HYSTER COMPANY

STROBE LIGHT

MEDIUM INTENSITY

KEY:
A: Tomar
B: Speaker

REF		PART NO.	NAME OF PART	QTY A	QTY B
1	a	1307508	Strobe Light	1	..
1	b	1317492	Strobe Light	1	..
1	a	3018106	Strobe Light	..	1
1	b	1317486	Strobe Light	..	1
1		227132	Screw	3	..
1		15855	O-Ring	3	..
1	a	1309776	Lens	1	..
1	b	1326357	Lens	1	..
1	c	3013632	Lens	1	..
1		39359	O-Ring	1	..
1		1309775	Bulb	1	..
1		3015705	Bulb	..	1
1		1326356	Fuse	..	1
1	a	3015706	Lens	..	1
1	b	3015707	Lens	..	1
1	c	3015708	Lens	..	1
2		1302024	Guard	1	..
2		3015709	Guard	..	1
3		328389	Grommet	1	1
4		275494	Conduit	1	1
5		1306578	Wire	1	1
6		1306579	Wire	1	1
7		335850	Fused Wire	1	1
8		1152830	Connector	1	1
9		241878	Adhesive Clamp	3	3

a Amber
b Red
c Blue

©1999 HYSTER COMPANY

STROBE LIGHT (FIGURE 222)

HIGH INTENSITY

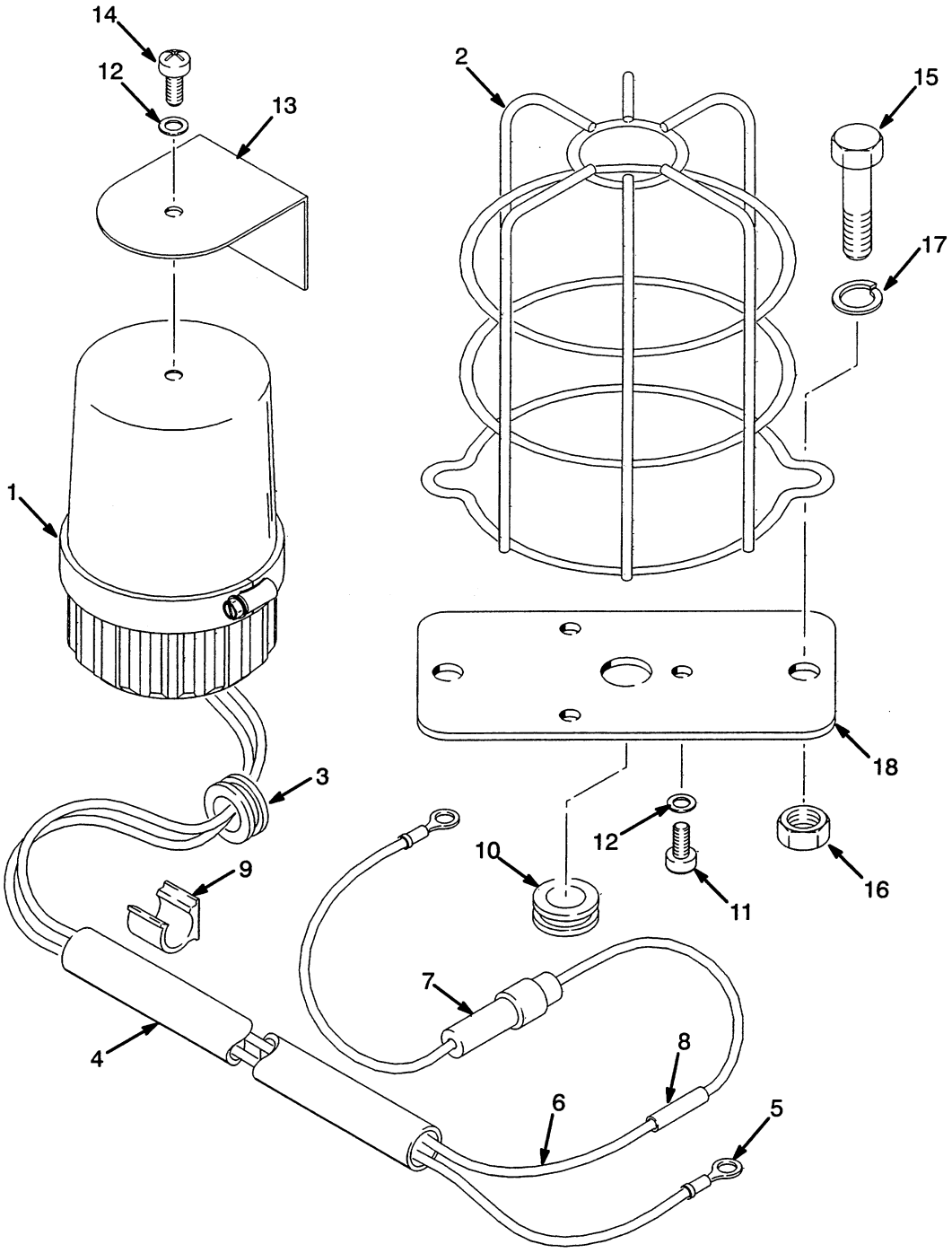

©1999 HYSTER COMPANY

STROBE LIGHT

HIGH INTENSITY

REF		PART NO.	NAME OF PART	QTY
1	a	1316485	Strobe Light	1
1	b	1317485	Strobe Light	1
1	a	1326366	Lens	1
1	b	1326358	Lens	1
1	c	1331216	Lens	1
1		1322390	Bulb	1
1		1367544	Circuit Board	1
1		1322393	Fuse	1
2		1312465	Guard	1
3		328389	Grommet	1
4		275494	Conduit	1
5		1306578	Wire	1
6		1306579	Wire	1
7		335850	Fused Wire	1
8		1152830	Connector	1
9		241878	Clamp (Adhesive)	3
10		133484	Grommet	1
11		227098	Screw	3
12		15930	Washer	4
13		1316480	Shield	1
14		16719	Screw	1
15		16828	Capscrew	2
16		222667	Nut	2
17		15156	Washer	2
18		1316479	Plate	1

a Amber
b Red
c Blue

©1999 HYSTER COMPANY

LIGHTS (FIGURE 223)

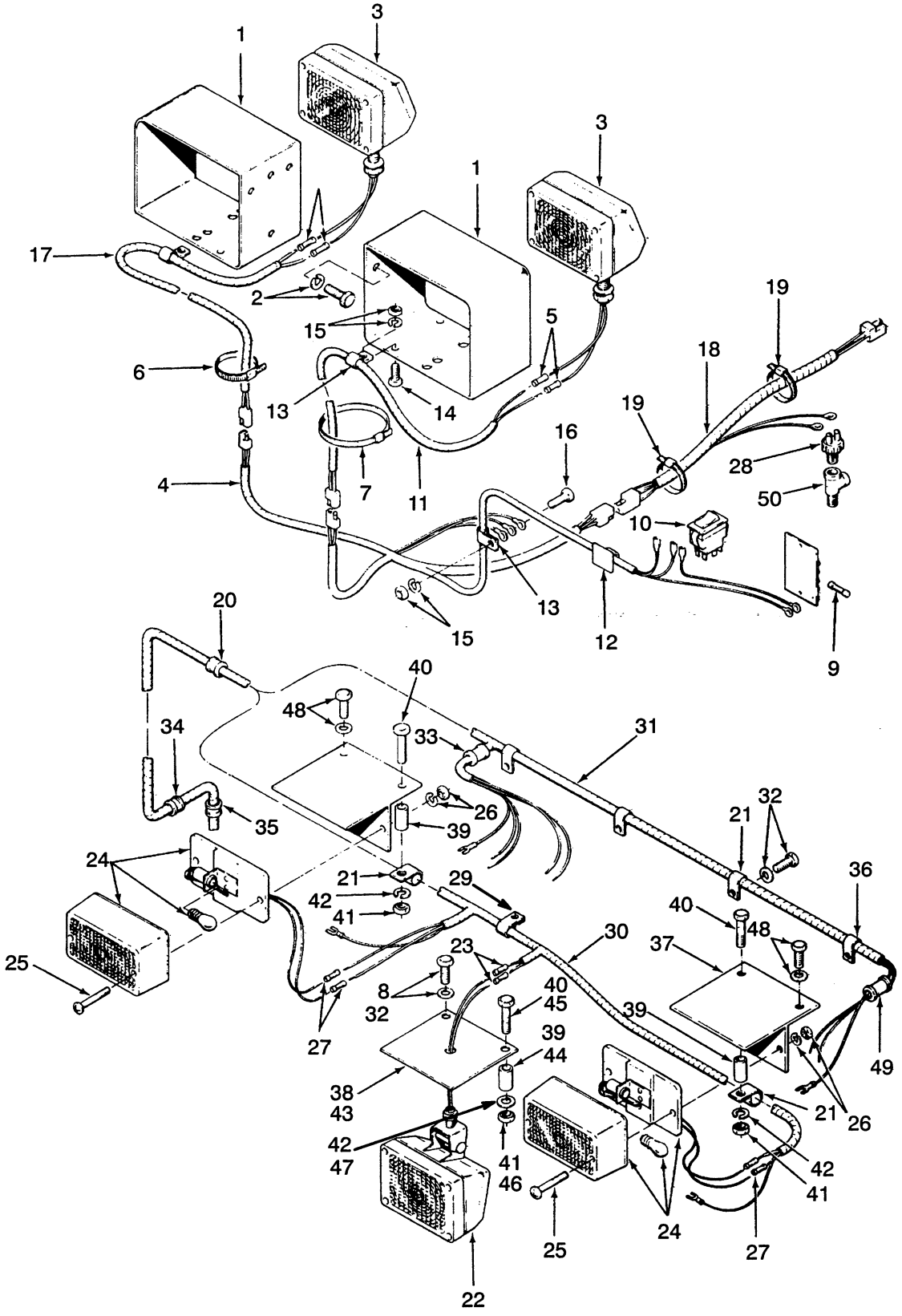

LIGHTS

KEY:
A: Work Lights
B: Work/Rear Drive Lights
C: Work/Rear Drive/Stop-Tail Lights Without Cab
D: Work/Rear Drive/Stop-Tail Lights With Cab

Ref		Part No.	Name Of Part	QTY A	B	C	D
1		389136	Bracket	2	2	2	2
2		292514	Capscrew	4	4	4	4
2		292682	Lockwasher	4	4	4	4
3		353478	Light	2	2	2	2
3		389793	Lamp (12V Halogen)	1	1	1	1
3	a	357934	Halogen Light	2	2	2	2
4		1324175	Harness	1	1	1	1
5		1152571	Connector	4	4	4	4
6		137852	Clamp	3	3	3	3
7		273775	Strap/Clamp	6	6	6	6
8		358674	Sealant	AR	AR	AR	AR
9		1300134	Fuse	1	1	1	1
10		374047	Switch	1	1	1	1
11		1324176	Harness	1	1	1	..
12		241878	Adhesive Clamp	3	3	3	3
13		132131	Clamp	4	4	4	4
14		136681	Capscrew	2	2	2	2
15		239503	Nut	4	4	4	4
15		292681	Lockwasher	4	4	4	4
16		136749	Capscrew	2	2	2	2
17		1324177	Harness	1	1	1	1
18		1324178	Harness	..	1	1	1
19		137852	Clamp	..	6	6	6
20		69727	Grommet	..	1	1	1
21		132131	Clamp	..	3	3	3
22		353478	Light	..	1	1	1
22		389793	Lamp (12V Halogen)	..	1	1	1
22	a	357934	Halogen Light	..	1	1	1
23		1152571	Connector	..	2	2	2
24		353479	Lamp	..	..	2	2
24		389792	Lens	..	..	1	1
24		177521	Bulb	..	..	1	1
25		1300742	Screw	..	..	4	4
26		15052	Nut	..	..	4	4
26		15152	Lockwasher	..	..	4	4
27		1152571	Connector	..	..	4	4
28		387867	Switch	..	..	1	1
29		241878	Clamp	3	3	3	3
30		353486	Harness	..	1	1	..
30	b	1324179	Harness	..	1	1	..
31	c	1324180	Harness	..	1	..	1
32	c	316678	Screw	..	6	..	6
32	c	292681	Lockwasher	..	6	..	6
32	c	288394	Sealant	AR	AR	AR	AR
33	c	236890	Grommet	..	2	..	2
34	c	69727	Grommet	..	1	..	1
35	c	143413	Grommet	..	1	..	1
36	c	132131	Clamp	..	1	..	1
37		383141	Bracket	..	..	2	2
38		353379	Plate	..	..	1	1
39		116142	Spacer	..	..	6	..
40		136704	Capscrew	..	..	6	..
41		239503	Nut	..	..	6	..
42		292681	Lockwasher	..	..	6	..
43		353379	Plate	..	1	..	..
44	b	116142	Spacer	..	2	..	..
45	b	136704	Capscrew	..	2	..	..
46	b	239503	Nut	..	2	..	..
47	b	292681	Lockwasher	..	2	..	..
48		316678	Screw	..	..	..	4
48		292681	Lockwasher	..	..	..	4
49		236890	Grommet	..	..	..	2
50		16186	Fitting	..	..	1	1

a Optional
b Without Cab
c With Cab

©1999 HYSTER COMPANY

CAB (FIGURE 224)

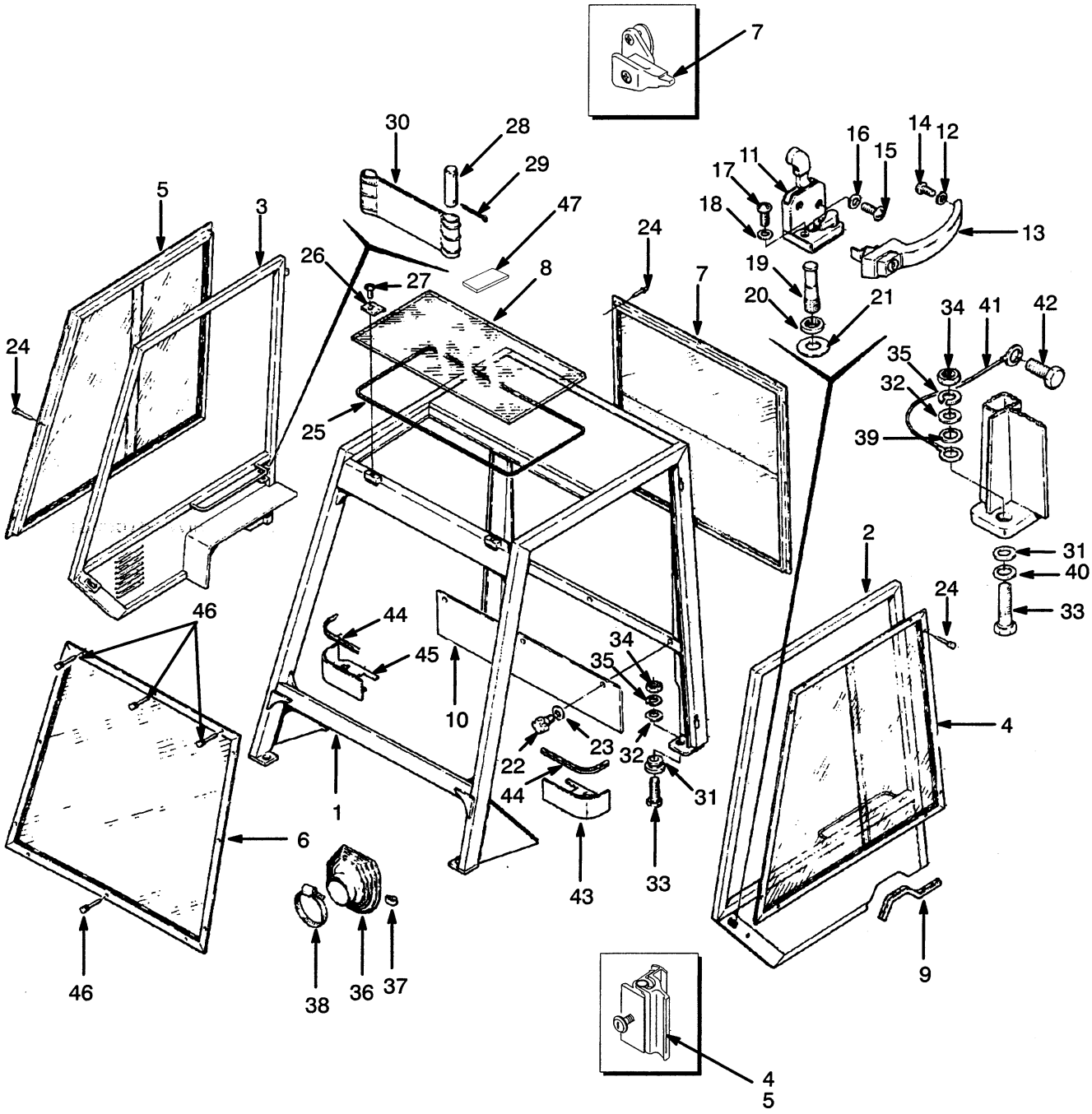

CAB

REF		PART NO.	NAME OF PART	QTY
1		1321871	Frame	1
2		1300733	Door (L.H.)	1
2		288394	Sealant	AR
3		1300734	Door (R.H.)	1
3		288394	Sealant	AR
4	a	1319351	Window (L.H.)	1
4	b	1371791	Window (L.H.)	1
4	a	1324080	Glass (Sliding)	1
4	a	1324084	Latch	1
4	b	1377702	Latch	1
5	a	1319352	Window (R.H.)	1
5	b	1371792	Window (R.H.)	1
5	a	1324080	Glass (Sliding)	1
5		1324084	Latch	1
6	a	1319353	Window (Front)	1
6	b	1371793	Window (Front)	1
6		288394	Sealant	AR
7	a	1319354	Window (Rear)	1
7	b	1371794	Window (Rear)	1
7	a	1324111	Latch	2
7	b	1377274	Latch	2
7		288394	Sealant	AR
8		3047342	Window	1
8		288394	Sealant	AR
9		3047251	Band	AR
10		1361667	Plate	1
11		1309824	Handle (L.H. Door)	1
11		1312450	Handle (R.H. Door)	1
11		823627	Key	1
12		292680	Lockwasher	2
13		365341	Door Handle (Outside)	2
13		1360777	Key	1
14		302050	Screw	2
15		302248	Screw	4
16		15165	Lockwasher	4
17		296464	Screw	4
18		296396	Washer	4
19		365344	Bolt	2
20		365343	Plate	2
21		15178	Washer	2
22		370294	Knob	3
23		320156	Washer	3
24		1321870	Rivet	24
25		318352	Strip	AR
26		3047238	Plate	3
27		302031	Screw	3
28		353474	Pin	4
29		18828	Cotter Pin	4
30		3047223	Retainer	2
31		209067	Mount	4
32		300932	Washer	4
33		292533	Capscrew	4
34		216877	Nut	4
35		292683	Lockwasher	4
36		3047177	Boot	2
37		806608	Clip	20
38		78286	Clamp	2
39		320161	Washer	1
40		296362	Lockwasher	1
41		353145	Wire	1
42		316678	Screw	1
43		1300725	Bracket	1
44		1302136	Seal	AR
45		1300728	Bracket	1
46		1321870	Rivet	40
47		1342660	Rubber Strip	3

a Last Used S/N G5D-4555

b First Used S/N G5D-4556
(Purchase Glass Locally)

Note: Optional All Black Cab Is Available

©1999 HYSTER COMPANY

HEATER (FIGURE 225)

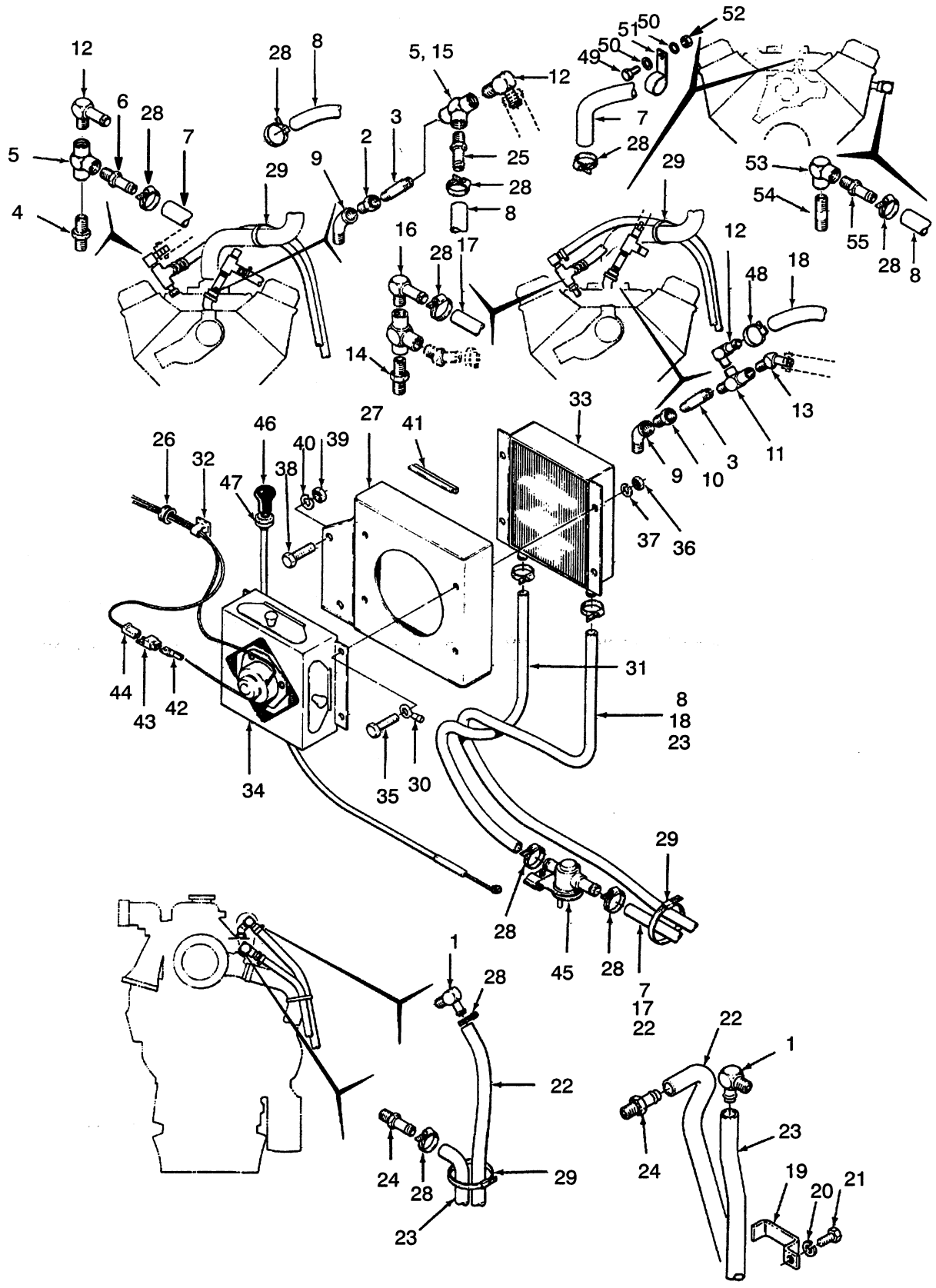

HEATER

KEY:
A: Gasoline
B: LPG
C: Diesel

REF		PART NO.	NAME OF PART	QTY A	B	C
1		17174	Fitting	..	..	1
2		12845	Fitting	1	..	..
3	a	19606	Fitting	1	1	..
4	a	12832	Fitting	1	..	..
5	a	12840	Fitting	2	..	..
6	a	127852	Fitting	1	..	..
7	a	258487	Hose	1	..	..
7	b	258488	Hose	1	..	..
8	a	1356936	Hose	1	..	..
8	b	1383309	Hose	1	..	..
9		19521	Fitting	..	1	..
10		12845	Fitting	..	1	..
11	a	12840	Fitting	..	1	..
12	a	17174	Fitting	2	1	..
13	a	127852	Fitting	..	2	..
14		12832	Fitting	..	1	..
15		201757	Fitting (Early Models)	..	1	..
16	a	16155	Fitting	..	1	..
17	a	258487	Hose	..	1	..
17	b	258488	Hose	..	1	..
18	a	1356936	Hose	..	1	..
18	b	1383309	Hose	..	1	..
19		251994	Clamp	..	..	1
20		292681	Lockwasher	..	..	1
21		136681	Capscrew	..	..	1
22		925952	Hose	..	..	1
23		1300738	Hose	..	..	1
24		16156	Fitting	..	..	1
25	a	17177	Fitting	1	..	..
26		216735	Grommet	1	1	1
27		1345018	Bracket	1	1	1
28		130845	Clamp	6	5	6
29		129563	Strap Clamp	9	9	9
30		129894	Terminal	1	1	1
31		1300732	Hose	1	1	1
32		279739	Clamp	6	6	6
32		1326654	Clamp (Optional)	6	6	6
33		353440	Radiator	1	1	1
34		353423	Blower	1	1	1
35		292501	Capscrew	4	4	4
36		136687	Nut	4	4	4
37		292680	Lockwasher	4	4	4
38		287854	Capscrew	2	2	2
39		136692	Nut	2	2	2
40		292682	Lockwasher	2	2	2
41		1328887	Seal	AR	AR	AR
42		134810	Connector	1	1	1
43		181045	Connector	1	1	1
44		181046	Connector	1	1	1
45		1300741	Valve	1	1	1
46		1302129	Cable	1	1	1
47		15134	Washer	2	2	2
48		130845	Clamp	..	1	..
49	b	293615	Capscrew	1	..	..
50	b	292681	Washer	2	..	..
51	b	101625	Clamp	1	..	..
52	b	239503	Nut	1	..	..
53	b	12817	Fitting	1	..	..
54	b	19581	Fitting	1	..	..
55	b	138710	Fitting	1	..	..

a Last Used On S/N G5D-7759 (Including S/N 7830-7832, 7834-7837, 7840 And 7841) Except S/N G5D-7710

b First Used On S/N G5D-7760 (Except For S/N 7830-7832, 7834-7837, 7840 And 7841) And Includes S/N G5D-7710

©1999 HYSTER COMPANY

WIPERS AND DEFROSTER FAN (FIGURE 226)

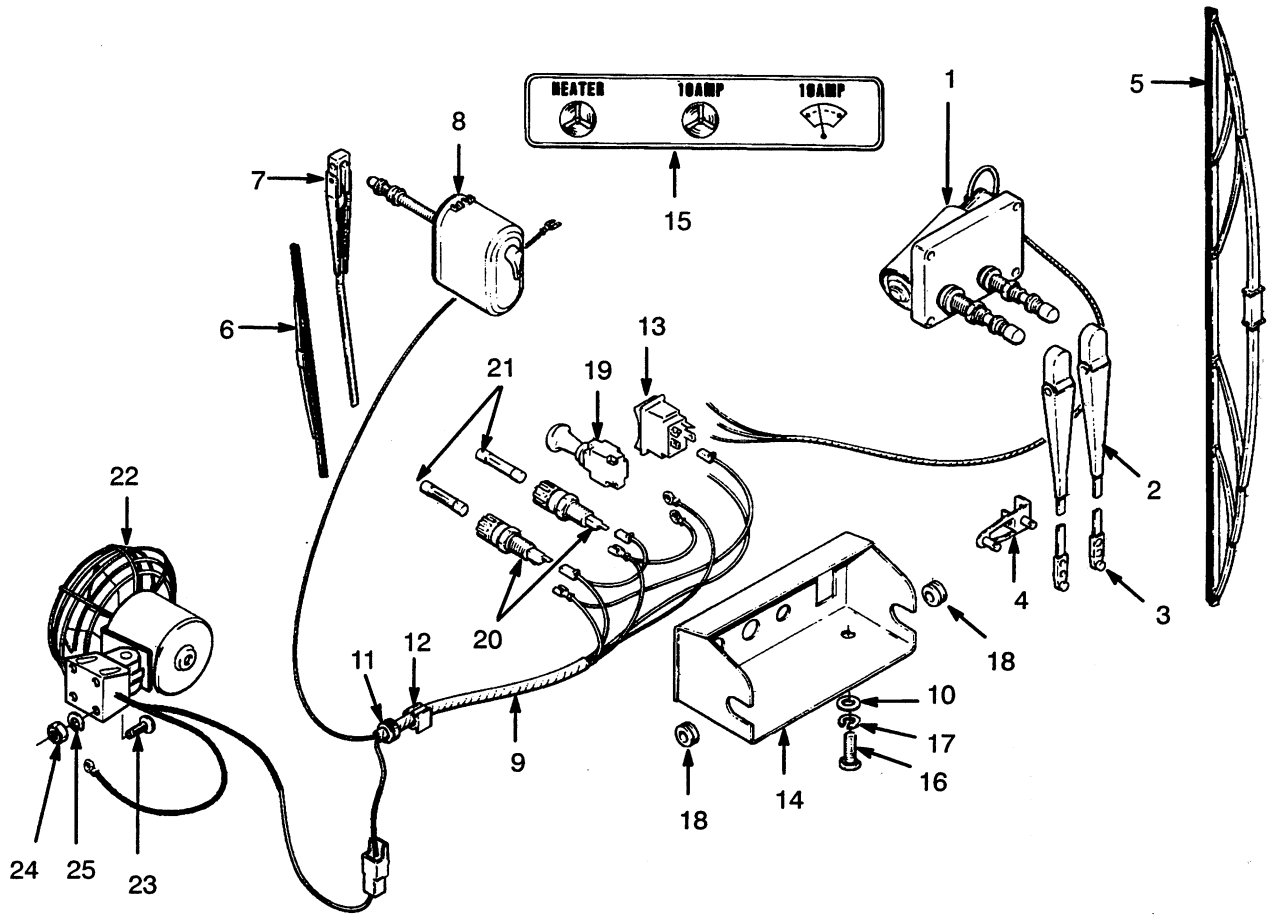

REF		PART NO.	NAME OF PART	QTY
1		334228	Wiper Motor	1
2	a	334233	Wiper Arm	1
2	b	816045	Wiper Arm	1
3	a	334234	Arm Guide	1
4		334229	Bracket	1
5	a	334230	Wiper Blade	1
5	b	816046	Wiper Blade	1
6	a	365305	Wiper Blade	1
6	b	1466437	Wiper Blade	1
7	a	365304	Wiper Arm	1
7	b	1466435	Wiper Arm	1
8	a	1317481	Wiper Motor	1
8	b	2038038	Wiper Motor	1
9	a	1324189	Harness	1
9	b	2038035	Harness	1
10		320156	Washer	2

REF	PART NO.	NAME OF PART	QTY
11	26283	Grommet	1
12	1301727	Adhesive Clamp	1
13	334635	Switch	1
14	377606	Panel	1
15	377608	Label	1
16	148962	Capscrew	2
17	292680	Lockwasher	2
18	1151997	Grommet	1
19	365348	Switch	1
20	377607	Holder	2
21	53124	Fuse (10 Amp)	2
22	1311213	Fan	1
23	16750	Screw	4
24	15002	Nut	4
25	15152	Lockwasher	4

a Last Used On S/N G5D-6989
b First Used On S/N G5D-6990

©1999 HYSTER COMPANY

SOUND LINER (FIGURE 227)

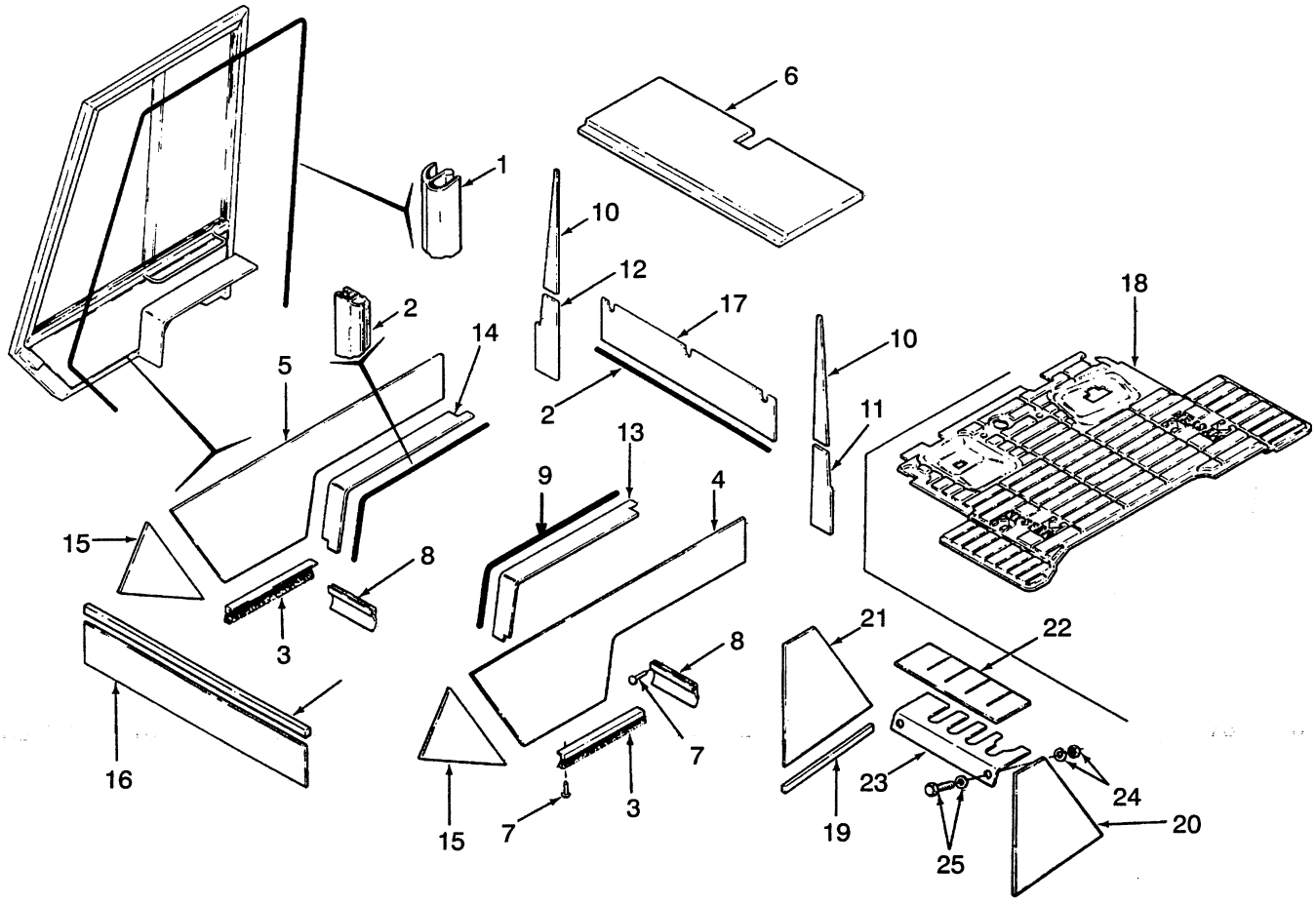

REF	PART NO.	NAME OF PART	QTY
1	365327	Seal	AR
2	1302136	Seal	AR
3	365328	Seal Strip	AR
4	1300232	Lining, LH	1
5	1300233	Lining, RH	1
6	1300241	Lining	1
7	222024	Rivet	20
8	1300730	Seal	2
9	288762	Foam Tape	AR
10	353450	Foam	2
11	1300237	Lining, RH	1
12	1300238	Lining, LH	1
13	1300235	Lining, LH	1
14	1300234	Lining, RH	1

REF	PART NO.	NAME OF PART	QTY
15	1300240	Lining	2
16	1300735	Lining	2
17	1300236	Lining	1
18	1323399	Floor Mat (Oil Clutch)	1
18	1358623	Floor Mat (Powershift)	1
19	288762	Foam Tape	AR
20	1300242	Lining, LH	1
21	1300243	Lining, RH	1
22	1300244	Lining	1
23	1300245	Bracket	1
24	239503	Nut	2
24	292681	Lockwasher	2
25	136749	Capscrew	2
25	320157	Washer	2

©1999 HYSTER COMPANY

BACK-UP ALARM (FIGURE 228)

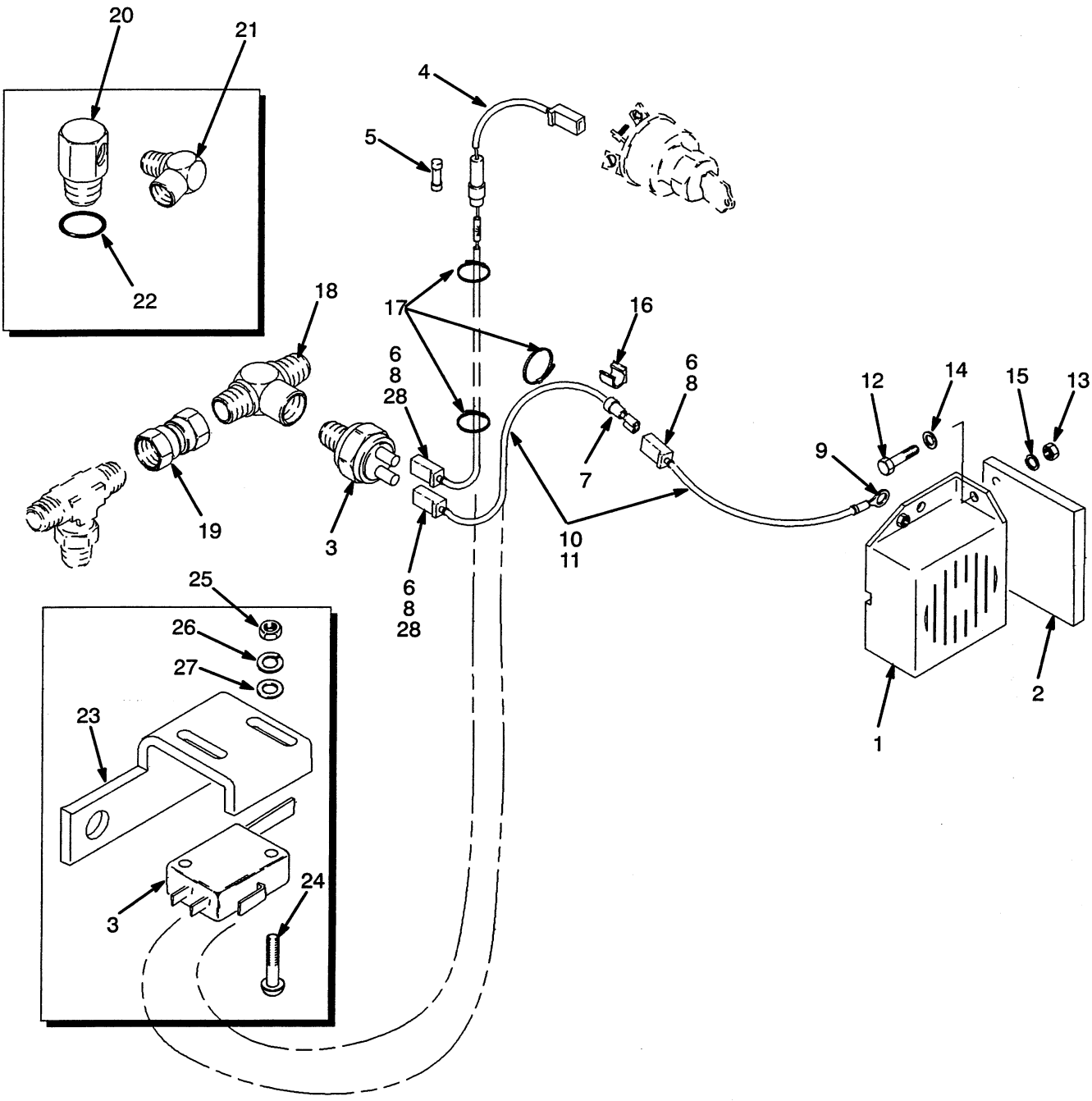

BACK-UP ALARM

KEY:
A: Powershift Monotrol Pedal
B: Powershift Forward/Reverse Lever
C: Oil Clutch

REF	PART NO.	NAME OF PART	QTY A	B	C
1	1350733	Alarm (87 dBA)	1	1	1
1	1350734	Alarm (97 dBA)	1	1	1
1	1350735	Alarm (102 dBA)	1	1	1
1	1350736	Alarm (107 dBA)	1	1	1
1	1339947	Alarm (82-102 dBA)	1	1	1
2	1339939	Bracket	1	1	1
3	1301299	Switch	1	1	..
4	1343636	Switch	..	..	1
4	1339941	Wire Assembly	1	1	1
5	826004	Crimp Connector	1	1	1
6	134812	Terminal	3	3	3
7	129892	Terminal	1	1	1
8	1301720	Connector	3	3	3
9	129887	Terminal	1	1	1
10	1355816	Conduit (174 Inches)	1	1	1
11	1355815	Wire (192 Inches)	1	1	1
12	18461	Capscrew	2	2	2
13	15004	Nut	2	2	2
14	15127	Washer	2	2	2
15	15154	Lockwasher	2	2	2
16	279739	Adhesive Clamp	10	10	10
17	137852	Strap Clamp	10	10	10
18	14645	Fitting	1	1	..
19	1352525	Fitting	1	..	..
20	1352546	Fitting	..	1	..
21	16151	Fitting	..	1	..
22	16482	O-Ring	..	1	..
23	1355813	Bracket	..	..	1
24	220428	Screw	..	..	2
25	16865	Nut	..	..	2
26	53162	Lockwasher	..	..	2
27	197064	Washer	..	..	2
28	214517	Terminal	..	..	2

©1999 HYSTER COMPANY

NOTE

©1999 HYSTER COMPANY

NUMERICAL INDEX

PART NO	PAGE	REF NO	PART NO	PAGE	REF NO	PART NO	PAGE	REF NO	PART NO	PAGE	REF NO	PART NO	PAGE	REF NO
....	169	1		25	37	15175	7	18	16156	127	4		26	16
	201	28		29	31		7	39		131	12	16815	201	30
AR	7	AR	15125	111	29	15200	151	12		131	31		29	16
126	151	11	15127	129	33		152	10	16167	125	19	16816	135	15
142	153	17		131	24		153	5	16177	159	42		29	34
12815	25	47		201	25		163	31		161	57	16818	25	27
	81	30		25	14	15212	11	6	16190	125	20	16828	135	19
12817	131	32		7	43		151	3		133	12		178	62
12818	127	3		81	6		153	10		161	28		181	26
12821	178	76	15134	185	24	15302	85	17	16372	83	30		201	30
	181	22		187	10	15303	61	27	16374	33	2		25	42
12831	131	68		191	13	15304	101	3		7	17	16836	205	27
12832	127	39		193	13		83	6	16378	35	33		71	43
12845	131	30		195	10		88	5		43	25		7	40
12928	25	34		25	43	15314	103	14	16379	33	45	16841	131	4
	25	51	15152	177	3		159	36		41	19	17173	177	52
	26	26		209	24		83	37		51	52		199	
	29	26	15154	129	32		88	5		59	55	17177	135	29
14273	131	17		131	25	15337	127	2	16394	71	45	17314	125	18
14303	125	2		44	6		135	31	16526	119	1	17343	133	10
14349	167	29		71	33	15483	83	33	16597	181	30		161	40
	97	23	15155	191	10		97	10	16598	127	27		167	27
14358	127	29		193	10	15916	191	18		129	25	17387	13	5
	127	43		201	24		207	10		151	6	17650	169	18
	129	27		205	28	15923	151	17		178	69	17671	169	18
	129	55		71	44	15962	115	21		178	92	17736	133	11
	131	36		7	21		117	21		187	9		161	27
	131	6	15156	135	16		159	37		195	9	17817	127	32
14372	125	21		177	25		31	39		71	49		129	52
14385	125	16		178	63		85	16	16634	26	15	18419	207	6
	133	17		178	70		91	34		29	15	18460	127	36
	161	35		178	93		99	20		35	46		129	34
14761	33	41		181	27	15963	137	3	16694	167	28		131	26
	41	40		185	25	16073	25	14		169	23	18465	167	17
	51	38		185	6		81	49	16708	125	7		169	28
	59	40		187	11	16100	159	41		133	3	18496	129	20
15002	151	8		189	4		161	14		161	63		191	9
	177	4		191	12		161	3	16709	44	6		193	9
15024	151	9		193	12		161	56	16719	145	15	18497	201	22
15026	111	13		195	11	16114	159	12	16731	143	4	18500	167	18
	95	22		201	31		159	60	16743	205	24		178	60
15034	127	44		25	35		161	8		207	13		199	49
	129	51		25	40	16116	131	28	16746	169	24		201	19
	131	67		25	42		181	23	16764	131	11		202	91
15049	205	41		35	46	16118	159	11		131	29	18515	169	27
	207	12		71	50		161	9	16782	135	4		169	30
15052	209	14	15162	33	36	16134	127	46	16794	101	5		191	11
15055	127	22		33	40		129	54		83	8		193	11
	138	23		41	49		131	62	16805	185	26		201	23
	167	20		51	47	16143	127	37		185	5		209	34
	169	25		59	50		129	35		187	33		7	28
15056	178	94	15168	13	4	16150	171	8		189	3	18525	26	10

©1999 HYSTER COMPANY

NUMERICAL INDEX

PART NO	PAGE	REF NO	PART NO	PAGE	REF NO	PART NO	PAGE	REF NO	PART NO	PAGE	REF NO	PART NO	PAGE	REF NO
	29	10		91	9	127852	131	71		161	52		25	1
18529	29	10	99663	87	8	128259	25	4		185	2		81	25
18535	177	24	99668	87	10		81	8		187	12	137122	11	5
18542	25	40	99722	111	7	128408	129	45		195	12	137852	151	16
18546	201	17		95	16		178	78		201	1		205	2
18547	25	35	99723	111	8		181	48		26	6	138573	205	43
	26	11		95	17		191	39		29	6	138710	127	38
	29	11	99725	111	15		201	63		9	4		129	36
18548	181	11		95	24	128469	25	41	136687	177	14		131	33
18549	25	38	99728	95	30		26	25		177	44	138880	125	32
	26	29	99756	163	25		29	25		178	81		133	5
	29	28	101625	182	74	128470	23	5		181	40		161	66
18727	7	15	101809	127	47	129563	129	10		181	5	139743	181	15
	7	27		129	50		131	47		187	18		201	21
18728	7	15		131	61		177	57		189	7		21	7
18731	7	15	101985	91	36		178	98		191	35	139919	131	15
19521	31	38	102898	129	5		181	52		193	8	141596	13	5
19870	196	16	107195	81	21		181	70		199	20	141776	129	46
	197	16	109919	135	3		185	11		199	39	145173	33	14
30368	119	12		167	22		187	32		201	38		41	7
30370	119	14		169	26		189	18		201	5		49	7
	119	17	111722	202	103		195	32		202	85		56	7
	119	3	111763	177	49		199	6		202	96	145177	36	4
39346	163	2		199	44		201	50		205	55	145587	159	5
41207	23	7	112989	131	66		202	101		205	9		159	64
42213	125	22		81	2		202	88		33	53	145639	7	18
43205	23	17	113012	127	41	129663	201	60		41	48		7	38
54123	25	52		129	47	130845	127	5		51	46	146047	182	79
63116	119	22	114312	181	8		129	3	136692	137	16		189	20
63899	125	31		189	23		131	10		151	2		205	58
	133	2		205	53		135	33		152	18	146938	199	11
	161	66	115696	169	9		75	42		153	18	147294	137	15
66487A	16			171	21		77	42		177	40	148764	146	8
	16		118051	152	4		95	34		181	58	149531	13	3
68968	119	20	119074	182	82	131357	26	28		182	77	149845	44	3
78462	129	4	119236	25	8	132473	141	26		182	83	149867	33	16
	131	9		81	47	132861	159	53		189	26		41	10
85777	167	23		99	30		161	49		191	41		49	10
	169	21	123991	205	42	132972	199	52		202	67		56	10
86851	131	19	124010	131	57		202	80		25	50	151315	163	4
88145	119	2		137	9	133469	31	24		81	31	151316	163	5
89220	181	57	124119	81	48		53	7	136703	81	24	152605	83	31
	191	40	124297	25	12		71	32	136749	11	22	152608	159	40
	205	30		81	37	133696	31	35		178	97		159	63
97999	131	58	124359	191	14		59	60		181	64		159	8
	137	10		193	14		71	37		199	27		161	59
99569	85	8	124668	29	33	134102	199			201	53		165	25
99571	85	13	125305	131	14	136516	189	25		59	34		97	20
99576	83	7	125789	137	1		191	6	136750	119	10	152609	159	39
99610	105	13	125793	129	13	136681	120	32		25	23		159	61
	107	9	125847	167	4		135	8	136985	151	2		159	7
	87	19		169	3		159	55		182	78		161	60

©1999 HYSTER COMPANY

NUMERICAL INDEX

PART NO	PAGE	REF NO	PART NO	PAGE	REF NO	PART NO	PAGE	REF NO	PART NO	PAGE	REF NO	PART NO	PAGE	REF NO
	165	24	161432	87	5		81	3	197038	137	4	221544	26	30
	97	21	161433	105	7	181045	177	33	197067	191	19		35	47
154065	15	2		87	5		181	68		205	49	221708	21	13
154066	15	2	161434	105	8		199	3	197068	205	11		43	17
154067	15	2		87	5		201	59		33	3	221767	21	11
154278	127	48	161440	87	6	183661	167	19	197888	33	30		21	7
	131	37	161454	95	13		169	29	198675	135	17		23	11
154565	202	93		95	15	184924	23	10		178	59	221771	16	
154594	127	15	161542	163	35	185768	31	22	199563	9	13		16	
157065	181	7	161648	87	9		39	21	200170	137	6		16	
	201	7	162288	85	34	185793	191	25	200172	137	7	222029	7	4
157554	205	16	162836	151	4	185806	207	11	201800	127	24	222030	7	4
158017	83	38	164289	129	4	186261	7	20		129	22	222473	129	46
158139	101	30	164488	135	13	186420	23	19		138	21		135	27
	83	26		193	6	186998	33	49	201808	129	5	222727	23	15
158187	111	16	167023	161	15		41	41	204223	177	21	224248	111	21
	159	13		161	4		51	39		177	46		95	31
	159	14	168718	133	18		59	61		181	47	226414	21	7
	159	5		161	61	187004	85	aeb		199	23	226458	12	6
	95	25	168914	156	4	188631	125	12		199	41	226580	209	4
158193	163	36	169718	31	8	189338	181	9		201	45	226589	209	11
159971	53	29		39	2	190252	178	67		202	98	227131	207	7
	55	28		63	33		181	72	204782	138	2	229875	107	12
	63	28	170658	15	24		199	25		141	2		91	12
	65	9	170688	156	11		199	4	204787	138	11	230886	191	24
159977	31	2	170748	83	16		201	27		141	10	231522	31	30
	47	14	172885	26	27		201	58	204790	141	27		71	47
	55	14	173941	159	16	190382	202	78		142	7	233908	131	56
	63	14		161	37	190383	177	47	204824	141	29		137	8
	65	14	175347	127	9		178	58	204829	144	5	239503	11	23
	75	17		129	7		199	42	204830	144	6		129	44
160996	25	33		131	5		199	51		145	9		131	53
	26	28	176451	135	7		201	20		146	9		152	7
	29	27	176640	135	15		202	86	204831	144	9		153	23
161195	31	27		159	57		202	90		145	18		159	56
161252	151	10		161	54	191534	120	35		146	18		161	53
161296	105	3		185	27	191805	127	25	204835	144	16		177	17
	87	3		187	20		129	23	204837	144			181	43
161297	105	4		195	20		138	22	207016	16			181	61
	87	4		23	1	191828	159	18	212355	127	6		181	66
161383	101	8	176801	137	24		161	51	214117	138	12		185	29
	111	27	176910	178	99	192077	119	1		141	11		187	22
161385	83	12		181	54	193212	23	12	216877	12	4		189	21
161425	105	1	177407	156	5	193213	23	12		95	27		195	22
	87	2	177590	11	2	193214	23	12	220489	191	17		199	16
161426	87	5	177894	177	7	193219	23	18	221418	7	42		199	28
161429	105	1		199	11	195342	85	18	221453	35	38		201	41
	87	2	178119	129	45	195343	85	20		43	30		201	55
161430	105	1		131	48	195852	88	2	221500	21	10		205	66
	87	2	178296	199	55	195856	23	16	221506	23	11		25	15
161431	105	1	178297	31	40	196193	144			31	23		25	45
	87	2	178899	25	9	196297	137	22		39	20		59	62

©1999 HYSTER COMPANY

NUMERICAL INDEX

PART NO	PAGE	REF NO	PART NO	PAGE	REF NO	PART NO	PAGE	REF NO	PART NO	PAGE	REF NO	PART NO	PAGE	REF NO
	81	10		49		266465	109	2	287854	152	14	292521	152	23
	9	25		49	4		93	2		159	48	292523	153	2
245262	23	2		56	4	268573	36	5		161	44		201	8
245781	109	28	263750	33	12		44	5		167	9	292524	26	12
	93	33		41	5		78	6		169	13		29	12
245800	101	10		49	5	271047	156			171	15	292525	137	18
	83	34		56	5	271299	87	1		9	21	292527	21	9
245885	159	62	263758	63	11	271320	159	5	287860	137	23	292539	21	18
	161	58	263759	63	11	271443	156	8		26	8	292540	21	6
	97	19	263765	35	8	271448	156	9		29	8	292560	21	17
246108	201	26	263788	31	13	271449	156	10	288394	11	15	292654	13	12
246780	11	9		35	44	272155	205	38		189	12	292656	11	29
246788	11	12	263794	36	11	272273	156	1		31	36	292668	152	8
	9	15		44	10	272274	156	12		39	36		178	91
246938	209	32		78	3	273324	159	4		59	53		205	51
246940	209	20	263795	36	10	273338	131	27	288762	11	14	292679	152	8
246943	209	2		44	9	273775	127	12	290734	167	3		178	90
246944	209	17		78	2		177	26		169	4		189	31
248127	209	3	263827	31	21		189	11	290735	167	5		205	50
248128	209	7		39	22		199	48	291974	169	9	292680	127	34
248129	209	8		53	4		205	35		171	12		177	16
248134	209	31		61	4	274232	31	4	292500	202	75		177	45
248137	209	19		75	13		39	8		202	83		181	42
248141	209	22	263828	31	25		47	26	292501	177	27		187	17
248143	209	16		39	19		55	27		177	43		189	6
248147	209	1		53	10		55	31		181	55		191	36
248148	209	5		61	2		63	27		185	22		193	7
248149	209	21		75	16		63	31		189	8		199	19
251099	191	3		77	16		65	19		193	2		199	40
	7		263842	35	23	274403	196	13		195	17		201	40
	7	54		43	37		197	13		199	38		202	84
254384	33	10		47	27	275494	189	13		202	95		202	97
255073	209	10		55	18	275496	177	54		205	15		205	10
256219	156	2		63	18		181	36		205	54		205	57
256220	156	3		65	10		199	47		33	50		33	52
257241	177	10	263844	31	7	275498	177	11		41	42		41	44
	177	48		31	9		177	11		51	40		51	42
	181	34		35	35		191	16	292502	185	15	292681	119	28
	199	43		36	12	279737	25	13		195	2		11	24
	199	9		39	17		81	9		205	8		120	34
257291	25	32		43	27	280644	11	19	292512	119	10		125	14
	26	27		47	15	281097	33	27	292513	127	49		127	21
257438	163	37		55	19	283149	119	27		131	38		129	19
257603	83	10		63	19	287750	81	51	292514	177	39		131	51
258321	143			78	1	287805	125	13		201	65		135	10
259660	23	3	263847	33	8	287816	178	72		9	2		138	23
261379	181	12		41	14		187	3	292515	178	79		13	10
	23	11		51	29		191	34		182	81		153	24
261963	138	10	263958	143			193	5		189	29		159	54
	141	14	264159	181	28	287851	153	8		191	23		161	50
263748	33	11		201	31		181	1		202	73		177	19
	41	4	265512	33	10		202	70		33	36		177	29

©1999 HYSTER COMPANY

NUMERICAL INDEX

PART NO	PAGE	REF NO	PART NO	PAGE	REF NO	PART NO	PAGE	REF NO	PART NO	PAGE	REF NO	PART NO	PAGE	REF NO
	181	2		201	29	296408	181	53	302244	129	39		201	62
	181	45		202	66		189	19	302247	185	12	312430	16	
	181	62		21	12		199	31		187	8	312948	33	16
	181	65		25	1		201	51		195	8		41	10
	185	30		25	25	296418	120	33	302248	152	3		49	11
	187	23		26	9		129	43	302250	205	48		56	11
	189	22		29	9		93	21	302251	178	88	313022	178	64
	195	23		81	25	296420	137	17		185	31		21	9
	199	12		9	22	296423	16			187	24	313805	202	76
	199	28	292683	11	30		16			195	24	313815	11	3
	201	2		12	3		16		302334	9	11	313828	119	6
	201	43		21	9	298096	107	7	302398	185	14	314539	33	15
	201	54	292685	12	5		91	7		185	34		41	8
	202	69		21	17	298132	201	64		187	27		49	8
	205	65	292781	156	6		51	35		187	7		56	8
	25	15		159	46	298831	125	30		195	27	314809	151	14
	25	23	292782	156	7	298832	133	1		195	7	316132	205	44
	25	27		159	46		161	65	302399	185	8	316448	15	13
	25	64	292841	119	24	300101	119	11		191	15	316825	129	40
	26	7	292883	119	8	300932	21	18		193	4	316826	26	13
	29	7	293614	167	32		21	6		195	16		29	13
	59	41		171	6	300937	16			205	26	316844	15	17
	7	51	293615	129	42		16			205	60	320154	182	73
	81	11		131	50		16		302400	135	18	320155	152	3
	81	24	293625	167	33		21	1		185	4		178	89
	81	53		171	7	301749	109	43		187	29		185	13
	9	17	293634	23	11		93	47		195	29		185	32
	9	2	293647	11	28	301751	109	45	302492	13	6		187	25
	9	4		12	2		93	49	302713	105	17		187	6
292682	127	26	293780	109	27	301775	95	6		87	18		189	32
	127	50		93	32	301785	111	33	303117	9	18		195	25
	129	24	294295	16			95	35	303758	107	6		195	6
	131	39	295308	127	23	301793	99	24		91	6	320156	127	35
	137	16		138	23	301836	83	9	305080	169	2		152	11
	151	2	295440	169	15	301955	35	20	305100	181	16		153	4
	151	6		171	17		39	4	305488	119	11		177	15
	152	17	296128	152	17		53	38	305594	133	4		177	23
	152	18	296359	181	6		61	38		161	62		178	71
	153	18		201	6		75	9	306008	137	21		178	83
	159	49		205	14	301956	35	21	306187	7	13		181	41
	161	45		205	56		39	5	306774	35	2		181	56
	167	10	296361	181	50		53	39	308624	35	28		185	7
	169	14		199	30		61	39		43	20		187	16
	171	16		201	49		75	10		53	16		189	5
	177	41	296379	178	82	301957	35	22		61	16		191	33
	178	61	296406	177	28		39	6	309124	177	13		193	3
	181	51		181	67		53	40		181	39		195	18
	181	60		201	56		61	40		199	17		199	20
	182	76	296407	181	50		75	11		201	37		202	77
	189	28		189	17	301966	196	18	309152	177	8		205	25
	191	43		199	30		197	18		181	32		205	59
	199	22		201	49	302243	189	30	309663	199	57		33	51

©1999 HYSTER COMPANY

NUMERICAL INDEX

PART NO	PAGE	REF NO	PART NO	PAGE	REF NO	PART NO	PAGE	REF NO	PART NO	PAGE	REF NO	PART NO	PAGE	REF NO
	41	43		153	2	329069	7	52	350818	181	3		153	7
	51	41		9	11	334421	137	24		201	3	353141	153	3
320157	119	7	320161	21	3	335553	7	37	352476	23	16	353142	152	20
	11	25	320166	201	39	335988	7	2	352482	152	19		153	21
	11	4	321734	33	18	335989	7	2		153	19	353143	152	21
	125	15		41	16	335991	7	3	352485	152	9		153	22
	125	27		51	26	336550	25	20		153	6	353145	177	35
	127	54		59	26		81	16	352490	25	48		181	49
	129	59	322784	201	47	339735	25	18	352499	152	1		189	16
	131	52	325463	135	14		81	14	352597	199	18		199	29
	133	7	325708	152	22	340204	25	22	352609	25	46		201	48
	135	16	325897	185	10		81	17		81	19	353159	152	16
	159	58		187	2	340796	21	15	352753	137	11	353164	152	12
	161	32		33	35	341788	137	20	352781	127	30		153	20
	167	21	326359	31	19	344228	137	5		129	28	353172	153	15
	199	16		39	30	344230	137	2	352782	151	19	353185	11	12
	23	1		39	37	344232	137	4	352885	152	2	353188	11	13
	59	35		53	21	344351	25	36	352899	119	4	353191	13	2
	7	50	326360	7	11	344357	23	16	352901	119	21		9	14
	81	24	326361	7	10	344432	25	21	352903	33	44	353195	152	15
	9	20	326362	7	8		81	18		41	20		153	12
	9	3	326363	7	6	344445	167	8		51	53	353198	167	24
320158	135	9	326364	7	5	344446	167	1		59	56		169	31
	13	11	326365	7	9	344982	23	14	352909	13	2	353199	33	43
	153	9	326926	141	31	344984	23	6	352942	152	5		41	47
	177	18	326978	7	7	344991	23	9	352944	152	6		51	45
	181	44	327439	16		344992	23	4	352950	153	13		59	48
	185	28	328013	93	5	344993	23	18	352952	33	48	353204	11	16
	185	3	328043	83	25	345453	25	19		41	23		9	9
	187	21	328047	109	36		81	15		51	58	353230	153	16
	187	31		93	39	345454	25	17		59	42	353256	177	51
	195	21	328385	119	8		81	13		71	26		199	34
	195	31	328626	15	17	346346	127	17	352985	205	12		201	61
	199	13	328753	169	9		129	15	352987	205	13	353257	177	55
	201	42		171	12	349377	83	4	353000	125	28		199	
	25	16	328754	169	9	349378	115	31		127	55		202	87
	81	12		171	12		99	18		129	60	353258	177	56
320159	131	40	329029	15	23	349380	85	3		133	8	353273	209	
	177	42	329067	11	8	350070	25	29		161	33	353303	119	18
	181	59		125	26		35	45	353005	21	4	353305	177	37
	182	75		127	53	350141	199	8	353006	21	5		199	33
	189	27		129	58	350151	23	16	353021	9	19	353306	177	53
	191	42		133	6	350152	23	16	353024	137	13		199	35
	202	71		161	31	350190	178	65	353025	137	13	353310	129	17
	25	2		169	16	350397	101	26	353102	119	15		135	21
	25	65		171	18		83	21	353103	119	e		167	26
	29	14		177	20	350399	107	18	353106	125	29		169	10
	81	26		181	4		91	18		127	56		25	10
	9	23		181	46	350483	125	7		129	38		81	4
320160	152	14		199	12		133	3		133	15	353317	137	13
	152	23		201	4		161	64		161	34	353393	25	28
	153	11		201	44	350498	205	36	353129	152	13	353453	153	14

©1999 HYSTER COMPANY

NUMERICAL INDEX

PART NO	PAGE	REF NO	PART NO	PAGE	REF NO	PART NO	PAGE	REF NO	PART NO	PAGE	REF NO	PART NO	PAGE	REF NO
353731	7	19		61	8	374714	138	13		53	25		41	26
355521	23	13	370250	15			141	15		61	25	375620	33	26
358677	67	6	370251	15		374922	167	6	375584	35	32		41	28
359144	163	23	370252	15		374923	167	7		43	34	376397	205	29
359145	163	24	370253	15		375550	35	2		53	23	377323	154	
360816	95	19	370254	15		375551	35	7	375585	36	8		159	
361312	97	2	370255	15			43	35		44	7		163	
361313	97	3	370256	15			47	10	375587	31	14		81	
361314	97	4	370257	15			55	11		39	32		83	
361336	85	19	370258	15			63	11		53	14		85	
364807	7	26	370259	15		375555	43	6		61	14		87	
364808	7	30	370263	21	2	375557	33	9		75	19		88	
364847	7	35	370281	189	2		41	2		77	19		91	
364848	7	32	370473	207			56	2	375589	31	17		93	
364854	7	29	370646	205	6	375558	33	9		53	20		95	
364857	9	12	370647	185	19	375559	33	9		61	20		97	
364861	9	10		187	14	375560	33	9	375590	31	16		99	
364911	7	1		195	14	375564	33	13	375595	31	32		99	
364940	7	48	370648	205	32		41	6	375597	196	19		99	
364976	7	47	370676	205	5		49	6		197	19		99	
365854	101	25	370699	23	8	375565	33	13		31	34		99	
	83	17	370776	205	31	375567	33	6		39	26	377324	167	12
366473	127	10	370863	205	18		41	12		51	4		171	2
	129	8	370864	205	19		51	27		59	4	377328	119	23
	131	34	370868	205	45	375568	33	7		73	7	377332	81	21
366686	33	46	371536	85	6		41	13	375598	39	13	377334	81	1
	41	36	372002	129	14		51	28		51	9	377354	21	14
	51	54	372006	21	7	375570	35	6		59	9	377358	167	11
	59	45	372009	131	22		43	1	375601	31	12		171	3
366687	177	5	372115	138	9		47	8		35	9		97	22
	181	20		141	9	375571	35	19		43	12	377374	159	17
367394	111	11	373081	23	8		43	2		47	16	377378	159	50
	95	20	373083	23	14		47	9		55	20		161	46
367953	207	17	373086	23	12		55	9		63	20	377379	199	53
367966	207	9	373087	23	12		63	9		65	20	377395	81	45
369139	31	36	373088	23	12	375574	43	24	375602	35	16	377399	159	45
	39	28	373105	23	13		43	5		43	10	377945	95	23
	51	50	373121	25	30		53	26		47	24	377976	109	3
	59	53	374034	25	32	375575	35	15		55	25		93	3
	71	36	374046	205	21		43	9		63	25	377997	163	29
369573	15	8	374706	138	19		47	23		65	25	379182	7	14
369748	31	24		142	4		55	24	375615	35	39	379190	7	49
	53	6	374708	138	17		63	24		43	28	379198	7	31
	61	7		141	23		65	24		53	36	379199	7	23
	75	38		142	3	375579	35	18		61	36	379400	33	39
	77	38	374709	138	16		43	18		75	5		41	45
369815	127	19		142	2		47	7	375616	35	37		51	43
	129	21	374710	138	15		55	7		43	31		59	46
370150	33	28		142	5	375580	63	7		53	34	379403	51	34
370169	31	20	374712	138	1		65	7		61	34	379405	33	42
	51	19		141	1	375582	35	29		75	3		41	46
	59	19	374713	141	12		43	23	375617	33	24		51	44

©1999 HYSTER COMPANY

NUMERICAL INDEX

PART NO	PAGE	REF NO	PART NO	PAGE	REF NO	PART NO	PAGE	REF NO	PART NO	PAGE	REF NO	PART NO	PAGE	REF NO
	59	47		109	9		202	81	996211	196		1303194	133	14
379407	71	34		111	36	389694	15	25	996337	178			161	41
379411	167	2		115	33	842799	105	3		182		1303200	11	32
379596	201	32		155	7		87	3		196		1303201	11	32
379674	7	34		159	19	842800	105	4		33		1304392	33	47
379675	7	33		163	11		87	4		51			41	25
379697	7	23		165	26	864735	131	46		59			51	55
	7	25		83	23	864736	131	63	996340	178			59	49
379698	7	25		85	31	864737	131	64		182		1304785	44	1
379902	205	3		91	3	864740	131	54		196		1304786	36	2
379903	205	39		93	11	864744	131	16		33		1304957	7	44
380320	7	47	387473	13	7	864745	131	3		51		1304971	9	26
380325	15	1	387869	205	40	864749	131	23		59		1305150	25	54
380326	15	1	388302	31	6	864750	131		996342	178		1305165	26	31
380327	15	1		39	7	864751	131	20		182			35	48
380328	15	1		55	29	864752	131	13	997728	111	20	1305166	25	53
380329	15	1		63	29	864753	131	55	1300057	205	67	1305436	25	11
381355	31	24		65	28	864760	131	41	1300107	7	36		81	7
	39	18	388305	35	28	864761	131	42	1300108	7	37	1305494	109	42
	53	1		43	21	864763	131	44	1300117	205	64	1305696	83	3
381802	177	9		53	17	864764	131	45		9	6	1305698	101	31
	181	33		61	17	864779	131	18	1300152	33	38		83	27
381846	205	68		75	26	864780	131	8		41	39	1305699	105	2
381879	159	51	388306	36	9	864853	131	7		51	37	1305701	105	2
	161	47		44	8	980727	101	1		59	39		109	30
381880	159	52		78	10		103	13	1300244	11	20	1305702	105	2
	161	48	388308	51	6		83	5	1300245	11	21	1305703	105	2
381922	199	10		59	6		85	2	1300745	137	13	1305706	105	12
381954	7	22	388313	47	25	981260	159	44	1301167	169	9		87	15
382632	209	18	388352	44	4		161	38		171	12	1305709	85	15
382633	209	9	388356	33	20	982155	113	6	1301177	25	57	1305711	85	4
382634	209	28		41	32	982328	81	42		25	62	1305714	85	7
382635	209	13		51	31	983340	163	38		81	34	1305715	85	9
382636	209	26		59	31	983346	159	9		81	38	1305716	85	10
382637	209	33	388359	56	15	983348	159	10	1302137	169	5	1305717	85	12
382638	209	12		59	7	983484	107	14	1302141	169	6	1305720	95	8
382639	209	27		67	3		91	14		171	9	1305721	95	9
382641	209	30	388364	35	11	984632	101	13	1302142	169	7	1305766	109	19
382642	209	29		35	17		83	13		171	10	1306030	107	13
382643	209	23		35	31	985222	159	59	1302143	169	8		91	13
382644	209	15		35	50		161	55		171	11	1306031	91	17
382646	209	25		43	8	985567	163	30	1302144	169	12	1306033	91	22
383116	7	37		47	20	986475	103	16		171	14	1306034	91	24
	7	37		55	22		85	23	1302145	171	20	1306036	91	27
385531	101	7		61	26	990429	111	2	1302148	169	17	1306037	91	28
	103	12		63	22		95	10	1302248	21	16	1306039	109	31
	83	11	388514	31	37	992003	87	13	1302379	171	19		93	34
	95	7		39	27	992025	103	15	1302390	11	27	1306040	109	33
385847	109	35		51	49		85	22	1302391	11	27		93	36
	93	38		59	52	992393	101	9	1302392	11	27	1306041	109	34
386459	101	28		71	35		83	15	1302393	11	27		93	37
	107	3	389109	199	1	995576	101	4	1302398	11	31	1306042	93	41

©1999 HYSTER COMPANY

NUMERICAL INDEX

PART NO	PAGE	REF NO	PART NO	PAGE	REF NO	PART NO	PAGE	REF NO	PART NO	PAGE	REF NO	PART NO	PAGE	REF NO
1306043	109	40	1306223	97	11	1306363	109	39	1307884	109	24		161	17
	93	43	1306224	97	17		93	42		159	23	1308002	159	24
1306047	109	38	1306328	109	46	1306364	107	11		161	18		161	21
	109	44		93	40		91	11		93	26	1308003	159	25
	93	48	1306329	163	2	1306367	109	47	1307885	93	27	1308004	159	32
1306049	163	9		165	1		93	46	1307886	93	30		161	25
1306125	163	10	1306331	159		1306368	109	48	1307887	109	26	1308005	159	30
1306126	163	13		161	24		93	6		93	31	1308006	159	31
1306127	163	14	1306334	163	32	1306369	107	23	1307888	95	5	1308050	15	28
1306128	163	15	1306337	165	23	1306370	119	1	1307889	159	13	1309090	199	5
1306129	163	16	1306341	83	32		97	14	1307891	159	35		201	57
1306132	163	20	1306345	159	26		97	16	1307893	101	24	1309831	99	29
1306133	163	21		161	23	1306371	159	33		88	4	1309839	35	8
1306134	163	22	1306346	85	24		161	26	1307894	109	29		63	10
1306135	163	26	1306347	85	26		163	12		115	14	1310277	201	12
1306136	163	28	1306349	101	33		165	29		117	14	1310556	199	8
1306137	109	1		83	29		85	27		155	6	1310557	199	10
	93	1	1306351	111	17		85	32		159	2		199	54
1306140	109	10		95	26	1306372	163	18	1307895	99	14	1310630	205	7
	93	12	1306352	95	28	1306373	163	27		99	22	1311054	101	18
1306141	93	15	1306353	111	19		99	15	1307897	99	21	1311055	101	19
1306142	93	16		95	29	1306374	109	4	1307898	115	23	1311057	101	21
1306143	109	16	1306354	107	4		93	4		117	23	1311070	165	22
1306145	93	18		163	34	1306676	35	27		99	23	1311072	91	37
1306146	109	17		91	33		43	19	1307900	99	10	1312043	12	1
	93	19		91	4		53	15	1307901	99	11	1312337	207	18
1306147	109	20	1306355	91	10		61	15	1307902	99	5	1312339	207	4
	93	22	1306356	107	16	1306678	44	2	1307903	99	6	1312340	207	5
1306148	109	21		91	16	1307266	167	14	1307908	115	12	1312344	207	2
	93	23	1306357	107	20		169	19		117	12	1312345	207	3
1306176	109	25		91	20	1307737	9	7	1307909	115	15	1312348	207	16
	93	29	1306358	107	21	1307875	109	7		117	15	1312473	207	1
1306179	95	2		109	41		83	14		99	17	1312474	207	1
1306180	95	4		117	32	1307876	93	8	1307910	85	25	1312681	199	32
	95	4		167	31	1307877	113	11	1307913	159	34		201	57
1306182	95	36		171	5		97	15	1307915	88	4	1312682	199	32
1306183	95	32		91	21	1307878	93	10		97	5		201	57
1306186	111	34		93	44	1307879	109	12	1307916	97	6	1312809	33	
1306193	105	15		97	9		93	14	1307917	97	7	1313835	151	20
	87	16		99	28	1307880	109	14	1307918	113	9		159	47
1306194	105	16	1306359	107	24	1307881	109	18	1307919	159	5	1313904	169	9
	87	17		163	8		115	18	1307920	159	6		171	12
1306197	99			165	4		117	18	1307921	159	14	1314219	119	18
1306199	85	33		91	23		165	20	1307958	35	8	1314355	7	41
1306200	99	4		93	9		85	30		55	12	1314381	178	96
1306201	99	8		99	12		93	20		63	10		181	24
1306203	99	31	1306360	91	26	1307882	109	22	1307962	36	1		51	8
1306205	99	25	1306361	107	27		93	24	1307964	33	23		59	8
1306208	99	16		91	29	1307883	109	23		41	30	1314387	178	86
1306216	201	14	1306362	107	22		159	21	1308000	159	20		185	33
1306219	91	35		109	37		161	20		161	19		187	26
1306222	97	1		91	38		93	25	1308001	159	22		195	26

©1999 HYSTER COMPANY

NUMERICAL INDEX

PART NO	PAGE	REF NO	PART NO	PAGE	REF NO	PART NO	PAGE	REF NO	PART NO	PAGE	REF NO	PART NO	PAGE	REF NO
1315411	127	40		129	56		131	35	1330396	127	16	1333842	125	6
1315428	21	8	1320915	133	16	1325037	137	14	1330397	127	20	1334299	77	7
1315494	93	45		161	29	1325271	15	15		129	18	1334401	196	1
1315495	95	1	1322236	81	20	1325273	15	14	1330450	65	6		197	1
1315496	111	31	1322637	199	37	1326337	7	12	1330453	36	3	1334406	197	5
	95	33		199	7	1326939	178	80		78	8	1334408	196	9
1315497	115	13	1322652	205	33		181	37	1330725	31	29		197	9
	117	13	1323017	85	abc		199	50		71	48	1334410	196	11
1315499	85	29	1323397	11	7		201	35	1330917	15	10		197	11
1315750	85	28	1323398	11	7	1327214	127	48	1330919	15	9	1334422	33	24
1315751	163	33	1323399	11	1		129	49	1330920	15	4		41	26
1315753	159	38	1323449	99	1		131	49	1331037	205	69	1334423	196	17
1315755	85	1	1323584	189	15	1327216	137	19	1331039	9	5		197	17
1315767	88	1	1323597	205	34	1327554	131	59	1331331	177	22		51	11
1316488	33	33	1323677	11	9		137	12	1331341	41	29		59	11
	41	22	1324011	35	18	1327907	178	66		55	27		71	5
	51	57		43	18		51	18		55	30		73	5
	59	43		47	7		59	18		63	27	1334790	7	46
	71	27		55	7	1327950	149			63	30	1334983	191	22
1316494	33	32	1324012	35	18	1327951	191	4		65	27	1335001	205	47
	41	21		43	18		193	1		71	7	1335057	35	25
	51	56		47	7	1327956	191	8	1331600	138			43	3
	59	44		55	7	1327961	125	11	1331602	125	4		55	16
	71	28	1324013	35	18	1327970	135	2	1331603	31			63	17
1316809	133	13		43	18	1328565	107	10		33		1335062	33	22
	161	42		47	7	1328885	9	24		35		1335063	33	1
1317393	207	8		55	7	1328888	25	44	1331622	127	28	1335064	35	40
1317394	207	15	1324014	35	18	1329271	25	58	1332401	137	2		43	32
1317472	33	31		43	18		81	36	1332607	125	17	1335146	15	19
	41	18		47	7	1329414	207	19		133	19	1335212	35	13
1318306	201	10		55	7	1329660	91	31		161	36		43	7
	201	15	1324015	35	7	1329910	202	94	1333541	36	7		47	22
1318904	83	36		43	36	1330272	151	13		78	9		55	17
1318921	115	32		47	11	1330273	151	13	1333805	177	12		63	32
1318965	109	8		55	11	1330287	119	25		199	14		65	18
	93	10	1324016	35	7	1330293	185	20	1333806	127	1	1335215	33	25
1318968	115	22		43	36		187	5		129	57	1335216	31	11
	117	22		47	11		195	5		135	30	1335226	35	14
1319175	199	24		55	11	1330301	187	4		138	24		43	11
	201	26	1324017	35	7	1330305	125	3		71	42		55	26
1319537	83	35		43	36	1330323	167	14	1333807	135	20		63	26
1319860	15	3		47	11		169	19		167	25		65	26
1320000	31	15		55	11	1330324	125	10		169	22	1335227	35	10
	39	33	1324018	35	7	1330325	125	9	1333808	129	30		43	4
	53	41		43	36	1330326	125	8	1333825	135	22		47	19
	61	41		47	1	1330341	178	73	1333827	177	2		55	21
	75	40		55	11	1330342	135	6		181	17		63	21
	77	40	1324313	207		1330347	167	16	1333828	135	11	1335228	35	12
1320001	207	14	1324480	202	102		169	32	1333829	135	12		43	6
1320610	9	16	1324518	202	92	1330353	178	75	1333830	178	87		47	21
1320659	205	20	1324996	205	63		181	21	1333836	125	23		55	23
1320865	127	52	1325033	127	45	1330383	125	5	1333837	125	24		63	23

©1999 HYSTER COMPANY

NUMERICAL INDEX

PART NO	PAGE	REF NO	PART NO	PAGE	REF NO	PART NO	PAGE	REF NO	PART NO	PAGE	REF NO	PART NO	PAGE	REF NO
1335240	53	2	1337872	41	37		41	17		81	28	1345024	201	13
	61	5	1337884	151	15	1339962	31	24	1343305	154		1345267	16	
	75	14	1337886	205	20	1339963	35	41		159		1345676	127	51
1335241	31	33	1337973	149			43	33		163		1345677	127	33
	39	11	1337974	149			53	12		81			129	31
	51	7	1337975	149			61	12		83		1345784	101	32
	59	57	1337976	149			75	36		85			83	28
	71	8	1337977	149			77	36		87		1345785	99	9
1335292	131	60	1337978	149		1339967	35	24		88		1345787	107	2
	137	14	1337979	149			43	38		91			91	2
1335488	39	12	1337980	149		1339969	35	1		93		1345790	91	25
1335494	31	24	1337981	149		1339970	35	1		95		1345791	99	26
	61	6	1337982	149	30		43	14		97		1345792	99	27
	75	37	1337983	149	31	1339971	35	30		99		1345794	167	30
1335497	51	12	1337984	149	32		43	22		99			171	4
	59	12	1338175	9	8		53	24		99			97	8
	73	8	1338178	15	5		61	24		99		1345795	167	30
1335498	31	5	1338222	35	26	1339972	35	30		99			171	4
1335499	31	10		43	13		43	22	1343308	81	23	1345798	99	19
	47	18	1338223	36	6		53	24	1343310	119	5	1345800	101	23
	55	10		78	5		61	24	1343320	25	59		88	3
	63	16	1338224	31	31	1339974	35	36		81	35		88	3
	65	16	1338258	119	2		43	29	1343321	81	50	1345808	15	17
1336133	151	7	1338645	16		1342525	196	14	1343900	178	85	1345809	15	17
1336135	127	7	1338675	31	26		197	14	1343902	33	21	1345826	7	1
	131	70	1339102	138	18	1342526	196	15		41	33	1345836	15	6
1336136	127	11		142	1		197	15		51	33	1345939	15	16
	127	42	1339103	138	20	1342528	196	2		59	33	1345979	135	18
	129	48	1339403	185	21		197	2	1343926	25	3	1345983	191	30
	129	9		189	14	1342529	196	3	1343927	25	58	1345984	191	29
1336137	127	14	1339423	135	5	1342530	196	4		81	36	1345985	191	27
	129	12	1339424	135	23	1342531	196	10	1343937	25	49	1345986	191	32
1336169	125	1	1339425	135	24	1342532	196	12		81	32	1345987	191	31
1336605	15	7	1339434	191	5	1342533	196	7	1343946	205	23	1345988	191	26
1336865	191	28	1339436	191	38	1342534	196	6	1343947	205	62	1345991	135	25
1337197	205	3	1339438	135	26		197	6	1343948	205	46	1345993	167	15
1337382	135	18	1339443	178	74	1342535	196	5	1343949	205	61		169	20
1337415	178	77		181	19	1342536	196	8	1343962	25	3	1345998	15	27
1337430	119	18	1339444	185	18	1342594	93	17	1343968	81	22	1346150	178	68
1337441	9	1		187	15	1342625	35	34	1343969	13	1		182	84
1337734	13	8		195	15	1342627	196		1343970	13	1	1346151	178	68
1337798	191	7	1339459	191	21	1342990	138	14	1343971	13	1		182	84
1337799	191	2	1339463	191	1	1342997	141	20	1343972	13	1	1346270	15	17
1337828	187	13	1339809	11	9	1343055	163	1	1343973	13	1	1346321	7	45
1337831	177	38	1339815	11	17	1343167	31	1	1343974	13	1	1346708	207	
1337841	182	80	1339816	11	26		33		1344132	15	6	1346733	205	22
	189	24	1339820	25	56		35		1344901	15	17	1346745	207	
	202	72		81	29	1343168	31	28	1344902	15	17	1346853	15	26
1337843	177	36	1339821	81	5	1343174	81	39	1344921	109	11	1346872	129	1
1337844	189	10	1339844	15	22	1343300	25	60		93	13	1347275	81	40
1337871	33	34	1339917	151	5		81	28	1345014	201	9	1347918	31	18
	59	36	1339961	33	19	1343301	25	60	1345022	151	18		39	29

©1999 HYSTER COMPANY

NUMERICAL INDEX

PART NO	PAGE	REF NO	PART NO	PAGE	REF NO	PART NO	PAGE	REF NO	PART NO	PAGE	REF NO	PART NO	PAGE	REF NO
1347952	207	3	1357930	25	61	1360182	35	4		95	18	1374113	39	15
1350036	33	37		81	33		43	16	1370949	111	18		51	13
	41	38	1357942	205	47		47	5	1371221	39	1		59	13
	51	36	1358043	41	31		55	5	1371222	39	3	1374114	43	26
	59	38		49	13		63	5	1371229	39	25	1374115	41	34
1350400	129	2		56	13		65	5		51	2		51	32
1350922	133	9		67	2	1360841	127	18		59	2		59	32
	161	30		69	2		129	16		71	46	1374123	43	14
1351171	178	95	1358047	41	27	1360868	33	29	1371232	39	16	1374205	169	9
1351987	178	84	1358079	39	35	1361665	119	11	1371233	41	35	1374206	169	9
1352276	120	37		55	29	1361670	129	53		59	58	1374207	169	9
1352277	120	38		63	29	1361673	119	5	1371235	196		1374249	47	
1352282	23	16		65	28		120	36	1371237	71	23	1374258	49	
1352285	23	16	1358085	61	22	1362120	43	14	1371704	91	1		49	1
1352691	120	38	1358156	31	3	1362121	43	14	1371708	163	3		56	1
1352692	119	19		39	34	1362122	43	14	1371711	95	6	1374286	49	
1352693	119	19		47	13		43	14	1371717	109	5		49	2
1352695	119	13		55	13	1362123	43	14	1371720	163	6	1374287	49	
1352696	119	13		63	13	1365778	16		1371723	159			49	3
1352698	119	9		65	13	1367478	49	12		163		1374288	51	16
1354165	15	21	1358241	141	21		56	12		83			51	23
1354180	178	68	1358327	131	21		67	2		91			59	23
	182	84	1358576	119	19	1367479	33	4		93			71	6
1354923	16		1358577	119	19	1367597	145	21		99			73	6
	16		1358582	120	36	1367710	135	28	1371731	163		1374289	51	24
	16		1358603	25	49	1367808	119	26		85			59	24
1355319	119	2		81	32	1367837	7	53		95			71	11
	97	18	1358604	25	63	1369003	120	31		97			73	11
1356929	39			81	32	1369042	99			99		1374290	51	25
	41		1358623	11	1	1369065	145	13	1371733	97	12		59	25
	43		1358624	11	18		146	13	1373924	81	23		71	3
1356961	25	55	1358677	41	9	1369074	85	14	1374057	141	28		73	3
1356962	25	26		49	9	1369077	101	26	1374105	41	3	1374291	51	21
1356963	25	24		56	9		83	19		49			59	21
1356964	25	31	1358729	135	28	1369081	83	24		49	3	1374292	51	21
1356975	119	11	1359100	25	39	1369470	131	43		56	3		59	21
1356976	119	29	1359102	25	51	1369481	33	17	1374108	39	31	1374293	51	22
1356977	119	13	1359103	25	51		41	15		53	19		59	22
1356992	81	29	1359673	131		1369485	41	24		75	39		71	14
1356998	11	11	1359706	15	26		51	48		77	39		73	14
1356999	11	11	1360152	25	5		59	51	1374109	39	23	1374296	53	30
1357061	185	9	1360158	120	30	1369490	33	17		51	1		61	30
1357062	185	9	1360160	11	10	1369493	47			59	1		75	1
1357063	185	9	1360178	61	23		49		1374110	39	24	1374297	53	31
1357707	145	12		75	28		51			51	3		61	31
	146	12		77	28		53			59	3		75	2
1357736	91	19	1360179	35	3	1369571	145		1374111	39	9		77	2
1357746	146	7		43	15	1369737	131	65		51	5	1374298	53	32
1357749	145	11		47	4	1370641	16			59	5		61	32
	146	11		55	4	1370947	111	3	1374112	39	14		75	8
1357900	11	10		63	4		95	11		51	14		77	8
1357901	11	10		65	4	1370948	111	10		59	14	1374299	53	33

©1999 HYSTER COMPANY

NUMERICAL INDEX

PART NO	PAGE	REF NO	PART NO	PAGE	REF NO	PART NO	PAGE	REF NO	PART NO	PAGE	REF NO	PART NO	PAGE	REF NO
	61	33	1374324	51	20	1377104	61	21	1378932	59	59	1383247	119	25
	75	7		59	20		75	29	1379499	202	82	1383248	119	21
1374300	53	35		59	37		77	29	1379505.	171	1	1383250	151	18
	61	35	1374326	53	9	1377106	55	8	1379734	101	27	1383257	71	30
	75	4		61	10		63	8		83	22		75	12
1374301	53	37		75	32	1377107	75	33	1380245	111	30		77	12
	61	37		77	32		77	33		95	6	1383263	75	41
	75	6	1374328	197	4	1377110	67	9	1380247	111	26		77	41
	77	6	1374329	197	3		69	3	1380250	111	32	1383264	141	19
1374302	53	27	1374330	197	8	1377735	26	3	1380251	111	35	1383265	141	17
1374303	53	28	1374331	197	7	1377736	26	5	1380300	63		1383267	129	37
1374304	53	22	1374332	197	10		29	5		67		1383271	135	11
1374306	53	5	1374333	197	12	1377738	181	14		71		1383274	151	5
1374307	53	3	1374437	177	56	1377741	26	1		75		1383275	191	37
	61	3	1374549	15	29	1377742	29	22	1380307	43	14	1383277	187	1
	75	12	1374750	7	24	1377745	26	23		55	2	1383284	177	11
1374308	47	3	1374758	127	17		29	23	1380601	127	17	1383285	177	11
	55	3	1374774	26	17	1377749	26	24		129	15	1383288	177	11
1374309	35	1		29	17		29	24	1380755	109	32	1383289	177	11
	43	14	1374980	111	9	1377750	26	2		93	35		181	35
	47	2		95	18		29	2	1380760	154		1383299	191	20
	55	2	1374982	101	22	1377751	181	13	1380761	154	4	1383305	129	26
1374310	47	2		88	6	1377752	26	4	1380763	111	28	1383331	177	7
1374311	47	3	1375027	145	1		29	4	1380802	51	51		181	31
	55	3	1375029	145	10	1377755	26	21		59	54		199	11
1374312	53	8		146	10		29	21		71	25	1383346	181	18
	61	9	1375030	145	17	1377762	26	20	1380803	120	40	1383350	21	8
1374313	47	17	1375031	145			29	20	1380805	120	39	1383778	177	28
	53	11	1375037	145	5	1377774	26	14	1380806	120	39		181	63
	55	15		146	5	1377781	26	18	1380854	25	48		199	26
	61	11	1375047	145	3		29	18	1382061	101	29		201	52
	63	15	1375925	51	17	1377785	55		1382073	85	5	1383791	205	37
	65	15		59	17	1377786	61	1	1382479	107	15	1383792	13	9
	75	34	1375954	35	5	1377787	61	28		91	15	1383904	59	16
	77	34		47	6	1377791	26	19	1382481	107	8		71	10
1374314	47	12		55	6		29	19		91	8		73	10
	61	44		63	6	1377792	59	27	1382562	155	5	1383905	56	
	63	12	1376358	16			71	15		159	3		59	
	75	35	1376359	16			71	16	1383200	141		1384092	77	13
	77	35	1376360	16			73	15	1383204	29	3	1384332	181	29
1374315	53	43	1376365	16		1377793	59	28	1383209	129	41	1384333	29	30
	61	43	1376429	145	8		71	16	1383211	71	39	1384347	167	16
	75	31	1376661	185	17		73	16	1383213	71	40		169	32
	77	31		195	13	1377794	59	29	1383224	23	8	1384349	71	29
1374317	53	13	1376876	53	18		71	17	1383225	29	1	1385673	141	18
	61	13		61	18		73	17	1383226	29	29		142	
	75	30	1376889	51	10	1377796	55		1383228	29	32	1385701	93	17
	77	30	1377072	125	33		56		1383230	135	23	1385702	109	13
1374319	78	4		125	6		59		1383231	135	12		93	15
1374320	78	7	1377103	61	19		61		1383237	71	38	1385720	163	36
1374321	78	11		75	23	1377908	93	28	1383239	71	41	1385724	163	1
1374322	197			77	23	1378427	81	22	1383241	71	31	1385873	185	16

©1999 HYSTER COMPANY

NUMERICAL INDEX

PART NO	PAGE	REF NO
	187	30
	195	30
1386142	109	15
1386176	78	
1386177	75	43
	78	11
1386178	75	20
	77	20
1386179	75	22
	77	22
1386180	75	21
	77	21
1386183	75	27
	77	27
1386184	75	24
	77	24
1386185	71	1
	73	1
1386186	71	12
	73	12
1386187	71	13
	73	13
1386188	71	18
1386189	71	21
	73	21
1386190	33	5
	41	11
	51	30
	59	30
	71	22
	73	22
1386191	185	35
	187	28
	195	28
	71	23
	73	23
1386194	67	4
	69	4
1386195	67	5
	69	5
1386196	67	1
1386197	67	7
	69	7
1386198	67	8
	69	8
1386219	9	1
1387260	25	6
	81	5
1388376	99	7
1388381	163	13
1388382	163	14
1388383	163	15
1388384	163	16
1388385	163	17
	165	10
1388386	163	19
	165	11
1388387	101	11
	83	18
1388444	85	21
1388597	21	4
1389050	71	19
	73	19
1389051	69	6
	71	20
	73	20
1389093	71	9
	73	9
1389099	63	1
1389100	75	15
	77	15
1389102	71	2
	73	2
1389103	71	24
1389104	75	25
1389105	71	24
1389133	71	51
	73	24
1389344	29	22
1389346	29	30
1389976	59	10
1389977	56	6
1390126	83	4
1390147	95	2
1390148	95	1
1390759	63	2
	65	2
1390760	63	2
	65	2
1390761	63	3
	65	3
1390765	63	3
	65	3
1390770	63	7
	65	7
1390771	63	11
1390772	63	11
1390773	63	10
	65	12
1390774	63	10
1391225	85	
	85	
	95	
	95	
	97	
	97	
	99	
1391246	111	24
	95	4
	95	4
1391776	83	
	83	1
1392220	201	16
1392547	75	44
1392548	75	45
1392552	199	56
	202	100
1393127	69	10
1393165	141	32
1393350	75	46
	77	17
1393582	63	
	67	
	71	
	75	
1396573	149	30
1450018	202	89
1450027	199	37
1450037	191	37
1450126	145	14
	145	16
	146	16
1450136	109	6
	83	35
1450554	63	21
1450555	63	22
	65	22
1450556	63	23
1450643	71	47
1450792	75	3
1450869	197	
1450941	63	19
1451315	197	2
1451316	197	15
1451319	63	17
	65	17
1451320	75	43
	78	11
1451321	77	14
1451323	67	1
1451329	63	19
1451601	105	5
1451602	105	6
1451625	101	6
1451630	103	11
1451633	103	6
1451636	103	7
1451642	111	14
1451643	111	5
1451644	111	6
1451645	111	4
1451650	107	25
1451651	107	26
1451656	165	27
1451669	165	15
1451672	165	17
1451673	165	18
1451674	165	19
1451733	115	11
	117	11
1451735	115	20
	117	20
1451737	115	29
	117	29
1451738	115	28
1451739	115	17
	117	17
1451741	115	26
1451742	115	30
1451770	161	10
1452142	25	6
	81	5
1452376	71	51
	73	24
1452865	201	46
1452866	201	46
1452904	178	85
1453154	165	28
1453203	101	
	103	
	105	
	107	
	109	
	111	
	113	
	155	
	161	
	165	
	81	
	88	
1453205	115	
	117	
1453247	29	19
1453314	165	2
1453315	165	30
1453581	63	
	67	
	71	
	75	
1453665	199	37
1453666	199	37
1453772	146	
1454144	161	7
1454176	103	17
1454315	109	49
	93	7
1454335	151	20
	161	67
1454560	26	17
	29	17
1454596	41	1
1454600	23	16
1454602	23	16
1454674	167	11
	171	3
1454955	75	9
	77	9
1454956	75	10
	77	10
1454957	75	11
	77	11
1454967	202	74
1454977	202	99
1455154	202	68
1455215	167	12
	171	2
1455305	146	17
1455306	146	15
1455307	146	14
1455309	146	2
1455310	146	1
1455577	81	45
1455579	81	22
1456064	85	
1456111	75	1
	77	1
1456338	155	
1456370	113	12
1456479	81	27
1456480	81	27
1456508	103	
	111	
	113	
	115	
	117	
1456509	101	
	107	
	109	
	111	
	115	

©1999 HYSTER COMPANY

NUMERICAL INDEX

PART NO	PAGE	REF NO
	117	
1456510	171	20
1456511	91	30
1456515	171	19
1456516	81	40
1456518	155	4
1456519	161	2
1456520	161	5
1456521	161	6
1456522	161	11
1456524	161	12
1456525	161	13
1456527	161	16
1456528	161	22
1456612	119	9
1456615	119	9
1456617	119	13
1456663	169	17
1456693	101	
1456694	101	14
1456695	101	12
1456696	101	17
1456697	101	16
1456698	101	15
1456699	105	14
1456700	105	9
1456701	105	11
1456703	103	3
1456704	103	10
1456705	103	4
1456706	103	5
1456707	103	2
1456708	103	9
1456709	103	8
1456711	103	18
1456713	103	20
1456714	103	21
1456715	103	22
1456716	103	
1456717	111	
1456718	111	1
1456721	107	1
1456722	107	5
1456723	107	17
1456724	107	19
1456726	163	7
	165	3
1456727	165	5
1456728	165	6
1456729	165	7
1456730	165	8
1456731	165	9
1456732	165	12
1456733	165	13
1456734	165	14
1456735	165	16
1456736	165	21
1456738	111	22
1456741	111	23
1456742	115	16
	117	16
1456745	115	27
	117	27
1456746	115	24
	117	24
1456747	115	25
	117	25
1456749	113	1
1456751	113	3
1456752	113	4
1456753	113	5
1456754	113	7
1456755	113	8
1456756	113	10
1456789	101	
1456791	9	14
1456792	9	14
1458267	99	1
1458268	99	
	99	
1458291	207	1
1458319	91	5
1458329	87	6
1458331	95	12
1458332	95	14
1458426	161	39
1459008	29	22
1459011	29	25
1459032	185	9
1459272	185	23
	187	19
1459400	23	16
1459401	23	16
1459456	87	11
1459457	87	14
1459646	63	
	67	
	71	
	75	
1459717	146	
1459730	97	13
1459741	181	38
	201	36
1459742	201	33
1459773	202	79
1459774	201	34
1459775	202	104
1459978	135	14
1460191	91	1
1460322	75	37
	77	37
1460330	63	21
	65	21
1460331	63	23
	65	23
1460332	77	43
1460384	69	9
1460385	63	1
	65	1
1460386	63	8
	65	8
1460454	115	1
1460562	113	2
1460567	103	19
1460572	165	1
	165	31
1460737	63	11
	65	11
1460738	63	11
	65	11
1460757	75	26
	75	26
	77	26
1460758	75	26
	77	26
1460765	189	9
1460766	189	9
1460774	195	19
1461409	151	7
1461713	105	9
1461714	105	9
1461715	105	11
1461716	105	11
1461743	195	4
1463664	165	1
1465171	115	19
	117	19
1465392	91	32
1465803	117	26
1465810	117	30
1465811	117	31
1465812	117	28
1465895	115	1
	117	1
1465896	115	
	117	
1466858	99	13
1466859	111	12
	95	21
1467584	65	
	69	
	73	
	77	
1468313	159	15
1471555	69	2
1471556	77	3
1471557	69	1
1471558	77	25
1471559	73	18
2004005	125	25
	135	32
2021238	21	5
2033817	131	69
	167	13
	169	11
	171	13
2034459	15	12
2035710	185	1
2036694	195	1
2036699	195	3
2038072	77	40
3002323	81	46
3002338	25	7
	81	46
3002793	25	51
8504095	207	
8504117	207	
8504287	185	9
8504324	15	20

©1999 HYSTER COMPANY