RUTHZIL TRATOR COMERCIAL DE PEÇAS LTDA 11 97083-6812 ROLANDO

PARTS MANUAL

HYSTER
CHALLENGER
H70-120XM
(K005)

H70XM H90XM H100XM H120XM

CUSTOMER EDITION

HYSTER

1466307
11/2009

©2009 HYSTER COMPANY

SECTIONS

1	FRAME
2	ENGINE ASSEMBLY
3	FUEL SYSTEM
4	ELECTRICAL SYSTEM
5	TRANSMISSION
6	DRIVE AXLE
7	STEERING SYSTEM
8	BRAKE SYSTEM
9	HYDRAULIC SYSTEM
10	MAST-TWO STAGE LIMITED FREE-LIFT
11	MAST-TWO STAGE FULL FREE-LIFT
12	MAST-THREE STAGE FULL FREE-LIFT
13	OPTIONS
14	NUMERICAL INDEX

This Parts Manual is divided into 14 major sections which are listed above. Quick reference to these sections can be made by placing the right thumb on the tab of the desired section, bending the book back and thumbing the pages to the corresponding tab.

TABLE OF CONTENTS

DESCRIPTION **PAGE**

A

ACCUMULATOR 13-26
AIR FILTER 3-74
AIR FILTER SYSTEM 3-72
ALTERNATOR
GASOLINE/LPG AND DIESEL 4-30
PRESTOLITE BRAND - GS, LPS, DS 4-32
ALTERNATOR MOUNTING
DIESEL (→ 7/2001) 2-52
DIESEL (7/2001 →) 2-54
AMBER STROBE REVERSE LIGHTS
WITHOUT CAB (→ 9/2003) 13-34
WITHOUT REAR DRIVE LIGHTS (9/2003 →) 13-36
AUDIBLE ALARM 13-62
AUXILIARY TUBE EXTENSION KIT
TWO AND THREE STAGE FULL FREE-LIFT 13-24
TWO STAGE LIMITED FREE-LIFT 13-22

B

BAFFLE AND ATTACHING PARTS 2-8
BRAKE AND BACK-UP LIGHTS 4-40
BRAKE ASSEMBLY
H100-120XM (→ S/N K005V05300A) 8-10
H100-120XM (S/N K005V05301A →) 8-14
H70-90XM 8-6
BRAKE RELAY ASSEMBLY 8-18
BRAKE SYSTEM 8-2

C

CAB 13-65
CAB ATTACHING PARTS 13-40
SHEET 1 OF 3 13-66
SHEET 2 OF 3 13-68
SHEET 3 OF 3 13-70
CAMSHAFT AND OIL PAN
GASOLINE AND LPG 2-34
CARBURETOR
LPG - WITH LOW EMISSIONS 3-41
CARRIAGE
THREE STAGE FULL FREE-LIFT 12-34
TWO STAGE FULL FREE-LIFT 11-18
TWO STAGE LIMITED FREE-LIFT 10-26
CONTROL VALVE
TRANSMISSION 5-20
COOLANT PUMP
DIESEL (→ 9/2001) 2-76
DIESEL (9/2001 →) 2-78
COOLING 2-4
COUNTERWEIGHT 1-28

©2009 HYSTER COMPANY

TABLE OF CONTENTS (continued)

DESCRIPTION	PAGE
CRANKSHAFT AND PISTON	
DIESEL	2-58
CYLINDER BLOCK	
DIESEL	2-56
GASOLINE AND LPG	2-30
CYLINDER HEAD	
DIESEL	2-66
GASOLINE AND LPG	2-38
D	
DIFFERENTIAL ASSEMBLY	6-2
DIRECTIONAL CLUTCH	
(FORWARD)	5-18
DISTRIBUTOR	4-34
DOOR ASSEMBLY	
LEFT HAND	13-76
RIGHT HAND	13-74
DRIVE AXLE	6-4
DUAL FUEL SYSTEM	
→ S/N K005D05482	3-42
S/N K005D05483 ↔ S/N K005V005980A	3-46
S/N K005V05981A ↔ 12/2003	3-50
12/2003 →	3-54
DUAL MIRRORS	
WITHOUT CAB	13-38
E	
ELECTRICAL SYSTEM	
ALTERNATOR AND BATTERY - G, GS, LPG AND LPS	4-8
COWL	4-4
DIESEL	4-26
GASOLINE AND GASOLINE SAFETY	4-12
GASOLINE, GASOLINE SAFETY, AND DUAL FUEL	4-16
LPG AND LPS	4-22
ENGINE ASSEMBLY	
DIESEL	2-50
GASOLINE AND LPG - WITH SERPENTINE BELT	2-26
ENGINE MOUNT	
DIESEL	2-48
GASOLINE AND LPG	2-24
EXHAUST	
DIESEL	2-22
GASOLINE AND LPG - WITHOUT LOW EMISSIONS (→ S/N K005V04115Z)	2-14
GASOLINE AND LPG - WITHOUT LOW EMISSIONS (S/N K005V04116Z →)	2-16
THREE-WAY CATALYTIC CONVERTER - LPG WITH LOW EMISSIONS (→ S/N K005V04115Z)	2-18
THREE-WAY CATALYTIC CONVERTER - LPG WITH LOW EMISSIONS (S/N K005V04116Z →)	2-20
EXHAUST MANIFOLD	
GASOLINE AND LPG (→ S/N K005V04115Z)	2-43
GASOLINE AND LPG (S/N K005V04116Z →)	2-44

©2009 HYSTER COMPANY

TABLE OF CONTENTS (continued)

DESCRIPTION **PAGE**

F

FAN DRIVE ASSEMBLY
COOLING SYSTEM 2-10
FENDER EXTENSIONS 13-10
FLOOR PLATES AND COVERS 1-26
FORK
POLISHED FORK WITH FULL BOTTOM TAPER HOOK TYPE - TWO STAGE LIMITED FREE-LIFT 10-32
POLISHED FORK WITH FULL BOTTOM TAPER HOOK TYPE - TWO STAGE FULL FREE-LIFT 11-26
POLISHED FORK WITH FULL BOTTOM TAPER HOOK TYPE - THREE STAGE FULL FREE-LIFT 12-42
STANDARD TAPER HOOK TYPE (H100-120XM) - TWO STAGE LIMITED FREE-LIFT 10-31
STANDARD TAPER HOOK TYPE (H100-120XM) - TWO STAGE FULL FREE-LIFT 11-25
STANDARD TAPER HOOK TYPE (H100-120XM) - THREE STAGE FULL FREE-LIFT 12-41
STANDARD TAPER HOOK TYPE (H70-90XM) - TWO STAGE LIMITED FREE-LIFT 10-30
STANDARD TAPER HOOK TYPE (H70-90XM) - TWO STAGE FULL FREE-LIFT 11-24
STANDARD TAPER HOOK TYPE (H70-90XM) - THREE STAGE FULL FREE-LIFT 12-40
FREE-LIFT
THREE STAGE FULL FREE-LIFT 12-18
FREE-LIFT CYLINDER
THREE STAGE FULL FREE-LIFT 12-26
TWO STAGE FULL FREE-LIFT 11-14
FRONT HEADLIGHTS
WITHOUT CAB 13-28
FUEL FILTER
LOW PRESSURE SYSTEM - DIESEL 3-10
FUEL SYSTEM
DIESEL 3-2
GASOLINE 3-18
LPG - OPEN LOOP (→ S/N K005D05482) 3-22
LPG - OPEN LOOP (S/N K005D05483 ↔ S/N K005V005980A) 3-26
LPG - OPEN LOOP (S/N K005V05981A →) 3-30
LPG - CLOSED LOOP (→ 12/2003) 3-34
LPG - CLOSED LOOP (12/2003 →) 3-38
FULL SUSPENSION SEAT
SHEET 1 OF 2 1-6
SHEET 2 OF 2 1-10

G

GENERAL TRUCK 1-2
GOVERNOR
LPG 3-67

H

HARNESS KIT
DUAL FUEL 4-19
HEADER HOSE
THREE STAGE FULL FREE-LIFT 12-30
TWO STAGE FULL FREE-LIFT 11-28
TWO STAGE LIMITED FREE-LIFT (→ S/N A749L03337) (→ S/N A750L02645) 10-18
TWO STAGE LIMITED FREE-LIFT (S/N A749L03338 → EXC. 6018) (S/N A750L02646 →) 10-22

©2009 HYSTER COMPANY

TABLE OF CONTENTS (continued)

DESCRIPTION	PAGE
HEATER	13-12
HEATER INSTALLATION	
DIESEL	13-18
GASOLINE	13-14
LPG	13-16
HEATER VALVE MOUNTING	
MONOTROL	13-20
HIGH PRESSURE FUEL INJECTION AND PUMP	
DIESEL	3-12
HOOD AND COVERS	1-16
HYDRAULIC CONTROL LINES	
FOUR FUNCTION (→ S/N K005V05721A)	9-14
FOUR FUNCTION (S/N K005V05722A → EXC. 5753)	9-16
THREE FUNCTION (→ S/N K005V05721A)	9-10
THREE FUNCTION (S/N K005V05722A → EXC. 5753)	9-12
HYDRAULIC CONTROL VALVE	
THREE AND FOUR FUNCTION (S/N K005V01706Y → THREE FUNCTION CONTROL VALVE) (S/N K005V01698Y → INC. 1704-1705, 1708, 1715-1716, 1722 FOUR FUNCTION CONTROL VALVE)	9-28
THREE AND FOUR FUNCTION - SHEET 1 OF 2 (S/N K005V01706Y ↔ S/N K005V05721A THREE FUNCTION CONTROL VALVE) (S/N K005V01698Y ↔ S/N K005V05721A EXC. 1704-1705, 1708, 1715-1716, 1722 FOUR FUNCTION CONTROL VALVE)	9-30
THREE AND FOUR FUNCTION - SHEET 2 OF 2 (S/N K005V01698Y ↔ S/N K005V05721A EXC. 1704-1705, 1708, 1715-1716, 1722 FOUR FUNCTION CONTROL VALVE) (S/N K005V01706Y ↔ S/N K005V05721A THREE FUNCTION CONTROL VALVE)	9-34
THREE AND FOUR FUNCTION (S/N K005V05722A → EXC. 5753)	9-36
HYDRAULIC CONTROL VALVE ATTACHING PARTS	
FOUR FUNCTION WITH DETENTED LEVERS (→ S/N K005V05721A)	9-24
FOUR FUNCTION WITH DETENTED LEVERS (S/N K005V05722A → EXC. 5753)	9-26
THREE FUNCTION (→ S/N K005V05721A)	9-18
THREE FUNCTION (S/N K005V05722A → EXC. 5753)	9-20
HYDRAULIC FILTER HOUSING	9-40
HYDRAULIC PUMP	
→ S/N K005D02086	9-48
S/N K005D02087 →	9-50
HYDRAULIC SYSTEM	
→ S/N K005V05721A	9-2
S/N K005V05722A → EXC. 5753	9-6
I	
INJECTOR THROTTLE BODY	
GASOLINE	3-70
INNER AND FREE-LIFT MAST	
TWO STAGE FULL FREE-LIFT	11-6
INNER MAST	
THREE STAGE FULL FREE-LIFT	12-10
TWO STAGE LIMITED FREE-LIFT	10-6

©2009 HYSTER COMPANY

TABLE OF CONTENTS (continued)

DESCRIPTION	PAGE
INPUT CLUTCH	
(REVERSE)	5-16
INSTRUMENT PANEL	4-7
INTERMEDIATE MAST	
THREE STAGE FULL FREE-LIFT	12-6
L	
LABELS AND PAINT	1-34
LIFT PUMP	
DIESEL	3-16
LIFTING EYE	13-78
LOAD BACKREST EXTENSION	
THREE STAGE FULL FREE-LIFT	12-38
TWO STAGE FULL FREE-LIFT	11-22
TWO STAGE LIMITED FREE-LIFT	10-28
LOCK-OFF FILTER	
LPG	3-64
LOW PRESSURE SYSTEM	
DIESEL (→ 7/2001)	3-6
DIESEL (7/2001 →)	3-8
LPG CONVERTER	
OPEN LOOP (→ S/N K005D05482)	3-65
OPEN LOOP (S/N K005D05483 →)	3-66
LPG TANK AND BRACKET	
SWING OUT	3-60
LPG TANK BRACKET	
FIXED	3-58
SWING OUT/DROP DOWN	3-62
M	
MAIN CYLINDER	
THREE STAGE FULL FREE-LIFT	12-22
TWO STAGE LIMITED FREE-LIFT	10-14
MAIN LIFT	
THREE STAGE FULL FREE-LIFT	12-14
TWO STAGE LIMITED FREE-LIFT	10-10
MAIN LIFT CYLINDER	
TWO STAGE FULL FREE-LIFT	11-10
MANIFOLD VALVE	5-22
MANIFOLDS	
DIESEL (→ 7/2001)	2-70
DIESEL (7/2001 →)	2-72
MAST INSTALLATION	
→ S/N K005V05217A	9-42
S/N K005V05218A →	9-44
MASTER CYLINDER AND BOOSTER ASSEMBLY	8-16
MONOTROL PEDAL	3-84
MONOTROL PEDAL LINKAGE	3-82

©2009 HYSTER COMPANY

TABLE OF CONTENTS (continued)

DESCRIPTION	PAGE
N	
NON-SUSPENSION SEAT	1-4
O	
OIL FILTER	
DIESEL	2-74
OIL PAN AND PUMP	
DIESEL	2-60
OIL PUMP	
GASOLINE AND LPG	2-46
OPERATOR MODULE	
→ S/N K005D05972 EXC. EXC. 6018	1-12
S/N K005D05973 → EXC. 6018	1-14
OUTER MAST	
THREE STAGE FULL FREE-LIFT	12-2
TWO STAGE LIMITED FREE-LIFT	10-2
OUTER MAST AND MAIN LIFT	
TWO STAGE FULL FREE-LIFT	11-2
OVERHEAD GUARD	1-24
P	
PARK BRAKE	8-20
R	
REAR ACCESS SCREEN	
→ S/N K005D02642X	1-30
S/N K005D02643X →	1-32
REAR DRIVE LIGHTS	
WITH AMBER STROBE - WITHOUT CAB (9/2003 →)	13-32
WITHOUT CAB	13-30
ROTARY EXHAUSTER	
DIESEL	2-80
S	
SHIFT LEVER	4-38
SIDE-SHIFT CARRIAGE	
TWO AND THREE STAGE FULL FREE-LIFT (48 AND 60-INCH) - H70-90XM	13-46
TWO AND THREE STAGE FULL FREE-LIFT (54 AND 60-INCH) - H100XM-H120XM	13-48
TWO STAGE LIMITED FREE-LIFT (48 AND 60-INCH) - H70XM - H90XMS	13-42
TWO STAGE LIMITED FREE-LIFT (54 AND 60-INCH) - H90XM - H120XM	13-44
SIDE-SHIFT CARRIAGE FRAME	
TWO AND THREE STAGE FULL FREE-LIFT (48-INCH) - H70XM - H90XM	13-56
TWO AND THREE STAGE FULL FREE-LIFT (54 AND 60-INCH) - H100XM-H120XM	13-60
TWO AND THREE STAGE FULL FREE-LIFT (60-INCH) - H70XM - H90XM	13-58
TWO STAGE LIMITED FREE-LIFT (54 AND 60-INCH) - H100XM - H120 XM	13-54
TWO STAGE LIMTED FREE-LIFT (48-INCH) - H70XM - H90XM	13-50
TWO STAGE LIMTED FREE-LIFT (60-INCH) - H70XM - H90XMS	13-52
SOUND REDUCTION	1-20
STARTER	
DIESEL	4-36

©2009 HYSTER COMPANY

TABLE OF CONTENTS (continued)

DESCRIPTION	PAGE
STEERING AXLE	7-6
STEERING COLUMN	7-4
STEERING CYLINDER	7-10
STEERING PUMP	7-12
STEERING SYSTEM	7-2
T	
THROTTLE ARM ASSEMBLY	3-80
THROTTLE BODY GOVERNOR	
GASOLINE AND DUAL FUEL	3-68
THROTTLE LINKAGE	
DIESEL	3-78
GASOLINE AND LPG	3-76
TILT CYLINDER	9-46
TIMING GEAR	
DIESEL	2-64
TIRE AND WHEEL	
DUAL DRIVE WHEEL	13-8
SINGLE DRIVE WHEEL - H70-90XM	13-4
SINGLE DRIVE WHEEL - H100-120XM	13-6
STEER WHEEL	13-9
TORQUE CONVERTER	5-6
TRANSMISSION	
SHEET 1 OF 2	5-8
SHEET 2 OF 2	5-12
TRANSMISSION LINES	5-4
TRANSMISSION MOUNT	5-2
U	
UNDERCARRIAGE PAN	1-22
V	
VALVE	
HIGH AND LOW	5-23
VALVE COVER AND INLET MANIFOLD	
GASOLINE AND LPG	2-40
VALVE COVER AND ROCKER ARM SHAFT	
DIESEL	2-68
W	
WATER SEPARATOR	3-14

©2009 HYSTER COMPANY

TABLE OF CONTENTS (continued)

DESCRIPTION	PAGE
WIRE HARNESS	
ADAPTER (→ 5/2001)	4-97
AUXILIARY LIGHTS - WORKLIGHTS	13-80
BRAKE PRESSURE SWITCH	4-163
CAB	13-72
CLOSED LOOP	4-83
CONVERSION, GASOLINE TO LPG, GM 4.3L - SHEET 1 OF 2 (→ S/N K005D05972Y INC. 6018)	4-44
CONVERSION, GASOLINE TO LPG, GM 4.3L - SHEET 2 OF 2 (→ S/N K005D05972Y)	4-46
DIESEL (→ S/N K005V02185Y)	4-84
DIESEL (S/N K005V02186Y →)	4-86
DUAL FUEL SHUT OFF	4-88
DUAL FUEL, GM V6 - SHEET 1 OF 2 (→ S/N K005D05972Y)	4-50
DUAL FUEL, GM V6 - SHEET 2 OF 2 (→ S/N K005D05972Y INC. 6018)	4-52
DUAL FUEL, GM V6 - SHEET 1 OF 2 (S/N K005D05973Y ↔ S/N K005V02186Y)	4-56
DUAL FUEL, GM V6 - SHEET 2 OF 2 (S/N K005D05973Y ↔ S/N K005V02186Y)	4-58
DUAL FUEL, GM V6 - SHEET 1 OF 2 (S/N K005V02186Y ↔ S/N K005V02836Z)	4-62
DUAL FUEL, GM V6 - SHEET 2 OF 2 (S/N K005V02186Y ↔ S/N K005V02836Z)	4-66
ENGINE, GM V6, 4.3L - SHEET 1 OF 2 (→ S/N K005D05972Y)	4-76
ENGINE, GM V6, 4.3L - SHEET 2 OF 2 (→ S/N K005D05972Y)	4-78
ENGINE, LPG, GM V6, 4.3L - SHEET 1 OF 2 (S/N K005D05973Y ↔ S/N K005V02185Y)	4-114
ENGINE, LPG, GM V6, 4.3L - SHEET 2 OF 2 (S/N K005D05973Y ↔ S/N K005V02185Y)	4-116
ENGINE, LPG, GM V6, 4.3L - SHEET 1 OF 2 (S/N K005V02186Y →)	4-120
ENGINE, LPG, GM V6, 4.3L - SHEET 2 OF 2 (S/N K005V02186Y →)	4-122
ESOS ADAPTER	4-89
GASOLINE AND LPG - TYPE "S" (→ S/N K005V02185Y)	4-49
GASOLINE ENGINE (→ S/N K005D05972Y INC. 6018)	4-42
GASOLINE ENGINE - GM 4.3L (S/N K005V04116Z →)	4-154
GASOLINE ENGINE, GM V6 - SHEET 1 OF 2 (→ S/N K005D05973Y)	4-98
GASOLINE ENGINE, GM V6 - SHEET 2 OF 2 (S/N K005D05973Y ↔ S/N K005V02185Y)	4-100
GASOLINE, GM V6 - SHEET 1 OF 2 (S/N K005V02186Y ↔ S/N K005V02836Z)	4-104
GASOLINE, GM V6 - SHEET 2 OF 2 (S/N K005V02186Y ↔ S/N K005V02836Z)	4-106
LPG SWITCH	4-81
MODULE POWERSHIFT (→ S/N K005D05972)	4-126
MODULE POWERSHIFT - SHEET 1 0F 2 (S/N K005V02412Z ↔ S/N K005V05903A)	4-128
MODULE POWERSHIFT - SHEET 2 OF 2 (S/N K005V02412Z ↔ S/N K005V05903A)	4-132
MODULE POWERSHIFT - SHEET 1 0F 2 (S/N K005V05904A →)	4-136
MODULE POWERSHIFT - SHEET 2 OF 2 (S/N K005V05904A →)	4-140
MODULE, TYPE S POWERSHIFT - SHEET 1 OF 2 (→ S/N K005D05972Y INC. 6018)	4-90
MODULE, TYPE S POWERSHIFT - SHEET 2 OF 2 (→ S/N K005D05972Y INC. 6018)	4-94
MODULE, TYPE S POWERSHIFT - SHEET 1 OF 2 (S/N K005D05973Y ↔ S/N K005V02411Z)	4-144
MODULE, TYPE S POWERSHIFT - SHEET 2 OF 2 (S/N K005D05973Y ↔ S/N K005V02412Z)	4-148
REVERSE ALARM	13-64
SEALED ALTERNATOR	4-152
TYPE S - GASOLINE AND LPG (S/N K005V02186Y →)	4-82
WIRE HARNESS (ENGINE)	
DUAL FUEL - GM 4.3L (S/N K005V02837Z ↔ S/N K005V04115Z)	4-70
DUAL FUEL - GM 4.3L (S/N K005V04116Z →)	4-158
GASOLINE AND GASOLINE SAFETY - GM 4.3L (S/N K005V02837Z ↔ S/N K005V04115Z)	4-110

©2009 HYSTER COMPANY

ABBREVIATIONS QUICK REFERENCE SHEET

Listed below are abbreviations used in parts manuals to denote the following expressions:

TERM	DEFINITION
Amp	Amperes
AR	As Required
BDI	Battery Discharge Indicators
BWI	Brush Wear Indicator
CE	Communicator End
CRE	Corrosive Environment
D/B	Date Break
dbA	Decibel "A" Scale
DE	Drive End
ECH	Empty Container Handler
ECH-3	Empty Container Handler - 3 High Stacking
ECH-4	Empty Container Handler - 4 High Stacking
ECH-5	Empty Container Handler - 5 High Stacking
ECH-6	Empty Container Handler - 6 High Stacking
ECH-7	Empty Container Handler - 7 High Stacking
ECM	Electronic Control Module
ECN	Engineering Change Notice
EEPROM	Electrically Erasable Programmable Read Only Memory
EPA	US Environmental Protection Agency
EPROM	Electrically Programmable Read Only Memory

TERM	DEFINITION
FRE	Freezer Environment
in.	inches
LPG	Liquefied Petroleum Gas
MAP	Manifold Absolute Pressure
mm	millimeters
MSTS	Microprocessor Spark Timing System
NPT	National Pipe Threads
O/S	Oversize
PTO	Power Take Off
RPM	Revolutions per Minute
S/N	Serial Number
TMM	Truck Management Module
UL Type D	Diesel-Powered Safety Rating
UL Type DS	Diesel-Powered Safety Rating
UL Type E	Battery-Powered Safety Rating
UL Type EE	Battery-Powered Safety Rating
UL Type ES	Battery-Powered Safety Rating
UL Type G	Gasoline-Powered Safety Rating
UL Type GS	Gasoline-Powered Safety Rating
UL Type LP	Gas-Powered Safety Rating
UL Type LPS	LP Gas-Powered Safety Rating
U/S	Undersize
UL	Underwriters Laboratory
V	Volts

©2009 HYSTER COMPANY

HOW TO USE THE ILLUSTRATED PARTS MANUAL

This parts manual describes and illustrates assemblies, subassemblies, and detail parts needed for service replacement.

The different constructions are indicated by keys and footnotes. The callouts correspond to descriptions found on the next page.

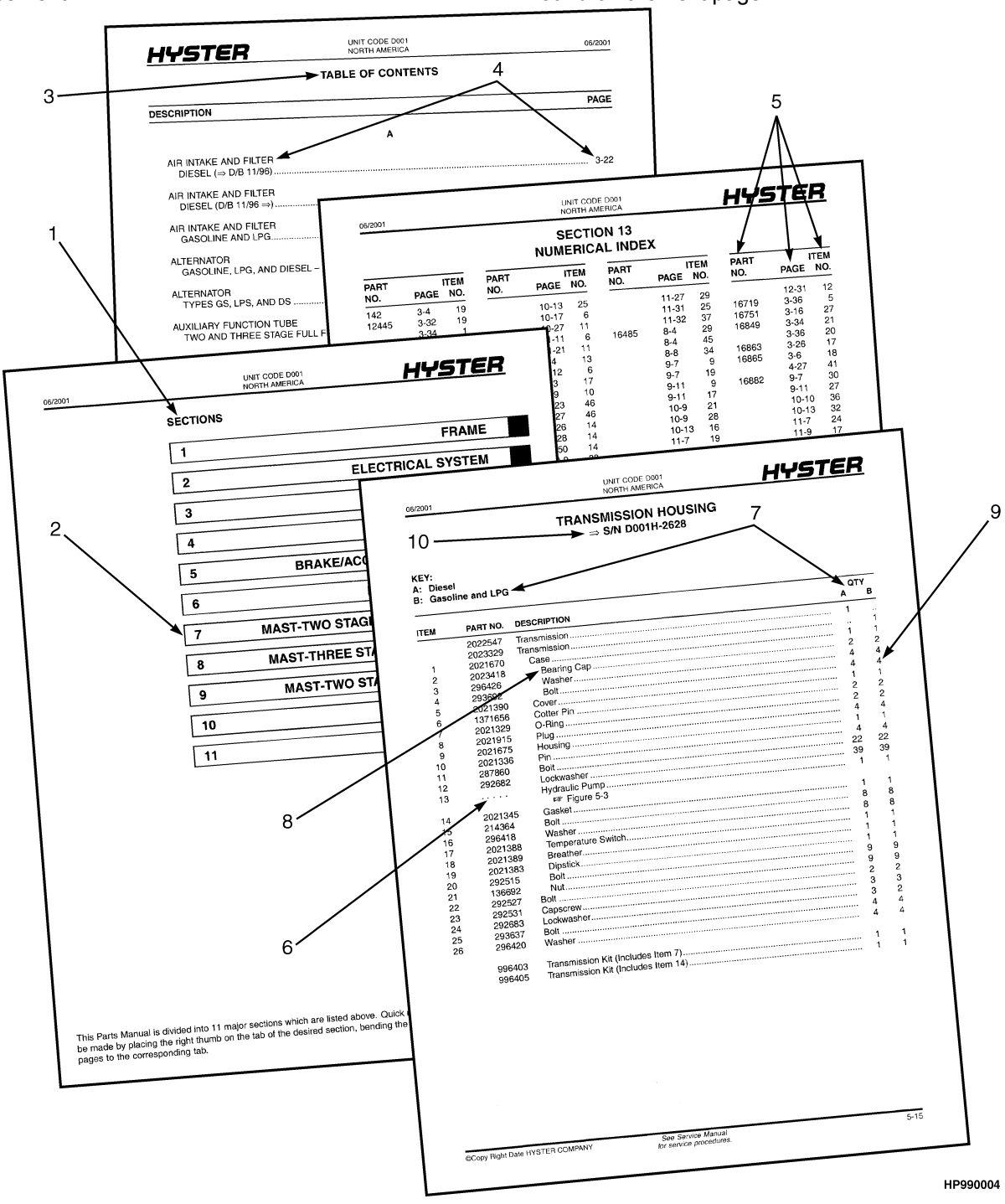

©2009 HYSTER COMPANY

HOW TO FIND THE DESIRED PART NUMBER

WHEN THE PART NUMBER AND THE NEXT HIGHER ASSEMBLY IS NOT KNOWN:

1. Determine the function and application of the part required. Turn to the Sections Page. Choose the general area of reference most likely to include the part.

2. Turn to the section you chose. Use the Section Table of Contents to determine the assembly which would normally contain the part required. Then locate the part on the assembly breakdown page.

WHEN THE PART NUMBER IS NOT KNOWN AND THE NEXT HIGHER ASSEMBLY IS KNOWN:

3. Determine the assembly the required part is used on. Turn to the Table of Contents (Page i).

4. Locate the assembly the required part is used on and turn to the page indicated for that assembly. Then locate the part on the assembly breakdown page.

WHEN THE PART NUMBER IS KNOWN:

5. Use the Numerical Index (Page 14-1) to find the part number. Turn to the page listed and locate the part as indicated by the item number.

GENERAL:

The assembly breakdowns include part numbers, descriptions, quantities required, keys and footnotes to help in selecting correct parts.

6. Five periods in the PART NO. column (. . . . .) indicate that the part is either *Not Serviced Separately* or there is a reference to another figure. A figure reference is denoted by a pointing hand followed by a figure number in the DESCRIPTION column (☞Figure 10)

7. Keys are used to show two or more similar assemblies, RH and LH assembly parts, etc. Select the appropriate key, "A", "B", "C", "D", or "E" and the corresponding quantity column to find the required parts. Two periods in the QTY column (..) indicate that the part is not used for that assembly.

8. Indented descriptions under the DESCRIPTION column are used to indicate assemblies and subparts of assemblies. In the example on the previous page, *BEARING CAP* (Item 2) is a subpart of the major assembly *CASE*.

9. Quantities shown are for one assembly. The quantities of the subpart *BEARING CAP* are indicated as two and two. This means two per *CASE* assembly.

10. Serial number breaks identify the most current parts information and are shown as follows:
    → **S/N D001H2628**
    Indicates last serial number affected.
    S/N D001H2629 →
    Indicates the first serial number affected.
    S/N D001H1553 ↔ S/N D001H3291
    Indicates a range of serial numbers affected.

    ECN numbers for pending serial numbers are shown to allow for the inclusion of the most current parts information and are identified as follows:
    → **S/N Pending Per ECN 63243**
    Indicates a pending serial number for last unit affected.
    S/N Pending Per ECN 63243 →
    Indicates a pending serial number for first unit affected.

    Date breaks are used to indicate when a change occurred but a subsequent serial number break was not recorded. This is an arbitrary date usually based on the ECN release and are identified as follows:
    → **D/B 3/00**
    Indicates that a change occurred sometime within that month for the item affected.
    D/B 3/00 →
    Indicates that a change occurred sometime within that month for the item affected.
    D/B 3/00 ↔ D/B 4/00
    Indicates a range of production dates of the item affected.

    Contact your local dealer for Hyster lift trucks for serial number information for items with a ECN or a date break.

ORDERING PARTS:

When ordering replacement parts, give the unit serial number, part number, name of part and quantity required.

For any further information on parts, service, or ordering, consult your local dealer for Hyster lift trucks.

©2009 HYSTER COMPANY

IDENTIFICATION OF TRUCK SERIAL NUMBERS

X	OOO	X	OOOO	X
(1)	(2)	(3)	(4)	(5)

(1) and (2) The first letter and three numbers indicate the truck unit code.

(3) The second letter indicates the plant of manufacture.

(4) The four or five digit number indicates the production sequence number of the truck.

(5) The final letter indicates the year of manufacture starting with "A" in 1957, 1980, and 2003. The letters "I", "O", and "Q" will not be used.

For pending serial numbers contact your local dealer for Hyster lift trucks.

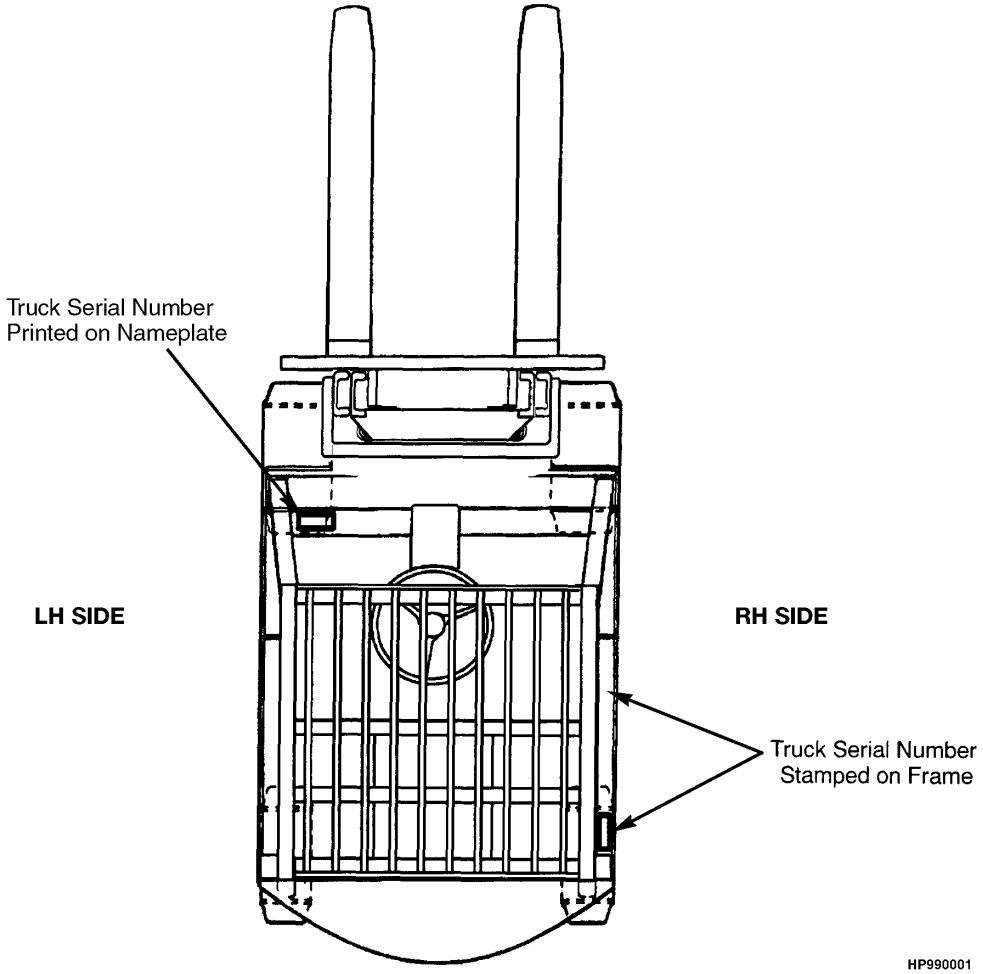

Parts referred to in this book as right or left hand parts are in accordance with the illustration above.

©2009 HYSTER COMPANY

IDENTIFICATION OF MAST SERIAL NUMBERS

X (1) OOO (2) X (3) OOOO (4) OOOO (5)

(1) and (2) The first letter and number indicates the mast unit code.

(3) The second letter indicates the plant of manufacture.

(4) The four or five digit number indicates the production sequence number of the mast.

(5) Carriage travel in millimeters stamped just below the serial number.

Mast Group identification consists of mast unit code (1) and (2) plus carriage travel (5).

For pending production sequence numbers contact your local dealer for Hyster lift trucks.

LIFT EQUIPMENT IDENTIFICATION

1. Fork part number, capacity rating, plant code letter, and date of manufacture are stamped approximately six inches below the top of most forks.

2. The carriage group number is stamped on the right hand side of the top crossmember (pin type) or on the back of the right hand end of the bottom crossmember (hook type). A date code has two letters in line with or below the carriage group number.

3. The mast identification number has a unit code, a letter indicating the plant of manufacture, and a serial number. Underneath the production sequence number is a four digit number that indicates the carriage travel in millimeters.

4. Tilt and lift cylinder group numbers are stamped on the cylinder shell.

   Always refer to the group, serial, or part number when ordering service parts.

   Modification of masts and carriages by SPED (Special Products Engineering Department) are identified by a model prefix code beginning with the letter "S". contact your dealer for Hyster lift trucks for information on these assemblies.

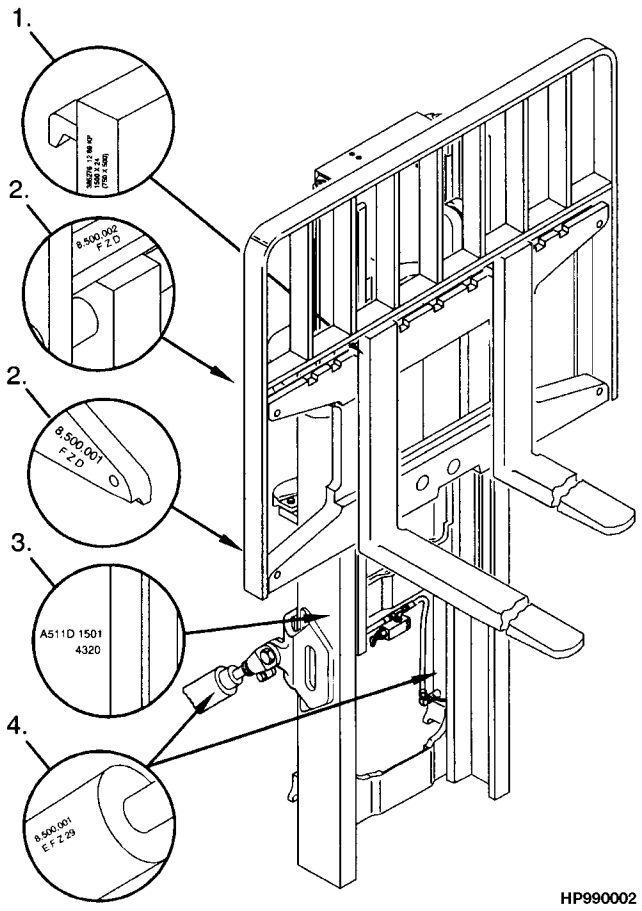

IDENTIFICATION OF ATTACHMENT AND SIDE-SHIFT CARRIAGE SERIAL NUMBERS

X OOO X OOOO

(1) (2) (3) (4)

(1) and (2) The first letter and three numbers indicate the attachment unit code.

(3) The second letter indicates the plant of manufacture.

(4) The four or five digit number indicates the production sequence number.

For pending production sequence numbers contact your local dealer for Hyster lift trucks.

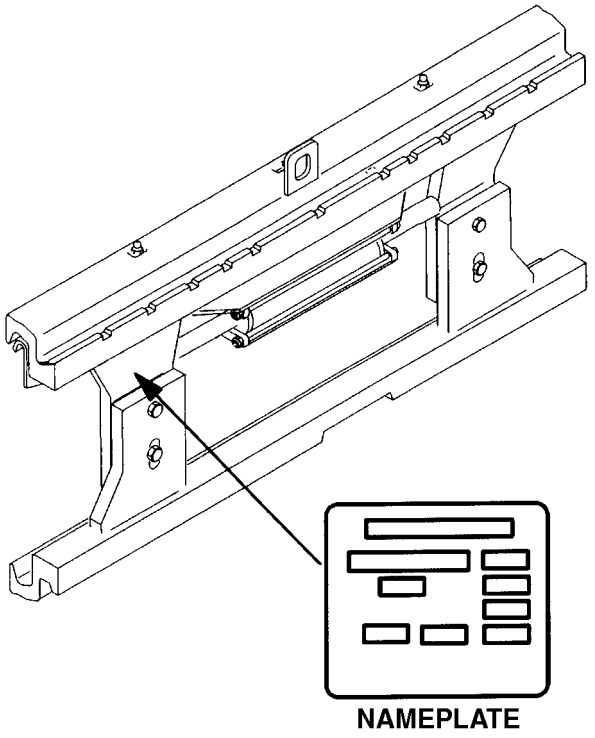

Side-shift carriages and attachments have nameplates. Use the serial number found on the nameplate to identify the attachment.

Always refer to the group, serial, or part number when ordering service parts.

Modifications of attachments and side-shift carriages by SPED (Special Products Engineering Department) are identified by a model prefix code beginning with the letter "S". Contact your dealer for Hyster lift trucks for information on these assemblies.

©2009 HYSTER COMPANY

PUBLICATIONS

Every new lift truck is provided with an OPERATING MANUAL. This manual has information that the operator must know for inspection and operation of the lift truck.

SERVICE MAINTENANCE MANUALS, which provide service and overhaul procedures, and PARTS MANUALS with complete replacement part identification, are available at a nominal fee from your Hyster dealer to assist users in effectively maintaining Hyster lift trucks in a safe, useful condition. See the list below for information on ordering specific publications for this model lift truck.

PUBLICATION	HYSTER PART NUMBER
Operating Manual	1466306
Service Manual (Complete)	1467766
Parts Manual	1466307

©2009 HYSTER COMPANY

NOTES

©2009 HYSTER COMPANY

1 FRAME

SECTION 1
FRAME

DESCRIPTION	PAGE
COUNTERWEIGHT	1-28
FLOOR PLATES AND COVERS	1-26
FULL SUSPENSION SEAT	
SHEET 1 OF 2	1-6
SHEET 2 OF 2	1-10
GENERAL TRUCK	1-2
HOOD AND COVERS	1-16
LABELS AND PAINT	1-34
NON-SUSPENSION SEAT	1-4
OPERATOR MODULE	
→ S/N K005D05972 EXC. EXC. 6018	1-12
S/N K005D05973 → EXC. 6018	1-14
OVERHEAD GUARD	1-24
REAR ACCESS SCREEN	
→ S/N K005D02642X	1-30
S/N K005D02643X →	1-32
SOUND REDUCTION	1-20
UNDERCARRIAGE PAN	1-22

©2009 HYSTER COMPANY

GENERAL TRUCK (FIGURE 1-1)

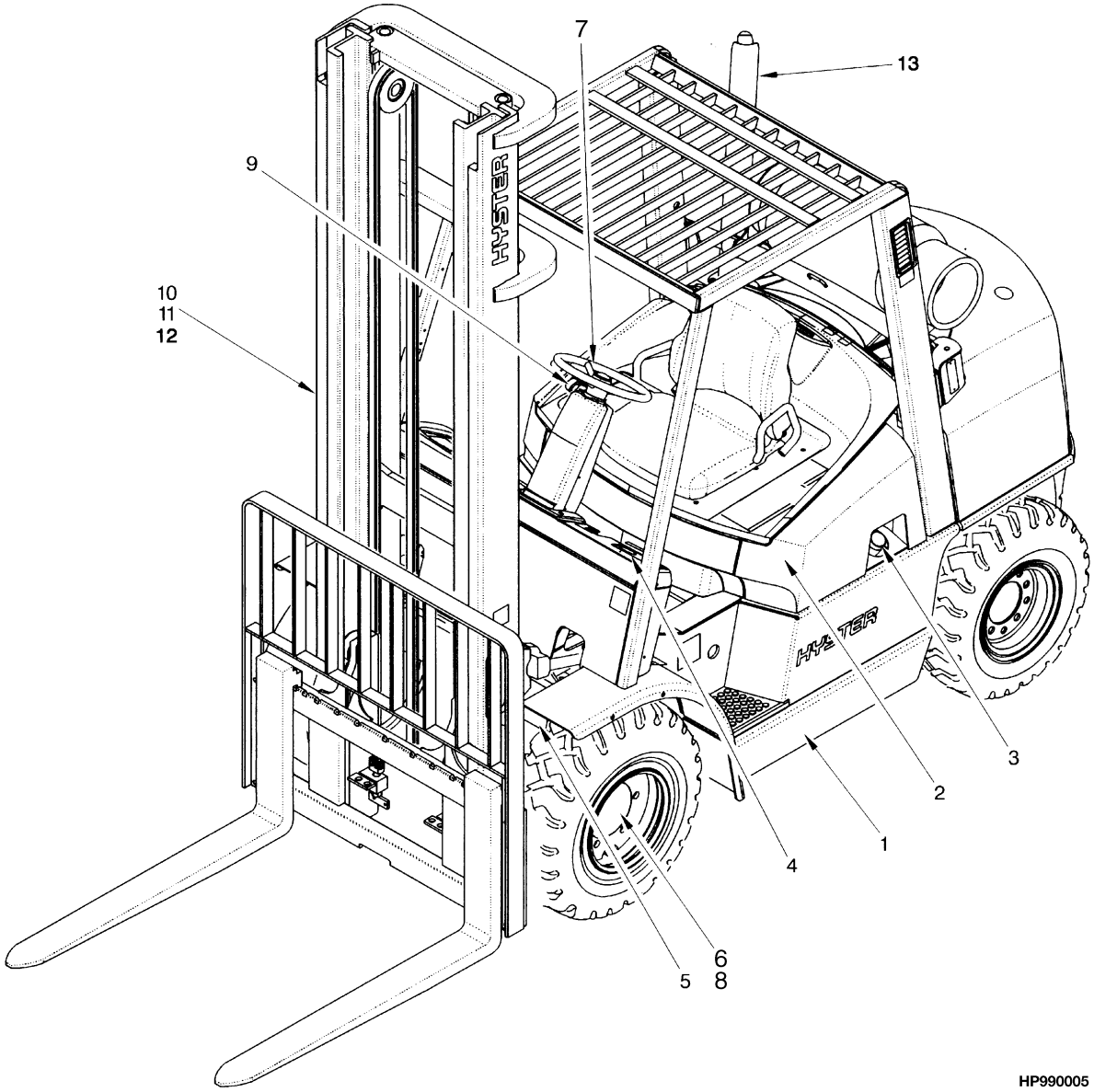

©2009 HYSTER COMPANY

GENERAL TRUCK

ITEM	PART NO.	DESCRIPTION	QTY
1	. . . . .	Frame (☞Figure 1-11)	1
2	. . . . .	Engine (☞Figure 2-10)	1
3	. . . . .	Fuel System (☞Figure 3-1)	1
4	. . . . .	Electrical System (☞Figure 4-1)	1
5	. . . . .	Transmission (☞Figure 5-4)	1
6	. . . . .	Drive Axle (☞Figure 6-2)	1
7	. . . . .	Steering System (☞Figure 7-1)	1
8	. . . . .	Brake System (☞Figure 8-2)	1
9	. . . . .	Hydraulic System (☞Figure 9-1)	1
10	. . . . .	Mast-Two Stage Limited Free-Lift	1
11	. . . . .	Mast-Three Stage Full Free-Lift	1
12	. . . . .	Mast-Two Stage Full Free-Lift	1
13	. . . . .	Options (☞Figure 13-1)	1

©2009 HYSTER COMPANY

NON-SUSPENSION SEAT (FIGURE 1-2)

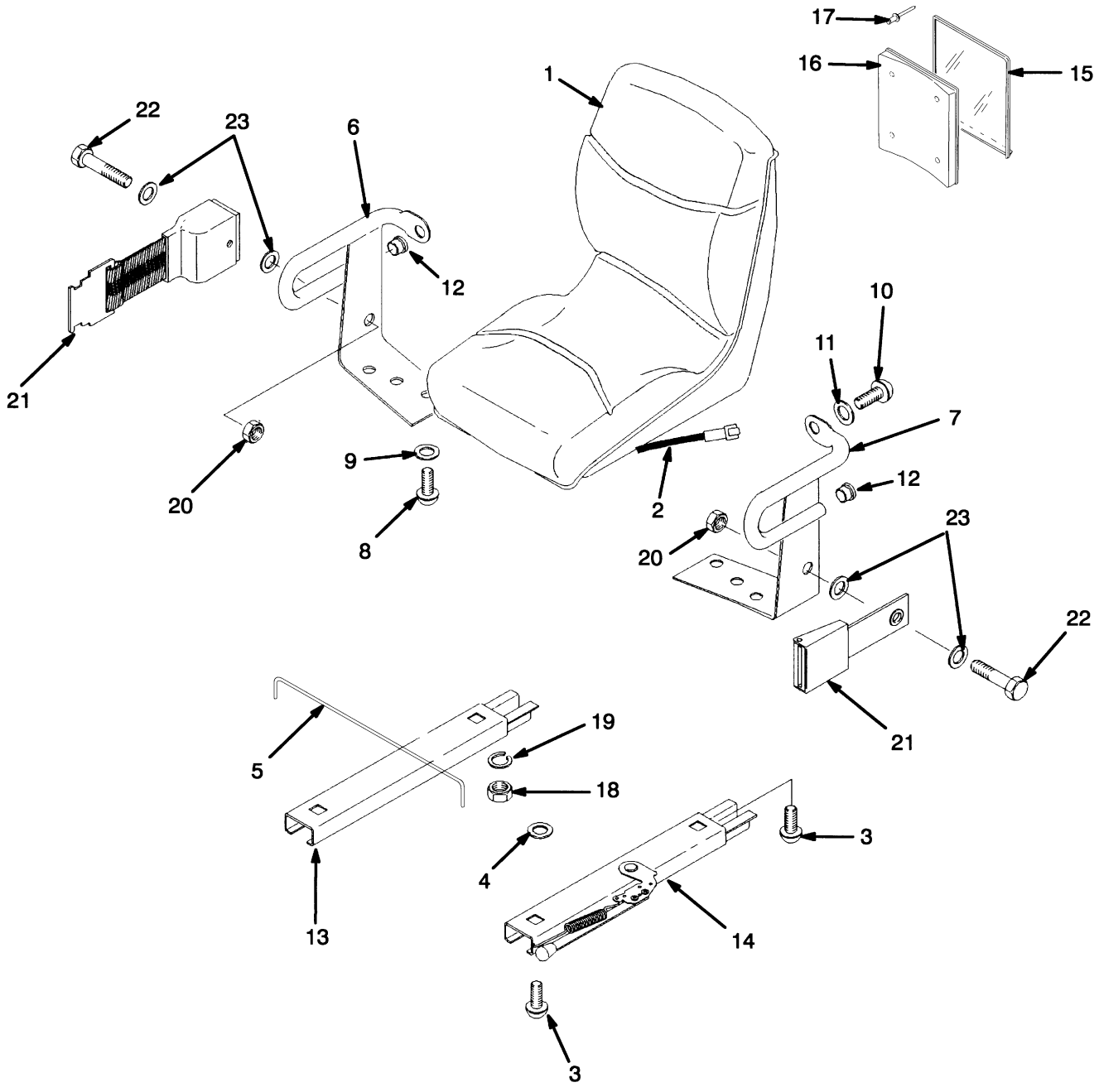

©2009 HYSTER COMPANY

NON-SUSPENSION SEAT

ITEM	PART NO.	DESCRIPTION	QTY
	1375150	Seat-Non Suspension (Vinyl)	1
1	1351473	Seat-Non Suspension	1
1	2087813	Seat-Non Suspension (Black Vinyl)	1
1	1563351	Kit-Seat Cushion (Vinyl)	1
1	335988	Information Case	1
1	335991	Cover (Information Case)	1
2	1354140	Switch	1
3	364914	Capscrew	4
4	221733	Washer	2
5	1300107	Rod	1
6	364807	Hip Restraint (RH)	1
7	364808	Hip Restraint (LH)	1
8	18727	Screw	4
9	18515	Washer	4
10	379197	Capscrew	2
11	379198	Washer	2
12	364854	Plug	2
13	383116	Seat Rail (RH)	1
14	335553	Seat Rail (LH)	1
15	335991	Cover (Information Case)	1
16	335988	Information Case	1
17	222029	Rivet	4
18	145639	Locknut	4
19	15175	Lockwasher	4
20	379698	Nut	2
21	1374750	Seat Belt	1
22	379199	Capscrew	2
23	379697	Washer	4

©2009 HYSTER COMPANY

FULL SUSPENSION SEAT (FIGURE 1-3)
SHEET 1 OF 2

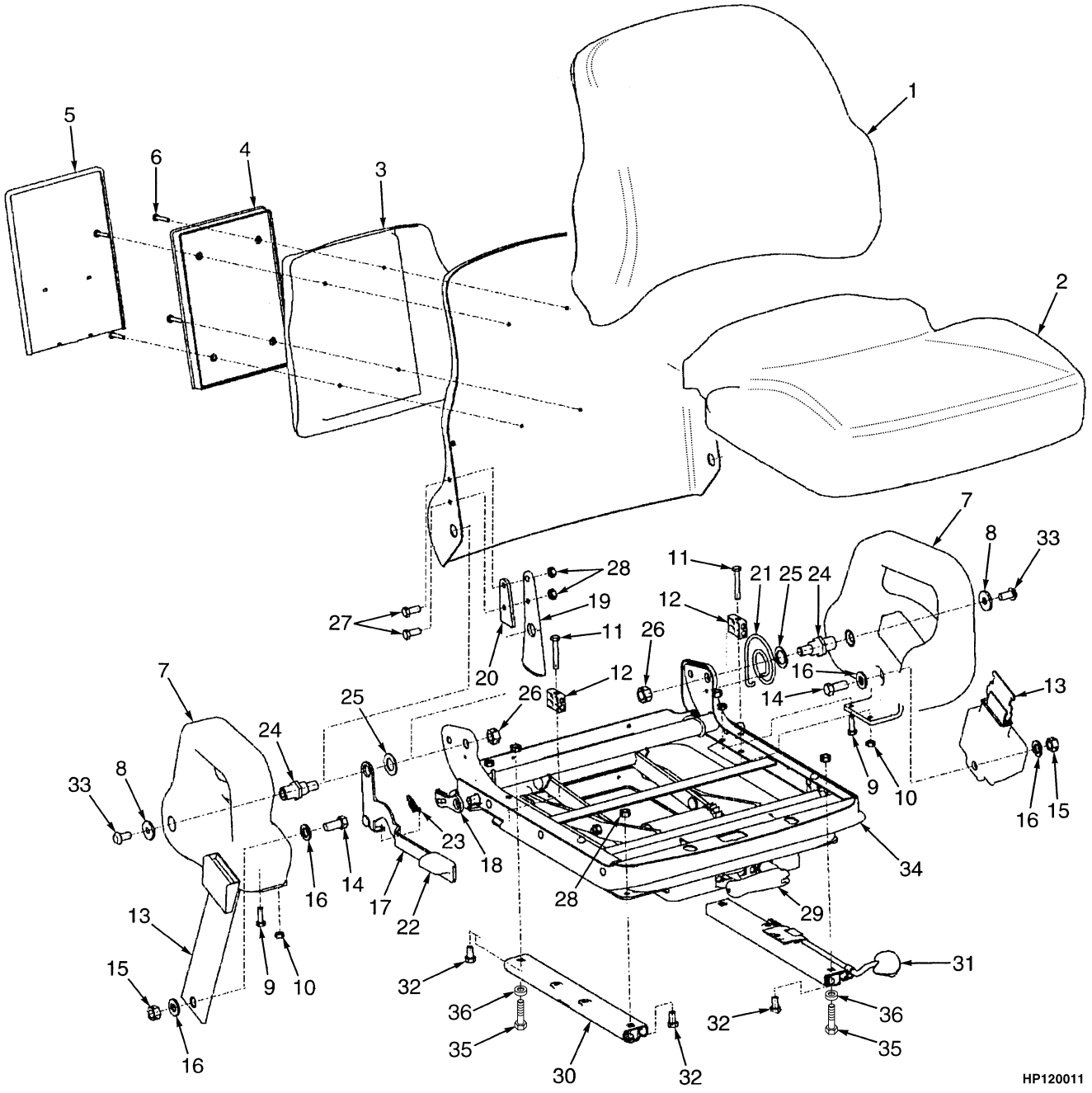

©2009 HYSTER COMPANY

FULL SUSPENSION SEAT

SHEET 1 OF 2

ITEM	PART NO.	DESCRIPTION	QTY
	1468473	Seat-Full Suspension (Cloth)	1
	1678474	Kit-Seat (Fabric) (Alternate Part)	1
	1468472	Seat-Full Suspension (Vinyl)	1
	1678473	Kit-Seat (Vinyl) (Alternate Part)	1
1	1470153	Seat Cushion (Back Cushion) (Cloth)	1
1	1470152	Seat Cushion (Back Cushion) (Vinyl)	1
2	1494077	Seat Cushion (Cloth)	1
2	1494076	Seat Cushion (Vinyl)	1
2	1467514	Switch (Seat)	1
2	1467515	Wire Harness	1
3	. . . . .	Riser	1
4	. . . . .	Box	1
5	. . . . .	Cover	1
6	. . . . .	Screw	4
7	. . . . .	Hip Restraint (RH)	1
7	. . . . .	Hip Restraint (LH)	1
8	. . . . .	Washer	2
9	. . . . .	Bolt	2
10	. . . . .	Nut	4
11	. . . . .	Bolt	2
12	. . . . .	Block	2
13	. . . . .	Seat Belt	1
14	. . . . .	Bolt	2
15	. . . . .	Nut	2
16	. . . . .	Washer	4
17	. . . . .	Handle	1
18	. . . . .	Latch	1
19	. . . . .	Bracket	1
20	. . . . .	Spacer	1
21	. . . . .	Spring	1
22	. . . . .	Knob	1
23	. . . . .	Spring Extension	1
24	. . . . .	Pivot	2
25	. . . . .	Washer	2
26	. . . . .	Nut	2
27	. . . . .	Bolt	2
28	. . . . .	Nut	6
29	1470163	Kit-Weight Adjuster	1
29	1584631	Knob	1
29	1600126	Handle	1
30	. . . . .	Slide (RH)	1
31	. . . . .	Slide (LH)	1
32	. . . . .	Bolt	4
33	. . . . .	Screw	2
34	1470159	Kit-Suspension	1
35	15175	Lockwasher	4
36	145639	Locknut	4
	1470155	Information Case (Kit)	1
	1470156	Hip Restraint (RH)	1

©2009 HYSTER COMPANY

See Service Manual for service procedures.

FULL SUSPENSION SEAT

SHEET 1 OF 2

ITEM	PART NO.	DESCRIPTION	QTY
	1470157	Hip Restraint (LH)	1
	1470158	Kit-Seat Belt	1
	1470164	Kit-Recliner	1
	1470161	Kit-Seat Rail	1

©2009 HYSTER COMPANY

NOTES

©2009 HYSTER COMPANY

FULL SUSPENSION SEAT (FIGURE 1-4)
SHEET 2 OF 2

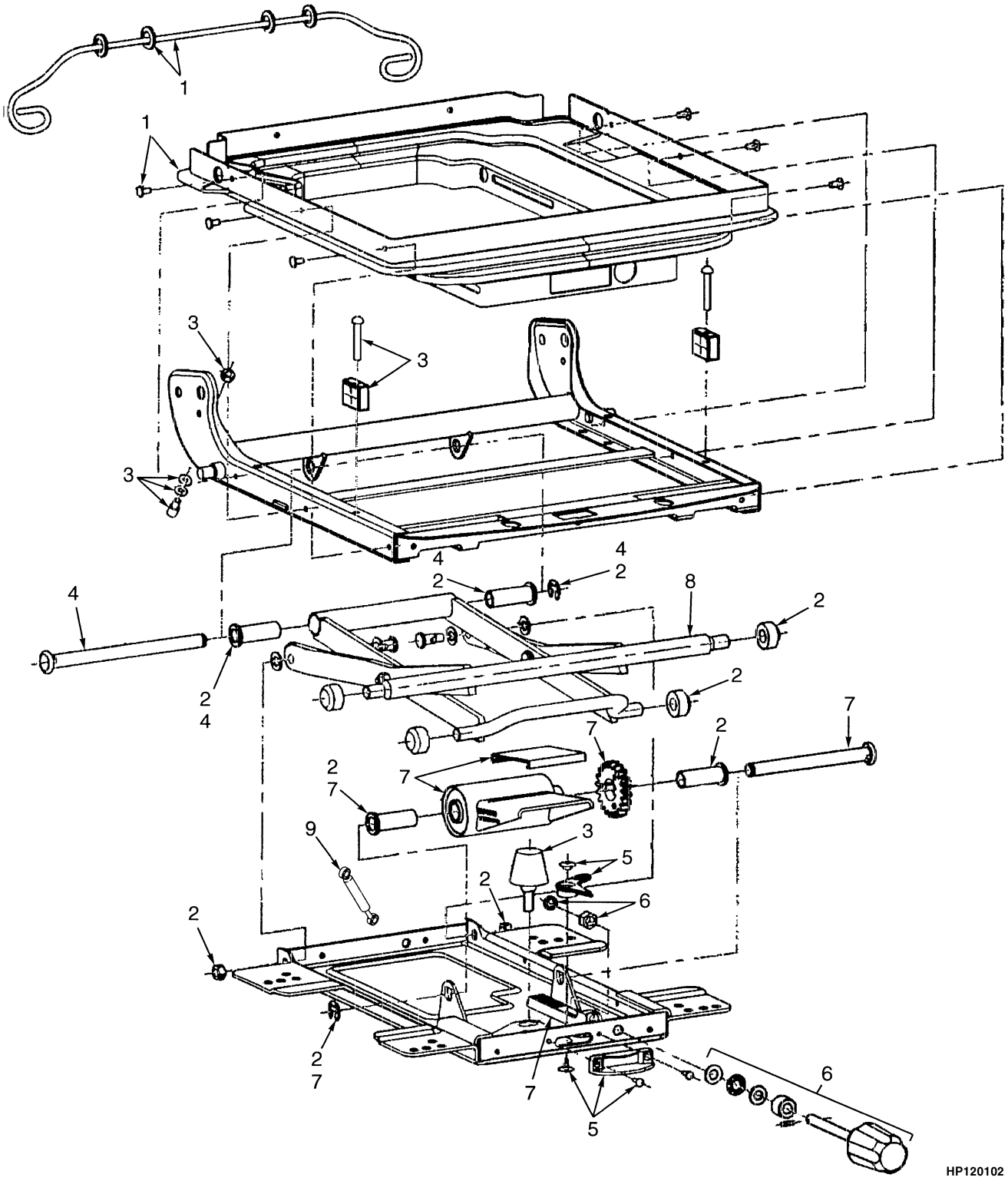

©2009 HYSTER COMPANY

FULL SUSPENSION SEAT

SHEET 2 OF 2

ITEM	PART NO.	DESCRIPTION	QTY
	1468473	Seat-Full Suspension (Cloth)	1
	1678474	Kit-Seat (Fabric) (Alternate Part)	1
	1468472	Seat-Full Suspension (Vinyl)	1
	1678473	Kit-Seat (Vinyl) (Alternate Part)	1
1	1467523	Kit-Boot	1
2	1467524	Kit-Bearing	1
3	1467525	Kit-Bumper	1
4	1467526	Kit-Shaft and Bearing	1
5	1467527	Kit-Weight Adjuster Indicator	1
6	1467531	Knob	1
7	1467529	Kit-Spring	1
8	1470160	Scissor	1
9	1483828	Kit-Gas Spring (Mounted to the rear of the seat)	1

©2009 HYSTER COMPANY

OPERATOR MODULE (FIGURE 1-5)

(→ S/N K005D05972 EXC. EXC. 6018)

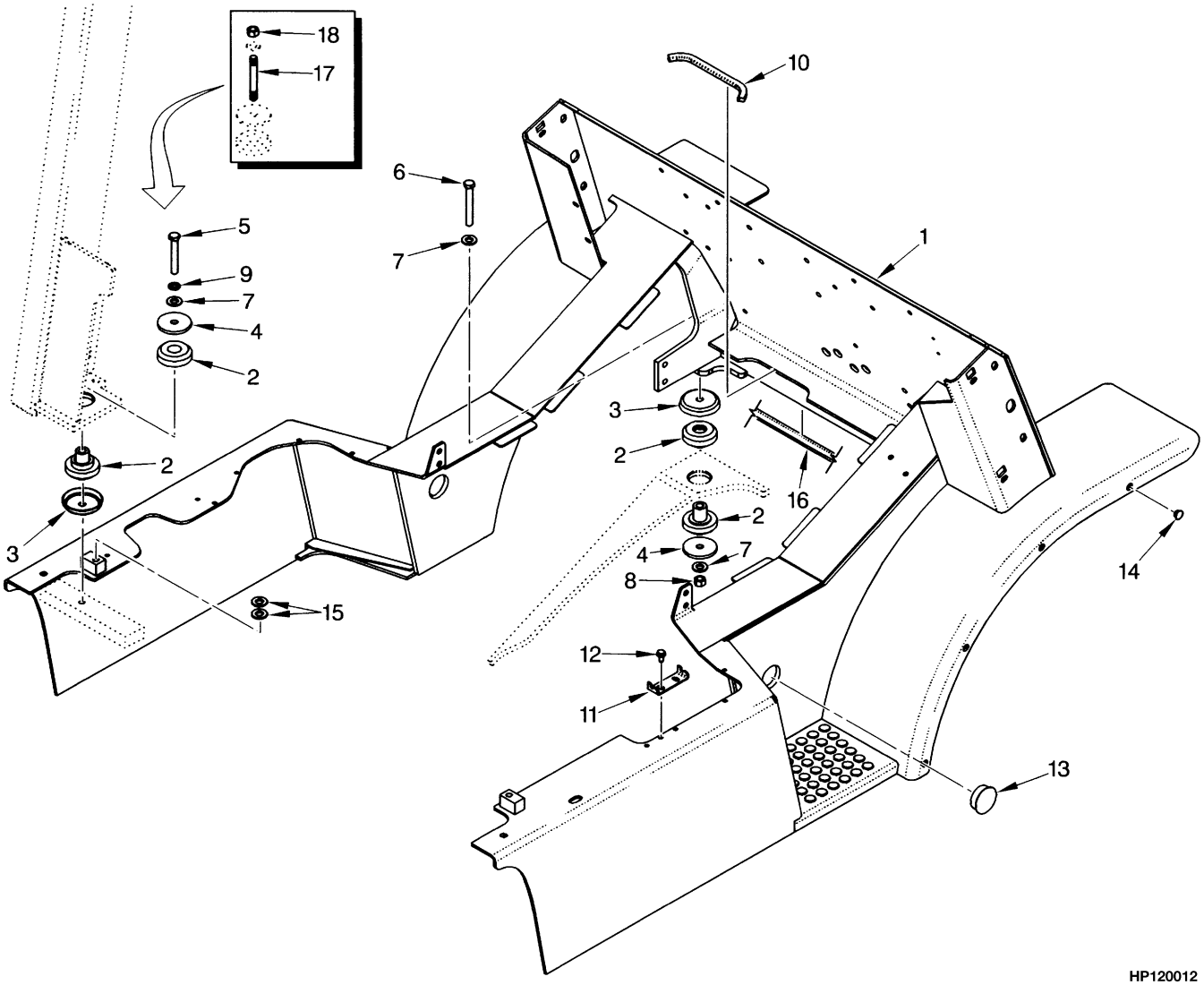

©2009 HYSTER COMPANY

OPERATOR MODULE

(→ S/N K005D05972 EXC. EXC. 6018)

ITEM	PART NO.	DESCRIPTION	QTY
1	1378107	Module (1830 mm Short Wheel Base)	1
1	1385433	Module (2100 mm Long Wheel Base)	1
2	1378168	Rubber Mount	4
3	1378197	Snubber	4
4	300939	Washer	4
5	293655	Capscrew	2
6	293657	Capscrew	2
7	296423	Washer	6
8	300937	Nut	2
9	292683	Lockwasher	2
10	1396024	Trim	1
11	1399434	Plate	1
12	316678	Screw	2
13	1398009	Plug	2
14	1399760	Plug	8
15	296422	Washer	4
16	1392745	Seal	AR
17	2037998	Stud (Optional)	2
18	300937	Nut (Optional)	2

©2009 HYSTER COMPANY

OPERATOR MODULE (FIGURE 1-6)

(S/N K005D05973 → EXC. 6018)

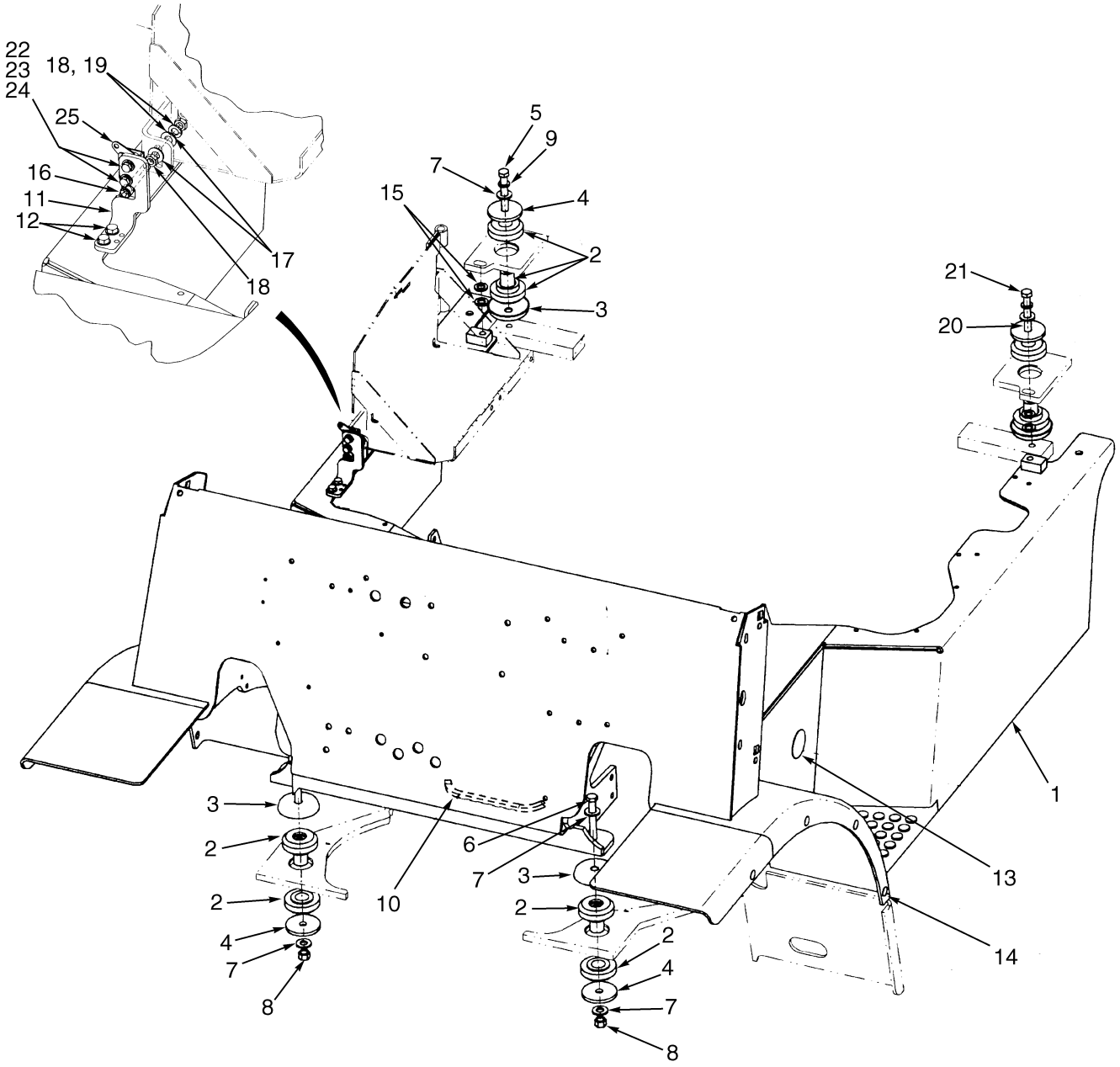

HP120642

©2009 HYSTER COMPANY

OPERATOR MODULE
(S/N K005D05973 → EXC. 6018)

KEY:
A: 1830 mm Short Wheel Base
B: 2100 mm Long Wheel Base

ITEM	PART NO.	DESCRIPTION	QTY A	QTY B
1	1493147	Operator Module	1	..
1	1493148	Operator Module	..	1
2	1378168	Rubber Mount	4	4
3	1378197	Snubber	4	4
4	300939	Washer	4	4
5	293655	Capscrew	2	2
6	293657	Capscrew	2	2
7	296423	Washer	6	6
8	302402	Locknut	2	2
9	292683	Lockwasher	2	2
10	1396024	Trim	1	1
11	1476761	Bracket	1	1
12	316678	Screw	2	2
13	1398009	Plug	2	2
14	1399760	Plug	8	8
15	296422	Washer	4	4
16	18762	Capscrew	1	1
17	15134	Washer	2	2
18	15086	Nut	2	2
19	15156	Lockwasher	1	1
20	2037998	Stud (Optional)	2	2
20	264134	Loctite	AR	AR
21	300937	Nut (Optional)	2	2
22	18462	Capscrew	2	2
23	15154	Lockwasher	2	2
24	15127	Washer	2	2
25	1476422	Latch (Rotary)	1	1

©2009 HYSTER COMPANY

HOOD AND COVERS (FIGURE 1-7)

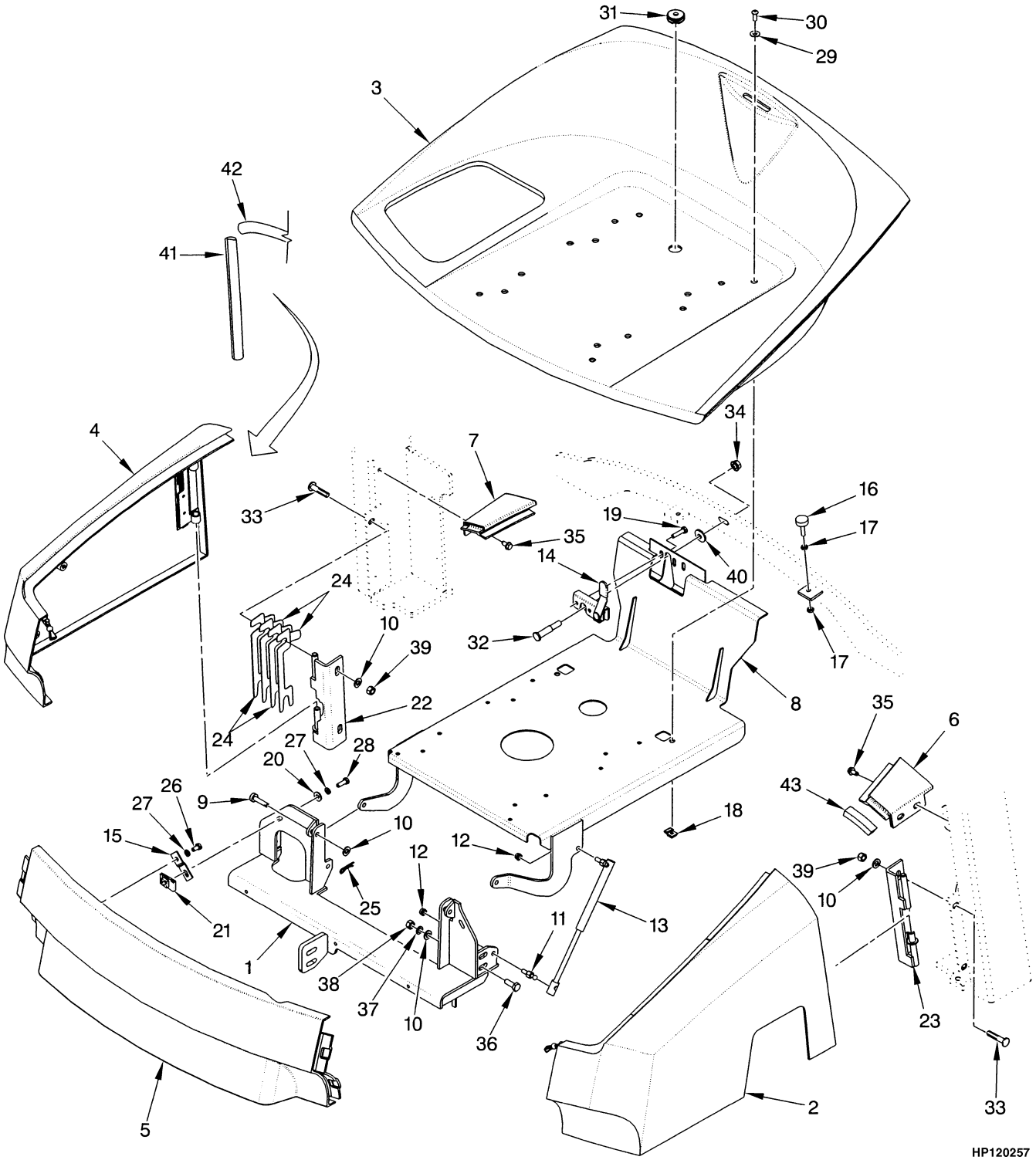

©2009 HYSTER COMPANY

HOOD AND COVERS

ITEM	PART NO.	DESCRIPTION	QTY
1	1491109	Crossmember	1
2	1397957	Panel (LH) (LPG)	1
2	1397958	Panel (LH) (Gas and Diesel)	1
2	1544913	Panel (Vented) (LH) (Gas and Diesel)	1
2	1544910	Panel (Vented) (LH) (LPG)	1
3	1397960	Hood	1
3	1544915	Hood (Vented)	1
4	1396626	Panel (RH)	1
4	1544906	Panel (Vented) (RH)	1
5	1396625	Cover (Front)	1
5	1392718	Latch	2
6	1397964	Cover (LH) (Without Cab)	1
6	1485280	Cover (LH) (With Cab)	1
7	1397963	Cover (RH) (Without Cab)	1
7	1485281	Cover (RH) (With Cab)	1
8	**a** 1488684	Seat Pan	1
8	**b** 1531579	Seat Pan	1
9	2021207	Pin	2
10	320159	Washer	10
11	1350285	Ball Stud (Ball)	1
12	316835	Nut	4
13	1518858	Gas Spring	2
13	1518888	Gas Spring	1
13	1513907	Ball Stud	2
14	2036143	Latch	1
15	2036866	Bracket	2
16	1347088	Screw	2
17	15001	Nut	4
18	1385535	Nut	2
19	1529238	Capscrew	2
20	320158	Washer	4
21	1364259	Nut	2
22	1567198	Hinge (RH)	1
23	1470009	Hinge (LH)	1
24	2036142	Shim (0.047 in.)	4
25	1362714	Cotter Pin	2
26	287851	Capscrew	2
27	292681	Lockwasher	6
28	136749	Screw	2
29	375629	Washer	2
30	370599	Capscrew	2
31	1359587	Grommet	1
32	1471866	Striker	1
33	220023	Bolt	4
34	264144	Nut	1
35	316678	Screw	4
36	136985	Capscrew	8
37	320157	Washer	2
38	316826	Nut	2
39	156133	Nut	8
40	2036863	Washer	1

©2009 HYSTER COMPANY

HOOD AND COVERS

ITEM	PART NO.	DESCRIPTION	QTY
41	1464909	Trim Seal	2
42	1396658	Trim Seal	2
43	1466416	Trim Seal	2

FOOTNOTES:

a → S/N K005V05721A

b S/N K005V05722A →

©2009 HYSTER COMPANY

NOTES

©2009 HYSTER COMPANY

SOUND REDUCTION (FIGURE 1-8)

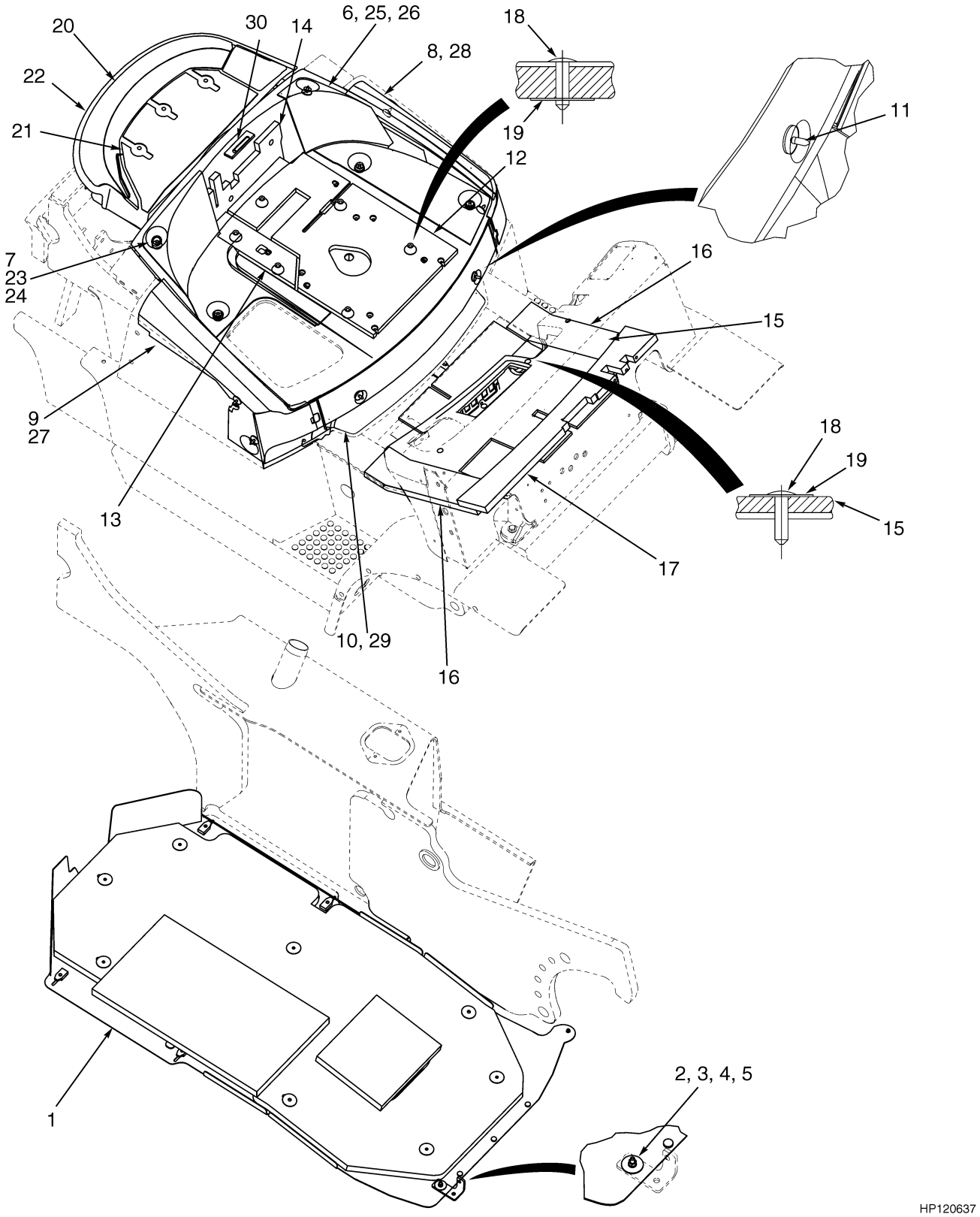

©2009 HYSTER COMPANY

SOUND REDUCTION

KEY:
A: 1830 mm Short Wheel Base
B: 2100 mm Long Wheel Base

ITEM	PART NO.	DESCRIPTION	QTY A	QTY B
1	1399809	Undercarriage (☞Figure 1-9)	1	..
1	1399810	Undercarriage (☞Figure 1-9)	..	1
2	1482394	Bracket	1	1
3	293603	Capscrew	1	1
4	2034906	Washer	2	2
4	292680	Washer	1	1
5	136687	Nut	1	1
6	1400151	Hood Liner (LH Hood)	1	1
7	1400152	Hood Liner (RH Hood)	1	1
8	1400153	Sound Liner (LH Door Panel)	1	1
9	1400154	Sound Liner (RH Door Panel)	1	1
10	1400155	Sound Liner (Front Cover)	1	1
11	1304971	Fastener	11	11
12	1468020	Sound Liner (Seat)	1	1
13	1468021	Sound Liner (Seat)	1	1
14	1468022	Sound Liner (Seat)	1	1
15	1468023	Sound Liner (Floor Plate)	1	1
16	1468024	Sound Liner (Floor Plate)	2	2
17	1468025	Barrier	1	1
18	1399815	Rivet	15	15
19	1399784	Washer	15	15
20	1468032	Sound Liner (Radiator Cover)	1	1
21	1468033	Noise Panel (Radiator Barrier)	1	1
22	1465534	Seal	AR	AR
23	1467338	Barrier (RH Seat Panel)	1	1
24	1467340	Barrier (RH Seat Panel)	1	1
25	1467342	Barrier (LH Seat Panel)	1	1
26	1467343	Barrier (LH Seat Panel)	1	1
27	1467344	Barrier (RH Door Panel)	1	1
28	1467345	Door Panel (LH Door Panel)	1	1
29	1467347	Panel (Front Panel)	1	1
30	1490766	Pad (Latch)	1	1
	1468027	Barrier	1	1

©2009 HYSTER COMPANY

UNDERCARRIAGE PAN (FIGURE 1-9)

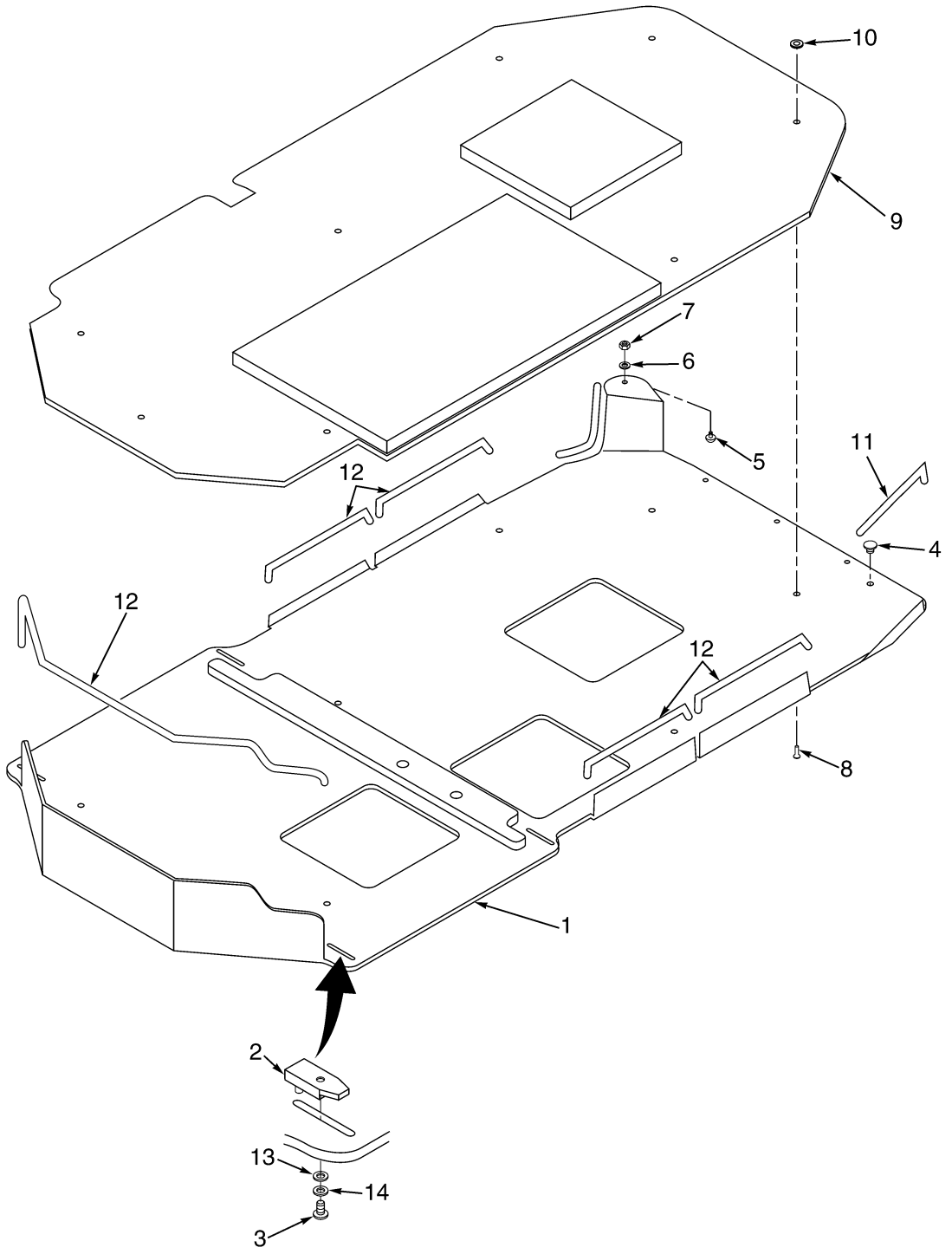

HP120636

©2009 HYSTER COMPANY

UNDERCARRIAGE PAN

KEY:
A: 1830 mm Short Wheel Base
B: 2100 mm Long Wheel Base

ITEM	PART NO.	DESCRIPTION	QTY A	QTY B
	1399809	Undercarriage (Assembly)	1	..
	1399810	Undercarriage (Assembly)	..	1
1	1397647	Undercarriage	1	..
1	1397651	Undercarriage	..	1
2	1399818	Bracket Wldmt	4	6
3	1399820	Capscrew	4	6
4	1399817	Bumper	3	3
5	1399816	Screw	1	1
6	320155	Washer	1	1
7	302398	Locknut	1	1
8	1399815	Rivet	8	8
9	1399813	Insulator	1	..
9	1399814	Insulator	..	1
10	1399784	Washer	8	8
11	1399829	Edge Protector (250 mm)	2	2
12	1399830	Edge Protector (420 mm)	4	4
13	320156	Washer	4	6
14	292680	Washer	4	6

©2009 HYSTER COMPANY

OVERHEAD GUARD (FIGURE 1-10)

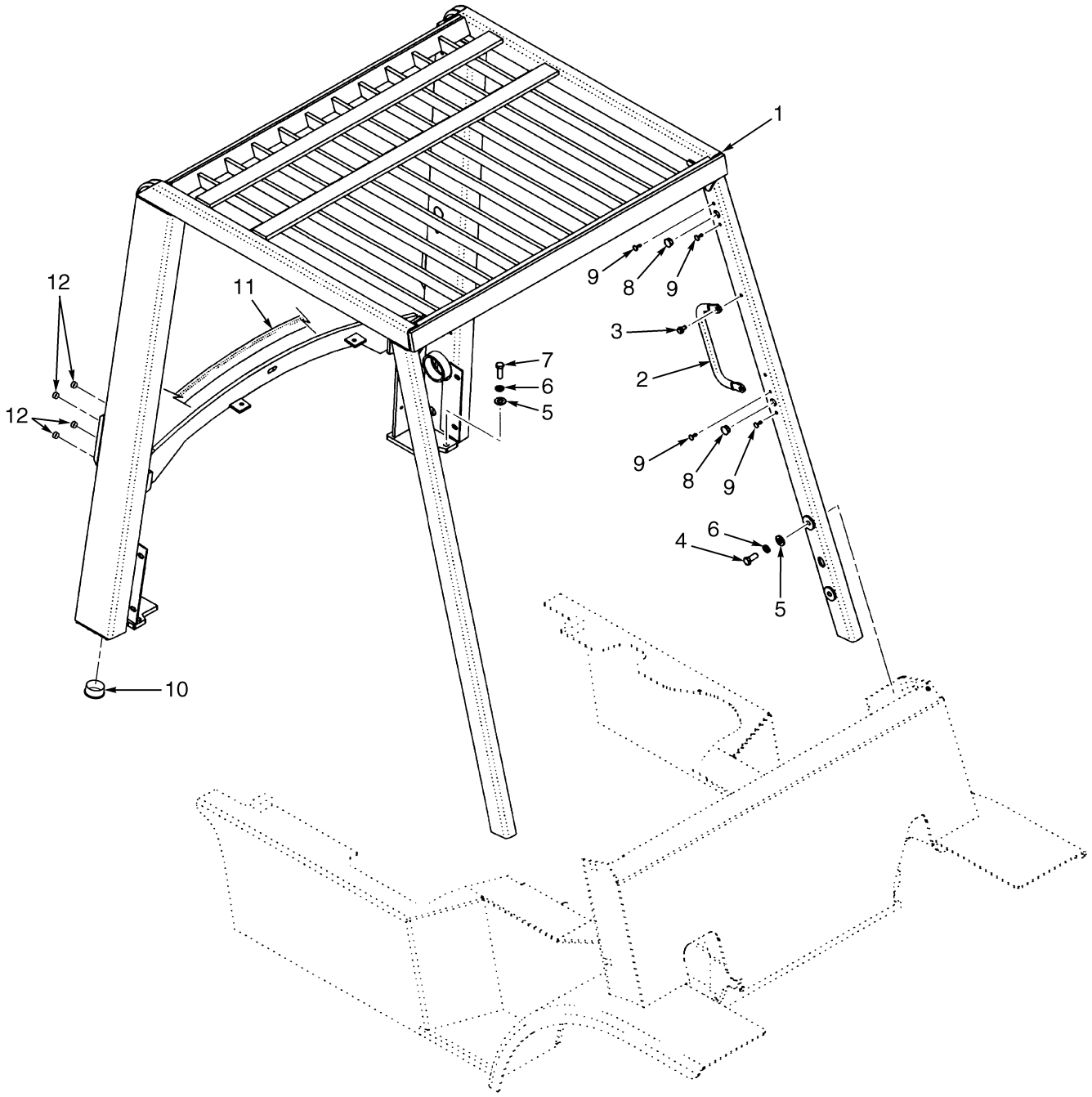

HP120014

©2009 HYSTER COMPANY

OVERHEAD GUARD

ITEM	PART NO.	DESCRIPTION	QTY
1	**b** 1396039	Overhead Guard (Standard Height)	1
1	**a** 1523718	Overhead Guard (Standard Height)	1
1	**b** 1465443	Overhead Guard (Raised Height)	1
1	**a** 1523715	Overhead Guard (Raised Height)	1
2	2035800	Handle Grip	2
3	316678	Screw	4
4	293644	Capscrew	4
5	296423	Washer	6
6	292683	Lockwasher	6
7	293646	Capscrew	2
8	1363917	Plug	6
9	1363916	Plug	14
10	1363918	Plug	2
10	1356377	Plug	2
11	1465740	Seal	1
12	1494888	Plug	8

FOOTNOTES:

a Gasoline and Diesel

b LPG And Dual Fuel

©2009 HYSTER COMPANY

FLOOR PLATES AND COVERS (FIGURE 1-11)

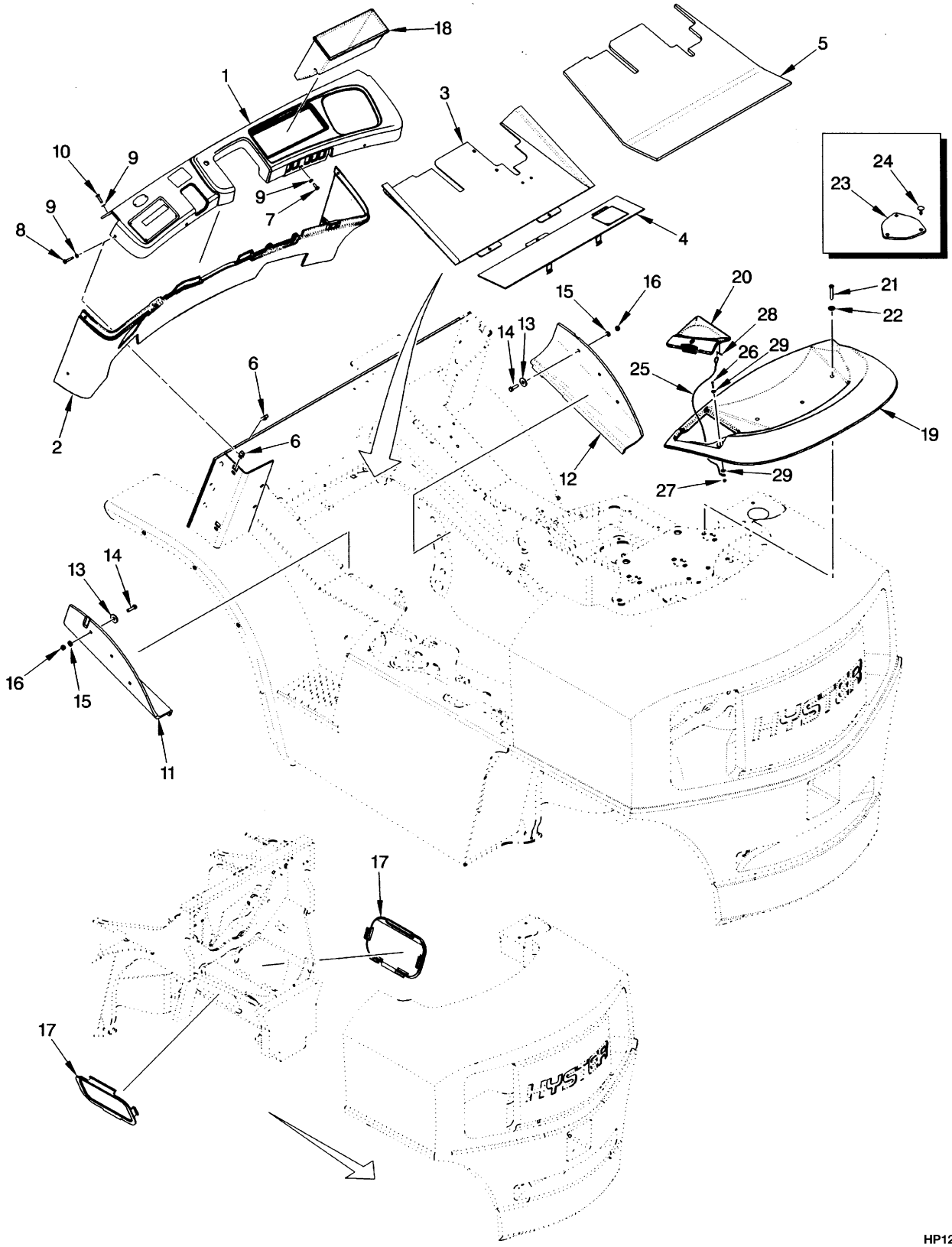

©2009 HYSTER COMPANY

FLOOR PLATES AND COVERS

ITEM	PART NO.	DESCRIPTION	QTY
1	1396147	Dash Display	1
2	1396148	Cowl Cover	1
3	2035798	Floorplate (Front)	1
4	2035980	Floorplate	1
5	1396641	Floormat	1
6	1350215	Nut	6
7	1525246	Screw	3
8	1525248	Screw	4
9	1399399	Washer	9
10	1525247	Screw	2
11	1399337	Flap (Right Cylinder)	1
12	1399338	Flap (Left Cylinder)	1
13	1334790	Washer	6
14	176640	Bolt	6
15	320157	Washer	6
16	302400	Nut	6
17	2036875	Cover	2
18	1338286	Storage Box (Without Cab)	1
19	1385498	Cover	1
19	1382126	Seal	AR
19	355844	Adhesive	AR
20	**a** 1396012	Cover	1
20	**b** 1396009	Cover	1
21	1469317	Capscrew	3
22	375629	Washer	3
23	1347043	Cover (Counterweight Exhaust)	1
24	1347045	Fastener (Counterweight Exhaust)	3
25	1400180	Lanyard	1
26	296511	Screw	1
27	302398	Locknut	1
28	15212	Cotter Pin	1
29	320156	Washer	2

FOOTNOTES:

a Type Gasoline and Diesel

b Type LPG, Dual Fuel, GS, LPS, and DS

©2009 HYSTER COMPANY

COUNTERWEIGHT (FIGURE 1-12)

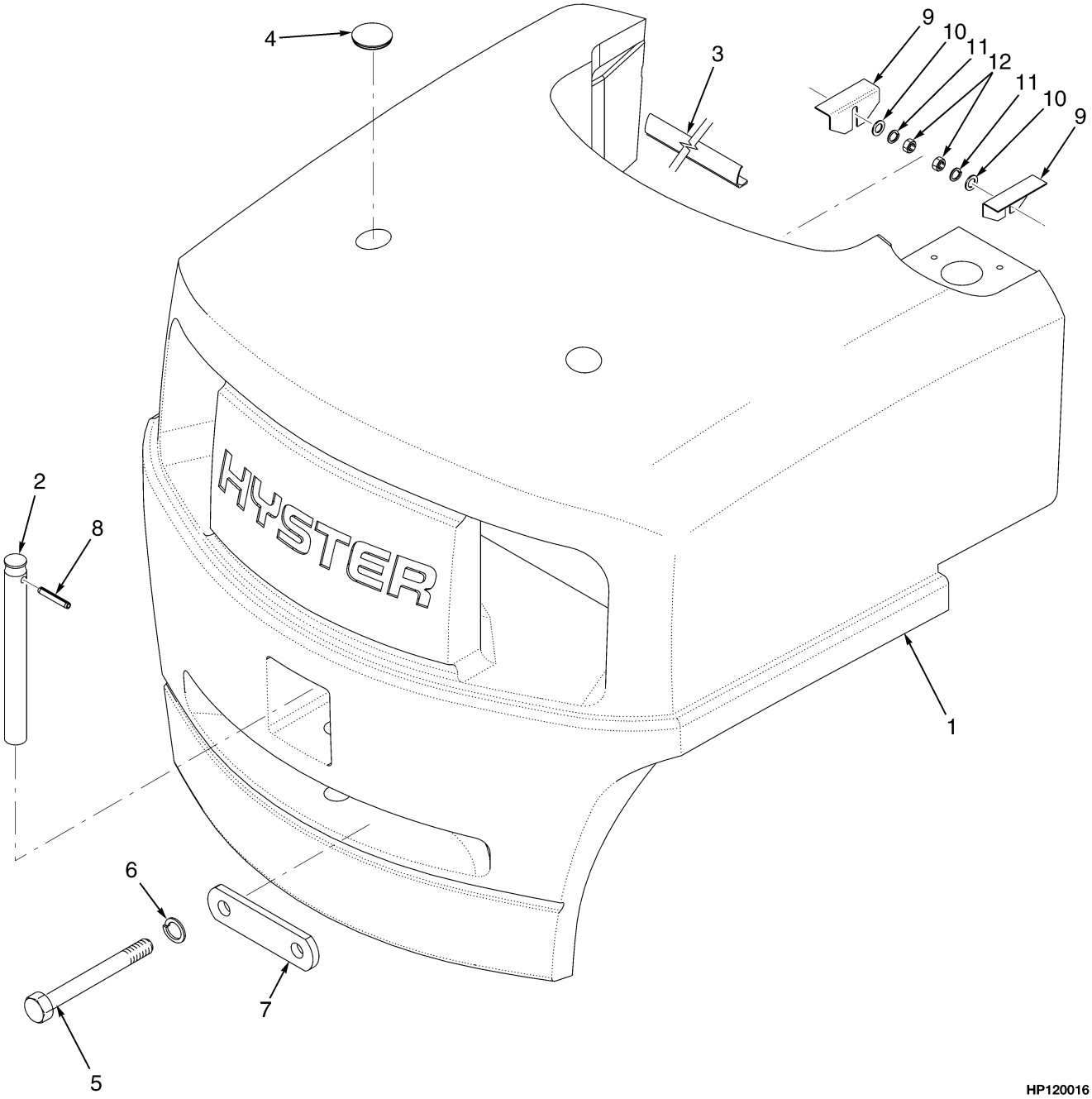

©2009 HYSTER COMPANY

COUNTERWEIGHT

ITEM	PART NO.	DESCRIPTION	QTY
1	1388879	Counterweight (H70XM)	1
1	1388880	Counterweight (H80XM)	1
1	1385449	Counterweight (H90XM)	1
1	1388882	Counterweight (H100XM)	1
1	1388883	Counterweight (H110XM)	1
1	1385457	Counterweight (H120XM)	1
2	1388898	Tow Pin	1
3	. . . . .	Seal (H70-90XM)	2
3	. . . . .	Seal (H100-120XM)	2
4	2021395	Cap	2
5	292614	Capscrew	2
6	292689	Washer	2
7	1480019	Washer	2
8	302492	Roll Pin	1
9	1335763	Shim (0.109 in.)	4
10	320158	Washer	4
11	292681	Lockwasher	4
12	239503	Nut	4

©2009 HYSTER COMPANY

REAR ACCESS SCREEN (FIGURE 1-13)

(→ S/N K005D02642X)

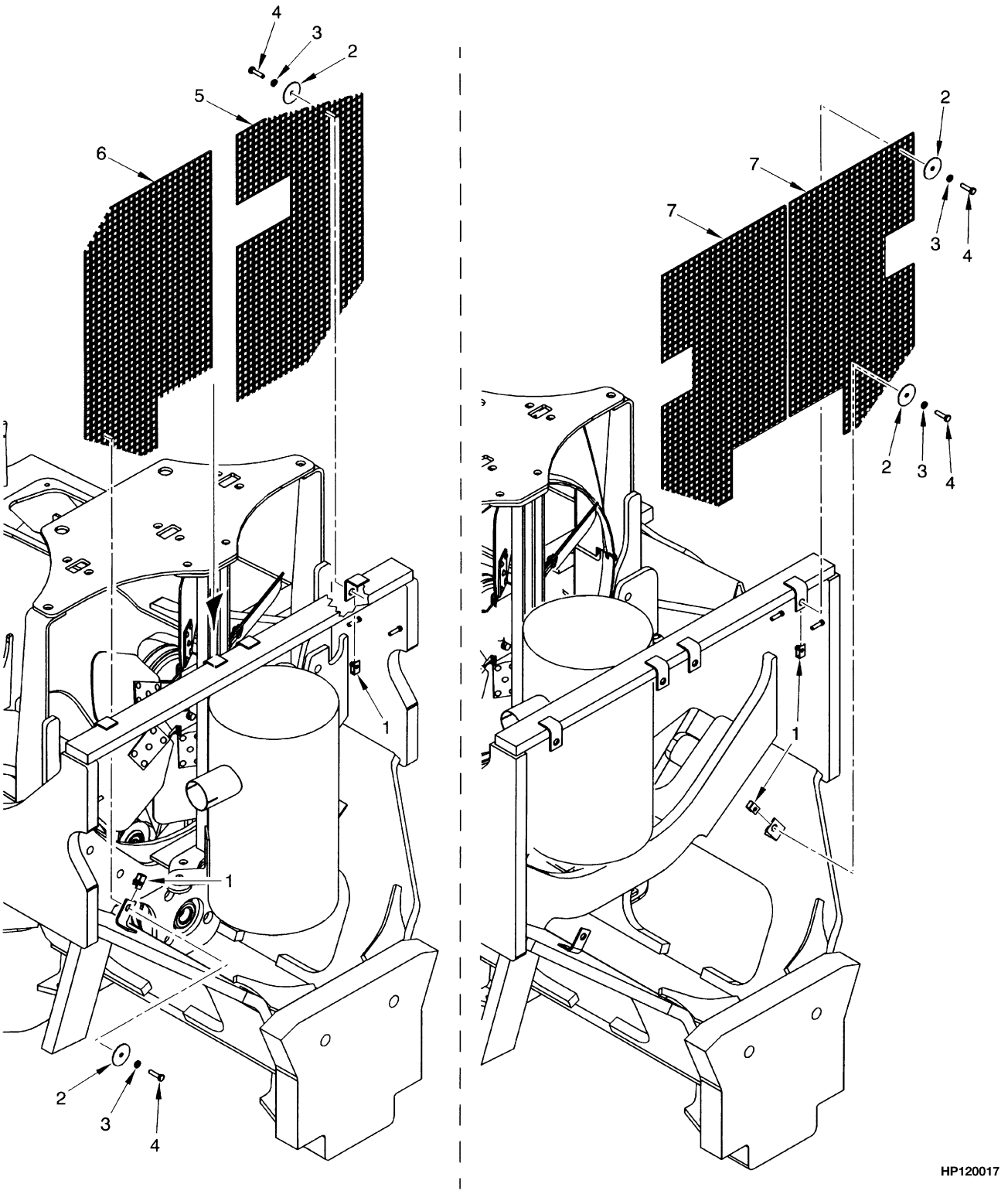

©2009 HYSTER COMPANY

REAR ACCESS SCREEN

(→ S/N K005D02642X)

ITEM	PART NO.	DESCRIPTION	QTY
1	1350215	Nut	6
2	1399784	Washer	6
3	292680	Washer	6
4	287816	Capscrew	6
5	1399779	Screen (RH) (1830/1880 mm Short Wheel Base)	1
6	1465328	Screen (LH) (1830/1880 mm Short Wheel Base)	1
7	1399778	Screen (2100 mm Long Wheel Base)	2

©2009 HYSTER COMPANY

REAR ACCESS SCREEN (FIGURE 1-14)

(S/N K005D02643X →)

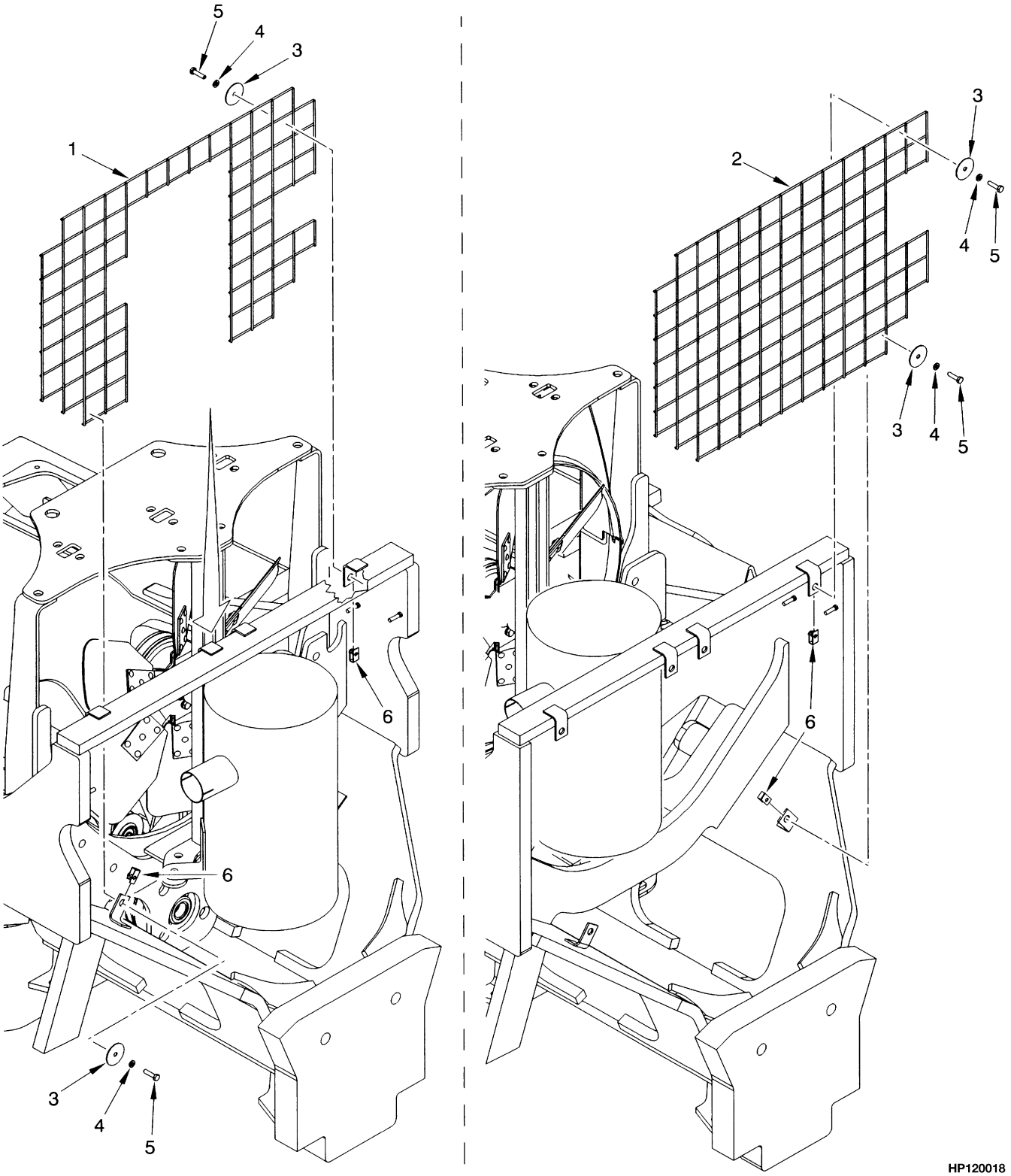

©2009 HYSTER COMPANY

REAR ACCESS SCREEN

(S/N K005D02643X →)

ITEM	PART NO.	DESCRIPTION	QTY
1	1470920	Screen (H70XM) (1830/1880 mm Short Wheel Base)	1
1	1470922	Screen (H80-90XM) (1830/1880 mm Short Wheel Base)	1
2	1468699	Screen (H100-120XM) (2100 mm Long Wheel Base)	1
3	1471535	Washer	4
4	292681	Lockwasher	4
5	136749	Screw	4
6	1398062	Nut	4

©2009 HYSTER COMPANY

LABELS AND PAINT (FIGURE 1-15)

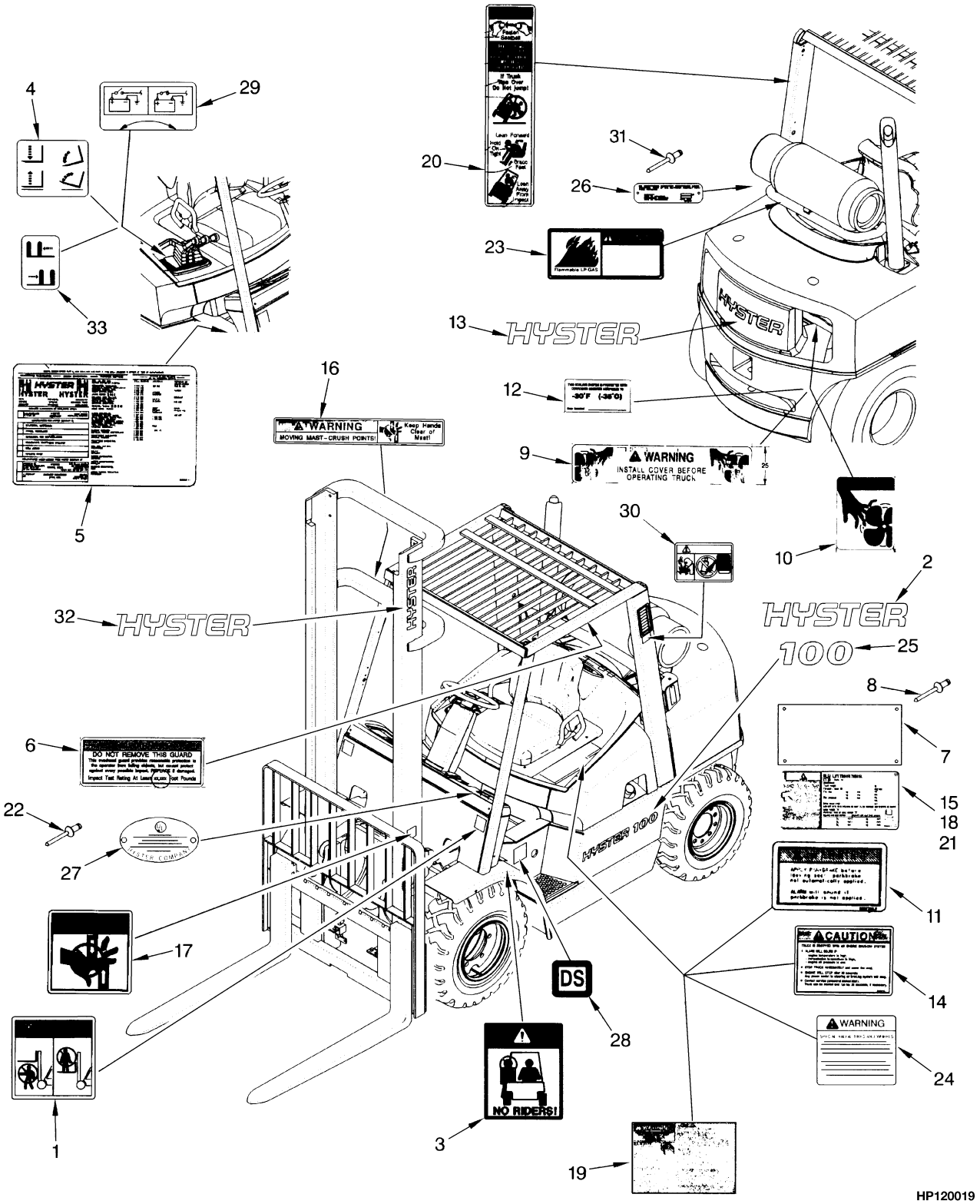

©2009 HYSTER COMPANY

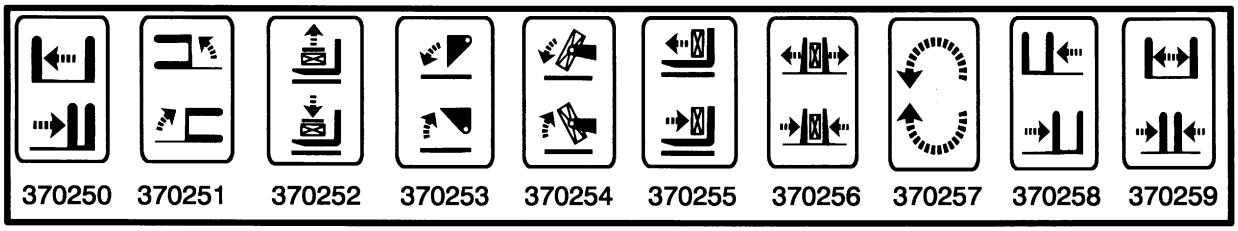

HP120020

LABELS AND PAINT

ITEM	PART NO.	DESCRIPTION	QTY
1	2075656	Label (Mast Warning)	2
2	2020517	Label (Hyster) (Horizontal)	2
3	1330920	Label (No Riders)	2
4	1356137	Label (Lift and Tilt)	1
5	1534660	Label (Patents and Trademarks)	2
6	**a**	Label (Impact Rating Warning)	1
7	389688	Nameplate	1
8	170658	Rivet	4
9	1325271	Label (Fan Warning)	1
10	1345939	Label (Fan Warning) (Pictorially)	2
11	2309799	Label (Parking Brake)	1
12	1354165	Label (Antifreeze)	1
13	1399885	Label (Hyster) (Counterweight) (Optional)	1
14	1385102	Label (Drive Train Protection)	1
15	1335137	Label (Nameplate Tag)	1
16	1330919	Label (Mast Warning)	1
17	1335129	Label (Pinch Point)	2
18	1304058	Nameplate (Incomplete) (Optional)	1
19	1336605	Label (Operator Warning)	1
20	1330917	Label (Operator Restraint)	1
21	**a**	Label (Nameplate)	1
22	166818	Rivet	2
23	1354171	Label (Flammable LPG)	1
24	1374549	Label (Radial Tire Warning)	1
25	1399873	Label (H70XM)	1
25	1399874	Label (H80XM)	2
25	1399875	Label (H90XM)	2
25	1399876	Label (H100XM)	2
25	1399877	Label (H110XM)	2
25	1399878	Label (H120XM)	2
26	1501259	Nameplate (LP Tank) (Type LP, LPS, Dual Fuel)	1
27	179420	Nameplate (Gasoline) (Type G)	1
27	179423	Nameplate (Diesel) (Type D)	1
27	179414	Nameplate (LPG) (Type LP)	1
27	179415	U.L. Plate (Type GS)	1
27	179417	Nameplate (Type DS)	1
27	179416	U.L. Plate (Type LPS)	1
27	1378509	U.L. Plate (Type Dual Fuel)	1
28	154065	Label (Type GS)	2
28	154067	Label (Type DS)	2
28	154066	Label (Type LPS)	2
29	1352190	Label (Battery Disconnect) (Type GS, LPS, DS)	1
30	2034459	Label (Ether Warning)	1

©2009 HYSTER COMPANY

LABELS AND PAINT

ITEM	PART NO.	DESCRIPTION	QTY
31	340044	Gripnail (Optional)	2
31	170658	Rivet	2
32	1339672	Label (Hyster) (Vertical)	2
33	370250	Label (Auxiliary Function - Reach)	1
33	370251	Label (Auxiliary Function - Swing)	1
33	370252	Label (Auxiliary Function - Stabilizer)	1
33	370253	Label (Auxiliary Function - Dump/Scoop)	1
33	370254	Label (Auxiliary Function - Upender)	1
33	370255	Label (Auxiliary Function - Push/Pull)	1
33	370256	Label (Auxiliary Function, Clamp)	1
33	370257	Label (Auxiliary Function, Rotate)	1
33	370258	Label (Auxiliary Function, Side-Shift)	1
33	370259	Label (Auxiliary Function - Fork Spreader)	1

FOOTNOTES:

a See Your Local Hyster Dealer

©2009 HYSTER COMPANY

2 ENGINE ASSEMBLY

SECTION 2
ENGINE ASSEMBLY

DESCRIPTION	PAGE
ALTERNATOR MOUNTING	
DIESEL (→ 7/2001)	2-52
DIESEL (7/2001 →)	2-54
BAFFLE AND ATTACHING PARTS	2-8
CAMSHAFT AND OIL PAN	
GASOLINE AND LPG	2-34
COOLANT PUMP	
DIESEL (→ 9/2001)	2-76
DIESEL (9/2001 →)	2-78
COOLING	2-4
CRANKSHAFT AND PISTON	
DIESEL	2-58
CYLINDER BLOCK	
DIESEL	2-56
GASOLINE AND LPG	2-30
CYLINDER HEAD	
DIESEL	2-66
GASOLINE AND LPG	2-38
ENGINE ASSEMBLY	
DIESEL	2-50
GASOLINE AND LPG - WITH SERPENTINE BELT	2-26
ENGINE MOUNT	
DIESEL	2-48
GASOLINE AND LPG	2-24
EXHAUST	
DIESEL	2-22
GASOLINE AND LPG - WITHOUT LOW EMISSIONS (→ S/N K005V04115Z)	2-14
GASOLINE AND LPG - WITHOUT LOW EMISSIONS (S/N K005V04116Z →)	2-16
THREE-WAY CATALYTIC CONVERTER - LPG WITH LOW EMISSIONS (→ S/N K005V04115Z)	2-18
THREE-WAY CATALYTIC CONVERTER - LPG WITH LOW EMISSIONS (S/N K005V04116Z →)	2-20
EXHAUST MANIFOLD	
GASOLINE AND LPG (→ S/N K005V04115Z)	2-43
GASOLINE AND LPG (S/N K005V04116Z →)	2-44
FAN DRIVE ASSEMBLY	
COOLING SYSTEM	2-10
MANIFOLDS	
DIESEL (→ 7/2001)	2-70
DIESEL (7/2001 →)	2-72
OIL FILTER	
DIESEL	2-74
OIL PAN AND PUMP	
DIESEL	2-60
OIL PUMP	
GASOLINE AND LPG	2-46
ROTARY EXHAUSTER	
DIESEL	2-80
TIMING GEAR	
DIESEL	2-64

©2009 HYSTER COMPANY

SECTION 2
ENGINE ASSEMBLY

DESCRIPTION	PAGE
VALVE COVER AND INLET MANIFOLD	
GASOLINE AND LPG	2-40
VALVE COVER AND ROCKER ARM SHAFT	
DIESEL	2-68

©2009 HYSTER COMPANY

NOTES

©2009 HYSTER COMPANY

COOLING (FIGURE 2-1)

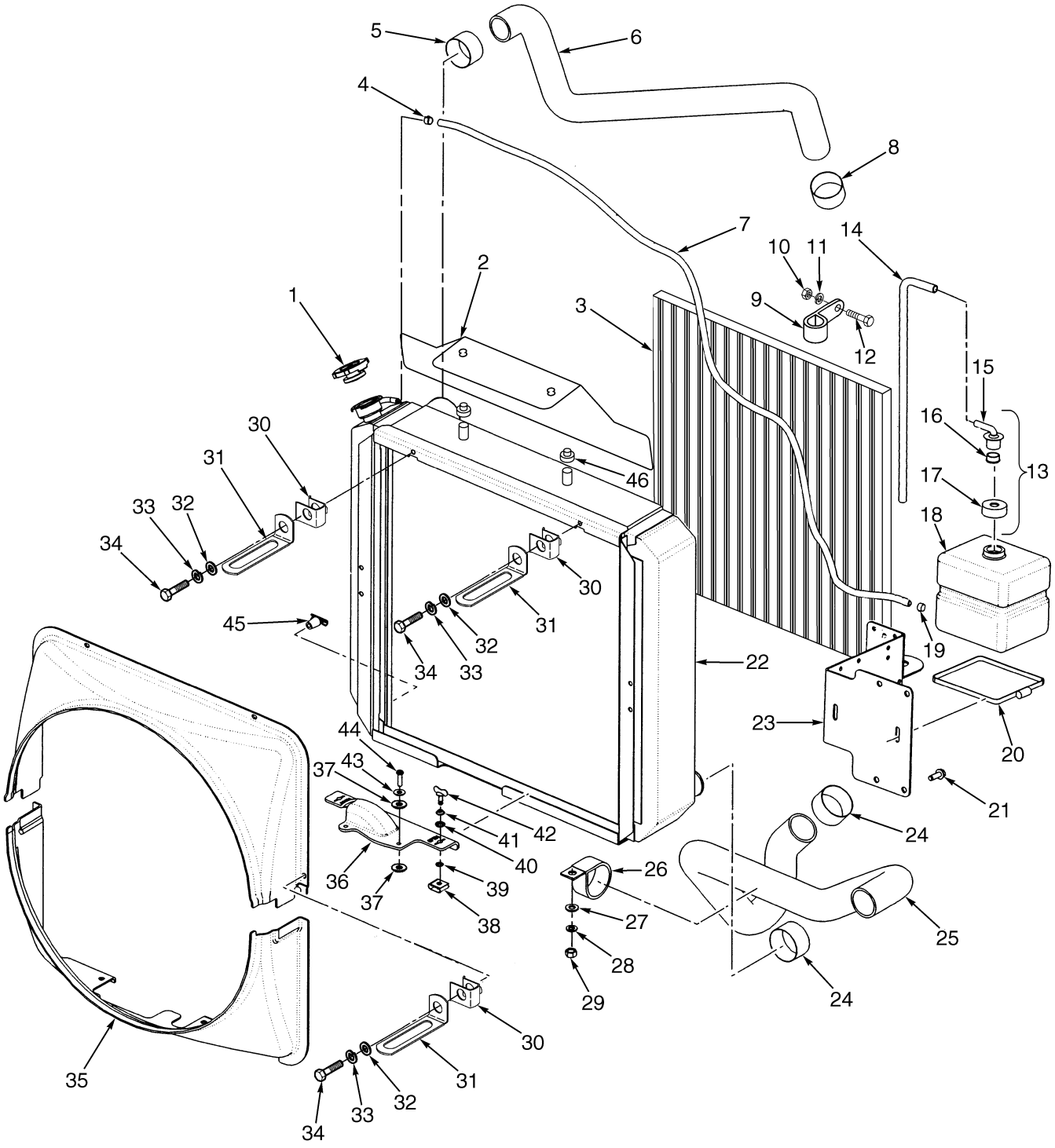

©2009 HYSTER COMPANY

COOLING

ITEM	PART NO.	DESCRIPTION	QTY
1	178899	Radiator Cap (Radiator)	1
2	1400226	Plate (Screen Mounting) (Includes Screen Latch)	1
3	1400229	Screen	1
4	369815	Clamp	1
5	1502000	Hose Clamp	1
6	2035359	Radiator Hose (Upper) (Gasoline and LPG)	1
6	2035357	Radiator Hose (Upper, Diesel)	1
7	1302954	Hose	1
8	1502000	Hose Clamp (Gasoline and LPG)	1
8	1549449	Hose Clamp (Diesel)	1
9	1339457	Clamp	1
10	136687	Nut	1
11	292680	Washer	1
12	292500	Capscrew	1
13	1359581	Outlet	1
14	1457312	Hose	1
15	345453	Outlet (Reservoir)	1
16	336550	Bushing	1
17	345454	Cap	1
18	344432	Reservoir	1
19	353310	Clamp	1
20	340204	Strap	1
21	316678	Screw	4
22	1388911	Radiator	1
23	1396187	Bracket	1
24	1549372	Hose Clamp (Gasoline and LPG)	1
24	1549449	Hose Clamp (Diesel)	1
25	2035355	Radiator Hose (Lower, Gasoline and LPG)	1
25	2035354	Radiator Hose (Lower, Diesel)	1
26	895963	Clamp (Gasoline and LPG)	1
27	320159	Washer	1
28	292682	Lockwasher	1
29	136692	Nut	1
30	1329272	Nut	4
31	1466001	Clamp	3
32	197066	Washer	4
33	292678	Lockwasher	4
34	302238	Capscrew	4
35	**a** 1397697	Shroud (Upper)	1
35	**a** 1397698	Shroud (Lower)	1
36	1397710	Shroud (Door)	1
37	15127	Washer	4
38	1399312	Receptacle	2
39	1399313	Retainer	2
40	1399310	Washer	2
41	1399311	Spring	2
42	1399314	Stud	2
43	320156	Washer	2
44	222038	Rivet	2
45	12815	Drain Valve (Drain)	1
46	2029170	Rubber Mount (Rubber)	4

©2009 HYSTER COMPANY

COOLING

ITEM	PART NO.	DESCRIPTION	QTY

FOOTNOTES:

a Replace with Kit 866145

©2009 HYSTER COMPANY

NOTES

©2009 HYSTER COMPANY

BAFFLE AND ATTACHING PARTS (FIGURE 2-2)

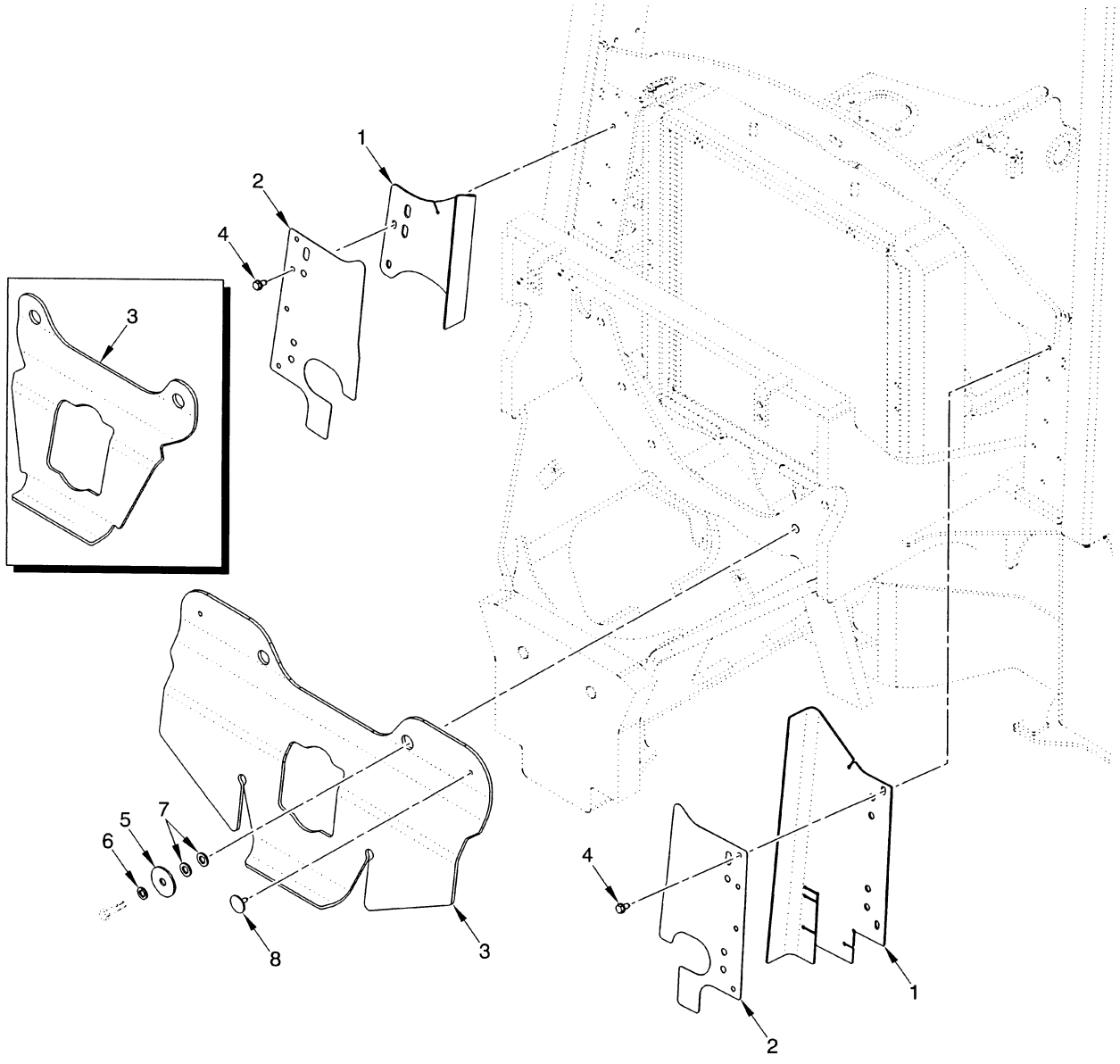

©2009 HYSTER COMPANY

BAFFLE AND ATTACHING PARTS

ITEM	PART NO.	DESCRIPTION	QTY
1	1471445	Baffle (RH)	1
1	1471446	Baffle (LH)	1
2	1471448	Plate	2
3	1471444	Baffle (Bottom) (2100 mm Long Wheel Base)	1
3	1471449	Baffle (Bottom) (1830/1880 mm Short Wheel Base)	1
4	316678	Screw	5
5	1397808	Washer	2
6	292683	Lockwasher	6
7	320161	Washer	2
8	1304971	Fastener (2100 mm Long Wheel Base)	1

©2009 HYSTER COMPANY

FAN DRIVE ASSEMBLY (FIGURE 2-3)
COOLING SYSTEM

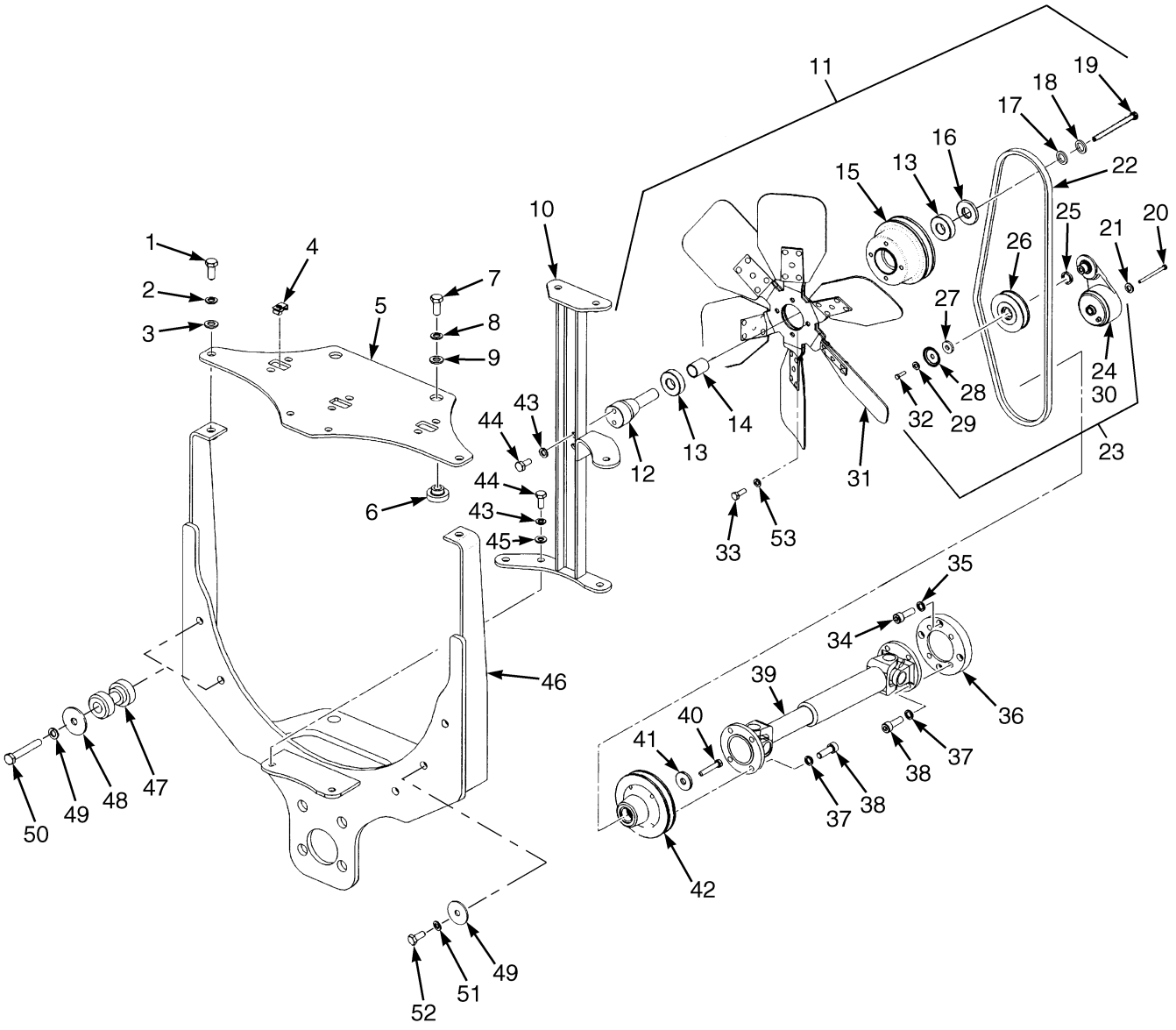

©2009 HYSTER COMPANY

FAN DRIVE ASSEMBLY
COOLING SYSTEM

ITEM	PART NO.	DESCRIPTION	QTY
1	292527	Capscrew	2
2	292683	Lockwasher	2
3	320161	Washer	2
4	1398062	Nut	3
5	2035322	Support Plate	1
6	2029170	Rubber Mount (Rubber)	4
7	287854	Capscrew	4
8	292682	Lockwasher	4
9	320159	Washer	4
10	**f** 2035331	Bracket	1
10	**i** 1499369	Bracket	1
11	**dg** 1504426	Fan Mount	1
11	**i** 1504410	Fan Mount	1
12	**be** 1388794	Pin	1
12	**g** 1504180	Pin	1
12	**i** 1504380	Pin	1
13	**e** 128469	Ball Bearing	4
13	**i** 124668	Ball Bearing	4
13	257291	Adhesive	AR
14	**e** 1396724	Spacer	1
14	**h** 1504256	Spacer	1
15	**cdf** 1384584	Fan Pulley	1
15	**i** 1495666	Fan Pulley	1
16	**e** 1396726	Washer	1
17	**h** 1531750	Snap Ring	1
18	**h** 12928	Snap Ring	1
19	**e** 302335	Capscrew	1
20	292522	Capscrew	1
21	292682	Lockwasher	1
22	**df** 328565	V-Belt	1
22	**i** 2048095	V-Belt (4 Rib)	1
23	**df** 1396171	Belt Tensioner (V-Belt)	1
24	**a** 1396779	Belt Tensioner (Also for V-Belt)	1
25	**a** 1396780	Spacer (V-Belt)	1
26	**a** 1396781	Pulley (V-Belt)	1
27	**a** 1396730	Washer (V-Belt)	1
28	. . . . .	Plate (V-Belt)	1
29	**a** 292681	Lockwasher (V-Belt)	1
30	**i** 1396779	Belt Tensioner (Serpentine Belt)	1
31	1394712	Fan (Draw Through)	1
32	**a** 136749	Screw (V-Belt)	1
33	136749	Screw	4
34	35116	Capscrew (Diesel)	4
35	177948	Lockwasher (Diesel)	4
36	1394595	Adapter (Diesel)	1
37	293780	Lockwasher	8
38	296011	Capscrew	8
39	1396174	Drive Shaft (Diesel)	1
39	53065	Flange	2
39	278085	Kit-Shaft and Bearing	2

©2009 HYSTER COMPANY

FAN DRIVE ASSEMBLY
COOLING SYSTEM

ITEM	PART NO.	DESCRIPTION	QTY
39	1394581	Drive Shaft (Gasoline and LPG)	1
39	53065	Flange	2
39	278085	Kit-Shaft and Bearing	2
40	136985	Capscrew	1
41	1396726	Washer	1
42	**f** 1394702	Pulley (Pump Drive) (V-Belt)	1
42	**i** 1495665	Pulley (4 Rib) (Pump Drive) (Serpentine Belt)	1
43	292682	Lockwasher	2
44	287854	Capscrew	6
44	287837	Capscrew (Diesel)	6
45	**f** 320159	Washer	4
46	1499373	Bracket	1
46	**i** 2035323	Bracket	1
47	1397807	Mount (Long Wheel Base)	2
48	1397808	Washer (Long Wheel Base)	2
49	320161	Washer	6
50	292535	Capscrew	2
51	292683	Lockwasher	6
52	287837	Capscrew	6
53	292681	Lockwasher	4

FOOTNOTES:

a Included with 1396171
b Service with 1504180 (Qty. 1), 124668 (Qty. 2), 1504256 (Qty. 1)
c Service with Fan Mount Assembly 1504426
d → S/N K005D06506Y
e → S/N K005V01822Y
f → S/N K005V02243Z
g S/N K005V01822Y ↔ S/N K005V02243Z
h S/N K005V01823Y →
i S/N K005V02244Z →

©2009 HYSTER COMPANY

NOTES

©2009 HYSTER COMPANY

EXHAUST (FIGURE 2-4)

GASOLINE AND LPG — WITHOUT LOW EMISSIONS (→ S/N K005V04115Z)

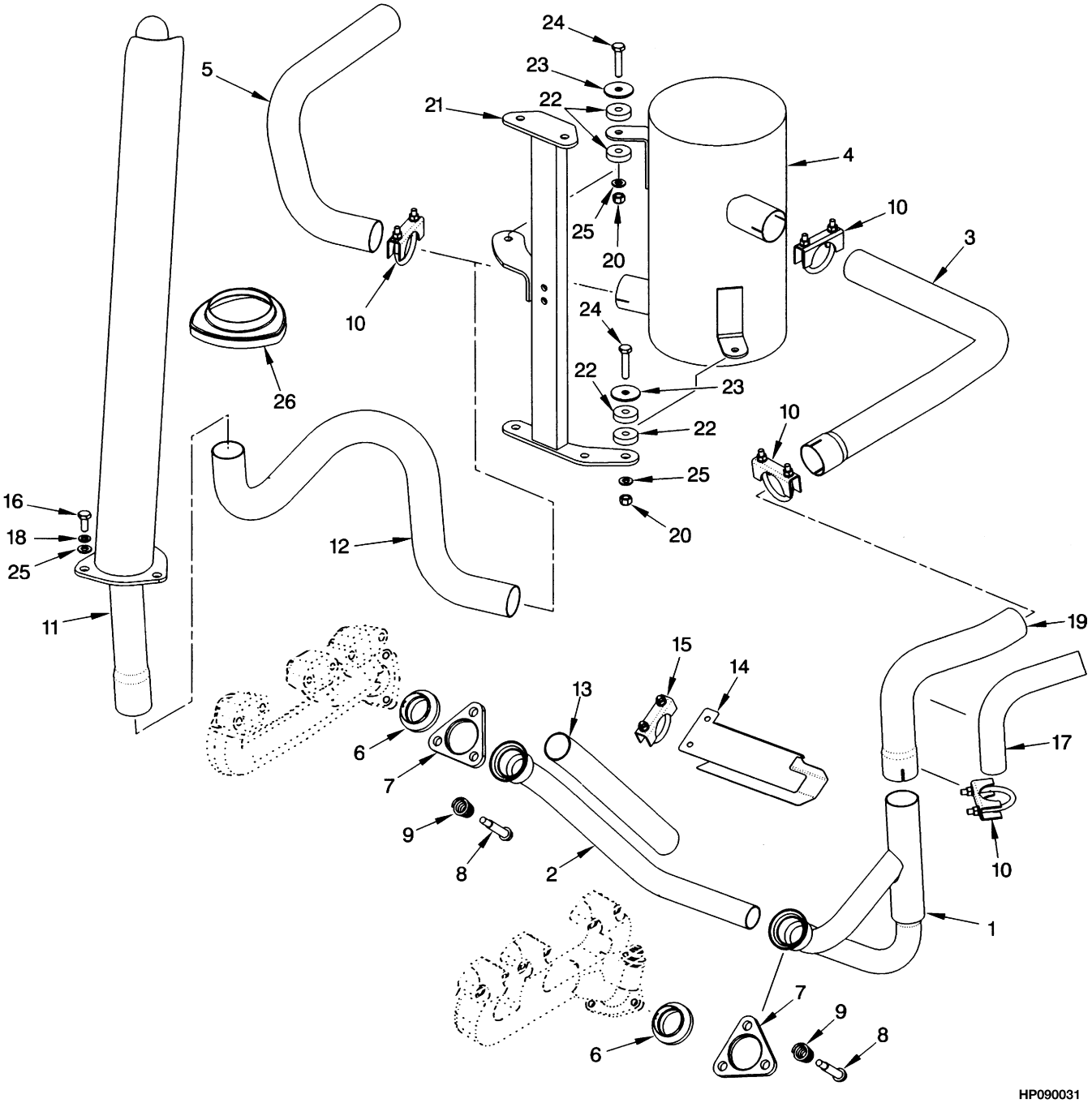

©2009 HYSTER COMPANY

EXHAUST

GASOLINE AND LPG – WITHOUT LOW EMISSIONS (→ S/N K005V04115Z)

ITEM	PART NO.	DESCRIPTION	QTY
1	1498089	Exhaust Pipe	1
2	1397820	Exhaust Pipe	1
3	1396576	Exhaust Pipe	1
4	**a** 2037113	Muffler	1
4	2037114	Muffler	1
5	1394803	Exhaust Pipe (Counterweight)	1
6	1397815	Seal	2
7	1397474	Flange	1
8	1337118	Capscrew	2
9	1335898	Spring	2
10	63116	Clamp	4
11	1396574	Overhead Exhaust	1
12	1396696	Exhaust Pipe	1
13	1399792	Heat Shield	1
14	1397822	Heat Shield	1
15	68968	Clamp	1
16	287854	Capscrew	3
17	1399791	Heat Shield	1
18	292682	Lockwasher	3
19	1398118	Exhaust Pipe	1
20	316826	Nut	2
21	1499369	Bracket	1
22	1351177	Rubber Cushion	4
23	1351176	Washer	2
24	292517	Capscrew	2
25	320159	Washer	5
26	1351178	Cover	1

FOOTNOTES:

a Type GS and LPS

©2009 HYSTER COMPANY

EXHAUST (FIGURE 2-5)

GASOLINE AND LPG — WITHOUT LOW EMISSIONS (S/N K005V04116Z →)

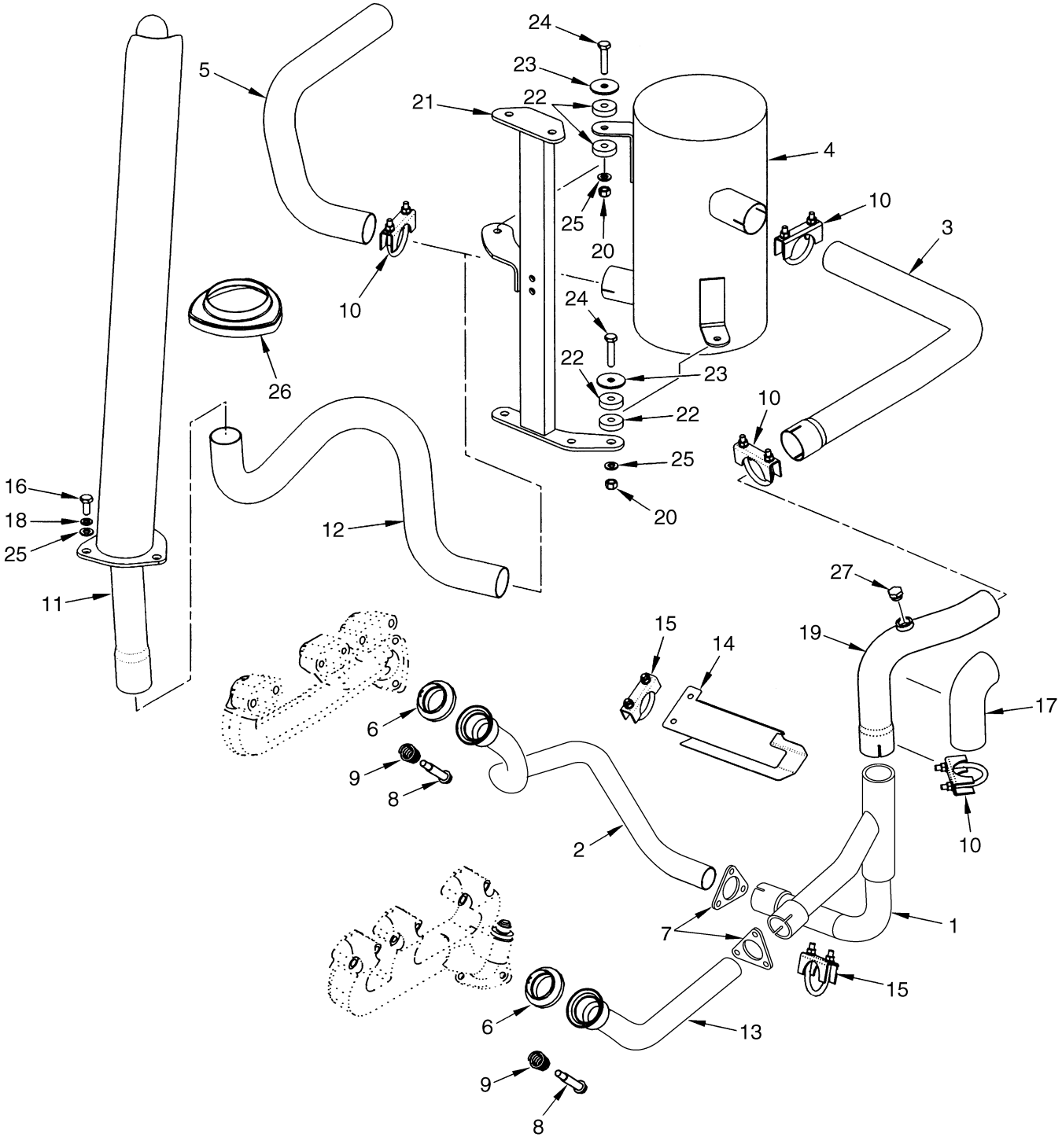

©2009 HYSTER COMPANY

EXHAUST

GASOLINE AND LPG – WITHOUT LOW EMISSIONS (S/N K005V04116Z →)

ITEM	PART NO.	DESCRIPTION	QTY
1	1476015	Exhaust Pipe	1
2	1476018	Exhaust Pipe	1
3	1476107	Exhaust Pipe	1
4	**a** 2037113	Muffler	1
4	2037114	Muffler	1
5	1394803	Exhaust Pipe (Counterweight)	1
6	1338258	Seal	2
7	1499514	Flange	2
8	1337118	Capscrew	6
9	1335898	Spring	6
10	63116	Clamp	4
11	1396574	Overhead Exhaust	1
12	1396696	Exhaust Pipe	1
13	1476017	Exhaust Pipe	1
14	1397822	Heat Shield	1
15	68968	Clamp	2
16	287854	Capscrew	3
17	1399791	Heat Shield	1
18	292682	Lockwasher	3
19	1500439	Exhaust Pipe	1
20	316826	Nut	2
21	1499369	Bracket	1
22	1351177	Rubber Cushion	4
23	1351176	Washer	2
24	292517	Capscrew	2
25	320159	Washer	5
26	1351178	Cover	1
27	1396518	Plug	1

FOOTNOTES:

a Type GS and LPS

©2009 HYSTER COMPANY

EXHAUST (FIGURE 2-6)

THREE-WAY CATALYTIC CONVERTER — LPG WITH LOW EMISSIONS (→ S/N K005V04115Z)

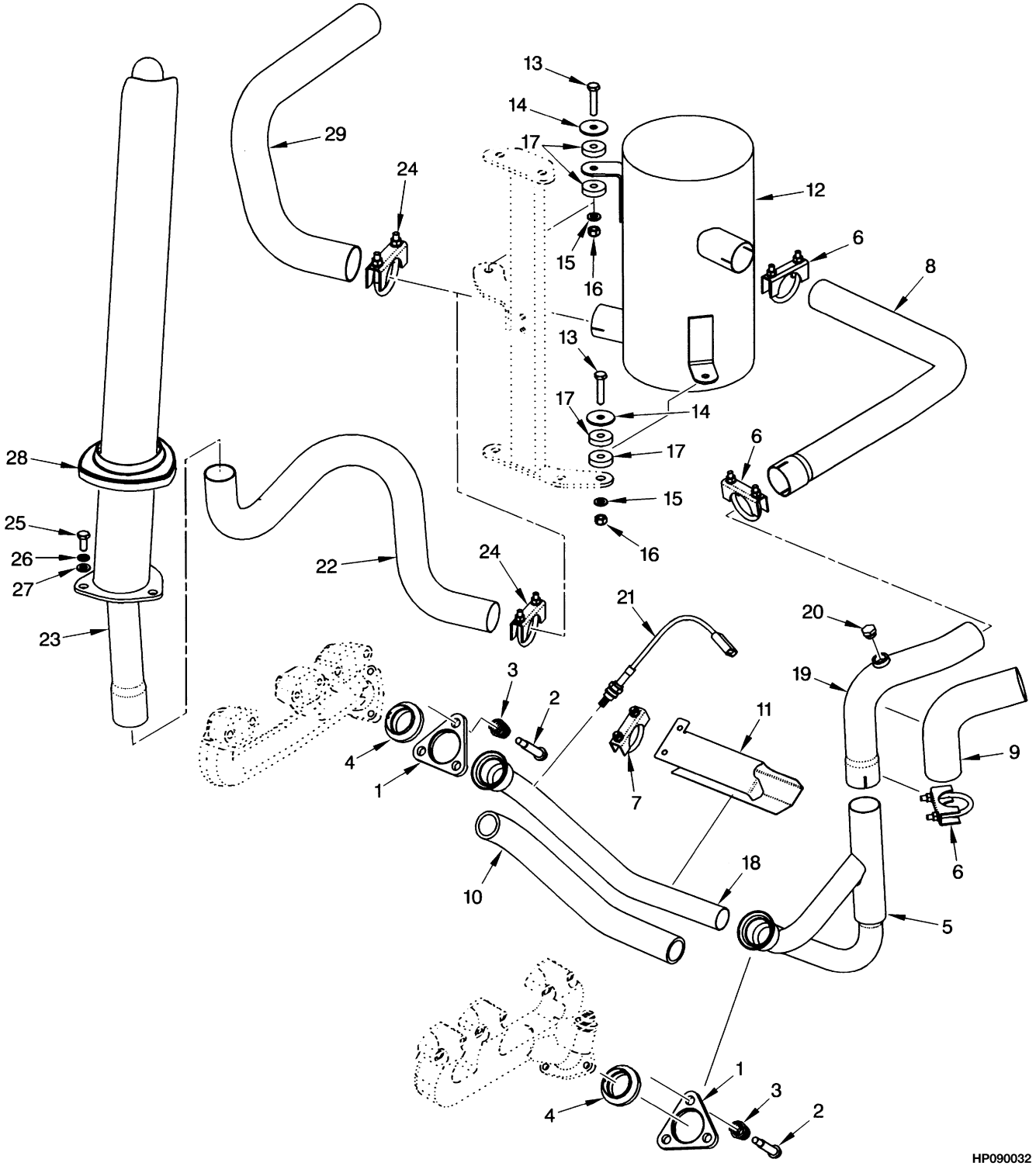

©2009 HYSTER COMPANY

EXHAUST

THREE-WAY CATALYTIC CONVERTER – LPG WITH LOW EMISSIONS (→ S/N K005V04115Z)

ITEM	PART NO.	DESCRIPTION	QTY
1	1397474	Flange	2
2	1337118	Capscrew	6
3	1335898	Spring	6
4	1397815	Seal	2
5	1397816	Exhaust Pipe (Exhaust)	1
6	63116	Clamp	3
7	68968	Clamp	1
8	1396576	Exhaust Pipe	1
9	1399791	Heat Shield	1
10	1399792	Heat Shield	1
11	1397822	Heat Shield	1
12	2037124	Catalytic Converter (Three-Way)	1
13	292517	Capscrew	2
14	1351176	Washer	2
15	320159	Washer	2
16	316826	Nut	2
17	1351177	Rubber Cushion	4
18	**a** 1392734	Exhaust Pipe	1
18	**b** 1397820	Exhaust Pipe	1
19	**a** 1392735	Exhaust Pipe	1
19	**b** 1398118	Exhaust Pipe	1
20	1396518	Plug	1
21	1397866	Sensor	1
22	1396696	Exhaust Pipe	1
23	1396574	Overhead Exhaust	1
24	63116	Clamp	5
25	287854	Capscrew	3
26	292682	Lockwasher	3
27	320159	Washer	3
28	1351178	Cover	1
29	1394803	Exhaust Pipe (Counterweight)	1

FOOTNOTES:

a → S/N K005D03078X

b S/N K005D03079X →

©2009 HYSTER COMPANY

EXHAUST (FIGURE 2-7)

THREE-WAY CATALYTIC CONVERTER — LPG WITH LOW EMISSIONS (S/N K005V04116Z →)

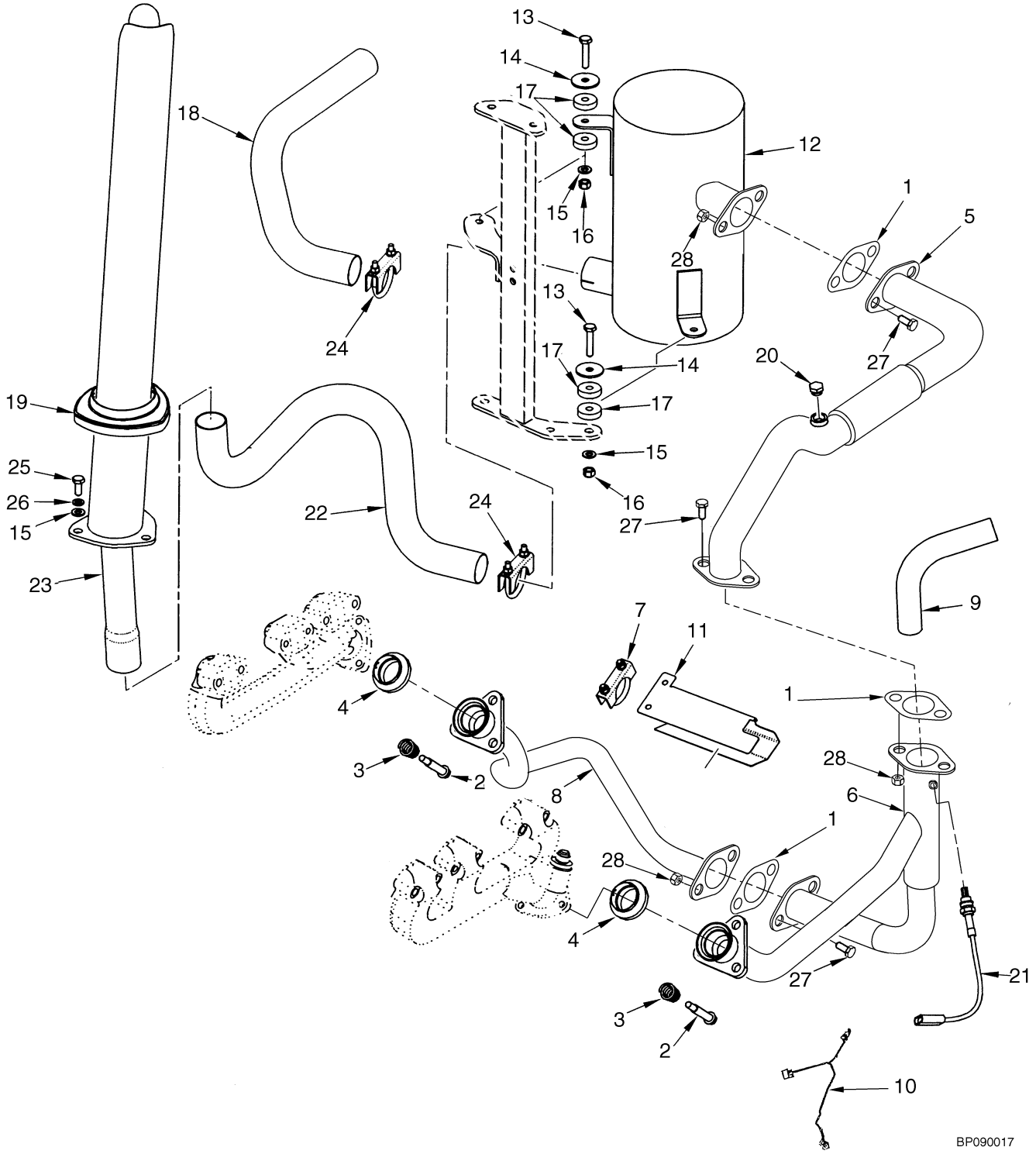

©2009 HYSTER COMPANY

EXHAUST

THREE-WAY CATALYTIC CONVERTER – LPG WITH LOW EMISSIONS (S/N K005V04116Z →)

ITEM	PART NO.	DESCRIPTION	QTY
1	1402189	Gasket	3
2	1337118	Capscrew	6
3	1335898	Spring	6
4	1338258	Seal	2
5	1476045	Exhaust Pipe	1
6	1476048	Exhaust Pipe	1
7	68968	Clamp	1
8	1476052	Exhaust Pipe	1
9	1511725	Heat Shield	1
10	2054282	Wire Harness (Closed Loop)	1
11	1397822	Heat Shield	1
12	2054419	Catalytic Converter (Three-Way)	1
13	292517	Capscrew	2
14	1351176	Washer	2
15	320159	Washer	5
16	316826	Nut	2
17	1351177	Rubber Cushion	4
18	1394803	Exhaust Pipe (Counterweight)	1
18	**a** 1537498	Exhaust Pipe (Counterweight)	1
19	1351178	Cover	1
20	1396518	Plug	1
21	1397866	Sensor	1
22	1396696	Exhaust Pipe	1
23	1396574	Overhead Exhaust	1
24	63116	Clamp	2
25	287854	Capscrew	3
26	292682	Lockwasher	3
27	1512403	Capscrew	6
28	1460477	Nut	6

FOOTNOTES:

a Type LPS

©2009 HYSTER COMPANY

EXHAUST (FIGURE 2-8)
DIESEL

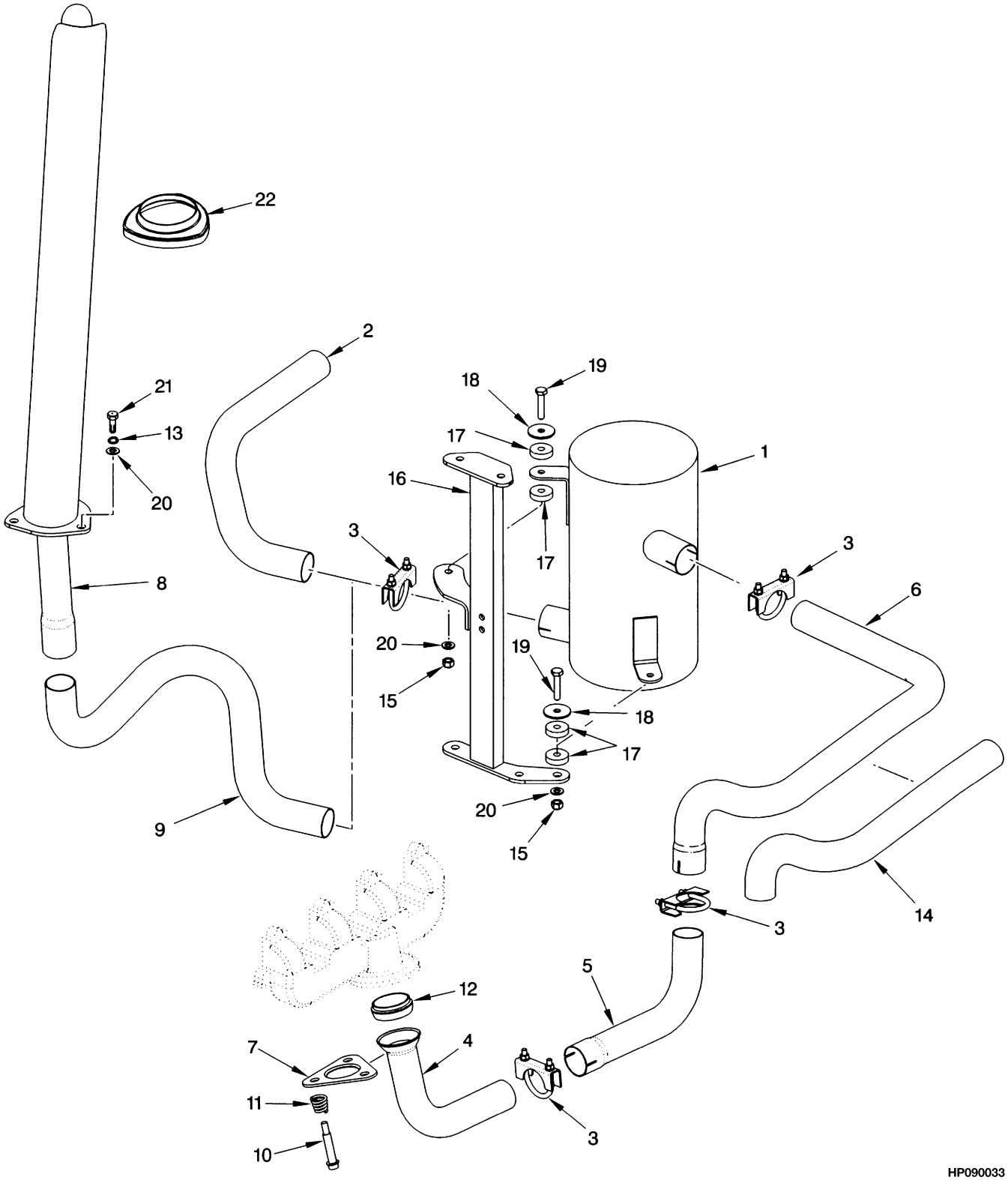

©2009 HYSTER COMPANY

EXHAUST
DIESEL

ITEM	PART NO.	DESCRIPTION	QTY
1	2037114	Muffler	1
1	**b** 2037113	Muffler	1
1	**a** 2038000	Catalytic Converter	1
2	1394803	Exhaust Pipe (Counterweight)	1
3	63116	Clamp	4
4	1396076	Exhaust Pipe	1
5	1398113	Exhaust Pipe	1
6	1398114	Exhaust Pipe	1
7	1396079	Adapter	1
8	1396574	Overhead Exhaust	1
9	1396696	Exhaust Pipe	1
10	1337118	Capscrew	1
11	1335898	Spring	1
12	1396139	Seal	1
13	292682	Lockwasher	3
14	1399791	Heat Shield	1
15	316826	Nut	2
16	1499369	Bracket	1
17	1351177	Rubber Cushion	4
18	1351176	Washer	2
19	292517	Capscrew	2
20	320159	Washer	5
21	287854	Capscrew	3
22	1351178	Cover	1

FOOTNOTES:

a Two-Way Catalytic

b Type DS

©2009 HYSTER COMPANY

See Service Manual for service procedures.

ENGINE MOUNT (FIGURE 2-9)
GASOLINE AND LPG

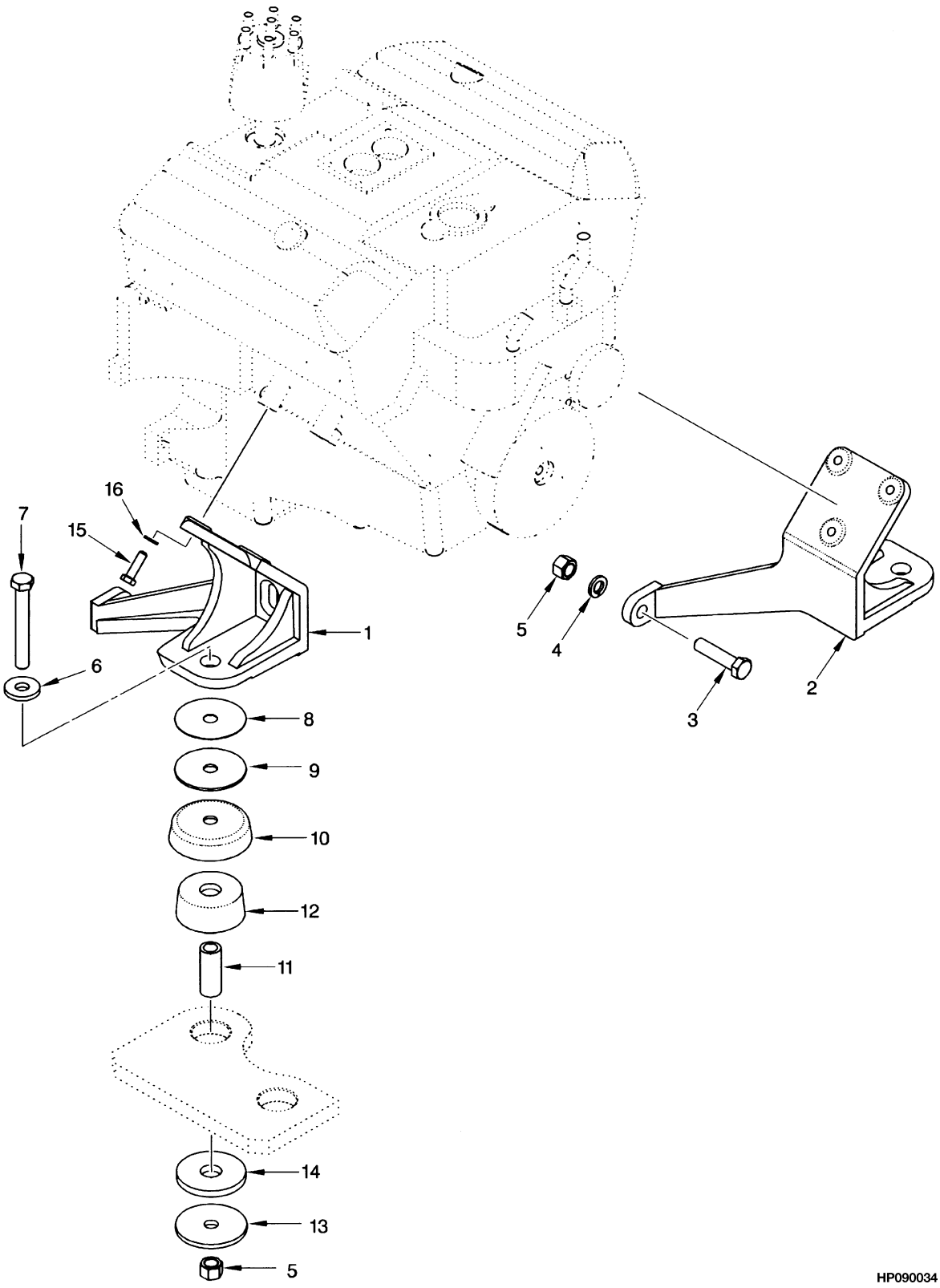

©2009 HYSTER COMPANY

ENGINE MOUNT
GASOLINE AND LPG

ITEM	PART NO.	DESCRIPTION	QTY
1	1394718	Mount (LH)	1
2	1493062	Mount (RH)	1
3	293690	Capscrew	2
4	292685	Lockwasher	2
5	316828	Nut	4
6	1357322	Washer	2
7	292573	Capscrew	2
8	1397762	Shim (0.039 in.)	AR
9	1397761	Washer	2
10	1378198	Cup	2
11	1394437	Spacer	2
12	1388704	Isolator	2
13	1394438	Washer	2
14	1394436	Bumper	2
15	293630	Capscrew	6
16	292682	Lockwasher	6

©2009 HYSTER COMPANY

ENGINE ASSEMBLY (FIGURE 2-10)
GASOLINE AND LPG — WITH SERPENTINE BELT

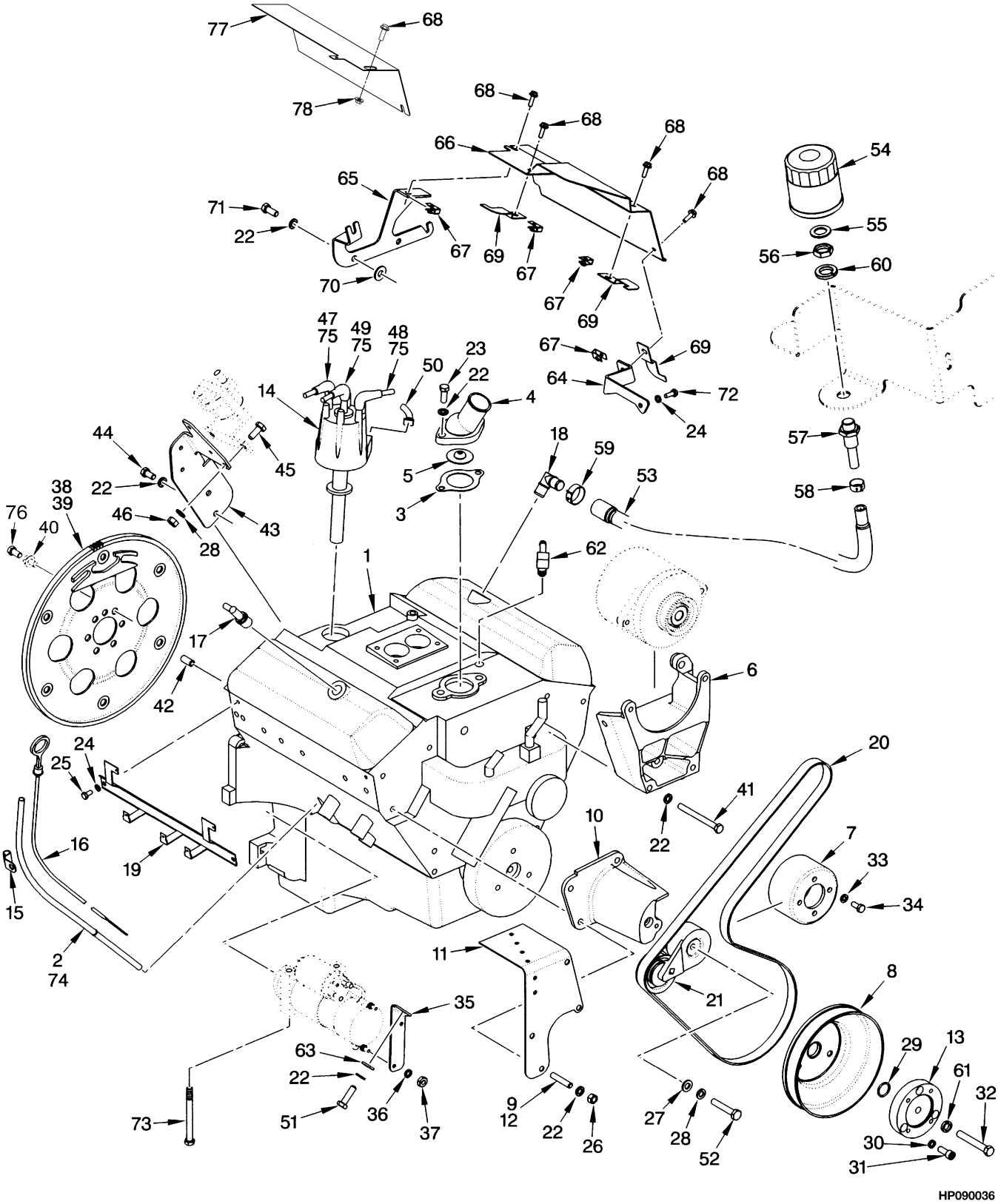

HP090036

©2009 HYSTER COMPANY

ENGINE ASSEMBLY

GASOLINE AND LPG – WITH SERPENTINE BELT

ITEM	PART NO.	DESCRIPTION	QTY
1	**b** 1484634	Engine Assy-Lpg (1MY 2001 Series Engine)	1
1	**d** 1506842	Engine Assy-Gas (2MY 2002 Series Engine)	1
1	**e** 1524199	Engine Assy-Gas (3MY 2003 Series Engine)	1
1	**ag** 1538872	Engine Assy-Gas (4MY 2004 Series Engine)	1
2	**c** 369139	Dipstick Tube (Dipstick)	1
2	**f** 1514915	Dipstick Tube (Dipstick)	1
3	1330725	Gasket (Thermostat)	1
4	1371229	Water Outlet	1
5	1450643	Thermostat	1
6	1384577	Bracket (Alternator)	1
7	1383204	Water Pump Pulley (Water Pump) (Water Pump)	1
8	1377750	Pulley	1
9	1398105	Stud	3
10	1384578	Bracket (Tensioner)	1
11	1397457	Bracket (G and GS)	1
11	**c** 1384581	Bracket (LPG)	1
11	**f** 1523722	Bracket (LPG)	1
12	264134	Loctite	AR
13	1394594	Adapter (Drive Shaft)	1
14	1450869	Distributor (☞Figure 4-11)	1
15	**c** 1399293	Bracket	1
15	**f** 1519843	Bracket	1
16	1510649	Dipstick	1
17	321734	Pcv Valve	1
18	379407	Fitting	1
19	1400173	Support (Spark Plug Wire)	1
20	2043404	V-Belt (Micro-V 6 Rib) (56 in.)	1
21	1396779	Belt Tensioner	1
22	15156	Lockwasher	10
23	16598	Capscrew	2
24	15154	Lockwasher	3
25	133469	Capscrew	2
26	15056	Nut	3
27	320159	Washer	1
28	292682	Lockwasher	2
29	39373	O-Ring	1
30	177947	Lockwasher	3
31	34811	Screw	3
32	221546	Capscrew	1
33	292681	Lockwasher	4
34	136681	Capscrew	4
35	**c** 1469605	Bracket	1
35	**f** 1533891	Bracket	1
36	15152	Lockwasher	3
37	15052	Nut	2
38	1399309	Lubricant	1
39	1399298	Flywheel	1
40	360387	Loctite	AR
41	221522	Capscrew	1
42	. . . . .	Dowel Pin	1

©2009 HYSTER COMPANY

ENGINE ASSEMBLY
GASOLINE AND LPG – WITH SERPENTINE BELT

ITEM	PART NO.	DESCRIPTION	QTY
43	**c** 1397754	Bracket	1
43	**f** 1523723	Bracket	1
44	16597	Capscrew	2
45	287854	Capscrew	2
46	136692	Nut	2
47	1452901	Wire Harness (LH) (Spark Plug)	1
48	1399824	Wire Harness (RH) (Spark Plug)	1
49	1452904	Ignition Cable (Coil)	1
50	1351987	Wire Harness (Primary)	1
51	293630	Capscrew	1
52	292521	Capscrew	1
53	1399836	Hose (Breather)	1
54	1350036	Oil Filter (Breather)	1
55	1300152	Washer	1
56	14761	Fitting	1
57	379400	Fitting	1
58	379405	Clamp	1
59	353199	Clamp	1
60	15162	Lockwasher	1
61	15157	Lockwasher	1
62	201808	Fitting	1
63	15134	Washer	1
64	1399770	Bracket	1
65	1399771	Bracket	1
66	1508442	Guard	1
67	1350215	Nut	4
68	1397614	Screw	4
69	1399825	Support	3
70	15176	Lockwasher	2
71	16598	Capscrew	2
72	18460	Capscrew	1
73	1397716	Bolt	1
74	288394	Sealant	AR
75	322784	Lubricant (Corrosion Preventive) (Corrosive Preventive)	AR
76	1456112	Bolt	6
77	1490290	Guard	1
78	1452270	Nut	1

FOOTNOTES:

a Replacement Engine 1501043 For LPG and 1501042 for Gasoline
b → S/N K005V01677Y
c → S/N K005V04115Z
d S/N K005V01678Y ↔ S/N K005V04115Z
e S/N K005V04116Z ↔ S/N K005V05128A
f S/N K005V04116Z →
g S/N K005V05129A →

©2009 HYSTER COMPANY

NOTES

©2009 HYSTER COMPANY

CYLINDER BLOCK (FIGURE 2-11)
GASOLINE AND LPG

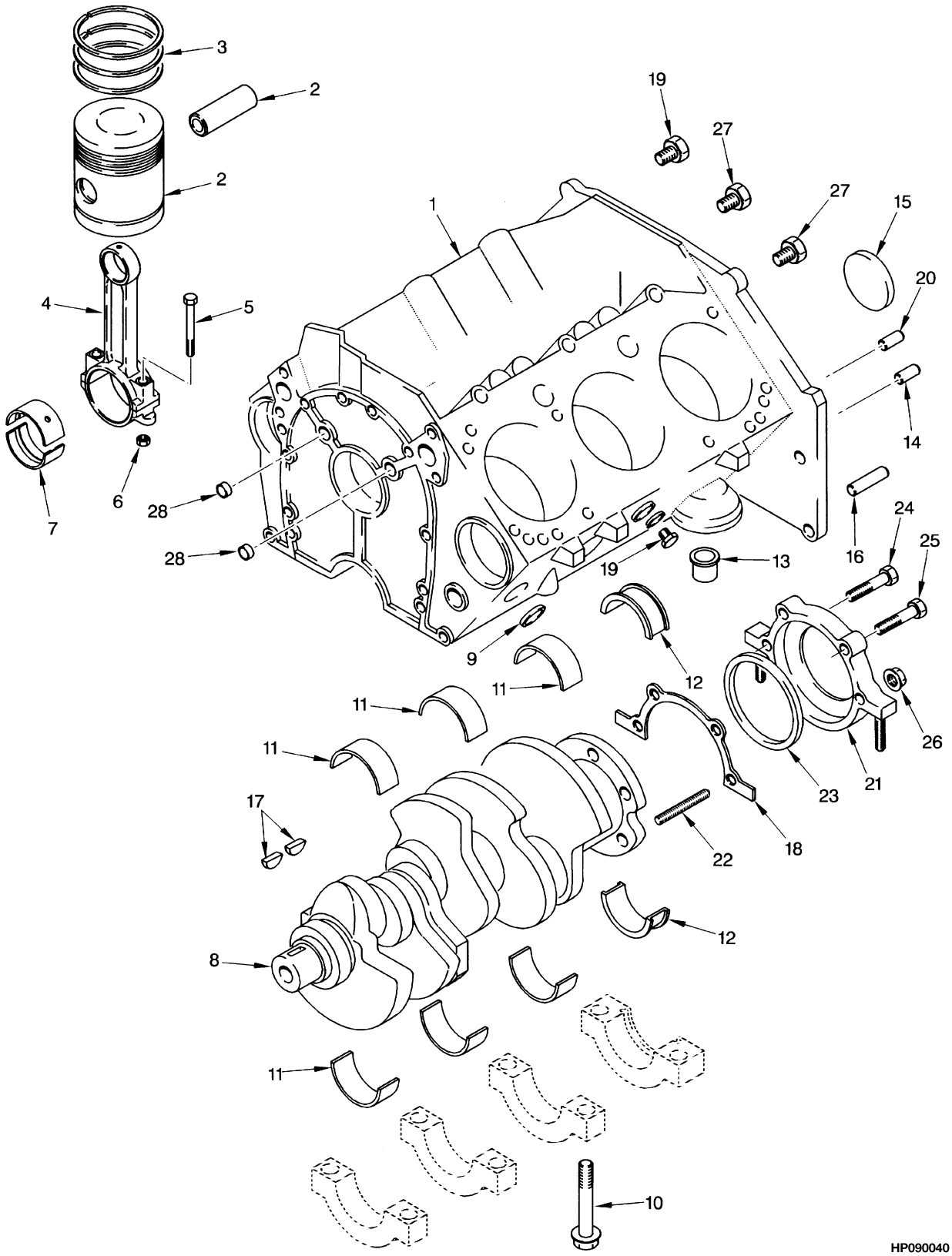

©2009 HYSTER COMPANY

CYLINDER BLOCK
GASOLINE AND LPG

KEY:
A: 1MY 2001 Series Engine
B: 2MY 2002 Series Engine
C: 3MY 2003 Series Engine

ITEM	PART NO.	DESCRIPTION	QTY A	QTY B	QTY C
	c 1484634	Engine Assy-Lpg	1	..	..
	d 1506842	Engine Assy-Gas	..	1	..
	e 1524199	Engine Assy-Gas	..	..	1
	af 1538872	Engine Assy-Gas (4MY 2004 Series)	..	..	1
1	1501157	Short Block	1	..	..
1	. . . . .	Short Block Assembly	..	1	1
2	**b** 1390759	Kit-Piston (Standard)	6	6	6
2	1390760	Kit-Piston (0.020 O/S) (0,5 mm)	6	6	6
3	**b** 1390761	Kit-Piston Ring	6	6	6
3	1390765	Kit-Piston Ring (0.020 O/S) (0,5 mm)	6	6	6
4	1360179	Piston Rod	6	6	6
5	1360182	Bolt	2	2	2
6	1330450	Nut	2	2	2
7	**b** 1390770	Piston Rod Bearing (Connecting Rod)	6	6	6
7	375580	Piston Rod Bearing (Undersize) (0.0055 in.) (0,014 mm)	6	..	..
8	1460386	Crankshaft	1	1	1
9	159971	Plug	5	..	..
9	169718	Plug	..	5	..
10	263842	Bolt	10	10	10
11	**b** 1460737	Kit-Crankshaft Bearing (Crankshaft)	3	3	3
11	1460738	Kit-Crankshaft Bearing (0.020 in. O/S) (Crankshaft) (0.020 in.)	3	3	3
12	1390773	Kit-Crankshaft Bearing (0.001 in.) (Crankshaft)	1	1	1
13	1358156	Valve	1	..	..
13	1514968	Valve	..	1	1
14	159977	Pin	4	4	4
15	1374313	Plug	1	1	1
16	1335499	Pin	2	2	2
17	1451319	Key	1	1	1
18	1335212	Gasket	1	..	..
18	1500884	Gasket	..	1	1
19	274232	Plug	5	2	..
19	1514267	Plug	..	1	..
19	1358026	Plug	..	..	2
20	375601	Pin (CR/SHF RR Seal Retainer)	1	1	1
21	1460330	Retainer	1	1	1
22	1450555	Stud	2	2	2
23	1460331	Seal	1	1	1
24	375575	Bolt	2	2	1
25	375602	Bolt	1	1	1
26	1335226	Nut	1	..	..
27	1331341	Plug	3	3	3
28	1358079	Plug (LH)	3	3	..
28	388302	Plug (RH)	2	2	3

©2009 HYSTER COMPANY

FOOTNOTES:

a Replacement Engine 1581043 for LPG and 1581042 for Gasoline
b Standard
c → S/N K005V01677Y
d S/N K005V01678Y ↔ S/N K005V04115Z
e S/N K005V04116Z ↔ S/N K005V05128A
f S/N K005V05129A →

©2009 HYSTER COMPANY

NOTES

©2009 HYSTER COMPANY

CAMSHAFT AND OIL PAN (FIGURE 2-12)
GASOLINE AND LPG

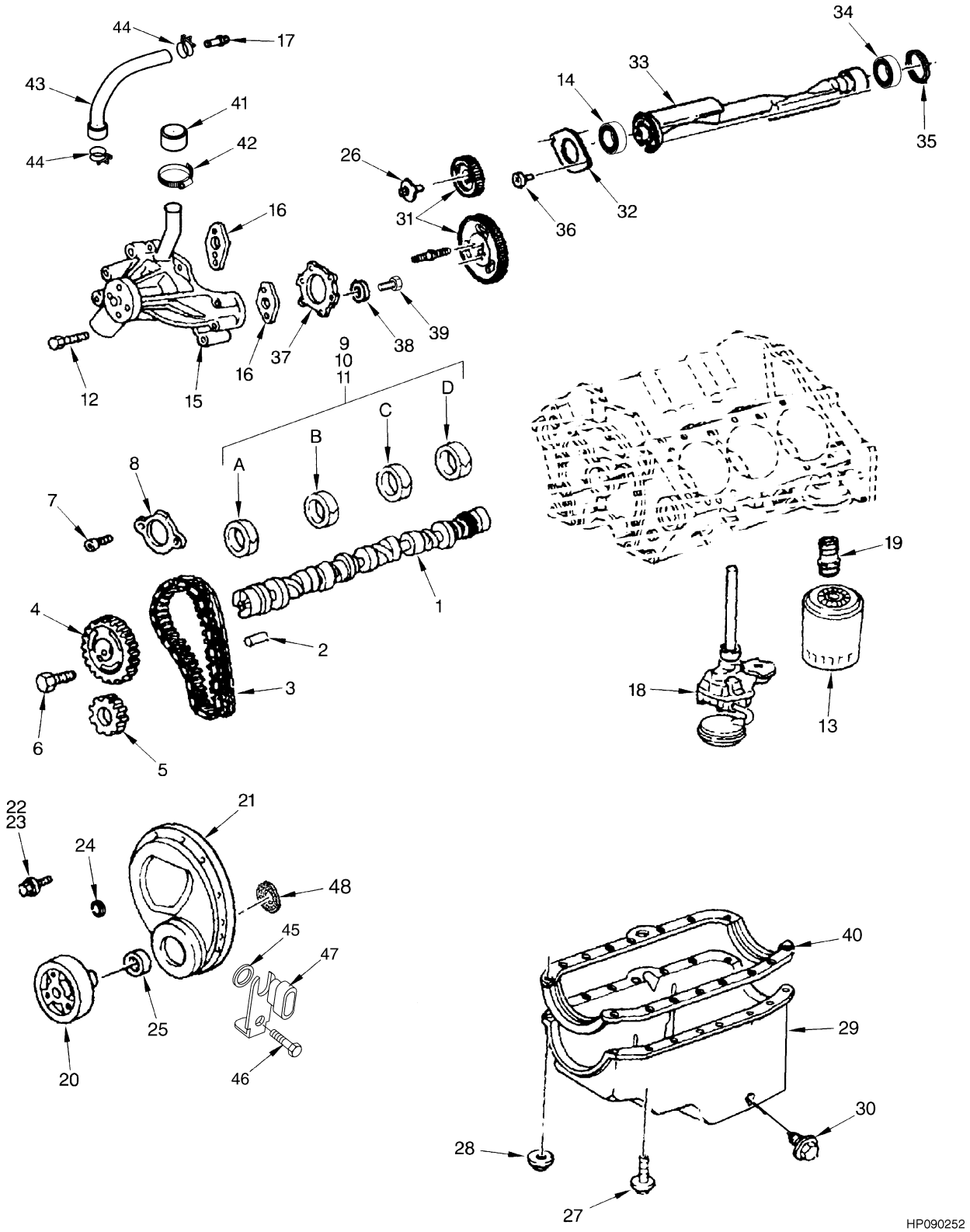

©2009 HYSTER COMPANY

CAMSHAFT AND OIL PAN
GASOLINE AND LPG

ITEM	PART NO.	DESCRIPTION	QTY
	d 1484634	Engine Assy-Lpg (1MY 2001 Series Engine)	1
	e 1506842	Engine Assy-Gas (2MY 2002 Series Engine)	1
	e 1524199	Engine Assy-Gas (3MY 2003 Series Engine)	1
	cf 1538872	Engine Assy-Gas (4MY 2004 Series Engine)	1
1	1456111	Camshaft	1
2	1374297	Pin	1
3	1471556	Kit-Repair Cable Chain	1
4	. . . . .	Sprocket	1
5	. . . . .	Sprocket	1
6	1374301	Bolt	3
7	1374299	Bolt	2
8	1374298	Retainer	1
9	**b** 1454955	Bearing (Position A, D)	2
9	**a** 1454955	Bearing (Position A)	1
10	**b** 1454956	Bearing (Position C)	1
10	**a** 1454956	Bearing (Position B, D)	2
11	**b** 1454957	Bearing (Position B)	1
11	**a** 1454957	Bearing (Position C)	1
12	1383257	Bolt (2001 Series Engine)	4
12	1383257	Bolt (2002 Series Engine)	5
12	1383257	Bolt (2003 Series Engine)	5
13	1320000	Oil Filter	1
14	1451321	Bearing	1
15	1389100	Water Pump	1
16	263828	Gasket	2
17	1393350	Fitting	1
18	1386176	Engine Oil Pump	1
19	375587	Fitting	1
20	1386178	Damper (2001 Series Engine)	1
20	1514969	Damper (2002 Series Engine)	1
20	1514969	Damper (2003 Series Engine)	1
20	1451319	Key	1
21	1386180	Cover (2001 Series Engine)	1
21	1514268	Engine Cover (2002 Series Engine)	1
21	1514268	Engine Cover (2003 Series Engine)	1
22	1386179	Bolt	3
23	1377103	Bolt	2
24	1389092	Grommet (2001 Series Engine)	1
24	1389092	Grommet (2002 Series Engine)	6
24	1389092	Grommet (2003 Series Engine)	6
25	1377104	Seal	1
26	1374317	Bolt	6
27	1386183	Bolt	10
28	1360178	Nut (2001 Series Engine)	1
28	388313	Nut (2002 Series Engine)	1
28	388313	Nut (2003 Series Engine)	1
29	1471558	Oil Pan	1
30	1460757	Screw	1
30	1460758	Gasket	1
31	1374315	Kit-Gear	1

©2009 HYSTER COMPANY

CAMSHAFT AND OIL PAN
GASOLINE AND LPG

ITEM	PART NO.	DESCRIPTION	QTY
32	1374326	Retainer	1
33	1377107	Shaft	1
34	1374314	Bearing	1
35	1374313	Plug	1
36	1339963	Bolt	2
37	1460322	Gasket	1
38	369748	Washer	5
39	1374108	Bolt	10
40	1386184	Gasket	1
41	1383263	Cap	1
42	130845	Clamp	1
43	1460332	Hose Assy	1
44	1471560	Clamp	2
45	1514964	O-Ring	1
46	1514965	Bolt	1
47	1514963	Sensor (Crankshaft Position)	1
48	1514962	Ring (Crankshaft Position Sensor)	1
	1460768	Kit-Bearing	1
	1454974	Bearing Set	1

FOOTNOTES:

a GM Identifcation Number on Left Side of Rear Transmission Housing Starts with "A" Followed by 8 Digits
b GM Identification Number on Left Side of Rear Transmission Housing is 8 Digits
c Replacement Engine 1581043 for LPG and 1581042 for Gasoline.
d → S/N K005V01677Y
e S/N K005V16778Y ↔ S/N K005V05128A
f S/N K005V05129A →

©2009 HYSTER COMPANY

NOTES

©2009 HYSTER COMPANY

CYLINDER HEAD (FIGURE 2-13)
GASOLINE AND LPG

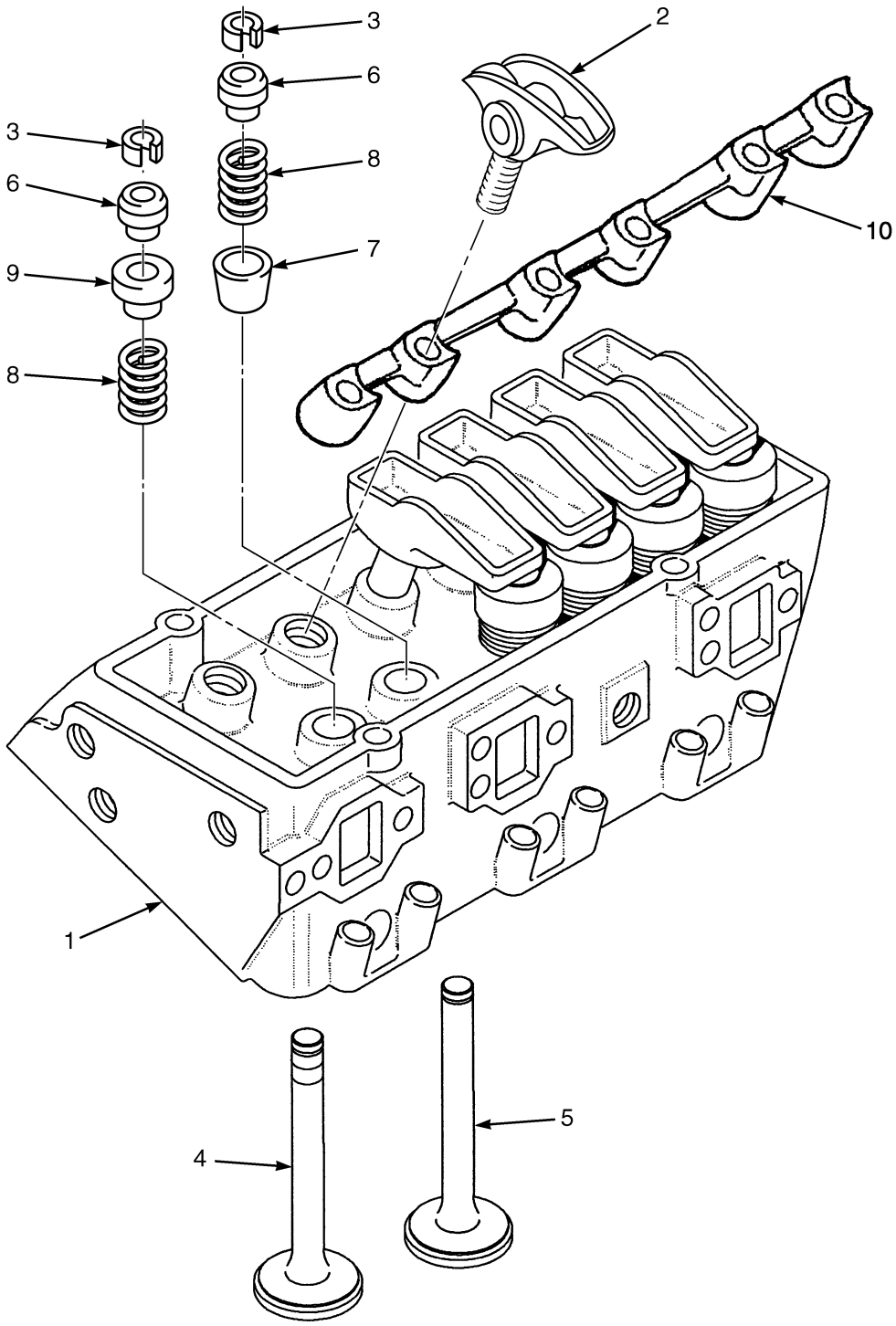

HP090254

©2009 HYSTER COMPANY

CYLINDER HEAD
GASOLINE AND LPG

KEY:
A: 1MY 2001 Series Engine
B: 2MY 2002 Series Engine
C: 3MY 2003 Series Engine

ITEM	PART NO.	DESCRIPTION	QTY A	QTY B	QTY C
	b 1484634	Engine Assy-Lpg	1	..	..
	c 1506842	Engine Assy-Gas	..	1	..
	d 1524199	Engine Assy-Gas	..	..	1
	ae 1538872	Engine Assy-Gas (4MY 2004 Series)	..	..	1
1	1471557	Cylinder Head	2	2	2
1	1482700	Cylinder Head (Optional)	2	..	..
2	1471555	Rocker Arm	12	12	12
2	1389051	Bolt	4	4	4
3	1377110	Valve Stop	24	24	24
4	1386194	Exhaust Valve	6	6	6
4	1482701	Exhaust Valve (Optional)	6	..	..
5	1386195	Inlet Valve	6	6	6
6	1393127	Cap	12	12	12
7	1386197	Seal (Black)	6	6	6
8	1386198	Spring	12	12	12
9	1460384	Seal (Orange)	6	6	6
10	1489643	Support (Rocker Arm)	..	2	2

FOOTNOTES:

a Replacement Engine 1581043 for LPG and 1581042 Gasoline
b → S/N K005V01677Y
c S/N K005V01678Y ↔ S/N K005V04115Z
d S/N K005V04116Z ↔ S/N K005V05128A
e S/N K005V05129A →

©2009 HYSTER COMPANY

VALVE COVER AND INLET MANIFOLD (FIGURE 2-14)
GASOLINE AND LPG

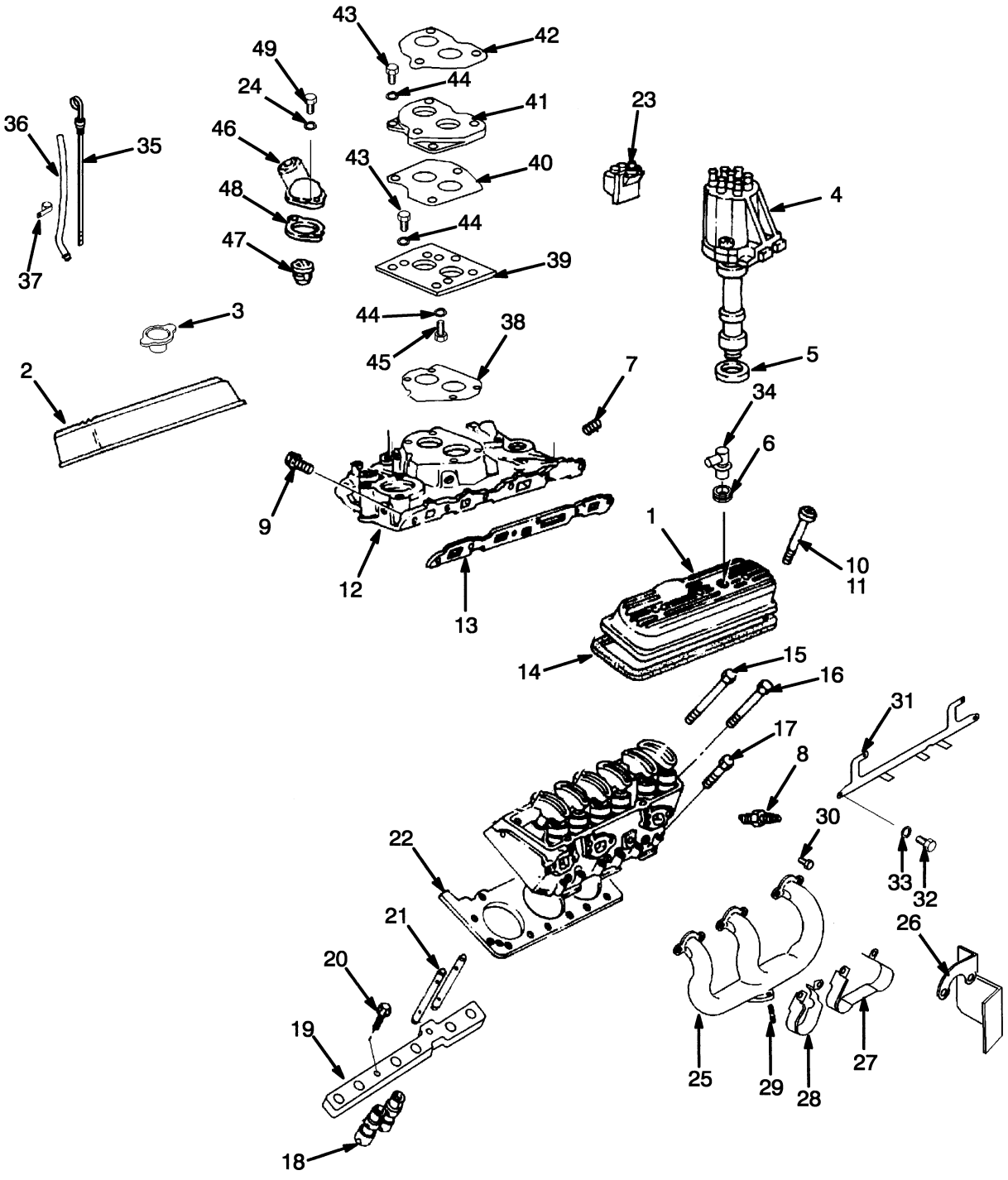

©2009 HYSTER COMPANY

VALVE COVER AND INLET MANIFOLD
GASOLINE AND LPG

KEY:
A: 1MY 2001 Series Engine
B: 2MY 2002 Series Engine
C: 2MY 2003 Series Engine
D: 4MY 2004 Series Engine

ITEM	PART NO.	DESCRIPTION	QTY A	B	C	D
	c 1484634	Engine Assy-Lpg	1	..	..	..
	d 1506842	Engine Assy-Gas	..	1	..	..
	e 1524199	Engine Assy-Gas	..	..	1	..
	bf 1538872	Engine Assy-Gas	..	..	..	1
1	1386185	Cover (LH)	1	1	1	1
2	1389102	Cover (RH)	1	1	1	1
3	1374290	Cap (Oil)	1	1	1	1
4	1450869	Distributor	1	1	1	1
5	1334423	Gasket	1	1	1	1
6	1374288	Grommet	3	3	3	3
7	1331341	Plug	1	1	1	1
8	1641492	Spark Plug	6	6	6	6
8	1452376	Spark Plug (Optional)	6	6	6	6
9	1389093	Bolt	8	8	8	8
10	1383904	Grommet	6	6	6	6
11	1374289	Bolt	6	6	6	6
12	1386186	Intake Manifold (Intake) (Inlet)	1	1	1	1
13	1386187	Kit-Gasket	1	1	1	1
14	1374293	Gasket	2	2	2	2
15	**a** 1377792	Bolt (Long)	10	10	10	10
16	**a** 1377793	Bolt (Medium)	4	4	4	4
17	**a** 1377794	Bolt (Short)	12	12	12	12
18	1471559	Valve Lifter	12	12	12	12
19	1389050	Guide	2	2	2	2
20	1389051	Bolt	4	4	4	2
21	1386189	Push Rod	12	12	12	12
22	1386190	Cylinder Head Gasket	2	2	2	..
22	1460333	Kit-Gasket (Cylinder Head)	..	..	..	1
23	1386191	Ignition Coil	1	1	1	1
24	15156	Lockwasher	2	2	5	5
25	1380802	Exhaust Manifold	1	1	1	..
25	1502741	Exhaust Manifold	..	..	..	1
26	352952	Heat Shield	1	1	1	..
26	1529010	Heat Shield	..	..	..	1
27	1316488	Shield	2	2	2	2
28	1316494	Shield	2	2	2	2
29	1384349	Stud	6	6	6	..
30	1383257	Bolt	12	12	12	12
31	1383241	Support	1	1	1	1
32	15154	Lockwasher	4	4	4	4
33	133469	Capscrew	4	4	4	4
34	379407	Fitting	1	1	1	1
35	388514	Dipstick	1	1	1	..

©2009 HYSTER COMPANY

VALVE COVER AND INLET MANIFOLD
GASOLINE AND LPG

KEY:
A: 1MY 2001 Series Engine
B: 2MY 2002 Series Engine
C: 2MY 2003 Series Engine
D: 4MY 2004 Series Engine

ITEM	PART NO.	DESCRIPTION	QTY A	QTY B	QTY C	QTY D
35	1510649	Dipstick	..	..	..	1
36	369139	Dipstick Tube	1	1	1	..
36	1514915	Dipstick Tube	..	..	..	1
37	133696	Clamp	1	1	1	1
38	1383237	Gasket	1	1	1	1
39	1383211	Plate	1	1	1	1
40	1383213	Gasket	1	1	1	1
41	1383239	Spacer	1	1	1	1
42	1333806	Gasket	1	1	1	1
43	16836	Capscrew	7	7	7	7
44	15155	Lockwasher	10	10	10	10
45	16394	Capscrew	1	1	1	1
46	1371229	Water Outlet	1	1	1	1
47	1450643	Thermostat	1	1	1	1
48	1330725	Gasket	1	1	1	1
49	16598	Capscrew	2	2	2	2

FOOTNOTES:

a Quanity is listed for both heads
b Replacement Engine 1581043 for LPG and 1581042 for Gas
c → S/N K005V01677Y
d S/N K005V01678Y ↔ S/N K005V04115Z
e S/N K005V04116Z ↔ S/N K005V05128A
f S/N K005V05129A →

©2009 HYSTER COMPANY

EXHAUST MANIFOLD (FIGURE 2-15)

GASOLINE AND LPG (→ S/N K005V04115Z)

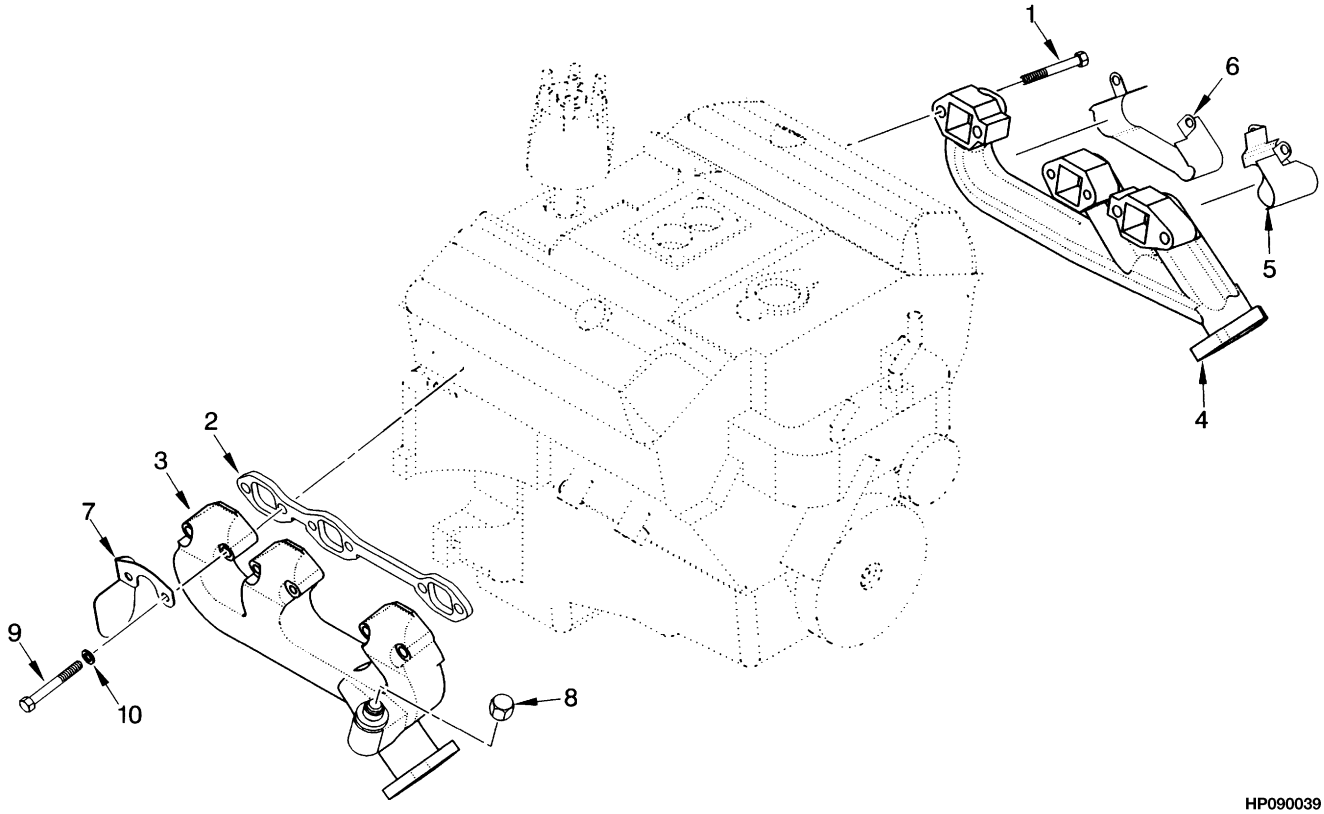

HP090039

ITEM	PART NO.	DESCRIPTION	QTY
1	1400209	Bolt (LH)	6
2	1398024	Spacer	2
3	1397788	Manifold (LH)	1
4	1397789	Manifold (RH)	1
5	1316494	Shield	1
6	1316488	Shield (Spark Plug)	1
7	352952	Heat Shield	1
8	14587	Nut	1
9	1383257	Bolt (RH)	6
10	1475161	Washer (RH)	6

©2009 HYSTER COMPANY

EXHAUST MANIFOLD (FIGURE 2-16)

GASOLINE AND LPG (S/N K005V04116Z →)

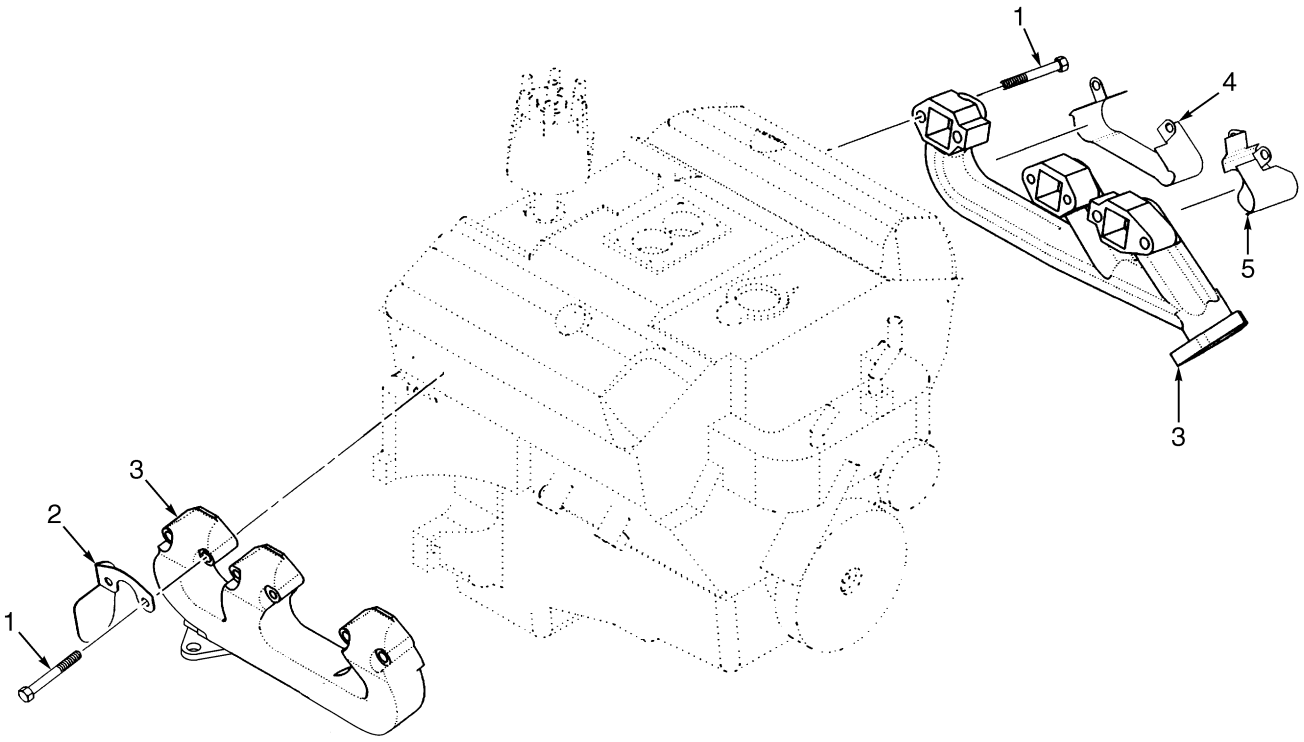

BP090018

ITEM	PART NO.	DESCRIPTION	QTY
1	1383257	Bolt	12
2	1529010	Heat Shield	1
3	1502741	Exhaust Manifold	2
4	1316488	Shield (Spark Plug)	2
5	1316494	Shield	2

©2009 HYSTER COMPANY

NOTES

©2009 HYSTER COMPANY

OIL PUMP (FIGURE 2-17)
GASOLINE AND LPG

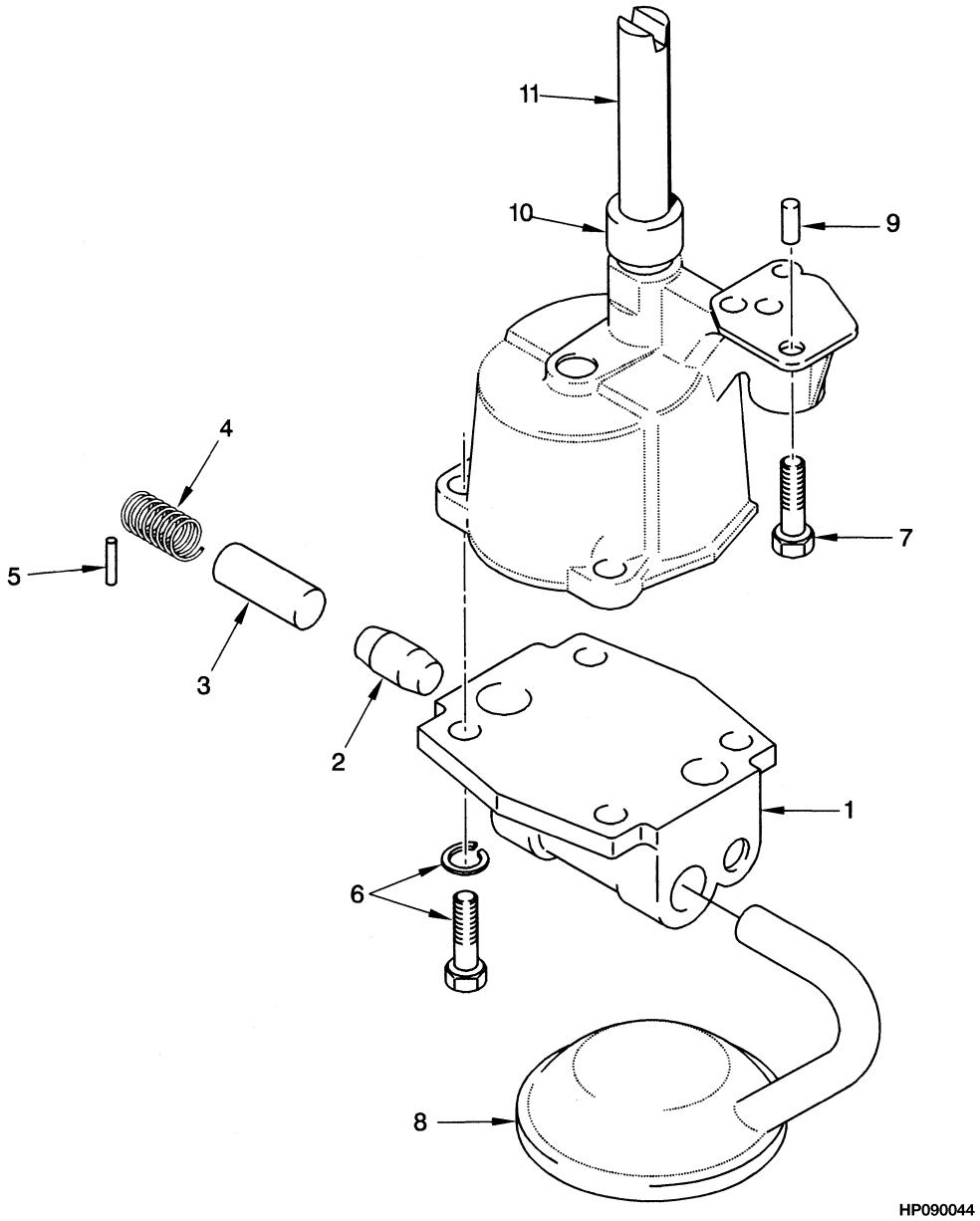

©2009 HYSTER COMPANY

OIL PUMP
GASOLINE AND LPG

ITEM	PART NO.	DESCRIPTION	QTY
	1386176	Engine Oil Pump	1
1	1374319	Cover	1
2	1338223	Stop	1
3	268573	Regulator Valve	1
4	1374320	Spring	1
5	1330453	Pin	1
6	1333541	Kit-Screw	2
7	388306	Bolt	1
8	1386177	Screen	1
9	1450941	Pin	1
10	263795	Retainer	1
11	263794	Shaft	1

©2009 HYSTER COMPANY

ENGINE MOUNT (FIGURE 2-18)
DIESEL

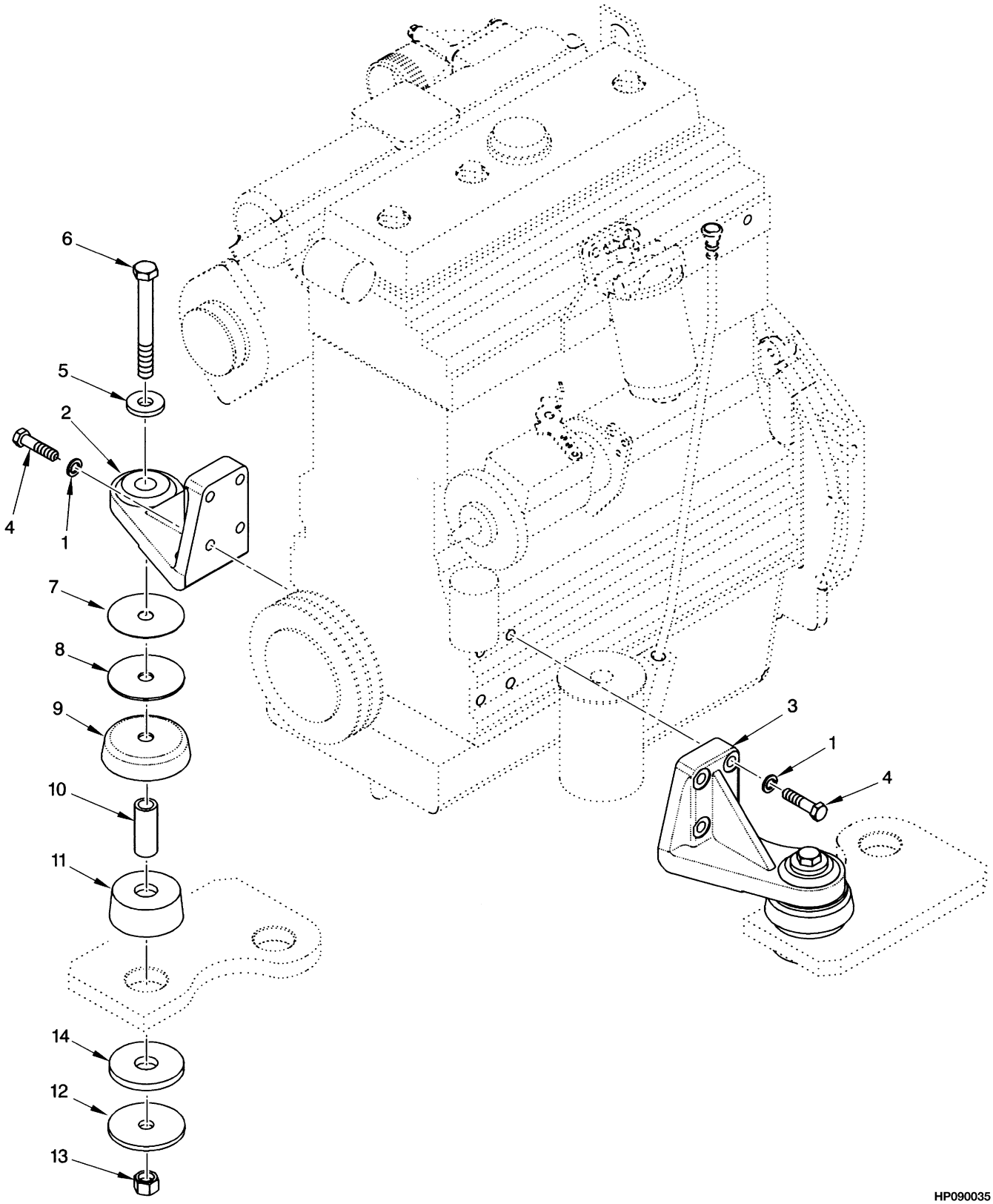

©2009 HYSTER COMPANY

ENGINE MOUNT
DIESEL

ITEM	PART NO.	DESCRIPTION	QTY
1	292683	Lockwasher	8
2	1394716	Motor Mount (LH)	1
3	1394717	Motor Mount (RH)	1
4	293649	Capscrew	8
5	1357322	Washer	2
6	292575	Capscrew	2
7	1397762	Shim (0.039 in.)	AR
8	1397761	Washer	2
9	1378198	Cup (Snubbing)	2
10	1394437	Spacer	2
11	1388704	Isolator	2
12	1394438	Washer	2
13	316828	Nut	2
14	1394436	Bumper	2

©2009 HYSTER COMPANY

ENGINE ASSEMBLY (FIGURE 2-19)
DIESEL

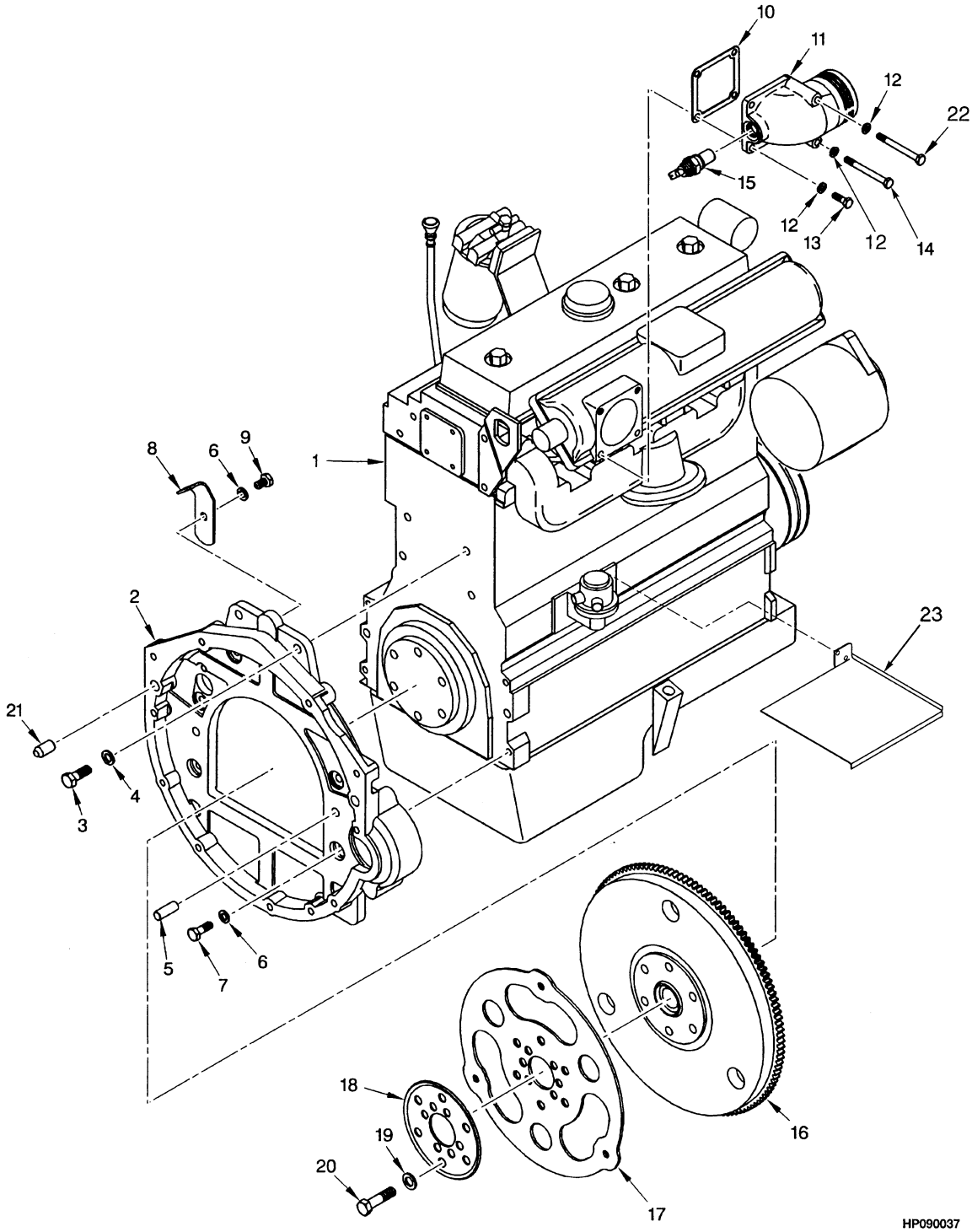

©2009 HYSTER COMPANY

ENGINE ASSEMBLY
DIESEL

ITEM	PART NO.	DESCRIPTION	QTY
1	1398112	Engine Assy-Diesel	1
2	1388733	Flywheel Housing (Flywheel)	1
3	292528	Capscrew	2
4	292683	Lockwasher	2
5	186420	Dowel	2
6	292682	Lockwasher	7
7	136985	Capscrew	6
8	1378226	Cover	1
9	292513	Capscrew	1
10	1345795	Gasket (Inlet)	1
11	1394774	Air Inlet	1
12	292681	Lockwasher	3
13	136749	Screw	2
14	296020	Capscrew	2
15	245885	Glow Plug (Intake) (Intake)	1
16	1388705	Flywheel	1
16	1388706	Flywheel	1
16	195856	Ring Gear	1
17	1397689	Flex Plate	1
18	1388750	Washer	1
19	296422	Washer	6
20	289867	Bolt	6
21	1335499	Pin	2
22	296020	Capscrew	1
23	1512021	Shield (UL Starter)	1
23	360387	Loctite	AR

©2009 HYSTER COMPANY

ALTERNATOR MOUNTING (FIGURE 2-20)

DIESEL (→ 7/2001)

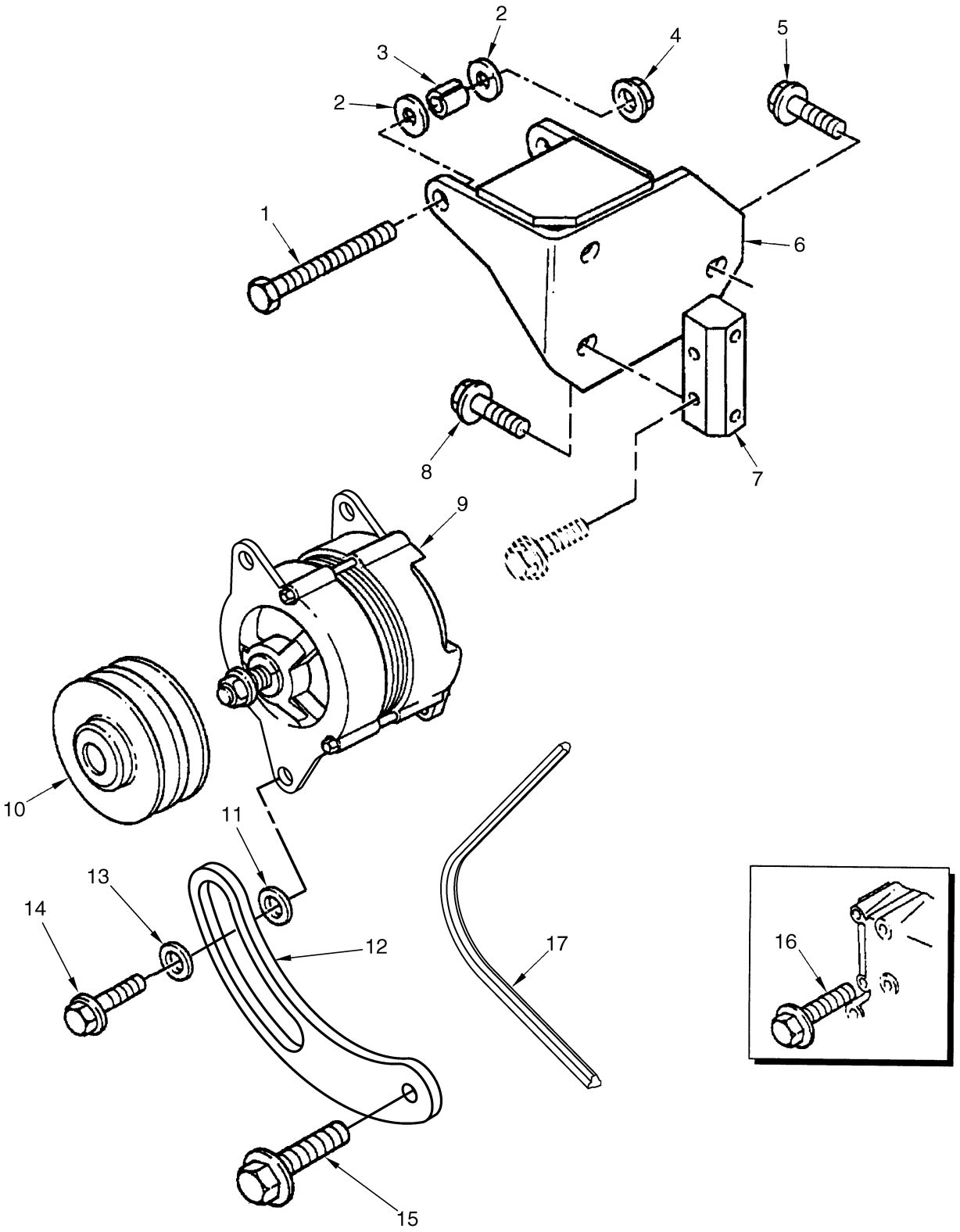

BP090012

©2009 HYSTER COMPANY

ALTERNATOR MOUNTING

DIESEL (→ 7/2001)

ITEM	PART NO.	DESCRIPTION	QTY
	1398112	Engine Assy-Diesel	1
1	1464111	Screw	1
2	1318306	Washer	2
3	1345014	Sleeve	1
4	1451745	Nut	1
5	1306357	Screw	2
6	1464110	Bracket	1
7	1464112	Bracket	1
8	1307910	Capscrew	3
9	**b** 1469598	Alternator	1
9	**b** 1469601	Wire (Alternator To Engine Harness)	1
9	**a** 1358911	Alternator	1
10	1310277	Pulley	1
11	1464115	Spacer	1
12	1464113	Lever	1
13	1464114	Spacer	1
14	1306353	Screw	1
15	1306358	Screw	1
16	1306362	Screw	3
17	2039256	V-Belt	1

FOOTNOTES:

a → S/N K005V02184Y

b S/N K005V02185Y →

©2009 HYSTER COMPANY

ALTERNATOR MOUNTING (FIGURE 2-21)

DIESEL (7/2001 →)

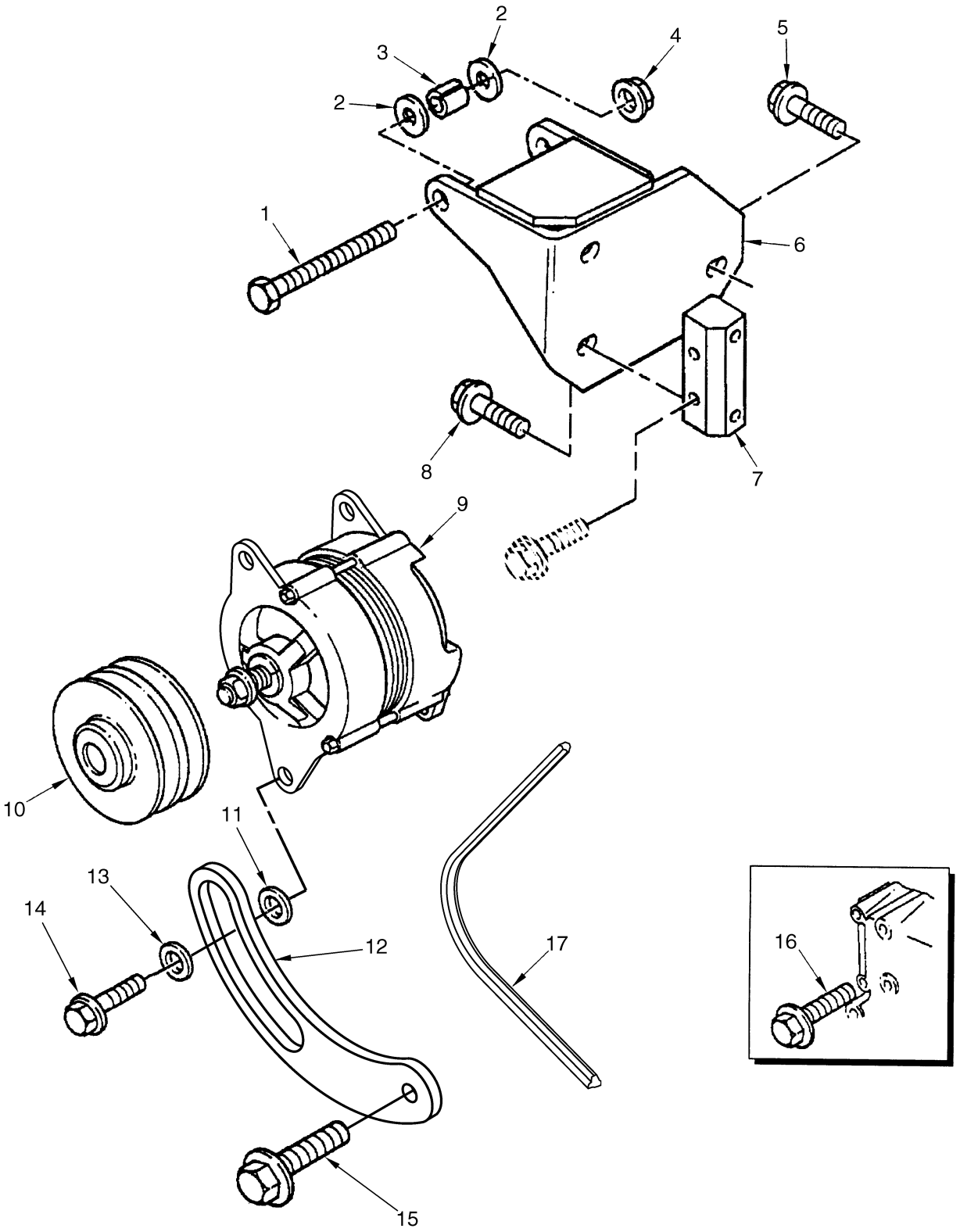

BP090012

©2009 HYSTER COMPANY

ALTERNATOR MOUNTING

DIESEL (7/2001 →)

ITEM	PART NO.	DESCRIPTION	QTY
	1398112	Engine Assy-Diesel	1
1	1464111	Screw	1
2	1318306	Washer	2
3	1345014	Sleeve	1
4	1451745	Nut	1
5	1306357	Screw	2
6	1464110	Bracket	1
7	1464112	Bracket	1
8	1307910	Capscrew	3
9	1469598	Alternator	1
9	1394001	Alternator (Sealed) (DS)	1
10	. . . . .	Pulley	1
10	353291	Pulley (DS)	1
11	1464115	Spacer	1
12	1464113	Lever	1
13	1464114	Spacer	1
14	1306353	Screw	1
15	1306358	Screw	1
16	1306362	Screw	3
17	2039256	V-Belt	1

©2009 HYSTER COMPANY

CYLINDER BLOCK (FIGURE 2-22)
DIESEL

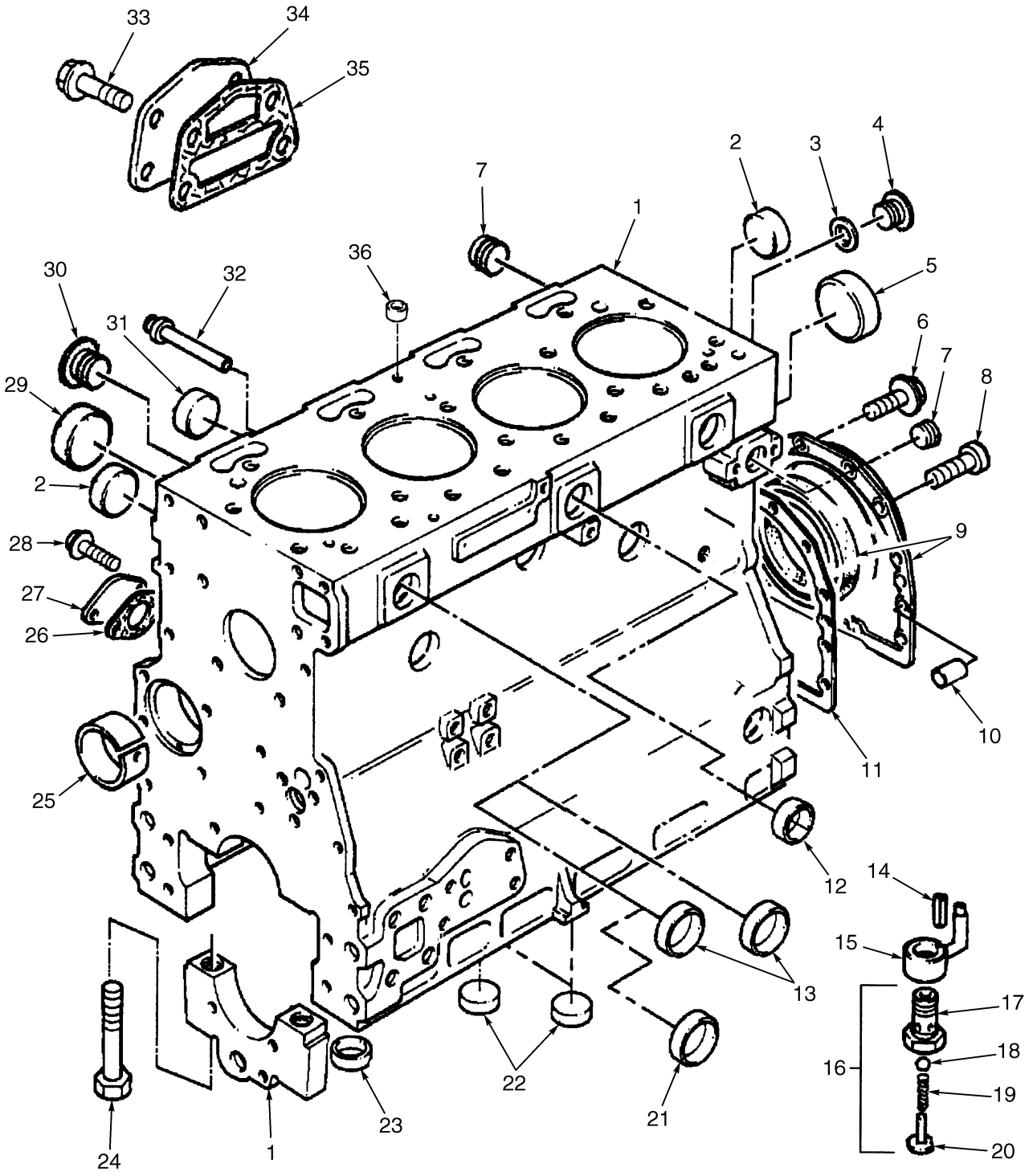

BP090010

©2009 HYSTER COMPANY

CYLINDER BLOCK
DIESEL

ITEM	PART NO.	DESCRIPTION	QTY
	1398112	Engine Assy-Diesel	1
	1516741	Short Block	1
1	385531	Plug	1
1	. . . . .	Block	1
1	. . . . .	Bearing cap	1
2	385531	Plug	4
3	984632	Washer	1
4	161385	Plug	1
5	1388387	Plug	1
6	386459	Screw	12
7	15304	Fitting	2
8	1382061	Screw	2
9	1369077	Housing	1
9	. . . . .	Cover	1
9	350397	Seal	1
10	158139	Dowel	2
11	1379734	Gasket	1
12	980727	Plug	6
13	349377	Plug	1
14	1456696	Dowel	1
15	1456697	Jet	1
16	1311054	Valve	1
17	. . . . .	Body	1
18	1311055	Ball	1
19	1311056	Spring	1
20	1311057	Retainer	1
21	1456694	Plug	1
22	245800	Plug	2
23	99576	Thimble	10
24	16794	Capscrew	10
25	1451625	Bushing	1
26	1357788	Gasket	1
27	1305698	Plate	1
28	1306349	Screw	2
29	385554	Plug	1
30	1459405	Plug	2
31	161383	Plug	3
32	365854	Plug	3
33	1307893	Screw	4
34	1374982	Plate	1
35	1345800	Gasket	1
36	992393	Plug	1
	1546462	Kit-Cylinder Block	1

©2009 HYSTER COMPANY

CRANKSHAFT AND PISTON (FIGURE 2-23)
DIESEL

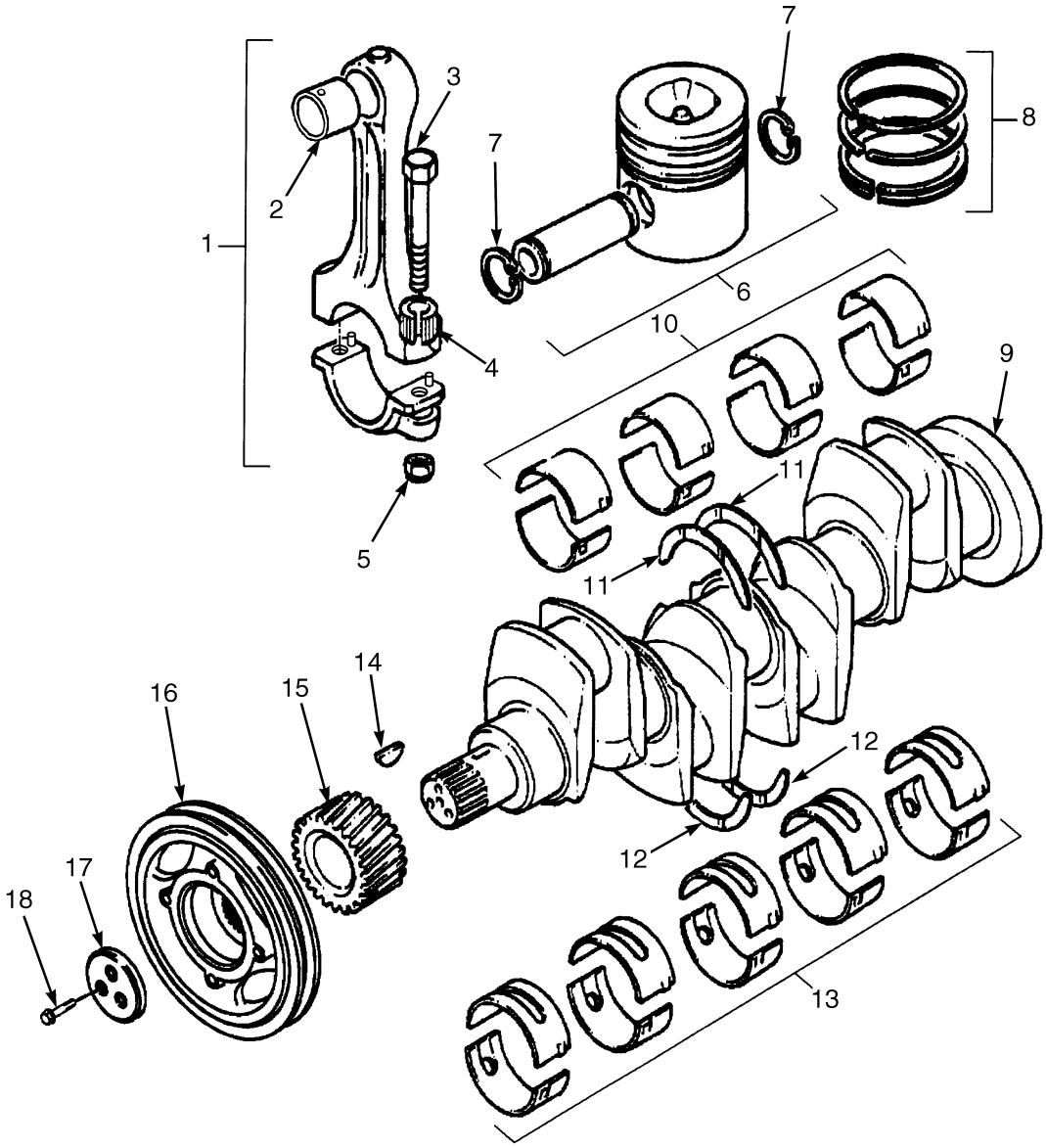

BP090008

©2009 HYSTER COMPANY

CRANKSHAFT AND PISTON
DIESEL

ITEM	PART NO.	DESCRIPTION	QTY
	1398112	Engine Assy-Diesel	1
1	1460543	Piston Rod (Grade H)	1
1	1460544	Piston Rod (Grade J)	1
1	1639697	Kit-Piston Rod	1
1	1460546	Kit-Piston Rod (Grade L)	1
2	1451602	Bushing	1
3	1306350	Bolt	2
4	1458329	Thimble	2
5	99663	Nut	2
6	1456700	Kit-Piston (Standard)	4
6	1461713	Kit-Piston (0.019 in.)	4
6	1461714	Kit-Piston (0.039 in.)	4
7	1451606	Snap Ring	2
8	1456701	Kit-Piston Ring (Standard)	4
8	1461715	Kit-Piston Ring (0.019 in.)	4
8	1461716	Kit-Piston Ring (0.039 in.)	4
9	1456699	Crankshaft	1
9	. . . . .	Crankshaft	1
10	1305699	Piston Rod Bearing (Standard)	1
10	1305701	Piston Rod Bearing (0.010 in.)	1
10	1305702	Piston Rod Bearing (0.020 in.)	1
10	1305703	Piston Rod Bearing (0.030 in.)	1
11	842799	Washer	2
11	161296	Washer (0.007 in.)	2
12	842800	Washer	2
12	161297	Thrust Washer (0.007 in.)	2
13	161425	Kit-Crankshaft Bearing (Standard)	1
13	161429	Kit-Crankshaft Bearing (0.010 in.)	1
13	161430	Kit-Crankshaft Bearing (0.020 in.)	1
13	161431	Kit-Crankshaft Bearing (0.030 in.)	1
14	99610	Key	1
15	1305706	Gear	1
16	1306193	Pulley	1
17	1306194	Block	1
18	302713	Screw	3

©2009 HYSTER COMPANY

OIL PAN AND PUMP (FIGURE 2-24)
DIESEL

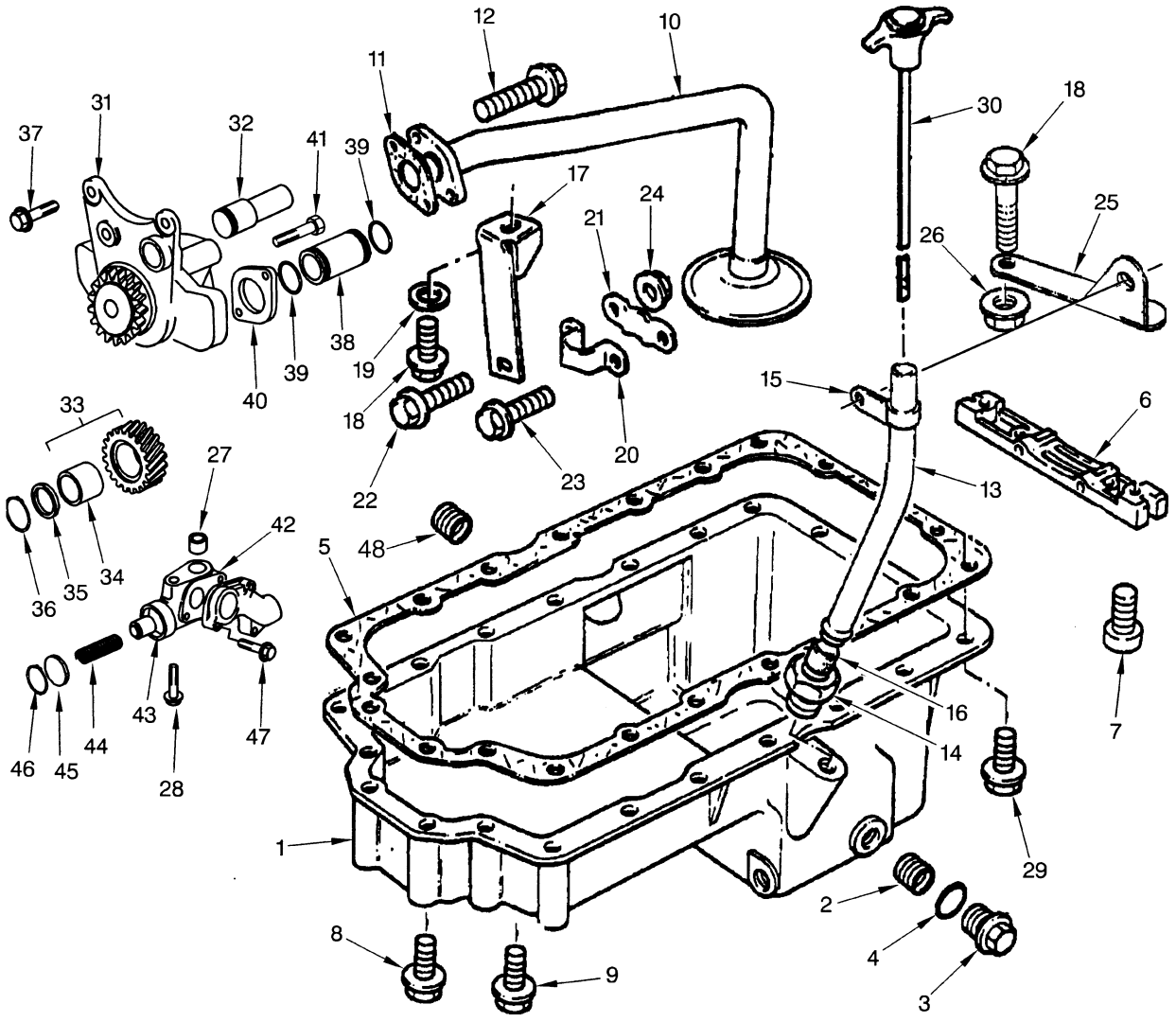

BP090009

©2009 HYSTER COMPANY

OIL PAN AND PUMP
DIESEL

ITEM	PART NO.	DESCRIPTION	QTY
	1398112	Engine Assy-Diesel	1
1	1464103	Oil Pan	1
1	. . . . .	Sump	1
2	266465	Insert	2
3	377976	Plug	2
4	1306374	O-Ring	2
5	1371717	Gasket	1
6	1537209	Plug	1
7	1307875	Screw	2
8	1318965	Screw	6
9	386459	Screw	12
10	1306140	Pipe	1
11	1344921	Gasket	1
12	1307879	Screw	2
13	1464104	Tube	1
14	1307880	Nut	1
15	1464105	Clip	1
16	1306143	Olive	1
17	1306146	Bracket	1
18	1307881	Screw	2
19	1315766	Washer	1
20	1306147	Clip	1
21	1306148	Plate	1
22	1307882	Screw	1
23	1307883	Screw	1
24	1307884	Nut	1
25	1464106	Bracket	1
26	1306359	Nut	1
27	1454315	Thimble	1
28	1306368	Screw	1
29	1307894	Screw	1
30	1464107	Dipstick	1
31	1306039	Engine Oil Pump	1
32	1380755	Shaft	1
33	1306040	Gear	1
33	. . . . .	Gear	1
34	1306041	Bushing	1
35	385847	Washer	1
36	328047	Snap Ring	1
37	1306362	Screw	3
38	1306042	Pipe	1
39	1306363	O-Ring	2
40	1306043	Flange	1
41	1306358	Screw	2
42	1456960	Relief Valve	1
42	. . . . .	Body	1
42	. . . . .	Cover	1
43	301749	Plunger	1
44	1306047	Spring	1
45	301751	Cap	1

©2009 HYSTER COMPANY

OIL PAN AND PUMP
DIESEL

ITEM	PART NO.	DESCRIPTION	QTY
46	1306328	Snap Ring	1
47	1306367	Screw	3
48	1377908	Plug	1
	1464018	Kit-Gasket	1

©2009 HYSTER COMPANY

NOTES

©2009 HYSTER COMPANY

TIMING GEAR (FIGURE 2-25)
DIESEL

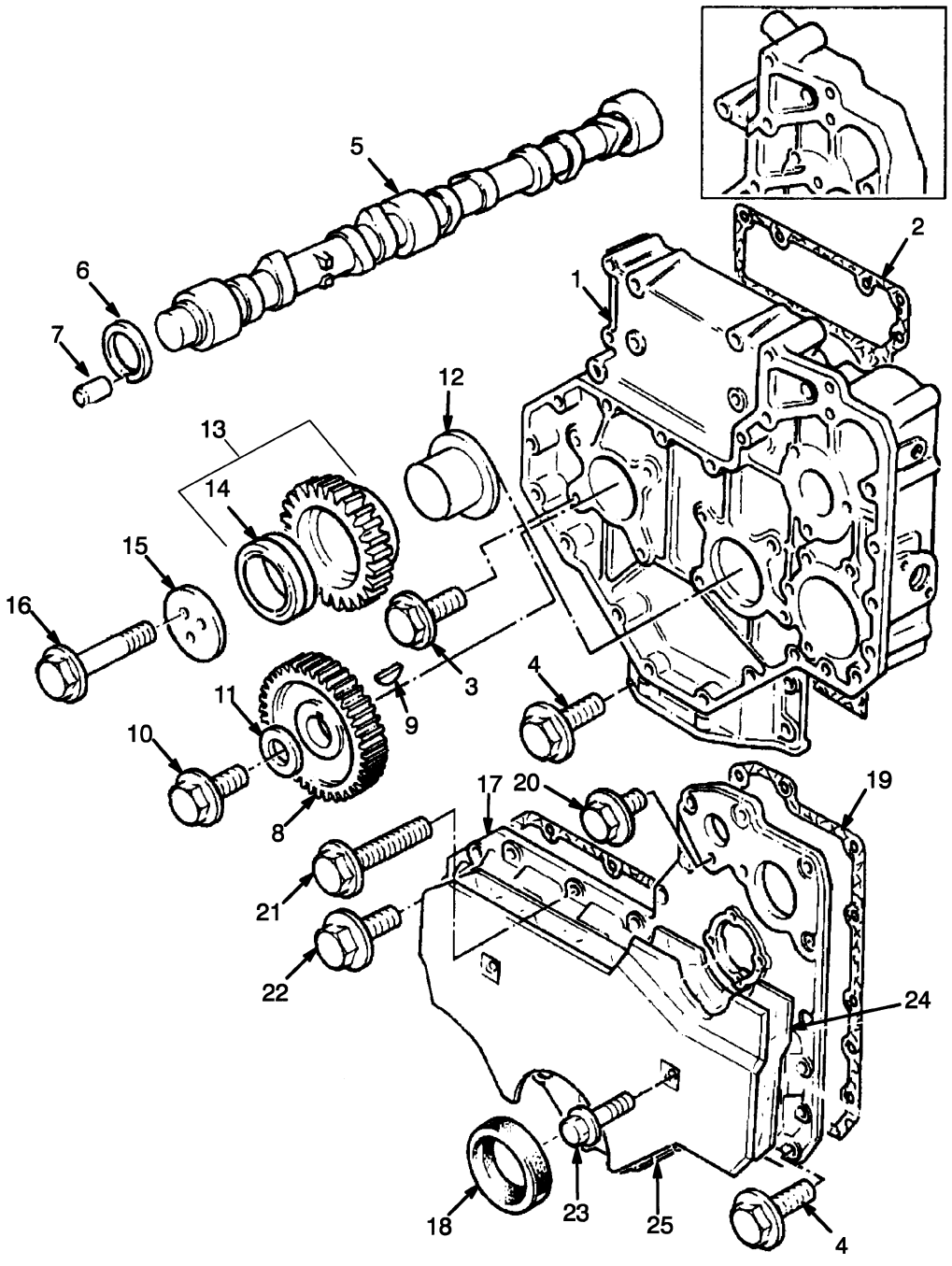

©2009 HYSTER COMPANY

TIMING GEAR
DIESEL

ITEM	PART NO.	DESCRIPTION	QTY
	1398112	Engine Assy-Diesel	1
1	1550595	Timing Case	1
2	1536819	Gasket	1
3	386459	Screw	8
4	1306354	Screw	6
5	1456722	Camshaft	1
6	99614	Washer	1
7	298096	Dowel	1
8	1382481	Gear	1
9	99610	Key (Woodruff)	1
10	1328565	Screw	1
11	1306364	Washer	1
12	229875	Hub (Idler Gear)	1
13	1306030	Gear	1
14	983484	Bushing	1
15	1382479	Plate	1
16	1306356	Screw	3
17	1456723	Cover	1
18	350399	Seal	1
19	1456724	Gasket	1
20	1306357	Screw	6
21	1306358	Screw	1
22	1306362	Screw	6
23	1306361	Screw	2
24	1451650	Shield	1
25	1451651	Damper	1
	1464018	Kit-Gasket	1

©2009 HYSTER COMPANY

CYLINDER HEAD (FIGURE 2-26)
DIESEL

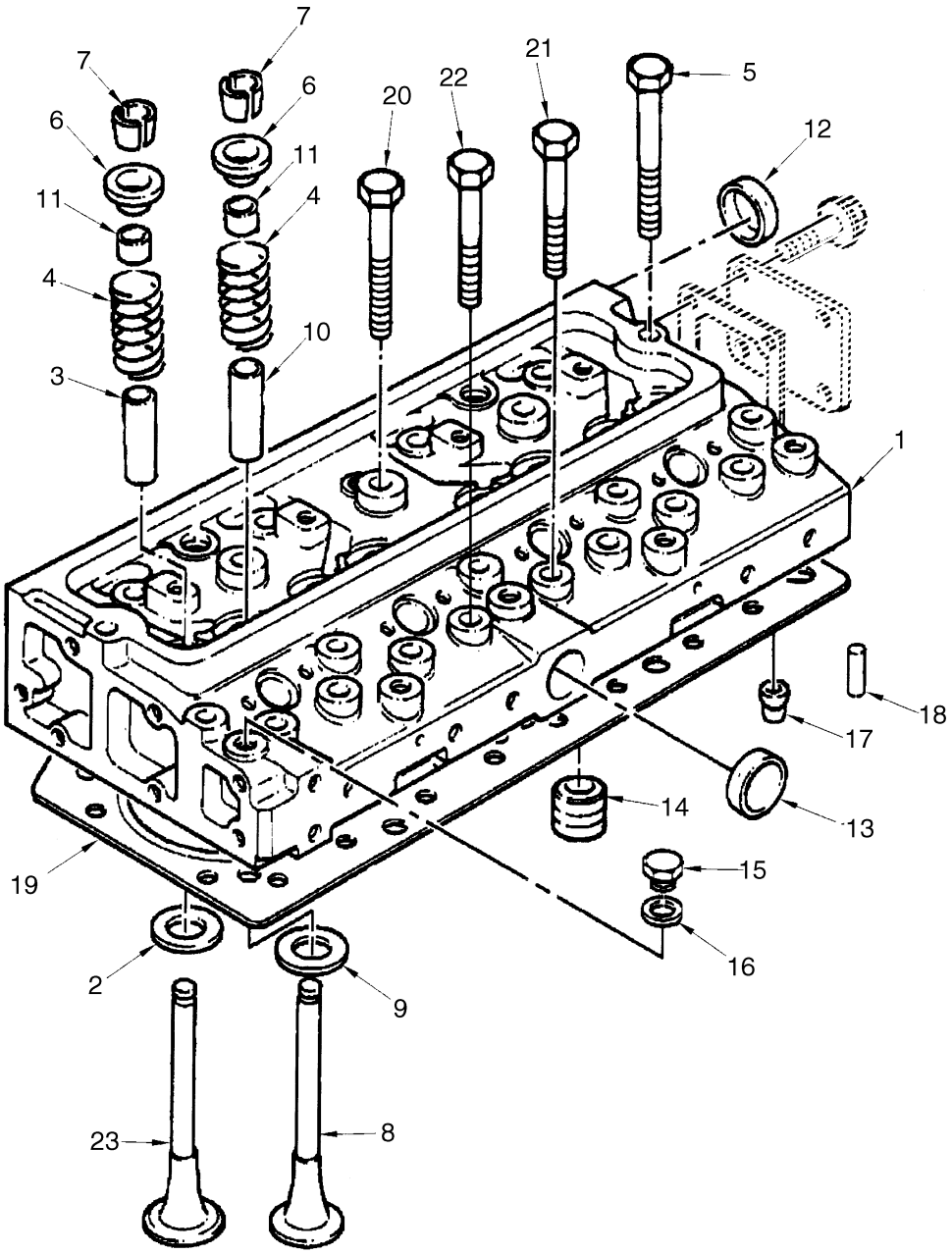

BP090002

©2009 HYSTER COMPANY

CYLINDER HEAD
DIESEL

ITEM	PART NO.	DESCRIPTION	QTY
	1398112	Engine Assy-Diesel	1
	1456716	Kit-Cylinder Head	1
1	. . . . .	Cylinder Head	1
2	1456707	Insert	4
3	1451629	Guide (Valve)	4
4	1456705	Spring	8
5	1456715	Screw	2
6	1451633	Cap	8
7	1451636	Keeper	16
8	1456709	Exhaust Valve (Exhaust)	4
9	1456708	Insert	4
10	1456704	Guide (Valve)	4
11	1451630	Seal (Exhaust)	4
11	1456706	Seal (Intake)	4
12	385531	Plug	1
13	980727	Plug	1
14	150879	Fitting	4
15	992025	Plug	1
16	986475	Washer	1
17	1454176	Dowel	2
18	1456711	Dowel	2
19	1460567	Cylinder Head Gasket	1
20	1456713	Screw	8
21	1456714	Screw	8
22	1370944	Bolt	4
23	1456702	Inlet Valve (Inlet)	4
	1460584	Kit-Gasket (Top)	1

©2009 HYSTER COMPANY

VALVE COVER AND ROCKER ARM SHAFT (FIGURE 2-27)

DIESEL

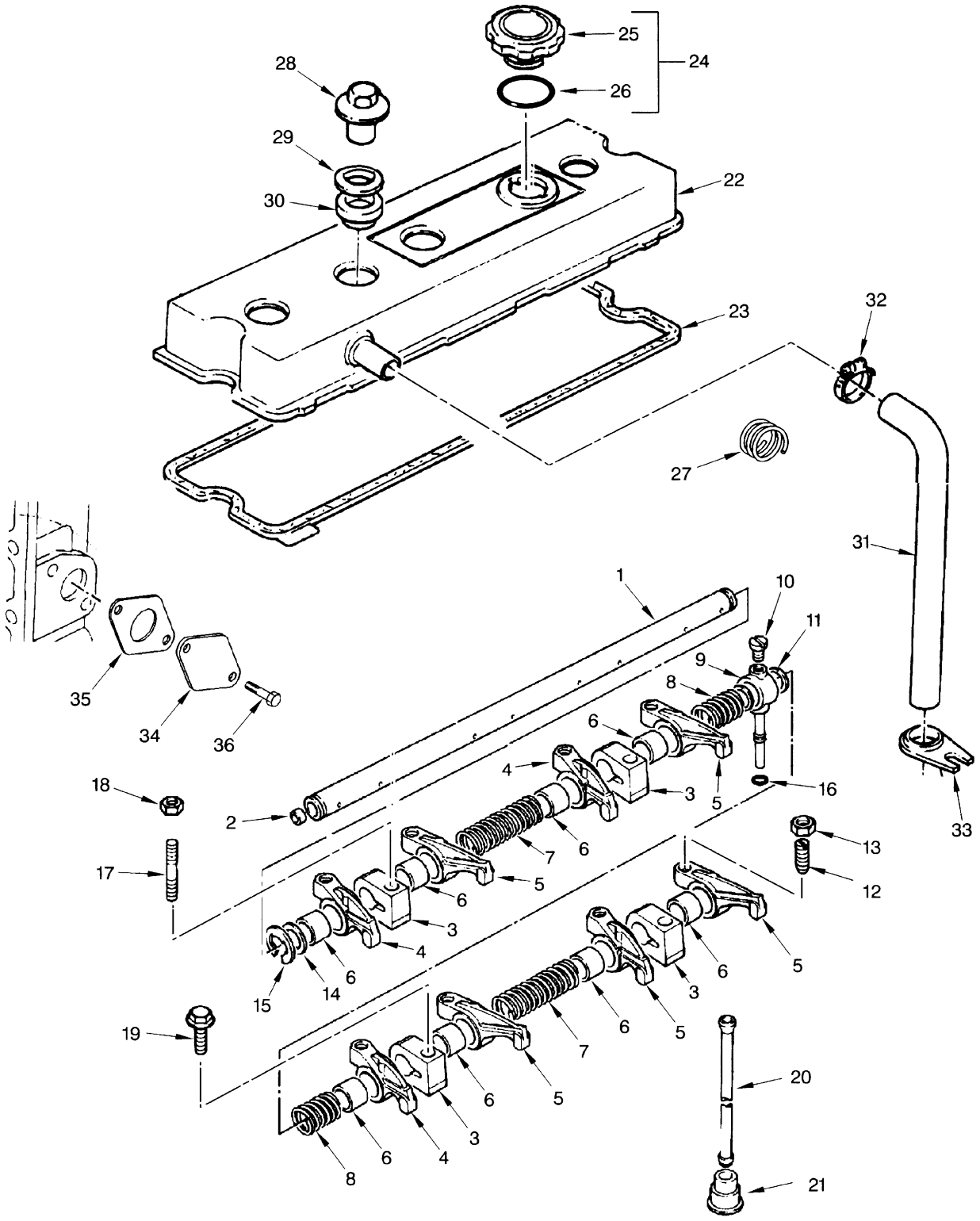

©2009 HYSTER COMPANY

VALVE COVER AND ROCKER ARM SHAFT
DIESEL

ITEM	PART NO.	DESCRIPTION	QTY
	1398112	Engine Assy-Diesel	1
	1456717	Rocker Shaft	1
1	1456718	Rocker Shaft	1
2	990429	Plug	2
3	1370947	Bracket	4
4	1451645	Rocker Arm (LH)	4
5	1451643	Rocker Arm (RH)	4
6	1451644	Bushing	3
7	99722	Spring	2
8	99723	Spring	2
9	1374980	Fitting	1
10	1370948	Screw	1
11	1479697	Shim	2
12	1466859	Screw	8
13	15026	Nut	8
14	1451642	Washer	2
15	99725	Snap Ring	1
16	158187	Olive (Rubber)	1
17	1306351	Stud	3
18	1370949	Nut	3
19	1306353	Screw	1
20	99728	Rod	8
21	224248	Tappet	8
22	1464108	Engine Cover	1
22	. . . . .	Cover	1
23	1456741	Valve Cover Gasket	1
24	1391246	Cap	1
25	. . . . .	Cap	1
26	1516930	O-Ring	1
27	1460559	Spring	1
28	1380763	Nut	3
29	15125	Washer	3
30	1380245	Seal	3
31	1456767	Pipe	1
32	1464109	Clip	1
33	301785	Bracket	1
34	1306186	Plate	1
35	1380251	Gasket	1
36	386459	Screw	2
	1460584	Kit-Gasket (Top)	1
	1464018	Kit-Gasket	1

©2009 HYSTER COMPANY

MANIFOLDS (FIGURE 2-28)

DIESEL (→ 7/2001)

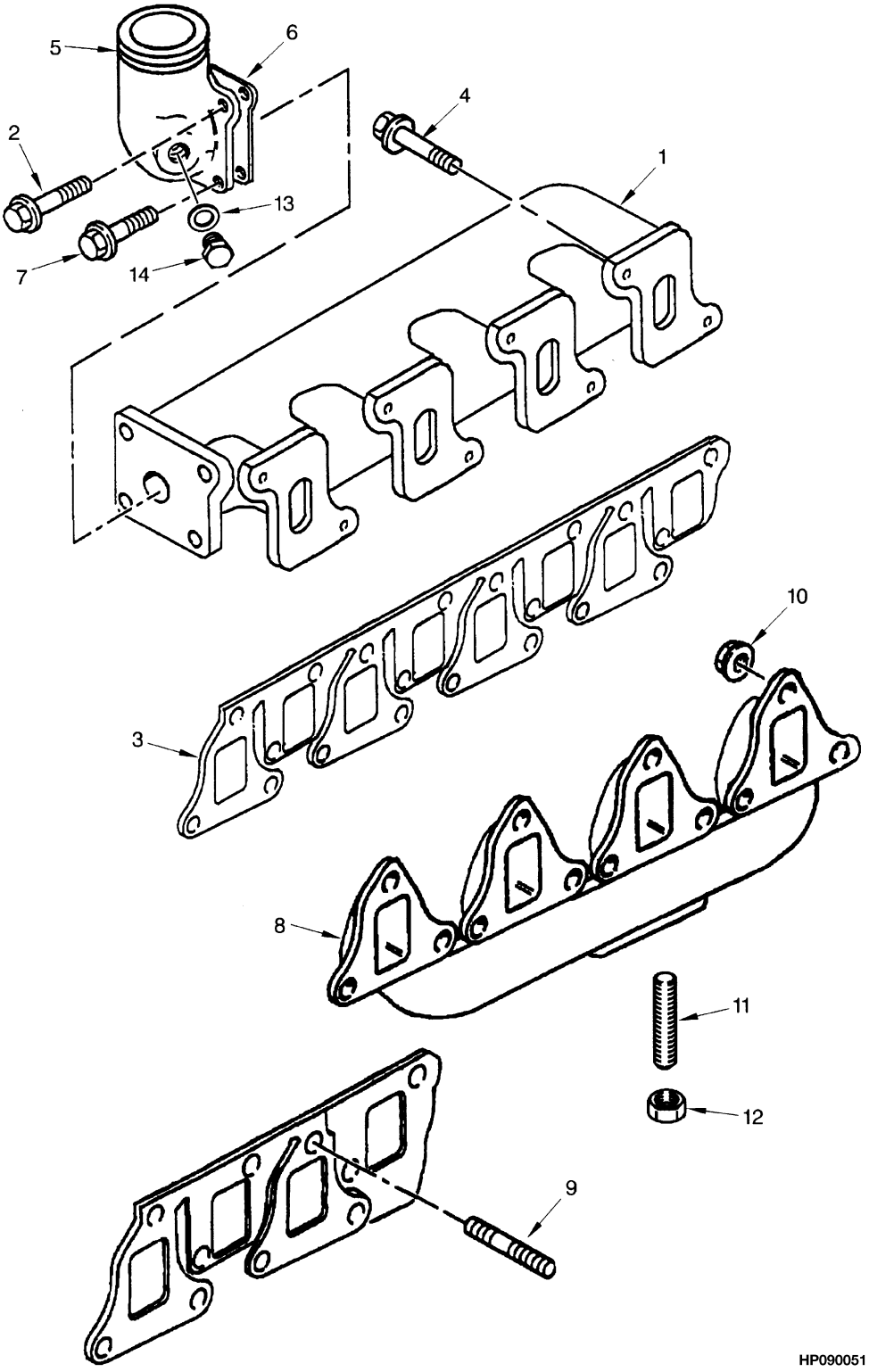

©2009 HYSTER COMPANY

MANIFOLDS

DIESEL (→ 7/2001)

ITEM	PART NO.	DESCRIPTION	QTY
	1398112	Engine Assy-Diesel	1
1	1464199	Manifold (Intake)	1
2	1307895	Screw	1
3	1456751	Gasket (Inlet/Exhaust)	1
4	1464200	Screw	8
5	1464201	Elbow	1
6	1464202	Gasket	1
7	1306358	Screw	3
8	1456755	Exhaust Manifold (Exhaust)	1
9	1460564	Stud	12
10	1456756	Nut	12
11	1307877	Stud	3
12	1306370	Nut	3
13	256159	Washer	1
14	133558	Plug	1
	1460584	Kit-Gasket (Top)	1

©2009 HYSTER COMPANY

MANIFOLDS (FIGURE 2-29)

DIESEL (7/2001 →)

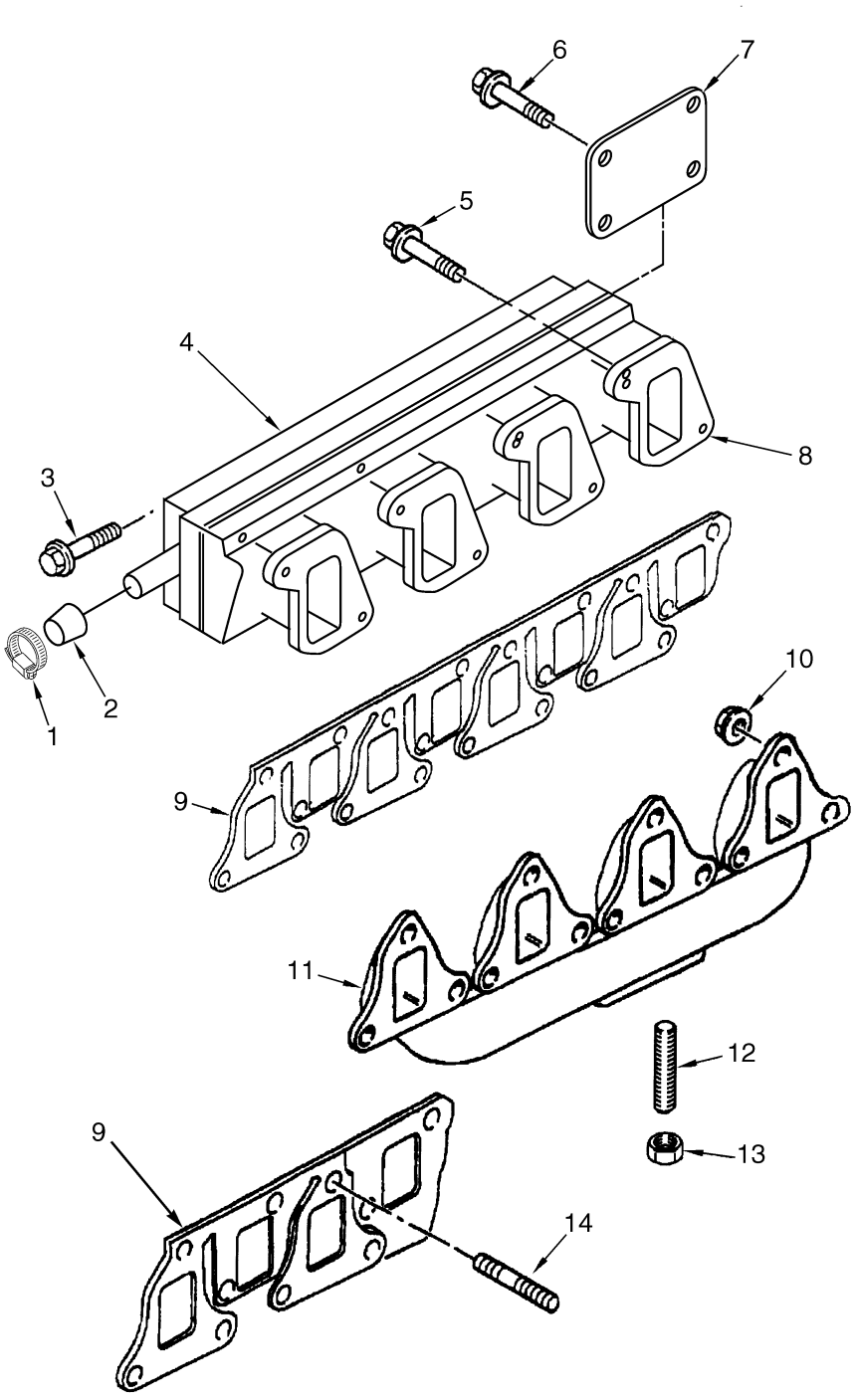

BP090004

©2009 HYSTER COMPANY

MANIFOLDS

DIESEL (7/2001 →)

ITEM	PART NO.	DESCRIPTION	QTY
	1398112	Engine Assy-Diesel	1
1	130845	Clamp	1
2	1472711	Cap	1
3	386459	Screw	9
4	1472707	Intake Manifold (Induction)	1
4	1456754	Sealant	1
5	1460547	Screw	8
6	1472710	Screw	4
7	1472709	Plate	1
8	1472708	Manifold (Intake)	1
9	1456751	Gasket (Inlet/Exhaust)	2
10	1456756	Nut	12
11	1456755	Exhaust Manifold (Exhaust)	1
12	1307877	Stud	3
13	1306370	Nut	3
14	1460564	Stud	12

©2009 HYSTER COMPANY

OIL FILTER (FIGURE 2-30)
DIESEL

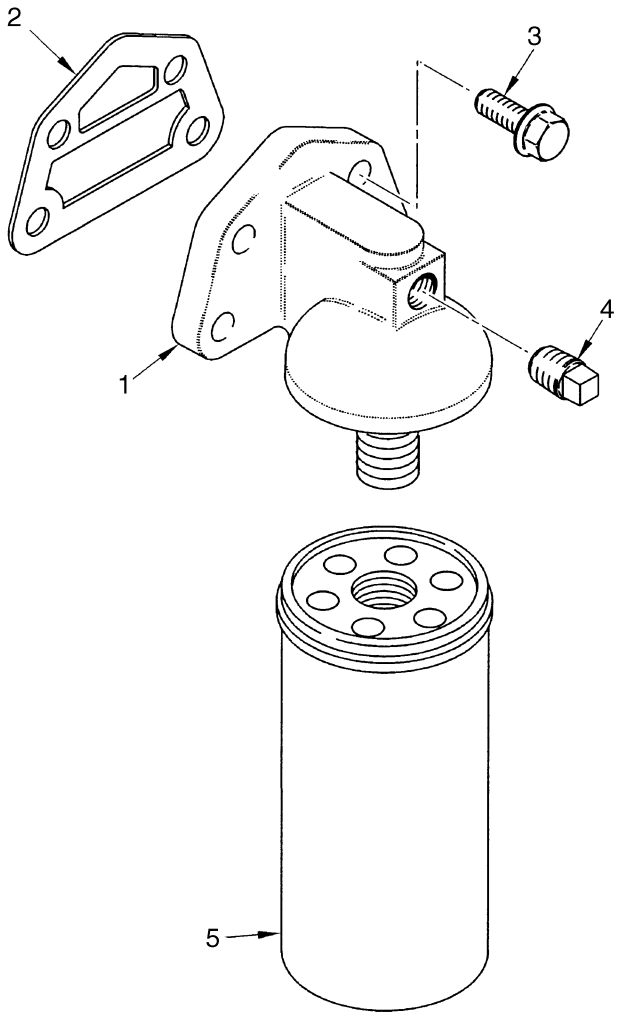

BP090006

ITEM	PART NO.	DESCRIPTION	QTY
	1398112	Engine Assy-Diesel	1
1	1315767	Head	1
1	. . . . .	Head	1
1	. . . . .	Adapter	1
2	1345800	Gasket	1
3	1307915	Capscrew	4
4	150879	Fitting	1
5	195852	Oil Filter	1

©2009 HYSTER COMPANY

NOTES

©2009 HYSTER COMPANY

COOLANT PUMP (FIGURE 2-31)

DIESEL (→ 9/2001)

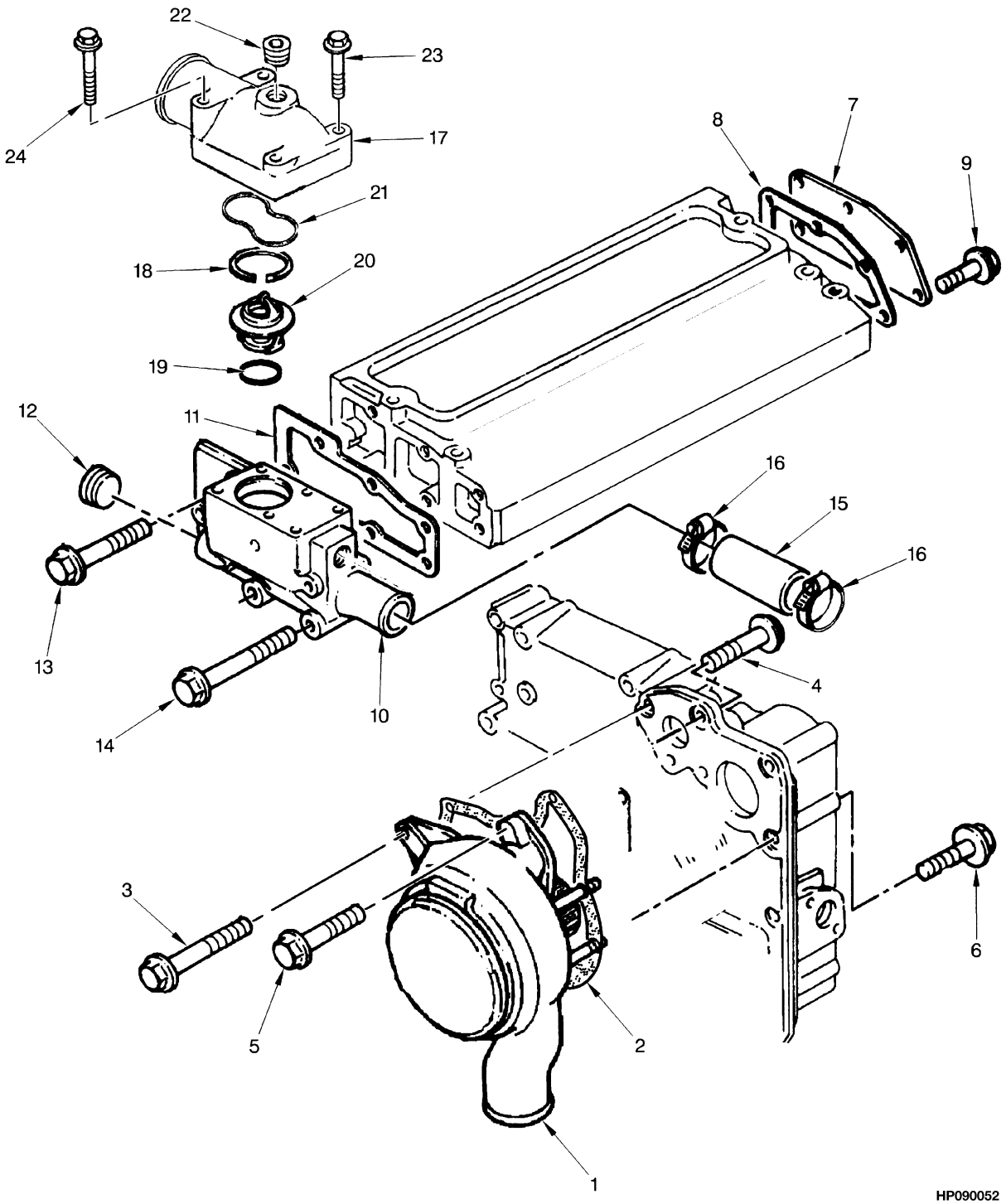

©2009 HYSTER COMPANY

COOLANT PUMP

DIESEL (→ 9/2001)

ITEM	PART NO.	DESCRIPTION	QTY
	1398112	Engine Assy-Diesel	1
1	1465895	Water Pump	1
2	1451733	Gasket	1
3	1307908	Screw	5
4	1318965	Screw	1
5	1306354	Screw	3
6	1307909	Screw	2
7	1456742	Plate	1
8	1451739	Gasket	1
9	1307881	Screw	3
10	1465171	Thermostat Housing	1
11	1451735	Gasket	1
12	15962	Fitting	1
13	1318968	Screw	3
14	1307898	Screw	3
15	1456746	Kit-Hose	1
16	1456747	Clip	2
17	1465803	Thermostat Housing	1
18	1465812	Ring	1
19	1451737	O-Ring	1
20	1456745	Thermostat (180°)	1
21	1465810	O-Ring	1
22	1465811	Plug	1
23	1306358	Screw	2
24	1307898	Screw	2
	1460584	Kit-Gasket (Top)	1
	1464018	Kit-Gasket	1
	1465896	Kit-Repair Water Pump (Water Pump)	1

©2009 HYSTER COMPANY

COOLANT PUMP (FIGURE 2-32)

DIESEL (9/2001 →)

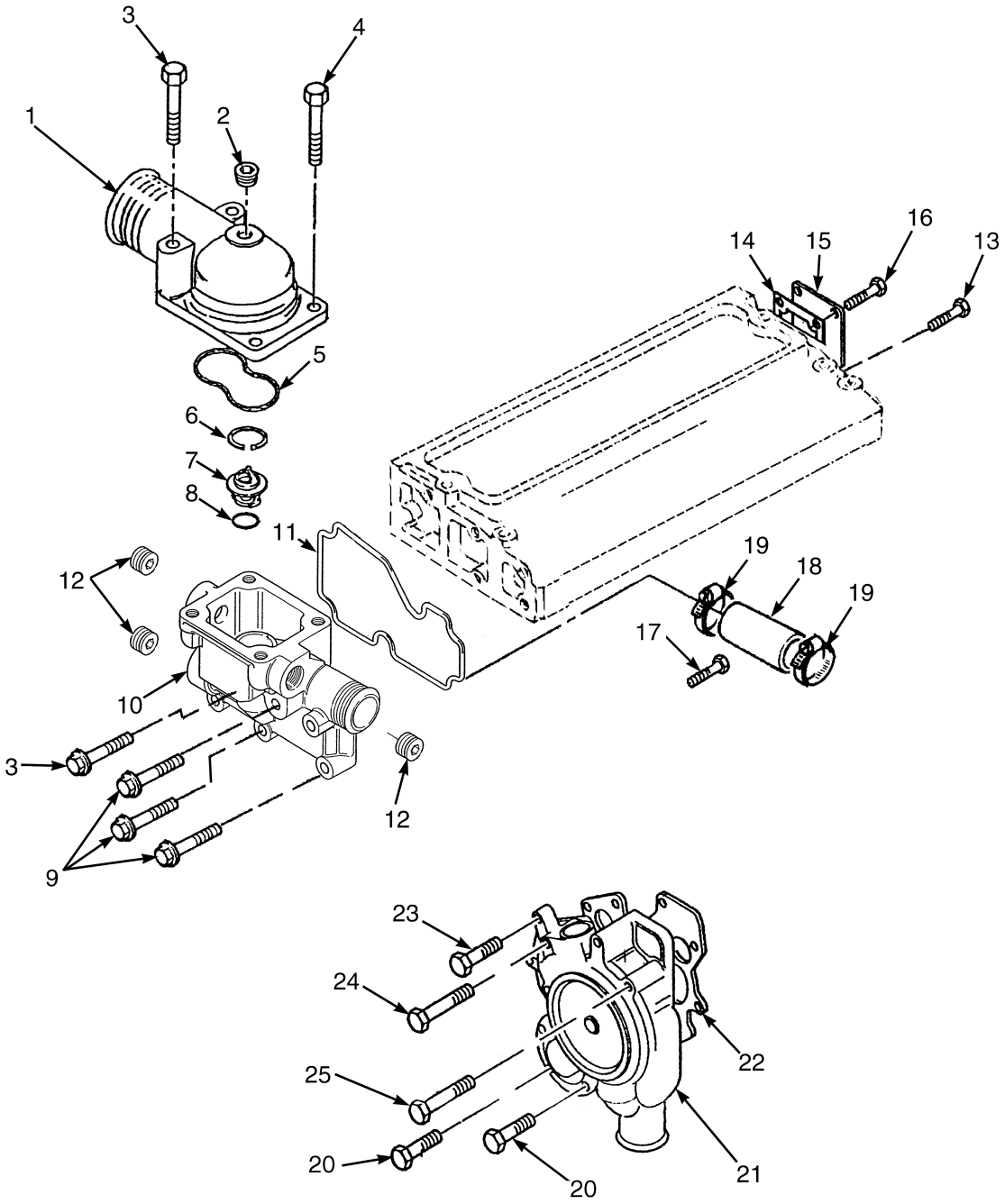

BP060002

©2009 HYSTER COMPANY

COOLANT PUMP

DIESEL (9/2001 →)

ITEM	PART NO.	DESCRIPTION	QTY
	1398112	Engine Assy-Diesel	1
1	1465803	Thermostat Housing	1
1	. . . . .	Connector	1
2	1465811	Plug	1
3	1318968	Screw	5
4	1306358	Screw	2
5	1465810	O-Ring	1
6	1465812	Ring	1
7	1456745	Thermostat	1
8	1451737	O-Ring	1
9	1307898	Screw	3
10	1550596	Thermostat Housing	1
11	1537344	Gasket	1
12	1516762	Plug	3
12	1516761	O-Ring	1
13	1307881	Screw	3
14	1451739	Gasket	1
15	1456742	Plate	1
16	. . . . .	Bolt	4
17	1307909	Screw	2
18	1456746	Kit-Hose	1
18	. . . . .	Hose	1
19	1456747	Clip	2
20	1523972	Screw	3
21	**a** 1465895	Water Pump	1
21	**a** 1465896	Kit-Repair Water Pump (Water Pump)	1
21	**b** 1545442	Water Pump	1
21	**b** 1537291	Kit-Repair Water Pump	1
21	**b** 1466858	O-Ring	1
22	1451733	Gasket	1
23	1315497	Screw	1
24	1307908	Screw	3
25	1318965	Screw	1

FOOTNOTES:

a → 9/2001

b 9/2001 →

©2009 HYSTER COMPANY

ROTARY EXHAUSTER (FIGURE 2-33)

DIESEL

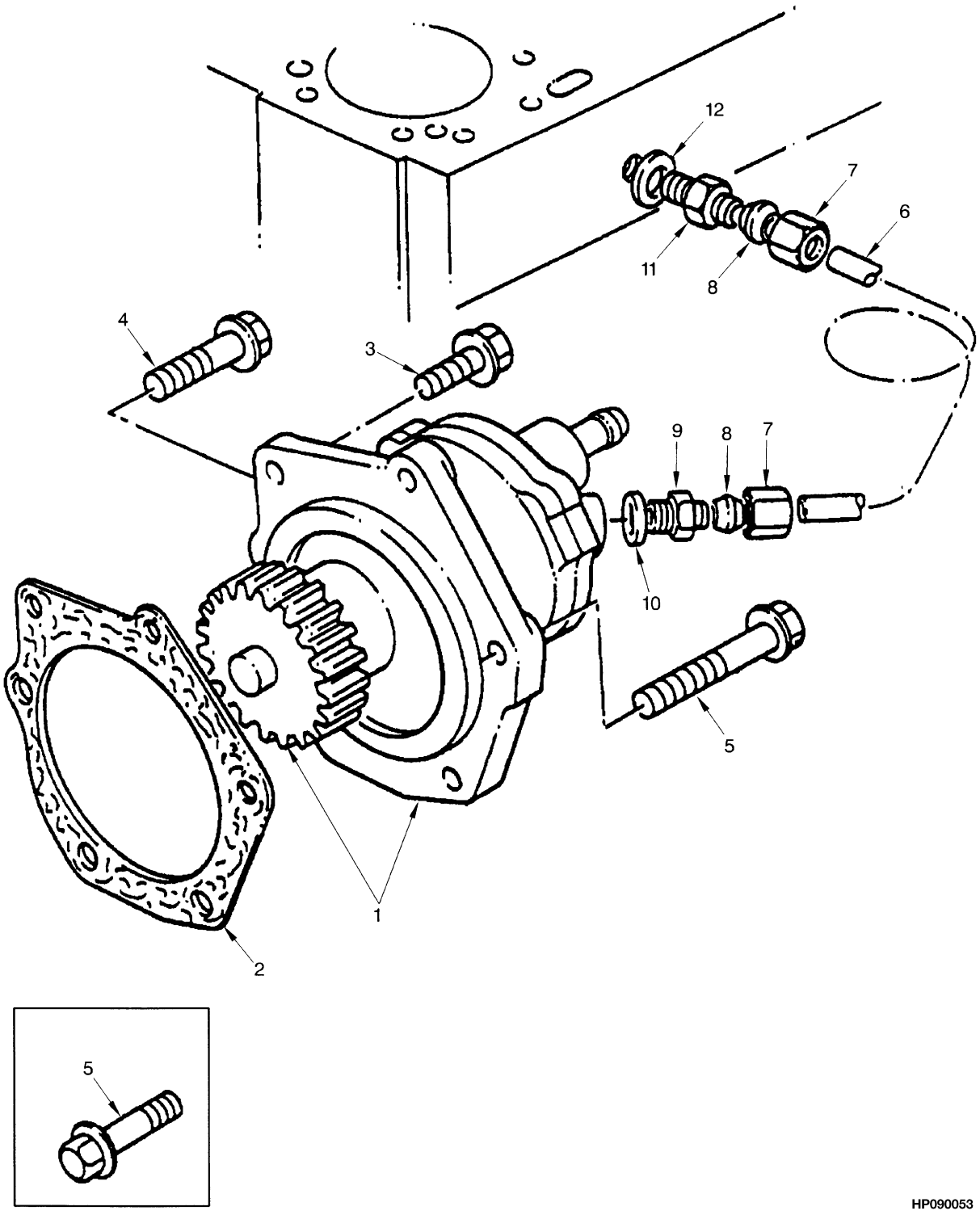

©2009 HYSTER COMPANY

ROTARY EXHAUSTER
DIESEL

ITEM	PART NO.	DESCRIPTION	QTY
	1398112	Engine Assy-Diesel	1
1	1528570	Exhauster	1
2	1329660	Gasket	1
3	1306354	Screw	4
4	1464197	Screw	1
5	1307913	Screw	2
6	1507960	Tube Assy	1
7	16193	Fitting	2
8	51455	Fitting	2
9	1464198	Adapter	1
10	1382543	Washer	1
11	1319028	Adapter	1
12	101985	Washer	1

©2009 HYSTER COMPANY

NOTES

©2009 HYSTER COMPANY

3 FUEL SYSTEM

SECTION 3
FUEL SYSTEM

DESCRIPTION	PAGE
AIR FILTER	3-74
AIR FILTER SYSTEM	3-72
CARBURETOR	
LPG - WITH LOW EMISSIONS	3-41
DUAL FUEL SYSTEM	
→ S/N K005D05482	3-42
S/N K005D05483 ↔ S/N K005V005980A	3-46
S/N K005V05981A ↔ 12/2003	3-50
12/2003 →	3-54
FUEL FILTER	
LOW PRESSURE SYSTEM - DIESEL	3-10
FUEL SYSTEM	
DIESEL	3-2
GASOLINE	3-18
LPG - OPEN LOOP (→ S/N K005D05482)	3-22
LPG - OPEN LOOP (S/N K005D05483 ↔ S/N K005V005980A)	3-26
LPG - OPEN LOOP (S/N K005V05981A →)	3-30
LPG - CLOSED LOOP (→ 12/2003)	3-34
LPG - CLOSED LOOP (12/2003 →)	3-38
GOVERNOR	
LPG	3-67
HIGH PRESSURE FUEL INJECTION AND PUMP	
DIESEL	3-12
INJECTOR THROTTLE BODY	
GASOLINE	3-70
LIFT PUMP	
DIESEL	3-16
LOCK-OFF FILTER	
LPG	3-64
LOW PRESSURE SYSTEM	
DIESEL (→ 7/2001)	3-6
DIESEL (7/2001 →)	3-8
LPG CONVERTER	
OPEN LOOP (→ S/N K005D05482)	3-65
OPEN LOOP (S/N K005D05483 →)	3-66
LPG TANK AND BRACKET	
SWING OUT	3-60
LPG TANK BRACKET	
FIXED	3-58
SWING OUT/DROP DOWN	3-62
MONOTROL PEDAL	3-84
MONOTROL PEDAL LINKAGE	3-82
THROTTLE ARM ASSEMBLY	3-80
THROTTLE BODY GOVERNOR	
GASOLINE AND DUAL FUEL	3-68
THROTTLE LINKAGE	
DIESEL	3-78
GASOLINE AND LPG	3-76
WATER SEPARATOR	3-14

©2009 HYSTER COMPANY

See Service Manual for service procedures.

FUEL SYSTEM (FIGURE 3-1)
DIESEL

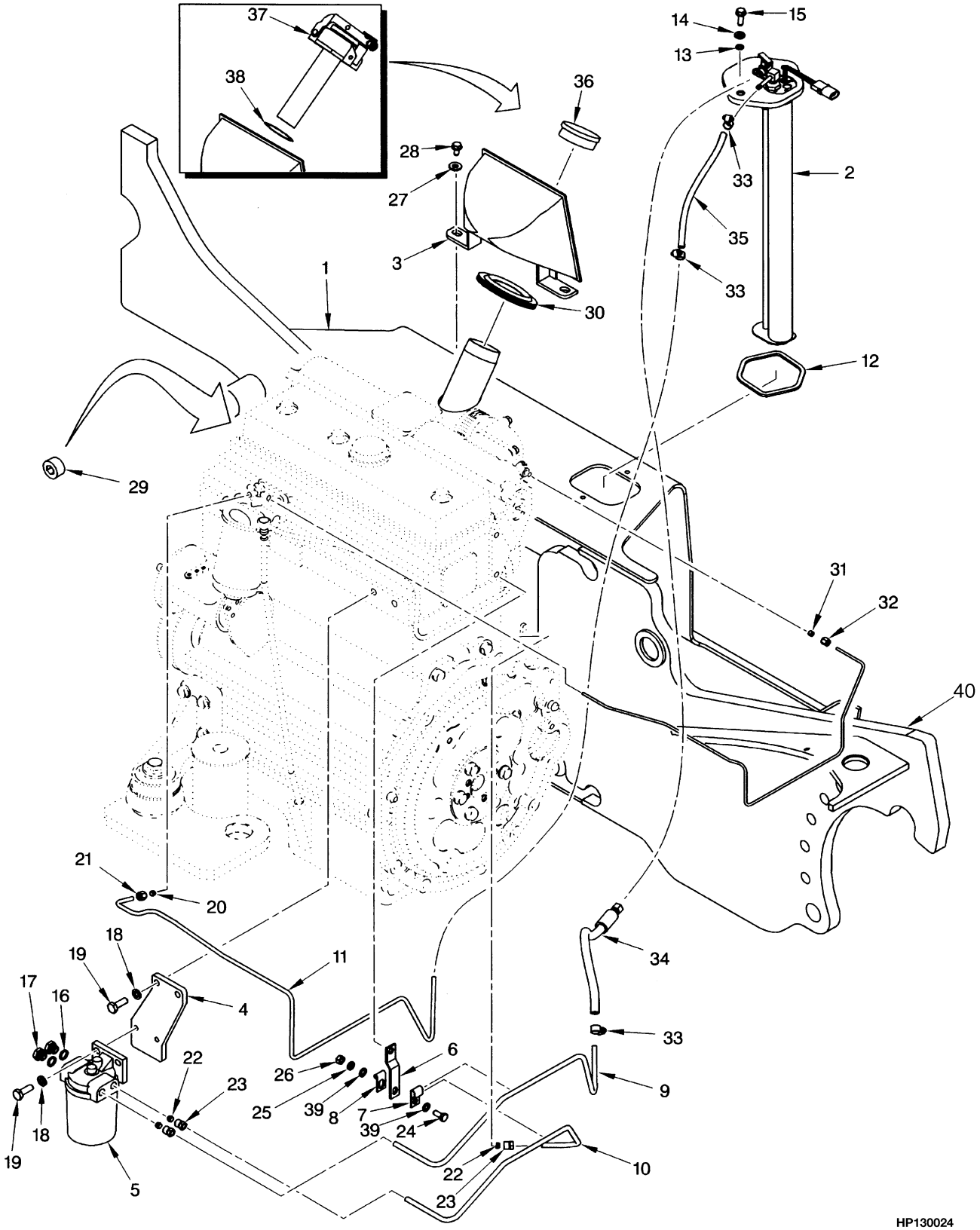

©2009 HYSTER COMPANY

FUEL SYSTEM
DIESEL

ITEM	PART NO.	DESCRIPTION	QTY
1	. . . . .	Frame (LH)	1
2	**a** 1397396	Fuel Sender	1
2	**b** 1371184	Kit-Fuel Sender Diesel	1
2	1371166	Wire Harness (Not Illustrated)	1
2	1371119	Kit-Fuel Sender Diesel	1
2	1371128	Cover	1
2	17650	Fitting	1
2	309651	Fitting	1
2	14303	Fitting	1
2	1371111	Fuel Sender	1
2	1371137	Tube Assy	1
2	16121	Fitting	1
2	1371141	Tube Assy	1
2	17343	Fitting	1
2	87446	Drain Valve (Shut-Off)	1
3	1376746	Shield	1
4	1396198	Plate	1
5	1396256	Water Separator (☞Figure 3-6)	1
6	1397830	Bracket	1
7	1399381	Clamp	1
8	69314	Clamp	1
9	1397438	Tube Assy (Supply)	1
10	1397441	Tube Assy (Fuel Pump)	1
11	1397394	Tube Assy (Return)	1
12	1343449	Seal	1
13	353000	O-Ring	2
14	320157	Washer	2
15	329067	Screw	2
16	. . . . .	Washer	2
17	. . . . .	Plug	2
18	292682	Lockwasher	4
19	136985	Capscrew	4
20	16114	Fitting	1
21	16118	Fitting	1
22	16177	Fitting	1
23	16100	Fitting	1
24	136681	Capscrew	1
25	292681	Lockwasher	1
26	239503	Nut	1
27	320158	Washer	2
28	316678	Screw	2
29	15964	Fitting	1
30	1339720	Grommet	1
31	152608	Olive	1
32	152609	Nut	1
33	168718	Clamp	1
34	1392744	Hose (Fuel)	1
34	193656	Hose (Fuel)	1
35	1399433	Hose	1
36	298832	Fuel Cap (Standard)	1

©2009 HYSTER COMPANY

FUEL SYSTEM
DIESEL

ITEM	PART NO.	DESCRIPTION	QTY
37	63899	Fuel Cap (Safety)	1
38	138880	Shim (0.020 in.) (Safety)	1
39	296418	Washer	2
40	1464210	Pipe	1

FOOTNOTES:

a → S/N K005V04791A

b S/N K005V04792A →

©2009 HYSTER COMPANY

NOTES

©2009 HYSTER COMPANY

LOW PRESSURE SYSTEM (FIGURE 3-2)

DIESEL (→ 7/2001)

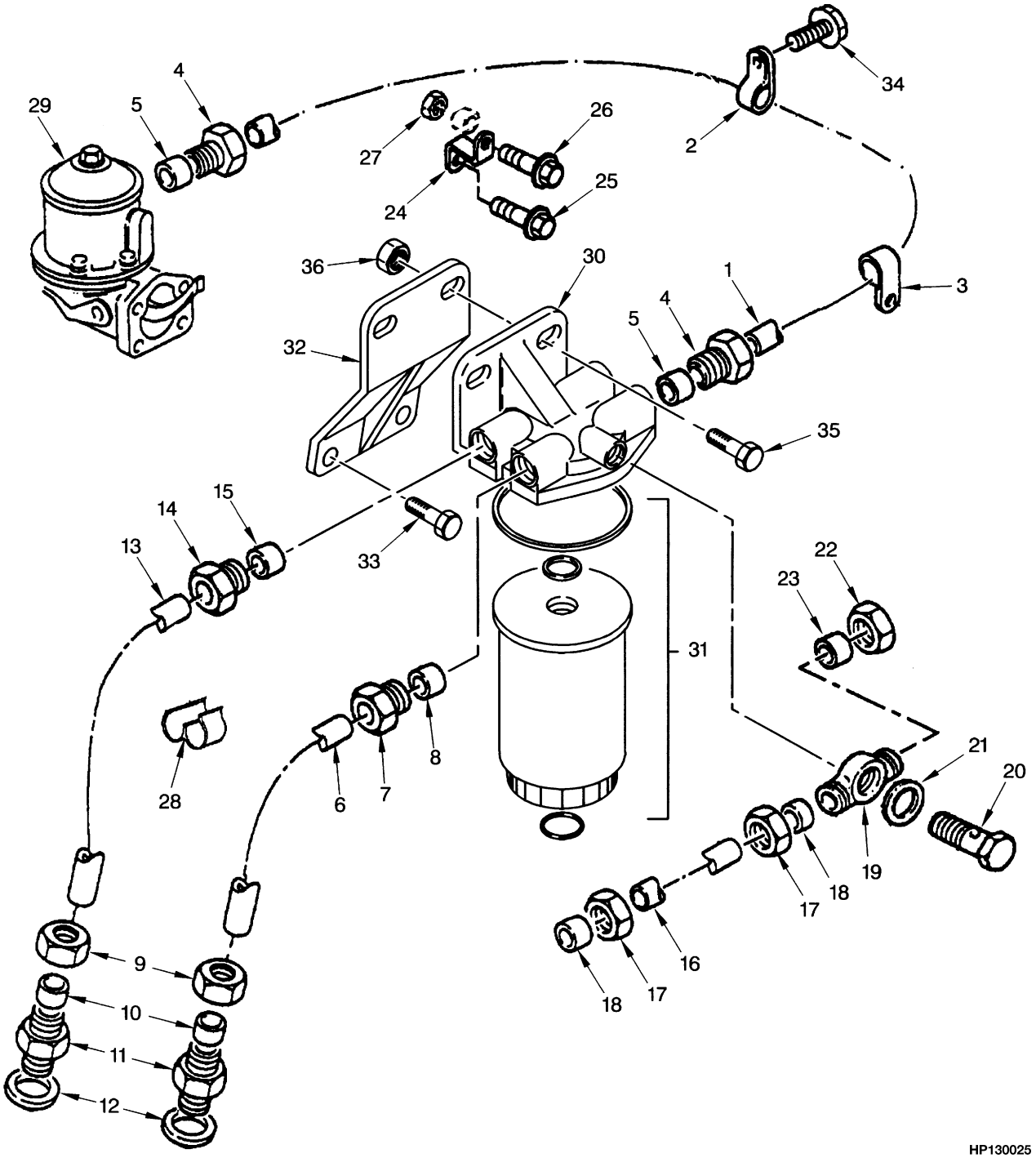

©2009 HYSTER COMPANY

LOW PRESSURE SYSTEM

DIESEL (→ 7/2001)

ITEM	PART NO.	DESCRIPTION	QTY
	1398112	Engine Assy-Diesel	1
1	1464203	Tube Assy (Fuel)	1
2	1464204	Clip	1
3	1456521	Clip	4
4	16100	Fitting	1
5	167023	Sleeve	2
6	1464205	Tube Assy (Fuel)	1
7	158186	Nut	1
8	158187	Olive	1
9	167507	Nut	1
10	167508	Olive	2
11	1464206	Fitting	2
12	1382543	Washer	2
13	1464207	Tube Assy (Fuel)	1
14	158186	Nut	1
15	158187	Olive	1
16	1464208	Tube Assy (Fuel)	1
17	152609	Nut	2
18	152608	Olive	2
19	1308003	Fitting	1
20	1456522	Bolt	1
21	1456524	Washer	2
22	16118	Fitting	1
23	16114	Fitting	1
24	1464209	Bracket	1
25	1307883	Screw	1
26	1306361	Screw	1
27	1307884	Nut	1
28	1458318	Clip	1
29	1456338	Lift Pump (☞Figure 3-7)	1
30	1306345	Fuel Filter	1
30	1474825	Filter Head	1
31	1306331	Fuel Filter	1
32	1308004	Bracket	1
33	1306371	Screw	2
34	386459	Screw	1
35	1307913	Screw	2
36	1307891	Nut	2

©2009 HYSTER COMPANY

LOW PRESSURE SYSTEM (FIGURE 3-3)

DIESEL (7/2001 →)

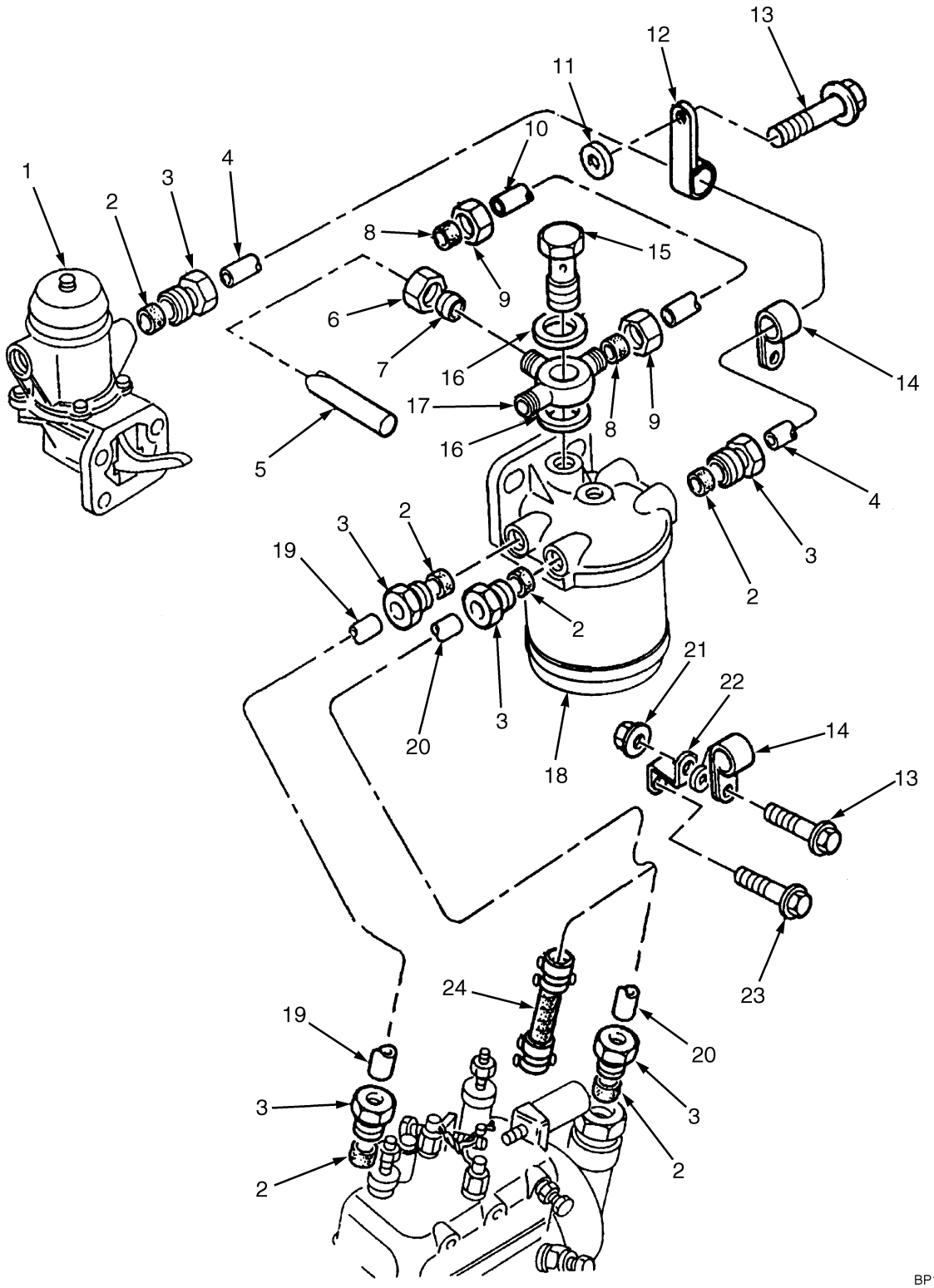

©2009 HYSTER COMPANY

LOW PRESSURE SYSTEM

DIESEL (7/2001 →)

ITEM	PART NO.	DESCRIPTION	QTY
1	1456338	Lift Pump (☞Figure 3-7)	1
2	167023	Sleeve (Included with 1464203)	2
3	16100	Fitting (Included with 1464203)	2
4	1464203	Tube Assy	1
5	1397394	Tube Assy (Return)	1
6	16118	Fitting	1
7	16114	Fitting	1
8	152608	Olive	2
9	152609	Nut	2
10	1456517	Tube Assy	1
11	. . . . .	Washer	1
12	1464204	Clip (Included with 1464203)	1
13	1306361	Screw	2
14	1456521	Clip (Included with 1464203)	2
15	1456522	Bolt	1
16	1456524	Washer	2
17	1451770	Fitting	1
18	1306345	Fuel Filter	1
19	1456525	Pipe	1
20	1456527	Pipe	1
21	1307884	Nut	1
22	1464209	Bracket	1
23	1307883	Screw	1
24	1456528	Clip	1

©2009 HYSTER COMPANY

FUEL FILTER (FIGURE 3-4)
LOW PRESSURE SYSTEM — DIESEL

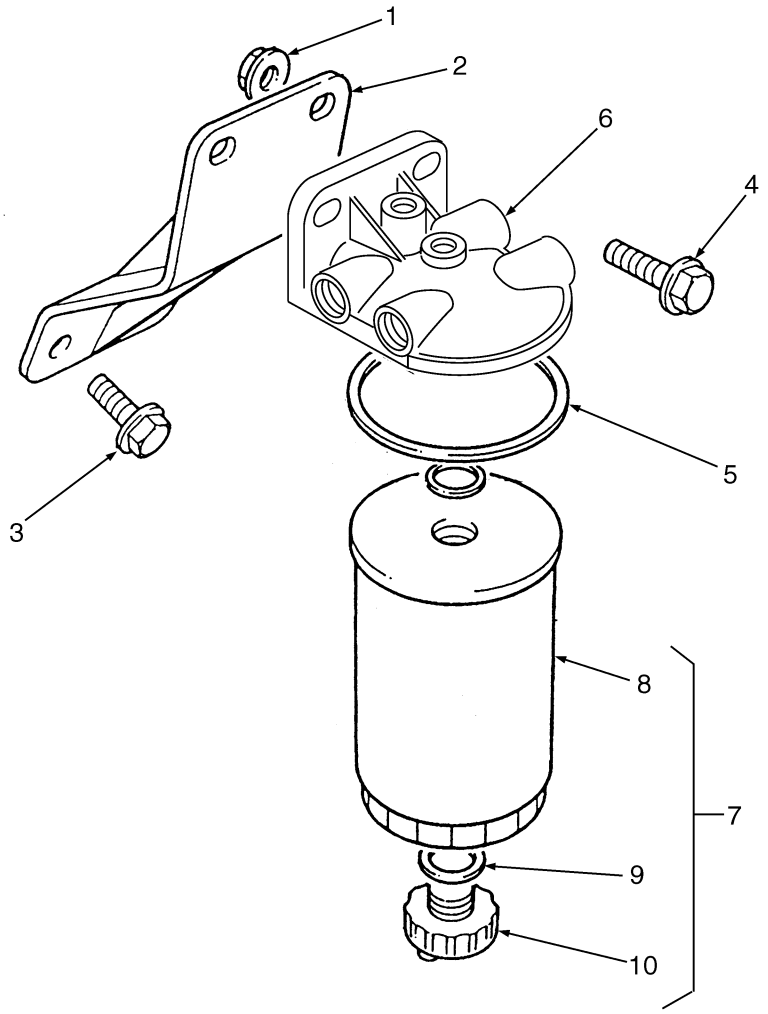

BP130007

ITEM	PART NO.	DESCRIPTION	QTY
	1398112	Engine Assy-Diesel	1
1	1307891	Nut	2
2	1308004	Bracket	1
3	1306371	Screw	2
4	1307913	Screw	2
5	1306345	Fuel Filter	1
5	. . . . .	Seal	1
6	1474825	Filter Head	1
7	1306331	Fuel Filter	1
8	. . . . .	Element	1
9	1308006	Washer	1
10	1308005	Plug	1

©2009 HYSTER COMPANY

NOTES

©2009 HYSTER COMPANY

HIGH PRESSURE FUEL INJECTION AND PUMP (FIGURE 3-5)

DIESEL

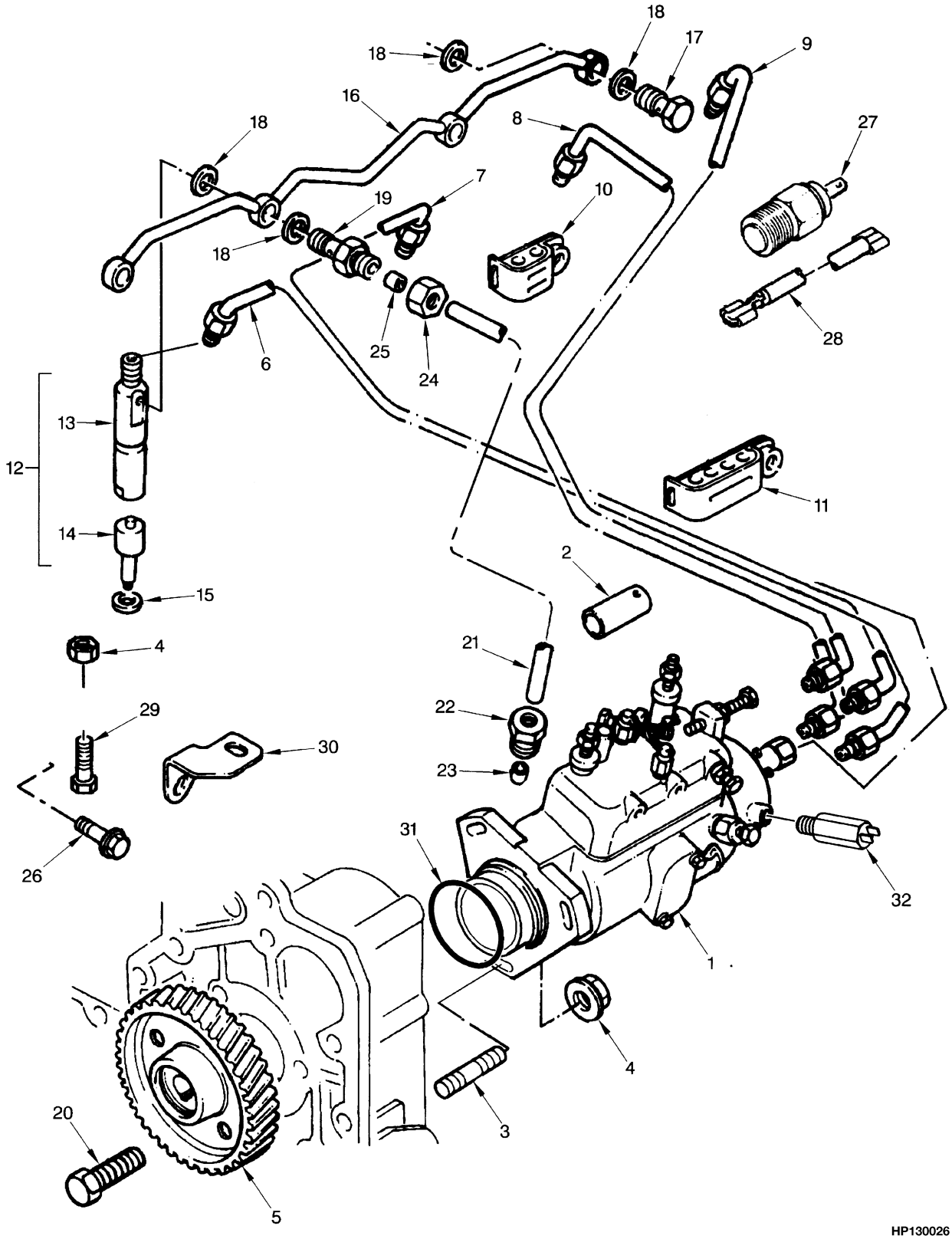

©2009 HYSTER COMPANY

HIGH PRESSURE FUEL INJECTION AND PUMP
DIESEL

ITEM	PART NO.	DESCRIPTION	QTY
	1398112	Engine Assy-Diesel	1
1	1498133	Injection Pump	1
2	1453314	Cap	1
3	1456726	Stud	3
4	1306359	Nut	4
5	1456727	Gear (Fuel Pump)	1
6	1460552	Tube Assy (No. 1)	1
7	1515797	Tube Assy (No. 2)	1
8	1460554	Tube Assy (No. 3)	1
9	1460555	Tube Assy (No. 4)	1
10	1388385	Clip	2
11	1388386	Clip	1
12	1456732	Atomizer	4
13	1456733	Holder	1
14	1456734	Nozzle	1
15	1451669	Washer (Copper)	4
16	1456735	Tube Assy (Leak Off)	1
17	1451672	Bolt	3
18	1451673	Washer	8
19	1451674	Fitting	1
20	1307881	Screw	4
21	1456736	Pipe (Air)	1
22	1311070	Nut	1
23	1306337	Olive	1
24	152609	Nut	1
25	152608	Olive	1
26	386459	Screw	1
27	1451656	Sender (Cold Start Installed on Manifold-Inlet)	1
28	1453154	Wire	1
29	1306371	Screw	1
30	1453315	Bracket	1
31	1460572	O-Ring	1
32	**a** 1306329	Solenoid	1
32	**b** 1498137	Solenoid (Cold Start)	1
32	**b** 1498136	Solenoid (Stop) (ESOS)	1

FOOTNOTES:

a → 5/2000

b 5/2000 →

©2009 HYSTER COMPANY

WATER SEPARATOR (FIGURE 3-6)

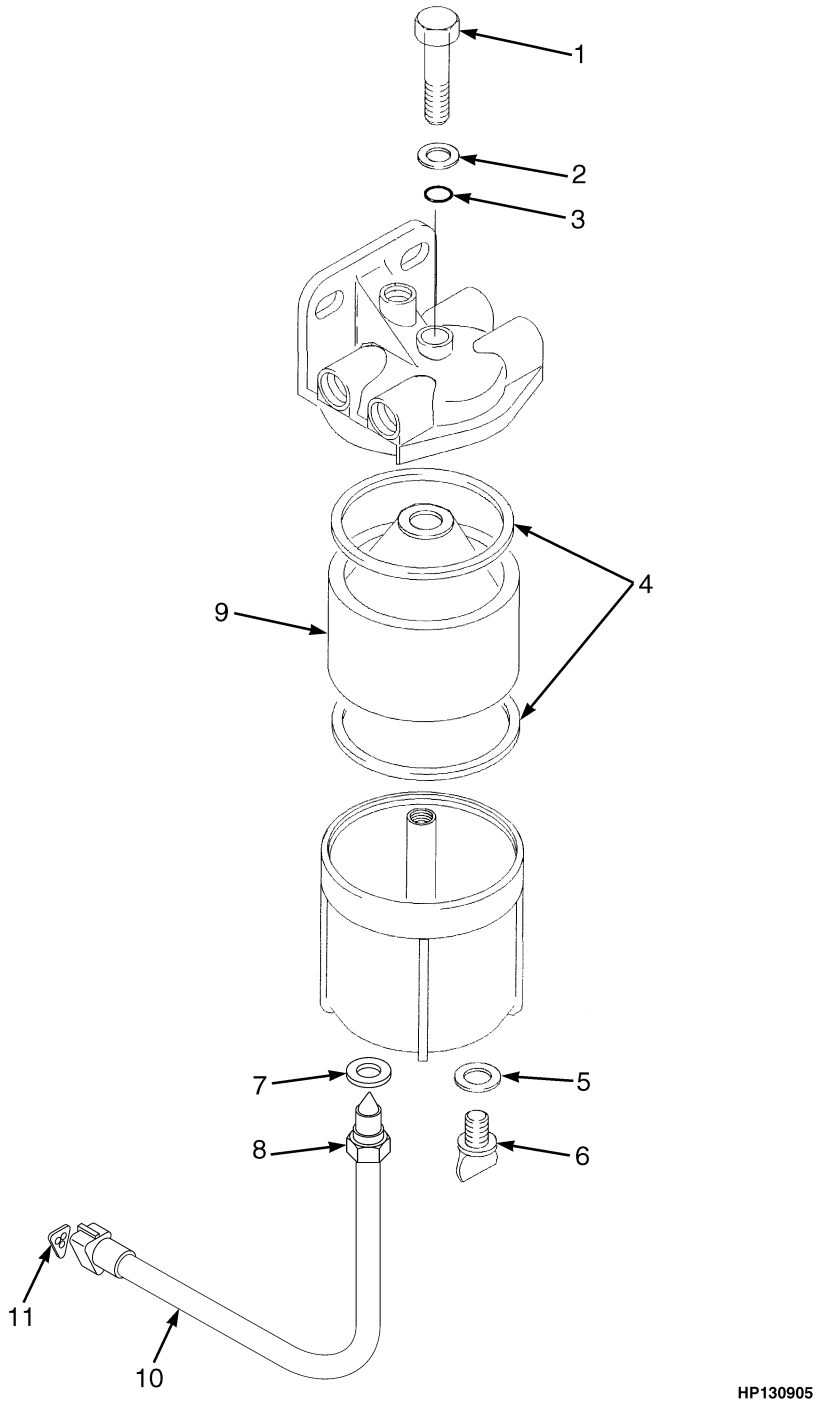

©2009 HYSTER COMPANY

WATER SEPARATOR

ITEM	PART NO.	DESCRIPTION	QTY
	1396256	Water Separator	1
1	1464543	Bolt	1
2	1464541	Washer	1
3	1464540	Sealing Ring	1
4	256160	Gasket	2
5	1308006	Washer	1
6	1464544	Drain Plug	1
7	1464545	Washer	1
8	1464546	Sensor (Water)	1
9	. . . . .	Element	1
10	1330410	Connector	1
11	1363885	Terminal (Pin)	3

©2009 HYSTER COMPANY

LIFT PUMP (FIGURE 3-7)
DIESEL

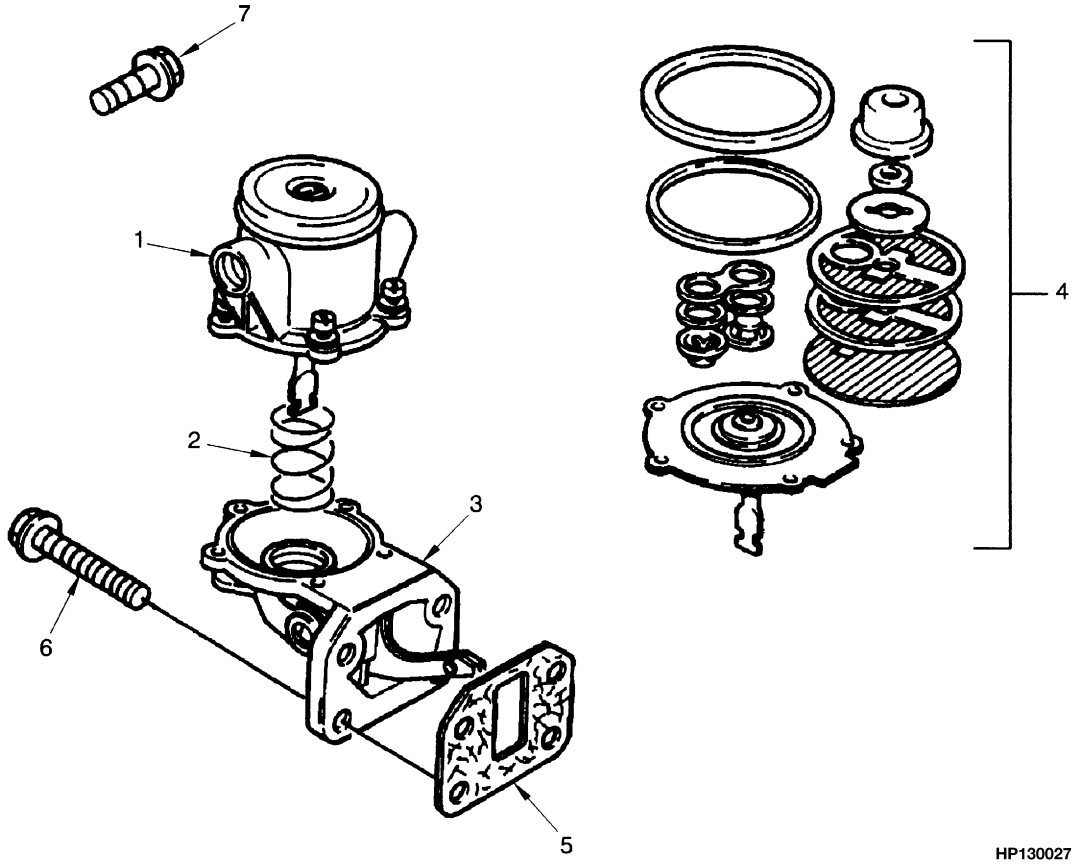

ITEM	PART NO.	DESCRIPTION	QTY
	1398112	Engine Assy-Diesel	1
	1456338	Lift Pump	1
1	. . . . .	Cover	1
2	. . . . .	Spring	1
3	. . . . .	Body	1
4	1515806	Fuel Filter	1
5	1345754	Gasket	1
6	1307894	Screw	4
7	386459	Screw	1

©2009 HYSTER COMPANY

NOTES

©2009 HYSTER COMPANY

FUEL SYSTEM (FIGURE 3-8)
GASOLINE

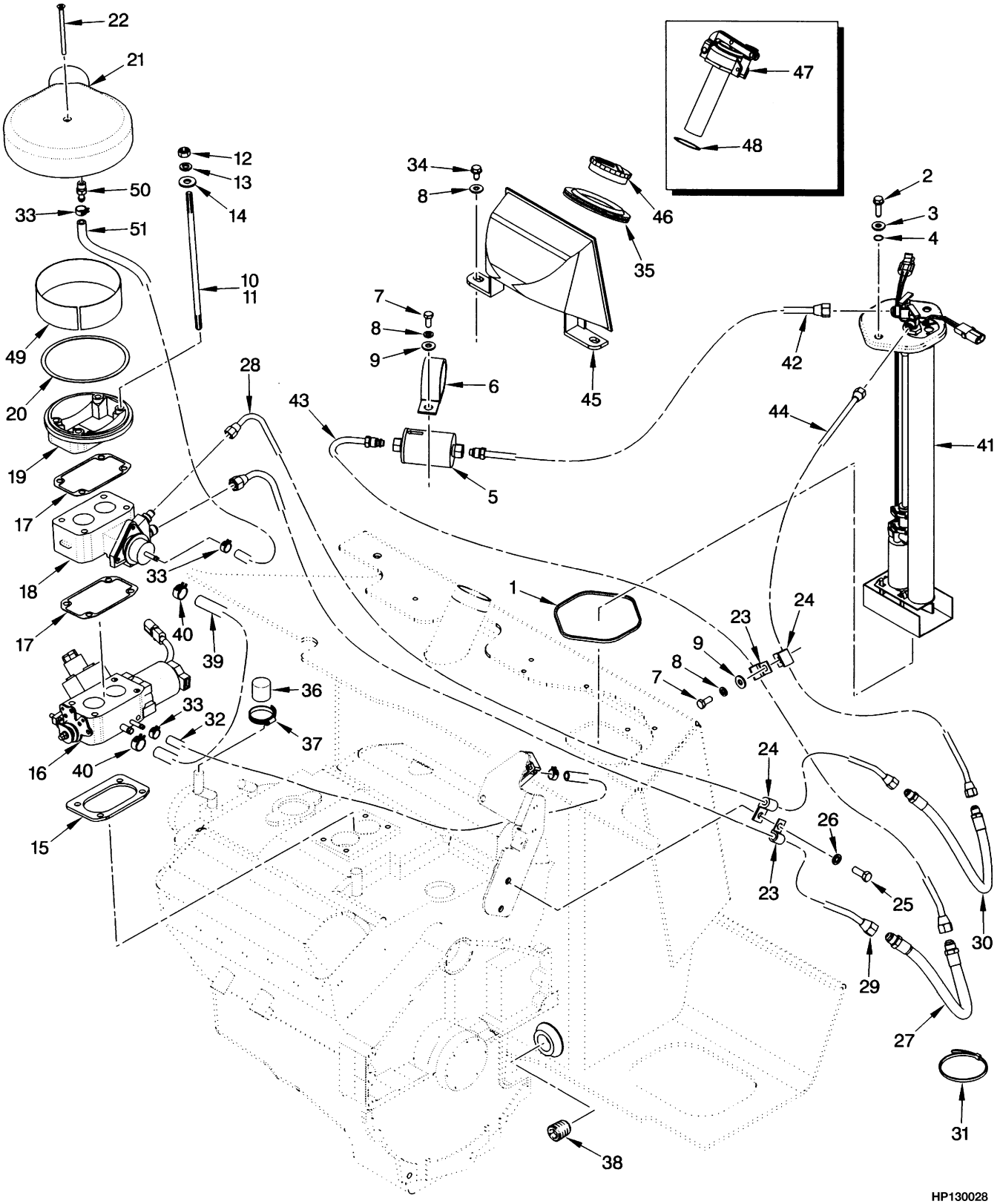

HP130028

©2009 HYSTER COMPANY

FUEL SYSTEM
GASOLINE

ITEM	PART NO.	DESCRIPTION	QTY
1	1343449	Seal	1
2	1339779	Screw	2
3	320157	Washer	2
4	353000	O-Ring	2
5	1330342	Fuel Filter	1
6	176451	Clamp	1
7	136681	Capscrew	2
8	320158	Washer	4
9	292681	Lockwasher	2
10	1396727	Stud	4
11	264134	Loctite	AR
12	15055	Nut	4
13	15155	Lockwasher	4
14	18515	Washer	4
15	1396723	Gasket	1
16	1397803	Governor (☞Figure 3-26)	1
17	1397412	Gasket	2
18	1394521	Throttle Body (☞Figure 3-27)	1
19	1397806	Adapter	1
20	1397422	Gasket	1
21	1397413	Hood	1
22	1397414	Screw	1
23	164488	Clamp	2
24	198675	Clamp	2
25	16805	Capscrew	1
26	15156	Lockwasher	1
27	1397407	Hose (Supply)	1
28	1398004	Tube	1
29	1398003	Tube	1
30	1397408	Hose (Return)	1
31	2004005	Strap Clamp	2
32	1330397	Hose (Silicone)	1
33	353310	Clamp	4
34	316678	Screw	2
35	1339720	Grommet	1
36	1383263	Cap	1
37	130845	Clamp	1
38	15964	Fitting	1
39	110497	Hose	1
40	353198	Clamp	2
41	**b** 1397421	Fuel Sender (Service with 1371181)	1
41	**c** 1371167	Wire Harness (Not illustrated)	1
41	**c** 1371112	Kit-Fuel Sender Diesel	1
41	1350286	Drain Valve (Shut Off)	1
41	16192	Drain Valve (Shut Off)	1
41	1371149	Connector	1
41	1330325	O-Ring	1
41	1371157	Strainer	1
41	1330324	Fuel Pump	1
41	1371111	Fuel Sender	1

©2009 HYSTER COMPANY

FUEL SYSTEM
GASOLINE

ITEM	PART NO.	DESCRIPTION	QTY
41	1371162	Wire Harness (Fuel Pump)	1
41	1330379	Terminal	4
41	1330377	Terminal (Fuel Pump)	1
41	1330380	Terminal	1
41	1330378	Terminal (Fuel Tank)	1
41	1330381	Terminal	1
42	**b** 1397409	Tube (Supply)	1
42	**c** 1371171	Tube (Supply)	1
42	1371127	Cover	1
43	1397410	Tube	1
44	**b** 1397411	Tube (Return)	1
44	**c** 1371169	Tube (Return)	1
45	1376746	Shield	1
46	298831	Fuel Cap	1
47	**a** 63899	Fuel Cap	1
48	**a** 138880	Shim (0.020 in.)	AR
49	1392732	Ring	1
50	1399438	Fitting	1
51	1377678	Hose	1

FOOTNOTES:

a Type GS
b → S/N K005V04791A
c S/N K005V04792A →

©2009 HYSTER COMPANY

NOTES

©2009 HYSTER COMPANY

FUEL SYSTEM (FIGURE 3-9)

LPG — OPEN LOOP (→ S/N K005D05482)

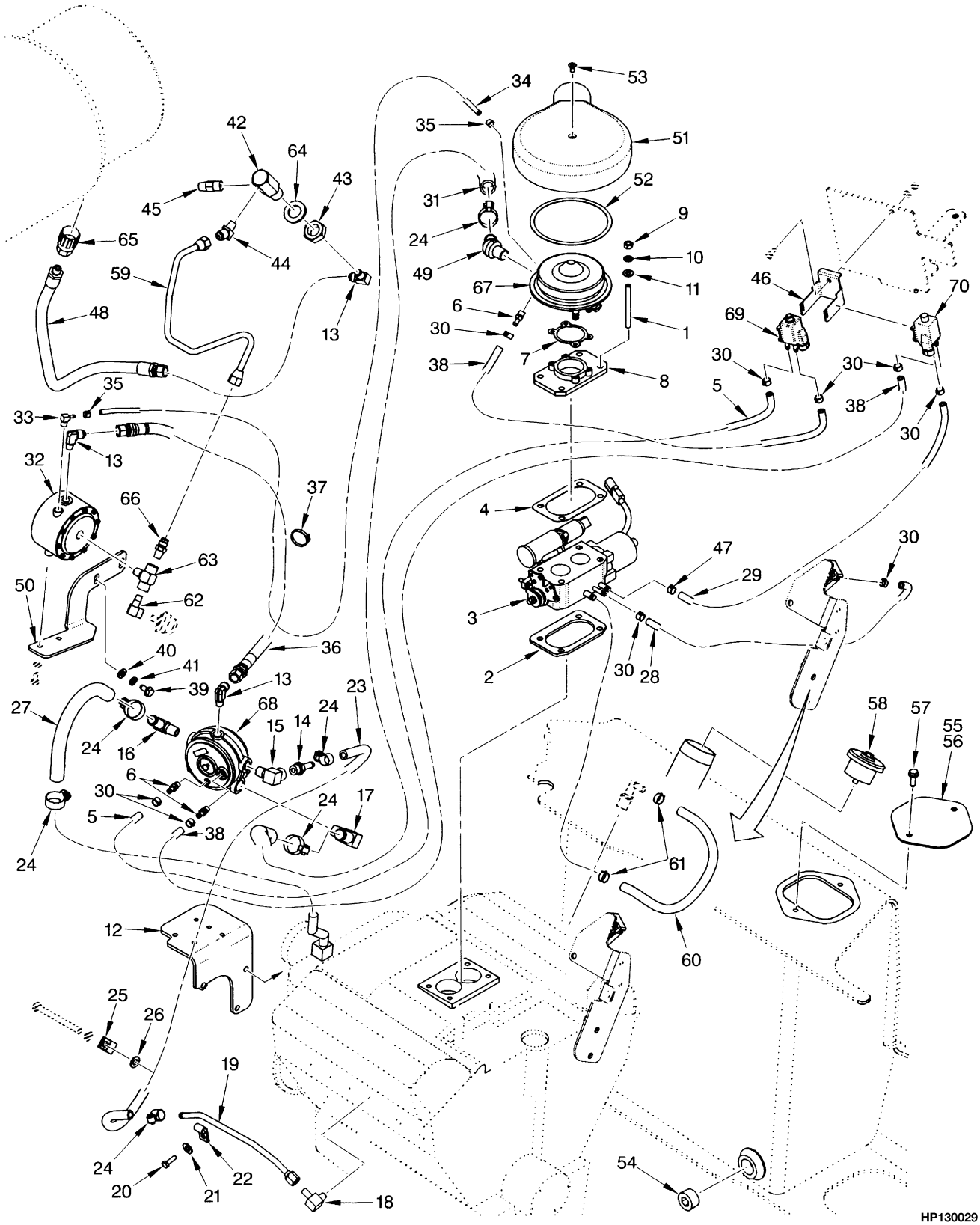

©2009 HYSTER COMPANY

FUEL SYSTEM

LPG – OPEN LOOP (→ S/N K005D05482)

ITEM	PART NO.	DESCRIPTION	QTY
1	1397424	Stud	4
2	1396723	Gasket (Manifold)	1
3	1397417	Throttle Body (☞Figure 3-25)	1
4	1399464	Gasket (Governor)	1
5	1400160	Hose (Silicone)	1
6	1399438	Fitting	2
7	1397831	Gasket (Mixer)	1
8	1529011	Plate	1
9	15055	Nut	4
10	15155	Lockwasher	4
11	18515	Washer	1
12	1384581	Bracket	1
13	14358	Fitting	3
14	141776	Fitting	2
15	16143	Fitting	1
16	125305	Fitting	1
17	201800	Fitting	1
18	14505	Fitting	1
19	1399782	Tube	1
20	18462	Capscrew	1
21	15127	Washer	1
22	154459	Clamp	1
23	393290	Hose	1
24	130845	Clamp	6
25	173247	Clamp	1
26	15134	Washer	2
27	212355	Hose	1
28	1333807	Hose (Silicone)	1
29	1354114	Hose	1
30	353310	Clamp	4
31	1397416	Hose	1
32	258321	Kit-Filter and Lock-Off Valve (☞Figure 3-22)	1
33	175347	Fitting	1
34	1400217	Hose (Silicone)	1
35	366473	Clamp	2
36	1400216	Hose Assy	1
37	137852	Strap Clamp	3
38	1399436	Hose (Silicone)	2
39	316678	Screw	2
40	320157	Washer	2
41	292681	Lockwasher	2
42	1400249	Fitting	1
43	15034	Nut	1
44	16863	Fitting	1
45	101809	Relief Valve	1
46	1465938	Bracket	1
47	1328878	Clamp	4
48	1464890	Hose Assy	1
49	349366	Fitting	1
50	1463625	Bracket	1

©2009 HYSTER COMPANY

FUEL SYSTEM

LPG – OPEN LOOP (→ S/N K005D05482)

ITEM	PART NO.	DESCRIPTION	QTY
51	1397413	Hood	1
52	1397422	Gasket	1
53	16520	Screw	1
54	15964	Fitting	1
55	1451568	Cover Plate	1
56	1392738	Gasket	1
57	1339779	Screw	2
58	1352123	Fuel Cap (Fuel)	1
59	1485923	Tube Assy	1
60	85777	Hose	1
61	353198	Clamp	1
62	15971	Fitting	1
63	17664	Fitting	1
64	320171	Washer	1
65	97999	Fitting	1
66	16134	Fitting	1
67	1397418	Lpg Carburetor	1
67	1463250	Valve (Air/Gasoline)	1
67	1463251	Gasket	1
67	132473	Screw	4
68	1399441	Lpg Converter (☞Figure 3-23)	1
69	1466003	Solenoid Valve (Solenoid)	1
70	1345677	Solenoid Valve (Solenoid)	1

©2009 HYSTER COMPANY

NOTES

©2009 HYSTER COMPANY

FUEL SYSTEM (FIGURE 3-10)

LPG — OPEN LOOP (S/N K005D05483 ↔ S/N K005V005980A)

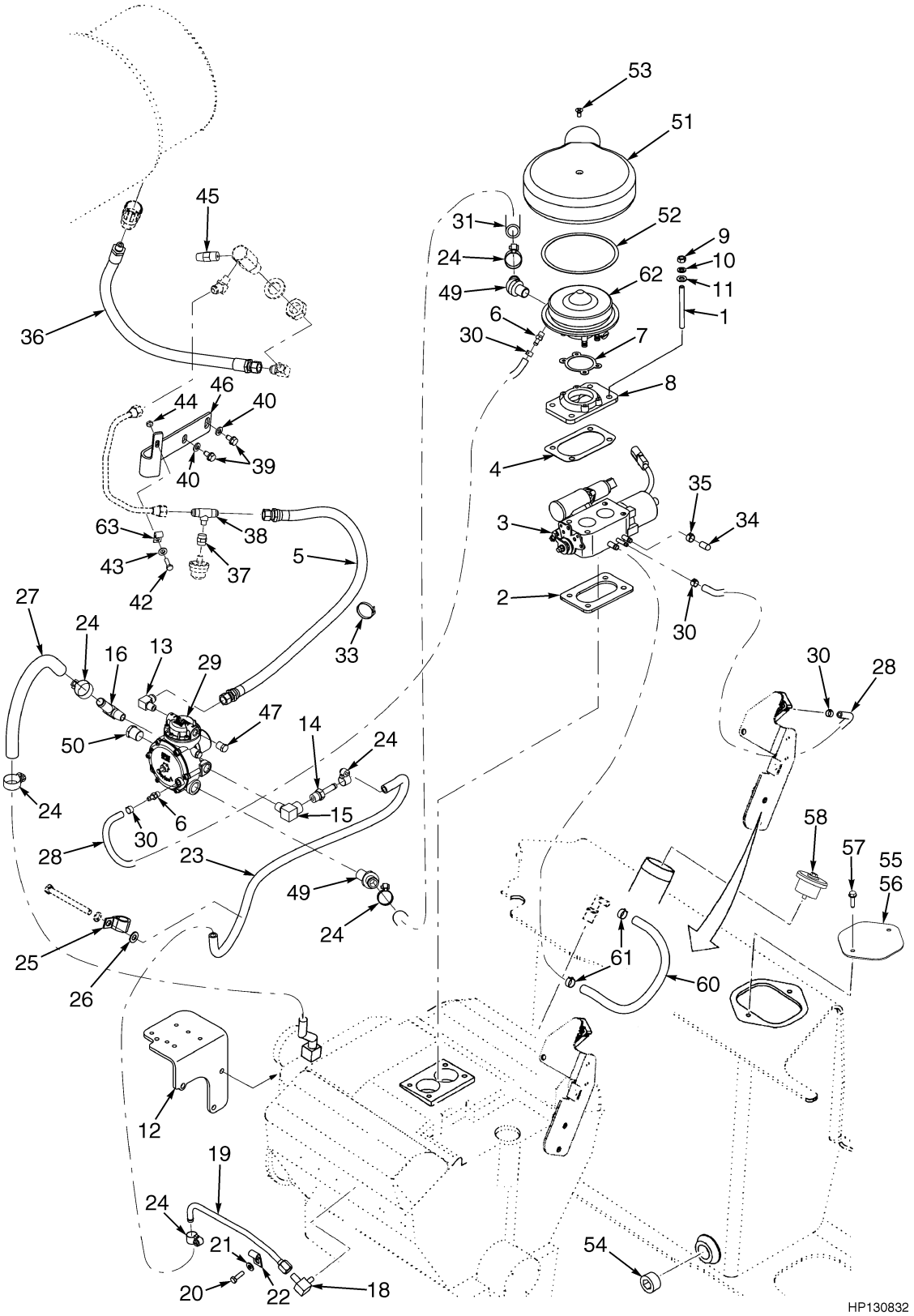

©2009 HYSTER COMPANY

FUEL SYSTEM

LPG – OPEN LOOP (S/N K005D05483 ↔ S/N K005V005980A)

ITEM	PART NO.	DESCRIPTION	QTY
1	1557524	Stud	4
2	1396723	Gasket (Manifold)	1
3	1397417	Throttle Body (☞Figure 3-25)	1
4	1399464	Gasket (Governor)	1
5	1400216	Hose Assy (Silicone)	1
6	1399438	Fitting	2
7	1397831	Gasket (Mixer)	1
8	**a** 1397420	Adapter	1
8	**b** 1529011	Plate	1
9	15055	Nut	4
10	15155	Lockwasher	4
11	18515	Washer	1
12	**a** 1384581	Bracket	1
12	**b** 1523722	Bracket	1
13	14358	Fitting	3
14	141776	Fitting	2
15	16143	Fitting	1
16	125305	Fitting	1
17	292526	Capscrew	8
18	14505	Fitting	1
19	1399782	Tube	1
20	18462	Capscrew	1
21	15127	Washer	1
22	133696	Clamp	1
23	393290	Hose	1
24	130845	Clamp	6
25	173247	Clamp	1
26	15134	Washer	2
27	212355	Hose	1
28	1333807	Hose (Silicone)	2
29	1482794	Controller (☞Figure 3-24)	1
30	353310	Clamp	4
31	1397416	Hose	1
32	320161	Washer	8
33	148271	Loom	AR
34	1399884	Cap	1
35	369815	Clamp	1
36	1464890	Hose Assy	1
37	16168	Fitting	1
38	14404	Fitting	1
39	316678	Screw	2
40	320157	Washer	2
41	292681	Lockwasher	2
42	18462	Capscrew	1
43	15127	Washer	1
44	221341	Locknut	1
45	101809	Relief Valve	1
46	1485921	Bracket	1
47	14385	Fitting	4
48	292501	Capscrew	1

©2009 HYSTER COMPANY

FUEL SYSTEM

LPG – OPEN LOOP (S/N K005D05483 ↔ S/N K005V005980A)

ITEM	PART NO.	DESCRIPTION	QTY
49	349366	Fitting	1
50	14387	Fitting	1
51	1397413	Hood	1
52	1345993	Gasket	1
53	16520	Screw	1
54	246869	Plug (Magnetic)	1
55	1451568	Cover Plate	1
56	1392738	Gasket	1
57	1339779	Screw	2
58	1352123	Fuel Cap (Fuel)	1
59	292680	Washer	2
60	85777	Hose	1
61	353198	Clamp	1
62	2044192	Mixer	1
62	1514309	Valve (Air/Gasoline)	1
63	128259	Clamp	1

FOOTNOTES:

a → S/N K005V04115Z

b S/N K005V04116Z →

©2009 HYSTER COMPANY

NOTES

©2009 HYSTER COMPANY

FUEL SYSTEM (FIGURE 3-11)

LPG — OPEN LOOP (S/N K005V05981A →)

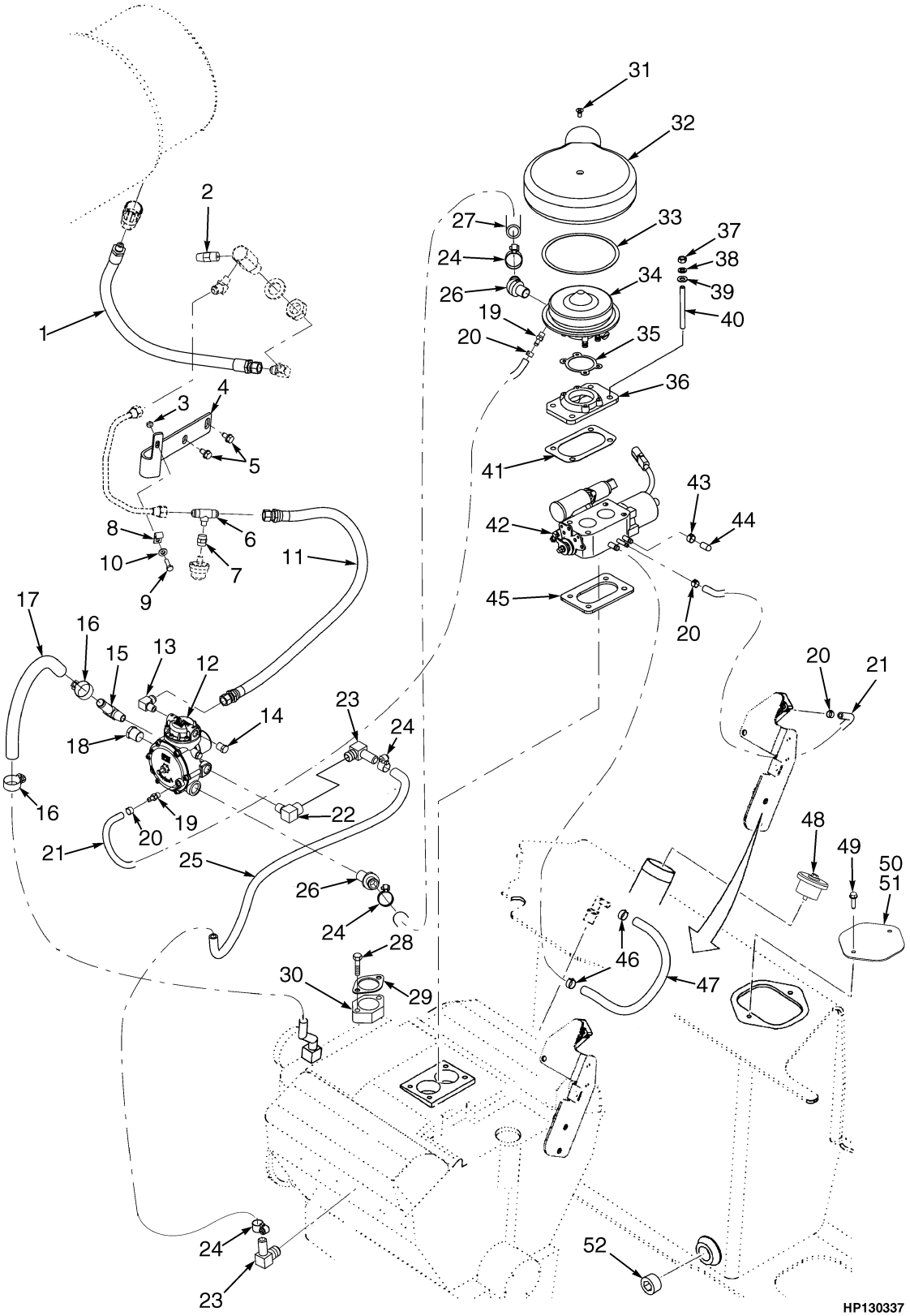

©2009 HYSTER COMPANY

FUEL SYSTEM

LPG – OPEN LOOP (S/N K005V05981A →)

ITEM	PART NO.	DESCRIPTION	QTY
1	1464890	Hose Assy	1
2	101809	Relief Valve	1
3	221341	Locknut	1
4	1485921	Bracket	1
5	316678	Screw	2
6	14404	Fitting	1
7	16168	Fitting	1
8	128259	Clamp	1
9	18462	Capscrew	1
10	15127	Washer	1
11	1400216	Hose Assy (Silicone)	1
12	1482794	Controller (☞Figure 3-24)	1
13	14358	Fitting	2
14	14385	Fitting	1
15	125305	Fitting	1
16	1502003	Hose Clamp	2
17	134491	Hose	1
18	14387	Fitting	1
19	1399438	Fitting	2
20	353310	Clamp	4
21	1333807	Hose (Silicone)	2
22	16143	Fitting	1
23	201808	Fitting	2
24	1501993	Hose Clamp	2
25	1302242	Hose	1
26	349366	Fitting	2
27	1397416	Hose	1
28	18537	Capscrew	2
29	1330725	Gasket	2
30	1538804	Adapter	1
31	16520	Screw	1
32	1397413	Hood	1
33	1345993	Gasket	1
34	2044192	Mixer	1
34	1514309	Valve (Air/Gasoline)	1
35	1397831	Gasket (Mixer)	1
36	1529011	Plate	1
37	15055	Nut	4
38	15155	Lockwasher	4
39	18515	Washer	4
40	1557524	Stud	4
41	1399464	Gasket (Governor)	1
42	1397417	Throttle Body	1
43	369815	Clamp	1
44	1399884	Cap	1
45	1396723	Gasket (Manifold)	1
46	353198	Clamp	1
47	85777	Hose	1
48	1352123	Fuel Cap (Fuel)	1
49	1339779	Screw	2

©2009 HYSTER COMPANY

FUEL SYSTEM

LPG – OPEN LOOP (S/N K005V05981A →)

ITEM	PART NO.	DESCRIPTION	QTY
50	1451568	Cover Plate	1
51	1392738	Gasket	1
52	246869	Plug (Magnetic)	2
	a 292501	Capscrew	1
	a 292680	Washer	2
	a 292526	Capscrew	8
	a 320161	Washer	8
	a 129563	Strap Clamp	2
	a 14386	Fitting	1
	a 1501994	Hose Clamp	2
	a 1523722	Bracket	1
	a 15056	Nut	3

FOOTNOTES:

a Not Illustrated

©2009 HYSTER COMPANY

NOTES

©2009 HYSTER COMPANY

FUEL SYSTEM (FIGURE 3-12)

LPG — CLOSED LOOP (→ 12/2003)

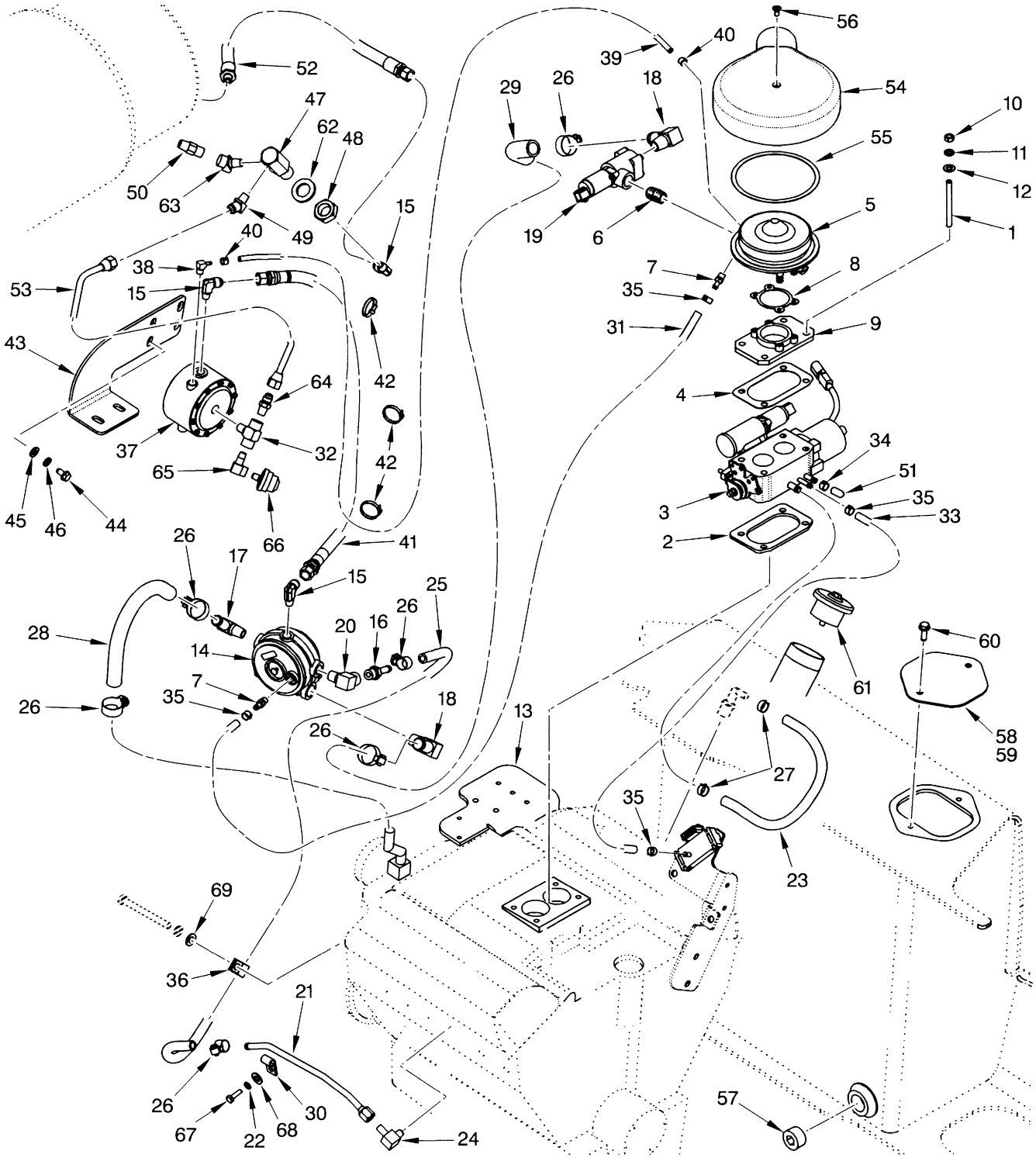

HP130312

©2009 HYSTER COMPANY

FUEL SYSTEM

LPG – CLOSED LOOP (→ 12/2003)

ITEM	PART NO.	DESCRIPTION	QTY
1	1557524	Stud	4
2	1396723	Gasket (Manifold)	1
3	1397417	Throttle Body (☞Figure 3-25)	1
4	1399464	Gasket (Governor)	1
5	**a** 1399826	Lpg Carburetor	1
5	**b** 2053931	Lpg Carburetor (With Low Emissions) (☞Figure 3-14)	1
6	15334	Fitting	1
7	1399438	Fitting	2
8	1397831	Gasket (Carburetor)	1
9	**a** 1397420	Adapter	1
9	**b** 1529011	Plate	1
10	15055	Nut	4
11	15155	Lockwasher	4
12	18515	Washer	4
13	**a** 1384581	Bracket	1
13	**b** 1523722	Bracket	1
14	1399827	Lpg Converter	1
14	1459717	Kit-Repair Lpg Converter	1
15	14358	Fitting	3
16	141776	Fitting	1
17	125305	Fitting	1
18	**a** 201800	Fitting	1
18	**b** 349366	Fitting	1
19	1397867	Valve	1
20	16143	Fitting	1
21	1399782	Tube	1
22	15154	Lockwasher	1
23	85777	Hose	1
24	14505	Fitting	1
25	393290	Hose	1
26	130845	Clamp	6
27	353198	Clamp	2
28	212355	Hose	1
29	**a** 1399883	Hose	1
29	**b** 1528870	Hose Assy	1
30	154459	Clamp	1
31	1333807	Hose	1
32	17664	Fitting	1
33	1330397	Hose	1
34	2047829	Seal	1
35	353310	Clamp	4
36	173247	Clamp	1
37	258321	Kit-Filter and Lock-Off Valve (☞Figure 3-22)	1
38	175347	Fitting	1
39	1400217	Hose (Silicone)	1
40	366473	Clamp	2
41	1400216	Hose Assy	1
42	137852	Strap Clamp	4
43	1463625	Bracket	1
44	316678	Screw	2

©2009 HYSTER COMPANY

FUEL SYSTEM

LPG – CLOSED LOOP (→ 12/2003)

ITEM	PART NO.	DESCRIPTION	QTY
45	320157	Washer	2
46	292681	Lockwasher	2
47	1400249	Fitting	1
48	15034	Nut	1
49	16863	Fitting	1
50	101809	Relief Valve	1
51	1399884	Cap	1
52	1464890	Hose Assy	1
53	1400247	Tube Assy	1
54	1397413	Hood (Air Filter)	1
55	1397422	Gasket	1
56	16520	Screw	1
57	246869	Plug (Magnetic)	1
58	1451568	Cover Plate	1
59	288394	Sealant	AR
60	1339779	Screw	2
61	1352123	Fuel Cap (Fuel)	1
62	320171	Washer	1
63	12822	Fitting	1
64	16134	Fitting	1
65	15971	Fitting	1
66	1301648	Pressure Switch	1
67	18462	Capscrew	1
68	15127	Washer	1
69	15134	Washer	1
70	349366	Fitting	1

FOOTNOTES:

a → S/N K005V04115Z

b S/N K005V04116Z →

©2009 HYSTER COMPANY

NOTES

©2009 HYSTER COMPANY

FUEL SYSTEM (FIGURE 3-13)
LPG — CLOSED LOOP (12/2003 →)

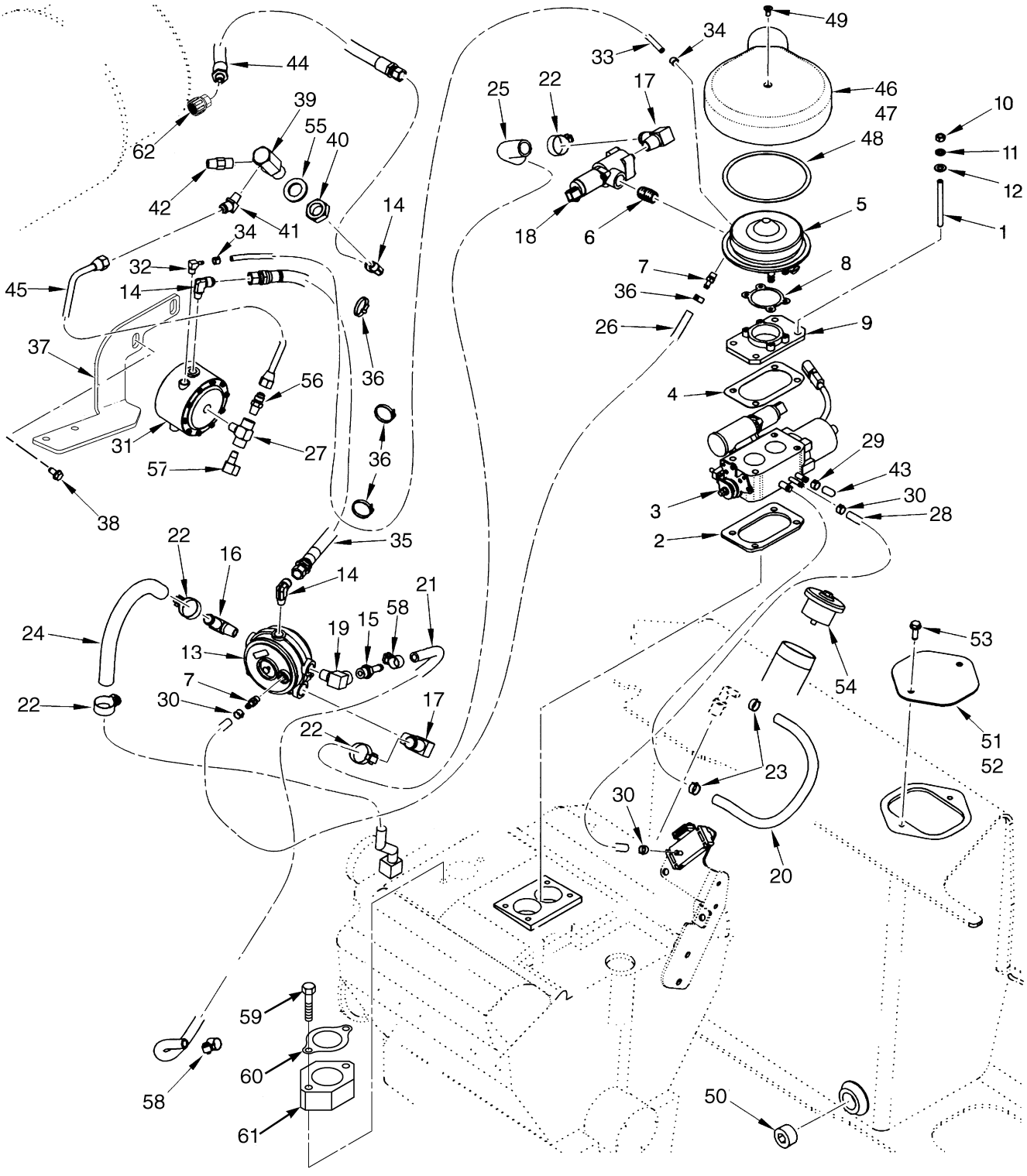

BP130122

©2009 HYSTER COMPANY

FUEL SYSTEM

LPG – CLOSED LOOP (12/2003 →)

ITEM	PART NO.	DESCRIPTION	QTY
1	1557524	Stud	4
2	1396723	Gasket (Manifold)	1
3	1397417	Throttle Body	1
4	1399464	Gasket (Governor)	1
5	2053931	Lpg Carburetor (With Low Emissions)	1
6	15334	Fitting	1
7	1399438	Fitting	2
8	1397831	Gasket (Carburetor)	1
9	1529011	Plate	1
10	15055	Nut	4
11	15155	Lockwasher	4
12	18515	Washer	4
13	1399827	Lpg Converter	1
13	1459717	Kit-Repair Lpg Converter	1
14	14358	Fitting	3
15	201808	Fitting	2
16	125305	Fitting	1
17	349366	Fitting	2
18	1397867	Valve	1
19	16143	Fitting	2
20	85777	Hose	1
21	1302242	Hose	1
22	1501993	Hose Clamp	2
23	353198	Clamp	2
24	1528872	Hose	1
25	1528870	Hose Assy	1
26	1333807	Hose	2
27	17664	Fitting	1
28	1333807	Hose	1
29	369815	Clamp	1
30	353310	Clamp	4
31	258321	Kit-Filter and Lock-Off Valve	1
32	175347	Fitting	1
33	1400217	Hose (Silicone)	1
34	366473	Clamp	2
35	1400216	Hose Assy	1
36	137852	Strap Clamp	3
37	1463625	Bracket	1
38	316678	Screw	2
39	1400249	Fitting	1
40	15034	Nut	1
41	16863	Fitting	1
42	101809	Relief Valve	1
43	1399884	Cap	1
44	1464890	Hose Assy	1
45	1400247	Tube Assy	1
46	1397413	Hood (Air Filter)	1
47	1392732	Ring	1
48	1345993	Gasket	1
49	16520	Screw	1

©2009 HYSTER COMPANY

FUEL SYSTEM

LPG – CLOSED LOOP (12/2003 →)

ITEM	PART NO.	DESCRIPTION	QTY
50	246869	Plug (Magnetic)	1
51	1451568	Cover Plate	1
52	1392738	Gasket	1
53	1339779	Screw	2
54	1352123	Fuel Cap (Fuel)	1
55	320171	Washer	1
56	16134	Fitting	1
57	15971	Fitting	1
58	1502003	Hose Clamp	2
59	18537	Capscrew	2
60	1330725	Gasket	2
61	1538804	Adapter	1
62	97999	Fitting	1
	a 129563	Strap Clamp	2
	a 292526	Capscrew	8
	a 1523722	Bracket	1
	a 15056	Nut	3
	a 320161	Washer	8
	a 14386	Fitting	1
	a 1501994	Hose Clamp	2

FOOTNOTES:

a Not Illustrated

©2009 HYSTER COMPANY

CARBURETOR (FIGURE 3-14)
LPG — WITH LOW EMISSIONS

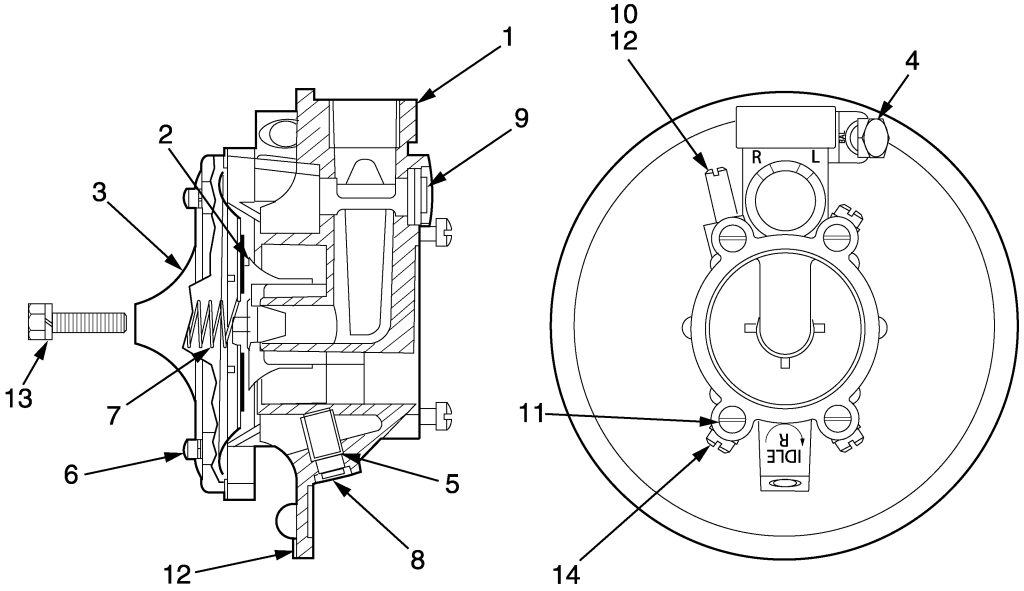

ITEM	PART NO.	DESCRIPTION	QTY
	2053931	Lpg Carburetor	1
1	. . . . .	Body Assembly	1
2	1494300	Valve	1
3	213977	Cover	1
4	1357749	Plug	1
5	1530268	Screw	1
6	132473	Screw	4
7	374713	Spring	1
8	1530269	Plug	1
9	1530270	Plug	1
10	323541	Fitting	1
11	204790	Screw	4
12	383789	Thread Sealant	AR
13	220551	Screw	1
14	326926	Screw	2

©2009 HYSTER COMPANY

DUAL FUEL SYSTEM (FIGURE 3-15)

(→ S/N K005D05482)

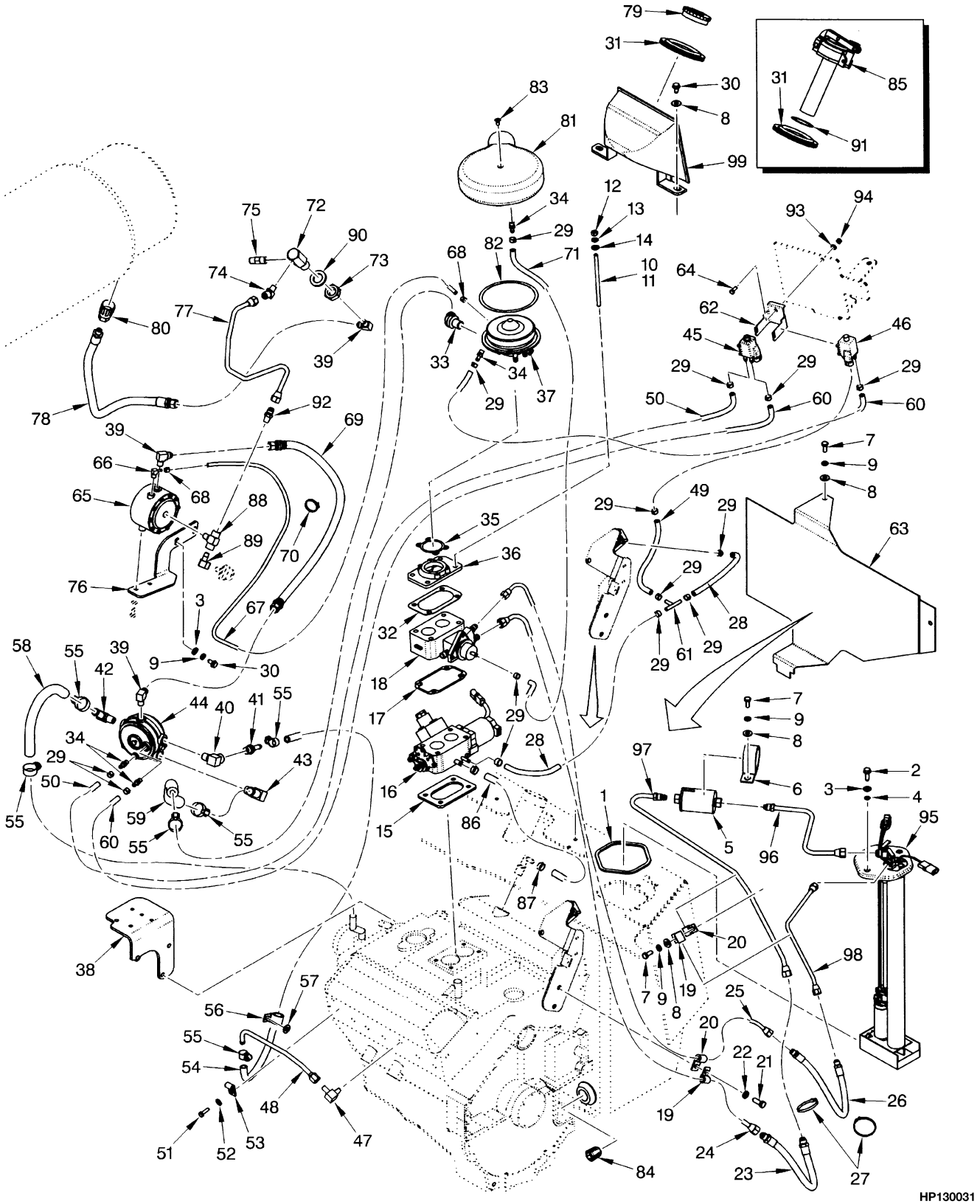

©2009 HYSTER COMPANY

DUAL FUEL SYSTEM
(→ S/N K005D05482)

ITEM	PART NO.	DESCRIPTION	QTY
1	1343449	Seal	1
2	1339779	Screw	2
3	320157	Washer	4
4	353000	O-Ring	2
5	1330342	Fuel Filter	1
6	176451	Clamp	1
7	136681	Capscrew	2
8	320158	Washer	4
9	292681	Lockwasher	4
10	1396728	Stud	4
11	264134	Loctite	AR
12	15055	Nut	4
13	15155	Lockwasher	4
14	18515	Washer	4
15	1396723	Gasket	1
16	1397803	Governor (☞Figure 3-26)	1
17	1397412	Gasket	1
18	1394521	Throttle Body (☞Figure 3-27)	
19	164488	Clamp	2
20	198675	Clamp	1
21	16805	Capscrew	1
22	15156	Lockwasher	1
23	1397407	Hose	1
24	1398003	Tube (Throttle Body Injector to Hose)	1
25	1398004	Tube (Hose to Throttle Body Injector)	1
26	1397408	Hose	1
27	2004005	Strap Clamp	2
28	1350682	Hose	2
29	353310	Clamp	14
30	316678	Screw	4
31	1339720	Grommet	1
32	1399464	Gasket	1
33	349366	Fitting	1
34	1399438	Fitting	4
35	1397831	Gasket	1
36	1397420	Adapter	1
37	**a** 1397418	Lpg Carburetor	1
37	1463250	Valve (Air/Gasoline)	1
37	1463251	Gasket	1
37	132473	Screw	4
37	**c** 1392826	Carburetor	1
37	1463250	Valve (Air/Gasoline)	1
37	204787	Gasket	1
37	372115	Fitting	1
38	1384581	Bracket	1
39	14358	Fitting	3
40	16143	Fitting	1
41	141776	Fitting	1
42	125305	Fitting	1
43	201800	Fitting	1

©2009 HYSTER COMPANY

DUAL FUEL SYSTEM

(→ S/N K005D05482)

ITEM	PART NO.	DESCRIPTION	QTY
44	1399441	Lpg Converter (☞Figure 3-23)	1
45	1466003	Solenoid Valve (Solenoid)	1
46	1345677	Solenoid Valve (Solenoid)	1
47	14505	Fitting	1
48	1399782	Tube	1
49	1354114	Hose	1
50	1400160	Hose	1
51	18462	Capscrew	1
52	15127	Washer	1
53	154459	Clamp	1
54	393290	Hose	1
55	130845	Clamp	6
56	173247	Clamp	1
57	15134	Washer	1
58	212355	Hose	1
59	1400161	Hose	1
60	1399436	Hose	2
61	2034520	Fitting	1
62	1465938	Bracket	1
63	1399301	Shield	1
64	292500	Capscrew	1
65	258321	Kit-Filter and Lock-Off Valve (☞Figure 3-22)	1
66	175347	Fitting	1
67	1400217	Hose	1
68	366473	Clamp	2
69	1400216	Hose Assy	1
70	137852	Strap Clamp	3
71	1377678	Hose	1
72	1400249	Fitting	1
73	15034	Nut	1
74	16863	Fitting	1
75	101809	Relief Valve	1
76	1463625	Bracket	1
77	1485923	Tube Assy	1
78	1464890	Hose Assy	1
79	298831	Fuel Cap	1
80	97999	Fitting	1
81	1397413	Hood	1
82	1397422	Gasket	1
83	16520	Screw	1
84	246869	Plug (Magnetic)	1
85	63899	Fuel Cap	1
86	85777	Hose	1
87	353198	Clamp	2
88	17664	Fitting	1
89	15971	Fitting	1
90	320171	Washer	1
91	138880	Shim (0.020 in.)	AR
92	16134	Fitting	1
93	320156	Washer	1

©2009 HYSTER COMPANY

DUAL FUEL SYSTEM
(→ S/N K005D05482)

ITEM	PART NO.	DESCRIPTION	QTY
94	302399	Nut	1
95	**b** 1397421	Fuel Sender	1
95	1371181	Kit-Fuel Sender Gas	1
95	**d** 1371112	Kit-Fuel Sender Diesel	1
95	1350286	Drain Valve (Shut Off)	1
95	16192	Drain Valve (Shut Off)	1
95	1371149	Connector	1
95	1330325	O-Ring	1
95	1371157	Strainer	1
95	1330324	Fuel Pump	1
95	1371111	Fuel Sender	1
95	1371162	Wire Harness (Fuel Pump)	1
95	1330377	Terminal	1
95	1330380	Terminal	1
95	1330378	Terminal	1
95	1330381	Terminal	1
96	1397409	Tube (Supply)	1
97	1397410	Tube	1
98	1397411	Tube (Return)	1
99	1376746	Shield	1

FOOTNOTES:

a → 10/1999
b → S/N K005V04791A
c 10/1999 →
d S/N K005V04792A →

©2009 HYSTER COMPANY

DUAL FUEL SYSTEM (FIGURE 3-16)

(S/N K005D05483 ↔ S/N K005V005980A)

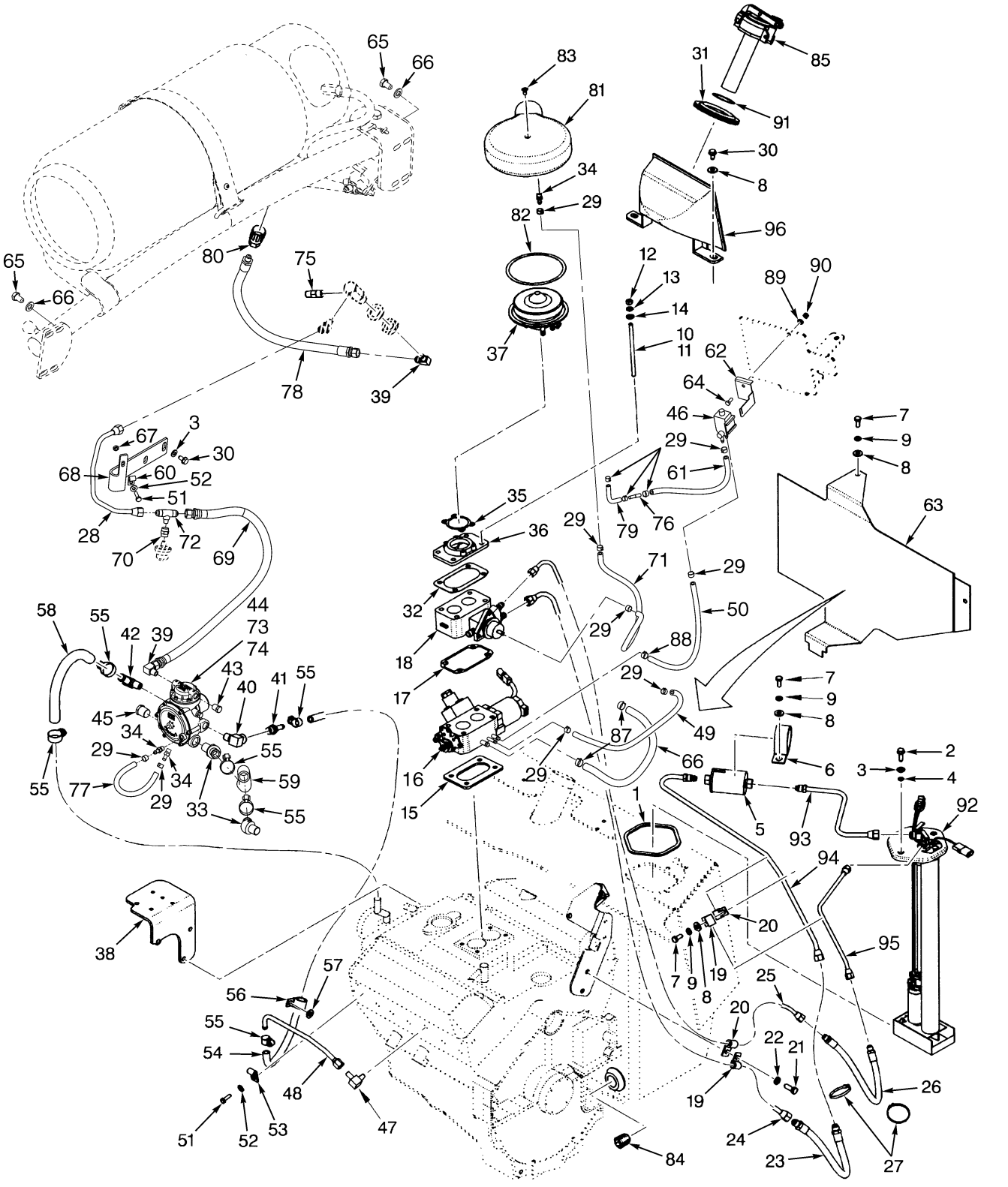

©2009 HYSTER COMPANY

DUAL FUEL SYSTEM

(S/N K005D05483 ↔ S/N K005V005980A)

ITEM	PART NO.	DESCRIPTION	QTY
1	1343449	Seal	1
2	1339779	Screw	2
3	320157	Washer	4
4	353000	O-Ring	2
5	1330342	Fuel Filter	1
6	176451	Clamp	1
7	136681	Capscrew	2
8	320158	Washer	4
9	292681	Lockwasher	4
10	1396728	Stud	4
11	264134	Loctite	AR
12	15055	Nut	4
13	15155	Lockwasher	4
14	18515	Washer	4
15	1396723	Gasket	1
16	1397803	Governor (☞Figure 3-26)	1
17	1397412	Gasket	1
18	1394521	Throttle Body (☞Figure 3-27)	
19	164488	Clamp	2
20	198675	Clamp	2
21	16805	Capscrew	1
22	15156	Lockwasher	1
23	1397407	Hose	1
24	1398003	Tube (Throttle Body Injector to Hose)	1
25	1398004	Tube (Hose to Throttle Body Injector)	1
26	1397408	Hose	1
27	2004005	Strap Clamp	2
28	1485923	Tube Assy	1
29	353310	Clamp	12
30	316678	Screw	4
31	1339720	Grommet	1
32	1399464	Gasket	1
33	349366	Fitting	1
34	1399438	Fitting	4
35	1397831	Gasket	1
36	1397420	Adapter	1
37	2044872	Carburetor	1
37	1514310	Valve (Air/Gasoline)	1
38	**a** 1384581	Bracket	1
38	**c** 1523722	Bracket	1
39	14358	Fitting	3
40	16143	Fitting	1
41	141776	Fitting	1
42	125305	Fitting	1
43	14385	Fitting	1
44	1482794	Controller (☞Figure 3-24)	1
45	14387	Fitting (☞Figure 3-24)	1
46	1345677	Solenoid Valve (Solenoid)	1
47	14505	Fitting	1
48	1399782	Tube	1

©2009 HYSTER COMPANY

DUAL FUEL SYSTEM

(S/N K005D05483 ↔ S/N K005V005980A)

ITEM	PART NO.	DESCRIPTION	QTY
49	1354114	Hose	1
50	1400160	Hose	1
51	18462	Capscrew	1
52	15127	Washer	1
53	133696	Clamp	1
54	393290	Hose	1
55	130845	Clamp	6
56	173247	Clamp	1
57	15134	Washer	1
58	212355	Hose	1
59	1476434	Hose	1
60	128259	Clamp	1
61	1333807	Hose	2
62	1485922	Bracket	1
63	1399301	Shield	1
64	292500	Capscrew	1
65	292526	Capscrew	8
66	320161	Washer	8
67	221341	Locknut	1
68	1485921	Bracket	1
69	1400216	Hose Assy	1
70	16168	Fitting	1
71	1377678	Hose	1
72	14404	Fitting	1
73	292501	Capscrew	2
74	292680	Washer	2
75	101809	Relief Valve	1
76	1471702	Fitting	1
77	1330397	Hose	1
78	1464890	Hose Assy	1
79	1333808	Hose	1
80	97999	Fitting	1
81	1397413	Hood	1
82	1345993	Gasket	1
83	16520	Screw	1
84	246869	Plug (Magnetic)	1
85	63899	Fuel Cap	1
86	85777	Hose	1
87	353198	Clamp	2
88	369815	Clamp	1
89	320156	Washer	1
90	302399	Nut	1
91	138880	Shim (0.020 in.)	AR
92	**b** 1397421	Fuel Sender	1
92	1371181	Kit-Fuel Sender Gas	1
92	**d** 1371112	Kit-Fuel Sender Diesel	1
92	1350286	Drain Valve (Shut Off)	1
92	16192	Drain Valve (Shut Off)	1
92	1371149	Connector	1
92	1330325	O-Ring	1

©2009 HYSTER COMPANY

DUAL FUEL SYSTEM

(S/N K005D05483 ↔ S/N K005V005980A)

ITEM	PART NO.	DESCRIPTION	QTY
92	1371157	Strainer	1
92	1330324	Fuel Pump	1
92	1371111	Fuel Sender	1
92	1371162	Wire Harness (Fuel Pump)	1
92	1330377	Terminal	1
92	1330380	Terminal	1
92	1330378	Terminal	1
92	1330381	Terminal	1
93	1397409	Tube (Supply)	1
94	1397410	Tube	1
95	1397411	Tube (Return)	1
96	1376746	Shield	1

FOOTNOTES:

a → S/N K005V04115Z
b → S/N K005V04791A
c S/N K005V04116Z →
d S/N K005V04792A →

©2009 HYSTER COMPANY

DUAL FUEL SYSTEM (FIGURE 3-17)

(S/N K005V05981A ↔ 12/2003)

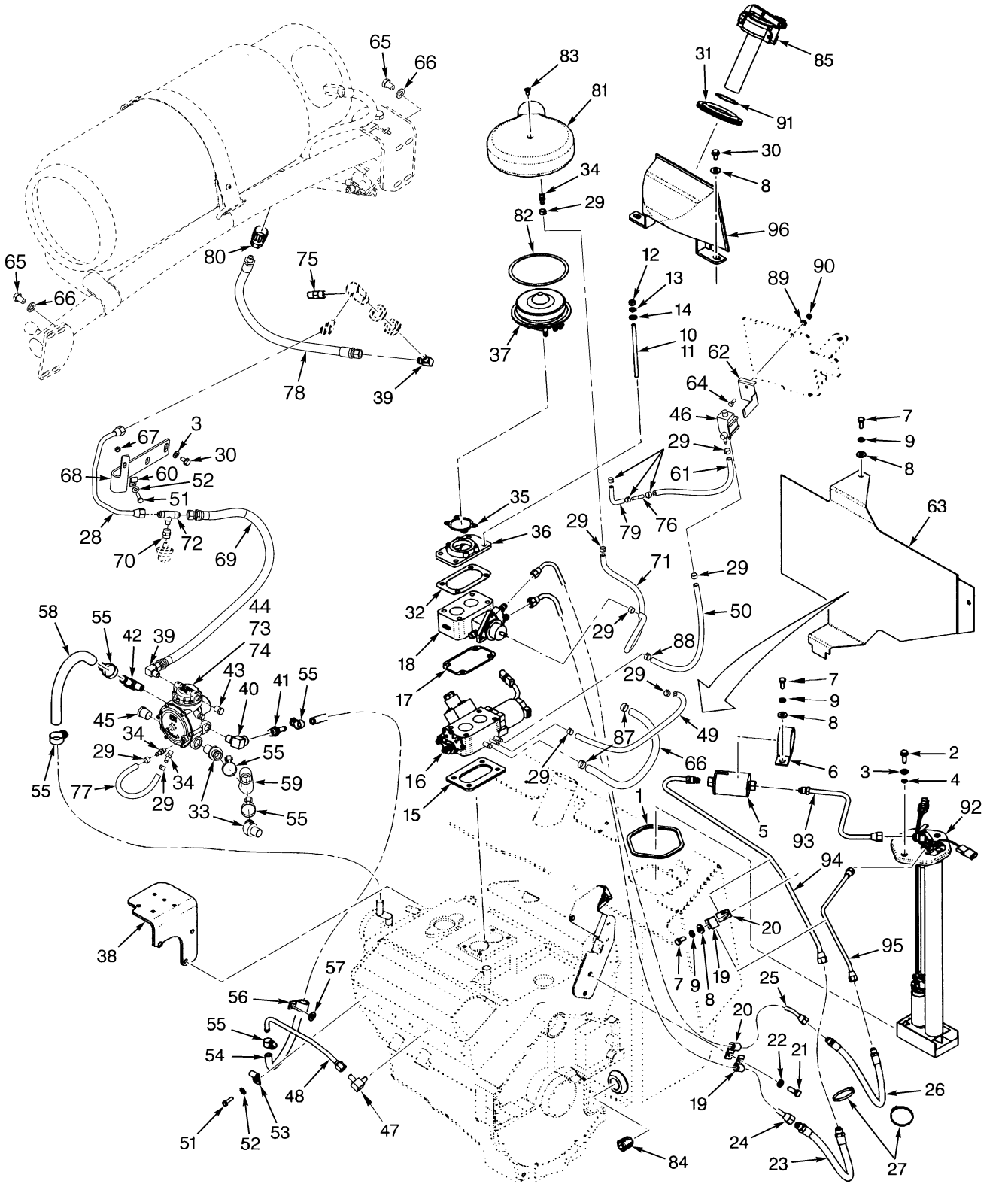

©2009 HYSTER COMPANY

DUAL FUEL SYSTEM
(S/N K005V05981A ↔ 12/2003)

ITEM	PART NO.	DESCRIPTION	QTY
1	1343449	Seal	1
2	1339779	Screw	2
3	320157	Washer	4
4	353000	O-Ring	2
5	1330342	Fuel Filter	1
6	176451	Clamp	1
7	136681	Capscrew	2
8	320158	Washer	4
9	292681	Lockwasher	4
10	1396728	Stud	4
11	264134	Loctite	AR
12	15055	Nut	4
13	15155	Lockwasher	4
14	18515	Washer	4
15	1396723	Gasket	1
16	1397803	Governor	1
17	1397412	Gasket	1
18	1394521	Throttle Body	
19	164488	Clamp	2
20	198675	Clamp	2
21	16805	Capscrew	1
22	15156	Lockwasher	1
23	1397407	Hose	1
24	1398003	Tube (Throttle Body Injector to Hose)	1
25	1398004	Tube (Hose to Throttle Body Injector)	1
26	1397408	Hose	1
27	2004005	Strap Clamp	2
28	1485923	Tube Assy	1
29	353310	Clamp	12
30	316678	Screw	4
31	1339720	Grommet	1
32	1399464	Gasket	1
33	349366	Fitting	1
34	1399438	Fitting	4
35	1397831	Gasket	1
36	1397420	Adapter	1
37	2044872	Carburetor	1
37	1514310	Valve (Air/Gasoline)	1
38	**a** 1384581	Bracket	1
38	**c** 1523722	Bracket	1
39	14358	Fitting	3
40	16143	Fitting	1
41	141776	Fitting	1
42	125305	Fitting	1
43	14385	Fitting	1
44	1482794	Controller	1
45	14387	Fitting	1
46	1345677	Solenoid Valve (Solenoid)	1
47	14505	Fitting	1
48	1399782	Tube	1

©2009 HYSTER COMPANY

DUAL FUEL SYSTEM
(S/N K005V05981A ↔ 12/2003)

ITEM	PART NO.	DESCRIPTION	QTY
49	1354114	Hose	1
50	1400160	Hose	1
51	18462	Capscrew	1
52	15127	Washer	1
53	133696	Clamp	1
54	393290	Hose	1
55	130845	Clamp	6
56	173247	Clamp	1
57	15134	Washer	1
58	212355	Hose	1
59	1476434	Hose	1
60	128259	Clamp	1
61	1333807	Hose	2
62	1485922	Bracket	1
63	1399301	Shield	1
64	292500	Capscrew	1
65	292526	Capscrew	8
66	320161	Washer	8
67	221341	Locknut	1
68	1485921	Bracket	1
69	1400216	Hose Assy	1
70	16168	Fitting	1
71	1377678	Hose	1
72	14404	Fitting	1
73	292501	Capscrew	2
74	292680	Washer	2
75	101809	Relief Valve	1
76	1471702	Fitting	1
77	1330397	Hose	1
78	1464890	Hose Assy	1
79	1333808	Hose	1
80	97999	Fitting	1
81	1397413	Hood	1
82	1345993	Gasket	1
83	16520	Screw	1
84	246869	Plug (Magnetic)	1
85	63899	Fuel Cap	1
86	85777	Hose	1
87	353198	Clamp	2
88	369815	Clamp	1
89	320156	Washer	1
90	302399	Nut	1
91	138880	Shim (0.020 in.)	AR
92	**b** 1397421	Fuel Sender	1
92	1371181	Kit-Fuel Sender Gas	1
92	**d** 1371112	Kit-Fuel Sender Diesel	1
92	1350286	Drain Valve (Shut Off)	1
92	16192	Drain Valve (Shut Off)	1
92	1371149	Connector	1
92	1330325	O-Ring	1

©2009 HYSTER COMPANY

DUAL FUEL SYSTEM

(S/N K005V05981A ↔ 12/2003)

ITEM	PART NO.	DESCRIPTION	QTY
92	1371157	Strainer	1
92	1330324	Fuel Pump	1
92	1371111	Fuel Sender	1
92	1371162	Wire Harness (Fuel Pump)	1
92	1330377	Terminal	1
92	1330380	Terminal	1
92	1330378	Terminal	1
92	1330381	Terminal	1
93	1397409	Tube (Supply)	1
94	1397410	Tube	1
95	1397411	Tube (Return)	1
96	1376746	Shield	1

FOOTNOTES:

a → S/N K005V04115
b → S/N K005V04791
c S/N K005V04116 →
d S/N K005V04792 →

©2009 HYSTER COMPANY

DUAL FUEL SYSTEM (FIGURE 3-18)

(12/2003 →)

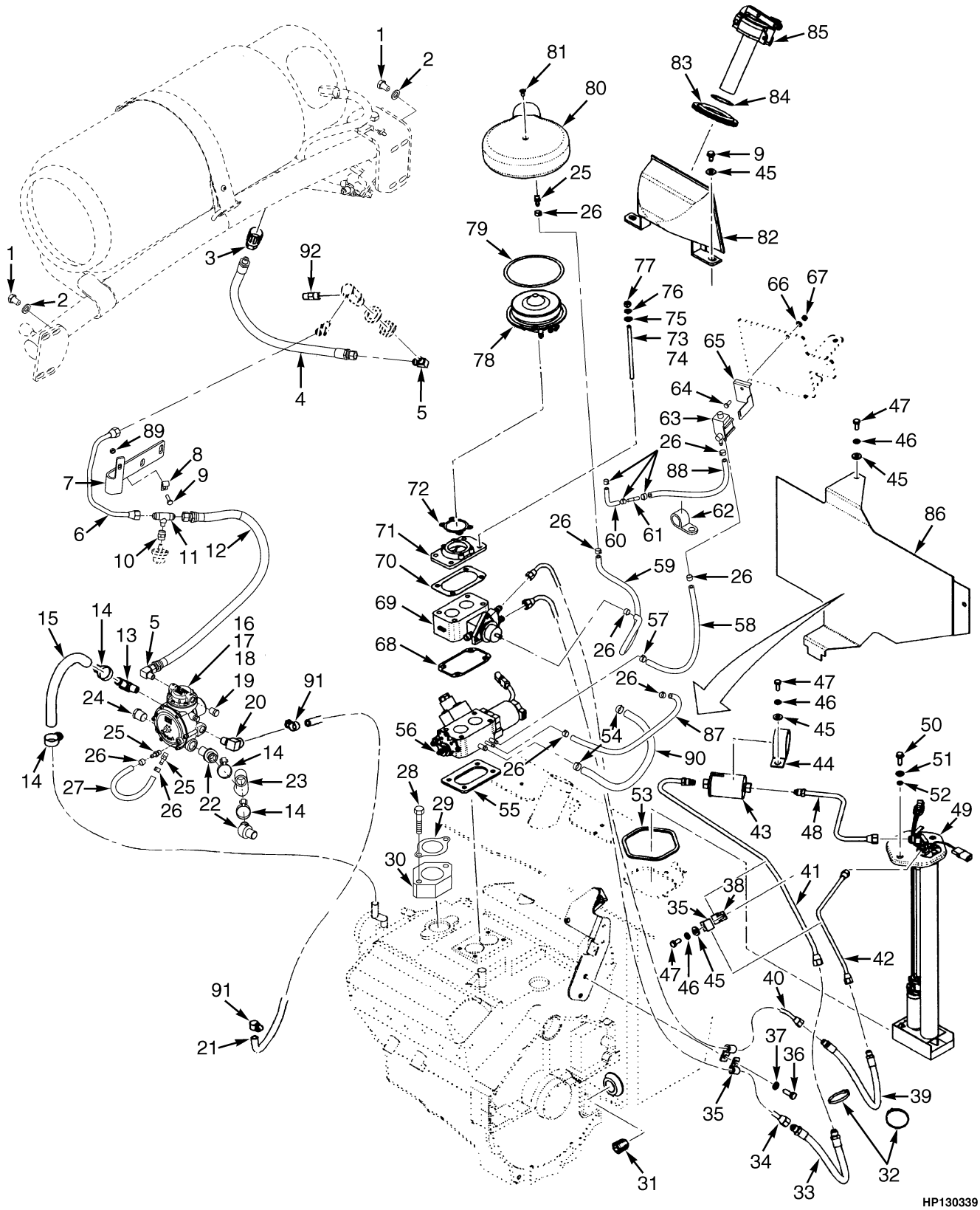

©2009 HYSTER COMPANY

DUAL FUEL SYSTEM
(12/2003 →)

ITEM	PART NO.	DESCRIPTION	QTY
1	292526	Capscrew	8
2	320161	Washer	8
3	97999	Fitting	1
4	1464890	Hose Assy	1
5	14358	Fitting	2
6	1485923	Tube Assy	1
7	1485921	Bracket	1
8	128259	Clamp	1
9	316678	Screw	4
10	16168	Fitting	1
11	14310	Fitting	1
12	1400216	Hose Assy	1
13	125305	Fitting	1
14	1501993	Hose Clamp	4
15	134491	Hose	1
16	1482794	Controller	1
17	292501	Capscrew	2
18	292680	Washer	2
19	14385	Fitting	1
20	201808	Fitting	1
21	1302242	Hose	1
22	349366	Fitting	1
23	1476434	Hose	1
24	14387	Fitting	1
25	1399438	Fitting	4
26	353310	Clamp	12
27	1330397	Hose	1
28	18538	Capscrew	2
29	1330725	Gasket	1
30	1538804	Adapter	1
31	246869	Plug (Magnetic)	1
32	2004005	Strap Clamp	2
33	1397407	Hose	1
34	1398003	Tube (Throttle Body Injector to Hose)	1
35	164488	Clamp	2
36	16805	Capscrew	1
37	15156	Lockwasher	1
38	198675	Clamp	2
39	1397408	Hose	1
40	1398004	Tube (Hose to Throttle Body Injector)	1
41	1397410	Tube	1
42	**a** 1397411	Tube (Return)	1
42	**b** 1371169	Tube (Return)	1
43	1330342	Fuel Filter	1
44	176451	Clamp	1
45	320158	Washer	4
46	292681	Lockwasher	4
47	136681	Capscrew	2
48	**a** 1397409	Tube (Supply)	1
48	**b** 1371171	Tube (Supply)	1

©2009 HYSTER COMPANY

DUAL FUEL SYSTEM

(12/2003 →)

ITEM	PART NO.	DESCRIPTION	QTY
48	1327954	O-Ring (Special)	1
49	**a** 1397421	Fuel Sender (Service with 1371181)	1
49	**b** 1371167	Wire Harness (Not illustrated)	1
49	**b** 1371112	Kit-Fuel Sender Diesel	1
49	1350286	Drain Valve (Shut Off)	1
49	16192	Drain Valve (Shut Off)	1
49	1371149	Connector	1
49	1330325	O-Ring	1
49	1371157	Strainer	1
49	1330324	Fuel Pump	1
49	1371111	Fuel Sender	1
49	1371162	Wire Harness (Fuel Pump)	1
49	1330379	Terminal	4
49	1330377	Terminal	1
49	1330380	Terminal	1
49	1330378	Terminal	1
49	1330381	Terminal	1
50	1339779	Screw	2
51	320157	Washer	4
52	353000	O-Ring	2
53	1343449	Seal	1
54	353198	Clamp	2
55	1396723	Gasket	1
56	1397803	Governor	1
57	369815	Clamp	1
58	1400160	Hose	1
59	1377678	Hose	1
60	1333808	Hose	1
61	1471702	Fitting	1
62	136516	Clamp	1
63	1345677	Solenoid Valve (Solenoid)	1
64	292500	Capscrew	1
65	1485922	Bracket	1
66	320156	Washer	1
67	302399	Nut	1
68	1397412	Gasket	1
69	1394521	Throttle Body	1
70	1399464	Gasket	1
71	1529011	Plate	1
72	1397831	Gasket	1
73	1396728	Stud	4
74	264134	Loctite	AR
75	18515	Washer	4
76	15155	Lockwasher	4
77	15055	Nut	4
78	2044872	Carburetor	1
78	1514310	Valve (Air/Gasoline)	1
79	1345993	Gasket	1
80	1397413	Hood	1
81	16520	Screw	1

©2009 HYSTER COMPANY

DUAL FUEL SYSTEM

(12/2003 →)

ITEM	PART NO.	DESCRIPTION	QTY
82	1376746	Shield	1
83	1339720	Grommet	1
84	138880	Shim (0.020 in.)	AR
85	63899	Fuel Cap	1
86	1399301	Shield	1
87	1354114	Hose	1
88	1333807	Hose	2
89	221341	Locknut	1
90	85777	Hose	1
91	1502003	Hose Clamp	2
92	101809	Relief Valve	1

FOOTNOTES:

a → S/N K005V04791A

b S/N K005V04792A →

©2009 HYSTER COMPANY

LPG TANK BRACKET (FIGURE 3-19)
FIXED

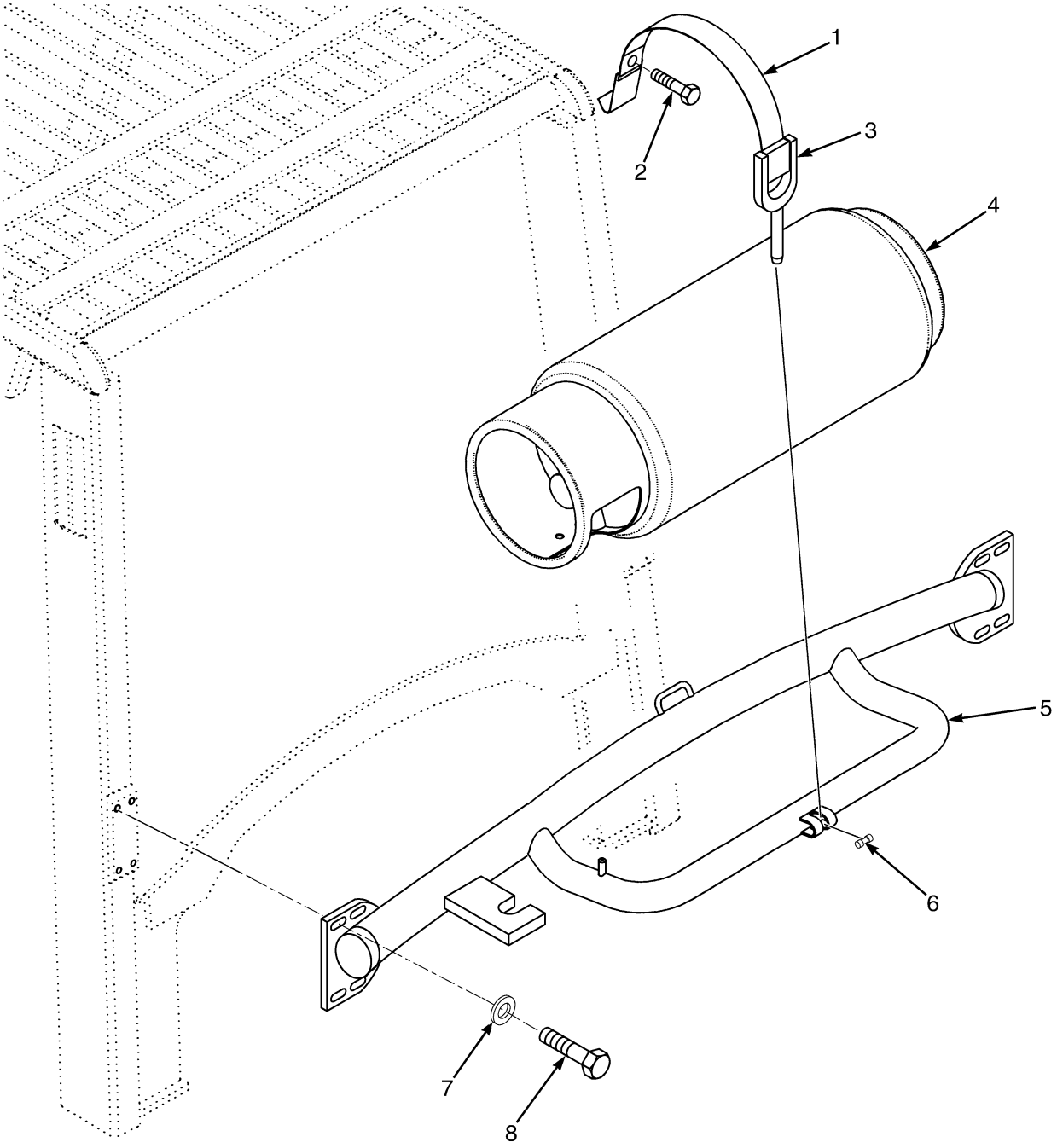

©2009 HYSTER COMPANY

LPG TANK BRACKET
FIXED

ITEM	PART NO.	DESCRIPTION	QTY
1	1400197	Strap	1
2	296163	Capscrew	1
3	196297	Latch	1
4	**a**	LPG Tank	1
5	1495485	Lpg Tank Bracket	1
6	147294	Nut	1
7	320161	Washer	8
8	292526	Capscrew	8

FOOTNOTES:

a Contact your authorized dealer for service parts

©2009 HYSTER COMPANY

LPG TANK AND BRACKET (FIGURE 3-20)
SWING OUT

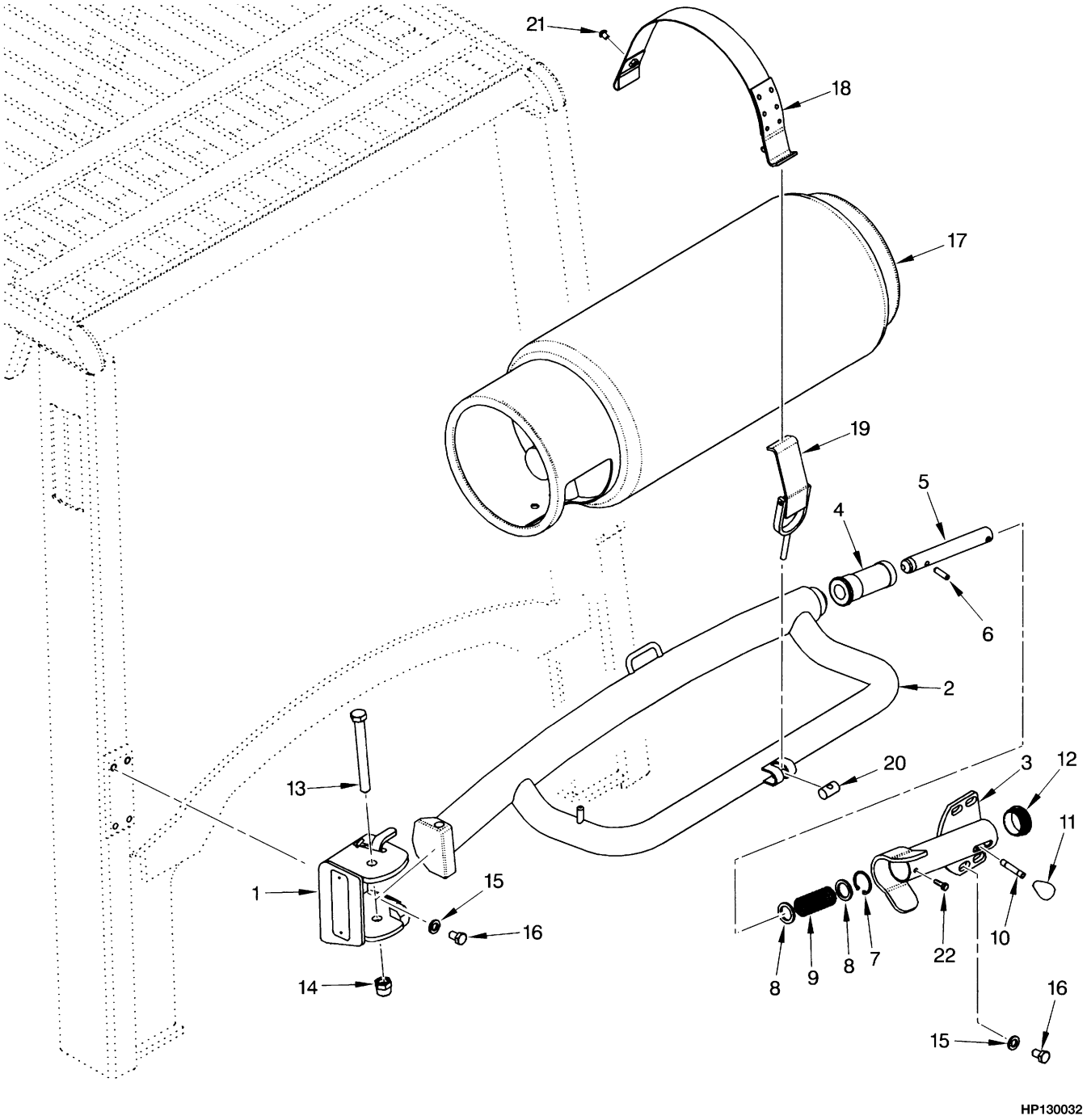

©2009 HYSTER COMPANY

LPG TANK AND BRACKET
SWING OUT

ITEM	PART NO.	DESCRIPTION	QTY
	1494466	Lpg Tank Bracket	1
1	1398141	Hinge (LH)	1
2	. . . . .	Swing Arm	1
3	1398143	Handle	1
4	1398085	Housing (Latch)	1
5	1398086	Shaft	1
6	302476	Roll Pin	1
7	1398092	Snap Ring (Internal)	1
8	1398089	Spring Seat	2
9	1398093	Spring	1
10	1398097	Shaft (Knob)	1
11	1398098	Knob	1
12	1398099	Plug	1
13	293700	Capscrew	1
14	302404	Locknut	1
15	320161	Washer	8
16	292526	Capscrew	8
17	**a**	Fuel Tank	1
18	1400197	Strap	1
19	196297	Latch	1
20	147294	Nut	1
21	296164	Capscrew	1
22	148962	Capscrew	1

FOOTNOTES:

a Contact your authorized dealer for service parts

©2009 HYSTER COMPANY

LPG TANK BRACKET (FIGURE 3-21)
SWING OUT/DROP DOWN

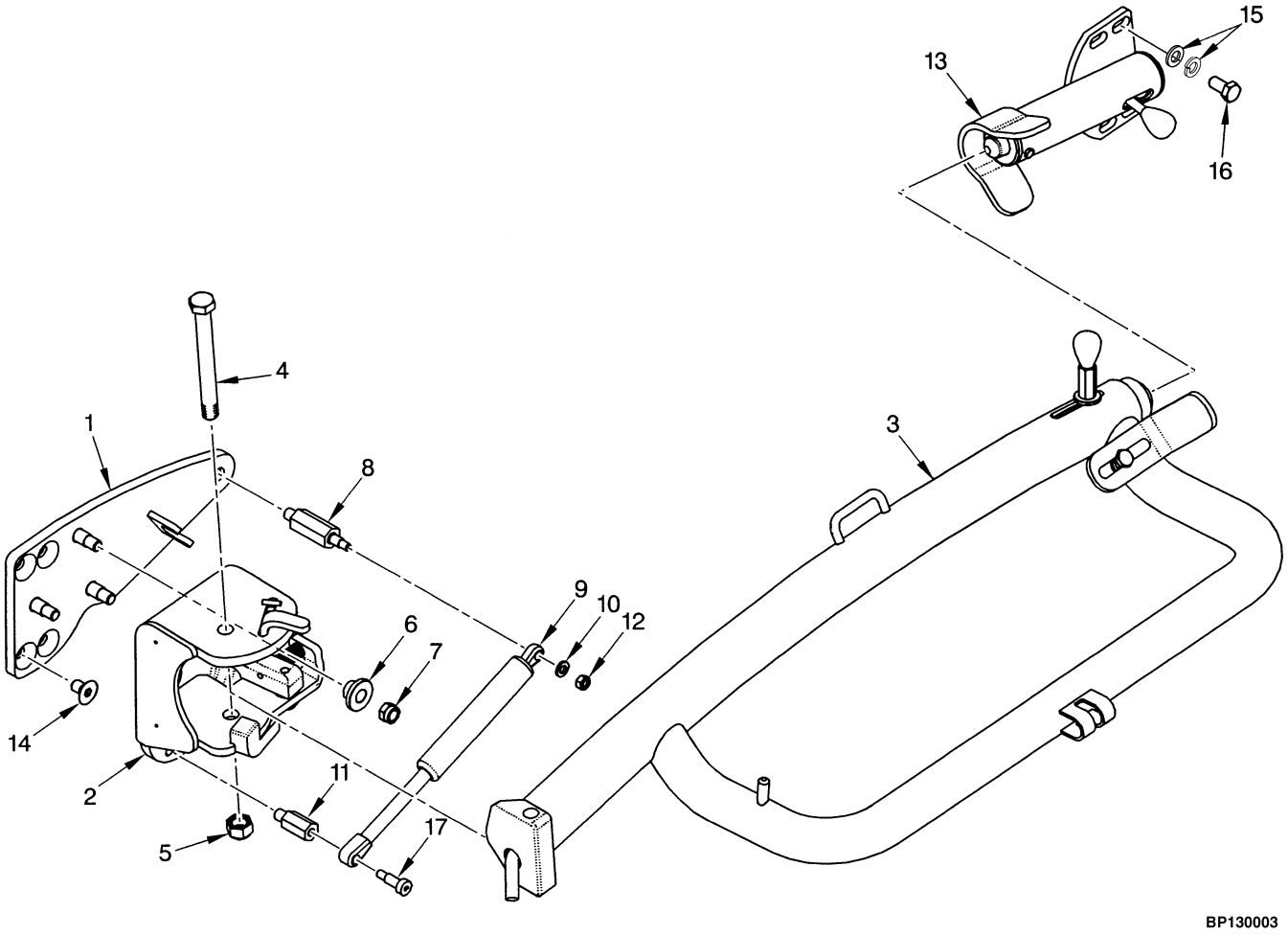

©2009 HYSTER COMPANY

LPG TANK BRACKET
SWING OUT/DROP DOWN

ITEM	PART NO.	DESCRIPTION	QTY
	1494782	Bracket	1
1	1399405	Baseplate	1
2	1399406	Hinge	1
3	1494784	Lpg Tank Bracket	1
4	293700	Capscrew	1
5	302404	Locknut	1
6	1399360	Washer	3
7	316837	Nut	3
8	1399407	Post	1
9	1399372	Gas Spring	1
10	320157	Washer	2
11	1399410	Post	1
12	302400	Nut	1
13	1398144	Latch	1
13	1398143	Handle	1
13	1398087	Latch	1
13	1398097	Shaft	1
13	1398098	Knob	1
13	1398099	Plug	1
13	148962	Capscrew	1
14	296251	Capscrew	4
15	320161	Washer	4
15	292683	Lockwasher	4
16	132860	Capscrew	4
17	1399347	Bolt	1

©2009 HYSTER COMPANY

LOCK-OFF FILTER (FIGURE 3-22)

LPG

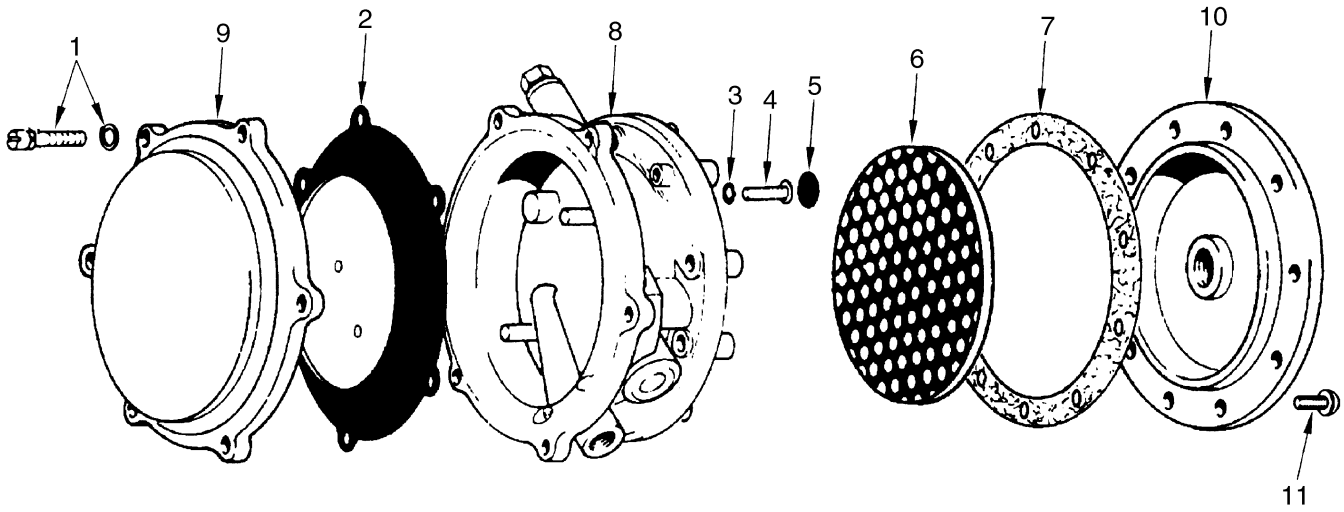

HP130033

ITEM	PART NO.	DESCRIPTION	QTY
	258321	Kit-Filter and Lock-Off Valve	1
1	. . . . .	Washer	6
1	1458580	Screw	6
2	. . . . .	Diaphragm	1
3	. . . . .	O-Ring	1
4	. . . . .	Screw	2
5	. . . . .	Valve Seat	1
6	1367589	Filter	1
7	. . . . .	Gasket	1
8	. . . . .	Body	1
9	1367587	Cover	1
10	1367588	Cover	1
11	1458582	Screw	10
	263958	Kit-Repair Lpg Converter	1

©2009 HYSTER COMPANY

LPG CONVERTER (FIGURE 3-23)

OPEN LOOP (→ S/N K005D05482)

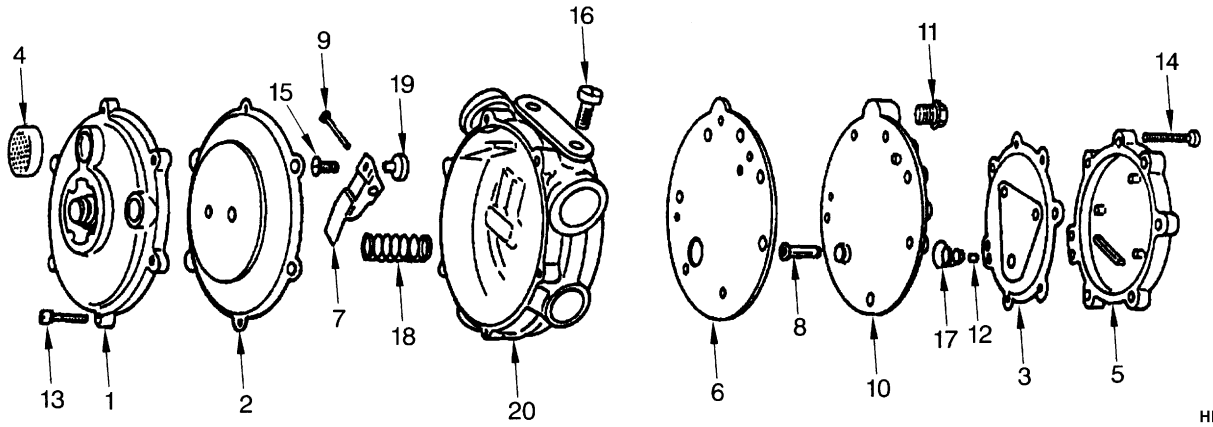

HP130034

ITEM	PART NO.	DESCRIPTION	QTY
	1399441	Lpg Converter	1
1	1455309	Cover	1
2	. . . . .	Diaphragm	1
3	. . . . .	Diaphragm	1
4	1367622	Screen	1
5	1375037	Cover	1
6	. . . . .	Gasket	1
7	. . . . .	Lever	1
8	. . . . .	Primary Valve Pin	1
9	204830	Pin	1
10	1375029	Plate	1
11	1357749	Plug	1
12	. . . . .	E-Ring	1
13	1450126	Screw	6
14	1455307	Capscrew	7
15	1455306	Screw	1
16	1369065	Kit-Screw	2
17	1455305	Spring	1
18	204831	Spring (Blue)	1
19	. . . . .	Seat	1
20	1455310	Body	1
	1459717	Kit-Repair Lpg Converter	1

©2009 HYSTER COMPANY

LPG CONVERTER (FIGURE 3-24)
OPEN LOOP (S/N K005D05483 →)

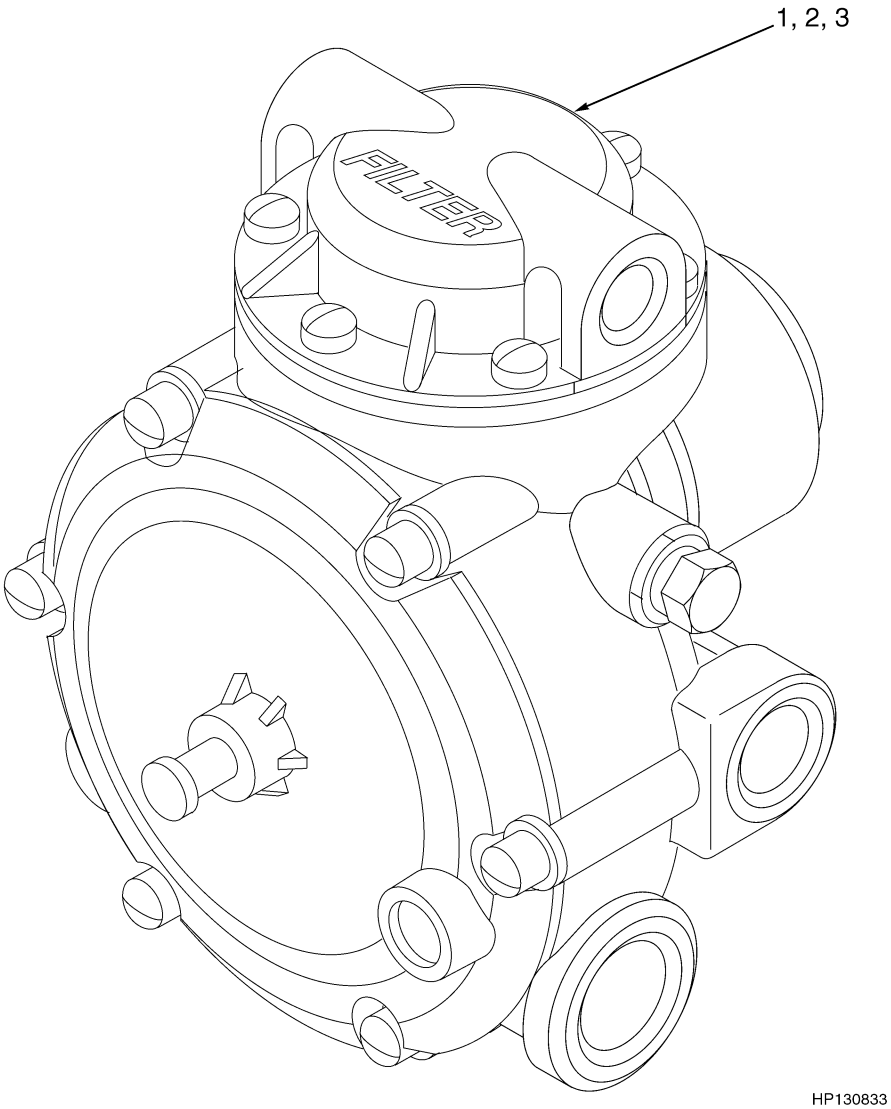

HP130833

ITEM	PART NO.	DESCRIPTION	QTY
	1482794	Controller	1
1	1496186	Coil	1
2	1496187	Kit-Repair Lpg Converter	1
3	1496188	Kit-Service	1

©2009 HYSTER COMPANY

GOVERNOR (FIGURE 3-25)
LPG

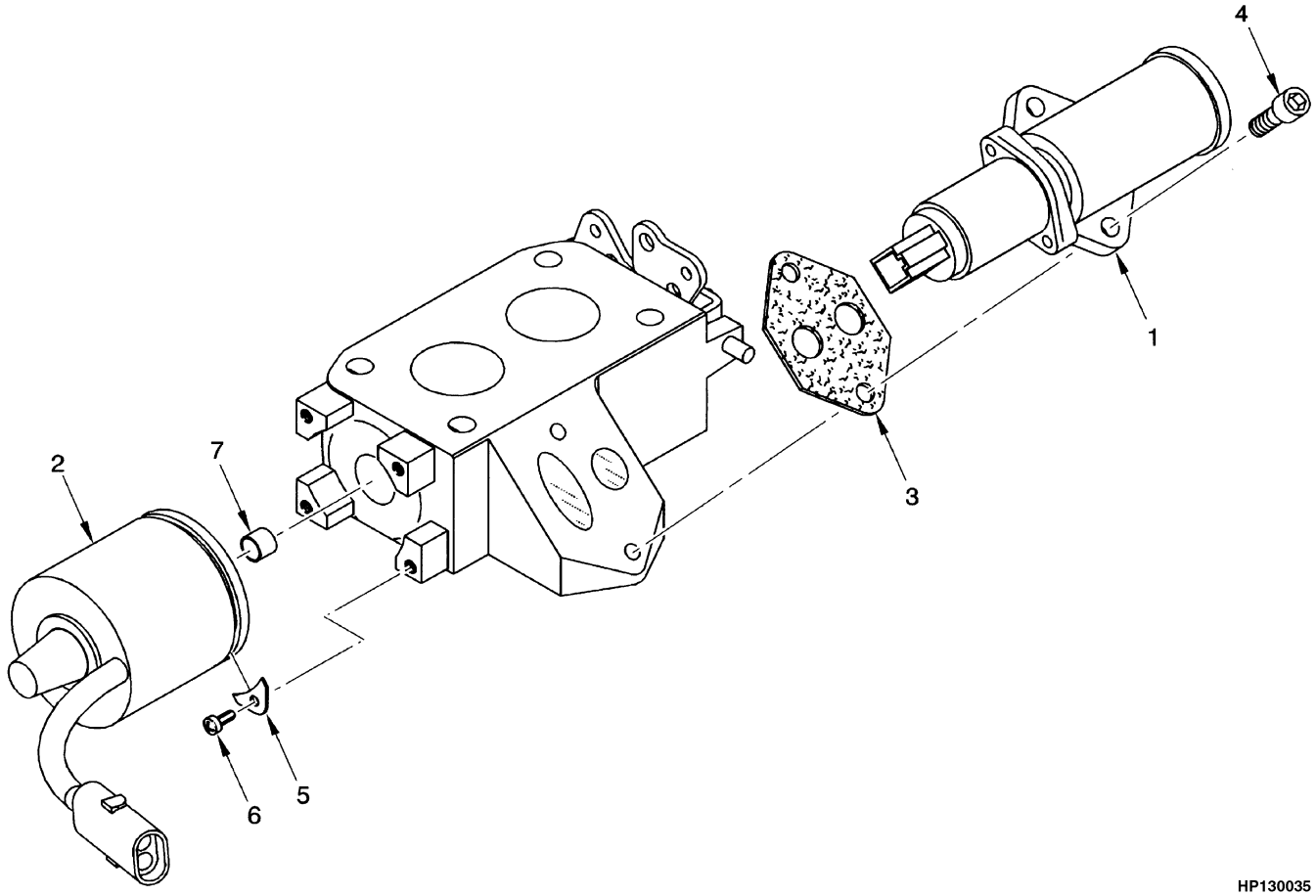

HP130035

ITEM	PART NO.	DESCRIPTION	QTY
	1397417	Throttle Body	1
1	1464657	Controller (Idle)	1
2	1464656	Motor	1
3	1464658	Gasket	1
4	. . . . .	Screw	2
5	1464654	Clamp	4
6	1464655	Screw	4
7	1464653	Sleeve	1

©2009 HYSTER COMPANY

THROTTLE BODY GOVERNOR (FIGURE 3-26)
GASOLINE AND DUAL FUEL

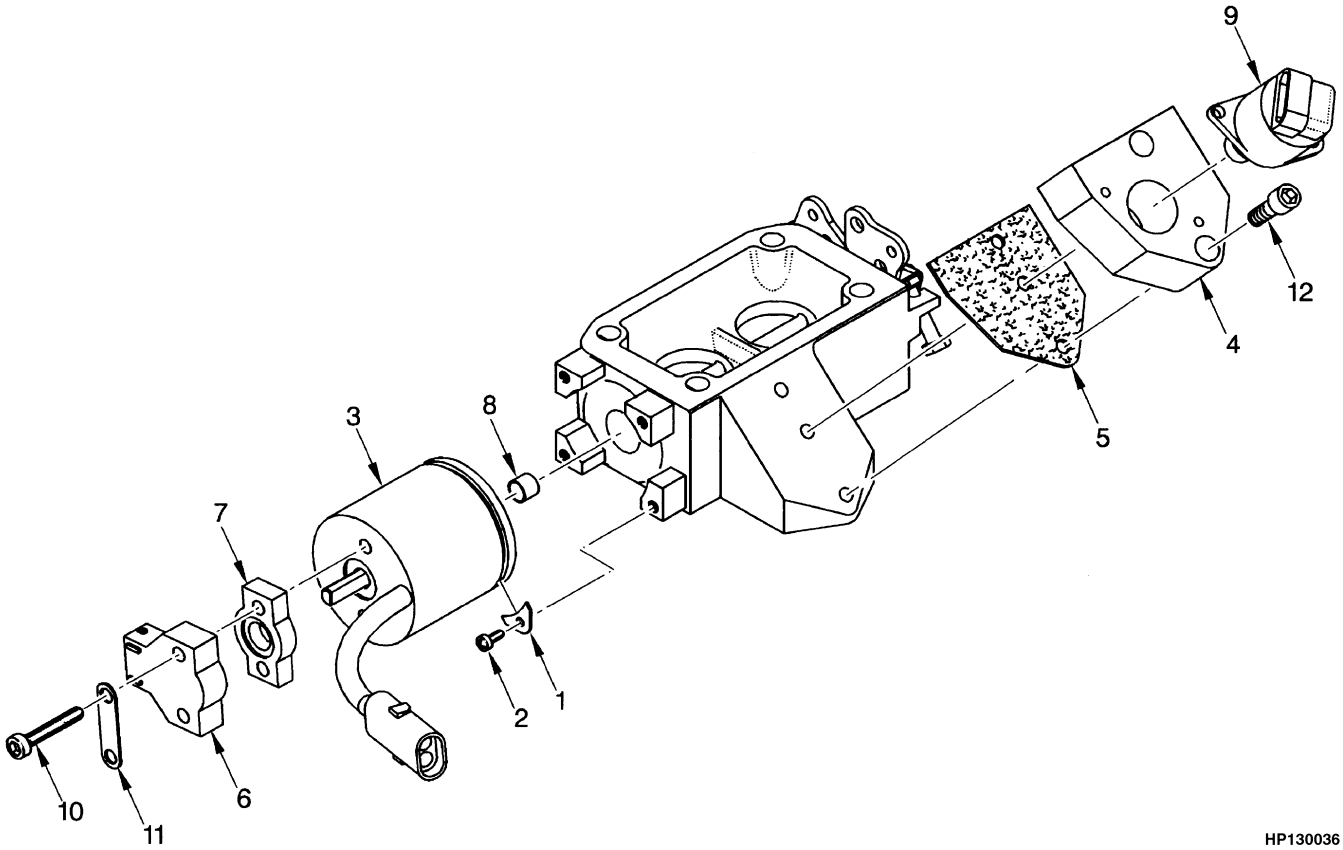

HP130036

ITEM	PART NO.	DESCRIPTION	QTY
	1397803	Governor	1
1	1464654	Clamp	4
2	1464655	Screw	4
3	1464656	Motor	1
4	1464820	Adapter	1
5	1464658	Gasket	1
6	1464660	Sensor	1
7	1464661	Spacer	1
8	1464653	Sleeve	1
9	1464662	Valve	1
10	1466095	Screw	2
11	1466096	Tag	1
12	. . . . .	Capscrew	2
13	1477278	Cap (Not Illustrated)	1

©2009 HYSTER COMPANY

NOTES

©2009 HYSTER COMPANY

INJECTOR THROTTLE BODY (FIGURE 3-27)
GASOLINE

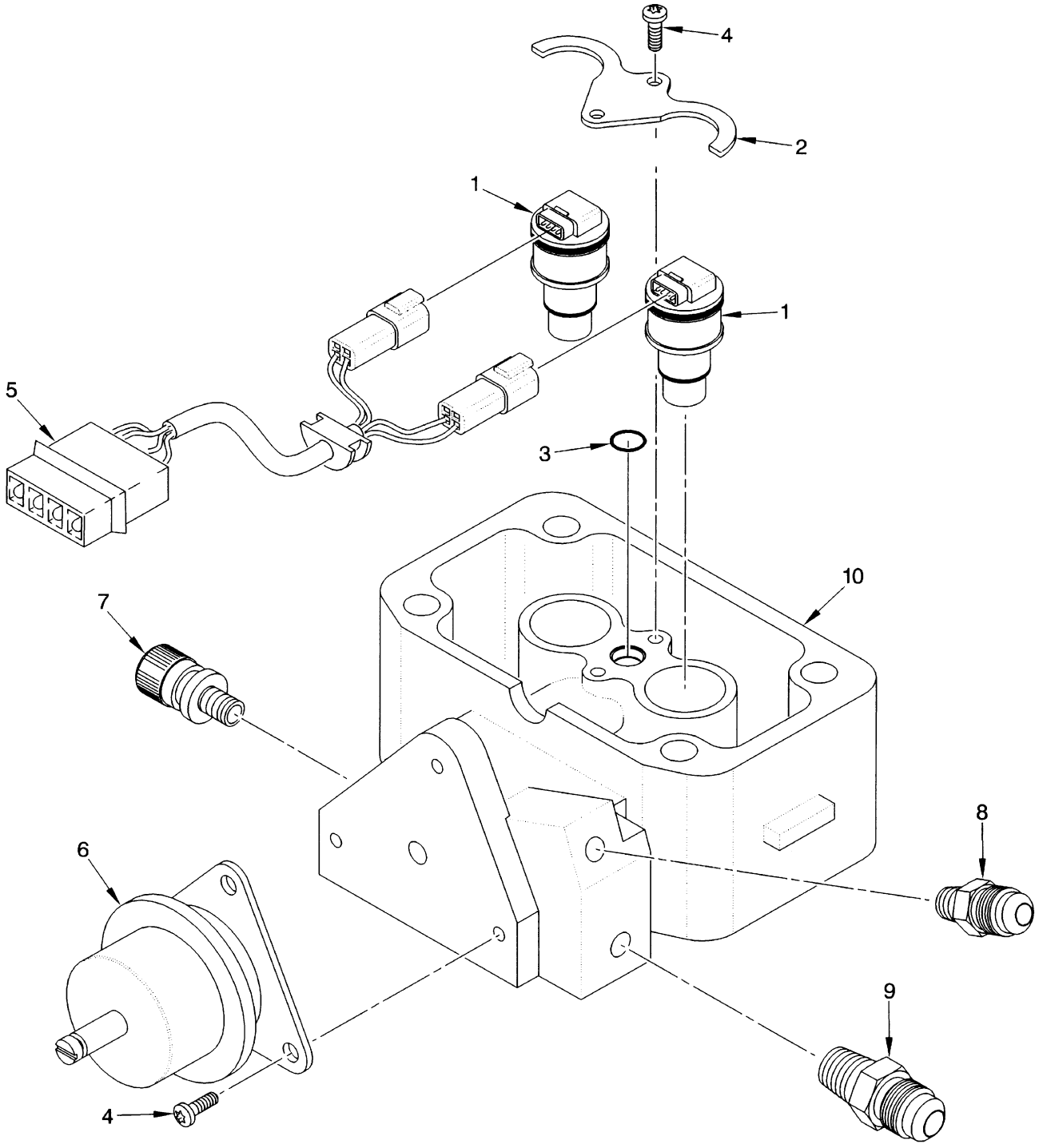

©2009 HYSTER COMPANY

INJECTOR THROTTLE BODY
GASOLINE

ITEM	PART NO.	DESCRIPTION	QTY
	1394521	Throttle Body	1
1	1464663	Injector	2
2	1464664	Cover	1
3	1464665	O-Ring	1
4	1464666	Screw	5
5	1464667	Connector	1
6	1464668	Regulator	1
7	1464669	Valve	1
8	16124	Fitting	1
9	16134	Fitting	1
10	1466094	Injector Body	1

©2009 HYSTER COMPANY

AIR FILTER SYSTEM (FIGURE 3-28)

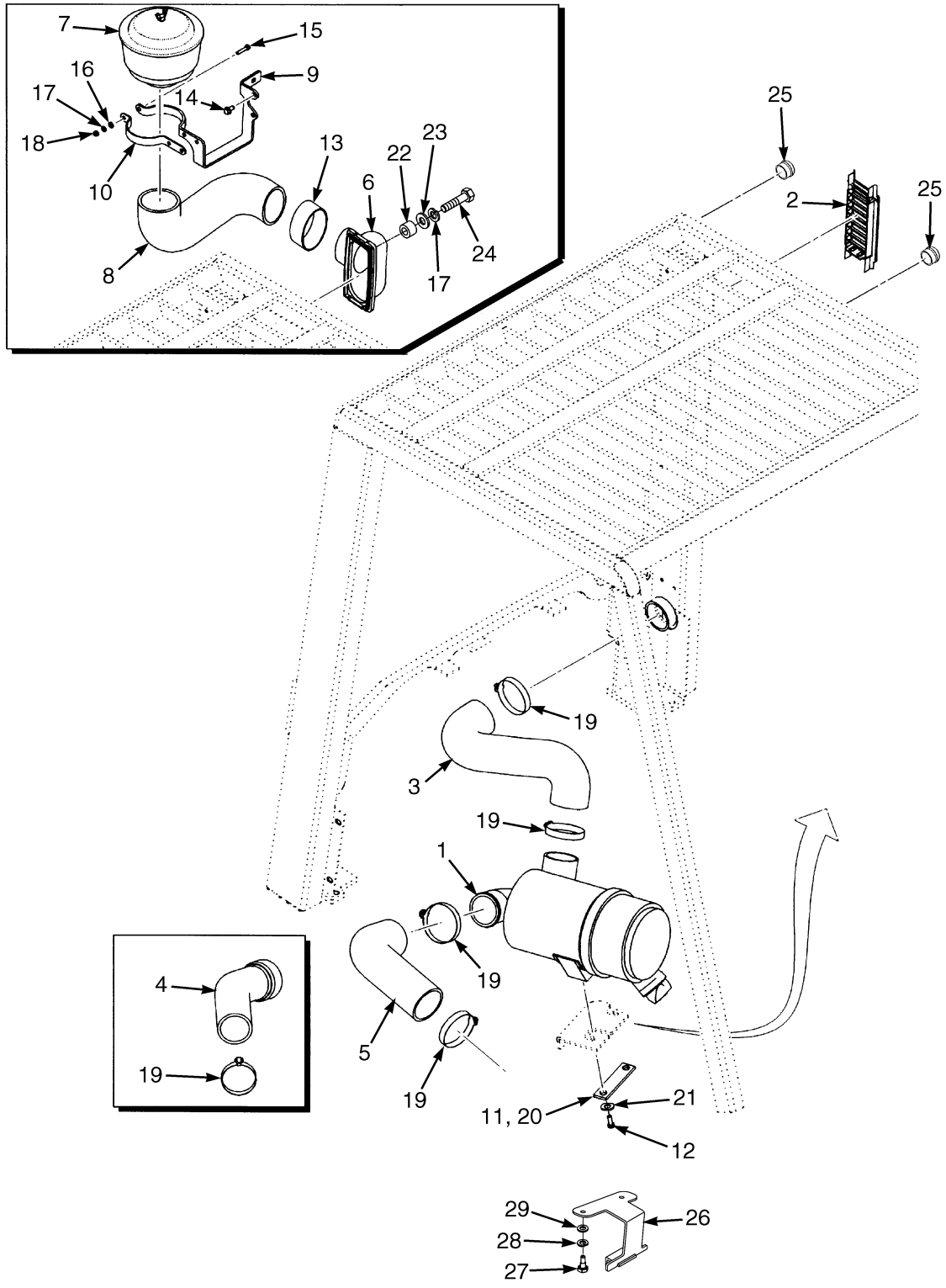

©2009 HYSTER COMPANY

AIR FILTER SYSTEM

KEY:
A: Air Filter (Standard)
B: Air Filter (Heavy Duty)

ITEM	PART NO.	DESCRIPTION	QTY A	QTY B
1	2035621	Air Filter (☞Figure 3-29)	1	1
2	2036475	Grill	1	..
3	1390110	Hose (Outlet Gasoline/LPG/Diesel)	1	1
4	2037320	Hose (Intake Gasoline/LPG)	1	1
5	1394593	Hose (Intake Diesel)	1	1
6	**b** 2036350	Molding	..	1
6	**c** 1497559	Molding	..	1
7	291974	Pre-Cleaner	..	1
7	1374205	Cover	..	1
7	1374206	Body	..	1
7	1374207	Sleeve	..	1
7	115696	Hose Clamp	..	1
8	1397987	Hose (Pre-Cleaner)	..	1
9	1397988	Bracket	..	1
10	1397989	Band	..	1
11	251099	Loctite	2	2
12	1397653	Bolt	2	2
13	1398002	Clamp	..	1
14	316678	Screw	..	2
15	302263	Capscrew	..	3
16	320156	Washer	..	3
17	292680	Washer	..	5
18	136687	Nut	..	3
19	115696	Hose Clamp	4	4
20	1397652	Plate	1	1
21	375984	Spring Washer	2	2
22	**c** 1498097	Spacer	..	2
23	**c** 197068	Washer	..	2
24	**c** 287816	Capscrew	..	2
25	1509037	Plug	2	..
26	**a** 1543536	Bracket	1	..
27	**a** 136681	Capscrew	2	..
28	**a** 292681	Lockwasher	2	..
29	**a** 320157	Washer	2	..

FOOTNOTES:

a Aftermarket Upgrade
b → S/N K005V01507Y
c S/N K005V01508Y →

©2009 HYSTER COMPANY

AIR FILTER (FIGURE 3-29)

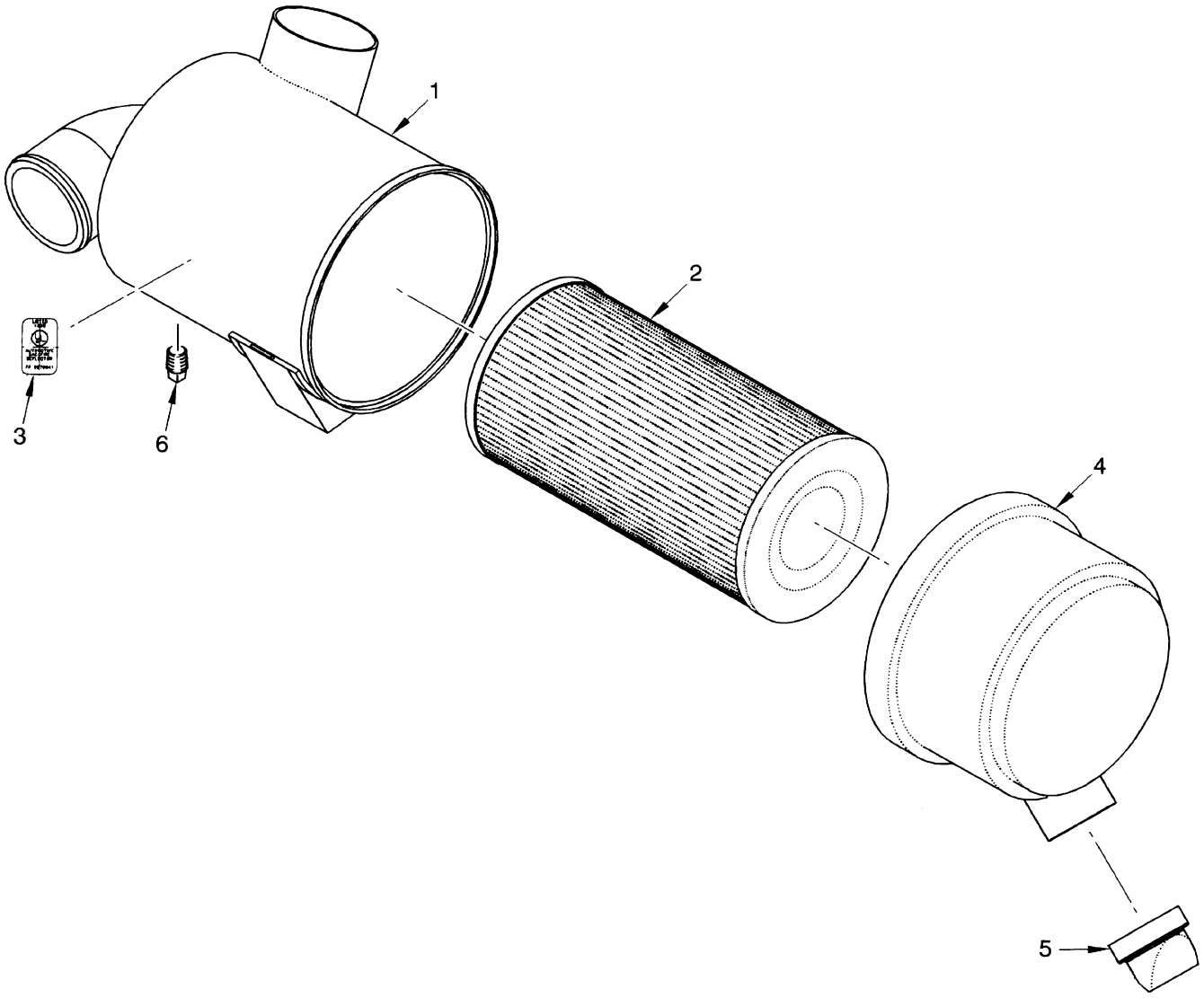

HP130039

ITEM	PART NO.	DESCRIPTION	QTY
	2035621	Air Filter	1
1	. . . . .	Body	1
2	1462439	Filter Element	1
3	. . . . .	Label	1
4	1462441	Cover	1
5	374923	Valve	1
6	1462442	Plug	1

©2009 HYSTER COMPANY

NOTES

©2009 HYSTER COMPANY

THROTTLE LINKAGE (FIGURE 3-30)
GASOLINE AND LPG

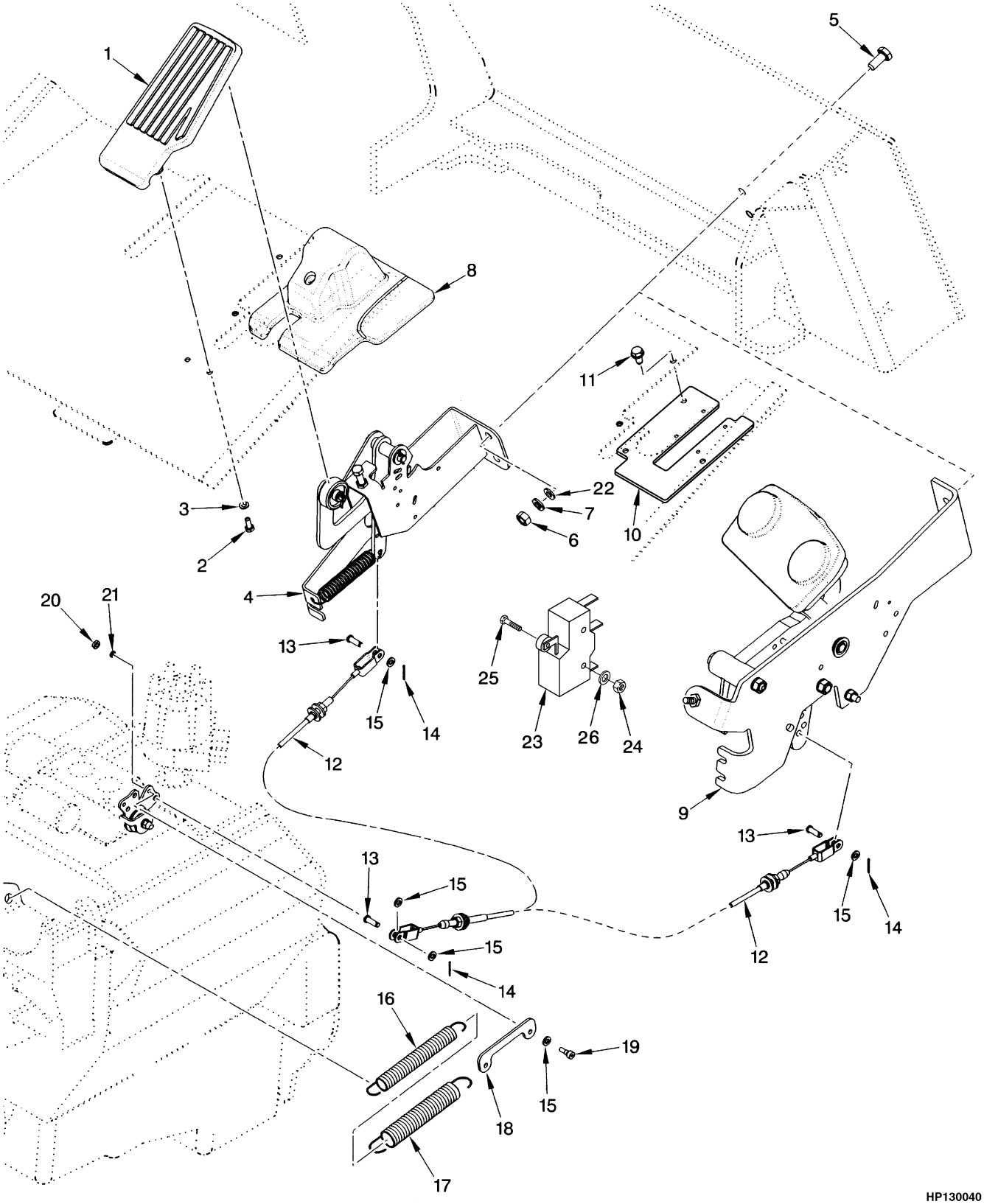

©2009 HYSTER COMPANY

THROTTLE LINKAGE
GASOLINE AND LPG

KEY:
A: Forward/Reverse Lever
B: Monotrol Pedal

ITEM	PART NO.	DESCRIPTION	QTY A	QTY B
1	2027337	Pedal	1	..
2	292500	Capscrew	1	1
3	292680	Washer	1	1
4	1465778	Throttle Arm (☞Figure 3-32)	1	1
5	287860	Capscrew	1	1
6	136692	Nut	1	1
7	292682	Lockwasher	1	1
8	1466632	Cover	1	..
9	1465899	Monotrol Pedal (☞Figure 3-33)	..	1
10	2052191	Cover Plate (With Cab)	1	1
10	2035836	Cover Plate (Without Cab)	1	1
11	316678	Screw	1	1
12	**a** 1396562	Throttle Cable	1	..
12	**b** 1493669	Throttle Cable	1	..
12	**a** 1397496	Throttle Cable	..	1
12	**b** 1493670	Throttle Cable	..	1
13	167218	Pin	2	2
14	15201	Cotter Pin	2	2
15	320156	Washer	5	5
16	1400221	Spring (Extension)	1	1
17	1400222	Spring (Extension)	1	1
18	1398038	Link	1	1
19	1399388	Capscrew	2	2
20	15052	Nut	2	2
21	15152	Lockwasher	2	2
22	**a** 1324577	Washer	2	2
22	**b** 1494446	Spacer	2	2
23	1320893	Microswitch	..	1
23	292665	Nut	..	2
23	302105	Setscrew	..	2
23	53162	Lockwasher	..	2

FOOTNOTES:

a → S/N K005D05465Y EXC. 5460-5461, 5463-5464

b S/N K005D05466Y → INC. 5460-5461, 5463-5464

©2009 HYSTER COMPANY

THROTTLE LINKAGE (FIGURE 3-31)
DIESEL

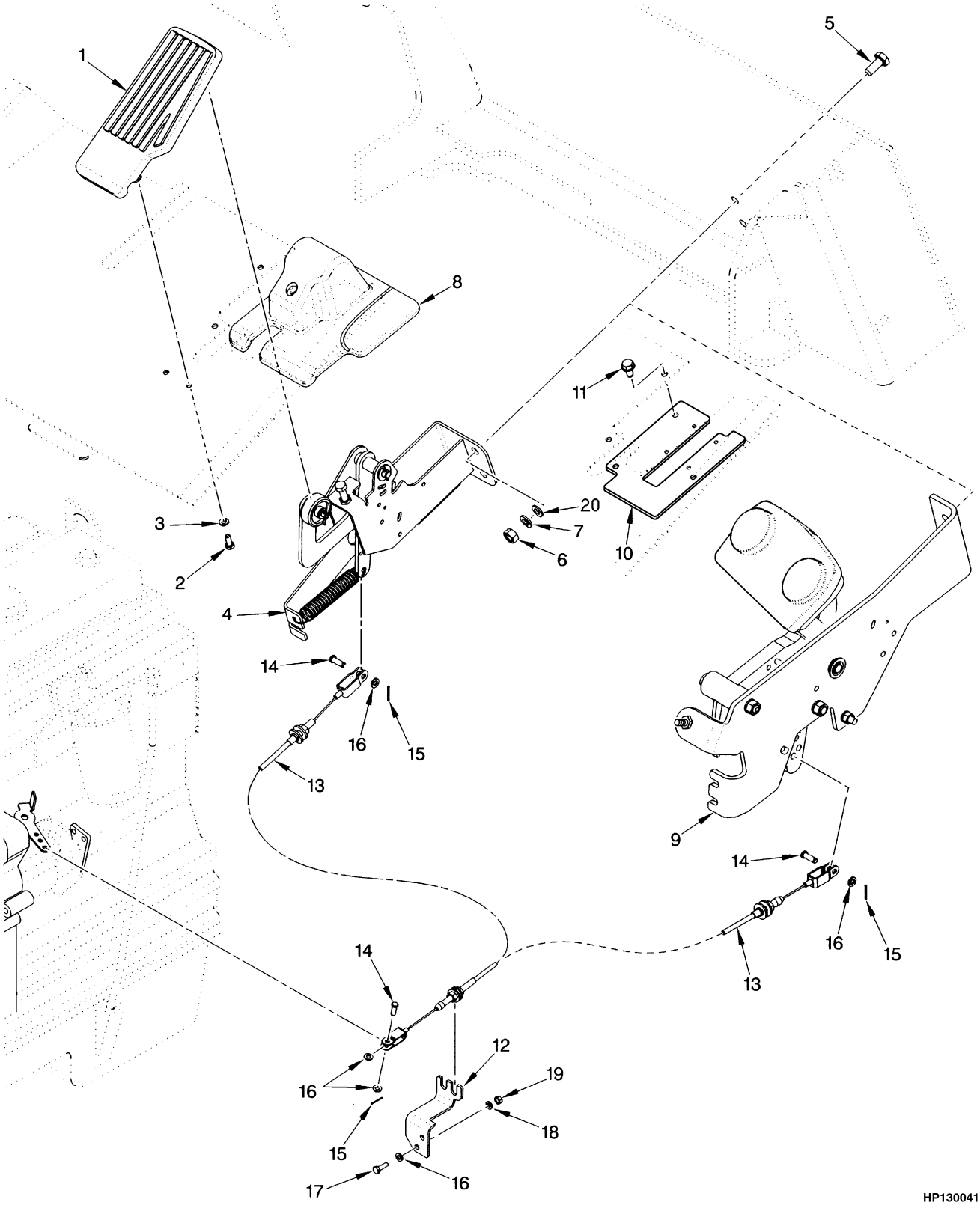

©2009 HYSTER COMPANY

THROTTLE LINKAGE
DIESEL

KEY:
A: Forward/Reverse Lever
B: Monotrol Pedal

ITEM	PART NO.	DESCRIPTION	QTY A	QTY B
1	2027337	Pedal	1	..
2	292500	Capscrew	1	..
3	292680	Washer	1	..
4	1465778	Throttle Arm (☞Figure 3-32)	1	..
5	287860	Capscrew	2	2
6	136692	Nut	1	1
7	292682	Lockwasher	1	1
8	1466632	Cover	1	..
9	1465899	Monotrol Pedal (☞Figure 3-33)	..	1
10	2052191	Cover Plate (With Cab)	..	1
10	2035836	Cover Plate (Without Cab)	..	1
11	316678	Screw	..	3
12	1397384	Bracket	1	1
13	**a** 1396563	Throttle Cable	1	1
13	**b** 1493668	Throttle Cable	..	1
13	**b** 1493667	Throttle Cable	1	..
14	167218	Pin	2	2
15	15201	Cotter Pin	2	2
16	320156	Washer	3	3
17	293602	Capscrew	2	2
18	292680	Washer	2	2
19	136687	Nut	2	2
20	1324577	Washer	2	2

FOOTNOTES:

a → S/N K005D05466

b S/N K005D05466 →

©2009 HYSTER COMPANY

THROTTLE ARM ASSEMBLY (FIGURE 3-32)

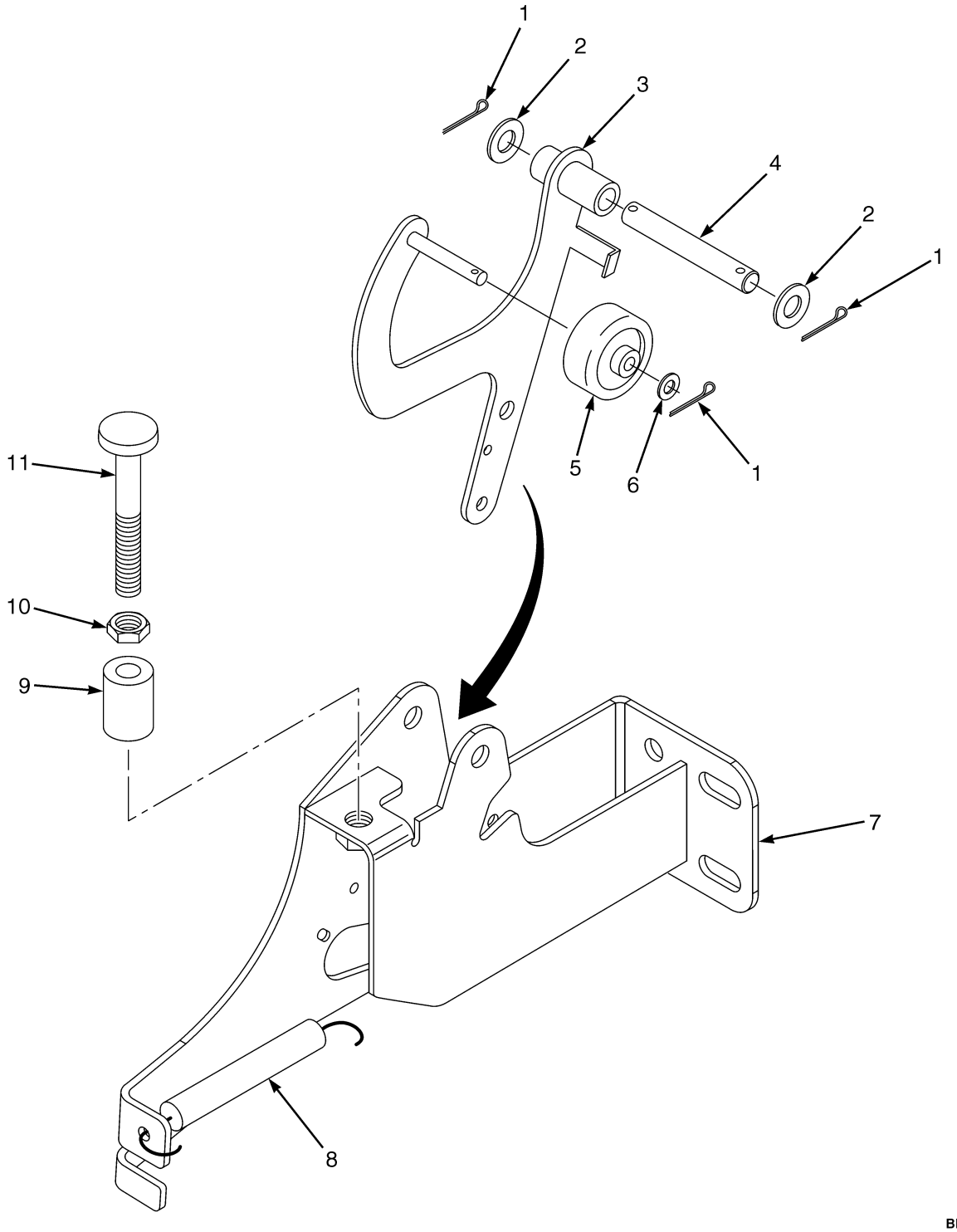

©2009 HYSTER COMPANY

THROTTLE ARM ASSEMBLY

ITEM	PART NO.	DESCRIPTION	QTY
	1465778	Throttle Arm	1
1	15212	Cotter Pin	3
2	320159	Washer	2
3	1465780	Lever	1
3	1400224	Shaft	1
4	1400232	Shaft	1
5	1465799	Roller	1
6	320156	Washer	1
7	1465779	Bracket	1
8	1400223	Spring	2
9	1471496	Spacer	1
10	15001	Nut	1
11	1471541	Stud	1

©2009 HYSTER COMPANY

MONOTROL PEDAL LINKAGE (FIGURE 3-33)

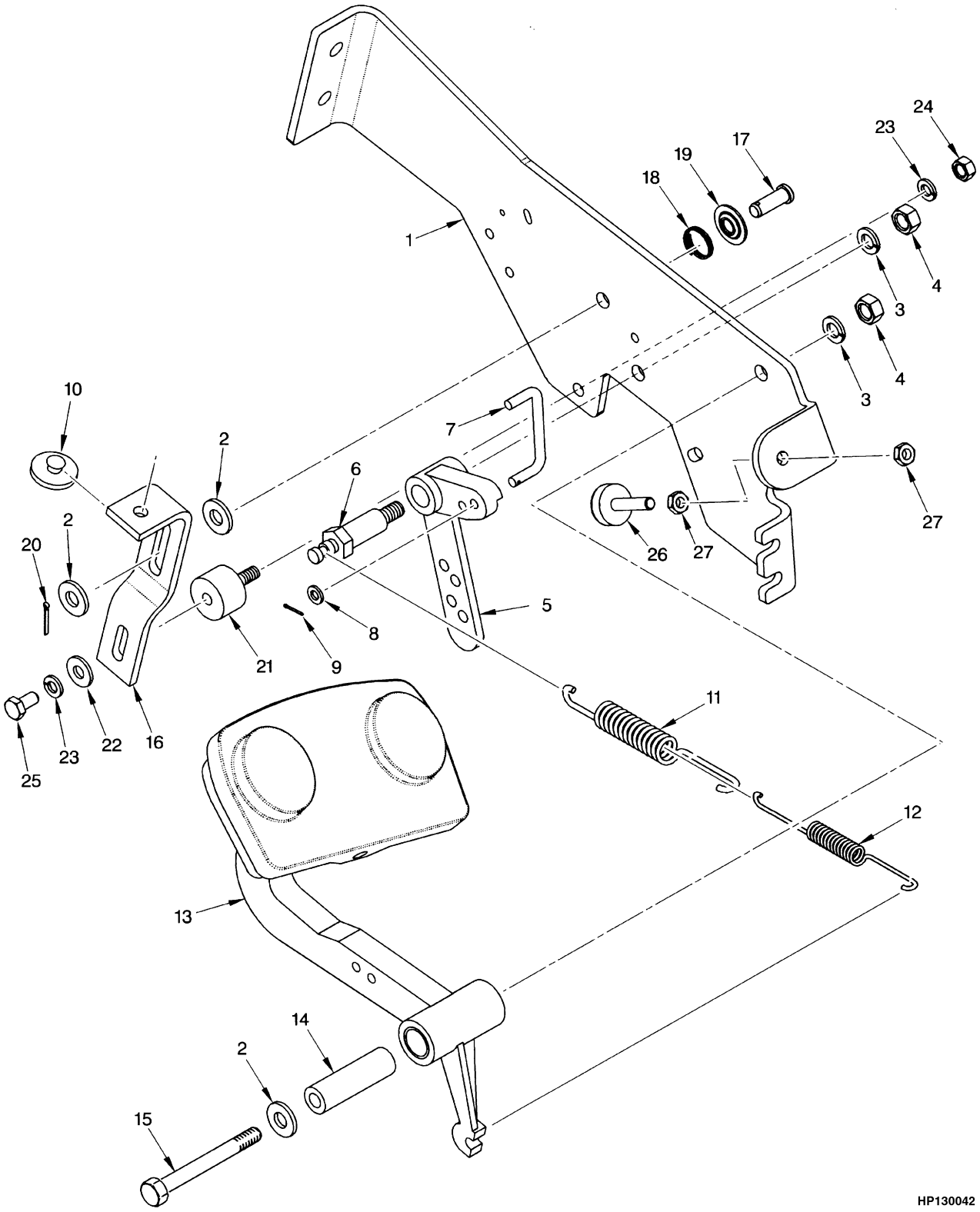

©2009 HYSTER COMPANY

MONOTROL PEDAL LINKAGE

ITEM	PART NO.	DESCRIPTION	QTY
	1465899	Monotrol Pedal	1
1	1396151	Bracket	1
2	320160	Washer	3
3	292682	Lockwasher	2
4	136692	Nut	2
5	353164	Crank	1
6	352485	Shaft	1
7	353129	Rod	1
8	320156	Washer	1
9	15200	Cotter Pin	1
10	353195	Bumper	1
11	353143	Spring	1
12	353142	Spring	1
13	1352575	Monotrol Pedal (☞Figure 3-34)	1
14	353141	Tube Assy	1
15	292523	Capscrew	1
16	352950	Bracket	1
17	142	Pin	1
18	353172	Spring	1
19	353230	Cap	1
20	15212	Cotter Pin	1
21	353453	Mount	1
22	320158	Washer	1
23	292681	Lockwasher	2
24	239503	Nut	1
25	287851	Capscrew	1
26	1347088	Screw	1
27	15001	Nut	2

©2009 HYSTER COMPANY

MONOTROL PEDAL (FIGURE 3-34)

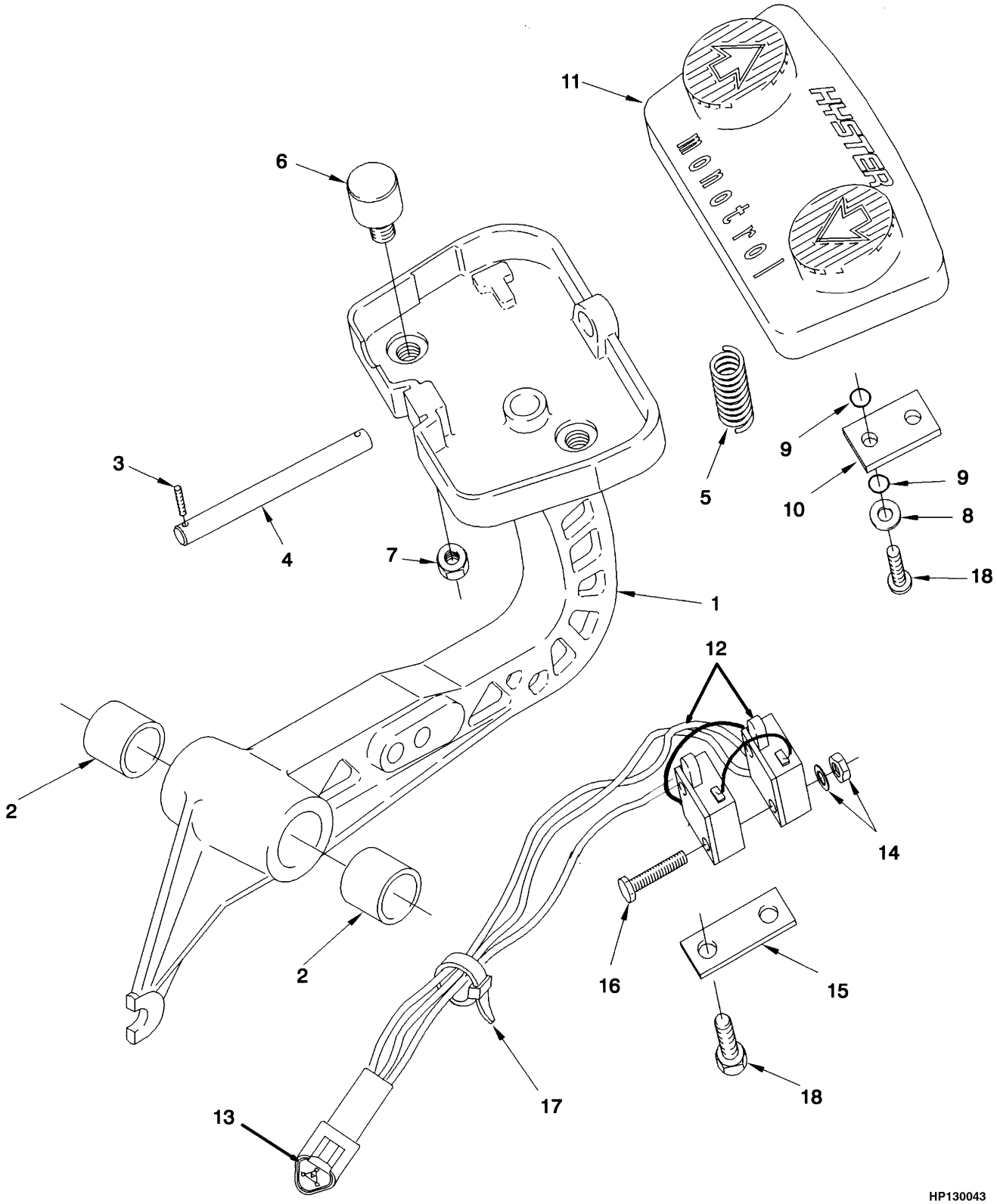

©2009 HYSTER COMPANY

MONOTROL PEDAL

ITEM	PART NO.	DESCRIPTION	QTY
	1352575	Monotrol Pedal	1
1	353397	Pedal	1
2	135685	Bushing	2
3	220932	Setscrew	2
3	360387	Loctite	AR
4	353154	Pin	1
5	353168	Spring	1
6	353422	Magnet	2
7	353432	Nut	2
8	353448	Washer	4
9	57568	O-Ring	8
10	359207	Plate	2
11	353175	Pad	1
12	1352090	Switch	1
12	1352089	Wire Harness	1
13	1330410	Connector	1
13	1330415	Connector	1
13	1330435	Terminal	3
14	53162	Lockwasher	2
14	16865	Nut	2
15	353165	Retainer	1
16	220434	Screw	2
17	114312	Strap Clamp	3
18	352969	Screw	6

©2009 HYSTER COMPANY

NOTES

©2009 HYSTER COMPANY

4 ELECTRICAL SYSTEM

SECTION 4
ELECTRICAL SYSTEM

DESCRIPTION **PAGE**

ALTERNATOR
GASOLINE/LPG AND DIESEL 4-30
PRESTOLITE BRAND - GS, LPS, DS 4-32
BRAKE AND BACK-UP LIGHTS 4-40
DISTRIBUTOR 4-34
ELECTRICAL SYSTEM
ALTERNATOR AND BATTERY - G, GS, LPG AND LPS 4-8
COWL 4-4
DIESEL 4-26
GASOLINE AND GASOLINE SAFETY 4-12
GASOLINE, GASOLINE SAFETY, AND DUAL FUEL 4-16
LPG AND LPS 4-22
HARNESS KIT
DUAL FUEL 4-19
INSTRUMENT PANEL 4-7
SHIFT LEVER 4-38
STARTER
DIESEL 4-36
WIRE HARNESS
ADAPTER (→ 5/2001) 4-97
BRAKE PRESSURE SWITCH 4-163
CLOSED LOOP 4-83
CONVERSION, GASOLINE TO LPG, GM 4.3L - SHEET 1 OF 2 (→ S/N K005D05972Y INC. 6018) 4-44
CONVERSION, GASOLINE TO LPG, GM 4.3L - SHEET 2 OF 2 (→ S/N K005D05972Y) 4-46
DIESEL (→ S/N K005V02185Y) 4-84
DIESEL (S/N K005V02186Y →) 4-86
DUAL FUEL SHUT OFF 4-88
DUAL FUEL, GM V6 - SHEET 1 OF 2 (→ S/N K005D05972Y) 4-50
DUAL FUEL, GM V6 - SHEET 2 OF 2 (→ S/N K005D05972Y INC. 6018) 4-52
DUAL FUEL, GM V6 - SHEET 1 OF 2 (S/N K005D05973Y ↔ S/N K005V02186Y) 4-56
DUAL FUEL, GM V6 - SHEET 2 OF 2 (S/N K005D05973Y ↔ S/N K005V02186Y) 4-58
DUAL FUEL, GM V6 - SHEET 1 OF 2 (S/N K005V02186Y ↔ S/N K005V02836Z) 4-62
DUAL FUEL, GM V6 - SHEET 2 OF 2 (S/N K005V02186Y ↔ S/N K005V02836Z) 4-66
ENGINE, GM V6, 4.3L - SHEET 1 OF 2 (→ S/N K005D05972Y) 4-76
ENGINE, GM V6, 4.3L - SHEET 2 OF 2 (→ S/N K005D05972Y) 4-78
ENGINE, LPG, GM V6, 4.3L - SHEET 1 OF 2 (S/N K005D05973Y ↔ S/N K005V02185Y) 4-114
ENGINE, LPG, GM V6, 4.3L - SHEET 2 OF 2 (S/N K005D05973Y ↔ S/N K005V02185Y) 4-116
ENGINE, LPG, GM V6, 4.3L - SHEET 1 OF 2 (S/N K005V02186Y →) 4-120
ENGINE, LPG, GM V6, 4.3L - SHEET 2 OF 2 (S/N K005V02186Y →) 4-122
ESOS ADAPTER 4-89
GASOLINE AND LPG - TYPE "S" (→ S/N K005V02185Y) 4-49
GASOLINE ENGINE (→ S/N K005D05972Y INC. 6018) 4-42
GASOLINE ENGINE - GM 4.3L (S/N K005V04116Z →) 4-154
GASOLINE ENGINE, GM V6 - SHEET 1 OF 2 (→ S/N K005D05973Y) 4-98
GASOLINE ENGINE, GM V6 - SHEET 2 OF 2 (S/N K005D05973Y ↔ S/N K005V02185Y) 4-100
GASOLINE, GM V6 - SHEET 1 OF 2 (S/N K005V02186Y ↔ S/N K005V02836Z) 4-104
GASOLINE, GM V6 - SHEET 2 OF 2 (S/N K005V02186Y ↔ S/N K005V02836Z) 4-106
LPG SWITCH 4-81
MODULE POWERSHIFT (→ S/N K005D05972) 4-126

©2009 HYSTER COMPANY

SECTION 4
ELECTRICAL SYSTEM

DESCRIPTION **PAGE**

MODULE POWERSHIFT - SHEET 1 0F 2 (S/N K005V02412Z ↔ S/N K005V05903A) 4-128
MODULE POWERSHIFT - SHEET 2 OF 2 (S/N K005V02412Z ↔ S/N K005V05903A) 4-132
MODULE POWERSHIFT - SHEET 1 0F 2 (S/N K005V05904A →) 4-136
MODULE POWERSHIFT - SHEET 2 OF 2 (S/N K005V05904A →) 4-140
MODULE, TYPE S POWERSHIFT - SHEET 1 OF 2 (→ S/N K005D05972Y INC. 6018) 4-90
MODULE, TYPE S POWERSHIFT - SHEET 2 OF 2 (→ S/N K005D05972Y INC. 6018) 4-94
MODULE, TYPE S POWERSHIFT - SHEET 1 OF 2 (S/N K005D05973Y ↔ S/N K005V02411Z) 4-144
MODULE, TYPE S POWERSHIFT - SHEET 2 OF 2 (S/N K005D05973Y ↔ S/N K005V02412Z) 4-148
SEALED ALTERNATOR 4-152
TYPE S - GASOLINE AND LPG (S/N K005V02186Y →) 4-82
WIRE HARNESS (ENGINE)
DUAL FUEL - GM 4.3L (S/N K005V02837Z ↔ S/N K005V04115Z) 4-70
DUAL FUEL - GM 4.3L (S/N K005V04116Z →) 4-158
GASOLINE AND GASOLINE SAFETY - GM 4.3L (S/N K005V02837Z ↔ S/N K005V04115Z) 4-110

©2009 HYSTER COMPANY

NOTES

©2009 HYSTER COMPANY

ELECTRICAL SYSTEM (FIGURE 4-1)
COWL

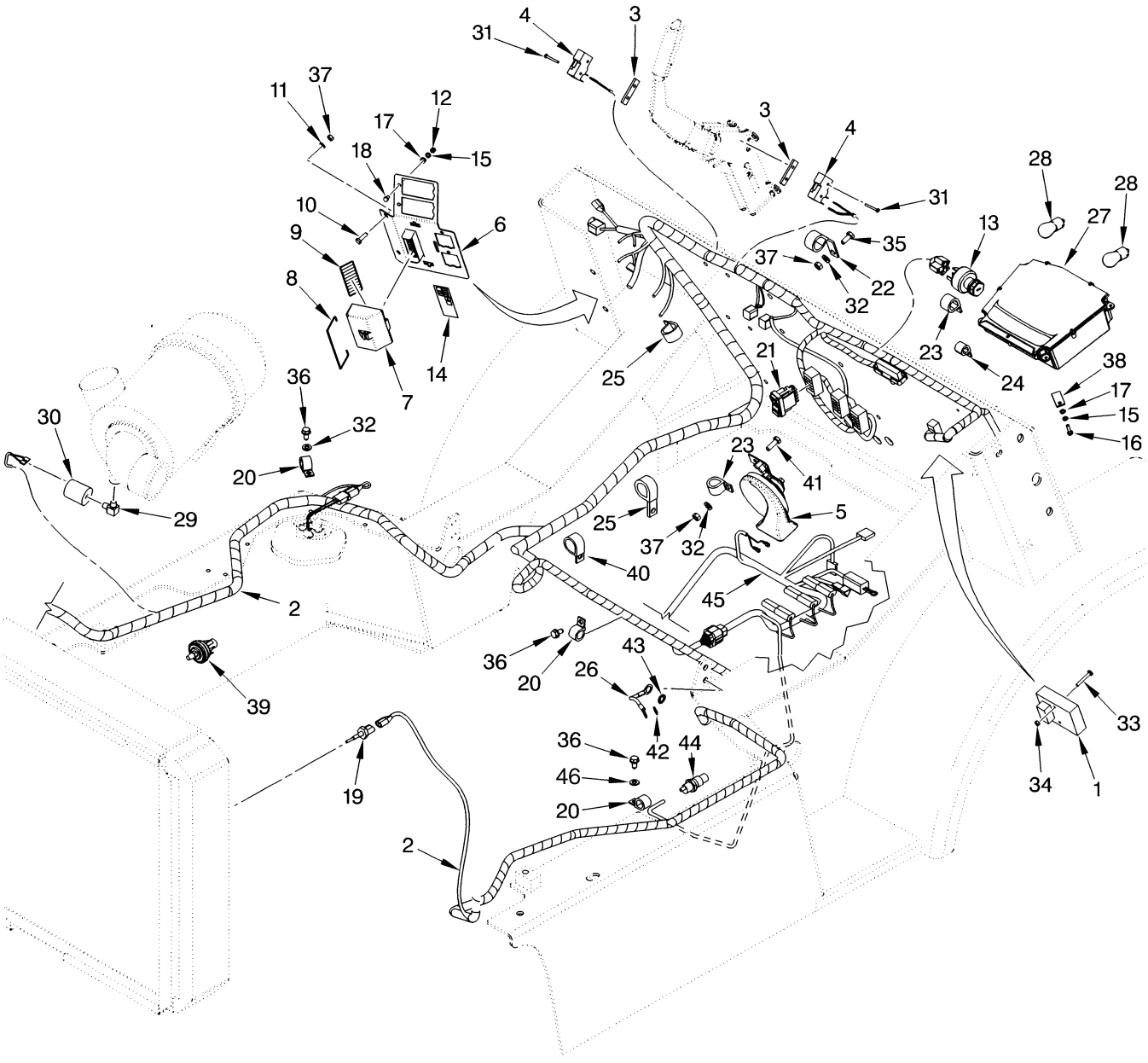

©2009 HYSTER COMPANY

ELECTRICAL SYSTEM
COWL

ITEM	PART NO.	DESCRIPTION	QTY
1	**d** 1394862	Controller (Transmission)	1
1	**h** 2059789	Controller	1
2	**b** 2035695	Wire Harness (Module) (☞Figure 4-47)	1
2	**j** 2044239	Wire Harness (Module)	1
2	**f** 2046117	Wire Harness (Module) (☞Figure 4-48)	1
2	**i** 2060627	Wire Harness (Module) (☞Figure 4-50)	1
2	1484681	Fuse Box (10-Way)	1
2	1484682	Fuse Box	1
2	**a** 2035581	Relay (Flasher)	8
2	1347114	Relay	1
2	1484684	Single Mini Relay Base	2
2	1490252	Diode (Single)	1
2	370647	Fuse (10 Amp)	4
2	1320669	Fuse (30 Amp)	2
2	370648	Fuse (20 Amp)	1
2	1310630	Fuse (15 Amp)	3
2	1496890	Nut	1
3	316132	Spacer	1
4	370868	Switch (Park Brake)	1
5	1496361	Horn (Mechanical) (Replaced with 1524525 12/02)	1
5	1524525	Horn	1
6	1492957	Bracket	1
7	370863	Cover (Fuse)	1
8	370864	Cover (Cover) (Latch)	1
9	1397451	Label (Fuse Panel)	1
10	136749	Screw	2
11	292681	Lockwasher	1
12	292668	Nut	4
13	379902	Ignition Switch	1
13	1337197	Key Set	1
14	**c** 1399382	Label (Fuse Panel Relays)	1
14	**g** 1515763	Label (Fuse Panel Relays)	1
15	292679	Washer	4
16	296510	Screw	4
17	320155	Washer	4
18	302244	Capscrew	4
19	1384594	Sender (Low Coolant)	1
20	166285	Clamp	11
21	1397840	Switch (First Gear)	1
22	1515763	Label (Fuse Panel Relays)	2
23	1347202	Clamp	2
23	1399400	Clamp (Dual Fuel)	2
24	173246	Clamp	1
25	178119	Clamp	3
26	387892	Wire	1
27	. . . . .	Instrument Panel (☞Figure 4-2)	1
28	1468571	Bulb (Back Lighting)	4
28	1460724	Bulb (Icon Lighting)	10
29	17650	Fitting	1
30	1347067	Switch (Restriction)	1

©2009 HYSTER COMPANY

ELECTRICAL SYSTEM
COWL

ITEM	PART NO.	DESCRIPTION	QTY
31	86510	Screw	10
32	320157	Washer	18
33	296504	Screw	2
34	815597	Nut	2
35	136749	Screw	6
36	316678	Screw	11
37	239503	Nut	8
38	1399886	Strap	2
39	1301648	Pressure Switch (Fuel)	1
40	1310611	Clamp	1
41	136749	Screw	1
42	296380	Washer	1
43	320158	Washer	1
44	1322627	Switch (Oil Temperature Warning)	1
45	**e** 2035694	Wire Harness (Powershift Transmission Control)	1
45	**i** 2059309	Wire Harness (Powershift Transmission Control)	1
46	375629	Washer	4

FOOTNOTES:

a Used for various functions including forward/ reverse, horn, lights, and shutdown
b → S/N K005D05972
c → S/N K005V02411Z
d → S/N K005V04125A
e → S/N K005V05903A
f S/N K005V02412Z ↔ S/N K005V05903A
g S/N K005V02412Z →
h S/N K005V04126A →
i S/N K005V05904A →
j S/N K005D05973 →

©2009 HYSTER COMPANY

INSTRUMENT PANEL (FIGURE 4-2)

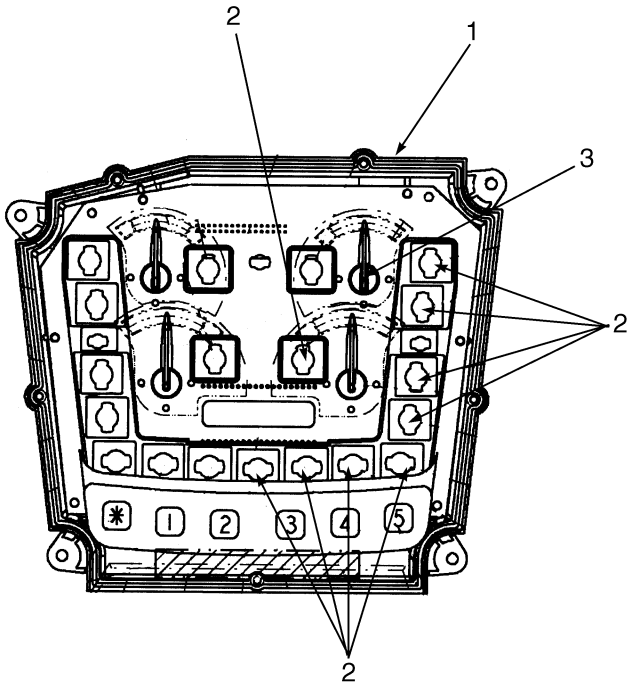

HP081276

ITEM	PART NO.	DESCRIPTION	QTY
1	**ac** 1397812	Instrument Panel (Standard)	1
1	**ad** 1510312	Instrument Cluster (Standard)	1
1	**bc** 1397813	Instrument Panel (Standard)	1
1	**bd** 1510313	Instrument Cluster (Standard)	1
1	**c** 1523477	Lens	1
1	**d** 1533858	Lens	1
1	**ac** 1397799	Instrument Panel (Premium)	1
1	**ad** 1510310	Instrument Cluster (Premium)	1
1	**bc** 1397800	Instrument Panel (Premium)	1
1	**bd** 1510311	Instrument Cluster (Premium)	1
1	**c** 1523478	Lens	1
1	**d** 1533859	Lens	1
1	**c** 1497254	Gasket	1
1	**c** 1497253	Screw	12
2	**ac** 1460724	Bulb (Standard)	15
2	**bc** 1460724	Bulb (Standard)	12
2	**ac** 1460724	Bulb (Premium)	18
2	**bc** 1460724	Bulb (Premium)	20
2	**d** 1533797	Bulb	2
3	**c** 1468571	Bulb	2
	1617431	Buzzer (Not Illustrated)	1

FOOTNOTES:

a Gasoline and Diesel
b LPG
c → S/N K005V04969A
d S/N K005V04970A →

©2009 HYSTER COMPANY

ELECTRICAL SYSTEM (FIGURE 4-3)
ALTERNATOR AND BATTERY — G, GS, LPG AND LPS

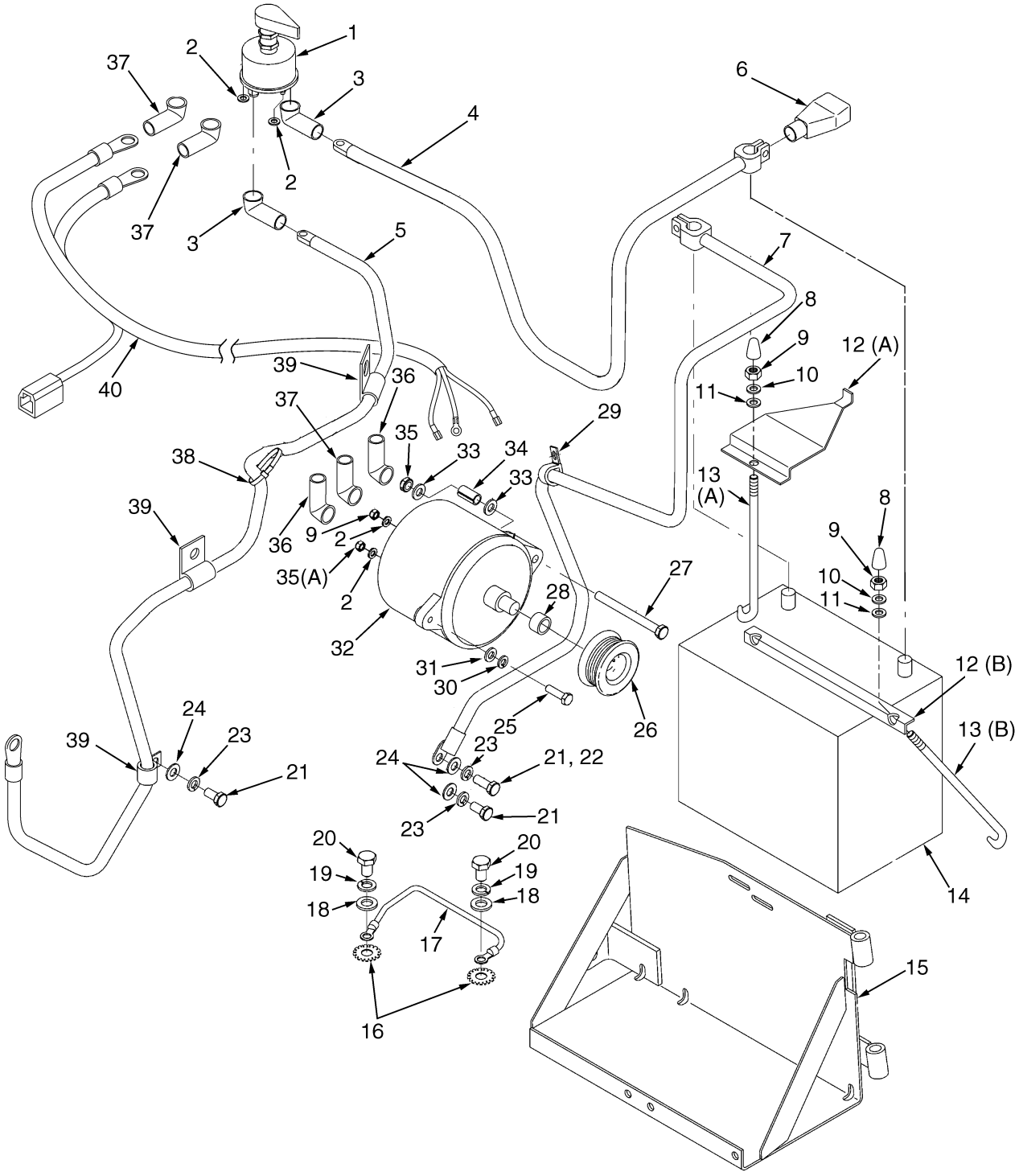

BP080038

©2009 HYSTER COMPANY

ELECTRICAL SYSTEM
ALTERNATOR AND BATTERY – G, GS, LPG AND LPS

KEY:
A: Gasoline and LP
B: GS and LPS

ITEM	PART NO.	DESCRIPTION	QTY A	QTY B
1	1324518	Switch (Disconnect)	..	1
2	296359	Washer	4	..
2	18500	Washer	..	6
3	204223	Boot	2	2
4	1397780	Battery Cable (One Per Unit)	1	..
4	1397786	Battery Cable	..	1
5	1397780	Battery Cable (One Per Unit)	1	..
5	1397787	Battery Cable	..	1
6	321158	Boot	1	1
7	1397783	Battery Cable	1	1
8	1326939	Cap	3	3
9	136687	Nut	2	2
10	292680	Washer	2	2
11	320156	Washer	2	2
12	**c** 1399333	Battery Hold Down (A)	1	1
12	**e** 309152	Battery Hold Down (B)	1	1
13	**c** 1399335	Link (A)	2	2
13	**e** 309124	Battery Hold Down (B)	2	2
14	1383331	Start Battery Wet	1	1
15	2035682	Battery Tray	1	1
16	296408	Lockwasher	1	1
17	**c** 387892	Wire	1	1
17	**e** 1493116	Wire (Ground)	1	1
18	**d** 320162	Washer (LP, LPS)	2	2
18	**f** 320161	Washer (LP, LPS)	2	2
18	320161	Washer (G, GS, DF)	2	2
19	292683	Lockwasher	2	2
20	292526	Capscrew	2	2
21	16597	Capscrew (LP, LPS)	2	2
21	16597	Capscrew (G, GS, DF)	3	3
22	16805	Capscrew (LP, LPS)	1	1
23	15156	Lockwasher	3	3
24	15134	Washer	3	3
25	18498	Capscrew (DF)	1	..
25	176640	Bolt (G, GS, LP, LPS)	1	1
26	**d** 1377751	Pulley	1	..
26	**f** 1392210	Pulley	..	1
27	18546	Capscrew	1	1
28	**d** 1377738	Spacer	1	..
28	**f** 1377738	Spacer	1	..
29	128408	Clamp (LP, LPS)	1	1
30	292681	Lockwasher	1	..
30	15155	Lockwasher	..	1
31	320157	Washer	1	..
31	18515	Washer	..	1

©2009 HYSTER COMPANY

ELECTRICAL SYSTEM

ALTERNATOR AND BATTERY – G, GS, LPG AND LPS

KEY:
A: Gasoline and LP
B: GS and LPS

ITEM	PART NO.	DESCRIPTION	QTY A	QTY B
32	**bd** 1358911	Alternator	1	..
32	**af** 1469597	Alternator	1	..
32	**f** 1469601	Wire (Alternator To Engine Harness)	1	1
32	1394001	Alternator (Sealed)	..	1
33	261379	Washer	2	2
34	**d** 189338	Spacer (Alternator Bracket)	1	1
34	**f** 305100	Sleeve (Not Illustrated)	1	..
35	**f** 287851	Capscrew (A)	1	1
35	139743	Locknut	1	1
35	136687	Nut	2	2
36	190383	Boot	..	2
37	157065	Boot	1	1
38	114312	Strap Clamp	1	1
39	153069	Clamp	4	4
40	**d** 2035688	Wire Harness (GS, LPS) (☞Figure 4-18)	..	1
40	**f** 2047579	Wire Harness (☞Figure 4-29)	..	1
41	2068496	Wire Harness (Sealed Alternator) (Not Illustrated)	..	1

FOOTNOTES:

a Includes Pulley
b Service With Alternator 1469597 and Jumper 1469601
c → S/N K005D05972Y INC. 6018
d → S/N K005V02185Y
e S/N K005D05973Y → EXC. 6018
f S/N K005V02186Y →

©2009 HYSTER COMPANY

NOTES

©2009 HYSTER COMPANY

ELECTRICAL SYSTEM (FIGURE 4-4)

GASOLINE AND GASOLINE SAFETY

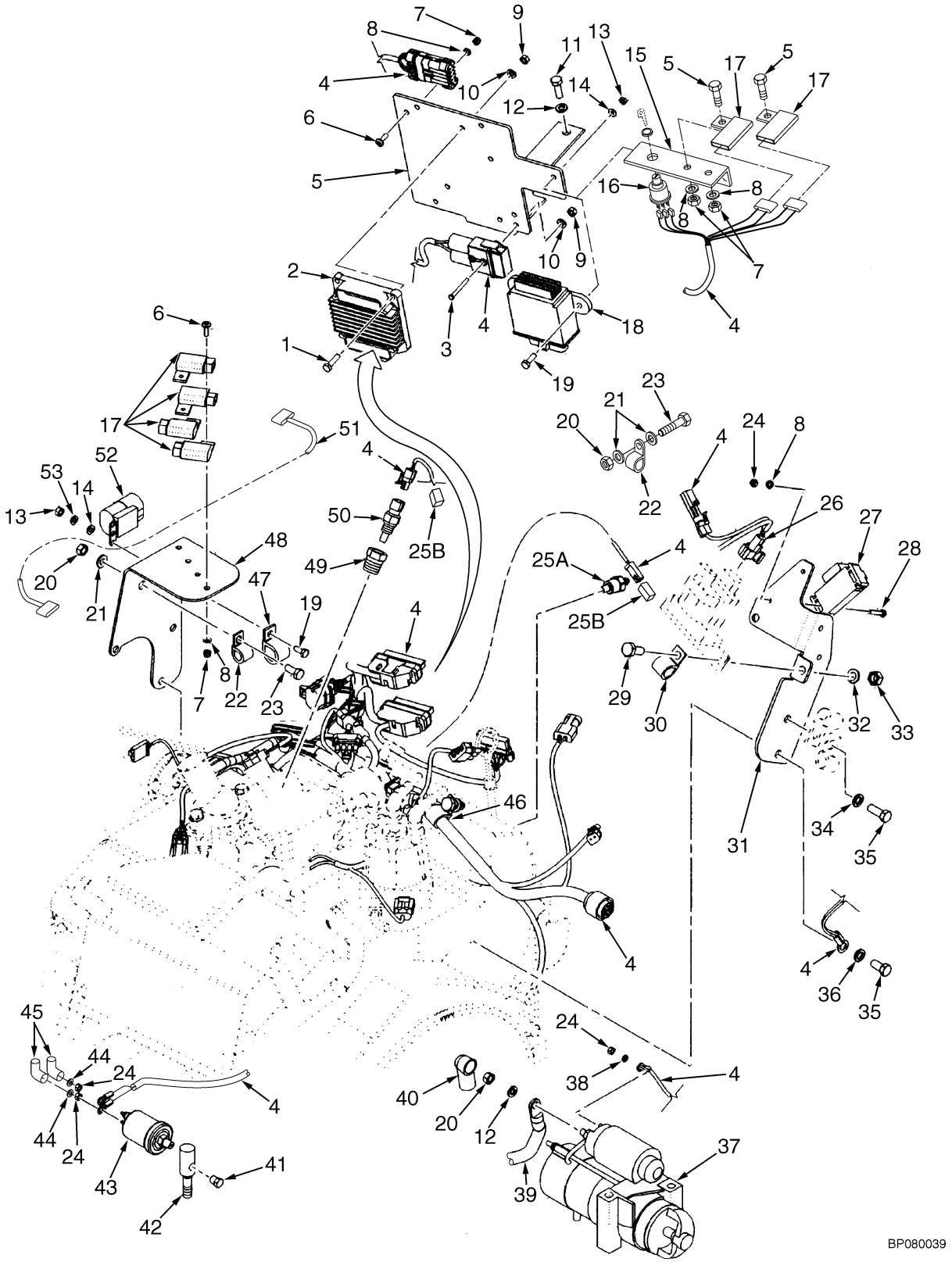

©2009 HYSTER COMPANY

ELECTRICAL SYSTEM
GASOLINE AND GASOLINE SAFETY

KEY:
A: Gasoline (G)
B: Gasoline Safety (GS)
C: Dual Fuel (DF)

ITEM	PART NO.	DESCRIPTION	QTY A	QTY B	QTY C
1	287816	Capscrew	3	3	3
2	**a** 2035691	Electronic Control Module (Open Loop)	1	..	..
2	**h** 2049999	Electronic Control Module (Closed Loop)	1	1	..
3	220485	Screw	1	1	1
4	**b** 2035681	Wire Harness (Engine Type G/GS) (☞Figure 4-15)	1	1	..
4	**d** 2043949	Wire Harness (G, GS Engine) (☞Figure 4-38, ☞Figure 4-39)	1	1	..
4	**e** 2047709	Wire Harness (G, GS Engine) (☞Figure 4-40, ☞Figure 4-41)	1	1	..
4	**b** 2036540	Wire Harness (Engine; DF) (☞Figure 4-19, ☞Figure 4-20)	..	..	1
4	**d** 2043950	Wire Harness (Engine; DF) (☞Figure 4-38, ☞Figure 4-39)	..	..	1
4	**e** 2047712	Wire Harness (Engine; DF) (☞Figure 4-23, ☞Figure 4-24)	..	..	1
5	1399416	Bracket	1	1	1
6	302035	Screw	5	5	7
7	302398	Locknut	5	5	7
8	320155	Washer	7	7	9
9	15039	Nut	1	1	1
10	197066	Washer	1	1	1
11	136749	Screw	2	2	2
12	292681	Lockwasher	2	2	2
13	136687	Nut	6	8	8
14	320156	Washer	6	6	6
15	1399315	Bracket	..	..	1
16	1369470	Switch (Fuel Changeover)	..	..	1
17	1330293	Cover (Fuse)	4	4	6
18	**c** 1327951	Module (Governor)	1	1	1
18	**f** 1498461	Module	1	1	1
19	292501	Capscrew	3	3	3
20	239503	Nut	2	2	..
21	320157	Washer	1	1	2
22	173246	Clamp	1	1	..
23	136681	Capscrew	2	2	..
24	292668	Nut	3	3	3
25	1333827	Temperature Sender (A)	1	1	1
25	387869	Boot (Switch Protector) (B)	..	..	5
26	1310611	Clamp	1	1	1
27	1520644	Sensor	1	1	1
28	302250	Capscrew	2	2	2
29	292526	Capscrew	2	2	2
30	128408	Clamp	2	2	2
31	1397457	Bracket (Coil)	1	1	1
32	292682	Lockwasher	2	2	2
33	320161	Washer	2	2	2
34	15156	Lockwasher	1	1	1
35	16567	Fitting	1	1	1
36	15905	Lockwasher	1	..	..

©2009 HYSTER COMPANY

ELECTRICAL SYSTEM
GASOLINE AND GASOLINE SAFETY

KEY:
A: Gasoline (G)
B: Gasoline Safety (GS)
C: Dual Fuel (DF)

ITEM	PART NO.	DESCRIPTION	QTY A	QTY B	QTY C
37	**c** 1486531	Starter	1	1	1
37	1490407	Switch	1	1	1
37	1490408	Bolt	2	2	2
37	**g** 1469604	Starter	1	1	1
37	1490407	Switch	1	1	1
37	1507400	Bolt	2	2	2
37	1394765	Bracket	1	1	1
38	292697	Lockwasher	1	1	1
39	1397780	Battery Cable (☞Figure 4-3)	1	..	1
39	1397787	Battery Cable (☞Figure 4-3)	..	1	..
40	204223	Boot (☞Figure 4-3)	1	1	1
41	14349	Fitting (Pipe Plug)	1	1	1
42	1383346	Fitting	1	1	1
43	1514215	Pressure Sender	1	1	1
44	18500	Washer	..	2	..
45	190382	Boot	..	2	..
46	212358	Clamp	1	1	1
47	1347202	Clamp	1	1	1
48	1397754	Bracket (Fuse)	1	1	1
49	16116	Fitting	1	1	1
50	1314381	Temperature Sender	1	1	1
51	2038881	Wire Harness (☞Figure 4-33)	..	1	..
52	1654578	Relay (Latch)	1	1	1
52	1654579	Clip (Relay)	1	1	1
53	292680	Washer	1	1	1

FOOTNOTES:

a → S/N K005D03078X
b → S/N K005D05972Y
c → S/N K005V02185Y
d S/N K005D05973Y ↔ S/N K005V02185Y
e S/N K005V02186Y ↔ S/N K005V02836Z
f S/N K005V08186Y ↔ S/N K005V05217A
g S/N K005V02186Y →
h S/N K005V02837Z →

©2009 HYSTER COMPANY

NOTES

©2009 HYSTER COMPANY

ELECTRICAL SYSTEM (FIGURE 4-5)
GASOLINE, GASOLINE SAFETY, AND DUAL FUEL

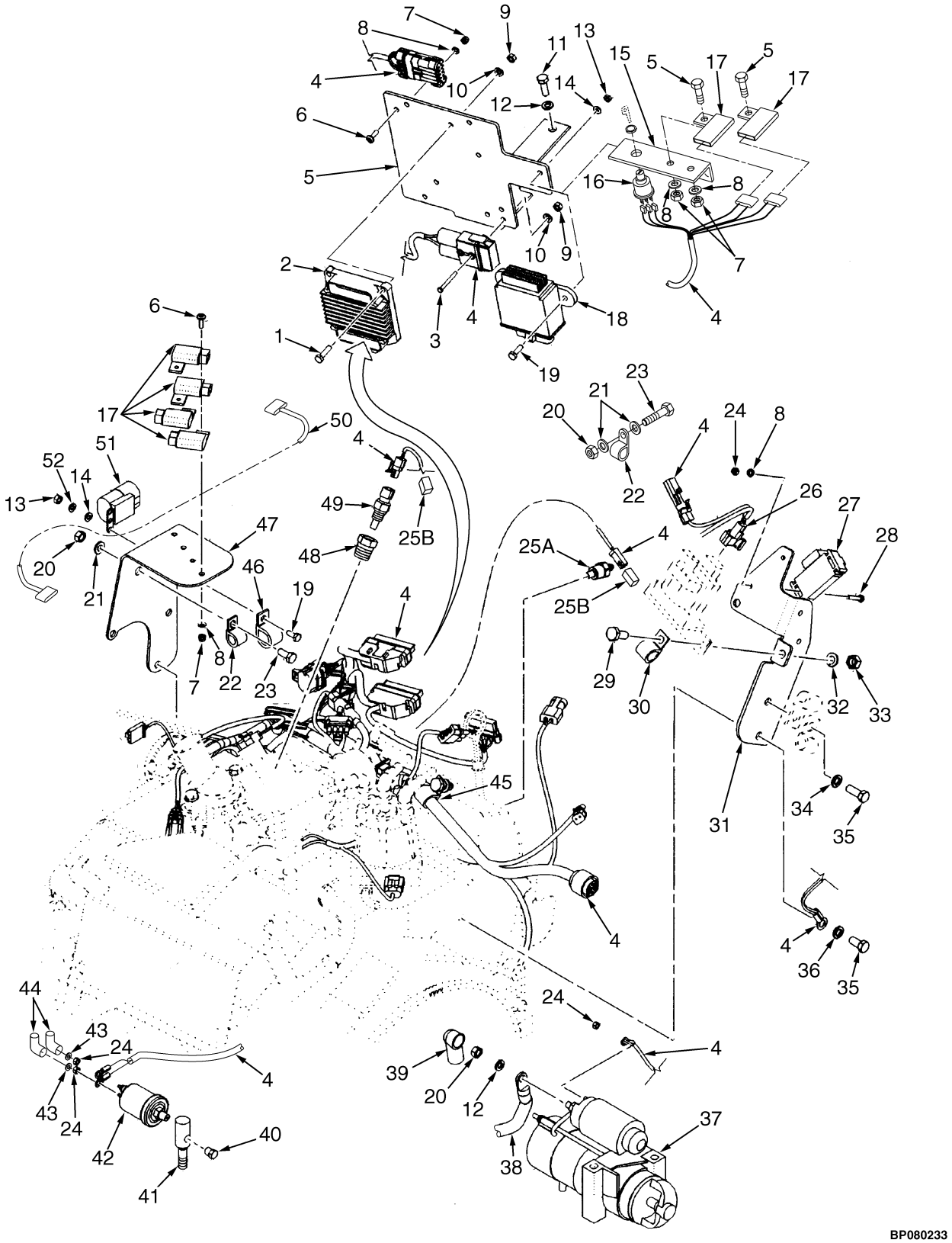

©2009 HYSTER COMPANY

ELECTRICAL SYSTEM
GASOLINE, GASOLINE SAFETY, AND DUAL FUEL

KEY:
A: Gasoline (G)
B: Gasoline Safety (GS)
C: Dual Fuel (DF)

ITEM	PART NO.	DESCRIPTION	QTY A	QTY B	QTY C
1	287816	Capscrew	3	3	3
2	**d** 2041878	Electronic Control Module (Open Loop)	1	1	1
2	**b** 2041877	Electronic Control Module (Closed Loop)	1	1	..
2	**g** 2050000	Electronic Control Module (Open Loop)	1	1	1
3	220485	Screw	1	1	1
4	**e** 2050502	Wire Harness (G, GS Engine) (☞Figure 4-42)	1	1	..
4	**h** 2054281	Wire Harness (G, GS Engine) (☞Figure 4-55)	1	1	..
4	**e** 2050503	Wire Harness (Engine; DF) (☞Figure 4-25)	..	..	1
4	**h** 2054294	Wire Harness (Engine; DF) (☞Figure 4-56)	..	..	1
5	1399416	Bracket	1	1	1
6	302035	Screw	5	5	7
7	302398	Locknut	5	5	7
8	320155	Washer	7	7	9
9	15039	Nut	1	1	1
10	197066	Washer	1	1	1
11	136749	Screw	2	2	2
12	292681	Lockwasher	2	2	2
13	136687	Nut	6	8	8
14	320156	Washer	6	6	6
15	1399315	Bracket	..	..	1
16	1369470	Switch (Fuel Changeover)	..	..	1
17	1330293	Cover (Fuse)	4	4	6
18	**f** 1498461	Module	1	1	1
18	**c** 1327951	Module (Governor)	1	1	1
19	292501	Capscrew	3	3	3
20	239503	Nut	2	2	..
21	320157	Washer	1	1	2
22	173246	Clamp	1	1	..
23	136681	Capscrew	2	2	..
24	292668	Nut	3	3	3
25	1333827	Temperature Sender (A)	1	1	1
25	387869	Boot (Switch Protector) (B)	..	..	5
26	1310611	Clamp	1	1	1
27	1520644	Sensor	1	1	1
28	302250	Capscrew	2	2	2
29	292526	Capscrew	2	2	2
30	128408	Clamp	2	2	2
31	1397457	Bracket (Coil)	1	1	1
32	292682	Lockwasher	2	2	2
33	320161	Washer	2	2	2
34	15156	Lockwasher	1	1	1
35	16567	Fitting	1	1	1
36	15905	Lockwasher	1	..	..
37	**a** 1486531	Starter	1	1	1

©2009 HYSTER COMPANY

ELECTRICAL SYSTEM
GASOLINE, GASOLINE SAFETY, AND DUAL FUEL

KEY:
A: Gasoline (G)
B: Gasoline Safety (GS)
C: Dual Fuel (DF)

ITEM	PART NO.	DESCRIPTION	QTY A	QTY B	QTY C
37	1490407	Switch	1	1	1
37	1490408	Bolt	2	2	2
37	**i** 1469604	Starter	1	1	1
37	1490407	Switch	1	1	1
37	1507400	Bolt	2	2	2
37	1394765	Bracket	1	1	1
38	1397780	Battery Cable	1	..	1
38	1397787	Battery Cable	..	1	..
39	204223	Boot	1	1	1
40	14349	Fitting (Pipe Plug)	1	1	1
41	1383346	Fitting	1	1	1
42	1514215	Pressure Sender	1	1	1
43	18500	Washer	..	2	..
44	190382	Boot	..	2	..
45	212358	Clamp	1	1	1
46	1347202	Clamp	1	1	1
47	1397754	Bracket (Fuse)	1	1	1
48	16116	Fitting	1	1	1
49	1314381	Temperature Sender	1	1	1
50	2038881	Wire Harness	..	1	..
51	1654578	Relay (Latch)	1	1	1
51	1654579	Clip (Relay)	1	1	1
52	292680	Washer	1	1	1

FOOTNOTES:

a → S/N K005V02185
b → S/N K005V02836Z
c → S/N K005V05218A
d S/N K005D03079X ↔ S/N K005V02836Z
e S/N K005V02837Z ↔ S/N K005V04115Z
f S/N K005V08186 ↔ S/N K005V05217
g S/N K005V02837Z →
h S/N K005V04116Z →
i S/N K005V02186 →

©2009 HYSTER COMPANY

HARNESS KIT (FIGURE 4-6)
DUAL FUEL

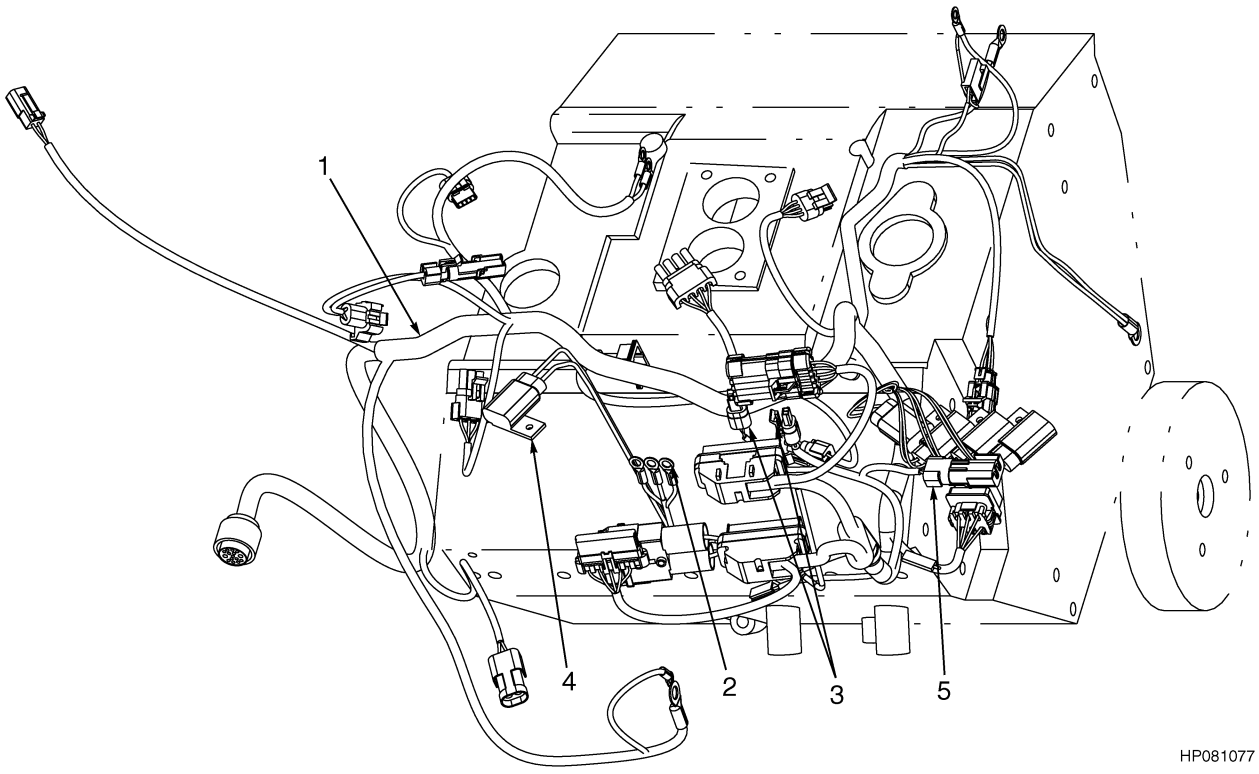

ITEM	PART NO.	DESCRIPTION	QTY
1	2036540	Wire Harness (Engine; DF) (Dual Fuel) (☞Figure 4-19, ☞Figure 4-20).....	1
2	1475583	Kit-Terminal	1
3	1475579	Connector	1
4	1475566	Fuse Holder	1
5	1475617	Kit-Connector	1

©2009 HYSTER COMPANY

NOTES

©2009 HYSTER COMPANY

ELECTRICAL SYSTEM (FIGURE 4-7)
LPG AND LPS

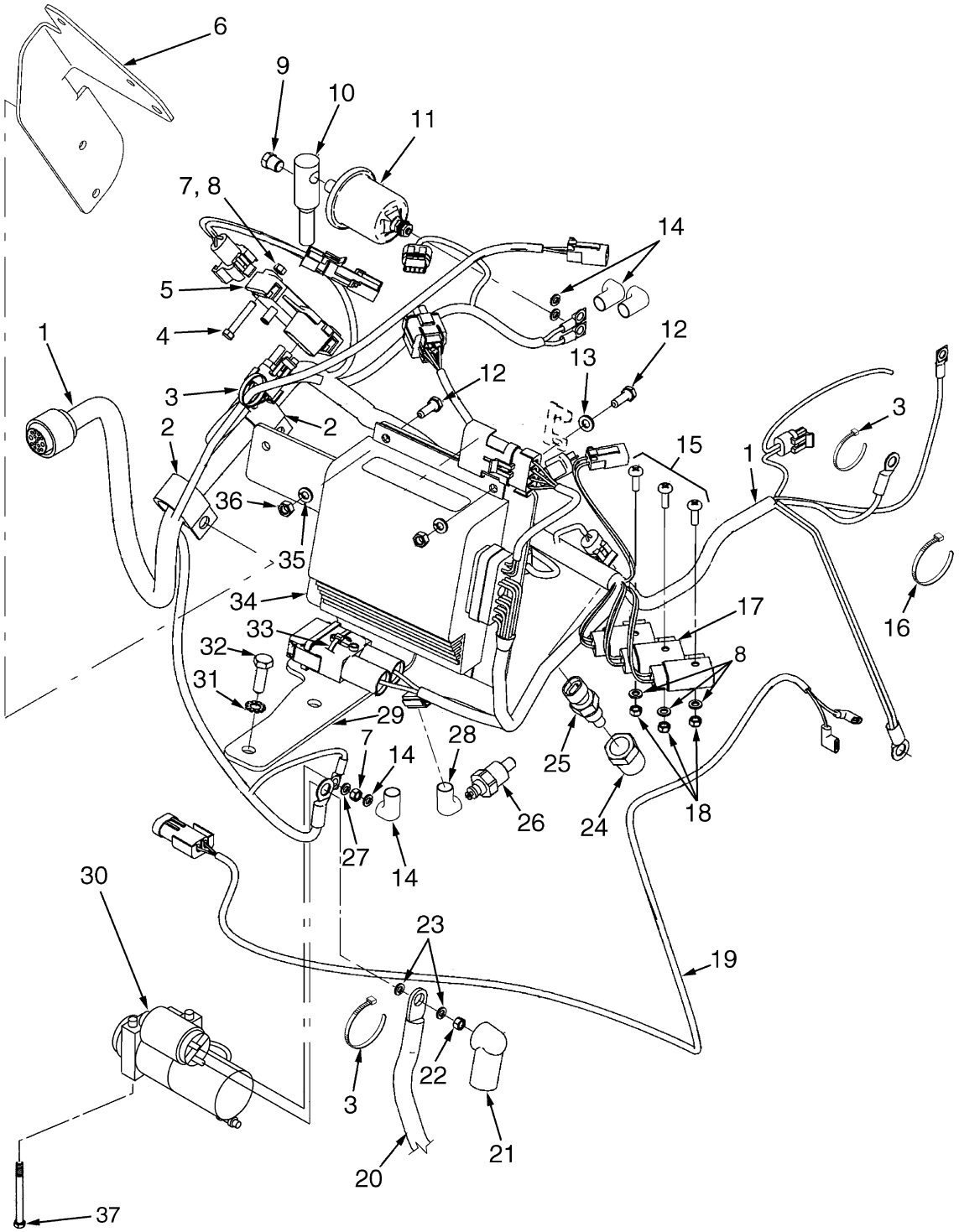

BP080149

©2009 HYSTER COMPANY

ELECTRICAL SYSTEM
LPG AND LPS

KEY:
A: LP
B: LPS

ITEM	PART NO.	DESCRIPTION	QTY A	QTY B
1	**h** 2035689	Wire Harness (Engine Conversion Gasoline to LPG GM 4.3L) (☞Figure 4-19, ☞Figure 4-27)	1	1
1	**c** 2044167	Wire Harness (Engine) (☞Figure 4-43, ☞Figure 4-44)	1	1
1	**g** 2047710	Wire Harness (Engine) (☞Figure 4-45, ☞Figure 4-46)	1	1
2	153069	Clamp	2	2
3	114312	Strap Clamp	3	3
4	302250	Capscrew	2	2
5	1520644	Sensor	1	1
6	1397457	Bracket (Coil)	1	1
7	292668	Nut	5	5
8	320155	Washer	7	7
9	14349	Fitting (Pipe Plug) (Oil Pressure)	1	1
10	1383346	Fitting (Oil Pressure)	1	1
11	1514215	Pressure Sender	1	1
12	292501	Capscrew	4	4
13	320156	Washer	1	1
14	18500	Washer	..	2
14	190383	Boot	..	2
15	302035	Screw	3	3
16	2004005	Strap Clamp	1	1
17	1330293	Cover (Fuse)	3	3
18	302398	Locknut	3	3
19	2036542	Wire Harness (LPG Switch) (LPG Switch) (☞Figure 4-28)	1	1
20	1397780	Battery Cable (☞Figure 4-3)	1	..
20	1397787	Battery Cable (☞Figure 4-3)	..	1
21	204223	Boot	1	1
22	239503	Nut	1	1
23	292681	Lockwasher	3	3
23	**g** 292681	Lockwasher	2	2
24	16116	Fitting	1	1
25	1314381	Temperature Sender	1	1
26	1333827	Temperature Sender	1	1
27	292679	Washer	1	1
28	387869	Boot (Switch Protector)	..	1
29	1399416	Bracket (ECU)	1	1
30	**a** 1486531	Starter	1	1
30	**a** 1490407	Switch	1	1
30	**a** 1490408	Bolt	2	2
30	**g** 1469604	Starter	1	1
30	**g** 1490407	Switch	1	1
30	**g** 1507400	Bolt	2	2
31	296380	Washer	2	2
32	136749	Screw	2	2
33	220485	Screw (Some Units) (Not Illustrated)	1	1
33	197066	Washer (Some Units) (Not Illustrated)	1	1

©2009 HYSTER COMPANY

ELECTRICAL SYSTEM
LPG AND LPS

KEY:
A: LP
B: LPS

ITEM	PART NO.	DESCRIPTION	QTY A	QTY B
33	15039	Nut (Some Units) (Not Illustrated)	1	1
33	114312	Strap Clamp	1	1
34	**b** 2043527	Electronic Control Module (Open Loop)	1	1
34	**e** 2053135	Engine Control Module (Open Loop)	1	1
34	**b** 2042658	Electronic Control Module (Closed Loop)	1	1
34	**d** 2053137	Engine Control Module (Closed Loop)	1	1
34	**f** 2053930	Engine Control Module (Closed Loop) (EPA Compliant)	1	1
35	292680	Washer	4	4
36	136687	Nut	4	4
37	1397716	Bolt	2	2

FOOTNOTES:

a → S/N K005V02184Y
b → S/N K005V02807Z
c S/N K005D05972Y ↔ S/N K005V02184Y
d S/N K005V02808Z ↔ S/N K005V04115Z
e S/N K005V02808Z →
f S/N K005V04116Z →
g S/N K005V02185Y →
h S/N K005D05971Y → EXC. 6018

©2009 HYSTER COMPANY

NOTES

©2009 HYSTER COMPANY

ELECTRICAL SYSTEM (FIGURE 4-8)
DIESEL

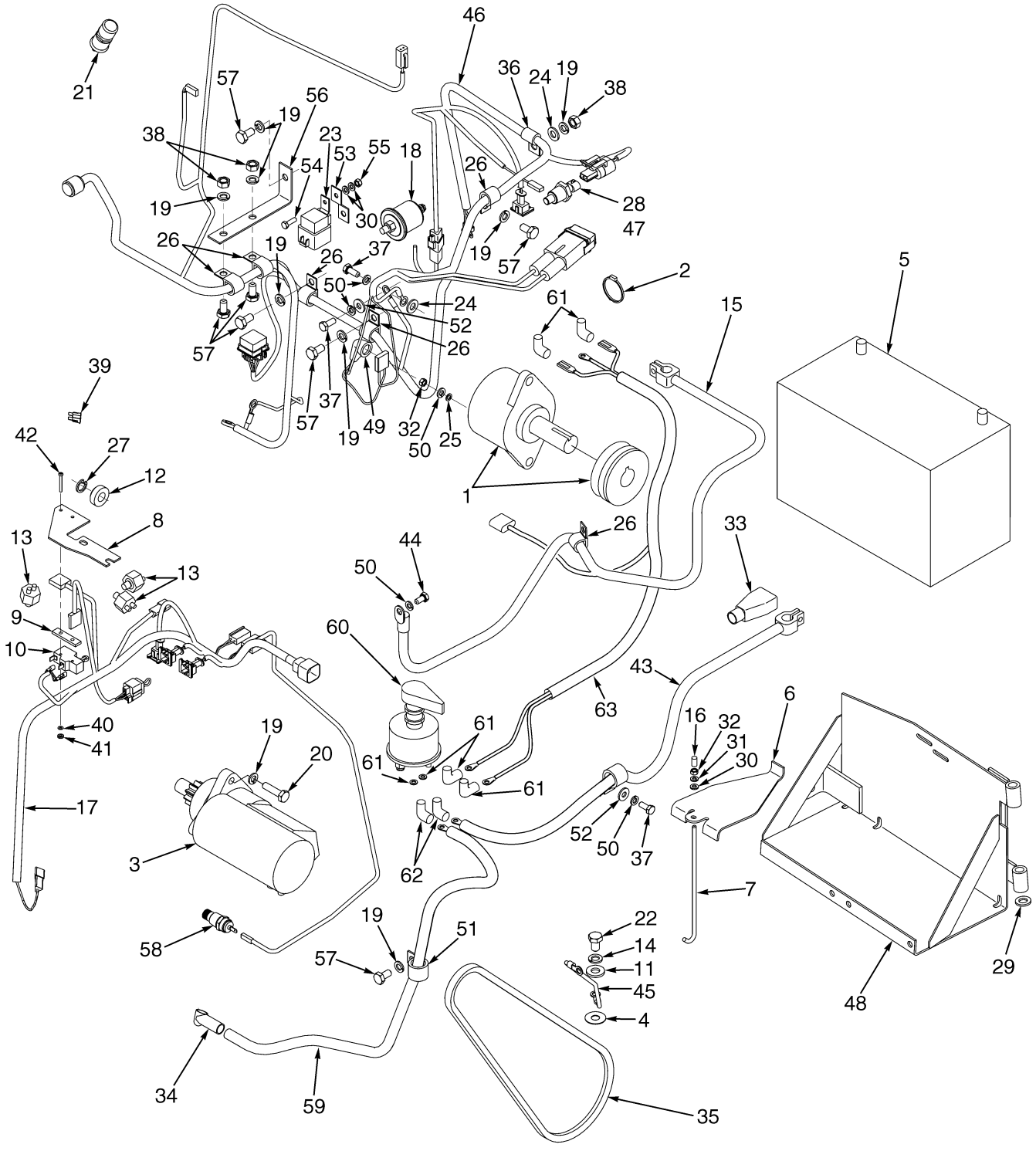

BP080045

©2009 HYSTER COMPANY

ELECTRICAL SYSTEM
DIESEL

ITEM	PART NO.	DESCRIPTION	QTY
1	1469598	Alternator (Includes Pulley) (☞Figure 4-9)	1
1	1394001	Alternator (Sealed) (DS) (☞Figure 4-10)	1
1	353291	Pulley (DS)	1
2	2004005	Strap Clamp	AR
3	1388721	Starter	1
4	296408	Lockwasher	2
5	1399332	Start Battery Wet	1
6	1399333	Battery Hold Down	1
7	1399335	Link (Battery Hold Down)	1
8	**a** 1324557	Bracket	1
9	**a** 316132	Spacer	1
10	**a** 1320893	Microswitch (Neutral)	1
11	320162	Washer	1
12	**a** 387455	Ring (Neutral Start)	1
13	**a** 387867	Pressure Switch	1
14	292683	Lockwasher	1
15	1397783	Battery Cable	1
16	1326939	Cap	1
17	**c** 2035694	Wire Harness (Powershift Transmission Control)	1
17	**e** 2059309	Wire Harness (Powershift Transmission Control)	1
18	1514215	Pressure Sender	1
19	292682	Lockwasher	9
20	292515	Capscrew	2
21	370776	Switch (Momentary) (Indicator)	1
22	292526	Capscrew	1
23	1654578	Relay (Latch) (Start)	1
23	1654579	Clip (Relay)	1
24	320159	Washer	3
25	296359	Washer	1
26	128408	Clamp	6
27	**a** 209417	Snap Ring	1
28	246108	Sealant	AR
29	320161	Washer	2
30	320156	Washer	1
31	292680	Washer	1
32	136687	Nut	1
33	321158	Boot	1
34	204223	Boot	3
35	2039256	V-Belt	1
36	164488	Clamp	3
37	136681	Capscrew	3
38	136692	Nut	2
39	370648	Fuse (20 Amp)	1
40	**a** 16743	Lockwasher	4
41	**a** 15049	Nut	2
42	**a** 86510	Screw	2
43	1397780	Battery Cable (One Per Unit)	1
43	1397786	Battery Cable	1
44	287851	Capscrew	1
45	1493116	Wire (Ground)	1

©2009 HYSTER COMPANY

ELECTRICAL SYSTEM
DIESEL

ITEM	PART NO.	DESCRIPTION	QTY
46	**b** 2036928	Wire Harness (Engine) (☞Figure 4-31)	1
46	**d** 2047711	Wire Harness (Engine) (☞Figure 4-32)	1
47	2037932	Temperature Sender (Water)	1
48	2035682	Battery Tray	1
49	157065	Boot	1
50	292681	Lockwasher	1
51	153069	Clamp	2
52	320158	Washer	1
53	1499120	Bracket	1
54	292501	Capscrew	1
55	302399	Nut	1
56	1527268	Bracket	1
57	292514	Capscrew	6
58	1322627	Switch (Oil Temperature Warning)	1
59	1397780	Battery Cable (One Per Unit)	1
59	1397787	Battery Cable (DS)	1
60	1324518	Switch (Disconnect) (DS)	1
61	18500	Washer (DS)	2
61	190383	Boot (DS)	2
62	204223	Boot	1
63	2047579	Wire Harness (DS) (☞Figure 4-29)	1

FOOTNOTES:

a Monotrol
b → S/N K005V02184Y
c → S/N K005V05903A
d S/N K005V02185Y →
e S/N K005V05904A →

©2009 HYSTER COMPANY

NOTES

©2009 HYSTER COMPANY

ALTERNATOR (FIGURE 4-9)
GASOLINE/LPG AND DIESEL

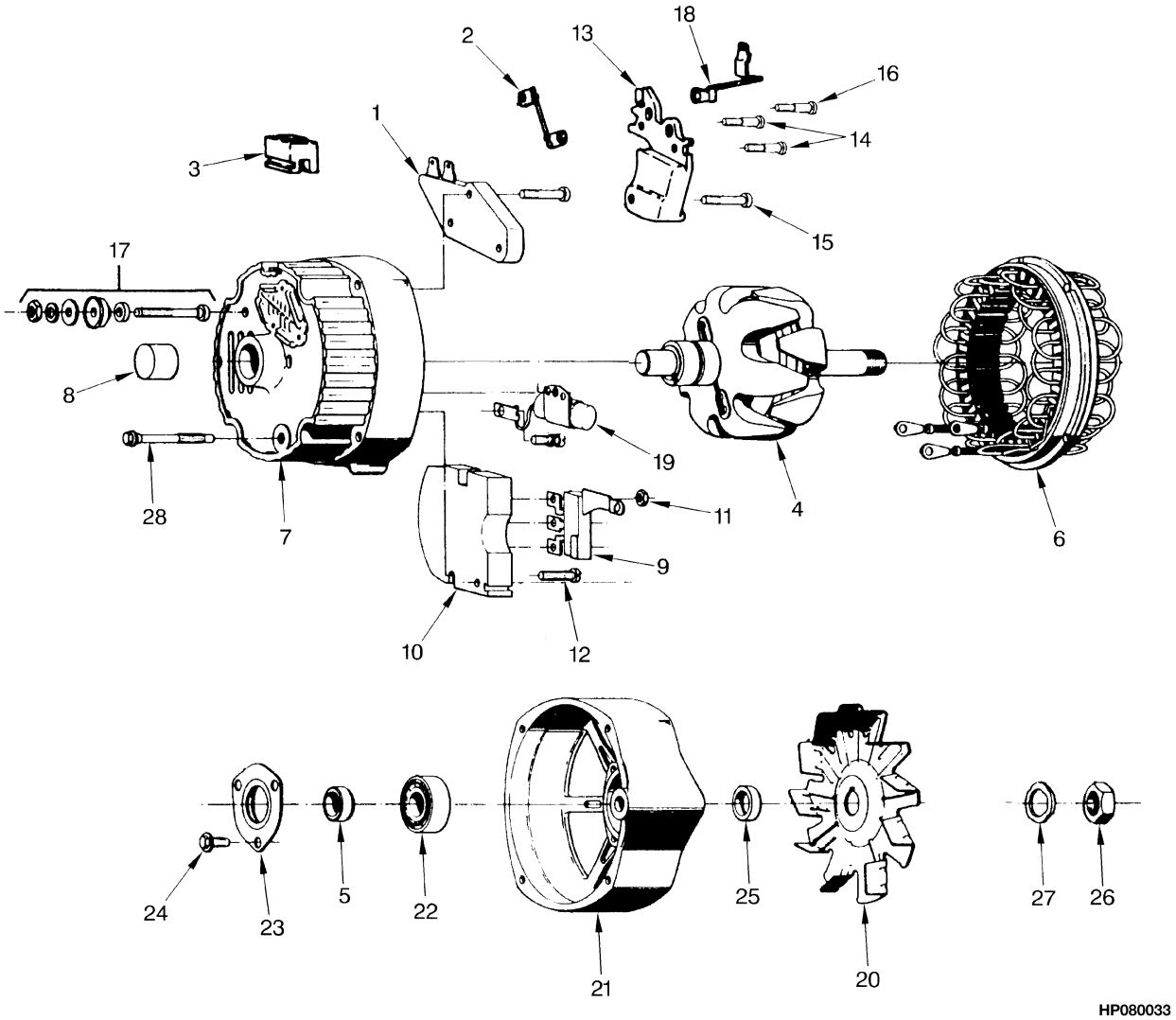

©2009 HYSTER COMPANY

ALTERNATOR
GASOLINE/LPG AND DIESEL

ITEM	PART NO.	DESCRIPTION	QTY
	d 1469597	Alternator (Gasoline and LPG)	1
	d 1469598	Alternator (Diesel)	1
	d 1469601	Wire (Alternator To Engine Harness)	1
	abc 1358911	Alternator	1
1	290303	Regulator	1
2	1377067	Resistor	1
3	274648	Boot	1
4	1377047	Rotor	1
5	343029	Collar	1
6	1377048	Stator	1
7	310085	Frame (CE)	1
8	290508	Bearing (CE)	1
9	223095	Diode	1
10	343031	Rectifier	1
11	1344274	Nut	1
12	343032	Screw	1
13	343041	Brush Holder	1
13	1377050	Brush Spring	2
14	268356	Screw (Brush)	2
15	290369	Screw (Brush Holder)	1
16	290370	Screw (Brush Holder)	1
17	310081	Kit-Terminal	1
18	344233	Terminal	1
19	1377052	Capacitor	1
20	1377051	Fan	1
21	1377049	End Head (DE)	1
22	290509	Bearing (DE)	1
23	1377053	Plate	1
24	344234	Screw	3
25	310088	Collar (DE)	1
26	55580	Nut	1
27	128835	Lockwasher	1
28	128852	Bolt	4

FOOTNOTES:

a Replace with Alternator 1469597 and Jumper 1469601 for Gasoline and LPG

b Replace with Alternator 1469598 and Jumper 1469601 for Diesel

c → S/N K005A02184Y

d S/N K005V02185Y →

©2009 HYSTER COMPANY

ALTERNATOR (FIGURE 4-10)
PRESTOLITE BRAND — GS, LPS, DS

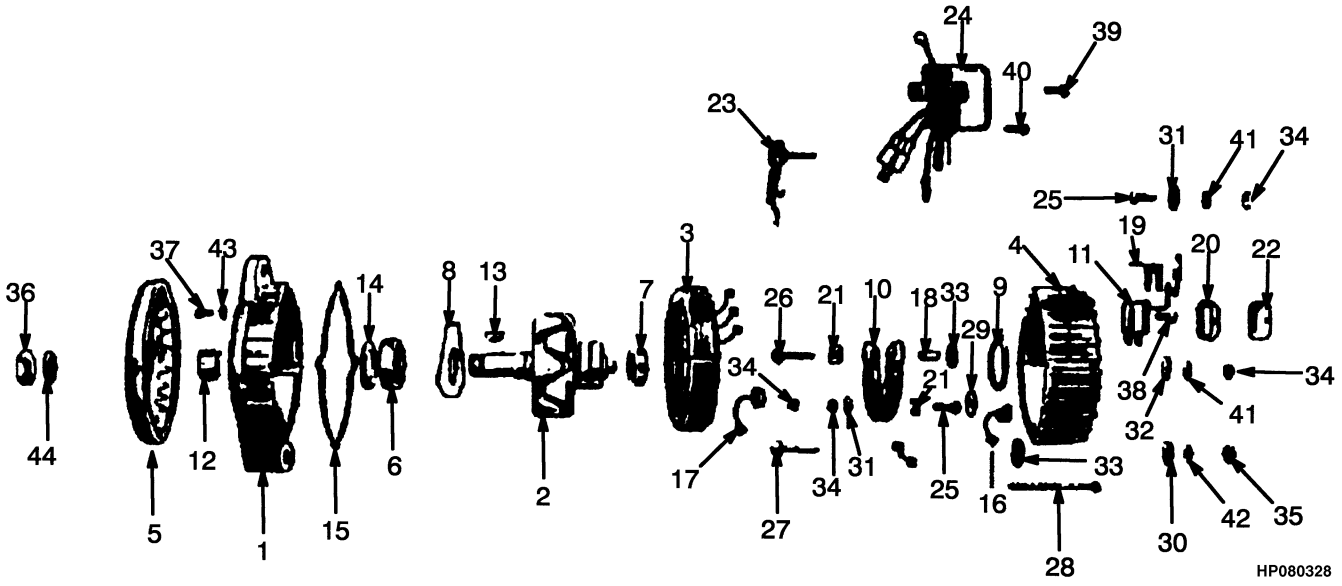

©2009 HYSTER COMPANY

ALTERNATOR
PRESTOLITE BRAND – GS, LPS, DS

ITEM	PART NO.	DESCRIPTION	QTY
	1394001	Alternator (Sealed)	1
1	. . . . .	Housing (Front)	1
2	. . . . .	Rotor	1
3	. . . . .	Stator	1
4	. . . . .	Housing (Rear)	1
5	. . . . .	Fan	1
6	. . . . .	Bearing (Front)	1
7	. . . . .	Bearing (Rear)	1
8	. . . . .	Retainer (Front)	1
9	. . . . .	Retainer (Rear)	1
10	. . . . .	Heat Sink	1
11	. . . . .	Brush Assembly	1
12	. . . . .	Spacer (Fan)	1
13	. . . . .	Key	1
14	. . . . .	Seal (Front)	1
15	. . . . .	Gasket	1
16	. . . . .	Diode (Negative)	1
17	. . . . .	Diode (Positive)	1
18	. . . . .	Sleeve	1
19	. . . . .	Insulation	1
20	. . . . .	Gasket (Cover)	1
21	. . . . .	Insulator	1
22	. . . . .	Brush Cover	1
23	. . . . .	Diode	1
24	. . . . .	Voltage Regulator	1
25	. . . . .	Bolt	3
26	. . . . .	Bolt	1
27	. . . . .	Bolt	1
28	. . . . .	Bolt	4
29	. . . . .	Insulator	3
30	. . . . .	Insulator (Round)	1
31	. . . . .	Insulator (Washer)	4
32	. . . . .	Insulator (Washer)	1
33	. . . . .	Insulator (Washer)	1
33	. . . . .	Insulator (Washer)	1
33	. . . . .	Insulator (Washer)	1
34	. . . . .	Nut	3
34	. . . . .	Nut	2
35	. . . . .	Nut	1
36	. . . . .	Nut	1
37	. . . . .	Screw	3
38	. . . . .	Screw	2
39	. . . . .	Screw	2
40	. . . . .	Screw	2
41	. . . . .	Washer	2
42	. . . . .	Washer	1
43	. . . . .	Lockwasher	3
44	. . . . .	Lockwasher	1

©2009 HYSTER COMPANY

DISTRIBUTOR (FIGURE 4-11)

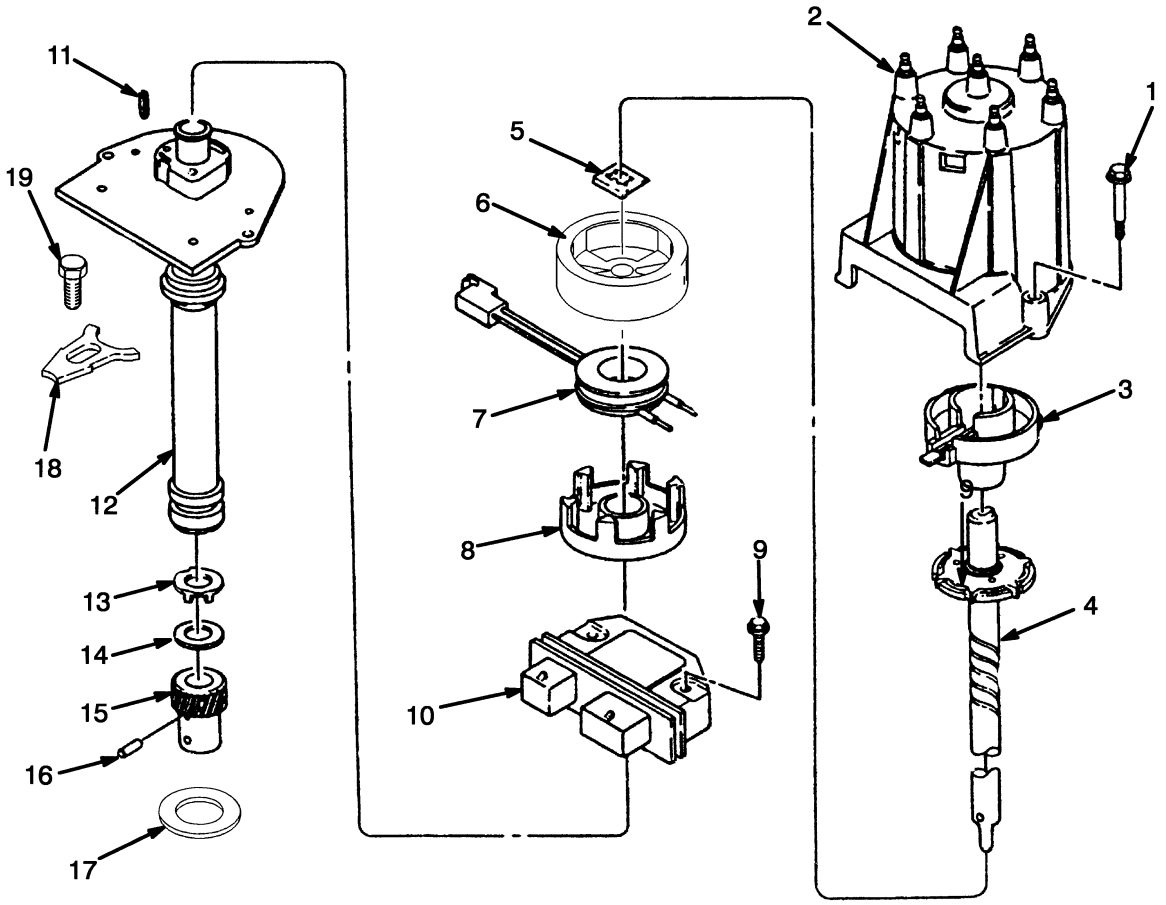

HP080035

ITEM	PART NO.	DESCRIPTION	QTY
	1450869	Distributor	1
1	1334401	Screw	2
2	1342528	Distributor Cap	1
3	1374329	Rotor	1
4	1374328	Shaft	1
5	1334406	Retainer	1
6	1342534	Shield	1
7	1374331	Ignition Coil	1
8	1374330	Pole Shoe (Stationary)	1
9	1334408	Bolt	2
10	1460387	Module	1
11	1334410	Pin	1
12	1374333	Housing	1
13	274403	Washer	1
14	1342525	Washer	1
15	1451316	Gear	1
16	19870	Pin	1
17	1334423	Gasket	1
18	301966	Clamp	1
19	375597	Bolt	1

©2009 HYSTER COMPANY

NOTES

©2009 HYSTER COMPANY

STARTER (FIGURE 4-12)
DIESEL

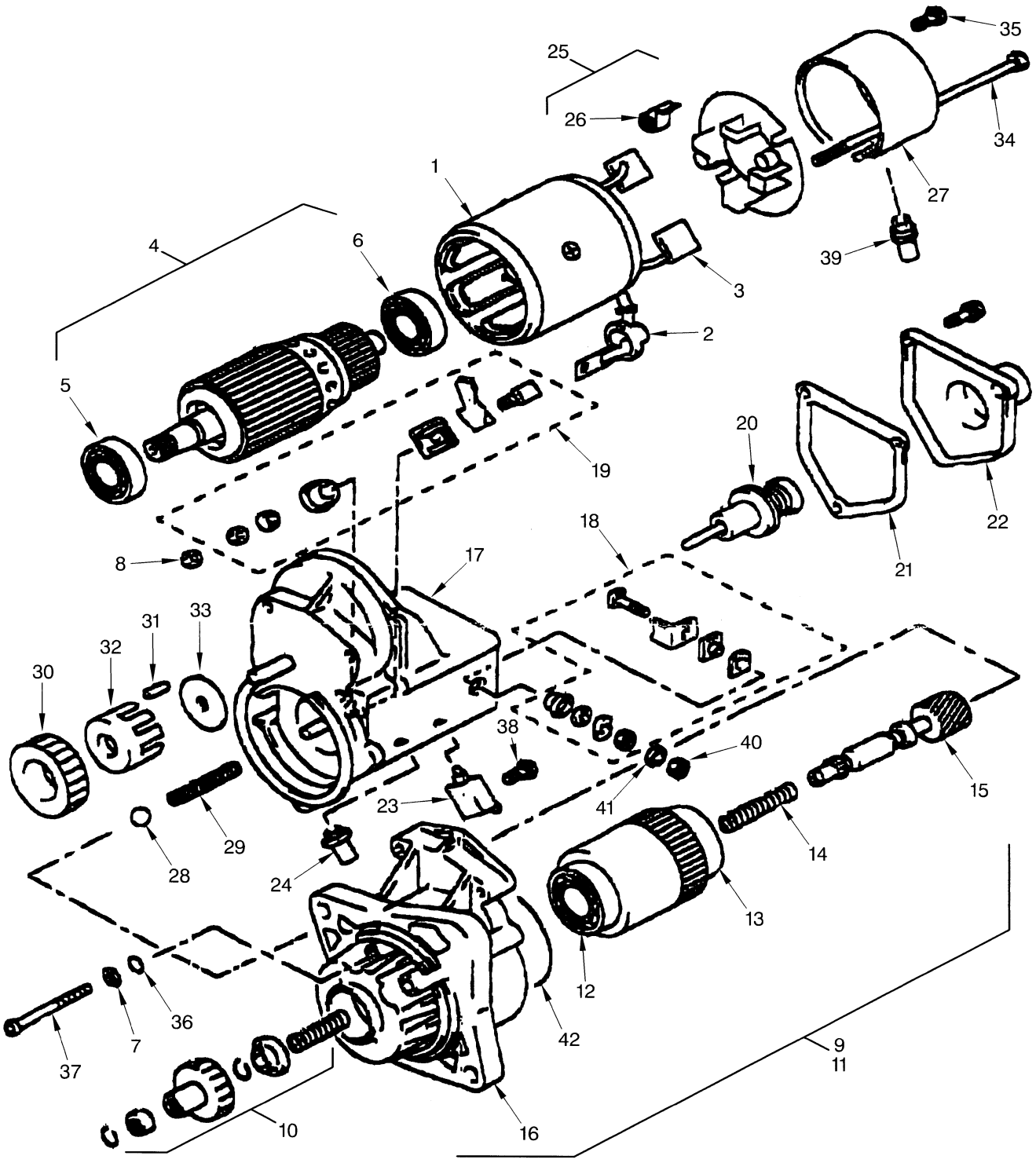

HP080036

©2009 HYSTER COMPANY

STARTER
DIESEL

ITEM	PART NO.	DESCRIPTION	QTY
	1388721	Starter	1
1	1462233	Yoke	1
2	1462234	Cover	1
3	1462235	Kit-Brush	2
4	1462236	Armature	1
5	1462239	Ball Bearing (Optional)	1
5	1462238	Ball Bearing	1
6	1462240	Bearing	1
7	1390163	Washer	3
8	1462273	Nut	1
9	1462241	Clutch Assy	1
10	. . . . .	Starter Kit	1
11	. . . . .	Subassembly	1
12	. . . . .	Bearing	1
13	. . . . .	Bearing	1
14	. . . . .	Spring (Compression Coil)	1
15	. . . . .	Shaft	1
16	. . . . .	Housing	1
17	1462249	Switch	1
18	1462250	Kit-Terminal (Terminal M)	1
19	1462251	Kit-Terminal (Terminal C)	1
20	1462252	Plunger	1
21	1462253	Gasket (Switch)	1
22	1462254	Cover (Solenoid)	1
23	1462255	Bolt (Terminal)	1
24	1462256	Bushing	1
25	1462257	Brush Holder	1
26	1462258	Spring	4
27	1462259	Cover (DE)	1
28	1462260	Ball	1
29	1462261	Spring	1
30	1462262	Pinion	1
31	1462263	Roller	5
32	1462264	Retainer	1
33	1462265	Retainer	1
34	1462266	Bolt	2
35	1462267	Screw	2
36	1390164	O-Ring	3
37	1462268	Screw	3
38	1390167	Screw	1
39	1462269	Cover	1
40	1462270	Nut	1
41	1462271	Lockwasher	1
42	1462272	Seal	1

©2009 HYSTER COMPANY

SHIFT LEVER (FIGURE 4-13)

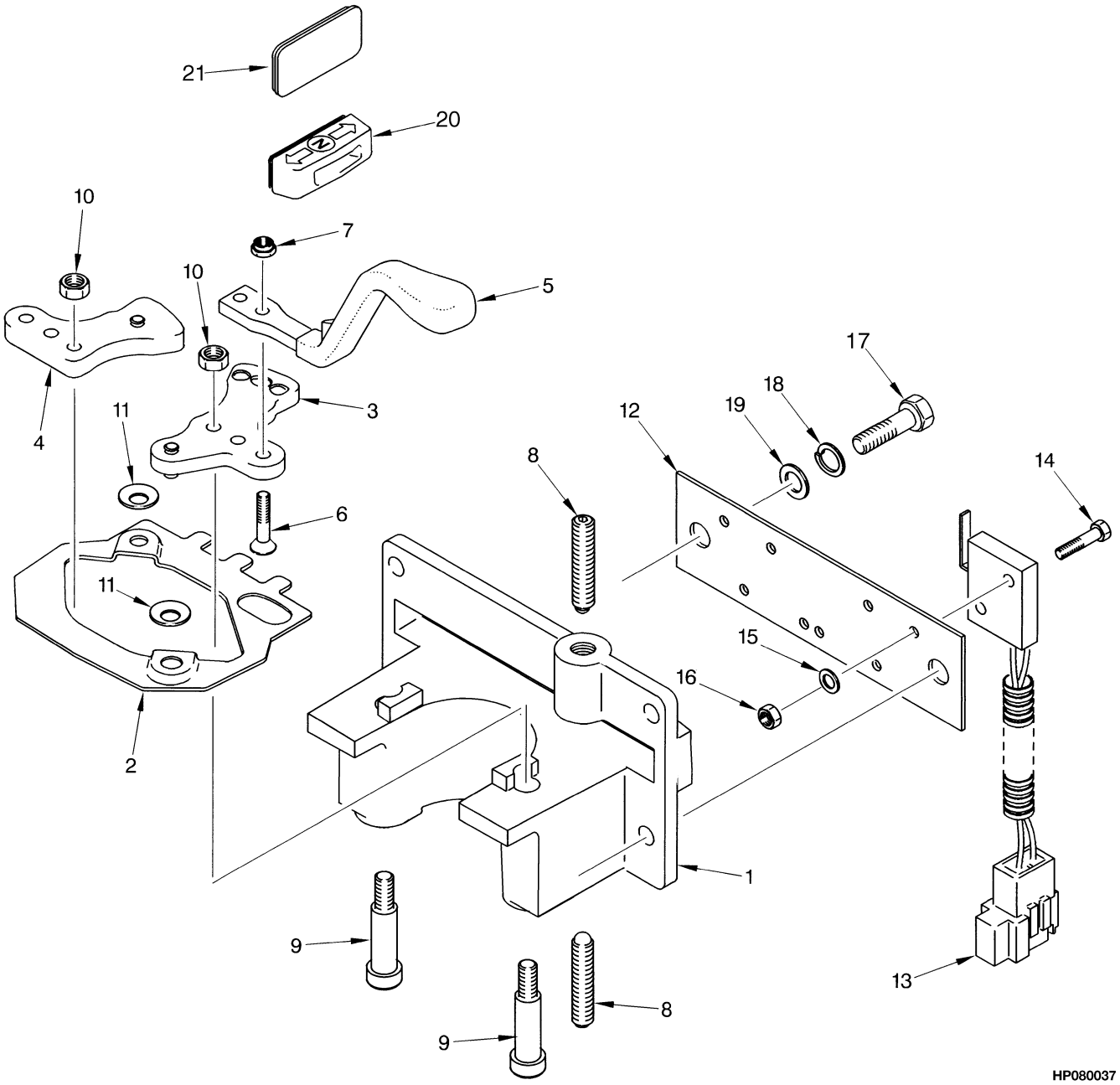

©2009 HYSTER COMPANY

SHIFT LEVER

ITEM	PART NO.	DESCRIPTION	QTY
	1347004	Lever Assembly	1
1	1343577	Base	1
2	1343578	Link	1
3	1343579	Crank	1
4	1343598	Crank	1
5	1343593	Lever	1
6	296205	Screw	2
7	302398	Locknut	2
8	**a** 1338291	Spring	2
8	**b** 1491830	Spring	2
9	1343594	Bolt	2
10	136687	Nut	2
11	1354300	Spring Washer	4
12	1343595	Plate	1
13	2035678	Switch	2
14	220426	Screw	4
15	53162	Lockwasher	8
16	16865	Nut	4
17	292500	Capscrew	4
18	320156	Washer	4
19	292680	Washer	4
20	1343597	Plug	1
21	1343596	Bracket (Label)	1

FOOTNOTES:

a → S/N K005D05663Y

b S/N K005D05664Y →

©2009 HYSTER COMPANY

BRAKE AND BACK-UP LIGHTS (FIGURE 4-14)

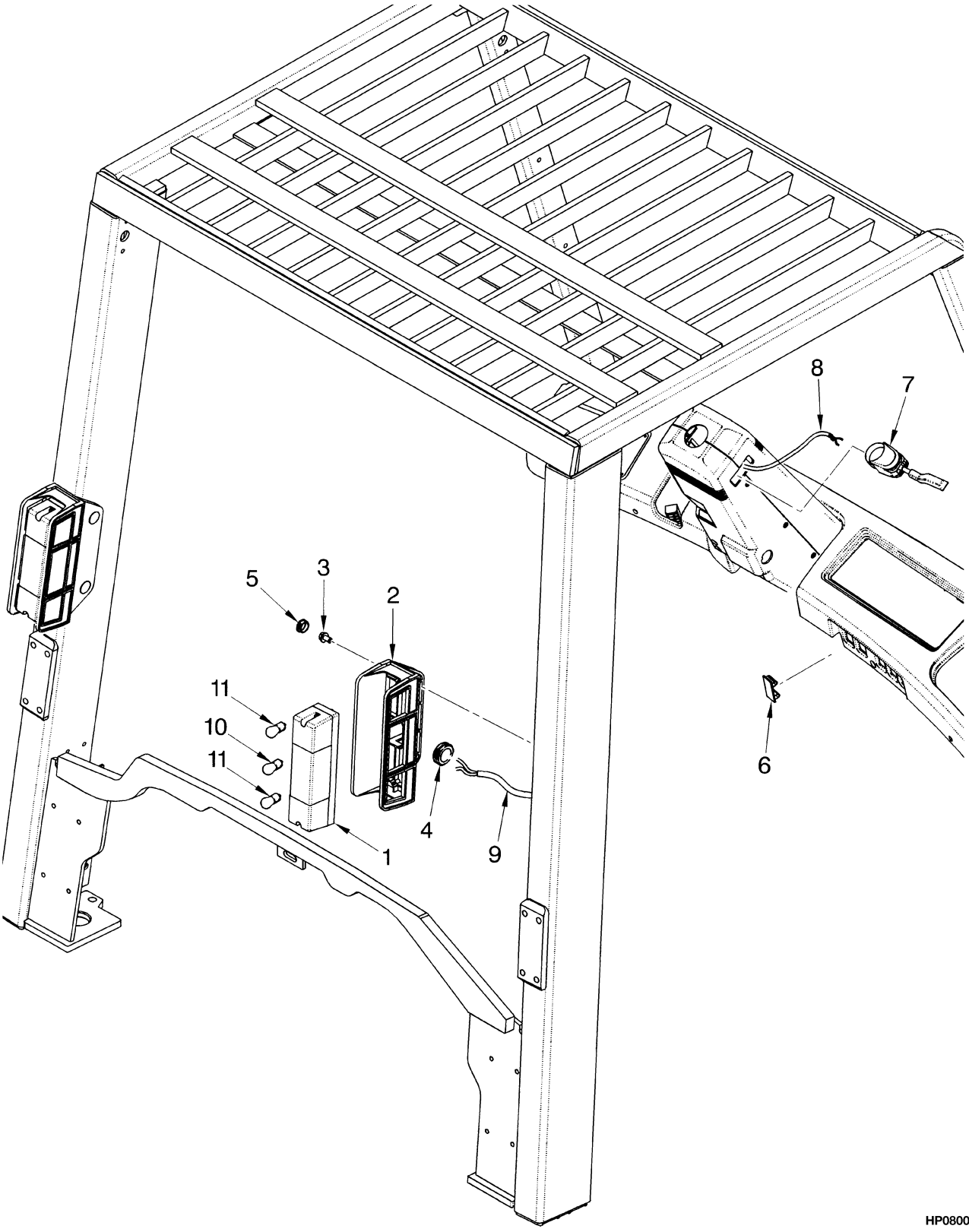

©2009 HYSTER COMPANY

BRAKE AND BACK-UP LIGHTS

ITEM	PART NO.	DESCRIPTION	QTY
1	1399473	Brake/Backup Light	1
1	1380757	Lens (Amber) (Amber)	1
1	1376439	Lens (Clear) (Clear)	1
1	1462605	Lens (Red) (Red)	1
2	1450293	Bracket	2
3	316678	Screw	4
4	339969	Grommet	6
5	1450356	Plug	4
6	1382313	Cover	4
7	1394100	Switch (Turn Signal)	1
8	2036925	Wire Harness	1
8	1324308	Terminal	3
8	1324307	Terminal	3
9	2038007	Wire Harness	1
10	177521	Bulb (12 Volt)	1
11	1302258	Bulb	2

©2009 HYSTER COMPANY

WIRE HARNESS (FIGURE 4-15)
GASOLINE ENGINE (→ S/N K005D05972Y INC. 6018)

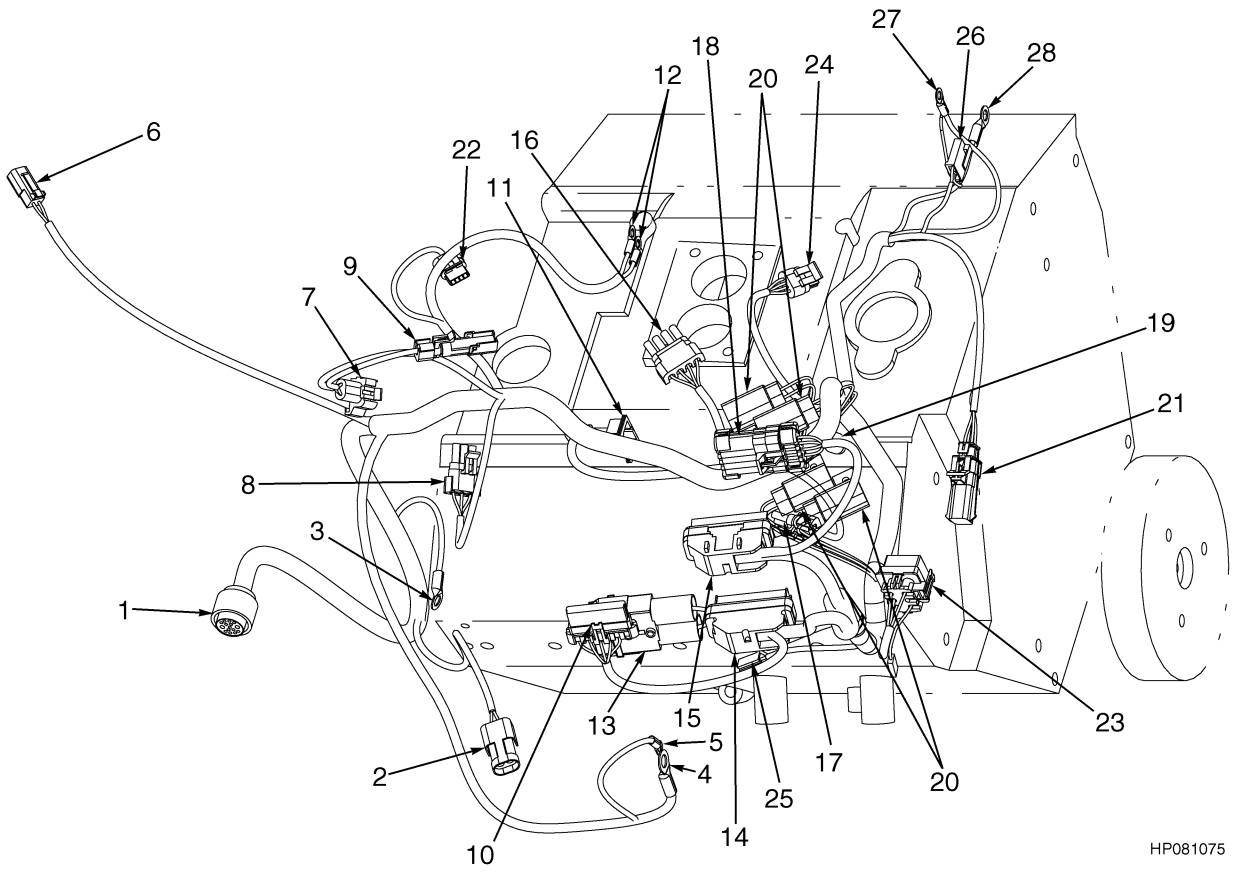

©2009 HYSTER COMPANY

WIRE HARNESS

GASOLINE ENGINE (→ S/N K005D05972Y INC. 6018)

ITEM	PART NO.	DESCRIPTION	QTY
	2035681	Wire Harness (Engine Type G/GS)	1
1	1475546	Kit-Connector (Bulkhead)	1
2	1475547	Kit-Connector (2 Pin)	1
3	1475548	Kit-Ring Terminal	1
4	1475549	Kit-Ring Terminal	1
5	1475550	Kit-Ring Terminal	1
6	1475551	Kit-Connector (2 Pin)	1
7	1475552	Connector	1
8	1475553	Connector (Map Sensor)	1
9	1475554	Connector (Tachometer)	1
10	1475556	Connector	1
11	1475610	Kit-Connector (2 Pin)	1
12	1475558	Kit-Ring Terminal	1
13	1475559	Fuse (60 Amp)	1
14	1475560	Connector	1
15	1475561	Connector	1
16	1475562	Connector	1
17	1475616	Connector (Governor Motor)	1
18	1475564	Connector (Diagnostic)	1
19	1475565	Connector	1
20	1475566	Fuse Holder	1
21	1475567	Connector	1
22	1475578	Kit-Connector (Distributor)	1
23	1475569	Connector (Shrouded Relay)	1
24	1475570	Connector	1
25	1475571	Kit-Pin	1
26	1475572	Kit-Connector	1
27	1475573	Kit-Ring Terminal	1
28	1475574	Kit-Ring Terminal	1

©2009 HYSTER COMPANY

WIRE HARNESS (FIGURE 4-16)

CONVERSION, GASOLINE TO LPG, GM 4.3L — SHEET 1 OF 2 (→ S/N K005D05972Y INC. 6018)

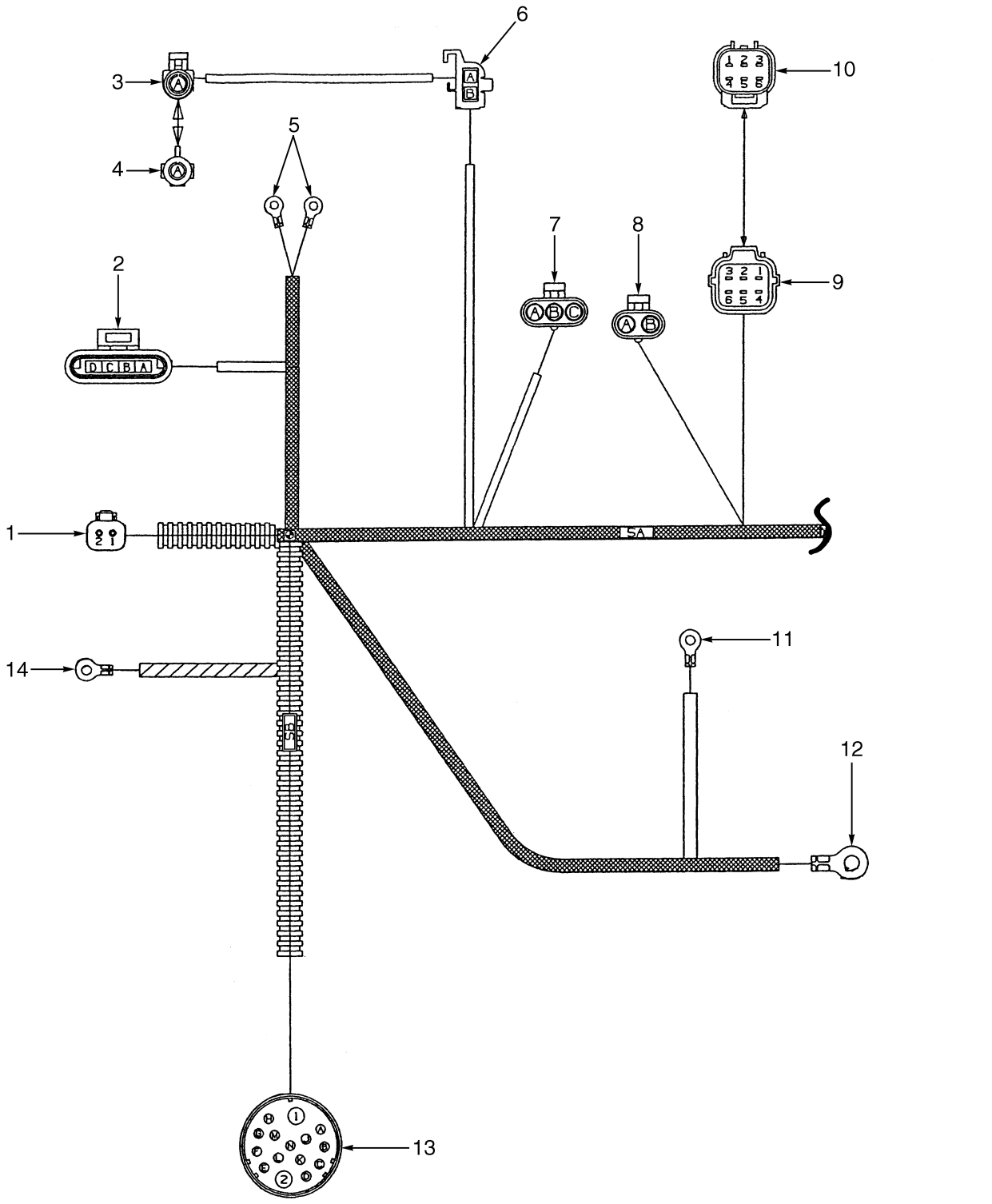

©2009 HYSTER COMPANY

WIRE HARNESS

CONVERSION, GASOLINE TO LPG, GM 4.3L – SHEET 1 OF 2 (→ S/N K005D05972Y INC. 6018)

ITEM	PART NO.	DESCRIPTION	QTY
	2035689	Wire Harness (Engine Conversion Gasoline to LPG GM 4.3L) (☞Figure 4-26, ☞Figure 4-27)	1
1	. . . . .	Connector Assembly (Seat Switch)	1
1	1484361	Connector (Socket)	1
1	1330424	Connector	1
1	1330438	Terminal (Socket)	2
2	. . . . .	Connector Assembly (Distributor)	1
2	1498478	Housing	1
2	1493461	Terminal	1
3	. . . . .	Connector Assembly (Tachometer)	1
3	1498473	Housing	1
3	1498419	Terminal	1
3	1498496	Seal	1
4	1498476	Connector (Mating Half, Item 3)	1
5	. . . . .	Connector Assembly (Oil Pressure Sender)	2
5	1496883	Ring	1
5	1496775	Heat Shrink	1
6	1498470	Connector Body (Coil)	1
7	. . . . .	Connector Assembly (Map Sensor)	1
7	1327958	Connector	1
7	1498415	Terminal	3
7	1498496	Seal	3
8	. . . . .	Connector Assembly (Governor)	1
8	1498474	Housing	1
8	1498496	Seal	2
8	1498419	Terminal	2
9	. . . . .	Connector Assembly (Closed Loop Option)	1
9	1497296	Housing	1
9	1497304	Retainer	1
9	1484656	Terminal (Socket)	5
9	1484597	Seal	5
9	1484611	Seal (Blanking)	1
10	1497291	Connector Body	1
11	. . . . .	Connector Assembly (Starter Solenoid)	1
11	1496883	Ring	1
11	1496775	Heat Shrink	1
12	. . . . .	Connector Assembly (+ VE)	1
12	1493455	Ring	1
12	1493450	Heat Shrink	1
13	. . . . .	Connector Assembly (Cowl)	1
13	1495955	Housing	1
13	1496889	Terminal	2
13	1496891	Terminal	5
13	1484716	Terminal	6
14	. . . . .	Connector Assembly (- VE)	1
14	1393455	Cover	1
14	1493450	Heat Shrink	1

©2009 HYSTER COMPANY

WIRE HARNESS (FIGURE 4-17)

CONVERSION, GASOLINE TO LPG, GM 4.3L — SHEET 2 OF 2 (→ S/N K005D05972Y)

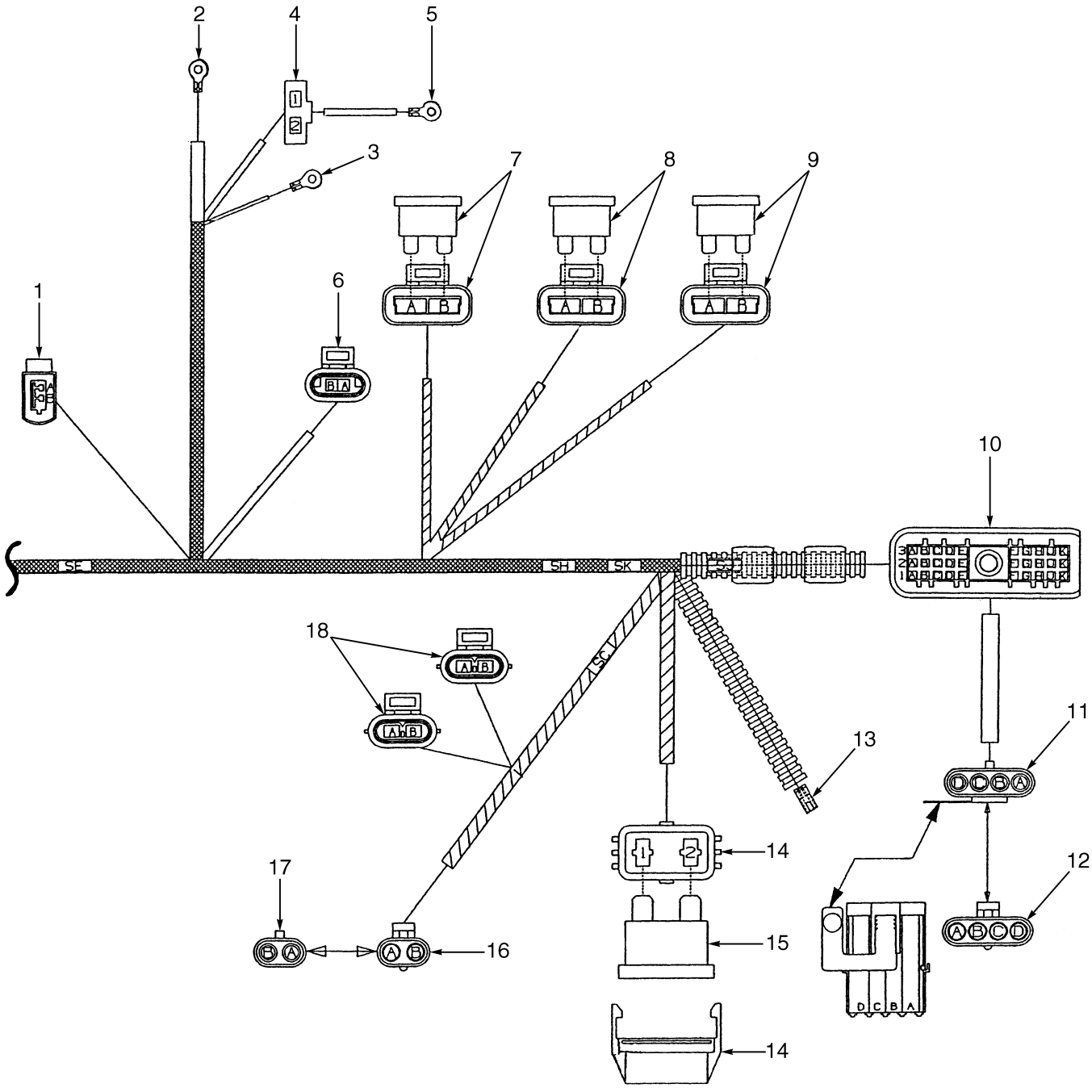

©2009 HYSTER COMPANY

WIRE HARNESS

CONVERSION, GASOLINE TO LPG, GM 4.3L – SHEET 2 OF 2 (→ S/N K005D05972Y)

ITEM	PART NO.	DESCRIPTION	QTY
	2035689	Wire Harness (Engine Conversion Gasoline to LPG GM 4.3L) (☞Figure 4-26, ☞Figure 4-27)	1
1	. . . . .	Connector Assembly (IAC)	1
1	1496785	Housing	1
1	1496786	Spacer	1
1	1496784	Terminal	2
2	. . . . .	Connector Assembly (Alternator, Negative)	1
2	1493458	E-Ring	1
2	1496775	Heat Shrink	1
3	. . . . .	Connector Assembly (Alternator, Positive)	1
3	1493457	Ring	1
3	1493450	Heat Shrink	1
4	. . . . .	Connector Assembly (Alternator)	1
4	1493469	Housing	1
4	1498413	Terminal	2
5	. . . . .	Connector Assembly (Alternator)	1
5	1497229	Ring	1
5	1496775	Heat Shrink	1
6	. . . . .	Connector Assembly (Temperature Sensor)	1
6	1493460	Housing	1
6	1493461	Terminal	2
7	. . . . .	Connector Assembly (Ignition)	1
7	1498425	Housing	1
7	1498412	Terminal	2
7	370647	Fuse (10 Amp)	2
8	. . . . .	Connector Assembly (Battery)	1
8	1498425	Housing	1
8	1498412	Terminal	2
8	370647	Fuse (10 Amp)	1
9	. . . . .	Connector Assembly (B +)	1
9	1498425	Housing	1
9	1498412	Terminal	2
9	1378661	Fuse (1 Amp)	1
10	. . . . .	Connector Assembly (ECU)	1
10	1504883	Housing	1
10	1493461	Terminal	23
10	1402866	Seal	7
11	. . . . .	Connector Assembly (COMMS Port)	1
11	1498477	Housing	1
11	1498496	Seal	4
11	1498415	Terminal	4
12	1498472	Connector Body (Mating Half, Item 11)	1
13	. . . . .	Connector Assembly (Temperature Sender)	1
13	1493441	Housing	1
13	1498413	Terminal	1
14	. . . . .	Connector Assembly (Alternator)	1
14	1497234	Fuse Holder	1
14	1497232	Terminal	2
14	1454827	Seal	2
15	1454829	Fuse (60 Amp)	1

©2009 HYSTER COMPANY

WIRE HARNESS

CONVERSION, GASOLINE TO LPG, GM 4.3L – SHEET 2 OF 2 (→ S/N K005D05972Y)

ITEM	PART NO.	DESCRIPTION	QTY
16	. . . . .	Connector Assembly (Convertor)	1
16	1498476	Connector	1
16	1498496	Seal	2
16	1498419	Terminal	2
17	1498422	Connector Body (Mating Half, Item 16)	1
18	. . . . .	Connector Assembly (Cut Off Solenoids)	1
18	1498423	Housing	1
18	1498493	Retainer	1
18	1498492	Seal	2
18	1482664	Connector Body	2

©2009 HYSTER COMPANY

WIRE HARNESS (FIGURE 4-18)

GASOLINE AND LPG — TYPE "S" (→ S/N K005V02185Y)

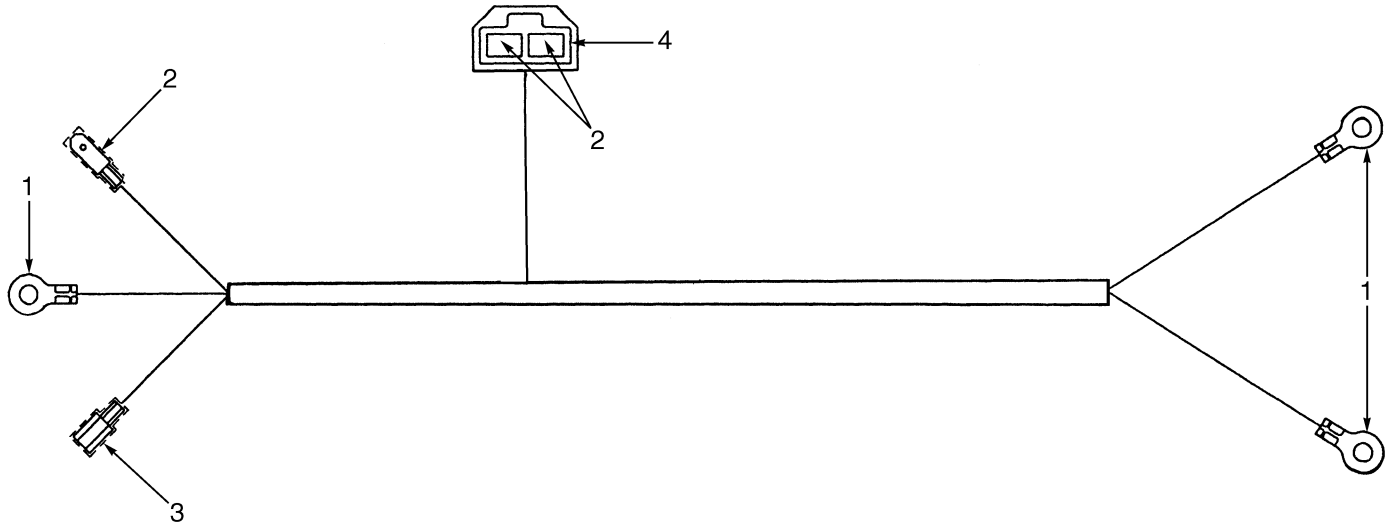

BP080061

ITEM	PART NO.	DESCRIPTION	QTY
	2035688	Wire Harness (GS, LPS)	1
1	1493448	E-Ring	3
1	1493442	Boot	3
2	134810	Terminal	3
2	181045	Connector Body	1
3	1498413	Terminal	1
3	181046	Connector Body	1
4	1498480	Housing	1

©2009 HYSTER COMPANY

WIRE HARNESS (FIGURE 4-19)

DUAL FUEL, GM V6 — SHEET 1 OF 2 (→ S/N K005D05972Y)

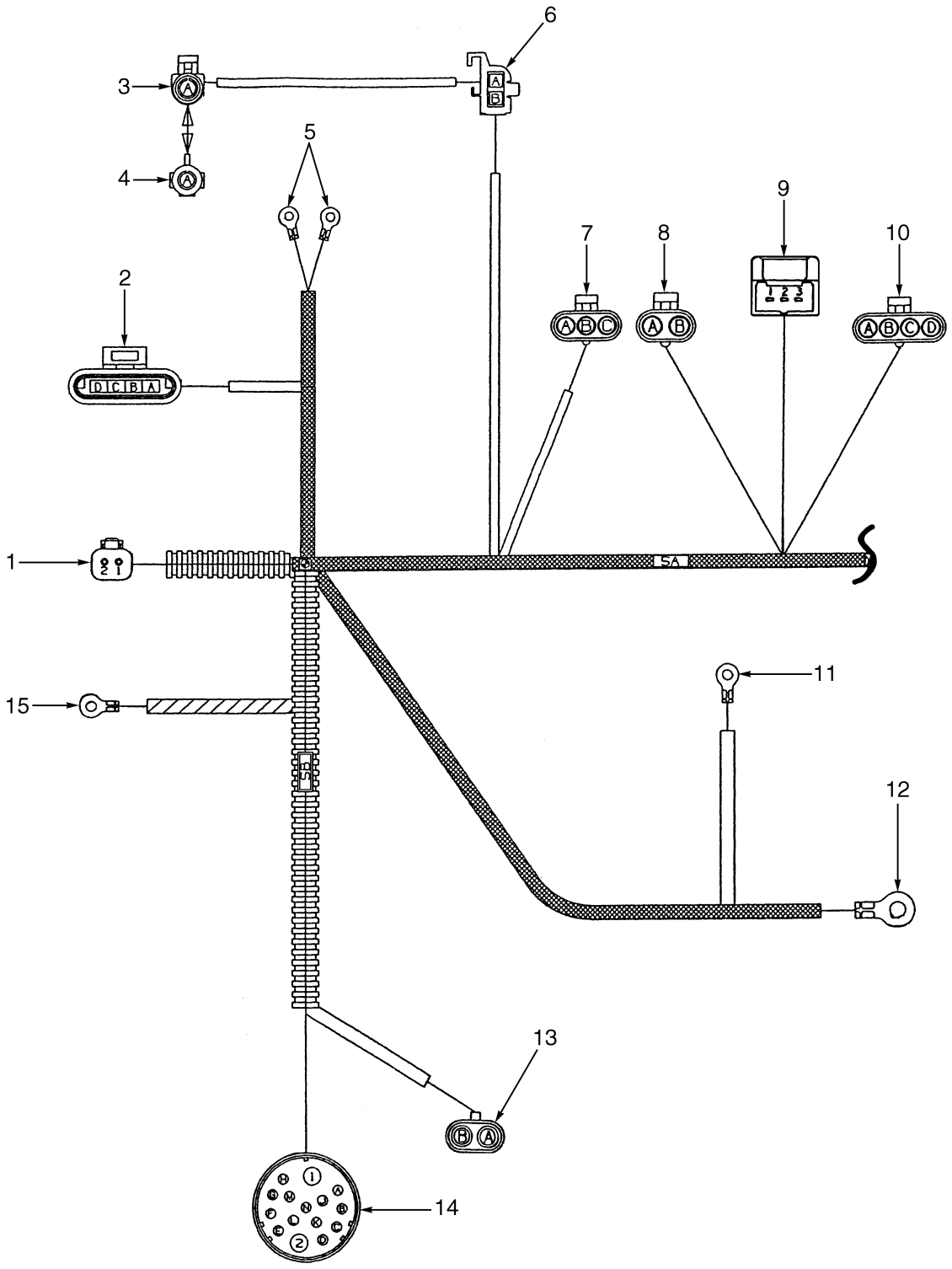

©2009 HYSTER COMPANY

WIRE HARNESS

DUAL FUEL, GM V6 – SHEET 1 OF 2 (→ S/N K005D05972Y)

ITEM	PART NO.	DESCRIPTION	QTY
	2036540	Wire Harness (Engine; DF)	1
1	. . . . .	Connector Assembly (Seat Switch)	1
1	1484361	Connector (Socket)	1
1	1330424	Connector	1
1	1330438	Terminal (Socket)	2
2	. . . . .	Connector Assembly (Distributor)	1
2	1498478	Housing	1
2	1493461	Terminal	4
3	. . . . .	Connector Assembly (Tachometer)	1
3	1498473	Housing	1
3	1498419	Terminal	1
3	1498496	Seal	1
4	. . . . .	Connector Assembly	1
4	1498476	Connector	1
4	1402857	Seal	1
5	1493455	Ring (Oil Pressure Sender)	2
5	1493450	Heat Shrink	2
6	. . . . .	Connector Assembly (Coil)	1
6	1498470	Connector Body	1
7	. . . . .	Connector Assembly (Map Sensor)	1
7	1327958	Connector	1
7	1498415	Terminal	3
7	1498496	Seal	3
8	. . . . .	Connector Assembly (Governor)	1
8	1498474	Housing	1
8	1498496	Seal	2
8	1498419	Terminal	2
9	. . . . .	Connector Assembly (Throttle)	1
9	1496777	Housing	1
9	1493436	Terminal (Socket)	3
9	1479109	Seal	3
10	. . . . .	Connector Assembly (Injectors)	1
10	1498472	Connector Body	1
10	1498496	Seal	4
10	1498419	Terminal	4
11	1496883	Ring (Starter Solenoid)	1
11	1493450	Heat Shrink	1
12	1493455	Ring (+ VE)	1
12	1496773	Heat Shrink	1
13	. . . . .	Connector Assembly (Fuel Pump)	1
13	1402616	Connector	1
13	1498496	Seal	2
13	1498415	Terminal	2
14	. . . . .	Connector Assembly (Cowl)	1
14	1495955	Housing	1
14	1496889	Terminal (Items 1 and 2)	2
14	1496891	Terminal (L, M, N)	4
14	1484716	Terminal (C, D, E, G, H, J, K, L)	7
15	1493455	Ring (- VE)	1
15	1496773	Heat Shrink	1

©2009 HYSTER COMPANY

WIRE HARNESS (FIGURE 4-20)

DUAL FUEL, GM V6 — SHEET 2 OF 2 (→ S/N K005D05972Y INC. 6018)

©2009 HYSTER COMPANY

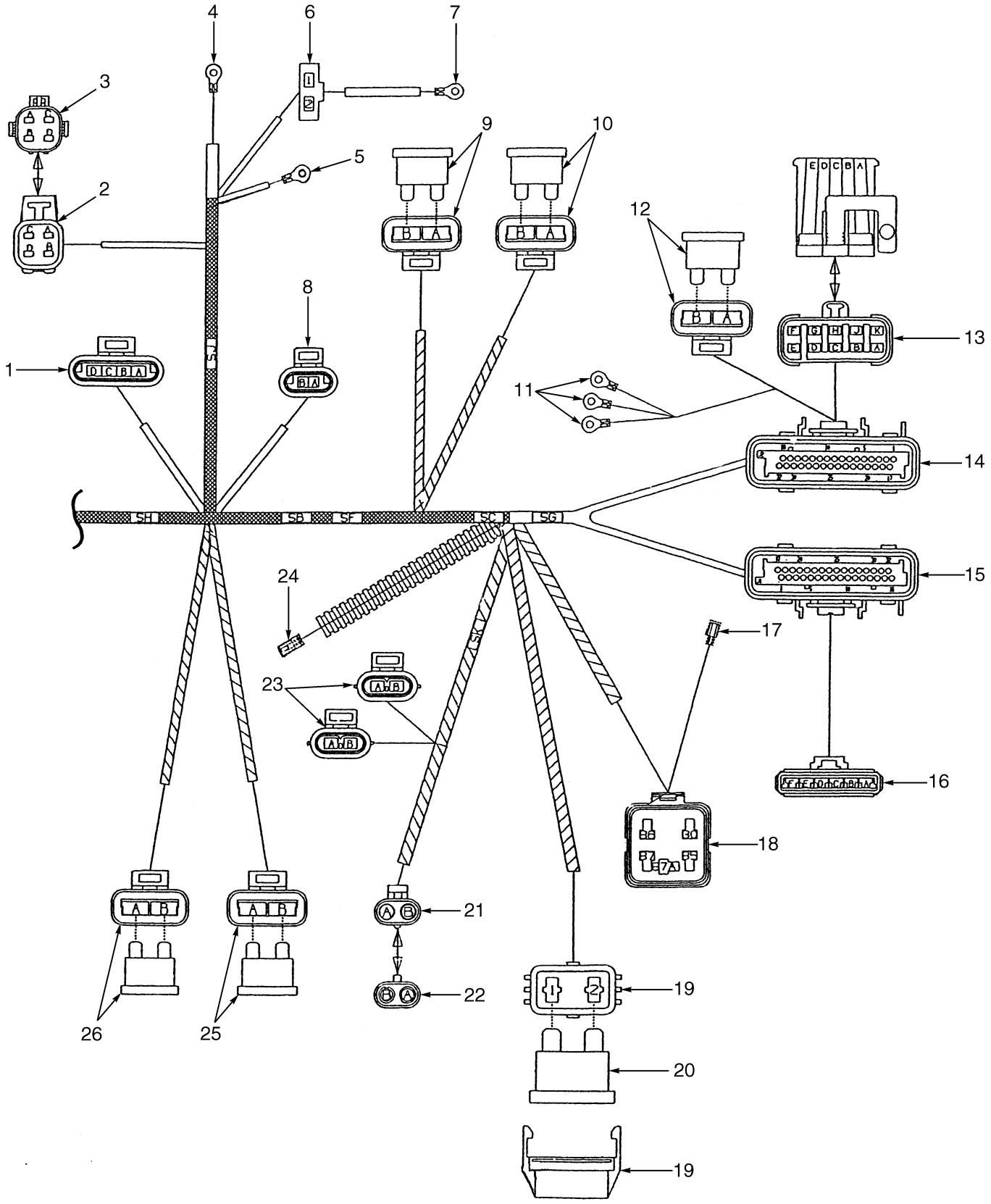
4
6
7
3
9
10
5
2
12
8
13
1
11
14
SH
SB
SF
SC
SG
24
15
17
23
16
18
21
22
19
26
25
20
19

BP08007

WIRE HARNESS

DUAL FUEL, GM V6 – SHEET 2 OF 2 (→ S/N K005D05972Y INC. 6018)

ITEM	PART NO.	DESCRIPTION	QTY
	2036540	Wire Harness (Engine; DF)	1
1	. . . . .	Connector Assembly (IAC)	1
1	1498478	Housing	1
1	1493461	Terminal	4
2	. . . . .	Connector Assembly (Oxygen Sensor)	1
2	1498468	Housing	1
2	1482664	Connector Body	4
2	1498492	Seal	4
3	. . . . .	Connector Assembly	1
3	1498424	Housing (Mating Pigtail)	1
3	1498498	Fitting	4
4	1493458	E-Ring (Alternator, Negative)	1
4	1484383	Heat Shrink	1
5	1493457	Ring (Alternator, Positive)	1
5	1484383	Heat Shrink	1
6	. . . . .	Connector Assembly (Alternator)	1
6	1493469	Housing	1
6	1484375	Terminal	2
7	1497229	Ring (Alternator)	1
7	1484383	Heat Shrink	1
8	. . . . .	Connector Assembly (Temperature Sensor)	1
8	1493460	Housing	1
8	1493461	Terminal	2
9	. . . . .	Connector Assembly (Ignition)	1
9	1498425	Housing	1
9	1498412	Terminal	2
9	370647	Fuse (10 Amp)	1
10	. . . . .	Connector Assembly (B +)	1
10	1498425	Housing	1
10	1498412	Terminal	2
10	370647	Fuse (10 Amp)	1
11	1497229	Ring (Gasoline/LPG Switch)	3
11	1484383	Heat Shrink	3
12	. . . . .	Connector Assembly (LPG Valve)	1
12	1498425	Housing	1
12	1498412	Terminal	2
12	370647	Fuse (10 Amp)	1
13	. . . . .	Connector Assembly (Comms Port)	1
13	1498427	Housing	1
13	1402907	Lock	1
13	1482664	Connector Body (A, B, F, G)	4
13	1498492	Seal (A, B, F, G)	4
13	1498498	Fitting (C, D, E, H, J, K)	6
14	. . . . .	Connector Assembly (EFI/ECM)	1
14	1498462	Retainer	1
14	1498487	Strain Relief	1
14	1498451	Insert	1
14	1498495	Seal	1
14	1484710	Terminal	20
14	1352105	Plug	12

©2009 HYSTER COMPANY

WIRE HARNESS

DUAL FUEL, GM V6 – SHEET 2 OF 2 (→ S/N K005D05972Y INC. 6018)

ITEM	PART NO.	DESCRIPTION	QTY
15	. . . . .	Connector Assembly (EFI/ECM)	1
15	1500963	Retainer	1
15	1498488	Strain Relief	1
15	1498451	Insert	1
15	1498495	Seal	1
15	1484710	Terminal	16
15	1352105	Plug	16
16	. . . . .	Connector Assembly (Governor Amplifier)	1
16	1498463	Housing	1
16	1498486	Lock	1
16	1498414	Terminal	1
16	1498496	Seal	5
16	1402857	Seal (Position F)	1
17	1497264	Terminal (Fuel Pump)	1
17	1497274	Boot	1
18	. . . . .	Connector Assembly (Fuel Pump Relay)	1
18	1498483	Sealant	1
18	1498469	Base	1
18	1402912	Terminal	5
18	1498496	Seal	5
19	. . . . .	Connector Assembly	1
19	1497234	Fuse Holder	1
19	1497232	Terminal	2
19	1454827	Seal	2
20	1454829	Fuse (60 Amp)	1
21	. . . . .	Connector Assembly (Converter)	1
21	1498474	Housing	1
21	1498496	Seal	2
21	1498419	Terminal	2
22	. . . . .	Connector Assembly (Mating Half)	1
22	1498422	Connector Body	1
22	1402857	Seal	2
23	. . . . .	Connector Assembly (LPG Cut Off, Solenoids)	2
23	1498423	Housing	1
23	1498493	Retainer	1
23	1482664	Connector Body	2
23	1498492	Seal	2
24	1493441	Housing (Temperature Sensor)	1
24	1484375	Terminal	1
25	. . . . .	Connector Assembly (Fuel Pump)	1
25	1498425	Housing	1
25	1498412	Terminal	2
25	370647	Fuse (10 Amp)	1
26	. . . . .	Connector Assembly	1
26	1498425	Housing	1
26	1498412	Terminal	2
26	370647	Fuse (10 Amp)	1

©2009 HYSTER COMPANY

WIRE HARNESS (FIGURE 4-21)

DUAL FUEL, GM V6 — SHEET 1 OF 2 (S/N K005D05973Y ↔ S/N K005V02186Y)

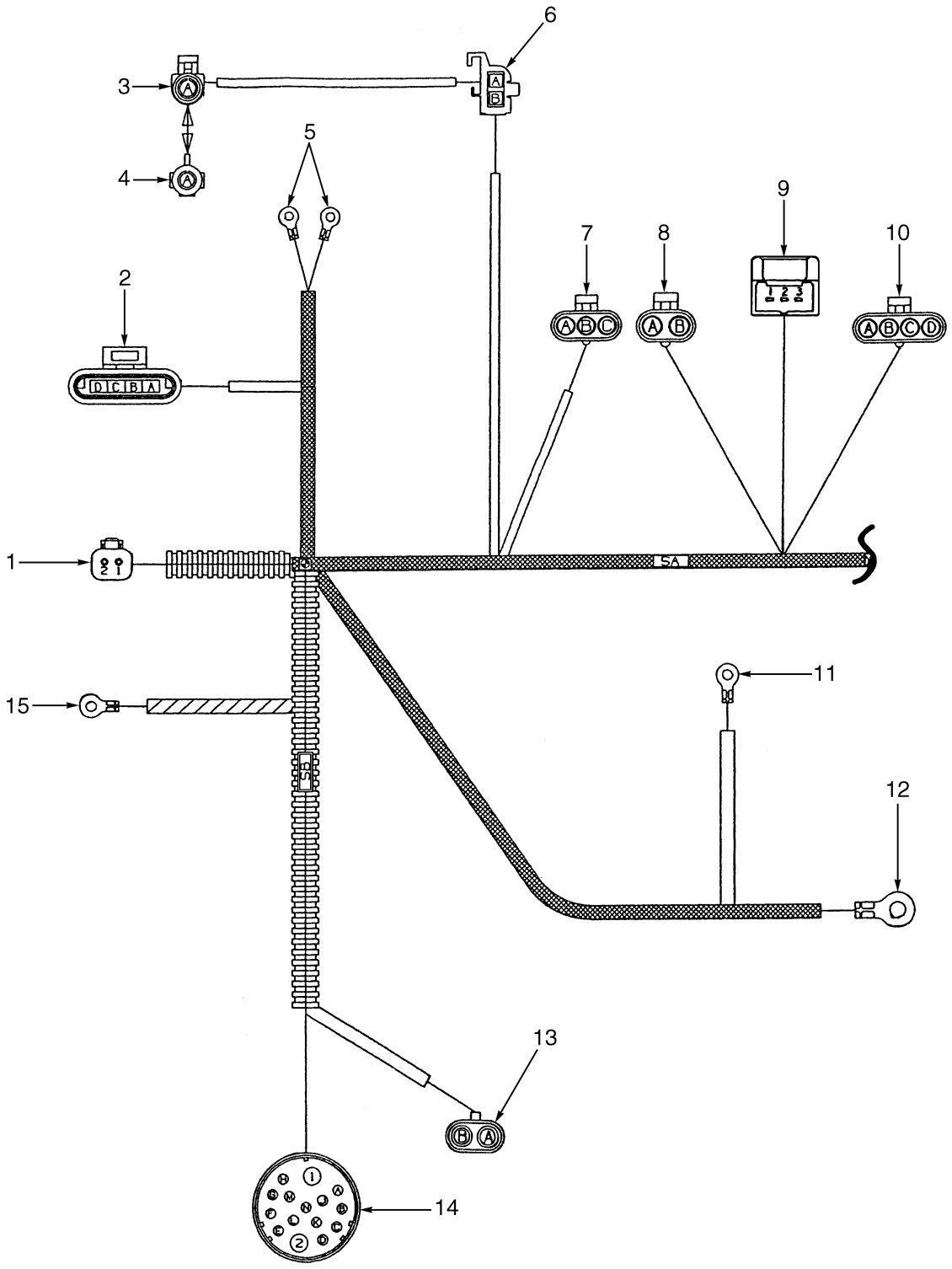

©2009 HYSTER COMPANY

WIRE HARNESS

DUAL FUEL, GM V6 – SHEET 1 OF 2 (S/N K005D05973Y ↔ S/N K005V02186Y)

ITEM	PART NO.	DESCRIPTION	QTY
	2043950	Wire Harness (Engine; DF)	1
1	. . . . .	Connector Assembly (Seat Switch)	1
1	1484361	Connector (Socket)	1
1	1330424	Connector	1
1	1330438	Terminal (Socket)	2
2	. . . . .	Connector Assembly (Distributor)	1
2	1498478	Housing	1
2	1493461	Terminal	4
3	. . . . .	Connector Assembly	1
3	1498473	Housing	1
3	1498419	Terminal	1
3	1498496	Seal	1
4	. . . . .	Connector Assembly	1
4	1498476	Connector	1
4	1402857	Seal	1
5	1496883	Ring (Oil Pressure Sender)	2
5	1493450	Heat Shrink	2
6	. . . . .	Connector Assembly (Coil)	1
6	1498470	Connector Body	1
7	. . . . .	Connector Assembly	1
7	1327958	Connector	1
7	1498415	Terminal	3
7	1498496	Seal	3
8	. . . . .	Connector Assembly	1
8	1498474	Housing	1
8	1498496	Seal	2
8	1498419	Terminal	2
9	. . . . .	Connector Assembly (Throttle)	1
9	1496777	Housing	1
9	1493436	Terminal (Socket)	3
9	1479109	Seal	3
10	. . . . .	Connector Assembly (Injectors)	1
10	1498472	Connector Body	1
10	1498496	Seal	4
10	1498419	Terminal	4
11	. . . . .	Connector Assembly (Starter Solenoid)	1
11	1496883	Ring	1
11	1493450	Heat Shrink	1
12	. . . . .	Connector Assembly (+ VE)	1
12	1493455	Ring (+ VE)	1
12	1496773	Heat Shrink	1
13	. . . . .	Connector Assembly (Fuel Pump)	1
13	1402616	Connector	1
13	1498496	Seal	2
13	1498415	Terminal	2
14	. . . . .	Connector Assembly (Cowl)	1
14	1495955	Housing	1
14	1496889	Terminal (Items 1 and 2)	2
14	1496891	Terminal (L, M, N)	4
14	1484716	Terminal (C, D, E, G, H, J, K, L)	7

©2009 HYSTER COMPANY

WIRE HARNESS (FIGURE 4-22)

DUAL FUEL, GM V6 — SHEET 2 OF 2 (S/N K005D05973Y ↔ S/N K005V02186Y)

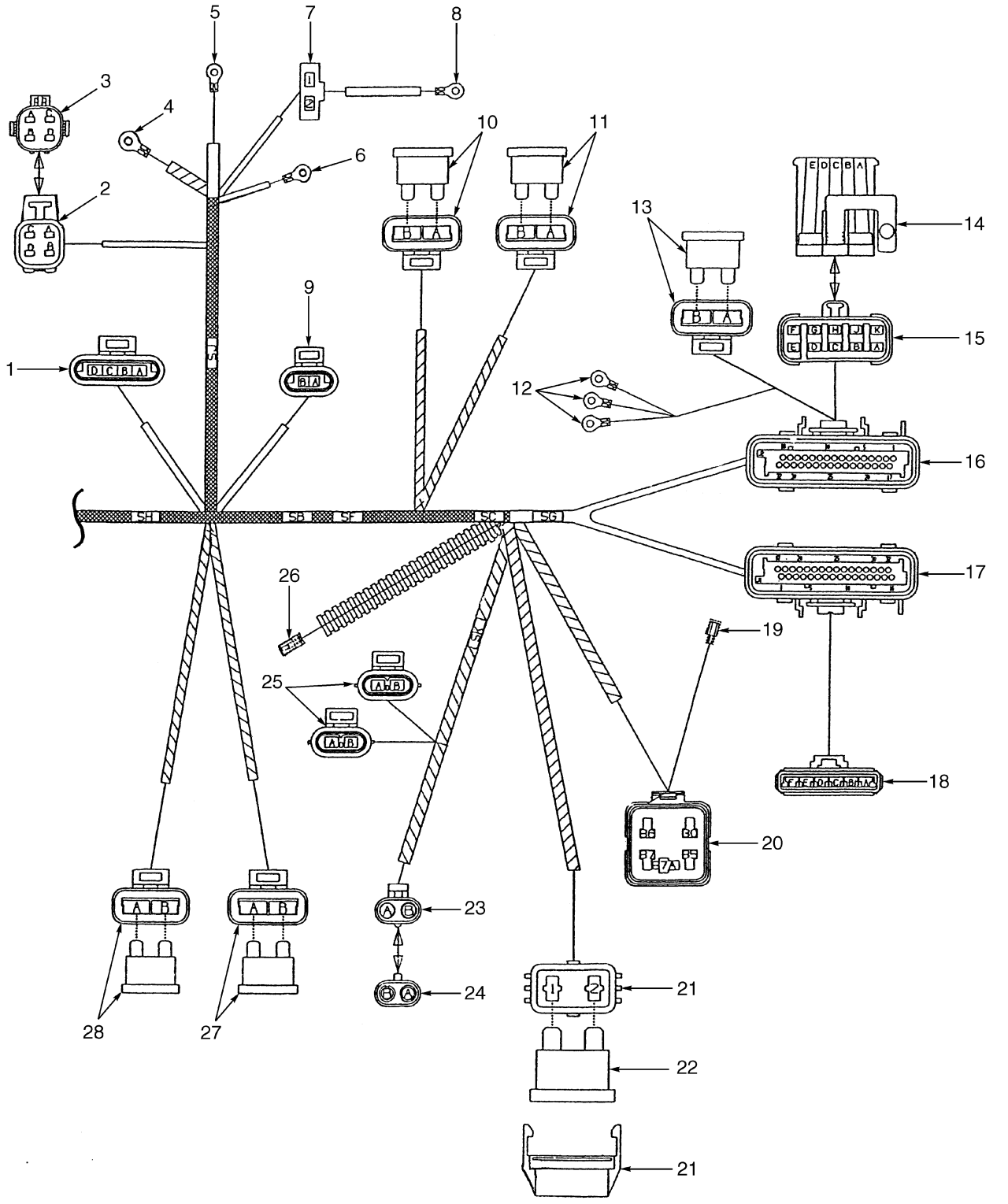

©2009 HYSTER COMPANY

WIRE HARNESS

DUAL FUEL, GM V6 – SHEET 2 OF 2 (S/N K005D05973Y ↔ S/N K005V02186Y)

ITEM	PART NO.	DESCRIPTION	QTY
	2043950	Wire Harness (Engine; DF)	1
1	. . . . .	Connector Assembly (Temperature Sensor)	1
1	1493460	Housing	1
1	1493461	Terminal	2
2	. . . . .	Connector Assembly	1
2	1498468	Housing	1
2	1482664	Connector Body	4
2	1498492	Seal	4
3	. . . . .	Connector Assembly	1
3	1498424	Housing	1
3	1498498	Fitting	4
4	. . . . .	Connector Assembly (- VE)	1
4	1493455	Ring	1
4	1496773	Heat Shrink	1
5	. . . . .	Connector Assembly (Alternator, Negative)	1
5	1493458	E-Ring	1
5	1484383	Heat Shrink	1
6	. . . . .	Connector Assembly (Alternator, Positive)	1
6	1493457	Ring	1
6	1484383	Heat Shrink	2
7	. . . . .	Connector Assembly (Alternator)	1
7	1493469	Housing	1
7	1484375	Terminal	2
8	1497229	Ring	1
8	1484383	Heat Shrink	1
9	. . . . .	Connector Assembly (Temperature Sensor)	1
9	1493460	Housing	1
9	1493461	Terminal	2
10	. . . . .	Connector Assembly	1
10	1498425	Housing	1
10	1498412	Terminal	1
10	370647	Fuse (10 Amp)	1
11	. . . . .	Connector Assembly	1
11	1498425	Housing	1
11	1498412	Terminal	1
11	370647	Fuse (10 Amp)	1
12	. . . . .	Connector Assembly (Gasoline/LPG Switch)	3
12	1497229	Ring	3
12	1484383	Heat Shrink	3
12	370647	Fuse (10 Amp)	1
13	. . . . .	Connector Assembly	1
13	1498425	Housing	1
13	1498412	Terminal	2
13	370647	Fuse (10 Amp)	1
14	. . . . .	Connector Assembly (Mating Half)	1
14	1498428	Housing	1
14	1402907	Lock	1
14	1498498	Fitting	1
14	1498421	Clip	1
15	. . . . .	Connector Assembly (Comms Port)	1

©2009 HYSTER COMPANY

WIRE HARNESS

DUAL FUEL, GM V6 – SHEET 2 OF 2 (S/N K005D05973Y ↔ S/N K005V02186Y)

ITEM	PART NO.	DESCRIPTION	QTY
15	1498427	Housing	1
15	1402907	Lock	1
15	1482664	Connector Body (Items A, B, F, G)	4
15	1498492	Seal	4
15	1498498	Fitting	6
16	. . . . .	Connector Assembly (J2, EFI/ECM)	1
16	1498462	Retainer	1
16	1498487	Strain Relief	1
16	1498451	Insert	1
16	1498495	Seal	1
16	1484710	Terminal	12
16	1352105	Plug	20
17	. . . . .	Connector Assembly (J1, EFI/ECM)	1
17	1500963	Retainer	1
17	1498488	Strain Relief	1
17	1498451	Insert	1
17	1498495	Seal	1
17	1484710	Terminal	16
17	1352105	Plug	16
18	. . . . .	Connector Assembly (Governor)	1
18	1498463	Housing	1
18	1498486	Lock	1
18	1498414	Terminal	5
18	1498496	Seal	5
19	. . . . .	Connector Assembly (Fuel Pump)	1
19	1497264	Terminal	1
19	1497274	Boot	4
20	. . . . .	Connector Assembly (Fuel Pump Relay)	1
20	1498469	Base	1
20	1498483	Sealant	1
20	1402912	Terminal	5
20	1498415	Terminal	5

©2009 HYSTER COMPANY

NOTES

©2009 HYSTER COMPANY

WIRE HARNESS (FIGURE 4-23)

DUAL FUEL, GM V6 — SHEET 1 OF 2 (S/N K005V02186Y ↔ S/N K005V02836Z)

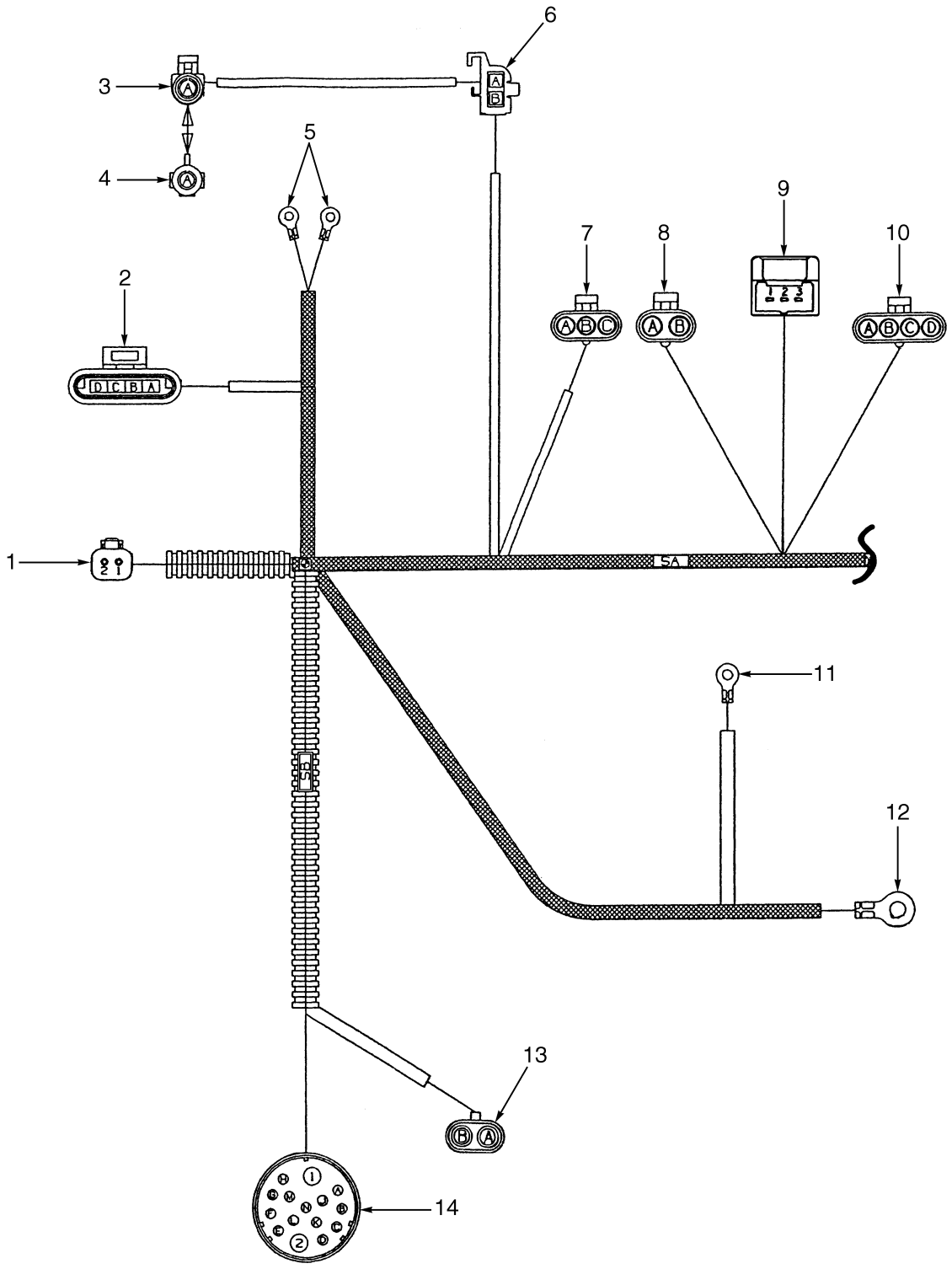

©2009 HYSTER COMPANY

WIRE HARNESS

DUAL FUEL, GM V6 – SHEET 1 OF 2 (S/N K005V02186Y ↔ S/N K005V02836Z)

ITEM	PART NO.	DESCRIPTION	QTY
	2047712	Wire Harness (Engine; DF)	1
1	. . . . .	Connector Assembly	1
1	1484361	Connector (Socket)	1
1	1330424	Connector	1
1	1330438	Terminal (Socket)	2
2	. . . . .	Connector Assembly	1
2	1498478	Housing	1
2	1493461	Terminal	4
3	. . . . .	Connector Assembly (Tachometer)	1
3	1498473	Housing	1
3	1498419	Terminal	1
3	1498496	Seal	1
4	. . . . .	Connector Assembly (Mating Half, Item 3)	1
4	1498476	Connector	1
4	1402857	Seal	1
5	. . . . .	Connector Assembly (Engine Oil Pressure Sender)	2
5	1496883	Ring	2
5	1493450	Heat Shrink	2
6	. . . . .	Connector Assembly (Coil)	1
6	1498470	Connector Body	2
7	. . . . .	Connector Assembly (Map Sensor)	1
7	1327958	Connector	1
7	1498415	Terminal	3
7	1498496	Seal	3
8	. . . . .	Connector Assembly (Governor)	1
8	1498474	Housing	1
8	1498496	Seal	2
8	1498419	Terminal	2
9	. . . . .	Connector Assembly (Throttle Position Sensor)	1
9	1496777	Housing	1
9	1493436	Terminal (Socket)	3
9	1479109	Seal	3
10	. . . . .	Connector Assembly (Injectors)	1
10	1498472	Connector Body	1
10	1498496	Seal	4
10	1498419	Terminal	4
11	. . . . .	Connector Assembly (Starter Solenoid)	1
11	1496883	Ring	1
11	1493450	Heat Shrink	1
12	. . . . .	Connector Assembly (TVE)	1
12	1493455	Ring	1
12	1496773	Heat Shrink	1
13	. . . . .	Connector Assembly (Fuel Pump)	1
13	1402816	Clip	1
13	1498496	Seal	2
13	1498415	Terminal	2
14	. . . . .	Connector Assembly (Cowl)	1
14	1495955	Housing	1
14	1496889	Terminal (Item 1 and 2)	2
14	1496891	Terminal (A, L, M, N)	4

©2009 HYSTER COMPANY

WIRE HARNESS

DUAL FUEL, GM V6 – SHEET 1 OF 2 (S/N K005V02186Y ↔ S/N K005V02836Z)

ITEM	PART NO.	DESCRIPTION	QTY
14	1484716	Terminal	7

©2009 HYSTER COMPANY

NOTES

©2009 HYSTER COMPANY

WIRE HARNESS (FIGURE 4-24)

DUAL FUEL, GM V6 — SHEET 2 OF 2 (S/N K005V02186Y ↔ S/N K005V02836Z)

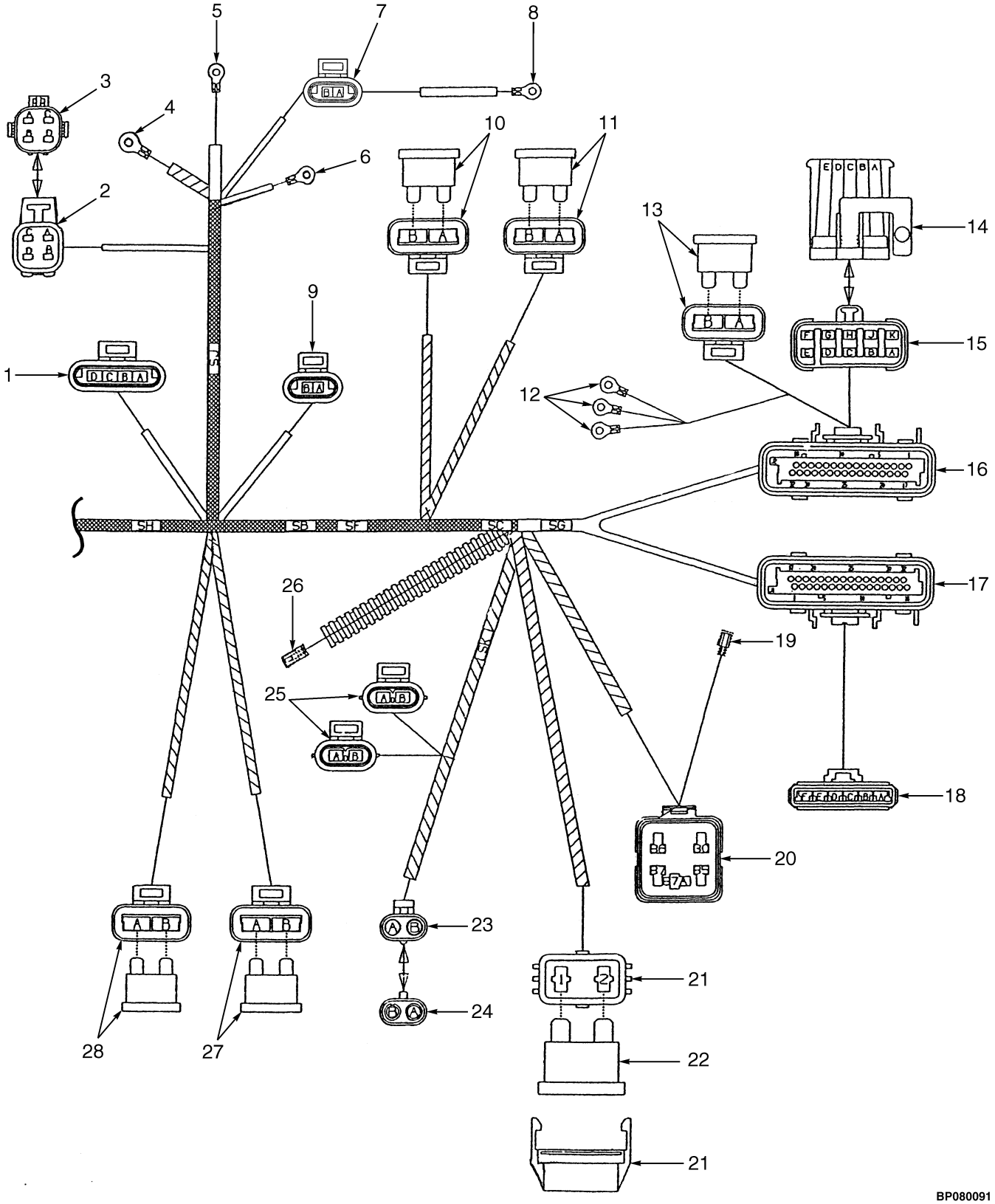

©2009 HYSTER COMPANY

WIRE HARNESS

DUAL FUEL, GM V6 – SHEET 2 OF 2 (S/N K005V02186Y ↔ S/N K005V02836Z)

ITEM	PART NO.	DESCRIPTION	QTY
	2047712	Wire Harness (Engine; DF)	1
1	. . . . .	Connector Assembly (IAC)	1
1	1498478	Housing	1
1	1493461	Terminal	4
2	. . . . .	Connector Assembly (Oxygen Sensor)	1
2	1482664	Connector Body	4
2	1498492	Seal	4
3	. . . . .	Connector Assembly (Mating Half, Item 2)	1
3	1498424	Housing	1
3	1498498	Fitting	4
4	. . . . .	Connector Assembly (- VE)	1
4	1493455	Ring	1
4	1496773	Heat Shrink	1
5	. . . . .	Connector Assembly (Alternator, Negative)	1
5	1497229	Ring	1
5	1484383	Heat Shrink	1
6	. . . . .	Connector Assembly (Alternator, Positive)	1
6	1493457	Ring	1
6	1484383	Heat Shrink	1
7	. . . . .	Connector Assembly	1
7	1493460	Housing	1
7	1493461	Terminal	2
8	. . . . .	Connector Assembly	1
8	1484383	Heat Shrink	1
9	. . . . .	Connector Assembly	1
9	1493460	Housing	1
9	1493461	Terminal	2
10	. . . . .	Connector Assembly (Ignition Fuse)	1
10	1498425	Housing	1
10	1498412	Terminal	2
10	370647	Fuse (10 Amp)	1
11	. . . . .	Connector Assembly (EFI/ECM)	1
11	1498425	Housing	1
11	1498412	Terminal	2
11	370647	Fuse (10 Amp)	1
12	. . . . .	Connector Assembly (LPG/CAS SW)	3
12	1497229	Ring	3
12	1484383	Heat Shrink	3
13	. . . . .	Connector Assembly (LPG Valve)	1
13	1498425	Housing	1
13	1498412	Terminal	2
13	370647	Fuse (10 Amp)	1
14	. . . . .	Connector Assembly (Mating Half)	1
14	1498428	Housing	1
14	1402907	Lock	1
14	1498498	Fitting	10
14	1498421	Clip	1
15	. . . . .	Connector Assembly (Comms Port)	1
15	1498427	Housing	1
15	1402907	Lock	1

©2009 HYSTER COMPANY

WIRE HARNESS

DUAL FUEL, GM V6 – SHEET 2 OF 2 (S/N K005V02186Y ↔ S/N K005V02836Z)

ITEM	PART NO.	DESCRIPTION	QTY
15	1482664	Connector Body (A, B, F, G)	4
15	1498492	Seal (A, B, F, G)	4
15	1498498	Fitting (C, D, E, H, J, K)	6
16	. . . . .	Connector Assembly (J2, EFI, ECM)	1
16	1498462	Retainer	1
16	1498487	Strain Relief	1
16	1498451	Insert	1
16	1498495	Seal	1
16	1484710	Terminal	12
16	1352105	Plug	20
17	. . . . .	Connector Assembly (J1, EFI, ECM)	1
17	1500963	Retainer	1
17	1498488	Strain Relief	1
17	1498451	Insert	1
17	1498495	Seal	1
17	1484710	Terminal	16
17	1352105	Plug	16
18	. . . . .	Connector Assembly (Governor Amplifier)	1
18	1498463	Housing	1
18	1498486	Lock	1
18	1498414	Terminal	5
18	1498496	Seal	5
18	1402857	Seal	1
19	. . . . .	Connector Assembly	1
19	1497264	Terminal	1
19	1497274	Boot	1
20	. . . . .	Connector Assembly (Fuel Relay Pump)	1
20	1498469	Base	1
20	1498483	Sealant	1
20	1402912	Terminal	5
20	1498496	Seal	5
21	. . . . .	Connector Assembly	1
21	1497234	Fuse Holder	1
21	1497232	Terminal	2
21	1454827	Seal	2
22	1454829	Fuse (60 Amp)	1
23	. . . . .	Connector Assembly (Converter)	1
23	1498474	Housing	1
23	1498496	Seal	2
23	1498419	Terminal	2
24	. . . . .	Connector Assembly (Mating Half, Item 23)	1
24	1498422	Connector Body	1
24	1498474	Housing	2
25	. . . . .	Connector Assembly (LPB Cut-off)	2
25	1498423	Housing	1
25	1498493	Retainer	1
25	1482664	Connector Body	2
25	1498492	Seal	2
26	. . . . .	Connector Assembly (TEP Sensor)	1
26	1493441	Housing	1

©2009 HYSTER COMPANY

WIRE HARNESS

DUAL FUEL, GM V6 – SHEET 2 OF 2 (S/N K005V02186Y ↔ S/N K005V02836Z)

ITEM	PART NO.	DESCRIPTION	QTY
26	1484375	Terminal	1
27	. . . . .	Connector Assembly (Fuel Pump)	1
27	1498425	Housing	1
27	1498412	Terminal	2
27	370647	Fuse (10 Amp)	1
28	. . . . .	Connector Assembly (Injector)	1
29	1498425	Housing	1
29	1498412	Terminal	2
29	370647	Fuse (10 Amp)	1

©2009 HYSTER COMPANY

WIRE HARNESS (ENGINE) (FIGURE 4-25)

DUAL FUEL — GM 4.3L (S/N K005V02837Z ↔ S/N K005V04115Z)

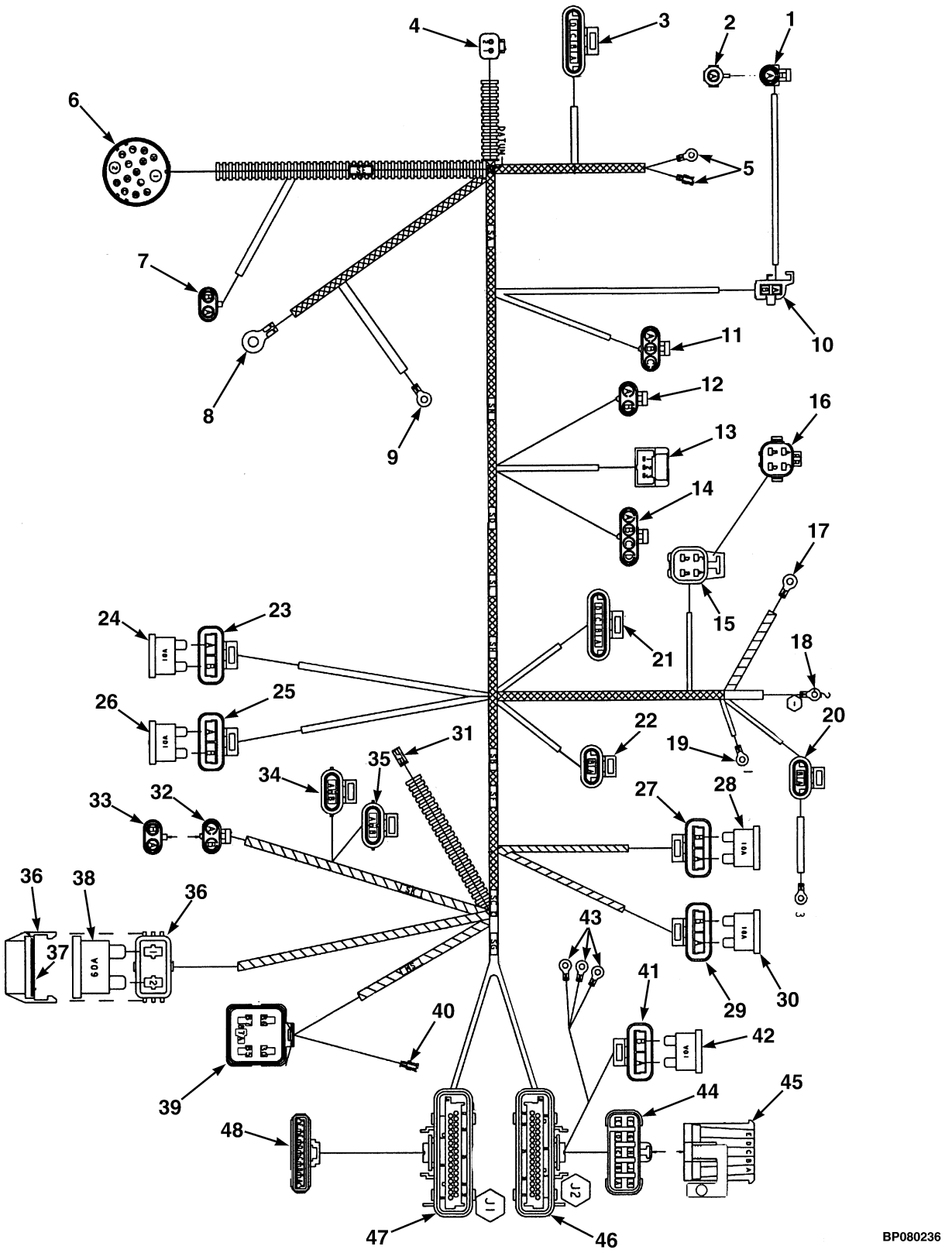

©2009 HYSTER COMPANY

WIRE HARNESS (ENGINE)

DUAL FUEL – GM 4.3L (S/N K005V02837Z ↔ S/N K005V04115Z)

ITEM	PART NO.	DESCRIPTION	QTY
	2050503	Wire Harness (Engine; DF)	1
1	. . . . .	Connector Assembly Tachometer	1
1	1330299	Connector	1
1	1336173	Terminal	1
1	1402858	Wire Seal	1
2	. . . . .	Connector Assembly (Mating Half)	1
2	1498476	Connector	1
2	1327164	Seal	1
3	. . . . .	Connector Assembly (Distributor)	1
3	1323575	Connector	1
3	1323576	Terminal	4
4	. . . . .	Connector Assembly (Seat Switch)	1
4	1484361	Connector (Socket)	1
4	1490243	Connector	1
4	1330438	Terminal (Socket)	2
5	. . . . .	Connector Assembly (Oil Pressure Sender)	1
5	252293	E-Ring	1
5	1468841	Connector	1
5	. . . . .	Shrink Tubing	AR
6	. . . . .	Connector Assembly (Cowl)	1
6	1495955	Housing	1
6	1496889	Terminal	2
6	1496891	Terminal	5
6	1484716	Terminal	6
7	. . . . .	Connector Assembly (Fuel Pump)	1
7	1465469	Connector	1
7	1402858	Wire Seal	2
7	1498415	Terminal	2
8	. . . . .	Connector Assembly (Battery +VE)	1
8	1354497	E-Ring	1
8	. . . . .	Shrink Tubing	AR
9	. . . . .	Connector Assembly (Starter Solenoid)	1
9	252293	E-Ring	1
9	. . . . .	Shrink Tubing	AR
10	. . . . .	Connector Assembly (Coil)	1
10	1498470	Connector Body	1
11	. . . . .	Connector Assembly (Map Sensor)	1
11	1327958	Connector	1
11	1498415	Terminal	3
11	1402858	Wire Seal	3
12	. . . . .	Connector Assembly (Governor)	1
12	1465468	Connector	1
12	1402858	Wire Seal	2
12	1336173	Terminal	2
13	. . . . .	Connector Assembly (Throttle Pos Sensor)	1
13	1496777	Housing	1
13	1402814	Terminal	3
13	1479109	Seal	3
14	. . . . .	Connector Assembly (Injectors)	1
14	1383804	Connector	1

©2009 HYSTER COMPANY

WIRE HARNESS (ENGINE)

DUAL FUEL – GM 4.3L (S/N K005V02837Z ↔ S/N K005V04115Z)

ITEM	PART NO.	DESCRIPTION	QTY
14	1402858	Wire Seal	4
14	1323583	Terminal	2
14	1336173	Terminal	2
15	. . . . .	Connector Assembly (Oxygen Sensor)	1
15	1498468	Housing	1
15	1330355	Terminal	4
15	1498492	Seal	4
16	. . . . .	Connector Assembly (Mating Half)	1
16	1498424	Housing	1
16	1482668	Plug	4
17	. . . . .	Connector Assembly (Battery -VE)	1
17	1354497	E-Ring	1
17	. . . . .	Shrink Tubing	AR
18	. . . . .	Connector Assembly (Alternator Negative) (#2)	1
18	148614	E-Ring	1
18	1509790	E-Ring	1
18	. . . . .	Shrink Tubing	AR
19	. . . . .	Connector Assembly (Alternator Positive) (#1)	1
19	148614	E-Ring	1
19	1509790	E-Ring	1
19	. . . . .	Shrink Tubing	AR
20	. . . . .	Connector Assembly (Alternator) (#3)	1
20	1323586	Connector	1
20	1323576	Terminal	2
20	. . . . .	Shrink Tubing	AR
21	. . . . .	Connector Assembly (IAC)	1
21	1323575	Connector	1
21	1323576	Terminal	4
22	. . . . .	Connector Assembly (H2O Temp Sensor)	1
22	1323586	Connector	1
22	1323576	Terminal	2
23	. . . . .	Fuse Holder (Injector)	1
23	1330292	Connector	1
23	1330283	Terminal	2
24	370647	Fuse (10 Amp)	1
25	. . . . .	Fuse Holder (Fuel Pump)	1
25	1330292	Connector	1
25	1330283	Terminal	2
26	370647	Fuse (10 Amp)	1
27	. . . . .	Fuse Holder (Ignition)	1
27	1330292	Connector	1
27	1330283	Terminal	2
28	370647	Fuse (10 Amp)	1
29	. . . . .	Fuse Holder (ECM B+)	1
29	1330292	Connector	1
29	1330283	Terminal	2
30	370647	Fuse (10 Amp)	1
31	. . . . .	Connector Assembly (H2O Temp Sensor Inst)	1
31	1301720	Connector Body	1
31	370730	Terminal	1

©2009 HYSTER COMPANY

WIRE HARNESS (ENGINE)

DUAL FUEL – GM 4.3L (S/N K005V02837Z ↔ S/N K005V04115Z)

ITEM	PART NO.	DESCRIPTION	QTY
32	. . . . .	Connector Assembly (Series 1 Converter)	1
32	1465468	Connector	1
32	1402858	Wire Seal	2
32	1336173	Terminal	2
33	. . . . .	Connector Assembly (Mating Half)	1
33	1465469	Connector	1
33	1327164	Seal	2
34	. . . . .	Connector Assembly (LPG Cut Off Solenoids #1)	1
34	1345689	Connector Body	1
34	1345690	Terminal (E FTG SEC LOCK)	1
34	1330355	Terminal	2
34	1498492	Seal	2
35	. . . . .	Connector Assembly (LPG Cut Off Solenoids #2)	1
35	1345689	Connector Body	1
35	1345690	Terminal (E FTG SEC LOCK)	1
35	1330355	Terminal	2
35	1498492	Seal	2
36	. . . . .	Fuse Holder (Alternator)	1
36	1497235	Fuse Holder	1
36	1402889	Terminal	2
36	1520543	Terminal	2
37	1497235	Fuse Holder (Cover)	1
38	1454829	Fuse (60 Amp)	1
39	. . . . .	Relay (Fuel Pump)	1
39	1461744	Connector Body	1
39	1345690	Terminal (E FTG SEC LOCK)	1
39	1402912	Terminal	4
39	1402858	Wire Seal	5
39	1402904	Terminal	1
40	. . . . .	Connector Assembly (Fuel Pump Prime)	1
40	1468841	Connector	1
41	. . . . .	Fuse Holder (LPG Valve)	1
41	1330292	Connector	1
41	1330283	Terminal	2
42	370647	Fuse (10 Amp)	1
43	. . . . .	Connector Assembly (Gasoline/LPG Switch)	1
43	1509790	E-Ring	1
43	. . . . .	Shrink Tubing	AR
44	. . . . .	Connector Assembly (Comms Port)	1
44	1376617	Plug	1
44	1402907	Lock	1
44	1330355	Terminal	4
44	1498492	Seal	4
44	1482668	Plug	6
45	. . . . .	Connector Assembly (Mating Half)	1
45	1402907	Lock	1
45	1482668	Plug	10
45	1498421	Clip	1
46	. . . . .	Connector Assembly (ECM Plug J2)	1
46	1498462	Retainer	1

©2009 HYSTER COMPANY

WIRE HARNESS (ENGINE)

DUAL FUEL – GM 4.3L (S/N K005V02837Z ↔ S/N K005V04115Z)

ITEM	PART NO.	DESCRIPTION	QTY
46	1498487	Strain Relief	1
46	1498451	Insert	1
46	1498495	Seal	1
46	1484710	Terminal	13
46	1352105	Plug	19
47	. . . . .	Connector Assembly (ECM Plug J1)	1
47	1500963	Retainer	1
47	1498488	Strain Relief	1
47	1498451	Insert	1
47	1498495	Seal	1
47	1352105	Plug	18
47	1484710	Terminal	14
48	. . . . .	Connector Assembly (Governor Amplifier)	1
48	1327959	Connector	1
48	1330297	Lock	1
48	1330281	Terminal	5
48	1402858	Wire Seal	5
48	1327164	Seal	1

©2009 HYSTER COMPANY

NOTES

©2009 HYSTER COMPANY

WIRE HARNESS (FIGURE 4-26)

ENGINE, GM V6, 4.3L — SHEET 1 OF 2 (→ S/N K005D05972Y)

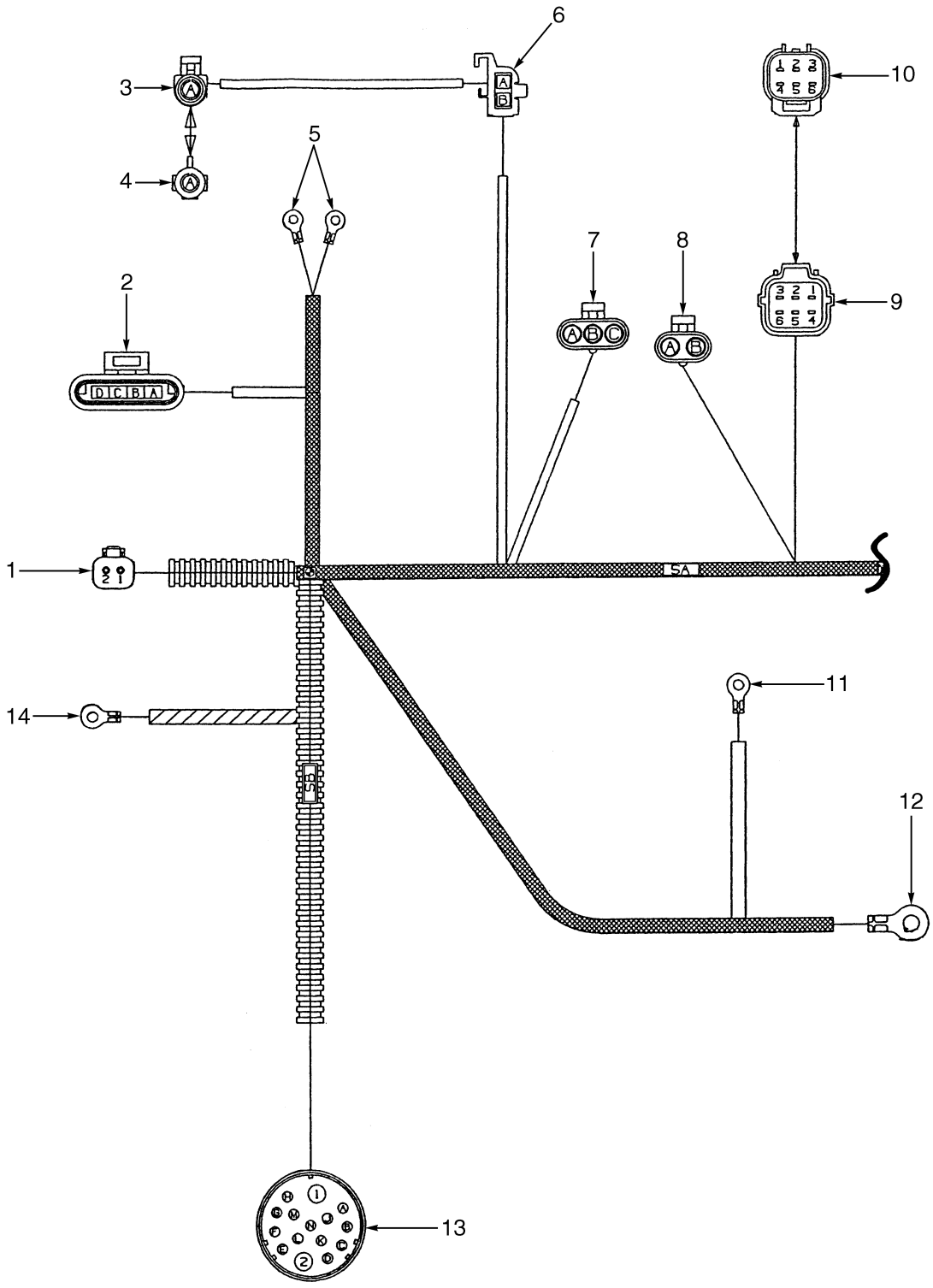

©2009 HYSTER COMPANY

WIRE HARNESS

ENGINE, GM V6, 4.3L – SHEET 1 OF 2 (→ S/N K005D05972Y)

ITEM	PART NO.	DESCRIPTION	QTY
	2035689	Wire Harness (Engine Conversion Gasoline to LPG GM 4.3L)	1
1	. . . . .	Connector Assembly (Seat Switch)	1
1	1484361	Connector (Socket)	1
1	1330424	Connector	1
1	1330438	Terminal (Socket)	2
2	. . . . .	Connector Assembly (Distributor)	1
2	1498478	Housing	1
2	1493461	Terminal	4
3	. . . . .	Connector Assembly (Tachometer)	1
3	1498473	Housing	1
3	1498419	Terminal	1
3	1498496	Seal	1
4	. . . . .	Connector Assembly	1
4	1498476	Connector	1
4	1402857	Seal	1
5	1496883	Ring	2
5	1496775	Heat Shrink	2
6	. . . . .	Connector Assembly (Coil)	1
6	1498470	Connector Body	1
7	. . . . .	Connector Assembly (Map Sensor)	1
7	1327958	Connector	1
7	1498415	Terminal	3
7	1498496	Seal	3
8	. . . . .	Connector Assembly (Governor)	1
8	1498474	Housing	1
8	1498496	Seal	2
8	1498419	Terminal	2
9	. . . . .	Connector Assembly (Closed Loop Option)	1
9	1497296	Housing	1
9	1497304	Retainer	1
9	1484656	Terminal (Socket)	5
9	1484597	Seal	5
9	1484611	Seal (Blanking)	1
10	. . . . .	Connector Assembly	1
10	1497291	Connector Body	1
10	1484611	Seal (Blanking)	6
11	1496883	Ring (Starter Solenoid)	1
11	1496775	Heat Shrink	1
12	1493455	Ring (TVE)	1
12	1493450	Heat Shrink	1
13	. . . . .	Connector Assembly (Cowl)	1
13	1495955	Housing	1
13	1496889	Terminal (Items 1 and 2)	2
13	1496891	Terminal (A, E, L, M, N)	5
13	1484716	Terminal (C, D, G, H, J, K)	6
14	1493455	Ring (- VE)	1
14	1493450	Heat Shrink	1

©2009 HYSTER COMPANY

WIRE HARNESS (FIGURE 4-27)

ENGINE, GM V6, 4.3L — SHEET 2 OF 2 (→ S/N K005D05972Y)

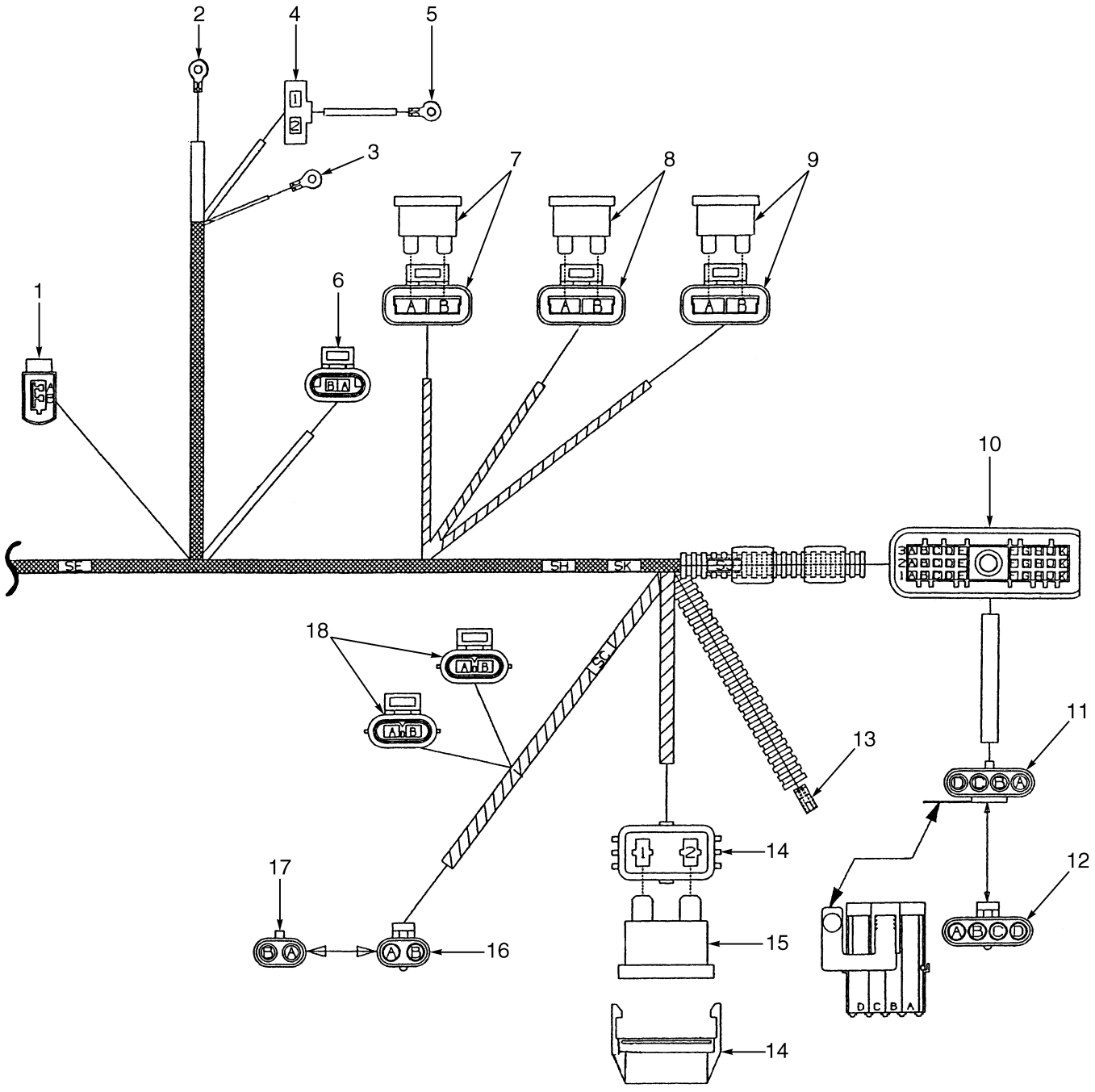

©2009 HYSTER COMPANY

WIRE HARNESS

ENGINE, GM V6, 4.3L – SHEET 2 OF 2 (→ S/N K005D05972Y)

ITEM	PART NO.	DESCRIPTION	QTY
	2035689	Wire Harness (Engine Conversion Gasoline to LPG GM 4.3L)	1
1	. . . . .	Connector Assembly (IAC)	1
1	1496785	Housing	1
1	1496786	Spacer	1
1	1496784	Terminal	2
2	1493458	E-Ring (Alternator)	1
2	1496775	Heat Shrink	1
3	1493457	Ring (Alternator, Positive)	1
3	1493450	Heat Shrink	1
4	. . . . .	Connector Assembly (Alternator)	1
4	1493469	Housing	1
4	1498413	Terminal	2
5	1497229	Ring	1
5	1496775	Heat Shrink	1
6	. . . . .	Connector Assembly (Temperature Sensor)	1
6	1493460	Housing	1
6	1493461	Terminal	2
7	. . . . .	Connector Assembly (Ignition)	1
7	1498425	Housing	1
7	1498412	Terminal	2
7	370647	Fuse (10 Amp)	1
8	. . . . .	Connector Assembly (Battery)	1
8	1498425	Housing	1
8	1498412	Terminal	2
8	370647	Fuse (10 Amp)	1
9	. . . . .	Connector Assembly (B +)	1
9	1498425	Housing	1
9	1498412	Terminal	2
9	1378661	Fuse (1 Amp)	1
10	. . . . .	Connector Assembly (ECU)	1
10	1504883	Housing	1
10	1493461	Terminal	23
10	1402866	Seal	7
11	. . . . .	Connector Assembly (Comms Port)	1
11	1498477	Housing	1
11	1498496	Seal	4
11	1498415	Terminal	4
12	. . . . .	Connector Assembly	1
12	1498472	Connector Body	1
12	1402857	Seal	4
13	1493441	Housing (Temperature Sensor)	1
13	1498413	Terminal	1
14	. . . . .	Connector Assembly (Alternator)	1
14	1497234	Fuse Holder	1
14	1497232	Terminal	2
14	1454827	Seal	2
15	1454829	Fuse (60 Amp)	1
16	. . . . .	Connector Assembly	1
16	1498476	Connector (Convertor)	1
16	1498496	Seal	2

©2009 HYSTER COMPANY

WIRE HARNESS

ENGINE, GM V6, 4.3L – SHEET 2 OF 2 (→ S/N K005D05972Y)

ITEM	PART NO.	DESCRIPTION	QTY
16	1498419	Terminal	2
17	1498422	Connector Body	1
18	. . . . .	Connector Assembly (Cut Off Solenoids)	2
18	1498423	Housing	1
18	1498493	Retainer	1
18	1498492	Seal	2
18	1482664	Connector Body	2

©2009 HYSTER COMPANY

WIRE HARNESS (FIGURE 4-28)
LPG SWITCH

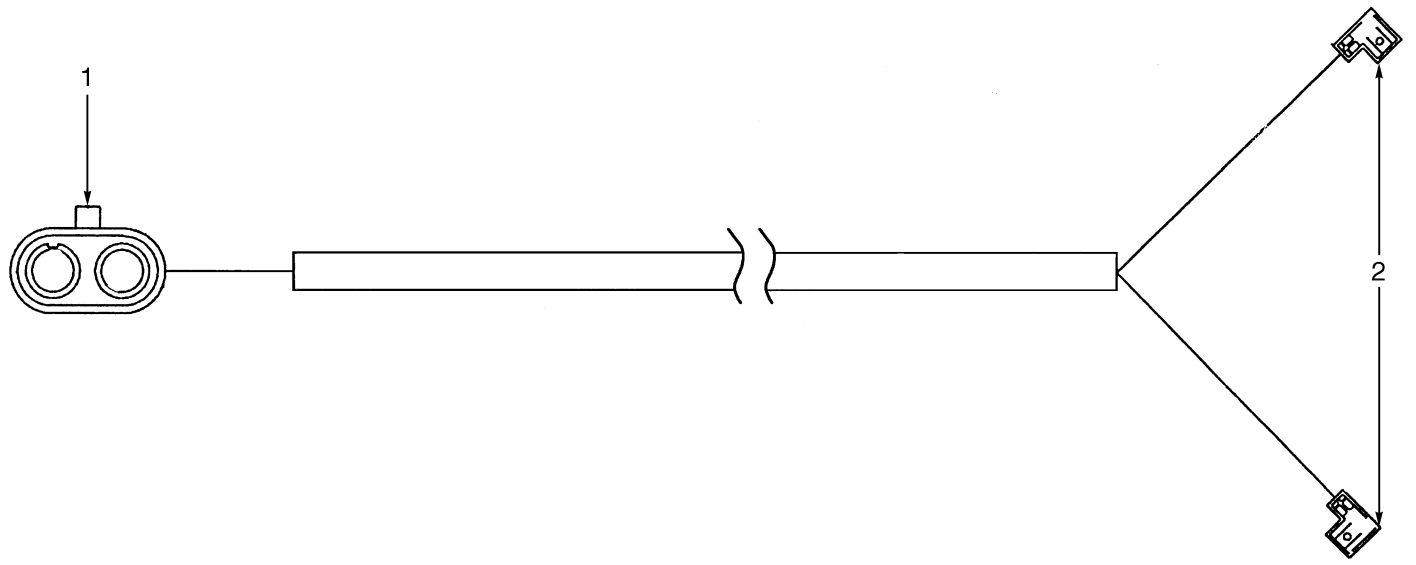

BP080057

ITEM	PART NO.	DESCRIPTION	QTY
	2036542	Wire Harness (LPG Switch) (LPG Switch)	1
1	1498422	Connector Body	1
1	1498415	Terminal	2
1	1498496	Seal	2
2	367540	Terminal (Female)	2

WIRE HARNESS (FIGURE 4-29)

TYPE S — GASOLINE AND LPG (S/N K005V02186Y →)

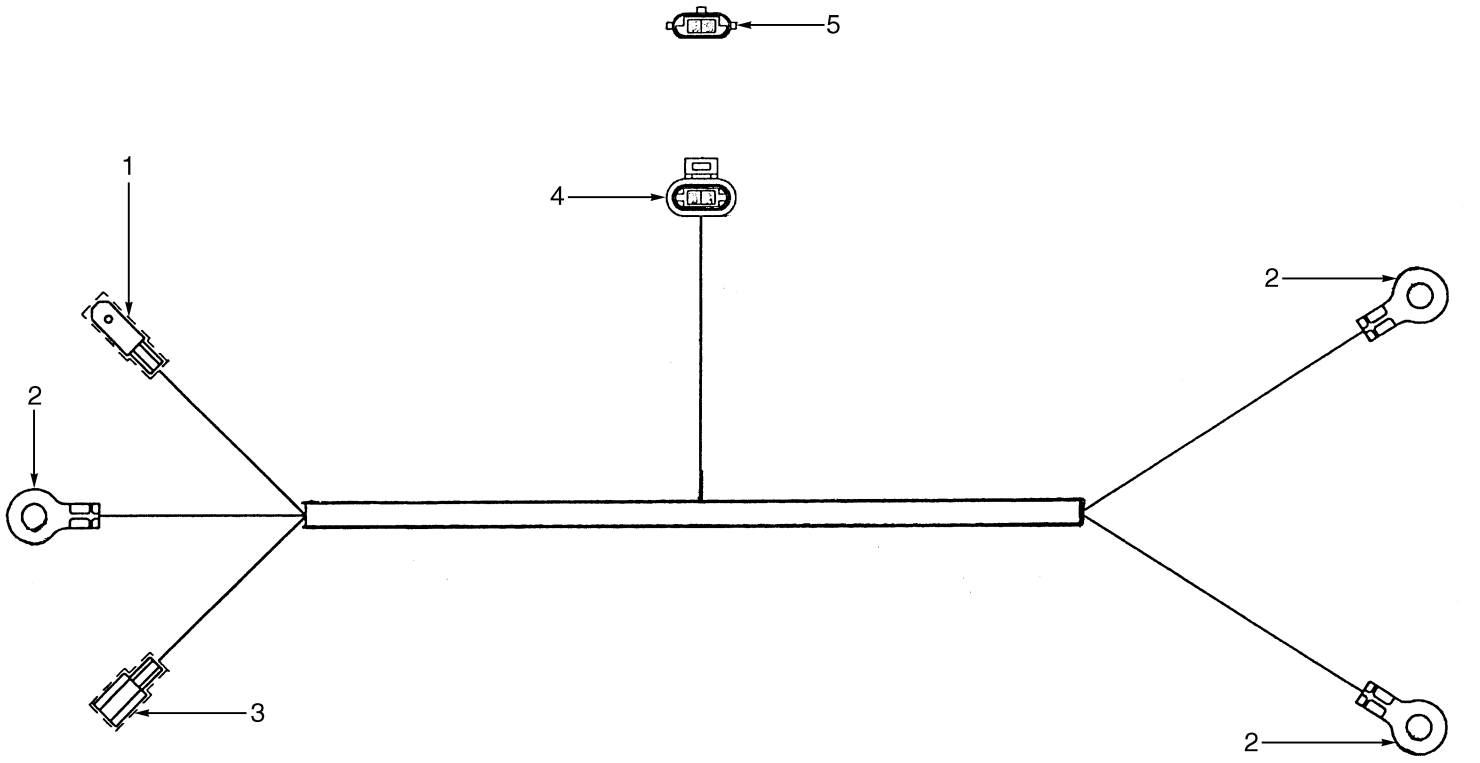

BP080059

ITEM	PART NO.	DESCRIPTION	QTY
	2047579	Wire Harness	1
1	1499234	Terminal	1
1	1498479	Housing	1
2	1524397	E-Ring	3
2	1493442	Boot	3
3	1498413	Terminal	1
3	1524398	Connector Body	1
4	1493460	Housing	1
4	1323576	Terminal	2
5	1508243	Adapter	1

©2009 HYSTER COMPANY

WIRE HARNESS (FIGURE 4-30)
CLOSED LOOP

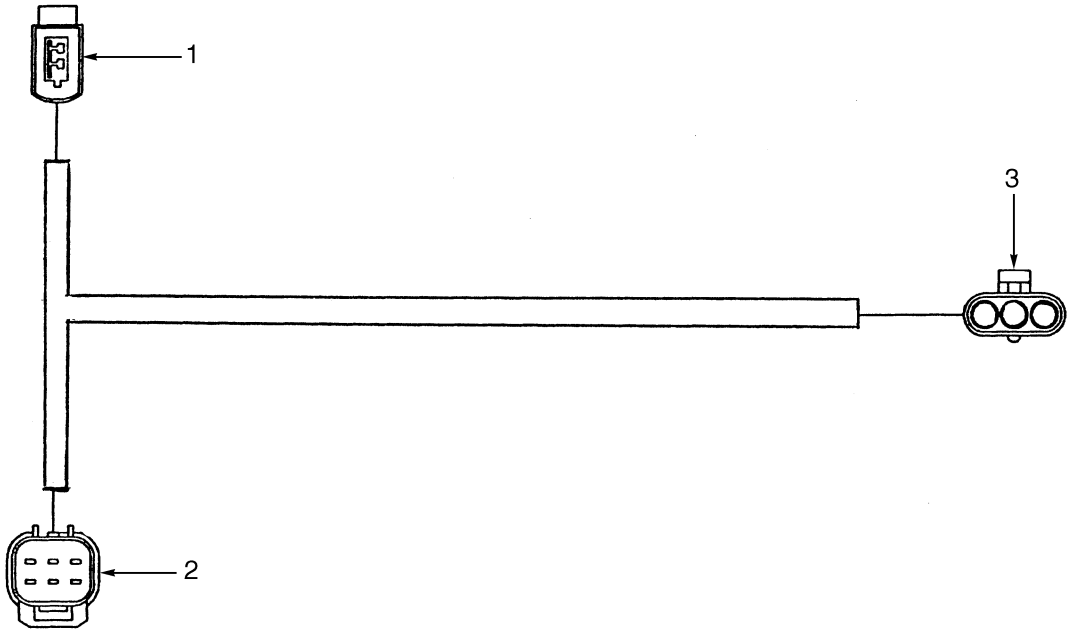

BP080054

ITEM	PART NO.	DESCRIPTION	QTY
	2036543	Wire Harness	1
1	1496785	Housing	1
1	1496786	Spacer	1
1	1496784	Terminal	2
2	1497291	Connector Body	1
2	1497305	Retainer	1
2	1484597	Seal	5
2	1484596	Terminal (Pin)	5
2	1484611	Seal (Blanking)	1
3	1498475	Housing	1
3	1498496	Seal	3
3	1498419	Terminal	3

©2009 HYSTER COMPANY

WIRE HARNESS (FIGURE 4-31)

DIESEL (→ S/N K005V02185Y)

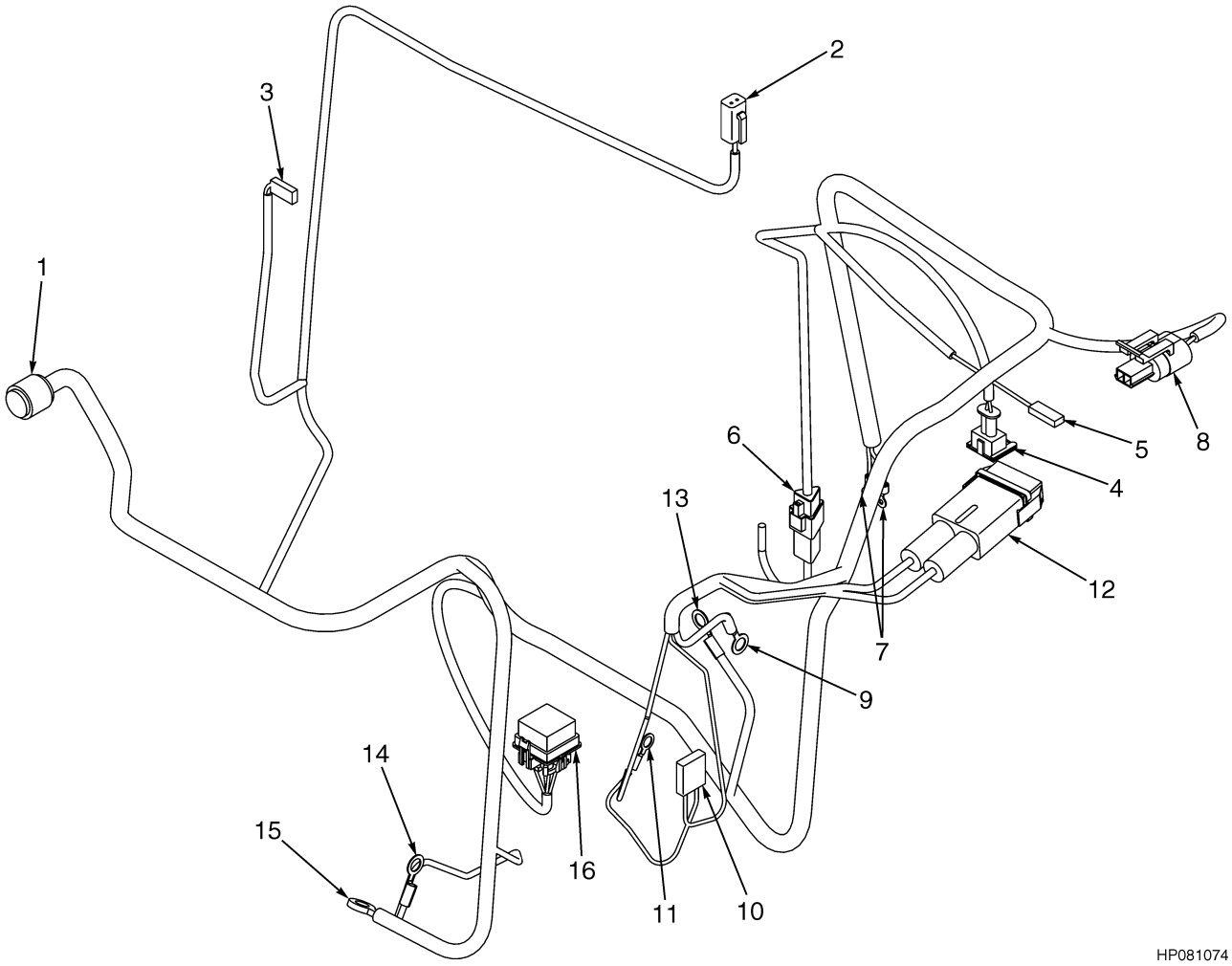

©2009 HYSTER COMPANY

WIRE HARNESS

DIESEL (→ S/N K005V02185Y)

ITEM	PART NO.	DESCRIPTION	QTY
	2036928	Wire Harness (Engine)	1
1	1475546	Kit-Connector (Bulkhead)	1
2	1475551	Kit-Connector (2 Pin)	1
3	1475620	Kit-Pin (Thermostat)	1
4	1475610	Kit-Connector (2 Pin)	1
5	1475621	Connector	1
6	1475608	Connector	1
7	1475558	Kit-Ring Terminal	1
8	1475622	Kit-Connector (2 Pin)	1
9	1475574	Kit-Ring Terminal	1
10	1475572	Kit-Connector (Alternator)	1
11	1475573	Kit-Ring Terminal (Ground)	1
12	1475559	Fuse	1
13	1475548	Kit-Ring Terminal	1
14	1475550	Kit-Ring Terminal	1
15	1475549	Kit-Ring Terminal	1
16	1654578	Relay (Latch)	1
16	1654579	Clip (Relay)	1

©2009 HYSTER COMPANY

WIRE HARNESS (FIGURE 4-32)

DIESEL (S/N K005V02186Y →)

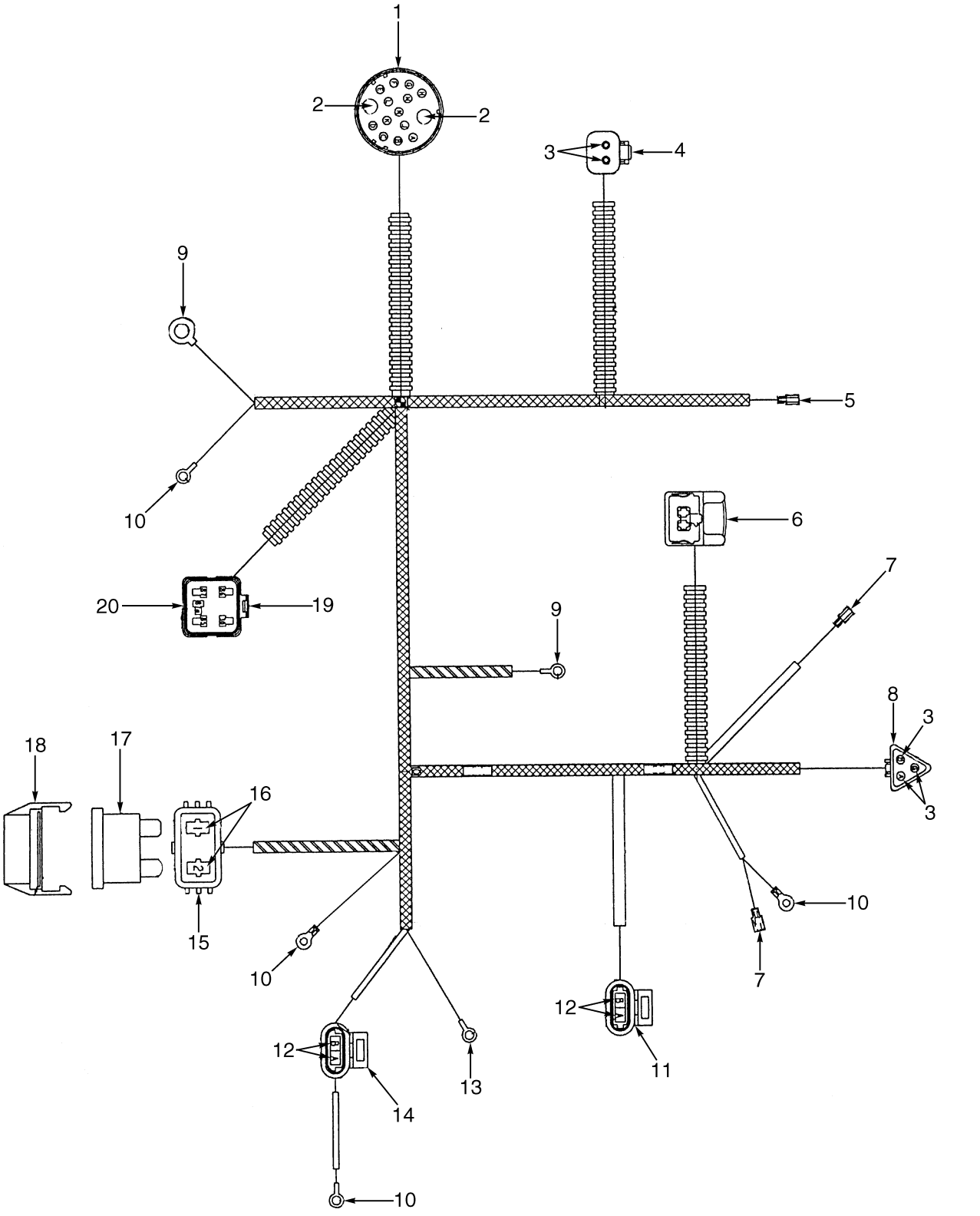

©2009 HYSTER COMPANY

WIRE HARNESS

DIESEL (S/N K005V02186Y →)

ITEM	PART NO.	DESCRIPTION	QTY
	2047711	Wire Harness (Engine)	1
1	1495955	Housing	1
1	1496891	Terminal	11
2	1496889	Terminal	2
3	1330438	Terminal (Socket)	5
4	1484361	Connector (Socket)	1
5	399487	Terminal	1
6	1493435	Connector (2-Way) (Engine Shut-Off Solenoid)	1
6	1479107	Terminal	2
6	1479109	Seal	2
7	370730	Terminal	1
8	1498502	Connector	1
8	1463194	Connector	1
9	1354497	E-Ring	2
10	252293	E-Ring	4
11	1498471	Connector Body	1
12	1493461	Terminal	4
13	148614	E-Ring	1
14	1493469	Housing	1
15	1497234	Fuse Holder	1
16	1402889	Terminal	2
16	1454827	Seal	2
17	1454829	Fuse (60 Amp)	1
18	1497235	Fuse Holder	1
19	1375795	Connector Body	1
19	1503088	Lock	1
19	1498496	Seal	4
19	1402912	Terminal	4
20	1402857	Seal	1

©2009 HYSTER COMPANY

WIRE HARNESS (FIGURE 4-33)
DUAL FUEL SHUT OFF

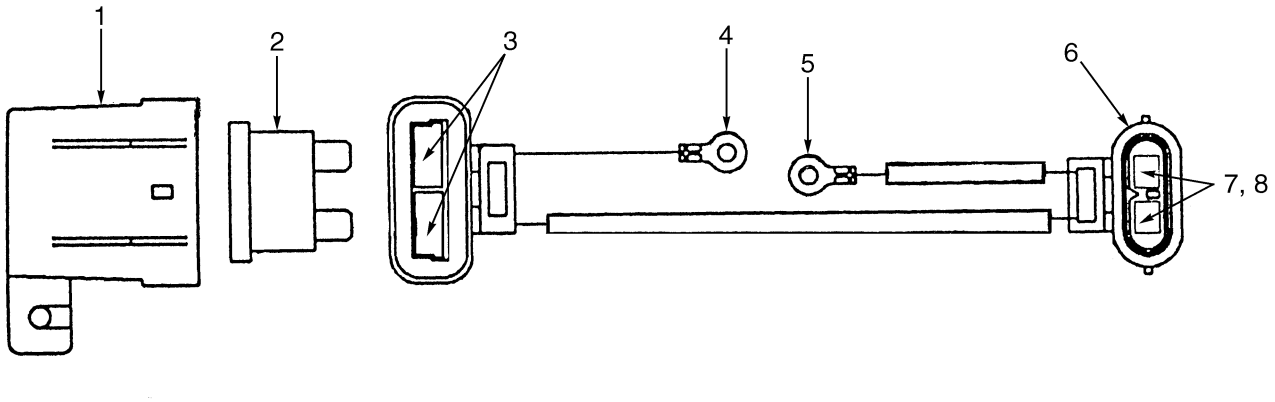

BP080052

ITEM	PART NO.	DESCRIPTION	QTY
	2038881	Wire Harness	1
1	1330293	Cover (Fuse)	1
2	370647	Fuse (10 Amp)	1
3	1498412	Terminal	2
4	370647	Fuse (10 Amp)	1
5	1524400	Ring	1
6	1498423	Housing	1
6	1498493	Retainer	1
7	1482664	Connector Body	2
8	1498492	Seal	2

©2009 HYSTER COMPANY

WIRE HARNESS (FIGURE 4-34)
ESOS ADAPTER

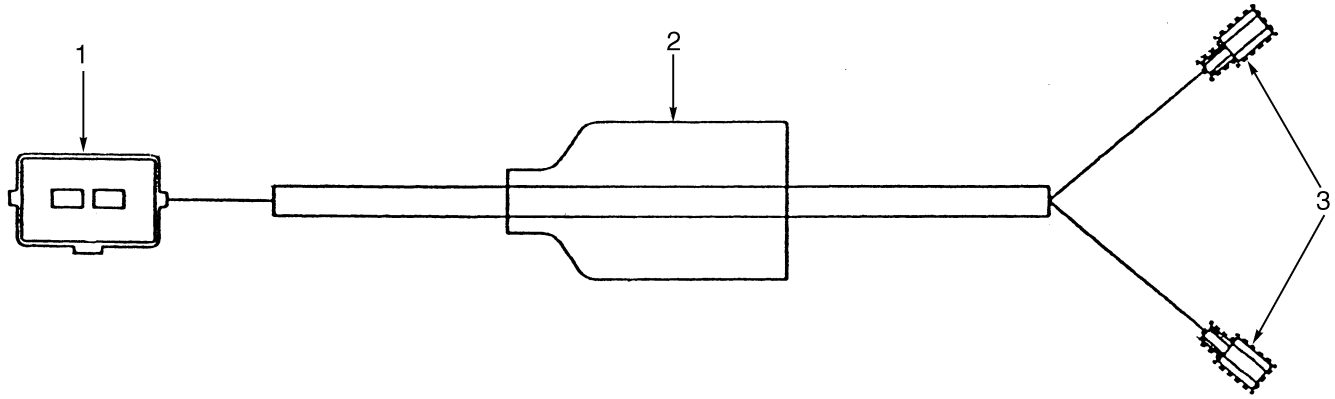

BP080056

ITEM	PART NO.	DESCRIPTION	QTY
	2042643	Wire Harness	1
1	1496782	Housing	1
1	1494864	Pin	2
1	1479109	Seal	2
2	1496783	Boot	1
3	1484396	Terminal	2
3	1497274	Boot	2

©2009 HYSTER COMPANY

WIRE HARNESS (FIGURE 4-35)

MODULE, TYPE S POWERSHIFT — SHEET 1 OF 2 (→ S/N K005D05972Y INC. 6018)

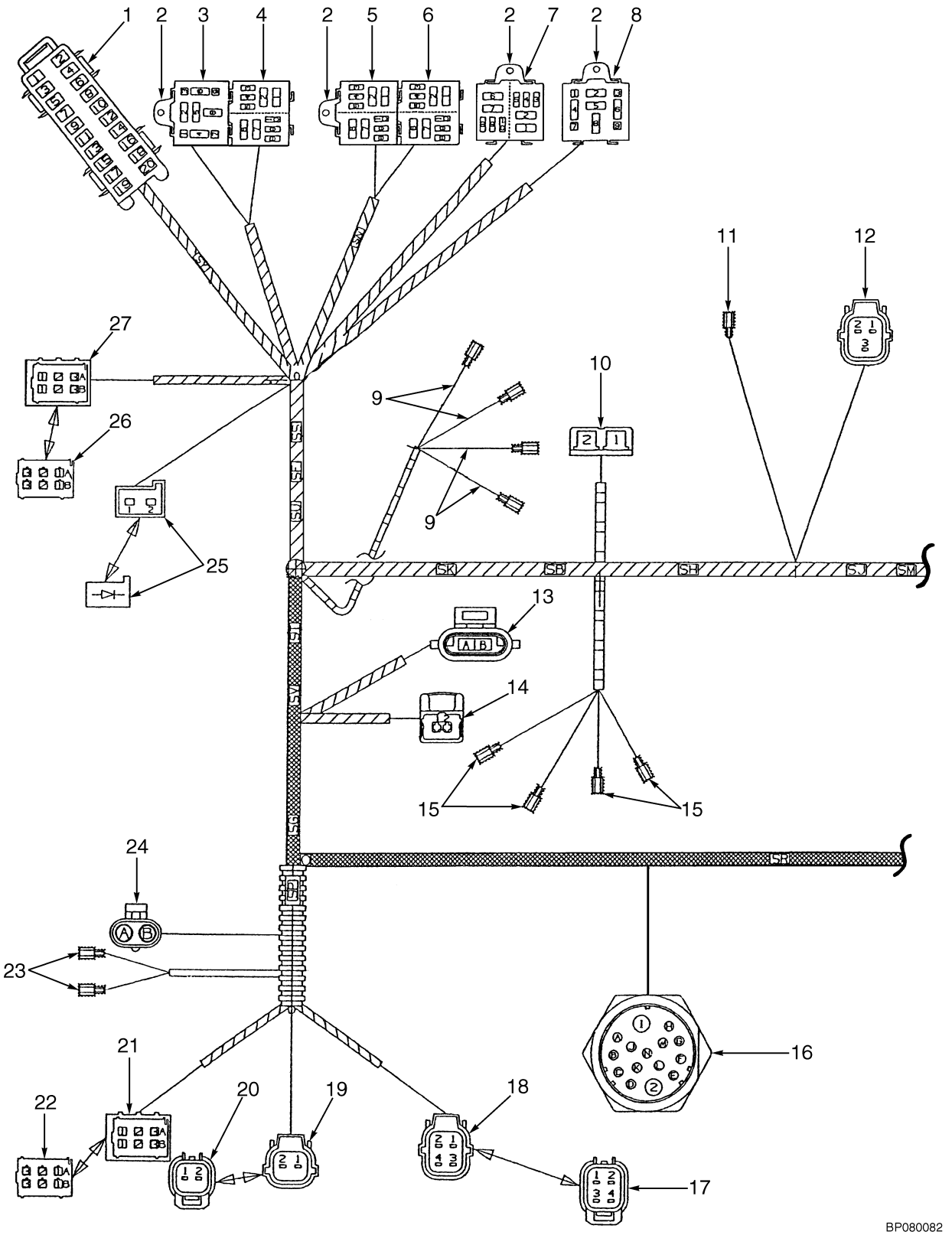

©2009 HYSTER COMPANY

WIRE HARNESS

MODULE, TYPE S POWERSHIFT – SHEET 1 OF 2 (→ S/N K005D05972Y INC. 6018)

ITEM	PART NO.	DESCRIPTION	QTY
	2043040	Wire Harness	1
1	. . . . .	Connector Assembly (Fuse Box)	1
1	1484681	Fuse Box (10-Way)	1
1	1484682	Fuse Box	1
1	1496885	Terminal (Items 1, 3, 5 and 7)	4
1	1490250	Terminal (2-Way) (Items 9 and 11)	2
1	1496884	Terminal (3-Way) (Items 13, 15 and 17)	3
1	1389479	Terminal	10
1	1489957	Connector (1-Way) (12)	1
1	370647	Fuse (10 Amp)	4
1	1320669	Fuse (30 Amp)	2
1	370648	Fuse (20 Amp)	1
1	1310630	Fuse (15 Amp)	3
2	1489956	Clip	4
3	. . . . .	Connector Assembly (Start Inhibit Relay)	1
3	1484684	Single Mini Relay Base	1
3	1489957	Connector (1-Way)	2
3	1389479	Terminal	2
4	. . . . .	Connector Assembly (Forward Relay)	1
4	1484683	Relay (Base)	1
4	1489957	Connector (1-Way)	2
4	1484719	Terminal	2
4	1489957	Connector (1-Way) (Reverse Relay)	2
4	1484719	Terminal	2
5	. . . . .	Connector Assembly (Horn Relay)	1
5	1484683	Relay (Base)	1
5	1389479	Terminal	2
5	1484719	Terminal (Neutral Relay)	2
5	1489957	Connector (1-Way)	3
5	1484719	Terminal	1
6	. . . . .	Connector Assembly (Reverse Light Relay)	1
6	1484683	Relay (Base)	1
6	1489957	Connector (1-Way)	2
6	1484719	Terminal	2
6	1389479	Terminal	1
6	1489957	Connector (1-Way)	1
6	1484719	Terminal	2
7	. . . . .	Connector Assembly (Cab Power)	1
7	1484683	Relay (Base)	1
7	1389479	Terminal	2
7	1484719	Terminal	2
7	1389479	Terminal	2
7	1484719	Terminal	2
8	. . . . .	Connector Assembly (Turn Signal Relay)	1
8	1484684	Single Mini Relay Base	1
8	1489957	Connector (1-Way)	2
8	. . . . .	Flasher	4
9	. . . . .	Connector Assembly (Park Brake Monotrol)	1
9	1497265	Housing	4
9	1497262	Terminal	4

©2009 HYSTER COMPANY

WIRE HARNESS

MODULE, TYPE S POWERSHIFT – SHEET 1 OF 2 (→ S/N K005D05972Y INC. 6018)

ITEM	PART NO.	DESCRIPTION	QTY
10	. . . . .	Connector Assembly (Thermostat)	1
10	1484661	Housing (Receptacle)	1
10	1484707	Terminal (56 Series)	1
10	1484375	Terminal	1
11	. . . . .	Connector Assembly (Horn Switch)	1
11	1497265	Housing	1
11	1497262	Terminal	1
12	. . . . .	Connector Assembly (Reverse Switch)	1
12	1497294	Socket (3-Way)	1
12	1497300	Retainer	1
12	1484656	Terminal (Socket)	3
12	1484597	Seal	3
13	. . . . .	Connector Assembly (Horn)	1
13	1402878	Connector	1
13	1498493	Retainer	1
13	1498492	Seal	2
13	1482664	Connector Body	2
14	. . . . .	Connector Assembly (Brake Reservoir)	1
14	1402922	Connector	1
14	1493436	Terminal (Socket)	2
14	1479109	Seal	2
15	. . . . .	Connector Assembly (Park Brake)	4
15	1497265	Housing	4
15	1497262	Terminal	4
16	. . . . .	Connector Assembly (Engine Harness)	1
16	1497228	Housing	1
16	1496926	Terminal	2
16	1496924	Terminal	6
16	1496925	Terminal	7
17	1497290	Socket	1
17	1484611	Seal (Blanking)	2
18	. . . . .	Connector Assembly (Optional Lighting)	1
18	1496886	Socket (4-Way)	1
18	1497302	Retainer	1
18	1484656	Terminal (Socket)	4
18	1484597	Seal	4
19	. . . . .	Connector Assembly (Reverse Alarm)	1
19	1497293	Connector Body (2-Way)	1
19	1497298	Retainer	1
19	1484656	Terminal (Socket)	2
19	1484597	Seal	2

©2009 HYSTER COMPANY

NOTES

©2009 HYSTER COMPANY

WIRE HARNESS (FIGURE 4-36)

MODULE, TYPE S POWERSHIFT — SHEET 2 OF 2 (→ S/N K005D05972Y INC. 6018)

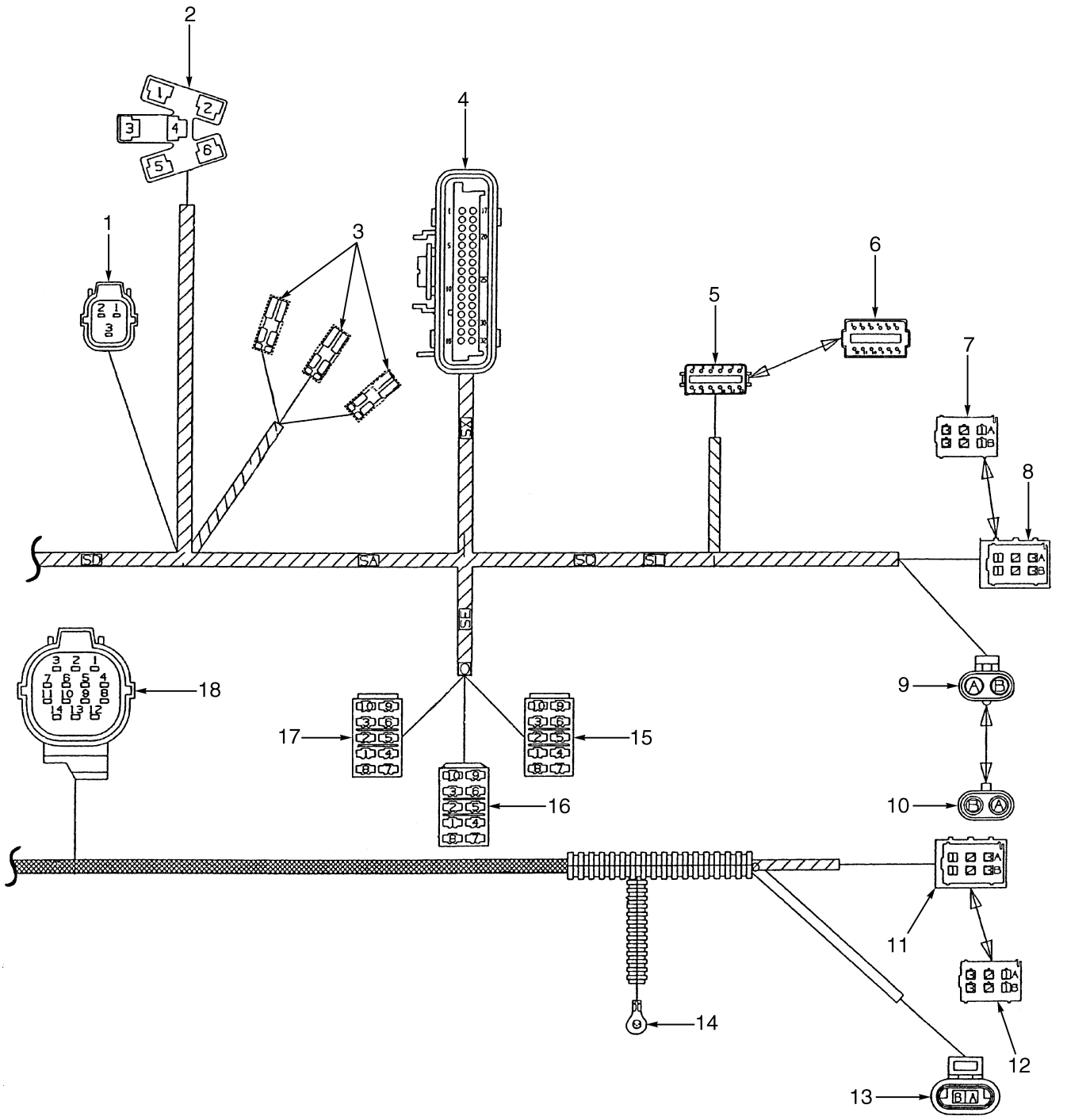

BP080083

©2009 HYSTER COMPANY

WIRE HARNESS

MODULE, TYPE S POWERSHIFT – SHEET 2 OF 2 (→ S/N K005D05972Y INC. 6018)

ITEM	PART NO.	DESCRIPTION	QTY
	2043040	Wire Harness	1
1	. . . . .	Connector Assembly (Forward Switch)	2
1	1497294	Socket (3-Way)	2
1	1497300	Retainer	2
1	1484656	Terminal (Socket)	3
1	1484597	Seal	3
2	. . . . .	Connector Assembly (Ignition Switch)	1
2	370728	Connector Body	1
2	1484707	Terminal (56 Series) (Items 1 and 3)	2
2	1484375	Terminal (Items 4 and 6)	2
3	. . . . .	Connector Assembly	3
3	1493444	Terminal	3
3	1493445	Cover	3
4	. . . . .	Connector Assembly (Cluster)	1
4	1484670	Retainer	1
4	1471960	Strain Relief	1
4	1484672	Insert	1
4	1484671	Seal	1
4	1484710	Terminal	21
4	1352105	Plug	11
5	. . . . .	Connector Assembly (High/Low Shift)	1
5	1484357	Connector (12-Way)	1
5	1484358	Retainer (Socket)	1
5	1330439	Plug	3
5	1330438	Terminal (Socket)	9
6	. . . . .	Connector Assembly (Mating Half, Item 5)	1
6	1330439	Plug	1
6	1484720	Connector	1
7	. . . . .	Connector Assembly (Mating Half, Item 8)	1
7	1496790	Terminal	1
8	. . . . .	Connector Assembly (RH Front Light)	1
8	1496791	Connector Body	1
8	1496788	Terminal	5
9	. . . . .	Connector Assembly (Cab Power)	1
9	1498474	Housing	1
9	1498419	Terminal	2
9	1498496	Seal	2
10	. . . . .	Connector Assembly (Mating Half, Item 9)	1
10	1498422	Connector Body	1
10	1402857	Seal	2
11	. . . . .	Connector Assembly (RH Rear Light)	1
11	1496791	Connector Body	1
11	1496788	Terminal	5
12	. . . . .	Connector Assembly (Mating Half, Item 11)	1
12	1496790	Terminal	1
13	. . . . .	Connector Assembly (Coolant Level)	1
13	1493460	Housing	1
13	1354237	Terminal	2
14	. . . . .	Connector Assembly	1
14	1493458	E-Ring	1

©2009 HYSTER COMPANY

WIRE HARNESS

MODULE, TYPE S POWERSHIFT – SHEET 2 OF 2 (→ S/N K005D05972Y INC. 6018)

ITEM	PART NO.	DESCRIPTION	QTY
14	1484383	Heat Shrink	1
15	. . . . .	Connector Assembly (Transmission Lock)	1
15	1484555	Switch (10-Way)	1
15	1497262	Terminal	4
16	. . . . .	Connector Assembly (Rear Lights)	1
16	1484555	Switch (10-Way)	1
16	1497262	Terminal	4
17	. . . . .	Connector Assembly (Front Lights)	1
17	1484555	Switch (10-Way)	1
17	1497262	Terminal	6
18	. . . . .	Connector Assembly (Transmission Harness)	1
18	1484654	Connector (14-Way)	1
18	1484655	Retainer (Socket)	1
18	1484656	Terminal (Socket)	14
18	1484597	Seal	14

©2009 HYSTER COMPANY

WIRE HARNESS (FIGURE 4-37)

ADAPTER (→ 5/2001)

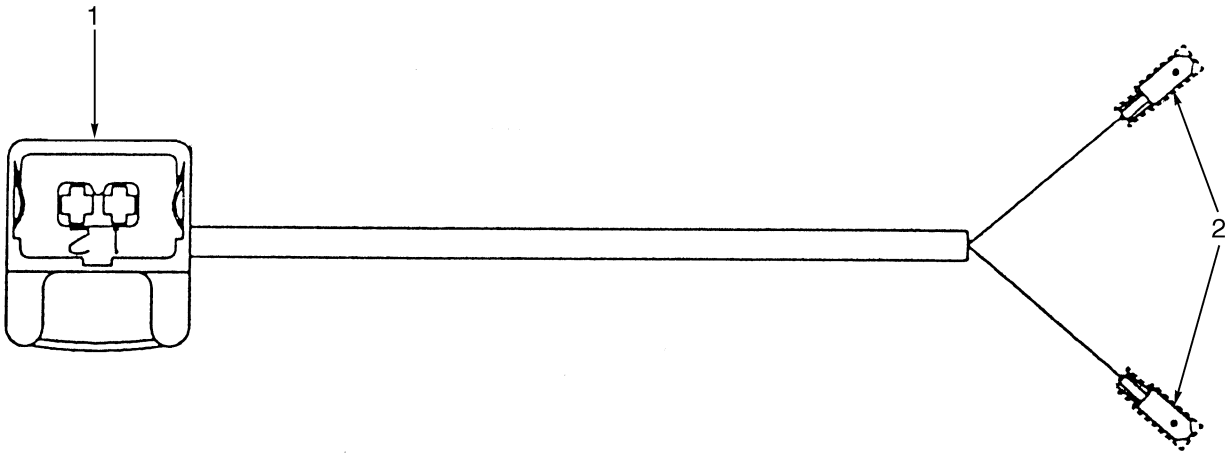

BP080055

ITEM	PART NO.	DESCRIPTION	QTY
	2043228	Wire Harness (Adapter)	1
1	1493446	Connector	1
1	1493436	Terminal (Socket)	2
1	1479109	Seal	2
2	1484651	Cover	2
2	1484651	Cover	2

©2009 HYSTER COMPANY

WIRE HARNESS (FIGURE 4-38)

GASOLINE ENGINE, GM V6 — SHEET 1 OF 2 (→ S/N K005D05973Y)

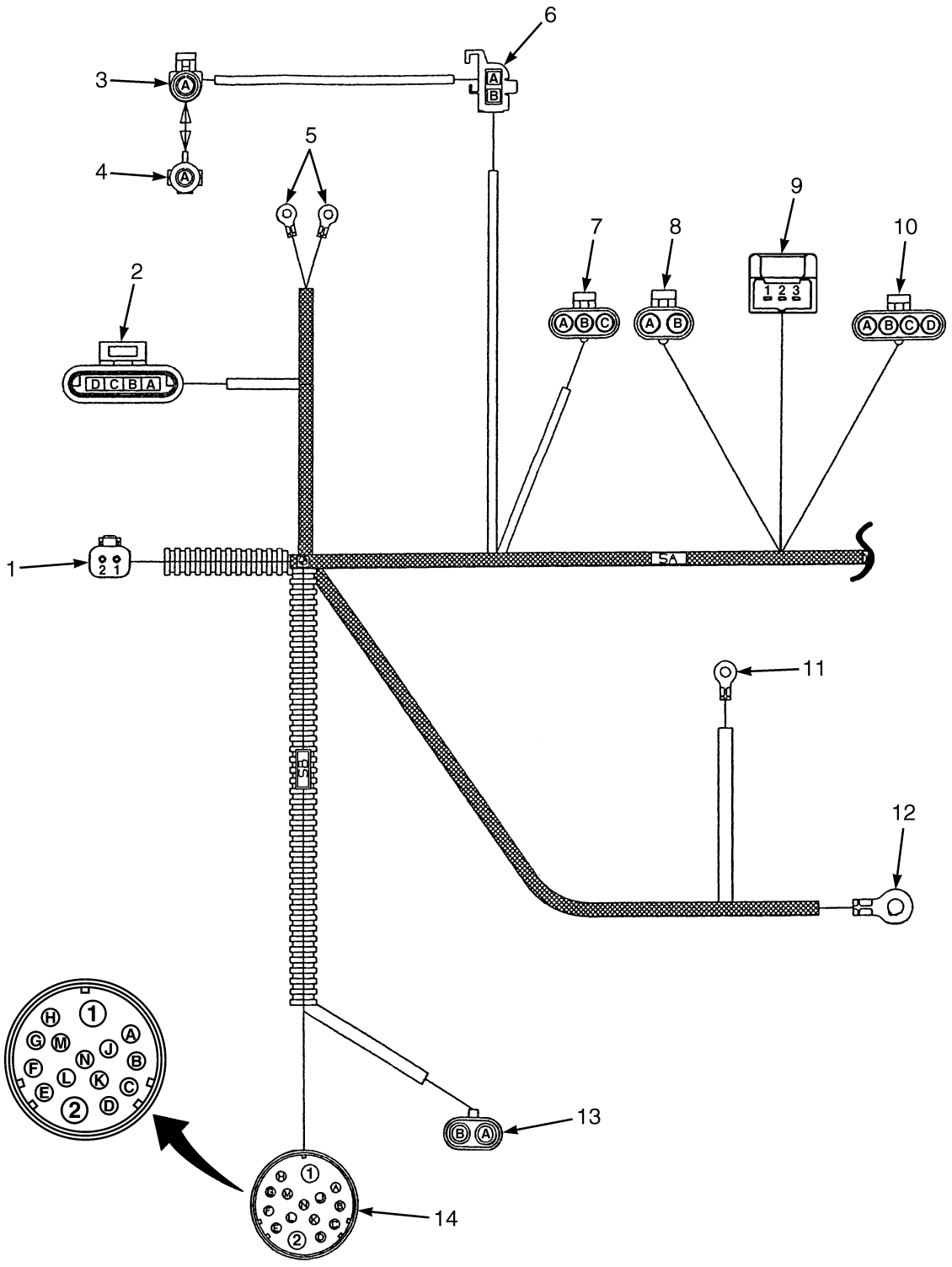

©2009 HYSTER COMPANY

WIRE HARNESS

GASOLINE ENGINE, GM V6 – SHEET 1 OF 2 (→ S/N K005D05973Y)

ITEM	PART NO.	DESCRIPTION	QTY
	2043949	Wire Harness (G, GS Engine)	1
1	. . . . .	Connector Assembly (Seat Switch)	1
1	1484361	Connector (Socket)	1
1	1330424	Connector	1
1	1330438	Terminal (Socket)	2
2	. . . . .	Connector Assembly (Distributor)	1
2	1498478	Housing	1
2	1493461	Terminal	4
3	. . . . .	Connector Assembly (Tachometer)	1
3	1498473	Housing	1
3	1498419	Terminal	1
3	1498496	Seal	1
4	. . . . .	Connector Assembly	1
4	1487441	Housing	1
4	1498498	Fitting	4
5	1493455	Ring	2
5	1493450	Heat Shrink	1
6	. . . . .	Connector Assembly	1
6	1498470	Connector Body	1
7	. . . . .	Connector Assembly	1
7	1327958	Connector	1
7	1498415	Terminal	3
7	1498496	Seal	3
8	. . . . .	Connector Assembly	1
8	1498474	Housing	1
8	1498496	Seal	2
8	1498419	Terminal	2
9	. . . . .	Connector Assembly (Throttle Position Sensor)	1
9	1496777	Housing	1
9	1493436	Terminal (Socket)	3
9	1479109	Seal	3
10	. . . . .	Connector Assembly (Injectors)	1
10	1498472	Connector Body	1
10	1498496	Seal	4
10	1498419	Terminal	4
11	. . . . .	Connector Assembly (Starter Solenoid)	1
11	1496883	Ring	2
11	1493450	Heat Shrink	2
12	. . . . .	Connector Assembly (+ VE)	1
12	1493455	Ring	1
12	1496773	Heat Shrink	1
13	. . . . .	Connector Assembly (Fuel Pump)	1
13	1402616	Connector	1
13	1323579	Seal	2
13	1498415	Terminal	2
14	. . . . .	Connector Assembly (Cowl)	1
14	1495955	Housing	1
14	1496889	Terminal (Items 1 and 2)	2
14	1496891	Terminal (Items A, L, M, N)	4
14	1484716	Terminal (Items C, D, E, G, H, J, K)	7

©2009 HYSTER COMPANY

WIRE HARNESS (FIGURE 4-39)

GASOLINE ENGINE, GM V6 — SHEET 2 OF 2 (S/N K005D05973Y ↔ S/N K005V02185Y)

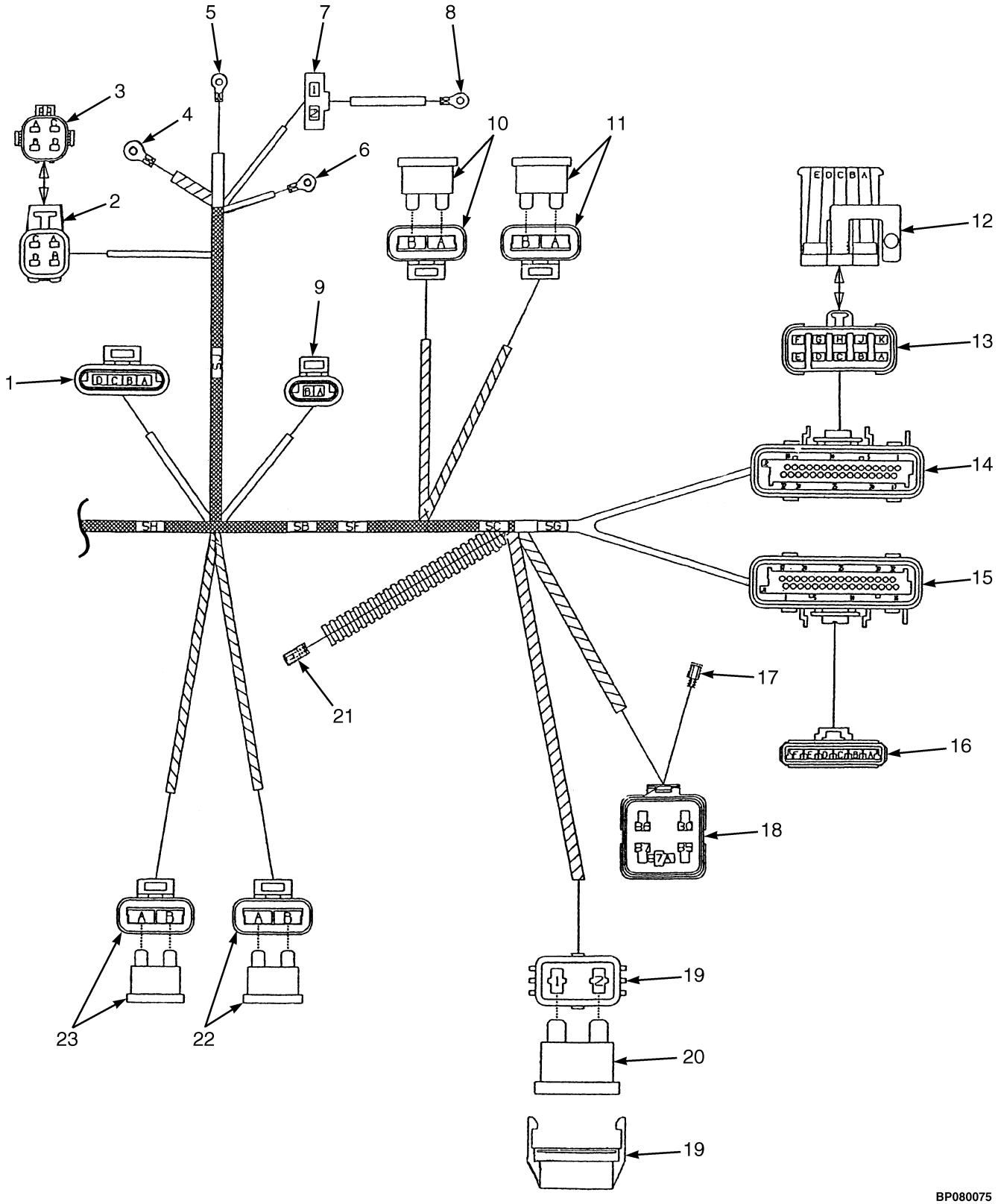

©2009 HYSTER COMPANY

WIRE HARNESS

GASOLINE ENGINE, GM V6 – SHEET 2 OF 2 (S/N K005D05973Y ↔ S/N K005V02185Y)

ITEM	PART NO.	DESCRIPTION	QTY
	2043949	Wire Harness (G, GS Engine)	1
1	. . . . .	Connector Assembly (IAC)	1
1	1498478	Housing	1
1	1493461	Terminal	4
2	. . . . .	Connector Assembly (Oxygen Sensor)	1
2	1498468	Housing	1
2	1482664	Connector Body	4
2	1498492	Seal	4
3	. . . . .	Connector Assembly (Mating Half)	1
3	1498424	Housing	1
3	1498498	Fitting	4
4	1493455	Ring	1
4	1496773	Heat Shrink	1
5	1493458	E-Ring (Alternator)	1
5	1484383	Heat Shrink	1
6	1493457	Ring (Alternator)	1
6	1484383	Heat Shrink	1
7	. . . . .	Connector Assembly (Alternator)	1
7	1493469	Housing	1
7	1484375	Terminal	2
8	1497229	Ring	1
8	1484383	Heat Shrink	1
9	. . . . .	Connector Assembly	1
9	1493460	Housing	1
9	1493461	Terminal	2
10	. . . . .	Connector Assembly	1
10	1498425	Housing	1
10	1498412	Terminal	2
10	370647	Fuse (10 Amp)	1
11	. . . . .	Connector Assembly	1
11	1498425	Housing	1
11	370647	Fuse (10 Amp)	1
11	1498412	Terminal	2
12	1498421	Clip	1
13	. . . . .	Connector Assembly	1
13	1498427	Housing	1
13	1402907	Lock	1
13	1482664	Connector Body	4
13	1498492	Seal	4
13	1498498	Fitting	6
14	. . . . .	Connector Assembly (EFI, ECM)	1
14	1498462	Retainer	1
14	1498487	Strain Relief	1
14	1498451	Insert	1
14	1498495	Seal	1
14	1484710	Terminal	12
14	1352105	Plug	20
15	. . . . .	Connector Assembly (EFI, ECU)	1
15	1500963	Retainer	1
15	1498451	Insert	1

©2009 HYSTER COMPANY

WIRE HARNESS

GASOLINE ENGINE, GM V6 – SHEET 2 OF 2 (S/N K005D05973Y ↔ S/N K005V02185Y)

ITEM	PART NO.	DESCRIPTION	QTY
15	1498495	Seal	1
15	1484710	Terminal	16
15	1352105	Plug	16
16	. . . . .	Connector Assembly (Governor)	1
16	1498463	Housing	1
16	1498486	Lock	1
16	1498414	Terminal	5
16	1498496	Seal	5
16	1402857	Seal	1
17	1497264	Terminal (Fuel Pump)	1
17	1497274	Boot	1
18	. . . . .	Connector Assembly (Fuel Pump Relay)	1
18	1498469	Base	1
18	1498483	Sealant	1
18	1402912	Terminal	5
18	1498496	Seal	5
19	. . . . .	Connector Assembly (Alternator)	1
19	1497234	Fuse Holder	1
19	1497232	Terminal	2
19	1454827	Seal	1
20	1454829	Fuse (60 Amp)	1
21	1493441	Housing	1
21	1484375	Terminal	1
22	. . . . .	Connector Assembly (Fuel Pump)	1
22	1498425	Housing	1
22	1498412	Terminal	2
22	370647	Fuse (10 Amp)	1
23	. . . . .	Connector Assembly	1
23	1498425	Housing	1
23	1498412	Terminal	2
23	370647	Fuse (10 Amp)	1

©2009 HYSTER COMPANY

NOTES

©2009 HYSTER COMPANY

WIRE HARNESS (FIGURE 4-40)

GASOLINE, GM V6 — SHEET 1 OF 2 (S/N K005V02186Y ↔ S/N K005V02836Z)

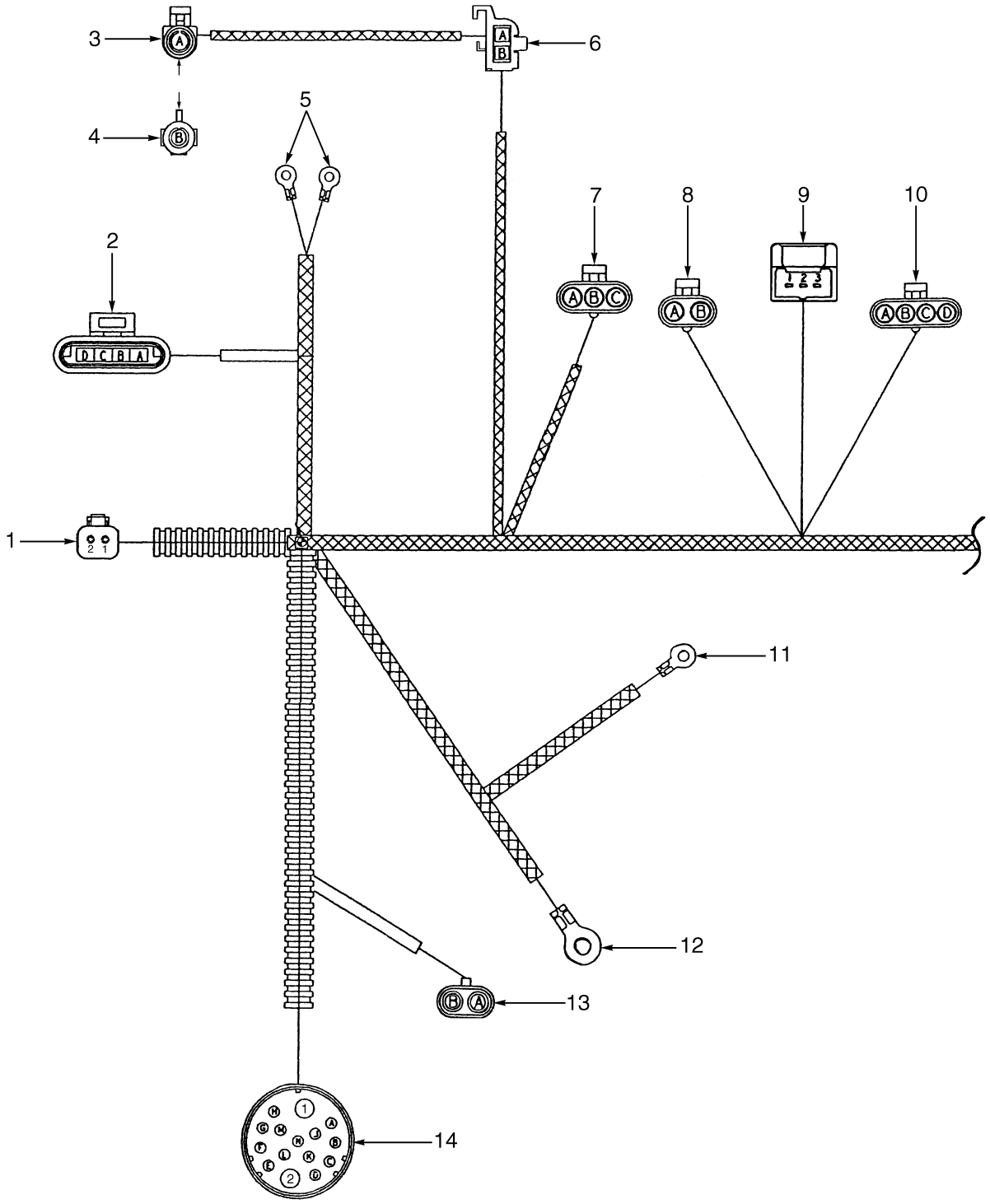

©2009 HYSTER COMPANY

WIRE HARNESS

GASOLINE, GM V6 – SHEET 1 OF 2 (S/N K005V02186Y ↔ S/N K005V02836Z)

ITEM	PART NO.	DESCRIPTION	QTY
	2047709	Wire Harness (G, GS Engine)	1
1	. . . . .	Connector Assembly (Seat Switch)	1
1	1484361	Connector (Socket)	1
1	1490243	Connector	1
1	1330438	Terminal (Socket)	2
2	. . . . .	Connector Assembly (Distributor)	1
2	1498478	Housing	1
2	1323576	Terminal	4
3	. . . . .	Connector Assembly (Tachometer)	1
3	1330299	Connector	1
3	1498419	Terminal	1
3	1402858	Wire Seal	1
4	. . . . .	Connector Assembly	1
4	1498476	Connector	1
4	1402857	Seal	1
5	252293	E-Ring (Engine Oil Pressure)	2
6	. . . . .	Connector Assembly (Coil)	1
6	1498470	Connector Body	1
7	. . . . .	Connector Assembly (Map Sensor)	1
7	1327958	Connector	1
7	1498415	Terminal	3
7	1402858	Wire Seal	3
8	. . . . .	Connector Assembly (Governor)	1
8	1496777	Housing	1
8	1402858	Wire Seal	1
8	1498419	Terminal	1
9	. . . . .	Connector Assembly (Throttle Position)	1
9	1496777	Housing	1
9	1402814	Terminal	3
9	1479109	Seal	3
10	. . . . .	Connector Assembly (Injectors)	1
10	1498472	Connector Body	1
10	1402858	Wire Seal	4
10	1498419	Terminal	4
11	252293	E-Ring (Starter Solenoid)	1
12	1354497	E-Ring (+ VE)	1
13	. . . . .	Connector Assembly (Fuel Pump)	1
13	1402616	Connector	1
13	1402858	Wire Seal	2
13	1498415	Terminal	2
14	. . . . .	Connector Assembly (Cowl)	1
14	1495955	Housing	1
14	1496889	Terminal (Items 1 and 2)	2
14	1496891	Terminal (Items A, L, M, N)	4
14	1484716	Terminal (Items C, D, E, G, H, J, K)	7

©2009 HYSTER COMPANY

WIRE HARNESS (FIGURE 4-41)

GASOLINE, GM V6 — SHEET 2 OF 2 (S/N K005V02186Y ↔ S/N K005V02836Z)

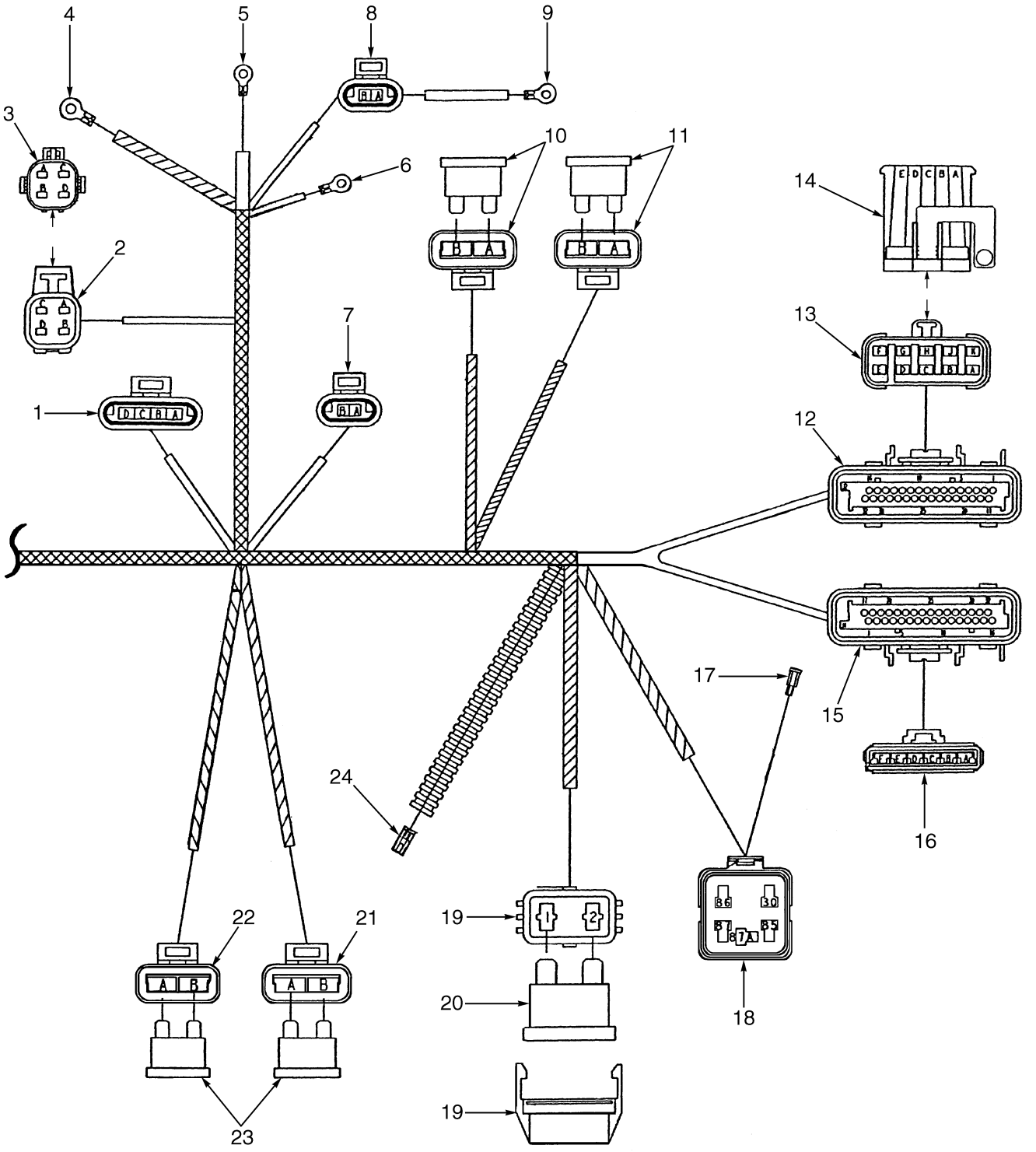

BP080069

©2009 HYSTER COMPANY

WIRE HARNESS

GASOLINE, GM V6 – SHEET 2 OF 2 (S/N K005V02186Y ↔ S/N K005V02836Z)

ITEM	PART NO.	DESCRIPTION	QTY
	2047709	Wire Harness (G, GS Engine)	1
1	. . . . .	Connector Assembly (IAC)	1
1	1498478	Housing	1
1	1493461	Terminal	4
2	. . . . .	Connector Assembly (Oxygen Sensor)	1
2	1498468	Housing	1
2	1482664	Connector Body	4
2	1498492	Seal	4
3	. . . . .	Connector Assembly	1
3	1498424	Housing	1
3	1402866	Seal	4
4	1354497	E-Ring (Ground)	1
5	1509790	E-Ring (Alternator, Negative)	1
6	148614	E-Ring (Alternator, Positive)	1
7	. . . . .	Connector Assembly (Temperature Sensor)	1
7	1493460	Housing	1
7	1498486	Lock	2
8	. . . . .	Connector Assembly	1
8	1493460	Housing	1
8	1323576	Terminal	2
9	1509790	E-Ring	1
9	. . . . .	Heatshrink	AR
10	. . . . .	Fuse Holder (Ignition)	1
10	1498425	Housing	1
10	1498412	Terminal	1
10	370647	Fuse (10 Amp)	1
11	. . . . .	Fuse Holder (EFI/ECM B+)	1
11	1498425	Housing	1
11	1498412	Terminal	1
11	370647	Fuse (10 Amp)	1
12	. . . . .	Connector Assembly (EFI/ECM)	1
12	1498462	Retainer	1
12	1498487	Strain Relief	1
12	1498451	Insert	1
12	1498495	Seal	1
12	1484710	Terminal	12
12	1352105	Plug	20
13	. . . . .	Connector Assembly (Comms Port)	1
13	1376617	Plug	1
13	1402907	Lock	1
13	1482664	Connector Body (Items A, B, F, G)	4
13	1498492	Seal (Items A, B, F, G)	4
13	1402866	Seal (Items C, D, E, F, J, K)	6
14	. . . . .	Connector Assembly	1
14	1402907	Lock	1
14	1402866	Seal	10
14	1376617	Plug	1
14	1498421	Clip	1
15	. . . . .	Connector Assembly (EFI/ECM)	1
15	1500963	Retainer	1

©2009 HYSTER COMPANY

WIRE HARNESS

GASOLINE, GM V6 – SHEET 2 OF 2 (S/N K005V02186Y ↔ S/N K005V02836Z)

ITEM	PART NO.	DESCRIPTION	QTY
15	1498488	Strain Relief	1
15	1498451	Insert	1
15	1498495	Seal	1
15	1484710	Terminal	16
15	1352105	Plug	16
16	. . . . .	Connector Assembly	1
16	1498463	Housing	1
16	1498486	Lock	1
16	1498414	Terminal	5
16	1402858	Wire Seal	5
16	1402857	Seal	1
17	1402849	Connector Body (Fuel Pump)	1
18	. . . . .	Connector Assembly	1
18	1498469	Base	1
18	1498483	Sealant	1
18	1402912	Terminal	5
18	1402858	Wire Seal	5
19	. . . . .	Connector Assembly	1
19	1497234	Fuse Holder	1
19	1402889	Terminal	2
19	1454827	Seal	2
20	1454829	Fuse (60 Amp)	1
21	. . . . .	Connector Assembly (Fuel Pump)	1
21	1498425	Housing	1
21	1498412	Terminal	2
22	. . . . .	Connector Assembly (Injector)	1
22	1498425	Housing	1
22	1498412	Terminal	2
23	370647	Fuse (10 Amp)	2
24	. . . . .	Connector Assembly	1
24	1301720	Connector Body	1
24	1498413	Terminal	1

©2009 HYSTER COMPANY

NOTES

©2009 HYSTER COMPANY

WIRE HARNESS (ENGINE) (FIGURE 4-42)

GASOLINE AND GASOLINE SAFETY — GM 4.3L (S/N K005V02837Z ↔ S/N K005V04115Z)

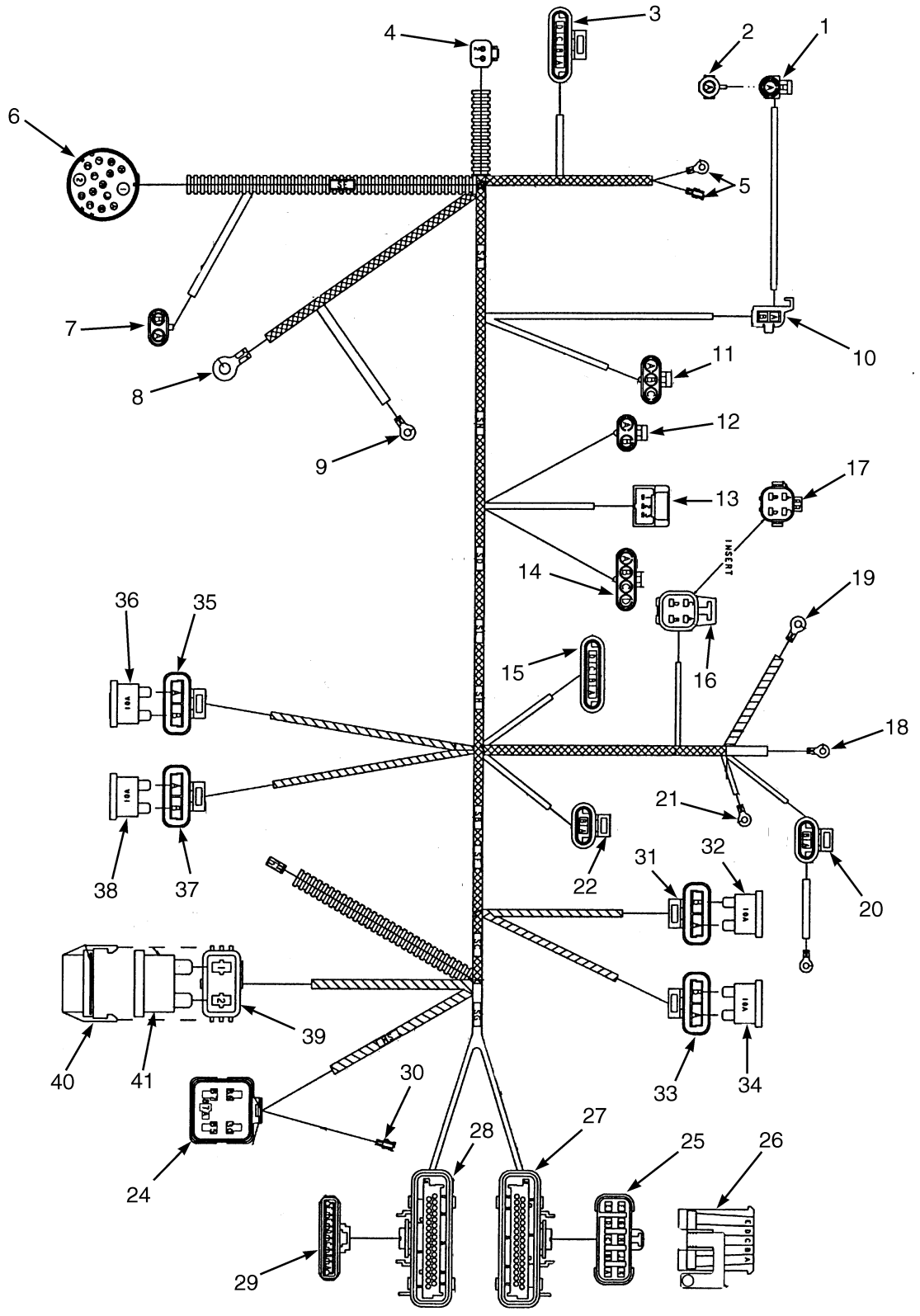

©2009 HYSTER COMPANY

WIRE HARNESS (ENGINE)

GASOLINE AND GASOLINE SAFETY – GM 4.3L (S/N K005V02837Z ↔ S/N K005V04115Z)

ITEM	PART NO.	DESCRIPTION	QTY
	2050502	Wire Harness (G, GS Engine)	1
1	. . . . .	Connector Assembly (Tachometer)	1
1	1330299	Connector	1
1	1336173	Terminal	1
1	1402858	Wire Seal	1
2	. . . . .	Connector Assembly (Mating Half)	1
2	1498476	Connector	1
2	1327164	Seal	1
3	. . . . .	Connector Assembly (Distributor)	1
3	1323575	Connector	1
3	1323576	Terminal	4
4	. . . . .	Connector Assembly (Seat Switch)	1
4	1484361	Connector (Socket)	1
4	1490243	Connector	1
4	1330438	Terminal (Socket)	2
5	. . . . .	Connector Assembly (Oil Press Sender)	1
5	252293	E-Ring	1
5	1468841	Connector	1
5	. . . . .	Shrink Tubing	AR
6	. . . . .	Connector Assembly (Cowl)	1
6	1495955	Housing	1
6	1496889	Terminal	2
6	1496891	Terminal	5
6	1524030	Terminal	6
7	. . . . .	Connector Assembly (Fuel Pump)	1
7	1465469	Connector	1
7	1402858	Wire Seal	2
7	1498415	Terminal	2
8	. . . . .	Connector Assembly (Battery +VE)	1
8	1354497	E-Ring	1
9	. . . . .	Connector Assembly (Start Solenoid)	1
9	252293	E-Ring	1
9	. . . . .	Shrink Tubing	AR
10	. . . . .	Connector Assembly (Coil)	1
10	1314393	Plug	1
11	. . . . .	Connector Assembly (Map Sensor)	1
11	1327958	Connector	1
11	1498415	Terminal	2
11	1402858	Wire Seal	3
11	1498416	Connector	1
12	. . . . .	Connector Assembly (Governor)	1
12	1465468	Connector	1
12	1402858	Wire Seal	2
12	1336173	Terminal	2
13	. . . . .	Connector Assembly (Throttle Pos Sensor)	1
13	1496777	Housing	1
13	1402814	Terminal	2
13	1479109	Seal	3
13	1531160	Terminal	1
14	. . . . .	Connector Assembly (Injectors)	1

©2009 HYSTER COMPANY

WIRE HARNESS (ENGINE)

GASOLINE AND GASOLINE SAFETY – GM 4.3L (S/N K005V02837Z ↔ S/N K005V04115Z)

ITEM	PART NO.	DESCRIPTION	QTY
14	1383804	Connector	1
14	1402858	Wire Seal	4
14	1323583	Terminal	2
14	1336173	Terminal	2
15	. . . . .	Connector Assembly (IAC)	1
15	1323575	Connector	1
15	1323576	Terminal	4
16	. . . . .	Connector Assembly (Oxygen Sensor)	1
16	1498468	Housing	1
16	1330355	Terminal	4
16	1498492	Seal	4
17	. . . . .	Connector Assembly (Mating Half)	1
17	1498424	Housing	1
17	1482668	Plug	4
18	. . . . .	Connector Assembly (Battery -VE)	1
18	1354497	E-Ring	1
19	. . . . .	Connector Assembly (Alternator Negative)	1
19	148614	E-Ring	1
19	1509790	E-Ring	1
19	. . . . .	Shrink Tubing	AR
20	. . . . .	Connector Assembly (Alternator)	1
20	1323586	Connector	1
20	1323576	Terminal	2
21	. . . . .	Connector Assembly (Alternator Positive)	1
21	148614	E-Ring	1
21	1509790	E-Ring	1
21	. . . . .	Shrink Tubing	AR
22	. . . . .	Connector Assembly (H2O Temp Sensor)	1
22	1323586	Connector	1
22	1323576	Terminal	2
23	. . . . .	Connector Assembly (H2O Temp Sensor Inst)	1
23	1301720	Connector Body	1
23	370730	Terminal	1
24	. . . . .	Relay (Fuel Pump)	1
24	1461744	Connector Body	1
24	1498483	Sealant	1
24	1402912	Terminal	4
24	1402858	Wire Seal	5
24	1402904	Terminal	1
25	. . . . .	Connector Assembly (Comms Port)	1
25	1376617	Plug	1
25	1402907	Lock	1
25	1330355	Terminal	4
25	1498492	Seal	4
25	1482668	Plug	6
26	. . . . .	Connector Assembly (Mating Half)	1
26	1376618	Receptacle	1
26	1402907	Lock	1
26	1482668	Plug	10
26	1498421	Clip	1

©2009 HYSTER COMPANY

WIRE HARNESS (ENGINE)

GASOLINE AND GASOLINE SAFETY – GM 4.3L (S/N K005V02837Z ↔ S/N K005V04115Z)

ITEM	PART NO.	DESCRIPTION	QTY
27	. . . . .	Connector Assembly (ECM Plug J2)	1
27	1498462	Retainer	1
27	1498487	Strain Relief	1
27	1498451	Insert	1
27	1498495	Seal	1
27	1484710	Terminal	13
27	1352105	Plug	19
28	. . . . .	Connector Assembly (ECM Plug J1)	1
28	1500963	Retainer	1
28	1498488	Strain Relief	1
28	1498451	Insert	1
28	1498495	Seal	1
28	1352105	Plug	18
28	1484710	Terminal	13
29	. . . . .	Connector Assembly (Governor Amplifier)	1
29	1327959	Connector	1
29	1330297	Lock	1
29	1330281	Terminal	5
29	1402858	Wire Seal	5
29	1327164	Seal	1
30	. . . . .	Connector Assembly (Fuel Pump Prime)	1
30	1468841	Connector	1
31	. . . . .	Fuse Holder (Ignition)	1
31	1330292	Connector	1
31	1330283	Terminal	2
32	370647	Fuse (10 Amp)	1
33	. . . . .	Fuse Holder (ECM B+)	1
33	1330292	Connector	1
33	1330283	Terminal	2
34	370647	Fuse (10 Amp)	1
35	. . . . .	Fuse Holder (Injector)	1
35	1330292	Connector	1
35	1330283	Terminal	2
36	370647	Fuse (10 Amp)	1
37	. . . . .	Fuse Holder (Fuel Pump)	1
37	1330292	Connector	1
37	1330283	Terminal	2
38	370647	Fuse (10 Amp)	1
39	. . . . .	Fuse Holder (Alternator)	1
39	1497234	Fuse Holder	1
39	1520543	Terminal	2
39	1454827	Seal	2
40	1497235	Fuse Holder	1
41	1454829	Fuse (60 Amp)	1

©2009 HYSTER COMPANY

WIRE HARNESS (FIGURE 4-43)

ENGINE, LPG, GM V6, 4.3L — SHEET 1 OF 2 (S/N K005D05973Y ↔ S/N K005V02185Y)

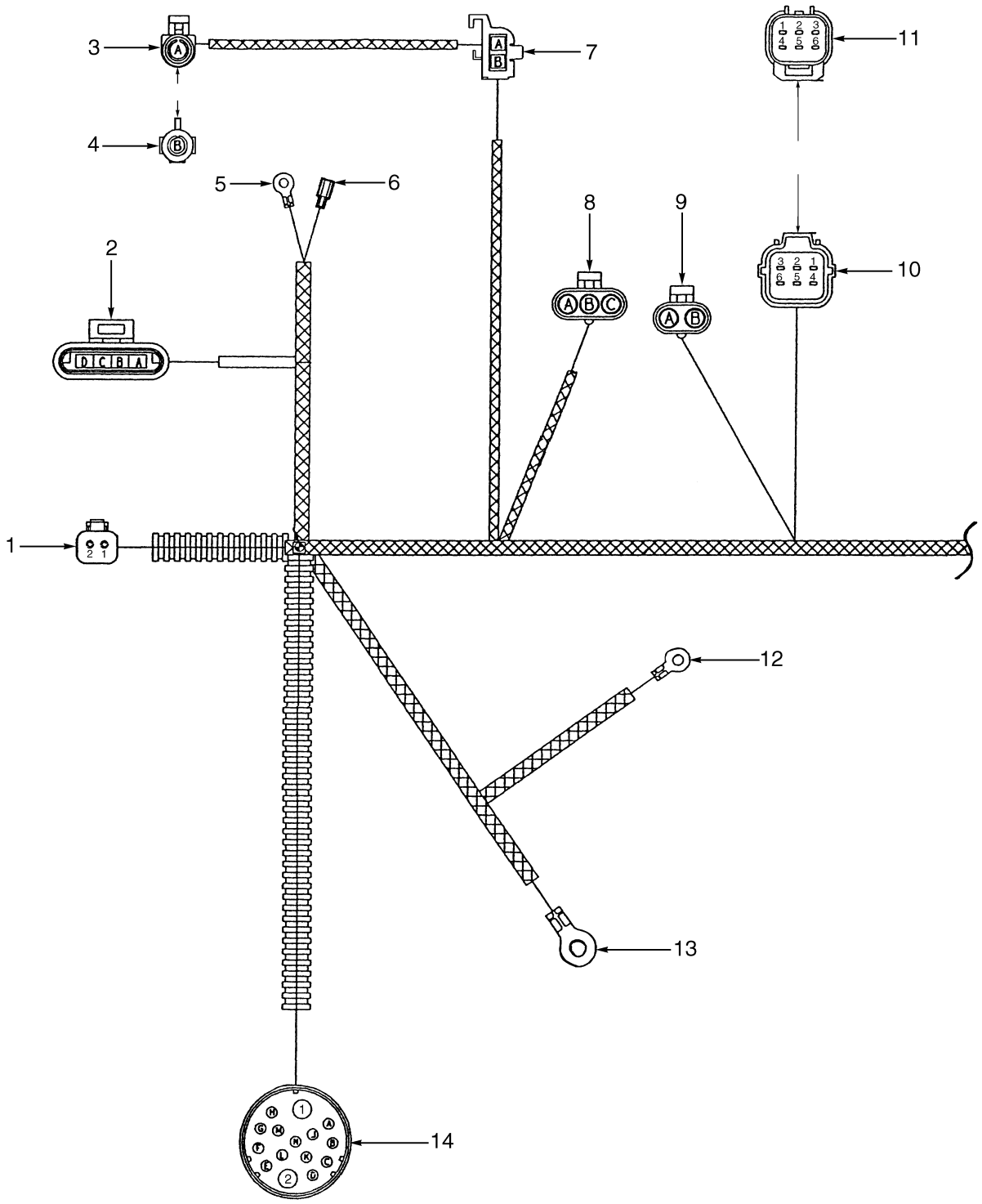

©2009 HYSTER COMPANY

WIRE HARNESS

ENGINE, LPG, GM V6, 4.3L – SHEET 1 OF 2 (S/N K005D05973Y ↔ S/N K005V02185Y)

ITEM	PART NO.	DESCRIPTION	QTY
	2044167	Wire Harness (Engine)	1
1	. . . . .	Connector Assembly	1
1	1484361	Connector (Socket)	1
1	1490243	Connector	1
1	1330438	Terminal (Socket)	2
2	. . . . .	Connector Assembly	1
2	1498478	Housing	1
2	1493461	Terminal	4
3	. . . . .	Connector Assembly	1
3	1498473	Housing	1
3	1498419	Terminal	1
3	1402858	Wire Seal	1
4	. . . . .	Connector Assembly	1
4	1498476	Connector	1
4	1402857	Seal	1
5	1509790	E-Ring	1
6	1495955	Housing	1
7	1498470	Connector Body	1
8	. . . . .	Connector Assembly	1
8	1327958	Connector	1
8	1498415	Terminal	3
8	1402858	Wire Seal	3
9	. . . . .	Connector Assembly	1
9	1498474	Housing	1
9	1498419	Terminal	2
9	1498415	Terminal	2
10	. . . . .	Connector Assembly	1
10	1497296	Housing	1
10	1497304	Retainer	1
10	1484656	Terminal (Socket)	5
10	1484597	Seal	5
10	1484611	Seal (Blanking)	1
11	. . . . .	Connector Assembly	1
11	1497291	Connector Body	1
11	1484611	Seal (Blanking)	6
12	1509790	E-Ring	1
13	1354497	E-Ring	1
13	. . . . .	Heatshrink	1
14	. . . . .	Connector Assembly	1
14	1495955	Housing	1
14	1496889	Terminal (Items 1 and 2)	2
14	1496891	Terminal (Items A, E, L, M, N)	5
14	1484716	Terminal (Items C, D, G, H, J, K)	6

©2009 HYSTER COMPANY

WIRE HARNESS (FIGURE 4-44)

ENGINE, LPG, GM V6, 4.3L — SHEET 2 OF 2 (S/N K005D05973Y ↔ S/N K005V02185Y)

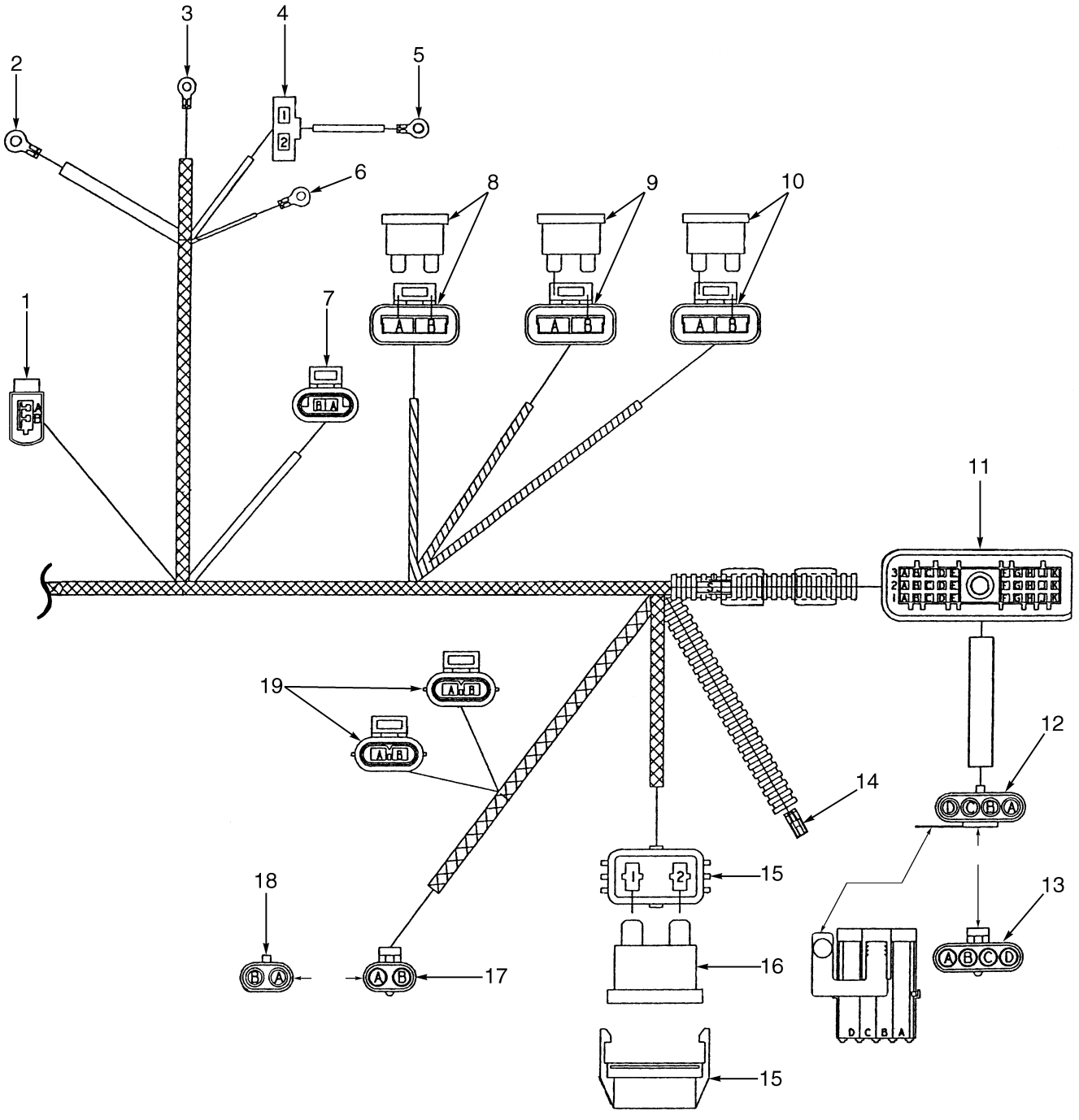

©2009 HYSTER COMPANY

WIRE HARNESS

ENGINE, LPG, GM V6, 4.3L – SHEET 2 OF 2 (S/N K005D05973Y ↔ S/N K005V02185Y)

ITEM	PART NO.	DESCRIPTION	QTY
	2044167	Wire Harness (Engine)	1
1	. . . . .	Connector Assembly	1
1	1496785	Housing	1
1	1496786	Spacer	1
1	1496784	Terminal	2
2	1354497	E-Ring	1
2	. . . . .	Heatshrink	1
3	148606	E-Ring	1
4	. . . . .	Connector Assembly	1
4	245996	Connector Body	1
4	1498413	Terminal	2
5	252293	E-Ring	1
6	148614	E-Ring	1
6	. . . . .	Heatshrink	1
7	. . . . .	Connector Assembly	1
7	1493460	Housing	1
7	1493461	Terminal	2
8	. . . . .	Connector Assembly (Ignition)	1
8	1498425	Housing	1
8	1498412	Terminal	2
8	370647	Fuse (10 Amp)	1
9	. . . . .	Connector Assembly (Battery)	1
9	1498425	Housing	1
9	1498412	Terminal	2
9	370647	Fuse (10 Amp)	1
10	. . . . .	Connector Assembly (B+)	1
10	1498425	Housing	1
10	1498412	Terminal	2
10	1378661	Fuse (1 Amp) (Items 1A)	1
11	. . . . .	Connector Assembly	1
11	1504883	Housing	1
11	1493461	Terminal	23
11	1402866	Seal	7
12	. . . . .	Connector Assembly	1
12	1498477	Housing	1
12	1402858	Wire Seal	4
12	1498415	Terminal	4
13	. . . . .	Connector Assembly	1
13	1498472	Connector Body	1
13	1402857	Seal	4
14	. . . . .	Connector Assembly	1
14	1301720	Connector Body	1
14	1498413	Terminal	1
15	. . . . .	Connector Assembly (Alternator)	1
15	1497234	Fuse Holder	1
15	1497232	Terminal	2
15	1454827	Seal	2
16	1454829	Fuse (60 Amp)	1
17	. . . . .	Connector Assembly (Converter)	1
17	1498474	Housing	1

©2009 HYSTER COMPANY

WIRE HARNESS

ENGINE, LPG, GM V6, 4.3L – SHEET 2 OF 2 (S/N K005D05973Y ↔ S/N K005V02185Y)

ITEM	PART NO.	DESCRIPTION	QTY
17	1402858	Wire Seal	2
17	1498419	Terminal	2
18	. . . . .	Connector Assembly	1
18	1498474	Housing	1
18	1402857	Seal	2
19	. . . . .	Connector Assembly	2
19	1498423	Housing	1
19	1498493	Retainer	1
19	1498492	Seal	2
19	1482664	Connector Body	2

©2009 HYSTER COMPANY

NOTES

©2009 HYSTER COMPANY

WIRE HARNESS (FIGURE 4-45)

ENGINE, LPG, GM V6, 4.3L — SHEET 1 OF 2 (S/N K005V02186Y →)

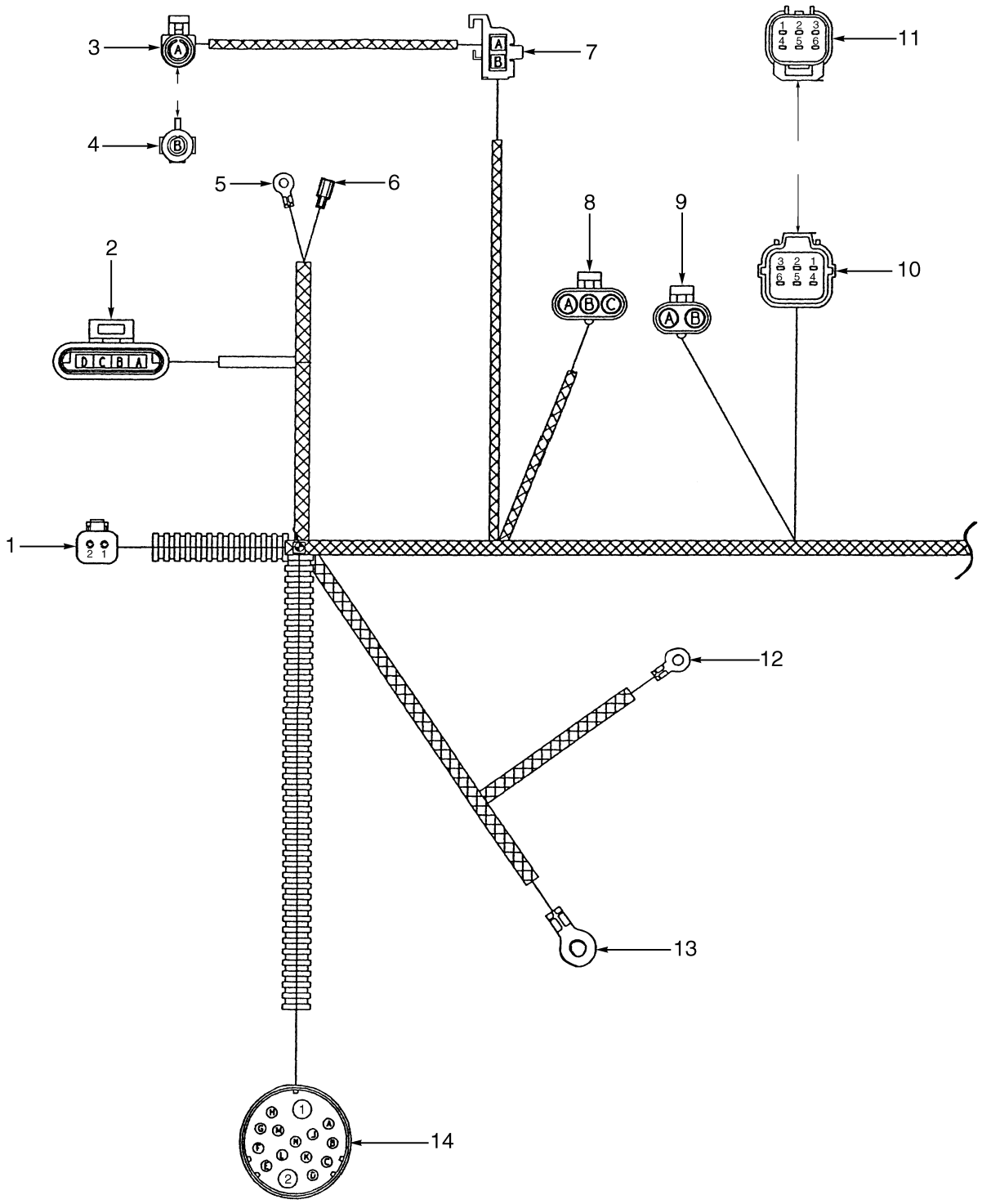

BP080066

©2009 HYSTER COMPANY

WIRE HARNESS

ENGINE, LPG, GM V6, 4.3L – SHEET 1 OF 2 (S/N K005V02186Y →)

ITEM	PART NO.	DESCRIPTION	QTY
	2047710	Wire Harness (Engine)	1
1	. . . . .	Connector Assembly (Seat Switch)	1
1	1484361	Connector (Socket)	1
1	1490243	Connector	1
1	1330438	Terminal (Socket)	2
2	. . . . .	Connector Assembly (Distributor)	1
2	1498478	Housing	1
2	1493461	Terminal	4
3	. . . . .	Connector Assembly (Tachometer)	1
3	1498473	Housing	1
3	1498419	Terminal	1
3	1402858	Wire Seal	1
4	. . . . .	Connector Assembly	1
4	1498476	Connector	1
4	1402857	Seal	1
5	1509790	E-Ring (Oil Pressure Sender)	1
6	1402849	Connector Body	1
7	. . . . .	Connector Assembly (Housing)	1
8	. . . . .	Connector Assembly (Map Sensor)	1
8	1327958	Connector	1
8	1498415	Terminal	3
8	1402858	Wire Seal	3
9	. . . . .	Connector Assembly (Governor)	1
9	1498474	Housing	1
9	1498419	Terminal	2
9	1498415	Terminal	2
10	. . . . .	Connector Assembly	1
10	1497296	Housing	1
10	1497304	Retainer	1
10	1484656	Terminal (Socket)	5
10	1484597	Seal	5
10	1484611	Seal (Blanking)	1
11	. . . . .	Connector Assembly	1
11	1497291	Connector Body	1
11	1484611	Seal (Blanking)	1
12	1509790	E-Ring	1
12	1496775	Heat Shrink	1
13	1354497	E-Ring	1
14	. . . . .	Connector Assembly (Cowl)	1
14	1495955	Housing	1
14	1496889	Terminal (Items 1 and 2)	2
14	1496891	Terminal (Items A, E, L, M, N)	5
14	1484716	Terminal (Items C, D, G, H, J, K)	6

©2009 HYSTER COMPANY

WIRE HARNESS (FIGURE 4-46)

ENGINE, LPG, GM V6, 4.3L — SHEET 2 OF 2 (S/N K005V02186Y →)

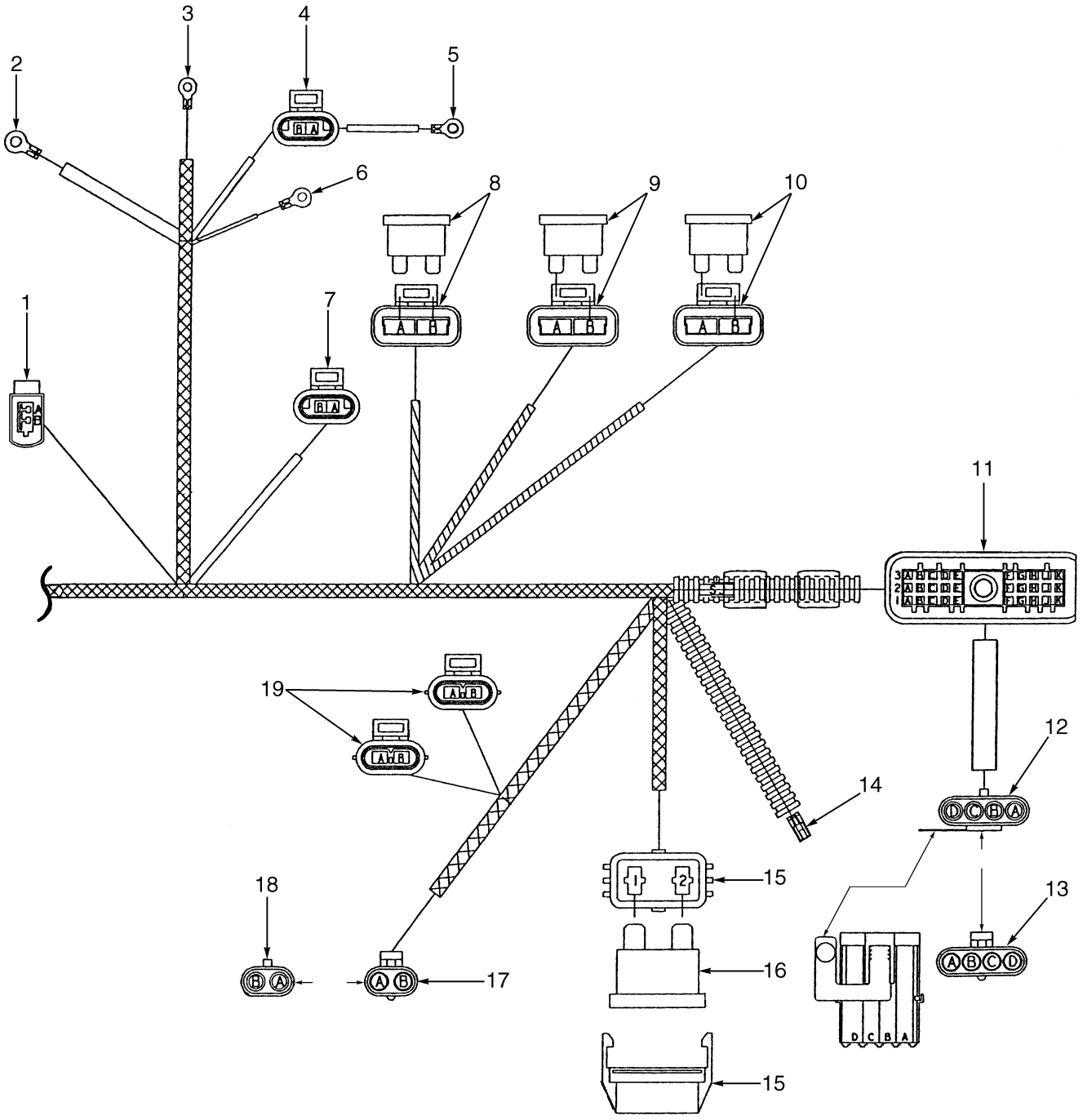

©2009 HYSTER COMPANY

WIRE HARNESS

ENGINE, LPG, GM V6, 4.3L – SHEET 2 OF 2 (S/N K005V02186Y →)

ITEM	PART NO.	DESCRIPTION	QTY
	2047710	Wire Harness (Engine)	1
1	. . . . .	Connector Assembly	1
1	1496785	Housing	1
1	1496786	Spacer	1
1	1496784	Terminal	2
2	1354497	E-Ring	1
3	252293	E-Ring (Heatshrink)	1
4	. . . . .	Connector Assembly	1
4	1493460	Housing	1
4	1493461	Terminal	2
5	252293	E-Ring	1
6	148614	E-Ring	1
6	1496775	Heat Shrink	1
7	. . . . .	Connector Assembly	1
7	1493460	Housing	1
7	1493461	Terminal	2
8	. . . . .	Connector Assembly (Ignition)	1
8	1498425	Housing	1
8	1498412	Terminal	2
8	370647	Fuse (10 Amp)	1
9	. . . . .	Connector Assembly (Battery)	1
9	1498425	Housing	1
9	1498412	Terminal	2
9	370647	Fuse (10 Amp)	1
10	. . . . .	Connector Assembly (B+)	1
10	1498425	Housing	1
10	1498412	Terminal	2
10	1378661	Fuse (1 Amp) (Items 1A)	1
11	. . . . .	Connector Assembly	1
11	1504883	Housing	1
11	1493461	Terminal	23
11	1402866	Seal	7
12	. . . . .	Connector Assembly	1
12	1498477	Housing	1
12	1402858	Wire Seal	4
12	1498415	Terminal	4
13	. . . . .	Connector Assembly	1
13	1498472	Connector Body	1
13	1402857	Seal	4
14	. . . . .	Connector Assembly	1
14	1301720	Connector Body	1
14	1498413	Terminal	1
15	. . . . .	Connector Assembly (Alternator)	1
15	1497234	Fuse Holder	1
15	1497232	Terminal	2
15	1454827	Seal	2
16	1454829	Fuse (60 Amp)	1
17	. . . . .	Connector Assembly (Converter)	1
17	1498474	Housing	1
17	1402858	Wire Seal	2

©2009 HYSTER COMPANY

WIRE HARNESS

ENGINE, LPG, GM V6, 4.3L – SHEET 2 OF 2 (S/N K005V02186Y →)

ITEM	PART NO.	DESCRIPTION	QTY
17	1498419	Terminal	2
18	. . . . .	Connector Assembly	1
18	1498474	Housing	1
18	1402857	Seal	2
19	. . . . .	Connector Assembly	2
19	1498423	Housing	1
19	1498493	Retainer	1
19	1498492	Seal	2
19	1482664	Connector Body	2

©2009 HYSTER COMPANY

NOTES

©2009 HYSTER COMPANY

WIRE HARNESS (FIGURE 4-47)
MODULE POWERSHIFT (→ S/N K005D05972)

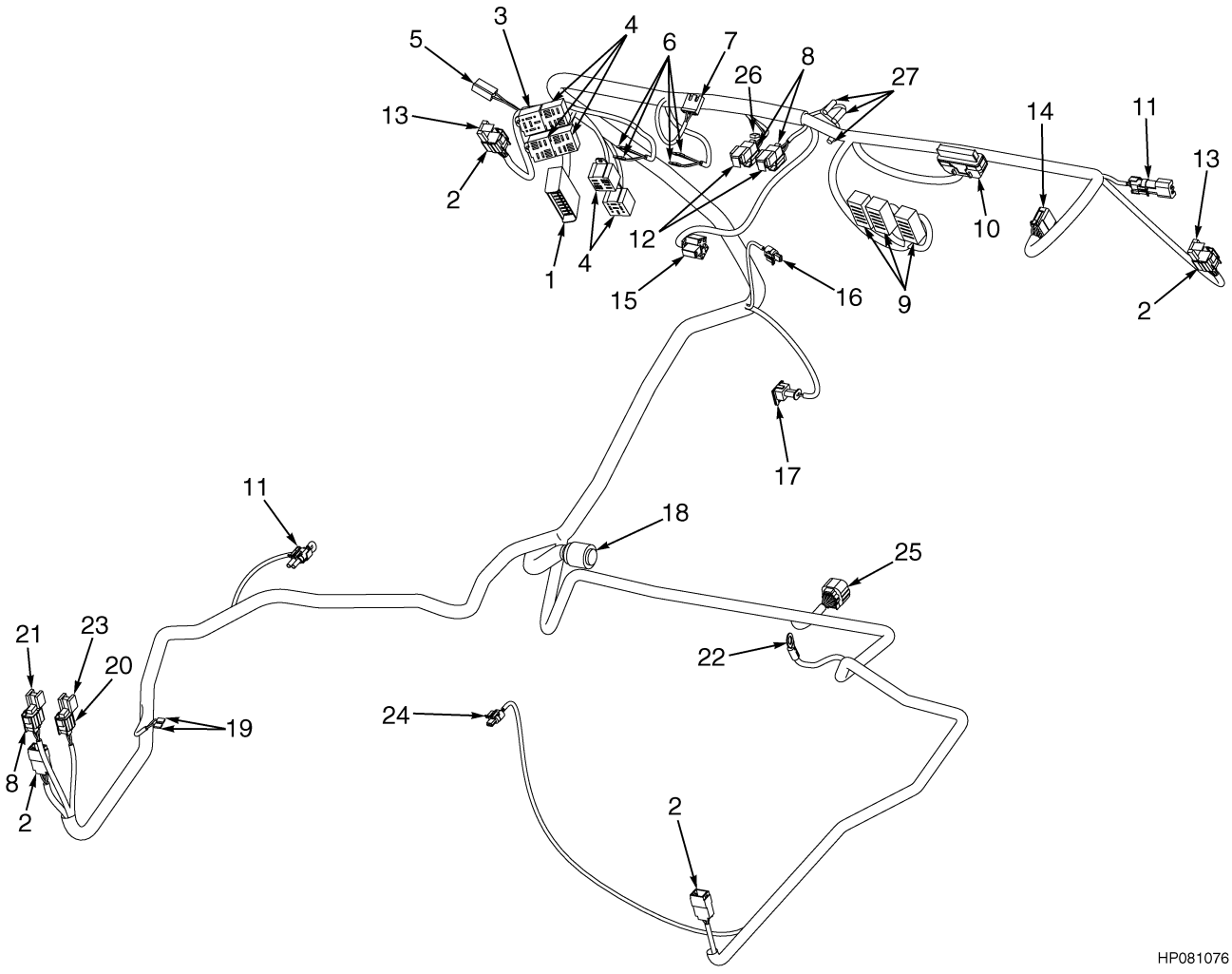

©2009 HYSTER COMPANY

WIRE HARNESS

MODULE POWERSHIFT (→ S/N K005D05972)

ITEM	PART NO.	DESCRIPTION	QTY
	2035695	Wire Harness	1
1	1475519	Kit-Panel	1
2	1475520	Kit-Connector	1
3	1475521	Kit-Relay	1
4	1475522	Kit-Relay	1
5	1475523	Kit-Diode	1
6	1475524	Connector (Single)	1
7	1475525	Connector	1
8	1475526	Connector (3 Pin)	1
9	1475527	Connector (Light Switch)	1
9	2035581	Relay (Flasher) (Not Illustrated)	7
9	1347114	Relay (Not Illustrated)	1
10	1475528	Kit-Connector	1
11	1475529	Kit-Connector	1
12	1475530	Kit-Dust Cover	1
13	1475531	Kit-Dust Cover	1
14	1475532	Connector	1
15	1475533	Kit-Connector (Keyswitch)	1
16	1475534	Kit-Connector (2 Pin)	1
17	1475610	Kit-Connector	1
18	1475536	Kit-Connector (Bulkhead)	1
19	1475538	Connector (Single Terminal)	1
20	1475539	Connector (Two-Way)	1
21	1475540	Kit-Dust Cover	1
22	1475541	Kit-Ring Terminal	1
23	1475542	Kit-Dust Cover	1
24	1475543	Kit-Connector (2 Pin) (Connector For Low Coolant Sender)	1
25	1475544	Connector	1
26	1475537	Connector (Horn Wire)	1
27	1475618	Connector (Single Bullet)	1

©2009 HYSTER COMPANY

WIRE HARNESS (FIGURE 4-48)

MODULE POWERSHIFT — SHEET 1 0F 2 (S/N K005V02412Z ↔ S/N K005V05903A)

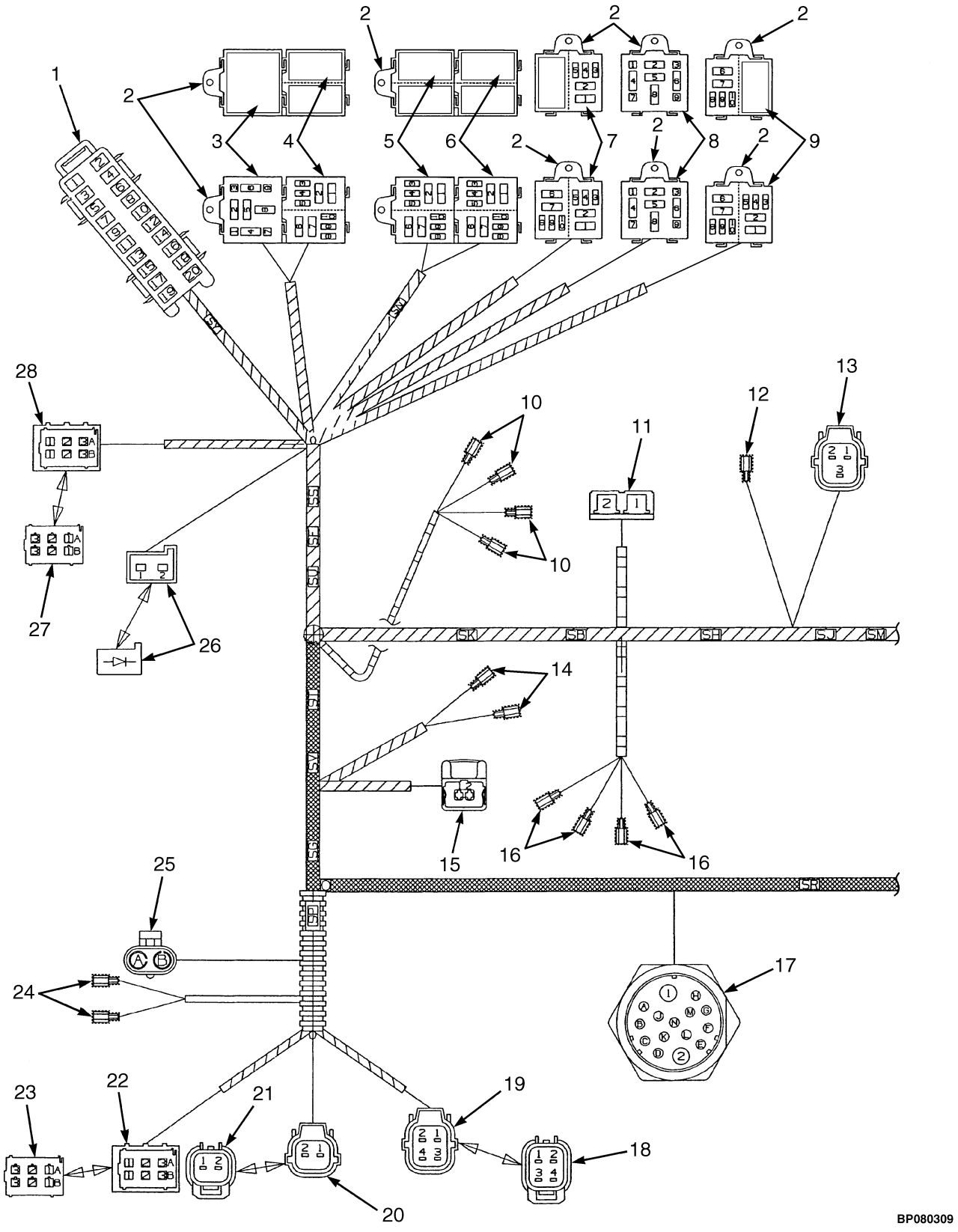

©2009 HYSTER COMPANY

WIRE HARNESS

MODULE POWERSHIFT – SHEET 1 0F 2 (S/N K005V02412Z ↔ S/N K005V05903A)

ITEM	PART NO.	DESCRIPTION	QTY
	2046117	Wire Harness	1
1	. . . . .	Connector Assembly (Fuse Box)	1
1	1484681	Fuse Box (10-Way)	1
1	1484682	Fuse Box	1
1	1496885	Terminal	4
1	1490250	Terminal (2-Way)	2
1	1389479	Terminal	10
1	1489957	Connector (1-Way)	1
1	370647	Fuse (10 Amp) (Positions 1, 6, 7, 8, 9)	5
1	1320669	Fuse (30 Amp) (Positions 2, 3)	2
1	370648	Fuse (20 Amp) (Position 4)	1
1	1310630	Fuse (15 Amp) (Positions 5, 10)	2
2	1489956	Clip	5
3	. . . . .	Connector Assembly (Start Inhibit Relay)	1
3	1484684	Single Mini Relay Base	1
3	1389479	Terminal	2
3	1489957	Connector (1-Way)	2
3	1347114	Relay	1
4	. . . . .	Connector Assembly (Forward Relay)	1
4	1484683	Relay (Base)	1
4	1489957	Connector (1-Way)	2
4	1484610	Terminal	2
5	2035581	Relay (Flasher)	2
5	. . . . .	Connector Assembly (Horn Relay)	1
5	1484683	Relay (Base)	1
5	1484610	Terminal	2
5	2035581	Relay (Flasher)	1
5	1489957	Connector (1-Way)	2
5	1389479	Terminal	2
6	. . . . .	Connector Assembly (Reverse Light Relay) (With Shutdown Relay)	1
6	1484683	Relay (Base)	1
6	1489957	Connector (1-Way)	2
6	1484610	Terminal	2
6	2035581	Relay (Flasher)	1
7	. . . . .	Connector Assembly (Cab Power Relay)	1
7	1484683	Relay (Base)	1
7	1389479	Terminal	2
7	1484610	Terminal	2
7	2035581	Relay (Flasher)	1
8	. . . . .	Connector Assembly (Turn Signal Relay)	1
8	1484684	Single Mini Relay Base	1
8	1489957	Connector (1-Way)	2
9	. . . . .	Connector Assembly (Brake Light Relay)	1
9	1484683	Relay (Base)	1
9	1489957	Connector (1-Way)	2
9	1484610	Terminal	2
9	2035581	Relay (Flasher)	1
10	1402849	Connector Body	4
11	. . . . .	Connector Assembly (Thermostat)	1
11	346330	Connector Body	1

©2009 HYSTER COMPANY

WIRE HARNESS

MODULE POWERSHIFT – SHEET 1 0F 2 (S/N K005V02412Z ↔ S/N K005V05903A)

ITEM	PART NO.	DESCRIPTION	QTY
11	141462	Terminal	1
11	1402909	Terminal (Female)	1
12	1389480	Terminal (Horn Switch)	1
12	233141	Terminal	1
13	. . . . .	Connector Assembly	1
13	1497294	Socket (3-Way)	1
13	1497300	Retainer	1
13	1484656	Terminal (Socket)	3
13	1484597	Seal	3
14	. . . . .	Connector Assembly (Horn)	1
14	129892	Terminal	1
14	1523907	Terminal	2
15	. . . . .	Connector Assembly (Brake Reservoir)	1
15	1402922	Connector	1
15	1402814	Terminal	2
15	1479109	Seal	2
16	. . . . .	Connector Assembly (Parking Brake)	1
16	1402849	Connector Body	4
17	. . . . .	Connector Assembly (Engine Harness)	1
17	1520305	Terminal	2
17	1520306	Terminal	7
17	1496924	Terminal	6
18	1497290	Socket	1
19	. . . . .	Connector Assembly (Optional Lighting)	1
19	1496886	Socket (4-Way)	1
19	1497302	Retainer	1
19	1484656	Terminal (Socket)	4
19	1484597	Seal	4
20	. . . . .	Connector Assembly (Reverse Alarm)	1
20	1497293	Connector Body (2-Way)	1
20	1497298	Retainer	1
20	1484656	Terminal (Socket)	2
20	1484597	Seal	2
21	1497288	Housing	1
21	1484611	Seal (Blanking)	2
22	. . . . .	Connector Assembly (LH Rear Light)	1
22	1496791	Connector Body	1
22	1496788	Terminal	5
22	1496787	Terminal	2
23	. . . . .	Connector Assembly	1
24	. . . . .	Connector Assembly	1
24	1523907	Terminal	2
25	. . . . .	Connector Assembly (Fuel Sender)	1
25	1465468	Connector	1
25	1323583	Terminal	2
25	1402888	Seal	2
26	. . . . .	Connector Assembly (Reverse Diode)	1
26	2054463	Female Terminal	1
27	1529057	Connector (2-Way)	1
28	. . . . .	Connector Assembly (LH Front Light)	1

©2009 HYSTER COMPANY

WIRE HARNESS

MODULE POWERSHIFT – SHEET 1 0F 2 (S/N K005V02412Z ↔ S/N K005V05903A)

ITEM	PART NO.	DESCRIPTION	QTY
28	1496791	Connector Body	1
28	1496788	Terminal	5
28	1496787	Terminal	2

©2009 HYSTER COMPANY

WIRE HARNESS (FIGURE 4-49)

MODULE POWERSHIFT — SHEET 2 OF 2 (S/N K005V02412Z ↔ S/N K005V05903A)

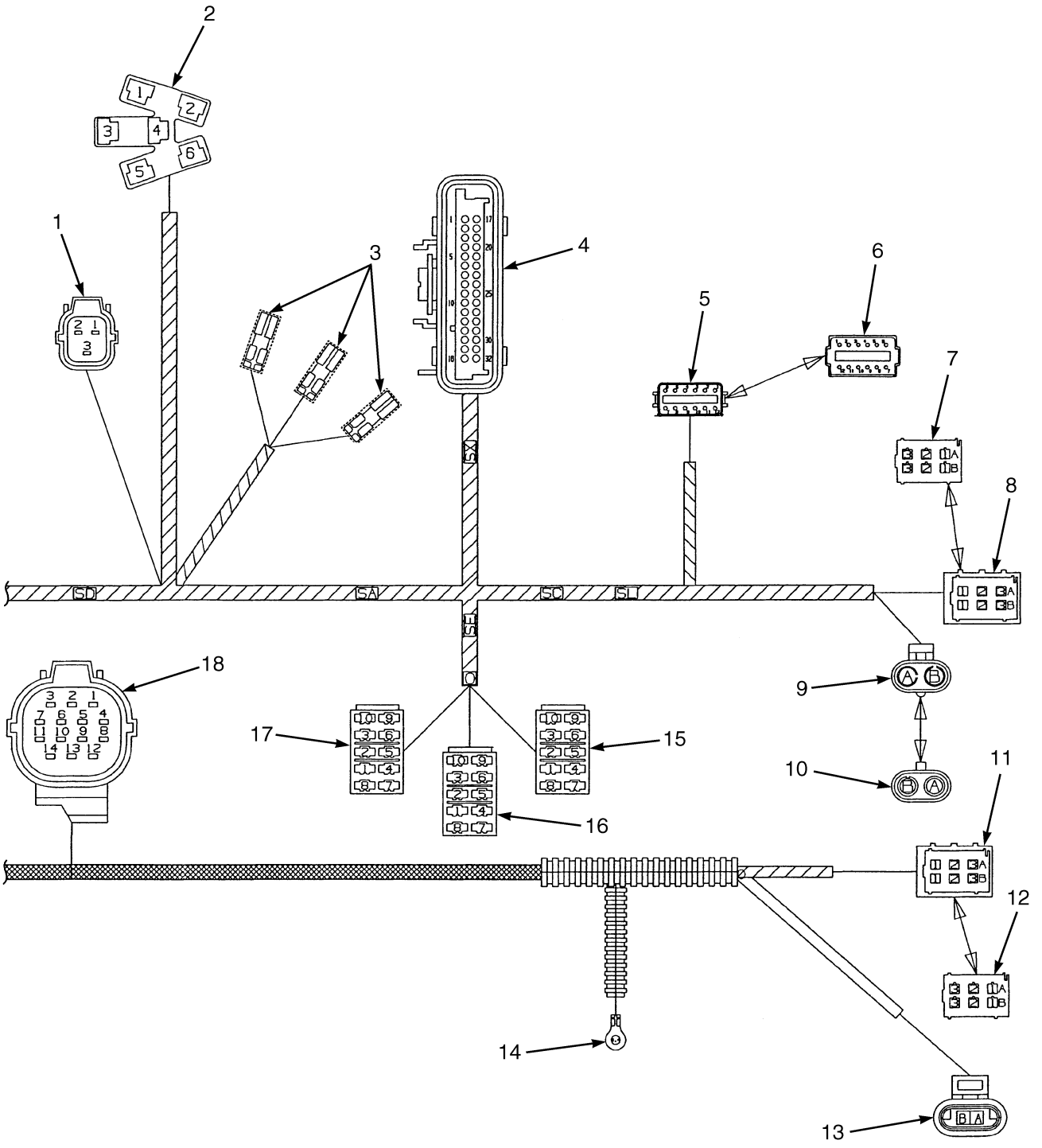

BP080079

©2009 HYSTER COMPANY

WIRE HARNESS

MODULE POWERSHIFT – SHEET 2 OF 2 (S/N K005V02412Z ↔ S/N K005V05903A)

ITEM	PART NO.	DESCRIPTION	QTY
	2046117	Wire Harness	1
1	. . . . .	Connector Assembly (Forward Switch)	1
1	1497294	Socket (3-Way)	1
1	1497300	Retainer	1
1	1484656	Terminal (Socket)	3
1	1484597	Seal	3
2	. . . . .	Connector Assembly (Ignition Switch)	1
2	370728	Connector Body	1
2	141462	Terminal	2
2	1402909	Terminal (Female)	1
3	. . . . .	Connector Assembly (Indicator Switch)	3
3	1324310	Terminal	3
3	1324309	Sleeve	3
4	. . . . .	Connector Assembly (Cluster)	1
4	1471958	Connector	1
4	1471960	Strain Relief	1
4	1471956	Retainer	1
4	1484671	Seal	1
4	1474822	Socket	21
4	1352105	Plug	11
5	. . . . .	Connector Assembly (High/Low Shift)	1
5	1484357	Connector (12-Way)	1
5	1351069	Connector	1
5	1330439	Plug (Positions 6, 9, 10)	3
5	1330438	Terminal (Socket)	9
6	. . . . .	Connector Assembly (Mating Half, Item 5)	1
6	1330439	Plug	12
6	1484720	Connector	1
7	. . . . .	Connector Assembly (Mating Half, Item 8)	1
7	1496790	Terminal	1
8	. . . . .	Connector Assembly (RH Front Light)	1
8	1496791	Connector Body	1
8	1496788	Terminal	5
8	1496787	Terminal	1
9	. . . . .	Connector Assembly (Cab Power)	1
9	1465468	Connector	1
9	1336173	Terminal	2
9	1323579	Seal	2
10	. . . . .	Connector Assembly (Mating Half, Item 9)	1
10	1465469	Connector	1
11	. . . . .	Connector Assembly (RH Rear Light)	1
11	1496791	Connector Body	1
11	1496788	Terminal	5
11	1496787	Terminal	1
12	. . . . .	Connector Assembly (Mating Half, Item 11)	1
12	1496790	Terminal	1
13	. . . . .	Connector Assembly	1
13	1323586	Connector	1
13	1323576	Terminal	2
14	. . . . .	Connector Assembly	1

©2009 HYSTER COMPANY

WIRE HARNESS

MODULE POWERSHIFT – SHEET 2 OF 2 (S/N K005V02412Z ↔ S/N K005V05903A)

ITEM	PART NO.	DESCRIPTION	QTY
14	1402608	Ring Terminal (Cluster)	1
14	1484383	Heat Shrink	1
15	. . . . .	Connector Assembly (Transmission Lock)	1
15	129892	Terminal	1
15	1523907	Terminal	4
16	. . . . .	Connector Assembly (Rear Lights)	1
16	1484555	Switch (10-Way)	1
16	233141	Terminal	4
17	. . . . .	Connector Assembly (Front Lights)	1
17	1484555	Switch (10-Way)	1
17	233141	Terminal	6
18	. . . . .	Connector Assembly (Transmission Harness)	1
18	1484654	Connector (14-Way)	1
18	1484655	Retainer (Socket)	1
18	1484656	Terminal (Socket)	14
18	1484597	Seal	14

©2009 HYSTER COMPANY

NOTES

©2009 HYSTER COMPANY

WIRE HARNESS (FIGURE 4-50)

MODULE POWERSHIFT — SHEET 1 0F 2 (S/N K005V05904A →)

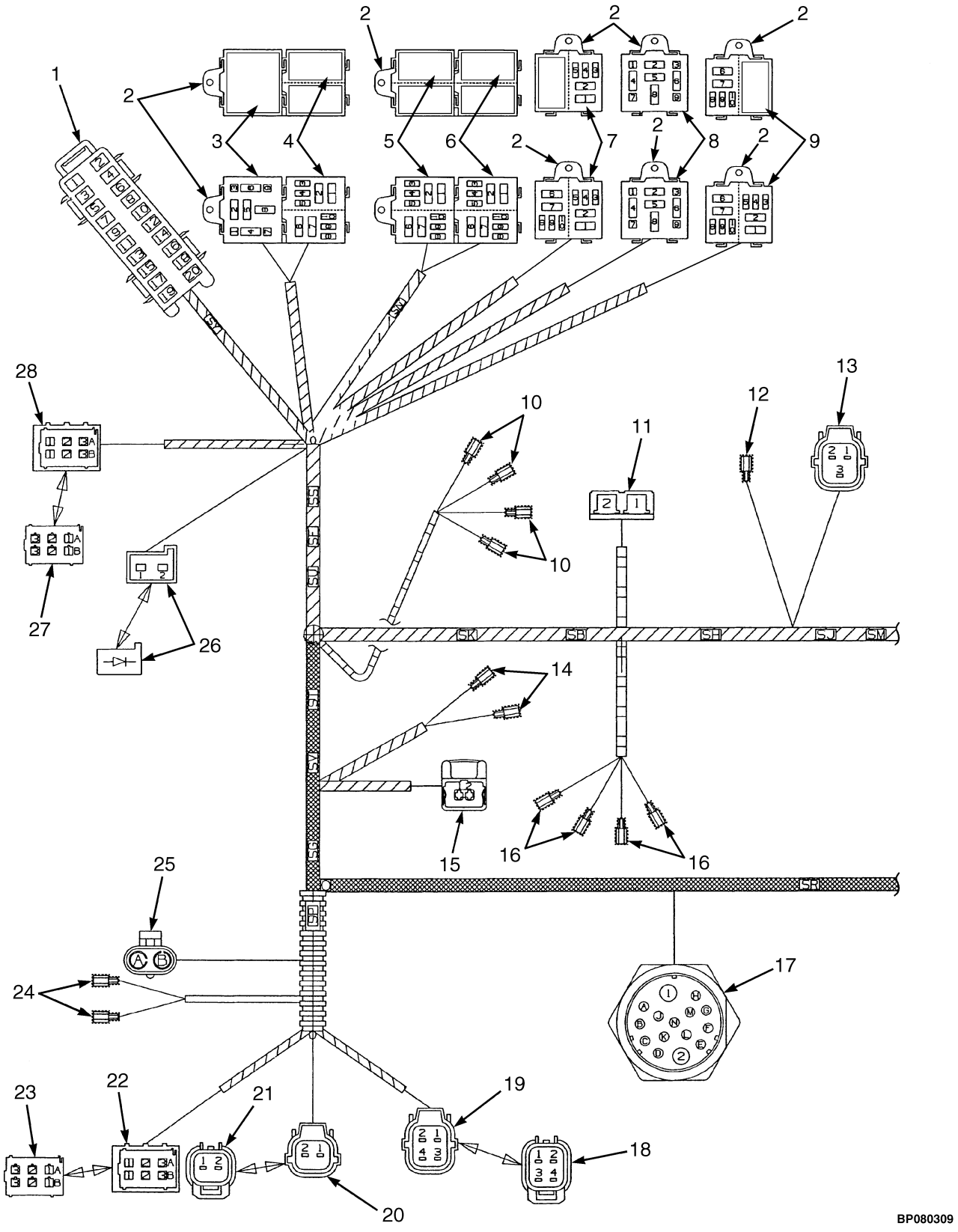

BP080309

©2009 HYSTER COMPANY

WIRE HARNESS

MODULE POWERSHIFT – SHEET 1 0F 2 (S/N K005V05904A →)

ITEM	PART NO.	DESCRIPTION	QTY
	2060627	Wire Harness	1
1	. . . . .	Connector Assembly (Fuse Box)	1
1	1484681	Fuse Box (10-Way)	1
1	1484682	Fuse Box	1
1	1496885	Terminal	4
1	1490250	Terminal (2-Way)	2
1	1496884	Terminal (3-Way)	1
1	1389479	Terminal	9
1	1389480	Terminal	1
1	1489957	Connector (1-Way)	1
1	370647	Fuse (10 Amp) (Positions 1, 6, 7, 8)	4
1	1320669	Fuse (30 Amp) (Positions 2, 3)	2
1	370648	Fuse (20 Amp) (Position 4)	1
1	1310630	Fuse (15 Amp) (Positions 5, 10, 9)	3
2	1489956	Clip	5
3	. . . . .	Connector Assembly	1
3	1484684	Single Mini Relay Base	1
3	1389479	Terminal	2
3	1489957	Connector (1-Way)	2
3	1347114	Relay	1
4	. . . . .	Connector Assembly (Forward Relay)	1
4	1484683	Relay (Base)	1
4	1489957	Connector (1-Way)	2
4	1484610	Terminal	1
5	2035581	Relay (Flasher)	1
5	. . . . .	Connector Assembly (Horn Relay)	1
5	1484683	Relay (Base)	1
5	1484610	Terminal	4
5	2035581	Relay (Flasher)	1
5	1489957	Connector (1-Way)	2
5	1389479	Terminal	2
6	. . . . .	Connector Assembly (Reverse Light Relay)	1
6	1484683	Relay (Base)	1
6	1489957	Connector (1-Way)	4
6	1484610	Terminal	4
6	2035581	Relay (Flasher)	1
7	. . . . .	Connector Assembly (Cab Power Relay)	1
7	1484683	Relay (Base)	1
7	1389479	Terminal	3
7	1484610	Terminal	4
7	1389480	Terminal	1
7	2035581	Relay (Flasher)	1
8	. . . . .	Connector Assembly (Turn Signal Relay)	1
8	1484684	Single Mini Relay Base	1
8	1489957	Connector (1-Way)	2
9	1402608	Ring Terminal	1
10	1521309	Connector Body	4
11	. . . . .	Connector Assembly (Thermostat)	1
11	346330	Connector Body	1
11	141462	Terminal	1

©2009 HYSTER COMPANY

WIRE HARNESS

MODULE POWERSHIFT – SHEET 1 0F 2 (S/N K005V05904A →)

ITEM	PART NO.	DESCRIPTION	QTY
11	1402909	Terminal (Female)	1
12	1521309	Connector Body	1
13	. . . . .	Connector Assembly	1
13	1497294	Socket (3-Way)	1
13	1497300	Retainer	1
13	1484656	Terminal (Socket)	3
13	1484597	Seal	3
14	. . . . .	Connector Assembly (Horn)	1
14	1331233	Terminal	2
14	1537135	Connector Body	1
15	. . . . .	Connector Assembly (Brake Reservoir)	1
15	1402922	Connector	1
15	1402814	Terminal	1
15	1531160	Terminal	1
15	1479109	Seal	2
16	. . . . .	Connector Assembly (Parking Brake)	1
16	1402849	Connector Body	1
16	1521309	Connector Body	3
17	. . . . .	Connector Assembly (Engine Harness)	1
17	1497228	Housing	1
17	1496926	Terminal	2
17	1520305	Terminal	7
17	1520306	Terminal	6
17	1496890	Nut	1
18	1497290	Socket	1
19	. . . . .	Connector Assembly (Optional Lighting)	1
19	1496886	Socket (4-Way)	1
19	1497302	Retainer	1
19	1484656	Terminal (Socket)	4
19	1484597	Seal	4
20	. . . . .	Connector Assembly (Reverse Alarm)	1
20	1497293	Connector Body (2-Way)	1
20	1497298	Retainer	1
20	1484656	Terminal (Socket)	2
20	1484597	Seal	2
21	1497290	Socket	1
22	. . . . .	Connector Assembly (LH Rear Light)	1
22	1496791	Connector Body	1
22	1496788	Terminal	5
23	1497290	Socket	1
24	. . . . .	Connector Assembly	1
24	1523907	Terminal	2
25	. . . . .	Connector Assembly (Fuel Sender)	1
25	1465468	Connector	1
25	1504197	Terminal	1
25	1498420	Terminal	1
25	1323579	Seal	2
26	. . . . .	Connector Assembly (Reverse Diode)	1
26	1529057	Connector (2-Way)	1
26	2054463	Female Terminal	1

©2009 HYSTER COMPANY

WIRE HARNESS

MODULE POWERSHIFT – SHEET 1 0F 2 (S/N K005V05904A →)

ITEM	PART NO.	DESCRIPTION	QTY
27	1497290	Socket	1
28	. . . . .	Connector Assembly (LH Front Light)	1
28	1496791	Connector Body	1
28	1496788	Terminal	5

©2009 HYSTER COMPANY

WIRE HARNESS (FIGURE 4-51)

MODULE POWERSHIFT — SHEET 2 OF 2 (S/N K005V05904A →)

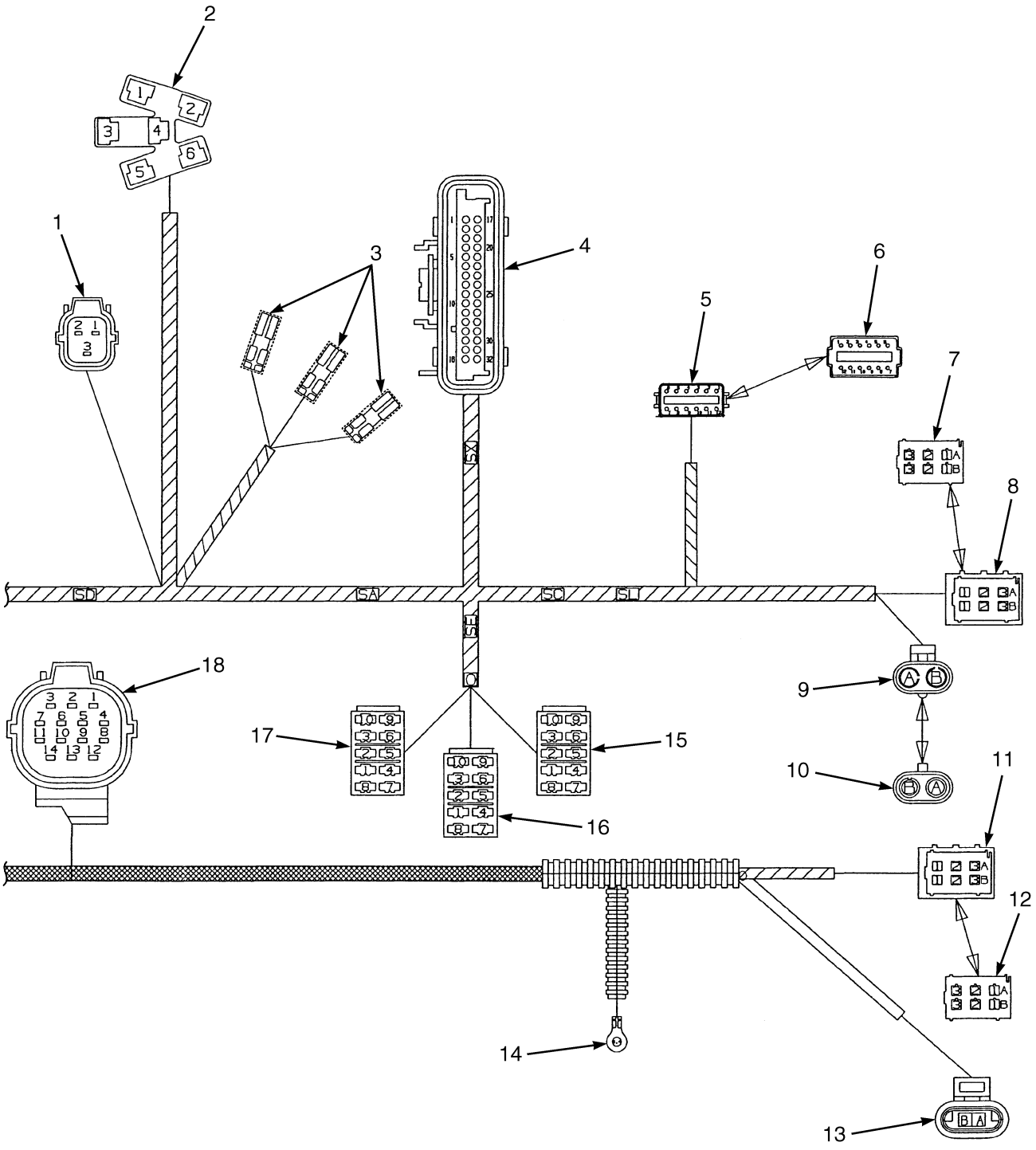

BP080079

©2009 HYSTER COMPANY

WIRE HARNESS

MODULE POWERSHIFT – SHEET 2 OF 2 (S/N K005V05904A →)

ITEM	PART NO.	DESCRIPTION	QTY
	2060627	Wire Harness	1
1	. . . . .	Connector Assembly (Forward Switch)	1
1	1497294	Socket (3-Way)	1
1	1497300	Retainer	1
1	1484656	Terminal (Socket)	3
1	1484597	Seal	3
2	. . . . .	Connector Assembly (Ignition Switch)	1
2	370728	Connector Body	1
2	141462	Terminal	2
2	1402909	Terminal (Female)	1
3	. . . . .	Connector Assembly (Indicator Switch)	3
3	1324310	Terminal	3
3	1324309	Sleeve	3
4	. . . . .	Connector Assembly (Cluster)	1
4	1471958	Connector	1
4	1471960	Strain Relief	1
4	1471956	Retainer	1
4	1484671	Seal	1
4	1474822	Socket	21
4	1352105	Plug	11
5	. . . . .	Connector Assembly (High/Low Shift)	1
5	1484357	Connector (12-Way)	1
5	1351069	Connector	1
5	1330439	Plug (Positions 6, 9, 10)	3
5	1330438	Terminal (Socket)	9
6	. . . . .	Connector Assembly (Mating Half, Item 5)	1
6	1330439	Plug	12
6	1484720	Connector	1
7	. . . . .	Connector Assembly (Mating Half, Item 8)	1
7	1496790	Terminal	1
8	. . . . .	Connector Assembly (RH Front Light)	1
8	1496791	Connector Body	1
8	1496788	Terminal	5
8	1496787	Terminal	1
9	. . . . .	Connector Assembly (Cab Power)	1
9	1465468	Connector	1
9	1336173	Terminal	2
9	1323579	Seal	2
10	. . . . .	Connector Assembly (Mating Half, Item 9)	1
10	1465469	Connector	1
11	. . . . .	Connector Assembly (RH Rear Light)	1
11	1496791	Connector Body	1
11	1496788	Terminal	5
11	1496787	Terminal	1
12	. . . . .	Connector Assembly (Mating Half, Item 11)	1
12	1496790	Terminal	1
13	. . . . .	Connector Assembly	1
13	1323586	Connector	1
13	1323576	Terminal	2
14	. . . . .	Connector Assembly	1

©2009 HYSTER COMPANY

WIRE HARNESS

MODULE POWERSHIFT – SHEET 2 OF 2 (S/N K005V05904A →)

ITEM	PART NO.	DESCRIPTION	QTY
14	1402608	Ring Terminal (Cluster)	1
14	1484383	Heat Shrink	1
15	. . . . .	Connector Assembly (Transmission Lock)	1
15	129892	Terminal	1
15	1523907	Terminal	4
16	. . . . .	Connector Assembly (Rear Lights)	1
16	1484555	Switch (10-Way)	1
16	233141	Terminal	4
17	. . . . .	Connector Assembly (Front Lights)	1
17	1484555	Switch (10-Way)	1
17	233141	Terminal	6
18	. . . . .	Connector Assembly (Transmission Harness)	1
18	1484654	Connector (14-Way)	1
18	1484655	Retainer (Socket)	1
18	1484656	Terminal (Socket)	14
18	1484597	Seal	14

©2009 HYSTER COMPANY

NOTES

©2009 HYSTER COMPANY

WIRE HARNESS (FIGURE 4-52)

MODULE, TYPE S POWERSHIFT — SHEET 1 OF 2 (S/N K005D05973Y ↔ S/N K005V02411Z)

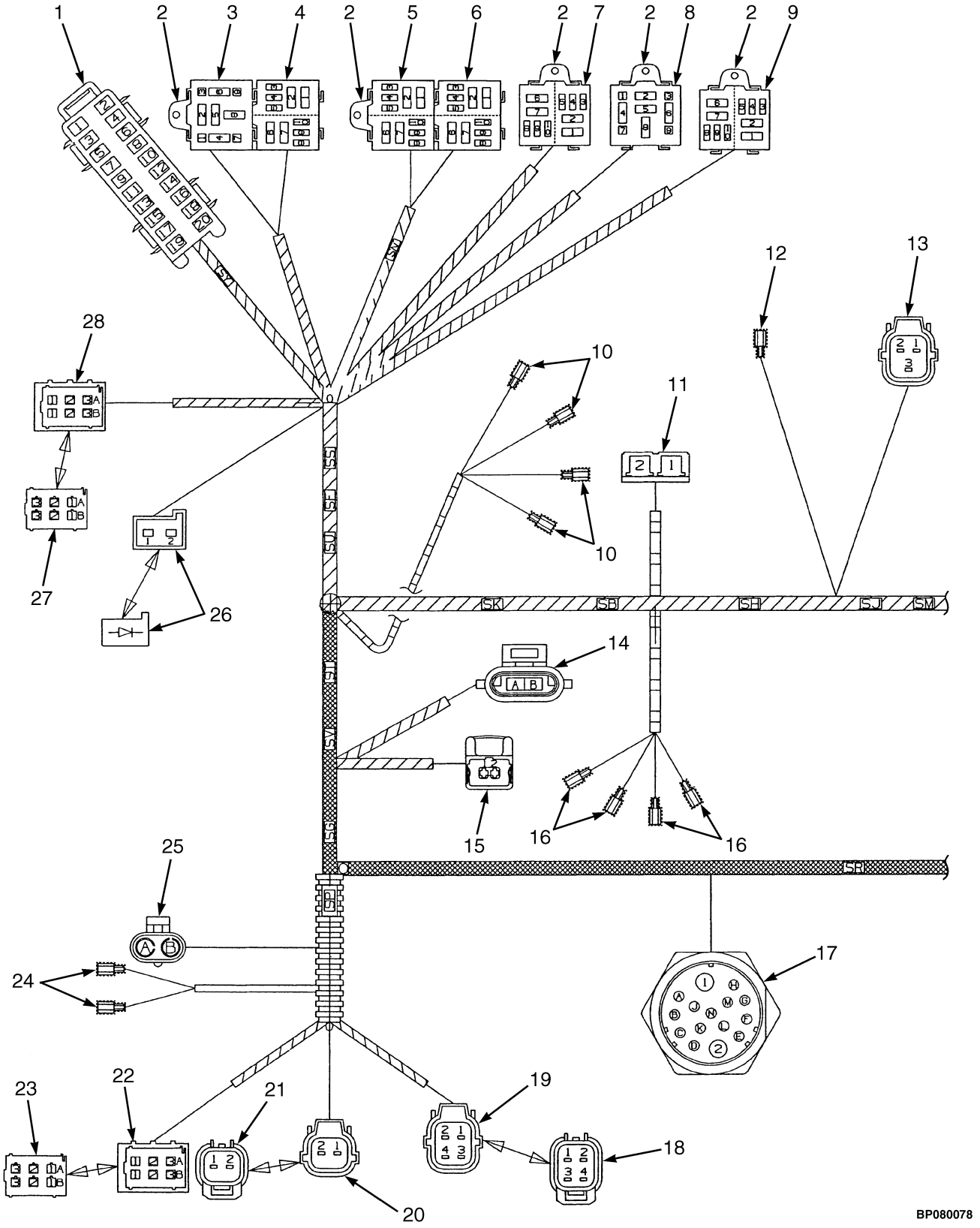

©2009 HYSTER COMPANY

WIRE HARNESS

MODULE, TYPE S POWERSHIFT – SHEET 1 OF 2 (S/N K005D05973Y ↔ S/N K005V02411Z)

ITEM	PART NO.	DESCRIPTION	QTY
	2044238	Wire Harness	1
1	. . . . .	Connector Assembly (Fuse Box)	1
1	1484681	Fuse Box (10-Way)	1
1	1484682	Fuse Box	1
1	1496885	Terminal (Positions 1, 3, 5, 7)	4
1	1490250	Terminal (2-Way) (Positions 9, 11)	2
1	1496884	Terminal (3-Way) (Positions 13, 15, 17)	3
1	1389479	Terminal	10
1	1489957	Connector (1-Way) (Position 12)	1
1	370647	Fuse (10 Amp) (Positions 1, 6, 7, 8, 9)	5
1	1320669	Fuse (30 Amp) (Positions 2, 3)	2
1	370648	Fuse (20 Amp) (Position 4)	1
1	1310630	Fuse (15 Amp) (Positions 5, 10)	2
2	1489956	Clip	5
3	. . . . .	Connector Assembly	1
3	1484684	Single Mini Relay Base	1
3	1389479	Terminal	2
3	1489957	Connector (1-Way)	2
3	1347114	Relay	1
4	. . . . .	Connector Assembly (Forward Relay)	1
5	1484683	Relay (Base)	1
5	1489957	Connector (1-Way)	2
5	1484719	Terminal	2
5	2035581	Relay (Flasher)	2
5	1489957	Connector (1-Way)	2
5	1484719	Terminal	1
5	2035581	Relay (Flasher)	1
5	. . . . .	Connector Assembly (Horn Relay)	1
5	1484683	Relay (Base)	1
5	1389479	Terminal	2
5	1484719	Terminal	2
5	2035581	Relay (Flasher)	1
5	1489957	Connector (1-Way)	2
5	1484719	Terminal	2
5	2035581	Relay (Flasher)	1
6	. . . . .	Connector Assembly (Reverse Light Relay)	1
6	1484683	Relay (Base)	1
6	1489957	Connector (1-Way)	2
6	1484719	Terminal	2
6	2035581	Relay (Flasher)	1
6	1489957	Connector (1-Way) (Shutdown)	2
6	1484719	Terminal	2
6	2035581	Relay (Flasher)	1
7	. . . . .	Connector Assembly (Cab Power Relay)	1
7	1484683	Relay (Base)	1
7	1389479	Terminal	2
7	1484719	Terminal	2
7	2035581	Relay (Flasher)	1
7	1389479	Terminal (Light Relay)	2
7	1484719	Terminal	2

©2009 HYSTER COMPANY

WIRE HARNESS

MODULE, TYPE S POWERSHIFT – SHEET 1 OF 2 (S/N K005D05973Y ↔ S/N K005V02411Z)

ITEM	PART NO.	DESCRIPTION	QTY
7	2035581	Relay (Flasher)	1
8	. . . . .	Connector Assembly (Turn Signal Relay)	1
8	1484684	Single Mini Relay Base	1
8	1489957	Connector (1-Way)	2
8	. . . . .	Flasher	1
9	. . . . .	Connector Assembly (Brake Light Relay)	1
9	1484683	Relay (Base)	1
9	1489957	Connector (1-Way)	2
9	1484719	Terminal	2
9	2035581	Relay (Flasher)	1
9	. . . . .	Spare	1
10	1497265	Housing	4
10	1497262	Terminal	4
11	. . . . .	Connector Assembly (Thermostat)	1
11	1484661	Housing (Receptacle)	1
11	1484707	Terminal (56 Series)	1
11	1484375	Terminal	1
12	1497265	Housing (Horn Switch)	1
12	1497262	Terminal	1
13	. . . . .	Connector Assembly	1
13	1497294	Socket (3-Way)	1
13	1497300	Retainer	1
13	1484656	Terminal (Socket)	3
13	1484597	Seal	3
14	. . . . .	Connector Assembly (Horn)	1
14	1402878	Connector	1
14	1498493	Retainer	1
14	1498492	Seal	2
14	1482664	Connector Body	2
15	. . . . .	Connector Assembly (Brake Reservoir)	1
15	1402922	Connector	1
15	1493436	Terminal (Socket)	2
15	1479109	Seal	2
16	1497265	Housing	4
16	1497262	Terminal	4
17	. . . . .	Connector Assembly (Engine Harness)	1
17	1497228	Housing (Nut)	1
17	1496926	Terminal (Positions 1, 2)	2
17	1496925	Terminal (Positions C, D, F, G, H, J, K)	7
17	1496924	Terminal (Positions A, B, E, L, M, N)	6
18	1497290	Socket	1
19	. . . . .	Connector Assembly (Optional Lighting)	1
19	1496886	Socket (4-Way)	1
19	1497302	Retainer	1
19	1484656	Terminal (Socket)	4
19	1484597	Seal	4
20	. . . . .	Connector Assembly (Reverse Alarm)	1
20	1497293	Connector Body (2-Way)	1
20	1497298	Retainer	1
20	1484656	Terminal (Socket)	2

©2009 HYSTER COMPANY

WIRE HARNESS

MODULE, TYPE S POWERSHIFT – SHEET 1 OF 2 (S/N K005D05973Y ↔ S/N K005V02411Z)

ITEM	PART NO.	DESCRIPTION	QTY
20	1484597	Seal	2
21	1497288	Housing	1
21	1484611	Seal (Blanking)	2
22	. . . . .	Connector Assembly (LH Rear Light)	1
22	1496791	Connector Body	1
22	1496788	Terminal	5
23	. . . . .	Connector Assembly	1
24	1497259	Terminal	2
24	1484651	Cover	2
25	. . . . .	Connector Assembly (Fuel Sender)	1
25	1498474	Housing	1
25	1498419	Terminal	2
25	1498496	Seal	2
26	. . . . .	Connector Assembly (Reverse Diode)	1
26	1484687	Connector (Socket)	1
26	1484718	Terminal (Socket)	2
26	1490252	Diode (Single)	1
27	1496790	Terminal	1
28	. . . . .	Connector Assembly (LH Front Light)	1
28	1496791	Connector Body	1
28	1496788	Terminal	5

©2009 HYSTER COMPANY

WIRE HARNESS (FIGURE 4-53)

MODULE, TYPE S POWERSHIFT — SHEET 2 OF 2 (S/N K005D05973Y ↔ S/N K005V02412Z)

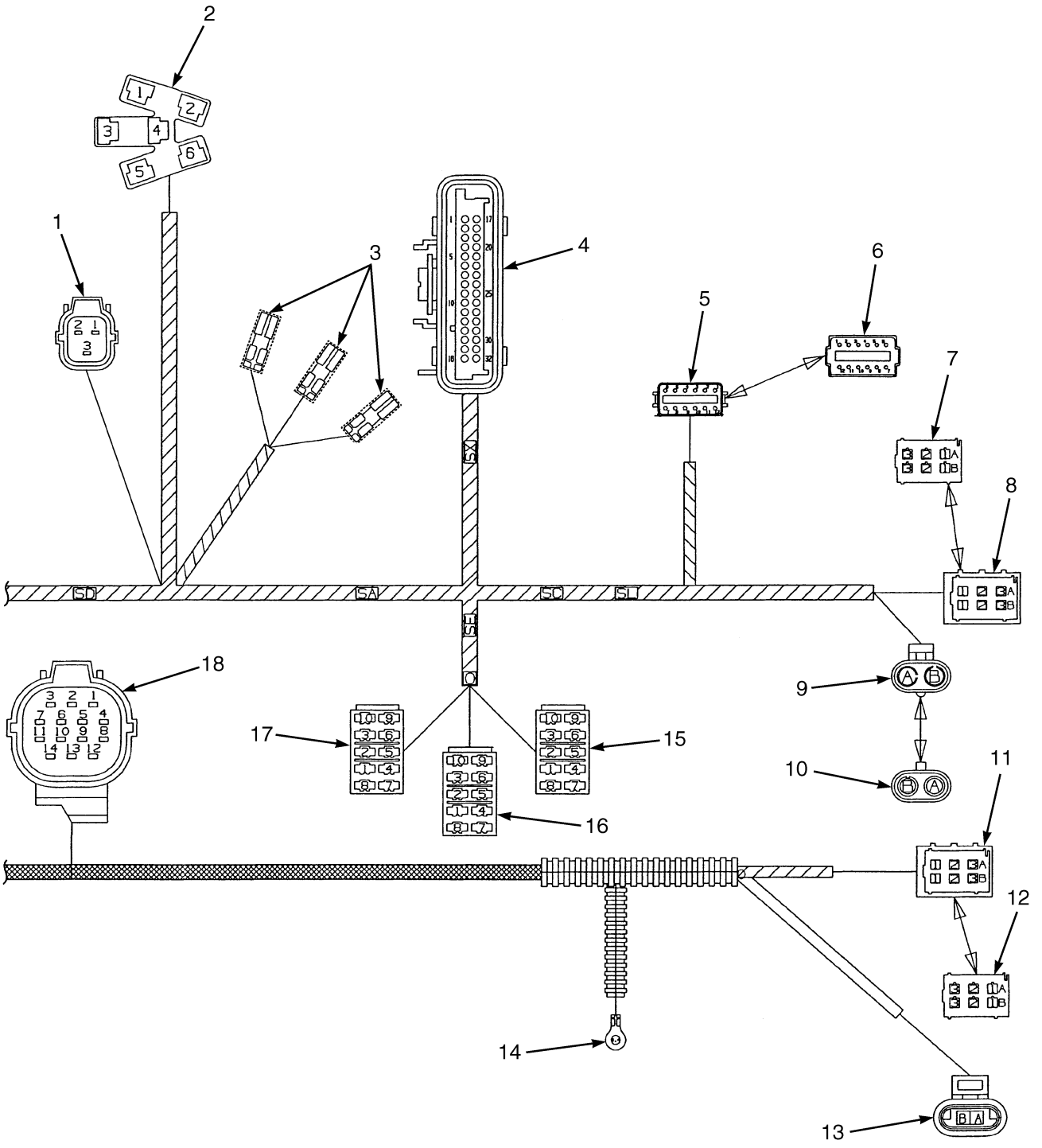

BP080079

©2009 HYSTER COMPANY

WIRE HARNESS

MODULE, TYPE S POWERSHIFT – SHEET 2 OF 2 (S/N K005D05973Y ↔ S/N K005V02412Z)

ITEM	PART NO.	DESCRIPTION	QTY
	2044238	Wire Harness	1
1	. . . . .	Connector Assembly (Forward Switch)	1
1	1497294	Socket (3-Way)	1
1	1497300	Retainer	1
1	1484656	Terminal (Socket)	3
1	1484597	Seal	3
2	. . . . .	Connector Assembly (Ignition Switch)	1
2	370728	Connector Body	1
2	1484707	Terminal (56 Series)	2
2	1484375	Terminal	1
3	. . . . .	Connector Assembly (Indicator Switch)	3
3	1493444	Terminal	3
3	1493445	Cover	3
4	. . . . .	Connector Assembly (Cluster)	1
4	1484670	Retainer	1
4	1471960	Strain Relief	1
4	1484672	Insert	1
4	1484671	Seal	1
4	1484710	Terminal	21
4	1352105	Plug	11
5	. . . . .	Connector Assembly (High/Low Shift)	1
5	1484357	Connector (12-Way)	1
5	1484358	Retainer (Socket)	1
5	1330439	Plug (Positions 6, 9, 10)	3
5	1330438	Terminal (Socket)	9
6	. . . . .	Connector Assembly (Mating Half, Item 5)	1
6	1330439	Plug	12
6	1484720	Connector	1
7	. . . . .	Connector Assembly (Mating Half, Item 8)	1
7	1496790	Terminal	1
8	. . . . .	Connector Assembly (RH Front Light)	1
8	1496791	Connector Body	1
8	1496788	Terminal	5
9	. . . . .	Connector Assembly (Cab Power)	1
9	1498474	Housing	1
9	1498419	Terminal	2
9	1498496	Seal	2
10	. . . . .	Connector Assembly (Mating Half, Item 9)	1
10	1498422	Connector Body	1
11	. . . . .	Connector Assembly (RH Rear Light)	1
11	1496791	Connector Body	1
11	1496788	Terminal	5
12	. . . . .	Connector Assembly (Mating Half, Item 11)	1
12	1496790	Terminal	1
13	. . . . .	Connector Assembly	1
13	1493460	Housing	1
13	1354237	Terminal	2
14	. . . . .	Connector Assembly	1
14	1493458	E-Ring (Cluster)	1
14	1484383	Heat Shrink	1

©2009 HYSTER COMPANY

WIRE HARNESS

MODULE, TYPE S POWERSHIFT – SHEET 2 OF 2 (S/N K005D05973Y ↔ S/N K005V02412Z)

ITEM	PART NO.	DESCRIPTION	QTY
15	. . . . .	Connector Assembly (Transmission Lock)	1
15	1484555	Switch (10-Way)	1
15	1497262	Terminal (Positions 2, 3, 7, 8)	4
16	. . . . .	Connector Assembly (Rear Lights)	1
16	1484555	Switch (10-Way)	1
16	1497262	Terminal	4
17	. . . . .	Connector Assembly (Front Lights)	1
17	1484555	Switch (10-Way)	1
17	1497262	Terminal	6
18	. . . . .	Connector Assembly (Transmission Harness)	1
18	1484654	Connector (14-Way)	1
18	1484655	Retainer (Socket)	1
18	1484656	Terminal (Socket)	14
18	1484597	Seal	14

©2009 HYSTER COMPANY

NOTES

©2009 HYSTER COMPANY

WIRE HARNESS (FIGURE 4-54)
SEALED ALTERNATOR

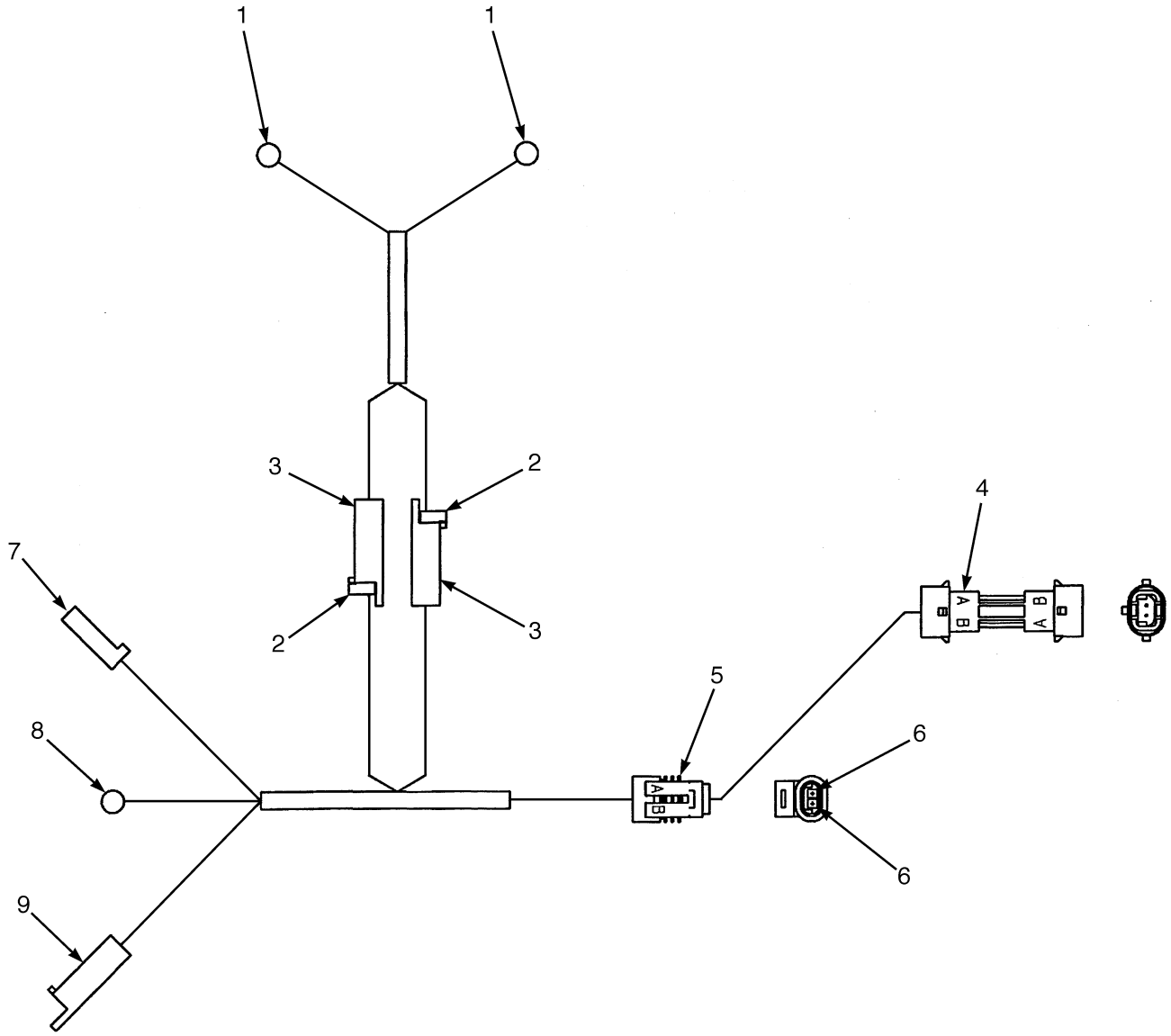

BP080204

©2009 HYSTER COMPANY

WIRE HARNESS
SEALED ALTERNATOR

ITEM	PART NO.	DESCRIPTION	QTY
	2057624	Wire Harness (Sealed Alternator)	1
1	. . . . .	Connector Assembly (Disconnect Switch)	2
1	129887	E-Ring	1
1	190383	Boot	1
2	. . . . .	Connector Assembly	2
2	181046	Connector Body	1
2	134812	Terminal	1
3	. . . . .	Connector Assembly	2
3	181045	Connector Body	1
3	134810	Terminal	1
4	1469606	Adapter (Engine Harness)	1
5	. . . . .	Connector Assembly	1
5	1323586	Connector	1
6	1323576	Terminal	2
7	. . . . .	Connector Assembly (Alternator EX)	1
7	181046	Connector Body	1
7	134812	Terminal	1
8	. . . . .	Connector Assembly (Alternator 3DA)	1
8	148610	E-Ring	1
8	190383	Boot	1
9	. . . . .	Connector Assembly (Alternator FS)	1
9	181045	Connector Body	1
9	134810	Terminal	1

©2009 HYSTER COMPANY

WIRE HARNESS (FIGURE 4-55)

GASOLINE ENGINE — GM 4.3L (S/N K005V04116Z →)

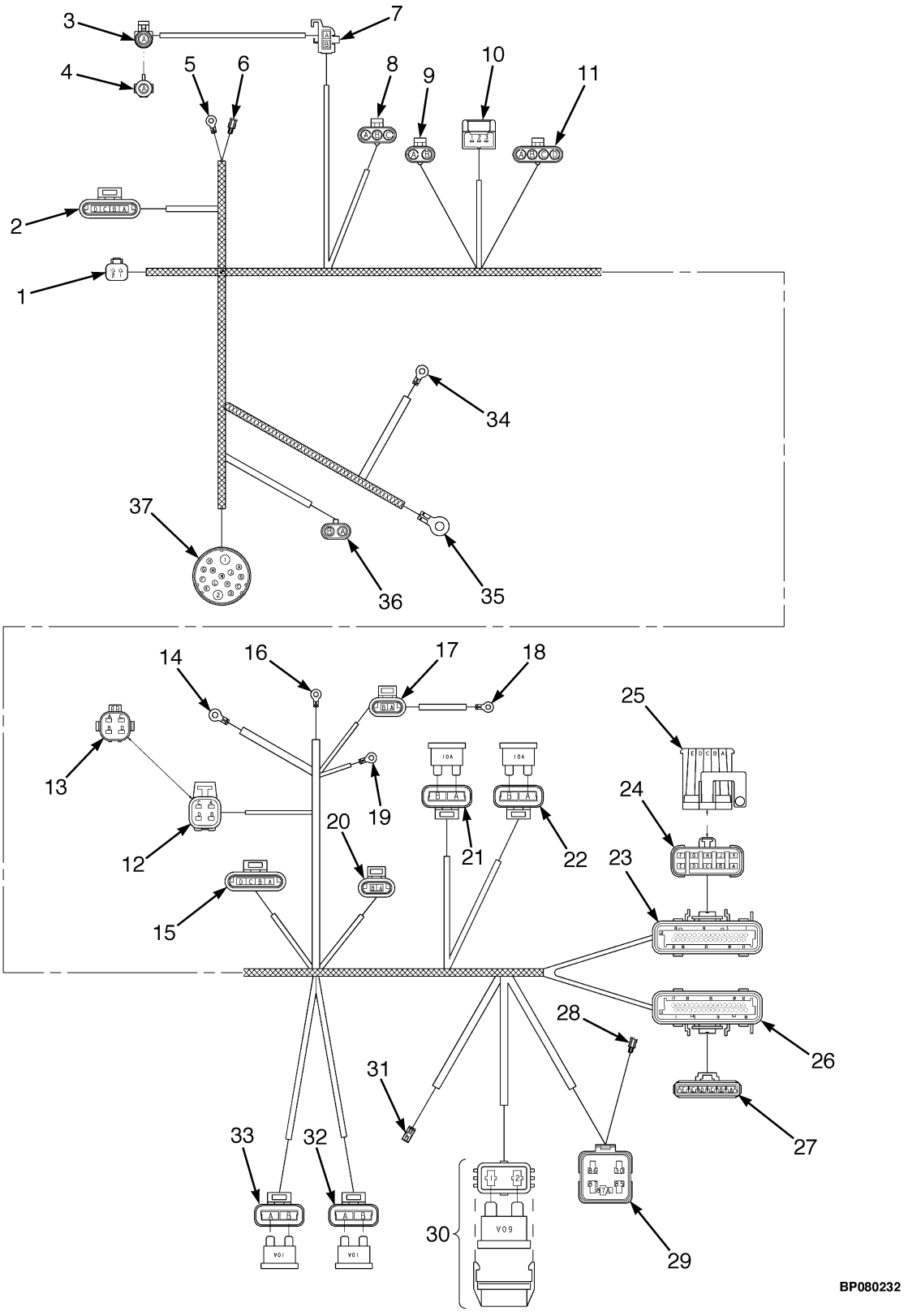

©2009 HYSTER COMPANY

WIRE HARNESS

GASOLINE ENGINE – GM 4.3L (S/N K005V04116Z →)

ITEM	PART NO.	DESCRIPTION	QTY
	2054281	Wire Harness (G, GS Engine)	1
1	. . . . .	Connector Assembly (Seat Switch)	1
1	1484361	Connector (Socket)	1
1	1490243	Connector	1
1	1330438	Terminal (Socket)	2
2	. . . . .	Connector Assembly (Distributer)	1
2	1323575	Connector	1
2	1323576	Terminal	4
3	. . . . .	Connector Assembly (Tachometer)	1
3	1330299	Connector	1
3	1336173	Terminal	1
3	1402858	Wire Seal	1
4	. . . . .	Connector Assembly (Mating Half)	1
4	1498476	Connector	1
4	1327164	Seal	1
5	. . . . .	Connector Assembly (Oil Pressure Sender)	1
5	252293	E-Ring	1
5	. . . . .	Shrink Tubing	AR
6	1468841	Connector (Oil Pressure Sender)	1
7	1314393	Plug (Coil)	1
8	. . . . .	Connector Assembly (Map Sensor)	1
8	1498415	Terminal	2
8	1498416	Connector	1
8	1402858	Wire Seal	3
9	. . . . .	Connector Assembly (Govenor)	1
9	1402858	Wire Seal	2
9	1336173	Terminal	2
10	. . . . .	Connector Assembly (Throttle Pos Sensor)	1
10	1496777	Housing	1
10	1402814	Terminal	2
10	1531160	Terminal	1
10	1479109	Seal	3
11	. . . . .	Connector Assembly (Injectors)	1
11	1383804	Connector	1
11	1402858	Wire Seal	4
11	1323583	Terminal	2
11	1336173	Terminal	2
12	. . . . .	Connector Assembly (Oxygen Sensor)	1
12	1498468	Housing	1
12	1330355	Terminal	4
12	1498492	Seal	4
13	. . . . .	Connector Assembly (Mating Half)	1
13	1498424	Housing	1
13	1482668	Plug	4
14	. . . . .	Connector Assembly	1
14	1354497	E-Ring	1
14	. . . . .	Shrink Tubing	AR
15	. . . . .	Connector Assembly (IAC)	1
15	1323575	Connector	1
15	1323576	Terminal	4

©2009 HYSTER COMPANY

WIRE HARNESS

GASOLINE ENGINE – GM 4.3L (S/N K005V04116Z →)

ITEM	PART NO.	DESCRIPTION	QTY
16	. . . . .	Connector Assembly (Alternator) (Negative)	1
16	1509790	E-Ring	1
16	. . . . .	Shrink Tubing	AR
17	. . . . .	Connector Assembly (Alternator)	1
17	1323586	Connector	1
17	1323576	Terminal	2
18	. . . . .	Connector Assembly (Alternator)	1
18	1509790	E-Ring	1
18	. . . . .	Shrink Tubing	AR
19	. . . . .	Connector Assembly (Alternator) (Positive)	1
19	148614	E-Ring	1
19	. . . . .	Shrink Tubing	AR
20	. . . . .	Connector Assembly (Temp Sensor EFI)	1
20	1323586	Connector	1
20	1323576	Terminal	2
21	. . . . .	Fuse Holder (Ignition)	1
21	1330292	Connector	1
21	1330293	Cover (Fuse)	2
21	370647	Fuse (10 Amp)	1
22	. . . . .	Fuse Holder (EFI B+)	1
22	1330292	Connector	1
22	1330293	Cover (Fuse)	2
22	370647	Fuse (10 Amp)	1
23	. . . . .	Connector Assembly (EFI ECM J2)	1
23	1498462	Retainer	1
23	1498487	Strain Relief	1
23	1498451	Insert	1
23	1498495	Seal	1
23	1484710	Terminal	13
23	. . . . .	Shrink Tubing	AR
24	. . . . .	Connector Assembly (Commons Port)	1
24	1376617	Plug	1
24	1402907	Lock	1
24	1330355	Terminal	4
24	1498492	Seal	4
24	1482668	Plug	6
25	. . . . .	Connector Assembly (Mating Half)	1
25	1498421	Clip	1
25	1402907	Lock	1
25	1482668	Plug	10
26	. . . . .	Connector Assembly (EFI ECM J1)	1
26	1500963	Retainer	1
26	1498488	Strain Relief	1
26	1498451	Insert	1
26	1498495	Seal	1
26	1484710	Terminal	14
26	1352105	Plug	18
27	. . . . .	Connector Assembly (Governor Amp)	1
27	1327959	Connector	1
27	1330297	Lock	1

©2009 HYSTER COMPANY

WIRE HARNESS

GASOLINE ENGINE – GM 4.3L (S/N K005V04116Z →)

ITEM	PART NO.	DESCRIPTION	QTY
27	1330281	Terminal	5
27	1402858	Wire Seal	5
27	1327164	Seal	1
28	1468841	Connector (Fuel Pump Prime)	1
29	. . . . .	Connector Assembly (Fuel Pump Relay)	1
29	1461744	Connector Body	1
29	1498483	Sealant	1
29	1402912	Terminal	4
29	1402858	Wire Seal	5
29	1402904	Terminal	1
29	. . . . .	Relay	1
30	. . . . .	Fuse Holder (Alternator)	1
30	1497234	Fuse Holder	1
30	1402889	Terminal	2
30	1454827	Seal	2
30	1454829	Fuse (60 Amp)	1
31	. . . . .	Connector Assembly (H2) Temp Sensor)	1
31	1301720	Connector Body	1
31	370730	Terminal	1
32	. . . . .	Fuse Holder (Fuel Pump)	1
32	1330292	Connector	1
32	1330283	Terminal	2
32	370647	Fuse (10 Amp)	1
33	. . . . .	Fuse Holder (Injector)	1
33	1330292	Connector	1
33	1330283	Terminal	2
33	370647	Fuse (10 Amp)	1
34	. . . . .	Connector Assembly (Starter Solenoid)	1
34	129887	E-Ring	1
34	. . . . .	Shrink Tubing	AR
35	. . . . .	Connector Assembly (Battery +VE)	1
35	806426	E-Ring	1
35	. . . . .	Shrink Tubing	AR
36	. . . . .	Connector Assembly (Fuel Pump)	1
36	1465469	Connector	1
36	1402858	Wire Seal	2
36	1498415	Terminal	2
37	. . . . .	Connector Assembly (Cowl)	1
37	1495955	Housing	1
37	1496889	Terminal	2
37	1496891	Terminal	5
37	1524030	Terminal	6

©2009 HYSTER COMPANY

WIRE HARNESS (ENGINE) (FIGURE 4-56)

DUAL FUEL — GM 4.3L (S/N K005V04116Z →)

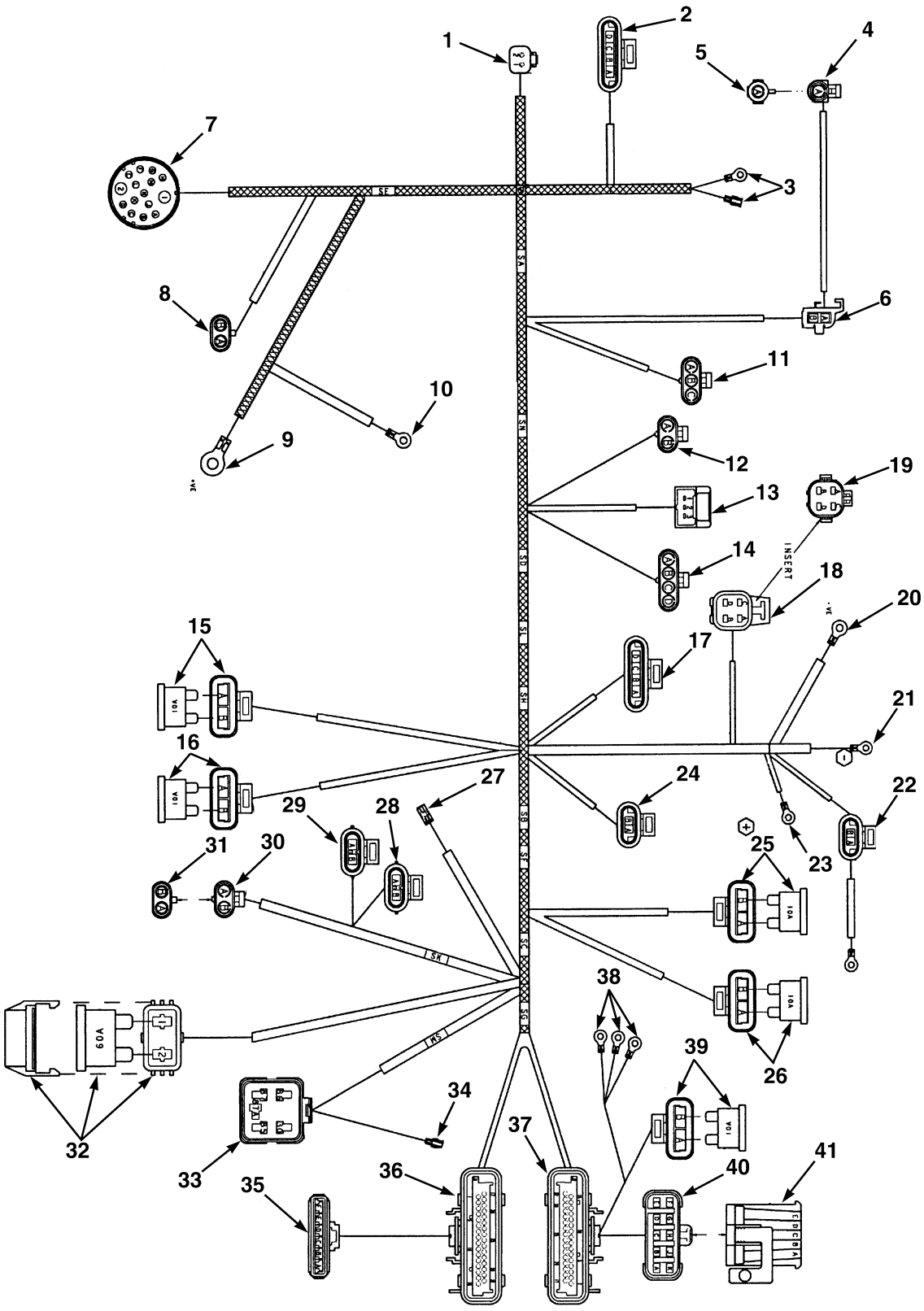

©2009 HYSTER COMPANY

WIRE HARNESS (ENGINE)

DUAL FUEL – GM 4.3L (S/N K005V04116Z →)

ITEM	PART NO.	DESCRIPTION	QTY
	2054294	Wire Harness (Engine; DF)	1
1	. . . . .	Connector Assembly (Seat Switch)	1
1	1484361	Connector (Socket)	1
1	1490243	Connector	1
1	1330438	Terminal (Socket)	2
2	. . . . .	Connector Assembly (Distributor)	1
2	1323575	Connector	1
2	1323576	Terminal	4
3	. . . . .	Connector Assembly (Oil Pressure Sender)	1
3	252293	E-Ring	1
3	1468841	Connector	1
3	. . . . .	Shrink Tubing	AR
4	. . . . .	Connector Assembly (Tachometer)	1
4	1330299	Connector	1
4	1336173	Terminal	1
4	1402858	Wire Seal	1
5	. . . . .	Connector Assembly (Mating Half)	1
5	1498476	Connector	1
5	1327164	Seal	1
6	. . . . .	Connector Assembly (Coil)	1
6	1498470	Connector Body	1
7	. . . . .	Connector Assembly (Cowl)	1
7	1495955	Housing	1
7	1496889	Terminal	2
7	1496891	Terminal	4
7	1484716	Terminal	6
7	370730	Terminal	1
8	. . . . .	Connector Assembly (Fuel Pump)	1
8	1465469	Connector	1
8	1498415	Terminal	2
8	1402858	Wire Seal	2
9	. . . . .	Connector Assembly (Battery +VE)	1
9	806426	E-Ring	1
9	. . . . .	Shrink Tubing	AR
10	. . . . .	Connector Assembly (Starter Solenoid)	1
10	129887	E-Ring	1
10	. . . . .	Shrink Tubing	AR
11	. . . . .	Connector Assembly (Map Sensor)	1
11	1327958	Connector	1
11	1498415	Terminal	3
11	1402858	Wire Seal	3
12	. . . . .	Connector Assembly (Governor)	1
12	1465468	Connector	1
12	1402858	Wire Seal	2
12	1336173	Terminal	2
13	. . . . .	Connector Assembly (Throttle Pos Sensor)	1
13	1496777	Housing	1
13	1402814	Terminal	3
13	1479109	Seal	3
14	. . . . .	Connector Assembly (Injectors)	1

©2009 HYSTER COMPANY

WIRE HARNESS (ENGINE)

DUAL FUEL – GM 4.3L (S/N K005V04116Z →)

ITEM	PART NO.	DESCRIPTION	QTY
14	1383804	Connector	1
14	1402858	Wire Seal	4
14	1336173	Terminal	4
15	. . . . .	Fuse Holder (Injector)	1
15	370647	Fuse (10 Amp)	1
15	1330292	Connector	1
15	1330283	Terminal	2
16	. . . . .	Fuse Holder (Fuel Pump)	1
16	370647	Fuse (10 Amp)	1
16	1330292	Connector	1
16	1330283	Terminal	2
17	. . . . .	Connector Assembly (IAC)	1
17	1323575	Connector	1
17	1323576	Terminal	4
18	. . . . .	Connector Assembly (Oxygen Sensor)	1
18	1498468	Housing	1
18	1330355	Terminal	4
18	1498492	Seal	4
19	. . . . .	Connector Assembly (Mating Half)	1
19	1482668	Plug	4
20	. . . . .	Connector Assembly (Battery -VE)	1
20	1354497	E-Ring	1
20	. . . . .	Shrink Tubing	AR
21	. . . . .	Connector Assembly (Alternator Negative)	1
21	148614	E-Ring	1
21	1509790	E-Ring	1
21	. . . . .	Shrink Tubing	AR
22	. . . . .	Connector Assembly (Alternator)	1
22	1323586	Connector	1
22	1323576	Terminal	2
22	. . . . .	Shrink Tubing	AR
23	. . . . .	Connector Assembly (Alternator Positive)	1
23	148614	E-Ring	1
23	1509790	E-Ring	1
23	. . . . .	Shrink Tubing	AR
24	. . . . .	Connector Assembly (H2O Temp Sensor)	1
24	1323586	Connector	1
24	1323576	Terminal	2
25	. . . . .	Fuse Holder (ECM Ignition)	1
25	370647	Fuse (10 Amp)	1
25	1330292	Connector	1
25	1330283	Terminal	2
26	. . . . .	Fuse Holder (ECM B+)	1
26	370647	Fuse (10 Amp)	1
26	1330292	Connector	1
26	1330283	Terminal	2
27	. . . . .	Connector Assembly (H2O Temp Sensor Inst)	1
27	1301720	Connector Body	1
27	370730	Terminal	1
28	. . . . .	Connector Assembly (LPG Cut Off Solenoid #1)	1

©2009 HYSTER COMPANY

WIRE HARNESS (ENGINE)

DUAL FUEL – GM 4.3L (S/N K005V04116Z →)

ITEM	PART NO.	DESCRIPTION	QTY
28	1345689	Connector Body	1
28	1345690	Terminal (E FTG SEC LOCK)	1
28	1330355	Terminal	2
28	1498492	Seal	2
29	. . . . .	Connector Assembly (LPG Cut Off Solenoid #2)	1
29	1345689	Connector Body	1
29	1345690	Terminal (E FTG SEC LOCK)	1
29	1330355	Terminal	2
29	1498492	Seal	2
30	. . . . .	Connector Assembly (Series 1)	1
30	1465468	Connector	1
30	1402858	Wire Seal	2
30	1336173	Terminal	2
31	. . . . .	Connector Assembly (Mating Half)	1
31	1465469	Connector	1
31	1327164	Seal	2
32	. . . . .	Fuse Holder (Alternator)	1
32	1497234	Fuse Holder	1
32	1402889	Terminal	1
32	1520543	Terminal	2
32	1497235	Fuse Holder	2
32	1454829	Fuse (60 Amp)	1
33	. . . . .	Relay (Fuel Pump)	1
33	1461744	Connector Body	1
33	1345690	Terminal (E FTG SEC LOCK)	1
33	1402912	Terminal	5
33	1402858	Wire Seal	5
34	. . . . .	Connector Assembly (Fuel Pump Prime)	1
34	1468841	Connector	1
35	. . . . .	Connector Assembly (Governor Amplifier)	1
35	1327959	Connector	1
35	1330297	Lock	1
35	1330281	Terminal	5
35	1402858	Wire Seal	5
35	1327164	Seal	1
36	. . . . .	Connector Assembly (J1 ECM Plug)	1
36	1500963	Retainer	1
36	1498488	Strain Relief	1
36	1498451	Insert	1
36	1498495	Seal	1
36	1484710	Terminal	14
36	1352105	Plug	18
37	. . . . .	Connector Assembly (J2 ECM Plug)	1
37	1498462	Retainer	1
37	1498487	Strain Relief	1
37	1498451	Insert	1
37	1498495	Seal	1
37	1484710	Terminal	13
37	1352105	Plug	19
38	. . . . .	Connector Assembly (Gasoline/LPG Switch)	1

©2009 HYSTER COMPANY

WIRE HARNESS (ENGINE)

DUAL FUEL – GM 4.3L (S/N K005V04116Z →)

ITEM	PART NO.	DESCRIPTION	QTY
38	1550623	E-Ring	2
38	1550626	E-Ring	1
38	. . . . .	Shrink Tubing	AR
39	. . . . .	Fuse Holder (LPG Valve)	1
39	1330292	Connector	1
39	1330283	Terminal	2
39	370647	Fuse (10 Amp)	1
40	. . . . .	Connector Assembly (Comms Port)	1
40	1376617	Plug	1
40	1402907	Lock	1
40	1330355	Terminal	4
40	1498492	Seal	4
40	1482668	Plug	6
41	. . . . .	Connector Assembly (Mating Half)	1
41	1498421	Clip	1
41	1376618	Receptacle	1
41	1402907	Lock	1
41	1482668	Plug	10

©2009 HYSTER COMPANY

WIRE HARNESS (FIGURE 4-57)
BRAKE PRESSURE SWITCH

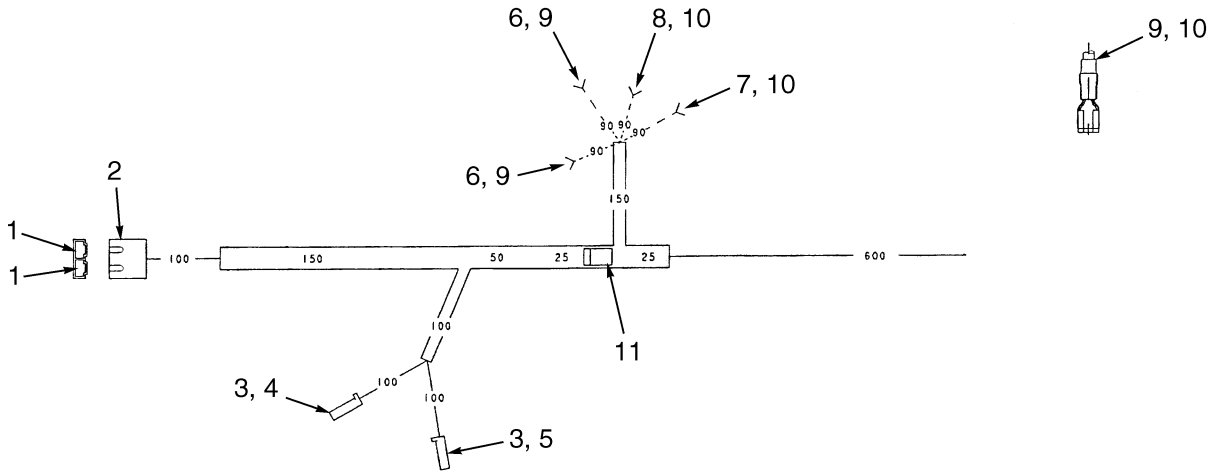

BP040031

ITEM	PART NO.	DESCRIPTION	QTY
	2066481	Wire Harness (Brake Pressure Switch)	1
1	370730	Terminal	2
2	346330	Connector Body	1
3	181045	Connector Body	2
4	134810	Terminal	1
5	134809	Terminal	1
6	236901	Terminal	2
7	248196	Terminal	1
8	148648	Terminal	1
9	175944	Heat Shrink	2
10	222523	Heat Shrink	2
11	303294	Rectifier	1

©2009 HYSTER COMPANY

NOTES

©2009 HYSTER COMPANY

5 TRANSMISSION

SECTION 5
TRANSMISSION

DESCRIPTION	PAGE
CONTROL VALVE	
TRANSMISSION	5-20
DIRECTIONAL CLUTCH	
(FORWARD)	5-18
INPUT CLUTCH	
(REVERSE)	5-16
MANIFOLD VALVE	5-22
TORQUE CONVERTER	5-6
TRANSMISSION	
SHEET 1 OF 2	5-8
SHEET 2 OF 2	5-12
TRANSMISSION LINES	5-4
TRANSMISSION MOUNT	5-2
VALVE	
HIGH AND LOW	5-23

©2009 HYSTER COMPANY

TRANSMISSION MOUNT (FIGURE 5-1)

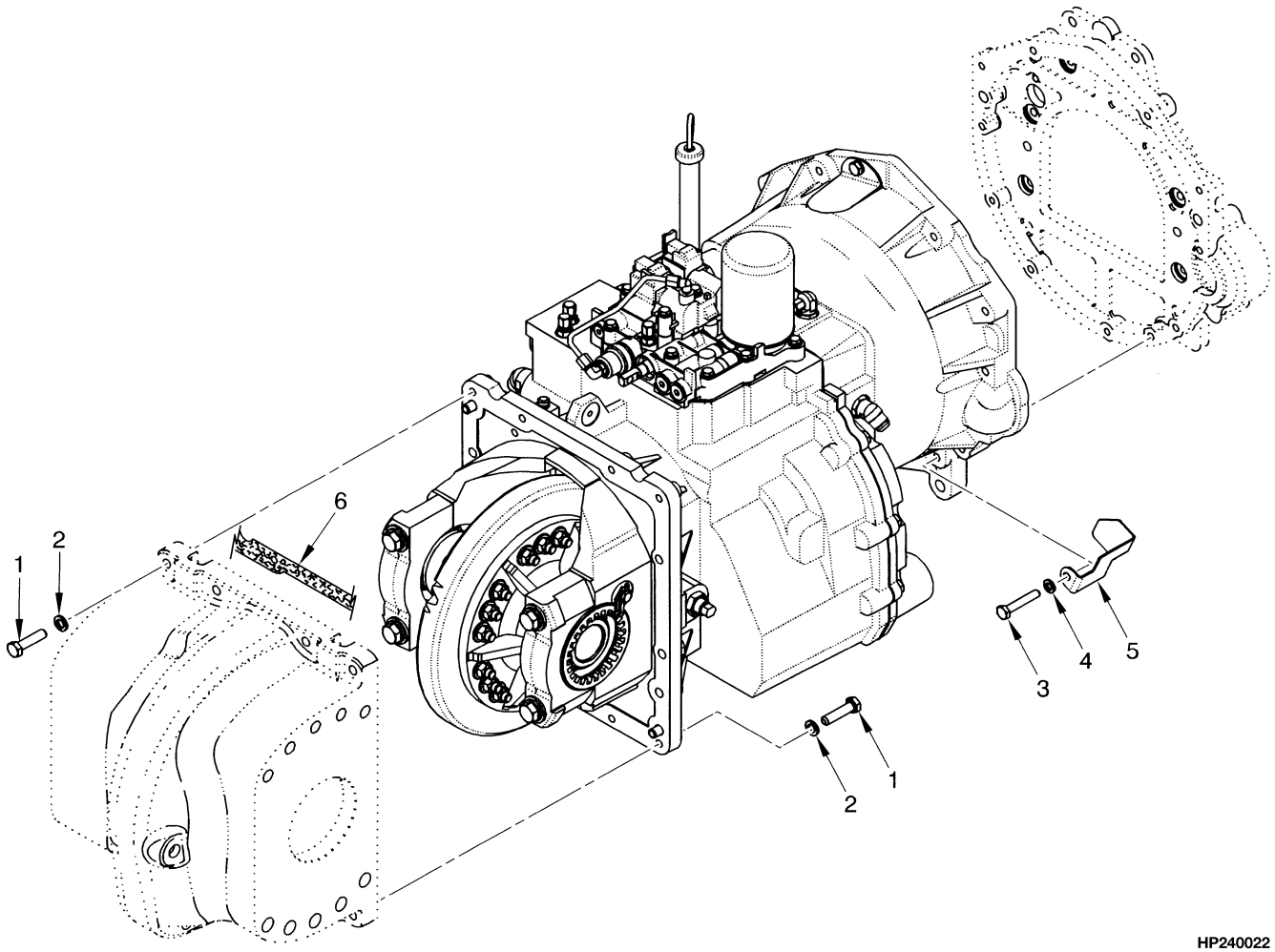

KEY:
A: Two Speed
B: Single Speed

ITEM	PART NO.	DESCRIPTION	QTY A	QTY B
	a 1388871	Transmission Assy (1830 mm Short Wheel Base)	..	1
	d 1488597	Transmission Assy (T086) (Short Wheel Base) (1830 mm Short Wheel Base)	..	1
	b 1388873	Transmission Assy (1830 mm Short Wheel Base)	1	..
	e 1488600	Transmission Assy (T088) (Short Wheel Base) (1830 mm Short Wheel Base)	1	..
	c 1388874	Transmission Assy (2100 mm Long Wheel Base)	1	..
	f 1488601	Transmission Assy (T089) (Long Wheel Base) (2100 mm Long Wheel Base)	1	..
1	292529	Capscrew	15	15
2	292683	Lockwasher	15	15
3	292519	Capscrew	11	11
4	292682	Lockwasher	11	11
5	1397797	Cover (Starter)	1	1
6	313022	Sealant	AR	AR

©2009 HYSTER COMPANY

FOOTNOTES:

a → T086 M004047
b → T088 M005599
c → T089 M005669
d T086 M004048 →
e T088 M005600 →
f T089 M005670 →

©2009 HYSTER COMPANY

TRANSMISSION LINES (FIGURE 5-2)

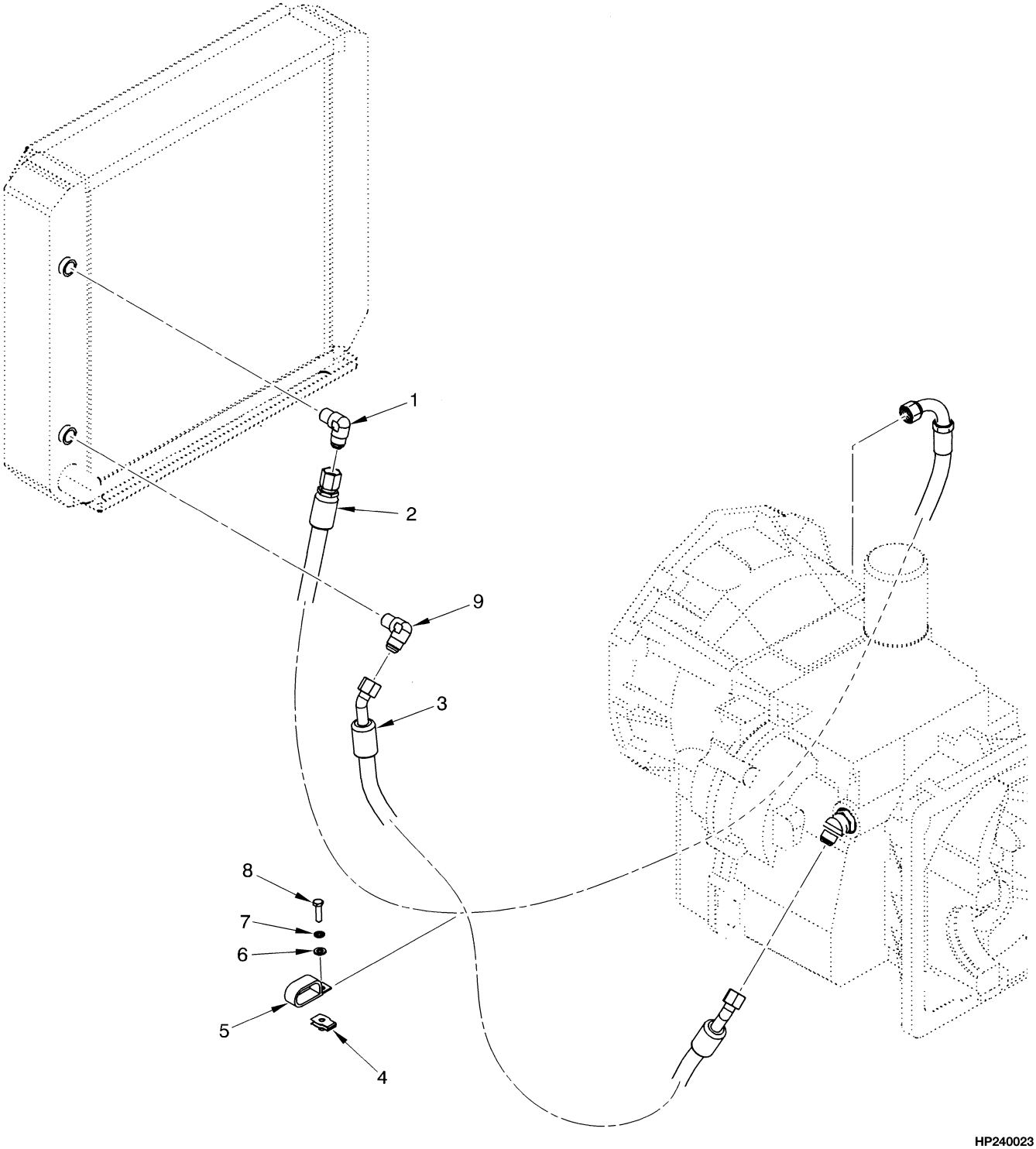

©2009 HYSTER COMPANY

TRANSMISSION LINES

ITEM	PART NO.	DESCRIPTION	QTY
1	66885	Fitting	1
2	1397978	Hose Assy	1
3	1397982	Hose Assy	1
4	1393879	Nut	2
5	212786	Clamp	2
6	320157	Washer	2
7	292681	Lockwasher	2
8	132861	Capscrew	2
9	201787	Fitting	1

©2009 HYSTER COMPANY

TORQUE CONVERTER (FIGURE 5-3)

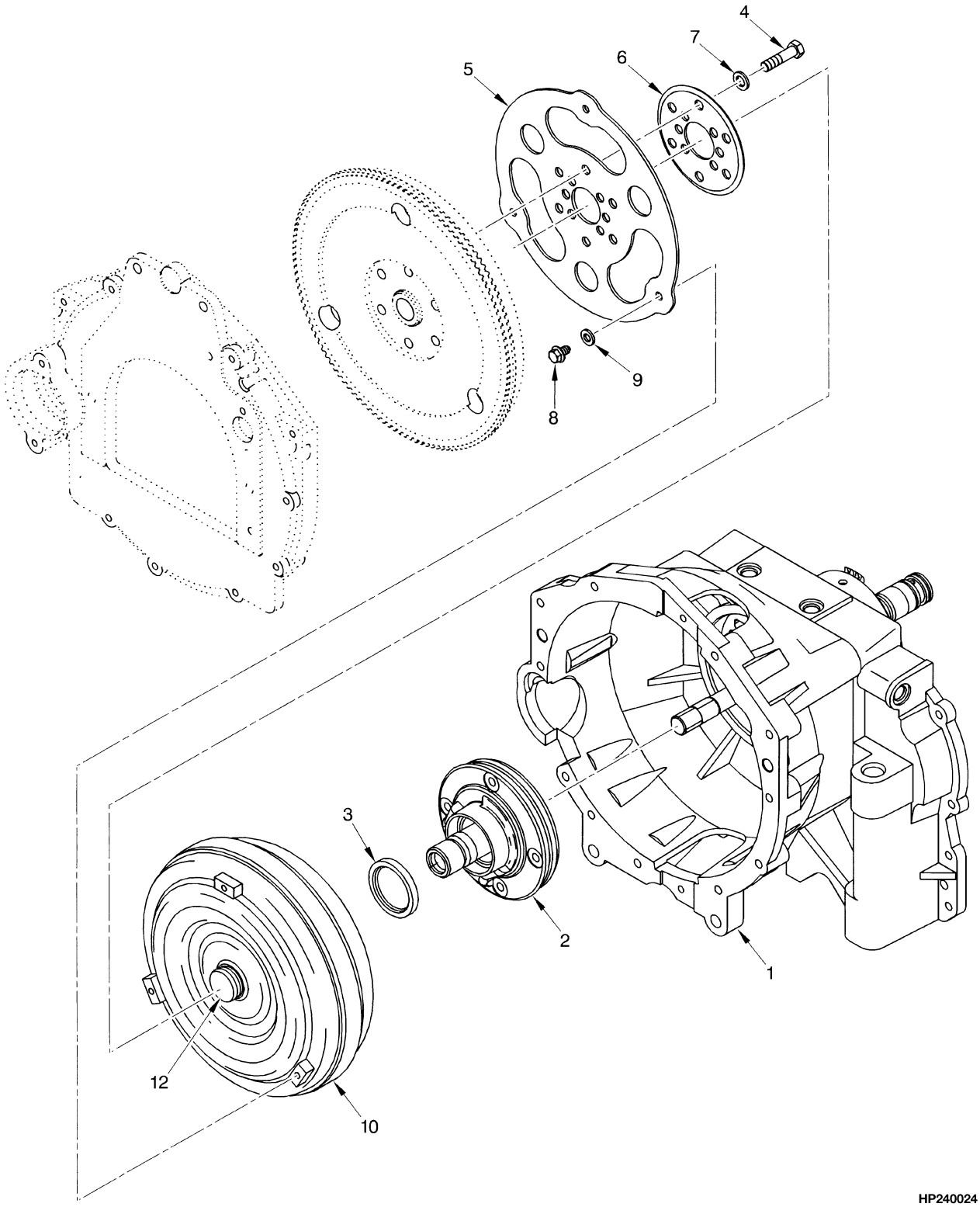

©2009 HYSTER COMPANY

TORQUE CONVERTER

KEY:
A: One Speed
B: Two Speed

ITEM	PART NO.	DESCRIPTION	QTY A	QTY B
	a 1388871	Transmission Assy (T86, 1830 mm Short Wheel Base)	1	..
	d 1488597	Transmission Assy (T086) (Short Wheel Base) (T86, 1830 mm Short Wheel Base)	1	..
	b 1388873	Transmission Assy (T88, 1830 mm Short Wheel Base)	..	1
	e 1488600	Transmission Assy (T088) (Short Wheel Base) (T88, 1830 mm Short Wheel Base)	..	1
	c 1388874	Transmission Assy (T89, 2100 mm Long Wheel Base)	..	1
	f 1488601	Transmission Assy (T089) (Long Wheel Base) (T89, 2100 mm Long Wheel Base)	..	1
1	1394798	Converter Housing	1	..
1	1394799	Converter Housing	..	1
2	1320018	Charge Pump	1	1
2	1322333	Bushing	1	1
2	373950	O-Ring	1	1
3	1498807	Seal (Double Lip)	1	1
4	289867	Bolt (Diesel) (☞Figure 2-19)	8	8
4	289867	Bolt (Gas)	6	6
5	1397689	Flex Plate (Diesel) (☞Figure 2-19)	1	1
6	1388750	Washer (☞Figure 2-19)	1	1
7	296422	Washer (☞Figure 2-19)	6	6
8	1397804	Bolt (☞Figure 2-19)	3	3
9	296420	Washer (☞Figure 2-19)	3	3
10	1503453	Torque Converter	1	1
11	1388705	Flywheel (Diesel) (☞Figure 2-19)	1	1
11	1399298	Flywheel (Gasoline and LPG) (☞Figure 2-10)	1	1
12	251979	Lubricant	AR	AR

FOOTNOTES:

a → T086M004047
b → T088M005599
c → T089M005669
d T086M004048 →
e T088M005600 →
f T089M005670 →

©2009 HYSTER COMPANY

TRANSMISSION (FIGURE 5-4)
SHEET 1 OF 2

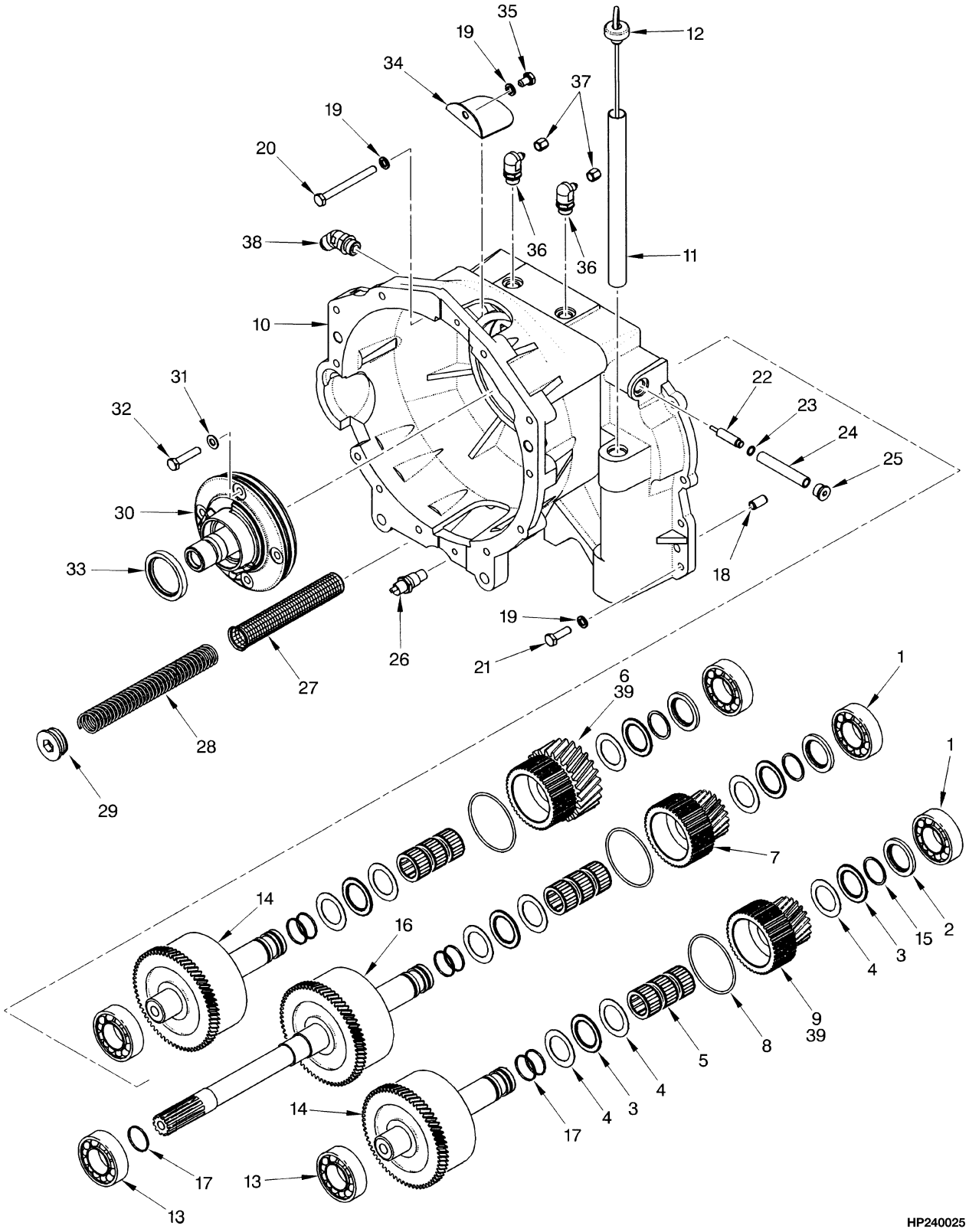

©2009 HYSTER COMPANY

TRANSMISSION
SHEET 1 OF 2

KEY:
A: Two Speed
B: Single Speed

ITEM	PART NO.	DESCRIPTION	QTY A	QTY B
	a 1388871	Transmission Assy (1830 mm Short Wheel Base)	..	1
	g 1488597	Transmission Assy (T086) (Short Wheel Base) (1830 mm Short Wheel Base)	..	1
	c 1388873	Transmission Assy (1830 mm Short Wheel Base)	1	..
	j 1488600	Transmission Assy (T088) (Short Wheel Base) (1830 mm Short Wheel Base)	1	..
	e 1388874	Transmission Assy (2100 mm Long Wheel Base)	1	..
	l 1488601	Transmission Assy (T089) (Long Wheel Base) (2100 mm Long Wheel Base)	1	..
1	41308	Bearing	3	2
2	1396053	Thrust Washer	3	2
3	346731	Needle Bearing	6	4
4	346696	Thrust Washer	9	6
5	346730	Needle Bearing	9	6
6	1394786	Gear (Clutch Output)	1	..
7	1394788	Gear (Clutch Output)	1	..
8	1386958	O-Ring	3	2
9	1394787	Gear (Clutch Output)	1	..
10	1394799	Converter Housing	1	..
10	1394798	Converter Housing	..	1
11	1388752	Dipstick Tube (Dipstick)	1	1
12	1388753	Dipstick	1	1
13	41208	Bearing	3	2
14	1488604	Clutch Pack (☞Figure 5-7)	2	1
15	346675	Snap Ring	3	2
16	1488602	Clutch Pack (☞Figure 5-6)	1	1
17	1394794	Sealing Ring	7	5
18	186420	Dowel (Single Speed)	4	4
19	292682	Lockwasher	16	16
20	334421	Capscrew	4	4
21	287860	Capscrew	10	10
22	1388856	Spool	1	1
23	1394714	Snap Ring	1	1
24	1388857	Spring	1	1
25	235691	Fitting	1	1
25	16484	O-Ring	1	1
26	1322627	Switch (Oil Temperature Warning)	1	1
27	346680	Screen	1	1
28	1388993	Spring (Screen)	1	1
29	188210	Fitting	1	1
29	16983	O-Ring	1	1
30	1320018	Charge Pump	1	1
30	373950	O-Ring	1	1
30	1322333	Bushing	1	1
31	380524	Washer	1	1

©2009 HYSTER COMPANY

TRANSMISSION
SHEET 1 OF 2

KEY:
A: Two Speed
B: Single Speed

ITEM	PART NO.	DESCRIPTION	QTY A	QTY B
32	292517	Capscrew	1	1
33	**bdf** 373449	Seal	1	1
33	**hikm** 1498807	Seal (Double Lip)	1	1
34	1388901	Cover Plate	2	2
35	292513	Capscrew	2	2
36	162155	Fitting	2	2
36	16484	O-Ring	1	1
37	16923	Nut	5	5
38	16569	Fitting	1	1
38	16485	O-Ring	1	1
39	1394789	Gear (Output)	..	2

FOOTNOTES:

a → T086 M004047
b → T086M-04221
c → T088 M005599
d → T088M-05754
e → T089 M005669
f → T089M-06006
g T086 M004048 →
h T086M-04222 →
i T087M-01524 →
j T088 M005600 →
k T088M-05754 →
l T089 M005670 →
m T089M-06007 →

©2009 HYSTER COMPANY

NOTES

©2009 HYSTER COMPANY

TRANSMISSION (FIGURE 5-5)
SHEET 2 OF 2

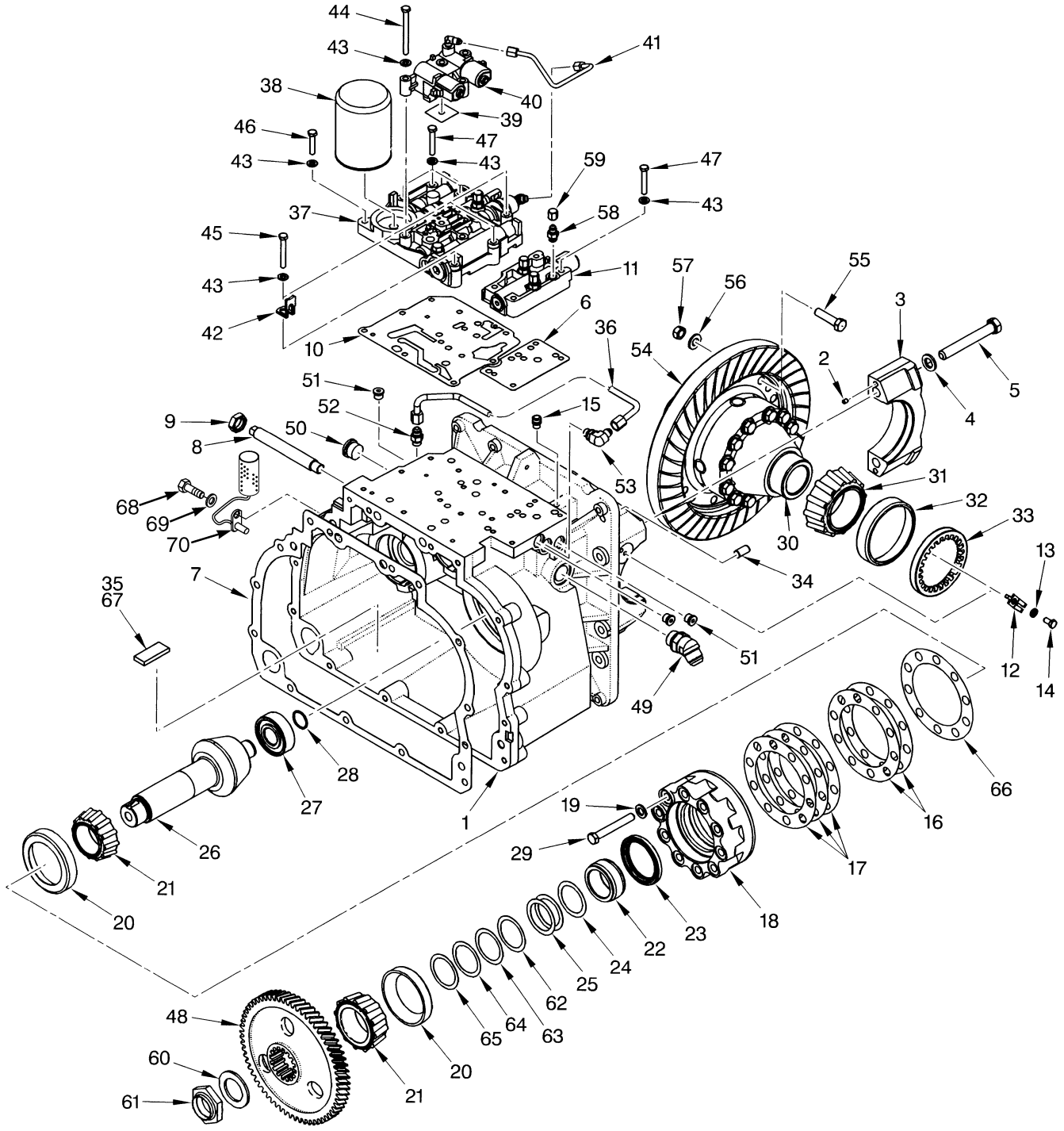

BP080258

©2009 HYSTER COMPANY

TRANSMISSION
SHEET 2 OF 2

KEY:
A: Two Speed
B: Single Speed

ITEM	PART NO.	DESCRIPTION	QTY A	QTY B
	a 1388871	Transmission Assy (1830 mm Short Wheel Base)	..	1
	d 1488597	Transmission Assy (T086) (Short Wheel Base) (1830 mm Short Wheel Base)	..	1
	b 1388873	Transmission Assy (1830 mm Short Wheel Base)	1	..
	e 1488600	Transmission Assy (T088) (Short Wheel Base) (1830 mm Short Wheel Base)	1	..
	c 1388874	Transmission Assy (2100 mm Long Wheel Base)	1	..
	f 1488601	Transmission Assy (T089) (Long Wheel Base) (2100 mm Long Wheel Base)	1	..
1	1388869	Transmission Housing	..	1
1	1388870	Transmission Housing	1	..
2	234038	Dowel	4	4
3	. . . . .	Bearing Cap	2	2
4	296426	Washer	4	4
5	293697	Capscrew	4	4
6	1394709	Gasket	1	..
7	1388802	Gasket (Cover)	1	1
8	352321	Screw	1	1
9	1399455	Nut	1	1
10	1386940	Gasket (Control Valve)	1	1
11	1388612	Valve	1	..
12	334447	Lockplate	2	2
13	292681	Lockwasher	2	2
14	287851	Capscrew	2	2
15	21420	Breather	1	1
16	1388697	Shim (0.020 in.)	AR	AR
17	1388698	Shim (0.007 in.)	AR	AR
18	1388678	Carrier	1	1
19	296422	Washer	10	10
20	200972	Bearing Cup (Tapered)	2	2
21	143004	Bearing Cone	2	2
22	1388677	Spacer	1	1
23	1394707	Seal	1	1
24	1385060	Shim (0.356 in.)	AR	AR
25	1385065	Shim (0.635 in.)	AR	AR
26	. . . . .	Pinion (Hypoid) (1830 mm Short Wheel Base)	1	1
26	. . . . .	Pinion (Hypoid) (2100 mm Long Wheel Base)	1	1
27	1388680	Bearing	1	1
28	1394800	Snap Ring	1	1
29	293657	Capscrew	10	10
30	1476426	Differential (☞Figure 6-1)	1	1
31	271479	Bearing Cone	2	2
32	30162	Bearing Cup	2	2
33	1388735	Nut	2	2
34	186420	Dowel	4	4

©2009 HYSTER COMPANY

TRANSMISSION
SHEET 2 OF 2

KEY:
A: Two Speed
B: Single Speed

ITEM	PART NO.	DESCRIPTION	QTY A	QTY B
35	334560	Magnet	1	1
36	1388801	Tube Assy	1	..
37	1466123	Valve (☞Figure 5-8)	1	1
38	1328691	Transmission Filter	1	1
39	1388573	Gasket	1	1
40	1400159	Valve (☞Figure 5-9)	1	1
41	1302973	Tube Assy	1	1
42	1385873	Strap	1	1
43	320157	Washer	1	1
44	346656	Capscrew	4	4
45	136704	Capscrew	3	3
46	292508	Capscrew	1	1
47	292509	Capscrew	4	..
48	1385489	Gear (Output)	1	..
48	1388747	Gear (Output)	..	1
49	201782	Fitting	1	1
49	16486	O-Ring	1	1
50	222444	Fitting	1	..
50	16486	O-Ring	1	..
51	222443	Fitting	3	1
51	16483	O-Ring	1	1
52	16540	Connector	1	..
52	16483	O-Ring	1	..
53	16558	Fitting	1	..
53	16483	O-Ring	1	..
54	. . . . .	Gear (Hypoid) (1830 mm Short Wheel Base)	1	1
54	. . . . .	Gear (Hypoid) (2100 mm Long Wheel Base)	1	1
55	1466438	Capscrew	18	18
56	221771	Washer	18	18
57	278326	Nut	18	18
58	17753	Adapter	3	2
58	16482	O-Ring	1	1
59	16923	Nut	5	4
60	1388695	Washer	1	1
61	1390101	Nut	1	1
62	1385061	Shim (0.381 in.)	AR	AR
63	1385062	Shim (0.406 in.)	AR	AR
64	1385063	Shim (0.508 in.)	AR	AR
65	1385064	Shim (0.559 in.)	AR	AR
66	1388699	Shim (0.005 in.)	AR	AR
67	264159	Adhesive	AR	AR
68	292500	Capscrew	1	..
69	292680	Washer	1	..
70	1547680	Sensor	1	..
	1397851	Gear and Pinion (1830 mm Short Wheel Base)	1	1

©2009 HYSTER COMPANY

TRANSMISSION
SHEET 2 OF 2

KEY:
A: Two Speed
B: Single Speed

ITEM	PART NO.	DESCRIPTION	QTY A	QTY B
	1397852	Gear and Pinion (2100 mm Long Wheel Base)	1	1

FOOTNOTES:

a → T086 M004047
b → T088 M005599
c → T089 M005669
d T086 M004048 →
e T088 M005600 →
f T089 M005670 →

©2009 HYSTER COMPANY

INPUT CLUTCH (FIGURE 5-6)
(REVERSE)

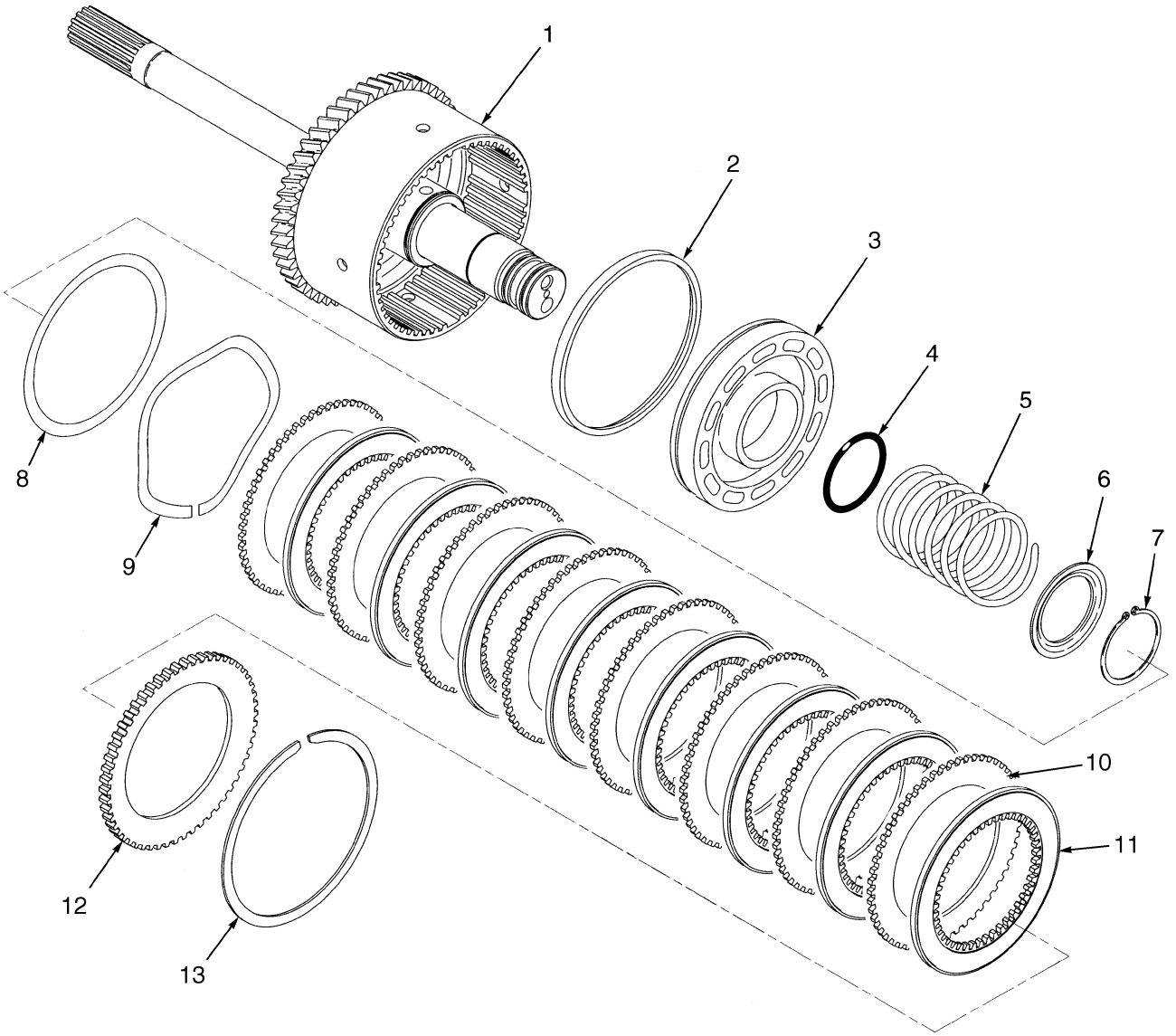

BP240026

©2009 HYSTER COMPANY

INPUT CLUTCH
(REVERSE)

KEY:
A: Single Speed
B: Two Speed

ITEM	PART NO.	DESCRIPTION	QTY A	QTY B
	ceh 1394776	Clutch Pack	1	1
	lnq 1488602	Clutch Pack	1	1
1	1396064	Shaft	1	1
2	334402	Seal	1	1
3	**ceh** 1394885	Piston	1	1
3	**lq** 1523953	Piston	1	1
4	1394879	O-Ring	1	1
5	1394882	Spring	1	1
6	1394893	Guide (Spring)	1	1
7	1394912	Snap Ring	1	1
8	1515680	Washer	1	1
9	**afi** 1473595	Spring	1	1
9	**jor** 1523551	Spring	1	1
10	1387235	Separator Plate (Separator)	8	8
11	**bdg** 1469300	Plate (Friction)	8	8
11	**kmp** 1469301	Friction Disk (Friction)	8	8
12	1394881	Pressure Plate (0.248-0.252 in.)	1	1
12	1487201	Pressure Plate (Shimming) (0.272-0.276 in.) (Optional)	1	1
12	1545871	Pressure Plate (Shimming, Stepped) (0.201-0.205 in.) (Optional)	1	1
12	1487202	Pressure Plate (Shimming, Stepped) (0.220-0.224 in.) (Optional)	1	1
13	334475	Snap Ring	1	1

FOOTNOTES:

a → T086M-01547
b → T086M-02608
c → T086M-04047
d → T088M-03305
e → T088M-05599
f → T088M-07042
g → T089M-03175
h → T089M-05669
i → T089M-07577
j T086M-01547 →
k T086M-02609 →
l T086M-04048 →
m T088M-03306 →
n T088M-05600 →
o T088M-07043 →
p T089M-03176 →
q T089M-05670 →
r T089M-07578 →

©2009 HYSTER COMPANY

DIRECTIONAL CLUTCH (FIGURE 5-7)
(FORWARD)

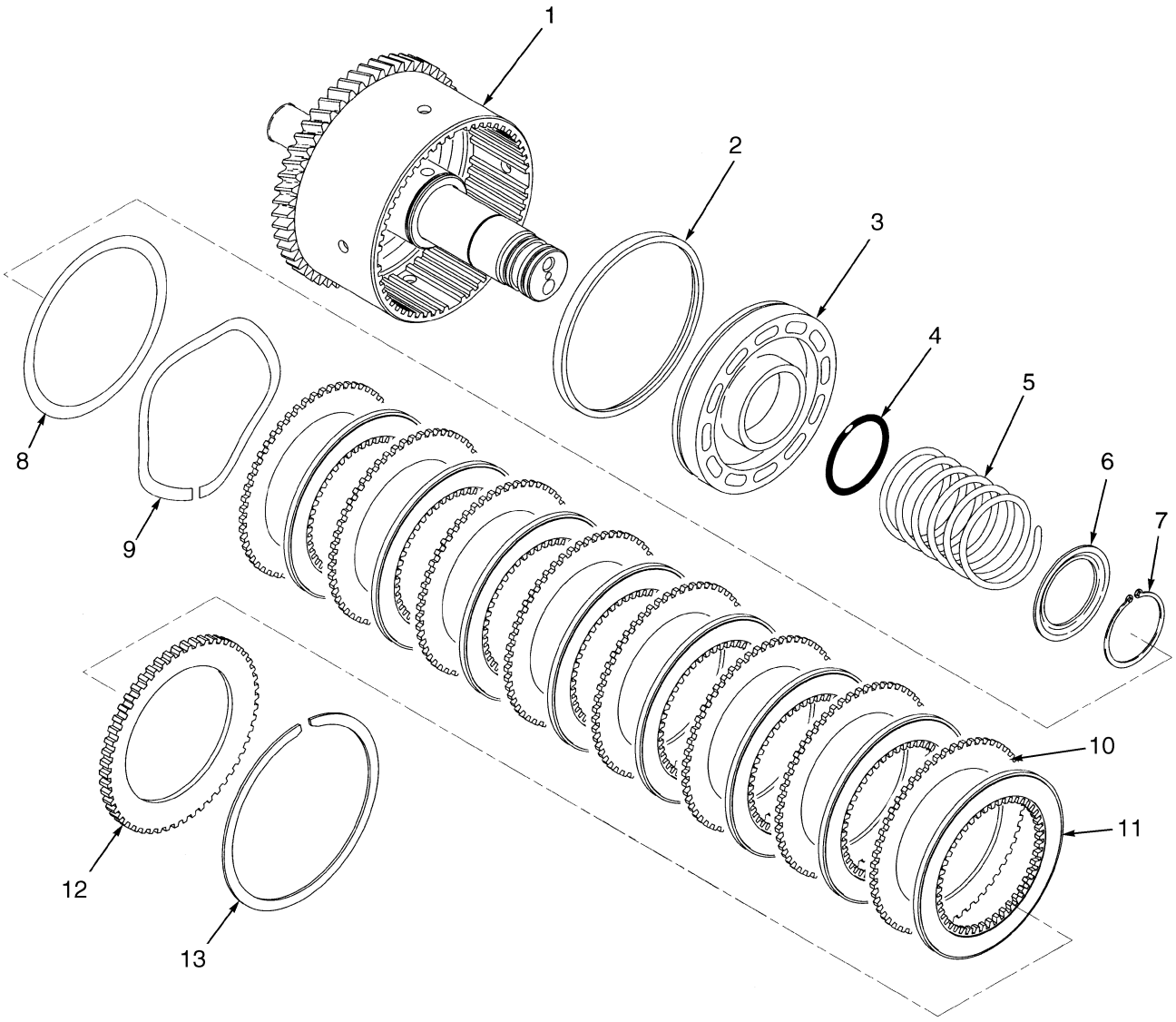

BP240027

©2009 HYSTER COMPANY

DIRECTIONAL CLUTCH
(FORWARD)

KEY:
A: Single Speed
B: Two Speed

ITEM	PART NO.	DESCRIPTION	QTY A	QTY B
	ceh 1394777	Clutch Pack	1	1
	lnq 1488604	Clutch Pack	1	2
1	1396065	Shaft	1	2
2	334402	Seal	1	2
3	**ceh** 1394885	Piston	1	2
3	**lq** 1523953	Piston	1	2
4	1394879	O-Ring	1	2
5	1394882	Spring	1	2
6	1394893	Guide (Spring)	1	2
7	1394912	Snap Ring	1	2
8	1515680	Washer	1	2
9	**afi** 1473595	Spring	1	2
9	**jor** 1523551	Spring	1	2
10	1387235	Separator Plate (Separator)	8	16
11	**bdg** 1469300	Plate (Friction)	8	16
11	**kmp** 1469301	Friction Disk (Friction)	8	16
12	1394881	Pressure Plate (0.248-0.252 in.)	1	2
12	1487201	Pressure Plate (Shimming) (0.272-0.276 in.) (Optional)	1	2
12	1545871	Pressure Plate (Shimming, Stepped) (0.201-0.205 in.) (Optional)	1	2
12	1487202	Pressure Plate (Shimming, Stepped) (0.220-0.224 in.) (Optional)	1	2
13	334475	Snap Ring	1	2

FOOTNOTES:

a → T086M-01547
b → T086M-02608
c → T086M-04047
d → T088M-03305
e → T088M-05599
f → T088M-07042
g → T089M-03175
h → T089M-05669
i → T089M-07577
j T086M-01547 →
k T086M-02609 →
l T086M-04048 →
m T088M-03306 →
n T088M-05600 →
o T088M-07043 →
p T089M-03176 →
q T089M-05670 →
r T089M-07578 →

©2009 HYSTER COMPANY

CONTROL VALVE (FIGURE 5-8)
TRANSMISSION

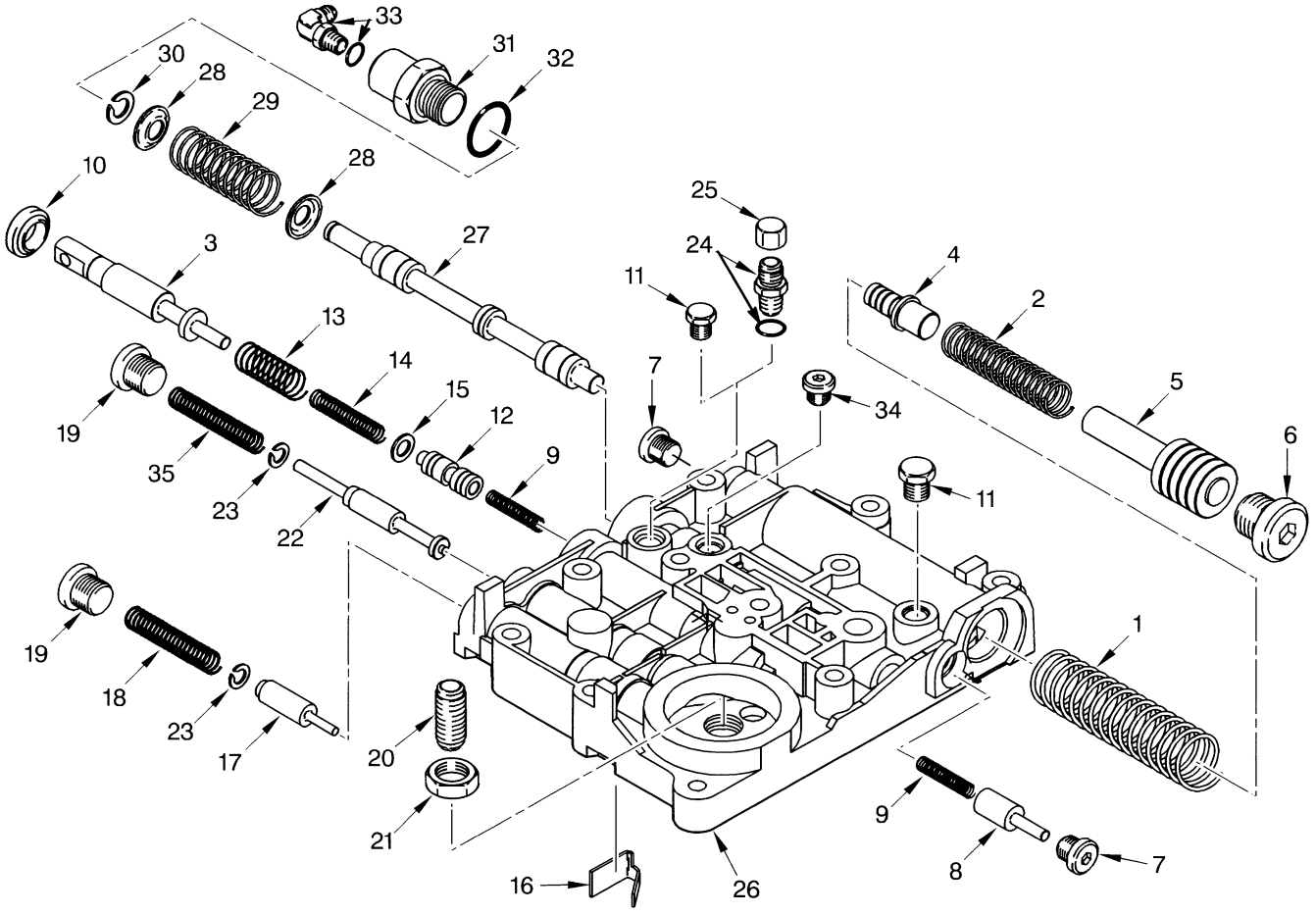

©2009 HYSTER COMPANY

CONTROL VALVE
TRANSMISSION

ITEM	PART NO.	DESCRIPTION	QTY
	1466123	Valve	1
1	361876	Spring (Accumulator)	1
2	361877	Spring (Trimmer)	1
3	1337817	Plunger (Inching)	1
4	334582	Spool (Trimmer)	1
5	359221	Spool (Accumulator)	1
6	200659	Fitting	1
6	16982	O-Ring	1
7	222443	Fitting	2
7	16483	O-Ring	2
8	334542	Spool (Dump)	1
9	334543	Spring	2
10	334500	Seal	1
11	14592	Plug	1
11	16482	O-Ring	1
12	1483108	Spool (Inching)	1
13	334531	Spring (Inching)	1
14	1387230	Spring (Inching)	1
15	296418	Washer	1
16	350484	Plate (Inching)	1
17	1394710	Spool (Regulator)	1
18	1394711	Spring (Regulator)	1
19	235691	Fitting	2
19	16484	O-Ring	1
20	181766	Fitting	1
21	15032	Nut	1
22	1388924	Spool (Pack Regulator)	1
23	1394714	Snap Ring (External)	2
24	222380	Fitting	1
24	16482	O-Ring	1
25	16923	Nut	1
26	1396637	Body	1
27	1490391	Spool (Forward/Reverse)	1
28	346648	Cap (Forward/Reverse)	2
29	346645	Spring	1
30	58936	Snap Ring	1
31	375986	Cap (Monotrol)	1
32	367945	Gasket	1
33	16556	Fitting	1
33	16481	O-Ring	1
34	134436	Fitting	1
34	16482	O-Ring	1
35	1461077	Spring	1

©2009 HYSTER COMPANY

MANIFOLD VALVE (FIGURE 5-9)

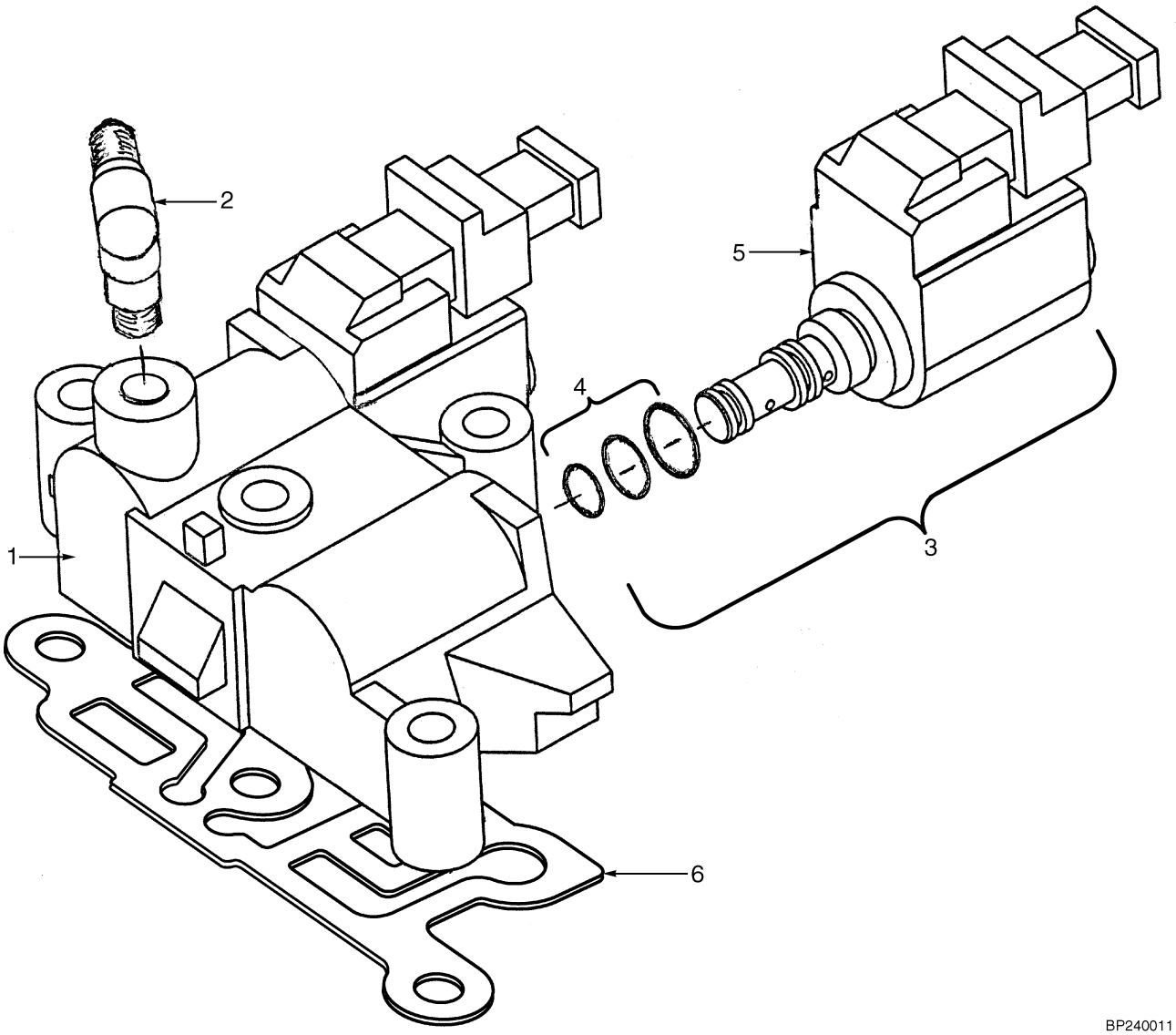

BP240011

ITEM	PART NO.	DESCRIPTION	QTY
	1400159	Valve	1
1	. . . . .	Manifold	1
2	14500	Fitting	1
2	246108	Sealant	AR
3	1400158	Solenoid	2
4	**a** 1393160	Kit-Seal	1
5	1464144	Coil	1
6	1388573	Gasket	1

FOOTNOTES:

a Services One Solenoid Valve

©2009 HYSTER COMPANY

VALVE (FIGURE 5-10)
HIGH AND LOW

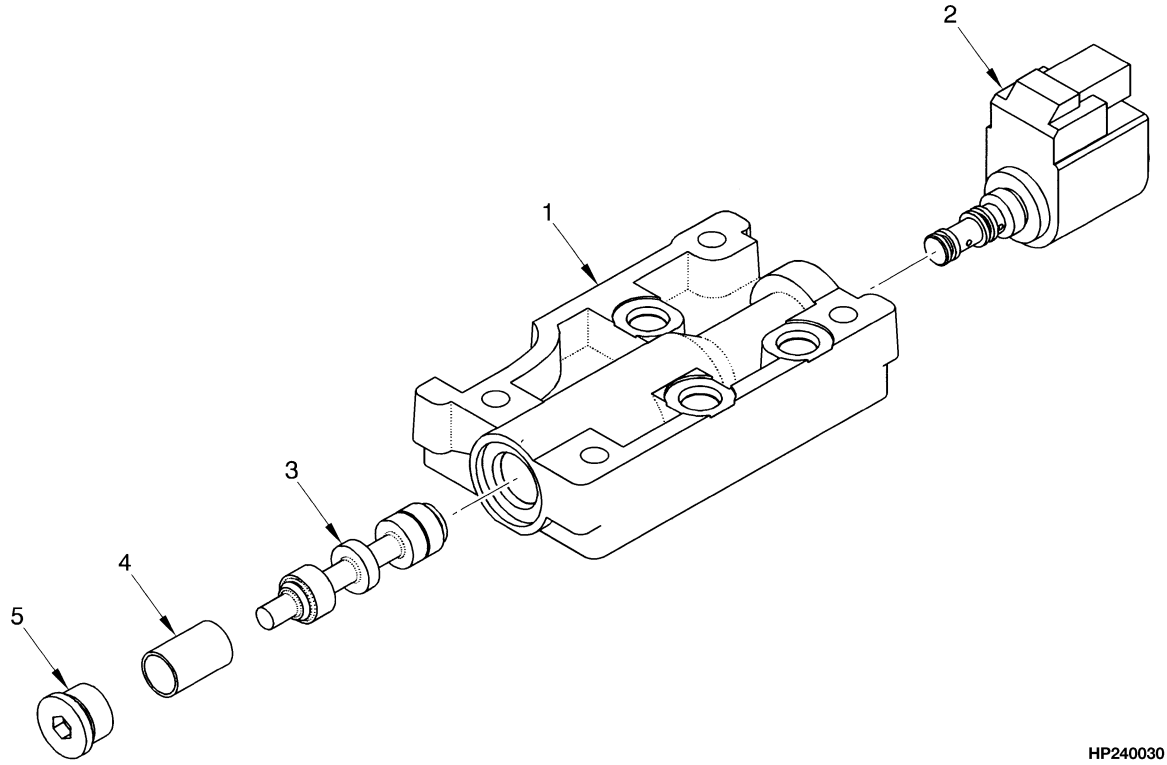

ITEM	PART NO.	DESCRIPTION	QTY
	1388612	Valve	1
1	1388613	Body	1
2	1400158	Solenoid	1
2	1393160	Kit-Seal	1
3	1388615	Spool	1
4	334531	Spring	1
5	235691	Fitting	1
5	16484	O-Ring	1

©2009 HYSTER COMPANY

NOTES

©2009 HYSTER COMPANY

6 DRIVE AXLE

SECTION 6
DRIVE AXLE

DESCRIPTION	PAGE
DIFFERENTIAL ASSEMBLY	6-2
DRIVE AXLE	6-4

©2009 HYSTER COMPANY

DIFFERENTIAL ASSEMBLY (FIGURE 6-1)

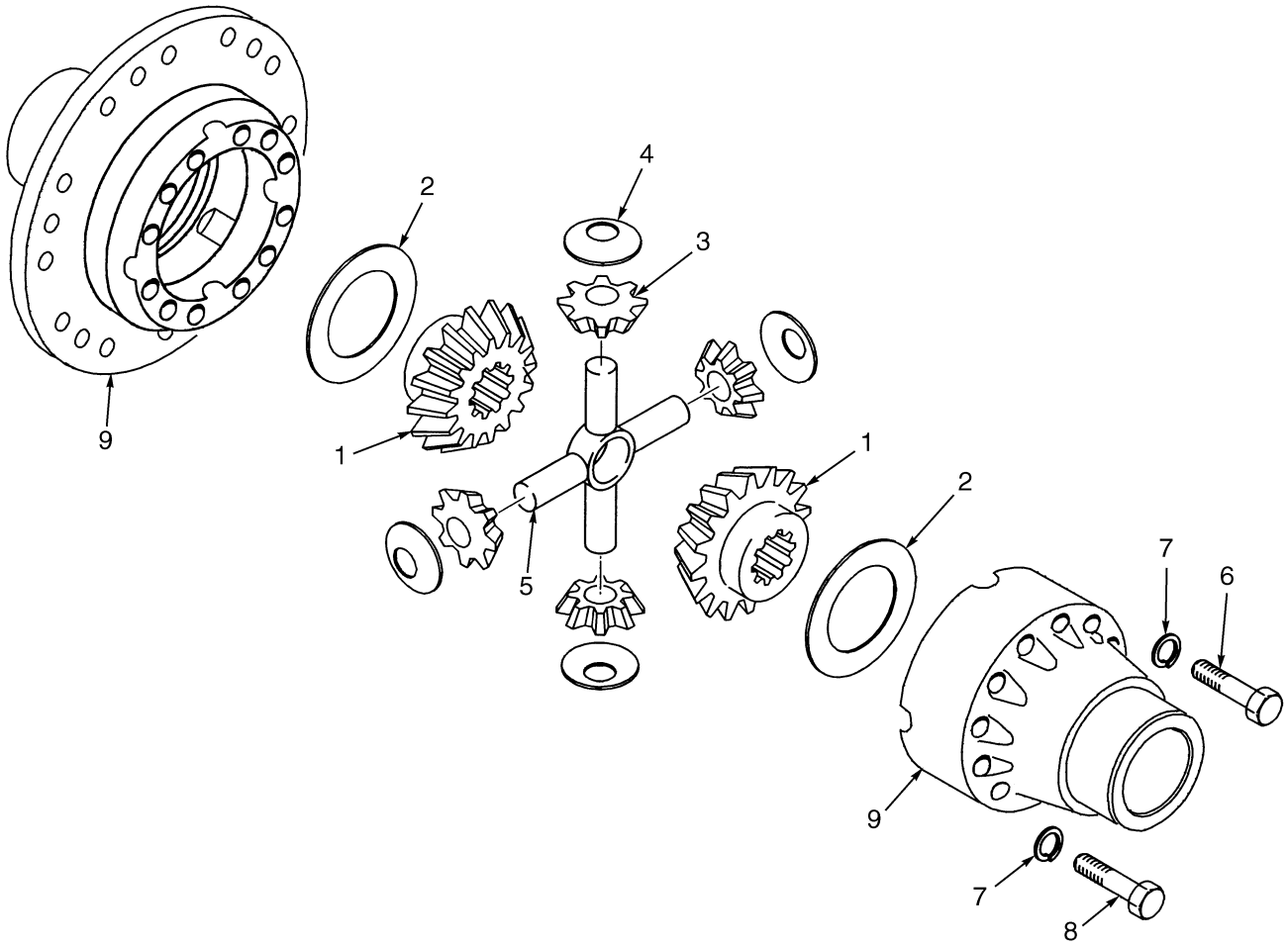

BP070003

ITEM	PART NO.	DESCRIPTION	QTY
	1476426	Differential	1
1	1484734	Gear	2
2	1484735	Washer	2
3	1484736	Pinion	4
4	1484737	Washer	4
5	1484738	Spider	1
6	1484739	Bolt	8
7	1484741	Washer	12
8	1484740	Bolt	4
9	1484733	Case	1

©2009 HYSTER COMPANY

NOTES

©2009 HYSTER COMPANY

DRIVE AXLE (FIGURE 6-2)

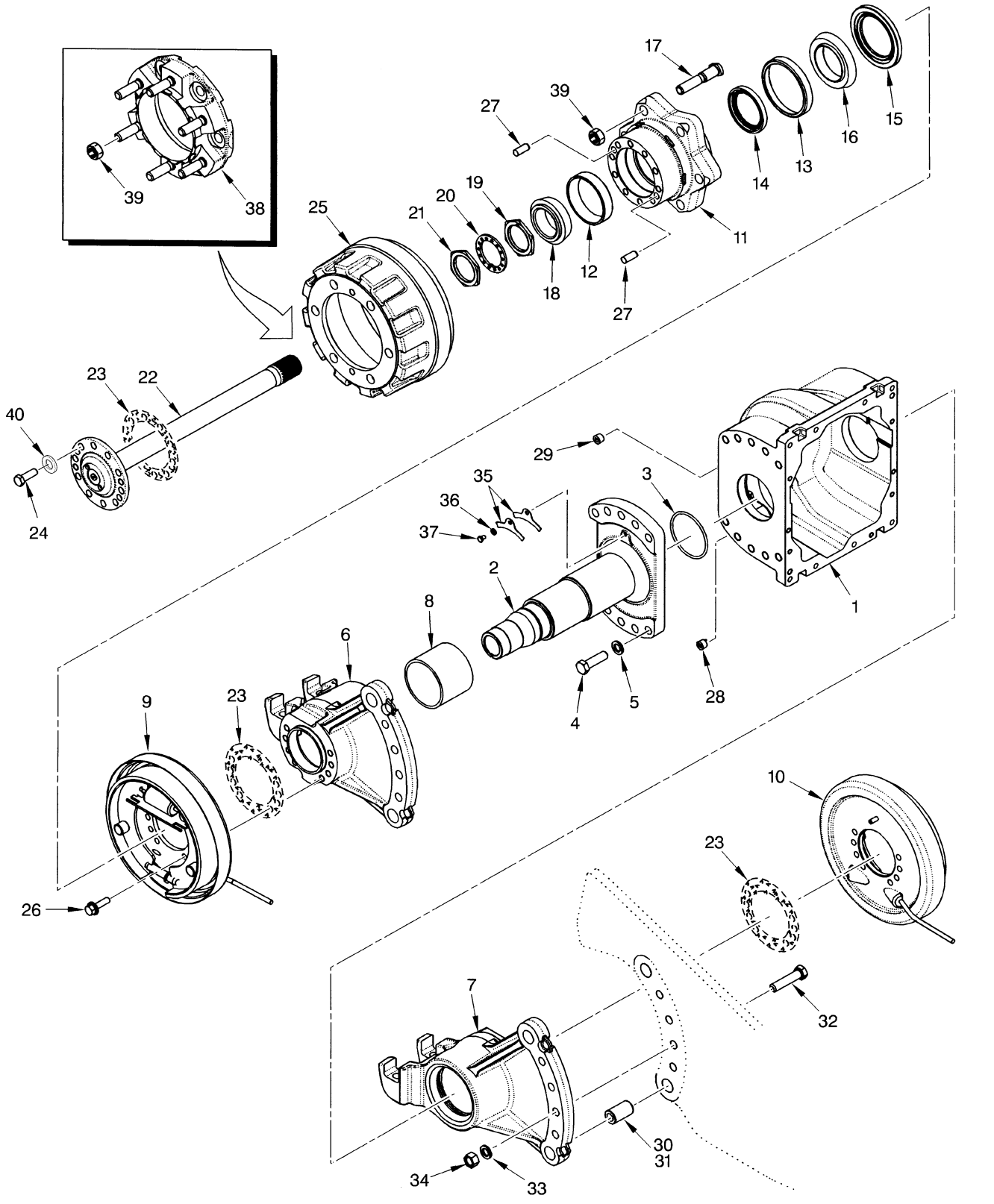

©2009 HYSTER COMPANY

DRIVE AXLE

KEY:
A: H70-90XM
B: H100-120XM

ITEM	PART NO.	DESCRIPTION	QTY A	QTY B
	a 2035673	Drive Axle	1	..
	d 1529708	Drive Axle	1	..
	a 2035674	Drive Axle	..	1
	c 1529709	Drive Axle	..	1
	e 1536722	Drive Axle	..	1
1	1394603	Differential Housing	1	1
2	**a** 1394604	Spindle	2	2
2	**d** 1528427	Spindle	2	2
3	18942	O-Ring	2	2
4	293710	Capscrew	20	20
5	292687	Lockwasher	20	20
6	**a** 1394607	Hanger (LH)	1	1
6	**d** 1528484	Hanger (LH)	1	1
7	**a** 1394610	Hanger (RH)	1	1
7	**d** 1528410	Hanger (RH)	1	1
7	**a** 1394687	Hanger (RH) (Optional)	1	1
8	1394605	Bushing	2	2
9	1394681	Brake Assembly (LH) (☞Figure 8-2)	1	..
9	**a** 1394670	Brake Assembly (LH) (☞Figure 8-3)	..	1
9	**c** 1530995	Brake Assembly (LH) (☞Figure 8-3)	..	1
9	**e** 1536792	Brake Assembly (LH) (☞Figure 8-4)	..	1
10	1394682	Brake Assembly (RH) (☞Figure 8-2)	1	..
10	**a** 1394671	Brake Assembly (RH) (☞Figure 8-3)	..	1
10	**c** 1530996	Brake Assembly (RH) (☞Figure 8-3)	..	1
10	**e** 1536793	Brake Assembly (RH) (☞Figure 8-4)	..	1
11	**b** 1394612	Hub	2	2
11	**e** 1536794	Hub	2	2
11	**b** 1394615	Wheel Hub	1	1
11	**e** 1536684	Wheel Hub	1	1
12	30098	Bearing Cup	1	1
13	1313897	Bearing Cup	1	1
14	2035568	Seal	1	1
15	2035569	Seal	1	1
16	1394618	Bearing Cone	1	1
17	1393342	Wheel Stud	6	6
18	30097	Bearing Cone	2	2
19	1394620	Locknut	2	2
20	1394621	Lockwasher	2	2
21	1394622	Locknut	2	2
22	1394624	Axle Shaft	2	2
23	313022	Sealant	AR	AR
24	293684	Capscrew	20	20
25	1479756	Brake Drum	2	..
25	**b** 1479757	Brake Drum	..	2
25	**e** 1485867	Brake Drum	..	2
26	1394646	Bolt	16	16

©2009 HYSTER COMPANY

DRIVE AXLE

KEY:
A: H70-90XM
B: H100-120XM

ITEM	PART NO.	DESCRIPTION	QTY A	QTY B
27	352220	Dowel	4	4
28	15290	Fitting	1	1
29	15315	Fitting	1	1
30	370651	Pin	4	4
31	251979	Lubricant	AR	AR
32	292589	Capscrew	8	8
33	292687	Lockwasher	8	8
34	292620	Nut	8	8
35	1394661	Shim (0.039 in.)	AR	AR
36	292681	Lockwasher	2	2
37	287805	Capscrew	2	2
38	1393346	Adapter (Dual Wheel) (2100 mm Long Wheel Base)	..	1
38	1393344	Adapter (Dual Wheel) (1830 mm Short Wheel Base)	1	..
38	1393342	Wheel Stud	6	6
39	376026	Wheel Nut	12	12
39	376026	Wheel Nut (Dual Wheel)	24	24
39	1394715	Wheel Nut (Optional)	12	12
39	1394715	Wheel Nut (Dual Wheel) (Optional)	24	24
40	292685	Lockwasher	..	20

FOOTNOTES:

a → S/N K005V04223A
b → S/N K005V05300A
c S/N K005V04224A ↔ S/N K005V05300A
d S/N K005V04224A →
e S/N K005V05301A →

©2009 HYSTER COMPANY

7 STEERING SYSTEM

SECTION 7
STEERING SYSTEM

DESCRIPTION	PAGE
STEERING AXLE	7-6
STEERING COLUMN	7-4
STEERING CYLINDER	7-10
STEERING PUMP	7-12
STEERING SYSTEM	7-2

©2009 HYSTER COMPANY

STEERING SYSTEM (FIGURE 7-1)

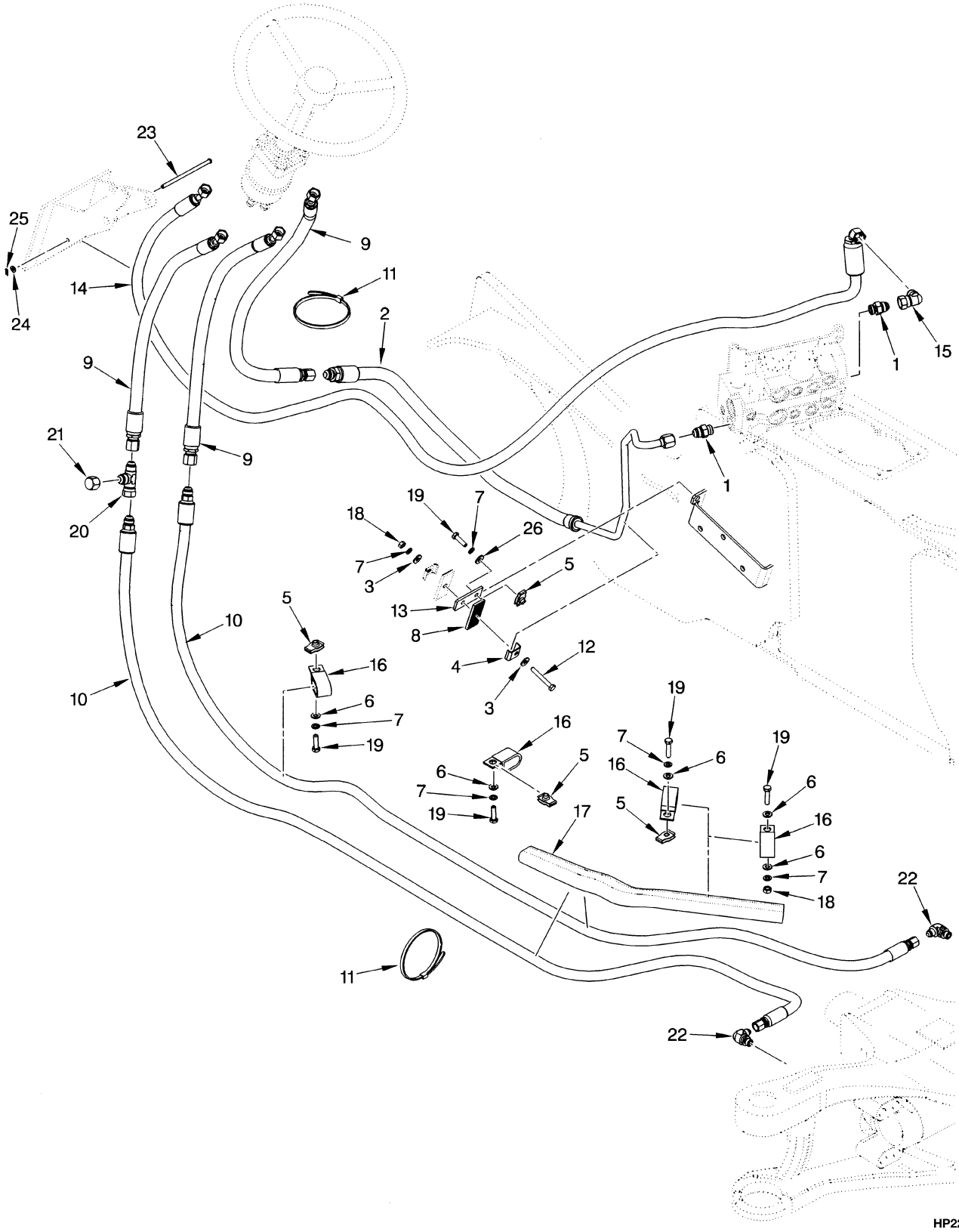

©2009 HYSTER COMPANY

STEERING SYSTEM

ITEM	PART NO.	DESCRIPTION	QTY
1	16541	Fitting	2
1	16484	O-Ring	1
2	1400218	Hose and Tube Assy	1
3	320158	Washer	3
4	1400244	Clamp	1
5	1393879	Nut	4
6	320157	Washer	6
7	292681	Lockwasher	6
8	1399323	Pad	1
9	1396719	Hose Assy	3
10	1397979	Hose Assy (1830 mm Short Wheel Base)	1
10	1397980	Hose Assy (2100 mm Long Wheel Base)	1
11	397676	Strap Clamp	1
12	136704	Capscrew	1
13	1400243	Plate	1
14	1396720	Hose Assy	1
15	16989	Fitting	1
16	79377	Clamp	4
17	1358120	Sleeve	1
18	239503	Nut	1
19	176640	Bolt	3
20	17062	Fitting	1
21	16925	Fitting	1
22	16558	Fitting	2
22	16483	O-Ring	1
23	1352616	Pin (Rod End)	1
24	320156	Washer	1
25	18824	Cotter Pin	1
26	320158	Washer	6

©2009 HYSTER COMPANY

STEERING COLUMN (FIGURE 7-2)

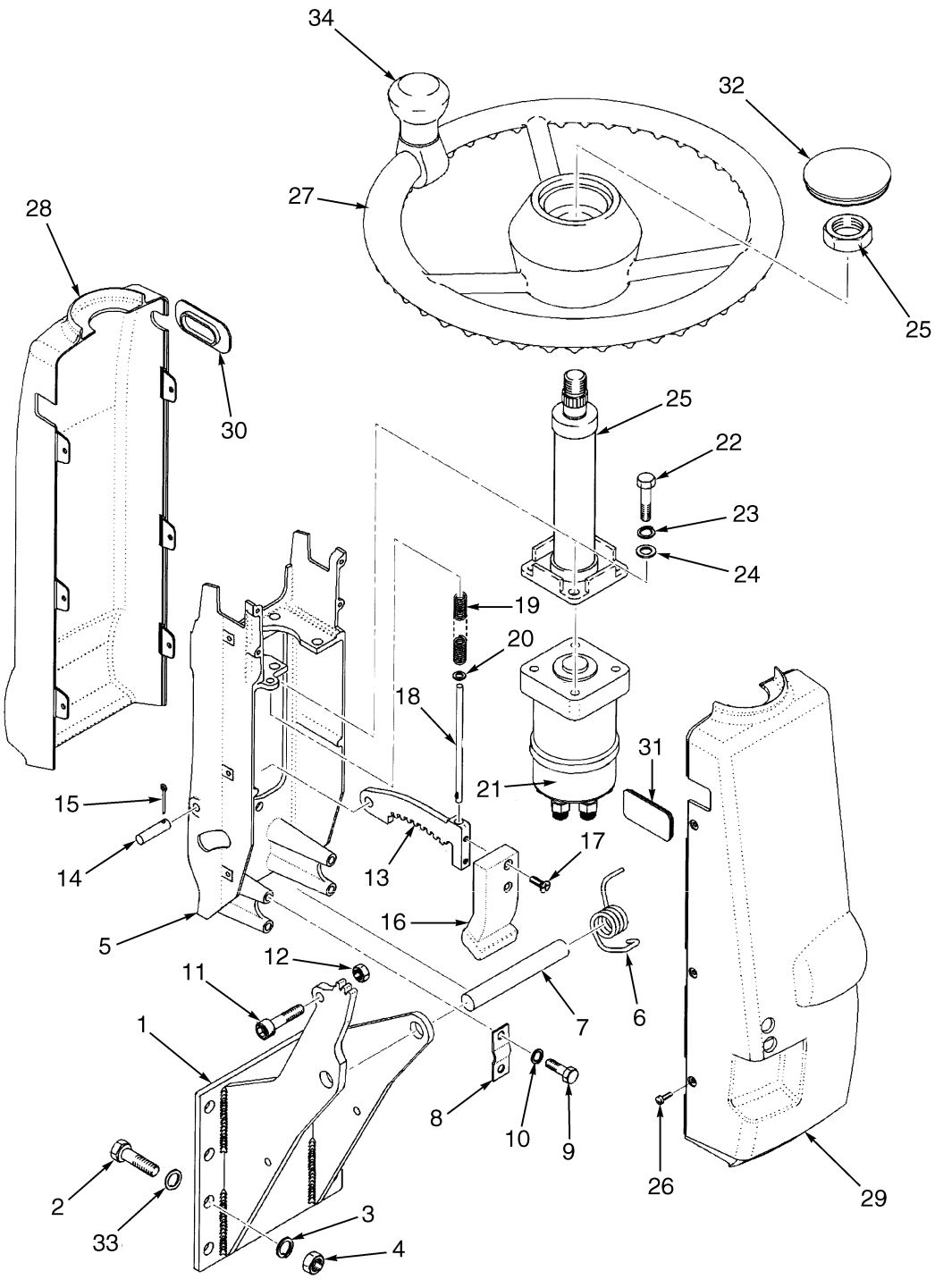

HP220006

©2009 HYSTER COMPANY

STEERING COLUMN

ITEM	PART NO.	DESCRIPTION	QTY
1	1385451	Bracket Wldmt	1
2	136985	Capscrew	4
3	292682	Lockwasher	4
4	136692	Nut	4
5	1343573	Bracket	1
6	1378600	Spring	1
7	1335987	Shaft	1
8	1335967	Plate	2
9	136749	Screw	4
10	292681	Lockwasher	4
11	296010	Capscrew	1
12	302400	Nut	1
13	1364271	Latch (Gear)	1
14	1343607	Pin	1
15	15212	Cotter Pin	1
16	1343574	Handle Grip (Latch)	1
17	296215	Capscrew	2
18	1343572	Rod	1
19	1343537	Spring	1
20	320155	Washer	1
21	1388773	Steering Pump (☞Figure 7-5)	1
22	16815	Capscrew	4
23	15156	Lockwasher	4
24	15134	Washer	4
25	1347025	Steering Column	1
25	345423	Nut	1
25	1382556	Kit-Terminal (Contact Rivets)	1
26	1507923	Screw	6
27	1329250	Steering Wheel	1
28	1397863	Cover (Upper)	1
29	1397864	Cover (Lower)	1
30	1376743	Plug (Without Turn Signals)	1
31	1343597	Plug	2
32	**a** 1347135	Horn Button	1
33	1324577	Washer	4
34	895468	Wheelspinner	1

FOOTNOTES:

a Service with Horn Replacement Kit 1642090

©2009 HYSTER COMPANY

STEERING AXLE (FIGURE 7-3)

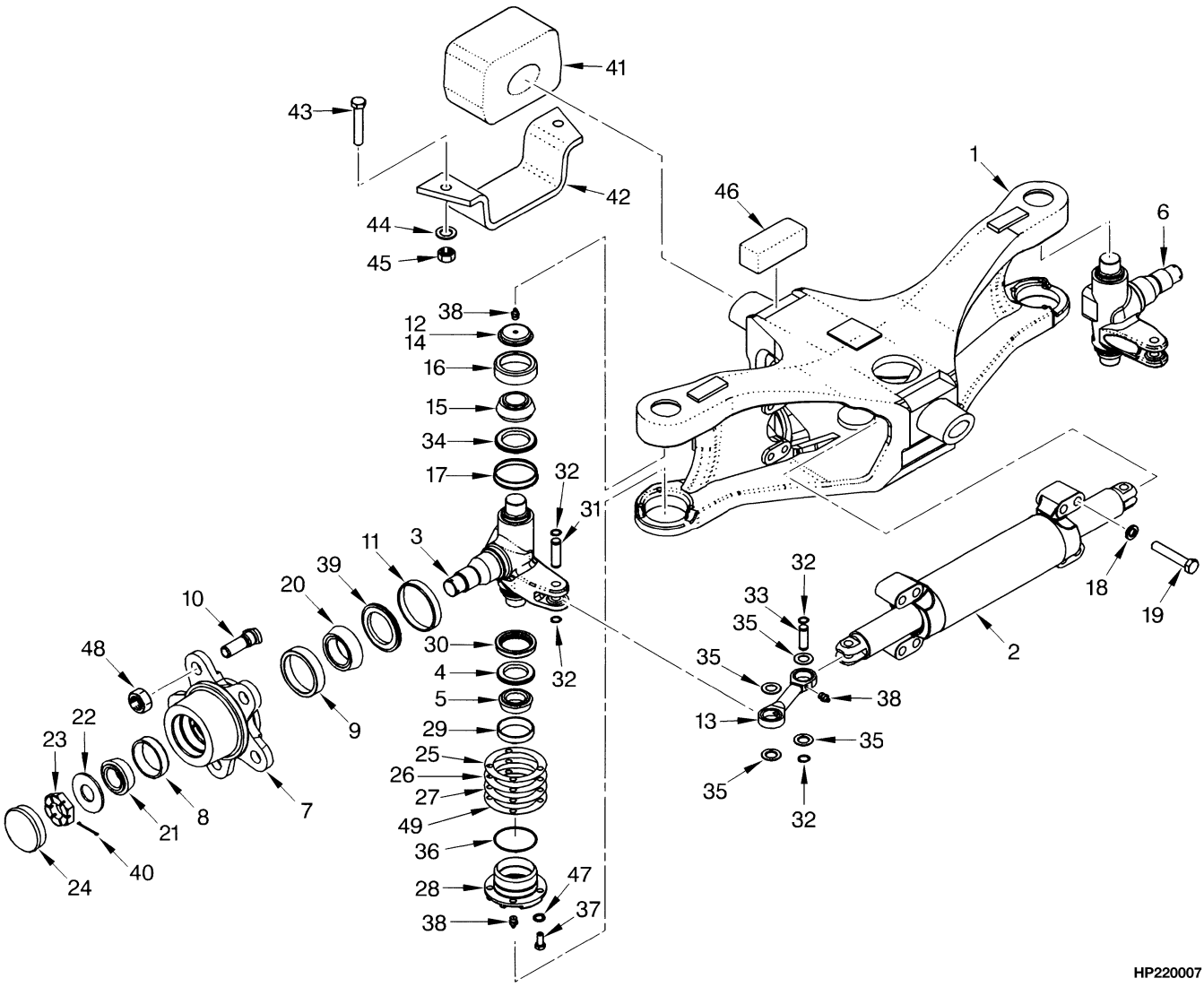

HP220007

©2009 HYSTER COMPANY

STEERING AXLE

ITEM	PART NO.	DESCRIPTION	QTY
	a 1388833	Steering Axle	1
	b 1491381	Steering Axle	1
1	1388673	Steering Axle (Steer Axle)	1
2	2035137	Steering Cylinder (☞Figure 7-4)	1
3	1388670	Spindle (LH)	1
4	266728	Seal	2
5	135657	Bearing Cone	2
6	1388842	Spindle (RH)	1
7	1388828	Hub	2
7	1388827	Wheel Hub	1
8	30019	Bearing Cup	1
9	30147	Bearing Cup	1
10	1393348	Wheel Stud (Wheel)	5
11	164639	Wear Sleeve	1
12	1388829	Dust Cap	2
13	**a** 1400205	Tie Rod	2
13	**bc** 1491382	Tie Rod	2
13	1350680	Bearing	2
14	288394	Sealant	AR
15	153715	Bearing Cone	2
16	230421	Bearing Cup	2
17	153717	Wear Sleeve	2
18	292685	Lockwasher	8
19	293694	Capscrew	8
20	230315	Bearing Cone	2
21	30289	Bearing Cone	2
22	1388832	Lockwasher	2
23	1383777	Nut (Spindle)	2
24	69029	Cap (Hub)	2
25	1388846	Shim (0.005 in.)	2
26	1388847	Shim (0.007 in.)	2
27	1388848	Shim (0.020 in.)	2
28	1394554	Bearing Cap	2
28	1394552	Bearing Cap	1
29	135658	Bearing Cup	1
30	266733	Seal	2
31	1544972	Pin	2
32	58903	Snap Ring	8
33	1544971	Pin	2
34	153716	Seal	2
35	1345684	Seal	8
36	39678	O-Ring	2
37	293628	Capscrew	6
38	13957	Grease Fitting	12
39	44542	Seal	2
40	15226	Cotter Pin	2
41	324864	Rubber Mount	2
42	324858	Plate	2
43	293648	Capscrew	4
44	320161	Washer	8
45	300937	Nut	4

©2009 HYSTER COMPANY

STEERING AXLE

ITEM	PART NO.	DESCRIPTION	QTY
46	1388838	Rubber Mount	2
47	296420	Washer	4
48	376026	Wheel Nut	10
48	1394715	Wheel Nut (Optional)	10
49	1563860	Shim (0.002 in.)	AR

FOOTNOTES:

a → S/N K005D05431
b S/N K005D05432 →
c S/N K005V05750A →

©2009 HYSTER COMPANY

NOTES

©2009 HYSTER COMPANY

STEERING CYLINDER (FIGURE 7-4)

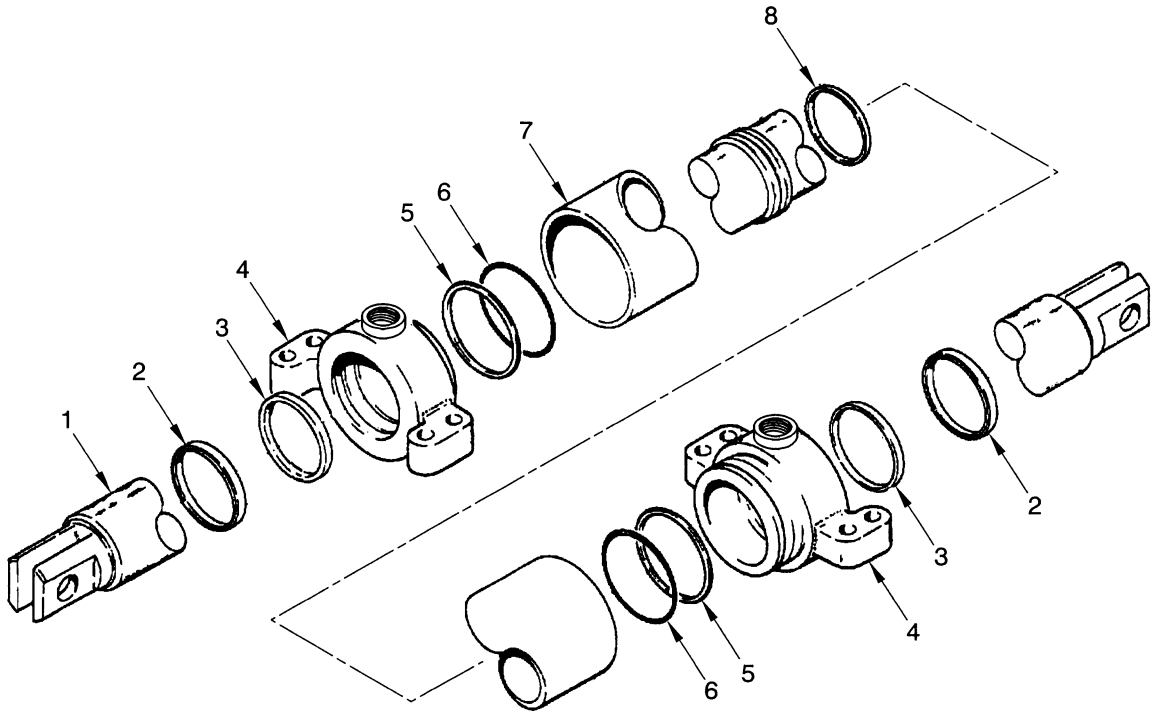

HP220211

©2009 HYSTER COMPANY

STEERING CYLINDER

ITEM	PART NO.	DESCRIPTION	QTY
	2035137	Steering Cylinder (Group No. 8602499)	1
1	1388657	Cylinder Rod	1
2	270015	Back-Up Ring	2
3	79981	O-Ring	2
4	1388665	End Cap	2
5	203071	Rod Wiper	2
6	2032490	Seal	2
7	1388780	Tube Wldmt-Cylinder	1
8	2047829	Seal	1
	1501409	Kit-Seal	1

©2009 HYSTER COMPANY

STEERING PUMP (FIGURE 7-5)

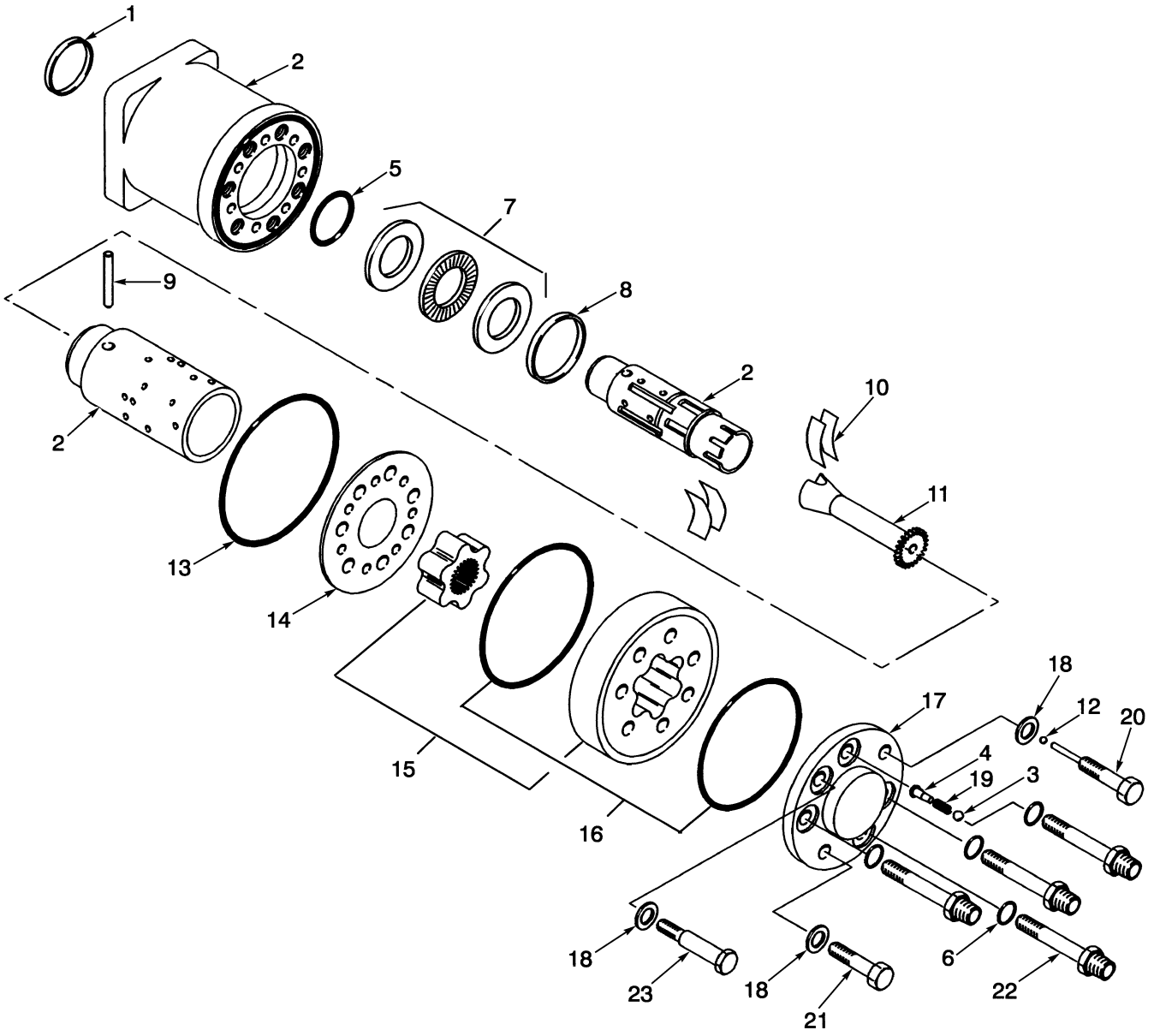

BP220018

©2009 HYSTER COMPANY

STEERING PUMP

ITEM	PART NO.	DESCRIPTION	QTY
	1388773	Steering Pump	1
1	. . . . .	Seal Ring	1
2	. . . . .	Housing	1
2	. . . . .	Spool and Sleeve	1
3	345408	Ball	1
4	1459988	Stop	1
5	2032230	Seal	1
6	15860	O-Ring	4
6	1451708	O-Ring (Optional Replacement)	4
7	345410	Bearing Set	1
8	345411	Ring	1
9	345412	Pin	1
10	1303787	Spring	1
11	1355326	Shaft	1
12	1459984	Ball	1
13	. . . . .	O-Ring	1
14	. . . . .	Plate	1
15	. . . . .	Gear Set	1
16	1459989	O-Ring	2
17	. . . . .	Cover	1
18	. . . . .	Washer	3
19	1459987	Spring	1
20	366069	Screw	1
21	371344	Capscrew	1
22	1459985	Fitting (Male)	4
23	1459986	Screw	1
	1459983	Kit-Seal	1

©2009 HYSTER COMPANY

NOTES

©2009 HYSTER COMPANY

8 BRAKE SYSTEM

SECTION 8
BRAKE SYSTEM

DESCRIPTION	PAGE
BRAKE ASSEMBLY	
H100-120XM (→ S/N K005V05300A)	8-10
H100-120XM (S/N K005V05301A →)	8-14
H70-90XM	8-6
BRAKE RELAY ASSEMBLY	8-18
BRAKE SYSTEM	8-2
MASTER CYLINDER AND BOOSTER ASSEMBLY	8-16
PARK BRAKE	8-20

©2009 HYSTER COMPANY

BRAKE SYSTEM (FIGURE 8-1)

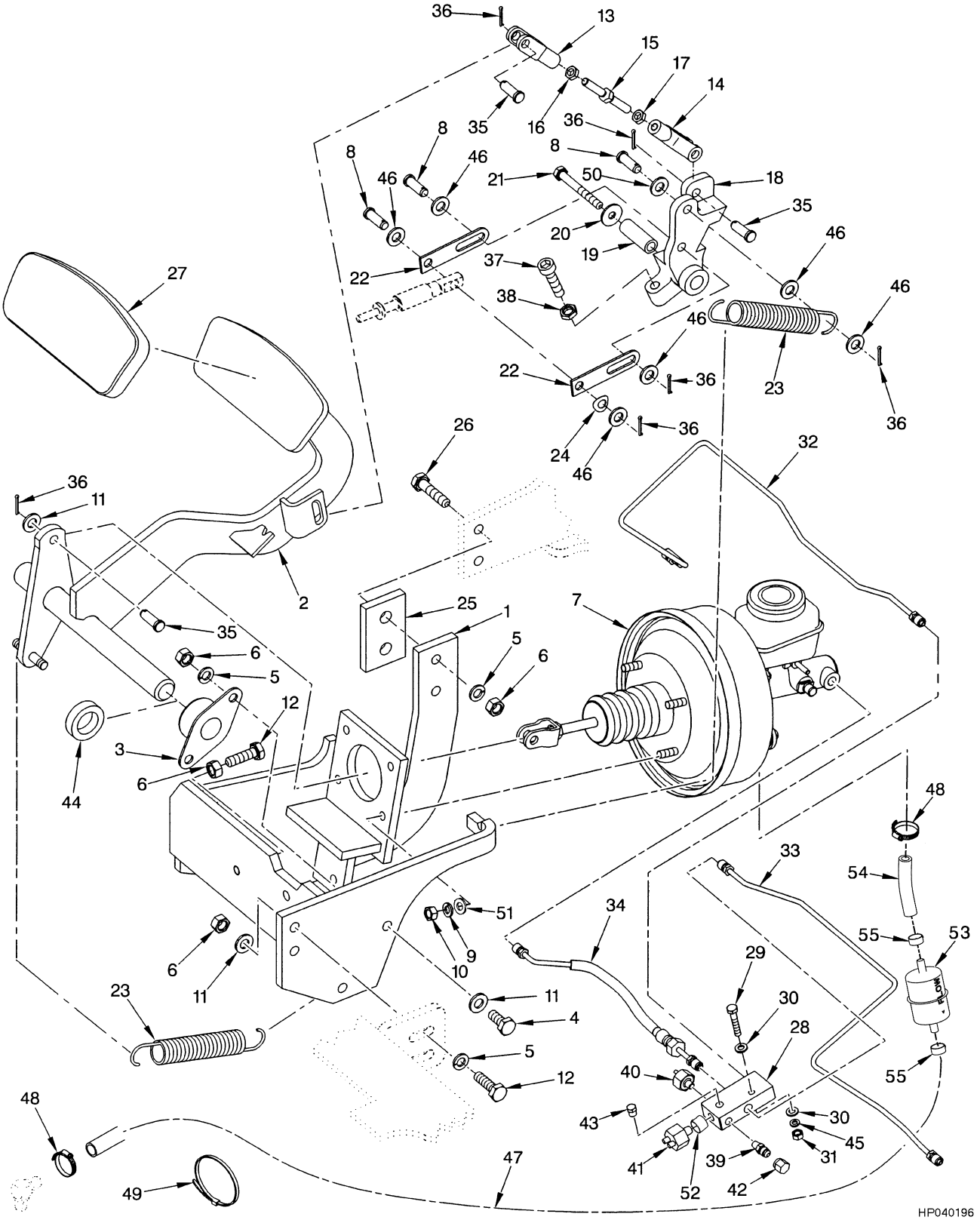

©2009 HYSTER COMPANY

BRAKE SYSTEM

ITEM	PART NO.	DESCRIPTION	QTY
1	1399277	Bracket	1
2	1490070	Pedal	1
3	1327161	Bushing	2
4	136985	Capscrew	4
5	292682	Lockwasher	8
6	136692	Nut	9
7	1399276	Master Cylinder and Booster Assy (☞Figure 8-5)	1
8	1378435	Pin	3
9	292681	Lockwasher	4
10	239503	Nut	4
11	320159	Washer	6
12	287860	Capscrew	3
13	393502	Rod End	1
14	1338262	Rod End	1
15	1394576	Link	1
16	15025	Nut	1
17	16897	Nut	1
18	1399288	Crank (Inching)	1
19	1337108	Spacer	1
20	332755	Washer	1
21	136704	Capscrew	1
22	1399289	Link	2
23	2037760	Spring	2
24	375984	Spring Washer	1
25	1397708	Plate	1
26	292516	Capscrew	1
27	1343630	Rubber Pad (Pedal)	1
28	1470686	Block	1
29	292504	Capscrew	1
30	15172	Washer	2
31	136687	Nut	1
32	**c** 1394815	Tube Assy (LH)	1
32	**d** 1394817	Tube Assy (LH)	1
33	**c** 1394816	Tube Assy (RH)	1
33	**d** 1394818	Tube Assy (RH)	1
34	1394819	Hose Assy	1
35	142	Pin	3
36	1351689	Lockring	5
37	302054	Screw	1
38	292653	Nut	1
39	16124	Fitting	1
40	16186	Fitting (Monotrol Pedal)	1
41	**be** 2065825	Pressure Switch	2
41	**af** 387867	Pressure Switch	2
42	281700	Fitting	1
43	14349	Fitting (Pipe Plug)	2
44	370743	Collar	1
45	292680	Washer	1
46	15134	Washer	6
47	2037906	Hose (LPG)	1
47	2037907	Hose (Diesel)	1

©2009 HYSTER COMPANY

BRAKE SYSTEM

ITEM	PART NO.	DESCRIPTION	QTY
48	166857	Clamp	2
49	2004005	Strap Clamp (LPG)	1
49	2004005	Strap Clamp (Diesel)	4
50	1397649	Washer	1
51	320158	Washer	4
52	16187	Fitting	1
53	1499886	Filter	1
54	1473099	Hose	1
55	353198	Clamp	2
56	. . . . .	Brake Relay Assembly (☞Figure 8-6)	1

FOOTNOTES:

a After 11/03 one switch is used with Forward And Reverse Lever, two with Monotrol Pedal
b Before 11/03 one 2066481 switch is used with Forward And Reverse Lever, one each 2066481 and 387867 used with Monotrol Pedal
c H70-80XM and H90XMS
d H90-120XM
e → S/N K005V05903A
f S/N K005V05904A →

©2009 HYSTER COMPANY

NOTES

©2009 HYSTER COMPANY

BRAKE ASSEMBLY (FIGURE 8-2)
H70-90XM

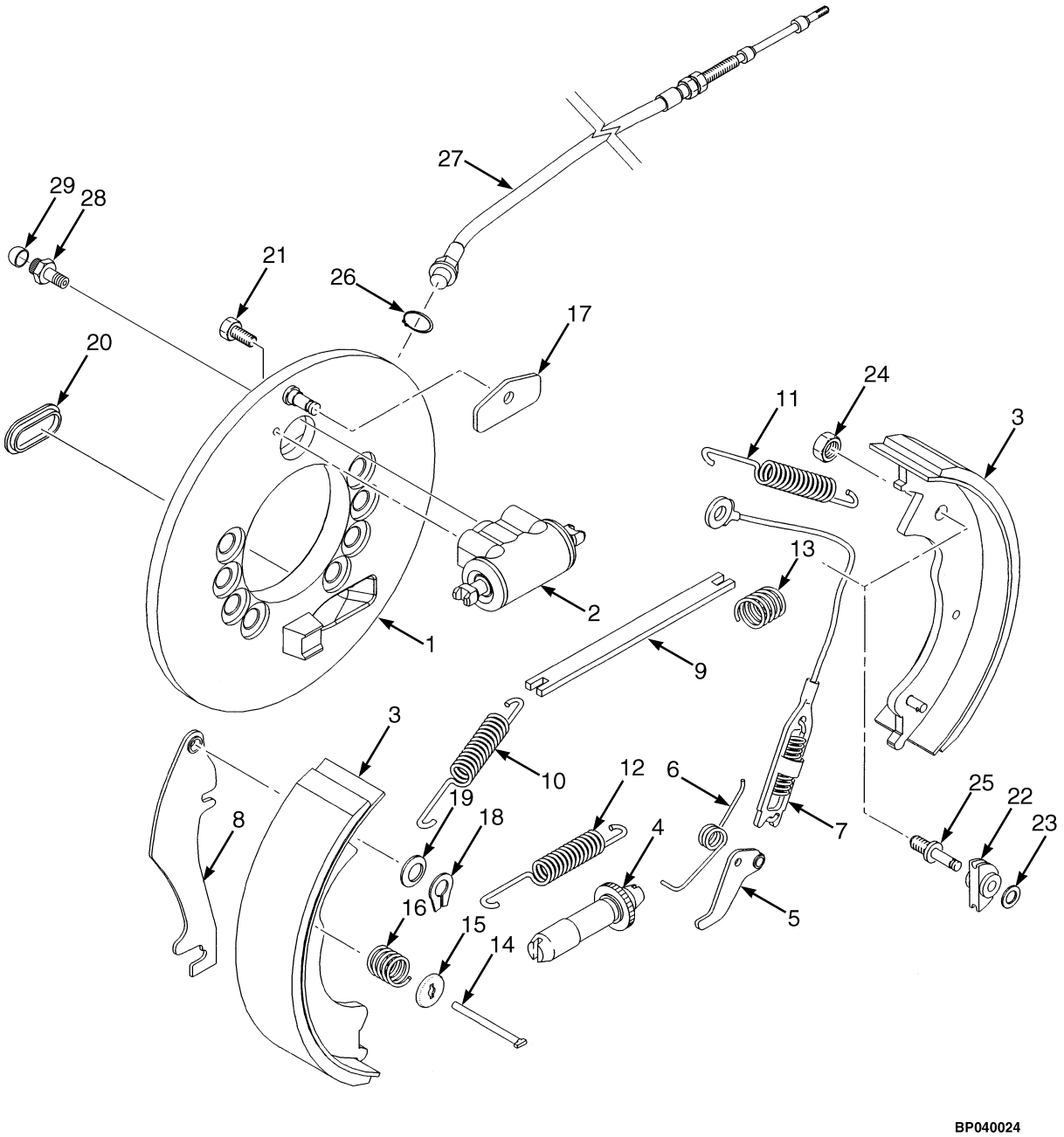

©2009 HYSTER COMPANY

BRAKE ASSEMBLY
H70-90XM

KEY:
A: Left Hand
B: Right Hand

ITEM	PART NO.	DESCRIPTION	QTY A	QTY B
	1394681	Brake Assembly (With Park Brake Cable)	1	..
	1394682	Brake Assembly (With Park Brake Cable)	..	1
	1463245	Brake Assembly (LH) (Without Park Brake Cable)	1	..
	1463246	Brake Assembly (RH) (Without Park Brake Cable)	..	1
1	1463242	Backplate	1	..
1	1463243	Backplate	..	1
2	1463244	Wheel Cylinder	1	1
2	1463223	Kit-Repair Wheel Cylinder	1	1
2	. . . . .	Piston and Cup	2	2
2	. . . . .	Boot	2	2
3	1463226	Kit-Brake Shoe	1	..
3	1463229	Kit-Brake Shoe	..	1
3	. . . . .	Shoe and Lining	1	1
3	. . . . .	Shoe Lining and Pin Assembly	1	1
4	2037327	Adjuster	1	..
4	2037328	Adjuster	..	1
5	2037329	Lever	1	..
5	2037330	Lever	..	1
6	2037331	Spring	1	..
6	2037332	Spring	..	1
7	2037333	Kit-Cable	1	1
8	2037334	Parking Brake Lever	1	..
8	2037335	Parking Brake Lever	..	1
9	2037336	Strut	1	..
9	2037337	Strut	..	1
10	2037338	Spring	1	1
11	2037339	Spring	1	1
12	2037340	Spring	1	1
13	1360797	Spring	1	1
14	2037323	Pin (Shoe Hold Down)	2	2
15	2037341	Cup (Shoe Hold Down)	4	4
16	2037342	Spring (Shoe Hold Down)	2	2
17	2037343	Wear Plate	1	1
18	1338916	Retainer	2	2
19	1338917	Washer	2	2
20	1334642	Cover	1	1
21	2037344	Bolt	2	2
22	. . . . .	Sheave	1	1
23	. . . . .	Washer	1	1
24	. . . . .	Nut	1	1
25	. . . . .	Pin	1	1
26	1361502	Snap Ring	1	1
27	1463247	Parking Brake Cable (LH)	1	..
27	1463248	Parking Brake Cable (RH)	..	1
28	2041967	Bleeder Screw	1	1

©2009 HYSTER COMPANY

BRAKE ASSEMBLY
H70-90XM

KEY:
A: Left Hand
B: Right Hand

ITEM	PART NO.	DESCRIPTION	QTY A	QTY B
29	1361504	Cap	1	1
	1464917	Kit-Sheave	1	1
	1464915	Kit-Park Brake (LH)	1	..
	1464916	Kit-Park Brake (RH)	..	1
	2038663	Kit-Spring	1	1
	2037377	Kit-Hold Down	2	2

©2009 HYSTER COMPANY

NOTES

©2009 HYSTER COMPANY

BRAKE ASSEMBLY (FIGURE 8-3)

H100-120XM (→ S/N K005V05300A)

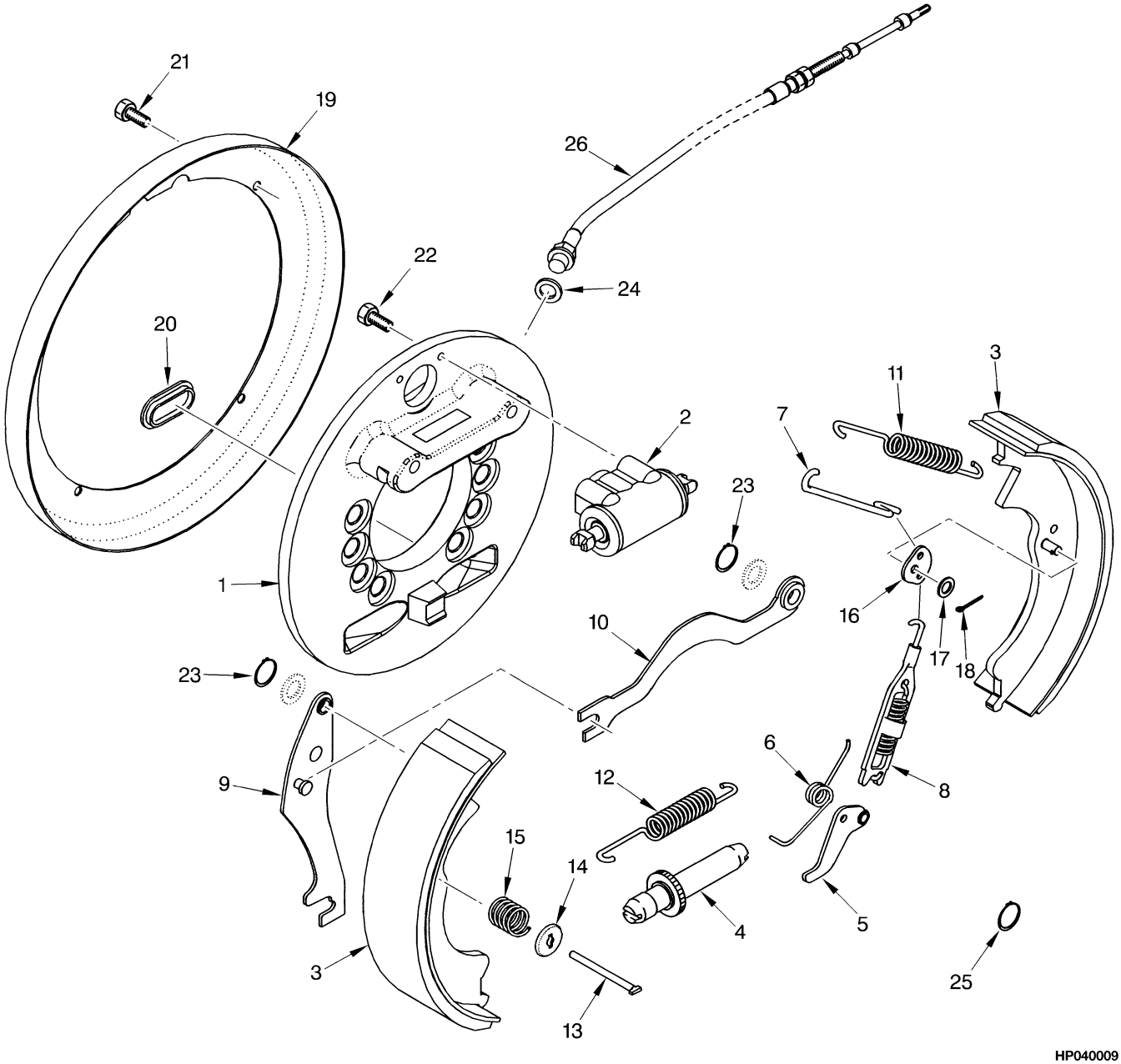

©2009 HYSTER COMPANY

BRAKE ASSEMBLY

H100-120XM (→ S/N K005V05300A)

KEY:
A: Left Hand
B: Right Hand

ITEM	PART NO.	DESCRIPTION	QTY A	QTY B
	a 1394670	Brake Assembly	1	..
	b 1530995	Brake Assembly	1	..
	a 1394671	Brake Assembly	..	1
	b 1530996	Brake Assembly	..	1
	a 1463469	Brake	1	..
	b 1532851	Brake Assembly	1	..
	a 1463470	Brake	..	1
	b 1532852	Brake Assembly	..	1
1	1463339	Backplate	1	..
1	1463340	Backplate	..	1
2	1463341	Wheel Cylinder	1	1
2	1463231	Kit-Repair Wheel Cylinder	1	1
3	**a** 1463236	Kit-Brake Shoe	1	..
3	**b** 1532655	Kit-Brake Shoe	1	..
3	**a** 1463239	Kit-Brake Shoe	..	1
3	**b** 1532656	Kit-Brake Shoe	..	1
4	2037515	Adjuster	1	..
4	2037516	Adjuster	..	1
5	2037517	Lever	1	..
5	2037518	Lever	..	1
6	1463350	Spring	1	..
6	1463351	Spring	..	1
7	1463352	Link	1	..
7	1463353	Link	..	1
8	1463354	Spring	1	1
9	1463355	Parking Brake Lever (Parking)	1	..
9	1463356	Parking Brake Lever (Parking)	..	1
10	1463357	Strut	1	..
10	1463358	Strut	..	1
11	1463359	Spring	2	2
12	2037519	Spring	1	1
13	2037323	Pin (Shoe Hold Down)	2	2
14	1463361	Cup (Shoe Hold Down)	4	4
15	1463362	Spring (Shoe Hold Down)	2	2
16	1463363	Lever	1	1
17	2037324	Washer	1	1
18	2037325	Cotter Pin	1	1
19	1463364	Dust Shield	1	1
20	2037326	Cover	1	1
21	1463365	Bolt	4	..
22	1463366	Bolt	2	2
23	. . . . .	Retainer	2	2
24	. . . . .	Washer	2	2
25	1361502	Snap Ring	1	1
26	1463471	Parking Brake Cable	1	..

©2009 HYSTER COMPANY

BRAKE ASSEMBLY

H100-120XM (→ S/N K005V05300A)

KEY:
A: Left Hand
B: Right Hand

ITEM	PART NO.	DESCRIPTION	QTY A	QTY B
26	1463472	Parking Brake Cable	..	1

FOOTNOTES:

a → S/N K005V04223A

b S/N K005V04224A →

©2009 HYSTER COMPANY

NOTES

©2009 HYSTER COMPANY

BRAKE ASSEMBLY (FIGURE 8-4)

H100-120XM (S/N K005V05301A →)

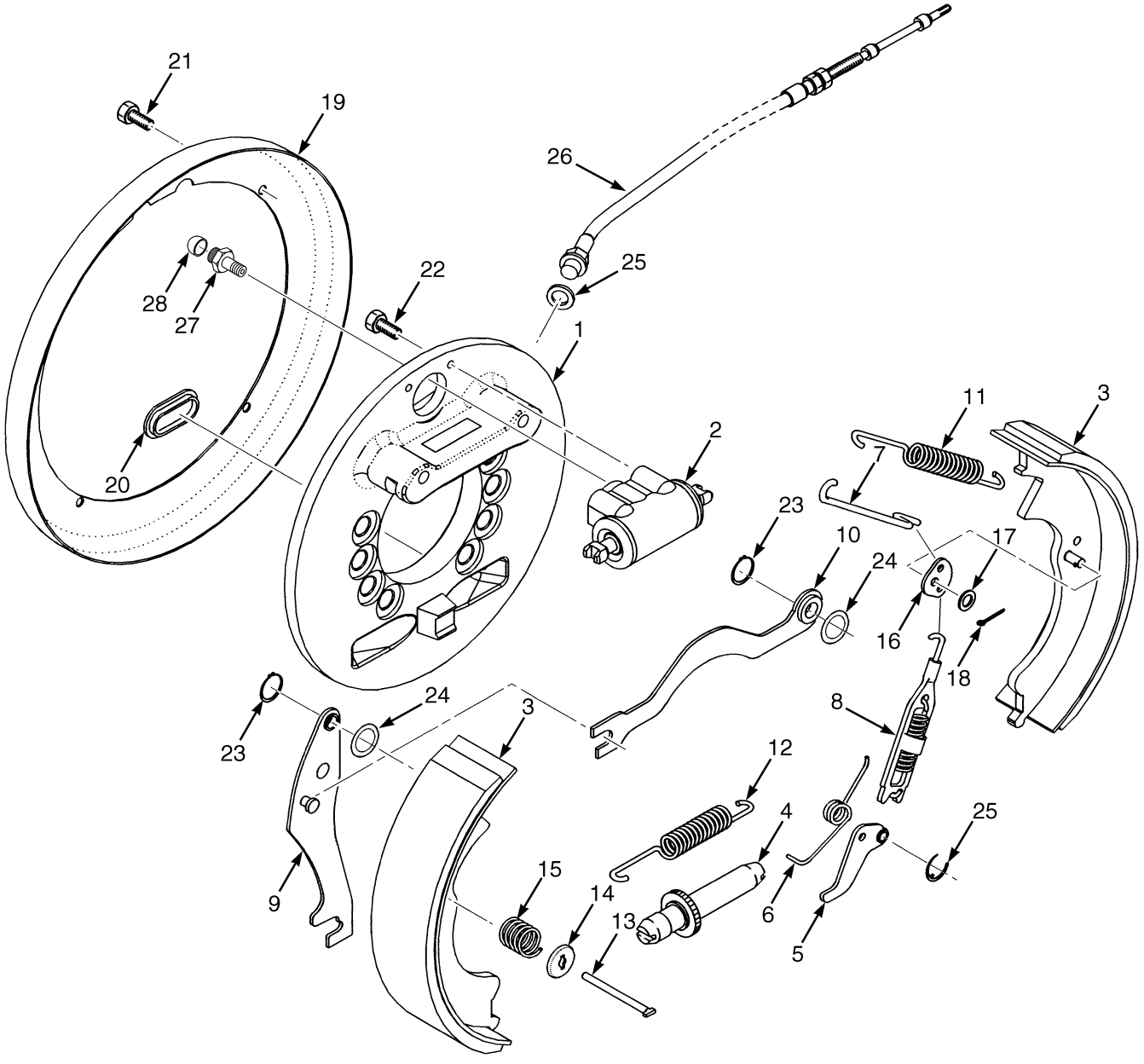

BP040023

©2009 HYSTER COMPANY

BRAKE ASSEMBLY

H100-120XM (S/N K005V05301A →)

KEY:
A: Left Hand
B: Right Hand

ITEM	PART NO.	DESCRIPTION	QTY A	QTY B
	1536792	Brake Assembly (With Park Brake Cable)	1	..
	1536793	Brake Assembly (With Park Brake Cable)	..	1
	1539589	Brake Assembly (Without Park Brake Cable)	1	..
	1539590	Brake Assembly (Without Park Brake Cable)	..	1
1	1463339	Backplate	1	..
1	1463340	Backplate	..	1
2	1463341	Wheel Cylinder	1	1
2	1463231	Kit-Repair Wheel Cylinder	1	1
3	1539595	Kit-Brake Shoe	1	..
3	1539596	Kit-Brake Shoe	..	1
4	2037515	Adjuster	1	..
4	2037516	Adjuster	..	1
5	2037517	Lever	1	..
5	2037518	Lever	..	1
6	1463350	Spring	1	..
6	1463351	Spring	..	1
7	1463352	Link	1	..
7	1463353	Link	..	1
8	1463354	Spring	1	1
9	1463355	Parking Brake Lever (Parking)	1	..
9	1463356	Parking Brake Lever (Parking)	..	1
10	1463357	Strut	1	..
10	1463358	Strut	..	1
11	1463359	Spring	1	1
11	1502503	Spring (White)	1	1
12	2037519	Spring	1	1
13	2037323	Pin (Shoe Hold Down)	2	2
14	1463361	Cup (Shoe Hold Down)	4	4
15	1463362	Spring (Shoe Hold Down)	2	2
16	1463363	Lever	1	1
17	2037324	Washer	1	1
18	2037325	Cotter Pin	1	1
19	1463364	Dust Shield	1	1
20	2037326	Cover	1	1
21	1463365	Bolt	4	..
22	1463366	Bolt	2	2
23	1338916	Retainer	2	2
24	1338917	Washer	2	2
25	1361502	Snap Ring	1	1
26	1463471	Parking Brake Cable	1	..
26	1463472	Parking Brake Cable	..	1
27	1361503	Bleeder Screw	1	1
28	1361504	Cap	1	1

©2009 HYSTER COMPANY

MASTER CYLINDER AND BOOSTER ASSEMBLY (FIGURE 8-5)

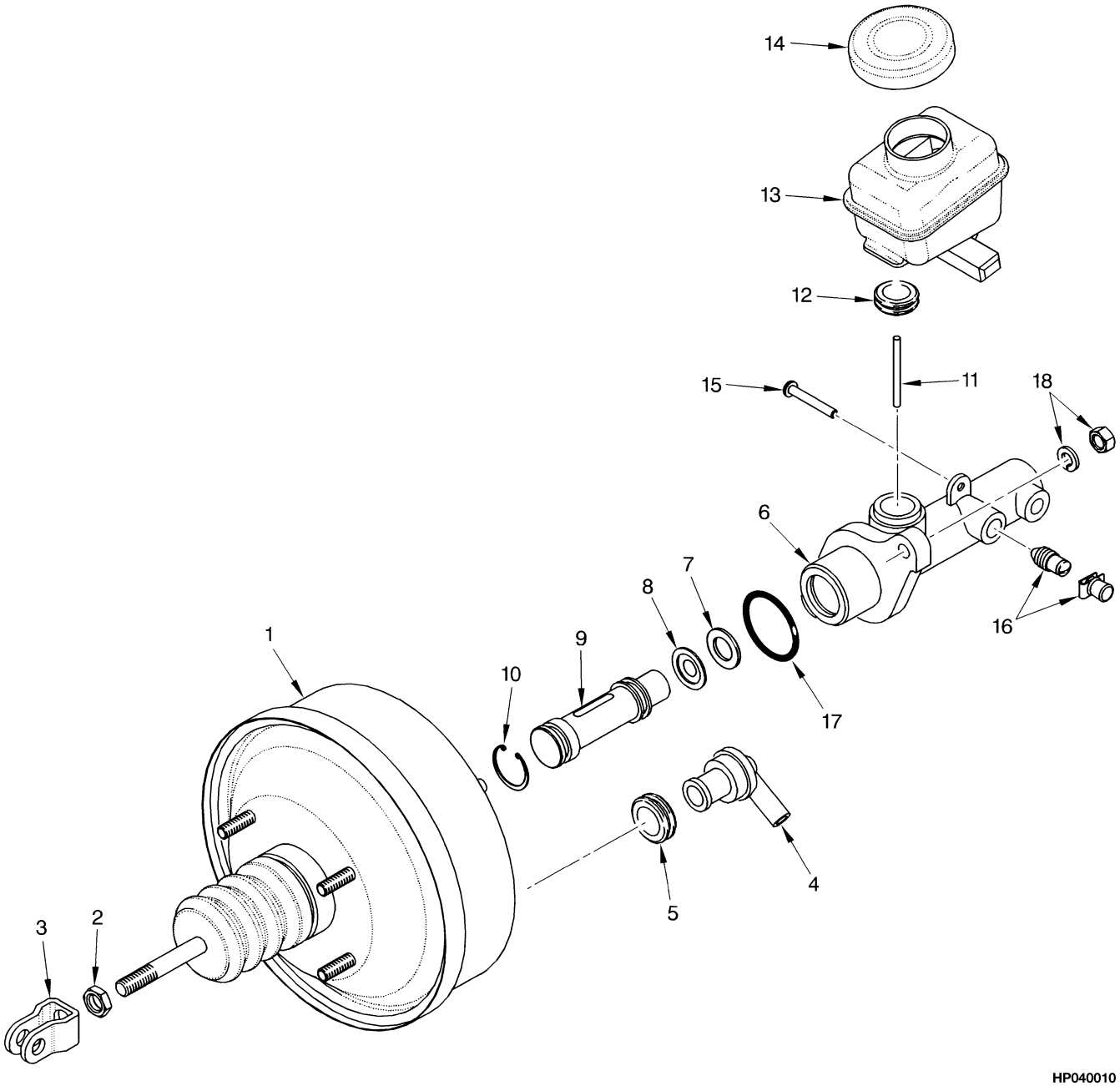

©2009 HYSTER COMPANY

MASTER CYLINDER AND BOOSTER ASSEMBLY

ITEM	PART NO.	DESCRIPTION	QTY
	1399276	Master Cylinder and Booster Assy	1
1	1463445	Brake Booster Assy	1
2	1463461	Nut	1
3	1463462	Clevis	1
4	1463455	Valve (Brake Booster)	1
5	1463454	Grommet	1
6	1463446	Master Cylinder Assy	1
6	1470275	Kit-Seal	1
7	1463466	Valve Seat	1
8	1463450	Check Valve	1
9	1463447	Piston	1
10	1463467	Snap Ring	1
11	1463463	Pin	1
12	1463464	Grommet	1
13	1463448	Reservoir Assy	1
13	. . . . .	Brake Fluid Level Sensor	1
14	1463449	Cap	1
15	1463465	Screw	1
16	1463995	Screw (Bleeder Kit)	1
17	1463451	O-Ring	1
18	1463993	Kit-Washer	1

©2009 HYSTER COMPANY

BRAKE RELAY ASSEMBLY (FIGURE 8-6)

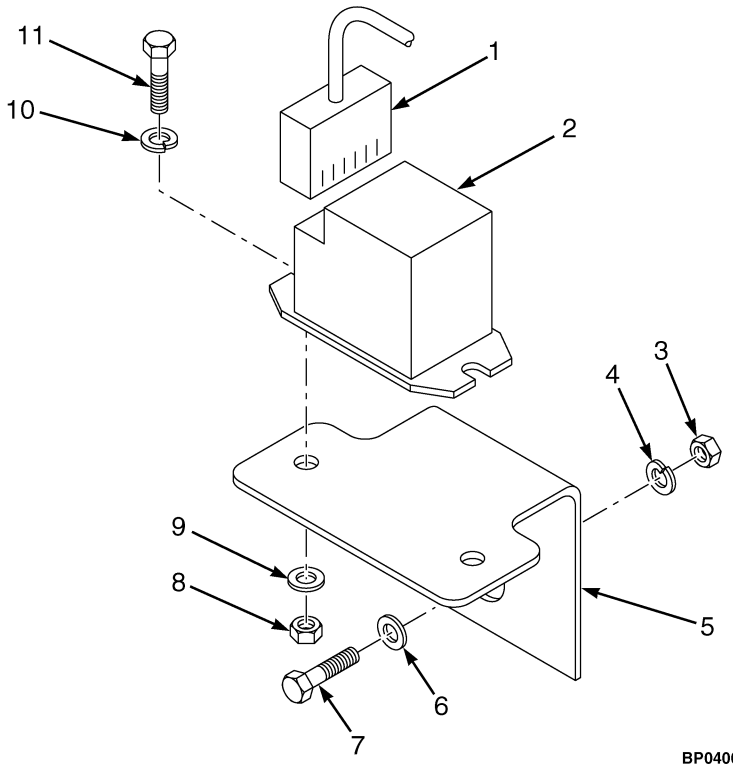

ITEM	PART NO.	DESCRIPTION	QTY
1	2066481	Wire Harness (Brake Pressure Switch) (☞Figure 4-57)	1
2	1460442	Relay (12 Volt)	1
3	136692	Nut	1
4	292682	Lockwasher	1
5	1557529	Bracket	1
6	320159	Washer	1
7	287860	Capscrew	1
8	15049	Nut	2
9	15151	Lockwasher	2
10	197065	Washer	2
11	220289	Screw	2

©2009 HYSTER COMPANY

NOTES

©2009 HYSTER COMPANY

PARK BRAKE (FIGURE 8-7)

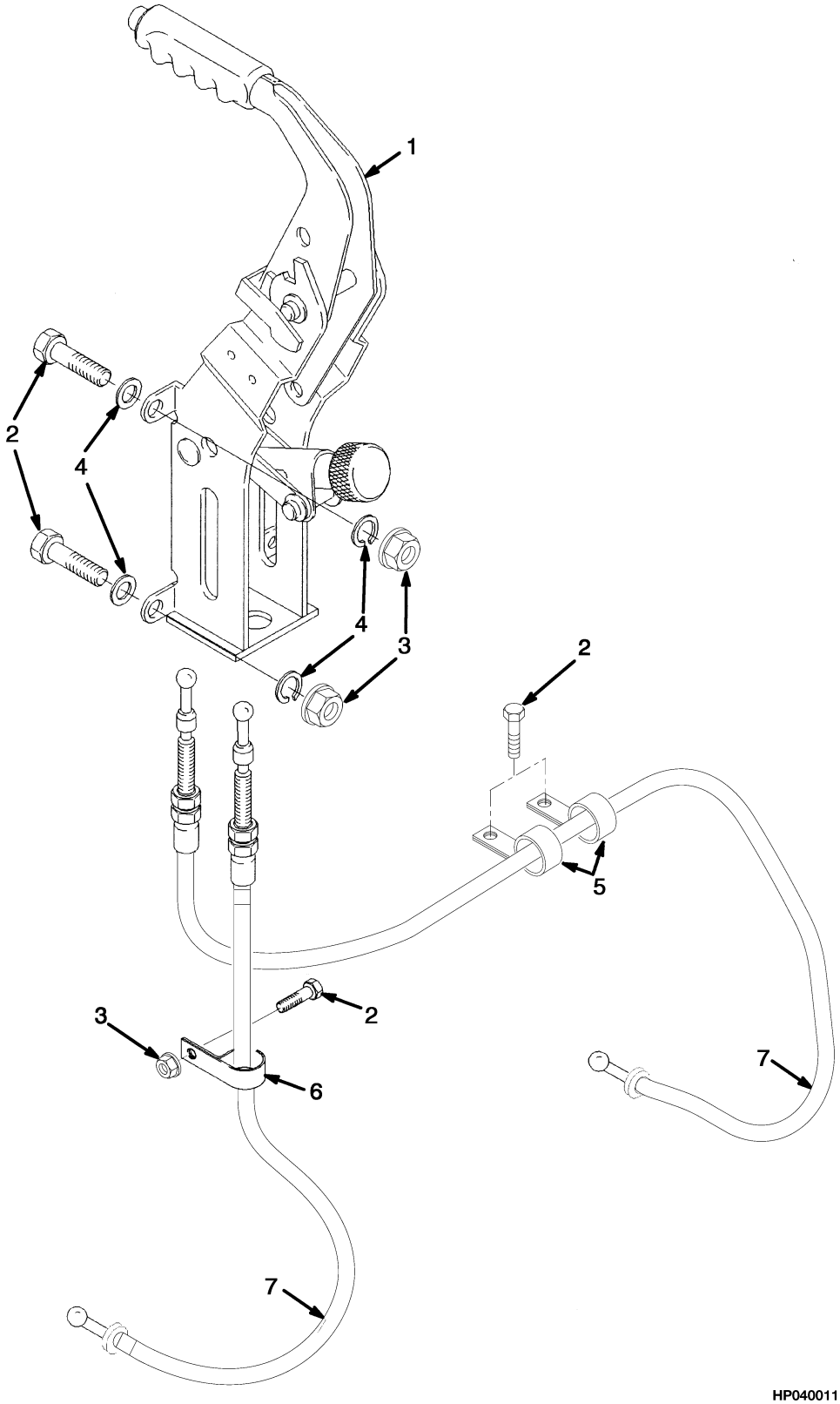

©2009 HYSTER COMPANY

PARK BRAKE

ITEM	PART NO.	DESCRIPTION	QTY
1	1376557	Parking Brake Lever	1
2	136749	Screw	5
3	1466011	Nut (Flanged)	5
4	320158	Washer	4
5	124297	Clamp	1
6	136516	Clamp	2
7	**a** 1463247	Parking Brake Cable (LH) (H70-90XM) (☞Figure 8-2)	1
7	**a** 1463248	Parking Brake Cable (RH) (H70-90XM) (☞Figure 8-2)	1
7	**a** 1463471	Parking Brake Cable (LH) (H100-120XM) (☞Figure 8-4)	1
7	**a** 1463472	Parking Brake Cable (RH) (H100-120 XM) (☞Figure 8-4)	1

FOOTNOTES:

a Cables Are Included With Service Brake Assemblies

©2009 HYSTER COMPANY

NOTES

©2009 HYSTER COMPANY

9 HYDRAULIC SYSTEM

SECTION 9
HYDRAULIC SYSTEM

DESCRIPTION	PAGE
HYDRAULIC CONTROL LINES	
FOUR FUNCTION (→ S/N K005V05721A)	9-14
FOUR FUNCTION (S/N K005V05722A → EXC. 5753)	9-16
THREE FUNCTION (→ S/N K005V05721A)	9-10
THREE FUNCTION (S/N K005V05722A → EXC. 5753)	9-12
HYDRAULIC CONTROL VALVE	
THREE AND FOUR FUNCTION (S/N K005V01706Y → THREE FUNCTION CONTROL VALVE) (S/N K005V01698Y → INC. 1704-1705, 1708, 1715-1716, 1722 FOUR FUNCTION CONTROL VALVE)	9-28
THREE AND FOUR FUNCTION - SHEET 1 OF 2 (S/N K005V01706Y ↔ S/N K005V05721A THREE FUNCTION CONTROL VALVE) (S/N K005V01698Y ↔ S/N K005V05721A EXC. 1704-1705, 1708, 1715-1716, 1722 FOUR FUNCTION CONTROL VALVE)	9-30
THREE AND FOUR FUNCTION - SHEET 2 OF 2 (S/N K005V01698Y ↔ S/N K005V05721A EXC. 1704-1705, 1708, 1715-1716, 1722 FOUR FUNCTION CONTROL VALVE) (S/N K005V01706Y ↔ S/N K005V05721A THREE FUNCTION CONTROL VALVE)	9-34
THREE AND FOUR FUNCTION (S/N K005V05722A → EXC. 5753)	9-36
HYDRAULIC CONTROL VALVE ATTACHING PARTS	
FOUR FUNCTION WITH DETENTED LEVERS (→ S/N K005V05721A)	9-24
FOUR FUNCTION WITH DETENTED LEVERS (S/N K005V05722A → EXC. 5753)	9-26
THREE FUNCTION (→ S/N K005V05721A)	9-18
THREE FUNCTION (S/N K005V05722A → EXC. 5753)	9-20
HYDRAULIC FILTER HOUSING	9-40
HYDRAULIC PUMP	
→ S/N K005D02086	9-48
S/N K005D02087 →	9-50
HYDRAULIC SYSTEM	
→ S/N K005V05721A	9-2
S/N K005V05722A → EXC. 5753	9-6
MAST INSTALLATION	
→ S/N K005V05217A	9-42
S/N K005V05218A →	9-44
TILT CYLINDER	9-46

©2009 HYSTER COMPANY

HYDRAULIC SYSTEM (FIGURE 9-1)

(→ S/N K005V05721A)

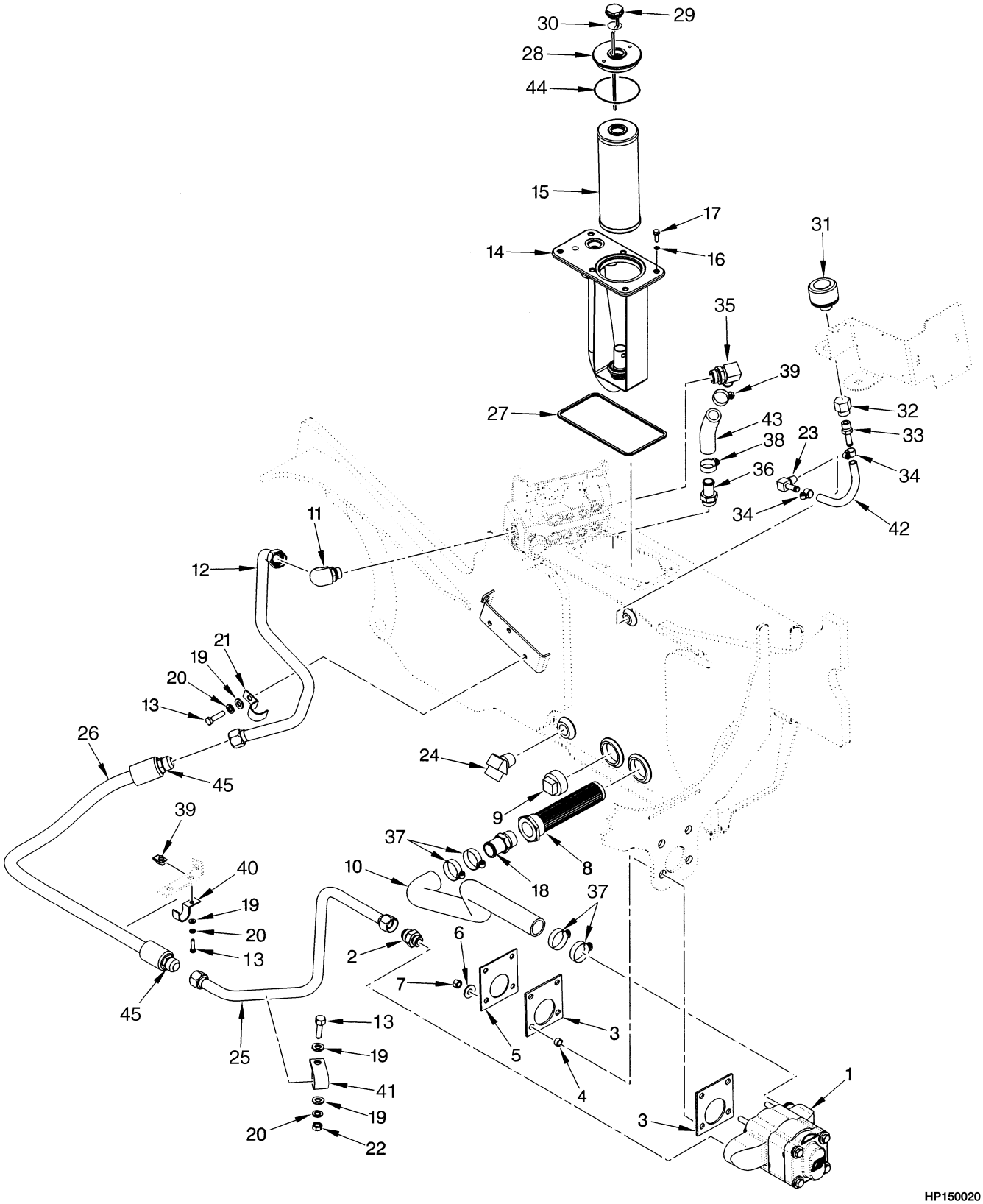

©2009 HYSTER COMPANY

HYDRAULIC SYSTEM

(→ S/N K005V05721A)

ITEM	PART NO.	DESCRIPTION	QTY
1	**a** 2035983	Hydraulic Pump (1830 mm Short Wheel Base) (☞Figure 9-19)	1
1	**d** 2038201	Hydraulic Pump (1830 mm Short Wheel Base) (☞Figure 9-20)	1
1	**a** 2035981	Hydraulic Pump (2100 mm Long Wheel Base) (☞Figure 9-19)	1
1	**d** 2038202	Hydraulic Pump (2100 mm Long Wheel Base) (☞Figure 9-20)	1
2	142500	Fitting	1
2	16486	O-Ring	1
3	1397685	Isolator	2
4	182891	Hose	4
5	1399823	Plate	1
6	296422	Washer	4
7	300937	Nut	4
8	1388963	Hydraulic Filter	1
9	15310	Fitting	1
10	1394453	Hose (Suction)	1
11	184761	Fitting	1
11	16486	O-Ring	1
12	2036484	Tube Assy	1
13	132861	Capscrew	6
14	1397739	Hydraulic Filter (☞Figure 9-15)	1
14	1397796	Cover	1
15	2037740	Hydraulic Filter	1
16	353000	O-Ring	6
17	136681	Capscrew	6
18	183635	Fitting	1
19	320157	Washer	9
20	292681	Lockwasher	10
21	325897	Clamp	1
22	239503	Nut	4
23	**bc** 17174	Fitting	1
23	**ef** 1484026	Fitting	1
24	246869	Plug (Magnetic)	1
25	1399386	Tube Assy	1
26	1397981	Hose Assy	1
27	1397744	Seal	1
28	190787	Filter Head (Filter)	1
29	1397570	Dipstick	1
30	16487	O-Ring	1
31	1356393	Breather (40 Micron)	1
31	1371445	Breather (10 Micron) (Optional)	1
32	17706	Fitting	1
33	222473	Fitting	1
34	379405	Clamp	2
35	112470	Fitting	1
35	16487	O-Ring	1
36	88195	Fitting	1
36	16487	O-Ring	1
37	119236	Clamp	4
38	127045	Clamp (Hose)	2
39	1393879	Nut	5
40	1399334	Clamp	2

©2009 HYSTER COMPANY

HYDRAULIC SYSTEM

(→ S/N K005V05721A)

ITEM	PART NO.	DESCRIPTION	QTY
41	76382	Clamp	1
42	78456	Hose	1
43	1401537	Hose	1
44	39742	O-Ring	1
45	244167	O-Ring	1

FOOTNOTES:

a → S/N K005D02086
b → S/N K005D04728X (Long Wheel Base)
c → S/N K005D05017X (Short Wheel Base)
d S/N K005D02087 →
e S/N K005D04729X → (Long Wheel Base)
f S/N K005D05018X → (Short Wheel Base)

©2009 HYSTER COMPANY

NOTES

©2009 HYSTER COMPANY

HYDRAULIC SYSTEM (FIGURE 9-2)

(S/N K005V05722A → EXC. 5753)

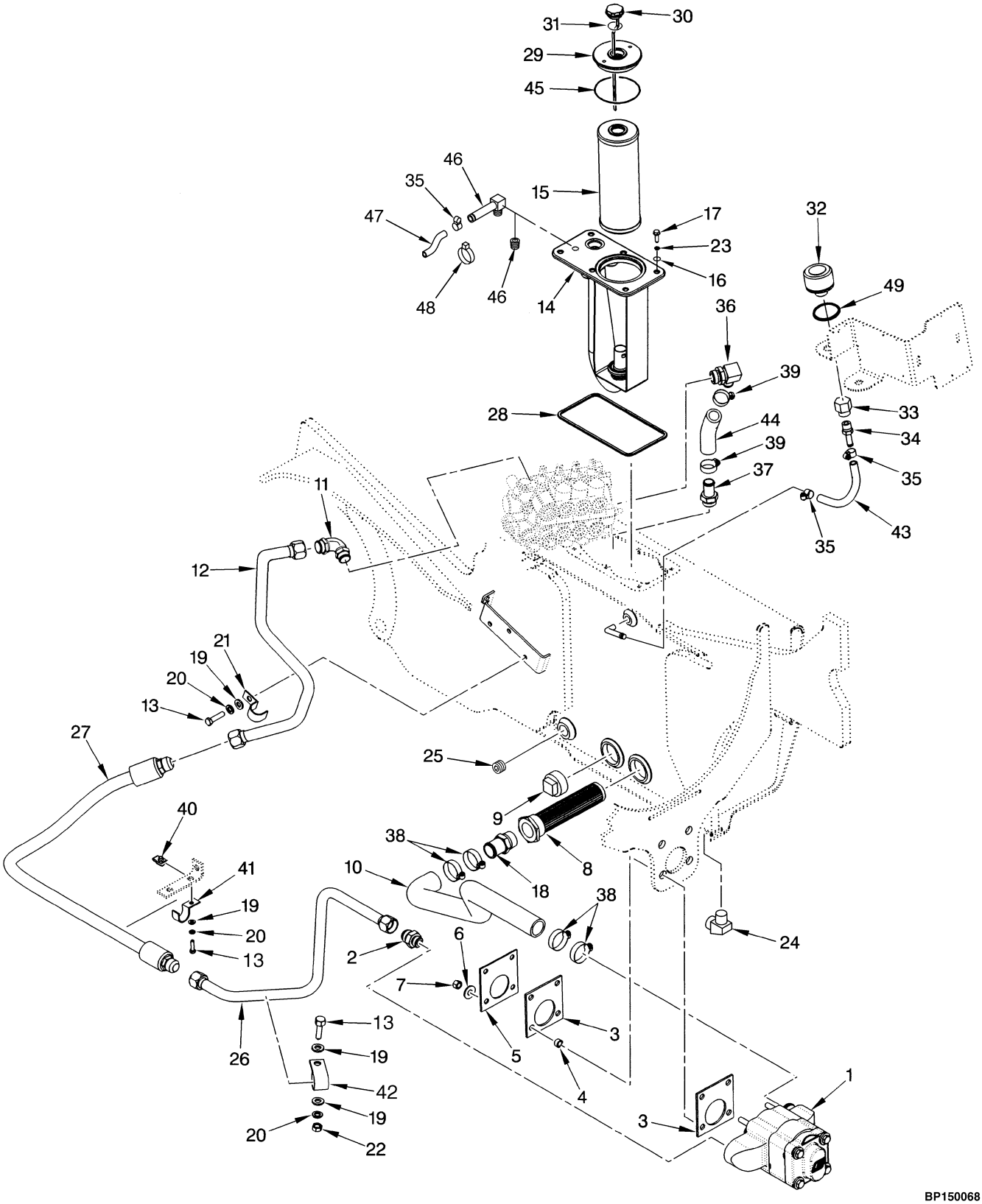

©2009 HYSTER COMPANY

HYDRAULIC SYSTEM

(S/N K005V05722A → EXC. 5753)

ITEM	PART NO.	DESCRIPTION	QTY
1	2038201	Hydraulic Pump (1830 mm Short Wheel Base) (☞Figure 9-20)	1
1	2038202	Hydraulic Pump (2100 mm Long Wheel Base) (☞Figure 9-20)	1
2	142500	Fitting	1
2	16486	O-Ring	1
3	1397685	Isolator	2
4	182891	Hose	4
5	1399823	Plate	1
6	296422	Washer	4
7	300937	Nut	4
8	1388963	Hydraulic Filter	1
9	15310	Fitting	1
10	1394453	Hose (Suction)	1
11	1551160	Fitting	1
11	16486	O-Ring	1
12	1543615	Tube Assy	1
13	132861	Capscrew	6
14	1397739	Hydraulic Filter (☞Figure 9-15)	1
15	2037740	Hydraulic Filter	1
16	353000	O-Ring	6
17	136681	Capscrew	6
18	183635	Fitting	1
19	320158	Washer	9
20	292681	Lockwasher	9
21	239370	Clamp	1
22	239503	Nut	4
23	320157	Washer	6
24	246869	Plug (Magnetic) (Magnetic Drain Plug)	1
25	246869	Plug (Magnetic)	1
26	1399386	Tube Assy	1
27	893660	Hose Assy	1
28	1397744	Seal	1
28	1477232	Adhesive	1
29	190787	Filter Head (Filter)	1
30	1397570	Dipstick	1
31	16487	O-Ring	1
32	1356393	Breather (40 Micron)	1
32	1371445	Breather (10 Micron) (Optional)	1
33	17706	Fitting	1
34	222473	Fitting	1
35	379405	Clamp	2
36	112470	Fitting	1
36	16487	O-Ring	1
37	88195	Fitting	1
37	16487	O-Ring	1
38	119236	Clamp	4
39	127045	Clamp (Hose)	2
40	1393879	Nut	6
41	1399334	Clamp	2
42	76382	Clamp	1
43	78456	Hose	1

©2009 HYSTER COMPANY

HYDRAULIC SYSTEM

(S/N K005V05722A → EXC. 5753)

ITEM	PART NO.	DESCRIPTION	QTY
44	1401537	Hose	1
44	1475160	Hose (Optional)	1
44	325897	Clamp	1
45	39742	O-Ring	1
46	150879	Fitting (Two Stage Full Free-Lift)	1
46	102898	Fitting (Two Stage Limited Free-Lift and Three Stage Full Free-Lift Masts)	1
47	1399121	Hose	1
48	397676	Strap Clamp	1
49	301550	O-Ring	1

©2009 HYSTER COMPANY

NOTES

©2009 HYSTER COMPANY

HYDRAULIC CONTROL LINES (FIGURE 9-3)

THREE FUNCTION (→ S/N K005V05721A)

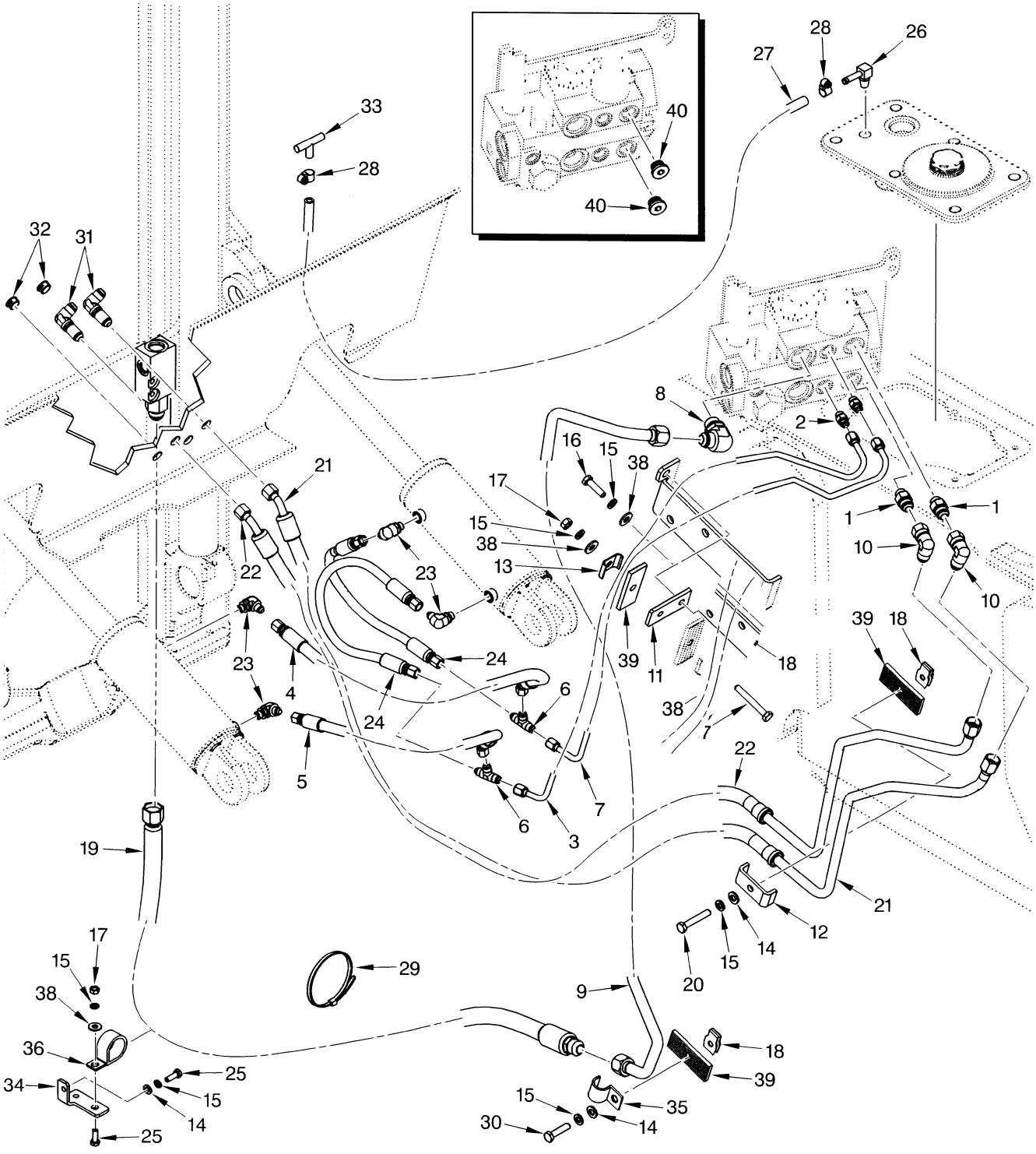

©2009 HYSTER COMPANY

HYDRAULIC CONTROL LINES

THREE FUNCTION (→ S/N K005V05721A)

ITEM	PART NO.	DESCRIPTION	QTY
1	206150	Fitting	2
1	16484	O-Ring	1
2	16540	Connector	2
2	16483	O-Ring	1
3	2036487	Tube Assy (Tilt)	1
4	1388954	Hose Assy	1
5	1397984	Hose Assy	1
6	14560	Fitting	2
7	2036486	Tube Assy (Tilt)	1
8	16561	Elbow	1
8	16486	O-Ring	1
9	2036485	Tube Assy (Hoist)	1
10	16882	Fitting	2
11	1400243	Plate	2
12	1397682	Clamp	1
13	193239	Clamp	1
14	320157	Washer	2
15	292681	Lockwasher	3
16	176640	Bolt	1
17	239503	Nut	2
18	1393879	Nut	1
19	1399787	Hose Assy	1
20	292509	Capscrew	1
21	1399417	Hose and Tube Assy	1
22	1399418	Hose and Tube Assy	1
23	16558	Fitting	4
23	16483	O-Ring	1
24	1388776	Hose Assy	2
25	136749	Screw	2
26	201808	Fitting	1
27	1399121	Hose	1
28	353198	Clamp	2
29	397676	Strap Clamp	AR
30	136704	Capscrew	1
31	16458	Fitting	2
32	1363917	Plug	2
33	1399248	Fitting	1
34	2037894	Bracket	1
35	128409	Clamp	1
36	258590	Clamp	1
37	176640	Bolt	1
38	320158	Washer	6
39	1399323	Pad	3
40	1389590	Plug	2

©2009 HYSTER COMPANY

HYDRAULIC CONTROL LINES (FIGURE 9-4)

THREE FUNCTION (S/N K005V05722A → EXC. 5753)

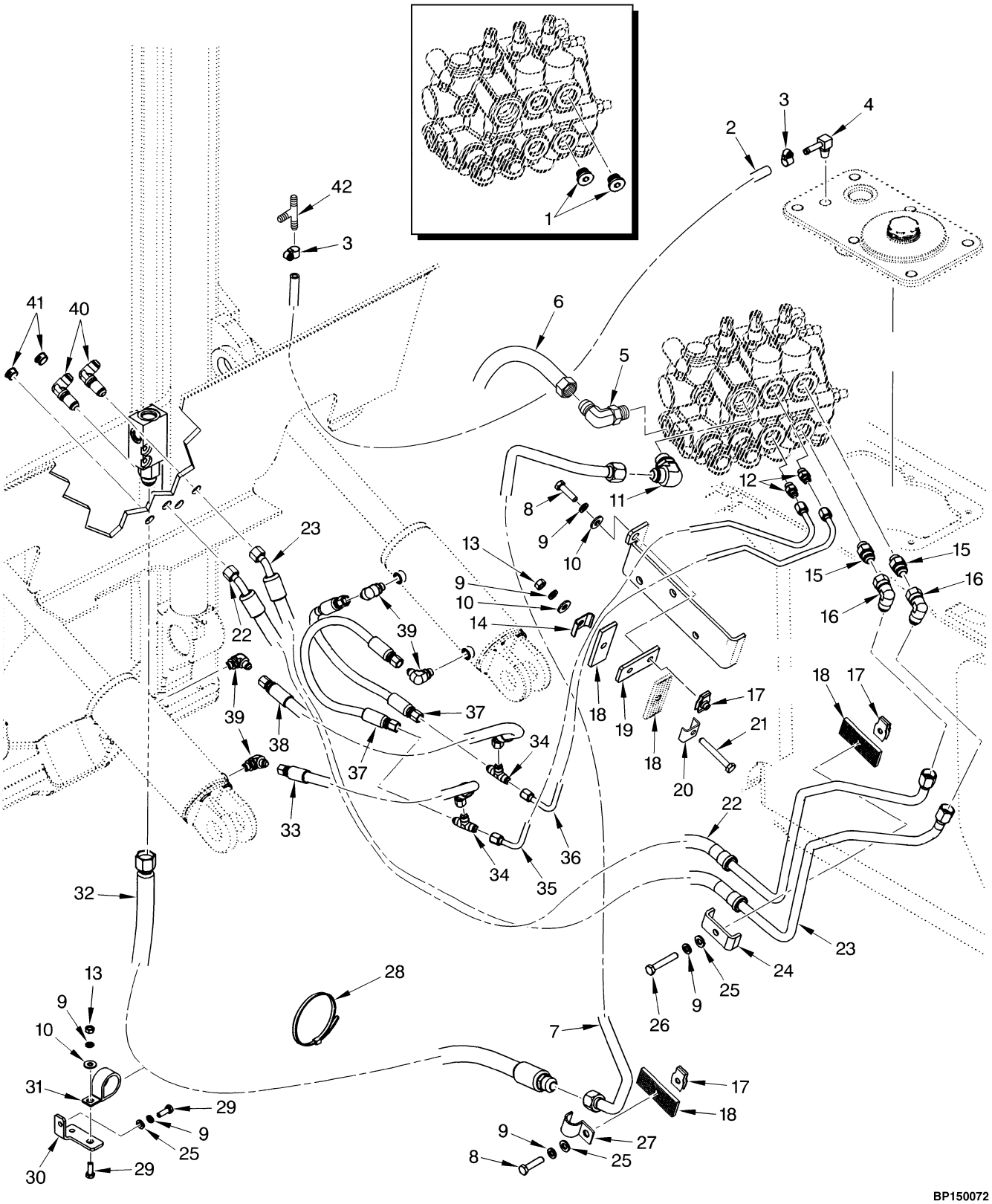

©2009 HYSTER COMPANY

HYDRAULIC CONTROL LINES

THREE FUNCTION (S/N K005V05722A → EXC. 5753)

ITEM	PART NO.	DESCRIPTION	QTY
1	1363917	Plug	2
2	1399121	Hose (Three Stage Full Free-Lift, Two Stage Limited Free-Lift)	1
3	379405	Clamp	2
4	102898	Fitting	1
5	16559	Fitting	1
6	1543616	Hose and Tube Assy (Steering Supply)	1
7	1543617	Tube Assy (Hoist)	1
8	132861	Capscrew	6
9	292681	Lockwasher	5
10	320158	Washer	6
11	16561	Elbow	1
11	16486	O-Ring	1
12	16745	Fitting	2
12	16483	O-Ring	1
13	239503	Nut	4
14	193239	Clamp	1
15	206150	Fitting	2
15	16484	O-Ring	1
16	16882	Fitting	2
17	1393879	Nut	6
18	1399323	Pad	3
19	1550643	Plate	2
20	1400244	Clamp	1
21	136704	Capscrew	1
22	1550942	Hose and Tube Assy	1
23	1399417	Hose and Tube Assy	1
24	1397682	Clamp	1
25	320157	Washer	3
26	292509	Capscrew	1
27	128409	Clamp	1
28	397676	Strap Clamp	AR
29	136749	Screw	2
30	2037894	Bracket	1
31	258590	Clamp	1
32	1399787	Hose Assy	1
33	1388954	Hose Assy	1
34	14560	Fitting	2
35	1566080	Tube Assy (Tilt)	1
36	1566079	Tube Assy (Tilt)	1
37	1388776	Hose Assy	2
38	1397984	Hose Assy	1
39	16558	Fitting	4
39	16483	O-Ring	1
40	16458	Fitting	2
41	1389590	Plug	2
42	2046871	Fitting	1

©2009 HYSTER COMPANY

HYDRAULIC CONTROL LINES (FIGURE 9-5)

FOUR FUNCTION (→ S/N K005V05721A)

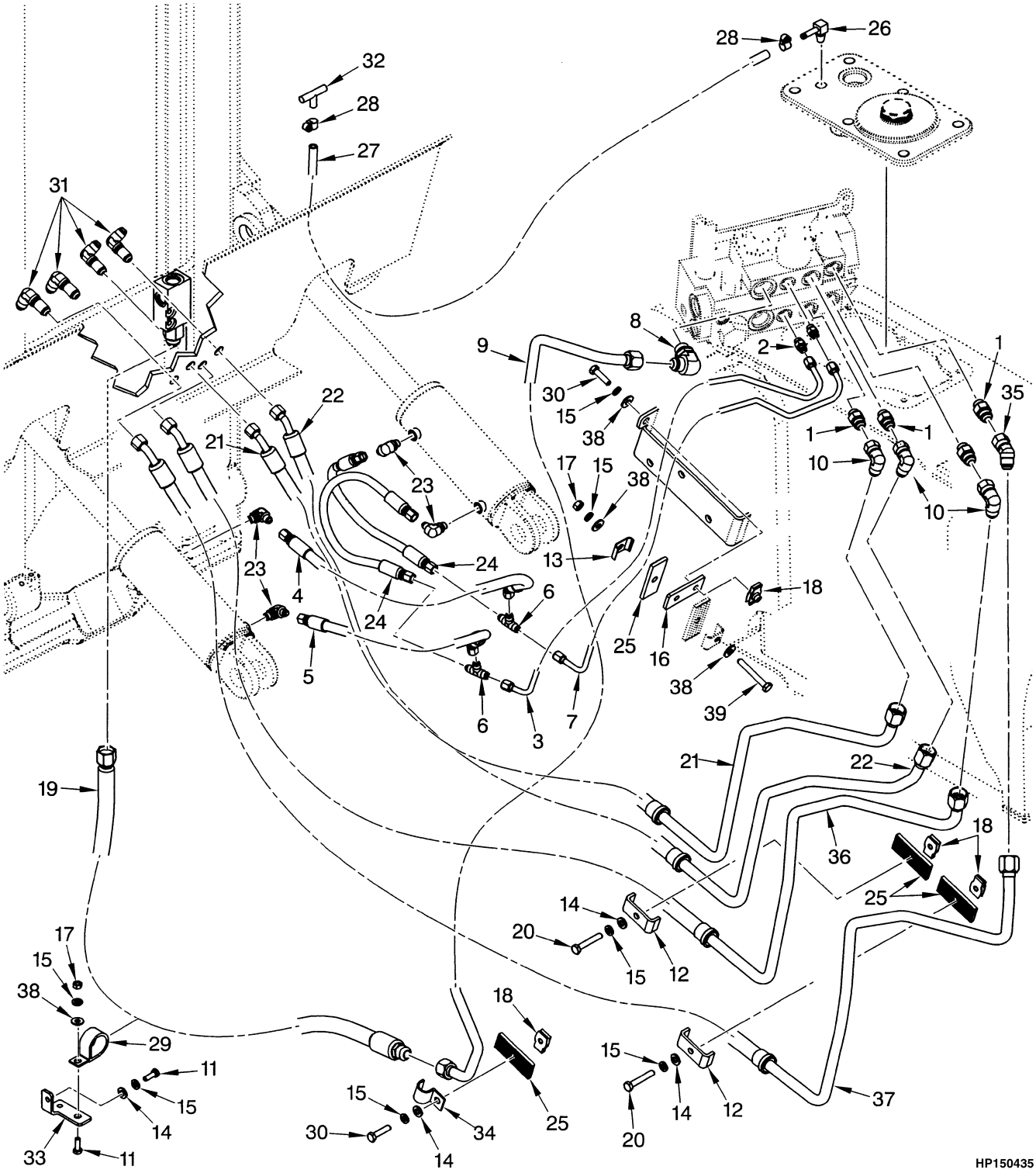

©2009 HYSTER COMPANY

HYDRAULIC CONTROL LINES
FOUR FUNCTION (→ S/N K005V05721A)

ITEM	PART NO.	DESCRIPTION	QTY
1	206150	Fitting	4
1	16484	O-Ring	1
2	16540	Connector	2
2	16483	O-Ring	1
3	2036486	Tube Assy (Tilt)	1
4	1397984	Hose Assy	1
5	1388954	Hose Assy	1
6	14560	Fitting	2
7	2036487	Tube Assy (Tilt)	1
8	16561	Elbow	1
8	16486	O-Ring	1
9	2036485	Tube Assy (Hoist)	1
10	16882	Fitting	3
11	136749	Screw	2
12	1397682	Clamp	3
13	193239	Clamp	1
14	320157	Washer	4
15	292681	Lockwasher	7
16	1400243	Plate	1
17	239503	Nut	2
18	1393879	Nut	3
19	1399787	Hose Assy	1
20	292509	Capscrew	3
21	1399417	Hose and Tube Assy	1
22	1399418	Hose and Tube Assy	1
23	16558	Fitting	5
23	16483	O-Ring	1
24	1388776	Hose Assy	2
25	1399323	Pad	4
26	201808	Fitting	1
27	1399121	Hose	1
28	353198	Clamp	2
29	258590	Clamp	2
30	136704	Capscrew	1
31	16458	Fitting	4
32	1399248	Fitting	1
33	2037894	Bracket	1
34	128409	Clamp	1
35	17039	Fitting	1
36	1399419	Hose and Tube Assy	1
37	1399420	Tube Assy	1
38	320158	Washer	6
39	176640	Bolt	1

©2009 HYSTER COMPANY

HYDRAULIC CONTROL LINES (FIGURE 9-6)

FOUR FUNCTION (S/N K005V05722A → EXC. 5753)

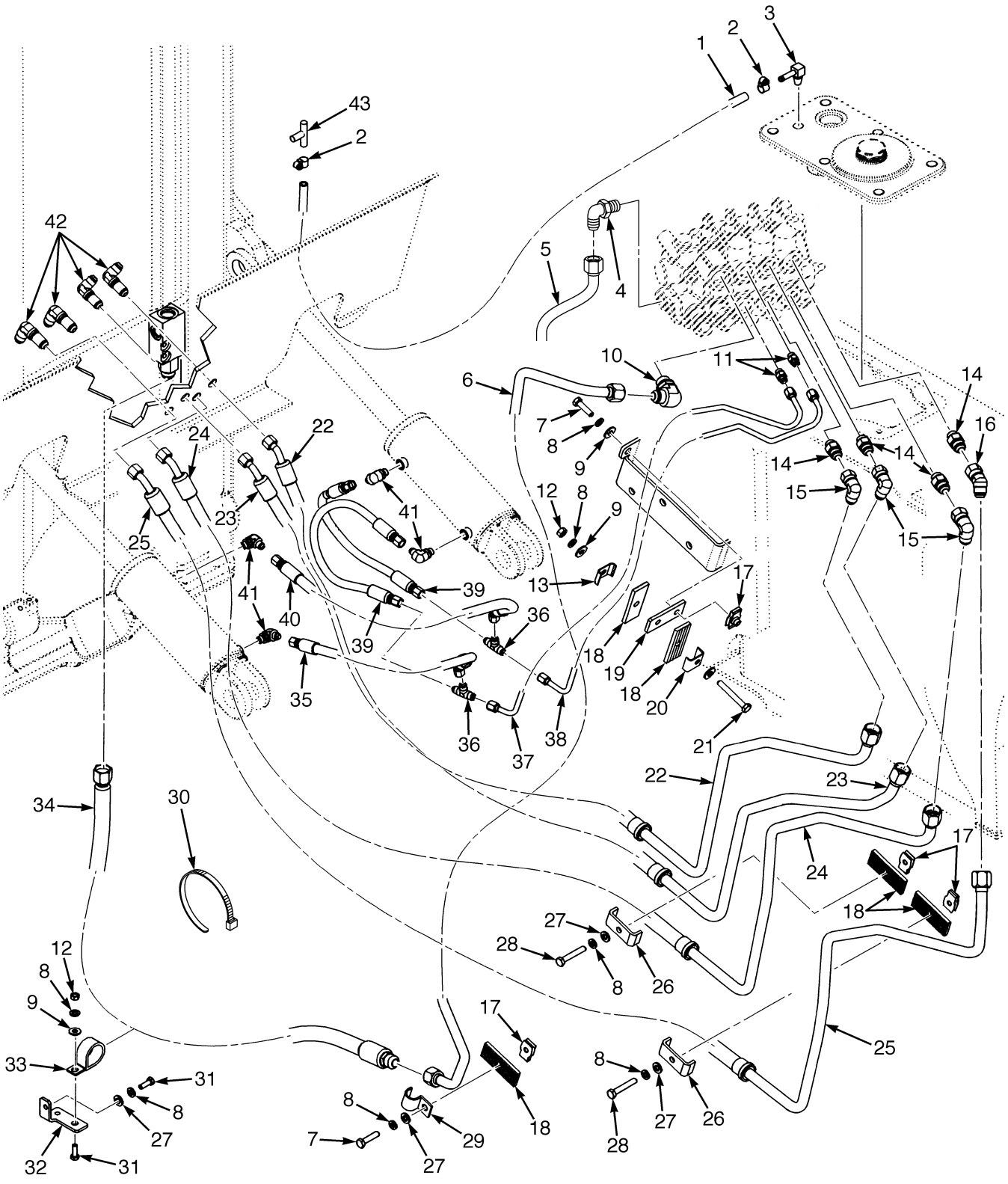

BP150073

©2009 HYSTER COMPANY

HYDRAULIC CONTROL LINES

FOUR FUNCTION (S/N K005V05722A → EXC. 5753)

ITEM	PART NO.	DESCRIPTION	QTY
1	1399121	Hose (Two Stage Limited Free-Lift, Three Stage Full Free-Lift)	1
2	379405	Clamp	2
3	102898	Fitting	1
4	16559	Fitting	1
5	1543616	Hose and Tube Assy (Steering Supply)	1
6	1543617	Tube Assy (Hoist)	1
7	132861	Capscrew	1
8	292681	Lockwasher	11
9	320158	Washer	6
10	16561	Elbow	1
10	16486	O-Ring	1
11	16745	Fitting	2
11	16483	O-Ring	1
12	239503	Nut	2
13	193239	Clamp	1
14	206150	Fitting	4
14	16484	O-Ring	1
15	16882	Fitting	3
16	17039	Fitting	1
17	1393879	Nut	3
18	1399323	Pad	4
19	1550643	Plate	1
20	1400244	Clamp	1
21	136704	Capscrew	1
22	1550942	Hose and Tube Assy	1
23	1399417	Hose and Tube Assy	1
24	1399419	Hose and Tube Assy	1
25	1399420	Tube Assy	1
26	1397682	Clamp	3
27	320157	Washer	4
28	292509	Capscrew	3
29	128409	Clamp	1
30	397676	Strap Clamp	AR
31	136749	Screw	2
32	2037894	Bracket	1
33	258590	Clamp	2
34	1399787	Hose Assy	1
35	1397984	Hose Assy	1
36	14560	Fitting	2
37	1566080	Tube Assy (Tilt)	1
38	1566079	Tube Assy (Tilt)	1
39	1388776	Hose Assy	2
40	1388954	Hose Assy	1
41	16558	Fitting	5
41	16483	O-Ring	1
42	16458	Fitting	4
43	2046871	Fitting	1

©2009 HYSTER COMPANY

HYDRAULIC CONTROL VALVE ATTACHING PARTS (FIGURE 9-7)

THREE FUNCTION (→ S/N K005V05721A)

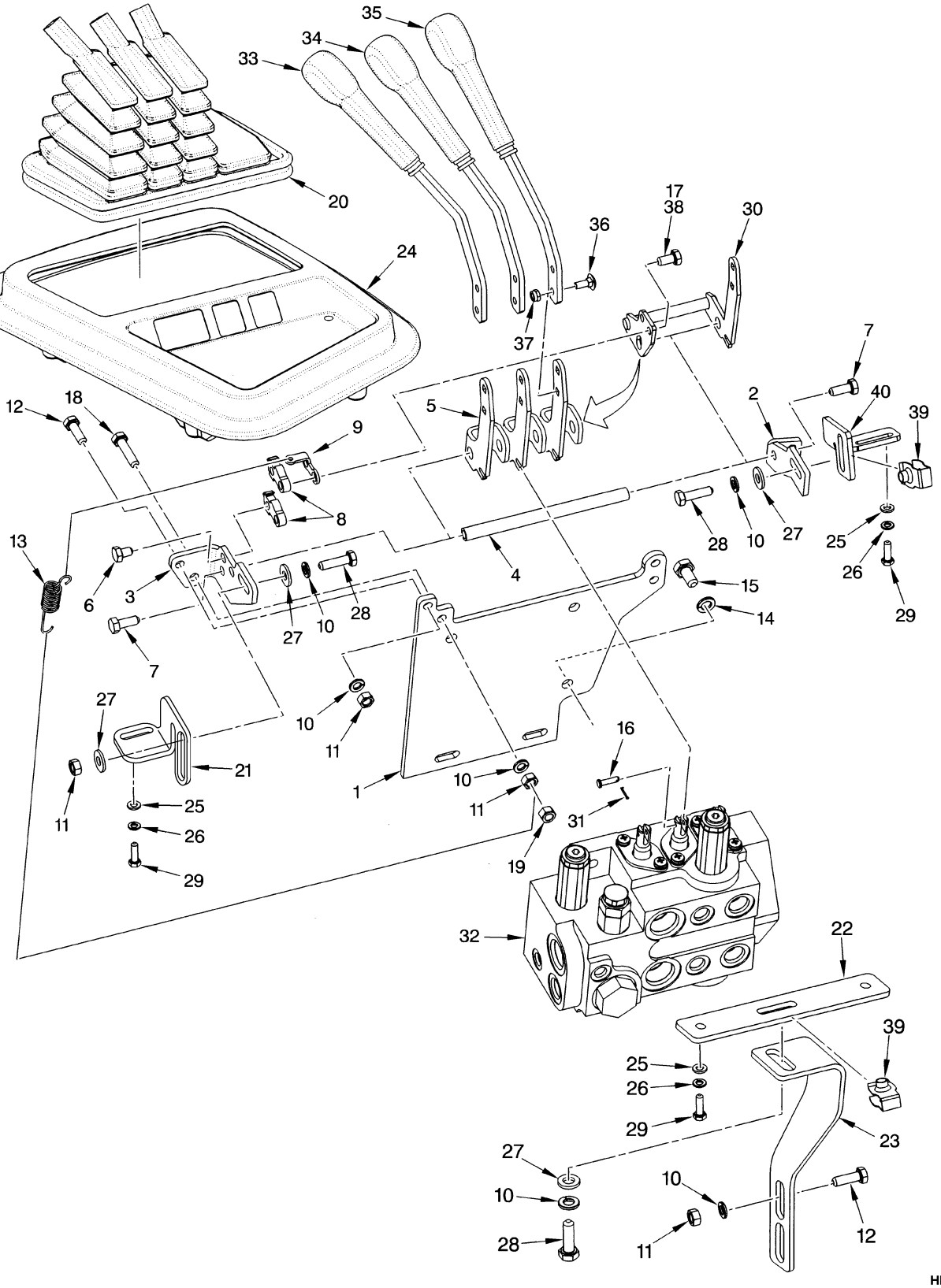

HP150023

©2009 HYSTER COMPANY

HYDRAULIC CONTROL VALVE ATTACHING PARTS

THREE FUNCTION (→ S/N K005V05721A)

ITEM	PART NO.	DESCRIPTION	QTY
1	1388909	Bracket	1
2	1397675	Bracket (RH)	1
3	1397676	Bracket (LH)	1
4	1343443	Pivot	1
5	**b** 1339749	Crank	3
5	**a** 1339749	Crank	2
6	293611	Capscrew	4
7	1328930	Capscrew	2
8	**a** 1339745	Lock	2
9	**a** 1339746	Plate	1
10	292681	Lockwasher	12
11	239503	Nut	6
12	136749	Screw	5
13	**a** 1396708	Spring	1
14	292682	Lockwasher	3
15	292514	Capscrew	3
16	309109	Pin (Rod End)	2
17	293612	Capscrew	2
18	**a** 132861	Capscrew	1
19	**a** 313828	Nut	1
20	2036476	Boot	1
21	**c** 1551997	Bracket	1
21	**d** 1567833	Bracket	1
22	1396715	Bracket	1
23	1399380	Strut	1
24	1396108	Cover (Without Disconnect Switch)	1
25	320156	Washer	4
26	292680	Washer	4
27	320158	Washer	9
28	176640	Bolt	6
29	292501	Capscrew	4
30	**a** 1339770	Crank	1
31	15200	Cotter Pin	3
32	1484351	Hydraulic Control Valve (☞Figure 9-11)	1
32	1503437	Hydraulic Control Valve (☞Figure 9-12)	1
33	1396014	Lever (Hoist)	1
34	1396015	Lever (Tilt)	1
35	1396016	Lever (Auxiliary)	1
36	308980	Bolt	4
37	316834	Nut	4
38	**a** 264134	Loctite	AR
39	1393879	Nut	4
40	1397678	Bracket	1

FOOTNOTES:

a With Detented Levers
b Without Detented Levers
c → S/N K005V05721A
d S/N K005V05722A →

©2009 HYSTER COMPANY

HYDRAULIC CONTROL VALVE ATTACHING PARTS (FIGURE 9-8)

THREE FUNCTION (S/N K005V05722A → EXC. 5753)

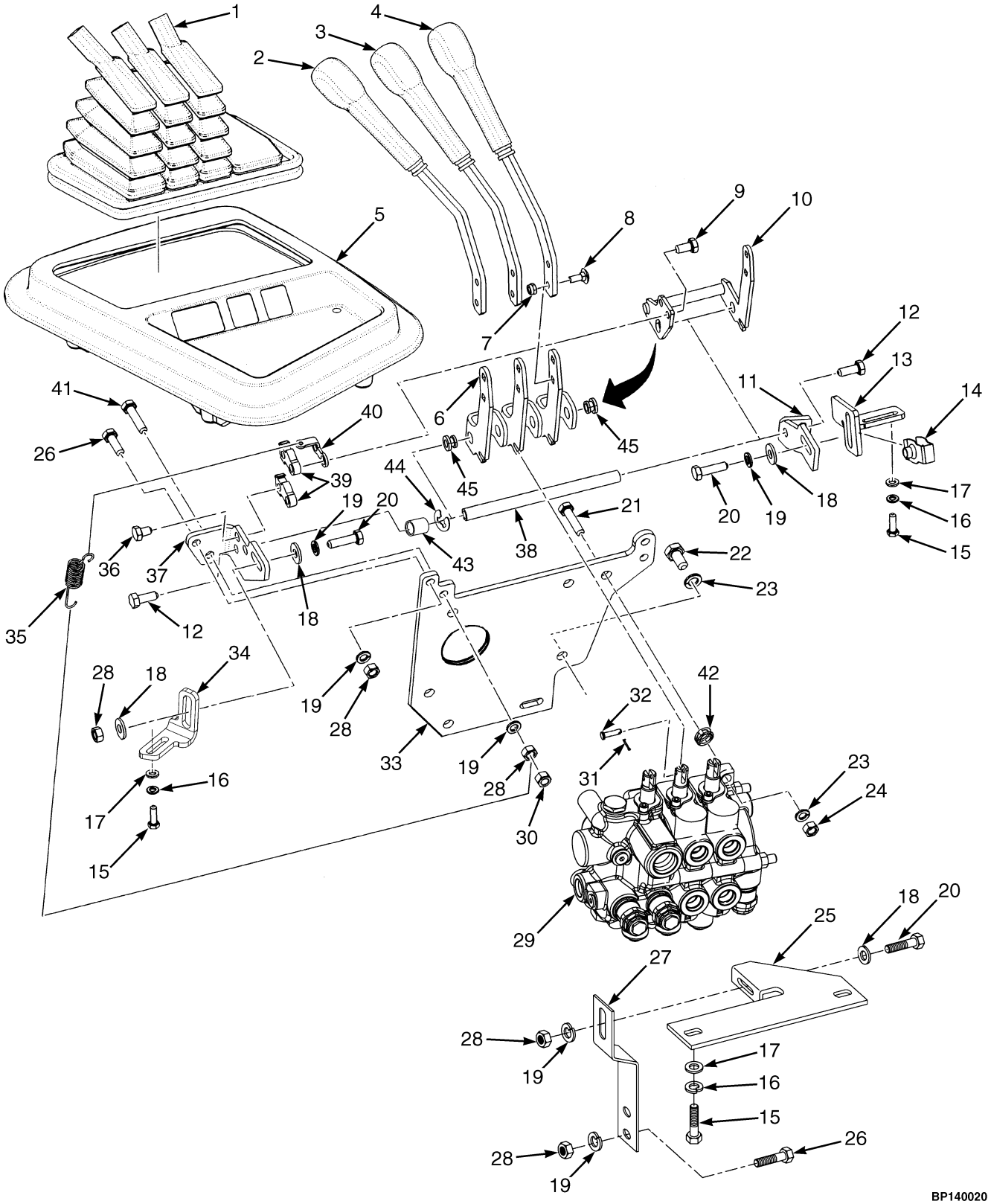

©2009 HYSTER COMPANY

HYDRAULIC CONTROL VALVE ATTACHING PARTS

THREE FUNCTION (S/N K005V05722A → EXC. 5753)

KEY:
A: With Detented Levers
B: Without Detented Levers

ITEM	PART NO.	DESCRIPTION	QTY A	QTY B
1	2036476	Boot	1	1
2	1396014	Lever (Hoist)	1	1
3	1396015	Lever (Tilt)	1	1
4	1396016	Lever (Auxiliary)	1	1
5	1396108	Cover (Without Disconnect Switch)	1	..
5	1397511	Cover (With Disconnect Switch)	1	1
6	1339749	Crank	2	3
7	316834	Nut	6	6
8	308980	Bolt	6	6
9	293612	Capscrew	2	..
9	264134	Loctite	AR	..
10	1339770	Crank	1	..
11	1548231	Bracket (RH)	1	1
12	1328930	Capscrew	2	2
13	1397678	Bracket	1	1
14	1393879	Nut	2	2
15	292501	Capscrew	4	4
16	292680	Washer	4	4
17	320156	Washer	4	4
18	320158	Washer	8	9
19	292681	Lockwasher	11	11
20	176640	Bolt	5	3
21	132861	Capscrew	1	1
22	292514	Capscrew	2	2
23	292682	Lockwasher	3	3
24	313828	Nut	1	1
25	1396715	Bracket	1	1
26	136749	Screw	5	6
27	1399380	Strut	1	1
28	239503	Nut	6	7
29	1543927	Hydraulic Control Valve (☞Figure 9-14)	1	1
30	136692	Nut	1	..
31	15200	Cotter Pin	3	4
32	309109	Pin	3	4
33	1544207	Bracket	1	1
34	1567833	Bracket	1	1
35	1396708	Spring	1	..
36	293611	Capscrew	2	..
37	1548232	Bracket (LH)	1	1
38	1343443	Pivot	1	1
39	1339745	Lock	2	..
40	1339746	Plate	1	..
41	287860	Capscrew	1	..
42	2076419	Bearing (Spherical)	1	..
43	2076356	Bearing (Polymer)	1	

©2009 HYSTER COMPANY

HYDRAULIC CONTROL VALVE ATTACHING PARTS

THREE FUNCTION (S/N K005V05722A → EXC. 5753)

KEY:
A: With Detented Levers
B: Without Detented Levers

ITEM	PART NO.	DESCRIPTION	QTY A	QTY B
44	2076497	Clip	1	
45	2076368	Bearing Clip	4	6

©2009 HYSTER COMPANY

NOTES

©2009 HYSTER COMPANY

HYDRAULIC CONTROL VALVE ATTACHING PARTS (FIGURE 9-9)

FOUR FUNCTION WITH DETENTED LEVERS (→ S/N K005V05721A)

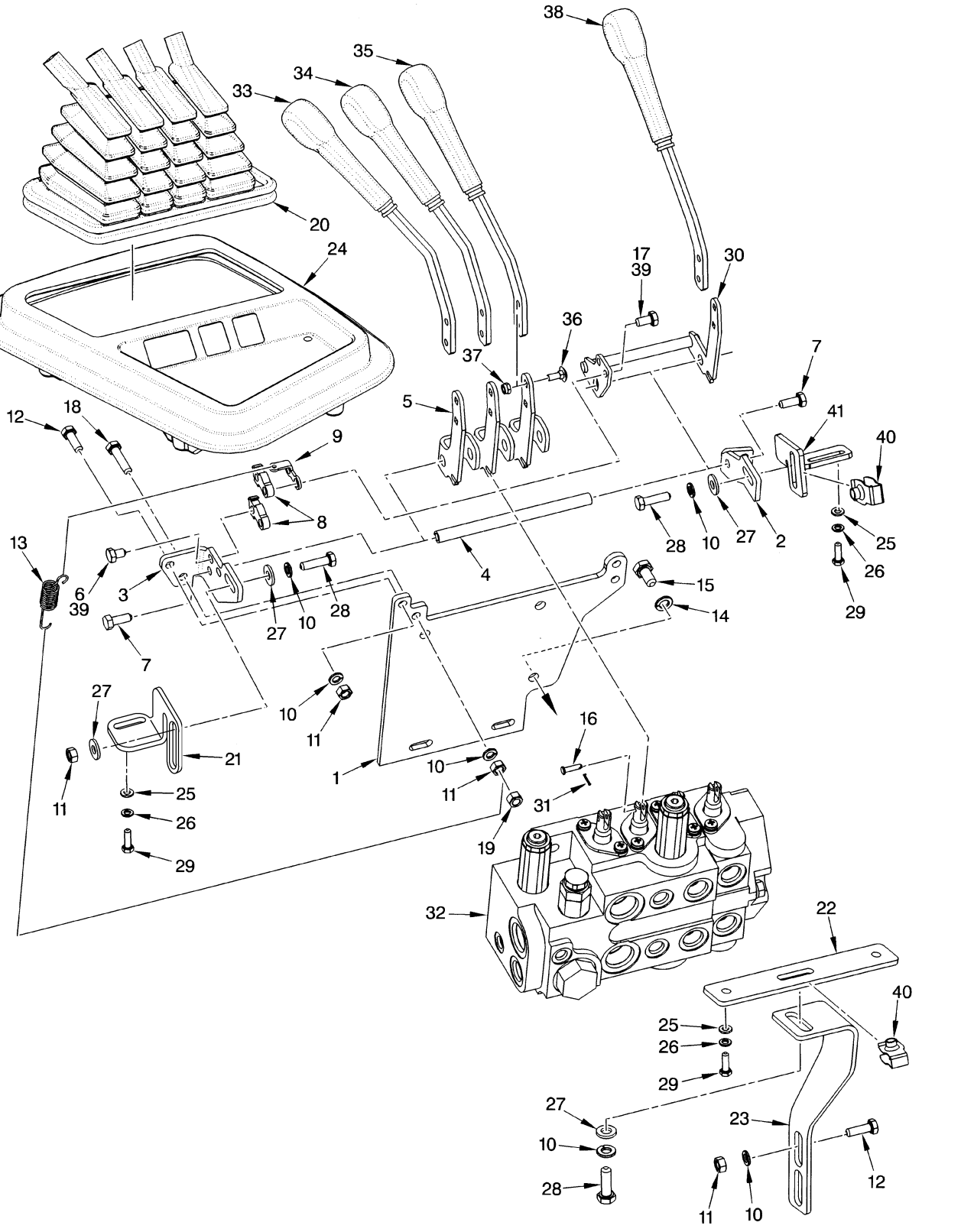

©2009 HYSTER COMPANY

HYDRAULIC CONTROL VALVE ATTACHING PARTS

FOUR FUNCTION WITH DETENTED LEVERS (→ S/N K005V05721A)

ITEM	PART NO.	DESCRIPTION	QTY
1	1388909	Bracket	1
2	1397675	Bracket (RH)	1
3	1397676	Bracket (LH)	1
4	1343443	Pivot	1
5	1339749	Crank	3
6	293611	Capscrew	4
7	1328930	Capscrew	1
8	1339745	Lock	4
9	1339746	Plate	2
10	292681	Lockwasher	11
11	239503	Nut	5
12	136749	Screw	5
13	1396708	Spring	2
14	292682	Lockwasher	3
15	292514	Capscrew	3
16	309109	Pin	5
17	293612	Capscrew	2
18	132861	Capscrew	2
19	313828	Nut	2
20	2036477	Boot	1
21	**a** 1551997	Bracket	1
21	**b** 1567833	Bracket	1
22	1396715	Bracket	1
23	1399380	Strut	1
24	1396108	Cover (Without Disconnect Switch)	1
25	320156	Washer	4
26	292680	Washer	4
27	320158	Washer	8
28	176640	Bolt	4
29	292501	Capscrew	3
30	1339748	Crank	1
31	15200	Cotter Pin	4
32	1485568	Hydraulic Control Valve (☞Figure 9-11)	1
32	1503438	Hydraulic Control Valve (☞Figure 9-12)	1
33	1396014	Lever (Hoist)	1
34	1396015	Lever (Tilt)	1
35	1396016	Lever (Auxiliary)	1
36	308980	Bolt	8
37	316834	Nut	8
38	1396017	Lever (Auxiliary)	1
39	264134	Loctite	AR
40	1393879	Nut	2
41	1397678	Bracket	1

FOOTNOTES:

a → S/N K005V05721A

b S/N K005V05722A →

©2009 HYSTER COMPANY

HYDRAULIC CONTROL VALVE ATTACHING PARTS (FIGURE 9-10)

FOUR FUNCTION WITH DETENTED LEVERS (S/N K005V05722A → EXC. 5753)

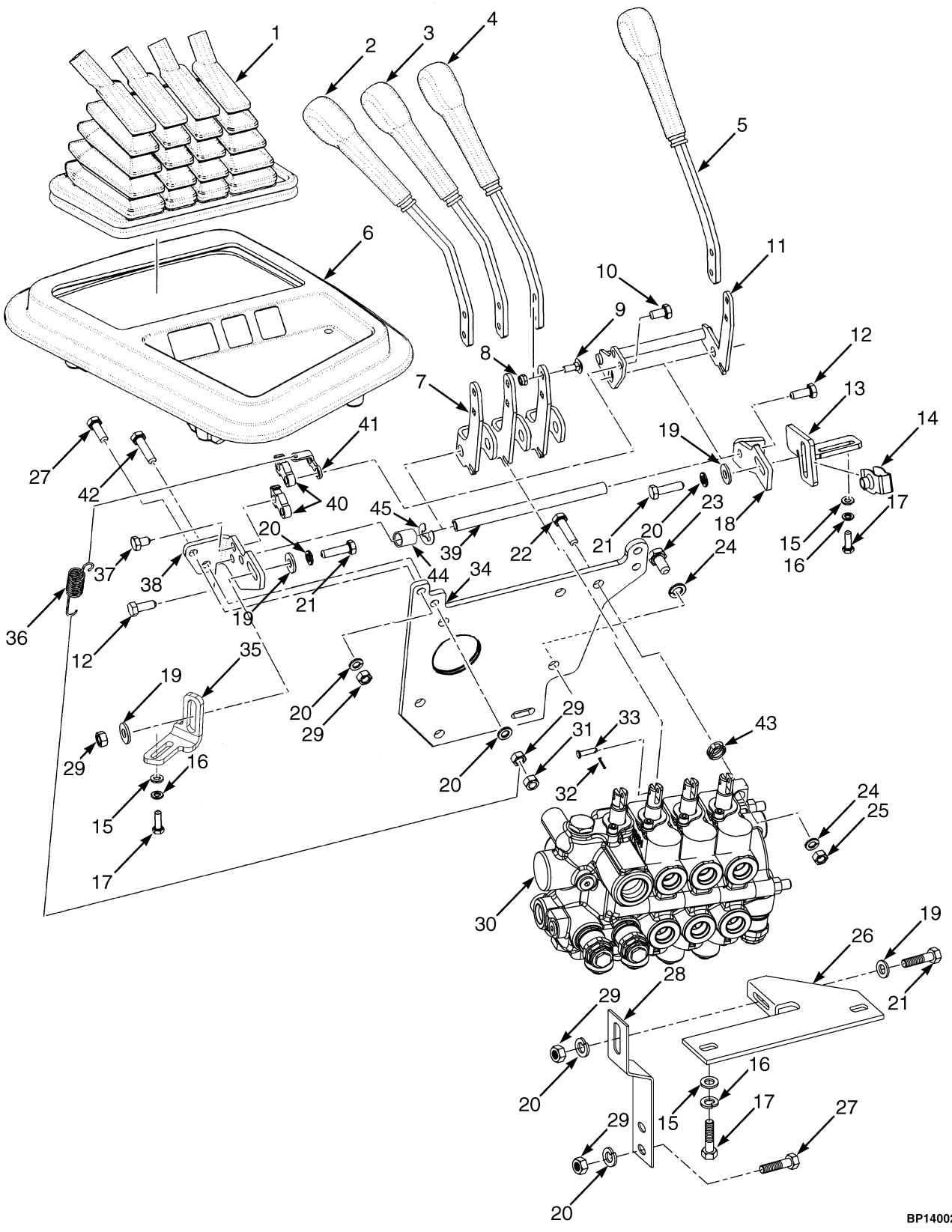

©2009 HYSTER COMPANY

HYDRAULIC CONTROL VALVE ATTACHING PARTS

FOUR FUNCTION WITH DETENTED LEVERS (S/N K005V05722A → EXC. 5753)

ITEM	PART NO.	DESCRIPTION	QTY
1	2036477	Boot	1
2	1396014	Lever (Hoist)	1
3	1396015	Lever (Tilt)	1
4	1396016	Lever (Auxiliary)	2
5	1396017	Lever (Auxiliary)	2
6	1396108	Cover (Without Disconnect Switch)	1
6	1397511	Cover (With Disconnect Switch)	1
7	1339749	Crank	3
8	316834	Nut	8
9	308980	Bolt	8
10	293612	Capscrew	1
10	264134	Loctite	AR
11	1339748	Crank	1
12	1328930	Capscrew	2
13	1397678	Bracket	1
14	1393879	Nut	2
15	320156	Washer	4
16	292680	Washer	4
17	292501	Capscrew	4
18	1548231	Bracket (RH)	1
19	320158	Washer	9
20	292681	Lockwasher	11
21	176640	Bolt	5
22	132861	Capscrew	1
23	292514	Capscrew	2
24	292682	Lockwasher	3
25	313828	Nut	1
26	1396715	Bracket	1
27	136749	Screw	5
28	1399380	Strut	1
29	239503	Nut	7
30	1543928	Hydraulic Control Valve (With Detented Levers) (☞Figure 9-14)	1
31	136692	Nut	1
32	15200	Cotter Pin	4
33	309109	Pin	4
34	1544207	Bracket	1
35	1551997	Bracket	1
36	1396708	Spring	1
37	293611	Capscrew	2
38	1548232	Bracket (LH)	1
39	1343443	Pivot	1
40	1339745	Lock	2
41	1339746	Plate	1
42	287860	Capscrew	1

©2009 HYSTER COMPANY

HYDRAULIC CONTROL VALVE (FIGURE 9-11)

THREE AND FOUR FUNCTION (S/N K005V01706Y → THREE FUNCTION CONTROL VALVE) (S/N K005V01698Y → INC. 1704-1705, 1708, 1715-1716, 1722 FOUR FUNCTION CONTROL VALVE)

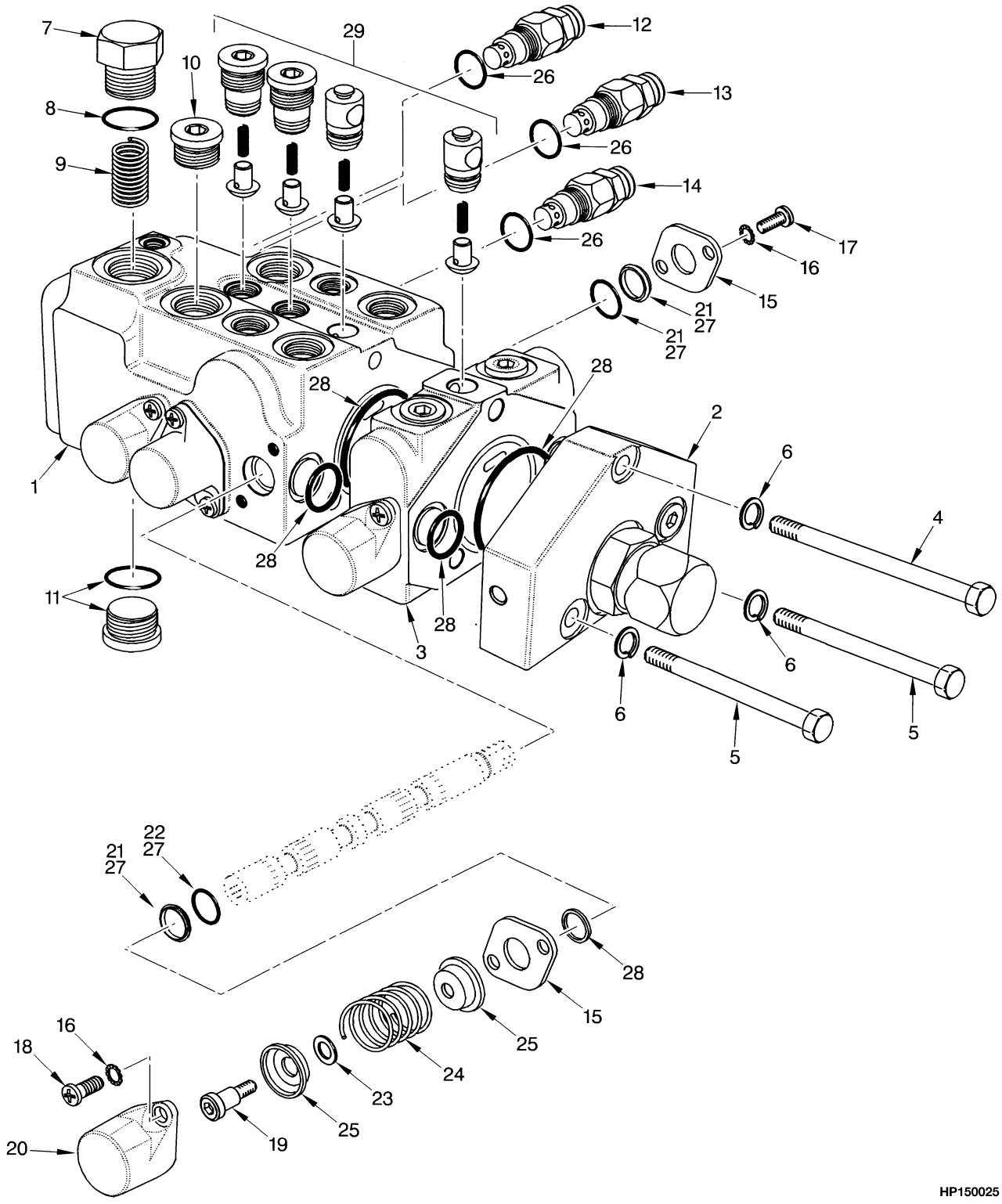

©2009 HYSTER COMPANY

HYDRAULIC CONTROL VALVE

THREE AND FOUR FUNCTION (S/N K005V01706Y → THREE FUNCTION CONTROL VALVE) (S/N K005V01698Y → INC. 1704-1705, 1708, 1715-1716, 1722 FOUR FUNCTION CONTROL VALVE)

KEY:
A: Three Function
B: Four Function

ITEM	PART NO.	DESCRIPTION	QTY A	QTY B
	1484351	Hydraulic Control Valve	1	..
	1485568	Hydraulic Control Valve	..	1
1	. . . . .	Body	1	1
2	1467926	Valve Section	1	1
3	1467925	Valve Section (Auxiliary)	..	1
4	221516	Capscrew (3.0 in.) (3 in.)	1	..
4	221524	Capscrew (4.5 in.)	..	1
5	221510	Capscrew (2.0 in.) (2 in.)	2	..
5	221520	Capscrew (3.5 in.)	..	2
6	1491859	Lockwasher	3	3
7	1467927	Plug	1	1
8	16982	O-Ring	1	1
9	1467928	Spring (Priority)	1	1
10	222444	Fitting	1	1
10	16486	O-Ring	1	1
11	200659	Fitting	1	1
11	16982	O-Ring	1	1
12	1467931	Relief Valve (Main)	1	1
13	1467932	Relief Valve (Steering)	1	1
14	1467933	Relief Valve (Secondary)	1	1
14	1482550	Kit-Seal	1	..
15	1467934	Retainer Plate	6	8
16	15923	Lockwasher	6	8
17	16705	Screw	6	8
18	16709	Screw	6	8
19	. . . . .	Bolt	1	1
20	. . . . .	Cap	1	1
21	. . . . .	Wiper	1	1
22	. . . . .	O-Ring	1	1
23	. . . . .	Spacer	1	1
24	. . . . .	Spring	1	1
25	1467954	Retainer	2	2
26	. . . . .	Seal Kit (Relief Valve)	3	3
27	. . . . .	Seal Kit (Spools)	4	4
28	. . . . .	Seal Kit (Section)	2	2
29	1467938	Kit-Valve	1	1
	1467929	Kit-Spool	1	1
	1504807	Kit-Seal	1	1
	1504440	Kit-Spool	1	1

©2009 HYSTER COMPANY

HYDRAULIC CONTROL VALVE (FIGURE 9-12)

THREE AND FOUR FUNCTION — SHEET 1 OF 2

(S/N K005V01706Y ↔ S/N K005V05721A THREE FUNCTION CONTROL VALVE)

(S/N K005V01698Y ↔ S/N K005V05721A EXC. 1704-1705, 1708, 1715-1716, 1722 FOUR FUNCTION CONTROL VALVE)

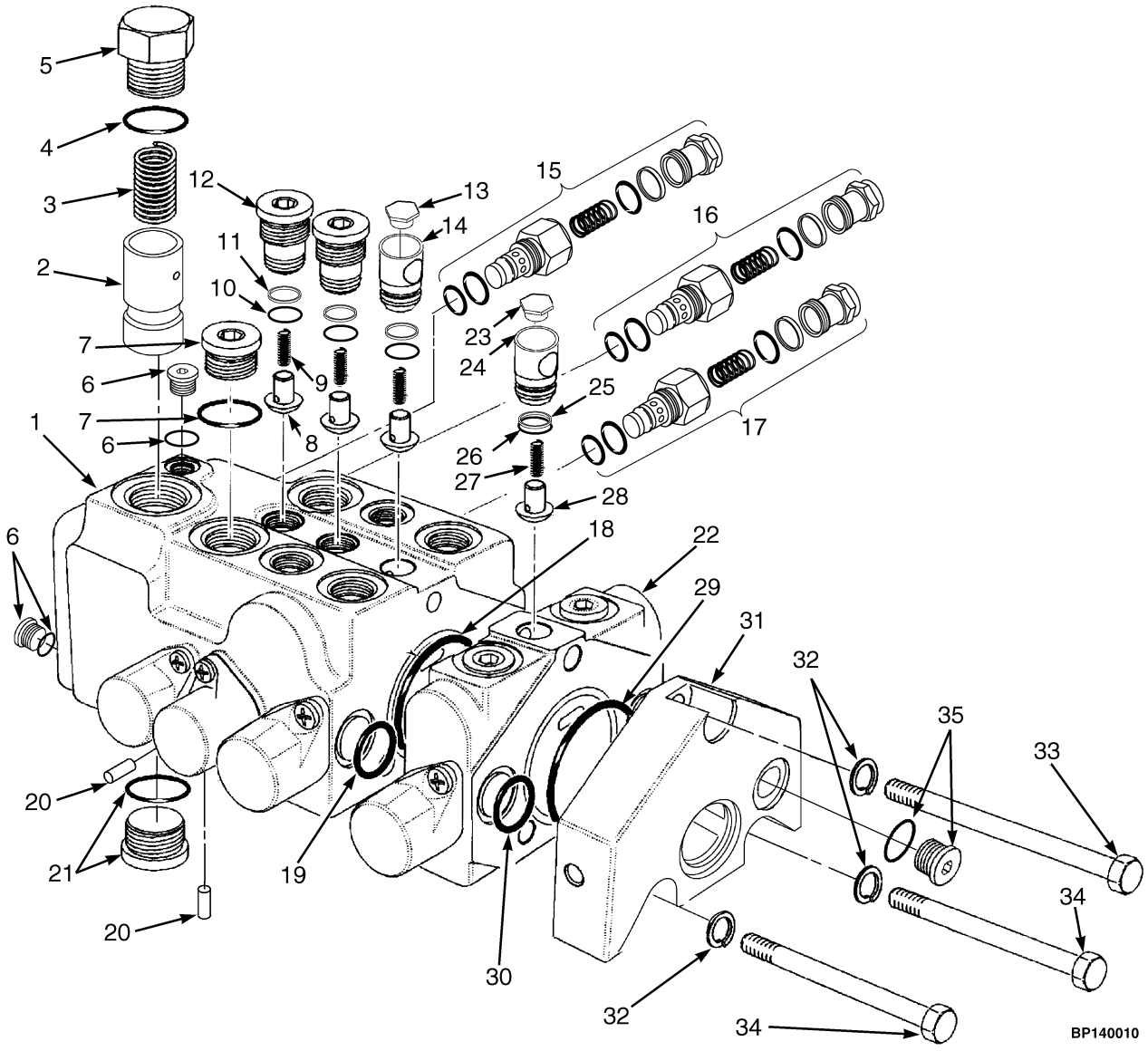

©2009 HYSTER COMPANY

HYDRAULIC CONTROL VALVE

THREE AND FOUR FUNCTION – SHEET 1 OF 2

(S/N K005V01706Y ↔ S/N K005V05721A THREE FUNCTION CONTROL VALVE)

(S/N K005V01698Y ↔ S/N K005V05721A EXC. 1704-1705, 1708, 1715-1716, 1722 FOUR FUNCTION CONTROL VALVE)

KEY:
A: Three Function
B: Four Function

ITEM	PART NO.	DESCRIPTION	QTY A	QTY B
	1503437	Hydraulic Control Valve	1	..
	1503438	Hydraulic Control Valve	..	1
1	. . . . .	Housing	1	1
2	. . . . .	Spool (Priority)	1	1
3	1467928	Spring (Priority)	1	1
4	. . . . .	O-Ring	1	1
5	. . . . .	Plug	1	1
6	1504458	Plug	2	2
6	. . . . .	O-Ring	1	1
7	1504456	Plug	1	1
7	. . . . .	O-Ring	1	1
8	. . . . .	Poppet	3	3
9	. . . . .	Spring	3	3
10	. . . . .	O-Ring	3	3
11	. . . . .	Back-Up Ring	3	3
12	. . . . .	Check Guide	2	2
13	. . . . .	Plug	1	1
14	. . . . .	Check Guide	1	1
15	1504448	Relief Valve (Main)	1	1
15	. . . . .	O-Ring	1	1
15	. . . . .	O-Ring	2	2
15	. . . . .	Seal	1	1
16	1504449	Relief Valve (Steering)	1	1
16	. . . . .	O-Ring	1	1
16	. . . . .	O-Ring	2	2
16	. . . . .	Seal	1	1
17	1504457	Relief Valve (Secondary)	1	1
17	. . . . .	O-Ring	1	1
17	. . . . .	O-Ring	2	2
17	. . . . .	Seal	1	1
18	. . . . .	O-Ring	1	1
19	. . . . .	O-Ring	2	2
20	. . . . .	Plug	2	2
21	. . . . .	Plug	1	1
21	. . . . .	O-Ring	1	1
22	1504459	Valve Section (4th Function)	..	1
23	. . . . .	Plug	..	1
24	. . . . .	Check Guide	..	1
25	. . . . .	Back-Up Ring	..	1
26	. . . . .	O-Ring	..	1
27	. . . . .	Spring	..	1
28	. . . . .	Poppet	..	1

©2009 HYSTER COMPANY

HYDRAULIC CONTROL VALVE

THREE AND FOUR FUNCTION – SHEET 1 OF 2

(S/N K005V01706Y ↔ S/N K005V05721A THREE FUNCTION CONTROL VALVE)

(S/N K005V01698Y ↔ S/N K005V05721A EXC. 1704-1705, 1708, 1715-1716, 1722 FOUR FUNCTION CONTROL VALVE)

KEY:
A: Three Function
B: Four Function

ITEM	PART NO.	DESCRIPTION	QTY A	QTY B
29	. . . . .	O-Ring	..	1
30	. . . . .	O-Ring	..	2
31	1467926	Valve Section	1	1
32	1491859	Lockwasher	3	3
33	221512	Capscrew	1	..
33	2056780	Capscrew	..	1
34	221499	Capscrew	2	..
34	185768	Capscrew	..	2
35	. . . . .	Plug	1	1
35	. . . . .	O-Ring	1	1
	1504446	Kit-Plug	1	1
	1504443	Kit-Valve	1	1
	1504451	Kit-Seal	2	2
	1504808	Kit-Relief Valve (Services Seals On One Relief Valve)	3	3
	1500170	Kit-Seal (Services One Check Guide Only)	3	4
	1499676	Kit-Seal (Three Function) (Includes Instructions and Kits 1504451, 1504808, 1504814, and 1500170)	1	..
	1504807	Kit-Seal (Includes Kits 1504451, 1504808, 1504814, and 1504443)	..	1

©2009 HYSTER COMPANY

NOTES

©2009 HYSTER COMPANY

HYDRAULIC CONTROL VALVE (FIGURE 9-13)

THREE AND FOUR FUNCTION — SHEET 2 OF 2

(S/N K005V01698Y ↔ S/N K005V05721A EXC. 1704-1705, 1708, 1715-1716, 1722 FOUR FUNCTION CONTROL VALVE) (S/N K005V01706Y ↔ S/N K005V05721A THREE FUNCTION CONTROL VALVE)

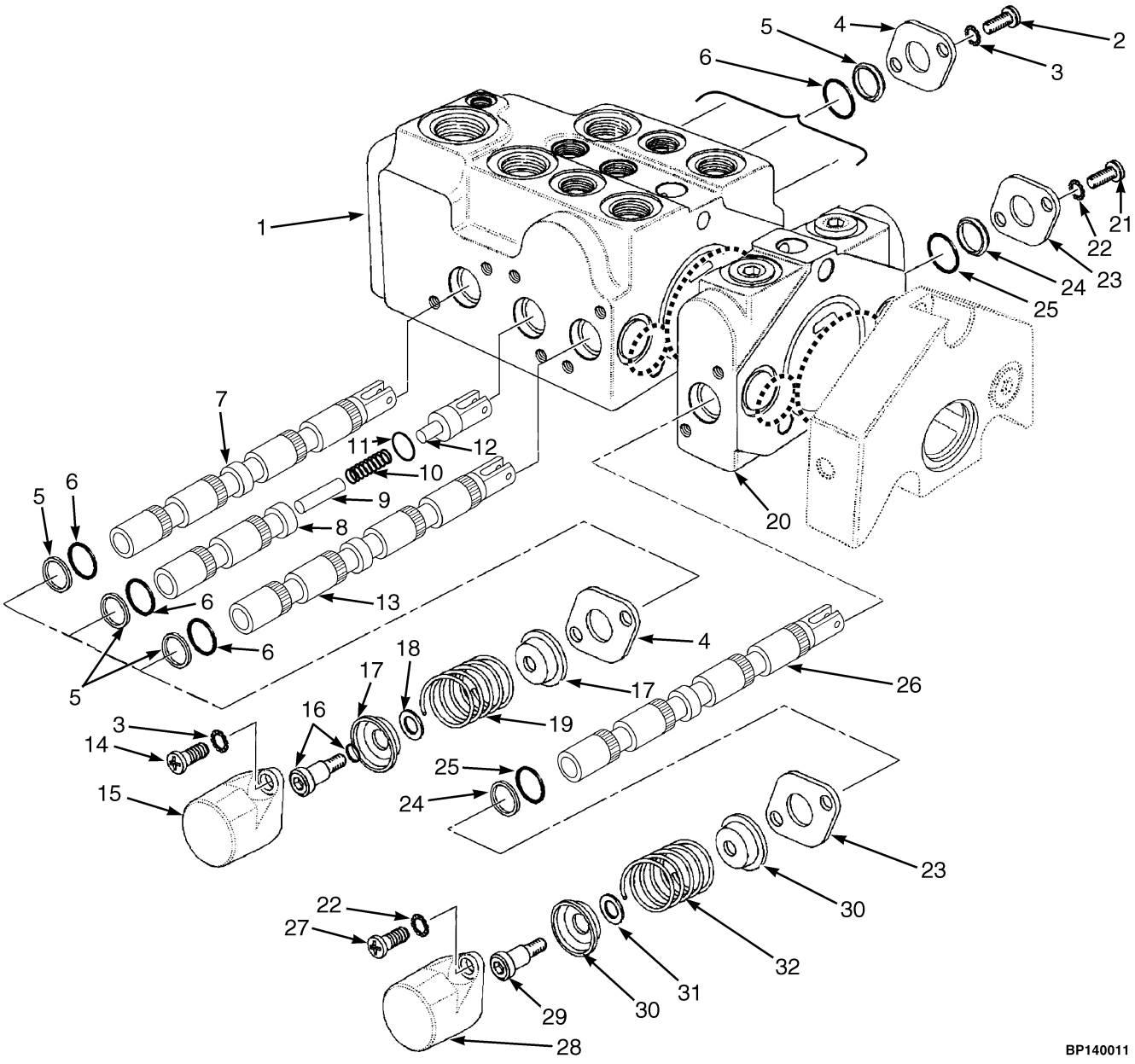

©2009 HYSTER COMPANY

HYDRAULIC CONTROL VALVE

THREE AND FOUR FUNCTION – SHEET 2 OF 2

(S/N K005V01698Y ↔ S/N K005V05721A EXC. 1704-1705, 1708, 1715-1716, 1722 FOUR FUNCTION CONTROL VALVE) (S/N K005V01706Y ↔ S/N K005V05721A THREE FUNCTION CONTROL VALVE)

KEY:
A: Three Function
B: Four Function

ITEM	PART NO.	DESCRIPTION	QTY A	QTY B
	1503437	Hydraulic Control Valve	1	..
	1503438	Hydraulic Control Valve	..	1
1	. . . . .	Housing	1	1
2	16709	Screw	6	6
3	15923	Lockwasher	12	12
4	1467934	Retainer Plate	6	6
5	. . . . .	Wiper	6	6
6	. . . . .	O-Ring	6	6
7	. . . . .	Spool (Lift)	1	1
8	. . . . .	Spool (Tilt)	1	1
9	. . . . .	Piston (Tilt)	1	1
10	1491853	Spring (Tilt)	1	1
11	. . . . .	O-Ring	1	1
12	. . . . .	Lug (Tilt Spool)	1	1
13	. . . . .	Spool (Auxiliary)	1	1
14	16705	Screw	6	6
15	. . . . .	Cap	3	3
16	. . . . .	Stripper Bolt	3	3
16	. . . . .	O-Ring (Tilt Spool Only)	1	1
17	. . . . .	Retainer	6	6
18	. . . . .	Spacer	3	3
19	. . . . .	Spring	3	3
20	1504459	Valve Section (4th Function)	..	1
20	. . . . .	Housing	..	1
21	16709	Screw	..	2
22	15923	Lockwasher	..	4
23	1467934	Retainer Plate	..	2
24	. . . . .	Wiper	..	2
25	. . . . .	O-Ring	..	2
26	. . . . .	Spool (Auxiliary) (4th Function)	..	1
27	16705	Screw	..	2
28	. . . . .	Cap	..	1
29	. . . . .	Stripper Bolt	..	1
30	. . . . .	Retainer	..	2
31	. . . . .	Spacer	..	1
32	. . . . .	Spring	..	1
33	1504440	Kit-Spool	1	1
34	1504434	Kit-End Cap (Each Kit Services One Endcap On One Spool)	3	4
35	1504814	Kit-Seal (Each Kit Services One Spool)	3	4
36	1499676	Kit-Seal (Three Function) (Includes Instructions and Kits 1504451, 1504808, 1504814, and 1500170)	1	..
37	1504807	Kit-Seal (Includes Kits 1504451, 1504808, 1504814, and 1504443)	..	1

©2009 HYSTER COMPANY

HYDRAULIC CONTROL VALVE (FIGURE 9-14)

THREE AND FOUR FUNCTION (S/N K005V05722A → EXC. 5753)

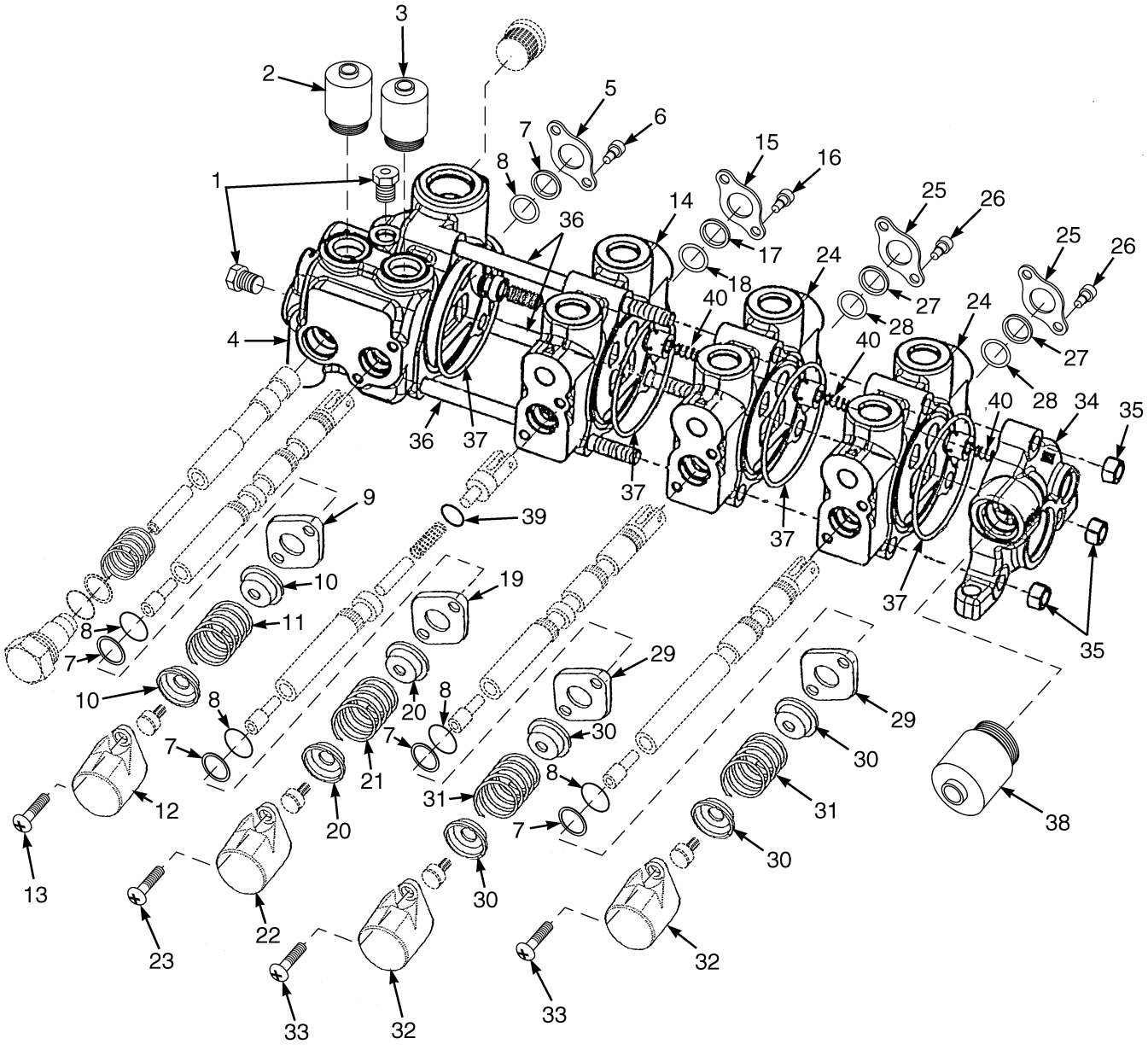

©2009 HYSTER COMPANY

HYDRAULIC CONTROL VALVE

THREE AND FOUR FUNCTION (S/N K005V05722A → EXC. 5753)

KEY:
A: Three Function Valve
B: Four Function Valve

ITEM	PART NO.	DESCRIPTION	QTY A	QTY B
	1543927	Hydraulic Control Valve (Three Function)	1	..
	1543928	Hydraulic Control Valve (Four Function)	..	1
1	14591	Plug	2	2
2	1559975	Relief Valve (Steer Relief)	1	1
3	1559973	Relief Valve (3100 PSI) (Main Relief)	1	1
4	1559969	Valve Section	1	1
5	. . . . .	Seal Plate	1	1
6	. . . . .	Capscrew	2	2
7	. . . . .	Wiper	2	2
8	. . . . .	O-Ring	2	2
9	. . . . .	Seal Plate	1	1
10	. . . . .	Spring Seat	2	2
11	. . . . .	Spring	1	1
12	. . . . .	Cap	1	1
13	. . . . .	Capscrew	2	2
14	1559970	Valve Section	1	1
15	. . . . .	Seal Plate	1	1
16	. . . . .	Capscrew	2	2
17	. . . . .	Wiper	2	2
18	. . . . .	O-Ring	2	2
19	. . . . .	Seal Plate	1	1
20	. . . . .	Spring Seat	2	2
21	. . . . .	Spring	1	1
22	. . . . .	Cap	1	1
23	. . . . .	Capscrew	2	1
24	1559971	Valve Section (Third and Fourth Function)	1	2
25	. . . . .	Seal Plate	1	1
26	. . . . .	Capscrew	2	2
27	. . . . .	Wiper	2	2
28	. . . . .	O-Ring	2	2
29	. . . . .	Seal Plate	1	1
30	. . . . .	Spring Seat	2	2
31	. . . . .	Spring	1	1
32	. . . . .	Cap	1	1
33	. . . . .	Capscrew	2	2
34	1559972	Valve Section	1	1
35	. . . . .	Nut	3	3
36	. . . . .	Tie Rod	3	3
37	1560679	O-Ring	5	5
38	1559974	Relief Valve (Secondary Relief)	1	1
39	16481	O-Ring	1	1
40	205123	Spring	2	3
	1559976	Kit-Tie Rod (Three Function)	1	1
	1559986	Kit-Tie Rod (Four Function)	1	1
	1559977	Kit-Seal (Services up to five sections)	1	1

©2009 HYSTER COMPANY

HYDRAULIC CONTROL VALVE

THREE AND FOUR FUNCTION (S/N K005V05722A → EXC. 5753)

KEY:
A: Three Function Valve
B: Four Function Valve

ITEM	PART NO.	DESCRIPTION	QTY A	QTY B
	1559978	Kit-Spool (Services one section)	1	1

©2009 HYSTER COMPANY

NOTES

©2009 HYSTER COMPANY

HYDRAULIC FILTER HOUSING (FIGURE 9-15)

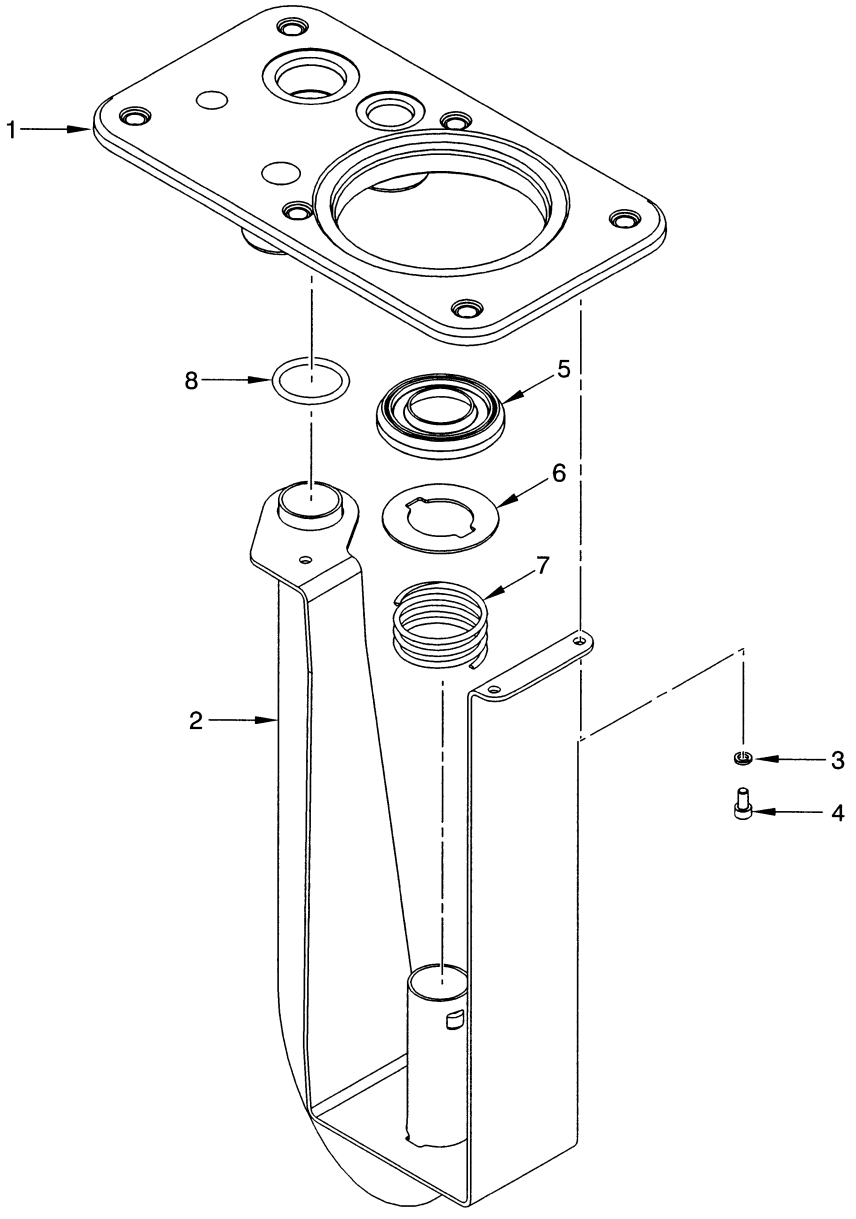

©2009 HYSTER COMPANY

HYDRAULIC FILTER HOUSING

ITEM	PART NO.	DESCRIPTION	QTY
	1397739	Hydraulic Filter	1
1	1397796	Cover	1
2	1397740	Bracket Wldmt (Filter)	1
3	293778	Lockwasher	3
4	293741	Capscrew	3
4	251099	Loctite	AR
5	181941	Seal (Tube)	1
6	190785	Washer	1
7	190784	Spring	1
8	55434	O-Ring	1

©2009 HYSTER COMPANY

MAST INSTALLATION (FIGURE 9-16)

(→ S/N K005V05217A)

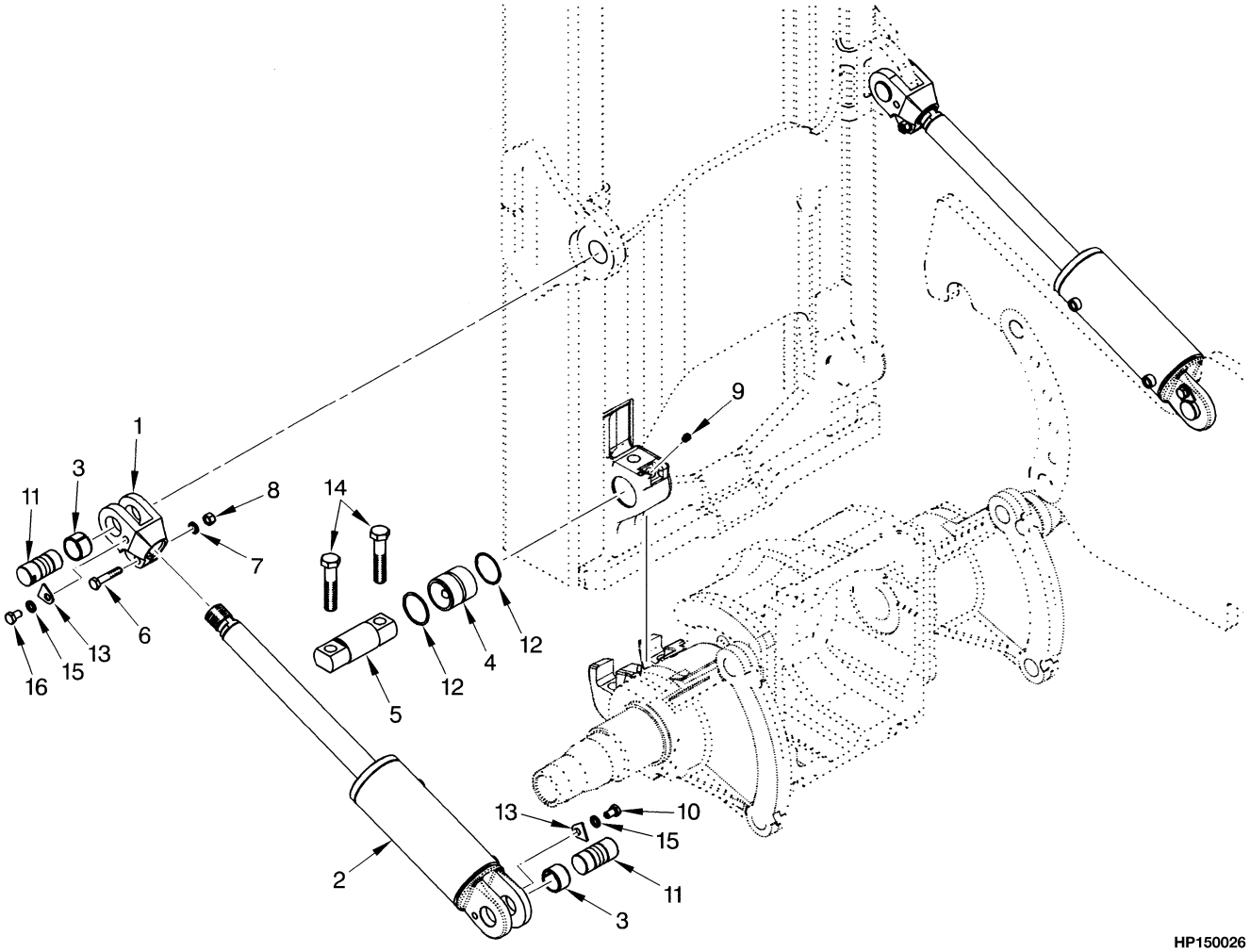

©2009 HYSTER COMPANY

MAST INSTALLATION
(→ S/N K005V05217A)

ITEM	PART NO.	DESCRIPTION	QTY
1	**c** 248462	Rod End	2
1	**a** 352288	Rod End	2
2	**b** 2035312	Tilt Cylinder (☞Figure 9-18)	2
2	**d** 2035314	Tilt Cylinder (☞Figure 9-18)	2
3	192429	Bushing	4
4	1387586	Bushing	2
5	1389839	Pin	2
6	292531	Capscrew	2
7	292683	Lockwasher	4
8	216877	Nut	2
9	16001	Grease Fitting	2
10	292526	Capscrew	2
11	**e** 1394672	Pin	4
11	**f** 1518377	Pin	4
12	1465518	Snap Ring	4
13	**e** 1394688	Retainer	4
13	**f** 1518378	Retainer	4
14	1394689	Capscrew	4
15	15158	Washer	2
16	18585	Capscrew	2

FOOTNOTES:

a 12° Forward/6° Back
b 6° Forward/12° Back, 12° Forward/6° Back
c 6° Forward/12° Back, and 6° Forward/6° Back
d 6° Forward/6° Back
e → S/N K005V03346Z
f S/N K005V03347Z →

©2009 HYSTER COMPANY

MAST INSTALLATION (FIGURE 9-17)

(S/N K005V05218A →)

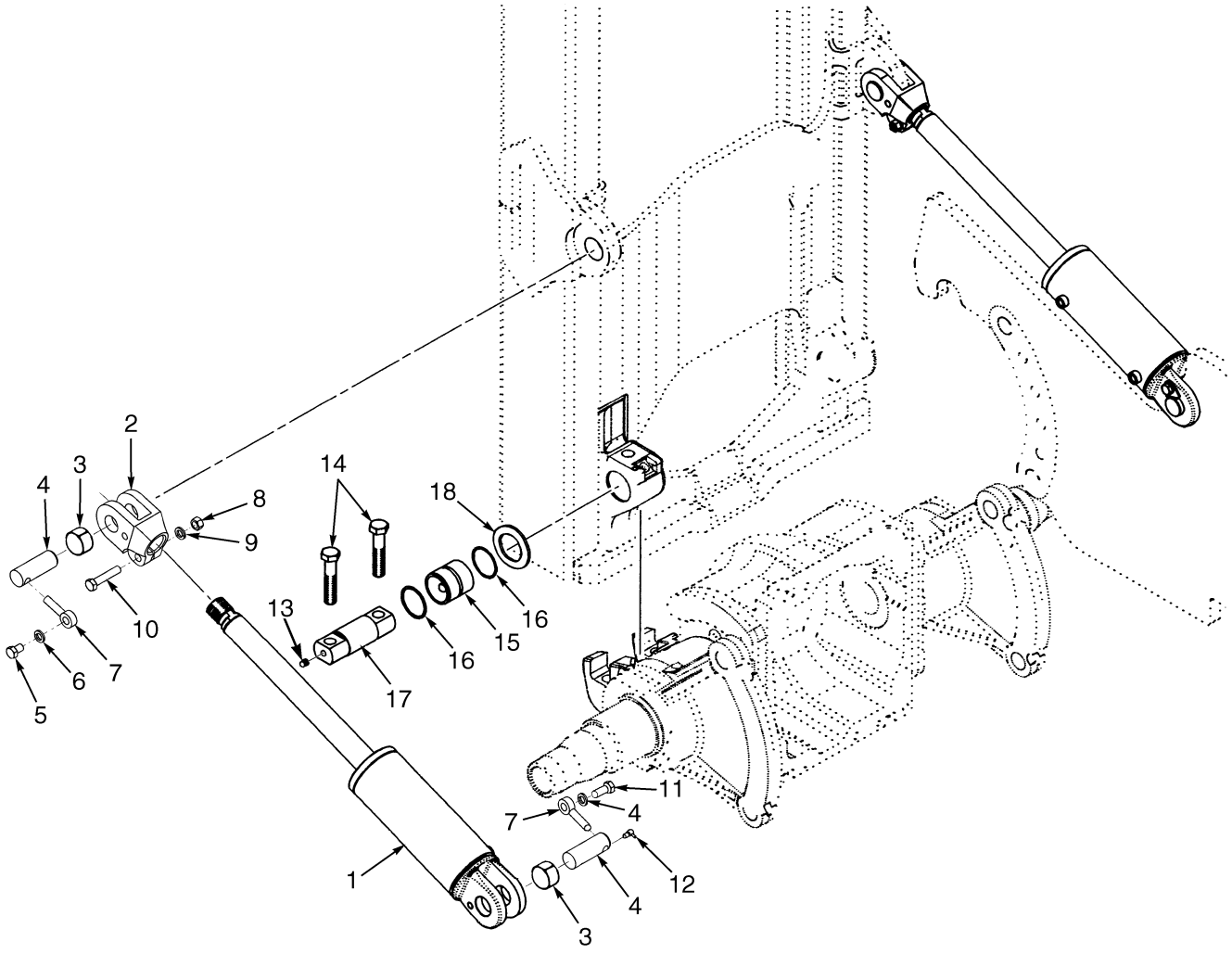

HP150804

©2009 HYSTER COMPANY

MAST INSTALLATION

(S/N K005V05218A →)

ITEM	PART NO.	DESCRIPTION	QTY
1	. . . . .	Tilt Cylinder (☞Figure 9-18)	2
2	248462	Rod End	2
3	192429	Bushing	4
4	1532691	Pin	4
5	16830	Capscrew	2
6	15158	Washer	2
7	241079	Anchor	4
8	216877	Nut	2
9	1581852	Washer	2
10	1581592	Capscrew	2
11	292527	Capscrew	2
12	16001	Grease Fitting	4
13	16015	Grease Fitting	2
14	1646441	Capscrew	4
15	1485449	Bushing	2
16	1465518	Snap Ring	4
17	1485443	Pin	2
18	1502645	Washer	2

©2009 HYSTER COMPANY

TILT CYLINDER (FIGURE 9-18)

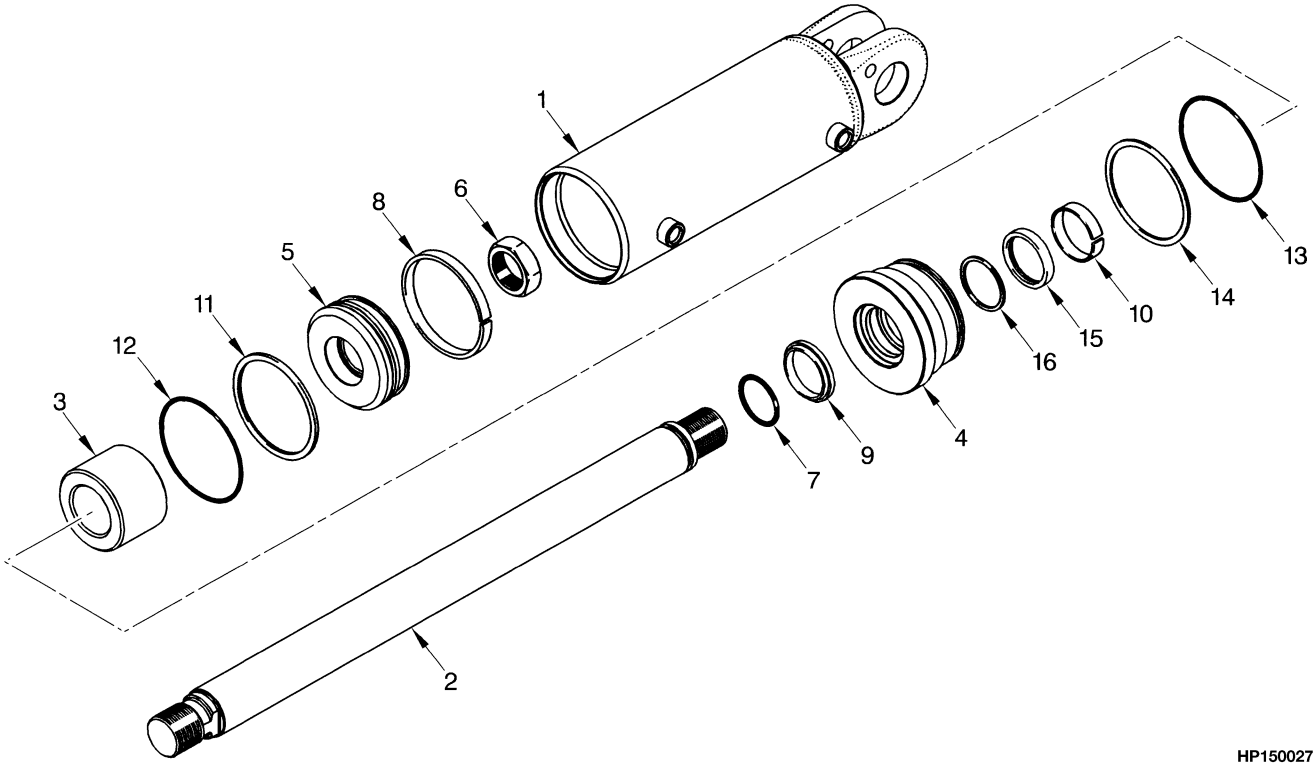

HP150027

ITEM	PART NO.	DESCRIPTION	QTY
	a 2035312	Tilt Cylinder	1
	b 2035314	Tilt Cylinder	1
1	2035315	Tube Wldmt-Cylinder	1
2	**a** 2035316	Cylinder Rod	1
2	**b** 2035318	Cylinder Rod	1
3	**b** 1383031	Spacer	1
4	1380878	Gland	1
5	352247	Piston	1
6	2036547	Locknut	1
7	199917	O-Ring	1
8	193550	Wear Ring	1
9	193554	Rod Wiper	1
10	334155	Wear Ring	1
11	2044373	Piston Seal	1
12	199917	O-Ring	1
13	46629	O-Ring	1
14	270330	Back-Up Ring	1
15	1381085	Rod Seal (Rod)	1
16	638248	Back-Up Ring	1
	1493306	Kit-Seal	1

FOOTNOTES:

a 6° Forward/12° Back, 12° Forward/6° Back

b 6° Forward/6° Back

©2009 HYSTER COMPANY

NOTES

©2009 HYSTER COMPANY

HYDRAULIC PUMP (FIGURE 9-19)
(→ S/N K005D02086)

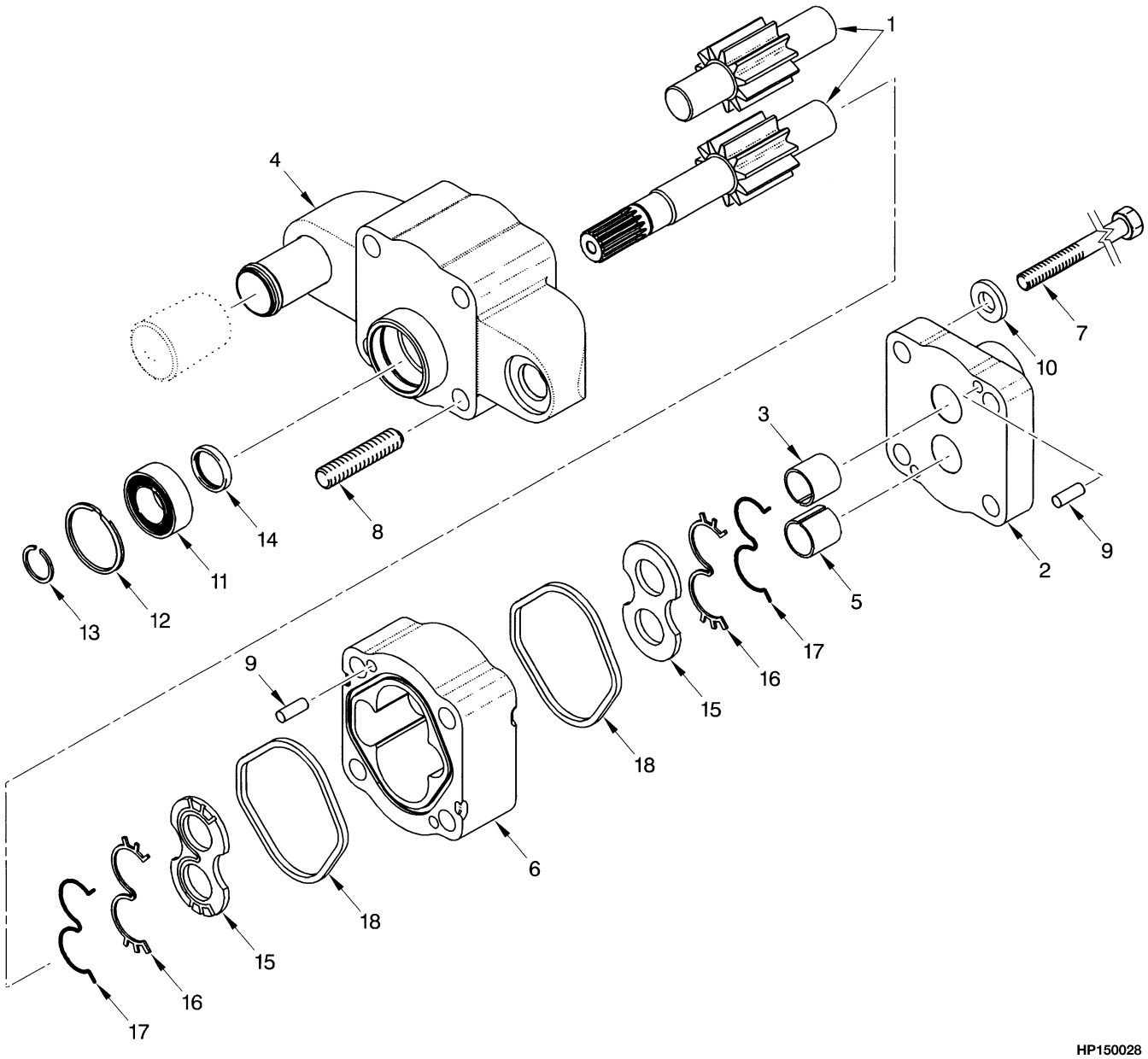

©2009 HYSTER COMPANY

HYDRAULIC PUMP
(→ S/N K005D02086)

KEY:
A: 2100 mm Long Wheel Base (H100-120XM)
B: 1830/1880 mm Short Wheel Base (H70-90XM)

ITEM	PART NO.	DESCRIPTION	QTY A	QTY B
	2035981	Hydraulic Pump	1	..
	2035983	Hydraulic Pump	..	1
1	1466441	Gear Set	1	..
1	1466440	Gear Set	..	1
2	1466442	Cover (Port End)	1	1
3	1360875	Bushing	2	2
4	1466443	Cover (Shaft End)	1	1
5	1360875	Bushing	2	2
6	1466445	Housing	1	..
6	1466444	Housing	..	1
7	1466446	Capscrew	4	4
8	1466447	Stud	4	4
9	1151722	Dowel	4	4
10	176167	Washer	4	4
11	1466396	Bearing	1	1
12	311277	Snap Ring	1	1
13	1466397	Snap Ring	1	1
14	176169	Seal	1	1
15	372111	Thrust Plate	2	2
16	1453776	Seal	2	2
17	1453775	Seal	2	2
18	176173	Seal	2	2
	1466394	Kit-Seal (Outer)	1	1
	1466395	Kit-Seal (Inner)	1	1
	1466398	Kit-Pump Thrust Plate	1	1

©2009 HYSTER COMPANY

HYDRAULIC PUMP (FIGURE 9-20)
(S/N K005D02087 →)

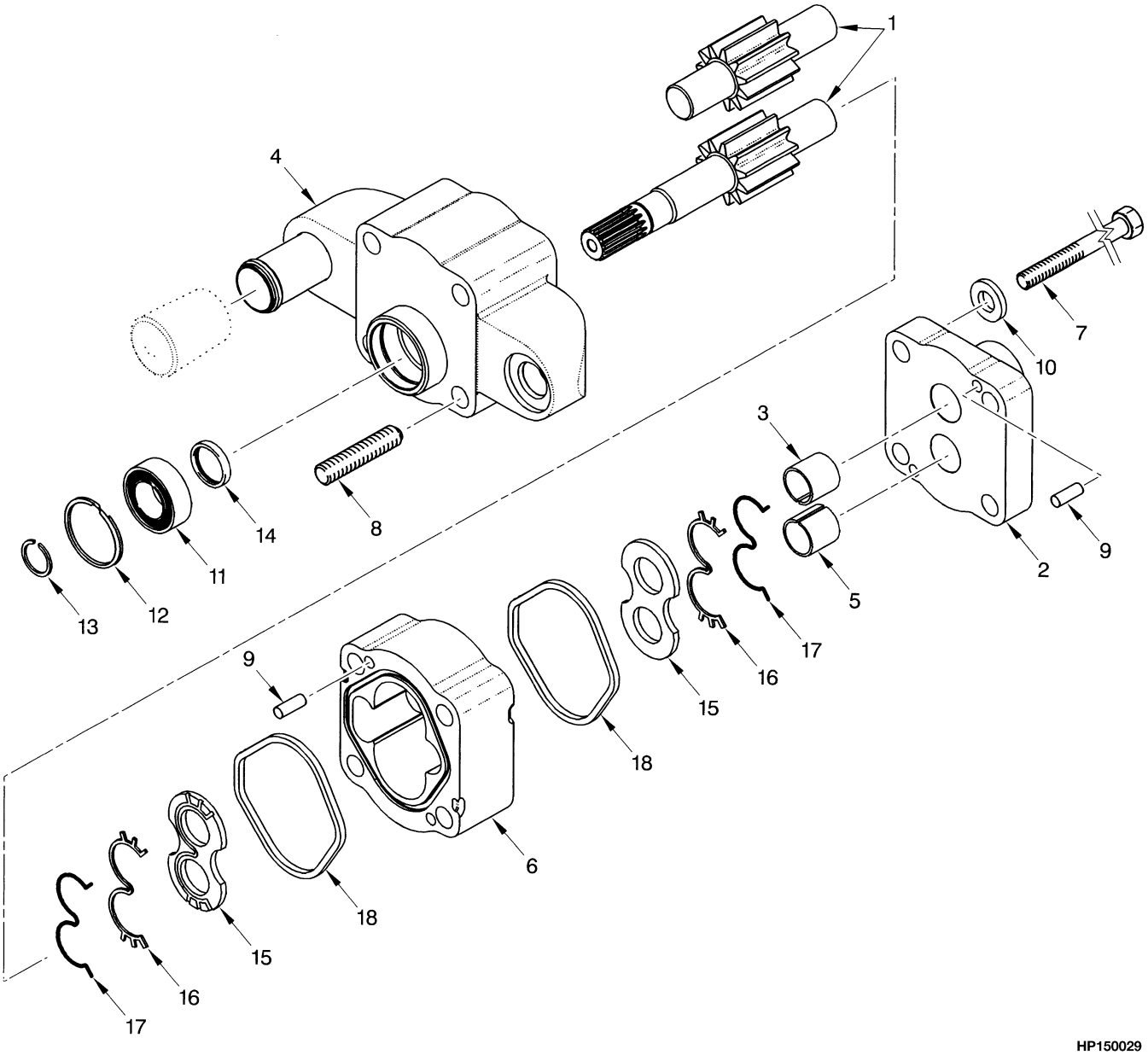

©2009 HYSTER COMPANY

HYDRAULIC PUMP
(S/N K005D02087 →)

KEY:
A: 2100 mm Long Wheel Base (H100-120XM)
B: 1830/1880 mm Short Wheel Base (H70-90XM)

ITEM	PART NO.	DESCRIPTION	QTY A	QTY B
	2038202	Hydraulic Pump	1	..
	2038201	Hydraulic Pump	..	1
1	1468469	Gear Set	1	..
1	1468468	Gear Set	..	1
2	1466442	Cover (Port End)	1	1
3	1360875	Bushing	2	2
4	1466443	Cover (Shaft End)	1	1
5	1360875	Bushing	2	2
6	1466444	Housing	1	..
6	1468578	Housing	..	1
7	1466446	Capscrew	4	4
8	1466447	Stud	4	4
9	1151722	Dowel	4	4
10	176167	Washer	4	4
11	. . . . .	Bearing	1	1
12	311277	Snap Ring	1	1
13	. . . . .	Snap Ring	1	1
14	176169	Seal	1	1
15	. . . . .	Plate	2	2
16	1453776	Seal	2	2
17	1453775	Seal	2	2
18	176173	Seal	2	2
	1466394	Kit-Seal (Outer)	1	1
	1468470	Kit-Seal (Inner)	1	1
	1468576	Kit-Pump Thrust Plate	1	1

©2009 HYSTER COMPANY

NOTES

©2009 HYSTER COMPANY

10 MAST-TWO STAGE LIMITED FREE-LIFT

SECTION 10
MAST-TWO STAGE LIMITED FREE-LIFT

DESCRIPTION	PAGE
CARRIAGE	
TWO STAGE LIMITED FREE-LIFT	10-26
FORK	
POLISHED FORK WITH FULL BOTTOM TAPER HOOK TYPE - TWO STAGE LIMITED FREE-LIFT	10-32
STANDARD TAPER HOOK TYPE (H100-120XM) - TWO STAGE LIMITED FREE-LIFT	10-31
STANDARD TAPER HOOK TYPE (H70-90XM) - TWO STAGE LIMITED FREE-LIFT	10-30
HEADER HOSE	
TWO STAGE LIMITED FREE-LIFT (→ S/N A749L03337) (→ S/N A750L02645)	10-18
TWO STAGE LIMITED FREE-LIFT (S/N A749L03338 → EXC. 6018) (S/N A750L02646 →)	10-22
INNER MAST	
TWO STAGE LIMITED FREE-LIFT	10-6
LOAD BACKREST EXTENSION	
TWO STAGE LIMITED FREE-LIFT	10-28
MAIN CYLINDER	
TWO STAGE LIMITED FREE-LIFT	10-14
MAIN LIFT	
TWO STAGE LIMITED FREE-LIFT	10-10
OUTER MAST	
TWO STAGE LIMITED FREE-LIFT	10-2

©2009 HYSTER COMPANY

OUTER MAST (FIGURE 10-1)
TWO STAGE LIMITED FREE-LIFT

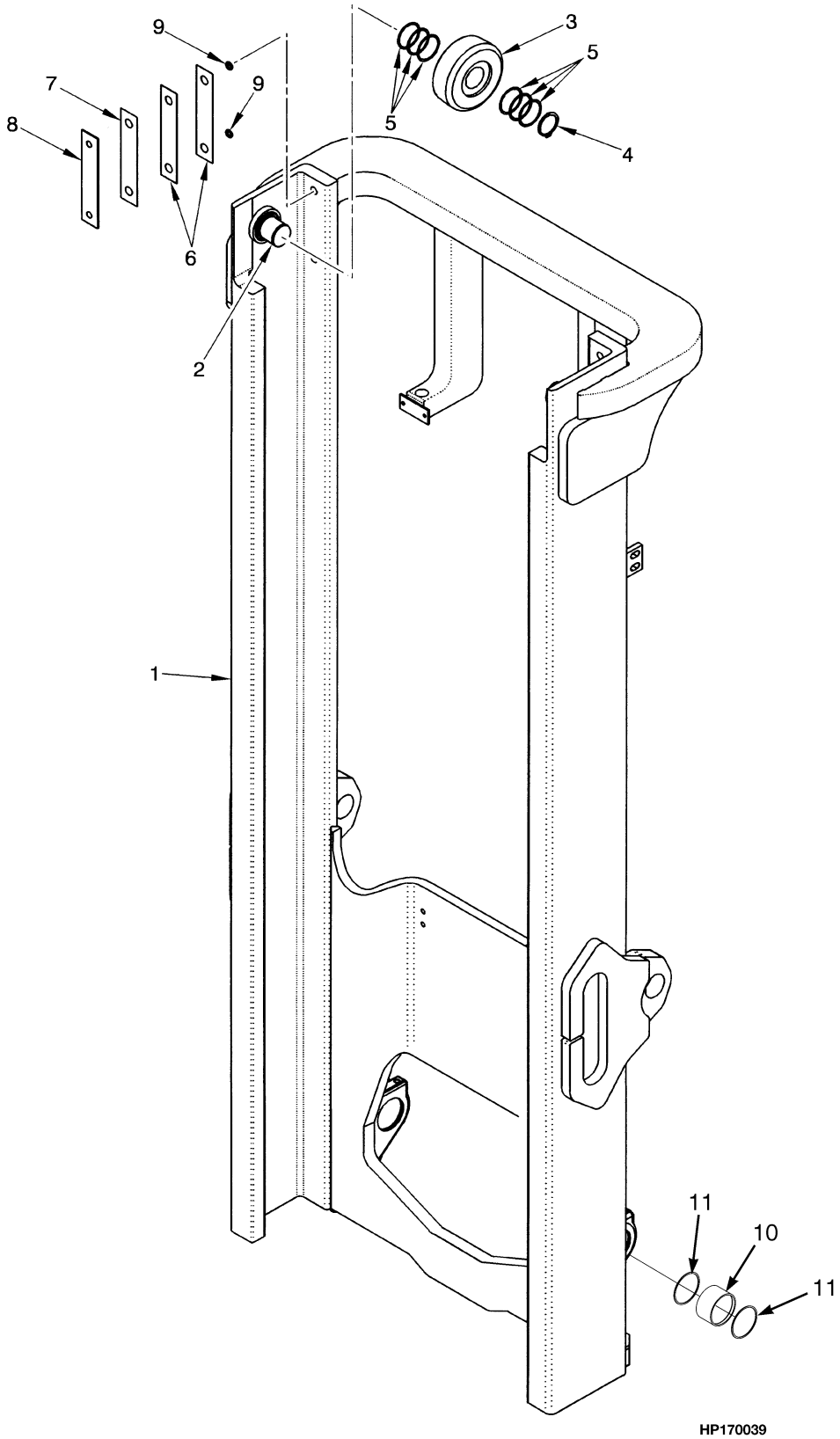

©2009 HYSTER COMPANY

OUTER MAST
TWO STAGE LIMITED FREE-LIFT

A749

ITEM	DESCRIPTION 1 2 3 4	LIFT HEIGHT TO BOTTOM OF FORKS			
		3050 mm (120.1 in.)	3650 mm (143.7 in.)	4250 mm (167.3 in.)	4950 mm (194.9 in.)
	Mast Group Number	A749 3050	A749 3650	A749 4250	A749 4950
	Mast Assy	2036050	2036051	2036052	2036054
1	Outer Mast	1395342	1395348	1395354	1395361

A749

ITEM	DESCRIPTION 1 2 3 4	LIFT HEIGHT TO BOTTOM OF FORKS	
		5550 mm (218.5 in.)	6150 mm (242.1 in.)
	Mast Group Number	A749 5550	A749 6150
	Mast Assy	2036055	2036056
1	Outer Mast	1395367	1395373

A750

ITEM	DESCRIPTION 1 2 3 4	LIFT HEIGHT TO BOTTOM OF FORKS			
		2790 mm (109.8 in.)	3390 mm (133.5 in.)	3990 mm (157.1 in.)	4690 mm (184.6 in.)
	Mast Group Number	A750 2790	A750 3390	A750 3990	A750 4690
	Mast Assy	2036057	2036058	2036059	2036061
1	Outer Mast	1395342	1395348	1395354	1395361

A750

ITEM	DESCRIPTION 1 2 3 4	LIFT HEIGHT TO BOTTOM OF FORKS	
		5290 mm (208.3 in.)	5890 mm (231.9 in.)
	Mast Group Number	A750 5290	A750 5890
	Mast Assy	2036062	2036063
1	Outer Mast	1395367	1395373

KEY:
A: H70-90XM
B: H100-120XM

ITEM	PART NO.	DESCRIPTION	QTY A	QTY B
	b	Mast Assy	1	1

©2009 HYSTER COMPANY

OUTER MAST
TWO STAGE LIMITED FREE-LIFT

KEY:
A: H70-90XM
B: H100-120XM

ITEM	PART NO.	DESCRIPTION	QTY A	QTY B
1	**b**	Outer Mast	1	1
2	1500744	Stubshaft	2	2
3	**a** 1399203	Load Roller (123.55 mm) ("A")	2	2
3	**a** 1399204	Load Roller 5 in. ("B") (0,76 mm)	2	2
3	**a** 1399205	Load Roller (125.07 mm) ("C") (1,52 mm)	2	2
4	1465072	Snap Ring	2	2
5	126765	Shim	12	12
6	161273	Shim (0.020 in.)	AR	AR
7	161272	Shim (0.007 in.)	AR	AR
8	104264	Wear Strip	2	2
9	104506	O-Ring	4	4
10	1485449	Bushing	2	2
11	1465518	Snap Ring	4	4

FOOTNOTES:

a Letter Located on Inside Surface of Load Roller

b Refer to Table

©2009 HYSTER COMPANY

NOTES

©2009 HYSTER COMPANY

INNER MAST (FIGURE 10-2)
TWO STAGE LIMITED FREE-LIFT

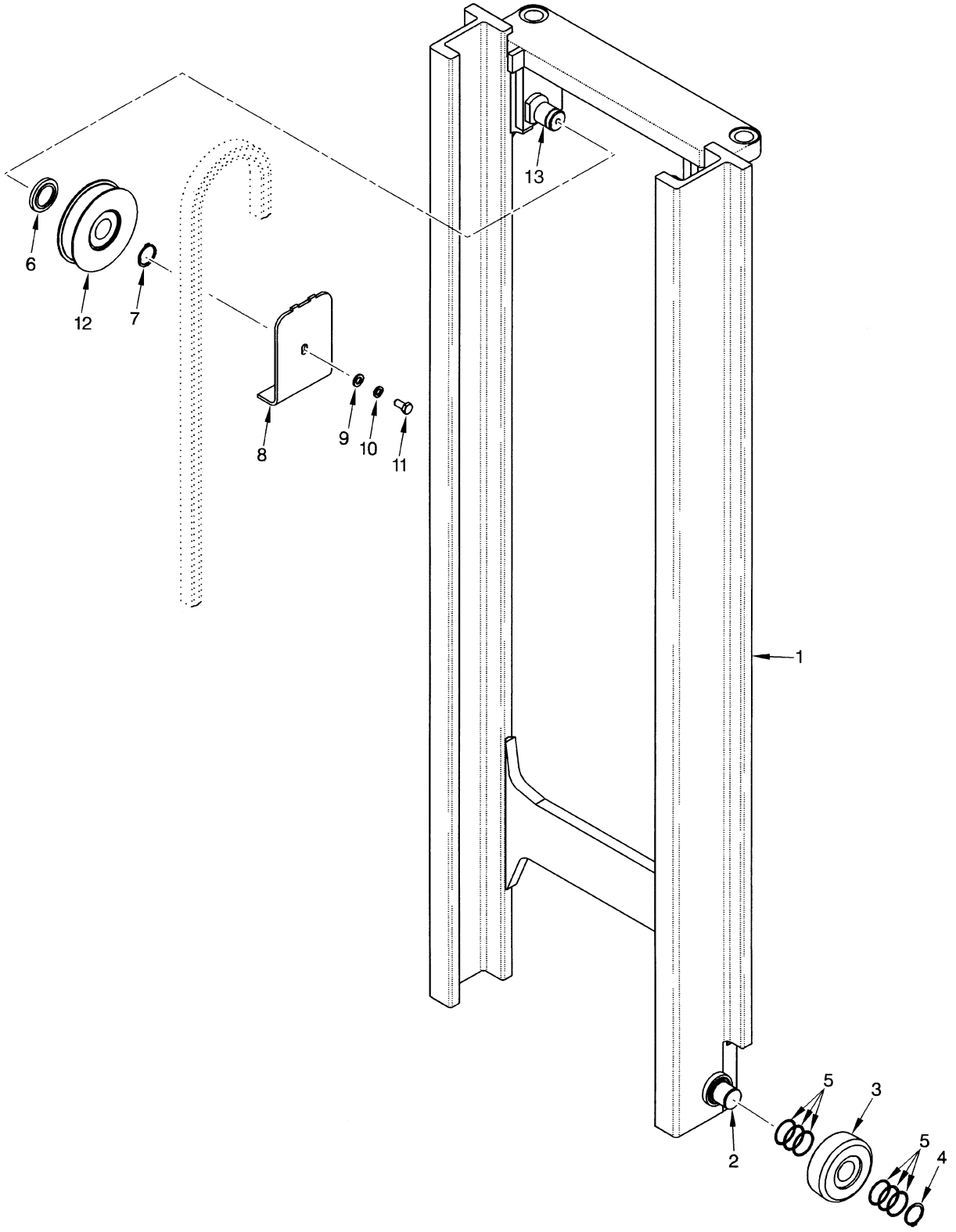

HP170040

©2009 HYSTER COMPANY

INNER MAST
TWO STAGE LIMITED FREE-LIFT

A749

ITEM	DESCRIPTION 1 2 3 4	LIFT HEIGHT TO BOTTOM OF FORKS			
		3050 mm (120.1 in.)	3650 mm (143.7 in.)	4250 mm (167.3 in.)	4950 mm (194.9 in.)
	Mast Group Number	A749 3050	A749 3650	A749 4250	A749 4950
	Mast Assy	2036050	2036051	2036052	2036054
1	Inner Mast	1395384	1395390	1395396	1395403

A749

ITEM	DESCRIPTION 1 2 3 4	LIFT HEIGHT TO BOTTOM OF FORKS	
		5550 mm (218.5 in.)	6150 mm (242.1 in.)
	Mast Group Number	A749 5550	A749 6150
	Mast Assy	2036055	2036056
1	Inner Mast	1395409	1395415

A750

ITEM	DESCRIPTION 1 2 3 4	LIFT HEIGHT TO BOTTOM OF FORKS			
		2790 mm (109.8 in.)	3390 mm (133.5 in.)	3990 mm (157.1 in.)	4690 mm (184.6 in.)
	Mast Group Number	A750 2790	A750 3390	A750 3990	A750 4690
	Mast Assy	2036057	2036058	2036059	2036061
1	Inner Mast	1395384	1395390	1395396	1395403

A750

ITEM	DESCRIPTION 1 2 3 4	LIFT HEIGHT TO BOTTOM OF FORKS	
		5290 mm (208.3 in.)	5890 mm (231.9 in.)
	Mast Group Number	A750 5290	A750 5890
	Mast Assy	2036062	2036063
1	Inner Mast	1395409	1395415

KEY:
A: H70-90XM
B: H100-120XM

ITEM	PART NO.	DESCRIPTION	QTY A	QTY B
	b	Mast Assy	1	1

©2009 HYSTER COMPANY

INNER MAST
TWO STAGE LIMITED FREE-LIFT

KEY:
A: H70-90XM
B: H100-120XM

ITEM	PART NO.	DESCRIPTION	QTY A	QTY B
1	**b**	Inner Mast	1	1
2	1500744	Stubshaft	2	2
3	**a** 1399203	Load Roller (123.55 mm) ("A")	2	2
3	**a** 1399204	Load Roller 5 in. ("B") (0,76 mm)	2	2
3	**a** 1399205	Load Roller (125.07 mm) ("C") (1,52 mm)	2	2
4	1465072	Snap Ring	2	2
5	126765	Shim	12	12
6	1389846	Spacer	2	2
7	12891	Snap Ring	2	2
8	1389959	Bracket	2	2
9	320161	Washer	2	2
10	292683	Lockwasher	2	2
11	132860	Capscrew	2	2
12	1387745	Chain Sheave	2	..
12	1387744	Chain Sheave	..	2
13	1389932	Stubshaft	2	2

FOOTNOTES:

a Letter Located on Inside Surface of Load Roller

b Refer to Table

©2009 HYSTER COMPANY

NOTES

©2009 HYSTER COMPANY

MAIN LIFT (FIGURE 10-3)
TWO STAGE LIMITED FREE-LIFT

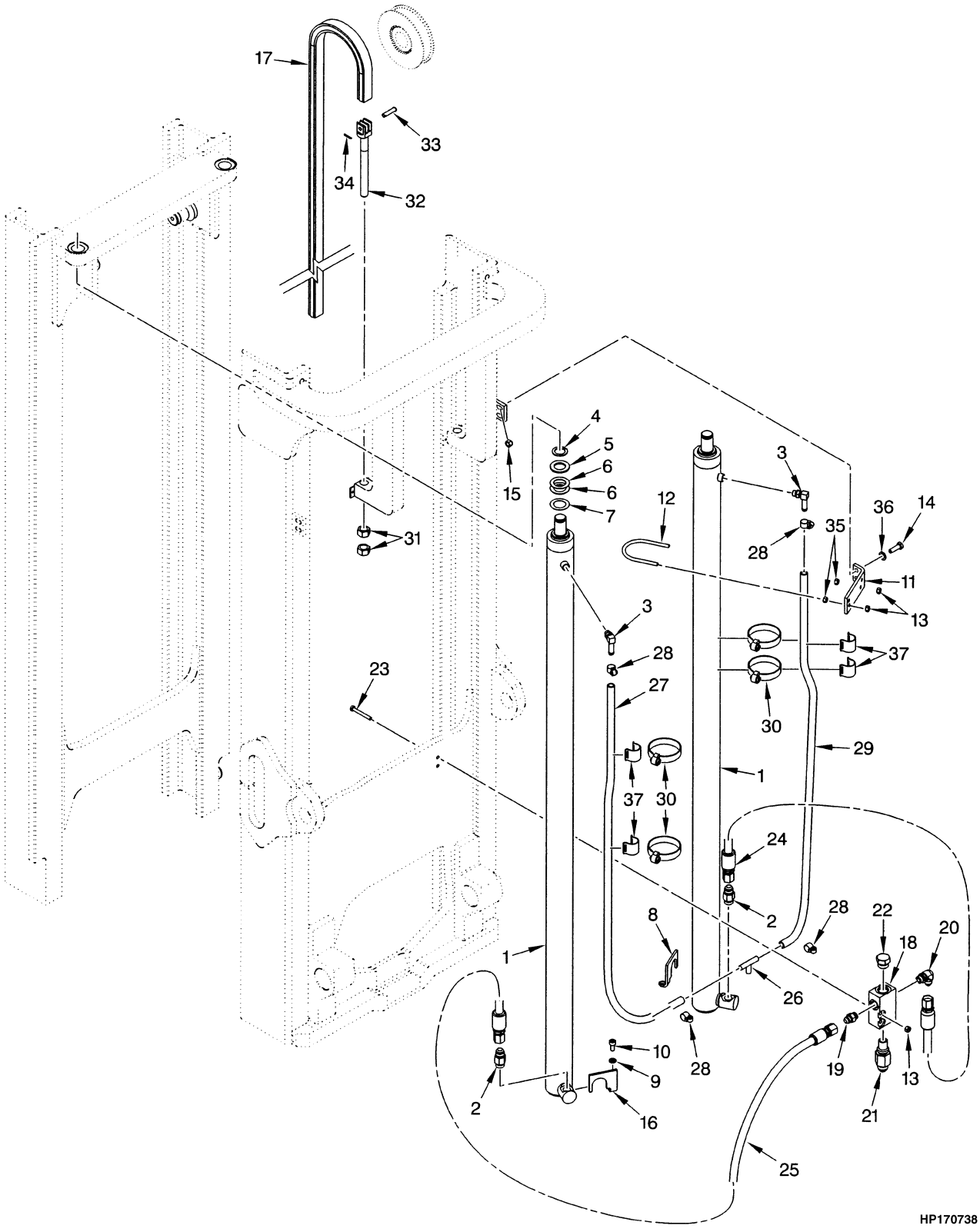

©2009 HYSTER COMPANY

MAIN LIFT
TWO STAGE LIMITED FREE-LIFT

A749

ITEM	DESCRIPTION 1 2 3 4	LIFT HEIGHT TO BOTTOM OF FORKS			
		3050 mm (120.1 in.)	3650 mm (143.7 in.)	4250 mm (167.3 in.)	4950 mm (194.9 in.)
	Mast Group Number	A749 3050	A749 3650	A749 4250	A749 4950
	Mast Assy	2036050	2036051	2036052	2036054
17	Chain	182342	191072	191076	291256
27	Hose Assy (LH)	1399086	1399098	1399110	1399128
29	Hose Assy (RH)	1474605	1399086	1399098	1399116

A749

ITEM	DESCRIPTION 1 2 3 4	LIFT HEIGHT TO BOTTOM OF FORKS	
		5550 mm (218.5 in.)	6150 mm (242.1 in.)
	Mast Group Number	A749 5550	A749 6150
	Mast Assy	2036055	2036056
17	Chain	1395450	304303
27	Hose Assy (LH)	1399144	1399160
29	Hose Assy (RH)	1399132	1399148

A750

ITEM	DESCRIPTION 1 2 3 4	LIFT HEIGHT TO BOTTOM OF FORKS			
		2790 mm (109.8 in.)	3390 mm (133.5 in.)	3990 mm (157.1 in.)	4690 mm (184.6 in.)
	Mast Group Number	A750 2790	A750 3390	A750 3990	A750 4690
	Mast Assy	2036057	2036058	2036059	2036061
17	Chain	338647	348149	356917	357025
27	Hose Assy (LH)	1399081	1399093	1399105	1399123
29	Hose Assy (RH)	1486838	1399081	1399093	1399111

©2009 HYSTER COMPANY

MAIN LIFT
TWO STAGE LIMITED FREE-LIFT

A750

ITEM	DESCRIPTION 1 2 3 4	LIFT HEIGHT TO BOTTOM OF FORKS	
		5290 mm (208.3 in.)	5890 mm (231.9 in.)
	Mast Group Number	A750 5290	A750 5890
	Mast Assy	2036062	2036063
17	Chain	1395492	1395499
27	Hose Assy (LH)	1399139	1399155
29	Hose Assy (RH)	1399127	1399143

KEY:
A: H70-90XM
B: H100-120XM

ITEM	PART NO.	DESCRIPTION	QTY A	QTY B
	c	Mast Assy	1	1
1	. . . . .	Main Cylinder (☞Figure 10-4)	2	2
2	2035787	Hyd Velocity Fuse	2	..
2	2036856	Hyd Velocity Fuse	..	2
3	110178	Fitting	2	2
3	16483	O-Ring	1	1
4	304523	Snap Ring	2	2
5	332061	Washer	2	2
6	142247	Shim	AR	AR
7	1325120	Shim	AR	AR
8	1389923	Bracket (RH)	1	1
9	292682	Lockwasher	2	2
10	296024	Capscrew	2	2
11	1474399	Bracket Wldmt	2	2
12	**b** 1389844	Clamp	2	..
12	**a** 1389845	Clamp	2	..
12	1389845	Clamp	..	2
13	313828	Nut	10	10
14	287860	Capscrew	4	4
15	316826	Nut	4	4
16	1389921	Bracket (LH)	1	1
17	**c**	Chain	2	2
18	1388019	Housing	1	1
19	16541	Fitting	1	1
19	16484	O-Ring	1	1
20	16559	Fitting	1	1
20	16484	O-Ring	1	1
21	315262	Lowering Control Valve	1	..
21	319891	Lowering Control Valve	..	1
22	14603	Plug	1	1
22	16486	O-Ring	1	1

©2009 HYSTER COMPANY

MAIN LIFT
TWO STAGE LIMITED FREE-LIFT

KEY:
A: H70-90XM
B: H100-120XM

ITEM	PART NO.	DESCRIPTION	QTY A	QTY B
23	292511	Capscrew	2	2
24	1387324	Hose Assy	1	1
25	1387399	Hose Assy	1	1
26	1399248	Fitting	1	1
27	**c**	Hose Assy (LH)	1	1
28	379405	Clamp	4	4
29	**c**	Hose Assy (RH)	1	1
30	112989	Hose Clamp	4	..
30	115696	Hose Clamp	..	4
31	221717	Nut	4	4
32	1331990	Chain Anchor	2	..
32	1331991	Chain Anchor	..	2
33	327591	Pin (Anchor)	2	..
33	339932	Pin (Anchor)	..	2
34	15222	Cotter Pin	2	2
35	239503	Nut	4	4
36	320160	Washer	4	4
37	1465585	Hose Clamp	4	4

FOOTNOTES:

a Lift Height → 6150 mm
b Lift Height 6150 mm →
c Refer to Table

©2009 HYSTER COMPANY

MAIN CYLINDER (FIGURE 10-4)
TWO STAGE LIMITED FREE-LIFT

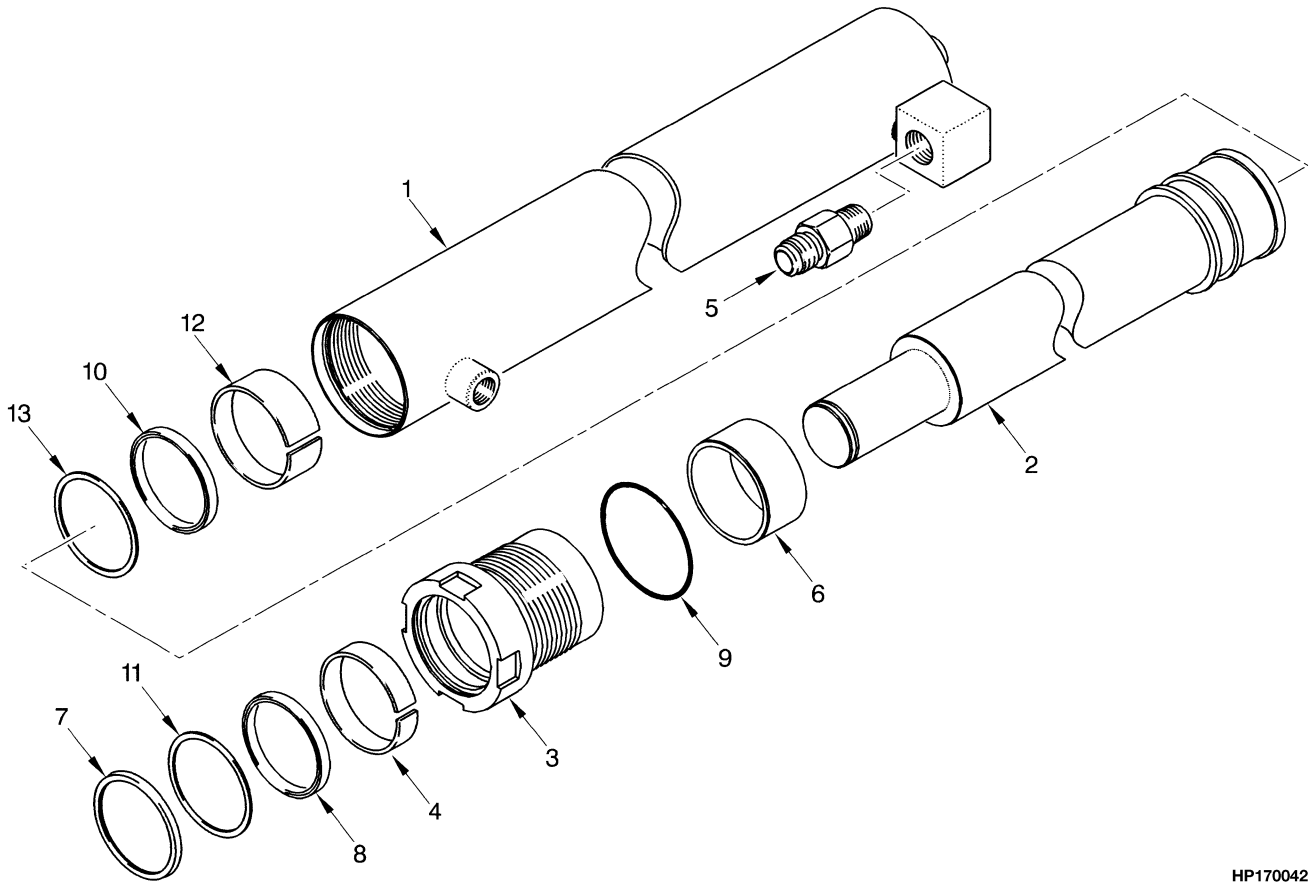

©2009 HYSTER COMPANY

MAIN CYLINDER
TWO STAGE LIMITED FREE-LIFT

A749

ITEM	DESCRIPTION 1 2 3 4	LIFT HEIGHT TO BOTTOM OF FORKS			
		3050 mm (120.1 in.)	3650 mm (143.7 in.)	4250 mm (167.3 in.)	4950 mm (194.9 in.)
	Mast Group Number	**A749 3050**	**A749 3650**	**A749 4250**	**A749 4950**
	Cylinder Group Number	**8604051**	**8604057**	**8604063**	**8604070**
	Cylinder Assy	2035804	2035805	2035806	2035808
1	Tube Wldmt-Cylinder	2036181	2036182	2036183	2036185
2	Cylinder Rod	2036195	2036196	2036197	2036199
6	Spacer	----	----	----	367139

A749

ITEM	DESCRIPTION 1 2 3 4	LIFT HEIGHT TO BOTTOM OF FORKS	
		5550 mm (218.5 in.)	6150 mm (242.1 in.)
	Mast Group Number	**A749 5550**	**A749 6150**
	Cylinder Group Number	**8604076**	**8604022**
	Cylinder Assy	2035809	2035810
1	Tube Wldmt-Cylinder	2036186	2036194
2	Cylinder Rod	2036200	2036207
6	Spacer	367140	2036211

A750

ITEM	DESCRIPTION 1 2 3 4	LIFT HEIGHT TO BOTTOM OF FORKS			
		2790 mm (109.8 in.)	3390 mm (133.5 in.)	3990 mm (157.1 in.)	4690 mm (184.6 in.)
	Mast Group Number	**A750 2790**	**A750 3390**	**A750 3990**	**A750 4690**
	Cylinder Group Number	**8603801**	**8603807**	**8603813**	**8603820**
	Cylinder Assy	2035811	2035812	2035813	2035815
1	Tube Wldmt-Cylinder	2036187	2036188	2036189	2036191
2	Cylinder Rod	2036201	2036202	2036203	2036205
6	Spacer	----	----	----	2036209

©2009 HYSTER COMPANY

MAIN CYLINDER
TWO STAGE LIMITED FREE-LIFT

A750

ITEM	DESCRIPTION 1 2 3 4	LIFT HEIGHT TO BOTTOM OF FORKS	
		5290 mm (208.3 in.)	5890 mm (231.9 in.)
	Mast Group Number	A750 5290	A750 5890
	Cylinder Group Number	8603826	8603853
	Cylinder Assy	2035816	2035817
1	Tube Wldmt-Cylinder	2036192	2036193
2	Cylinder Rod	2036206	2036208
6	Spacer	2036210	381110

ITEM	PART NO.	DESCRIPTION	QTY
	c	Cylinder Assy	..
1	**c**	Tube Wldmt-Cylinder	..
2	**c**	Cylinder Rod	..
3	**a** 2033243	Gland	..
3	**b** 2033281	Gland	..
3	**a** 2033281	Gland	..
3	**b** 2033299	Gland	..
4	**a** 215425	Wear Ring	..
4	**b** 297532	Wear Ring	..
4	**a** 297532	Wear Ring	..
4	**b** 215301	Wear Ring	..
5	2035787	Hyd Velocity Fuse	..
5	2036856	Hyd Velocity Fuse	..
6	**c**	Spacer	..
7	**a** 1383066	Rod Wiper	..
7	**b** 1383067	Rod Wiper	..
7	**a** 1383067	Rod Wiper	..
7	**b** 1383068	Rod Wiper	..
8	**a** 270077	Rod Seal	..
8	**b** 327807	Rod Seal	..
8	**a** 327807	Rod Seal	..
8	**b** 201829	Rod Seal	..
9	**a** 57664	O-Ring	..
9	**b** 15879	O-Ring	..
9	15879	O-Ring	..
10	**a** 1381061	Rod Seal	..
10	**b** 1381062	Rod Seal	..
10	1381062	Rod Seal	..
11	**a** 638249	Back-Up Ring	..
11	**b** 327808	Back-Up Ring	..
11	**a** 327808	Back-Up Ring	..
11	**b** 638250	Back-Up Ring	..

©2009 HYSTER COMPANY

MAIN CYLINDER
TWO STAGE LIMITED FREE-LIFT

ITEM	PART NO.	DESCRIPTION	QTY
12	**a** 297532	Wear Ring	..
12	**b** 351531	Wear Ring	..
12	351531	Wear Ring	..
13	**a** 638249	Back-Up Ring	..
13	**b** 351532	Back-Up Ring	..
13	351532	Back-Up Ring	..
	2035784	Kit-Seal (Class III up to 5550 mm)	..
	2035785	Kit-Seal (Class III 5550 mm and up, Class IV up to 5550 mm)	..
	2035786	Kit-Seal (Class IV 5550 mm and up)	..

FOOTNOTES:

a Lift Height → 5550 mm
b Lift Height 5550 mm →
c Refer to Table

©2009 HYSTER COMPANY

HEADER HOSE (FIGURE 10-5)

TWO STAGE LIMITED FREE-LIFT (→ S/N A749L03337) (→ S/N A750L02645)

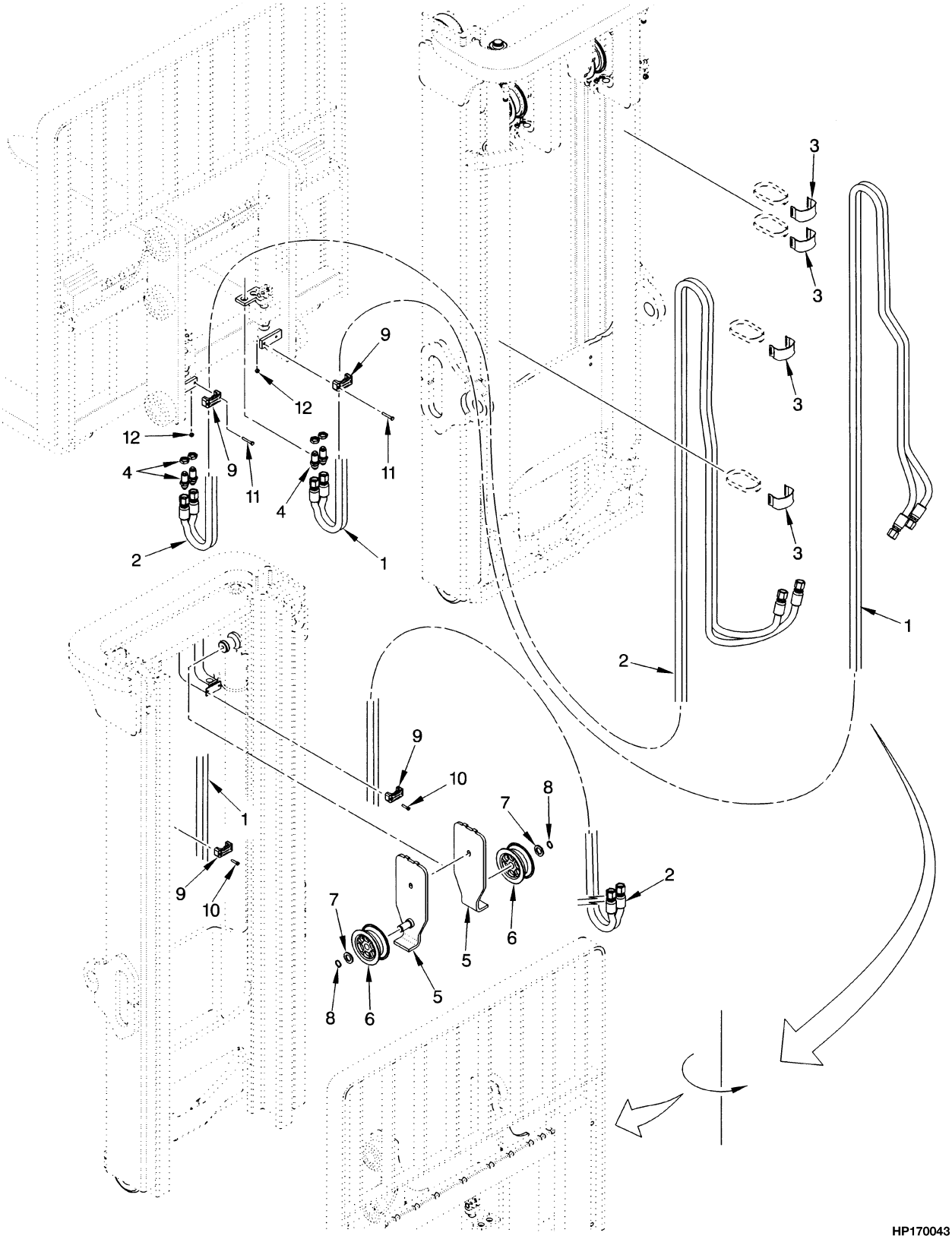

©2009 HYSTER COMPANY

HEADER HOSE

TWO STAGE LIMITED FREE-LIFT (→ S/N A749L03337) (→ S/N A750L02645)

A749

ITEM	DESCRIPTION 1 2 3 4	LIFT HEIGHT TO BOTTOM OF FORKS			
		3050 mm (120.1 in.)	3650 mm (143.7 in.)	4250 mm (167.3 in.)	4950 mm (194.9 in.)
	Mast Group Number	A749 3050	A749 3650	A749 4250	A749 4950
	Mast Assy	2036050	2036051	2036052	2036054
1	Hose Assy	1399551	1399559	1399565	1399576
2	Hose Assy	1399702	1399703	1399704	1399705

A749

ITEM	DESCRIPTION 1 2 3 4	LIFT HEIGHT TO BOTTOM OF FORKS	
		5550 mm (218.5 in.)	6150 mm (242.1 in.)
	Mast Group Number	A749 5550	A749 6150
	Mast Assy	2036055	2036056
1	Hose Assy	1399593	1399609
2	Hose Assy	1399706	1399707

A750

ITEM	DESCRIPTION 1 2 3 4	LIFT HEIGHT TO BOTTOM OF FORKS			
		2790 mm (109.8 in.)	3390 mm (133.5 in.)	3990 mm (157.1 in.)	4690 mm (184.6 in.)
	Mast Group Number	A750 2790	A750 3390	A750 3990	A750 4690
	Mast Assy	2036057	2036058	2036059	2036061
1	Hose Assy	1399551	1399559	1399565	1399576
2	Hose Assy	1399702	1399703	1399704	1399705

A750

ITEM	DESCRIPTION 1 2 3 4	LIFT HEIGHT TO BOTTOM OF FORKS	
		5290 mm (208.3 in.)	5890 mm (231.9 in.)
	Mast Group Number	A750 5290	A750 5890
	Mast Assy	2036062	2036063
1	Hose Assy	1399593	1399609
2	Hose Assy	1399706	1399707

©2009 HYSTER COMPANY

HEADER HOSE

TWO STAGE LIMITED FREE-LIFT (→ S/N A749L03337) (→ S/N A750L02645)

KEY:
A: Three Function
B: Four Function

ITEM	PART NO.	DESCRIPTION	QTY A	QTY B
	a	Mast Assy	1	1
1	**a**	Hose Assy	1	1
2	**a**	Hose Assy	..	1
3	1465489	Hose Clamp	4	8
4	16448	Fitting	2	4
5	1389961	Bracket Wldmt	1	2
6	1332705	Hose Sheave	1	2
7	320171	Washer	1	2
8	58902	Snap Ring	1	2
9	2035791	Hose Clamp	2	4
10	293797	Capscrew	2	4
11	287844	Capscrew	2	4
12	313805	Nut	2	4

FOOTNOTES:

a Refer to Table

©2009 HYSTER COMPANY

NOTES

©2009 HYSTER COMPANY

HEADER HOSE (FIGURE 10-6)

TWO STAGE LIMITED FREE-LIFT (S/N A749L03338 → EXC. 6018) (S/N A750L02646 →)

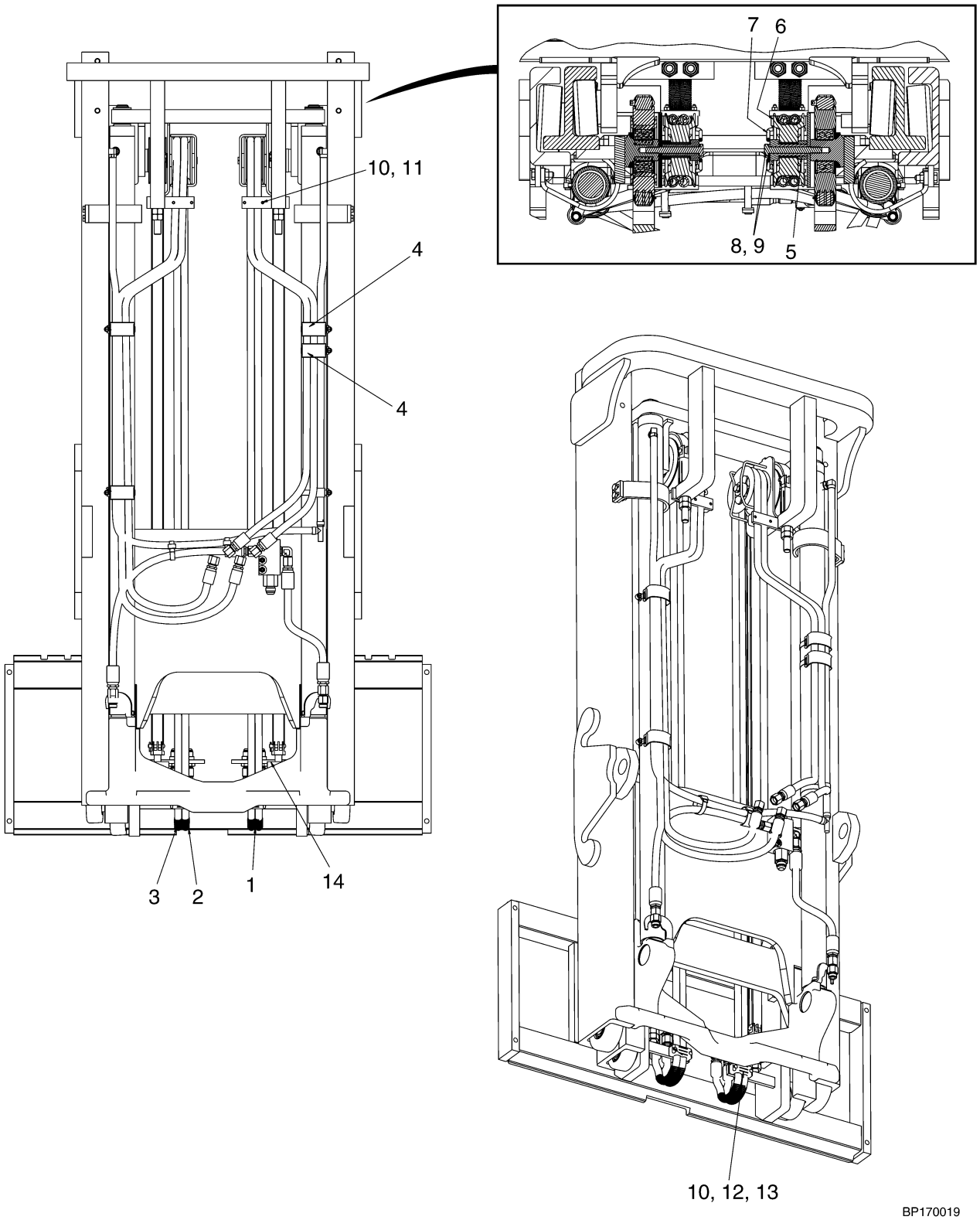

©2009 HYSTER COMPANY

HEADER HOSE

TWO STAGE LIMITED FREE-LIFT (S/N A749L03338 → EXC. 6018) (S/N A750L02646 →)

A749

ITEM	DESCRIPTION 1 2 3 4	LIFT HEIGHT TO BOTTOM OF FORKS			
		3050 mm (120.1 in.)	3650 mm (143.7 in.)	4250 mm (167.3 in.)	4950 mm (194.9 in.)
	Mast Group Number	A749 3050	A749 3650	A749 4250	A749 4950
	Mast Assy	2036050	2036051	2036052	2036054
1	Hose Assy	1506889	1506895	1506901	1506908
2	Hose Assy (RH)	1506932	1506937	1506943	1506950
3	Hose Assy (LH)	1506894	1506900	1506906	1506913

A749

ITEM	DESCRIPTION 1 2 3 4	LIFT HEIGHT TO BOTTOM OF FORKS	
		5550 mm (218.5 in.)	6150 mm (242.1 in.)
	Mast Group Number	A749 5550	A749 6150
	Mast Assy	2036055	2036056
1	Hose Assy	1506914	1506920
2	Hose Assy (RH)	1506956	1506962
3	Hose Assy (LH)	1506919	1506925

A750

ITEM	DESCRIPTION 1 2 3 4	LIFT HEIGHT TO BOTTOM OF FORKS			
		2790 mm (109.8 in.)	3390 mm (133.5 in.)	3990 mm (157.1 in.)	4690 mm (184.6 in.)
	Mast Group Number	A750 2790	A750 3390	A750 3990	A750 4690
	Mast Assy	2036057	2036058	2036059	2036061
1	Hose Assy	1506889	1506895	1506901	1506908
2	Hose Assy (RH)	1506932	1506937	1506943	1506950
3	Hose Assy (LH)	1506894	1506900	1506906	1506913

©2009 HYSTER COMPANY

HEADER HOSE

TWO STAGE LIMITED FREE-LIFT (S/N A749L03338 → EXC. 6018) (S/N A750L02646 →)

A750

ITEM	DESCRIPTION 1 2 3 4	LIFT HEIGHT TO BOTTOM OF FORKS	
		5290 mm (208.3 in.)	5890 mm (231.9 in.)
	Mast Group Number	A750 5290	A750 5890
	Mast Assy	2036062	2036063
1	Hose Assy	1506914	1506920
2	Hose Assy (RH)	1506956	1506962
3	Hose Assy (LH)	1506919	1506925

KEY:
A: Three Function
B: Four Function

ITEM	PART NO.	DESCRIPTION	QTY A	QTY B
	a	Mast Assy	1	1
1	**a**	Hose Assy	2	2
2	**a**	Hose Assy (RH)	..	1
3	**a**	Hose Assy (LH)	..	1
4	1465489	Hose Clamp	2	2
5	1477578	Spacer	1	1
6	1495279	Hose Sheave	1	1
6	332057	Bushing	1	1
7	1477570	Stubshaft	1	1
8	292683	Lockwasher	1	1
9	292538	Capscrew	1	1
10	2035791	Hose Clamp	2	2
11	292503	Capscrew	2	2
12	287844	Capscrew	2	2
13	313805	Nut	4	4
14	16448	Fitting	2	2

FOOTNOTES:

a Refer to Table

©2009 HYSTER COMPANY

NOTES

©2009 HYSTER COMPANY

CARRIAGE (FIGURE 10-7)
TWO STAGE LIMITED FREE-LIFT

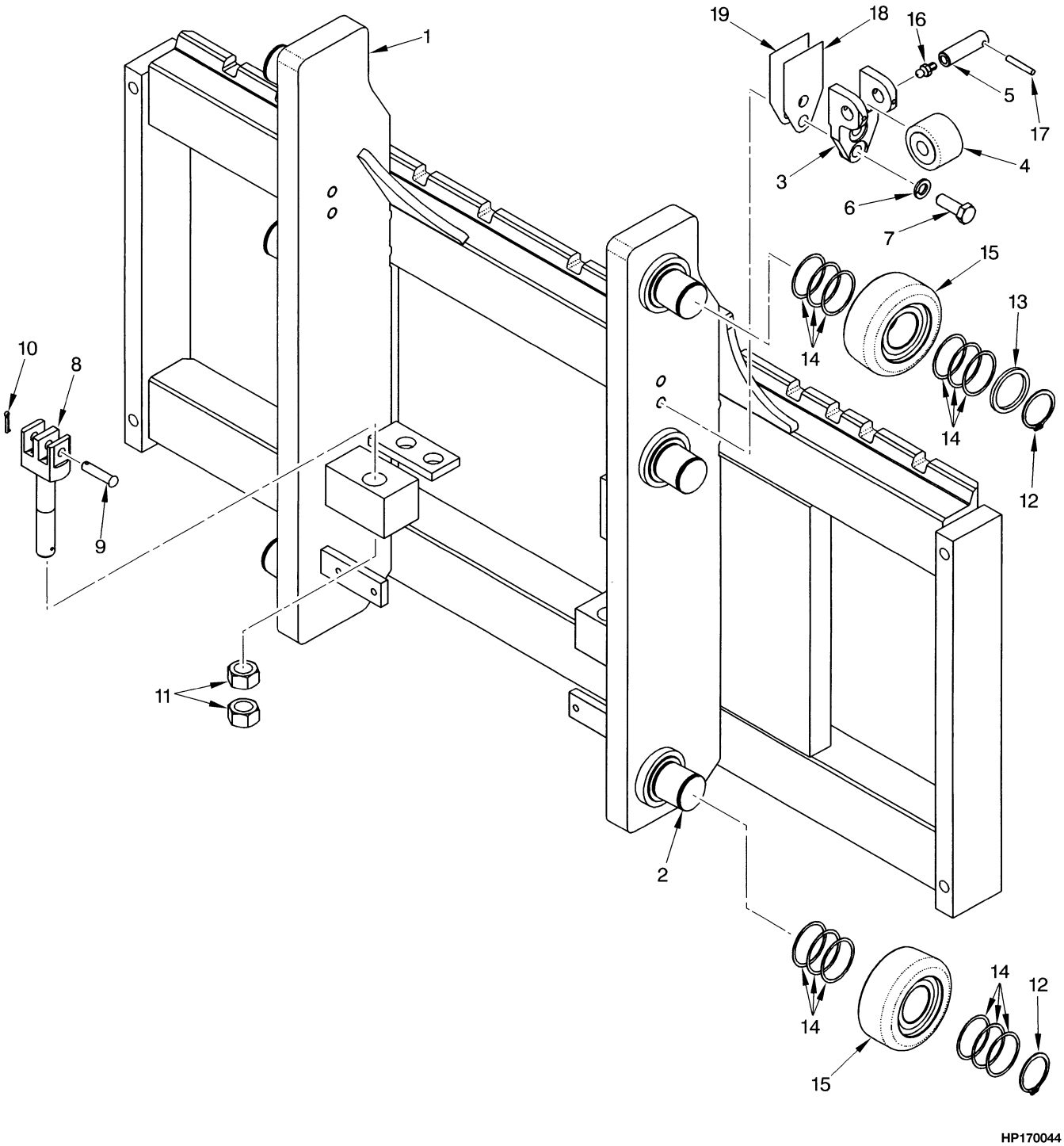

©2009 HYSTER COMPANY

CARRIAGE
TWO STAGE LIMITED FREE-LIFT

KEY:
A: H70-90XM
B: H100-120XM

ITEM	PART NO.	DESCRIPTION	QTY A	QTY B
	2035667	Carriage (48 in.)	1	..
	2035669	Carriage (60 in.)	1	..
	2035671	Carriage (54 in.)	..	1
	a 2037706	Carriage (54 in.)	..	1
	2035672	Carriage (60 in.)	..	1
1	1388092	Carriage Wldmt (48 in.)	1	..
1	1388094	Carriage Wldmt (60 in.)	1	..
1	1387447	Carriage Wldmt (54 in.)	..	1
1	**a** 1465226	Carriage Wldmt (54 in.)	..	1
1	1387448	Carriage Wldmt (60 in.)	..	1
2	1500744	Stubshaft	6	6
3	**a** 1465177	Bracket	..	2
4	**a** 1387993	Side Roller	..	2
5	**a** 1465028	Pin	..	2
6	**a** 292683	Lockwasher	..	4
7	**a** 292528	Capscrew	..	4
8	1387285	Chain Anchor	2	..
8	1387286	Chain Anchor	..	2
9	327591	Pin (Anchor)	2	..
9	339932	Pin (Anchor)	..	2
10	15222	Cotter Pin	2	2
11	221717	Nut	4	4
12	1465072	Snap Ring	6	6
13	1399224	Spacer	2	2
14	126765	Shim	AR	AR
15	**b** 1511882	Load Roller (100.91 mm) ("A")	6	6
15	**c** 1511883	Load Roller (101.67 mm) ("B") (0,26 mm)	6	6
15	1511884	Load Roller (102.43 mm) ("C") (1,52 mm)	6	6
16	**a** 16001	Grease Fitting	..	2
17	**a** 66333	Roll Pin	..	2
18	**a** 192425	Shim (0.062 in.)	..	AR
19	**a** 192424	Shim (0.030 in.)	..	AR

FOOTNOTES:

a Attachment Carriage (H90XM, 100XM)
b Letter "A" Located on Inside Surface of Load Roller
c Letter "B" Located on inside Surface of Load Roller

©2009 HYSTER COMPANY

LOAD BACKREST EXTENSION (FIGURE 10-8)
TWO STAGE LIMITED FREE-LIFT

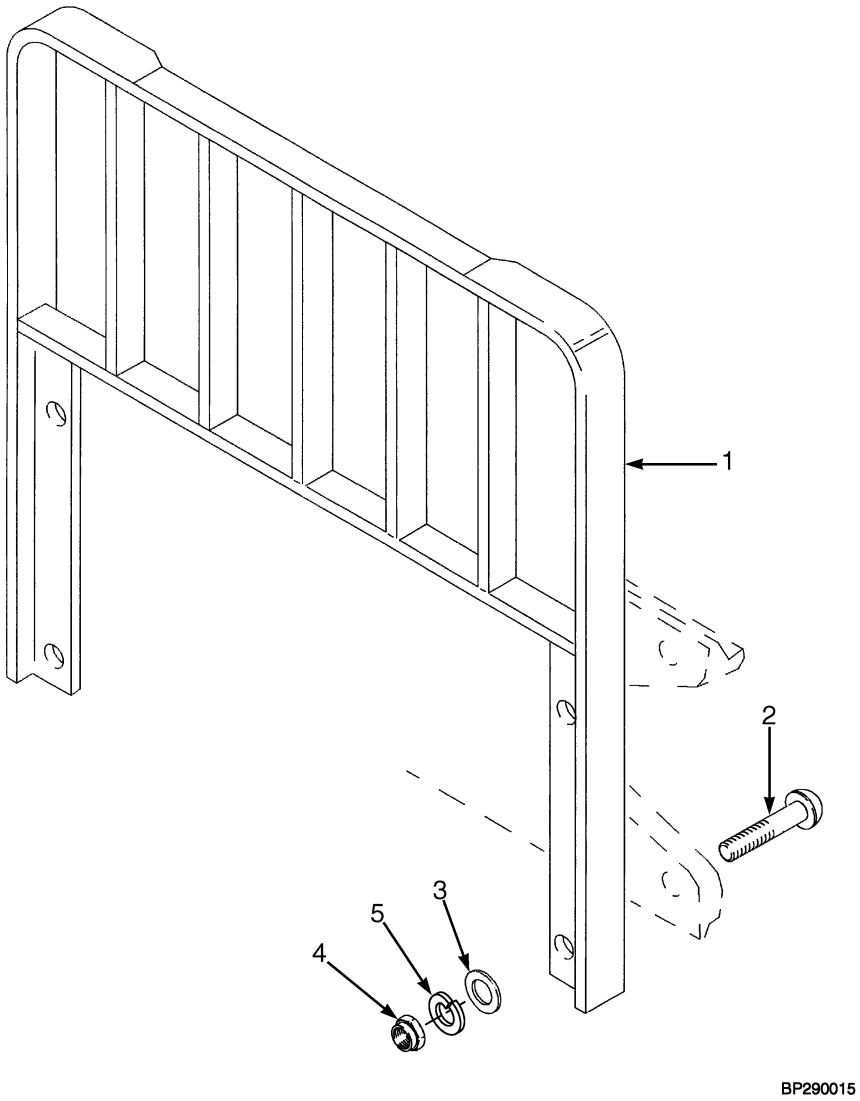

©2009 HYSTER COMPANY

LOAD BACKREST EXTENSION
TWO STAGE LIMITED FREE-LIFT

KEY:
A: H70-90XM
B: H100-120XM

ITEM	PART NO.	DESCRIPTION	QTY A	QTY B
1	1387341	Load Backrest (48 in.)	1	..
1	**a** 1387342	Load Backrest (48 in.)	1	..
1	1387348	Load Backrest (48 in.)	..	1
1	**a** 1464863	Load Backrest (48 in.)	..	1
1	1387343	Load Backrest (54 in.)	1	..
1	**a** 1387344	Load Backrest (54 in.)	1	..
1	1387904	Load Backrest (54 in.)	..	1
1	**a** 1464864	Load Backrest (54 in.)	..	1
1	1387345	Load Backrest (60 in.)	1	..
1	**a** 1387346	Load Backrest (60 in.)	1	..
1	1387349	Load Backrest (60 in.)	..	1
1	**a** 1464865	Load Backrest (60 in.)	..	1
2	1387330	Capscrew	4	4
3	221771	Washer	4	4
3	**b** 296423	Washer	4	4
4	292656	Nut	4	4
5	292683	Lockwasher	4	4

FOOTNOTES:

a For Polished Forks with Full Bottom Taper

b Optional

©2009 HYSTER COMPANY

FORK (FIGURE 10-9)

STANDARD TAPER HOOK TYPE (H70-90XM) — TWO STAGE LIMITED FREE-LIFT

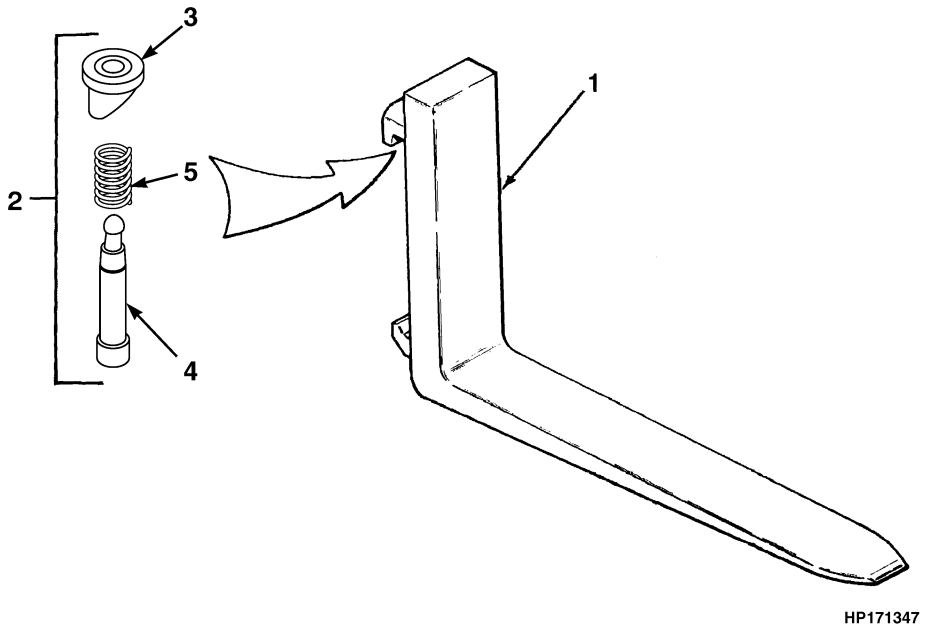

KEY:
A: H70XM (50 mm x 125 mm) (2 in. x 5 in.)
B: H80XM (50 mm x 125 mm) (2 in. x 5 in.)
C: H80XM (50 mm x 150 mm) (2 in. x 6 in.)
D: H90XM (50 mm x 125 mm) (2 in. x 5 in.)
E: H90XM (50 mm x 150 mm) (2 in. x 6 in.)

ITEM	PART NO.	DESCRIPTION	QTY A	B	C	D	E
1	367420	Fork (42 in.)	2	2	..	2	..
1	367421	Fork (48 in.)	2	2	..	2	..
1	367422	Fork (54 in.)	2	2	..	..	..
1	1399915	Fork (54 in.)	..	..	..	..	2
1	367423	Fork (60 in.)	2	..	..	..	..
1	1399916	Fork (60 in.)	..	..	2	..	2
1	367424	Fork (72 in.)	2	..	..	..	..
1	1399917	Fork (72 in.)	..	..	2	..	2
2	1523739	Kit-Latch	2	2	2	2	2
3	1523732	Knob	1	1	1	1	1
4	1523737	Pin	1	1	1	1	1
5	1500784	Spring	1	1	1	1	1

©2009 HYSTER COMPANY

FORK (FIGURE 10-10)

STANDARD TAPER HOOK TYPE (H100-120XM) — TWO STAGE LIMITED FREE-LIFT

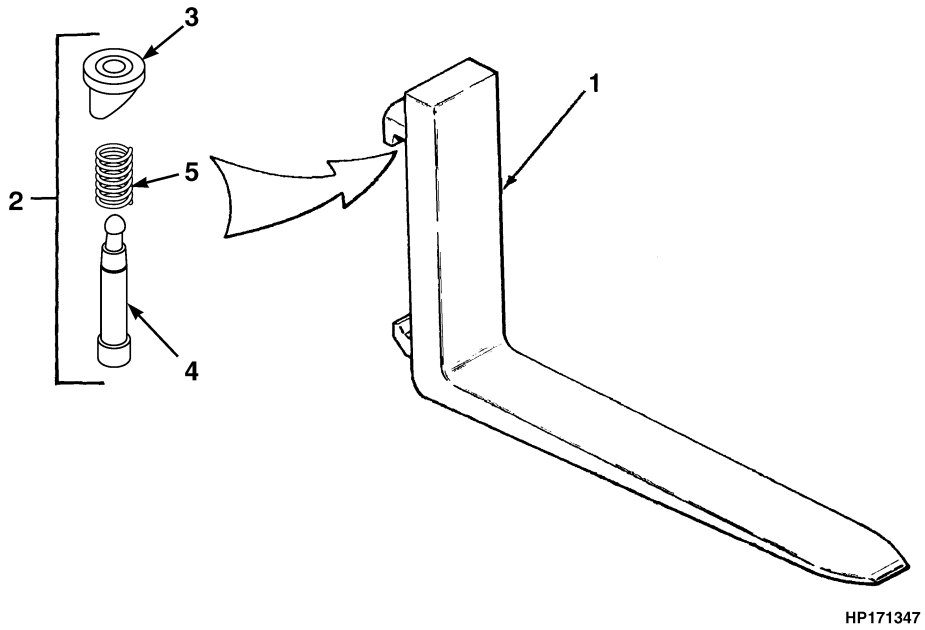

KEY:
A: H100XM (50 mm x 150 mm) (2 in. x 6 in.)
B: H100XM (60 mm x 150 mm) (2.36 in. x 6 in.)
C: H110XM (50 mm x 150 mm) (2 in. x 6 in.)
D: H110 XM (60 mm x 150 mm) (2.36 in. x 6 in.)
E: H120XM (60 mm x 150 mm) (2.36 in. x 6 in.)

			QTY				
ITEM	**PART NO.**	**DESCRIPTION**	**A**	**B**	**C**	**D**	**E**
1	1399919	Fork (42 in.)	2	..	2	..	..
1	1458264	Fork (42 in.)	..	..	..	..	2
1	1399920	Fork (48 in.)	2	..	2	..	..
1	1333001	Fork (48 in.)	..	..	..	..	2
1	1399921	Fork (54 in.)	2	..	..	..	..
1	1333002	Fork (54 in.)	..	..	..	2	2
1	1399922	Fork (60 in.)	2	..	..	..	..
1	1333003	Fork (60 in.)	..	..	..	2	2
1	1333004	Fork (72 in.)	..	2	..	2	2
2	1523742	Kit-Latch (Class IV)	2	2	2	2	2
3	1523732	Knob	1	1	1	1	1
4	1523741	Pin	1	1	1	1	1
5	1500786	Spring	1	1	1	1	1

©2009 HYSTER COMPANY

FORK (FIGURE 10-11)

POLISHED FORK WITH FULL BOTTOM TAPER HOOK TYPE — TWO STAGE LIMITED FREE-LIFT

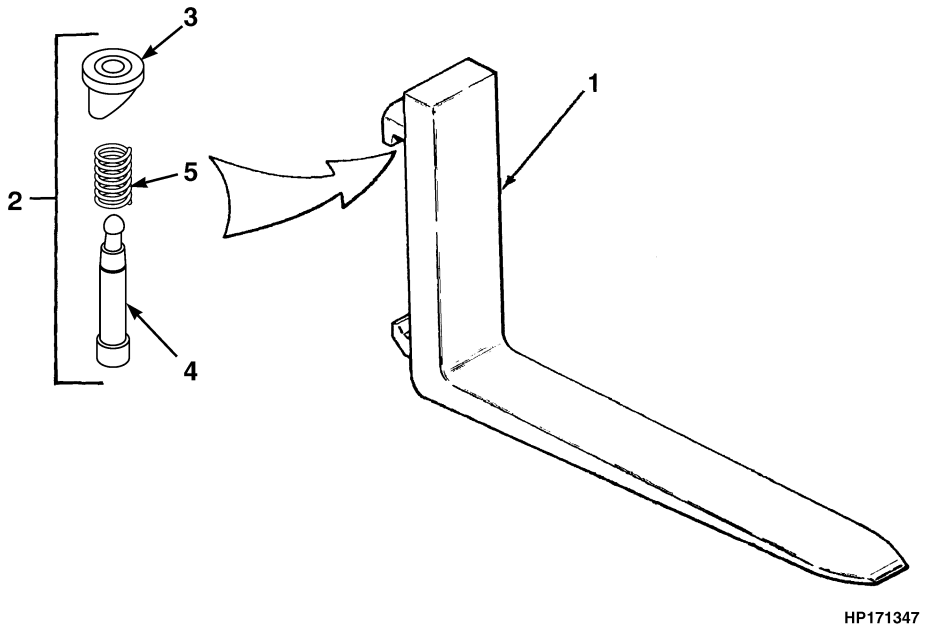

KEY:
A: H70-90XM (40 mm x 200 mm) (1.5 in. x 8 in.)
B: H100-120XM (40 mm x 250 mm) (1.5 in. x 10 in.)

ITEM	PART NO.	DESCRIPTION	QTY A	QTY B
1	1465545	Fork (48 in.)	2	..
1	1465547	Fork (48 in.)	..	2
1	1465546	Fork (54 in.)	2	..
1	1465548	Fork (54 in.)	..	2
2	1523736	Kit-Latch	2	..
2	1523742	Kit-Latch (Class IV)	..	2
3	1523732	Knob	1	1
4	1523737	Pin	1	..
4	1523741	Pin	..	1
5	1500784	Spring	1	..
5	1500786	Spring	..	1

©2009 HYSTER COMPANY

11 MAST-TWO STAGE FULL FREE-LIFT

SECTION 11
MAST-TWO STAGE FULL FREE-LIFT

DESCRIPTION	PAGE
CARRIAGE	
TWO STAGE FULL FREE-LIFT	11-18
FORK	
POLISHED FORK WITH FULL BOTTOM TAPER HOOK TYPE - TWO STAGE FULL FREE-LIFT	11-26
STANDARD TAPER HOOK TYPE (H100-120XM) - TWO STAGE FULL FREE-LIFT	11-25
STANDARD TAPER HOOK TYPE (H70-90XM) - TWO STAGE FULL FREE-LIFT	11-24
FREE-LIFT CYLINDER	
TWO STAGE FULL FREE-LIFT	11-14
HEADER HOSE	
TWO STAGE FULL FREE-LIFT	11-28
INNER AND FREE-LIFT MAST	
TWO STAGE FULL FREE-LIFT	11-6
LOAD BACKREST EXTENSION	
TWO STAGE FULL FREE-LIFT	11-22
MAIN LIFT CYLINDER	
TWO STAGE FULL FREE-LIFT	11-10
OUTER MAST AND MAIN LIFT	
TWO STAGE FULL FREE-LIFT	11-2

©2009 HYSTER COMPANY

OUTER MAST AND MAIN LIFT (FIGURE 11-1)
TWO STAGE FULL FREE-LIFT

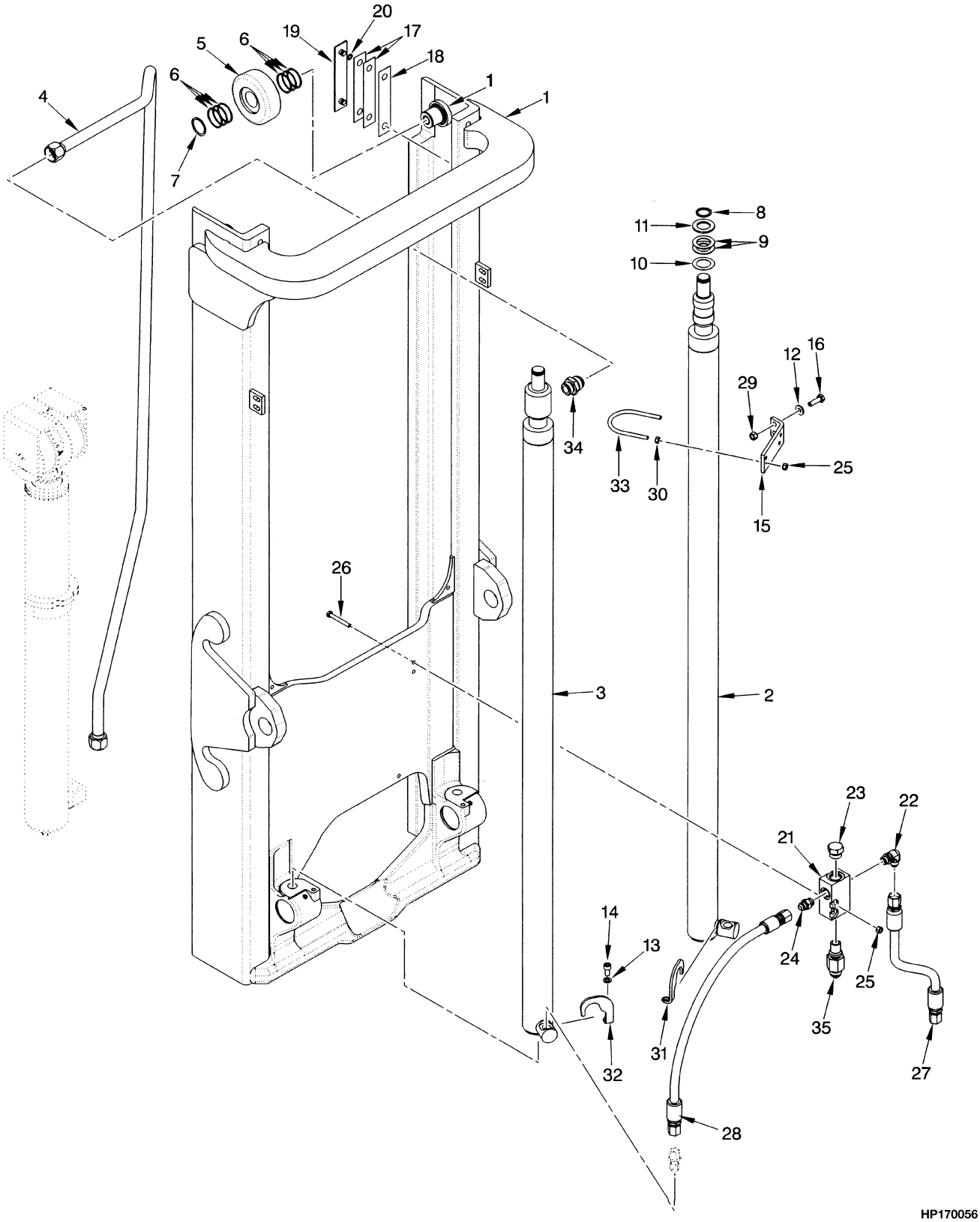

©2009 HYSTER COMPANY

OUTER MAST AND MAIN LIFT
TWO STAGE FULL FREE-LIFT

A753

ITEM	DESCRIPTION 1 2 3 4	LIFT HEIGHT TO BOTTOM OF FORKS	
		3050 mm (120.1 in.)	3650 mm (143.7 in.)
	Mast Group Number	A753 3050	A753 3650
	Mast Assy	2038212	2038218
1	Outer Mast	1465940	1465946

A754

ITEM	DESCRIPTION 1 2 3 4	LIFT HEIGHT TO BOTTOM OF FORKS	
		2790 mm (109.8 in.)	3390 mm (133.5 in.)
	Mast Group Number	A754 2790	A754 3390
	Mast Assy	2038254	2038260
1	Outer Mast	1465940	1465946

KEY:
A: H70-90XM
B: H100-120XM

ITEM	PART NO.	DESCRIPTION	QTY A	QTY B
	f	Mast Assy	1	1
1	**f**	Outer Mast	1	1
1	1500744	Stubshaft	2	2
2	. . . . .	Main Cylinder (RH) (☞Figure 11-3)	1	1
3	. . . . .	Main Cylinder (LH) (☞Figure 11-3)	1	1
4	**cf** 1467651	Tube Assy (☞Figure 11-2)	1	..
4	**df** 1467657	Tube Assy (☞Figure 11-2)	1	..
4	**af** 1467651	Tube Assy (☞Figure 11-2)	..	1
4	**bf** 1467657	Tube Assy (☞Figure 11-2)	..	1
5	**e** 1399203	Load Roller (123.55 mm) ("A")	2	2
5	**e** 1399204	Load Roller 5 in. ("B") (0,52 mm)	2	2
5	**e** 1399205	Load Roller (125.07 mm) ("C") (1,52 mm)	2	2
6	126765	Shim	12	12
7	1465072	Snap Ring	2	2
8	304523	Snap Ring	2	2
9	1325120	Shim	AR	AR
10	142247	Shim	AR	AR
11	332061	Washer	2	2
12	320160	Washer	4	4
13	292682	Lockwasher	2	2
14	296024	Capscrew	2	2
15	1474399	Bracket Wldmt	2	2
16	287860	Capscrew	4	4

©2009 HYSTER COMPANY

OUTER MAST AND MAIN LIFT
TWO STAGE FULL FREE-LIFT

KEY:
A: H70-90XM
B: H100-120XM

ITEM	PART NO.	DESCRIPTION	QTY A	QTY B
17	161273	Shim (0.020 in.)	AR	AR
18	161272	Shim (0.007 in.)	AR	AR
19	104264	Wear Strip	2	2
20	104506	O-Ring	4	4
21	1388019	Housing (Control Valve)	1	1
22	16559	Fitting	1	1
23	14603	Plug	1	1
24	16541	Fitting	1	1
25	313828	Nut	6	6
26	292511	Capscrew	2	2
27	1387324	Hose Assy	1	1
28	1387399	Hose Assy	1	1
29	316826	Nut	4	4
30	239503	Nut	4	4
31	1389924	Bracket (RH)	1	1
32	1389922	Bracket (LH)	1	1
33	1389844	Clamp	2	2
34	1304349	Fitting	1	1
35	315262	Lowering Control Valve	1	..
35	319891	Lowering Control Valve	..	1

FOOTNOTES:

a H100-120XM A754-2790
b H100-120XM A754-3390
c H70-90XM A753-3050
d H70-90XM A753-3650
e Letter Located on Inside Surface of Load Roller
f Refer to Table

©2009 HYSTER COMPANY

NOTES

©2009 HYSTER COMPANY

INNER AND FREE-LIFT MAST (FIGURE 11-2)

TWO STAGE FULL FREE-LIFT

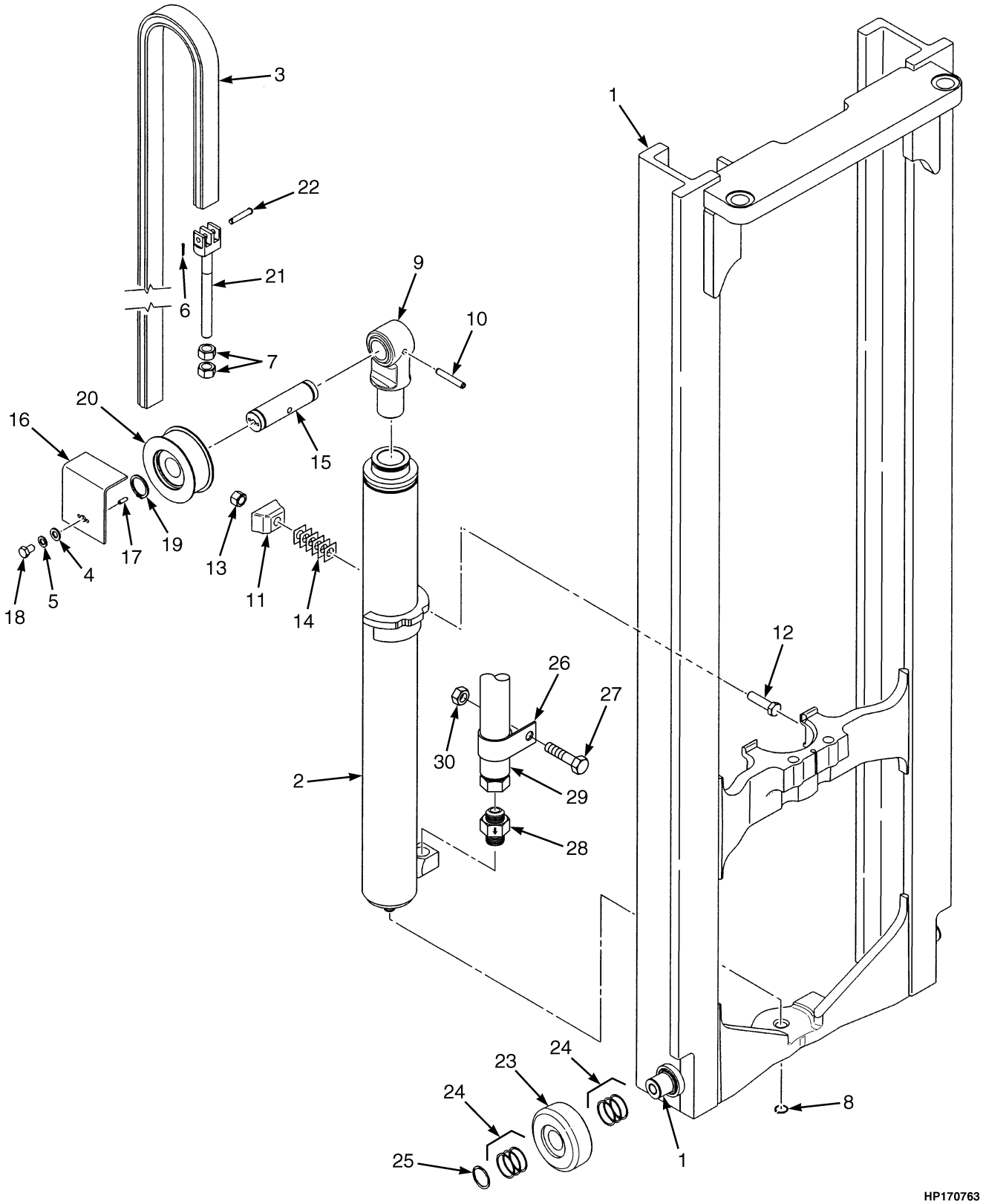

©2009 HYSTER COMPANY

INNER AND FREE-LIFT MAST
TWO STAGE FULL FREE-LIFT

A753

ITEM	DESCRIPTION 1 2 3 4	LIFT HEIGHT TO BOTTOM OF FORKS	
		3050 mm (120.1 in.)	3650 mm (143.7 in.)
	Mast Group Number	A753 3050	A753 3650
	Mast Assy	2038212	2038218
1	Inner Mast	1467081	1467087

A754

ITEM	DESCRIPTION 1 2 3 4	LIFT HEIGHT TO BOTTOM OF FORKS	
		2790 mm (109.8 in.)	3390 mm (133.5 in.)
	Mast Group Number	A754 2790	A754 3390
	Mast Assy	2038254	2038260
1	Inner Mast	1467081	1467087

ITEM	PART NO.	DESCRIPTION	QTY
	f	Mast Assy	1
1	**f**	Inner Mast	1
1	1500744	Stubshaft	2
2	. . . . .	Free-Lift Cylinder (☞Figure 11-4)	1
3	**cf** 337190	Chain	2
3	**df** 338646	Chain	2
3	**af** 337180	Chain	2
3	**bf** 348827	Chain	2
4	320161	Washer	2
5	292683	Lockwasher	2
6	15222	Cotter Pin	2
7	221717	Nut	4
8	12929	Snap Ring	1
9	1389825	Crosshead	1
10	302493	Roll Pin	1
11	2036756	Clamp	2
12	292563	Capscrew	2
13	316828	Nut	4
14	1387584	Shim	12
15	1387281	Pin	1
16	1387519	Guard	2
17	**gh** 302461	Roll Pin	2
17	**ij** 302472	Roll Pin	2
18	292526	Capscrew	2
19	304527	Snap Ring	2
20	1387743	Chain Sheave	2
21	1331991	Chain Anchor	2

©2009 HYSTER COMPANY

INNER AND FREE-LIFT MAST
TWO STAGE FULL FREE-LIFT

ITEM	PART NO.	DESCRIPTION	QTY
22	339932	Pin	2
23	**e** 1399203	Load Roller (123.55 mm) ("A")	2
23	**e** 1399204	Load Roller 5 in. ("B") (0,52 mm)	2
23	**e** 1399205	Load Roller (125.07 mm) ("C") (1,52 mm)	2
24	126765	Shim	12
25	1465072	Snap Ring	2
26	178119	Clamp	1
27	292508	Capscrew	1
28	2038981	Hyd Velocity Fuse (A753)	1
28	2038982	Hyd Velocity Fuse (A754)	1
29	1467651	Tube Assy (A753,-3050 mm, A754-2790 mm)	1
29	1467657	Tube Assy (A753,-3850 mm, A754-3390 mm)	1
30	313828	Nut	1

FOOTNOTES:

a H100-120XM A754-2790
b H100-120XM A754-3390
c H70-90XM A753-3050
d H70-90XM A753-3650
e Letter Located on Inside Surface of Load Roller
f Refer to Table
g → S/N A753L01769
h → S/N A754L01584
i S/N A753L01769 →
j S/N A754L01585 →

©2009 HYSTER COMPANY

NOTES

©2009 HYSTER COMPANY

MAIN LIFT CYLINDER (FIGURE 11-3)
TWO STAGE FULL FREE-LIFT

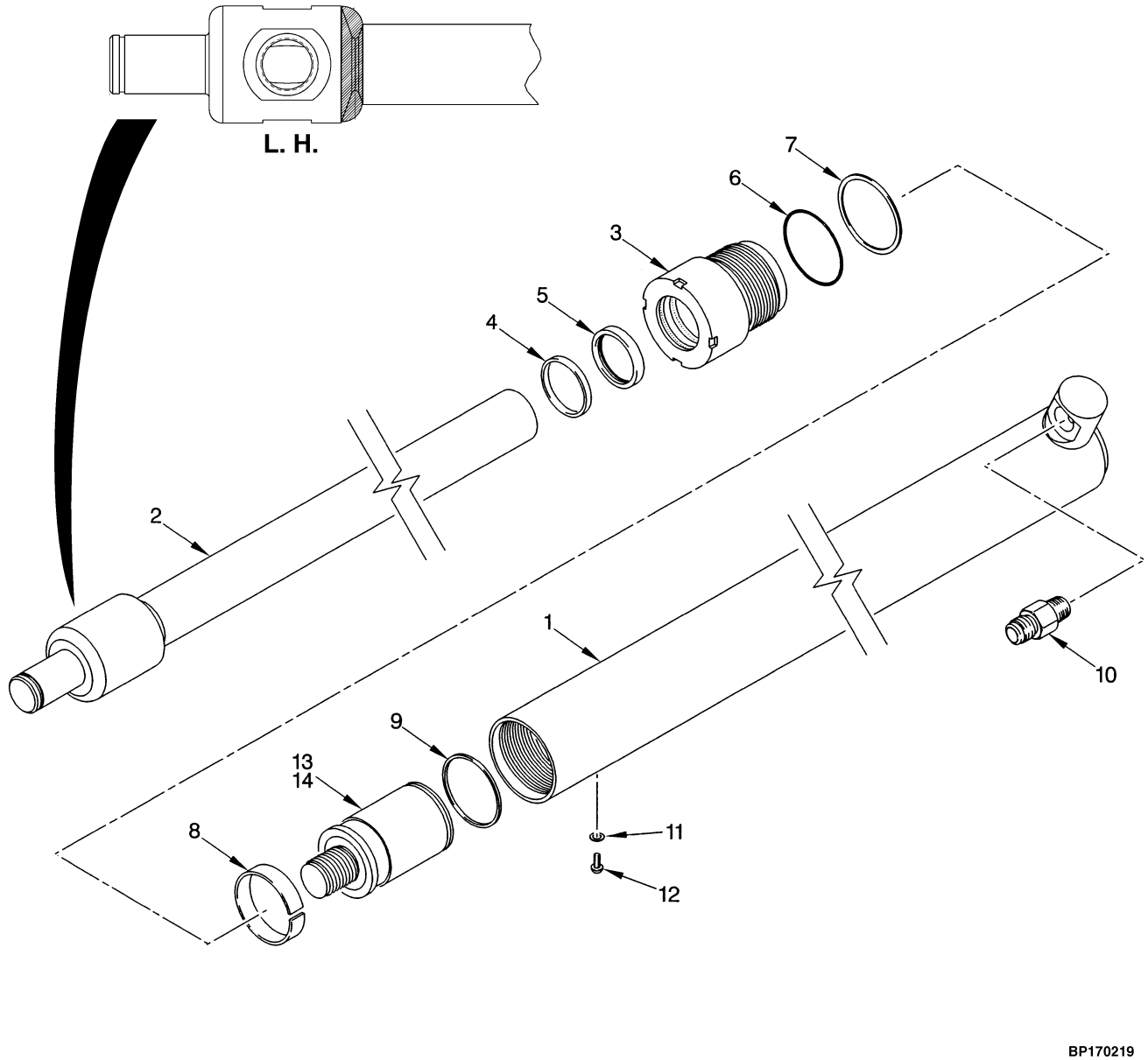

©2009 HYSTER COMPANY

MAIN LIFT CYLINDER
TWO STAGE FULL FREE-LIFT

LEFT HAND

ITEM	DESCRIPTION 1 2 3 4	LIFT HEIGHT TO BOTTOM OF FORKS	
		3050 mm (120.1 in.)	3650 mm (143.7 in.)
	Mast Group Number	A753 3050	A753 3650
	Cylinder Group Number	8605751	8605757
	Cylinder Assy	2038359	2038365
1	Tube Wldmt-Cylinder	1380901	1380904
2	Cylinder Rod	1400907	1400910
19	Spacer (Not Illustrated)	----	----

RIGHT HAND

ITEM	DESCRIPTION 1 2 3 4	LIFT HEIGHT TO BOTTOM OF FORKS	
		3050 mm (120.1 in.)	3650 mm (143.7 in.)
	Mast Group Number	A753 3050	A753 3650
	Cylinder Group Number	8605701	8605707
	Cylinder Assy	2038289	2038314
1	Tube Wldmt-Cylinder	1380901	1380904
2	Cylinder Rod	1400901	1400904
19	Spacer (Not Illustrated)	----	----

©2009 HYSTER COMPANY

MAIN LIFT CYLINDER
TWO STAGE FULL FREE-LIFT

LEFT HAND

ITEM	DESCRIPTION 1 2 3 4	LIFT HEIGHT TO BOTTOM OF FORKS	
		3050 mm (120.1 in.)	3650 mm (143.7 in.)
	Mast Group Number	A754 2790	A754 3390
	Cylinder Group Number	8502151	8502157
	Cylinder Assy	2038457	2038463
1	Tube Wldmt-Cylinder	1380901	1380904
2	Cylinder Rod	1400919	1400922
19	Spacer (Not Illustrated)	357626	357626

RIGHT HAND

ITEM	DESCRIPTION 1 2 3 4	LIFT HEIGHT TO BOTTOM OF FORKS	
		3050 mm (120.1 in.)	3650 mm (143.7 in.)
	Mast Group Number	A754 2790	A754 3390
	Cylinder Group Number	8502101	8502107
	Cylinder Assy	2038415	2038421
1	Tube Wldmt-Cylinder	1380901	1380904
2	Cylinder Rod	1400913	1400916
19	Spacer (Not Illustrated)	357626	357626

KEY:
A: H70-90XM
B: H100-120XM

ITEM	PART NO.	DESCRIPTION	QTY A	QTY B
	b	Cylinder Assy	1	1
1	**b**	Tube Wldmt-Cylinder	1	1
2	**b**	Cylinder Rod	1	1
3	1310376	Gland	1	..
3	1310377	Gland	..	1
4	1310370	Rod Wiper	1	..
4	1310371	Rod Wiper	..	1
5	1310373	Rod Seal	1	..
5	1310374	Rod Seal	..	1

©2009 HYSTER COMPANY

MAIN LIFT CYLINDER
TWO STAGE FULL FREE-LIFT

KEY:
A: H70-90XM
B: H100-120XM

ITEM	PART NO.	DESCRIPTION	QTY A	QTY B
5	1381086	Rod Seal (Alternate Part)	..	1
6	198518	O-Ring	1	1
7	166659	Back-Up Ring	1	1
8	2038675	Wear Ring (RH)	1	1
8	297532	Wear Ring (LH)	1	1
9	1379063	Piston Ring (RH)	1	1
10	2041965	Hyd Velocity Fuse (RH)	1	..
10	2035787	Hyd Velocity Fuse (RH)	..	1
11	190887	Sealing Ring	1	1
12	295649	Screw	1	1
13	1381055	Piston (RH)	1	1
13	1381056	Piston (LH)	1	1
14	264134	Loctite	AR	AR
15	**a** 2094192	Sleeve (Alternate Part)	..	1
	2038676	Kit-Seal	1	..
	2038679	Kit-Seal	..	1
	2104947	Kit-Seal (Alternate Part)	..	1
	b	Spacer (Not Illustrated)	..	1

FOOTNOTES:

a Not Illustrated

b Refer to Table

©2009 HYSTER COMPANY

FREE-LIFT CYLINDER (FIGURE 11-4)
TWO STAGE FULL FREE-LIFT

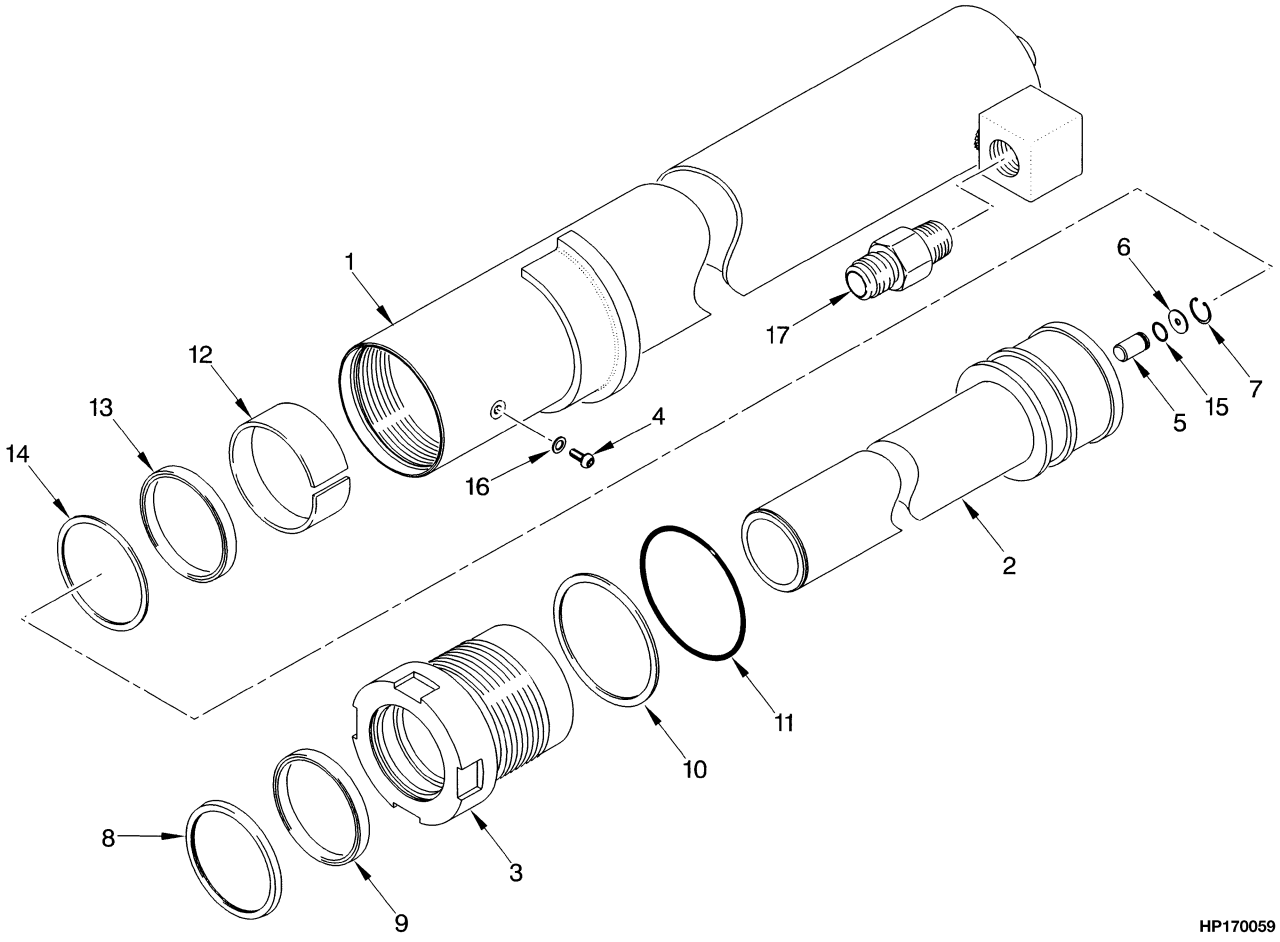

©2009 HYSTER COMPANY

FREE-LIFT CYLINDER
TWO STAGE FULL FREE-LIFT

A753

ITEM	DESCRIPTION 1 2 3 4	LIFT HEIGHT TO BOTTOM OF FORKS	
		3050 mm (120.1 in.)	3650 mm (143.7 in.)
	Mast Group Number	A753 3050	A753 3650
	Cylinder Group Number	8605501	8605506
	Cylinder Assy	2036440	2036442
1	Tube Wldmt-Cylinder	2037868	2037872
2	Cylinder Rod	2037833	2037837

A754

ITEM	DESCRIPTION 1 2 3 4	LIFT HEIGHT TO BOTTOM OF FORKS	
		2790 mm (109.8 in.)	3390 mm (133.5 in.)
	Mast Group Number	A754 2790	A754 3390
	Cylinder Group Number	8520951	8520956
	Cylinder Assy	2062748	2062115
1	Tube Wldmt-Cylinder	2065887	2065888
2	Cylinder Rod	2062074	2062079

KEY:
A: H70-90XM
B: H100-120XM

ITEM	PART NO.	DESCRIPTION	QTY A	QTY B
	a	Cylinder Assy	2	2
1	**a**	Tube Wldmt-Cylinder	1	1
2	**a**	Cylinder Rod	1	1
3	2036282	Gland	1	..
3	2036283	Gland	..	1
4	1361302	Screw	1	1
5	257913	Check Valve	1	1
6	297531	Washer	1	1
6	637635	Washer (Optional)	1	1
7	187388	Snap Ring	1	1
8	1383070	Rod Wiper	1	1
9	637161	Rod Seal	1	1
10	164632	Back-Up Ring	1	..

©2009 HYSTER COMPANY

FREE-LIFT CYLINDER
TWO STAGE FULL FREE-LIFT

KEY:
A: H70-90XM
B: H100-120XM

ITEM	PART NO.	DESCRIPTION	QTY A	QTY B
10	615145	Back-Up Ring	..	1
11	15885	O-Ring	..	1
11	46629	O-Ring	1	..
12	636950	Wear Ring	1	..
12	636952	Wear Ring	..	1
13	637162	Rod Seal	1	..
13	637164	Rod Seal	..	1
14	638293	Back-Up Ring	1	..
14	638295	Back-Up Ring	..	1
15	39348	O-Ring	1	1
16	190887	Sealing Ring	1	1
17	2038981	Hyd Velocity Fuse	1	..
17	2038982	Hyd Velocity Fuse	..	1
	2036279	Kit-Seal	1	..
	2065889	Kit-Seal	..	1

FOOTNOTES:

a Refer to Table

©2009 HYSTER COMPANY

NOTES

©2009 HYSTER COMPANY

CARRIAGE (FIGURE 11-5)
TWO STAGE FULL FREE-LIFT

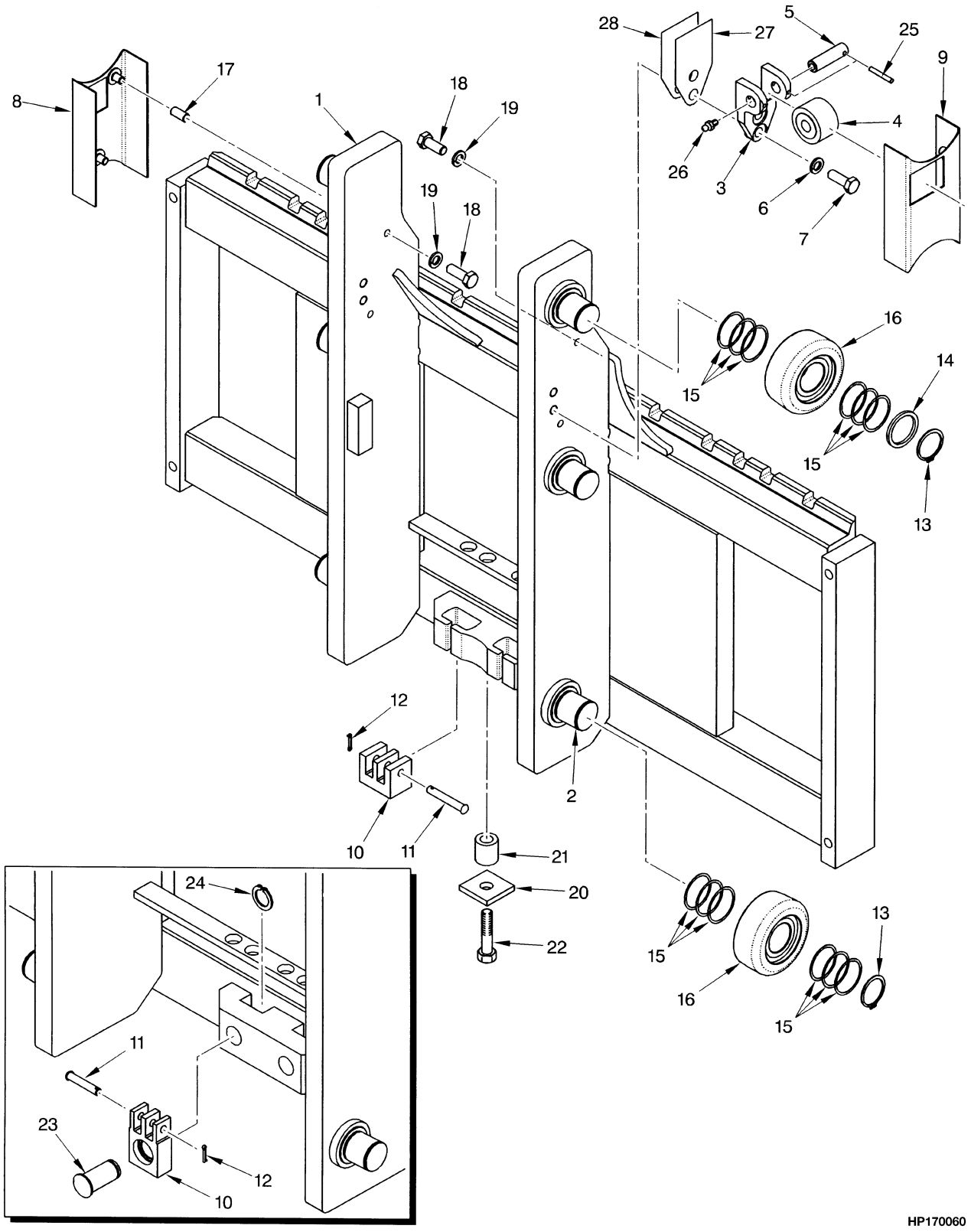

©2009 HYSTER COMPANY

CARRIAGE
TWO STAGE FULL FREE-LIFT

KEY:
A: H70-90XM
B: H100-120XM

ITEM	PART NO.	DESCRIPTION	QTY A	QTY B
	2038558	Carriage (48 in.)	1	..
	2109343	Carriage (48 in.) (Alternate Part)	1	..
	2038561	Carriage (60 in.)	1	..
	2109348	Carriage (60 in.) (Alternate Part)	1	..
	2038564	Carriage (54 in.)	..	1
	a 2038565	Carriage (54 in.)	..	1
	2038566	Carriage (60 in.)	..	1
1	1394984	Carriage Wldmt (48 in.)	1	..
1	1699955	Carriage Wldmt (48 in.) (Alternate Part)	1	..
1	1394986	Carriage Wldmt (60 in.)	1	..
1	1699995	Carriage Wldmt (60 in.) (Alternate Part)	1	..
1	1394992	Carriage Wldmt (54 in.)	..	1
1	**a** 1465885	Carriage Wldmt (54 in.)	..	1
1	1394993	Carriage Wldmt (60 in.)	..	1
2	1500744	Stubshaft	6	6
3	**a** 1465177	Bracket	..	2
4	**a** 1387993	Side Roller	..	2
5	**a** 1465028	Pin	..	2
6	**a** 292683	Lockwasher	..	4
7	**a** 292528	Capscrew	..	4
8	319323	Bracket Wldmt (LH) (LH)	1	1
9	319322	Bracket Wldmt (RH) (RH)	1	1
10	1387548	Chain Anchor	2	..
10	341558	Chain Anchor	..	2
11	1387549	Pin (Anchor)	2	..
11	339932	Pin (Anchor)	..	2
12	15222	Cotter Pin	2	2
13	1465072	Snap Ring	6	6
14	1399224	Spacer	2	2
15	126765	Shim	AR	AR
16	**b** 1511882	Load Roller (100.91 mm) ("A")	6	6
16	**b** 1511883	Load Roller (101.67 mm) ("B") (0,26 mm)	6	6
16	**b** 1511884	Load Roller (102.43 mm) ("C") (1,52 mm)	6	6
17	317292	Spacer	4	4
18	18518	Capscrew	4	4
19	15155	Lockwasher	4	4
20	1400126	Plate	1	..
21	1400125	Spacer	1	..
22	292508	Capscrew	1	..
23	320327	Pin	..	2
24	131358	Snap Ring	..	2
25	**a** 66333	Roll Pin	..	2
26	**a** 16001	Grease Fitting	..	2
27	**a** 192425	Shim (0.062 in.)	..	AR
28	**a** 192424	Shim (0.030 in.)	..	AR

©2009 HYSTER COMPANY

FOOTNOTES:

a Attachment Carriage (H90XM, 100XM)

b Letter Located on Inside Surface of Load Roller

©2009 HYSTER COMPANY

NOTES

©2009 HYSTER COMPANY

LOAD BACKREST EXTENSION (FIGURE 11-6)
TWO STAGE FULL FREE-LIFT

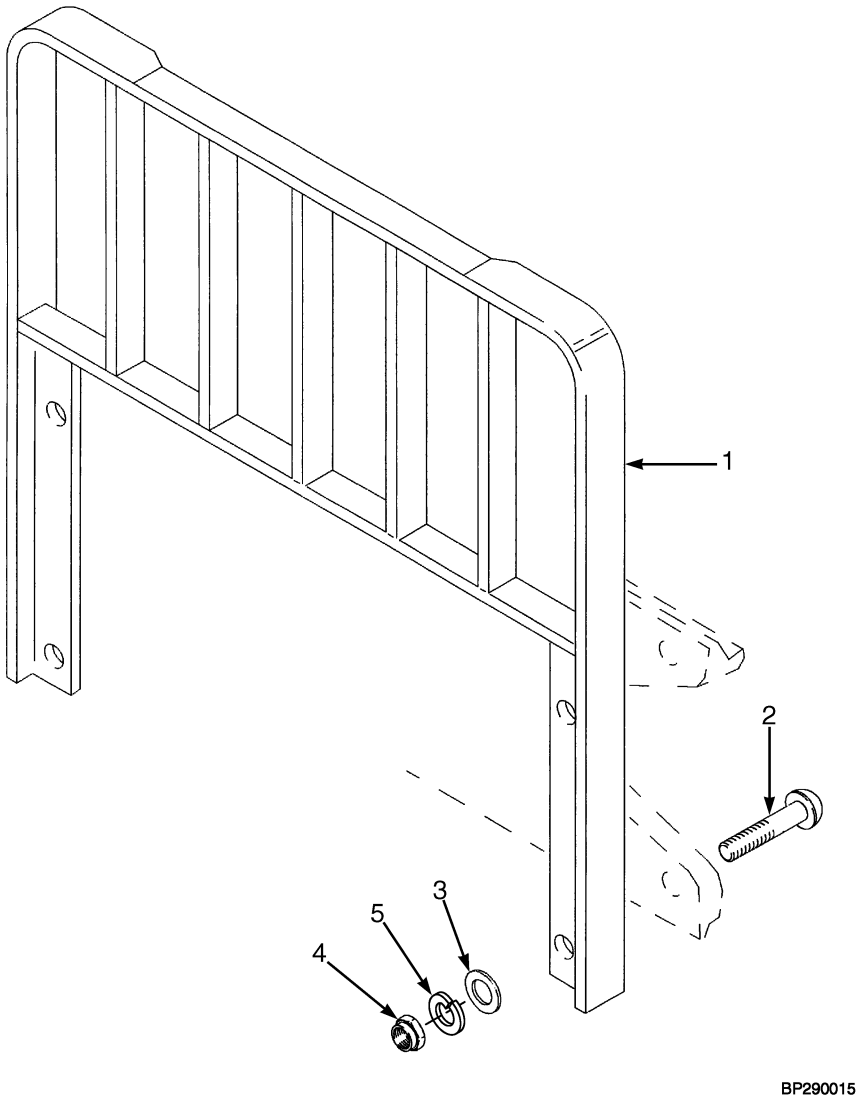

©2009 HYSTER COMPANY

LOAD BACKREST EXTENSION
TWO STAGE FULL FREE-LIFT

KEY:
A: H70-90XM
B: H100-120XM

ITEM	PART NO.	DESCRIPTION	QTY A	QTY B
1	1387341	Load Backrest (48 in.)	1	..
1	**a** 1387342	Load Backrest (48 in.)	1	..
1	1387348	Load Backrest (48 in.)	..	1
1	**a** 1464863	Load Backrest (48 in.)	..	1
1	1387343	Load Backrest (54 in.)	1	..
1	**a** 1387344	Load Backrest (54 in.)	1	..
1	1387904	Load Backrest (54 in.)	..	1
1	1464864	Load Backrest (54 in.)	..	1
1	1387345	Load Backrest (60 in.)	1	..
1	**a** 1387346	Load Backrest (60 in.)	1	..
1	1387349	Load Backrest (60 in.)	..	1
1	**a** 1464865	Load Backrest (60 in.)	..	1
2	1387330	Capscrew	4	4
3	221771	Washer	4	4
3	**b** 296423	Washer	4	4
4	292656	Nut	4	4
5	292683	Lockwasher	4	4

FOOTNOTES:

a For Polished Forks with Full Bottom Taper

b Optional

©2009 HYSTER COMPANY

FORK (FIGURE 11-7)

STANDARD TAPER HOOK TYPE (H70-90XM) — TWO STAGE FULL FREE-LIFT

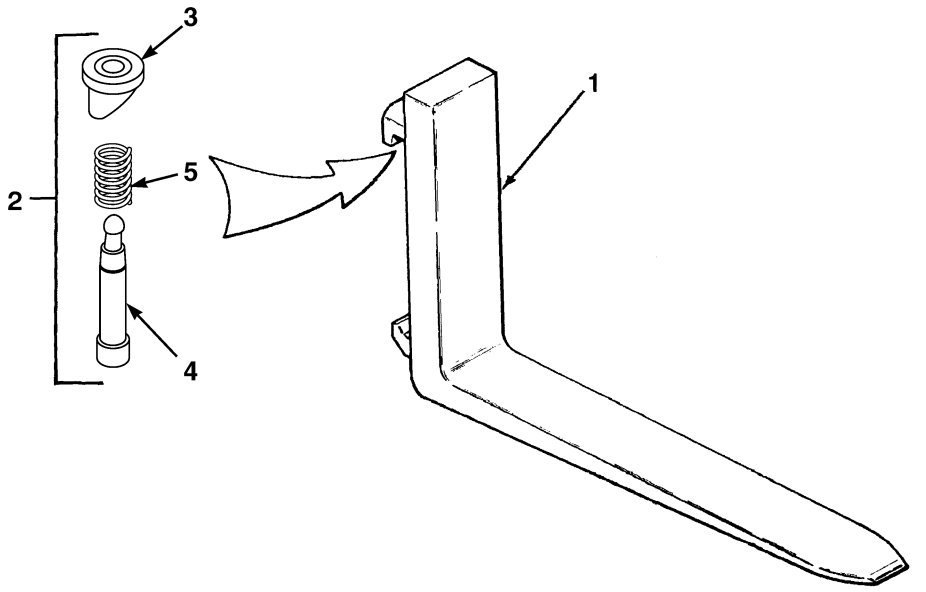

HP171347

KEY:
A: H70XM (50 mm x 125 mm) (2 in. x 5 in.)
B: H80XM (50 mm x 125 mm) (2 in. x 5 in.)
C: H80XM (50 mm x 150 mm) (2 in. x 6 in.)
D: H90XM (50 mm x 125 mm) (2 in. x 5 in.)
E: H90XM (50 mm x 150 mm) (2 in. x 6 in.)

			QTY				
ITEM	**PART NO.**	**DESCRIPTION**	**A**	**B**	**C**	**D**	**E**
1	367420	Fork (42 in.)	2	2	..	2	..
1	367421	Fork (48 in.)	2	2	..	2	..
1	367422	Fork (54 in.)	2	2	..	..	..
1	1399915	Fork (54 in.)	..	..	..	..	2
1	367423	Fork (60 in.)	2	..	..	..	..
1	1399916	Fork (60 in.)	..	..	2	..	2
1	367424	Fork (72 in.)	2	..	..	..	..
1	1399917	Fork (72 in.)	..	..	2	..	2
2	1523739	Kit-Latch	2	2	2	2	2
3	1523732	Knob	1	1	1	1	1
4	1523737	Pin	1	1	1	1	1
5	1500784	Spring	1	1	1	1	1

©2009 HYSTER COMPANY

FORK (FIGURE 11-8)

STANDARD TAPER HOOK TYPE (H100-120XM) — TWO STAGE FULL FREE-LIFT

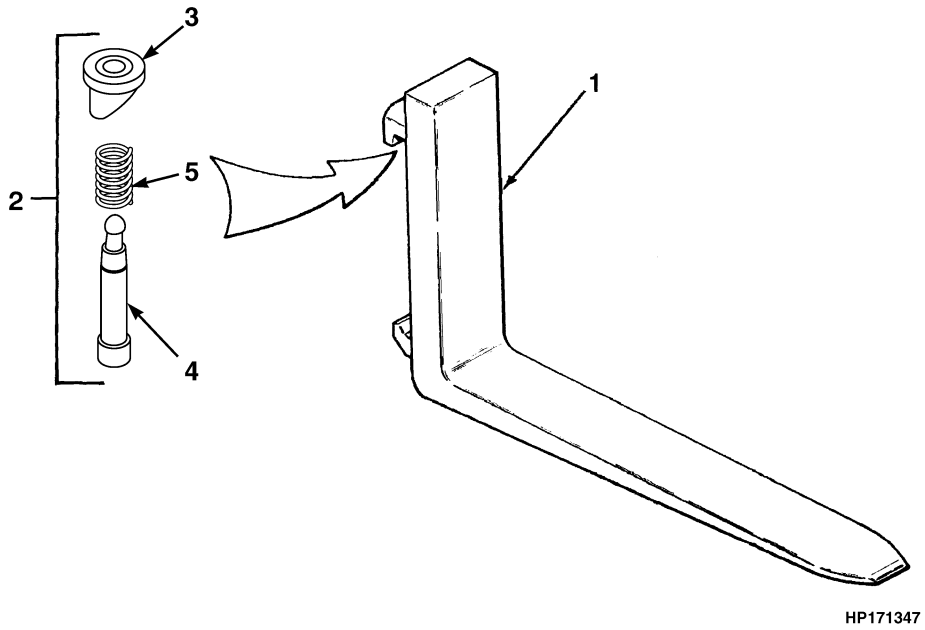

KEY:
A: H100XM (50 mm x 150 mm) (2 in. x 6 in.)
B: H100XM (60 mm x 150 mm) (2.36 in. x 6 in.)
C: H110XM (50 mm x 150 mm) (2 in. x 6 in.)
D: H110XM (60 mm x 150 mm) (2.36 in. x 6 in.)
E: H120XM (60 mm x 150 mm) (2.36 in. x 6 in.)

			QTY				
ITEM	**PART NO.**	**DESCRIPTION**	**A**	**B**	**C**	**D**	**E**
1	1399919	Fork (42 in.)	2	2	..	..	..
1	1458264	Fork (42 in.)	..	..	..	..	2
1	1399920	Fork (48 in.)	2	2	..	..	2
1	1399921	Fork (54 in.)	2	..	..	..	..
1	1333002	Fork (54 in.)	..	..	..	2	2
1	1399922	Fork (60 in.)	2	..	..	..	..
1	1333003	Fork (60 in.)	..	..	..	2	2
1	1333004	Fork (72 in.)	..	2	..	2	2
2	1523742	Kit-Latch (Class IV)	2	2	2	2	2
3	1523732	Knob	1	1	1	1	1
4	1523741	Pin	1	1	1	1	1
5	1500786	Spring	1	1	1	1	1

©2009 HYSTER COMPANY

FORK (FIGURE 11-9)

POLISHED FORK WITH FULL BOTTOM TAPER HOOK TYPE — TWO STAGE FULL FREE-LIFT

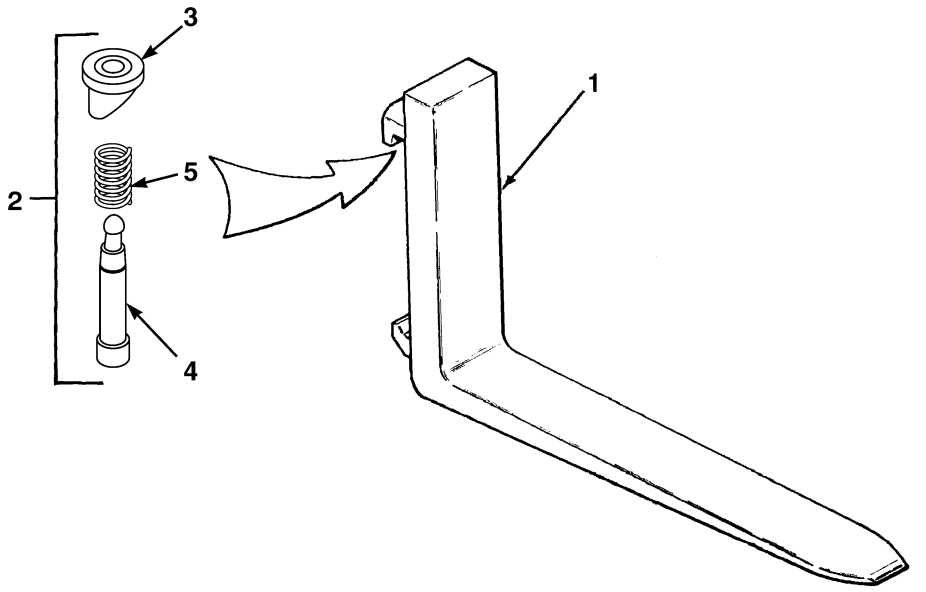

KEY:
A: H70-90XM (40 mm x 200 mm) (1.5 in. x 8 in.)
B: H100-120XM (40 mm x 250 mm) (1.5 in. x 10 in.)

ITEM	PART NO.	DESCRIPTION	QTY A	QTY B
1	1465545	Fork (48 in.)	2	..
1	1465547	Fork (48 in.)	..	2
1	1465546	Fork (54 in.)	2	..
1	1465548	Fork (54 in.)	..	2
2	1523739	Kit-Latch	2	..
2	1523742	Kit-Latch (Class IV)	..	2
3	1523732	Knob	1	1
4	1523737	Pin	1	..
4	1523741	Pin	..	1
5	1500784	Spring	1	..
5	1500786	Spring	..	1

©2009 HYSTER COMPANY

NOTES

©2009 HYSTER COMPANY

HEADER HOSE (FIGURE 11-10)
TWO STAGE FULL FREE-LIFT

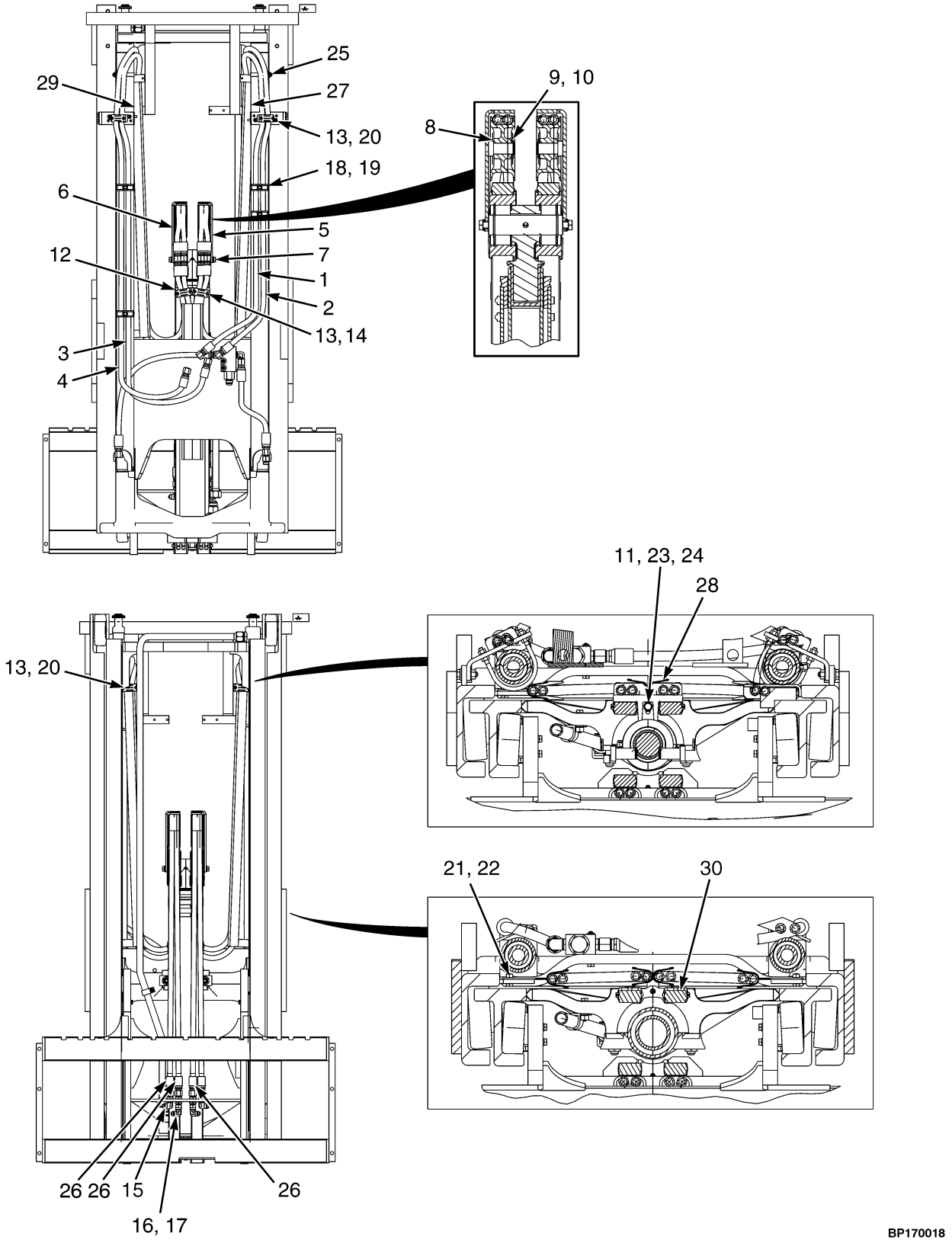

©2009 HYSTER COMPANY

HEADER HOSE
TWO STAGE FULL FREE-LIFT

LEFT HAND

ITEM	DESCRIPTION 1 2 3 4	LIFT HEIGHT TO BOTTOM OF FORKS	
		3050 mm (120.1 in.)	3650 mm (143.7 in.)
	Mast Group Number	A753 3050	A753 3650
1	Hose Assy	1475787	1484498
3	Hose Assy	1484522	1484528
26	Hose Assy	1484277	1483993
28	Channel (Free-Lift)	1474051	1474057
29	Channel	1474125	1474131

RIGHT HAND

ITEM	DESCRIPTION 1 2 3 4	LIFT HEIGHT TO BOTTOM OF FORKS	
		3050 mm (120.1 in.)	3650 mm (143.7 in.)
	Mast Group Number	A753 3050	A753 3650
2	Hose Assy	1475788	1475794
4	Hose Assy	1475833	1475839
27	Hose Guide	1474101	1474107

LEFT HAND

ITEM	DESCRIPTION 1 2 3 4	LIFT HEIGHT TO BOTTOM OF FORKS	
		3050 mm (120.1 in.)	3650 mm (143.7 in.)
	Mast Group Number	A754 2790	A754 3390
1	Hose Assy	1483938	1483944
3	Hose Assy	1484454	1484460
26	Hose Assy	1484276	1484283
28	Channel (Free-Lift)	1474048	1474054
29	Channel	1474125	1474131

©2009 HYSTER COMPANY

HEADER HOSE
TWO STAGE FULL FREE-LIFT

RIGHT HAND

ITEM	DESCRIPTION 1 2 3 4	LIFT HEIGHT TO BOTTOM OF FORKS	
		3050 mm (120.1 in.)	3650 mm (143.7 in.)
	Mast Group Number	A754 2790	A754 3390
2	Hose Assy	1475789	1475795
4	Hose Assy	1475834	1475840
27	Hose Guide	1474101	1474107

KEY:
A: Three Function
B: Four Function

ITEM	PART NO.	DESCRIPTION	QTY A	QTY B
1	**c**	Hose Assy	1	1
2	**c**	Hose Assy	1	1
3	**c**	Hose Assy	..	1
4	**c**	Hose Assy	..	1
5	1399217	Bracket Wldmt (RH)	1	..
6	1399218	Bracket Wldmt (Hose Mounting) (LH)	..	1
7	**de** 302461	Roll Pin	1	1
7	**fg** 302472	Roll Pin	1	1
8	1332705	Hose Sheave	1	1
9	320171	Washer	1	1
10	58902	Snap Ring	1	1
11	320157	Washer	1	1
12	1399243	Clamp	2	..
13	2035791	Hose Clamp	3	3
13	1466925	Bracket (H70-90XM)	1	1
13	1477080	Bracket (H100-120XM)	1	1
14	293797	Capscrew	2	2
15	16458	Fitting	1	1
16	16448	Fitting	1	1
17	16989	Fitting	1	1
18	1465489	Hose Clamp	4	4
19	115696	Hose Clamp	2	2
20	293796	Capscrew	4	4
21	136681	Capscrew	1	1
22	313828	Nut	1	1
23	136749	Screw	1	..
24	292681	Lockwasher	1	..
25	112989	Hose Clamp	1	1
26	**c**	Hose Assy	2	4
27	**c**	Hose Guide	1	1
28	**c**	Channel (Free-Lift)	..	1
29	**c**	Channel	1	1
30	**b** 1466925	Bracket	1	1

©2009 HYSTER COMPANY

HEADER HOSE
TWO STAGE FULL FREE-LIFT

KEY:
A: Three Function
B: Four Function

ITEM	PART NO.	DESCRIPTION	QTY A	QTY B
30	**a** 1477080	Bracket	1	1

FOOTNOTES:

a H100-120XM
b H70-90XM
c Refer to Table
d → S/N A753L01769
e → S/N A754L01584
f S/N A753L01770 →
g S/N A754L01585 →

©2009 HYSTER COMPANY

NOTES

©2009 HYSTER COMPANY

12 MAST-THREE STAGE FULL FREE-LIFT

SECTION 12
MAST-THREE STAGE FULL FREE-LIFT

DESCRIPTION	PAGE
CARRIAGE	
THREE STAGE FULL FREE-LIFT	12-34
FORK	
POLISHED FORK WITH FULL BOTTOM TAPER HOOK TYPE - THREE STAGE FULL FREE-LIFT	12-42
STANDARD TAPER HOOK TYPE (H100-120XM) - THREE STAGE FULL FREE-LIFT	12-41
STANDARD TAPER HOOK TYPE (H70-90XM) - THREE STAGE FULL FREE-LIFT	12-40
FREE-LIFT	
THREE STAGE FULL FREE-LIFT	12-18
FREE-LIFT CYLINDER	
THREE STAGE FULL FREE-LIFT	12-26
HEADER HOSE	
THREE STAGE FULL FREE-LIFT	12-30
INNER MAST	
THREE STAGE FULL FREE-LIFT	12-10
INTERMEDIATE MAST	
THREE STAGE FULL FREE-LIFT	12-6
LOAD BACKREST EXTENSION	
THREE STAGE FULL FREE-LIFT	12-38
MAIN CYLINDER	
THREE STAGE FULL FREE-LIFT	12-22
MAIN LIFT	
THREE STAGE FULL FREE-LIFT	12-14
OUTER MAST	
THREE STAGE FULL FREE-LIFT	12-2

©2009 HYSTER COMPANY

OUTER MASS (FIGURE 12-1)

THREE STAGE FULL FREE-LIFT

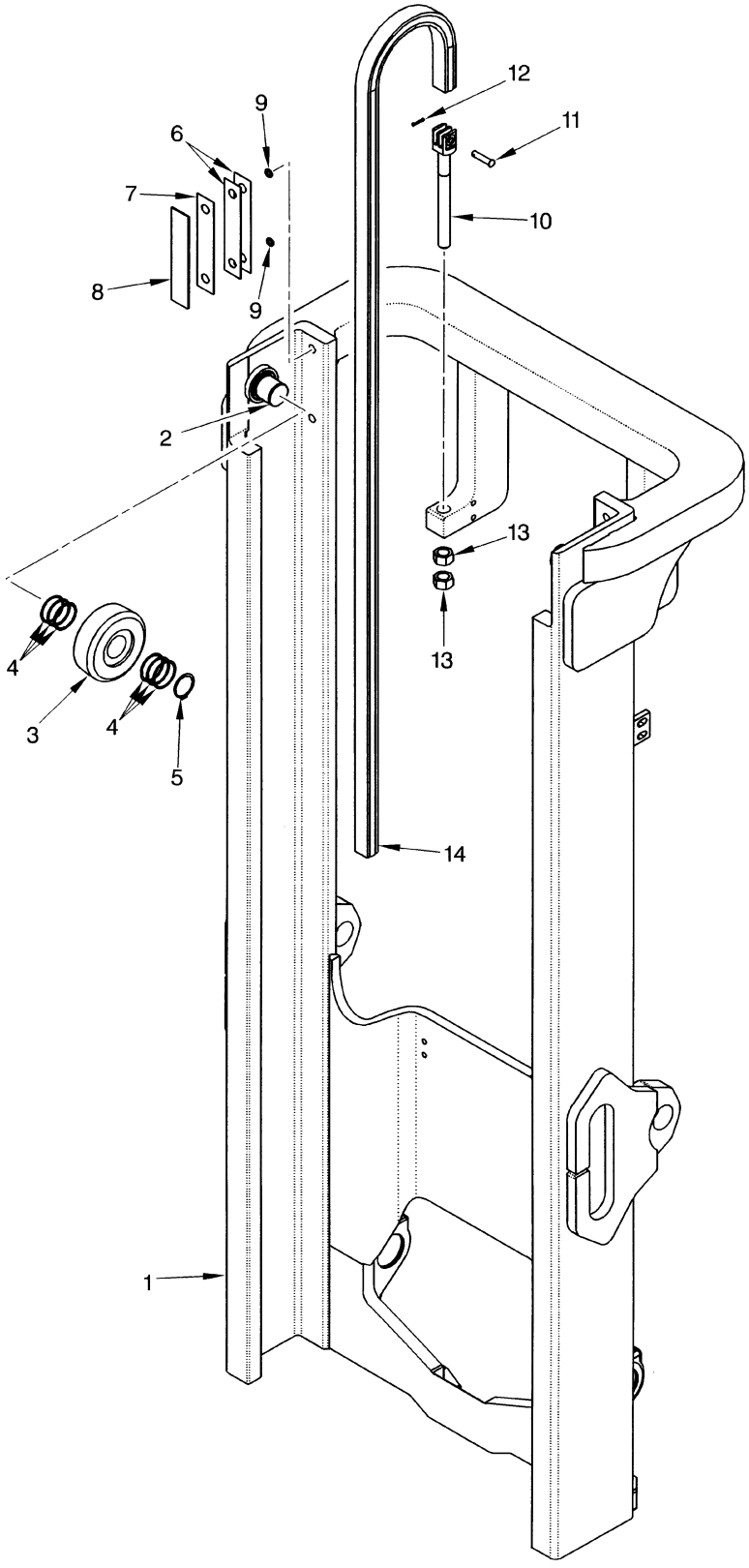

©2009 HYSTER COMPANY

OUTER MAST
THREE STAGE FULL FREE-LIFT

A751

ITEM	DESCRIPTION 1 2 3 4	LIFT HEIGHT TO BOTTOM OF FORKS			
		4365 mm (171.9 in.)	4665 mm (183.7 in.)	4900 mm (192.9 in.)	5200 mm (204.7 in.)
	Mast Group Number	A751 4365	A751 4665	A751 4900	A751 5200
	Mast Assy	2036777	2036779	2036780	2036781
1	Outer Mast	1395851	1395853	1395854	1395856
14	Chain	191081	182342	194607	191085

A751

ITEM	DESCRIPTION 1 2 3 4	LIFT HEIGHT TO BOTTOM OF FORKS	
		5500 mm (216.5 in.)	5950 mm (234.3 in.)
	Mast Group Number	A751 5500	A751 5950
	Mast Assy	2036782	2036783
1	Outer Mast	1395858	1395861
14	Chain	191072	206749

A752

ITEM	DESCRIPTION 1 2 3 4	LIFT HEIGHT TO BOTTOM OF FORKS			
		4087 mm (160.9 in.)	4387 mm (172.7 in.)	4640 mm (182.7 in.)	4940 mm (194.5 in.)
	Mast Group Number	A752 4087	A752 4387	A752 4640	A752 4940
	Mast Assy	2036784	2036785	2036786	2036787
1	Outer Mast	1395851	1395853	1395854	1395856
14	Chain	280878	338647	152404	339934

A752

ITEM	DESCRIPTION 1 2 3 4	LIFT HEIGHT TO BOTTOM OF FORKS	
		5240 mm (206.3 in.)	5690 mm (224.0 in.)
	Mast Group Number	A752 5240	A752 5690
	Mast Assy	2036788	2036789
1	Outer Mast	1395858	1395861
14	Chain	356916	338649

©2009 HYSTER COMPANY

OUTER MAST
THREE STAGE FULL FREE-LIFT

KEY:
A: H70-90XM
B: H100-120XM

ITEM	PART NO.	DESCRIPTION	QTY A	QTY B
	b	Mast Assy	1	1
1	**b**	Outer Mast	1	1
2	1500744	Stubshaft	2	2
3	**a** 1399203	Load Roller (123.55 mm) ("A")	2	2
3	**a** 1399204	Load Roller 5 in. ("B") (0,52 mm)	2	2
3	**a** 1399205	Load Roller (125.07 mm) ("C") (1,52 mm)	2	2
4	126765	Shim	12	12
5	1465072	Snap Ring	2	2
6	161273	Shim (0.020 in.)	AR	AR
7	161272	Shim (0.007 in.)	AR	AR
8	104264	Wear Strip	2	2
9	104506	O-Ring	4	4
10	1331990	Chain Anchor	2	..
10	1331991	Chain Anchor	..	2
11	327591	Pin (Anchor)	2	..
11	339932	Pin (Anchor)	..	2
12	15222	Cotter Pin	2	2
13	221717	Nut	4	4
14	**b**	Chain	2	2

FOOTNOTES:

a Letter Located on Inside Surface of Load Roller

b Refer to Table

©2009 HYSTER COMPANY

NOTES

©2009 HYSTER COMPANY

INTERMEDIATE MAST (FIGURE 12-2)
THREE STAGE FULL FREE-LIFT

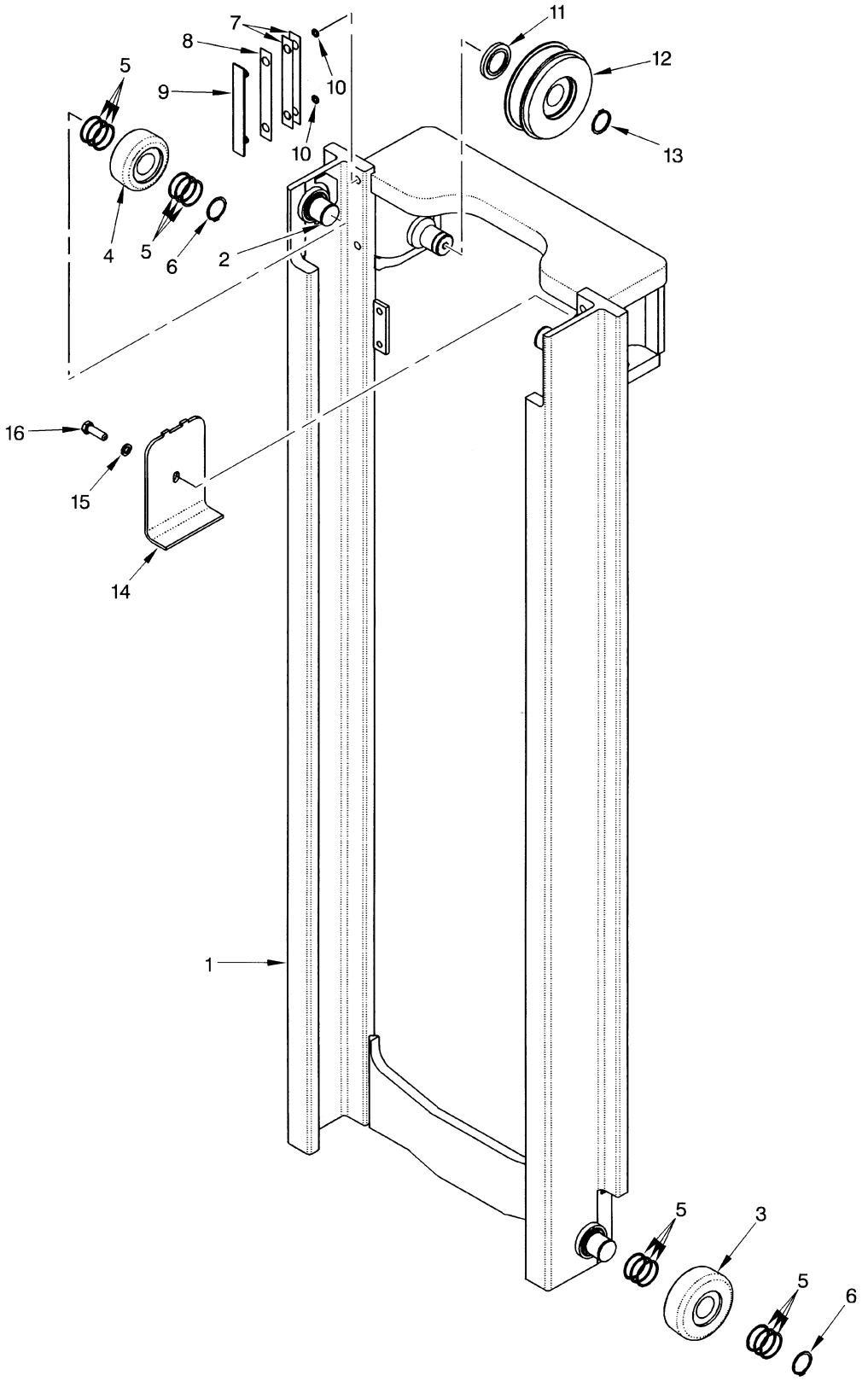

©2009 HYSTER COMPANY

INTERMEDIATE MAST
THREE STAGE FULL FREE-LIFT

A751

ITEM	DESCRIPTION 1 2 3 4	LIFT HEIGHT TO BOTTOM OF FORKS			
		4365 mm (171.9 in.)	4665 mm (183.7 in.)	4900 mm (192.9 in.)	5200 mm (204.7 in.)
	Mast Group Number	A751 4365	A751 4665	A751 4900	A751 5200
	Mast Assy	2036777	2036779	2036780	2036781
1	Intermediate Mast	1395877	1395879	1395880	1395882

A751

ITEM	DESCRIPTION 1 2 3 4	LIFT HEIGHT TO BOTTOM OF FORKS	
		5500 mm (216.5 in.)	5950 mm (234.3 in.)
	Mast Group Number	A751 5500	A751 5950
	Mast Assy	2036782	2036783
1	Intermediate Mast	1395884	1395887

A752

ITEM	DESCRIPTION 1 2 3 4	LIFT HEIGHT TO BOTTOM OF FORKS			
		4087 mm (160.9 in.)	4387 mm (172.7 in.)	4640 mm (182.7 in.)	4940 mm (194.5 in.)
	Mast Group Number	A752 4087	A752 4387	A752 4640	A752 4940
	Mast Assy	2036784	2036785	2036786	2036787
1	Intermediate Mast	1395877	1395879	1395880	1395882

A752

ITEM	DESCRIPTION 1 2 3 4	LIFT HEIGHT TO BOTTOM OF FORKS	
		5240 mm (206.3 in.)	5690 mm (224.0 in.)
	Mast Group Number	A752 5240	A752 5690
	Mast Assy	2036788	2036789
1	Intermediate Mast	1395884	1395887

KEY:
A: H70-90XM
B: H100-120XM

ITEM	PART NO.	DESCRIPTION	QTY A	QTY B
	b	Mast Assy	1	1

©2009 HYSTER COMPANY

INTERMEDIATE MAST
THREE STAGE FULL FREE-LIFT

KEY:
A: H70-90XM
B: H100-120XM

ITEM	PART NO.	DESCRIPTION	QTY A	QTY B
1	**b**	Intermediate Mast	1	1
2	1500744	Stubshaft	4	4
3	**a** 1399203	Load Roller (123.55 mm) ("A")	2	2
3	**a** 1399204	Load Roller 5 in. ("B") (0,76 mm)	2	2
3	**a** 1399205	Load Roller (125.07 mm) ("C") (1,52 mm)	2	2
4	**a** 1511882	Load Roller (100.91 mm) ("A")	2	2
4	**a** 1511883	Load Roller (101.67 mm) ("B") (0,26 mm)	2	2
4	**a** 1511884	Load Roller (102.43 mm) ("C") (1,52 mm)	2	2
5	126765	Shim	24	24
6	1465072	Snap Ring	4	4
7	131716	Shim (0.020 in.)	AR	AR
8	131715	Shim (0.007 in.)	AR	AR
9	215211	Wear Strip	2	2
10	104506	O-Ring	4	4
11	1389846	Spacer	2	2
12	1389780	Chain Sheave	2	..
12	1389779	Chain Sheave	..	2
13	12891	Snap Ring	2	2
14	1389959	Bracket (Chain)	1	1
15	292683	Lockwasher	1	1
16	246001	Capscrew	1	1

FOOTNOTES:

a Letter Located on Inside Surface of Load Roller **b** Refer to Table

©2009 HYSTER COMPANY

NOTES

©2009 HYSTER COMPANY

INNER MAST (FIGURE 12-3)
THREE STAGE FULL FREE-LIFT

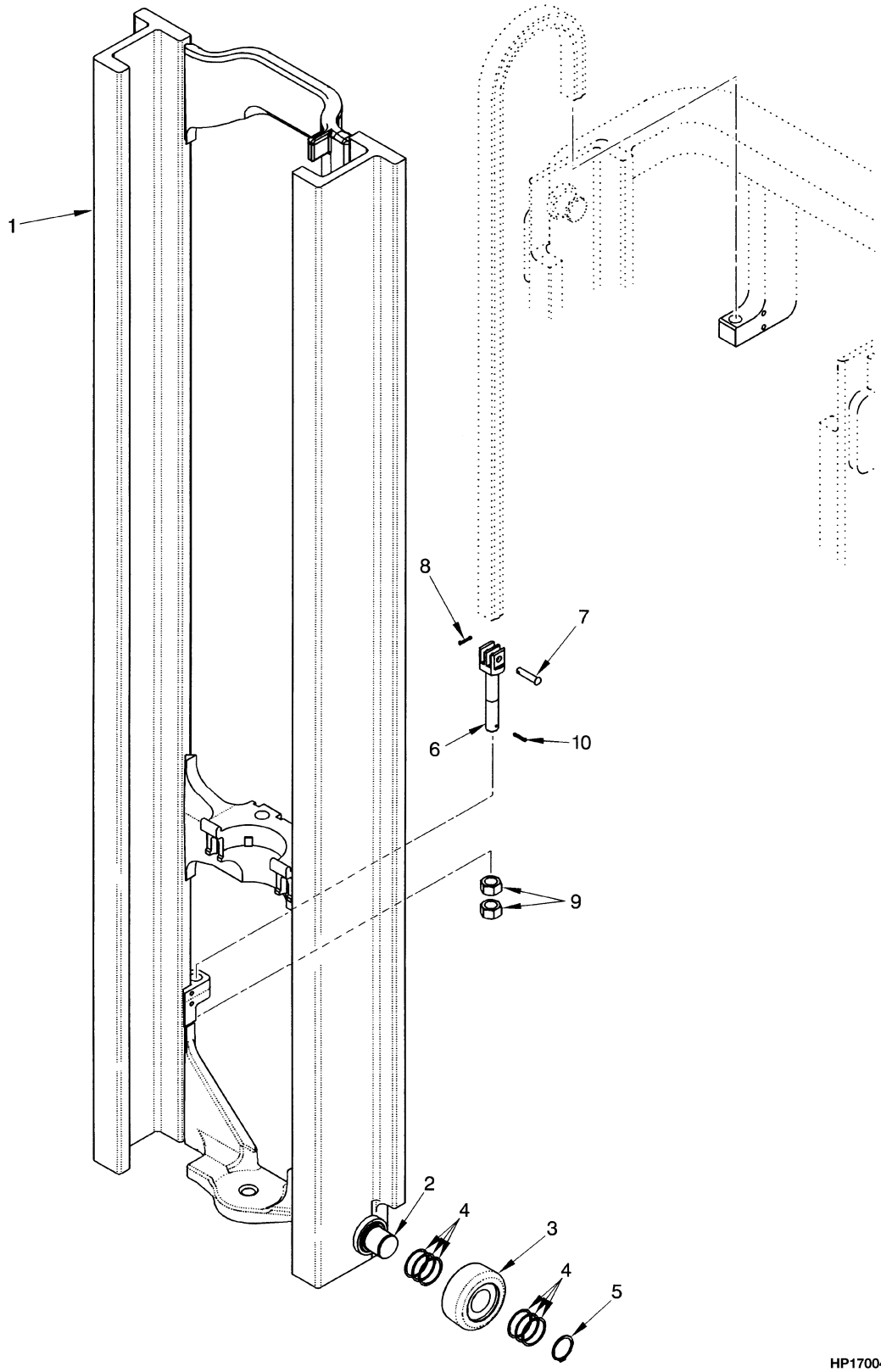

©2009 HYSTER COMPANY

INNER MAST
THREE STAGE FULL FREE-LIFT

A751

ITEM	DESCRIPTION 1 2 3 4	LIFT HEIGHT TO BOTTOM OF FORKS			
		4365 mm (171.9 in.)	4665 mm (183.7 in.)	4900 mm (192.9 in.)	5200 mm (204.7 in.)
	Mast Group Number	A751 4365	A751 4665	A751 4900	A751 5200
	Mast Assy	2036777	2036779	2036780	2036781
1	Inner Mast	1395903	1395905	1395906	1395908

A751

ITEM	DESCRIPTION 1 2 3 4	LIFT HEIGHT TO BOTTOM OF FORKS	
		5500 mm (216.5 in.)	5950 mm (234.3 in.)
	Mast Group Number	A751 5500	A751 5950
	Mast Assy	2036782	2036783
1	Inner Mast	1395910	1395913

A752

ITEM	DESCRIPTION 1 2 3 4	LIFT HEIGHT TO BOTTOM OF FORKS			
		4087 mm (160.9 in.)	4387 mm (172.7 in.)	4640 mm (182.7 in.)	4940 mm (194.5 in.)
	Mast Group Number	A752 4087	A752 4387	A752 4640	A752 4940
	Mast Assy	2036784	2036785	2036786	2036787
1	Inner Mast	1395903	1395905	1395906	1395908

A752

ITEM	DESCRIPTION 1 2 3 4	LIFT HEIGHT TO BOTTOM OF FORKS	
		5240 mm (206.3 in.)	5690 mm (224.0 in.)
	Mast Group Number	A752 5240	A752 5690
	Mast Assy	2036788	2036789
1	Inner Mast	1395910	1395913

KEY:
A: H70-90XM
B: H100-120XM

ITEM	PART NO.	DESCRIPTION	QTY A	QTY B
	b	Mast Assy	1	1

©2009 HYSTER COMPANY

INNER MAST
THREE STAGE FULL FREE-LIFT

KEY:
A: H70-90XM
B: H100-120XM

ITEM	PART NO.	DESCRIPTION	QTY A	QTY B
1	**b**	Inner Mast	1	1
2	1500744	Stubshaft	2	2
3	**a** 1511882	Load Roller (100.91 mm) ("A")	2	2
3	**a** 1511883	Load Roller (101.67 mm) ("B") (0,26 mm)	2	2
3	**a** 1511884	Load Roller (102.43 mm) ("C") (1,52 mm)	2	2
4	126765	Shim	12	12
5	1465072	Snap Ring	2	2
6	1387285	Chain Anchor	2	..
6	1387286	Chain Anchor	..	2
7	327591	Pin (Anchor)	2	..
7	339932	Pin (Anchor)	..	2
8	15222	Cotter Pin	2	2
9	221717	Nut	4	4
10	15224	Cotter Pin	2	2

FOOTNOTES:

a Letter Located on Inside Surface of Load Roller

b Refer to Table

©2009 HYSTER COMPANY

NOTES

©2009 HYSTER COMPANY

MAIN LIFT (FIGURE 12-4)
THREE STAGE FULL FREE-LIFT

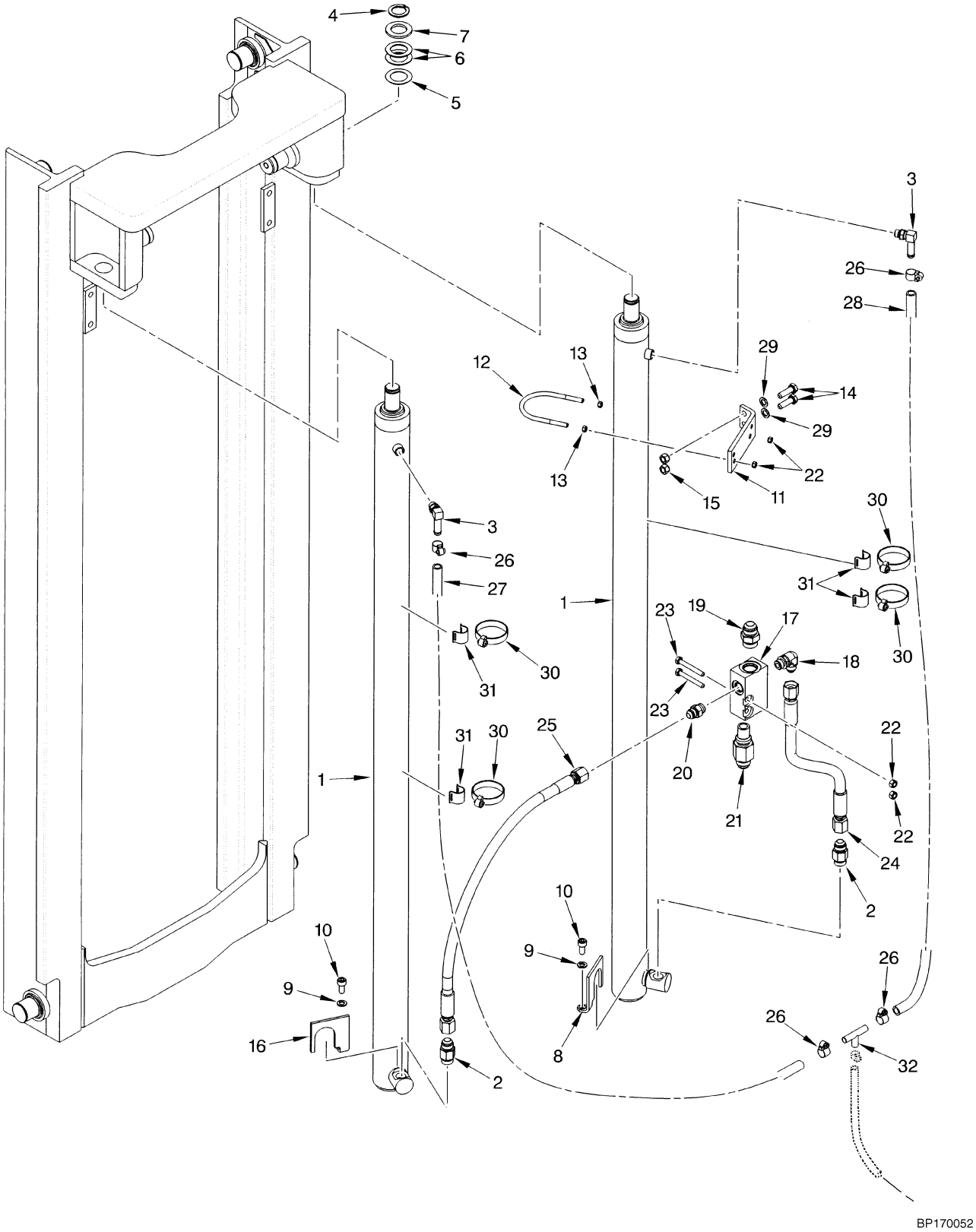

©2009 HYSTER COMPANY

MAIN LIFT
THREE STAGE FULL FREE-LIFT

A751

ITEM	DESCRIPTION 1 2 3 4	LIFT HEIGHT TO BOTTOM OF FORKS			
		4365 mm (171.9 in.)	4665 mm (183.7 in.)	4900 mm (192.9 in.)	5200 mm (204.7 in.)
	Mast Group Number	A751 4365	A751 4665	A751 4900	A751 5200
	Mast Assy	2036777	2036779	2036780	2036781
27	Hose Assy (LH)	1399092	1399096	1399099	1399103
28	Hose Assy (RH)	127518	1474605	1399077	1399081

A751

ITEM	DESCRIPTION 1 2 3 4	LIFT HEIGHT TO BOTTOM OF FORKS	
		5500 mm (216.5 in.)	5950 mm (234.3 in.)
	Mast Group Number	A751 5500	A751 5950
	Mast Assy	2036782	2036783
27	Hose Assy (LH)	1399107	1399116
28	Hose Assy (RH)	1399085	1399094

A752

ITEM	DESCRIPTION 1 2 3 4	LIFT HEIGHT TO BOTTOM OF FORKS			
		4087 mm (160.9 in.)	4387 mm (172.7 in.)	4640 mm (182.7 in.)	4940 mm (194.5 in.)
	Mast Group Number	A752 4087	A752 4387	A752 4640	A752 4940
	Mast Assy	2036784	2036785	2036786	2036787
27	Hose Assy (LH)	1399090	1399094	1399096	1399100
28	Hose Assy (RH)	1486838	980929	1474605	1399078

A752

ITEM	DESCRIPTION 1 2 3 4	LIFT HEIGHT TO BOTTOM OF FORKS	
		5240 mm (206.3 in.)	5690 mm (224.0 in.)
	Mast Group Number	A752 5240	A752 5690
	Mast Assy	2036788	2036789
27	Hose Assy (LH)	1399104	1399114
28	Hose Assy (RH)	1399082	1399092

©2009 HYSTER COMPANY

MAIN LIFT
THREE STAGE FULL FREE-LIFT

KEY:
A: H70-90XM
B: H100-120XM

ITEM	PART NO.	DESCRIPTION	QTY A	QTY B
	a	Mast Assy	1	1
1	. . . . .	Main Cylinder (☞Figure 12-6)	2	2
2	2035787	Hyd Velocity Fuse	2	2
3	110178	Fitting	2	2
3	16483	O-Ring	1	1
4	304523	Snap Ring	2	2
5	1325120	Shim	AR	AR
6	142247	Shim	AR	AR
7	332061	Washer	1	1
8	1389924	Bracket (RH)	1	1
9	292682	Lockwasher	2	2
10	296024	Capscrew	2	2
11	1474399	Bracket Wldmt	2	2
12	1389844	Clamp	2	..
12	1389845	Clamp	..	2
13	239503	Nut	4	4
14	287860	Capscrew	4	4
15	316826	Nut	4	4
16	1389922	Bracket (LH)	1	1
17	1388019	Housing (Control Valve)	1	1
18	16559	Fitting	1	1
18	16484	O-Ring	1	1
19	16543	Connector	1	1
19	16484	O-Ring	1	1
20	16541	Fitting	1	1
20	16484	O-Ring	1	1
21	315262	Lowering Control Valve	1	..
21	319891	Lowering Control Valve	..	1
22	313828	Nut	6	6
23	292511	Capscrew	2	2
24	1387324	Hose Assy	1	1
25	1387399	Hose Assy	1	1
26	379405	Clamp	4	4
27	**a**	Hose Assy (LH)	1	1
28	**a**	Hose Assy (RH)	1	1
29	320160	Washer	4	4
30	112989	Hose Clamp	4	..
30	115696	Hose Clamp	..	4
31	1465585	Hose Clamp	4	4
32	2046871	Fitting	1	1

FOOTNOTES:

a Refer to Table

©2009 HYSTER COMPANY

NOTES

©2009 HYSTER COMPANY

FREE-LIFT (FIGURE 12-5)
THREE STAGE FULL FREE-LIFT

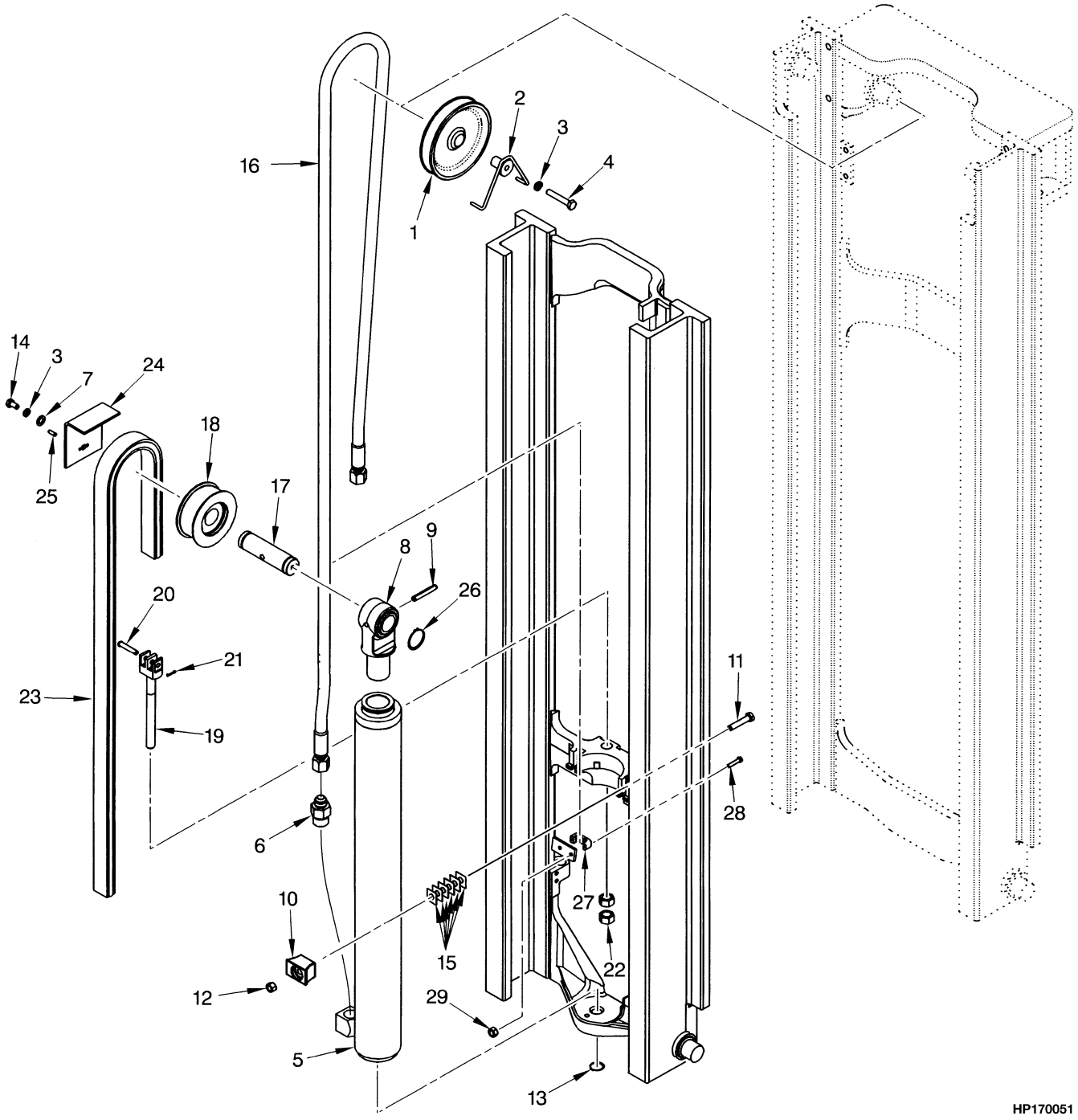

©2009 HYSTER COMPANY

FREE-LIFT
THREE STAGE FULL FREE-LIFT

A751

ITEM	DESCRIPTION 1 2 3 4	LIFT HEIGHT TO BOTTOM OF FORKS			
		4365 mm (171.9 in.)	4665 mm (183.7 in.)	4900 mm (192.9 in.)	5200 mm (204.7 in.)
	Mast Group Number	A751 4365	A751 4665	A751 4900	A751 5200
	Mast Assy	2036777	2036779	2036780	2036781
16	Hose Assy	1387963	1387965	1387966	1387968
23	Chain	337190	348827	339933	338646

A751

ITEM	DESCRIPTION 1 2 3 4	LIFT HEIGHT TO BOTTOM OF FORKS	
		5500 mm (216.5 in.)	5950 mm (234.3 in.)
	Mast Group Number	A751 5500	A751 5950
	Mast Assy	2036782	2036783
16	Hose Assy	1387970	1387973
23	Chain	366106	347243

A752

ITEM	DESCRIPTION 1 2 3 4	LIFT HEIGHT TO BOTTOM OF FORKS			
		4087 mm (160.9 in.)	4387 mm (172.7 in.)	4640 mm (182.7 in.)	4940 mm (194.5 in.)
	Mast Group Number	A752 4087	A752 4387	A752 4640	A752 4940
	Mast Assy	2036784	2036785	2036786	2036787
16	Hose Assy	1387963	1387965	1387966	1387968
23	Chain	297640	337189	337190	348827

A752

ITEM	DESCRIPTION 1 2 3 4	LIFT HEIGHT TO BOTTOM OF FORKS	
		5240 mm (206.3 in.)	5690 mm (224.0 in.)
	Mast Group Number	A752 5240	A752 5690
	Mast Assy	2036788	2036789
16	Hose Assy	1387970	1387973
23	Chain	339933	366106

©2009 HYSTER COMPANY

FREE-LIFT
THREE STAGE FULL FREE-LIFT

KEY:
A: H70-90XM
B: H100-120XM

ITEM	PART NO.	DESCRIPTION	QTY A	QTY B
	a	Mast Assy	1	1
1	2036778	Hose Sheave	1	1
2	1387553	Stubshaft	1	1
3	292683	Lockwasher	4	4
4	292531	Capscrew	1	1
5	. . . . .	Free-Lift Cylinder (☞Figure 12-7)	1	1
6	2036478	Hyd Velocity Fuse	1	..
6	2036857	Hyd Velocity Fuse	..	1
7	320161	Washer	2	2
8	1389825	Crosshead	1	1
9	302493	Roll Pin	1	1
10	2036756	Clamp	1	1
11	292564	Capscrew	2	2
12	316828	Nut	2	2
13	58929	Snap Ring	1	1
14	292526	Capscrew	2	2
15	1387584	Shim	12	12
16	**a**	Hose Assy	1	1
17	1387281	Pin	1	1
18	1387743	Chain Sheave	2	2
19	1331991	Chain Anchor	2	2
20	339932	Pin (Anchor)	2	2
21	15222	Cotter Pin	2	2
22	221717	Nut	4	4
23	**a**	Chain	2	2
24	1387519	Guard	2	2
25	**bc** 302461	Roll Pin	2	2
25	**de** 302472	Roll Pin	2	2
26	304527	Snap Ring	2	2
27	1387479	Hose Clamp	1	1
28	287844	Capscrew	2	2
29	313805	Nut	2	2

FOOTNOTES:

a Refer to Table
b → S/N A751L05296
c → S/N A752L03398
d S/N A751L05297 →
e S/N A752L03399 →

©2009 HYSTER COMPANY

NOTES

©2009 HYSTER COMPANY

MAIN CYLINDER (FIGURE 12-6)
THREE STAGE FULL FREE-LIFT

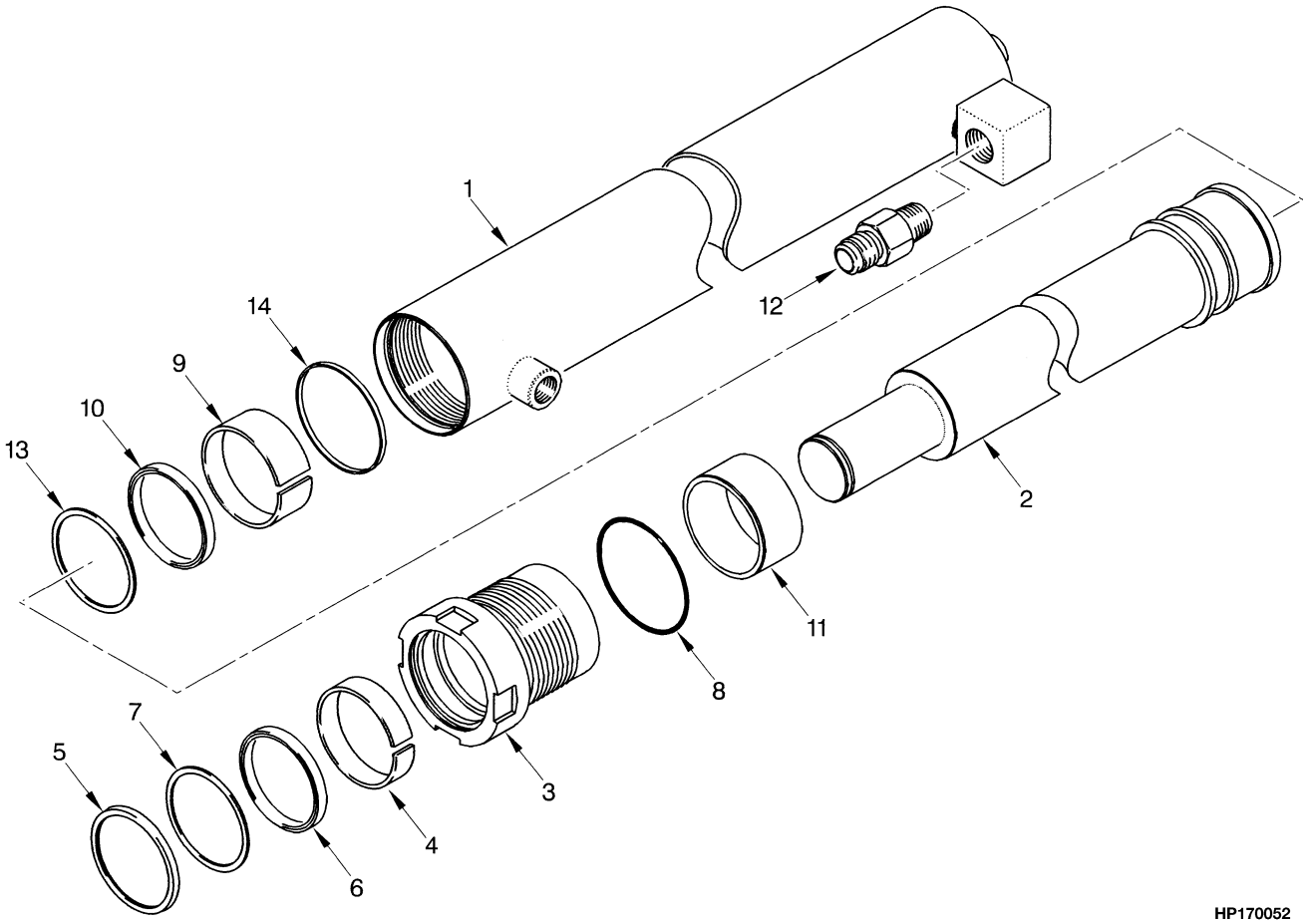

©2009 HYSTER COMPANY

MAIN CYLINDER
THREE STAGE FULL FREE-LIFT

A751

ITEM	DESCRIPTION 1 2 3 4	LIFT HEIGHT TO BOTTOM OF FORKS			
		4365 mm (171.9 in.)	4665 mm (183.7 in.)	4900 mm (192.9 in.)	5200 mm (204.7 in.)
	Mast Group Number	**A751 4365**	**A751 4665**	**A751 4900**	**A751 5200**
	Cylinder Group Number	**8604401**	**8604403**	**8604404**	**8604406**
	Cylinder Assy	2036386	2036387	2036388	2036389
1	Tube Wldmt-Cylinder	2037882	2037883	2037884	2037885
2	Cylinder Rod	2037856	2037857	2037858	2037859
11	Spacer	----	----	----	----

A751

ITEM	DESCRIPTION 1 2 3 4	LIFT HEIGHT TO BOTTOM OF FORKS	
		5500 mm (216.5 in.)	5950 mm (234.3 in.)
	Mast Group Number	**A751 5500**	**A751 5950**
	Cylinder Group Number	**8604408**	**8604411**
	Cylinder Assy	2036390	2036391
1	Tube Wldmt-Cylinder	2037886	2037887
2	Cylinder Rod	2037860	2037861
11	Spacer	----	381113

A752

ITEM	DESCRIPTION 1 2 3 4	LIFT HEIGHT TO BOTTOM OF FORKS			
		4087 mm (160.9 in.)	4387 mm (172.7 in.)	4640 mm (182.7 in.)	4940 mm (194.5 in.)
	Mast Group Number	**A752 4087**	**A752 4387**	**A752 4640**	**A752 4940**
	Cylinder Group Number	**8604451**	**8604453**	**8604454**	**8604456**
	Cylinder Assy	2036406	2036392	2036393	2036407
1	Tube Wldmt-Cylinder	2037876	2037877	2037878	2037879
2	Cylinder Rod	2037841	2037842	2037844	2037845
11	Spacer	----	----	----	----

©2009 HYSTER COMPANY

MAIN CYLINDER
THREE STAGE FULL FREE-LIFT

A752

ITEM	DESCRIPTION 1 2 3 4	LIFT HEIGHT TO BOTTOM OF FORKS	
		5240 mm (206.3 in.)	5690 mm (224.0 in.)
	Mast Group Number	A752 5240	A752 5690
	Cylinder Group Number	8604458	8604461
	Cylinder Assy	2036408	2036409
1	Tube Wldmt-Cylinder	2037880	2037881
2	Cylinder Rod	2037846	2037847
11	Spacer	----	2035198

KEY:
A: H70-90XM
B: H100-120XM

ITEM	PART NO.	DESCRIPTION	QTY A	QTY B
	a	Cylinder Assy	1	1
1	**a**	Tube Wldmt-Cylinder	1	1
2	**a**	Cylinder Rod	1	1
3	2033243	Gland	1	..
3	2033299	Gland	..	1
4	215425	Wear Ring	1	..
4	215301	Wear Ring	..	1
5	1383066	Rod Wiper (Rod)	1	..
5	1383068	Rod Wiper (Rod)	..	1
6	201829	Rod Seal	..	1
6	270077	Rod Seal	1	..
7	638249	Back-Up Ring	1	..
7	638250	Back-Up Ring	..	1
8	57664	O-Ring	1	..
8	15879	O-Ring	..	1
9	297532	Wear Ring	1	..
9	351531	Wear Ring	..	1
10	1381061	Rod Seal (Piston)	1	..
10	1381062	Rod Seal (Piston)	..	1
11	**a**	Spacer	1	1
12	2035787	Hyd Velocity Fuse	1	..
12	2036856	Hyd Velocity Fuse	..	1
13	638248	Back-Up Ring	1	..
13	351532	Back-Up Ring	..	1
14	1379063	Piston Ring (RH)	1	..
14	2036479	Piston Ring	..	1
	2036277	Kit-Seal	1	..

©2009 HYSTER COMPANY

MAIN CYLINDER
THREE STAGE FULL FREE-LIFT

KEY:
A: H70-90XM
B: H100-120XM

ITEM	PART NO.	DESCRIPTION	QTY A	QTY B
	2036278	Kit-Seal	..	1

FOOTNOTES:

a Refer to Table

FREE-LIFT CYLINDER (FIGURE 12-7)
THREE STAGE FULL FREE-LIFT

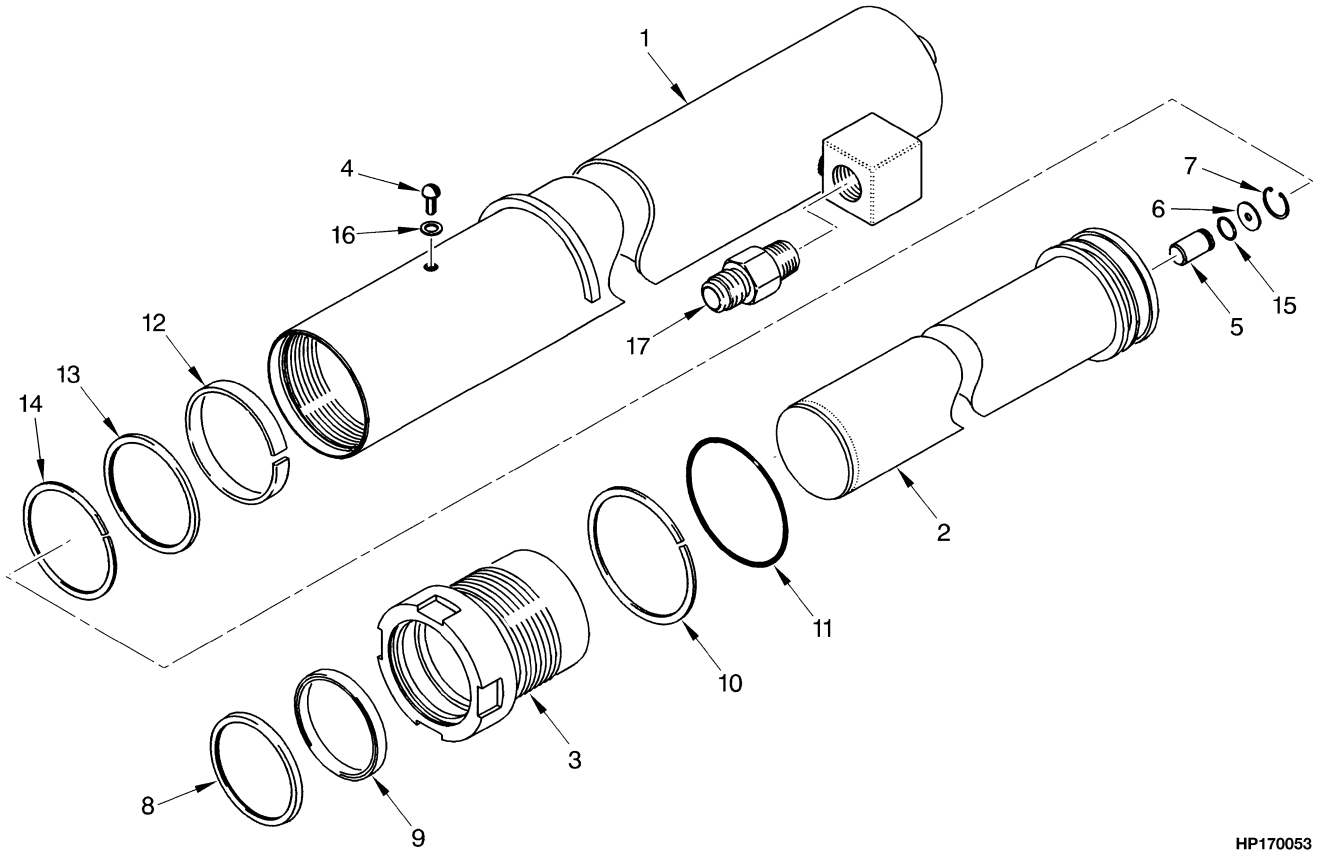

©2009 HYSTER COMPANY

FREE-LIFT CYLINDER
THREE STAGE FULL FREE-LIFT

A751

ITEM	DESCRIPTION 1 2 3 4	LIFT HEIGHT TO BOTTOM OF FORKS			
		4365 mm (171.9 in.)	4665 mm (183.7 in.)	4900 mm (192.9 in.)	5200 mm (204.7 in.)
	Mast Group Number	**A751 4365**	**A751 4665**	**A751 4900**	**A751 5200**
	Cylinder Group Number	**8605501**	**8605503**	**8605504**	**8605506**
	Cylinder Assy	2036440	2036422	2036441	2036442
1	Tube Wldmt-Cylinder	2037868	2037870	2037871	2037872
2	Cylinder Rod	2037833	2037835	2037836	2037837

A751

ITEM	DESCRIPTION 1 2 3 4	LIFT HEIGHT TO BOTTOM OF FORKS	
		5500 mm (216.5 in.)	5950 mm (234.3 in.)
	Mast Group Number	**A751 5500**	**A751 5950**
	Cylinder Group Number	**8605508**	**8605511**
	Cylinder Assy	2036443	2036444
1	Tube Wldmt-Cylinder	2037873	2037875
2	Cylinder Rod	2037838	2037840

A752

ITEM	DESCRIPTION 1 2 3 4	LIFT HEIGHT TO BOTTOM OF FORKS			
		4087 mm (160.9 in.)	4387 mm (172.7 in.)	4640 mm (182.7 in.)	4940 mm (194.5 in.)
	Mast Group Number	**A752 4087**	**A752 4387**	**A752 4640**	**A752 4940**
	Cylinder Group Number	**8520951**	**8520953**	**8520954**	**8520956**
	Cylinder Assy	2062748	2062113	2062114	2062115
1	Tube Wldmt-Cylinder	2065887	2066450	2066005	2065888
2	Cylinder Rod	2062074	2062076	2062077	2062079

©2009 HYSTER COMPANY

FREE-LIFT CYLINDER
THREE STAGE FULL FREE-LIFT

A752

ITEM	DESCRIPTION 1 2 3 4	LIFT HEIGHT TO BOTTOM OF FORKS	
		5240 mm (206.3 in.)	5690 mm (224.0 in.)
	Mast Group Number	A752 5240	A752 5690
	Cylinder Group Number	8520958	8520961
	Cylinder Assy	2062117	2062120
1	Tube Wldmt- Cylinder	2066006	2066423
2	Cylinder Rod	2062081	2062084

KEY:
A: H70-90XM
B: H100-120XM

ITEM	PART NO.	DESCRIPTION	QTY A	QTY B
	a	Cylinder Assy	1	1
1	**a**	Tube Wldmt-Cylinder	1	1
2	**a**	Cylinder Rod	1	1
3	2036282	Gland	1	..
3	2036283	Gland	..	1
4	1361302	Screw	1	1
5	257913	Check Valve	1	1
6	297531	Washer	1	1
6	637635	Washer (Optional)	1	1
7	187388	Snap Ring	1	1
8	1383070	Rod Wiper	1	1
9	637161	Rod Seal	1	1
10	164632	Back-Up Ring	1	..
10	615145	Back-Up Ring	..	1
11	15885	O-Ring	..	1
11	46629	O-Ring	1	..
12	636950	Wear Ring	1	..
12	636952	Wear Ring	..	1
13	637162	Rod Seal	1	..
13	637164	Rod Seal	..	1
14	638293	Back-Up Ring	1	..
14	638295	Back-Up Ring	..	1
15	39348	O-Ring	1	1
16	190887	Sealing Ring (Seal)	1	1
17	2036478	Hyd Velocity Fuse	1	..
17	2036857	Hyd Velocity Fuse	..	1
	2036279	Kit-Seal	1	..
	2065889	Kit-Seal	..	1

©2009 HYSTER COMPANY

FOOTNOTES:

a Refer to Table

HEADER HOSE (FIGURE 12-8)
THREE STAGE FULL FREE-LIFT

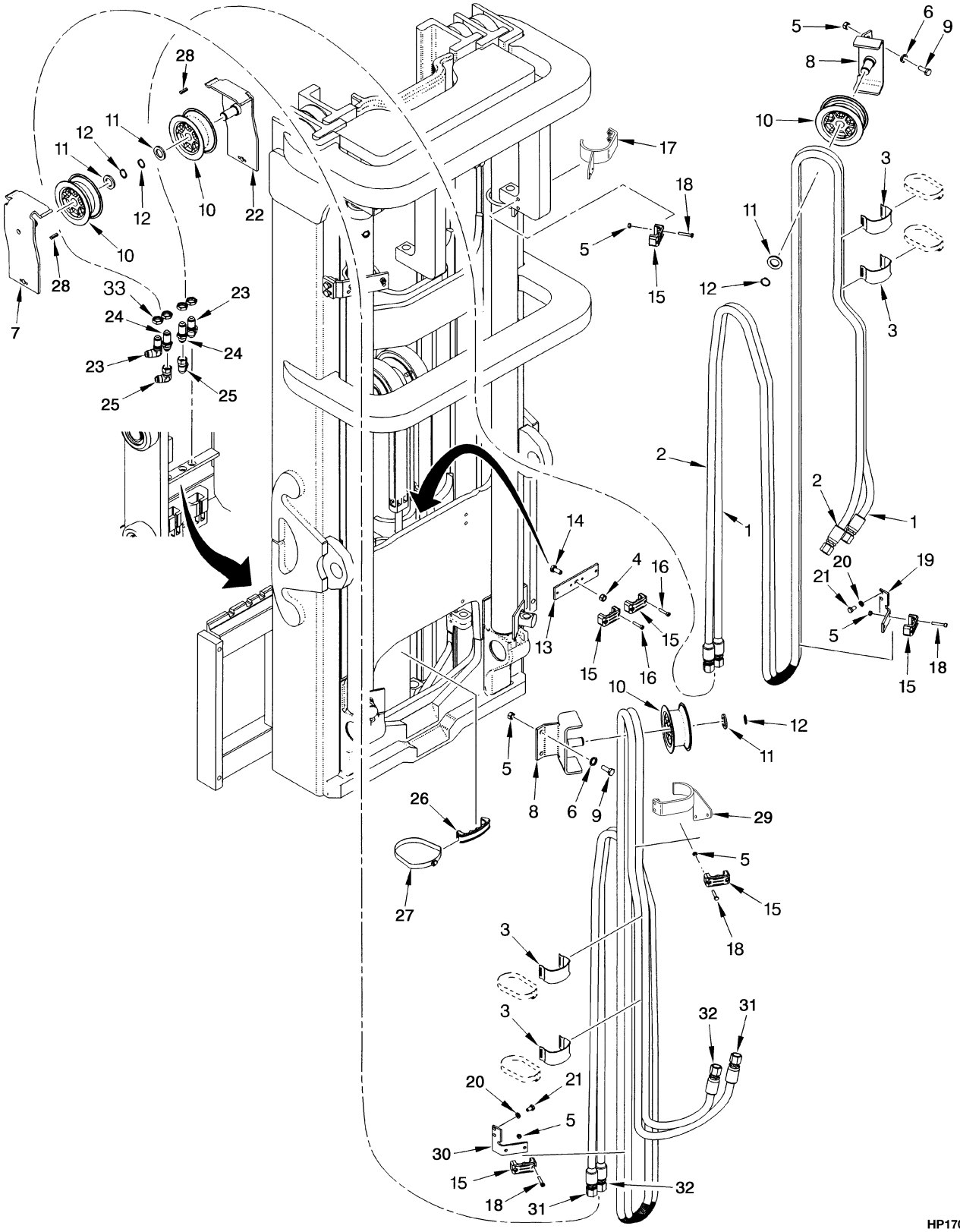

©2009 HYSTER COMPANY

HEADER HOSE
THREE STAGE FULL FREE-LIFT

A751

ITEM	DESCRIPTION 1 2 3 4	LIFT HEIGHT TO BOTTOM OF FORKS			
		4365 mm (171.9 in.)	4665 mm (183.7 in.)	4900 mm (192.9 in.)	5200 mm (204.7 in.)
	Mast Group Number	A751 4365	A751 4665	A751 4900	A751 5200
1	Hose Assy (LH)	1399268	1399480	1399484	1399266
2	Hose Assy (RH)	1399476	1399480	1399483	1399266
31	Hose Assy (LH)	1473100	1399492	1399270	1399500
32	Hose Assy (RH)	1399274	1399490	1399494	1399499

A751

ITEM	DESCRIPTION 1 2 3 4	LIFT HEIGHT TO BOTTOM OF FORKS	
		5500 mm (216.5 in.)	5950 mm (234.3 in.)
	Mast Group Number	A751 5500	A751 5950
1	Hose Assy (LH)	1399496	1399505
2	Hose Assy (RH)	1399495	1399506
31	Hose Assy (LH)	1399506	1399514
32	Hose Assy (RH)	1399504	1399512

A752

ITEM	DESCRIPTION 1 2 3 4	LIFT HEIGHT TO BOTTOM OF FORKS			
		4087 mm (160.9 in.)	4387 mm (172.7 in.)	4640 mm (182.7 in.)	4940 mm (194.5 in.)
	Mast Group Number	A752 4087	A752 4387	A752 4640	A752 4940
1	Hose Assy (LH)	1399475	1399477	1399482	1399487
2	Hose Assy (RH)	1399475	1399479	1399482	1399488
31	Hose Assy (LH)	1399482	1399489	1399493	1399498
32	Hose Assy (RH)	1399481	1399485	1399491	1399273

©2009 HYSTER COMPANY

HEADER HOSE
THREE STAGE FULL FREE-LIFT

A752

ITEM	DESCRIPTION 1 2 3 4	LIFT HEIGHT TO BOTTOM OF FORKS	
		5240 mm (206.3 in.)	5690 mm (224.0 in.)
	Mast Group Number	A752 5240	A752 5690
1	Hose Assy (LH)	1467327	1399503
2	Hose Assy (RH)	1399493	1399503
31	Hose Assy (LH)	1399503	1399272
32	Hose Assy (RH)	1399501	1399510

KEY:
A: Three Function
B: Four Function

ITEM	PART NO.	DESCRIPTION	QTY A	QTY B
1	**a**	Hose Assy (LH)	1	..
2	**a**	Hose Assy (RH)	1	..
3	1465489	Hose Clamp	4	8
4	316826	Nut	1	1
5	313805	Nut	4	8
6	292682	Lockwasher	2	4
7	1399218	Bracket Wldmt (Hose Mounting) (LH)	..	1
8	1387523	Bracket Wldmt	1	2
9	287860	Capscrew	2	4
10	1332705	Hose Sheave	2	4
11	320171	Washer	2	4
12	58902	Snap Ring	2	4
13	1389828	Bracket	1	1
14	287854	Capscrew	1	1
15	2035791	Hose Clamp	3	6
16	293796	Capscrew	4	8
17	1474496	Bracket (RH)	1	1
18	292503	Capscrew	4	8
19	1387327	Bracket (RH)	1	1
20	292681	Lockwasher	2	4
21	287851	Capscrew	2	4
22	1399217	Bracket Wldmt	1	1
23	16458	Fitting	1	2
24	16448	Fitting	1	2
25	16989	Fitting	1	2
26	1388018	Spacer	1	1
27	1399243	Clamp	1	1
28	**bc** 302461	Roll Pin (Spring)	1	2
28	**de** 302472	Roll Pin (Spring)	1	2
29	1474497	Bracket (LH)	..	1
30	1389854	Bracket (LH)	..	1

See Service Manual for service procedures.
©2009 HYSTER COMPANY

HEADER HOSE
THREE STAGE FULL FREE-LIFT

KEY:
A: Three Function
B: Four Function

ITEM	PART NO.	DESCRIPTION	QTY A	QTY B
31	**a**	Hose Assy (LH)	..	1
32	**a**	Hose Assy (RH)	..	1
33	1625091	Shim	2	4

FOOTNOTES:

a Refer to Table
b → S/N A751L05296
c → S/N A752L03398
d S/N A751L05297 →
e S/N A752L03399 →

©2009 HYSTER COMPANY

CARRIAGE (FIGURE 12-9)
THREE STAGE FULL FREE-LIFT

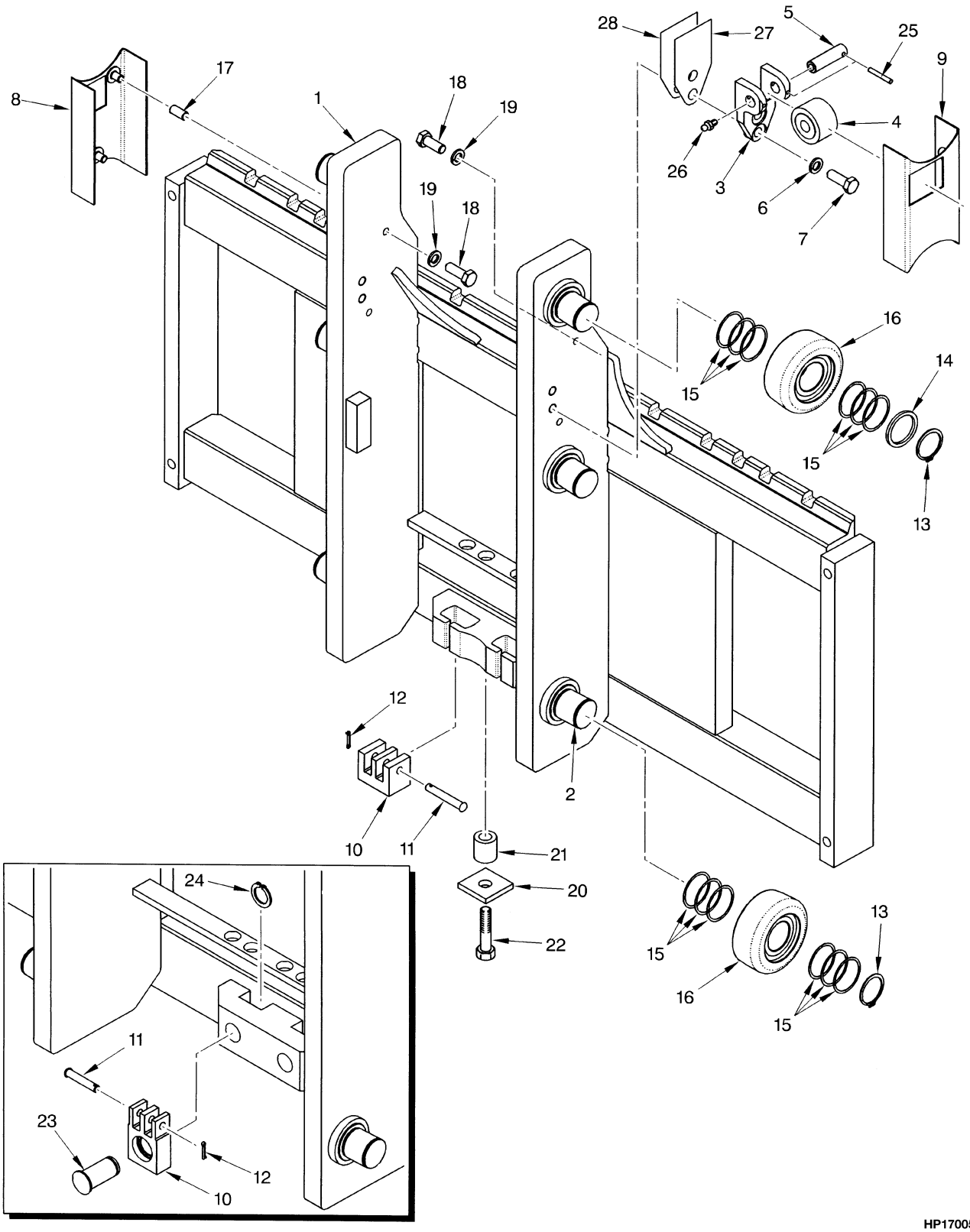

HP170055

©2009 HYSTER COMPANY

CARRIAGE
THREE STAGE FULL FREE-LIFT

KEY:
A: H70-90XM
B: H100-120XM

ITEM	PART NO.	DESCRIPTION	QTY A	QTY B
	2035792	Carriage (48 in.)	1	..
	2109388	Carriage (48 in.) (Alternate Part)	1	..
	2035794	Carriage (60 in.)	1	..
	2109423	Carriage (60 in.) (Alternate Part)	1	..
	2035796	Carriage (54 in.)	..	1
	a 2037707	Carriage (54 in.)	..	1
	2035797	Carriage (60 in.)	..	1
1	1387457	Carriage Wldmt (48 in.)	1	..
1	1700060	Carriage Wldmt (48 in.) (Alternate Part)	1	..
1	1387459	Carriage Wldmt (60 in.)	1	..
1	1700217	Carriage Wldmt (60 in.) (Alternate Part)	1	..
1	1387497	Carriage Wldmt (54 in.)	..	1
1	**a** 1465228	Carriage Wldmt (54 in.)	..	1
1	1387498	Carriage Wldmt (60 in.)	..	1
2	1500744	Stubshaft	6	6
3	**a** 1465177	Bracket	..	2
4	**a** 1387993	Side Roller	..	2
5	**a** 1465028	Pin	..	2
6	292683	Lockwasher	..	4
7	292528	Capscrew	..	4
8	319323	Bracket Wldmt (LH) (LH)	1	1
9	319322	Bracket Wldmt (RH) (RH)	1	1
10	1387548	Chain Anchor	2	..
10	341558	Chain Anchor	..	2
11	1387549	Pin (Anchor)	2	..
11	339932	Pin (Anchor)	..	2
12	15222	Cotter Pin	2	2
13	1465072	Snap Ring	6	6
14	1399224	Spacer	2	2
15	126765	Shim	24	24
16	**b** 1511882	Load Roller (100.91 mm) ("A")	6	6
16	**b** 1511883	Load Roller (101.67 mm) ("B") (0,26 mm)	6	6
16	**b** 1511884	Load Roller (102.43 mm) ("C") (1,52 mm)	6	6
17	317292	Spacer	4	4
18	18518	Capscrew	4	4
19	15155	Lockwasher	4	4
20	1400126	Plate	1	..
21	1400125	Spacer	1	..
22	292512	Capscrew	1	..
23	320327	Pin	..	2
24	131358	Snap Ring	..	2
25	**a** 66333	Roll Pin	..	2
26	**a** 16001	Grease Fitting	..	2
27	**a** 192425	Shim (0.062 in.)	..	AR
28	**a** 192424	Shim (0.030 in.)	..	AR

©2009 HYSTER COMPANY

FOOTNOTES:

a Attachment Carriage (H90XM, 100XM)

b Letter Located on Inside Surface of Load Roller

©2009 HYSTER COMPANY

NOTES

©2009 HYSTER COMPANY

LOAD BACKREST EXTENSION (FIGURE 12-10)
THREE STAGE FULL FREE-LIFT

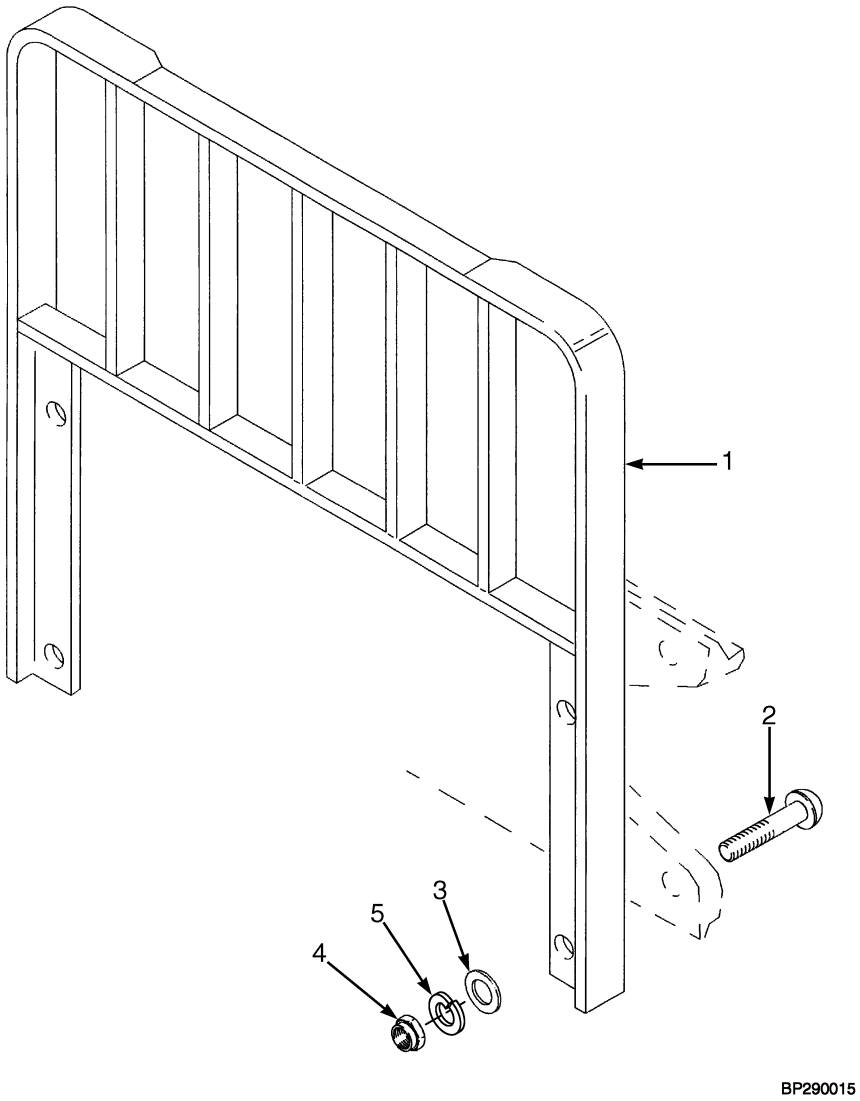

©2009 HYSTER COMPANY

LOAD BACKREST EXTENSION
THREE STAGE FULL FREE-LIFT

KEY:
A: H70-90XM
B: H100-120XM

ITEM	PART NO.	DESCRIPTION	QTY A	QTY B
1	1387341	Load Backrest (48 in.)	1	..
1	**a** 1387342	Load Backrest (48 in.)	1	..
1	1387348	Load Backrest (48 in.)	..	1
1	**a** 1464863	Load Backrest (48 in.)	..	1
1	1387343	Load Backrest (54 in.)	1	..
1	**a** 1387344	Load Backrest (54 in.)	1	..
1	1387904	Load Backrest (54 in.)	..	1
1	**a** 1464864	Load Backrest (54 in.)	..	1
1	1387345	Load Backrest (60 in.)	1	..
1	**a** 1387346	Load Backrest (60 in.)	1	..
1	1387349	Load Backrest (60 in.)	..	1
1	**a** 1464865	Load Backrest (60 in.)	..	1
2	1387330	Capscrew	4	4
3	221771	Washer	4	4
3	**b** 296423	Washer	4	4
4	292656	Nut	4	4
5	292683	Lockwasher	4	4

FOOTNOTES:

a For Polished Forks with Full Bottom Taper

b Optional

©2009 HYSTER COMPANY

FORK (FIGURE 12-11)

STANDARD TAPER HOOK TYPE (H70-90XM) — THREE STAGE FULL FREE-LIFT

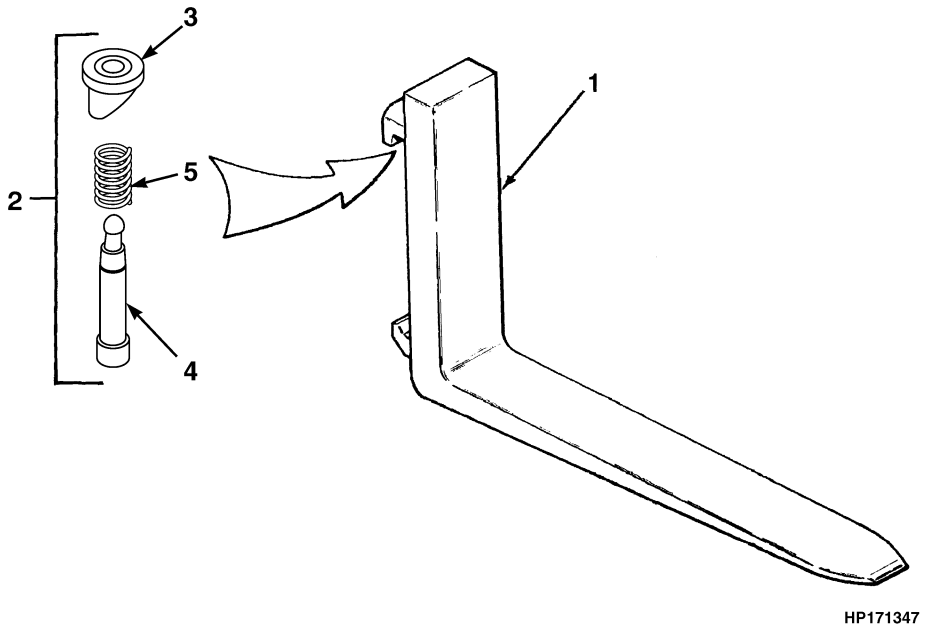

HP171347

KEY:
A: H70XM (50 mm x 125 mm) (2 in. x 5 in.)
B: H80XM (50 mm x 125 mm) (2 in. x 5 in.)
C: H90XM (50 mm x 150 mm) (2 in. x 6 in.)
D: H90XM (50 mm x 125 mm) (2 in. x 5 in.)
E: H90XM (50 mm x 150 mm) (2 in. x 6 in.)

ITEM	PART NO.	DESCRIPTION	QTY A	B	C	D	E
1	367420	Fork (42 in.)	2	2	..	2	..
1	367421	Fork (48 in.)	2	2	..	2	..
1	367422	Fork (54 in.)	2	2	..	..	..
1	1399915	Fork (54 in.)	..	..	..	..	2
1	367423	Fork (60 in.)	2	..	..	..	..
1	1399916	Fork (60 in.)	..	..	2	..	2
1	367424	Fork (72 in.)	2	..	..	..	..
1	1399917	Fork (72 in.)	..	..	2	..	2
2	1523739	Kit-Latch	2	2	2	2	2
3	1523732	Knob	1	1	1	1	1
4	1523737	Pin	1	1	1	1	1
5	1500784	Spring	1	1	1	1	1

©2009 HYSTER COMPANY

FORK (FIGURE 12-12)

STANDARD TAPER HOOK TYPE (H100-120XM) — THREE STAGE FULL FREE-LIFT

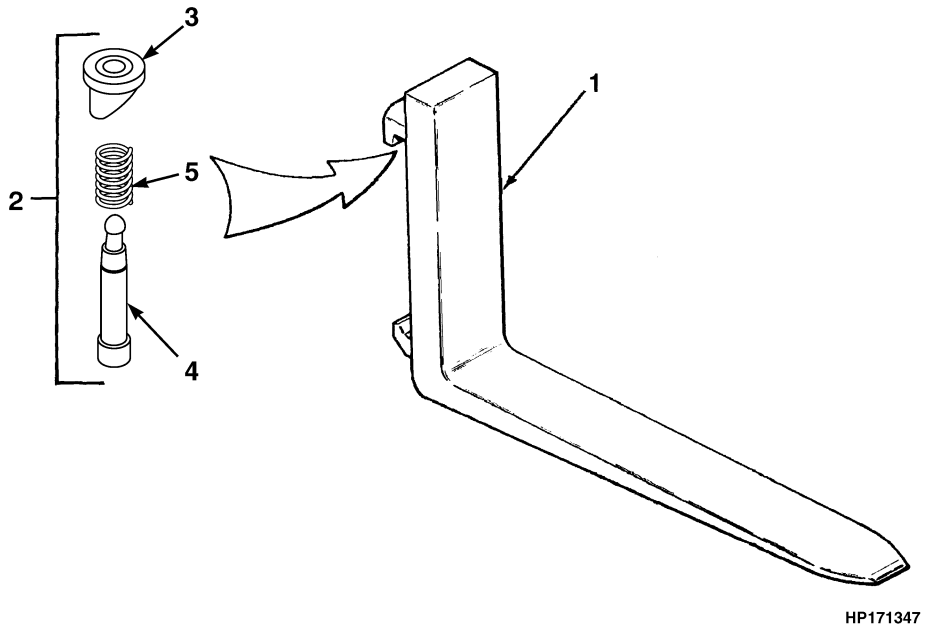

KEY:
A: H100 XM (50 mm x 150 mm) (2 in. x 6 in.)
B: H100 XM (60 mm x 150 mm) (2.36 in. x 6 in.)
C: H110XM (50 mm x 150 mm) (2 in. x 6 in.)
D: H110 XM (60 mm x 150 mm) (2.36 in. x 6 in.)
E: H120 XM (60 mm x 150 mm) (2.36 in. x 6 in.)

			QTY				
ITEM	**PART NO.**	**DESCRIPTION**	**A**	**B**	**C**	**D**	**E**
1	1399919	Fork (42 in.)	2	..	2	..	..
1	1458264	Fork (42 in.)	..	..	..	..	2
1	1399920	Fork (48 in.)	2	..	2	..	..
1	1333001	Fork (48 in.)	..	..	..	..	2
1	1399921	Fork (54 in.)	2	..	..	..	..
1	1333002	Fork (54 in.)	..	..	..	2	2
1	1399922	Fork (60 in.)	2	..	..	..	..
1	1333003	Fork (60 in.)	..	..	..	2	2
1	1333004	Fork (72 in.)	..	2	..	2	2
2	1523742	Kit-Latch (Class IV)	2	2	2	2	2
3	1523732	Knob	1	1	1	1	1
4	1523741	Pin	1	1	1	1	1
5	1500786	Spring	1	1	1	1	1

©2009 HYSTER COMPANY

FORK (FIGURE 12-13)

POLISHED FORK WITH FULL BOTTOM TAPER HOOK TYPE — THREE STAGE FULL FREE-LIFT

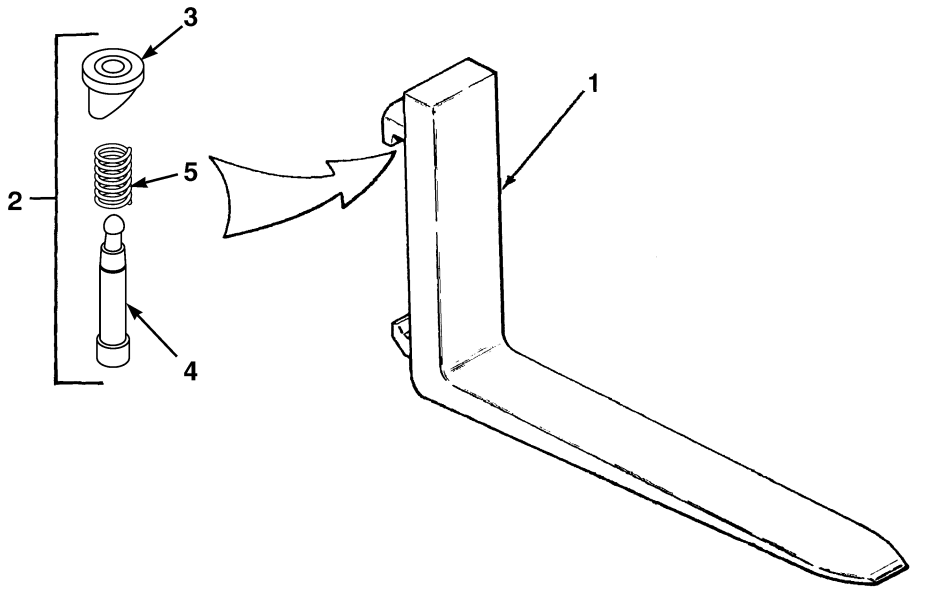

KEY:
A: H70-90XM (40 mm x 200 mm) (1.5 in. x 8 in.)
B: H100-120 XM (40 mm x 250 mm) (1.5 in. x 10 in.)

ITEM	PART NO.	DESCRIPTION	QTY A	QTY B
1	1465545	Fork (48 in.)	2	..
1	1465547	Fork (48 in.)	..	2
1	1465546	Fork (54 in.)	2	..
1	1465548	Fork (54 in.)	..	2
2	1523739	Kit-Latch	2	..
2	1523742	Kit-Latch (Class IV)	..	2
3	1523732	Knob	1	1
4	1523737	Pin	1	..
4	1523741	Pin	..	1
5	1500784	Spring	1	..
5	1500786	Spring	..	1

©2009 HYSTER COMPANY

13 OPTIONS

SECTION 13
OPTIONS

DESCRIPTION	PAGE
ACCUMULATOR	13-26
AMBER STROBE REVERSE LIGHTS	
WITHOUT CAB (→ 9/2003)	13-34
WITHOUT REAR DRIVE LIGHTS (9/2003 →)	13-36
AUDIBLE ALARM	13-62
AUXILIARY TUBE EXTENSION KIT	
TWO AND THREE STAGE FULL FREE-LIFT	13-24
TWO STAGE LIMITED FREE-LIFT	13-22
CAB	13-65
CAB ATTACHING PARTS	13-40
SHEET 1 OF 3	13-66
SHEET 2 OF 3	13-68
SHEET 3 OF 3	13-70
DOOR ASSEMBLY	
LEFT HAND	13-76
RIGHT HAND	13-74
DUAL MIRRORS	
WITHOUT CAB	13-38
FENDER EXTENSIONS	13-10
FRONT HEADLIGHTS	
WITHOUT CAB	13-28
HEATER	13-12
HEATER INSTALLATION	
DIESEL	13-18
GASOLINE	13-14
LPG	13-16
HEATER VALVE MOUNTING	
MONOTROL	13-20
LIFTING EYE	13-78
REAR DRIVE LIGHTS	
WITH AMBER STROBE - WITHOUT CAB (9/2003 →)	13-32
WITHOUT CAB	13-30
SIDE-SHIFT CARRIAGE	
TWO AND THREE STAGE FULL FREE-LIFT (48 AND 60-INCH) - H70-90XM	13-46
TWO AND THREE STAGE FULL FREE-LIFT (54 AND 60-INCH) - H100XM-H120XM	13-48
TWO STAGE LIMITED FREE-LIFT (48 AND 60-INCH) - H70XM - H90XMS	13-42
TWO STAGE LIMITED FREE-LIFT (54 AND 60-INCH) - H90XM - H120XM	13-44
SIDE-SHIFT CARRIAGE FRAME	
TWO AND THREE STAGE FULL FREE-LIFT (48-INCH) - H70XM - H90XM	13-56
TWO AND THREE STAGE FULL FREE-LIFT (54 AND 60-INCH) - H100XM-H120XM	13-60
TWO AND THREE STAGE FULL FREE-LIFT (60-INCH) - H70XM - H90XM	13-58
TWO STAGE LIMITED FREE-LIFT (54 AND 60-INCH) - H100XM - H120 XM	13-54
TWO STAGE LIMTED FREE-LIFT (48-INCH) - H70XM - H90XM	13-50
TWO STAGE LIMTED FREE-LIFT (60-INCH) - H70XM - H90XMS	13-52
TIRE AND WHEEL	
DUAL DRIVE WHEEL	13-8
SINGLE DRIVE WHEEL - H70-90XM	13-4
SINGLE DRIVE WHEEL - H100-120XM	13-6
STEER WHEEL	13-9

©2009 HYSTER COMPANY

SECTION 13
OPTIONS

DESCRIPTION **PAGE**

WIRE HARNESS
AUXILIARY LIGHTS - WORKLIGHTS 13-80
CAB 13-72
REVERSE ALARM 13-64

©2009 HYSTER COMPANY

NOTES

©2009 HYSTER COMPANY

TIRE AND WHEEL (FIGURE 13-1)
SINGLE DRIVE WHEEL — H70-90XM

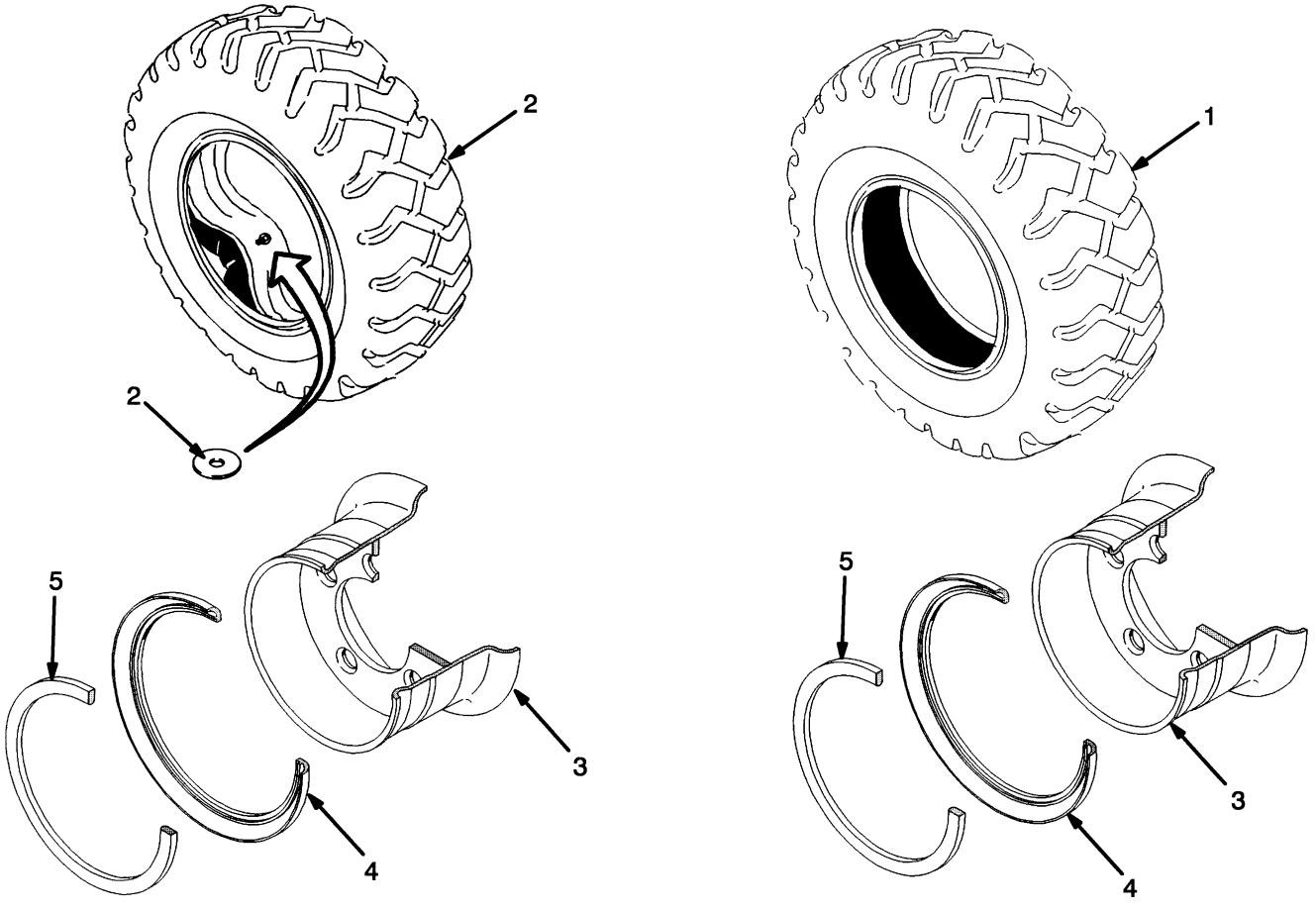

©2009 HYSTER COMPANY

TIRE AND WHEEL

SINGLE DRIVE WHEEL – H70-90XM

KEY:

A: 250 x 15 - Solid (H70-90XM)
B: 250 x 15 - 16 Ply (H70-80XM)
C: 250 x 15 - 18 Ply (H70-90XM)
D: 250/70 R15 Radial (H70-90XM)

ITEM	PART NO.	DESCRIPTION	QTY A	QTY B	QTY C	QTY D
1	352266	Tire (Standard Hardness)	2	..	..	..
2	1302126	Tire Assembly	..	..	2	..
2	1337744	Pneumatic Tire Assembly	..	..	..	2
2	352268	Tire Assembly	..	2	..	..
2	352269	Tire	..	1	..	..
2	1302127	Tire	..	..	1	..
2	1358184	Pneumatic Tire	..	..	..	1
2	1358195	Tube	..	..	..	1
2	352270	Tube	..	1	1	..
2	1376007	Washer (Valve Stem)	..	..	..	2
3	2035020	Wheel Assy (7.50 x 15)	..	..	..	2
3	**a** 2035020	Wheel Assy (7.50 x 15)	2	2	2	..
3	**b** 2035021	Wheel Assy (7.50 x 15)	2	2	2	..
4	322637	Wheel Side Ring	1	1	1	1
5	322638	Wheel Lock Ring	1	1	1	1

FOOTNOTES:

a Standard Tread

b Wide Tread

©2009 HYSTER COMPANY

TIRE AND WHEEL (FIGURE 13-2)
SINGLE DRIVE WHEEL — H100-120XM

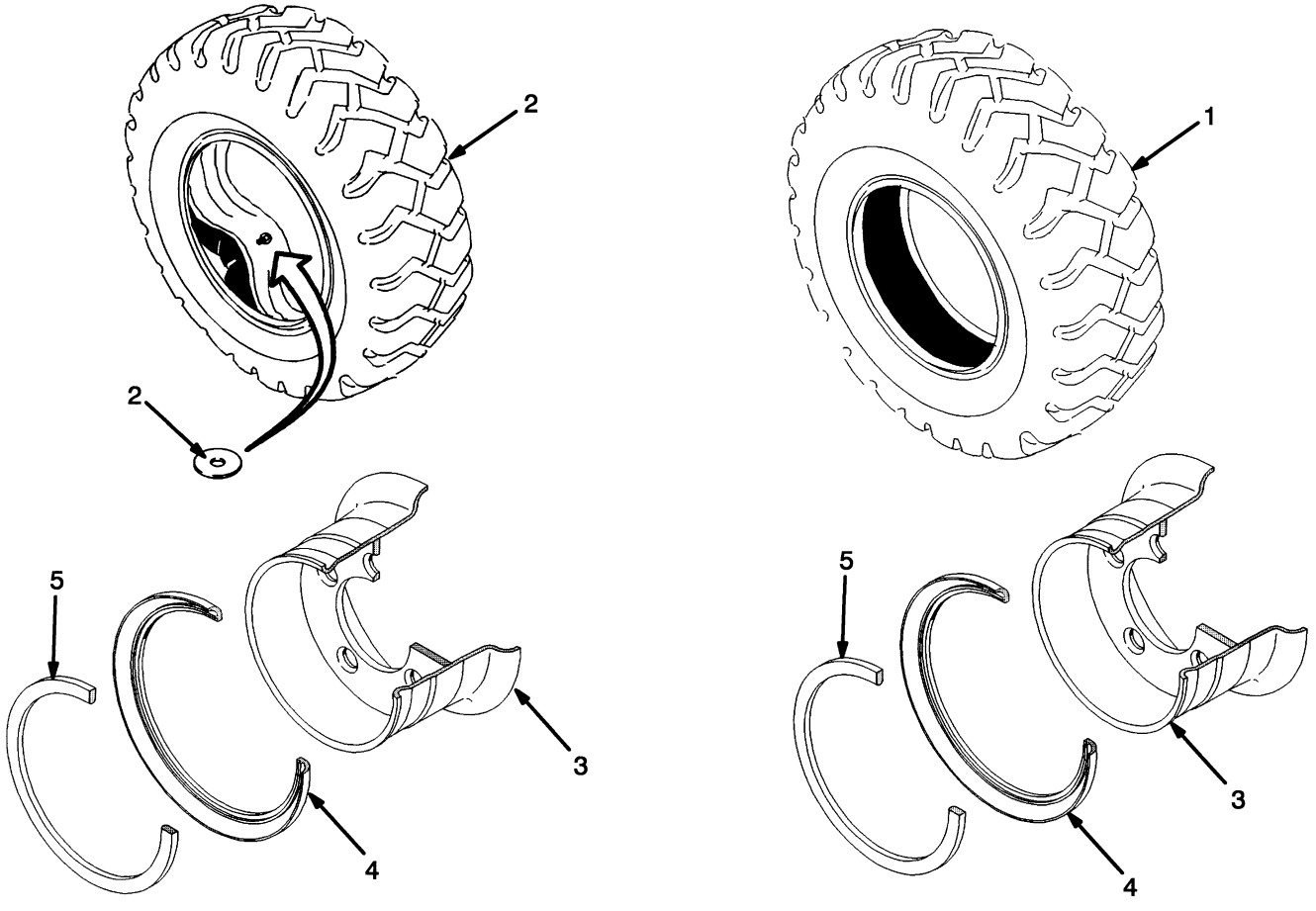

©2009 HYSTER COMPANY

TIRE AND WHEEL

SINGLE DRIVE WHEEL – H100-120XM

KEY:
A: 300 x 15 Solid
B: 300 x 15 18 Ply
C: 315/70 R15 Radial

ITEM	PART NO.	DESCRIPTION	QTY A	QTY B	QTY C
1	336123	Tire (Standard Hardness)	2	..	..
2	321043	Tire Assembly	..	2	..
2	1337745	Pneumatic Tire Assembly	..	..	2
2	1358185	Pneumatic Tire	..	..	1
2	321044	Tire	..	1	..
2	321045	Tube	..	1	1
2	1358192	Tube	..	..	1
2	1376007	Washer (Valve Stem)	..	..	2
3	**a** 2035022	Wheel Assy (8.00 x 15)	2	2	2
3	**b** 2035023	Wheel Assy (8.00 x 15)	2	2	..
3	**a** 1394480	Wheel	1	1	1
3	**b** 1394482	Wheel	1	1	..
4	322637	Wheel Side Ring	1	1	1
5	322638	Wheel Lock Ring	1	1	1

FOOTNOTES:

a Standard Tread

b Wide Tread

©2009 HYSTER COMPANY

TIRE AND WHEEL (FIGURE 13-3)
DUAL DRIVE WHEEL

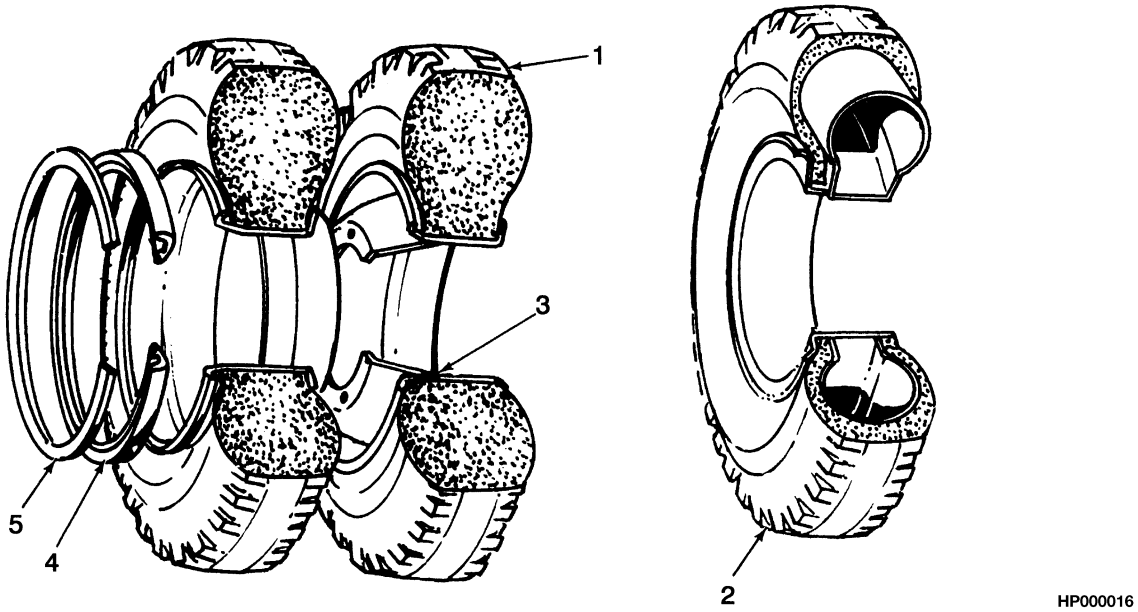

HP000016

KEY:
A: 7.00 x 15 Solid (H70-90XM)
B: 7.00 x 15 Pneumatic (H70-90XM)
C: 8.25 x 15 Solid (H100-120XM)
D: 8.25 x 15 - 12 Ply (H100-120XM)

ITEM	PART NO.	DESCRIPTION	QTY A	B	C	D
1	174214	Solid Pneumatic Tire (Standard Hardness)	4	..	..	..
1	1547346	Tire (Alternate Part)	4	..	..	..
1	237050	Tire (Standard Hardness)	..	4	..	..
2	137134	Tire Flap	..	4	..	..
2	130616	Tire Flap	..	..	..	4
2	137135	Tire Flap (With Flap)	..	1	..	..
2	129846	Tire Flap (With Flap)	..	..	..	1
2	137136	Tire Flap	..	1	..	..
2	25722	Tire Flap	..	..	..	1
3	1394476	Wheel (7.50 x 15)	..	..	..	1
3	1394478	Wheel (7.50 x 15)	1	1	1	..
3	2035024	Wheel Assy (5.50 x 15)	4	4	..	..
3	2035025	Wheel Assy (6.50 x 15)	..	..	4	4
4	322637	Wheel Side Ring	1	1	1	1
5	322638	Wheel Lock Ring	1	1	1	1

©2009 HYSTER COMPANY

TIRE AND WHEEL (FIGURE 13-4)
STEER WHEEL

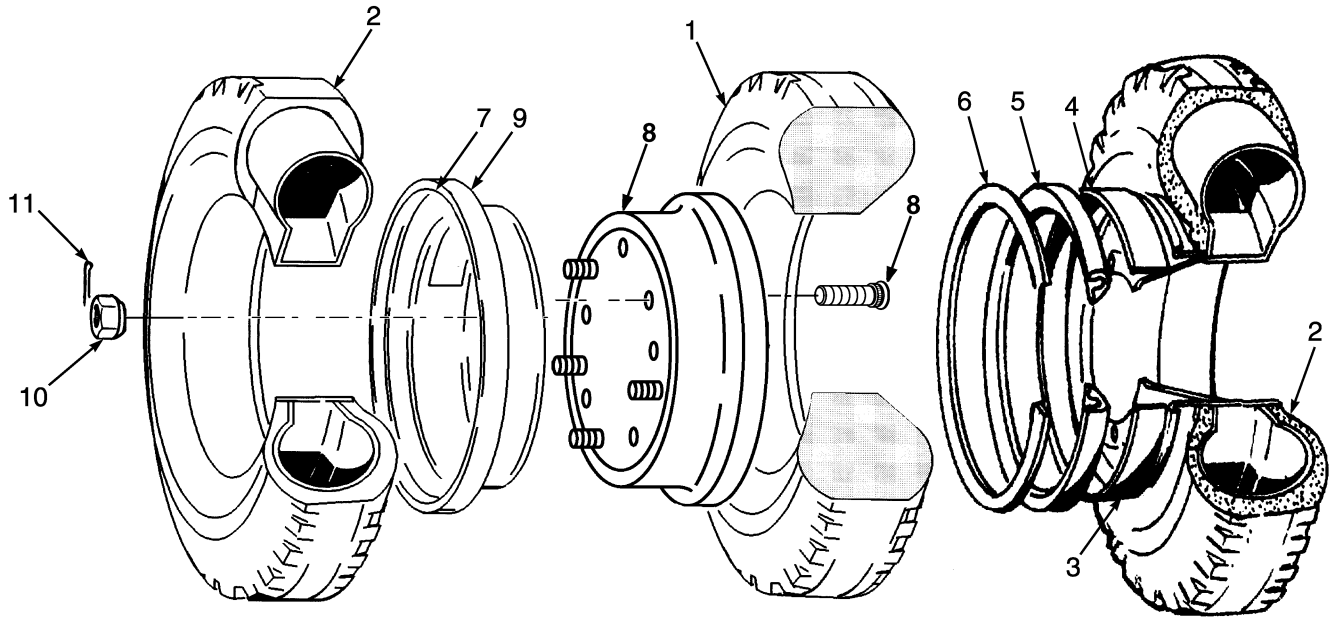

BP000043

KEY:
A: 7.00 x 12 Solid
B: 7.00 x 12 12 Ply
C: 7.00 R12 Radial

ITEM	PART NO.	DESCRIPTION	QTY A	QTY B	QTY C
1	174209	Solid Pneumatic Tire (Standard Hardness)	2	..	..
2	130619	Tire Flap	..	2	..
2	1337743	Pneumatic Tire (Michelin XMZ)	..	..	2
2	1358179	Pneumatic Tire	..	..	1
2	45736	Tire Flap (With Flap)	..	1	..
2	45737	Tire Flap	..	1	..
2	1358190	Tube	..	..	1
2	1376007	Washer (Valve Stem)	..	..	1
3	2035044	Rim (5.00 x 12)	..	..	2
3	1394514	Wheel	..	..	1
4	806556	Shoulder Ring	..	..	1
5	161890	Wheel Side Ring	..	..	1
6	161889	Wheel Lock Ring	..	..	1
7	288638	Label (Warning)	2	2	..
8	1394509	Wheel (Outer)	2	2	..
8	45656	Wheel Stud (Press Fitted)	5	5	..
9	1394511	Wheel Assy (Inner)	2	2	..
10	11276	Wheel Nut	10	10	..
10	1394715	Wheel Nut (Optional)	10	10	..
11	15224	Cotter Pin	10	10	..

©2009 HYSTER COMPANY

FENDER EXTENSIONS (FIGURE 13-5)

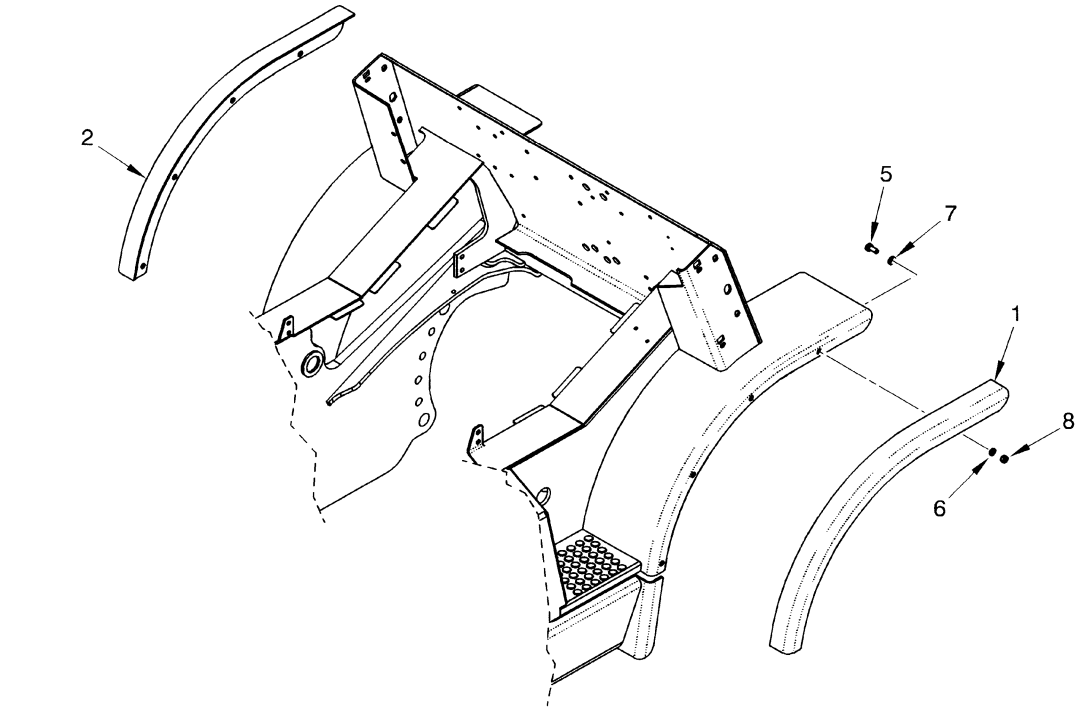

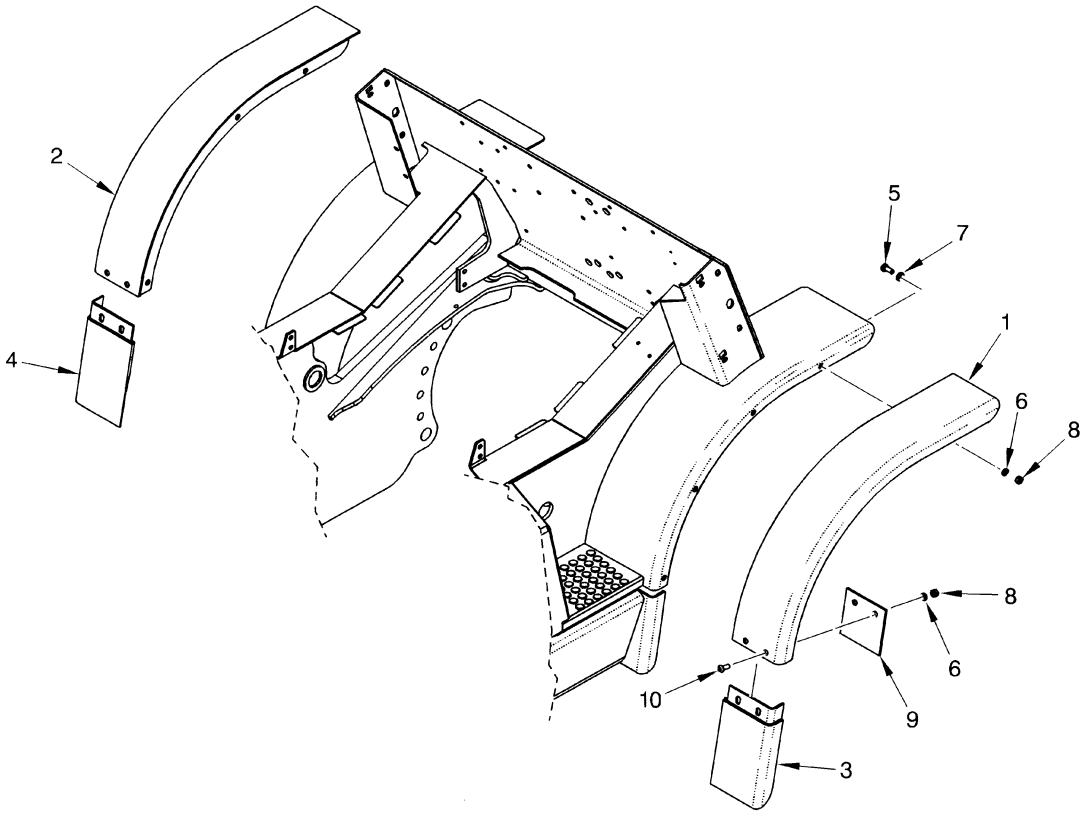

HP000018

©2009 HYSTER COMPANY

FENDER EXTENSIONS

KEY:
A: 250 x 15 Single Wheel (H70-90XM)
B: 300 x 15 Single Wheel (H100-120XM)
C: 7.00 x 15 Dual Wheel (H70-90XM)
D: 8.25 x 15 Dual Wheel (H100-120XM)

ITEM	PART NO.	DESCRIPTION	QTY A	QTY B	QTY C	QTY D
1	1396526	Fender Extension (RH)	1	..	..	..
1	1397500	Fender Extension (RH)	..	1	..	..
1	1396527	Fender Extension (RH)	..	..	1	..
1	1396528	Fender Extension (RH)	..	..	..	1
2	1396534	Fender Extension (LH)	1	..	..	..
2	1397502	Fender Extension (LH)	..	1	..	..
2	1396535	Fender Extension (LH)	..	..	1	..
2	1396536	Fender Extension (LH)	..	..	..	1
3	1398127	Mud Flap (RH)	..	..	1	..
3	1398128	Mud Flap (RH)	..	..	..	1
4	1398132	Mud Flap (LH)	..	..	..	1
4	1398131	Mud Flap (LH)	..	..	1	..
5	287854	Capscrew	8	8	8	8
6	292682	Lockwasher	8	8	..	..
6	292682	Lockwasher	..	..	12	12
7	296420	Washer	8	8	8	8
8	136692	Nut	8	8	..	..
8	136692	Nut	..	..	12	12
9	1399432	Plate	..	..	2	2
10	1384659	Capscrew	..	..	4	4

©2009 HYSTER COMPANY

HEATER (FIGURE 13-6)

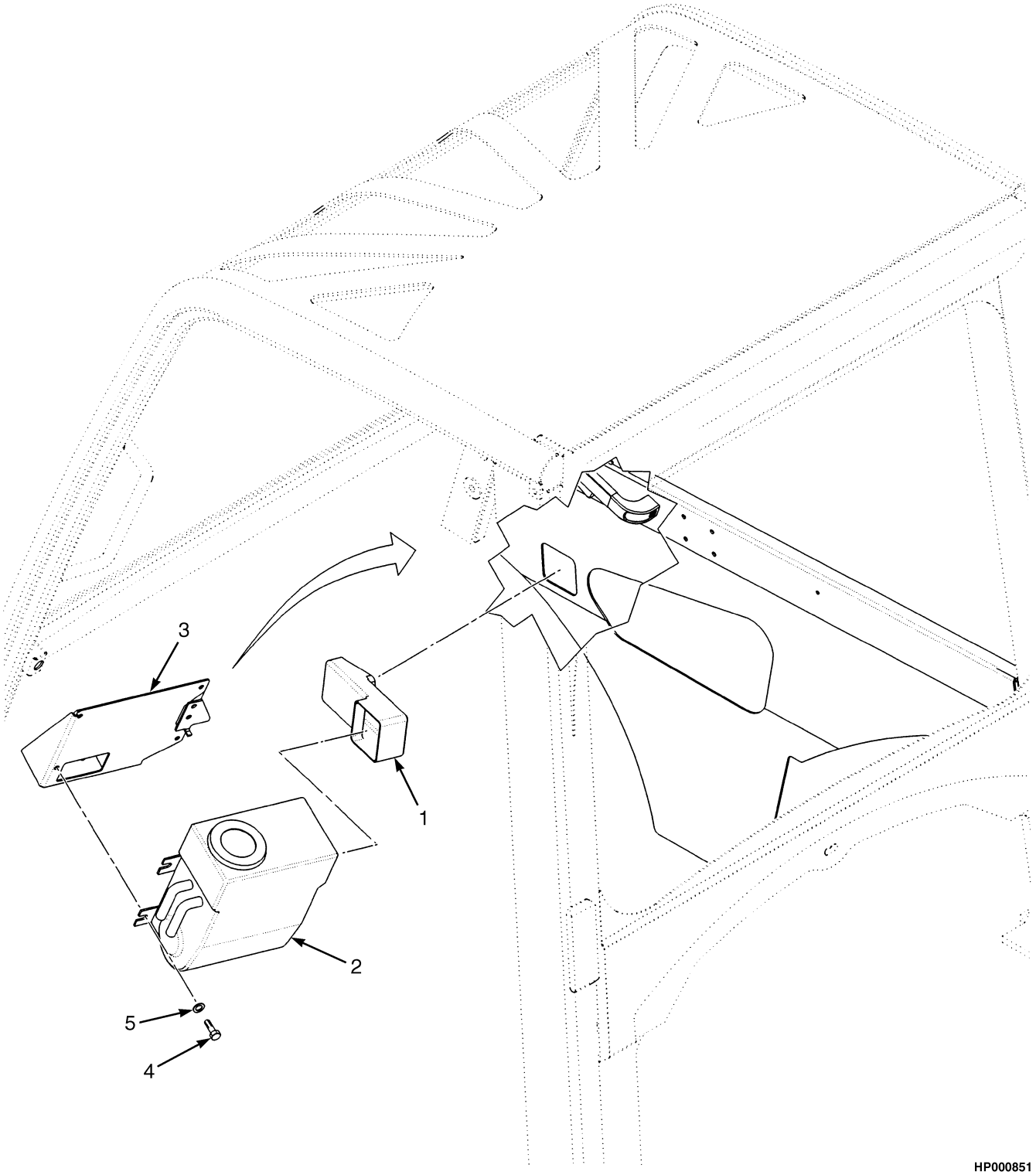

©2009 HYSTER COMPANY

HEATER

ITEM	PART NO.	DESCRIPTION	QTY
1	1474951	Heater Inlet	1
2	1393540	Heater	1
2	1511097	Radiator	1
2	1560640	Motor	1
2	1560641	Housing	1
2	1511099	Resistor	1
2	1560642	Wire Harness	1
2	1560643	Clamp	8
2	1560644	Louver (Round)	1
2	1560645	Louver (Rectangular)	1
3	1488265	Bracket	1
4	136681	Capscrew	4
5	320157	Washer	4

©2009 HYSTER COMPANY

HEATER INSTALLATION (FIGURE 13-7)
GASOLINE

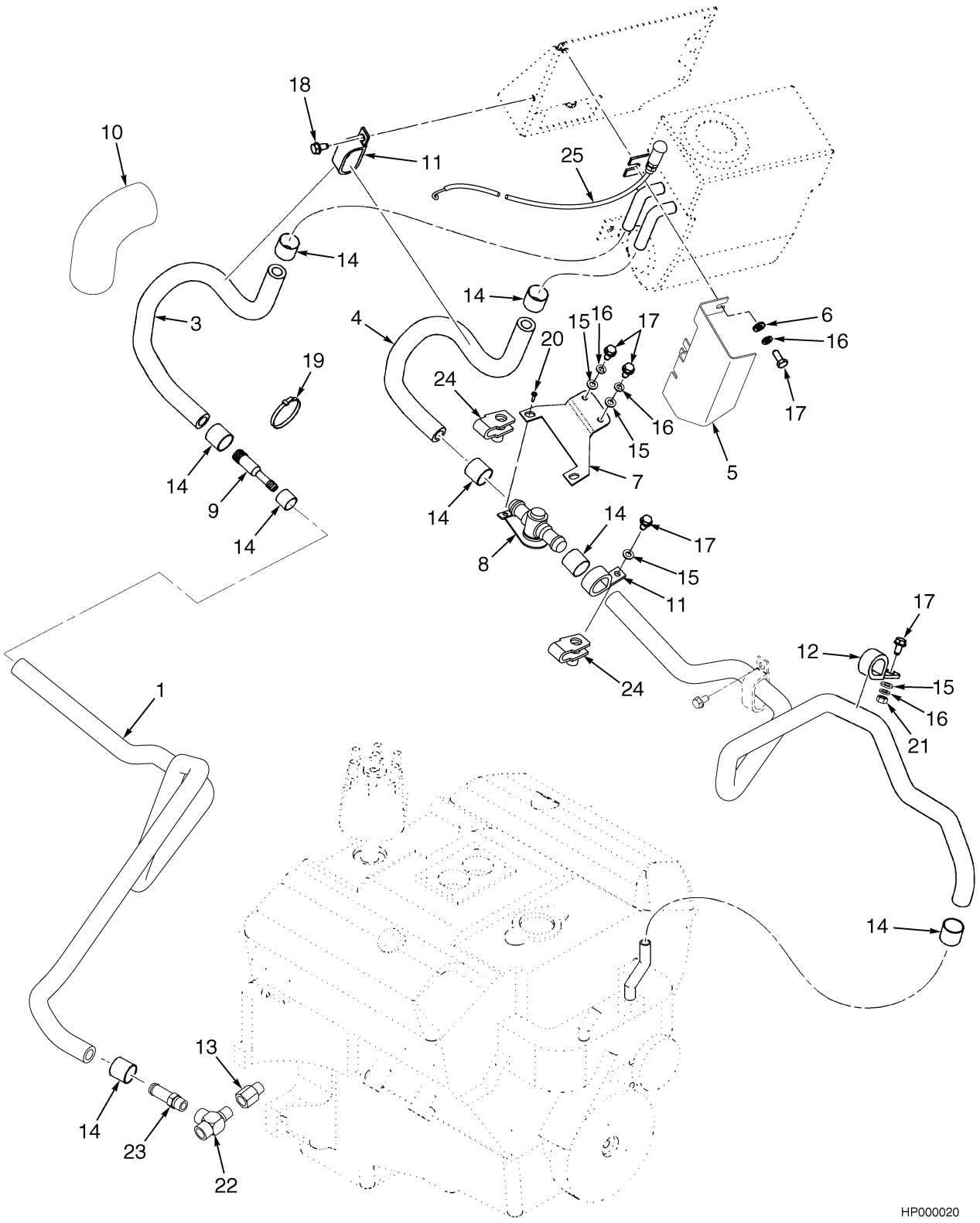

©2009 HYSTER COMPANY

HEATER INSTALLATION
GASOLINE

ITEM	PART NO.	DESCRIPTION	QTY
1	2040752	Hose	1
2	2050576	Hose	1
3	**a** 1399864	Hose (Front)	1
4	**a** 1399863	Hose (Rear)	1
5	1488265	Bracket (Heater)	1
6	320158	Washer	4
7	**a** 1521393	Bracket Wldmt	1
8	1300741	Drain Valve (Heater)	1
9	1399822	Coupler (Reducer)	1
10	1358120	Sleeve	1
11	251994	Clamp	4
12	1310611	Clamp	1
13	17642	Fitting	1
14	1397993	Clamp	8
15	320157	Washer	5
16	**a** 292681	Lockwasher	7
17	**a** 136681	Capscrew	9
18	316678	Screw	4
19	2004005	Strap Clamp	1
20	16653	Screw	2
21	239503	Nut	1
22	154452	Fitting	1
23	138710	Fitting	1
24	**a** 1480237	Nut	2
25	1523453	Cable Assy	1

FOOTNOTES:

a Forward/Reverse

©2009 HYSTER COMPANY

HEATER INSTALLATION (FIGURE 13-8)
LPG

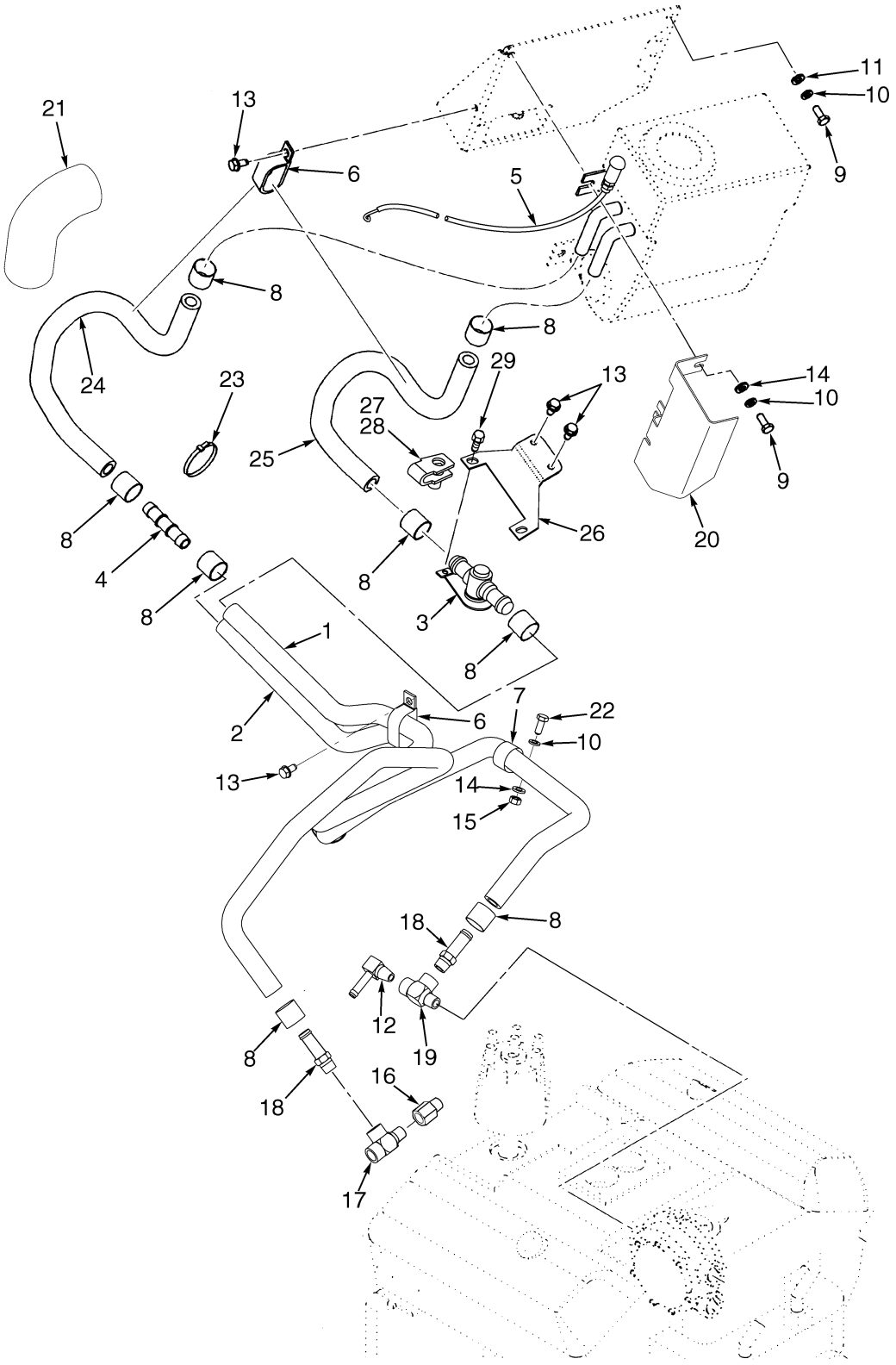

HP000021

©2009 HYSTER COMPANY

HEATER INSTALLATION
LPG

KEY:
A: Forward/Reverse Lever
B: Monotrol Pedal

ITEM	PART NO.	DESCRIPTION	QTY A	QTY B
1	2050576	Hose	1	1
2	2040752	Hose	1	1
3	1300741	Drain Valve (Heater)	1	1
4	1399822	Coupler	1	1
5	1523453	Cable Assy	1	1
6	251994	Clamp	4	4
7	1310611	Clamp	1	1
8	1397993	Clamp	8	8
9	136681	Capscrew	16	12
10	292681	Lockwasher	14	12
11	320158	Washer	4	4
12	125305	Fitting	1	1
13	316678	Screw	4	4
14	320157	Washer	5	5
15	239503	Nut	1	1
16	17642	Fitting	1	1
17	154452	Fitting	1	1
18	138710	Fitting	1	1
19	17665	Fitting	1	1
20	1488265	Bracket	1	1
21	1358120	Sleeve	1	1
22	136749	Screw	1	1
23	2004005	Strap Clamp	1	1
24	1399864	Hose	1	1
25	1399863	Hose	1	1
26	1521393	Bracket Wldmt	1	..
27	1480237	Nut	2	..
28	1398062	Nut	..	2
29	136749	Screw	..	2

©2009 HYSTER COMPANY

HEATER INSTALLATION (FIGURE 13-9)
DIESEL

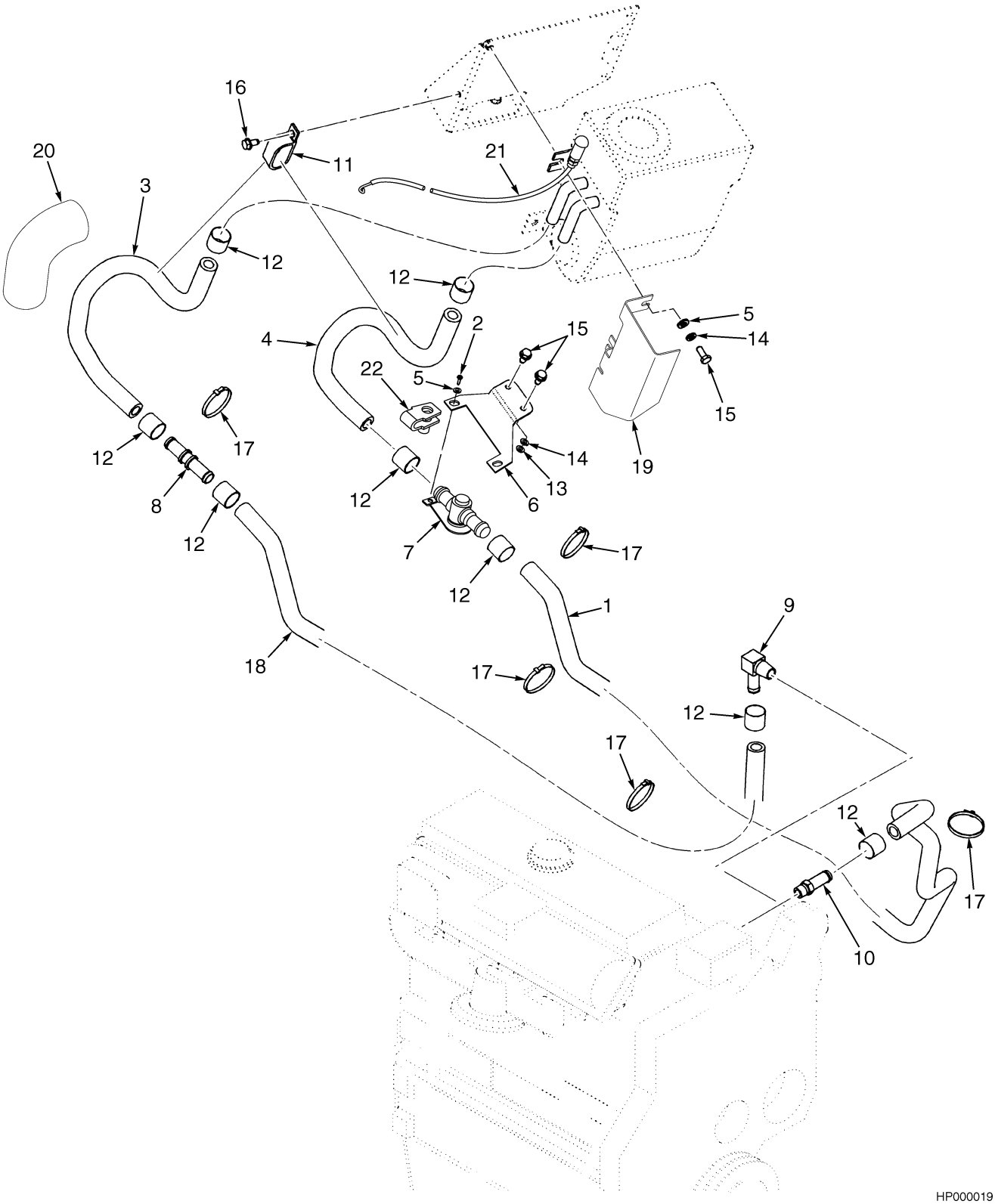

©2009 HYSTER COMPANY

HEATER INSTALLATION
DIESEL

ITEM	PART NO.	DESCRIPTION	QTY
1	2040751	Hose	1
2	16653	Screw	2
3	1399864	Hose (Front)	1
4	1399863	Hose (Rear)	1
5	320158	Washer	4
6	1521393	Bracket Wldmt	1
7	1300741	Drain Valve (Heater)	1
8	1399822	Coupler	1
9	16155	Fitting	1
10	16156	Fitting	1
11	251994	Clamp	4
12	1397993	Clamp	8
13	320157	Washer	4
14	292681	Lockwasher	6
15	136681	Capscrew	8
16	316678	Screw	4
17	2004005	Strap Clamp	4
18	2040752	Hose	1
19	1488265	Bracket	1
20	1358120	Sleeve	1
21	1523453	Cable Assy	1
22	1480237	Nut	2

©2009 HYSTER COMPANY

HEATER VALVE MOUNTING (FIGURE 13-10)
MONOTROL

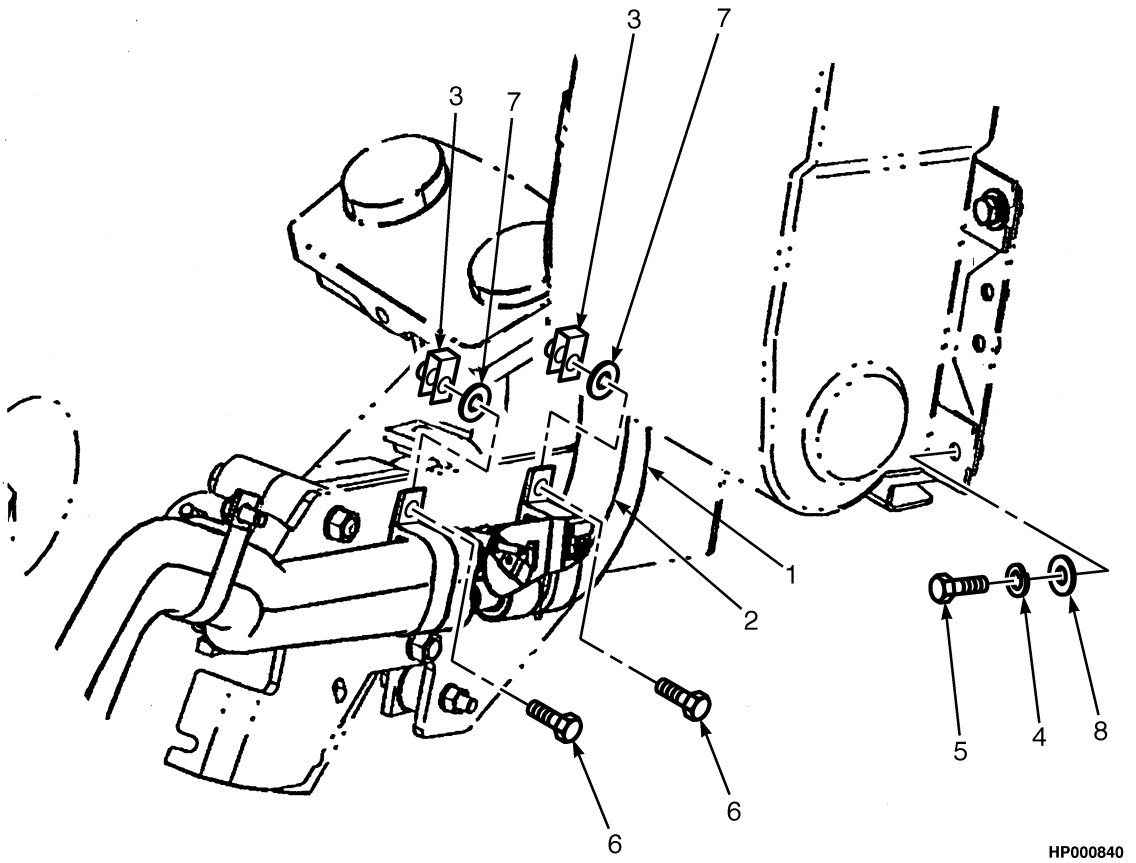

ITEM	PART NO.	DESCRIPTION	QTY
1	1399864	Hose	1
2	1399863	Hose	1
3	1398062	Nut	2
4	292681	Lockwasher	5
5	136681	Capscrew	5
6	136749	Screw	2
7	320157	Washer	4
8	320158	Washer	4

©2009 HYSTER COMPANY

NOTES

©2009 HYSTER COMPANY

AUXILIARY TUBE EXTENSION KIT (FIGURE 13-11)
TWO STAGE LIMITED FREE-LIFT

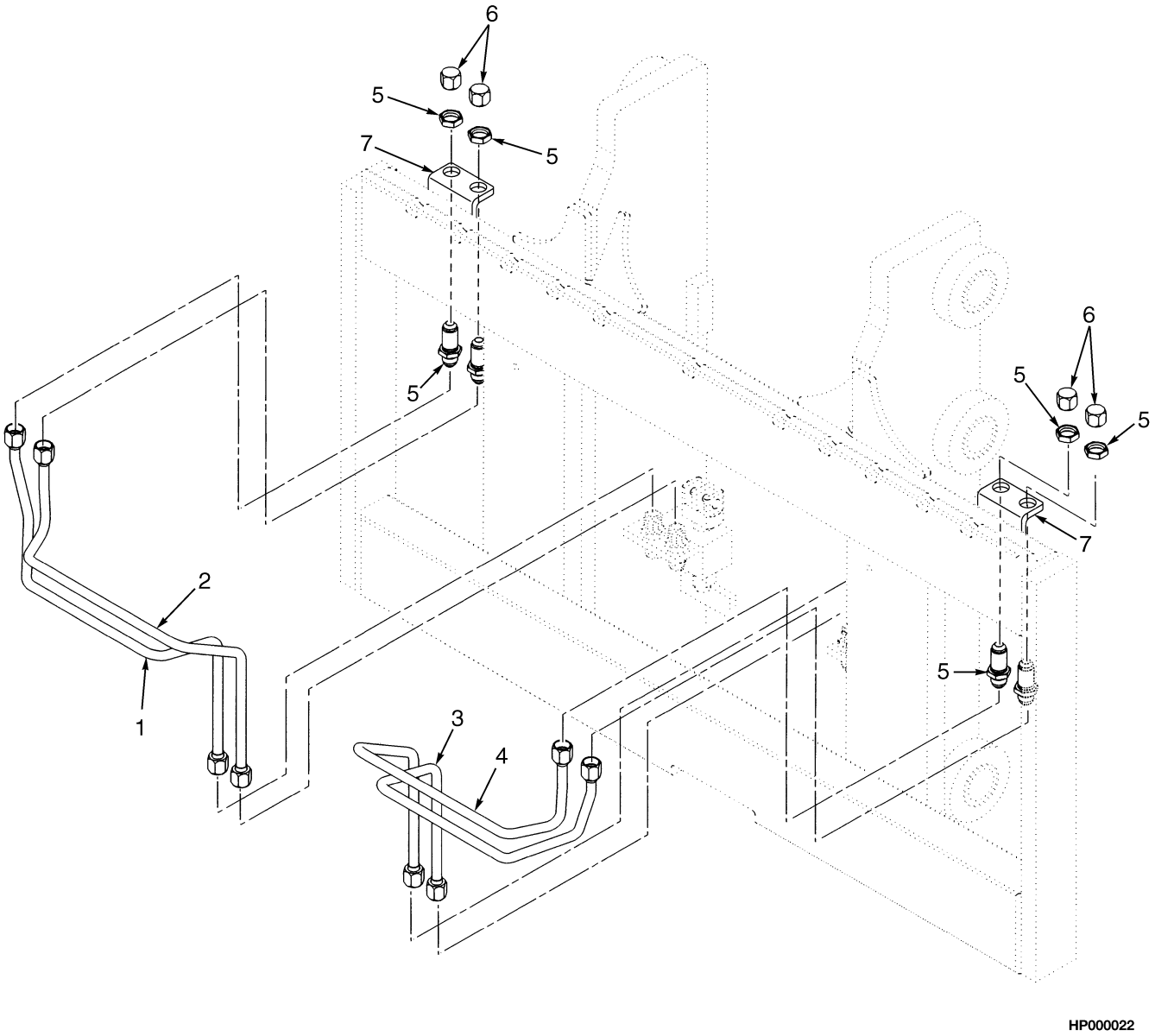

HP000022

©2009 HYSTER COMPANY

AUXILIARY TUBE EXTENSION KIT
TWO STAGE LIMITED FREE-LIFT

KEY:
A: Three Function
B: Four Function

ITEM	PART NO.	DESCRIPTION	QTY A	QTY B
1	1400128	Tube Assy (Mast A749)	1	1
1	1400134	Tube Assy (Mast A750)	1	1
2	1400129	Tube Assy (Mast A749)	1	1
2	1400135	Tube Assy (Mast A750)	1	1
3	1400130	Tube Assy (Mast A749)	..	1
3	1400136	Tube Assy (Mast A750)	..	1
4	1400131	Tube Assy (Mast A749)	..	1
4	1400137	Tube Assy (Mast A750)	..	1
5	16448	Fitting	2	4
6	16925	Fitting	2	4
7	1400127	Bracket (Not Illustrated)	1	2
	1465157	Kit-Aux Tube Extension (Mast A749)	1	..
	1465158	Kit-Aux Tube Extension (Mast A749)	..	1
	1465159	Kit-Aux Tube Extension (Mast A750)	1	..
	1465160	Kit-Aux Tube Extension (Mast A750)	..	1

©2009 HYSTER COMPANY

AUXILIARY TUBE EXTENSION KIT (FIGURE 13-12)
TWO AND THREE STAGE FULL FREE-LIFT

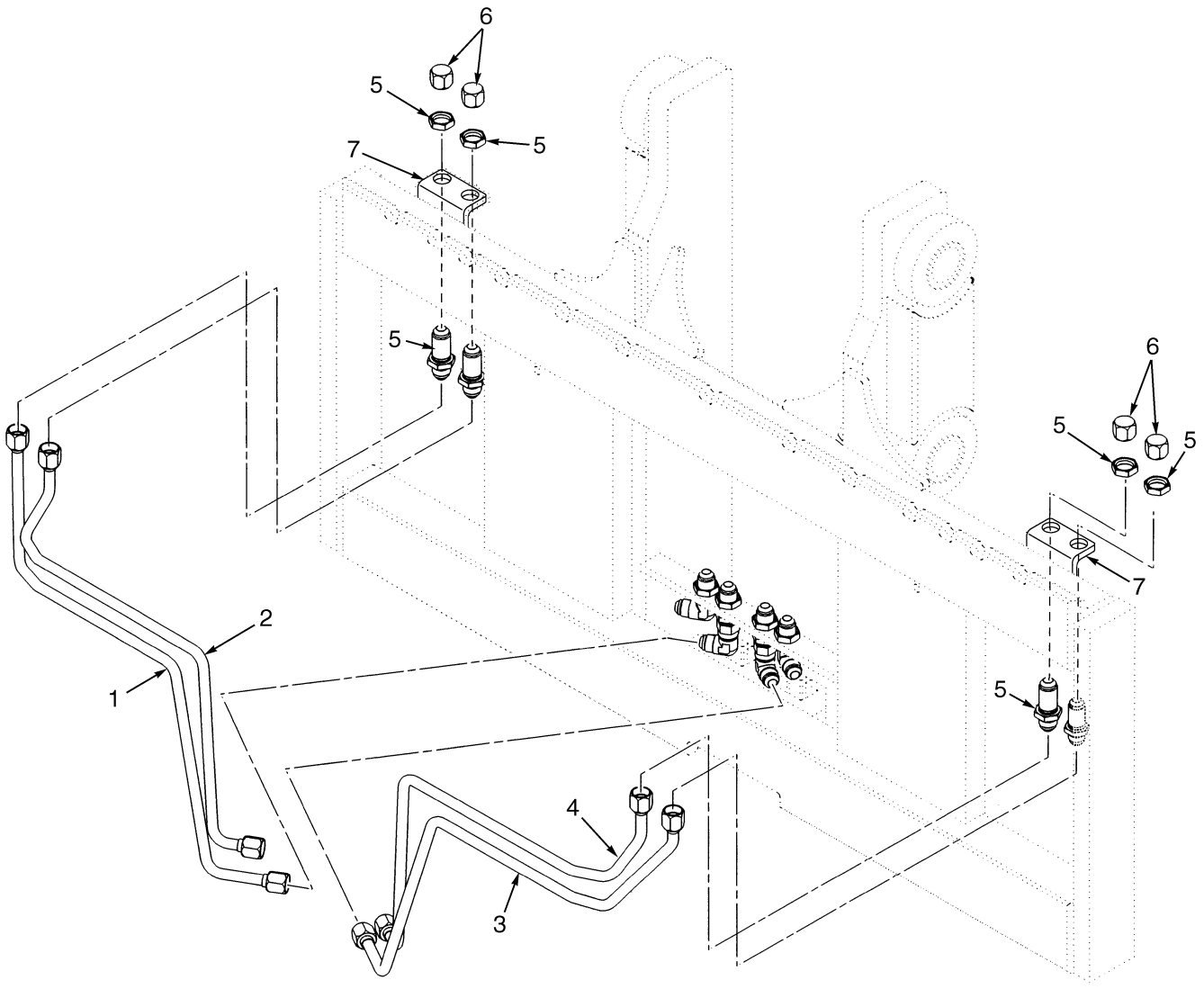

©2009 HYSTER COMPANY

AUXILIARY TUBE EXTENSION KIT
TWO AND THREE STAGE FULL FREE-LIFT

KEY:
A: Three Function
B: Four Function

ITEM	PART NO.	DESCRIPTION	QTY A	QTY B
1	1400140	Tube Assy (Mast A751/A753)	..	1
1	1400146	Tube Assy (Mast A752/A754)	..	1
2	1400141	Tube Assy (Mast A751/A753)	..	1
2	1400147	Tube Assy (Mast A752/A754)	..	1
3	1400138	Tube Assy (Mast A751/A753)	1	..
3	1400144	Tube Assy (Mast A752/A754)	1	..
4	1400139	Tube Assy (Mast A751/A753)	1	..
4	1400145	Tube Assy (Mast A752/A754)	1	..
5	16448	Fitting	2	4
6	16925	Fitting	2	4
7	1400127	Bracket	1	2
	1465322	Kit-Aux Tube Extension (Mast A751/A753)	1	..
	1465323	Kit-Aux Tube Extension (Mast A751/A753)	..	1
	1465324	Kit-Aux Tube Extension (Mast A752/A754)	1	..
	1465325	Kit-Aux Tube Extension (Mast A752/A754)	..	1

©2009 HYSTER COMPANY

ACCUMULATOR (FIGURE 13-13)

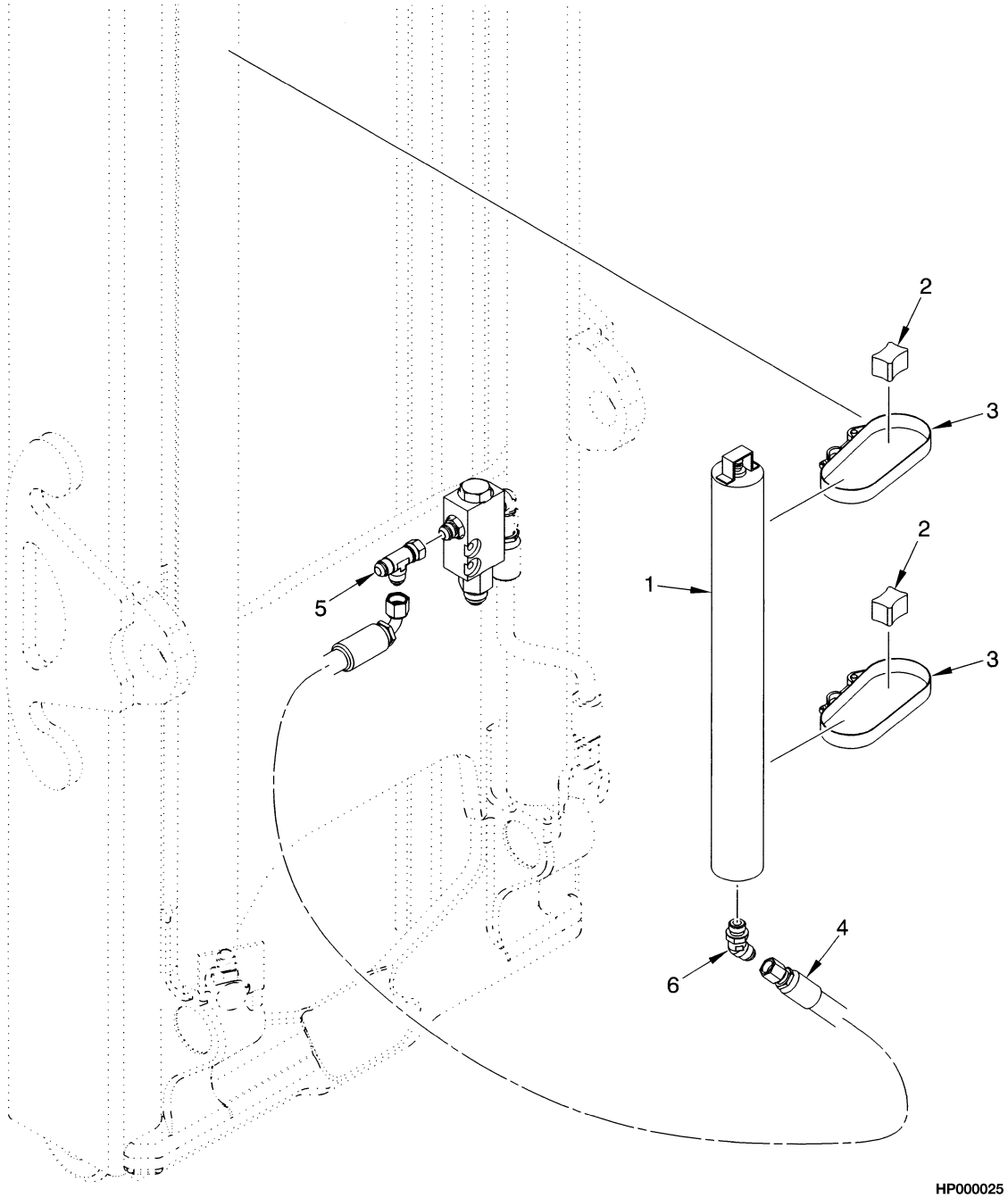

ITEM	PART NO.	DESCRIPTION	QTY
1	1465897	Accumulator	1
2	1466337	Spacer	2
3	1466472	Clamp	2
4	1466415	Hose Assy	1
5	17062	Fitting	1
6	16568	Fitting	1
6	16484	O-Ring	1

©2009 HYSTER COMPANY

NOTES

©2009 HYSTER COMPANY

FRONT HEADLIGHTS (FIGURE 13-14)
WITHOUT CAB

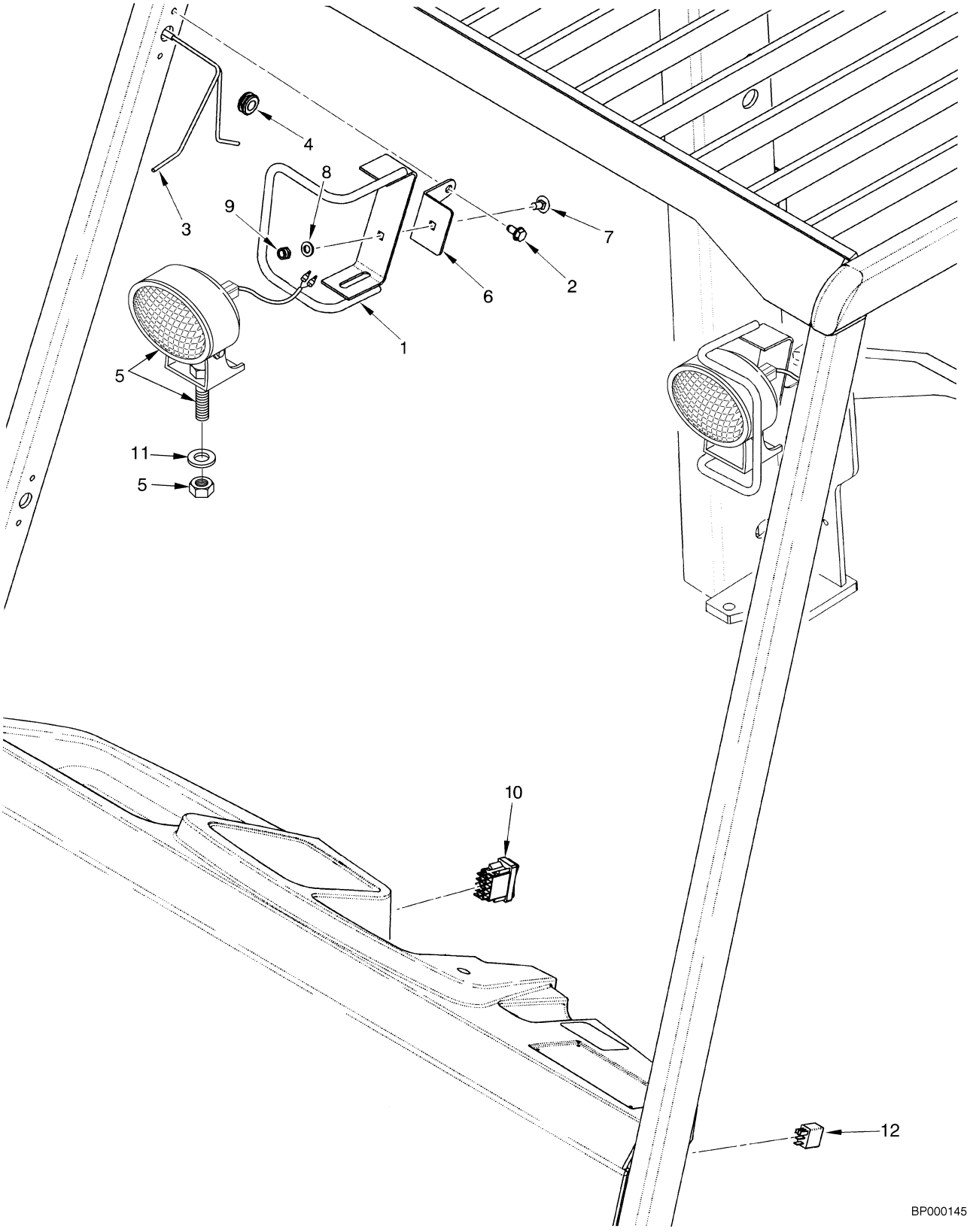

©2009 HYSTER COMPANY

FRONT HEADLIGHTS
WITHOUT CAB

ITEM	PART NO.	DESCRIPTION	QTY
1	1375172	Bracket Wldmt (LH)	1
1	1375171	Bracket Wldmt (RH)	1
2	316678	Screw	4
3	2036544	Wire Harness	2
4	1367645	Grommet	2
5	**a** 1399472	Headlight	2
5	1354119	Headlight (Speaker)	1
5	1363016	Lens	1
5	1379799	Bulb	1
5	1356335	Headlight (Hella) (Optional)	1
5	1662409	Bulb	1
5	1483739	Light	1
5	. . . . .	Bolt	1
5	. . . . .	Nut	1
5	**b** 1531982	Headlight	2
5	1544764	Bulb	1
5	1565839	Wire Harness	1
6	1375169	Plate	2
7	1375168	Bolt	2
8	296418	Washer	2
9	316835	Nut	2
10	1397694	Switch (Front Work Light)	1
11	320158	Washer	2
12	2035581	Relay (Flasher)	1

FOOTNOTES:

a → S/N K005V04774A

b S/N K005V04775A →

©2009 HYSTER COMPANY

REAR DRIVE LIGHTS (FIGURE 13-15)
WITHOUT CAB

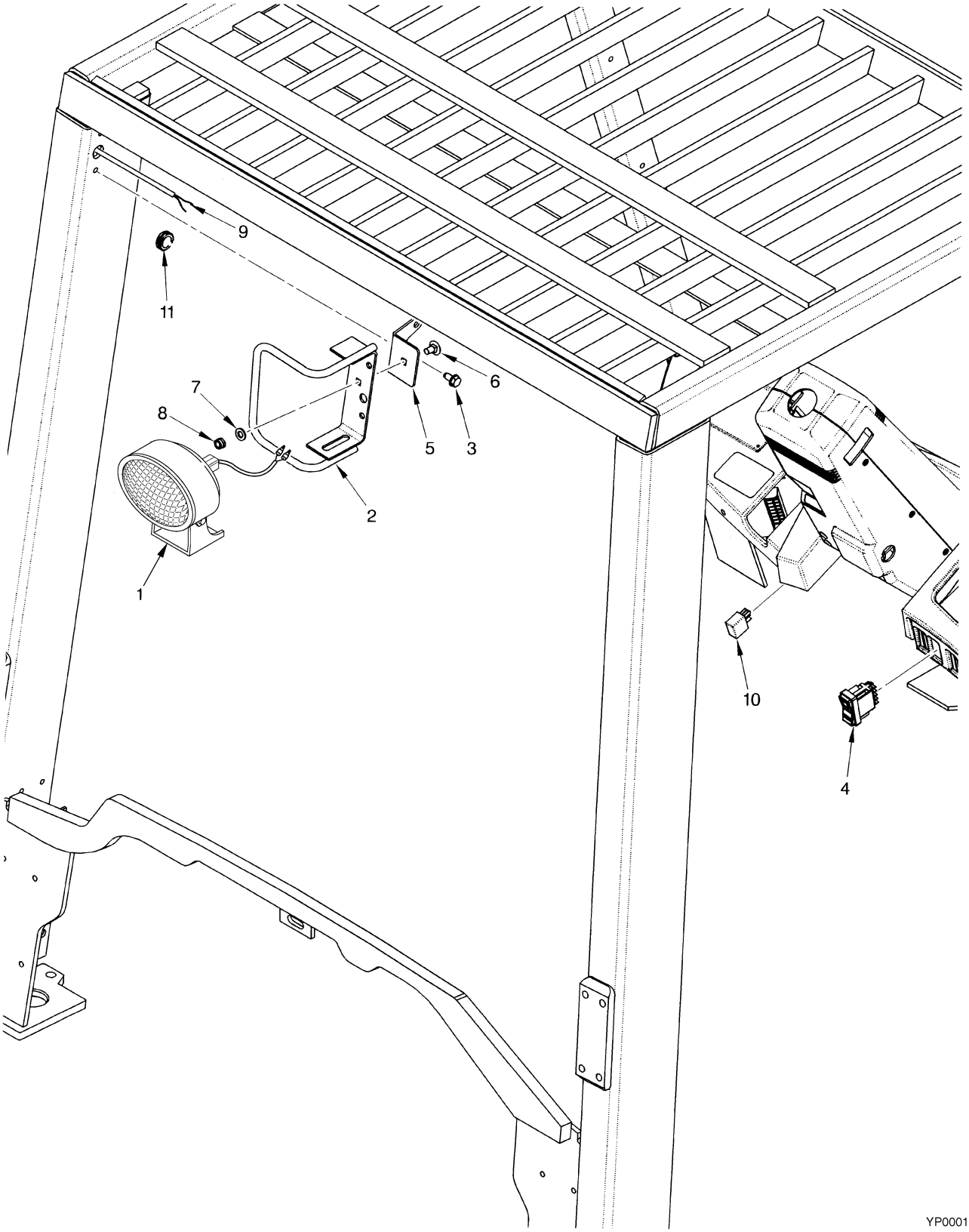

©2009 HYSTER COMPANY

REAR DRIVE LIGHTS
WITHOUT CAB

ITEM	PART NO.	DESCRIPTION	QTY
1	**a** 1399472	Headlight	1
1	1354119	Headlight (Speaker)	1
1	1363016	Lens	1
1	1379799	Bulb	1
1	1356335	Headlight (Hella) (Optional)	1
1	1662409	Bulb	1
1	1483739	Light	1
1	**b** 1531982	Headlight	1
1	1544764	Bulb	1
1	1565839	Wire Harness	1
2	1376579	Bracket Wldmt	1
3	316678	Screw	2
4	1399766	Switch (Rear Work Light)	1
5	1375169	Plate	1
6	1375168	Bolt	1
7	296418	Washer	1
8	316835	Nut	1
9	2036541	Wire Harness (☞Figure 13-41)	1
10	2035581	Relay (Flasher)	1
11	1367645	Grommet	1

FOOTNOTES:

a → S/N K005V04773A

b S/N K005V04774A →

REAR DRIVE LIGHTS (FIGURE 13-16)

WITH AMBER STROBE — WITHOUT CAB (9/2003 →)

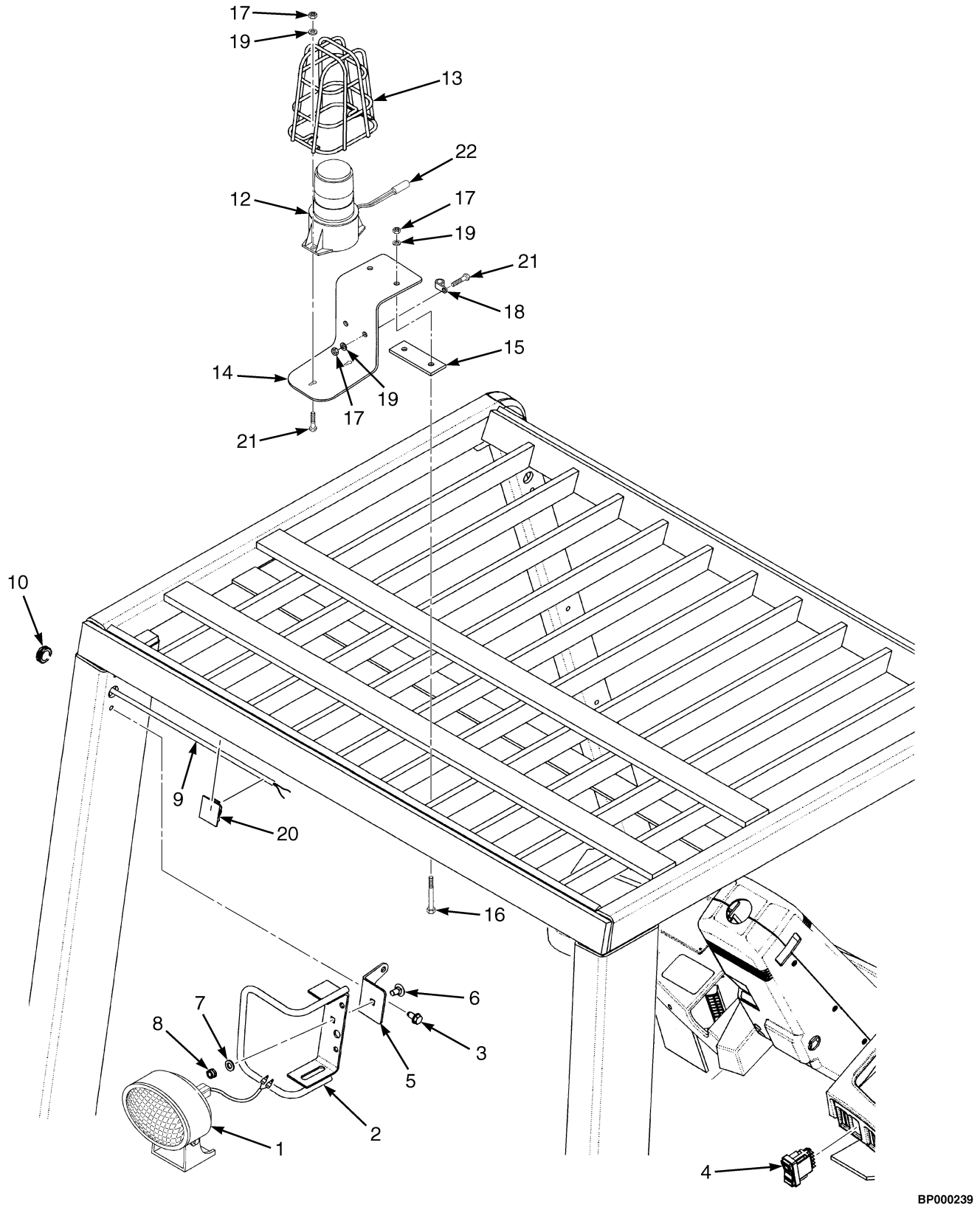

©2009 HYSTER COMPANY

REAR DRIVE LIGHTS

WITH AMBER STROBE – WITHOUT CAB (9/2003 →)

ITEM	PART NO.	DESCRIPTION	QTY
1	1531982	Headlight	1
1	1544764	Bulb	1
1	1565839	Wire Harness	1
2	1376579	Bracket Wldmt	1
3	316678	Screw	2
4	1399766	Switch (Rear Work Light)	1
5	1375169	Plate	1
6	1375168	Bolt	1
7	296418	Washer	1
8	316835	Nut	1
9	2036541	Wire Harness (☞Figure 13-41)	1
10	1491175	Grommet	1
	a 320158	Washer	1
12	1399474	Strobe Light	1
12	1382130	Strobe Light	1
12	1309775	Strobe Light	1
12	1526082	Lens (Amber)	1
13	1302024	Guard	1
14	1399763	Bracket	1
15	2037363	Bar	1
16	1367822	Capscrew	2
17	313805	Nut	5
18	164488	Clamp	1
19	320156	Washer	7
20	1301727	Clamp	2
21	302049	Screw	3
22	878959	Hose Guard	AR

FOOTNOTES:

a Not Illustrated

©2009 HYSTER COMPANY

AMBER STROBE REVERSE LIGHTS (FIGURE 13-17)

WITHOUT CAB (→ 9/2003)

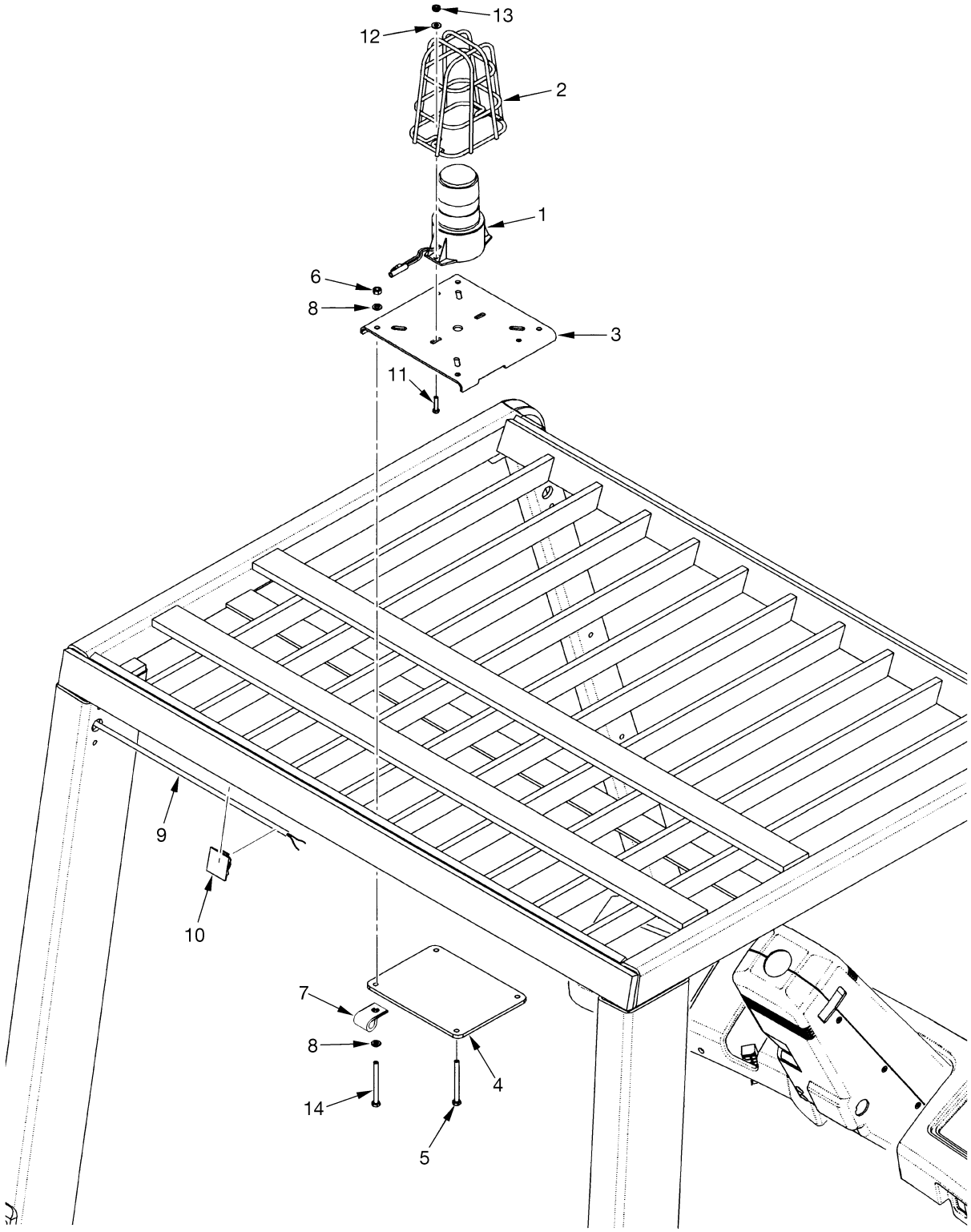

HP000028

©2009 HYSTER COMPANY

AMBER STROBE REVERSE LIGHTS

WITHOUT CAB (→ 9/2003)

ITEM	PART NO.	DESCRIPTION	QTY
1	1399474	Strobe Light	1
1	1309775	Strobe Light	1
1	1526082	Lens (Amber)	1
2	1302024	Guard	1
3	1399764	Bracket	1
4	1399762	Plate	1
5	337239	Capscrew	3
6	313805	Nut	4
7	164488	Clamp	1
8	320156	Washer	5
9	2036541	Wire Harness (☞Figure 13-41)	1
10	1301727	Clamp	4
11	220498	Screw	2
12	197067	Washer	2
13	230882	Locknut	2
14	1456686	Capscrew	1

©2009 HYSTER COMPANY

AMBER STROBE REVERSE LIGHTS (FIGURE 13-18)

WITHOUT REAR DRIVE LIGHTS (9/2003 →)

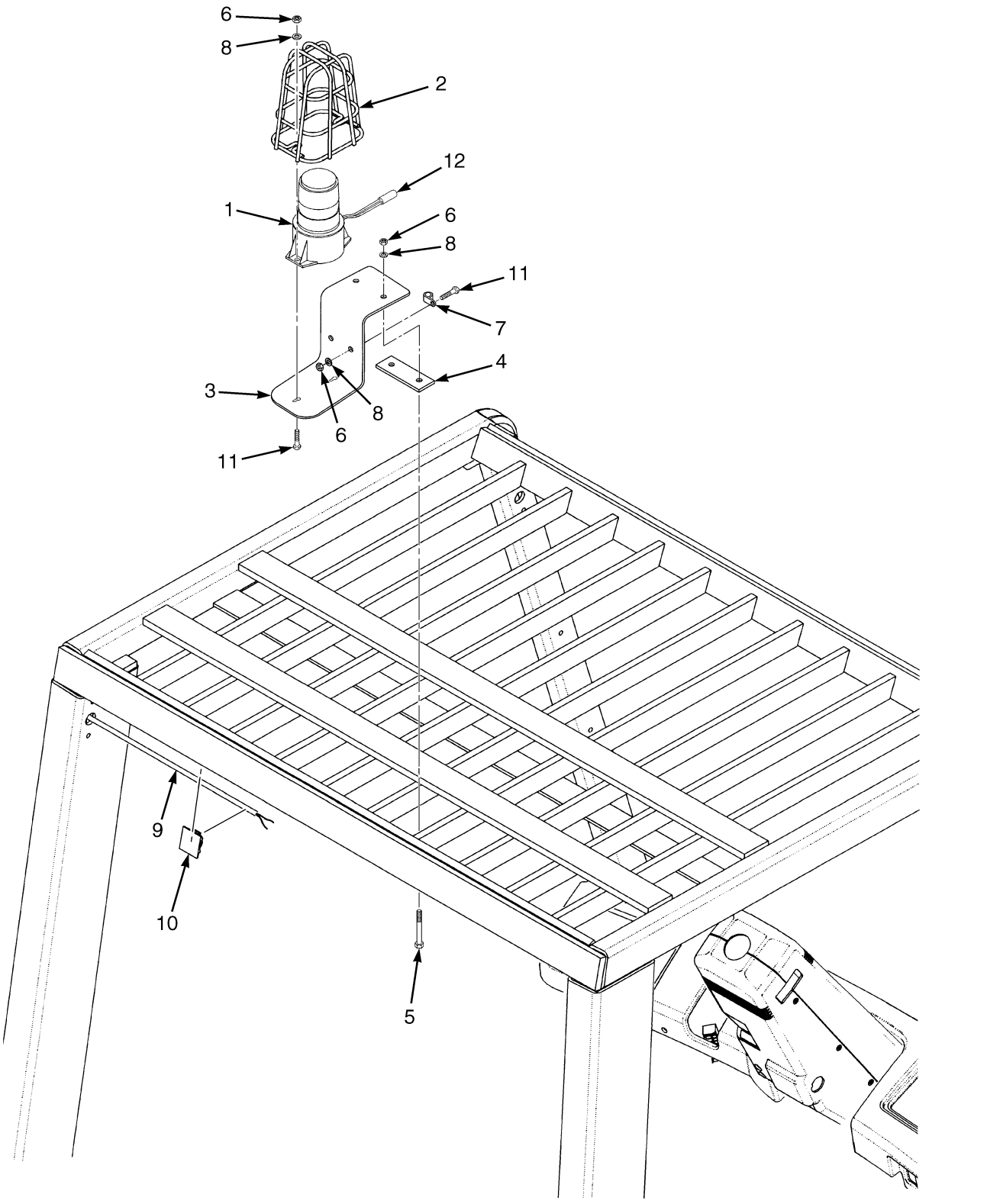

BP000236

©2009 HYSTER COMPANY

AMBER STROBE REVERSE LIGHTS

WITHOUT REAR DRIVE LIGHTS (9/2003 →)

ITEM	PART NO.	DESCRIPTION	QTY
1	1399474	Strobe Light	1
1	1382130	Strobe Light	1
1	1309775	Strobe Light	1
1	1526082	Lens (Amber)	1
2	1302024	Guard	1
3	1399763	Bracket	1
4	2037363	Bar	1
5	1367822	Capscrew	2
6	313805	Nut	5
7	164488	Clamp	1
8	320156	Washer	7
9	2036541	Wire Harness (☞Figure 13-41)	1
10	1301727	Clamp	2
11	302049	Screw	3
12	878959	Hose Guard	AR

©2009 HYSTER COMPANY

DUAL MIRRORS (FIGURE 13-19)
WITHOUT CAB

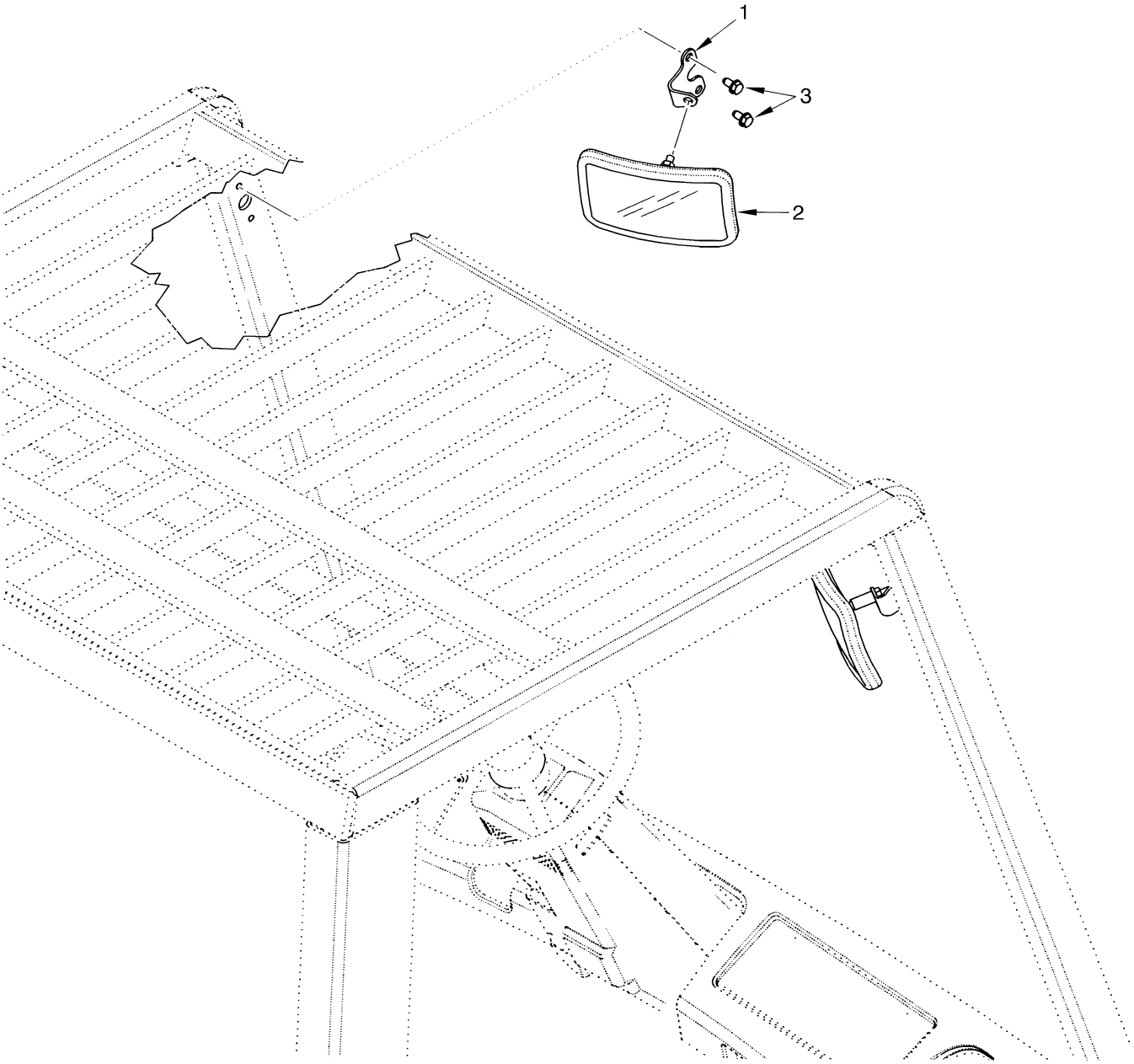

HP000029

ITEM	PART NO.	DESCRIPTION	QTY
1	1356520	Bracket	2
2	1301286	Mirror	2
3	316678	Screw	4

©2009 HYSTER COMPANY

NOTES

©2009 HYSTER COMPANY

CAB ATTACHING PARTS (FIGURE 13-20)

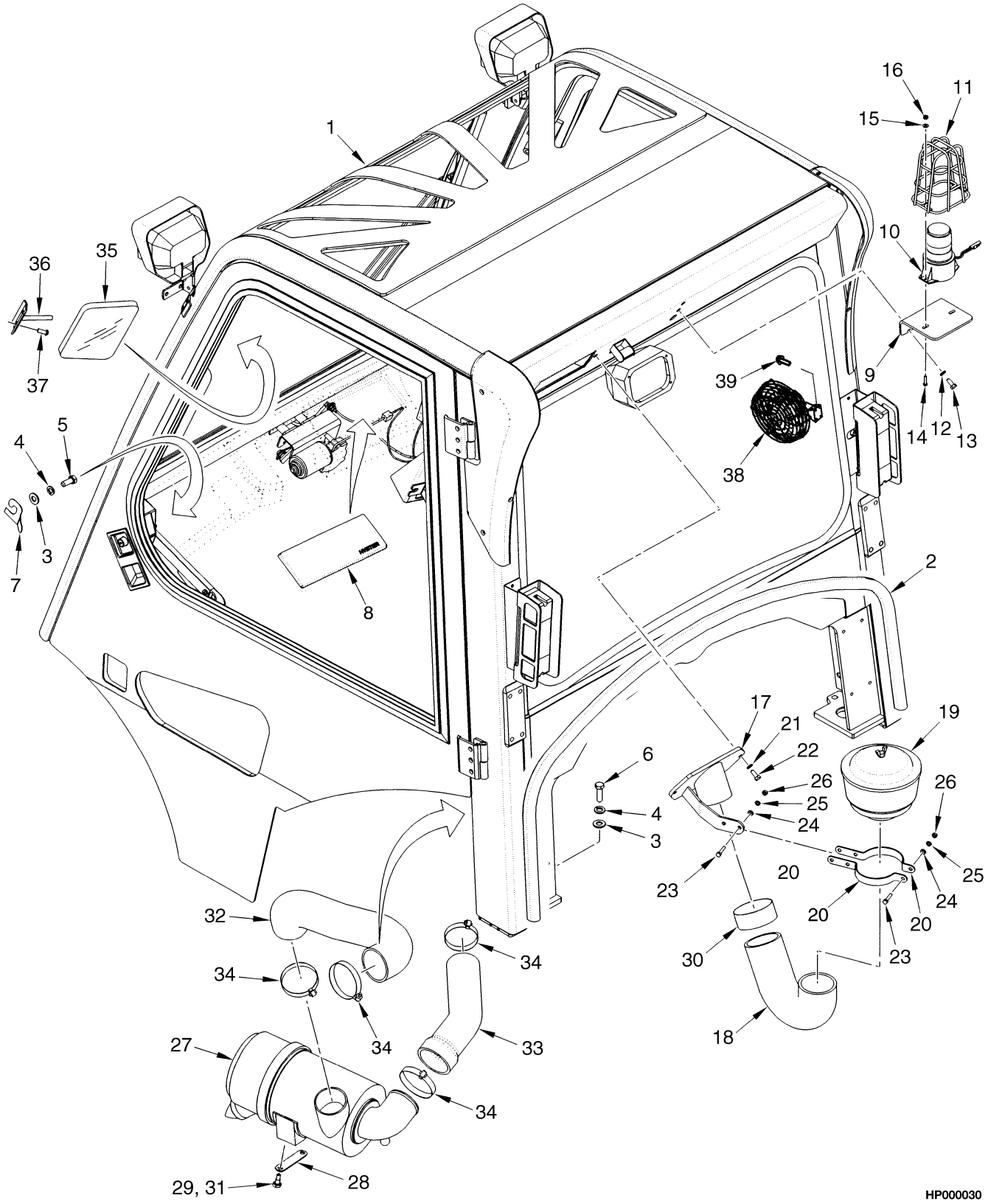

©2009 HYSTER COMPANY

CAB ATTACHING PARTS

ITEM	PART NO.	DESCRIPTION	QTY
1	1400172	Cab	1
2	1465740	Seal	1
3	296423	Washer	6
4	292683	Lockwasher	6
5	293645	Capscrew	4
6	293647	Capscrew	2
7	1392740	Shim (0.039 in.)	AR
8	1400207	Cover	1
9	1392797	Bracket	1
10	1399474	Strobe Light	1
10	1526082	Lens (Amber)	1
10	1309775	Strobe Light	1
11	1302024	Guard	1
12	292681	Lockwasher	2
13	136681	Capscrew	2
14	220498	Screw	2
15	197067	Washer	2
16	230882	Locknut	2
17	1392814	Bracket Wldmt	1
18	1392799	Hose	1
19	291974	Pre-Cleaner	1
20	1397989	Band	2
21	375984	Spring Washer	2
22	292501	Capscrew	2
23	302263	Capscrew	3
24	320156	Washer	2
25	292680	Washer	3
26	136687	Nut	3
27	2035621	Air Filter (☞Figure 3-29)	1
28	1397652	Plate	1
29	1397653	Bolt	2
30	1398002	Clamp	1
31	251099	Loctite	AR
32	1390110	Hose	1
33	**b** 2037320	Hose	1
33	**a** 1394593	Hose	1
34	**b** 115696	Hose Clamp	4
34	**a** 115696	Hose Clamp	3
35	1392819	Mirror	1
36	1392818	Bracket	1
37	369242	Capscrew	2
38	1503620	Fan	1
39	293726	Capscrew	3

FOOTNOTES:

a Diesel

b Gasoline, LPG, Dual Fuel

©2009 HYSTER COMPANY

SIDE-SHIFT CARRIAGE (FIGURE 13-21)

TWO STAGE LIMITED FREE-LIFT (48 AND 60-INCH) — H70XM - H90XMS

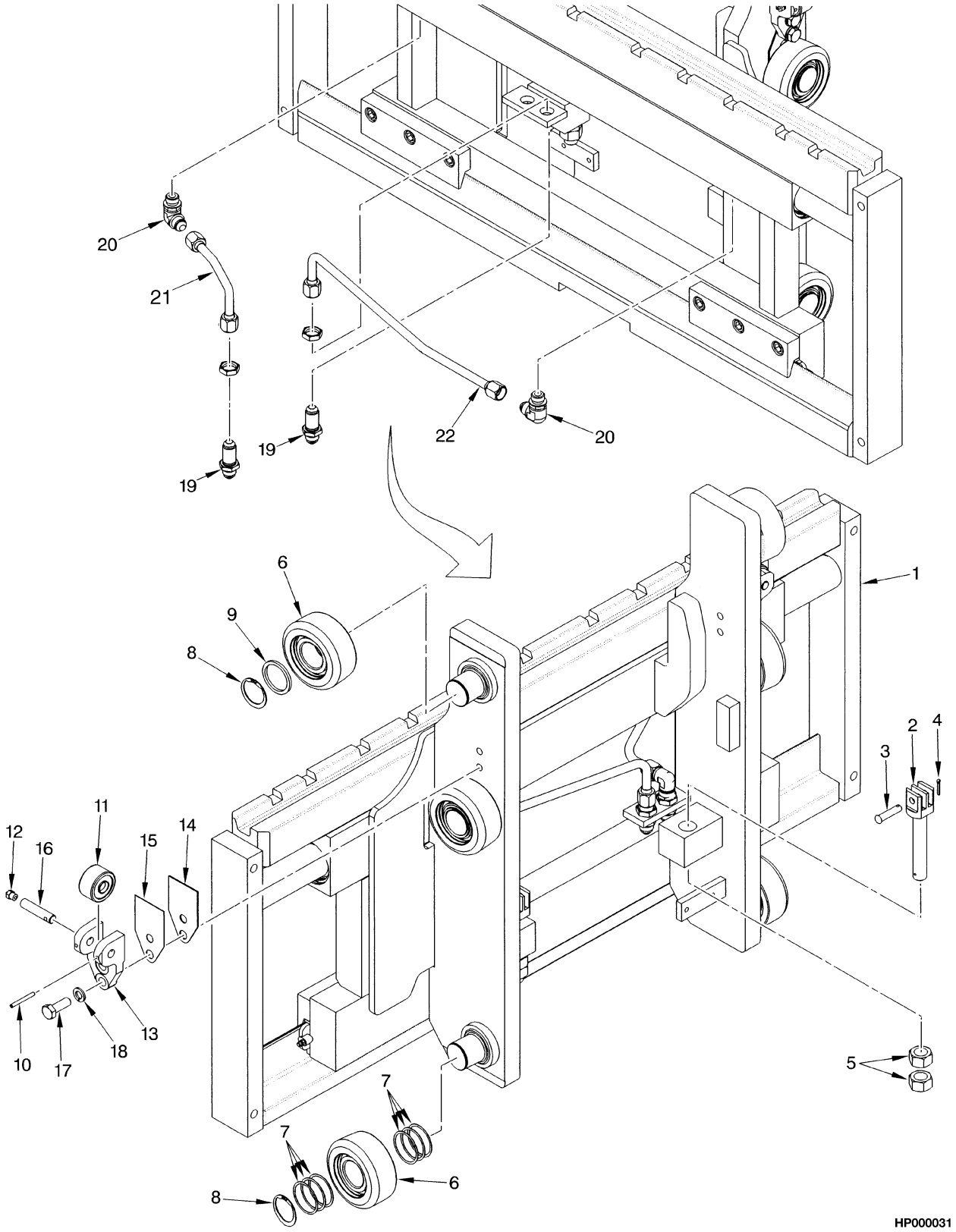

©2009 HYSTER COMPANY

SIDE-SHIFT CARRIAGE

TWO STAGE LIMITED FREE-LIFT (48 AND 60-INCH) – H70XM - H90XMS

ITEM	PART NO.	DESCRIPTION	QTY
	2037951	Side-Shift Carriage (48 in.) (Group No. 8502066)	1
	2037952	Side-Shift Carriage (60 in.) (Group No. 8502067)	1
1	2037943	Side-Shift Carriage (48 in.) (☞Figure 13-25)	1
1	2037944	Side-Shift Carriage (60 in.) (☞Figure 13-26)	1
2	1387285	Chain Anchor	2
3	327591	Pin	2
4	15222	Cotter Pin	2
5	221717	Nut	4
6	1511882	Load Roller (100.91 mm) ("A")	6
6	1511883	Load Roller (101.67 mm) ("B") (0,26 mm)	6
6	1511884	Load Roller (102.43 mm) ("C") (1,52 mm)	6
7	126765	Shim	24
8	1465072	Snap Ring	6
9	1399224	Spacer	2
10	66333	Roll Pin	2
11	1387993	Side Roller	2
12	16001	Grease Fitting	2
13	1465177	Bracket	2
14	192425	Shim (0.062 in.)	AR
15	192424	Shim (0.030 in.)	AR
16	1465028	Pin	2
17	292528	Capscrew	4
18	292683	Lockwasher	4
19	16448	Fitting	2
20	16559	Fitting	2
20	16484	O-Ring	1
21	1499104	Hose Assy	1
22	1499103	Hose Assy	1

©2009 HYSTER COMPANY

SIDE-SHIFT CARRIAGE (FIGURE 13-22)

TWO STAGE LIMITED FREE-LIFT (54 AND 60-INCH) — H90XM - H120XM

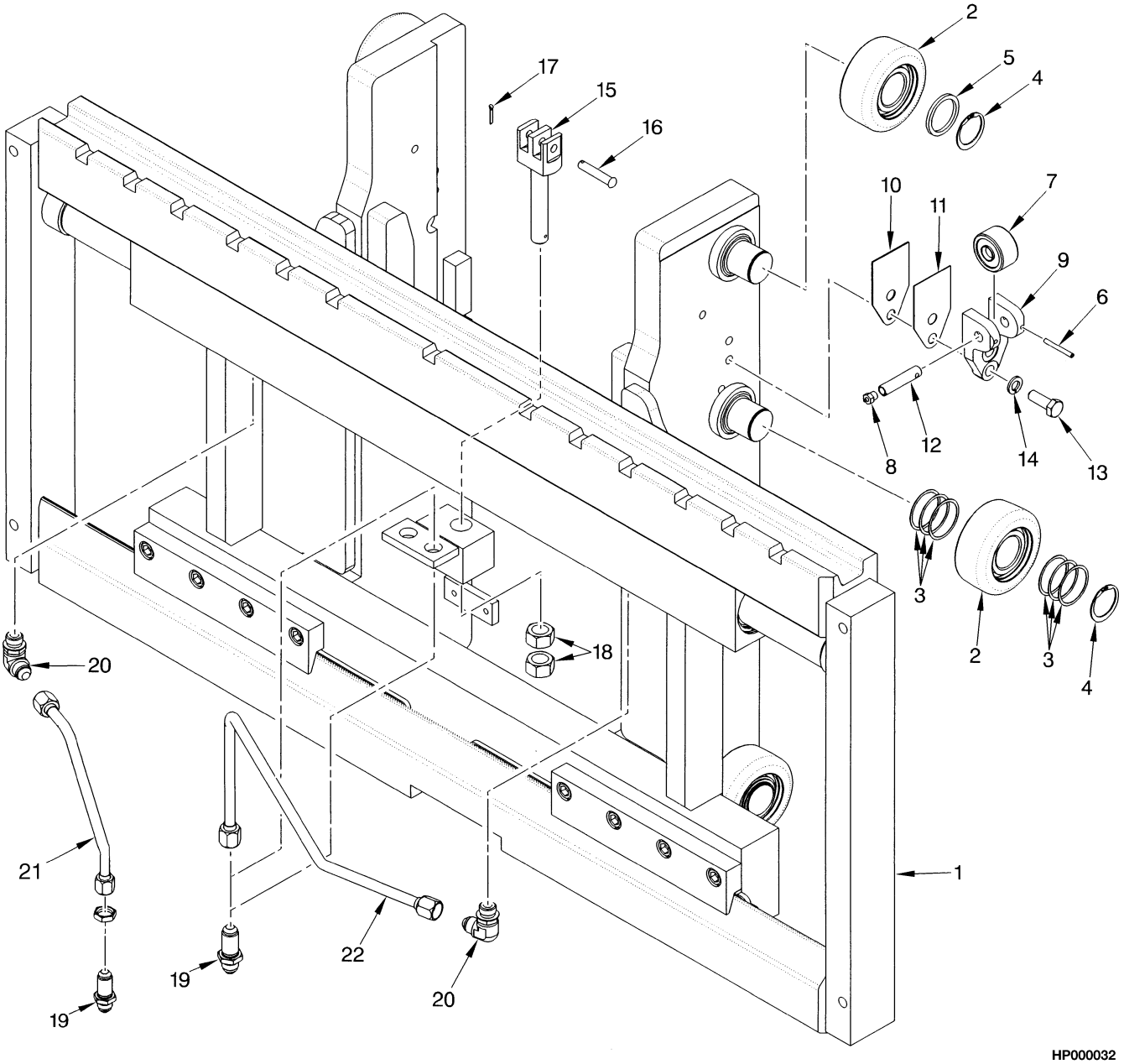

©2009 HYSTER COMPANY

SIDE-SHIFT CARRIAGE

TWO STAGE LIMITED FREE-LIFT (54 AND 60-INCH) – H90XM - H120XM

ITEM	PART NO.	DESCRIPTION	QTY
	2037953	Side-Shift Carriage (54 in.) (Group No. 8502068)	1
	2037954	Side-Shift Carriage (60 in.) (Group No. 8502069)	1
1	2037945	Side-Shift Carriage (54 in.) (☞Figure 13-27)	1
1	2037946	Side-Shift Carriage (60 in.) (☞Figure 13-27)	1
2	1511882	Load Roller (100.91 mm) ("A")	6
2	1511883	Load Roller (101.67 mm) ("B") (0,26 mm)	6
2	1511884	Load Roller (102.43 mm) ("C") (1,52 mm)	6
3	126765	Shim	24
4	1465072	Snap Ring	6
5	1399224	Spacer	2
6	66333	Roll Pin	2
7	1387993	Side Roller	2
8	16001	Grease Fitting	2
9	1465177	Bracket	2
10	192425	Shim (0.062 in.)	AR
11	192424	Shim (0.030 in.)	AR
12	1465028	Pin	2
13	292528	Capscrew	4
14	292683	Lockwasher	4
15	1387286	Chain Anchor	2
16	339932	Pin	2
17	15222	Cotter Pin	2
18	221717	Nut	4
19	16448	Fitting	2
20	16559	Fitting	2
20	16484	O-Ring	1
21	**b** 1499102	Hose Assy	1
21	**a** 1467059	Tube Assy (54 in. Carriage)	1
21	**a** 1467061	Tube Assy (60 in. Carriage)	1
22	**b** 1499101	Hose Assy	1
22	**a** 1397992	Clamp (54 in. Carriage)	1
22	**a** 1467062	Tube Assy (60 in. Carriage)	1

FOOTNOTES:

a → 11/2001

b 11/2001 →

©2009 HYSTER COMPANY

SIDE-SHIFT CARRIAGE (FIGURE 13-23)

TWO AND THREE STAGE FULL FREE-LIFT (48 AND 60-INCH) — H70-90XM

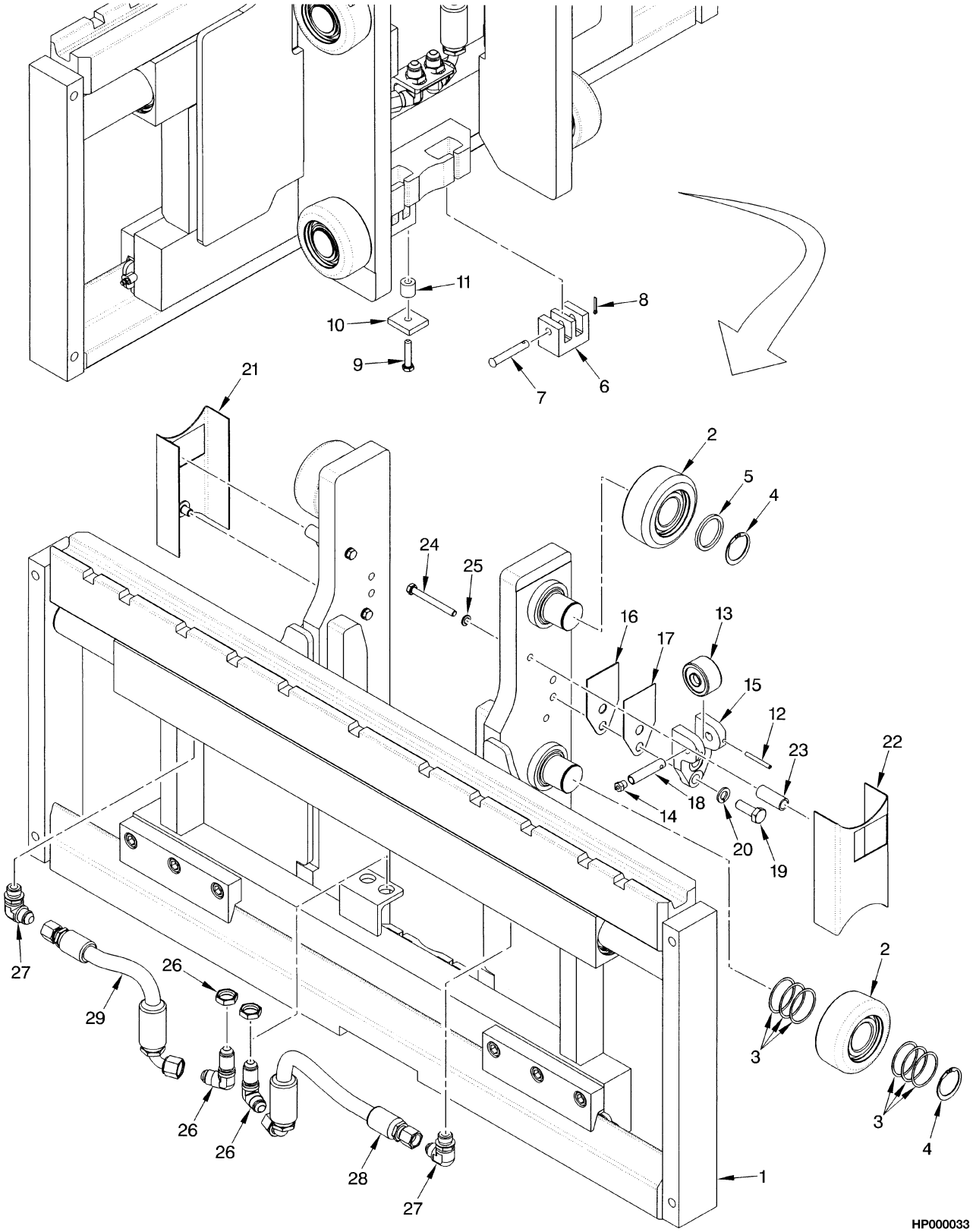

©2009 HYSTER COMPANY

SIDE-SHIFT CARRIAGE

TWO AND THREE STAGE FULL FREE-LIFT (48 AND 60-INCH) – H70-90XM

ITEM	PART NO.	DESCRIPTION	QTY
	a 2037955	Side-Shift Carriage (48 in.) (Group No. 8502070)	1
	b 2038594	Side-Shift Carriage (48 in.) (Group No. 8502090)	1
	a 2037956	Side-Shift Carriage (60 in.) (Group No. 8502071)	1
	b 2038596	Side-Shift Carriage (60 in.) (Group No. 8502091)	1
1	. . . . .	Carriage	1
2	1511882	Load Roller (100.91 mm) ("A")	6
2	1511883	Load Roller (101.67 mm) ("B") (0,26 mm)	6
2	1511884	Load Roller (102.43 mm) ("C") (1,52 mm)	6
3	126765	Shim	24
4	1465072	Snap Ring	6
5	1399224	Spacer	2
6	1387548	Chain Anchor	2
7	1387549	Pin	2
8	15222	Cotter Pin	2
9	292508	Capscrew	1
10	1400126	Plate	1
11	1400125	Spacer	1
12	66333	Roll Pin	2
13	1387993	Side Roller	2
14	16001	Grease Fitting	2
15	1465177	Bracket	2
16	192425	Shim (0.062 in.)	AR
17	192424	Shim (0.030 in.)	AR
18	1465028	Pin	2
19	292528	Capscrew	4
20	292683	Lockwasher	4
21	319322	Bracket Wldmt (RH)	1
22	319323	Bracket Wldmt (LH)	1
23	317292	Spacer	4
24	18518	Capscrew	4
25	15155	Lockwasher	4
26	16458	Fitting	2
27	16559	Fitting	2
27	16484	O-Ring	1
28	1499105	Hose Assy	1
29	1499106	Hose Assy	1

FOOTNOTES:

a Three Stage Full Free-Lift

b Two Stage Full Free-Lift

©2009 HYSTER COMPANY

SIDE-SHIFT CARRIAGE (FIGURE 13-24)

TWO AND THREE STAGE FULL FREE-LIFT (54 AND 60-INCH) — H100XM-H120XM

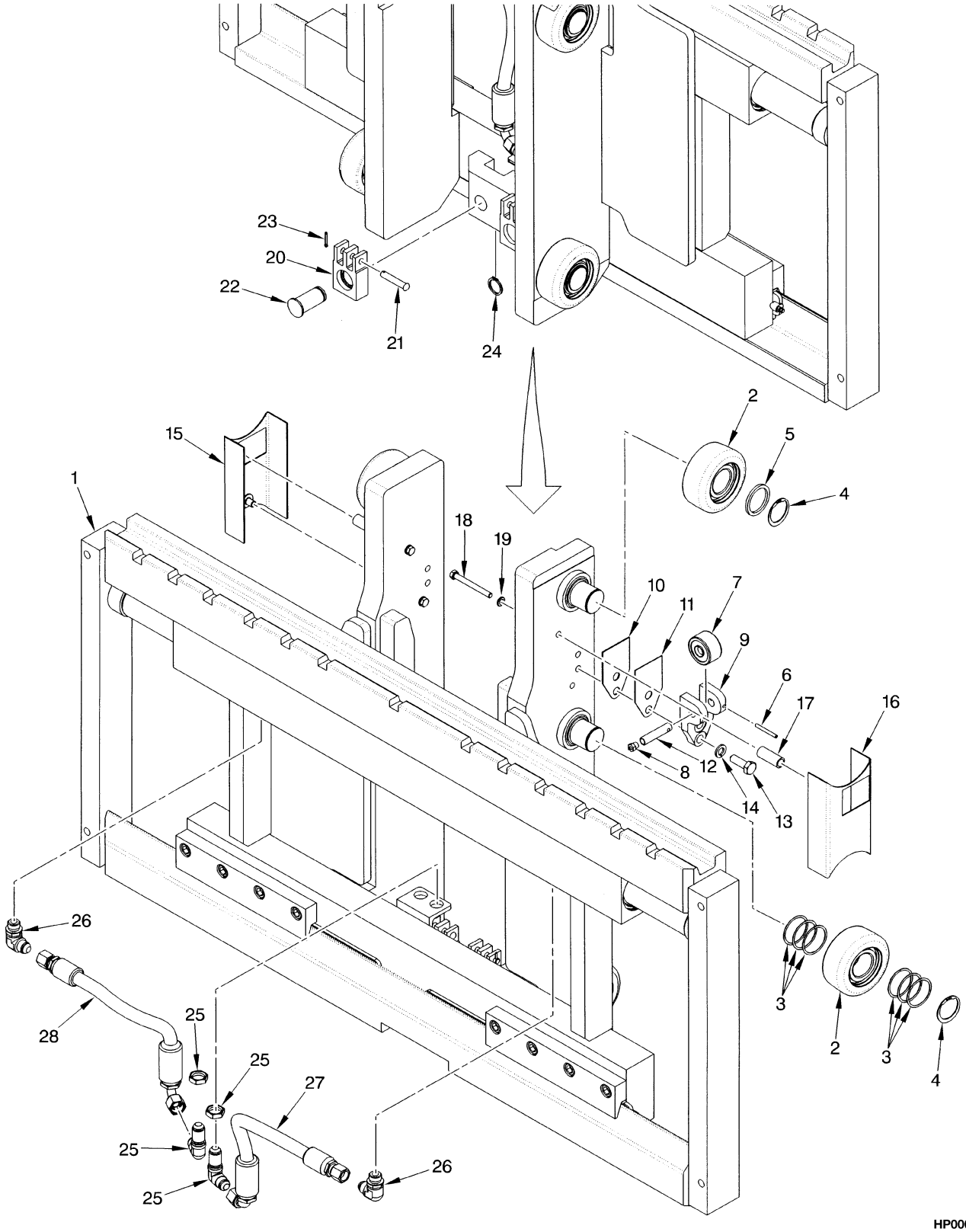

©2009 HYSTER COMPANY

SIDE-SHIFT CARRIAGE

TWO AND THREE STAGE FULL FREE-LIFT (54 AND 60-INCH) – H100XM-H120XM

ITEM	PART NO.	DESCRIPTION	QTY
	a 2037957	Side-Shift Carriage (54 in.) (Group No. 8502072)	1
	b 2038597	Side-Shift Carriage (54 in.) (Group No. 8502092)	1
	a 2037958	Side-Shift Carriage (60 in.) (Group No. 8502073)	1
	b 2038598	Side-Shift Carriage (60 in.) (Group No. 8502093)	1
1	**a** 2037949	Side-Shift Carriage (54 in.) (☞Figure 13-30)	1
1	**a** 2037950	Side-Shift Carriage (60 in.) (☞Figure 13-30)	1
1	**b** 2038600	Side-Shift Carriage (54 in.) (☞Figure 13-30)	1
1	**b** 2038601	Side-Shift Carriage (60 in.) (☞Figure 13-30)	1
2	1511882	Load Roller (100.91 mm) ("A")	6
2	1511883	Load Roller (101.67 mm) ("B") (0,26 mm)	6
2	1511884	Load Roller (102.43 mm) ("C") (1,52 mm)	6
3	126765	Shim	24
4	1465072	Snap Ring	6
5	1399224	Spacer	2
6	66333	Roll Pin	2
7	1387993	Side Roller	2
8	16001	Grease Fitting	2
9	1465177	Bracket	2
10	192425	Shim (0.062 in.)	AR
11	192424	Shim (0.030 in.)	AR
12	1465028	Pin	2
13	292528	Capscrew	4
14	292683	Lockwasher	4
15	319322	Bracket Wldmt (RH)	1
16	319323	Bracket Wldmt (LH)	1
17	317292	Spacer	4
18	18520	Capscrew	3
18	18518	Capscrew	1
19	15155	Lockwasher	4
20	1480392	Chain Anchor	2
21	339932	Pin	2
22	320327	Pin	2
23	15222	Cotter Pin	2
24	131358	Snap Ring	2
25	16458	Fitting	2
26	16559	Fitting	2
26	16484	O-Ring	1
27	1499107	Hose Assy	1
28	1499108	Hose Assy	1

FOOTNOTES:

a Three Stage Full Free-Lift

b Two Stage Full Free-Lift

©2009 HYSTER COMPANY

SIDE-SHIFT CARRIAGE FRAME (FIGURE 13-25)

TWO STAGE LIMTED FREE-LIFT (48-INCH) — H70XM - H90XM

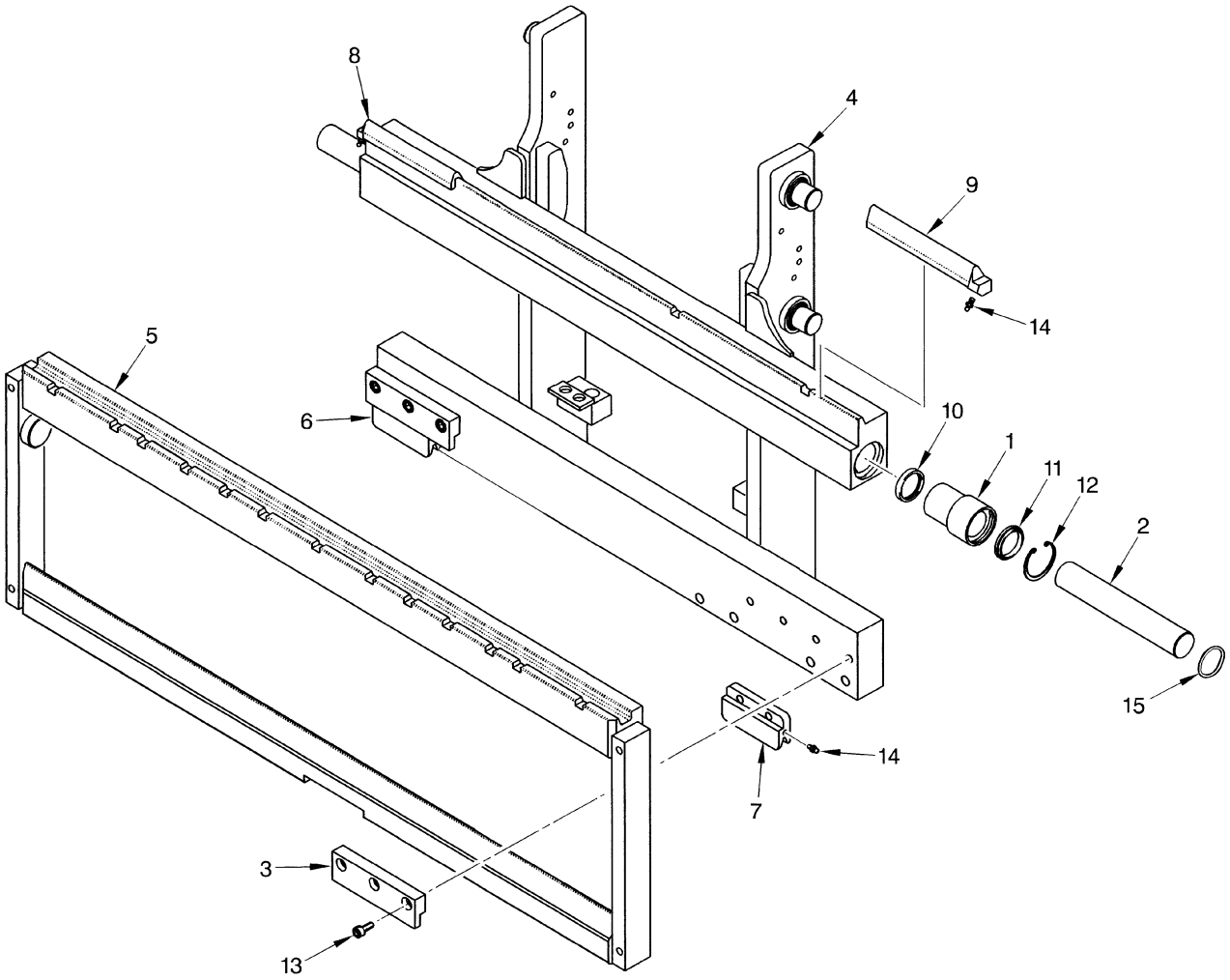

HP000035

©2009 HYSTER COMPANY

SIDE-SHIFT CARRIAGE FRAME

TWO STAGE LIMTED FREE-LIFT (48-INCH) – H70XM - H90XM

ITEM	PART NO.	DESCRIPTION	QTY
	2037943	Side-Shift Carriage	1
1	1467151	Bushing	2
2	1467153	Rod	2
3	1467154	Hook	2
4	1467769	Frame	1
5	**a** 1467268	Apron	1
5	**b** 1532640	Apron	1
6	1467145	Wear Strip (Right Lower) (RH Lower)	1
7	1467146	Wear Strip (Left Lower) (LH Lower)	1
8	1467147	Wear Strip (Right Upper) (RH Upper)	1
9	1467148	Wear Strip (Left Upper) (LH Upper)	1
10	1622935	Seal	2
11	1467150	Rod Wiper	2
12	1467632	Snap Ring	2
13	1467633	Screw	6
14	16041	Grease Fitting	8
15	39365	O-Ring	2

FOOTNOTES:

a → 12/2002

b 12/2002 →

©2009 HYSTER COMPANY

SIDE-SHIFT CARRIAGE FRAME (FIGURE 13-26)

TWO STAGE LIMTED FREE-LIFT (60-INCH) — H70XM - H90XMS

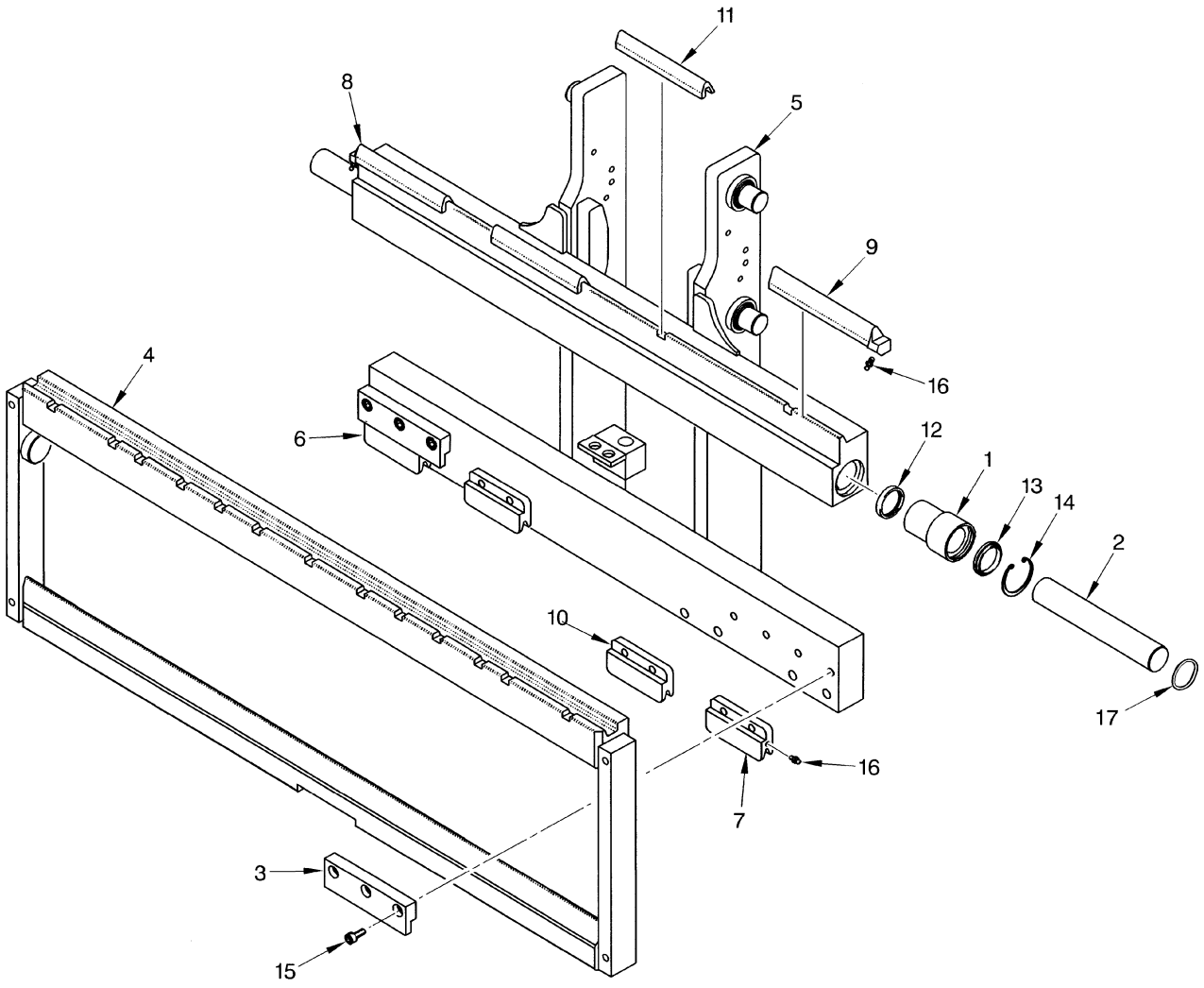

HP000036

©2009 HYSTER COMPANY

SIDE-SHIFT CARRIAGE FRAME

TWO STAGE LIMTED FREE-LIFT (60-INCH) – H70XM - H90XMS

ITEM	PART NO.	DESCRIPTION	QTY
	2037944	Side-Shift Carriage	1
1	1467151	Bushing	2
2	1467153	Rod	2
3	1467154	Hook	2
4	**a** 1467269	Apron	1
4	**b** 1532643	Apron	1
5	1467771	Frame	1
6	1467145	Wear Strip (Right Lower) (RH Lower)	1
7	1467146	Wear Strip (Left Lower) (LH Lower)	1
8	1467147	Wear Strip (Right Upper) (RH Upper)	1
9	1467148	Wear Strip (Left Upper) (LH Upper)	1
10	1467201	Wear Strip (Lower Center)	2
11	1467200	Wear Strip (Upper Center)	2
12	1622935	Seal	2
13	1467150	Rod Wiper	2
14	1467632	Snap Ring	2
15	1467633	Screw	6
16	16041	Grease Fitting	8
17	39365	O-Ring	2

FOOTNOTES:

a → 12/2002

b 12/2002 →

©2009 HYSTER COMPANY

SIDE-SHIFT CARRIAGE FRAME (FIGURE 13-27)
TWO STAGE LIMITED FREE-LIFT (54 AND 60-INCH) — H100XM - H120 XM

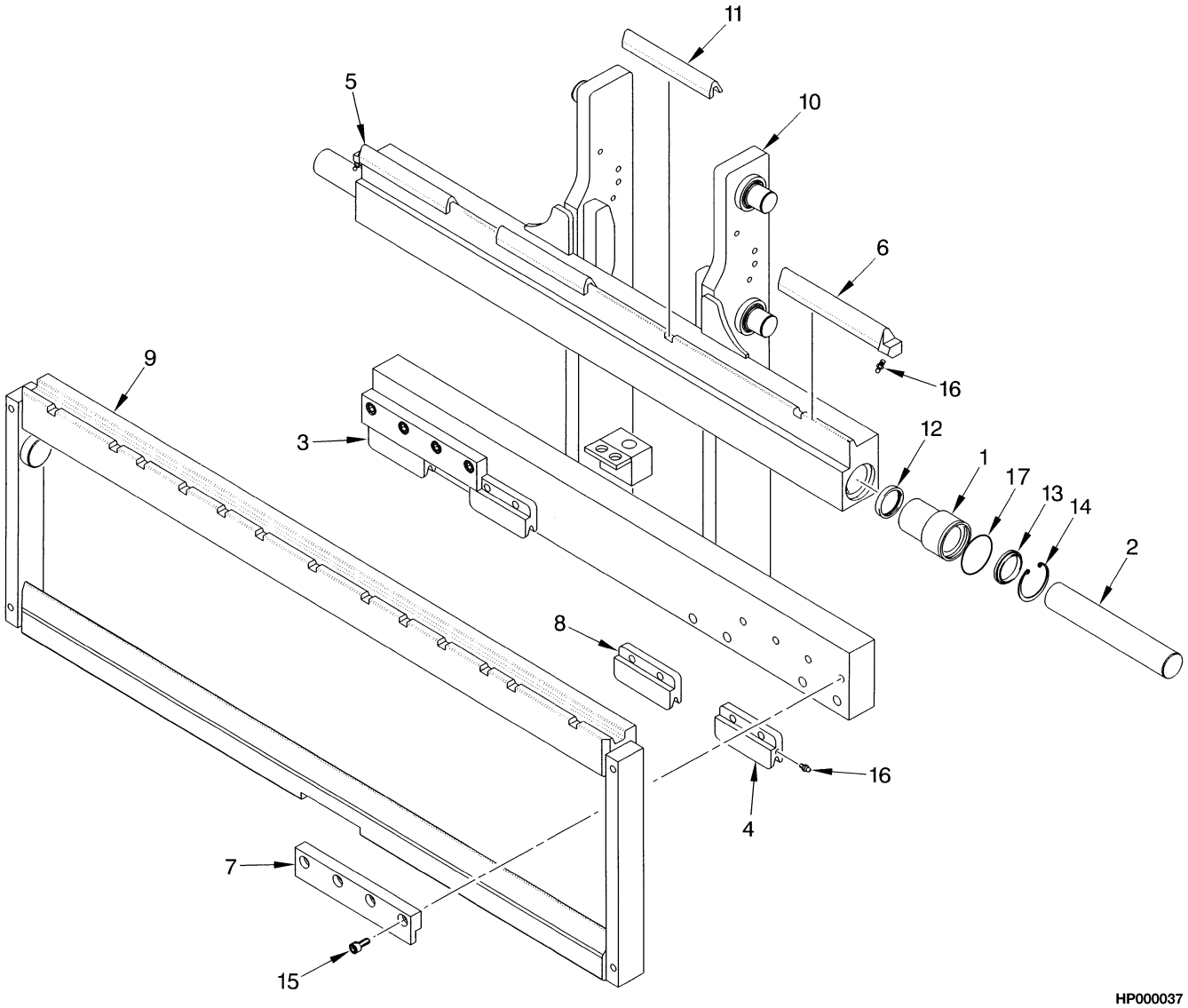

©2009 HYSTER COMPANY

SIDE-SHIFT CARRIAGE FRAME

TWO STAGE LIMITED FREE-LIFT (54 AND 60-INCH) – H100XM - H120 XM

ITEM	PART NO.	DESCRIPTION	QTY
	2037946	Side-Shift Carriage (60 in.)	1
	2037945	Side-Shift Carriage (54 in.)	1
1	1467204	Bushing	2
2	1467205	Rod	2
3	1467145	Wear Strip (Right Lower) (RH Lower)	1
4	1467146	Wear Strip (Left Lower) (LH Lower)	1
5	1467147	Wear Strip (Right Upper) (RH Upper)	1
6	1467148	Wear Strip (Left Upper) (LH Upper)	1
7	1467206	Hook	2
8	1467201	Wear Strip (Lower Center)	2
9	**a** 1467270	Apron (54 in.)	1
9	**b** 1532638	Apron (54 in.)	1
9	**a** 1467846	Apron (60 in.)	1
9	**b** 1532639	Apron (60 in.)	1
10	1467774	Frame (54 in.)	1
10	1467776	Frame (60 in.)	1
11	1467200	Wear Strip (Upper Center)	2
12	1622936	Seal	2
13	1467203	Rod Wiper	2
14	1467634	Snap Ring	2
15	1467633	Screw	8
16	16041	Grease Fitting	8
17	39366	O-Ring	2

FOOTNOTES:

a → 3/2003

b 3/2003 →

©2009 HYSTER COMPANY

SIDE-SHIFT CARRIAGE FRAME (FIGURE 13-28)
TWO AND THREE STAGE FULL FREE-LIFT (48-INCH) — H70XM - H90XM

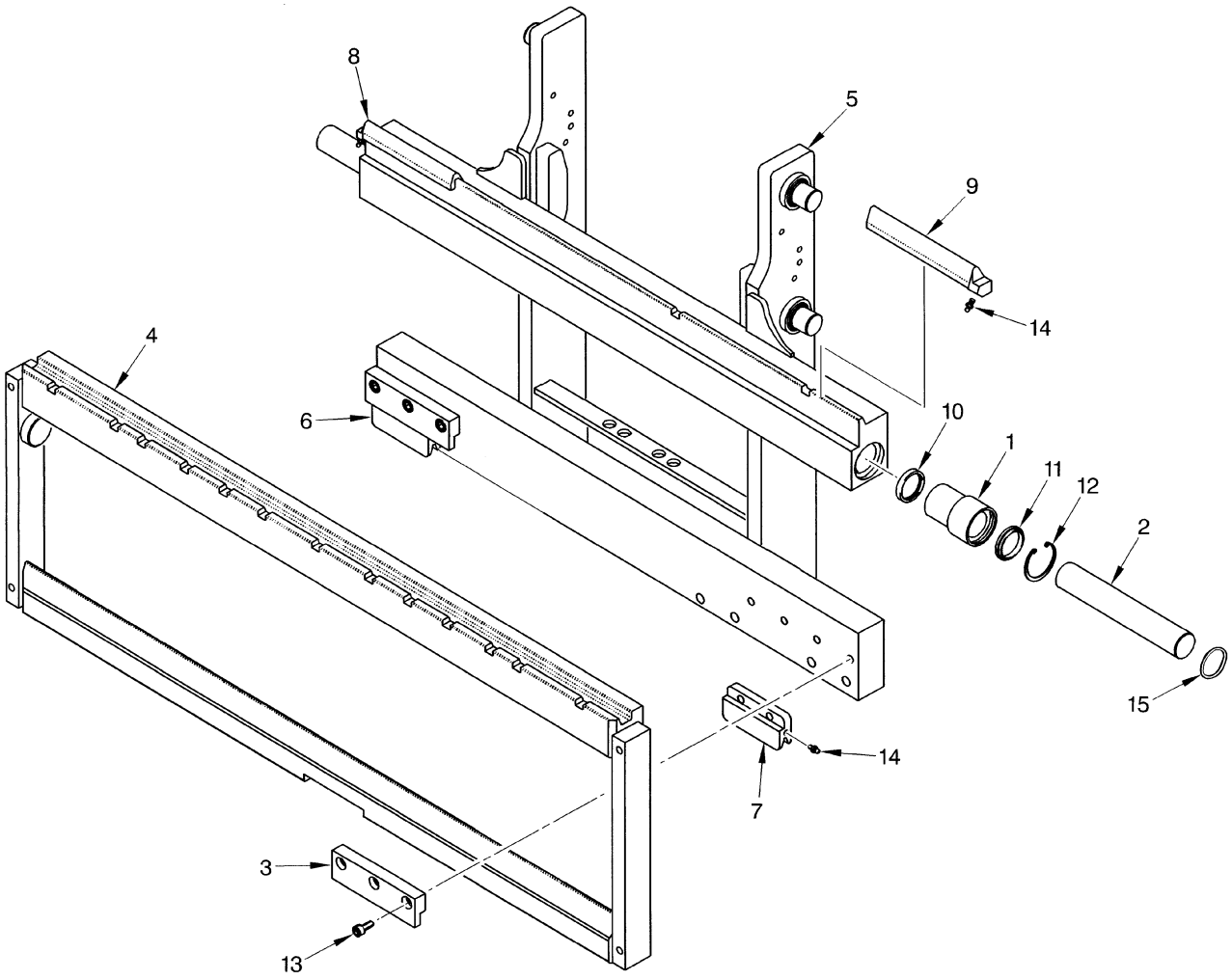

HP000038

©2009 HYSTER COMPANY

SIDE-SHIFT CARRIAGE FRAME

TWO AND THREE STAGE FULL FREE-LIFT (48-INCH) – H70XM - H90XM

ITEM	PART NO.	DESCRIPTION	QTY
	a 2037947	Side-Shift Carriage (48 in.)	1
	b 2038595	Side-Shift Carriage (48 in.)	1
1	1467151	Bushing	2
2	1467153	Rod	2
3	1467154	Hook	2
4	**c** 1467268	Apron	1
4	**d** 1532640	Apron	1
5	**a** 1467770	Frame	1
5	**b** 1483336	Frame	1
6	1467145	Wear Strip (Right Lower) (RH Lower)	1
7	1467146	Wear Strip (Left Lower) (LH Lower)	1
8	1467147	Wear Strip (Right Upper) (RH Upper)	1
9	1467148	Wear Strip (Left Upper) (LH Upper)	1
10	1622935	Seal	2
11	1467150	Rod Wiper	2
12	1467632	Snap Ring	2
13	1467633	Screw	6
14	16041	Grease Fitting	8
15	39365	O-Ring	2
	2083999	Kit-Seal (Class III)	1

FOOTNOTES:

a Three Stage Full Free-Lift
b Two Stage Full Free-Lift
c → 12/2002
d 12/2002 →

©2009 HYSTER COMPANY

SIDE-SHIFT CARRIAGE FRAME (FIGURE 13-29)

TWO AND THREE STAGE FULL FREE-LIFT (60-INCH) — H70XM - H90XM

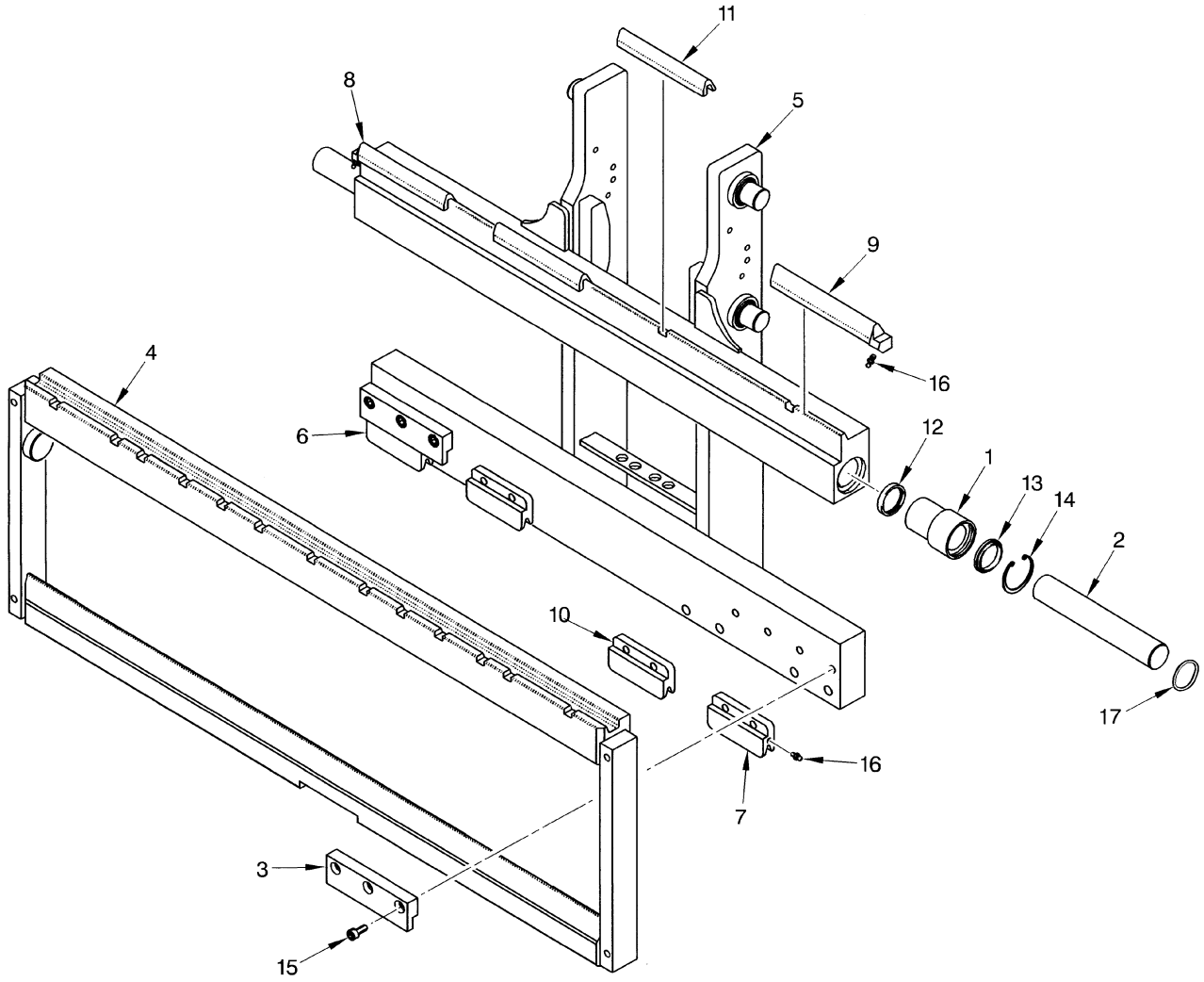

HP000039

©2009 HYSTER COMPANY

SIDE-SHIFT CARRIAGE FRAME

TWO AND THREE STAGE FULL FREE-LIFT (60-INCH) – H70XM - H90XM

ITEM	PART NO.	DESCRIPTION	QTY
	b 2038599	Side-Shift Carriage (60 in.)	1
	a 2037948	Side-Shift Carriage (60 in.)	1
1	1467151	Bushing	2
2	1467153	Rod	2
3	1467154	Hook	2
4	**c** 1467269	Apron	1
4	**d** 1532643	Apron	1
5	**a** 1467772	Frame	1
5	**b** 1483335	Frame	1
6	1467145	Wear Strip (Right Lower) (RH Lower)	1
7	1467146	Wear Strip (Left Lower) (LH Lower)	1
8	1467147	Wear Strip (Right Upper) (RH Upper)	1
9	1467148	Wear Strip (Left Upper) (LH Upper)	1
10	1467201	Wear Strip (Lower Center)	2
11	1467200	Wear Strip (Upper Center)	2
12	1622935	Seal	2
13	1467150	Rod Wiper	2
14	1467632	Snap Ring	2
15	1467633	Screw	6
16	16041	Grease Fitting	4
17	39365	O-Ring	2

FOOTNOTES:

a Three Stage Full Free-Lift
b Two Stage Full Free-Lift
c → 12/2002
d 12/2002 →

©2009 HYSTER COMPANY

SIDE-SHIFT CARRIAGE FRAME (FIGURE 13-30)

TWO AND THREE STAGE FULL FREE-LIFT (54 AND 60-INCH) — H100XM-H120XM

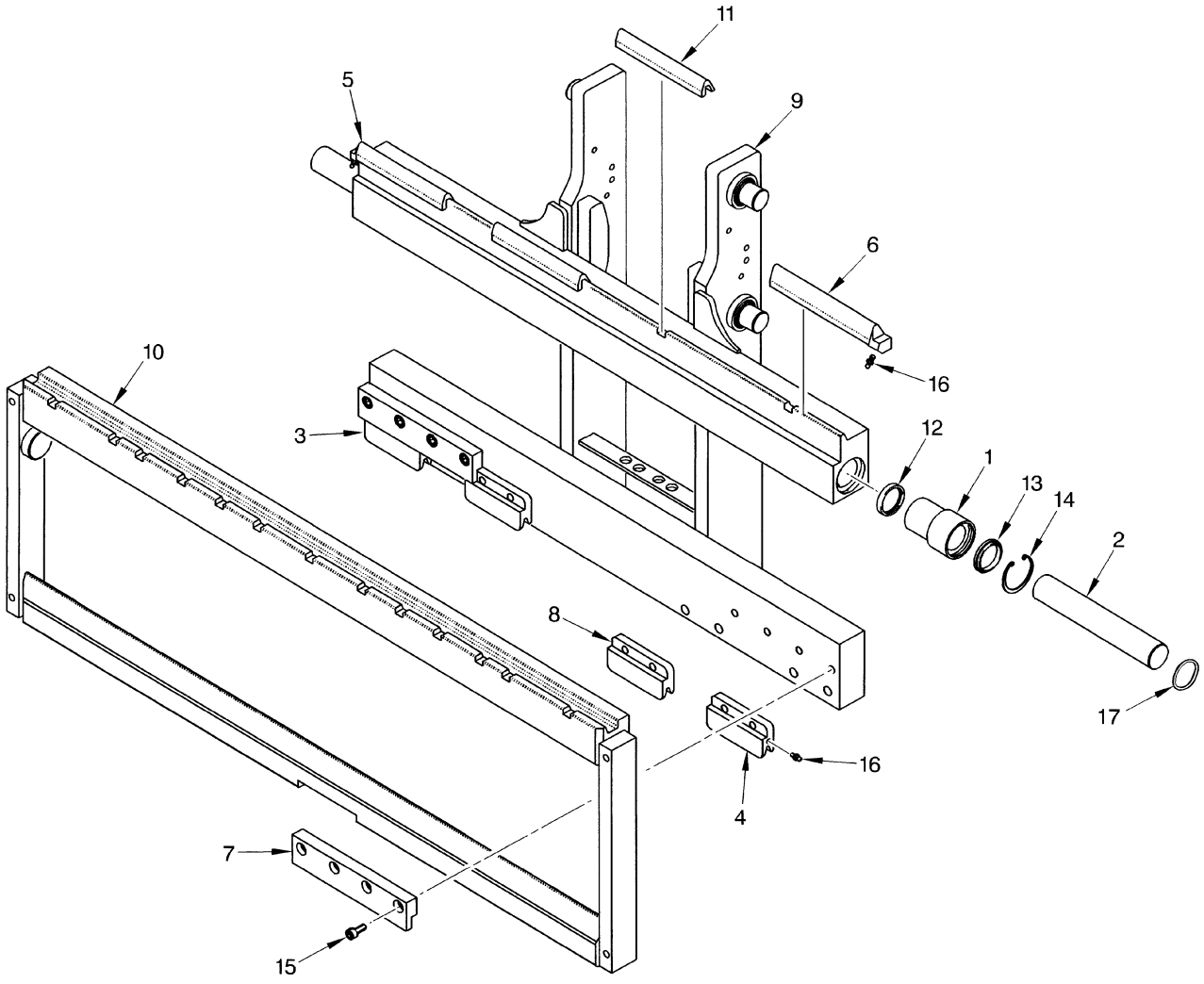

HP000040

©2009 HYSTER COMPANY

SIDE-SHIFT CARRIAGE FRAME

TWO AND THREE STAGE FULL FREE-LIFT (54 AND 60-INCH) – H100XM-H120XM

ITEM	PART NO.	DESCRIPTION	QTY
	a 2037949	Side-Shift Carriage (54 in.)	1
	a 2037950	Side-Shift Carriage (60 in.)	1
	b 2038600	Side-Shift Carriage (54 in.)	1
	b 2038601	Side-Shift Carriage (60 in.)	1
1	1467204	Bushing	2
2	1467205	Rod	2
3	1467145	Wear Strip (Right Lower) (RH Lower)	1
4	1467146	Wear Strip (Left Lower) (LH Lower)	1
5	1467147	Wear Strip (Right Upper) (RH Upper)	1
6	1467148	Wear Strip (Left Upper) (LH Upper)	1
7	1467206	Hook	2
8	1467201	Wear Strip (Lower Center)	2
9	**a** 1467773	Frame (54 in.)	1
9	**a** 1467775	Frame (60 in.)	1
9	**b** 1483331	Side-Shift Carriage (60 in.)	1
9	**b** 1483333	Frame (54 in.)	1
10	**c** 1467270	Apron (54 in.)	1
10	**d** 1532638	Apron (54 in.)	1
10	**c** 1467846	Apron (60 in.)	1
10	**d** 1532639	Apron (60 in.)	1
11	1467200	Wear Strip (Upper Center)	2
12	1622936	Seal	2
13	1467203	Rod Wiper	2
14	1467634	Snap Ring	2
15	1467633	Screw	8
16	16041	Grease Fitting	8
17	39366	O-Ring	2

FOOTNOTES:

a Three Stage Full Free-Lift
b Two Stage Full Free-Lift
c → 12/2002
d 12/2002 →

©2009 HYSTER COMPANY

AUDIBLE ALARM (FIGURE 13-31)

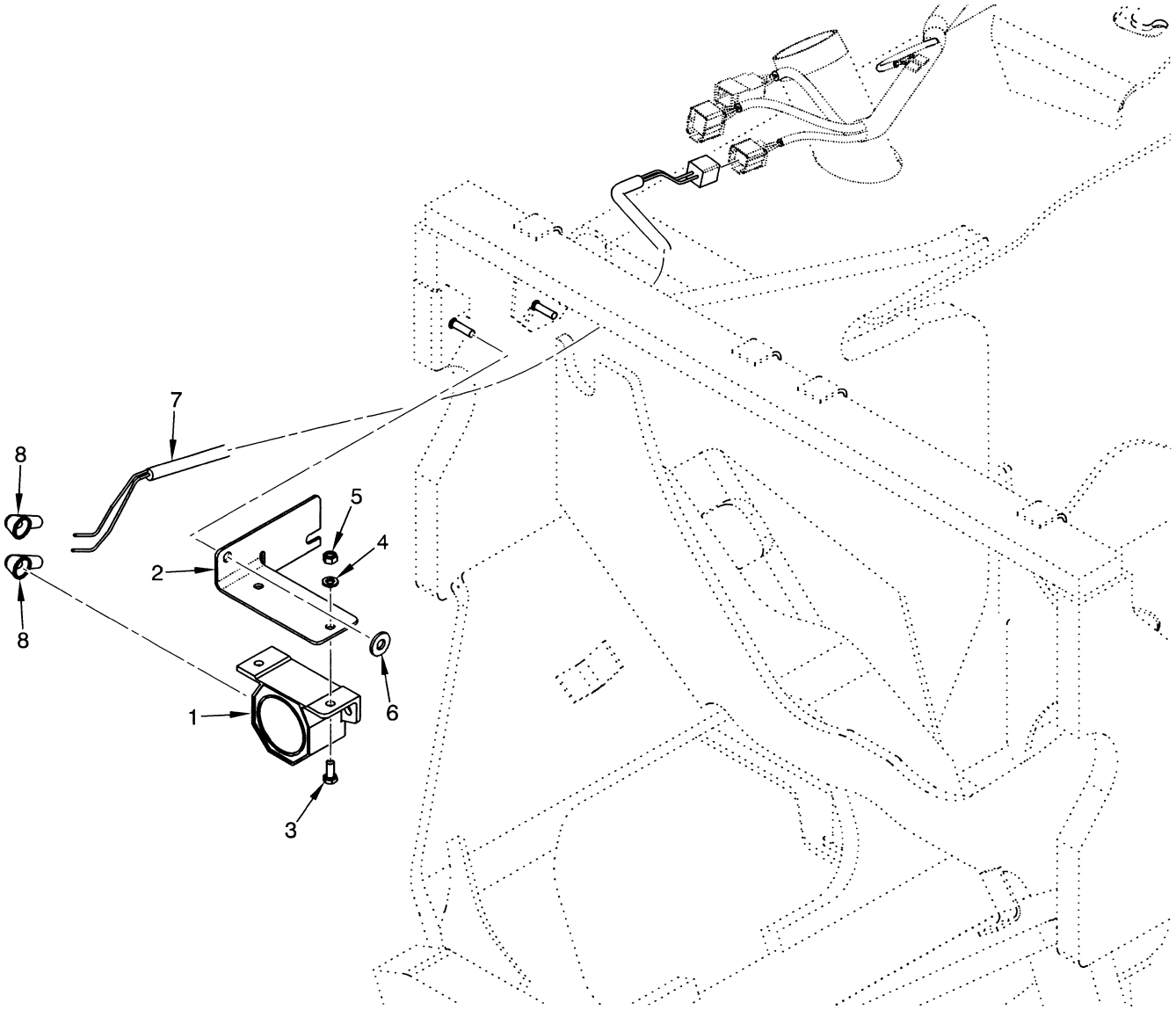

©2009 HYSTER COMPANY

AUDIBLE ALARM

ITEM	PART NO.	DESCRIPTION	QTY
1	1339947	Back-Up Alarm (82-102 dbA)	1
1	1350733	Back-Up Alarm (87 dbA)	1
1	1350734	Back-Up Alarm (97 dbA)	1
1	1350735	Back-Up Alarm (102 dbA)	1
1	1350736	Back-Up Alarm (107 dbA)	1
2	1466997	Bracket	1
3	292500	Capscrew	2
4	320156	Washer	2
5	302399	Nut	2
6	320158	Washer	1
7	2036924	Wire Harness (☞Figure 13-32)	1
8	190382	Boot	2

©2009 HYSTER COMPANY

WIRE HARNESS (FIGURE 13-32)
REVERSE ALARM

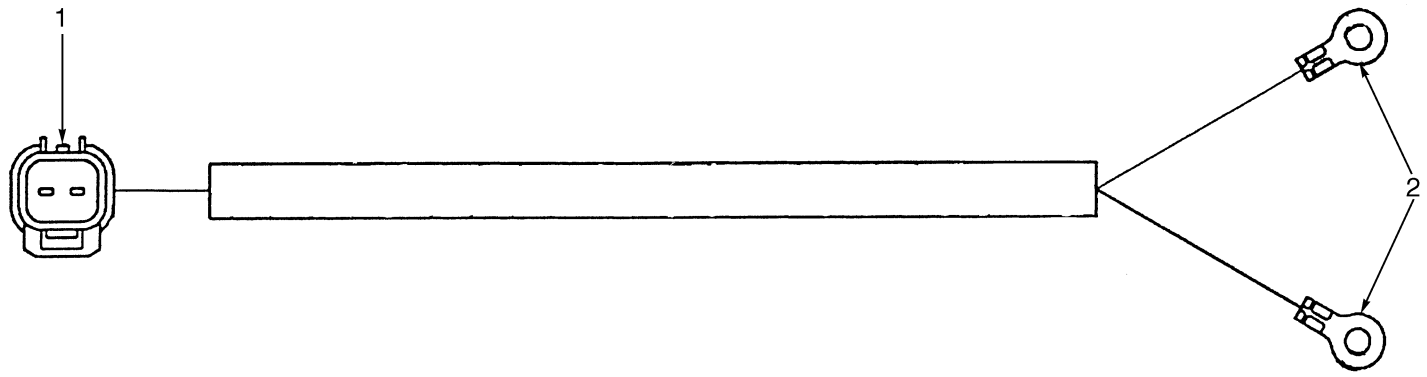

BP080058

ITEM	PART NO.	DESCRIPTION	QTY
	2036924	Wire Harness	1
1	1497288	Housing	1
1	1497299	Retainer	1
1	1484596	Terminal (Pin)	2
1	1484597	Seal	2
2	252293	E-Ring	2

©2009 HYSTER COMPANY

CAB (FIGURE 13-33)

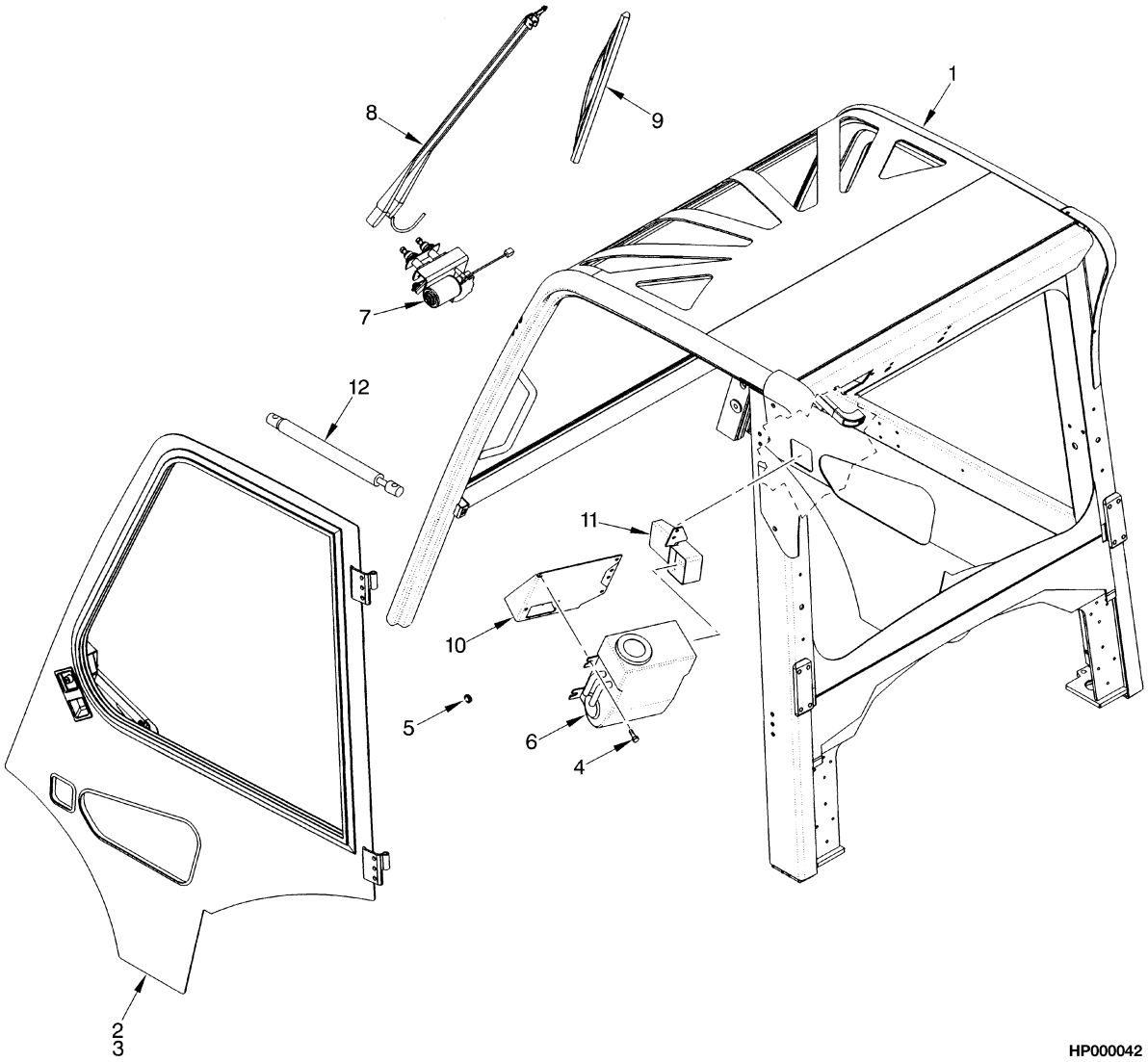

HP000042

ITEM	PART NO.	DESCRIPTION	QTY
1	. . . . .	Cab Attaching Parts (☞Figure 13-34, ☞Figure 13-35, ☞Figure 13-36).....	1
2	1505287	Wire Harness (☞Figure 13-37).....	1
2	1474701	Door (LH) (☞Figure 13-39).....	1
3	1474702	Door (RH) (☞Figure 13-38).....	1
4	1468311	Screw	6
5	1474703	Grommet	1
6	1393540	Heater (☞Figure 13-6).....	1
7	1393492	Wiper Motor	1
8	1393493	Wiper Arm	1
9	1520927	Wiper Blade	1
10	1474950	Bracket	1
11	1474951	Heater Inlet	1
12	1393471	Gas Spring	2

©2009 HYSTER COMPANY

CAB ATTACHING PARTS (FIGURE 13-34)
SHEET 1 OF 3

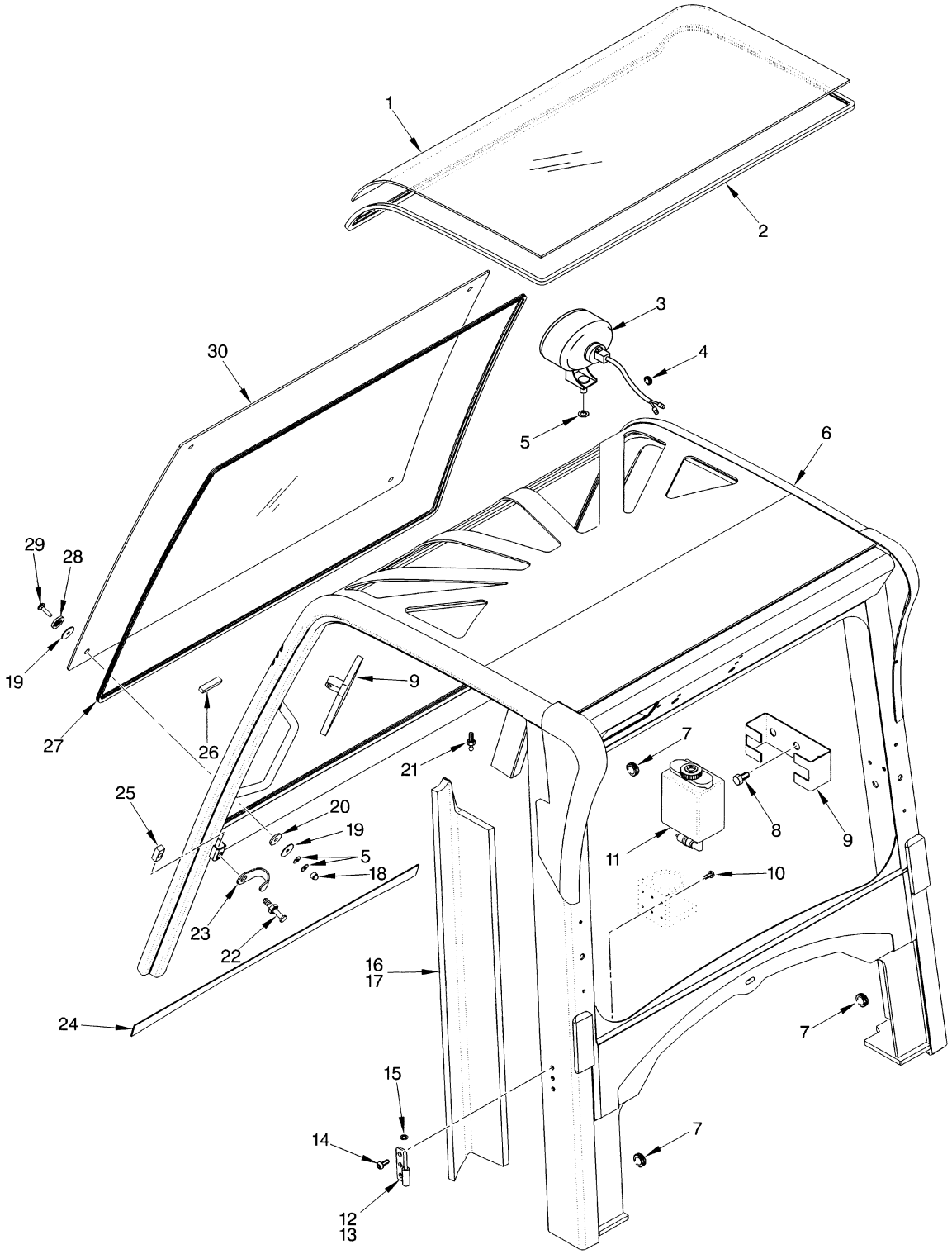

©2009 HYSTER COMPANY

CAB ATTACHING PARTS
SHEET 1 OF 3

ITEM	PART NO.	DESCRIPTION	QTY
1	1502769	Window	1
2	1498362	Seal	1
3	**a** 1399472	Headlight	3
3	1354119	Headlight (Speaker)	1
3	1363016	Lens	1
3	1379799	Bulb	1
3	1356335	Headlight (Hella) (Optional)	1
3	1662409	Bulb	1
3	1483739	Light	1
3	**c** 1531982	Headlight	3
3	1544764	Bulb	1
3	1565839	Wire Harness	1
4	1393517	Grommet	2
5	296419	Washer	14
6	1474957	Frame	1
7	1393511	Grommet	5
8	1468309	Screw	2
9	1474954	Bracket	1
10	1468307	Screw	5
11	1393543	Reservoir (With Pump)	1
12	1474952	Hinge (LH)	2
13	1474953	Hinge (RH)	2
14	1468311	Screw	12
15	1468312	Washer	4
16	1393453	Cover (LH)	1
17	1393454	Cover (RH)	1
18	316835	Nut	4
19	1468316	Washer	8
20	1468317	Washer	4
21	1393472	Ball Stud	2
22	1393486	Striker Bolt	2
23	1393541	Guard	2
24	1393455	Cover (Front)	1
25	1393488	Block (Mounting)	1
26	1474709	Block	2
27	1393463	Seal	1
28	1468315	Washer	4
29	1468314	Screw	4
30	**b** 1393490	Front Window (Front)	1
30	**d** 1504084	Front Window	1
30	**d** 1504083	Kit-Glue	1
	1479092	Floormat (LH) (Not Illustrated)	1
	1479093	Floormat (RH) (Not Illustrated)	1

FOOTNOTES:

a → S/N K005V04773A
b → T4103-Q
c S/N K005V04774A →
d T4104-Q →

©2009 HYSTER COMPANY

CAB ATTACHING PARTS (FIGURE 13-35)
SHEET 2 OF 3

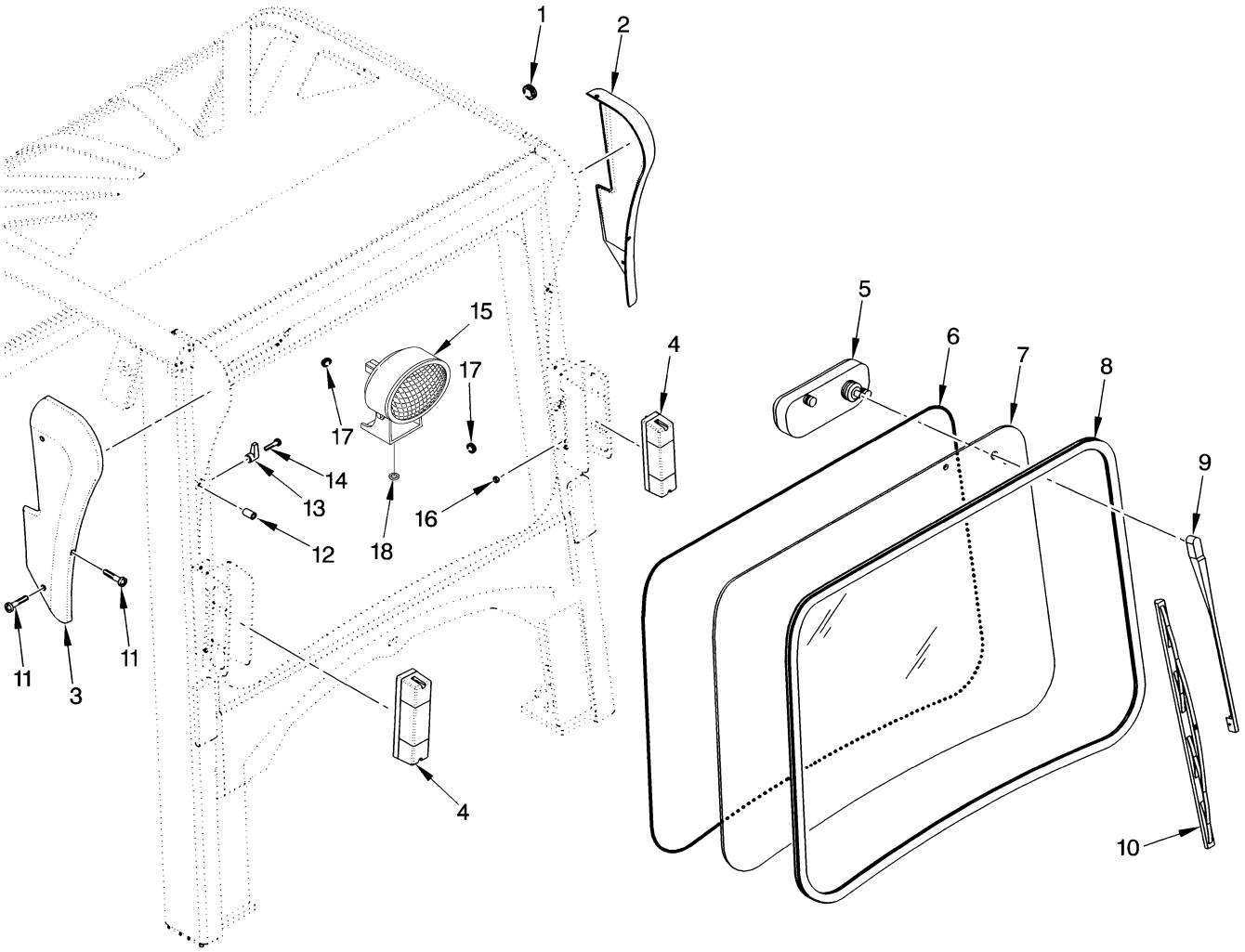

HP000782

©2009 HYSTER COMPANY

CAB ATTACHING PARTS
SHEET 2 OF 3

ITEM	PART NO.	DESCRIPTION	QTY
1	1393511	Grommet	2
2	1393452	Ear (RH)	1
3	1393451	Cover (LH)	1
4	1399473	Brake/Backup Light	2
5	1393504	Wiper Motor	1
6	1393497	Seal (Rubber)	1
7	1493909	Rear Window (Rear)	1
8	**a** 1393466	Seal (Rubber) (11.5 ft.)	1
8	**c** 4000475	Seal (11.5 ft.)	1
9	1393505	Wiper Arm	1
10	1474955	Wiper Blade	1
11	302047	Screw	6
12	1474710	Insert	12
13	1393458	Hanger (Coat)	1
14	1468307	Screw	1
15	**b** 1399472	Headlight (Rear) (☞Figure 13-15)	1
15	1354119	Headlight (Speaker)	1
15	1363016	Lens	1
15	1379799	Bulb	1
15	1356335	Headlight (Hella) (Optional)	1
15	1662409	Bulb	1
15	1483739	Light	1
15	**d** 1531982	Headlight	1
15	1544764	Bulb	1
15	1565839	Wire Harness	1
16	302324	Nut	4
17	1393514	Grommet	5
18	296419	Washer	1
	1498750	Kit-Seal	1

FOOTNOTES:

a → PENDING PER ECN 105998
b → S/N K005V04773A
c PENDING PER ECN 105998 →
d S/N K005V04774A →

©2009 HYSTER COMPANY

CAB ATTACHING PARTS (FIGURE 13-36)
SHEET 3 OF 3

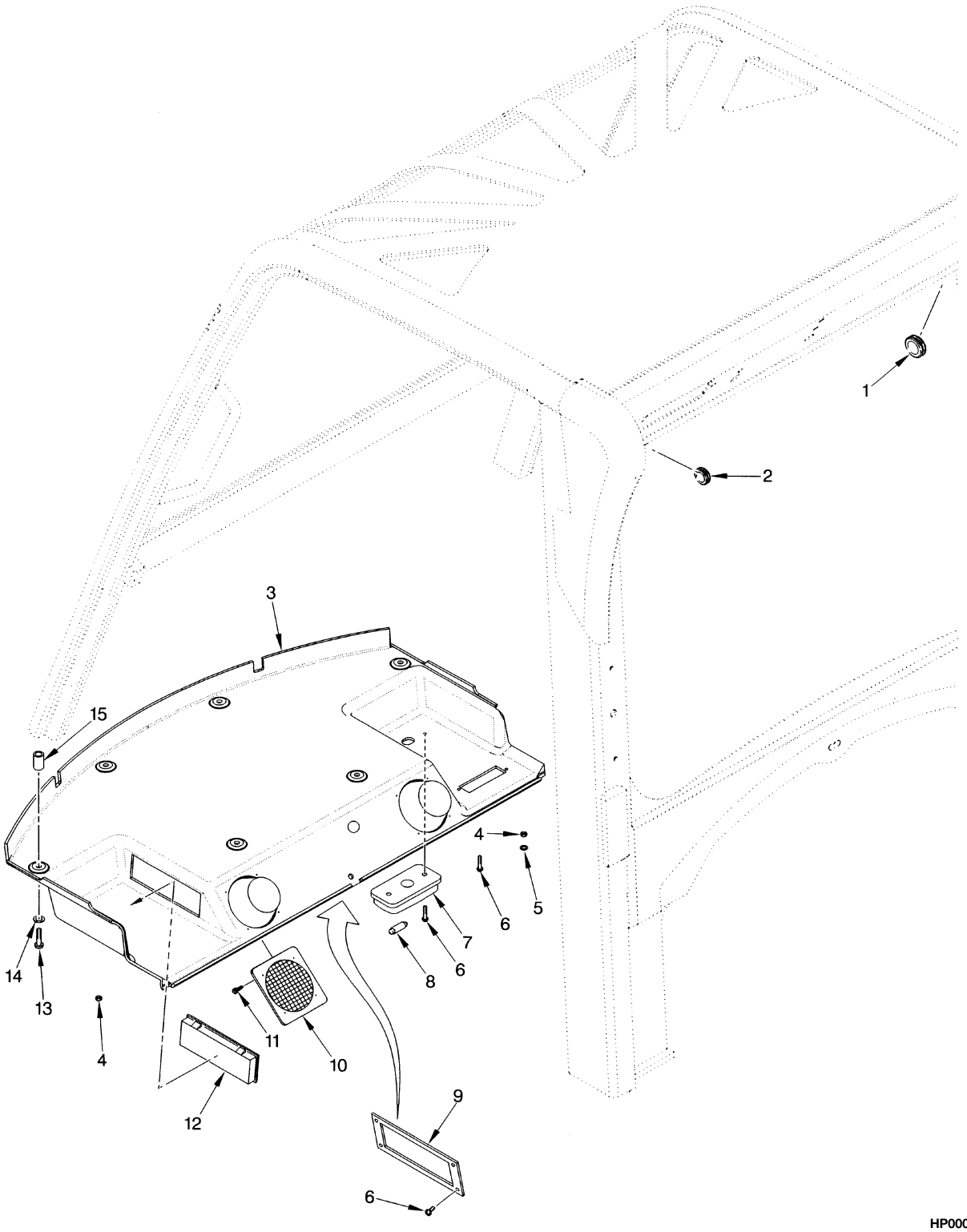

©2009 HYSTER COMPANY

CAB ATTACHING PARTS
SHEET 3 OF 3

ITEM	PART NO.	DESCRIPTION	QTY
1	1474704	Grommet	1
2	1393511	Grommet	1
3	1393524	Headliner	1
4	292667	Nut	16
5	296415	Washer	2
6	302023	Screw	8
7	1393528	Dome Light	1
8	1393527	Bulb	1
9	1474956	Plate	1
10	1393526	Cover (Speaker)	2
11	1468320	Screw	8
12	1393525	Cover (Radio)	1
13	302049	Screw	7
14	1468321	Washer (Plastic)	7
15	1474711	Insert	9

©2009 HYSTER COMPANY

WIRE HARNESS (FIGURE 13-37)
CAB

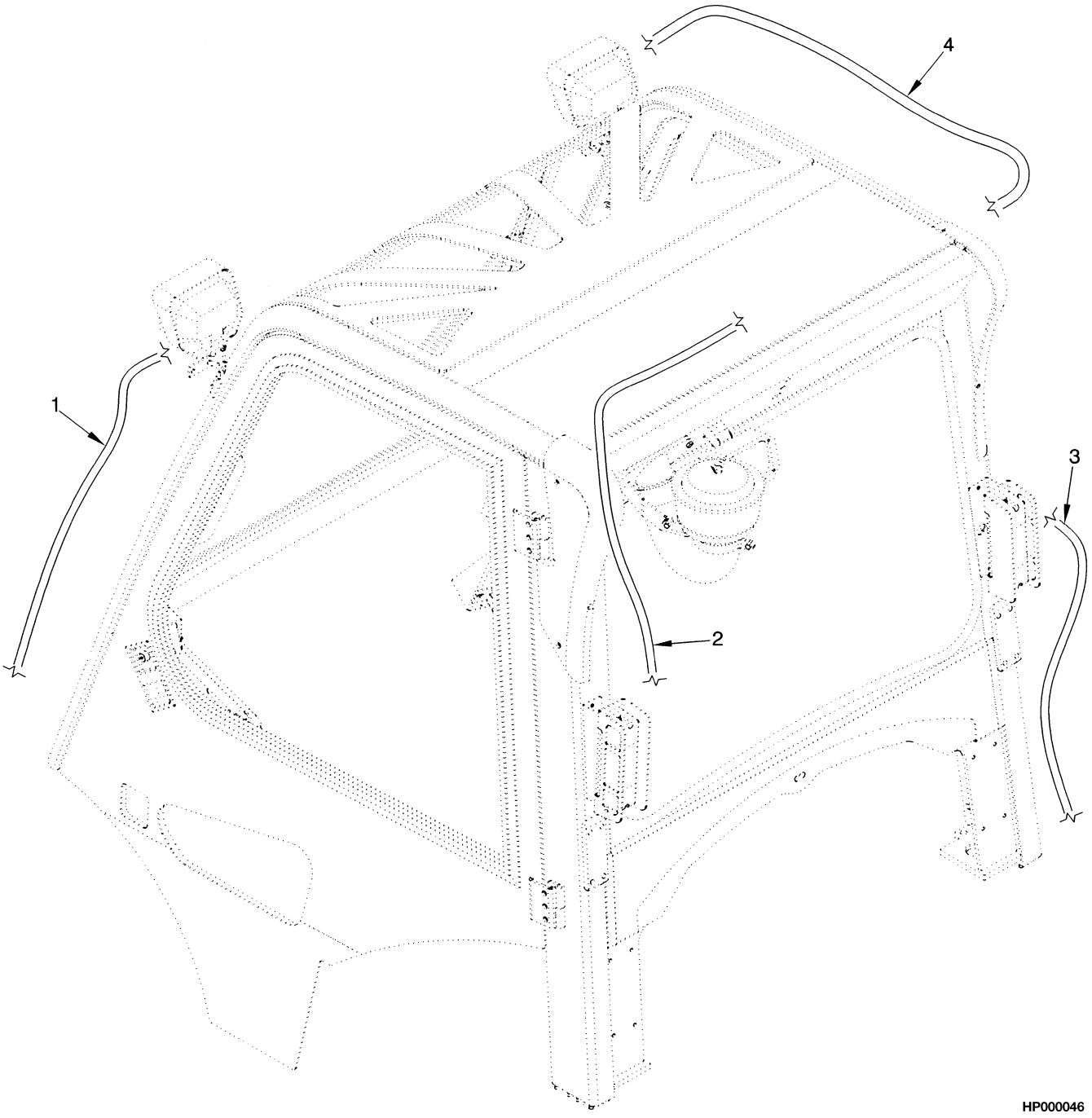

©2009 HYSTER COMPANY

WIRE HARNESS
CAB

ITEM	PART NO.	DESCRIPTION	QTY
1	2036544	Wire Harness (Front)	1
2	2036541	Wire Harness (Auxiliary) (☞Figure 13-41)	1
3	2038007	Wire Harness (Rear)	1
4	1505287	Wire Harness (Main)	1
	a 1494692	Switch (Front)	1
	a 1494693	Switch (Rear)	1
	a 1494673	Switch (Heater Blower)	1
7	1604009	Bulb	1
	a 1393547	Cover	1
	a 1393537	Relay	1

FOOTNOTES:

a Not Illustrated

©2009 HYSTER COMPANY

DOOR ASSEMBLY (FIGURE 13-38)
RIGHT HAND

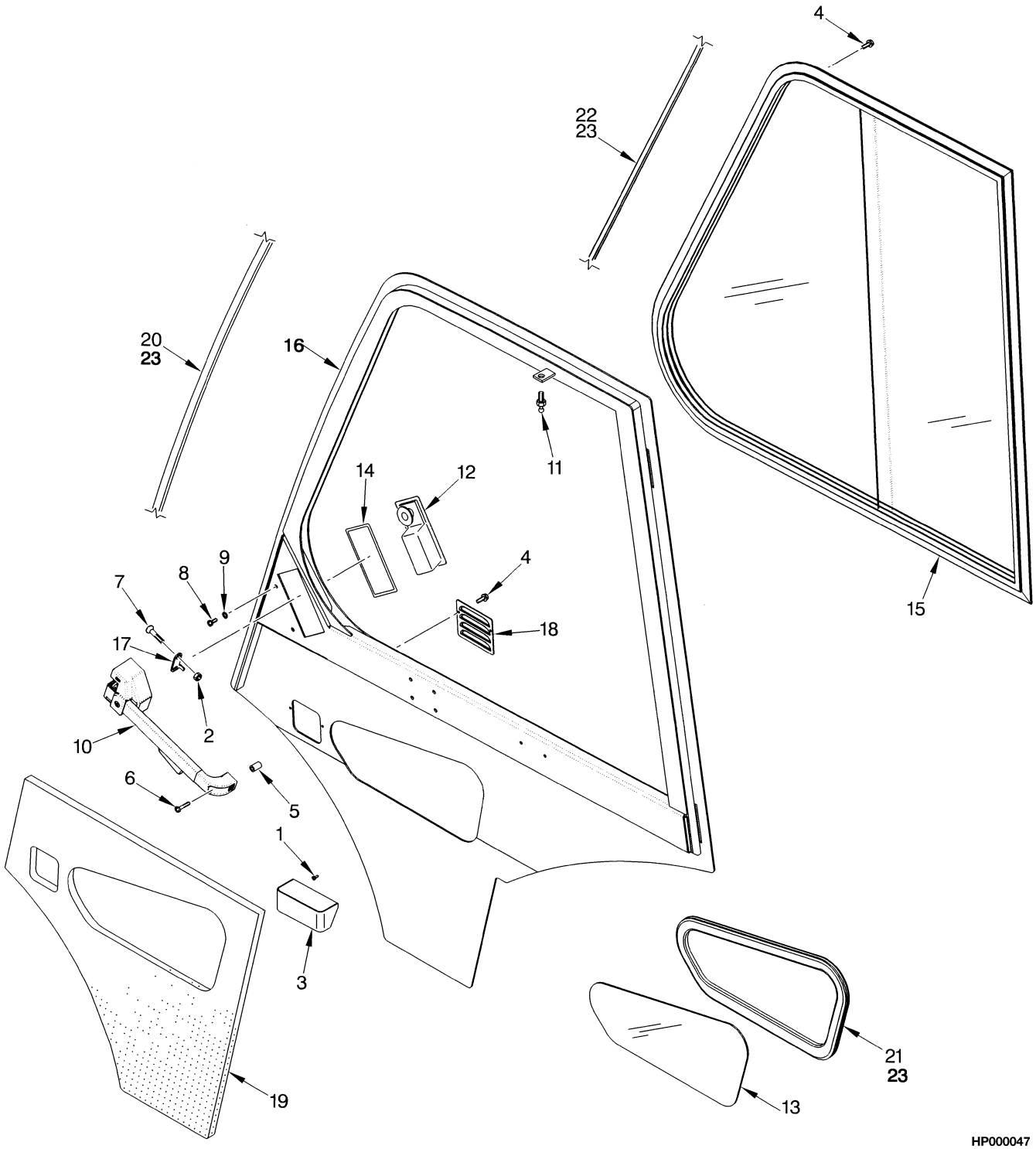

©2009 HYSTER COMPANY

DOOR ASSEMBLY
RIGHT HAND

ITEM	PART NO.	DESCRIPTION	QTY
	1474702	Door	1
1	134102	Screw	2
2	316835	Nut	2
3	1393489	Ashtray	1
4	1474765	Screw	14
5	1474710	Insert	1
6	302048	Screw	1
7	296229	Capscrew	2
8	1468310	Screw	3
9	1474766	Washer	3
10	1393482	Door Handle	1
11	1393472	Ball Stud	1
12	1393483	Latch	1
13	1393464	Window (Lower)	1
14	1393485	Seal	1
15	**a** 1393470	Sliding Window (RH)	1
15	1483226	Latch	1
15	1502180	Glass (Rear Fixed)	1
15	1483228	Glass (Front Sliding)	1
15	**b** 1504095	Window (RH)	1
15	1504089	Latch	1
15	1504088	Glass (RH) (Rear Fixed)	1
15	1504087	Glass (Silder Assy RH)	1
16	1474962	Frame (Door)	1
17	1474961	Plate (Door Lock)	1
18	1393478	Cover (Heater)	1
19	1393468	Cover (Door)	1
20	1393463	Seal	1
21	1474767	Seal (Lower)	1
22	1638808	Seal (RH) (Sliding Window)	1
23	1474820	Sealant	1
24	1393459	Cup Holder (Not Illustrated)	1
25	1493913	Door Key (Not Illustrated)	1

FOOTNOTES:

a → T4103Q

b T4104Q →

©2009 HYSTER COMPANY

DOOR ASSEMBLY (FIGURE 13-39)
LEFT HAND

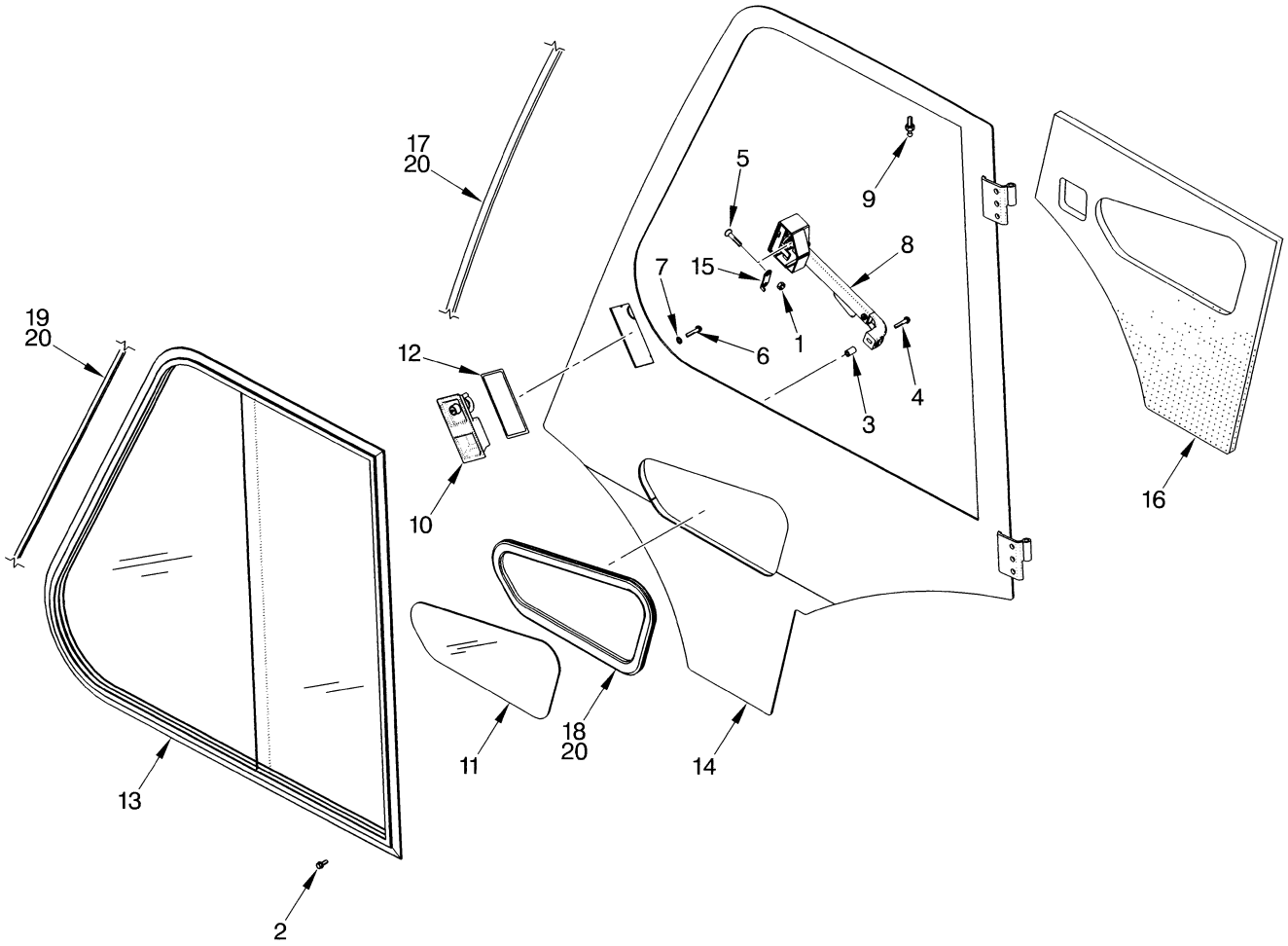

HP000048

©2009 HYSTER COMPANY

DOOR ASSEMBLY
LEFT HAND

ITEM	PART NO.	DESCRIPTION	QTY
	1474701	Door	1
1	316835	Nut	2
2	1474765	Screw	11
3	1474710	Insert	1
4	302048	Screw	1
5	296229	Capscrew	2
6	1468310	Screw	3
7	1474766	Washer	3
8	1393479	Door Handle	1
9	1393472	Ball Stud	1
10	1393480	Latch	1
11	1393464	Window (Lower)	1
12	1393485	Seal	1
13	**b** 1393469	Sliding Window (LH)	1
13	1483226	Latch	1
13	1502180	Glass (Rear Fixed)	1
13	1483228	Glass (Front Sliding)	1
13	**a** 1504094	Window (LH)	1
13	1504089	Latch	1
13	1504086	Glass (LH Rear Fixed)	1
13	1504085	Glass (LH Front Sliding)	1
14	1474959	Frame (Door)	1
15	1474960	Plate (Door Lock)	1
16	1393467	Cover (Door)	1
17	1393463	Seal	1
18	1474767	Seal (Lower)	1
19	1474768	Seal (LH) (Sliding Window)	1
20	1474820	Sealant	1
21	1493913	Door Key (Not Illustrated)	1

FOOTNOTES:

a → T4104Q

b T4103Q →

©2009 HYSTER COMPANY

LIFTING EYE (FIGURE 13-40)

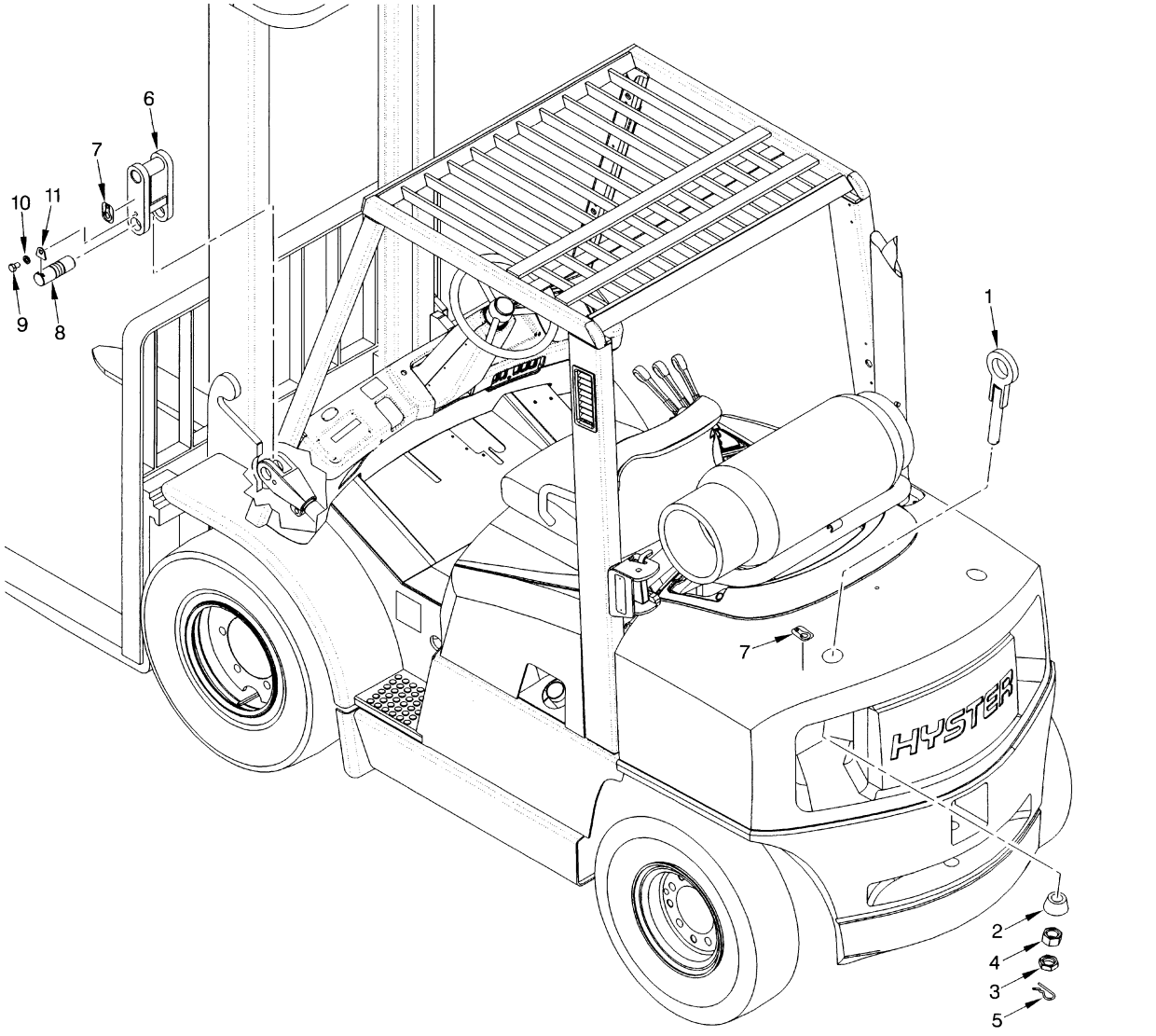

HP000049

ITEM	PART NO.	DESCRIPTION	QTY
1	1476416	Lifting Eye (Rear)	2
2	1488915	Anchor (H70XM)	2
2	1474318	Anchor (H80-120XM)	2
3	296140	Nut	2
4	292661	Nut	2
5	15246	Cotter Pin	2
6	1474335	Lifting Eye (Front)	2
7	316448	Label (Lifting Eye)	4
8	**a** 1474314	Pin (Extended)	2
8	**b** 1518463	Pin (Extended)	2
9	18585	Capscrew	2
10	15158	Washer	2
11	**a** 1394688	Retainer (Tilt Pin)	2
11	**b** 1518378	Retainer (Tilt Pin)	2

©2009 HYSTER COMPANY

FOOTNOTES:

a → S/N K005V03346Z

b S/N K005V03347Z →

WIRE HARNESS (FIGURE 13-41)
AUXILIARY LIGHTS — WORKLIGHTS

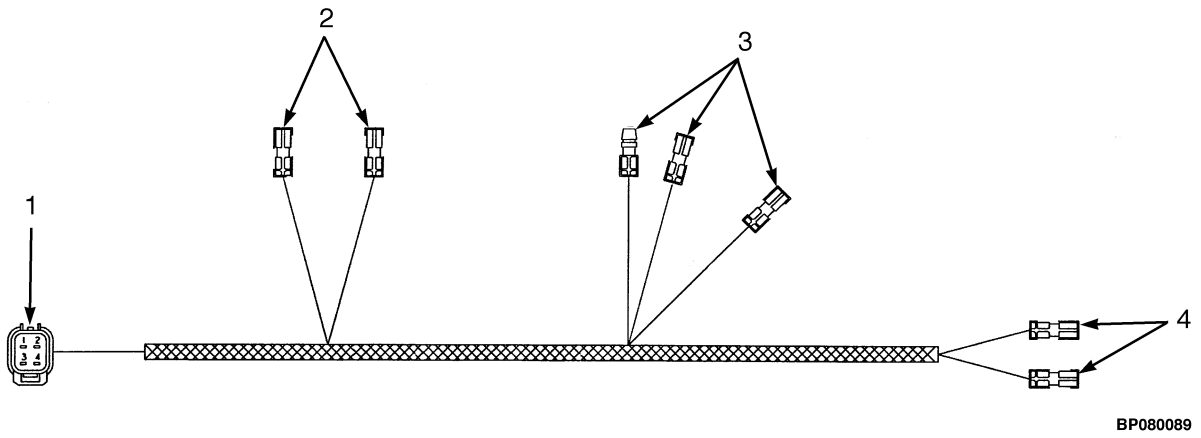

ITEM	PART NO.	DESCRIPTION	QTY
	2036541	Wire Harness	1
1	. . . . .	Connection Assembly (Module Connection)	1
1	1497290	Socket	1
1	1497303	Retainer	1
1	1484596	Terminal (Pin)	3
1	1484597	Seal	3
1	1484594	Terminal (Pin)	1
1	1484595	Seal	1
2	. . . . .	Connection Assembly (LH Work Light)	2
2	1324310	Terminal	2
2	1324309	Sleeve	2
3	. . . . .	Connection Assembly (Strobe/Beacon)	1
3	1324310	Terminal	2
3	1324309	Sleeve	2
3	1324308	Terminal	1
3	1324307	Terminal	1
4	. . . . .	Connection Assembly (RH) (Work Light)	2
4	1324310	Terminal	2
4	1324309	Sleeve	2

©2009 HYSTER COMPANY

14 NUMERICAL INDEX

SECTION 14
NUMERICAL INDEX

PART NO.	PAGE	ITEM
142	3-83	17
	8-3	35
11276	13-9	10
12815	2-5	45
12822	3-36	63
12891	10-8	7
	12-8	13
12928	2-11	18
12929	11-7	8
13957	7-7	38
14303	3-3	2
14310	3-55	11
14349	4-14	41
	4-18	40
	4-23	9
	8-3	43
14358	3-23	13
	3-27	13
	3-31	13
	3-35	15
	3-39	14
	3-43	39
	3-47	39
	3-51	39
	3-55	5
14385	3-27	47
	3-31	14
	3-47	43
	3-51	43
	3-55	19
14386	3-32	
	3-40	
14387	3-28	50
	3-31	18
	3-47	45
	3-51	45
	3-55	24
14404	3-27	38
	3-31	6
	3-48	72
	3-52	72
14500	5-22	2
14505	3-23	18
	3-27	18
	3-35	24
	3-44	47
	3-47	47
	3-51	47
14560	9-11	6
	9-13	34
	9-15	6
	9-17	36
14587	2-43	8
14591	9-37	1
14592	5-21	11
14603	10-12	22
	11-4	23
14761	2-28	56
15001	1-17	17
	3-81	10
	3-83	27
15025	8-3	16
15026	2-69	13
15032	5-21	21
15034	3-23	43
	3-36	48
	3-39	40
	3-44	73
15039	4-13	9
	4-17	9
	4-24	33
15049	4-27	41
	8-18	8
15052	2-27	37
	3-77	20
15055	3-19	12
	3-23	9
	3-27	9
	3-31	37
	3-35	10
	3-39	10
	3-43	12
	3-47	12
	3-51	12
	3-56	77
15056	2-27	26
	3-32	
	3-40	
15086	1-15	18
15125	2-69	29
15127	1-15	24
	2-5	37
	3-23	21
	3-27	21
	3-27	43
	3-31	10
	3-36	68
	3-44	52
	3-48	52
	3-52	52
15134	1-15	17
	2-28	63
	3-23	26
	3-27	26
	3-36	69
	3-44	57
	3-48	57
	3-52	57
	4-9	24
	7-5	24
	8-3	46
15151	8-18	9
15152	2-27	36
	3-77	21
15154	1-15	23
	2-27	24
	2-41	32
	3-35	22
15155	2-42	44
	3-19	13
	3-23	10
	3-27	10
	3-31	38
	3-35	11
	3-39	11
	3-43	13
	3-47	13
	3-51	13
	3-56	76
	4-9	30
	11-19	19
	12-35	19
	13-47	25
	13-49	19
15156	1-15	19
	2-27	22
	2-41	24
	3-19	26
	3-43	22
	3-47	22
	3-51	22
	3-55	37
	4-9	23
	4-13	34
	4-17	34
	7-5	23
15157	2-28	61
15158	9-43	15
	9-45	6
	13-78	10
15162	2-28	60
15172	8-3	30
15175	1-5	19
	1-7	35
15176	2-28	70
15200	3-83	9
	9-19	31
	9-21	31
	9-25	31
	9-27	32
15201	3-77	14
	3-79	15
15212	1-27	28
	3-81	1
	3-83	20
	7-5	15
15222	10-13	34
	10-27	10
	11-7	6
	11-19	12
	12-4	12
	12-12	8
	12-20	21
	12-35	12
	13-43	4
	13-45	17
	13-47	8
	13-49	23
15224	12-12	10
	13-9	11
15226	7-7	40
15246	13-78	5
15290	6-6	28
15304	2-57	7
15310	9-3	9
	9-7	9
15315	6-6	29
15334	3-35	6
	3-39	6
15860	7-13	6
15879	10-16	9
	10-16	9
	12-24	8
15885	11-16	11
	12-28	11
15905	4-13	36

©2009 HYSTER COMPANY

See Service Manual for service procedures.

NUMERICAL INDEX (continued)

PART NO.	PAGE	ITEM
	4-17	36
15923	9-29	16
	9-35	3
	9-35	22
15962	2-77	12
15964	3-3	29
	3-19	38
	3-24	54
15971	3-24	62
	3-36	65
	3-40	57
	3-44	89
16001	9-43	9
	9-45	12
	10-27	16
	11-19	26
	12-35	26
	13-43	12
	13-45	8
	13-47	14
	13-49	8
16015	9-45	13
16041	13-51	14
	13-53	16
	13-55	16
	13-57	14
	13-59	16
	13-61	16
16100	3-3	23
	3-7	4
	3-9	3
16114	3-3	20
	3-7	23
	3-9	7
16116	4-14	49
	4-18	48
	4-23	24
16118	3-3	21
	3-7	22
	3-9	6
16121	3-3	2
16124	3-71	8
	8-3	39
16134	3-24	66
	3-36	64
	3-40	56
	3-44	92
	3-71	9
16143	3-23	15
	3-27	15
	3-31	22
	3-35	20
	3-39	19
	3-43	40
	3-47	40
	3-51	40
16155	13-19	9
16156	13-19	10
16168	3-27	37
	3-31	7
	3-48	70
	3-52	70
	3-55	10
16177	3-3	22
16186	8-3	40
16187	8-4	52
16192	3-19	41
	3-45	95
	3-48	92
	3-52	92
	3-56	49
16193	2-81	7
16394	2-42	45
16448	10-20	4
	10-24	14
	11-30	16
	12-32	24
	13-23	5
	13-25	5
	13-43	19
	13-45	19
16458	9-11	31
	9-13	40
	9-15	31
	9-17	42
	11-30	15
	12-32	23
	13-47	26
	13-49	25
16481	5-21	33
	9-37	39
16482	5-14	58
	5-21	11
	5-21	24
	5-21	34
16483	5-14	51
	5-14	52
	5-14	53
	5-21	7
	7-3	22
	9-11	2
	9-11	23
	9-13	12
	9-13	39
	9-15	2
	9-15	23
	9-17	11
	9-17	41
	10-12	3
	12-16	3
16484	5-9	25
	5-10	36
	5-21	19
	5-23	5
	7-3	1
	9-11	1
	9-13	15
	9-15	1
	9-17	14
	10-12	19
	10-12	20
	12-16	18
	12-16	19
	12-16	20
	13-26	6
	13-43	20
	13-45	20
	13-47	27
	13-49	26
16485	5-10	38
16486	5-14	49
	5-14	50
	9-3	2
	9-3	11
	9-7	2
	9-7	11
	9-11	8
	9-13	11
	9-15	8
	9-17	10
	9-29	10
	10-12	22
16487	9-3	30
	9-3	35
	9-3	36
	9-7	31
	9-7	36
	9-7	37
16520	3-24	53
	3-28	53
	3-31	31
	3-36	56
	3-39	49
	3-44	83
	3-48	83
	3-52	83
	3-56	81
16540	5-14	52
	9-11	2
	9-15	2
16541	7-3	1
	10-12	19
	11-4	24
	12-16	20
16543	12-16	19
16556	5-21	33
16558	5-14	53
	7-3	22
	9-11	23
	9-13	39
	9-15	23
	9-17	41
16559	9-13	5
	9-17	4
	10-12	20
	11-4	22
	12-16	18
	13-43	20
	13-45	20
	13-47	27
	13-49	26
16561	9-11	8
	9-13	11
	9-15	8
	9-17	10
16567	4-13	35
	4-17	35
16568	13-26	6
16569	5-10	38
16597	2-28	44
	4-9	21
	4-9	21
16598	2-27	23
	2-28	71
	2-42	49
16653	13-15	20
	13-19	2
16705	9-29	17
	9-35	14
	9-35	27
16709	9-29	18
	9-35	2
	9-35	21
16743	4-27	40
16745	9-13	12
	9-17	11
16794	2-57	24
16805	3-19	25

©2009 HYSTER COMPANY

NUMERICAL INDEX (continued)

PART NO.	PAGE	ITEM
	3-43	21
	3-47	21
	3-51	21
	3-55	36
	4-9	22
16815	7-5	22
16830	9-45	5
16836	2-42	43
16863	3-23	44
	3-36	49
	3-39	41
	3-44	74
16865	3-85	14
	4-39	16
16882	9-11	10
	9-13	16
	9-15	10
	9-17	15
16897	8-3	17
16923	5-10	37
	5-14	59
	5-21	25
16925	7-3	21
	13-23	6
	13-25	6
16982	5-21	6
	9-29	8
	9-29	11
16983	5-9	29
16989	7-3	15
	11-30	17
	12-32	25
17039	9-15	35
	9-17	16
17062	7-3	20
	13-26	5
17174	9-3	23
17343	3-3	2
17642	13-15	13
	13-17	16
17650	3-3	2
	4-5	29
17664	3-24	63
	3-35	32
	3-39	27
	3-44	88
17665	13-17	19
17706	9-3	32
	9-7	33
17753	5-14	58
18460	2-28	72
18462	1-15	22
	3-23	20
	3-27	20
	3-27	42
	3-31	9
	3-36	67
	3-44	51
	3-48	51
	3-52	51
18498	4-9	25
18500	4-9	2
	4-14	44
	4-18	43
	4-23	14
	4-28	61
18515	1-5	9
	3-19	14
	3-23	11
	3-27	11
	3-31	39
	3-35	12
	3-39	12
	3-43	14
	3-47	14
	3-51	14
	3-56	75
	4-9	31
18518	11-19	18
	12-35	18
	13-47	24
	13-49	18
18520	13-49	18
18537	3-31	28
	3-40	59
18538	3-55	28
18546	4-9	27
18585	9-43	16
	13-78	9
18727	1-5	8
18762	1-15	16
18824	7-3	25
18942	6-5	3
19870	4-34	16
21420	5-13	15
25722	13-8	2
30019	7-7	8
30097	6-5	18
30098	6-5	12
30147	7-7	9
30162	5-13	32
30289	7-7	21
34811	2-27	31
35116	2-11	34
39348	11-16	15
	12-28	15
39365	13-51	15
	13-53	17
	13-57	15
	13-59	17
39366	13-55	17
	13-61	17
39373	2-27	29
39678	7-7	36
39742	9-4	44
	9-8	45
41208	5-9	13
41308	5-9	1
44542	7-7	39
45656	13-9	8
45736	13-9	2
45737	13-9	2
46629	9-46	13
	11-16	11
	12-28	11
51455	2-81	8
53065	2-11	39
	2-12	39
53162	3-77	23
	3-85	14
	4-39	15
55434	9-41	8
55580	4-31	26
57568	3-85	9
57664	10-16	9
	12-24	8
58902	10-20	8
	11-30	10
	12-32	12
58903	7-7	32
58929	12-20	13
58936	5-21	30
63116	2-15	10
	2-17	10
	2-19	6
	2-19	24
	2-21	24
	2-23	3
63899	3-4	37
	3-20	47
	3-44	85
	3-48	85
	3-52	85
	3-57	85
66333	10-27	17
	11-19	25
	12-35	25
	13-43	10
	13-45	6
	13-47	12
	13-49	6
66885	5-5	1
68968	2-15	15
	2-17	15
	2-19	7
	2-21	7
69029	7-7	24
69314	3-3	8
76382	9-4	41
	9-7	42
78456	9-4	42
	9-7	43
79377	7-3	16
79981	7-11	3
85777	3-24	60
	3-28	60
	3-31	47
	3-35	23
	3-39	20
	3-44	86
	3-48	86
	3-52	86
	3-57	90
86510	4-6	31
	4-27	42
87446	3-3	2
88195	9-3	36
	9-7	37
97999	3-24	65
	3-40	62
	3-44	80
	3-48	80
	3-52	80
	3-55	3
99576	2-57	23
99610	2-59	14
	2-65	9
99614	2-65	6
99663	2-59	5
99722	2-69	7
99723	2-69	8
99725	2-69	15
99728	2-69	20
101809	3-23	45
	3-27	45
	3-31	2
	3-36	50
	3-39	42

©2009 HYSTER COMPANY

NUMERICAL INDEX (continued)

PART NO.	PAGE	ITEM
	3-44	75
	3-48	75
	3-52	75
	3-57	92
101985	2-81	12
102898	9-8	46
	9-13	4
	9-17	3
104264	10-4	8
	11-4	19
	12-4	8
104506	10-4	9
	11-4	20
	12-4	9
	12-8	10
110178	10-12	3
	12-16	3
110497	3-19	39
112470	9-3	35
	9-7	36
112989	10-13	30
	11-30	25
	12-16	30
114312	3-85	17
	4-10	38
	4-23	3
	4-24	33
115696	3-73	7
	3-73	19
	10-13	30
	11-30	19
	12-16	30
	13-41	34
	13-41	34
119236	9-3	37
	9-7	38
124297	8-21	5
124668	2-11	13
125305	3-23	16
	3-27	16
	3-31	15
	3-35	17
	3-39	16
	3-43	42
	3-47	42
	3-51	42
	3-55	13
	13-17	12
126765	10-4	5
	10-8	5
	10-27	14
	11-3	6
	11-8	24
	11-19	15
	12-4	4
	12-8	5
	12-12	4
	12-35	15
	13-43	7
	13-45	3
	13-47	3
	13-49	3
127045	9-3	38
	9-7	39
127518	12-16	28
128259	3-28	63
	3-31	8
	3-48	60
	3-52	60
	3-55	8
128408	4-9	29
	4-13	30
	4-17	30
	4-27	26
128409	9-11	35
	9-13	27
	9-15	34
	9-17	29
128469	2-11	13
128835	4-31	27
128852	4-31	28
129563	3-32	
	3-40	
129846	13-8	2
129887	4-153	1
	4-157	34
	4-159	10
129892	4-130	14
	4-134	15
	4-142	15
130616	13-8	2
130619	13-9	2
130845	2-36	42
	2-73	1
	3-19	37
	3-23	24
	3-27	24
	3-35	26
	3-44	55
	3-48	55
	3-52	55
131358	11-19	24
	12-35	24
	13-49	24
131715	12-8	8
131716	12-8	7
132473	3-24	67
	3-41	6
	3-43	37
132860	3-63	16
	10-8	11
132861	5-5	8
	9-3	13
	9-7	13
	9-13	8
	9-17	7
	9-19	18
	9-21	21
	9-25	18
	9-27	22
133469	2-27	25
	2-41	33
133558	2-71	14
133696	2-42	37
	3-27	22
	3-48	53
	3-52	53
134102	13-75	1
134436	5-21	34
134491	3-31	17
	3-55	15
134809	4-163	5
134810	4-49	2
	4-153	3
	4-153	9
	4-163	4
134812	4-153	2
	4-153	7
135657	7-7	5
135658	7-7	29
135685	3-85	2
136516	3-56	62
	8-21	6
136681	2-27	34
	3-3	24
	3-19	7
	3-43	7
	3-47	7
	3-51	7
	3-55	47
	3-73	27
	4-13	23
	4-17	23
	4-27	37
	9-3	17
	9-7	17
	11-30	21
	13-13	4
	13-15	17
	13-17	9
	13-19	15
	13-20	5
	13-41	13
136687	1-21	5
	2-5	10
	3-73	18
	3-79	19
	4-9	9
	4-10	35
	4-13	13
	4-17	13
	4-24	36
	4-27	32
	4-39	10
	8-3	31
	13-41	26
136692	2-5	29
	2-28	46
	3-77	6
	3-79	6
	3-83	4
	4-27	38
	7-5	4
	8-3	6
	8-18	3
	9-21	30
	9-27	31
	13-11	8
	13-11	8
136704	5-14	45
	7-3	12
	8-3	21
	9-11	30
	9-13	21
	9-15	30
	9-17	21
136749	1-17	28
	1-33	5
	2-11	32
	2-11	33
	2-51	13
	4-5	10
	4-6	35
	4-6	41
	4-13	11
	4-17	11
	4-23	32
	7-5	9

©2009 HYSTER COMPANY

NUMERICAL INDEX (continued)

PART NO.	PAGE	ITEM
	8-21	2
	9-11	25
	9-13	29
	9-15	11
	9-17	31
	9-19	12
	9-21	26
	9-25	12
	9-27	27
	11-30	23
	13-17	22
	13-17	29
	13-20	6
136985	1-17	36
	2-12	40
	2-51	7
	3-3	19
	7-5	2
	8-3	4
137134	13-8	2
137135	13-8	2
137136	13-8	2
137852	3-23	37
	3-35	42
	3-39	36
	3-44	70
138710	13-15	23
	13-17	18
138880	3-4	38
	3-20	48
	3-44	91
	3-48	91
	3-52	91
	3-57	84
139743	4-10	35
141462	4-130	11
	4-133	2
	4-137	11
	4-141	2
141776	3-23	14
	3-27	14
	3-35	16
	3-43	41
	3-47	41
	3-51	41
142247	10-12	6
	11-3	10
	12-16	6
142500	9-3	2
	9-7	2
143004	5-13	21
145639	1-5	18
	1-7	36
147294	3-59	6
	3-61	20
148271	3-27	33
148606	4-117	3
148610	4-153	8
148614	4-72	18
	4-72	19
	4-87	13
	4-107	6
	4-112	19
	4-112	21
	4-117	6
	4-123	6
	4-156	19
	4-160	21
	4-160	23
148648	4-163	8
148962	3-61	22
	3-63	13
150879	2-67	14
	2-74	4
	9-8	46
152404	12-4	14
152608	3-3	31
	3-7	18
	3-9	8
	3-13	25
152609	3-3	32
	3-7	17
	3-9	9
	3-13	24
153069	4-10	39
	4-23	2
	4-28	51
153715	7-7	15
153716	7-7	34
153717	7-7	17
154065	1-35	28
154066	1-35	28
154067	1-35	28
154452	13-15	22
	13-17	17
154459	3-23	22
	3-35	30
	3-44	53
156133	1-17	39
157065	4-10	37
	4-28	49
158139	2-57	10
158186	3-7	7
	3-7	14
158187	2-69	16
	3-7	8
	3-7	15
159971	2-31	9
159977	2-31	14
161272	10-4	7
	11-4	18
	12-4	7
161273	10-4	6
	11-4	17
	12-4	6
161296	2-59	11
161297	2-59	12
161383	2-57	31
161385	2-57	4
161425	2-59	13
161429	2-59	13
161430	2-59	13
161431	2-59	13
161889	13-9	6
161890	13-9	5
162155	5-10	36
164488	3-19	23
	3-43	19
	3-47	19
	3-51	19
	3-55	35
	4-27	36
	13-33	18
	13-35	7
	13-37	7
164632	11-15	10
	12-28	10
164639	7-7	11
166285	4-5	20
166659	11-13	7
166818	1-35	22
166857	8-4	48
167023	3-7	5
	3-9	2
167218	3-77	13
	3-79	14
167507	3-7	9
167508	3-7	10
168718	3-3	33
169718	2-31	9
170658	1-35	8
	1-36	31
173246	4-5	24
	4-13	22
	4-17	22
173247	3-23	25
	3-27	25
	3-35	36
	3-44	56
	3-48	56
	3-52	56
174209	13-9	1
174214	13-8	1
175347	3-23	33
	3-35	38
	3-39	32
	3-44	66
175944	4-163	9
176167	9-49	10
	9-51	10
176169	9-49	14
	9-51	14
176173	9-49	18
	9-51	18
176451	3-19	6
	3-43	6
	3-47	6
	3-51	6
	3-55	44
176640	1-27	14
	4-9	25
	7-3	19
	9-11	16
	9-11	37
	9-15	39
	9-19	28
	9-21	20
	9-25	28
	9-27	21
177521	4-41	10
177947	2-27	30
177948	2-11	35
178119	4-5	25
	11-8	26
178899	2-5	1
179414	1-35	27
179415	1-35	27
179416	1-35	27
179417	1-35	27
179420	1-35	27
179423	1-35	27
181045	4-49	2
	4-153	3
	4-153	9
	4-163	3
181046	4-49	3
	4-153	2
	4-153	7

©2009 HYSTER COMPANY

NUMERICAL INDEX (continued)

PART NO.	PAGE	ITEM
181766	5-21	20
181941	9-41	5
182342	10-12	17
	12-4	14
182891	9-3	4
	9-7	4
183635	9-3	18
	9-7	18
184761	9-3	11
185768	9-32	34
186420	2-51	5
	5-9	18
	5-13	34
187388	11-15	7
	12-28	7
188210	5-9	29
189338	4-10	34
190382	4-14	45
	4-18	44
	13-63	8
190383	4-10	36
	4-23	14
	4-28	61
	4-153	1
	4-153	8
190784	9-41	7
190785	9-41	6
190787	9-3	28
	9-7	29
190887	11-13	11
	11-16	16
	12-28	16
191072	10-12	17
	12-4	14
191076	10-12	17
191081	12-4	14
191085	12-4	14
192424	10-27	19
	11-19	28
	12-35	28
	13-43	15
	13-45	11
	13-47	17
	13-49	11
192425	10-27	18
	11-19	27
	12-35	27
	13-43	14
	13-45	10
	13-47	16
	13-49	10
192429	9-43	3
	9-45	3
193239	9-11	13
	9-13	14
	9-15	13
	9-17	13
193550	9-46	8
193554	9-46	9
193656	3-3	34
194607	12-4	14
195852	2-74	5
195856	2-51	16
196297	3-59	3
	3-61	19
197065	8-18	10
197066	2-5	32
	4-13	10
	4-17	10
	4-23	33
197067	13-35	12
	13-41	15
197068	3-73	23
198518	11-13	6
198675	3-19	24
	3-43	20
	3-47	20
	3-51	20
	3-55	38
199917	9-46	7
	9-46	12
200659	5-21	6
	9-29	11
200972	5-13	20
201782	5-14	49
201787	5-5	9
201800	3-23	17
	3-35	18
	3-43	43
201808	2-28	62
	3-31	23
	3-39	15
	3-55	20
	9-11	26
	9-15	26
201829	10-16	8
	12-24	6
203071	7-11	5
204223	4-9	3
	4-14	40
	4-18	39
	4-23	21
	4-27	34
	4-28	62
204787	3-43	37
204790	3-41	11
204830	3-65	9
204831	3-65	18
205123	9-37	40
206150	9-11	1
	9-13	15
	9-15	1
	9-17	14
206749	12-4	14
209417	4-27	27
212355	3-23	27
	3-27	27
	3-35	28
	3-44	58
	3-48	58
	3-52	58
212358	4-14	46
	4-18	45
212786	5-5	5
213977	3-41	3
215211	12-8	9
215301	10-16	4
	12-24	4
215425	10-16	4
	12-24	4
216877	9-43	8
	9-45	8
220023	1-17	33
220289	8-18	11
220426	4-39	14
220434	3-85	16
220485	4-13	3
	4-17	3
	4-23	33
220498	13-35	11
	13-41	14
220551	3-41	13
220932	3-85	3
221341	3-27	44
	3-31	3
	3-48	67
	3-52	67
	3-57	89
221499	9-32	34
221510	9-29	5
221512	9-32	33
221516	9-29	4
221520	9-29	5
221522	2-27	41
221524	9-29	4
221546	2-27	32
221717	10-13	31
	10-27	11
	11-7	7
	12-4	13
	12-12	9
	12-20	22
	13-43	5
	13-45	18
221733	1-5	4
221771	5-14	56
	10-29	3
	11-23	3
	12-39	3
222029	1-5	17
222038	2-5	44
222380	5-21	24
222443	5-14	51
	5-21	7
222444	5-14	50
	9-29	10
222473	9-3	33
	9-7	34
222523	4-163	10
223095	4-31	9
224248	2-69	21
229875	2-65	12
230315	7-7	20
230421	7-7	16
230882	13-35	13
	13-41	16
233141	4-130	12
	4-134	16
	4-134	17
	4-142	16
	4-142	17
234038	5-13	2
235691	5-9	25
	5-21	19
	5-23	5
236901	4-163	6
237050	13-8	1
239370	9-7	21
239503	1-29	12
	3-3	26
	3-83	24
	4-6	37
	4-13	20
	4-17	20
	4-23	22
	7-3	18
	8-3	10
	9-3	22

See Service Manual for service procedures.
©2009 HYSTER COMPANY

NUMERICAL INDEX (continued)

PART NO.	PAGE	ITEM
	9-7	22
	9-11	17
	9-13	13
	9-15	17
	9-17	12
	9-19	11
	9-21	28
	9-25	11
	9-27	29
	10-13	35
	11-4	30
	12-16	13
	13-15	21
	13-17	15
241079	9-45	7
244167	9-4	45
245800	2-57	22
245885	2-51	15
245996	4-117	4
246001	12-8	16
246108	4-27	28
	5-22	2
246869	3-28	54
	3-32	52
	3-36	57
	3-40	50
	3-44	84
	3-48	84
	3-52	84
	3-55	31
	9-3	24
	9-7	24
	9-7	25
248196	4-163	7
248462	9-43	1
	9-45	2
251099	3-73	11
	9-41	4
	13-41	31
251979	5-7	12
	6-6	31
251994	13-15	11
	13-17	6
	13-19	11
252293	4-71	5
	4-71	9
	4-87	10
	4-105	5
	4-105	11
	4-111	5
	4-111	9
	4-117	5
	4-123	3
	4-123	5
	4-155	5
	4-159	3
	13-64	2
256159	2-71	13
256160	3-15	4
257291	2-11	13
257913	11-15	5
	12-28	5
258321	3-23	32
	3-35	37
	3-39	31
	3-44	65
	3-64	
258590	9-11	36
	9-13	31
	9-15	29
	9-17	33
261379	4-10	33
263794	2-47	11
263795	2-47	10
263828	2-35	16
263842	2-31	10
263958	3-64	
264134	1-15	20
	2-27	12
	3-19	11
	3-43	11
	3-47	11
	3-51	11
	3-56	74
	9-19	38
	9-21	9
	9-25	39
	9-27	10
	11-13	14
264144	1-17	34
264159	5-14	67
266465	2-61	2
266728	7-7	4
266733	7-7	30
268356	4-31	14
268573	2-47	3
270015	7-11	2
270077	10-16	8
	12-24	6
270330	9-46	14
271479	5-13	31
274232	2-31	19
274403	4-34	13
274648	4-31	3
278085	2-11	39
	2-12	39
278326	5-14	57
280878	12-4	14
281700	8-3	42
287805	6-6	37
287816	1-31	4
	3-73	24
	4-13	1
	4-17	1
287837	2-12	44
	2-12	52
287844	10-20	11
	10-24	12
	12-20	28
287851	1-17	26
	3-83	25
	4-10	35
	4-27	44
	5-13	14
	12-32	21
287854	2-11	7
	2-12	44
	2-15	16
	2-17	16
	2-19	25
	2-21	25
	2-23	21
	2-28	45
	12-32	14
	13-11	5
287860	3-77	5
	3-79	5
	5-9	21
	8-3	12
	8-18	7
	9-21	41
	9-27	42
	10-12	14
	11-3	16
	12-16	14
	12-32	9
288394	2-28	74
	3-36	59
	7-7	14
288638	13-9	7
289867	2-51	20
	5-7	4
	5-7	4
290303	4-31	1
290369	4-31	15
290370	4-31	16
290508	4-31	8
290509	4-31	22
291256	10-12	17
291974	3-73	7
	13-41	19
292500	2-5	12
	3-44	64
	3-48	64
	3-52	64
	3-56	64
	3-77	2
	3-79	2
	4-39	17
	5-14	68
	13-63	3
292501	3-27	48
	3-32	
	3-48	73
	3-52	73
	3-55	17
	4-13	19
	4-17	19
	4-23	12
	4-28	54
	9-19	29
	9-21	15
	9-25	29
	9-27	17
	13-41	22
292503	10-24	11
	12-32	18
292504	8-3	29
292508	5-14	46
	11-8	27
	11-19	22
	13-47	9
292509	5-14	47
	9-11	20
	9-13	26
	9-15	20
	9-17	28
292511	10-13	23
	11-4	26
	12-16	23
292512	12-35	22
292513	2-51	9
	5-10	35
292514	4-28	57
	9-19	15
	9-21	22
	9-25	15
	9-27	23

©2009 HYSTER COMPANY

NUMERICAL INDEX (continued)

PART NO.	PAGE	ITEM
292515	4-27	20
292516	8-3	26
292517	2-15	24
	2-17	24
	2-19	13
	2-21	13
	2-23	19
	5-10	32
292519	5-2	3
292521	2-28	52
292522	2-11	20
292523	3-83	15
292526	3-27	17
	3-32	
	3-40	
	3-48	65
	3-52	65
	3-55	1
	3-59	8
	3-61	16
	4-9	20
	4-13	29
	4-17	29
	4-27	22
	9-43	10
	11-7	18
	12-20	14
292527	2-11	1
	9-45	11
292528	2-51	3
	10-27	7
	11-19	7
	12-35	7
	13-43	17
	13-45	13
	13-47	19
	13-49	13
292529	5-2	1
292531	9-43	6
	12-20	4
292535	2-12	50
292538	10-24	9
292563	11-7	12
292564	12-20	11
292573	2-25	7
292575	2-49	6
292589	6-6	32
292614	1-29	5
292620	6-6	34
292653	8-3	38
292656	10-29	4
	11-23	4
	12-39	4
292661	13-78	4
292665	3-77	23
292667	13-71	4
292668	4-5	12
	4-13	24
	4-17	24
	4-23	7
292678	2-5	33
292679	4-5	15
	4-23	27
292680	1-21	4
	1-23	14
	1-31	3
	2-5	11
	3-28	59
	3-32	
	3-48	74
	3-52	74
	3-55	18
	3-73	17
	3-77	3
	3-79	3
	3-79	18
	4-9	10
	4-14	53
	4-18	52
	4-24	35
	4-27	31
	4-39	19
	5-14	69
	8-3	45
	9-19	26
	9-21	16
	9-25	26
	9-27	16
	13-41	25
292681	1-17	27
	1-29	11
	1-33	4
	2-11	29
	2-12	53
	2-27	33
	2-51	12
	3-3	25
	3-19	9
	3-23	41
	3-27	41
	3-36	46
	3-43	9
	3-47	9
	3-51	9
	3-55	46
	3-73	28
	3-83	23
	4-5	11
	4-9	30
	4-13	12
	4-17	12
	4-23	23
	4-23	23
	4-28	50
	5-5	7
	5-13	13
	6-6	36
	7-3	7
	7-5	10
	8-3	9
	9-3	20
	9-7	20
	9-11	15
	9-13	9
	9-15	15
	9-17	8
	9-19	10
	9-21	19
	9-25	10
	9-27	20
	11-30	24
	12-32	20
	13-15	16
	13-17	10
	13-19	14
	13-20	4
	13-41	12
292682	2-5	28
	2-11	8
	2-11	21
	2-12	43
	2-15	18
	2-17	18
	2-19	26
	2-21	26
	2-23	13
	2-25	16
	2-27	28
	2-51	6
	3-3	18
	3-77	7
	3-79	7
	3-83	3
	4-13	32
	4-17	32
	4-27	19
	5-2	4
	5-9	19
	7-5	3
	8-3	5
	8-18	4
	9-19	14
	9-21	23
	9-25	14
	9-27	24
	10-12	9
	11-3	13
	12-16	9
	12-32	6
	13-11	6
	13-11	6
292683	1-13	9
	1-15	9
	1-25	6
	2-9	6
	2-11	2
	2-12	51
	2-49	1
	2-51	4
	3-63	15
	4-9	19
	4-27	14
	5-2	2
	9-43	7
	10-8	10
	10-24	8
	10-27	6
	10-29	5
	11-7	5
	11-19	6
	11-23	5
	12-8	15
	12-20	3
	12-35	6
	12-39	5
	13-41	4
	13-43	18
	13-45	14
	13-47	20
	13-49	14
292685	2-25	4
	6-6	40
	7-7	18
292687	6-5	5
	6-6	33
292689	1-29	6
292697	4-14	38
293602	3-79	17

©2009 HYSTER COMPANY

NUMERICAL INDEX (continued)

PART NO.	PAGE	ITEM
293603	1-21	3
293611	9-19	6
	9-21	36
	9-25	6
	9-27	37
293612	9-19	17
	9-21	9
	9-25	17
	9-27	10
293628	7-7	37
293630	2-25	15
	2-28	51
293644	1-25	4
293645	13-41	5
293646	1-25	7
293647	13-41	6
293648	7-7	43
293649	2-49	4
293655	1-13	5
	1-15	5
293657	1-13	6
	1-15	6
	5-13	29
293684	6-5	24
293690	2-25	3
293694	7-7	19
293697	5-13	5
293700	3-61	13
	3-63	4
293710	6-5	4
293726	13-41	39
293741	9-41	4
293778	9-41	3
293780	2-11	37
293796	11-30	20
	12-32	16
293797	10-20	10
	11-30	14
295649	11-13	12
296010	7-5	11
296011	2-11	38
296020	2-51	14
	2-51	22
296024	10-12	10
	11-3	14
	12-16	10
296140	13-78	3
296163	3-59	2
296164	3-61	21
296205	4-39	6
296215	7-5	17
296229	13-75	7
	13-77	5
296251	3-63	14
296359	4-9	2
	4-27	25
296380	4-6	42
	4-23	31
296408	4-9	16
	4-27	4
296415	13-71	5
296418	3-4	39
	5-21	15
	13-29	8
	13-31	7
	13-33	7
296419	13-67	5
	13-69	18
296420	5-7	9
	7-8	47
	13-11	7
296422	1-13	15
	1-15	15
	2-51	19
	5-7	7
	5-13	19
	9-3	6
	9-7	6
296423	1-13	7
	1-15	7
	1-25	5
	10-29	3
	11-23	3
	12-39	3
	13-41	3
296426	5-13	4
296504	4-6	33
296510	4-5	16
296511	1-27	26
297531	11-15	6
	12-28	6
297532	10-16	4
	10-16	4
	10-17	12
	11-13	8
	12-24	9
297640	12-20	23
298096	2-65	7
298831	3-20	46
	3-44	79
298832	3-3	36
300937	1-13	8
	1-13	18
	1-15	21
	7-7	45
	9-3	7
	9-7	7
300939	1-13	4
	1-15	4
301550	9-8	49
301749	2-61	43
301751	2-61	45
301785	2-69	33
301966	4-34	18
302023	13-71	6
302035	4-13	6
	4-17	6
	4-23	15
302047	13-69	11
302048	13-75	6
	13-77	4
302049	13-33	21
	13-37	11
	13-71	13
302054	8-3	37
302105	3-77	23
302238	2-5	34
302244	4-5	18
302250	4-13	28
	4-17	28
	4-23	4
302263	3-73	15
	13-41	23
302324	13-69	16
302335	2-11	19
302398	1-23	7
	1-27	27
	4-13	7
	4-17	7
	4-23	18
	4-39	7
302399	3-45	94
	3-48	90
	3-52	90
	3-56	67
	4-28	55
	13-63	5
302400	1-27	16
	3-63	12
	7-5	12
302402	1-15	8
302404	3-61	14
	3-63	5
302461	11-7	17
	11-30	7
	12-20	25
	12-32	28
302472	11-7	17
	11-30	7
	12-20	25
	12-32	28
302476	3-61	6
302492	1-29	8
302493	11-7	10
	12-20	9
302713	2-59	18
303294	4-163	11
304303	10-12	17
304523	10-12	4
	11-3	8
	12-16	4
304527	11-7	19
	12-20	26
305100	4-10	34
308980	9-19	36
	9-21	8
	9-25	36
	9-27	9
309109	9-19	16
	9-21	32
	9-25	16
	9-27	33
309124	4-9	13
309152	4-9	12
309651	3-3	2
310081	4-31	17
310085	4-31	7
310088	4-31	25
311277	9-49	12
	9-51	12
313022	5-2	6
	6-5	23
313805	10-20	12
	10-24	13
	12-20	29
	12-32	5
	13-33	17
	13-35	6
	13-37	6
313828	9-19	19
	9-21	24
	9-25	19
	9-27	25
	10-12	13
	11-4	25
	11-8	30
	11-30	22
	12-16	22

©2009 HYSTER COMPANY

NUMERICAL INDEX (continued)

PART NO.	PAGE	ITEM
315262	10-12	21
	11-4	35
	12-16	21
316132	4-5	3
	4-27	9
316448	13-78	7
316678	1-13	12
	1-15	12
	1-17	35
	1-25	3
	2-5	21
	2-9	4
	3-3	28
	3-19	34
	3-23	39
	3-27	39
	3-31	5
	3-35	44
	3-39	38
	3-43	30
	3-47	30
	3-51	30
	3-55	9
	3-73	14
	3-77	11
	3-79	11
	4-6	36
	4-41	3
	13-15	18
	13-17	13
	13-19	16
	13-29	2
	13-31	3
	13-33	3
	13-38	3
316826	1-17	38
	2-15	20
	2-17	20
	2-19	16
	2-21	16
	2-23	15
	10-12	15
	11-4	29
	12-16	15
	12-32	4
316828	2-25	5
	2-49	13
	11-7	13
	12-20	12
316834	9-19	37
	9-21	7
	9-25	37
	9-27	8
316835	1-17	12
	13-29	9
	13-31	8
	13-33	8
	13-67	18
	13-75	2
	13-77	1
316837	3-63	7
317292	11-19	17
	12-35	17
	13-47	23
	13-49	17
319322	11-19	9
	12-35	9
	13-47	21
	13-49	15
319323	11-19	8
	12-35	8
	13-47	22
	13-49	16
319891	10-12	21
	11-4	35
	12-16	21
320155	1-23	6
	4-5	17
	4-13	8
	4-17	8
	4-23	8
	7-5	20
320156	1-23	13
	1-27	29
	2-5	43
	3-44	93
	3-48	89
	3-52	89
	3-56	66
	3-73	16
	3-77	15
	3-79	16
	3-81	6
	3-83	8
	4-9	11
	4-13	14
	4-17	14
	4-23	13
	4-27	30
	4-39	18
	7-3	24
	9-19	25
	9-21	17
	9-25	25
	9-27	15
	13-33	19
	13-35	8
	13-37	8
	13-41	24
	13-63	4
320157	1-17	37
	1-27	15
	3-3	14
	3-19	3
	3-23	40
	3-27	40
	3-36	45
	3-43	3
	3-47	3
	3-51	3
	3-56	51
	3-63	10
	3-73	29
	4-6	32
	4-9	31
	4-13	21
	4-17	21
	5-5	6
	5-14	43
	7-3	6
	9-3	19
	9-7	23
	9-11	14
	9-13	25
	9-15	14
	9-17	27
	11-30	11
	13-13	5
	13-15	15
	13-17	14
	13-19	13
	13-20	7
320158	1-17	20
	1-29	10
	3-3	27
	3-19	8
	3-43	8
	3-47	8
	3-51	8
	3-55	45
	3-83	22
	4-6	43
	4-28	52
	7-3	3
	7-3	26
	8-4	51
	8-21	4
	9-7	19
	9-11	38
	9-13	10
	9-15	38
	9-17	9
	9-19	27
	9-21	18
	9-25	27
	9-27	19
	13-15	6
	13-17	11
	13-19	5
	13-20	8
	13-29	11
	13-33	
	13-63	6
320159	1-17	10
	2-5	27
	2-11	9
	2-12	45
	2-15	25
	2-17	25
	2-19	15
	2-19	27
	2-21	15
	2-23	20
	2-27	27
	3-81	2
	4-27	24
	8-3	11
	8-18	6
320160	3-83	2
	10-13	36
	11-3	12
	12-16	29
320161	2-9	7
	2-11	3
	2-12	49
	3-27	32
	3-32	
	3-40	
	3-48	66
	3-52	66
	3-55	2
	3-59	7
	3-61	15
	3-63	15
	4-9	18
	4-9	18
	4-13	33
	4-17	33

See Service Manual for service procedures.
©2009 HYSTER COMPANY

NUMERICAL INDEX (continued)

PART NO.	PAGE	ITEM
	4-27	29
	7-7	44
	10-8	9
	11-7	4
	12-20	7
320162	4-9	18
	4-27	11
320171	3-24	64
	3-36	62
	3-40	55
	3-44	90
	10-20	7
	11-30	9
	12-32	11
320327	11-19	23
	12-35	23
	13-49	22
321043	13-7	2
321044	13-7	2
321045	13-7	2
321158	4-9	6
	4-27	33
321734	2-27	17
322637	13-5	4
	13-7	4
	13-8	4
322638	13-5	5
	13-7	5
	13-8	5
322784	2-28	75
323541	3-41	10
324858	7-7	42
324864	7-7	41
325897	9-3	21
	9-8	44
326926	3-41	14
327591	10-13	33
	10-27	9
	12-4	11
	12-12	7
	13-43	3
327807	10-16	8
	10-16	8
327808	10-16	11
	10-16	11
328047	2-61	36
328565	2-11	22
329067	3-3	15
332057	10-24	6
332061	10-12	5
	11-3	11
	12-16	7
332755	8-3	20
334155	9-46	10
334402	5-17	2
	5-19	2
334421	5-9	20
334447	5-13	12
334475	5-17	13
	5-19	13
334500	5-21	10
334531	5-21	13
	5-23	4
334542	5-21	8
334543	5-21	9
334560	5-14	35
334582	5-21	4
335553	1-5	14
335988	1-5	1
	1-5	16
335991	1-5	1
	1-5	15
336123	13-7	1
336550	2-5	16
337180	11-7	3
337189	12-20	23
337190	11-7	3
	12-20	23
	12-20	23
337239	13-35	5
338646	11-7	3
	12-20	23
338647	10-12	17
	12-4	14
338649	12-4	14
339932	10-13	33
	10-27	9
	11-8	22
	11-19	11
	12-4	11
	12-12	7
	12-20	20
	12-35	11
	13-45	16
	13-49	21
339933	12-20	23
	12-20	23
339934	12-4	14
339969	4-41	4
340044	1-36	31
340204	2-5	20
341558	11-19	10
	12-35	10
343029	4-31	5
343031	4-31	10
343032	4-31	12
343041	4-31	13
344233	4-31	18
344234	4-31	24
344432	2-5	18
345408	7-13	3
345410	7-13	7
345411	7-13	8
345412	7-13	9
345423	7-5	25
345453	2-5	15
345454	2-5	17
346330	4-129	11
	4-137	11
	4-163	2
346645	5-21	29
346648	5-21	28
346656	5-14	44
346675	5-9	15
346680	5-9	27
346696	5-9	4
346730	5-9	5
346731	5-9	3
347243	12-20	23
348149	10-12	17
348827	11-7	3
	12-20	23
	12-20	23
349366	3-23	49
	3-28	49
	3-31	26
	3-35	18
	3-36	70
	3-39	17
	3-43	33
	3-47	33
	3-51	33
	3-55	22
349377	2-57	13
350397	2-57	9
350399	2-65	18
350484	5-21	16
351531	10-17	12
	10-17	12
	12-24	9
351532	10-17	13
	10-17	13
	12-24	13
352220	6-6	27
352247	9-46	5
352266	13-5	1
352268	13-5	2
352269	13-5	2
352270	13-5	2
352288	9-43	1
352321	5-13	8
352485	3-83	6
352950	3-83	16
352952	2-41	26
	2-43	7
352969	3-85	18
353000	3-3	13
	3-19	4
	3-43	4
	3-47	4
	3-51	4
	3-56	52
	9-3	16
	9-7	16
353129	3-83	7
353141	3-83	14
353142	3-83	12
353143	3-83	11
353154	3-85	4
353164	3-83	5
353165	3-85	15
353168	3-85	5
353172	3-83	18
353175	3-85	11
353195	3-83	10
353198	3-19	40
	3-24	61
	3-28	61
	3-31	46
	3-35	27
	3-39	23
	3-44	87
	3-48	87
	3-52	87
	3-56	54
	8-4	55
	9-11	28
	9-15	28
353199	2-28	59
353230	3-83	19
353291	2-55	10
	4-27	1
353310	2-5	19
	3-19	33
	3-23	30
	3-27	30
	3-31	20
	3-35	35

©2009 HYSTER COMPANY

NUMERICAL INDEX (continued)

PART NO.	PAGE	ITEM
	3-39	30
	3-43	29
	3-47	29
	3-51	29
	3-55	26
353397	3-85	1
353422	3-85	6
353432	3-85	7
353448	3-85	8
353453	3-83	21
355844	1-27	19
356916	12-4	14
356917	10-12	17
357025	10-12	17
357626	11-13	
	11-13	
	11-13	
	11-13	
359207	3-85	10
359221	5-21	5
360387	2-27	40
	2-51	23
	3-85	3
361876	5-21	1
361877	5-21	2
364807	1-5	6
364808	1-5	7
364854	1-5	12
364914	1-5	3
365854	2-57	32
366069	7-13	20
366106	12-20	23
	12-20	23
366473	3-23	35
	3-35	40
	3-39	34
	3-44	68
367139	10-16	6
367140	10-16	6
367420	10-30	1
	11-24	1
	12-40	1
367421	10-30	1
	11-24	1
	12-40	1
367422	10-30	1
	11-24	1
	12-40	1
367423	10-30	1
	11-24	1
	12-40	1
367424	10-30	1
	11-24	1
	12-40	1
367540	4-81	2
367945	5-21	32
369139	2-27	2
	2-42	36
369242	13-41	37
369748	2-36	38
369815	2-5	4
	3-27	35
	3-31	43
	3-39	29
	3-48	88
	3-52	88
	3-56	57
370250	1-36	33
370251	1-36	33
370252	1-36	33
370253	1-36	33
370254	1-36	33
370255	1-36	33
370256	1-36	33
370257	1-36	33
370258	1-36	33
370259	1-36	33
370599	1-17	30
370647	4-5	2
	4-47	7
	4-47	8
	4-54	9
	4-54	10
	4-54	12
	4-55	25
	4-55	26
	4-59	10
	4-59	11
	4-59	12
	4-59	13
	4-67	10
	4-67	11
	4-67	13
	4-69	27
	4-69	29
	4-72	24
	4-72	26
	4-72	28
	4-72	30
	4-73	42
	4-79	7
	4-79	8
	4-88	2
	4-88	4
	4-91	1
	4-101	10
	4-101	11
	4-102	22
	4-102	23
	4-107	10
	4-107	11
	4-108	23
	4-113	32
	4-113	34
	4-113	36
	4-113	38
	4-117	8
	4-117	9
	4-123	8
	4-123	9
	4-129	1
	4-137	1
	4-145	1
	4-156	21
	4-156	22
	4-157	32
	4-157	33
	4-160	15
	4-160	16
	4-160	25
	4-160	26
	4-162	39
370648	4-5	2
	4-27	39
	4-91	1
	4-129	1
	4-137	1
	4-145	1
370651	6-6	30
370728	4-95	2
	4-133	2
	4-141	2
	4-149	2
370730	4-72	31
	4-87	7
	4-112	23
	4-157	31
	4-159	7
	4-160	27
	4-163	1
370743	8-3	44
370776	4-27	21
370863	4-5	7
370864	4-5	8
370868	4-5	4
371344	7-13	21
372111	9-49	15
372115	3-43	37
373449	5-10	33
373950	5-7	2
	5-9	30
374713	3-41	7
374923	3-74	5
375575	2-31	24
375580	2-31	7
375587	2-35	19
375597	4-34	19
375601	2-31	20
375602	2-31	25
375629	1-17	29
	1-27	22
	4-6	46
375984	3-73	21
	8-3	24
	13-41	21
375986	5-21	31
376026	6-6	39
	6-6	39
	7-8	48
377976	2-61	3
379197	1-5	10
379198	1-5	11
379199	1-5	22
379400	2-28	57
379405	2-28	58
	9-3	34
	9-7	35
	9-13	3
	9-17	2
	10-13	28
	12-16	26
379407	2-27	18
	2-41	34
379697	1-5	23
379698	1-5	20
379902	4-5	13
380524	5-9	31
381110	10-16	6
381113	12-24	11
383116	1-5	13
383789	3-41	12
385531	2-57	1
	2-57	2
	2-67	12
385554	2-57	29
385847	2-61	35
386459	2-57	6
	2-61	9

©2009 HYSTER COMPANY

NUMERICAL INDEX (continued)

PART NO.	PAGE	ITEM
	2-65	3
	2-69	36
	2-73	3
	3-7	34
	3-13	26
	3-16	7
387455	4-27	12
387867	4-27	13
	8-3	41
387869	4-13	25
	4-17	25
	4-23	28
387892	4-5	26
	4-9	17
388302	2-31	28
388306	2-47	7
388313	2-35	28
	2-35	28
388514	2-41	35
389688	1-35	7
393290	3-23	23
	3-27	23
	3-35	25
	3-44	54
	3-48	54
	3-52	54
393502	8-3	13
397676	7-3	11
	9-8	48
	9-11	29
	9-13	28
	9-17	30
399487	4-87	5
615145	11-16	10
	12-28	10
636950	11-16	12
	12-28	12
636952	11-16	12
	12-28	12
637161	11-15	9
	12-28	9
637162	11-16	13
	12-28	13
637164	11-16	13
	12-28	13
637635	11-15	6
	12-28	6
638248	9-46	16
	12-24	13
638249	10-16	11
	10-17	13
	12-24	7
638250	10-16	11
	12-24	7
638293	11-16	14
	12-28	14
638295	11-16	14
	12-28	14
806426	4-157	35
	4-159	9
806556	13-9	4
815597	4-6	34
842799	2-59	11
842800	2-59	12
878959	13-33	22
	13-37	12
893660	9-7	27
895468	7-5	34
895963	2-5	26
980727	2-57	12
	2-67	13
980929	12-16	28
983484	2-65	14
984632	2-57	3
986475	2-67	16
990429	2-69	2
992025	2-67	15
992393	2-57	36
1151722	9-49	9
	9-51	9
1300107	1-5	5
1300152	2-28	55
1300741	13-15	8
	13-17	3
	13-19	7
1301286	13-38	2
1301648	3-36	66
	4-6	39
1301720	4-72	31
	4-108	24
	4-112	23
	4-117	14
	4-123	14
	4-157	31
	4-160	27
1301727	13-33	20
	13-35	10
	13-37	10
1302024	13-33	13
	13-35	2
	13-37	2
	13-41	11
1302126	13-5	2
1302127	13-5	2
1302242	3-31	25
	3-39	21
	3-55	21
1302258	4-41	11
1302954	2-5	7
1302973	5-14	41
1303787	7-13	10
1304058	1-35	18
1304349	11-4	34
1304971	1-21	11
	2-9	8
1305698	2-57	27
1305699	2-59	10
1305701	2-59	10
1305702	2-59	10
1305703	2-59	10
1305706	2-59	15
1306030	2-65	13
1306039	2-61	31
1306040	2-61	33
1306041	2-61	34
1306042	2-61	38
1306043	2-61	40
1306047	2-61	44
1306140	2-61	10
1306143	2-61	16
1306146	2-61	17
1306147	2-61	20
1306148	2-61	21
1306186	2-69	34
1306193	2-59	16
1306194	2-59	17
1306328	2-62	46
1306329	3-13	32
1306331	3-7	31
	3-10	7
1306337	3-13	23
1306345	3-7	30
	3-9	18
	3-10	5
1306349	2-57	28
1306350	2-59	3
1306351	2-69	17
1306353	2-53	14
	2-55	14
	2-69	19
1306354	2-65	4
	2-77	5
	2-81	3
1306356	2-65	16
1306357	2-53	5
	2-55	5
	2-65	20
1306358	2-53	15
	2-55	15
	2-61	41
	2-65	21
	2-71	7
	2-77	23
	2-79	4
1306359	2-61	26
	3-13	4
1306361	2-65	23
	3-7	26
	3-9	13
1306362	2-53	16
	2-55	16
	2-61	37
	2-65	22
1306363	2-61	39
1306364	2-65	11
1306367	2-62	47
1306368	2-61	28
1306370	2-71	12
	2-73	13
1306371	3-7	33
	3-10	3
	3-13	29
1306374	2-61	4
1307875	2-61	7
1307877	2-71	11
	2-73	12
1307879	2-61	12
1307880	2-61	14
1307881	2-61	18
	2-77	9
	2-79	13
	3-13	20
1307882	2-61	22
1307883	2-61	23
	3-7	25
	3-9	23
1307884	2-61	24
	3-7	27
	3-9	21
1307891	3-7	36
	3-10	1
1307893	2-57	33
1307894	2-61	29
	3-16	6
1307895	2-71	2
1307898	2-77	14
	2-77	24
	2-79	9

©2009 HYSTER COMPANY

NUMERICAL INDEX (continued)

PART NO.	PAGE	ITEM
1307908	2-77	3
	2-79	24
1307909	2-77	6
	2-79	17
1307910	2-53	8
	2-55	8
1307913	2-81	5
	3-7	35
	3-10	4
1307915	2-74	3
1308003	3-7	19
1308004	3-7	32
	3-10	2
1308005	3-10	10
1308006	3-10	9
	3-15	5
1309775	13-33	12
	13-35	1
	13-37	1
	13-41	10
1310277	2-53	10
1310370	11-12	4
1310371	11-12	4
1310373	11-12	5
1310374	11-12	5
1310376	11-12	3
1310377	11-12	3
1310611	4-6	40
	4-13	26
	4-17	26
	13-15	12
	13-17	7
1310630	4-5	2
	4-91	1
	4-129	1
	4-137	1
	4-145	1
1311054	2-57	16
1311055	2-57	18
1311056	2-57	19
1311057	2-57	20
1311070	3-13	22
1313897	6-5	13
1314381	4-14	50
	4-18	49
	4-23	25
1314393	4-111	10
	4-155	7
1315497	2-79	23
1315766	2-61	19
1315767	2-74	1
1316488	2-41	27
	2-43	6
	2-44	4
1316494	2-41	28
	2-43	5
	2-44	5
1318306	2-53	2
	2-55	2
1318965	2-61	8
	2-77	4
	2-79	25
1318968	2-77	13
	2-79	3
1319028	2-81	11
1320000	2-35	13
1320018	5-7	2
	5-9	30
1320669	4-5	2
	4-91	1
	4-129	1
	4-137	1
	4-145	1
1320893	3-77	23
	4-27	10
1322333	5-7	2
	5-9	30
1322627	4-6	44
	4-28	58
	5-9	26
1323575	4-71	3
	4-72	21
	4-111	3
	4-112	15
	4-155	2
	4-155	15
	4-159	2
	4-160	17
1323576	4-71	3
	4-72	20
	4-72	21
	4-72	22
	4-82	4
	4-105	2
	4-107	8
	4-111	3
	4-112	15
	4-112	20
	4-112	22
	4-133	13
	4-141	13
	4-153	6
	4-155	2
	4-155	15
	4-156	17
	4-156	20
	4-159	2
	4-160	17
	4-160	22
	4-160	24
1323579	4-99	13
	4-133	9
	4-138	25
	4-141	9
1323583	4-72	14
	4-112	14
	4-130	25
	4-155	11
1323586	4-72	20
	4-72	22
	4-112	20
	4-112	22
	4-133	13
	4-141	13
	4-153	5
	4-156	17
	4-156	20
	4-160	22
	4-160	24
1324307	4-41	8
	13-80	3
1324308	4-41	8
	13-80	3
1324309	4-133	3
	4-141	3
	13-80	2
	13-80	3
	13-80	4
1324310	4-133	3
	4-141	3
	13-80	2
	13-80	3
	13-80	4
1324518	4-9	1
	4-28	60
1324557	4-27	8
1324577	3-77	22
	3-79	20
	7-5	33
1325120	10-12	7
	11-3	9
	12-16	5
1325271	1-35	9
1326939	4-9	8
	4-27	16
1327161	8-3	3
	4-71	2
	4-73	33
	4-74	48
	4-111	2
	4-113	29
	4-155	4
	4-157	27
	4-159	5
	4-161	31
	4-161	35
1327951	4-13	18
	4-17	18
1327954	3-56	48
1327958	4-45	7
	4-51	7
	4-57	7
	4-63	7
	4-71	11
	4-77	7
	4-99	7
	4-105	7
	4-111	11
	4-115	8
	4-121	8
	4-159	11
1327959	4-74	48
	4-113	29
	4-156	27
	4-161	35
1328565	2-65	10
1328691	5-14	38
1328878	3-23	47
1328930	9-19	7
	9-21	12
	9-25	7
	9-27	12
1329250	7-5	27
1329272	2-5	30
1329660	2-81	2
1330281	4-74	48
	4-113	29
	4-157	27
	4-161	35
1330283	4-72	23
	4-72	25
	4-72	27
	4-72	29
	4-73	41
	4-113	31
	4-113	33
	4-113	35
	4-113	37

See Service Manual for service procedures.
©2009 HYSTER COMPANY

NUMERICAL INDEX (continued)

PART NO.	PAGE	ITEM
	4-157	32
	4-157	33
	4-160	15
	4-160	16
	4-160	25
	4-160	26
	4-162	39
1330292	4-72	23
	4-72	25
	4-72	27
	4-72	29
	4-73	41
	4-113	31
	4-113	33
	4-113	35
	4-113	37
	4-156	21
	4-156	22
	4-157	32
	4-157	33
	4-160	15
	4-160	16
	4-160	25
	4-160	26
	4-162	39
1330293	4-13	17
	4-17	17
	4-23	17
	4-88	1
	4-156	21
	4-156	22
1330297	4-74	48
	4-113	29
	4-156	27
	4-161	35
1330299	4-71	1
	4-105	3
	4-111	1
	4-155	3
	4-159	4
1330324	3-19	41
	3-45	95
	3-49	92
	3-53	92
	3-56	49
1330325	3-19	41
	3-45	95
	3-48	92
	3-52	92
	3-56	49
1330342	3-19	5
	3-43	5
	3-47	5
	3-51	5
	3-55	43
1330355	4-72	15
	4-73	34
	4-73	35
	4-73	44
	4-112	16
	4-112	25
	4-155	12
	4-156	24
	4-160	18
	4-161	28
	4-161	29
	4-162	40
1330377	3-20	41
	3-45	95
	3-49	92
	3-53	92
	3-56	49
1330378	3-20	41
	3-45	95
	3-49	92
	3-53	92
	3-56	49
1330379	3-20	41
	3-56	49
1330380	3-20	41
	3-45	95
	3-49	92
	3-53	92
	3-56	49
1330381	3-20	41
	3-45	95
	3-49	92
	3-53	92
	3-56	49
1330397	3-19	32
	3-35	33
	3-48	77
	3-52	77
	3-55	27
1330410	3-15	10
	3-85	13
1330415	3-85	13
1330424	4-45	1
	4-51	1
	4-57	1
	4-63	1
	4-77	1
	4-99	1
1330435	3-85	13
1330438	4-45	1
	4-51	1
	4-57	1
	4-63	1
	4-71	4
	4-77	1
	4-87	3
	4-95	5
	4-99	1
	4-105	1
	4-111	4
	4-115	1
	4-121	1
	4-133	5
	4-141	5
	4-149	5
	4-155	1
	4-159	1
1330439	4-95	5
	4-95	6
	4-133	5
	4-133	6
	4-141	5
	4-141	6
	4-149	5
	4-149	6
1330450	2-31	6
1330453	2-47	5
1330725	2-27	3
	2-42	48
	3-31	29
	3-40	60
	3-55	29
1330917	1-35	20
1330919	1-35	16
1330920	1-35	3
1331233	4-138	14
1331341	2-31	27
	2-41	7
1331990	10-13	32
	12-4	10
1331991	10-13	32
	11-7	21
	12-4	10
	12-20	19
1332705	10-20	6
	11-30	8
	12-32	10
1333001	10-31	1
	12-41	1
1333002	10-31	1
	11-25	1
	12-41	1
1333003	10-31	1
	11-25	1
	12-41	1
1333004	10-31	1
	11-25	1
	12-41	1
1333541	2-47	6
1333806	2-42	42
1333807	3-23	28
	3-27	28
	3-31	21
	3-35	31
	3-39	26
	3-39	28
	3-48	61
	3-52	61
	3-57	88
1333808	3-48	79
	3-52	79
	3-56	60
1333827	4-13	25
	4-17	25
	4-23	26
1334401	4-34	1
1334406	4-34	5
1334408	4-34	9
1334410	4-34	11
1334423	2-41	5
	4-34	17
1334642	8-7	20
1334790	1-27	13
1335129	1-35	17
1335137	1-35	15
1335212	2-31	18
1335226	2-31	26
1335499	2-31	16
	2-51	21
1335763	1-29	9
1335898	2-15	9
	2-17	9
	2-19	3
	2-21	3
	2-23	11
1335967	7-5	8
1335987	7-5	7
1336173	4-71	1
	4-71	12
	4-72	14
	4-73	32
	4-111	1
	4-111	12

©2009 HYSTER COMPANY

NUMERICAL INDEX (continued)

PART NO.	PAGE	ITEM
	4-112	14
	4-133	9
	4-141	9
	4-155	3
	4-155	9
	4-155	11
	4-159	4
	4-159	12
	4-160	14
	4-161	30
1336605	1-35	19
1337108	8-3	19
1337118	2-15	8
	2-17	8
	2-19	2
	2-21	2
	2-23	10
1337197	4-5	13
1337743	13-9	2
1337744	13-5	2
1337745	13-7	2
1337817	5-21	3
1338223	2-47	2
1338258	2-17	6
	2-21	4
1338262	8-3	14
1338286	1-27	18
1338291	4-39	8
1338916	8-7	18
	8-15	23
1338917	8-7	19
	8-15	24
1339457	2-5	9
1339672	1-36	32
1339720	3-3	30
	3-19	35
	3-43	31
	3-47	31
	3-51	31
	3-57	83
1339745	9-19	8
	9-21	39
	9-25	8
	9-27	40
1339746	9-19	9
	9-21	40
	9-25	9
	9-27	41
1339748	9-25	30
	9-27	11
1339749	9-19	5
	9-19	5
	9-21	6
	9-25	5
	9-27	7
1339770	9-19	30
	9-21	10
1339779	3-19	2
	3-24	57
	3-28	57
	3-31	49
	3-36	60
	3-40	53
	3-43	2
	3-47	2
	3-51	2
	3-56	50
1339947	13-63	1
1339963	2-36	36
1342525	4-34	14
1342528	4-34	2
1342534	4-34	6
1343443	9-19	4
	9-21	38
	9-25	4
	9-27	39
1343449	3-3	12
	3-19	1
	3-43	1
	3-47	1
	3-51	1
	3-56	53
1343537	7-5	19
1343572	7-5	18
1343573	7-5	5
1343574	7-5	16
1343577	4-39	1
1343578	4-39	2
1343579	4-39	3
1343593	4-39	5
1343594	4-39	9
1343595	4-39	12
1343596	4-39	21
1343597	4-39	20
	7-5	31
1343598	4-39	4
1343607	7-5	14
1343630	8-3	27
1344274	4-31	11
1344921	2-61	11
1345014	2-53	3
	2-55	3
1345677	3-24	70
	3-44	46
	3-47	46
	3-51	46
	3-56	63
1345684	7-7	35
1345689	4-73	34
	4-73	35
	4-161	28
	4-161	29
1345690	4-73	34
	4-73	35
	4-73	39
	4-161	28
	4-161	29
	4-161	33
1345754	3-16	5
1345795	2-51	10
1345800	2-57	35
	2-74	2
1345939	1-35	10
1345993	3-28	52
	3-31	33
	3-39	48
	3-48	82
	3-52	82
	3-56	79
1347004	4-39	
1347025	7-5	25
1347043	1-27	23
1347045	1-27	24
1347067	4-5	30
1347088	1-17	16
	3-83	26
1347114	4-5	2
	4-127	9
	4-129	3
	4-137	3
	4-145	3
1347135	7-5	32
1347202	4-5	23
	4-14	47
	4-18	46
1350036	2-28	54
1350215	1-27	6
	1-31	1
	2-28	67
1350285	1-17	11
1350286	3-19	41
	3-45	95
	3-48	92
	3-52	92
	3-56	49
1350680	7-7	13
1350682	3-43	28
1350733	13-63	1
1350734	13-63	1
1350735	13-63	1
1350736	13-63	1
1351069	4-133	5
	4-141	5
1351176	2-15	23
	2-17	23
	2-19	14
	2-21	14
	2-23	18
1351177	2-15	22
	2-17	22
	2-19	17
	2-21	17
	2-23	17
1351178	2-15	26
	2-17	26
	2-19	28
	2-21	19
	2-23	22
1351473	1-5	1
1351689	8-3	36
1351987	2-28	50
1352089	3-85	12
1352090	3-85	12
1352105	4-54	14
	4-55	15
	4-60	16
	4-60	17
	4-68	16
	4-68	17
	4-74	46
	4-74	47
	4-95	4
	4-101	14
	4-102	15
	4-107	12
	4-108	15
	4-113	27
	4-113	28
	4-133	4
	4-141	4
	4-149	4
	4-156	26
	4-161	36
	4-161	37
1352123	3-24	58
	3-28	58
	3-31	48
	3-36	61

©2009 HYSTER COMPANY

NUMERICAL INDEX (continued)

PART NO.	PAGE	ITEM
	3-40	54
1352190	1-35	29
1352575	3-83	13
	3-85	
1352616	7-3	23
1354114	3-23	29
	3-44	49
	3-48	49
	3-52	49
	3-57	87
1354119	13-29	5
	13-31	1
	13-67	3
	13-69	15
1354140	1-5	2
1354165	1-35	12
1354171	1-35	23
1354237	4-95	13
	4-149	13
1354300	4-39	11
1354497	4-71	8
	4-72	17
	4-87	9
	4-105	12
	4-107	4
	4-111	8
	4-112	18
	4-115	13
	4-117	2
	4-121	13
	4-123	2
	4-155	14
	4-160	20
1355326	7-13	11
1356137	1-35	4
1356335	13-29	5
	13-31	1
	13-67	3
	13-69	15
1356377	1-25	10
1356393	9-3	31
	9-7	32
1356520	13-38	1
1357322	2-25	6
	2-49	5
1357749	3-41	4
	3-65	11
1357788	2-57	26
1358026	2-31	19
1358079	2-31	28
1358120	7-3	17
	13-15	10
	13-17	21
	13-19	20
1358156	2-31	13
1358179	13-9	2
1358184	13-5	2
1358185	13-7	2
1358190	13-9	2
1358192	13-7	2
1358195	13-5	2
1358911	2-53	9
	4-10	32
	4-31	
1359581	2-5	13
1359587	1-17	31
1360178	2-35	28
1360179	2-31	4
1360182	2-31	5
1360797	8-7	13
1360875	9-49	3
	9-49	5
	9-51	3
	9-51	5
1361302	11-15	4
	12-28	4
1361502	8-7	26
	8-11	25
	8-15	25
1361503	8-15	27
1361504	8-8	29
	8-15	28
1362714	1-17	25
1363016	13-29	5
	13-31	1
	13-67	3
	13-69	15
1363885	3-15	11
1363916	1-25	9
1363917	1-25	8
	9-11	32
	9-13	1
1363918	1-25	10
1364259	1-17	21
1364271	7-5	13
1367587	3-64	9
1367588	3-64	10
1367589	3-64	6
1367622	3-65	4
1367645	13-29	4
	13-31	11
1367822	13-33	16
	13-37	5
1369065	3-65	16
1369077	2-57	9
1369470	4-13	16
	4-17	16
1370944	2-67	22
1370947	2-69	3
1370948	2-69	10
1370949	2-69	18
1371111	3-3	2
	3-19	41
	3-45	95
	3-49	92
	3-53	92
	3-56	49
1371112	3-19	41
	3-45	95
	3-48	92
	3-52	92
	3-56	49
1371119	3-3	2
1371127	3-20	42
1371128	3-3	2
1371137	3-3	2
1371141	3-3	2
1371149	3-19	41
	3-45	95
	3-48	92
	3-52	92
	3-56	49
1371157	3-19	41
	3-45	95
	3-49	92
	3-53	92
	3-56	49
1371162	3-20	41
	3-45	95
	3-49	92
	3-53	92
	3-56	49
1371166	3-3	2
1371167	3-19	41
	3-56	49
1371169	3-20	44
	3-55	42
1371171	3-20	42
	3-55	48
1371181	3-45	95
	3-48	92
	3-52	92
1371184	3-3	2
1371229	2-27	4
	2-42	46
1371445	9-3	31
	9-7	32
1371717	2-61	5
1374108	2-36	39
1374205	3-73	7
1374206	3-73	7
1374207	3-73	7
1374288	2-41	6
1374289	2-41	11
1374290	2-41	3
1374293	2-41	14
1374297	2-35	2
1374298	2-35	8
1374299	2-35	7
1374301	2-35	6
1374313	2-31	15
	2-36	35
1374314	2-36	34
1374315	2-35	31
1374317	2-35	26
1374319	2-47	1
1374320	2-47	4
1374326	2-36	32
1374328	4-34	4
1374329	4-34	3
1374330	4-34	8
1374331	4-34	7
1374333	4-34	12
1374549	1-35	24
1374750	1-5	21
1374980	2-69	9
1374982	2-57	34
1375029	3-65	10
1375037	3-65	5
1375150	1-5	
1375168	13-29	7
	13-31	6
	13-33	6
1375169	13-29	6
	13-31	5
	13-33	5
1375171	13-29	1
1375172	13-29	1
1375795	4-87	19
1376007	13-5	2
	13-7	2
	13-9	2
1376439	4-41	1
1376557	8-21	1
1376579	13-31	2
	13-33	2
1376617	4-73	44
	4-107	13

©2009 HYSTER COMPANY

NUMERICAL INDEX (continued)

PART NO.	PAGE	ITEM
	4-107	14
	4-112	25
	4-156	24
	4-162	40
1376618	4-112	26
	4-162	41
1376743	7-5	30
1376746	3-3	3
	3-20	45
	3-45	99
	3-49	96
	3-53	96
	3-57	82
1377047	4-31	4
1377048	4-31	6
1377049	4-31	21
1377050	4-31	13
1377051	4-31	20
1377052	4-31	19
1377053	4-31	23
1377067	4-31	2
1377103	2-35	23
1377104	2-35	25
1377107	2-36	33
1377110	2-39	3
1377678	3-20	51
	3-44	71
	3-48	71
	3-52	71
	3-56	59
1377738	4-9	28
	4-9	28
1377750	2-27	8
1377751	4-9	26
1377792	2-41	15
1377793	2-41	16
1377794	2-41	17
1377908	2-62	48
1378107	1-13	1
1378168	1-13	2
	1-15	2
1378197	1-13	3
	1-15	3
1378198	2-25	10
	2-49	9
1378226	2-51	8
1378435	8-3	8
1378509	1-35	27
1378600	7-5	6
1378661	4-47	9
	4-79	9
	4-117	10
	4-123	10
1379063	11-13	9
	12-24	14
1379734	2-57	11
1379799	13-29	5
	13-31	1
	13-67	3
	13-69	15
1380245	2-69	30
1380251	2-69	35
1380755	2-61	32
1380757	4-41	1
1380763	2-69	28
1380802	2-41	25
1380878	9-46	4
1380901	11-12	1
	11-12	1
	11-12	1
	11-12	1
	11-12	1
1380904	11-12	1
	11-12	1
	11-12	1
	11-12	1
1381055	11-13	13
1381056	11-13	13
1381061	10-16	10
	12-24	10
1381062	10-16	10
	10-16	10
	12-24	10
1381085	9-46	15
1381086	11-13	5
1382061	2-57	8
1382126	1-27	19
1382130	13-33	12
	13-37	1
1382313	4-41	6
1382479	2-65	15
1382481	2-65	8
1382543	2-81	10
	3-7	12
1382556	7-5	25
1383031	9-46	3
1383066	10-16	7
	12-24	5
1383067	10-16	7
	10-16	7
1383068	10-16	7
	12-24	5
1383070	11-15	8
	12-28	8
1383204	2-27	7
1383211	2-42	39
1383213	2-42	40
1383237	2-42	38
1383239	2-42	41
1383241	2-41	31
1383257	2-35	12
	2-35	12
	2-35	12
	2-41	30
	2-43	9
	2-44	1
1383263	2-36	41
	3-19	36
1383331	4-9	14
1383346	4-14	42
	4-18	41
	4-23	10
1383777	7-7	23
1383804	4-71	14
	4-112	14
	4-155	11
	4-160	14
1383904	2-41	10
1384349	2-41	29
1384577	2-27	6
1384578	2-27	10
1384581	2-27	11
	3-23	12
	3-27	12
	3-35	13
	3-43	38
	3-47	38
	3-51	38
1384584	2-11	15
1384594	4-5	19
1384659	13-11	10
1385060	5-13	24
1385061	5-14	62
1385062	5-14	63
1385063	5-14	64
1385064	5-14	65
1385065	5-13	25
1385102	1-35	14
1385433	1-13	1
1385449	1-29	1
1385451	7-5	1
1385457	1-29	1
1385489	5-14	48
1385498	1-27	19
1385535	1-17	18
1385873	5-14	42
1386176	2-35	18
	2-47	
1386177	2-47	8
1386178	2-35	20
1386179	2-35	22
1386180	2-35	21
1386183	2-35	27
1386184	2-36	40
1386185	2-41	1
1386186	2-41	12
1386187	2-41	13
1386189	2-41	21
1386190	2-41	22
1386191	2-41	23
1386194	2-39	4
1386195	2-39	5
1386197	2-39	7
1386198	2-39	8
1386940	5-13	10
1386958	5-9	8
1387230	5-21	14
1387235	5-17	10
	5-19	10
1387281	11-7	15
	12-20	17
1387285	10-27	8
	12-12	6
	13-43	2
1387286	10-27	8
	12-12	6
	13-45	15
1387324	10-13	24
	11-4	27
	12-16	24
1387327	12-32	19
1387330	10-29	2
	11-23	2
	12-39	2
1387341	10-29	1
	11-23	1
	12-39	1
1387342	10-29	1
	11-23	1
	12-39	1
1387343	10-29	1
	11-23	1
	12-39	1
1387344	10-29	1
	11-23	1
	12-39	1
1387345	10-29	1
	11-23	1
	12-39	1

See Service Manual for service procedures.
©2009 HYSTER COMPANY

NUMERICAL INDEX (continued)

PART NO.	PAGE	ITEM
1387346	10-29	1
	11-23	1
	12-39	1
1387348	10-29	1
	11-23	1
	12-39	1
1387349	10-29	1
	11-23	1
	12-39	1
1387399	10-13	25
	11-4	28
	12-16	25
1387447	10-27	1
1387448	10-27	1
1387457	12-35	1
1387459	12-35	1
1387479	12-20	27
1387497	12-35	1
1387498	12-35	1
1387519	11-7	16
	12-20	24
1387523	12-32	8
1387548	11-19	10
	12-35	10
	13-47	6
1387549	11-19	11
	12-35	11
	13-47	7
1387553	12-20	2
1387584	11-7	14
	12-20	15
1387586	9-43	4
1387743	11-7	20
	12-20	18
1387744	10-8	12
1387745	10-8	12
1387904	10-29	1
	11-23	1
	12-39	1
1387963	12-20	16
	12-20	16
1387965	12-20	16
	12-20	16
1387966	12-20	16
	12-20	16
1387968	12-20	16
	12-20	16
1387970	12-20	16
	12-20	16
1387973	12-20	16
	12-20	16
1387993	10-27	4
	11-19	4
	12-35	4
	13-43	11
	13-45	7
	13-47	13
	13-49	7
1388018	12-32	26
1388019	10-12	18
	11-4	21
	12-16	17
1388092	10-27	1
1388094	10-27	1
1388385	3-13	10
1388386	3-13	11
1388387	2-57	5
1388573	5-14	39
	5-22	6
1388612	5-13	11
	5-23	
1388613	5-23	1
1388615	5-23	3
1388657	7-11	1
1388665	7-11	4
1388670	7-7	3
1388673	7-7	1
1388677	5-13	22
1388678	5-13	18
1388680	5-13	27
1388695	5-14	60
1388697	5-13	16
1388698	5-13	17
1388699	5-14	66
1388704	2-25	12
	2-49	11
1388705	2-51	16
	5-7	11
1388706	2-51	16
1388721	4-27	3
	4-37	
1388733	2-51	2
1388735	5-13	33
1388747	5-14	48
1388750	2-51	18
	5-7	6
1388752	5-9	11
1388753	5-9	12
1388773	7-5	21
	7-13	
1388776	9-11	24
	9-13	37
	9-15	24
	9-17	39
1388780	7-11	7
1388794	2-11	12
1388801	5-14	36
1388802	5-13	7
1388827	7-7	7
1388828	7-7	7
1388829	7-7	12
1388832	7-7	22
1388833	7-7	
1388838	7-8	46
1388842	7-7	6
1388846	7-7	25
1388847	7-7	26
1388848	7-7	27
1388856	5-9	22
1388857	5-9	24
1388869	5-13	1
1388870	5-13	1
1388871	5-2	
	5-7	
	5-9	
	5-13	
1388873	5-2	
	5-7	
	5-9	
	5-13	
1388874	5-2	
	5-7	
	5-9	
	5-13	
1388879	1-29	1
1388880	1-29	1
1388882	1-29	1
1388883	1-29	1
1388898	1-29	2
1388901	5-10	34
1388909	9-19	1
	9-25	1
1388911	2-5	22
1388924	5-21	22
1388954	9-11	4
	9-13	33
	9-15	5
	9-17	40
1388963	9-3	8
	9-7	8
1388993	5-9	28
1389050	2-41	19
1389051	2-39	2
	2-41	20
1389092	2-35	24
	2-35	24
	2-35	24
1389093	2-41	9
1389100	2-35	15
1389102	2-41	2
1389479	4-91	1
	4-91	3
	4-91	5
	4-91	6
	4-91	7
	4-91	7
	4-129	1
	4-129	3
	4-129	5
	4-129	7
	4-137	1
	4-137	3
	4-137	5
	4-137	7
	4-145	1
	4-145	3
	4-145	5
	4-145	7
	4-145	7
1389480	4-130	12
	4-137	1
	4-137	7
1389590	9-11	40
	9-13	41
1389779	12-8	12
1389780	12-8	12
1389825	11-7	9
	12-20	8
1389828	12-32	13
1389839	9-43	5
1389844	10-12	12
	11-4	33
	12-16	12
1389845	10-12	12
	10-12	12
	12-16	12
1389846	10-8	6
	12-8	11
1389854	12-32	30
1389921	10-12	16
1389922	11-4	32
	12-16	16
1389923	10-12	8
1389924	11-4	31
	12-16	8
1389932	10-8	13
1389959	10-8	8
	12-8	14

©2009 HYSTER COMPANY

NUMERICAL INDEX (continued)

PART NO.	PAGE	ITEM
1389961	10-20	5
1390101	5-14	61
1390110	3-73	3
	13-41	32
1390163	4-37	7
1390164	4-37	36
1390167	4-37	38
1390759	2-31	2
1390760	2-31	2
1390761	2-31	3
1390765	2-31	3
1390770	2-31	7
1390773	2-31	12
1391246	2-69	24
1392210	4-9	26
1392718	1-17	5
1392732	3-20	49
	3-39	47
1392734	2-19	18
1392735	2-19	19
1392738	3-24	56
	3-28	56
	3-32	51
	3-40	52
1392740	13-41	7
1392744	3-3	34
1392745	1-13	16
1392797	13-41	9
1392799	13-41	18
1392814	13-41	17
1392818	13-41	36
1392819	13-41	35
1392826	3-43	37
1393127	2-39	6
1393160	5-22	4
	5-23	2
1393342	6-5	17
	6-6	38
1393344	6-6	38
1393346	6-6	38
1393348	7-7	10
1393350	2-35	17
1393451	13-69	3
1393452	13-69	2
1393453	13-67	16
1393454	13-67	17
1393455	4-45	14
	13-67	24
1393458	13-69	13
1393459	13-75	24
1393463	13-67	27
	13-75	20
	13-77	17
1393464	13-75	13
	13-77	11
1393466	13-69	8
1393467	13-77	16
1393468	13-75	19
1393469	13-77	13
1393470	13-75	15
1393471	13-65	12
1393472	13-67	21
	13-75	11
	13-77	9
1393478	13-75	18
1393479	13-77	8
1393480	13-77	10
1393482	13-75	10
1393483	13-75	12
1393485	13-75	14
	13-77	12
1393486	13-67	22
1393488	13-67	25
1393489	13-75	3
1393490	13-67	30
1393492	13-65	7
1393493	13-65	8
1393497	13-69	6
1393504	13-69	5
1393505	13-69	9
1393511	13-67	7
	13-69	1
	13-71	2
1393514	13-69	17
1393517	13-67	4
1393524	13-71	3
1393525	13-71	12
1393526	13-71	10
1393527	13-71	8
1393528	13-71	7
1393537	13-73	
1393540	13-13	2
	13-65	6
1393541	13-67	23
1393543	13-67	11
1393547	13-73	
1393879	5-5	4
	7-3	5
	9-3	39
	9-7	40
	9-11	18
	9-13	17
	9-15	18
	9-17	17
	9-19	39
	9-21	14
	9-25	40
	9-27	14
1394001	2-55	9
	4-10	32
	4-27	1
	4-33	
1394100	4-41	7
1394436	2-25	14
	2-49	14
1394437	2-25	11
	2-49	10
1394438	2-25	13
	2-49	12
1394453	9-3	10
	9-7	10
1394476	13-8	3
1394478	13-8	3
1394480	13-7	3
1394482	13-7	3
1394509	13-9	8
1394511	13-9	9
1394514	13-9	3
1394521	3-19	18
	3-43	18
	3-47	18
	3-51	18
	3-56	69
	3-71	
1394552	7-7	28
1394554	7-7	28
1394576	8-3	15
1394581	2-12	39
1394593	3-73	5
	13-41	33
1394594	2-27	13
1394595	2-11	36
1394603	6-5	1
1394604	6-5	2
1394605	6-5	8
1394607	6-5	6
1394610	6-5	7
1394612	6-5	11
1394615	6-5	11
1394618	6-5	16
1394620	6-5	19
1394621	6-5	20
1394622	6-5	21
1394624	6-5	22
1394646	6-5	26
1394661	6-6	35
1394670	6-5	9
	8-11	
1394671	6-5	10
	8-11	
1394672	9-43	11
1394681	6-5	9
	8-7	
1394682	6-5	10
	8-7	
1394687	6-5	7
1394688	9-43	13
	13-78	11
1394689	9-43	14
1394702	2-12	42
1394707	5-13	23
1394709	5-13	6
1394710	5-21	17
1394711	5-21	18
1394712	2-11	31
1394714	5-9	23
	5-21	23
1394715	6-6	39
	6-6	39
	7-8	48
	13-9	10
1394716	2-49	2
1394717	2-49	3
1394718	2-25	1
1394765	4-14	37
	4-18	37
1394774	2-51	11
1394776	5-17	
1394777	5-19	
1394786	5-9	6
1394787	5-9	9
1394788	5-9	7
1394789	5-10	39
1394794	5-9	17
1394798	5-7	1
	5-9	10
1394799	5-7	1
	5-9	10
1394800	5-13	28
1394803	2-15	5
	2-17	5
	2-19	29
	2-21	18
	2-23	2
1394815	8-3	32
1394816	8-3	33
1394817	8-3	32
1394818	8-3	33

See Service Manual for service procedures.
©2009 HYSTER COMPANY

NUMERICAL INDEX (continued)

PART NO.	PAGE	ITEM
1394819	8-3	34
1394862	4-5	1
1394879	5-17	4
	5-19	4
1394881	5-17	12
	5-19	12
1394882	5-17	5
	5-19	5
1394885	5-17	3
	5-19	3
1394893	5-17	6
	5-19	6
1394912	5-17	7
	5-19	7
1394984	11-19	1
1394986	11-19	1
1394992	11-19	1
1394993	11-19	1
1395342	10-4	1
	10-4	1
1395348	10-4	1
	10-4	1
1395354	10-4	1
	10-4	1
1395361	10-4	1
	10-4	1
1395367	10-4	1
	10-4	1
1395373	10-4	1
	10-4	1
1395384	10-8	1
	10-8	1
1395390	10-8	1
	10-8	1
1395396	10-8	1
	10-8	1
1395403	10-8	1
	10-8	1
1395409	10-8	1
	10-8	1
1395415	10-8	1
	10-8	1
1395450	10-12	17
1395492	10-12	17
1395499	10-12	17
1395851	12-4	1
	12-4	1
1395853	12-4	1
	12-4	1
1395854	12-4	1
	12-4	1
1395856	12-4	1
	12-4	1
1395858	12-4	1
	12-4	1
1395861	12-4	1
	12-4	1
1395877	12-8	1
	12-8	1
1395879	12-8	1
	12-8	1
1395880	12-8	1
	12-8	1
1395882	12-8	1
	12-8	1
1395884	12-8	1
	12-8	1
1395887	12-8	1
	12-8	1
1395903	12-12	1
	12-12	1
1395905	12-12	1
	12-12	1
1395906	12-12	1
	12-12	1
1395908	12-12	1
	12-12	1
1395910	12-12	1
	12-12	1
1395913	12-12	1
	12-12	1
1396009	1-27	20
1396012	1-27	20
1396014	9-19	33
	9-21	2
	9-25	33
	9-27	2
1396015	9-19	34
	9-21	3
	9-25	34
	9-27	3
1396016	9-19	35
	9-21	4
	9-25	35
	9-27	4
1396017	9-25	38
	9-27	5
1396024	1-13	10
	1-15	10
1396039	1-25	1
1396053	5-9	2
1396064	5-17	1
1396065	5-19	1
1396076	2-23	4
1396079	2-23	7
1396108	9-19	24
	9-21	5
	9-25	24
	9-27	6
1396139	2-23	12
1396147	1-27	1
1396148	1-27	2
1396151	3-83	1
1396171	2-11	23
1396174	2-11	39
1396187	2-5	23
1396198	3-3	4
1396256	3-3	5
	3-15	
1396518	2-17	27
	2-19	20
	2-21	20
1396526	13-11	1
1396527	13-11	1
1396528	13-11	1
1396534	13-11	2
1396535	13-11	2
1396536	13-11	2
1396562	3-77	12
1396563	3-79	13
1396574	2-15	11
	2-17	11
	2-19	23
	2-21	23
	2-23	8
1396576	2-15	3
	2-19	8
1396625	1-17	5
1396626	1-17	4
1396637	5-21	26
1396641	1-27	5
1396658	1-18	42
1396696	2-15	12
	2-17	12
	2-19	22
	2-21	22
	2-23	9
1396708	9-19	13
	9-21	35
	9-25	13
	9-27	36
1396715	9-19	22
	9-21	25
	9-25	22
	9-27	26
1396719	7-3	9
1396720	7-3	14
1396723	3-19	15
	3-23	2
	3-27	2
	3-31	45
	3-35	2
	3-39	2
	3-43	15
	3-47	15
	3-51	15
	3-56	55
1396724	2-11	14
1396726	2-11	16
	2-12	41
1396727	3-19	10
1396728	3-43	10
	3-47	10
	3-51	10
	3-56	73
1396730	2-11	27
1396779	2-11	24
	2-11	30
	2-27	21
1396780	2-11	25
1396781	2-11	26
1397384	3-79	12
1397394	3-3	11
	3-9	5
1397396	3-3	2
1397407	3-19	27
	3-43	23
	3-47	23
	3-51	23
	3-55	33
1397408	3-19	30
	3-43	26
	3-47	26
	3-51	26
	3-55	39
1397409	3-20	42
	3-45	96
	3-49	93
	3-53	93
	3-55	48
1397410	3-20	43
	3-45	97
	3-49	94
	3-53	94
	3-55	41
1397411	3-20	44
	3-45	98
	3-49	95

©2009 HYSTER COMPANY

NUMERICAL INDEX (continued)

PART NO.	PAGE	ITEM
	3-53	95
	3-55	42
1397412	3-19	17
	3-43	17
	3-47	17
	3-51	17
	3-56	68
1397413	3-19	21
	3-24	51
	3-28	51
	3-31	32
	3-36	54
	3-39	46
	3-44	81
	3-48	81
	3-52	81
	3-56	80
1397414	3-19	22
1397416	3-23	31
	3-27	31
	3-31	27
1397417	3-23	3
	3-27	3
	3-31	42
	3-35	3
	3-39	3
	3-67	
1397418	3-24	67
	3-43	37
1397420	3-27	8
	3-35	9
	3-43	36
	3-47	36
	3-51	36
1397421	3-19	41
	3-45	95
	3-48	92
	3-52	92
	3-56	49
1397422	3-19	20
	3-24	52
	3-36	55
	3-44	82
1397424	3-23	1
1397438	3-3	9
1397441	3-3	10
1397451	4-5	9
1397457	2-27	11
	4-13	31
	4-17	31
	4-23	6
1397474	2-15	7
	2-19	1
1397496	3-77	12
1397500	13-11	1
1397502	13-11	2
1397511	9-21	5
	9-27	6
1397570	9-3	29
	9-7	30
1397614	2-28	68
1397647	1-23	1
1397649	8-4	50
1397651	1-23	1
1397652	3-73	20
	13-41	28
1397653	3-73	12
	13-41	29
1397675	9-19	2
	9-25	2
1397676	9-19	3
	9-25	3
1397678	9-19	40
	9-21	13
	9-25	41
	9-27	13
1397682	9-11	12
	9-13	24
	9-15	12
	9-17	26
1397685	9-3	3
	9-7	3
1397689	2-51	17
	5-7	5
1397694	13-29	10
1397697	2-5	35
1397698	2-5	35
1397708	8-3	25
1397710	2-5	36
1397716	2-28	73
	4-24	37
1397739	9-3	14
	9-7	14
	9-41	
1397740	9-41	2
1397744	9-3	27
	9-7	28
1397754	2-28	43
	4-14	48
	4-18	47
1397761	2-25	9
	2-49	8
1397762	2-25	8
	2-49	7
1397780	4-9	4
	4-9	5
	4-14	39
	4-18	38
	4-23	20
	4-27	43
	4-28	59
1397783	4-9	7
	4-27	15
1397786	4-9	4
	4-27	43
1397787	4-9	5
	4-14	39
	4-18	38
	4-23	20
	4-28	59
1397788	2-43	3
1397789	2-43	4
1397796	9-3	14
	9-41	1
1397797	5-2	5
1397799	4-7	1
1397800	4-7	1
1397803	3-19	16
	3-43	16
	3-47	16
	3-51	16
	3-56	56
	3-68	
1397804	5-7	8
1397806	3-19	19
1397807	2-12	47
1397808	2-9	5
	2-12	48
1397812	4-7	1
1397813	4-7	1
1397815	2-15	6
	2-19	4
1397816	2-19	5
1397820	2-15	2
	2-19	18
1397822	2-15	14
	2-17	14
	2-19	11
	2-21	11
1397830	3-3	6
1397831	3-23	7
	3-27	7
	3-31	35
	3-35	8
	3-39	8
	3-43	35
	3-47	35
	3-51	35
	3-56	72
1397840	4-5	21
1397851	5-14	
1397852	5-15	
1397863	7-5	28
1397864	7-5	29
1397866	2-19	21
	2-21	21
1397867	3-35	19
	3-39	18
1397957	1-17	2
1397958	1-17	2
1397960	1-17	3
1397963	1-17	7
1397964	1-17	6
1397978	5-5	2
1397979	7-3	10
1397980	7-3	10
1397981	9-3	26
1397982	5-5	3
1397984	9-11	5
	9-13	38
	9-15	4
	9-17	35
1397987	3-73	8
1397988	3-73	9
1397989	3-73	10
	13-41	20
1397992	13-45	22
1397993	13-15	14
	13-17	8
	13-19	12
1398002	3-73	13
	13-41	30
1398003	3-19	29
	3-43	24
	3-47	24
	3-51	24
	3-55	34
1398004	3-19	28
	3-43	25
	3-47	25
	3-51	25
	3-55	40
1398009	1-13	13
	1-15	13
1398024	2-43	2
1398038	3-77	18
1398062	1-33	6
	2-11	4

©2009 HYSTER COMPANY

NUMERICAL INDEX (continued)

PART NO.	PAGE	ITEM
	13-17	28
	13-20	3
1398085	3-61	4
1398086	3-61	5
1398087	3-63	13
1398089	3-61	8
1398092	3-61	7
1398093	3-61	9
1398097	3-61	10
	3-63	13
1398098	3-61	11
	3-63	13
1398099	3-61	12
	3-63	13
1398105	2-27	9
1398112	2-51	1
	2-53	
	2-55	
	2-57	
	2-59	
	2-61	
	2-65	
	2-67	
	2-69	
	2-71	
	2-73	
	2-74	
	2-77	
	2-79	
	2-81	
	3-7	
	3-10	
	3-13	
	3-16	
1398113	2-23	5
1398114	2-23	6
1398118	2-15	19
	2-19	19
1398127	13-11	3
1398128	13-11	3
1398131	13-11	4
1398132	13-11	4
1398141	3-61	1
1398143	3-61	3
	3-63	13
1398144	3-63	13
1399077	12-16	28
1399078	12-16	28
1399081	10-13	27
	10-13	29
	12-16	28
1399082	12-16	28
1399085	12-16	28
1399086	10-13	27
	10-13	29
1399090	12-16	27
1399092	12-16	27
	12-16	28
1399093	10-13	27
	10-13	29
1399094	12-16	27
	12-16	28
1399096	12-16	27
	12-16	27
1399098	10-13	27
	10-13	29
1399099	12-16	27
1399100	12-16	27
1399103	12-16	27
1399104	12-16	27
1399105	10-13	27
1399107	12-16	27
1399110	10-13	27
1399111	10-13	29
1399114	12-16	27
1399116	10-13	29
	12-16	27
1399121	9-8	47
	9-11	27
	9-13	2
	9-15	27
	9-17	1
1399123	10-13	27
1399127	10-13	29
1399128	10-13	27
1399132	10-13	29
1399139	10-13	27
1399143	10-13	29
1399144	10-13	27
1399148	10-13	29
1399155	10-13	27
1399160	10-13	27
1399203	10-4	3
	10-8	3
	11-3	5
	11-8	23
	12-4	3
	12-8	3
1399204	10-4	3
	10-8	3
	11-3	5
	11-8	23
	12-4	3
	12-8	3
1399205	10-4	3
	10-8	3
	11-3	5
	11-8	23
	12-4	3
	12-8	3
1399217	11-30	5
	12-32	22
1399218	11-30	6
	12-32	7
1399224	10-27	13
	11-19	14
	12-35	14
	13-43	9
	13-45	5
	13-47	5
	13-49	5
1399243	11-30	12
	12-32	27
1399248	9-11	33
	9-15	32
	10-13	26
1399266	12-32	1
	12-32	2
1399268	12-32	1
1399270	12-33	31
1399272	12-33	31
1399273	12-33	32
1399274	12-33	32
1399276	8-3	7
	8-17	
1399277	8-3	1
1399288	8-3	18
1399289	8-3	22
1399293	2-27	15
1399298	2-27	39
	5-7	11
1399301	3-44	63
	3-48	63
	3-52	63
	3-57	86
1399309	2-27	38
1399310	2-5	40
1399311	2-5	41
1399312	2-5	38
1399313	2-5	39
1399314	2-5	42
1399315	4-13	15
	4-17	15
1399323	7-3	8
	9-11	39
	9-13	18
	9-15	25
	9-17	18
1399332	4-27	5
1399333	4-9	12
	4-27	6
1399334	9-3	40
	9-7	41
1399335	4-9	13
	4-27	7
1399337	1-27	11
1399338	1-27	12
1399347	3-63	17
1399360	3-63	6
1399372	3-63	9
1399380	9-19	23
	9-21	27
	9-25	23
	9-27	28
1399381	3-3	7
1399382	4-5	14
1399386	9-3	25
	9-7	26
1399388	3-77	19
1399399	1-27	9
1399400	4-5	23
1399405	3-63	1
1399406	3-63	2
1399407	3-63	8
1399410	3-63	11
1399416	4-13	5
	4-17	5
	4-23	29
1399417	9-11	21
	9-13	23
	9-15	21
	9-17	23
1399418	9-11	22
	9-15	22
1399419	9-15	36
	9-17	24
1399420	9-15	37
	9-17	25
1399432	13-11	9
1399433	3-3	35
1399434	1-13	11
1399436	3-23	38
	3-44	60
1399438	3-20	50
	3-23	6
	3-27	6
	3-31	19
	3-35	7

©2009 HYSTER COMPANY

NUMERICAL INDEX (continued)

PART NO.	PAGE	ITEM
	3-39	7
	3-43	34
	3-47	34
	3-51	34
	3-55	25
1399441	3-24	68
	3-44	44
	3-65	
1399455	5-13	9
1399464	3-23	4
	3-27	4
	3-31	41
	3-35	4
	3-39	4
	3-43	32
	3-47	32
	3-51	32
	3-56	70
1399472	13-29	5
	13-31	1
	13-67	3
	13-69	15
1399473	4-41	1
	13-69	4
1399474	13-33	12
	13-35	1
	13-37	1
	13-41	10
1399475	12-32	1
	12-32	2
1399476	12-32	2
1399477	12-32	1
1399479	12-32	2
1399480	12-32	1
	12-32	2
1399481	12-33	32
1399482	12-32	1
	12-32	2
	12-33	31
1399483	12-32	2
1399484	12-32	1
1399485	12-33	32
1399487	12-32	1
1399488	12-32	2
1399489	12-33	31
1399490	12-33	32
1399491	12-33	32
1399492	12-33	31
1399493	12-32	2
	12-33	31
1399494	12-33	32
1399495	12-32	2
1399496	12-32	1
1399498	12-33	31
1399499	12-33	32
1399500	12-33	31
1399501	12-33	32
1399503	12-32	1
	12-32	2
	12-33	31
1399504	12-33	32
1399505	12-32	1
1399506	12-32	2
	12-33	31
1399510	12-33	32
1399512	12-33	32
1399514	12-33	31
1399551	10-20	1
	10-20	1
1399559	10-20	1
	10-20	1
1399565	10-20	1
	10-20	1
1399576	10-20	1
	10-20	1
1399593	10-20	1
	10-20	1
1399609	10-20	1
	10-20	1
1399702	10-20	2
	10-20	2
1399703	10-20	2
	10-20	2
1399704	10-20	2
	10-20	2
1399705	10-20	2
	10-20	2
1399706	10-20	2
	10-20	2
1399707	10-20	2
	10-20	2
1399760	1-13	14
	1-15	14
1399762	13-35	4
1399763	13-33	14
	13-37	3
1399764	13-35	3
1399766	13-31	4
	13-33	4
1399770	2-28	64
1399771	2-28	65
1399778	1-31	7
1399779	1-31	5
1399782	3-23	19
	3-27	19
	3-35	21
	3-44	48
	3-47	48
	3-51	48
1399784	1-21	19
	1-23	10
	1-31	2
1399787	9-11	19
	9-13	32
	9-15	19
	9-17	34
1399791	2-15	17
	2-17	17
	2-19	9
	2-23	14
1399792	2-15	13
	2-19	10
1399809	1-21	1
	1-23	
1399810	1-21	1
	1-23	
1399813	1-23	9
1399814	1-23	9
1399815	1-21	18
	1-23	8
1399816	1-23	5
1399817	1-23	4
1399818	1-23	2
1399820	1-23	3
1399822	13-15	9
	13-17	4
	13-19	8
1399823	9-3	5
	9-7	5
1399824	2-28	48
1399825	2-28	69
1399826	3-35	5
1399827	3-35	14
	3-39	13
1399829	1-23	11
1399830	1-23	12
1399836	2-28	53
1399863	13-15	4
	13-17	25
	13-19	4
	13-20	2
1399864	13-15	3
	13-17	24
	13-19	3
	13-20	1
1399873	1-35	25
1399874	1-35	25
1399875	1-35	25
1399876	1-35	25
1399877	1-35	25
1399878	1-35	25
1399883	3-35	29
1399884	3-27	34
	3-31	44
	3-36	51
	3-39	43
1399885	1-35	13
1399886	4-6	38
1399915	10-30	1
	11-24	1
	12-40	1
1399916	10-30	1
	11-24	1
	12-40	1
1399917	10-30	1
	11-24	1
	12-40	1
1399919	10-31	1
	11-25	1
	12-41	1
1399920	10-31	1
	11-25	1
	12-41	1
1399921	10-31	1
	11-25	1
	12-41	1
1399922	10-31	1
	11-25	1
	12-41	1
1400125	11-19	21
	12-35	21
	13-47	11
1400126	11-19	20
	12-35	20
	13-47	10
1400127	13-23	7
	13-25	7
1400128	13-23	1
1400129	13-23	2
1400130	13-23	3
1400131	13-23	4
1400134	13-23	1
1400135	13-23	2
1400136	13-23	3
1400137	13-23	4
1400138	13-25	3
1400139	13-25	4
1400140	13-25	1

See Service Manual for service procedures.
©2009 HYSTER COMPANY

NUMERICAL INDEX (continued)

PART NO.	PAGE	ITEM
1400141	13-25	2
1400144	13-25	3
1400145	13-25	4
1400146	13-25	1
1400147	13-25	2
1400151	1-21	6
1400152	1-21	7
1400153	1-21	8
1400154	1-21	9
1400155	1-21	10
1400158	5-22	3
	5-23	2
1400159	5-14	40
	5-22	
1400160	3-23	5
	3-44	50
	3-48	50
	3-52	50
	3-56	58
1400161	3-44	59
1400172	13-41	1
1400173	2-27	19
1400180	1-27	25
1400197	3-59	1
	3-61	18
1400205	7-7	13
1400207	13-41	8
1400209	2-43	1
1400216	3-23	36
	3-27	5
	3-31	11
	3-35	41
	3-39	35
	3-44	69
	3-48	69
	3-52	69
	3-55	12
1400217	3-23	34
	3-35	39
	3-39	33
	3-44	67
1400218	7-3	2
1400221	3-77	16
1400222	3-77	17
1400223	3-81	8
1400224	3-81	3
1400226	2-5	2
1400229	2-5	3
1400232	3-81	4
1400243	7-3	13
	9-11	11
	9-15	16
1400244	7-3	4
	9-13	20
	9-17	20
1400247	3-36	53
	3-39	45
1400249	3-23	42
	3-36	47
	3-39	39
	3-44	72
1400901	11-12	2
1400904	11-12	2
1400907	11-12	2
1400910	11-12	2
1400913	11-12	2
1400916	11-12	2
1400919	11-12	2
1400922	11-12	2
1401537	9-4	43
	9-8	44
1402189	2-21	1
1402608	4-134	14
	4-137	9
	4-142	14
1402616	4-51	13
	4-57	13
	4-99	13
	4-105	13
1402814	4-71	13
	4-105	9
	4-111	13
	4-130	15
	4-138	15
	4-155	10
	4-159	13
1402816	4-63	13
1402849	4-108	17
	4-121	6
	4-129	10
	4-130	16
	4-138	16
1402857	4-51	4
	4-55	16
	4-55	22
	4-57	4
	4-63	4
	4-68	18
	4-77	4
	4-79	12
	4-87	20
	4-95	10
	4-102	16
	4-105	4
	4-108	16
	4-115	4
	4-117	13
	4-118	18
	4-121	4
	4-123	13
	4-124	18
1402858	4-71	1
	4-71	7
	4-71	11
	4-71	12
	4-72	14
	4-73	32
	4-73	39
	4-74	48
	4-105	3
	4-105	7
	4-105	8
	4-105	10
	4-105	13
	4-108	16
	4-108	18
	4-111	1
	4-111	7
	4-111	11
	4-111	12
	4-112	14
	4-112	24
	4-113	29
	4-115	3
	4-115	8
	4-117	12
	4-118	17
	4-121	3
	4-121	8
	4-123	12
	4-123	17
	4-155	3
	4-155	8
	4-155	9
	4-155	11
	4-157	27
	4-157	29
	4-157	36
	4-159	4
	4-159	8
	4-159	11
	4-159	12
	4-160	14
	4-161	30
	4-161	33
	4-161	35
1402866	4-47	10
	4-79	10
	4-107	3
	4-107	13
	4-107	14
	4-117	11
	4-123	11
1402878	4-92	13
	4-146	14
1402888	4-130	25
1402889	4-73	36
	4-87	16
	4-108	19
	4-157	30
	4-161	32
1402904	4-73	39
	4-112	24
	4-157	29
1402907	4-54	13
	4-59	14
	4-60	15
	4-67	14
	4-67	15
	4-73	44
	4-73	45
	4-101	13
	4-107	13
	4-107	14
	4-112	25
	4-112	26
	4-156	24
	4-156	25
	4-162	40
	4-162	41
1402909	4-130	11
	4-133	2
	4-138	11
	4-141	2
1402912	4-55	18
	4-60	20
	4-68	20
	4-73	39
	4-87	19
	4-102	18
	4-108	18
	4-112	24
	4-157	29
	4-161	33
1402922	4-92	14
	4-130	15
	4-138	15
	4-146	15

©2009 HYSTER COMPANY

NUMERICAL INDEX (continued)

PART NO.	PAGE	ITEM
1450126	3-65	13
1450293	4-41	2
1450356	4-41	5
1450555	2-31	22
1450643	2-27	5
	2-42	47
1450869	2-27	14
	2-41	4
	4-34	
1450941	2-47	9
1451316	4-34	15
1451319	2-31	17
	2-35	20
1451321	2-35	14
1451568	3-24	55
	3-28	55
	3-32	50
	3-36	58
	3-40	51
1451602	2-59	2
1451606	2-59	7
1451625	2-57	25
1451629	2-67	3
1451630	2-67	11
1451633	2-67	6
1451636	2-67	7
1451642	2-69	14
1451643	2-69	5
1451644	2-69	6
1451645	2-69	4
1451650	2-65	24
1451651	2-65	25
1451656	3-13	27
1451669	3-13	15
1451672	3-13	17
1451673	3-13	18
1451674	3-13	19
1451708	7-13	6
1451733	2-77	2
	2-79	22
1451735	2-77	11
1451737	2-77	19
	2-79	8
1451739	2-77	8
	2-79	14
1451745	2-53	4
	2-55	4
1451770	3-9	17
1452270	2-28	78
1452376	2-41	8
1452901	2-28	47
1452904	2-28	49
1453154	3-13	28
1453314	3-13	2
1453315	3-13	30
1453775	9-49	17
	9-51	17
1453776	9-49	16
	9-51	16
1454176	2-67	17
1454315	2-61	27
1454827	4-47	14
	4-55	19
	4-68	21
	4-79	14
	4-87	16
	4-102	19
	4-108	19
	4-113	39
	4-117	15
	4-123	15
	4-157	30
1454829	4-47	15
	4-55	20
	4-68	22
	4-73	38
	4-79	15
	4-87	17
	4-102	20
	4-108	20
	4-113	41
	4-117	16
	4-123	16
	4-157	30
	4-161	32
1454955	2-35	9
	2-35	9
1454956	2-35	10
	2-35	10
1454957	2-35	11
	2-35	11
1454974	2-36	
1455305	3-65	17
1455306	3-65	15
1455307	3-65	14
1455309	3-65	1
1455310	3-65	20
1456111	2-35	1
1456112	2-28	76
1456338	3-7	29
	3-9	1
	3-16	
1456517	3-9	10
1456521	3-7	3
	3-9	14
1456522	3-7	20
	3-9	15
1456524	3-7	21
	3-9	16
1456525	3-9	19
1456527	3-9	20
1456528	3-9	24
1456686	13-35	14
1456694	2-57	21
1456696	2-57	14
1456697	2-57	15
1456699	2-59	9
1456700	2-59	6
1456701	2-59	8
1456702	2-67	23
1456704	2-67	10
1456705	2-67	4
1456706	2-67	11
1456707	2-67	2
1456708	2-67	9
1456709	2-67	8
1456711	2-67	18
1456713	2-67	20
1456714	2-67	21
1456715	2-67	5
1456716	2-67	
1456717	2-69	
1456718	2-69	1
1456722	2-65	5
1456723	2-65	17
1456724	2-65	19
1456726	3-13	3
1456727	3-13	5
1456732	3-13	12
1456733	3-13	13
1456734	3-13	14
1456735	3-13	16
1456736	3-13	21
1456741	2-69	23
1456742	2-77	7
	2-79	15
1456745	2-77	20
	2-79	7
1456746	2-77	15
	2-79	18
1456747	2-77	16
	2-79	19
1456751	2-71	3
	2-73	9
1456754	2-73	4
1456755	2-71	8
	2-73	11
1456756	2-71	10
	2-73	10
1456767	2-69	31
1456960	2-61	42
1457312	2-5	14
1458264	10-31	1
	11-25	1
	12-41	1
1458318	3-7	28
1458329	2-59	4
1458580	3-64	1
1458582	3-64	11
1459405	2-57	30
1459717	3-35	14
	3-39	13
	3-65	
1459983	7-13	
1459984	7-13	12
1459985	7-13	22
1459986	7-13	23
1459987	7-13	19
1459988	7-13	4
1459989	7-13	16
1460322	2-36	37
1460330	2-31	21
1460331	2-31	23
1460332	2-36	43
1460333	2-41	22
1460384	2-39	9
1460386	2-31	8
1460387	4-34	10
1460442	8-18	2
1460477	2-21	28
1460543	2-59	1
1460544	2-59	1
1460546	2-59	1
1460547	2-73	5
1460552	3-13	6
1460554	3-13	8
1460555	3-13	9
1460559	2-69	27
1460564	2-71	9
	2-73	14
1460567	2-67	19
1460572	3-13	31
1460584	2-67	
	2-69	
	2-71	
	2-77	
1460724	4-5	28
	4-7	2

See Service Manual for service procedures.
©2009 HYSTER COMPANY

NUMERICAL INDEX (continued)

PART NO.	PAGE	ITEM
	4-7	2
	4-7	2
	4-7	2
1460737	2-31	11
1460738	2-31	11
1460757	2-35	30
1460758	2-35	30
1460768	2-36	
1461077	5-21	35
1461713	2-59	6
1461714	2-59	6
1461715	2-59	8
1461716	2-59	8
1461744	4-73	39
	4-112	24
	4-157	29
	4-161	33
1462233	4-37	1
1462234	4-37	2
1462235	4-37	3
1462236	4-37	4
1462238	4-37	5
1462239	4-37	5
1462240	4-37	6
1462241	4-37	9
1462249	4-37	17
1462250	4-37	18
1462251	4-37	19
1462252	4-37	20
1462253	4-37	21
1462254	4-37	22
1462255	4-37	23
1462256	4-37	24
1462257	4-37	25
1462258	4-37	26
1462259	4-37	27
1462260	4-37	28
1462261	4-37	29
1462262	4-37	30
1462263	4-37	31
1462264	4-37	32
1462265	4-37	33
1462266	4-37	34
1462267	4-37	35
1462268	4-37	37
1462269	4-37	39
1462270	4-37	40
1462271	4-37	41
1462272	4-37	42
1462273	4-37	8
1462439	3-74	2
1462441	3-74	4
1462442	3-74	6
1462605	4-41	1
1463194	4-87	8
1463223	8-7	2
1463226	8-7	3
1463229	8-7	3
1463231	8-11	2
	8-15	2
1463236	8-11	3
1463239	8-11	3
1463242	8-7	1
1463243	8-7	1
1463244	8-7	2
1463245	8-7	
1463246	8-7	
1463247	8-7	27
	8-21	7
1463248	8-7	27
	8-21	7
1463250	3-24	67
	3-43	37
	3-43	37
1463251	3-24	67
	3-43	37
1463339	8-11	1
	8-15	1
1463340	8-11	1
	8-15	1
1463341	8-11	2
	8-15	2
1463350	8-11	6
	8-15	6
1463351	8-11	6
	8-15	6
1463352	8-11	7
	8-15	7
1463353	8-11	7
	8-15	7
1463354	8-11	8
	8-15	8
1463355	8-11	9
	8-15	9
1463356	8-11	9
	8-15	9
1463357	8-11	10
	8-15	10
1463358	8-11	10
	8-15	10
1463359	8-11	11
	8-15	11
1463361	8-11	14
	8-15	14
1463362	8-11	15
	8-15	15
1463363	8-11	16
	8-15	16
1463364	8-11	19
	8-15	19
1463365	8-11	21
	8-15	21
1463366	8-11	22
	8-15	22
1463445	8-17	1
1463446	8-17	6
1463447	8-17	9
1463448	8-17	13
1463449	8-17	14
1463450	8-17	8
1463451	8-17	17
1463454	8-17	5
1463455	8-17	4
1463461	8-17	2
1463462	8-17	3
1463463	8-17	11
1463464	8-17	12
1463465	8-17	15
1463466	8-17	7
1463467	8-17	10
1463469	8-11	
1463470	8-11	
1463471	8-11	26
	8-15	26
	8-21	7
1463472	8-12	26
	8-15	26
	8-21	7
1463625	3-23	50
	3-35	43
	3-39	37
	3-44	76
1463993	8-17	18
1463995	8-17	16
1464018	2-62	
	2-65	
	2-69	
	2-77	
1464103	2-61	1
1464104	2-61	13
1464105	2-61	15
1464106	2-61	25
1464107	2-61	30
1464108	2-69	22
1464109	2-69	32
1464110	2-53	6
	2-55	6
1464111	2-53	1
	2-55	1
1464112	2-53	7
	2-55	7
1464113	2-53	12
	2-55	12
1464114	2-53	13
	2-55	13
1464115	2-53	11
	2-55	11
1464144	5-22	5
1464197	2-81	4
1464198	2-81	9
1464199	2-71	1
1464200	2-71	4
1464201	2-71	5
1464202	2-71	6
1464203	3-7	1
	3-9	4
1464204	3-7	2
	3-9	12
1464205	3-7	6
1464206	3-7	11
1464207	3-7	13
1464208	3-7	16
1464209	3-7	24
	3-9	22
1464210	3-4	40
1464540	3-15	3
1464541	3-15	2
1464543	3-15	1
1464544	3-15	6
1464545	3-15	7
1464546	3-15	8
1464653	3-67	7
	3-68	8
1464654	3-67	5
	3-68	1
1464655	3-67	6
	3-68	2
1464656	3-67	2
	3-68	3
1464657	3-67	1
1464658	3-67	3
	3-68	5
1464660	3-68	6
1464661	3-68	7
1464662	3-68	9
1464663	3-71	1
1464664	3-71	2
1464665	3-71	3

©2009 HYSTER COMPANY

NUMERICAL INDEX (continued)

PART NO.	PAGE	ITEM
1464666	3-71	4
1464667	3-71	5
1464668	3-71	6
1464669	3-71	7
1464820	3-68	4
1464863	10-29	1
	11-23	1
	12-39	1
1464864	10-29	1
	11-23	1
	12-39	1
1464865	10-29	1
	11-23	1
	12-39	1
1464890	3-23	48
	3-27	36
	3-31	1
	3-36	52
	3-39	44
	3-44	78
	3-48	78
	3-52	78
	3-55	4
1464909	1-18	41
1464915	8-8	
1464916	8-8	
1464917	8-8	
1465028	10-27	5
	11-19	5
	12-35	5
	13-43	16
	13-45	12
	13-47	18
	13-49	12
1465072	10-4	4
	10-8	4
	10-27	12
	11-3	7
	11-8	25
	11-19	13
	12-4	5
	12-8	6
	12-12	5
	12-35	13
	13-43	8
	13-45	4
	13-47	4
	13-49	4
1465157	13-23	
1465158	13-23	
1465159	13-23	
1465160	13-23	
1465171	2-77	10
1465177	10-27	3
	11-19	3
	12-35	3
	13-43	13
	13-45	9
	13-47	15
	13-49	9
1465226	10-27	1
1465228	12-35	1
1465322	13-25	
1465323	13-25	
1465324	13-25	
1465325	13-25	
1465328	1-31	6
1465443	1-25	1
1465468	4-71	12
	4-73	32
	4-111	12
	4-130	25
	4-133	9
	4-138	25
	4-141	9
	4-159	12
	4-161	30
1465469	4-71	7
	4-73	33
	4-111	7
	4-133	10
	4-141	10
	4-157	36
	4-159	8
	4-161	31
1465489	10-20	3
	10-24	4
	11-30	18
	12-32	3
1465518	9-43	12
	9-45	16
	10-4	11
1465534	1-21	22
1465545	10-32	1
	11-26	1
	12-42	1
1465546	10-32	1
	11-26	1
	12-42	1
1465547	10-32	1
	11-26	1
	12-42	1
1465548	10-32	1
	11-26	1
	12-42	1
1465585	10-13	37
	12-16	31
1465740	1-25	11
	13-41	2
1465778	3-77	4
	3-79	4
	3-81	
1465779	3-81	7
1465780	3-81	3
1465799	3-81	5
1465803	2-77	17
	2-79	1
1465810	2-77	21
	2-79	5
1465811	2-77	22
	2-79	2
1465812	2-77	18
	2-79	6
1465885	11-19	1
1465895	2-77	1
	2-79	21
1465896	2-77	
	2-79	21
1465897	13-26	1
1465899	3-77	9
	3-79	9
	3-83	
1465938	3-23	46
	3-44	62
1465940	11-3	1
	11-3	1
1465946	11-3	1
	11-3	1
1466001	2-5	31
1466003	3-24	69
	3-44	45
1466011	8-21	3
1466094	3-71	10
1466095	3-68	10
1466096	3-68	11
1466123	5-14	37
	5-21	
1466337	13-26	2
1466394	9-49	
	9-51	
1466395	9-49	
1466396	9-49	11
1466397	9-49	13
1466398	9-49	
1466415	13-26	4
1466416	1-18	43
1466438	5-14	55
1466440	9-49	1
1466441	9-49	1
1466442	9-49	2
	9-51	2
1466443	9-49	4
	9-51	4
1466444	9-49	6
	9-51	6
1466445	9-49	6
1466446	9-49	7
	9-51	7
1466447	9-49	8
	9-51	8
1466472	13-26	3
1466632	3-77	8
	3-79	8
1466858	2-79	21
1466859	2-69	12
1466925	11-30	13
	11-30	30
1466997	13-63	2
1467059	13-45	21
1467061	13-45	21
1467062	13-45	22
1467081	11-7	1
	11-7	1
1467087	11-7	1
	11-7	1
1467145	13-51	6
	13-53	6
	13-55	3
	13-57	6
	13-59	6
	13-61	3
1467146	13-51	7
	13-53	7
	13-55	4
	13-57	7
	13-59	7
	13-61	4
1467147	13-51	8
	13-53	8
	13-55	5
	13-57	8
	13-59	8
	13-61	5
1467148	13-51	9
	13-53	9
	13-55	6
	13-57	9
	13-59	9

See Service Manual for service procedures.
©2009 HYSTER COMPANY

NUMERICAL INDEX (continued)

PART NO.	PAGE	ITEM
	13-61	6
1467150	13-51	11
	13-53	13
	13-57	11
	13-59	13
1467151	13-51	1
	13-53	1
	13-57	1
	13-59	1
1467153	13-51	2
	13-53	2
	13-57	2
	13-59	2
1467154	13-51	3
	13-53	3
	13-57	3
	13-59	3
1467200	13-53	11
	13-55	11
	13-59	11
	13-61	11
1467201	13-53	10
	13-55	8
	13-59	10
	13-61	8
1467203	13-55	13
	13-61	13
1467204	13-55	1
	13-61	1
1467205	13-55	2
	13-61	2
1467206	13-55	7
	13-61	7
1467268	13-51	5
	13-57	4
1467269	13-53	4
	13-59	4
1467270	13-55	9
	13-61	10
1467327	12-32	1
1467338	1-21	23
1467340	1-21	24
1467342	1-21	25
1467343	1-21	26
1467344	1-21	27
1467345	1-21	28
1467347	1-21	29
1467514	1-7	2
1467515	1-7	2
1467523	1-11	1
1467524	1-11	2
1467525	1-11	3
1467526	1-11	4
1467527	1-11	5
1467529	1-11	7
1467531	1-11	6
1467632	13-51	12
	13-53	14
	13-57	12
	13-59	14
1467633	13-51	13
	13-53	15
	13-55	15
	13-57	13
	13-59	15
	13-61	15
1467634	13-55	14
	13-61	14
1467651	11-3	4
	11-3	4
	11-8	29
1467657	11-3	4
	11-3	4
	11-8	29
1467769	13-51	4
1467770	13-57	5
1467771	13-53	5
1467772	13-59	5
1467773	13-61	9
1467774	13-55	10
1467775	13-61	9
1467776	13-55	10
1467846	13-55	9
	13-61	10
1467925	9-29	3
1467926	9-29	2
	9-32	31
1467927	9-29	7
1467928	9-29	9
	9-31	3
1467929	9-29	
1467931	9-29	12
1467932	9-29	13
1467933	9-29	14
1467934	9-29	15
	9-35	4
	9-35	23
1467938	9-29	29
1467954	9-29	25
1468020	1-21	12
1468021	1-21	13
1468022	1-21	14
1468023	1-21	15
1468024	1-21	16
1468025	1-21	17
1468027	1-21	
1468032	1-21	20
1468033	1-21	21
1468307	13-67	10
	13-69	14
1468309	13-67	8
1468310	13-75	8
	13-77	6
1468311	13-65	4
	13-67	14
1468312	13-67	15
1468314	13-67	29
1468315	13-67	28
1468316	13-67	19
1468317	13-67	20
1468320	13-71	11
1468321	13-71	14
1468468	9-51	1
1468469	9-51	1
1468470	9-51	
1468472	1-7	
	1-11	
1468473	1-7	
	1-11	
1468571	4-5	28
	4-7	3
1468576	9-51	
1468578	9-51	6
1468699	1-33	2
1468841	4-71	5
	4-73	40
	4-111	5
	4-113	30
	4-155	6
	4-157	28
	4-159	3
	4-161	34
1469300	5-17	11
	5-19	11
1469301	5-17	11
	5-19	11
1469317	1-27	21
1469597	4-10	32
	4-31	
1469598	2-53	9
	2-55	9
	4-27	1
	4-31	
1469601	2-53	9
	4-10	32
	4-31	
1469604	4-14	37
	4-18	37
	4-23	30
1469605	2-27	35
1469606	4-153	4
1470009	1-17	23
1470152	1-7	1
1470153	1-7	1
1470155	1-7	
1470156	1-7	
1470157	1-8	
1470158	1-8	
1470159	1-7	34
1470160	1-11	8
1470161	1-8	
1470163	1-7	29
1470164	1-8	
1470275	8-17	6
1470686	8-3	28
1470920	1-33	1
1470922	1-33	1
1471444	2-9	3
1471445	2-9	1
1471446	2-9	1
1471448	2-9	2
1471449	2-9	3
1471496	3-81	9
1471535	1-33	3
1471541	3-81	11
1471555	2-39	2
1471556	2-35	3
1471557	2-39	1
1471558	2-35	29
1471559	2-41	18
1471560	2-36	44
1471702	3-48	76
	3-52	76
	3-56	61
1471866	1-17	32
1471956	4-133	4
	4-141	4
1471958	4-133	4
	4-141	4
1471960	4-95	4
	4-133	4
	4-141	4
	4-149	4
1472707	2-73	4
1472708	2-73	8
1472709	2-73	7
1472710	2-73	6
1472711	2-73	2

©2009 HYSTER COMPANY

NUMERICAL INDEX (continued)

PART NO.	PAGE	ITEM
1473099	8-4	54
1473100	12-33	31
1473595	5-17	9
	5-19	9
1474048	11-30	28
1474051	11-30	28
1474054	11-30	28
1474057	11-30	28
1474101	11-30	27
	11-30	27
1474107	11-30	27
	11-30	27
1474125	11-30	29
	11-30	29
1474131	11-30	29
	11-30	29
1474314	13-78	8
1474318	13-78	2
1474335	13-78	6
1474399	10-12	11
	11-3	15
	12-16	11
1474496	12-32	17
1474497	12-32	29
1474605	10-13	29
	12-16	28
	12-16	28
1474701	13-65	2
	13-77	
1474702	13-65	3
	13-75	
1474703	13-65	5
1474704	13-71	1
1474709	13-67	26
1474710	13-69	12
	13-75	5
	13-77	3
1474711	13-71	15
1474765	13-75	4
	13-77	2
1474766	13-75	9
	13-77	7
1474767	13-75	21
	13-77	18
1474768	13-77	19
1474820	13-75	23
	13-77	20
1474822	4-133	4
	4-141	4
1474825	3-7	30
	3-10	6
1474950	13-65	10
1474951	13-13	1
	13-65	11
1474952	13-67	12
1474953	13-67	13
1474954	13-67	9
1474955	13-69	10
1474956	13-71	9
1474957	13-67	6
1474959	13-77	14
1474960	13-77	15
1474961	13-75	17
1474962	13-75	16
1475160	9-8	44
1475161	2-43	10
1475519	4-127	1
1475520	4-127	2
1475521	4-127	3
1475522	4-127	4
1475523	4-127	5
1475524	4-127	6
1475525	4-127	7
1475526	4-127	8
1475527	4-127	9
1475528	4-127	10
1475529	4-127	11
1475530	4-127	12
1475531	4-127	13
1475532	4-127	14
1475533	4-127	15
1475534	4-127	16
1475536	4-127	18
1475537	4-127	26
1475538	4-127	19
1475539	4-127	20
1475540	4-127	21
1475541	4-127	22
1475542	4-127	23
1475543	4-127	24
1475544	4-127	25
1475546	4-43	1
	4-85	1
1475547	4-43	2
1475548	4-43	3
	4-85	13
1475549	4-43	4
	4-85	15
1475550	4-43	5
	4-85	14
1475551	4-43	6
	4-85	2
1475552	4-43	7
1475553	4-43	8
1475554	4-43	9
1475556	4-43	10
1475558	4-43	12
	4-85	7
1475559	4-43	13
	4-85	12
1475560	4-43	14
1475561	4-43	15
1475562	4-43	16
1475564	4-43	18
1475565	4-43	19
1475566	4-20	4
	4-43	20
1475567	4-43	21
1475569	4-43	23
1475570	4-43	24
1475571	4-43	25
1475572	4-43	26
	4-85	10
1475573	4-43	27
	4-85	11
1475574	4-43	28
	4-85	9
1475578	4-43	22
1475579	4-20	3
1475583	4-20	2
1475608	4-85	6
1475610	4-43	11
	4-85	4
	4-127	17
1475616	4-43	17
1475617	4-20	5
1475618	4-127	27
1475620	4-85	3
1475621	4-85	5
1475622	4-85	8
1475787	11-30	1
1475788	11-30	2
1475789	11-30	2
1475794	11-30	2
1475795	11-30	2
1475833	11-30	4
1475834	11-30	4
1475839	11-30	4
1475840	11-30	4
1476015	2-17	1
1476017	2-17	13
1476018	2-17	2
1476045	2-21	5
1476048	2-21	6
1476052	2-21	8
1476107	2-17	3
1476416	13-78	1
1476422	1-15	25
1476426	5-13	30
	6-2	
1476434	3-48	59
	3-52	59
	3-55	23
1476761	1-15	11
1477080	11-30	13
	11-31	30
1477232	9-7	28
1477278	3-68	13
1477570	10-24	7
1477578	10-24	5
1479092	13-67	
1479093	13-67	
1479107	4-87	6
1479109	4-51	9
	4-57	9
	4-63	9
	4-71	13
	4-87	6
	4-89	1
	4-92	14
	4-97	1
	4-99	9
	4-105	9
	4-111	13
	4-130	15
	4-138	15
	4-146	15
	4-155	10
	4-159	13
1479697	2-69	11
1479756	6-5	25
1479757	6-5	25
1480019	1-29	7
1480237	13-15	24
	13-17	27
	13-19	22
1480392	13-49	20
1482394	1-21	2
1482550	9-29	14
1482664	4-48	18
	4-54	2
	4-54	13
	4-55	23
	4-59	2
	4-60	15
	4-67	2
	4-68	15
	4-68	25

See Service Manual for service procedures.
©2009 HYSTER COMPANY

NUMERICAL INDEX (continued)

PART NO.	PAGE	ITEM
	4-80	18
	4-88	7
	4-92	13
	4-101	2
	4-101	13
	4-107	2
	4-107	13
	4-118	19
	4-124	19
	4-146	14
1482668	4-72	16
	4-73	44
	4-73	45
	4-112	17
	4-112	25
	4-112	26
	4-155	13
	4-156	24
	4-156	25
	4-160	19
	4-162	40
	4-162	41
1482700	2-39	1
1482701	2-39	4
1482794	3-27	29
	3-31	12
	3-47	44
	3-51	44
	3-55	16
	3-66	
1483108	5-21	12
1483226	13-75	15
	13-77	13
1483228	13-75	15
	13-77	13
1483331	13-61	9
1483333	13-61	9
1483335	13-59	5
1483336	13-57	5
1483739	13-29	5
	13-31	1
	13-67	3
	13-69	15
1483828	1-11	9
1483938	11-30	1
1483944	11-30	1
1483993	11-30	26
1484026	9-3	23
1484276	11-30	26
1484277	11-30	26
1484283	11-30	26
1484351	9-19	32
	9-29	
1484357	4-95	5
	4-133	5
	4-141	5
	4-149	5
1484358	4-95	5
	4-149	5
1484361	4-45	1
	4-51	1
	4-57	1
	4-63	1
	4-71	4
	4-77	1
	4-87	4
	4-99	1
	4-105	1
	4-111	4
	4-115	1
	4-121	1
	4-155	1
	4-159	1
1484375	4-54	6
	4-55	24
	4-59	7
	4-69	26
	4-92	10
	4-95	2
	4-101	7
	4-102	21
	4-146	11
	4-149	2
1484383	4-54	4
	4-54	5
	4-54	7
	4-54	11
	4-59	5
	4-59	6
	4-59	8
	4-59	12
	4-67	5
	4-67	6
	4-67	8
	4-67	12
	4-96	14
	4-101	5
	4-101	6
	4-101	8
	4-134	14
	4-142	14
	4-149	14
1484396	4-89	3
1484454	11-30	3
1484460	11-30	3
1484498	11-30	1
1484522	11-30	3
1484528	11-30	3
1484555	4-96	15
	4-96	16
	4-96	17
	4-134	16
	4-134	17
	4-142	16
	4-142	17
	4-150	15
	4-150	16
	4-150	17
1484594	13-80	1
1484595	13-80	1
1484596	4-83	2
	13-64	1
	13-80	1
1484597	4-45	9
	4-77	9
	4-83	2
	4-92	12
	4-92	18
	4-92	19
	4-95	1
	4-96	18
	4-115	10
	4-121	10
	4-130	13
	4-130	19
	4-130	20
	4-133	1
	4-134	18
	4-138	13
	4-138	19
	4-138	20
	4-141	1
	4-142	18
	4-146	13
	4-146	19
	4-147	20
	4-149	1
	4-150	18
	13-64	1
	13-80	1
1484610	4-129	4
	4-129	5
	4-129	6
	4-129	7
	4-129	9
	4-137	4
	4-137	5
	4-137	6
	4-137	7
1484611	4-45	9
	4-77	9
	4-77	10
	4-83	2
	4-92	17
	4-115	10
	4-115	11
	4-121	10
	4-121	11
	4-130	21
	4-147	21
1484634	2-27	1
	2-31	
	2-35	
	2-39	
	2-41	
1484651	4-97	2
	4-97	2
	4-147	24
1484654	4-96	18
	4-134	18
	4-142	18
	4-150	18
1484655	4-96	18
	4-134	18
	4-142	18
	4-150	18
1484656	4-45	9
	4-77	9
	4-92	12
	4-92	18
	4-92	19
	4-95	1
	4-96	18
	4-115	10
	4-121	10
	4-130	13
	4-130	19
	4-130	20
	4-133	1
	4-134	18
	4-138	13
	4-138	19
	4-138	20
	4-141	1
	4-142	18
	4-146	13
	4-146	19
	4-147	20
	4-149	1
	4-150	18
	13-64	1
	13-80	1
1484610	4-129	4
	4-129	5
	4-129	6
	4-129	7
	4-129	9
	4-137	4
	4-137	5
	4-137	6
	4-137	7
1484611	4-45	9
	4-77	9
	4-77	10
	4-83	2
	4-92	17
	4-115	10
	4-115	11
	4-121	10
	4-121	11
	4-130	21
	4-147	21
1484634	2-27	1
	2-31	
	2-35	
	2-39	
	2-41	
1484651	4-97	2
	4-97	2
	4-147	24
1484654	4-96	18
	4-134	18
	4-142	18
	4-150	18
1484655	4-96	18
	4-134	18
	4-142	18
	4-150	18
1484656	4-45	9
	4-77	9
	4-92	12
	4-92	18
	4-92	19
	4-95	1
	4-96	18
	4-115	10
	4-121	10
	4-130	13
	4-130	19
	4-130	20
	4-133	1
	4-134	18
	4-138	13
	4-138	19
	4-138	20
	4-141	1
	4-142	18
	4-146	13
	4-146	19
	4-146	20

©2009 HYSTER COMPANY

NUMERICAL INDEX (continued)

PART NO.	PAGE	ITEM
	4-149	1
	4-150	18
1484661	4-92	10
	4-146	11
1484670	4-95	4
	4-149	4
1484671	4-95	4
	4-133	4
	4-141	4
	4-149	4
1484672	4-95	4
	4-149	4
1484681	4-5	2
	4-91	1
	4-129	1
	4-137	1
	4-145	1
1484682	4-5	2
	4-91	1
	4-129	1
	4-137	1
	4-145	1
1484683	4-91	4
	4-91	5
	4-91	6
	4-91	7
	4-129	4
	4-129	5
	4-129	6
	4-129	7
	4-129	9
	4-137	4
	4-137	5
	4-137	6
	4-137	7
	4-145	5
	4-145	5
	4-145	6
	4-145	7
	4-146	9
1484684	4-5	2
	4-91	3
	4-91	8
	4-129	3
	4-129	8
	4-137	3
	4-137	8
	4-145	3
	4-146	8
1484687	4-147	26
1484707	4-92	10
	4-95	2
	4-146	11
	4-149	2
1484710	4-54	14
	4-55	15
	4-60	16
	4-60	17
	4-68	16
	4-68	17
	4-74	46
	4-74	47
	4-95	4
	4-101	14
	4-102	15
	4-107	12
	4-108	15
	4-113	27
	4-113	28
	4-149	4
	4-156	23
	4-156	26
	4-161	36
	4-161	37
1484716	4-45	13
	4-51	14
	4-57	14
	4-64	14
	4-71	6
	4-77	13
	4-99	14
	4-105	14
	4-115	14
	4-121	14
	4-159	7
1484718	4-147	26
1484719	4-91	4
	4-91	4
	4-91	5
	4-91	5
	4-91	6
	4-91	6
	4-91	7
	4-145	5
	4-145	5
	4-145	6
	4-145	6
	4-145	7
	4-145	7
1484720	4-95	6
	4-133	6
	4-141	6
	4-149	6
1484733	6-2	9
1484734	6-2	1
1484735	6-2	2
1484736	6-2	3
1484737	6-2	4
1484738	6-2	5
1484739	6-2	6
1484740	6-2	8
1484741	6-2	7
1485280	1-17	6
1485281	1-17	7
1485443	9-45	17
1485449	9-45	15
	10-4	10
1485568	9-25	32
	9-29	
1485867	6-5	25
1485921	3-27	46
	3-31	4
	3-48	68
	3-52	68
	3-55	7
1485922	3-48	62
	3-52	62
	3-56	65
1485923	3-24	59
	3-44	77
	3-47	28
	3-51	28
	3-55	6
1486531	4-14	37
	4-17	37
	4-23	30
1486838	10-13	29
	12-16	28
1487201	5-17	12
	5-19	12
1487202	5-17	12
	5-19	12
1487441	4-99	4
1488265	13-13	3
	13-15	5
	13-17	20
	13-19	19
1488597	5-2	
	5-7	
	5-9	
	5-13	
1488600	5-2	
	5-7	
	5-9	
	5-13	
1488601	5-2	
	5-7	
	5-9	
	5-13	
1488602	5-9	16
	5-17	
1488604	5-9	14
	5-19	
1488684	1-17	8
1488915	13-78	2
1489643	2-39	10
1489956	4-91	2
	4-129	2
	4-137	2
	4-145	2
1489957	4-91	1
	4-91	3
	4-91	4
	4-91	4
	4-91	5
	4-91	6
	4-91	6
	4-91	8
	4-129	1
	4-129	3
	4-129	4
	4-129	5
	4-129	6
	4-129	8
	4-129	9
	4-137	1
	4-137	3
	4-137	4
	4-137	5
	4-137	6
	4-137	8
	4-145	1
	4-145	3
	4-145	5
	4-145	5
	4-145	5
	4-145	6
	4-145	6
	4-146	8
	4-146	9
1490070	8-3	2
1490243	4-71	4
	4-105	1
	4-111	4

©2009 HYSTER COMPANY

NUMERICAL INDEX (continued)

PART NO.	PAGE	ITEM
	4-115	1
	4-121	1
	4-155	1
	4-159	1
1490250	4-91	1
	4-129	1
	4-137	1
	4-145	1
1490252	4-5	2
	4-147	26
1490290	2-28	77
1490391	5-21	27
1490407	4-14	37
	4-14	37
	4-18	37
	4-18	37
	4-23	30
	4-23	30
1490408	4-14	37
	4-18	37
	4-23	30
1490766	1-21	30
1491109	1-17	1
1491175	13-33	10
1491381	7-7	
1491382	7-7	13
1491830	4-39	8
1491853	9-35	10
1491859	9-29	6
	9-32	32
1492957	4-5	6
1493062	2-25	2
1493116	4-9	17
	4-27	45
1493147	1-15	1
1493148	1-15	1
1493306	9-46	
1493435	4-87	6
1493436	4-51	9
	4-57	9
	4-63	9
	4-92	14
	4-97	1
	4-99	9
	4-146	15
1493441	4-47	13
	4-55	24
	4-68	26
	4-79	13
	4-102	21
1493442	4-49	1
	4-82	2
1493444	4-95	3
	4-149	3
1493445	4-95	3
	4-149	3
1493446	4-97	1
1493448	4-49	1
1493450	4-45	12
	4-45	14
	4-47	3
	4-51	5
	4-51	11
	4-57	5
	4-57	11
	4-63	5
	4-63	11
	4-77	12
	4-77	14
	4-79	3
	4-99	5
	4-99	11
1493455	4-45	12
	4-51	5
	4-51	12
	4-51	15
	4-57	12
	4-59	4
	4-63	12
	4-67	4
	4-77	12
	4-77	14
	4-99	5
	4-99	12
	4-101	4
1493457	4-47	3
	4-54	5
	4-59	6
	4-67	6
	4-79	3
	4-101	6
1493458	4-47	2
	4-54	4
	4-59	5
	4-79	2
	4-95	14
	4-101	5
	4-149	14
1493460	4-47	6
	4-54	8
	4-59	1
	4-59	9
	4-67	7
	4-67	9
	4-79	6
	4-82	4
	4-95	13
	4-101	9
	4-107	7
	4-107	8
	4-117	7
	4-123	4
	4-123	7
	4-149	13
1493461	4-45	2
	4-47	6
	4-47	10
	4-51	2
	4-54	1
	4-54	8
	4-57	2
	4-59	1
	4-59	9
	4-63	2
	4-67	1
	4-67	7
	4-67	9
	4-77	2
	4-79	6
	4-79	10
	4-87	12
	4-99	2
	4-101	1
	4-101	9
	4-107	1
	4-115	2
	4-117	7
	4-117	11
	4-121	2
	4-123	4
	4-123	7
	4-123	11
1493469	4-47	4
	4-54	6
	4-59	7
	4-79	4
	4-87	14
	4-101	7
1493667	3-79	13
1493668	3-79	13
1493669	3-77	12
1493670	3-77	12
1493909	13-69	7
1493913	13-75	25
	13-77	21
1494076	1-7	2
1494077	1-7	2
1494300	3-41	2
1494446	3-77	22
1494466	3-61	
1494673	13-73	
1494692	13-73	
1494693	13-73	
1494782	3-63	
1494784	3-63	3
1494864	4-89	1
1494888	1-25	12
1495279	10-24	6
1495485	3-59	5
1495665	2-12	42
1495666	2-11	15
1495955	4-45	13
	4-51	14
	4-57	14
	4-63	14
	4-71	6
	4-77	13
	4-87	1
	4-99	14
	4-105	14
	4-111	6
	4-115	6
	4-115	14
	4-121	14
	4-157	37
	4-159	7
1496186	3-66	1
1496187	3-66	2
1496188	3-66	3
1496361	4-5	5
1496773	4-51	12
	4-51	15
	4-57	12
	4-59	4
	4-63	12
	4-67	4
	4-99	12
	4-101	4
1496775	4-45	5
	4-45	11
	4-47	2
	4-47	5
	4-77	5
	4-77	11
	4-79	2
	4-79	5
	4-121	12
	4-123	6

©2009 HYSTER COMPANY

NUMERICAL INDEX (continued)

PART NO.	PAGE	ITEM
1496777	4-51	9
	4-57	9
	4-63	9
	4-71	13
	4-99	9
	4-105	8
	4-105	9
	4-111	13
	4-155	10
	4-159	13
1496782	4-89	1
1496783	4-89	2
1496784	4-47	1
	4-79	1
	4-83	1
	4-117	1
	4-123	1
1496785	4-47	1
	4-79	1
	4-83	1
	4-117	1
	4-123	1
1496786	4-47	1
	4-79	1
	4-83	1
	4-117	1
	4-123	1
1496787	4-130	22
	4-131	28
	4-133	8
	4-133	11
	4-141	8
	4-141	11
1496788	4-95	8
	4-95	11
	4-130	22
	4-131	28
	4-133	8
	4-133	11
	4-138	22
	4-139	28
	4-141	8
	4-141	11
	4-147	22
	4-147	28
	4-149	8
	4-149	11
1496790	4-95	7
	4-95	12
	4-133	7
	4-133	12
	4-141	7
	4-141	12
	4-147	27
	4-149	7
	4-149	12
1496791	4-95	8
	4-95	11
	4-130	22
	4-131	28
	4-133	8
	4-133	11
	4-138	22
	4-139	28
	4-141	8
	4-141	11
	4-147	22
	4-147	28
	4-149	8
	4-149	11
	4-159	7
1496890	4-5	2
	4-138	17
1496891	4-45	13
	4-51	14
	4-57	14
	4-63	14
	4-71	6
	4-77	13
	4-87	1
	4-99	14
	4-105	14
	4-111	6
	4-115	14
	4-121	14
	4-157	37
	4-159	7
1496924	4-92	16
	4-130	17
	4-146	17
1496925	4-92	16
	4-146	17
1496926	4-92	16
	4-138	17
	4-146	17
1497228	4-92	16
	4-138	17
	4-146	17
1497229	4-47	5
	4-54	7
	4-54	11
	4-59	8
	4-59	12
	4-67	5
	4-67	12
	4-79	5
	4-101	8
1497232	4-47	14
	4-55	19
	4-68	21
	4-79	14
	4-102	19
	4-117	15
	4-123	15
1497234	4-47	14
	4-55	19
	4-68	21
	4-79	14
	4-87	15
	4-102	19
	4-108	19
	4-113	39
	4-117	15
	4-123	15
	4-157	30
	4-161	32
1497235	4-73	36
	4-73	37
	4-87	18
	4-113	40
	4-161	32
1497253	4-7	1
1497254	4-7	1
1497259	4-147	24
1497262	4-91	9
	4-92	11
	4-92	15
	4-96	15
	4-96	16
	4-96	17
	4-146	10
	4-146	12
	4-146	16
	4-150	15
	4-150	16
	4-150	17
1497264	4-55	17
	4-60	19
	4-68	19
	4-102	17
1497265	4-91	9
	4-92	11
	4-92	15
	4-146	10
	4-146	12
	4-146	16
1497274	4-55	17
	4-60	19
	4-68	19
	4-89	3
	4-102	17
1497288	4-130	21
	4-147	21
	13-64	1
1497290	4-92	17
	4-130	18
	4-138	18
	4-138	21
	4-138	23
	4-139	27
	4-146	18
	13-80	1
1497291	4-45	10
	4-77	10

©2009 HYSTER COMPANY

NUMERICAL INDEX (continued)

PART NO.	PAGE	ITEM
	4-83	2
	4-115	11
	4-121	11
1497293	4-92	19
	4-130	20
	4-138	20
	4-146	20
1497294	4-92	12
	4-95	1
	4-130	13
	4-133	1
	4-138	13
	4-141	1
	4-146	13
	4-149	1
1497296	4-45	9
	4-77	9
	4-115	10
	4-121	10
1497298	4-92	19
	4-130	20
	4-138	20
	4-146	20
1497299	13-64	1
1497300	4-92	12
	4-95	1
	4-130	13
	4-133	1
	4-138	13
	4-141	1
	4-146	13
	4-149	1
1497302	4-92	18
	4-130	19
	4-138	19
	4-146	19
1497303	13-80	1
1497304	4-45	9
	4-77	9
	4-115	10
	4-121	10
1497305	4-83	2
1497559	3-73	6
1498089	2-15	1
1498097	3-73	22
1498133	3-13	1
1498136	3-13	32
1498137	3-13	32
1498362	13-67	2
1498412	4-47	7
	4-47	8
	4-47	9
	4-54	9
	4-54	10
	4-54	12
	4-55	25
	4-55	26
	4-59	10
	4-59	11
	4-59	13
	4-67	10
	4-67	11
	4-67	13
	4-69	27
	4-69	29
	4-79	7
	4-79	8
	4-79	9
	4-88	3
	4-101	10
	4-101	11
	4-102	22
	4-102	23
	4-107	10
	4-107	11
	4-108	21
	4-108	22
	4-117	8
	4-117	9
	4-117	10
	4-123	8
	4-123	9
	4-123	10
1498413	4-47	4
	4-47	13
	4-49	3
	4-79	4
	4-79	13
	4-82	3
	4-108	24
	4-117	4
	4-117	14
	4-123	14
1498414	4-55	16
	4-60	18
	4-68	18
	4-102	16
	4-108	16
1498415	4-45	7
	4-47	11
	4-51	7
	4-51	13
	4-57	7
	4-57	13
	4-60	20
	4-63	7
	4-63	13
	4-71	7
	4-71	11
	4-77	7
	4-79	11
	4-81	1
	4-99	7
	4-99	13
	4-105	7
	4-105	13
	4-111	7
	4-111	11
	4-115	8
	4-115	9
	4-117	12
	4-121	8
	4-121	9
	4-123	12
	4-155	8
	4-157	36
	4-159	8
	4-159	11
1498416	4-111	11
	4-155	8
1498419	4-45	3
	4-45	8
	4-48	16
	4-51	3
	4-51	8
	4-51	10
	4-55	21
	4-57	3
	4-57	8
	4-57	10
	4-63	3
	4-63	8
	4-63	10
	4-68	23
	4-77	3
	4-77	8
	4-80	16
	4-83	3
	4-95	9
	4-99	3
	4-99	8
	4-99	10
	4-105	3
	4-105	8
	4-105	10
	4-115	3
	4-115	9
	4-118	17
	4-121	3
	4-121	9
	4-124	17
	4-147	25
	4-149	9
1498420	4-138	25
1498421	4-59	14
	4-67	14
	4-73	45
	4-101	12
	4-107	14
	4-112	26
	4-156	25
	4-162	41
1498422	4-48	17
	4-55	22
	4-68	24
	4-80	17
	4-81	1
	4-95	10
	4-149	10
1498423	4-48	18
	4-55	23
	4-68	25
	4-80	18
	4-88	6
	4-118	19
	4-124	19
1498424	4-54	3
	4-59	3
	4-67	3
	4-72	16
	4-101	3
	4-107	3
	4-112	17
	4-155	13
1498425	4-47	7
	4-47	8
	4-47	9
	4-54	9
	4-54	10
	4-54	12
	4-55	25
	4-55	26
	4-59	10
	4-59	11
	4-59	13
	4-67	10
	4-67	11
	4-67	13

©2009 HYSTER COMPANY

NUMERICAL INDEX (continued)

PART NO.	PAGE	ITEM
	4-69	27
	4-69	29
	4-79	7
	4-79	8
	4-79	9
	4-101	10
	4-101	11
	4-102	22
	4-102	23
	4-107	10
	4-107	11
	4-108	21
	4-108	22
	4-117	8
	4-117	9
	4-117	10
	4-123	8
	4-123	9
	4-123	10
1498427	4-54	13
	4-60	15
	4-67	15
	4-101	13
1498428	4-59	14
	4-67	14
1498451	4-54	14
	4-55	15
	4-60	16
	4-60	17
	4-68	16
	4-68	17
	4-74	46
	4-74	47
	4-101	14
	4-101	15
	4-107	12
	4-108	15
	4-113	27
	4-113	28
	4-156	23
	4-156	26
	4-161	36
	4-161	37
1498461	4-13	18
	4-17	18
1498462	4-54	14
	4-60	16
	4-68	16
	4-73	46
	4-101	14
	4-107	12
	4-113	27
	4-156	23
	4-161	37
1498463	4-55	16
	4-60	18
	4-68	18
	4-102	16
	4-108	16
1498468	4-54	2
	4-59	2
	4-72	15
	4-101	2
	4-107	2
	4-112	16
	4-155	12
	4-160	18
1498469	4-55	18
	4-60	20
	4-68	20
	4-102	18
	4-108	18
1498470	4-45	6
	4-51	6
	4-57	6
	4-63	6
	4-71	10
	4-77	6
	4-99	6
	4-105	6
	4-115	7
	4-159	6
1498471	4-87	11
1498472	4-47	12
	4-51	10
	4-57	10
	4-63	10
	4-79	12
	4-99	10
	4-105	10
	4-117	13
	4-123	13
1498473	4-45	3
	4-51	3
	4-57	3
	4-63	3
	4-77	3
	4-99	3
	4-115	3
	4-121	3
1498474	4-45	8
	4-51	8
	4-55	21
	4-57	8
	4-63	8
	4-68	23
	4-68	24
	4-77	8
	4-95	9
	4-99	8
	4-115	9
	4-117	17
	4-118	18
	4-121	9
	4-123	17
	4-124	18
	4-147	25
	4-149	9
1498475	4-83	3
1498476	4-45	4
	4-48	16
	4-51	4
	4-57	4
	4-63	4
	4-71	2
	4-77	4
	4-79	16
	4-105	4
	4-111	2
	4-115	4
	4-121	4
	4-155	4
	4-159	5
1498477	4-47	11
	4-79	11
	4-117	12
	4-123	12
1498478	4-45	2
	4-51	2
	4-54	1
	4-57	2
	4-63	2
	4-67	1
	4-77	2
	4-99	2
	4-101	1
	4-105	2
	4-107	1
	4-115	2
	4-121	2
1498479	4-82	1
1498480	4-49	4
1498483	4-55	18
	4-60	20
	4-68	20
	4-102	18
	4-108	18
	4-112	24
	4-157	29
1498486	4-55	16
	4-60	18
	4-68	18
	4-102	16
	4-107	7
	4-108	16
1498487	4-54	14
	4-60	16
	4-68	16
	4-74	46
	4-101	14
	4-107	12
	4-113	27
	4-156	23
	4-161	37
1498488	4-55	15
	4-60	17
	4-68	17
	4-74	47
	4-108	15
	4-113	28
	4-156	26
	4-161	36
1498492	4-48	18
	4-54	2
	4-54	13
	4-55	23
	4-59	2
	4-60	15
	4-67	2
	4-68	15
	4-68	25
	4-72	15
	4-73	34
	4-73	35
	4-73	44
	4-80	18
	4-88	8
	4-92	13
	4-101	2
	4-101	13
	4-107	2
	4-107	13
	4-112	16
	4-112	25
	4-118	19
	4-124	19
	4-146	14
	4-155	12

See Service Manual for service procedures.
©2009 HYSTER COMPANY

NUMERICAL INDEX (continued)

PART NO.	PAGE	ITEM
	4-156	24
	4-160	18
	4-161	28
	4-161	29
	4-162	40
1498493	4-48	18
	4-55	23
	4-68	25
	4-80	18
	4-88	6
	4-92	13
	4-118	19
	4-124	19
	4-146	14
1498495	4-54	14
	4-55	15
	4-60	16
	4-60	17
	4-68	16
	4-68	17
	4-74	46
	4-74	47
	4-101	14
	4-102	15
	4-107	12
	4-108	15
	4-113	27
	4-113	28
	4-156	23
	4-156	26
	4-161	36
	4-161	37
1498496	4-45	3
	4-45	7
	4-45	8
	4-47	11
	4-48	16
	4-51	3
	4-51	7
	4-51	8
	4-51	10
	4-51	13
	4-55	16
	4-55	18
	4-55	21
	4-57	3
	4-57	7
	4-57	8
	4-57	10
	4-57	13
	4-60	18
	4-63	3
	4-63	7
	4-63	8
	4-63	10
	4-63	13
	4-68	18
	4-68	20
	4-68	23
	4-77	3
	4-77	7
	4-77	8
	4-79	11
	4-79	16
	4-81	1
	4-83	3
	4-87	19
	4-95	9
	4-99	3
	4-99	7
	4-99	8
	4-99	10
	4-102	16
	4-102	18
	4-147	25
	4-149	9
1498498	4-54	3
	4-54	13
	4-59	3
	4-59	14
	4-60	15
	4-67	3
	4-67	14
	4-68	15
	4-99	4
	4-101	3
	4-101	13
1498502	4-87	8
1498750	13-69	
1498807	5-7	3
	5-10	33
1499101	13-45	22
1499102	13-45	21
1499103	13-43	22
1499104	13-43	21
1499105	13-47	28
1499106	13-47	29
1499107	13-49	27
1499108	13-49	28
1499120	4-28	53
1499234	4-82	1
1499369	2-11	10
	2-15	21
	2-17	21
	2-23	16
1499373	2-12	46
1499514	2-17	7
1499676	9-32	
	9-35	36
1499886	8-4	53
1500170	9-32	
1500439	2-17	19
1500744	10-4	2
	10-8	2
	10-27	2
	11-3	1
	11-7	1
	11-19	2
	12-4	2
	12-8	2
	12-12	2
	12-35	2
1500784	10-30	5
	10-32	5
	11-24	5
	11-26	5
	12-40	5
	12-42	5
1500786	10-31	5
	10-32	5
	11-25	5
	11-26	5
	12-41	5
	12-42	5
1500884	2-31	18
1500963	4-55	15
	4-60	17
	4-68	17
	4-74	47
	4-101	15
	4-107	15
	4-113	28
	4-156	26
	4-161	36
1501157	2-31	1
1501259	1-35	26
1501409	7-11	
1501993	3-31	24
	3-39	22
	3-55	14
1501994	3-32	
	3-40	
1502000	2-5	5
	2-5	8
1502003	3-31	16
	3-40	58
	3-57	91
1502180	13-75	15
	13-77	13
1502503	8-15	11
1502645	9-45	18
1502741	2-41	25
	2-44	3
1502769	13-67	1
1503088	4-87	19
1503437	9-19	32
	9-31	
	9-35	
1503438	9-25	32
	9-31	
	9-35	
1503453	5-7	10
1503620	13-41	38
1504083	13-67	30
1504084	13-67	30
1504085	13-77	13
1504086	13-77	13
1504087	13-75	15
1504088	13-75	15
1504089	13-75	15
	13-77	13
1504094	13-77	13
1504095	13-75	15
1504180	2-11	12
1504197	4-138	25
1504256	2-11	14
1504380	2-11	12
1504410	2-11	11
1504426	2-11	11
1504434	9-35	34
1504440	9-29	
	9-35	33
1504443	9-32	
1504446	9-32	
1504448	9-31	15
1504449	9-31	16
1504451	9-32	
1504456	9-31	7
1504457	9-31	17
1504458	9-31	6
1504459	9-31	22
	9-35	20
1504807	9-29	
	9-32	
	9-35	37
1504808	9-32	
1504814	9-35	35
1504883	4-47	10

©2009 HYSTER COMPANY

NUMERICAL INDEX (continued)

PART NO.	PAGE	ITEM
	4-79	10
	4-117	11
	4-123	11
1505287	13-65	2
	13-73	4
1506842	2-27	1
	2-31	
	2-35	
	2-39	
	2-41	
1506889	10-24	1
	10-24	1
1506894	10-24	3
	10-24	3
1506895	10-24	1
	10-24	1
1506900	10-24	3
	10-24	3
1506901	10-24	1
	10-24	1
1506906	10-24	3
	10-24	3
1506908	10-24	1
	10-24	1
1506913	10-24	3
	10-24	3
1506914	10-24	1
	10-24	1
1506919	10-24	3
	10-24	3
1506920	10-24	1
	10-24	1
1506925	10-24	3
	10-24	3
1506932	10-24	2
	10-24	2
1506937	10-24	2
	10-24	2
1506943	10-24	2
	10-24	2
1506950	10-24	2
	10-24	2
1506956	10-24	2
	10-24	2
1506962	10-24	2
	10-24	2
1507400	4-14	37
	4-18	37
	4-23	30
1507923	7-5	26
1507960	2-81	6
1508243	4-82	5
1508442	2-28	66
1509037	3-73	25
1509790	4-72	18
	4-72	19
	4-73	43
	4-107	5
	4-107	9
	4-112	19
	4-112	21
	4-115	5
	4-115	12
	4-121	5
	4-121	12
	4-156	16
	4-156	18
	4-160	21
	4-160	23
1510310	4-7	1
1510311	4-7	1
1510312	4-7	1
1510313	4-7	1
1510649	2-27	16
	2-42	35
1511097	13-13	2
1511099	13-13	2
1511725	2-21	9
1511882	10-27	15
	11-19	16
	12-8	4
	12-12	3
	12-35	16
	13-43	6
	13-45	2
	13-47	2
	13-49	2
1511883	10-27	15
	11-19	16
	12-8	4
	12-12	3
	12-35	16
	13-43	6
	13-45	2
	13-47	2
	13-49	2
1511884	10-27	15
	11-19	16
	12-8	4
	12-12	3
	12-35	16
	13-43	6
	13-45	2
	13-47	2
	13-49	2
1512021	2-51	23
1512403	2-21	27
1513907	1-17	13
1514215	4-14	43
	4-18	42
	4-23	11
	4-27	18
1514267	2-31	19
1514268	2-35	21
	2-35	21
1514309	3-28	62
	3-31	34
1514310	3-47	37
	3-51	37
	3-56	78
1514915	2-27	2
	2-42	36
1514962	2-36	48
1514963	2-36	47
1514964	2-36	45
1514965	2-36	46
1514968	2-31	13
1514969	2-35	20
	2-35	20
1515680	5-17	8
	5-19	8
1515763	4-5	14
	4-5	22
1515797	3-13	7
1515806	3-16	4
1516741	2-57	
1516761	2-79	12
1516762	2-79	12
1516930	2-69	26
1518377	9-43	11
1518378	9-43	13
	13-78	11
1518463	13-78	8
1518858	1-17	13
1518888	1-17	13
1519843	2-27	15
1520305	4-130	17
	4-138	17
1520306	4-130	17
	4-138	17
1520543	4-73	36
	4-113	39
	4-161	32
1520644	4-13	27
	4-17	27
	4-23	5
1520927	13-65	9
1521309	4-137	10
	4-138	12
	4-138	16
1521393	13-15	7
	13-17	26
	13-19	6
1523453	13-15	25
	13-17	5
	13-19	21
1523477	4-7	1
1523478	4-7	1
1523551	5-17	9
	5-19	9
1523715	1-25	1
1523718	1-25	1
1523722	2-27	11
	3-27	12
	3-32	
	3-35	13
	3-40	
	3-47	38
	3-51	38
1523723	2-28	43
1523732	10-30	3
	10-31	3
	10-32	3
	11-24	3
	11-25	3
	11-26	3
	12-40	3
	12-41	3
	12-42	3
1523736	10-32	2
1523737	10-30	4
	10-32	4
	11-24	4
	11-26	4
	12-40	4
	12-42	4
1523739	10-30	2
	11-24	2
	11-26	2
	12-40	2
	12-42	2
1523741	10-31	4
	10-32	4
	11-25	4
	11-26	4
	12-41	4
	12-42	4
1523742	10-31	2

See Service Manual for service procedures.
©2009 HYSTER COMPANY

NUMERICAL INDEX (continued)

PART NO.	PAGE	ITEM
	10-32	2
	11-25	2
	11-26	2
	12-41	2
	12-42	2
1523907	4-130	14
	4-130	24
	4-134	15
	4-138	24
	4-142	15
1523953	5-17	3
	5-19	3
1523972	2-79	20
1524030	4-111	6
	4-157	37
1524199	2-27	1
	2-31	
	2-35	
	2-39	
	2-41	
1524397	4-82	2
1524398	4-82	3
1524400	4-88	5
1524525	4-5	5
1525246	1-27	7
1525247	1-27	10
1525248	1-27	8
1526082	13-33	12
	13-35	1
	13-37	1
	13-41	10
1527268	4-28	56
1528410	6-5	7
1528427	6-5	2
1528484	6-5	6
1528570	2-81	1
1528870	3-35	29
	3-39	25
1528872	3-39	24
1529010	2-41	26
	2-44	2
1529011	3-23	8
	3-27	8
	3-31	36
	3-35	9
	3-39	9
	3-56	71
1529057	4-130	27
	4-138	26
1529238	1-17	19
1529708	6-5	
1529709	6-5	
1530268	3-41	5
1530269	3-41	8
1530270	3-41	9
1530995	6-5	9
	8-11	
1530996	6-5	10
	8-11	
1531160	4-111	13
	4-138	15
	4-155	10
1531579	1-17	8
1531750	2-11	17
1531982	13-29	5
	13-31	1
	13-33	1
	13-67	3
	13-69	15
1532638	13-55	9
	13-61	10
1532639	13-55	9
	13-61	10
1532640	13-51	5
	13-57	4
1532643	13-53	4
	13-59	4
1532655	8-11	3
1532656	8-11	3
1532691	9-45	4
1532851	8-11	
1532852	8-11	
1533797	4-7	2
1533858	4-7	1
1533859	4-7	1
1533891	2-27	35
1534660	1-35	5
1536684	6-5	11
1536722	6-5	
1536792	6-5	9
	8-15	
1536793	6-5	10
	8-15	
1536794	6-5	11
1536819	2-65	2
1537135	4-138	14
1537209	2-61	6
1537291	2-79	21
1537344	2-79	11
1537498	2-21	18
1538804	3-31	30
	3-40	61
	3-55	30
1538872	2-27	1
	2-31	
	2-35	
	2-39	
	2-41	
1539589	8-15	
1539590	8-15	
1539595	8-15	3
1539596	8-15	3
1543536	3-73	26
1543615	9-7	12
1543616	9-13	6
	9-17	5
1543617	9-13	7
	9-17	6
1543927	9-21	29
	9-37	
1543928	9-27	30
	9-37	
1544207	9-21	33
	9-27	34
1544764	13-29	5
	13-31	1
	13-33	1
	13-67	3
	13-69	15
1544906	1-17	4
1544910	1-17	2
1544913	1-17	2
1544915	1-17	3
1544971	7-7	33
1544972	7-7	31
1545442	2-79	21
1545871	5-17	12
	5-19	12
1546462	2-57	
1547346	13-8	1
1547680	5-14	70
1548231	9-21	11
	9-27	18
1548232	9-21	37
	9-27	38
1549372	2-5	24
1549449	2-5	8
	2-5	24
1550595	2-65	1
1550596	2-79	10
1550623	4-162	38
1550626	4-162	38
1550643	9-13	19
	9-17	19
1550942	9-13	22
	9-17	22
1551160	9-7	11
1551997	9-19	21
	9-25	21
	9-27	35
1557524	3-27	1
	3-31	40
	3-35	1
	3-39	1
1557529	8-18	5
1559969	9-37	4
1559970	9-37	14
1559971	9-37	24
1559972	9-37	34
1559973	9-37	3
1559974	9-37	38
1559975	9-37	2
1559976	9-37	
1559977	9-37	
1559978	9-38	
1559986	9-37	
1560640	13-13	2
1560641	13-13	2
1560642	13-13	2
1560643	13-13	2
1560644	13-13	2
1560645	13-13	2
1560679	9-37	37
1563351	1-5	1
1563860	7-8	49
1565839	13-29	5
	13-31	1
	13-33	1
	13-67	3
	13-69	15
1566079	9-13	36
	9-17	38
1566080	9-13	35
	9-17	37
1567198	1-17	22
1567833	9-19	21
	9-21	34
	9-25	21
1581592	9-45	10
1581852	9-45	9
1584631	1-7	29
1600126	1-7	29
1604009	13-73	7
1617431	4-7	
1622935	13-51	10
	13-53	12
	13-57	10
	13-59	12

©2009 HYSTER COMPANY

NUMERICAL INDEX (continued)

PART NO.	PAGE	ITEM
1622936	13-55	12
	13-61	12
1625091	12-33	33
1638808	13-75	22
1639697	2-59	1
1641492	2-41	8
1646441	9-45	14
1654578	4-14	52
	4-18	51
	4-27	23
	4-85	16
1654579	4-14	52
	4-18	51
	4-27	23
	4-85	16
1662409	13-29	5
	13-31	1
	13-67	3
	13-69	15
1678473	1-7	
	1-11	
1678474	1-7	
	1-11	
1699955	11-19	1
1699995	11-19	1
1700060	12-35	1
1700217	12-35	1
2004005	3-19	31
	3-43	27
	3-47	27
	3-51	27
	3-55	32
	4-23	16
	4-27	2
	8-4	49
	8-4	49
	13-15	19
	13-17	23
	13-19	17
2020517	1-35	2
2021207	1-17	9
2021395	1-29	4
2027337	3-77	1
	3-79	1
2029170	2-5	46
	2-11	6
2032230	7-13	5
2032490	7-11	6
2033243	10-16	3
	12-24	3
2033281	10-16	3
	10-16	3
2033299	10-16	3
	12-24	3
2034459	1-35	30
2034520	3-44	61
2034906	1-21	4
2035020	13-5	3
	13-5	3
2035021	13-5	3
2035022	13-7	3
2035023	13-7	3
2035024	13-8	3
2035025	13-8	3
2035044	13-9	3
2035137	7-7	2
	7-11	
2035198	12-24	11
2035312	9-43	2
	9-46	
2035314	9-43	2
	9-46	
2035315	9-46	1
2035316	9-46	2
2035318	9-46	2
2035322	2-11	5
2035323	2-12	46
2035331	2-11	10
2035354	2-5	25
2035355	2-5	25
2035357	2-5	6
2035359	2-5	6
2035568	6-5	14
2035569	6-5	15
2035581	4-5	2
	4-127	9
	4-129	5
	4-129	5
	4-129	6
	4-129	7
	4-129	9
	4-137	5
	4-137	5
	4-137	6
	4-137	7
	4-145	5
	4-145	5
	4-145	5
	4-145	5
	4-145	6
	4-145	6
	4-145	7
	4-146	7
	4-146	9
	13-29	12
	13-31	10
2035621	3-73	1
	3-74	
	13-41	27
2035667	10-27	
2035669	10-27	
2035671	10-27	
2035672	10-27	
2035673	6-5	
2035674	6-5	
2035678	4-39	13
2035681	4-13	4
	4-43	
2035682	4-9	15
	4-28	48
2035688	4-10	40
	4-49	
2035689	4-23	1
	4-45	
	4-47	
	4-77	
	4-79	
2035691	4-13	2
2035694	4-6	45
	4-27	17
2035695	4-5	2
	4-127	
2035784	10-17	
2035785	10-17	
2035786	10-17	
2035787	10-12	2
	10-16	5
	11-13	10
	12-16	2
	12-24	12
2035791	10-20	9
	10-24	10
	11-30	13
	12-32	15
2035792	12-35	
2035794	12-35	
2035796	12-35	
2035797	12-35	
2035798	1-27	3
2035800	1-25	2
2035804	10-16	
2035805	10-16	
2035806	10-16	
2035808	10-16	
2035809	10-16	
2035810	10-16	
2035811	10-16	
2035812	10-16	
2035813	10-16	
2035815	10-16	
2035816	10-16	
2035817	10-16	
2035836	3-77	10
	3-79	10
2035980	1-27	4
2035981	9-3	1
	9-49	
2035983	9-3	1
	9-49	
2036050	10-3	
	10-7	
	10-12	
	10-20	
	10-24	
2036051	10-3	
	10-7	
	10-12	
	10-20	
	10-24	
2036052	10-3	
	10-7	
	10-12	
	10-20	
	10-24	
2036054	10-3	
	10-7	
	10-12	
	10-20	
	10-24	
2036055	10-3	
	10-7	
	10-12	
	10-20	
	10-24	
2036056	10-3	
	10-7	
	10-12	
	10-20	
	10-24	
2036057	10-3	
	10-7	
	10-12	
	10-20	
	10-24	
2036058	10-3	
	10-7	
	10-12	
	10-20	

See Service Manual for service procedures.
©2009 HYSTER COMPANY

NUMERICAL INDEX (continued)

PART NO.	PAGE	ITEM
	10-24	
2036059	10-3	
	10-7	
	10-12	
	10-20	
	10-24	
2036061	10-3	
	10-7	
	10-12	
	10-20	
	10-24	
2036062	10-3	
	10-7	
	10-12	
	10-20	
	10-24	
2036063	10-3	
	10-7	
	10-12	
	10-20	
	10-24	
2036142	1-17	24
2036143	1-17	14
2036181	10-16	1
2036182	10-16	1
2036183	10-16	1
2036185	10-16	1
2036186	10-16	1
2036187	10-16	1
2036188	10-16	1
2036189	10-16	1
2036191	10-16	1
2036192	10-16	1
2036193	10-16	1
2036194	10-16	1
2036195	10-16	2
2036196	10-16	2
2036197	10-16	2
2036199	10-16	2
2036200	10-16	2
2036201	10-16	2
2036202	10-16	2
2036203	10-16	2
2036205	10-16	2
2036206	10-16	2
2036207	10-16	2
2036208	10-16	2
2036209	10-16	6
2036210	10-16	6
2036211	10-16	6
2036277	12-24	
2036278	12-25	
2036279	11-16	
	12-28	
2036282	11-15	3
	12-28	3
2036283	11-15	3
	12-28	3
2036350	3-73	6
2036386	12-24	
2036387	12-24	
2036388	12-24	
2036389	12-24	
2036390	12-24	
2036391	12-24	
2036392	12-24	
2036393	12-24	
2036406	12-24	
2036407	12-24	
2036408	12-24	
2036409	12-24	
2036422	12-28	
2036440	11-15	
	12-28	
2036441	12-28	
2036442	11-15	
	12-28	
2036443	12-28	
2036444	12-28	
2036475	3-73	2
2036476	9-19	20
	9-21	1
2036477	9-25	20
	9-27	1
2036478	12-20	6
	12-28	17
2036479	12-24	14
2036484	9-3	12
2036485	9-11	9
	9-15	9
2036486	9-11	7
	9-15	3
2036487	9-11	3
	9-15	7
2036540	4-13	4
	4-20	1
	4-51	
	4-54	
2036541	13-31	9
	13-33	9
	13-35	9
	13-37	9
	13-73	2
	13-80	
2036542	4-23	19
	4-81	
2036543	4-83	
2036544	13-29	3
	13-73	1
2036547	9-46	6
2036756	11-7	11
	12-20	10
2036777	12-4	
	12-7	
	12-11	
	12-16	
	12-20	
2036778	12-20	1
2036779	12-4	
	12-7	
	12-11	
	12-16	
	12-20	
2036780	12-4	
	12-7	
	12-11	
	12-16	
	12-20	
2036781	12-4	
	12-7	
	12-11	
	12-16	
	12-20	
2036782	12-4	
	12-7	
	12-11	
	12-16	
	12-20	
2036783	12-4	
	12-7	
	12-11	
	12-16	
	12-20	
2036784	12-4	
	12-7	
	12-11	
	12-16	
	12-20	
2036785	12-4	
	12-7	
	12-11	
	12-16	
	12-20	
2036786	12-4	
	12-7	
	12-11	
	12-16	
2036787	12-4	
	12-7	
	12-11	
	12-16	
	12-20	
2036788	12-4	
	12-7	
	12-11	
	12-16	
	12-20	
2036789	12-4	
	12-7	
	12-11	
	12-16	
	12-20	
2036856	10-12	2
	10-16	5
	12-24	12
2036857	12-20	6
	12-28	17
2036863	1-17	40
2036866	1-17	15
2036875	1-27	17
2036924	13-63	7
	13-64	
2036925	4-41	8
2036928	4-28	46
	4-85	
2037113	2-15	4
	2-17	4
	2-23	1
2037114	2-15	4
	2-17	4
	2-23	1
2037124	2-19	12
2037320	3-73	4
	13-41	33
2037323	8-7	14
	8-11	13
	8-15	13
2037324	8-11	17
	8-15	17
2037325	8-11	18
	8-15	18
2037326	8-11	20
	8-15	20
2037327	8-7	4
2037328	8-7	4
2037329	8-7	5
2037330	8-7	5

©2009 HYSTER COMPANY

NUMERICAL INDEX (continued)

PART NO.	PAGE	ITEM
2037331	8-7	6
2037332	8-7	6
2037333	8-7	7
2037334	8-7	8
2037335	8-7	8
2037336	8-7	9
2037337	8-7	9
2037338	8-7	10
2037339	8-7	11
2037340	8-7	12
2037341	8-7	15
2037342	8-7	16
2037343	8-7	17
2037344	8-7	21
2037363	13-33	15
	13-37	4
2037377	8-8	
2037515	8-11	4
	8-15	4
2037516	8-11	4
	8-15	4
2037517	8-11	5
	8-15	5
2037518	8-11	5
	8-15	5
2037519	8-11	12
	8-15	12
2037706	10-27	
2037707	12-35	
2037740	9-3	15
	9-7	15
2037760	8-3	23
2037833	11-15	2
	12-28	2
2037835	12-28	2
2037836	12-28	2
2037837	11-15	2
	12-28	2
2037838	12-28	2
2037840	12-28	2
2037841	12-24	2
2037842	12-24	2
2037844	12-24	2
2037845	12-24	2
2037846	12-24	2
2037847	12-24	2
2037856	12-24	2
2037857	12-24	2
2037858	12-24	2
2037859	12-24	2
2037860	12-24	2
2037861	12-24	2
2037868	11-15	1
	12-28	1
2037870	12-28	1
2037871	12-28	1
2037872	11-15	1
	12-28	1
2037873	12-28	1
2037875	12-28	1
2037876	12-24	1
2037877	12-24	1
2037878	12-24	1
2037879	12-24	1
2037880	12-24	1
2037881	12-24	1
2037882	12-24	1
2037883	12-24	1
2037884	12-24	1
2037885	12-24	1
2037886	12-24	1
2037887	12-24	1
2037894	9-11	34
	9-13	30
	9-15	33
	9-17	32
2037906	8-3	47
2037907	8-3	47
2037932	4-28	47
2037943	13-43	1
	13-51	
2037944	13-43	1
	13-53	
2037945	13-45	1
	13-55	
2037946	13-45	1
	13-55	
2037947	13-57	
2037948	13-59	
2037949	13-49	1
	13-61	
2037950	13-49	1
	13-61	
2037951	13-43	
2037952	13-43	
2037953	13-45	
2037954	13-45	
2037955	13-47	
2037956	13-47	
2037957	13-49	
2037958	13-49	
2037998	1-13	17
	1-15	20
2038000	2-23	1
2038007	4-41	9
	13-73	3
2038201	9-3	1
	9-7	1
	9-51	
2038202	9-3	1
	9-7	1
	9-51	
2038212	11-3	
	11-7	
2038218	11-3	
	11-7	
2038254	11-3	
	11-7	
2038260	11-3	
	11-7	
2038289	11-12	
2038314	11-12	
2038359	11-12	
2038365	11-12	
2038415	11-12	
2038421	11-12	
2038457	11-12	
2038463	11-12	
2038558	11-19	
2038561	11-19	
2038564	11-19	
2038565	11-19	
2038566	11-19	
2038594	13-47	
2038595	13-57	
2038596	13-47	
2038597	13-49	
2038598	13-49	
2038599	13-59	
2038600	13-49	1
	13-61	
2038601	13-49	1
	13-61	
2038663	8-8	
2038675	11-13	8
2038676	11-13	
2038679	11-13	
2038881	4-14	51
	4-18	50
	4-88	
2038981	11-8	28
	11-16	17
2038982	11-8	28
	11-16	17
2039256	2-53	17
	2-55	17
	4-27	35
2040751	13-19	1
2040752	13-15	1
	13-17	2
	13-19	18
2041877	4-17	2
2041878	4-17	2
2041965	11-13	10
2041967	8-7	28
2042643	4-89	
2042658	4-24	34
2043040	4-91	
	4-95	
2043228	4-97	
2043404	2-27	20
2043527	4-24	34
2043949	4-13	4
	4-99	
	4-101	
2043950	4-13	4
	4-57	
	4-59	
2044167	4-23	1
	4-115	
	4-117	
2044192	3-28	62
	3-31	34
2044238	4-145	
	4-149	
2044239	4-5	2
2044373	9-46	11
2044872	3-47	37
	3-51	37
	3-56	78
2046117	4-5	2
	4-129	
	4-133	
2046871	9-13	42
	9-17	43
	12-16	32
2047579	4-10	40
	4-28	63
	4-82	
2047709	4-13	4
	4-105	
	4-107	
2047710	4-23	1
	4-121	
	4-123	
2047711	4-28	46
	4-87	
2047712	4-13	4

See Service Manual for service procedures.
©2009 HYSTER COMPANY

NUMERICAL INDEX (continued)

PART NO.	PAGE	ITEM
	4-63	
	4-67	
2047829	3-35	34
	7-11	8
2048095	2-11	22
2049999	4-13	2
2050000	4-17	2
2050502	4-17	4
	4-111	
2050503	4-17	4
	4-71	
2050576	13-15	2
	13-17	1
2052191	3-77	10
	3-79	10
2053135	4-24	34
2053137	4-24	34
2053930	4-24	34
2053931	3-35	5
	3-39	5
	3-41	
2054281	4-17	4
	4-155	
2054282	2-21	10
2054294	4-17	4
	4-159	
2054419	2-21	12
2054463	4-130	26
	4-138	26
2056780	9-32	33
2057624	4-153	
2059309	4-6	45
	4-27	17
2059789	4-5	1
2060627	4-5	2
	4-137	
	4-141	
2062074	11-15	2
	12-28	2
2062076	12-28	2
2062077	12-28	2
2062079	11-15	2
	12-28	2
2062081	12-28	2
2062084	12-28	2
2062113	12-28	
2062114	12-28	
2062115	11-15	
	12-28	
2062117	12-28	
2062120	12-28	
2062748	11-15	
	12-28	
2065825	8-3	41
2065887	11-15	1
	12-28	1
2065888	11-15	1
	12-28	1
2065889	11-16	
	12-28	
2066005	12-28	1
2066006	12-28	1
2066423	12-28	1
2066450	12-28	1
2066481	4-163	
	8-18	1
2068496	4-10	41
2075656	1-35	1
2076356	9-21	43
2076368	9-22	45
2076419	9-21	42
2076497	9-22	44
2083999	13-57	
2087813	1-5	1
2094192	11-13	15
2104947	11-13	
2109343	11-19	
2109348	11-19	
2109388	12-35	
2109423	12-35	
2309799	1-35	11
4000475	13-69	8

©2009 HYSTER COMPANY

NUMERICAL INDEX (continued)

NOTES

©2009 HYSTER COMPANY


HYSTER