RUTHZIL TRATOR COMERCIAL DE PEÇAS LTDA 11 97083-6812 ROLANDO

PARTS MANUAL

2003

HYSTER

CHALLENGER

H100XM, H110XM, H120XM, H70XM, H80XM, H90XM (K005)

CUSTOMER EDITION

HYSTER

1466307
01/2003

©2003 Hyster Company

SECTIONS

1	FRAME
2	ENGINE ASSEMBLY
3	FUEL SYSTEM
4	ELECTRICAL SYSTEM
5	TRANSMISSION
6	DRIVE AXLE
7	STEERING SYSTEM
8	BRAKE SYSTEM
9	HYDRAULIC SYSTEM
10	MAST-TWO STAGE LIMITED FREE-LIFT
11	MAST-TWO STAGE FULL FREE-LIFT
12	MAST-THREE STAGE FULL FREE-LIFT
13	OPTIONS
14	NUMERICAL INDEX

This Parts Manual is divided into 14 major sections which are listed above. Quick reference to these sections can be made by placing the right thumb on the tab of the desired section, bending the book back and thumbing the pages to the corresponding tab.

TABLE OF CONTENTS

DESCRIPTION	PAGE
A	
ACCUMULATOR	13-22
AIR FILTER	3-56
AIR FILTER SYSTEM	3-54
ALTERNATOR	
GAS/LPG AND DIESEL	4-26
PRESTOLITE BRAND	
GS, LPS, DS	4-28
ALTERNATOR MOUNTING	
DIESEL	
D/B 07/2001⇒	2-52
⇒D/B 07/2001	2-50
AMBER STROBE REVERSE LIGHTS	
WITHOUT CAB	13-28
AUDIBLE ALARM	13-54
AUXILIARY TUBE EXTENSION KIT	
TWO AND THREE STAGE FULL FREE-LIFT	13-20
TWO STAGE LIMITED FREE-LIFT	13-18
B	
BACKUP AND BRAKE LIGHTS	4-36
BAFFLE AND ATTACHING PARTS	2-6
BRAKE ASSEMBLY	
H100-120XM	8-10
H70-90XM	8-6
BRAKE LINKAGE	8-2
C	
CAB	13-57
CAB ATTACHING PARTS	13-32
SHEET 1 OF 3	13-58
SHEET 2 OF 3	13-60
SHEET 3 OF 3	13-62
CAMSHAFT AND OIL PAN	
GASOLINE AND LPG	2-32
CARBURETOR (LPG)	
WITH LOW EMISSIONS	3-31
CARRIAGE	
THREE STAGE FULL FREE-LIFT	12-32
TWO STAGE FULL FREE-LIFT	11-18
TWO STAGE LIMITED FREE-LIFT	10-20
CONTROL VALVE	
(1 OF 2)	
S/N PENDING PER ECN 63639⇒	9-16
(2 OF 2)	
S/N PENDING PER ECN 63639⇒	9-20
⇒S/N PENDING PER ECN 63639	9-14
TRANSMISSION	5-20
CONTROL VALVE AND ATTACHING PARTS	
FOUR FUNCTION WITH DETENTED LEVERS	9-12
THREE FUNCTION	9-10

©2003 HYSTER COMPANY

TABLE OF CONTENTS (Continued)

DESCRIPTION **PAGE**

C (continued)

COOLANT PUMP
DIESEL
D/B 09/2001⇒ ... 2-80
⇒D/B 09/2001 ... 2-78
COOLING ... 2-4
COUNTERWEIGHT ... 1-24
CRANKSHAFT AND PISTON
DIESEL
D/B 07/2001⇒ ... 2-60
⇒D/B 07/2001 ... 2-58
CYLINDER BLOCK
DIESEL
D/B 07/2001⇒ ... 2-56
⇒D/B 07/2001 ... 2-54
GASOLINE AND LPG ... 2-28
CYLINDER HEAD
DIESEL ... 2-68
GASOLINE AND LPG ... 2-36

D

DIFFERENTIAL ASSEMBLY ... 6-2
DIRECTIONAL CLUTCH ... 5-18
DISTRIBUTOR ... 4-30
DOOR ASSEMBLY
LEFT HAND ... 13-68
RIGHT HAND ... 13-66
DRIVE AXLE ... 6-4
DUAL FUEL SYSTEM
⇒S/N K005D-5482 ... 3-32
S/N K005D-5483⇒ ... 3-36
DUAL MIRROR
WITHOUT CAB ... 13-30

E

ELECTRICAL SYSTEM
ALTERNATOR AND BATTERY
G, GS, LPG, LPS, AND DUAL FUEL ... 4-8
COWL ... 4-4
DIESEL ... 4-22
GASOLINE, GASOLINE SAFETY, AND DUAL FUEL ... 4-12
LPG AND LPS ... 4-18
ENGINE AND ATTACHING PARTS
DIESEL ... 2-48
GASOLINE AND LPG ... 2-24
ENGINE MOUNT
DIESEL ... 2-46
GASOLINE AND LPG ... 2-22
EXHAUST
3-WAY CATALYTIC CONVERTER

©2003 HYSTER COMPANY

TABLE OF CONTENTS (Continued)

DESCRIPTION **PAGE**

E (continued)

LPG WITH LOW EMISSIONS
S/N PENDING PER ECN 73989⇒ 2-18
⇒S/N PENDING PER ECN 73989 2-16
DIESEL 2-20
GASOLINE AND LPG
WITHOUT LOW EMISSIONS
S/N PENDING PER ECN 73989⇒ 2-14
⇒S/N PENDING PER ECN 73989 2-12
EXHAUST MANIFOLD
GASOLINE AND LPG
S/N PENDING PER ECN 73989⇒ 2-42
⇒S/N PENDING PER ECN 73989 2-40

F

FAN DRIVE ASSEMBLY 2-8
FENDER EXTENSIONS 13-10
FLOOR PLATES AND COVERS 1-22
FORK
POLISHED FORK WITH FULL BOTTOM TAPER HOOK TYPE
THREE STAGE FULL FREE-LIFT 12-40
TWO STAGE FULL FREE-LIFT 11-26
TWO STAGE LIMITED FREE-LIFT 10-26
STANDARD TAPER HOOK TYPE (H100-120XM)
THREE STAGE FULL FREE-LIFT 12-39
TWO STAGE FULL FREE-LIFT 11-25
TWO STAGE LIMITED FREE-LIFT 10-25
STANDARD TAPER HOOK TYPE (H70-90XM)
THREE STAGE FULL FREE-LIFT 12-38
TWO STAGE FULL FREE-LIFT 11-24
TWO STAGE LIMITED FREE-LIFT 10-24
FREE-LIFT
THREE STAGE FULL FREE-LIFT 12-16
FREE-LIFT CYLINDER
THREE STAGE FULL FREE-LIFT 12-24
TWO STAGE FULL FREE-LIFT 11-14
FRONT HEAD LIGHTS
WITHOUT CAB 13-24
FUEL FILTER
LOW PRESSURE SYSTEM
DIESEL 3-8
FUEL SYSTEM
DIESEL 3-2
GASOLINE 3-16
LPG
CLOSED LOOP 3-28
OPEN LOOP
⇒S/N K005D-5482 3-20
S/N K005D-5483⇒ 3-24
FULL SUSPENSION SEAT

©2003 HYSTER COMPANY

TABLE OF CONTENTS (Continued)

DESCRIPTION **PAGE**

F (continued)

SHEET 1 OF 2 1-6
SHEET 2 OF 2 1-8

G

GENERAL TRUCK 1-2
GOVERNOR
LPG 3-49

H

HARNESS KIT
DUAL FUEL 4-15
HEADER HOSE
THREE STAGE FULL FREE-LIFT 12-28
TWO STAGE FULL FREE-LIFT 11-28
TWO STAGE LIMITED FREE-LIFT
⇒S/N A749L-3337, ⇒S/N A750L-2645 10-14
S/N A749L-3338⇒, S/N A750L-2646⇒ 10-16
HEATER INSTALLATION
DIESEL 13-12
GASOLINE 13-14
LPG 13-16
HIGH PRESSURE FUEL INJECTION AND PUMP
DIESEL 3-10
HOOD AND COVERS 1-14
HYDRAULIC CONTROL LINES
FOUR FUNCTION 9-8
THREE FUNCTION 9-6
HYDRAULIC PUMP
⇒S/N K005D-02086 9-26
S/N K005D-02087⇒ 9-28
HYDRAULIC SYSTEM 9-2

I

INJECTOR THROTTLE BODY
GASOLINE 3-52
INNER AND FREE LIFT MAST
TWO STAGE FULL FREE-LIFT 11-6
INNER MAST
THREE STAGE FULL FREE-LIFT 12-10
TWO STAGE LIMITED FREE-LIFT 10-4
INPUT CLUTCH 5-16
INSTRUMENT PANEL 4-7
INTERMEDIATE MAST
THREE STAGE FULL FREE-LIFT 12-6

©2003 HYSTER COMPANY

TABLE OF CONTENTS (Continued)

DESCRIPTION	PAGE
L	
LABELS AND PAINT	1-31
LIFT PUMP	
DIESEL	3-14
LIFTING EYE	13-70
LOAD BACKREST EXTENSION	
THREE STAGE FULL FREE-LIFT	12-36
TWO STAGE FULL FREE-LIFT	11-22
TWO STAGE LIMITED FREE-LIFT	10-22
LOCK-OFF FILTER	
LPG	3-46
LOW PRESSURE SYSTEM	
DIESEL	
⇒D/B 07/2001	3-4
LOW PRESSURE SYSTEM (DIESEL)	
D/B 07/2001⇒	3-6
LPG CONVERTER	
OPEN LOOP	
⇒S/N K005D-5482	3-47
S/N K005D-5483⇒	3-48
LPG TANK AND BRACKET	
SWING OUT	3-42
LPG TANK BRACKET	
FIXED	3-40
SWING OUT/DROP DOWN	3-44
M	
MAIN CYLINDER	
THREE STAGE FULL FREE-LIFT	12-20
TWO STAGE LIMITED FREE-LIFT	10-10
MAIN LIFT	
THREE STAGE FULL FREE-LIFT	12-12
TWO STAGE LIMITED FREE-LIFT	10-6
MAIN LIFT CYLINDER	
TWO STAGE FULL FREE-LIFT	11-10
MANIFOLD VALVE	5-23
MANIFOLDS	
DIESEL	
D/B 07/2001⇒	2-74
⇒D/B 07/2001	2-72
MAST INSTALLATION	9-22
MASTER CYLINDER AND BOOSTER ASSEMBLY	8-12
MONOTROL PEDAL	3-64
MONOTROL PEDAL LINKAGE	3-62
N	
NON-SUSPENSION SEAT	1-4

TABLE OF CONTENTS (Continued)

DESCRIPTION	PAGE
O	
OIL FILTER	
DIESEL	2-76
OIL PAN AND PUMP	
DIESEL	2-62
OIL PUMP	
GASOLINE AND LPG	2-44
OPERATOR MODULE	
⇒S/N K005D-05972	1-10
S/N K005D-05973⇒ EXC. 6018	1-12
OUTER MAST	
THREE STAGE FULL FREE-LIFT	12-2
TWO STAGE LIMITED FREE-LIFT	10-2
OUTER MAST AND MAIN LIFT	
TWO STAGE FULL FREE-LIFT	11-2
OVERHEAD GUARD	1-20
P	
PARK BRAKE	8-14
R	
REAR ACCESS SCREEN	
S/N PENDING PER ECN 70712-24⇒	1-28
⇒S/N PENDING PER ECN 70712-24	1-26
REAR DRIVE LIGHTS	
WITHOUT CAB	13-26
ROTARY EXHAUSTER	
DIESEL	2-82
S	
SHIFT LEVER	4-34
SIDE-SHIFT CARRIAGE	
TWO AND THREE STAGE FULL-FREE-LIFT (48 AND 60-INCH)	
H70-90XM	13-38
TWO AND THREE STAGE FULL-FREE-LIFT (54 AND 60-INCH)	
H100XM-H120XM	13-40
TWO STAGE LIMITED FREE-LIFT (48 AND 60-INCH)	
H70XM - H90XM	13-34
TWO STAGE LIMITED FREE-LIFT (54 AND 60-INCH)	
H100XM - H120XM	13-36
SIDE-SHIFT CARRIAGE FRAME	
TWO AND THREE STAGE FULL FREE-LIFT (48-INCH)	
H70XM - H90XM	13-48
TWO AND THREE STAGE FULL FREE-LIFT (54 AND 60-INCH)	
H100XM-H120XM	13-52
TWO AND THREE STAGE FULL FREE-LIFT (60-INCH)	
H70XM - H90XM	13-50
TWO STAGE LIMITED FREE-LIFT (54 AND 60-INCH)	
H100XM - H120 XM	13-46
TWO STAGE LIMTED FREE-LIFT (48-INCH)	
H70XM - H90XM	13-42

©2003 HYSTER COMPANY

TABLE OF CONTENTS (Continued)

DESCRIPTION **PAGE**

S (continued)

TWO STAGE LIMTED FREE-LIFT (60-INCH)
H70XM - H90XM 13-44
SOUND REDUCTION 1-16
STARTER
DIESEL 4-32
STEERING AXLE 7-6
STEERING COLUMN 7-4
STEERING CYLINDER 7-10
STEERING PUMP 7-12
STEERING SYSTEM 7-2

T

THROTTLE BODY GOVERNOR
GASOLINE AND DUAL FUEL 3-50
THROTTLE LINKAGE
DIESEL 3-60
GASOLINE AND LPG 3-58
TILT CYLINDER 9-24
TIMING GEAR
DIESEL 2-66
TIRE AND WHEEL
DUAL DRIVE WHEEL 13-8
SINGLE DRIVE WHEEL
H100-120XM 13-6
H70-90XM 13-4
STEER WHEEL 13-9
TORQUE CONVERTER 5-6
TRANSMISSION
SHEET 1 OF 2 5-8
SHEET 2 OF 2 5-12
TRANSMISSION LINES 5-4
TRANSMISSION MOUNT 5-2

U

UNDERCARRIAGE PAN 1-18

V

VALVE
HIGH AND LOW 5-24
VALVE COVER AND INLET MANIFOLD
GASOLINE AND LPG 2-38
VALVE COVER AND ROCKER ARM SHAFT
DIESEL 2-70

W

WATER SEPARATOR 3-12
WIRE HARNESS
ADAPTER
⇒S/N PENDING PER ECN 63634-01 4-93

©2003 HYSTER COMPANY

TABLE OF CONTENTS (Continued)

DESCRIPTION **PAGE**

W (continued)

AUXILIARY LIGHTS
WORKLIGHTS 13-71
CAB 13-64
CLOSED LOOP
⇒S/N PENDING PER ECN 70700-65 4-79
CONVERSION, GAS TO LPG, GM 4.3L
SHEET 1 OF 2 4-40
SHEET 2 OF 2 4-42
DIESEL
S/N PENDING PER ECN 73766⇒ 4-82
⇒S/N PENDING PER ECN 73766 4-80
DUAL FUEL SHUT OFF 4-84
DUAL FUEL, GM V6
SHEET 1 OF 2
S/N PENDING PER ECN 73766⇔S/N PENDING PER ECN 73891-01 4-62
⇒S/N PENDING PER ECN 92210-01 4-46
S/N PENDING PER ECN 92210-01⇔S/N PENDING PER ECN 73766 4-54
SHEET 2 OF 2
S/N PENDING PER ECN 73766⇔S/N PENDING PER ECN 73891-01 4-67
⇒S/N PENDING PER ECN 92210-01 4-51
S/N PENDING PER ECN 92210-01⇔S/N PENDING PER ECN 73766 4-58
ENGINE, GAS, GM V6
SHEET 1 OF 2
S/N PENDING PER ECN 92210-01⇔S/N PENDING PER ECN 73766 4-94
SHEET 2 OF 2
S/N PENDING PER ECN 92210-01⇔S/N PENDING PER ECN 73766 4-99
ENGINE, GM V6, 4.3L
SHEET 1 OF 2
⇒S/N PENDING PER ECN 92210-01 4-72
SHEET 2 OF 2
⇒S/N PENDING PER ECN 92210-01 4-74
ENGINE, LPG, GM V6, 4.3L
SHEET 1 OF 2
S/N PENDING PER ECN 73766⇒ 4-114
S/N PENDING PER ECN 92110-01⇔S/N PENDING PER ECN 73766 4-108
SHEET 2 OF 2
S/N PENDING PER ECN 73766⇒ 4-116
S/N PENDING PER ECN 92110-01⇔S/N PENDING PER ECN 73766 4-110
ESOS ADAPTER
⇒S/N PENDING PER ECN 63634-01 4-85
GAS ENGINE
⇒S/N PENDING PER ECN 92210-01 4-38
GAS, GM V6
SHEET 1 OF 2
S/N PENDING PER ECN 73766⇔S/N PENDING PER ECN 73891-01 4-102
SHEET 2 OF 2
S/N PENDING PER ECN 73766⇔S/N PENDING PER ECN 73891-01 4-104
LPG SWITCH 4-77
MODULE, TYPE S POWERSHIFT
SHEET 1 OF 2

©2003 HYSTER COMPANY

TABLE OF CONTENTS (Continued)

DESCRIPTION **PAGE**

W (continued)

S/N PENDING PER ECN 63571⇔S/N PENDING PER ECN 73675-01 4-120
POWERSHIFT
SHEET 1 OF 2
⇒S/N PENDING PER ECN 63571 4-86
SHEET 2 OF 2
⇒S/N PENDING PER ECN 63571 4-90
REVERSE ALARM 13-56
TYPE "S" GAS AND LPG
⇒S/N PENDING PER ECN 73766 4-45
TYPE S
GAS AND LPG
S/N PENDING PER ECN 73766⇒ 4-78

©2003 HYSTER COMPANY

ABBREVIATIONS QUICK REFERENCE SHEET

Listed below are abbreviations used in parts manuals to denote the following expressions:

TERM	DEFINITION
Amp	Amperes
AR	As Required
BDI	Battery Discharge Indicators
BWI	Brush Wear Indicator
CE	Communicator End
CRE	Corrosive Environment
D/B	Date Break
dbA	Decibel "A" Scale
DE	Drive End
ECH	Empty Container Handler
ECH-3	Empty Container Handler - 3 High Stacking
ECH-4	Empty Container Handler - 4 High Stacking
ECH-5	Empty Container Handler - 5 High Stacking
ECH-6	Empty Container Handler - 6 High Stacking
ECH-7	Empty Container Handler - 7 High Stacking
ECM	Electronic Control Module
ECN	Engineering Change Notice
EEPROM	Electrically Erasable Programmable Read Only Memory
EPROM	Electrically Programmable Read Only Memory

TERM	DEFINITION
FRE	Freezer Environment
in.	inches
LPG	Liquefied Petroleum Gas
MAP	Manifold Absolute Pressure
mm	millimeters
MSTS	Microprocessor Spark Timing System
NPT	National Pipe Threads
O/S	Oversize
PTO	Power Take Off
RPM	Revolutions per Minute
S/N	Serial Number
TMM	Truck Management Module
UL Type D	Diesel-Powered Safety Rating
UL Type DS	Diesel-Powered Safety Rating
UL Type E	Battery-Powered Safety Rating
UL Type EE	Battery-Powered Safety Rating
UL Type ES	Battery-Powered Safety Rating
UL Type G	Gasoline-Powered Safety Rating
UL Type GS	Gasoline-Powered Safety Rating
UL Type LP	Gas-Powered Safety Rating
UL Type LPS	LP Gas-Powered Safety Rating
U/S	Undersize
UL	Underwriters Laboratory
V	Volts

See Service Manual for service procedures.
©2003 HYSTER COMPANY

HOW TO USE THE ILLUSTRATED PARTS MANUAL

This parts manual describes and illustrates assemblies, subassemblies, and detail parts needed for service replacement.

The different constructions are indicated by keys and footnotes. The callouts correspond to descriptions found on the next page.

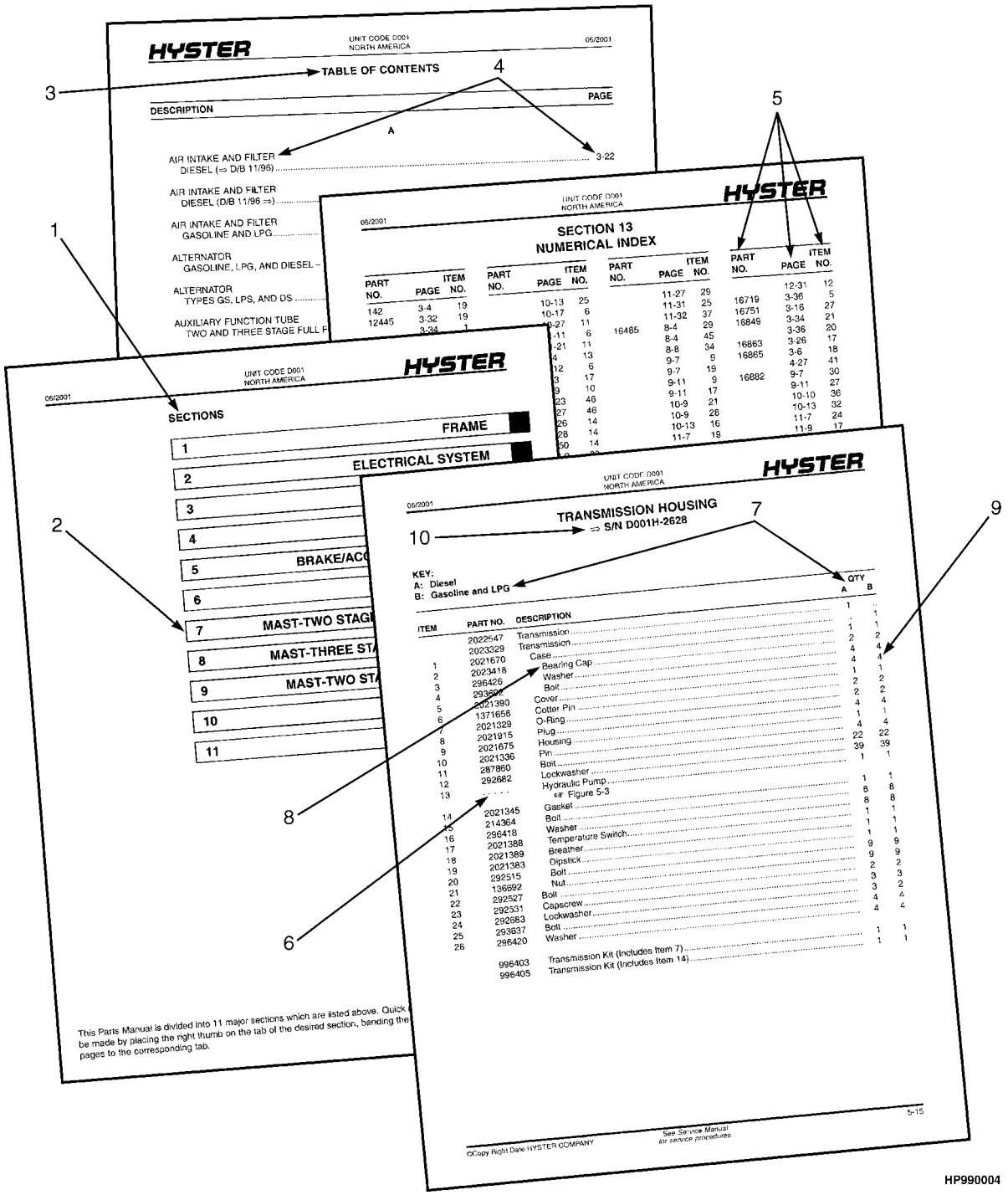

HOW TO FIND THE DESIRED PART NUMBER

WHEN THE PART NUMBER AND THE NEXT HIGHER ASSEMBLY IS NOT KNOWN:

1. Determine the function and application of the part required. Turn to the Sections Page. Choose the general area of reference most likely to include the part.

2. Turn to the section you chose. Use the Section Table of Contents to determine the assembly which would normally contain the part required. Then locate the part on the assembly breakdown page.

WHEN THE PART NUMBER IS NOT KNOWN AND THE NEXT HIGHER ASSEMBLY IS KNOWN:

3. Determine the assembly the required part is used on. Turn to the Table of Contents on Page i.

4. Locate the assembly the required part is used on and turn to the page indicated for that assembly. Then locate the part on the assembly breakdown page.

WHEN THE PART NUMBER IS KNOWN:

5. Use the Numerical Index on Page 14-1 to find the part number. Turn to the page listed and locate the part as indicated by the item number.

GENERAL:

The assembly breakdowns include part numbers, descriptions, quantities required, keys and footnotes to help in selecting correct parts.

6. Five periods in the PART NO. column (. . . . .) indicate that the part is either *Not Serviced Separately* or there is a reference to another figure. A figure reference is denoted by a pointing hand followed by a figure number in the DESCRIPTION column (☞Figure 10)

7. Keys are used to show two or more similar assemblies, RH and LH assembly parts, etc. Select the appropriate key, "A", "B", "C", "D", or "E" and the corresponding quantity column to find the required parts. Two periods in the QTY column (..) indicate that the part is not used for that assembly.

8. Indented descriptions under the DESCRIPTION column are used to indicate assemblies and subparts of assemblies. In the example on the previous page, *BEARING CAP* (Item 2) is a subpart of the major assembly *CASE*.

9. Quantities shown are for one assembly. The quantities of the subpart *BEARING CAP* are indicated as two and two. This means two per *CASE* assembly.

10. Serial number breaks identify the most current parts information and are shown as follows:
    ⇒ S/N D001H-2628
    Indicates last serial number affected.
    S/N D001H-2629 ⇒
    Indicates the first serial number affected.
    S/N D001H-1553 ⇔ S/N D001H-3291
    Indicates a range of serial numbers affected.

    ECN numbers for pending serial numbers are shown to allow for the inclusion of the most current parts information and are identified as follows:
    ⇒ S/N Pending Per ECN 63243
    Indicates a pending serial number for last unit affected.
    S/N Pending Per ECN 63243 ⇒
    Indicates a pending serial number for first unit affected.

    Date breaks are used to indicate when a change occurred but a subsequent serial number break was not recorded. This is an arbitrary date usually based on the ECN release and are identified as follows:
    ⇒ D/B 3/00
    Indicates that a change occurred sometime within that month for the item affected.
    D/B 3/00 ⇒
    Indicates that a change occurred sometime within that month for the item affected.
    D/B 3/00 ⇔ D/B 4/00
    Indicates a range of production dates of the item affected.

    Contact your local dealer for Hyster lift trucks for serial number information for items with a ECN or a date break.

ORDERING PARTS:

When ordering replacement parts, give the unit serial number, part number, name of part and quantity required.

For any further information on parts, service, or ordering, consult your local dealer for Hyster lift trucks.

©2003 HYSTER COMPANY

IDENTIFICATION OF TRUCK SERIAL NUMBERS

X	OOO	X	OOOO	X
(1)	(2)	(3)	(4)	(5)

(1) and (2) The first letter and three numbers indicate the truck unit code.

(3) The second letter indicates the plant of manufacture.

(4) The four or five digit number indicates the production sequence number of the truck.

(5) The final letter indicates the year of manufacture starting with "A" in 1957 and 1980. The letters "I", "O", and "Q" will not be used.

For pending serial numbers contact your local dealer for Hyster lift trucks.

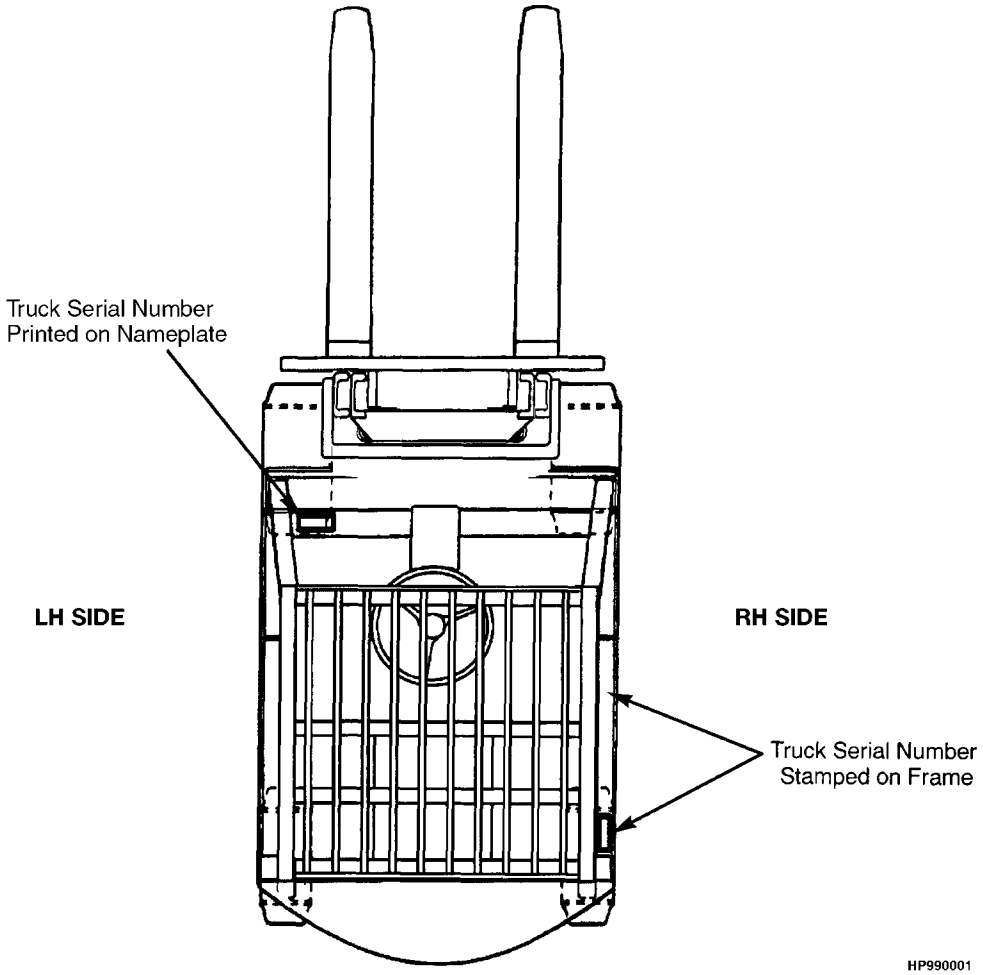

Parts referred to in this book as right or left hand parts are in accordance with the illustration above.

IDENTIFICATION OF MAST SERIAL NUMBERS

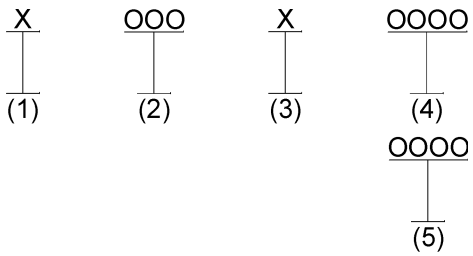

(1) and (2) The first letter and number indicates the mast unit code.

(3) The second letter indicates the plant of manufacture.

(4) The four or five digit number indicates the production sequence number of the mast.

(5) Carriage travel in millimeters stamped just below the serial number.

Mast Group identification consists of mast unit code (1) and (2) plus carriage travel (5).

For pending production sequence numbers contact your local dealer for Hyster lift trucks.

LIFT EQUIPMENT IDENTIFICATION

1. Fork part number, capacity rating, plant code letter, and date of manufacture are stamped approximately six inches below the top of most forks.

2. The carriage group number is stamped on the right hand side of the top crossmember (pin type) or on the back of the right hand end of the bottom crossmember (hook type). A date code has two letters in line with or below the carriage group number.

3. The mast identification number has a unit code, a letter indicating the plant of manufacture, and a serial number. Underneath the production sequence number is a four digit number that indicates the carriage travel in millimeters.

4. Tilt and lift cylinder group numbers are stamped on the cylinder shell.

   Always refer to the group, serial, or part number when ordering service parts.

   Modification of masts and carriages by SPED (Special Products Engineering Department) are identified by a model prefix code beginning with the letter "S". contact your dealer for Hyster lift trucks for information on these assemblies.

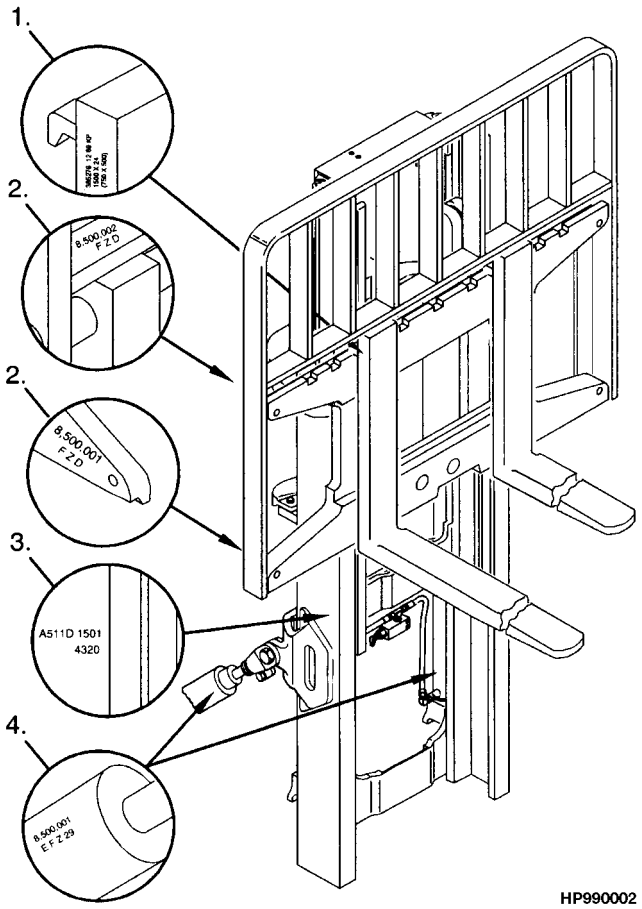

HP990002

©2003 HYSTER COMPANY

IDENTIFICATION OF ATTACHMENT AND SIDE-SHIFT CARRIAGE SERIAL NUMBERS

X OOO X OOOO

(1) (2) (3) (4)

(1) and (2) The first letter and three numbers indicate the attachment unit code.

(3) The second letter indicates the plant of manufacture.

(4) The four or five digit number indicates the production sequence number.

For pending production sequence numbers contact your local dealer for Hyster lift trucks.

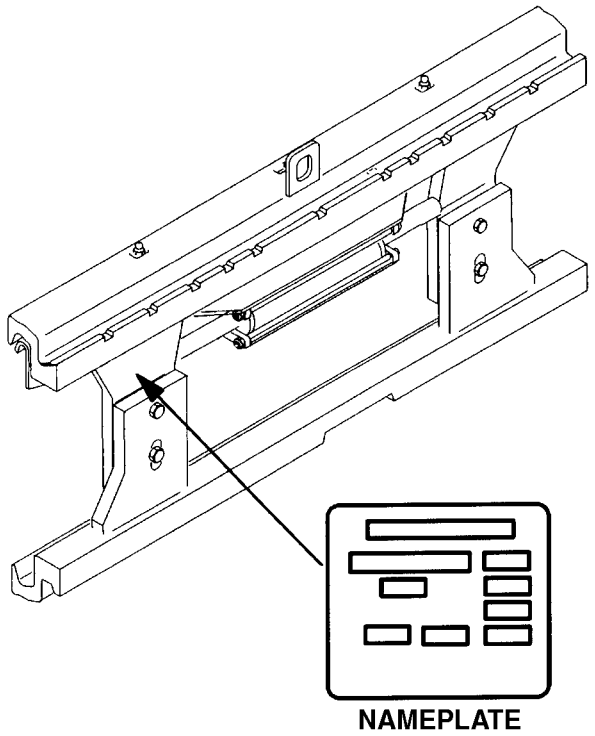

HP990003

Side-shift carriages and attachments have nameplates. Use the serial number found on the nameplate to identify the attachment.

Always refer to the group, serial, or part number when ordering service parts.

Modifications of attachments and side-shift carriages by SPED (Special Products Engineering Department) are identified by a model prefix code beginning with the letter "S". Contact your dealer for Hyster lift trucks for information on these assemblies.

©2003 HYSTER COMPANY

PUBLICATIONS

Every new lift truck is provided with an OPERATING MANUAL. This manual has information that the operator must know for inspection and operation of the lift truck.

SERVICE MAINTENANCE MANUALS, which provide service and overhaul procedures, and PARTS MANUALS with complete replacement part identification, are available at a nominal fee from your Hyster dealer to assist users in effectively maintaining Hyster lift trucks in a safe, useful condition. See the list below for information on ordering specific publications for this model lift truck.

PUBLICATION	HYSTER PART NUMBER
Operating Manual	1466306
Service Manual (Complete)	1467766
Parts Manual	1466307

©2003 HYSTER COMPANY

1 FRAME

SECTION 1
FRAME

DESCRIPTION	PAGE
COUNTERWEIGHT	1-24
FLOOR PLATES AND COVERS	1-22
FULL SUSPENSION SEAT	
SHEET 1 OF 2	1-6
SHEET 2 OF 2	1-8
GENERAL TRUCK	1-2
HOOD AND COVERS	1-14
LABELS AND PAINT	1-31
NON-SUSPENSION SEAT	1-4
OPERATOR MODULE	
⇒S/N K005D-05972	1-10
S/N K005D-05973⇒ EXC. 6018	1-12
OVERHEAD GUARD	1-20
REAR ACCESS SCREEN	
S/N PENDING PER ECN 70712-24⇒	1-28
⇒S/N PENDING PER ECN 70712-24	1-26
SOUND REDUCTION	1-16
UNDERCARRIAGE PAN	1-18

©2003 HYSTER COMPANY

GENERAL TRUCK (Figure 1-1)

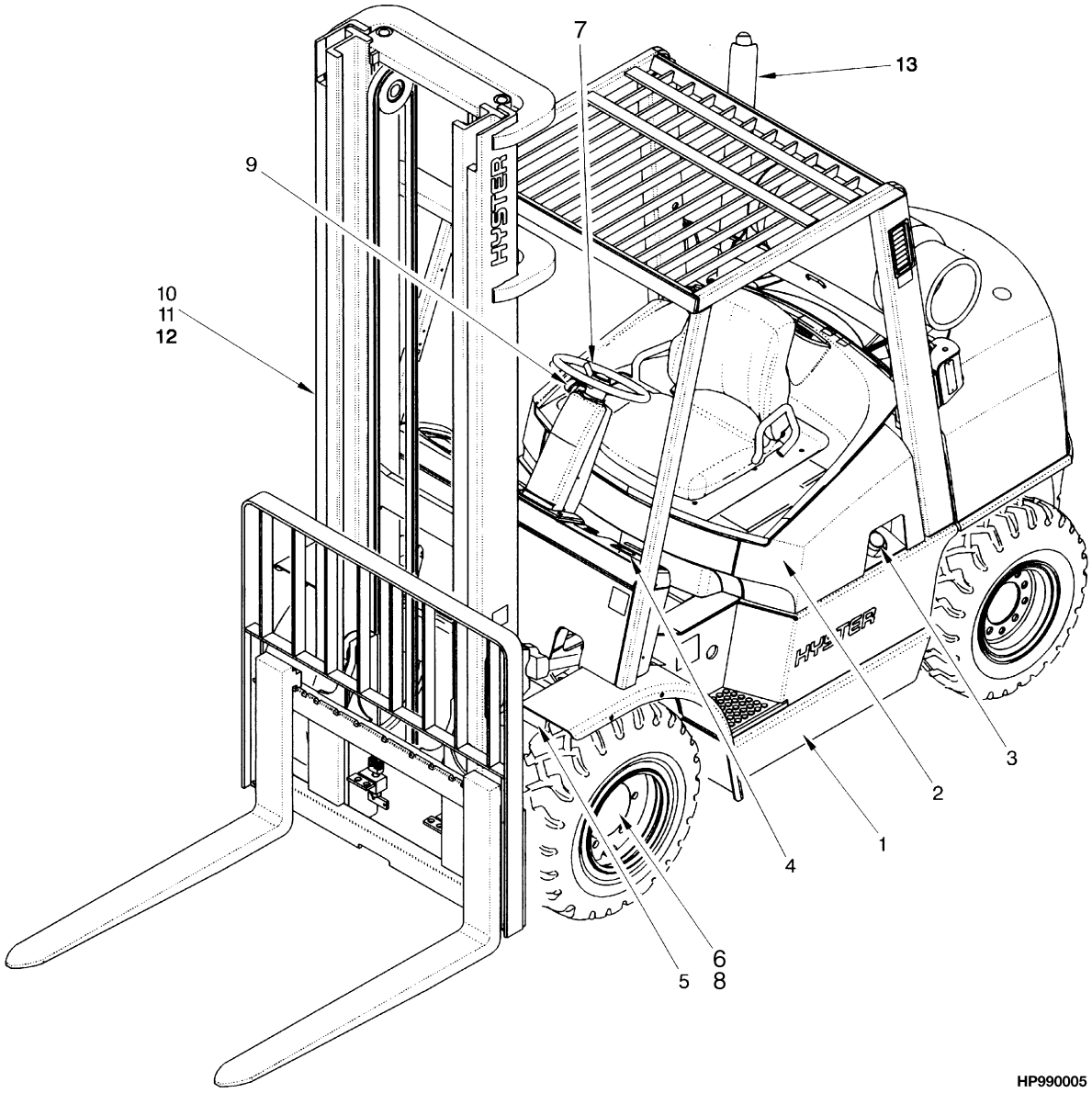

©2003 HYSTER COMPANY

GENERAL TRUCK

ITEM	PART NO.	DESCRIPTION	QTY
1	. . . . .	Frame (☞ Figure 1-11)	1
2	. . . . .	Engine (☞ Figure 2-10)	1
3	. . . . .	Fuel System (☞ Figure 3-1)	1
4	. . . . .	Electrical System (☞ Figure 4-1)	1
5	. . . . .	Transmission (☞ Figure 5-4)	1
6	. . . . .	Drive Axle (☞ Figure 6-2)	1
7	. . . . .	Steering System (☞ Figure 7-1)	1
8	. . . . .	Brake System (☞ Figure 8-2)	1
9	. . . . .	Hydraulic System (☞ Figure 9-1)	1
10	. . . . .	Mast-Two Stage Limited Free-Lift (☞ Figure 10-3)	1
11	. . . . .	Mast-Three Stage Full Free-Lift (☞ Figure 12-4)	1
12	. . . . .	Mast-Two Stage Full Free-Lift (☞ Figure 11-1)	1
13	. . . . .	Options (☞ Figure 13-1)	1

©2003 HYSTER COMPANY

NON-SUSPENSION SEAT (Figure 1-2)

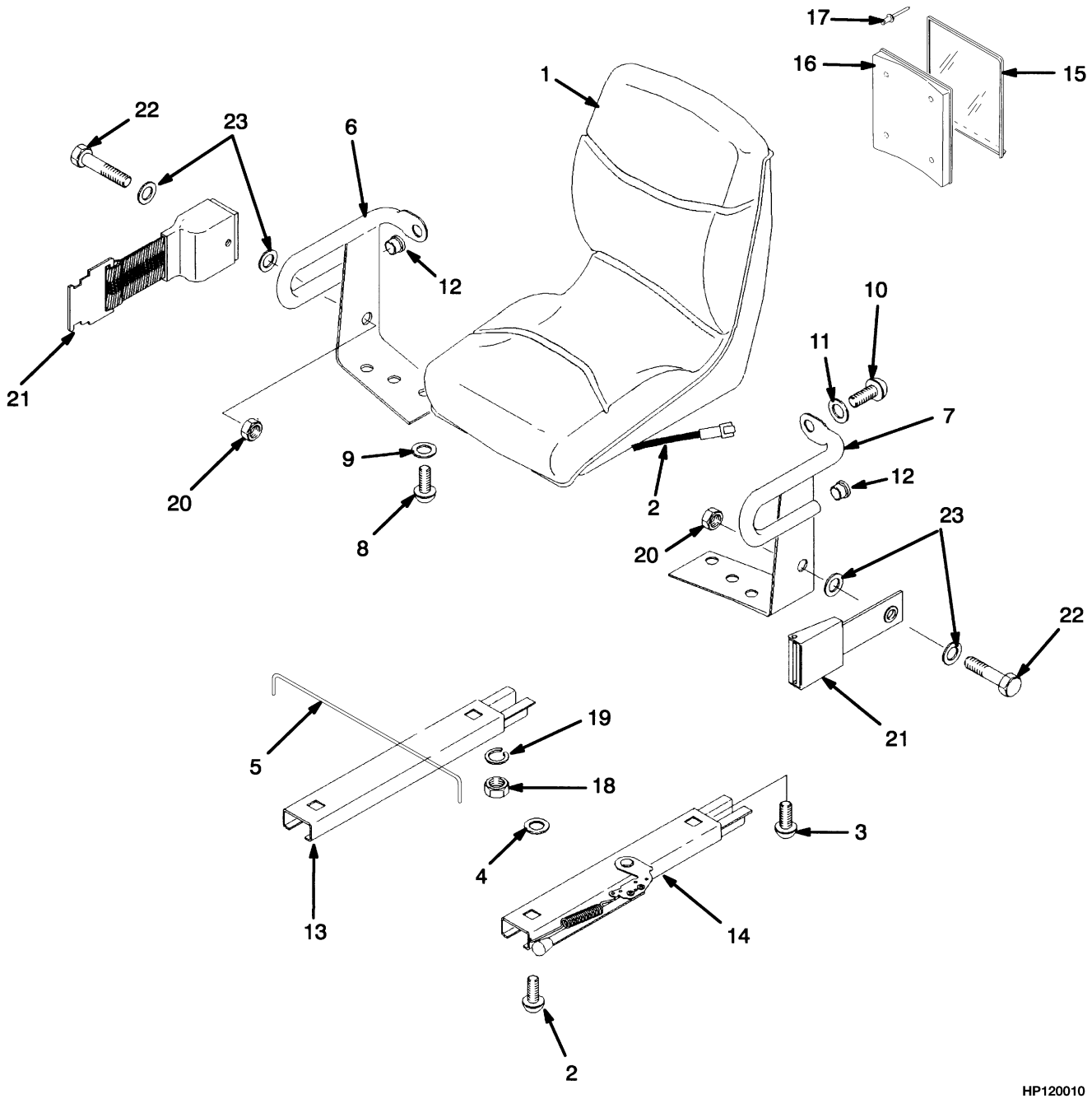

©2003 HYSTER COMPANY

NON-SUSPENSION SEAT

ITEM	PART NO.	DESCRIPTION	QTY
	1375150	Seat Assembly (Vinyl)	1
1	1351473	Seat	1
1	1351431	Seat	1
2	1354140	Switch Assembly	1
3	364914	Capscrew	4
4	221733	Washer	2
5	1300107	Rod	1
6	364807	Hip Restraint (RH)	1
7	364808	Hip Restraint (LH)	1
8	18727	Capscrew	4
9	18515	Washer	4
10	379197	Capscrew	2
11	379198	Washer	2
12	364854	Plug	2
13	383116	Seat Rail (RH)	1
14	335553	Seat Rail (LH)	1
15	335991	Cover	1
16	335988	Base (Information Case)	1
17	222029	Rivet	4
18	145639	Nut	4
19	15175	Washer	4
20	379698	Nut	2
21	1374750	Seat Belt	1
22	379199	Capscrew	2
23	379697	Washer	4

©2003 HYSTER COMPANY

FULL SUSPENSION SEAT (Figure 1-3)
SHEET 1 OF 2

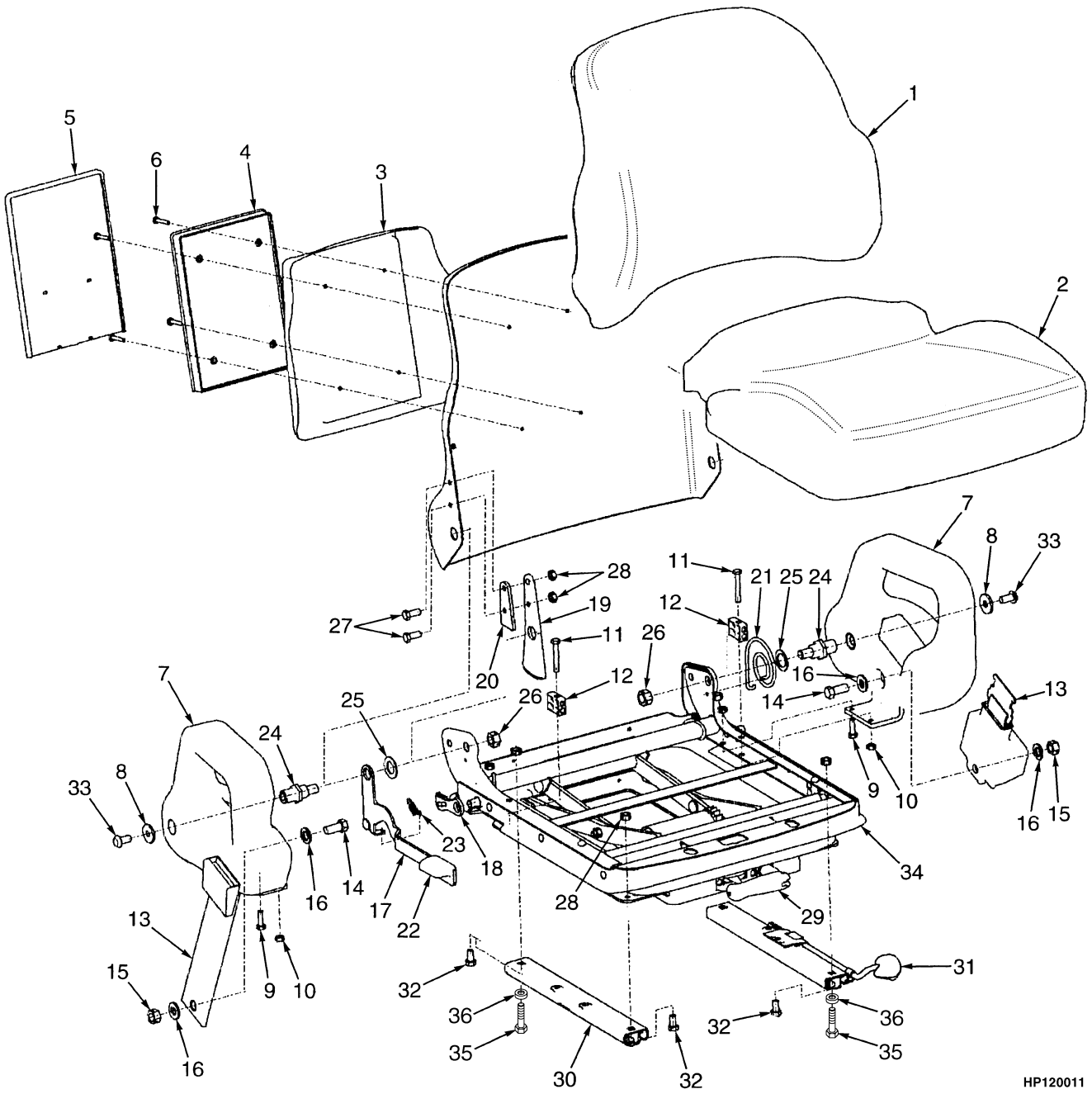

©2003 HYSTER COMPANY

FULL SUSPENSION SEAT
SHEET 1 OF 2

ITEM	PART NO.	DESCRIPTION	QTY
	1468473	Seat Assembly (Fabric)	1
	1468472	Seat Assembly (Vinyl)	1
1	1470153	Back Cushion (Fabric)	1
1	1470152	Back Cushion (Vinyl)	1
2	1494077	Seat Cushion (Fabric)	1
2	1494076	Seat Cushion	1
3	. . . . .	Riser	1
4	. . . . .	Box	1
5	. . . . .	Cover	1
6	. . . . .	Screw	4
7	. . . . .	Hip Restraint (RH)	1
7	. . . . .	Hip Restraint (LH)	1
8	. . . . .	Washer	2
9	. . . . .	Bolt	2
10	. . . . .	Nut	4
11	. . . . .	Bolt	2
12	. . . . .	Block	2
13	. . . . .	Seat Belt	1
14	. . . . .	Bolt	2
15	. . . . .	Nut	2
16	. . . . .	Washer	4
17	. . . . .	Handle	1
18	. . . . .	Latch	1
19	. . . . .	Bracket	1
20	. . . . .	Spacer	1
21	. . . . .	Spring	1
22	. . . . .	Knob	1
23	. . . . .	Spring Extension	1
24	. . . . .	Pivot	2
25	. . . . .	Washer	2
26	. . . . .	Nut	2
27	. . . . .	Bolt	2
28	. . . . .	Nut	6
29	1470163	Handle Kit	1
30	. . . . .	Slide (RH)	1
31	. . . . .	Slide (LH)	1
32	. . . . .	Bolt	4
33	. . . . .	Screw	2
34	1470159	Suspension Kit	1
35	15175	Washer	4
36	145639	Nut	4
	1470155	Manual Holder Kit (Includes Items 3-6)	1
	1470156	Hip Restraint Kit (RH) (Includes Items 7-12, 33)	1
	1470157	Hip Restraint Kit (LH) (Includes Items 7-12, 33)	1
	1470158	Seat Belt Kit (Includes Items 13-16)	1
	1470164	Recliner Kit (Includes Items 17-28)	1
	1470161	Slide Kit (Includes Items 30-32)	1

©2003 HYSTER COMPANY

FULL SUSPENSION SEAT (Figure 1-4)
SHEET 2 OF 2

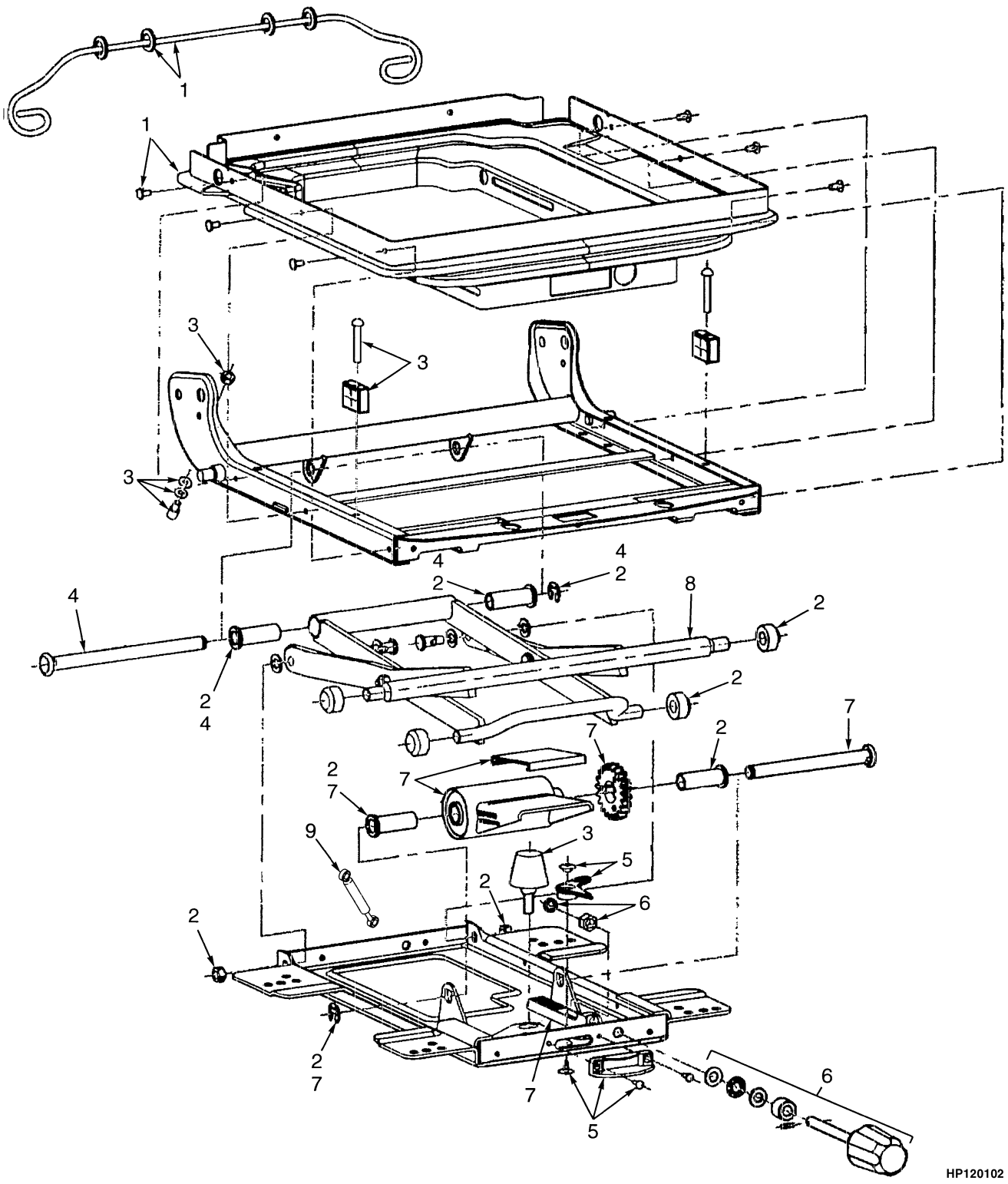

©2003 HYSTER COMPANY

FULL SUSPENSION SEAT
SHEET 2 OF 2

ITEM	PART NO.	DESCRIPTION	QTY
	1468473	Seat Assembly (Fabric)	1
	1468472	Seat Assembly (Vinyl)	1
1	1467523	Boot Kit	1
2	1467524	Roller and Bearing Kit	1
3	1467525	Bumper and Stop Kit	1
4	1467526	Bearing Shaft Kit	1
5	1467527	Weight Adjuster Kit	1
6	1467531	Knob	1
7	1467529	Suspension Spring Kit	1
8	1470160	Scissor Assembly	1
9	1483828	Shock Absorber	1

©2003 HYSTER COMPANY

OPERATOR MODULE (Figure 1-5)
(⇒S/N K005D-05972)

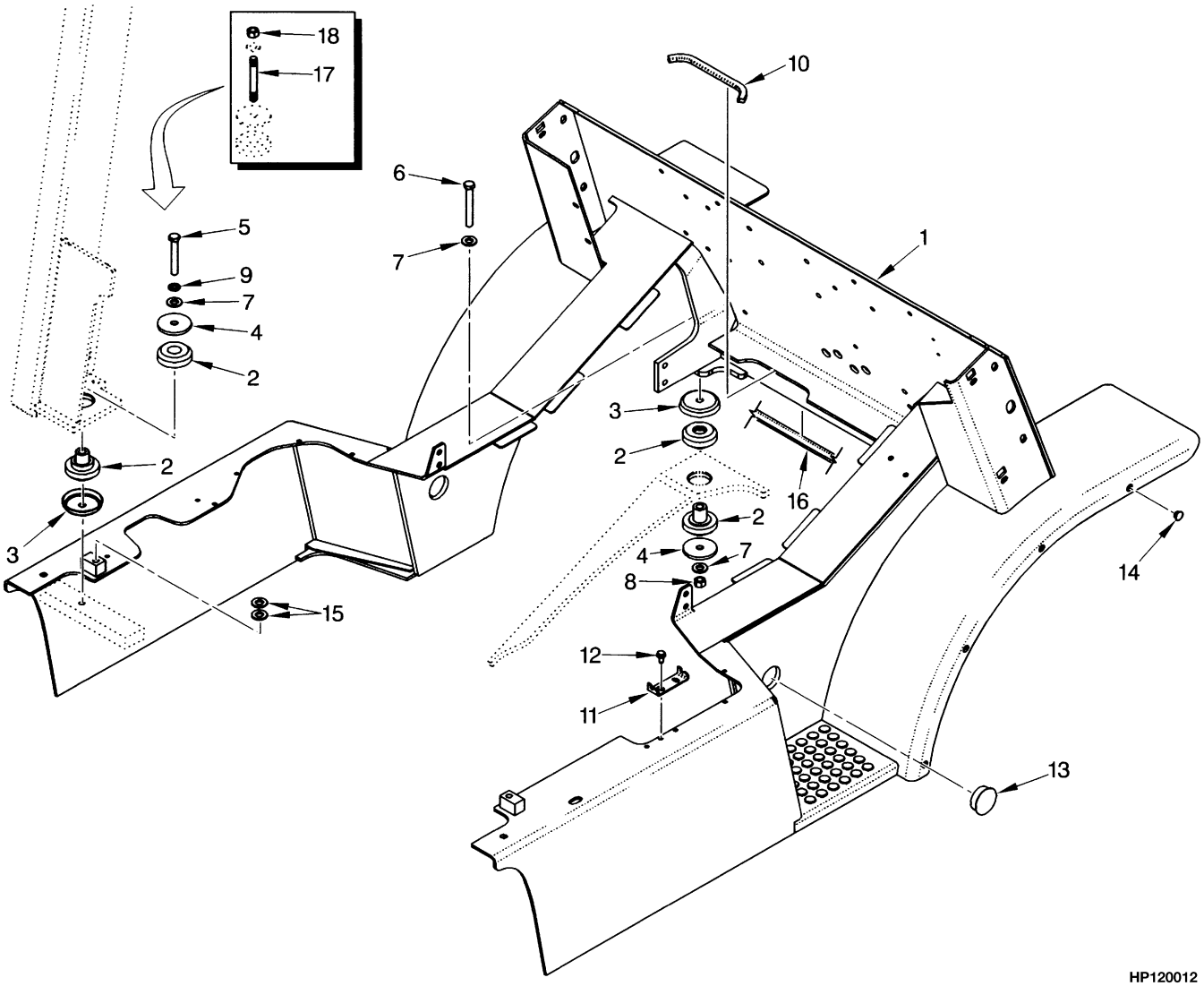

©2003 HYSTER COMPANY

OPERATOR MODULE
(⇒S/N K005D-05972)

ITEM	PART NO.	DESCRIPTION	QTY
1	1378107	Module (1830 WB)	1
1	1385433	Module (2100 WB)	1
2	1378168	Mount	4
3	1378197	Snubber	4
4	300939	Washer	4
5	293655	Capscrew	2
6	293657	Capscrew	2
7	296423	Washer	6
8	300937	Nut	2
9	292683	Lockwasher	2
10	1396024	Trim	1
11	1399434	Plate	1
12	316678	Screw	2
13	1398009	Plug	2
14	1399760	Plug	8
15	296422	Washer	4
16	1392745	Seal	AR
17	2037998	Stud (Optional)	2
18	300937	Nut (Optional)	2

©2003 HYSTER COMPANY

OPERATOR MODULE (Figure 1-6)
(S/N K005D-05973⇒ EXC. 6018)

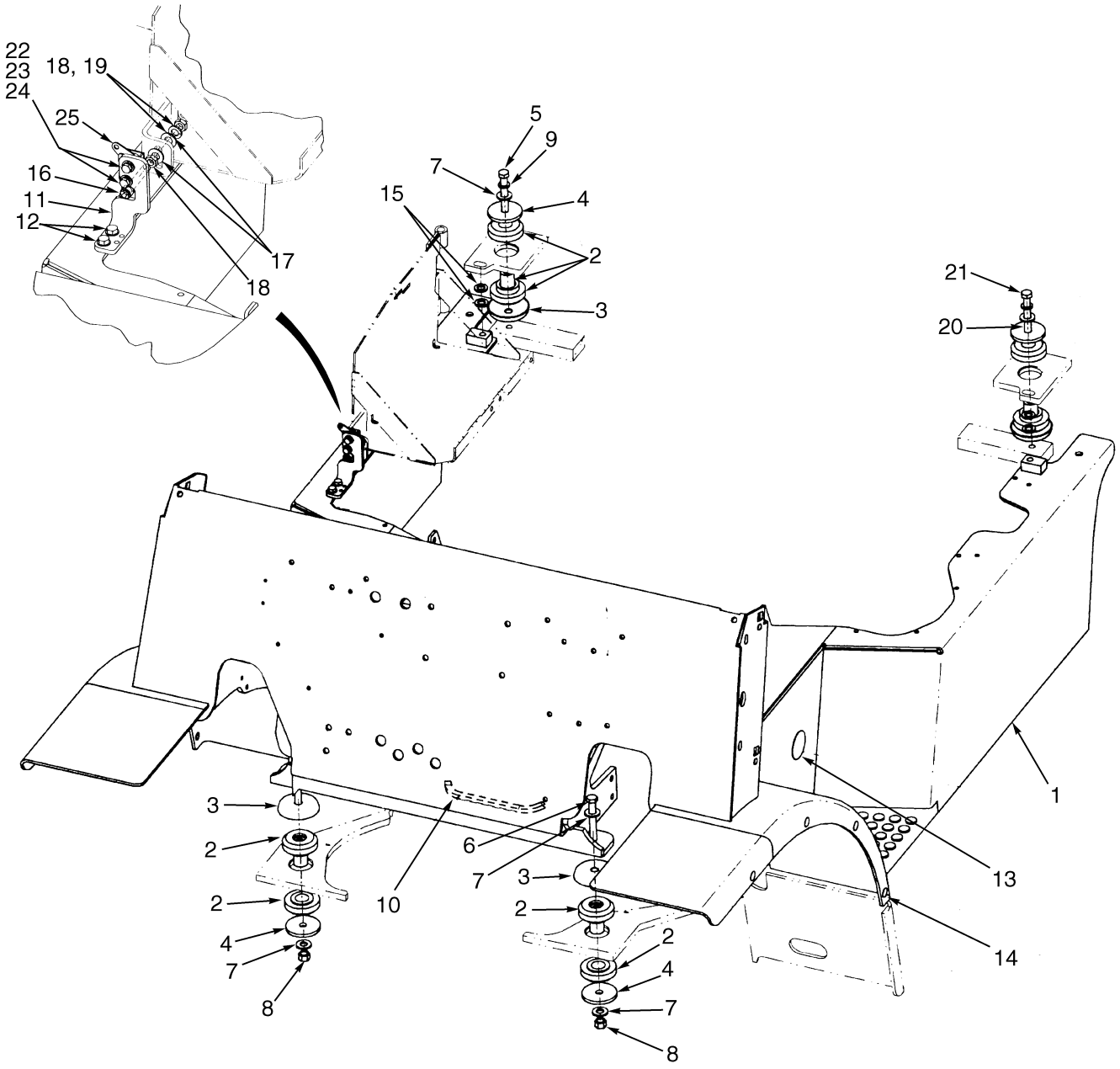

HP120642

©2003 HYSTER COMPANY

OPERATOR MODULE
(S/N K005D-05973⇒ EXC. 6018)

KEY:
A: 1830 WB
B: 2100 WB

ITEM	PART NO.	DESCRIPTION	QTY A	QTY B
1	1493147	Module	1	..
1	1493148	Module	..	1
2	1378168	Mount	4	4
3	1378197	Snubber	4	4
4	300939	Washer	4	4
5	293655	Capscrew	2	2
6	293657	Capscrew	2	2
7	296423	Washer	6	6
8	302402	Nut	2	2
9	292683	Lockwasher	2	2
10	1396024	Trim	1	1
11	1476761	Bracket	1	1
12	316678	Screw	2	2
13	1398009	Plug	2	2
14	1399760	Plug	8	8
15	296422	Washer	4	4
16	18762	Capscrew	1	1
17	15134	Washer	2	2
18	15086	Nut	2	2
19	15156	Lockwasher	1	1
20	2037998	Stud (Optional)	2	2
20	264134	Sealant	AR	AR
21	300937	Nut (Optional)	2	2
22	18462	Capscrew	2	2
23	15154	Lockwasher	2	2
24	15127	Washer	2	2
25	1476422	Latch (Rotary)	1	1

©2003 HYSTER COMPANY

HOOD AND COVERS (Figure 1-7)

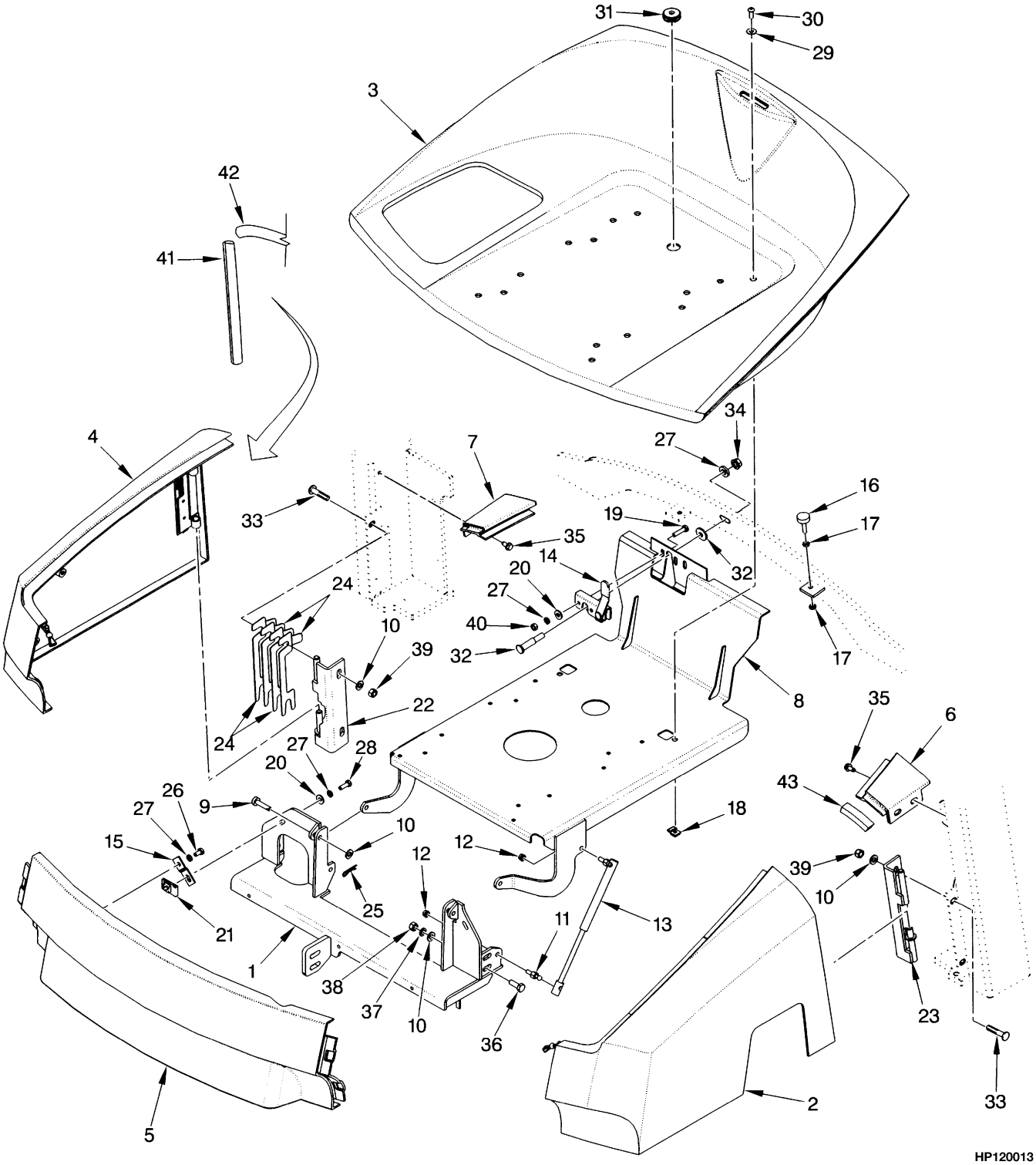

©2003 HYSTER COMPANY

HOOD AND COVERS

ITEM	PART NO.	DESCRIPTION	QTY
1	1396042	Crossmember	1
2	1397958	Panel (LH) (Gasoline/Diesel/Dual Fuel)	1
2	1397957	Panel (LH) (LPG)	1
3	1397960	Hood	1
4	1396626	Panel (RH)	1
5	1396625	Cover (Front)	1
5	1392718	Latch (Over Center)	2
6	1397964	Corner (LH)	1
7	1397963	Corner (RH)	1
8	1396107	Seat Pan	1
9	2021207	Pin	2
10	320159	Washer	10
11	1350285	Stud	2
12	316835	Nut	4
13	1518858	Gas Spring Assembly	2
13	1518888	Gas Spring	1
13	1513907	Ball Stud	2
14	2036143	Latch	1
15	2036866	Bracket	2
16	1347088	Stop Screw	2
17	15001	Nut	4
18	1350282	Nut	2
19	293616	Capscrew	2
20	320158	Washer	4
21	1364259	Clip	2
22	1470010	Hinge (RH)	1
23	1470009	Hinge (LH)	1
24	2036142	Shim (0.047 in.)	4
25	1362714	Cotter Pin	2
26	287851	Capscrew	2
27	292681	Lockwasher	4
28	136749	Capscrew	2
29	375629	Washer	2
30	369242	Capscrew	1
31	1359587	Grommet	1
32	2036862	Striker	1
33	1470021	Bolt	4
34	264144	Nut	1
35	316678	Screw	4
36	136985	Capscrew	8
37	292682	Lockwasher	4
38	136692	Nut	4
39	316826	Nut	4
40	239503	Nut	4
41	1464909	Trim	2
42	1396658	Seal	2
43	1466416	Seal	2

©2003 HYSTER COMPANY

SOUND REDUCTION (Figure 1-8)

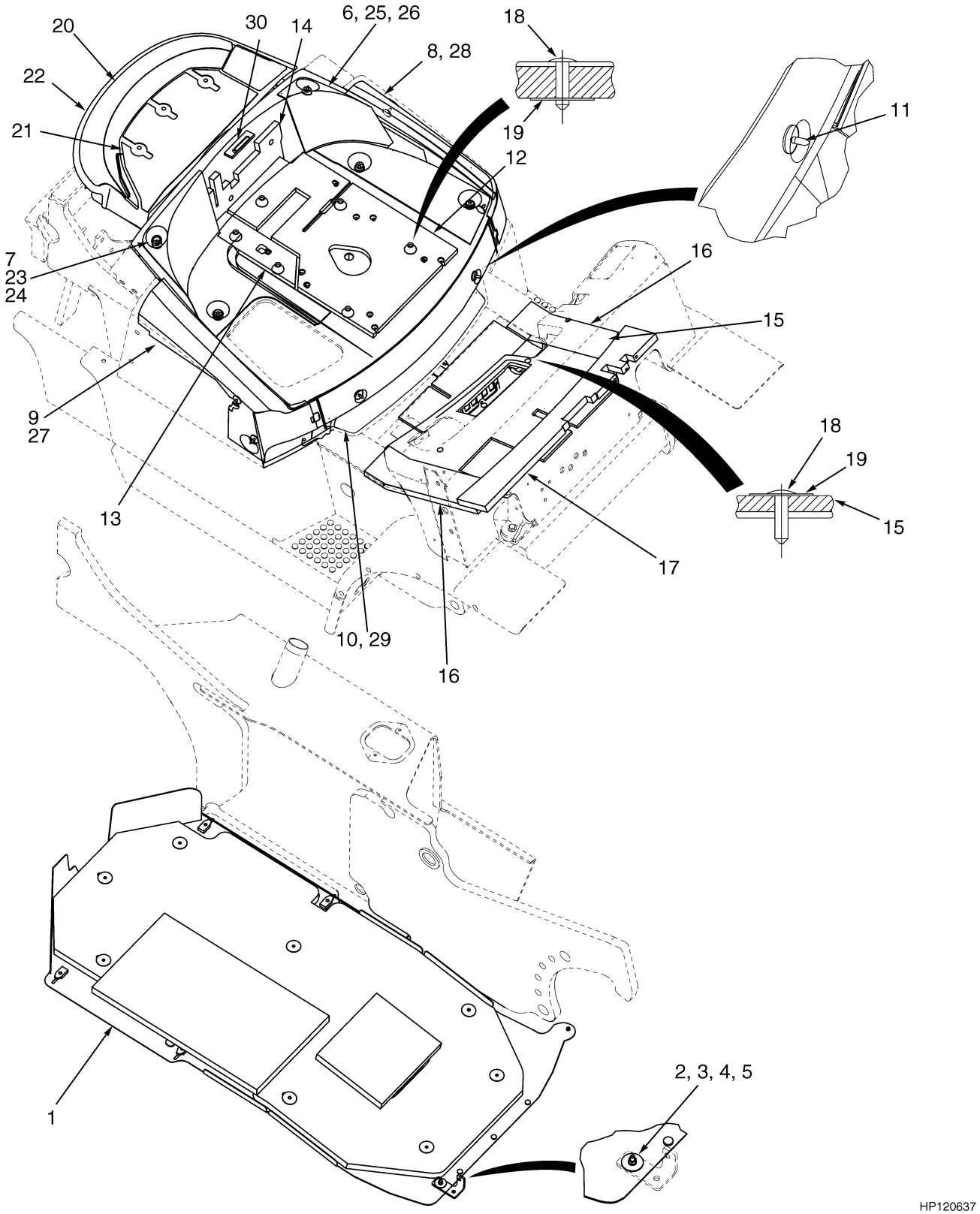

©2003 HYSTER COMPANY

SOUND REDUCTION

KEY:
A: 1830 mm WB
B: 2100 mm WB

ITEM	PART NO.	DESCRIPTION	QTY A	QTY B
1	1399809	Undercarriage Pan	1	..
1	1399810	Undercarriage Pan	..	1
2	293603	Capscrew	1	1
3	2034906	Washer	2	2
4	292680	Lockwasher	1	1
5	136687	Nut	1	1
6	1400151	Liner (Hood LH)	1	1
7	1400152	Liner (Hood RH)	1	1
8	1400153	Liner (Door LH)	1	1
9	1400154	Liner (Door RH)	1	1
10	1400155	Liner (Front Cover)	1	1
11	1304971	Fastener	11	11
12	1468020	Sound Liner (Seat)	1	1
13	1468021	Sound Liner (Seat)	1	1
14	1468022	Sound Liner (Seat)	1	1
15	1468023	Sound Liner (Floor Plate)	1	1
16	1468024	Sound Liner (Floor Plate)	2	2
17	1468025	Cowl Barrier	1	1
18	1399815	Rivet	15	15
19	1399784	Washer	15	15
20	1468032	Sound Liner (Radiator Cover)	1	1
21	1468033	Sound Liner (Radiator Barrier)	1	1
22	1382126	Seal	AR	AR
23	1467338	Barrier (RH Seat Panel)	1	1
24	1467340	Barrier (RH Seat Panel)	1	1
25	1467342	Barrier (LH Seat Panel)	1	1
26	1467343	Barrier (LH Seat Panel)	1	1
27	1467344	Barrier (RH Door Panel)	1	1
28	1467345	Barrier (LH Door Panel)	1	1
29	1467347	Panel (Front)	1	1
30	1490766	Pad (Latch)	1	1
	1468027	Barrier Kit (Includes Items 23-30)	1	1

©2003 HYSTER COMPANY

UNDERCARRIAGE PAN (Figure 1-9)

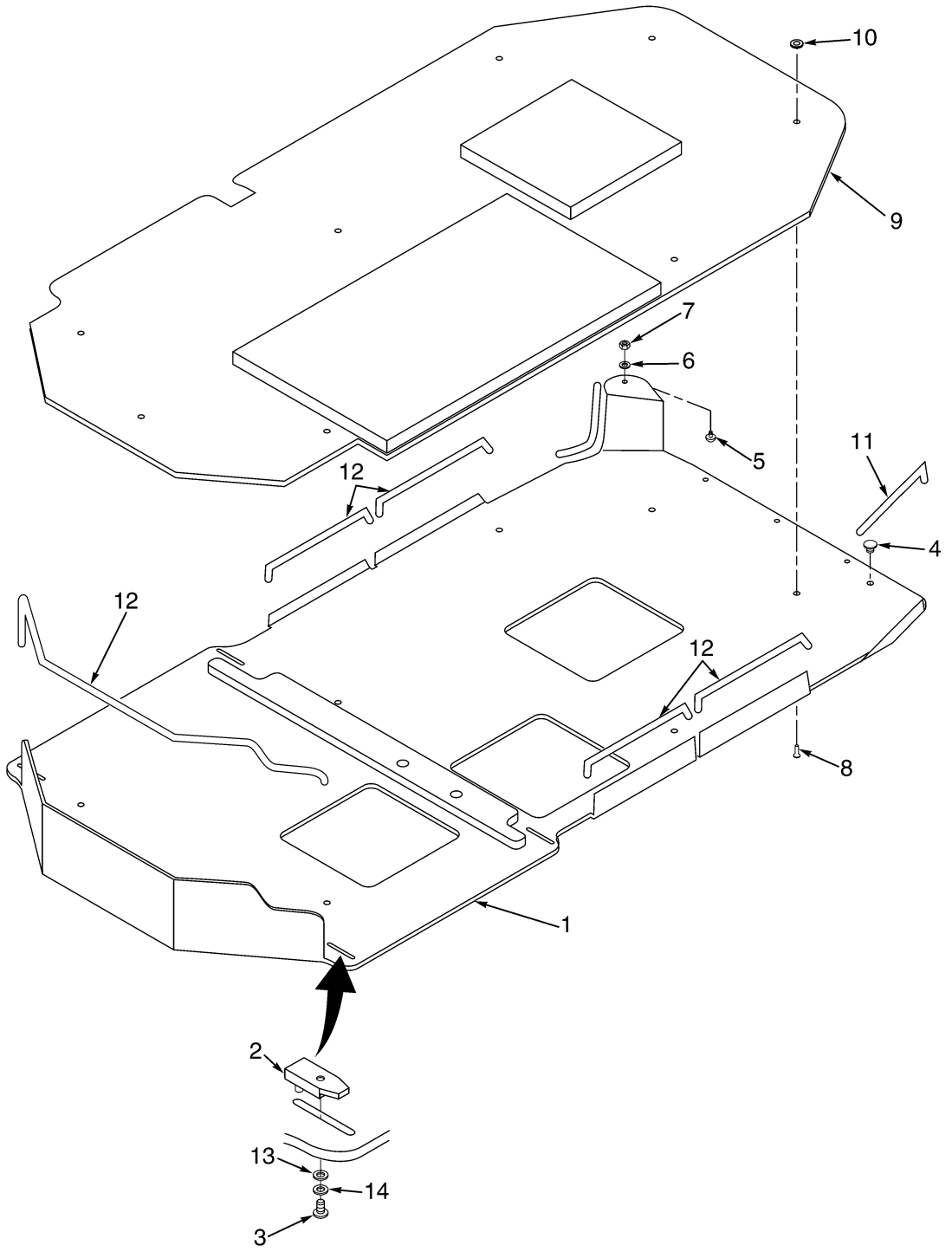

HP120636

©2003 HYSTER COMPANY

UNDERCARRIAGE PAN

KEY:
A: 1830mm WB
B: 2100mm WB

ITEM	PART NO.	DESCRIPTION	QTY A	QTY B
	1399809	Undercarriage Pan (Assembly)	1	..
	1399810	Undercarriage Pan (Assembly)	..	1
1	1397647	Undercarriage	1	..
1	1397651	Undercarriage	..	1
2	1399818	Nut	4	4
3	1399820	Capscrew	4	4
4	1399817	Bumper	3	3
5	1399816	Screw	1	1
6	320155	Washer	1	1
7	302398	Locknut	1	1
8	1399815	Rivet	8	8
9	1399813	Liner	1	..
9	1399814	Liner	..	1
10	1399784	Washer	8	8
11	1399829	Edge Strip (250 mm)	2	2
12	1399830	Edge Strip (420 mm)	4	4
13	320156	Washer	4	6
14	292680	Lockwasher	4	6

©2003 HYSTER COMPANY

OVERHEAD GUARD (Figure 1-10)

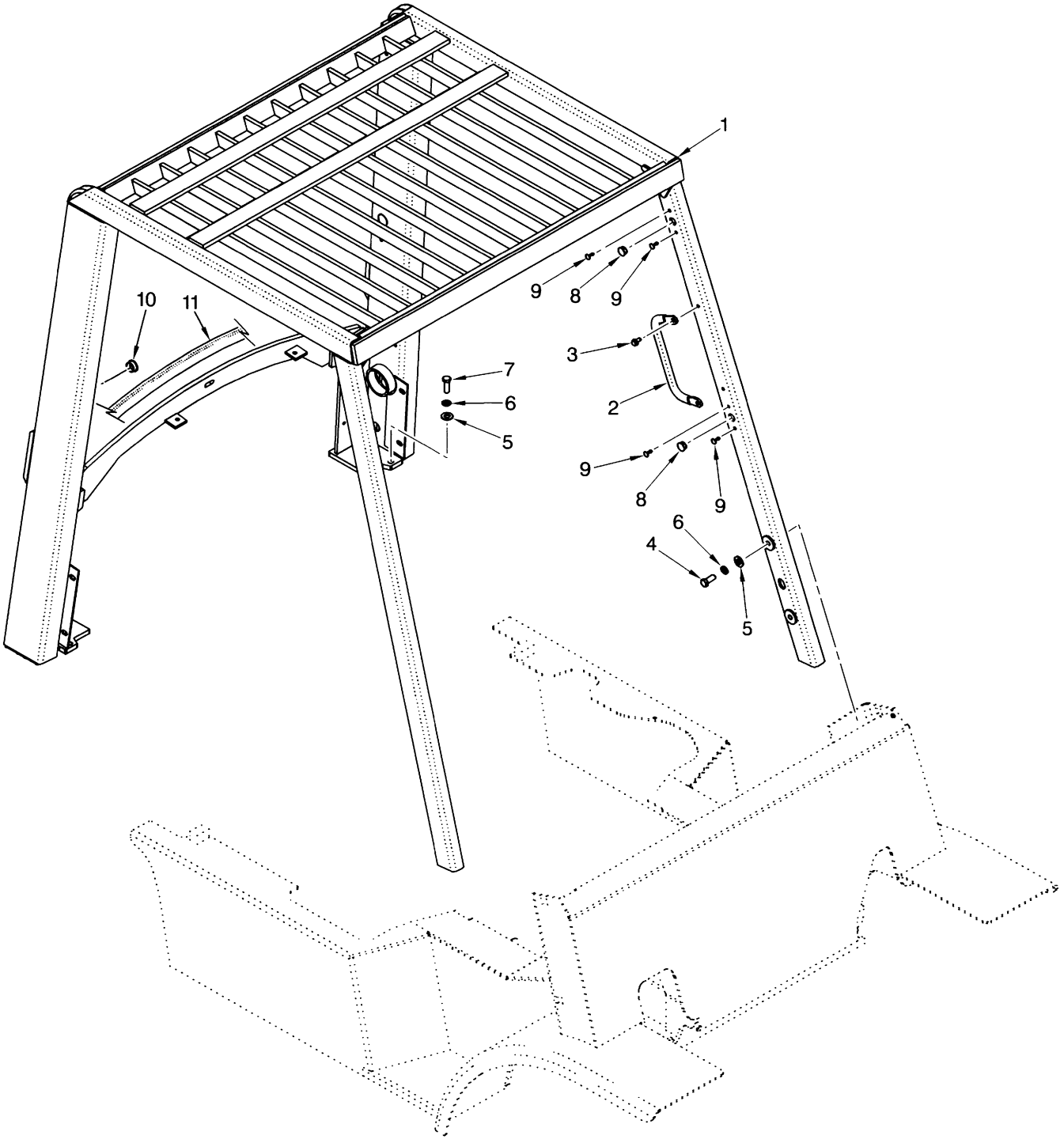

©2003 HYSTER COMPANY

OVERHEAD GUARD

ITEM	PART NO.	DESCRIPTION	QTY
1	1396039	Overhead Guard (Standard Height)	1
1	1465443	Overhead Guard (Raised Height)	1
2	2035800	Handle	2
3	316678	Screw	4
4	293644	Capscrew	4
5	296423	Washer	6
6	292683	Lockwasher	6
7	293646	Capscrew	2
8	1363917	Plug	6
9	1363916	Plug	14
10	1363918	Plug	2
11	1465740	Seal	1

©2003 HYSTER COMPANY

FLOOR PLATES AND COVERS (Figure 1-11)

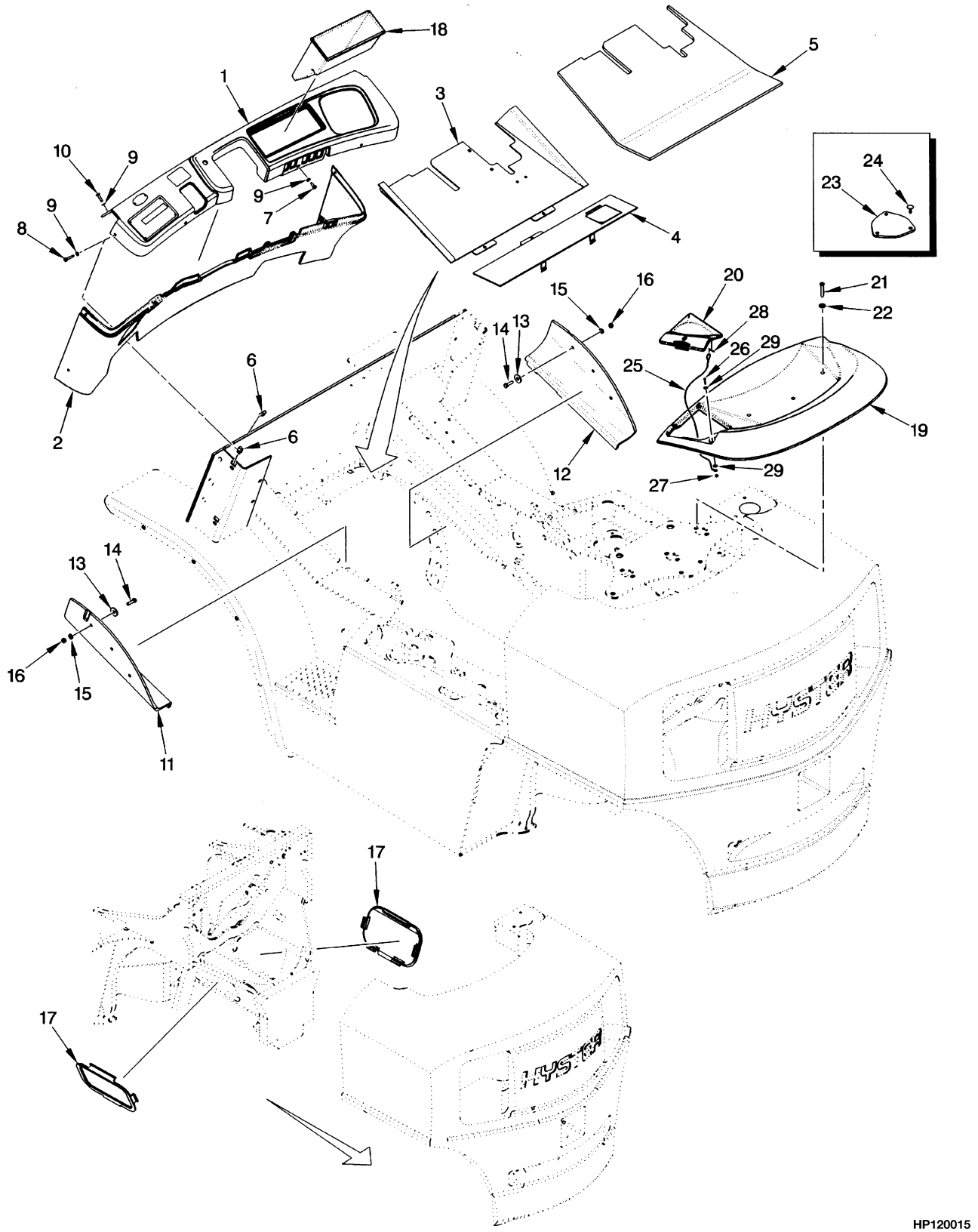

©2003 HYSTER COMPANY

FLOOR PLATES AND COVERS

ITEM		PART NO.	DESCRIPTION	QTY
1		1396147	Dash	1
2		1396148	Cowl Panel	1
3		2035798	Floorplate (Front)	1
4		2035980	Floorplate	1
5		1396641	Floormat	1
6		1350215	U-Nut	6
7		1399393	Screw	3
8		1399395	Screw	4
9		1399399	Washer	9
10		1399394	Screw	2
11		1399337	Flap (Right Cylinder)	1
12		1399338	Flap (Left Cylinder)	1
13		1334790	Washer	6
14		176640	Capscrew	6
15		320157	Washer	6
16		302400	Locknut	6
17		2036875	Cover	2
18		1338286	Storage Compartment (Without Cab)	1
19		1385498	Cover	1
20	**a**	1396012	Radiator Cap Door	1
20	**b**	1396009	Radiator Cap Door	1
21		1464899	Capscrew	3
22		375629	Washer	3
23		1347043	Cover (Counterweight Exhaust)	1
24		1347045	Fastener (Counterweight Exhaust)	3
25		1400180	Lanyard	1
26		296510	Screw	1
27		302398	Locknut	1
28		15212	Cotter Pin	1
29		320156	Washer	2

FOOTNOTES:

a Type Gas and Diesel

b Type LPG, Dual Fuel, GS, LPS, and DS

©2003 HYSTER COMPANY

COUNTERWEIGHT (Figure 1-12)

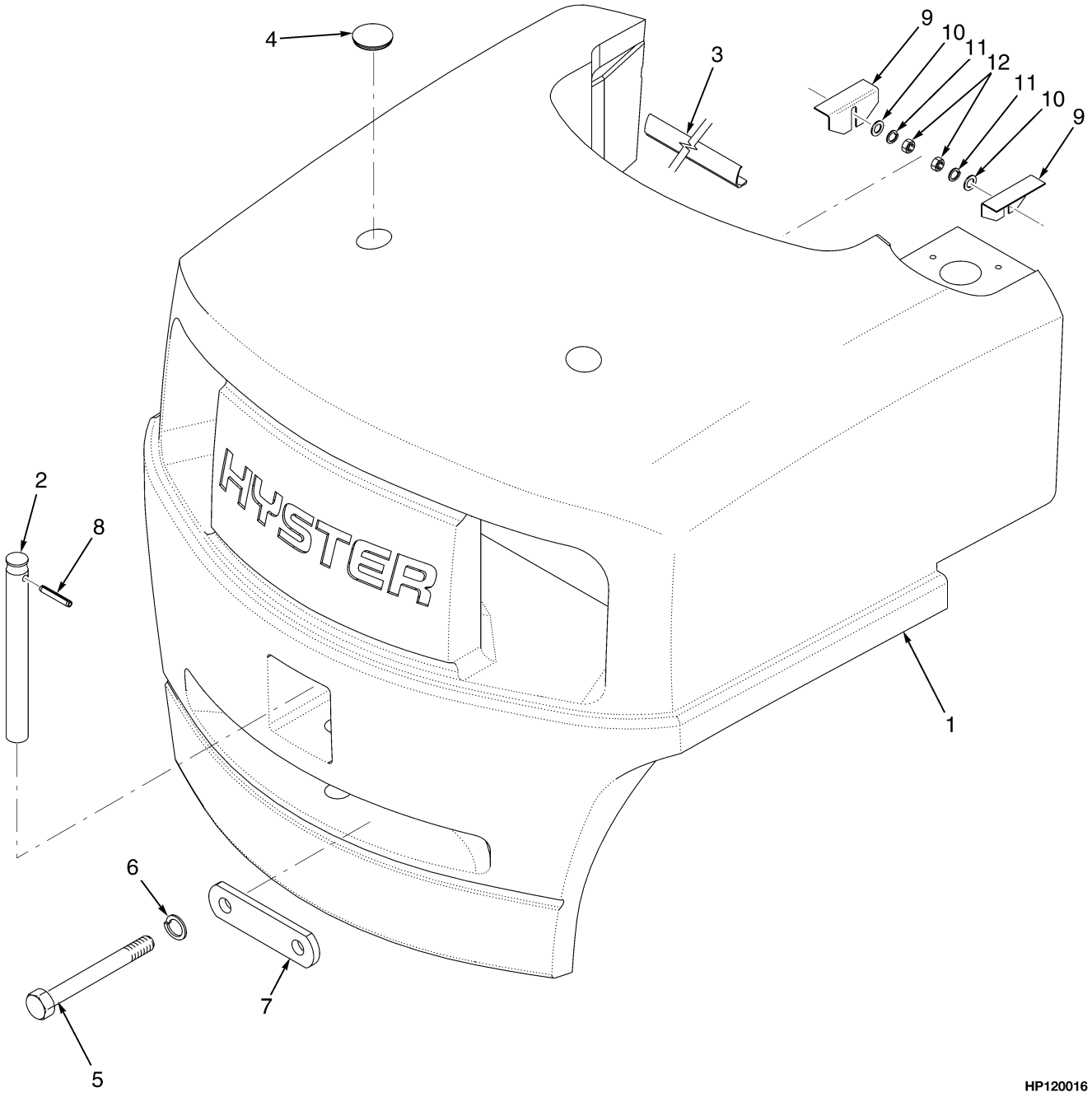

©2003 HYSTER COMPANY

COUNTERWEIGHT

ITEM	PART NO.	DESCRIPTION	QTY
1	1388879	Counterweight (H70XM)	1
1	1388880	Counterweight (H80XM)	1
1	1385449	Counterweight (H90XM)	1
1	1388882	Counterweight (H100XM)	1
1	1388883	Counterweight (H110XM)	1
1	1385457	Counterweight (H120XM)	1
2	1388898	Pin	1
3	. . . . .	Seal (H70-90XM)	2
3	. . . . .	Seal (H100-120XM)	2
4	2021395	Cap	2
5	292614	Capscrew	2
6	292689	Lockwasher	2
7	1375214	Washer	2
8	302492	Pin	1
9	1335763	Shim (0.109 in.)	4
10	320158	Washer	4
11	292681	Lockwasher	4
12	239503	Nut	4

©2003 HYSTER COMPANY

REAR ACCESS SCREEN (Figure 1-13)
(⇒S/N PENDING PER ECN 70712-24)

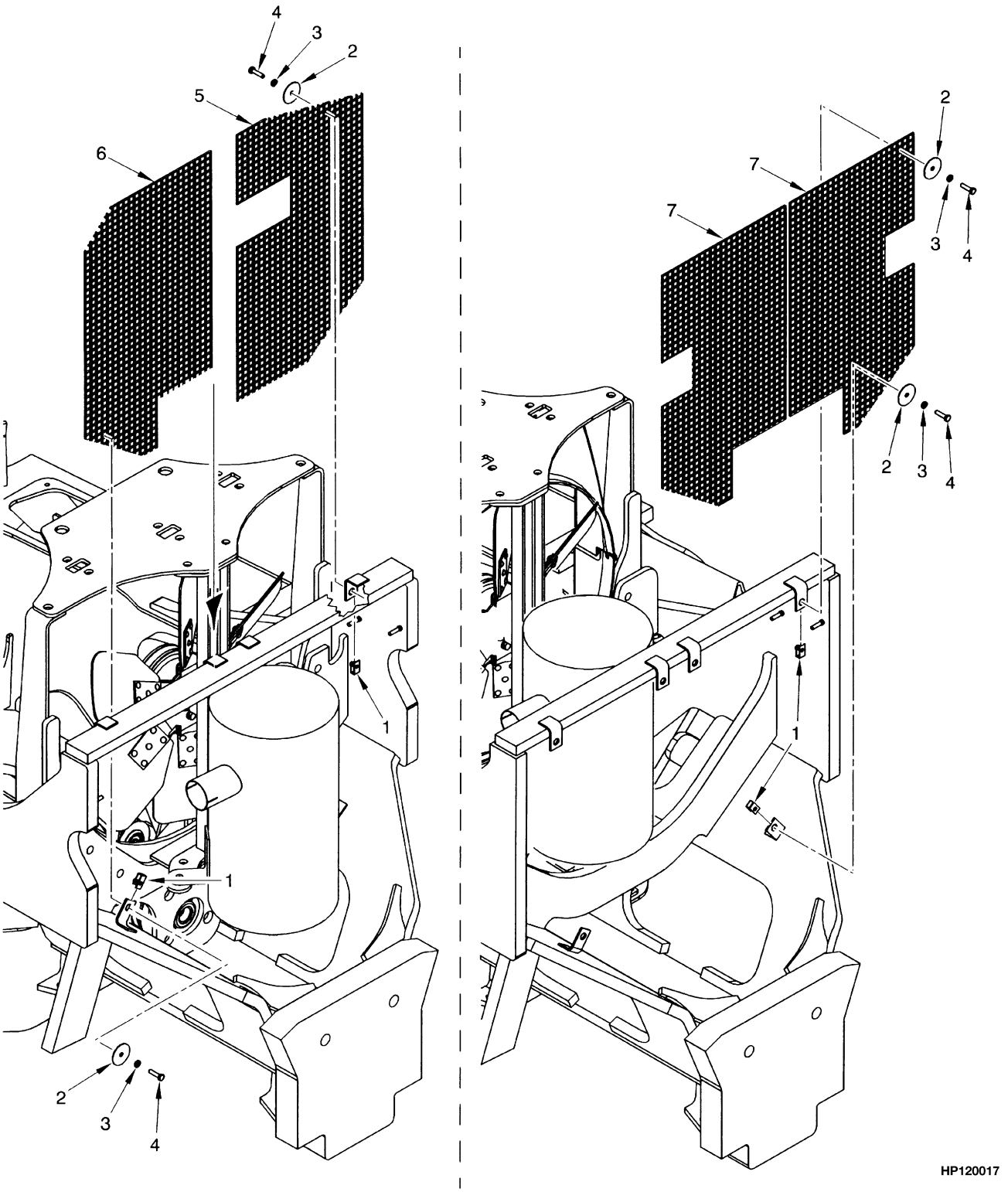

©2003 HYSTER COMPANY

REAR ACCESS SCREEN
(⇒S/N PENDING PER ECN 70712-24)

ITEM	PART NO.	DESCRIPTION	QTY
1	1350215	U-Nut	6
2	1399784	Washer	6
3	292680	Lockwasher	6
4	287816	Capscrew	6
5	1399779	Screen (RH) (1830/1880 WB)	1
6	1465328	Screen (LH) (1830/1880 WB)	1
7	1399778	Screen (2100 WB)	2

©2003 HYSTER COMPANY

REAR ACCESS SCREEN (Figure 1-14)
(S/N PENDING PER ECN 70712-24⇒)

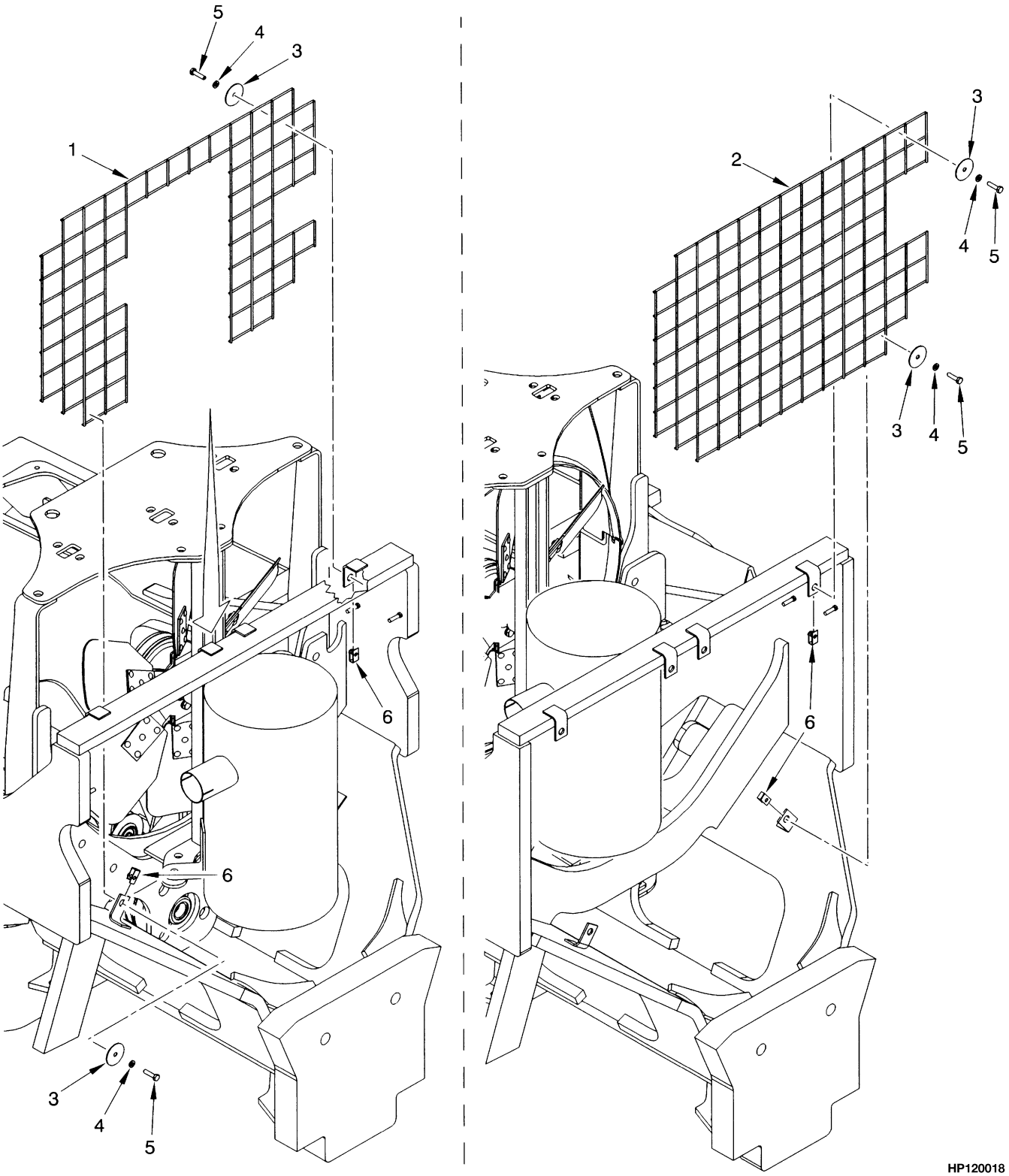

©2003 HYSTER COMPANY

REAR ACCESS SCREEN
(S/N PENDING PER ECN 70712-24⇒)

ITEM	PART NO.	DESCRIPTION	QTY
1	1470920	Screen (H70XM) (1830/1880 WB)	1
1	1470922	Screen (H80-90XM) (1830/1880 WB)	1
2	1468699	Screen (H100-120XM) (2100 WB)	1
3	1471535	Washer	4
4	292681	Lockwasher	4
5	136749	Capscrew	4
6	1398062	Nut	4

©2003 HYSTER COMPANY

LABELS AND PAINT (Figure 1-15)

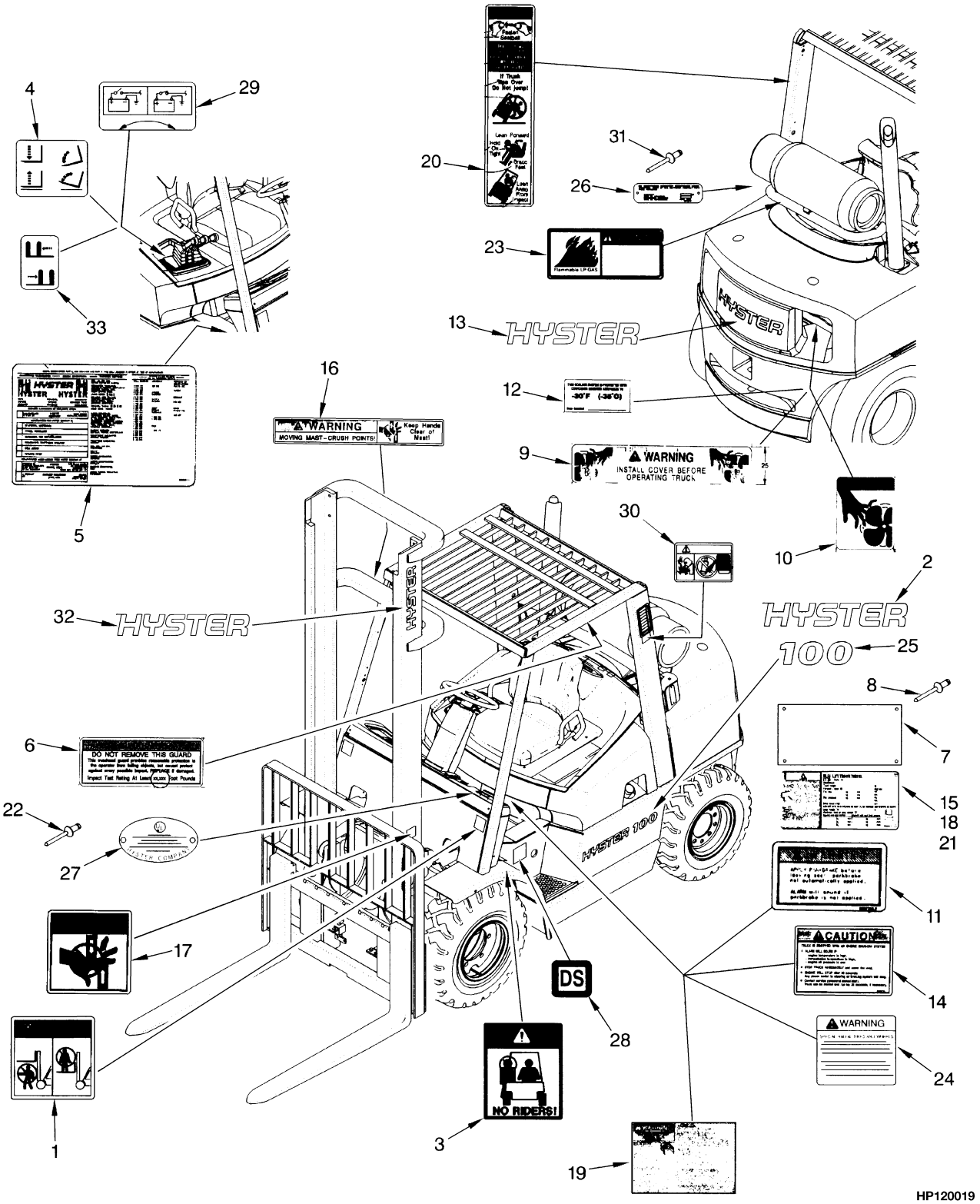

©2003 HYSTER COMPANY

LABELS AND PAINT

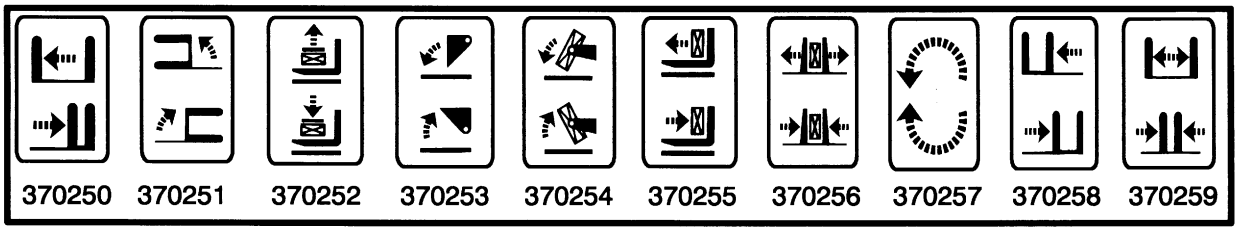

HP120020

ITEM		PART NO.	DESCRIPTION	QTY
1		1338178	Label (Mast Warning)	2
2		2020517	Label (Hyster) (Horizontal)	2
3		1330920	Label (No Riders)	2
4		1356137	Label (Lift and Tilt)	1
5		389692	Label (US Patents and Trademarks)	2
6	**a**	. . . . .	Label (Impact Rating Warning)	1
7		389688	Cover	1
8		170658	Rivet	4
9		1325271	Label (Fan Warning)	1
10		1345939	Label (Fan Warning) (Pictorially)	2
11		2309799	Label (Parking Brake)	1
12		1354165	Label (Antifreeze)	1
13		1399885	Label (Hyster) (Counterweight) (Optional)	1
14		1385102	Label (Drive Train Protection)	1
15		1335137	Nameplate	1
16		1330919	Label (Mast Warning)	1
17		1335129	Label (Pinch Point)	2
18		1304058	Nameplate (Incomplete) (Optional)	1
19		1336605	Label (Operator Warning)	1
20		1330917	Label (Operator Restraint)	1
21	**a**	. . . . .	Label (Nameplate)	1
22		166818	Rivet	2
23		1354171	Label (Flammable LPG)	1
24		1374549	Label (Warning)	1
25		1399873	Label (H70XM)	1
25		1399874	Label (H80XM)	1
25		1399875	Label (H90XM)	1
25		1399876	Label (H100XM)	1
25		1399877	Label (H110XM)	1
25		1399878	Label (H120XM)	1
26		1501259	Label (LPG Tank) (Type LP, LPS, Dual Fuel)	1
27		179420	Inspection Plate (Type G)	1
27		179423	Inspection Plate (Type D)	1
27		179414	Inspection Plate (Type LP)	1
27		179415	Inspection Plate (Type GS)	1
27		179417	Inspection Plate (Type DS)	1
27		179416	Inspection Plate (Type LPS)	1
27		1378509	Inspection Plate (Type Dual Fuel)	1
28		154065	Label (Type GS)	2
28		154067	Label (DS)	2
28		154066	Label (UL)	2
29		1352190	Label (Battery Disconnect) (Type GS, LPS, DS)	1
30		2034459	Label (Ether Caution)	1
31		340044	Gripnail (Optional)	2

©2003 HYSTER COMPANY

LABELS AND PAINT

ITEM	PART NO.	DESCRIPTION	QTY
31	170658	Rivet	2
32	1339672	Label (Hyster) (Vertical)	2
33	370250	Label (Auxiliary Function - Reach)	1
33	370251	Label (Auxiliary Function - Swing)	1
33	370252	Label (Auxiliary Function - Stabilizer)	1
33	370253	Label (Auxiliary Function - Dump/Scoop)	1
33	370254	Label (Auxiliary Function - Upender)	1
33	370255	Label (Auxiliary Function - Push/Pull)	1
33	370256	Label (Auxiliary Function - Clamp)	1
33	370257	Label (Auxiliary Function - Rotate)	1
33	370258	Label (Auxiliary Function - Side-Shift)	1
33	370259	Label (Auxiliary Function - Fork Spreader)	1

FOOTNOTES:
a See Your Local Hyster Dealer

©2003 HYSTER COMPANY

2 ENGINE ASSEMBLY

SECTION 2
ENGINE ASSEMBLY

DESCRIPTION **PAGE**

ALTERNATOR MOUNTING
DIESEL
D/B 07/2001⇒ ... 2-52
⇒D/B 07/2001 ... 2-50
BAFFLE AND ATTACHING PARTS ... 2-6
CAMSHAFT AND OIL PAN
GASOLINE AND LPG ... 2-32
COOLANT PUMP
DIESEL
D/B 09/2001⇒ ... 2-80
⇒D/B 09/2001 ... 2-78
COOLING ... 2-4
CRANKSHAFT AND PISTON
DIESEL
D/B 07/2001⇒ ... 2-60
⇒D/B 07/2001 ... 2-58
CYLINDER BLOCK
DIESEL
D/B 07/2001⇒ ... 2-56
⇒D/B 07/2001 ... 2-54
GASOLINE AND LPG ... 2-28
CYLINDER HEAD
DIESEL ... 2-68
GASOLINE AND LPG ... 2-36
ENGINE AND ATTACHING PARTS
DIESEL ... 2-48
GASOLINE AND LPG ... 2-24
ENGINE MOUNT
DIESEL ... 2-46
GASOLINE AND LPG ... 2-22
EXHAUST
3-WAY CATALYTIC CONVERTER
LPG WITH LOW EMISSIONS
S/N PENDING PER ECN 73989⇒ ... 2-18
⇒S/N PENDING PER ECN 73989 ... 2-16
DIESEL ... 2-20
GASOLINE AND LPG
WITHOUT LOW EMISSIONS
S/N PENDING PER ECN 73989⇒ ... 2-14
⇒S/N PENDING PER ECN 73989 ... 2-12
EXHAUST MANIFOLD
GASOLINE AND LPG
S/N PENDING PER ECN 73989⇒ ... 2-42
⇒S/N PENDING PER ECN 73989 ... 2-40
FAN DRIVE ASSEMBLY ... 2-8
MANIFOLDS
DIESEL
D/B 07/2001⇒ ... 2-74
⇒D/B 07/2001 ... 2-72
OIL FILTER

©2003 HYSTER COMPANY

SECTION 2
ENGINE ASSEMBLY (Continued)

DESCRIPTION	PAGE
DIESEL	2-76
OIL PAN AND PUMP	
DIESEL	2-62
OIL PUMP	
GASOLINE AND LPG	2-44
ROTARY EXHAUSTER	
DIESEL	2-82
TIMING GEAR	
DIESEL	2-66
VALVE COVER AND INLET MANIFOLD	
GASOLINE AND LPG	2-38
VALVE COVER AND ROCKER ARM SHAFT	
DIESEL	2-70

©2003 HYSTER COMPANY

NOTES

COOLING (Figure 2-1)

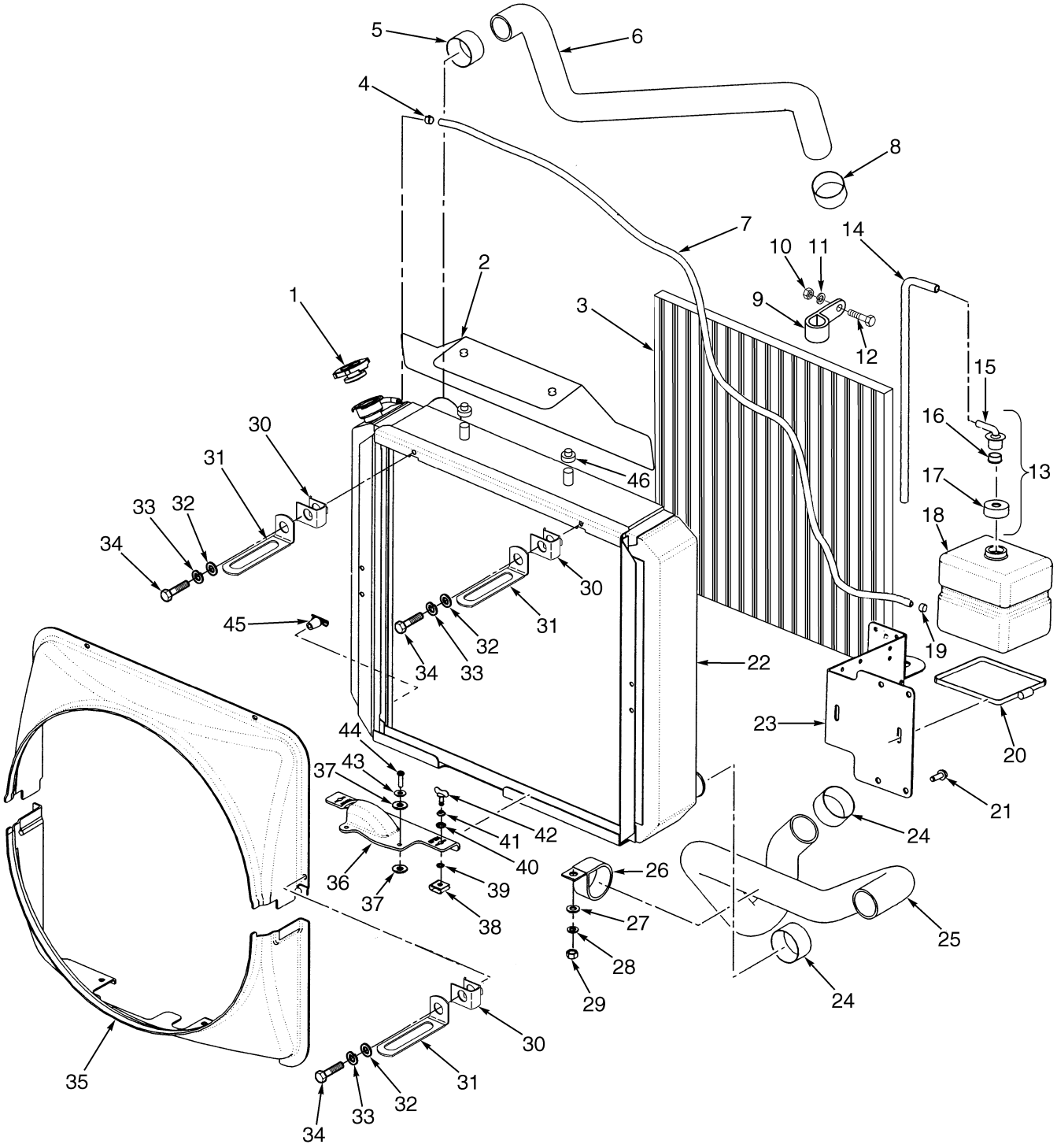

BP060004

©2003 HYSTER COMPANY

COOLING

ITEM	PART NO.	DESCRIPTION	QTY
1	178899	Cap	1
2	1400226	Mount Plate (Includes Screen Latch)	1
3	1400229	Screen	1
4	369815	Clamp	1
5	1396783	Clamp	1
6	2035359	Hose (Upper, Gas, LPG)	1
6	2035357	Hose (Upper, Diesel)	1
7	1302954	Tube	1
8	1396783	Clamp (Gas, LPG)	1
8	1396785	Clamp (Diesel)	1
9	1339457	Clamp	1
10	136687	Nut	1
11	292680	Lockwasher	1
12	292500	Capscrew	1
13	1359581	Outlet Assembly	1
14	1457312	Hose	1
15	345453	Outlet	1
16	336550	Bushing	1
17	345454	Cap	1
18	344432	Reservoir	1
19	353310	Clamp	1
20	340204	Strap	1
21	316678	Screw	4
22	1388911	Radiator	1
23	1396187	Bracket	1
24	1396784	Clamp (Gas, LPG)	1
24	112989	Clamp (Diesel)	1
25	2035355	Hose (Lower, LPG)	1
25	2035354	Hose (Lower, Diesel)	1
26	895963	Clamp (Gas, LPG)	1
27	320159	Washer	1
28	292682	Lockwasher	1
29	136692	Nut	1
30	1329272	U-Nut	4
31	1466001	Clamp	3
32	197066	Washer	4
33	292678	Lockwasher	4
34	302238	Screw	4
35	1397697	Shroud (Upper)	1
35	1397698	Shroud (Lower)	1
36	1397710	Shroud (Door)	1
37	15127	Washer	4
38	1399312	Clip	2
39	1399313	Retainer	2
40	1399310	Washer	2
41	1399311	Spring	2
42	1399314	Stud	2
43	320156	Washer	2
44	222038	Rivet	2
45	12815	Drain Valve	1
46	2029170	Cushion (Rubber)	4

©2003 HYSTER COMPANY

BAFFLE AND ATTACHING PARTS (Figure 2-2)

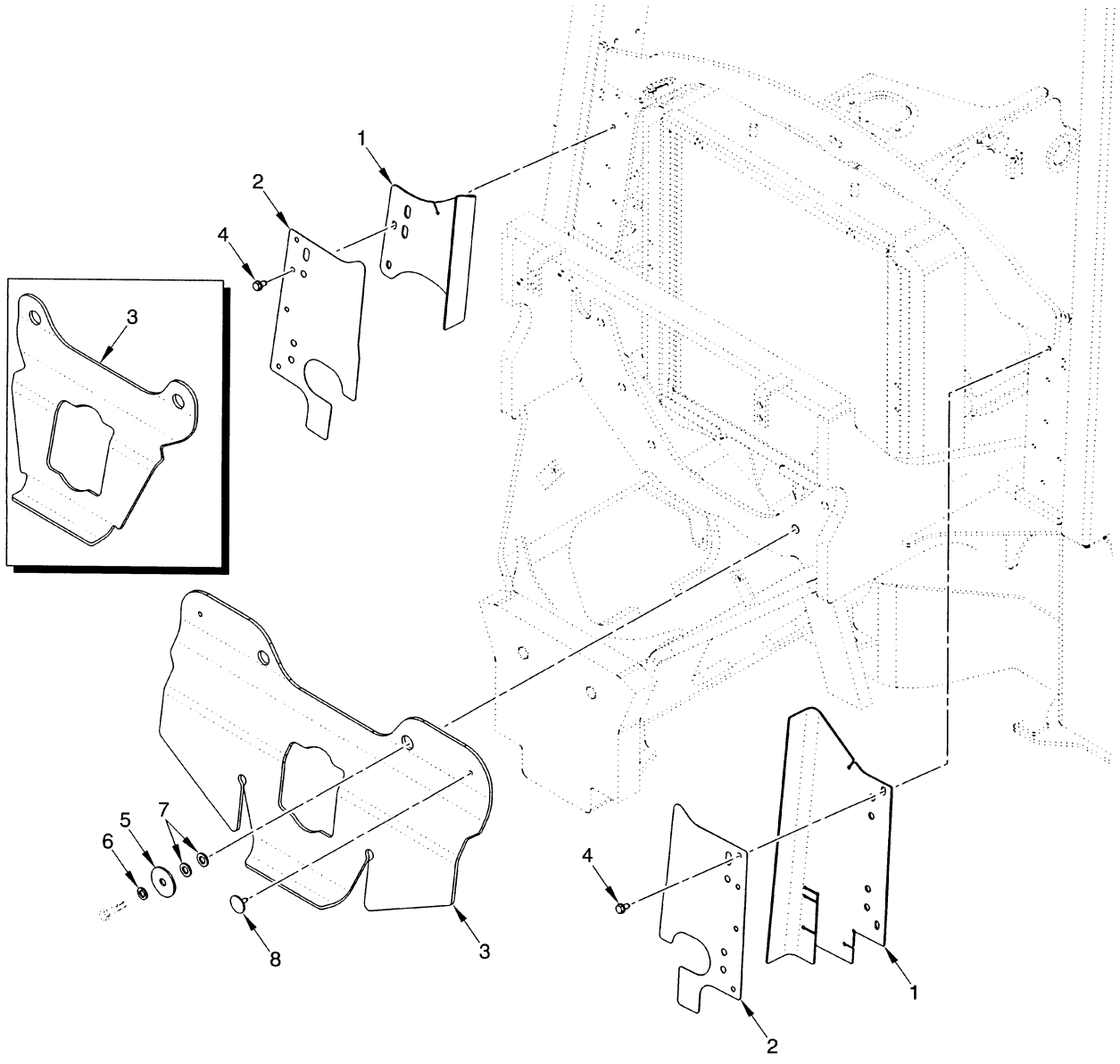

©2003 HYSTER COMPANY

BAFFLE AND ATTACHING PARTS

ITEM	PART NO.	DESCRIPTION	QTY
1	1471445	Baffle (RH)	1
1	1471446	Baffle (LH)	1
2	1471448	Plate	2
3	1471444	Baffle (Bottom) (2100 WB)	1
3	1471449	Baffle (Bottom) (1830/1880 WB)	1
4	316678	Screw	5
5	1397808	Washer	2
6	292683	Lockwasher	6
7	320161	Washer	2
8	1304971	Fastener (2100 WB)	1

©2003 HYSTER COMPANY

FAN DRIVE ASSEMBLY (Figure 2-3)

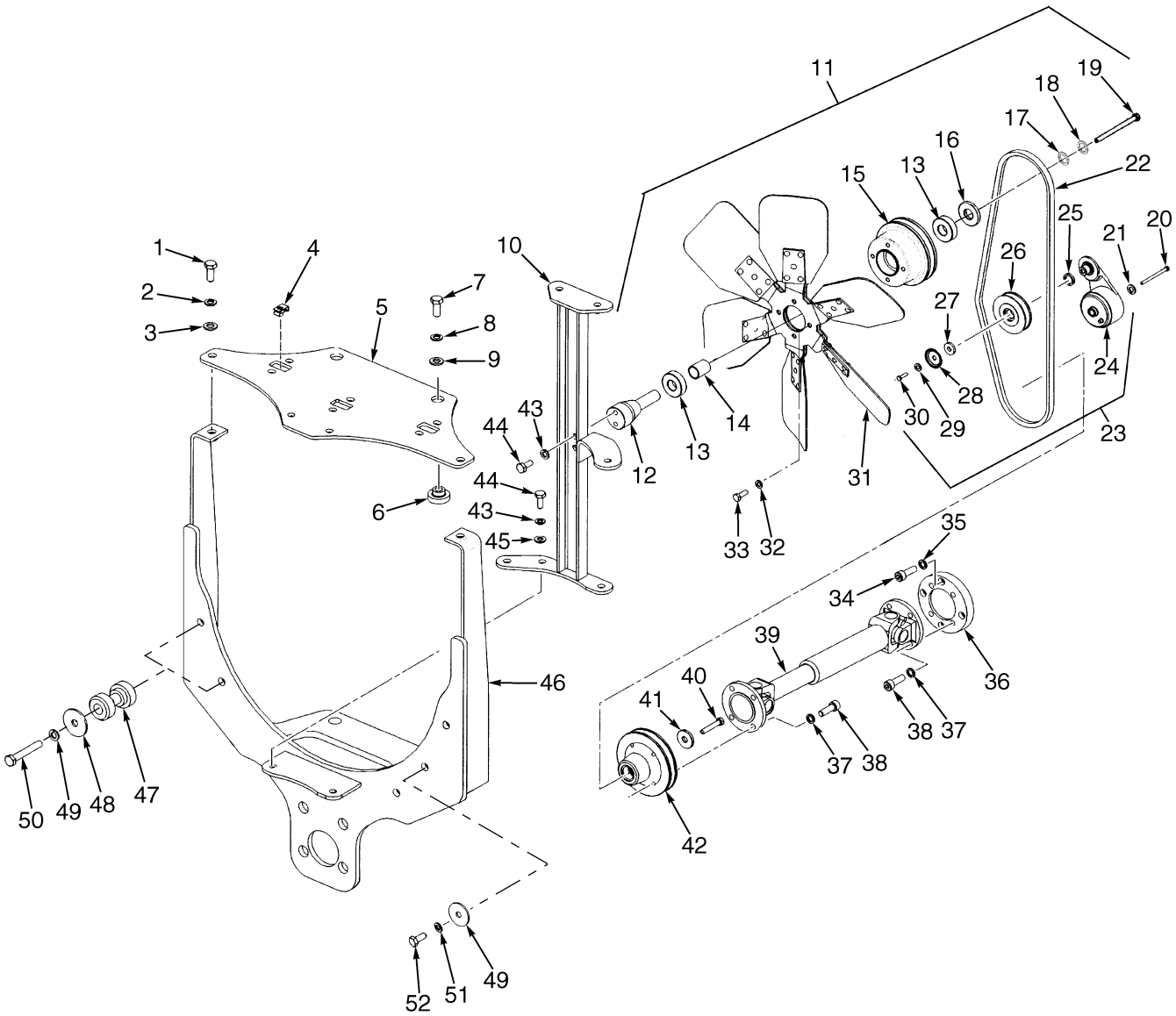

©2003 HYSTER COMPANY

FAN DRIVE ASSEMBLY

ITEM		PART NO.	DESCRIPTION	QTY
1		292527	Capscrew	2
2		292683	Lockwasher	2
3		320161	Washer	2
4		1398062	Nut	3
5		2035322	Plate	1
6		2029170	Cushion (Rubber)	4
7		287854	Capscrew	4
8		292682	Lockwasher	4
9		320159	Washer	4
10	**c**	2035331	Bracket	1
10	**d**	1499369	Bracket	1
11	**f**	1504426	Fan Mount Assembly	1
11	**d**	1504410	Fan Mount Assembly	1
12	**ae**	1388794	Pin	1
12	**f**	1504180	Pin	1
12	**d**	1504380	Pin	1
13	**ae**	128469	Ball Bearing	4
13	**d**	124668	Bearing	4
13		257291	Adhesive	AR
14	**e**	1396724	Spacer	1
14	**g**	1504256	Spacer	1
15	**bc**	1384584	Pulley	1
15	**d**	1495666	Pulley	1
16	**e**	1396726	Washer	1
17	**g**	54120	Snap Ring	1
18	**g**	12928	Snap Ring	1
19	**e**	302335	Capscrew	1
20		292522	Capscrew	1
21		292682	Lockwasher	1
22	**c**	328565	V-Belt	1
22	**d**	2048095	V-Belt	1
23	**c**	1396171	Tensioner Assembly	1
24	**d**	1396779	Tensioner	1
25		1396780	Spacer	1
26		1396781	Pulley	1
27		1396730	Washer	1
28		. . . . .	Plate	1
29		292681	Lockwasher	1
30		136749	Capscrew	1
31		1394712	Fan (Draw Through)	1
32		292681	Lockwasher	4
33		136749	Capscrew	4
34		35116	Capscrew (Diesel)	4
35		177948	Lockwasher (Diesel)	4
36		1394595	Adapter (Diesel)	1
37		293780	Lockwasher	8
38		296011	Capscrew	8
39		1396174	Drive Shaft (Diesel)	1
39		53065	Flange	2
39		278085	Universal Joint Kit	1
39		1394581	Drive Shaft (Gasoline/LPG)	1

©2003 HYSTER COMPANY

FAN DRIVE ASSEMBLY

ITEM		PART NO.	DESCRIPTION	QTY
39		53065	Flange	2
39		278085	Universal Joint Kit	1
40		136985	Capscrew	1
41		1396726	Washer	1
42	**c**	1394702	Pulley	1
42	**d**	1495665	Pulley	1
43		292682	Lockwasher	2
44		287854	Capscrew	6
44		287837	Capscrew (Diesel)	6
45	**c**	320159	Washer	4
46		1499373	Bracket	1
46	**d**	2035323	Bracket	1
47		1397807	Mount (Long Wheel Base)	2
48		1397808	Washer (Long Wheel Base)	2
49		320161	Washer	6
50		292535	Capscrew	2
51		292683	Lockwasher	6
52		287837	Capscrew	6

FOOTNOTES:

a Service with 1504180 (Qty. 1), 124668 (Qty. 2), 1504256 (Qty. 1)
b Service with Fan Mount Assembly 1504426
c ⇒ S/N K005V-02243Z
d S/N K005V-02244Z ⇒
e ⇒ S/N K005Y-01822Y
f S/N K005Y-01822Y⇔S/N K005Y-02243Z
g S/N K005Y-01823Y ⇒

©2003 HYSTER COMPANY

NOTES

EXHAUST (Figure 2-4)
GASOLINE AND LPG
WITHOUT LOW EMISSIONS
(⇒S/N PENDING PER ECN 73989)

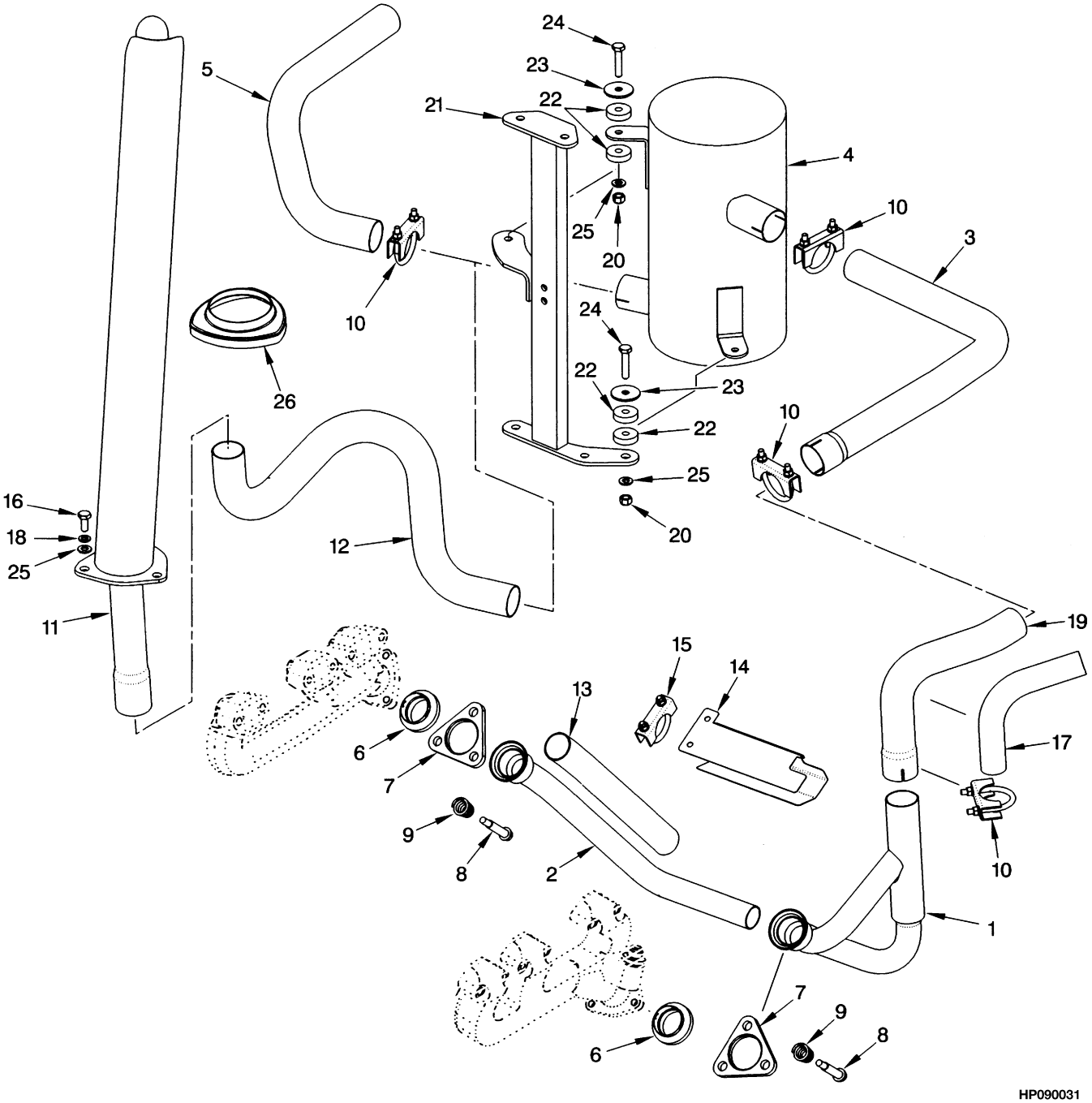

©2003 HYSTER COMPANY

EXHAUST
GASOLINE AND LPG
WITHOUT LOW EMISSIONS
(⇒S/N PENDING PER ECN 73989)

ITEM		PART NO.	DESCRIPTION	QTY
1		1498089	Exhaust Pipe	1
2		1397820	Exhaust Pipe	1
3		1396576	Exhaust Pipe	1
4	**a**	2037113	Muffler	1
4		2037114	Muffler	1
5		1394803	Exhaust Pipe (Counterweight)	1
6		1397815	Seal	2
7		1397474	Flange	1
8		1337118	Capscrew	2
9		1335898	Spring	2
10		63116	Clamp	4
11		1396574	Overhead Exhaust	1
12		1396696	Exhaust Pipe	1
13		1399792	Shield	1
14		1397822	Shield	1
15		68968	Clamp	1
16		287854	Capscrew	3
17		1399791	Shield	1
18		292682	Lockwasher	3
19		1398118	Exhaust Pipe	1
20		316826	Nut	2
21		1499369	Bracket	1
22		1351177	Cushion	4
23		1351176	Washer	2
24		292517	Capscrew	2
25		320159	Washer	5
26		1351178	Cover	1

FOOTNOTES:
a Type GS and LPS

©2003 HYSTER COMPANY

EXHAUST (Figure 2-5)
GASOLINE AND LPG
WITHOUT LOW EMISSIONS
(S/N PENDING PER ECN 73989⇒)

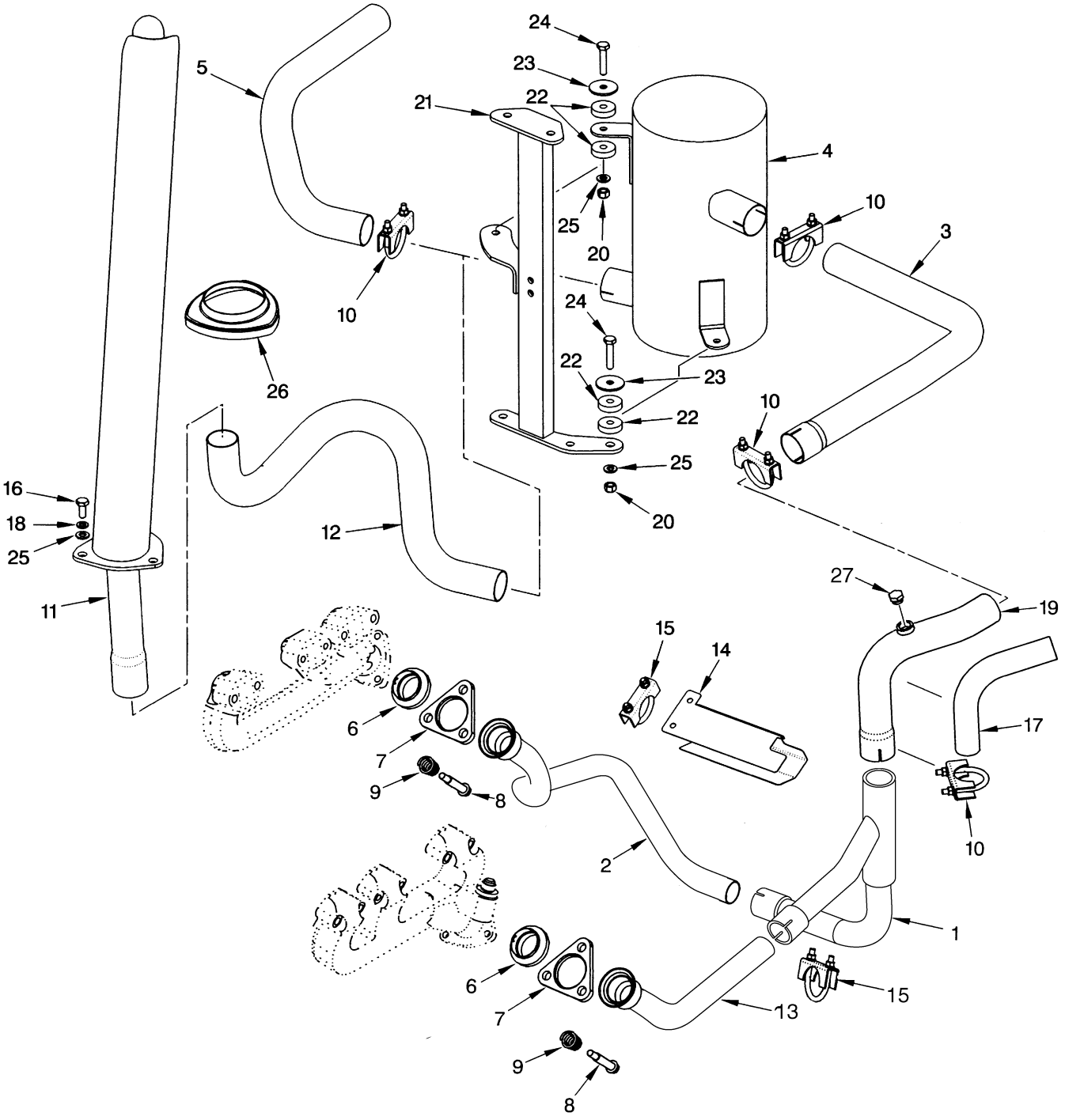

BP090015

©2003 HYSTER COMPANY

EXHAUST
GASOLINE AND LPG
WITHOUT LOW EMISSIONS
(S/N PENDING PER ECN 73989⇒)

ITEM		PART NO.	DESCRIPTION	QTY
1		1476015	Exhaust Pipe	1
2		1476018	Exhaust Pipe	1
3		1476107	Exhaust Pipe	1
4	**a**	2037113	Muffler	1
4		2037114	Muffler	1
5		1394803	Exhaust Pipe (Counterweight)	1
6		1338258	Seal	2
7		1499514	Flange	2
8		1337118	Capscrew	6
9		1335898	Spring	6
10		63116	Clamp	4
11		1396574	Overhead Exhaust	1
12		1396696	Exhaust Pipe	1
13		1476017	Exhaust Pipe	1
14		1397822	Shield	1
15		68968	Clamp	2
16		287854	Capscrew	3
17		1399791	Shield	1
18		292682	Lockwasher	3
19		1500439	Exhaust Pipe	1
20		316826	Nut	2
21		1499369	Bracket	1
22		1351177	Cushion	4
23		1351176	Washer	2
24		292517	Capscrew	2
25		320159	Washer	5
26		1351178	Cover	1
27		1396518	Plug	1

FOOTNOTES:
a Type GS and LPS

©2003 HYSTER COMPANY

EXHAUST (Figure 2-6)
3-WAY CATALYTIC CONVERTER
LPG WITH LOW EMISSIONS
(⇒S/N PENDING PER ECN 73989)

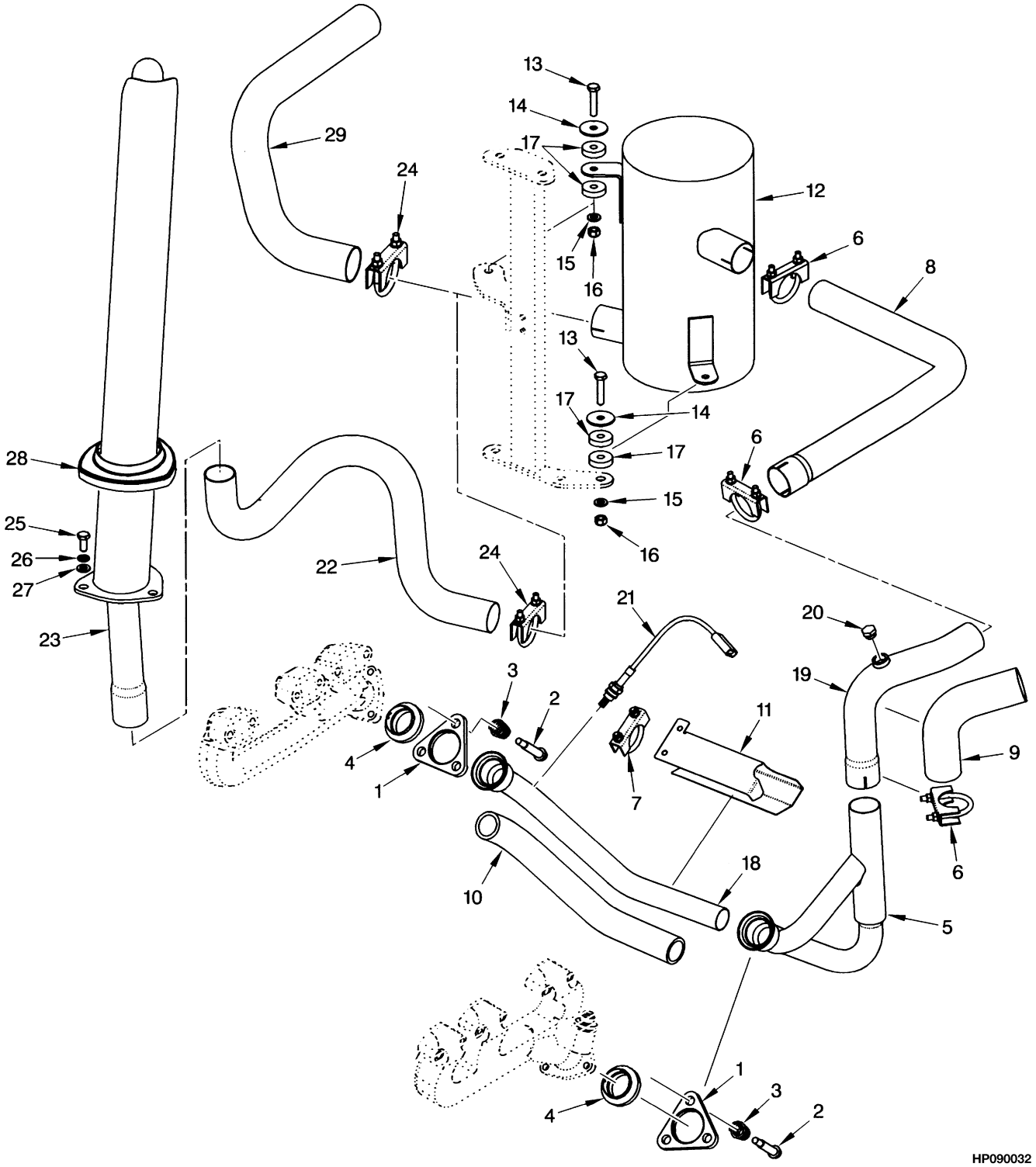

©2003 HYSTER COMPANY

EXHAUST
3-WAY CATALYTIC CONVERTER
LPG WITH LOW EMISSIONS
(⇒S/N PENDING PER ECN 73989)

ITEM		PART NO.	DESCRIPTION	QTY
1		1397474	Flange	2
2		1337118	Capscrew	6
3		1335898	Spring	6
4		1397815	Seal	2
5		1397816	Exhaust Pipe (Exhaust)	1
6		63116	Clamp	3
7		68968	Clamp	1
8		1396576	Exhaust Pipe	1
9		1399791	Shield	1
10		1399792	Shield	1
11		1397822	Shield	1
12		2037124	Muffler (3-Way)	1
13		292517	Capscrew	2
14		1351176	Washer	2
15		320159	Washer	2
16		316826	Nut	2
17		1351177	Cushion	4
18	**a**	1392734	Exhaust Pipe	1
18	**b**	1397820	Exhaust Pipe	1
19	**a**	1392735	Exhaust Pipe	1
19	**b**	1398118	Exhaust Pipe	1
20		1396518	Plug	1
21		1397866	Oxygen Sensor	1
22		1396696	Exhaust Pipe	1
23		1396574	Overhead Exhaust	1
24		63116	Clamp	5
25		287854	Capscrew	3
26		292682	Lockwasher	3
27		320159	Washer	3
28		1351178	Cover	1
29		1394803	Exhaust Pipe (Counterweight)	1

FOOTNOTES:
a ⇒ S/N K005D-03078X
b S/N K005D-03079X ⇒

EXHAUST (Figure 2-7)
3-WAY CATALYTIC CONVERTER
LPG WITH LOW EMISSIONS
(S/N PENDING PER ECN 73989⇒)

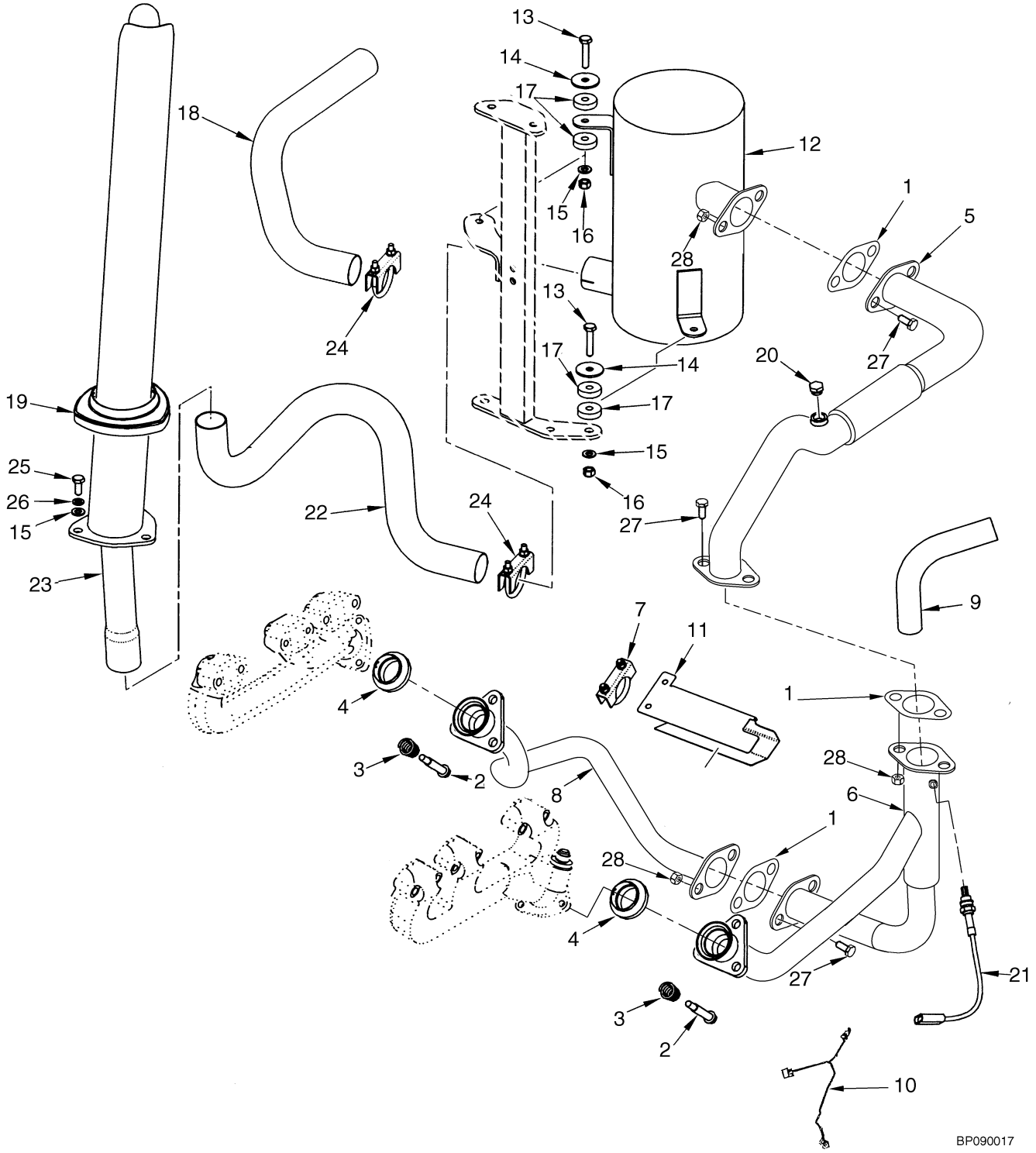

©2003 HYSTER COMPANY

EXHAUST
3-WAY CATALYTIC CONVERTER
LPG WITH LOW EMISSIONS
(S/N PENDING PER ECN 73989⇒)

ITEM	PART NO.	DESCRIPTION	QTY
1	1402189	Gasket	3
2	1337118	Capscrew	6
3	1335898	Spring	6
4	1338258	Seal	2
5	1476045	Exhaust Pipe	1
6	1476048	Exhaust Pipe	1
7	68968	Clamp	1
8	1476052	Exhaust Pipe	1
9	1511725	Shield	1
10	2054282	Wire Harness (Closed Loop)	1
11	1397822	Shield	1
12	2054419	Muffler (3-Way)	1
13	292517	Capscrew	2
14	1351176	Washer	2
15	320159	Washer	5
16	316826	Nut	2
17	1351177	Cushion	4
18	1394803	Exhaust Pipe (Counterweight)	1
19	1351178	Cover	1
20	1396518	Plug	1
21	1397866	Oxygen Sensor	1
22	1396696	Exhaust Pipe	1
23	1396574	Overhead Exhaust	1
24	63116	Clamp	2
25	287854	Capscrew	3
26	292682	Lockwasher	3
27	1512403	Capscrew	6
28	1460477	Nut	6

©2003 HYSTER COMPANY

EXHAUST (Figure 2-8)
DIESEL

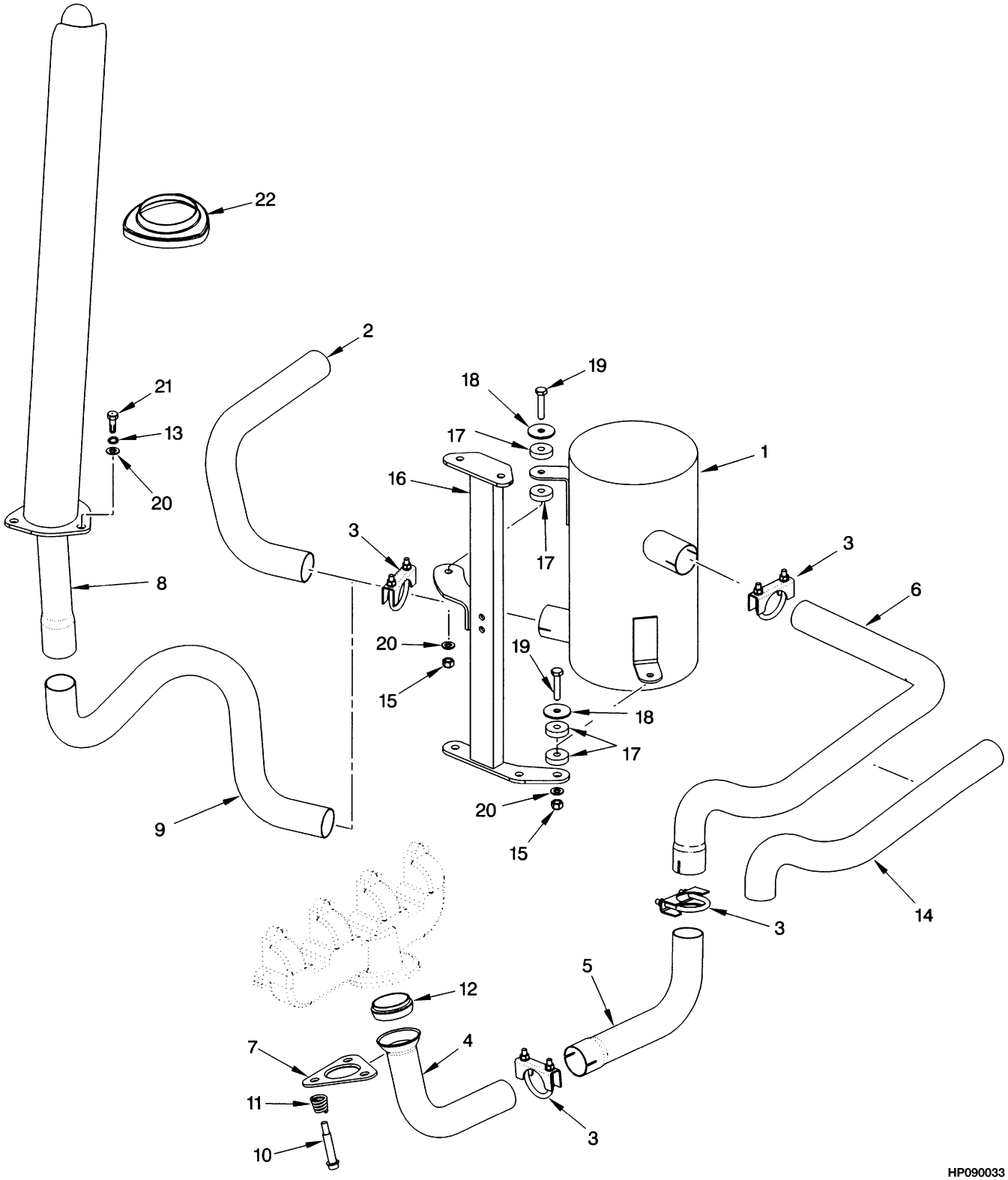

©2003 HYSTER COMPANY

EXHAUST
DIESEL

ITEM		PART NO.	DESCRIPTION	QTY
1	**a**	2037113	Muffler	1
1		2037114	Muffler	1
1	**b**	2038000	Muffler	1
2		1394803	Exhaust Pipe (Counterweight)	1
3		63116	Clamp	4
4		1396076	Exhaust Pipe	1
5		1398113	Exhaust Pipe	1
6		1398114	Exhaust Pipe	1
7		1396079	Adapter	1
8		1396574	Overhead Exhaust	1
9		1396696	Exhaust Pipe	1
10		1337118	Capscrew	1
11		1335898	Spring	1
12		1396139	Seal	1
13		292682	Lockwasher	3
14		1399791	Shield	1
15		316826	Nut	2
16		1499369	Bracket	1
17		1351177	Cushion	4
18		1351176	Washer	2
19		292517	Capscrew	2
20		320159	Washer	5
21		287854	Capscrew	3
22		1351178	Cover	1

FOOTNOTES:
a 2-Way Catalytic
b Type DS

ENGINE MOUNT (Figure 2-9)
GASOLINE AND LPG

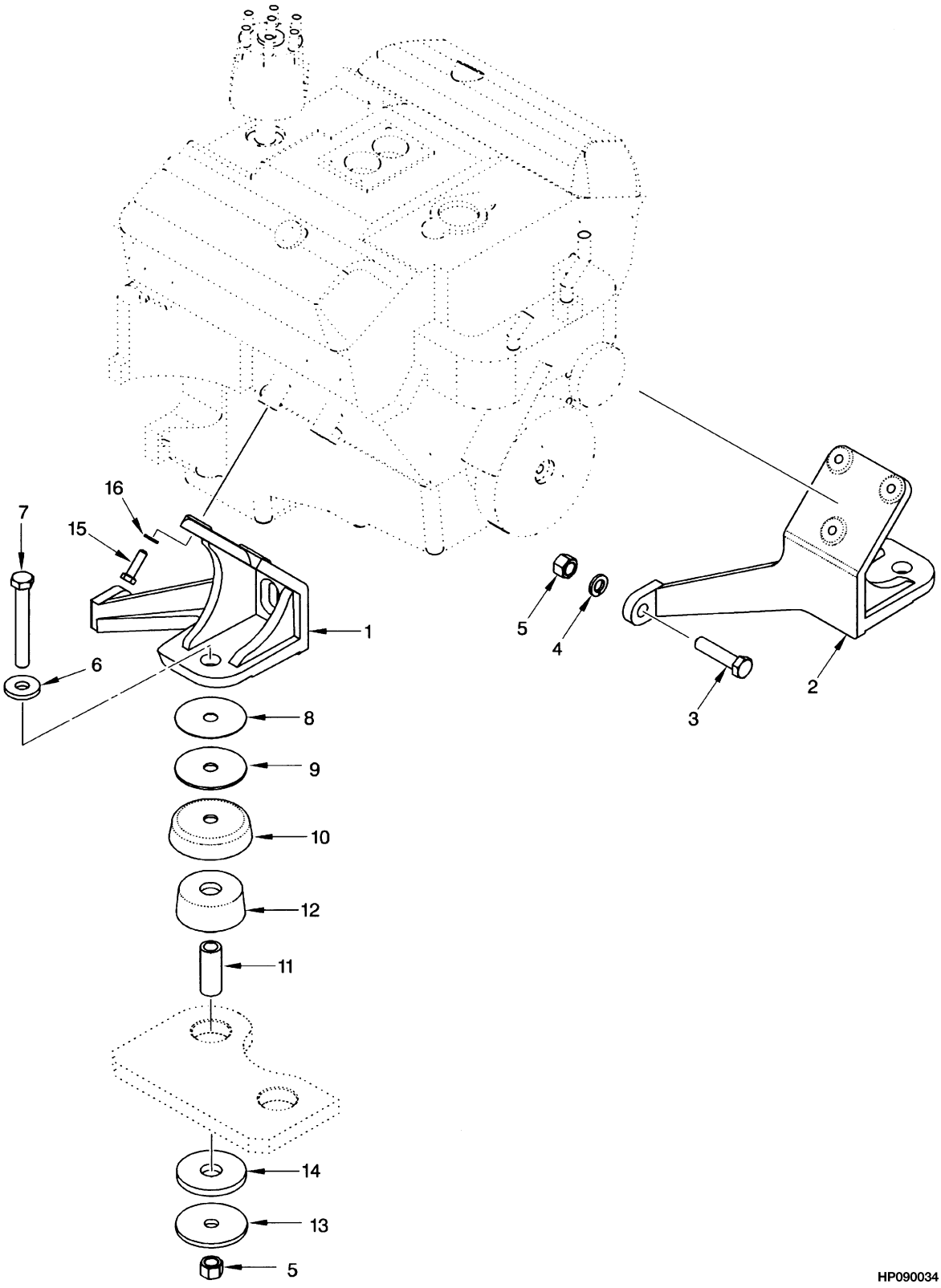

©2003 HYSTER COMPANY

ENGINE MOUNT
GASOLINE AND LPG

ITEM	PART NO.	DESCRIPTION	QTY
1	1394718	Mount (LH)	1
2	1493062	Mount (RH)	1
3	293690	Capscrew	2
4	292685	Lockwasher	2
5	316828	Nut	4
6	1357322	Washer	2
7	292573	Capscrew	2
8	1397762	Shim (0.039 in.)	AR
9	1397761	Washer	2
10	1378198	Snubber Cup	2
11	1394437	Spacer	2
12	1388704	Isolator	2
13	1394438	Washer	2
14	1394436	Bumper	2
15	293630	Capscrew	6
16	292682	Lockwasher	6

©2003 HYSTER COMPANY

ENGINE AND ATTACHING PARTS (Figure 2-10)
GASOLINE AND LPG

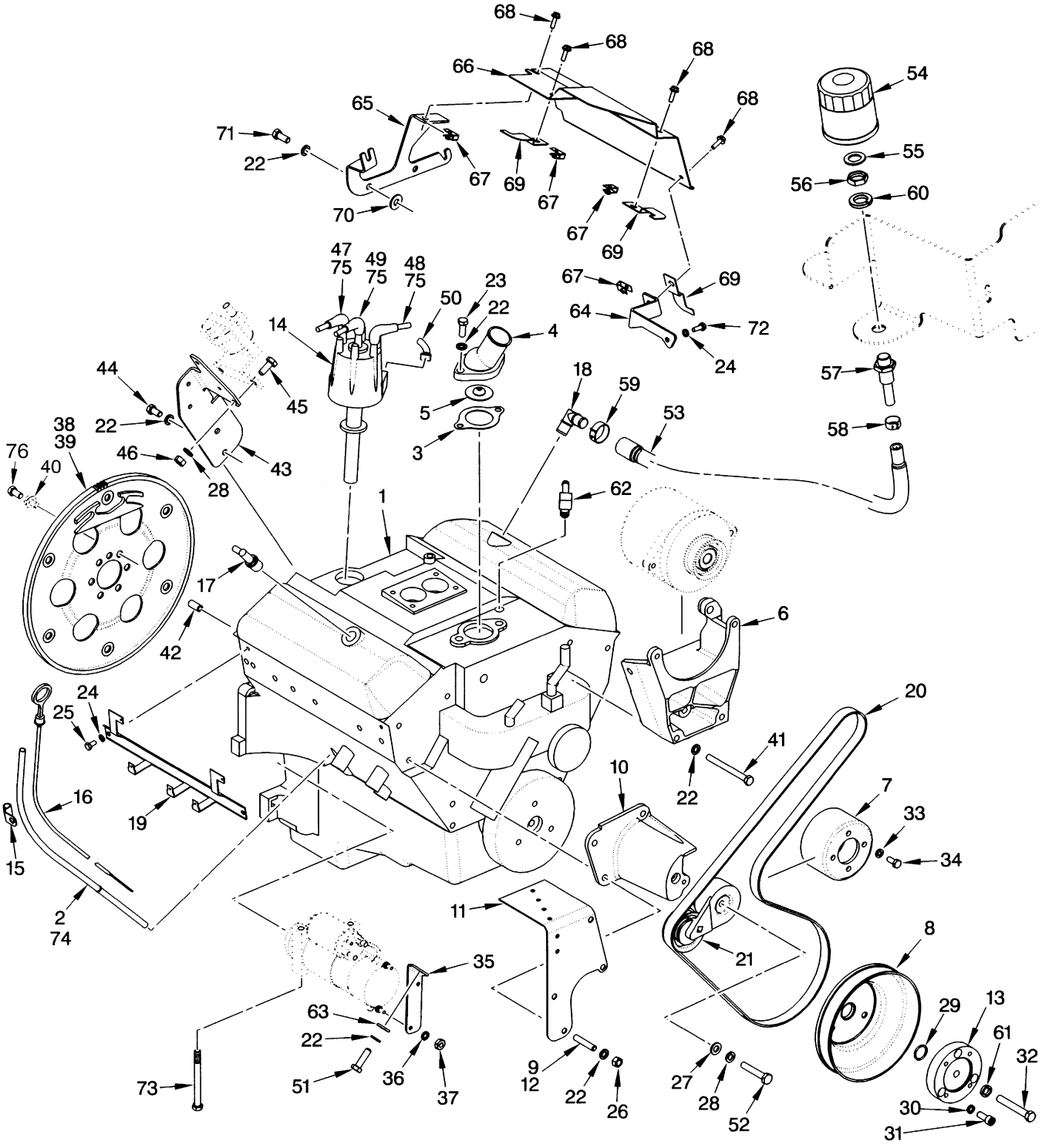

©2003 HYSTER COMPANY

ENGINE AND ATTACHING PARTS
GASOLINE AND LPG

ITEM		PART NO.	DESCRIPTION	QTY
1	**a**	1484634	Engine (1MY 2001 Series Engine)	1
1	**b**	1506842	Engine (2MY 2002 Series Engine)	1
1	**f**	1524199	Engine (3MY 2003 Series Engine)	1
2	**e**	369139	Tube (Dipstick)	1
2	**f**	1514915	Tube (Dipstick)	1
3		1330725	Gasket (Thermostat)	1
4		1371229	Outlet	1
5		1450643	Thermostat	1
6		1384577	Bracket (Alternator)	1
7		1383204	Pulley (Water Pump)	1
8		1377750	Pulley	1
9		1398105	Stud	3
10		1384578	Bracket (Tensioner)	1
11		1397457	Bracket (G and GS)	1
11	**e**	1384581	Bracket (LPG)	1
11	**f**	1523722	Bracket (LPG)	1
12		264134	Sealant	AR
13		1394594	Adapter (Drive Shaft)	1
14		1450869	Distributor (☞ Figure 4-10)	1
15	**e**	1399293	Bracket	1
15	**f**	1519843	Bracket	1
16	**c**	388514	Dipstick	1
16	**d**	1510649	Dipstick	1
17		321734	Valve	1
18		379407	Fitting	1
19		1400173	Support (Spark Plug Wire)	1
20		2043404	V-Belt	1
21		1396779	Tensioner	1
22		15156	Lockwasher	10
23		16598	Capscrew	2
24		15154	Lockwasher	3
25		133469	Capscrew	2
26		15056	Nut	3
27		320159	Washer	1
28		292682	Lockwasher	2
29		39373	O-Ring	1
30		177947	Lockwasher	3
31		34811	Capscrew	3
32		221546	Capscrew	1
33		292681	Lockwasher	4
34		136681	Capscrew	4
35	**e**	1469605	Bracket	1
35	**f**	1533891	Bracket	1
36		15152	Lockwasher	3
37		15052	Nut	2
38		1399309	Lubricant	1
39		1399298	Flywheel	1
40		360387	Sealant	AR
41		221522	Capscrew	1
42		. . . . .	Dowel Pin	1
43	**e**	1397754	Bracket	1

©2003 HYSTER COMPANY

ENGINE AND ATTACHING PARTS
GASOLINE AND LPG

ITEM		PART NO.	DESCRIPTION	QTY
43	**f**	1523723	Bracket	1
44		16597	Capscrew	2
45		287854	Capscrew	2
46		136692	Nut	2
47		1452901	Wire Harness (Spark Plug) (LH)	1
48		1399824	Wire Harness (Spark Plug) (RH)	1
49		1452904	Wire Harness (Coil)	1
50		1351987	Wire Harness (Primary)	1
51		293630	Capscrew	1
52		292521	Capscrew	1
53		1399836	Hose (Breather)	1
54		1350036	Filter (Breather)	1
55		1300152	Washer	1
56		14761	Nut	1
57		379400	Fitting	1
58		379405	Clamp	1
59		353199	Clamp	1
60		15162	Lockwasher	1
61		15157	Lockwasher	1
62		201808	Fitting	1
63		15134	Washer	1
64		1399770	Bracket	1
65		1399771	Bracket	1
66		1508442	Guard	1
67		1350215	U-Nut	4
68		1397614	Screw	4
69		1399825	Support	3
70		15176	Washer	2
71		16598	Capscrew	2
72		18460	Capscrew	1
73		1397716	Bolt	1
74		288394	Adhesive	AR
75		322784	Compound (Corrosive Preventive)	AR
76		1456112	Bolt	6

FOOTNOTES:
a ⇒ S/N K005V-01677Y
b S/N K005V-01678Y⇔S/N PENDING PER ECN 73989
c ⇒ S/N PENDING PER ECN 64934
d S/N PENDING PER ECN 64934 ⇒
e ⇒ S/N PENDING PER ECN 73989
f S/N PENDING PER ECN 73989 ⇒

©2003 HYSTER COMPANY

NOTES

CYLINDER BLOCK (Figure 2-11)
GASOLINE AND LPG

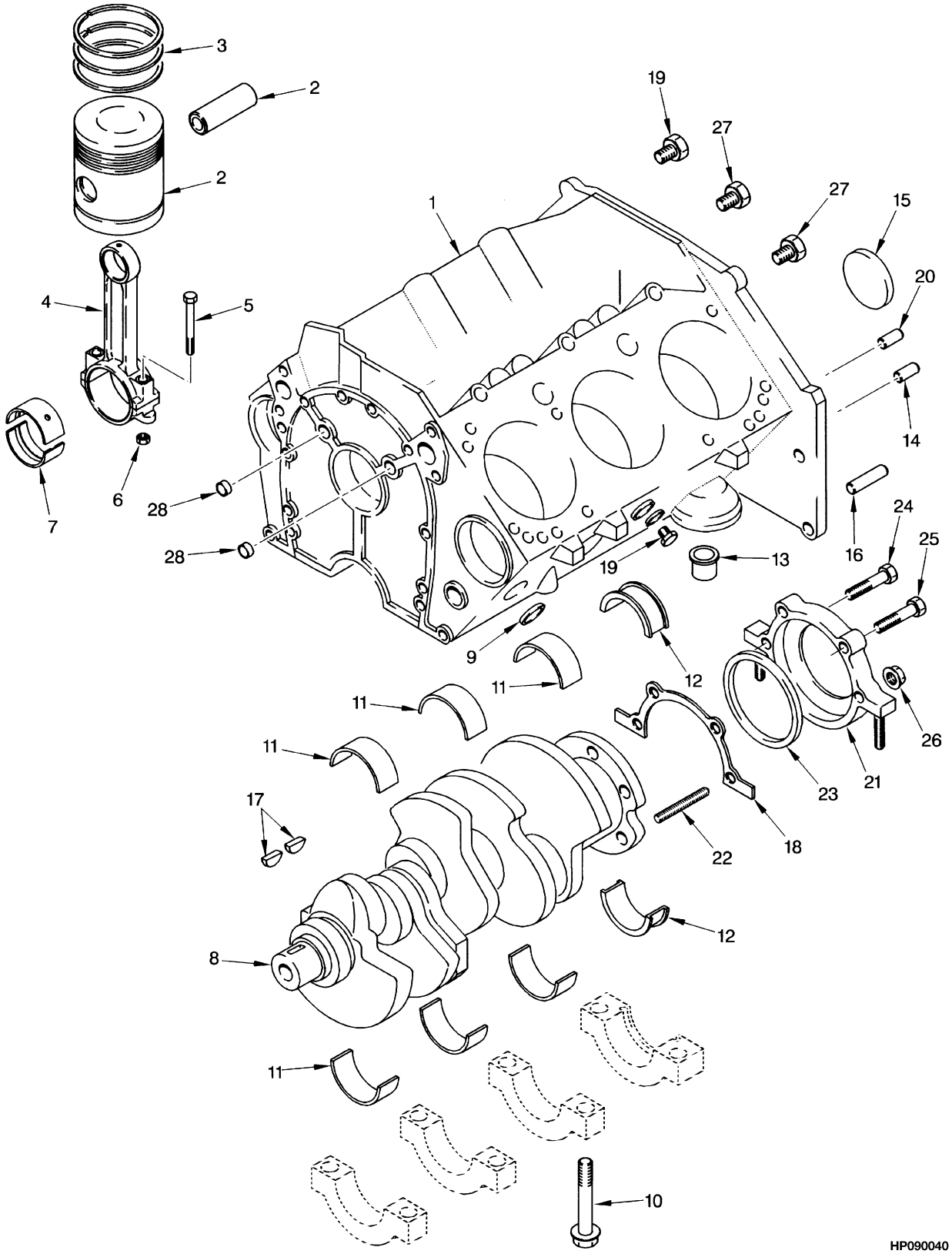

©2003 HYSTER COMPANY

CYLINDER BLOCK
GASOLINE AND LPG

KEY:
A: 1MY 2001 Series Engine
B: 2MY 2002 Series Engine
C: 3MY 2003 Series Engine

ITEM		PART NO.	DESCRIPTION	QTY A	QTY B	QTY C
	b	1484634	Engine	1	..	..
	c	1506842	Engine	..	1	..
	d	1524199	Engine	..	..	1
1		1501157	Short Engine	1	..	..
1		. . . . .	Short Block Assembly	..	1	1
2	**a**	1390759	Piston and Pin Kit (Standard)	6	6	6
2		1390760	Piston and Pin Kit (0,5 mm)	6	6	6
3	**a**	1390761	Piston Ring Kit	6	6	6
3		1390765	Piston Ring Kit (0,5 mm)	6	6	6
4		1360179	Connecting Rod	6	6	6
5		1360182	Bolt	2	2	2
6		1330450	Nut	2	2	2
7	**a**	1390770	Bearing	6	6	6
7		375580	Bearing (0.014 in.) (0,014 mm)	6	..	..
8		1460386	Crankshaft	1	1	1
9		159971	Plug	5	..	..
9		169718	Plug	..	5	..
10		263842	Bolt	10	10	10
11	**a**	1460737	Crankshaft Bearing (Crankshaft)	3	3	3
11		1460738	Bearing Set (0.020 in.) (Crankshaft) (0.020 in.)	3	3	3
12		1390773	Bearing Set (0.001 in.) (Crankshaft)	1	1	1
13		1358156	Valve	1	..	..
13		1514968	Valve	..	1	1
14		159977	Pin	4	4	4
15		1374313	Plug	1	1	1
16		1335499	Pin	2	2	2
17		1451319	Key	1	1	1
18		1335212	Gasket	1	..	..
18		1500884	Gasket	..	1	1
19		274232	Plug	5	2	..
19		1514267	Plug	..	1	..
19		1358026	Plug	..	..	2
20		375601	Pin	1	1	1
21		1460330	Retainer Assembly	1	1	1
22		1450555	Stud	2	2	2
23		1460331	Seal	1	1	1
24		375575	Bolt	2	2	1
25		375602	Bolt	1	1	1
26		1335226	Nut	1	..	..
27		1331341	Plug	3	3	3
28		1358079	Plug (LH)	3	3	..
28		388302	Plug (RH)	2	2	3

FOOTNOTES:
a Standard
b ⇒ S/N K005V-01677Y

©2003 HYSTER COMPANY

CYLINDER BLOCK
GASOLINE AND LPG

c S/N K005V-01678Y⇔S/N PENDING PER ECN 73989
d S/N PENDING PER ECN 73989 ⇒

©2003 HYSTER COMPANY

NOTES

CAMSHAFT AND OIL PAN (Figure 2-12)
GASOLINE AND LPG

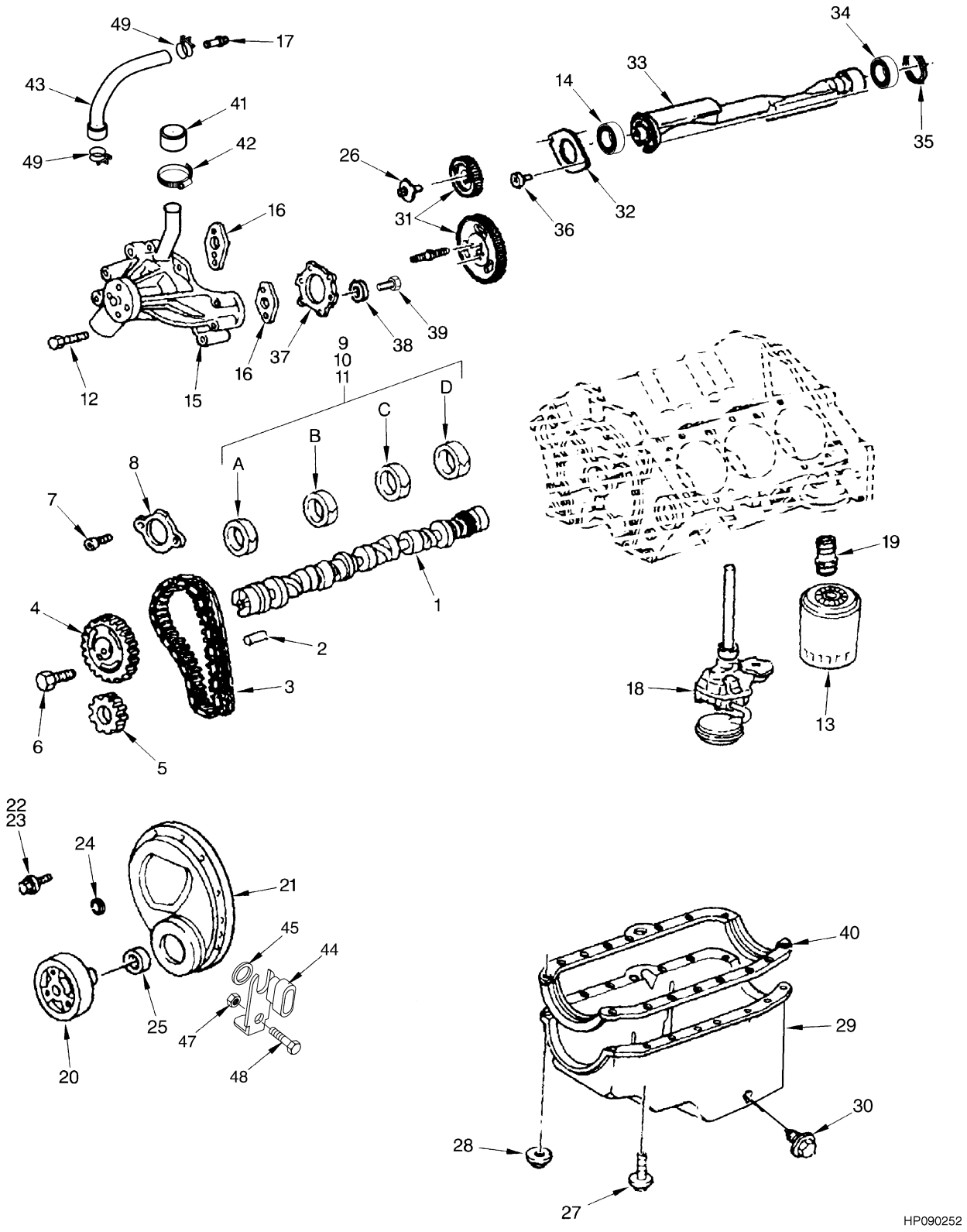

©2003 HYSTER COMPANY

CAMSHAFT AND OIL PAN
GASOLINE AND LPG

ITEM		PART NO.	DESCRIPTION	QTY
	c	1484634	Engine (1MY 2001 Series Engine)	1
	d	1506842	Engine (2MY 2002 Series Engine)	1
	e	1524199	Engine (3MY 2003 Series Engine)	1
1		1456111	Camshaft	1
2		1374297	Pin	1
3		1471556	Chain Kit	1
4		. . . . .	Sprocket	1
5		. . . . .	Sprocket	1
6		1374301	Bolt	3
7		1374299	Bolt	2
8		1374298	Retainer	1
9	**b**	1454955	Bearing (Position A, D)	2
9	**a**	1454955	Bearing (Position A)	1
10	**b**	1454956	Bearing (Position C)	1
10	**a**	1454956	Bearing (Position B, D)	2
11	**b**	1454957	Bearing (Position B)	1
11	**a**	1454957	Bearing (Position C)	1
12		1383257	Bolt (2001 Series Engine)	4
12		1383257	Bolt (2002 Series Engine)	5
12		1383257	Bolt (2003 Series Engine)	5
13		1320000	Oil Filter	1
14		1451321	Bearing	1
15		1389100	Water Pump	1
16		263828	Gasket	2
17		1393350	Nipple	1
18		1386176	Oil Pump	1
19		375587	Fitting	1
20		1386178	Damper (2001 Series Engine)	1
20		1514969	Damper (2002 Series Engine)	1
20		1514969	Damper (2003 Series Engine)	1
21		1386180	Cover (2001 Series Engine)	1
21		1514268	Cover (2002 Series Engine)	1
21		1514268	Cover (2003 Series Engine)	1
22		1386179	Bolt	3
23		1377103	Bolt	2
24		1389092	Grommet (2001 Series Engine)	1
24		1389092	Grommet (2002 Series Engine)	6
24		1389092	Grommet (2003 Series Engine)	6
25		1377104	Seal	1
26		1374317	Bolt	6
27		1386183	Bolt	10
28		1360178	Nut (2001 Series Engine)	1
28		388313	Nut (2002 Series Engine)	1
28		388313	Nut (2003 Series Engine)	1
29		1471558	Oil Pan	1
30		1460757	Screw	1
30		1460758	Seal	1
31		1374315	Gear Kit	1
32		1374326	Retainer	1
33		1377107	Shaft	1
34		1374314	Bearing	1

©2003 HYSTER COMPANY

CAMSHAFT AND OIL PAN
GASOLINE AND LPG

ITEM	PART NO.	DESCRIPTION	QTY
35	1374313	Plug	1
36	1339963	Bolt	2
37	1460322	Gasket	1
38	369748	Washer	5
39	1374108	Bolt	10
40	1386184	Gasket	1
41	1383263	Cap	1
42	130845	Clamp	1
43	1460332	Hose	1
44	1514963	Sensor	1
45	1514964	O-Ring	1
46	1514961	Insert (Not Illustrated)	1
47	1514962	Ring	1
48	1514965	Bolt	1
49	1471560	Clamp	2
	1460768	Bearing Kit (Includes Items 9-11)	1
	1454974	Bearing Kit (Includes Items 9-11)	1

FOOTNOTES:
a GM Identifcation Number on Left Side of Rear Transmission Housing Starts with "A" Followed by 8 Digits
b GM Identification Number on Left Side of Rear Transmission Housing is 8 Digits
c ⇒ S/N K005V-01677Y
d S/N K005V-01678Y⇔S/N PENDING PER ECN 73989
e S/N PENDING PER ECN 73989 ⇒

©2003 HYSTER COMPANY

NOTES

CYLINDER HEAD (Figure 2-13)
GASOLINE AND LPG

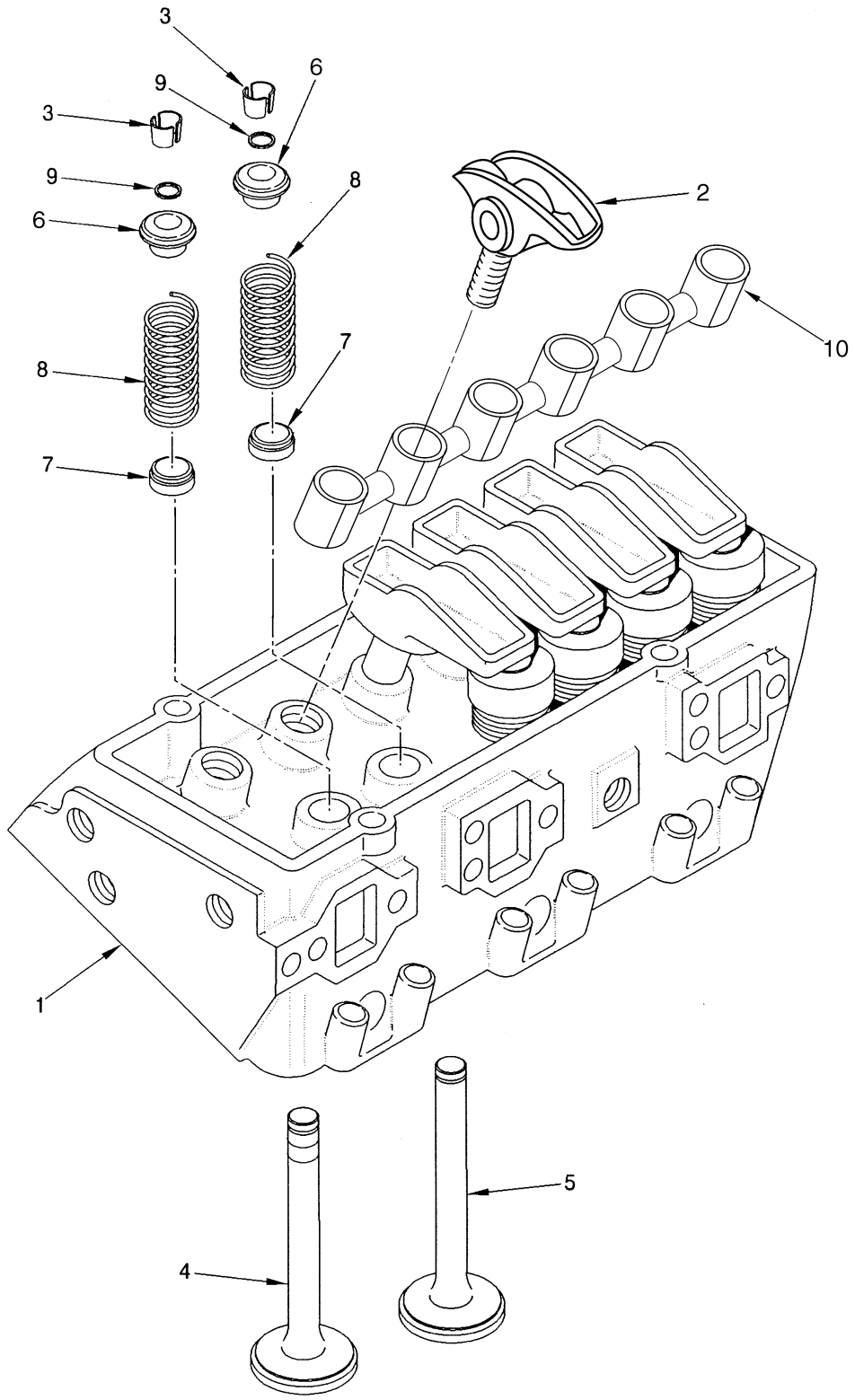

HP090254.tif

©2003 HYSTER COMPANY

CYLINDER HEAD
GASOLINE AND LPG

KEY:
A: 1MY 2001 Series Engine
B: 2MY 2002 Series Engine
C: 3MY 2003 Series Engine

ITEM		PART NO.	DESCRIPTION	QTY A	QTY B	QTY C
	a	1484634	Engine	1	..	..
	b	1506842	Engine	..	1	..
	c	1524199	Engine	..	..	1
1		1471557	Cylinder Head	2	2	2
2		1471555	Rocker Arm	12	12	12
		1389051	Bolt (Includes Item)	4	4	4
3		1377110	Key (Valve)	24	24	24
4		1386194	Exhaust Valve	6	6	6
5		1386195	Inlet Valve	6	6	6
6		1393127	Cap	12	12	12
7		1386197	Seal	12	12	12
8		1386198	Spring	12	12	12
9		1460384	Seal	12	12	12
10		1489643	Pivot Support (Rocker Arm)	..	2	2

FOOTNOTES:
a ⇒ S/N K005V-01677Y
b S/N K005V-01678Y⇔S/N PENDING PER ECN 73989
c S/N PENDING PER ECN 73989 ⇒

VALVE COVER AND INLET MANIFOLD (Figure 2-14)
GASOLINE AND LPG

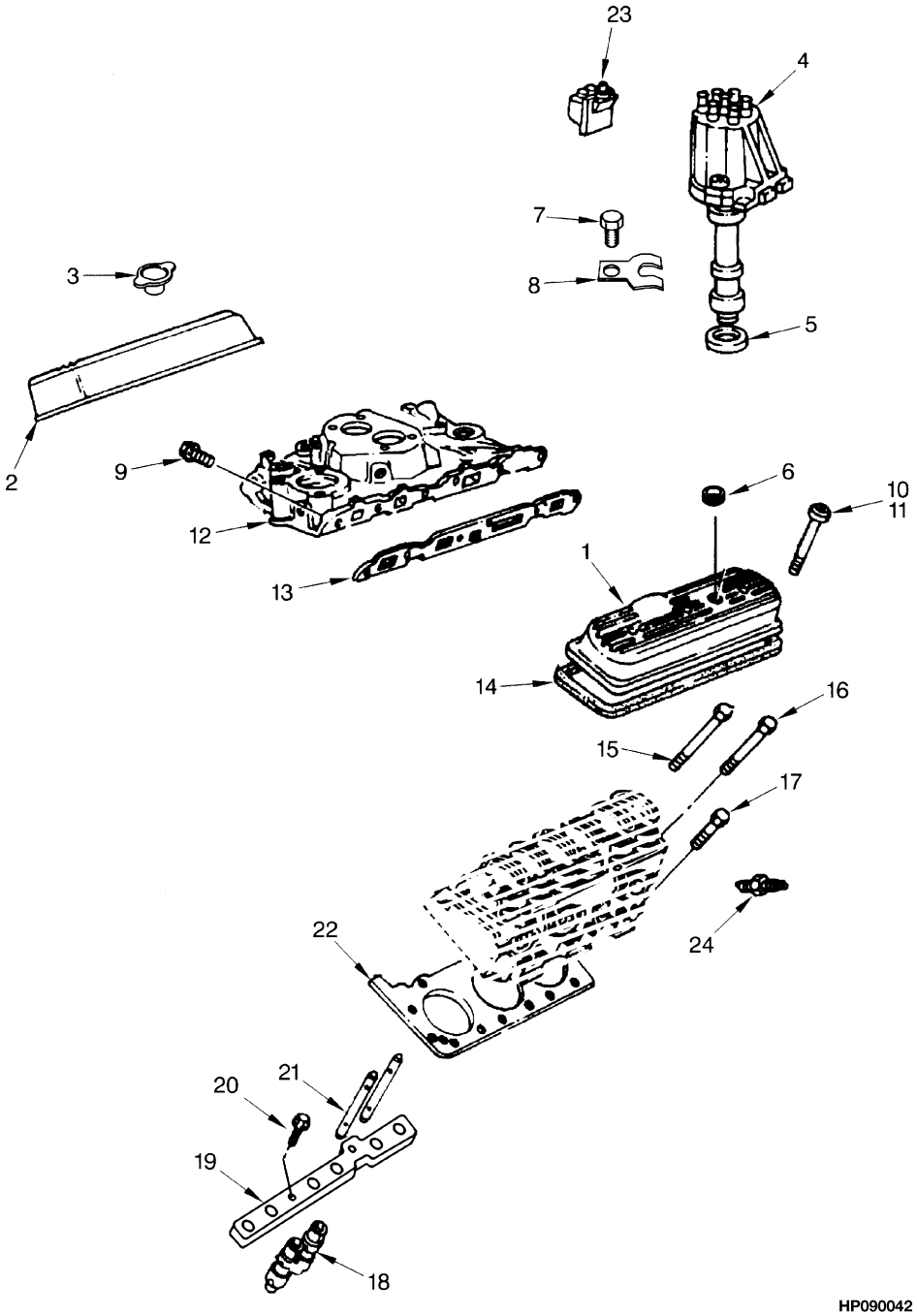

©2003 HYSTER COMPANY

VALVE COVER AND INLET MANIFOLD
GASOLINE AND LPG

KEY:
A: 1MY 2001 Series Engine
B: 2MY 2002 Series Engine
C: 3MY 2003 Series Engine

ITEM		PART NO.	DESCRIPTION	QTY A	QTY B	QTY C
	a	1484634	Engine	1	..	..
	b	1506842	Engine	..	1	..
	c	1524199	Engine	..	..	1
1		1386185	Valve Cover (RH)	1	1	1
2		1389102	Valve Cover (LH)	1	1	1
3		1374290	Cap (Oil)	1	1	1
4		1450869	Distributor (☞ Figure 4-10)	1	1	1
5		1334423	Gasket	1	1	1
6		1374288	Grommet	3	3	3
7		375597	Bolt	1	1	1
8		1335497	Clamp	1	1	1
9		1389093	Bolt	8	8	8
10		1383904	Grommet	6	6	6
11		1374289	Bolt	6	6	6
12		1386186	Manifold (Inlet)	1	1	1
13		1386187	Gasket	1	1	1
14		1374293	Gasket	2	2	2
15		1377792	Bolt	10	10	10
16		1377793	Bolt	4	4	4
17		1377794	Bolt	12	10	10
18		1471559	Lifter Assembly	12	12	12
19		1389050	Guide	2	2	2
20		1389051	Bolt	4	4	4
21		1386189	Rod	12	12	12
22		1386190	Gasket	2	2	2
23		1386191	Ignition Coil	1	1	1
24		1389133	Spark Plug	6	6	6
24		1452376	Spark Plug (Optional)	6	6	6

FOOTNOTES:
a ⇒ S/N K005V-01677Y
b S/N K005V-01678Y⇔S/N PENDING PER ECN 73989
c S/N PENDING PER ECN 73989 ⇒

©2003 HYSTER COMPANY

EXHAUST MANIFOLD (Figure 2-15)
GASOLINE AND LPG
(⇒S/N PENDING PER ECN 73989)

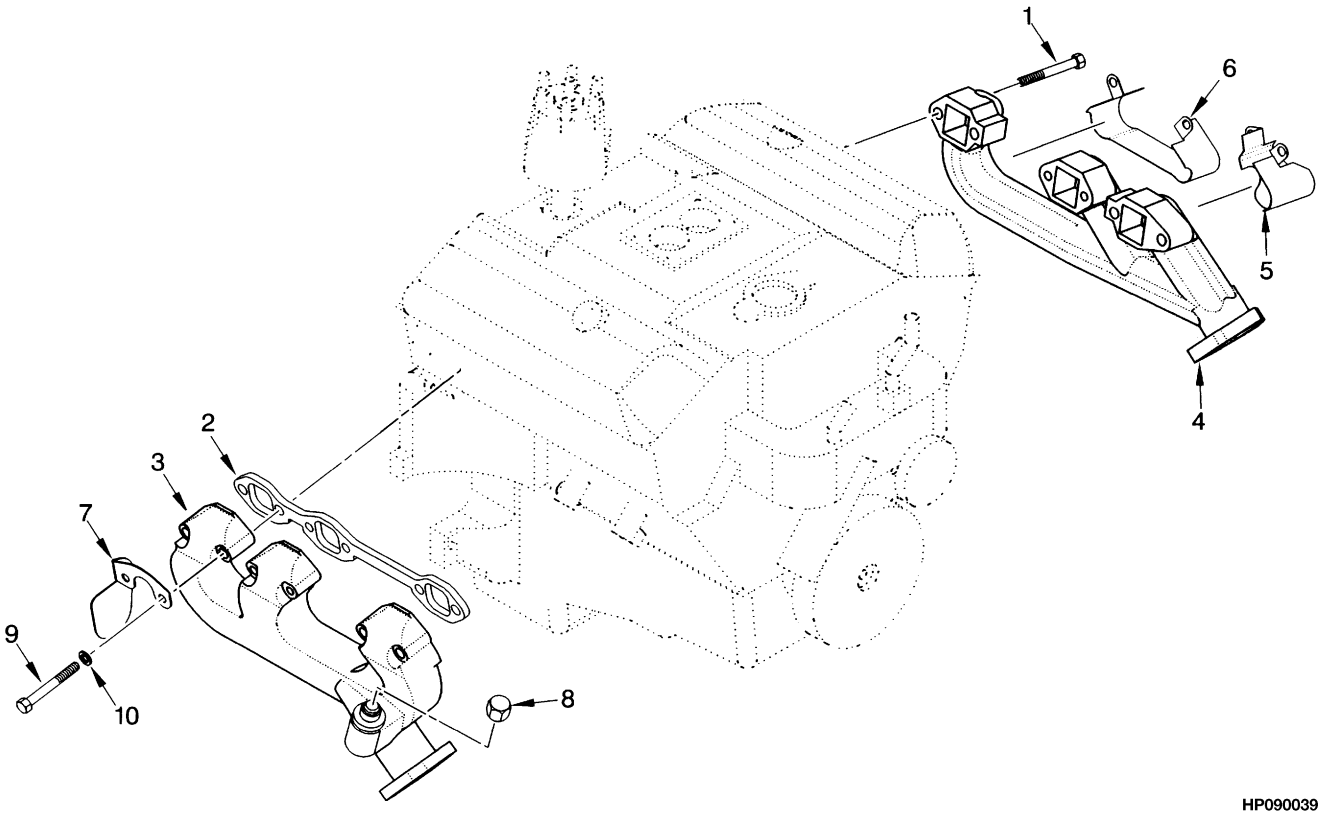

ITEM	PART NO.	DESCRIPTION	QTY
1	1400209	Bolt (LH)	6
2	1398024	Spacer	2
3	1397788	Manifold (LH)	1
4	1397789	Manifold (RH)	1
5	1316494	Shield	1
6	1316488	Shield (Spark Plug)	1
7	352952	Shield	1
8	14587	Fitting	1
9	1383257	Bolt (RH)	6
10	1475161	Washer (RH)	6

©2003 HYSTER COMPANY

NOTES

EXHAUST MANIFOLD (Figure 2-16)
GASOLINE AND LPG
(S/N PENDING PER ECN 73989⇒)

©2003 HYSTER COMPANY

EXHAUST MANIFOLD
GASOLINE AND LPG
(S/N PENDING PER ECN 73989⇒)

ITEM	PART NO.	DESCRIPTION	QTY
1	1383257	Bolt	12
2	1529010	Shield	1
3	1502741	Manifold	2
4	1316488	Shield (Spark Plug)	2
5	1316494	Shield	2

©2003 HYSTER COMPANY

OIL PUMP (Figure 2-17)
GASOLINE AND LPG

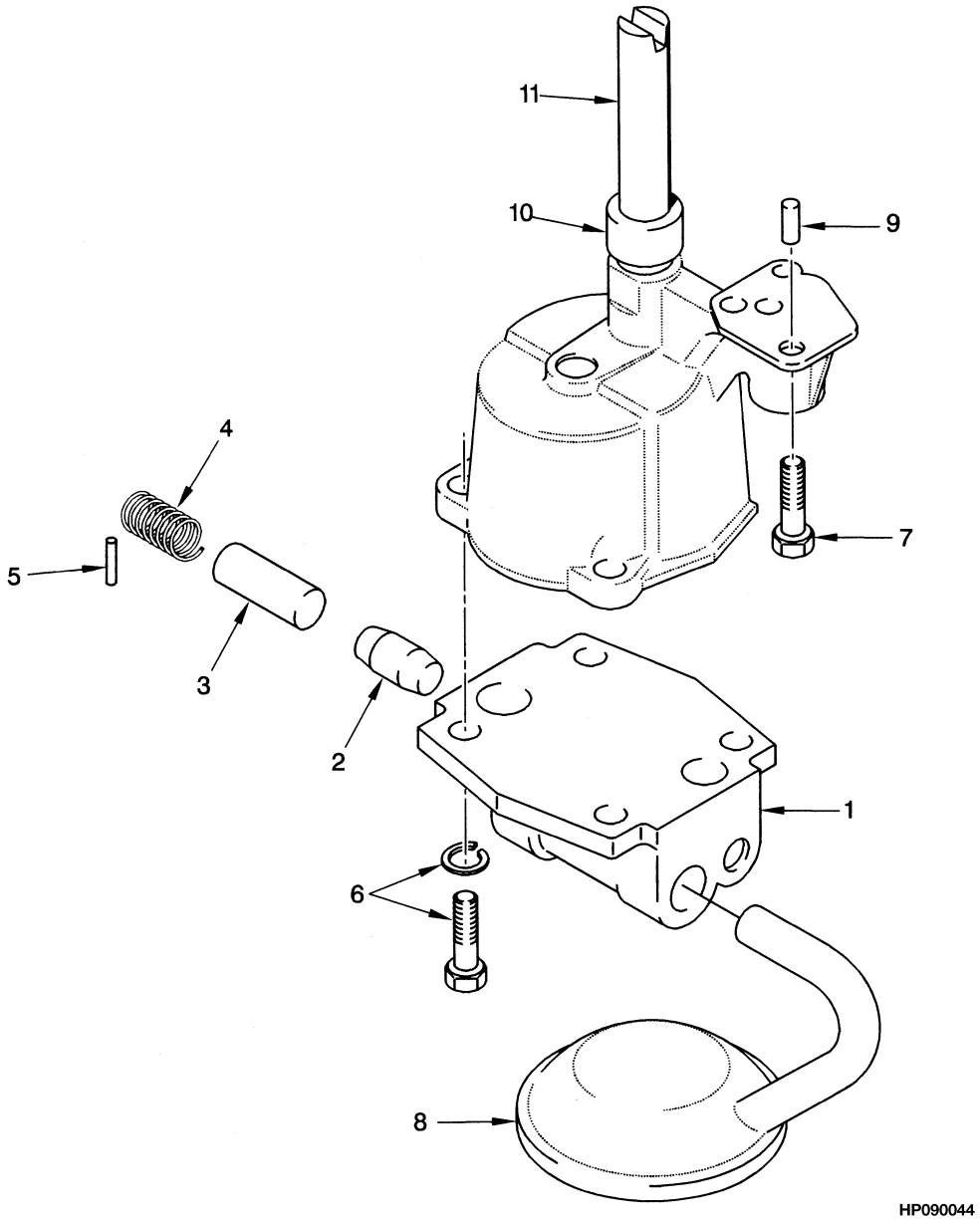

©2003 HYSTER COMPANY

OIL PUMP
GASOLINE AND LPG

ITEM	PART NO.	DESCRIPTION	QTY
	1386176	Oil Pump	1
1	1374319	Cover	1
2	1338223	Stop	1
3	268573	Regulator Valve	1
4	1374320	Spring	1
5	1330453	Pin	1
6	1333541	Screw and Washer	2
7	388306	Bolt	1
8	1386177	Screen	1
9	1450941	Pin	1
10	263795	Retainer	1
11	263794	Shaft	1

©2003 HYSTER COMPANY

ENGINE MOUNT (Figure 2-18)
DIESEL

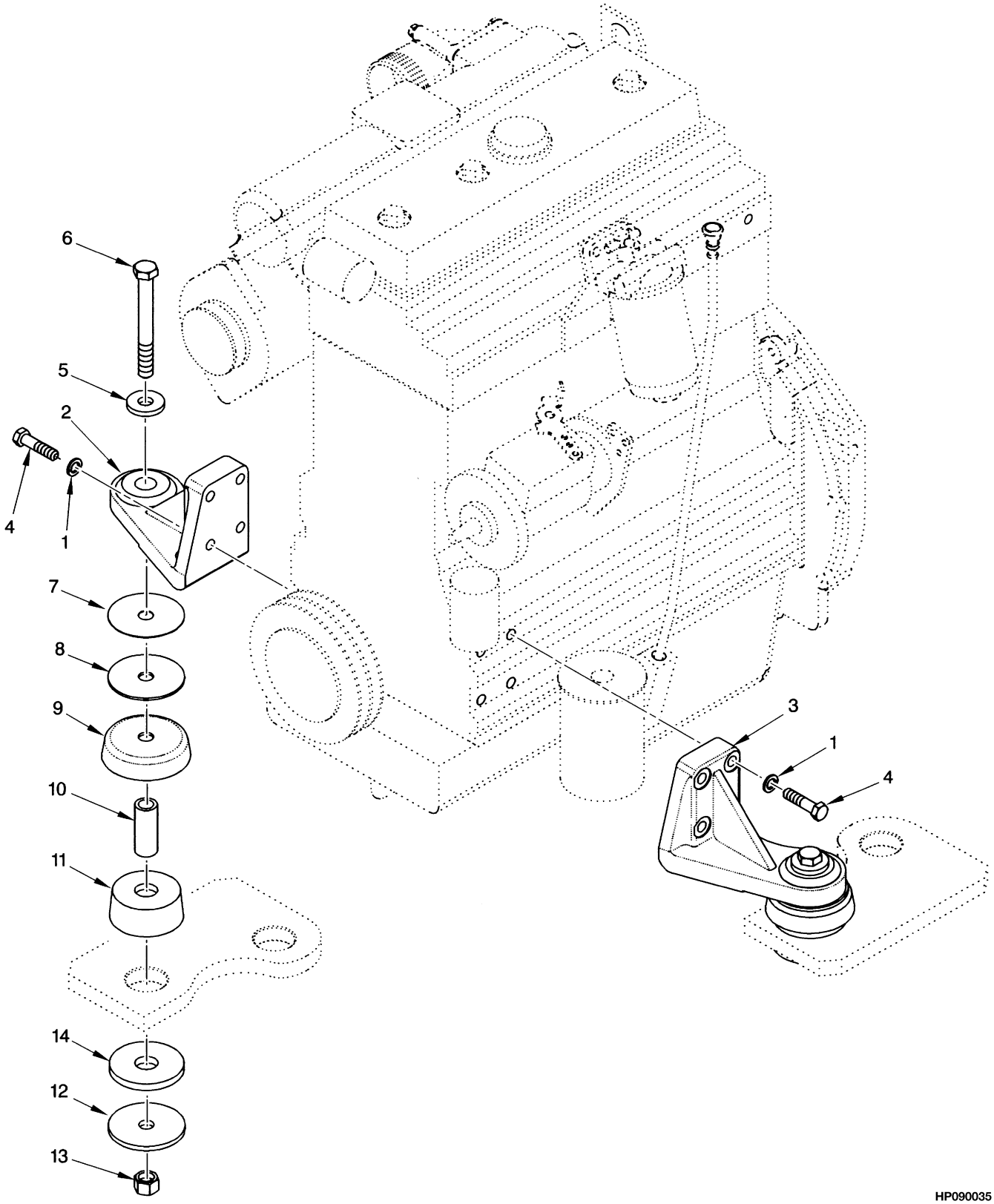

©2003 HYSTER COMPANY

ENGINE MOUNT
DIESEL

ITEM	PART NO.	DESCRIPTION	QTY
1	292683	Lockwasher	8
2	1394716	Mount (LH)	1
3	1394717	Mount (RH)	1
4	293649	Capscrew	8
5	1357322	Washer	2
6	292575	Capscrew	2
7	1397762	Shim (0.039 in.)	AR
8	1397761	Washer	2
9	1378198	Snubber Cup (Snubbing)	2
10	1394437	Spacer	2
11	1388704	Isolator	2
12	1394438	Washer	2
13	316828	Nut	2
14	1394436	Bumper	2

©2003 HYSTER COMPANY

ENGINE AND ATTACHING PARTS (Figure 2-19)
DIESEL

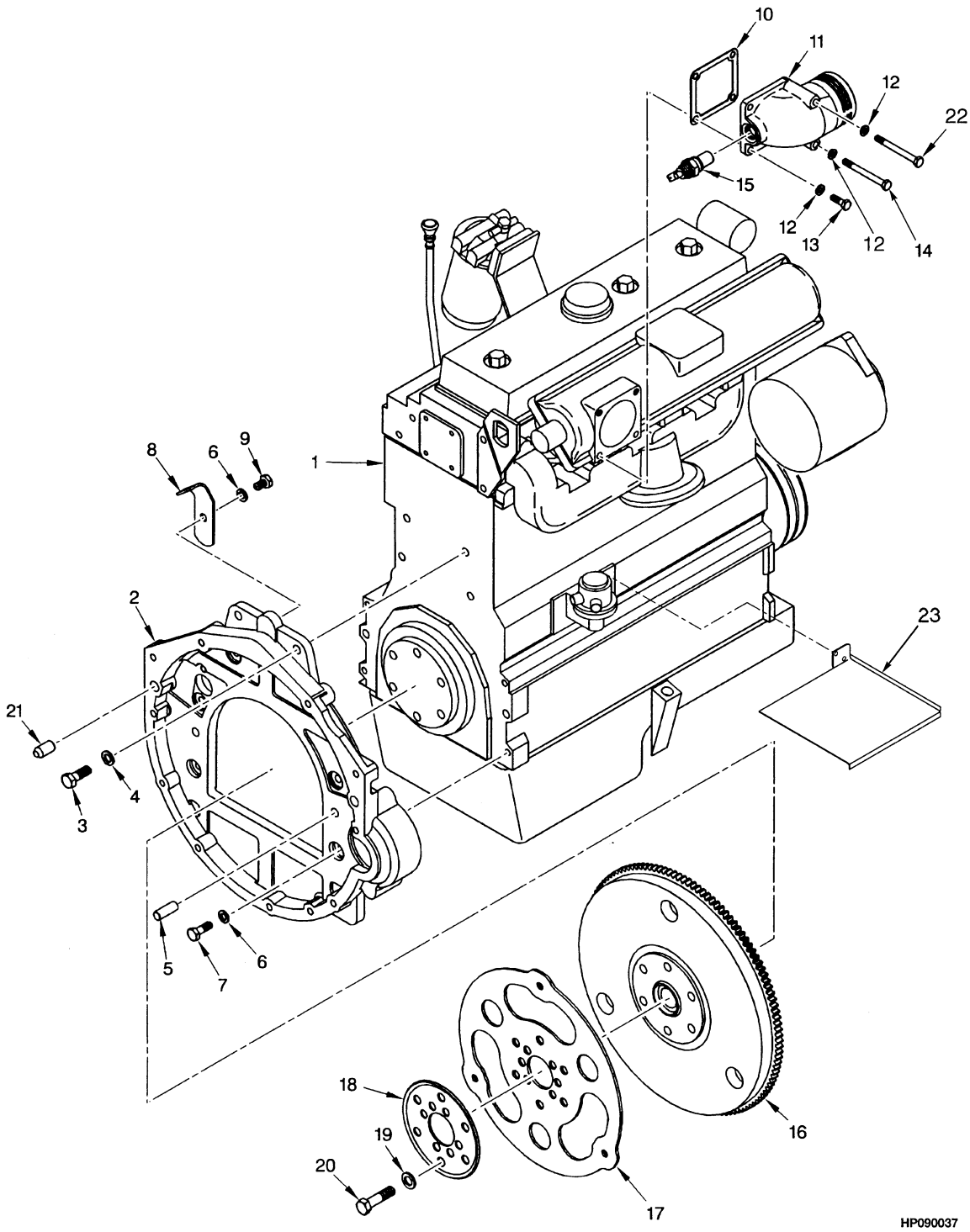

©2003 HYSTER COMPANY

ENGINE AND ATTACHING PARTS
DIESEL

ITEM	PART NO.	DESCRIPTION	QTY
1	1398112	Engine	1
2	1388733	Housing (Flywheel)	1
3	292528	Capscrew	2
4	292683	Lockwasher	2
5	186420	Pin	2
6	292682	Lockwasher	7
7	136985	Capscrew	6
8	1378226	Plate	1
9	292513	Capscrew	1
10	1345795	Gasket (Inlet)	1
11	1394774	Air Intake	1
12	292681	Lockwasher	3
13	136749	Capscrew	2
14	296020	Capscrew	2
15	245885	Heater (Intake) (Intake)	1
16	1388705	Flywheel Assembly	1
16	1388706	Flywheel	1
16	195856	Ring Gear	1
17	1397689	Flexplate	1
18	1388750	Washer	1
19	296422	Washer	6
20	289867	Bolt	6
21	1335499	Pin	2
22	296020	Capscrew	1
23	1512021	Shield (Starter, UL)	1
23	360387	Sealant	AR

©2003 HYSTER COMPANY

ALTERNATOR MOUNTING (Figure 2-20)

DIESEL

(⇒D/B 07/2001)

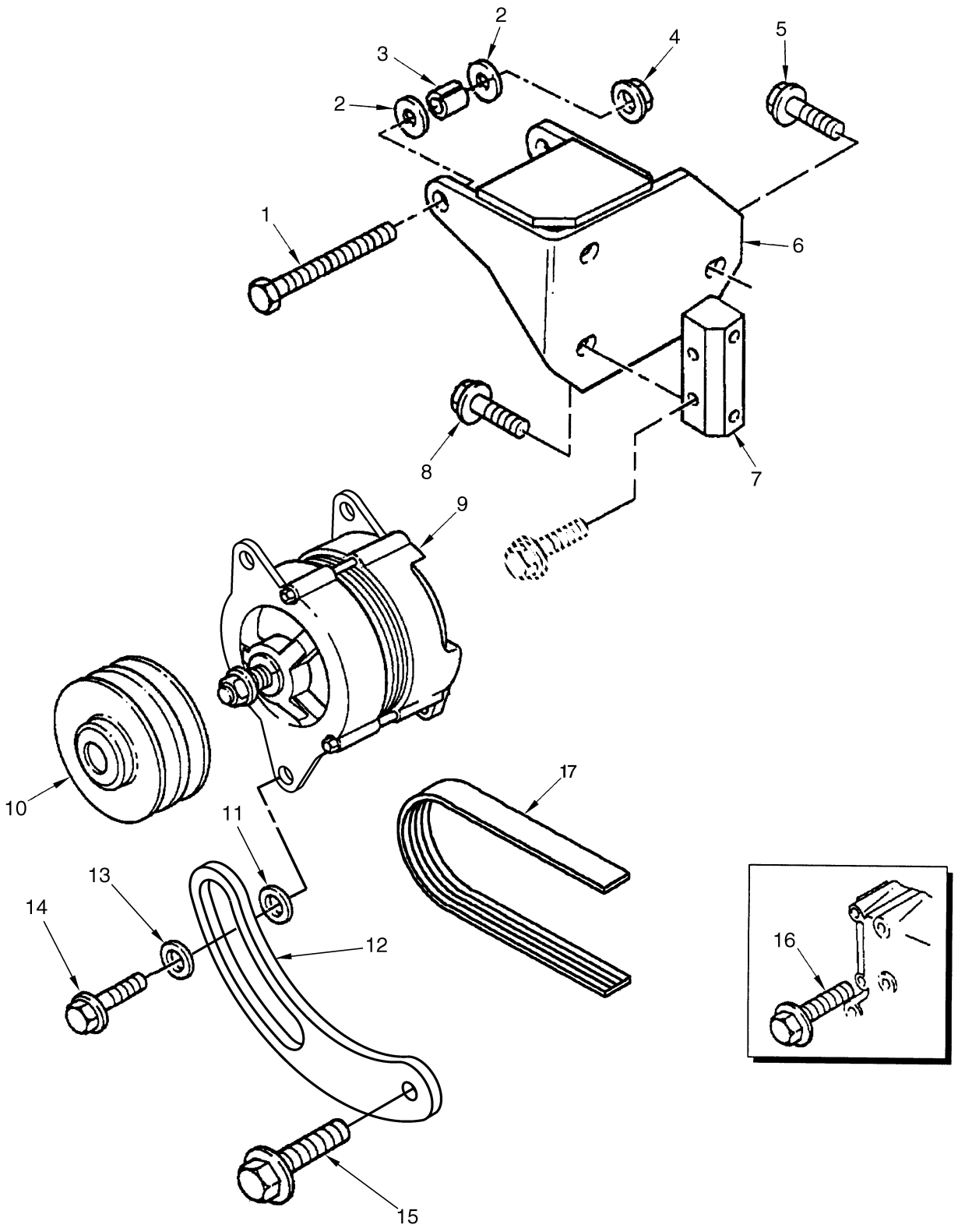

BP090012

©2003 HYSTER COMPANY

ALTERNATOR MOUNTING
DIESEL
(⇒D/B 07/2001)

ITEM		PART NO.	DESCRIPTION	QTY
		1398112	Engine	1
1		1464111	Screw	1
2		1318306	Washer	2
3		1345014	Sleeve	1
4		1451745	Nut	1
5		1306357	Screw	2
6		1464110	Bracket	1
7		1464112	Bracket	1
8		1307910	Screw	3
9	**b**	1469598	Alternator	1
9	**b**	1469601	Wire Harness (Alternator To Engine Harness)	1
9	**a**	1358911	Alternator	1
10		1310277	Pulley	1
11		1464115	Spacer	1
12		1464113	Lever	1
13		1464114	Spacer	1
14		1306353	Screw	1
15		1306358	Screw	1
16		1306362	Screw	3
17		2039256	V-Belt	1

FOOTNOTES:
a ⇒ S/N PENDING PER ECN 73766
b S/N PENDING PER ECN 73766 ⇒

©2003 HYSTER COMPANY

ALTERNATOR MOUNTING (Figure 2-21)

DIESEL

(D/B 07/2001⇒)

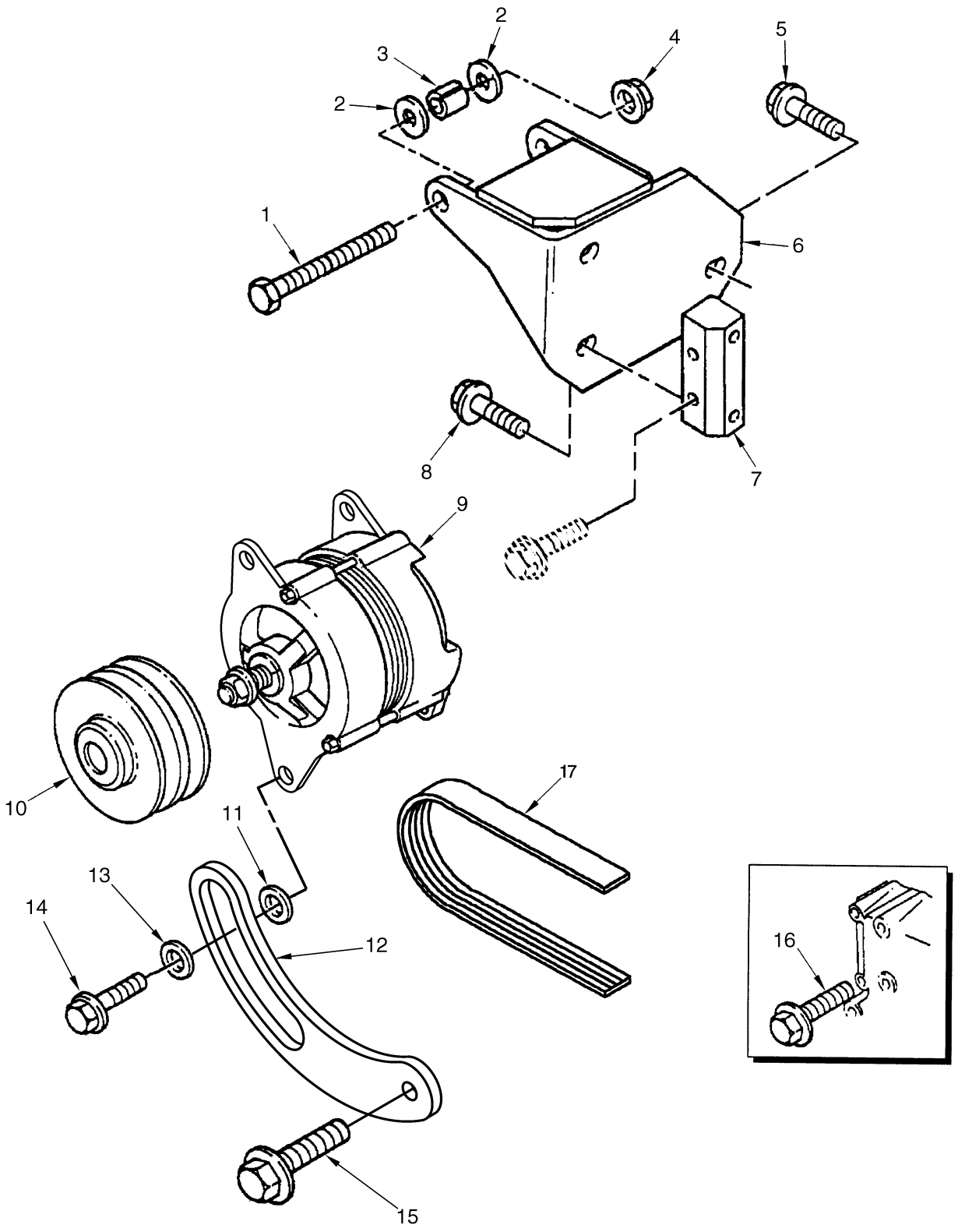

BP090012

©2003 HYSTER COMPANY

ALTERNATOR MOUNTING
DIESEL
(D/B 07/2001⇒)

ITEM	PART NO.	DESCRIPTION	QTY
	1398112	Engine	1
1	1464111	Screw	1
2	1318306	Washer	2
3	1345014	Sleeve	1
4	1451745	Nut	1
5	1306357	Screw	2
6	1464110	Bracket	1
7	1464112	Bracket	1
8	1307910	Screw	3
9	1469598	Alternator	1
9	1394001	Alternator (DS)	1
10	. . . . .	Pulley	1
10	353291	Pulley (DS)	1
11	1464115	Spacer	1
12	1464113	Lever	1
13	1464114	Spacer	1
14	1306353	Screw	1
15	1306358	Screw	1
16	1306362	Screw	3
17	2039256	V-Belt	1

©2003 HYSTER COMPANY

CYLINDER BLOCK (Figure 2-22)
DIESEL
(⇒D/B 07/2001)

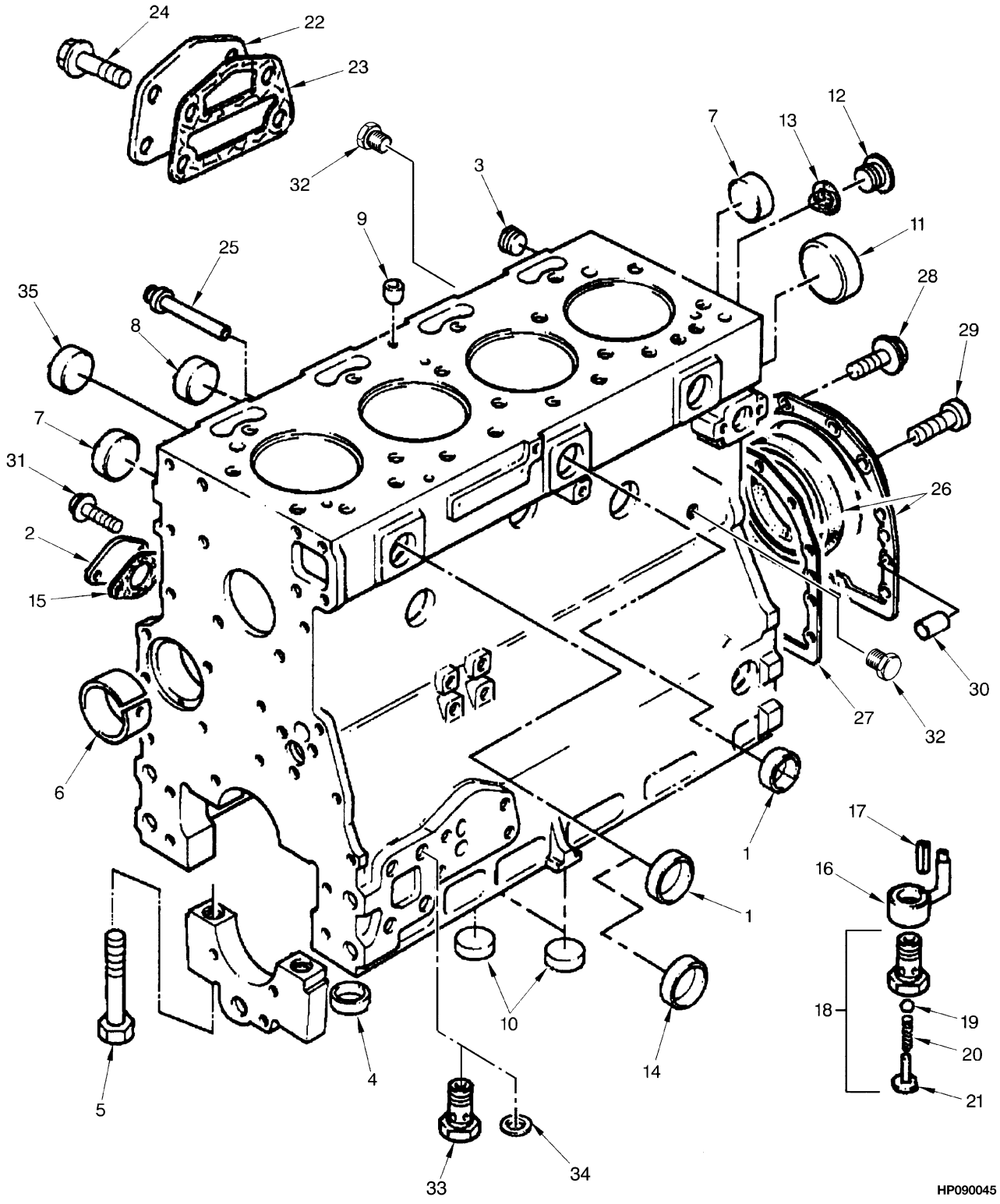

©2003 HYSTER COMPANY

CYLINDER BLOCK
DIESEL
(⇒D/B 07/2001)

ITEM	PART NO.	DESCRIPTION	QTY
	1398112	Engine	1
1	980727	Plug	6
2	1305698	Cover	1
3	15304	Fitting	2
4	99576	Thimble	10
5	16794	Capscrew	10
6	1451625	Bushing	1
7	385531	Plug	6
8	161383	Plug	3
9	992393	Plug	1
10	245800	Plug	2
11	1388387	Plug	1
12	161385	Plug	1
13	984632	Washer	1
14	1456694	Plug	1
15	1357788	Gasket	1
16	1456697	Jet	1
17	1456696	Pin	1
18	1311054	Valve	1
19	1311055	Ball	1
20	1311056	Spring	1
21	1311057	Retainer	1
22	1374982	Plate	1
23	1345800	Gasket	1
24	1307893	Screw	4
25	365854	Plug	1
26	1369077	Housing Assembly	1
26	350397	Seal (Rear)	1
27	1379734	Gasket	1
28	386459	Screw	12
29	1382061	Screw	2
30	158139	Pin	2
31	1306349	Screw	1
32	1459405	Plug	2
33	1456698	Plug	2
34	152605	Spacer	2
35	385554	Plug	2
	1456693	Cylinder Block Kit (Includes Items 1-14, 16-24)	1
	1464018	Gasket Kit (Includes Items 15, 23, 27)	1

©2003 HYSTER COMPANY

CYLINDER BLOCK (Figure 2-23)
DIESEL
(D/B 07/2001⇒)

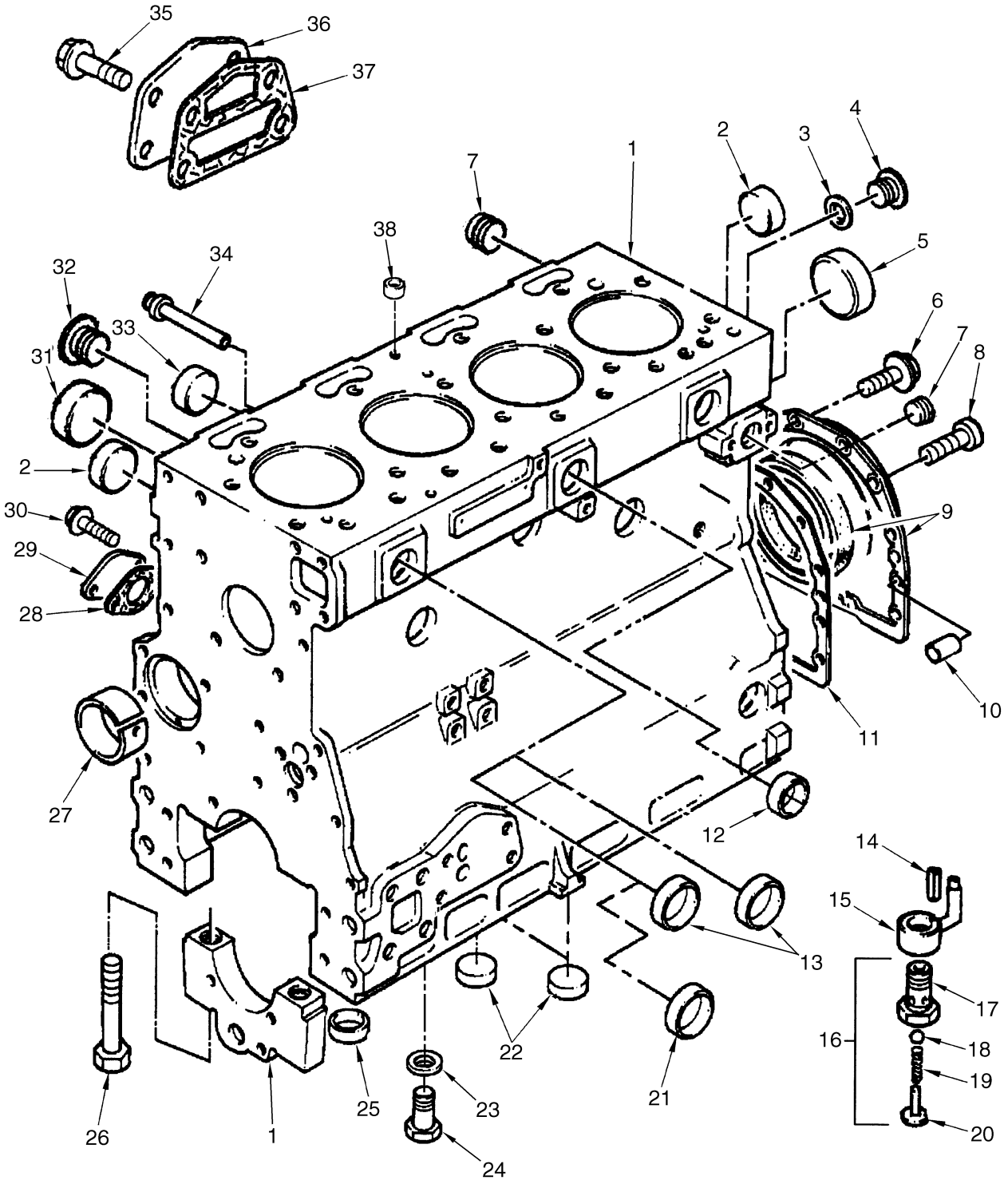

BP090010

©2003 HYSTER COMPANY

CYLINDER BLOCK
DIESEL
(D/B 07/2001⇒)

ITEM	PART NO.	DESCRIPTION	QTY
	1398112	Engine	1
1	. . . . .	Short Block Kit	1
1	1456693	Cylinder Block Kit	1
1	385531	Plug	1
1	. . . . .	Block	1
1	. . . . .	Bearing cap	1
2	385531	Plug	4
3	984632	Washer	1
4	161385	Plug	1
5	1388387	Plug	1
6	386459	Screw	12
7	15304	Fitting	2
8	1382061	Screw	2
9	1369077	Housing Assembly	1
9	. . . . .	Cover	1
9	350397	Seal	1
10	158139	Pin	2
11	1379734	Gasket	1
12	980727	Plug	6
13	349377	Plug	1
14	1456696	Pin	1
15	1456697	Jet	1
16	1311054	Valve	1
17	. . . . .	Body	1
18	1311055	Ball	1
19	1311056	Spring	1
20	1311057	Retainer	1
21	1456694	Plug	1
22	245800	Plug	2
23	152605	Spacer	8
24	16372	Capscrew	8
25	99576	Thimble	10
26	16794	Capscrew	10
27	1451625	Bushing	1
28	1357788	Gasket	1
29	1305698	Cover	1
30	1306349	Screw	2
31	385554	Plug	1
32	1459405	Plug	2
33	161383	Plug	3
34	365854	Plug	3
35	1307893	Screw	4
36	1374982	Plate	1
37	1345800	Gasket	1
38	992393	Plug	1

©2003 HYSTER COMPANY

CRANKSHAFT AND PISTON (Figure 2-24)
DIESEL
(⇒D/B 07/2001)

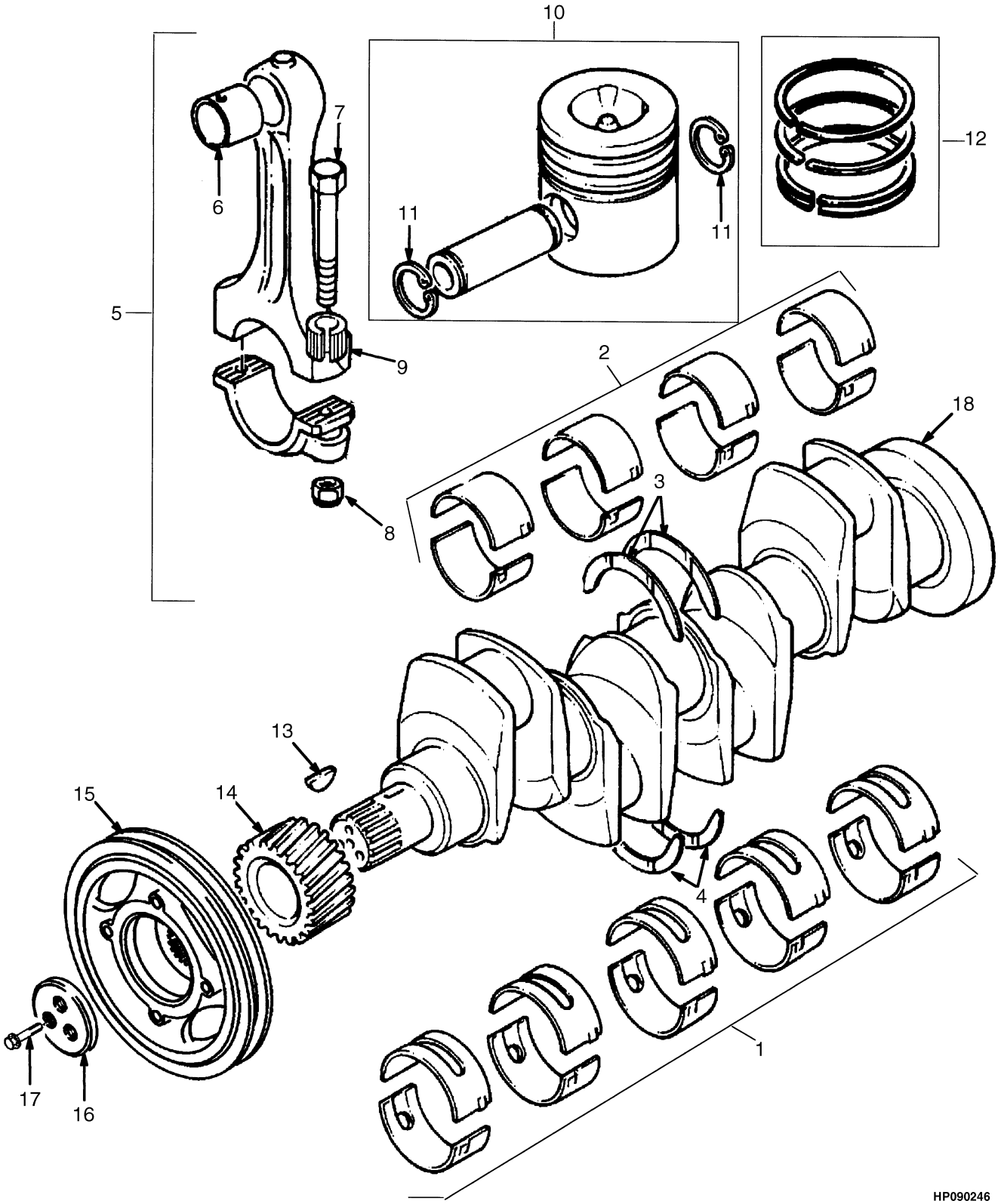

©2003 HYSTER COMPANY

CRANKSHAFT AND PISTON
DIESEL
(⇒D/B 07/2001)

ITEM		PART NO.	DESCRIPTION	QTY
		1398112	Engine	1
1	**ab**	161425	Bearing Kit (Standard)	1
1		161429	Bearing Kit (0.010 in.) (Main)	1
1		161430	Bearing Kit (0.020 in.) (Main)	1
1		161431	Bearing Kit (0.030 in.) (Main)	1
2	**b**	1305699	Bearing Kit (Standard)	1
2		1305701	Bearing Kit (0.010 in.)	1
2		1305702	Bearing Kit (0.020 in.)	1
2		1305703	Bearing Kit (0.030 in.)	1
3	**ab**	842799	Thrust Washer (Standard)	2
3		161296	Thrust Washer (0.007 in.)	2
4	**ab**	842800	Thrust Washer (Standard)	2
4		161297	Thrust Washer (0.007 in.)	2
5		1460543	Connecting Rod Kit (Grade H) (Standard)	4
5		1460544	Connecting Rod Kit (Grade J) (0.010 in.)	4
5		1460545	Connecting Rod Kit (Grade K) (0.020 in.)	4
5		1460546	Connecting Rod Kit (Grade L) (0.030 in.)	4
6		1451602	Bushing	1
7		1306350	Bolt	2
8		99663	Nut	2
9		1458329	Thimble	2
10		1456700	Piston Kit (Standard) (Standard)	4
10		1461713	Piston Kit (0.019 in.)	4
10		1461714	Piston Kit (0.039 in.)	4
11		1451606	Snap Ring	2
12		1456701	Piston Ring Kit (Standard) (Standard)	4
12		1461715	Piston Ring Kit (0.019 in.)	4
12		1461716	Piston Ring Kit (0.039 in.)	4
13		99610	Key	1
14		1456699	Crankshaft Assembly	1
14		1305706	Gear	1
15		1306193	Pulley	1
16		1306194	Block	1
17		302713	Screw	3
18		1456699	Crankshaft Assembly	1

FOOTNOTES:

a Crankshaft/Bearing Includes Standard Size Bearings and Thrust Washers

b Included With Crankshaft Assembly

©2003 HYSTER COMPANY

CRANKSHAFT AND PISTON (Figure 2-25)
DIESEL
(D/B 07/2001⇒)

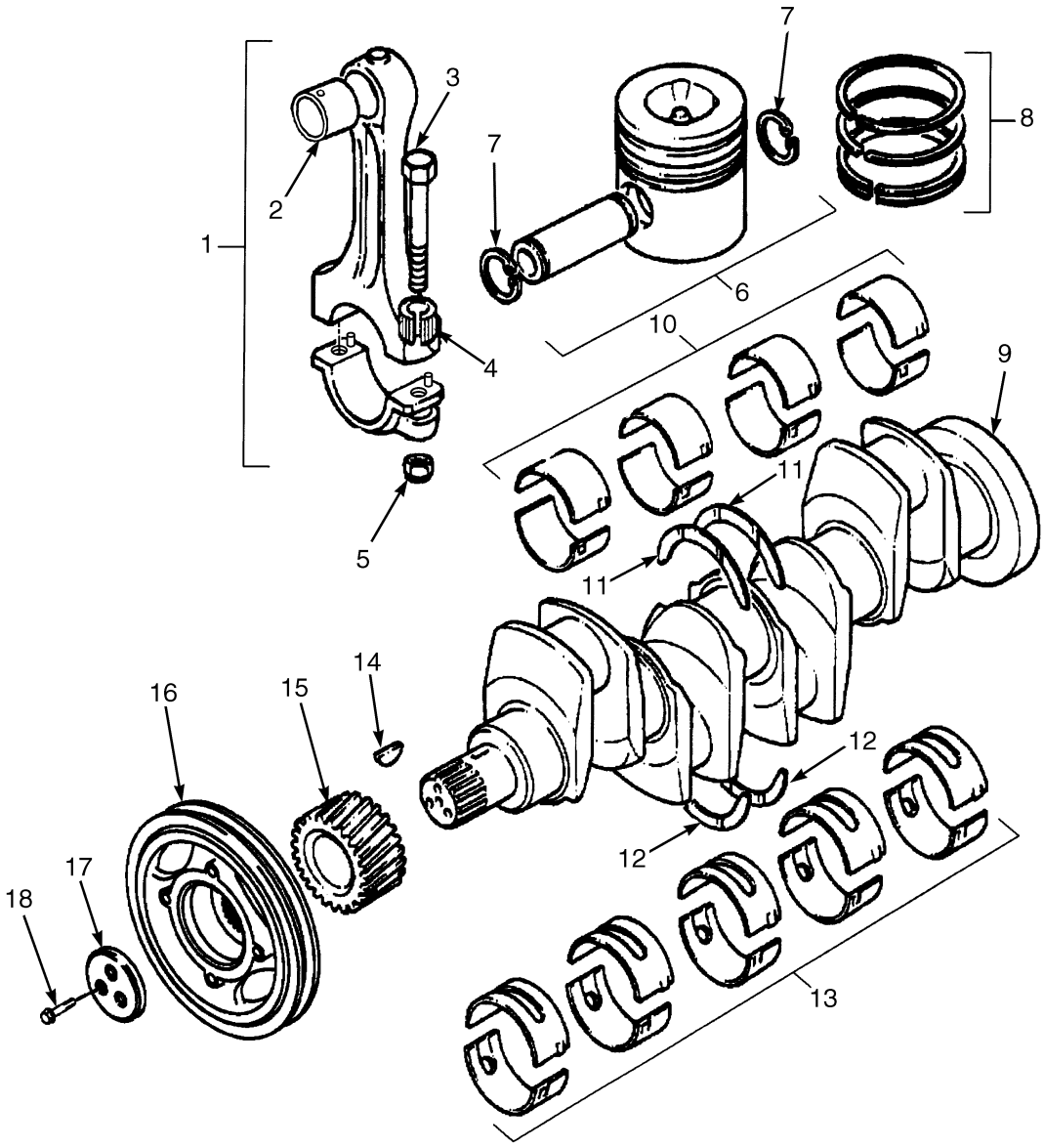

BP090008

©2003 HYSTER COMPANY

CRANKSHAFT AND PISTON
DIESEL
(D/B 07/2001⇒)

ITEM	PART NO.	DESCRIPTION	QTY
	1398112	Engine	1
1	1460543	Connecting Rod Kit (Grade H)	1
1	1460544	Connecting Rod Kit (Grade J)	1
1	1460545	Connecting Rod Kit (Grade K)	1
1	1460546	Connecting Rod Kit (Grade L)	1
2	1451602	Bushing	1
3	1306350	Bolt	2
4	1458329	Thimble	2
5	99663	Nut	2
6	1456700	Piston Kit (Standard)	4
6	1461713	Piston Kit (0.019 in.)	4
6	1461714	Piston Kit (0.039 in.)	4
7	1451606	Snap Ring	2
8	1456701	Piston Ring Kit (Standard)	4
8	1461715	Piston Ring Kit (0.019 in.)	4
8	1461716	Piston Ring Kit (0.039 in.)	4
9	1456699	Crankshaft Assembly	1
9	. . . . .	Crankshaft	1
10	1305699	Bearing Kit	1
10	1305701	Bearing Kit (0.010 in.)	1
10	1305702	Bearing Kit (0.020 in.)	1
10	1305703	Bearing Kit (0.030 in.)	1
11	842799	Thrust Washer	2
11	161296	Thrust Washer (0.007 in.)	2
12	842800	Thrust Washer	2
12	161297	Thrust Washer (0.007 in.)	2
13	161425	Bearing Kit	1
13	161429	Bearing Kit (0.010 in.)	1
13	161430	Bearing Kit (0.020 in.)	1
13	161431	Bearing Kit (0.030 in.)	1
14	99610	Key	1
15	1305706	Gear	1
16	1306193	Pulley	1
17	1306194	Block	1
18	302713	Screw	3

©2003 HYSTER COMPANY

OIL PAN AND PUMP (Figure 2-26)
DIESEL

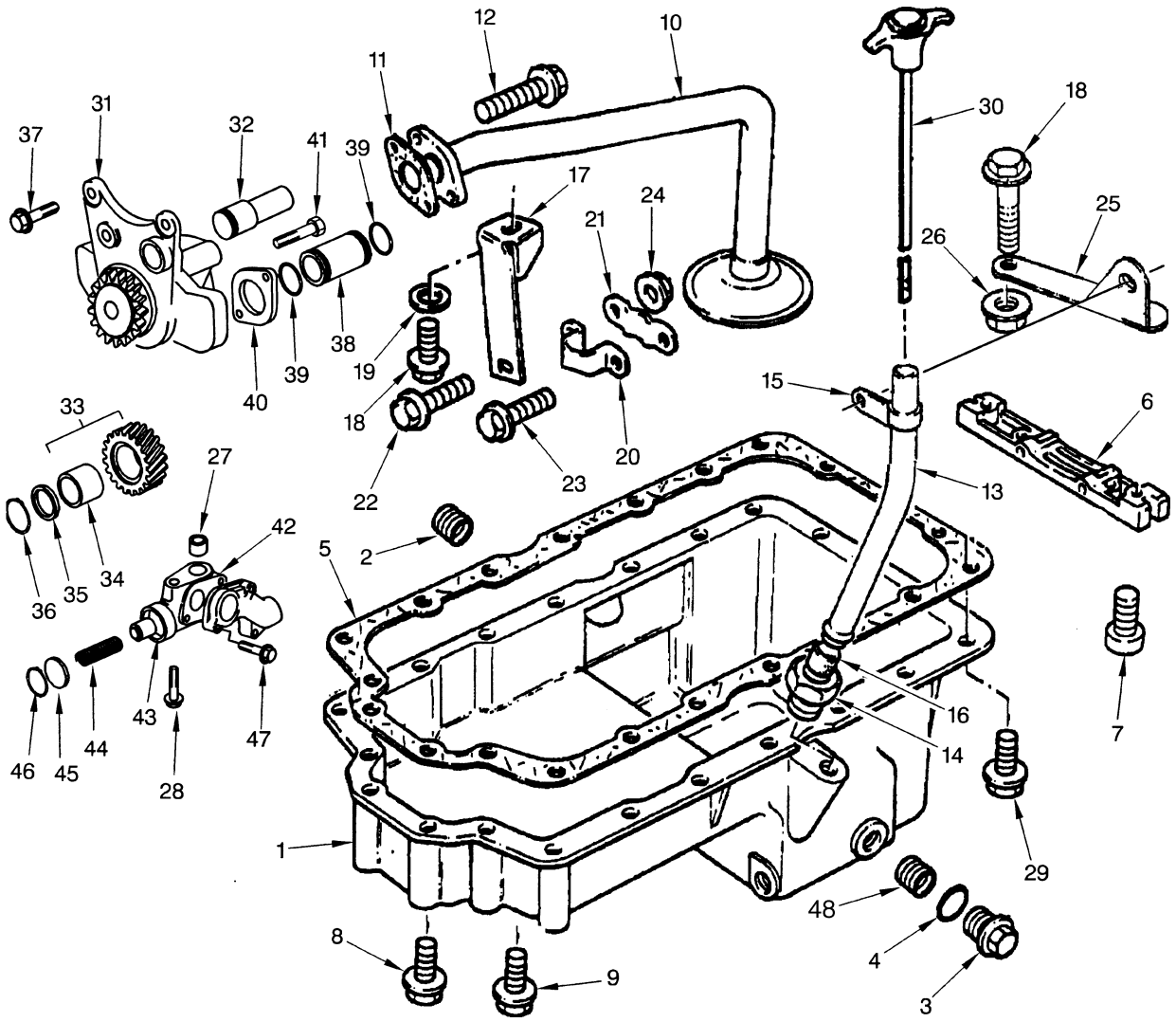

©2003 HYSTER COMPANY

OIL PAN AND PUMP
DIESEL

ITEM	PART NO.	DESCRIPTION	QTY
	1398112	Engine	1
1	1464103	Sump Assembly	1
1	. . . . .	Sump	1
2	1377908	Plug	1
3	377976	Plug	2
4	1306374	O-Ring	2
5	1371717	Gasket	1
6	1450136	Bridge	1
7	1307875	Screw	2
8	1318965	Screw	6
9	386459	Screw	12
10	1306140	Pipe	1
11	1344921	Gasket	1
12	1307879	Screw	2
13	1464104	Tube	1
14	1307880	Nut	1
15	1464105	Clip	1
16	1306143	Olive	1
17	1306146	Bracket	1
18	1307881	Screw	2
19	1315766	Washer	1
20	1306147	Clip	1
21	1306148	Plate	1
22	1307882	Screw	1
23	1307883	Screw	1
24	1307884	Nut	1
25	1464106	Bracket	1
26	1306359	Nut	1
27	1454315	Thimble	1
28	1306368	Screw	1
29	1307894	Screw	1
30	1464107	Dipstick	1
31	1306039	Oil Pump	1
32	1380755	Shaft	1
33	1306040	Gear Assembly	1
33	. . . . .	Gear	1
34	1306041	Bushing	1
35	385847	Washer	1
36	328047	Snap Ring	1
37	1306362	Screw	3
38	1306042	Pipe	1
39	1306363	O-Ring	2
40	1306043	Flange	1
41	1306358	Screw	2
42	1456960	Relief Valve	1
42	. . . . .	Body	1
42	. . . . .	Cover	1
43	301749	Plunger	1
44	1306047	Spring	1
45	301751	Cap	1
46	1306328	Snap Ring	1

©2003 HYSTER COMPANY

OIL PAN AND PUMP
DIESEL

ITEM	PART NO.	DESCRIPTION	QTY
47	1306367	Screw	3
48	266465	Insert	2
	1464018	Gasket Kit (Includes Item 5)	1

©2003 HYSTER COMPANY

NOTES

TIMING GEAR (Figure 2-27)
DIESEL

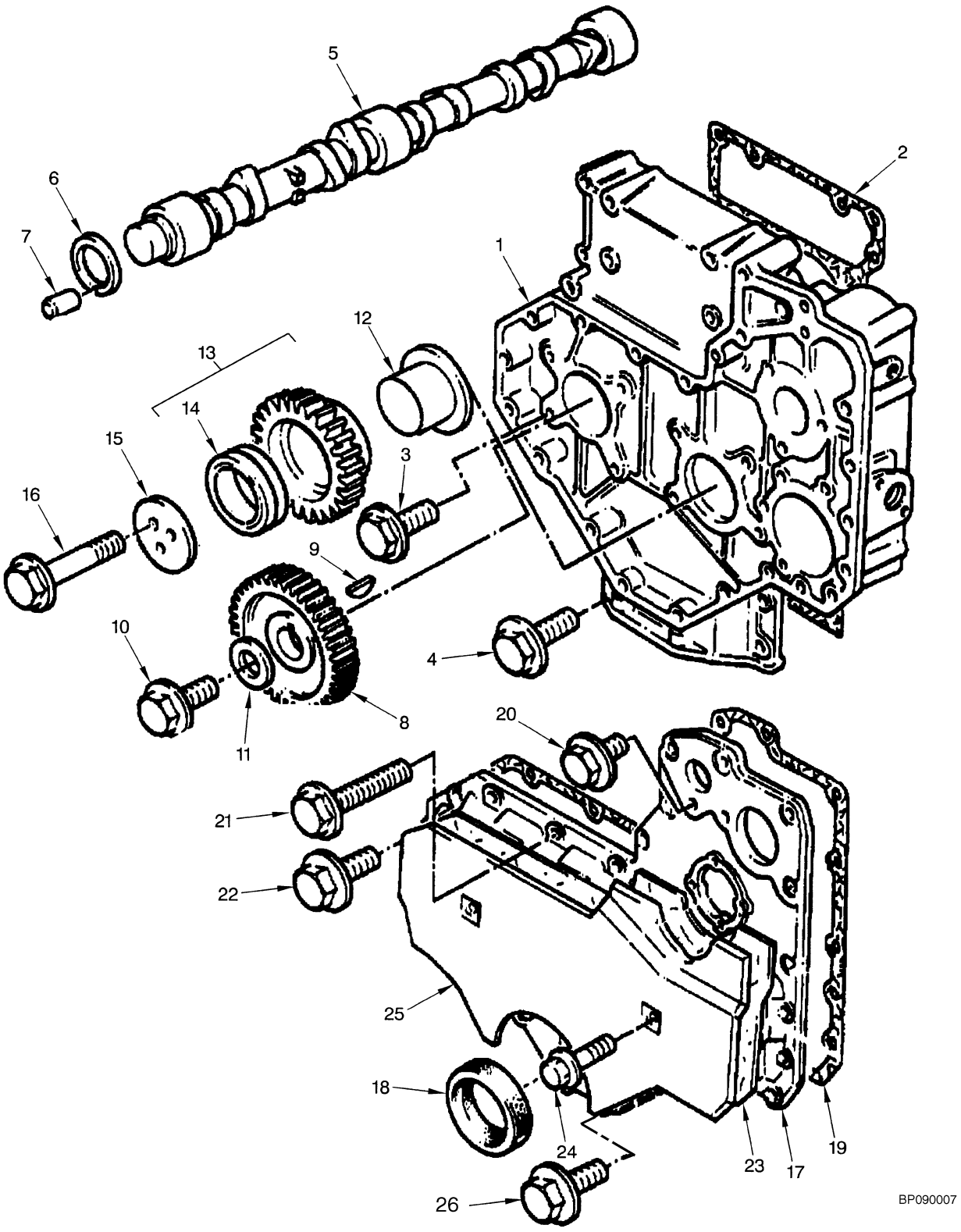

©2003 HYSTER COMPANY

TIMING GEAR
DIESEL

ITEM	PART NO.	DESCRIPTION	QTY
	1398112	Engine	1
1	1456721	Case	1
2	1499349	Gasket	1
3	386459	Screw	8
4	1523972	Screw	4
5	1456722	Camshaft	1
6	303758	Washer	1
7	298096	Pin	1
8	1382481	Gear	1
9	99610	Key (Woodruff)	1
10	1328565	Screw	1
11	1306364	Washer	1
12	229875	Hub (Idler Gear)	1
13	1306030	Gear	1
14	983484	Bushing	1
15	1382479	Plate	1
16	1306356	Screw	3
17	1456723	Cover	1
18	350399	Seal	1
19	1456724	Gasket	1
20	1306357	Screw	6
21	1306358	Screw	1
22	1306362	Screw	6
23	1451651	Damper	1
24	1306361	Screw	2
25	1451650	Shield	1
26	1523972	Screw	2
	1464018	Gasket Kit (Includes Items 2, 19)	1

©2003 HYSTER COMPANY

CYLINDER HEAD (Figure 2-28)
DIESEL

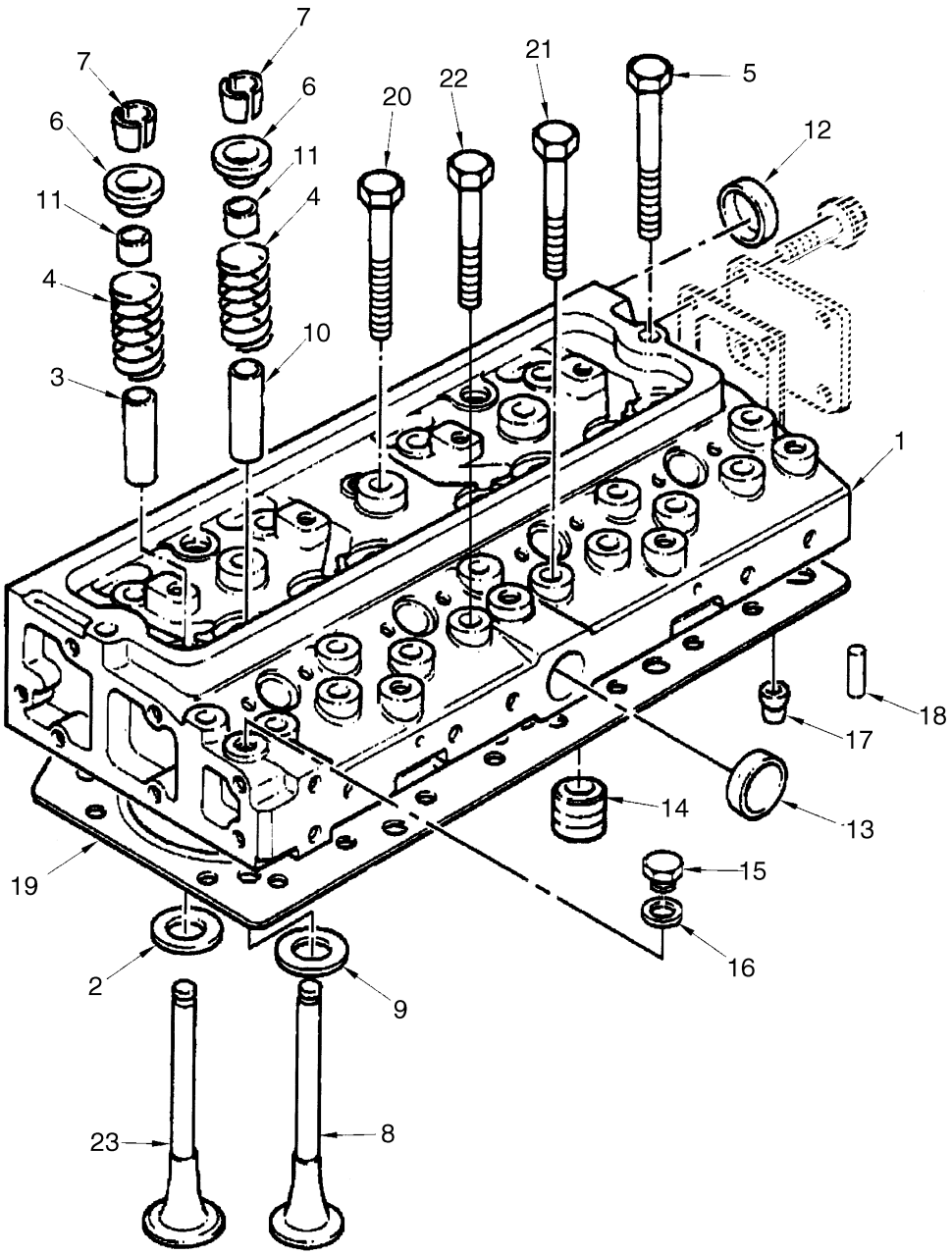

BP090002

©2003 HYSTER COMPANY

CYLINDER HEAD
DIESEL

ITEM	PART NO.	DESCRIPTION	QTY
	1398112	Engine	1
	1456716	Cylinder Head Assembly	1
1	. . . . .	Cylinder Head	1
2	1456707	Insert	4
3	1451629	Valve Guide (Valve)	4
4	1456705	Spring	8
5	1456715	Screw	2
6	1451633	Cap	8
7	1451636	Keeper	16
8	1456709	Valve (Exhaust)	4
9	1456708	Insert	4
10	1456704	Valve Guide (Valve)	4
11	1451630	Seal (Exhaust)	4
11	1456706	Seal (Intake)	4
12	385531	Plug	1
13	980727	Plug	1
14	15314	Fitting	4
15	992025	Plug	1
16	986475	Washer	1
17	1454176	Pin	2
18	1456711	Pin	2
19	1460567	Gasket	1
20	1456713	Screw	8
21	1456714	Screw	8
22	1370944	Bolt	4
23	1456702	Valve (Inlet)	4
	1460584	Gasket Kit (Top) (Includes Items 11, 19)	1

©2003 HYSTER COMPANY

VALVE COVER AND ROCKER ARM SHAFT (Figure 2-29)
DIESEL

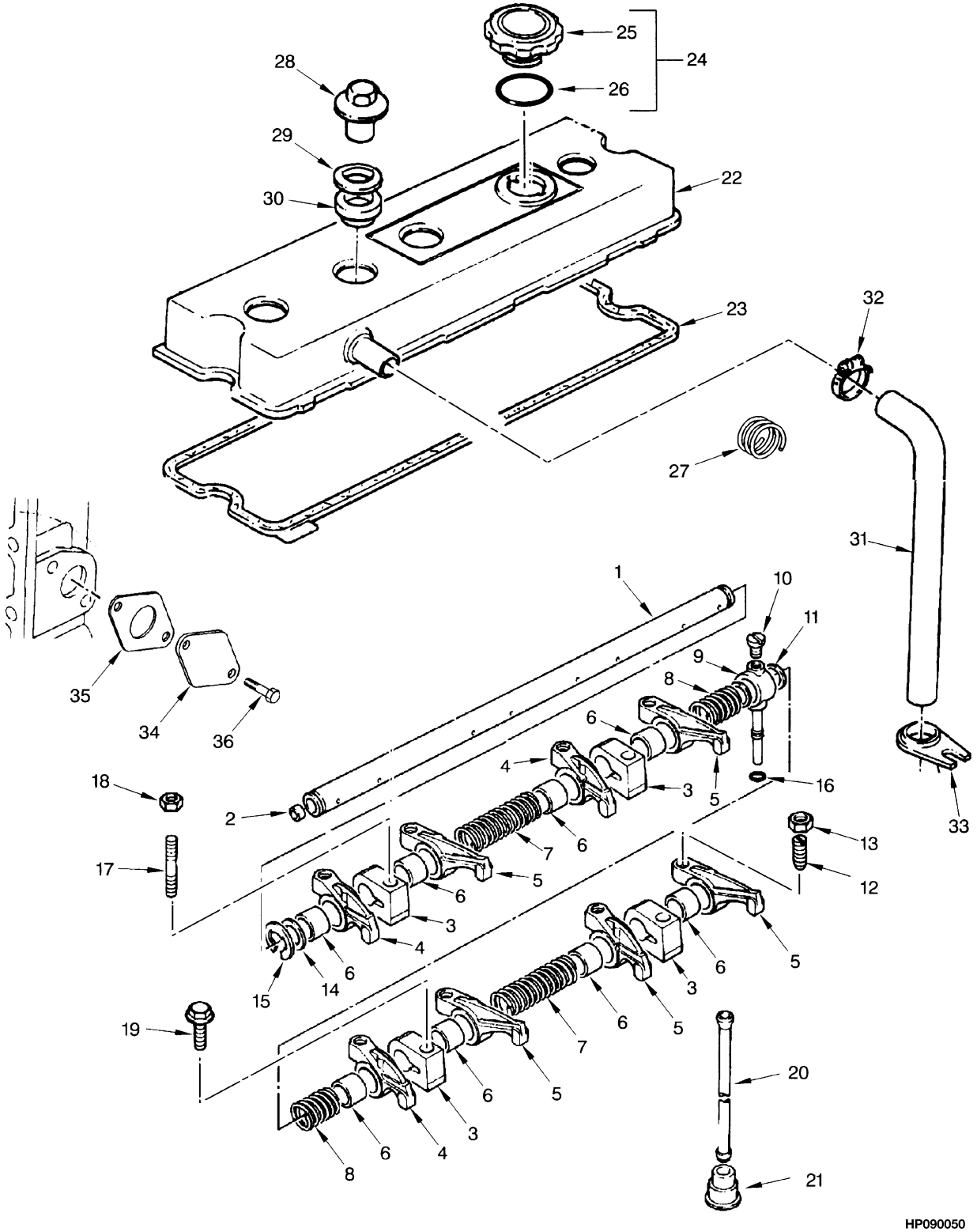

©2003 HYSTER COMPANY

VALVE COVER AND ROCKER ARM SHAFT
DIESEL

ITEM	PART NO.	DESCRIPTION	QTY
	1398112	Engine	1
	1456717	Rocker Shaft Assembly	1
1	1456718	Rocker Shaft	1
2	990429	Plug	2
3	1370947	Bracket	4
4	1451645	Rocker Arm (LH)	4
5	1451643	Rocker Arm (RH)	4
6	1451644	Bushing	3
7	99722	Spring	2
8	99723	Spring	2
9	1374980	Connector	1
10	1370948	Screw	1
11	1479697	Shim	2
12	1466859	Screw	8
13	15026	Nut	8
14	1451642	Washer	2
15	99725	Snap Ring	1
16	158187	Olive (Rubber)	1
17	1306351	Stud	3
18	1370949	Nut	3
19	1306353	Screw	1
20	99728	Rod	8
21	224248	Tappet	8
22	1464108	Cover Assembly	1
22	. . . . .	(Cover)	1
23	1456741	Gasket	1
24	1391246	Cap	1
25	. . . . .	Cap	1
26	1516930	O-Ring	1
27	1460559	Spring	1
28	1380763	Nut	3
29	15125	Washer	3
30	1380245	Seal	3
31	1456767	Pipe	1
32	1464109	Clamp	1
33	301785	Bracket	1
34	1306186	Plate	1
35	1380251	Gasket	1
36	386459	Screw	2
	1460584	Gasket Kit (Top) (Includes Items 16, 23)	1
	1464018	Gasket Kit (Includes Item 35)	1

©2003 HYSTER COMPANY

MANIFOLDS (Figure 2-30)
DIESEL
(⇒D/B 07/2001)

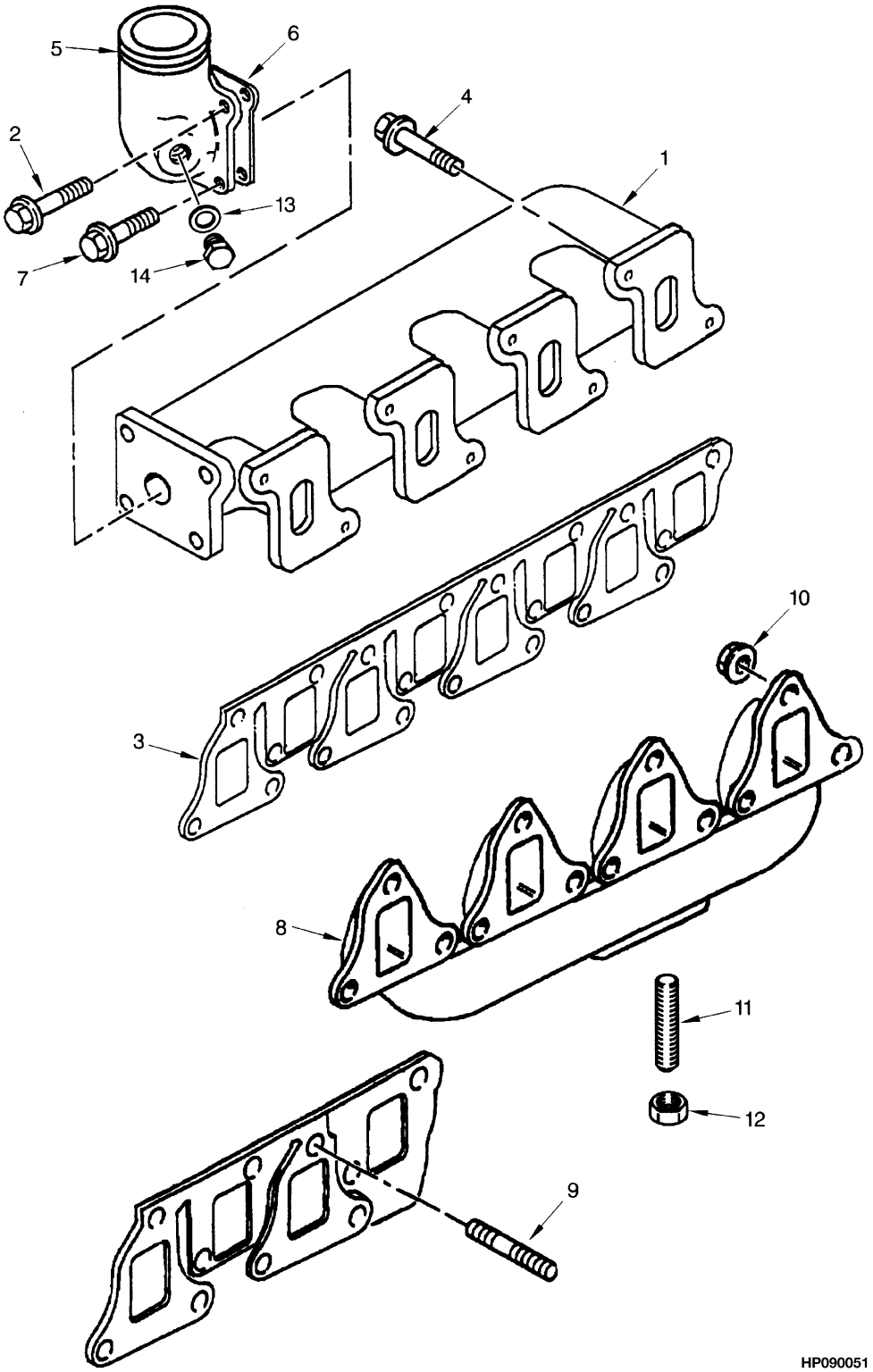

©2003 HYSTER COMPANY

MANIFOLDS
DIESEL
(⇒D/B 07/2001)

ITEM	PART NO.	DESCRIPTION	QTY
	1398112	Engine	1
1	1464199	Manifold (Intake)	1
2	1307895	Screw	1
3	1456751	Gasket	1
4	1464200	Screw	8
5	1464201	Elbow	1
6	1464202	Gasket	1
7	1306358	Screw	3
8	1456755	Manifold (Exhaust)	1
9	1460564	Stud	12
10	1456756	Nut	12
11	1307877	Stud	3
12	1306370	Nut	3
13	256159	Washer	1
14	133558	Plug	1
	1460584	Gasket Kit (Top) (Includes Item 3)	1

©2003 HYSTER COMPANY

MANIFOLDS (Figure 2-31)
DIESEL
(D/B 07/2001⇒)

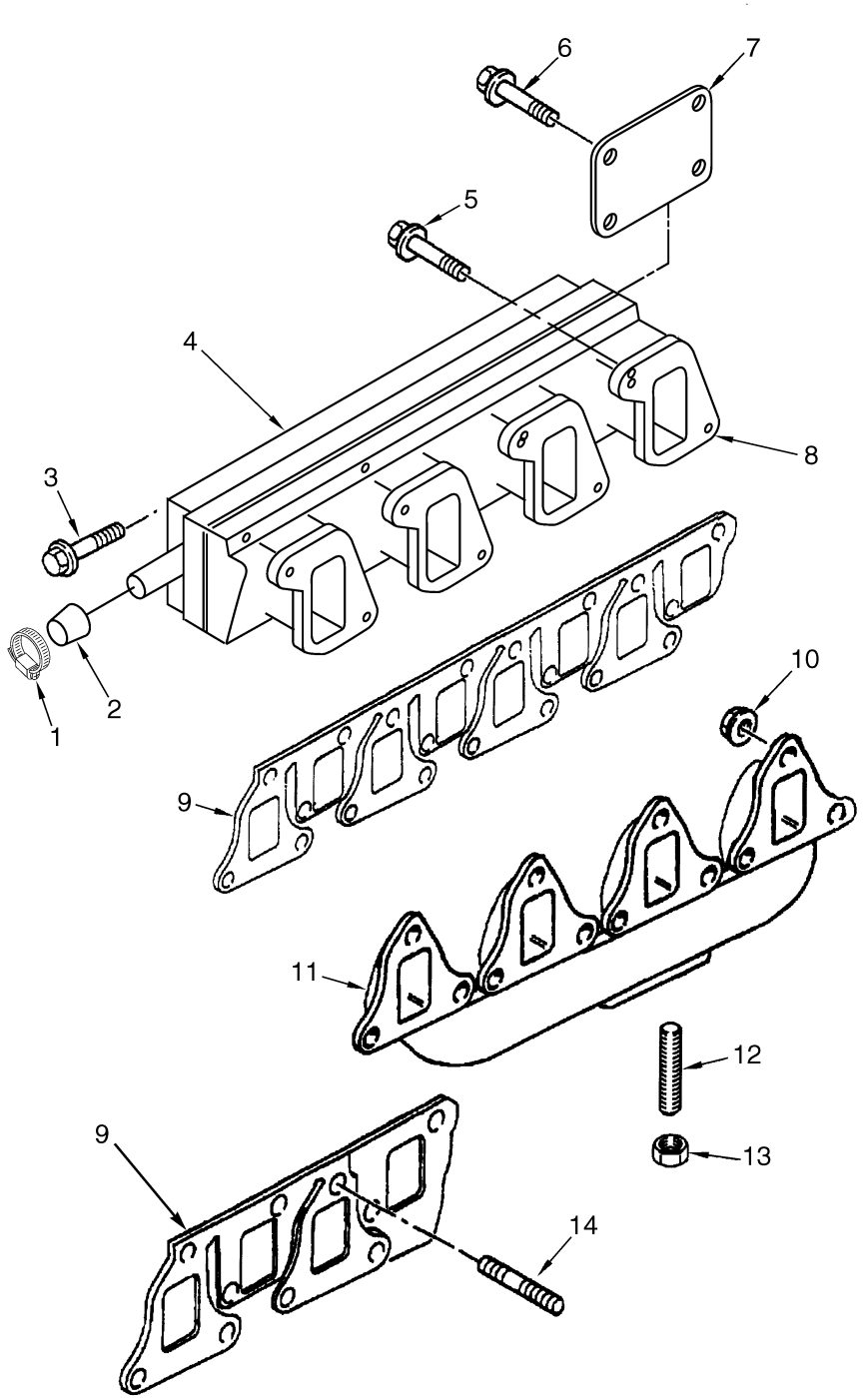

BP090004

©2003 HYSTER COMPANY

MANIFOLDS
DIESEL
(D/B 07/2001⇒)

ITEM	PART NO.	DESCRIPTION	QTY
	1398112	Engine	1
1	130845	Clamp	1
2	1472711	Cap	1
3	386459	Screw	9
4	1472707	Manifold (Intake)	1
4	1456754	Sealant	1
5	1460547	Screw	8
6	1472710	Screw	4
7	1472709	Cover	1
8	1472708	Manifold (Intake)	1
9	1456751	Gasket	2
10	1456756	Nut	12
11	1456755	Manifold (Exhaust)	1
12	1307877	Stud	3
13	1306370	Nut	3
14	1460564	Stud	12

©2003 HYSTER COMPANY

OIL FILTER (Figure 2-32)
DIESEL

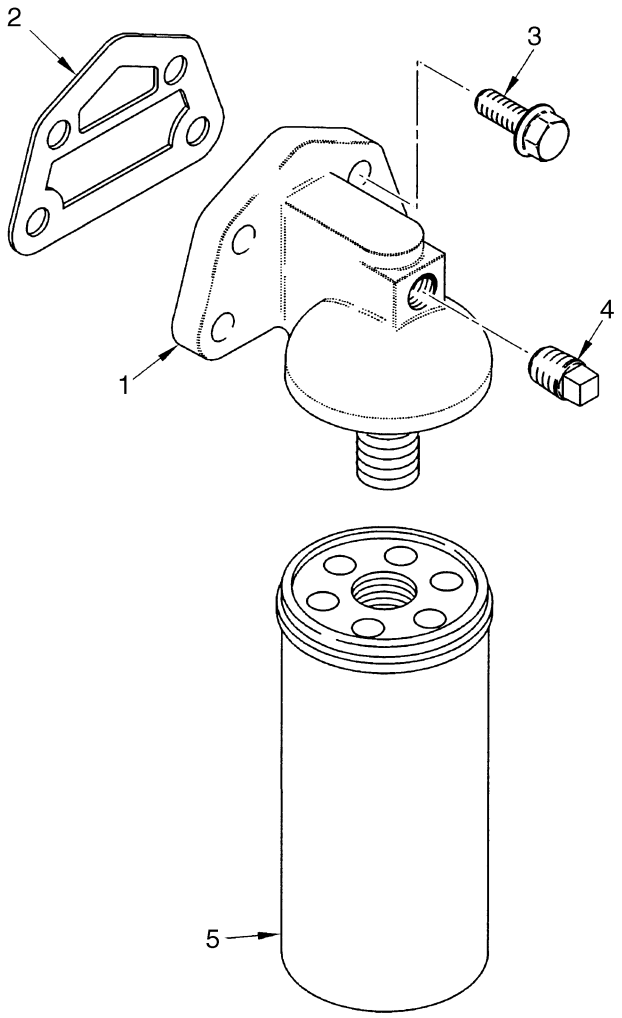

BP090006

ITEM	PART NO.	DESCRIPTION	QTY
	1398112	Engine	1
1	1315767	Filter Head	1
1	. . . . .	Head	1
1	. . . . .	Adapter	1
2	1345800	Gasket	1
3	1307915	Screw	4
4	15314	Fitting	1
5	195852	Filter Element	1

©2003 HYSTER COMPANY

NOTES

COOLANT PUMP (Figure 2-33)
DIESEL
(⇒D/B 09/2001)

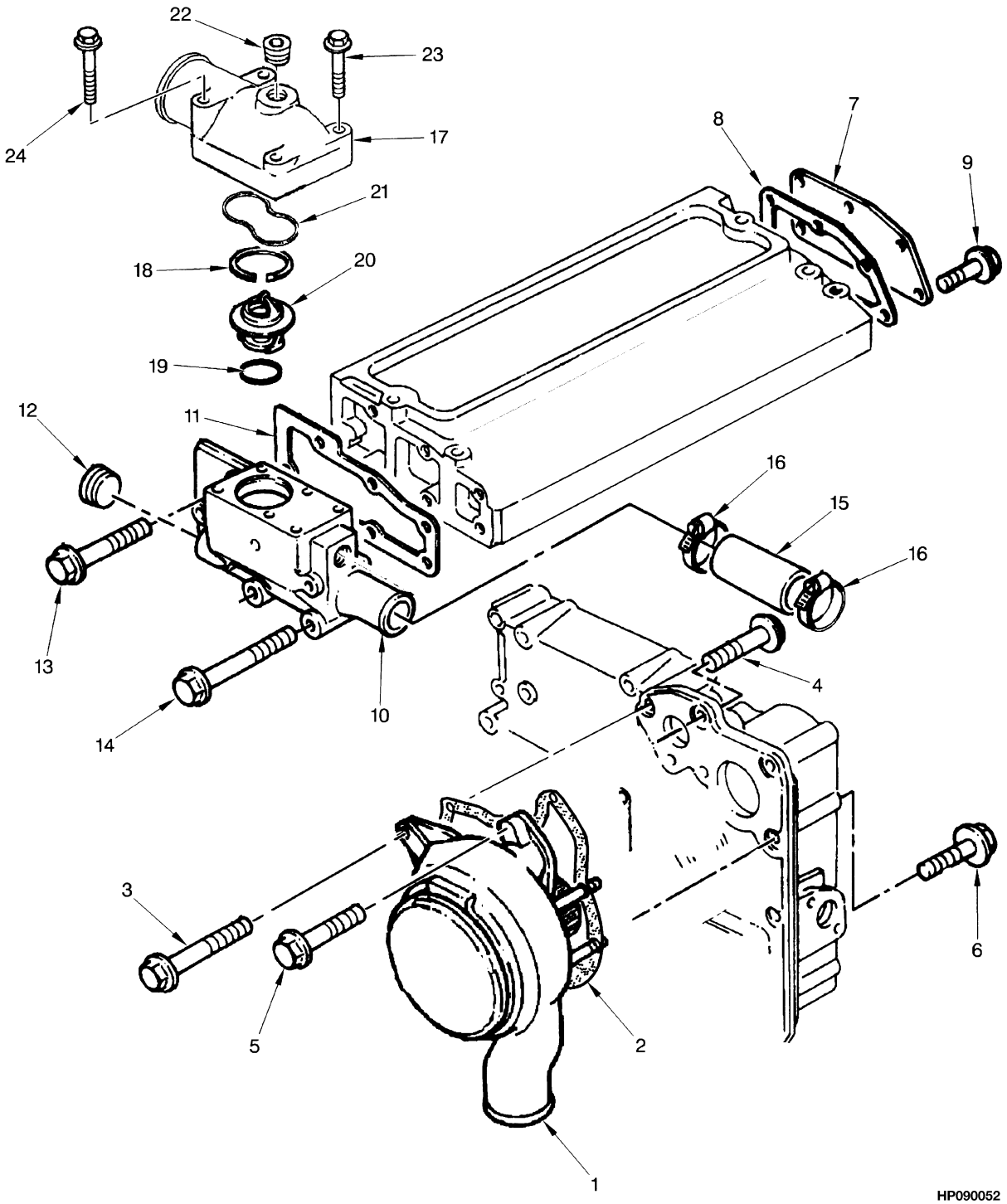

©2003 HYSTER COMPANY

COOLANT PUMP
DIESEL
(⇒D/B 09/2001)

ITEM	PART NO.	DESCRIPTION	QTY
	1398112	Engine	1
1	1465895	Water Pump	1
2	1451733	Gasket	1
3	1307908	Screw	5
4	1318965	Screw	1
5	1306354	Screw	3
6	1307909	Screw	2
7	1456742	Cover	1
8	1451739	Gasket	1
9	1307881	Screw	3
10	1465171	Housing	1
11	1451735	Gasket	1
12	15962	Plug	1
13	1318968	Screw	3
14	1307898	Screw	3
15	1456746	Hose Kit	1
16	1456747	Clamp	2
17	1465803	Connector Assembly	1
18	1465812	Snap Ring	1
19	1451737	O-Ring	1
20	1456745	Thermostat (180°)	1
21	1465810	O-Ring	1
22	1465811	Plug	1
23	1306358	Screw	2
24	1307898	Screw	2
	1460584	Gasket Kit (Top) (Includes Items 8, 11, 19, 21)	1
	1464018	Gasket Kit (Includes Item 2)	1
	1465896	Repair Kit (Water Pump) (Includes Item 2)	1

©2003 HYSTER COMPANY

COOLANT PUMP (Figure 2-34)
DIESEL
(D/B 09/2001⇒)

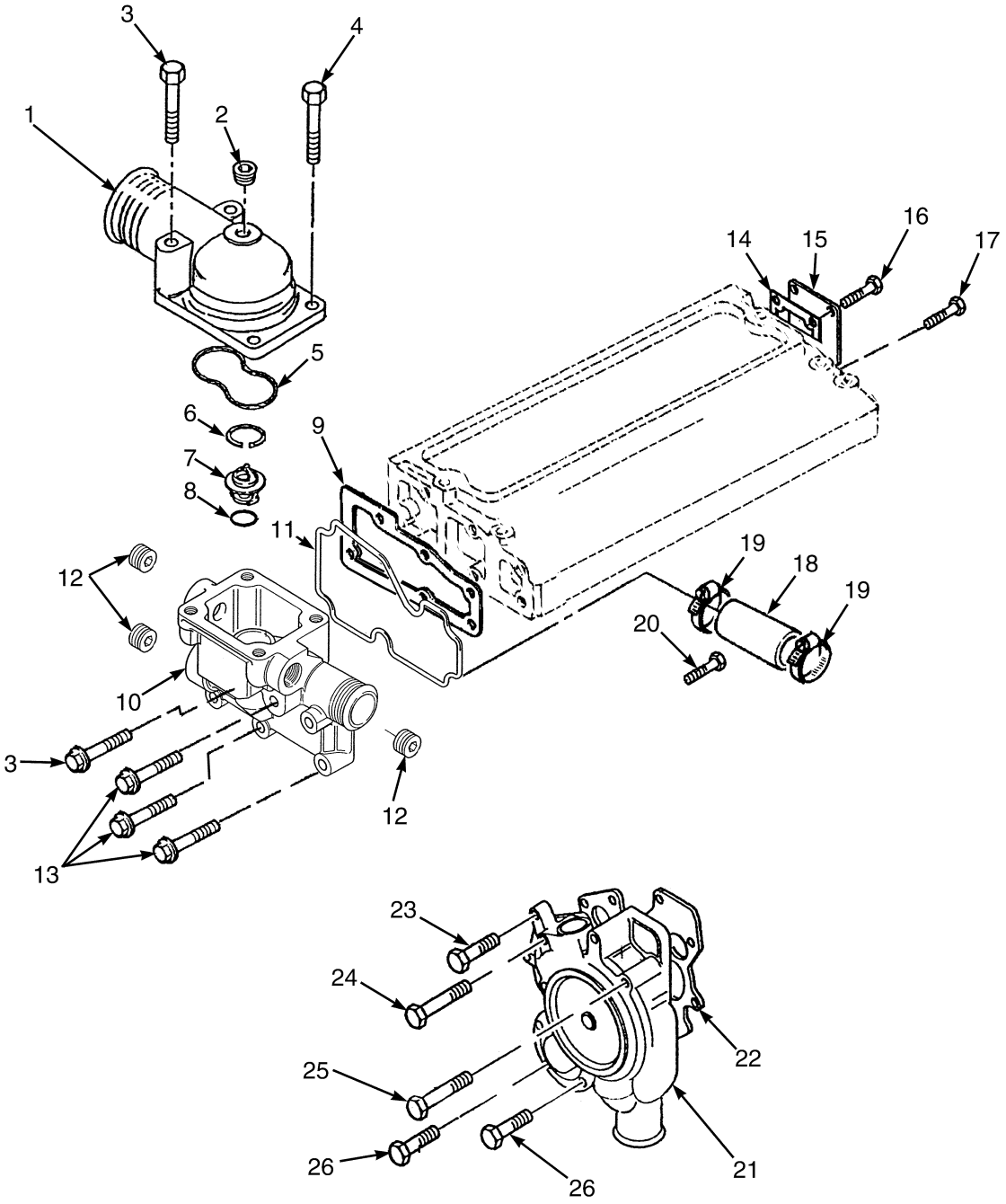

BP060002

©2003 HYSTER COMPANY

COOLANT PUMP
DIESEL
(D/B 09/2001⇒)

ITEM	PART NO.	DESCRIPTION	QTY
	1398112	Engine	1
1	1465803	Connector Assembly	1
1	. . . . .	Connector	1
2	1465811	Plug	1
3	1318968	Screw	5
4	1306358	Screw	2
5	1465810	O-Ring	1
6	1465812	Snap Ring	1
7	1456745	Thermostat	1
8	1451737	O-Ring	1
9	1451735	Gasket	1
10	1491202	Housing	1
10	. . . . .	Housing	1
11	1516761	O-Ring	1
12	1516762	Plug	3
13	1307898	Screw	3
14	1451739	Gasket	1
15	1456742	Cover	1
16	. . . . .	Bolt	4
17	1307881	Screw	3
18	1456746	Hose Kit	1
18	. . . . .	Hose	1
19	1456747	Clamp	2
20	1307909	Screw	2
21	1465895	Water Pump	1
21	1465896	Repair Kit (Water Pump)	1
22	1451733	Gasket	1
23	1315497	Screw	1
24	1307908	Screw	3
25	1318965	Screw	1
26	1523972	Screw	3

©2003 HYSTER COMPANY

ROTARY EXHAUSTER (Figure 2-35)
DIESEL

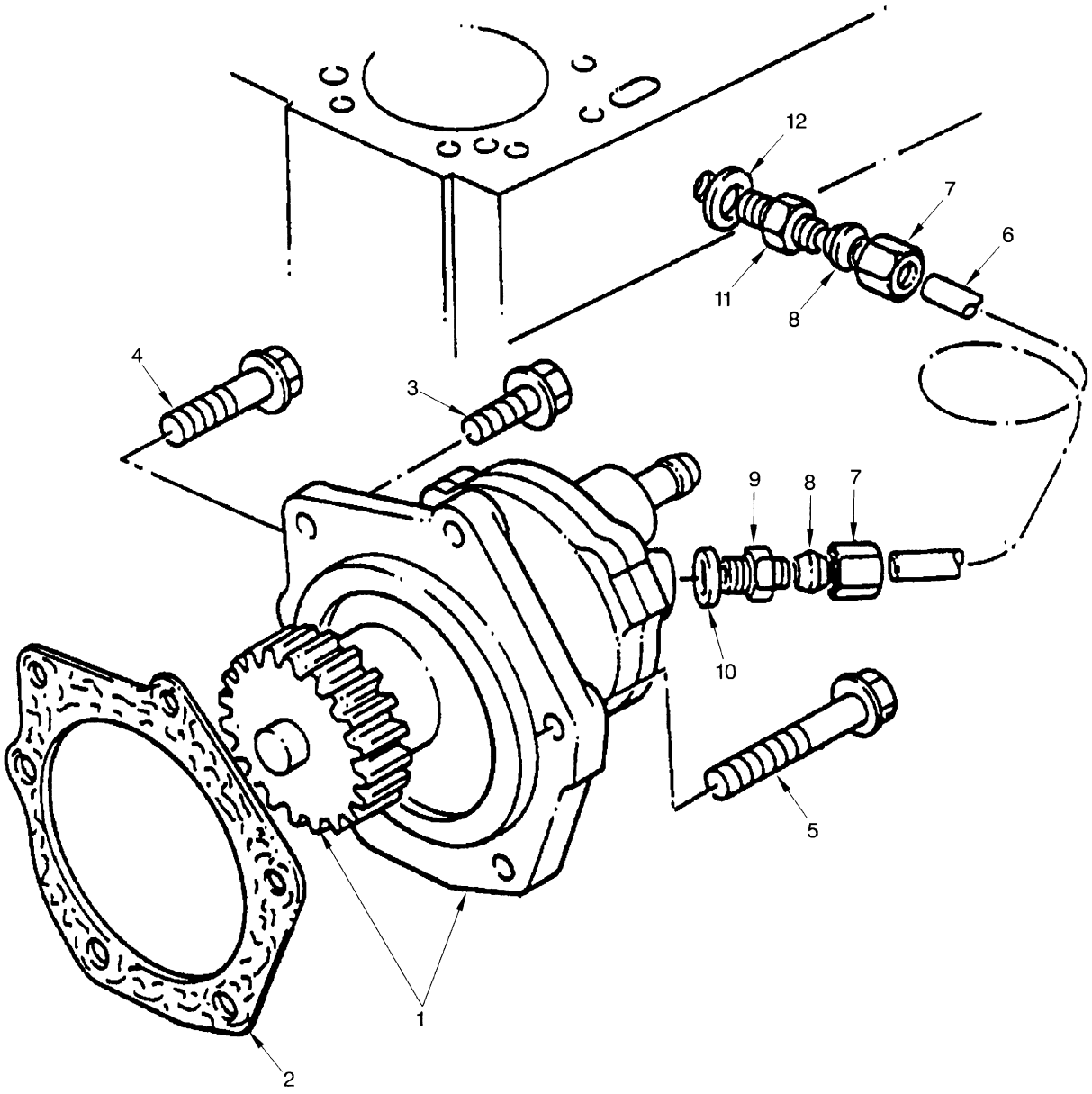

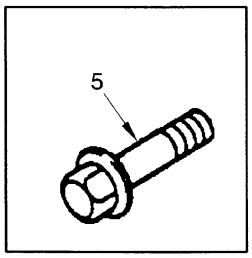

HP090053

©2003 HYSTER COMPANY

ROTARY EXHAUSTER
DIESEL

ITEM	PART NO.	DESCRIPTION	QTY
	1398112	Engine	1
1	1528570	Rotary Exhauster	1
2	1329660	Gasket	1
3	1306354	Screw	4
4	1464197	Screw	1
5	1307913	Screw	2
6	1507960	Pipe	1
7	16193	Fitting	2
8	51455	Fitting	2
9	1464198	Adapter	1
10	1382543	Washer	1
11	1319028	Adapter	1
12	101985	Washer	1

©2003 HYSTER COMPANY

NOTES

3 FUEL SYSTEM

SECTION 3
FUEL SYSTEM

DESCRIPTION	PAGE
AIR FILTER	3-56
AIR FILTER SYSTEM	3-54
CARBURETOR (LPG)	
WITH LOW EMISSIONS	3-31
DUAL FUEL SYSTEM	
⇒S/N K005D-5482	3-32
S/N K005D-5483⇒	3-36
FUEL FILTER	
LOW PRESSURE SYSTEM	
DIESEL	3-8
FUEL SYSTEM	
DIESEL	3-2
GASOLINE	3-16
LPG	
CLOSED LOOP	3-28
OPEN LOOP	
⇒S/N K005D-5482	3-20
S/N K005D-5483⇒	3-24
GOVERNOR	
LPG	3-49
HIGH PRESSURE FUEL INJECTION AND PUMP	
DIESEL	3-10
INJECTOR THROTTLE BODY	
GASOLINE	3-52
LIFT PUMP	
DIESEL	3-14
LOCK-OFF FILTER	
LPG	3-46
LOW PRESSURE SYSTEM	
DIESEL	
⇒D/B 07/2001	3-4
LOW PRESSURE SYSTEM (DIESEL)	
D/B 07/2001⇒	3-6
LPG CONVERTER	
OPEN LOOP	
⇒S/N K005D-5482	3-47
S/N K005D-5483⇒	3-48
LPG TANK AND BRACKET	
SWING OUT	3-42
LPG TANK BRACKET	
FIXED	3-40
SWING OUT/DROP DOWN	3-44
MONOTROL PEDAL	3-64
MONOTROL PEDAL LINKAGE	3-62
THROTTLE BODY GOVERNOR	
GASOLINE AND DUAL FUEL	3-50
THROTTLE LINKAGE	
DIESEL	3-60
GASOLINE AND LPG	3-58
WATER SEPARATOR	3-12

©2003 HYSTER COMPANY

FUEL SYSTEM (Figure 3-1)
DIESEL

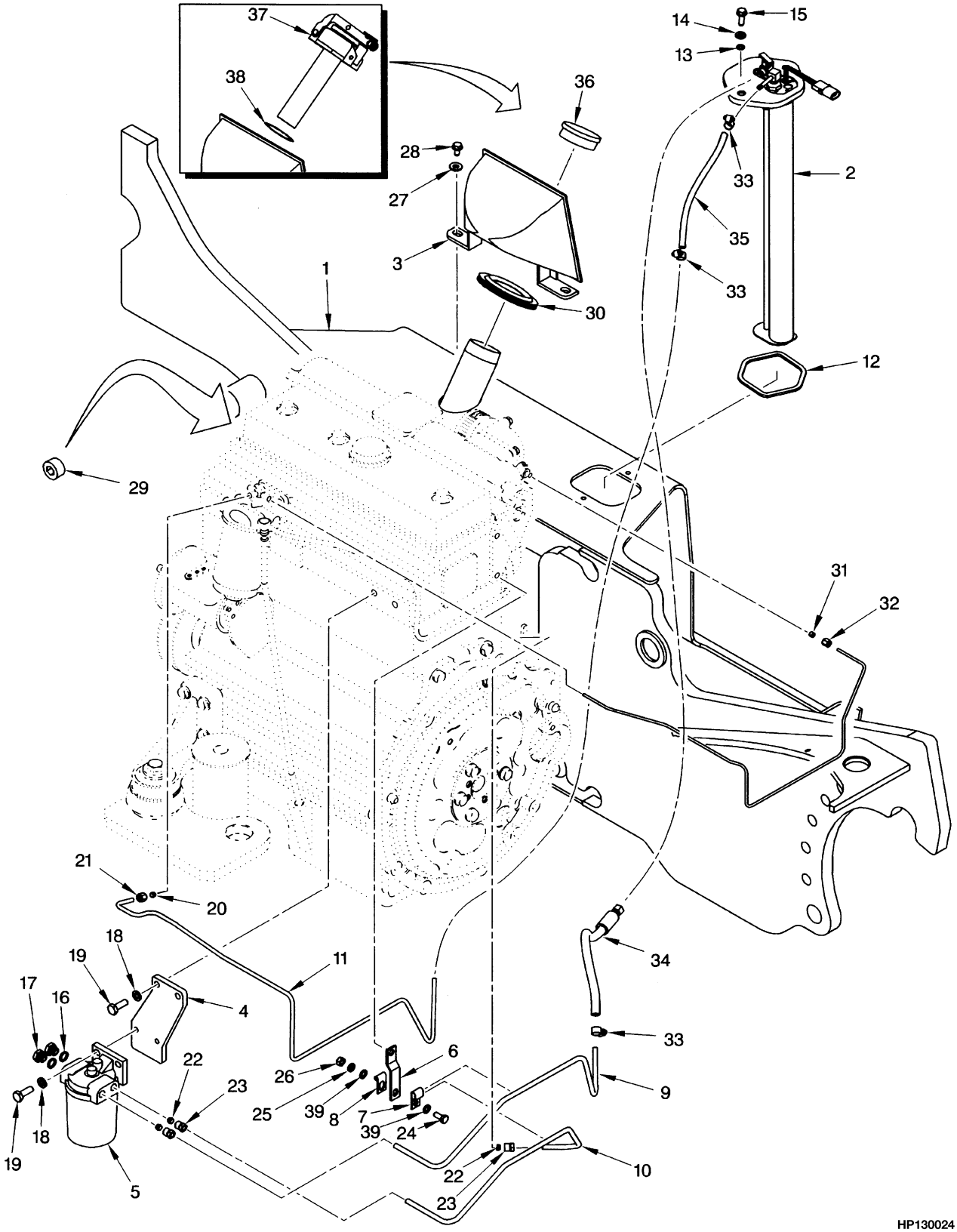

©2003 HYSTER COMPANY

FUEL SYSTEM
DIESEL

ITEM	PART NO.	DESCRIPTION	QTY
1	. . . . .	Frame (LH)	1
2	1397396	Fuel Sender	1
3	1376746	Shield	1
4	1396198	Plate	1
5	1396256	Water Separator (☞ Figure 3-6)	1
6	1397830	Bracket	1
7	1399381	Clamp	1
8	69314	Clamp	1
9	1397438	Tube (Supply)	1
10	1397441	Tube (Fuel Pump)	1
11	1397394	Tube (Return)	1
12	1343449	Seal	1
13	353000	O-Ring	2
14	320157	Washer	2
15	329067	Screw	2
16	. . . . .	Washer	2
17	. . . . .	Plug	2
18	292682	Lockwasher	4
19	136985	Capscrew	4
20	16114	Sleeve	1
21	16118	Fitting	1
22	16177	Fitting	1
23	16100	Fitting	1
24	136681	Capscrew	1
25	292681	Lockwasher	1
26	239503	Nut	1
27	320158	Washer	2
28	316678	Screw	2
29	15964	Fitting	1
30	1339720	Grommet	1
31	152608	Sleeve	1
32	152609	Nut	1
33	168718	Clamp	1
34	1392744	Hose (Fuel)	1
35	1399433	Hose	1
36	298832	Cap (Standard)	1
37	63899	Fuel Cap (Safety)	1
38	138880	Shim (0.020 in.) (Safety)	1
39	296418	Washer	2

©2003 HYSTER COMPANY

LOW PRESSURE SYSTEM (Figure 3-2)
DIESEL
(⇒D/B 07/2001)

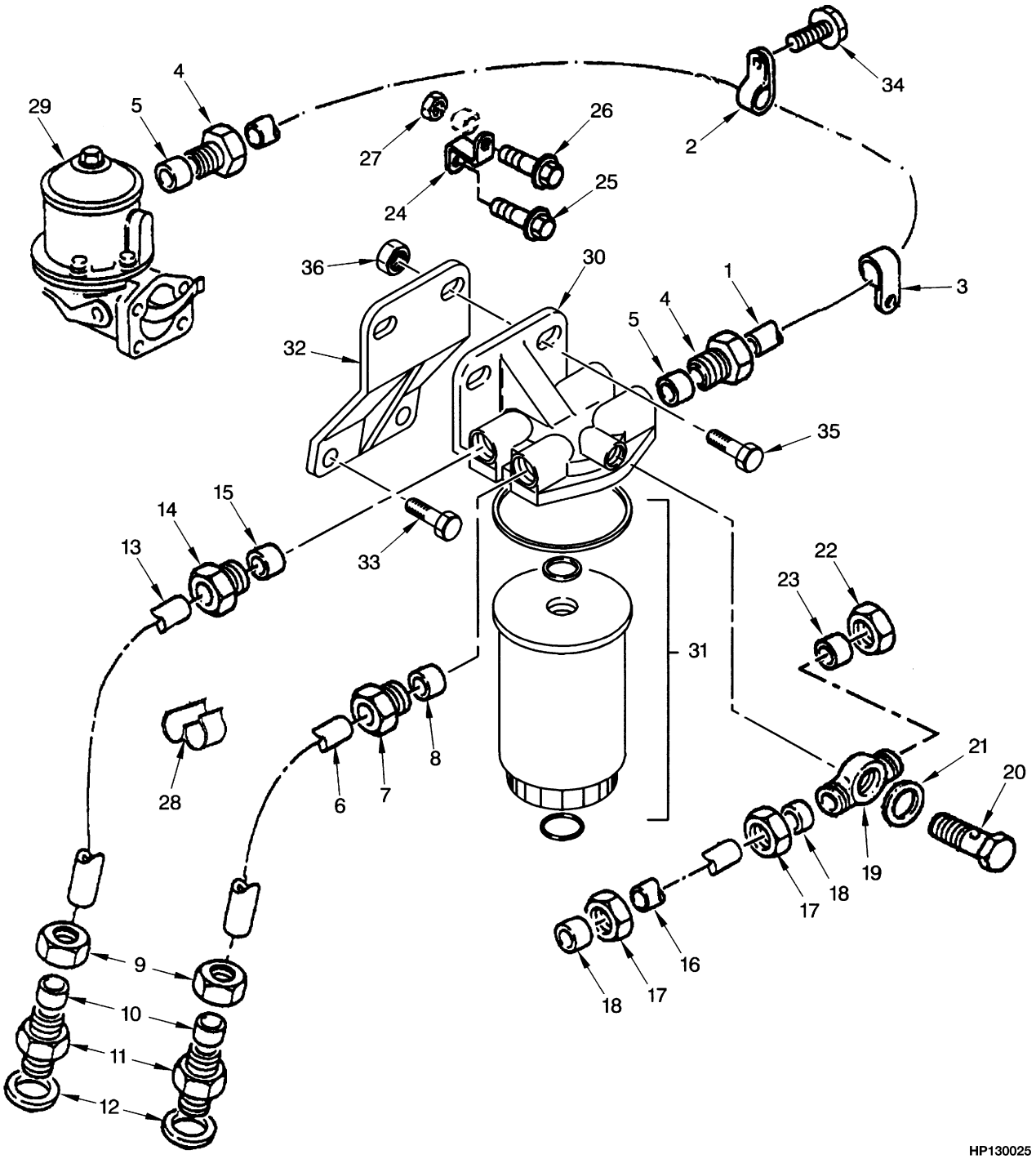

©2003 HYSTER COMPANY

LOW PRESSURE SYSTEM
DIESEL
(⇒D/B 07/2001)

ITEM	PART NO.	DESCRIPTION	QTY
	1398112	Engine	1
1	1464203	Pipe (Fuel)	1
2	1464204	Clamp	1
3	1456521	Clamp	4
4	16100	Fitting	1
5	167023	Sleeve	2
6	1464205	Pipe (Fuel)	1
7	158186	Nut	1
8	158187	Olive	1
9	167507	Nut	1
10	167508	Olive	2
11	1464206	Fitting	2
12	1382543	Washer	2
13	1464207	Pipe (Fuel)	1
14	158186	Nut	1
15	158187	Olive	1
16	1464208	Pipe (Fuel)	1
17	152609	Nut	2
18	152608	Sleeve	2
19	1308003	Fitting	1
20	1456522	Banjo Bolt	1
21	1456524	Washer	2
22	16118	Fitting	1
23	16114	Sleeve	1
24	1464209	Bracket	1
25	1307883	Screw	1
26	1306361	Screw	1
27	1307884	Nut	1
28	1458318	Clip	1
29	1456338	Lift Pump (☞ Figure 3-7)	1
30	1306345	Fuel Filter Assembly	1
30	1474825	Filter Head	1
31	1306331	Filter Element Kit	1
32	1308004	Bracket	1
33	1306371	Screw	2
34	386459	Screw	1
35	1307913	Screw	2
36	1307891	Nut	2

©2003 HYSTER COMPANY

LOW PRESSURE SYSTEM (DIESEL) (Figure 3-3)
(D/B 07/2001⇒)

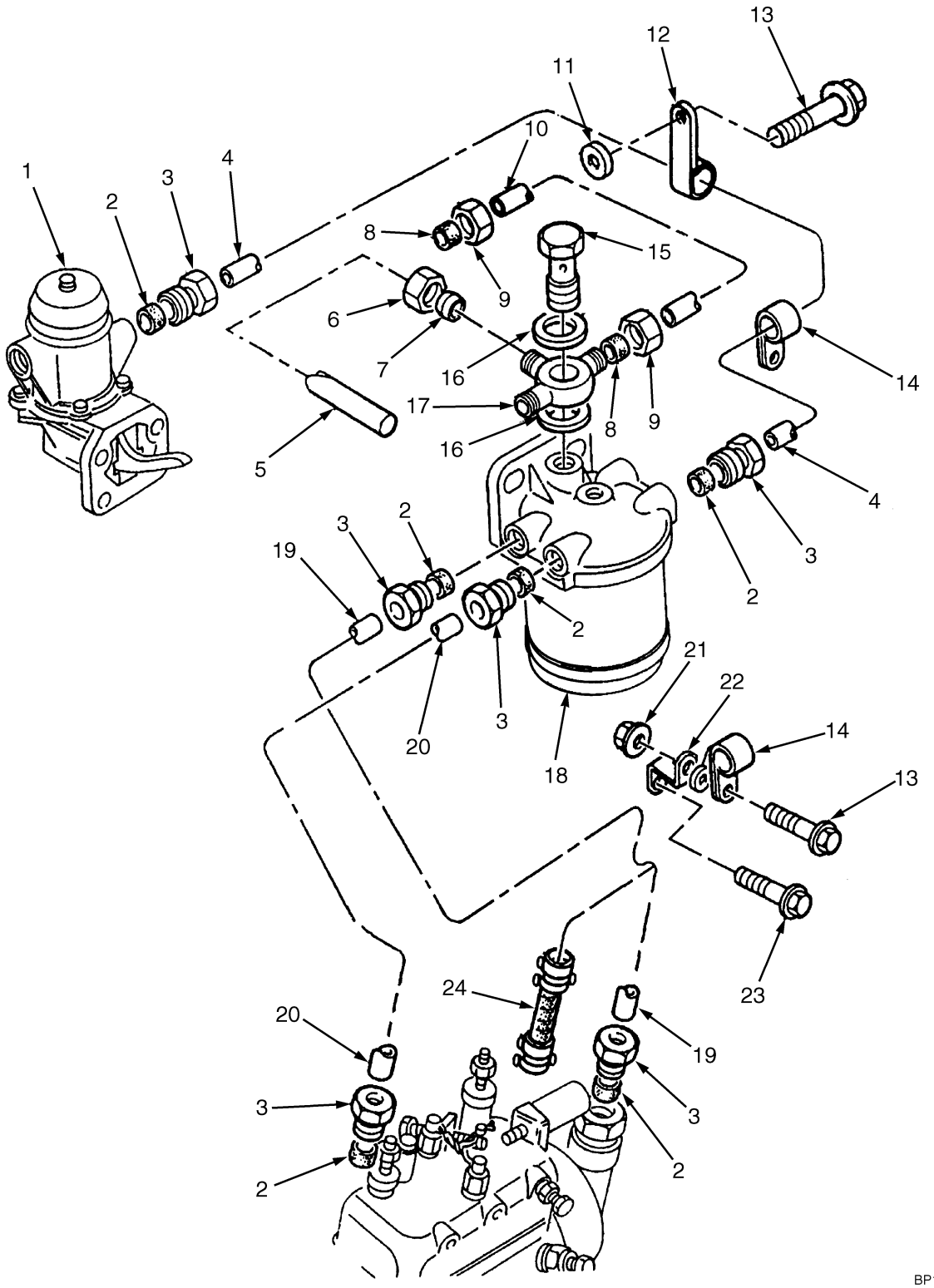

©2003 HYSTER COMPANY

LOW PRESSURE SYSTEM (DIESEL)
(D/B 07/2001⇒)

ITEM	PART NO.	DESCRIPTION	QTY
1	1456338	Lift Pump (☞ Figure 3-7)	1
2	167023	Sleeve	2
3	16100	Fitting	2
4	1464203	Pipe	1
5	1397394	Tube (Return)	1
6	16118	Fitting	1
7	16114	Sleeve	1
8	152608	Sleeve	2
9	152609	Nut	2
10	1456517	Pipe	1
11	1308002	Washer	1
12	1464204	Clamp	1
13	1306361	Screw	2
14	1456521	Clamp	2
15	1456522	Banjo Bolt	1
16	1456524	Washer	2
17	1451770	Connector	1
18	1306345	Fuel Filter Assembly	1
19	1456525	Pipe	1
20	1456527	Pipe	1
21	1307884	Nut	1
22	1464209	Bracket	1
23	1307883	Screw	1
24	1456528	Clamp	1

©2003 HYSTER COMPANY

FUEL FILTER (Figure 3-4)
LOW PRESSURE SYSTEM
DIESEL

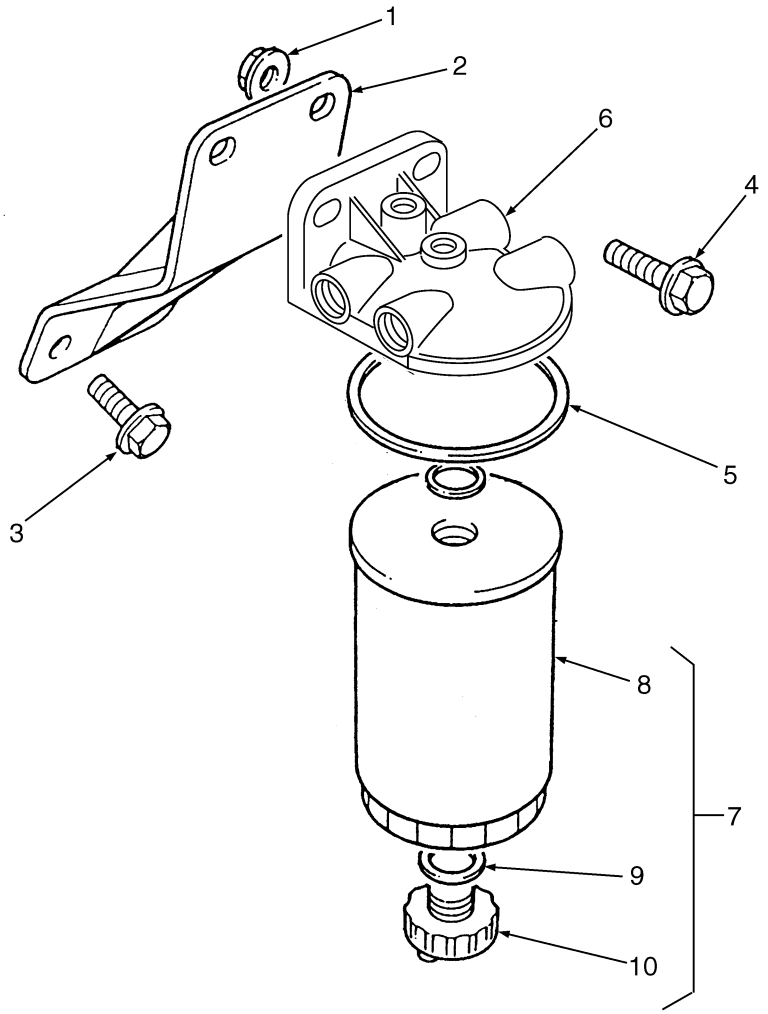

BP130007

ITEM	PART NO.	DESCRIPTION	QTY
	1398112	Engine	1
1	1307891	Nut	2
2	1308004	Bracket	1
3	1306371	Screw	2
4	1307913	Screw	2
5	1306345	Fuel Filter Assembly	1
5	. . . . .	Seal	1
6	1474825	Filter Head	1
7	1306331	Filter Element Kit	1
8	. . . . .	Element	1
9	1308006	Washer	1
10	1308005	Plug	1

©2003 HYSTER COMPANY

NOTES

HIGH PRESSURE FUEL INJECTION AND PUMP (Figure 3-5)
DIESEL

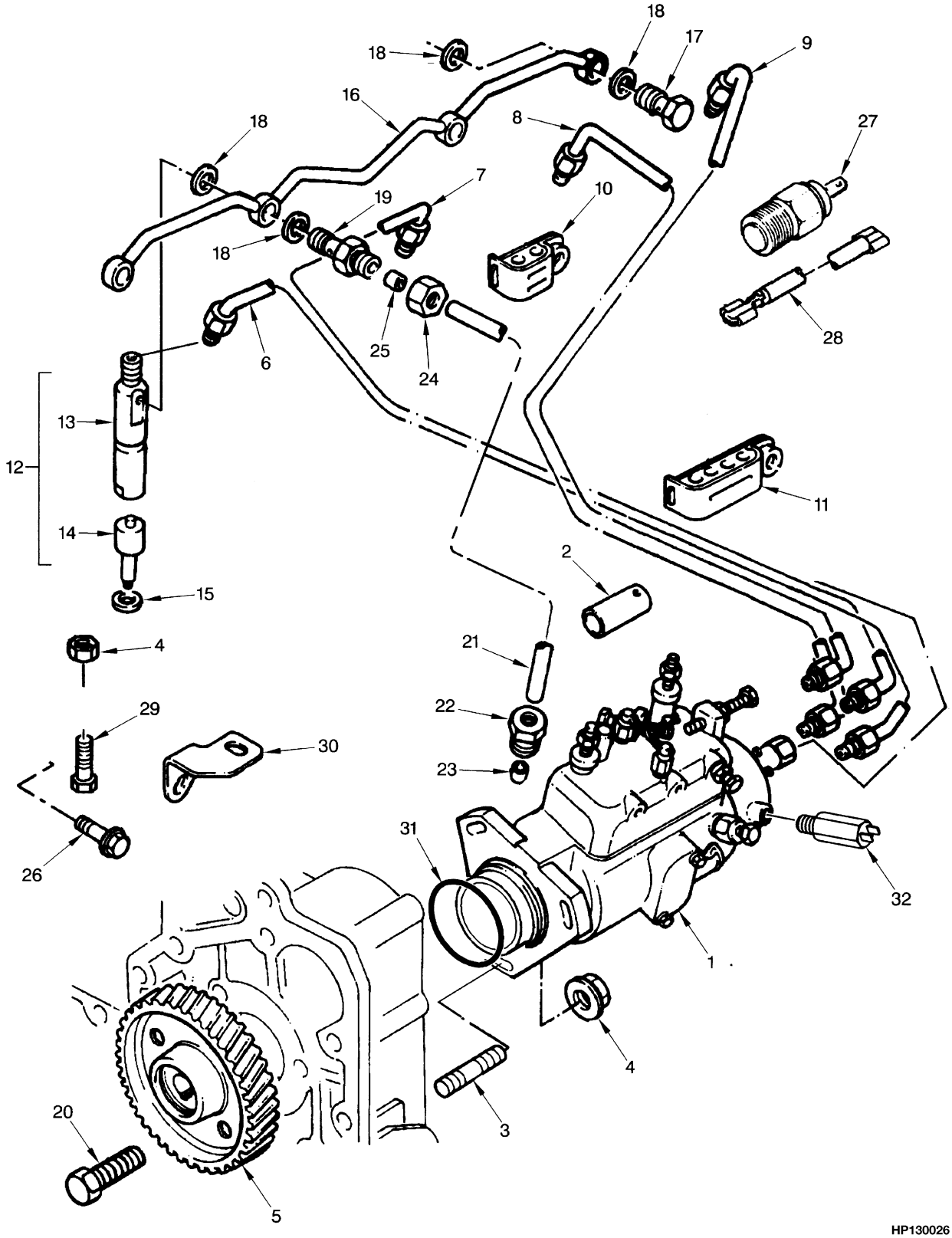

©2003 HYSTER COMPANY

HIGH PRESSURE FUEL INJECTION AND PUMP
DIESEL

ITEM	PART NO.	DESCRIPTION	QTY
	1398112	Engine	1
1	1498133	Injection Pump	1
1	1498136	Solenoid (ESOS)	1
1	1498137	Solenoid (Cold Start)	1
2	1453314	Cap	1
3	1456726	Stud	3
4	1306359	Nut	4
5	1456727	Gear (Fuel Pump)	1
6	1460552	Pipe (No. 1)	1
7	1460553	Pipe (No. 2)	1
8	1460554	Pipe (No. 3)	1
9	1460555	Pipe (No. 4)	1
10	1388385	Clip	2
11	1388386	Clip	1
12	1456732	Atomizer	4
13	1456733	Holder	1
14	1456734	Nozzle	1
15	1451669	Washer	4
16	1456735	Pipe (Leak Off)	1
17	1451672	Bolt	3
18	1451673	Washer	8
19	1451674	Connector	1
20	1307881	Screw	4
21	1456736	Pipe (Air)	1
22	1311070	Nut	1
23	1306337	Olive	1
24	152609	Nut	1
25	152608	Sleeve	1
26	386459	Screw	1
27	1451656	Sender	1
28	1453154	Lead	1
29	1306371	Screw	1
30	1453315	Bracket	1
31	1460572	O-Ring	1
32	1306329	Solenoid	1

©2003 HYSTER COMPANY

WATER SEPARATOR (Figure 3-6)

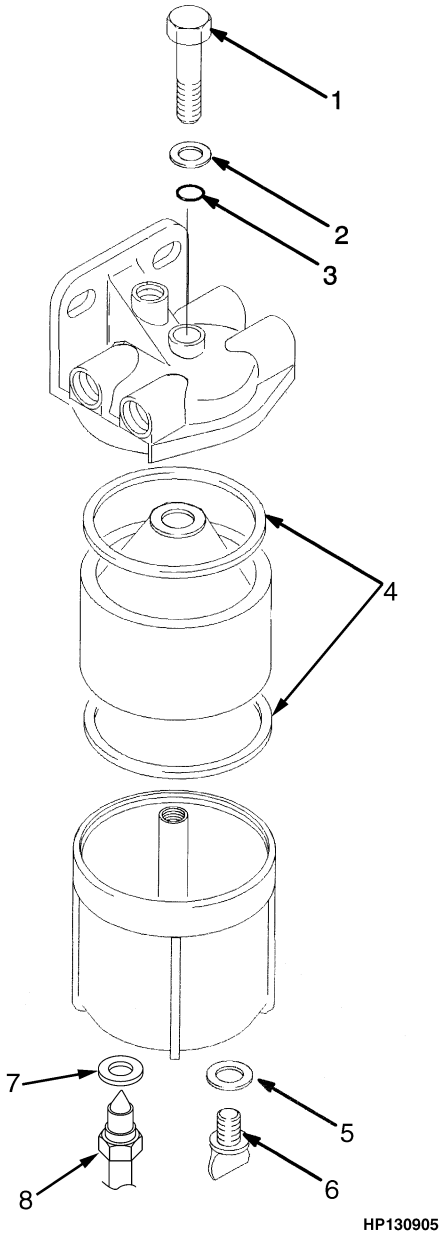

©2003 HYSTER COMPANY

WATER SEPARATOR

ITEM	PART NO.	DESCRIPTION	QTY
	1396256	Water Separator	1
1	1464543	Bolt	1
2	1464541	Washer	1
3	1464540	Sealing Ring	1
4	256160	Gasket	2
5	1308006	Washer	1
6	1464544	Drain Plug	1
7	1464545	Washer	1
8	1464546	Sensor (Water)	1

©2003 HYSTER COMPANY

LIFT PUMP (Figure 3-7)
DIESEL

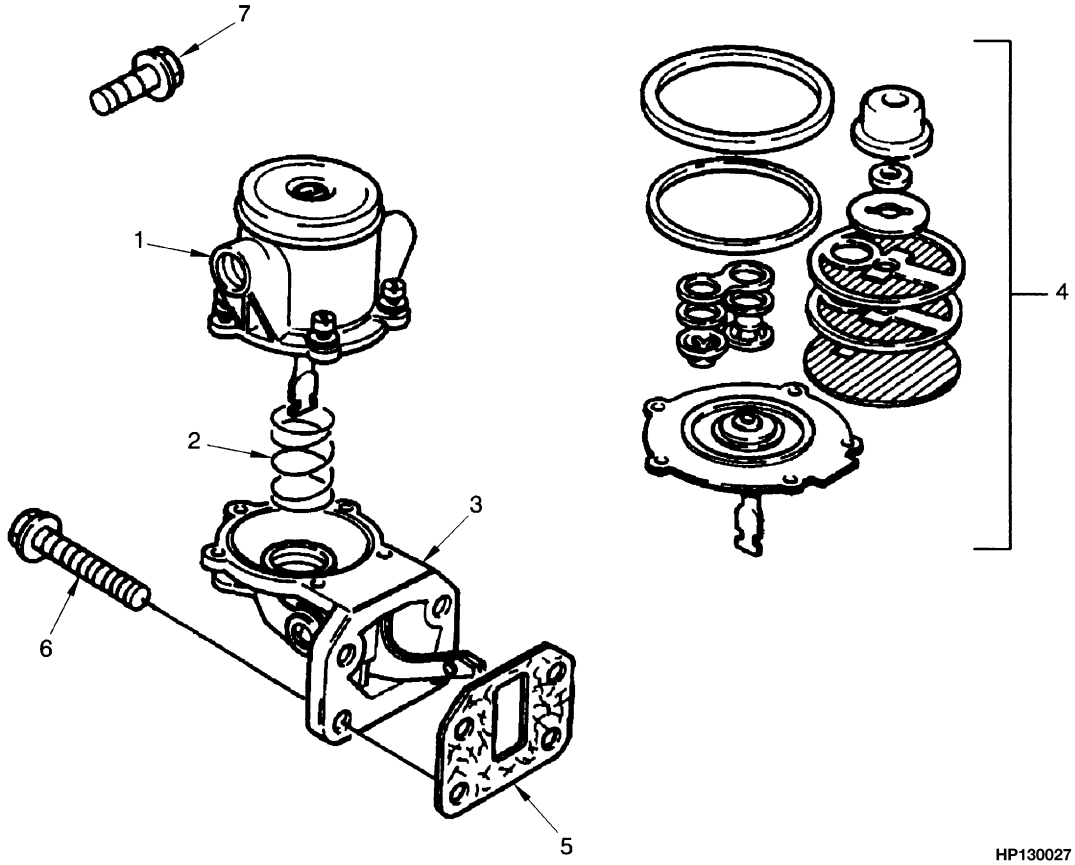

ITEM	PART NO.	DESCRIPTION	QTY
	1398112	Engine	1
	1456338	Lift Pump	1
1	. . . . .	Cover	1
2	. . . . .	Spring	1
3	. . . . .	Body	1
4	1515806	Filter Kit	1
5	1345754	Gasket	1
6	1307894	Screw	4
7	386459	Screw	1

©2003 HYSTER COMPANY

NOTES

FUEL SYSTEM (Figure 3-8)
GASOLINE

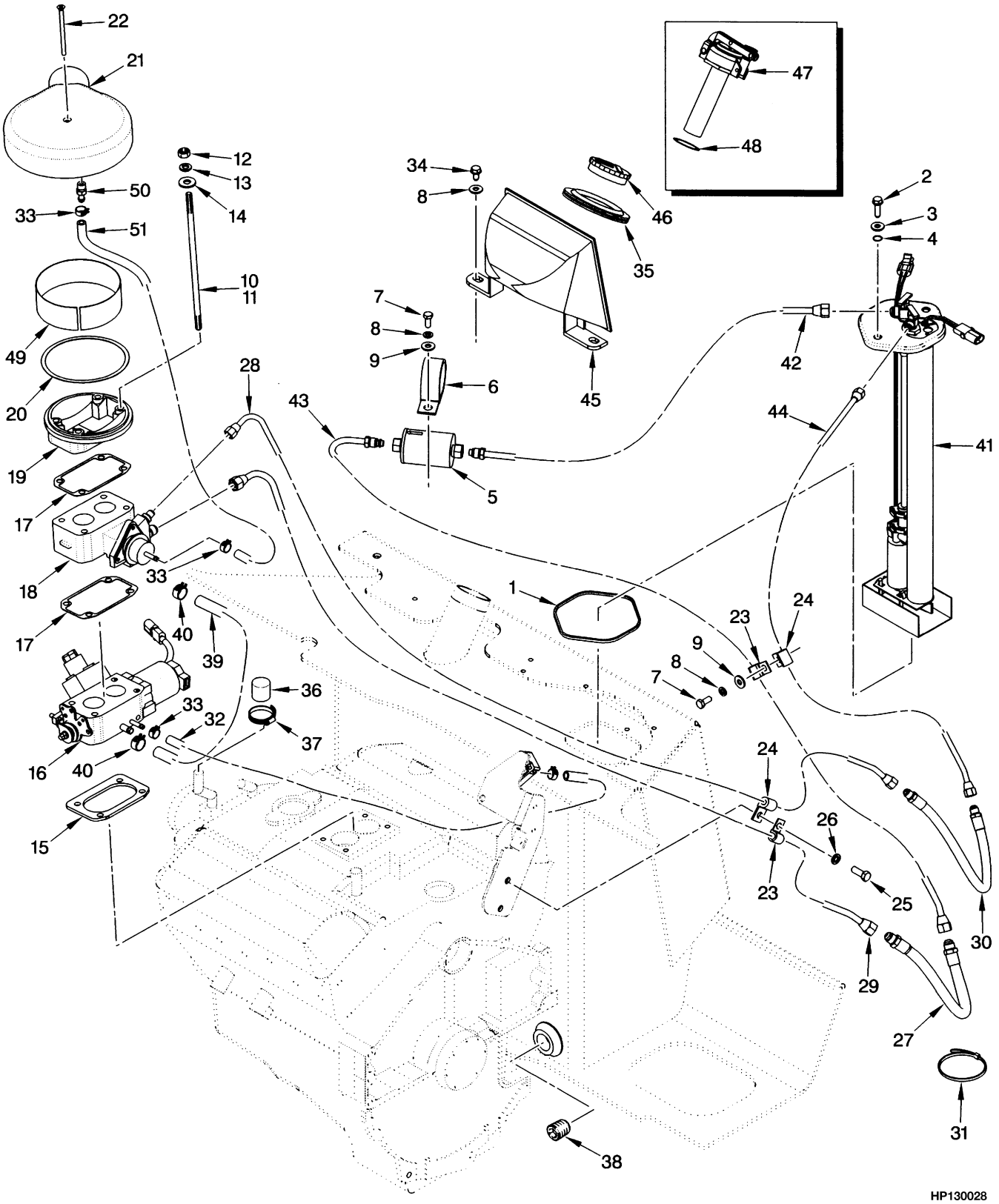

©2003 HYSTER COMPANY

FUEL SYSTEM
GASOLINE

ITEM		PART NO.	DESCRIPTION	QTY
1		1343449	Seal	1
2		1339779	Screw	2
3		320157	Washer	2
4		353000	O-Ring	2
5		1330342	Filter	1
6		176451	Clamp	1
7		136681	Capscrew	2
8		320158	Washer	4
9		292681	Lockwasher	2
10		1396727	Stud	4
11		264134	Sealant	AR
12		15055	Nut	4
13		15155	Lockwasher	4
14		18515	Washer	4
15		1396723	Gasket	1
16		1397803	Governor (☞ Figure 3-22)	1
17		1397412	Gasket	2
18		1394521	Injector Throttle Body Assembly (☞ Figure 3-23)	1
19		1397806	Adapter	1
20		1397422	Gasket	1
21		1397413	Bonnet	1
22		1397414	Screw	1
23		164488	Clamp	2
24		198675	Clamp	2
25		16805	Capscrew	1
26		15156	Lockwasher	1
27		1397407	Hose (Supply)	1
28		1398004	Tube	1
29		1398003	Tube	1
30		1397408	Hose (Return)	1
31		2004005	Strap Clamp	2
32		1330397	Hose (Silicone)	1
33		353310	Clamp	4
34		316678	Screw	2
35		1339720	Grommet	1
36		1383263	Cap	1
37		130845	Clamp	1
38		15964	Fitting	1
39		110497	Hose	1
40		353198	Clamp	2
41		1397421	Pump and Sender Assembly	1
41		1330324	Fuel Pump Kit	1
42		1397409	Tube	1
43		1397410	Tube	1
44		1397411	Tube	1
45		1376746	Shield	1
46		298831	Fuel Cap	1
47	**a**	63899	Fuel Cap	1
48	**a**	138880	Shim (0.020 in.)	AR
49		1392732	Ring	1

©2003 HYSTER COMPANY

FUEL SYSTEM
GASOLINE

ITEM	PART NO.	DESCRIPTION	QTY
50	1399438	Fitting	1
51	1377678	Hose	1

FOOTNOTES:
a Type GS

©2003 HYSTER COMPANY

NOTES

FUEL SYSTEM (Figure 3-9)
LPG
OPEN LOOP
(⇒S/N K005D-5482)

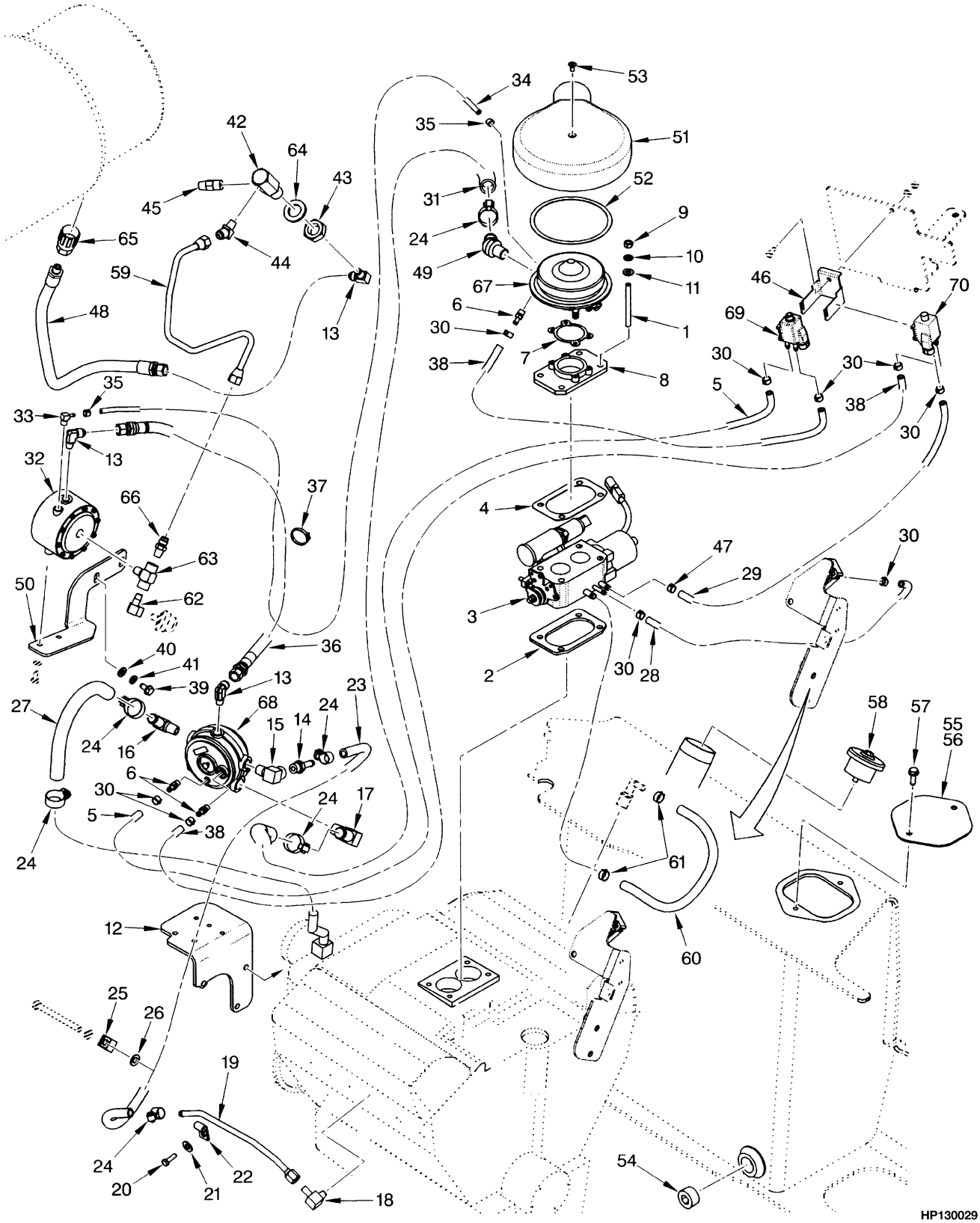

©2003 HYSTER COMPANY

FUEL SYSTEM
LPG
OPEN LOOP
(⇒S/N K005D-5482)

ITEM	PART NO.	DESCRIPTION	QTY
1	1397424	Stud	4
2	1396723	Gasket (Manifold)	1
3	1397417	Governor (☞ Figure 3-21)	1
4	1399464	Gasket (Governor)	1
5	1400160	Hose (Silicone)	1
6	1399438	Fitting	2
7	1397831	Gasket (Mixer)	1
8	1397420	Adapter	1
9	15055	Nut	4
10	15155	Lockwasher	4
11	18515	Washer	1
12	1384581	Bracket	1
13	14358	Fitting	3
14	141776	Fitting	2
15	16143	Fitting	1
16	125305	Fitting	1
17	201800	Fitting	1
18	14505	Fitting	1
19	1399782	Tube	1
20	18462	Capscrew	1
21	15127	Washer	1
22	154459	Clamp	1
23	393290	Hose	1
24	130845	Clamp	6
25	173247	Clamp	1
26	15134	Washer	2
27	212355	Hose	1
28	1333807	Hose (Silicone)	1
29	1354114	Hose	1
30	353310	Clamp	4
31	1397416	Hose	1
32	258321	Filter and Lock-Off Valve (☞ Figure 3-18)	1
33	175347	Fitting	1
34	1400217	Hose (Silicone)	1
35	366473	Clamp	2
36	1400216	Hose	1
37	137852	Strap Clamp	3
38	1399436	Hose (Silicone)	2
39	316678	Screw	2
40	320157	Washer	2
41	292681	Lockwasher	2
42	1400249	Fitting	1
43	15034	Nut	1
44	16863	Fitting	1
45	101809	Valve	1
46	1465938	Bracket	1
47	1328878	Clamp	4
48	1464890	Hose	1
49	349366	Fitting	1

©2003 HYSTER COMPANY

FUEL SYSTEM
LPG
OPEN LOOP
(⇒S/N K005D-5482)

ITEM	PART NO.	DESCRIPTION	QTY
50	1463625	Bracket	1
51	1397413	Bonnet	1
52	1397422	Gasket	1
53	16520	Screw	1
54	15964	Fitting	1
55	1451568	Plate	1
56	1392738	Gasket	1
57	1339779	Screw	2
58	1352123	Cap (Fuel)	1
59	1485923	Tube	1
60	85777	Hose	1
61	353198	Clamp	1
62	15971	Fitting	1
63	17664	Fitting	1
64	320171	Washer	1
65	97999	Disconnect	1
66	16134	Fitting	1
67	1397418	Carburetor	1
67	1463250	Valve (Air/Gasoline)	1
67	1463251	Gasket	1
67	132473	Screw	4
68	1399441	Converter Assembly (☞ Figure 3-19)	1
69	1466003	Valve (Solenoid)	1
70	1345677	Valve (Solenoid)	1

©2003 HYSTER COMPANY

NOTES

FUEL SYSTEM (Figure 3-10)
LPG
OPEN LOOP
(S/N K005D-5483⇒)

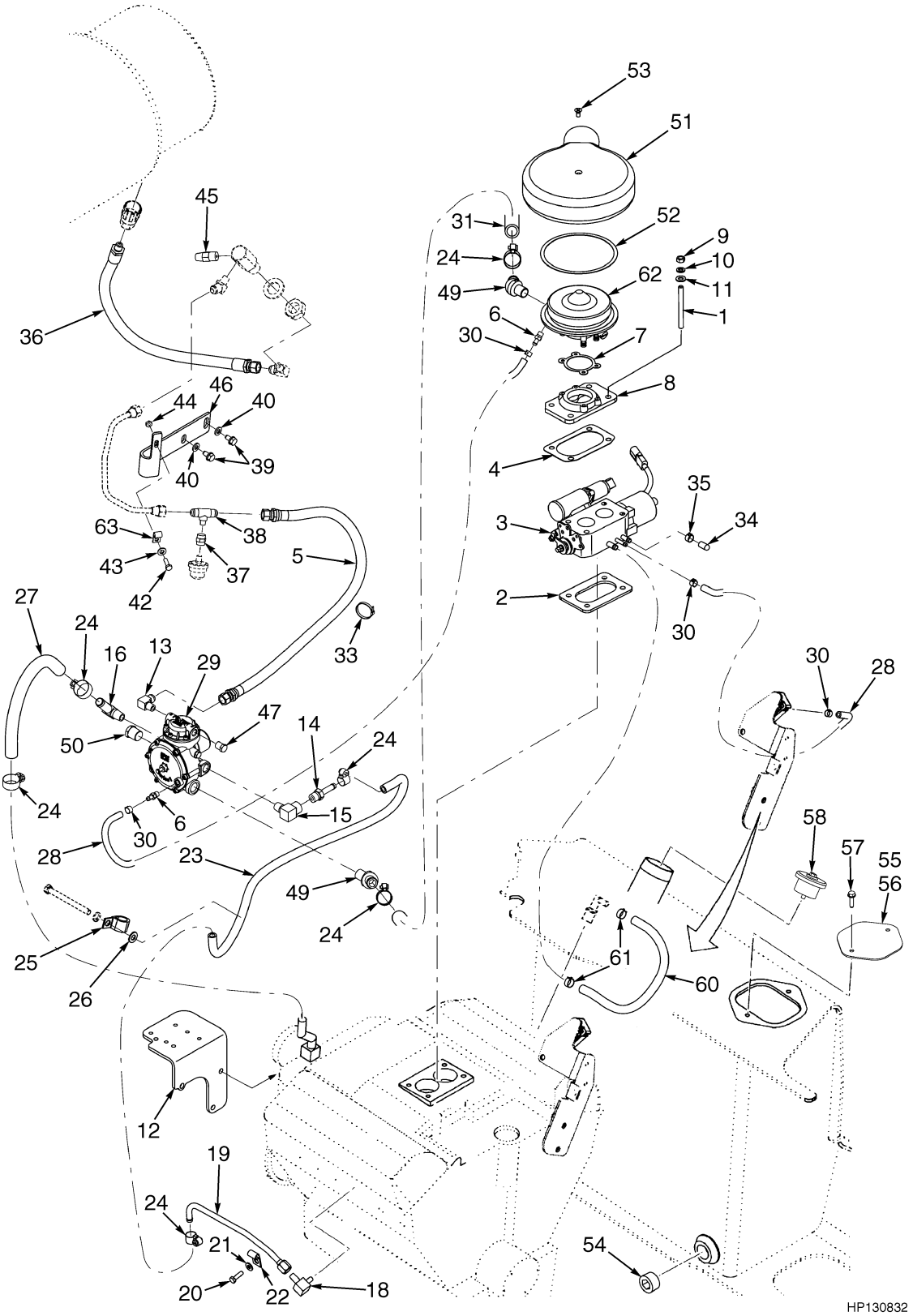

©2003 HYSTER COMPANY

FUEL SYSTEM
LPG
OPEN LOOP
(S/N K005D-5483⇒)

ITEM		PART NO.	DESCRIPTION	QTY
1		1397424	Stud	4
2		1396723	Gasket (Manifold)	1
3		1397417	Governor (☞ Figure 3-21)	1
4		1399464	Gasket (Governor)	1
5		1400216	Hose (Silicone)	1
6		1399438	Fitting	2
7		1397831	Gasket (Mixer)	1
8	**a**	1397420	Adapter	1
8	**b**	1529011	Adapter	1
9		15055	Nut	4
10		15155	Lockwasher	4
11		18515	Washer	1
12	**a**	1384581	Bracket	1
12	**b**	1523722	Bracket	1
13		14358	Fitting	3
14		141776	Fitting	2
15		16143	Fitting	1
16		125305	Fitting	1
17		292526	Capscrew	8
18		14505	Fitting	1
19		1399782	Tube	1
20		18462	Capscrew	1
21		15127	Washer	1
22		133696	Clamp	1
23		393290	Hose	1
24		130845	Clamp	6
25		173247	Clamp	1
26		15134	Washer	2
27		212355	Hose	1
28		1333807	Hose (Silicone)	2
29		1482794	Converter (☞ Figure 3-20)	1
30		353310	Clamp	4
31		1397416	Hose	1
32		320161	Washer	8
33		148271	Loom	AR
34		1399884	Cap	1
35		369815	Clamp	1
36		1464890	Hose	1
37		16168	Fitting	1
38		14404	Fitting	1
39		316678	Screw	2
40		320157	Washer	2
41		292681	Lockwasher	2
42		18462	Capscrew	1
43		15127	Washer	1
44		221341	Nut	1
45		101809	Valve	1
46		1485921	Bracket	1
47		14385	Fitting	4

©2003 HYSTER COMPANY

FUEL SYSTEM
LPG
OPEN LOOP
(S/N K005D-5483⇒)

ITEM	PART NO.	DESCRIPTION	QTY
48	292501	Capscrew	1
49	349366	Fitting	1
50	14387	Fitting	1
51	1397413	Bonnet	1
52	1345993	Gasket	1
53	16520	Screw	1
54	15963	Fitting	1
55	1451568	Plate	1
56	1392738	Gasket	1
57	1339779	Screw	2
58	1352123	Cap (Fuel)	1
59	292680	Lockwasher	2
60	85777	Hose	1
61	353198	Clamp	1
62	2044192	Carburetor	1
62	1514309	Valve (Air/Gas)	1
63	128259	Clamp	1

FOOTNOTES:
a ⇒ S/N PENDING PER ECN 73989
b S/N PENDING PER ECN 73989 ⇒

©2003 HYSTER COMPANY

NOTES

FUEL SYSTEM (Figure 3-11)
LPG
CLOSED LOOP

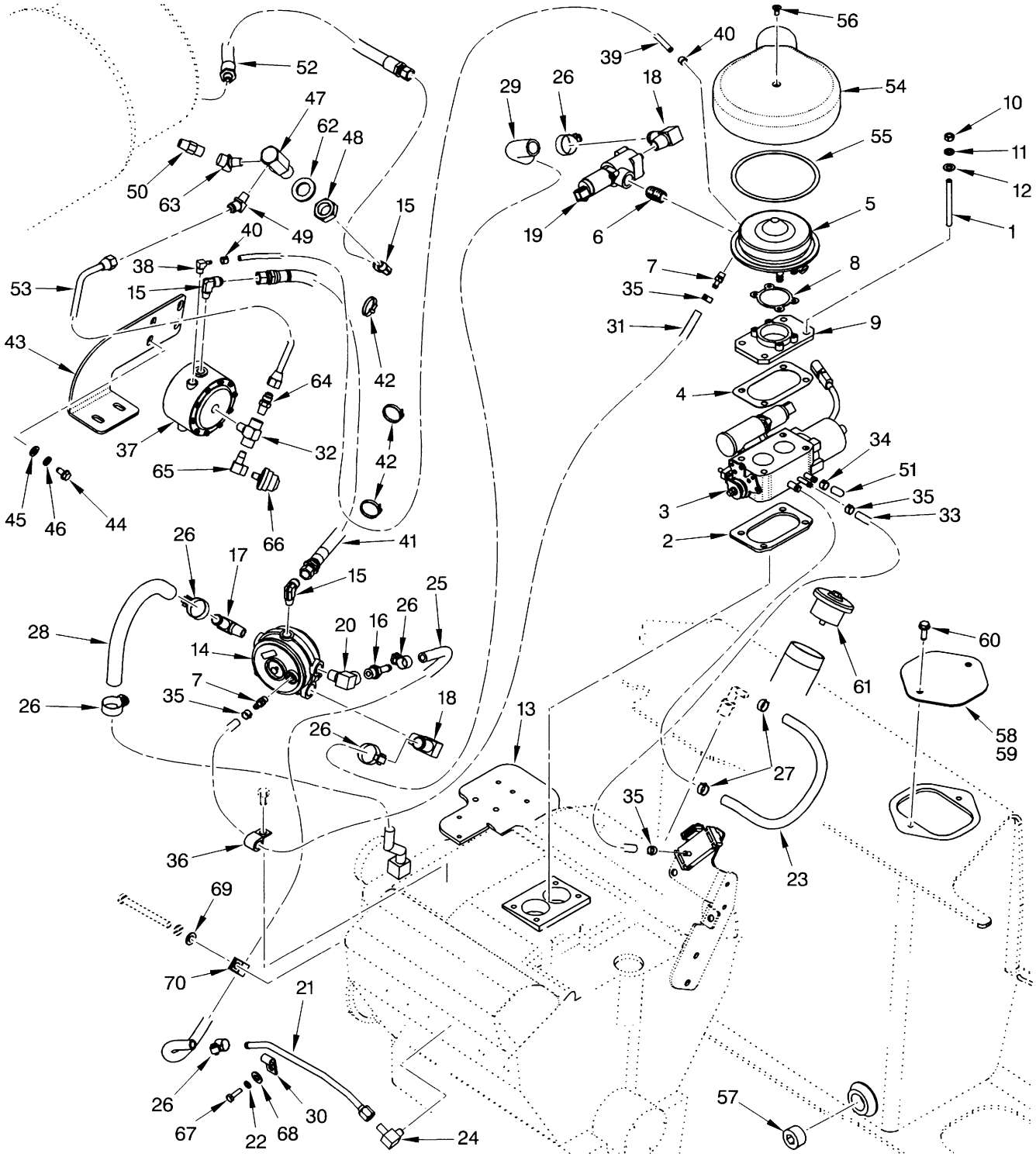

HP130030

©2003 HYSTER COMPANY

FUEL SYSTEM
LPG
CLOSED LOOP

ITEM		PART NO.	DESCRIPTION	QTY
1		1397424	Stud	4
2		1396723	Gasket (Manifold)	1
3		1397417	Governor (☞ Figure 3-21)	1
4		1399464	Gasket (Governor)	1
5	**a**	1399826	Carburetor	1
5	**b**	2053931	Carburetor (With Low Emissions) (☞ Figure 3-12)	1
6		15334	Fitting	1
7		1399438	Fitting	2
8		1397831	Gasket (Carburetor)	1
9	**a**	1397420	Adapter	1
9	**b**	1529011	Adapter	1
10		15055	Nut	4
11		15155	Lockwasher	4
12		18515	Washer	4
13	**a**	1384581	Bracket	1
13	**b**	1523722	Bracket	1
14		1399827	Converter	1
14		1459717	Repair Kit	1
15		14358	Fitting	3
16		141776	Fitting	1
17		125305	Fitting	1
18	**a**	201800	Fitting	1
18	**b**	349366	Fitting	1
19		1397867	Valve	1
20		16143	Fitting	1
21		1399782	Tube	1
22		15154	Lockwasher	1
23		85777	Hose	1
24		14505	Fitting	1
25		393290	Hose	1
26		130845	Clamp	6
27		353198	Clamp	2
28		212355	Hose	1
29	**a**	1399883	Hose	1
29	**b**	1528870	Hose	1
30		154459	Clamp	1
31		1333807	Hose	1
32		17664	Fitting	1
33		1330397	Hose	1
34		2047829	Seal	1
35		353310	Clamp	4
36		136516	Clamp	1
37		258321	Filter and Lock-Off Valve (☞ Figure 3-18)	1
38		175347	Fitting	1
39		1400217	Hose (Silicone)	1
40		366473	Clamp	2
41		1400216	Hose	1
42		137852	Strap Clamp	4
43		1463625	Bracket	1
44		316678	Screw	2

©2003 HYSTER COMPANY

FUEL SYSTEM
LPG
CLOSED LOOP

ITEM	PART NO.	DESCRIPTION	QTY
45	320157	Washer	2
46	292681	Lockwasher	2
47	1400249	Fitting	1
48	15034	Nut	1
49	16863	Fitting	1
50	101809	Valve	1
51	1399884	Cap	1
52	1464890	Hose	1
53	1400247	Tube	1
54	1397413	Bonnet (Air Filter)	1
55	1397422	Gasket	1
56	16520	Screw	1
57	15963	Fitting	1
58	1451568	Plate	1
59	288394	Adhesive	AR
60	1339779	Screw	2
61	1352123	Cap (Fuel)	1
62	320171	Washer	1
63	12822	Fitting	1
64	16134	Fitting	1
65	15971	Fitting	1
66	1301648	Low Pressure Switch	1
67	18462	Capscrew	1
68	15127	Washer	1
69	15134	Washer	1
70	173247	Clamp	1

FOOTNOTES:
a ⇒ S/N PENDING PER ECN 73989
b S/N PENDING PER ECN 73989 ⇒

©2003 HYSTER COMPANY

CARBURETOR (LPG) (Figure 3-12)
WITH LOW EMISSIONS

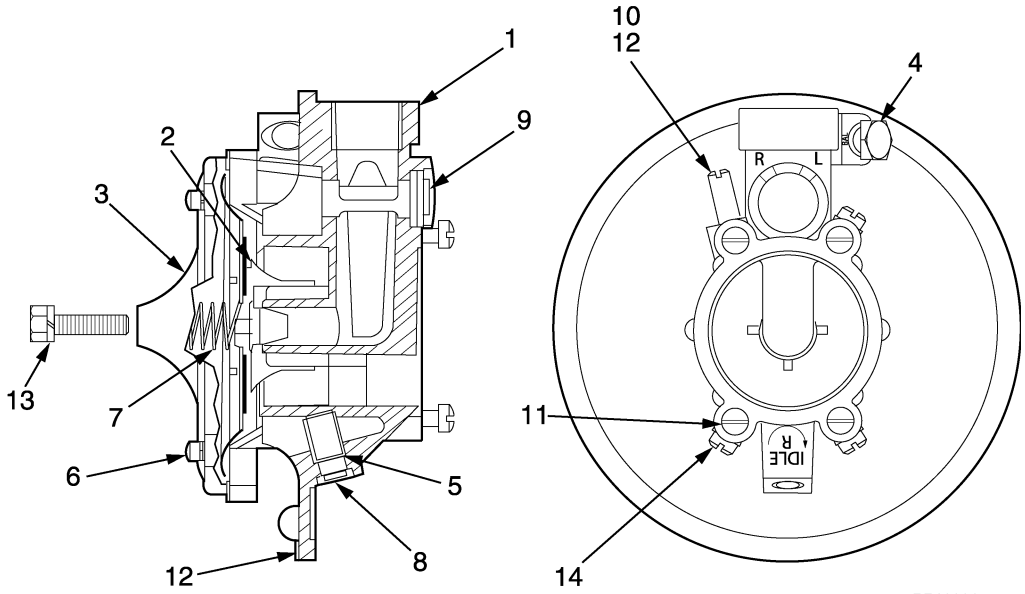

ITEM	PART NO.	DESCRIPTION	QTY
	2053931	Carburetor	1
1	. . . . .	Body Assembly	1
2	1494300	Valve Assembly	1
3	213977	Cover	1
4	1357749	Plug	1
5	1530268	Screw	1
6	132473	Screw	4
7	374713	Spring	1
8	1530269	Plug	1
9	1530270	Plug	1
10	323541	Fitting	1
11	204790	Screw	4
12	383789	Thread Sealer	AR
13	220551	Screw	1
14	326926	Screw	2

DUAL FUEL SYSTEM (Figure 3-13)
(⇒S/N K005D-5482)

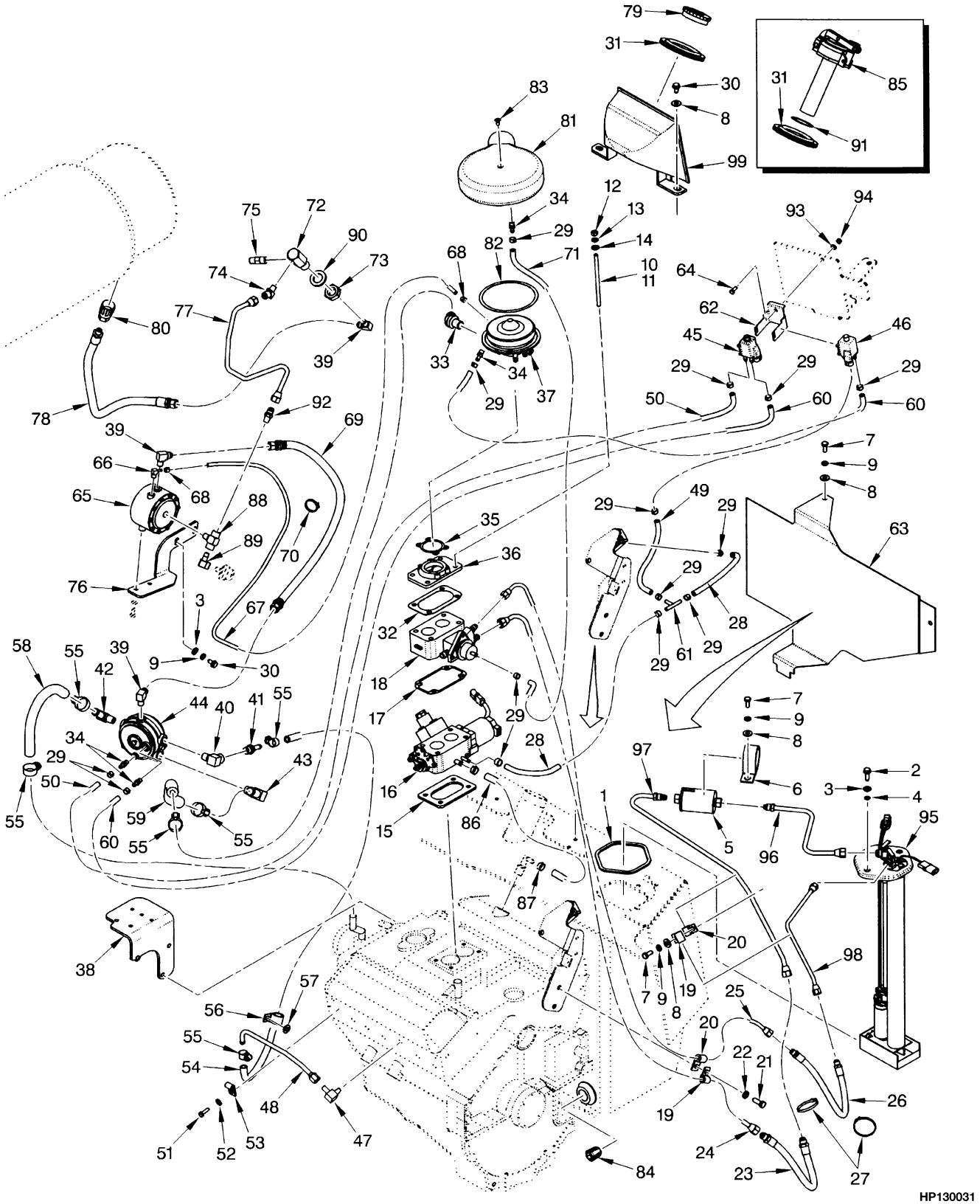

©2003 HYSTER COMPANY

DUAL FUEL SYSTEM
(⇒S/N K005D-5482)

ITEM		PART NO.	DESCRIPTION	QTY
1		1343449	Seal	1
2		1339779	Screw	2
3		320157	Washer	4
4		353000	O-Ring	2
5		1330342	Filter	1
6		176451	Clamp	1
7		136681	Capscrew	2
8		320158	Washer	4
9		292681	Lockwasher	4
10		1396728	Stud	4
11		264134	Sealant	AR
12		15055	Nut	4
13		15155	Lockwasher	4
14		18515	Washer	4
15		1396723	Gasket	1
16		1397803	Governor (☞ Figure 3-22)	1
17		1397412	Gasket	1
18		1394521	Injector Throttle Body Assembly (☞ Figure 3-23)	
19		164488	Clamp	2
20		198675	Clamp	1
21		16805	Capscrew	1
22		15156	Lockwasher	1
23		1397407	Hose	1
24		1398003	Tube (Throttle Body Injector to Hose)	1
25		1398004	Tube (Hose to Throttle Body Injector)	1
26		1397408	Hose	1
27		2004005	Strap Clamp	2
28		1350682	Hose	2
29		353310	Clamp	14
30		316678	Screw	4
31		1339720	Grommet	1
32		1399464	Gasket	1
33		349366	Fitting	1
34		1399438	Fitting	4
35		1397831	Gasket	1
36		1397420	Adapter	1
37	**a**	1397418	Carburetor	1
37		1463250	Valve (Air/Gasoline)	1
37		1463251	Gasket	1
37		132473	Screw	4
37	**b**	1392826	Carburetor	1
37		1463250	Valve (Air/Gasoline)	1
37		204787	Gasket	1
37		372115	Fitting	1
38		1384581	Bracket	1
39		14358	Fitting	3
40		16143	Fitting	1
41		141776	Fitting	1
42		125305	Fitting	1
43		201800	Fitting	1
44		1399441	Converter Assembly (☞ Figure 3-19)	1

©2003 HYSTER COMPANY

DUAL FUEL SYSTEM
(⇒S/N K005D-5482)

ITEM	PART NO.	DESCRIPTION	QTY
45	1466003	Valve (Solenoid)	1
46	1345677	Valve (Solenoid)	1
47	14505	Fitting	1
48	1399782	Tube	1
49	1354114	Hose	1
50	1400160	Hose	1
51	18462	Capscrew	1
52	15127	Washer	1
53	154459	Clamp	1
54	393290	Hose	1
55	130845	Clamp	6
56	173247	Clamp	1
57	15134	Washer	1
58	212355	Hose	1
59	1400161	Hose	1
60	1399436	Hose	2
61	2034520	Fitting	1
62	1465938	Bracket	1
63	1399301	Shield	1
64	292500	Capscrew	1
65	258321	Filter and Lock-Off Valve (☞ Figure 3-18)	1
66	175347	Fitting	1
67	1400217	Hose	1
68	366473	Clamp	2
69	1400216	Hose	1
70	137852	Strap Clamp	3
71	1377678	Hose	1
72	1400249	Fitting	1
73	15034	Nut	1
74	16863	Fitting	1
75	101809	Valve	1
76	1463625	Bracket	1
77	1485923	Tube	1
78	1464890	Hose	1
79	298831	Fuel Cap	1
80	97999	Disconnect	1
81	1397413	Bonnet	1
82	1397422	Gasket	1
83	16520	Screw	1
84	15963	Fitting	1
85	63899	Fuel Cap	1
86	85777	Hose	1
87	353198	Clamp	2
88	17664	Fitting	1
89	15971	Fitting	1
90	320171	Washer	1
91	138880	Shim (0.020 in.)	AR
92	16134	Fitting	1
93	320156	Washer	1
94	302399	Nut	1
95	1397421	Pump and Sender Assembly	1
95	1330324	Fuel Pump Kit	1

©2003 HYSTER COMPANY

DUAL FUEL SYSTEM
(⇒S/N K005D-5482)

ITEM	PART NO.	DESCRIPTION	QTY
96	1397409	Tube	1
97	1397410	Tube	1
98	1397411	Tube	1
99	1376746	Shield	1

FOOTNOTES:

a ⇒ S/N PENDING PER ECN 70712-39

b S/N PENDING PER ECN 70712-39⇔S/N PENDING PER ECN 70714-52

©2003 HYSTER COMPANY

DUAL FUEL SYSTEM (Figure 3-14)
(S/N K005D-5483⇒)

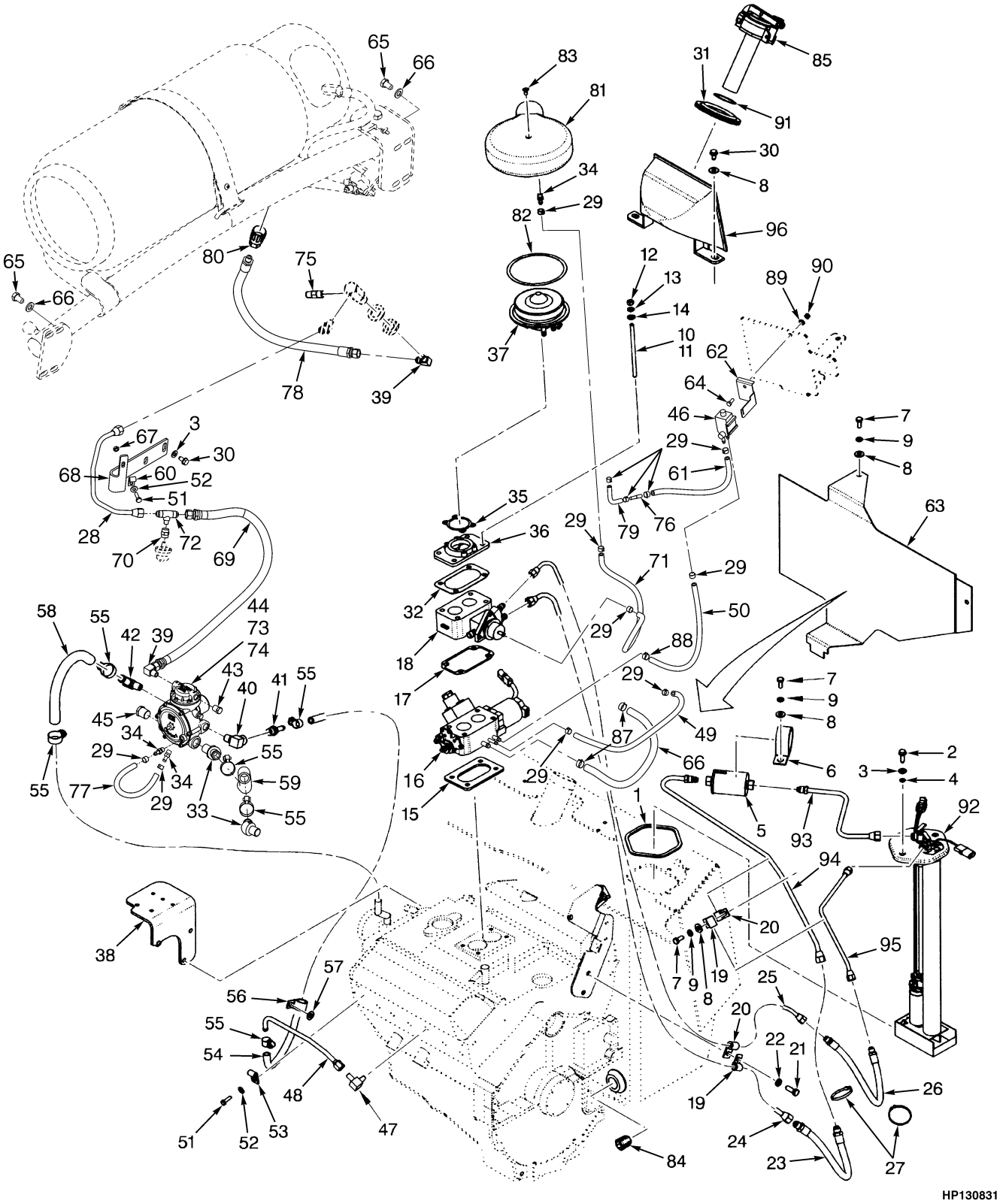

HP130831

©2003 HYSTER COMPANY

DUAL FUEL SYSTEM
(S/N K005D-5483⇒)

ITEM		PART NO.	DESCRIPTION	QTY
1		1343449	Seal	1
2		1339779	Screw	2
3		320157	Washer	4
4		353000	O-Ring	2
5		1330342	Filter	1
6		176451	Clamp	1
7		136681	Capscrew	2
8		320158	Washer	4
9		292681	Lockwasher	4
10		1396728	Stud	4
11		264134	Sealant	AR
12		15055	Nut	4
13		15155	Lockwasher	4
14		18515	Washer	4
15		1396723	Gasket	1
16		1397803	Governor (☞ Figure 3-22)	1
17		1397412	Gasket	1
18		1394521	Injector Throttle Body Assembly (☞ Figure 3-23)	
19		164488	Clamp	2
20		198675	Clamp	2
21		16805	Capscrew	1
22		15156	Lockwasher	1
23		1397407	Hose	1
24		1398003	Tube (Throttle Body Injector to Hose)	1
25		1398004	Tube (Hose to Throttle Body Injector)	1
26		1397408	Hose	1
27		2004005	Strap Clamp	2
28		1485923	Tube	1
29		353310	Clamp	12
30		316678	Screw	4
31		1339720	Grommet	1
32		1399464	Gasket	1
33		349366	Fitting	1
34		1399438	Fitting	4
35		1397831	Gasket	1
36		1397420	Adapter	1
37		2044872	Carburetor	1
37		1514310	Valve (Air/Gas)	1
38	**a**	1384581	Bracket	1
38	**b**	1523722	Bracket	1
39		14358	Fitting	3
40		16143	Fitting	1
41		141776	Fitting	1
42		125305	Fitting	1
43		14385	Fitting	1
44		1482794	Converter (☞ Figure 3-20)	1
45		14387	Fitting (☞ Figure 3-20)	1
46		1345677	Valve (Solenoid)	1
47		14505	Fitting	1
48		1399782	Tube	1
49		1354114	Hose	1

©2003 HYSTER COMPANY

DUAL FUEL SYSTEM
(S/N K005D-5483⇒)

ITEM	PART NO.	DESCRIPTION	QTY
50	1400160	Hose	1
51	18462	Capscrew	1
52	15127	Washer	1
53	133696	Clamp	1
54	393290	Hose	1
55	130845	Clamp	6
56	173247	Clamp	1
57	15134	Washer	1
58	212355	Hose	1
59	1476434	Hose	1
60	128259	Clamp	1
61	1333807	Hose	2
62	1485922	Bracket	1
63	1399301	Shield	1
64	292500	Capscrew	1
65	292526	Capscrew	8
66	320161	Washer	8
67	221341	Nut	1
68	1485921	Bracket	1
69	1400216	Hose	1
70	16168	Fitting	1
71	1377678	Hose	1
72	14404	Fitting	1
73	292501	Capscrew	2
74	292680	Lockwasher	2
75	101809	Valve	1
76	1471702	Fitting	1
77	1330397	Hose	1
78	1464890	Hose	1
79	1333808	Hose	1
80	97999	Disconnect	1
81	1397413	Bonnet	1
82	1345993	Gasket	1
83	16520	Screw	1
84	15963	Fitting	1
85	63899	Fuel Cap	1
86	85777	Hose	1
87	353198	Clamp	2
88	369815	Clamp	1
89	320156	Washer	1
90	302399	Nut	1
91	138880	Shim (0.020 in.)	AR
92	1397421	Pump and Sender Assembly	1
92	1330324	Fuel Pump Kit	1
93	1397409	Tube	1
94	1397410	Tube	1
95	1397411	Tube	1
96	1376746	Shield	1

FOOTNOTES:

a ⇒ S/N PENDING PER ECN 73989

b S/N PENDING PER ECN 73989 ⇒

©2003 HYSTER COMPANY

NOTES

LPG TANK BRACKET (Figure 3-15)
FIXED

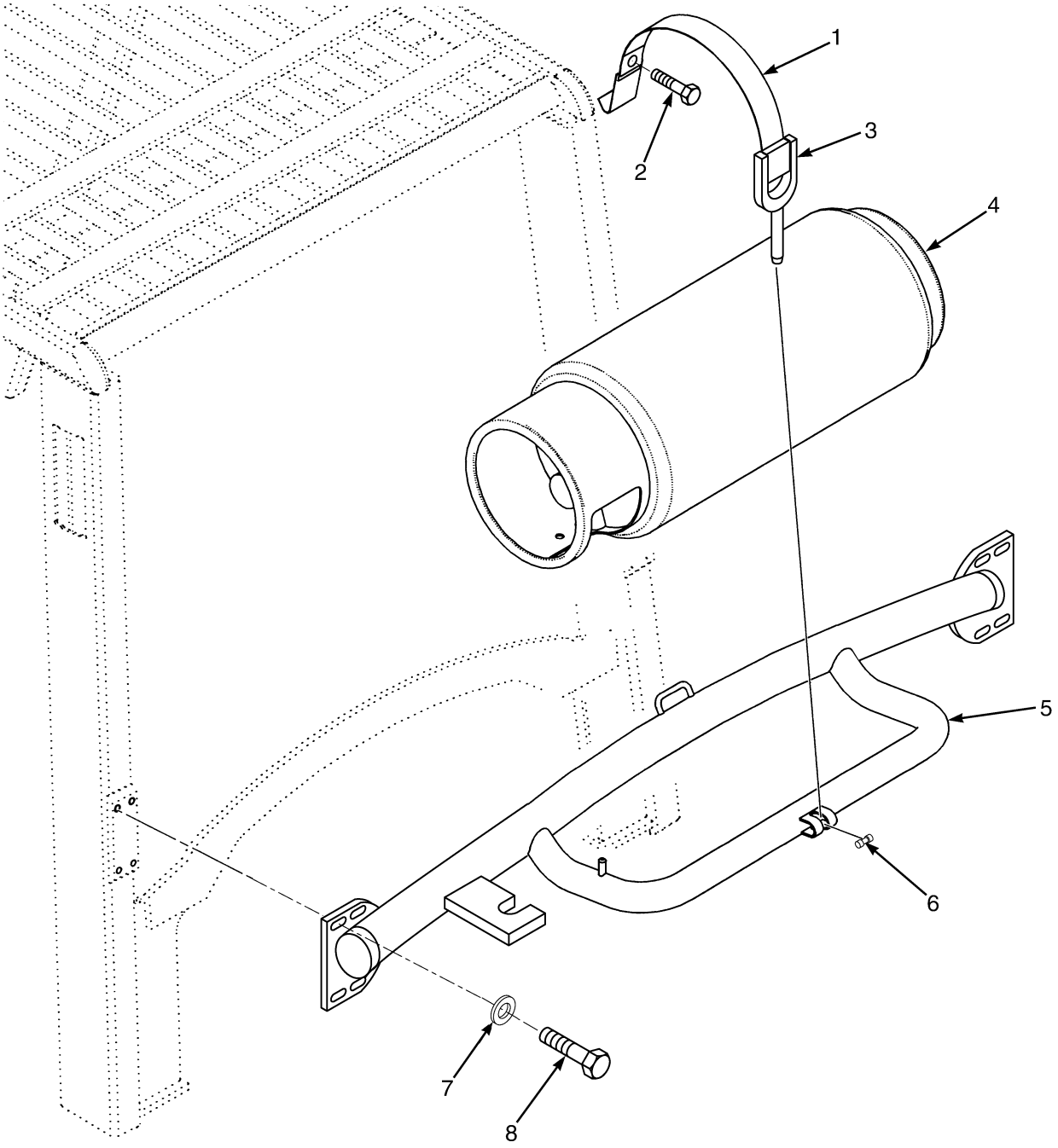

©2003 HYSTER COMPANY

LPG TANK BRACKET
FIXED

ITEM		PART NO.	DESCRIPTION	QTY
1		1400197	Strap	1
2		296163	Capscrew	1
3		196297	Latch	1
4	**a**	. . . . .	LPG Tank	1
5		1495485	Tank Bracket	1
6		147294	Nut	1
7		320161	Washer	8
8		292526	Capscrew	8

FOOTNOTES:

a Contact your authorized dealer for service parts.

©2003 HYSTER COMPANY

LPG TANK AND BRACKET (Figure 3-16)
SWING OUT

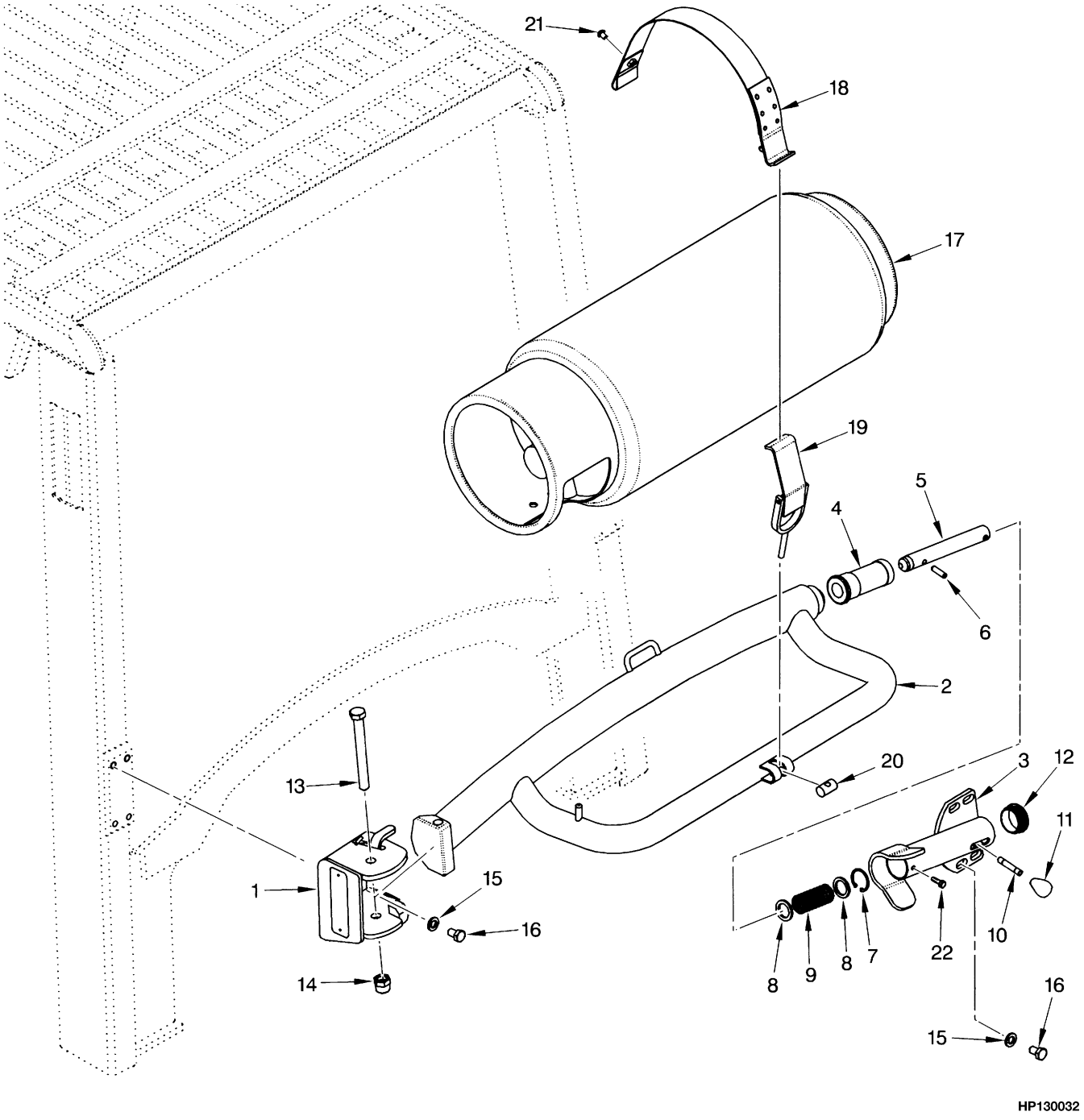

©2003 HYSTER COMPANY

LPG TANK AND BRACKET
SWING OUT

ITEM		PART NO.	DESCRIPTION	QTY
		1494466	LPG Tank Bracket Assembly	1
1		1398141	Hinge (LH)	1
2		1494460	Swing Arm	1
3		1398143	Receiver	1
4		1398085	Housing (Latch)	1
5		1398086	Shaft	1
6		302476	Pin	1
7		1398092	Snap Ring (Internal)	1
8		1398089	Spring Seat	2
9		1398093	Spring	1
10		1398097	Shaft (Knob)	1
11		1398098	Knob	1
12		1398099	Plug	1
13		293700	Capscrew	1
14		302404	Locknut	1
15		320161	Washer	8
16		292526	Capscrew	8
17	**a**	. . . . .	Fuel Tank	1
18		1400197	Strap	1
19		196297	Latch	1
20		147294	Nut	1
21		296164	Capscrew	1
22		148962	Capscrew	1

FOOTNOTES:
a Contact your authorized dealer for service parts.

©2003 HYSTER COMPANY

LPG TANK BRACKET (Figure 3-17)
SWING OUT/DROP DOWN

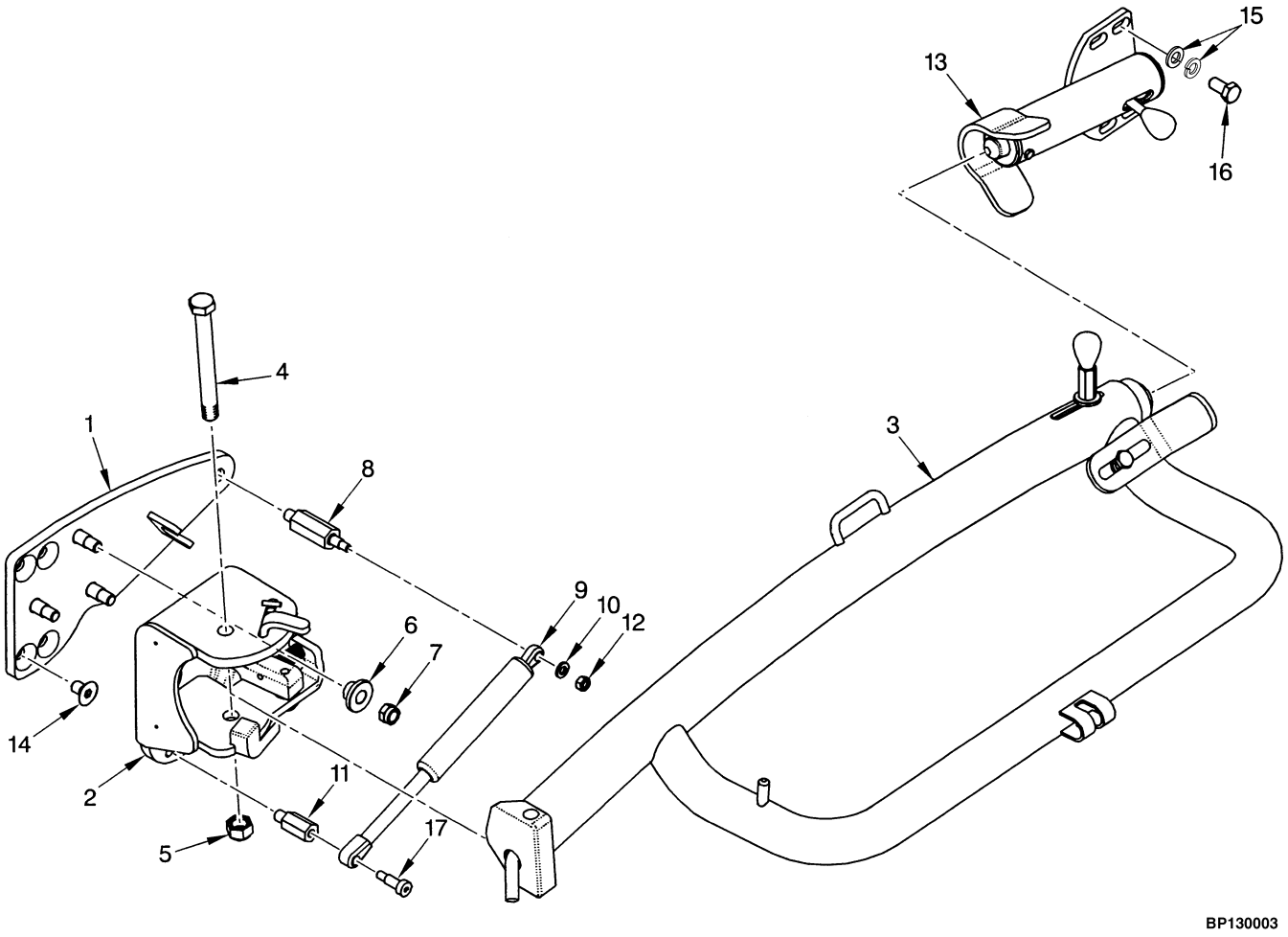

©2003 HYSTER COMPANY

LPG TANK BRACKET
SWING OUT/DROP DOWN

ITEM	PART NO.	DESCRIPTION	QTY
	1494782	Tank Bracket Assembly	1
1	1399405	Base Plate	1
2	1399406	Hinge	1
3	1494784	Tank Carrier	1
4	293700	Capscrew	1
5	302404	Locknut	1
6	1399360	Guide Washer	3
7	316837	Nut	3
8	1399407	Post	1
9	1399372	Gas Spring	1
10	320157	Washer	2
11	1399410	Post	1
12	302400	Locknut	1
13	1398144	Latch Tube Assembly	1
13	1398143	Receiver	1
13	1398087	Latch	1
13	1398097	Shaft	1
13	1398098	Knob	1
13	1398099	Plug	1
13	148962	Capscrew	1
14	296251	Capscrew	4
15	320161	Washer	4
15	292683	Lockwasher	4
16	132860	Capscrew	4
17	1399347	Bolt	1

©2003 HYSTER COMPANY

LOCK-OFF FILTER (Figure 3-18)
LPG

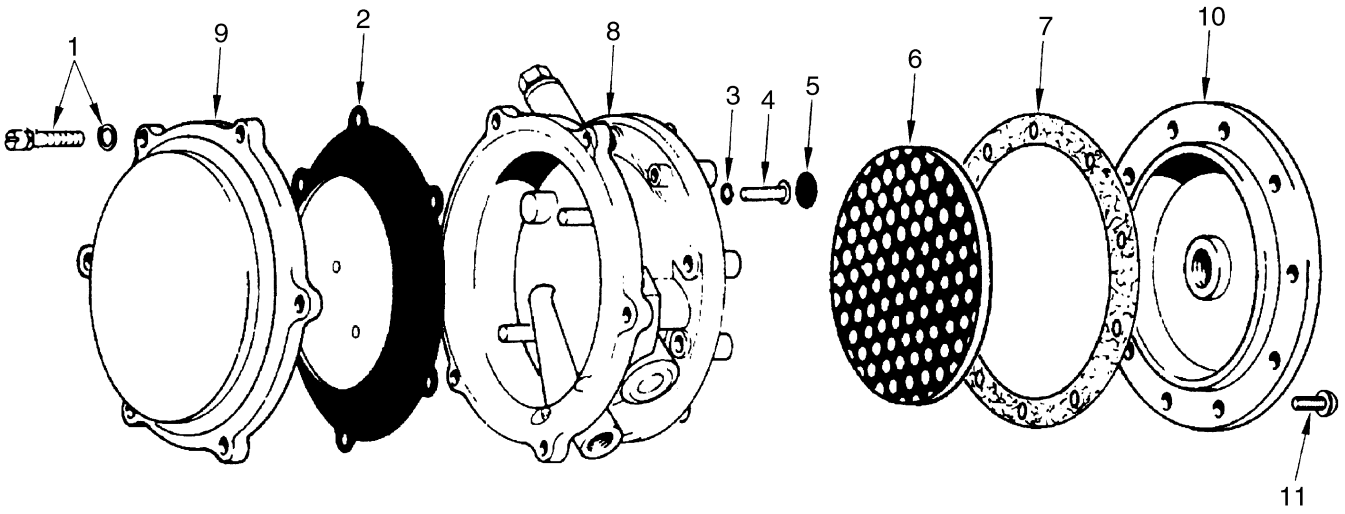

HP130033

ITEM	PART NO.	DESCRIPTION	QTY
	258321	Filter and Lock-Off Valve	1
1	. . . . .	Washer	6
1	1458580	Screw	6
2	. . . . .	Diaphragm	1
3	. . . . .	O-Ring	1
4	. . . . .	Screw	2
5	. . . . .	Valve Seat	1
6	1367589	Filter	1
7	. . . . .	Gasket	1
8	. . . . .	Body	1
9	1367587	Cover	1
10	1367588	Cover	1
11	1458582	Screw	10
	263958	Repair Kit (Includes Items 1-7)	1

©2003 HYSTER COMPANY

LPG CONVERTER (Figure 3-19)
OPEN LOOP
(⇒S/N K005D-5482)

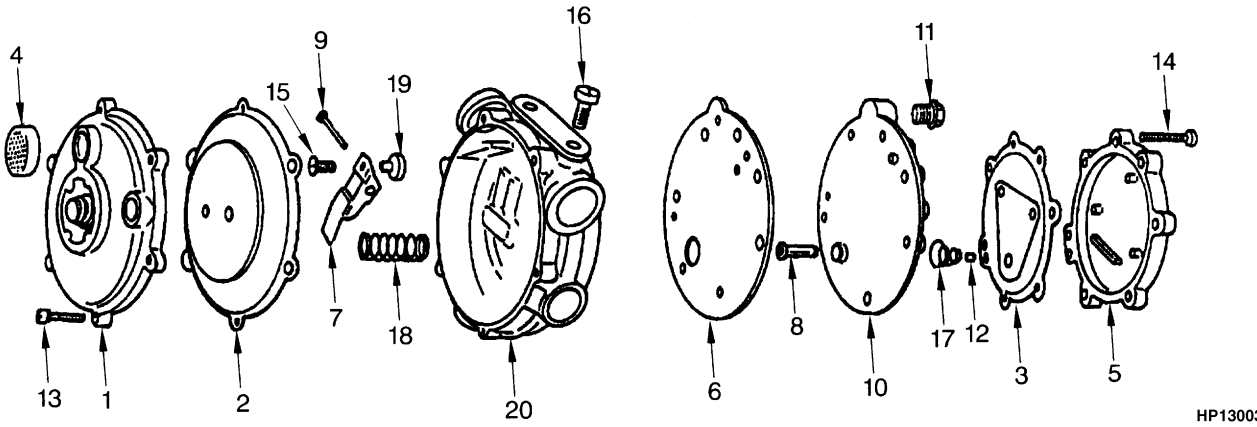

ITEM	PART NO.	DESCRIPTION	QTY
	1399441	Converter Assembly	1
1	1455309	Cover Assembly	1
2	. . . . .	Diaphragm	1
3	. . . . .	Diaphragm	1
4	1367622	Screen	1
5	1375037	Cover	1
6	. . . . .	Gasket	1
7	1357746	Lever	1
8	. . . . .	Primary Valve Pin	1
9	204830	Pin	1
10	1375029	Cover Plate	1
11	1357749	Plug	1
12	. . . . .	E-Ring	1
13	1450126	Screw	6
14	1455307	Capscrew	7
15	1455306	Screw	1
16	1369065	Screw and Washer	2
17	1455305	Spring	1
18	204831	Spring (Blue)	1
19	. . . . .	Seat	1
20	1455310	Body	1
	1459717	Repair Kit (Includes Item)	1

LPG CONVERTER (Figure 3-20)
OPEN LOOP
(S/N K005D-5483⇒)

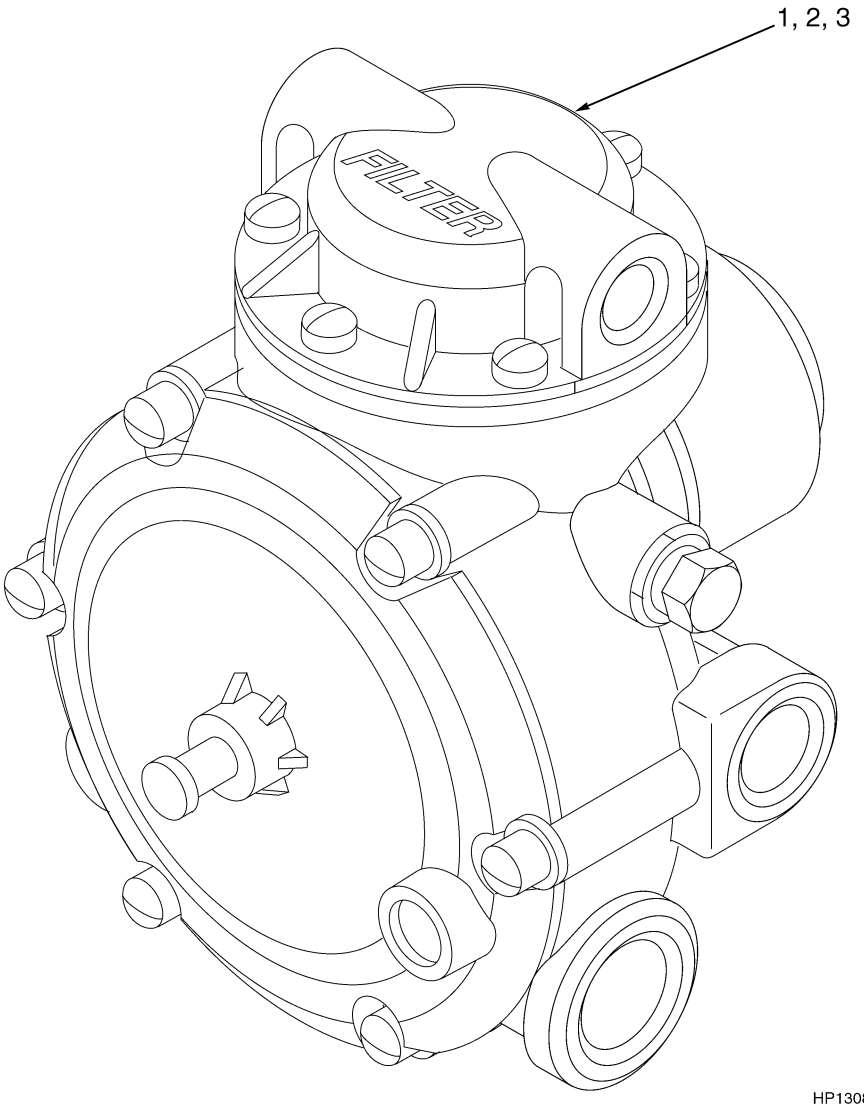

ITEM	PART NO.	DESCRIPTION	QTY
	1482794	Converter	1
1	1496186	Coil Assembly	1
2	1496187	Repair Kit (Series 1)	1
3	1496188	Filter Kit	1

©2003 HYSTER COMPANY

GOVERNOR (Figure 3-21)
LPG

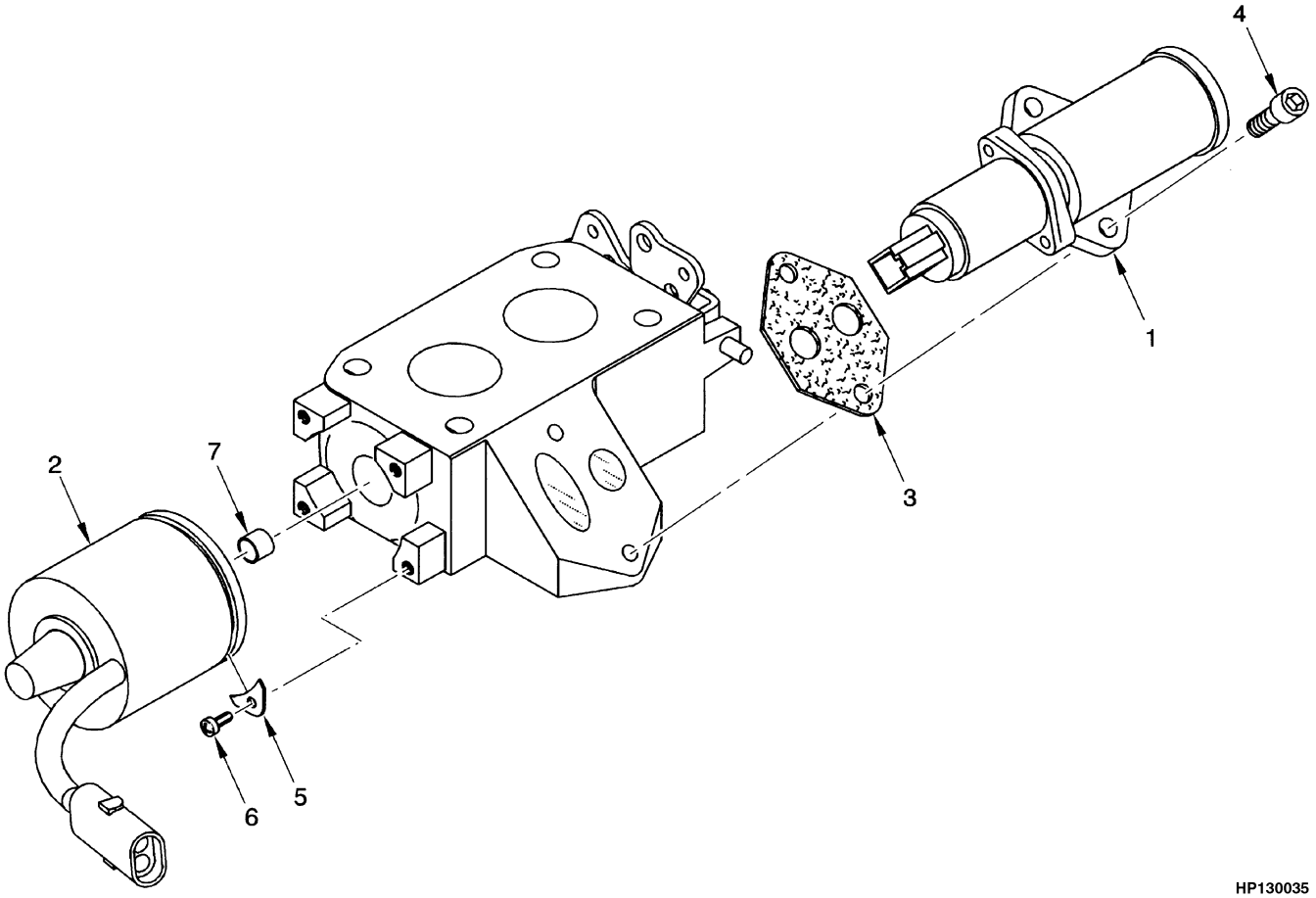

ITEM	PART NO.	DESCRIPTION	QTY
	1397417	Governor	1
1	1464657	Valve (Idle)	6
2	1464656	Motor	1
3	1464658	Gasket	1
4	. . . . .	Screw	2
5	1464654	Clamp	1
6	1464655	Drive Screw	1
7	1464653	Sleeve	1

THROTTLE BODY GOVERNOR (Figure 3-22)
GASOLINE AND DUAL FUEL

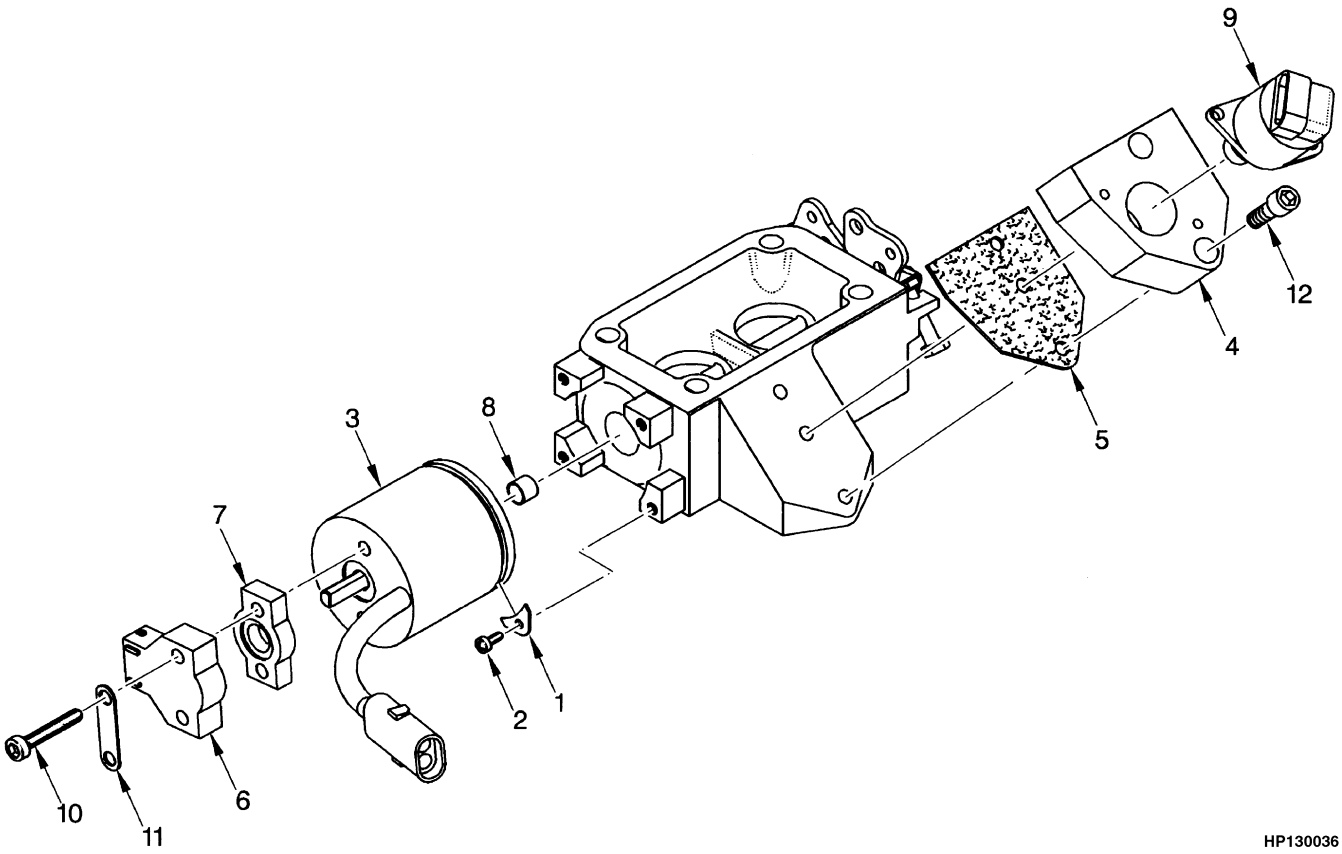

HP130036

ITEM	PART NO.	DESCRIPTION	QTY
	1397803	Governor	1
1	1464654	Clamp	4
2	1464655	Drive Screw	4
3	1464656	Motor	1
4	1464820	Adapter	1
5	1464658	Gasket	1
6	1464660	Throttle Position Sensor	1
7	1464661	Spacer	1
8	1464653	Sleeve	1
9	1464662	Valve	1
10	1466095	Screw	2
11	1466096	Tag	1
12	. . . . .	Capscrew	2
13	1477278	Cap (Not Illustrated)	1

©2003 HYSTER COMPANY

NOTES

INJECTOR THROTTLE BODY (Figure 3-23)
GASOLINE

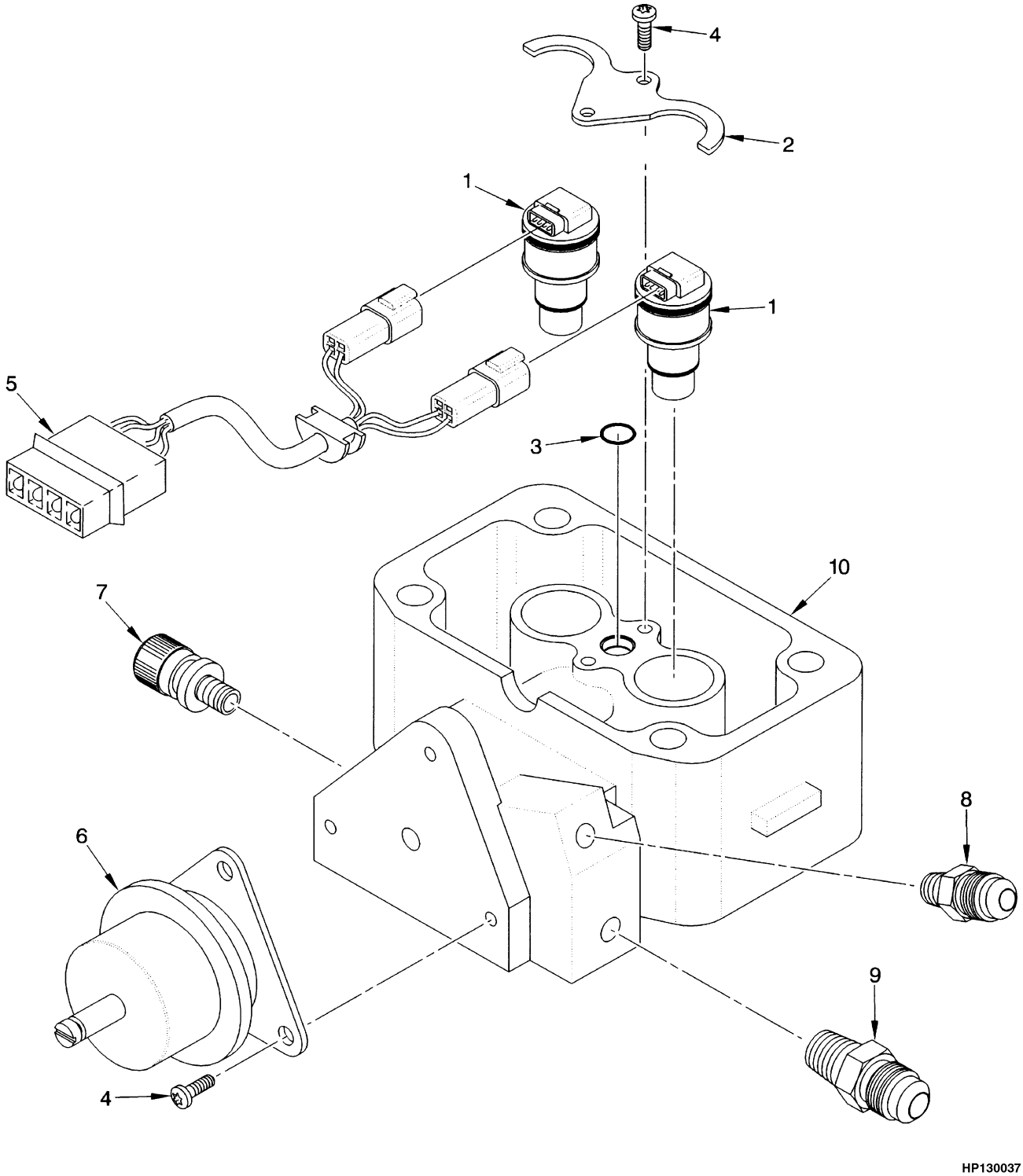

©2003 HYSTER COMPANY

INJECTOR THROTTLE BODY
GASOLINE

ITEM	PART NO.	DESCRIPTION	QTY
	1394521	Injector Throttle Body Assembly	1
1	1464663	Injector	2
2	1464664	Cover	1
3	1464665	O-Ring	1
4	1464666	Screw	5
5	1464667	Connector	1
6	1464668	Regulator	1
7	1464669	Valve	1
8	16124	Fitting	1
9	16134	Fitting	1
10	1466094	Injector Body	1

©2003 HYSTER COMPANY

AIR FILTER SYSTEM (Figure 3-24)

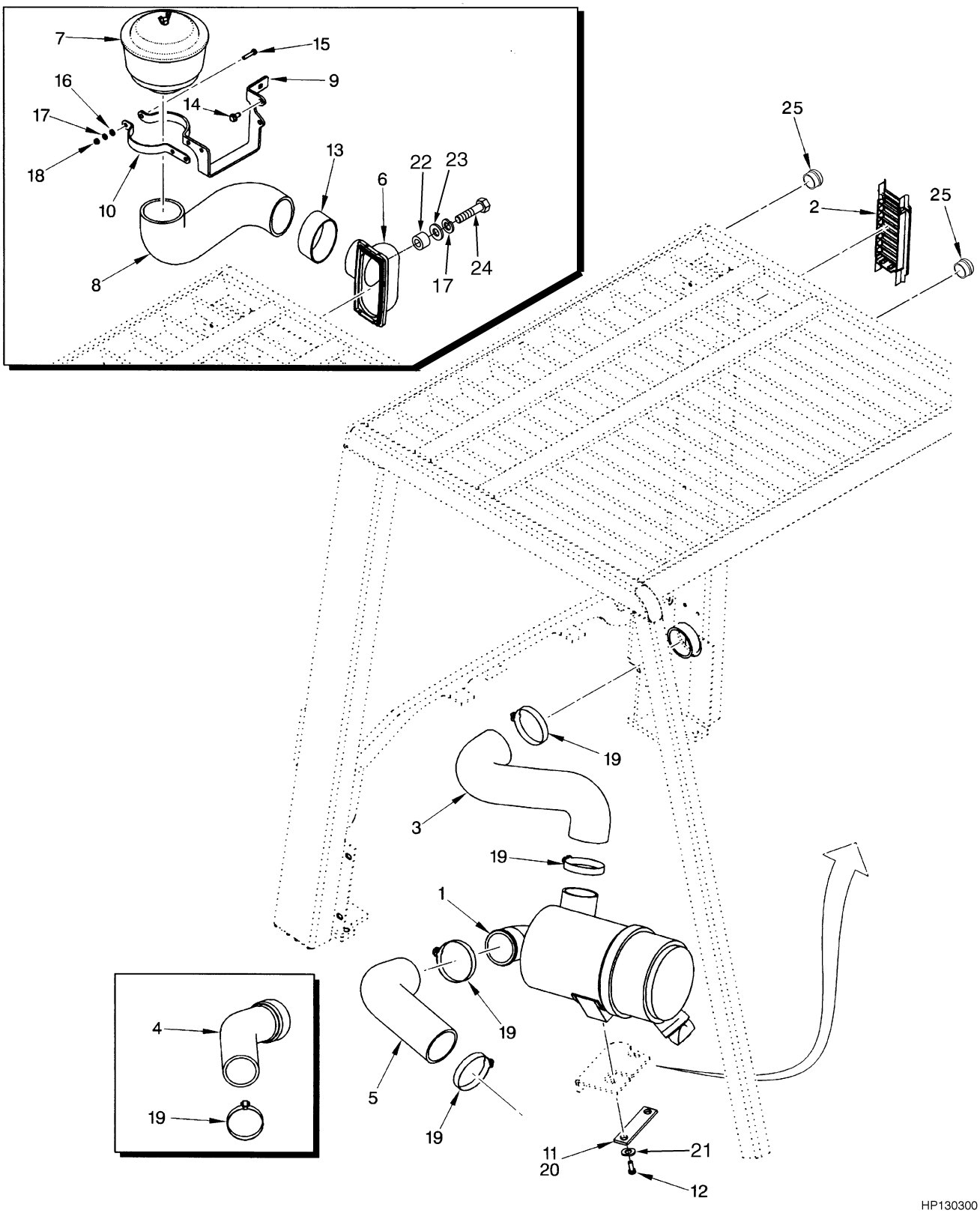

©2003 HYSTER COMPANY

AIR FILTER SYSTEM

KEY:
A: Air Filter (Standard)
B: Air Filter (Heavy Duty)

ITEM		PART NO.	DESCRIPTION	QTY A	QTY B
1		2035621	Air Filter (☞ Figure 3-25)	1	1
2		2036475	Grill	1	..
3		1390110	Hose (Outlet Gasoline/LPG/Diesel)	1	1
4		2037320	Hose (Intake Gasoline/LPG)	1	1
5		1394593	Hose (Intake Diesel)	1	1
6	**a**	2036350	Pre-Cleaner Port	..	1
6	**b**	1497559	Pre-Cleaner Port	..	1
7		291974	Pre-Cleaner	..	1
8		1397987	Hose (Pre-Cleaner)	..	1
9		1397988	Bracket	..	1
10		1397989	Band	..	1
11		251099	Adhesive	2	2
12		1397653	Bolt	2	2
13		1398002	Clamp	..	1
14		316678	Screw	..	2
15		302263	Screw	..	3
16		320156	Washer	..	3
17		292680	Lockwasher	..	5
18		136687	Nut	..	3
19		115696	Clamp	4	4
20		1397652	Plate	1	1
21		375984	Washer	2	2
22	**b**	1498097	Spacer	..	2
23	**b**	197068	Washer	..	2
24	**b**	287816	Capscrew	..	2
25		1509037	Plug	2	..

FOOTNOTES:
a ⇒ S/N K005V-01507Y
b S/N K005V-01508Y ⇒

AIR FILTER (Figure 3-25)

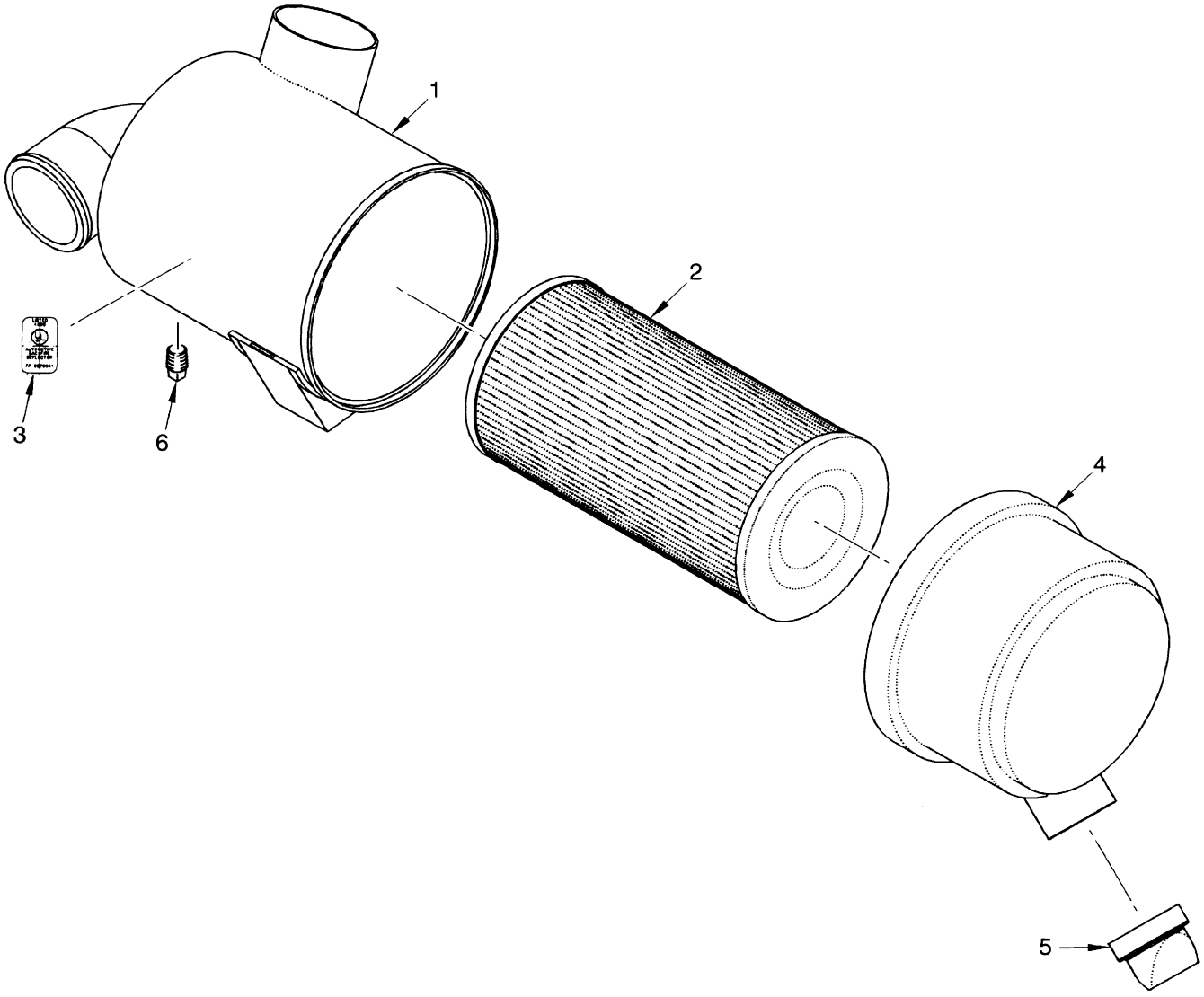

HP130039

ITEM	PART NO.	DESCRIPTION	QTY
	2035621	Air Filter	1
1	. . . . .	Body	1
2	1462439	Filter Element	1
3	. . . . .	Label	1
4	1462441	Cover	1
5	374923	Valve	1
6	1462442	Plug	1

©2003 HYSTER COMPANY

NOTES

THROTTLE LINKAGE (Figure 3-26)
GASOLINE AND LPG

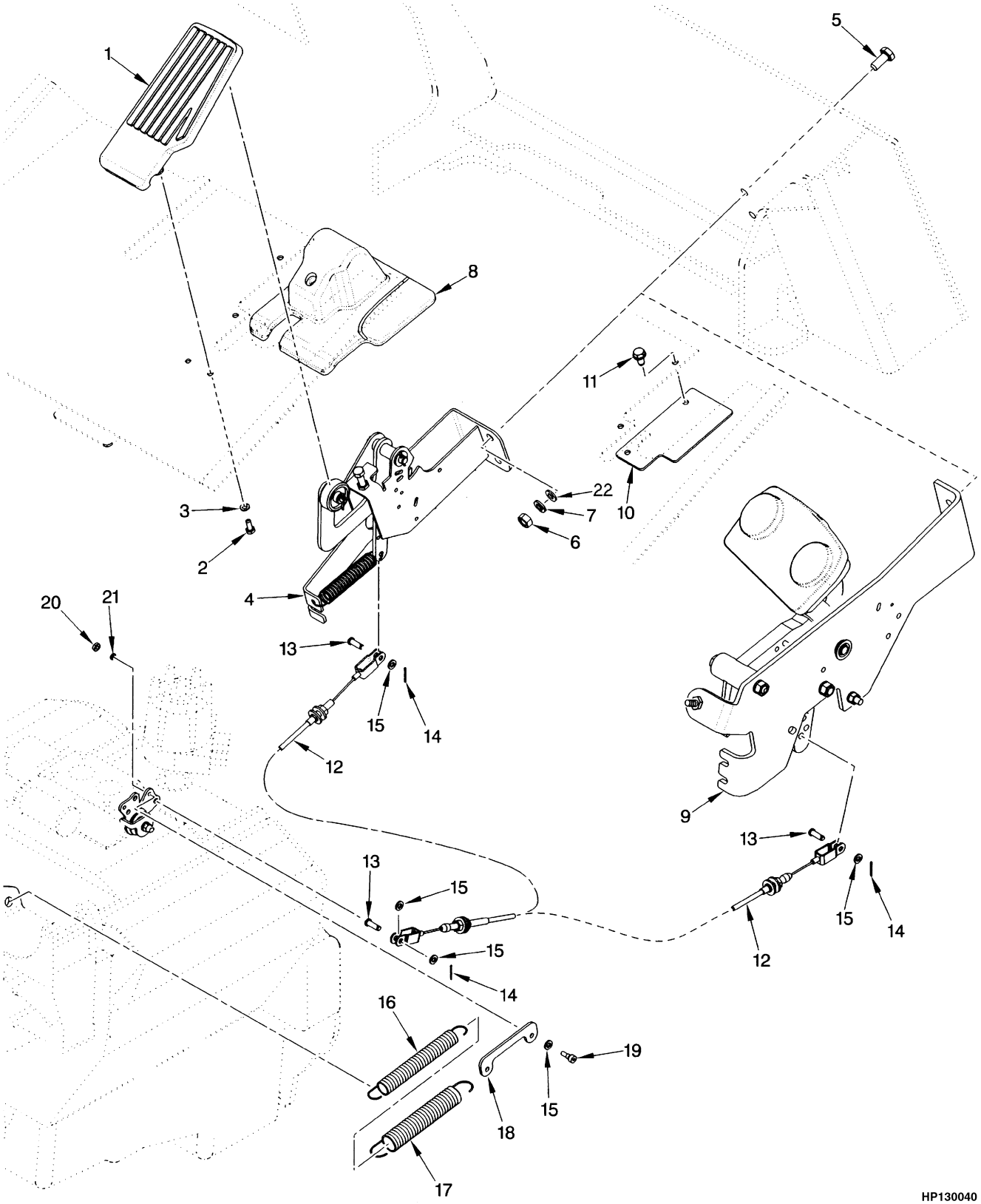

©2003 HYSTER COMPANY

THROTTLE LINKAGE
GASOLINE AND LPG

KEY:
A: Forward and Reverse Lever
B: Montrol Pedal

ITEM		PART NO.	DESCRIPTION	QTY A	QTY B
1		2027337	Pedal	1	..
2		292500	Capscrew	1	1
3		292680	Lockwasher	1	1
4		1465778	Throttle Arm Assembly	1	1
5		287860	Capscrew	1	1
6		136692	Nut	1	1
7		292682	Lockwasher	1	1
8		1466632	Cover	1	..
9		1465899	Monotrol Pedal and Bracket Assembly (☞ Figure 3-28)	..	1
10		2035836	Plate	1	1
11		316678	Screw	1	1
12	**a**	1396562	Throttle Cable	1	..
12	**b**	1493669	Throttle Cable	1	..
12	**a**	1397496	Throttle Cable	..	1
12	**b**	1493670	Throttle Cable	..	1
13		167218	Rod End Pin	2	2
14		15201	Cotter Pin	2	2
15		320156	Washer	5	5
16		1400221	Spring (Extension)	1	1
17		1400222	Spring (Extension)	1	1
18		1398038	Link	1	1
19		1399388	Screw	2	2
20		15052	Nut	2	2
21		15152	Lockwasher	2	2
22		1324577	Washer	2	2

FOOTNOTES:
a ⇒ S/N PENDING PER ECN 63582
b S/N PENDING PER ECN 63582 ⇒

©2003 HYSTER COMPANY

THROTTLE LINKAGE (Figure 3-27)
DIESEL

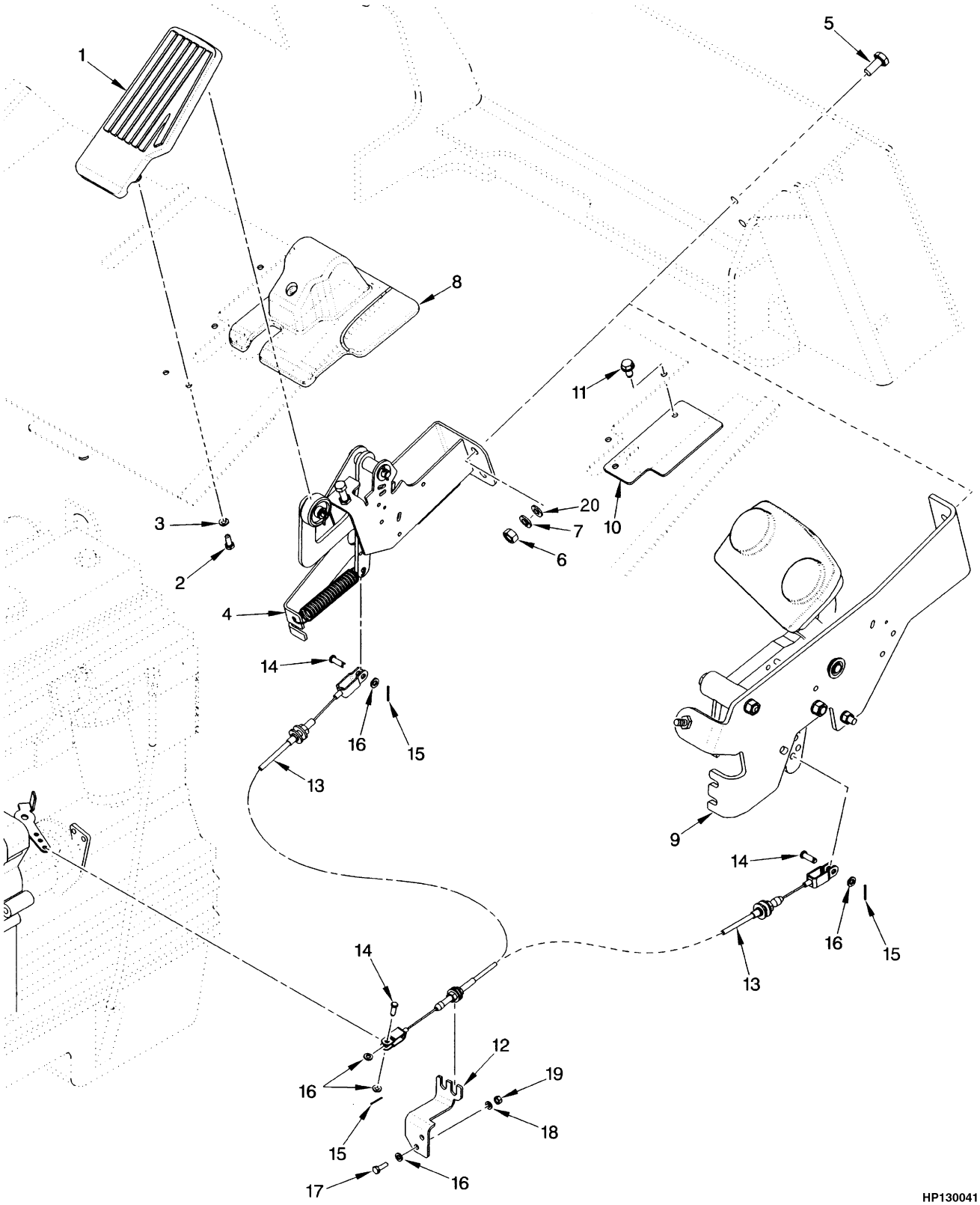

©2003 HYSTER COMPANY

THROTTLE LINKAGE
DIESEL

KEY:
A: Forward and Reverse Lever
B: Monotrol Pedal

ITEM		PART NO.	DESCRIPTION	QTY A	QTY B
1		2027337	Pedal	1	..
2		292500	Capscrew	1	..
3		292680	Lockwasher	1	..
4		1465778	Throttle Arm Assembly	1	..
5		287860	Capscrew	2	2
6		136692	Nut	1	1
7		292682	Lockwasher	1	1
8		1466632	Cover	1	..
9		1465899	Monotrol Pedal and Bracket Assembly (☞ Figure 3-28)	..	1
10		2035836	Plate	..	1
11		316678	Screw	..	3
12		1397384	Bracket	1	1
13	**a**	1396563	Throttle Cable	1	1
13	**b**	1493668	Throttle Cable	..	1
13	**b**	1493667	Throttle Cable	1	..
14		167218	Rod End Pin	2	2
15		15201	Cotter Pin	2	2
16		320156	Washer	3	3
17		293602	Capscrew	2	2
18		292680	Lockwasher	2	2
19		136687	Nut	2	2
20		1324577	Washer	2	2

FOOTNOTES:
a ⇒ S/N K005D-5466 EXC. 5460-5461, 5463-5464
b S/N K005D-5466 ⇒ INC. 5460-5461, 5463-5464

MONOTROL PEDAL LINKAGE (Figure 3-28)

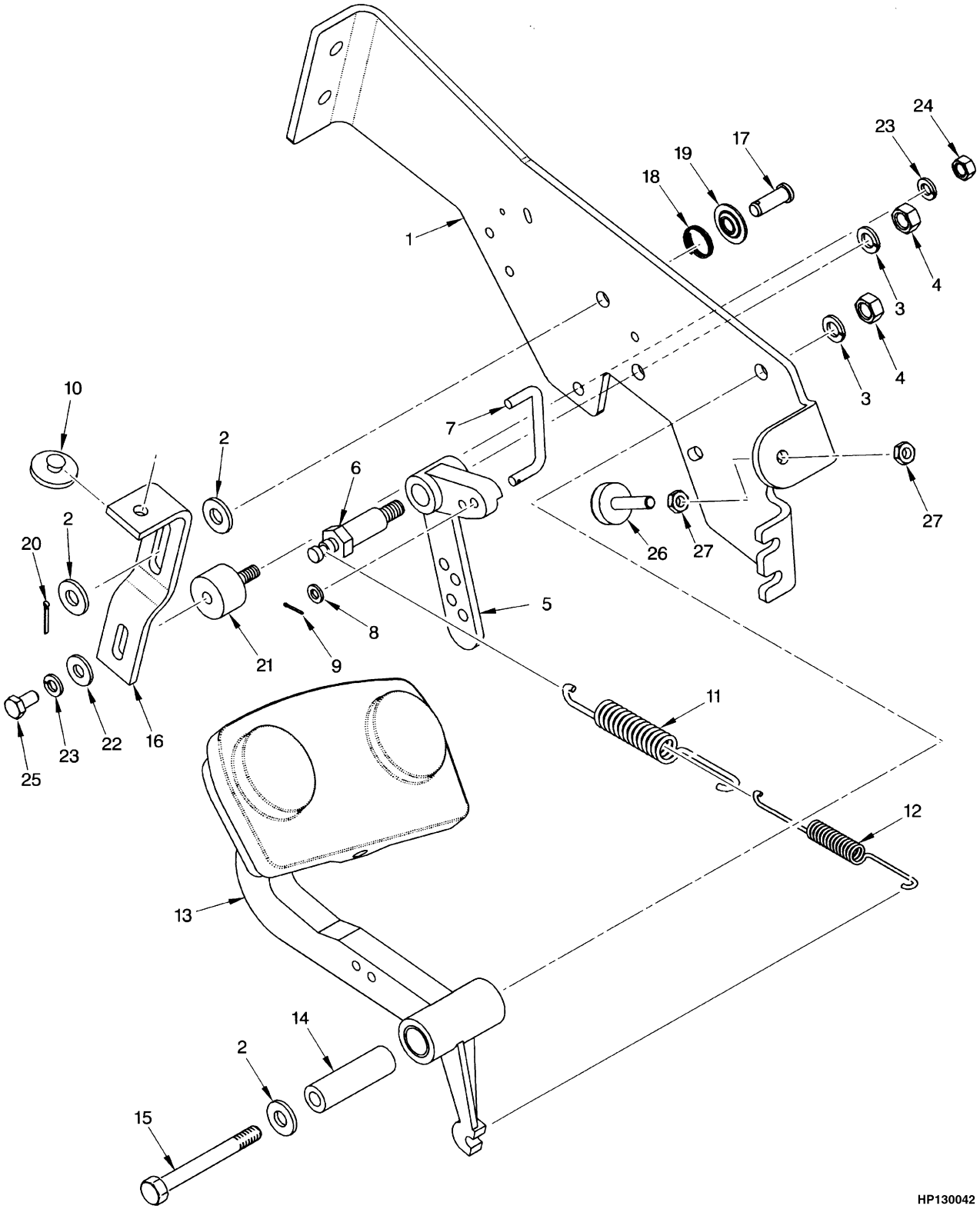

©2003 HYSTER COMPANY

MONOTROL PEDAL LINKAGE

ITEM	PART NO.	DESCRIPTION	QTY
	1465899	Monotrol Pedal and Bracket Assembly	1
1	1396151	Bracket	1
2	320160	Washer	3
3	292682	Lockwasher	2
4	136692	Nut	2
5	353164	Crank	1
6	352485	Shaft	1
7	353129	Rod	1
8	320156	Washer	1
9	15200	Cotter Pin	1
10	353195	Bumper	1
11	353143	Spring	1
12	353142	Spring	1
13	1352575	Pedal (☞ Figure 3-29)	1
14	353141	Tube	1
15	292523	Capscrew	1
16	352950	Bracket	1
17	142	Pin	1
18	353172	Spring	1
19	353230	Cap	1
20	15212	Cotter Pin	1
21	353453	Mount	1
22	320158	Washer	1
23	292681	Lockwasher	2
24	239503	Nut	1
25	287851	Capscrew	1
26	1347088	Stop Screw	1
27	15001	Nut	2

©2003 HYSTER COMPANY

MONOTROL PEDAL (Figure 3-29)

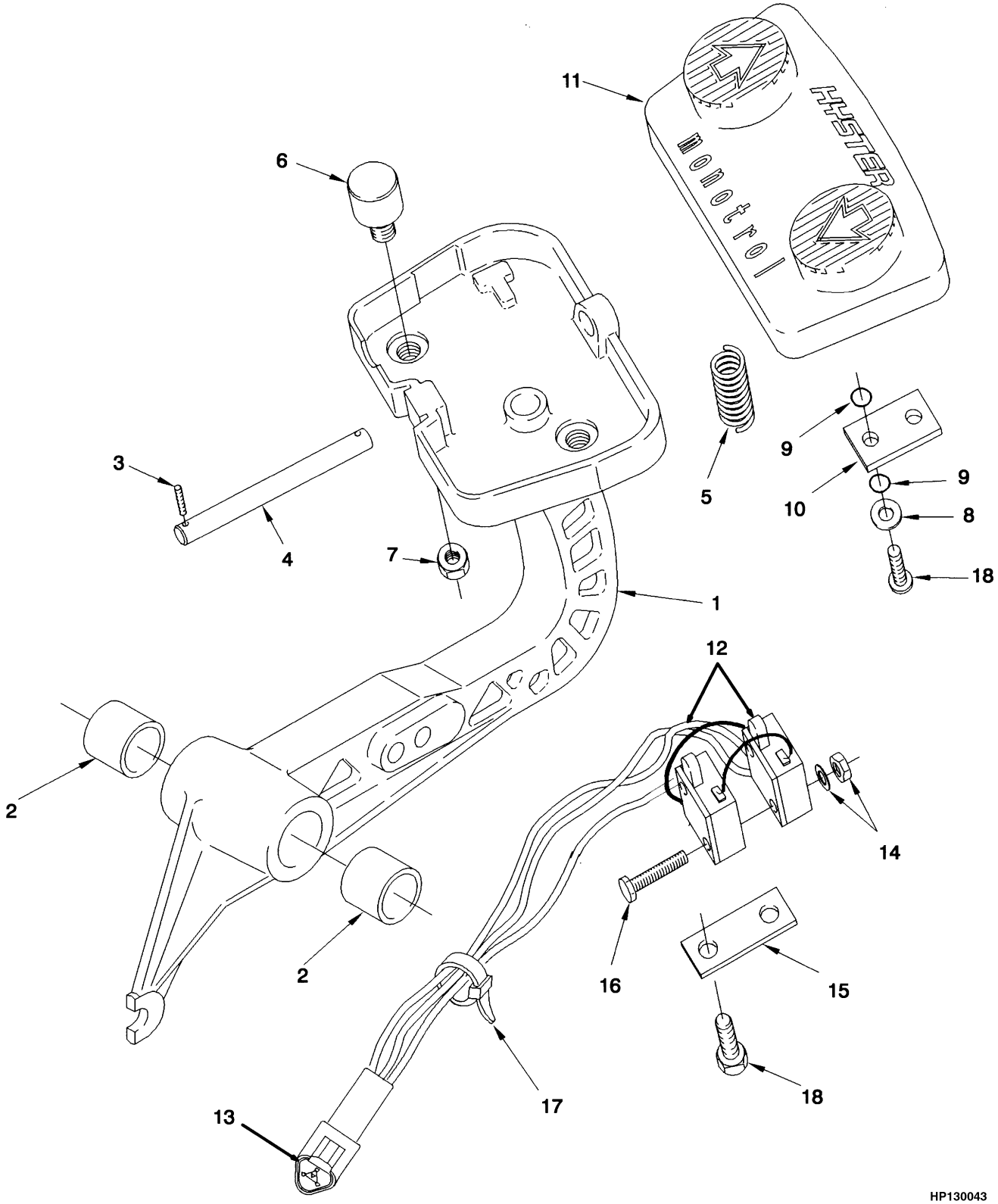

©2003 HYSTER COMPANY

MONOTROL PEDAL

ITEM	PART NO.	DESCRIPTION	QTY
	1352575	Pedal	1
1	353397	Pedal	1
2	135685	Bushing	2
3	220932	Screw	2
3	360387	Sealant	AR
4	353154	Pin	1
5	353168	Spring	1
6	353422	Magnet	2
7	353432	Nut	2
8	353448	Washer	4
9	57568	O-Ring	8
10	359207	Plate	2
11	353175	Pad	1
12	1352090	Switch Assembly	1
12	1352089	Wire Harness	1
13	1330410	Connector	1
13	1330415	Lock	1
13	1330435	Pin	3
14	53162	Lockwasher	2
14	16865	Nut	2
15	353165	Retainer	1
16	220434	Capscrew	2
17	114312	Strap Clamp	3
18	352969	Screw	6

©2003 HYSTER COMPANY

NOTES

4 ELECTRICAL SYSTEM

SECTION 4
ELECTRICAL SYSTEM

DESCRIPTION	PAGE
ALTERNATOR	
GAS/LPG AND DIESEL	4-26
PRESTOLITE BRAND	
GS, LPS, DS	4-28
BACKUP AND BRAKE LIGHTS	4-36
DISTRIBUTOR	4-30
ELECTRICAL SYSTEM	
ALTERNATOR AND BATTERY	
G, GS, LPG, LPS, AND DUAL FUEL	4-8
COWL	4-4
DIESEL	4-22
GASOLINE, GASOLINE SAFETY, AND DUAL FUEL	4-12
LPG AND LPS	4-18
HARNESS KIT	
DUAL FUEL	4-15
INSTRUMENT PANEL	4-7
SHIFT LEVER	4-34
STARTER	
DIESEL	4-32
WIRE HARNESS	
ADAPTER	
⇒S/N PENDING PER ECN 63634-01	4-93
CLOSED LOOP	
⇒S/N PENDING PER ECN 70700-65	4-79
CONVERSION, GAS TO LPG, GM 4.3L	
SHEET 1 OF 2	4-40
SHEET 2 OF 2	4-42
DIESEL	
S/N PENDING PER ECN 73766⇒	4-82
⇒S/N PENDING PER ECN 73766	4-80
DUAL FUEL SHUT OFF	4-84
DUAL FUEL, GM V6	
SHEET 1 OF 2	
S/N PENDING PER ECN 73766⇔S/N PENDING PER ECN 73891-01	4-62
⇒S/N PENDING PER ECN 92210-01	4-46
S/N PENDING PER ECN 92210-01⇔S/N PENDING PER ECN 73766	4-54
SHEET 2 OF 2	
S/N PENDING PER ECN 73766⇔S/N PENDING PER ECN 73891-01	4-67
⇒S/N PENDING PER ECN 92210-01	4-51
S/N PENDING PER ECN 92210-01⇔S/N PENDING PER ECN 73766	4-58
ENGINE, GAS, GM V6	
SHEET 1 OF 2	
S/N PENDING PER ECN 92210-01⇔S/N PENDING PER ECN 73766	4-94
SHEET 2 OF 2	
S/N PENDING PER ECN 92210-01⇔S/N PENDING PER ECN 73766	4-99
ENGINE, GM V6, 4.3L	
SHEET 1 OF 2	
⇒S/N PENDING PER ECN 92210-01	4-72
SHEET 2 OF 2	
⇒S/N PENDING PER ECN 92210-01	4-74

©2003 HYSTER COMPANY

SECTION 4
ELECTRICAL SYSTEM (Continued)

DESCRIPTION **PAGE**

ENGINE, LPG, GM V6, 4.3L
SHEET 1 OF 2
S/N PENDING PER ECN 73766⇒ 4-114
S/N PENDING PER ECN 92110-01⇔S/N PENDING PER ECN 73766 4-108
SHEET 2 OF 2
S/N PENDING PER ECN 73766⇒ 4-116
S/N PENDING PER ECN 92110-01⇔S/N PENDING PER ECN 73766 4-110
ESOS ADAPTER
⇒S/N PENDING PER ECN 63634-01 4-85
GAS ENGINE
⇒S/N PENDING PER ECN 92210-01 4-38
GAS, GM V6
SHEET 1 OF 2
S/N PENDING PER ECN 73766⇔S/N PENDING PER ECN 73891-01 4-102
SHEET 2 OF 2
S/N PENDING PER ECN 73766⇔S/N PENDING PER ECN 73891-01 4-104
LPG SWITCH 4-77
MODULE, TYPE S POWERSHIFT
SHEET 1 OF 2
S/N PENDING PER ECN 63571⇔S/N PENDING PER ECN 73675-01 4-120
POWERSHIFT
SHEET 1 OF 2
⇒S/N PENDING PER ECN 63571 4-86
SHEET 2 OF 2
⇒S/N PENDING PER ECN 63571 4-90
TYPE "S" GAS AND LPG
⇒S/N PENDING PER ECN 73766 4-45
TYPE S
GAS AND LPG
S/N PENDING PER ECN 73766⇒ 4-78

©2003 HYSTER COMPANY

NOTES

ELECTRICAL SYSTEM (Figure 4-1)
COWL

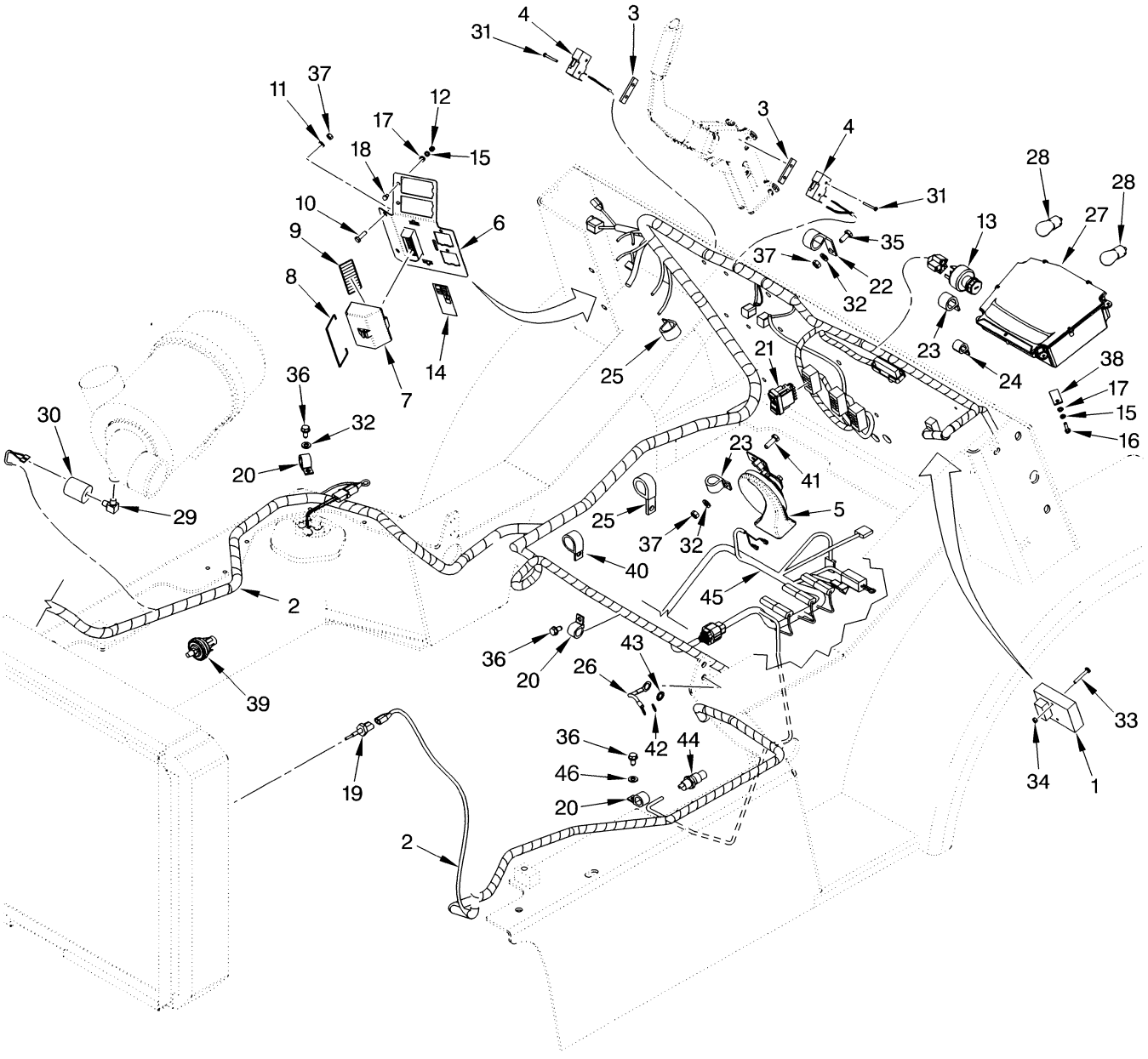

©2003 HYSTER COMPANY

ELECTRICAL SYSTEM
COWL

ITEM		PART NO.	DESCRIPTION	QTY
1	**h**	1394862	Controller (Transmission)	1
1	**i**	2059789	Controller (Transmission)	1
2	**d**	2035695	Wire Harness (Module)	1
2	**e**	2044239	Wire Harness (Module)	1
2	**k**	2046117	Wire Harness (Module)	1
2		1484681	Fuse Box (10-Way)	1
2		1484682	Secondary Lock	1
2	**c**	2035581	Relay	8
2		1347114	Check Relay	1
2		1484684	Relay Base	2
2		1490252	Diode (Single)	1
2		370647	Fuse (10 Amp)	4
2		1320669	Fuse (30 Amp)	2
2		370648	Fuse (20 Amp)	1
2		1310630	Fuse (15 Amp)	3
2		1496890	Jam Nut	1
3		316132	Spacer	1
4		370868	Switch	1
5	**j**	1398063	Horn	1
5	**k**	1496361	Horn	1
6		1492957	Bracket	1
7		370863	Cover (Fuse)	1
8		370864	Latch (Cover) (Latch)	1
9		1397451	Label (Fuse Panel)	1
10		136749	Capscrew	2
11		292681	Lockwasher	1
12		292668	Nut	4
13		379902	Ignition Switch	1
13		1337197	Key	1
14	**f**	1399382	Label (Fuse Panel Relays)	1
14	**g**	1515763	Label (Fuse Panel Relays)	1
15		292679	Lockwasher	4
16		296510	Screw	4
17		320155	Washer	4
18		302244	Screw	4
19		1384594	Low Coolant Sender	1
20		166285	Clamp	11
21		1397840	Switch	1
22		1515763	Label (Fuse Panel Relays)	2
23		1347202	Clamp	2
24		173246	Clamp	1
25		178119	Clamp	3
26		387892	Wire Harness (Ground)	1
27	**b**	1397812	Instrument Panel (Gasoline/Diesel) (☞ Figure 4-2)	1
27	**b**	1397813	Instrument Panel (LPG) (☞ Figure 4-2)	1
27	**a**	1397799	Instrument Panel (Gasoline/Diesel) (☞ Figure 4-2)	1
27	**a**	1397800	Instrument Panel (LPG) (☞ Figure 4-2)	1
28		1468571	Bulb (Back Lighting)	4
28		1460724	Bulb (Icon Lighting)	10
29		17650	Fitting	1
30		1347067	Switch (Restriction)	1

©2003 HYSTER COMPANY

ELECTRICAL SYSTEM
COWL

ITEM	PART NO.	DESCRIPTION	QTY
31	86510	Screw	10
32	320157	Washer	18
33	296504	Screw	2
34	815597	Nut	2
35	136749	Capscrew	6
36	316678	Screw	11
37	239503	Nut	8
38	1399886	Strap	2
39	1301648	Low Pressure Switch (Fuel)	1
40	1310611	Clamp	1
41	136749	Capscrew	1
42	296380	Lockwasher	1
43	320158	Washer	1
44	1322627	Temperature Switch	1
45	2035694	Wire Harness (Powershift Transmission Control)	1
46	375629	Washer	4

FOOTNOTES:
a Premium
b Standard
c Used for various functions including forward/reverse, horn, lights, and shutdown.
d ⇒ S/N K005D-5972
e S/N K005D-5973 ⇒
f ⇒ S/N PENDING PER ECN 63571-03
g S/N PENDING PER ECN 63571-03 ⇒
h ⇒ S/N PENDING PER ECN 65281
i S/N PENDING PER ECN 65281 ⇒
j ⇒ S/N PENDING PER ECN 73675-01
k S/N PENDING PER ECN 73675-01 ⇒

©2003 HYSTER COMPANY

INSTRUMENT PANEL (Figure 4-2)

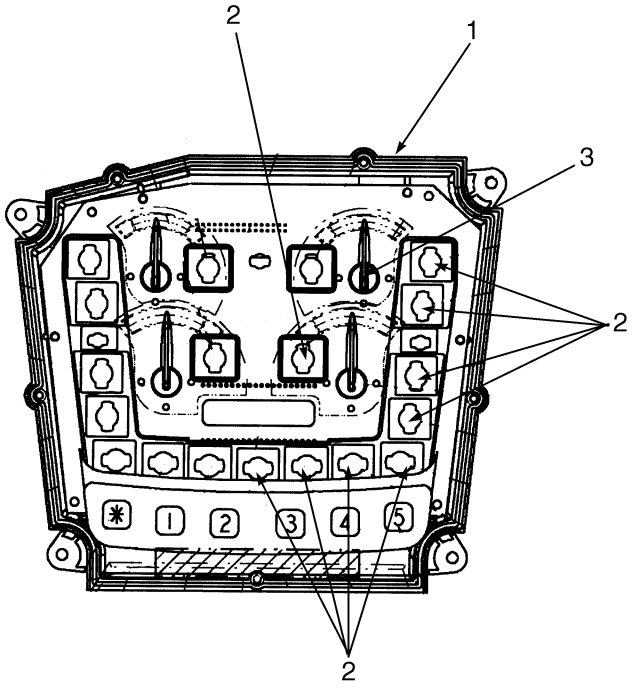

HP081276

ITEM		PART NO.	DESCRIPTION	QTY
1	**a**	1397812	Instrument Panel (Standard)	1
1	**b**	1397813	Instrument Panel (Standard)	1
1	**d**	1523477	Lens	1
1	**a**	1397799	Instrument Panel (Premium)	1
1	**b**	1397800	Instrument Panel (Premium)	1
1	**c**	1523478	Lens	1
1		1497254	Gasket	1
1		1497253	Screw	12
2	**a**	1460724	Bulb (Standard)	15
2	**b**	1460724	Bulb (Standard)	12
2	**a**	1460724	Bulb (Premium)	18
2	**b**	1460724	Bulb (Premium)	20
3		1468571	Bulb	2

FOOTNOTES:
a Gas and Diesel
b LPG
c Premium for USA and Europe
d Standard for U.S.A.

©2003 HYSTER COMPANY

ELECTRICAL SYSTEM (Figure 4-3)
ALTERNATOR AND BATTERY
G, GS, LPG, LPS, AND DUAL FUEL

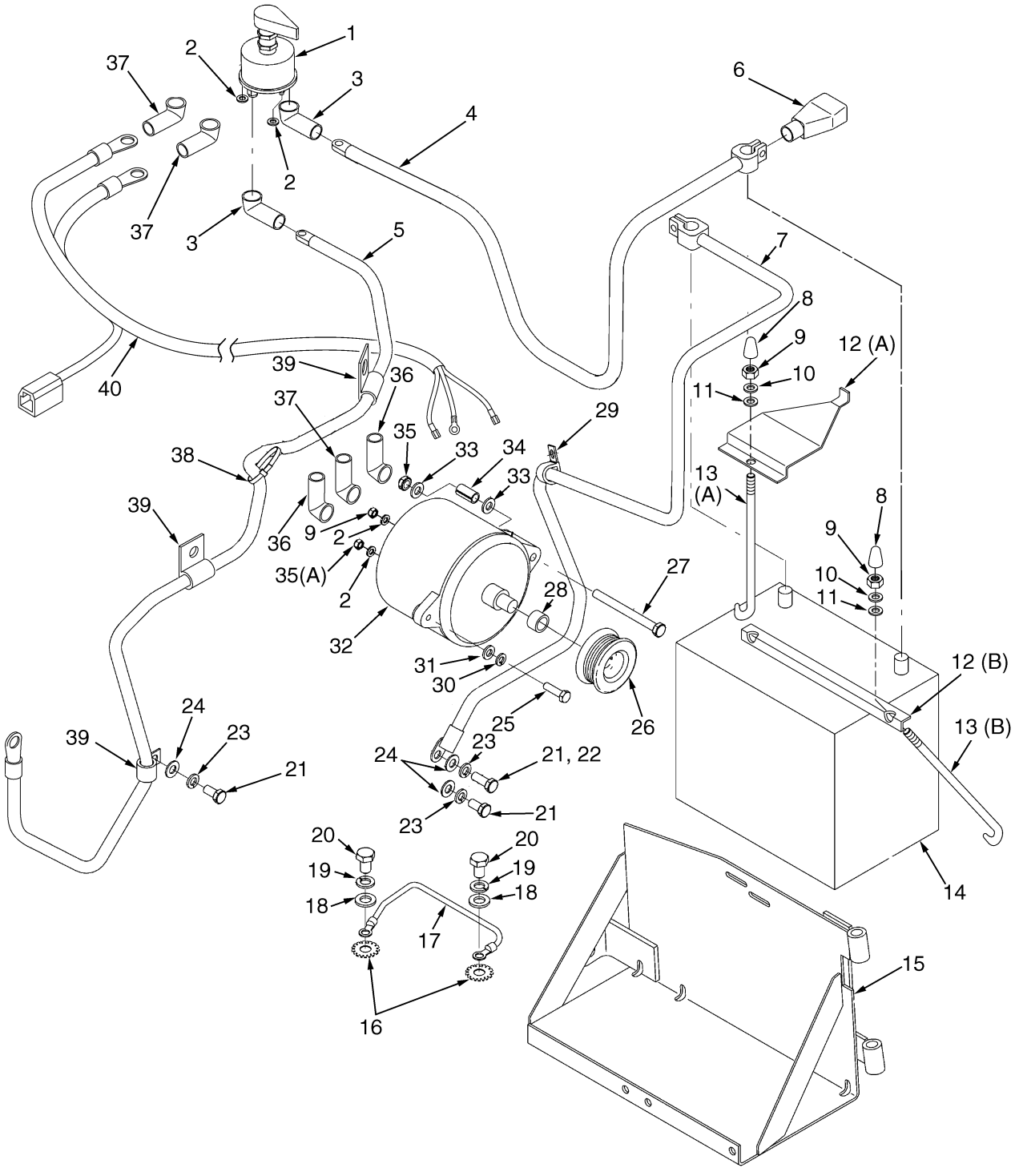

BP080038

©2003 HYSTER COMPANY

ELECTRICAL SYSTEM
ALTERNATOR AND BATTERY
G, GS, LPG, LPS, AND DUAL FUEL

KEY:
A: Gas, LP, And Dual Fuel
B: GS And LPS

ITEM		PART NO.	DESCRIPTION	QTY A	QTY B
1		1324517	Switch (Disconnect)	..	1
2		296359	Lockwasher	4	..
2		18500	Washer	..	4
3		204223	Boot	2	2
4		1397780	Battery Cable (One Per Unit)	1	..
4		1397786	Battery Cable	..	1
5		1397780	Battery Cable (One Per Unit)	1	..
5		1397787	Battery Cable	..	1
6		321158	Boot	1	1
7		1397783	Battery Cable	1	1
8		1326939	Cap	3	3
9		136687	Nut	2	2
10		292680	Lockwasher	2	2
11		320156	Washer	2	2
12	**e**	1399333	Battery Hold Down (A)	1	1
12	**f**	309152	Battery Hold Down (B)	1	1
13	**e**	1399335	Link (A)	2	2
13	**f**	309124	Link (B)	2	2
14		1383331	Battery	1	1
15		2035682	Battery Tray	1	1
16		296408	Lockwasher	1	1
17	**c**	387892	Wire Harness (Ground)	1	1
17	**d**	1493116	Wire Harness (Ground)	1	1
18	**g**	320162	Washer (LP, LPS)	2	2
18	**h**	320161	Washer (LP, LPS)	2	2
18		320161	Washer (G, GS, DF)	2	2
19		292683	Lockwasher	2	2
20		292526	Capscrew	2	2
21		16597	Capscrew (LP, LPS)	2	2
21		16597	Capscrew (G, GS, DF)	3	3
22		16805	Capscrew (LP, LPS)	1	1
23		15156	Lockwasher	3	3
24		15134	Washer	3	3
25		18498	Capscrew (DF)	1	..
25		176640	Capscrew (G, GS, LP, LPS)	1	1
26	**g**	1377751	Pulley	1	..
26	**h**	1392210	Pulley	..	1
27		18546	Capscrew	1	1
28	**g**	1377738	Spacer	1	..
29		128408	Clamp (LP, LPS)	1	1
30		292681	Lockwasher	1	..
30		15155	Lockwasher	..	1
31		320157	Washer	1	..
31		18515	Washer	..	1
32	**bg**	1358911	Alternator	1	..

©2003 HYSTER COMPANY

ELECTRICAL SYSTEM
ALTERNATOR AND BATTERY
G, GS, LPG, LPS, AND DUAL FUEL

ITEM		PART NO.	DESCRIPTION	QTY A	QTY B
32	**ah**	1469597	Alternator	1	..
32	**h**	1469601	Wire Harness (Alternator To Engine Harness)	1	1
32		1394001	Alternator	..	1
33		261379	Washer	2	2
34	**g**	189338	Spacer (Alternator Bracket)	1	1
34	**h**	305100	Sleeve (Not Illustrated)	1	..
35	**g**	287851	Capscrew (A)	1	1
35		139743	Locknut	1	1
35		136687	Nut	2	2
36		190383	Boot	..	2
37		157065	Boot	1	1
38		114312	Strap Clamp	1	1
39		153069	Clamp	4	4
40	**g**	2035688	Wire Harness (GS, LPS) (☞ Figure 4-17)	..	1
40	**h**	2047579	Harness (☞ Figure 4-27)	..	1

FOOTNOTES:
a Includes Pulley
b Service With Alternator 1469597 and Jumper 146960
c ⇒ S/N PENDING PER ECN 63571
d S/N PENDING PER ECN 63571 ⇒
e ⇒ S/N PENDING PER ECN 63571-01
f S/N PENDING PER ECN 635710-01 ⇒
g ⇒ S/N PENDING PER ECN 73766
h S/N PENDING PER ECN 73766 ⇒

©2003 HYSTER COMPANY

NOTES

ELECTRICAL SYSTEM (Figure 4-4)
GASOLINE, GASOLINE SAFETY, AND DUAL FUEL

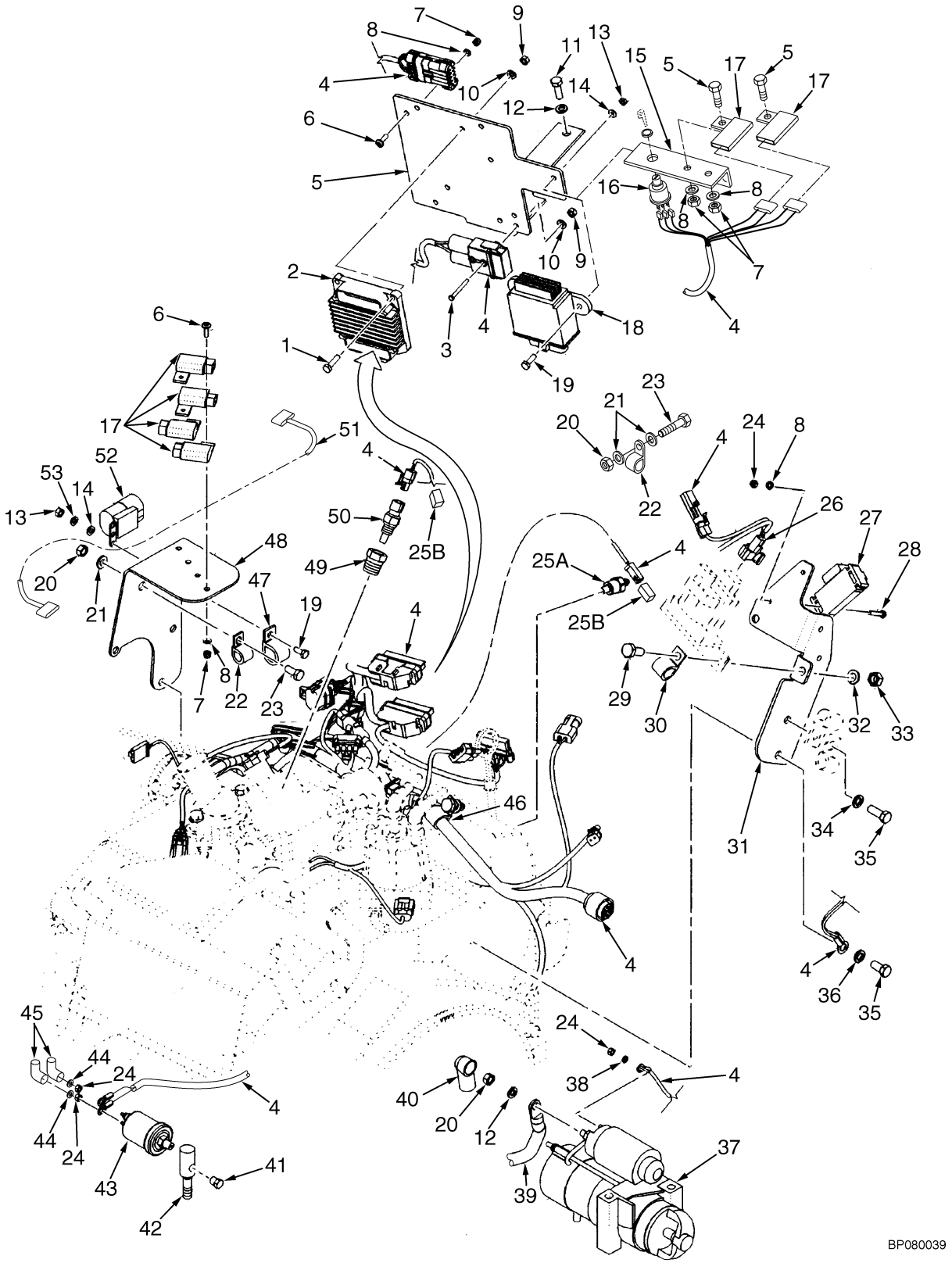

©2003 HYSTER COMPANY

ELECTRICAL SYSTEM
GASOLINE, GASOLINE SAFETY, AND DUAL FUEL

KEY:
A: Gas (G)
B: Gas Safety (GS)
C: Dual Fuel (DF)

ITEM		PART NO.	DESCRIPTION	QTY A	QTY B	QTY C
1		287816	Capscrew	3	3	3
2	**a**	2035691	Electronic Control Module (Open Loop)	1	..	..
2	**b**	2041878	Electronic Control Module (Open Loop)	1	1	1
2	**g**	2050000	Electronic Control Module (Open Loop)	1	1	1
2	**f**	2041877	Electronic Control Module (Closed Loop)	1	1	..
2	**g**	2049999	Electronic Control Module (Closed Loop)	1	1	..
3		220485	Screw	1	1	1
4	**k**	2035681	Wire Harness (Engine Type G/GS) (☞ Figure 4-14)	1	1	..
4	**l**	2043949	Wire Harness (Engine; G, GS) (☞ Figure 4-36, ☞ Figure 4-37)	1	1	..
4	**d**	2047709	Wire Harness (Engine; G, GS) (☞ Figure 4-38, ☞ Figure 4-39)	1	1	..
4	**h**	2050502	Wire Harness (Engine; G, GS)	1	1	..
4	**j**	2054281	Wire Harness (Engine; G, GS)	1	1	..
4	**k**	2036540	Wire Harness (Engine; DF) (☞ Figure 4-18, ☞ Figure 4-19)	..	..	1
4	**l**	2043950	Wire Harness (Engine; DF) (☞ Figure 4-36, ☞ Figure 4-37)	..	..	1
4	**d**	2047712	Wire Harness (Engine; DF) (☞ Figure 4-22, ☞ Figure 4-23)	..	..	1
4	**i**	2050503	Wire Harness (Engine; DF)	..	..	1
4	**j**	2054294	Wire Harness (Engine; DF)	..	..	1
5		1399416	Bracket	1	1	1
6		302035	Capscrew	5	5	7
7		302398	Locknut	5	5	7
8		320155	Washer	7	7	9
9		15039	Nut	1	1	1
10		197066	Washer	1	1	1
11		136749	Capscrew	2	2	2
12		292681	Lockwasher	2	2	2
13		136687	Nut	6	8	8
14		320156	Washer	6	6	6
15		1399315	Bracket	..	..	1
16		1369470	Switch (Fuel Changeover)	..	..	1
17		1330293	Cover (Fuse)	4	4	6
18		1498461	Module (Governor)	1	1	1
19		292501	Capscrew	3	3	3
20		239503	Nut	2	2	..
21		320157	Washer	1	1	2
22		173246	Clamp	1	1	..
23		136681	Capscrew	2	2	..
24		292668	Nut	3	3	3
25		1333827	Temperature Sender (A)	1	1	1
25		387869	Boot (B)	..	..	5
26		1310611	Clamp	1	1	1
27		1520644	MAP Sensor	1	1	1
28		302250	Screw	2	2	2
29		292526	Capscrew	2	2	2
30		128408	Clamp	2	2	2
31		1397457	Bracket (Coil)	1	1	1
32		292682	Lockwasher	2	2	2

©2003 HYSTER COMPANY

ELECTRICAL SYSTEM
GASOLINE, GASOLINE SAFETY, AND DUAL FUEL

ITEM		PART NO.	DESCRIPTION	QTY A	QTY B	QTY C
33		320161	Washer	2	2	2
34		15156	Lockwasher	1	1	1
35		16567	Fitting	1	1	1
36		15905	Lockwasher	1	..	..
37	**c**	1486531	Starter	1	1	1
37		1490407	Solenoid	1	1	1
37		1490408	Bolt	1	1	1
37	**e**	1469604	Starter	1	1	1
37		1490407	Solenoid	1	1	1
37		1507422	Bolt	1	1	1
38		292697	Washer	1	1	1
39		1397780	Battery Cable (☞ Figure 4-3)	1	..	1
39		1397787	Battery Cable (☞ Figure 4-3)	..	1	..
40		204223	Boot (☞ Figure 4-3)	1	1	1
41		14349	Fitting	1	1	1
42		1383346	Fitting	1	1	1
43		1514215	Oil Pressure Sender	1	1	1
44		18500	Washer	..	2	..
45		190382	Boot	..	2	..
46		212358	Clamp	1	1	1
47		1347202	Clamp	1	1	1
48		1397754	Bracket (Fuse)	1	1	1
49		16116	Fitting	1	1	1
50		1314381	Coolant Temperature Sensor	1	1	1
51		2038881	Harness Adapter (☞ Figure 4-31)	..	1	..
52		1461743	Relay (Shrouded)	1	1	1
53		292680	Lockwasher	1	1	1

FOOTNOTES:

a ⇒ S/N PENDING PER ECN 70714-14
b S/N PENDING PER ECN 70714-14⇔S/N PENDING PER ECN 73891
c ⇒ S/N PENDING PER ECN 73766
d S/N PENDING PER ECN 73766⇔S/N PENDING PER ECN 73891-01
e S/N PENDING PER ECN 73866 ⇒
f ⇒ S/N PENDING PER ECN 73891
g S/N PENDING PER ECN 73891 ⇒
h S/N PENDING PER ECN 73891-01 ⇒
i S/N PENDING PER ECN 73891-01⇔S/N PENDING PER ECN 73989
j S/N PENDING PER ECN 73989 ⇒
k ⇒ S/N PENDING PER ECN 92210-01
l S/N PENDING PER ECN 92210-01⇔S/N PENDING PER ECN 73766

©2003 HYSTER COMPANY

HARNESS KIT (Figure 4-5)
DUAL FUEL

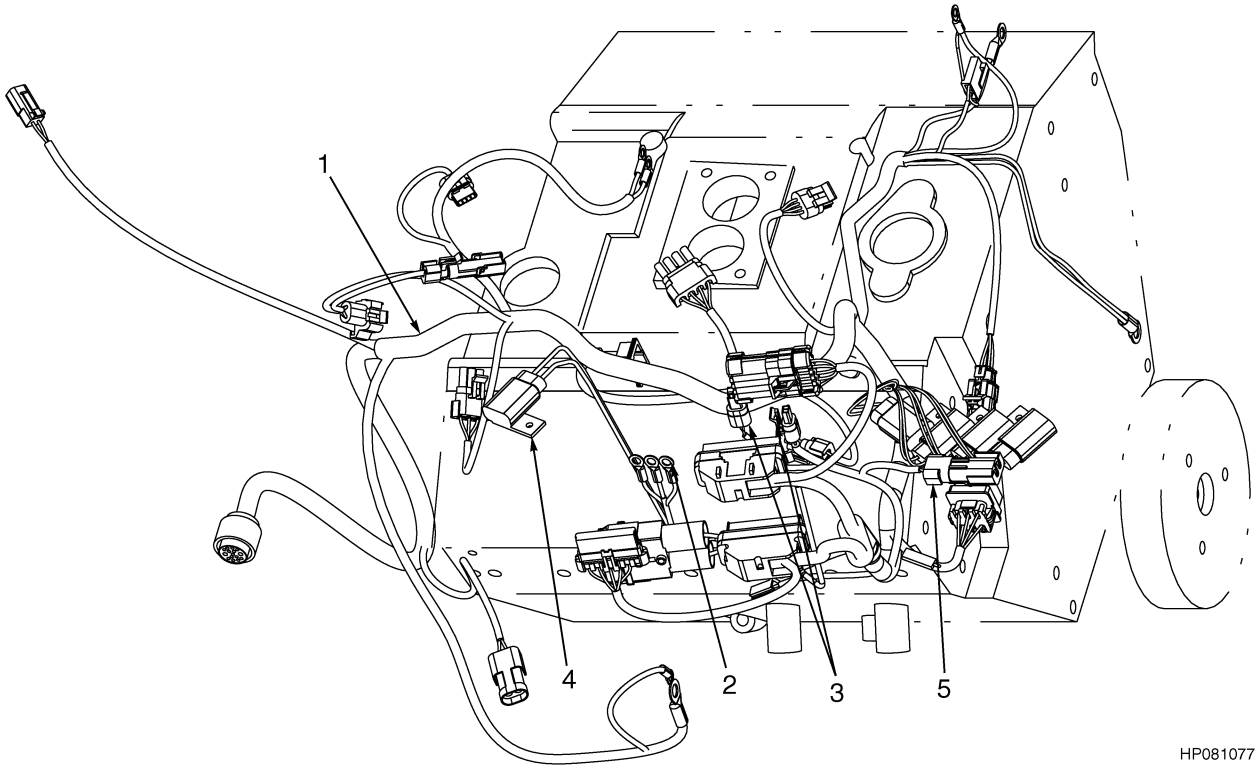

HARNESS KIT
DUAL FUEL

ITEM	PART NO.	DESCRIPTION	QTY
1	2036540	Wire Harness (Engine; DF) (Dual Fuel) (☞ Figure 4-18, ☞ Figure 4-19)	1
2	1475583	Switch Ring Kit	1
3	1475579	Solenoid Kit	1
4	1475566	Fuse Holder Kit	1
5	1475617	Connector Kit	1

©2003 HYSTER COMPANY

NOTES

ELECTRICAL SYSTEM (Figure 4-6)
LPG AND LPS

©2003 HYSTER COMPANY

ELECTRICAL SYSTEM
LPG AND LPS

KEY:
A: LP
B: LPS

ITEM		PART NO.	DESCRIPTION	QTY A	QTY B
1	**g**	2035689	Wire Harness (Engine,Conversion, Gas to LPG, GM 4.3L) (☞ Figure 4-18, ☞ Figure 4-25)	1	1
1	**h**	2044167	Wire Harness (Engine) (☞ Figure 4-40, ☞ Figure 4-41)	1	1
1	**e**	2047710	Wire Harness (Engine) (☞ Figure 4-42, ☞ Figure 4-43)	1	1
2		153069	Clamp	2	2
3		114312	Strap Clamp	3	3
4		302250	Screw	2	2
5		1520644	MAP Sensor	1	1
6		1397457	Bracket (Coil)	1	1
7		292668	Nut	5	5
8		320155	Washer	7	7
9		14349	Fitting (Oil Pressure)	1	1
10		1383346	Fitting (Oil Pressure)	1	1
11		1514215	Oil Pressure Sender	1	1
12		292501	Capscrew	4	4
13		320156	Washer	1	1
14		18500	Washer	..	2
14		190383	Boot	..	2
15		302035	Capscrew	3	3
16		2004005	Strap Clamp	1	1
17		1330293	Cover (Fuse)	3	3
18		302398	Locknut	3	3
19		2036542	Wire Harness (LPG Switch) (☞ Figure 4-26)	1	1
20		1397780	Battery Cable (☞ Figure 4-3)	1	..
20		1397787	Battery Cable (☞ Figure 4-3)	..	1
21		204223	Boot	1	1
22		239503	Nut	1	1
23	**d**	292681	Lockwasher	3	3
23	**e**	292681	Lockwasher	2	2
24		1314381	Coolant Temperature Sensor	1	1
25		16116	Fitting	1	1
26		1333827	Temperature Sender	1	1
27		292679	Lockwasher	1	1
28		387869	Boot	..	1
29		1399416	Bracket (ECU)	1	1
30	**d**	1486531	Starter	1	1
30	**d**	1490407	Solenoid	1	1
30	**d**	1490408	Bolt	1	1
30	**e**	1469604	Starter	1	1
30	**e**	1490407	Solenoid	1	1
30	**e**	1507422	Bolt	1	1
31		296380	Lockwasher	2	2
32		136749	Capscrew	2	2
33		220485	Screw (Some Units) (Not Illustrated)	1	1
33		197066	Washer (Some Units) (Not Illustrated)	1	1
33		15039	Nut (Some Units) (Not Illustrated)	1	1

©2003 HYSTER COMPANY

ELECTRICAL SYSTEM
LPG AND LPS

ITEM		PART NO.	DESCRIPTION	QTY A	QTY B
33		114312	Strap Clamp	1	1
34	**a**	2035679	Electronic Control Unit (Open Loop)	1	1
34	**b**	2053136	Electronic Control Unit (Open Loop)	1	1
34	**a**	2043527	Electronic Control Unit (Open Loop)	1	1
34	**b**	2053135	Electronic Control Unit (Open Loop)	1	1
34	**a**	2042658	Electronic Control Unit (Closed Loop)	1	1
34	**c**	2053137	Electronic Control Unit (Closed Loop)	1	1
34	**f**	2053930	Electronic Control Unit (Closed Loop) (ECES)	1	1
35		292680	Lockwasher	4	4
36		136687	Nut	4	4

FOOTNOTES:
a ⇒ S/N PENDING PER ECN 65039
b S/N PENDING PER ECN 65039 ⇒
c S/N PENDING PER ECN 65039⇔S/N PENDING PER ECN 73989
d ⇒ S/N PENDING PER ECN 73766
e S/N PENDING PER ECN 73766 ⇒
f S/N PENDING PER ECN 73989 ⇒
g ⇒ S/N PENDING PER ECN 92210-01
h S/N PENDING PER ECN 92210-01⇔S/N PENDING PER ECN 73766

©2003 HYSTER COMPANY

NOTES

ELECTRICAL SYSTEM (Figure 4-7)
DIESEL

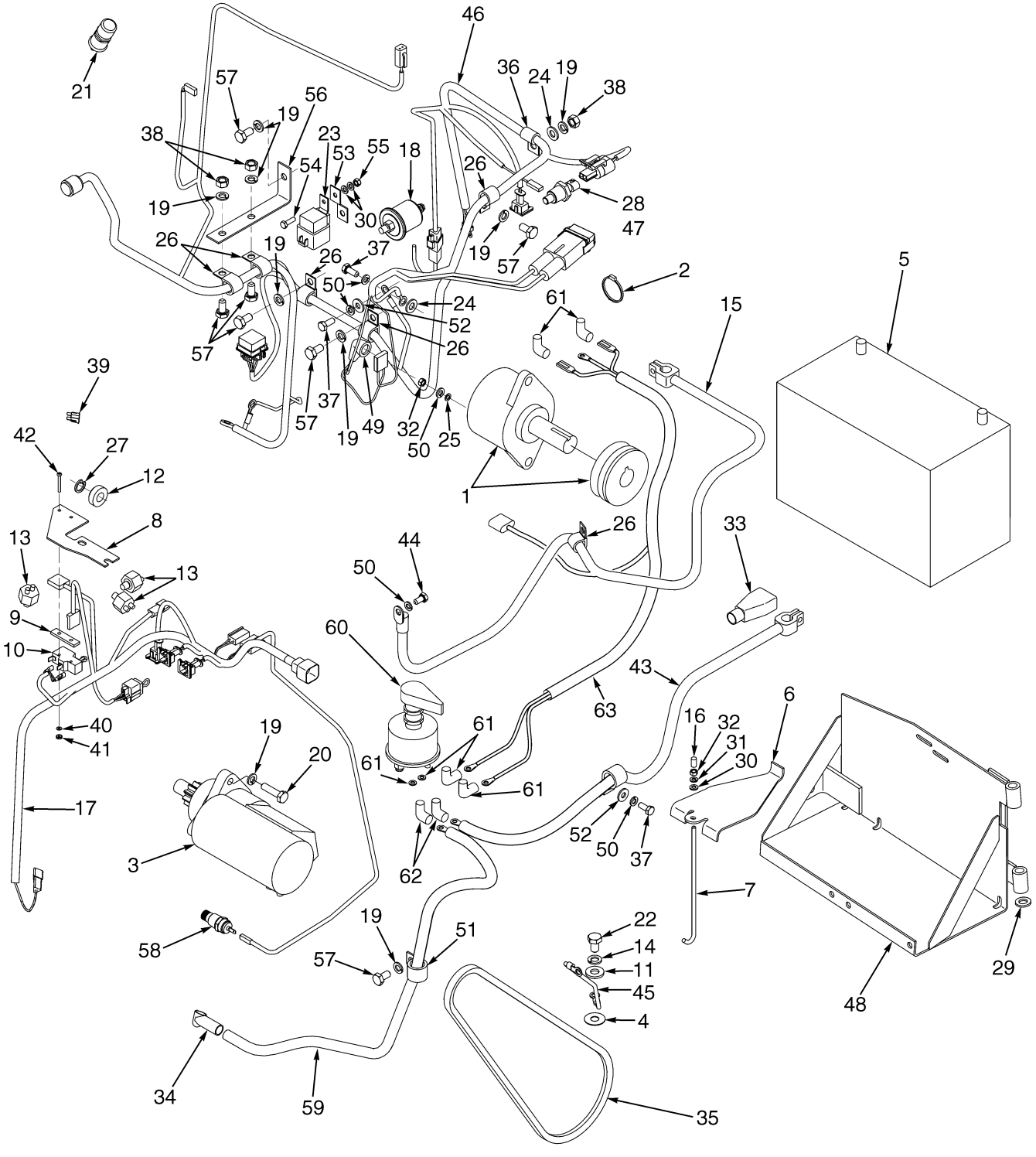

BP080045

©2003 HYSTER COMPANY

ELECTRICAL SYSTEM
DIESEL

ITEM		PART NO.	DESCRIPTION	QTY
1		1469598	Alternator (Includes Pulley) (☞ Figure 4-8)	1
1		1394001	Alternator (DS) (☞ Figure 4-9)	1
1		353291	Pulley (DS)	1
2		2004005	Strap Clamp	AR
3		1388721	Starter Motor	1
4		296408	Lockwasher	2
5		1399332	Battery (Wet)	1
6		1399333	Battery Hold Down	1
7		1399335	Link (Battery Hold Down)	1
8	**a**	1324557	Bracket	1
9	**a**	316132	Spacer	1
10	**a**	1320893	Switch	1
11		320162	Washer	1
12	**a**	387455	Disk (Neutral Start)	1
13	**a**	387867	Pressure Switch	1
14		292683	Lockwasher	1
15		1397783	Battery Cable	1
16		1326939	Cap	1
17		2035694	Wire Harness (Powershift Transmission Control)	1
18		1514215	Oil Pressure Sender	1
19		292682	Lockwasher	7
20		292515	Capscrew	2
21		370776	Switch (Momentary) (Indicator)	1
22		292526	Capscrew	1
23		1461743	Relay (Start)	1
24		320159	Washer	3
25		296359	Lockwasher	1
26		128408	Clamp	6
27	**a**	209417	Snap Ring	1
28		246108	Sealant	AR
29		320161	Washer	2
30		320156	Washer	1
31		292680	Lockwasher	1
32		136687	Nut	1
33		321158	Boot	1
34		204223	Boot	3
35		2039256	V-Belt	1
36		164488	Clamp	3
37		136681	Capscrew	3
38		136692	Nut	1
39		370648	Fuse (20 Amp)	1
40	**a**	16743	Lockwasher	4
41	**a**	15049	Nut	2
42	**a**	86510	Screw	2
43		1397780	Battery Cable (One Per Unit)	1
43		1397786	Battery Cable	1
44		287851	Capscrew	1
45		1493116	Wire Harness (Ground)	1
46	**b**	2036928	Wire Harness (Engine) (☞ Figure 4-29)	1
46	**c**	2047711	Wire Harness (Engine) (☞ Figure 4-30)	1
47		2037932	Temperature Sender	1

©2003 HYSTER COMPANY

ELECTRICAL SYSTEM
DIESEL

ITEM	PART NO.	DESCRIPTION	QTY
48	2035682	Battery Tray	1
49	157065	Boot	1
50	292681	Lockwasher	1
51	153069	Clamp	2
52	320158	Washer	1
53	1499120	Bracket	1
54	292501	Capscrew	1
55	302399	Nut	1
56	1455154	Bracket	1
57	292514	Capscrew	2
58	1322627	Temperature Switch	1
59	1397780	Battery Cable (One Per Unit)	1
59	1397787	Battery Cable (DS)	1
60	1324517	Switch (Disconnect) (DS)	1
61	18500	Washer (DS)	2
61	190383	Boot (DS)	2
62	204223	Boot	1
63	2047579	Harness (DS) (☞ Figure 4-27)	1

FOOTNOTES:
a Monotrol
b ⇒ S/N PENDING PER ECN 73766
c S/N PENDING PER ECN 73766 ⇒

©2003 HYSTER COMPANY

NOTES

ALTERNATOR (Figure 4-8)
GAS/LPG AND DIESEL

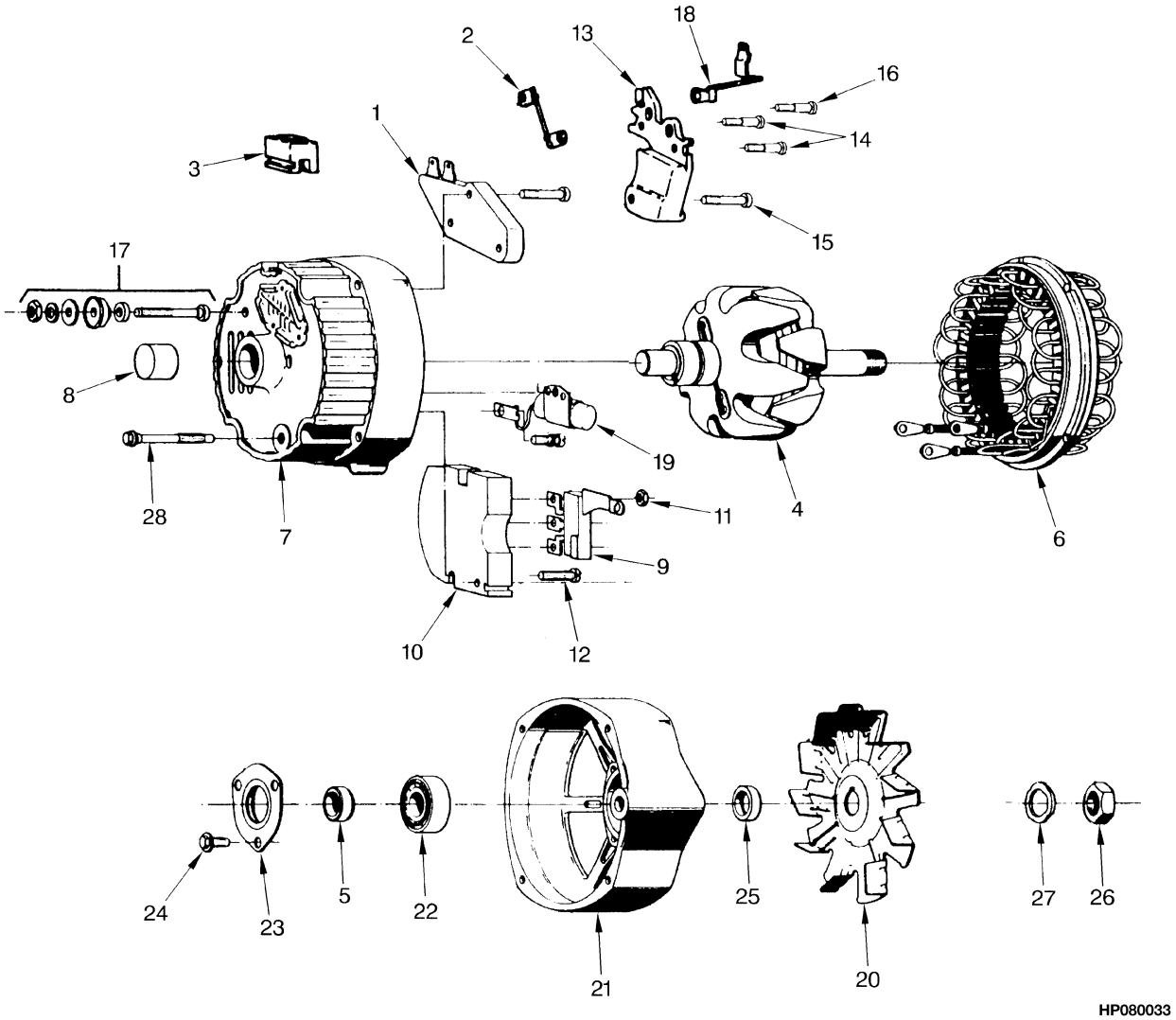

©2003 HYSTER COMPANY

ALTERNATOR
GAS/LPG AND DIESEL

ITEM		PART NO.	DESCRIPTION	QTY
	d	1469597	Alternator (Gasoline/LPG)	1
	d	1469598	Alternator (Diesel)	1
	d	1469601	Wire Harness (Alternator To Engine Harness)	1
	abc	1358911	Alternator	1
1		290303	Regulator	1
		1394001	Alternator (GS, DS, LPS) (☞ Figure 4-9)	1
2		1377067	Resistor	1
3		274648	Boot	1
4		1377047	Rotor	1
5		343029	Collar	1
6		1377048	Stator	1
7		310085	Cover (CE)	1
8		290508	Bearing (CE)	1
9		223095	Diode	1
10		343031	Rectifier Bridge	1
11		1344274	Nut	1
12		343032	Screw and Washer	1
13		343041	Brush Assembly	1
13		1377050	Spring	2
14		268356	Screw (Brush)	2
15		290369	Screw (Brush Holder)	1
16		290370	Screw (Brush Holder)	1
17		310081	Terminal Kit	1
18		344233	Terminal Relay	1
19		1377052	Capacitor	1
20		1377051	Fan	1
21		1377049	Frame (DE)	1
22		290509	Bearing (DE)	1
23		1377053	Plate	1
24		344234	Screw	3
25		310088	Collar (DE)	1
26		55580	Nut	1
27		128835	Lockwasher	1
28		128852	Bolt	4

FOOTNOTES:

a Replace with Alternator 1469598 and Jumper 1469601 for Diesel.
b Replace with Alternator 14697 and Jumper 1469601 for Gas and LPG.
c ⇒ S/N PENDING PER ECN 73766
d S/N PENDING PER ECN 73766 ⇒

©2003 HYSTER COMPANY

ALTERNATOR (Figure 4-9)
PRESTOLITE BRAND
GS, LPS, DS

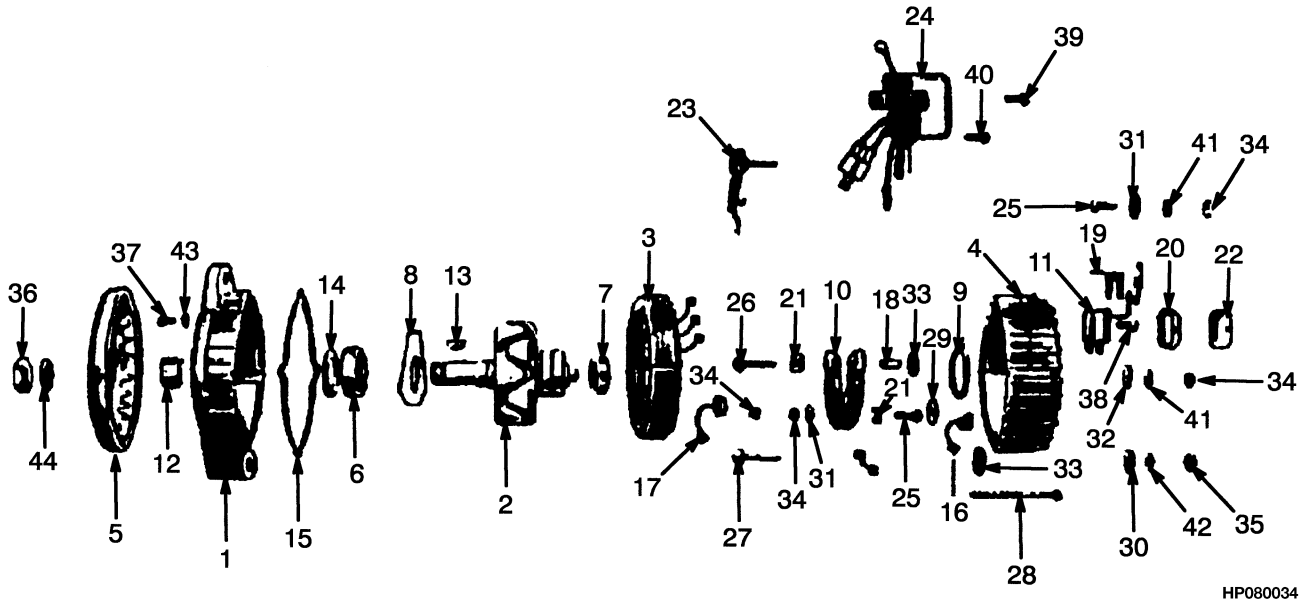

©2003 HYSTER COMPANY

ALTERNATOR
PRESTOLITE BRAND
GS, LPS, DS

ITEM	PART NO.	DESCRIPTION	QTY
	1394001	Alternator	1
1	1453351	Housing (Front)	1
2	1453681	Rotor Assembly	1
3	1453682	Stator Assembly	1
4	295802	Housing (Rear)	1
5	225673	Fan	1
6	248128	Bearing (Front/Rear)	1
7	386071	Bearing (Rear)	1
8	226576	Retainer (Front)	1
9	1371211	Retainer (Rear	1
10	226578	Heat Sink	1
11	2022534	Brush Assembly	1
12	1453352	Spacer (Fan)	1
13	1453354	Key	1
14	1453358	Seal (Front)	1
15	226582	Gasket	1
16	226583	Diode (Negative)	1
17	226584	Diode (Positive)	1
18	1371212	Sleeve	1
19	2022535	Insulation	1
20	1453387	Gasket (Cover)	1
21	1371214	Insulator	1
22	2022538	Brush Cover	1
23	2022532	Diode	1
24	1453386	Voltage Regulator	1
25	1453361	Bolt	3
26	1453362	Bolt	1
27	1453363	Bolt	1
28	1453364	Bolt	4
29	1453365	Insulator	3
30	1453366	Insulator (Round)	1
31	1453367	Insulator (Washer)	4
32	1453368	Insulator (Washer)	1
33	1453369	Insulator (Washer)	1
33	1453370	Insulator (Washer)	1
33	1453371	Insulator (Washer)	1
34	1453680	Nut	2
34	1453373	Nut	3
35	1328516	Nut	1
36	1453375	Nut	1
37	1453376	Screw	3
38	1453377	Screw	2
39	1328521	Screw	2
40	1453379	Screw	2
41	1453381	Washer	2
42	1453382	Washer	1
43	1453383	Lockwasher	1
44	1453385	Lockwasher	1

©2003 HYSTER COMPANY

DISTRIBUTOR (Figure 4-10)

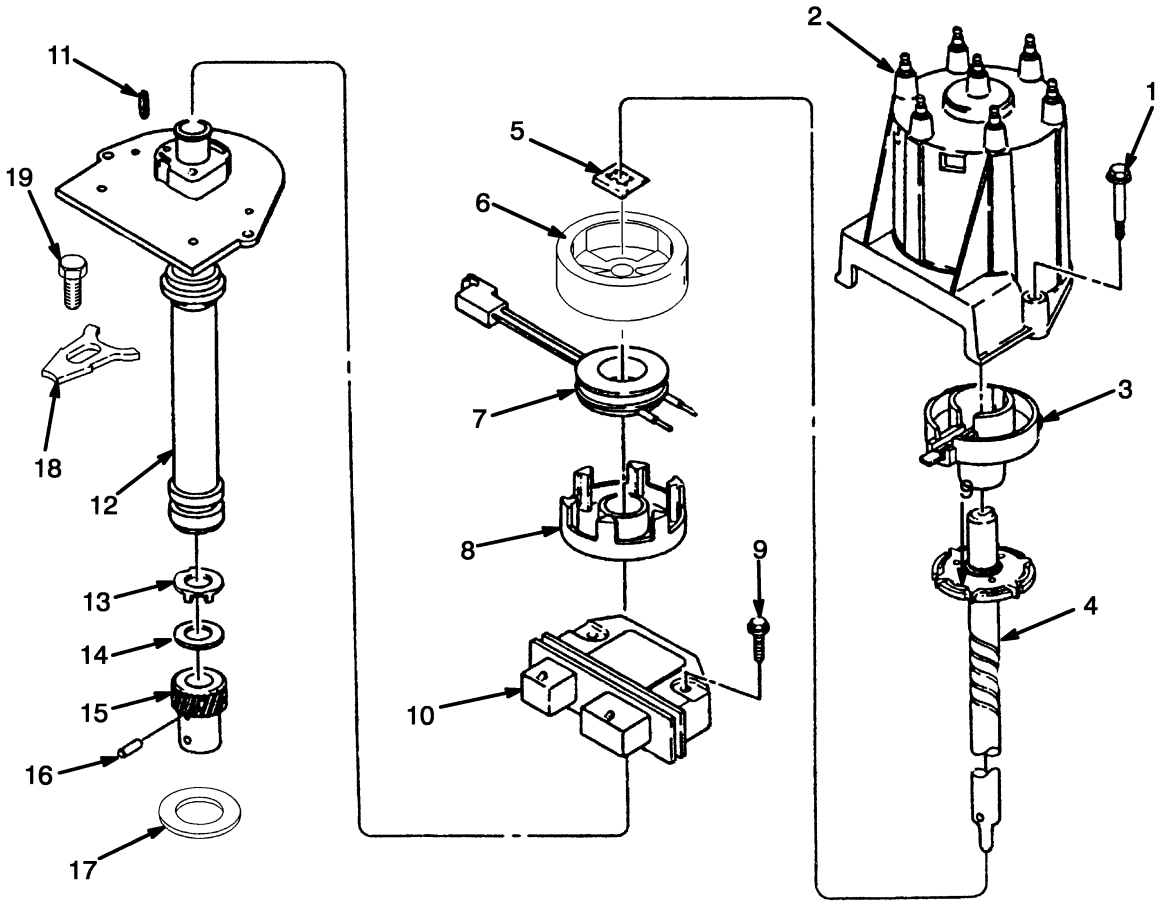

HP080035

ITEM	PART NO.	DESCRIPTION	QTY
	1450869	Distributor	1
1	1334401	Screw	2
2	1342528	Cap	1
3	1374329	Rotor	1
4	1374328	Shaft Assembly	1
5	1334406	Retainer	1
6	1342534	Shield	1
7	1374331	Coil	1
8	1374330	Pole Piece (Stationary)	1
9	1334408	Bolt	2
10	1460387	Module	1
11	1334410	Pin	1
12	1374333	Housing	1
13	274403	Washer	1
14	1342525	Washer	1
15	1451316	Gear	1
16	19870	Pin	1
17	1334423	Gasket	1
18	301966	Clamp	1
19	375597	Bolt	1

©2003 HYSTER COMPANY

NOTES

STARTER (Figure 4-11)
DIESEL

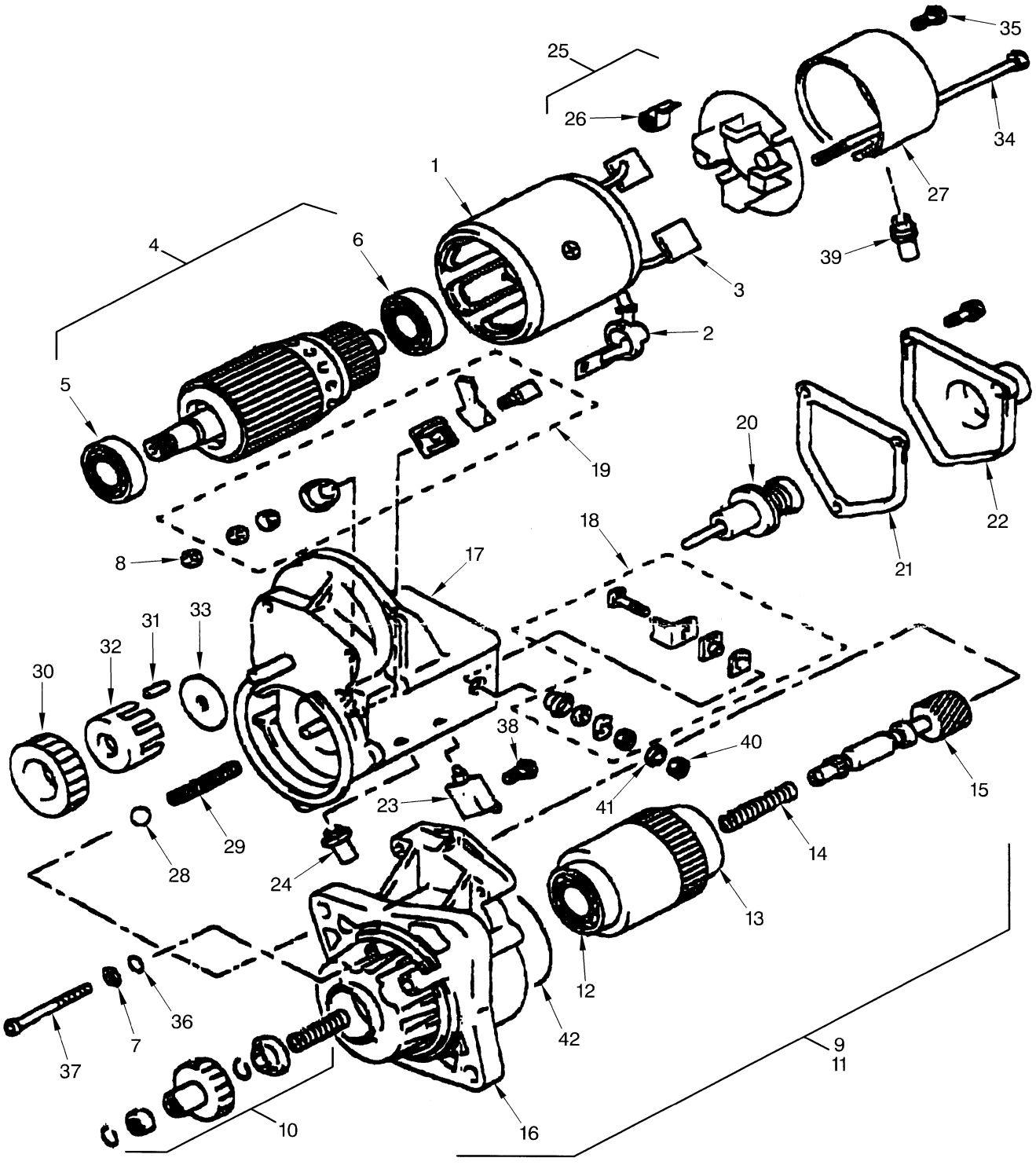

HP080036

©2003 HYSTER COMPANY

STARTER
DIESEL

ITEM	PART NO.	DESCRIPTION	QTY
	1388721	Starter Motor	1
1	1462233	Yoke Assembly	1
2	1462234	Cover	1
3	1462235	Brush Kit	2
4	1462236	Armature	1
5	1462239	Bearing (Optional)	1
5	1462238	Bearing	1
6	1462240	Bearing	1
7	1390163	Washer	3
8	1462273	Nut	1
9	1462241	Clutch Assembly	1
10	. . . . .	Starter Kit	1
11	. . . . .	Subassembly	1
12	. . . . .	Bearing	1
13	. . . . .	Bearing	1
14	. . . . .	Spring (Compression Coil)	1
15	. . . . .	Shaft	1
16	. . . . .	Housing	1
17	1462249	Switch Assembly	1
18	1462250	Terminal Kit (Terminal M)	1
19	1462251	Terminal Kit (Terminal C)	1
20	1462252	Plunger	1
21	1462253	Gasket (Switch)	1
22	1462254	Cover (Solenoid)	1
23	1462255	Bolt	1
24	1462256	Bushing	1
25	1462257	Brush Holder Assembly	1
26	1462258	Spring	4
27	1462259	Cover (DE)	1
28	1462260	Ball	1
29	1462261	Spring	1
30	1462262	Pinion	1
31	1462263	Roller	5
32	1462264	Retainer	1
33	1462265	Retainer	1
34	1462266	Bolt	2
35	1462267	Screw	2
36	1390164	O-Ring	3
37	1462268	Screw	3
38	1390167	Screw	1
39	1462269	Cover	1
40	1462270	Nut	1
41	1462271	Lockwasher	1
42	1462272	Seal	1

©2003 HYSTER COMPANY

SHIFT LEVER (Figure 4-12)

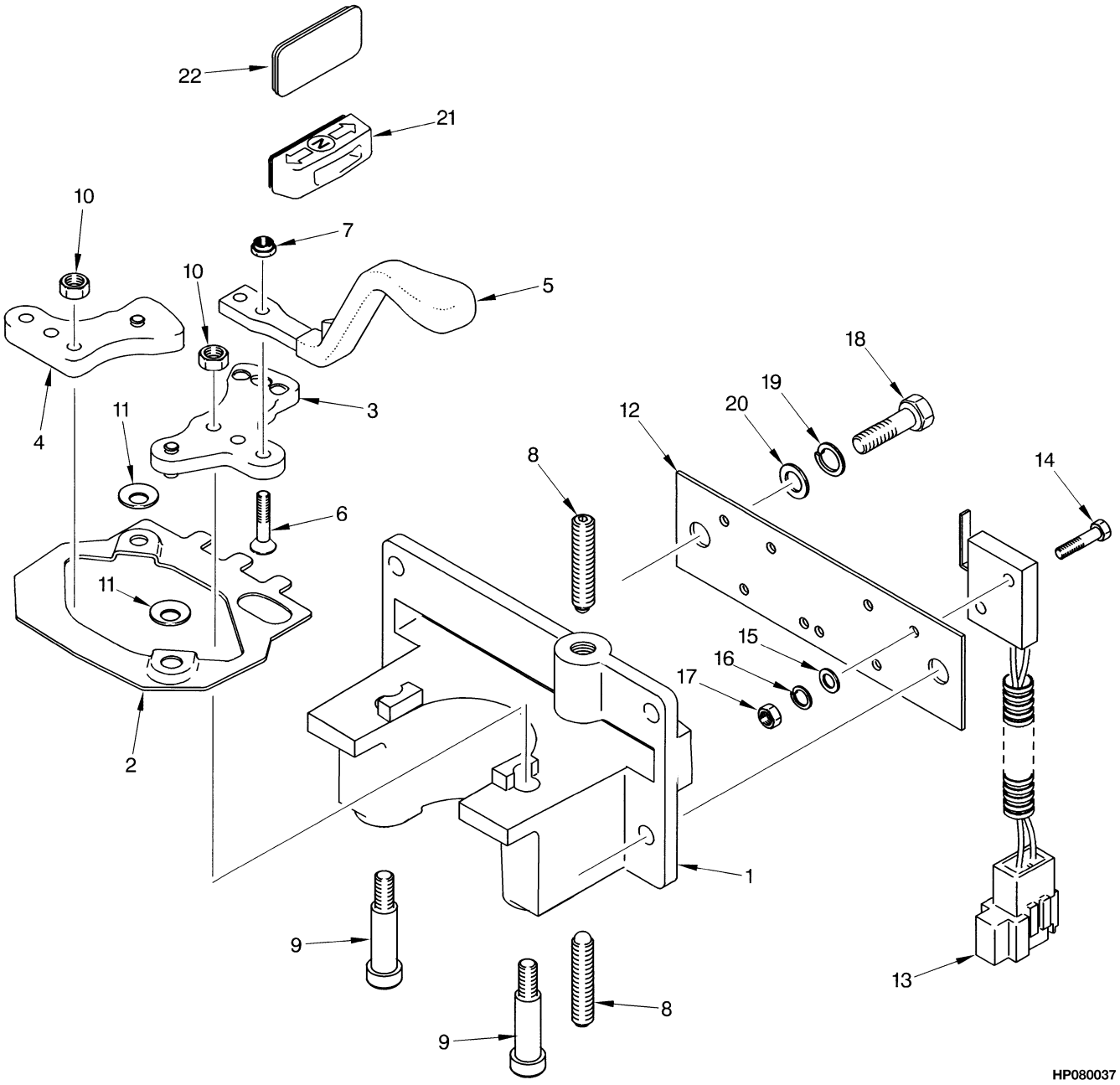

©2003 HYSTER COMPANY

SHIFT LEVER

ITEM		PART NO.	DESCRIPTION	QTY
		1347004	Shift Lever	1
1		1343577	Base	1
2		1343578	Link	1
3		1343579	Crank	1
4		1343598	Crank	1
5		1343593	Shift Lever	1
6		296205	Capscrew	2
7		302398	Locknut	2
8	**a**	1338291	Spring Plunger	2
8	**b**	1491830	Spring Plunger	2
9		1343594	Bolt	2
10		136687	Nut	2
11		1354300	Washer	4
12		1343595	Plate	1
13		2035678	Switch	2
14		220426	Screw	4
15		53162	Lockwasher	4
16		18419	Lockwasher	4
17		16865	Nut	4
18		292500	Capscrew	4
19		292680	Lockwasher	4
20		320156	Washer	4
21		1343596	Bracket (Label)	1
22		1343597	Plug	1

FOOTNOTES:

a ⇒ S/N PENDING PER ECN 73615

b S/N PENDING PER ECN 73615 ⇒

©2003 HYSTER COMPANY

BACKUP AND BRAKE LIGHTS (Figure 4-13)

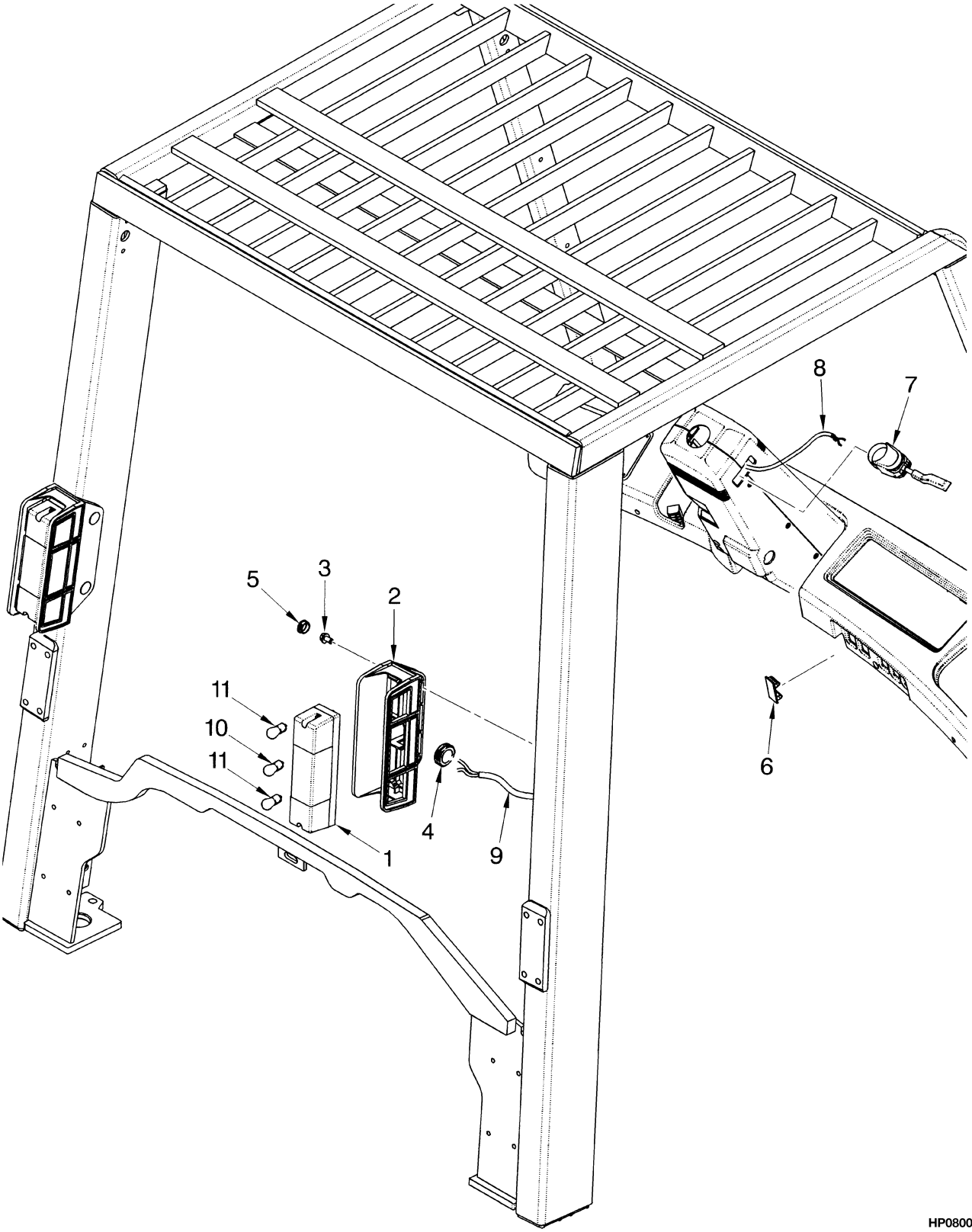

©2003 HYSTER COMPANY

BACKUP AND BRAKE LIGHTS

ITEM	PART NO.	DESCRIPTION	QTY
1	1399473	Brake and Back-Up Light	1
1	1380757	Lens (Amber)	1
1	1376439	Lens (Clear)	1
1	1462605	Lens (Red)	1
2	1450293	Bracket	2
3	316678	Screw	4
4	339969	Grommet	6
5	1450356	Plug	4
6	1382313	Cover	4
7	1394100	Switch	1
8	2036925	Wire Harness	1
8	1324308	Electrical Fitting	3
8	1324307	Electrical Fitting	3
9	2038007	Wire Harness	1
10	177521	Bulb (12 Volt)	1
11	1302258	Bulb	2

©2003 HYSTER COMPANY

WIRE HARNESS (Figure 4-14)
GAS ENGINE
(⇒S/N PENDING PER ECN 92210-01)

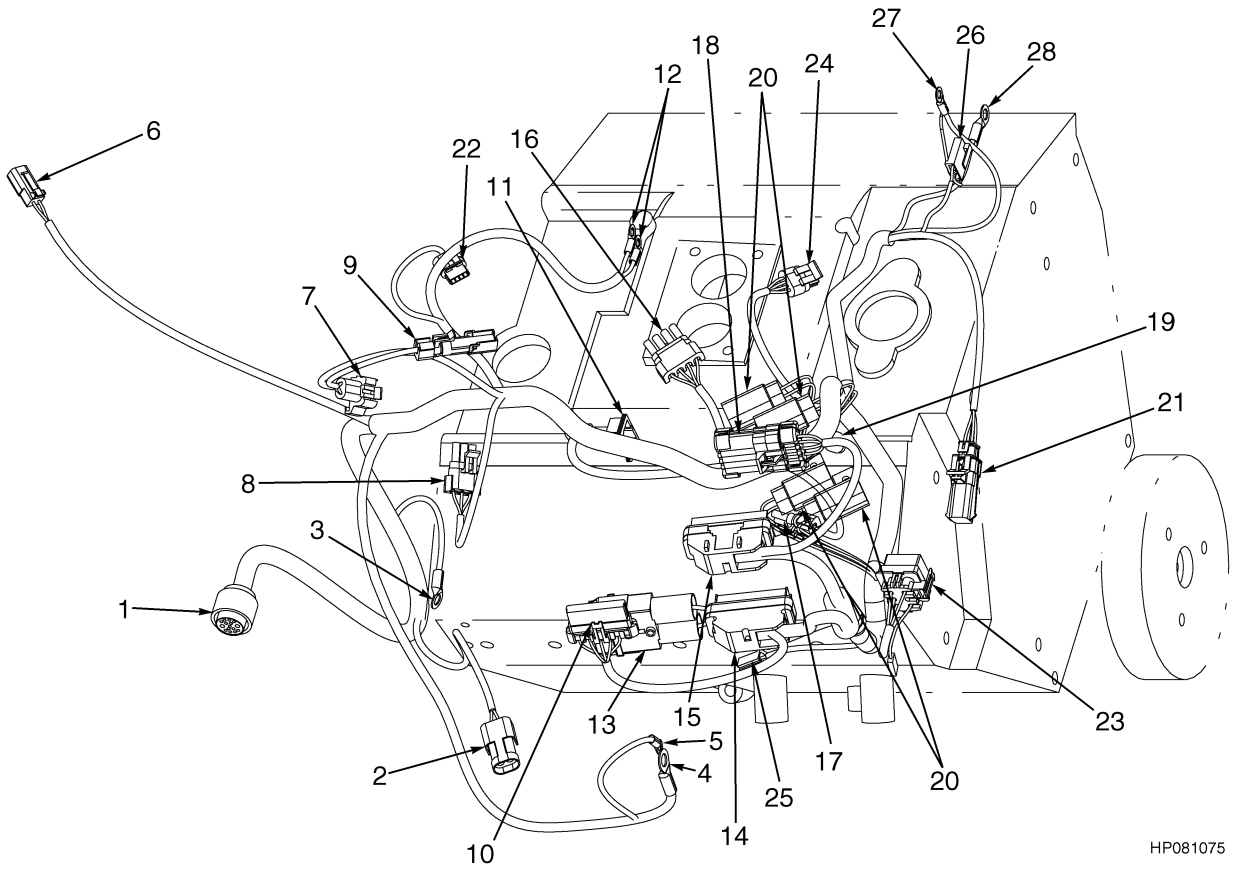

©2003 HYSTER COMPANY

WIRE HARNESS
GAS ENGINE
(⇒S/N PENDING PER ECN 92210-01)

ITEM	PART NO.	DESCRIPTION	QTY
	2035681	Wire Harness (Engine Type G/GS)	1
1	1475546	Connector Kit (Bulkhead)	1
2	1475547	Connector Kit (2 Pin)	1
3	1475548	Ring Terminal Kit	1
4	1475549	Ring Terminal Kit	1
5	1475550	Ring Terminal Kit	1
6	1475551	Connector Kit (2 Pin)	1
7	1475552	Coil Connector Kit	1
8	1475553	Connector Kit (Map Sensor)	1
9	1475554	Connector Kit (Tachometer)	1
10	1475556	Governor Amplifier Kit	1
11	1475610	Connector Kit (2 Pin)	1
12	1475558	Ring Terminal Kit	1
13	1475559	Fuse Kit	1
14	1475560	Connector Kit	1
15	1475561	Connector Kit	1
16	1475562	Connector Kit	1
17	1475616	Connector Kit (Governor Motor)	1
18	1475564	Connector Kit (Diagnostic)	1
19	1475565	Connector Kit	1
20	1475566	Fuse Holder Kit	1
21	1475567	Connector Kit	1
22	1475578	Connector Kit (Distributor)	1
23	1475569	Plug Kit (Shrouded Relay)	1
24	1475570	Connector Kit	1
25	1475571	Pin Kit	1
26	1475572	Connector Kit	1
27	1475573	Ring Terminal Kit	1
28	1475574	Ring Terminal Kit	1

©2003 HYSTER COMPANY

WIRE HARNESS (Figure 4-15)
CONVERSION, GAS TO LPG, GM 4.3L
SHEET 1 OF 2

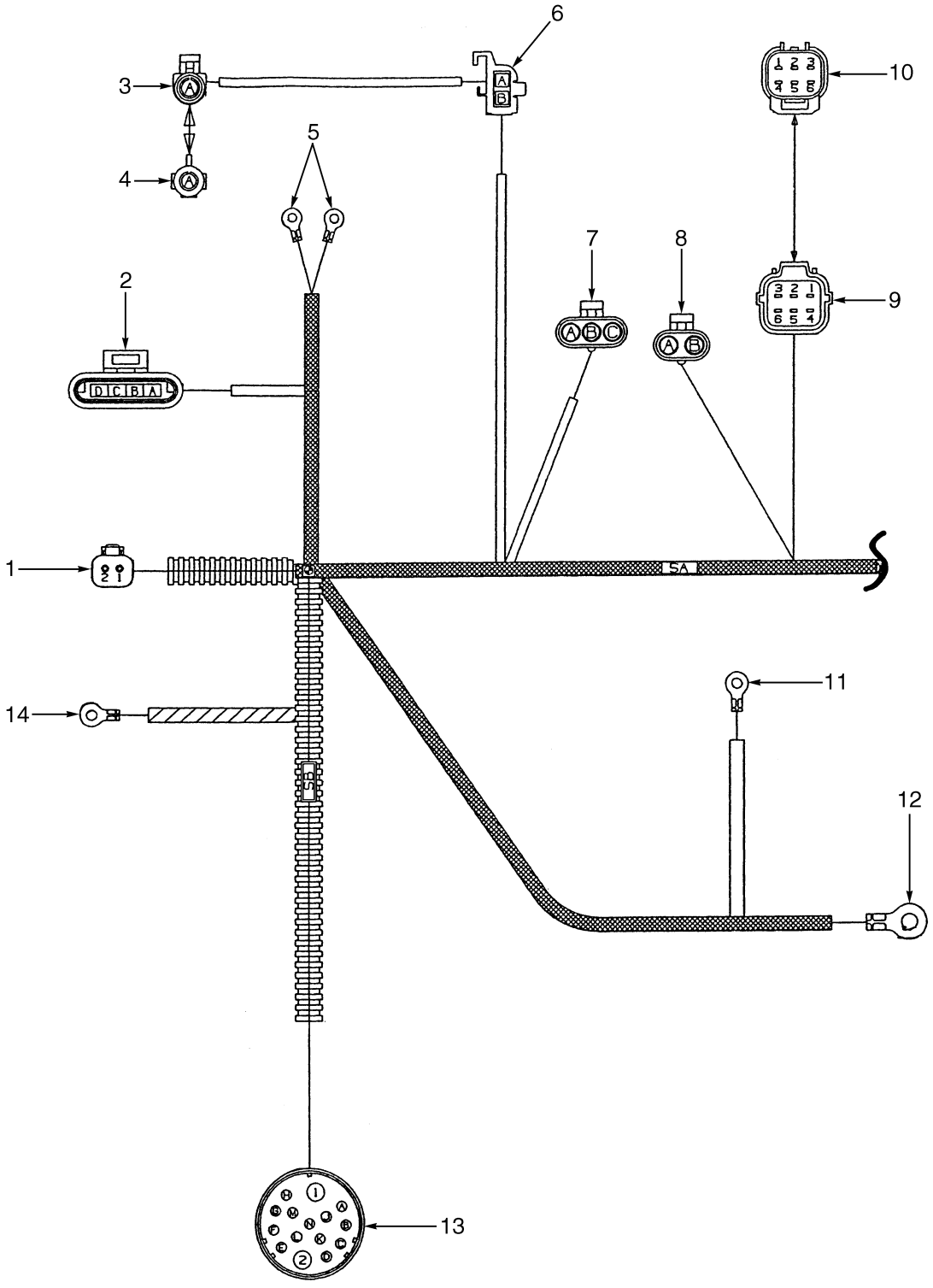

©2003 HYSTER COMPANY

WIRE HARNESS
CONVERSION, GAS TO LPG, GM 4.3L
SHEET 1 OF 2

ITEM	PART NO.	DESCRIPTION	QTY
	a 2035689	Wire Harness (Engine,Conversion, Gas to LPG, GM 4.3L) (☞ Figure 4-24, ☞ Figure 4-25)	1
1	. . . . .	Connector Assembly (Seat Switch)	1
1	1484361	Housing (Socket)	1
1	1330424	Lock	1
1	1330438	Socket	2
2	. . . . .	Connector Assembly (Distributer)	1
2	1498478	Housing	1
2	1493461	Terminal	1
3	. . . . .	Connector Assembly (Tachometer)	1
3	1498473	Housing	1
3	1498419	Terminal	1
3	1498496	Seal	1
4	1498476	Connector Housing (Mating Half, Item 3)	1
5	. . . . .	Connector Assembly (Oil Pressure Sender)	2
5	1496883	Terminal	1
5	1496775	Sleeve	1
6	1498470	Connector Housing (Coil)	1
7	. . . . .	Connector Assembly (Map Sensor)	1
7	1327958	Housing	1
7	1498415	Terminal	3
7	1498496	Seal	3
8	. . . . .	Connector Assembly (Governor)	1
8	1498474	Housing	1
8	1498496	Seal	2
8	1498419	Terminal	2
9	. . . . .	Connector Assembly (Closed Loop Option)	1
9	1497296	Housing	1
9	1497304	Retainer	1
9	1484656	Terminal (Socket)	5
9	1484597	Seal	5
9	1484611	Seal	1
10	1497291	Connector Housing	1
11	. . . . .	Connector Assembly (Start Solenoid)	1
11	1496883	Terminal	1
11	1496775	Sleeve	1
12	. . . . .	Connector Assembly (+ VE)	1
12	1493455	Terminal	1
12	1493450	Heatshrink	1
13	. . . . .	Connector Assembly (Cowl)	1
13	1495955	Housing	1
13	1496889	Terminal	2
13	1496891	Terminal	5
13	1484716	Terminal	6
14	. . . . .	Connector Assembly (- VE)	1
14	1393455	Cover	1
14	1493450	Heatshrink	1

FOOTNOTES:

a ⇒ S/N PENDING PER ECN 92210-01

©2003 HYSTER COMPANY

WIRE HARNESS (Figure 4-16)
CONVERSION, GAS TO LPG, GM 4.3L
SHEET 2 OF 2

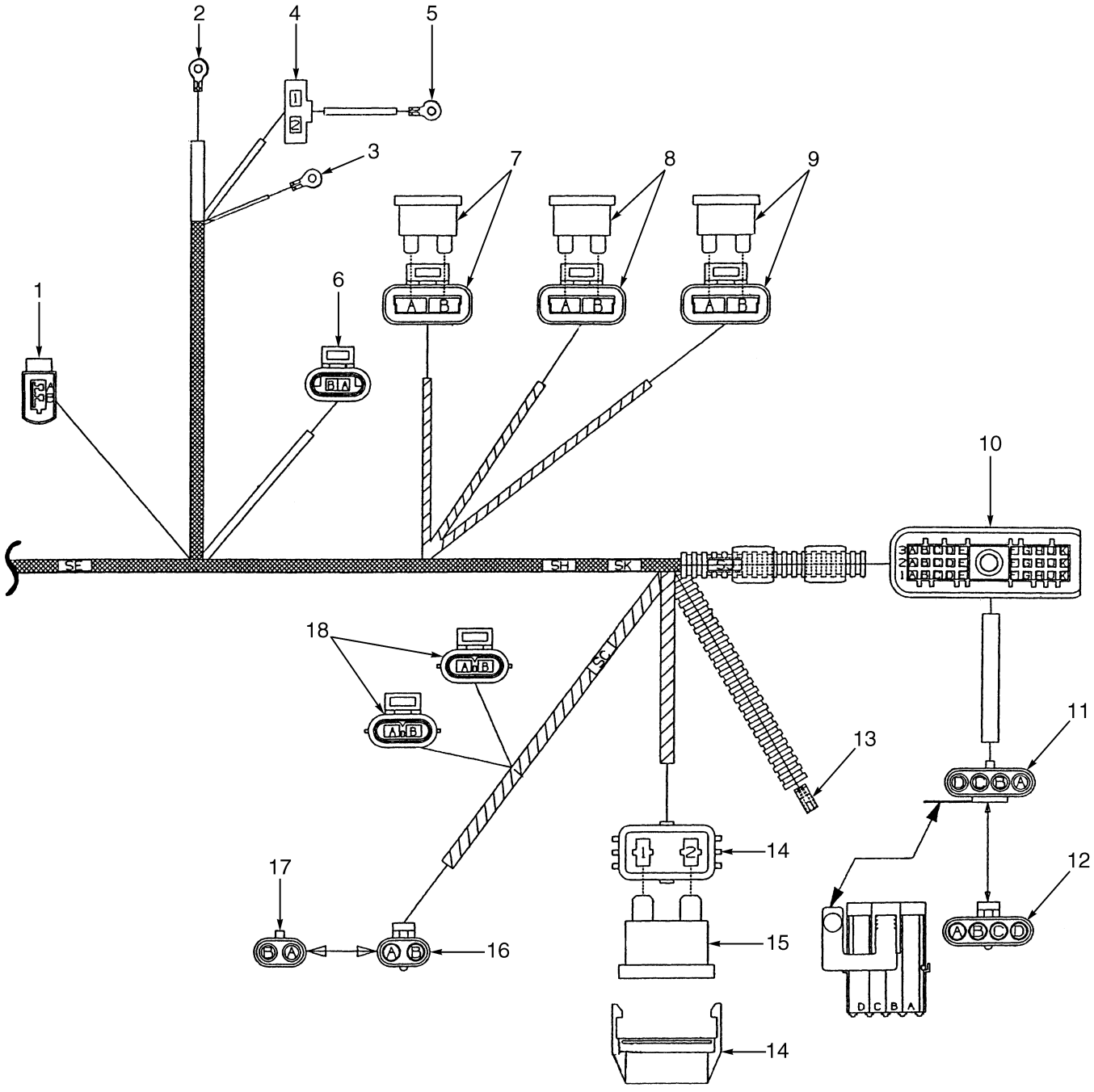

©2003 HYSTER COMPANY

WIRE HARNESS
CONVERSION, GAS TO LPG, GM 4.3L
SHEET 2 OF 2

ITEM	PART NO.	DESCRIPTION	QTY
a	2035689	Wire Harness (Engine,Conversion, Gas to LPG, GM 4.3L) (☞ Figure 4-24, ☞ Figure 4-25)	1
1	. . . . .	Connector Assembly (IAC)	1
1	1496785	Housing	1
1	1496786	Spacer	1
1	1496784	Terminal	2
2	. . . . .	Connector Assembly (Alternator -)	1
2	1493458	Fitting	1
2	1496775	Sleeve	1
3	. . . . .	Connector Assembly (Alternator +)	1
3	1493457	Fitting	1
3	1493450	Heatshrink	1
4	. . . . .	Connector Assembly (Alternator)	1
4	1493469	Housing	1
4	1498413	Terminal	2
5	. . . . .	Connector Assembly (Alternator)	1
5	1497229	Terminal	1
5	1496775	Sleeve	1
6	. . . . .	Connector Assembly (Temperature Sensor)	1
6	1493460	Housing	1
6	1493461	Terminal	2
7	. . . . .	Connector Assembly (Ignition)	1
7	1498425	Housing	1
7	1498412	Terminal	2
7	370647	Fuse (10 Amp)	2
8	. . . . .	Connector Assembly (Battery)	1
8	1498425	Housing	1
8	1498412	Terminal	2
8	370647	Fuse (10 Amp)	1
9	. . . . .	Connector Assembly) (B +)	1
9	1498425	Housing	1
9	1498412	Terminal	2
9	1378661	Fuse	1
10	. . . . .	Connector Assembly (ECU)	1
10	1504883	Housing	1
10	1493461	Terminal	23
10	1402866	Seal	7
11	. . . . .	Connector Assembly (COMMS Port)	1
11	1498477	Housing	1
11	1498496	Seal	4
11	1498415	Terminal	4
12	1498472	Connector Housing (Mating Half, Item 11)	1
13	. . . . .	Connector Assembly (Temperature Sender)	1
13	1493441	Housing	1
13	1498413	Terminal	1
14	. . . . .	Connector Assembly (Alternator)	1
14	1497234	Fuse Holder	1
14	1497232	Terminal	2
14	1497233	Seal	2
15	1454829	Fuse (60 Amp)	1

©2003 HYSTER COMPANY

WIRE HARNESS
CONVERSION, GAS TO LPG, GM 4.3L
SHEET 2 OF 2

ITEM	PART NO.	DESCRIPTION	QTY
16	. . . . .	Connector Assembly (Convertor)	1
16	1498476	Connector Housing	1
16	1498496	Seal	2
16	1498419	Terminal	2
17	1498422	Connector Housing (Mating Half, Item 16)	1
18	. . . . .	Connector Assembly (Cut Off Solenoids	1
18	1498423	Housing	1
18	1498493	Retainer	1
18	1498492	Seal	2
18	1482664	Terminal	2

FOOTNOTES:
a ⇒ S/N PENDING PER ECN 92210-01

©2003 HYSTER COMPANY

WIRE HARNESS (Figure 4-17)
TYPE "S" GAS AND LPG
(⇒S/N PENDING PER ECN 73766)

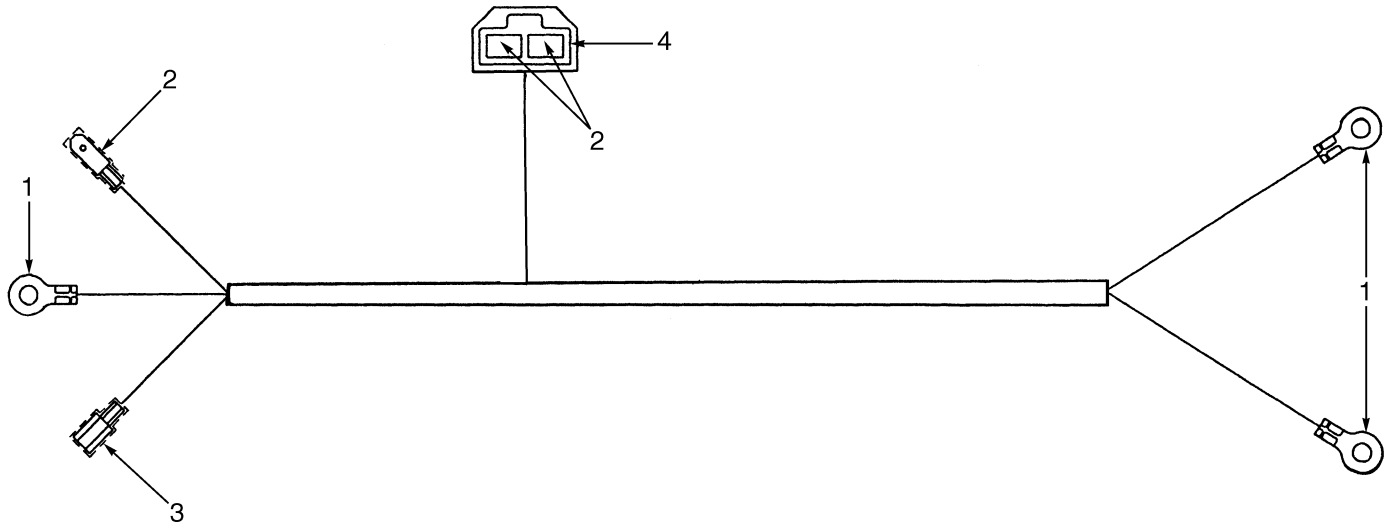

BP080(

ITEM	PART NO.	DESCRIPTION	QTY
	2035688	Wire Harness (GS, LPS)	1
1	1493448	Fitting	3
1	1493442	Boot	3
2	134810	Terminal	3
2	181045	Connector	1
3	1498413	Terminal	1
3	181046	Connector	1
4	1498480	Housing	1

WIRE HARNESS (Figure 4-18)
DUAL FUEL, GM V6
SHEET 1 OF 2
(⇒S/N PENDING PER ECN 92210-01)

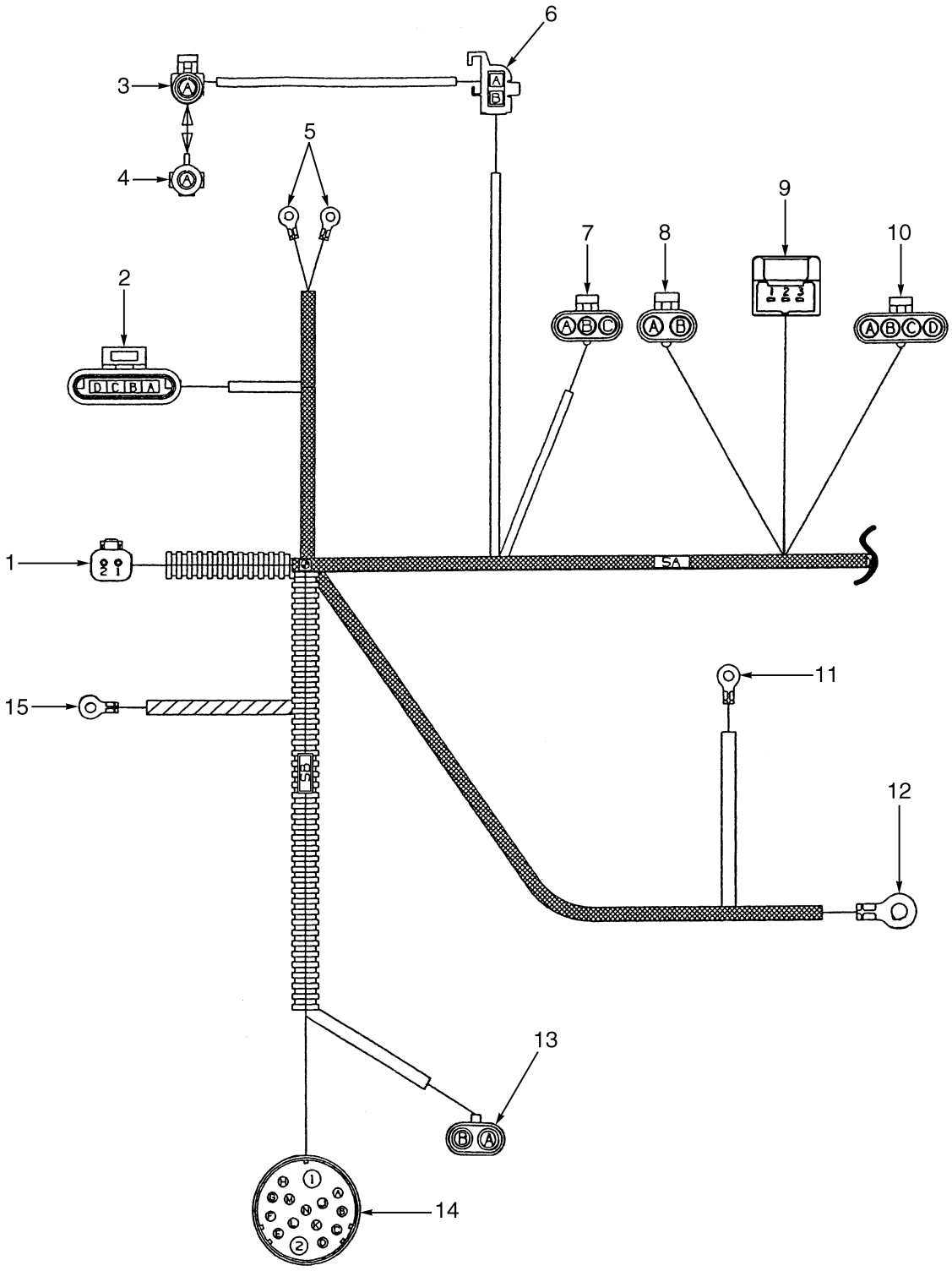

BP080072

©2003 HYSTER COMPANY

WIRE HARNESS
DUAL FUEL, GM V6
SHEET 1 OF 2
(⇒S/N PENDING PER ECN 92210-01)

ITEM	PART NO.	DESCRIPTION	QTY
	2036540	Wire Harness (Engine; DF)	1
1	. . . . .	Connector Assembly (Seat Switch)	1
1	1484361	Housing (Socket)	1
1	1330424	Lock	1
1	1330438	Socket	2
2	. . . . .	Connector Assembly (Distributor)	1
2	1498478	Housing	1
2	1493461	Terminal	4
3	. . . . .	Connector Assembly (Tachometer)	1
3	1498473	Housing	1
3	1498419	Terminal	1
3	1498496	Seal	1
4	. . . . .	Connector Assembly	1
4	1498476	Connector Housing	1
4	1402857	Plug	1
5	1493455	Terminal (Oil Pressure Sender)	2
5	1493450	Heatshrink	2
6	. . . . .	Connector Assembly (Coil)	1
6	1498470	Connector Housing	1
7	. . . . .	Connector Assembly (Map Sensor)	1
7	1327958	Housing	1
7	1498415	Terminal	3
7	1498496	Seal	3
8	. . . . .	Connector Assembly (Governor)	1
8	1498474	Housing	1
8	1498496	Seal	2
8	1498419	Terminal	2
9	. . . . .	Connector Assembly (Throttle)	1
9	1496777	Housing	1
9	1493436	Terminal	3
9	1479109	Seal	3
10	. . . . .	Connector Assembly (Injectors)	1
10	1498472	Connector Housing	1
10	1498496	Seal	4
10	1498419	Terminal	4
11	1496883	Terminal (Starter Solenoid)	1
11	1493450	Heatshrink	1
12	1493455	Terminal (+ VE)	1
12	1496773	Sleeve	1
13	. . . . .	Connector Assembly (Fuel Pump)	1
13	1402616	Housing	1
13	1498496	Seal	2
13	1498415	Terminal	2
14	. . . . .	Connector Assembly (Cowl)	1
14	1495955	Housing	1
14	1496889	Terminal (Items 1 and 2)	2
14	1496891	Terminal (L, M, N)	4
14	1484716	Terminal (C, D, E, G, H, J, K, L)	7

©2003 HYSTER COMPANY

WIRE HARNESS
DUAL FUEL, GM V6
SHEET 1 OF 2
(⇒S/N PENDING PER ECN 92210-01)

ITEM	PART NO.	DESCRIPTION	QTY
15	1493455	Terminal (- VE)	1
15	1496773	Sleeve	1

©2003 HYSTER COMPANY

NOTES

WIRE HARNESS (Figure 4-19)
DUAL FUEL, GM V6
SHEET 2 OF 2
(⇒S/N PENDING PER ECN 92210-01)

©2003 HYSTER COMPANY

WIRE HARNESS
DUAL FUEL, GM V6
SHEET 2 OF 2
(⇒S/N PENDING PER ECN 92210-01)

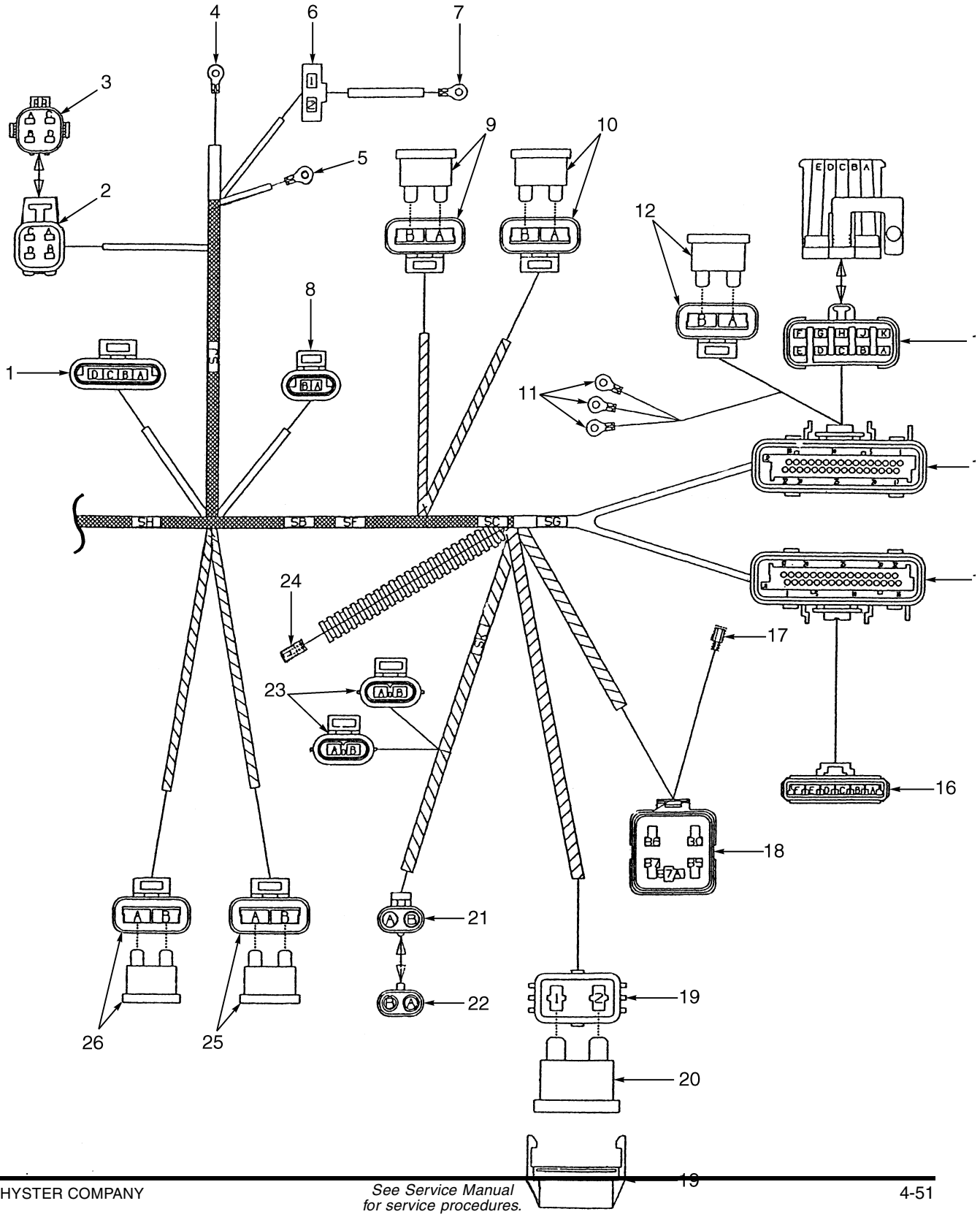

WIRE HARNESS
DUAL FUEL, GM V6
SHEET 2 OF 2
(⇒S/N PENDING PER ECN 92210-01)

ITEM	PART NO.	DESCRIPTION	QTY
	2036540	Wire Harness (Engine; DF)	1
1	. . . . .	Connector Assembly (IAC)	1
1	1498478	Housing	1
1	1493461	Terminal	4
2	. . . . .	Connector Assembly (Oxygen Sensor)	1
2	1498468	Housing	1
2	1482664	Terminal	4
2	1498492	Seal	4
3	. . . . .	Connector Assembly	1
3	1498424	Housing (Mating Pigtail)	1
3	1498498	Seal	4
4	1493458	Fitting (Alternator -)	1
4	1484383	Heat Shrink Tube	1
5	1493457	Fitting (Alternator +)	1
5	1484383	Heat Shrink Tube	1
6	. . . . .	Connector Assembly (Alternator)	1
6	1493469	Housing	1
6	1484375	Terminal	2
7	1497229	Terminal (Alternator)	1
7	1484383	Heat Shrink Tube	1
8	. . . . .	Connector Assembly (Temperature Sensor)	1
8	1493460	Housing	1
8	1493461	Terminal	2
9	. . . . .	Connector Assembly (Ignition)	1
9	1498425	Housing	1
9	1498412	Terminal	2
9	370647	Fuse (10 Amp)	1
10	. . . . .	Connector Assembly (B +)	1
10	1498425	Housing	1
10	1498412	Terminal	2
10	370647	Fuse (10 Amp)	1
11	1497229	Terminal (LPG Gas Switch)	3
11	1484383	Heat Shrink Tube	3
12	. . . . .	Connector Assembly (LPG Valve)	1
12	1498425	Housing	1
12	1498412	Terminal	2
12	370647	Fuse (10 Amp)	1
13	. . . . .	Connector Assembly (Comms Port)	1
13	1498427	Housing	1
13	1402907	Lock	1
13	1482664	Terminal (A, B, F, G)	4
13	1498492	Seal (A, B, F, G)	4
13	1498498	Seal (C, D, E, H, J, K)	6
14	. . . . .	Connector Assembly (EFI/ECM)	1
14	1498462	Retainer	1
14	1498487	Strain Relief	1
14	1498451	Insert	1
14	1498495	Seal	1
14	1484710	Terminal	20

©2003 HYSTER COMPANY

WIRE HARNESS
DUAL FUEL, GM V6
SHEET 2 OF 2
(⇒S/N PENDING PER ECN 92210-01)

ITEM	PART NO.	DESCRIPTION	QTY
14	1352105	Plug	12
15	. . . . .	Connector Assembly (EFI/ECM)	1
15	1500963	Retainer	1
15	1498488	Strain Relief	1
15	1498451	Insert	1
15	1498495	Seal	1
15	1484710	Terminal	16
15	1352105	Plug	16
16	. . . . .	Connector Assembly (Governor Amplifier)	1
16	1498463	Housing	1
16	1498486	Lock	1
16	1498414	Terminal	1
16	1498496	Seal	5
16	1402857	Plug (Position F)	1
17	1497264	Terminal (Fuel Pump)	1
17	1497274	Boot	1
18	. . . . .	Connector Assembly (Fuel Pump Relay)	1
18	1498483	Sealant	1
18	1498469	Relay Base	1
18	1402912	Terminal	5
18	1498496	Seal	5
19	. . . . .	Connector Assembly	1
19	1497234	Fuse Holder	1
19	1497232	Terminal	2
19	1497233	Seal	2
20	1454829	Fuse (60 Amp)	1
21	. . . . .	Connector Assembly (Converter)	1
21	1498474	Housing	1
21	1498496	Seal	2
21	1498419	Terminal	2
22	. . . . .	Connector Assembly (Mating Half)	1
22	1498422	Connector Housing	1
22	1402857	Plug	2
23	. . . . .	Connector Assembly (LPG Cut Off, Solenoids)	2
23	1498423	Housing	1
23	1498493	Retainer	1
23	1482664	Terminal	2
23	1498492	Seal	2
24	1493441	Housing (Temperature Sensor)	1
24	1484375	Terminal	1
25	. . . . .	Connector Assembly (Fuel Pump)	1
25	1498425	Housing	1
25	1498412	Terminal	2
25	370647	Fuse (10 Amp)	1
26	. . . . .	Connector Assembly	1
26	1498425	Housing	1
26	1498412	Terminal	2
26	370647	Fuse (10 Amp)	1

©2003 HYSTER COMPANY

WIRE HARNESS (Figure 4-20)
DUAL FUEL, GM V6
SHEET 1 OF 2
(S/N PENDING PER ECN 92210-01⇔S/N PENDING PER ECN 73766)

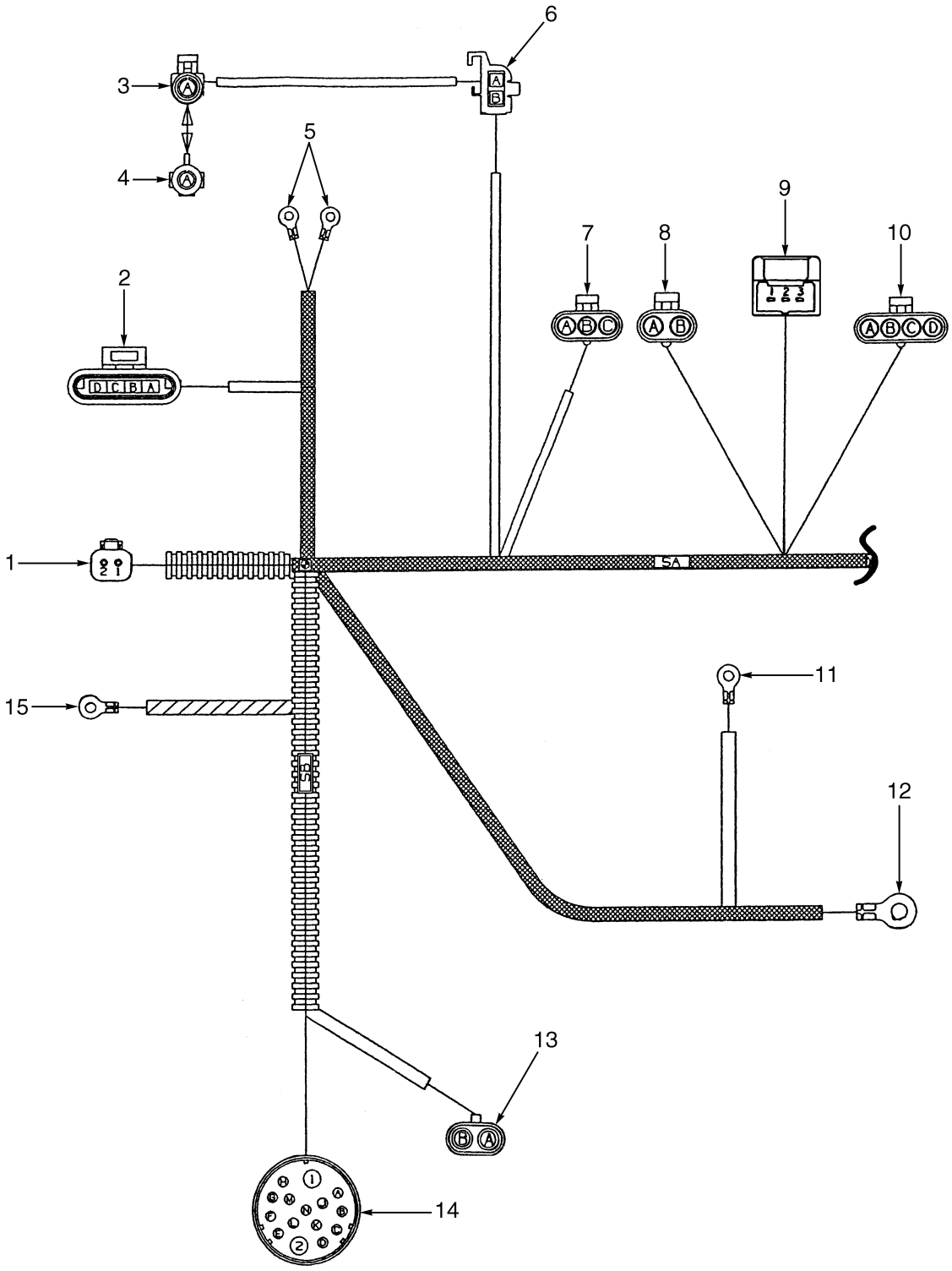

©2003 HYSTER COMPANY

WIRE HARNESS
DUAL FUEL, GM V6
SHEET 1 OF 2
(S/N PENDING PER ECN 92210-01⇔S/N PENDING PER ECN 73766)

ITEM	PART NO.	DESCRIPTION	QTY
	2043950	Wire Harness (Engine; DF)	1
1	. . . . .	Connector Assembly (Seat Switch)	1
1	1484361	Housing (Socket)	1
1	1330424	Lock	1
1	1330438	Socket	2
2	. . . . .	Connector Assembly (Distributor)	1
2	1498478	Housing	1
2	1493461	Terminal	4
3	. . . . .	Connector Assembly	1
3	1498473	Housing	1
3	1498419	Terminal	1
3	1498496	Seal	1
4	. . . . .	Connector Assembly	1
4	1498476	Connector Housing	1
4	1402857	Plug	1
5	1496883	Terminal (Oil Pressure Sender)	2
5	1493450	Heatshrink	2
6	. . . . .	Connector Assembly (Coil)	1
6	1498470	Connector Housing	1
7	. . . . .	Connector Assembly	1
7	1327958	Housing	1
7	1498415	Terminal	3
7	1498496	Seal	3
8	. . . . .	Connector Assembly	1
8	1498474	Housing	1
8	1498496	Seal	2
8	1498419	Terminal	2
9	. . . . .	Connector Assembly (Throttle)	1
9	1496777	Housing	1
9	1493436	Terminal	3
9	1479109	Seal	3
10	. . . . .	Connector Assembly (Injectors)	1
10	1498472	Connector Housing	1
10	1498496	Seal	4
10	1498419	Terminal	4
11	. . . . .	Connector Assembly (Starter Solenoid)	1
11	1496883	Terminal	1
11	1493450	Heatshrink	1
12	. . . . .	Connector Assembly (+ VE)	1
12	1493455	Terminal (+ VE)	1
12	1496773	Sleeve	1
13	. . . . .	Connector Assembly (Fuel Pump)	1
13	1402616	Housing	1
13	1498496	Seal	2
13	1498415	Terminal	2
14	. . . . .	Connector Assembly (Cowl)	1
14	1495955	Housing	1
14	1496889	Terminal (Items 1 and 2)	2

©2003 HYSTER COMPANY

WIRE HARNESS
DUAL FUEL, GM V6
SHEET 1 OF 2
(S/N PENDING PER ECN 92210-01⇔S/N PENDING PER ECN 73766)

ITEM	PART NO.	DESCRIPTION	QTY
14	1496891	Terminal (L, M, N)	4
14	1484716	Terminal (C, D, E, G, H, J, K, L)	7

©2003 HYSTER COMPANY

NOTES

WIRE HARNESS (Figure 4-21)
DUAL FUEL, GM V6
SHEET 2 OF 2
(S/N PENDING PER ECN 92210-01⇔S/N PENDING PER ECN 73766)

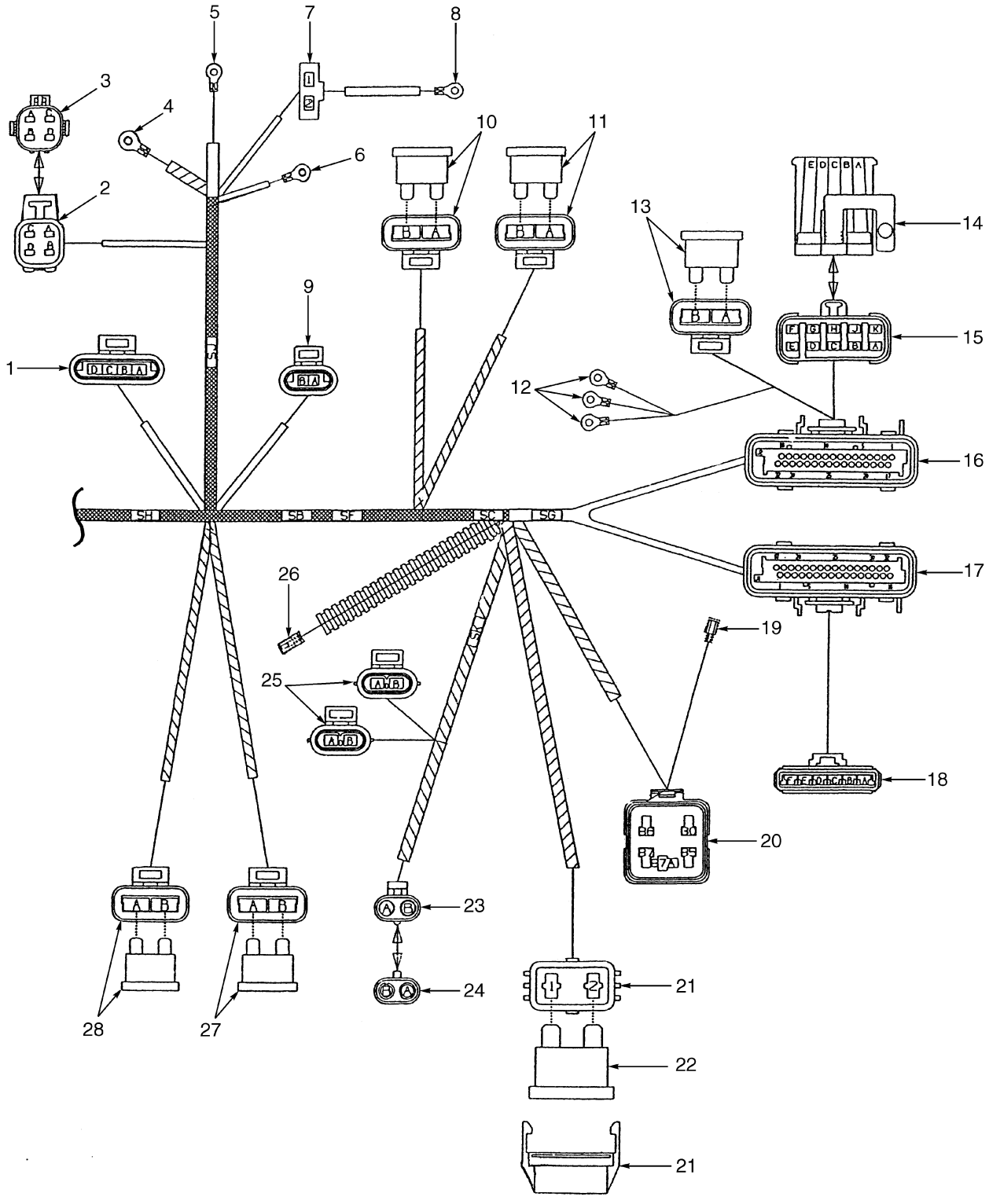

BP080077

©2003 HYSTER COMPANY

WIRE HARNESS
DUAL FUEL, GM V6
SHEET 2 OF 2
(S/N PENDING PER ECN 92210-01⇔S/N PENDING PER ECN 73766)

ITEM	PART NO.	DESCRIPTION	QTY
	2043950	Wire Harness (Engine; DF)	1
1	. . . . .	Connector Assembly (Temperature Sensor)	1
1	1493460	Housing	1
1	1493461	Terminal	2
2	. . . . .	Connector Assembly	1
2	1498468	Housing	1
2	1482664	Terminal	4
2	1498492	Seal	4
3	. . . . .	Connector Assembly	1
3	1498424	Housing	1
3	1498498	Seal	4
4	. . . . .	Connector Assembly (- VE)	1
4	1493455	Terminal	1
4	1496773	Sleeve	1
5	. . . . .	Connector Assembly (Alternator -)	1
5	1493458	Fitting	1
5	1484383	Heat Shrink Tube	1
6	. . . . .	Connector Assembly (Alternator +)	1
6	1493457	Fitting	1
6	1484383	Heat Shrink Tube	2
7	. . . . .	Connector Assembly (Alternator)	1
7	1493469	Housing	1
7	1484375	Terminal	2
8	1497229	Terminal	1
8	1484383	Heat Shrink Tube	1
9	. . . . .	Connector Assembly (Temperature Sensor)	1
9	1493460	Housing	1
9	1493461	Terminal	2
10	. . . . .	Connector Assembly	1
10	1498425	Housing	1
10	1498412	Terminal	1
10	370647	Fuse (10 Amp)	1
11	. . . . .	Connector Assembly	1
11	1498425	Housing	1
11	1498412	Terminal	1
11	370647	Fuse (10 Amp)	1
12	. . . . .	Connector Assembly (LPG/Gas Switch)	3
12	1497229	Terminal	3
12	1484383	Heat Shrink Tube	3
12	370647	Fuse (10 Amp)	1
13	. . . . .	Connector Assembly	1
13	1498425	Housing	1
13	1498412	Terminal	2
13	370647	Fuse (10 Amp)	1
14	. . . . .	Connector Assembly (Mating Half)	1
14	1498428	Housing	1
14	1402907	Lock	1
14	1498498	Seal	1
14	1498421	Clip	1

©2003 HYSTER COMPANY

WIRE HARNESS
DUAL FUEL, GM V6
SHEET 2 OF 2
(S/N PENDING PER ECN 92210-01⇔S/N PENDING PER ECN 73766)

ITEM	PART NO.	DESCRIPTION	QTY
15	. . . . .	Connector Assembly (Comms Port)	1
15	1498427	Housing	1
15	1402907	Lock	1
15	1482664	Terminal (Items A, B, F, G)	4
15	1498492	Seal	4
15	1498498	Seal	6
16	. . . . .	Connector Assembly (J2, EFI/ECM)	1
16	1498462	Retainer	1
16	1498487	Strain Relief	1
16	1498451	Insert	1
16	1498495	Seal	1
16	1484710	Terminal	12
16	1352105	Plug	20
17	. . . . .	Connector Assembly (J1, EFI/ECM)	1
17	1500963	Retainer	1
17	1498488	Strain Relief	1
17	1498451	Insert	1
17	1498495	Seal	1
17	1484710	Terminal	16
17	1352105	Plug	16
18	. . . . .	Connector Assembly (Governor)	1
18	1498463	Housing	1
18	1498486	Lock	1
18	1498414	Terminal	5
18	1498496	Seal	5
19	. . . . .	Connector Assembly (Fuel Pump)	1
19	1497264	Terminal	1
19	1497274	Boot	4
20	. . . . .	Connector Assembly (Fuel Pump Relay)	1
20	1498469	Relay Base	1
20	1498483	Sealant	1
20	1402912	Terminal	5
20	1498415	Terminal	5

See Service Manual for service procedures.
©2003 HYSTER COMPANY

NOTES

WIRE HARNESS (Figure 4-22)
DUAL FUEL, GM V6
SHEET 1 OF 2
(S/N PENDING PER ECN 73766⇔S/N PENDING PER ECN 73891-01)

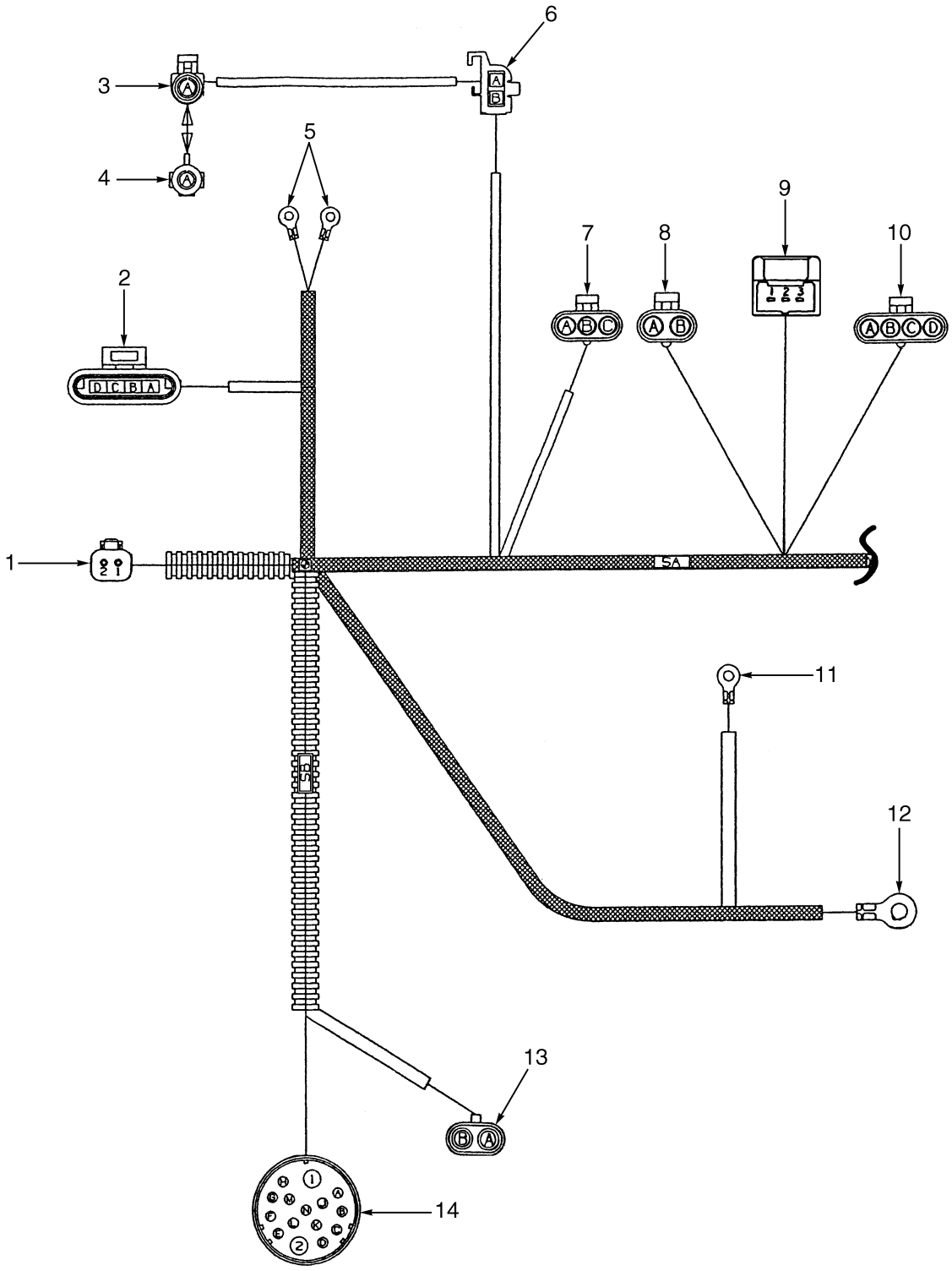

©2003 HYSTER COMPANY

WIRE HARNESS
DUAL FUEL, GM V6
SHEET 1 OF 2
(S/N PENDING PER ECN 73766⇔S/N PENDING PER ECN 73891-01)

ITEM	PART NO.	DESCRIPTION	QTY
	2047712	Wire Harness (Engine; DF)	1
1	. . . . .	Connector Assembly	1
1	1484361	Housing (Socket)	1
1	1330424	Lock	1
1	1330438	Socket	2
2	. . . . .	Connector Assembly	1
2	1498478	Housing	1
2	1493461	Terminal	4
3	. . . . .	Connector Assembly (Tachometer)	1
3	1498473	Housing	1
3	1498419	Terminal	1
3	1498496	Seal	1
4	. . . . .	Connector Assembly (Mating Half, Item 3)	1
4	1498476	Connector Housing	1
4	1402857	Plug	1
5	. . . . .	Connector Assembly (Engine Oil Pressure Sender)	2
5	1496883	Terminal	2
5	1493450	Heatshrink	2
6	. . . . .	Connector Assembly (Coil)	1
6	1498470	Connector Housing	2
7	. . . . .	Connector Assembly (Map Sensor)	1
7	1327958	Housing	1
7	1498415	Terminal	3
7	1498496	Seal	3
8	. . . . .	Connector Assembly (Governor)	1
8	1498474	Housing	1
8	1498496	Seal	2
8	1498419	Terminal	2
9	. . . . .	Connector Assembly (Throttle Position Sensor)	1
9	1496777	Housing	1
9	1493436	Terminal	3
9	1479109	Seal	3
10	. . . . .	Connector Assembly (Injectors)	1
10	1498472	Connector Housing	1
10	1498496	Seal	4
10	1498419	Terminal	4
11	. . . . .	Connector Assembly (Start Solenoid)	1
11	1496883	Terminal	1
11	1493450	Heatshrink	1
12	. . . . .	Connector Assembly (TVE)	1
12	1493455	Terminal	1
12	1496773	Sleeve	1
13	. . . . .	Connector Assembly (Fuel Pump)	1
13	1402816	Clip	1
13	1498496	Seal	2
13	1498415	Terminal	2
14	. . . . .	Connector Assembly (Cowl)	1
14	1495955	Housing	1
14	1496889	Terminal (Item 1 and 2)	2

©2003 HYSTER COMPANY

WIRE HARNESS
DUAL FUEL, GM V6
SHEET 1 OF 2
(S/N PENDING PER ECN 73766⇔S/N PENDING PER ECN 73891-01)

ITEM	PART NO.	DESCRIPTION	QTY
14	1496891	Terminal (A, L, M, N)	4
14	1484716	Terminal	7

©2003 HYSTER COMPANY

NOTES

WIRE HARNESS (Figure 4-23)
DUAL FUEL, GM V6
SHEET 2 OF 2
(S/N PENDING PER ECN 73766⇔S/N PENDING PER ECN 73891-01)

©2003 HYSTER COMPANY

WIRE HARNESS
DUAL FUEL, GM V6
SHEET 2 OF 2
(S/N PENDING PER ECN 73766⇔S/N PENDING PER ECN 73891-01)

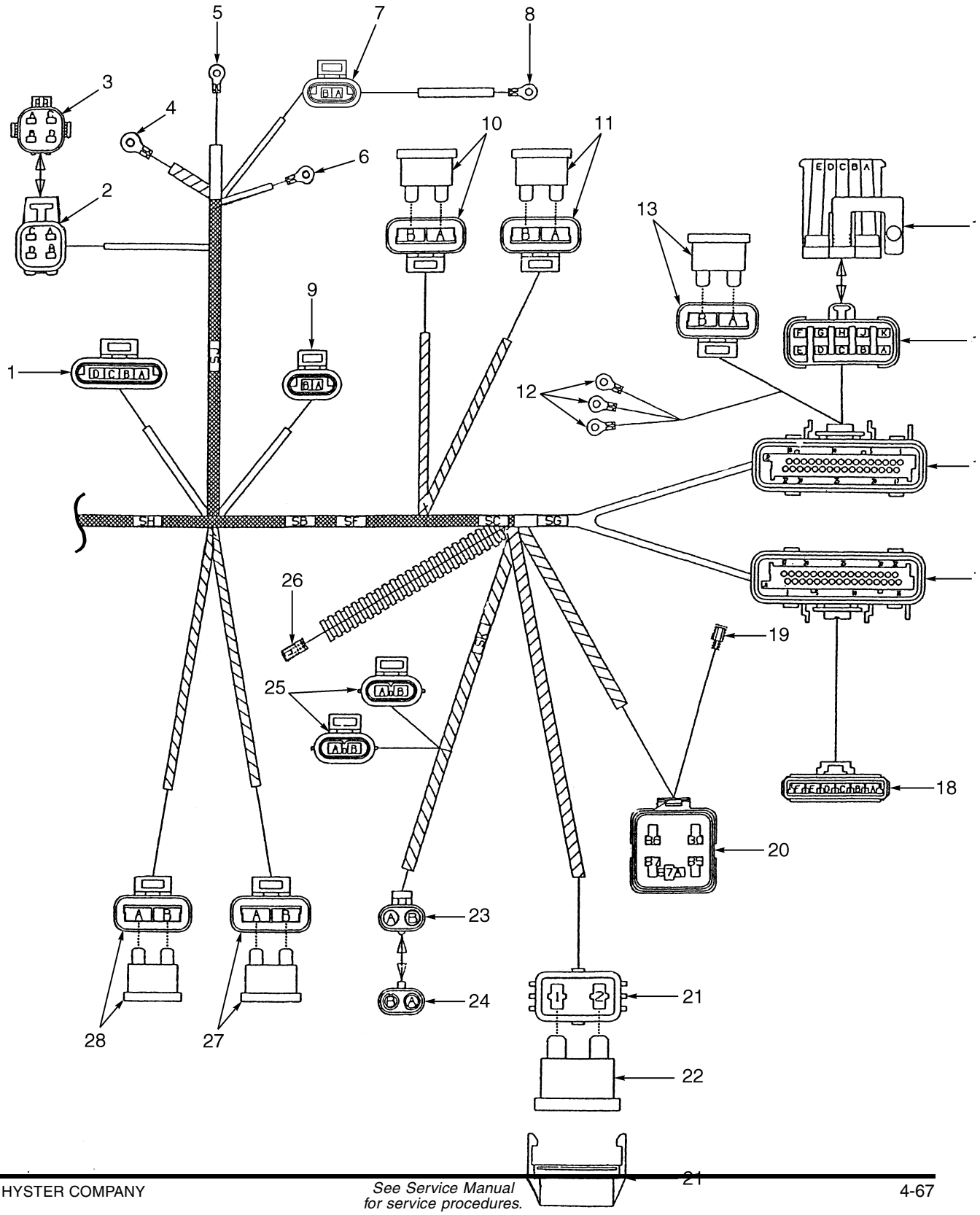

WIRE HARNESS
DUAL FUEL, GM V6
SHEET 2 OF 2
(S/N PENDING PER ECN 73766⇔S/N PENDING PER ECN 73891-01)

ITEM	PART NO.	DESCRIPTION	QTY
	2047712	Wire Harness (Engine; DF)	1
1	. . . . .	Connector Assembly (IAC)	1
1	1498478	Housing	1
1	1493461	Terminal	4
2	. . . . .	Connector Assembly (Oxygen Sensor)	1
2	1482664	Terminal	4
2	1498492	Seal	4
3	. . . . .	Connector Assembly (Mating Half, Item 2)	1
3	1498424	Housing	1
3	1498498	Seal	4
4	. . . . .	Connector Assembly (- VE)	1
4	1493455	Terminal	1
4	1496773	Sleeve	1
5	. . . . .	Connector Assembly (Alternator -)	1
5	1497229	Terminal	1
5	1484383	Heat Shrink Tube	1
6	. . . . .	Connector Assembly (Alternator +)	1
6	1493457	Fitting	1
6	1484383	Heat Shrink Tube	1
7	. . . . .	Connector Assembly	1
7	1493460	Housing	1
7	1493461	Terminal	2
8	. . . . .	Connector Assembly	1
8	1484383	Heat Shrink Tube	1
9	. . . . .	Connector Assembly	1
9	1493460	Housing	1
9	1493461	Terminal	2
10	. . . . .	Connector Assembly (Ignition Fuse)	1
10	1498425	Housing	1
10	1498412	Terminal	2
10	370647	Fuse (10 Amp)	1
11	. . . . .	Connector Assembly (EFI/ECM)	1
11	1498425	Housing	1
11	1498412	Terminal	2
11	370647	Fuse (10 Amp)	1
12	. . . . .	Connector Assembly (LPG/CAS SW)	3
12	1497229	Terminal	3
12	1484383	Heat Shrink Tube	3
13	. . . . .	Connector Assembly (LPG Valve)	1
13	1498425	Housing	1
13	1498412	Terminal	2
13	370647	Fuse (10 Amp)	1
14	. . . . .	Connector Assembly (Mating Half)	1
14	1498428	Housing	1
14	1402907	Lock	1
14	1498498	Seal	10
14	1498421	Clip	1
15	. . . . .	Connector Assembly (Comms Port)	1
15	1498427	Housing	1

©2003 HYSTER COMPANY

WIRE HARNESS
DUAL FUEL, GM V6
SHEET 2 OF 2
(S/N PENDING PER ECN 73766⇔S/N PENDING PER ECN 73891-01)

ITEM	PART NO.	DESCRIPTION	QTY
15	1402907	Lock	1
15	1482664	Terminal (A, B, F, G)	4
15	1498492	Seal (A, B, F, G)	4
15	1498498	Seal (C, D, E, H, J, K)	6
16	. . . . .	Connector Assembly (J2, EFI, ECM)	1
16	1498462	Retainer	1
16	1498487	Strain Relief	1
16	1498451	Insert	1
16	1498495	Seal	1
16	1484710	Terminal	12
16	1352105	Plug	20
17	. . . . .	Connector Assembly (J1, EFI, ECM)	1
17	1500963	Retainer	1
17	1498488	Strain Relief	1
17	1498451	Insert	1
17	1498495	Seal	1
17	1484710	Terminal	16
17	1352105	Plug	16
18	. . . . .	Connector Assembly (Governor Amplifier)	1
18	1498463	Housing	1
18	1498486	Lock	1
18	1498414	Terminal	5
18	1498496	Seal	5
18	1402857	Plug	1
19	. . . . .	Connector Assembly	1
19	1497264	Terminal	1
19	1497274	Boot	1
20	. . . . .	Connector Assembly (Fuel Relay Pump)	1
20	1498469	Relay Base	1
20	1498483	Sealant	1
20	1402912	Terminal	5
20	1498496	Seal	5
21	. . . . .	Connector Assembly	1
21	1497234	Fuse Holder	1
21	1497232	Terminal	2
21	1497233	Seal	2
22	1454829	Fuse (60 Amp)	1
23	. . . . .	Connector Assembly (Converter)	1
23	1498474	Housing	1
23	1498496	Seal	2
23	1498419	Terminal	2
24	. . . . .	Connector Assembly (Mating Half, Item 23)	1
24	1498422	Connector Housing	1
24	1498474	Housing	2
25	. . . . .	Connector Assembly (LPB Cut-off)	2
25	1498423	Housing	1
25	1498493	Retainer	1
25	1482664	Terminal	2
25	1498492	Seal	2

©2003 HYSTER COMPANY

WIRE HARNESS
DUAL FUEL, GM V6
SHEET 2 OF 2
(S/N PENDING PER ECN 73766⇔S/N PENDING PER ECN 73891-01)

ITEM	PART NO.	DESCRIPTION	QTY
26	. . . . .	Connector Assembly (TEP Sensor)	1
26	1493441	Housing	1
26	1484375	Terminal	1
27	. . . . .	Connector Assembly (Fuel Pump)	1
27	1498425	Housing	1
27	1498412	Terminal	2
27	370647	Fuse (10 Amp)	1
28	. . . . .	Connector Assembly (Injector)	1
29	1498425	Housing	1
29	1498412	Terminal	2
29	370647	Fuse (10 Amp)	1

©2003 HYSTER COMPANY

NOTES

WIRE HARNESS (Figure 4-24)
ENGINE, GM V6, 4.3L
SHEET 1 OF 2
(⇒S/N PENDING PER ECN 92210-01)

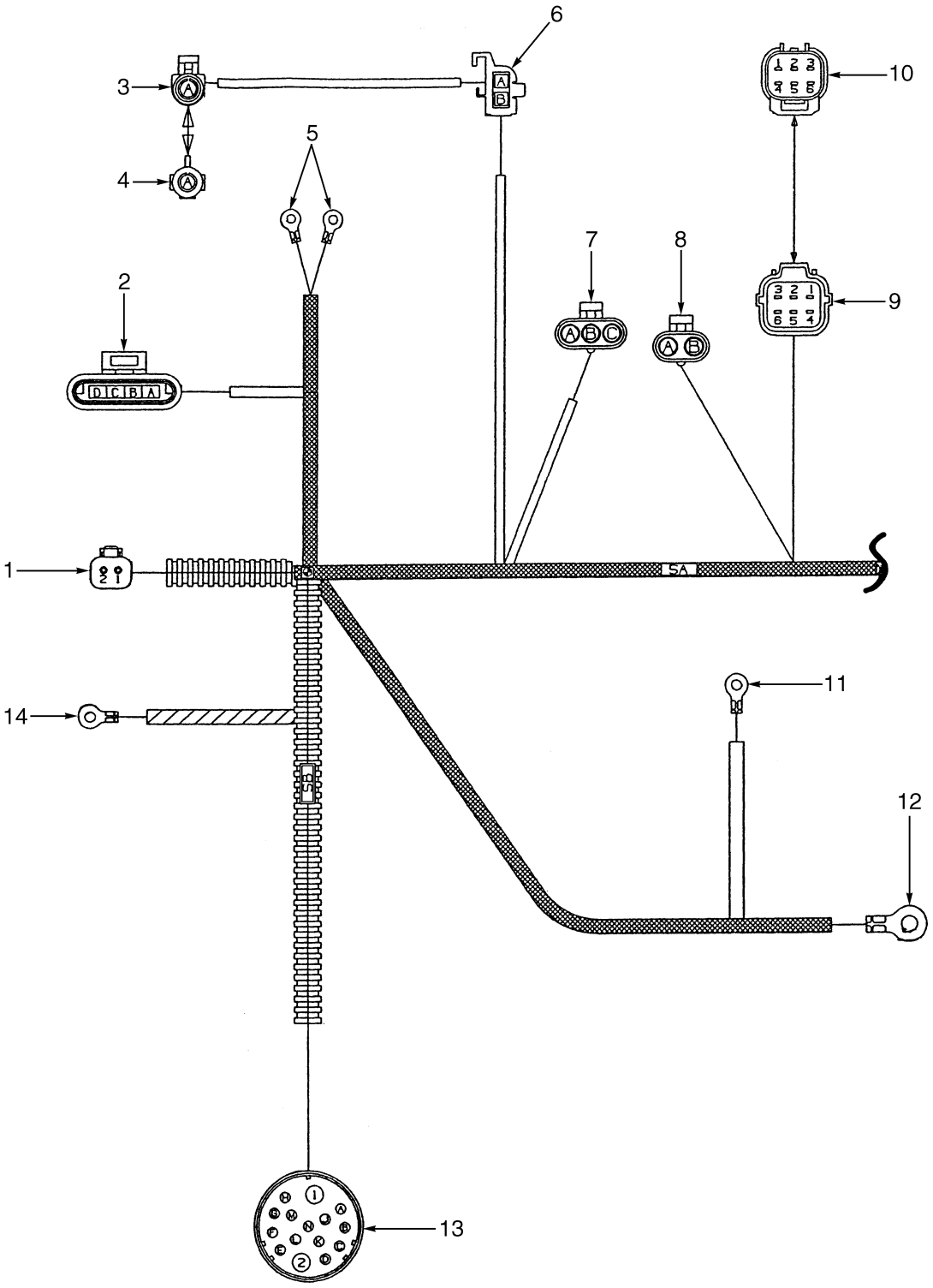

©2003 HYSTER COMPANY

WIRE HARNESS
ENGINE, GM V6, 4.3L
SHEET 1 OF 2
(⇒S/N PENDING PER ECN 92210-01)

ITEM	PART NO.	DESCRIPTION	QTY
	2035689	Wire Harness (Engine,Conversion, Gas to LPG, GM 4.3L)	1
1	. . . . .	Connector Assembly (Seat Switch)	1
1	1484361	Housing (Socket)	1
1	1330424	Lock	1
1	1330438	Socket	2
2	. . . . .	Connector Assembly (Distributor)	1
2	1498478	Housing	1
2	1493461	Terminal	4
3	. . . . .	Connector Assembly (Tachometer)	1
3	1498473	Housing	1
3	1498419	Terminal	1
3	1498496	Seal	1
4	. . . . .	Connector Assembly	1
4	1498476	Connector Housing	1
4	1402857	Plug	1
5	1496883	Terminal	2
5	1496775	Sleeve	2
6	. . . . .	Connector Assembly (Coil)	1
6	1498470	Connector Housing	1
7	. . . . .	Connector Assembly (Map Sensor)	1
7	1327958	Housing	1
7	1498415	Terminal	3
7	1498496	Seal	3
8	. . . . .	Connector Assembly (Governor)	1
8	1498474	Housing	1
8	1498496	Seal	2
8	1498419	Terminal	2
9	. . . . .	Connector Assembly (Closed Loop Option)	1
9	1497296	Housing	1
9	1497304	Retainer	1
9	1484656	Terminal (Socket)	5
9	1484597	Seal	5
9	1484611	Seal	1
10	. . . . .	Connector Assembly	1
10	1497291	Connector Housing	1
10	1484611	Seal	6
11	1496883	Terminal (Starter Solenoid)	1
11	1496775	Sleeve	1
12	1493455	Terminal (TVE)	1
12	1493450	Heatshrink	1
13	. . . . .	Connector Assembly (Cowl)	1
13	1495955	Housing	1
13	1496889	Terminal (Items 1 and 2)	2
13	1496891	Terminal (A, E, L, M, N)	5
13	1484716	Terminal (C, D, G, H, J, K)	6
14	1493455	Terminal (- VE)	1
14	1493450	Heatshrink	1

©2003 HYSTER COMPANY

WIRE HARNESS (Figure 4-25)
ENGINE, GM V6, 4.3L
SHEET 2 OF 2
(⇒S/N PENDING PER ECN 92210-01)

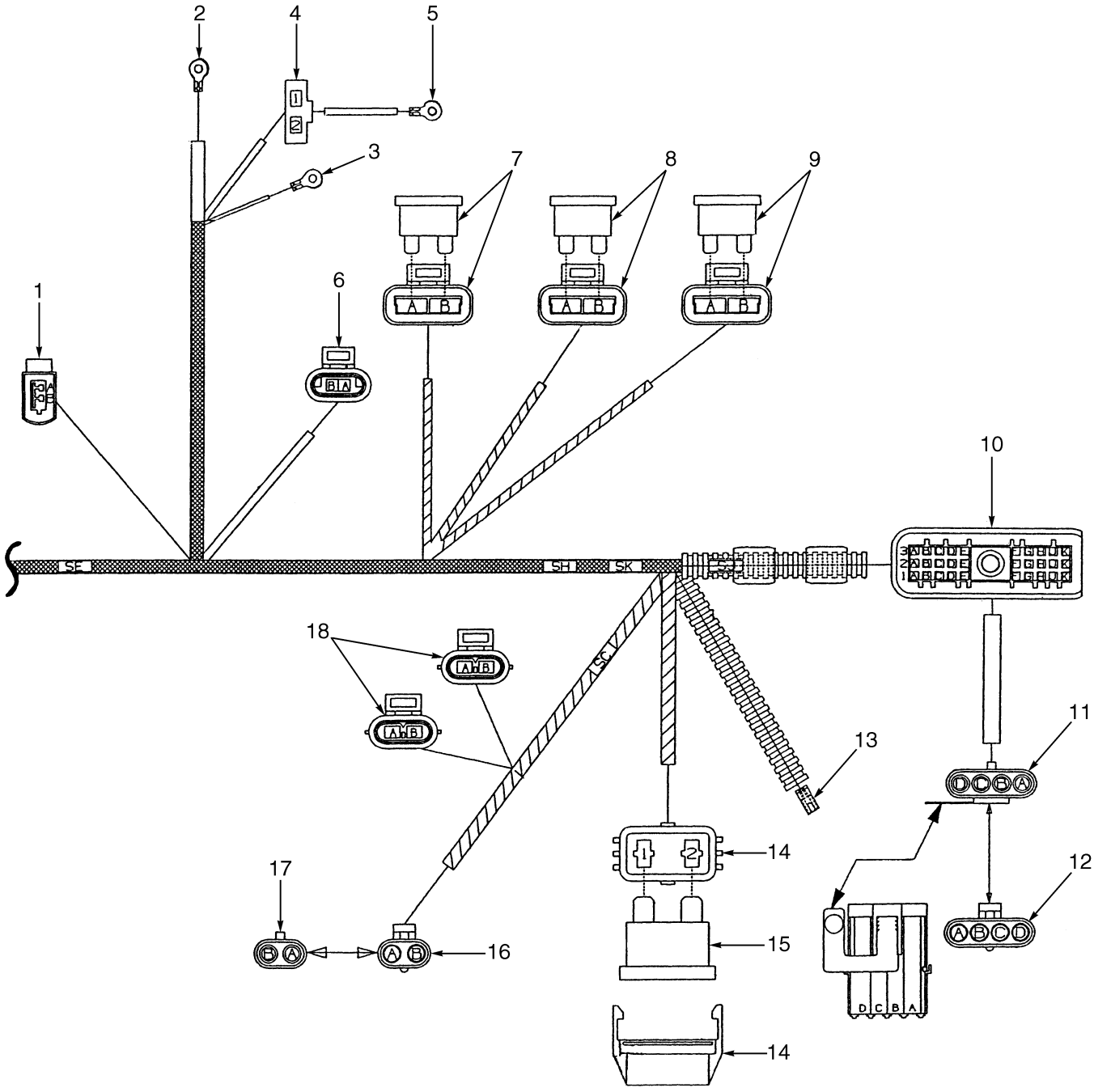

©2003 HYSTER COMPANY

WIRE HARNESS
ENGINE, GM V6, 4.3L
SHEET 2 OF 2
(⇒S/N PENDING PER ECN 92210-01)

ITEM	PART NO.	DESCRIPTION	QTY
	2035689	Wire Harness (Engine,Conversion, Gas to LPG, GM 4.3L)	1
1	. . . . .	Connector Assembly (IAC)	1
1	1496785	Housing	1
1	1496786	Spacer	1
1	1496784	Terminal	2
2	1493458	Fitting (Alternator)	1
2	1496775	Sleeve	1
3	1493457	Fitting (+ Alternator)	1
3	1493450	Heatshrink	1
4	. . . . .	Connector Assembly (Alternator)	1
4	1493469	Housing	1
4	1498413	Terminal	2
5	1497229	Terminal	1
5	1496775	Sleeve	1
6	. . . . .	Connector Assembly (Temperature Sensor)	1
6	1493460	Housing	1
6	1493461	Terminal	2
7	. . . . .	Connector Assembly (Ignition)	1
7	1498425	Housing	1
7	1498412	Terminal	2
7	370647	Fuse (10 Amp)	1
8	. . . . .	Connector Assembly (Battery)	1
8	1498425	Housing	1
8	1498412	Terminal	2
8	370647	Fuse (10 Amp)	1
9	. . . . .	Connector Assembly (B +)	1
9	1498425	Housing	1
9	1498412	Terminal	2
9	1378661	Fuse	1
10	. . . . .	Connector Assembly (ECU)	1
10	1504883	Housing	1
10	1493461	Terminal	23
10	1402866	Seal	7
11	. . . . .	Connector Assembly (Comms Port)	1
11	1498477	Housing	1
11	1498496	Seal	4
11	1498415	Terminal	4
12	. . . . .	Connector Assembly	1
12	1498472	Connector Housing	1
12	1402857	Plug	4
13	1493441	Housing (Temperature Sensor)	1
13	1498413	Terminal	1
14	. . . . .	Connector Assembly (Alternator)	1
14	1497234	Fuse Holder	1
14	1497232	Terminal	2
14	1497233	Seal	2
15	1454829	Fuse (60 Amp)	1
16	. . . . .	Connector Assembly	1
16	1498476	Connector Housing (Convertor)	1

©2003 HYSTER COMPANY

WIRE HARNESS
ENGINE, GM V6, 4.3L
SHEET 2 OF 2
(⇒S/N PENDING PER ECN 92210-01)

ITEM	PART NO.	DESCRIPTION	QTY
16	1498496	Seal	2
16	1498419	Terminal	2
17	1498422	Connector Housing	1
18	. . . . .	Connector Assembly (Cut Off Solenoids)	2
18	1498423	Housing	1
18	1498493	Retainer	1
18	1498492	Seal	2
18	1482664	Terminal	2

©2003 HYSTER COMPANY

WIRE HARNESS (Figure 4-26)
LPG SWITCH

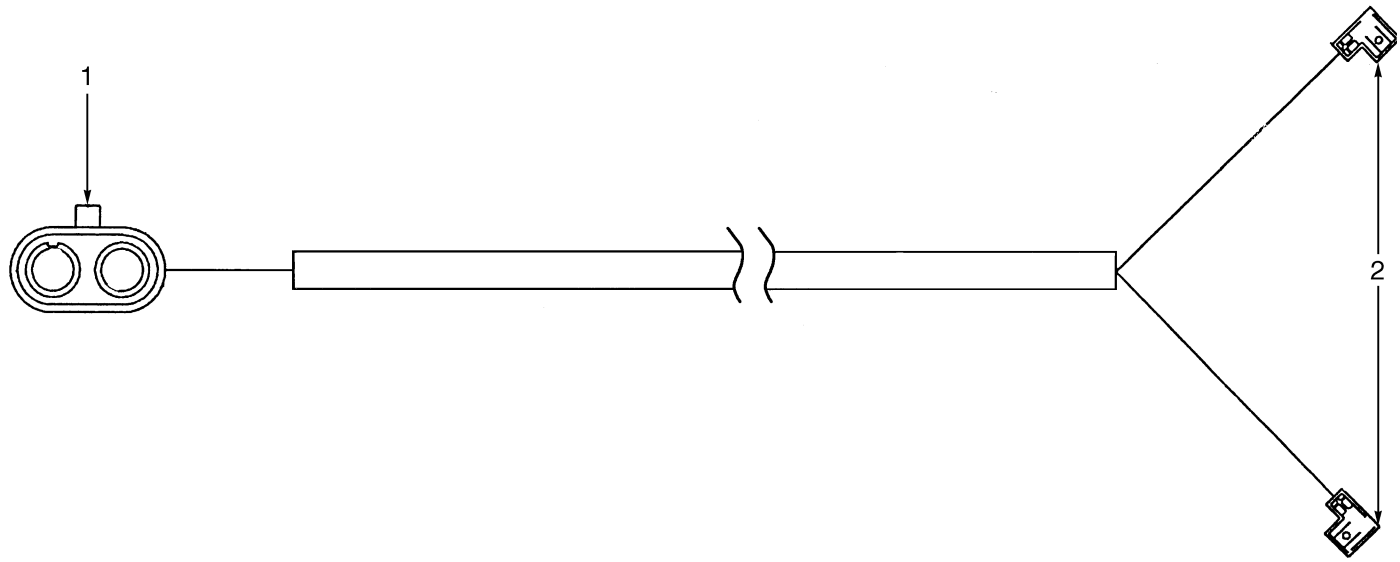

ITEM	PART NO.	DESCRIPTION	QTY
	2036542	Wire Harness (LPG Switch)	1
1	1498422	Connector Housing	1
1	1498415	Terminal	2
1	1498496	Seal	2
2	367540	Fitting	2

WIRE HARNESS (Figure 4-27)
TYPE S
GAS AND LPG
(S/N PENDING PER ECN 73766⇒)

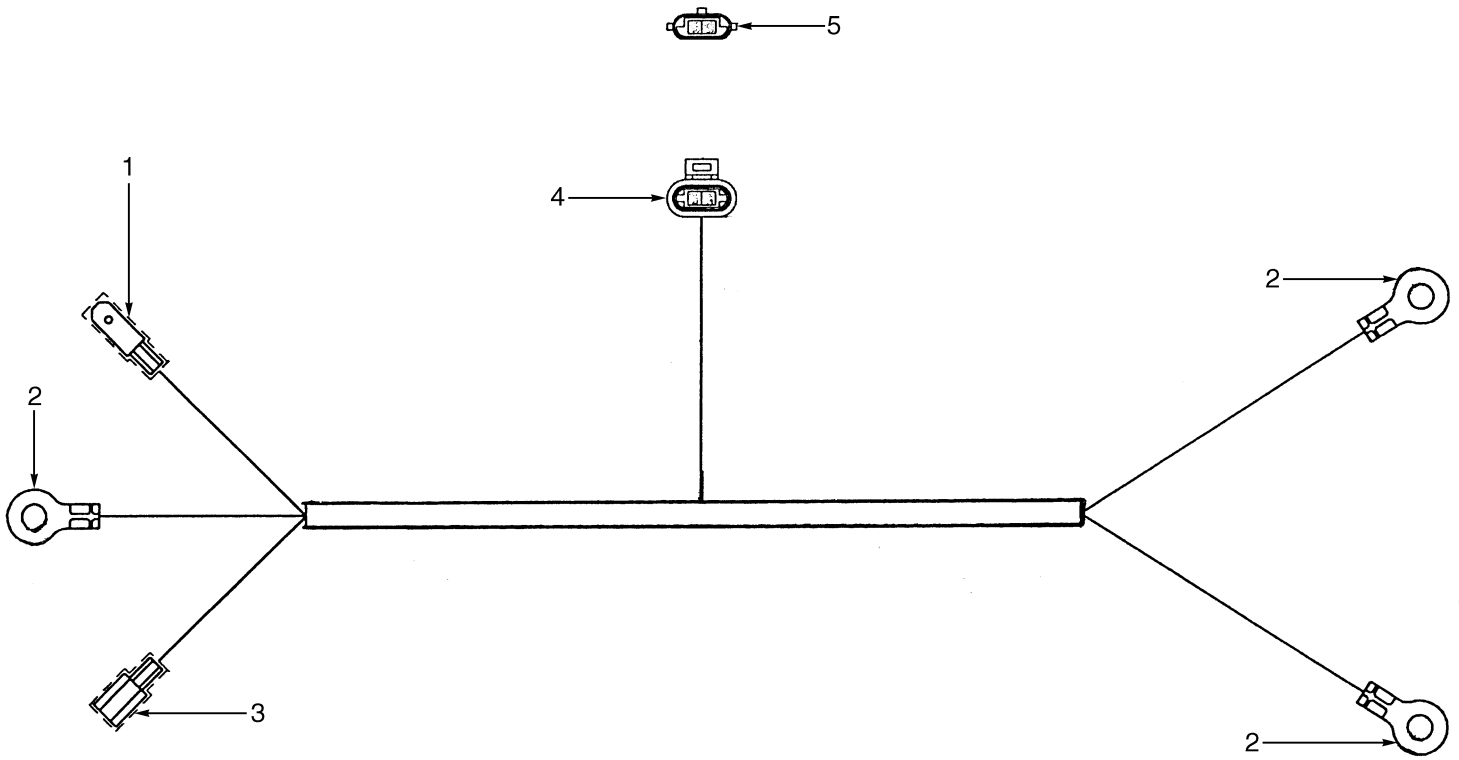

BP080059

ITEM	PART NO.	DESCRIPTION	QTY
	2047579	Harness	1
1	1499234	Terminal	1
1	1498479	Housing	1
2	1524397	Terminal	3
2	1493442	Boot	3
3	1498413	Terminal	1
3	1524398	Housing	1
4	1493460	Housing	1
4	1323576	Terminal	2
5	1508243	Adapter	1

©2003 HYSTER COMPANY

WIRE HARNESS (Figure 4-28)
CLOSED LOOP
(⇒S/N PENDING PER ECN 70700-65)

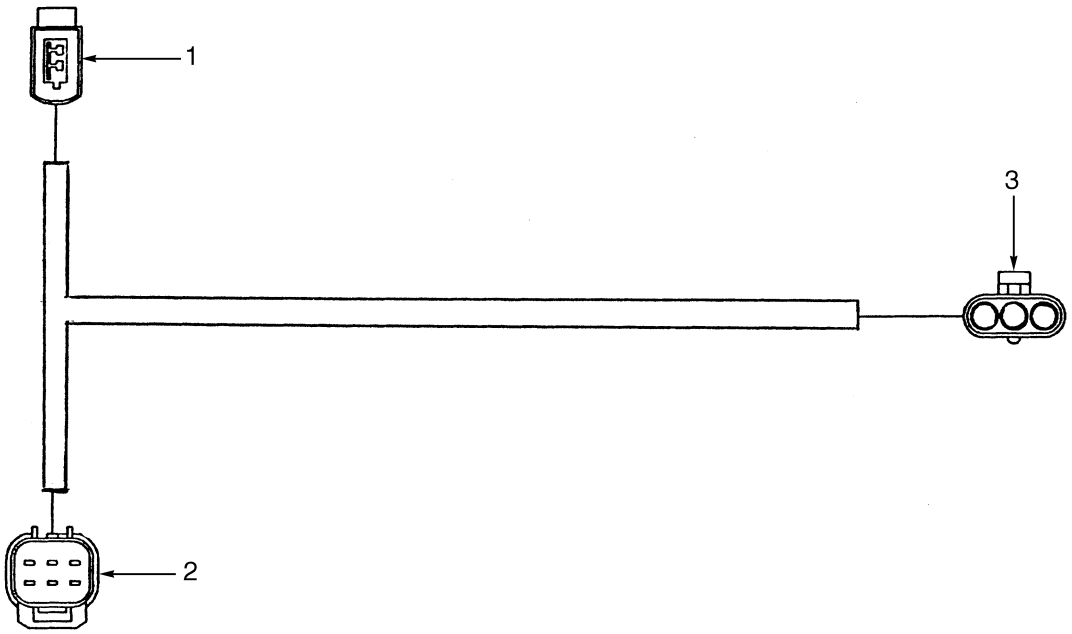

BP080054

ITEM	PART NO.	DESCRIPTION	QTY
	2036543	Harness	1
1	1496785	Housing	1
1	1496786	Spacer	1
1	1496784	Terminal	2
2	1497291	Connector Housing	1
2	1497305	Retainer	1
2	1484597	Seal	5
2	1484596	Terminal (Pin)	5
2	1484611	Seal	1
3	1498475	Housing	1
3	1498496	Seal	3
3	1498419	Terminal	3

©2003 HYSTER COMPANY

WIRE HARNESS (Figure 4-29)
DIESEL
(⇒S/N PENDING PER ECN 73766)

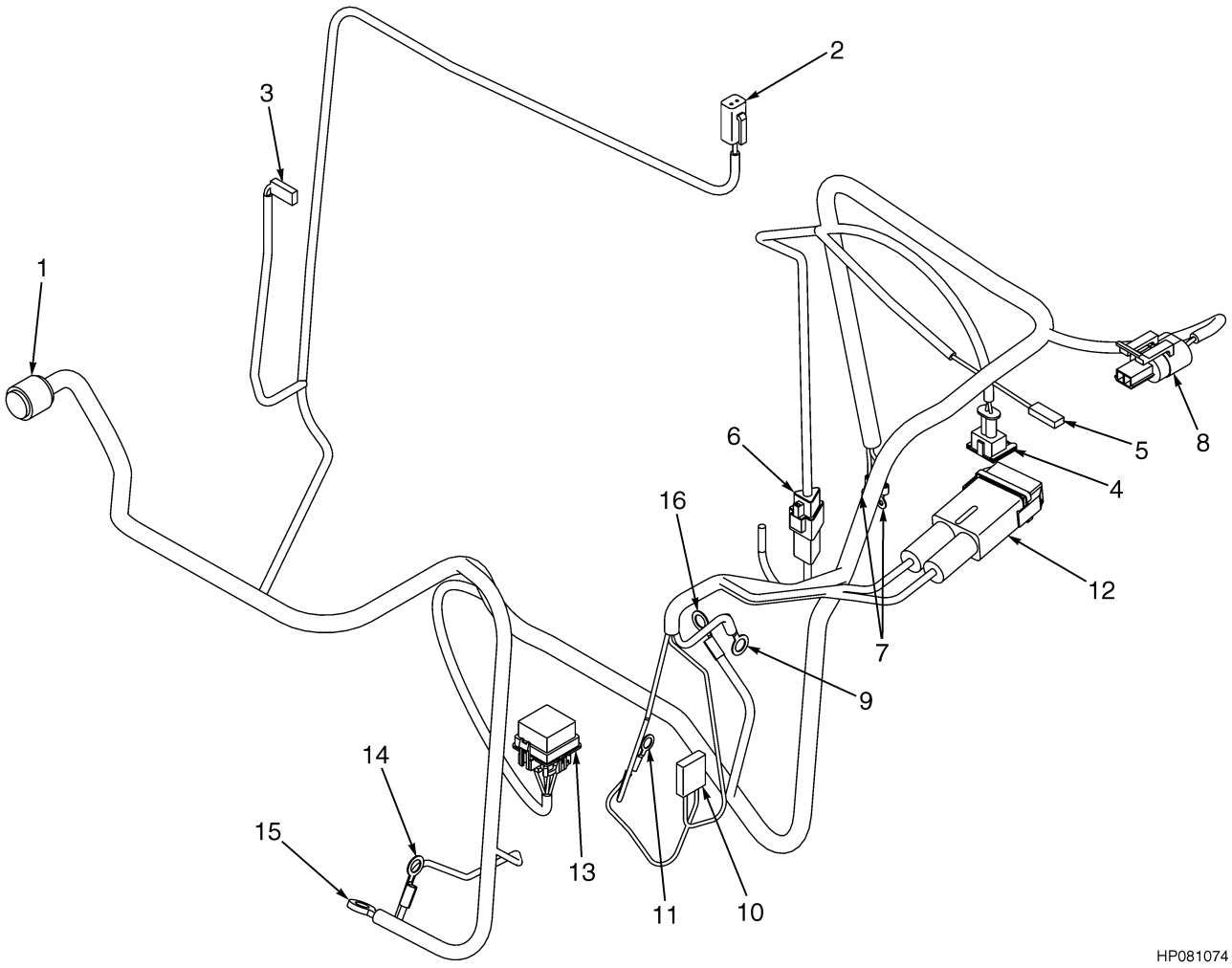

©2003 HYSTER COMPANY

WIRE HARNESS
DIESEL
(⇒S/N PENDING PER ECN 73766)

ITEM	PART NO.	DESCRIPTION	QTY
	2036928	Wire Harness (Engine)	1
1	1475546	Connector Kit (Bulkhead)	1
2	1475551	Connector Kit (2 Pin)	1
3	1475620	Pin Kit (Thermostat)	1
4	1475610	Connector Kit (2 Pin)	1
5	1475621	Connector Kit	1
6	1475608	Plug Kit	1
7	1475558	Ring Terminal Kit	1
8	1475622	Connector Kit (2 Pin)	1
9	1475574	Ring Terminal Kit	1
10	1475572	Connector Kit (Alternator)	1
11	1475573	Ring Terminal Kit (Ground)	1
12	1475559	Fuse Kit	1
13	1475578	Connector Kit (Distributer)	1
14	1475550	Ring Terminal Kit	1
15	1475549	Ring Terminal Kit	1
16	1475548	Ring Terminal Kit	1

©2003 HYSTER COMPANY

WIRE HARNESS (Figure 4-30)
DIESEL
(S/N PENDING PER ECN 73766⇒)

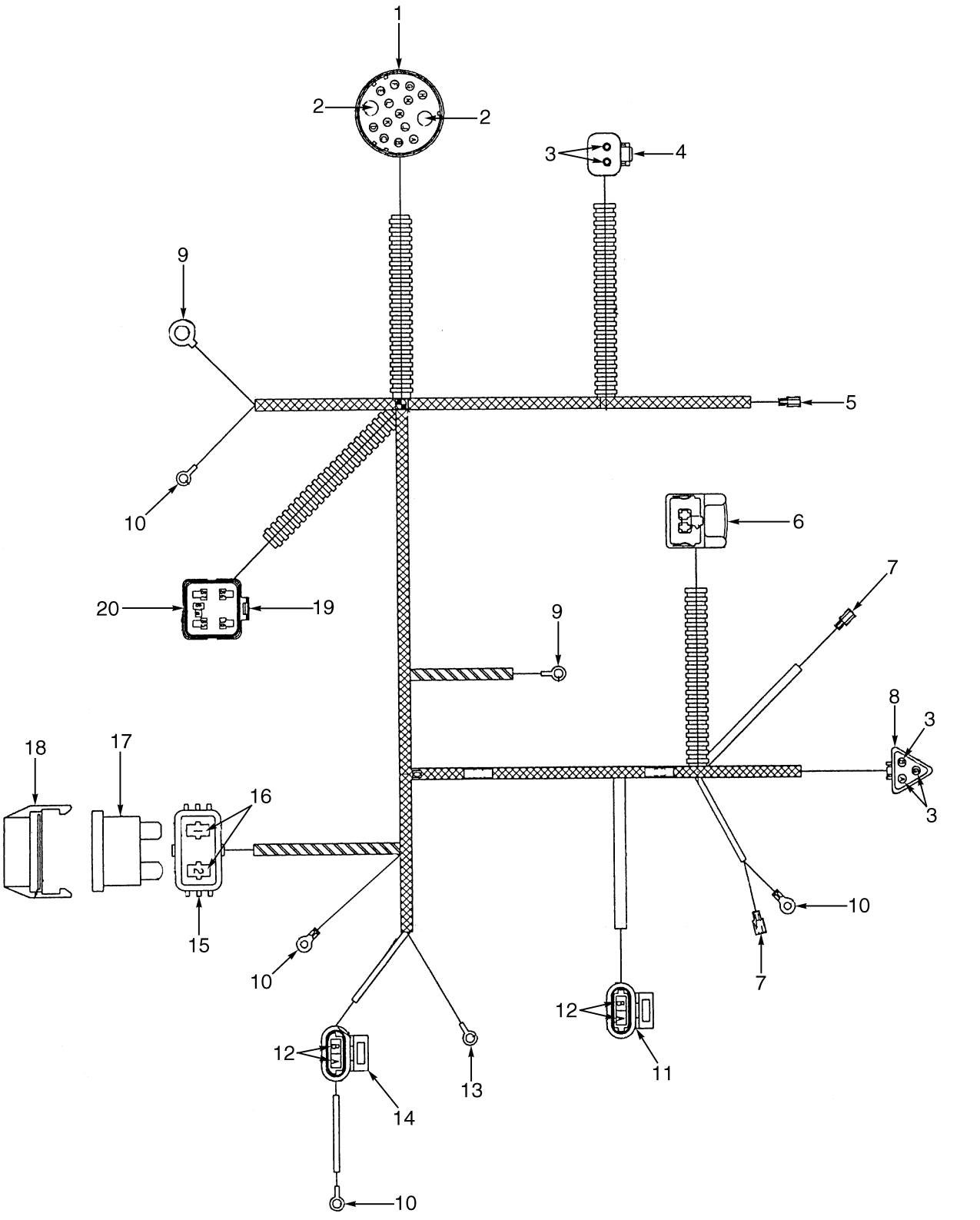

©2003 HYSTER COMPANY

WIRE HARNESS
DIESEL
(S/N PENDING PER ECN 73766⇒)

ITEM	PART NO.	DESCRIPTION	QTY
	2047711	Wire Harness (Engine)	1
1	1495955	Housing	1
1	1496891	Terminal	11
2	1496889	Terminal	2
3	1330438	Socket	5
4	1484361	Housing (Socket)	1
5	399487	Terminal	1
6	1493435	Socket	1
6	1489107	Terminal	2
6	1479109	Seal	2
7	370730	Terminal	1
8	1498502	Housing	1
8	1463194	Secondary Lock	1
9	1354497	Terminal	2
10	252293	Fitting	4
11	1498471	Housing	1
12	1493461	Terminal	4
13	148614	Terminal	1
14	1493469	Housing	1
15	1497234	Fuse Holder	1
16	1402889	Terminal	2
16	1454827	Seal	2
17	1454829	Fuse (60 Amp)	1
18	1497235	Fuse Holder	1
19	1375795	Connector	1
19	1503088	Lock	1
19	1498496	Seal	4
19	1402912	Terminal	4
20	1402857	Plug	1

©2003 HYSTER COMPANY

WIRE HARNESS (Figure 4-31)
DUAL FUEL SHUT OFF

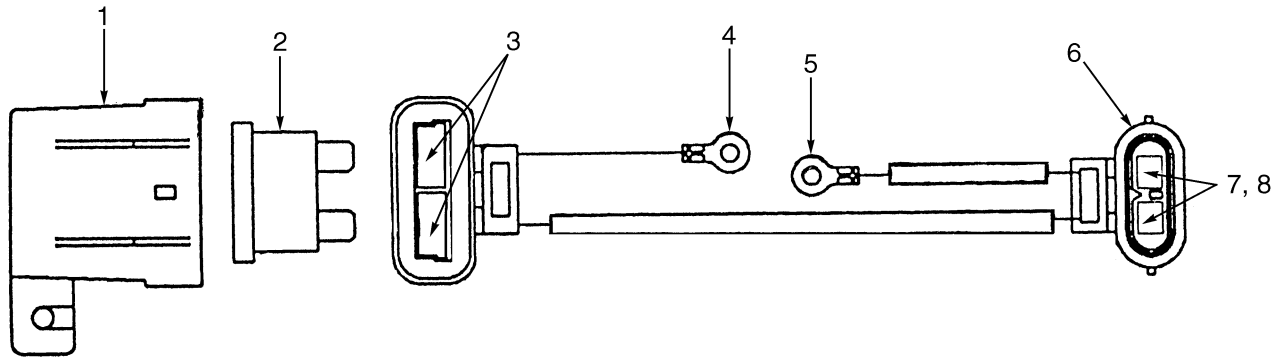

BP080052

ITEM	PART NO.	DESCRIPTION	QTY
	2038881	Harness Adapter	1
1	1330293	Cover (Fuse)	1
2	370647	Fuse (10 Amp)	1
3	1498412	Terminal	2
4	370647	Fuse (10 Amp)	1
5	1524400	Ring	1
6	1498423	Housing	1
6	1498493	Retainer	1
7	1482664	Terminal	2
8	1498492	Seal	2

©2003 HYSTER COMPANY

WIRE HARNESS (Figure 4-32)
ESOS ADAPTER
(⇒S/N PENDING PER ECN 63634-01)

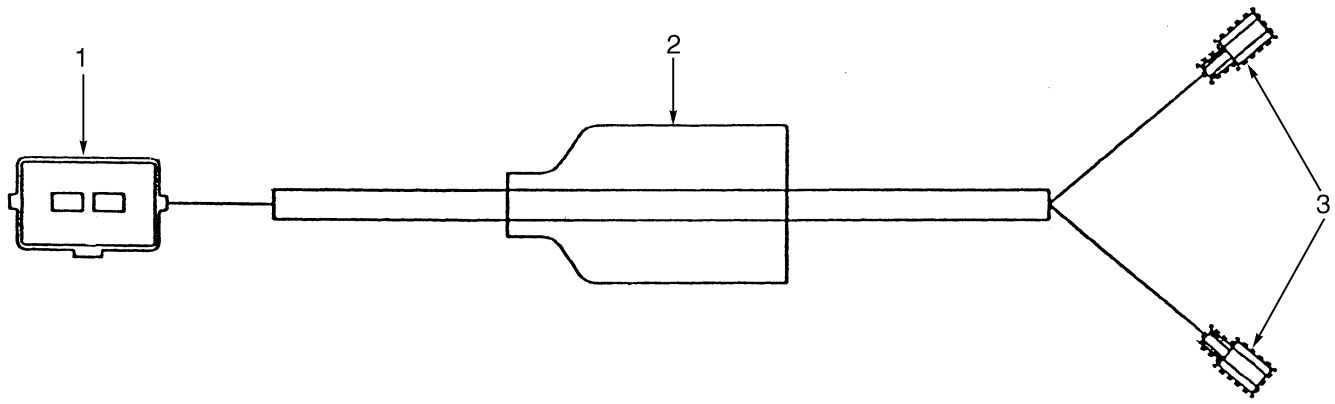

BP080056

ITEM	PART NO.	DESCRIPTION	QTY
	2042643	Wire Harness	1
1	1496782	Housing	1
1	1494864	Pin	2
1	1479109	Seal	2
2	1496783	Boot	1
3	1484396	Terminal	2
3	1497274	Boot	2

©2003 HYSTER COMPANY

WIRE HARNESS (Figure 4-33)
POWERSHIFT
SHEET 1 OF 2
(⇒S/N PENDING PER ECN 63571)

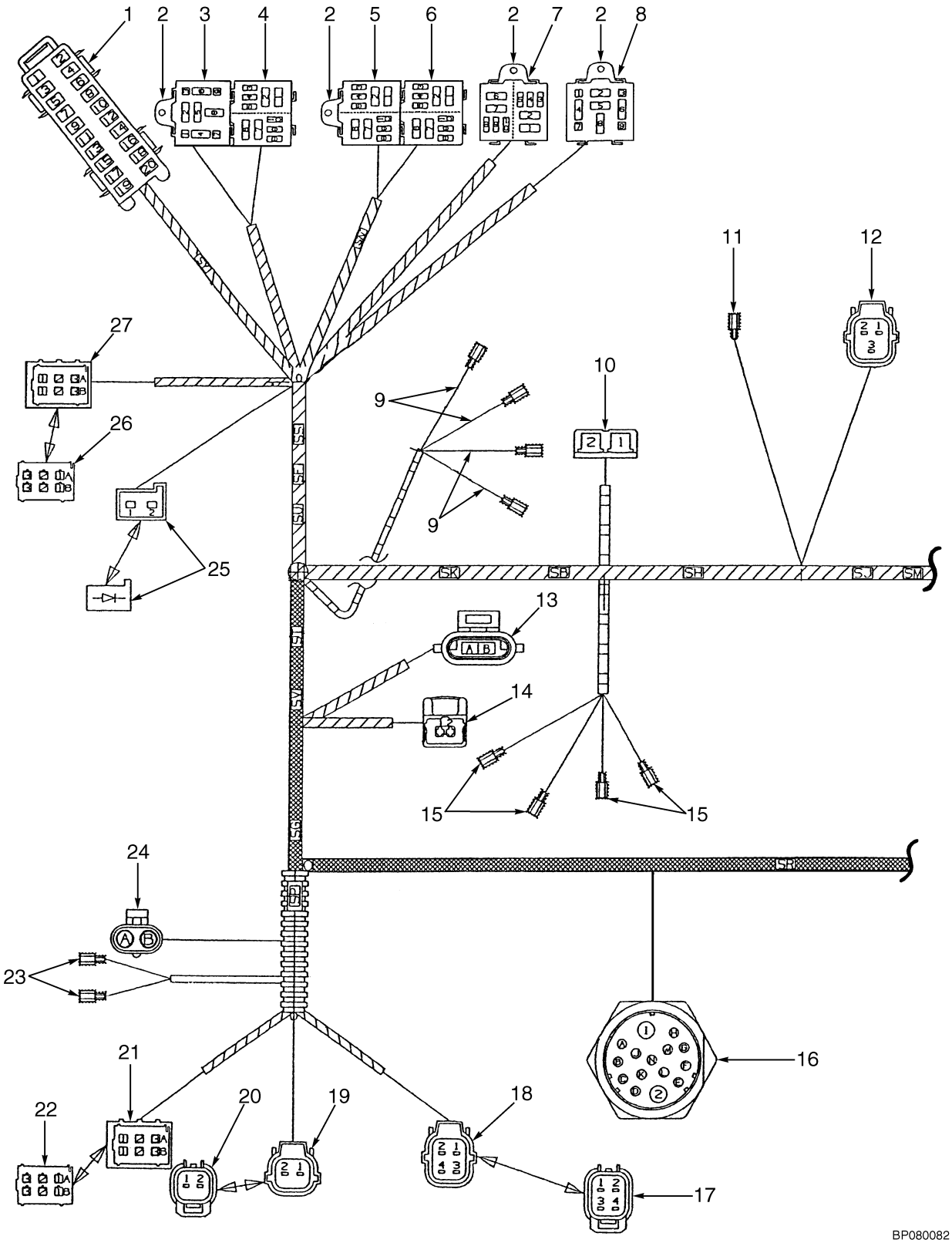

©2003 HYSTER COMPANY

WIRE HARNESS
POWERSHIFT
SHEET 1 OF 2
(⇒S/N PENDING PER ECN 63571)

ITEM	PART NO.	DESCRIPTION	QTY
	2043040	Wire Harness	1
1	. . . . .	Connector Assembly (Fuse Box)	1
1	1484681	Fuse Box (10-Way)	1
1	1484682	Secondary Lock	1
1	1496885	Terminal (Items 1, 3, 5 and 7)	4
1	1490250	Bridge Piece (2-Way) (Items 9 and 11)	2
1	1496884	Bridge Piece (Items 13, 15 and 17)	3
1	1389479	Electrical Fitting	10
1	1489957	Connector 12	1
1	370647	Fuse (10 Amp)	4
1	1320669	Fuse (30 Amp)	2
1	370648	Fuse (20 Amp)	1
1	1310630	Fuse (15 Amp)	3
2	1489956	Clip	4
3	. . . . .	Connector Assembly (Start Inhibit Relay)	1
3	1484684	Relay Base	1
3	1489957	Connector	2
3	1389479	Electrical Fitting	2
4	. . . . .	Connector Assembly (Forward Relay)	1
4	1484683	Relay Base	1
4	1489957	Connector	2
4	1484719	Terminal	2
4	1489957	Connector (Reverse Relay)	2
4	1484719	Terminal	2
5	. . . . .	Connector Assembly (Horn Relay)	1
5	1484683	Relay Base	1
5	1389479	Electrical Fitting	2
5	1484719	Terminal (Neutral Relay)	2
5	1489957	Connector	3
5	1484719	Terminal	1
6	. . . . .	Connector Assembly (Reverse Light Relay)	1
6	1484683	Relay Base	1
6	1489957	Connector	2
6	1484719	Terminal	2
6	1389479	Electrical Fitting	1
6	1489957	Connector	1
6	1484719	Terminal	2
7	. . . . .	Connector Assembly (Cab Power)	1
7	1484683	Relay Base	1
7	1389479	Electrical Fitting	2
7	1484719	Terminal	2
7	1389479	Electrical Fitting	2
7	1484719	Terminal	2
8	. . . . .	Connector Assembly (Turn Signal Relay)	1
8	1484684	Relay Base	1
8	1489957	Connector	2
8	. . . . .	Flasher	4
9	. . . . .	Connector Assembly (Park Brake Monotrol)	1
9	1497265	Housing	4

©2003 HYSTER COMPANY

WIRE HARNESS
POWERSHIFT
SHEET 1 OF 2
(⇒S/N PENDING PER ECN 63571)

ITEM	PART NO.	DESCRIPTION	QTY
9	1497262	Terminal	4
10	. . . . .	Connector Assembly (Thermostat)	1
10	1484661	Housing (Receptacle)	1
10	1484707	Terminal (56 Series)	1
10	1484375	Terminal	1
11	. . . . .	Connector Assembly (Horn Switch)	1
11	1497265	Housing	1
11	1497262	Terminal	1
12	. . . . .	Connector Assembly (Reverse Switch)	1
12	1497294	Housing	1
12	1497300	Retainer	1
12	1484656	Terminal (Socket)	3
12	1484597	Seal	3
13	. . . . .	Connector Assembly (Horn)	1
13	1402878	Connector	1
13	1498493	Retainer	1
13	1498492	Seal	2
13	1482664	Terminal	2
14	. . . . .	Connector Assembly (Brake Reservoir)	1
14	1402922	Connector	1
14	1493436	Terminal	2
14	1479109	Seal	2
15	. . . . .	Connector Assembly (Park Brake)	4
15	1497265	Housing	4
15	1497262	Terminal	4
16	. . . . .	Connector Assembly (Engine Harness)	1
16	1497228	Terminal	1
16	1496926	Terminal	2
16	1496924	Terminal	6
16	1496925	Terminal	7
17	1497290	Housing	1
17	1484611	Seal	2
18	. . . . .	Connector Assembly (Optional Lighting)	1
18	1496886	Housing	1
18	1497302	Retainer	1
18	1484656	Terminal (Socket)	4
18	1484597	Seal	4
19	. . . . .	Connector Assembly (Reverse Alarm)	1
19	1497293	Housing	1
19	1497298	Retainer	1
19	1484656	Terminal (Socket)	2
19	1484597	Seal	2

©2003 HYSTER COMPANY

NOTES

WIRE HARNESS (Figure 4-34)
POWERSHIFT
SHEET 2 OF 2
(⇒S/N PENDING PER ECN 63571)

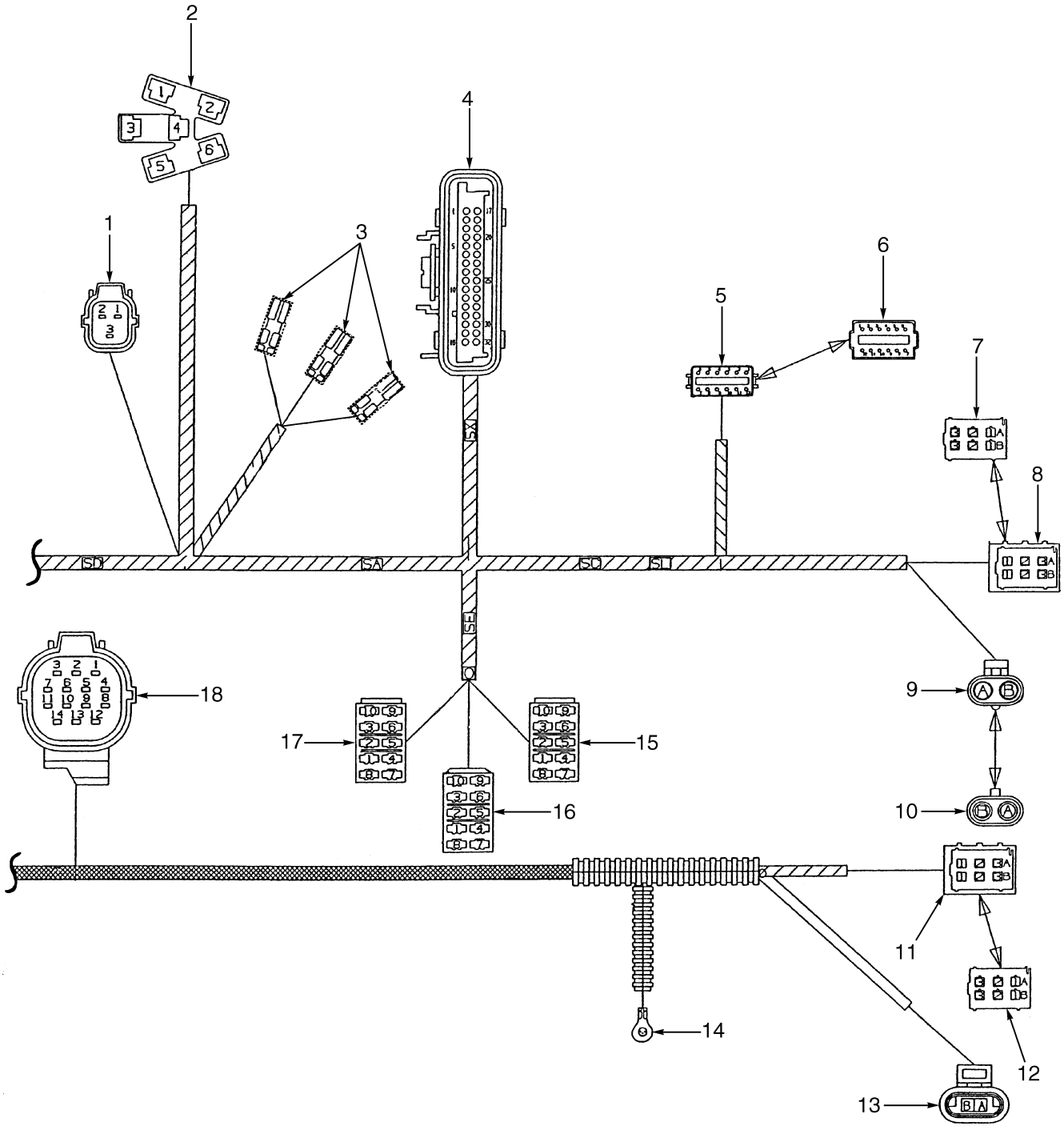

BP080083

©2003 HYSTER COMPANY

WIRE HARNESS
POWERSHIFT
SHEET 2 OF 2
(⇒S/N PENDING PER ECN 63571)

ITEM	PART NO.	DESCRIPTION	QTY
	2043040	Wire Harness	1
1	. . . . .	Connector Assembly (Forward Switch)	2
1	1497294	Housing	2
1	1497300	Retainer	2
1	1484656	Terminal (Socket)	3
1	1484597	Seal	3
2	. . . . .	Connector Assembly (Ignition Switch)	1
2	1484660	Housing (Ignition Switch)	1
2	1484707	Terminal (56 Series) (Items 1 and 3)	2
2	1484375	Terminal (Items 4 and 6)	2
3	. . . . .	Connector Assembly	3
3	1493444	Terminal	3
3	1493445	Cover	3
4	. . . . .	Connector Assembly (Cluster)	1
4	1484670	Retainer	1
4	1471960	Strain Relief	1
4	1484672	Insert	1
4	1484671	Seal	1
4	1484710	Terminal	21
4	1352105	Plug	11
5	. . . . .	Connector Assembly (High/Low Shift)	1
5	1484357	Housing (Socket)	1
5	1484358	Retainer (Socket)	1
5	1330439	Plug	3
5	1330438	Socket	9
6	. . . . .	Connector Assembly (Mating Half, Item 5)	1
6	1330439	Plug	1
6	1484720	Connector	1
7	. . . . .	Connector Assembly (Mating Half, Item 8)	1
7	1496790	Housing	1
8	. . . . .	Connector Assembly (Right Hand Front Lights)	1
8	1496791	Housing	1
8	1496788	Terminal	5
9	. . . . .	Connector Assembly (Cab Power)	1
9	1498474	Housing	1
9	1498419	Terminal	2
9	1498496	Seal	2
10	. . . . .	Connector Assembly (Mating Half, Item 9)	1
10	1498422	Connector Housing	1
10	1402857	Plug	2
11	. . . . .	Connector Assembly (Right Hand Rear Lights)	1
11	1496791	Housing	1
11	1496788	Terminal	5
12	. . . . .	Connector Assembly (Mating Half, Item 11)	1
12	1496790	Housing	1
13	. . . . .	Connector Assembly (Coolant Level)	1
13	1493460	Housing	1
13	1354237	Terminal	2
14	. . . . .	Connector Assembly	1

©2003 HYSTER COMPANY

WIRE HARNESS
POWERSHIFT
SHEET 2 OF 2
(⇒S/N PENDING PER ECN 63571)

ITEM	PART NO.	DESCRIPTION	QTY
14	1493458	Fitting	1
14	1484383	Heat Shrink Tube	1
15	. . . . .	Connector Assembly (Transmission Lock)	1
15	1484555	Housing (Switch)	1
15	1497262	Terminal	4
16	. . . . .	Connector Assembly (Rear Lights)	1
16	1484555	Housing (Switch)	1
16	1497262	Terminal	4
17	. . . . .	Connector Assembly (Front Lights)	1
17	1484555	Housing (Switch)	1
17	1497262	Terminal	6
18	. . . . .	Connector Assembly (Transmission Harness)	1
18	1484654	Housing (Socket)	1
18	1484655	Retainer (Socket)	1
18	1484656	Terminal (Socket)	14
18	1484597	Seal	14

©2003 HYSTER COMPANY

WIRE HARNESS (Figure 4-35)
ADAPTER
(⇒S/N PENDING PER ECN 63634-01)

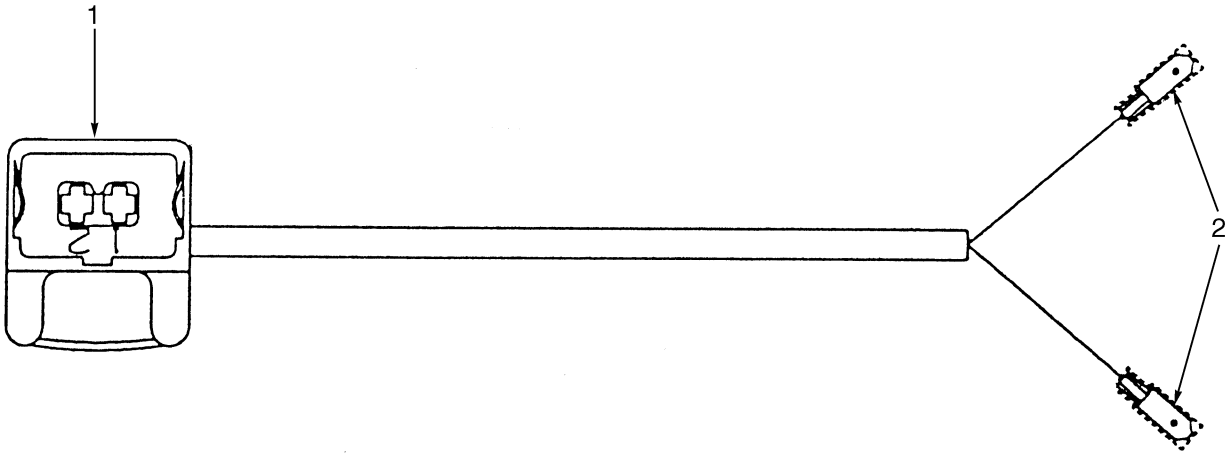

BP08(

ITEM	PART NO.	DESCRIPTION	QTY
	2043228	Wire Harness (Adapter)	1
1	1493446	Socket Housing	1
1	1493436	Terminal	2
1	1479109	Seal	2
2	1484651	Cover	2
2	1484651	Cover	2

WIRE HARNESS (Figure 4-36)
ENGINE, GAS, GM V6
SHEET 1 OF 2
(S/N PENDING PER ECN 92210-01⇔S/N PENDING PER ECN 73766)

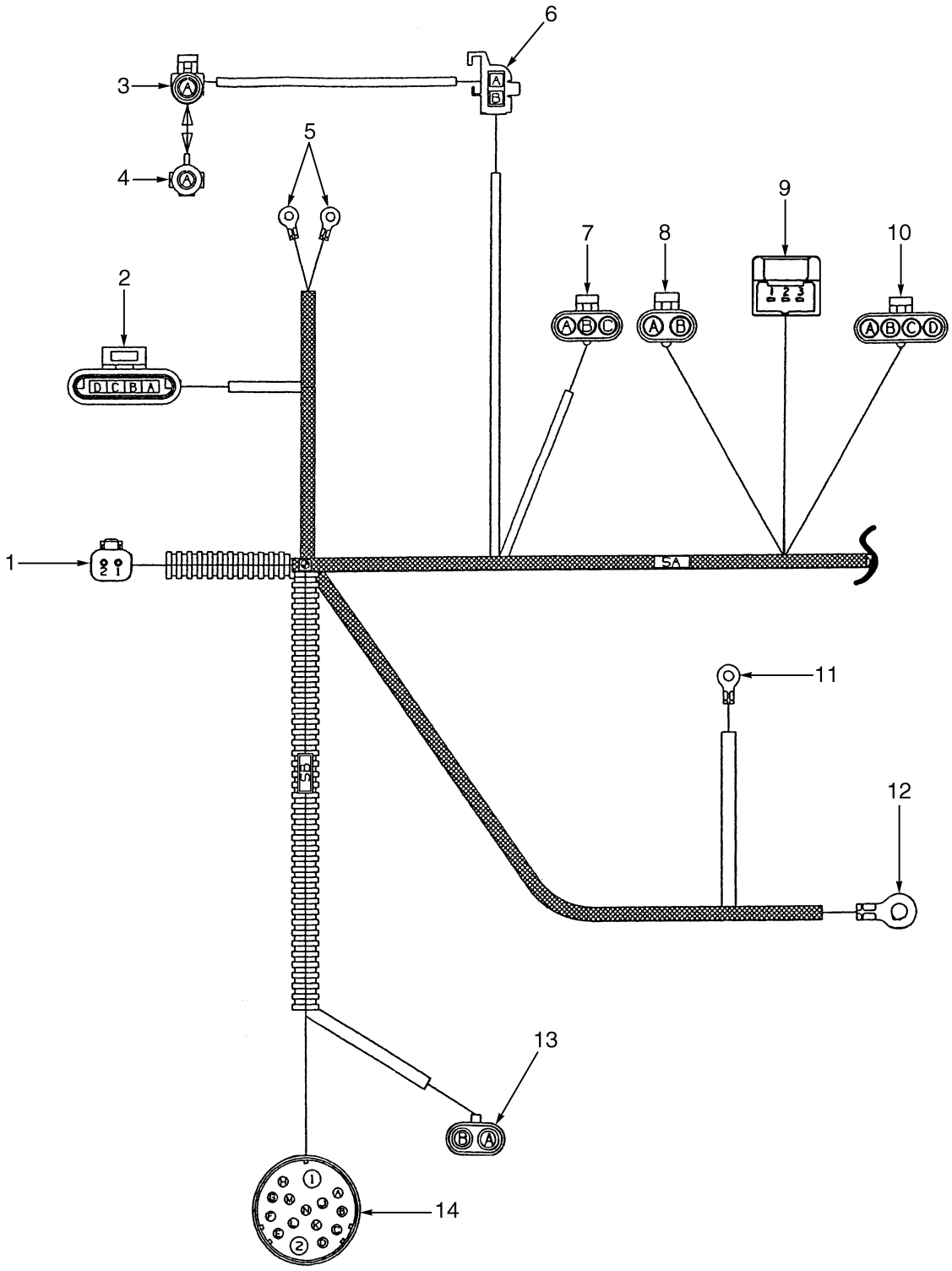

©2003 HYSTER COMPANY

WIRE HARNESS
ENGINE, GAS, GM V6
SHEET 1 OF 2
(S/N PENDING PER ECN 92210-01⇔S/N PENDING PER ECN 73766)

ITEM	PART NO.	DESCRIPTION	QTY
	2043949	Wire Harness (Engine; G, GS)	1
1	. . . . .	Connector Assembly (Seat Switch)	1
1	1484361	Housing (Socket)	1
1	1330424	Lock	1
1	1330438	Socket	2
2	. . . . .	Connector Assembly (Distributor)	1
2	1498478	Housing	1
2	1493461	Terminal	4
3	. . . . .	Connector Assembly (Tachometer)	1
3	1498473	Housing	1
3	1498419	Terminal	1
3	1498496	Seal	1
4	. . . . .	Connector Assembly	1
4	1487441	Housing	1
4	1498498	Seal	4
5	1493455	Terminal	2
5	1493450	Heatshrink	1
6	. . . . .	Connector Assemvly	1
6	1498470	Connector Housing	1
7	. . . . .	Connector Assembly	1
7	1327958	Housing	1
7	1498415	Terminal	3
7	1498496	Seal	3
8	. . . . .	Connector Assembly	1
8	1498474	Housing	1
8	1498496	Seal	2
8	1498419	Terminal	2
9	. . . . .	Connector Assembly (Throttle Position Sensor)	1
9	1496777	Housing	1
9	1493436	Terminal	3
9	1479109	Seal	3
10	. . . . .	Connector Assembly (Injectors)	1
10	1498472	Connector Housing	1
10	1498496	Seal	4
10	1498419	Terminal	4
11	. . . . .	Connector Assembly (Start Solenoid)	1
11	1496883	Terminal	2
11	1493450	Heatshrink	2
12	. . . . .	Connector Assembly (+ VE)	1
12	1493455	Terminal	1
12	1496773	Sleeve	1
13	. . . . .	Connector Assembly (Fuel Pump)	1
13	1402616	Housing	1
13	1323579	Seal	2
13	1498415	Terminal	2
14	. . . . .	Connector Assembly (Cowl)	1
14	1495955	Housing	1
14	1496889	Terminal (Items 1 and 2)	2

©2003 HYSTER COMPANY

WIRE HARNESS
ENGINE, GAS, GM V6
SHEET 1 OF 2
(S/N PENDING PER ECN 92210-01⇔S/N PENDING PER ECN 73766)

ITEM	PART NO.	DESCRIPTION	QTY
14	1496891	Terminal (Items A, L, M, N)	4
14	1484716	Terminal (Items C, D, E, G, H, J, K)	7

©2003 HYSTER COMPANY

NOTES

WIRE HARNESS (Figure 4-37)
ENGINE, GAS, GM V6
SHEET 2 OF 2
(S/N PENDING PER ECN 92210-01⇔S/N PENDING PER ECN 73766)

©2003 HYSTER COMPANY

WIRE HARNESS
ENGINE, GAS, GM V6
SHEET 2 OF 2
(S/N PENDING PER ECN 92210-01⇔S/N PENDING PER ECN 73766)

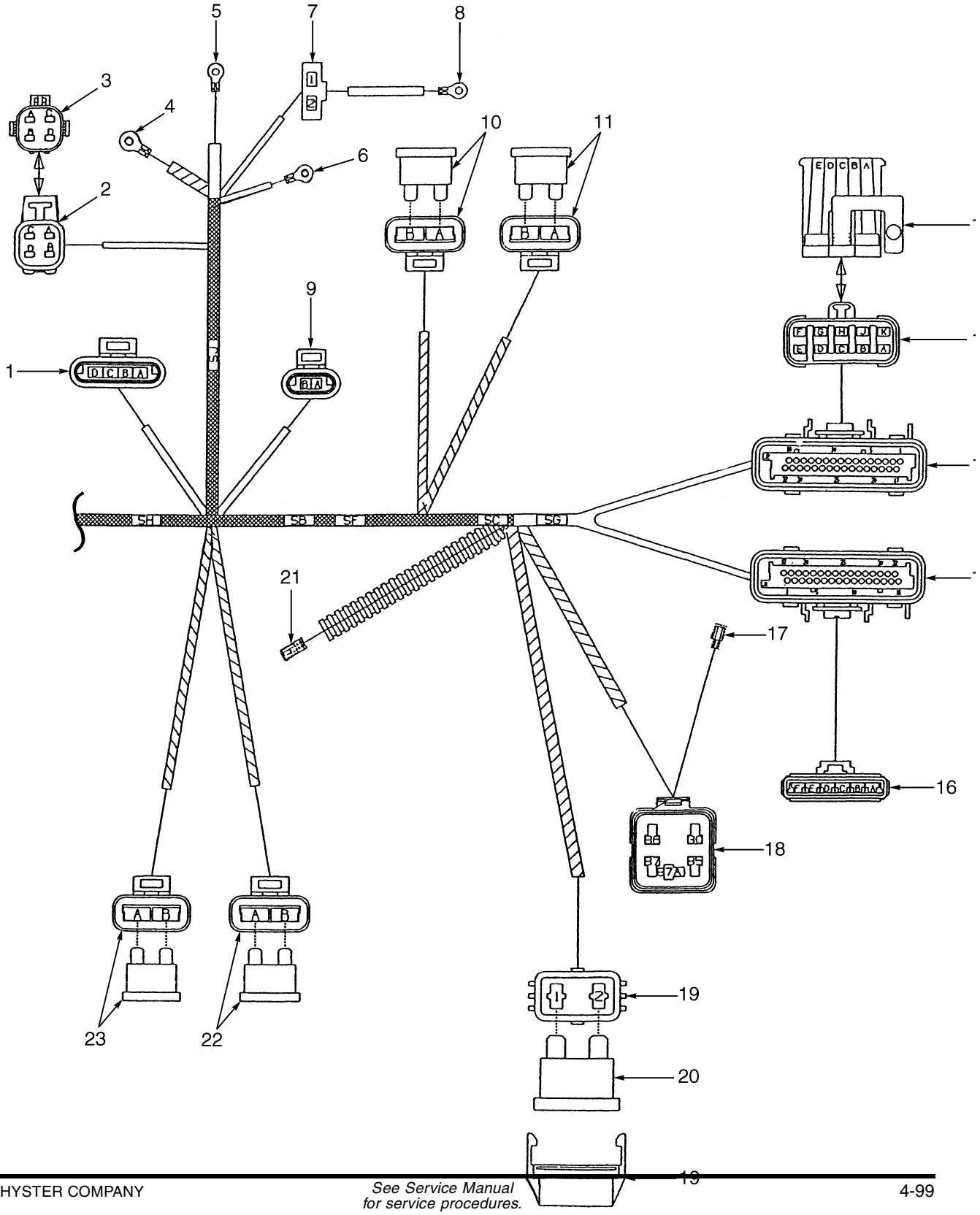

WIRE HARNESS
ENGINE, GAS, GM V6
SHEET 2 OF 2
(S/N PENDING PER ECN 92210-01⇔S/N PENDING PER ECN 73766)

ITEM	PART NO.	DESCRIPTION	QTY
	2043949	Wire Harness (Engine; G, GS)	1
1	. . . . .	Connector Assembly (IAC)	1
1	1498478	Housing	1
1	1493461	Terminal	4
2	. . . . .	Connector Assembly (Oxygen Sensor)	1
2	1498468	Housing	1
2	1482664	Terminal	4
2	1498492	Seal	4
3	. . . . .	Connector Assembly (Mating Half)	1
3	1498424	Housing	1
3	1498498	Seal	4
4	1493455	Terminal	1
4	1496773	Sleeve	1
5	1493458	Fitting (Alternator)	1
5	1484383	Heat Shrink Tube	1
6	1493457	Fitting (Alternator)	1
6	1484383	Heat Shrink Tube	1
7	. . . . .	Connector Assembly (Alternator)	1
7	1493469	Housing	1
7	1484375	Terminal	2
8	1497229	Terminal	1
8	1484383	Heat Shrink Tube	1
9	. . . . .	Connector Assembly	1
9	1493460	Housing	1
9	1493461	Terminal	2
10	. . . . .	Connector Assembly	1
10	1498425	Housing	1
10	1498412	Terminal	2
10	370647	Fuse (10 Amp)	1
11	. . . . .	Connector Assembly	1
11	1498425	Housing	1
11	370647	Fuse (10 Amp)	1
11	1498412	Terminal	2
12	1498421	Clip	1
13	. . . . .	Connector Assembly	1
13	1498427	Housing	1
13	1402907	Lock	1
13	1482664	Terminal	4
13	1498492	Seal	4
13	1498498	Seal	6
14	. . . . .	Connector Assembly (EFI, ECM)	1
14	1498462	Retainer	1
14	1498487	Strain Relief	1
14	1498451	Insert	1
14	1498495	Seal	1
14	1484710	Terminal	12
14	1352105	Plug	20
15	. . . . .	Connector Assembly (EFI, ECU)	1
15	1500963	Retainer	1

©2003 HYSTER COMPANY

WIRE HARNESS
ENGINE, GAS, GM V6
SHEET 2 OF 2
(S/N PENDING PER ECN 92210-01⇔S/N PENDING PER ECN 73766)

ITEM	PART NO.	DESCRIPTION	QTY
15	1498451	Insert	1
15	1498495	Seal	1
15	1484710	Terminal	16
15	1352105	Plug	16
16	. . . . .	Connector Assembly (Governor)	1
16	1498463	Housing	1
16	1498486	Lock	1
16	1498414	Terminal	5
16	1498496	Seal	5
16	1402857	Plug	1
17	1497264	Terminal (Fuel Pump)	1
17	1497274	Boot	1
18	. . . . .	Connector Assembly (Fuel Pump Relay)	1
18	1498469	Relay Base	1
18	1498483	Sealant	1
18	1402912	Terminal	5
18	1498496	Seal	5
19	. . . . .	Connector Assembly (Alternator)	1
19	1497234	Fuse Holder	1
19	1497232	Terminal	2
19	1497233	Seal	1
20	1454829	Fuse (60 Amp)	1
21	1493441	Housing	1
21	1484375	Terminal	1
22	. . . . .	Connector Assembly (Fuel Pump)	1
22	1498425	Housing	1
22	1498412	Terminal	2
22	370647	Fuse (10 Amp)	1
23	. . . . .	Connector Assembly	1
23	1498425	Housing	1
23	1498412	Terminal	2
23	370647	Fuse (10 Amp)	1

©2003 HYSTER COMPANY

WIRE HARNESS (Figure 4-38)
GAS, GM V6
SHEET 1 OF 2
(S/N PENDING PER ECN 73766⇔S/N PENDING PER ECN 73891-01)

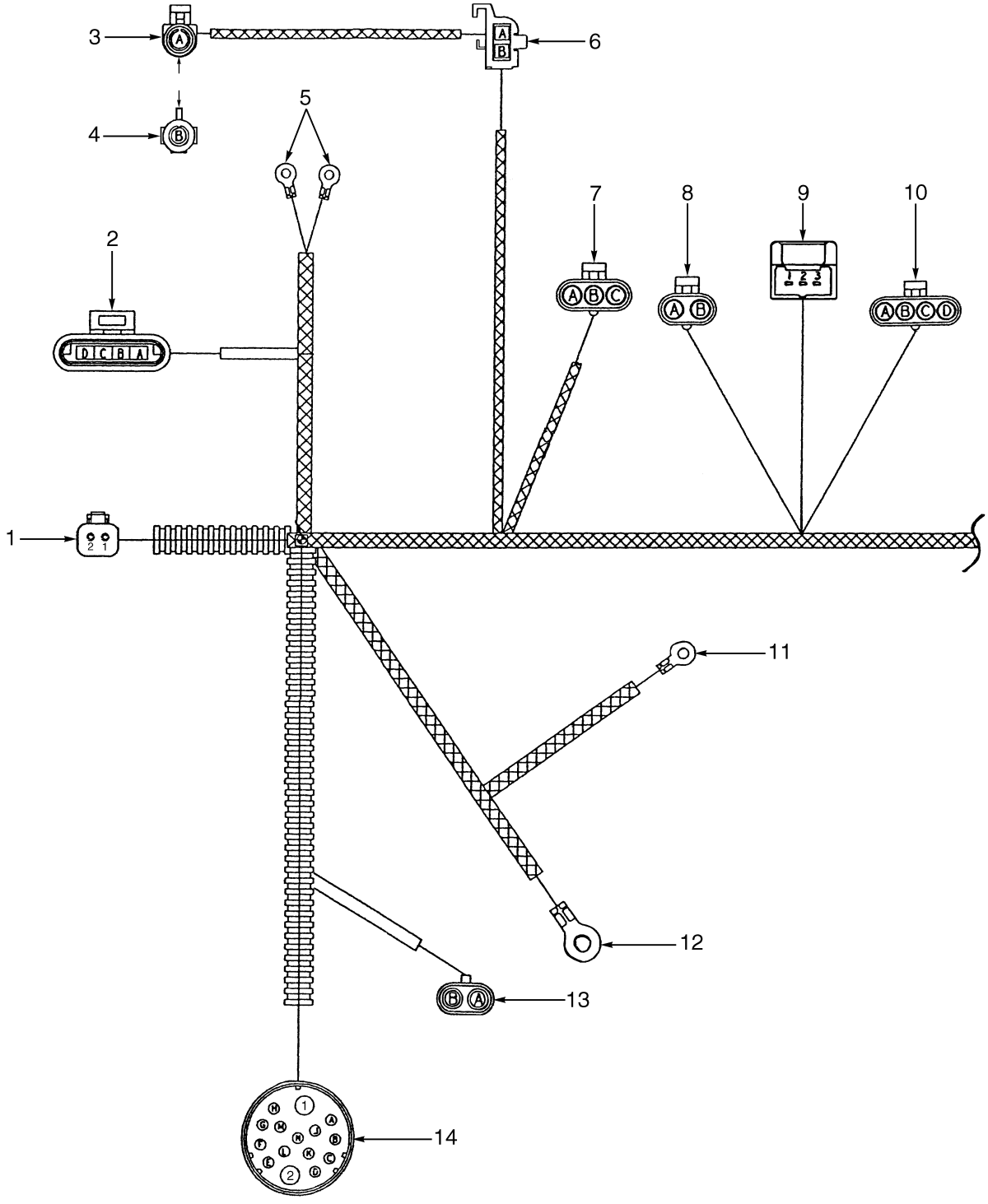

BP080068

©2003 HYSTER COMPANY

WIRE HARNESS
GAS, GM V6
SHEET 1 OF 2
(S/N PENDING PER ECN 73766⇔S/N PENDING PER ECN 73891-01)

ITEM	PART NO.	DESCRIPTION	QTY
	2047709	Wire Harness (Engine; G, GS)	1
1	. . . . .	Connector Assembly (Seat Switch)	1
1	1484361	Housing (Socket)	1
1	1490243	Retainer (Socket)	1
1	1330438	Socket	2
2	. . . . .	Connector Assembly (Distributor)	1
2	1498478	Housing	1
2	1323576	Terminal	4
3	. . . . .	Connector Assembly (Tachometer)	1
3	1330299	Connector	1
3	1498419	Terminal	1
3	1402858	Seal	1
4	. . . . .	Connector Assembly	1
4	1498476	Connector Housing	1
4	1402857	Plug	1
5	252293	Fitting (Engine Oil Pressure)	2
6	. . . . .	Connector Assembly (Coil)	1
6	1498470	Connector Housing	1
7	. . . . .	Connector Assembly (Map Sensor)	1
7	1327958	Housing	1
7	1498415	Terminal	3
7	1402858	Seal	3
8	. . . . .	Connector Assembly (Governor)	1
8	1496777	Housing	1
8	1402858	Seal	1
8	1498419	Terminal	1
9	. . . . .	Connector Assembly (Throttle Position)	1
9	1496777	Housing	1
9	1402814	Terminal	3
9	1479109	Seal	3
10	. . . . .	Connector Assembly (Injectors)	1
10	1498472	Connector Housing	1
10	1402858	Seal	4
10	1498419	Terminal	4
11	252293	Fitting (Starter Solenoid)	1
12	1354497	Terminal (+ VE)	1
13	. . . . .	Connector Assembly (Fuel Pump)	1
13	1402616	Housing	1
13	1402858	Seal	2
13	1498415	Terminal	2
14	. . . . .	Connector Assembly (Cowl)	1
14	1495955	Housing	1
14	1496889	Terminal (Items 1 and 2)	2
14	1496891	Terminal Items A, L, M, N)	4
14	1484716	Terminal (Items C, D, E, G, H, J, K)	7

©2003 HYSTER COMPANY

WIRE HARNESS (Figure 4-39)
GAS, GM V6
SHEET 2 OF 2
(S/N PENDING PER ECN 73766⇔S/N PENDING PER ECN 73891-01)

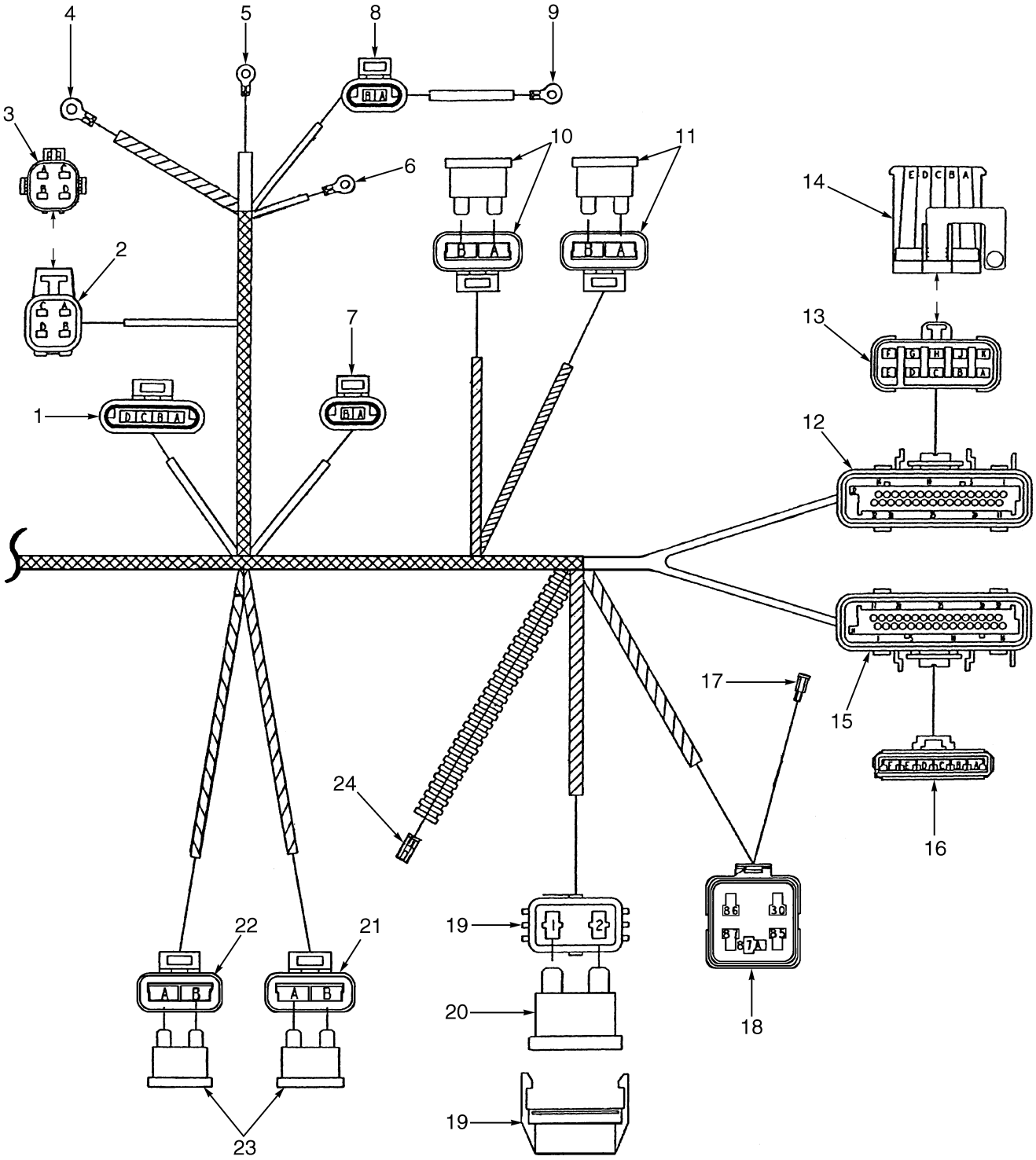

BP080069

©2003 HYSTER COMPANY

WIRE HARNESS
GAS, GM V6
SHEET 2 OF 2
(S/N PENDING PER ECN 73766⇔S/N PENDING PER ECN 73891-01)

ITEM	PART NO.	DESCRIPTION	QTY
	2047709	Wire Harness (Engine; G, GS)	1
1	. . . . .	Connector Assembly (IAC)	1
1	1498478	Housing	1
1	1493461	Terminal	4
2	. . . . .	Connector Assembly (Oxygen Sensor)	1
2	1498468	Housing	1
2	1482664	Terminal	4
2	1498492	Seal	4
3	. . . . .	Connector Assembly	1
3	1498424	Housing	1
3	1402866	Seal	4
4	1354497	Terminal (Ground)	1
5	1509790	Terminal (Alternator, Negative)	1
6	148614	Terminal (Alternator, Positive)	1
7	. . . . .	Connector Assembly (Temperature Sensor)	1
7	1493460	Housing	1
7	1498486	Lock	2
8	. . . . .	Connector Assembly	1
8	1493460	Housing	1
8	1323576	Terminal	2
9	1509790	Terminal	1
9	. . . . .	Shrink Fit	AR
10	. . . . .	Fuse Holder (Ignition)	1
10	1498425	Housing	1
10	1498412	Terminal	1
10	370647	Fuse (10 Amp)	1
11	. . . . .	Fuse Holder (EFI/ECM B+)	1
11	1498425	Housing	1
11	1498412	Terminal	1
11	370647	Fuse (10 Amp)	1
12	. . . . .	Connector Assembly (EFI/ECM)	1
12	1498462	Retainer	1
12	1498487	Strain Relief	1
12	1498451	Insert	1
12	1498495	Seal	1
12	1484710	Terminal	12
12	1352105	Plug	20
13	. . . . .	Connector Assembly (Comms Port)	1
13	1376617	Plug	1
13	1402907	Lock	1
13	1482664	Terminal (Items A, B, F, G)	4
13	1498492	Seal (Items A, B, F, G)	4
13	1402866	Seal (Items C, D, E, F, J, K)	6
14	. . . . .	Connector Assembly	1
14	1402907	Lock	1
14	1402866	Seal	10
14	1376617	Plug	1
14	1498421	Clip	1
15	. . . . .	Connector Assembly (EFI/ECM)	1

©2003 HYSTER COMPANY

WIRE HARNESS
GAS, GM V6
SHEET 2 OF 2
(S/N PENDING PER ECN 73766⇔S/N PENDING PER ECN 73891-01)

ITEM	PART NO.	DESCRIPTION	QTY
15	1500963	Retainer	1
15	1498488	Strain Relief	1
15	1498451	Insert	1
15	1498495	Seal	1
15	1484710	Terminal	16
15	1352105	Plug	16
16	. . . . .	Connector Assembly	1
16	1498463	Housing	1
16	1498486	Lock	1
16	1498414	Terminal	5
16	1402858	Seal	5
16	1402857	Plug	1
17	1402849	Connector Body (Fuel Pump)	1
18	. . . . .	Connector Assembly	1
18	1498469	Relay Base	1
18	1498483	Sealant	1
18	1402912	Terminal	5
18	1402858	Seal	5
19	. . . . .	Connector Assembly	1
19	1497234	Fuse Holder	1
19	1402889	Terminal	2
19	1454827	Seal	2
20	1454829	Fuse (60 Amp)	1
21	. . . . .	Connector Assembly (Fuel Pump)	1
21	1498425	Housing	1
21	1498412	Terminal	2
22	. . . . .	Connector Assembly (Injector)	1
22	1498425	Housing	1
22	1498412	Terminal	2
23	370647	Fuse (10 Amp)	2
24	. . . . .	Connector Assembly	1
24	1301720	Connector Body	1
24	1498413	Terminal	1

©2003 HYSTER COMPANY

NOTES

WIRE HARNESS (Figure 4-40)
ENGINE, LPG, GM V6, 4.3L
SHEET 1 OF 2
(S/N PENDING PER ECN 92110-01⇔S/N PENDING PER ECN 73766)

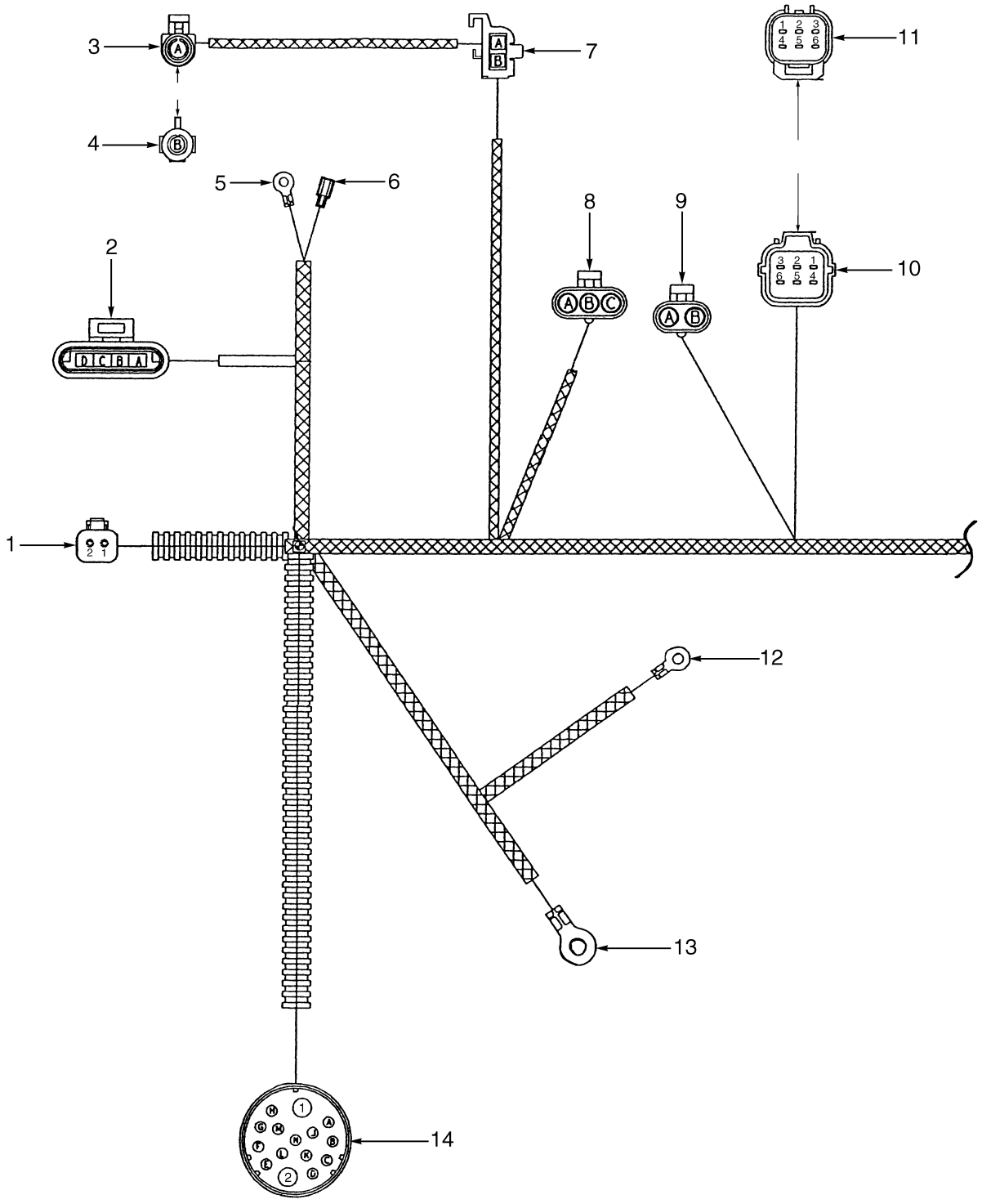

©2003 HYSTER COMPANY

WIRE HARNESS
ENGINE, LPG, GM V6, 4.3L
SHEET 1 OF 2
(S/N PENDING PER ECN 92110-01⇔S/N PENDING PER ECN 73766)

ITEM	PART NO.	DESCRIPTION	QTY
	2044167	Wire Harness (Engine)	1
1	. . . . .	Connector Assembly	1
1	1484361	Housing (Socket)	1
1	1490243	Retainer (Socket)	1
1	1330438	Socket	2
2	. . . . .	Connector Assembly	1
2	1498478	Housing	1
2	1493461	Terminal	4
3	. . . . .	Connector Assembly	1
3	1498473	Housing	1
3	1498419	Terminal	1
3	1402858	Seal	1
4	. . . . .	Connector Assembly	1
4	1498476	Connector Housing	1
4	1402857	Plug	1
5	1509790	Terminal	1
6	1495955	Housing	1
7	1498470	Connector Housing	1
8	. . . . .	Connector Assembly	1
8	1327958	Housing	1
8	1498415	Terminal	3
8	1402858	Seal	3
9	. . . . .	Connector Assembly	1
9	1498474	Housing	1
9	1498419	Terminal	2
9	1498415	Terminal	2
10	. . . . .	Connector Assembly	1
10	1497296	Housing	1
10	1497304	Retainer	1
10	1484656	Terminal (Socket)	5
10	1484597	Seal	5
10	1484611	Seal	1
11	. . . . .	Connector Assembly	1
11	1497291	Connector Housing	1
11	1484611	Seal	6
12	1509790	Terminal	1
13	1354497	Terminal	1
13	. . . . .	Heat Shrink	1
14	. . . . .	Connector Assembly	1
14	1495955	Housing	1
14	1496889	Terminal (Items 1 and 2)	2
14	1496891	Terminal Items A, E, L, M, N)	5
14	1484716	Terminal (Items C, D, G, H, J, K)	6

©2003 HYSTER COMPANY

WIRE HARNESS (Figure 4-41)
ENGINE, LPG, GM V6, 4.3L
SHEET 2 OF 2
(S/N PENDING PER ECN 92110-01⇔S/N PENDING PER ECN 73766)

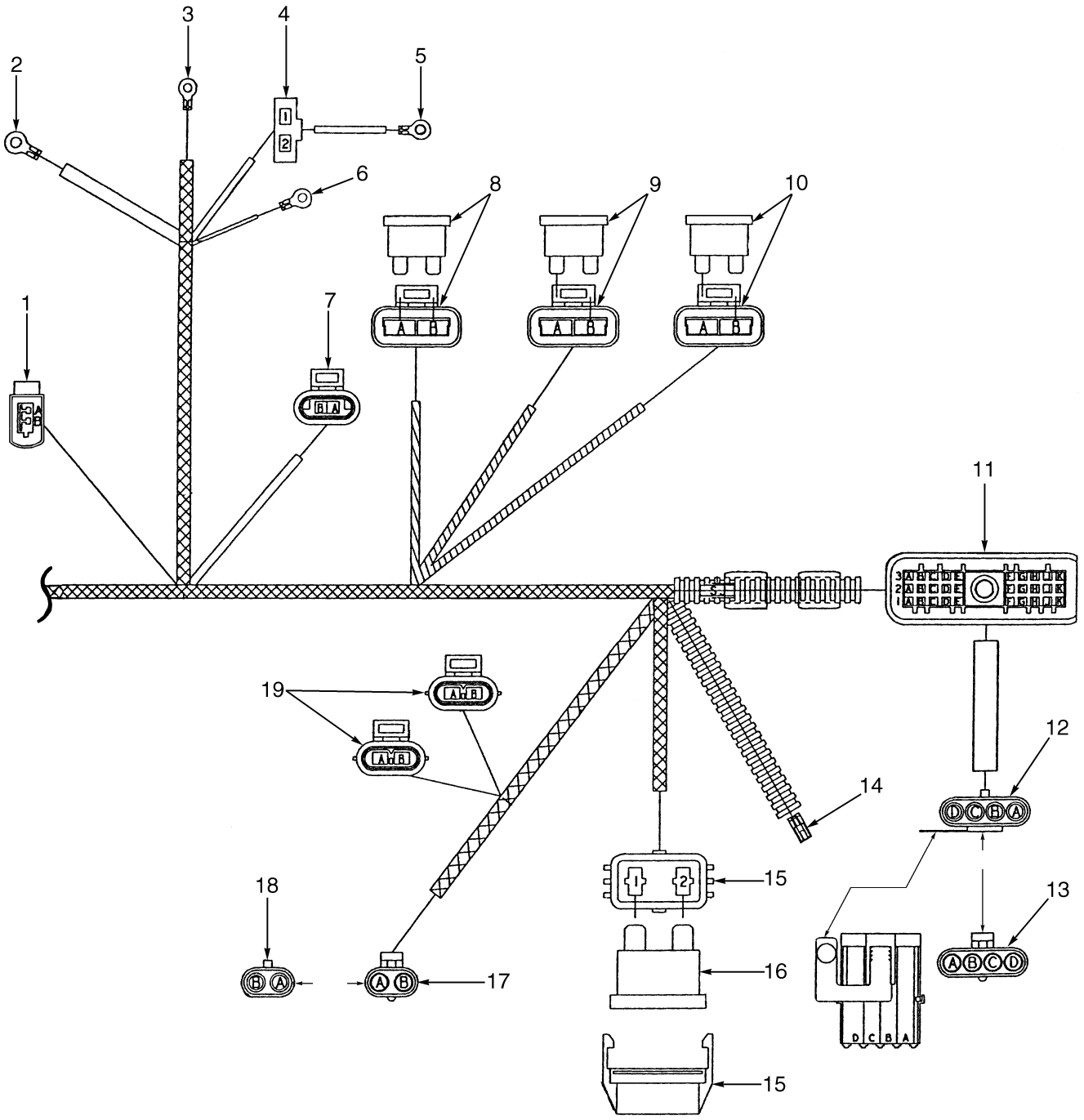

©2003 HYSTER COMPANY

WIRE HARNESS
ENGINE, LPG, GM V6, 4.3L
SHEET 2 OF 2
(S/N PENDING PER ECN 92110-01⇔S/N PENDING PER ECN 73766)

ITEM	PART NO.	DESCRIPTION	QTY
	2044167	Wire Harness (Engine)	1
1	. . . . .	Connector Assembly	1
1	1496785	Housing	1
1	1496786	Spacer	1
1	1496784	Terminal	2
2	1354497	Terminal	1
2	. . . . .	(Heatshrink)	1
3	148606	Terminal	1
4	. . . . .	Connector Assembly	1
4	245996	Connector Body	1
4	1498413	Terminal	2
5	252293	Fitting	1
6	148614	Terminal	1
6	. . . . .	(Heat Shrink)	1
7	. . . . .	Connector Assembly	1
7	1493460	Housing	1
7	1493461	Terminal	2
8	. . . . .	Connector Assembly (Ignition)	1
8	1498425	Housing	1
8	1498412	Terminal	2
8	370647	Fuse (10 Amp)	1
9	. . . . .	Connector Assembly (Battery)	1
9	1498425	Housing	1
9	1498412	Terminal	2
9	370647	Fuse (10 Amp)	1
10	. . . . .	Connector Assembly (B+)	1
10	1498425	Housing	1
10	1498412	Terminal	2
10	1378661	Fuse (Items 1A)	1
11	. . . . .	Connector Assembly	1
11	1504883	Housing	1
11	1493461	Terminal	23
11	1402866	Seal	7
12	. . . . .	Connector Assembly	1
12	1498477	Housing	1
12	1402858	Seal	4
12	1498415	Terminal	4
13	. . . . .	Connector Assembly	1
13	1498472	Connector Housing	1
13	1402857	Plug	4
14	. . . . .	Connector Assembly	1
14	1301720	Connector Body	1
14	1498413	Terminal	1
15	. . . . .	Connector Assembly (Alternator)	1
15	1497234	Fuse Holder	1
15	1497232	Terminal	2
15	1497233	Seal	2
16	1454829	Fuse (60 Amp)	1
17	. . . . .	Connector Assembly (Converter)	1

©2003 HYSTER COMPANY

WIRE HARNESS
ENGINE, LPG, GM V6, 4.3L
SHEET 2 OF 2
(S/N PENDING PER ECN 92110-01⇔S/N PENDING PER ECN 73766)

ITEM	PART NO.	DESCRIPTION	QTY
17	1498474	Housing	1
17	1402858	Seal	2
17	1498419	Terminal	2
18	. . . . .	Connector Assembly	1
18	1498474	Housing	1
18	1402857	Plug	2
19	. . . . .	Connector Assembly	2
19	1498423	Housing	1
19	1498493	Retainer	1
19	1498492	Seal	2
19	1482664	Terminal	2

©2003 HYSTER COMPANY

NOTES

WIRE HARNESS (Figure 4-42)
ENGINE, LPG, GM V6, 4.3L
SHEET 1 OF 2
(S/N PENDING PER ECN 73766⇒)

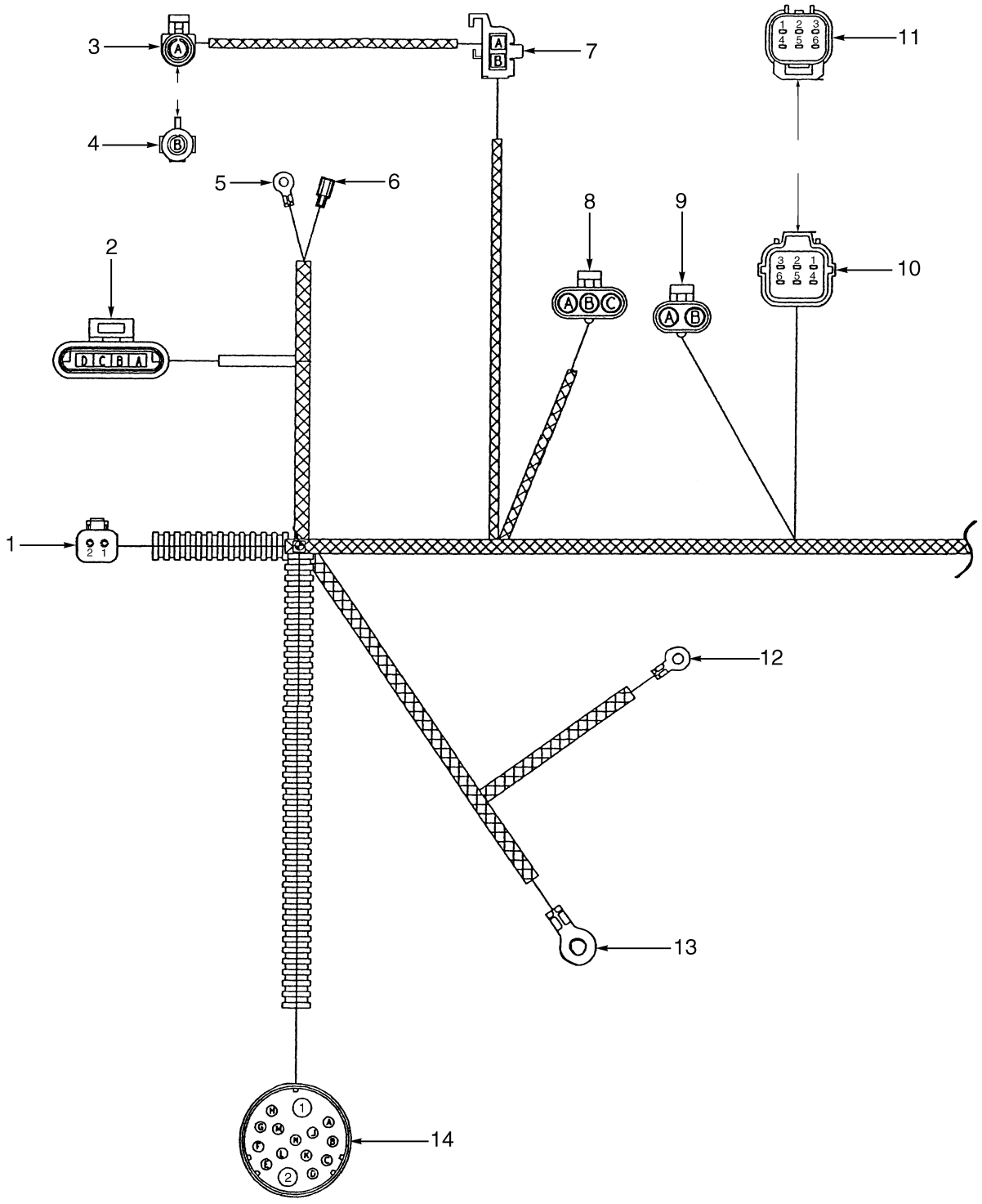

BP080066

©2003 HYSTER COMPANY

WIRE HARNESS
ENGINE, LPG, GM V6, 4.3L
SHEET 1 OF 2
(S/N PENDING PER ECN 73766⇒)

ITEM	PART NO.	DESCRIPTION	QTY
	2047710	Wire Harness (Engine)	1
1	. . . . .	Connector Assembly (Seat Switch)	1
1	1484361	Housing (Socket)	1
1	1490243	Retainer (Socket)	1
1	1330438	Socket	2
2	. . . . .	Connector Assembly (Distributor)	1
2	1498478	Housing	1
2	1493461	Terminal	4
3	. . . . .	Connector Assembly (Tachometer)	1
3	1498473	Housing	1
3	1498419	Terminal	1
3	1402858	Seal	1
4	. . . . .	Connector Assembly	1
4	1498476	Connector Housing	1
4	1402857	Plug	1
5	1509790	Terminal (Oil Pressure Sender)	1
6	1402849	Connector Body	1
7	. . . . .	Connector Assembly (Housing)	1
8	. . . . .	Connector Assembly (Map Sensor)	1
8	1327958	Housing	1
8	1498415	Terminal	3
8	1402858	Seal	3
9	. . . . .	Connector Assembly (Governor)	1
9	1498474	Housing	1
9	1498419	Terminal	2
9	1498415	Terminal	2
10	. . . . .	Connector Assembly	1
10	1497296	Housing	1
10	1497304	Retainer	1
10	1484656	Terminal (Socket)	5
10	1484597	Seal	5
10	1484611	Seal	1
11	. . . . .	Connector Assembly	1
11	1497291	Connector Housing	1
11	1484611	Seal	1
12	1509790	Terminal	1
12	1496775	Sleeve	1
13	1354497	Terminal	1
14	. . . . .	Connector Assembly (Cowl)	1
14	1495955	Housing	1
14	1496889	Terminal (Items 1 and 2)	2
14	1496891	Terminal Items A, E, L, M, N)	5
14	1484716	Terminal (Items C, D, G, H, J, K)	6

©2003 HYSTER COMPANY

WIRE HARNESS (Figure 4-43)
ENGINE, LPG, GM V6, 4.3L
SHEET 2 OF 2
(S/N PENDING PER ECN 73766⇒)

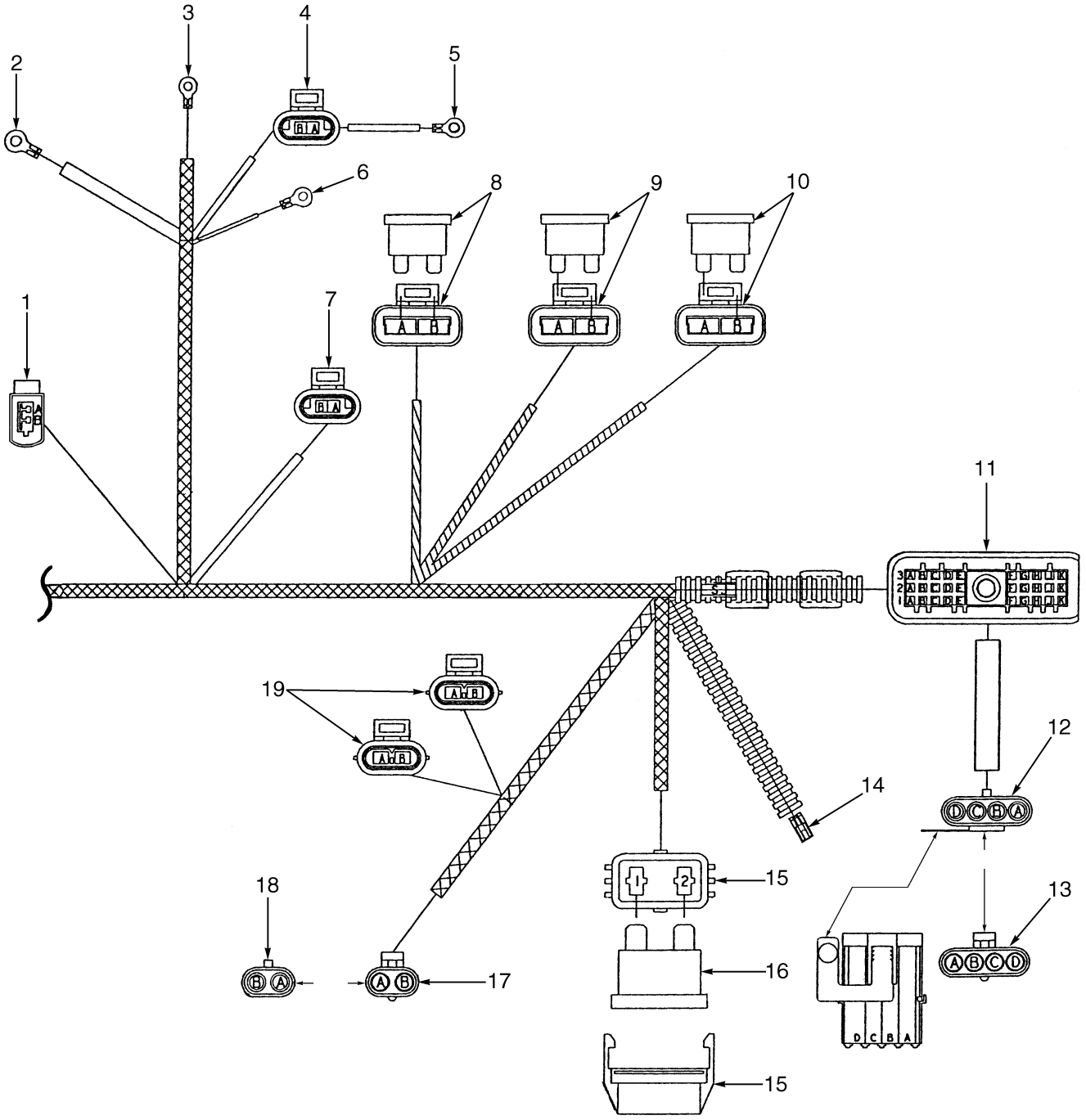

BP080067

©2003 HYSTER COMPANY

WIRE HARNESS
ENGINE, LPG, GM V6, 4.3L
SHEET 2 OF 2
(S/N PENDING PER ECN 73766⇒)

ITEM	PART NO.	DESCRIPTION	QTY
	2047710	Wire Harness (Engine)	1
1	. . . . .	Connector Assembly	1
1	1496785	Housing	1
1	1496786	Spacer	1
1	1496784	Terminal	2
2	1354497	Terminal	1
3	252293	Fitting (Heat Shrink)	1
4	. . . . .	Connector Assembly	1
4	1493460	Housing	1
4	1493461	Terminal	2
5	252293	Fitting	1
6	148614	Terminal	1
6	1496775	Sleeve	1
7	. . . . .	Connector Assembly	1
7	1493460	Housing	1
7	1493461	Terminal	2
8	. . . . .	Connector Assembly (Ignition)	1
8	1498425	Housing	1
8	1498412	Terminal	2
8	370647	Fuse (10 Amp)	1
9	. . . . .	Connector Assembly (Battery)	1
9	1498425	Housing	1
9	1498412	Terminal	2
9	370647	Fuse (10 Amp)	1
10	. . . . .	Connector Assembly (B+)	1
10	1498425	Housing	1
10	1498412	Terminal	2
10	1378661	Fuse (Items 1A)	1
11	. . . . .	Connector Assembly	1
11	1504883	Housing	1
11	1493461	Terminal	23
11	1402866	Seal	7
12	. . . . .	Connector Assembly	1
12	1498477	Housing	1
12	1402858	Seal	4
12	1498415	Terminal	4
13	. . . . .	Connector Assembly	1
13	1498472	Connector Housing	1
13	1402857	Plug	4
14	. . . . .	Connector Assembly	1
14	1301720	Connector Body	1
14	1498413	Terminal	1
15	. . . . .	Connector Assembly (Alternator)	1
15	1497234	Fuse Holder	1
15	1497232	Terminal	2
15	1497233	Seal	2
16	1454829	Fuse (60 Amp)	1
17	. . . . .	Connector Assembly (Converter)	1
17	1498474	Housing	1

©2003 HYSTER COMPANY

WIRE HARNESS
ENGINE, LPG, GM V6, 4.3L
SHEET 2 OF 2
(S/N PENDING PER ECN 73766⇒)

ITEM	PART NO.	DESCRIPTION	QTY
17	1402858	Seal	2
17	1498419	Terminal	2
18	. . . . .	Connector Assembly	1
18	1498474	Housing	1
18	1402857	Plug	2
19	. . . . .	Connector Assembly	2
19	1498423	Housing	1
19	1498493	Retainer	1
19	1498492	Seal	2
19	1482664	Terminal	2

©2003 HYSTER COMPANY

NOTES

WIRE HARNESS (Figure 4-44)
MODULE, TYPE S POWERSHIFT
SHEET 1 OF 2
(S/N PENDING PER ECN 63571⇔S/N PENDING PER ECN 73675-01)

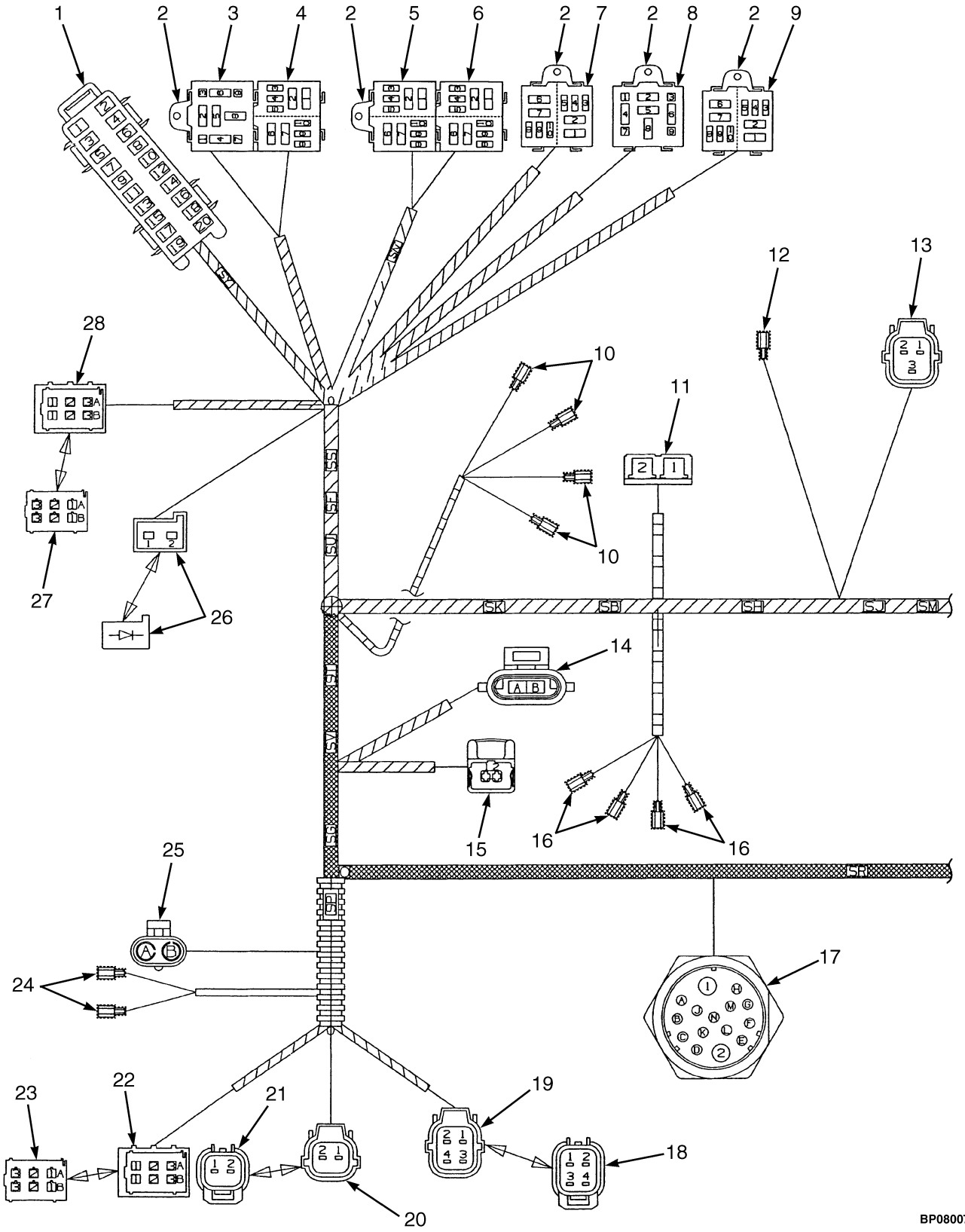

©2003 HYSTER COMPANY

WIRE HARNESS
MODULE, TYPE S POWERSHIFT
SHEET 1 OF 2
(S/N PENDING PER ECN 63571⇔S/N PENDING PER ECN 73675-01)

ITEM	PART NO.	DESCRIPTION	QTY
	2044238	Wire Harness	1
1	. . . . .	Connector Assembly (Fuse Box)	1
1	1484681	Fuse Box (10-Way)	1
1	1484682	Secondary Lock	1
1	1496885	Terminal (Positions 1, 3, 5, 7)	1
1	1490250	Bridge Piece (2-Way) (Positions 9, 11)	1
1	1496884	Bridge Piece (Positions 13, 15, 17)	1
1	1389479	Electrical Fitting	10
1	1489957	Connector (Position 12)	1
1	370647	Fuse (10 Amp) (Positions 1, 6, 7, 8, 9)	5
1	1320669	Fuse (30 Amp) (Positions 2, 3)	2
1	370648	Fuse (20 Amp) (Position 4)	1
1	1310630	Fuse (15 Amp) (Positions 5, 10)	2
2	1489956	Clip	5
3	. . . . .	Connector Assembly	1
3	1484684	Relay Base	1
3	1389479	Electrical Fitting	2
3	1489957	Connector	2
3	1347114	Check Relay	1
4	. . . . .	Connector Assembly (Forward Relay)	1
5	1484683	Relay Base	1
5	1489957	Connector	2
5	1484719	Terminal	2
5	2035581	Relay	2
5	1489957	Connector	2
5	1484719	Terminal	1
5	2035581	Relay	1
5	. . . . .	Connector Assembly (Horn Relay)	1
5	1484683	Relay Base	1
5	1389479	Electrical Fitting	2
5	1484719	Terminal	2
5	2035581	Relay	1
5	1489957	Connector	2
5	1484719	Terminal	2
5	2035581	Relay	1
6	. . . . .	Connector Assembly (Relay Reverse Light)	1
6	1484683	Relay Base	1
6	1489957	Connector	2
6	1484719	Terminal	2
6	2035581	Relay	1
6	1489957	Connector (Shutdown)	2
6	1484719	Terminal	2
6	2035581	Relay	1
7	. . . . .	Connector Assembly (Cab Power Relay)	1
7	1484683	Relay Base	1
7	1389479	Electrical Fitting	2
7	1484719	Terminal	2
7	2035581	Relay	1
7	1389479	Electrical Fitting (Lighting Relay)	2

©2003 HYSTER COMPANY

WIRE HARNESS
MODULE, TYPE S POWERSHIFT
SHEET 1 OF 2
(S/N PENDING PER ECN 63571⇔S/N PENDING PER ECN 73675-01)

ITEM	PART NO.	DESCRIPTION	QTY
7	1484719	Terminal	2
7	2035581	Relay	1
8	. . . . .	Connector Assembly (Turn Signal Relay)	1
8	1484684	Relay Base	1
8	1489957	Connector	2
8	. . . . .		1
9	. . . . .	Connector Assembly	1
9	1498474	Housing	1
9	1498419	Terminal	2
9	1498415	Terminal	2
10	. . . . .	Connector Assembly	1
10	1497296	Housing	1
10	1497304	Retainer	1
10	1484656	Terminal (Socket)	5
10	1484597	Seal	5
10	1484611	Seal	1
11	. . . . .	Connector Assembly	1
11	1497291	Connector Housing	1
11	1484611	Seal	6
12	1509790	Terminal	1
13	1354497	Terminal	1
13	. . . . .	Heat Shrink	1
14	. . . . .	Connector Assembly	1
14	1495955	Housing	1
14	1496889	Terminal (Items 1 and 2)	2
14	1496891	Terminal Items A, E, L, M, N)	5
14	1484716	Terminal (Items C, D, G, H, J, K)	6

©2003 HYSTER COMPANY

5 TRANSMISSION

SECTION 5
TRANSMISSION

DESCRIPTION	PAGE
CONTROL VALVE	
TRANSMISSION	5-20
DIRECTIONAL CLUTCH	5-18
INPUT CLUTCH	5-16
MANIFOLD VALVE	5-23
TORQUE CONVERTER	5-6
TRANSMISSION	
SHEET 1 OF 2	5-8
SHEET 2 OF 2	5-12
TRANSMISSION LINES	5-4
TRANSMISSION MOUNT	5-2
VALVE	
HIGH AND LOW	5-24

©2003 HYSTER COMPANY

TRANSMISSION MOUNT (Figure 5-1)

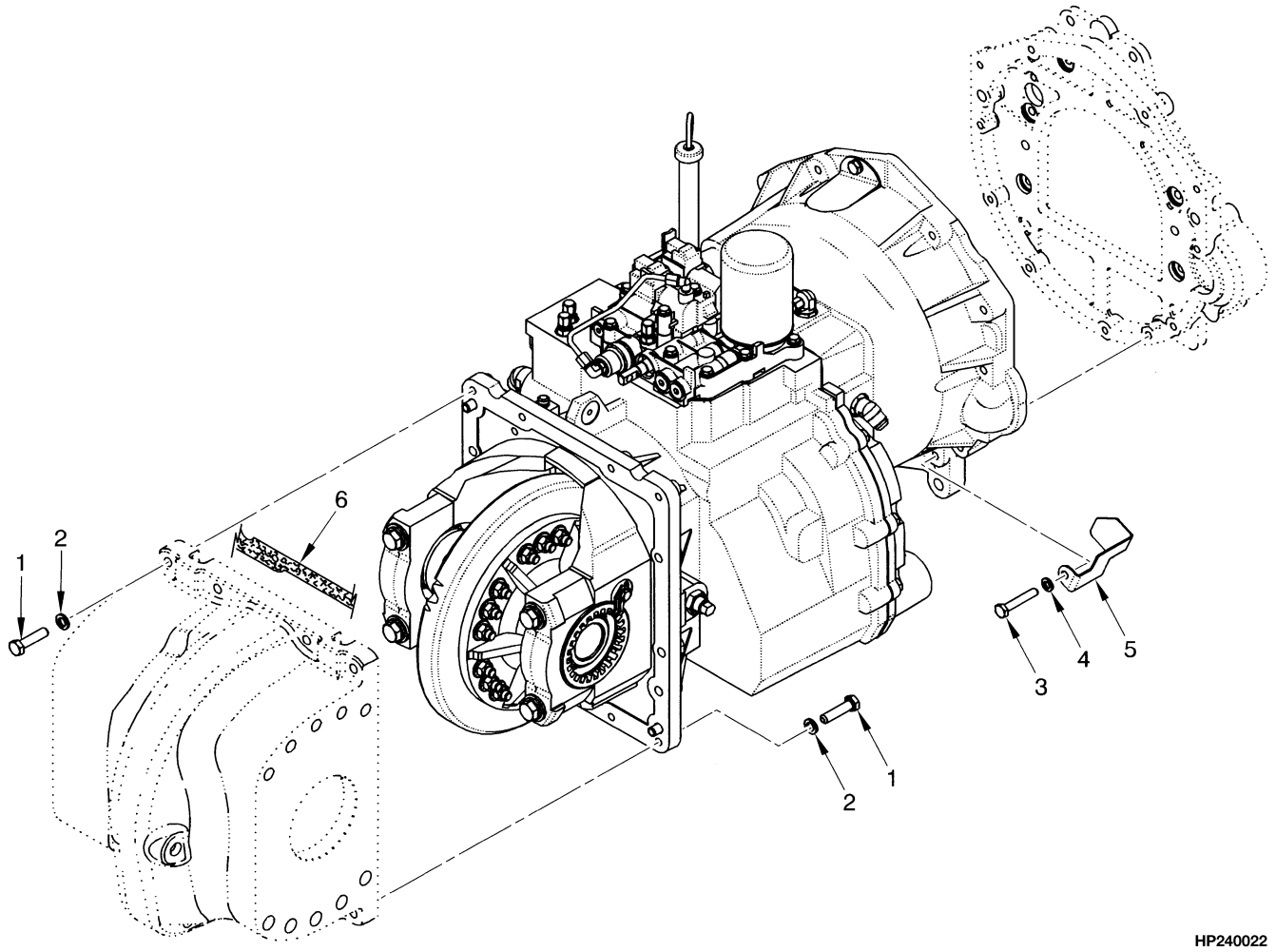

KEY:
A: Two Speed
B: Single Speed

ITEM	PART NO.	DESCRIPTION	QTY A	QTY B
a	1388871	Transmission Assembly (1830 WB)	..	1
b	1488597	Transmission Assembly (1830 WB)	..	1
g	1388872	Transmission Assembly (2100 WB)	..	1
h	1488598	Transmission Assembly (2100 WB)	..	1
c	1388873	Transmission Assembly (1830 WB)	1	..
d	1488600	Transmission Assembly (1830 WB)	1	..
e	1388874	Transmission Assembly (2100 WB)	1	..
f	1488601	Transmission Assembly (2100 WB)	1	..
1	292529	Capscrew	15	15
2	292683	Lockwasher	15	15
3	292519	Capscrew	11	11
4	292682	Lockwasher	11	11

©2003 HYSTER COMPANY

TRANSMISSION MOUNT

ITEM	PART NO.	DESCRIPTION	QTY A	QTY B
5	1397797	Cover (Starter)	1	1
6	313022	Sealant	AR	AR

FOOTNOTES:

a ⇒ S/N T086 M004047
b S/N T086 M004048 ⇒
c ⇒ S/N T088 M005599
d S/N T088 M005600 ⇒
e ⇒ S/N T089 M005669
f S/N T089 M005670 ⇒
g ⇒ S/N PENDING PER ECN 70714-20
h S/N PENDING PER ECN 70714-20 ⇒

©2003 HYSTER COMPANY

TRANSMISSION LINES (Figure 5-2)

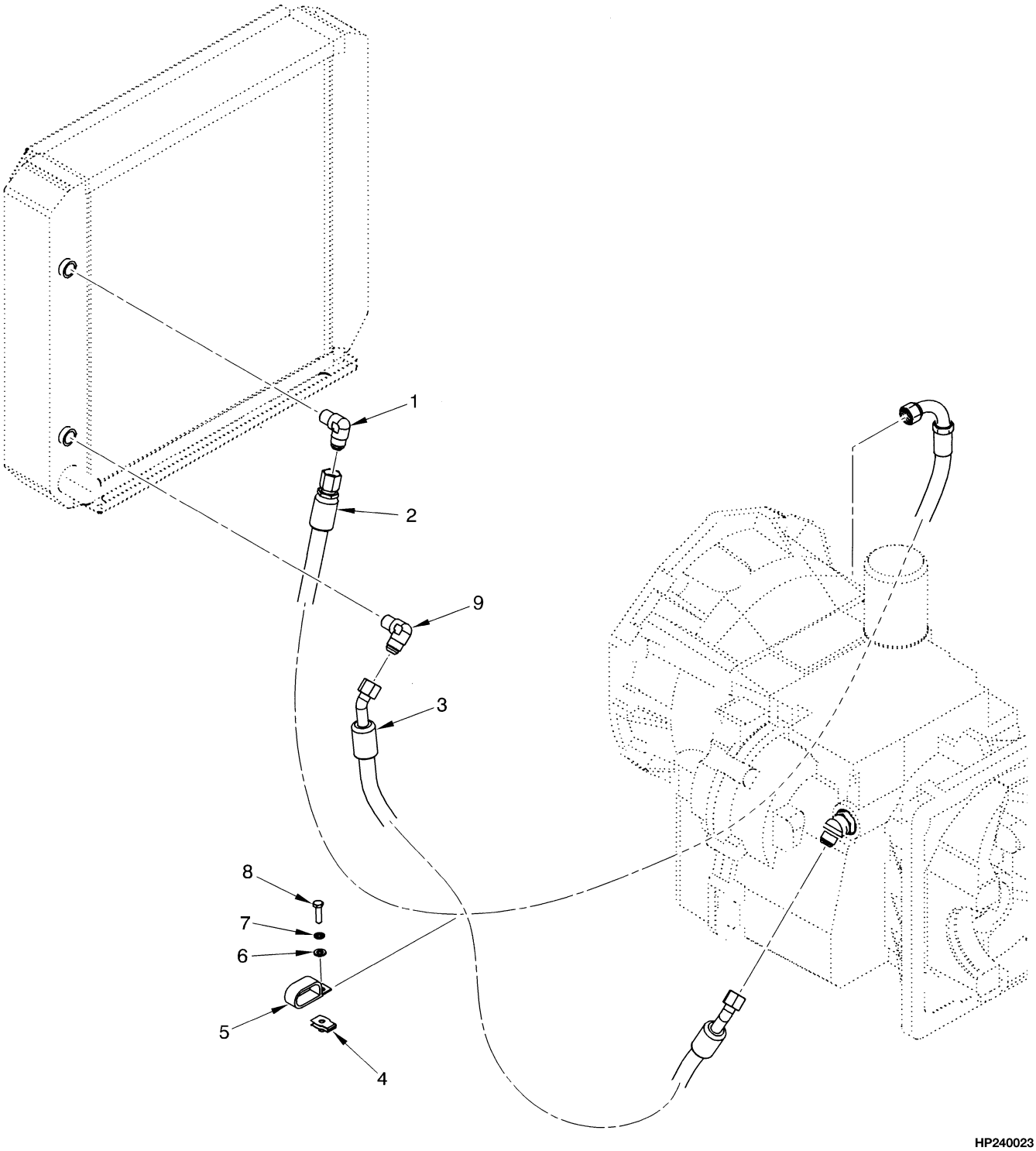

©2003 HYSTER COMPANY

TRANSMISSION LINES

ITEM	PART NO.	DESCRIPTION	QTY
1	66885	Fitting	1
2	1397978	Hose	1
3	1397982	Hose	1
4	1393879	Clip Nut	2
5	212786	Clamp	2
6	320157	Washer	2
7	292681	Lockwasher	2
8	132861	Capscrew	2
9	201787	Fitting	1

©2003 HYSTER COMPANY

TORQUE CONVERTER (Figure 5-3)

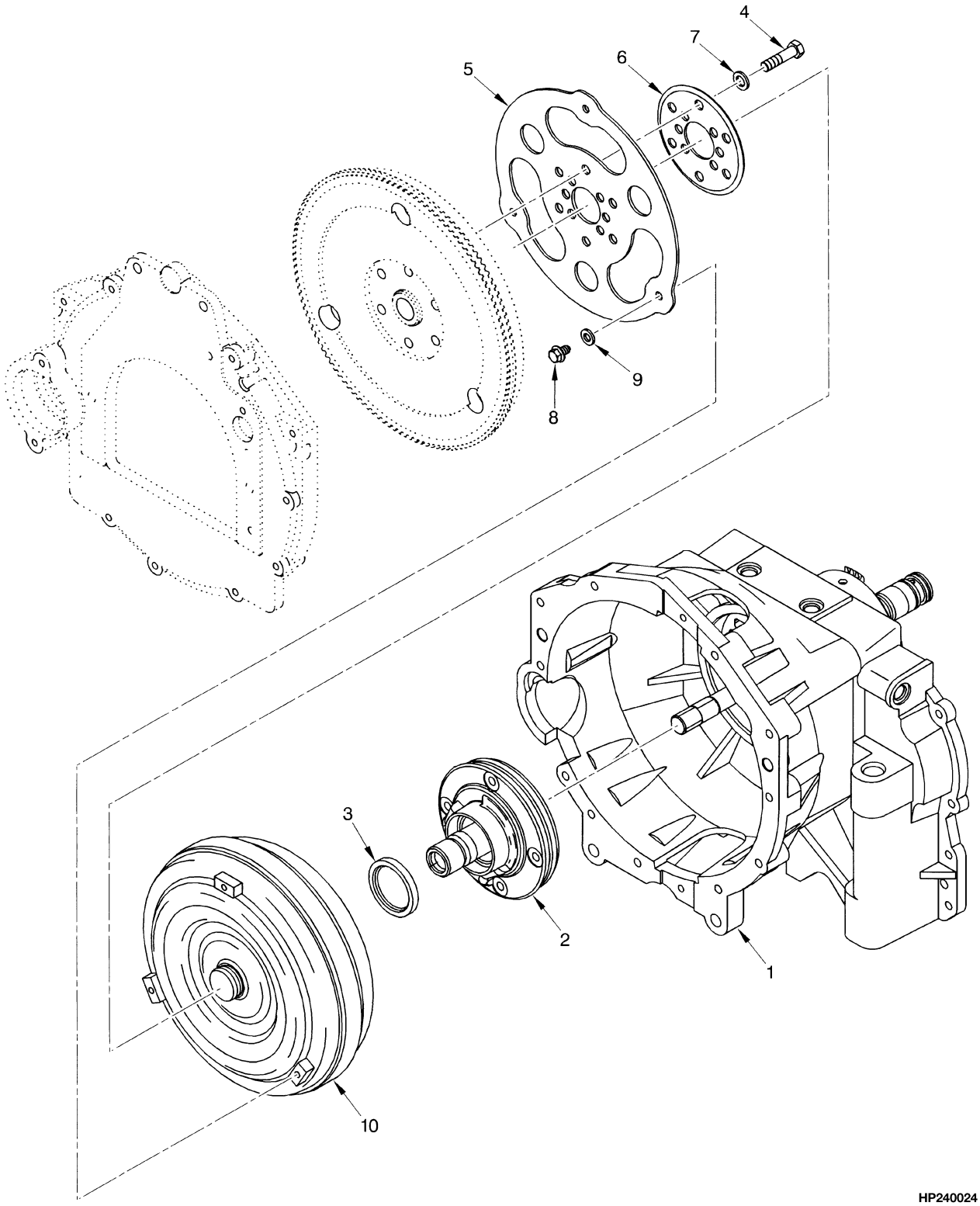

©2003 HYSTER COMPANY

TORQUE CONVERTER

KEY:
A: Two Speed
B: Single Speed

ITEM		PART NO.	DESCRIPTION	QTY A	QTY B
	a	1388871	Transmission Assembly (1830 WB)	..	1
	b	1488597	Transmission Assembly (1830 WB	..	1
	i	1388872	Transmission Assembly (2100 WB)	..	1
	j	1488598	Transmission Assembly (2100 WB)	..	1
	c	1388873	Transmission Assembly (1830 WB)	1	..
	d	1488600	Transmission Assembly (1830 WB)	1	..
	e	1388874	Transmission Assembly (2100 WB)	1	..
	f	1488601	Transmission Assembly (2100 WB)	1	..
1		1394798	Housing	..	1
1		1394799	Housing	1	..
2		1320018	Charge Pump	1	1
2		1322333	Bushing	1	1
2		373950	O-Ring	1	1
3		1498807	Oil Seal (Double Lip)	1	1
4		289867	Bolt (☞ Figure 2-19)	8	8
5		1397689	Flexplate (☞ Figure 2-19)	1	1
6		1388750	Washer (☞ Figure 2-19)	1	1
7		296422	Washer (☞ Figure 2-19)	6	6
8		1397804	Bolt (☞ Figure 2-19)	3	3
9		296420	Washer (☞ Figure 2-19)	3	3
10	**g**	1468682	Torque Converter	1	1
10	**h**	1503453	Torque Converter	1	1
11		1388705	Flywheel Assembly (☞ Figure 2-19)	1	1
11		1399298	Flywheel (☞ Figure 2-10)	1	1

FOOTNOTES:
a ⇒ S/N T086 M004047
b S/N T086 M004048 ⇒
c ⇒ S/N T088 M005599
d S/N T088 M005600 ⇒
e ⇒ S/N T089 M005669
f S/N T089 M005670 ⇒
g ⇒ S/N PENDING PER ECN 63646
h S/N PENDING PER ECN 63646 ⇒
i ⇒ S/N PENDING PER ECN 70714-20
j S/N PENDING PER ECN 70714-20 ⇒

©2003 HYSTER COMPANY

TRANSMISSION (Figure 5-4)
SHEET 1 OF 2

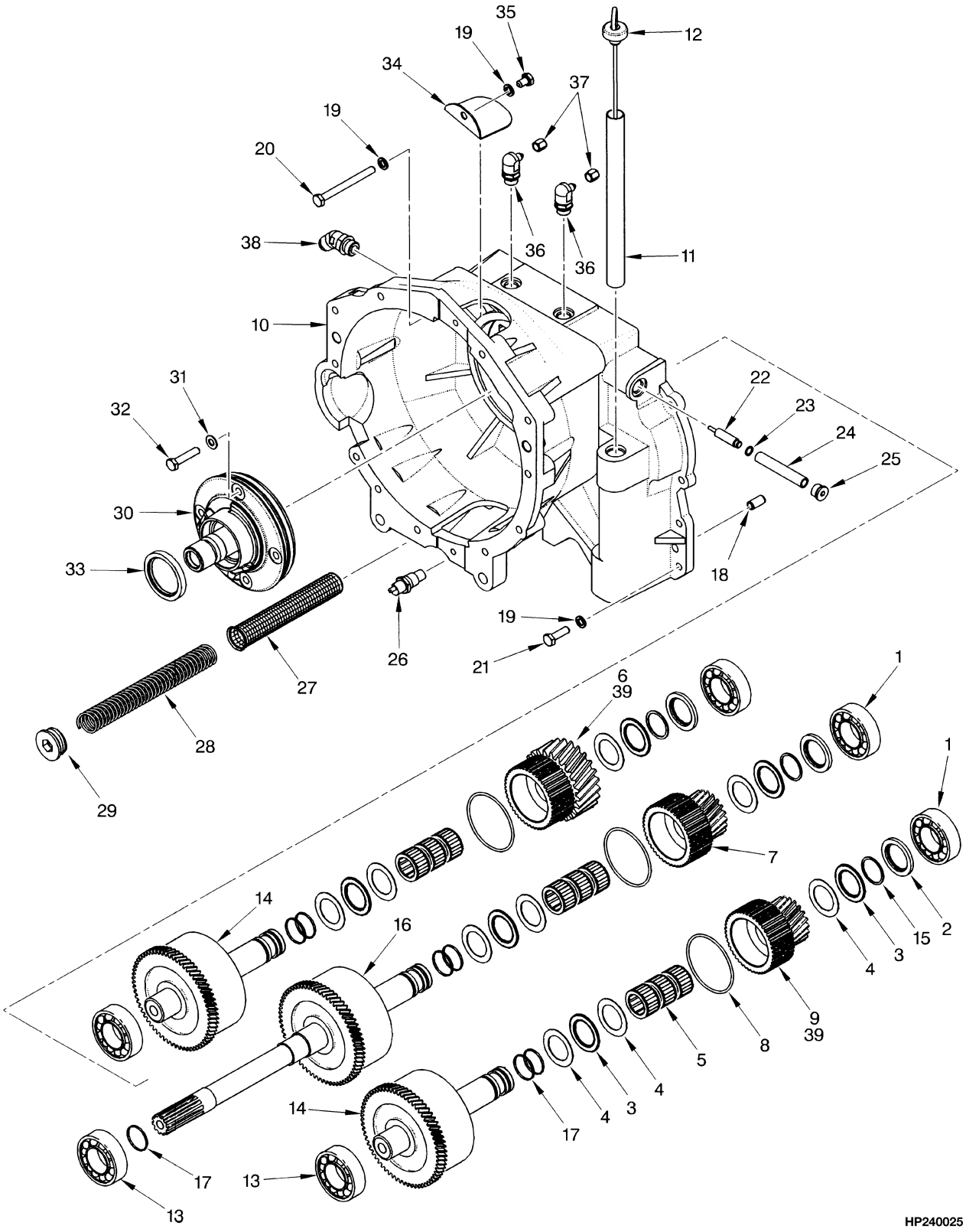

©2003 HYSTER COMPANY

TRANSMISSION
SHEET 1 OF 2

KEY:
A: Two Speed
B: Single Speed

ITEM		PART NO.	DESCRIPTION	QTY A	QTY B
	a	1388871	Transmission Assembly (1830 WB)	..	1
	b	1488597	Transmission Assembly (1830 WB)	..	1
	f	1388873	Transmission Assembly (1830 WB)	1	..
	g	1488600	Transmission Assembly (1830 WB)	1	..
	j	1388874	Transmission Assembly (2100 WB)	1	..
	k	1488601	Transmission Assembly (2100 WB)	1	..
1		41308	Bearing	3	2
2		1396053	Thrust Washer	3	2
3		346731	Needle Bearing	6	4
4		346696	Thrust Washer	9	6
5		346730	Needle Bearing	9	6
6		1394786	Gear (Clutch Output)	1	..
7		1394788	Gear (Clutch Output)	1	..
8		1386958	O-Ring	3	2
9		1394787	Gear (Clutch Output)	1	..
10		1394799	Housing	1	..
10		1394798	Housing	..	1
11		1388752	Tube (Dipstick)	1	1
12		1388753	Dipstick	1	1
13		41208	Bearing	3	2
14		1488604	Clutch Pack Assembly (☞ Figure 5-7)	2	1
15		346675	Snap Ring	3	2
16		1488602	Clutch Pack Assembly (☞ Figure 5-6)	1	1
17		1394794	Ring	7	5
18		186420	Pin (Single Speed)	4	4
19		292682	Lockwasher	16	16
20		334421	Capscrew	4	4
21		287860	Capscrew	10	10
22		1388856	Valve Spool	1	1
23		1394714	Snap Ring	1	1
24		1388857	Spring	1	1
25		235691	Fitting	1	1
25		16484	O-Ring	1	1
26		1322627	Temperature Switch	1	1
27		346680	Screen	1	1
28		1388993	Spring (Screen)	1	1
29		188210	Fitting	1	1
29		16983	O-Ring	1	1
30		1320018	Charge Pump	1	1
30		373950	O-Ring	1	1
30		1322333	Bushing	1	1
31		380524	Washer	1	1
32		292517	Capscrew	1	1
33	**chl**	373449	Oil Seal	1	1
33	**deim**	1498807	Oil Seal (Double Lip)	1	1
34		1388901	Plate	2	2

©2003 HYSTER COMPANY

TRANSMISSION
SHEET 1 OF 2

ITEM	PART NO.	DESCRIPTION	QTY A	QTY B
35	292513	Capscrew	2	2
36	162155	Fitting	2	2
36	16484	O-Ring	1	1
37	16923	Fitting	5	5
38	16569	Fitting	1	1
38	16485	O-Ring	1	1
39	1394789	Gear (Output)	..	2

FOOTNOTES:
a ⇒ S/N T086 M004047
b S/N T086 M004048 ⇒
c ⇒ S/N T086M-04221
d S/N T086M-04222 ⇒
e S/N T087M-01524 ⇒
f ⇒ S/N T088 M005599
g S/N T088 M005600 ⇒
h ⇒ S/N T088M-05754
i S/N T088M-05754 ⇒
j ⇒ S/N T089 M005669
k S/N T089 M005670 ⇒
l ⇒ S/N T089M-06006
m S/N T089M-06007 ⇒

©2003 HYSTER COMPANY

NOTES

TRANSMISSION (Figure 5-5)
SHEET 2 OF 2

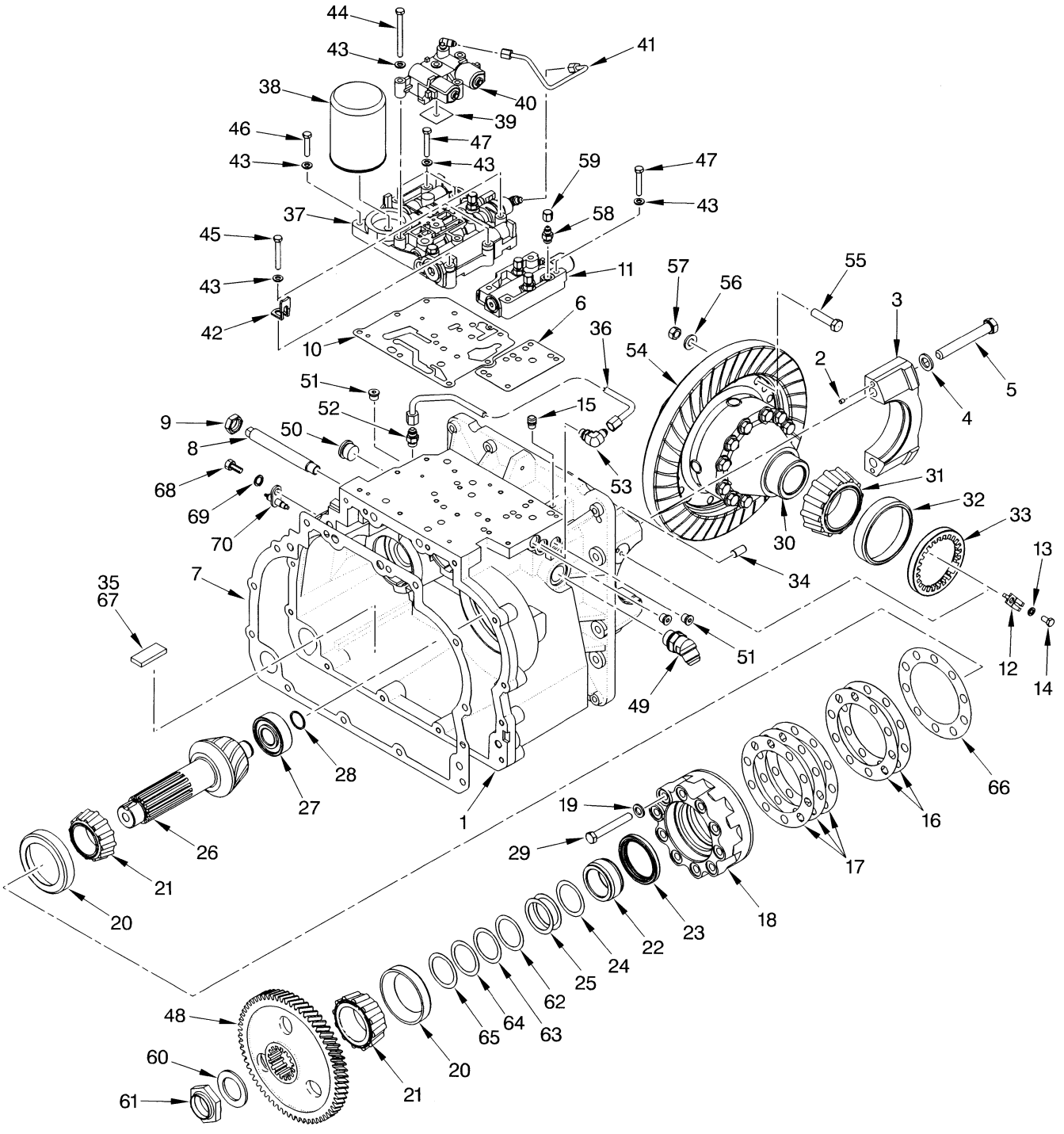

HP240026

©2003 HYSTER COMPANY

TRANSMISSION
SHEET 2 OF 2

KEY:
A: Two Speed
B: Single Speed

ITEM	PART NO.	DESCRIPTION	QTY A	QTY B
a	1388871	Transmission Assembly (1830 WB)	..	1
b	1488597	Transmission Assembly (1830 WB)	..	1
c	1388873	Transmission Assembly (1830 WB)	1	..
d	1488600	Transmission Assembly (1830 WB)	1	..
e	1388874	Transmission Assembly (2100 WB)	1	..
f	1488601	Transmission Assembly (2100 WB)	1	..
1	1388869	Housing	..	1
1	1388870	Housing	1	..
2	234038	Dowel Pin	4	4
3	1378259	Bearing Cap	2	2
4	296426	Washer	4	4
5	293697	Capscrew	4	4
6	1394709	Gasket	1	..
7	1388802	Gasket (Cover)	1	1
8	352321	Thrust Screw	1	1
9	1399455	Jam Nut	1	1
10	1386940	Gasket (Control Valve)	1	1
11	1388612	Valve Assembly	1	..
12	334447	Lock Plate	2	2
13	292681	Lockwasher	2	2
14	287851	Capscrew	2	2
15	21420	Plug	1	1
16	1388697	Shim (0.020 in.)	AR	AR
17	1388698	Shim (0.007 in.)	AR	AR
18	1388678	Carrier Housing	1	1
19	296422	Washer	10	10
20	200972	Bearing Cup	2	2
21	143004	Bearing Cone	2	2
22	1388677	Spacer	1	1
23	1394707	Oil Seal	1	1
24	1385060	Shim (0.356 in.)	AR	AR
25	1385065	Shim (0.635 in.)	AR	AR
26	. . . . .	Pinion (Hypoid) (1830 WB)	1	1
26	. . . . .	Pinion (Hypoid) (2100 WB)	1	1
27	1388680	Bearing	1	1
28	1394800	Snap Ring	1	1
29	293657	Capscrew	10	10
30	1476426	Differential Assembly (☞ Figure 6-1)	1	1
31	271479	Bearing Cone	2	2
32	30162	Bearing Cup	2	2
33	1388735	Nut	2	2
34	186420	Pin	4	4
35	334560	Magnet	1	1
36	1388801	Tube	1	..
37	1466123	Control Valve (☞ Figure 5-8)	1	1
38	1328691	Filter	1	1

©2003 HYSTER COMPANY

TRANSMISSION
SHEET 2 OF 2

ITEM	PART NO.	DESCRIPTION	QTY A	QTY B
39	1388573	Gasket	1	1
40	1400159	Manifold Valve (☞ Figure 5-9)	1	1
41	1302973	Tube	1	1
42	1385873	Strap	1	1
43	320157	Washer	1	1
44	346656	Capscrew	4	4
45	136704	Capscrew	3	3
46	292508	Capscrew	1	1
47	292509	Capscrew	4	..
48	1385489	Gear (Output)	1	..
48	1388747	Gear (Output)	..	1
49	201782	Fitting	1	1
49	16486	O-Ring	1	1
50	222444	Fitting	1	..
50	16486	O-Ring	1	..
51	222443	Fitting	3	1
51	16483	O-Ring	1	1
52	16540	Fitting	1	..
52	16483	O-Ring	1	..
53	16558	Hydraulic Fitting	1	..
53	16483	O-Ring	1	..
54	. . . . .	Gear (Hypoid) (1830 WB)	1	1
54	. . . . .	Gear (Hypoid) (2100 WB)	1	1
55	1466438	Capscrew	18	18
56	221771	Washer	18	18
57	221355	Nut	18	18
58	222380	Fitting	3	2
58	16482	O-Ring	1	1
59	16923	Fitting	5	4
60	1388695	Washer	1	1
61	1390101	Nut	1	1
62	1385061	Shim (0.381 in.)	AR	AR
63	1385062	Shim (0.406 in.)	AR	AR
64	1385063	Shim (0.508 in.)	AR	AR
65	1385064	Shim (0.559 in.)	AR	AR
66	1388699	Shim (0.005 in.)	AR	AR
67	264159	Adhesive	AR	AR
68	148962	Capscrew	1	..
69	292680	Lockwasher	1	..
70	1388804	Speed Sensor	1	..
	1397851	Hypoid Gear Set (1830 WB) (Includes Items 26, 54)	1	1
	1397852	Hypoid Gear Set (2100 WB) (Includes Items 26, 54)	1	1

FOOTNOTES:
a ⇒ S/N T086 M004047
b S/N T086 M004048 ⇒
c ⇒ S/N T088 M005599
d S/N T088 M005600 ⇒
e ⇒ S/N T089 M005669
f S/N T089 M005670 ⇒

©2003 HYSTER COMPANY

NOTES

INPUT CLUTCH (Figure 5-6)

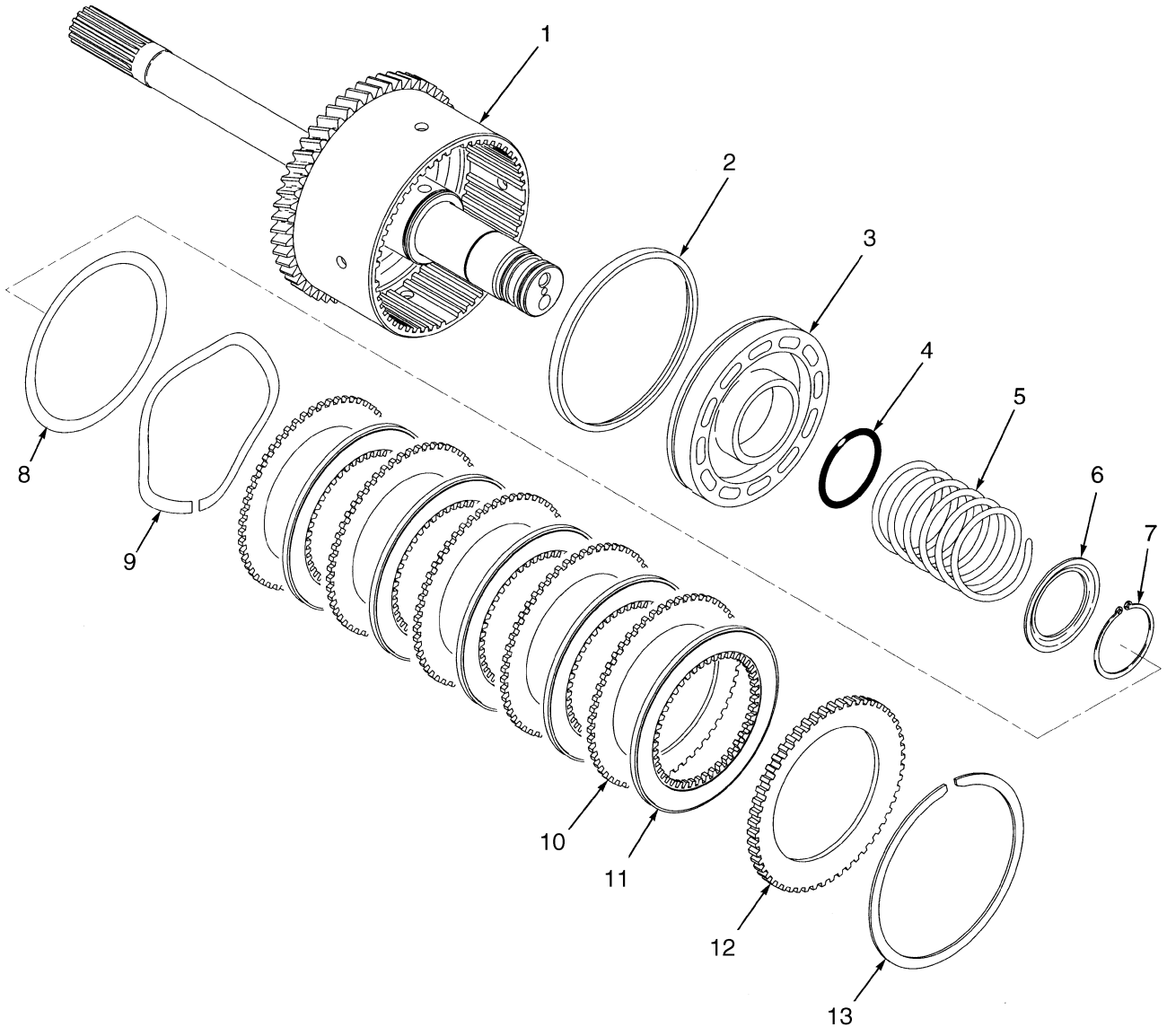

BP240018

©2003 HYSTER COMPANY

INPUT CLUTCH

KEY:
A: Two Speed
B: Single Speed

ITEM		PART NO.	DESCRIPTION	QTY A	QTY B
	eio	1394776	Clutch Pack Assembly	1	1
	fjp	1488602	Clutch Pack Assembly	1	1
1		1396064	Shaft Assembly	1	1
2		334402	Seal	1	1
3	**eio**	1394885	Piston	1	1
3	**fp**	1523953	Piston	1	1
4		1394879	O-Ring	1	1
5		1394882	Spring	1	1
6		1394893	Guide (Spring)	1	1
7		1394912	Snap Ring	1	1
8		1515680	Back-Up Washer	1	1
9	**akq**	1473595	Wave Spring	1	1
9	**blr**	1523551	Wave Spring	1	1
10		1387235	Plate (Separator)	8	8
11	**cgm**	1469300	Plate (Friction)	8	8
11	**dhn**	1469301	Plate (Friction)	8	8
12		1394881	Plate (Pressure)	1	1
12		1487201	Plate (Pressure, Optional)	1	1
12		1487202	Plate (Pressure, Stepped, Optional)	1	1
13		334475	Snap Ring	1	1

FOOTNOTES:
a ⇒ S/N T086M-01547
b S/N T086M-01547 ⇒
c ⇒ S/N T086M-02608
d S/N T086M-02609 ⇒
e ⇒ S/N T086M-04047
f S/N T086M-04048 ⇒
g ⇒ S/N T088M-03305
h S/N T088M-03306 ⇒
i ⇒ S/N T088M-05599
j S/N T088M-05600 ⇒
k ⇒ S/N T088M-07042
l S/N T088M-07043 ⇒
m ⇒ S/N T089M-03175
n S/N T089M-03176 ⇒
o ⇒ S/N T089M-05669
p S/N T089M-05670 ⇒
q ⇒ S/N T089M-07577
r S/N T089M-07578 ⇒

©2003 HYSTER COMPANY

DIRECTIONAL CLUTCH (Figure 5-7)

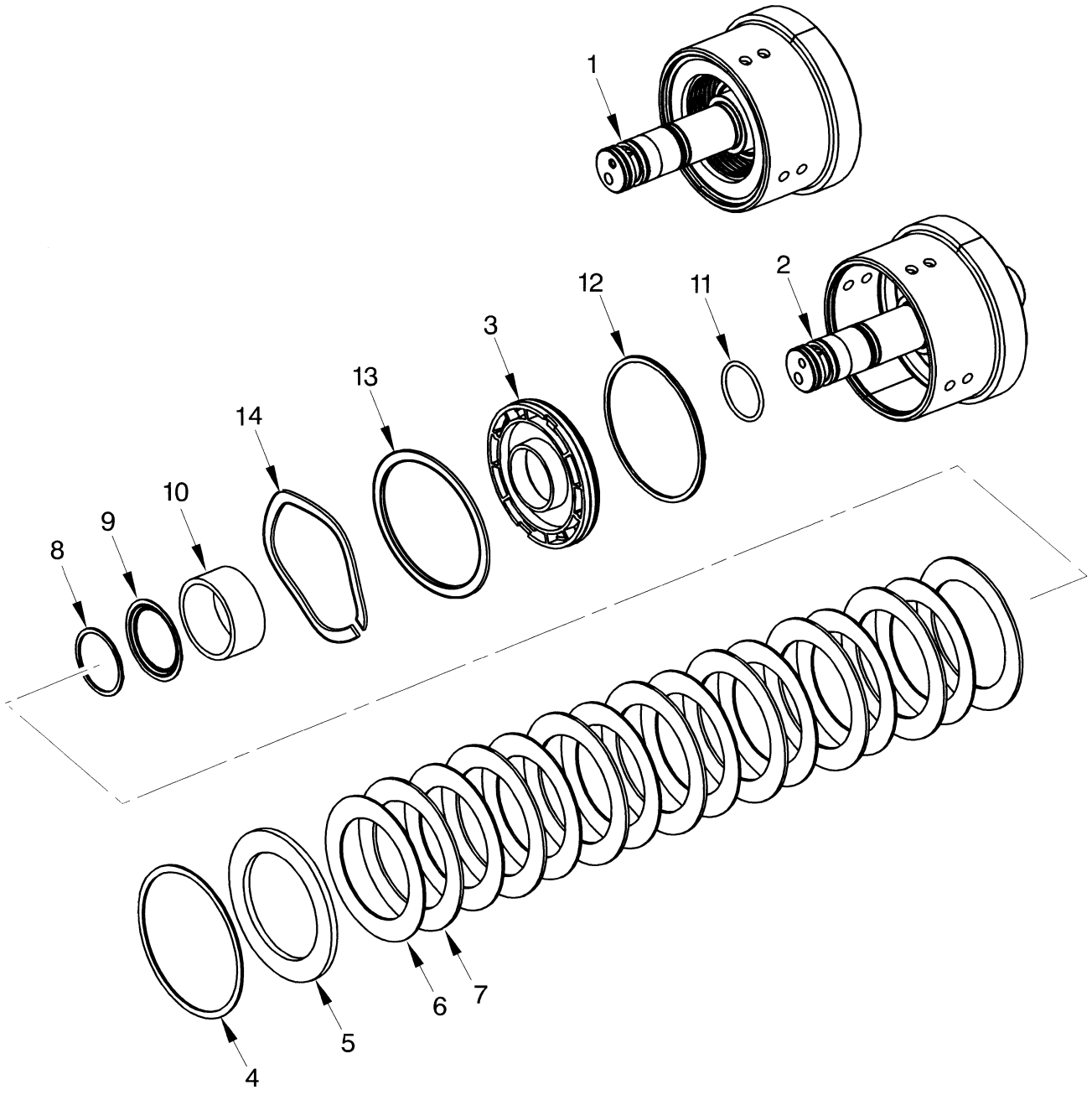

HP240028

©2003 HYSTER COMPANY

DIRECTIONAL CLUTCH

KEY:
A: Two Speed
B: Single Speed

ITEM		PART NO.	DESCRIPTION	QTY A	QTY B
1	**ehn**	1394777	Clutch Pack Assembly	2	1
1	**fio**	1488604	Clutch Pack Assembly	2	1
2		1396065	Shaft Assembly	1	1
3	**ehn**	1394885	Piston	1	1
3	**fio**	1523953	Piston	1	1
4		334475	Snap Ring	1	1
5		1394881	Plate (Pressure)	1	1
5		1487201	Plate (Pressure, Optional)	1	1
5		1487202	Plate (Pressure, Stepped, Optional)	1	1
6	**cgl**	1469300	Plate (Friction)	8	8
6	**dmr**	1469301	Plate (Friction)	8	8
7		1387235	Plate (Separator)	8	8
8		1394912	Snap Ring	1	1
9		1394893	Guide (Spring)	1	1
10		1394882	Spring	1	1
11		1394879	O-Ring	1	1
12		334402	Seal	1	1
13		1515680	Back-Up Washer	AR	AR
14	**ajp**	1473595	Wave Spring	1	1
14	**bkq**	1523551	Wave Spring	1	1

FOOTNOTES:
a ⇒ S/N T086M-01546
b S/N T086M-01547 ⇒
c ⇒ S/N T086M-02608
d S/N T086M-02609 ⇒
e ⇒ S/N T086M-04047
f S/N T086M-04048 ⇒
g ⇒ S/N T088M-03305
h ⇒ S/N T088M-05599
i S/N T088M-05600 ⇒
j ⇒ S/N T088M-07042
k S/N T088M-07043 ⇒
l ⇒ S/N T089M-03175
m S/N T089M-03176 ⇒
n ⇒ S/N T089M-05669
o S/N T089M-05670 ⇒
p ⇒ S/N T089M-07577
q S/N T089M-07578 ⇒
r S/N TO88M-03306 ⇒

©2003 HYSTER COMPANY

CONTROL VALVE (Figure 5-8)
TRANSMISSION

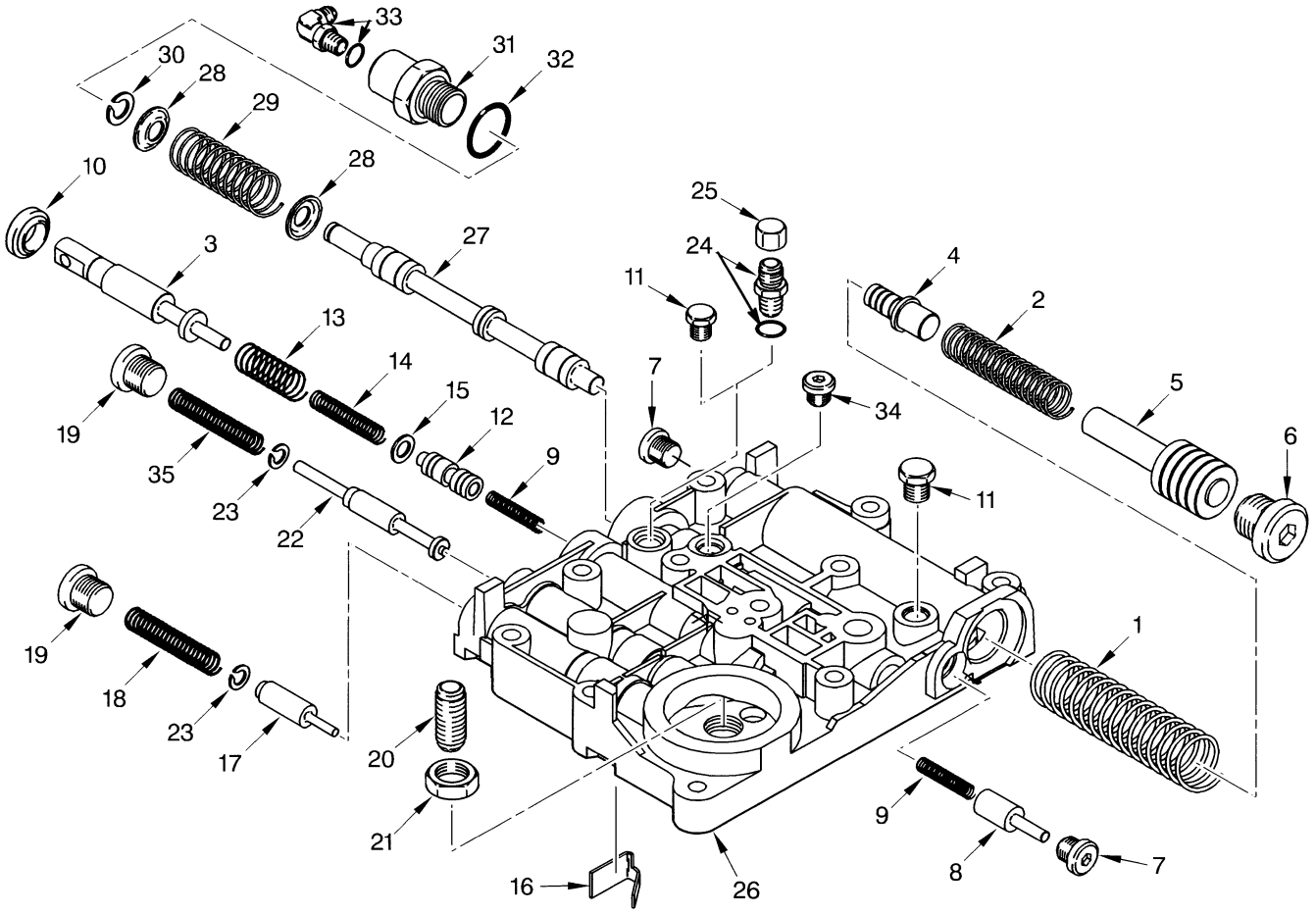

HP240029

©2003 HYSTER COMPANY

CONTROL VALVE
TRANSMISSION

ITEM		PART NO.	DESCRIPTION	QTY
		1466123	Control Valve	1
1		361876	Spring (Accumulator)	1
2		361877	Spring (Trimmer)	1
3		1337817	Plunger (Inching)	1
4		334582	Spool (Trimer)	1
5		359221	Spool (Accumulator)	1
6		200659	Fitting	1
6		16982	O-Ring	1
7		222443	Fitting	2
7		16483	O-Ring	2
8		334542	Spool (Dump)	1
9		334543	Spring	2
10		334500	Oil Seal	1
11		14592	Fitting	1
11		16482	O-Ring	1
12	**a**	1466124	Spool (Inching)	1
12	**b**	1483108	Spool (Inching)	1
13		334531	Spring (Inching)	1
14		1387230	Spring (Inching)	1
15		296418	Washer	1
16		350484	Stop (Inching)	1
17		1394710	Spool (Regulator)	1
18		1394711	Spring (Regulator)	1
19		235691	Fitting	2
19		16484	O-Ring	1
20		181766	Nipple	1
21		15032	Nut	1
22		1388924	Spool (Pack Regulator)	1
23		1394714	Snap Ring (External)	2
24		222380	Fitting	1
24		16482	O-Ring	1
25		16923	Fitting	1
26		1396637	Body	1
27	**c**	369922	Spool (Forward and Reverse)	1
27	**d**	1490391	Spool (Forward And Reverse)	1
28		346648	Cap (Forward and Reverse)	2
29		346645	Spring	1
30	**c**	346650	Snap Ring	1
30	**d**	58936	Snap Ring	1
31		375986	Cap (Monotrol)	1
32		367945	Gasket	1
33		16556	Fitting	1
33		16481	O-Ring	1
34		134436	Fitting	1
34		16482	O-Ring	1
35		1461077	Spring	1

FOOTNOTES:
a ⇒ S/N C813D-03004Y
b S/N C813D-03005Y ⇒

©2003 HYSTER COMPANY

CONTROL VALVE
TRANSMISSION

c ⇒ S/N PENDING PER ECN 73589
d S/N PENDING PER ECN 73589 ⇒

©2003 HYSTER COMPANY

MANIFOLD VALVE (Figure 5-9)

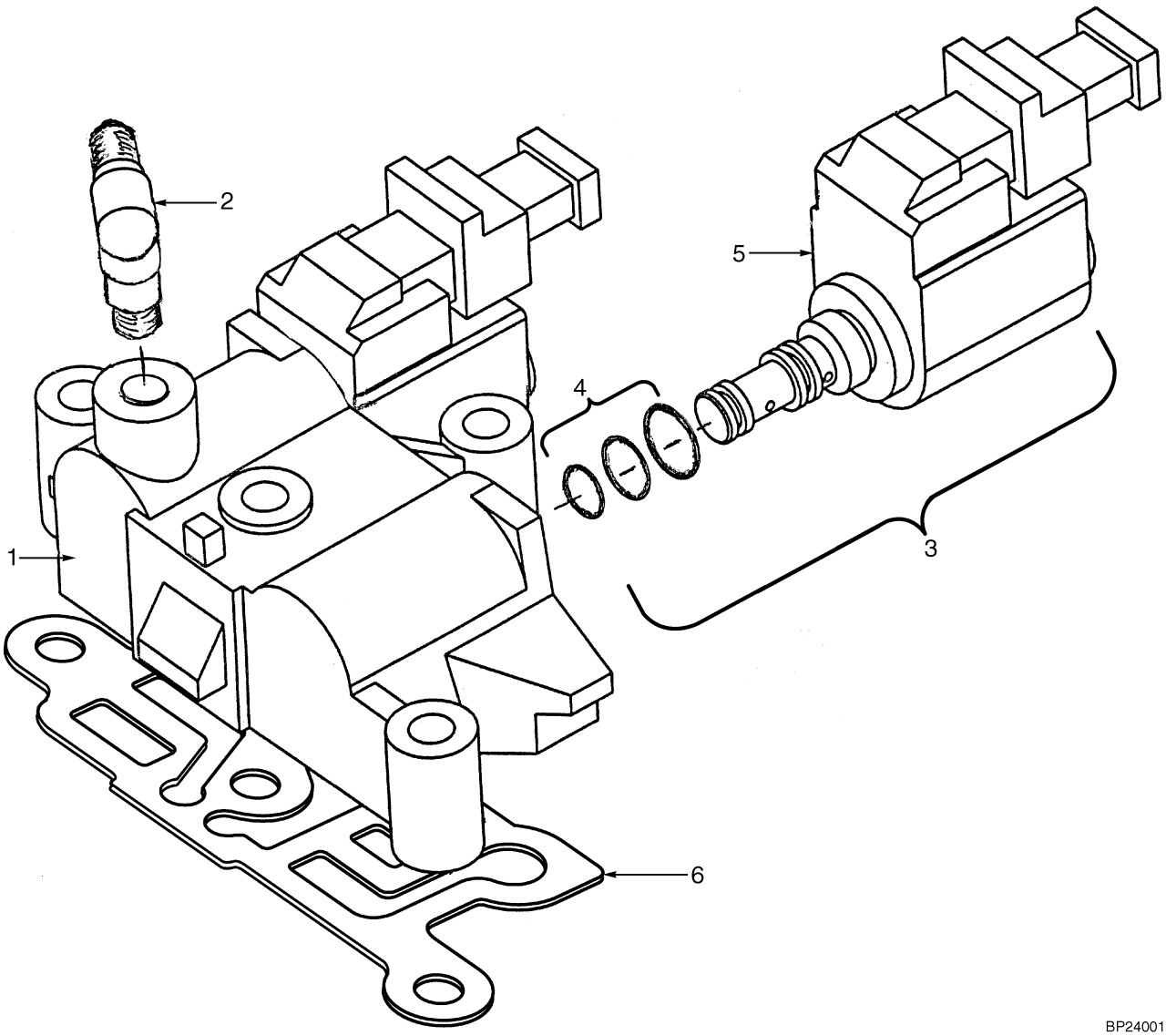

BP240011

ITEM		PART NO.	DESCRIPTION	QTY
		1400159	Manifold Valve	1
1		1388563	Manifold	1
2		14500	Fitting	1
2		246108	Sealant	AR
3		1400158	Solenoid Valve Assembly	2
4	**a**	1393160	Seal Kit	1
5		1464144	Coil	1
6		1388573	Gasket	1

FOOTNOTES:

a Services One Solenoid Valve

VALVE (Figure 5-10)
HIGH AND LOW

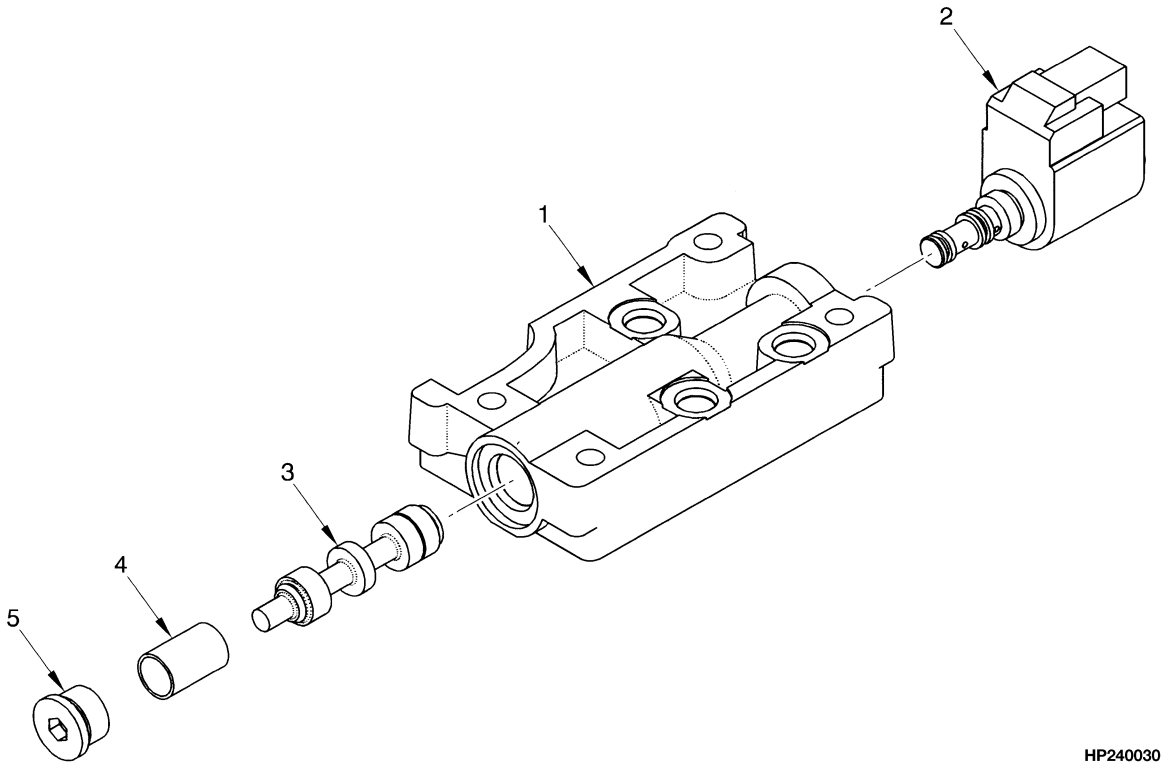

ITEM	PART NO.	DESCRIPTION	QTY
	1388612	Valve Assembly	1
1	1388613	Body	1
2	1400158	Solenoid Valve Assembly	1
3	1388615	Spool	1
4	334531	Spring	1
5	235691	Fitting	1
5	16484	O-Ring	1

©2003 HYSTER COMPANY

6 DRIVE AXLE

SECTION 6
DRIVE AXLE

DESCRIPTION **PAGE**

DIFFERENTIAL ASSEMBLY 6-2
DRIVE AXLE 6-4

DIFFERENTIAL ASSEMBLY (Figure 6-1)

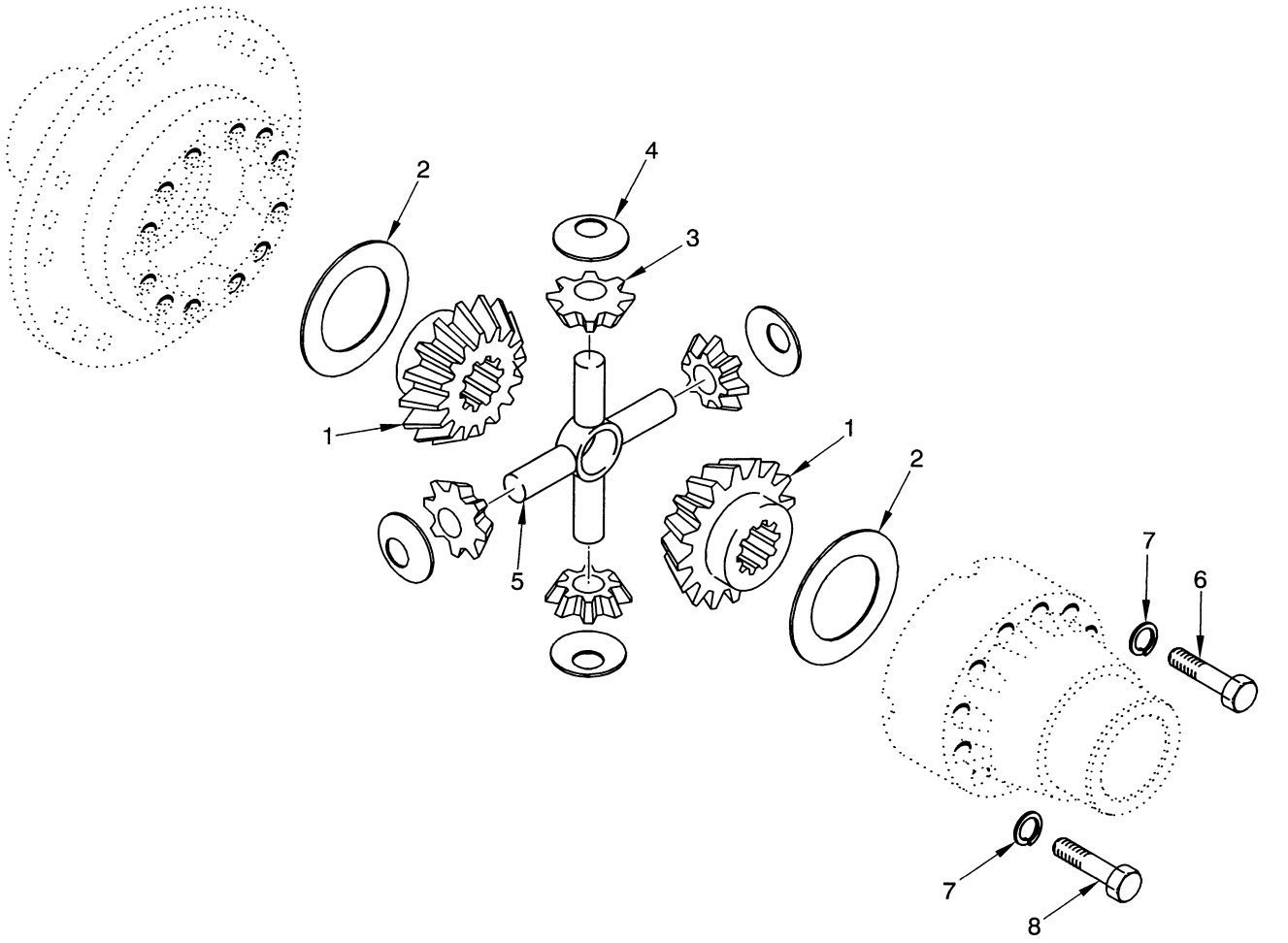

ITEM	PART NO.	DESCRIPTION	QTY
	1476426	Differential Assembly	1
1	1484734	Side Gear	2
2	1484735	Washer	2
3	1484736	Pinion	4
4	1484737	Washer	4
5	1484738	Spider	1
6	1484739	Capscrew	8
7	1484741	Washer	12
8	1484740	Bolt	4

©2003 HYSTER COMPANY

NOTES

DRIVE AXLE (Figure 6-2)

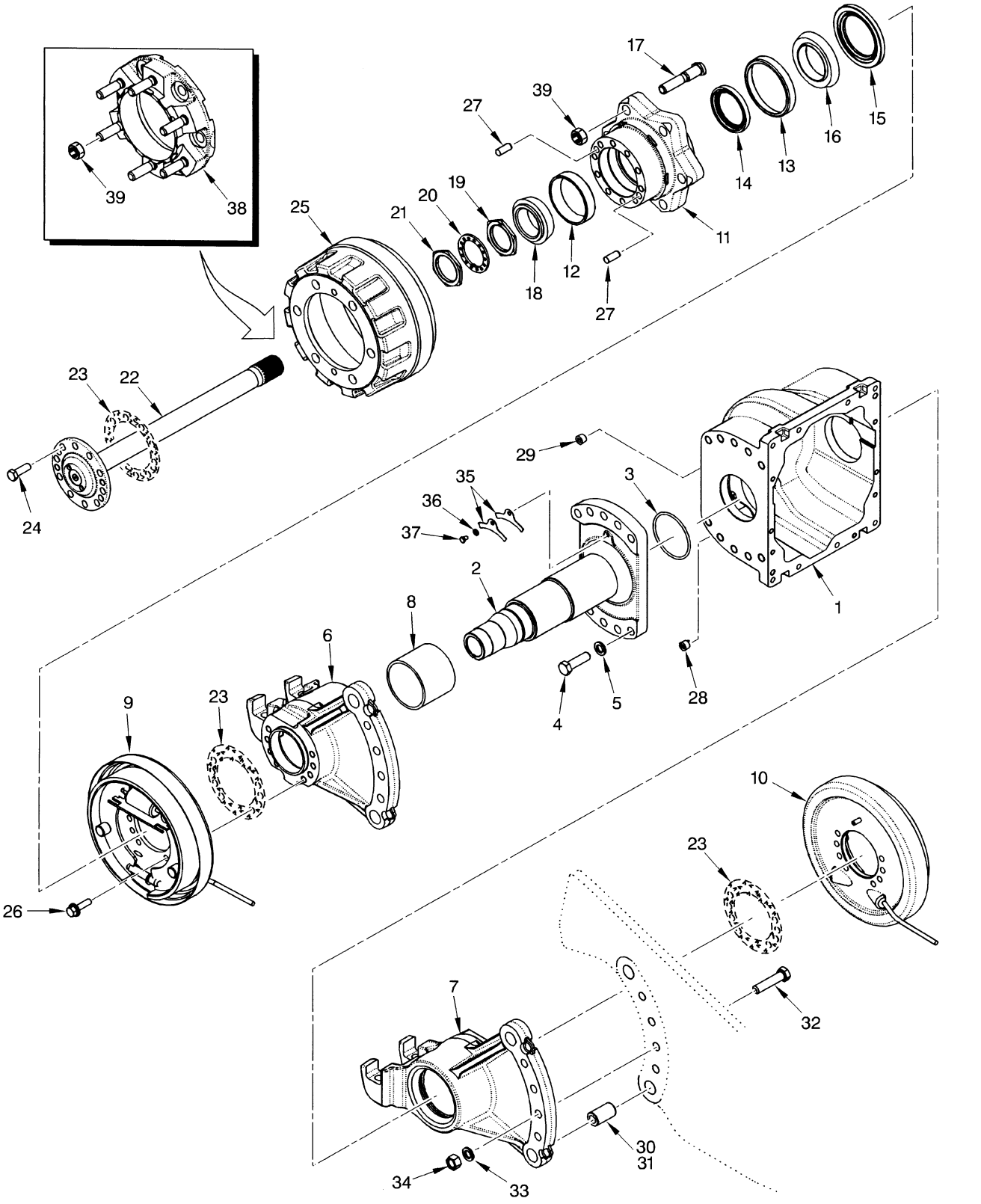

©2003 HYSTER COMPANY

DRIVE AXLE

KEY:
A: H70-90XM
B: H100-120XM

ITEM		PART NO.	DESCRIPTION	QTY A	QTY B
	a	2035673	Drive Axle Assembly	1	..
	b	1529708	Drive Axle Assembly	1	..
	a	2035674	Drive Axle Assembly	..	1
	b	1529709	Drive Axle Assembly	..	1
1		1394603	Housing	1	1
2	**a**	1394604	Spindle	2	2
2	**b**	1528427	Spindle	2	2
3		18942	O-Ring	2	2
4		293710	Capscrew	20	20
5		292687	Lockwasher	20	20
6	**a**	1394607	Hanger (LH)	1	1
6	**b**	1528484	Hanger (LH)	1	1
7	**a**	1394610	Hanger (RH)	1	1
7	**b**	1528410	Hanger (RH)	1	1
7	**a**	1394687	Hanger (RH) (Optional)	1	1
8		1394605	Bushing	2	2
9		1394681	Brake Assembly (LH) (☞ Figure 8-2)	1	..
9		1532851	Brake Assembly (LH) (☞ Figure 8-3)	..	1
10		1394682	Brake Assembly (RH) (☞ Figure 8-2)	1	..
10		1532852	Brake Assembly (RH) (☞ Figure 8-3)	..	1
11		1394612	Hub Assembly	2	2
11		1394615	Hub	1	1
12		30098	Bearing Cup	1	1
13		1394617	Bearing Cup	1	1
14		2035568	Oil Seal	1	1
15		2035569	Oil Seal	1	1
16		1394618	Bearing Cone	1	1
17		1393342	Stud	6	6
18		30097	Bearing Cone	2	2
19		1394620	Nut	2	2
20		1394621	Lockwasher	2	2
21		1394622	Nut	2	2
22		1394624	Axle Shaft	2	2
23		313022	Sealant	AR	AR
24		293685	Capscrew	20	20
25		1394626	Brake Drum	2	..
25		1394686	Brake Drum	..	2
26		1394646	Bolt	16	16
27		352220	Pin	4	4
28		15290	Fitting	1	1
29		15315	Fitting	1	1
30		370651	Pin	4	4
31		251979	Lubricant	AR	AR
32		292589	Capscrew	8	8
33		292687	Lockwasher	8	8
34		292620	Nut	8	8

©2003 HYSTER COMPANY

DRIVE AXLE

ITEM	PART NO.	DESCRIPTION	QTY A	QTY B
35	1394661	Shim (0.039 in.)	4	4
36	292681	Lockwasher	2	2
37	287805	Capscrew	2	2
38	1393346	Adapter (Dual Wheel) (2100 WB)	..	1
38	1393344	Adapter (Dual Wheel) (1830 WB)	1	..
39	376026	Lug Nut	12	12
39	376026	Lug Nut (Dual Wheel)	24	24
39	1394715	Lug Nut (Optional)	12	12
39	1394715	Lug Nut (Dual Wheel) (Optional)	24	24

FOOTNOTES:

a ⇒ S/N PENDING PER ECN 74077

b S/N PENDING PER ECN 74077 ⇒

©2003 HYSTER COMPANY

7 STEERING SYSTEM

SECTION 7
STEERING SYSTEM

DESCRIPTION **PAGE**

STEERING AXLE 7-6
STEERING COLUMN 7-4
STEERING CYLINDER 7-10
STEERING PUMP 7-12
STEERING SYSTEM 7-2

©2003 HYSTER COMPANY

STEERING SYSTEM (Figure 7-1)

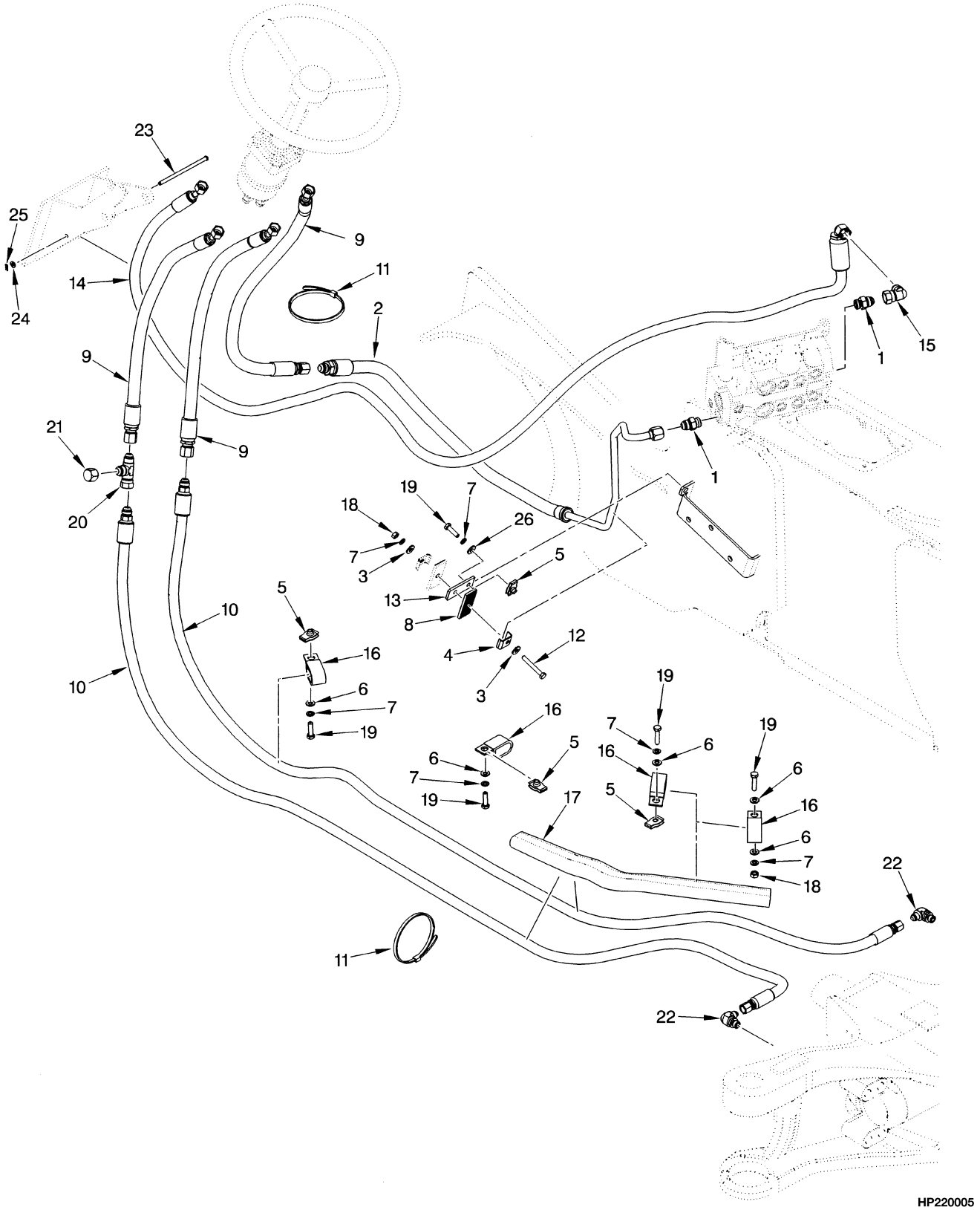

©2003 HYSTER COMPANY

STEERING SYSTEM

ITEM	PART NO.	DESCRIPTION	QTY
1	16541	Fitting	2
1	16484	O-Ring	1
2	1400218	Hose	1
3	320158	Washer	3
4	1400244	Clamp	1
5	1393879	Clip Nut	4
6	320157	Washer	6
7	292681	Lockwasher	6
8	1399323	Pad	1
9	1396719	Hose	3
10	1397979	Hose (1830 WB)	1
10	1397980	Hose (2100 WB)	1
11	397676	Strap Clamp	1
12	136704	Capscrew	1
13	1400243	Plate	1
14	1396720	Hose	1
15	16989	Fitting	1
16	79377	Clamp	4
17	1358120	Sleeve	1
18	239503	Nut	1
19	176640	Capscrew	3
20	17062	Fitting	1
21	16925	Fitting	1
22	16558	Hydraulic Fitting	2
22	16483	O-Ring	1
23	1352616	Rod End Pin (Rod End)	1
24	320156	Washer	1
25	18824	Cotter Pin	1
26	320158	Washer	6

©2003 HYSTER COMPANY

STEERING COLUMN (Figure 7-2)

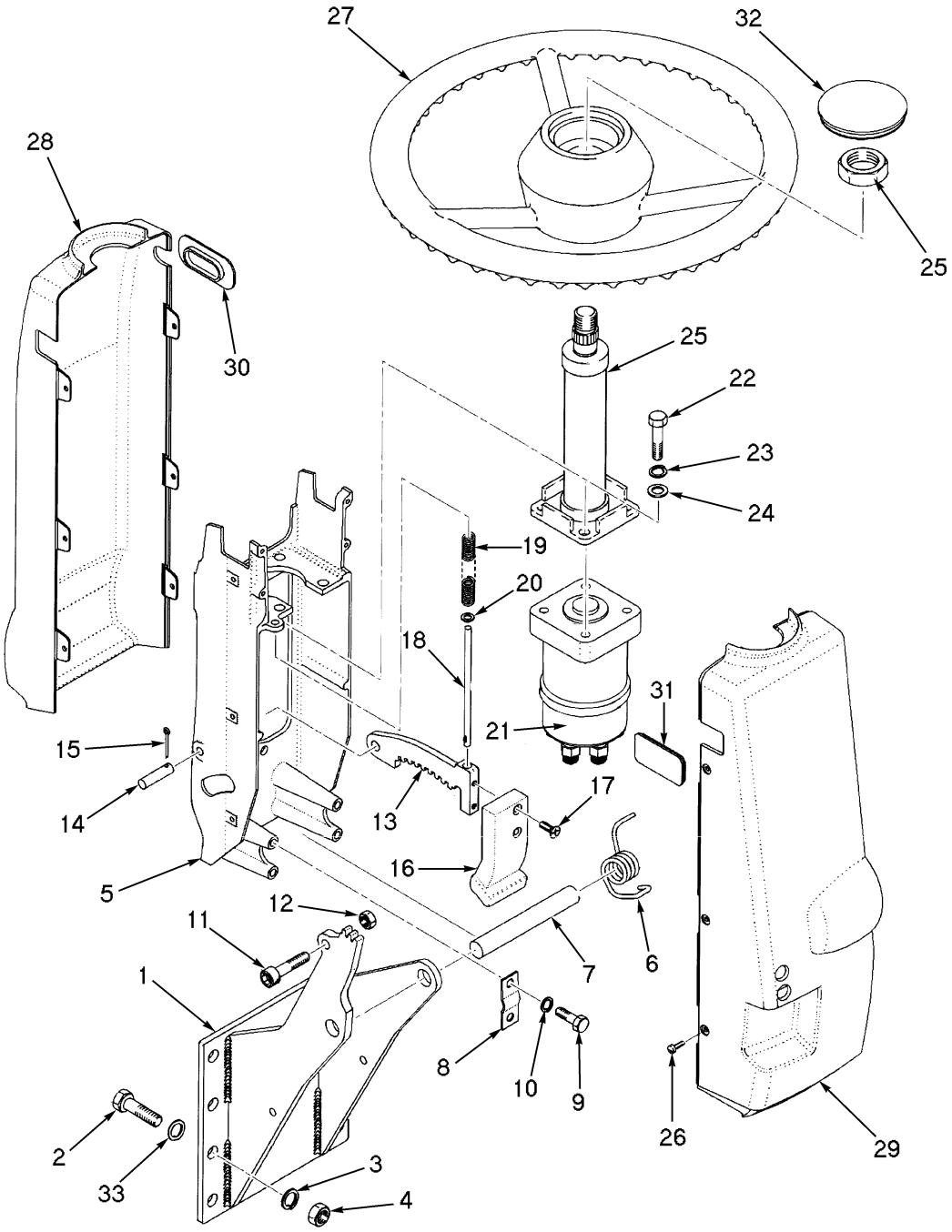

HP220006

©2003 HYSTER COMPANY

STEERING COLUMN

ITEM	PART NO.	DESCRIPTION	QTY
1	1385451	Bracket	1
2	136985	Capscrew	4
3	292682	Lockwasher	4
4	136692	Nut	4
5	1343573	Bracket	1
6	1378600	Spring	1
7	1335987	Shaft	1
8	1335967	Plate	2
9	136749	Capscrew	4
10	292681	Lockwasher	4
11	296010	Capscrew	1
12	302400	Locknut	1
13	1364271	Latch (Gear)	1
14	1343607	Pin	1
15	15212	Cotter Pin	1
16	1343574	Knob	1
17	296215	Capscrew	2
18	1343572	Rod	1
19	1343537	Spring	1
20	320155	Washer	1
21	1388773	Steering Pump (☞ Figure 7-5)	1
22	16815	Capscrew	4
23	15156	Lockwasher	4
24	15134	Washer	4
25	1347025	Steering Column	1
25	345423	Nut	1
25	1382556	Terminal Kit	1
26	1337196	Screw	6
27	1329250	Steering Wheel	1
28	1397863	Cover (Upper)	1
29	1397864	Cover (Lower)	1
30	1376743	Plug (Without Turn Signals)	1
31	1343597	Plug	2
32	1347135	Horn Button	1
33	1324577	Washer	4

©2003 HYSTER COMPANY

STEERING AXLE (Figure 7-3)

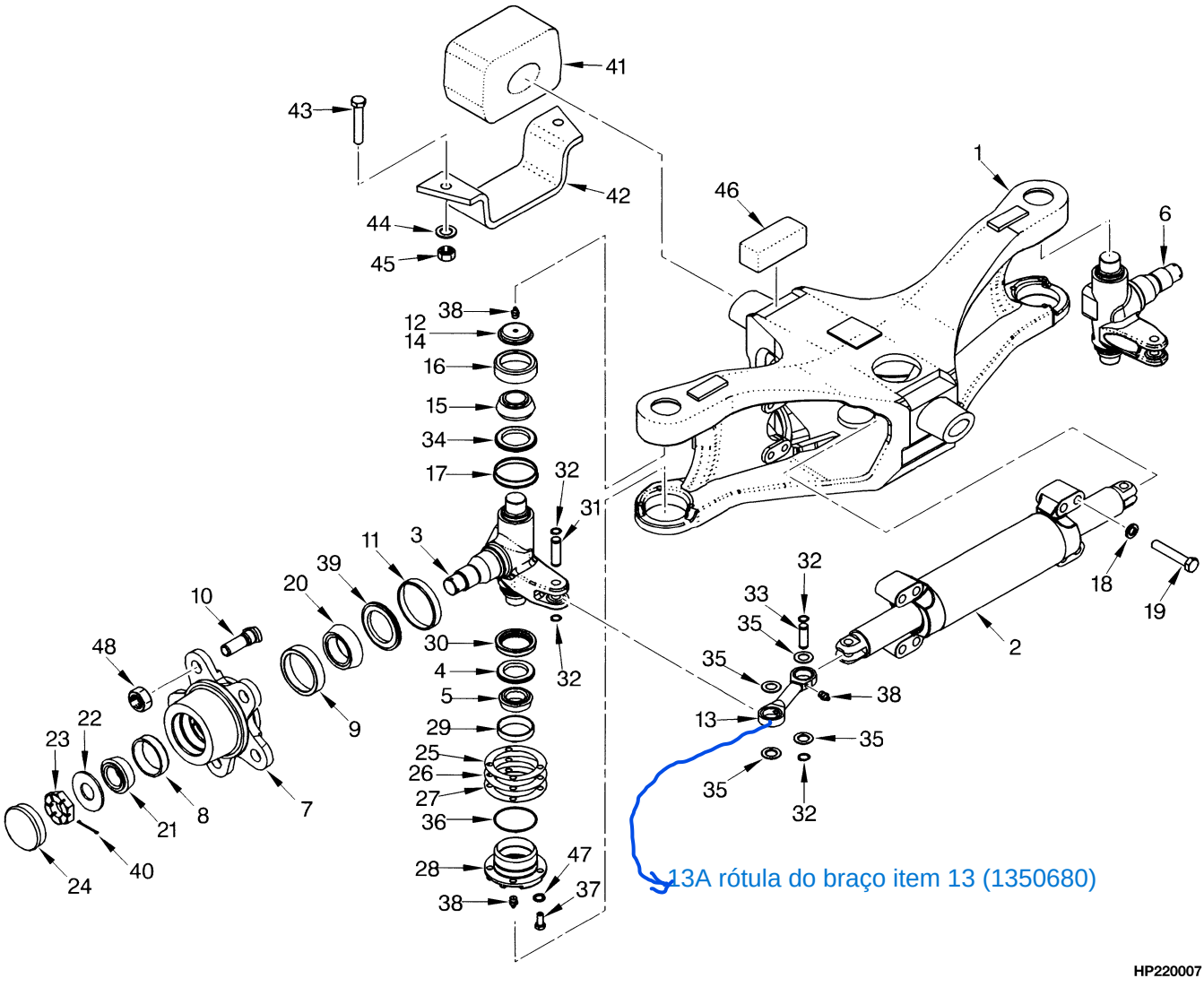

©2003 HYSTER COMPANY

STEERING AXLE

ITEM		PART NO.	DESCRIPTION	QTY
	a	1388833	Steering Axle Assembly	1
	b	1491381	Steering Axle Assembly	1
1		1388673	Steer Axle	1
2		2035137	Steering Cylinder (☞ Figure 7-4)	1
3		1388670	Spindle (LH)	1
4		266728	Seal	2
5		135657	Bearing Cone	2
6		1388842	Spindle (RH)	1
7		1388828	Hub Assembly	2
7		1388827	Hub	1
8		30019	Bearing Cup	1
9		30147	Bearing Cup	1
10		1393348	Stud (Wheel)	5
11		164639	Wear Sleeve	1
12		1388829	Cap	2
13	**a**	1400205	Tie Rod	2
13	**b**	1491382	Tie Rod	2
14		288394	Adhesive	AR
15		153715	Bearing Cone	2
16		230421	Bearing Cup	2
17		153717	Wear Sleeve	2
18		292685	Lockwasher	8
19		293694	Capscrew	8
20		230315	Bearing Cone	2
21		30289	Bearing Cone	2
22		1388832	Washer	2
23		1383777	Nut (Spindle)	2
24		69029	Cap (Hub)	2
25		1388846	Shim (0.005 in.)	2
26		1388847	Shim (0.007 in.)	2
27		1388848	Shim (0.020 in.)	2
28		1394554	Cap Assembly	2
28		1394552	Bearing Cap	1
29		135658	Bearing Cup	1
30		266733	Seal	2
31	**a**	1388843	Pin	2
31	**b**	1487765	Pin	2
32		58903	Snap Ring	8
33	**a**	326498	Pin	2
33	**b**	1487764	Pin	2
34		153716	Seal	2
35		1345684	Seal	8
36		39678	O-Ring	2
37		293628	Screw	6
38		13957	Grease Fitting	12
39		44542	Oil Seal	2
40		15226	Cotter Pin	2
41		324864	Mount	2
42		324858	Plate	2
43		293648	Capscrew	4
44		320161	Washer	8

©2003 HYSTER COMPANY

STEERING AXLE

ITEM	PART NO.	DESCRIPTION	QTY
45	300937	Nut	4
46	1388838	Mount	2
47	296420	Washer	4
48	376026	Lug Nut	10
48	1394715	Lug Nut (Optional)	10

FOOTNOTES:
a ⇒ S/N K005D-05431
b S/N K005D-05432 ⇒

©2003 HYSTER COMPANY

NOTES

STEERING CYLINDER (Figure 7-4)

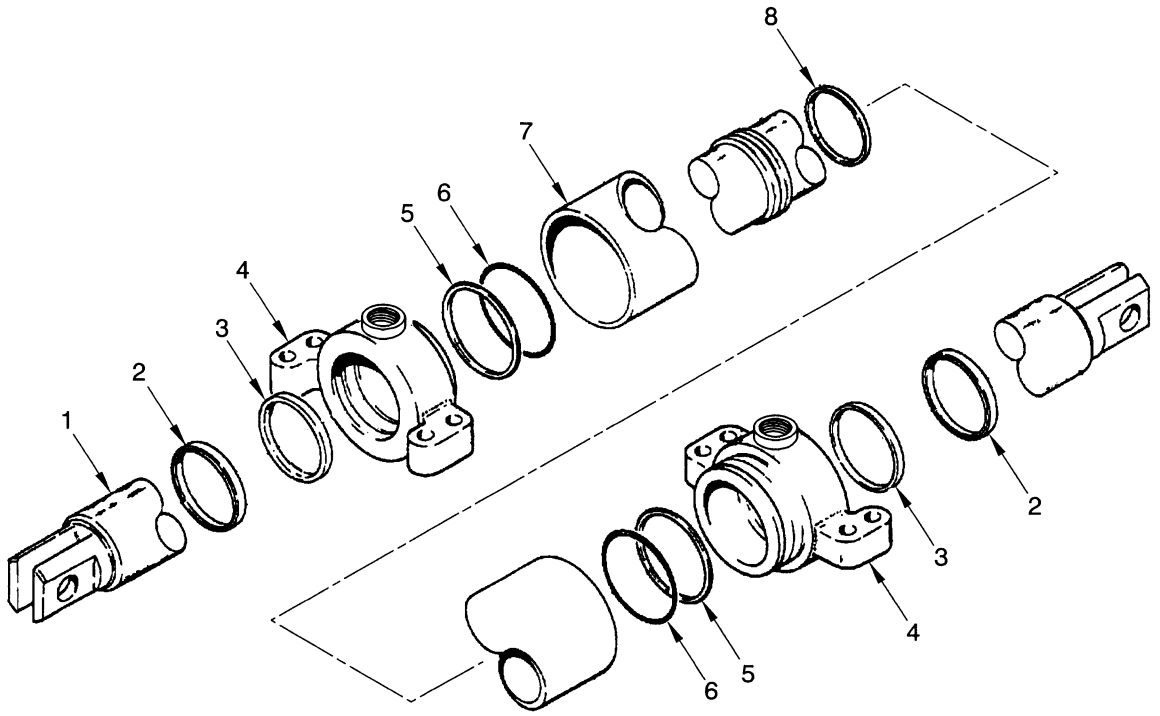

HP220211

©2003 HYSTER COMPANY

STEERING CYLINDER

ITEM	PART NO.	DESCRIPTION	QTY
	2035137	Steering Cylinder (Group No. 8602499)	1
1	1388657	Rod	1
2	203071	Wiper Ring	2
3	210183	Seal	2
4	1388665	Cap	2
5	270015	Back-Up Ring	2
6	79981	O-Ring	2
7	1388780	Shell	1
8	2047829	Seal	1
	1501409	Seal Kit (Includes Items 2-3, 5-6, 8)	1

©2003 HYSTER COMPANY

STEERING PUMP (Figure 7-5)

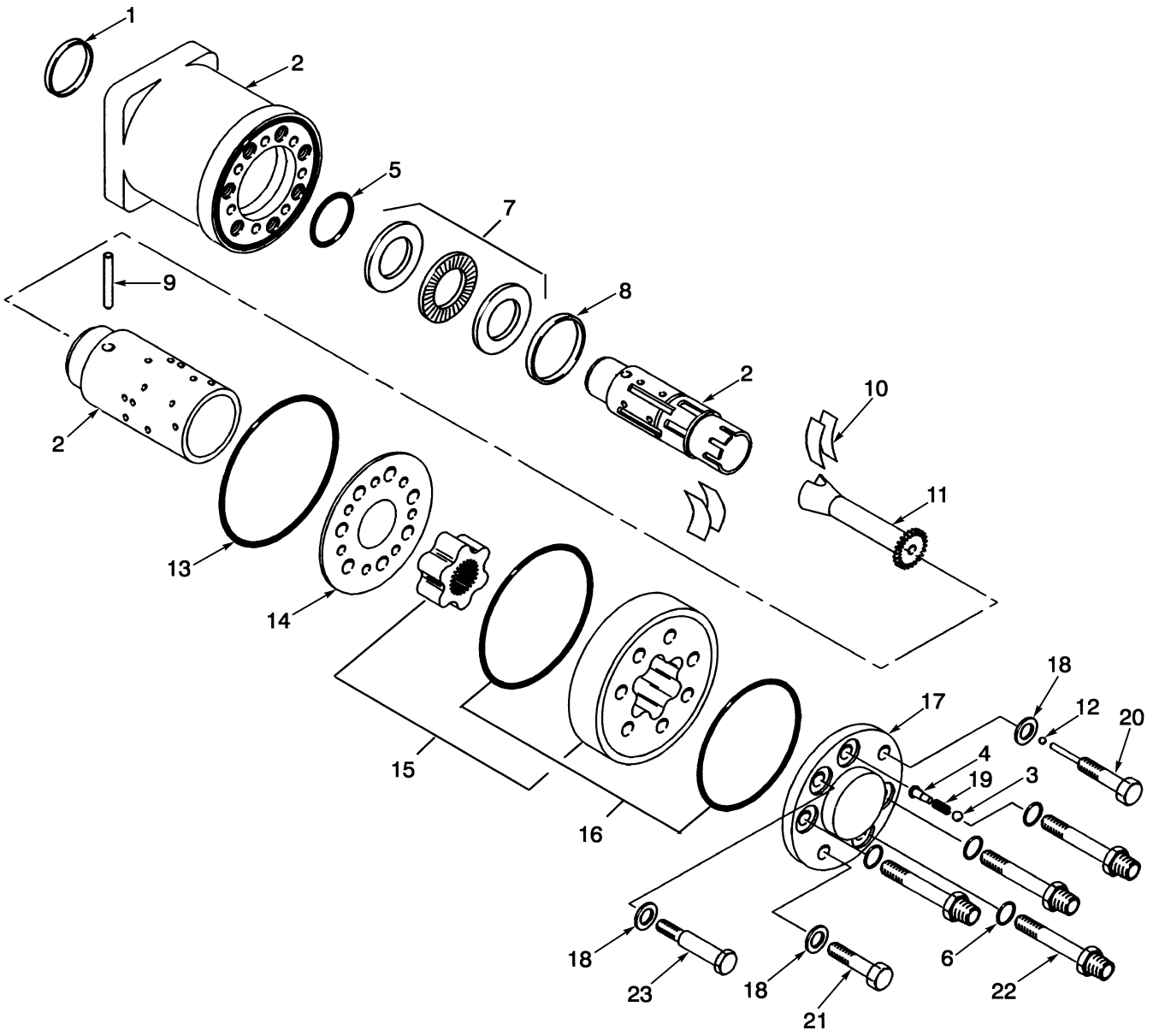

BP220018

©2003 HYSTER COMPANY

STEERING PUMP

ITEM	PART NO.	DESCRIPTION	QTY
	1388773	Steering Pump	1
1	. . . . .	Seal Ring	1
2	. . . . .	Housing	1
2	. . . . .	Spool and Sleeve	1
3	345408	Ball	1
4	1459988	Stop	1
5	2032230	Seal	1
6	15860	O-Ring	4
7	345410	Bearing Set	1
8	345411	Ring	1
9	345412	Pin	1
10	1303787	Spring	1
11	1355326	Shaft	1
12	1459984	Ball	1
13	. . . . .	O-Ring	1
14	. . . . .	Plate	1
15	. . . . .	Gear Set	1
16	1459989	O-Ring	2
17	. . . . .	Cover	1
18	. . . . .	Washer	3
19	1459987	Spring	1
20	366069	Screw	1
21	371344	Capscrew	1
22	1459985	Port (Male)	4
23	1459986	Screw	1
	1459983	Seal Kit (Includes Items 1, 5-6, 13, 16, 18)	1

©2003 HYSTER COMPANY

NOTES

8 BRAKE SYSTEM

SECTION 8
BRAKE SYSTEM

DESCRIPTION **PAGE**

BRAKE ASSEMBLY
H100-120XM 8-10
H70-90XM 8-6
BRAKE LINKAGE 8-2
MASTER CYLINDER AND BOOSTER ASSEMBLY 8-12
PARK BRAKE 8-14

©2003 HYSTER COMPANY

BRAKE LINKAGE (Figure 8-1)

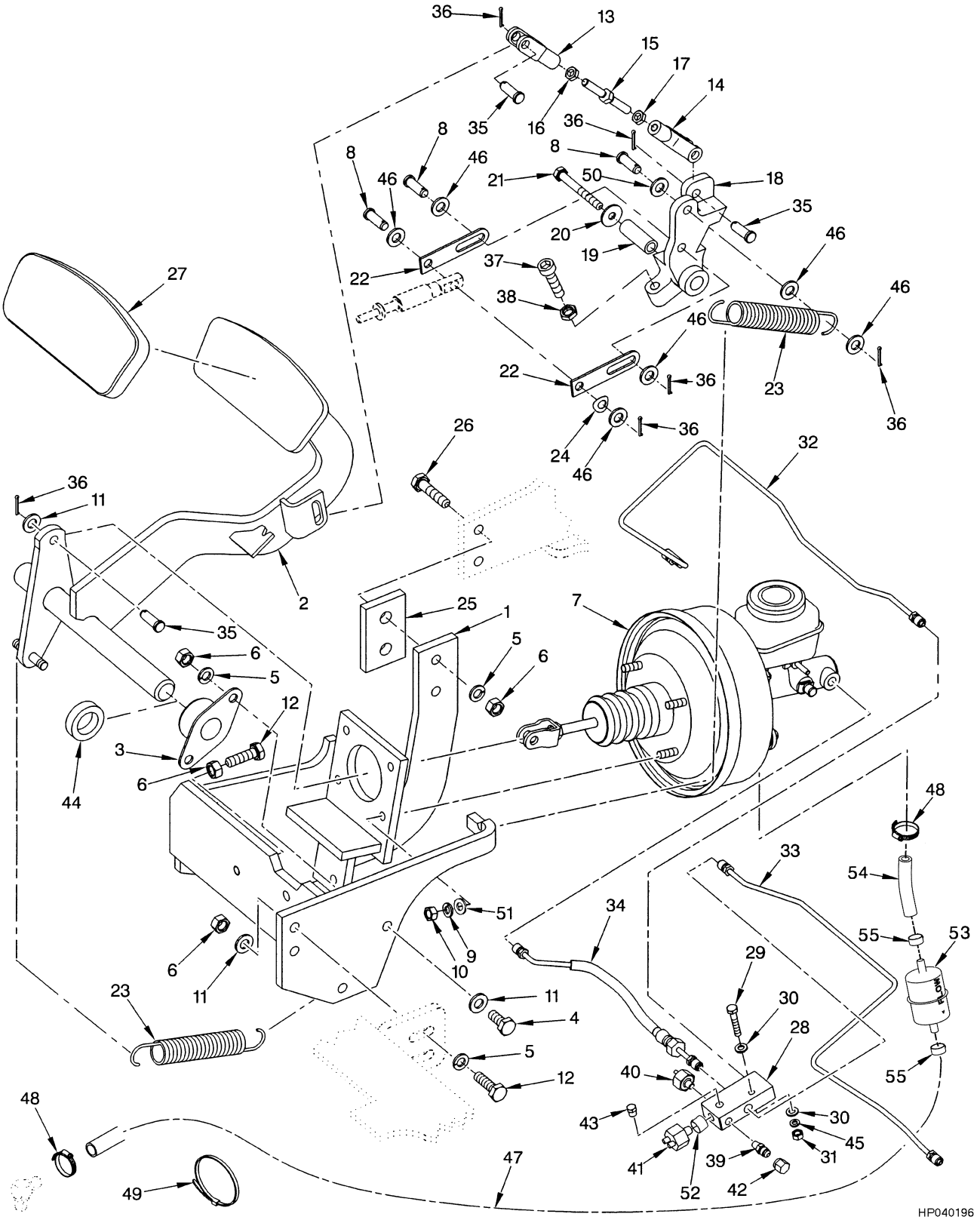

©2003 HYSTER COMPANY

BRAKE LINKAGE

ITEM		PART NO.	DESCRIPTION	QTY
1		1399277	Bracket	1
2		1490070	Pedal	1
3		1327161	Bushing	2
4		136985	Capscrew	4
5		292682	Lockwasher	8
6		136692	Nut	9
7		1399276	Master Cylinder and Booster (☞ Figure 8-4)	1
8		1378435	Rod End Pin	3
9		292681	Lockwasher	4
10		239503	Nut	4
11		320159	Washer	6
12		287860	Capscrew	3
13		393502	Rod End	1
14		1338262	Rod End	1
15		1394576	Link	1
16		15025	Nut	1
17		16897	Nut	1
18		1399288	Crank (Inching)	1
19		1337108	Spacer	1
20		332755	Washer	1
21		136704	Capscrew	1
22		1399289	Link	2
23		2037760	Spring	2
24		375984	Washer	1
25		1397708	Plate	1
26		292516	Capscrew	1
27		1343630	Pad (Pedal)	1
28		1470686	Block	1
29		292504	Capscrew	1
30		15172	Washer	2
31		136687	Nut	1
32	**a**	1394815	Tube (LH)	1
32	**b**	1394817	Tube (LH)	1
33	**a**	1394816	Tube (RH)	1
33	**b**	1394818	Tube (RH)	1
34		1394819	Hose	1
35		142	Pin	3
36		1351689	Cotter Pin	5
37		302054	Screw	1
38		292653	Nut	1
39		16124	Fitting	1
40		16186	Fitting (Monotrol Pedal)	1
41		387867	Pressure Switch	1
42		281700	Nut	1
43		14349	Fitting	2
44		370743	Collar	1
45		292680	Lockwasher	1
46		15134	Washer	6
47		2037906	Hose (LPG)	1
47		2037907	Hose (Diesel)	1
48		166857	Clamp	2

©2003 HYSTER COMPANY

BRAKE LINKAGE

ITEM	PART NO.	DESCRIPTION	QTY
49	2004005	Strap Clamp (LPG)	1
49	2004005	Strap Clamp (Diesel)	4
50	1397649	Washer	1
51	320158	Washer	4
52	16187	Fitting	1
53	1499886	Filter	1
54	1473099	Hose	1
55	353198	Clamp	2

FOOTNOTES:
a H70-80XM and H90XMS
b H90-120XM

©2003 HYSTER COMPANY

NOTES

BRAKE ASSEMBLY (Figure 8-2)
H70-90XM

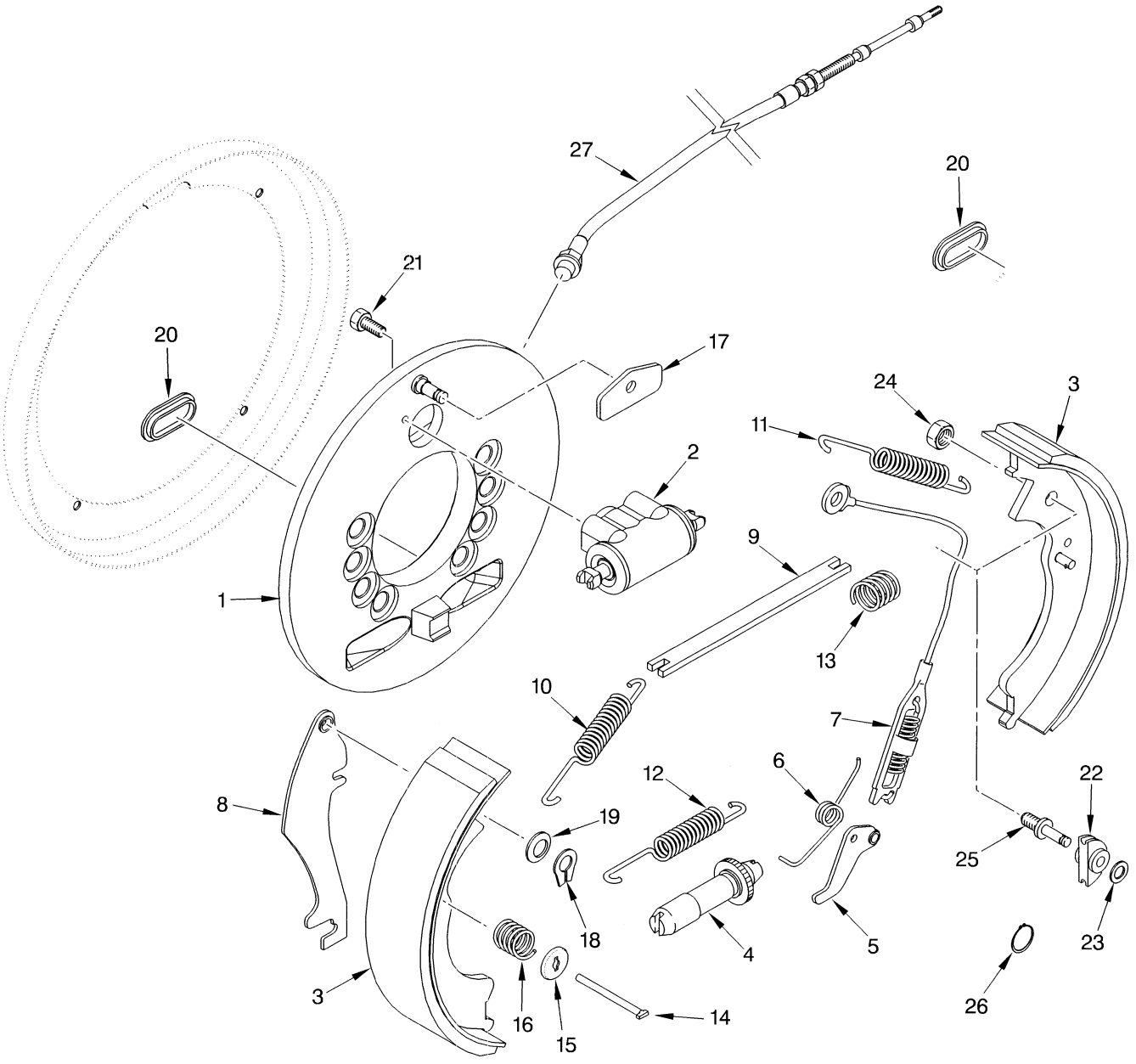

©2003 HYSTER COMPANY

BRAKE ASSEMBLY
H70-90XM

KEY:
A: Left Hand
B: Right Hand

ITEM	PART NO.	DESCRIPTION	QTY A	QTY B
	1394681	Brake Assembly With Park Brake Cable	1	..
	1394682	Brake Assembly With Park Brake Cable	..	1
	1463245	Brake Assembly Without Park Brake Cable	1	..
	1463246	Brake Assembly Without Park Brake Cable	..	1
1	1463242	Plate	1	..
1	1463243	Plate	..	1
2	1463244	Wheel Cylinder Assembly	1	1
2	1463223	Wheel Cylinder Kit	1	1
2	. . . . .	Piston and Cup	2	2
2	. . . . .	Boot	2	2
3	. . . . .	Shoe and Lining	1	1
3	. . . . .	Shoe Lining and Pin Assembly	1	1
3	1463226	Shoe and Lining Assembly Kit	1	..
3	1463229	Shoe and Lining Assembly Kit	..	1
4	2037327	Adjuster	1	..
4	2037328	Adjuster	..	1
5	2037329	Lever	1	..
5	2037330	Lever	..	1
6	2037331	Spring	1	..
6	2037332	Spring	..	1
7	2037333	Spring	1	1
8	2037334	Parking Lever	1	..
8	2037335	Parking Lever	..	1
9	2037336	Strut	1	..
9	2037337	Strut	..	1
10	2037338	Spring	1	1
11	2037339	Spring	1	1
12	2037340	Spring	1	1
13	1360797	Spring	1	1
14	2037323	Pin (Shoe Hold Down)	2	2
15	2037341	Cup (Shoe Hold Down)	4	4
16	2037342	Spring (Shoe Hold Down)	2	2
17	2037343	Plate	1	1
18	. . . . .	Retainer	2	2
19	. . . . .	Washer	2	2
20	1334642	Cover	1	1
21	2037344	Bolt Kit	4	4
22	. . . . .	Sheave	1	1
23	. . . . .	Washer	1	1
24	. . . . .	Nut	1	1
25	. . . . .	Pin	1	1
26	1361502	Snap Ring	1	1
27	1463247	Cable (LH)	1	..
27	1463248	Cable (RH)	..	1
	1464917	Sheave Kit (Includes Items 7, 10-11, 22-25)	1	1

©2003 HYSTER COMPANY

BRAKE ASSEMBLY
H70-90XM

ITEM	PART NO.	DESCRIPTION	QTY A	QTY B
	1464915	Park Brake Kit (LH) (Includes Items 8-9, 13, 18-19)	1	..
	1464916	Park Brake Kit (RH) (Includes Items 8-9, 18-19)	..	1
	2038663	Spring Kit (Includes Items 10-12)	1	1
	2037377	Shoe Hold Down Kit (Includes Items 14-16)	1	1

©2003 HYSTER COMPANY

NOTES

BRAKE ASSEMBLY (Figure 8-3)
H100-120XM

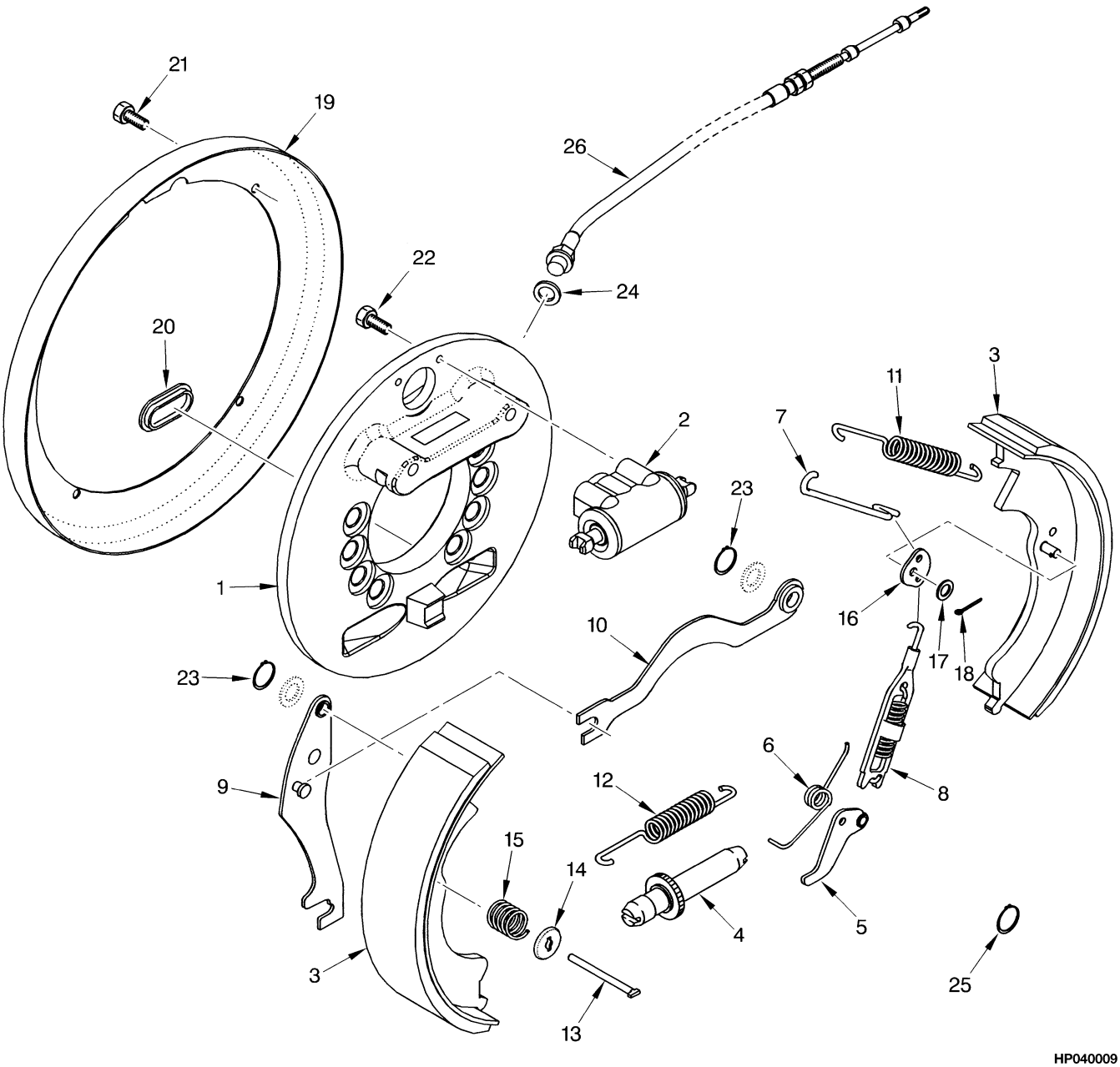

©2003 HYSTER COMPANY

BRAKE ASSEMBLY
H100-120XM

KEY:
A: Left Hand
B: Right Hand

ITEM	PART NO.	DESCRIPTION	QTY A	QTY B
	1532851	Brake Assembly	1	..
	1532852	Brake Assembly	..	1
1	1463339	Plate	1	..
1	1463340	Plate	..	1
2	1463341	Wheel Cylinder Assembly	1	1
2	1463231	Wheel Cylinder Kit	1	1
3	1532655	Shoe and Lining Assembly Kit	1	..
3	1532656	Shoe and Lining Assembly Kit	..	1
3	. . . . .	Shoe and Lining Assembly	..	1
3	. . . . .	Shoe and Lining Assembly	1	..
4	2037515	Adjuster	1	..
4	2037516	Adjuster	..	1
5	2037517	Lever	1	..
5	2037518	Lever	..	1
6	1463350	Spring	1	..
6	1463351	Spring	..	1
7	1463352	Link	1	..
7	1463353	Link	..	1
8	1463354	Spring and Link Assembly	1	1
9	1463355	Lever	1	..
9	1463356	Lever	..	1
10	1463357	Strut	1	..
10	1463358	Strut	..	1
11	1463359	Spring	2	2
12	2037519	Spring	1	1
13	2037323	Pin (Shoe Hold Down)	2	2
14	1463361	Cup (Shoe Hold Down)	4	4
15	1463362	Spring (Shoe Hold Down)	2	2
16	1463363	Lever	1	1
17	2037324	Washer	1	1
18	2037325	Cotter Pin	1	1
19	1463364	Shield	1	1
20	2037326	Cover	1	1
21	1463365	Bolt Kit	4	..
22	1463366	Bolt Kit	2	2
23	. . . . .	Retainer	2	2
24	. . . . .	Washer	2	2
25	1361502	Snap Ring	1	1
26	1463471	Cable	1	..
26	1463472	Cable	..	1

©2003 HYSTER COMPANY

MASTER CYLINDER AND BOOSTER ASSEMBLY (Figure 8-4)

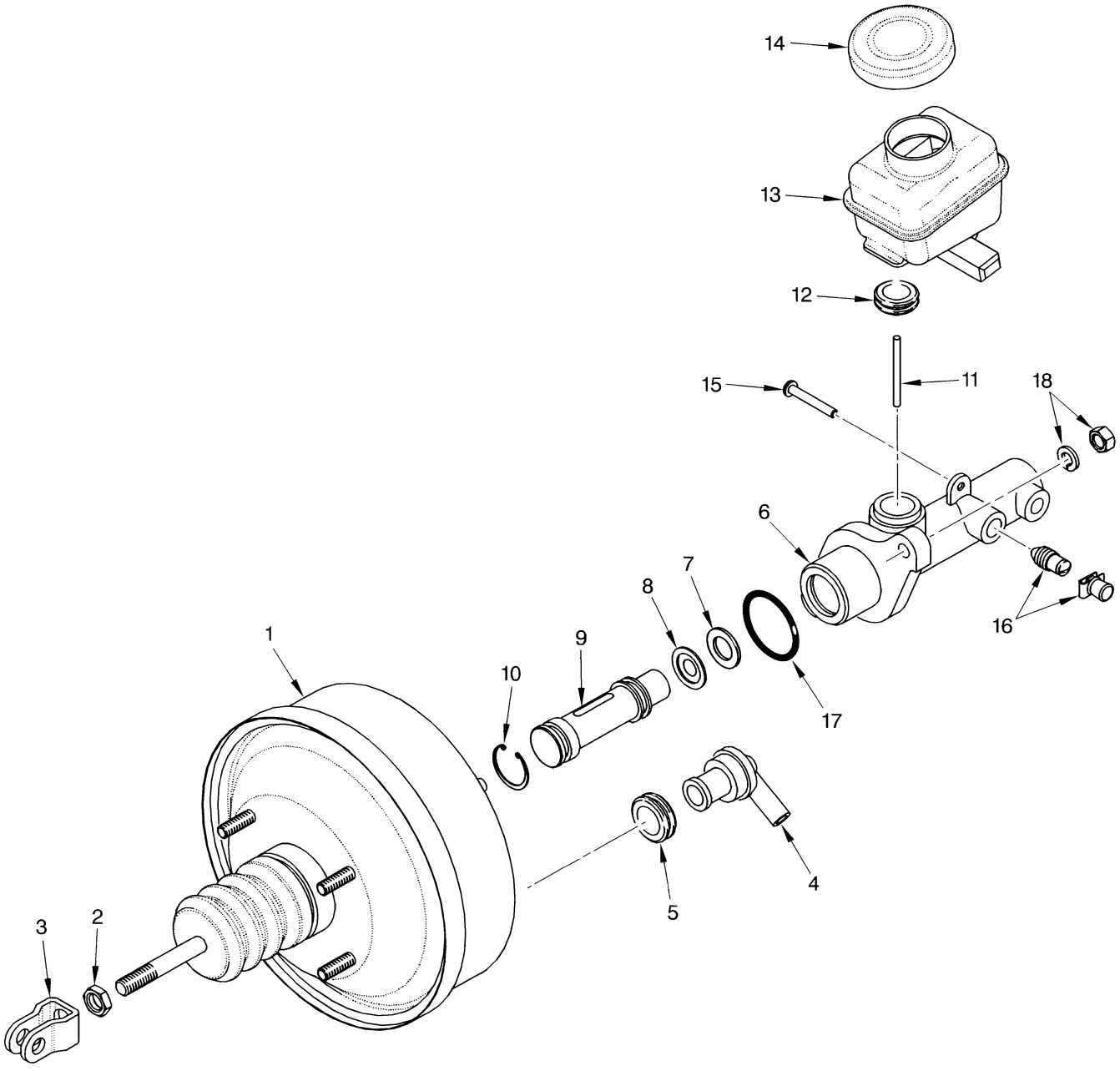

©2003 HYSTER COMPANY

MASTER CYLINDER AND BOOSTER ASSEMBLY

ITEM	PART NO.	DESCRIPTION	QTY
	1399276	Master Cylinder and Booster	1
1	1463445	Booster	1
2	1463461	Nut	1
3	1463462	Clevis	1
4	1463455	Valve	1
5	1463454	Grommet	1
6	1463446	Master Cylinder	1
6	1470275	Seal Kit	1
7	1463466	Valve Seat	1
8	1463450	Check Valve	1
9	1463447	Piston	1
10	1463467	Snap Ring	1
11	1463463	Pin	1
12	1463464	Grommet	1
13	1463448	Reservoir Assembly	1
14	1463449	Cap	1
15	1463465	Screw	1
16	1463995	Bleeder Screw	1
17	1463451	O-Ring	1
18	1463993	Spring Washer Kit	1

©2003 HYSTER COMPANY

PARK BRAKE (Figure 8-5)

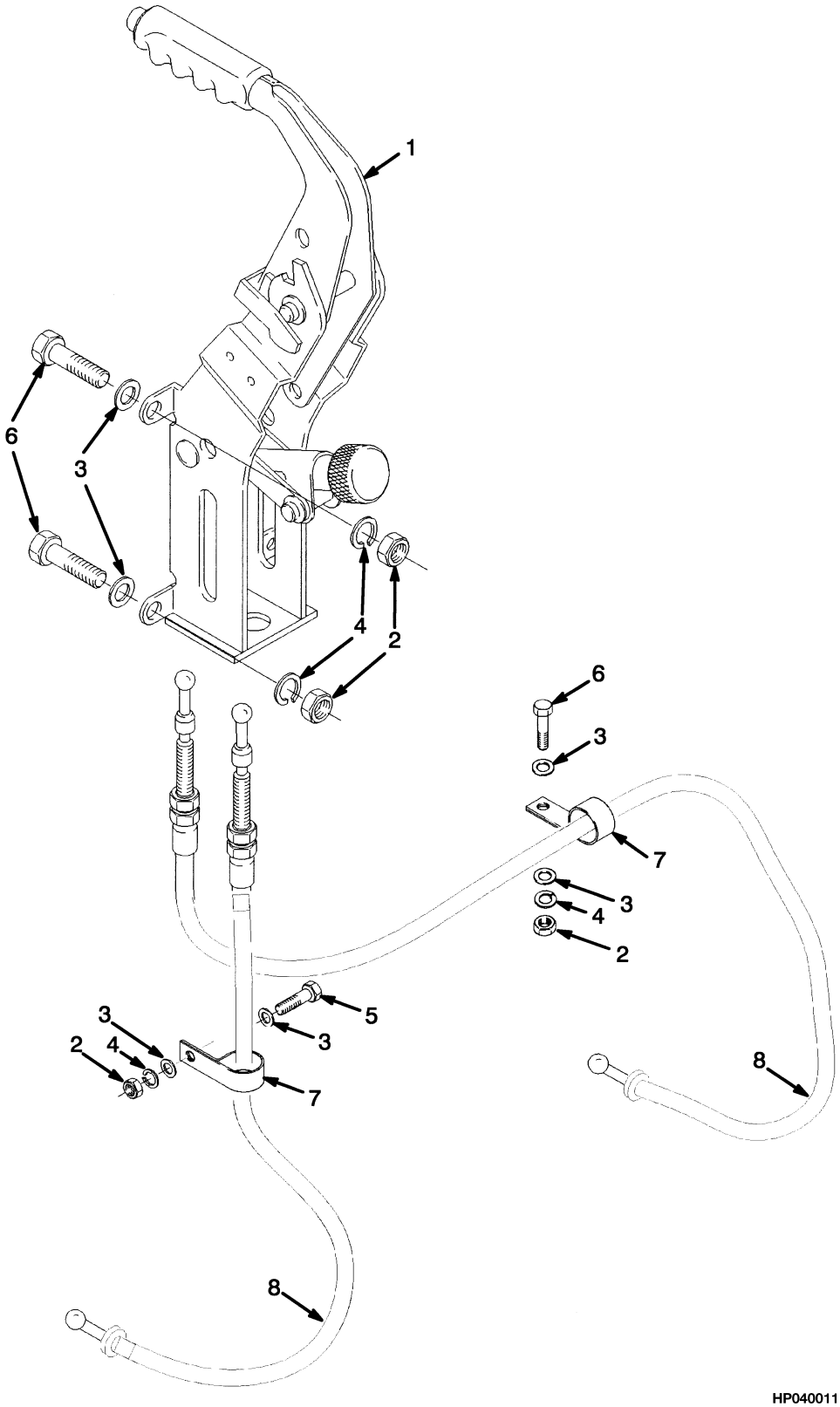

©2003 HYSTER COMPANY

PARK BRAKE

ITEM		PART NO.	DESCRIPTION	QTY
1		1376557	Lever Assembly (Park Brake)	1
2		239503	Nut	6
3		320157	Washer	8
4		292681	Lockwasher	6
5		176640	Capscrew	1
6		136749	Capscrew	5
7		113341	Clamp	2
8	**a**	1463247	Cable (LH) (H70-90XM) (☞ Figure 8-2)	2
8	**a**	1463248	Cable (RH) (H70-90XM) (☞ Figure 8-2)	2
8	**a**	1463471	Cable (LH) (H100-120XM) (☞ Figure 8-3)	2
8	**a**	1463472	Cable (RH) (H100-120 XM) (☞ Figure 8-3)	2

FOOTNOTES:

a Cables Are Included With Service Brake Assemblies

©2003 HYSTER COMPANY

NOTES

9 HYDRAULIC SYSTEM

SECTION 9
HYDRAULIC SYSTEM

DESCRIPTION **PAGE**

CONTROL VALVE
(1 OF 2)
S/N PENDING PER ECN 63639⇒ 9-16
(2 OF 2)
S/N PENDING PER ECN 63639⇒ 9-20
⇒S/N PENDING PER ECN 63639 9-14
CONTROL VALVE AND ATTACHING PARTS
FOUR FUNCTION WITH DETENTED LEVERS 9-12
THREE FUNCTION 9-10
HYDRAULIC CONTROL LINES
FOUR FUNCTION 9-8
THREE FUNCTION 9-6
HYDRAULIC PUMP
⇒S/N K005D-02086 9-26
S/N K005D-02087⇒ 9-28
HYDRAULIC SYSTEM 9-2
MAST INSTALLATION 9-22
TILT CYLINDER 9-24

©2003 HYSTER COMPANY

HYDRAULIC SYSTEM (Figure 9-1)

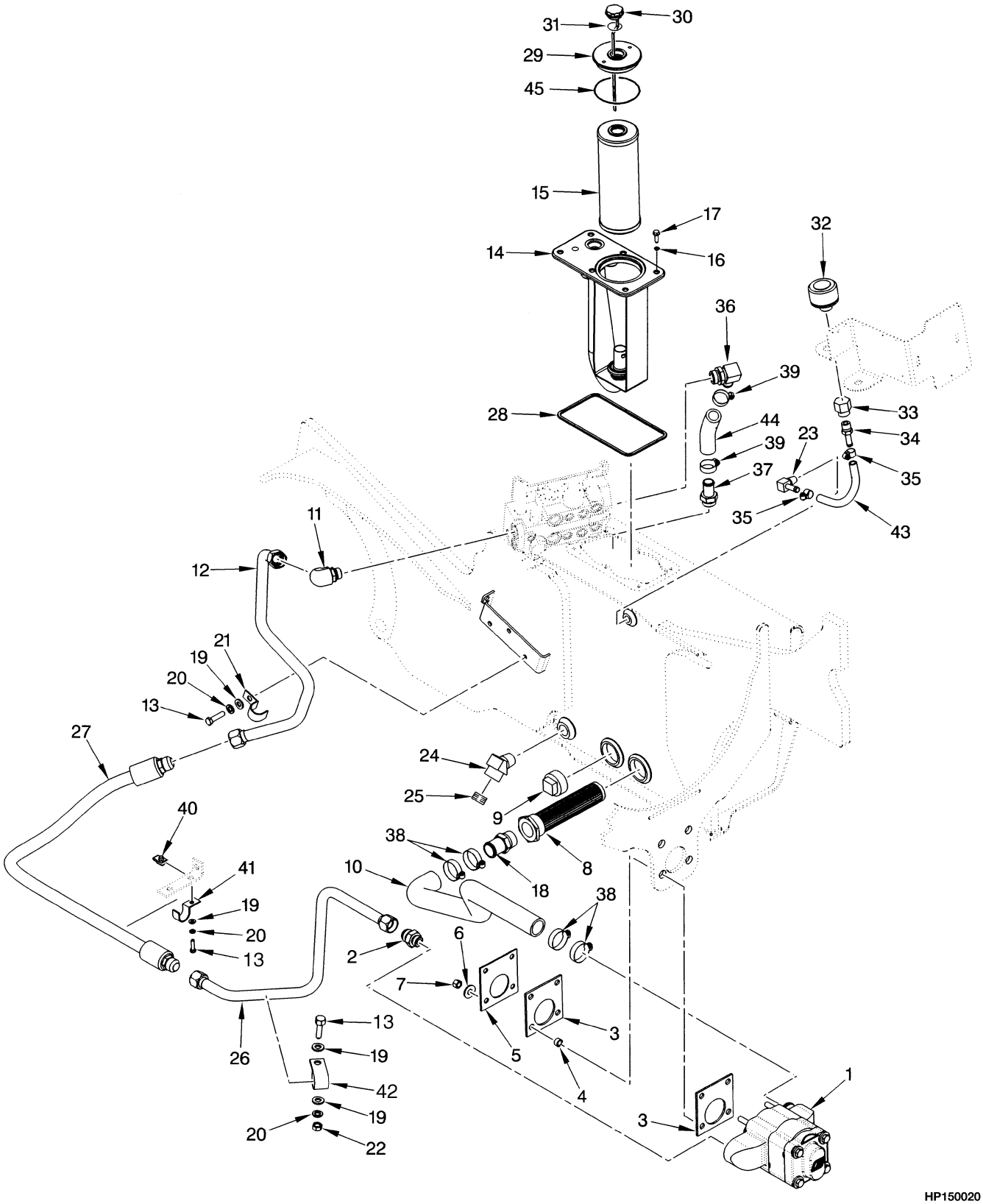

©2003 HYSTER COMPANY

HYDRAULIC SYSTEM

ITEM		PART NO.	DESCRIPTION	QTY
1	**a**	2035983	Hydraulic Pump (1830 WB) (☞ Figure 9-11)	1
1	**b**	2038201	Hydraulic Pump (1830 WB) (☞ Figure 9-12)	1
1	**a**	2035981	Hydraulic Pump (2100 WB) (☞ Figure 9-11)	1
1	**b**	2038202	Hydraulic Pump (2100 WB) (☞ Figure 9-12)	1
2		142500	Fitting	1
2		16486	O-Ring	1
3		1397685	Isolator	2
4		182891	Hose	4
5		1399823	Plate	1
6		296422	Washer	4
7		300937	Nut	4
8		1388963	Screen	1
9		15310	Fitting	1
10		1394453	Hose (Suction)	1
11		184761	Fitting	1
11		16486	O-Ring	1
12		2036484	Tube	1
13		132861	Capscrew	6
14		1397739	Hydraulic Filter Assembly	1
14		1397796	Cover	1
15		2037740	Filter Element	1
16		353000	O-Ring	6
17		136681	Capscrew	6
18		183635	Fitting	1
19		320157	Washer	9
20		292681	Lockwasher	10
21		325897	Clamp	1
22		239503	Nut	4
23		17174	Fitting	1
24		246869	Fitting	1
25		15963	Fitting	1
26		1399386	Tube	1
27		1397981	Hose	1
28		1397744	Seal Ring	1
29		190787	Filter Head (Filter)	1
30		1397570	Dipstick	1
31		16487	O-Ring	1
32		1356393	Breather	1
32		1371445	Breather (Optional)	1
33		17706	Fitting	1
34		222473	Fitting	1
35		379405	Clamp	2
36		112470	Fitting	1
36		16487	O-Ring	1
37		88195	Fitting	1
37		16487	O-Ring	1
38		119236	Clamp	4
39		127045	Clamp	2
40		1393879	Clip Nut	5
41		1399334	Clamp	2
42		76382	Clamp	1

©2003 HYSTER COMPANY

HYDRAULIC SYSTEM

ITEM	PART NO.	DESCRIPTION	QTY
43	78456	Hose	1
44	1401537	Hose	1
45	39742	O-Ring	1

FOOTNOTES:
a ⇒ S/N K005D-02086
b S/N K005D-02087 ⇒

©2003 HYSTER COMPANY

NOTES

HYDRAULIC CONTROL LINES (Figure 9-2)
THREE FUNCTION

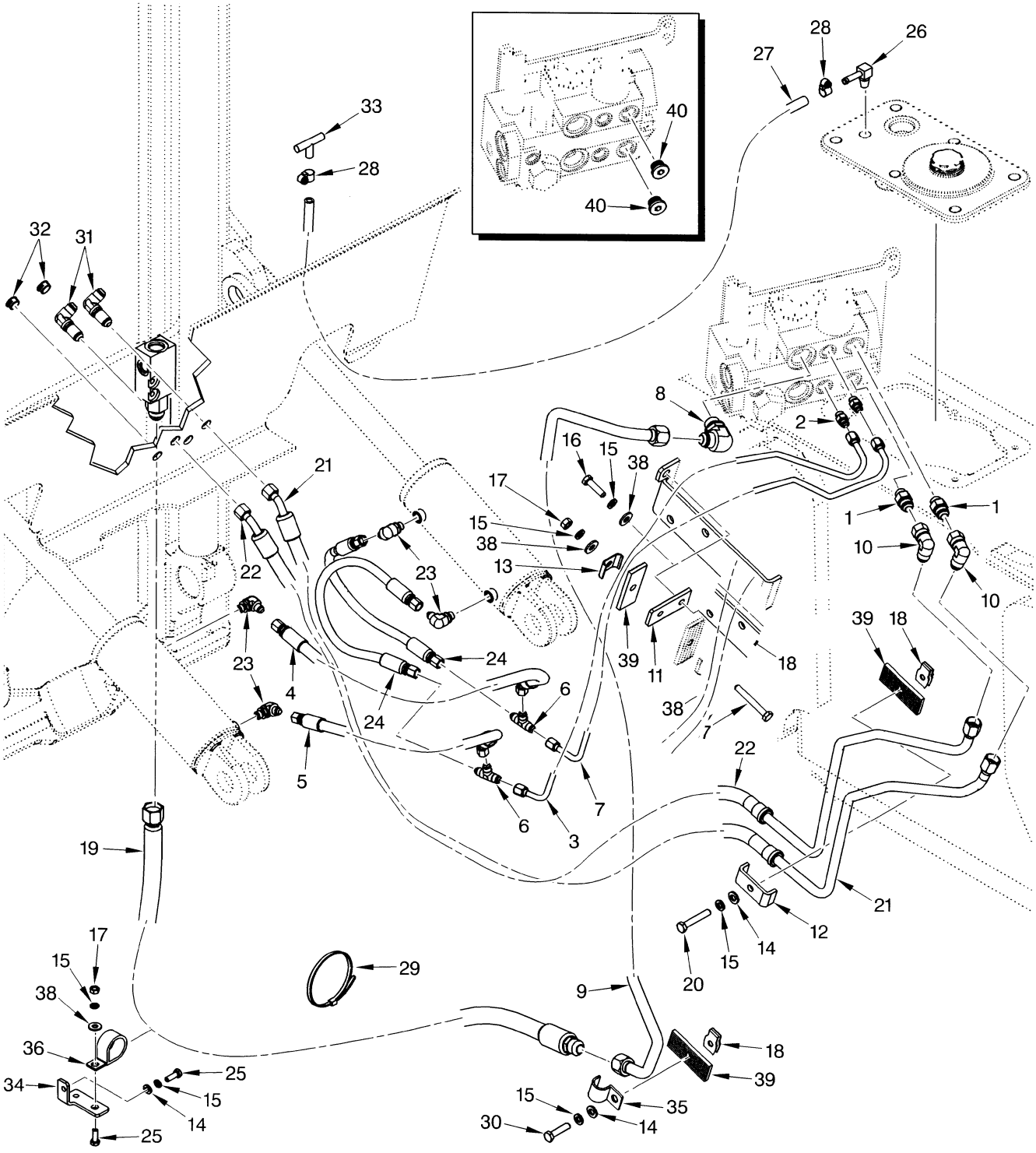

©2003 HYSTER COMPANY

HYDRAULIC CONTROL LINES
THREE FUNCTION

ITEM	PART NO.	DESCRIPTION	QTY
1	206150	Fitting	2
1	16484	O-Ring	1
2	16540	Fitting	2
2	16483	O-Ring	1
3	2036486	Tube (Tilt)	1
4	1388954	Hose	1
5	1397984	Hose	1
6	14560	Fitting	2
7	2036487	Tube (Tilt)	1
8	16561	Fitting	1
8	16486	O-Ring	1
9	2036485	Tube (Hoist)	1
10	16882	Fitting	2
11	1400243	Plate	2
12	1397682	Clamp	1
13	193239	Clamp	1
14	320157	Washer	2
15	292681	Lockwasher	3
16	176640	Capscrew	1
17	239503	Nut	2
18	1393879	Clip Nut	1
19	1399787	Hose	1
20	292509	Capscrew	1
21	1399417	Hose and Tube Assembly	1
22	1399418	Hose and Tube Assembly	1
23	16558	Hydraulic Fitting	4
23	16483	O-Ring	1
24	1388776	Hose	2
25	136749	Capscrew	2
26	201808	Fitting	1
27	88381	Hose	1
28	353198	Clamp	2
29	397676	Strap Clamp	AR
30	136704	Capscrew	1
31	16458	Fitting	2
32	1363917	Plug	2
33	1399248	Fitting	1
34	2037894	Bracket	1
35	128409	Clamp	1
36	258590	Clamp	1
37	176640	Capscrew	1
38	320158	Washer	6
39	1399323	Pad	3
40	1389590	Plug	2

©2003 HYSTER COMPANY

HYDRAULIC CONTROL LINES (Figure 9-3)
FOUR FUNCTION

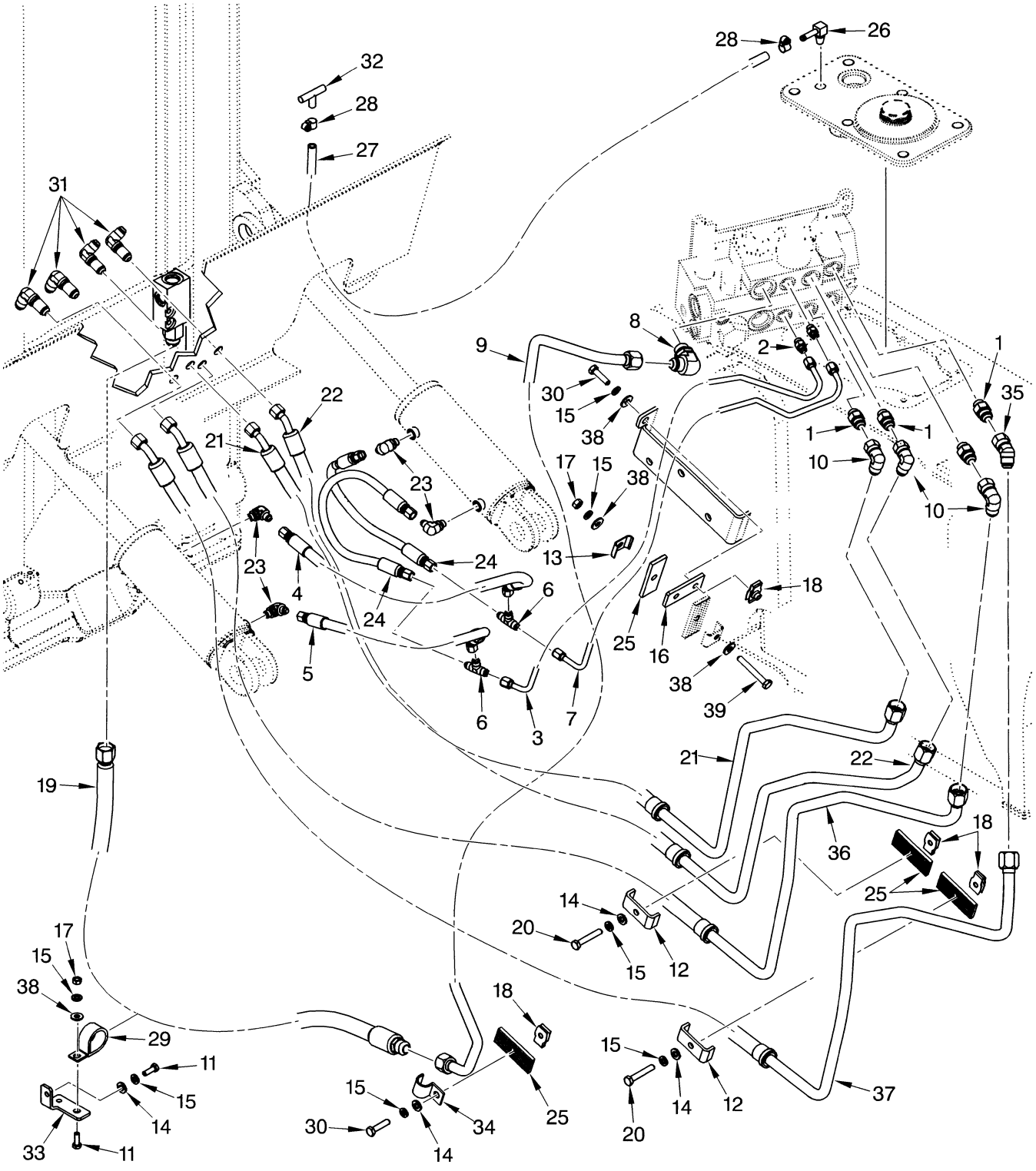

©2003 HYSTER COMPANY

HYDRAULIC CONTROL LINES
FOUR FUNCTION

ITEM	PART NO.	DESCRIPTION	QTY
1	206150	Fitting	4
1	16484	O-Ring	1
2	16540	Fitting	2
2	16483	O-Ring	1
3	2036486	Tube (Tilt)	1
4	1388954	Hose	1
5	1397984	Hose	1
6	14560	Fitting	2
7	2036487	Tube (Tilt)	1
8	16561	Fitting	1
8	16486	O-Ring	1
9	2036485	Tube (Hoist)	1
10	16882	Fitting	3
11	136749	Capscrew	2
12	1397682	Clamp	3
13	193239	Clamp	1
14	320157	Washer	4
15	292681	Lockwasher	7
16	1400243	Plate	1
17	239503	Nut	2
18	1393879	Clip Nut	3
19	1399787	Hose	1
20	292509	Capscrew	3
21	1399417	Hose and Tube Assembly	1
22	1399418	Hose and Tube Assembly	1
23	16558	Hydraulic Fitting	5
23	16483	O-Ring	1
24	1388776	Hose	2
25	1399323	Pad	4
26	201808	Fitting	1
27	88381	Hose	1
28	353198	Clamp	2
29	258590	Clamp	2
30	136704	Capscrew	1
31	16458	Fitting	4
32	1399248	Fitting	1
33	2037894	Bracket	1
34	128409	Clamp	1
35	17039	Fitting	1
36	1399420	Hose and Tube Assembly	1
37	1399419	Hose and Tube Assembly	1
38	320158	Washer	6
39	176640	Capscrew	1

©2003 HYSTER COMPANY

CONTROL VALVE AND ATTACHING PARTS (Figure 9-4)
THREE FUNCTION

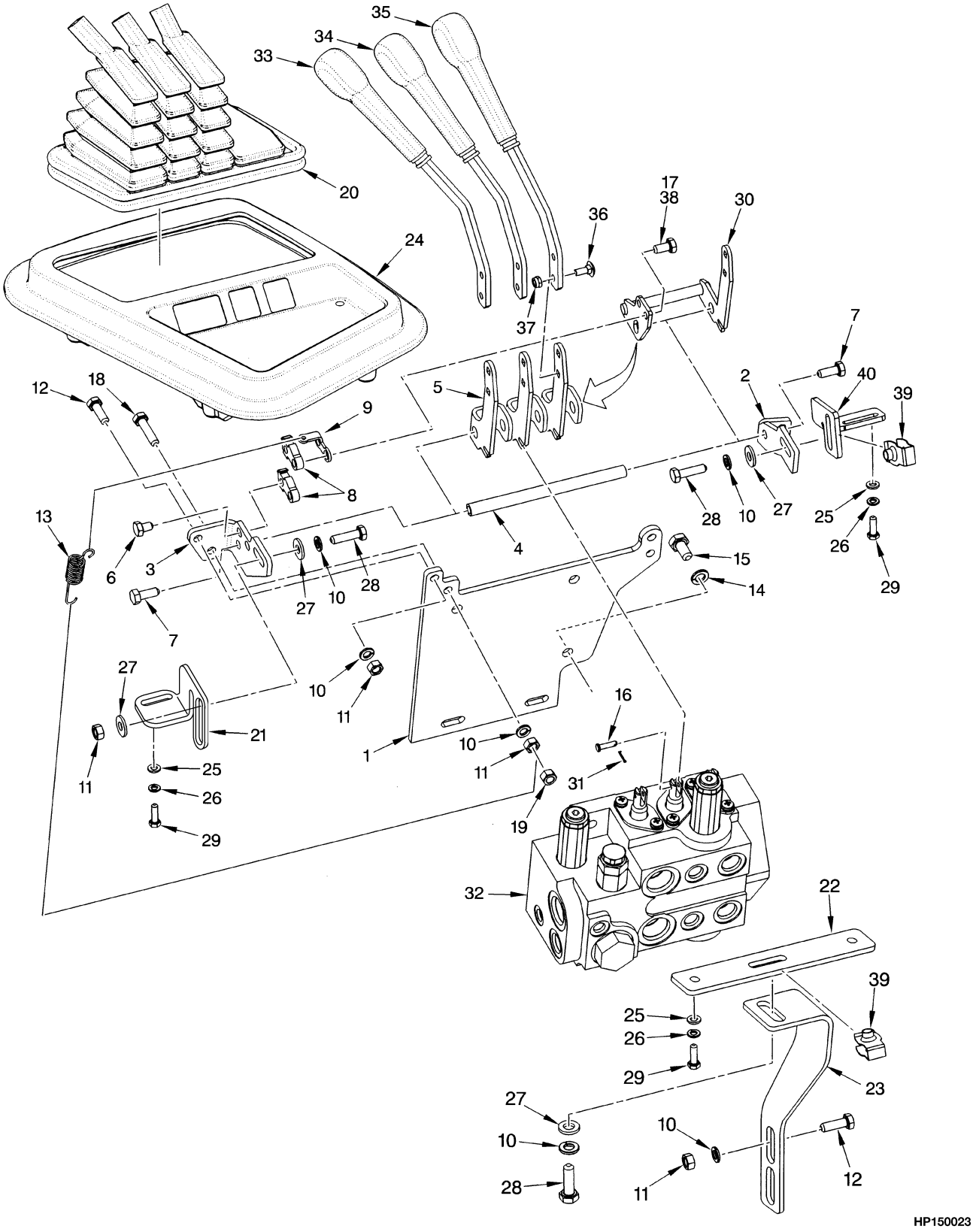

©2003 HYSTER COMPANY

CONTROL VALVE AND ATTACHING PARTS
THREE FUNCTION

ITEM		PART NO.	DESCRIPTION	QTY
1		1388909	Bracket	1
2		1397675	Bracket (RH)	1
3		1397676	Bracket (LH)	1
4		1343443	Pivot	1
5	**b**	1339749	Crank	3
5	**a**	1339749	Crank	2
6		293611	Capscrew	4
7		1328930	Capscrew	2
8	**a**	1339745	Lock	2
9	**a**	1339746	Plate	1
10		292681	Lockwasher	12
11		239503	Nut	6
12		136749	Capscrew	5
13	**a**	1396708	Spring	1
14		292682	Lockwasher	3
15		292514	Capscrew	3
16		309109	Pin (Rod End)	2
17		293612	Capscrew	2
18	**a**	132861	Capscrew	1
19	**a**	313828	Nut	1
20		2036476	Boot	1
21		1397677	Bracket	1
22		1396715	Bracket	1
23		1399380	Strut	1
24		1396108	Cover	1
25		320156	Washer	4
26		292680	Lockwasher	4
27		320158	Washer	9
28		176640	Capscrew	6
29		292501	Capscrew	4
30	**a**	1339770	Crank	1
31		15200	Cotter Pin	3
32		1484351	Control Valve (☞ Figure 9-6)	1
32		1503437	Control Valve (☞ Figure 9-7)	1
33		1396014	Lever (Hoist)	1
34		1396015	Lever (Tilt)	1
35		1396016	Lever (Auxiliary)	1
36		308980	Bolt	4
37		316834	Nut	4
38	**a**	264134	Sealant	AR
39		1393879	Clip Nut	4
40		1397678	Bracket	1

FOOTNOTES:
a With Detented Levers
b Without Detented Levers

©2003 HYSTER COMPANY

CONTROL VALVE AND ATTACHING PARTS (Figure 9-5)
FOUR FUNCTION WITH DETENTED LEVERS

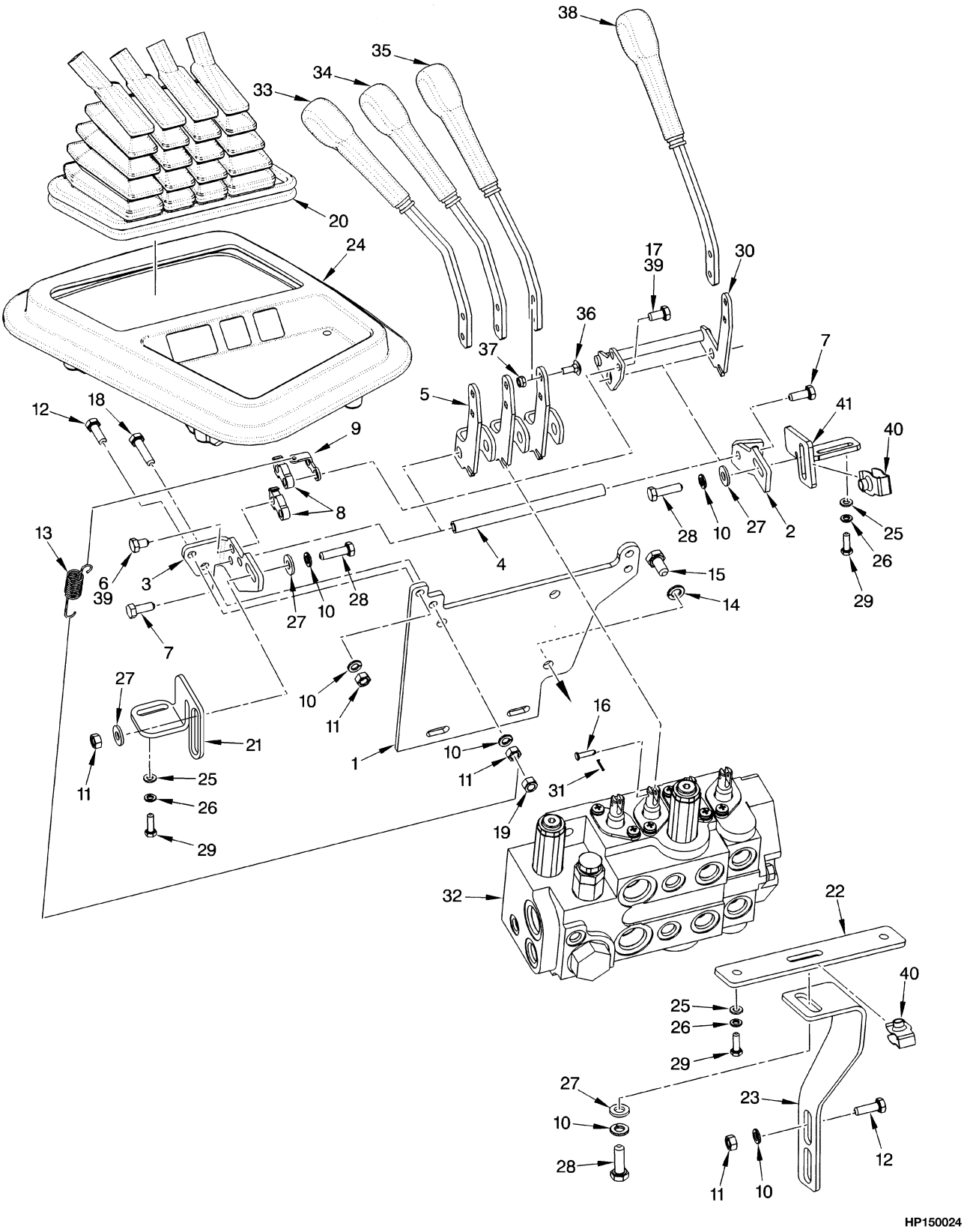

©2003 HYSTER COMPANY

CONTROL VALVE AND ATTACHING PARTS
FOUR FUNCTION WITH DETENTED LEVERS

ITEM	PART NO.	DESCRIPTION	QTY
1	1388909	Bracket	1
2	1397675	Bracket (RH)	1
3	1397676	Bracket (LH)	1
4	1343443	Pivot	1
5	1339749	Crank	3
6	293611	Capscrew	4
7	1328930	Capscrew	1
8	1339745	Lock	4
9	1339746	Plate	2
10	292681	Lockwasher	11
11	239503	Nut	5
12	136749	Capscrew	5
13	1396708	Spring	2
14	292682	Lockwasher	3
15	292514	Capscrew	3
16	309109	Pin	5
17	293612	Capscrew	2
18	132861	Capscrew	2
19	313828	Nut	2
20	2036477	Boot	1
21	1397677	Bracket	2
22	1396715	Bracket	1
23	1399380	Strut	1
24	1396108	Cover	1
25	320156	Washer	4
26	292680	Lockwasher	4
27	320158	Washer	8
28	176640	Capscrew	4
29	292501	Capscrew	3
30	1339748	Crank	1
31	15200	Cotter Pin	4
32	1485568	Control Valve (☞ Figure 9-6)	1
32	1503438	Control Valve (☞ Figure 9-7)	1
33	1396014	Lever (Hoist)	1
34	1396015	Lever (Tilt)	1
35	1396016	Lever (Auxiliary)	1
36	308980	Bolt	8
37	316834	Nut	8
38	1396017	Lever (Auxiliary)	1
39	264134	Sealant	AR
40	1393879	Clip Nut	2
41	1397678	Bracket	1

©2003 HYSTER COMPANY

CONTROL VALVE (Figure 9-6)
(⇒S/N PENDING PER ECN 63639)

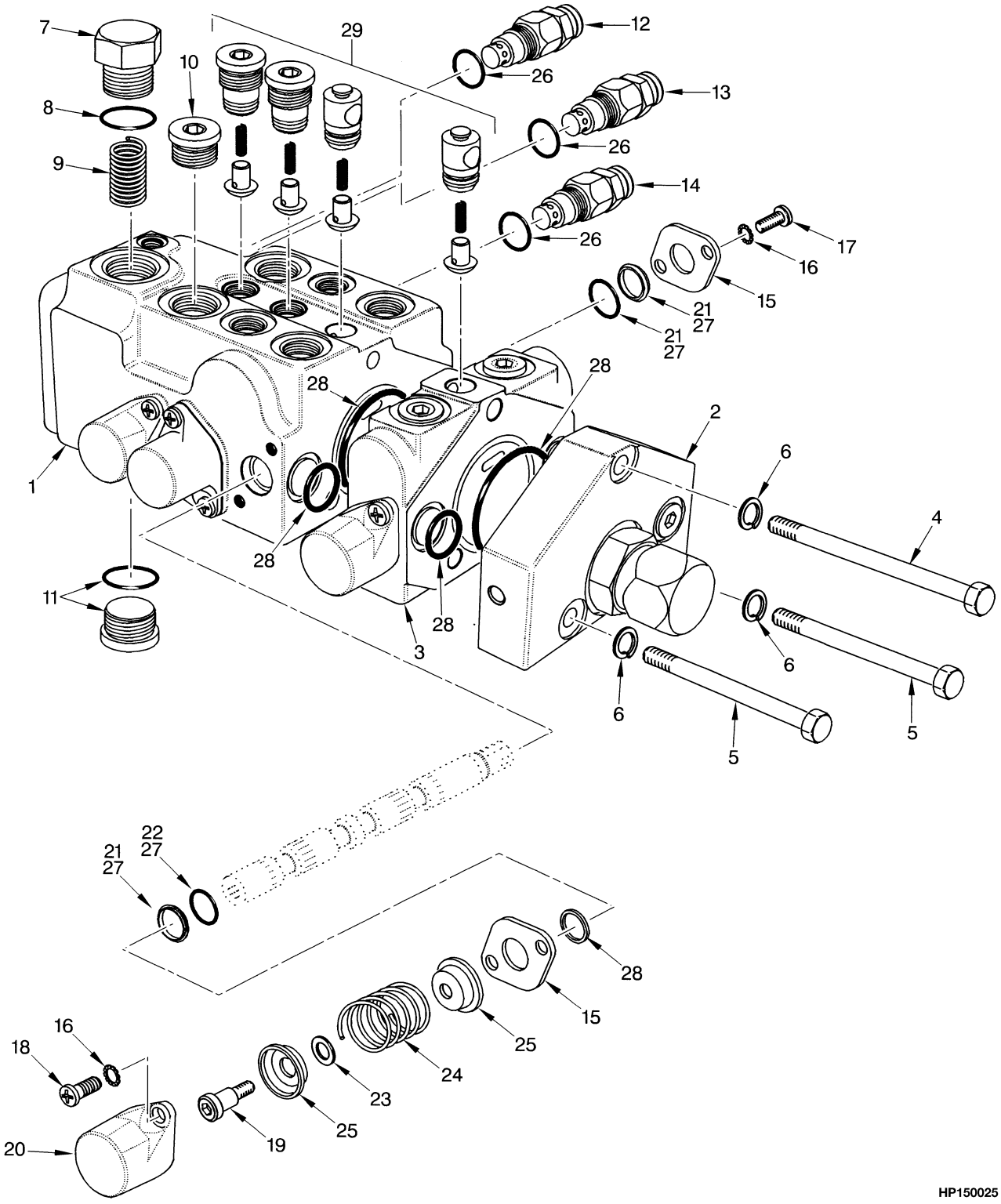

©2003 HYSTER COMPANY

CONTROL VALVE
(⇒S/N PENDING PER ECN 63639)

KEY:
A: Three Function
B: Four Function

ITEM	PART NO.	DESCRIPTION	QTY A	QTY B
	1484351	Control Valve	1	..
	1485568	Control Valve	..	1
1	. . . . .	Body	1	1
2	1467926	Outlet Section	1	1
3	1467925	Section (Auxiliary)	..	1
4	221516	Capscrew (3.0 in.) (3 in.)	1	..
4	221524	Capscrew (4.5 in.)	..	1
5	221510	Capscrew (2.0 in.) (2 in.)	2	..
5	221520	Capscrew (3.5 in.)	..	2
6	1491859	Lockwasher	3	3
7	1467927	Plug	1	1
8	16982	O-Ring	1	1
9	1467928	Spring (Priority)	1	1
10	222444	Fitting	1	1
10	16486	O-Ring	1	1
11	200659	Fitting	1	1
11	16982	O-Ring	1	1
12	1467931	Relief Valve (Main)	1	1
13	1467932	Relief Valve (Steering)	1	1
14	1467933	Relief Valve (Secondary)	1	1
14	1482550	Seal Kit	1	..
15	1467934	Retainer Plate	6	8
16	15923	Lockwasher	6	8
17	16705	Screw	6	8
18	16709	Screw	6	8
19	. . . . .	Bolt	1	1
20	. . . . .	Cap	1	1
21	. . . . .	Wiper	1	1
22	. . . . .	O-Ring	1	1
23	. . . . .	Spacer	1	1
24	. . . . .	Spring	1	1
25	1467954	Retainer Spring	2	2
26	. . . . .	Seal Kit (Relief Valve)	3	3
27	. . . . .	Seal Kit (Spools)	4	4
28	. . . . .	Seal Kit (Section)	2	2
29	1467938	Transition Check Kit	1	1
	1467929	Spool Kit (Includes Items 18-25)	1	1
	1467930	Seal Kit (Includes Items 8, 10-11, 21-22, 26-29)	1	1

©2003 HYSTER COMPANY

CONTROL VALVE (Figure 9-7)
(1 OF 2)
(S/N PENDING PER ECN 63639⇒)

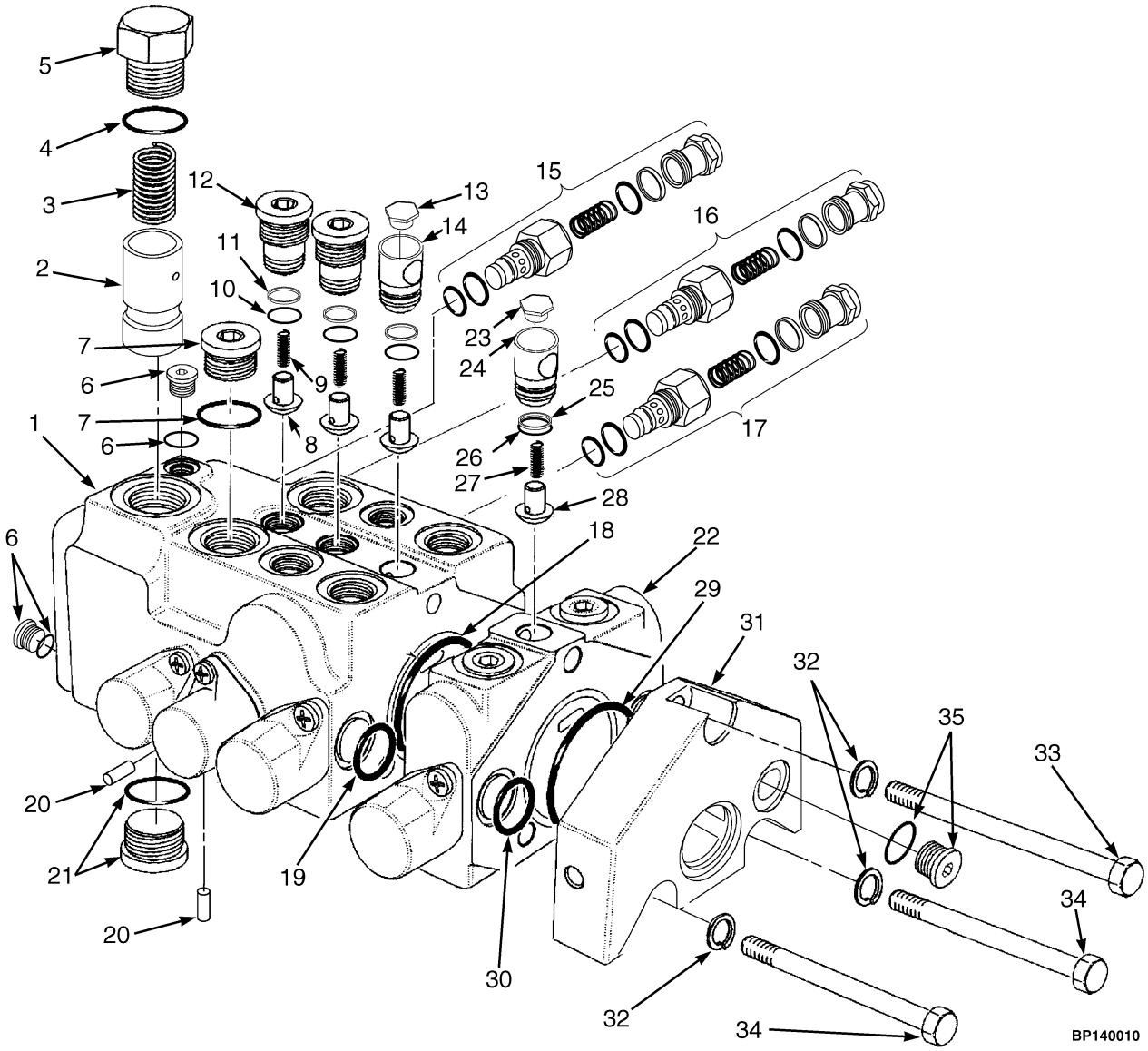

©2003 HYSTER COMPANY

CONTROL VALVE
(1 OF 2)
(S/N PENDING PER ECN 63639⇒)

KEY:
A: Three Function
B: Four Function

ITEM	PART NO.	DESCRIPTION	QTY A	QTY B
	1503437	Control Valve	1	..
	1503438	Control Valve	..	1
1	. . . . .	Housing	1	1
2	. . . . .	Spool (Priority)	1	1
3	1467928	Spring (Priority)	1	1
4	. . . . .	O-Ring	1	1
5	. . . . .	Plug	1	1
6	1504458	Plug	2	2
6	. . . . .	O-Ring	1	1
7	1504456	Plug	1	1
7	. . . . .	O-Ring	1	1
8	. . . . .	Poppet	3	3
9	. . . . .	Spring	3	3
10	. . . . .	O-Ring	3	3
11	. . . . .	Back-Up Ring	3	3
12	. . . . .	Check Guide	2	2
13	. . . . .	Plug	1	1
14	. . . . .	Check Guide	1	1
15	1504448	Relief Valve (Main)	1	1
15	. . . . .	O-Ring	1	1
15	. . . . .	O-Ring	2	2
15	. . . . .	Seal	1	1
16	1504449	Relief Valve (Steering)	1	1
16	. . . . .	O-Ring	1	1
16	. . . . .	O-Ring	2	2
16	. . . . .	Seal	1	1
17	1504457	Relief Valve (Secondary)	1	1
17	. . . . .	O-Ring	1	1
17	. . . . .	O-Ring	2	2
17	. . . . .	Seal	1	1
18	. . . . .	O-Ring	1	1
19	. . . . .	O-Ring	2	2
20	. . . . .	Plug	2	2
21	. . . . .	Plug	1	1
21	. . . . .	O-Ring	1	1
22	1504459	Spool Section (Auxiliary) (4th Function)	..	1
23	. . . . .	Plug	..	1
24	. . . . .	Check Guide	..	1
25	. . . . .	Back-Up Ring	..	1
26	. . . . .	O-Ring	..	1
27	. . . . .	Spring	..	1
28	. . . . .	Poppet	..	1
29	. . . . .	O-Ring	..	1
30	. . . . .	O-Ring	..	2
31	1467926	Outlet Section	1	1

©2003 HYSTER COMPANY

CONTROL VALVE
(1 OF 2)
(S/N PENDING PER ECN 63639⇒)

ITEM	PART NO.	DESCRIPTION	QTY A	QTY B
32	1491859	Lockwasher	3	3
33	221512	Capscrew	1	..
33	2056780	Capscrew	..	1
34	221499	Capscrew	2	..
34	185768	Capscrew	..	2
35	. . . . .	Plug	1	1
35	. . . . .	O-Ring	1	1
	1504446	Priority Plug Kit (Includes Items 4-5)	1	1
	1504443	Transition Check Kit (Includes Items 8-9, 11-12, 14, 24-28)	1	1
	1504451	Section Seals Kit (Includes Items 29-30)	2	2
	1504808	Relief Valve Seal Kit (Services Seals On One Relief Valve) (Includes Items 15-17)	3	3
	1500170	Check Seals Kit (Services One Check Guide Only) (Includes Items 10-11, 25-26)	3	4
	1499676	Complete Seal Kit (Three Function) (Includes Instructions And Kits 1504451, 1504808, 1504814, And 1500170) (Includes Items 4, 6-7, 11, 15-17, 21, 25-26, 29-30)	1	..
	1504807	Complete Seal Kit (Four Function) (Includes Kits 1504451, 1504808, 1504814, and 1504443) (Includes Items 4, 6-9, 11-12, 14-17, 24-30)	..	1

©2003 HYSTER COMPANY

NOTES

CONTROL VALVE (Figure 9-8)
(2 OF 2)
(S/N PENDING PER ECN 63639⇒)

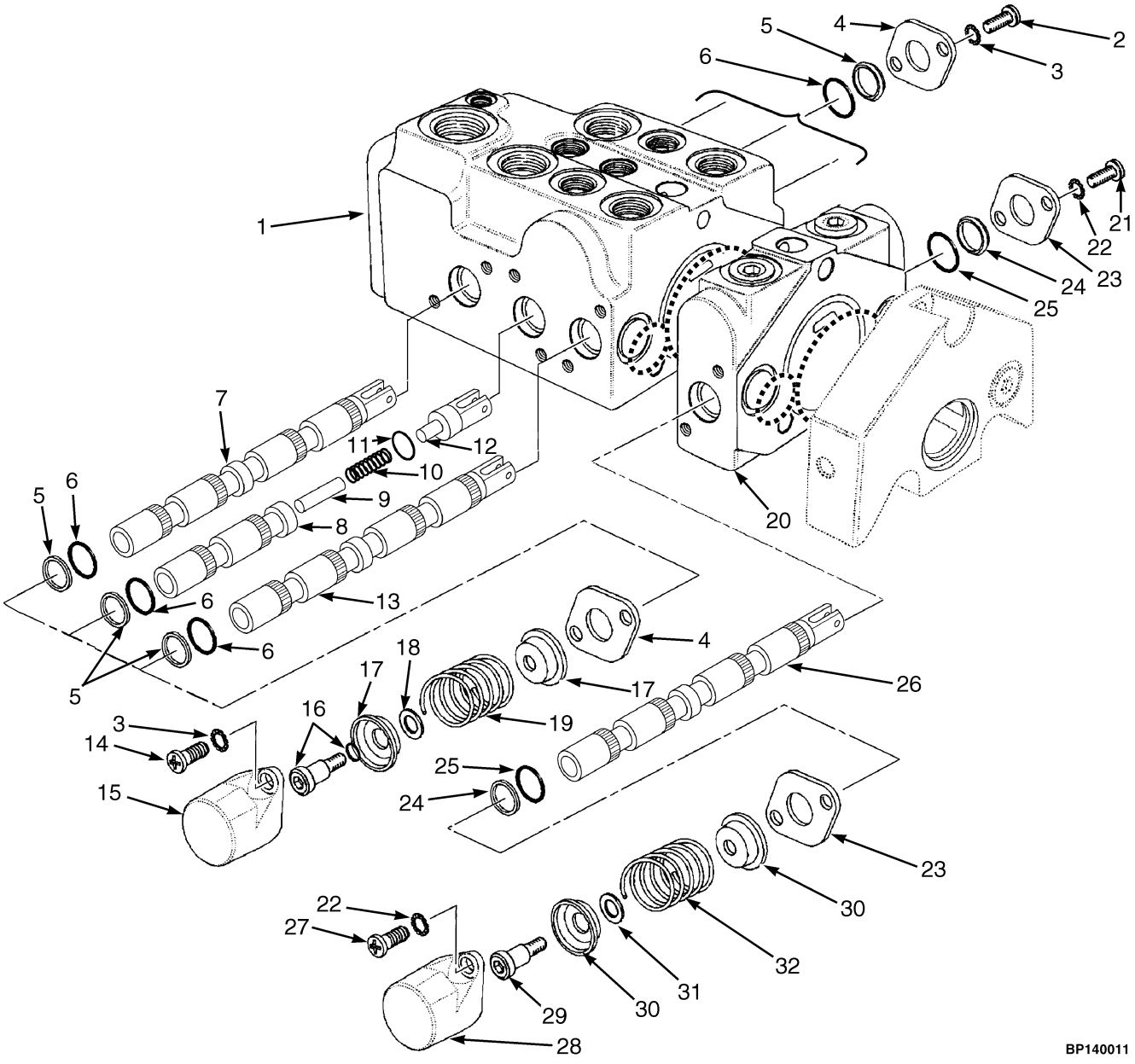

©2003 HYSTER COMPANY

CONTROL VALVE
(2 OF 2)
(S/N PENDING PER ECN 63639⇒)

KEY:
A: Three Function
B: Four Function

ITEM	PART NO.	DESCRIPTION	QTY A	QTY B
	1503438	Control Valve	..	1
	1503437	Control Valve	1	..
1	. . . . .	Housing	1	1
2	16709	Screw	6	6
3	15923	Lockwasher	12	12
4	1467934	Retainer Plate	6	6
5	. . . . .	Wiper	6	6
6	. . . . .	O-Ring	6	6
7	. . . . .	Spool (Lift)	1	1
8	. . . . .	Spool (Tilt)	1	1
9	. . . . .	Piston (Tilt)	1	1
10	1491853	Spring (Tilt)	1	1
11	. . . . .	O-Ring	1	1
12	. . . . .	Lug (Tilt Spool)	1	1
13	. . . . .	Spool (Auxiliary)	1	1
14	16705	Screw	6	6
15	. . . . .	Cap	3	3
16	. . . . .	Stripper Bolt	3	3
16	. . . . .	O-Ring (Tilt Spool Only)	1	1
17	. . . . .	Retainer	6	6
18	. . . . .	Spacer	3	3
19	. . . . .	Spring	3	3
20	1504459	Spool Section (Auxiliary) (4th Function)	..	1
20	. . . . .	Housing	..	1
21	16709	Screw	..	2
22	15923	Lockwasher	..	4
23	1467934	Retainer Plate	..	2
24	. . . . .	Wiper	..	2
25	. . . . .	O-Ring	..	2
26	. . . . .	Spool (Auxiliary) (4th Function)	..	1
27	16705	Screw	..	2
28	. . . . .	Cap	..	1
29	. . . . .	Stripper Bolt	..	1
30	. . . . .	Retainer	..	2
31	. . . . .	Spacer	..	1
32	. . . . .	Spring	..	1
	1504440	Lug Spool Kit (Includes Items 11-12)	1	..
	1504434	Endcap Kit (Each Kit Services One Endcap On One Spool) (Includes Items 3-6, 14-19, 22-23, 27-32)	3	4
	1504814	Spool Seals Kit (Each Kit Services One Spool) (Includes Items 5-6, 24-25)	3	4
	1499676	Complete Seal Kit (Three Function) (Includes Instructions And Kits 1504451, 1504808, 1504814, and 1500170) (Includes Items 16, 24-25)	1	..
	1504807	Complete Seal Kit (Four Function) (Includes Kits 1504451, 1504808, 1504814, and 1504443) (Includes Items 24-25)	..	1

©2003 HYSTER COMPANY

MAST INSTALLATION (Figure 9-9)

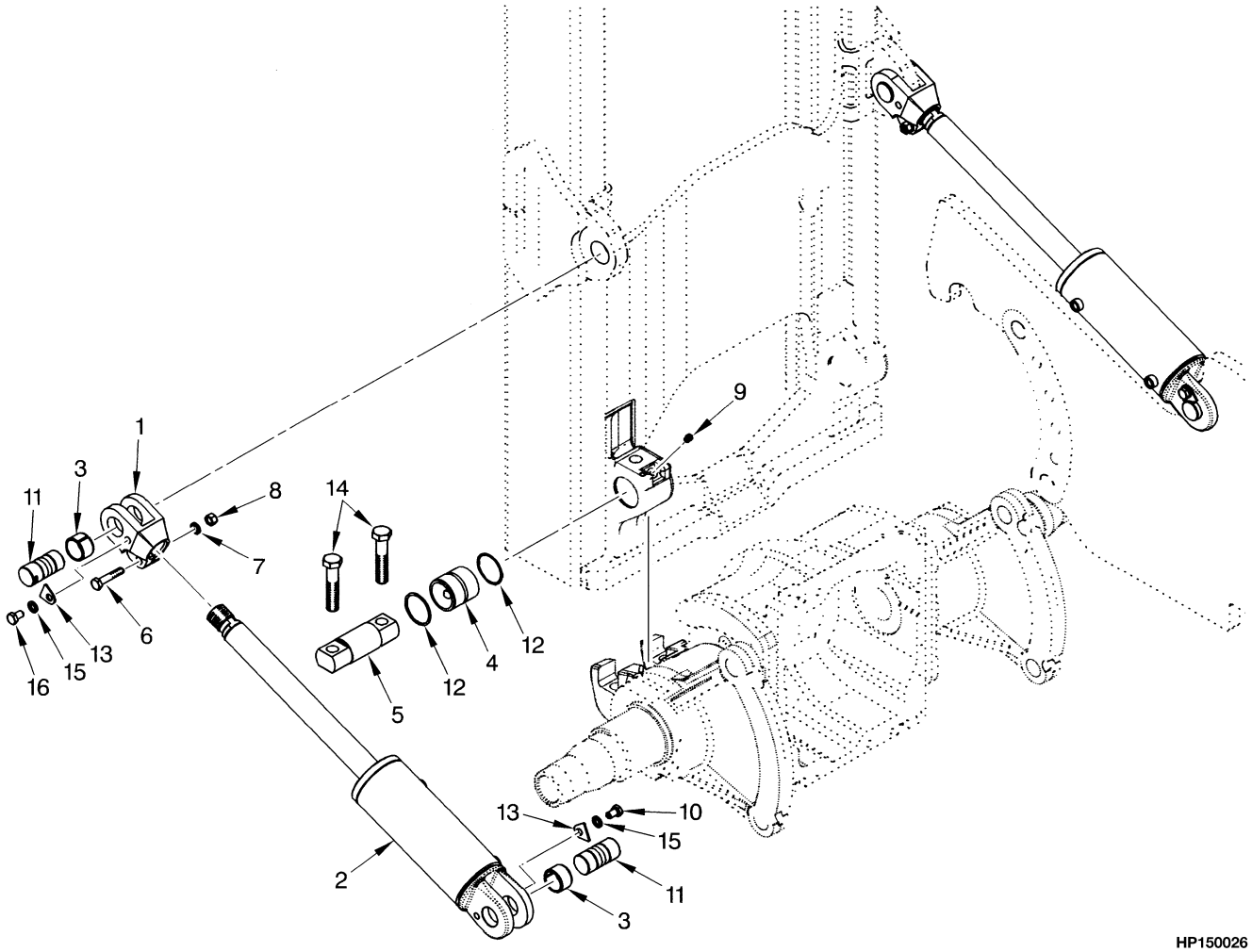

©2003 HYSTER COMPANY

MAST INSTALLATION

ITEM		PART NO.	DESCRIPTION	QTY
1	**c**	248462	Rod End	2
1	**a**	352288	Rod End	2
2	**b**	2035312	Tilt Cylinder (☞ Figure 9-10)	2
2	**d**	2035314	Tilt Cylinder (☞ Figure 9-10)	2
3		192429	Bushing	4
4		1387586	Bushing	2
5		1389839	Pin	2
6		292531	Capscrew	2
7		292683	Lockwasher	4
8		216877	Nut	2
9		16001	Lube Fitting	2
10		292526	Capscrew	2
11	**e**	1394672	Tilt Pin	4
11	**f**	1518377	Tilt Pin	4
12		1465518	Snap Ring	4
13	**e**	1394688	Retainer	4
13	**f**	1518378	Retainer	4
14		1394689	Capscrew	4
15		1502645	Washer	2
16		18585	Capscrew	2

FOOTNOTES:

a 12° Forward/6° Back
b 6° Forward/12° Back, 12° Forward/6° Back
c 6° Forward/12° Back, and 6° Forward/6° Back
d 6° Forward/6° Back
e ⇒ S/N PENDING PER ECN 92456-01
f S/N PENDING PER ECN 92456-01 ⇒

©2003 HYSTER COMPANY

TILT CYLINDER (Figure 9-10)

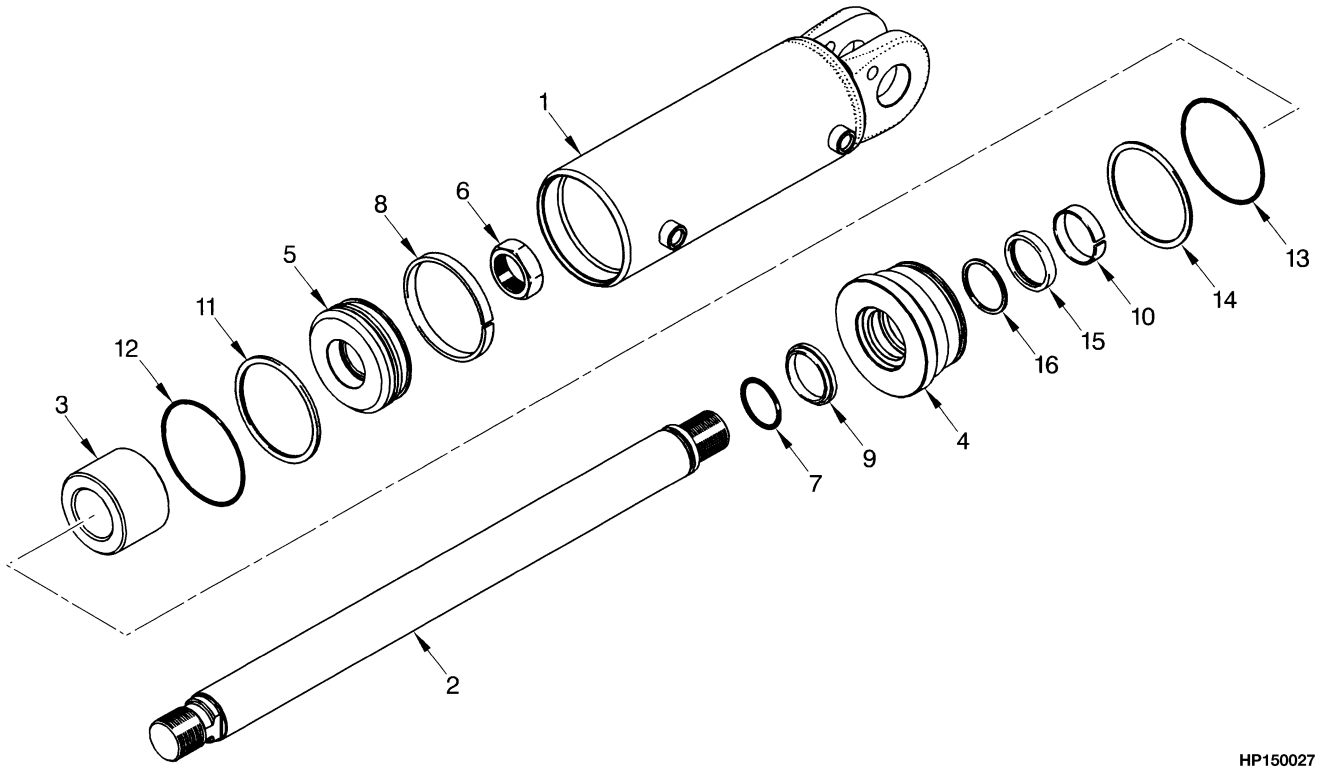

HP150027

ITEM		PART NO.	DESCRIPTION	QTY
	a	2035312	Tilt Cylinder	1
	b	2035314	Tilt Cylinder	1
1		2035315	Tube	1
2	**a**	2035316	Rod	1
2	**b**	2035318	Rod	1
3	**b**	1383031	Spacer	1
4		1380878	Gland	1
5		352247	Piston	1
6		2036547	Nut	1
7		199917	O-Ring	1
8		193550	Guide Ring	1
9		193554	Wiper Ring	1
10		334155	Wear Ring	1
11		2044373	Piston Seal	1
13		46629	O-Ring	1
14		270330	Back-Up Ring	1
15		1381085	Seal (Rod)	1
16		638248	Back-Up Ring	1
		1493306	Seal Kit (Includes Items 7-11, 13-16)	1

FOOTNOTES:

a 6° Forward/12° Back, 12° Forward/6° Back

b 6° Forward/6° Back

©2003 HYSTER COMPANY

NOTES

HYDRAULIC PUMP (Figure 9-11)
(⇒S/N K005D-02086)

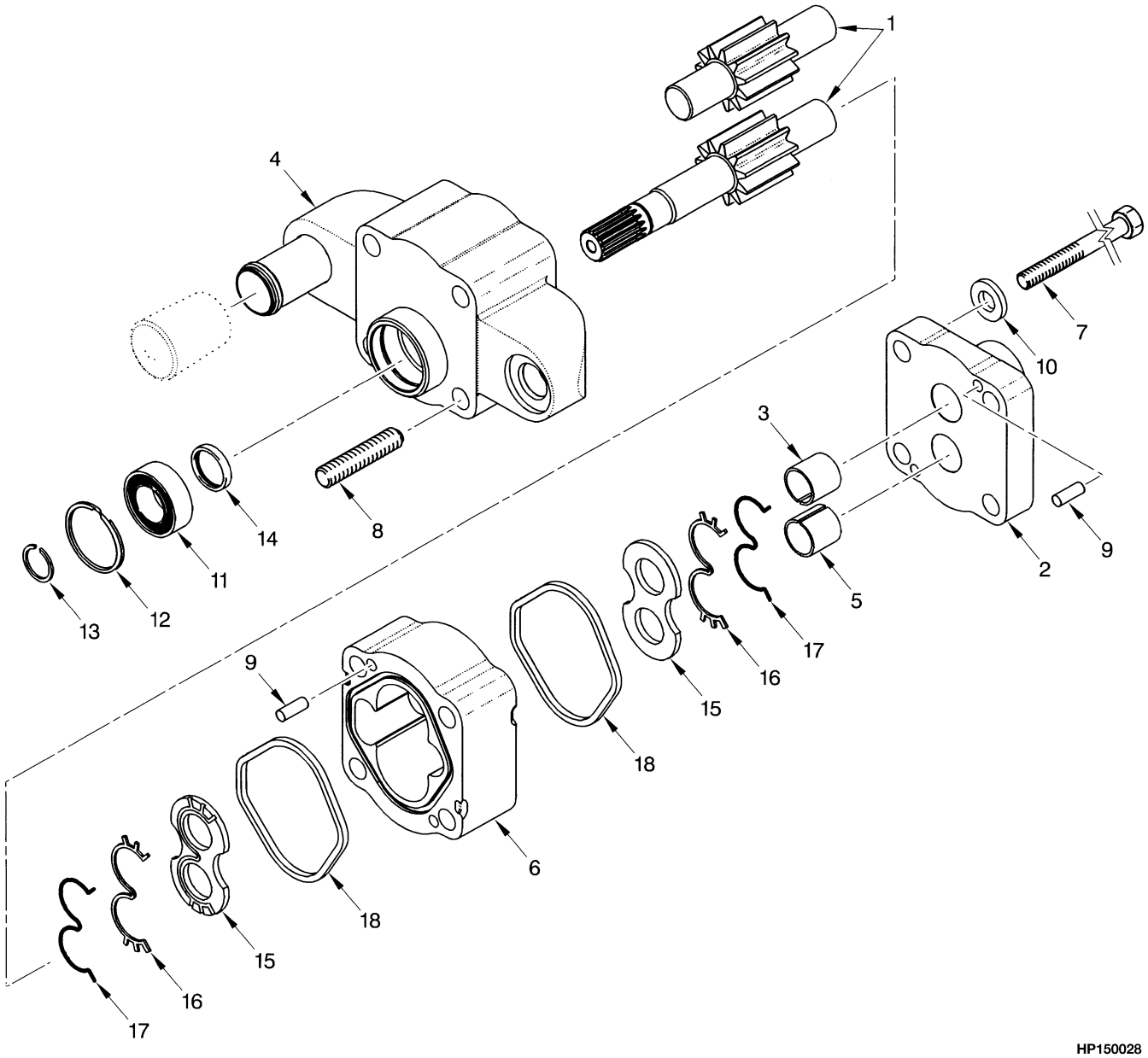

©2003 HYSTER COMPANY

HYDRAULIC PUMP
(⇒S/N K005D-02086)

KEY:
A: 2100 Wheel Base
B: 1830/1880 Wheel Base

ITEM	PART NO.	DESCRIPTION	QTY A	QTY B
	2035981	Hydraulic Pump	1	..
	2035983	Hydraulic Pump	..	1
1	1466441	Gear Set	1	..
1	1466440	Gear Set	..	1
2	1466442	Cover (Port End)	1	1
3	1360875	Bushing	2	2
4	1466443	Cover (Shaft End)	1	1
5	1360875	Bushing	2	2
6	1466445	Housing	1	..
6	1466444	Housing	..	1
7	1466446	Capscrew	4	4
8	1466447	Stud	4	4
9	1151722	Pin	4	4
10	176167	Washer	4	4
11	1466396	Bearing	1	1
12	311277	Snap Ring	1	1
13	1466397	Snap Ring	1	1
14	176169	Seal	1	1
15	372111	Plate	2	2
16	1453776	Seal	2	2
17	1453775	Seal	2	2
18	176173	Seal	2	2
	1466394	Seal Kit (Outer) (Includes Items 11-14)	1	1
	1466395	Seal Kit (Inner) (Includes Items 15-18)	1	1
	1466398	Thrust Plate Kit (Includes Item 15)	1	1

©2003 HYSTER COMPANY

HYDRAULIC PUMP (Figure 9-12)
(S/N K005D-02087⇒)

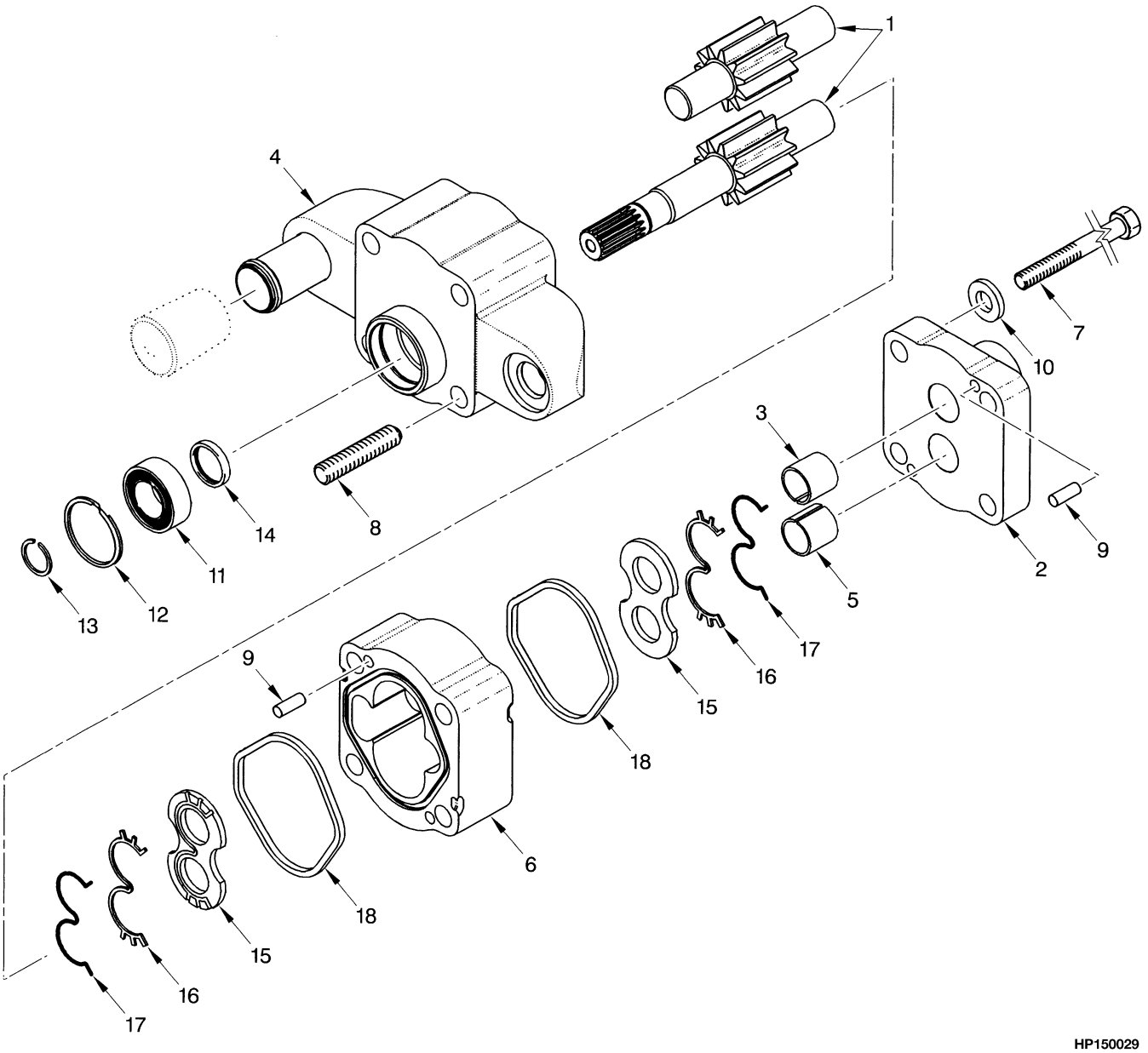

©2003 HYSTER COMPANY

HYDRAULIC PUMP
(S/N K005D-02087⇒)

KEY:
A: 2100 Wheel Base
B: 1830/1880 Wheel Base

ITEM	PART NO.	DESCRIPTION	QTY A	QTY B
	2038202	Hydraulic Pump	1	..
	2038201	Hydraulic Pump	..	1
1	1468469	Gear Set	1	..
1	1468468	Gear Set	..	1
2	1466442	Cover (Port End)	1	1
3	1360875	Bushing	2	2
4	1466443	Cover (Shaft End)	1	1
5	1360875	Bushing	2	2
6	1466444	Housing	1	..
6	1468578	Housing	..	1
7	1466446	Capscrew	4	4
8	1466447	Stud	4	4
9	1151722	Pin	4	4
10	176167	Washer	4	4
11	1466396	Bearing	1	1
12	311277	Snap Ring	1	1
13	1466397	Snap Ring	1	1
14	176169	Seal	1	1
15	. . . . .	Plate	2	2
16	1453776	Seal	2	2
17	1453775	Seal	2	2
18	176173	Seal	2	2
	1466394	Seal Kit (Outer) (Includes Items 11-14)	1	1
	1468470	Seal Kit (Inner) (Includes Items 16-18, 21)	1	1
	1468576	Thrust Plate Kit	1	1

©2003 HYSTER COMPANY

NOTES

10 MAST-TWO STAGE LIMITED FREE-LIFT

SECTION 10
MAST-TWO STAGE LIMITED FREE-LIFT

DESCRIPTION	PAGE
CARRIAGE	
TWO STAGE LIMITED FREE-LIFT	10-20
FORK	
POLISHED FORK WITH FULL BOTTOM TAPER HOOK TYPE	
TWO STAGE LIMITED FREE-LIFT	10-26
STANDARD TAPER HOOK TYPE (H100-120XM)	
TWO STAGE LIMITED FREE-LIFT	10-25
STANDARD TAPER HOOK TYPE (H70-90XM)	
TWO STAGE LIMITED FREE-LIFT	10-24
HEADER HOSE	
TWO STAGE LIMITED FREE-LIFT	
⇒S/N A749L-3337, ⇒S/N A750L-2645	10-14
S/N A749L-3338⇒, S/N A750L-2646⇒	10-16
INNER MAST	
TWO STAGE LIMITED FREE-LIFT	10-4
LOAD BACKREST EXTENSION	
TWO STAGE LIMITED FREE-LIFT	10-22
MAIN CYLINDER	
TWO STAGE LIMITED FREE-LIFT	10-10
MAIN LIFT	
TWO STAGE LIMITED FREE-LIFT	10-6
OUTER MAST	
TWO STAGE LIMITED FREE-LIFT	10-2

©2003 HYSTER COMPANY

OUTER MAST (Figure 10-1)
TWO STAGE LIMITED FREE-LIFT

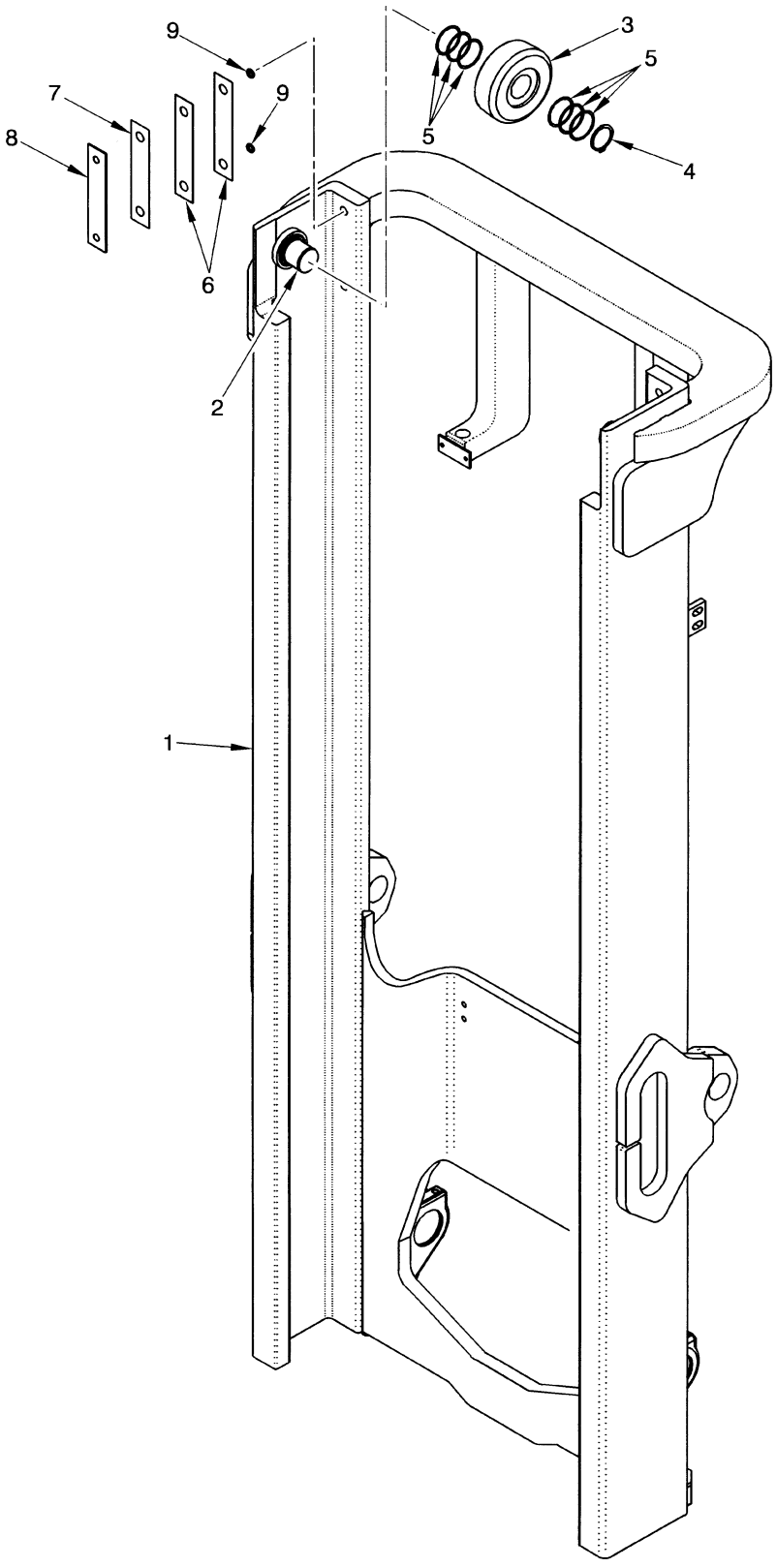

HP170039

©2003 HYSTER COMPANY

OUTER MASS
TWO STAGE LIMITED FREE-LIFT

H100-120XM

ITEM	DESCRIPTION 1 2 3 4	LIFT HEIGHT TO BOTTOM OF FORKS					
		2790 mm (109.8 in.)	3390 mm (133.5 in.)	3990 mm (157.1 in.)	4690 mm (184.6 in.)	5290 mm (208.3 in.)	5890 mm (231.9 in.)
	Mast Group Number	A750 2790	A750 3390	A750 3990	A750 4690	A750 5290	A750 5890
	Mast Assembly	2036057	2036058	2036059	2036061	2036062	2036063
1	Outer Mast	1395342	1395348	1395354	1395361	1395367	1395373

H70-90XM

ITEM	DESCRIPTION 1 2 3 4	LIFT HEIGHT TO BOTTOM OF FORKS					
		3050 mm (120.1 in.)	3650 mm (143.7 in.)	4250 mm (167.3 in.)	4950 mm (194.9 in.)	5550 mm (218.5 in.)	6150 mm (242.1 in.)
	Mast Group Number	A749 3050	A749 3650	A749 4250	A749 4950	A749 5550	A749 6150
	Mast Assembly	2036050	2036051	2036052	2036054	2036055	2036056
1	Outer Mast	1395342	1395348	1395354	1395361	1395367	1395373

KEY:
A: H70-90XM
B: H100-120XM

ITEM		PART NO.	DESCRIPTION	QTY A	QTY B
	b	. . . . .	Mast Assembly	1	1
1	**b**	. . . . .	Outer Mast	1	1
2		1500744	Stub Shaft	2	2
3	**a**	1399203	Load Roller ("A")	2	2
3	**a**	1399204	Load Roller ("B") (0,76 mm)	2	2
3	**a**	1399205	Load Roller ("C") (1,52 mm)	2	2
4		1465072	Snap Ring	2	2
5		1399207	Shim (0.020 in.)	12	12
6		161273	Shim (0.020 in.)	AR	AR
7		161272	Shim (0.007 in.)	AR	AR
8		104264	Bearing Strip	2	2
9		104506	O-Ring	4	4

FOOTNOTES:
a Letter Located on Inside Surface of Load Roller
b Refer to Table

©2003 HYSTER COMPANY

INNER MAST (Figure 10-2)
TWO STAGE LIMITED FREE-LIFT

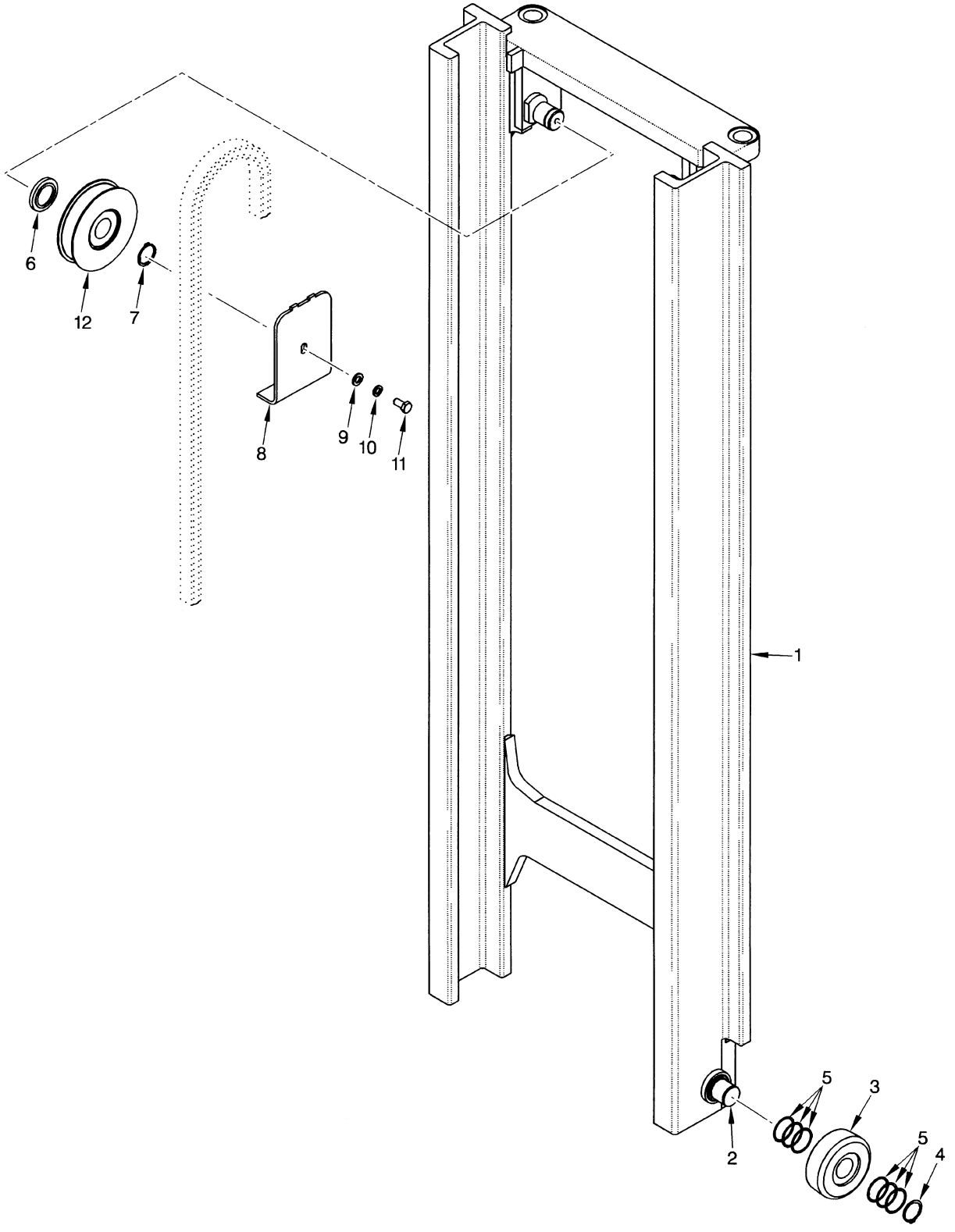

HP170040

©2003 HYSTER COMPANY

INNER MAST
TWO STAGE LIMITED FREE-LIFT

H100-120XM

ITEM	DESCRIPTION 1 2 3 4	LIFT HEIGHT TO BOTTOM OF FORKS					
		2790 mm (109.8 in.)	3390 mm (133.5 in.)	3990 mm (157.1 in.)	4690 mm (184.6 in.)	5290 mm (208.3 in.)	5890 mm (231.9 in.)
	Mast Group Number	A750 2790	A750 3390	A750 3990	A750 4690	A750 5290	A750 5890
	Mast Assembly	2036057	2036058	2036059	2036061	2036062	2036063
1	Inner Mast	1395384	1395390	1395396	1395403	1395409	1395415

H70-90XM

ITEM	DESCRIPTION 1 2 3 4	LIFT HEIGHT TO BOTTOM OF FORKS					
		3050 mm (120.1 in.)	3650 mm (143.7 in.)	4250 mm (167.3 in.)	4950 mm (194.9 in.)	5550 mm (218.5 in.)	6150 mm (242.1 in.)
	Mast Group Number	A749 3050	A749 3650	A749 4250	A749 4950	A749 5550	A749 6150
	Mast Assembly	2036050	2036051	2036052	2036054	2036055	2036056
1	Inner Mast	1395384	1395390	1395396	1395403	1395409	1395415

KEY:
A: H70-90XM
B: H100-120XM

ITEM		PART NO.	DESCRIPTION	QTY A	QTY B
	b	. . . . .	Mast Assembly	1	1
1	**b**	. . . . .	Inner Mast	1	1
2		1500744	Stub Shaft	2	2
3	**a**	1399203	Load Roller ("A")	2	2
3	**a**	1399204	Load Roller ("B") (0,76 mm)	2	2
3	**a**	1399205	Load Roller ("C") (1,52 mm)	2	2
4		1465072	Snap Ring	2	2
5		1399207	Shim (0.020 in.)	12	12
6		1389846	Spacer	2	2
7		12891	Snap Ring	2	2
8		1389959	Bracket	2	2
9		320161	Washer	2	2
10		292683	Lockwasher	2	2
11		132860	Capscrew	2	2
12		1387745	Chain Sheave	2	..
12		1387744	Chain Sheave	..	2

FOOTNOTES:
a Letter Located on Inside Surface of Load Roller
b Refer to Table

©2003 HYSTER COMPANY

MAIN LIFT (Figure 10-3)
TWO STAGE LIMITED FREE-LIFT

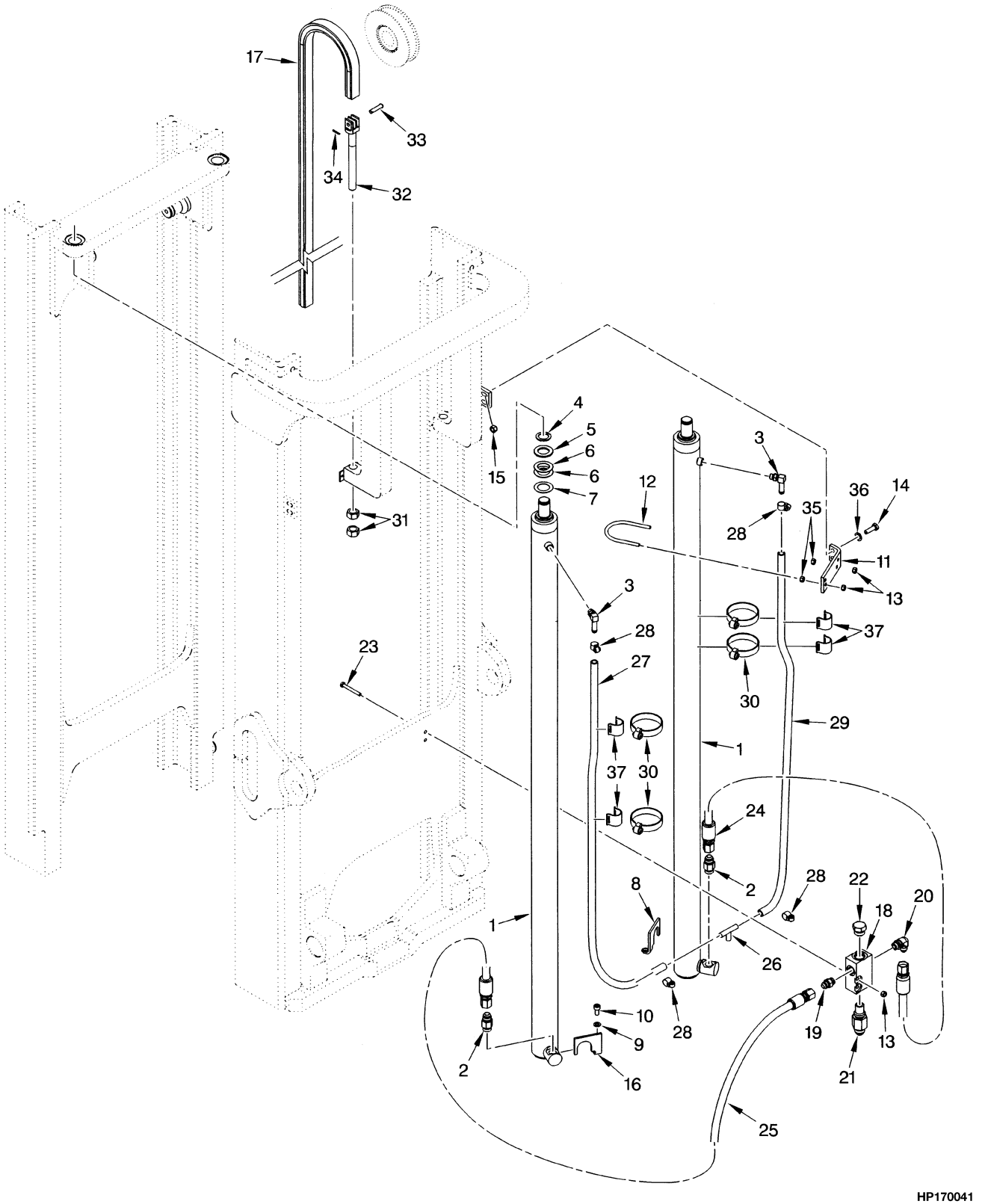

©2003 HYSTER COMPANY

MAIN LIFT
TWO STAGE LIMITED FREE-LIFT

H100-120XM

ITEM	DESCRIPTION 1 2 3 4	LIFT HEIGHT TO BOTTOM OF FORKS					
		2790 mm (109.8 in.)	3390 mm (133.5 in.)	3990 mm (157.1 in.)	4690 mm (184.6 in.)	5290 mm (208.3 in.)	5890 mm (231.9 in.)
	Mast Group Number	A750 2790	A750 3390	A750 3990	A750 4690	A750 5290	A750 5890
	Mast Assembly	2036057	2036058	2036059	2036061	2036062	2036063
17	Chain	338647	356916	356917	357025	1395492	1395499
27	Hose (LH)	1399087	1399099	1399111	1399129	1399145	1399161
29	Hose (RH)	1399075	1399085	1399097	1399115	1399131	1399147

H70-90XM

ITEM	DESCRIPTION 1 2 3 4	LIFT HEIGHT TO BOTTOM OF FORKS					
		3050 mm (120.1 in.)	3650 mm (143.7 in.)	4250 mm (167.3 in.)	4950 mm (194.9 in.)	5550 mm (218.5 in.)	6150 mm (242.1 in.)
	Mast Group Number	A749 3050	A749 3650	A749 4250	A749 4950	A749 5550	A749 6150
	Mast Assembly	2036050	2036051	2036052	2036054	2036055	2036056
17	Chain	182342	191072	191076	291256	1395450	304303
27	Hose (LH)	1399092	1399104	1399116	1399134	1399150	1399166
29	Hose (RH)	1399078	1399090	1399102	1399120	1399136	1399152

KEY:
A: H70-90XM
B: H100-120XM

ITEM		PART NO.	DESCRIPTION	QTY A	QTY B
	c	. . . . .	Mast Assembly	1	1
1		. . . . .	Main Cylinder (☞ Figure 10-4)	2	2
2		2035787	Velocity Fuse	2	..
2		2036856	Velocity Fuse	..	2
3		110178	Fitting	2	2
3		16483	O-Ring	1	1
4		304523	Snap Ring	2	2
5		332061	Washer	2	2
6		142247	Shim (0.049 in.)	AR	AR
7		1325120	Shim (0.70 in.)	AR	AR
8		1389923	Bracket (RH)	1	1
9		292682	Lockwasher	2	2
10		296024	Capscrew	2	2
11		1474399	Bracket	2	2
12	**b**	1389844	U-Bolt	2	..
12	**a**	1389845	U-Bolt	2	..
12		1389845	U-Bolt	..	2
13		313828	Nut	10	10

©2003 HYSTER COMPANY

MAIN LIFT
TWO STAGE LIMITED FREE-LIFT

ITEM		PART NO.	DESCRIPTION	QTY A	QTY B
14		287860	Capscrew	4	4
15		316826	Nut	4	4
16		1389921	Bracket (LH)	1	1
17	**c**	. . . . .	Chain	1	1
18		1388019	Housing	1	1
19		16541	Fitting	1	1
19		16484	O-Ring	1	1
20		16559	Fitting	1	1
20		16484	O-Ring	1	1
21		315262	Control Valve (Lowering)	1	..
21		319891	Control Valve (Lowering)	..	1
22		14603	Fitting	1	1
22		16486	O-Ring	1	1
23		292511	Capscrew	2	2
24		1387324	Hose	1	1
25		1387399	Hose	1	1
26		1399248	Fitting	1	1
27	**c**	. . . . .	Hose (LH)	1	1
28		379405	Clamp	4	4
29	**c**	. . . . .	Hose (RH)	1	1
30		1465585	Clamp	4	4
31		221717	Nut	4	4
32		1331990	Chain Anchor	2	..
32		1331991	Chain Anchor	..	2
33		327591	Pin (Anchor)	2	..
33		339932	Pin (Anchor)	..	2
34		15222	Cotter Pin	2	2
35		239503	Nut	4	4
36		320160	Washer	4	4
37		115696	Clamp	4	4

FOOTNOTES:
a Lift Height ⇒ 6150 mm
b Lift Height 6150 mm ⇒
c Refer to Table

©2003 HYSTER COMPANY

NOTES

MAIN CYLINDER (Figure 10-4)
TWO STAGE LIMITED FREE-LIFT

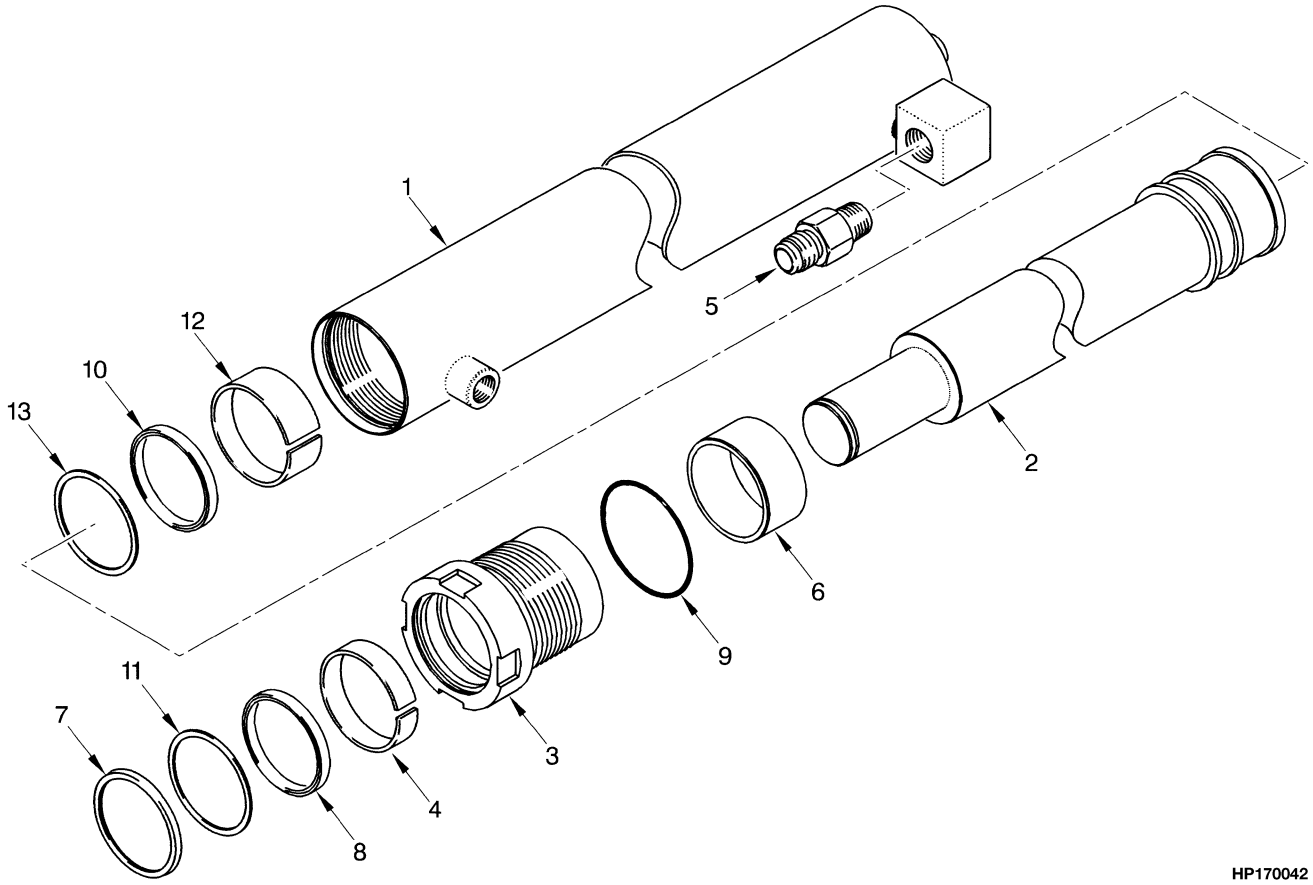

©2003 HYSTER COMPANY

MAIN CYLINDER
TWO STAGE LIMITED FREE-LIFT

H100-120XM

ITEM	DESCRIPTION 1 2 3 4	LIFT HEIGHT TO BOTTOM OF FORKS					
		2790 mm (109.8 in.)	3390 mm (133.5 in.)	3990 mm (157.1 in.)	4690 mm (184.6 in.)	5290 mm (208.3 in.)	5890 mm (231.9 in.)
	Mast Group Number	**A750 2790**	**A750 3390**	**A750 3990**	**A750 4690**	**A750 5290**	**A750 5890**
	Cylinder Group Number	**8603801**	**8603807**	**8603813**	**8603820**	**8603826**	**8603853**
	Lift Cylinder	2035811	2035812	2035813	2035815	2035816	2035817
1	Shell	2036187	2036188	2036189	2036191	2036192	2036193
2	Rod	2036201	2036202	2036203	2036205	2036206	2036208
6	Spacer	----	----	----	2036209	2036210	381110

H70-90XM

ITEM	DESCRIPTION 1 2 3 4	LIFT HEIGHT TO BOTTOM OF FORKS					
		3050 mm (120.1 in.)	3650 mm (143.7 in.)	4250 mm (167.3 in.)	4950 mm (194.9 in.)	5550 mm (218.5 in.)	6150 mm (242.1 in.)
	Mast Group Number	**A749 3050**	**A749 3650**	**A749 4250**	**A749 4950**	**A749 5550**	**A749 6150**
	Cylinder Group Number	**8604051**	**8604057**	**8604063**	**8604070**	**8604076**	**8604022**
	Lift Cylinder	2035804	2035805	2035806	2035808	2035809	2035810
1	Shell	2036181	2036182	2036183	2036185	2036186	2036194
2	Rod	2036195	2036196	2036197	2036199	2036200	2036207
6	Spacer	----	----	----	367139	367140	2036211

KEY:
A: H70-90XM
B: H100-120XM

ITEM	PART NO.	DESCRIPTION	QTY A	QTY B
	c	Lift Cylinder	2	2
1	**c**	Shell	1	1
2	**c**	Rod	1	1
3	**a** 2033243	Gland	1	..
3	**b** 2033281	Gland	1	..
3	**a** 2033281	Gland	..	1
3	**b** 2033299	Gland	..	1
4	**a** 215425	Wear Ring	1	..
4	**b** 297532	Wear Ring	1	..
4	**a** 297532	Wear Ring	..	1
4	**b** 215301	Wear Ring	..	1
5	2035787	Velocity Fuse	1	..
5	2036856	Velocity Fuse	..	1
6	**c**	Spacer	1	1

©2003 HYSTER COMPANY

MAIN CYLINDER
TWO STAGE LIMITED FREE-LIFT

ITEM		PART NO.	DESCRIPTION	QTY A	QTY B
7	**a**	2036212	Wiper Ring	1	..
7	**b**	2036213	Wiper Ring	1	..
7	**a**	2036213	Wiper Ring	..	1
7	**b**	2034269	Wiper Ring	..	1
8	**a**	270077	Rod Seal	1	..
8	**b**	327807	Seal	1	..
8	**a**	327807	Seal	..	1
8	**b**	201829	Rod Seal	..	1
9	**a**	57664	O-Ring	1	..
9	**b**	15879	O-Ring	1	..
9		15879	O-Ring	..	1
10	**a**	1381061	Seal	1	..
10	**b**	1381062	Seal	1	..
10		1381062	Seal	..	1
11	**a**	638249	Back-Up Ring	1	..
11	**b**	327808	Back-Up Ring	1	..
11	**a**	327808	Back-Up Ring	..	1
11	**b**	638250	Back-Up Ring	..	1
12	**a**	297532	Wear Ring	1	..
12	**b**	351531	Wear Ring	1	..
12		351531	Wear Ring	..	1
13	**a**	638249	Back-Up Ring	1	..
13	**b**	351532	Back-Up Ring	1	..
13		351532	Back-Up Ring	..	1
		2035784	Seal Kit (Class III up to 5550 mm) (Includes Items 4, 7-13)	1	1
		2035785	Seal Kit (Class III 5550 mm and up, Class IV up to 5550 mm) (Includes Items 4, 7-13)	1	1
		2035786	Seal Kit (Class IV 5550 mm and up) (Includes Items 4, 7-13)	1	1

FOOTNOTES:
a Lift Height ⇒ 5550 mm
b Lift Height 5550 mm ⇒
c Refer to Table

©2003 HYSTER COMPANY

NOTES

HEADER HOSE (Figure 10-5)
TWO STAGE LIMITED FREE-LIFT
(⇒S/N A749L-3337, ⇒S/N A750L-2645)

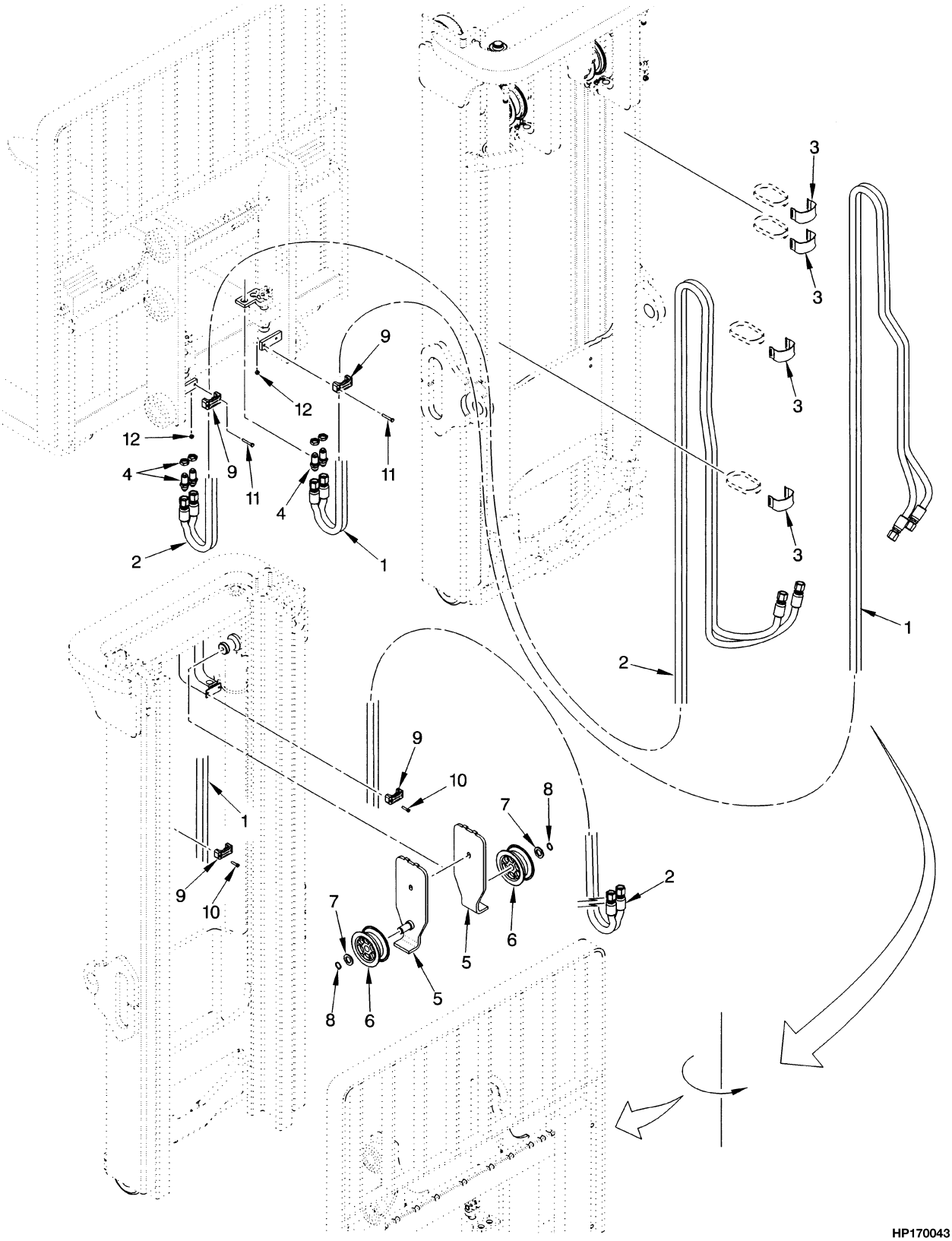

©2003 HYSTER COMPANY

HEADER HOSE
TWO STAGE LIMITED FREE-LIFT
(⇒S/N A749L-3337, ⇒S/N A750L-2645)

H100-H120XM

ITEM	DESCRIPTION 1 2 3 4	LIFT HEIGHT TO BOTTOM OF FORKS					
		2790 mm (109.8 in.)	3390 mm (133.5 in.)	3990 mm (157.1 in.)	4690 mm (184.6 in.)	5290 mm (208.3 in.)	5890 mm (231.9 in.)
	Mast Group Number	A750 2790	A750 3390	A750 3990	A750 4690	A750 5290	A750 5890
	Mast Assembly	2036057	2036058	2036059	2036061	2036062	2036063
1	Hose	1399551	1399559	1399565	1399576	1399593	1399609
2	Hose	1399702	1399703	1399704	1399705	1399706	1399707

H70-90XM

ITEM	DESCRIPTION 1 2 3 4	LIFT HEIGHT TO BOTTOM OF FORKS					
		3050 mm (120.1 in.)	3650 mm (143.7 in.)	4250 mm (167.3 in.)	4950 mm (194.9 in.)	5550 mm (218.5 in.)	6150 mm (242.1 in.)
	Mast Group Number	A749 3050	A749 3650	A749 4250	A749 4950	A749 5550	A749 6150
	Mast Assembly	2036051	2036050	2036052	2036054	2036055	2036056
1	Hose	1399551	1399559	1399565	1399576	1399593	1399609
2	Hose	1399702	1399703	1399704	1399705	1399706	1399707

KEY:
A: Three Function
B: Four Function

ITEM	PART NO.	DESCRIPTION	QTY A	QTY B
	a	Mast Assembly	1	1
1	**a**	Hose	1	..
2	**a**	Hose	..	1
3	1465489	Clamp	4	8
4	16448	Fitting	2	4
5	1389961	Bracket	1	2
6	1332705	Sheave	1	2
7	320171	Washer	1	2
8	58902	Snap Ring	1	2
9	2035791	Clamp	2	4
10	293797	Capscrew	2	4
11	287844	Capscrew	2	4
12	313805	Nut	2	4

FOOTNOTES:
a Refer to Table

©2003 HYSTER COMPANY

HEADER HOSE (Figure 10-6)
TWO STAGE LIMITED FREE-LIFT
(S/N A749L-3338⇒, S/N A750L-2646⇒)

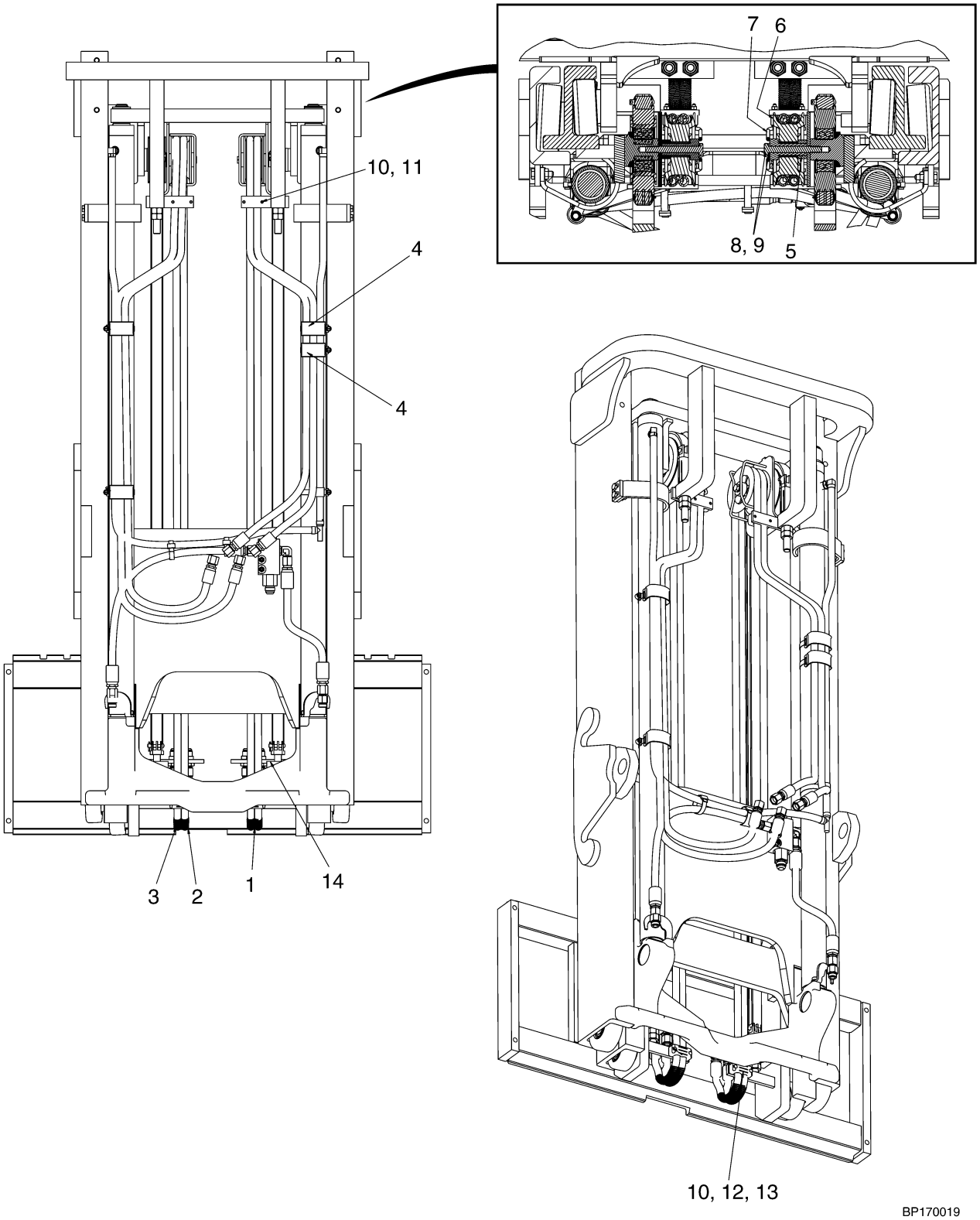

©2003 HYSTER COMPANY

HEADER HOSE
TWO STAGE LIMITED FREE-LIFT
(S/N A749L-3338⇒, S/N A750L-2646⇒)

H100-120XM (THREE AND FOUR FUNCTION)

ITEM	DESCRIPTION 1 2 3 4	LIFT HEIGHT TO BOTTOM OF FORKS					
		2790 mm (109.8 in.)	3390 mm (133.5 in.)	3990 mm (157.1 in.)	4690 mm (184.6 in.)	5290 mm (208.3 in.)	5890 mm (231.9 in.)
	Mast Group Number	A750 2790	A750 3390	A750 3990	A750 4690	A750 5290	A750 5890
	Mast Assembly	2036057	2036058	2036059	2036061	2036062	2036063
1	Hose	1506889	1506895	1506901	1506908	1506914	1506920
2	Hose (RH)	1506932	1506937	1506943	1506950	1506956	1506962
3	Hose (LH)	1506894	1506900	1506906	1506913	1506919	1506925

H70-90XM (THREE AND FOUR FUNCTION)

ITEM	DESCRIPTION 1 2 3 4	LIFT HEIGHT TO BOTTOM OF FORKS					
		3050 mm (120.1 in.)	3650 mm (143.7 in.)	4250 mm (167.3 in.)	4950 mm (194.9 in.)	5550 mm (218.5 in.)	6150 mm (242.1 in.)
	Mast Group Number	A749 3050	A749 3650	A749 4250	A749 4950	A749 5550	A749 6150
	Mast Assembly	2036050	2036051	2036052	2036054	2036055	2036056
1	Hose	1506889	1506895	1506901	1506908	1506914	1506920
2	Hose (RH)	1506932	1506937	1506943	1506950	1506956	1506962
3	Hose (LH)	1506894	1506900	1506906	1506913	1506919	1506925

KEY:
A: Three Function
B: Four Function

ITEM	PART NO.	DESCRIPTION	QTY A	QTY B
	a	Mast Assembly	1	1
1	**a**	Hose	2	2
2	**a**	Hose (RH)	1	1
3	**a**	Hose (LH)	1	1
4	1465489	Clamp	2	2
5	1477578	Spacer	1	1
6	1495279	Sheave	1	1
7	1477570	Stubshaft	1	1
8	292683	Lockwasher	1	1
9	292538	Capscrew	1	1
10	2035791	Clamp	2	2
11	293798	Capscrew	2	2
12	287844	Capscrew	2	2

©2003 HYSTER COMPANY

HEADER HOSE
TWO STAGE LIMITED FREE-LIFT
(S/N A749L-3338⇒, S/N A750L-2646⇒)

ITEM	PART NO.	DESCRIPTION	QTY A	QTY B
13	313805	Nut	2	2
14	16448	Fitting	2	2

FOOTNOTES:
a Refer to Table

©2003 HYSTER COMPANY

NOTES

CARRIAGE (Figure 10-7)
TWO STAGE LIMITED FREE-LIFT

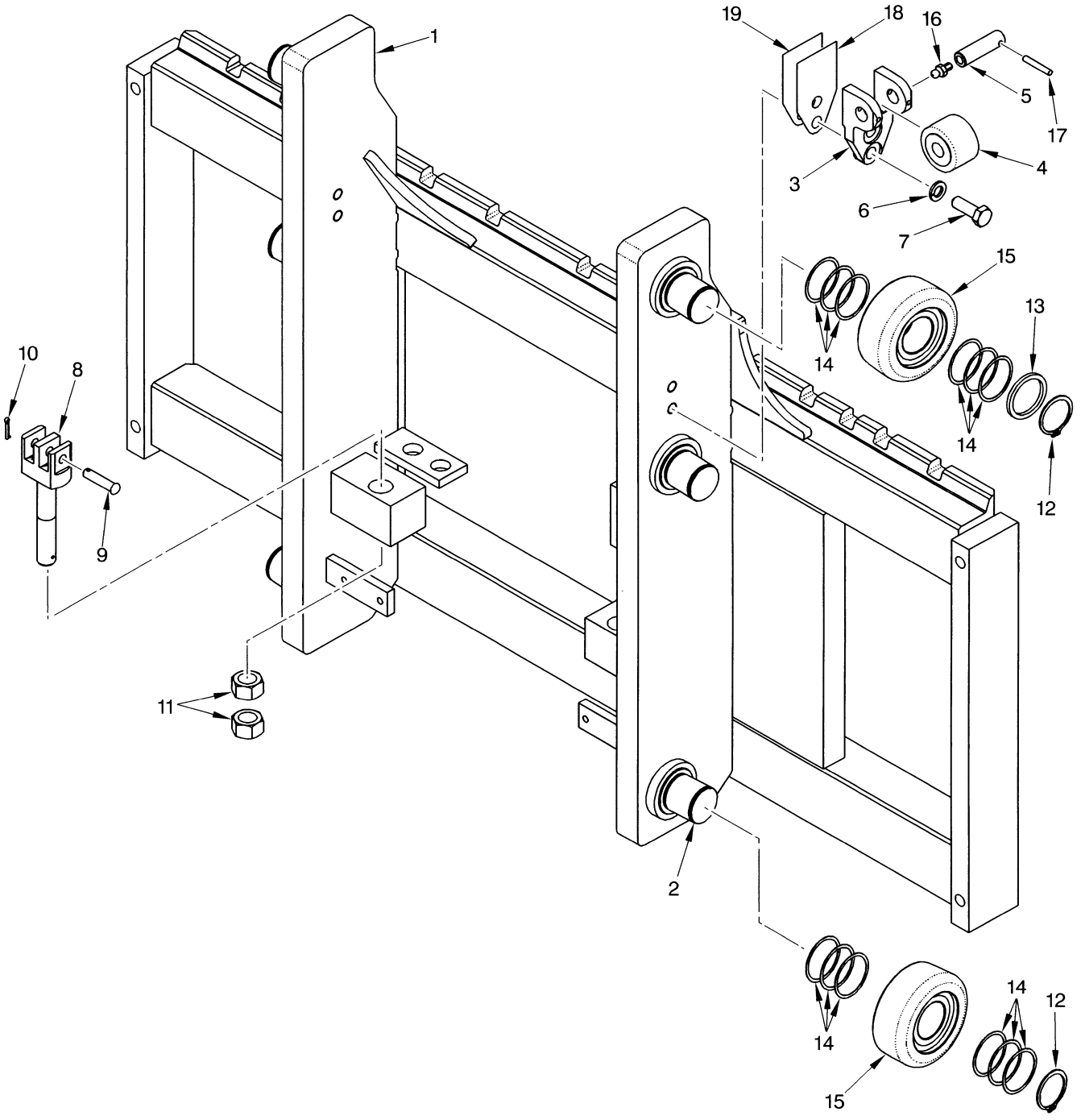

©2003 HYSTER COMPANY

CARRIAGE
TWO STAGE LIMITED FREE-LIFT

KEY:
A: H70-90XM
B: H100-120XM

ITEM		PART NO.	DESCRIPTION	QTY A	QTY B
		2035667	Carriage Assembly (48 in.)	1	..
		2035668	Carriage Assembly (54 in.)	1	..
		2035669	Carriage Assembly (60 in.)	1	..
		2035670	Carriage Assembly (48 in.)	..	1
		2035671	Carriage Assembly (54 in.)	..	1
	a	2037706	Carriage Assembly (54 in.)	..	1
		2035672	Carriage Assembly (60 in.)	..	1
1		1388092	Frame (48 in.)	1	..
1		1388093	Frame (54 in.)	1	..
1		1388094	Frame (60 in.)	1	..
1		1387446	Frame (48 in.)	..	1
1		1387447	Frame (54 in.)	..	1
1	**a**	1465226	Frame (54 in.)	..	1
1		1387448	Frame (60 in.)	..	1
2		1500744	Stub Shaft	6	6
3	**a**	1465177	Bracket	..	2
4	**a**	1387993	Roller Bearing	..	2
5	**a**	1465028	Pin	..	2
6	**a**	292683	Lockwasher	..	4
7	**a**	292528	Capscrew	..	4
8		1387285	Chain Anchor	2	..
8		1387286	Chain Anchor	..	2
9		327591	Pin (Anchor)	2	..
9		339932	Pin (Anchor)	..	2
10		15222	Cotter Pin	2	2
11		221717	Nut	4	4
12		1465072	Snap Ring	6	6
13		1399224	Spacer	2	2
14		1399207	Shim (0.020 in.)	AR	AR
15	**b**	1511882	Load Roller ("A")	6	6
15	**c**	1511883	Load Roller ("B") (0,26 mm)	6	6
15		1511884	Load Roller ("C") (1,52 mm)	6	6
16	**a**	16001	Lube Fitting	..	2
17	**a**	66333	Pin	..	2
18	**a**	192425	Shim (0.062 in.)	..	AR
19	**a**	192424	Shim (0.030 in.)	..	AR

FOOTNOTES:
a Attachment Carriage (H90XM, 100XM)
b Letter "A" Located on Inside Surface of Load Roller
c Letter "B" Located on inside Surface of Load Roller

©2003 HYSTER COMPANY

LOAD BACKREST EXTENSION (Figure 10-8)
TWO STAGE LIMITED FREE-LIFT

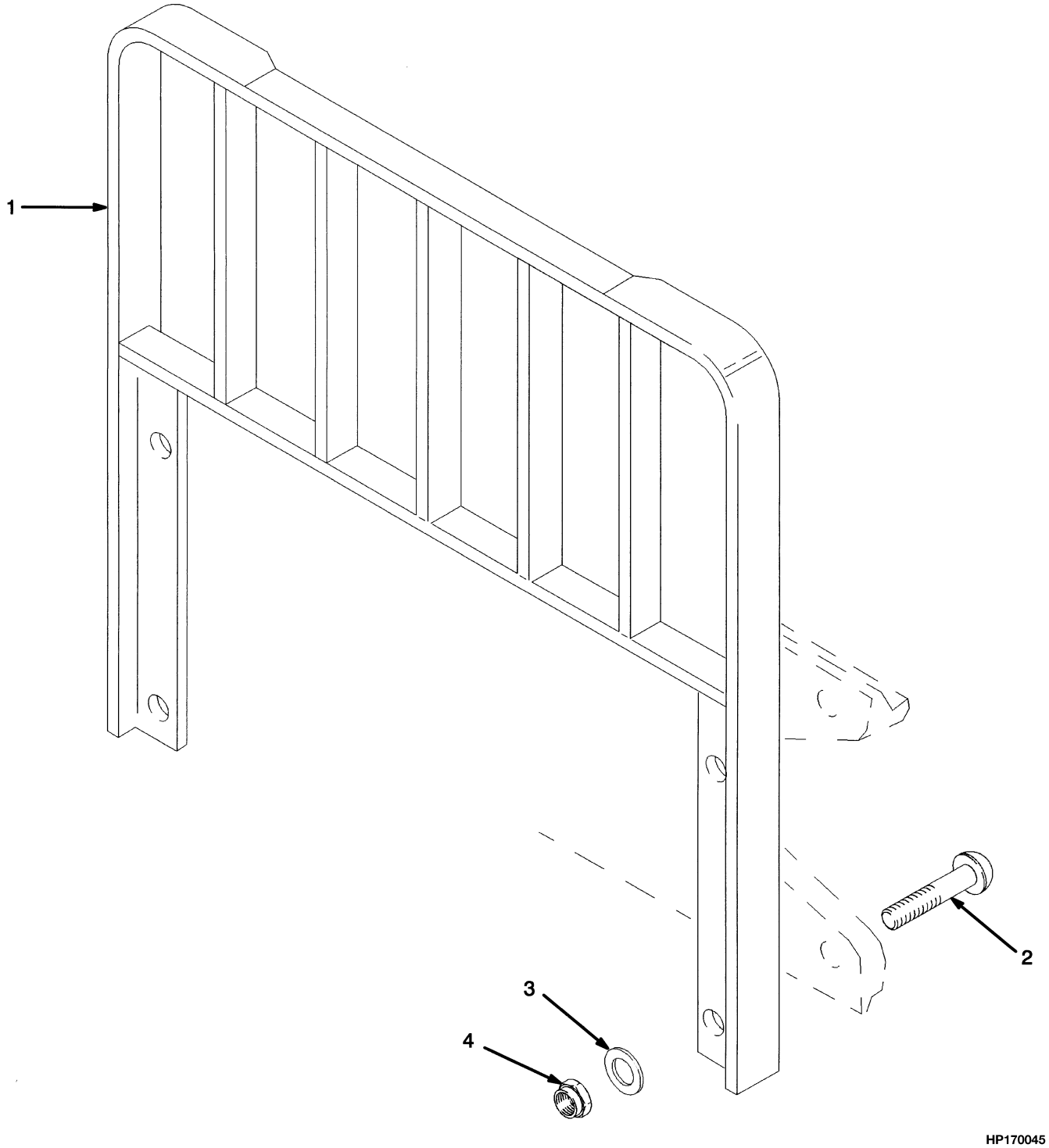

©2003 HYSTER COMPANY

LOAD BACKREST EXTENSION
TWO STAGE LIMITED FREE-LIFT

KEY:
A: H70-90XM
B: H100-120XM

ITEM		PART NO.	DESCRIPTION	QTY A	QTY B
1		1387341	Load Backrest Extension (48 in.)	1	..
1	**a**	1387342	Load Backrest Extension (48 in.)	1	..
1		1387348	Load Backrest Extension (48 in.)	..	1
1	**a**	1464863	Load Backrest Extension (48 in.)	..	1
1		1387343	Load Backrest Extension (54 in.)	1	..
1	**a**	1387344	Load Backrest Extension (54 in.)	1	..
1		1387904	Load Backrest Extension (54 in.)	..	1
1	**a**	1464864	Load Backrest Extension (54 in.)	..	1
1		1387345	Load Backrest Extension (60 in.)	1	..
1	**a**	1387346	Load Backrest Extension (60 in.)	1	..
1		1387349	Load Backrest Extension (60 in.)	..	1
1	**a**	1464865	Load Backrest Extension (60 in.)	..	1
2		1387330	Capscrew	4	4
3		221771	Washer	4	4
3	**b**	296423	Washer	4	4
4		300937	Nut	4	4

FOOTNOTES:
a For Polished Forks with Full Bottom Taper
b Optional

©2003 HYSTER COMPANY

FORK (Figure 10-9)
STANDARD TAPER HOOK TYPE (H70-90XM)
TWO STAGE LIMITED FREE-LIFT

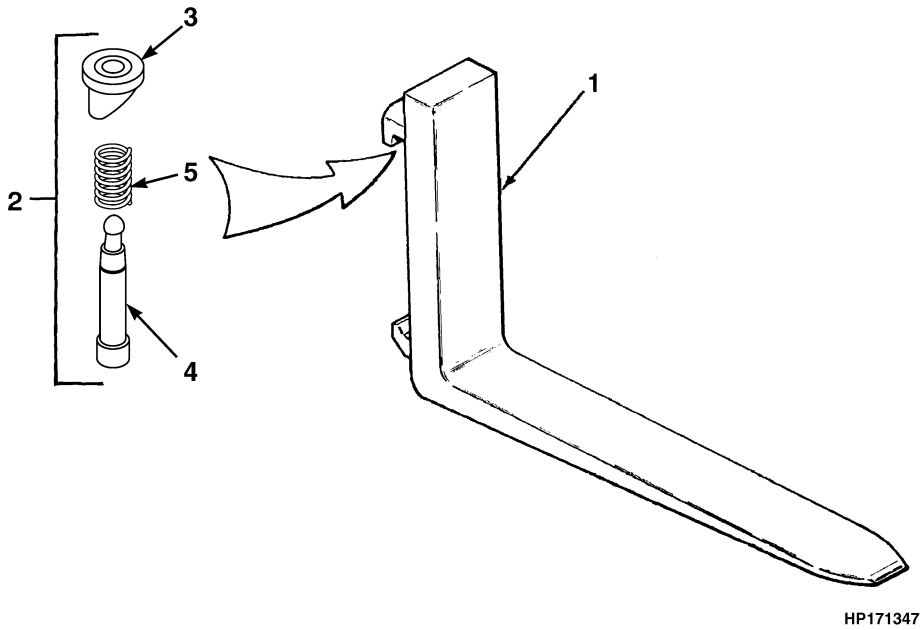

KEY:
A: H70XM (50 mm x 125 mm) (2 in x 5 in)
B: H80XM (50 mm x 125 mm) (2 in x 5 in)
C: H80XM (50 mm x 150 mm) (2 in x 6 in)
D: H90XM (50 mm x 125 mm) (2 in x 5 in)
E: H90XM (50 mm x 150 mm) (2 in x 6 in)

ITEM	PART NO.	DESCRIPTION	QTY A	B	C	D	E
1	367420	Fork (42 in.)	2	2	..	2	..
1	367421	Fork (48 in.)	2	2	..	2	..
1	367422	Fork (54 in.)	2	2	..	..	..
1	1399915	Fork (54 in.)	..	..	..	..	2
1	367423	Fork (60 in.)	2	..	..	..	..
1	1399916	Fork (60 in.)	..	..	2	..	2
1	367424	Fork (72 in.)	2	..	..	..	..
1	1399917	Fork (72 in.)	..	..	2	..	2
2	1500774	Latch Kit	2	2	2	2	2
3	. . . . .	Knob	1	1	1	1	1
4	. . . . .	Pin	1	1	1	1	1
5	. . . . .	Spring	1	1	1	1	1

©2003 HYSTER COMPANY

FORK (Figure 10-10)
STANDARD TAPER HOOK TYPE (H100-120XM)
TWO STAGE LIMITED FREE-LIFT

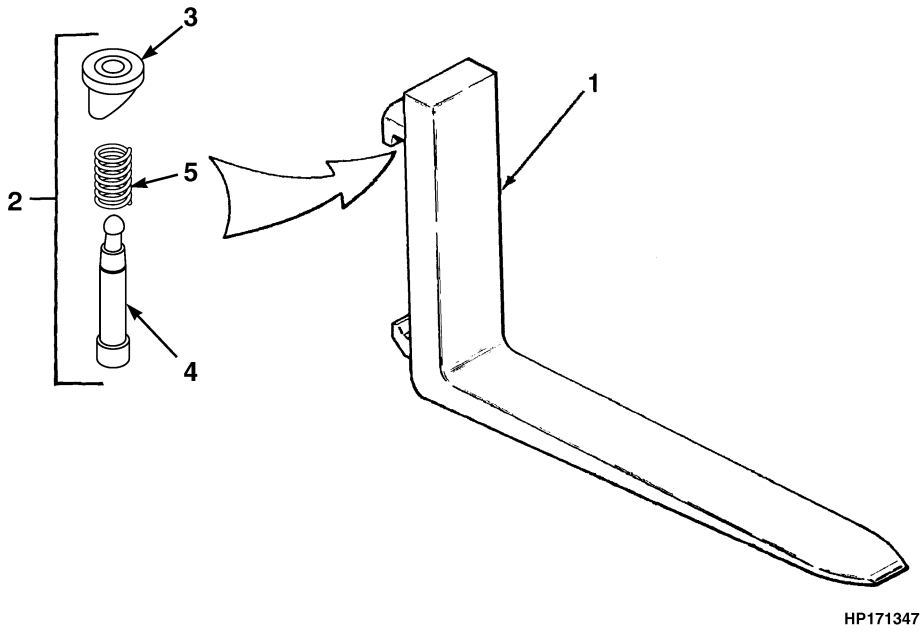

KEY:
A: H100XM (50 mm x 150 mm) (2 in x 6 in)
B: H100XM (60 mm x 150 mm) (2.36 in x 6 in)
C: H110XM (50 mm x 150 mm) (2 in x 6 in)
D: H110 XM (60 mm x 150 mm) (2.36 in x 6 in)
E: H120XM (60 mm x 150 mm) (2.36 in x 6 in)

ITEM	PART NO.	DESCRIPTION	QTY A	B	C	D	E
1	1399919	Fork (42 in.)	2	..	2	..	..
1	1458264	Fork (42 in.)	..	..	..	..	2
1	1399920	Fork (48 in.)	2	..	2	..	..
1	1333001	Fork (48 in.)	..	..	..	..	2
1	1399921	Fork (54 in.)	2	..	..	..	..
1	1333002	Fork (54 in.)	..	..	..	2	2
1	1399922	Fork (60 in.)	2	..	..	..	..
1	1333003	Fork (60 in.)	..	..	..	2	2
1	1333004	Fork (72 in.)	..	2	..	2	2
2	1502122	Latch Kit	2	2	2	2	2
3	. . . . .	Knob	1	1	1	1	1
4	. . . . .	Pin	1	1	1	1	1
5	. . . . .	Spring	1	1	1	1	1

©2003 HYSTER COMPANY

FORK (Figure 10-11)
POLISHED FORK WITH FULL BOTTOM TAPER HOOK TYPE
TWO STAGE LIMITED FREE-LIFT

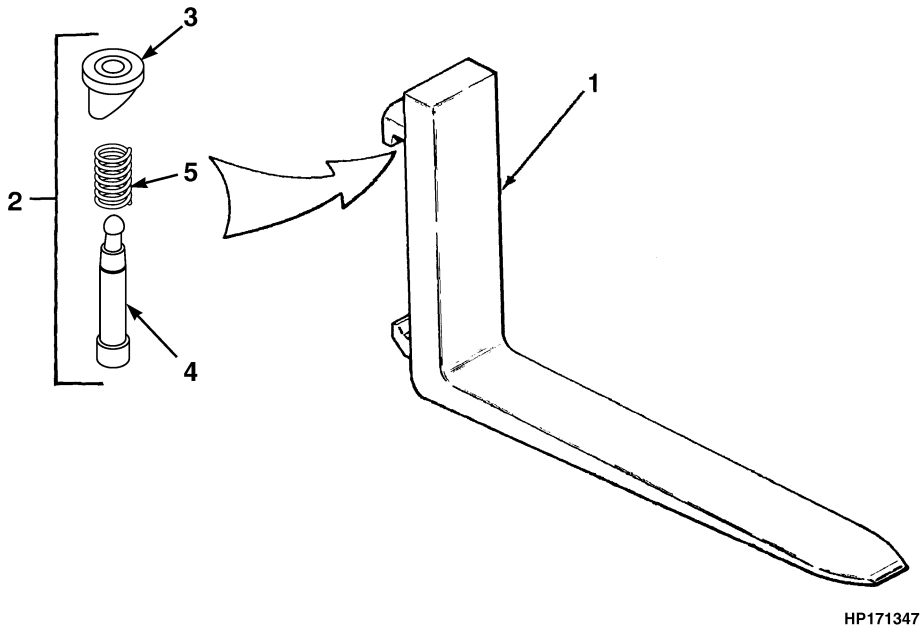

KEY:
A: H70-90XM (40 mm x 200 mm) (1.5 in x 8 in)
B: H100-120XM (40 mm x 250 mm) (1.5 in x 10 in)

ITEM	PART NO.	DESCRIPTION	QTY A	QTY B
1	1465545	Fork (47.5 in.)	2	..
1	1465547	Fork (47.5 in.)	..	2
1	1465546	Fork (54 in.)	2	..
1	1465548	Fork (54 in.)	..	2
2	1500774	Latch Kit	2	..
2	1502122	Latch Kit	..	2
3	. . . . .	Knob	1	1
4	. . . . .	Pin	1	1
5	. . . . .	Spring	1	1

©2003 HYSTER COMPANY

11 MAST-TWO STAGE FULL FREE-LIFT

SECTION 11
MAST-TWO STAGE FULL FREE-LIFT

DESCRIPTION	PAGE
CARRIAGE	
TWO STAGE FULL FREE-LIFT	11-18
FORK	
POLISHED FORK WITH FULL BOTTOM TAPER HOOK TYPE	
TWO STAGE FULL FREE-LIFT	11-26
STANDARD TAPER HOOK TYPE (H100-120XM)	
TWO STAGE FULL FREE-LIFT	11-25
STANDARD TAPER HOOK TYPE (H70-90XM)	
TWO STAGE FULL FREE-LIFT	11-24
FREE-LIFT CYLINDER	
TWO STAGE FULL FREE-LIFT	11-14
HEADER HOSE	
TWO STAGE FULL FREE-LIFT	11-28
INNER AND FREE LIFT MAST	
TWO STAGE FULL FREE-LIFT	11-6
LOAD BACKREST EXTENSION	
TWO STAGE FULL FREE-LIFT	11-22
MAIN LIFT CYLINDER	
TWO STAGE FULL FREE-LIFT	11-10
OUTER MAST AND MAIN LIFT	
TWO STAGE FULL FREE-LIFT	11-2

©2003 HYSTER COMPANY

OUTER MAST AND MAIN LIFT (Figure 11-1)
TWO STAGE FULL FREE-LIFT

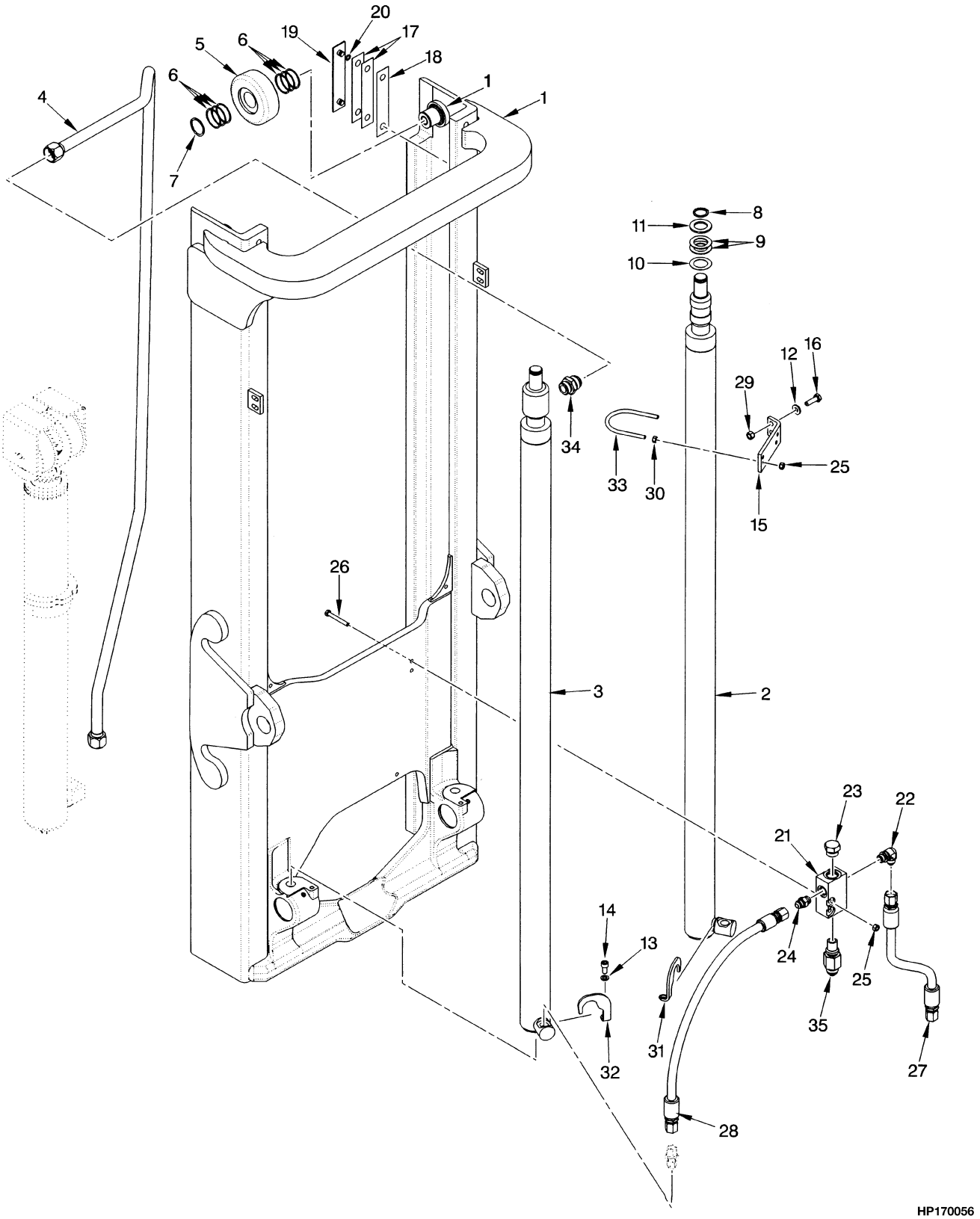

©2003 HYSTER COMPANY

OUTER MAST AND MAIN LIFT
TWO STAGE FULL FREE-LIFT

H100-120XM

ITEM	DESCRIPTION 1 2 3 4	LIFT HEIGHT TO BOTTOM OF FORKS	
		2790 mm (109.8 in.)	3390 mm (133.5 in.)
	Mast Group Number	A754 2790	A754 3390
	Mast Assembly	2038254	2038260
1	Outer Mast	1465940	1465946
4	Tube	1467651	1467657

H70-90XM

ITEM	DESCRIPTION 1 2 3 4	LIFT HEIGHT TO BOTTOM OF FORKS	
		3050 mm (120.1 in.)	3650 mm (143.7 in.)
	Mast Group Number	A753 3050	A753 3650
	Mast Assembly	2038212	2038218
1	Outer Mast	1465940	1465946
4	Tube	1467651	1467657

KEY:
A: H70-90XM
B: H100-120XM

ITEM		PART NO.	DESCRIPTION	QTY A	QTY B
	b	. . . . .	Mast Assembly	1	1
1	**b**	. . . . .	Outer Mast	1	1
1		1500744	Stub Shaft	2	2
2		. . . . .	Main Cylinder (RH) (☞ Figure 11-3)	1	1
3		. . . . .	Main Cylinder (LH) (☞ Figure 11-3)	1	1
4	**b**	. . . . .	Tube	1	1
5	**a**	1399203	Load Roller ("A")	2	2
5	**a**	1399204	Load Roller ("B") (0,52 mm)	2	2
5	**a**	1399205	Load Roller ("C") (1,52 mm)	2	2
6		1399207	Shim (0.020 in.)	12	12
7		1465072	Snap Ring	2	2
8		304523	Snap Ring	2	2
9		1325120	Shim (0.70 in.)	AR	AR
10		142247	Shim (0.049 in.)	AR	AR
11		332061	Washer	2	2
12		320160	Washer	4	4
13		292682	Lockwasher	2	2
14		296024	Capscrew	2	2
15		1474399	Bracket	2	2
16		287860	Capscrew	4	4
17		161273	Shim (0.020 in.)	AR	AR

©2003 HYSTER COMPANY

OUTER MAST AND MAIN LIFT
TWO STAGE FULL FREE-LIFT

ITEM	PART NO.	DESCRIPTION	QTY A	QTY B
18	161272	Shim (0.007 in.)	AR	AR
19	104264	Bearing Strip	2	2
20	104506	O-Ring	4	4
21	1388019	Housing (Control Valve)	1	1
22	16559	Fitting	1	1
23	14603	Fitting	1	1
24	16541	Fitting	1	1
25	313828	Nut	6	6
26	292511	Capscrew	2	2
27	1387324	Hose	1	1
28	1387399	Hose	1	1
29	316826	Nut	4	4
30	239503	Nut	4	4
31	1389924	Bracket (RH)	1	1
32	1389922	Bracket (LH)	1	1
33	1389844	U-Bolt	2	2
34	1304349	Fitting	1	1
35	315262	Control Valve (Lowering)	1	..
35	319891	Control Valve (Lowering)	..	1

FOOTNOTES:
a Letter Located on Inside Surface of Load Roller
b Refer to Table

©2003 HYSTER COMPANY

NOTES

INNER AND FREE LIFT MAST (Figure 11-2)
TWO STAGE FULL FREE-LIFT

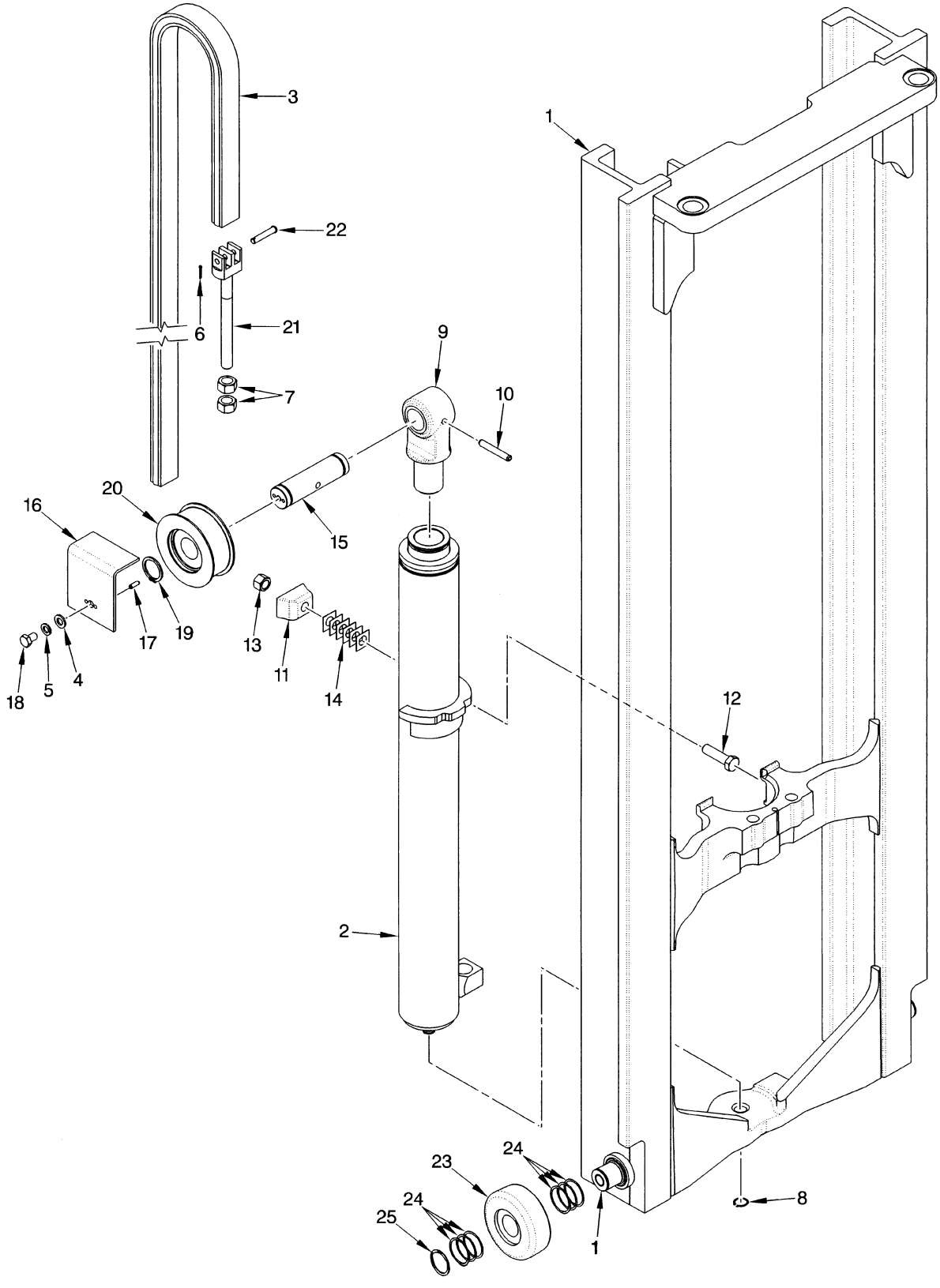

HP170057

©2003 HYSTER COMPANY

INNER AND FREE LIFT MAST
TWO STAGE FULL FREE-LIFT

H100-120XM

ITEM	DESCRIPTION 1 2 3 4	LIFT HEIGHT TO BOTTOM OF FORKS	
		2790 mm (109.8 in.)	3390 mm (133.5 in.)
	Mast Group Number	A754 2790	A754 3390
	Mast Assembly	2038254	2038260
1	Inner Mast	1467081	1467087
3	Chain	337180	348827

H70-90XM

ITEM	DESCRIPTION 1 2 3 4	LIFT HEIGHT TO BOTTOM OF FORKS	
		3050 mm (120.1 in.)	3650 mm (143.7 in.)
	Mast Group Number	A753 3050	A753 3650
	Mast Assembly	2038212	2038218
1	Inner Mast	1467081	1467087
3	Chain	337190	338646

ITEM		PART NO.	DESCRIPTION	QTY
	b	. . . . .	Mast Assembly	1
1	**b**	. . . . .	Inner Mast	1
1		1500744	Stub Shaft	2
2		. . . . .	Free-Lift Cylinder (☞ Figure 11-4)	1
3	**b**	. . . . .	Chain	1
4		320161	Washer	2
5		292683	Lockwasher	2
6		15222	Cotter Pin	2
7		221717	Nut	4
8		12929	Snap Ring	1
9		1389825	Crosshead	1
10		302493	Pin	1
11		2036756	Clamp	2
12		292563	Capscrew	2
13		316828	Nut	4
14		1387584	Shim	12
15		1387281	Pin	1
16		1387519	Guard	2
17		302461	Pin	2
18		292526	Capscrew	2
19		304527	Snap Ring	2
20		1387743	Chain Sheave	2
21		1331991	Chain Anchor	2
22		339932	Pin	2
23	**a**	1399203	Load Roller ("A")	2
23	**a**	1399204	Load Roller ("B") (0,52 mm)	2

©2003 HYSTER COMPANY

INNER AND FREE LIFT MAST
TWO STAGE FULL FREE-LIFT

ITEM		PART NO.	DESCRIPTION	QTY
23	**a**	1399205	Load Roller ("C") (1,52 mm)	2
24		1399207	Shim (0.020 in.)	12
25		1465072	Snap Ring	2

FOOTNOTES:
a Letter Located on Inside Surface of Load Roller
b Refer to Table

©2003 HYSTER COMPANY

NOTES

MAIN LIFT CYLINDER (Figure 11-3)
TWO STAGE FULL FREE-LIFT

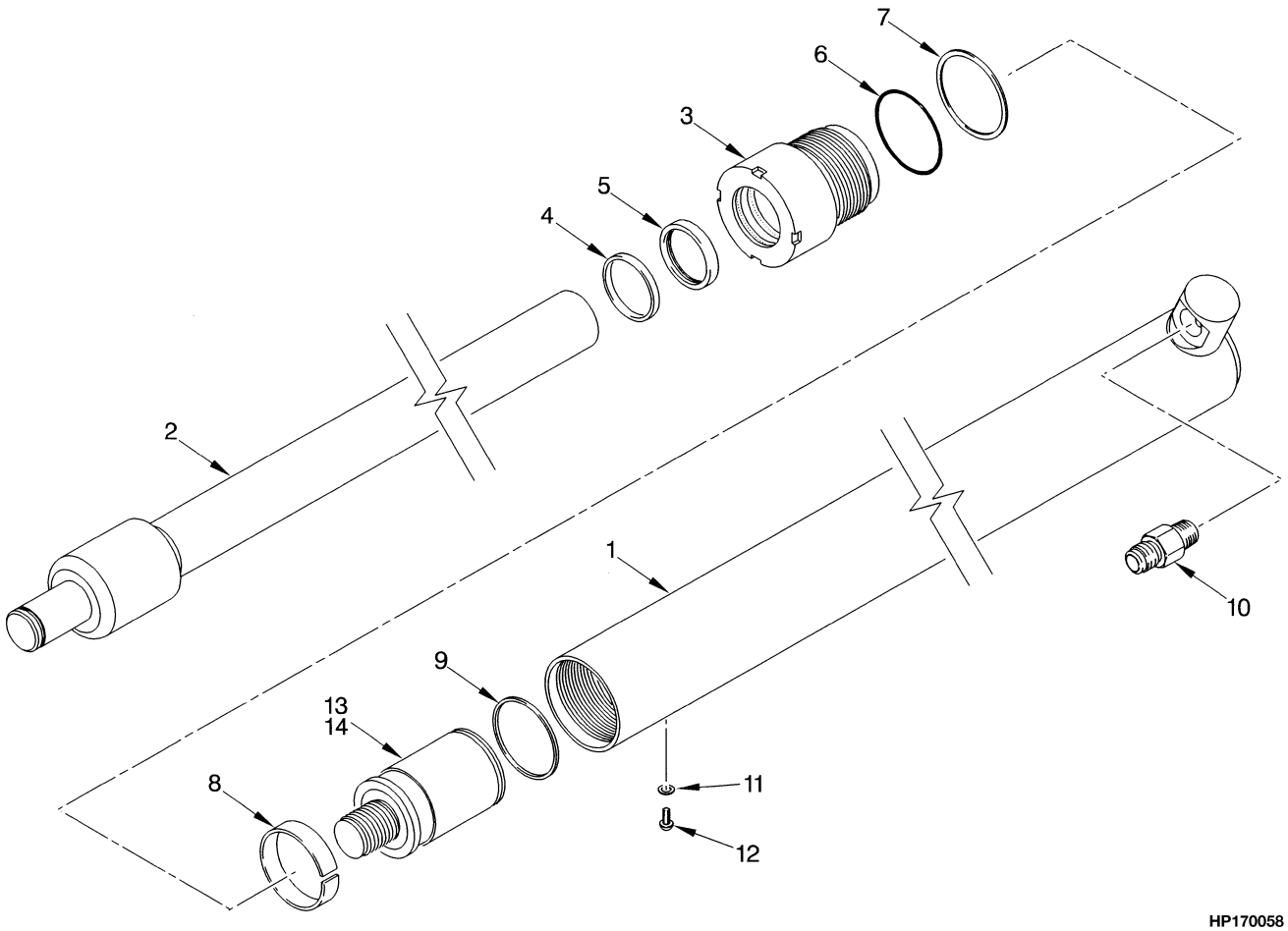

©2003 HYSTER COMPANY

MAIN LIFT CYLINDER
TWO STAGE FULL FREE-LIFT

H100-120XM

ITEM	DESCRIPTION 1 2 3 4	LIFT HEIGHT TO BOTTOM OF FORKS			
		2790 mm (109.8 in.)	2790 mm (109.8 in.)	3390 mm (133.5 in.)	3390 mm (133.5 in.)
	Mast Group Number	**A754 2790**	**A754 2790**	**A754 3390**	**A754 3390**
	Cylinder Group Number	**8502101**	**8502151**	**8502107**	**8502157**
	Lift Cylinder	2038415	2038457	2038421	2038463
1	Shell	1380901	1380901	1380904	1380904
2	Rod	1400913	1400919	1400916	1400922

H70-90XM

ITEM	DESCRIPTION 1 2 3 4	LIFT HEIGHT TO BOTTOM OF FORKS			
		3050 mm (120.1 in.)	3050 mm (120.1 in.)	3650 mm (143.7 in.)	3650 mm (143.7 in.)
	Mast Group Number	**A753 3050**	**A753 3050**	**A753 3650**	**A753 3650**
	Cylinder Group Number	**8605701**	**8605751**	**8605707**	**8605757**
	Lift Cylinder	2038289	2038359	2038314	2038365
1	Shell	1380901	1380901	1380904	1380904
2	Rod	1400901	1400907	1400904	1400910

KEY:
A: H70-90XM
B: H100-120XM

ITEM		PART NO.	DESCRIPTION	QTY A	QTY B
	a	. . . . .	Lift Cylinder	2	2
1	**a**	. . . . .	Shell	1	1
2	**a**	. . . . .	Rod	1	1
3		1310376	Retainer	1	..
3		1310377	Retainer	..	1
4		1310370	Wiper Ring	1	..
4		1310371	Wiper Ring	..	1
5		1310373	Oil Seal	1	..
5		1310374	Oil Seal	..	1
6		198518	O-Ring	1	1
7		166659	Back-Up Ring	1	1
8		297532	Wear Ring (LH)	1	1
8		2038675	Wear Ring (RH)	1	1
9		1379063	Piston Ring	1	1
10		2035787	Velocity Fuse	1	1
11		190887	Seal	1	1
12		295649	Screw	1	1

©2003 HYSTER COMPANY

MAIN LIFT CYLINDER
TWO STAGE FULL FREE-LIFT

ITEM	PART NO.	DESCRIPTION	QTY A	QTY B
13	1381055	Piston (LH)	1	1
13	1381056	Piston (RH)	1	1
14	264134	Sealant	AR	AR
	2038677	Seal Kit (Includes Items 4-8)	1	..
	2038680	Seal Kit (Includes Items 4-8)	..	1
	2038676	Seal Kit (Includes Items 6-8)	1	..
	2038679	Seal Kit (Includes Items 4-8)	..	1

FOOTNOTES:
a Refer to Table

©2003 HYSTER COMPANY

NOTES

FREE-LIFT CYLINDER (Figure 11-4)
TWO STAGE FULL FREE-LIFT

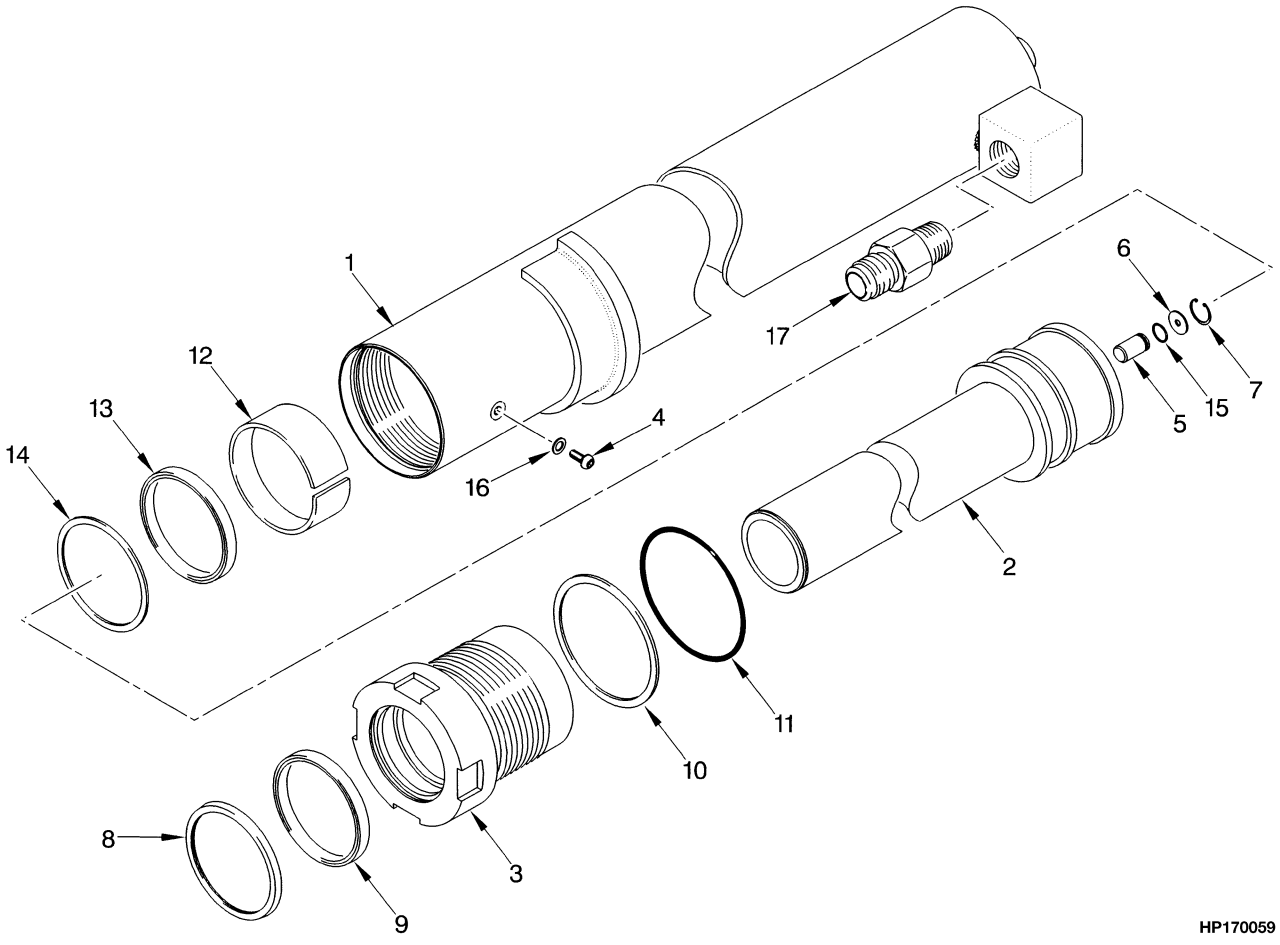

©2003 HYSTER COMPANY

FREE-LIFT CYLINDER
TWO STAGE FULL FREE-LIFT

H100-120XM

ITEM	DESCRIPTION 1 2 3 4	LIFT HEIGHT TO BOTTOM OF FORKS	
		2790 mm (109.8 in.)	3390 mm (133.5 in.)
	Mast Group Number	A754 2790	A754 3390
	Cylinder Group Number	8605551	8605556
	Lift Cylinder	2036466	2036467
1	Shell	2037862	2037865
2	Rod	2037850	2037853

H70-90XM

ITEM	DESCRIPTION 1 2 3 4	LIFT HEIGHT TO BOTTOM OF FORKS	
		3050 mm (120.1 in.)	3650 mm (143.7 in.)
	Mast Group Number	A753 3050	A753 3650
	Cylinder Group Number	8605501	8605506
	Lift Cylinder	2036440	2036442
1	Shell	2037868	2037822
2	Rod	2037833	2037837

KEY:
A: H70-90XM
B: H100-120XM

ITEM		PART NO.	DESCRIPTION	QTY A	QTY B
	a	. . . . .	Lift Cylinder	2	2
1	**a**	. . . . .	Shell	1	1
2	**a**	. . . . .	Rod	1	1
3		2036282	Gland	1	..
3		2036283	Gland	..	1
4		1361302	Screw	1	1
5		257913	Check Valve	1	1
6		297531	Washer	1	1
6		637635	Washer (Optional)	1	1
7		187388	Snap Ring	1	1
8		2034274	Wiper Ring	1	1
9		637161	Rod Seal (Rod)	1	1
10		164632	Back-Up Ring	1	..
10		615145	Back-Up Ring	..	1
11		15885	O-Ring	..	1
11		46629	O-Ring	1	..
12		636950	Wear Ring	1	..

©2003 HYSTER COMPANY

FREE-LIFT CYLINDER
TWO STAGE FULL FREE-LIFT

ITEM	PART NO.	DESCRIPTION	QTY A	QTY B
12	636952	Wear Ring	..	1
13	637162	Seal	1	..
13	637164	Seal	..	1
14	638293	Back-Up Ring	1	..
14	638295	Back-Up Ring	..	1
15	39348	O-Ring	1	1
16	190887	Seal	1	1
17	2036478	Velocity Fuse	1	..
17	2036857	Velocity Fuse	..	1
	2036279	Seal Kit (Includes Items 8-16)	1	..
	2036280	Seal Kit (Includes Items 8-16)	..	1

FOOTNOTES:
a Refer to Table

©2003 HYSTER COMPANY

NOTES

CARRIAGE (Figure 11-5)
TWO STAGE FULL FREE-LIFT

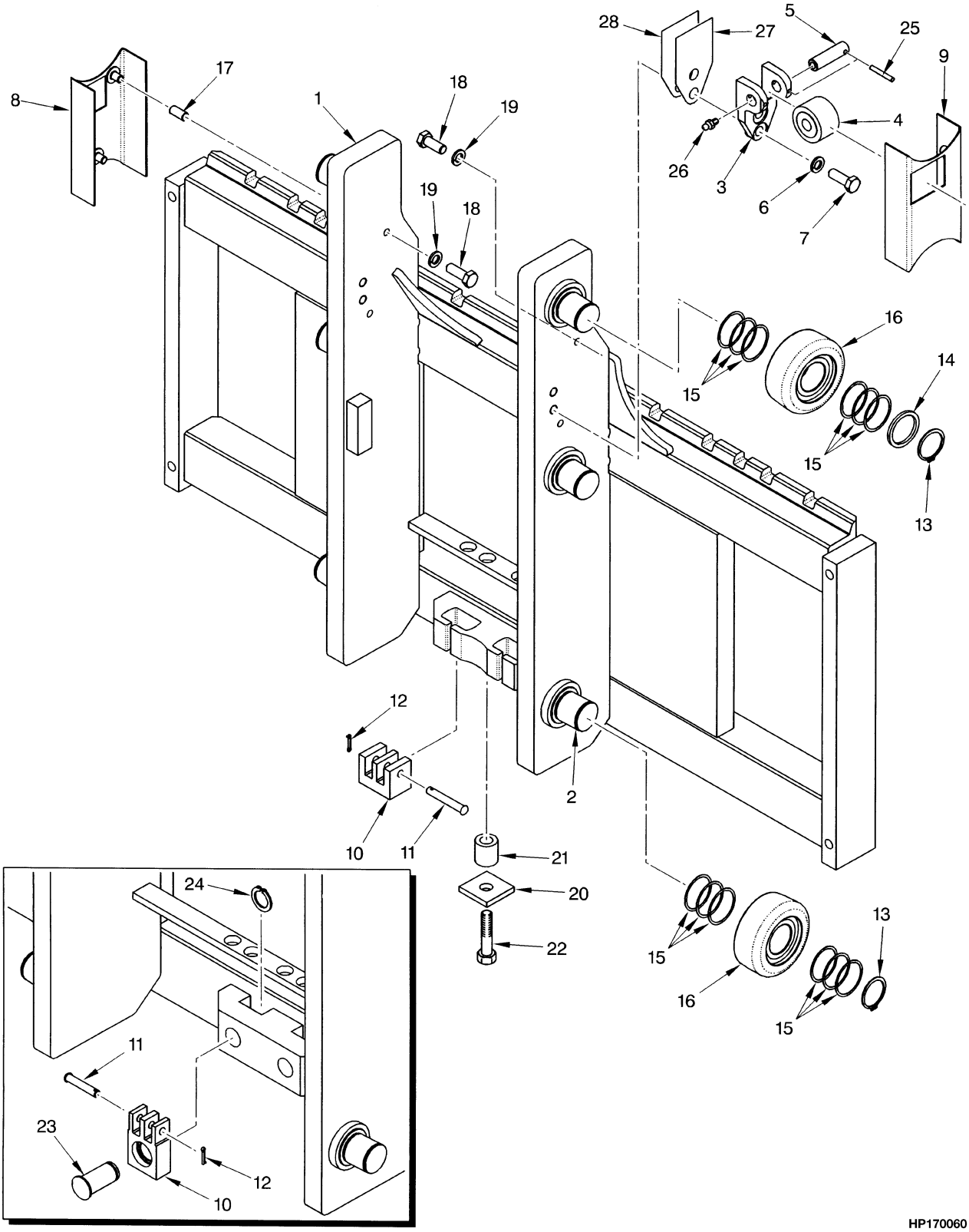

©2003 HYSTER COMPANY

CARRIAGE
TWO STAGE FULL FREE-LIFT

KEY:
A: H70-90XM
B: H100-120XM

ITEM		PART NO.	DESCRIPTION	QTY A	QTY B
		2038558	Carriage (48 in.)	1	..
		2038560	Carriage (54 in.)	1	..
		2038561	Carriage (60 in.)	1	..
		2038562	Carriage (48 in.)	..	1
		2038564	Carriage (54 in.)	..	1
	a	2038565	Carriage (54 in.)	..	1
		2038566	Carriage (60 in.)	..	1
1		1394984	Frame (48 in.)	1	..
1		1394985	Frame (54 in.)	1	..
1		1394986	Frame (60 in.)	1	..
1		1394991	Frame (48 in.)	..	1
1		1394992	Frame (54 in.)	..	1
1	**a**	1465885	Frame (54 in.)	..	1
1		1394993	Frame (60 in.)	..	1
2		1500744	Stub Shaft	6	6
3	**a**	1465177	Bracket	..	2
4	**a**	1387993	Roller Bearing	..	2
5	**a**	1465028	Pin	..	2
6	**a**	292683	Lockwasher	..	4
7	**a**	292528	Capscrew	..	4
8		319323	Guard (LH) (LH)	1	1
9		319322	Guard (RH) (RH)	1	1
10		1387548	Chain Anchor	2	..
10		341558	Chain Anchor	..	2
11		1387549	Pin (Anchor)	2	..
11		339932	Pin (Anchor)	..	2
12		15222	Cotter Pin	2	2
13		1465072	Snap Ring	6	6
14		1399224	Spacer	2	2
15		1399207	Shim (0.020 in.)	AR	AR
16	**b**	1511882	Load Roller ("A")	6	6
16	**b**	1511883	Load Roller ("B") (0,26 mm)	6	6
16	**b**	1511884	Load Roller ("C") (1,52 mm)	6	6
17		317292	Spacer	4	4
18		18518	Capscrew	4	4
19		15155	Lockwasher	4	4
20		1400126	Plate	1	..
21		1400125	Spacer	1	..
22		292508	Capscrew	1	..
23		320327	Pin	..	2
24		131358	Snap Ring	..	2
25	**a**	66333	Pin	..	2
26	**a**	16001	Lube Fitting	..	2

©2003 HYSTER COMPANY

CARRIAGE
TWO STAGE FULL FREE-LIFT

ITEM		PART NO.	DESCRIPTION	QTY A	QTY B
27	**a**	192425	Shim (0.062 in.)	..	AR
28	**a**	192424	Shim (0.030 in.)	..	AR

FOOTNOTES:
a Attachment Carriage (H90XM, 100XM)
b Letter Located on Inside Surface of Load Roller

©2003 HYSTER COMPANY

NOTES

LOAD BACKREST EXTENSION (Figure 11-6)
TWO STAGE FULL FREE-LIFT

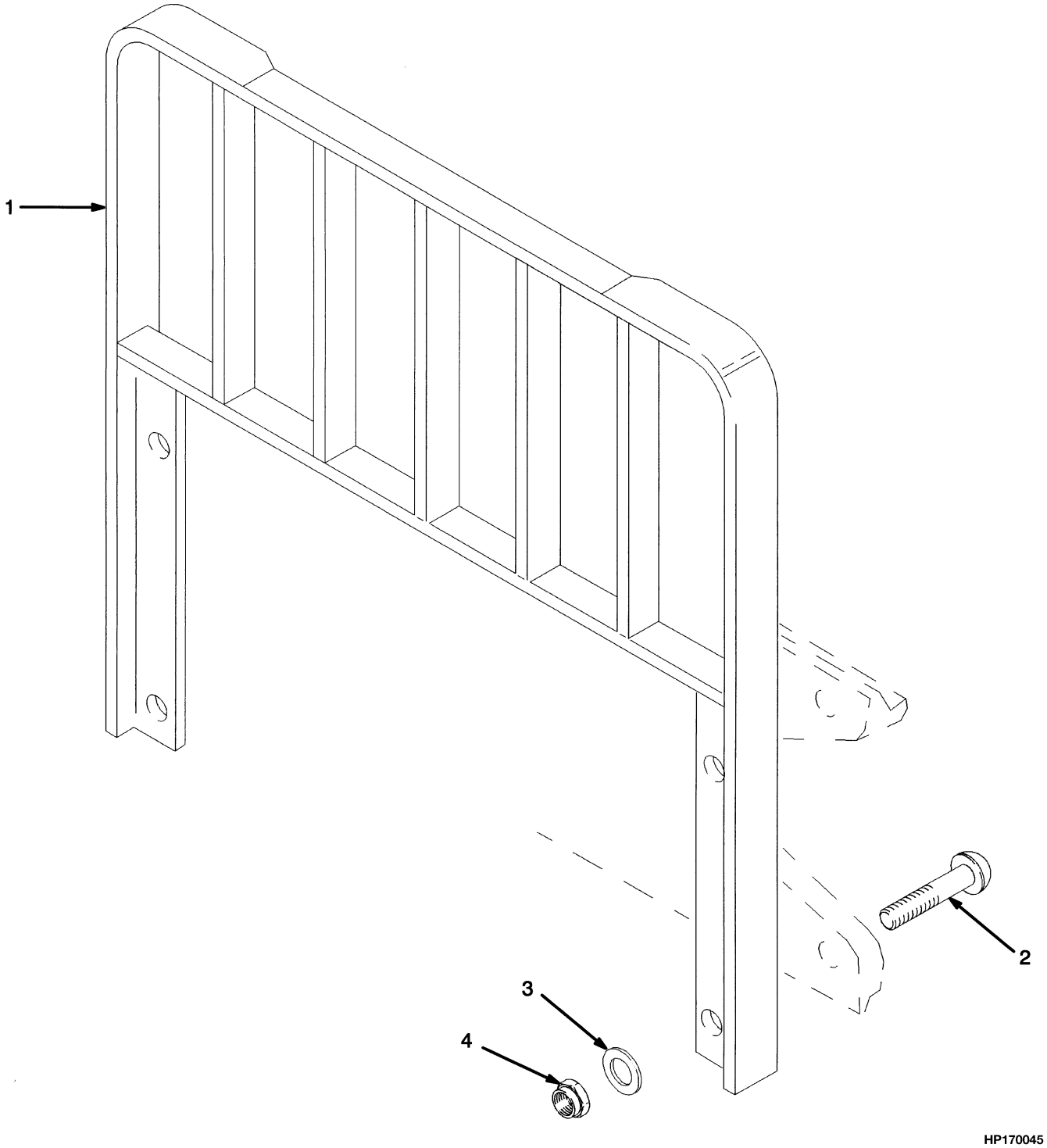

©2003 HYSTER COMPANY

LOAD BACKREST EXTENSION
TWO STAGE FULL FREE-LIFT

KEY:
A: H70-90XM
B: H100-120XM

ITEM		PART NO.	DESCRIPTION	QTY A	QTY B
1		1387341	Load Backrest Extension (48 in.)	1	..
1	**a**	1387342	Load Backrest Extension (48 in.)	1	..
1		1387348	Load Backrest Extension (48 in.)	..	1
1	**a**	1464863	Load Backrest Extension (48 in.)	..	1
1		1387343	Load Backrest Extension (54 in.)	1	..
1	**a**	1387344	Load Backrest Extension (54 in.)	1	..
1		1387904	Load Backrest Extension (54 in.)	..	1
1		1464864	Load Backrest Extension (54 in.)	..	1
1		1387345	Load Backrest Extension (60 in.)	1	..
1	**a**	1387346	Load Backrest Extension (60 in.)	1	..
1		1387349	Load Backrest Extension (60 in.)	..	1
1	**a**	1464865	Load Backrest Extension (60 in.)	..	1
2		1387330	Capscrew	4	4
3		221771	Washer	4	4
3	**b**	296423	Washer	4	4
4		300937	Nut	4	4

FOOTNOTES:
a For Polished Forks with Full Bottom Taper
b Optional

©2003 HYSTER COMPANY

FORK (Figure 11-7)
STANDARD TAPER HOOK TYPE (H70-90XM)
TWO STAGE FULL FREE-LIFT

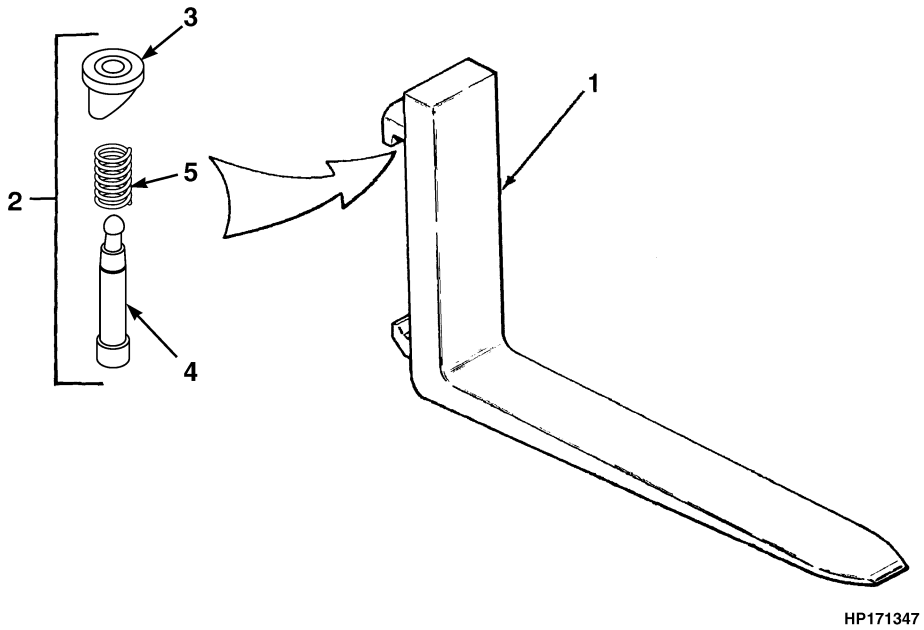

KEY:
A: H70XM (50 mm x 125 mm) (2 in x 5 in)
B: H80XM (50 mm x 125 mm) (2 in x 5 in)
C: H80XM (50 mm x 150 mm) (2 in x 6 in)
D: H90XM (50 mm x 125 mm) (2 in x 5 in)
E: H90XM (50 mm x 150 mm) (2 in x 6 in)

ITEM	PART NO.	DESCRIPTION	QTY A	B	C	D	E
1	367420	Fork (42 in.)	2	2	..	2	..
1	367421	Fork (48 in.)	2	2	..	2	..
1	367422	Fork (54 in.)	2	2	..	..	..
1	1399915	Fork (54 in.)	..	..	..	..	2
1	367423	Fork (60 in.)	2	..	..	..	..
1	1399916	Fork (60 in.)	..	..	2	..	2
1	367424	Fork (72 in.)	2	..	..	..	..
1	1399917	Fork (72 in.)	..	..	2	..	2
2	1500774	Latch Kit	2	2	2	2	2
3	. . . . .	Knob	1	1	1	1	1
4	. . . . .	Pin	1	1	1	1	1
5	. . . . .	Spring	1	1	1	1	1

©2003 HYSTER COMPANY

FORK (Figure 11-8)
STANDARD TAPER HOOK TYPE (H100-120XM)
TWO STAGE FULL FREE-LIFT

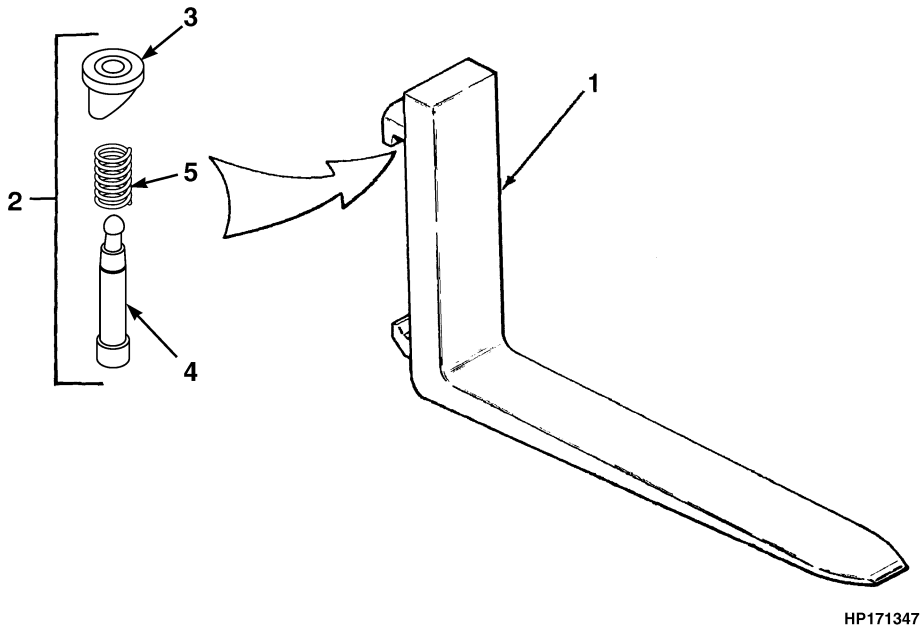

KEY:
A: H100XM (50 mm x 150 mm) (2 in x 6 in)
B: H100XM (60 mm x 150 mm) (2.36 in x 6 in)
C: H110XM (50 mm x 150 mm) (2 in x 6 in)
D: H110XM (60 mm x 150 mm) (2.36 in x 6 in)
E: H120XM (60 mm x 150 mm) (2.36 in x 6 in)

ITEM	PART NO.	DESCRIPTION	QTY A	B	C	D	E
1	1399919	Fork (42 in.)	2	2	..	..	..
1	1458264	Fork (42 in.)	..	..	..	..	2
1	1399920	Fork (48 in.)	2	2	..	..	2
1	1399921	Fork (54 in.)	2	..	..	..	..
1	1333002	Fork (54 in.)	..	..	..	2	2
1	1399922	Fork (60 in.)	2	..	..	..	..
1	1333003	Fork (60 in.)	..	..	..	2	2
1	1333004	Fork (72 in.)	..	2	..	2	2
2	1502122	Latch Kit	2	2	2	2	2
3	. . . . .	Knob	1	1	1	1	1
4	. . . . .	Pin	1	1	1	1	1
5	. . . . .	Spring	1	1	1	1	1

©2003 HYSTER COMPANY

FORK (Figure 11-9)
POLISHED FORK WITH FULL BOTTOM TAPER HOOK TYPE
TWO STAGE FULL FREE-LIFT

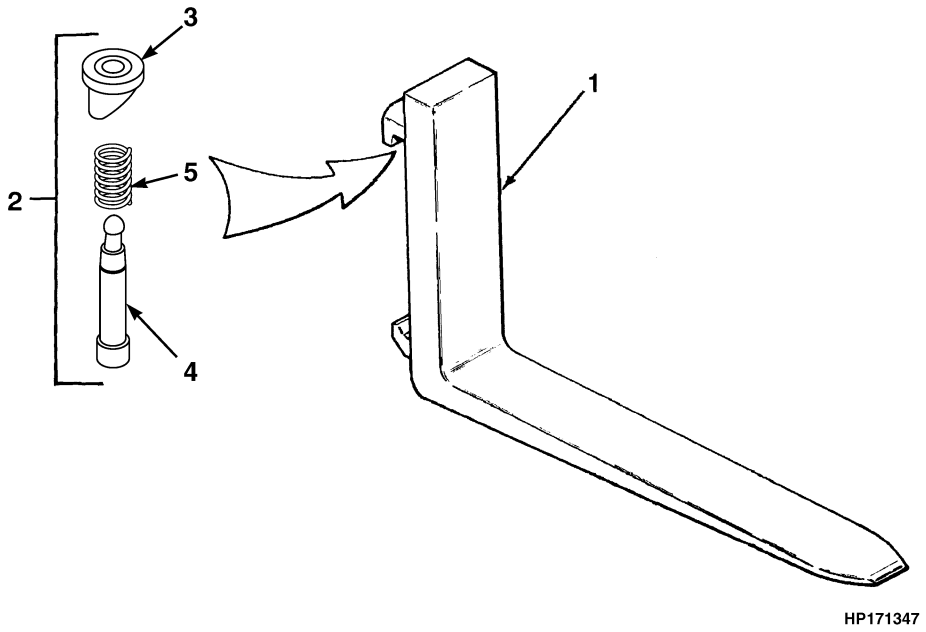

KEY:
A: H70-90XM (40 mm x 200 mm) (1.5 in x 8 in)
B: H100-120XM (40 mm x 250 mm) (1.5 in x 10 in)

ITEM	PART NO.	DESCRIPTION	QTY A	QTY B
1	1465545	Fork (47.5 in.)	2	..
1	1465547	Fork (47.5 in.)	..	2
1	1465546	Fork (54 in.)	2	..
1	1465548	Fork (54 in.)	..	2
2	1500774	Latch Kit	2	..
2	1502122	Latch Kit	..	2
3	. . . . .	Knob	1	1
4	. . . . .	Pin	1	1
5	. . . . .	Spring	1	1

©2003 HYSTER COMPANY

NOTES

HEADER HOSE (Figure 11-10)
TWO STAGE FULL FREE-LIFT

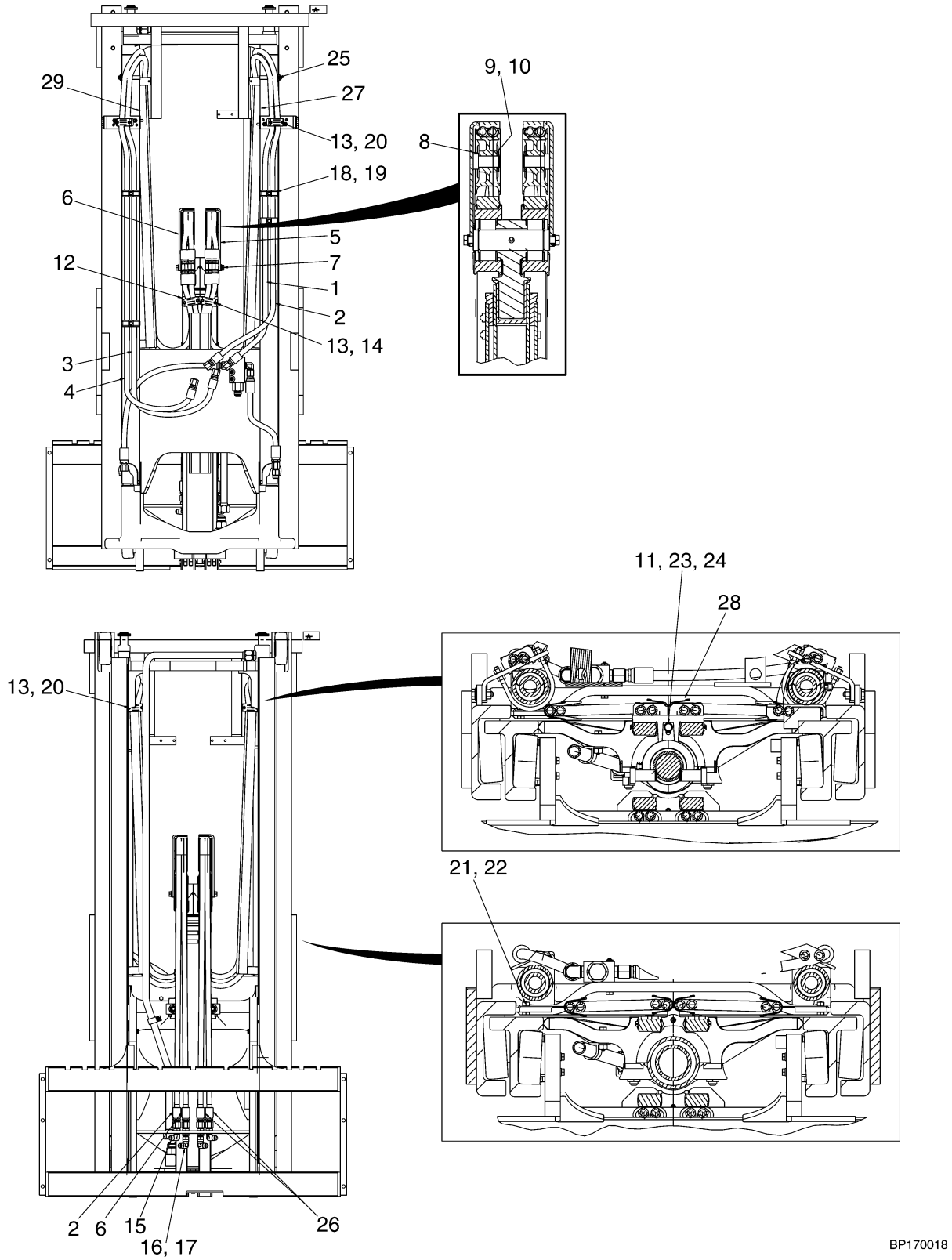

©2003 HYSTER COMPANY

HEADER HOSE
TWO STAGE FULL FREE-LIFT

H100-120XM (FOUR FUNCTION)

ITEM	DESCRIPTION 1 2 3 4	LIFT HEIGHT TO BOTTOM OF FORKS			
		2790 mm (109.8 in.)	3050 mm (120.1 in.)	3390 mm (133.5 in.)	3650 mm (143.7 in.)
	Mast Group Number	A754 2790	A753 3050	A754 3390	A753 3650
3	Channel (Free-Lift)	----	1484522	----	1484528
4	Hose (RH)	----	1475833	----	1475839
26	Hose	----	1484277	----	1483993
28	Channel (Free-Lift)	1474048	----	1474054	----

H100-120XM (THREE FUNCTION)

ITEM	DESCRIPTION 1 2 3 4	LIFT HEIGHT TO BOTTOM OF FORKS			
		2790 mm (109.8 in.)	3050 mm (120.1 in.)	3390 mm (133.5 in.)	3650 mm (143.7 in.)
	Mast Group Number	A754 2790	A753 3050	A754 3390	A753 3650
1	Channel (Free-Lift)	----	1475787	----	1484498
2	Hose (RH)	----	1475788	----	1475794
26	Hose	----	1484277	----	1483993
27	Channel (RH Main)	1474101	----	1474107	----
28	Channel (Free-Lift)	1474048	----	1474054	----

H70-90XM (FOUR FUNCTION)

ITEM	DESCRIPTION 1 2 3 4	LIFT HEIGHT TO BOTTOM OF FORKS			
		2790 mm (109.8 in.)	3050 mm (120.1 in.)	3390 mm (133.5 in.)	3650 mm (143.7 in.)
	Mast Group Number	A754 2790	A753 3050	A754 3390	A753 3650
3	Hose (LH)	1475834	----	1484460	----
4	Hose (RH)	1484454	----	1475840	----
26	Hose	1484276	----	1484283	----
28	Channel (Free-Lift)	----	1474051	----	1474057
29	Channel (LH Main)	1474125	1474125	1474131	1474131

©2003 HYSTER COMPANY

HEADER HOSE
TWO STAGE FULL FREE-LIFT
H70-90XM (THREE FUNCTION)

ITEM	DESCRIPTION 1 2 3 4	LIFT HEIGHT TO BOTTOM OF FORKS			
		2790 mm (109.8 in.)	3050 mm (120.1 in.)	3390 mm (133.5 in.)	3650 mm (143.7 in.)
	Mast Group Number	A754 2790	A753 3050	A754 3390	A753 3650
1	Hose (LH)	1483938	----	1483944	----
2	Hose (RH)	1475789	----	1475795	----
26	Hose	1484276	----	1484283	----
27	Channel (RH Main)	----	1474101	----	1474107
28	Channel (Free-Lift)	----	1474051	----	1474057

KEY:
A: Three Function
B: Four Function

ITEM		PART NO.	DESCRIPTION	QTY A	QTY B
1	**a**	. . . . .	Hose (LH)	1	..
2	**a**	. . . . .	Hose (RH)	1	..
3	**a**	. . . . .	Hose (LH)	..	1
4	**a**	. . . . .	Hose (RH)	..	1
5		1399217	Bracket (RH)	1	..
6		1399218	Bracket (LH)	..	1
7		302461	Pin	1	1
8		1332705	Sheave	1	1
9		320171	Washer	1	1
10		58902	Snap Ring	1	1
11		320157	Washer	1	1
12		1399243	Clamp	2	..
13		2035791	Clamp	3	3
14		293797	Capscrew	2	2
15		16458	Fitting	1	1
16		16448	Fitting	1	1
17		16989	Fitting	1	1
18		1465489	Clamp	4	4
19		115696	Clamp	2	2
20		293796	Capscrew	4	4
21		136681	Capscrew	1	1
22		313828	Nut	1	1
23		136749	Capscrew	1	..
24		292681	Lockwasher	1	..
25		112989	Clamp	1	1
26	**a**	. . . . .	Hose	2	2
27	**a**	. . . . .	Channel (RH Main)	1	..
28	**a**	. . . . .	Channel (Free-Lift)	1	1
29	**a**	. . . . .	Channel (LH Main)	..	1

FOOTNOTES:
a Refer to Table

©2003 HYSTER COMPANY

12 MAST-THREE STAGE FULL FREE-LIFT

SECTION 12
MAST-THREE STAGE FULL FREE-LIFT

DESCRIPTION	PAGE
CARRIAGE	
THREE STAGE FULL FREE-LIFT	12-32
FORK	
POLISHED FORK WITH FULL BOTTOM TAPER HOOK TYPE	
THREE STAGE FULL FREE-LIFT	12-40
STANDARD TAPER HOOK TYPE (H100-120XM)	
THREE STAGE FULL FREE-LIFT	12-39
STANDARD TAPER HOOK TYPE (H70-90XM)	
THREE STAGE FULL FREE-LIFT	12-38
FREE-LIFT	
THREE STAGE FULL FREE-LIFT	12-16
FREE-LIFT CYLINDER	
THREE STAGE FULL FREE-LIFT	12-24
HEADER HOSE	
THREE STAGE FULL FREE-LIFT	12-28
INNER MAST	
THREE STAGE FULL FREE-LIFT	12-10
INTERMEDIATE MAST	
THREE STAGE FULL FREE-LIFT	12-6
LOAD BACKREST EXTENSION	
THREE STAGE FULL FREE-LIFT	12-36
MAIN CYLINDER	
THREE STAGE FULL FREE-LIFT	12-20
MAIN LIFT	
THREE STAGE FULL FREE-LIFT	12-12
OUTER MAST	
THREE STAGE FULL FREE-LIFT	12-2

©2003 HYSTER COMPANY

OUTER MAST (Figure 12-1)
THREE STAGE FULL FREE-LIFT

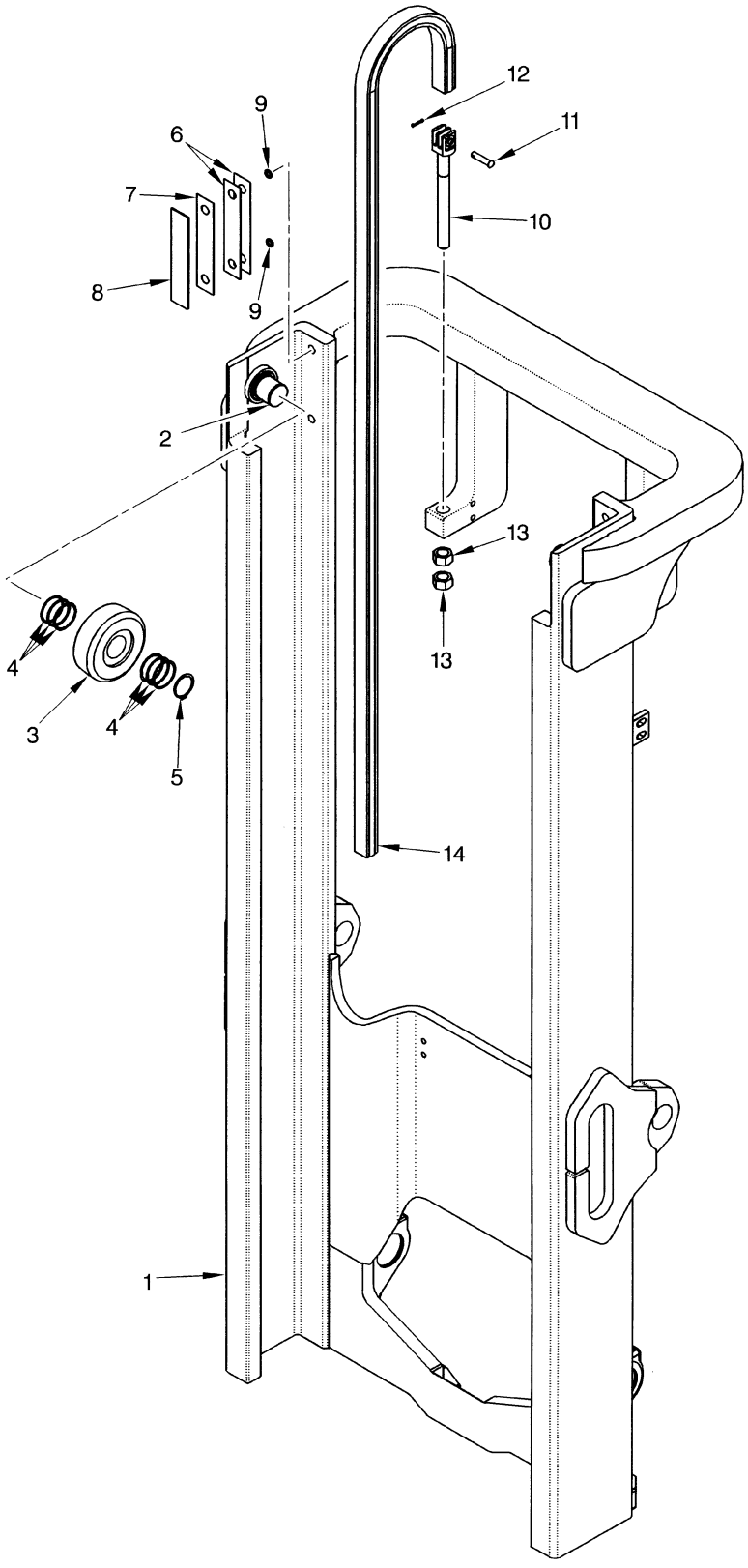

HP170047

©2003 HYSTER COMPANY

OUTER MAST
THREE STAGE FULL FREE-LIFT

H100-120XM

ITEM	DESCRIPTION 1 2 3 4	LIFT HEIGHT TO BOTTOM OF FORKS					
		4087 mm (160.9 in.)	4387 mm (172.7 in.)	4640 mm (182.7 in.)	4940 mm (194.5 in.)	5240 mm (206.3 in.)	5690 mm (224.0 in.)
	Mast Group Number	A752 4087	A752 4387	A752 4640	A752 4940	A752 5240	A752 5690
	Mast Assembly	2036784	2036785	2036786	2036787	2036788	2036789
1	Outer Mast	1395851	1395853	1395854	1395856	1395858	1395861
14	Chain (Main)	280878	338647	153404	339934	356916	338649

H70-90XM

ITEM	DESCRIPTION 1 2 3 4	LIFT HEIGHT TO BOTTOM OF FORKS					
		4365 mm (171.9 in.)	4665 mm (183.7 in.)	4900 mm (192.9 in.)	5200 mm (204.7 in.)	5500 mm (216.5 in.)	5950 mm (234.3 in.)
	Mast Group Number	A751 4365	A751 4665	A751 4900	A751 5200	A751 5500	A751 5950
	Mast Assembly	2036777	2036779	2036780	2036781	2036782	2036783
1	Outer Mast	1395851	1395853	1395854	1395856	1395858	1395861
14	Chain (Main)	191081	182342	194607	191085	191072	1206749

KEY:
A: H70-90XM
B: H100-120XM

ITEM		PART NO.	DESCRIPTION	QTY A	QTY B
	b	. . . . .	Mast Assembly	1	1
1	**b**	. . . . .	Outer Mast	1	1
2		1500744	Stub Shaft	2	2
3	**a**	1399203	Load Roller ("A")	2	2
3	**a**	1399204	Load Roller ("B") (0,52 mm)	2	2
3	**a**	1399205	Load Roller ("C") (1,52 mm)	2	2
4		1399207	Shim (0.020 in.)	12	12
5		1465072	Snap Ring	2	2
6		161273	Shim (0.020 in.)	AR	AR
7		161272	Shim (0.007 in.)	AR	AR
8		104264	Bearing Strip	2	2
9		104506	O-Ring	4	4
10		1331990	Chain Anchor	2	..
10		1331991	Chain Anchor	..	2
11		327591	Pin (Anchor)	2	..
11		339932	Pin (Anchor)	..	2
12		15222	Cotter Pin	2	2

©2003 HYSTER COMPANY

OUTER MAST
THREE STAGE FULL FREE-LIFT

ITEM		PART NO.	DESCRIPTION	QTY A	QTY B
13		221717	Nut	4	4
14	**b**	. . . . .	Chain (Main)	2	2

FOOTNOTES:
a Letter Located on Inside Surface of Load Roller
b Refer to Table

©2003 HYSTER COMPANY

NOTES

INTERMEDIATE MAST (Figure 12-2)
THREE STAGE FULL FREE-LIFT

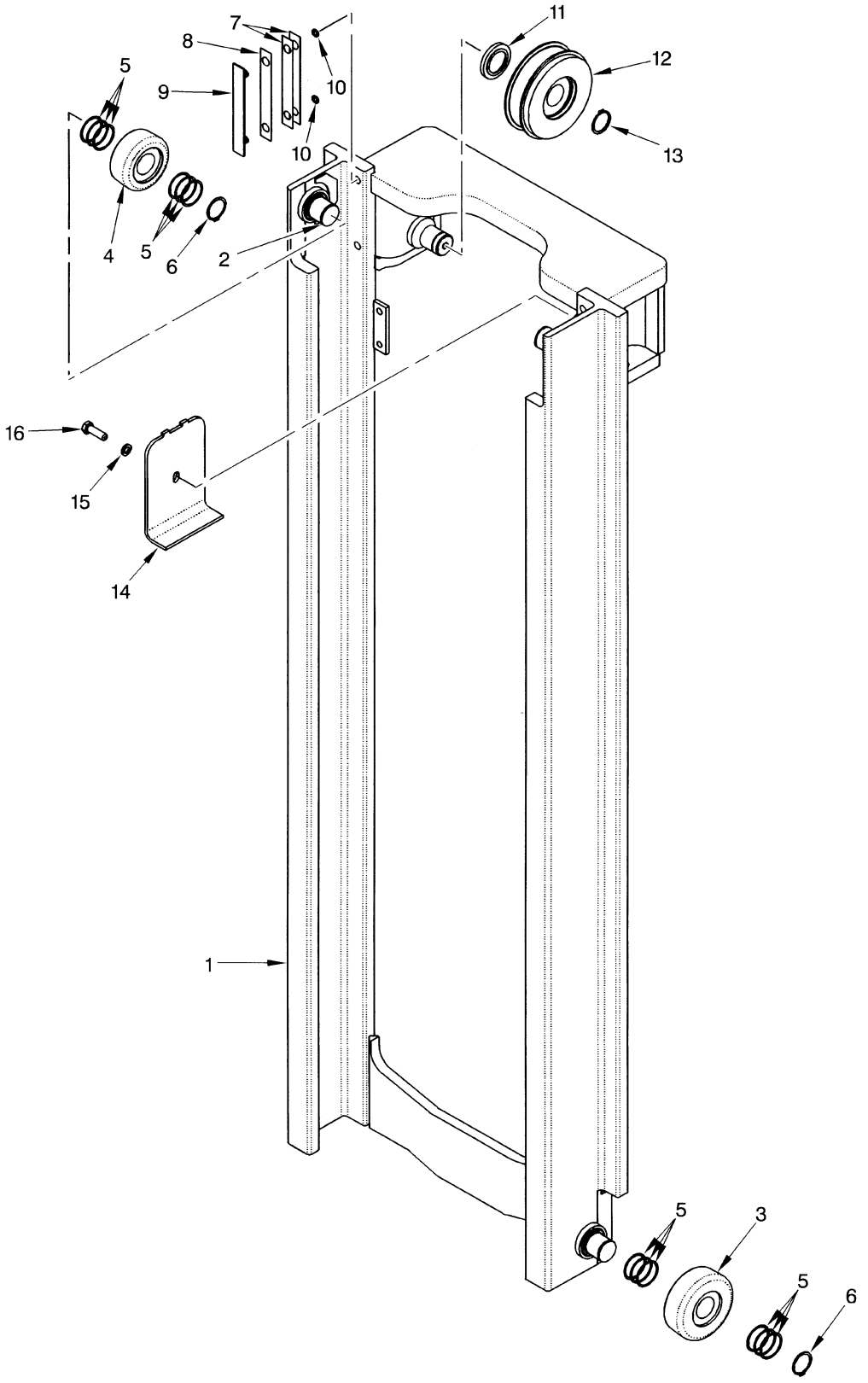

©2003 HYSTER COMPANY

INTERMEDIATE MAST
THREE STAGE FULL FREE-LIFT

H100-120XM

ITEM	DESCRIPTION 1 2 3 4	LIFT HEIGHT TO BOTTOM OF FORKS					
		4087 mm (160.9 in.)	4387 mm (172.7 in.)	4640 mm (182.7 in.)	4940 mm (194.5 in.)	5240 mm (206.3 in.)	5690 mm (224.0 in.)
	Mast Group Number	A752 4087	A752 4387	A752 4640	A752 4940	A752 5240	A752 5690
	Mast Assembly	2036784	2036785	2036786	2036787	2036788	2036789
1	Intermediate Mast	1395877	1395879	1395880	1395882	1395884	1395887

H70-90XM

ITEM	DESCRIPTION 1 2 3 4	LIFT HEIGHT TO BOTTOM OF FORKS					
		4365 mm (171.9 in.)	4665 mm (183.7 in.)	4900 mm (192.9 in.)	5200 mm (204.7 in.)	5500 mm (216.5 in.)	5950 mm (234.3 in.)
	Mast Group Number	A751 4365	A751 4665	A751 4900	A751 5200	A751 5500	A751 5950
	Mast Assembly	2036777	2036779	2036780	2036781	2036782	2036783
1	Intermediate Mast	1395877	1395879	1395880	1395882	1395884	1395887

KEY:
A: H70-90XM
B: H100-120XM

ITEM		PART NO.	DESCRIPTION	QTY A	QTY B
	b	. . . . .	Mast Assembly	1	1
1	**b**	. . . . .	Intermediate Mast	1	1
2		1500744	Stub Shaft	4	4
3	**a**	1399203	Load Roller ("A")	2	2
3	**a**	1399204	Load Roller ("B") (0,76 mm)	2	2
3	**a**	1399205	Load Roller ("C") (1,52 mm)	2	2
4	**a**	1511882	Load Roller ("A")	2	2
4	**a**	1511883	Load Roller ("B") (0,26 mm)	2	2
4	**a**	1511884	Load Roller ("C") (1,52 mm)	2	2
5		1399207	Shim (0.020 in.)	24	24
6		1465072	Snap Ring	4	4
7		131716	Shim (0.020 in.)	AR	AR
8		131715	Shim (0.007 in.)	AR	AR
9		215211	Bearing Strip	2	2
10		104506	O-Ring	4	4
11		1389846	Spacer	2	2
12		1389780	Chain Sheave	2	..
12		1389779	Chain Sheave	..	2
13		12891	Snap Ring	2	2
14		1389959	Bracket (Chain)	1	1

©2003 HYSTER COMPANY

INTERMEDIATE MAST
THREE STAGE FULL FREE-LIFT

ITEM	PART NO.	DESCRIPTION	QTY A	QTY B
15	292683	Lockwasher	1	1
16	246001	Capscrew	1	1

FOOTNOTES:
a Letter Located on Inside Surface of Load Roller
b Refer to Table

©2003 HYSTER COMPANY

NOTES

INNER MAST (Figure 12-3)
THREE STAGE FULL FREE-LIFT

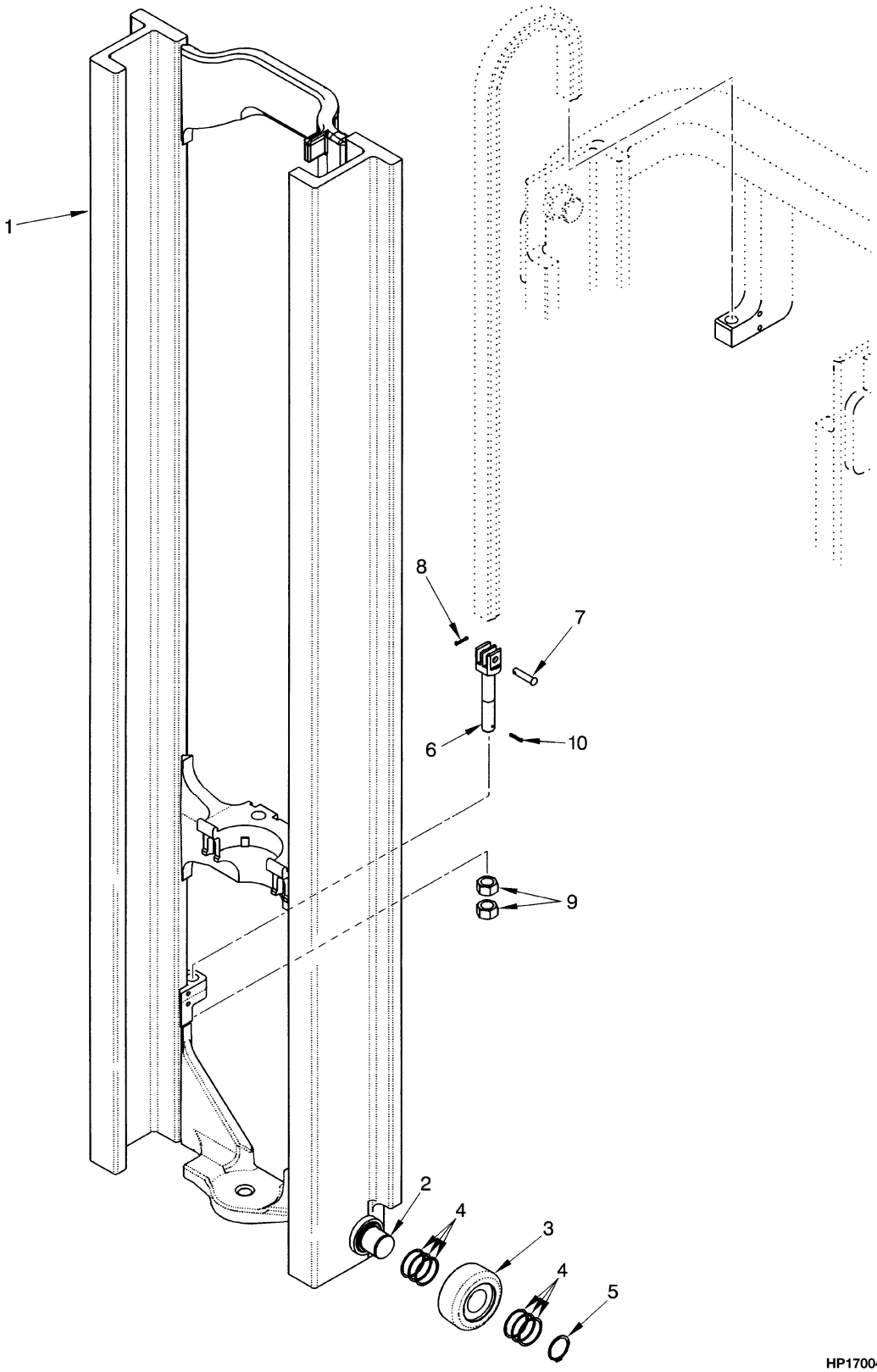

©2003 HYSTER COMPANY

INNER MAST
THREE STAGE FULL FREE-LIFT

H100-120XM

ITEM	DESCRIPTION 1 2 3 4	LIFT HEIGHT TO BOTTOM OF FORKS					
		4087 mm (160.9 in.)	4387 mm (172.7 in.)	4640 mm (182.7 in.)	4940 mm (194.5 in.)	5240 mm (206.3 in.)	5690 mm (224.0 in.)
	Mast Group Number	A752 4087	A752 4387	A752 4640	A752 4940	A752 5240	A752 5690
	Mast Assembly	2036784	2036785	2036786	2036787	2036788	2036789
1	Inner Mast	1395903	1395905	1395906	1395908	1395910	1395913

H70-90XM

ITEM	DESCRIPTION 1 2 3 4	LIFT HEIGHT TO BOTTOM OF FORKS					
		4365 mm (171.9 in.)	4665 mm (183.7 in.)	4900 mm (192.9 in.)	5200 mm (204.7 in.)	5500 mm (216.5 in.)	5950 mm (234.3 in.)
	Mast Group Number	A751 4365	A751 4665	A751 4900	A751 5200	A751 5500	A751 5950
	Mast Assembly	2036777	2036779	2036780	2036781	2036782	2036783
1	Inner Mast	1395903	1395905	1395906	1395908	1395910	1395913

KEY:
A: H70-90XM
B: H100-120XM

ITEM		PART NO.	DESCRIPTION	QTY A	QTY B
	b	. . . . .	Mast Assembly	1	1
1	**b**	. . . . .	Inner Mast	1	1
2		1500744	Stub Shaft	2	2
3	**a**	1511882	Load Roller ("A")	2	2
3	**a**	1511883	Load Roller ("B") (0,26 mm)	2	2
3	**a**	1511884	Load Roller ("C") (1,52 mm)	2	2
4		1399207	Shim (0.020 in.)	12	12
5		1465072	Snap Ring	2	2
6		1387285	Chain Anchor	2	..
6		1387286	Chain Anchor	..	2
7		327591	Pin (Anchor)	2	..
7		339932	Pin (Anchor)	..	2
8		15222	Cotter Pin	2	2
9		221717	Nut	4	4
10		15224	Cotter Pin	2	2

FOOTNOTES:
a Letter Located on Inside Surface of Load Roller
b Refer to Table

©2003 HYSTER COMPANY

MAIN LIFT (Figure 12-4)
THREE STAGE FULL FREE-LIFT

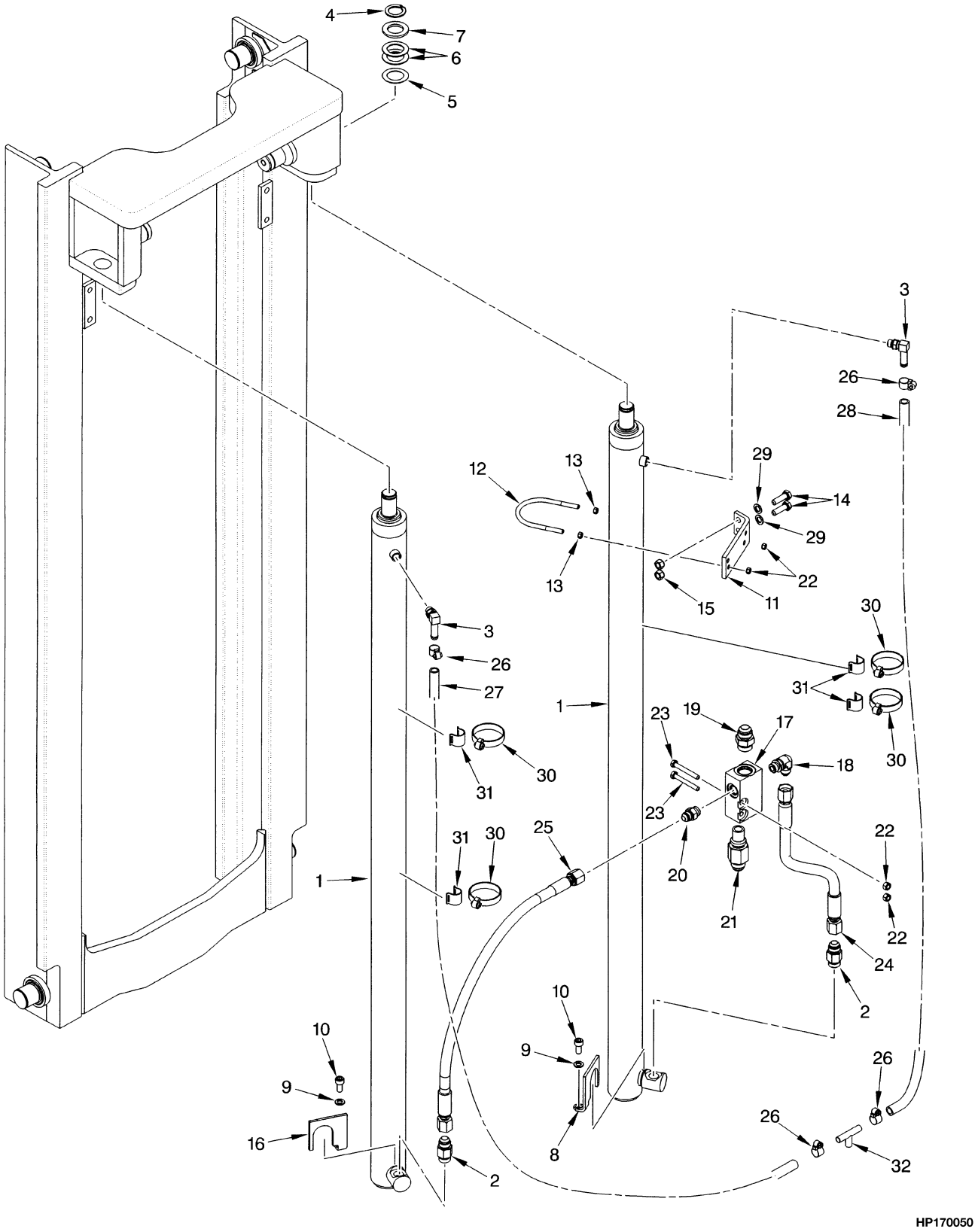

©2003 HYSTER COMPANY

MAIN LIFT
THREE STAGE FULL FREE-LIFT

H100-120XM

ITEM	DESCRIPTION 1 2 3 4	LIFT HEIGHT TO BOTTOM OF FORKS					
		4087 mm (160.9 in.)	4387 mm (172.7 in.)	4640 mm (182.7 in.)	4940 mm (194.5 in.)	5240 mm (206.3 in.)	5690 mm (224.0 in.)
	Mast Group Number	A752 4087	A752 4387	A752 4640	A752 4940	A752 5240	A752 5690
	Mast Assembly	2036784	2036785	2036786	2036787	2036788	2036789
27	Hose (LH)	1399086	1399090	1399092	1399096	1399100	1399110
28	Hose (RH)	980929	983010	1399077	1399081	1399085	1399093

H70-90XM

ITEM	DESCRIPTION 1 2 3 4	LIFT HEIGHT TO BOTTOM OF FORKS					
		4365 mm (171.9 in.)	4665 mm (183.7 in.)	4900 mm (192.9 in.)	5200 mm (204.7 in.)	5500 mm (216.5 in.)	5950 mm (234.3 in.)
	Mast Group Number	A751 4365	A751 4665	A751 4900	A751 5200	A751 5500	A751 5950
	Mast Assembly	2036777	2036779	2036780	2036781	2036782	2036783
27	Hose (LH)	1399088	1399092	1399095	1399099	1399103	1399112
28	Hose (RH)	1399075	1399077	119856	1399084	1399088	1399097

KEY:
A: H70-90XM
B: H100-120XM

ITEM	PART NO.	DESCRIPTION	QTY A	QTY B
	a	Mast Assembly	1	1
1	. . . . .	Main Cylinder (☞ Figure 12-6)	2	2
2	2035787	Velocity Fuse	2	..
2	2036856	Velocity Fuse	..	2
3	110178	Fitting	2	2
3	16483	O-Ring	1	1
4	304523	Snap Ring	2	2
5	1325120	Shim (0.70 in.)	AR	AR
6	142247	Shim (0.049 in.)	AR	AR
7	332061	Washer	1	1
8	1389924	Bracket (RH)	1	1
9	292682	Lockwasher	2	2
10	296024	Capscrew	2	2
11	1474399	Bracket	2	2
12	1389844	U-Bolt	2	..
12	1389845	U-Bolt	..	2
13	239503	Nut	4	4
14	287860	Capscrew	4	4
15	316826	Nut	4	4
16	1389922	Bracket (LH)	1	1
17	1388019	Housing (Control Valve)	1	1

©2003 HYSTER COMPANY

MAIN LIFT
THREE STAGE FULL FREE-LIFT

ITEM		PART NO.	DESCRIPTION	QTY A	QTY B
18		16559	Fitting	1	1
18		16484	O-Ring	1	1
19		16543	Fitting	1	1
19		16484	O-Ring	1	1
20		16541	Fitting	1	1
20		16484	O-Ring	1	1
21		315262	Control Valve (Lowering)	1	..
21		319891	Control Valve (Lowering)	..	1
22		313828	Nut	6	6
23		292511	Capscrew	2	2
24		1387324	Hose	1	1
25		1387399	Hose	1	1
26		379405	Clamp	4	4
27	**a**	. . . . .	Hose (LH)	1	1
28	**a**	. . . . .	Hose (RH)	1	1
29		320160	Washer	4	4
30		1465585	Clamp	4	4
31		115696	Clamp	4	4
32		1399248	Fitting	1	1

FOOTNOTES:
a Refer to Table

©2003 HYSTER COMPANY

NOTES

FREE-LIFT (Figure 12-5)
THREE STAGE FULL FREE-LIFT

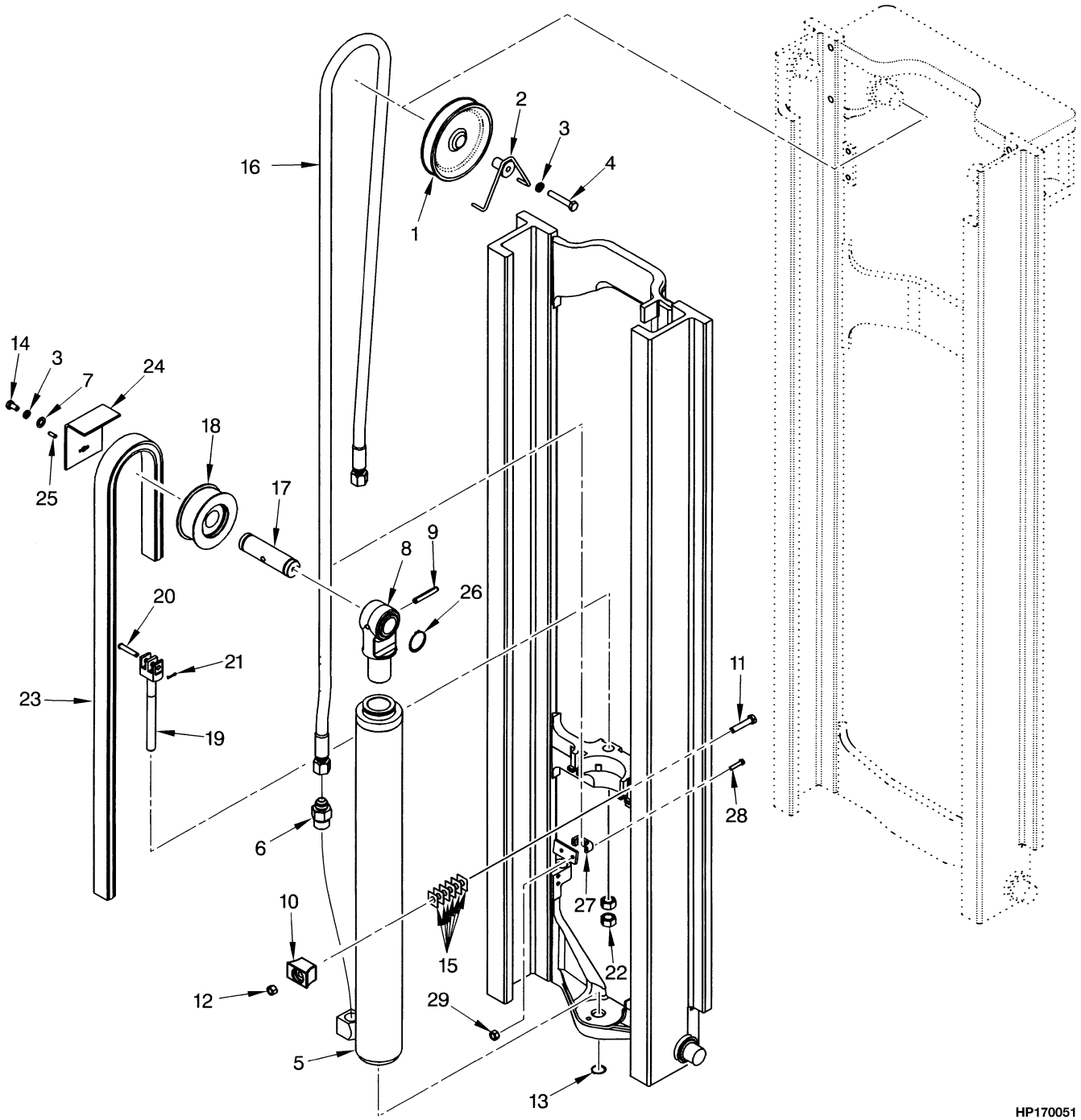

©2003 HYSTER COMPANY

FREE-LIFT
THREE STAGE FULL FREE-LIFT

H100-120XM

ITEM	DESCRIPTION 1 2 3 4	LIFT HEIGHT TO BOTTOM OF FORKS					
		4087 mm (160.9 in.)	4387 mm (172.7 in.)	4640 mm (182.7 in.)	4940 mm (194.5 in.)	5240 mm (206.3 in.)	5690 mm (224.0 in.)
	Mast Group Number	A752 4087	A752 4387	A752 4640	A752 4940	A752 5240	A752 5690
	Mast Assembly	2036784	2036785	2036786	2036787	2036788	2036789
16	Hose	1387963	1387965	1387966	1387968	1387970	1387973
23	Chain (Free-Lift)	297640	337189	337190	348827	339933	366106

H70-90XM

ITEM	DESCRIPTION 1 2 3 4	LIFT HEIGHT TO BOTTOM OF FORKS					
		4365 mm (171.9 in.)	4665 mm (183.7 in.)	4900 mm (192.9 in.)	5200 mm (204.7 in.)	5500 mm (216.5 in.)	5950 mm (234.3 in.)
	Mast Group Number	A751 4365	A751 4665	A751 4900	A751 5200	A751 5500	A751 5950
	Mast Assembly	2036777	2036779	2036780	2036781	2036782	2036783
16	Hose	1387963	1387965	1387966	1387968	1387970	1387973
23	Chain (Free-Lift)	337190	348827	339933	3338646	366106	347243

KEY:
A: H70-90XM
B: H100-120XM

ITEM		PART NO.	DESCRIPTION	QTY A	QTY B
	a	. . . . .	Mast Assembly		1
1		2036778	Sheave	1	1
2		1387553	Stubshaft	1	1
3		292683	Lockwasher	4	4
4		292531	Capscrew	1	1
5		. . . . .	Free-Lift Cylinder (☞ Figure 12-7)	1	1
6		2036478	Velocity Fuse	1	1
7		320161	Washer	2	2
8		1389825	Crosshead	1	1
9		302493	Pin	1	1
10		2036756	Clamp	1	1
11		292564	Capscrew	2	2
12		316828	Nut	2	2
13		58929	Snap Ring	1	1
14		292526	Capscrew	2	2
15		1387584	Shim	12	12
16	**a**	. . . . .	Hose	1	1
17		1387281	Pin	1	1
18		1387743	Chain Sheave	2	2
19		1331991	Chain Anchor	2	2
20		339932	Pin (Anchor)	2	2

©2003 HYSTER COMPANY

FREE-LIFT
THREE STAGE FULL FREE-LIFT

ITEM		PART NO.	DESCRIPTION	QTY A	QTY B
21		15222	Cotter Pin	2	2
22		221717	Nut	4	4
23	**a**	. . . . .	Chain (Free-Lift)	2	2
24		1387519	Guard	2	2
25		302461	Pin	2	2
26		304527	Snap Ring	2	2
27		1387479	Clamp	1	1
28		287844	Capscrew	2	2
29		313805	Nut	2	2

FOOTNOTES:
a Refer to Table

©2003 HYSTER COMPANY

NOTES

MAIN CYLINDER (Figure 12-6)
THREE STAGE FULL FREE-LIFT

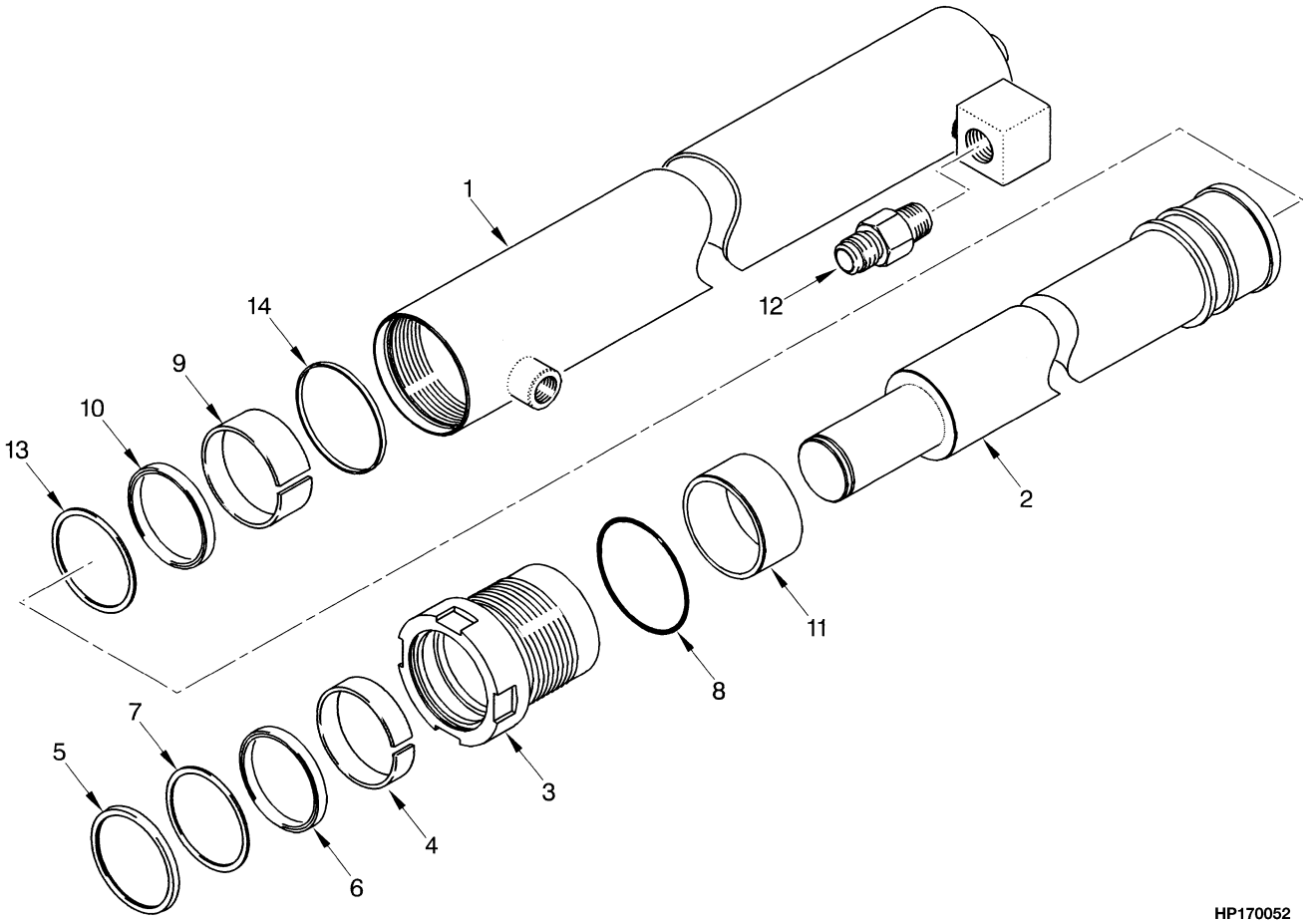

©2003 HYSTER COMPANY

MAIN CYLINDER
THREE STAGE FULL FREE-LIFT

H100-120XM

ITEM	DESCRIPTION 1 2 3 4	LIFT HEIGHT TO BOTTOM OF FORKS					
		4087 mm (160.9 in.)	4387 mm (172.7 in.)	4640 mm (182.7 in.)	4940 mm (194.5 in.)	5240 mm (206.3 in.)	5690 mm (224.0 in.)
	Mast Group Number	**A752 4087**	**A752 4387**	**A752 4640**	**A752 4940**	**A752 5240**	**A752 5690**
	Cylinder Group Number	**8604451**	**8604453**	**8604454**	**8604456**	**8604458**	**8604461**
	Lift Cylinder	2036406	2036392	2036393	2036407	2036408	2036409
1	Shell	2037876	2037877	2037878	2037879	2037880	2037881
2	Rod	2037841	2037842	2037844	2037845	2037846	2037847
11	Spacer	----	----	----	----	----	2035198

H70-90XM

ITEM	DESCRIPTION 1 2 3 4	LIFT HEIGHT TO BOTTOM OF FORKS					
		4365 mm (171.9 in.)	4665 mm (183.7 in.)	4900 mm (192.9 in.)	5200 mm (204.7 in.)	5500 mm (216.5 in.)	5950 mm (234.3 in.)
	Mast Group Number	**A751 4365**	**A751 4665**	**A751 4900**	**A751 5200**	**A751 5500**	**A751 5950**
	Cylinder Group Number	**8604401**	**8604403**	**8604404**	**8604406**	**8604408**	**8604411**
	Lift Cylinder	2036386	2036387	2036388	2036389	2036390	2036391
1	Shell	2037882	2037883	2037884	2037885	2037886	2037887
2	Rod	2037856	2037857	2037858	2037859	2037860	2037861
11	Spacer	----	----	----	----	----	381113

KEY:
A: H70-90XM
B: H100-120XM

ITEM	PART NO.	DESCRIPTION	QTY A	QTY B
	a	Lift Cylinder	2	2
1	**a**	Shell	1	1
2	**a**	Rod	1	1
3	2033243	Gland	1	..
3	2033299	Gland	..	1
4	215425	Wear Ring	1	..
4	215301	Wear Ring	..	1
5	2036212	Wiper Ring (Rod)	1	..
5	2034269	Wiper Ring (Rod)	..	1
6	201829	Rod Seal	..	1
6	270077	Rod Seal	1	..
7	638249	Back-Up Ring	1	..
7	638250	Back-Up Ring	..	1
8	57664	O-Ring	1	..

©2003 HYSTER COMPANY

MAIN CYLINDER
THREE STAGE FULL FREE-LIFT

ITEM		PART NO.	DESCRIPTION	QTY A	QTY B
8		15879	O-Ring	..	1
9		297532	Wear Ring	1	..
9		351531	Wear Ring	..	1
10		1381061	Seal (Piston)	1	..
10		1381062	Seal (Piston)	..	1
11	**a**	. . . . .	Spacer	1	1
12		2035787	Velocity Fuse	1	..
12		2036856	Velocity Fuse	..	1
13		638248	Back-Up Ring	1	..
13		351532	Back-Up Ring	..	1
14		1379063	Piston Ring	1	..
14		2036479	Piston Ring	..	1
		2036277	Seal Kit (Includes Items 4-10, 13-14)	1	..
		2036278	Seal Kit (Includes Items 4-10, 13-14)	1	..

FOOTNOTES:
a Refer to Table

©2003 HYSTER COMPANY

NOTES

FREE-LIFT CYLINDER (Figure 12-7)
THREE STAGE FULL FREE-LIFT

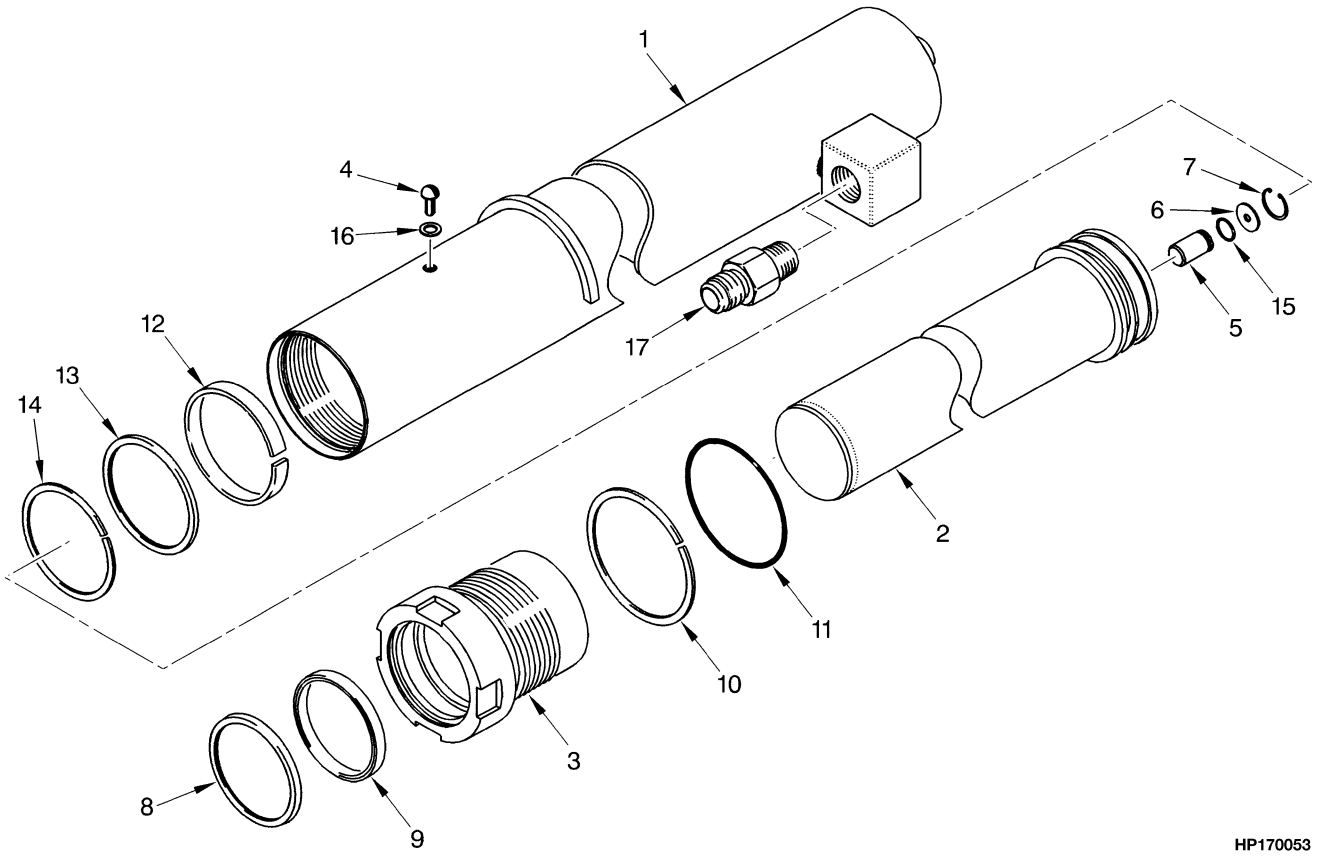

©2003 HYSTER COMPANY

FREE-LIFT CYLINDER
THREE STAGE FULL FREE-LIFT

H100-120XM

ITEM	DESCRIPTION 1 2 3 4	LIFT HEIGHT TO BOTTOM OF FORKS					
		4087 mm (160.9 in.)	4387 mm (172.7 in.)	4640 mm (182.7 in.)	4940 mm (194.5 in.)	5240 mm (206.3 in.)	5690 mm (224.0 in.)
	Mast Group Number	A752 4087	A752 4387	A752 4640	A752 4940	A752 5240	A752 5690
	Cylinder Group Number	8605551	8605553	8605554	8605556	8605558	8605561
	Lift Cylinder	2036466	2036452	2036453	2036467	2036468	2036469
1	Shell	2037862	2037863	2037864	2037865	2037866	2037867
2	Rod	2037850	2037851	2037852	2037853	2037854	2037855

H70-90XM

ITEM	DESCRIPTION 1 2 3 4	LIFT HEIGHT TO BOTTOM OF FORKS					
		4365 mm (171.9 in.)	4665 mm (183.7 in.)	4900 mm (192.9 in.)	5200 mm (204.7 in.)	5500 mm (216.5 in.)	5950 mm (234.3 in.)
	Mast Group Number	A751 4365	A751 4665	A751 4900	A751 5200	A751 5500	A751 5950
	Cylinder Group Number	8605501	8605503	8605504	8605506	8605508	8605511
	Lift Cylinder	2036440	2036422	2036441	2036442	2036443	2036444
1	Shell	2037868	2037870	2037871	2037872	2037873	2037875
2	Rod	2037833	2037835	2037836	2037837	2037838	2037840

KEY:
A: H70-90XM
B: H100-120XM

ITEM	PART NO.	DESCRIPTION	QTY A	QTY B
	a	Lift Cylinder	1	1
1	**a**	Shell	1	1
2	**a**	Rod	1	1
3	2036282	Gland	1	..
3	2036283	Gland	..	1
4	1361302	Screw	1	1
5	257913	Check Valve	1	1
6	297531	Washer	1	1
6	637635	Washer (Optional)	1	1
7	187388	Snap Ring	1	1
8	2034274	Wiper Ring (Rod)	1	1
9	637161	Rod Seal (Rod)	1	1
10	164632	Back-Up Ring	1	..
10	615145	Back-Up Ring	..	1
11	15885	O-Ring	..	1
11	46629	O-Ring	1	..
12	636950	Wear Ring	1	..

©2003 HYSTER COMPANY

FREE-LIFT CYLINDER
THREE STAGE FULL FREE-LIFT

ITEM	PART NO.	DESCRIPTION	QTY A	QTY B
12	636952	Wear Ring	..	1
13	637162	Seal	1	..
13	637164	Seal	..	1
14	638293	Back-Up Ring	1	..
14	638295	Back-Up Ring	..	1
15	39348	O-Ring	1	1
16	190887	Seal (Seal)	1	1
17	2036478	Velocity Fuse	1	..
17	2036857	Velocity Fuse	..	1
	2036279	Seal Kit (Includes Items 8-16)	1	..
	2036280	Seal Kit (Includes Items 8-16)	..	1

FOOTNOTES:
a Refer to Table

©2003 HYSTER COMPANY

NOTES

HEADER HOSE (Figure 12-8)
THREE STAGE FULL FREE-LIFT

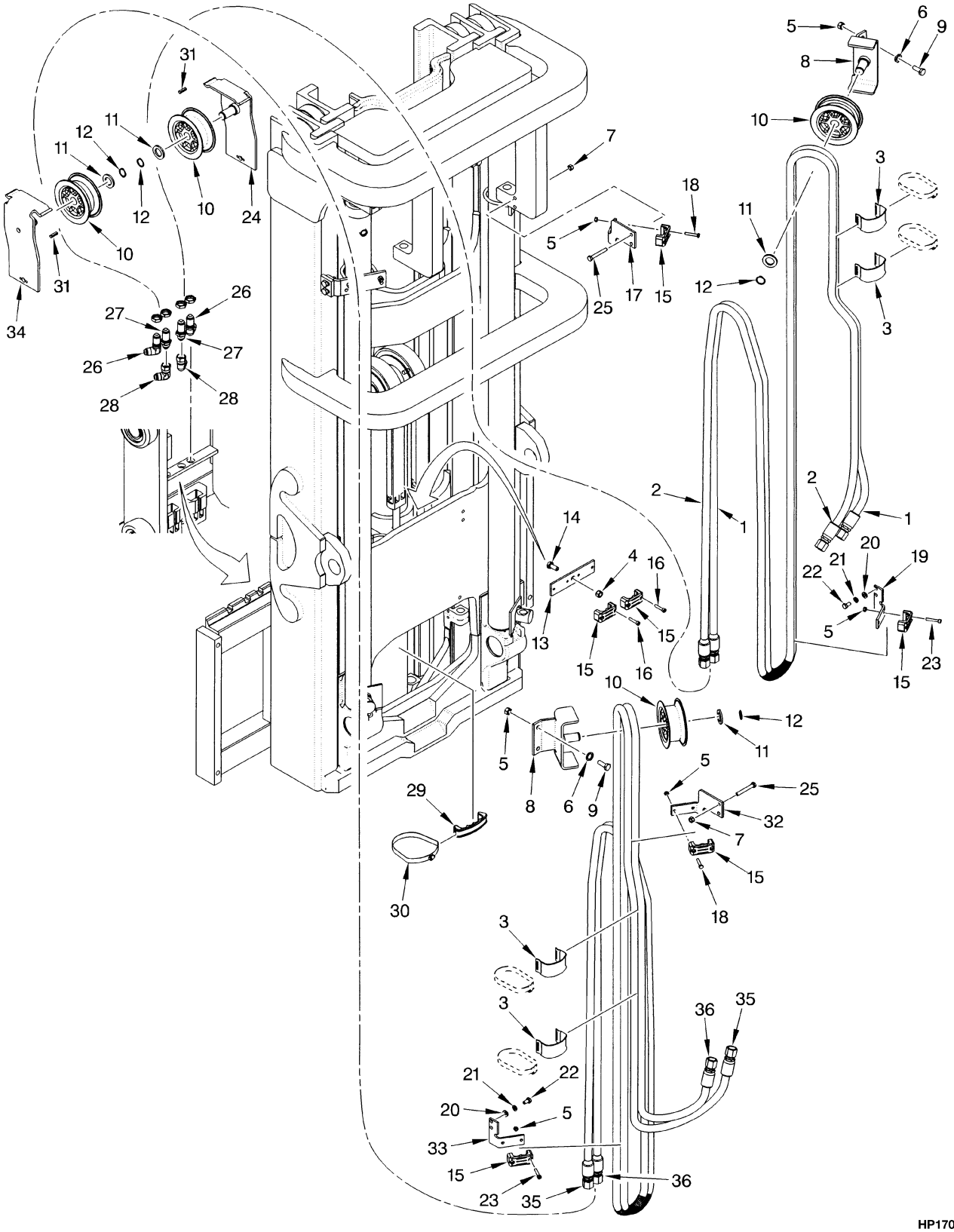

©2003 HYSTER COMPANY

HEADER HOSE
THREE STAGE FULL FREE-LIFT

FOUR FUNCTION H100-120XM

ITEM	DESCRIPTION 1 2 3 4	LIFT HEIGHT TO BOTTOM OF FORKS					
		4087 mm (160.9 in.)	4387 mm (172.7 in.)	4640 mm (182.7 in.)	4940 mm (194.5 in.)	5240 mm (206.3 in.)	5690 mm (224.0 in.)
	Mast Group Number	A752 4087	A752 4387	A752 4640	A752 4940	A752 5240	A752 5690
	Mast Assembly	2036784	2036785	2036786	2036787	2036788	2036789
35	Hose (LH)	1399482	1399488	1399493	1399498	1399503	1399272
36	Hose (RH)	1399481	1399485	1399491	1399273	1399501	1399510

FOUR FUNCTION H70-90XM

ITEM	DESCRIPTION 1 2 3 4	LIFT HEIGHT TO BOTTOM OF FORKS					
		4365 mm (171.9 in.)	4665 mm (183.7 in.)	4900 mm (192.9 in.)	5200 mm (204.7 in.)	5500 mm (216.5 in.)	5950 mm (234.3 in.)
	Mast Group Number	A751 4365	A751 4665	A751 4900	A751 5200	A751 5500	A751 5950
	Mast Assembly	2036777	2036779	2036780	2036781	2036782	2036783
35	Hose (LH)	1399485	1399492	1399270	1399500	1399506	1399514
36	Hose (RH)	1399274	1399490	1399494	1399499	1399504	1399512

THREE FUNCTION H100-120XM

ITEM	DESCRIPTION 1 2 3 4	LIFT HEIGHT TO BOTTOM OF FORKS					
		4087 mm (160.9 in.)	4387 mm (172.7 in.)	4640 mm (182.7 in.)	4940 mm (194.5 in.)	5240 mm (206.3 in.)	5690 mm (224.0 in.)
	Mast Group Number	A752 4087	A752 4387	A752 4640	A752 4940	A752 5240	A752 5690
	Mast Assembly	2036784	2036785	2036786	2036787	2036788	2036789
1	Hose (LH)	1399475	1399477	1399482	1399487	1399327	1399502
2	Hose (RH)	1399475	1399478	1399482	1399487	1399327	1399502

THREE FUNCTION H70-90XM

ITEM	DESCRIPTION 1 2 3 4	LIFT HEIGHT TO BOTTOM OF FORKS					
		4365 mm (171.9 in.)	4665 mm (183.7 in.)	4900 mm (192.9 in.)	5200 mm (204.7 in.)	5500 mm (216.5 in.)	5950 mm (234.3 in.)
	Mast Group Number	A751 4365	A751 4665	A751 4900	A751 5200	A751 5500	A751 5950
	Mast Assembly	2036777	2036779	2036780	2036781	2036782	2036783
1	Hose (LH)	1399268	1399480	1399484	1399266	1399496	1399505
2	Hose (RH)	1399476	1399480	1399484	1399266	1399496	1399506

©2003 HYSTER COMPANY

HEADER HOSE
THREE STAGE FULL FREE-LIFT

KEY:
A: Three Function
B: Four Function

ITEM		PART NO.	DESCRIPTION	QTY A	QTY B
	a	. . . . .	Mast Assembly	1	1
1	**a**	. . . . .	Hose (LH)	1	..
2	**a**	. . . . .	Hose (RH)	1	..
3		1465489	Clamp	4	8
4		316826	Nut	1	1
5		313805	Nut	4	8
6		292682	Lockwasher	2	4
7		313828	Nut	2	4
8		1387523	Bracket	1	2
9		136985	Capscrew	2	4
10		1332705	Sheave	2	4
11		320171	Washer	2	4
12		58902	Snap Ring	2	4
13		1389828	Bracket	1	1
14		287854	Capscrew	1	1
15		2035791	Clamp	3	6
16		293797	Capscrew	2	4
17		1389859	Bracket (RH)	1	1
18		292503	Capscrew	2	4
19		1387327	Bracket (RH)	1	1
20		320157	Washer	2	4
21		292681	Lockwasher	2	4
22		287851	Capscrew	2	4
23		293798	Capscrew	2	4
24		1399217	Bracket	1	1
25		136704	Capscrew	2	4
26		16458	Fitting	1	2
27		16448	Fitting	1	2
28		16989	Fitting	1	2
29		1388018	Spacer	1	1
30		1399243	Clamp	1	1
31		302461	Pin (Spring)	1	2
32		1389857	Bracket (LH)	..	1
33		1389854	Bracket (LH)	..	1
34		1399218	Bracket (LH)	..	1
35	**a**	. . . . .	Hose (LH)	..	1
36	**a**	. . . . .	Hose (RH)	..	1

FOOTNOTES:
a Refer to Table

©2003 HYSTER COMPANY

NOTES

CARRIAGE (Figure 12-9)
THREE STAGE FULL FREE-LIFT

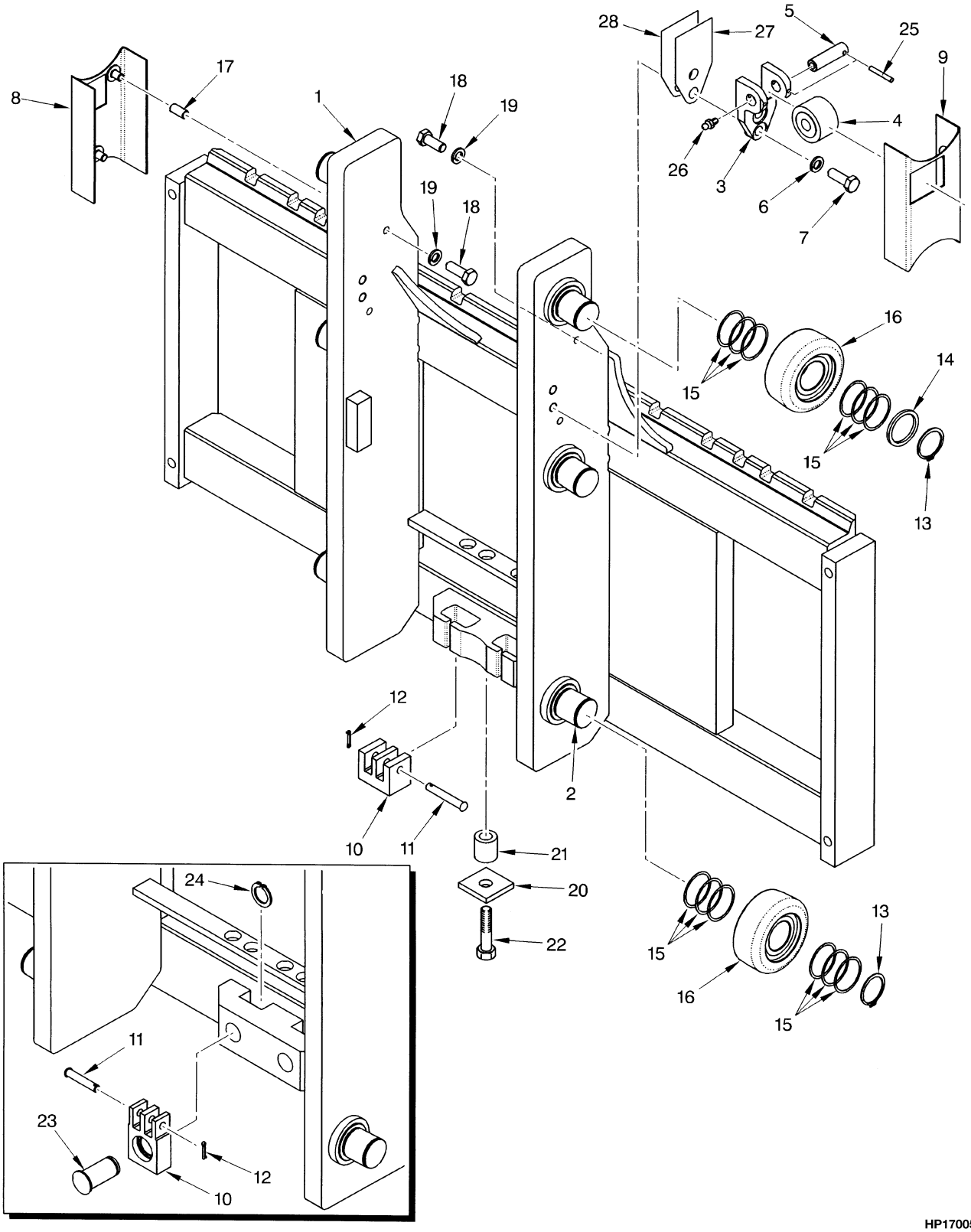

©2003 HYSTER COMPANY

CARRIAGE
THREE STAGE FULL FREE-LIFT

KEY:
A: H70-90XM
B: H100-120XM

ITEM		PART NO.	DESCRIPTION	QTY A	QTY B
		2035792	Carriage (48 in.)	1	..
		2035793	Carriage (54 in.)	1	..
		2035794	Carriage (60 in.)	1	..
		2035795	Carriage (48 in.)	..	1
		2035796	Carriage (54 in.)	..	1
	a	2037707	Carriage (54 in.)	..	1
		2035797	Carriage (60 in.)	..	1
1		1387457	Frame (48 in.)	1	..
1		1387458	Frame (54 in.)	1	..
1		1387459	Frame (60 in.)	1	..
1		1387496	Frame (48 in.)	..	1
1		1387497	Frame (54 in.)	..	1
1	**a**	1465228	Frame (54 in.)	..	1
1		1387498	Frame (60 in.)	..	1
2		1500744	Stub Shaft	6	6
3	**a**	1465177	Bracket	..	2
4	**a**	1387993	Roller Bearing	..	2
5	**a**	1465028	Pin	..	2
6		292683	Lockwasher	..	4
7		292528	Capscrew	..	4
8		319323	Guard (LH) (LH)	1	1
9		319322	Guard (RH) (RH)	1	1
10		1387548	Chain Anchor	2	..
10		341558	Chain Anchor	..	2
11		1387549	Pin (Anchor)	2	..
11		339932	Pin (Anchor)	..	2
12		15222	Cotter Pin	2	2
13		1465072	Snap Ring	6	6
14		1399224	Spacer	2	2
15		1399207	Shim (0.020 in.)	AR	AR
16	**b**	1511882	Load Roller ("A")	6	6
16	**b**	1511883	Load Roller ("B") (0,26 mm)	6	6
16	**b**	1511884	Load Roller ("C") (1,52 mm)	6	6
17		317292	Spacer	4	4
18		18518	Capscrew	4	4
19		15155	Lockwasher	4	4
20		1400126	Plate	1	..
21		1400125	Spacer	1	..
22		292512	Capscrew	1	..
23		320327	Pin	..	2
24		131358	Snap Ring	..	2
25	**a**	66333	Pin	..	2
26	**a**	16001	Lube Fitting	..	2

©2003 HYSTER COMPANY

CARRIAGE
THREE STAGE FULL FREE-LIFT

ITEM		PART NO.	DESCRIPTION	QTY A	QTY B
27	**a**	192425	Shim (0.062 in.)	..	AR
28	**a**	192424	Shim (0.030 in.)	..	AR

FOOTNOTES:
a Attachment Carriage (H90XM, 100XM)
b Letter Located on Inside Surface of Load Roller

©2003 HYSTER COMPANY

NOTES

LOAD BACKREST EXTENSION (Figure 12-10)
THREE STAGE FULL FREE-LIFT

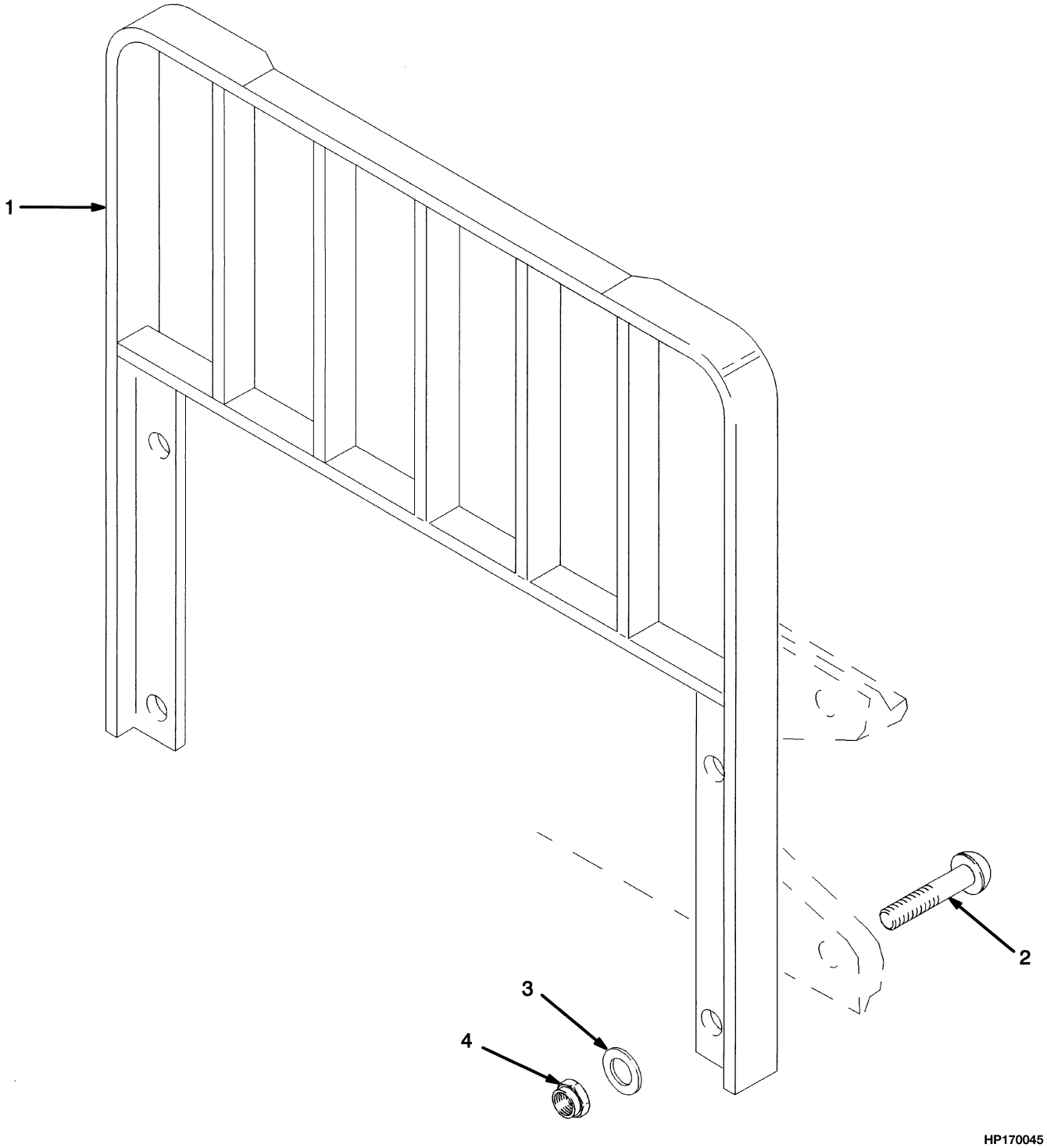

©2003 HYSTER COMPANY

LOAD BACKREST EXTENSION
THREE STAGE FULL FREE-LIFT

KEY:
A: H70-90XM
B: H100-120XM

ITEM		PART NO.	DESCRIPTION	QTY A	QTY B
1		1387341	Load Backrest Extension (48 in.)	1	..
1	**a**	1387342	Load Backrest Extension (48 in.)	1	..
1		1387348	Load Backrest Extension (48 in.)	..	1
1	**a**	1464863	Load Backrest Extension (48 in.)	..	1
1		1387343	Load Backrest Extension (54 in.)	1	..
1	**a**	1387344	Load Backrest Extension (54 in.)	1	..
1		1387904	Load Backrest Extension (54 in.)	..	1
1	**a**	1464864	Load Backrest Extension (54 in.)	..	1
1		1387345	Load Backrest Extension (60 in.)	1	..
1	**a**	1387346	Load Backrest Extension (60 in.)	1	..
1		1387349	Load Backrest Extension (60 in.)	..	1
1	**a**	1464865	Load Backrest Extension (60 in.)	..	1
2		1387330	Capscrew	4	4
3		221771	Washer	4	4
3	**b**	296423	Washer	4	4
4		300937	Nut	4	4

FOOTNOTES:
a For Polished Forks with Full Bottom Taper
b Optional

©2003 HYSTER COMPANY

FORK (Figure 12-11)
STANDARD TAPER HOOK TYPE (H70-90XM)
THREE STAGE FULL FREE-LIFT

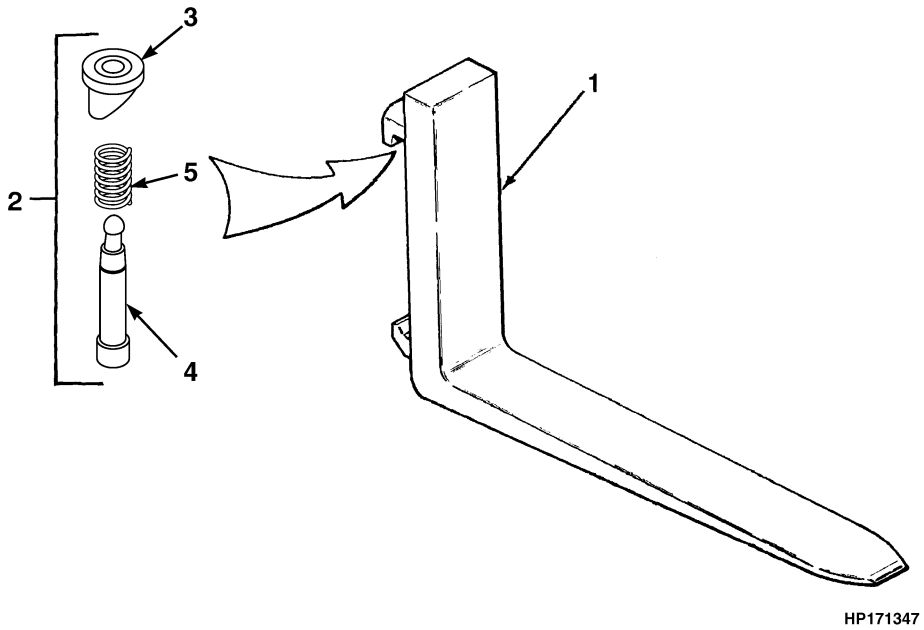

KEY:
A: H70XM (50 mm x 125 mm) (2 in x 5 in)
B: H80XM (50 mm x 125 mm) (2 in x 5 in)
C: H90XM (50 mm x 150 mm) (2 in x 6 in)
D: H90XM (50 mm x 125 mm) (2 in x 5 in)
E: H90XM (50 mm x 150 mm) (2 in x 6 in)

ITEM	PART NO.	DESCRIPTION	QTY A	B	C	D	E
1	367420	Fork (42 in.)	2	2	..	2	..
1	367421	Fork (48 in.)	2	2	..	2	..
1	367422	Fork (54 in.)	2	2	..	..	..
1	1399915	Fork (54 in.)	..	..	..	..	2
1	367423	Fork (60 in.)	2	..	..	..	..
1	1399916	Fork (60 in.)	..	..	2	..	2
1	367424	Fork (72 in.)	2	..	..	..	..
1	1399917	Fork (72 in.)	..	..	2	..	2
2	1500774	Latch Kit	2	2	2	2	2
3	. . . . .	Knob	1	1	1	1	1
4	. . . . .	Pin	1	1	1	1	1
5	. . . . .	Spring	1	1	1	1	1

©2003 HYSTER COMPANY

FORK (Figure 12-12)
STANDARD TAPER HOOK TYPE (H100-120XM)
THREE STAGE FULL FREE-LIFT

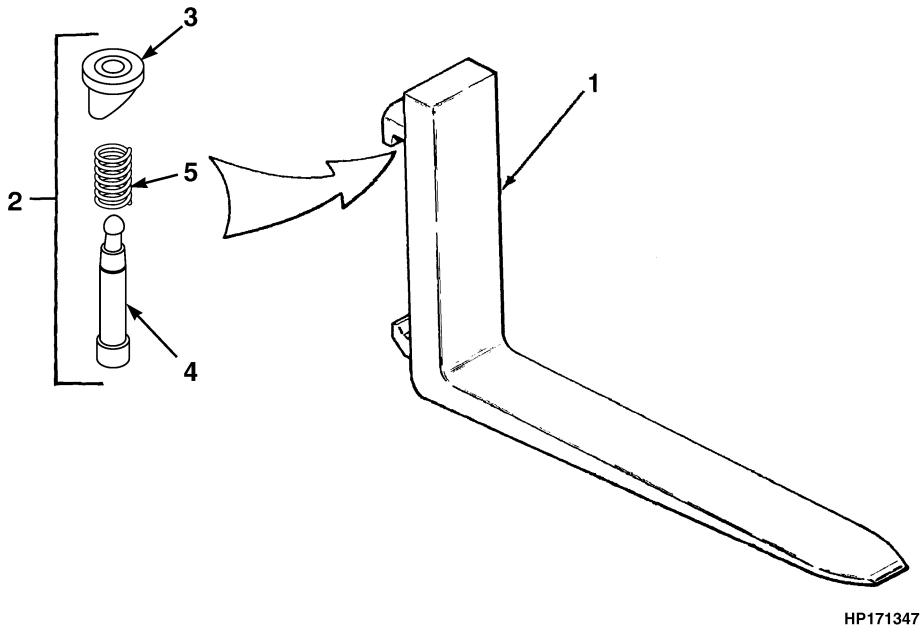

KEY:
A: H100 XM (50 mm x 150 mm) (2 in x 6 in)
B: H100 XM (60 mm x 150 mm) (2.36 in x 6 in)
C: H110XM (50 mm x 150 mm) (2 in x 6 in)
D: H110 XM (60 mm x 150 mm) (2.36 in x 6 in)
E: H120 XM (60 mm x 150 mm) (2.36 in x 6 in)

ITEM	PART NO.	DESCRIPTION	QTY A	B	C	D	E
1	1399919	Fork (42 in.)	2	..	2	..	..
1	1458264	Fork (42 in.)	..	..	..	..	2
1	1399920	Fork (48 in.)	2	..	2	..	..
1	1333001	Fork (48 in.)	..	..	..	..	2
1	1399921	Fork (54 in.)	2	..	..	..	..
1	1333002	Fork (54 in.)	..	..	..	2	2
1	1399922	Fork (60 in.)	2	..	..	..	..
1	1333003	Fork (60 in.)	..	..	..	2	2
1	1333004	Fork (72 in.)	..	2	..	2	2
2	1502122	Latch Kit	2	2	2	2	2
3	. . . . .	Knob	1	1	1	1	1
4	. . . . .	Pin	1	1	1	1	1
5	. . . . .	Spring	1	1	1	1	1

FORK (Figure 12-13)
POLISHED FORK WITH FULL BOTTOM TAPER HOOK TYPE
THREE STAGE FULL FREE-LIFT

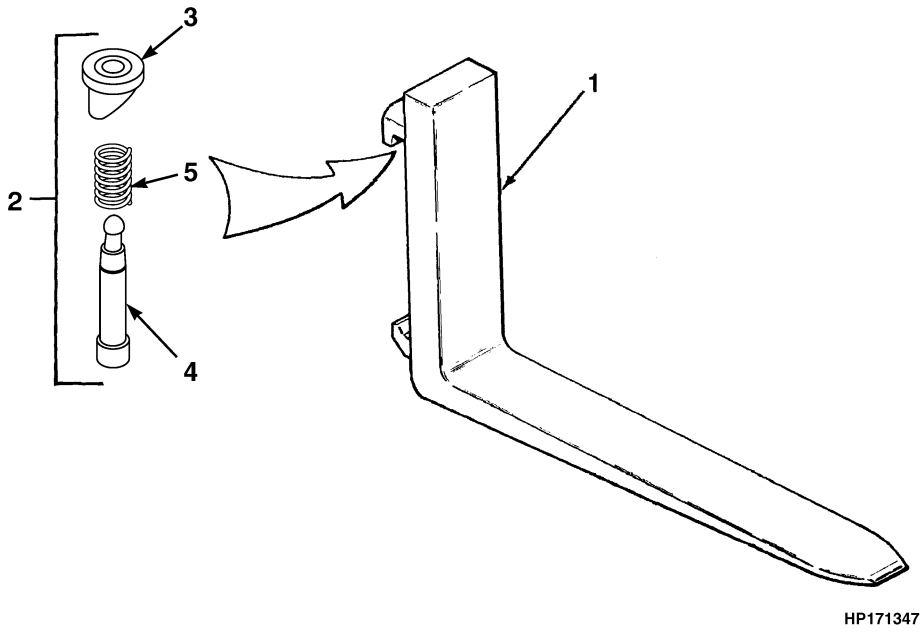

KEY:
A: H70-90XM (40 mm x 200 mm) (1.5 in x 8 in)
B: H100-120 XM (40 mm x 250 mm) (1.5 in x 10 in)

ITEM	PART NO.	DESCRIPTION	QTY A	QTY B
1	1465545	Fork (47.5 in.)	2	..
1	1465547	Fork (47.5 in.)	..	2
1	1465546	Fork (54 in.)	2	..
1	1465548	Fork (54 in.)	..	2
2	1500774	Latch Kit	2	..
2	1502122	Latch Kit	..	2
3	. . . . .	Knob	1	1
4	. . . . .	Pin	1	1
5	. . . . .	Spring	1	1

©2003 HYSTER COMPANY

13 OPTIONS

SECTION 13
OPTIONS

DESCRIPTION	PAGE
ACCUMULATOR	13-22
AMBER STROBE REVERSE LIGHTS	
WITHOUT CAB	13-28
AUDIBLE ALARM	13-54
AUXILIARY TUBE EXTENSION KIT	
TWO AND THREE STAGE FULL FREE-LIFT	13-20
TWO STAGE LIMITED FREE-LIFT	13-18
CAB	13-57
CAB ATTACHING PARTS	13-32
SHEET 1 OF 3	13-58
SHEET 2 OF 3	13-60
SHEET 3 OF 3	13-62
DOOR ASSEMBLY	
LEFT HAND	13-68
RIGHT HAND	13-66
DUAL MIRROR	
WITHOUT CAB	13-30
FENDER EXTENSIONS	13-10
FRONT HEAD LIGHTS	
WITHOUT CAB	13-24
HEATER INSTALLATION	
DIESEL	13-12
GASOLINE	13-14
LPG	13-16
LIFTING EYE	13-70
REAR DRIVE LIGHTS	
WITHOUT CAB	13-26
SIDE-SHIFT CARRIAGE	
TWO AND THREE STAGE FULL-FREE-LIFT (48 AND 60-INCH)	
H70-90XM	13-38
TWO AND THREE STAGE FULL-FREE-LIFT (54 AND 60-INCH)	
H100XM-H120XM	13-40
TWO STAGE LIMITED FREE-LIFT (48 AND 60-INCH)	
H70XM - H90XM	13-34
TWO STAGE LIMITED FREE-LIFT (54 AND 60-INCH)	
H100XM - H120XM	13-36
SIDE-SHIFT CARRIAGE FRAME	
TWO AND THREE STAGE FULL FREE-LIFT (48-INCH)	
H70XM - H90XM	13-48
TWO AND THREE STAGE FULL FREE-LIFT (54 AND 60-INCH)	
H100XM-H120XM	13-52
TWO AND THREE STAGE FULL FREE-LIFT (60-INCH)	
H70XM - H90XM	13-50
TWO STAGE LIMITED FREE-LIFT (54 AND 60-INCH)	
H100XM - H120 XM	13-46
TWO STAGE LIMTED FREE-LIFT (48-INCH)	
H70XM - H90XM	13-42
TWO STAGE LIMTED FREE-LIFT (60-INCH)	
H70XM - H90XM	13-44
TIRE AND WHEEL	

©2003 HYSTER COMPANY

SECTION 13
OPTIONS (Continued)

DESCRIPTION	PAGE
DUAL DRIVE WHEEL	13-8
SINGLE DRIVE WHEEL	
H100-120XM	13-6
H70-90XM	13-4
STEER WHEEL	13-9
WIRE HARNESS	
AUXILIARY LIGHTS	
WORKLIGHTS	13-71
CAB	13-64
REVERSE ALARM	13-56

©2003 HYSTER COMPANY

NOTES

TIRE AND WHEEL (Figure 13-1)
SINGLE DRIVE WHEEL
H70-90XM

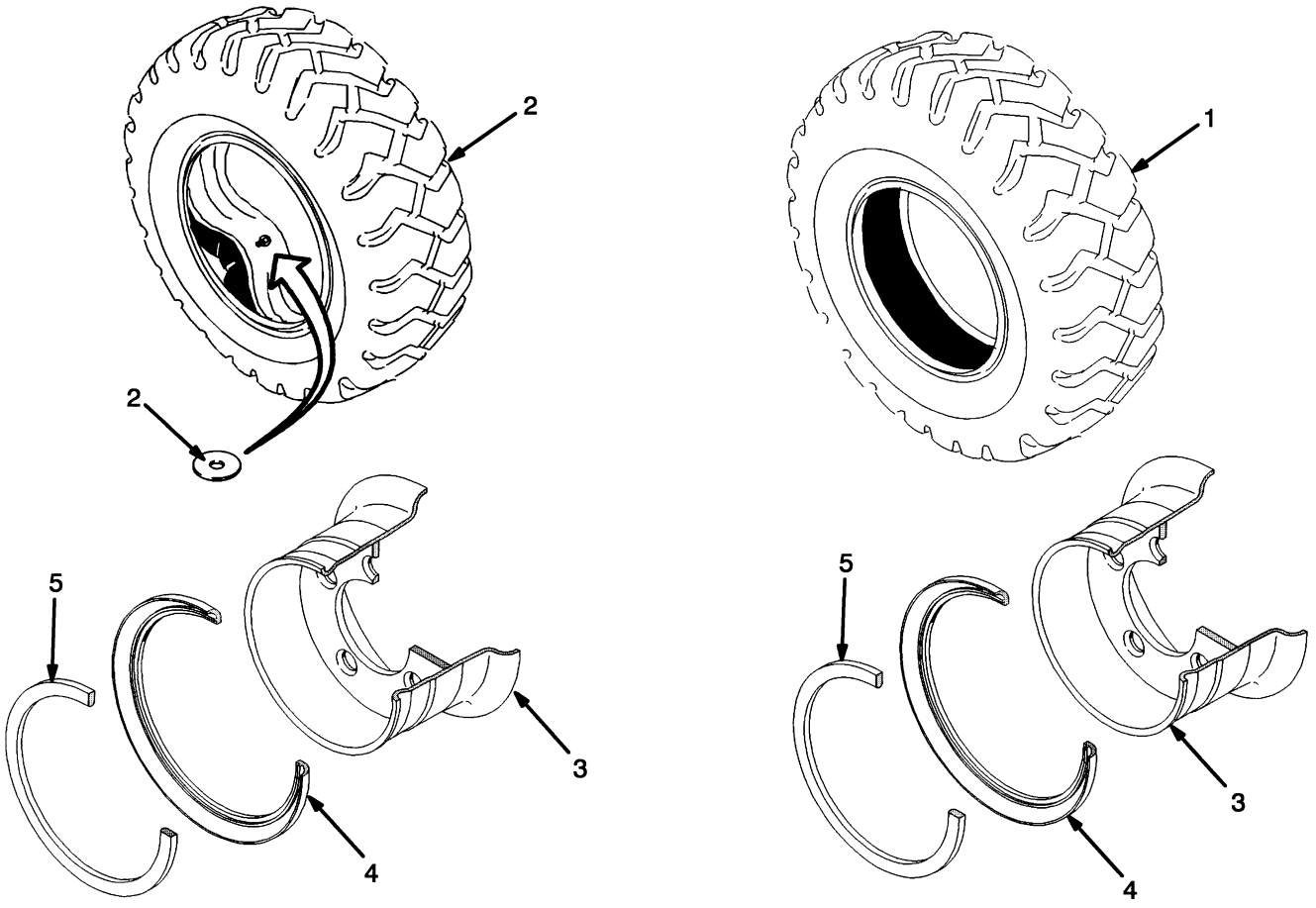

©2003 HYSTER COMPANY

TIRE AND WHEEL
SINGLE DRIVE WHEEL
H70-90XM

KEY:
A: 250 x 15 - Solid (H70-90XM)
B: 250 x 15 - 16 Ply (H70-80XM)
C: 250 x 15 - 18 Ply (H70-90XM)
D: 250/70 R15 Radial (H70-90XM)

ITEM		PART NO.	DESCRIPTION	QTY A	B	C	D
1		352266	Tire (Standard Hardness)	2	..	..	..
2		1302126	Tire Assembly	..	..	2	..
2		1337744	Tire Assembly	..	..	..	2
2		352268	Tire Assembly	..	2	..	..
2		352269	Tire (With Flap)	..	1	..	..
2		1302127	Tire (With Flap)	..	..	1	..
2		1358184	Tire	..	..	..	1
2		1358195	Tube	..	..	..	1
2		352270	Tube	..	1	1	..
2		1376007	Washer	..	..	..	2
3		2035020	Wheel Assembly	..	..	..	2
3	**a**	2035020	Wheel Assembly	2	2	2	..
3	**b**	2035021	Wheel Assembly	2	2	2	..
3		1394476	Wheel	..	..	..	1
3	**a**	1394476	Wheel	1	1	1	..
3	**b**	1394478	Wheel	1	1	1	..
4		322637	Side Ring	1	1	1	1
5		322638	Locking Ring	1	1	1	1

FOOTNOTES:
a Standard Tread
b Wide Tread

©2003 HYSTER COMPANY

TIRE AND WHEEL (Figure 13-2)
SINGLE DRIVE WHEEL
H100-120XM

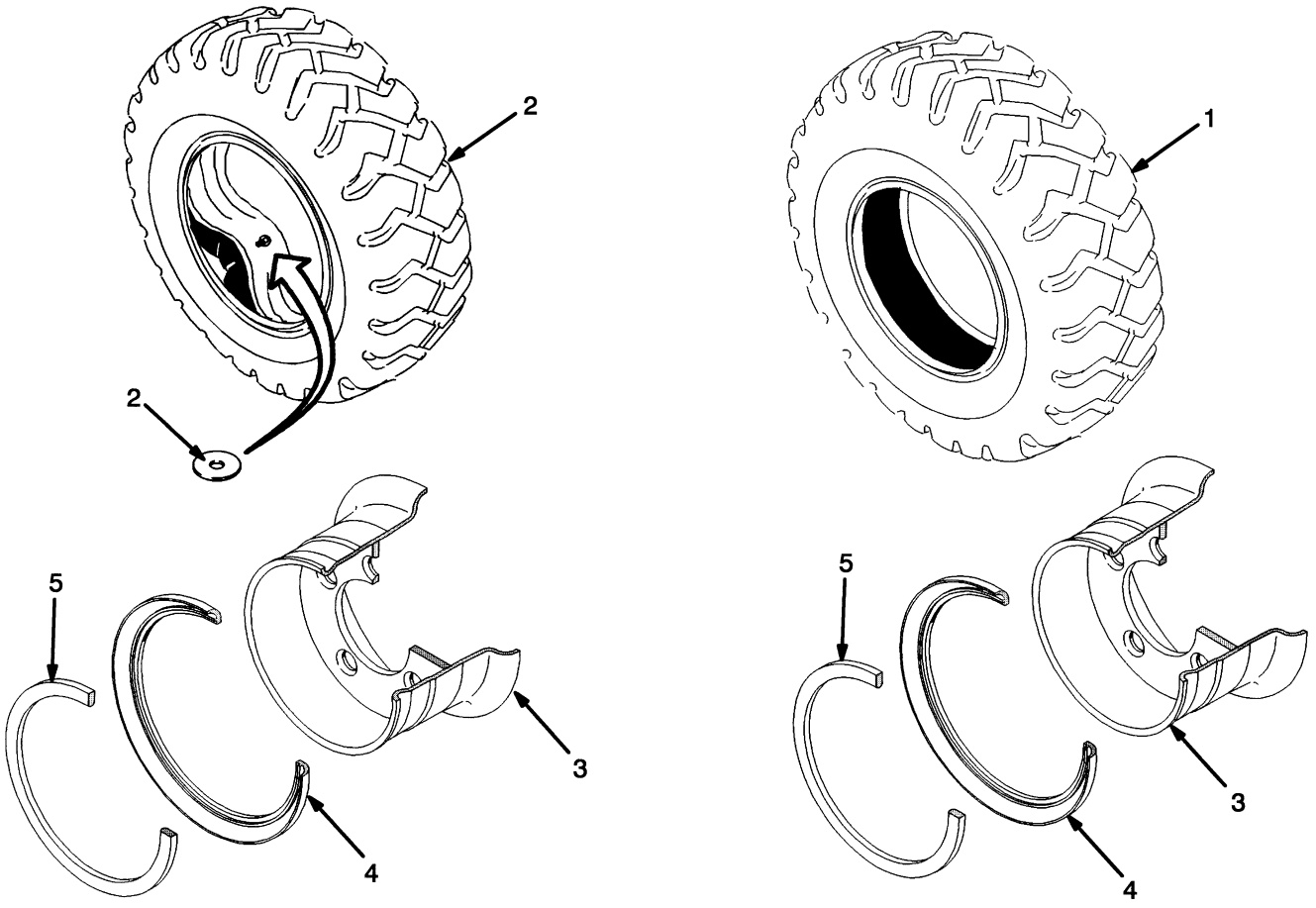

©2003 HYSTER COMPANY

TIRE AND WHEEL
SINGLE DRIVE WHEEL
H100-120XM

KEY:
A: 300 x 15 Solid
B: 300 x 15 18 Ply
C: 315/70 R15 Radial

ITEM		PART NO.	DESCRIPTION	QTY A	QTY B	QTY C
1		336123	Tire (Standard Hardness)	2	..	..
2		321043	Tire Assembly	..	2	..
2		1337745	Tire Assembly	..	..	2
2		1358185	Tire	..	..	1
2		321044	Tire (With Flap)	..	1	..
2		321045	Tube	..	1	1
2		1358192	Tube	..	..	1
2		1376007	Washer	..	..	2
3	**a**	2035022	Wheel Assembly	2	2	2
3	**b**	2035023	Wheel Assembly	2	2	..
3	**a**	1394480	Wheel	1	1	1
3	**b**	1394482	Wheel	1	1	..
4		322637	Side Ring	1	1	1
5		322638	Locking Ring	1	1	1

FOOTNOTES:
a Standard Tread
b Wide Tread

©2003 HYSTER COMPANY

TIRE AND WHEEL (Figure 13-3)
DUAL DRIVE WHEEL

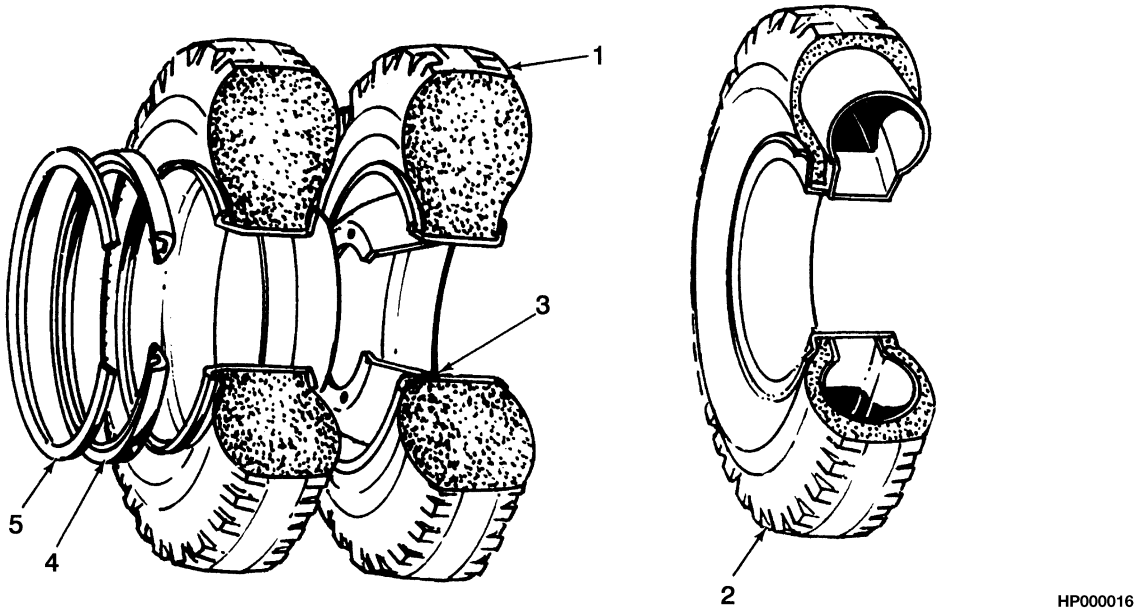

KEY:
A: 7.00 x 15 Solid (H70-90XM)
B: 7.00 x 15 Pneumatic (H70-90XM)
C: 8.25 x 15 Solid (H100-120XM)
D: 8.25 x 15 - 12 Ply (H100-120XM)

ITEM	PART NO.	DESCRIPTION	QTY A	QTY B	QTY C	QTY D
1	174214	Tire (Standard Hardness)	4	..	..	..
1	237050	Tire (Standard Hardness)	..	4	..	..
2	137134	Tire Assembly	..	4	..	..
2	130616	Tire Assembly	..	..	..	4
2	137135	Tire (With Flap)	..	1	..	..
2	129846	Tire (With Flap)	..	..	..	1
2	137136	Tube	..	1	..	..
2	25722	Tube	..	..	..	1
3	1394476	Wheel	..	..	..	1
3	1394478	Wheel	1	1	1	..
3	2035024	Wheel Assembly	4	4	..	..
3	2035025	Wheel Assembly	..	..	4	4
4	322637	Side Ring	1	1	1	1
5	322638	Locking Ring	1	1	1	1

©2003 HYSTER COMPANY

TIRE AND WHEEL (Figure 13-4)
STEER WHEEL

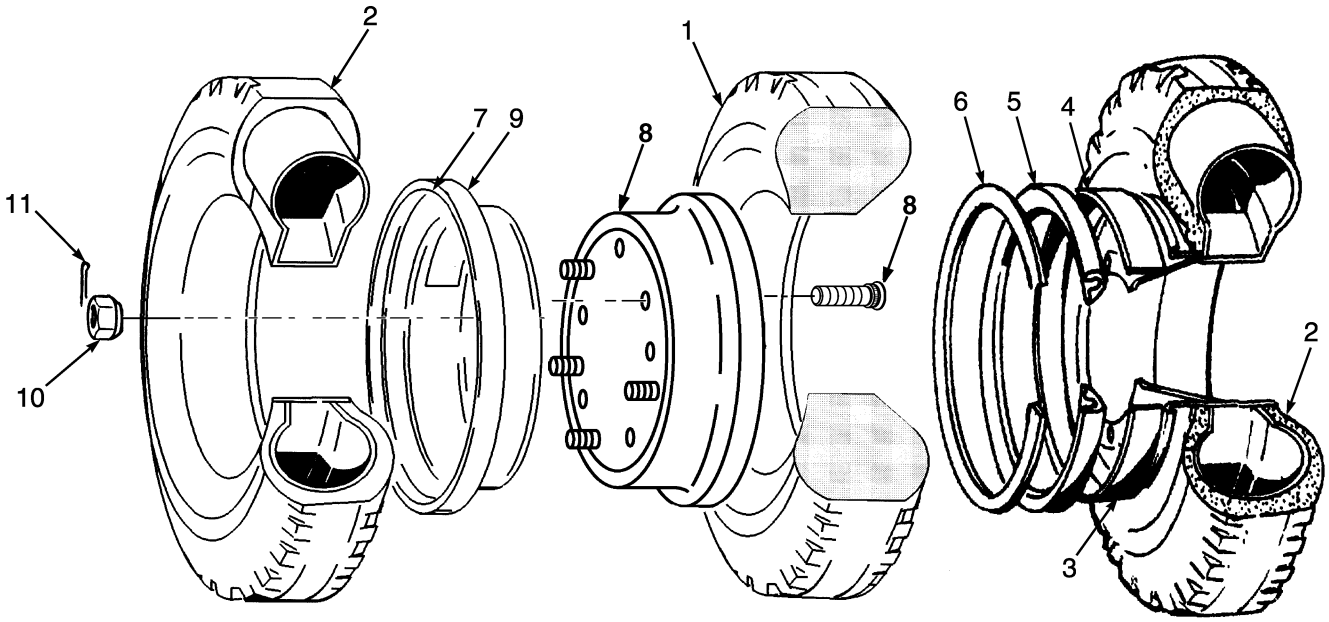

KEY:
A: 7.00 x 12 Solid
B: 7.00 x 12 12 Ply
C: 7.00 R12 Radial

ITEM	PART NO.	DESCRIPTION	QTY A	QTY B	QTY C
1	174209	Tire (Standard Hardness)	2	..	..
2	130619	Tire Assembly	..	2	..
2	1337743	Tire Assembly	..	..	2
2	1358179	Tire	..	..	1
2	45736	Tire (With Flap)	..	1	..
2	45737	Tube	..	1	..
2	1358190	Tube	..	..	1
2	1376007	Washer	..	..	1
3	2035044	Wheel Assembly	..	..	2
3	1394514	Wheel	..	..	1
4	806556	Shoulder Ring	..	..	1
5	161890	Side Ring	..	..	1
6	161889	Locking Ring	..	..	1
7	288638	Label (Warning)	2	2	..
8	1394509	Wheel (Outer)	2	2	..
8	45656	Wheel Stud (Press Fitted)	5	5	..
9	1394511	Wheel (Inner)	2	2	..
10	11276	Lug Nut	10	10	..
10	1394715	Lug Nut (Optional)	10	10	..
11	15224	Cotter Pin	10	10	..

©2003 HYSTER COMPANY

FENDER EXTENSIONS (Figure 13-5)

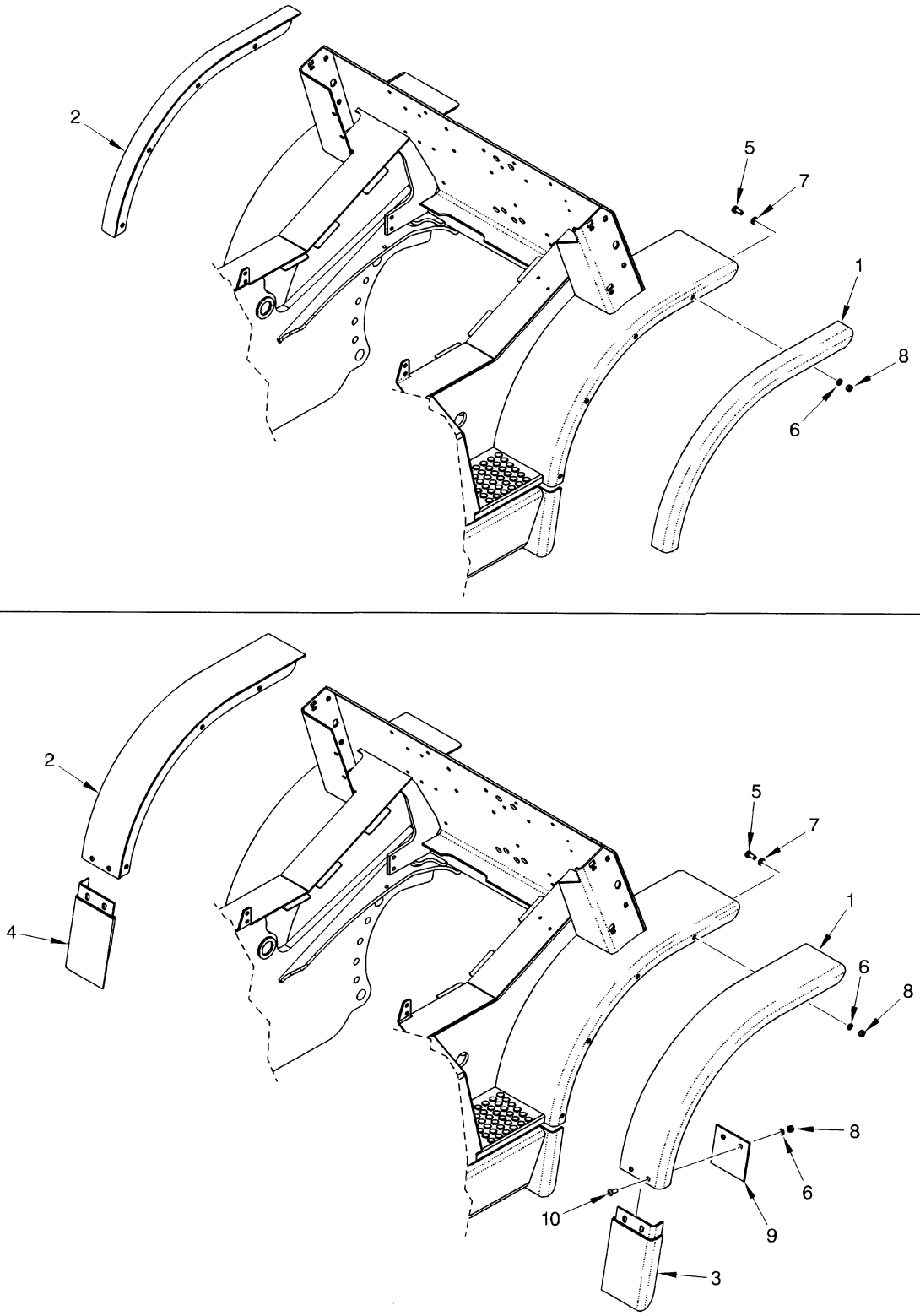

©2003 HYSTER COMPANY

FENDER EXTENSIONS

KEY:
A: 250 x 15 Single Wheel (H70-90XM)
B: 300 x 15 Single Wheel (H100-120XM)
C: 7.00 x 15 Dual Wheel (H70-90XM)
D: 8.25 x 15 Dual Wheel (H100-120XM)

ITEM	PART NO.	DESCRIPTION	QTY A	B	C	D
1	1396526	Fender Extension (RH)	1	..	..	..
1	1397500	Fender Extension (RH)	..	1	..	..
1	1396527	Fender Extension (RH)	..	..	1	..
1	1396528	Fender Extension (RH)	..	..	..	1
2	1396534	Fender Extension (LH)	1	..	..	..
2	1397502	Fender Extension (LH)	..	1	..	..
2	1396535	Fender Extension (LH)	..	..	1	..
2	1396536	Fender Extension (LH)	..	..	..	1
3	1398127	Mud Flap (RH)	..	..	1	..
3	1398128	Mud Flap (RH)	..	..	..	1
4	1398132	Mud Flap (LH)	..	..	..	1
4	1398131	Mud Flap (LH)	..	..	1	..
5	287854	Capscrew	1	1	1	1
6	292682	Lockwasher	8	8	..	..
6	292682	Lockwasher	..	..	12	12
7	292420	Packing Kit	8	8	8	8
8	136692	Nut	8	8	..	..
8	136692	Nut	..	..	12	12
9	1399432	Plate	..	..	2	2
10	1384659	Capscrew	..	..	4	4

©2003 HYSTER COMPANY

HEATER INSTALLATION (Figure 13-6)
DIESEL

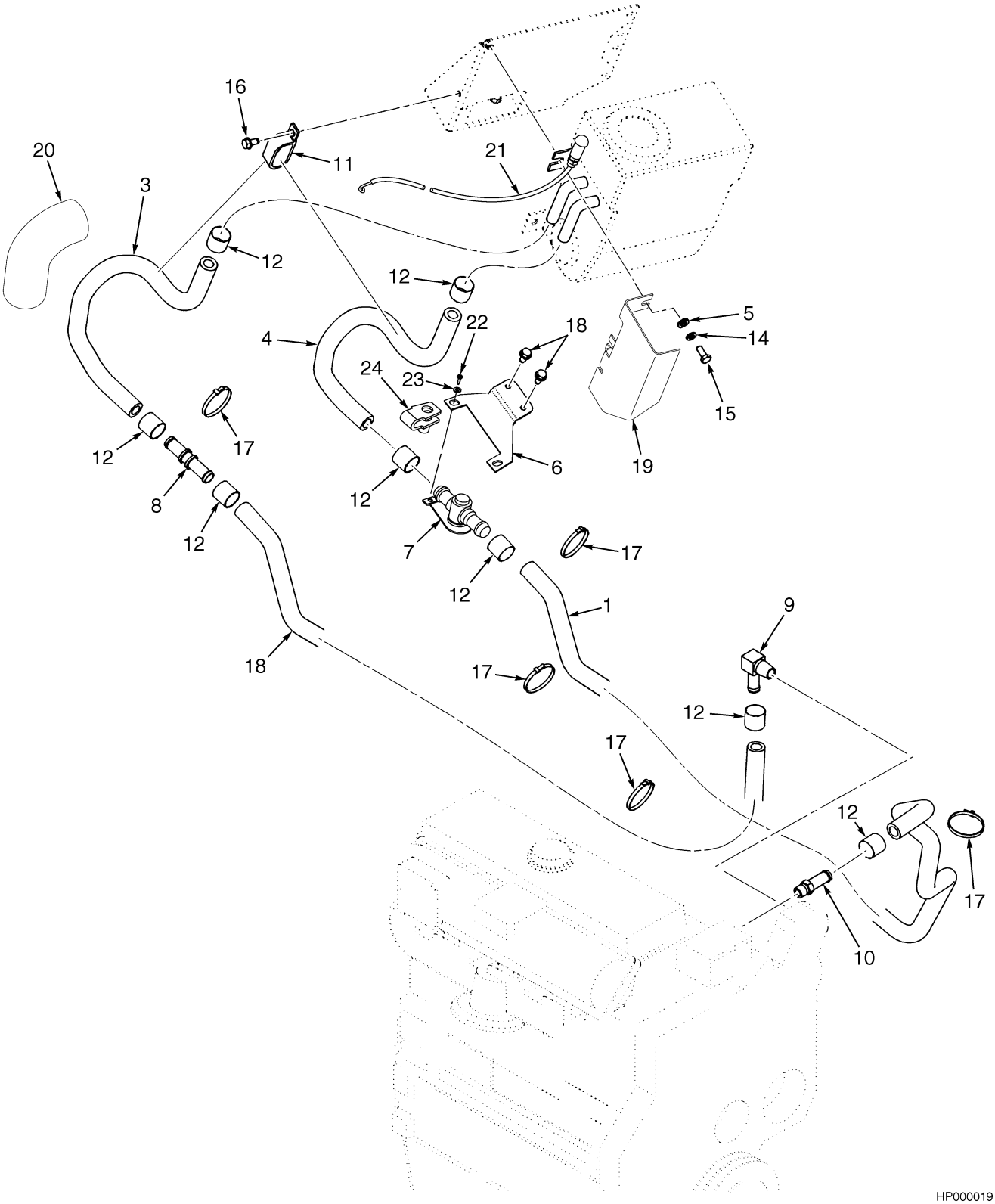

©2003 HYSTER COMPANY

HEATER INSTALLATION
DIESEL

ITEM	PART NO.	DESCRIPTION	QTY
1	2040751	Hose	1
2	16653	Screw	2
3	1399864	Hose (Front)	1
4	1399863	Hose (Rear)	1
5	320158	Washer	4
6	1521393	Bracket	1
7	1300741	Valve (Heater)	1
8	1399822	Coupling	1
9	16155	Fitting	1
10	16156	Fitting	1
11	251994	Clamp	4
12	1397993	Clamp	8
13	320157	Washer	4
14	292681	Lockwasher	6
15	136681	Capscrew	8
16	316678	Screw	4
17	2004005	Strap Clamp	3
18	2040752	Hose	1
19	1488265	Shield	1
20	1358120	Sleeve	1
21	1523453	Cable	1
22	16653	Screw	2
23	1480237	Nut-Clip	2

©2003 HYSTER COMPANY

HEATER INSTALLATION (Figure 13-7)
GASOLINE

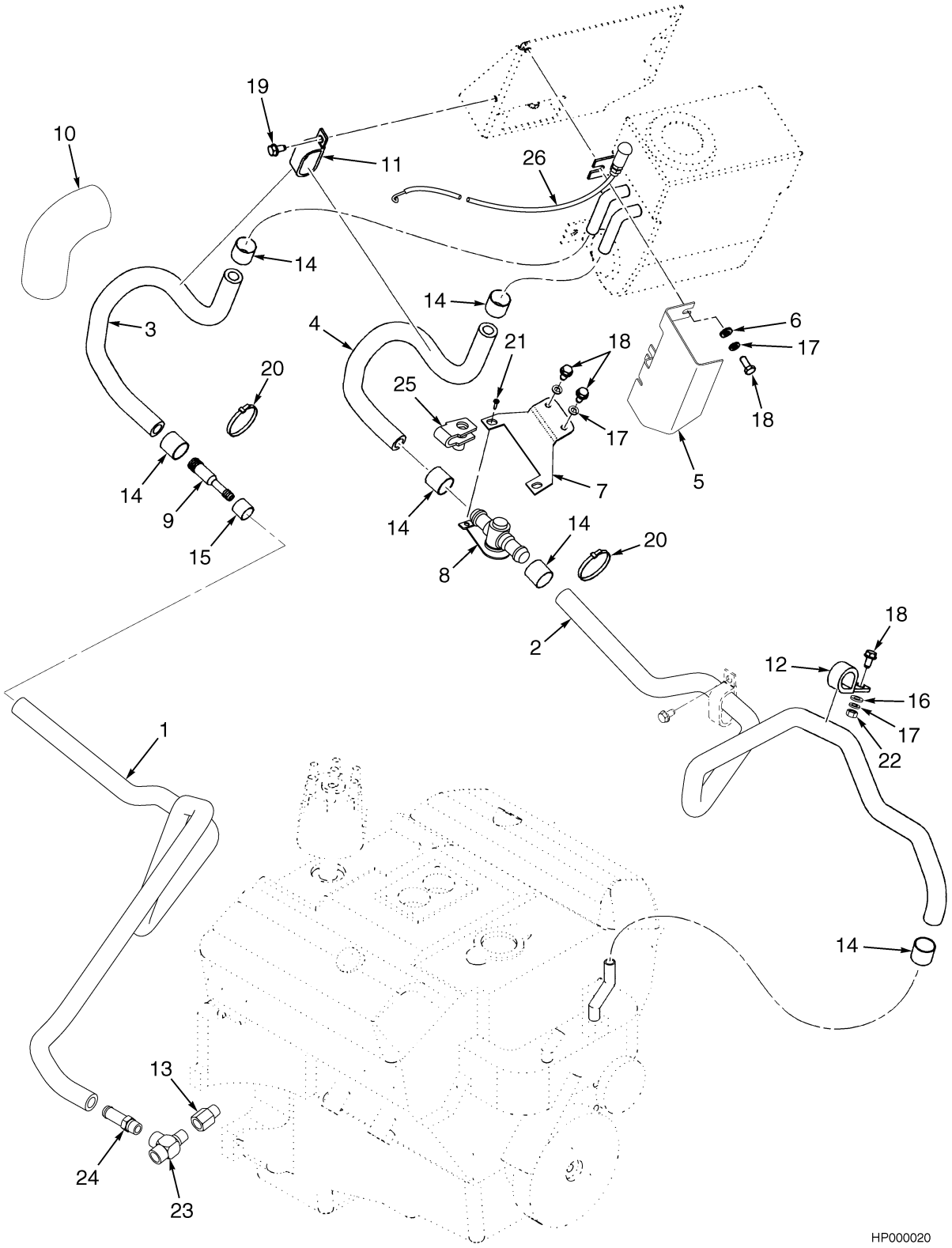

©2003 HYSTER COMPANY

HEATER INSTALLATION
GASOLINE

ITEM	PART NO.	DESCRIPTION	QTY
1	2040752	Hose	1
2	2050576	Hose	1
3	1399864	Hose (Front)	1
4	1399863	Hose (Rear)	1
5	1488265	Shield (Heater)	1
6	320158	Washer	4
7	1521393	Bracket	1
8	1300741	Valve (Heater)	1
9	1399822	Coupling (Reducer)	1
10	1358120	Sleeve	1
11	251994	Clamp	4
12	1310611	Clamp	1
13	17642	Fitting	1
14	1397993	Clamp	6
15	1397992	Clamp	2
16	320157	Washer	5
17	292681	Lockwasher	7
18	136681	Capscrew	9
19	316678	Screw	4
20	2004005	Strap Clamp	2
21	16653	Screw	2
22	239503	Nut	1
23	154452	Fitting	1
24	138710	Fitting	1
25	1480237	Nut-Clip	2
26	1523453	Cable	1

©2003 HYSTER COMPANY

HEATER INSTALLATION (Figure 13-8)
LPG

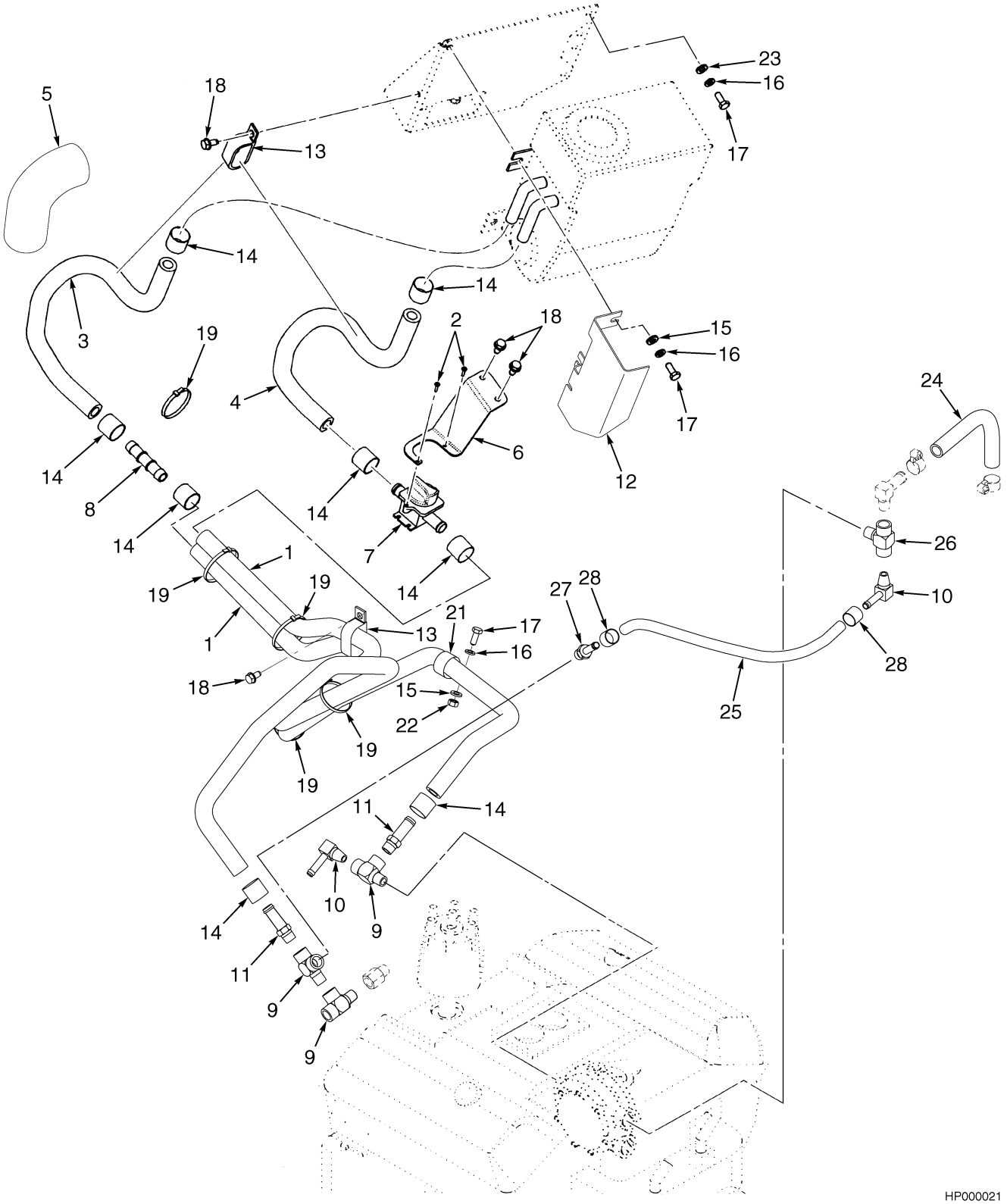

©2003 HYSTER COMPANY

HEATER INSTALLATION
LPG

ITEM	PART NO.	DESCRIPTION	QTY
1	2040751	Hose	1
2	16653	Screw	2
3	1399864	Hose (Front)	1
4	1399863	Hose (Rear)	1
5	1358120	Sleeve	2
6	1521393	Bracket	1
7	1300741	Valve (Heater)	1
8	1399822	Coupling	1
9	154452	Fitting	3
10	201808	Fitting	1
11	138710	Fitting	1
12	1488265	Shield	2
13	251994	Clamp	2
14	1397993	Clamp	8
15	320157	Washer	3
16	292681	Lockwasher	7
17	136681	Capscrew	7
18	316678	Screw	4
19	2004005	Strap Clamp	5
20	17642	Fitting	1
21	1310611	Clamp	1
22	239503	Nut	1
23	320158	Washer	1
24	212355	Hose	1
25	1483164	Hose	1
26	17665	Fitting	1
27	141776	Fitting	1
28	1397992	Clamp	2
29	2040751	Hose	1
30	1523453	Cable	1
31	1480237	Nut-Clip	2

©2003 HYSTER COMPANY

AUXILIARY TUBE EXTENSION KIT (Figure 13-9)
TWO STAGE LIMITED FREE-LIFT

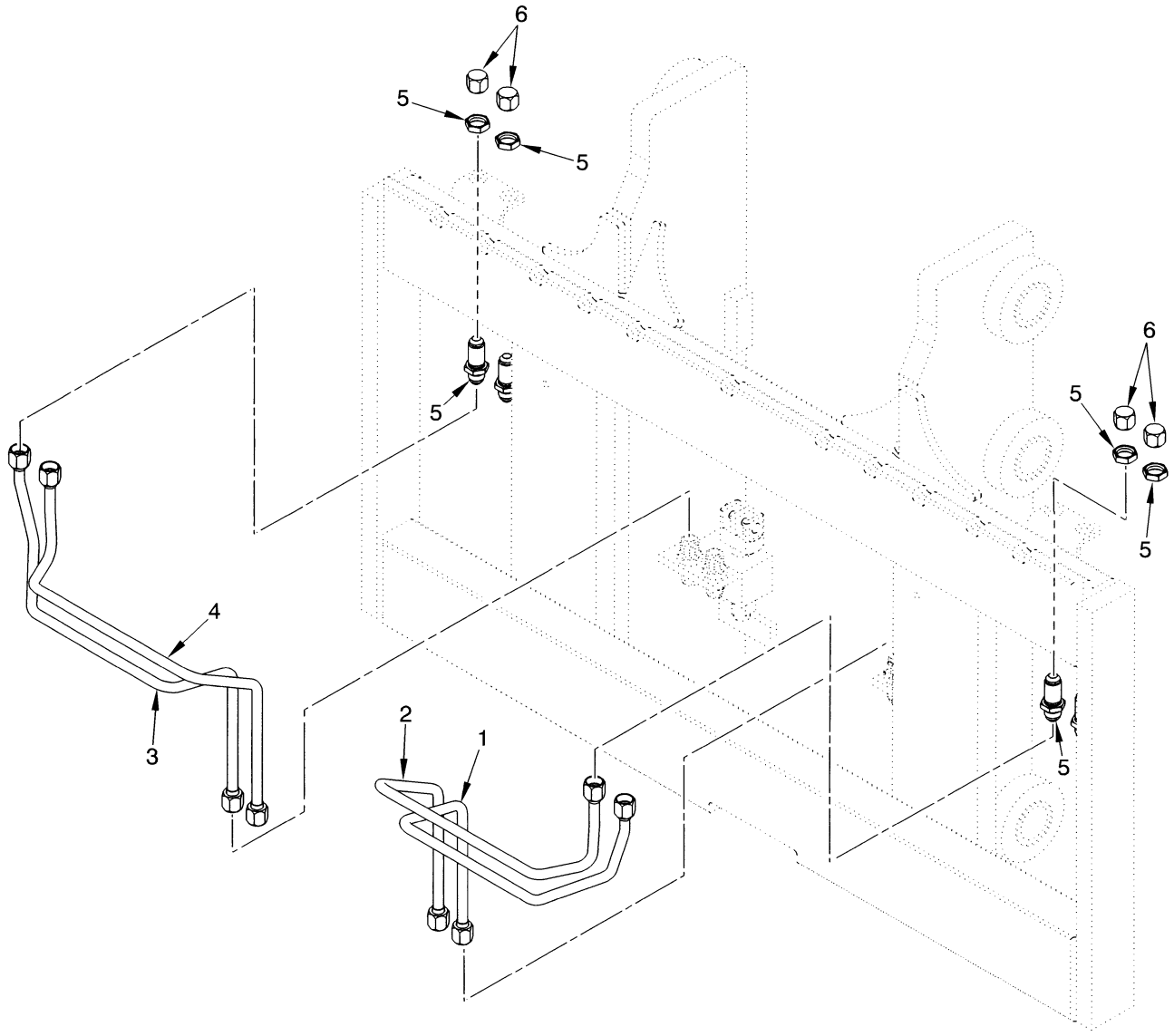

©2003 HYSTER COMPANY

AUXILIARY TUBE EXTENSION KIT
TWO STAGE LIMITED FREE-LIFT

KEY:
A: Three Function
B: Four Function

ITEM	PART NO.	DESCRIPTION	QTY A	QTY B
1	1400128	Tube (Mast A749)	1	1
1	1400134	Tube (Mast A750)	1	1
2	1400129	Tube (Mast A749)	1	1
2	1400135	Tube (Mast A750)	1	1
3	1400130	Tube (Mast A749)	..	1
3	1400136	Tube (Mast A750)	..	1
4	1400131	Tube (Mast A749)	..	1
4	1400137	Tube (Mast A750)	..	1
5	16448	Fitting	2	4
6	16925	Fitting	2	4
7	1400127	Bracket (Not Illustrated)	1	2
	1465157	Tube Kit (Mast A749) (Includes Items 1-2, 5-7)	1	..
	1465158	Tube Kit (Mast A749) (Includes Items 3-7)	..	1
	1465159	Tube Kit (Mast A750) (Includes Items 1-2, 5-7)	1	..
	1465160	Tube Kit (Mast A750) (Includes Items 3-7)	..	1

©2003 HYSTER COMPANY

AUXILIARY TUBE EXTENSION KIT (Figure 13-10)
TWO AND THREE STAGE FULL FREE-LIFT

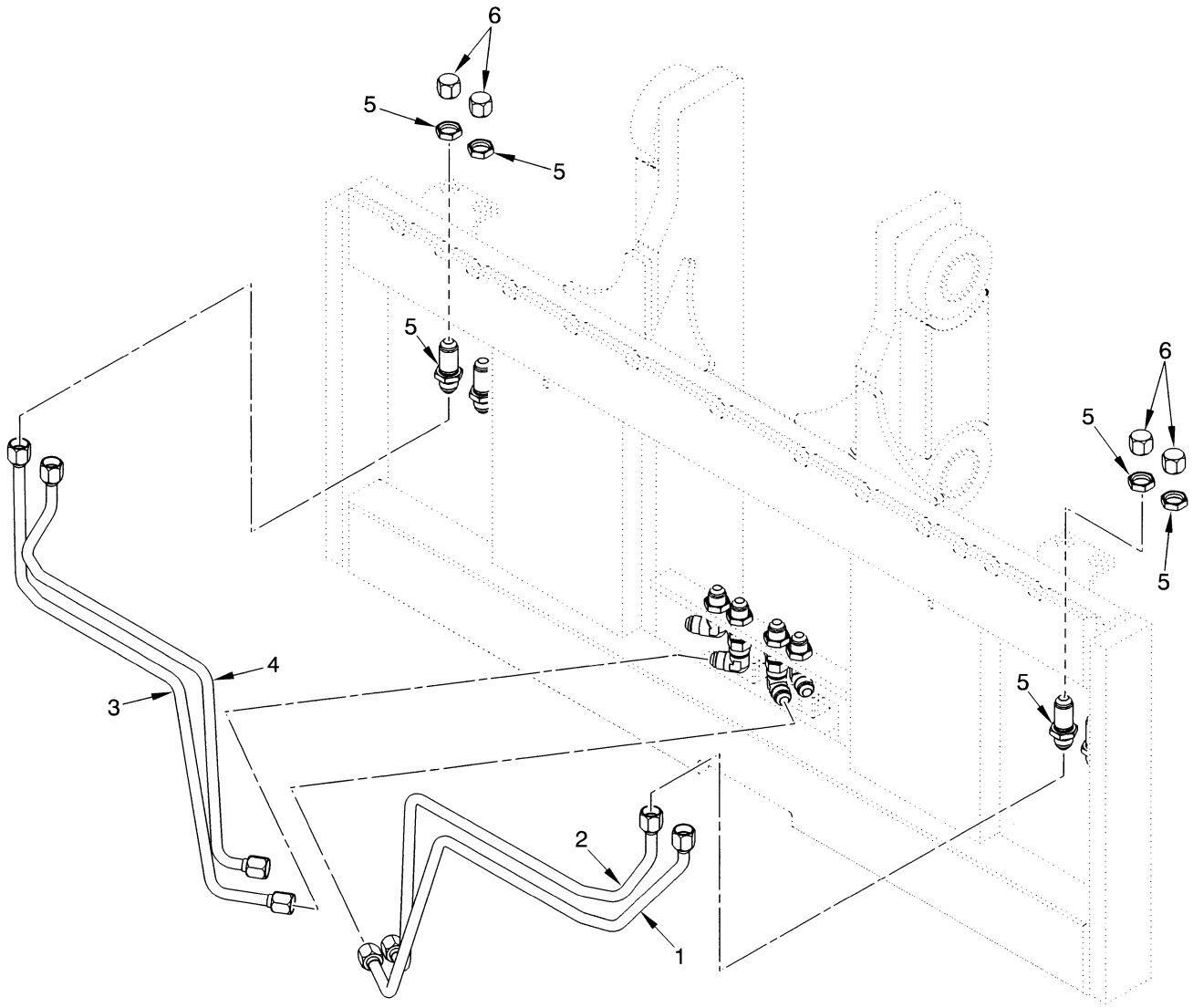

HP000023

©2003 HYSTER COMPANY

AUXILIARY TUBE EXTENSION KIT
TWO AND THREE STAGE FULL FREE-LIFT

KEY:
A: Three Function
B: Four Function

ITEM	PART NO.	DESCRIPTION	QTY A	QTY B
1	1400140	Tube (Mast A751)	..	1
1	1400146	Tube (Mast A752)	..	1
2	1400141	Tube (Mast A751)	..	1
2	1400147	Tube (Mast A752)	..	1
3	1400138	Tube (Mast A751)	1	..
3	1400144	Tube (Mast A752)	1	..
4	1400139	Tube (Mast A751)	1	..
4	1400145	Tube (Mast A752)	1	..
5	16448	Fitting	2	4
6	16925	Fitting	2	4
7	1400127	Bracket	1	2
	1465322	Tube Kit (Mast A751) (Includes Items 3-7)	1	..
	1465323	Tube Kit (Mast A751) (Includes Items 1-2, 5-7)	..	1
	1465324	Tube Kit (Mast A752) (Includes Items 3-7)	1	..
	1465325	Tube Kit (Mast A752) (Includes Items 1-2, 5-7)	..	1

©2003 HYSTER COMPANY

ACCUMULATOR (Figure 13-11)

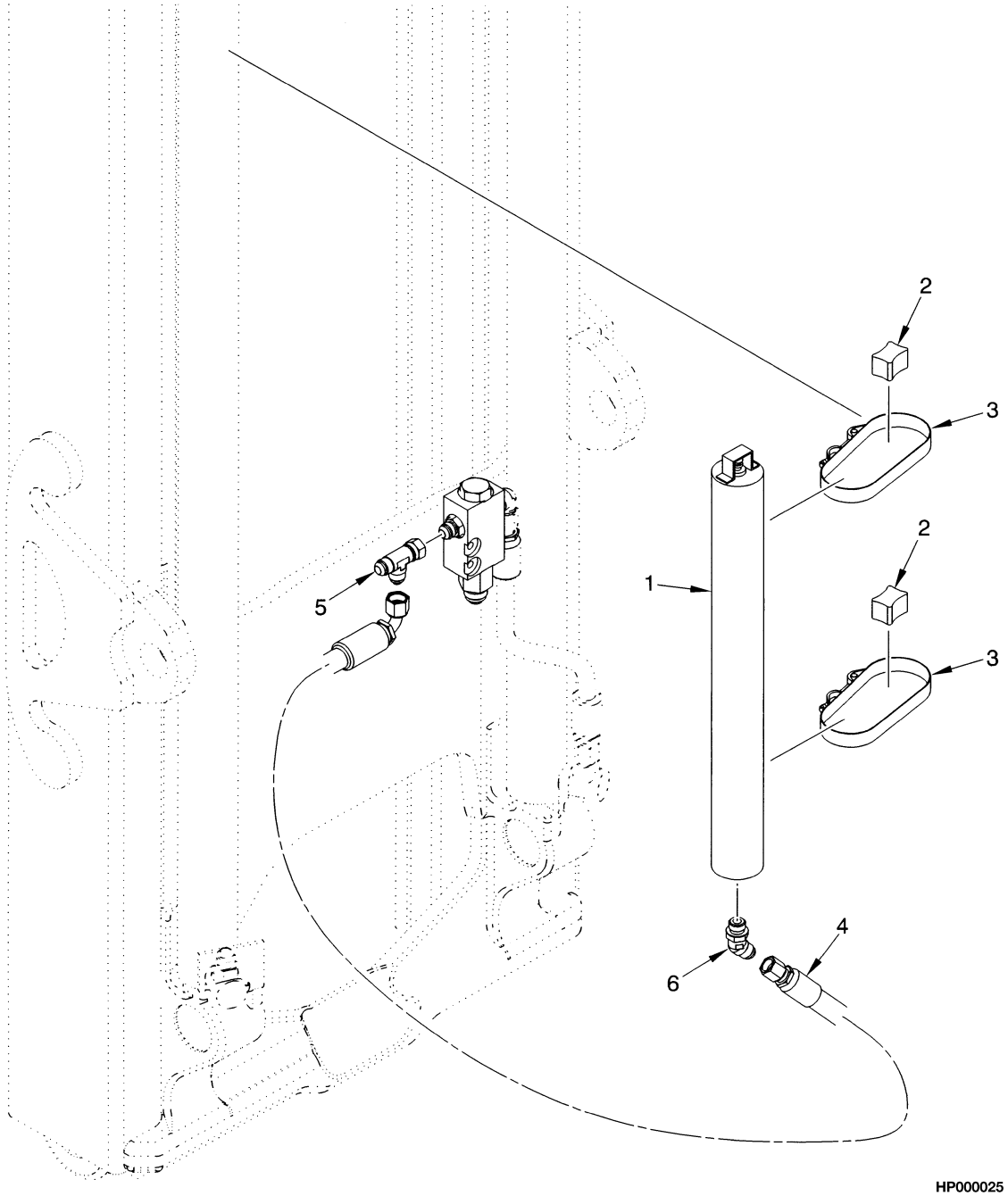

ITEM	PART NO.	DESCRIPTION	QTY
1	1465897	Accumulator	1
2	1466337	Spacer	2
3	1466472	Clamp	2
4	1466415	Hose	1
5	16568	Fitting	1
6	17062	Fitting	1

©2003 HYSTER COMPANY

NOTES

FRONT HEAD LIGHTS (Figure 13-12)
WITHOUT CAB

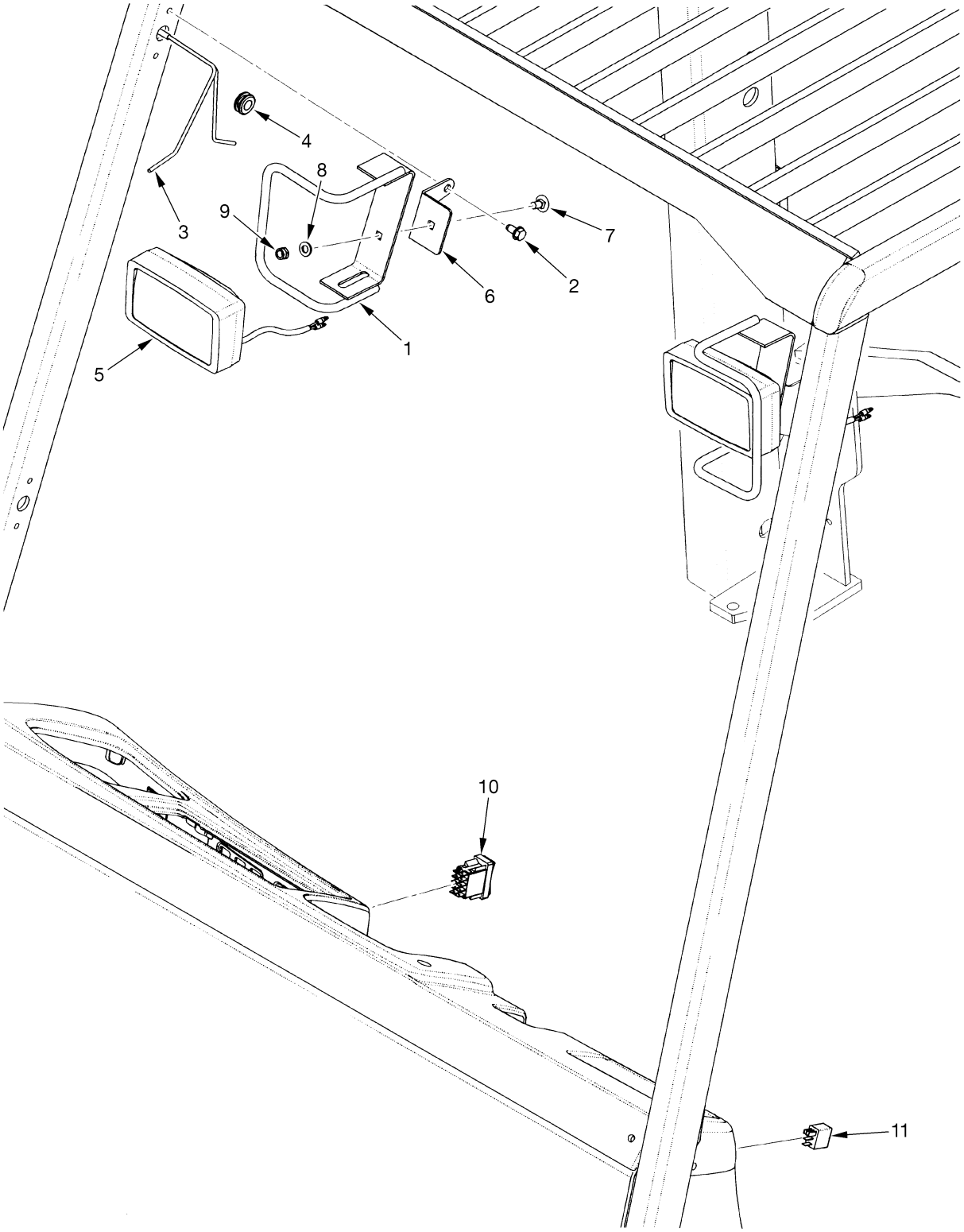

©2003 HYSTER COMPANY

FRONT HEAD LIGHTS
WITHOUT CAB

ITEM	PART NO.	DESCRIPTION	QTY
1	1375172	Bracket (LH)	1
1	1375171	Bracket (RH)	1
2	316678	Screw	4
3	2036544	Wire Harness	1
4	1367645	Grommet	2
5	1399472	Headlight Assembly	2
5	1354119	Headlight	1
5	1356335	Headlight (Optional)	1
5	1363016	Flood Lens	1
5	1379799	Bulb (12 Volt)	1
5	369474	Bulb (Optional)	1
6	1375169	Bracket	2
7	1375168	Bolt	2
8	296418	Washer	2
9	316835	Nut	2
10	1397694	Switch	1
11	2035581	Relay	1

©2003 HYSTER COMPANY

REAR DRIVE LIGHTS (Figure 13-13)
WITHOUT CAB

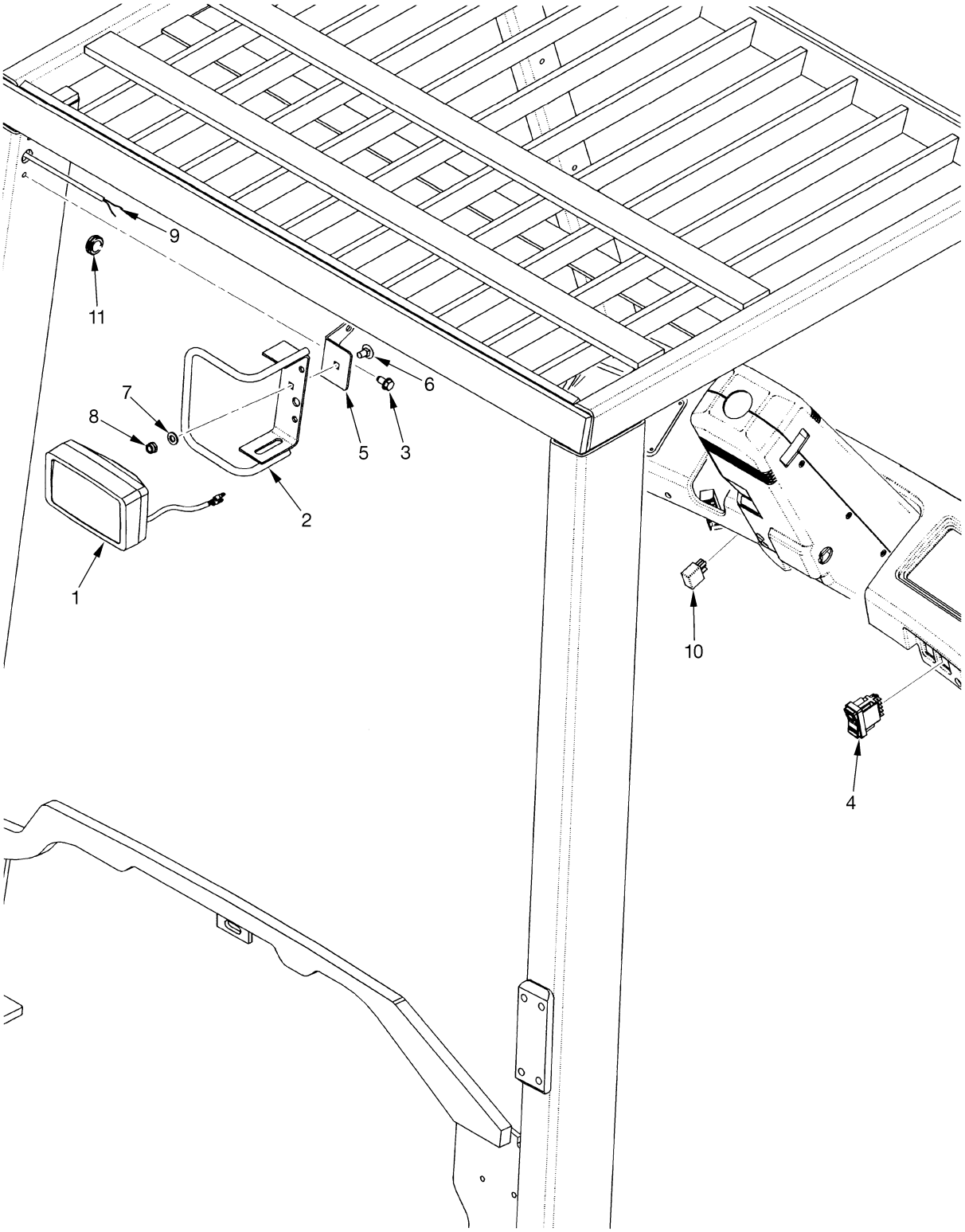

HP000027

©2003 HYSTER COMPANY

REAR DRIVE LIGHTS
WITHOUT CAB

ITEM	PART NO.	DESCRIPTION	QTY
1	1399472	Headlight Assembly	1
1	1354119	Headlight	1
1	1356335	Headlight (Optional)	1
1	1363016	Flood Lens	1
1	1379799	Bulb	1
1	369474	Bulb (Optional)	1
2	1376579	Bracket	1
3	316678	Screw	2
4	1399766	Switch	1
5	1375169	Bracket	1
6	1375168	Bolt	1
7	296418	Washer	1
8	316835	Nut	1
9	2036541	Wire Harness (☞ Figure 13-37)	1
10	2035581	Relay	1
11	1367645	Grommet	1

©2003 HYSTER COMPANY

AMBER STROBE REVERSE LIGHTS (Figure 13-14)
WITHOUT CAB

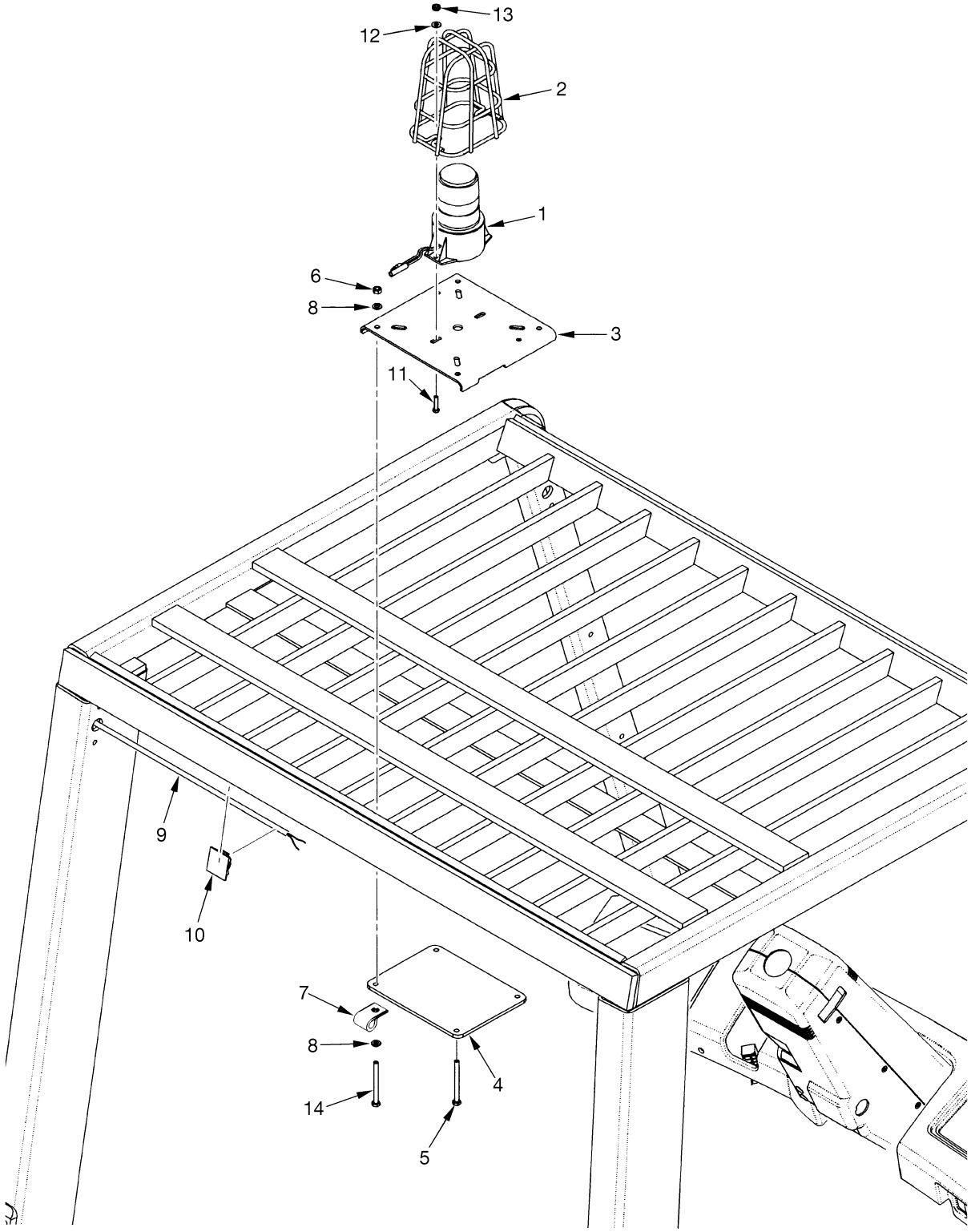

HP000028

©2003 HYSTER COMPANY

AMBER STROBE REVERSE LIGHTS
WITHOUT CAB

ITEM	PART NO.	DESCRIPTION	QTY
1	1399474	Strobe Light Assembly	1
1	1309775	Bulb	1
1	1382131	Lens (Amber)	1
2	1302024	Guard	1
3	1399764	Bracket	1
4	1399762	Plate	1
5	337239	Capscrew	3
6	313805	Nut	4
7	164488	Clamp	1
8	320156	Washer	5
9	2036541	Wire Harness (☞ Figure 13-37)	1
10	1301727	Clamp	4
11	220498	Screw	2
12	197067	Washer	2
13	230882	Nut	2
14	1456686	Capscrew	1

©2003 HYSTER COMPANY

DUAL MIRROR (Figure 13-15)
WITHOUT CAB

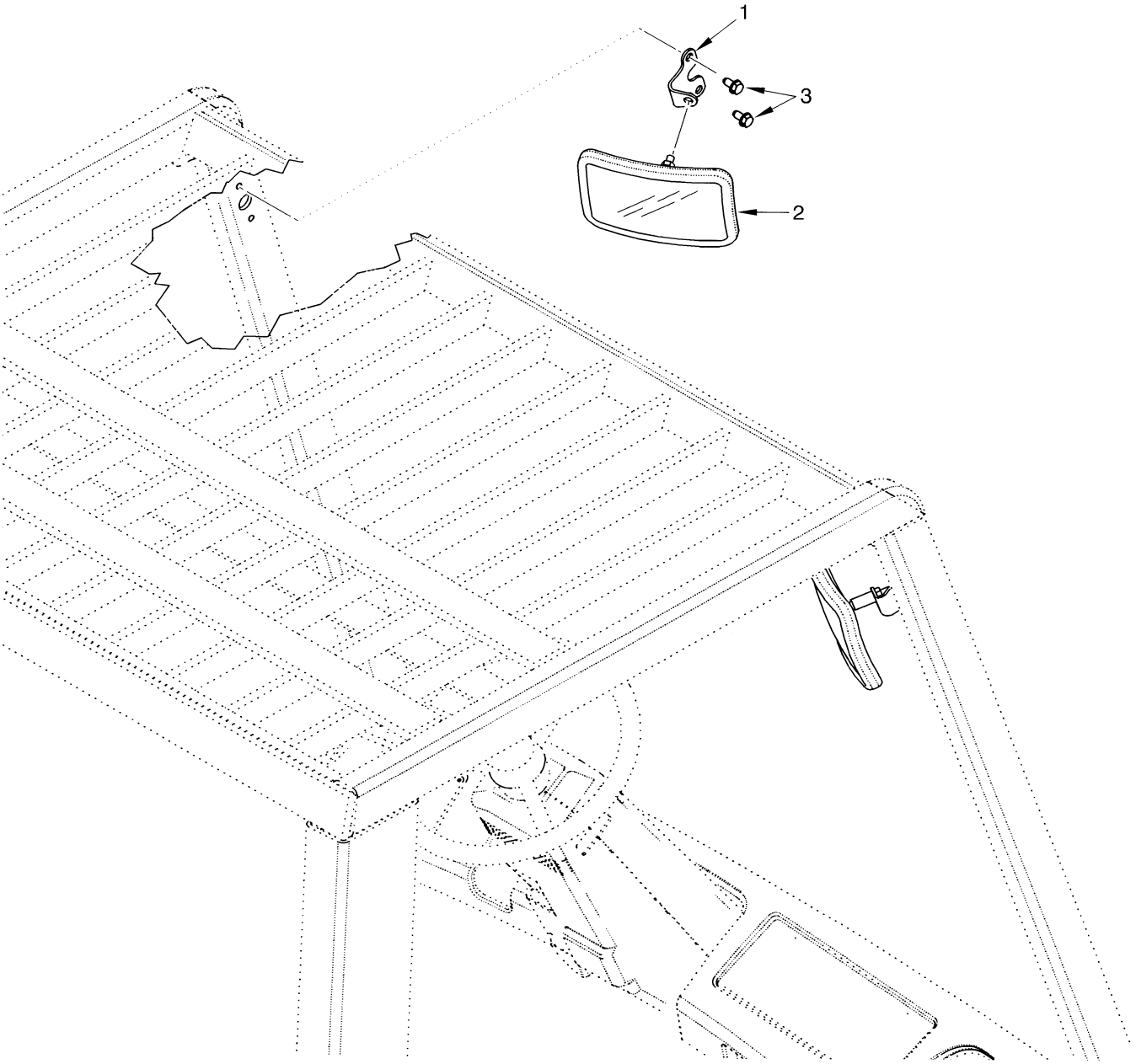

HP000029

ITEM	PART NO.	DESCRIPTION	QTY
1	1356520	Bracket	2
2	1301286	Mirror	2
3	316678	Screw	4

©2003 HYSTER COMPANY

NOTES

CAB ATTACHING PARTS (Figure 13-16)

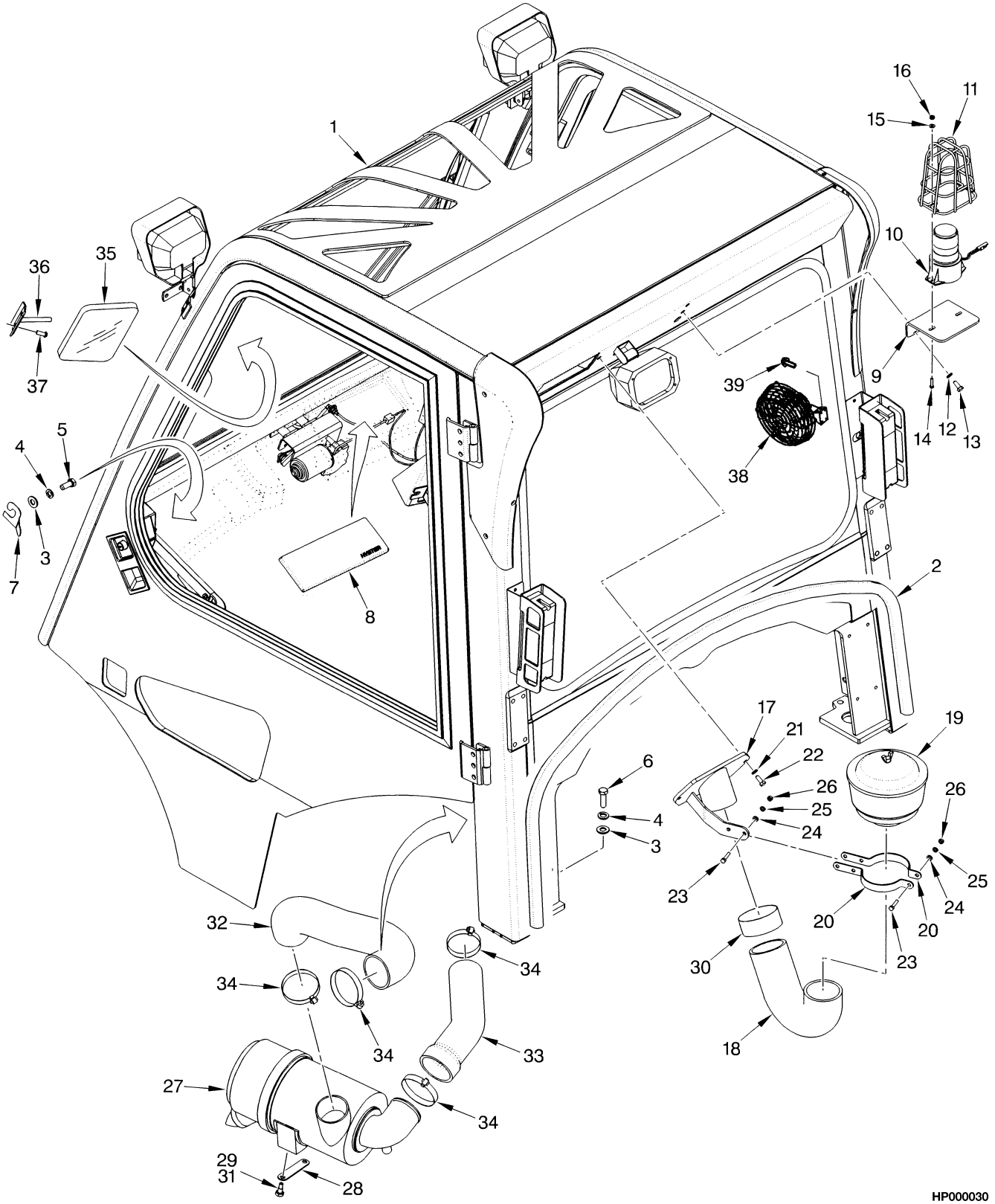

©2003 HYSTER COMPANY

CAB ATTACHING PARTS

ITEM	PART NO.	DESCRIPTION	QTY
1	1400172	Cab	1
2	1465740	Seal	1
3	296423	Washer	6
4	292683	Lockwasher	6
5	293645	Capscrew	4
6	293647	Capscrew	2
7	1392740	Shim (0.039 in.)	AR
8	1400207	Cover	1
9	1392797	Bracket	1
10	1399474	Strobe Light Assembly	1
10	1382131	Lens (Amber)	1
10	1309775	Bulb	1
11	1302024	Guard	1
12	292681	Lockwasher	2
13	136681	Capscrew	2
14	220498	Screw	2
15	197067	Washer	2
16	230882	Nut	2
17	1392814	Bracket	1
18	1392799	Hose	1
19	291974	Pre-Cleaner	1
20	1397989	Band	2
21	375984	Washer	2
22	292501	Capscrew	2
23	302263	Screw	3
24	320156	Washer	3
25	292680	Lockwasher	3
26	136687	Nut	3
27	2035621	Air Filter (☞ Figure 3-25)	1
28	1397652	Plate	1
29	1397653	Bolt	2
30	1398002	Clamp	1
31	251099	Adhesive	AR
32	1399391	Hose	1
33 **b**	2037320	Hose	1
33 **a**	1394593	Hose	1
34 **b**	115696	Clamp	4
34 **a**	115696	Clamp	3
35	1392819	Mirror	1
36	1392818	Bracket	1
37	369242	Capscrew	2
38	1503620	Fan Assembly	1
39	293726	Screw (Allen)	3

FOOTNOTES:
a Diesel
b Gasoline, LPG, Dual Fuel

©2003 HYSTER COMPANY

SIDE-SHIFT CARRIAGE (Figure 13-17)
TWO STAGE LIMITED FREE-LIFT (48 AND 60-INCH)
H70XM - H90XM

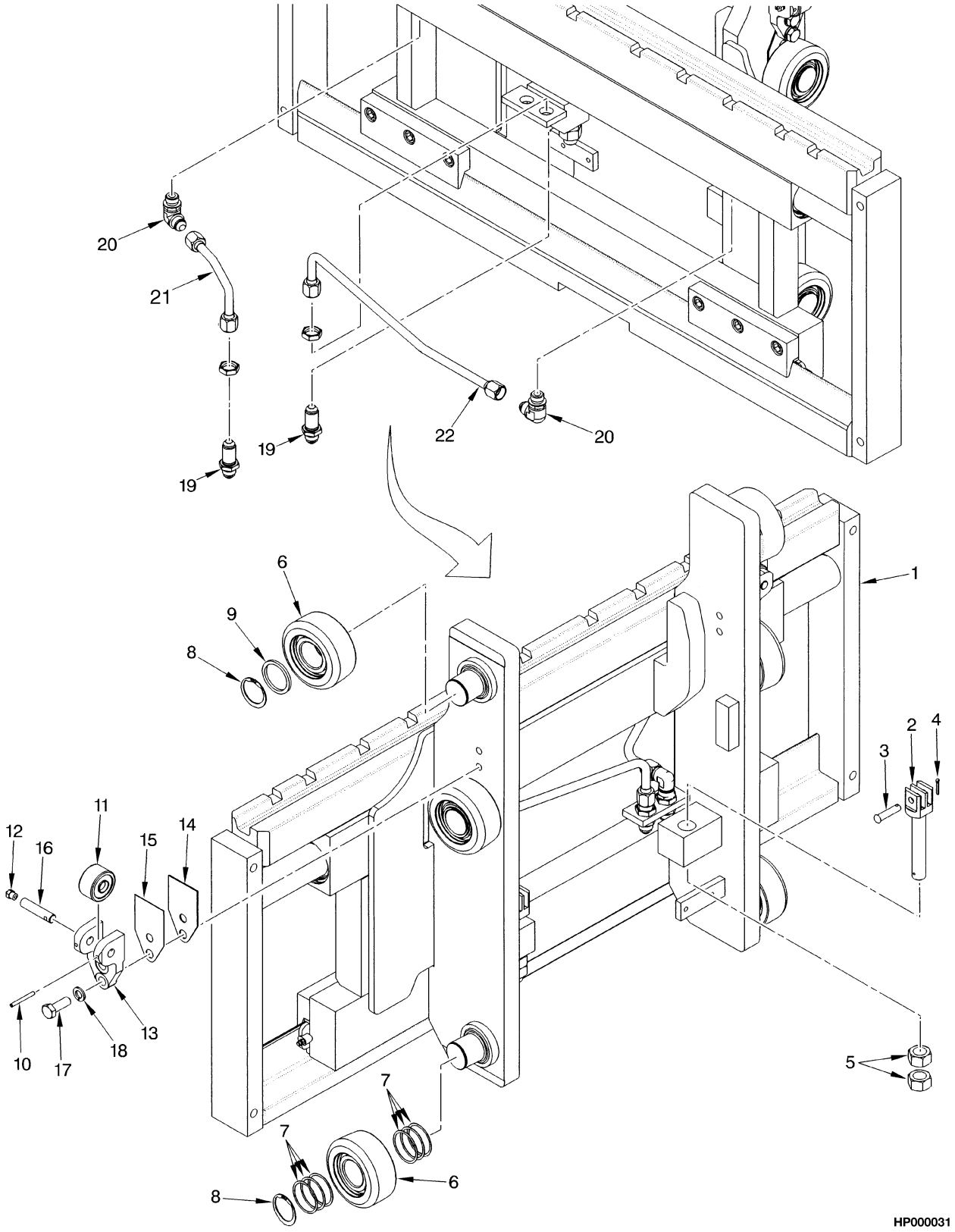

©2003 HYSTER COMPANY

SIDE-SHIFT CARRIAGE
TWO STAGE LIMITED FREE-LIFT (48 AND 60-INCH)
H70XM - H90XM

ITEM	PART NO.	DESCRIPTION	QTY
	2037951	Carriage Assembly (48 in.) (Group No. 8502066)	1
	2037952	Carriage Assembly (60 in.) (Group No. 8502067)	1
1	2037943	Carriage (48 in.) (☞ Figure 13-21)	1
1	2037944	Carriage (60 in.) (☞ Figure 13-22)	1
2	1387285	Chain Anchor	2
3	327591	Pin	2
4	15222	Cotter Pin	2
5	221717	Nut	4
6	1511882	Load Roller ("A")	6
6	1511883	Load Roller ("B") (0,26 mm)	6
6	1511884	Load Roller ("C") (1,52 mm)	6
7	1399207	Shim (0.020 in.)	24
8	1465072	Snap Ring	6
9	1399224	Spacer	2
10	66333	Pin	2
11	1387993	Roller Bearing	2
12	16001	Lube Fitting	2
13	1465177	Bracket	2
14	192425	Shim (0.062 in.)	AR
15	192424	Shim (0.030 in.)	AR
16	1465028	Pin	2
17	292528	Capscrew	4
18	292683	Lockwasher	4
19	16448	Fitting	2
20	16559	Fitting	2
20	16484	O-Ring	1
21	1499104	Hose	1
22	1499103	Hose	1

©2003 HYSTER COMPANY

SIDE-SHIFT CARRIAGE (Figure 13-18)
TWO STAGE LIMITED FREE-LIFT (54 AND 60-INCH)
H100XM - H120XM

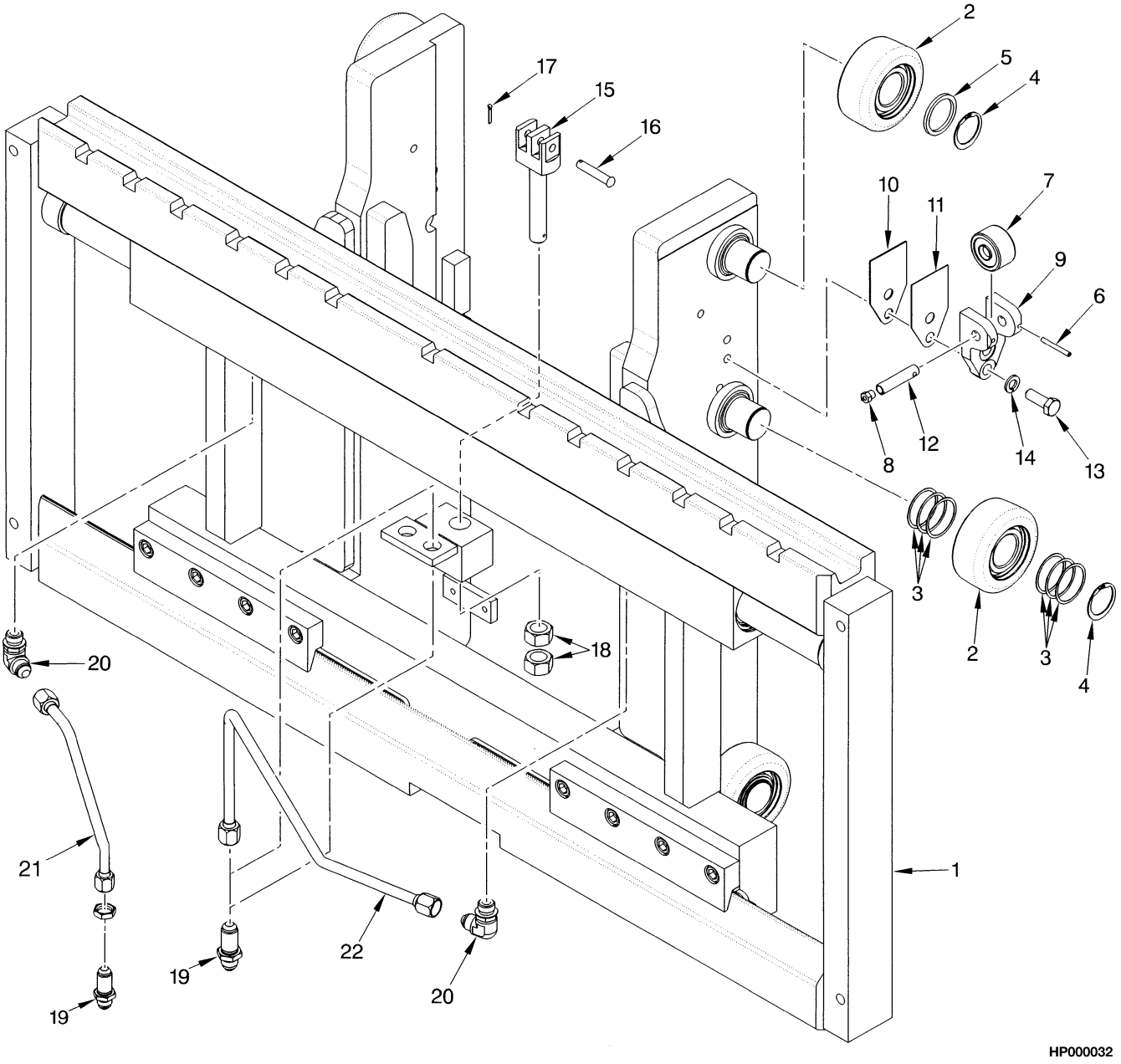

©2003 HYSTER COMPANY

SIDE-SHIFT CARRIAGE
TWO STAGE LIMITED FREE-LIFT (54 AND 60-INCH)
H100XM - H120XM

ITEM	PART NO.	DESCRIPTION	QTY
	2037953	Carriage Assembly (54 in.) (Group No. 8502068)	1
	2037954	Carriage Assembly (60 in.) (Group No. 8502069)	1
1	2037945	Carriage (54 in.) (☞ Figure 13-23)	1
1	2037946	Carriage (60 in.) (☞ Figure 13-23)	1
2	1511882	Load Roller ("A")	6
2	1511883	Load Roller ("B") (0,26 mm)	6
2	1511884	Load Roller ("C") (1,52 mm)	6
3	1399207	Shim (0.020 in.)	24
4	1465072	Snap Ring	6
5	1399224	Spacer	2
6	66333	Pin	2
7	1387993	Roller Bearing	2
8	16001	Lube Fitting	2
9	1465177	Bracket	2
10	192425	Shim (0.062 in.)	AR
11	192424	Shim (0.030 in.)	AR
12	1465028	Pin	2
13	292528	Capscrew	4
14	292683	Lockwasher	4
15	1387286	Chain Anchor	2
16	339932	Pin	2
17	15222	Cotter Pin	2
18	221717	Nut	4
19	16448	Fitting	2
20	16559	Fitting	2
20	16484	O-Ring	1
21	1499102	Hose	1
22	1499101	Hose	1

©2003 HYSTER COMPANY

SIDE-SHIFT CARRIAGE (Figure 13-19)
TWO AND THREE STAGE FULL-FREE-LIFT (48 AND 60-INCH)
H70-90XM

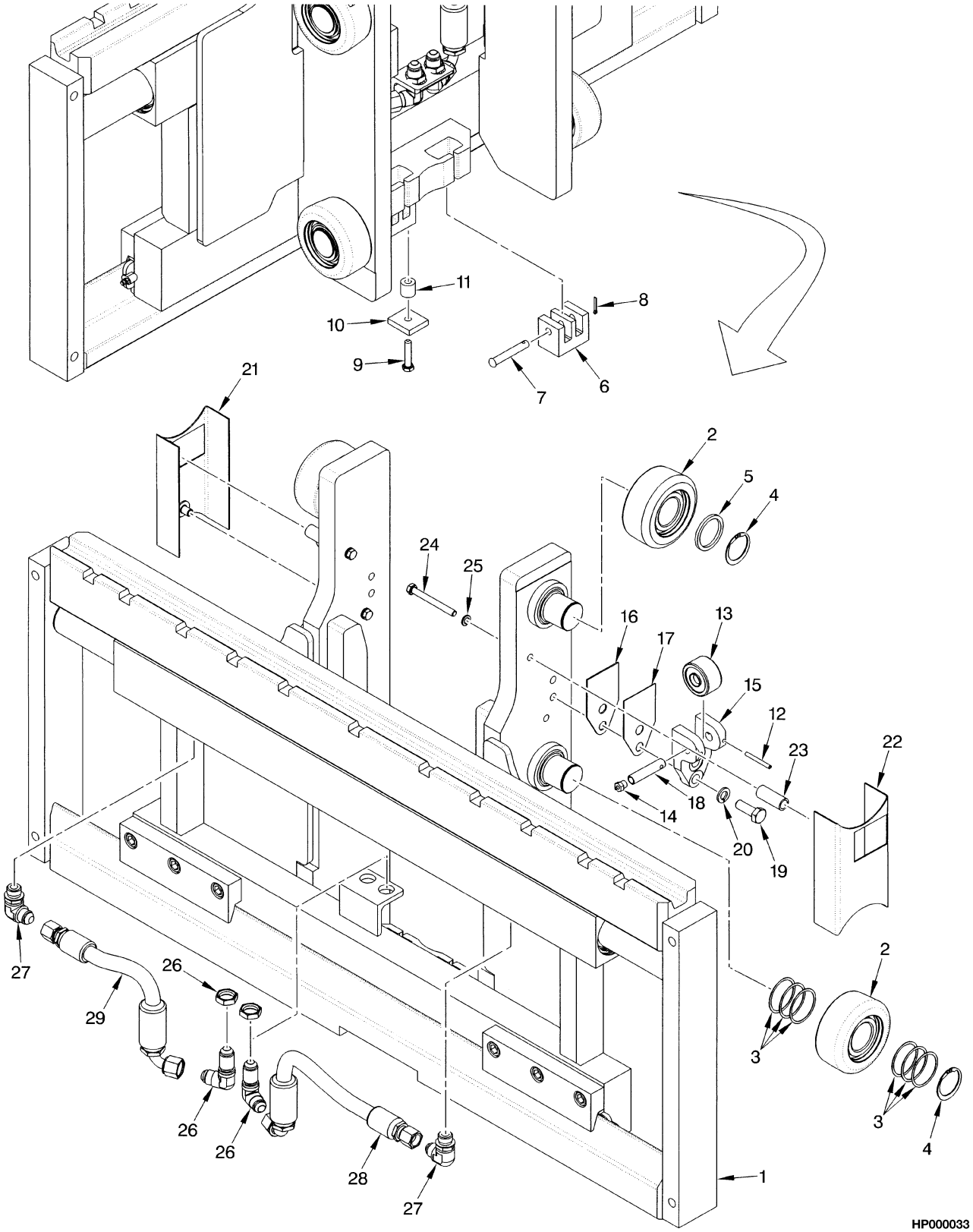

©2003 HYSTER COMPANY

SIDE-SHIFT CARRIAGE
TWO AND THREE STAGE FULL-FREE-LIFT (48 AND 60-INCH)
H70-90XM

ITEM		PART NO.	DESCRIPTION	QTY
	a	2037955	Carriage Assembly (48 in.) (Group No. 8502070)	1
	b	2038594	Carriage Assembly (48 in.) (Group No. 8502090)	1
	a	2037956	Carriage Assembly (60 in.) (Group No. 8502071)	1
	b	2038596	Carriage Assembly (60 in.) (Group No. 8502091)	1
1		. . . . .	Carriage (☞ Figure 13-22, ☞ Figure 13-23)	1
2		1511882	Load Roller ("A")	6
2		1511883	Load Roller ("B") (0,26 mm)	6
2		1511884	Load Roller ("C") (1,52 mm)	6
3		1399207	Shim (0.020 in.)	24
4		1465072	Snap Ring	6
5		1399224	Spacer	2
6		1387548	Chain Anchor	2
7		1387549	Pin	2
8		15222	Cotter Pin	2
9		292508	Capscrew	1
10		1400126	Plate	1
11		1400125	Spacer	1
12		66333	Pin	2
13		1387993	Roller Bearing	2
14		16001	Lube Fitting	2
15		1465177	Bracket	2
16		192425	Shim (0.062 in.)	AR
17		192424	Shim (0.030 in.)	AR
18		1465028	Pin	2
19		292528	Capscrew	4
20		292683	Lockwasher	4
21		319322	Guard (RH)	1
22		319323	Guard (LH)	1
23		317292	Spacer	4
24		18518	Capscrew	4
25		15155	Lockwasher	4
26		16458	Fitting	2
27		16559	Fitting	2
27		16484	O-Ring	1
28		1499105	Hose	1
29		1499106	Hose	1

FOOTNOTES:
a Three Stage Full Free-Lift
b Two Stage Full Free-Lift

©2003 HYSTER COMPANY

SIDE-SHIFT CARRIAGE (Figure 13-20)
TWO AND THREE STAGE FULL-FREE-LIFT (54 AND 60-INCH)
H100XM-H120XM

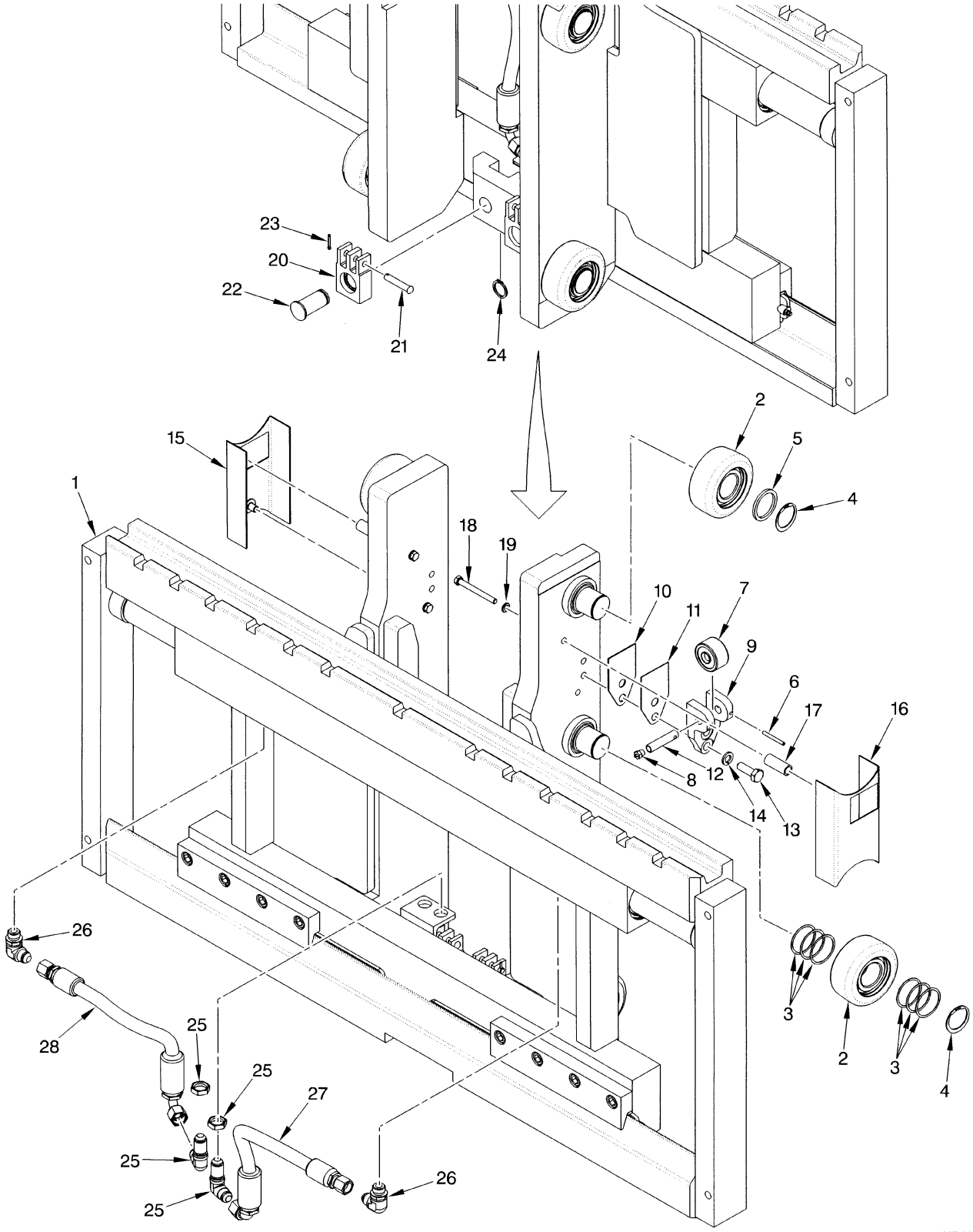

©2003 HYSTER COMPANY

SIDE-SHIFT CARRIAGE
TWO AND THREE STAGE FULL-FREE-LIFT (54 AND 60-INCH)
H100XM-H120XM

ITEM		PART NO.	DESCRIPTION	QTY
	a	2037957	Carriage Assembly (54 in.) (Group No. 8502072)	1
	b	2038597	Carriage Assembly (54 in.) (Group No. 8502092)	1
	a	2037958	Carriage Assembly (60 in.) (Group No. 8502073)	1
	b	2038598	Carriage Assembly (60 in.) (Group No. 8502093)	1
1	**a**	2037949	Carriage (54 in.) (☞ Figure 13-26)	1
1	**a**	2037950	Carriage (60 in.) (☞ Figure 13-26)	1
1	**b**	2038600	Carriage (54 in.) (☞ Figure 13-26)	1
1	**b**	2038601	Carriage (60 in.) (☞ Figure 13-26)	1
2		1511882	Load Roller ("A")	6
2		1511883	Load Roller ("B") (0,26 mm)	6
2		1511884	Load Roller ("C") (1,52 mm)	6
3		1399207	Shim (0.020 in.)	24
4		1465072	Snap Ring	6
5		1399224	Spacer	2
6		66333	Pin	2
7		1387993	Roller Bearing	2
8		16001	Lube Fitting	2
9		1465177	Bracket	2
10		192425	Shim (0.062 in.)	AR
11		192424	Shim (0.030 in.)	AR
12		1465028	Pin	2
13		292528	Capscrew	4
14		292683	Lockwasher	4
15		319322	Guard (RH)	1
16		319323	Guard (LH)	1
17		317292	Spacer	4
18		18520	Capscrew	3
18		18518	Capscrew	1
19		15155	Lockwasher	4
20		1480392	Chain Anchor	2
21		339932	Pin	2
22		320327	Pin	2
23		15222	Cotter Pin	2
24		131358	Snap Ring	2
25		16458	Fitting	2
26		16559	Fitting	2
26		16484	O-Ring	1
27		1499107	Hose	1
28		1499108	Hose	1

FOOTNOTES:
a Three Stage Full Free-Lift
b Two Stage Full Free-Lift

©2003 HYSTER COMPANY

SIDE-SHIFT CARRIAGE FRAME (Figure 13-21)
TWO STAGE LIMTED FREE-LIFT (48-INCH)
H70XM - H90XM

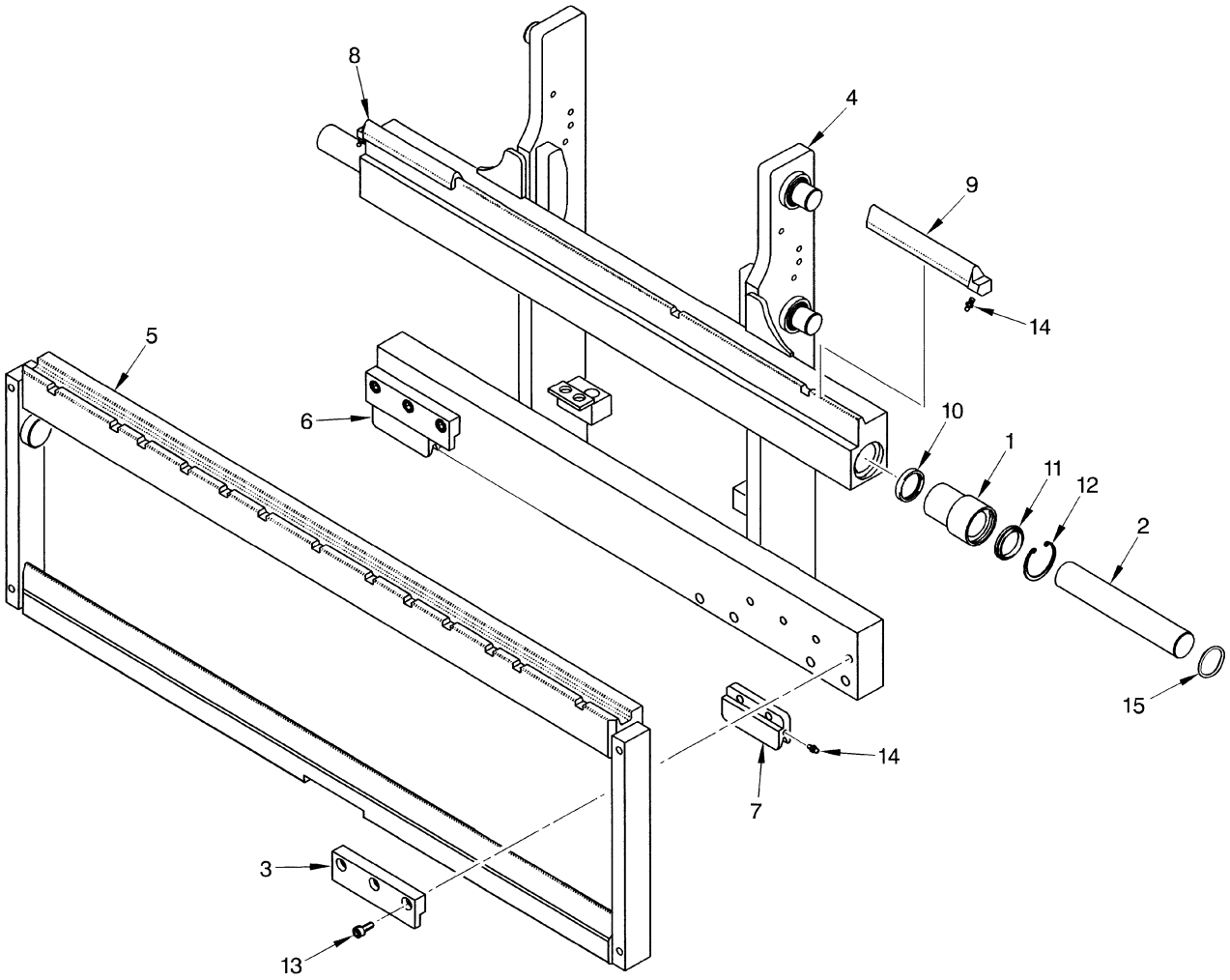

HP000035

©2003 HYSTER COMPANY

SIDE-SHIFT CARRIAGE FRAME
TWO STAGE LIMTED FREE-LIFT (48-INCH)
H70XM - H90XM

ITEM	PART NO.	DESCRIPTION	QTY
	2037943	Carriage	1
1	1467151	Bushing	2
2	1467153	Rod	2
3	1467154	Hook	2
4	1467769	Frame	1
5	1467268	Apron	1
6	1467145	Bearing Strip (RH Lower)	1
7	1467146	Bearing Strip (LH Lower)	1
8	1467147	Bearing Strip (RH Upper)	1
9	1467148	Bearing Strip (LH Upper)	1
10	1467149	Seal	2
11	1467150	Wiper Ring	2
12	1467632	Snap Ring	2
13	1467633	Screw	6
14	16041	Lube Fitting	4
15	39366	O-Ring	2

©2003 HYSTER COMPANY

SIDE-SHIFT CARRIAGE FRAME (Figure 13-22)
TWO STAGE LIMTED FREE-LIFT (60-INCH)
H70XM - H90XM

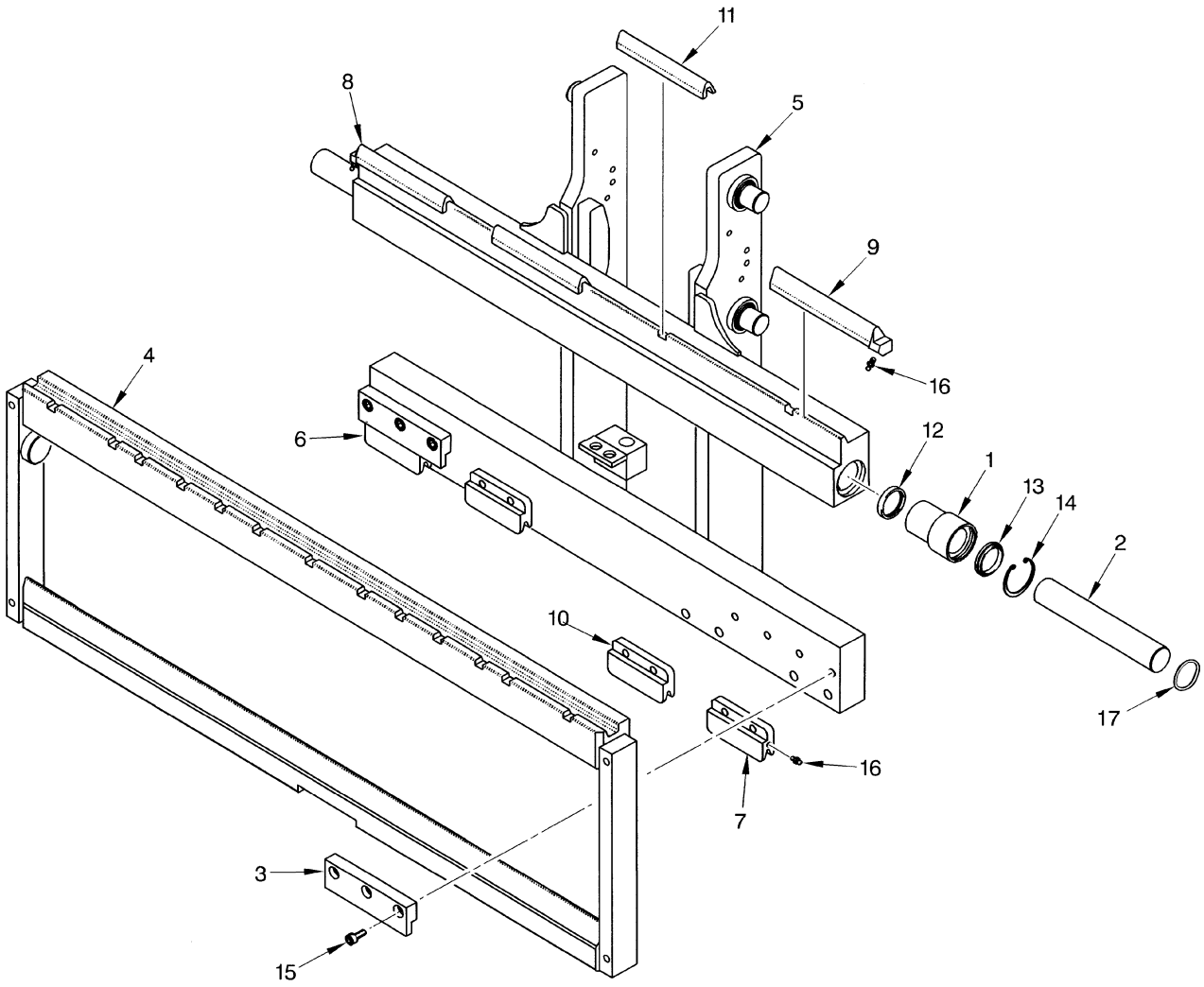

HP000036

©2003 HYSTER COMPANY

SIDE-SHIFT CARRIAGE FRAME
TWO STAGE LIMTED FREE-LIFT (60-INCH)
H70XM - H90XM

ITEM	PART NO.	DESCRIPTION	QTY
	2037944	Carriage	1
1	1467151	Bushing	2
2	1467153	Rod	2
3	1467154	Hook	2
4	1467269	Apron	1
5	1467771	Frame	1
6	1467145	Bearing Strip (RH Lower)	1
7	1467146	Bearing Strip (LH Lower)	1
8	1467147	Bearing Strip (RH Upper)	1
9	1467148	Bearing Strip (LH Upper)	1
10	1467201	Bearing Strip (Lower Center)	2
11	1467200	Bearing Strip (Upper Center)	2
12	1467149	Seal	2
13	1467150	Wiper Ring	2
14	1467632	Snap Ring	2
15	1467633	Screw	6
16	16041	Lube Fitting	4
17	39366	O-Ring	2

©2003 HYSTER COMPANY

SIDE-SHIFT CARRIAGE FRAME (Figure 13-23)
TWO STAGE LIMITED FREE-LIFT (54 AND 60-INCH)
H100XM - H120 XM

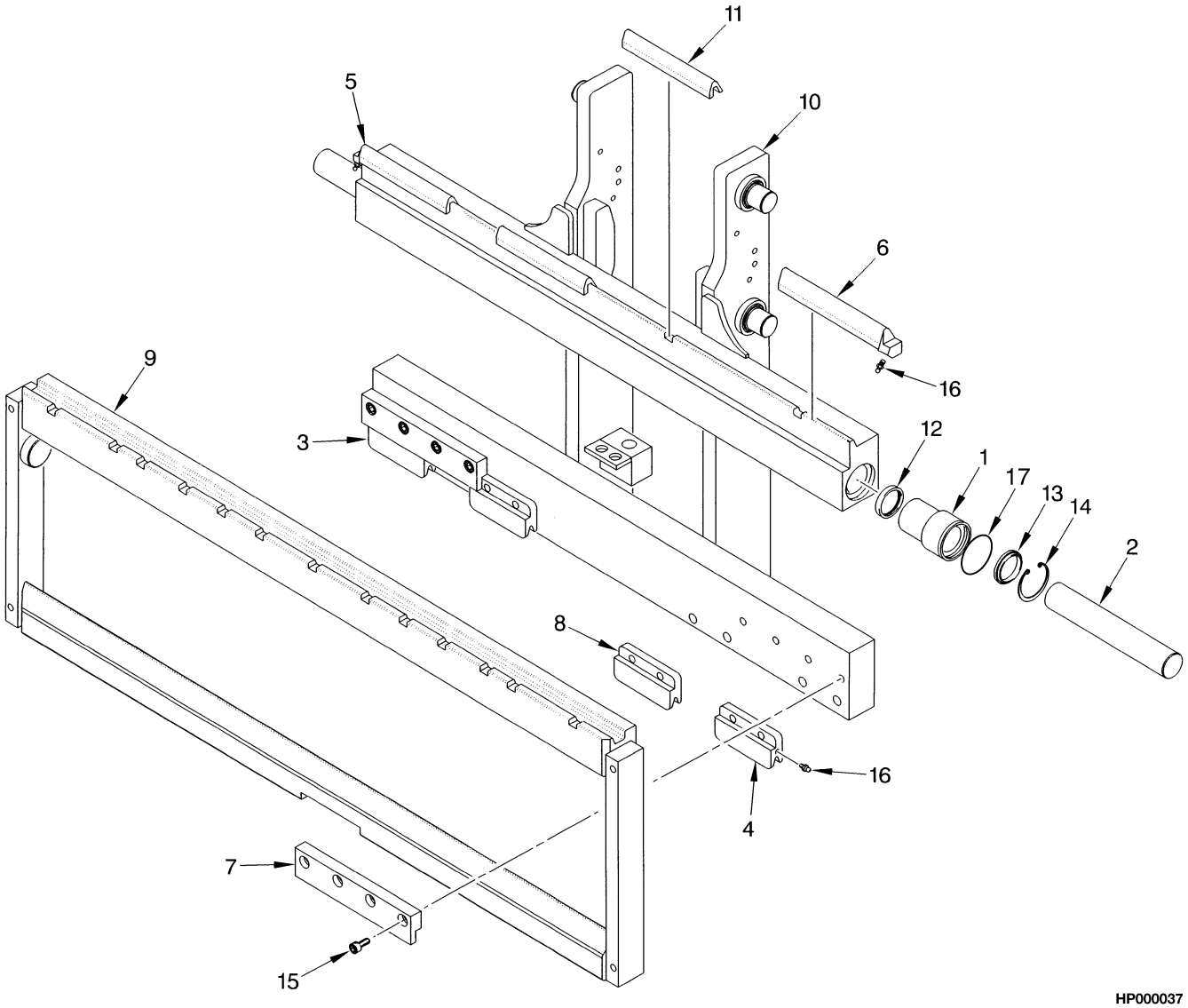

©2003 HYSTER COMPANY

SIDE-SHIFT CARRIAGE FRAME
TWO STAGE LIMITED FREE-LIFT (54 AND 60-INCH)
H100XM - H120 XM

ITEM	PART NO.	DESCRIPTION	QTY
	2037946	Carriage (60 in.)	1
	2037945	Carriage (54 in.)	1
1	1467204	Bushing	2
2	1467205	Rod	2
3	1467145	Bearing Strip (RH Lower)	1
4	1467146	Bearing Strip (LH Lower)	1
5	1467147	Bearing Strip (RH Upper)	1
6	1467148	Bearing Strip (LH Upper)	1
7	1467206	Hook	2
8	1467201	Bearing Strip (Lower Center)	2
9	1467270	Apron (54 in.)	1
9	1467846	Apron (60 in.)	1
10	1467774	Frame (54 in.)	1
10	1467776	Frame (60 in.)	1
11	1467200	Bearing Strip (Upper Center)	2
12	1467202	Seal	2
13	1467203	Wiper Ring	2
14	1467634	Snap Ring	2
15	1467633	Screw	8
16	16041	Lube Fitting	4
17	39365	O-Ring	2

©2003 HYSTER COMPANY

SIDE-SHIFT CARRIAGE FRAME (Figure 13-24)
TWO AND THREE STAGE FULL FREE-LIFT (48-INCH)
H70XM - H90XM

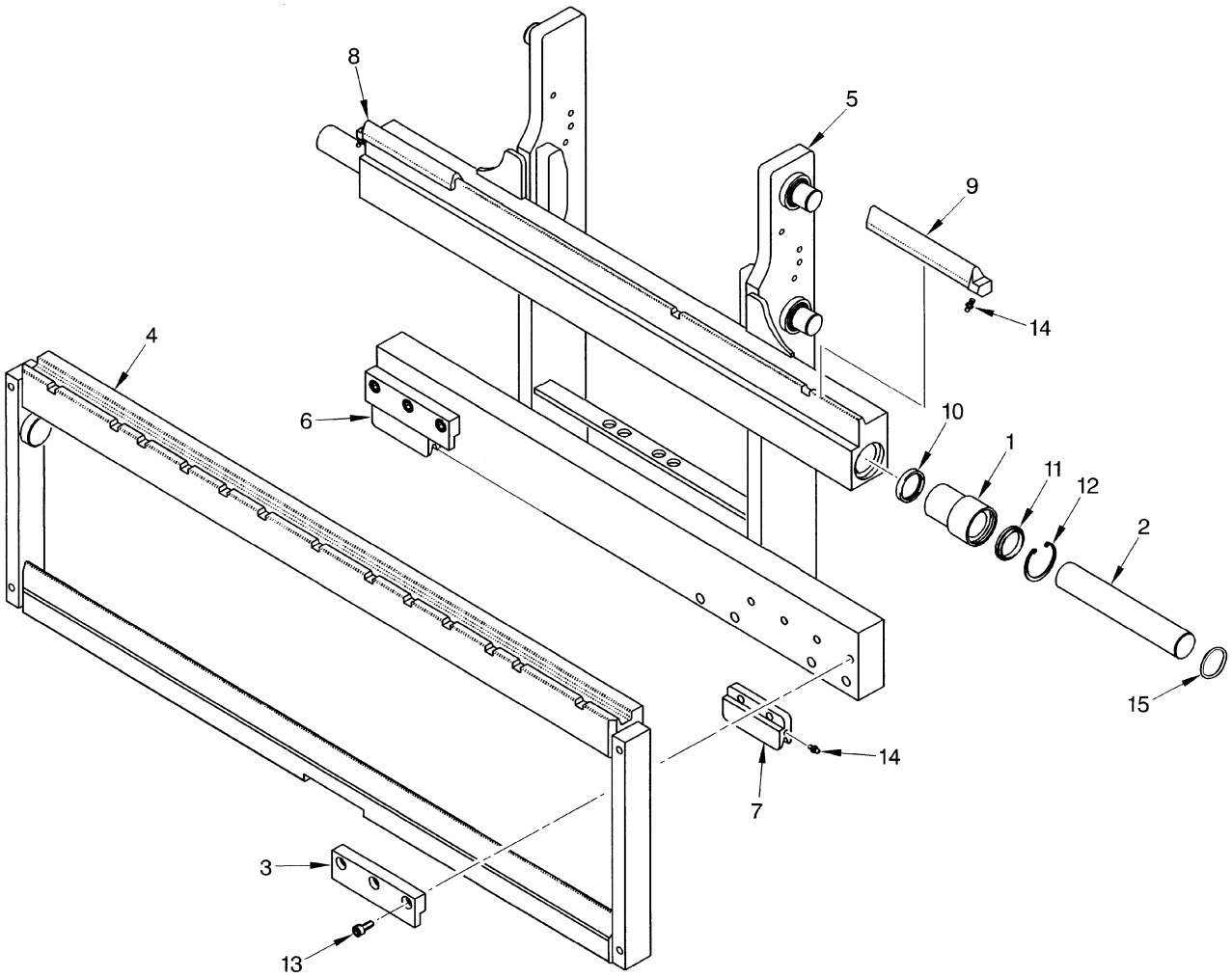

HP000038

©2003 HYSTER COMPANY

SIDE-SHIFT CARRIAGE FRAME
TWO AND THREE STAGE FULL FREE-LIFT (48-INCH)
H70XM - H90XM

ITEM		PART NO.	DESCRIPTION	QTY
	a	2037947	Carriage (48 in.)	1
	b	2038595	Carriage (48 in.)	1
1		1467151	Bushing	2
2		1467153	Rod	2
3		1467154	Hook	2
4		1467268	Apron	1
5	**a**	1467770	Frame	1
5	**b**	1483336	Frame	1
6		1467145	Bearing Strip (RH Lower)	1
7		1467146	Bearing Strip (LH Lower)	1
8		1467147	Bearing Strip (RH Upper)	1
9		1467148	Bearing Strip (LH Upper)	1
10		1467149	Seal	2
11		1467150	Wiper Ring	2
12		1467632	Snap Ring	2
13		1467633	Screw	6
14		16041	Lube Fitting	4
15		39366	O-Ring	2

FOOTNOTES:
a Three Stage Full Free-Lift
b Two Stage Full Free-Lift

©2003 HYSTER COMPANY

SIDE-SHIFT CARRIAGE FRAME (Figure 13-25)
TWO AND THREE STAGE FULL FREE-LIFT (60-INCH)
H70XM - H90XM

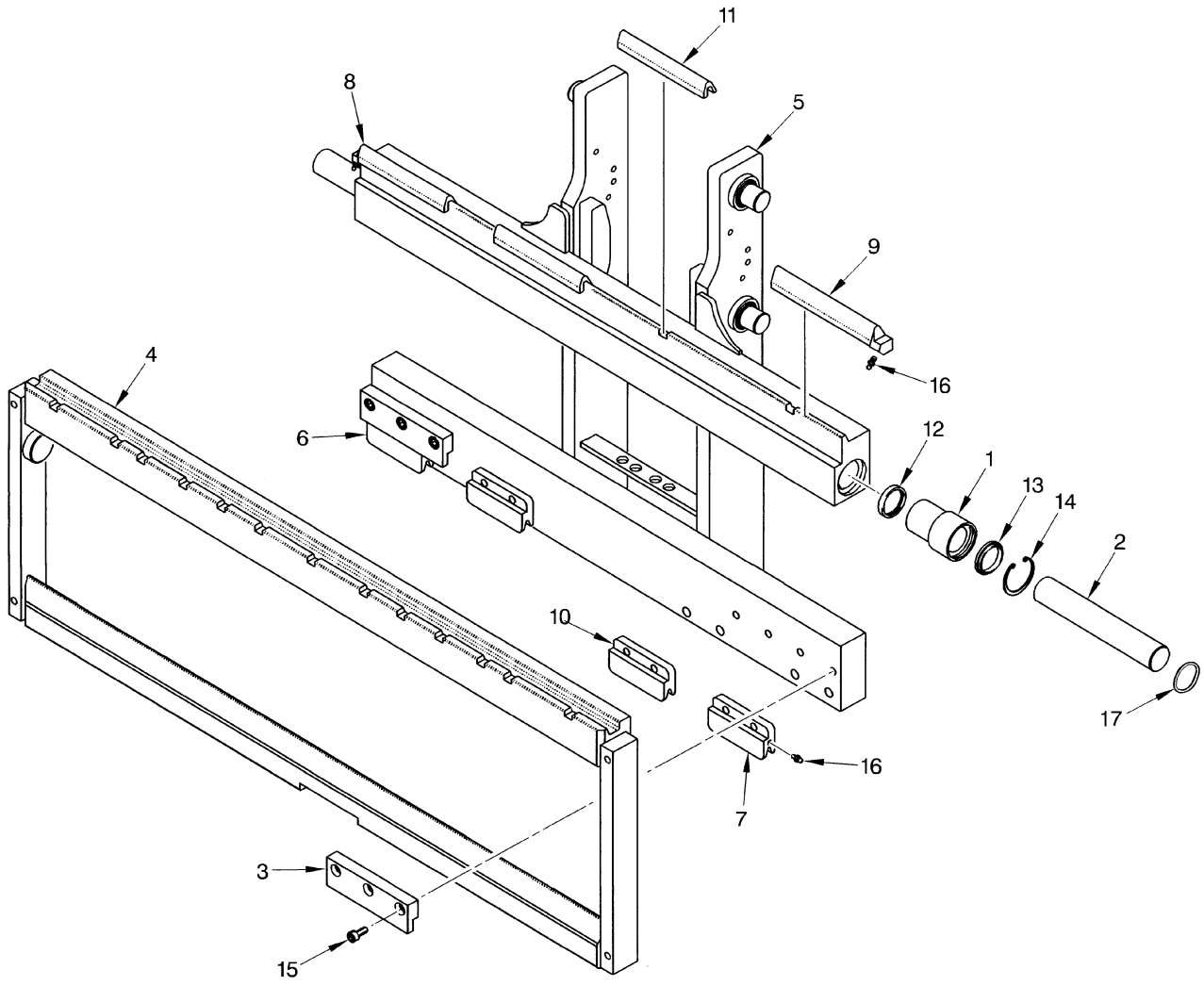

HP000039

©2003 HYSTER COMPANY

SIDE-SHIFT CARRIAGE FRAME
TWO AND THREE STAGE FULL FREE-LIFT (60-INCH)
H70XM - H90XM

ITEM		PART NO.	DESCRIPTION	QTY
	b	2038599	Carriage (60 in.)	1
	a	2037948	Carriage (60 in)	1
1		1467151	Bushing	2
2		1467153	Rod	2
3		1467154	Hook	2
4		1467269	Apron	1
5	**a**	1467772	Frame	1
5	**b**	1483335	Frame	1
6		1467145	Bearing Strip (RH Lower)	1
7		1467146	Bearing Strip (LH Lower)	1
8		1467147	Bearing Strip (RH Upper)	1
9		1467148	Bearing Strip (LH Upper)	1
10		1467201	Bearing Strip (Lower Center)	2
11		1467200	Bearing Strip (Upper Center)	2
12		1467149	Seal	2
13		1467150	Wiper Ring	2
14		1467632	Snap Ring	2
15		1467633	Screw	6
16		16041	Lube Fitting	4
17		39366	O-Ring	2

FOOTNOTES:
a Three Stage Full Free-Lift
b Two Stage Full Free-Lift

©2003 HYSTER COMPANY

SIDE-SHIFT CARRIAGE FRAME (Figure 13-26)
TWO AND THREE STAGE FULL FREE-LIFT (54 AND 60-INCH)
H100XM-H120XM

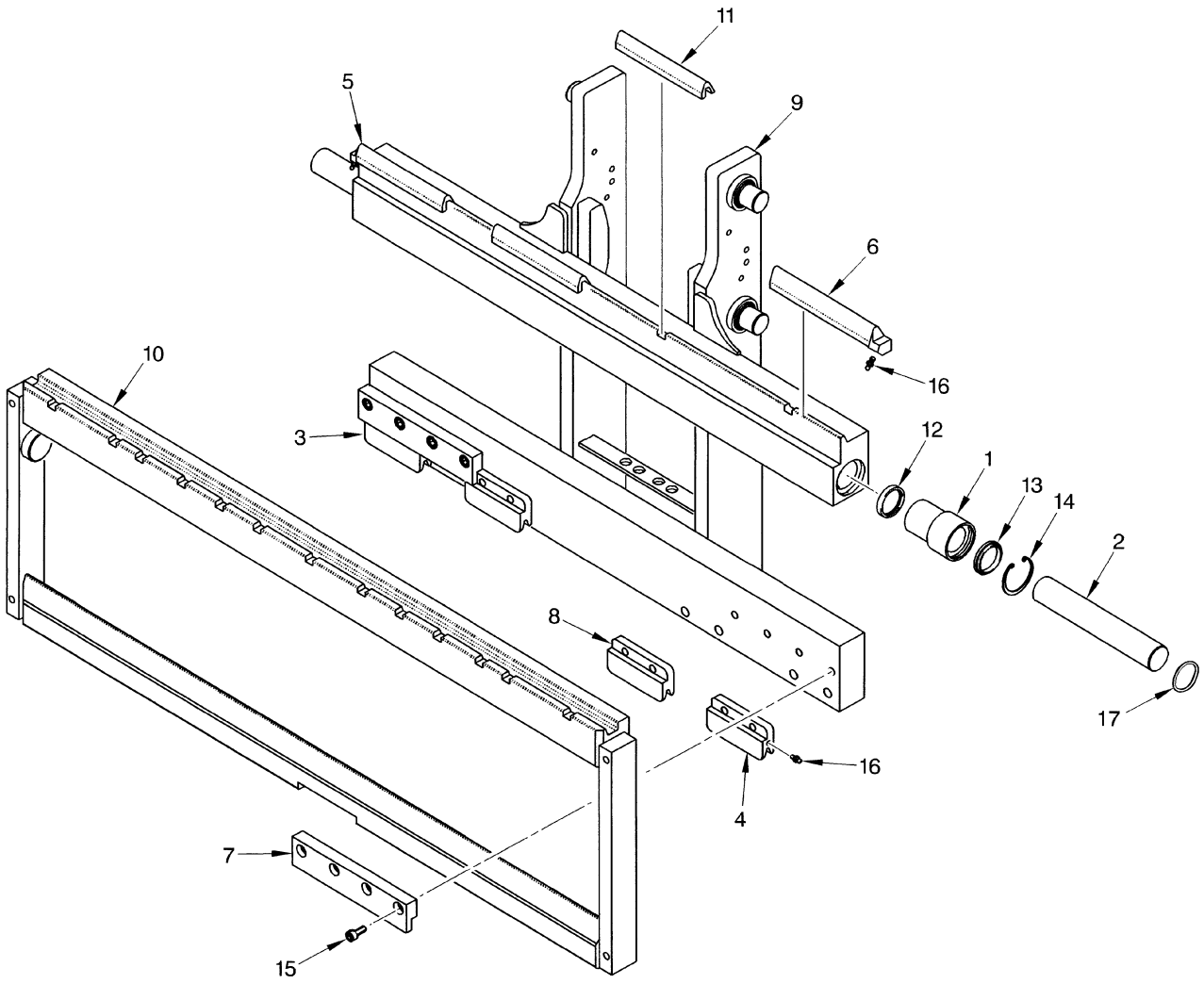

HP000040

©2003 HYSTER COMPANY

SIDE-SHIFT CARRIAGE FRAME
TWO AND THREE STAGE FULL FREE-LIFT (54 AND 60-INCH)
H100XM-H120XM

ITEM		PART NO.	DESCRIPTION	QTY
	a	2037949	Carriage (54 in.)	1
	a	2037950	Carriage (60 in.)	1
	b	2038600	Carriage (54 in.)	1
	b	2038601	Carriage (60 in.)	1
1		1467204	Bushing	2
2		1467205	Rod	2
3		1467145	Bearing Strip (RH Lower)	1
4		1467146	Bearing Strip (LH Lower)	1
5		1467147	Bearing Strip (RH Upper)	1
6		1467148	Bearing Strip (LH Upper)	1
7		1467206	Hook	2
8		1467201	Bearing Strip (Lower Center)	2
9	**a**	1467773	Frame (54 in.)	1
9	**a**	1467775	Frame (60 in.)	1
9	**b**	1483331	Frame (60 in.)	1
9	**b**	1483333	Frame (54 in.)	1
10		1467270	Apron (54 in.)	1
10		1467846	Apron (60 in.)	1
11		1467200	Bearing Strip (Upper Center)	2
12		1467202	Seal	2
13		1467203	Wiper Ring	2
14		1467634	Snap Ring	2
15		1467633	Screw	8
16		16041	Lube Fitting	4
17		39366	O-Ring	2

FOOTNOTES:
a Three Stage Full Free-Lift
b Two Stage Full Free-Lift

©2003 HYSTER COMPANY

AUDIBLE ALARM (Figure 13-27)

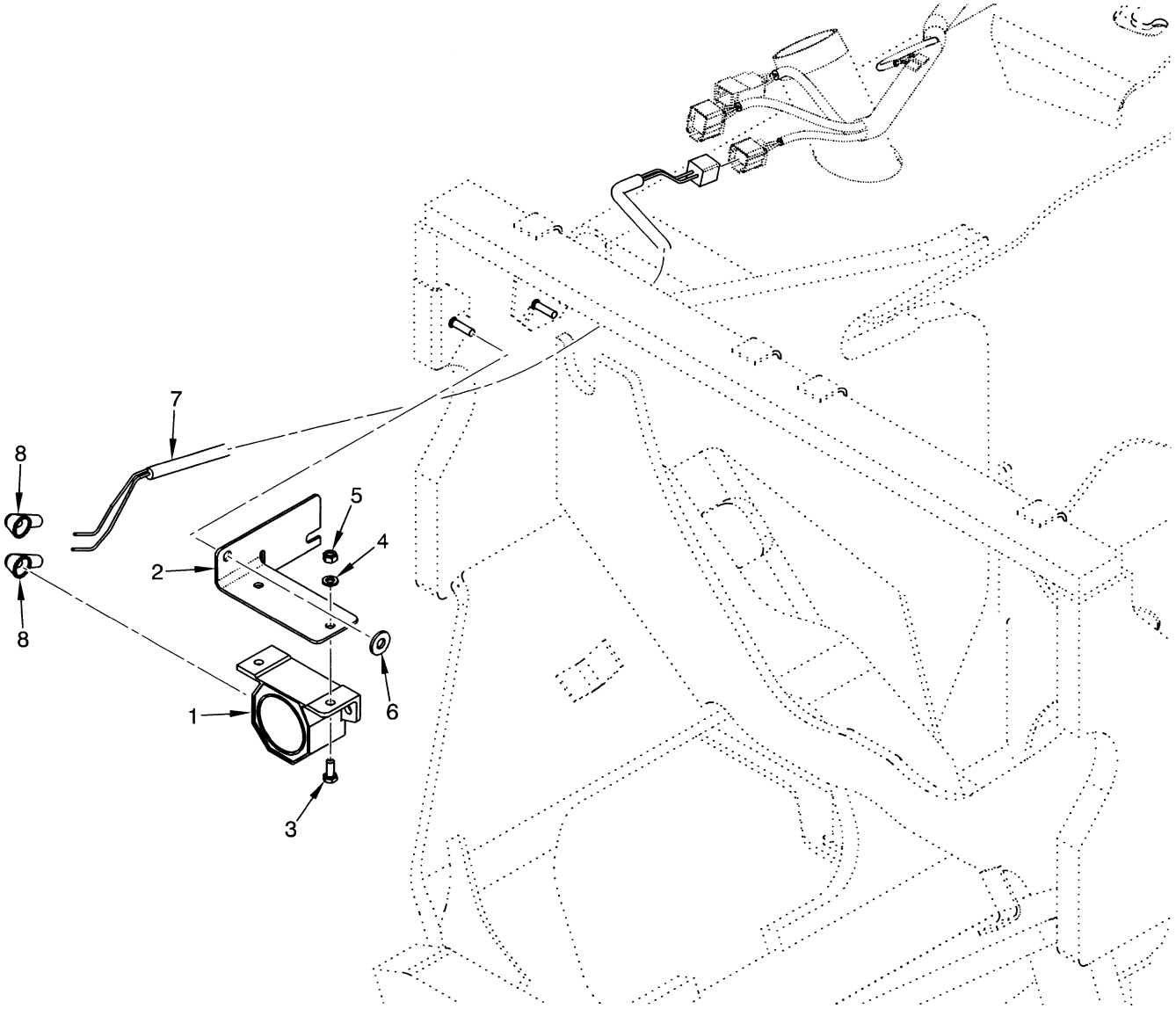

©2003 HYSTER COMPANY

AUDIBLE ALARM

ITEM	PART NO.	DESCRIPTION	QTY
1	1339947	Alarm (82-102 dBA)	1
1	1350733	Alarm (87 dBA)	1
1	1350734	Alarm (97 dBA)	1
1	1350735	Alarm (102 dBA)	1
1	1350736	Alarm (107 dBA)	1
2	1466997	Bracket	1
3	292500	Capscrew	2
4	320156	Washer	2
5	302399	Nut	2
6	320158	Washer	1
7	2036924	Wire Harness (☞ Figure 13-28)	1
8	190382	Boot	2

©2003 HYSTER COMPANY

WIRE HARNESS (Figure 13-28)
REVERSE ALARM

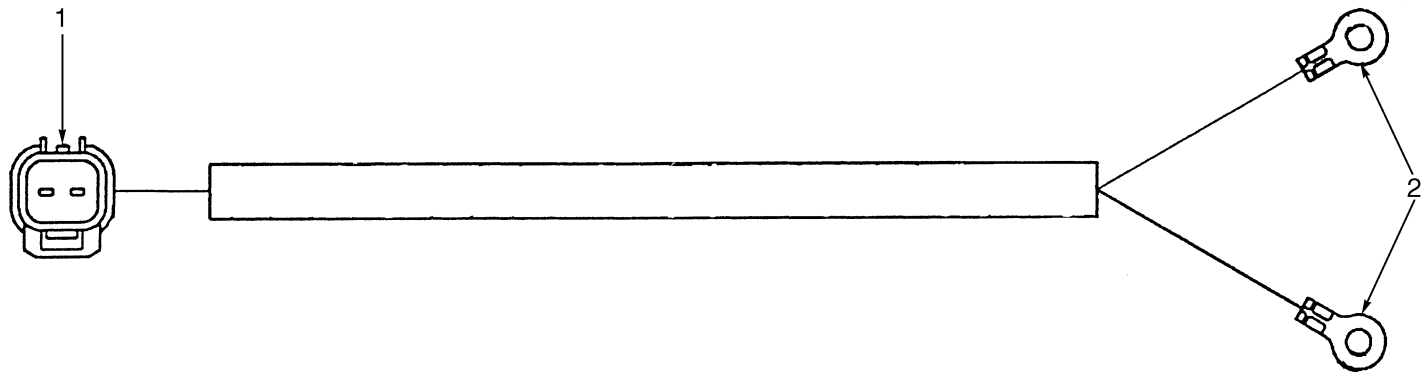

BP080058

ITEM	PART NO.	DESCRIPTION	QTY
	2036924	Wire Harness	1
1	1497288	Housing	1
1	1497299	Retainer	1
1	1484596	Terminal (Pin)	2
1	1484597	Seal	2
2	252293	Fitting	2

©2003 HYSTER COMPANY

CAB (Figure 13-29)

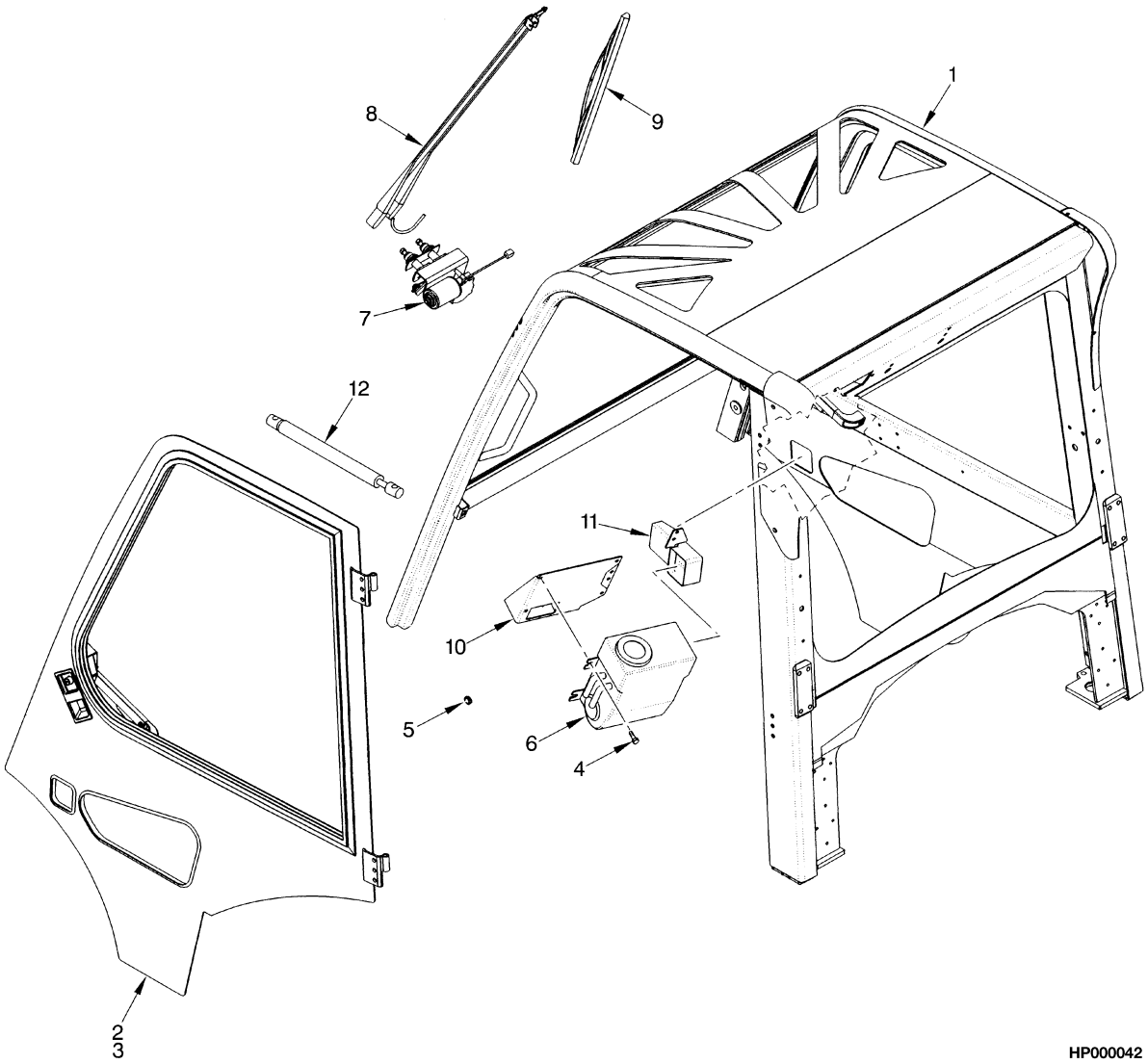

ITEM	PART NO.	DESCRIPTION	QTY
1	. . . . .	Cab Attaching Parts (☞ Figure 13-30, ☞ Figure 13-31, ☞ Figure 13-32)	1
2	1505287	Wire Harness (☞ Figure 13-33)	1
2	1474701	Door Assembly (LH) (☞ Figure 13-35)	1
3	1474702	Door Assembly (RH) (☞ Figure 13-34)	1
4	1468311	Screw.....	6
5	1474703	Grommet.....	1
6	1393540	Heater.....	1
7	1393492	Wiper Motor	1
8	1393493	Wiper Arm.....	1
9	1520927	Wiper blade.....	1
10	1474950	Bracket.....	1
11	1474951	Heat Duct.....	1
12	1393471	Gas Spring.....	2

CAB ATTACHING PARTS (Figure 13-30)
SHEET 1 OF 3

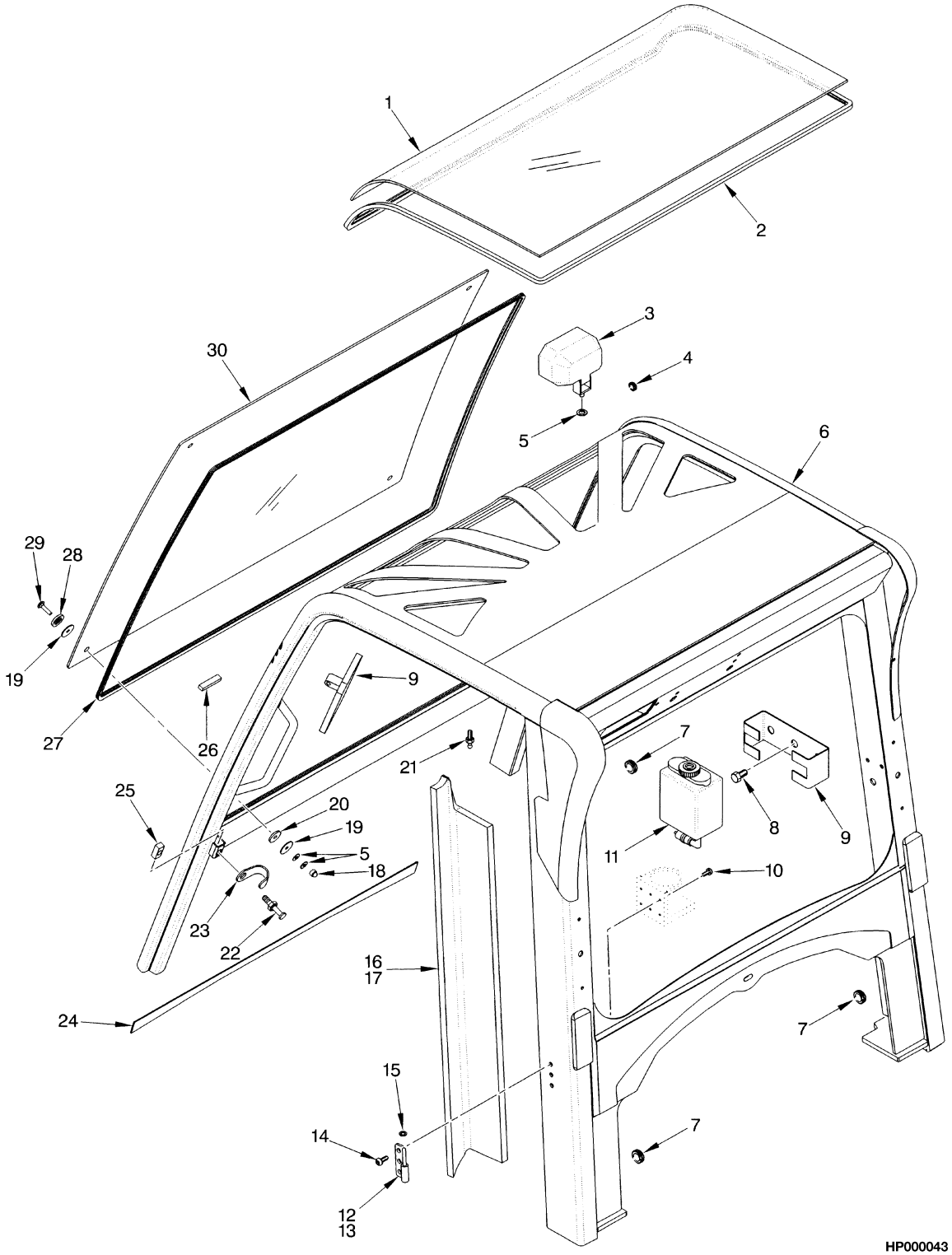

©2003 HYSTER COMPANY

CAB ATTACHING PARTS
SHEET 1 OF 3

ITEM		PART NO.	DESCRIPTION	QTY
1	**d**	1502769	Skylight	1
1	**c**	1393500	Skylight	1
2		1393542	Seal	1
3		1399472	Headlight Assembly	3
4		1393517	Grommet	2
5		296419	Washer	14
6		1474957	Frame	1
7		1393511	Grommet	5
8		1468309	Screw	2
9		1474954	Bracket	1
10		1468307	Screw	5
11		1393543	Reservoir Bottle	1
12		1474952	Hinge (LH)	2
13		1474953	Hinge (RH)	2
14		1468311	Screw	12
15		1468312	Washer	4
16		1504084	Window (Front) (LH)	1
17		1393454	Post Cover (RH)	1
18		316835	Nut	4
19		1468316	Washer	8
20		1468317	Washer	4
21		1393472	Ball Stud	2
22		1393486	Striker Bolt	2
23		1393541	Guard	2
24		1393455	Cover (Front)	1
25		1393488	Block (Mounting)	1
26		1474709	Block	2
27		1393463	Seal	1
28		1468315	Washer	4
29		1468314	Screw	4
30	**a**	1393490	Window (Front)	1
31	**b**	1504084	Window (Front)	1
32	**b**	1504083	Glue Kit (Front Window)	1
33		1479092	Step Floormat (LH) (Not Illustrated)	1
33		1479093	Step Floormat (RH) (Not Illustrated)	1

FOOTNOTES:
a ⇒ S/N T4103-Q Cab
b S/N T4104-Q ⇒ Cab
c ⇒ S/N T5644-C Cab
d S/N T5645-C ⇒ Cab

©2003 HYSTER COMPANY

CAB ATTACHING PARTS (Figure 13-31)
SHEET 2 OF 3

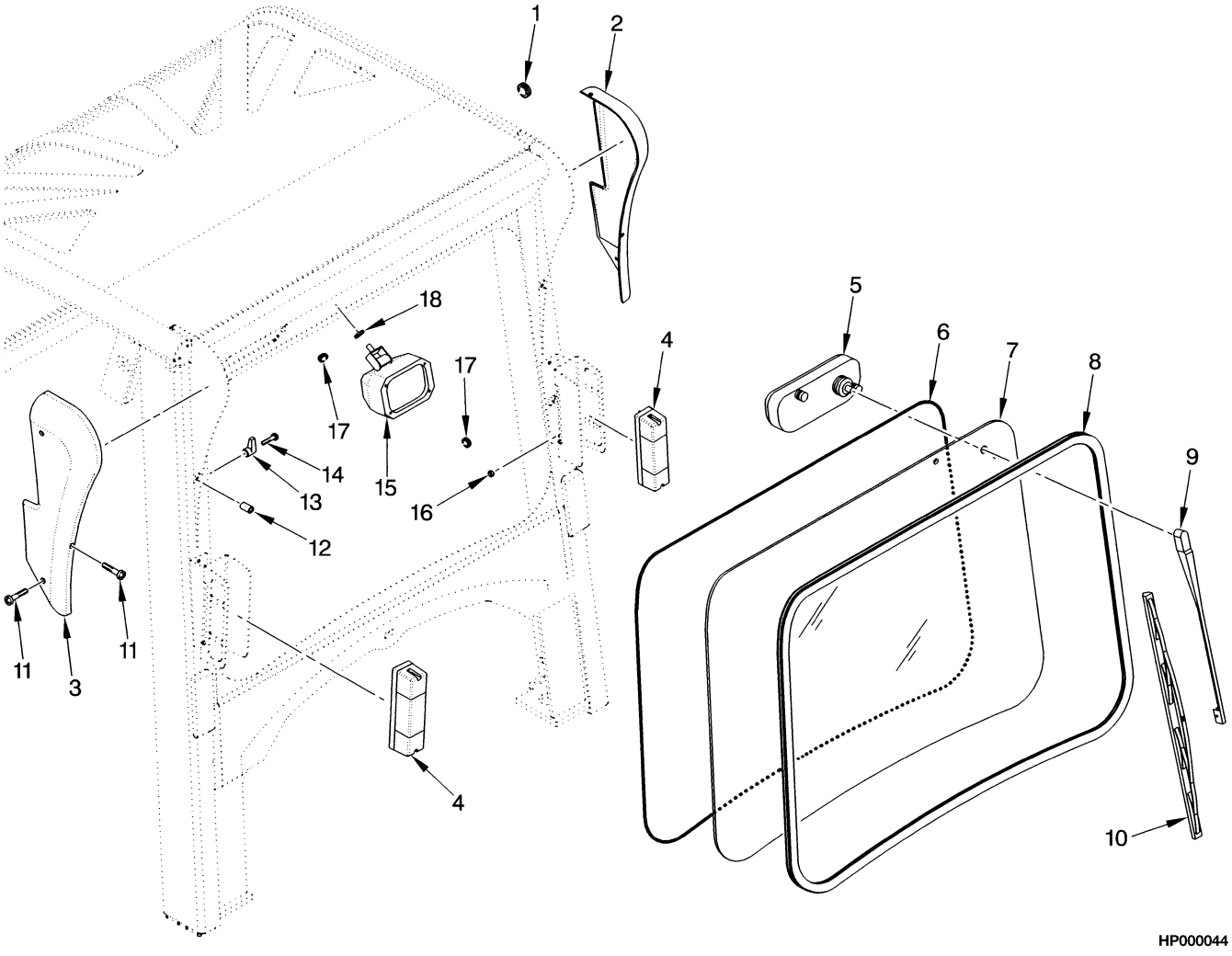

©2003 HYSTER COMPANY

CAB ATTACHING PARTS
SHEET 2 OF 3

ITEM	PART NO.	DESCRIPTION	QTY
1	1393511	Grommet	2
2	1393451	Ear (LH)	1
3	1393452	Ear (RH)	1
4	. . . . .	Brake/Backup Light	2
5	1393504	Wiper Motor	1
6	1393497	Seal (Rubber)	1
7	1493909	Window (Rear)	1
8	1393466	Seal (Rubber)	1
9	1393505	Wiper Arm	1
10	1474955	Wiper Blade	1
11	302047	Screw	6
12	1474710	Insert	12
13	1393458	Hanger (Coat)	1
14	1468307	Screw	1
15	1399472	Headlight Assembly (Rear) (☞ Figure 13-13)	1
16	302324	Nut	4
17	1393514	Grommet	5
18	296419	Washer	1

©2003 HYSTER COMPANY

CAB ATTACHING PARTS (Figure 13-32)
SHEET 3 OF 3

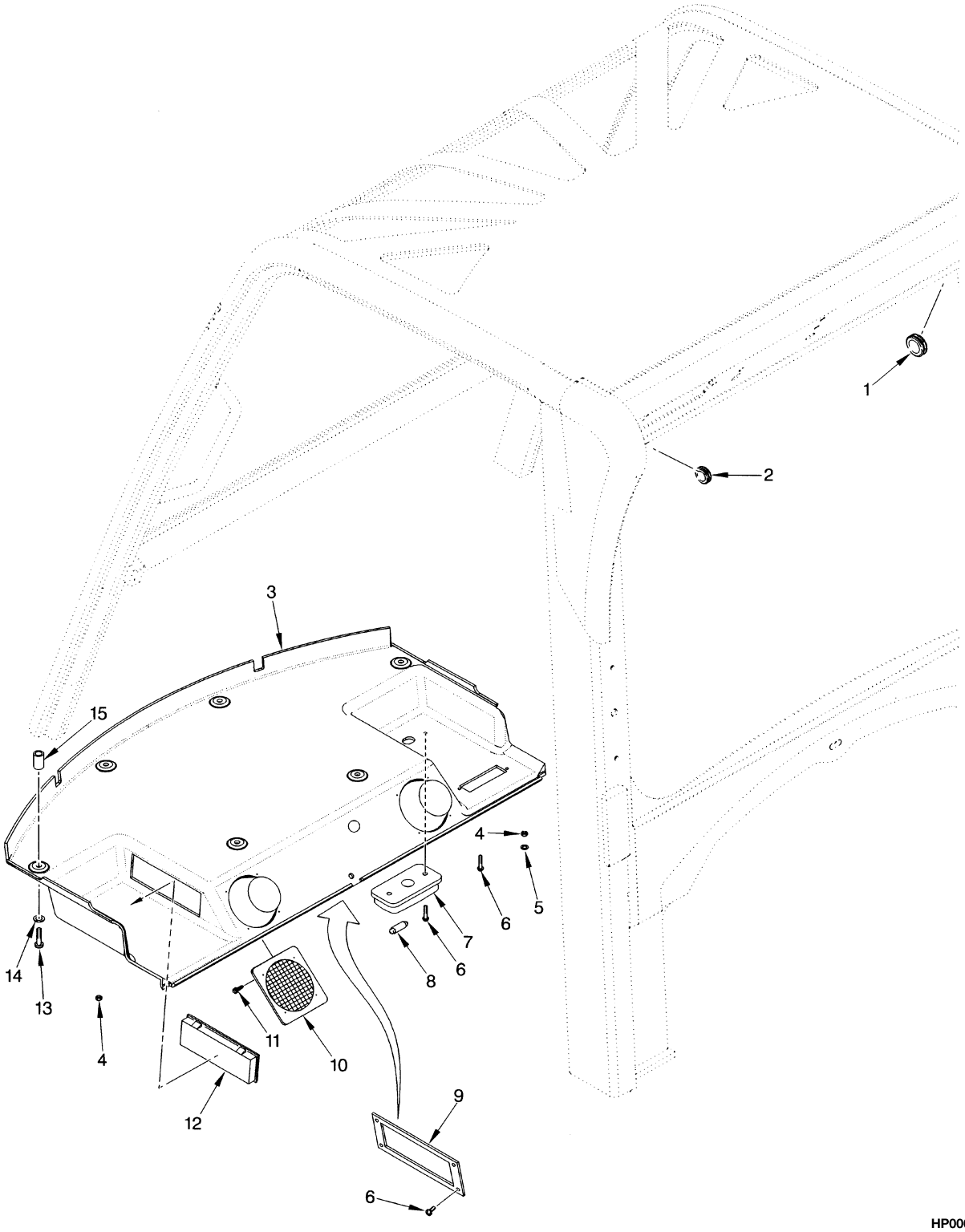

©2003 HYSTER COMPANY

CAB ATTACHING PARTS
SHEET 3 OF 3

ITEM	PART NO.	DESCRIPTION	QTY
1	1474704	Grommet	1
2	1393511	Grommet	1
3	1393524	Liner	1
4	292667	Nut	16
5	296415	Washer	2
6	302023	Screw	8
7	1393528	Dome Light	1
8	1393527	Bulb	1
9	1474956	Plate	1
10	1393526	Cover (Speaker)	2
11	1468320	Screw	8
12	1393525	Cover (Radio)	1
13	302049	Screw	7
14	1468321	Washer	7
15	1474711	Insert	9

©2003 HYSTER COMPANY

WIRE HARNESS (Figure 13-33)
CAB

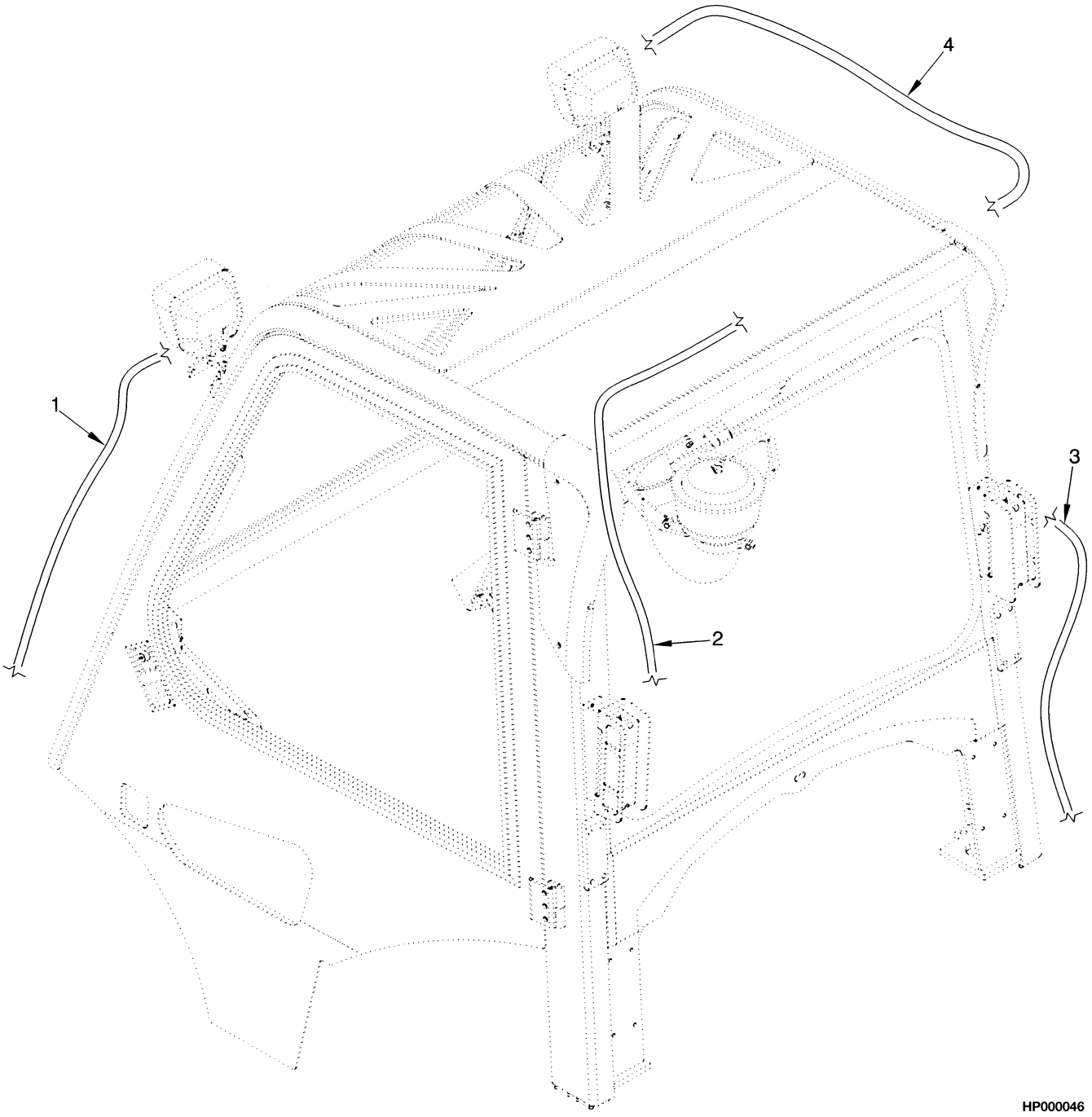

©2003 HYSTER COMPANY

WIRE HARNESS
CAB

ITEM		PART NO.	DESCRIPTION	QTY
1		2036544	Wire Harness (Front)	1
2		2036541	Wire Harness (Auxilary) (☞ Figure 13-37)	1
3		2038007	Wire Harness (Rear)	1
4		1505287	Wire Harness (Main)	1
5	**a**	1494692	Wiper Switch (Front)	1
6	**a**	1494693	Wiper Switch (Rear)	1
7	**a**	1494673	Heater Blower Switch	1
8	**a**	1393547	Switch Panel	1
9	**a**	1393537	Relay	1

FOOTNOTES:
a Not Illustrated

©2003 HYSTER COMPANY

DOOR ASSEMBLY (Figure 13-34)
RIGHT HAND

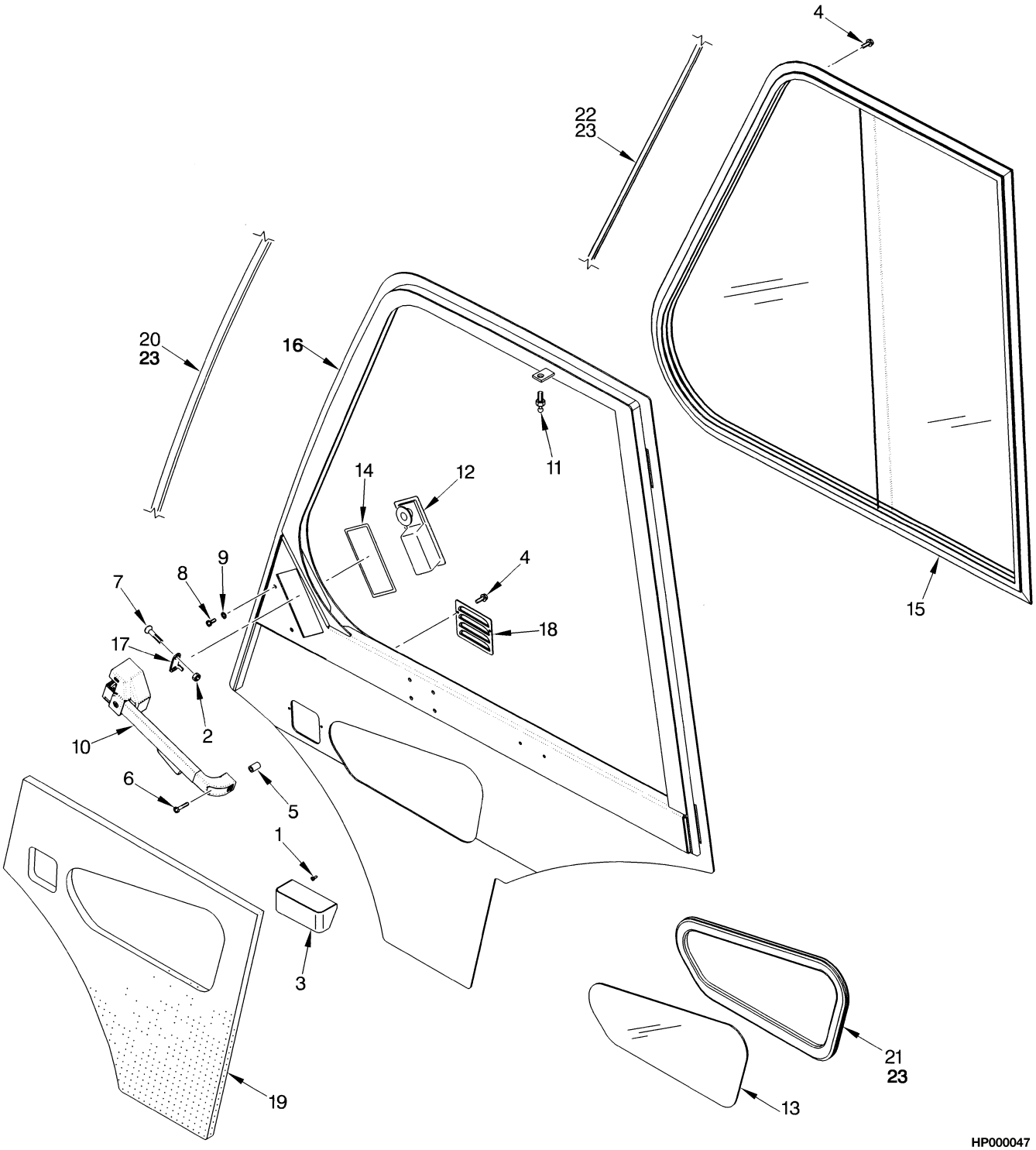

©2003 HYSTER COMPANY

DOOR ASSEMBLY
RIGHT HAND

ITEM		PART NO.	DESCRIPTION	QTY
		1474702	Door Assembly	1
1		134102	Screw	2
2		316835	Nut	2
3		1393489	Ashtray	1
4		1474765	Screw	14
5		1474710	Insert	1
6		302048	Screw	1
7		296229	Capscrew	2
8		1468310	Screw	3
9		1474766	Washer	3
10		1393482	Handle	1
11		1393472	Ball Stud	1
12		1393483	Latch	1
13		1393464	Window (Lower)	1
14		1393485	Seal	1
15	**a**	1393470	Window Assembly (RH)	1
15		1483226	Latch	1
15		1502180	Glass (Rear Fixed)	1
15		1483228	Glass (Front Sliding)	1
15		1504095	Window Assembly (RH)	1
15	**b**	1504089	Latch	1
15		1504088	Glass (Rear Fixed, RH)	1
15		1504087	Glass (Front Sliding, RH)	1
16		1474962	Door Frame	1
17		1474961	Plate (Door Lock)	1
18		1393478	Cover (Heater)	1
19		1393468	Cover (Door)	1
20		1393463	Seal	1
21		1474767	Window Seal (Lower)	1
22		1474768	Seal (Sliding Window)	1
23		1474820	Sealant	1
24		1393459	Cup Holder (Not Illustrated)	1

FOOTNOTES:
a ⇒ S/N CAB T4103Q-
b S/N CAB T4104Q- ⇒

©2003 HYSTER COMPANY

DOOR ASSEMBLY (Figure 13-35)
LEFT HAND

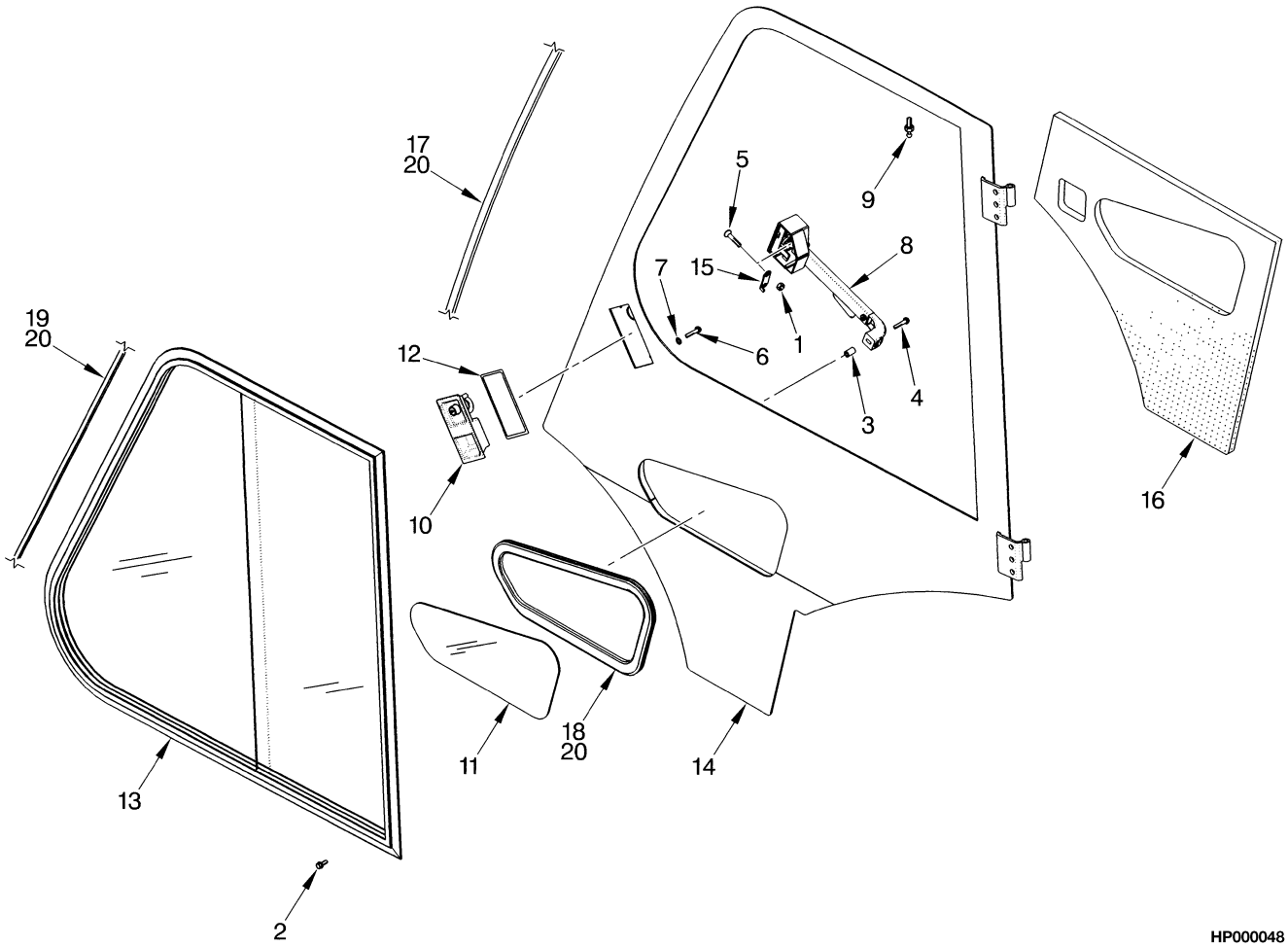

©2003 HYSTER COMPANY

DOOR ASSEMBLY
LEFT HAND

ITEM		PART NO.	DESCRIPTION	QTY
		1474701	Door Assembly	1
1		316835	Nut	2
2		1474765	Screw	11
3		1474710	Insert	1
4		302048	Screw	1
5		296229	Capscrew	2
6		1468310	Screw	3
7		1474766	Washer	3
8		1393479	Handle	1
9		1393472	Ball Stud	1
10		1393480	Latch	1
11		1393464	Window (Lower)	1
12		1393485	Seal	1
13	**a**	1393469	Window Assembly (LH)	1
13		1483226	Latch	1
13		1502180	Glass (Rear Fixed)	1
13		1483228	Glass (Front Sliding)	1
13	**b**	1504094	Window Assembly (LH)	1
13		1504089	Latch	1
13		1504086	Glass (Rear Fixed, LH)	1
13		1504085	Glass (Front Sliding, LH)	1
14		1474959	Door Frame	1
15		1474960	Plate (Door Lock)	1
16		1393467	Cover (Door)	1
17		1393463	Seal	1
18		1474767	Window Seal (Lower)	1
19		1474768	Seal (Sliding Window)	1
20		1474820	Sealant	1

FOOTNOTES:
a ⇒ S/N CAB T4103Q-
b S/N CAB T4104Q- ⇒

©2003 HYSTER COMPANY

LIFTING EYE (Figure 13-36)

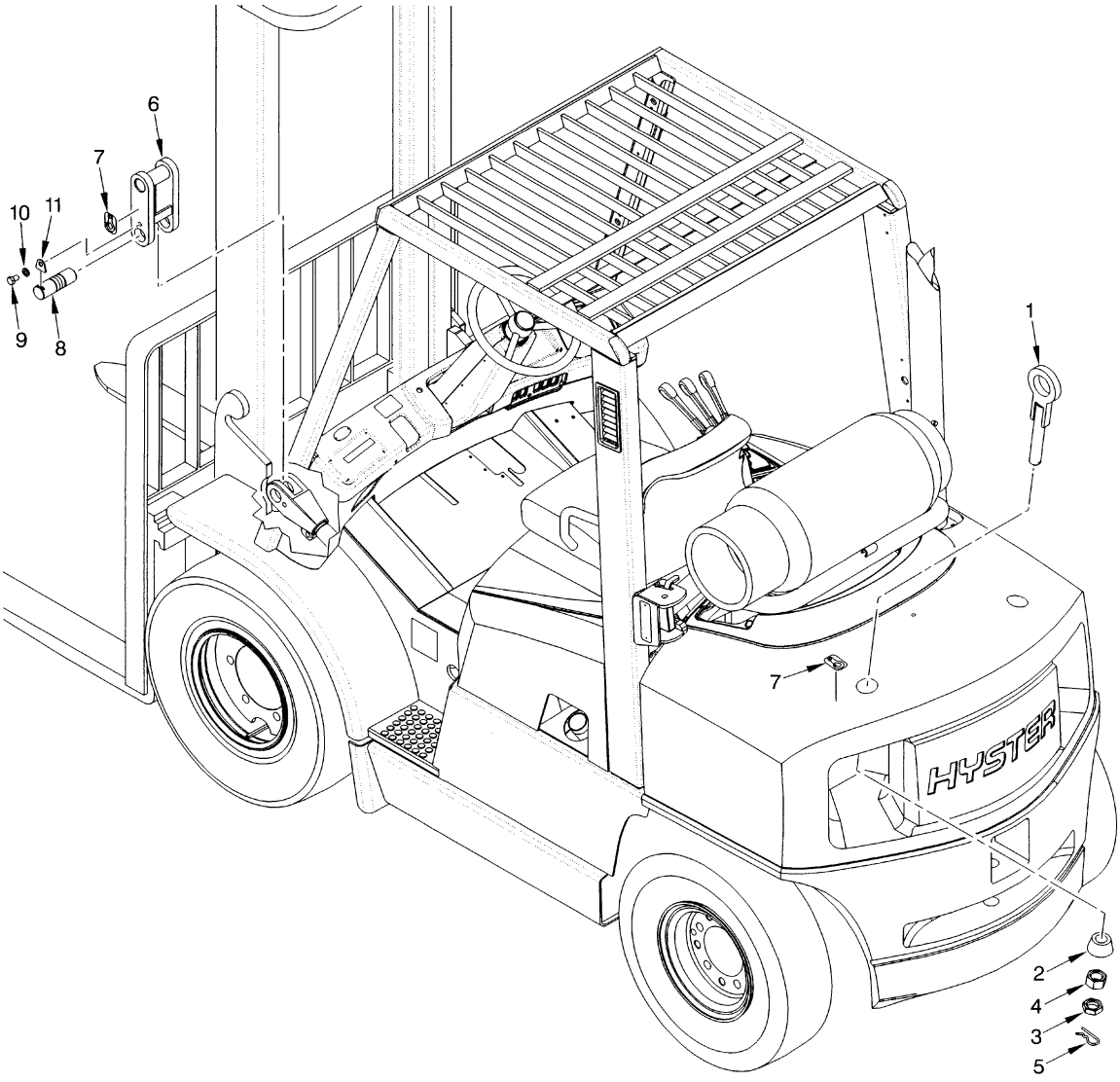

HP000049

ITEM		PART NO.	DESCRIPTION	QTY
1		1476416	Eye Bolt (Rear)	2
2		1488915	Anchor	2
3		296140	Nut	2
4		292661	Nut	2
5		15246	Cotter Pin	2
6		1474335	Shackle (Front)	2
7		316448	Label (Lifting Eye) (Lifting Eye)	4
8	**a**	1474314	Tilt Pin (Extended)	2
8	**b**	1518463	Tilt Pin (Extended)	2
9		18585	Capscrew	2
10		15158	Lockwasher	2
11	**a**	1394688	Retainer (Tilt Pin)	2
11	**b**	1518378	Retainer (Tilt Pin)	2

FOOTNOTES:

a ⇒ S/N PENDING PER ECN 92456-01

b S/N PENDING PER ECN 92456-01 ⇒

©2003 HYSTER COMPANY

WIRE HARNESS (Figure 13-37)
AUXILIARY LIGHTS
WORKLIGHTS

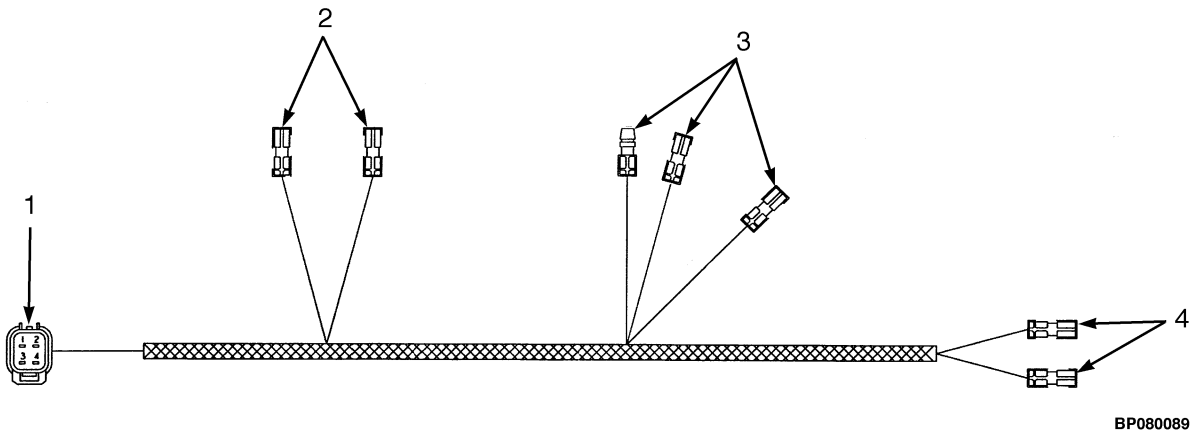

ITEM	PART NO.	DESCRIPTION	QTY
	2036541	Wire Harness	1
1	. . . . .	Connection Assembly (Module Connection)	1
1	1497290	Housing	1
1	1497303	Retainer	1
1	1484596	Terminal (Pin)	3
1	1484597	Seal	3
1	1484594	Terminal (Pin)	1
1	1484595	Seal	1
2	. . . . .	Connection Assembly (Left Hand Work Light)	2
2	1324310	Terminal	2
2	1324309	Connector	2
3	. . . . .	Connection Assembly (Strobe/Beacon)	1
3	1324310	Terminal	2
3	1324309	Connector	2
3	1324308	Electrical Fitting	1
3	1324307	Electrical Fitting	1
4	. . . . .	Connection Assembly (Right Hand Work Light)	2
4	1324310	Terminal	2
4	1324309	Connector	2

©2003 HYSTER COMPANY

NOTES

14 NUMERICAL INDEX

SECTION 14
NUMERICAL INDEX

PART NO.	PG	ITEM
142	3-63	17
	8-3	35
11276	13-9	10
12815	2-5	45
12822	3-30	63
12891	10-5	7
	12-7	13
12928	2-9	18
12929	11-7	8
13957	7-7	38
14349	4-14	41
	4-19	9
	8-3	43
14358	3-21	13
	3-25	13
	3-29	15
	3-33	39
	3-37	39
14385	3-25	47
	3-37	43
14387	3-26	50
	3-37	45
14404	3-25	38
	3-38	72
14500	5-23	2
14505	3-21	18
	3-25	18
	3-29	24
	3-34	47
	3-37	47
14560	9-7	6
	9-9	6
14587	2-40	8
14592	5-21	11
14603	10-8	22
	11-4	23
14761	2-26	56
15001	1-15	17
	3-63	27
15025	8-3	16
15026	2-71	13
15032	5-21	21
15034	3-21	43
	3-30	48
	3-34	73
15039	4-13	9
	4-19	33
15049	4-23	41
15052	2-25	37
	3-59	20
15055	3-17	12
	3-21	9
	3-25	9
	3-29	10
	3-33	12
	3-37	12
15056	2-25	26
15086	1-13	18
15125	2-71	29
15127	1-13	24
	2-5	37
	3-21	21
	3-25	21
	3-25	43
	3-30	68
	3-34	52
	3-38	52
15134	1-13	17
	2-26	63
	3-21	26
	3-25	26
	3-30	69
	3-34	57
	3-38	57
	4-9	24
	7-5	24
	8-3	46
15152	2-25	36
	3-59	21
15154	1-13	23
	2-25	24
	3-29	22
15155	3-17	13
	3-21	10
	3-25	10
	3-29	11
	3-33	13
	3-37	13
	4-9	30
	11-19	19
	12-33	19
	13-39	25
	13-41	19
15156	1-13	19
	2-25	22
	3-17	26
	3-33	22
	3-37	22
	4-9	23
	4-14	34
	7-5	23
15157	2-26	61
15158	13-70	10
15162	2-26	60
15172	8-3	30
15175	1-5	19
	1-7	35
15176	2-26	70
15200	3-63	9
	9-11	31
	9-13	31
15201	3-59	14
	3-61	15
15212	1-23	28
	3-63	20
	7-5	15
15222	10-8	34
	10-21	10
	11-7	6
	11-19	12
	12-3	12
	12-11	8
	12-17	21
	12-33	12
	13-35	4
	13-37	17
	13-39	8
	13-41	23
15224	12-11	10
	13-9	11
15226	7-7	40
15246	13-70	5
15290	6-5	28
15304	2-55	3
	2-57	7
15310	9-3	9
15314	2-69	14
	2-76	4
15315	6-5	29
15334	3-29	6
15860	7-13	6
15879	10-12	9
	10-12	9
	12-21	8
15885	11-15	11
	12-25	11
15905	4-14	36
15923	9-15	16
	9-21	3
	9-21	22
15962	2-79	12
15963	3-26	54
	3-30	57
	3-34	84
	3-38	84
	9-3	25
15964	3-3	29
	3-17	38
	3-22	54
15971	3-22	62
	3-30	65
	3-34	89
16001	9-23	9
	10-21	16
	11-19	26
	12-33	26
	13-35	12
	13-37	8
	13-39	14
	13-41	8
16041	13-43	14
	13-45	16
	13-47	16
	13-49	14
	13-51	16
	13-53	16
16100	3-3	23
	3-5	4
	3-7	3
16114	3-3	20
	3-5	23
	3-7	7
16116	4-14	49
	4-19	25
16118	3-3	21
	3-5	22
	3-7	6
16124	3-53	8
	8-3	39
16134	3-22	66
	3-30	64
	3-34	92
	3-53	9
16143	3-21	15
	3-25	15
	3-29	20
	3-33	40
	3-37	40
16155	13-13	9
16156	13-13	10
16168	3-25	37
	3-38	70
16177	3-3	22
16186	8-3	40
16187	8-4	52
16193	2-83	7
16372	2-57	24
16448	10-15	4

©2003 HYSTER COMPANY

NUMERICAL INDEX (Continued)

PART NO.	PG	ITEM
	10-18	14
	11-30	16
	12-30	27
	13-19	5
	13-21	5
	13-35	19
	13-37	19
16458	9-7	31
	9-9	31
	11-30	15
	12-30	26
	13-39	26
	13-41	25
16481	5-21	33
16482	5-14	58
	5-21	11
	5-21	24
	5-21	34
16483	5-14	51
	5-14	52
	5-14	53
	5-21	7
	7-3	22
	9-7	2
	9-7	23
	9-9	2
	9-9	23
	10-7	3
	12-13	3
16484	5-9	25
	5-10	36
	5-21	19
	5-24	5
	7-3	1
	9-7	1
	9-9	1
	10-8	19
	10-8	20
	12-14	18
	12-14	19
	12-14	20
	13-35	20
	13-37	20
	13-39	27
	13-41	26
16485	5-10	38
16486	5-14	49
	5-14	50
	9-3	2
	9-3	11
	9-7	8
	9-9	8

PART NO.	PG	ITEM
	9-15	10
	10-8	22
16487	9-3	31
	9-3	36
	9-3	37
16520	3-22	53
	3-26	53
	3-30	56
	3-34	83
	3-38	83
16540	5-14	52
	9-7	2
	9-9	2
16541	7-3	1
	10-8	19
	11-4	24
	12-14	20
16543	12-14	19
16556	5-21	33
16558	5-14	53
	7-3	22
	9-7	23
	9-9	23
16559	10-8	20
	11-4	22
	12-13	18
	13-35	20
	13-37	20
	13-39	27
	13-41	26
16561	9-7	8
	9-9	8
16567	4-14	35
16568	13-22	5
16569	5-10	38
16597	2-26	44
	4-9	21
	4-9	21
16598	2-25	23
	2-26	71
16653	13-13	2
	13-13	22
	13-15	21
	13-17	2
16705	9-15	17
	9-21	14
	9-21	27
16709	9-15	18
	9-21	2
	9-21	21
16743	4-23	40
16794	2-55	5

PART NO.	PG	ITEM
	2-57	26
16805	3-17	25
	3-33	21
	3-37	21
	4-9	22
16815	7-5	22
16863	3-21	44
	3-30	49
	3-34	74
16865	3-65	14
	4-35	17
16882	9-7	10
	9-9	10
16897	8-3	17
16923	5-10	37
	5-14	59
	5-21	25
16925	7-3	21
	13-19	6
	13-21	6
16982	5-21	6
	9-15	8
	9-15	11
16983	5-9	29
16989	7-3	15
	11-30	17
	12-30	28
17039	9-9	35
17062	7-3	20
	13-22	6
17174	9-3	23
17642	13-15	13
	13-17	20
17650	4-5	29
17664	3-22	63
	3-29	32
	3-34	88
17665	13-17	26
17706	9-3	33
18419	4-35	16
18460	2-26	72
18462	1-13	22
	3-21	20
	3-25	20
	3-25	42
	3-30	67
	3-34	51
	3-38	51
18498	4-9	25
18500	4-9	2
	4-14	44
	4-19	14

PART NO.	PG	ITEM
	4-24	61
18515	1-5	9
	3-17	14
	3-21	11
	3-25	11
	3-29	12
	3-33	14
	3-37	14
	4-9	31
18518	11-19	18
	12-33	18
	13-39	24
	13-41	18
18520	13-41	18
18546	4-9	27
18585	9-23	16
	13-70	9
18727	1-5	8
18762	1-13	16
18824	7-3	25
18942	6-5	3
19870	4-30	16
21420	5-13	15
25722	13-8	2
30019	7-7	8
30097	6-5	18
30098	6-5	12
30147	7-7	9
30162	5-13	32
30289	7-7	21
34811	2-25	31
35116	2-9	34
39348	11-16	15
	12-26	15
39365	13-47	17
39366	13-43	15
	13-45	17
	13-49	15
	13-51	17
	13-53	17
39373	2-25	29
39678	7-7	36
39742	9-4	45
41208	5-9	13
41308	5-9	1
44542	7-7	39
45656	13-9	8
45736	13-9	2
45737	13-9	2
46629	9-24	13
	11-15	11
	12-25	11

See Service Manual for service procedures.
©2003 HYSTER COMPANY

NUMERICAL INDEX (Continued)

PART NO.	PG	ITEM
51455	2-83	8
53065	2-9	39
	2-9	39
53162	3-65	14
	4-35	15
54120	2-9	17
55580	4-27	26
57568	3-65	9
57664	10-12	9
	12-21	8
58902	10-15	8
	11-30	10
	12-30	12
58903	7-7	32
58929	12-17	13
58936	5-21	30
63116	2-13	10
	2-15	10
	2-17	6
	2-17	24
	2-19	24
	2-21	3
63899	3-3	37
	3-17	47
	3-34	85
	3-38	85
66333	10-21	17
	11-19	25
	12-33	25
	13-35	10
	13-37	6
	13-39	12
	13-41	6
66885	5-5	1
68968	2-13	15
	2-15	15
	2-17	7
	2-19	7
69029	7-7	24
69314	3-3	8
76382	9-3	42
78456	9-3	43
79377	7-3	16
79981	7-11	6
85777	3-22	60
	3-26	60
	3-29	23
	3-34	86
	3-38	86
86510	4-5	31
	4-23	42
88195	9-3	37
88381	9-7	27
	9-9	27
97999	3-22	65
	3-34	80
	3-38	80
99576	2-55	4
	2-57	25
99610	2-59	13
	2-61	14
	2-67	9
99663	2-59	8
	2-61	5
99722	2-71	7
99723	2-71	8
99725	2-71	15
99728	2-71	20
101809	3-21	45
	3-25	45
	3-30	50
	3-34	75
	3-38	75
101985	2-83	12
104264	10-3	8
	11-4	19
	12-3	8
104506	10-3	9
	11-4	20
	12-3	9
	12-7	10
110178	10-7	3
	12-13	3
110497	3-17	39
112470	9-3	36
112989	2-5	24
	11-30	25
113341	8-15	7
114312	3-65	17
	4-10	38
	4-19	3
	4-19	33
115696	3-55	19
	10-8	37
	11-30	19
	12-14	31
	13-33	34
	13-33	34
119236	9-3	38
119856	12-14	28
124668	2-9	13
125305	3-21	16
	3-25	16
	3-29	17
	3-33	42
	3-37	42
127045	9-3	39
128259	3-26	63
	3-38	60
128408	4-9	29
	4-13	30
	4-23	26
128409	9-7	35
	9-9	34
128469	2-9	13
128835	4-27	27
128852	4-27	28
129846	13-8	2
130616	13-8	2
130619	13-9	2
130845	2-34	42
	2-75	1
	3-17	37
	3-21	24
	3-25	24
	3-29	26
	3-34	55
	3-38	55
131358	11-19	24
	12-33	24
	13-41	24
131715	12-7	8
131716	12-7	7
132473	3-22	67
	3-31	6
	3-33	37
132860	3-45	16
	10-5	11
132861	5-5	8
	9-3	13
	9-11	18
	9-13	18
133469	2-25	25
133558	2-73	14
133696	3-25	22
	3-38	53
134102	13-67	1
134436	5-21	34
134810	4-45	2
135657	7-7	5
135658	7-7	29
135685	3-65	2
136516	3-29	36
136681	2-25	34
	3-3	24
	3-17	7
	3-33	7
	3-37	7
	4-13	23
	4-23	37
	9-3	17
	11-30	21
	13-13	15
	13-15	18
	13-17	17
	13-33	13
136687	1-17	5
	2-5	10
	3-55	18
	3-61	19
	4-9	9
	4-10	35
	4-13	13
	4-20	36
	4-23	32
	4-35	10
	8-3	31
	13-33	26
136692	1-15	38
	2-5	29
	2-26	46
	3-59	6
	3-61	6
	3-63	4
	4-23	38
	7-5	4
	8-3	6
	13-11	8
	13-11	8
136704	5-14	45
	7-3	12
	8-3	21
	9-7	30
	9-9	30
	12-30	25
136749	1-15	28
	1-29	5
	2-9	30
	2-9	33
	2-49	13
	4-5	10
	4-6	35
	4-6	41
	4-13	11
	4-19	32
	7-5	9
	8-15	6
	9-7	25

©2003 HYSTER COMPANY

NUMERICAL INDEX (Continued)

PART NO.	PG	ITEM
	9-9	11
	9-11	12
	9-13	12
	11-30	23
136985	1-15	36
	2-10	40
	2-49	7
	3-3	19
	7-5	2
	8-3	4
	12-30	9
137134	13-8	2
137135	13-8	2
137136	13-8	2
137852	3-21	37
	3-29	42
	3-34	70
138710	13-15	24
	13-17	11
138880	3-3	38
	3-17	48
	3-34	91
	3-38	91
139743	4-10	35
141776	3-21	14
	3-25	14
	3-29	16
	3-33	41
	3-37	41
	13-17	27
142247	10-7	6
	11-3	10
	12-13	6
142500	9-3	2
143004	5-13	21
145639	1-5	18
	1-7	36
147294	3-41	6
	3-43	20
148271	3-25	33
148606	4-111	3
148614	4-83	13
	4-105	6
	4-111	6
	4-117	6
148962	3-43	22
	3-45	13
	5-14	68
152605	2-55	34
	2-57	23
152608	3-3	31
	3-5	18
	3-7	8
	3-11	25
152609	3-3	32
	3-5	17
	3-7	9
	3-11	24
153069	4-10	39
	4-19	2
	4-24	51
153404	12-4	14
153715	7-7	15
153716	7-7	34
153717	7-7	17
154065	1-31	28
154066	1-31	28
154067	1-31	28
154452	13-15	23
	13-17	9
154459	3-21	22
	3-29	30
	3-34	53
157065	4-10	37
	4-24	49
158139	2-55	30
	2-57	10
158186	3-5	7
	3-5	14
158187	2-71	16
	3-5	8
	3-5	15
159971	2-29	9
159977	2-29	14
161272	10-3	7
	11-3	18
	12-3	7
161273	10-3	6
	11-3	17
	12-3	6
161296	2-59	3
	2-61	11
161297	2-59	4
	2-61	12
161383	2-55	8
	2-57	33
161385	2-55	12
	2-57	4
161425	2-59	1
	2-61	13
161429	2-59	1
	2-61	13
161430	2-59	1
	2-61	13
161431	2-59	1
	2-61	13
161889	13-9	6
161890	13-9	5
162155	5-10	36
164488	3-17	23
	3-33	19
	3-37	19
	4-23	36
	13-29	7
164632	11-15	10
	12-25	10
164639	7-7	11
166285	4-5	20
166659	11-11	7
166818	1-31	22
166857	8-3	48
167023	3-5	5
	3-7	2
167218	3-59	13
	3-61	14
167507	3-5	9
167508	3-5	10
168718	3-3	33
169718	2-29	9
170658	1-31	8
	1-31	31
173246	4-5	24
	4-13	22
173247	3-21	25
	3-25	25
	3-30	70
	3-34	56
	3-38	56
174209	13-9	1
174214	13-8	1
175347	3-21	33
	3-29	38
	3-34	66
176167	9-27	10
	9-29	10
176169	9-27	14
	9-29	14
176173	9-27	18
	9-29	18
176451	3-17	6
	3-33	6
	3-37	6
176640	1-23	14
	4-9	25
	7-3	19
	8-15	5
	9-7	16
	9-7	37
	9-9	39
	9-11	28
	9-13	28
177521	4-37	10
177947	2-25	30
177948	2-9	35
178119	4-5	25
178899	2-5	1
179414	1-31	27
179415	1-31	27
179416	1-31	27
179417	1-31	27
179420	1-31	27
179423	1-31	27
181045	4-45	2
181046	4-45	3
181766	5-21	20
182342	10-8	17
	12-4	14
182891	9-3	4
183635	9-3	18
184761	9-3	11
185768	9-18	34
186420	2-49	5
	5-9	18
	5-13	34
187388	11-15	7
	12-25	7
188210	5-9	29
189338	4-10	34
190382	4-14	45
	13-55	8
190383	4-10	36
	4-19	14
	4-24	61
190787	9-3	29
190887	11-11	11
	11-16	16
	12-26	16
191072	10-8	17
	12-4	14
191076	10-8	17
191081	12-4	14
191085	12-4	14
192424	10-21	19
	11-20	28
	12-34	28
	13-35	15
	13-37	11
	13-39	17

See Service Manual for service procedures.
©2003 HYSTER COMPANY

NUMERICAL INDEX (Continued)

PART NO.	PG	ITEM
	13-41	11
192425	10-21	18
	11-19	27
	12-33	27
	13-35	14
	13-37	10
	13-39	16
	13-41	10
192429	9-23	3
193239	9-7	13
	9-9	13
193550	9-24	8
193554	9-24	9
194607	12-4	14
195852	2-76	5
195856	2-49	16
196297	3-41	3
	3-43	19
197066	2-5	32
	4-13	10
	4-19	33
197067	13-29	12
	13-33	15
197068	3-55	23
198518	11-11	6
198675	3-17	24
	3-33	20
	3-37	20
199917	9-24	7
200659	5-21	6
	9-15	11
200972	5-13	20
201782	5-14	49
201787	5-5	9
201800	3-21	17
	3-29	18
	3-33	43
201808	2-26	62
	9-7	26
	9-9	26
	13-17	10
201829	10-12	8
	12-21	6
203071	7-11	2
204223	4-9	3
	4-14	40
	4-19	21
	4-23	34
	4-24	62
204787	3-33	37
204790	3-31	11
204830	3-47	9
204831	3-47	18
206150	9-7	1
	9-9	1
209417	4-23	27
210183	7-11	3
212355	3-21	27
	3-25	27
	3-29	28
	3-34	58
	3-38	58
	13-17	24
212358	4-14	46
212786	5-5	5
213977	3-31	3
215211	12-7	9
215301	10-11	4
	12-21	4
215425	10-11	4
	12-21	4
216877	9-23	8
220426	4-35	14
220434	3-65	16
220485	4-13	3
	4-19	33
220498	13-29	11
	13-33	14
220551	3-31	13
220932	3-65	3
221341	3-25	44
	3-38	67
221355	5-14	57
221499	9-18	34
221510	9-15	5
221512	9-18	33
221516	9-15	4
221520	9-15	5
221522	2-25	41
221524	9-15	4
221546	2-25	32
221717	10-8	31
	10-21	11
	11-7	7
	12-3	13
	12-11	9
	12-18	22
	13-35	5
	13-37	18
221733	1-5	4
221771	5-14	56
	10-23	3
	11-23	3
	12-37	3
222029	1-5	17
222038	2-5	44
222380	5-14	58
	5-21	24
222443	5-14	51
	5-21	7
222444	5-14	50
	9-15	10
222473	9-3	34
223095	4-27	9
224248	2-71	21
225673	4-29	5
226576	4-29	8
226578	4-29	10
226582	4-29	15
226583	4-29	16
226584	4-29	17
229875	2-67	12
230315	7-7	20
230421	7-7	16
230882	13-29	13
	13-33	16
234038	5-13	2
235691	5-9	25
	5-21	19
	5-24	5
237050	13-8	1
239503	1-15	40
	1-25	12
	3-3	26
	3-63	24
	4-6	37
	4-13	20
	4-19	22
	7-3	18
	8-3	10
	8-15	2
	9-3	22
	9-7	17
	9-9	17
	9-11	11
	9-13	11
	10-8	35
	11-4	30
	12-13	13
	13-15	22
	13-17	22
245800	2-55	10
	2-57	22
245885	2-49	15
245996	4-111	4
246001	12-8	16
246108	4-23	28
	5-23	2
246869	9-3	24
248128	4-29	6
248462	9-23	1
251099	3-55	11
	13-33	31
251979	6-5	31
251994	13-13	11
	13-15	11
	13-17	13
252293	4-83	10
	4-103	5
	4-103	11
	4-111	5
	4-117	3
	4-117	5
	13-56	2
256159	2-73	13
256160	3-13	4
257291	2-9	13
257913	11-15	5
	12-25	5
258321	3-21	32
	3-29	37
	3-34	65
	3-46	
258590	9-7	36
	9-9	29
261379	4-10	33
263794	2-45	11
263795	2-45	10
263828	2-33	16
263842	2-29	10
263958	3-46	12
264134	1-13	20
	2-25	12
	3-17	11
	3-33	11
	3-37	11
	9-11	38
	9-13	39
	11-12	14
264144	1-15	34
264159	5-14	67
266465	2-64	48
266728	7-7	4
266733	7-7	30
268356	4-27	14
268573	2-45	3
270015	7-11	5
270077	10-12	8

©2003 HYSTER COMPANY

NUMERICAL INDEX (Continued)

PART NO.	PG	ITEM
	12-21	6
270330	9-24	14
271479	5-13	31
274232	2-29	19
274403	4-30	13
274648	4-27	3
278085	2-9	39
	2-10	39
280878	12-4	14
281700	8-3	42
287805	6-6	37
287816	1-27	4
	3-55	24
	4-13	1
287837	2-10	44
	2-10	52
287844	10-15	11
	10-17	12
	12-18	28
287851	1-15	26
	3-63	25
	4-10	35
	4-23	44
	5-13	14
	12-30	22
287854	2-9	7
	2-10	44
	2-13	16
	2-15	16
	2-17	25
	2-19	25
	2-21	21
	2-26	45
	12-30	14
	13-11	5
287860	3-59	5
	3-61	5
	5-9	21
	8-3	12
	10-7	14
	11-3	16
	12-13	14
288394	2-26	74
	3-30	59
	7-7	14
288638	13-9	7
289867	2-49	20
	5-7	4
290303	4-27	1
290369	4-27	15
290370	4-27	16
290508	4-27	8
290509	4-27	22
291256	10-8	17
291974	3-55	7
	13-33	19
292420	13-11	7
292500	2-5	12
	3-34	64
	3-38	64
	3-59	2
	3-61	2
	4-35	18
	13-55	3
292501	3-25	48
	3-38	73
	4-13	19
	4-19	12
	4-24	54
	9-11	29
	9-13	29
	13-33	22
292503	12-30	18
292504	8-3	29
292508	5-14	46
	11-19	22
	13-39	9
292509	5-14	47
	9-7	20
	9-9	20
292511	10-8	23
	11-4	26
	12-14	23
292512	12-33	22
292513	2-49	9
	5-9	35
292514	4-24	57
	9-11	15
	9-13	15
292515	4-23	20
292516	8-3	26
292517	2-13	24
	2-15	24
	2-17	13
	2-19	13
	2-21	19
	5-9	32
292519	5-2	3
292521	2-26	52
292522	2-9	20
292523	3-63	15
292526	3-25	17
	3-38	65
	3-41	8
	3-43	16
	4-9	20
	4-13	29
	4-23	22
	9-23	10
	11-7	18
	12-17	14
292527	2-9	1
292528	2-49	3
	10-21	7
	11-19	7
	12-33	7
	13-35	17
	13-37	13
	13-39	19
	13-41	13
292529	5-2	1
292531	9-23	6
	12-17	4
292535	2-10	50
292538	10-17	9
292563	11-7	12
292564	12-17	11
292573	2-23	7
292575	2-47	6
292589	6-5	32
292614	1-25	5
292620	6-5	34
292653	8-3	38
292661	13-70	4
292667	13-63	4
292668	4-5	12
	4-13	24
	4-19	7
292678	2-5	33
292679	4-5	15
	4-19	27
292680	1-17	4
	1-19	14
	1-27	3
	2-5	11
	3-26	59
	3-38	74
	3-55	17
	3-59	3
	3-61	3
	3-61	18
	4-9	10
	4-14	53
	4-20	35
	4-23	31
	4-35	19
	5-14	69
	8-3	45
	9-11	26
	9-13	26
	13-33	25
292681	1-15	27
	1-25	11
	1-29	4
	2-9	29
	2-9	32
	2-25	33
	2-49	12
	3-3	25
	3-17	9
	3-21	41
	3-25	41
	3-30	46
	3-33	9
	3-37	9
	3-63	23
	4-5	11
	4-9	30
	4-13	12
	4-19	23
	4-19	23
	4-24	50
	5-5	7
	5-13	13
	6-6	36
	7-3	7
	7-5	10
	8-3	9
	8-15	4
	9-3	20
	9-7	15
	9-9	15
	9-11	10
	9-13	10
	11-30	24
	12-30	21
	13-13	14
	13-15	17
	13-17	16
	13-33	12
292682	1-15	37
	2-5	28
	2-9	8
	2-9	21
	2-10	43
	2-13	18
	2-15	18
	2-17	26

©2003 HYSTER COMPANY

NUMERICAL INDEX (Continued)

PART NO.	PG	ITEM
	2-19	26
	2-21	13
	2-23	16
	2-25	28
	2-49	6
	3-3	18
	3-59	7
	3-61	7
	3-63	3
	4-13	32
	4-23	19
	5-2	4
	5-9	19
	7-5	3
	8-3	5
	9-11	14
	9-13	14
	10-7	9
	11-3	13
	12-13	9
	12-30	6
	13-11	6
	13-11	6
292683	1-11	9
	1-13	9
	1-21	6
	2-7	6
	2-9	2
	2-10	51
	2-47	1
	2-49	4
	3-45	15
	4-9	19
	4-23	14
	5-2	2
	9-23	7
	10-5	10
	10-17	8
	10-21	6
	11-7	5
	11-19	6
	12-7	15
	12-17	3
	12-33	6
	13-33	4
	13-35	18
	13-37	14
	13-39	20
	13-41	14
292685	2-23	4
	7-7	18
292687	6-5	5
	6-5	33
292689	1-25	6
292697	4-14	38
293602	3-61	17
293603	1-17	2
293611	9-11	6
	9-13	6
293612	9-11	17
	9-13	17
293616	1-15	19
293628	7-7	37
293630	2-23	15
	2-26	51
293644	1-21	4
293645	13-33	5
293646	1-21	7
293647	13-33	6
293648	7-7	43
293649	2-47	4
293655	1-11	5
	1-13	5
293657	1-11	6
	1-13	6
	5-13	29
293685	6-5	24
293690	2-23	3
293694	7-7	19
293697	5-13	5
293700	3-43	13
	3-45	4
293710	6-5	4
293726	13-33	39
293780	2-9	37
293796	11-30	20
293797	10-15	10
	11-30	14
	12-30	16
293798	10-17	11
	12-30	23
295649	11-11	12
295802	4-29	4
296010	7-5	11
296011	2-9	38
296020	2-49	14
	2-49	22
296024	10-7	10
	11-3	14
	12-13	10
296140	13-70	3
296163	3-41	2
296164	3-43	21
296205	4-35	6
296215	7-5	17
296229	13-67	7
	13-69	5
296251	3-45	14
296359	4-9	2
	4-23	25
296380	4-6	42
	4-19	31
296408	4-9	16
	4-23	4
296415	13-63	5
296418	3-3	39
	5-21	15
	13-25	8
	13-27	7
296419	13-59	5
	13-61	18
296420	5-7	9
	7-8	47
296422	1-11	15
	1-13	15
	2-49	19
	5-7	7
	5-13	19
	9-3	6
296423	1-11	7
	1-13	7
	1-21	5
	10-23	3
	11-23	3
	12-37	3
	13-33	3
296426	5-13	4
296504	4-6	33
296510	1-23	26
	4-5	16
297531	11-15	6
	12-25	6
297532	10-11	4
	10-11	4
	10-12	12
	11-11	8
	12-22	9
297640	12-18	23
298096	2-67	7
298831	3-17	46
	3-34	79
298832	3-3	36
300937	1-11	8
	1-11	18
	1-13	21
	7-7	45
	9-3	7
	10-23	4
	11-23	4
	12-37	4
300939	1-11	4
	1-13	4
301749	2-63	43
301751	2-63	45
301785	2-71	33
301966	4-30	18
302023	13-63	6
302035	4-13	6
	4-19	15
302047	13-61	11
302048	13-67	6
	13-69	4
302049	13-63	13
302054	8-3	37
302238	2-5	34
302244	4-5	18
302250	4-13	28
	4-19	4
302263	3-55	15
	13-33	23
302324	13-61	16
302335	2-9	19
302398	1-19	7
	1-23	27
	4-13	7
	4-19	18
	4-35	7
302399	3-34	94
	3-38	90
	4-24	55
	13-55	5
302400	1-23	16
	3-45	12
	7-5	12
302402	1-13	8
302404	3-43	14
	3-45	5
302461	11-7	17
	11-30	7
	12-18	25
	12-30	31
302476	3-43	6
302492	1-25	8
302493	11-7	10
	12-17	9
302713	2-59	17
	2-61	18
303758	2-67	6

©2003 HYSTER COMPANY

NUMERICAL INDEX (Continued)

PART NO.	PG	ITEM
304303	10-8	17
304523	10-7	4
	11-3	8
	12-13	4
304527	11-7	19
	12-18	26
305100	4-10	34
308980	9-11	36
	9-13	36
309109	9-11	16
	9-13	16
309124	4-9	13
309152	4-9	12
310081	4-27	17
310085	4-27	7
310088	4-27	25
311277	9-27	12
	9-29	12
313022	5-3	6
	6-5	23
313805	10-15	12
	10-17	13
	12-18	29
	12-30	5
	13-29	6
313828	9-11	19
	9-13	19
	10-7	13
	11-4	25
	11-30	22
	12-14	22
	12-30	7
315262	10-8	21
	11-4	35
	12-14	21
316132	4-5	3
	4-23	9
316448	13-70	7
316678	1-11	12
	1-13	12
	1-15	35
	1-21	3
	2-5	21
	2-7	4
	3-3	28
	3-17	34
	3-21	39
	3-25	39
	3-29	44
	3-33	30
	3-37	30
	3-55	14
	3-59	11
	3-61	11
	4-6	36
	4-37	3
	13-13	16
	13-15	19
	13-17	18
	13-25	2
	13-27	3
	13-30	3
316826	1-15	39
	2-13	20
	2-15	20
	2-17	16
	2-19	16
	2-21	15
	10-8	15
	11-4	29
	12-13	15
	12-30	4
316828	2-23	5
	2-47	13
	11-7	13
	12-17	12
316834	9-11	37
	9-13	37
316835	1-15	12
	13-25	9
	13-27	8
	13-59	18
	13-67	2
	13-69	1
316837	3-45	7
317292	11-19	17
	12-33	17
	13-39	23
	13-41	17
319322	11-19	9
	12-33	9
	13-39	21
	13-41	15
319323	11-19	8
	12-33	8
	13-39	22
	13-41	16
319891	10-8	21
	11-4	35
	12-14	21
320155	1-19	6
	4-5	17
	4-13	8
	4-19	8
	7-5	20
320156	1-19	13
	1-23	29
	2-5	43
	3-34	93
	3-38	89
	3-55	16
	3-59	15
	3-61	16
	3-63	8
	4-9	11
	4-13	14
	4-19	13
	4-23	30
	4-35	20
	7-3	24
	9-11	25
	9-13	25
	13-29	8
	13-33	24
	13-55	4
320157	1-23	15
	3-3	14
	3-17	3
	3-21	40
	3-25	40
	3-29	45
	3-33	3
	3-37	3
	3-45	10
	4-6	32
	4-9	31
	4-13	21
	5-5	6
	5-14	43
	7-3	6
	8-15	3
	9-3	19
	9-7	14
	9-9	14
	11-30	11
	12-30	20
	13-13	13
	13-15	16
	13-17	15
320158	1-15	20
	1-25	10
	3-3	27
	3-17	8
	3-33	8
	3-37	8
	3-63	22
	4-6	43
	4-24	52
	7-3	3
	7-3	26
	8-4	51
	9-7	38
	9-9	38
	9-11	27
	9-13	27
	13-13	5
	13-15	6
	13-17	23
	13-55	6
320159	1-15	10
	2-5	27
	2-9	9
	2-10	45
	2-13	25
	2-15	25
	2-17	15
	2-17	27
	2-19	15
	2-21	20
	2-25	27
	4-23	24
	8-3	11
320160	3-63	2
	10-8	36
	11-3	12
	12-14	29
320161	2-7	7
	2-9	3
	2-10	49
	3-25	32
	3-38	66
	3-41	7
	3-43	15
	3-45	15
	4-9	18
	4-9	18
	4-13	33
	4-23	29
	7-7	44
	10-5	9
	11-7	4
	12-17	7
320162	4-9	18
	4-23	11
320171	3-22	64
	3-30	62
	3-34	90
	10-15	7

©2003 HYSTER COMPANY

NUMERICAL INDEX (Continued)

PART NO.	PG	ITEM
	11-30	9
	12-30	11
320327	11-19	23
	12-33	23
	13-41	22
321043	13-7	2
321044	13-7	2
321045	13-7	2
321158	4-9	6
	4-23	33
321734	2-25	17
322637	13-5	4
	13-7	4
	13-8	4
322638	13-5	5
	13-7	5
	13-8	5
322784	2-26	75
323541	3-31	10
324858	7-7	42
324864	7-7	41
325897	9-3	21
326498	7-7	33
326926	3-31	14
327591	10-8	33
	10-21	9
	12-3	11
	12-11	7
	13-35	3
327807	10-12	8
	10-12	8
327808	10-12	11
	10-12	11
328047	2-63	36
328565	2-9	22
329067	3-3	15
332061	10-7	5
	11-3	11
	12-13	7
332755	8-3	20
334155	9-24	10
334402	5-17	2
	5-19	12
334421	5-9	20
334447	5-13	12
334475	5-17	13
	5-19	4
334500	5-21	10
334531	5-21	13
	5-24	4
334542	5-21	8
334543	5-21	9
334560	5-13	35
334582	5-21	4
335553	1-5	14
335988	1-5	16
335991	1-5	15
336123	13-7	1
336550	2-5	16
337180	11-7	3
337189	12-18	23
337190	11-7	3
	12-18	23
337239	13-29	5
338646	11-7	3
338647	10-8	17
	12-4	14
338649	12-4	14
339932	10-8	33
	10-21	9
	11-7	22
	11-19	11
	12-3	11
	12-11	7
	12-17	20
	12-33	11
	13-37	16
	13-41	21
339933	12-18	23
339934	12-4	14
339969	4-37	4
340044	1-31	31
340204	2-5	20
341558	11-19	10
	12-33	10
343029	4-27	5
343031	4-27	10
343032	4-27	12
343041	4-27	13
344233	4-27	18
344234	4-27	24
344432	2-5	18
345408	7-13	3
345410	7-13	7
345411	7-13	8
345412	7-13	9
345423	7-5	25
345453	2-5	15
345454	2-5	17
346645	5-21	29
346648	5-21	28
346650	5-21	30
346656	5-14	44
346675	5-9	15
346680	5-9	27
346696	5-9	4
346730	5-9	5
346731	5-9	3
347243	12-18	23
348827	11-7	3
	12-18	23
349366	3-21	49
	3-26	49
	3-29	18
	3-33	33
	3-37	33
349377	2-57	13
350397	2-55	26
	2-57	9
350399	2-67	18
350484	5-21	16
351531	10-12	12
	10-12	12
	12-22	9
351532	10-12	13
	10-12	13
	12-22	13
352220	6-5	27
352247	9-24	5
352266	13-5	1
352268	13-5	2
352269	13-5	2
352270	13-5	2
352288	9-23	1
352321	5-13	8
352485	3-63	6
352950	3-63	16
352952	2-40	7
352969	3-65	18
353000	3-3	13
	3-17	4
	3-33	4
	3-37	4
	9-3	16
353129	3-63	7
353141	3-63	14
353142	3-63	12
353143	3-63	11
353154	3-65	4
353164	3-63	5
353165	3-65	15
353168	3-65	5
353172	3-63	18
353175	3-65	11
353195	3-63	10
353198	3-17	40
	3-22	61
	3-26	61
	3-29	27
	3-34	87
	3-38	87
	8-4	55
	9-7	28
	9-9	28
353199	2-26	59
353230	3-63	19
353291	2-53	10
	4-23	1
353310	2-5	19
	3-17	33
	3-21	30
	3-25	30
	3-29	35
	3-33	29
	3-37	29
353397	3-65	1
353422	3-65	6
353432	3-65	7
353448	3-65	8
353453	3-63	21
356916	10-8	17
	12-4	14
356917	10-8	17
357025	10-8	17
359207	3-65	10
359221	5-21	5
360387	2-25	40
	2-49	23
	3-65	3
361876	5-21	1
361877	5-21	2
364807	1-5	6
364808	1-5	7
364854	1-5	12
364914	1-5	3
365854	2-55	25
	2-57	34
366069	7-13	20
366106	12-18	23
366473	3-21	35
	3-29	40
	3-34	68
367139	10-11	6
367140	10-11	6
367420	10-24	1
	11-24	1
	12-38	1
367421	10-24	1

©2003 HYSTER COMPANY

NUMERICAL INDEX (Continued)

PART NO.	PG	ITEM
	11-24	1
	12-38	1
367422	10-24	1
	11-24	1
	12-38	1
367423	10-24	1
	11-24	1
	12-38	1
367424	10-24	1
	11-24	1
	12-38	1
367540	4-77	2
367945	5-21	32
369139	2-25	2
369242	1-15	30
	13-33	37
369474	13-25	5
	13-27	1
369748	2-34	38
369815	2-5	4
	3-25	35
	3-38	88
369922	5-21	27
370250	1-32	33
370251	1-32	33
370252	1-32	33
370253	1-32	33
370254	1-32	33
370255	1-32	33
370256	1-32	33
370257	1-32	33
370258	1-32	33
370259	1-32	33
370647	4-5	2
	4-43	7
	4-43	8
	4-52	9
	4-52	10
	4-52	12
	4-53	25
	4-53	26
	4-59	10
	4-59	11
	4-59	12
	4-59	13
	4-68	10
	4-68	11
	4-68	13
	4-70	27
	4-70	29
	4-75	7
	4-75	8
	4-84	2
	4-84	4
	4-87	1
	4-100	10
	4-100	11
	4-101	22
	4-101	23
	4-105	10
	4-105	11
	4-106	23
	4-111	8
	4-111	9
	4-117	8
	4-117	9
	4-121	1
370648	4-5	2
	4-23	39
	4-87	1
	4-121	1
370651	6-5	30
370730	4-83	7
370743	8-3	44
370776	4-23	21
370863	4-5	7
370864	4-5	8
370868	4-5	4
371344	7-13	21
372111	9-27	15
372115	3-33	37
373449	5-9	33
373950	5-7	2
	5-9	30
374713	3-31	7
374923	3-56	5
375575	2-29	24
375580	2-29	7
375587	2-33	19
375597	2-39	7
	4-30	19
375601	2-29	20
375602	2-29	25
375629	1-15	29
	1-23	22
	4-6	46
375984	3-55	21
	8-3	24
	13-33	21
375986	5-21	31
376026	6-6	39
	6-6	39
	7-8	48
377976	2-63	3
379197	1-5	10
379198	1-5	11
379199	1-5	22
379400	2-26	57
379405	2-26	58
	9-3	35
	10-8	28
	12-14	26
379407	2-25	18
379697	1-5	23
379698	1-5	20
379902	4-5	13
380524	5-9	31
381110	10-11	6
381113	12-22	11
383116	1-5	13
383789	3-31	12
385531	2-55	7
	2-57	1
	2-57	2
	2-69	12
385554	2-55	35
	2-57	31
385847	2-63	35
386071	4-29	7
386459	2-55	28
	2-57	6
	2-63	9
	2-67	3
	2-71	36
	2-75	3
	3-5	34
	3-11	26
	3-14	7
387455	4-23	12
387867	4-23	13
	8-3	41
387869	4-13	25
	4-19	28
387892	4-5	26
	4-9	17
388302	2-29	28
388306	2-45	7
388313	2-33	28
	2-33	28
388514	2-25	16
389688	1-31	7
389692	1-31	5
393290	3-21	23
	3-25	23
	3-29	25
	3-34	54
	3-38	54
393502	8-3	13
397676	7-3	11
	9-7	29
399487	4-83	5
615145	11-15	10
	12-25	10
636950	11-15	12
	12-25	12
636952	11-15	12
	12-25	12
637161	11-15	9
	12-25	9
637162	11-16	13
	12-26	13
637164	11-16	13
	12-26	13
637635	11-15	6
	12-25	6
638248	9-24	16
	12-22	13
638249	10-12	11
	10-12	13
	12-21	7
638250	10-12	11
	12-21	7
638293	11-16	14
	12-26	14
638295	11-16	14
	12-26	14
806556	13-9	4
815597	4-6	34
842799	2-59	3
	2-61	11
842800	2-59	4
	2-61	12
895963	2-5	26
980727	2-55	1
	2-57	12
	2-69	13
980929	12-14	28
983010	12-14	28
983484	2-67	14
984632	2-55	13
	2-57	3
986475	2-69	16
990429	2-71	2
992025	2-69	15
992393	2-55	9
	2-57	38
1151722	9-27	9
	9-29	9

See Service Manual for service procedures.
©2003 HYSTER COMPANY

NUMERICAL INDEX (Continued)

PART NO.	PG	ITEM
1206749	12-4	14
1300107	1-5	5
1300152	2-26	55
1300741	13-13	7
	13-15	8
	13-17	7
1301286	13-30	2
1301648	3-30	66
	4-6	39
1301720	4-106	24
	4-111	14
	4-117	14
1301727	13-29	10
1302024	13-29	2
	13-33	11
1302126	13-5	2
1302127	13-5	2
1302258	4-37	11
1302954	2-5	7
1302973	5-14	41
1303787	7-13	10
1304058	1-31	18
1304349	11-4	34
1304971	1-17	11
	2-7	8
1305698	2-55	2
	2-57	29
1305699	2-59	2
	2-61	10
1305701	2-59	2
	2-61	10
1305702	2-59	2
	2-61	10
1305703	2-59	2
	2-61	10
1305706	2-59	14
	2-61	15
1306030	2-67	13
1306039	2-63	31
1306040	2-63	33
1306041	2-63	34
1306042	2-63	38
1306043	2-63	40
1306047	2-63	44
1306140	2-63	10
1306143	2-63	16
1306146	2-63	17
1306147	2-63	20
1306148	2-63	21
1306186	2-71	34
1306193	2-59	15
	2-61	16
1306194	2-59	16
	2-61	17
1306328	2-63	46
1306329	3-11	32
1306331	3-5	31
	3-8	7
1306337	3-11	23
1306345	3-5	30
	3-7	18
	3-8	5
1306349	2-55	31
	2-57	30
1306350	2-59	7
	2-61	3
1306351	2-71	17
1306353	2-51	14
	2-53	14
	2-71	19
1306354	2-79	5
	2-83	3
1306356	2-67	16
1306357	2-51	5
	2-53	5
	2-67	20
1306358	2-51	15
	2-53	15
	2-63	41
	2-67	21
	2-73	7
	2-79	23
	2-81	4
1306359	2-63	26
	3-11	4
1306361	2-67	24
	3-5	26
	3-7	13
1306362	2-51	16
	2-53	16
	2-63	37
	2-67	22
1306363	2-63	39
1306364	2-67	11
1306367	2-63	47
1306368	2-63	28
1306370	2-73	12
	2-75	13
1306371	3-5	33
	3-8	3
	3-11	29
1306374	2-63	4
1307875	2-63	7
1307877	2-73	11
	2-75	12
1307879	2-63	12
1307880	2-63	14
1307881	2-63	18
	2-79	9
	2-81	17
	3-11	20
1307882	2-63	22
1307883	2-63	23
	3-5	25
	3-7	23
1307884	2-63	24
	3-5	27
	3-7	21
1307891	3-5	36
	3-8	1
1307893	2-55	24
	2-57	35
1307894	2-63	29
	3-14	6
1307895	2-73	2
1307898	2-79	14
	2-79	24
	2-81	13
1307908	2-79	3
	2-81	24
1307909	2-79	6
	2-81	20
1307910	2-51	8
	2-53	8
1307913	2-83	5
	3-5	35
	3-8	4
1307915	2-76	3
1308002	3-7	11
1308003	3-5	19
1308004	3-5	32
	3-8	2
1308005	3-8	10
1308006	3-8	9
	3-13	5
1309775	13-29	1
	13-33	10
1310277	2-51	10
1310370	11-11	4
1310371	11-11	4
1310373	11-11	5
1310374	11-11	5
1310376	11-11	3
1310377	11-11	3
1310611	4-6	40
	4-13	26
	13-15	12
	13-17	21
1310630	4-5	2
	4-87	1
	4-121	1
1311054	2-55	18
	2-57	16
1311055	2-55	19
	2-57	18
1311056	2-55	20
	2-57	19
1311057	2-55	21
	2-57	20
1311070	3-11	22
1314381	4-14	50
	4-19	24
1315497	2-81	23
1315766	2-63	19
1315767	2-76	1
1316488	2-40	6
	2-43	4
1316494	2-40	5
	2-43	5
1318306	2-51	2
	2-53	2
1318965	2-63	8
	2-79	4
	2-81	25
1318968	2-79	13
	2-81	3
1319028	2-83	11
1320000	2-33	13
1320018	5-7	2
	5-9	30
1320669	4-5	2
	4-87	1
	4-121	1
1320893	4-23	10
1322333	5-7	2
	5-9	30
1322627	4-6	44
	4-24	58
	5-9	26
1323576	4-78	4
	4-103	2
	4-105	8
1323579	4-95	13
1324307	4-37	8
	13-71	3
1324308	4-37	8
	13-71	3
1324309	13-71	2

©2003 HYSTER COMPANY

NUMERICAL INDEX (Continued)

PART NO.	PG	ITEM
	13-71	3
	13-71	4
1324310	13-71	2
	13-71	3
	13-71	4
1324517	4-9	1
	4-24	60
1324557	4-23	8
1324577	3-59	22
	3-61	20
	7-5	33
1325120	10-7	7
	11-3	9
	12-13	5
1325271	1-31	9
1326939	4-9	8
	4-23	16
1327161	8-3	3
1327958	4-41	7
	4-47	7
	4-55	7
	4-63	7
	4-73	7
	4-95	7
	4-103	7
	4-109	8
	4-115	8
1328516	4-29	35
1328521	4-29	39
1328565	2-67	10
1328691	5-13	38
1328878	3-21	47
1328930	9-11	7
	9-13	7
1329250	7-5	27
1329272	2-5	30
1329660	2-83	2
1330293	4-13	17
	4-19	17
	4-84	1
1330299	4-103	3
1330324	3-17	41
	3-34	95
	3-38	92
1330342	3-17	5
	3-33	5
	3-37	5
1330397	3-17	32
	3-29	33
	3-38	77
1330410	3-65	13
1330415	3-65	13
1330424	4-41	1
	4-47	1
	4-55	1
	4-63	1
	4-73	1
	4-95	1
1330435	3-65	13
1330438	4-41	1
	4-47	1
	4-55	1
	4-63	1
	4-73	1
	4-83	3
	4-91	5
	4-95	1
	4-103	1
	4-109	1
	4-115	1
1330439	4-91	5
	4-91	6
1330450	2-29	6
1330453	2-45	5
1330725	2-25	3
1330917	1-31	20
1330919	1-31	16
1330920	1-31	3
1331341	2-29	27
1331990	10-8	32
	12-3	10
1331991	10-8	32
	11-7	21
	12-3	10
	12-17	19
1332705	10-15	6
	11-30	8
	12-30	10
1333001	10-25	1
	12-39	1
1333002	10-25	1
	11-25	1
	12-39	1
1333003	10-25	1
	11-25	1
	12-39	1
1333004	10-25	1
	11-25	1
	12-39	1
1333541	2-45	6
1333807	3-21	28
	3-25	28
	3-29	31
	3-38	61
1333808	3-38	79
1333827	4-13	25
	4-19	26
1334401	4-30	1
1334406	4-30	5
1334408	4-30	9
1334410	4-30	11
1334423	2-39	5
	4-30	17
1334642	8-7	20
1334790	1-23	13
1335129	1-31	17
1335137	1-31	15
1335212	2-29	18
1335226	2-29	26
1335497	2-39	8
1335499	2-29	16
	2-49	21
1335763	1-25	9
1335898	2-13	9
	2-15	9
	2-17	3
	2-19	3
	2-21	11
1335967	7-5	8
1335987	7-5	7
1336605	1-31	19
1337108	8-3	19
1337118	2-13	8
	2-15	8
	2-17	2
	2-19	2
	2-21	10
1337196	7-5	26
1337197	4-5	13
1337743	13-9	2
1337744	13-5	2
1337745	13-7	2
1337817	5-21	3
1338178	1-31	1
1338223	2-45	2
1338258	2-15	6
	2-19	4
1338262	8-3	14
1338286	1-23	18
1338291	4-35	8
1339457	2-5	9
1339672	1-32	32
1339720	3-3	30
	3-17	35
	3-33	31
	3-37	31
1339745	9-11	8
	9-13	8
1339746	9-11	9
	9-13	9
1339748	9-13	30
1339749	9-11	5
	9-11	5
	9-13	5
1339770	9-11	30
1339779	3-17	2
	3-22	57
	3-26	57
	3-30	60
	3-33	2
	3-37	2
1339947	13-55	1
1339963	2-34	36
1342525	4-30	14
1342528	4-30	2
1342534	4-30	6
1343443	9-11	4
	9-13	4
1343449	3-3	12
	3-17	1
	3-33	1
	3-37	1
1343537	7-5	19
1343572	7-5	18
1343573	7-5	5
1343574	7-5	16
1343577	4-35	1
1343578	4-35	2
1343579	4-35	3
1343593	4-35	5
1343594	4-35	9
1343595	4-35	12
1343596	4-35	21
1343597	4-35	22
	7-5	31
1343598	4-35	4
1343607	7-5	14
1343630	8-3	27
1344274	4-27	11
1344921	2-63	11
1345014	2-51	3
	2-53	3
1345677	3-22	70
	3-34	46
	3-37	46
1345684	7-7	35
1345754	3-14	5
1345795	2-49	10

©2003 HYSTER COMPANY

NUMERICAL INDEX (Continued)

PART NO.	PG	ITEM
1345800	2-55	23
	2-57	37
	2-76	2
1345939	1-31	10
1345993	3-26	52
	3-38	82
1347004	4-35	
1347025	7-5	25
1347043	1-23	23
1347045	1-23	24
1347067	4-5	30
1347088	1-15	16
	3-63	26
1347114	4-5	2
	4-121	3
1347135	7-5	32
1347202	4-5	23
	4-14	47
1350036	2-26	54
1350215	1-23	6
	1-27	1
	2-26	67
1350282	1-15	18
1350285	1-15	11
1350682	3-33	28
1350733	13-55	1
1350734	13-55	1
1350735	13-55	1
1350736	13-55	1
1351176	2-13	23
	2-15	23
	2-17	14
	2-19	14
	2-21	18
1351177	2-13	22
	2-15	22
	2-17	17
	2-19	17
	2-21	17
1351178	2-13	26
	2-15	26
	2-17	28
	2-19	19
	2-21	22
1351431	1-5	1
1351473	1-5	1
1351689	8-3	36
1351987	2-26	50
1352089	3-65	12
1352090	3-65	12
1352105	4-52	14
	4-53	15
	4-60	16
	4-60	17
	4-69	16
	4-69	17
	4-91	4
	4-100	14
	4-101	15
	4-105	12
	4-106	15
1352123	3-22	58
	3-26	58
	3-30	61
1352190	1-31	29
1352575	3-63	13
	3-65	
1352616	7-3	23
1354114	3-21	29
	3-34	49
	3-37	49
1354119	13-25	5
	13-27	1
1354140	1-5	2
1354165	1-31	12
1354171	1-31	23
1354237	4-91	13
1354300	4-35	11
1354497	4-83	9
	4-103	12
	4-105	4
	4-109	13
	4-111	2
	4-115	13
	4-117	2
	4-122	13
1355326	7-13	11
1356137	1-31	4
1356335	13-25	5
	13-27	1
1356393	9-3	32
1356520	13-30	1
1357322	2-23	6
	2-47	5
1357746	3-47	7
1357749	3-31	4
	3-47	11
1357788	2-55	15
	2-57	28
1358026	2-29	19
1358079	2-29	28
1358120	7-3	17
	13-13	20
	13-15	10
	13-17	5
1358156	2-29	13
1358179	13-9	2
1358184	13-5	2
1358185	13-7	2
1358190	13-9	2
1358192	13-7	2
1358195	13-5	2
1358911	2-51	9
	4-9	32
	4-27	
1359581	2-5	13
1359587	1-15	31
1360178	2-33	28
1360179	2-29	4
1360182	2-29	5
1360797	8-7	13
1360875	9-27	3
	9-27	5
	9-29	3
	9-29	5
1361302	11-15	4
	12-25	4
1361502	8-7	26
	8-11	25
1362714	1-15	25
1363016	13-25	5
	13-27	1
1363916	1-21	9
1363917	1-21	8
	9-7	32
1363918	1-21	10
1364259	1-15	21
1364271	7-5	13
1367587	3-46	9
1367588	3-46	10
1367589	3-46	6
1367622	3-47	4
1367645	13-25	4
	13-27	11
1369065	3-47	16
1369077	2-55	26
	2-57	9
1369470	4-13	16
1370944	2-69	22
1370947	2-71	3
1370948	2-71	10
1370949	2-71	18
1371211	4-29	9
1371212	4-29	18
1371214	4-29	21
1371229	2-25	4
1371445	9-3	32
1371717	2-63	5
1374108	2-34	39
1374288	2-39	6
1374289	2-39	11
1374290	2-39	3
1374293	2-39	14
1374297	2-33	2
1374298	2-33	8
1374299	2-33	7
1374301	2-33	6
1374313	2-29	15
	2-33	35
1374314	2-33	34
1374315	2-33	31
1374317	2-33	26
1374319	2-45	1
1374320	2-45	4
1374326	2-33	32
1374328	4-30	4
1374329	4-30	3
1374330	4-30	8
1374331	4-30	7
1374333	4-30	12
1374549	1-31	24
1374750	1-5	21
1374980	2-71	9
1374982	2-55	22
	2-57	36
1375029	3-47	10
1375037	3-47	5
1375150	1-5	
1375168	13-25	7
	13-27	6
1375169	13-25	6
	13-27	5
1375171	13-25	1
1375172	13-25	1
1375214	1-25	7
1375795	4-83	19
1376007	13-5	2
	13-7	2
	13-9	2
1376439	4-37	1
1376557	8-15	1
1376579	13-27	2
1376617	4-105	13
	4-105	14
1376743	7-5	30
1376746	3-3	3
	3-17	45
	3-35	99

©2003 HYSTER COMPANY

NUMERICAL INDEX (Continued)

PART NO.	PG	ITEM
	3-38	96
1377047	4-27	4
1377048	4-27	6
1377049	4-27	21
1377050	4-27	13
1377051	4-27	20
1377052	4-27	19
1377053	4-27	23
1377067	4-27	2
1377103	2-33	23
1377104	2-33	25
1377107	2-33	33
1377110	2-37	3
1377678	3-18	51
	3-34	71
	3-38	71
1377738	4-9	28
1377750	2-25	8
1377751	4-9	26
1377792	2-39	15
1377793	2-39	16
1377794	2-39	17
1377908	2-63	2
1378107	1-11	1
1378168	1-11	2
	1-13	2
1378197	1-11	3
	1-13	3
1378198	2-23	10
	2-47	9
1378226	2-49	8
1378259	5-13	3
1378435	8-3	8
1378509	1-31	27
1378600	7-5	6
1378661	4-43	9
	4-75	9
	4-111	10
	4-117	10
1379063	11-11	9
	12-22	14
1379734	2-55	27
	2-57	11
1379799	13-25	5
	13-27	1
1380245	2-71	30
1380251	2-71	35
1380755	2-63	32
1380757	4-37	1
1380763	2-71	28
1380878	9-24	4
1380901	11-11	1
1380904	11-11	1
1381055	11-11	13
1381056	11-12	13
1381061	10-12	10
	12-22	10
1381062	10-12	10
	10-12	10
	12-22	10
1381085	9-24	15
1382061	2-55	29
	2-57	8
1382126	1-17	22
1382131	13-29	1
	13-33	10
1382313	4-37	6
1382479	2-67	15
1382481	2-67	8
1382543	2-83	10
	3-5	12
1382556	7-5	25
1383031	9-24	3
1383204	2-25	7
1383257	2-33	12
	2-33	12
	2-33	12
	2-40	9
	2-43	1
1383263	2-34	41
	3-17	36
1383331	4-9	14
1383346	4-14	42
	4-19	10
1383777	7-7	23
1383904	2-39	10
1384577	2-25	6
1384578	2-25	10
1384581	2-25	11
	3-21	12
	3-25	12
	3-29	13
	3-33	38
	3-37	38
1384584	2-9	15
1384594	4-5	19
1384659	13-11	10
1385060	5-13	24
1385061	5-14	62
1385062	5-14	63
1385063	5-14	64
1385064	5-14	65
1385065	5-13	25
1385102	1-31	14
1385433	1-11	1
1385449	1-25	1
1385451	7-5	1
1385457	1-25	1
1385489	5-14	48
1385498	1-23	19
1385873	5-14	42
1386176	2-33	18
	2-45	
1386177	2-45	8
1386178	2-33	20
1386179	2-33	22
1386180	2-33	21
1386183	2-33	27
1386184	2-34	40
1386185	2-39	1
1386186	2-39	12
1386187	2-39	13
1386189	2-39	21
1386190	2-39	22
1386191	2-39	23
1386194	2-37	4
1386195	2-37	5
1386197	2-37	7
1386198	2-37	8
1386940	5-13	10
1386958	5-9	8
1387230	5-21	14
1387235	5-17	10
	5-19	7
1387281	11-7	15
	12-17	17
1387285	10-21	8
	12-11	6
	13-35	2
1387286	10-21	8
	12-11	6
	13-37	15
1387324	10-8	24
	11-4	27
	12-14	24
1387327	12-30	19
1387330	10-23	2
	11-23	2
	12-37	2
1387341	10-23	1
	11-23	1
	12-37	1
1387342	10-23	1
	11-23	1
	12-37	1
1387343	10-23	1
	11-23	1
	12-37	1
1387344	10-23	1
	11-23	1
	12-37	1
1387345	10-23	1
	11-23	1
	12-37	1
1387346	10-23	1
	11-23	1
	12-37	1
1387348	10-23	1
	11-23	1
	12-37	1
1387349	10-23	1
	11-23	1
	12-37	1
1387399	10-8	25
	11-4	28
	12-14	25
1387446	10-21	1
1387447	10-21	1
1387448	10-21	1
1387457	12-33	1
1387458	12-33	1
1387459	12-33	1
1387479	12-18	27
1387496	12-33	1
1387497	12-33	1
1387498	12-33	1
1387519	11-7	16
	12-18	24
1387523	12-30	8
1387548	11-19	10
	12-33	10
	13-39	6
1387549	11-19	11
	12-33	11
	13-39	7
1387553	12-17	2
1387584	11-7	14
	12-17	15
1387586	9-23	4
1387743	11-7	20
	12-17	18
1387744	10-5	12
1387745	10-5	12
1387904	10-23	1
	11-23	1
	12-37	1
1387963	12-17	16
1387965	12-17	16

©2003 HYSTER COMPANY

NUMERICAL INDEX (Continued)

PART NO.	PG	ITEM
1387966	12-17	16
1387968	12-17	16
1387970	12-17	16
1387973	12-17	16
1387993	10-21	4
	11-19	4
	12-33	4
	13-35	11
	13-37	7
	13-39	13
	13-41	7
1388018	12-30	29
1388019	10-8	18
	11-4	21
	12-13	17
1388092	10-21	1
1388093	10-21	1
1388094	10-21	1
1388385	3-11	10
1388386	3-11	11
1388387	2-55	11
	2-57	5
1388563	5-23	1
1388573	5-13	39
	5-23	6
1388612	5-13	11
	5-24	
1388613	5-24	1
1388615	5-24	3
1388657	7-11	1
1388665	7-11	4
1388670	7-7	3
1388673	7-7	1
1388677	5-13	22
1388678	5-13	18
1388680	5-13	27
1388695	5-14	60
1388697	5-13	16
1388698	5-13	17
1388699	5-14	66
1388704	2-23	12
	2-47	11
1388705	2-49	16
	5-7	11
1388706	2-49	16
1388721	4-23	3
	4-33	
1388733	2-49	2
1388735	5-13	33
1388747	5-14	48
1388750	2-49	18
	5-7	6
1388752	5-9	11
1388753	5-9	12
1388773	7-5	21
	7-13	
1388776	9-7	24
	9-9	24
1388780	7-11	7
1388794	2-9	12
1388801	5-13	36
1388802	5-13	7
1388804	5-14	70
1388827	7-7	7
1388828	7-7	7
1388829	7-7	12
1388832	7-7	22
1388833	7-7	
1388838	7-8	46
1388842	7-7	6
1388843	7-7	31
1388846	7-7	25
1388847	7-7	26
1388848	7-7	27
1388856	5-9	22
1388857	5-9	24
1388869	5-13	1
1388870	5-13	1
1388871	5-2	
	5-7	
	5-9	
	5-13	
1388872	5-2	
	5-7	
1388873	5-2	
	5-7	
	5-9	
	5-13	
1388874	5-2	
	5-7	
	5-9	
	5-13	
1388879	1-25	1
1388880	1-25	1
1388882	1-25	1
1388883	1-25	1
1388898	1-25	2
1388901	5-9	34
1388909	9-11	1
	9-13	1
1388911	2-5	22
1388924	5-21	22
1388954	9-7	4
	9-9	4
1388963	9-3	8
1388993	5-9	28
1389050	2-39	19
1389051	2-37	2
	2-39	20
1389092	2-33	24
	2-33	24
	2-33	24
1389093	2-39	9
1389100	2-33	15
1389102	2-39	2
1389133	2-39	24
1389479	4-87	1
	4-87	3
	4-87	5
	4-87	6
	4-87	7
	4-87	7
	4-121	1
	4-121	3
	4-121	5
	4-121	7
	4-121	7
1389590	9-7	40
1389779	12-7	12
1389780	12-7	12
1389825	11-7	9
	12-17	8
1389828	12-30	13
1389839	9-23	5
1389844	10-7	12
	11-4	33
	12-13	12
1389845	10-7	12
	10-7	12
	12-13	12
1389846	10-5	6
	12-7	11
1389854	12-30	33
1389857	12-30	32
1389859	12-30	17
1389921	10-8	16
1389922	11-4	32
	12-13	16
1389923	10-7	8
1389924	11-4	31
	12-13	8
1389959	10-5	8
	12-7	14
1389961	10-15	5
1390101	5-14	61
1390110	3-55	3
1390163	4-33	7
1390164	4-33	36
1390167	4-33	38
1390759	2-29	2
1390760	2-29	2
1390761	2-29	3
1390765	2-29	3
1390770	2-29	7
1390773	2-29	12
1391246	2-71	24
1392210	4-9	26
1392718	1-15	5
1392732	3-17	49
1392734	2-17	18
1392735	2-17	19
1392738	3-22	56
	3-26	56
1392740	13-33	7
1392744	3-3	34
1392745	1-11	16
1392797	13-33	9
1392799	13-33	18
1392814	13-33	17
1392818	13-33	36
1392819	13-33	35
1392826	3-33	37
1393127	2-37	6
1393160	5-23	4
1393342	6-5	17
1393344	6-6	38
1393346	6-6	38
1393348	7-7	10
1393350	2-33	17
1393451	13-61	2
1393452	13-61	3
1393454	13-59	17
1393455	4-41	14
	13-59	24
1393458	13-61	13
1393459	13-67	24
1393463	13-59	27
	13-67	20
	13-69	17
1393464	13-67	13
	13-69	11
1393466	13-61	8
1393467	13-69	16
1393468	13-67	19
1393469	13-69	13
1393470	13-67	15
1393471	13-57	12
1393472	13-59	21

©2003 HYSTER COMPANY

NUMERICAL INDEX (Continued)

PART NO.	PG	ITEM
	13-67	11
	13-69	9
1393478	13-67	18
1393479	13-69	8
1393480	13-69	10
1393482	13-67	10
1393483	13-67	12
1393485	13-67	14
	13-69	12
1393486	13-59	22
1393488	13-59	25
1393489	13-67	3
1393490	13-59	30
1393492	13-57	7
1393493	13-57	8
1393497	13-61	6
1393500	13-59	1
1393504	13-61	5
1393505	13-61	9
1393511	13-59	7
	13-61	1
	13-63	2
1393514	13-61	17
1393517	13-59	4
1393524	13-63	3
1393525	13-63	12
1393526	13-63	10
1393527	13-63	8
1393528	13-63	7
1393537	13-65	9
1393540	13-57	6
1393541	13-59	23
1393542	13-59	2
1393543	13-59	11
1393547	13-65	8
1393879	5-5	4
	7-3	5
	9-3	40
	9-7	18
	9-9	18
	9-11	39
	9-13	40
1394001	2-53	9
	4-10	32
	4-23	1
	4-27	1
	4-29	
1394100	4-37	7
1394436	2-23	14
	2-47	14
1394437	2-23	11
	2-47	10
1394438	2-23	13
	2-47	12
1394453	9-3	10
1394476	13-5	3
	13-5	3
	13-8	3
1394478	13-5	3
	13-8	3
1394480	13-7	3
1394482	13-7	3
1394509	13-9	8
1394511	13-9	9
1394514	13-9	3
1394521	3-17	18
	3-33	18
	3-37	18
	3-53	
1394552	7-7	28
1394554	7-7	28
1394576	8-3	15
1394581	2-9	39
1394593	3-55	5
	13-33	33
1394594	2-25	13
1394595	2-9	36
1394603	6-5	1
1394604	6-5	2
1394605	6-5	8
1394607	6-5	6
1394610	6-5	7
1394612	6-5	11
1394615	6-5	11
1394617	6-5	13
1394618	6-5	16
1394620	6-5	19
1394621	6-5	20
1394622	6-5	21
1394624	6-5	22
1394626	6-5	25
1394646	6-5	26
1394661	6-5	35
1394672	9-23	11
1394681	6-5	9
	8-7	
1394682	6-5	10
	8-7	
1394686	6-5	25
1394687	6-5	7
1394688	9-23	13
	13-70	11
1394689	9-23	14
1394702	2-10	42
1394707	5-13	23
1394709	5-13	6
1394710	5-21	17
1394711	5-21	18
1394712	2-9	31
1394714	5-9	23
	5-21	23
1394715	6-6	39
	6-6	39
	7-8	48
	13-9	10
1394716	2-47	2
1394717	2-47	3
1394718	2-23	1
1394774	2-49	11
1394776	5-17	1
1394777	5-19	1
1394786	5-9	6
1394787	5-9	9
1394788	5-9	7
1394789	5-10	39
1394794	5-9	17
1394798	5-7	1
	5-9	10
1394799	5-7	1
	5-9	10
1394800	5-13	28
1394803	2-13	5
	2-15	5
	2-17	29
	2-19	18
	2-21	2
1394815	8-3	32
1394816	8-3	33
1394817	8-3	32
1394818	8-3	33
1394819	8-3	34
1394862	4-5	1
1394879	5-17	4
	5-19	11
1394881	5-17	12
	5-19	5
1394882	5-17	5
	5-19	10
1394885	5-17	3
	5-19	3
1394893	5-17	6
	5-19	9
1394912	5-17	7
	5-19	8
1394984	11-19	1
1394985	11-19	1
1394986	11-19	1
1394991	11-19	1
1394992	11-19	1
1394993	11-19	1
1395342	10-3	1
1395348	10-3	1
1395354	10-3	1
1395361	10-3	1
1395367	10-3	1
1395373	10-3	1
1395384	10-5	1
1395390	10-5	1
1395396	10-5	1
1395403	10-5	1
1395409	10-5	1
1395415	10-5	1
1395450	10-8	17
1395492	10-8	17
1395499	10-8	17
1395851	12-3	1
1395853	12-3	1
1395854	12-3	1
1395856	12-3	1
1395858	12-3	1
1395861	12-3	1
1395877	12-7	1
1395879	12-7	1
1395880	12-7	1
1395882	12-7	1
1395884	12-7	1
1395887	12-7	1
1395903	12-11	1
1395905	12-11	1
1395906	12-11	1
1395908	12-11	1
1395910	12-11	1
1395913	12-11	1
1396009	1-23	20
1396012	1-23	20
1396014	9-11	33
	9-13	33
1396015	9-11	34
	9-13	34
1396016	9-11	35
	9-13	35
1396017	9-13	38
1396024	1-11	10
	1-13	10
1396039	1-21	1
1396042	1-15	1
1396053	5-9	2
1396064	5-17	1

See Service Manual for service procedures.
©2003 HYSTER COMPANY

NUMERICAL INDEX (Continued)

PART NO.	PG	ITEM
1396065	5-19	2
1396076	2-21	4
1396079	2-21	7
1396107	1-15	8
1396108	9-11	24
	9-13	24
1396139	2-21	12
1396147	1-23	1
1396148	1-23	2
1396151	3-63	1
1396171	2-9	23
1396174	2-9	39
1396187	2-5	23
1396198	3-3	4
1396256	3-3	5
	3-13	
1396518	2-15	27
	2-17	20
	2-19	20
1396526	13-11	1
1396527	13-11	1
1396528	13-11	1
1396534	13-11	2
1396535	13-11	2
1396536	13-11	2
1396562	3-59	12
1396563	3-61	13
1396574	2-13	11
	2-15	11
	2-17	23
	2-19	23
	2-21	8
1396576	2-13	3
	2-17	8
1396625	1-15	5
1396626	1-15	4
1396637	5-21	26
1396641	1-23	5
1396658	1-15	42
1396696	2-13	12
	2-15	12
	2-17	22
	2-19	22
	2-21	9
1396708	9-11	13
	9-13	13
1396715	9-11	22
	9-13	22
1396719	7-3	9
1396720	7-3	14
1396723	3-17	15
	3-21	2
	3-25	2
	3-29	2
	3-33	15
	3-37	15
1396724	2-9	14
1396726	2-9	16
	2-10	41
1396727	3-17	10
1396728	3-33	10
	3-37	10
1396730	2-9	27
1396779	2-9	24
	2-25	21
1396780	2-9	25
1396781	2-9	26
1396783	2-5	5
	2-5	8
1396784	2-5	24
1396785	2-5	8
1397384	3-61	12
1397394	3-3	11
	3-7	5
1397396	3-3	2
1397407	3-17	27
	3-33	23
	3-37	23
1397408	3-17	30
	3-33	26
	3-37	26
1397409	3-17	42
	3-34	96
	3-38	93
1397410	3-17	43
	3-35	97
	3-38	94
1397411	3-17	44
	3-35	98
	3-38	95
1397412	3-17	17
	3-33	17
	3-37	17
1397413	3-17	21
	3-22	51
	3-26	51
	3-30	54
	3-34	81
	3-38	81
1397414	3-17	22
1397416	3-21	31
	3-25	31
1397417	3-21	3
	3-25	3
	3-29	3
	3-49	
1397418	3-22	67
	3-33	37
1397420	3-21	8
	3-25	8
	3-29	9
	3-33	36
	3-37	36
1397421	3-17	41
	3-34	95
	3-38	92
1397422	3-17	20
	3-22	52
	3-30	55
	3-34	82
1397424	3-21	1
	3-25	1
	3-29	1
1397438	3-3	9
1397441	3-3	10
1397451	4-5	9
1397457	2-25	11
	4-13	31
	4-19	6
1397474	2-13	7
	2-17	1
1397496	3-59	12
1397500	13-11	1
1397502	13-11	2
1397570	9-3	30
1397614	2-26	68
1397647	1-19	1
1397649	8-4	50
1397651	1-19	1
1397652	3-55	20
	13-33	28
1397653	3-55	12
	13-33	29
1397675	9-11	2
	9-13	2
1397676	9-11	3
	9-13	3
1397677	9-11	21
	9-13	21
1397678	9-11	40
	9-13	41
1397682	9-7	12
	9-9	12
1397685	9-3	3
1397689	2-49	17
	5-7	5
1397694	13-25	10
1397697	2-5	35
1397698	2-5	35
1397708	8-3	25
1397710	2-5	36
1397716	2-26	73
1397739	9-3	14
1397744	9-3	28
1397754	2-25	43
	4-14	48
1397761	2-23	9
	2-47	8
1397762	2-23	8
	2-47	7
1397780	4-9	4
	4-9	5
	4-14	39
	4-19	20
	4-23	43
	4-24	59
1397783	4-9	7
	4-23	15
1397786	4-9	4
	4-23	43
1397787	4-9	5
	4-14	39
	4-19	20
	4-24	59
1397788	2-40	3
1397789	2-40	4
1397796	9-3	14
1397797	5-2	5
1397799	4-5	27
	4-7	1
1397800	4-5	27
	4-7	1
1397803	3-17	16
	3-33	16
	3-37	16
	3-50	
1397804	5-7	8
1397806	3-17	19
1397807	2-10	47
1397808	2-7	5
	2-10	48
1397812	4-5	27
	4-7	1
1397813	4-5	27
	4-7	1
1397815	2-13	6
	2-17	4
1397816	2-17	5

©2003 HYSTER COMPANY

NUMERICAL INDEX (Continued)

PART NO.	PG	ITEM
1397820	2-13	2
	2-17	18
1397822	2-13	14
	2-15	14
	2-17	11
	2-19	11
1397830	3-3	6
1397831	3-21	7
	3-25	7
	3-29	8
	3-33	35
	3-37	35
1397840	4-5	21
1397851	5-14	71
1397852	5-14	72
1397863	7-5	28
1397864	7-5	29
1397866	2-17	21
	2-19	21
1397867	3-29	19
1397957	1-15	2
1397958	1-15	2
1397960	1-15	3
1397963	1-15	7
1397964	1-15	6
1397978	5-5	2
1397979	7-3	10
1397980	7-3	10
1397981	9-3	27
1397982	5-5	3
1397984	9-7	5
	9-9	5
1397987	3-55	8
1397988	3-55	9
1397989	3-55	10
	13-33	20
1397992	13-15	15
	13-17	28
1397993	13-13	12
	13-15	14
	13-17	14
1398002	3-55	13
	13-33	30
1398003	3-17	29
	3-33	24
	3-37	24
1398004	3-17	28
	3-33	25
	3-37	25
1398009	1-11	13
	1-13	13
1398024	2-40	2
1398038	3-59	18
1398062	1-29	6
	2-9	4
1398063	4-5	5
1398085	3-43	4
1398086	3-43	5
1398087	3-45	13
1398089	3-43	8
1398092	3-43	7
1398093	3-43	9
1398097	3-43	10
	3-45	13
1398098	3-43	11
	3-45	13
1398099	3-43	12
	3-45	13
1398105	2-25	9
1398112	2-49	1
	2-51	
	2-53	
	2-55	
	2-57	
	2-59	
	2-61	
	2-63	
	2-67	
	2-69	
	2-71	
	2-73	
	2-75	
	2-76	
	2-79	
	2-81	
	2-83	
	3-5	
	3-8	
	3-11	
	3-14	
1398113	2-21	5
1398114	2-21	6
1398118	2-13	19
	2-17	19
1398127	13-11	3
1398128	13-11	3
1398131	13-11	4
1398132	13-11	4
1398141	3-43	1
1398143	3-43	3
	3-45	13
1398144	3-45	13
1399075	10-8	29
	12-14	28
1399077	12-14	28
1399078	10-8	29
1399081	12-14	28
1399084	12-14	28
1399085	10-8	29
	12-14	28
1399086	12-14	27
1399087	10-8	27
1399088	12-14	27
	12-14	28
1399090	10-8	29
	12-14	27
1399092	10-8	27
	12-14	27
1399093	12-14	28
1399095	12-14	27
1399096	12-14	27
1399097	10-8	29
	12-14	28
1399099	10-8	27
	12-14	27
1399100	12-14	27
1399102	10-8	29
1399103	12-14	27
1399104	10-8	27
1399110	12-14	27
1399111	10-8	27
1399112	12-14	27
1399115	10-8	29
1399116	10-8	27
1399120	10-8	29
1399129	10-8	27
1399131	10-8	29
1399134	10-8	27
1399136	10-8	29
1399145	10-8	27
1399147	10-8	29
1399150	10-8	27
1399152	10-8	29
1399161	10-8	27
1399166	10-8	27
1399203	10-3	3
	10-5	3
	11-3	5
	11-7	23
	12-3	3
	12-7	3
1399204	10-3	3
	10-5	3
	11-3	5
	11-7	23
	12-3	3
	12-7	3
1399205	10-3	3
	10-5	3
	11-3	5
	11-7	23
	12-3	3
	12-7	3
1399207	10-3	5
	10-5	5
	10-21	14
	11-3	6
	11-8	24
	11-19	15
	12-3	4
	12-7	5
	12-11	4
	12-33	15
	13-35	7
	13-37	3
	13-39	3
	13-41	3
1399217	11-30	5
	12-30	24
1399218	11-30	6
	12-30	34
1399224	10-21	13
	11-19	14
	12-33	14
	13-35	9
	13-37	5
	13-39	5
	13-41	5
1399243	11-30	12
	12-30	30
1399248	9-7	33
	9-9	32
	10-8	26
	12-14	32
1399266	12-30	1
	12-30	2
1399268	12-30	1
1399270	12-30	35
1399272	12-30	35
1399273	12-30	36
1399274	12-30	36
1399276	8-3	7
	8-13	
1399277	8-3	1
1399288	8-3	18
1399289	8-3	22
1399293	2-25	15
1399298	2-25	39

©2003 HYSTER COMPANY

NUMERICAL INDEX (Continued)

PART NO.	PG	ITEM
	5-7	11
1399301	3-34	63
	3-38	63
1399309	2-25	38
1399310	2-5	40
1399311	2-5	41
1399312	2-5	38
1399313	2-5	39
1399314	2-5	42
1399315	4-13	15
1399323	7-3	8
	9-7	39
	9-9	25
1399327	12-30	1
	12-30	2
1399332	4-23	5
1399333	4-9	12
	4-23	6
1399334	9-3	41
1399335	4-9	13
	4-23	7
1399337	1-23	11
1399338	1-23	12
1399347	3-45	17
1399360	3-45	6
1399372	3-45	9
1399380	9-11	23
	9-13	23
1399381	3-3	7
1399382	4-5	14
1399386	9-3	26
1399388	3-59	19
1399391	13-33	32
1399393	1-23	7
1399394	1-23	10
1399395	1-23	8
1399399	1-23	9
1399405	3-45	1
1399406	3-45	2
1399407	3-45	8
1399410	3-45	11
1399416	4-13	5
	4-19	29
1399417	9-7	21
	9-9	21
1399418	9-7	22
	9-9	22
1399419	9-9	37
1399420	9-9	36
1399432	13-11	9
1399433	3-3	35
1399434	1-11	11
1399436	3-21	38
	3-34	60
1399438	3-17	50
	3-21	6
	3-25	6
	3-29	7
	3-33	34
	3-37	34
1399441	3-22	68
	3-33	44
	3-47	
1399455	5-13	9
1399464	3-21	4
	3-25	4
	3-29	4
	3-33	32
	3-37	32
1399472	13-25	5
	13-27	1
	13-59	3
	13-61	15
1399473	4-37	1
1399474	13-29	1
	13-33	10
1399475	12-30	1
	12-30	2
1399476	12-30	2
1399477	12-30	1
1399478	12-30	2
1399480	12-30	1
	12-30	2
1399481	12-30	36
1399482	12-30	35
	12-30	1
	12-30	2
1399484	12-30	1
	12-30	2
1399485	12-30	36
	12-30	35
1399487	12-30	1
	12-30	2
1399488	12-30	35
1399490	12-30	36
1399491	12-30	36
1399492	12-30	35
1399493	12-30	35
1399494	12-30	36
1399496	12-30	1
	12-30	2
1399498	12-30	35
1399499	12-30	36
1399500	12-30	35
1399501	12-30	36
1399502	12-30	1
	12-30	2
1399503	12-30	35
1399504	12-30	36
1399505	12-30	1
1399506	12-30	35
	12-30	2
1399510	12-30	36
1399512	12-30	36
1399514	12-30	35
1399551	10-15	1
1399559	10-15	1
1399565	10-15	1
1399576	10-15	1
1399593	10-15	1
1399609	10-15	1
1399702	10-15	2
1399703	10-15	2
1399704	10-15	2
1399705	10-15	2
1399706	10-15	2
1399707	10-15	2
1399760	1-11	14
	1-13	14
1399762	13-29	4
1399764	13-29	3
1399766	13-27	4
1399770	2-26	64
1399771	2-26	65
1399778	1-27	7
1399779	1-27	5
1399782	3-21	19
	3-25	19
	3-29	21
	3-34	48
	3-37	48
1399784	1-17	19
	1-19	10
	1-27	2
1399787	9-7	19
	9-9	19
1399791	2-13	17
	2-15	17
	2-17	9
	2-21	14
1399792	2-13	13
	2-17	10
1399809	1-17	1
	1-19	
1399810	1-17	1
	1-19	
1399813	1-19	9
1399814	1-19	9
1399815	1-17	18
	1-19	8
1399816	1-19	5
1399817	1-19	4
1399818	1-19	2
1399820	1-19	3
1399822	13-13	8
	13-15	9
	13-17	8
1399823	9-3	5
1399824	2-26	48
1399825	2-26	69
1399826	3-29	5
1399827	3-29	14
1399829	1-19	11
1399830	1-19	12
1399836	2-26	53
1399863	13-13	4
	13-15	4
	13-17	4
1399864	13-13	3
	13-15	3
	13-17	3
1399873	1-31	25
1399874	1-31	25
1399875	1-31	25
1399876	1-31	25
1399877	1-31	25
1399878	1-31	25
1399883	3-29	29
1399884	3-25	34
	3-30	51
1399885	1-31	13
1399886	4-6	38
1399915	10-24	1
	11-24	1
	12-38	1
1399916	10-24	1
	11-24	1
	12-38	1
1399917	10-24	1
	11-24	1
	12-38	1
1399919	10-25	1
	11-25	1
	12-39	1
1399920	10-25	1
	11-25	1
	12-39	1
1399921	10-25	1

©2003 HYSTER COMPANY

NUMERICAL INDEX (Continued)

PART NO.	PG	ITEM
	11-25	1
	12-39	1
1399922	10-25	1
	11-25	1
	12-39	1
1400125	11-19	21
	12-33	21
	13-39	11
1400126	11-19	20
	12-33	20
	13-39	10
1400127	13-19	7
	13-21	7
1400128	13-19	1
1400129	13-19	2
1400130	13-19	3
1400131	13-19	4
1400134	13-19	1
1400135	13-19	2
1400136	13-19	3
1400137	13-19	4
1400138	13-21	3
1400139	13-21	4
1400140	13-21	1
1400141	13-21	2
1400144	13-21	3
1400145	13-21	4
1400146	13-21	1
1400147	13-21	2
1400151	1-17	6
1400152	1-17	7
1400153	1-17	8
1400154	1-17	9
1400155	1-17	10
1400158	5-23	3
	5-24	2
1400159	5-14	40
	5-23	
1400160	3-21	5
	3-34	50
	3-37	50
1400161	3-34	59
1400172	13-33	1
1400173	2-25	19
1400180	1-23	25
1400197	3-41	1
	3-43	18
1400205	7-7	13
1400207	13-33	8
1400209	2-40	1
1400216	3-21	36
	3-25	5
	3-29	41
	3-34	69
	3-38	69
1400217	3-21	34
	3-29	39
	3-34	67
1400218	7-3	2
1400221	3-59	16
1400222	3-59	17
1400226	2-5	2
1400229	2-5	3
1400243	7-3	13
	9-7	11
	9-9	16
1400244	7-3	4
1400247	3-30	53
1400249	3-21	42
	3-30	47
	3-34	72
1400901	11-11	2
1400904	11-11	2
1400907	11-11	2
1400910	11-11	2
1400913	11-11	2
1400916	11-11	2
1400919	11-11	2
1400922	11-11	2
1401537	9-4	44
1402189	2-19	1
1402616	4-47	13
	4-55	13
	4-95	13
	4-103	13
1402814	4-103	9
1402816	4-63	13
1402849	4-106	17
	4-115	6
1402857	4-47	4
	4-53	16
	4-53	22
	4-55	4
	4-63	4
	4-69	18
	4-73	4
	4-75	12
	4-83	20
	4-91	10
	4-101	16
	4-103	4
	4-106	16
	4-109	4
	4-111	13
	4-112	18
	4-115	4
	4-117	13
	4-118	18
1402858	4-103	3
	4-103	7
	4-103	8
	4-103	10
	4-103	13
	4-106	16
	4-106	18
	4-109	3
	4-109	8
	4-111	12
	4-112	17
	4-115	3
	4-115	8
	4-117	12
	4-117	17
1402866	4-43	10
	4-75	10
	4-105	3
	4-105	13
	4-105	14
	4-111	11
	4-117	11
1402878	4-88	13
1402889	4-83	16
	4-106	19
1402907	4-52	13
	4-59	14
	4-60	15
	4-68	14
	4-68	15
	4-100	13
	4-105	13
	4-105	14
1402912	4-53	18
	4-60	20
	4-69	20
	4-83	19
	4-101	18
	4-106	18
1402922	4-88	14
1450126	3-47	13
1450136	2-63	6
1450293	4-37	2
1450356	4-37	5
1450555	2-29	22
1450643	2-25	5
1450869	2-25	14
	2-39	4
	4-30	
1450941	2-45	9
1451316	4-30	15
1451319	2-29	17
1451321	2-33	14
1451568	3-22	55
	3-26	55
	3-30	58
1451602	2-59	6
	2-61	2
1451606	2-59	11
	2-61	7
1451625	2-55	6
	2-57	27
1451629	2-69	3
1451630	2-69	11
1451633	2-69	6
1451636	2-69	7
1451642	2-71	14
1451643	2-71	5
1451644	2-71	6
1451645	2-71	4
1451650	2-67	25
1451651	2-67	23
1451656	3-11	27
1451669	3-11	15
1451672	3-11	17
1451673	3-11	18
1451674	3-11	19
1451733	2-79	2
	2-81	22
1451735	2-79	11
	2-81	9
1451737	2-79	19
	2-81	8
1451739	2-79	8
	2-81	14
1451745	2-51	4
	2-53	4
1451770	3-7	17
1452376	2-39	24
1452901	2-26	47
1452904	2-26	49
1453154	3-11	28
1453314	3-11	2
1453315	3-11	30
1453351	4-29	1
1453352	4-29	12
1453354	4-29	13
1453358	4-29	14
1453361	4-29	25
1453362	4-29	26

©2003 HYSTER COMPANY

NUMERICAL INDEX (Continued)

PART NO.	PG	ITEM
1453363	4-29	27
1453364	4-29	28
1453365	4-29	29
1453366	4-29	30
1453367	4-29	31
1453368	4-29	32
1453369	4-29	33
1453370	4-29	33
1453371	4-29	33
1453373	4-29	34
1453375	4-29	36
1453376	4-29	37
1453377	4-29	38
1453379	4-29	40
1453381	4-29	41
1453382	4-29	42
1453383	4-29	43
1453385	4-29	44
1453386	4-29	24
1453387	4-29	20
1453680	4-29	34
1453681	4-29	2
1453682	4-29	3
1453775	9-27	17
	9-29	17
1453776	9-27	16
	9-29	16
1454176	2-69	17
1454315	2-63	27
1454827	4-83	16
	4-106	19
1454829	4-43	15
	4-53	20
	4-69	22
	4-75	15
	4-83	17
	4-101	20
	4-106	20
	4-111	16
	4-117	16
1454955	2-33	9
	2-33	9
1454956	2-33	10
	2-33	10
1454957	2-33	11
	2-33	11
1454974	2-34	51
1455154	4-24	56
1455305	3-47	17
1455306	3-47	15
1455307	3-47	14
1455309	3-47	1
1455310	3-47	20
1456111	2-33	1
1456112	2-26	76
1456338	3-5	29
	3-7	1
	3-14	
1456517	3-7	10
1456521	3-5	3
	3-7	14
1456522	3-5	20
	3-7	15
1456524	3-5	21
	3-7	16
1456525	3-7	19
1456527	3-7	20
1456528	3-7	24
1456686	13-29	14
1456693	2-55	36
	2-57	1
1456694	2-55	14
	2-57	21
1456696	2-55	17
	2-57	14
1456697	2-55	16
	2-57	15
1456698	2-55	33
1456699	2-59	14
	2-59	18
	2-61	9
1456700	2-59	10
	2-61	6
1456701	2-59	12
	2-61	8
1456702	2-69	23
1456704	2-69	10
1456705	2-69	4
1456706	2-69	11
1456707	2-69	2
1456708	2-69	9
1456709	2-69	8
1456711	2-69	18
1456713	2-69	20
1456714	2-69	21
1456715	2-69	5
1456716	2-69	
1456717	2-71	
1456718	2-71	1
1456721	2-67	1
1456722	2-67	5
1456723	2-67	17
1456724	2-67	19
1456726	3-11	3
1456727	3-11	5
1456732	3-11	12
1456733	3-11	13
1456734	3-11	14
1456735	3-11	16
1456736	3-11	21
1456741	2-71	23
1456742	2-79	7
	2-81	15
1456745	2-79	20
	2-81	7
1456746	2-79	15
	2-81	18
1456747	2-79	16
	2-81	19
1456751	2-73	3
	2-75	9
1456754	2-75	4
1456755	2-73	8
	2-75	11
1456756	2-73	10
	2-75	10
1456767	2-71	31
1456960	2-63	42
1457312	2-5	14
1458264	10-25	1
	11-25	1
	12-39	1
1458318	3-5	28
1458329	2-59	9
	2-61	4
1458580	3-46	1
1458582	3-46	11
1459405	2-55	32
	2-57	32
1459717	3-29	14
	3-47	21
1459983	7-13	24
1459984	7-13	12
1459985	7-13	22
1459986	7-13	23
1459987	7-13	19
1459988	7-13	4
1459989	7-13	16
1460322	2-34	37
1460330	2-29	21
1460331	2-29	23
1460332	2-34	43
1460384	2-37	9
1460386	2-29	8
1460387	4-30	10
1460477	2-19	28
1460543	2-59	5
	2-61	1
1460544	2-59	5
	2-61	1
1460545	2-59	5
	2-61	1
1460546	2-59	5
	2-61	1
1460547	2-75	5
1460552	3-11	6
1460553	3-11	7
1460554	3-11	8
1460555	3-11	9
1460559	2-71	27
1460564	2-73	9
	2-75	14
1460567	2-69	19
1460572	3-11	31
1460584	2-69	24
	2-71	37
	2-73	15
	2-79	25
1460724	4-5	28
	4-7	2
	4-7	2
	4-7	2
	4-7	2
1460737	2-29	11
1460738	2-29	11
1460757	2-33	30
1460758	2-33	30
1460768	2-34	50
1461077	5-21	35
1461713	2-59	10
	2-61	6
1461714	2-59	10
	2-61	6
1461715	2-59	12
	2-61	8
1461716	2-59	12
	2-61	8
1461743	4-14	52
	4-23	23
1462233	4-33	1
1462234	4-33	2
1462235	4-33	3
1462236	4-33	4
1462238	4-33	5
1462239	4-33	5
1462240	4-33	6
1462241	4-33	9
1462249	4-33	17

©2003 HYSTER COMPANY

NUMERICAL INDEX (Continued)

PART NO.	PG	ITEM
1462250	4-33	18
1462251	4-33	19
1462252	4-33	20
1462253	4-33	21
1462254	4-33	22
1462255	4-33	23
1462256	4-33	24
1462257	4-33	25
1462258	4-33	26
1462259	4-33	27
1462260	4-33	28
1462261	4-33	29
1462262	4-33	30
1462263	4-33	31
1462264	4-33	32
1462265	4-33	33
1462266	4-33	34
1462267	4-33	35
1462268	4-33	37
1462269	4-33	39
1462270	4-33	40
1462271	4-33	41
1462272	4-33	42
1462273	4-33	8
1462439	3-56	2
1462441	3-56	4
1462442	3-56	6
1462605	4-37	1
1463194	4-83	8
1463223	8-7	2
1463226	8-7	3
1463229	8-7	3
1463231	8-11	2
1463242	8-7	1
1463243	8-7	1
1463244	8-7	2
1463245	8-7	
1463246	8-7	
1463247	8-7	27
	8-15	8
1463248	8-7	27
	8-15	8
1463250	3-22	67
	3-33	37
	3-33	37
1463251	3-22	67
	3-33	37
1463339	8-11	1
1463340	8-11	1
1463341	8-11	2
1463350	8-11	6
1463351	8-11	6
1463352	8-11	7
1463353	8-11	7
1463354	8-11	8
1463355	8-11	9
1463356	8-11	9
1463357	8-11	10
1463358	8-11	10
1463359	8-11	11
1463361	8-11	14
1463362	8-11	15
1463363	8-11	16
1463364	8-11	19
1463365	8-11	21
1463366	8-11	22
1463445	8-13	1
1463446	8-13	6
1463447	8-13	9
1463448	8-13	13
1463449	8-13	14
1463450	8-13	8
1463451	8-13	17
1463454	8-13	5
1463455	8-13	4
1463461	8-13	2
1463462	8-13	3
1463463	8-13	11
1463464	8-13	12
1463465	8-13	15
1463466	8-13	7
1463467	8-13	10
1463471	8-11	26
	8-15	8
1463472	8-11	26
	8-15	8
1463625	3-21	50
	3-29	43
	3-34	76
1463993	8-13	18
1463995	8-13	16
1464018	2-55	37
	2-64	49
	2-67	27
	2-71	38
	2-79	26
1464103	2-63	1
1464104	2-63	13
1464105	2-63	15
1464106	2-63	25
1464107	2-63	30
1464108	2-71	22
1464109	2-71	32
1464110	2-51	6
	2-53	6
1464111	2-51	1
	2-53	1
1464112	2-51	7
	2-53	7
1464113	2-51	12
	2-53	12
1464114	2-51	13
	2-53	13
1464115	2-51	11
	2-53	11
1464144	5-23	5
1464197	2-83	4
1464198	2-83	9
1464199	2-73	1
1464200	2-73	4
1464201	2-73	5
1464202	2-73	6
1464203	3-5	1
	3-7	4
1464204	3-5	2
	3-7	12
1464205	3-5	6
1464206	3-5	11
1464207	3-5	13
1464208	3-5	16
1464209	3-5	24
	3-7	22
1464540	3-13	3
1464541	3-13	2
1464543	3-13	1
1464544	3-13	6
1464545	3-13	7
1464546	3-13	8
1464653	3-49	7
	3-50	8
1464654	3-49	5
	3-50	1
1464655	3-49	6
	3-50	2
1464656	3-49	2
	3-50	3
1464657	3-49	1
1464658	3-49	3
	3-50	5
1464660	3-50	6
1464661	3-50	7
1464662	3-50	9
1464663	3-53	1
1464664	3-53	2
1464665	3-53	3
1464666	3-53	4
1464667	3-53	5
1464668	3-53	6
1464669	3-53	7
1464820	3-50	4
1464863	10-23	1
	11-23	1
	12-37	1
1464864	10-23	1
	11-23	1
	12-37	1
1464865	10-23	1
	11-23	1
	12-37	1
1464890	3-21	48
	3-25	36
	3-30	52
	3-34	78
	3-38	78
1464899	1-23	21
1464909	1-15	41
1464915	8-7	29
1464916	8-8	30
1464917	8-7	28
1465028	10-21	5
	11-19	5
	12-33	5
	13-35	16
	13-37	12
	13-39	18
	13-41	12
1465072	10-3	4
	10-5	4
	10-21	12
	11-3	7
	11-8	25
	11-19	13
	12-3	5
	12-7	6
	12-11	5
	12-33	13
	13-35	8
	13-37	4
	13-39	4
	13-41	4
1465157	13-19	8
1465158	13-19	9
1465159	13-19	10
1465160	13-19	11
1465171	2-79	10
1465177	10-21	3
	11-19	3
	12-33	3

©2003 HYSTER COMPANY

NUMERICAL INDEX (Continued)

PART NO.	PG	ITEM
	13-35	13
	13-37	9
	13-39	15
	13-41	9
1465226	10-21	1
1465228	12-33	1
1465322	13-21	8
1465323	13-21	9
1465324	13-21	10
1465325	13-21	11
1465328	1-27	6
1465443	1-21	1
1465489	10-15	3
	10-17	4
	11-30	18
	12-30	3
1465518	9-23	12
1465545	10-26	1
	11-26	1
	12-40	1
1465546	10-26	1
	11-26	1
	12-40	1
1465547	10-26	1
	11-26	1
	12-40	1
1465548	10-26	1
	11-26	1
	12-40	1
1465585	10-8	30
	12-14	30
1465740	1-21	11
	13-33	2
1465778	3-59	4
	3-61	4
1465803	2-79	17
	2-81	1
1465810	2-79	21
	2-81	5
1465811	2-79	22
	2-81	2
1465812	2-79	18
	2-81	6
1465885	11-19	1
1465895	2-79	1
	2-81	21
1465896	2-79	27
	2-81	21
1465897	13-22	1
1465899	3-59	9
	3-61	9
	3-63	
1465938	3-21	46
	3-34	62
1465940	11-3	1
1465946	11-3	1
1466001	2-5	31
1466003	3-22	69
	3-33	45
1466094	3-53	10
1466095	3-50	10
1466096	3-50	11
1466123	5-13	37
	5-21	
1466124	5-21	12
1466337	13-22	2
1466394	9-27	19
	9-29	19
1466395	9-27	20
1466396	9-27	11
	9-29	11
1466397	9-27	13
	9-29	13
1466398	9-27	21
1466415	13-22	4
1466416	1-15	43
1466438	5-14	55
1466440	9-27	1
1466441	9-27	1
1466442	9-27	2
	9-29	2
1466443	9-27	4
	9-29	4
1466444	9-27	6
	9-29	6
1466445	9-27	6
1466446	9-27	7
	9-29	7
1466447	9-27	8
	9-29	8
1466472	13-22	3
1466632	3-59	8
	3-61	8
1466859	2-71	12
1466997	13-55	2
1467081	11-7	1
1467087	11-7	1
1467145	13-43	6
	13-45	6
	13-47	3
	13-49	6
	13-51	6
	13-53	3
1467146	13-43	7
	13-45	7
	13-47	4
	13-49	7
	13-51	7
	13-53	4
1467147	13-43	8
	13-45	8
	13-47	5
	13-49	8
	13-51	8
	13-53	5
1467148	13-43	9
	13-45	9
	13-47	6
	13-49	9
	13-51	9
	13-53	6
1467149	13-43	10
	13-45	12
	13-49	10
	13-51	12
1467150	13-43	11
	13-45	13
	13-49	11
	13-51	13
1467151	13-43	1
	13-45	1
	13-49	1
	13-51	1
1467153	13-43	2
	13-45	2
	13-49	2
	13-51	2
1467154	13-43	3
	13-45	3
	13-49	3
	13-51	3
1467200	13-45	11
	13-47	11
	13-51	11
	13-53	11
1467201	13-45	10
	13-47	8
	13-51	10
	13-53	8
1467202	13-47	12
	13-53	12
1467203	13-47	13
	13-53	13
1467204	13-47	1
	13-53	1
1467205	13-47	2
	13-53	2
1467206	13-47	7
	13-53	7
1467268	13-43	5
	13-49	4
1467269	13-45	4
	13-51	4
1467270	13-47	9
	13-53	10
1467338	1-17	23
1467340	1-17	24
1467342	1-17	25
1467343	1-17	26
1467344	1-17	27
1467345	1-17	28
1467347	1-17	29
1467523	1-9	1
1467524	1-9	2
1467525	1-9	3
1467526	1-9	4
1467527	1-9	5
1467529	1-9	7
1467531	1-9	6
1467632	13-43	12
	13-45	14
	13-49	12
	13-51	14
1467633	13-43	13
	13-45	15
	13-47	15
	13-49	13
	13-51	15
	13-53	15
1467634	13-47	14
	13-53	14
1467651	11-3	4
1467657	11-3	4
1467769	13-43	4
1467770	13-49	5
1467771	13-45	5
1467772	13-51	5
1467773	13-53	9
1467774	13-47	10
1467775	13-53	9
1467776	13-47	10
1467846	13-47	9
	13-53	10
1467925	9-15	3
1467926	9-15	2
	9-17	31
1467927	9-15	7
1467928	9-15	9

©2003 HYSTER COMPANY

NUMERICAL INDEX (Continued)

PART NO.	PG	ITEM
	9-17	3
1467929	9-15	30
1467930	9-15	31
1467931	9-15	12
1467932	9-15	13
1467933	9-15	14
1467934	9-15	15
	9-21	4
	9-21	23
1467938	9-15	29
1467954	9-15	25
1468020	1-17	12
1468021	1-17	13
1468022	1-17	14
1468023	1-17	15
1468024	1-17	16
1468025	1-17	17
1468027	1-17	31
1468032	1-17	20
1468033	1-17	21
1468307	13-59	10
	13-61	14
1468309	13-59	8
1468310	13-67	8
	13-69	6
1468311	13-57	4
	13-59	14
1468312	13-59	15
1468314	13-59	29
1468315	13-59	28
1468316	13-59	19
1468317	13-59	20
1468320	13-63	11
1468321	13-63	14
1468468	9-29	1
1468469	9-29	1
1468470	9-29	20
1468472	1-7	
	1-9	
1468473	1-7	
	1-9	
1468571	4-5	28
	4-7	3
1468576	9-29	21
1468578	9-29	6
1468682	5-7	10
1468699	1-29	2
1469300	5-17	11
	5-19	6
1469301	5-17	11
	5-19	6
1469597	4-9	32
	4-27	
1469598	2-51	9
	2-53	9
	4-23	1
	4-27	
1469601	2-51	9
	4-10	32
	4-27	
1469604	4-14	37
	4-19	30
1469605	2-25	35
1470009	1-15	23
1470010	1-15	22
1470021	1-15	33
1470152	1-7	1
1470153	1-7	1
1470155	1-7	37
1470156	1-7	38
1470157	1-7	39
1470158	1-7	40
1470159	1-7	34
1470160	1-9	8
1470161	1-7	42
1470163	1-7	29
1470164	1-7	41
1470275	8-13	6
1470686	8-3	28
1470920	1-29	1
1470922	1-29	1
1471444	2-7	3
1471445	2-7	1
1471446	2-7	1
1471448	2-7	2
1471449	2-7	3
1471535	1-29	3
1471555	2-37	2
1471556	2-33	3
1471557	2-37	1
1471558	2-33	29
1471559	2-39	18
1471560	2-34	49
1471702	3-38	76
1471960	4-91	4
1472707	2-75	4
1472708	2-75	8
1472709	2-75	7
1472710	2-75	6
1472711	2-75	2
1473099	8-4	54
1473595	5-17	9
	5-19	14
1474048	11-30	28
1474051	11-30	28
1474054	11-30	28
1474057	11-30	28
1474101	11-30	27
1474107	11-30	27
1474125	11-30	29
1474131	11-30	29
1474314	13-70	8
1474335	13-70	6
1474399	10-7	11
	11-3	15
	12-13	11
1474701	13-57	2
	13-69	
1474702	13-57	3
	13-67	
1474703	13-57	5
1474704	13-63	1
1474709	13-59	26
1474710	13-61	12
	13-67	5
	13-69	3
1474711	13-63	15
1474765	13-67	4
	13-69	2
1474766	13-67	9
	13-69	7
1474767	13-67	21
	13-69	18
1474768	13-67	22
	13-69	19
1474820	13-67	23
	13-69	20
1474825	3-5	30
	3-8	6
1474950	13-57	10
1474951	13-57	11
1474952	13-59	12
1474953	13-59	13
1474954	13-59	9
1474955	13-61	10
1474956	13-63	9
1474957	13-59	6
1474959	13-69	14
1474960	13-69	15
1474961	13-67	17
1474962	13-67	16
1475161	2-40	10
1475546	4-39	1
	4-81	1
1475547	4-39	2
1475548	4-39	3
	4-81	16
1475549	4-39	4
	4-81	15
1475550	4-39	5
	4-81	14
1475551	4-39	6
	4-81	2
1475552	4-39	7
1475553	4-39	8
1475554	4-39	9
1475556	4-39	10
1475558	4-39	12
	4-81	7
1475559	4-39	13
	4-81	12
1475560	4-39	14
1475561	4-39	15
1475562	4-39	16
1475564	4-39	18
1475565	4-39	19
1475566	4-16	4
	4-39	20
1475567	4-39	21
1475569	4-39	23
1475570	4-39	24
1475571	4-39	25
1475572	4-39	26
	4-81	10
1475573	4-39	27
	4-81	11
1475574	4-39	28
	4-81	9
1475578	4-39	22
	4-81	13
1475579	4-16	3
1475583	4-16	2
1475608	4-81	6
1475610	4-39	11
	4-81	4
1475616	4-39	17
1475617	4-16	5
1475620	4-81	3
1475621	4-81	5
1475622	4-81	8
1475787	11-30	1
1475788	11-30	2
1475789	11-30	2
1475794	11-30	2
1475795	11-30	2
1475833	11-30	4
1475834	11-30	3
1475839	11-30	4

©2003 HYSTER COMPANY

NUMERICAL INDEX (Continued)

PART NO.	PG	ITEM
1475840	11-30	4
1476015	2-15	1
1476017	2-15	13
1476018	2-15	2
1476045	2-19	5
1476048	2-19	6
1476052	2-19	8
1476107	2-15	3
1476416	13-70	1
1476422	1-13	25
1476426	5-13	30
	6-2	
1476434	3-38	59
1476761	1-13	11
1477278	3-50	13
1477570	10-17	7
1477578	10-17	5
1479092	13-59	33
1479093	13-59	33
1479109	4-47	9
	4-55	9
	4-63	9
	4-83	6
	4-85	1
	4-88	14
	4-93	1
	4-95	9
	4-103	9
1479697	2-71	11
1480237	13-13	23
	13-15	25
	13-17	31
1480392	13-41	20
1482550	9-15	14
1482664	4-44	18
	4-52	2
	4-52	13
	4-53	23
	4-59	2
	4-60	15
	4-68	2
	4-69	15
	4-69	25
	4-76	18
	4-84	7
	4-88	13
	4-100	2
	4-100	13
	4-105	2
	4-105	13
	4-112	19
	4-118	19
1482794	3-25	29
	3-37	44
	3-48	
1483108	5-21	12
1483164	13-17	25
1483226	13-67	15
	13-69	13
1483228	13-67	15
	13-69	13
1483331	13-53	9
1483333	13-53	9
1483335	13-51	5
1483336	13-49	5
1483828	1-9	9
1483938	11-30	1
1483944	11-30	1
1483993	11-30	26
1484276	11-30	26
1484277	11-30	26
1484283	11-30	26
1484351	9-11	32
	9-15	
1484357	4-91	5
1484358	4-91	5
1484361	4-41	1
	4-47	1
	4-55	1
	4-63	1
	4-73	1
	4-83	4
	4-95	1
	4-103	1
	4-109	1
	4-115	1
1484375	4-52	6
	4-53	24
	4-59	7
	4-70	26
	4-88	10
	4-91	2
	4-100	7
	4-101	21
1484383	4-52	4
	4-52	5
	4-52	7
	4-52	11
	4-59	5
	4-59	6
	4-59	8
	4-59	12
	4-68	5
	4-68	6
	4-68	8
	4-68	12
	4-92	14
	4-100	5
	4-100	6
	4-100	8
1484396	4-85	3
1484454	11-30	4
1484460	11-30	3
1484498	11-30	1
1484522	11-30	3
1484528	11-30	3
1484555	4-92	15
	4-92	16
	4-92	17
1484594	13-71	1
1484595	13-71	1
1484596	4-79	2
	13-56	1
	13-71	1
1484597	4-41	9
	4-73	9
	4-79	2
	4-88	12
	4-88	18
	4-88	19
	4-91	1
	4-92	18
	4-109	10
	4-115	10
	4-122	10
	13-56	1
	13-71	1
1484611	4-41	9
	4-73	9
	4-73	10
	4-79	2
	4-88	17
	4-109	10
	4-109	11
	4-115	10
	4-115	11
	4-122	10
	4-122	11
1484634	2-25	1
	2-29	
	2-33	
	2-37	
	2-39	
1484651	4-93	2
	4-93	2
1484654	4-92	18
1484655	4-92	18
1484656	4-41	9
	4-73	9
	4-88	12
	4-88	18
	4-88	19
	4-91	1
	4-92	18
	4-109	10
	4-115	10
	4-122	10
1484660	4-91	2
1484661	4-88	10
1484670	4-91	4
1484671	4-91	4
1484672	4-91	4
1484681	4-5	2
	4-87	1
	4-121	1
1484682	4-5	2
	4-87	1
	4-121	1
1484683	4-87	4
	4-87	5
	4-87	6
	4-87	7
	4-121	5
	4-121	5
	4-121	6
	4-121	7
1484684	4-5	2
	4-87	3
	4-87	8
	4-121	3
	4-122	8
1484707	4-88	10
	4-91	2
1484710	4-52	14
	4-53	15
	4-60	16
	4-60	17
	4-69	16
	4-69	17
	4-91	4
	4-100	14
	4-101	15
	4-105	12
	4-106	15
1484716	4-41	13
	4-47	14
	4-56	14
	4-64	14

©2003 HYSTER COMPANY

NUMERICAL INDEX (Continued)

PART NO.	PG	ITEM
	4-73	13
	4-96	14
	4-103	14
	4-109	14
	4-115	14
	4-122	14
1484719	4-87	4
	4-87	4
	4-87	5
	4-87	5
	4-87	6
	4-87	6
	4-87	7
	4-87	7
	4-121	5
	4-121	5
	4-121	5
	4-121	6
	4-121	6
	4-121	7
	4-121	7
1484720	4-91	6
1484734	6-2	1
1484735	6-2	2
1484736	6-2	3
1484737	6-2	4
1484738	6-2	5
1484739	6-2	6
1484740	6-2	8
1484741	6-2	7
1485568	9-13	32
	9-15	
1485921	3-25	46
	3-38	68
1485922	3-38	62
1485923	3-22	59
	3-34	77
	3-37	28
1486531	4-14	37
	4-19	30
1487201	5-17	12
	5-19	5
1487202	5-17	12
	5-19	5
1487441	4-95	4
1487764	7-7	33
1487765	7-7	31
1488265	13-13	19
	13-15	5
	13-17	12
1488597	5-2	
	5-7	
	5-9	
	5-13	
1488598	5-2	
	5-7	
1488600	5-2	
	5-7	
	5-9	
	5-13	
1488601	5-2	
	5-7	
	5-9	
	5-13	
1488602	5-9	16
	5-17	1
1488604	5-9	14
	5-19	1
1488915	13-70	2
1489107	4-83	6
1489643	2-37	10
1489956	4-87	2
	4-121	2
1489957	4-87	1
	4-87	3
	4-87	4
	4-87	4
	4-87	5
	4-87	6
	4-87	6
	4-87	8
	4-121	1
	4-121	3
	4-121	5
	4-121	5
	4-121	5
	4-121	6
	4-122	8
1490070	8-3	2
1490243	4-103	1
	4-109	1
	4-115	1
1490250	4-87	1
	4-121	1
1490252	4-5	2
1490391	5-21	27
1490407	4-14	37
	4-14	37
	4-19	30
	4-19	30
1490408	4-14	37
	4-19	30
1490766	1-17	30
1491202	2-81	10
1491381	7-7	
1491382	7-7	13
1491830	4-35	8
1491853	9-21	10
1491859	9-15	6
	9-17	32
1492957	4-5	6
1493062	2-23	2
1493116	4-9	17
	4-23	45
1493147	1-13	1
1493148	1-13	1
1493306	9-24	17
1493435	4-83	6
1493436	4-47	9
	4-55	9
	4-63	9
	4-88	14
	4-93	1
	4-95	9
1493441	4-43	13
	4-53	24
	4-70	26
	4-75	13
	4-101	21
1493442	4-45	1
	4-78	2
1493444	4-91	3
1493445	4-91	3
1493446	4-93	1
1493448	4-45	1
1493450	4-41	12
	4-41	14
	4-43	3
	4-47	5
	4-47	11
	4-55	5
	4-55	11
	4-63	5
	4-63	11
	4-73	12
	4-73	14
	4-75	3
	4-95	5
	4-95	11
1493455	4-41	12
	4-47	5
	4-47	12
	4-47	15
	4-55	12
	4-59	4
	4-63	12
	4-68	4
	4-73	12
	4-73	14
	4-95	5
	4-95	12
	4-100	4
1493457	4-43	3
	4-52	5
	4-59	6
	4-68	6
	4-75	3
	4-100	6
1493458	4-43	2
	4-52	4
	4-59	5
	4-75	2
	4-91	14
	4-100	5
1493460	4-43	6
	4-52	8
	4-59	1
	4-59	9
	4-68	7
	4-68	9
	4-75	6
	4-78	4
	4-91	13
	4-100	9
	4-105	7
	4-105	8
	4-111	7
	4-117	4
	4-117	7
1493461	4-41	2
	4-43	6
	4-43	10
	4-47	2
	4-52	1
	4-52	8
	4-55	2
	4-59	1
	4-59	9
	4-63	2
	4-68	1
	4-68	7
	4-68	9
	4-73	2
	4-75	6
	4-75	10
	4-83	12

©2003 HYSTER COMPANY

NUMERICAL INDEX (Continued)

PART NO.	PG	ITEM
	4-95	2
	4-100	1
	4-100	9
	4-105	1
	4-109	2
	4-111	7
	4-111	11
	4-115	2
	4-117	4
	4-117	7
	4-117	11
1493469	4-43	4
	4-52	6
	4-59	7
	4-75	4
	4-83	14
	4-100	7
1493667	3-61	13
1493668	3-61	13
1493669	3-59	12
1493670	3-59	12
1493909	13-61	7
1494076	1-7	2
1494077	1-7	2
1494300	3-31	2
1494460	3-43	2
1494466	3-43	
1494673	13-65	7
1494692	13-65	5
1494693	13-65	6
1494782	3-45	
1494784	3-45	3
1494864	4-85	1
1495279	10-17	6
1495485	3-41	5
1495665	2-10	42
1495666	2-9	15
1495955	4-41	13
	4-47	14
	4-55	14
	4-63	14
	4-73	13
	4-83	1
	4-95	14
	4-103	14
	4-109	6
	4-109	14
	4-115	14
	4-122	14
1496186	3-48	1
1496187	3-48	2
1496188	3-48	3
1496361	4-5	5
1496773	4-47	12
	4-48	15
	4-55	12
	4-59	4
	4-63	12
	4-68	4
	4-95	12
	4-100	4
1496775	4-41	5
	4-41	11
	4-43	2
	4-43	5
	4-73	5
	4-73	11
	4-75	2
	4-75	5
	4-115	12
	4-117	6
1496777	4-47	9
	4-55	9
	4-63	9
	4-95	9
	4-103	8
	4-103	9
1496782	4-85	1
1496783	4-85	2
1496784	4-43	1
	4-75	1
	4-79	1
	4-111	1
	4-117	1
1496785	4-43	1
	4-75	1
	4-79	1
	4-111	1
	4-117	1
1496786	4-43	1
	4-75	1
	4-79	1
	4-111	1
	4-117	1
1496788	4-91	8
	4-91	11
1496790	4-91	7
	4-91	12
1496791	4-91	8
	4-91	11
1496883	4-41	5
	4-41	11
	4-47	11
	4-55	5
	4-55	11
	4-63	5
	4-63	11
	4-73	5
	4-73	11
	4-95	11
1496884	4-87	1
	4-121	1
1496885	4-87	1
	4-121	1
1496886	4-88	18
1496889	4-41	13
	4-47	14
	4-55	14
	4-63	14
	4-73	13
	4-83	2
	4-95	14
	4-103	14
	4-109	14
	4-115	14
	4-122	14
1496890	4-5	2
1496891	4-41	13
	4-47	14
	4-55	14
	4-63	14
	4-73	13
	4-83	1
	4-95	14
	4-103	14
	4-109	14
	4-115	14
	4-122	14
1496924	4-88	16
1496925	4-88	16
1496926	4-88	16
1497228	4-88	16
1497229	4-43	5
	4-52	7
	4-52	11
	4-59	8
	4-59	12
	4-68	5
	4-68	12
	4-75	5
	4-100	8
1497232	4-43	14
	4-53	19
	4-69	21
	4-75	14
	4-101	19
	4-111	15
	4-117	15
1497233	4-43	14
	4-53	19
	4-69	21
	4-75	14
	4-101	19
	4-111	15
	4-117	15
1497234	4-43	14
	4-53	19
	4-69	21
	4-75	14
	4-83	15
	4-101	19
	4-106	19
	4-111	15
	4-117	15
1497235	4-83	18
1497253	4-7	1
1497254	4-7	1
1497262	4-87	9
	4-88	11
	4-88	15
	4-92	15
	4-92	16
	4-92	17
1497264	4-53	17
	4-60	19
	4-69	19
	4-101	17
1497265	4-87	9
	4-88	11
	4-88	15
1497274	4-53	17
	4-60	19
	4-69	19
	4-85	3
	4-101	17
1497288	13-56	1
1497290	4-88	17
	13-71	1
1497291	4-41	10
	4-73	10
	4-79	2
	4-109	11
	4-115	11
	4-122	11
1497293	4-88	19
1497294	4-88	12
	4-91	1
1497296	4-41	9

NUMERICAL INDEX (Continued)

PART NO.	PG	ITEM
	4-73	9
	4-109	10
	4-115	10
	4-122	10
1497298	4-88	19
1497299	13-56	1
1497300	4-88	12
	4-91	1
1497302	4-88	18
1497303	13-71	1
1497304	4-41	9
	4-73	9
	4-109	10
	4-115	10
	4-122	10
1497305	4-79	2
1497559	3-55	6
1498089	2-13	1
1498097	3-55	22
1498133	3-11	1
1498136	3-11	1
1498137	3-11	1
1498412	4-43	7
	4-43	8
	4-43	9
	4-52	9
	4-52	10
	4-52	12
	4-53	25
	4-53	26
	4-59	10
	4-59	11
	4-59	13
	4-68	10
	4-68	11
	4-68	13
	4-70	27
	4-70	29
	4-75	7
	4-75	8
	4-75	9
	4-84	3
	4-100	10
	4-100	11
	4-101	22
	4-101	23
	4-105	10
	4-105	11
	4-106	21
	4-106	22
	4-111	8
	4-111	9
	4-111	10
	4-117	8
	4-117	9
	4-117	10
1498413	4-43	4
	4-43	13
	4-45	3
	4-75	4
	4-75	13
	4-78	3
	4-106	24
	4-111	4
	4-111	14
	4-117	14
1498414	4-53	16
	4-60	18
	4-69	18
	4-101	16
	4-106	16
1498415	4-41	7
	4-43	11
	4-47	7
	4-47	13
	4-55	7
	4-55	13
	4-60	20
	4-63	7
	4-63	13
	4-73	7
	4-75	11
	4-77	1
	4-95	7
	4-95	13
	4-103	7
	4-103	13
	4-109	8
	4-109	9
	4-111	12
	4-115	8
	4-115	9
	4-117	12
	4-122	9
1498419	4-41	3
	4-41	8
	4-44	16
	4-47	3
	4-47	8
	4-47	10
	4-53	21
	4-55	3
	4-55	8
	4-55	10
	4-63	3
	4-63	8
	4-63	10
	4-69	23
	4-73	3
	4-73	8
	4-76	16
	4-79	3
	4-91	9
	4-95	3
	4-95	8
	4-95	10
	4-103	3
	4-103	8
	4-103	10
	4-109	3
	4-109	9
	4-112	17
	4-115	3
	4-115	9
	4-118	17
	4-122	9
1498421	4-59	14
	4-68	14
	4-100	12
	4-105	14
1498422	4-44	17
	4-53	22
	4-69	24
	4-76	17
	4-77	1
	4-91	10
1498423	4-44	18
	4-53	23
	4-69	25
	4-76	18
	4-84	6
	4-112	19
	4-118	19
1498424	4-52	3
	4-59	3
	4-68	3
	4-100	3
	4-105	3
1498425	4-43	7
	4-43	8
	4-43	9
	4-52	9
	4-52	10
	4-52	12
	4-53	25
	4-53	26
	4-59	10
	4-59	11
	4-59	13
	4-68	10
	4-68	11
	4-68	13
	4-70	27
	4-70	29
	4-75	7
	4-75	8
	4-75	9
	4-100	10
	4-100	11
	4-101	22
	4-101	23
	4-105	10
	4-105	11
	4-106	21
	4-106	22
	4-111	8
	4-111	9
	4-111	10
	4-117	8
	4-117	9
	4-117	10
1498427	4-52	13
	4-60	15
	4-68	15
	4-100	13
1498428	4-59	14
	4-68	14
1498451	4-52	14
	4-53	15
	4-60	16
	4-60	17
	4-69	16
	4-69	17
	4-100	14
	4-100	15
	4-105	12
	4-106	15
1498461	4-13	18
1498462	4-52	14
	4-60	16
	4-69	16
	4-100	14
	4-105	12
1498463	4-53	16
	4-60	18
	4-69	18
	4-101	16
	4-106	16

©2003 HYSTER COMPANY

NUMERICAL INDEX (Continued)

PART NO.	PG	ITEM
1498468	4-52	2
	4-59	2
	4-100	2
	4-105	2
1498469	4-53	18
	4-60	20
	4-69	20
	4-101	18
	4-106	18
1498470	4-41	6
	4-47	6
	4-55	6
	4-63	6
	4-73	6
	4-95	6
	4-103	6
	4-109	7
1498471	4-83	11
1498472	4-43	12
	4-47	10
	4-55	10
	4-63	10
	4-75	12
	4-95	10
	4-103	10
	4-111	13
	4-117	13
1498473	4-41	3
	4-47	3
	4-55	3
	4-63	3
	4-73	3
	4-95	3
	4-109	3
	4-115	3
1498474	4-41	8
	4-47	8
	4-53	21
	4-55	8
	4-63	8
	4-69	23
	4-69	24
	4-73	8
	4-91	9
	4-95	8
	4-109	9
	4-111	17
	4-112	18
	4-115	9
	4-117	17
	4-118	18
	4-122	9
1498475	4-79	3
1498476	4-41	4
	4-44	16
	4-47	4
	4-55	4
	4-63	4
	4-73	4
	4-75	16
	4-103	4
	4-109	4
	4-115	4
1498477	4-43	11
	4-75	11
	4-111	12
	4-117	12
1498478	4-41	2
	4-47	2
	4-52	1
	4-55	2
	4-63	2
	4-68	1
	4-73	2
	4-95	2
	4-100	1
	4-103	2
	4-105	1
	4-109	2
	4-115	2
1498479	4-78	1
1498480	4-45	4
1498483	4-53	18
	4-60	20
	4-69	20
	4-101	18
	4-106	18
1498486	4-53	16
	4-60	18
	4-69	18
	4-101	16
	4-105	7
	4-106	16
1498487	4-52	14
	4-60	16
	4-69	16
	4-100	14
	4-105	12
1498488	4-53	15
	4-60	17
	4-69	17
	4-106	15
1498492	4-44	18
	4-52	2
	4-52	13
	4-53	23
	4-59	2
	4-60	15
	4-68	2
	4-69	15
	4-69	25
	4-76	18
	4-84	8
	4-88	13
	4-100	2
	4-100	13
	4-105	2
	4-105	13
	4-112	19
	4-118	19
1498493	4-44	18
	4-53	23
	4-69	25
	4-76	18
	4-84	6
	4-88	13
	4-112	19
	4-118	19
1498495	4-52	14
	4-53	15
	4-60	16
	4-60	17
	4-69	16
	4-69	17
	4-100	14
	4-101	15
	4-105	12
	4-106	15
1498496	4-41	3
	4-41	7
	4-41	8
	4-43	11
	4-44	16
	4-47	3
	4-47	7
	4-47	8
	4-47	10
	4-47	13
	4-53	16
	4-53	18
	4-53	21
	4-55	3
	4-55	7
	4-55	8
	4-55	10
	4-55	13
	4-60	18
	4-63	3
	4-63	7
	4-63	8
	4-63	10
	4-63	13
	4-69	18
	4-69	20
	4-69	23
	4-73	3
	4-73	7
	4-73	8
	4-75	11
	4-75	16
	4-77	1
	4-79	3
	4-83	19
	4-91	9
	4-95	3
	4-95	7
	4-95	8
	4-95	10
	4-101	16
	4-101	18
1498498	4-52	3
	4-52	13
	4-59	3
	4-59	14
	4-60	15
	4-68	3
	4-68	14
	4-69	15
	4-95	4
	4-100	3
	4-100	13
1498502	4-83	8
1498807	5-7	3
	5-9	33
1499101	13-37	22
1499102	13-37	21
1499103	13-35	22
1499104	13-35	21
1499105	13-39	28
1499106	13-39	29
1499107	13-41	27
1499108	13-41	28
1499120	4-24	53
1499234	4-78	1
1499349	2-67	2
1499369	2-9	10
	2-13	21
	2-15	21

©2003 HYSTER COMPANY

NUMERICAL INDEX (Continued)

PART NO.	PG	ITEM
	2-21	16
1499373	2-10	46
1499514	2-15	7
1499676	9-18	41
	9-21	36
1499886	8-4	53
1500170	9-18	40
1500439	2-15	19
1500744	10-3	2
	10-5	2
	10-21	2
	11-3	1
	11-7	1
	11-19	2
	12-3	2
	12-7	2
	12-11	2
	12-33	2
1500774	10-24	2
	10-26	2
	11-24	2
	11-26	2
	12-38	2
	12-40	2
1500884	2-29	18
1500963	4-53	15
	4-60	17
	4-69	17
	4-100	15
	4-105	15
1501157	2-29	1
1501259	1-31	26
1501409	7-11	9
1502122	10-25	2
	10-26	2
	11-25	2
	11-26	2
	12-39	2
	12-40	2
1502180	13-67	15
	13-69	13
1502645	9-23	15
1502741	2-43	3
1502769	13-59	1
1503088	4-83	19
1503437	9-11	32
	9-17	
	9-21	
1503438	9-13	32
	9-17	
	9-21	
1503453	5-7	10
1503620	13-33	38
1504083	13-59	32
1504084	13-59	16
	13-59	31
1504085	13-69	13
1504086	13-69	13
1504087	13-67	15
1504088	13-67	15
1504089	13-67	15
	13-69	13
1504094	13-69	13
1504095	13-67	15
1504180	2-9	12
1504256	2-9	14
1504380	2-9	12
1504410	2-9	11
1504426	2-9	11
1504434	9-21	34
1504440	9-21	33
1504443	9-18	37
1504446	9-18	36
1504448	9-17	15
1504449	9-17	16
1504451	9-18	38
1504456	9-17	7
1504457	9-17	17
1504458	9-17	6
1504459	9-17	22
	9-21	20
1504807	9-18	42
	9-21	37
1504808	9-18	39
1504814	9-21	35
1504883	4-43	10
	4-75	10
	4-111	11
	4-117	11
1505287	13-57	2
	13-65	4
1506842	2-25	1
	2-29	
	2-33	
	2-37	
	2-39	
1506889	10-17	1
1506894	10-17	3
1506895	10-17	1
1506900	10-17	3
1506901	10-17	1
1506906	10-17	3
1506908	10-17	1
1506913	10-17	3
1506914	10-17	1
1506919	10-17	3
1506920	10-17	1
1506925	10-17	3
1506932	10-17	2
1506937	10-17	2
1506943	10-17	2
1506950	10-17	2
1506956	10-17	2
1506962	10-17	2
1507422	4-14	37
	4-19	30
1507960	2-83	6
1508243	4-78	5
1508442	2-26	66
1509037	3-55	25
1509790	4-105	5
	4-105	9
	4-109	5
	4-109	12
	4-115	5
	4-115	12
	4-122	12
1510649	2-25	16
1511725	2-19	9
1511882	10-21	15
	11-19	16
	12-7	4
	12-11	3
	12-33	16
	13-35	6
	13-37	2
	13-39	2
	13-41	2
1511883	10-21	15
	11-19	16
	12-7	4
	12-11	3
	12-33	16
	13-35	6
	13-37	2
	13-39	2
	13-41	2
1511884	10-21	15
	11-19	16
	12-7	4
	12-11	3
	12-33	16
	13-35	6
	13-37	2
	13-39	2
	13-41	2
1512021	2-49	23
1512403	2-19	27
1513907	1-15	13
1514215	4-14	43
	4-19	11
	4-23	18
1514267	2-29	19
1514268	2-33	21
	2-33	21
1514309	3-26	62
1514310	3-37	37
1514915	2-25	2
1514961	2-34	46
1514962	2-34	47
1514963	2-34	44
1514964	2-34	45
1514965	2-34	48
1514968	2-29	13
1514969	2-33	20
	2-33	20
1515680	5-17	8
	5-19	13
1515763	4-5	14
	4-5	22
1515806	3-14	4
1516761	2-81	11
1516762	2-81	12
1516930	2-71	26
1518377	9-23	11
1518378	9-23	13
	13-70	11
1518463	13-70	8
1518858	1-15	13
1518888	1-15	13
1519843	2-25	15
1520644	4-13	27
	4-19	5
1520927	13-57	9
1521393	13-13	6
	13-15	7
	13-17	6
1523453	13-13	21
	13-15	26
	13-17	30
1523477	4-7	1
1523478	4-7	1
1523551	5-17	9
	5-19	14
1523722	2-25	11
	3-25	12
	3-29	13
	3-37	38

©2003 HYSTER COMPANY

NUMERICAL INDEX (Continued)

PART NO.	PG	ITEM
1523723	2-25	43
1523953	5-17	3
	5-19	3
1523972	2-67	4
	2-67	26
	2-81	26
1524199	2-25	1
	2-29	
	2-33	
	2-37	
	2-39	
1524397	4-78	2
1524398	4-78	3
1524400	4-84	5
1528410	6-5	7
1528427	6-5	2
1528484	6-5	6
1528570	2-83	1
1528870	3-29	29
1529010	2-43	2
1529011	3-25	8
	3-29	9
1529708	6-5	
1529709	6-5	
1530268	3-31	5
1530269	3-31	8
1530270	3-31	9
1532655	8-11	3
1532656	8-11	3
1532851	6-5	9
	8-11	
1532852	6-5	10
	8-11	
1533891	2-25	35
2004005	3-17	31
	3-33	27
	3-37	27
	4-19	16
	4-23	2
	8-3	49
	8-4	49
	13-13	17
	13-15	20
	13-17	19
2020517	1-31	2
2021207	1-15	9
2021395	1-25	4
2022532	4-29	23
2022534	4-29	11
2022535	4-29	19
2022538	4-29	22
2027337	3-59	1
	3-61	1
2029170	2-5	46
	2-9	6
2032230	7-13	5
2033243	10-11	3
	12-21	3
2033281	10-11	3
	10-11	3
2033299	10-11	3
	12-21	3
2034269	10-12	7
	12-21	5
2034274	11-15	8
	12-25	8
2034459	1-31	30
2034520	3-34	61
2034906	1-17	3
2035020	13-5	3
	13-5	3
2035021	13-5	3
2035022	13-7	3
2035023	13-7	3
2035024	13-8	3
2035025	13-8	3
2035044	13-9	3
2035137	7-7	2
	7-11	
2035198	12-22	11
2035312	9-23	2
	9-24	
2035314	9-23	2
	9-24	
2035315	9-24	1
2035316	9-24	2
2035318	9-24	2
2035322	2-9	5
2035323	2-10	46
2035331	2-9	10
2035354	2-5	25
2035355	2-5	25
2035357	2-5	6
2035359	2-5	6
2035568	6-5	14
2035569	6-5	15
2035581	4-5	2
	4-121	5
	4-121	5
	4-121	5
	4-121	5
	4-121	6
	4-121	6
	4-121	7
	4-122	7
	13-25	11
	13-27	10
2035621	3-55	1
	3-56	
	13-33	27
2035667	10-21	
2035668	10-21	
2035669	10-21	
2035670	10-21	
2035671	10-21	
2035672	10-21	
2035673	6-5	
2035674	6-5	
2035678	4-35	13
2035679	4-20	34
2035681	4-13	4
	4-39	
2035682	4-9	15
	4-23	48
2035688	4-10	40
	4-45	
2035689	4-19	1
	4-41	
	4-43	
	4-73	
	4-75	
2035691	4-13	2
2035694	4-6	45
	4-23	17
2035695	4-5	2
2035784	10-12	14
2035785	10-12	15
2035786	10-12	16
2035787	10-7	2
	10-11	5
	11-11	10
	12-13	2
	12-22	12
2035791	10-15	9
	10-17	10
	11-30	13
	12-30	15
2035792	12-33	
2035793	12-33	
2035794	12-33	
2035795	12-33	
2035796	12-33	
2035797	12-33	
2035798	1-23	3
2035800	1-21	2
2035804	10-11	
2035805	10-11	
2035806	10-11	
2035808	10-11	
2035809	10-11	
2035810	10-11	
2035811	10-11	
2035812	10-11	
2035813	10-11	
2035815	10-11	
2035816	10-11	
2035817	10-11	
2035836	3-59	10
	3-61	10
2035980	1-23	4
2035981	9-3	1
	9-27	
2035983	9-3	1
	9-27	
2036050	10-3	
	10-5	
	10-7	
	10-15	
	10-17	
2036051	10-3	
	10-5	
	10-7	
	10-15	
	10-17	
2036052	10-3	
	10-5	
	10-7	
	10-15	
	10-17	
2036054	10-3	
	10-5	
	10-7	
	10-15	
	10-17	
2036055	10-3	
	10-5	
	10-7	
	10-15	
	10-17	
2036056	10-3	
	10-5	
	10-7	
	10-15	
	10-17	
2036057	10-3	
	10-5	
	10-7	
	10-15	

©2003 HYSTER COMPANY

NUMERICAL INDEX (Continued)

PART NO.	PG	ITEM
	10-17	
2036058	10-3	
	10-5	
	10-7	
	10-15	
	10-17	
2036059	10-3	
	10-5	
	10-7	
	10-15	
	10-17	
2036061	10-3	
	10-5	
	10-7	
	10-15	
	10-17	
2036062	10-3	
	10-5	
	10-7	
	10-15	
	10-17	
2036063	10-3	
	10-5	
	10-7	
	10-15	
	10-17	
2036142	1-15	24
2036143	1-15	14
2036181	10-11	1
2036182	10-11	1
2036183	10-11	1
2036185	10-11	1
2036186	10-11	1
2036187	10-11	1
2036188	10-11	1
2036189	10-11	1
2036191	10-11	1
2036192	10-11	1
2036193	10-11	1
2036194	10-11	1
2036195	10-11	2
2036196	10-11	2
2036197	10-11	2
2036199	10-11	2
2036200	10-11	2
2036201	10-11	2
2036202	10-11	2
2036203	10-11	2
2036205	10-11	2
2036206	10-11	2
2036207	10-11	2
2036208	10-11	2
2036209	10-11	6
2036210	10-11	6
2036211	10-11	6
2036212	10-11	7
	12-21	5
2036213	10-12	7
	10-12	7
2036277	12-22	15
2036278	12-22	16
2036279	11-16	18
	12-26	18
2036280	11-16	19
	12-26	19
2036282	11-15	3
	12-25	3
2036283	11-15	3
	12-25	3
2036350	3-55	6
2036386	12-21	
2036387	12-21	
2036388	12-21	
2036389	12-21	
2036390	12-21	
2036391	12-21	
2036392	12-21	
2036393	12-21	
2036406	12-21	
2036407	12-21	
2036408	12-21	
2036409	12-21	
2036422	12-25	
2036440	11-15	
	12-25	
2036441	12-25	
2036442	11-15	
	12-25	
2036443	12-25	
2036444	12-25	
2036452	12-25	
2036453	12-25	
2036466	11-15	
	12-25	
2036467	11-15	
	12-25	
2036468	12-25	
2036469	12-25	
2036475	3-55	2
2036476	9-11	20
2036477	9-13	20
2036478	11-16	17
	12-17	6
	12-26	17
2036479	12-22	14
2036484	9-3	12
2036485	9-7	9
	9-9	9
2036486	9-7	3
	9-9	3
2036487	9-7	7
	9-9	7
2036540	4-13	4
	4-16	1
	4-47	
	4-52	
2036541	13-27	9
	13-29	9
	13-65	2
	13-71	
2036542	4-19	19
	4-77	
2036543	4-79	
2036544	13-25	3
	13-65	1
2036547	9-24	6
2036756	11-7	11
	12-17	10
2036777	12-3	
	12-7	
	12-11	
	12-13	
	12-17	
	12-30	
2036778	12-17	1
2036779	12-3	
	12-7	
	12-11	
	12-13	
	12-17	
	12-30	
2036780	12-3	
	12-7	
	12-11	
	12-13	
	12-17	
	12-30	
2036781	12-3	
	12-7	
	12-11	
	12-13	
	12-17	
	12-30	
2036782	12-3	
	12-7	
	12-11	
	12-13	
2036783	12-3	
	12-7	
	12-11	
	12-13	
	12-17	
	12-30	
2036784	12-3	
	12-7	
	12-11	
	12-13	
	12-17	
	12-30	
2036785	12-3	
	12-7	
	12-11	
	12-13	
	12-17	
	12-30	
2036786	12-3	
	12-7	
	12-11	
	12-13	
	12-17	
	12-30	
2036787	12-3	
	12-7	
	12-11	
	12-13	
	12-17	
	12-30	
2036788	12-3	
	12-7	
	12-11	
	12-13	
	12-17	
	12-30	
2036789	12-3	
	12-7	
	12-11	
	12-13	
	12-17	
	12-30	
2036856	10-7	2
	10-11	5
	12-13	2
	12-22	12
2036857	11-16	17
	12-26	17
2036862	1-15	32

See Service Manual for service procedures.
©2003 HYSTER COMPANY

NUMERICAL INDEX (Continued)

PART NO.	PG	ITEM
2036866	1-15	15
2036875	1-23	17
2036924	13-55	7
	13-56	
2036925	4-37	8
2036928	4-23	46
	4-81	
2037113	2-13	4
	2-15	4
	2-21	1
2037114	2-13	4
	2-15	4
	2-21	1
2037124	2-17	12
2037320	3-55	4
	13-33	33
2037323	8-7	14
	8-11	13
2037324	8-11	17
2037325	8-11	18
2037326	8-11	20
2037327	8-7	4
2037328	8-7	4
2037329	8-7	5
2037330	8-7	5
2037331	8-7	6
2037332	8-7	6
2037333	8-7	7
2037334	8-7	8
2037335	8-7	8
2037336	8-7	9
2037337	8-7	9
2037338	8-7	10
2037339	8-7	11
2037340	8-7	12
2037341	8-7	15
2037342	8-7	16
2037343	8-7	17
2037344	8-7	21
2037377	8-8	32
2037515	8-11	4
2037516	8-11	4
2037517	8-11	5
2037518	8-11	5
2037519	8-11	12
2037706	10-21	
2037707	12-33	
2037740	9-3	15
2037760	8-3	23
2037822	11-15	1
2037833	11-15	2
	12-25	2
2037835	12-25	2
2037836	12-25	2
2037837	11-15	2
	12-25	2
2037838	12-25	2
2037840	12-25	2
2037841	12-21	2
2037842	12-21	2
2037844	12-21	2
2037845	12-21	2
2037846	12-21	2
2037847	12-21	2
2037850	11-15	2
	12-25	2
2037851	12-25	2
2037852	12-25	2
2037853	11-15	2
	12-25	2
2037854	12-25	2
2037855	12-25	2
2037856	12-21	2
2037857	12-21	2
2037858	12-21	2
2037859	12-21	2
2037860	12-21	2
2037861	12-21	2
2037862	11-15	1
	12-25	1
2037863	12-25	1
2037864	12-25	1
2037865	11-15	1
	12-25	1
2037866	12-25	1
2037867	12-25	1
2037868	11-15	1
	12-25	1
2037870	12-25	1
2037871	12-25	1
2037872	12-25	1
2037873	12-25	1
2037875	12-25	1
2037876	12-21	1
2037877	12-21	1
2037878	12-21	1
2037879	12-21	1
2037880	12-21	1
2037881	12-21	1
2037882	12-21	1
2037883	12-21	1
2037884	12-21	1
2037885	12-21	1
2037886	12-21	1
2037887	12-21	1
2037894	9-7	34
	9-9	33
2037906	8-3	47
2037907	8-3	47
2037932	4-23	47
2037943	13-35	1
	13-43	
2037944	13-35	1
	13-45	
2037945	13-37	1
	13-47	
2037946	13-37	1
	13-47	
2037947	13-49	
2037948	13-51	
2037949	13-41	1
	13-53	
2037950	13-41	1
	13-53	
2037951	13-35	
2037952	13-35	
2037953	13-37	
2037954	13-37	
2037955	13-39	
2037956	13-39	
2037957	13-41	
2037958	13-41	
2037998	1-11	17
	1-13	20
2038000	2-21	1
2038007	4-37	9
	13-65	3
2038201	9-3	1
	9-29	
2038202	9-3	1
	9-29	
2038212	11-3	
	11-7	
2038218	11-3	
	11-7	
2038254	11-3	
	11-7	
2038260	11-3	
	11-7	
2038289	11-11	
2038314	11-11	
2038359	11-11	
2038365	11-11	
2038415	11-11	
2038421	11-11	
2038457	11-11	
2038463	11-11	
2038558	11-19	
2038560	11-19	
2038561	11-19	
2038562	11-19	
2038564	11-19	
2038565	11-19	
2038566	11-19	
2038594	13-39	
2038595	13-49	
2038596	13-39	
2038597	13-41	
2038598	13-41	
2038599	13-51	
2038600	13-41	1
	13-53	
2038601	13-41	1
	13-53	
2038663	8-8	31
2038675	11-11	8
2038676	11-12	17
2038677	11-12	15
2038679	11-12	18
2038680	11-12	16
2038881	4-14	51
	4-84	
2039256	2-51	17
	2-53	17
	4-23	35
2040751	13-13	1
	13-17	1
	13-17	29
2040752	13-13	18
	13-15	1
2041877	4-13	2
2041878	4-13	2
2042643	4-85	
2042658	4-20	34
2043040	4-87	
	4-91	
2043228	4-93	
2043404	2-25	20
2043527	4-20	34
2043949	4-13	4
	4-95	
	4-100	
2043950	4-13	4
	4-55	
	4-59	
2044167	4-19	1
	4-109	
	4-111	

©2003 HYSTER COMPANY

NUMERICAL INDEX (Continued)

PART NO.	PG	ITEM
2044192	3-26	62
2044238	4-121	
2044239	4-5	2
2044373	9-24	11
2044872	3-37	37
2046117	4-5	2
2047579	4-10	40
	4-24	63
	4-78	
2047709	4-13	4
	4-103	
	4-105	
2047710	4-19	1
	4-115	
	4-117	
2047711	4-23	46
	4-83	
2047712	4-13	4
	4-63	
	4-68	
2047829	3-29	34
	7-11	8
2048095	2-9	22
2049999	4-13	2
2050000	4-13	2
2050502	4-13	4
2050503	4-13	4
2050576	13-15	2
2053135	4-20	34
2053136	4-20	34
2053137	4-20	34
2053930	4-20	34
2053931	3-29	5
	3-31	
2054281	4-13	4
2054282	2-19	10
2054294	4-13	4
2054419	2-19	12
2056780	9-18	33
2059789	4-5	1
2309799	1-31	11
3338646	12-18	23

©2003 HYSTER COMPANY

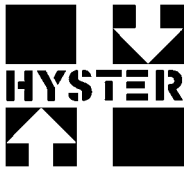
HYSTER