RUTHZIL TRATOR COMERCIAL DE PEÇAS LTDA 11 97083-6812 ROLANDO

# PARTS MANUAL

2004

HYSTER

# CHALLENGER

H70XM H80XM H90XM H100XM H120XM

## H70XM-H120XM (L005)

CUSTOMER EDITION

HYSTER

1560144
01/2004

©2004 Hyster Company

## SECTIONS

| | |
|---|---|
| 1 | FRAME |
| 2 | ENGINE ASSEMBLY |
| 3 | FUEL SYSTEM |
| 4 | ELECTRICAL SYSTEM |
| 5 | TRANSMISSION |
| 6 | DRIVE AXLE |
| 7 | STEERING SYSTEM |
| 8 | BRAKE SYSTEM |
| 9 | HYDRAULIC SYSTEM |
| 10 | MAST-TWO STAGE LIMITED FREE-LIFT |
| 11 | MAST-TWO STAGE FULL FREE-LIFT |
| 12 | MAST-THREE STAGE FULL FREE-LIFT |
| 13 | OPTIONS |
| 14 | NUMERICAL INDEX |

This Parts Manual is divided into 14 major sections which are listed above. Quick reference to these sections can be made by placing the right thumb on the tab of the desired section, bending the book back and thumbing the pages to the corresponding tab.

# TABLE OF CONTENTS

**DESCRIPTION** **PAGE**

**A**

ACCUMULATOR
MAST LOAD DAMPENING ... 13-42
AIR FILTER
DIESEL TIER II ... 3-4
GAS AND LPG ... 3-18
AIR INTAKE AND FILTER SYSTEM
DIESEL TIER II ... 3-2
GAS AND LPG ... 3-16
ALTERNATOR
PRESTOLITE BRAND
GS, LPS, DS ... 4-22
ASSEMBLED ENGINE
DIESEL TIER II ... 2-18
AUXILARY TUBE EXTENSION KIT
TWO AND THREE STAGE FULL FREE-LIFT ... 13-64
TWO STAGE LIMITED FREE-LIFT ... 13-62

**B**

BACK-UP ALARM ... 13-4
BRAKE ASSEMBLY
H100-120XM ... 8-12
H70-90XM ... 8-8
BRAKE SYSTEM ... 8-2

**C**

CAB
ATTACHING PARTS
1 OF 6 ... 13-16
2 OF 6 ... 13-18
3 OF 6 ... 13-20
4 OF 6 ... 13-22
5 OF 6 ... 13-24
6 OF 6 ... 13-26
DOOR ASSEMBLY
LEFT HAND ... 13-28
RIGHT HAND ... 13-30
WIRE HARNESSES ... 13-32
CAB WIRE HARNESS
HEADLIGHT AND HANDHELD LIGHT ... 13-35
WORKLIGHTS AND STROBE LIGHT ... 13-34
CAMSHAFT AND OIL PAN
GASOLINE AND LPG
4.3L EPA COMPLIANT ... 2-54
CARRIAGE
THREE STAGE FULL FREE-LIFT ... 12-30
TWO STAGE FULL FREE-LIFT ... 11-18
TWO STAGE LIMITED FREE-LIFT ... 10-14
CONTROL VALVE
TRANSMISSION ... 5-16
COOLING SYSTEM ... 2-4

©2004 HYSTER COMPANY

# TABLE OF CONTENTS (Continued)

**DESCRIPTION** **PAGE**

**C** (continued)

COUNTERWEIGHTS ..... 1-16
CRANKSHAFT AND PISTONS
  DIESEL TIER II ..... 2-26
CYLINDER BLOCK
  DIESEL TIER II ..... 2-20
  GASOLINE AND LPG
    4.3L EPA COMPLIANT ..... 2-52
CYLINDER HEAD
  GASOLINE AND LPG
    4.3L EPA COMPLIANT ..... 2-62
CYLINDER HEAD AND INDUCTION MANIFOLD
  DIESEL TIER II ..... 2-22

**D**

DIFFERENTIAL ASSEMBLY ..... 6-5
DIRECTIONAL CLUTCH
  FORWARD ..... 5-14
DISTRIBUTOR ASSEMBLY
  4.3 L EPA COMPLIANT ENGINE ..... 4-21
DRIP SHIELD
  GASOLINE AND LPG
    4.3L EPA COMPLIANT ..... 2-68
DRIVE AXLE ..... 6-2
DRIVE TIRES AND WHEELS
  DUAL ..... 13-70
  SINGLE
    H70-H90XM ..... 6-6
    H90-H120XM ..... 6-8
DUAL MIRRORS
  WITHOUT CAB ..... 13-14

**E**

ELECTRICAL SYSTEM
  ALTERNATOR AND BATTERY
    G, GS, LPG AND LPS ..... 4-10
  COWL ..... 4-2
  DIESEL TIER II ..... 4-14
  ENGINE COMPARTMENT
    GASOLINE AND LPG ..... 4-8
  TYPE DS ..... 4-18
ENGINE ASSEMBLY
  GASOLINE
    4.3 L EPA COMPLIANT ..... 2-48
  LPG
    4.3 L EPA COMPLIANT ..... 2-46
ENGINE BELT DRIVE AND ALTERNATOR MOUNTING
  4.3L EPA COMPLIANT ENGINE ..... 2-10
ENGINE FUEL SYSTEM
  4.3 L EPA COMPLIANT


©2004 HYSTER COMPANY

# TABLE OF CONTENTS (Continued)

**DESCRIPTION** **PAGE**

**E** (continued)

LPG ..... 3-22
ENGINE MOUNT
DIESEL TIER II ..... 2-16
ENGINE MOUNTING
GASOLINE AND LPG ..... 2-44
EXHAUST
DIESEL TIER II ..... 2-14
GAS AND LPG ..... 2-12
EXHAUST MANIFOLD
DIESEL TIER II ..... 2-34
GASOLINE AND LPG
4.3L EPA COMPLIANT ..... 2-50

**F**

FAN DRIVE ASSEMBLY ..... 2-8
FENDER EXTENSIONS ..... 13-68
FLOOR PLATES AND COVERS ..... 1-8
FLYWHEEL AND TORQUE CONVERTER ..... 5-10
FORKS
POLISHED FORK WITH FULL BOTTOM TAPER HOOK TYPE ..... 1-34
STANDARD TAPER HOOK TYPE
(H100-120XM) ..... 1-33
(H70-90XM) ..... 1-32
FREE-LIFT
THREE STAGE FULL FREE-LIFT ..... 12-18
FREE-LIFT CYLINDER
THREE STAGE FULL FREE-LIFT ..... 12-26
TWO STAGE FULL FREE-LIFT ..... 11-14
FRONT HEADLIGHTS
WITHOUT CAB ..... 13-8
FUEL FILTER
DIESEL TIER II ..... 3-14
FUEL FILTER AND SENDER
DIESEL TIER II ..... 3-12
FUEL INJECTION PUMP
DIESEL TIER II ..... 2-40
FUEL PUMP AND WATER SEPERATOR
DIESEL TIER II ..... 3-8
FUEL SUPPLY SYSTEM
DIESEL TIER II ..... 3-6
GASOLINE ..... 3-28
LPG ..... 3-20
FULL SUSPENSION SEAT
1 OF 2 ..... 1-12
2 OF 2 ..... 1-14

©2004 HYSTER COMPANY

# TABLE OF CONTENTS (Continued)


| DESCRIPTION | PAGE |
|---|---|
| **G** | |
| GENERAL TRUCK | 1-2 |
| **H** | |
| HEADER HOSE | |
| THREE STAGE FULL FREE-LIFT | 12-32 |
| TWO STAGE FULL FREE-LIFT | 11-20 |
| TWO STAGE LIMITED FREE-LIFT | 10-16 |
| HEATER INSTALLATION | |
| DIESEL TIER II | 13-40 |
| GASOLINE | 13-36 |
| LPG | 13-38 |
| HIGH AND LOW VALVE | 5-19 |
| HOOD AND COVERS | 1-6 |
| HYDRAULIC CONTROL LINES | |
| FOUR FUNCTION | 9-8 |
| THREE FUNCTION | 9-6 |
| HYDRAULIC CONTROL VALVE | |
| THREE AND FOUR FUNCTION | 9-14 |
| HYDRAULIC CONTROL VALVE AND ATTACHING PARTS | |
| FOUR FUNCTION | |
| WITH DETENTED LEVERS | 9-12 |
| THREE FUNCTION | |
| WITH AND WITHOUT DETENTED LEVERS | 9-10 |
| HYDRAULIC FILTER HOUSING | 9-16 |
| HYDRAULIC PUMP | 9-18 |
| HYDRAULIC SYSTEM | 9-2 |
| **I** | |
| INNER MAST | |
| THREE STAGE FULL FREE-LIFT | 12-10 |
| TWO STAGE LIMITED FREE-LIFT | 10-4 |
| INNER MAST AND FREE LIFT | |
| TWO STAGE FULL FREE-LIFT | 11-6 |
| INPUT CLUTCH | |
| REVERSE | 5-12 |
| INSTRUMENT PANEL | 4-6 |
| INTAKE MANIFOLD AND FUEL RAIL | |
| GASOLINE | |
| 4.3 L EPA COMPLIANT | 2-66 |
| INTEGRAL SIDE-SHIFT ASSEMBLY | |
| H100XM-120XM (54 AND 60 INCH) | |
| TWO AND THREE STAGE FULL-FREE-LIFT | 13-58 |
| H100XM-H120XM (54 AND 60-INCH) | |
| TWO STAGE LIMITED FREE-LIFT | 13-48 |
| H70XM - H90XM (48 AND 60-INCH) | |
| TWO STAGE LIMITED FREE-LIFT | 13-44 |
| H70XM-90XM (48 AND 60 INCH) | |
| TWO AND THREE STAGE FULL FREE-LIFT | 13-52 |
| INTEGRAL SIDE-SHIFT CARRIAGE | |
| H100XM - H120XM (54 AND 60-INCH) | |
| TWO STAGE LIMITED FREE-LIFT | 13-50 |



©2004 HYSTER COMPANY

# TABLE OF CONTENTS (Continued)

**DESCRIPTION** **PAGE**

**I** (continued)

H100XM-H120XM (54 AND 60 INCH)
TWO AND THREE STAGE FULL FREE-LIFT ... 13-60
H70XM - H90XM (48 AND 60-INCH)
TWO STAGE LIMITED FREE-LIFT ... 13-46
H70XM-90XM (48 INCH)
TWO AND THREE STAGE FULL FREE-LIFT ... 13-54
H70XM-H90XM (60 INCH)
TWO AND THREE STAGE FULL FREE-LIFT ... 13-56
INTERMEDIATE MAST
THREE STAGE FULL FREE-LIFT ... 12-6

**L**

LABELS AND DECALS ... 1-26
LIFTING EYES ... 13-67
LOAD BACKREST EXTENSION ... 1-30
LPG REGULATOR
4.3 L EPA COMPLIANT ... 3-26
LPG TANK BRACKET
FIXED ... 3-32
SWING OUT ... 3-34
SWING OUT/DROP DOWN ... 3-36

**M**

MAIN LIFT
THREE STAGE FULL FREE-LIFT ... 12-14
TWO STAGE LIMITED FREE-LIFT ... 10-6
MAIN LIFT CYLINDERS
THREE STAGE FULL FREE-LIFT ... 12-22
TWO STAGE FULL FREE-LIFT ... 11-10
TWO STAGE LIMITED FREE-LIFT ... 10-10
MANIFOLD VALVE ... 5-18
MAST INSTALLATION ... 9-20
MASTER CYLINDER AND BOOSTER ASSEMBLY ... 8-6
MONOTROL PEDAL ... 3-48
MONOTROL PEDAL AND BRACKET ASSEMBLY ... 3-46

**N**

NON-SUSPENSION SEAT ... 1-10

**O**

OIL COOLER
DIESEL TIER II ... 2-38
OIL FILTER
DIESEL TIER II ... 2-36
OIL PAN AND PUMP
DIESEL TIER II ... 2-28
OIL PUMP
GASOLINE AND LPG
4.3L EPA COMPLIANT ... 2-64

©2004 HYSTER COMPANY

# TABLE OF CONTENTS (Continued)

**DESCRIPTION** **PAGE**

**O** (continued)

OPERATOR MODULE ..... 1-4
OUTER MAST
  THREE STAGE FULL FREE-LIFT ..... 12-2
  TWO STAGE LIMITED FREE-LIFT ..... 10-2
OUTER MAST AND MAIN LIFT
  TWO STAGE FULL FREE-LIFT ..... 11-2
OVERHEAD GUARD ..... 1-20

**P**

PARK BRAKE ..... 8-16

**Q**

QUICK DISCONNECT FITTINGS ..... 13-66

**R**

REAR ACCESS SCREEN ..... 1-18
REAR DRIVE LIGHT
  WITHOUT CAB ..... 13-10
ROTARY EXHAUSTER
  DIESEL TIER II ..... 2-42

**S**

SHIFT LEVER ..... 7-6
SOUND REDUCTION ..... 1-22
STARTER
  DIESEL TIER II ..... 4-24
STEER AXLE ..... 7-8
STEER COLUMN ..... 7-4
STEER CYLINDER ..... 7-12
STEER PUMP ..... 7-14
STEER TIRES AND WHEELS ..... 7-16
STEERING SYSTEM ..... 7-2
STROBE LIGHT
  AMBER
    WITHOUT CAB ..... 13-12

**T**

THROTTLE ARM ASSEMBLY ..... 3-42
THROTTLE BODY AND LPG MIXER
  4.3 L EPA COMPLIANT ..... 3-24
THROTTLE BODY ASSEMBLY
  4.3 L EPA COMPLIANT
    GASOLINE ..... 3-30
THROTTLE LINKAGE
  DIESEL TIER II ..... 3-44
  GASOLINE AND LPG
    FORWARD AND REVERSE LEVER ..... 3-38
    MONOTROL PEDAL ..... 3-40
TILT CYLINDERS ..... 9-22


©2004 HYSTER COMPANY

# TABLE OF CONTENTS (Continued)

**DESCRIPTION** **PAGE**

**T** (continued)

TIMING GEAR
DIESEL TIER II ..... 2-32
TRANSMISSION
1 OF 2 ..... 5-2
2 OF 2 ..... 5-6
TRANSMISSION LINES ..... 5-20
TRANSMISSION MOUNT ..... 5-22

**U**

UNDERCARRIAGE PAN ..... 1-24

**V**

VALVE COVER AND INLET MANIFOLD
GASOLINE AND LPG
4.3L EPA COMPLIANT ..... 2-58
VALVE COVER AND ROCKER ARM SHAFT
DIESEL TIER II ..... 2-24

**W**

WATER PUMP AND OUTLET
DIESEL TIER II ..... 2-30
WATER SEPARATOR
DIESEL TIER II ..... 3-10
WIRE HARNESS
BACK-UP ALARM ..... 13-6
MODULE
SHEET 1 OF 2 ..... 4-28
SHEET 2 OF 2 ..... 4-32
SEALED ALTERNATOR ..... 4-36
WIRE HARNESS (ENGINE)
DIESEL TIER II ..... 4-26

©2004 HYSTER COMPANY

# ABBREVIATIONS QUICK REFERENCE SHEET

Listed below are abbreviations used in parts manuals to denote the following expressions:

| TERM | DEFINITION |
|---|---|
| Amp | Amperes |
| AR | As Required |
| BDI | Battery Discharge Indicators |
| BWI | Brush Wear Indicator |
| CE | Communicator End |
| CRE | Corrosive Environment |
| D/B | Date Break |
| dbA | Decibel "A" Scale |
| DE | Drive End |
| ECH | Empty Container Handler |
| ECH-3 | Empty Container Handler - 3 High Stacking |
| ECH-4 | Empty Container Handler - 4 High Stacking |
| ECH-5 | Empty Container Handler - 5 High Stacking |
| ECH-6 | Empty Container Handler - 6 High Stacking |
| ECH-7 | Empty Container Handler - 7 High Stacking |
| ECM | Electronic Control Module |
| ECN | Engineering Change Notice |
| EEPROM | Electrically Erasable Programmable Read Only Memory |
| EPROM | Electrically Programmable Read Only Memory |

| TERM | DEFINITION |
|---|---|
| FRE | Freezer Environment |
| in. | inches |
| LPG | Liquefied Petroleum Gas |
| MAP | Manifold Absolute Pressure |
| mm | millimeters |
| MSTS | Microprocessor Spark Timing System |
| NPT | National Pipe Threads |
| O/S | Oversize |
| PTO | Power Take Off |
| RPM | Revolutions per Minute |
| S/N | Serial Number |
| TMM | Truck Management Module |
| UL Type D | Diesel-Powered Safety Rating |
| UL Type DS | Diesel-Powered Safety Rating |
| UL Type E | Battery-Powered Safety Rating |
| UL Type EE | Battery-Powered Safety Rating |
| UL Type ES | Battery-Powered Safety Rating |
| UL Type G | Gasoline-Powered Safety Rating |
| UL Type GS | Gasoline-Powered Safety Rating |
| UL Type LP | Gas-Powered Safety Rating |
| UL Type LPS | LP Gas-Powered Safety Rating |
| U/S | Undersize |
| UL | Underwriters Laboratory |
| V | Volts |


©2004 HYSTER COMPANY

# HOW TO USE THE ILLUSTRATED PARTS MANUAL

This parts manual describes and illustrates assemblies, subassemblies, and detail parts needed for service replacement.

The different constructions are indicated by keys and footnotes. The callouts correspond to descriptions found on the next page.

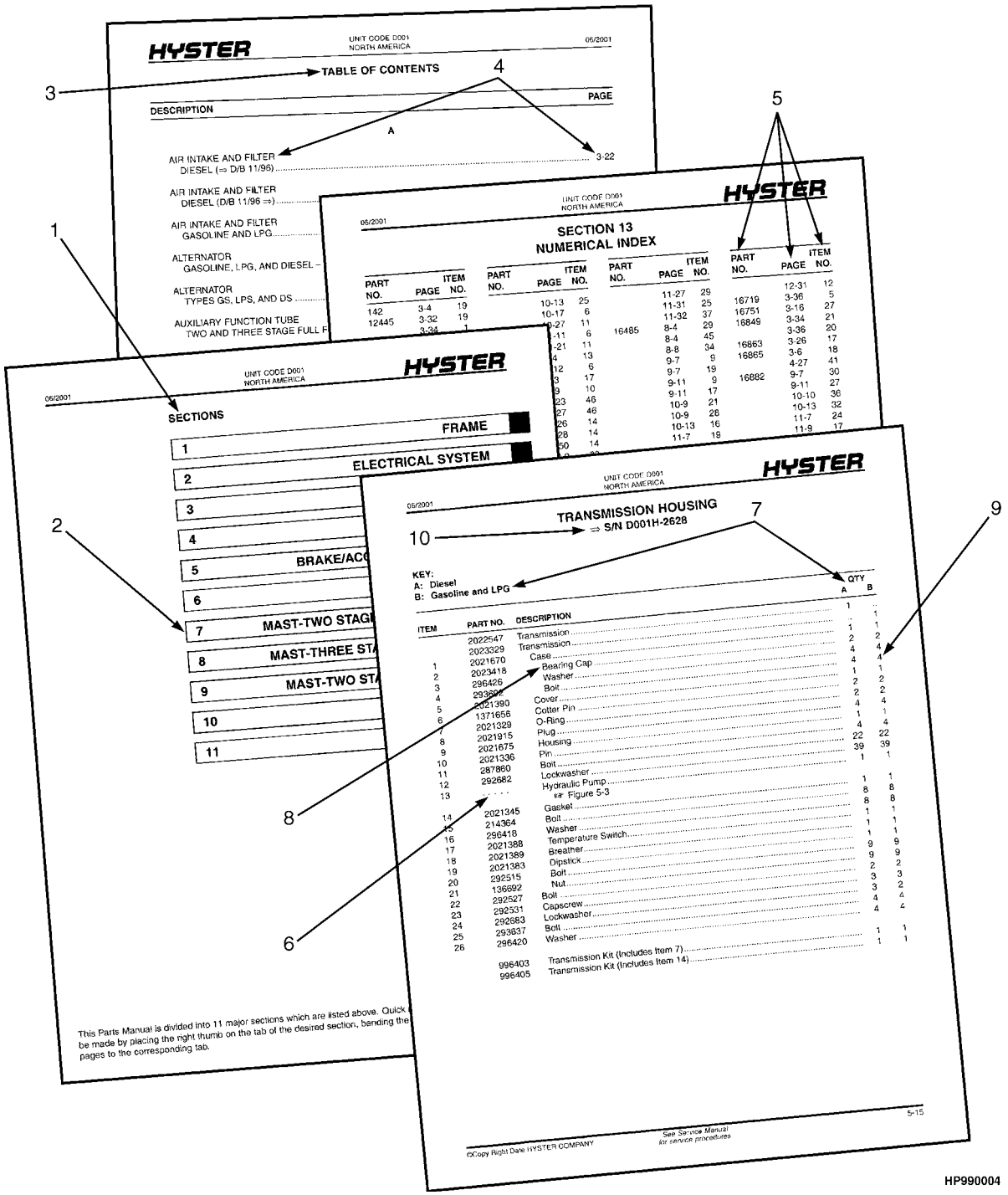

# HOW TO FIND THE DESIRED PART NUMBER

**WHEN THE PART NUMBER AND THE NEXT HIGHER ASSEMBLY IS NOT KNOWN:**

1. Determine the function and application of the part required. Turn to the Sections Page. Choose the general area of reference most likely to include the part.

2. Turn to the section you chose. Use the Section Table of Contents to determine the assembly which would normally contain the part required. Then locate the part on the assembly breakdown page.

**WHEN THE PART NUMBER IS NOT KNOWN AND THE NEXT HIGHER ASSEMBLY IS KNOWN:**

3. Determine the assembly the required part is used on. Turn to the Table of Contents on Page i.

4. Locate the assembly the required part is used on and turn to the page indicated for that assembly. Then locate the part on the assembly breakdown page.

**WHEN THE PART NUMBER IS KNOWN:**

5. Use the Numerical Index on Page 14-1 to find the part number. Turn to the page listed and locate the part as indicated by the item number.

**GENERAL:**

The assembly breakdowns include part numbers, descriptions, quantities required, keys and footnotes to help in selecting correct parts.

6. Five periods in the PART NO. column (. . . . .) indicate that the part is either *Not Serviced Separately* or there is a reference to another figure. A figure reference is denoted by a pointing hand followed by a figure number in the DESCRIPTION column (☞Figure 10)

7. Keys are used to show two or more similar assemblies, RH and LH assembly parts, etc. Select the appropriate key, "A", "B", "C", "D", or "E" and the corresponding quantity column to find the required parts. Two periods in the QTY column (..) indicate that the part is not used for that assembly.

8. Indented descriptions under the DESCRIPTION column are used to indicate assemblies and subparts of assemblies. In the example on the previous page, *BEARING CAP* (Item 2) is a subpart of the major assembly *CASE*.

9. Quantities shown are for one assembly. The quantities of the subpart *BEARING CAP* are indicated as two and two. This means two per *CASE* assembly.

10. Serial number breaks identify the most current parts information and are shown as follows:
    **⇒ S/N D001H-2628**
    Indicates last serial number affected.
    **S/N D001H-2629 ⇒**
    Indicates the first serial number affected.
    **S/N D001H-1553 ⇔ S/N D001H-3291**
    Indicates a range of serial numbers affected.

    ECN numbers for pending serial numbers are shown to allow for the inclusion of the most current parts information and are identified as follows:
    **⇒ S/N Pending Per ECN 63243**
    Indicates a pending serial number for last unit affected.
    **S/N Pending Per ECN 63243 ⇒**
    Indicates a pending serial number for first unit affected.

    Date breaks are used to indicate when a change occurred but a subsequent serial number break was not recorded. This is an arbitrary date usually based on the ECN release and are identified as follows:
    **⇒ D/B 3/00**
    Indicates that a change occurred sometime within that month for the item affected.
    **D/B 3/00 ⇒**
    Indicates that a change occurred sometime within that month for the item affected.
    **D/B 3/00 ⇔ D/B 4/00**
    Indicates a range of production dates of the item affected.

    Contact your local dealer for Hyster lift trucks for serial number information for items with a ECN or a date break.

**ORDERING PARTS:**

When ordering replacement parts, give the unit serial number, part number, name of part and quantity required.

For any further information on parts, service, or ordering, consult your local dealer for Hyster lift trucks.


©2004 HYSTER COMPANY

# IDENTIFICATION OF TRUCK SERIAL NUMBERS

| X | OOO | X | OOOO | X |
|---|---|---|---|---|
| (1) | (2) | (3) | (4) | (5) |

(1) and (2) The first letter and three numbers indicate the truck unit code.

(3) The second letter indicates the plant of manufacture.

(4) The four or five digit number indicates the production sequence number of the truck.

(5) The final letter indicates the year of manufacture starting with "A" in 1957 and 1980. The letters "I", "O", and "Q" will not be used.

For pending serial numbers contact your local dealer for Hyster lift trucks.

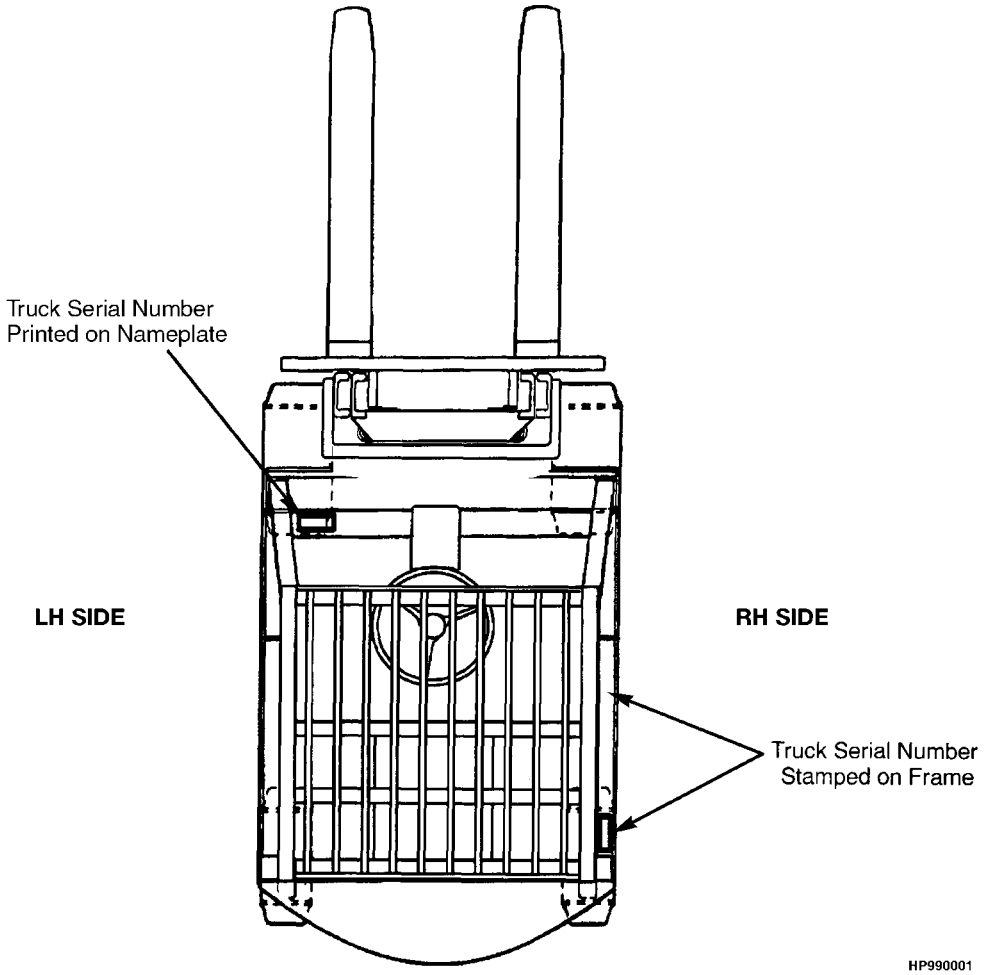


Parts referred to in this book as right or left hand parts are in accordance with the illustration above.

# IDENTIFICATION OF MAST SERIAL NUMBERS

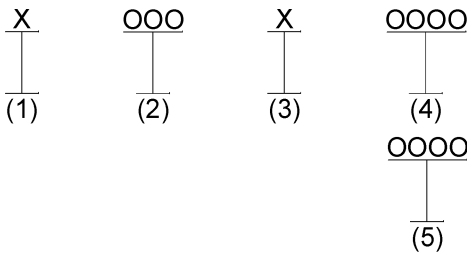


(1) and (2) The first letter and number indicates the mast unit code.

(3) The second letter indicates the plant of manufacture.

(4) The four or five digit number indicates the production sequence number of the mast.

(5) Carriage travel in millimeters stamped just below the serial number.

Mast Group identification consists of mast unit code (1) and (2) plus carriage travel (5).

For pending production sequence numbers contact your local dealer for Hyster lift trucks.

## LIFT EQUIPMENT IDENTIFICATION

1. Fork part number, capacity rating, plant code letter, and date of manufacture are stamped approximately six inches below the top of most forks.

2. The carriage group number is stamped on the right hand side of the top crossmember (pin type) or on the back of the right hand end of the bottom crossmember (hook type). A date code has two letters in line with or below the carriage group number.

3. The mast identification number has a unit code, a letter indicating the plant of manufacture, and a serial number. Underneath the production sequence number is a four digit number that indicates the carriage travel in millimeters.

4. Tilt and lift cylinder group numbers are stamped on the cylinder shell.

   Always refer to the group, serial, or part number when ordering service parts.

   Modification of masts and carriages by SPED (Special Products Engineering Department) are identified by a model prefix code beginning with the letter "S". contact your dealer for Hyster lift trucks for information on these assemblies.

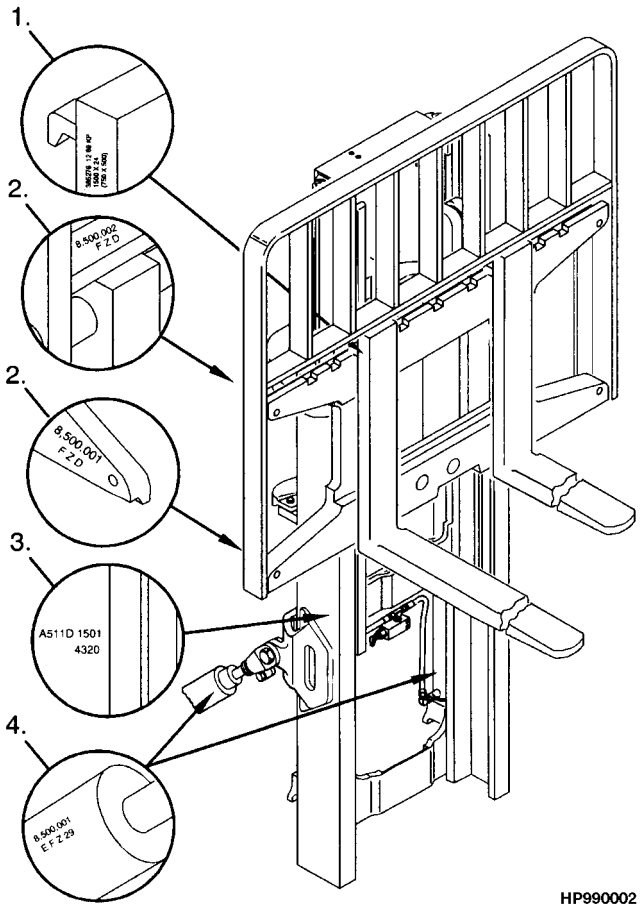



©2004 HYSTER COMPANY

# IDENTIFICATION OF ATTACHMENT AND SIDE-SHIFT CARRIAGE SERIAL NUMBERS

X OOO X OOOO

(1) (2) (3) (4)

(1) and (2) The first letter and three numbers indicate the attachment unit code.

(3) The second letter indicates the plant of manufacture.

(4) The four or five digit number indicates the production sequence number.

For pending production sequence numbers contact your local dealer for Hyster lift trucks.

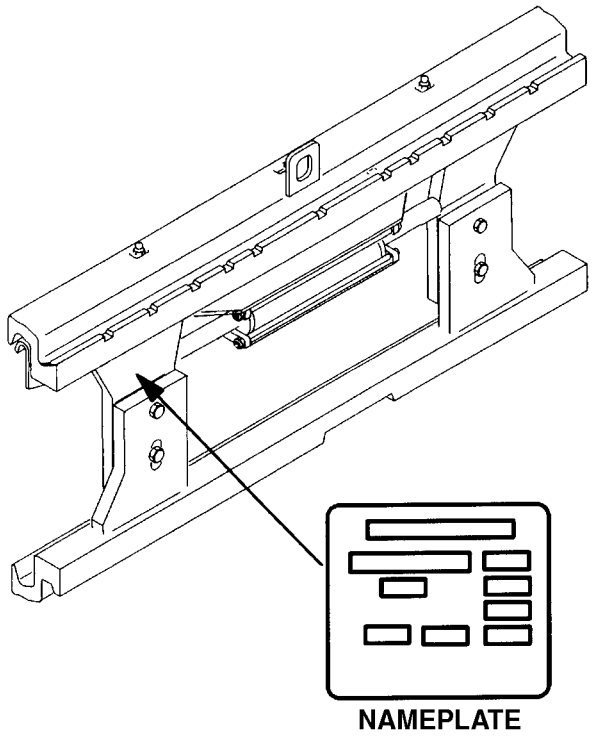


Side-shift carriages and attachments have nameplates. Use the serial number found on the nameplate to identify the attachment.

Always refer to the group, serial, or part number when ordering service parts.

Modifications of attachments and side-shift carriages by SPED (Special Products Engineering Department) are identified by a model prefix code beginning with the letter "S". Contact your dealer for Hyster lift trucks for information on these assemblies.

©2004 HYSTER COMPANY

# PUBLICATIONS

Every new lift truck is provided with an OPERATING MANUAL. This manual has information that the operator must know for inspection and operation of the lift truck.

SERVICE MAINTENANCE MANUALS, which provide service and overhaul procedures, and PARTS MANUALS with complete replacement part identification, are available at a nominal fee from your Hyster dealer to assist users in effectively maintaining Hyster lift trucks in a safe, useful condition. See the list below for information on ordering specific publications for this model lift truck.

| PUBLICATION | HYSTER PART NUMBER |
|---|---|
| **Operating Manual** | 1466306 |
| **Service Manual (Complete)** | 1560150 |
| **Parts Manual** | 1560144 |


©2004 HYSTER COMPANY

# 1 FRAME

# SECTION 1
# FRAME


| DESCRIPTION | PAGE |
|---|---|
| COUNTERWEIGHTS | 1-16 |
| FLOOR PLATES AND COVERS | 1-8 |
| FORKS | |
| POLISHED FORK WITH FULL BOTTOM TAPER HOOK TYPE | 1-34 |
| STANDARD TAPER HOOK TYPE | |
| (H100-120XM) | 1-33 |
| (H70-90XM) | 1-32 |
| FULL SUSPENSION SEAT | |
| 1 OF 2 | 1-12 |
| 2 OF 2 | 1-14 |
| GENERAL TRUCK | 1-2 |
| HOOD AND COVERS | 1-6 |
| LABELS AND DECALS | 1-26 |
| LOAD BACKREST EXTENSION | 1-30 |
| NON-SUSPENSION SEAT | 1-10 |
| OPERATOR MODULE | 1-4 |
| OVERHEAD GUARD | 1-20 |
| REAR ACCESS SCREEN | 1-18 |
| SOUND REDUCTION | 1-22 |
| UNDERCARRIAGE PAN | 1-24 |


©2004 HYSTER COMPANY

# GENERAL TRUCK (Figure 1-1)

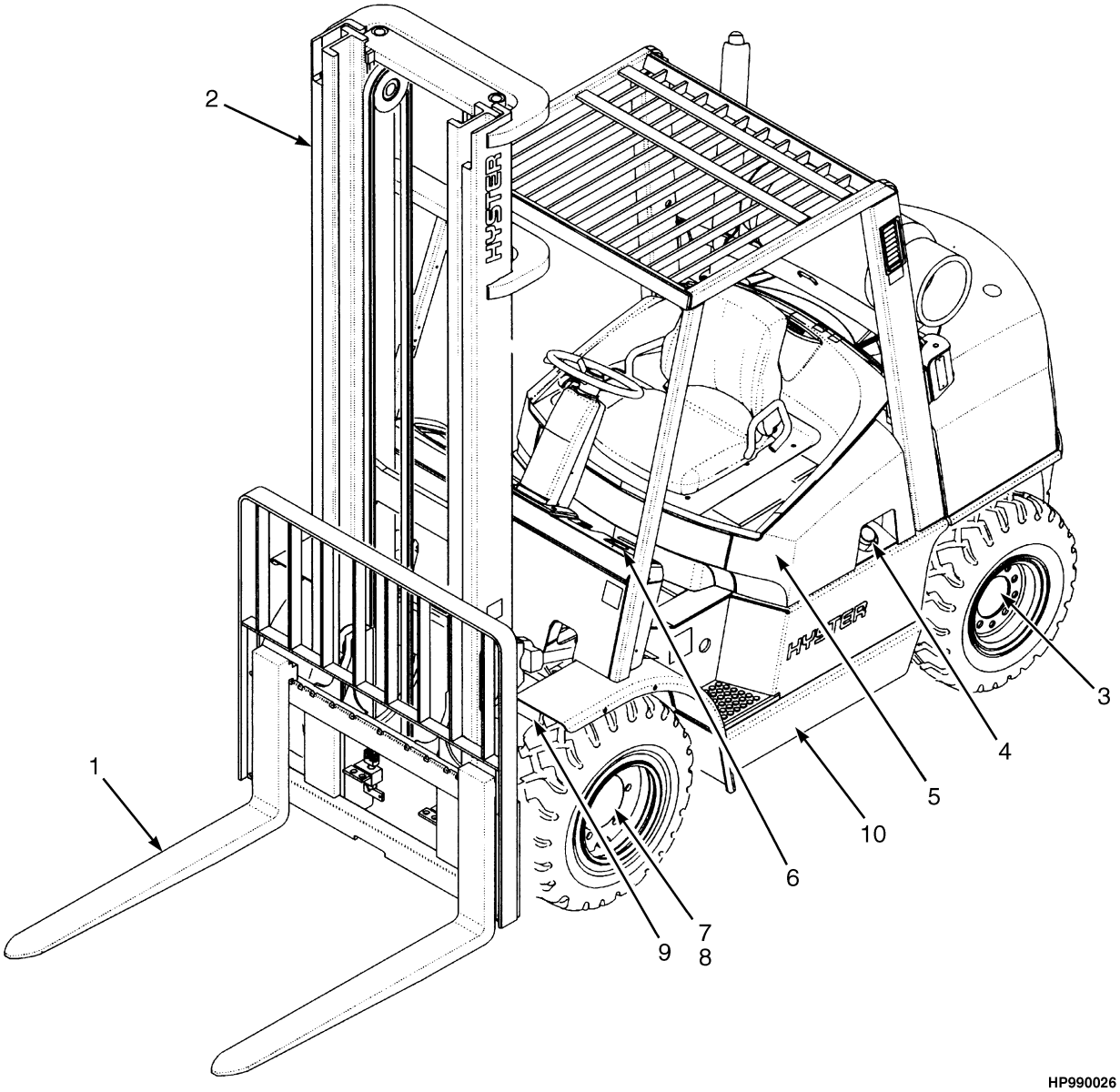



©2004 HYSTER COMPANY

# GENERAL TRUCK

| ITEM | PART NO. | DESCRIPTION | QTY |
|---|---|---|---|
| 1 | . . . . . | Forks (☞ Figure 1-15, ☞ Figure 1-16, ☞ Figure 1-17) | 1 |
| 2 | . . . . . | Mast-Two Stage Limited Free-Lift (☞ Figure 10-1) | 1 |
| 2 | . . . . . | Mast-Two Stage Full Free-Lift (☞ Figure 11-1) | 1 |
| 2 | . . . . . | Mast-Three Stage Full Free-Lift (☞ Figure 12-1) | 1 |
| 3 | . . . . . | Steering System (☞ Figure 7-1) | 1 |
| 4 | . . . . . | Fuel System (☞ Figure 3-3, ☞ Figure 3-10, ☞ Figure 3-14) | 1 |
| 5 | . . . . . | Engines (☞ Figure 2-7, ☞ Figure 2-21, ☞ Figure 2-22) | 1 |
| 6 | . . . . . | Electrical (☞ Figure 4-1, ☞ Figure 4-2, ☞ Figure 4-5, ☞ Figure 4-6) | 1 |
| 7 | . . . . . | Drive Axle (☞ Figure 6-1) | 1 |
| 8 | . . . . . | Brake System (☞ Figure 8-1) | 1 |
| 9 | . . . . . | Hydraulic System (☞ Figure 9-1) | 1 |
| 10 | . . . . . | Options (☞ Figure 13-3, ☞ Figure 13-4, ☞ Figure 13-5) | 1 |

©2004 HYSTER COMPANY

# OPERATOR MODULE (Figure 1-2)

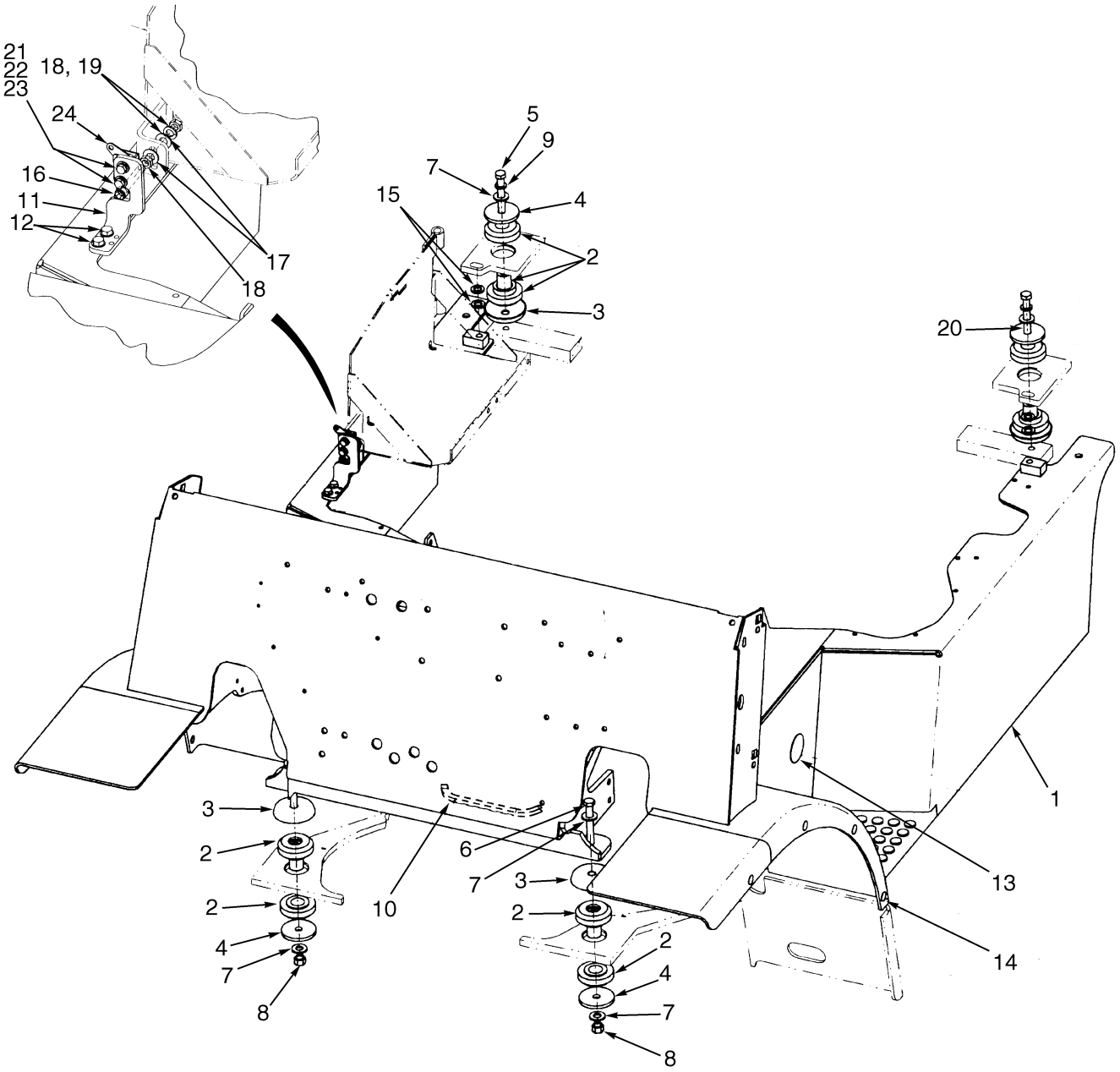


BP120049


©2004 HYSTER COMPANY

# OPERATOR MODULE

**KEY:**
**A: 1830 mm Short Wheel Base**
**B: 2100 mm Long Wheel Base**

| ITEM | PART NO. | DESCRIPTION | QTY A | QTY B |
|---|---|---|---|---|
| 1 | 1493147 | Operator Module | 1 | .. |
| 1 | 1493148 | Operator Module | .. | 1 |
| 2 | 1378168 | Mount | 4 | 4 |
| 3 | 1378197 | Cup | 4 | 4 |
| 3 | 1351098 | Cup (Optional) | 4 | 4 |
| 4 | 300939 | Washer | 4 | 4 |
| 5 | 293657 | Capscrew | 2 | 2 |
| 5 | 2037998 | Stud (Optional) | 2 | 2 |
| 5 | 302402 | Nut (Optional) | 2 | 2 |
| 6 | 293658 | Capscrew | 2 | 2 |
| 7 | 296423 | Washer | 6 | 6 |
| 8 | 302402 | Nut | 2 | 2 |
| 9 | 292683 | Lockwasher | 2 | 2 |
| 10 | 1396024 | Trim | 1 | 1 |
| 11 | 1476761 | Bracket | 1 | 1 |
| 12 | 316678 | Screw | 2 | 2 |
| 13 | 1398009 | Plug | 2 | 2 |
| 14 | 1399760 | Plug | 8 | 8 |
| 15 | 296422 | Washer | 4 | 4 |
| 16 | 18762 | Capscrew | 1 | 1 |
| 17 | 15134 | Washer | 2 | 2 |
| 18 | 15086 | Nut | 2 | 2 |
| 19 | 15156 | Lockwasher | 1 | 1 |
| 20 | 264134 | Sealant | AR | AR |
| 21 | 18462 | Capscrew | 2 | 2 |
| 22 | 15154 | Lockwasher | 2 | 2 |
| 23 | 15127 | Washer | 2 | 2 |
| 24 | 1476422 | Latch (Rotary) | 1 | 1 |

©2004 HYSTER COMPANY

# HOOD AND COVERS (Figure 1-3)

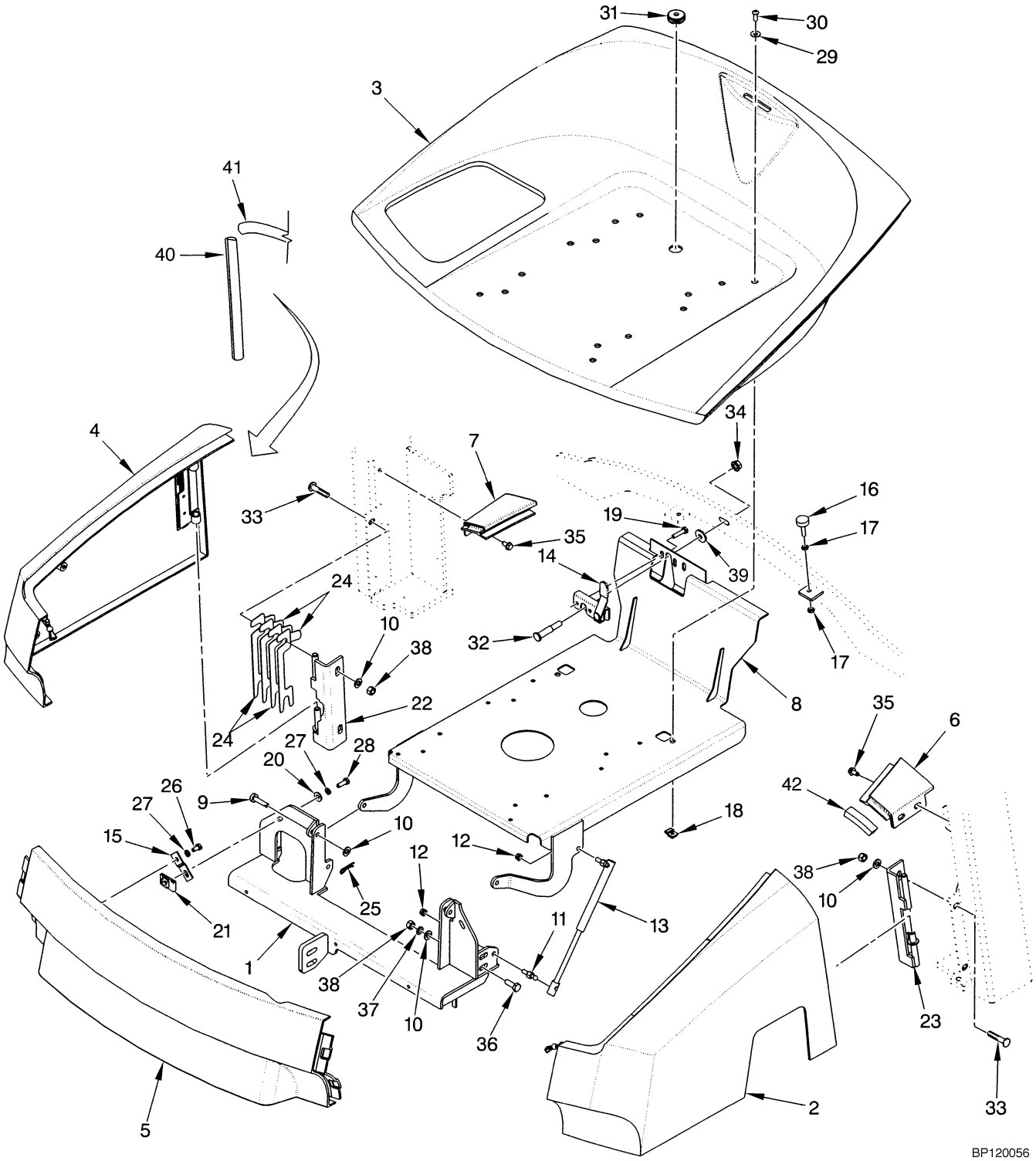



©2004 HYSTER COMPANY

# HOOD AND COVERS

| ITEM | PART NO. | DESCRIPTION | QTY |
|---|---|---|---|
| 1 | 1531582 | Crossmember | 1 |
| 2 | 1397957 | Panel (LH) (LPG) | 1 |
| 2 | 1397958 | Panel (LH) (Diesel, Gas, Dual Fuel) | 1 |
| 3 | 1397960 | Hood | 1 |
| 4 | 1396626 | Panel (RH) | 1 |
| 5 | 1396625 | Cover (Front) | 1 |
| 5 | 1392718 | Latch (Over Center) | 2 |
| 6 | 1397964 | Corner (LH) (Without Cab) | 1 |
| 6 | 1485280 | Corner (LH) (With Cab) | 1 |
| 7 | 1397963 | Corner (RH) (Without Cab) | 1 |
| 7 | 1485281 | Corner (RH) (With Cab) | 1 |
| 8 | 1531579 | Seat Pan | 1 |
| 9 | 2021207 | Pin | 2 |
| 10 | 320159 | Washer | 10 |
| 11 | 1350285 | Stud (Ball) | 1 |
| 12 | 316835 | Nut | 4 |
| 13 | 1518858 | Gas Spring Assembly | 2 |
| 13 | 1513907 | Ball Stud | 2 |
| 14 | 2036143 | Latch | 1 |
| 15 | 2036866 | Bracket | 2 |
| 16 | 1347088 | Stop Screw | 2 |
| 17 | 15001 | Nut | 4 |
| 18 | 1385535 | Nut | 2 |
| 19 | 1529238 | Capscrew | 2 |
| 20 | 320158 | Washer | 4 |
| 21 | 1364259 | Clip | 2 |
| 22 | 1470010 | Hinge (RH) | 1 |
| 23 | 1470009 | Hinge (LH) | 1 |
| 24 | 2036142 | Shim (0.047 in.) | 4 |
| 25 | 1362714 | Cotter Pin | 2 |
| 26 | 287851 | Capscrew | 2 |
| 27 | 292681 | Lockwasher | 4 |
| 28 | 136749 | Capscrew | 2 |
| 29 | 375629 | Washer | 2 |
| 30 | 370599 | Capscrew | 2 |
| 31 | 1359587 | Grommet | 1 |
| 32 | 1471866 | Striker | 1 |
| 33 | 1470021 | Bolt | 4 |
| 34 | 264144 | Nut | 1 |
| 35 | 316678 | Screw | 4 |
| 36 | 136985 | Capscrew | 8 |
| 37 | 320157 | Washer | 2 |
| 38 | 316826 | Nut | 2 |
| 39 | 2036863 | Washer | 1 |
| 40 | 1464909 | Trim | 2 |
| 41 | 1396658 | Seal | 2 |
| 42 | 1466416 | Seal | 2 |

©2004 HYSTER COMPANY

# FLOOR PLATES AND COVERS (Figure 1-4)

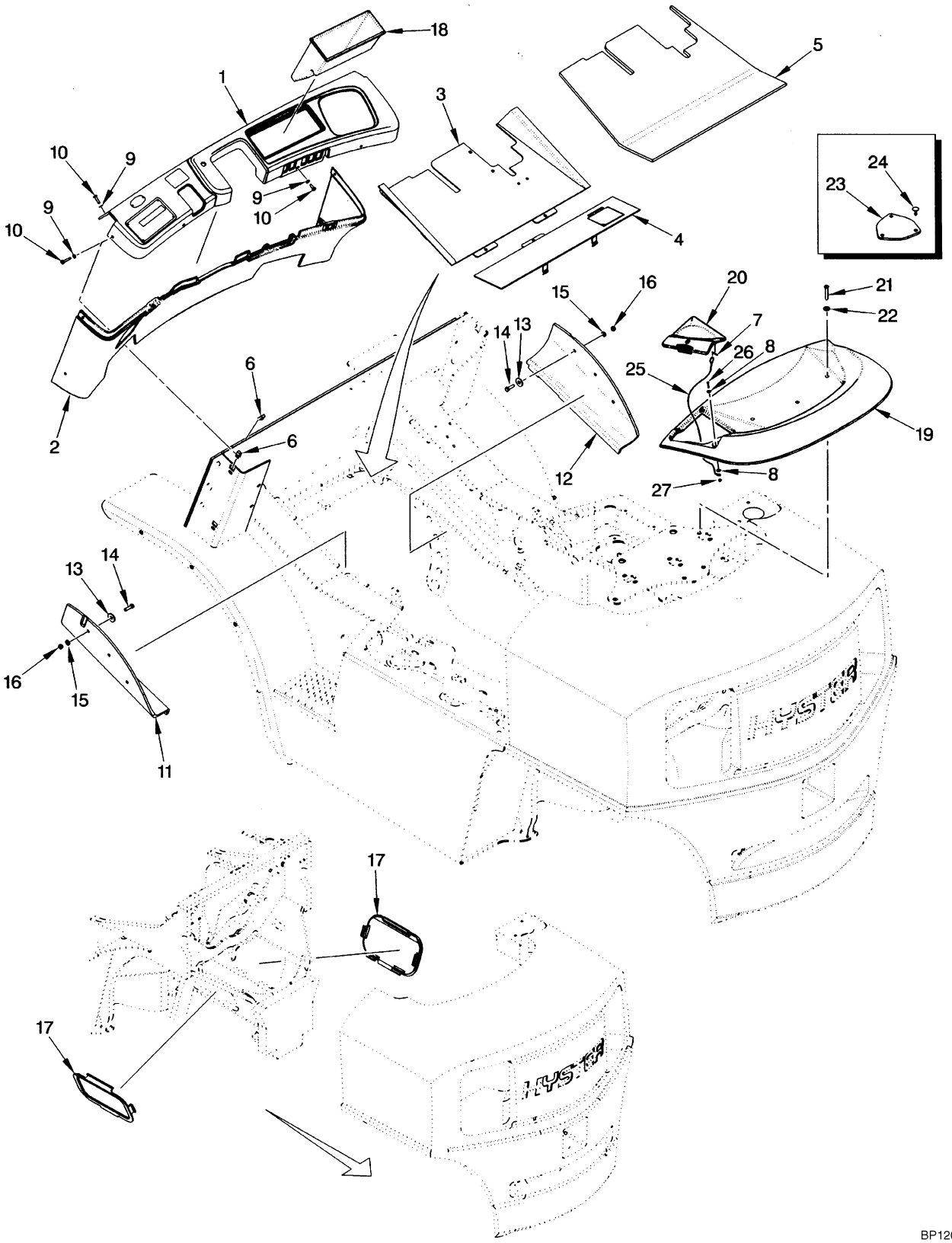



©2004 HYSTER COMPANY

# FLOOR PLATES AND COVERS

| ITEM | | PART NO. | DESCRIPTION | QTY |
|---|---|---|---|---|
| 1 | | 1396147 | Dash | 1 |
| 2 | | 1396148 | Cowl Panel | 1 |
| 3 | | 2035798 | Floorplate (Front) | 1 |
| 4 | | 2035980 | Floorplate | 1 |
| 5 | | 1396641 | Floormat | 1 |
| 6 | | 1350215 | Nut (Foldover) | 6 |
| 7 | | 15212 | Cotter Pin | 1 |
| 8 | | 320156 | Washer | 2 |
| 9 | | 1399399 | Washer | 9 |
| 10 | | 1525248 | Screw | 9 |
| 11 | | 1399337 | Flap (Right Cylinder) | 1 |
| 12 | | 1399338 | Flap (Left Cylinder) | 1 |
| 13 | | 1334790 | Washer | 6 |
| 14 | | 176640 | Capscrew | 6 |
| 15 | | 320157 | Washer | 6 |
| 16 | | 302400 | Locknut | 6 |
| 17 | | 2036875 | Cover | 2 |
| 18 | | 1338286 | Storage Compartment (Without Cab) | 1 |
| 19 | | 1385498 | Cover | 1 |
| 20 | **a** | 1396012 | Radiator Cap Door | 1 |
| 20 | **b** | 1396009 | Radiator Cap Door | 1 |
| 21 | | 1469317 | Capscrew | 3 |
| 22 | | 375629 | Washer | 3 |
| 23 | | 1347043 | Cover (Counterweight Exhaust) | 1 |
| 24 | | 1347045 | Fastener (Counterweight Exhaust) | 3 |
| 25 | | 1400180 | Lanyard | 1 |
| 26 | | 296511 | Screw | 1 |
| 27 | | 302398 | Locknut | 1 |

**FOOTNOTES:**

**a** Type Gasoline and Diesel

**b** Type LPG, Dual Fuel, GS, LPS, and DS

©2004 HYSTER COMPANY

# NON-SUSPENSION SEAT (Figure 1-5)

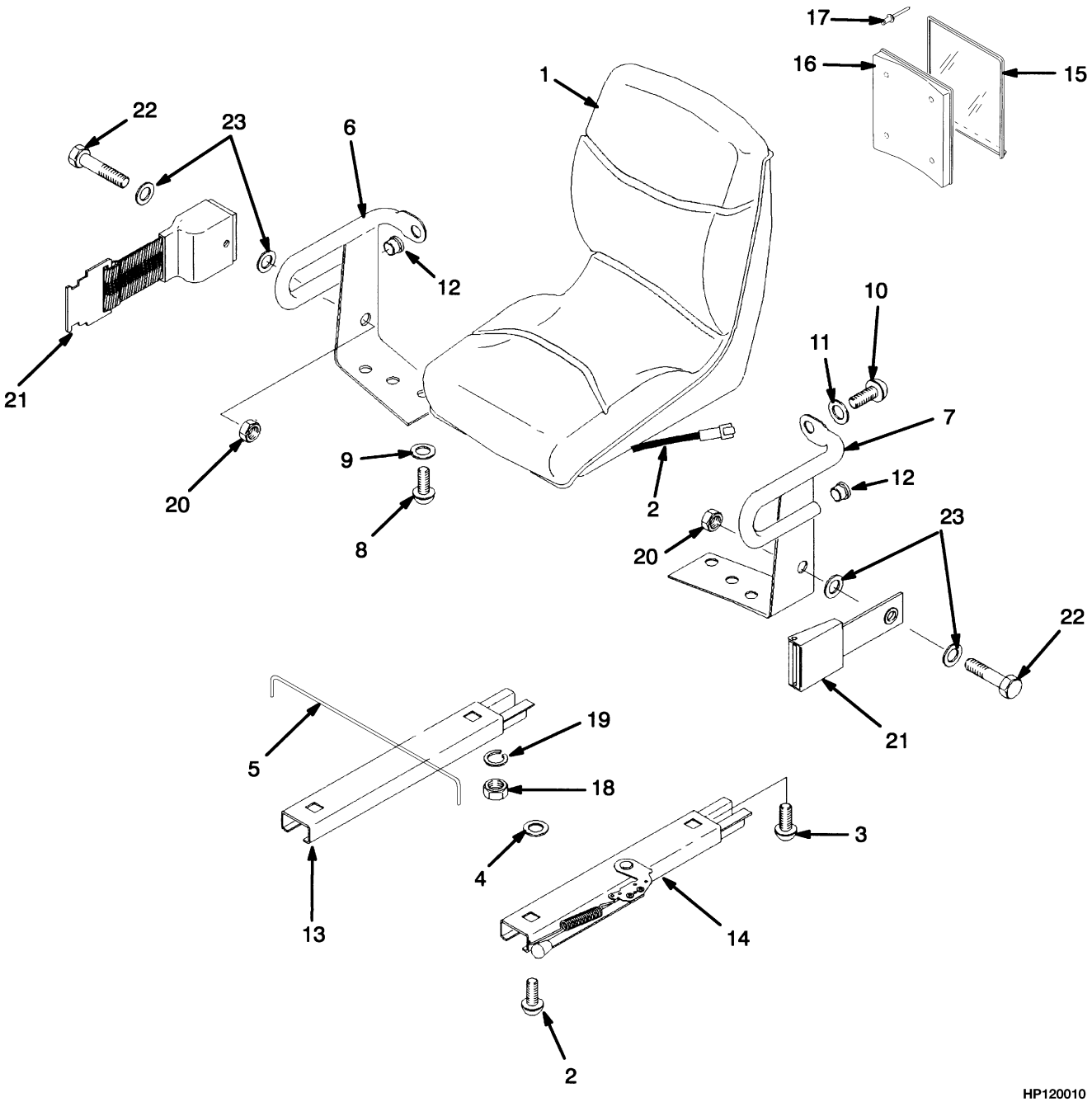



©2004 HYSTER COMPANY

# NON-SUSPENSION SEAT

| ITEM | PART NO. | DESCRIPTION | QTY |
|---|---|---|---|
| | 1375150 | Seat Assembly (Vinyl) | 1 |
| 1 | 1351473 | Seat | 1 |
| 2 | 1354140 | Switch Assembly | 1 |
| 3 | 364914 | Capscrew | 4 |
| 4 | 221733 | Washer | 2 |
| 5 | 1300107 | Rod | 1 |
| 6 | 364807 | Hip Restraint (RH) | 1 |
| 7 | 364808 | Hip Restraint (LH) | 1 |
| 8 | 18727 | Capscrew | 4 |
| 9 | 18515 | Washer | 4 |
| 10 | 379197 | Capscrew | 2 |
| 11 | 379198 | Washer | 2 |
| 12 | 364854 | Plug | 2 |
| 13 | 383116 | Seat Rail (RH) | 1 |
| 14 | 335553 | Seat Rail (LH) | 1 |
| 15 | 335991 | Cover | 1 |
| 16 | 335988 | Base | 1 |
| 17 | 222029 | Rivet | 4 |
| 18 | 145639 | Nut | 4 |
| 19 | 15175 | Washer | 4 |
| 20 | 379698 | Nut | 2 |
| 21 | 1374750 | Seat Belt | 1 |
| 22 | 379199 | Capscrew | 2 |
| 23 | 379697 | Washer | 4 |

©2004 HYSTER COMPANY

# FULL SUSPENSION SEAT (Figure 1-6)
## 1 OF 2

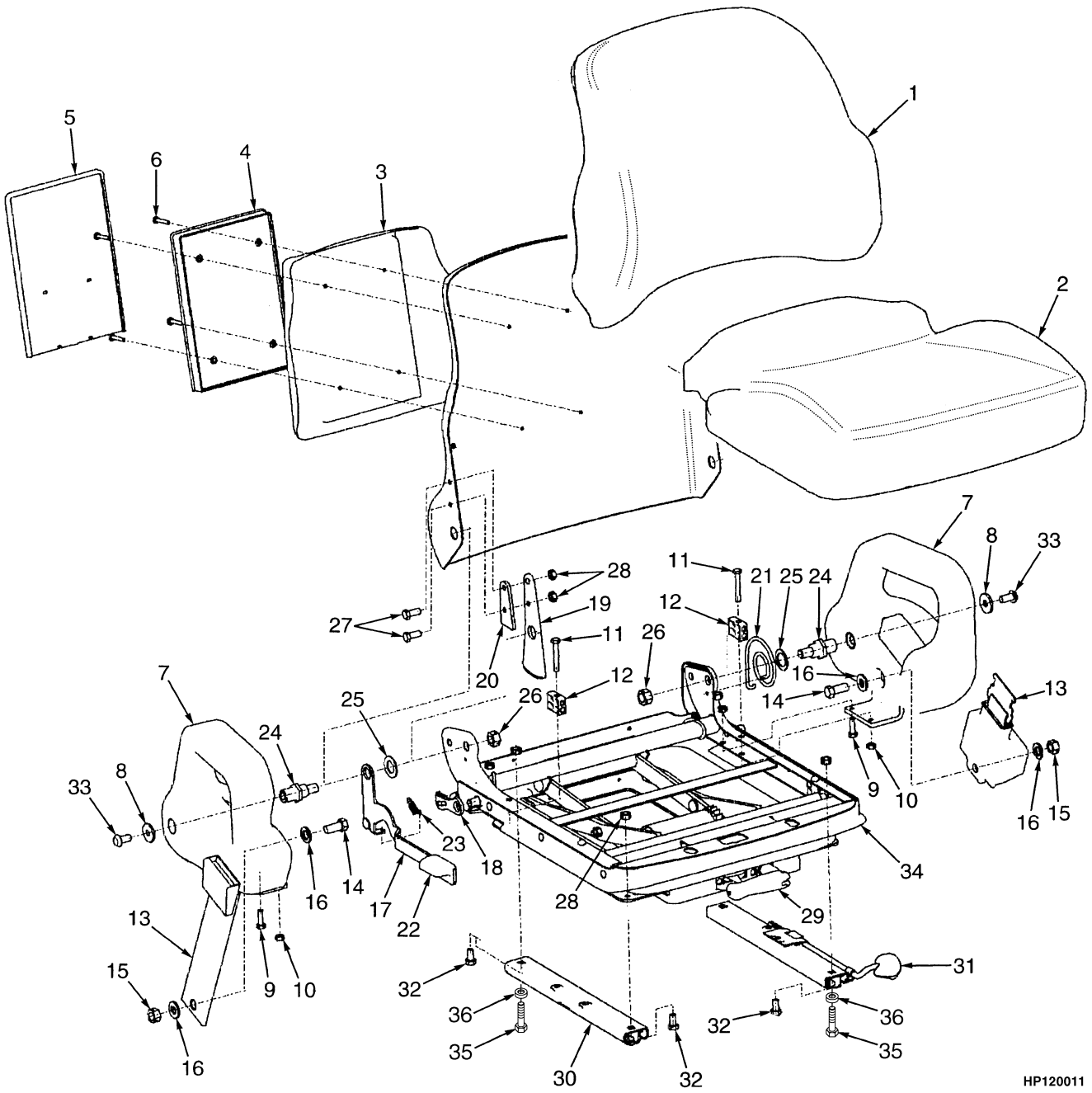



©2004 HYSTER COMPANY

# FULL SUSPENSION SEAT
## 1 OF 2

| ITEM | PART NO. | DESCRIPTION | QTY |
|---|---|---|---|
| | 1468473 | Seat Assembly (Fabric) | 1 |
| | 1468472 | Seat Assembly (Vinyl) | 1 |
| 1 | 1470153 | Back Cushion (Fabric) | 1 |
| 1 | 1470152 | Back Cushion (Vinyl) | 1 |
| 2 | 1494077 | Seat Cushion (Fabric) | 1 |
| 2 | 1494076 | Seat Cushion (Vinyl) | 1 |
| 3 | . . . . . | Riser | 1 |
| 4 | . . . . . | Box | 1 |
| 5 | . . . . . | Cover | 1 |
| 6 | . . . . . | Screw | 4 |
| 7 | . . . . . | Hip Restraint (RH) | 1 |
| 7 | . . . . . | Hip Restraint (LH) | 1 |
| 8 | . . . . . | Washer | 2 |
| 9 | . . . . . | Bolt | 2 |
| 10 | . . . . . | Nut | 4 |
| 11 | . . . . . | Bolt | 2 |
| 12 | . . . . . | Block | 2 |
| 13 | . . . . . | Seat Belt | 1 |
| 14 | . . . . . | Bolt | 2 |
| 15 | . . . . . | Nut | 2 |
| 16 | . . . . . | Washer | 4 |
| 17 | . . . . . | Handle | 1 |
| 18 | . . . . . | Latch | 1 |
| 19 | . . . . . | Bracket | 1 |
| 20 | . . . . . | Spacer | 1 |
| 21 | . . . . . | Spring | 1 |
| 22 | . . . . . | Knob | 1 |
| 23 | . . . . . | Spring Extension | 1 |
| 24 | . . . . . | Pivot | 2 |
| 25 | . . . . . | Washer | 2 |
| 26 | . . . . . | Nut | 2 |
| 27 | . . . . . | Bolt | 2 |
| 28 | . . . . . | Nut | 6 |
| 29 | 1470163 | Handle Kit | 1 |
| 30 | . . . . . | Slide (RH) | 1 |
| 31 | . . . . . | Slide (LH) | 1 |
| 32 | . . . . . | Bolt | 4 |
| 33 | . . . . . | Screw | 2 |
| 34 | 1470159 | Suspension Kit | 1 |
| 35 | 15175 | Washer | 4 |
| 36 | 145639 | Nut | 4 |
| | 1470155 | Manual Holder Kit (Includes Items 3-6) | 1 |
| | 1470156 | Hip Restraint Kit (RH) (Includes Items 7-12, 33) | 1 |
| | 1470157 | Hip Restraint Kit (LH) (Includes Items 7-12, 33) | 1 |
| | 1470158 | Seat Belt Kit (Includes Items 13-16) | 1 |
| | 1470164 | Recliner Kit (Includes Items 17-28) | 1 |
| | 1470161 | Slide Kit (Includes Items 30-32) | 1 |

©2004 HYSTER COMPANY

# FULL SUSPENSION SEAT (Figure 1-7)
## 2 OF 2

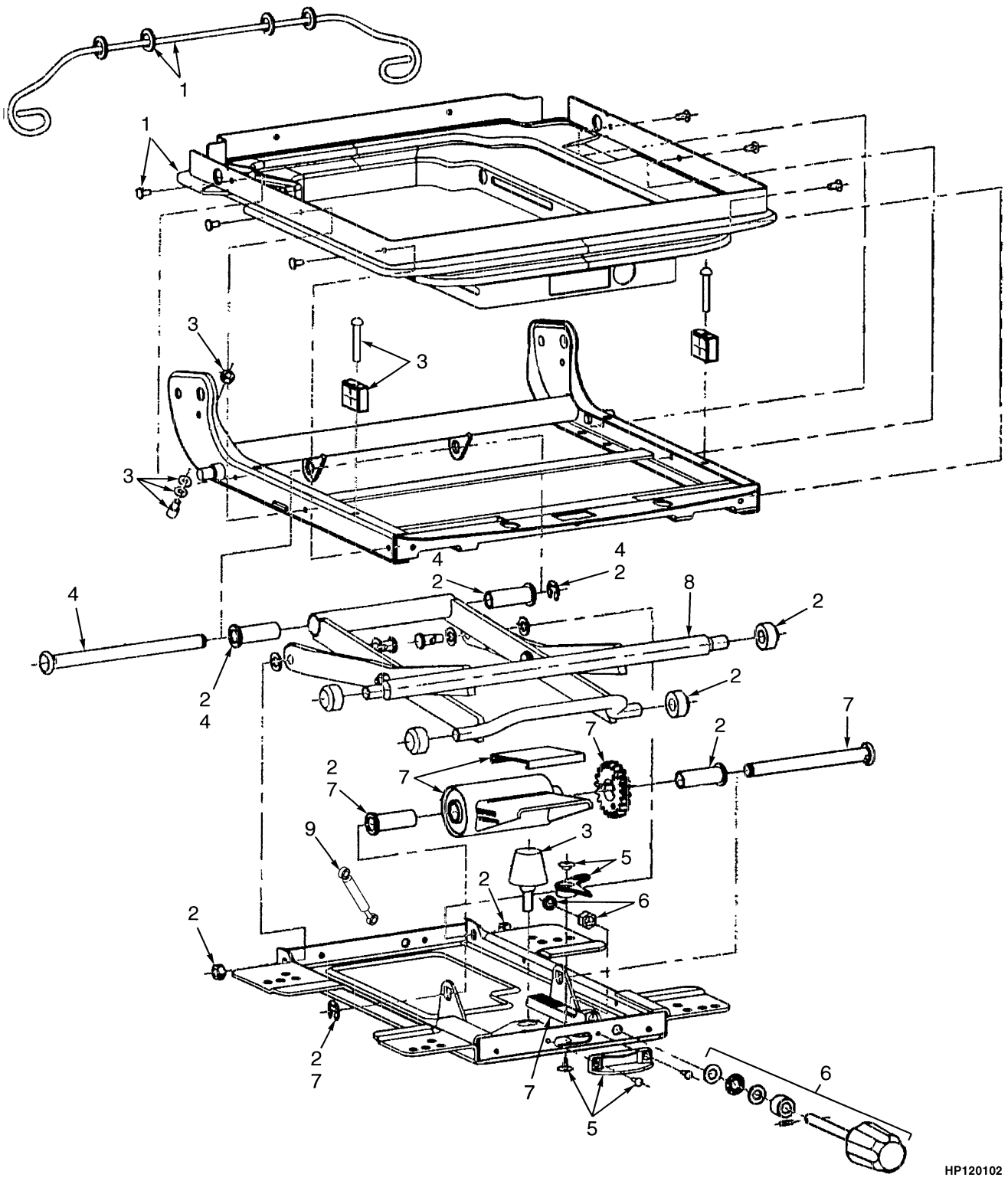



©2004 HYSTER COMPANY

# FULL SUSPENSION SEAT
## 2 OF 2

| ITEM | PART NO. | DESCRIPTION | QTY |
|---|---|---|---|
| | 1468473 | Seat Assembly (Fabric) | 1 |
| | 1468472 | Seat Assembly (Vinyl) | 1 |
| 1 | 1467523 | Boot Kit | 1 |
| 2 | 1467524 | Roller and Bearing Kit | 1 |
| 3 | 1467525 | Bumper and Stop Kit | 1 |
| 4 | 1467526 | Bearing Shaft Kit | 1 |
| 5 | 1467527 | Weight Adjuster Indicator Kit | 1 |
| 6 | 1467531 | Recliner Knob | 1 |
| 7 | 1467529 | Suspension Spring Kit | 1 |
| 8 | 1470160 | Scissor Assembly | 1 |
| 9 | 1483828 | Shock Absorber | 1 |

©2004 HYSTER COMPANY

# COUNTERWEIGHTS (Figure 1-8)

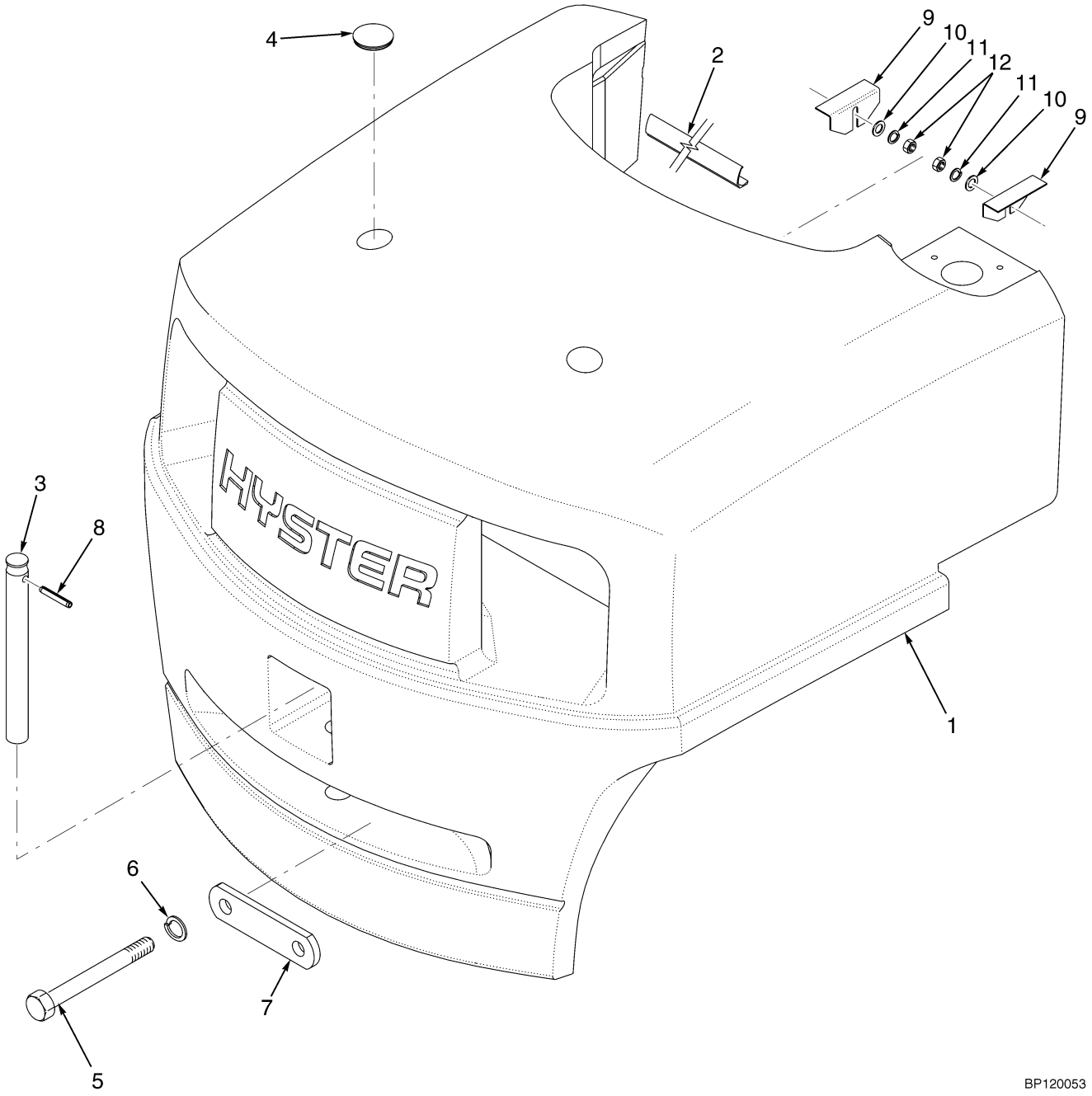



©2004 HYSTER COMPANY

# COUNTERWEIGHTS

| ITEM | PART NO. | DESCRIPTION | QTY |
|---|---|---|---|
| 1 | 1388879 | Counterweight (H70XM) | 1 |
| 1 | 1388880 | Counterweight (H80XM) | 1 |
| 1 | 1385449 | Counterweight (H90XM) | 1 |
| 1 | 1388882 | Counterweight (H100XM) | 1 |
| 1 | 1388883 | Counterweight (H110XM) | 1 |
| 1 | 1385457 | Counterweight (H120XM) | 1 |
| 2 | . . . . . | Seal (H70-90XM) | 2 |
| 2 | . . . . . | Seal (H100-120XM) | 2 |
| 3 | 1388898 | Tow Pin | 1 |
| 4 | 2021395 | Cap | 2 |
| 5 | 292614 | Capscrew | 2 |
| 6 | 292689 | Lockwasher | 2 |
| 7 | 1480019 | Washer | 2 |
| 8 | 1527470 | Spring Pin | 1 |
| 9 | 1335763 | Shim (0.109 in.) | 4 |
| 10 | 320158 | Washer | 4 |
| 11 | 292681 | Lockwasher | 4 |
| 12 | 239503 | Nut | 4 |

©2004 HYSTER COMPANY

# REAR ACCESS SCREEN (Figure 1-9)

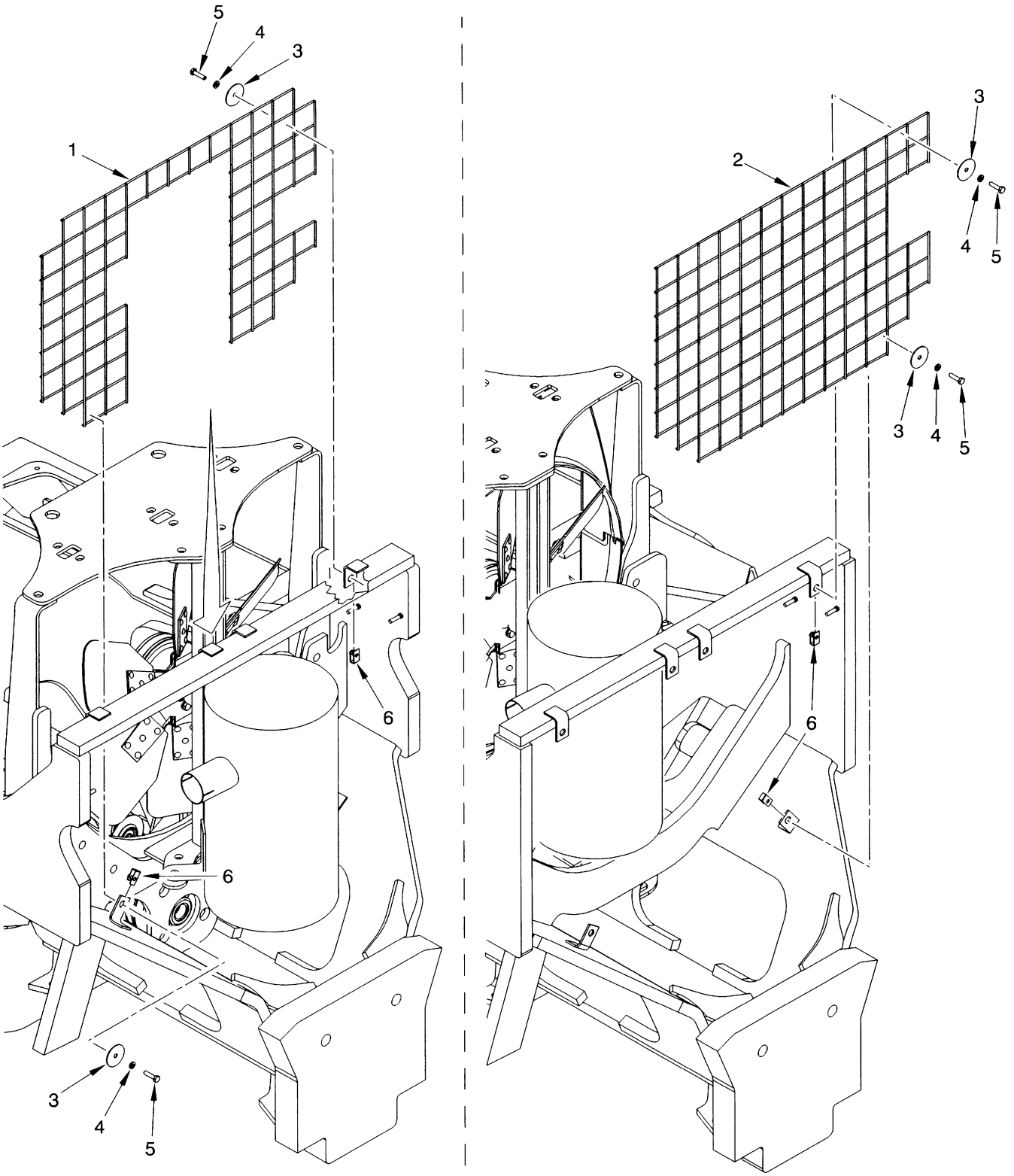



©2004 HYSTER COMPANY

# REAR ACCESS SCREEN

| ITEM | PART NO. | DESCRIPTION | QTY |
|---|---|---|---|
| 1 | 1470920 | Screen (H70XM) (With Counterweight Exhaust) | 1 |
| 1 | 1470921 | Screen (H70XM) (With Overhead Exhaust) | 1 |
| 1 | 1470922 | Screen (H80-90XM) (With Counterweight Exhaust) | 1 |
| 1 | 1470923 | Screen (H80-90XM) (With Overhead Exhaust) | 1 |
| 2 | 1468699 | Screen (H100-120XM) (2100 mm Long Wheel Base) | 1 |
| 3 | 1471535 | Washer | 4 |
| 4 | 292681 | Lockwasher | 4 |
| 5 | 136749 | Capscrew | 4 |
| 6 | 1398062 | Nut | 4 |

©2004 HYSTER COMPANY

# OVERHEAD GUARD (Figure 1-10)

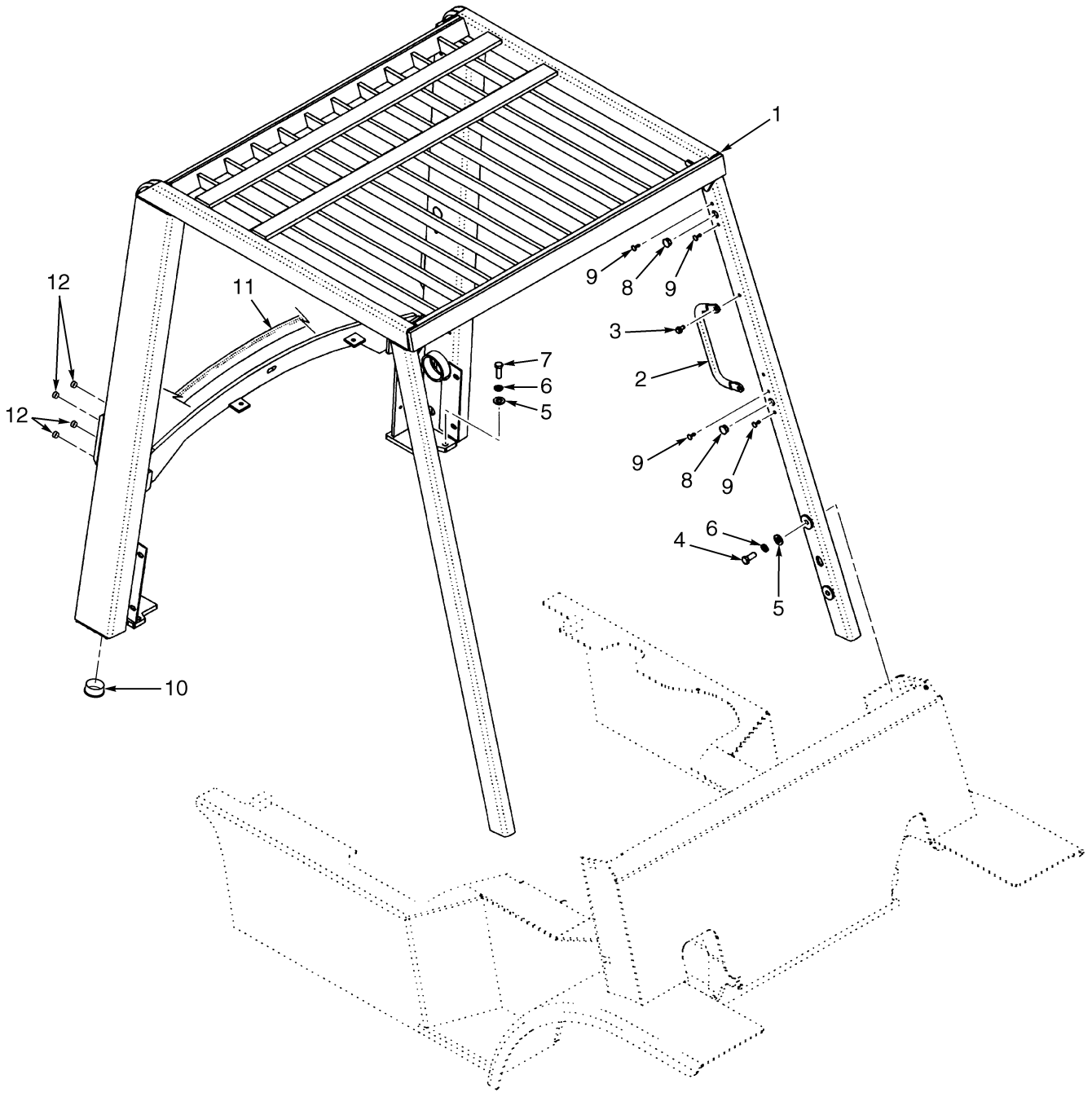


HP120014


©2004 HYSTER COMPANY

# OVERHEAD GUARD

| ITEM | | PART NO. | DESCRIPTION | QTY |
|---|---|---|---|---|
| 1 | **b** | 1396039 | Overhead Guard (Standard Height) | 1 |
| 1 | **a** | 1523718 | Overhead Guard (Standard Height) | 1 |
| 1 | **b** | 1465443 | Overhead Guard (Raised Height) | 1 |
| 1 | **a** | 1523715 | Overhead Guard (Raised Height) | 1 |
| 2 | | 2035800 | Handle | 2 |
| 3 | | 316678 | Screw | 4 |
| 4 | | 293644 | Capscrew | 4 |
| 5 | | 296423 | Washer | 6 |
| 6 | | 292683 | Lockwasher | 6 |
| 7 | | 293646 | Capscrew | 2 |
| 8 | | 1363917 | Plug | 6 |
| 9 | | 1363916 | Plug | 14 |
| 10 | | 1356377 | Plug | 2 |
| 11 | | 1465740 | Seal | 1 |
| 12 | | 1494888 | Plug | 8 |

**FOOTNOTES:**
**a** Gasoline and Diesel
**b** LPG

©2004 HYSTER COMPANY

# SOUND REDUCTION (Figure 1-11)

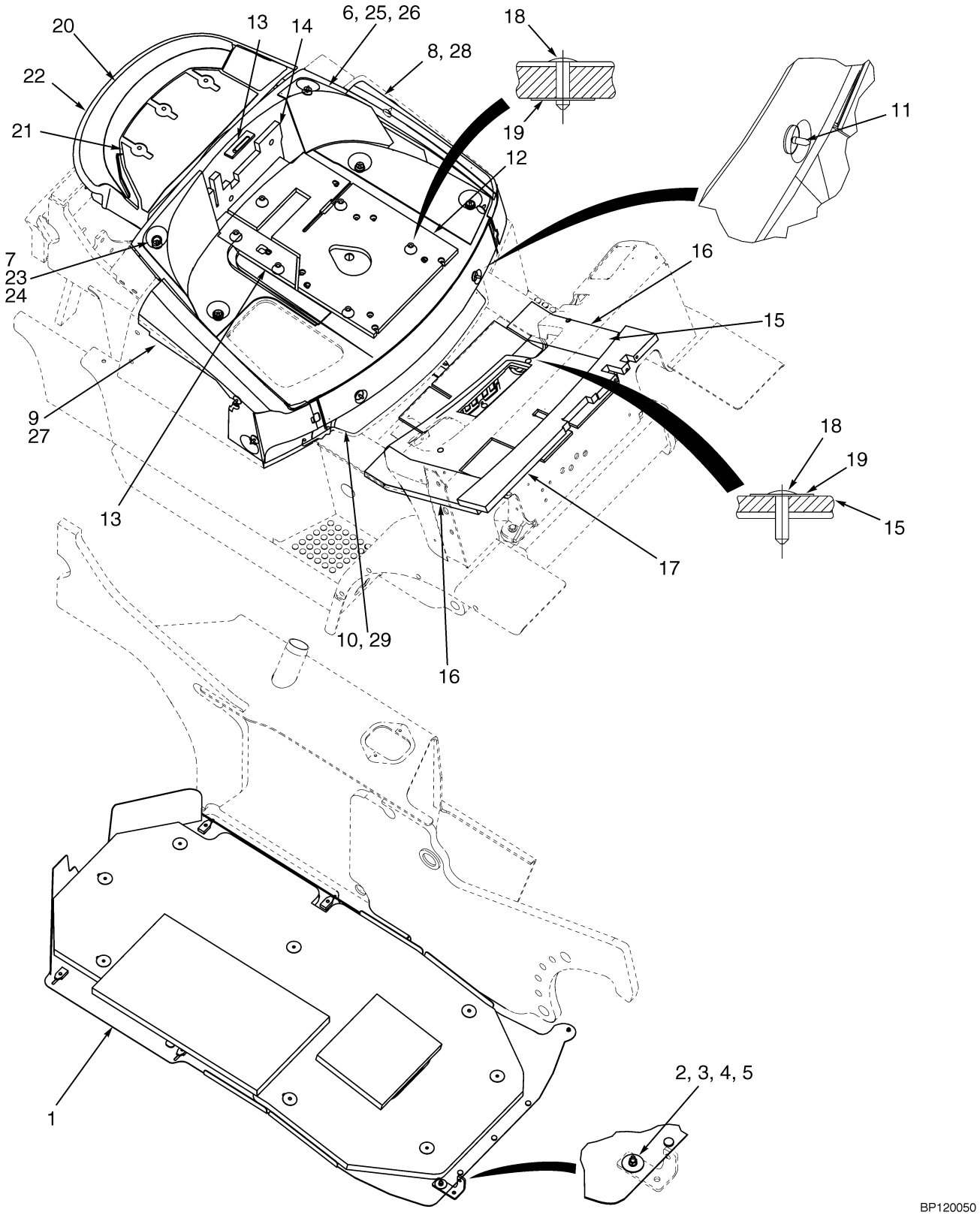



©2004 HYSTER COMPANY

# SOUND REDUCTION

**KEY:**
**A: 1830 mm Short Wheel Base**
**B: 2100 mm Long Wheel Base**

| ITEM | PART NO. | DESCRIPTION | QTY A | QTY B |
|---|---|---|---|---|
| 1 | 1399809 | Undercarriage Pan (☞ Figure 1-12) | 1 | .. |
| 1 | 1399810 | Undercarriage Pan (☞ Figure 1-12) | .. | 1 |
| 2 | 293603 | Capscrew | 1 | 1 |
| 3 | 2034906 | Washer | 2 | 2 |
| 4 | 292680 | Lockwasher | 1 | 1 |
| 5 | 136687 | Nut | 1 | 1 |
| 6 | 1400151 | Liner (Hood LH) | 1 | 1 |
| 7 | 1400152 | Liner (Hood RH) | 1 | 1 |
| 8 | 1400153 | Liner (Door LH) | 1 | 1 |
| 9 | 1400154 | Liner (Door RH) | 1 | 1 |
| 10 | 1541805 | Liner (Front Cover) | 1 | 1 |
| 11 | 1304971 | Fastener | 11 | 11 |
| 12 | 1544739 | Sound Liner (Seat) | 1 | 1 |
| 13 | 1490766 | Pad (Latch) | 1 | 1 |
| 14 | 1544743 | Sound Liner (Seat) | 1 | 1 |
| 15 | 1468023 | Sound Liner (Floor Plate) | 1 | 1 |
| 16 | 1468024 | Sound Liner (Floor Plate) | 2 | 2 |
| 17 | 1468025 | Cowl Barrier | 1 | 1 |
| 18 | 1399815 | Rivet | 15 | 15 |
| 19 | 1399784 | Washer | 15 | 15 |
| 20 | 1468032 | Sound Liner (Radiator Cover) | 1 | 1 |
| 21 | 1468033 | Sound Liner (Radiator Barrier) | 1 | 1 |
| 22 | 1382126 | Seal | AR | AR |
| 23 | 1467338 | Barrier (RH Seat Panel) | 1 | 1 |
| 24 | 1467340 | Barrier (RH Seat Panel) | 1 | 1 |
| 24 | 1467343 | Barrier (LH Seat Panel) | 1 | 1 |
| 25 | 1467342 | Barrier (LH Seat Panel) | 1 | 1 |
| 27 | 1467344 | Barrier (RH Door Panel) | 1 | 1 |
| 28 | 1467345 | Barrier (LH Door Panel) | 1 | 1 |
| 29 | 1467347 | Barrier (Front Panel) | 1 | 1 |
| | 1468027 | Barrier Kit (Includes Items 13, 23-25, 27-29) | 1 | 1 |

©2004 HYSTER COMPANY

# UNDERCARRIAGE PAN (Figure 1-12)

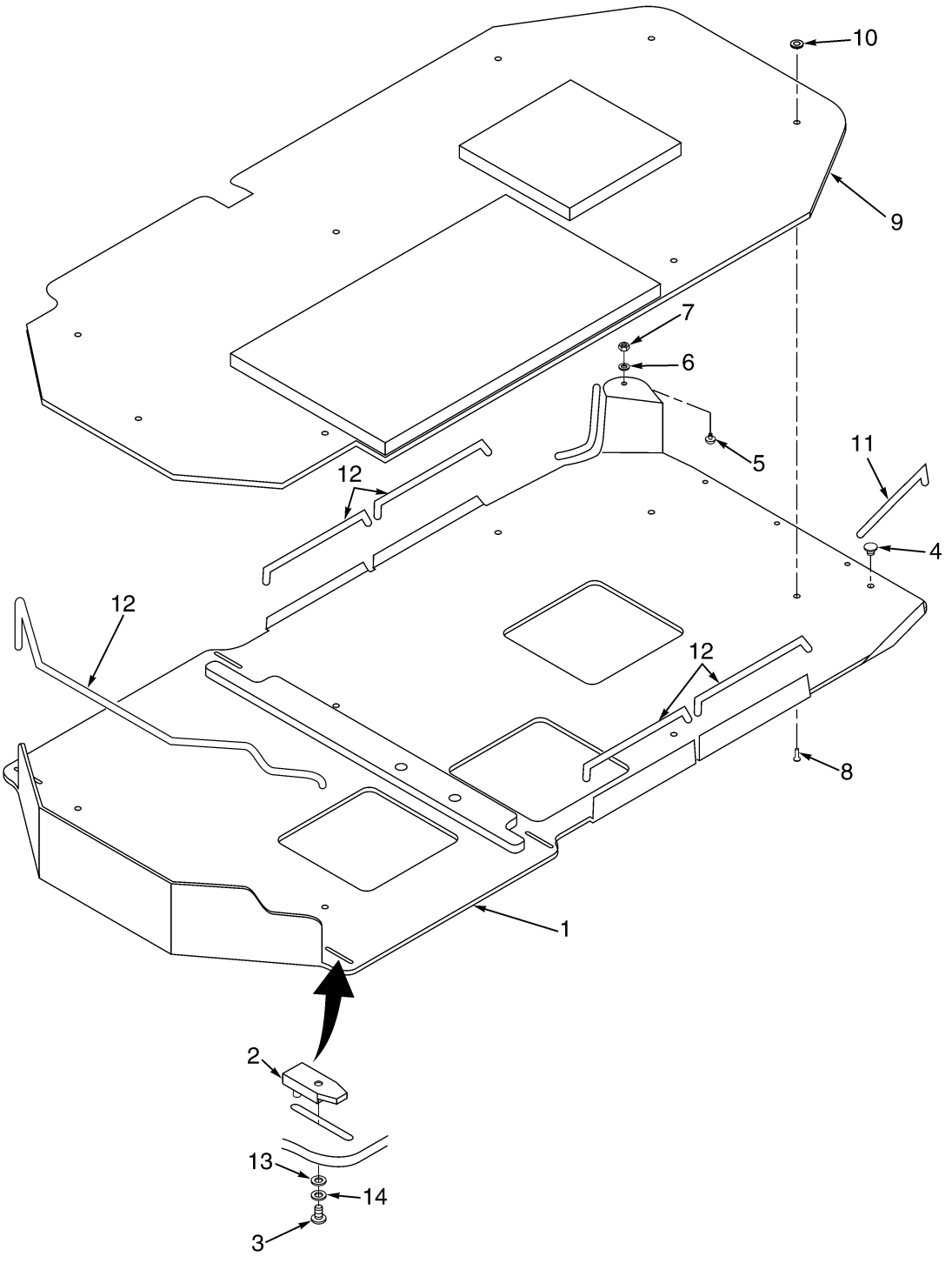


HP120636


©2004 HYSTER COMPANY

# UNDERCARRIAGE PAN

**KEY:**
**A: 1830 mm Short Wheel Base**
**B: 2100 mm Long Wheel Base**

| ITEM | PART NO. | DESCRIPTION | QTY A | QTY B |
|---|---|---|---|---|
| | 1399809 | Undercarriage Pan (Assembly) | 1 | .. |
| | 1399810 | Undercarriage Pan (Assembly) | .. | 1 |
| 1 | 1397647 | Pan | 1 | .. |
| 1 | 1397651 | Pan | .. | 1 |
| 2 | 1399818 | Nut | 4 | 4 |
| 3 | 1399820 | Capscrew | 4 | 4 |
| 4 | 1399817 | Bumper | 3 | 3 |
| 5 | 1399816 | Screw | 1 | 1 |
| 6 | 320155 | Washer | 1 | 1 |
| 7 | 302398 | Locknut | 1 | 1 |
| 8 | 1399815 | Rivet | 8 | 8 |
| 9 | 1399813 | Liner | 1 | .. |
| 9 | 1399814 | Liner | .. | 1 |
| 10 | 1399784 | Washer | 8 | 8 |
| 11 | 1399829 | Edge Strip (250 mm) | 2 | 2 |
| 12 | 1399830 | Edge Strip (420 mm) | 4 | 4 |
| 13 | 320156 | Washer | 4 | 6 |
| 14 | 292680 | Lockwasher | 4 | 6 |

©2004 HYSTER COMPANY

# LABELS AND DECALS (Figure 1-13)

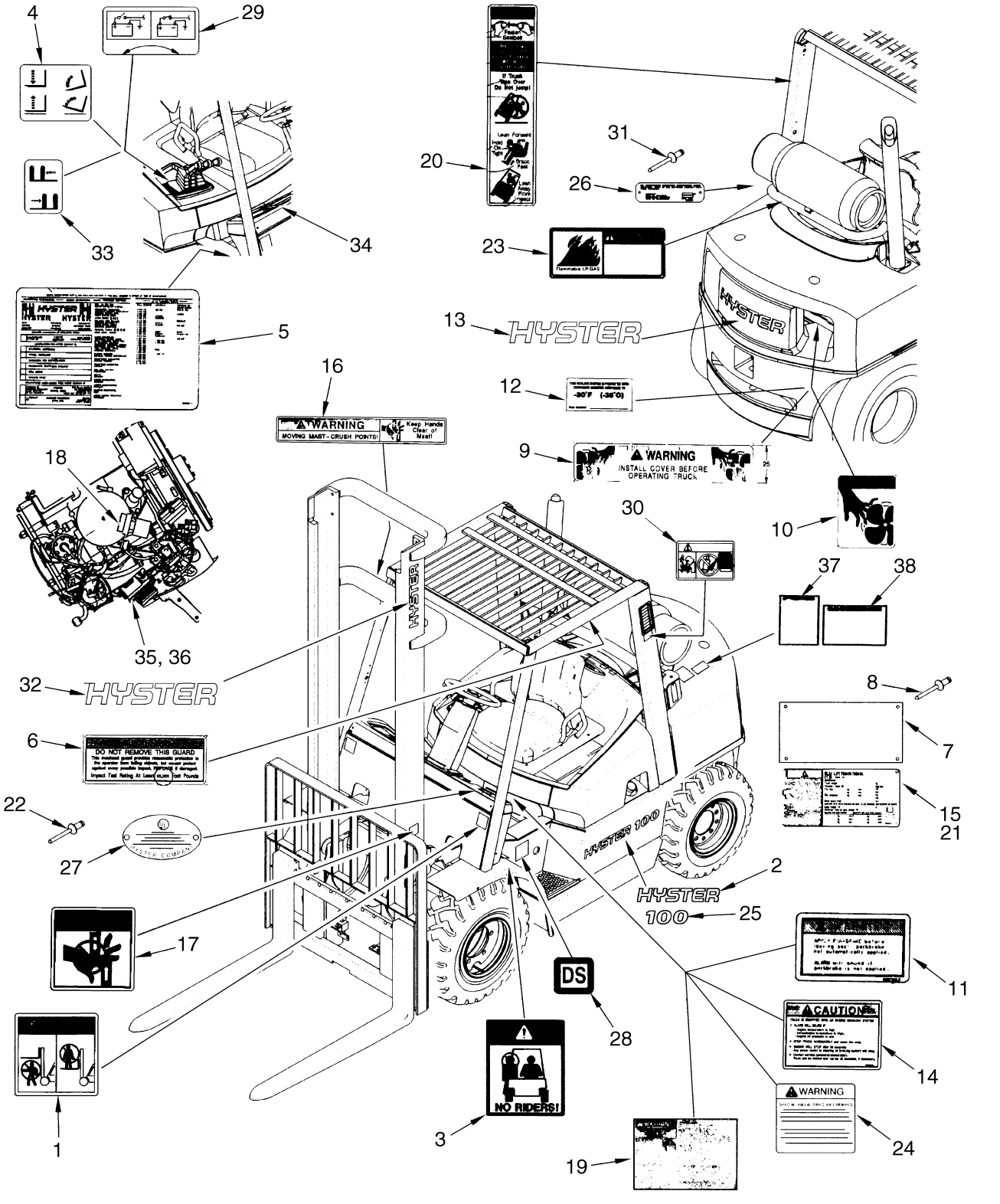



©2004 HYSTER COMPANY

# LABELS AND DECALS

| ITEM | | PART NO. | DESCRIPTION | QTY |
|---|---|---|---|---|
| 1 | | 1338178 | Label (Mast Warning) | 2 |
| 2 | | 2020517 | Label (Hyster) (Horizontal) | 2 |
| 3 | | 1330920 | Label (No Riders) | 2 |
| 4 | | 1356137 | Label (Lift and Tilt) | 1 |
| 5 | | 389692 | Label (US Patents and Trademarks) | 2 |
| 6 | **a** | . . . . . | Label (Impact Rating Warning) | 1 |
| 7 | | 389688 | Cover | 1 |
| 8 | | 170658 | Rivet | 4 |
| 9 | | 1325271 | Label (Fan Warning) | 1 |
| 10 | | 1345939 | Label (Fan Warning) (Pictorially) | 2 |
| 11 | | 2309799 | Label (Parking Brake) | 1 |
| 12 | | 1354165 | Label (Antifreeze) | 1 |
| 13 | | 1399885 | Label (Hyster) (Counterweight) (Optional) | 1 |
| 14 | | 1385102 | Label (Drive Train Protection) | 1 |
| 15 | | 1335137 | Label (Notice To User) (Tag) | 1 |
| 16 | | 1330919 | Label (Mast Warning) | 1 |
| 17 | | 1335129 | Label (Pinch Point) | 2 |
| 18 | | 2053467 | Decal (Emissions Compliant) | 1 |
| 19 | | 1336605 | Label (Operator Warning) | 1 |
| 20 | | 1330917 | Label (Operator Restraint) | 1 |
| 21 | **a** | . . . . . | Label (Nameplate) | 1 |
| 22 | | 166818 | Rivet | 2 |
| 23 | | 1354171 | Label (Flammable LPG) | 1 |
| 24 | | 1374549 | Label (Radial Tire Warning) | 1 |
| 25 | | 1399873 | Label (H70XM) | 1 |
| 25 | | 1399874 | Label (H80XM) | 1 |
| 25 | | 1399875 | Label (H90XM) | 1 |
| 25 | | 1399876 | Label (H100XM) | 1 |
| 25 | | 1399877 | Label (H110XM) | 1 |
| 25 | | 1399878 | Label (H120XM) | 1 |
| 26 | | 1501259 | Label (LPG Tank) (Type LP, LPS, Dual Fuel) | 1 |
| 27 | | 179420 | Inspection Plate - Gasoline (Type G) | 1 |
| 27 | | 179423 | Inspection Plate - Diesel (Type D) | 1 |
| 27 | | 179414 | Inspection Plate - LPG (Type LP) | 1 |
| 27 | | 179415 | Inspection Plate (Type GS) | 1 |
| 27 | | 179417 | Inspection Plate (Type DS) | 1 |
| 27 | | 179416 | Inspection Plate (Type LPS) | 1 |
| 27 | | 1378509 | Inspection Plate (Type Dual Fuel) | 1 |
| 28 | | 154065 | Label (Type GS) | 2 |
| 28 | | 154067 | Label (DS) | 2 |
| 28 | | 154066 | Label (Type LPS) | 2 |
| 29 | | 1352190 | Label (Battery Disconnect) (Type GS, LPS, DS) | 1 |
| 30 | | 2034459 | Label (Ether Warning) | 1 |
| 31 | | 340044 | Gripnail (Optional) | 2 |
| 31 | | 170658 | Rivet | 2 |
| 32 | | 1339672 | Label (Hyster) (Vertical) | 2 |
| 33 | | 370258 | Label (Auxiliary Function - Side-Shift) | 1 |
| 34 | | 864740 | Decal (Gasoline Fuel Gauge) | 1 |
| 35 | | 864765 | Decal (Fuel Changeover) | 1 |
| 36 | | 864763 | Plate (Fuel Selector) | 1 |

©2004 HYSTER COMPANY

# LABELS AND DECALS

| ITEM | PART NO. | DESCRIPTION | QTY |
|---|---|---|---|
| 37 | 864739 | Decal (Safety Maintenance) | 1 |
| 38 | 864738 | Decal (Refueling) | 1 |

**FOOTNOTES:**
**a** See Your Local Hyster Dealer


©2004 HYSTER COMPANY

# NOTES

# LOAD BACKREST EXTENSION (Figure 1-14)

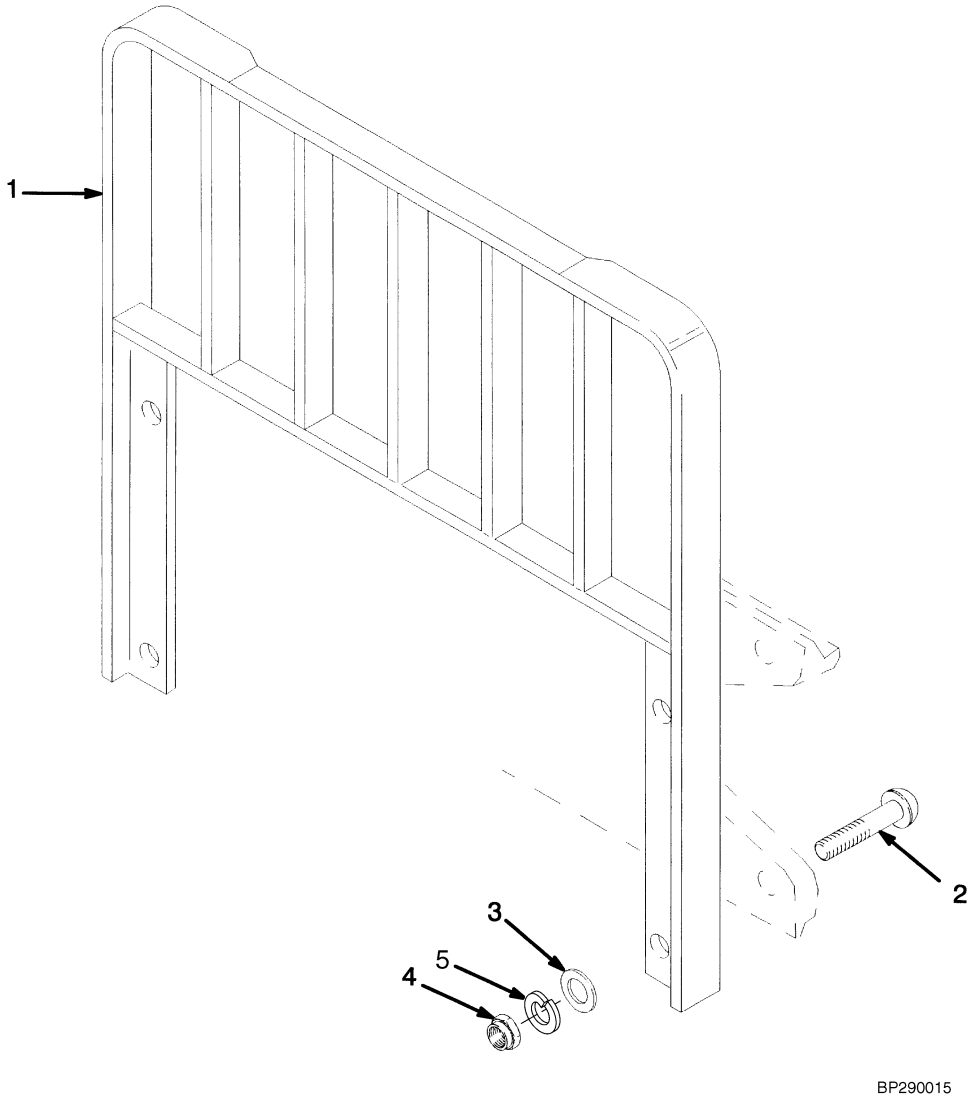



©2004 HYSTER COMPANY

# LOAD BACKREST EXTENSION

**KEY:**
**A: H70-90XM**
**B: H100-120XM**

| ITEM | | PART NO. | DESCRIPTION | QTY A | QTY B |
|---|---|---|---|---|---|
| 1 | | 1387341 | Load Backrest Extension (48 in.) | 1 | .. |
| 1 | **a** | 1387342 | Load Backrest Extension (48 in.) | 1 | .. |
| 1 | | 1387904 | Load Backrest Extension (54 in.) | .. | 1 |
| 1 | **a** | 1464864 | Load Backrest Extension (54 in.) | .. | 1 |
| 1 | | 1387345 | Load Backrest Extension (60 in.) | 1 | .. |
| 1 | **a** | 1387346 | Load Backrest Extension (60 in.) | 1 | .. |
| 1 | | 1387349 | Load Backrest Extension (60 in.) | .. | 1 |
| 1 | **a** | 1464865 | Load Backrest Extension (60 in.) | .. | 1 |
| 2 | | 1387330 | Capscrew | 4 | 4 |
| 3 | | 221771 | Washer | 4 | 4 |
| 3 | **b** | 296423 | Washer | 4 | 4 |
| 4 | | 292656 | Nut | 4 | 4 |
| 5 | | 292683 | Lockwasher | 4 | 4 |

**FOOTNOTES:**
**a** For Polished Forks with Full Bottom Taper
**b** Optional

# FORKS (Figure 1-15)
## STANDARD TAPER HOOK TYPE
## (H70-90XM)

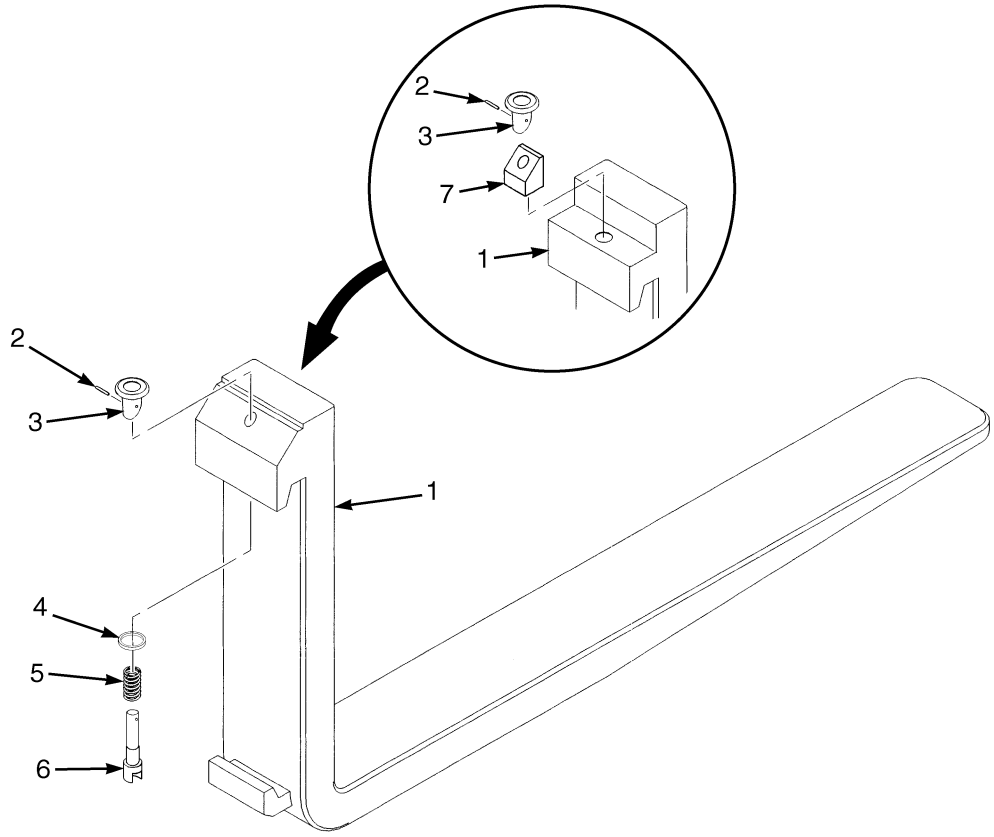


BP000188

**KEY:**
**A: H70XM (50 mm x 125 mm) (2 in. x 5 in.)**
**B: H80XM (50 mm x 125 mm) (2 in. x 5 in.)**
**C: H90XM (50 mm x 150 mm) (2 in. x 6 in.)**
**D: H90XM (50 mm x 125 mm) (2 in. x 5 in.)**
**E: H90XM (50 mm x 150 mm) (2 in. x 6 in.)**

| ITEM | PART NO. | DESCRIPTION | QTY A | B | C | D | E |
|---|---|---|---|---|---|---|---|
| 1 | 367420 | Fork (42 in.) | 2 | 2 | .. | 2 | .. |
| 1 | 367421 | Fork (48 in.) | 2 | 2 | .. | 2 | .. |
| 1 | 367422 | Fork (54 in.) | 2 | 2 | .. | .. | .. |
| 1 | 367423 | Fork (60 in.) | 2 | .. | .. | .. | .. |
| 1 | 367424 | Fork (72 in.) | 2 | .. | .. | .. | .. |
| 2 | 1523734 | Retainer Pin | 1 | 1 | 1 | 1 | 1 |
| 3 | 1523732 | Knob | 1 | 1 | 1 | 1 | 1 |
| 4 | 1477166 | Washer | 1 | 1 | 1 | 1 | 1 |
| 5 | 1500784 | Spring | 1 | 1 | 1 | 1 | 1 |
| 6 | 1523737 | Pin | 1 | 1 | 1 | 1 | 1 |
| 7 | 1477237 | Wedge | 1 | 1 | 1 | 1 | 1 |
| | 1523739 | Latch Kit (Class III) (Includes Items 2-7) | 2 | 2 | 2 | 2 | 2 |


©2004 HYSTER COMPANY

# FORKS (Figure 1-16)
## STANDARD TAPER HOOK TYPE
## (H100-120XM)

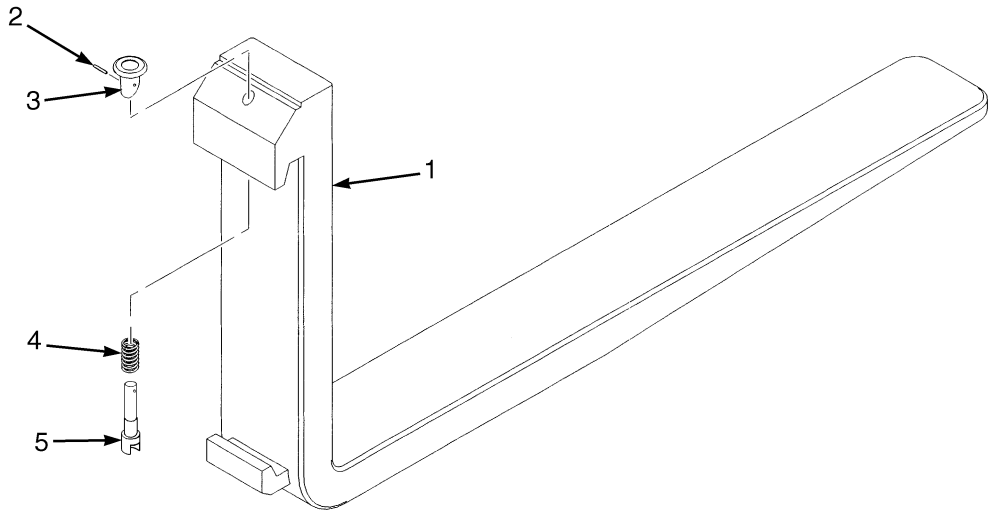


BP000187

**KEY:**
**A: H100 XM (50 mm x 150 mm) (2 in. x 6 in.)**
**B: H100 XM (60 mm x 150 mm) (2.36 in. x 6 in.)**
**C: H110XM (50 mm x 150 mm) (2 in. x 6 in.)**
**D: H110 XM (60 mm x 150 mm) (2.36 in. x 6 in.)**
**E: H120 XM (60 mm x 150 mm) (2.36 in. x 6 in.)**

| ITEM | PART NO. | DESCRIPTION | QTY A | B | C | D | E |
|---|---|---|---|---|---|---|---|
| 1 | 1399919 | Fork (42 in.) | 2 | .. | 2 | .. | .. |
| 1 | 1458264 | Fork (42 in.) | .. | .. | .. | .. | 2 |
| 1 | 1399920 | Fork (48 in.) | 2 | .. | 2 | .. | .. |
| 1 | 1333001 | Fork (48 in.) | .. | .. | .. | .. | 2 |
| 1 | 1399921 | Fork (54 in.) | 2 | .. | .. | .. | .. |
| 1 | 1333002 | Fork (54 in.) | .. | .. | .. | 2 | 2 |
| 1 | 1519441 | Fork (55 in.) | .. | .. | 2 | .. | .. |
| 1 | 1519442 | Fork (59 in.) | .. | .. | 2 | .. | .. |
| 1 | 1399922 | Fork (60 in.) | .. | .. | .. | .. | .. |
| 1 | 1333003 | Fork (60 in.) | .. | .. | .. | 2 | 2 |
| 1 | 1479090 | Fork (71 in.) | .. | .. | 2 | .. | .. |
| 1 | 1333004 | Fork (72 in.) | .. | 2 | .. | 2 | 2 |
| 2 | 1523734 | Retainer Pin | 1 | 1 | 1 | 1 | 1 |
| 3 | 1523732 | Knob | 1 | 1 | 1 | 1 | 1 |
| 4 | 1500786 | Spring | 1 | 1 | 1 | 1 | 1 |
| 5 | 1523741 | Pin | 1 | 1 | 1 | 1 | 1 |
| | 1523742 | Latch Kit (Class IV) (Includes Items 2-5) | 2 | 2 | 2 | 2 | 2 |

©2004 HYSTER COMPANY

# FORKS (Figure 1-17)
## POLISHED FORK WITH FULL BOTTOM TAPER HOOK TYPE

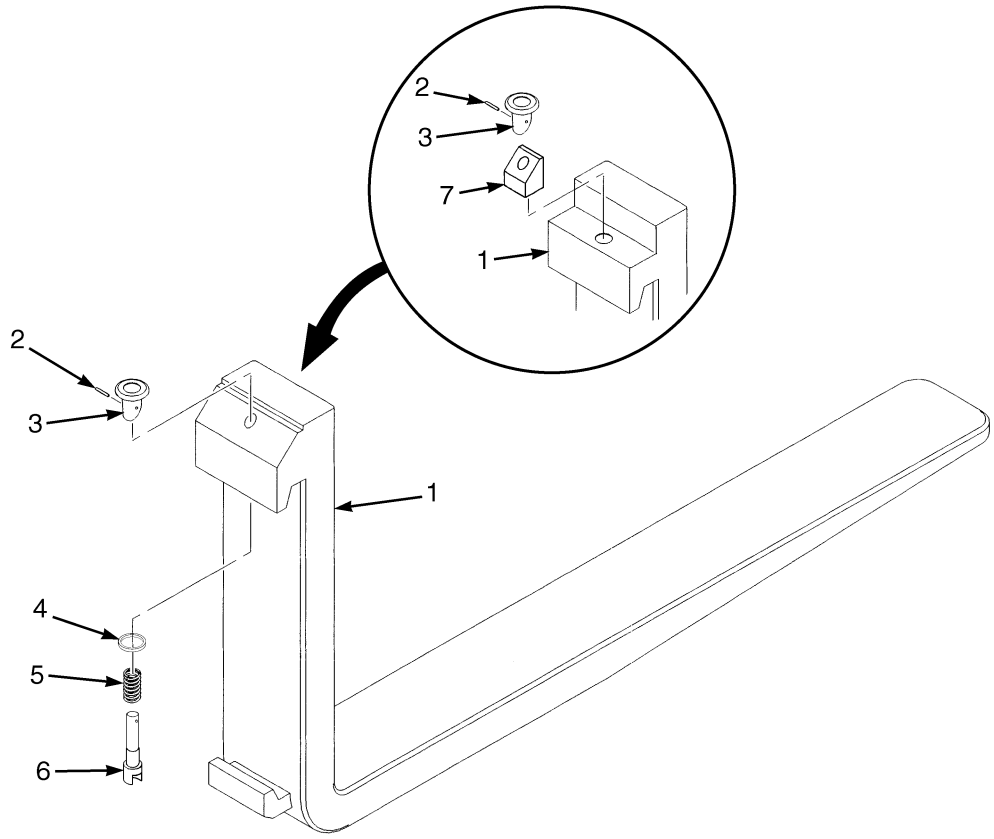


BP000188

**KEY:**
**A: H70XM, H80XM, H90XM**
**B: H100XM, H110XM, H120XM**

| ITEM | PART NO. | DESCRIPTION | QTY A | QTY B |
|---|---|---|---|---|
| 1 | 1465545 | Fork (47.5 in.) | 2 | .. |
| 1 | 1465546 | Fork (54 in.) | 2 | .. |
| 1 | 1465547 | Fork (47.5 in.) | .. | 2 |
| 1 | 1465548 | Fork (54 in.) | .. | 2 |
| 2 | 1523734 | Retainer Pin | 1 | 1 |
| 3 | 1523732 | Knob | 1 | 1 |
| 4 | 1477166 | Washer | 1 | .. |
| 5 | 1500784 | Spring | 1 | .. |
| 5 | 1500786 | Spring | .. | 1 |
| 6 | 1523737 | Pin | 1 | .. |
| 6 | 1523741 | Pin | .. | 1 |
| 7 | 1477237 | Wedge | 1 | .. |
| | 1523739 | Latch Kit (Class III) (Includes Items 2-7) | 2 | .. |
| | 1523742 | Latch Kit (Class IV) (Includes Items 2-3, 5-6) | .. | 2 |


©2004 HYSTER COMPANY

# 2 ENGINE ASSEMBLY

# SECTION 2
# ENGINE ASSEMBLY


| DESCRIPTION | PAGE |
|---|---|
| ASSEMBLED ENGINE | |
| DIESEL TIER II | 2-18 |
| CAMSHAFT AND OIL PAN | |
| GASOLINE AND LPG | |
| 4.3L EPA COMPLIANT | 2-54 |
| COOLING SYSTEM | 2-4 |
| CRANKSHAFT AND PISTONS | |
| DIESEL TIER II | 2-26 |
| CYLINDER BLOCK | |
| DIESEL TIER II | 2-20 |
| GASOLINE AND LPG | |
| 4.3L EPA COMPLIANT | 2-52 |
| CYLINDER HEAD | |
| GASOLINE AND LPG | |
| 4.3L EPA COMPLIANT | 2-62 |
| CYLINDER HEAD AND INDUCTION MANIFOLD | |
| DIESEL TIER II | 2-22 |
| DRIP SHIELD | |
| GASOLINE AND LPG | |
| 4.3L EPA COMPLIANT | 2-68 |
| ENGINE ASSEMBLY | |
| GASOLINE | |
| 4.3 L EPA COMPLIANT | 2-48 |
| LPG | |
| 4.3 L EPA COMPLIANT | 2-46 |
| ENGINE BELT DRIVE AND ALTERNATOR MOUNTING | |
| 4.3L EPA COMPLIANT ENGINE | 2-10 |
| ENGINE MOUNT | |
| DIESEL TIER II | 2-16 |
| ENGINE MOUNTING | |
| GASOLINE AND LPG | 2-44 |
| EXHAUST | |
| DIESEL TIER II | 2-14 |
| GAS AND LPG | 2-12 |
| EXHAUST MANIFOLD | |
| DIESEL TIER II | 2-34 |
| GASOLINE AND LPG | |
| 4.3L EPA COMPLIANT | 2-50 |
| FAN DRIVE ASSEMBLY | 2-8 |
| FUEL INJECTION PUMP | |
| DIESEL TIER II | 2-40 |
| INTAKE MANIFOLD AND FUEL RAIL | |
| GASOLINE | |
| 4.3 L EPA COMPLIANT | 2-66 |
| OIL COOLER | |
| DIESEL TIER II | 2-38 |
| OIL FILTER | |
| DIESEL TIER II | 2-36 |
| OIL PAN AND PUMP | |
| DIESEL TIER II | 2-28 |


©2004 HYSTER COMPANY

# SECTION 2
# ENGINE ASSEMBLY (Continued)

| DESCRIPTION | PAGE |
|---|---|
| OIL PUMP | |
| GASOLINE AND LPG | |
| 4.3L EPA COMPLIANT | 2-64 |
| ROTARY EXHAUSTER | |
| DIESEL TIER II | 2-42 |
| TIMING GEAR | |
| DIESEL TIER II | 2-32 |
| VALVE COVER AND INLET MANIFOLD | |
| GASOLINE AND LPG | |
| 4.3L EPA COMPLIANT | 2-58 |
| VALVE COVER AND ROCKER ARM SHAFT | |
| DIESEL TIER II | 2-24 |
| WATER PUMP AND OUTLET | |
| DIESEL TIER II | 2-30 |


©2004 HYSTER COMPANY

# NOTES

# COOLING SYSTEM (Figure 2-1)

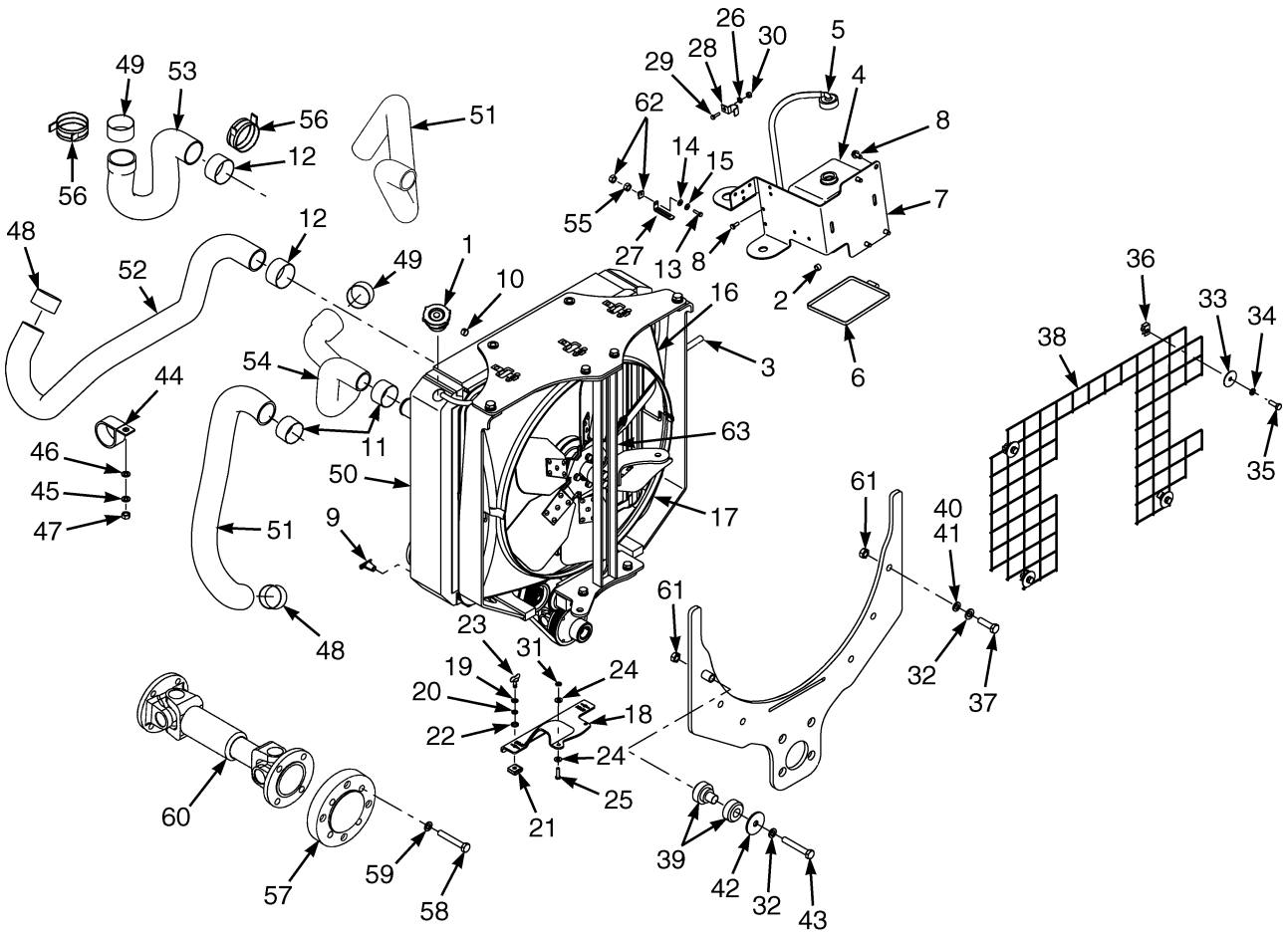



©2004 HYSTER COMPANY

# COOLING SYSTEM

| ITEM | | PART NO. | DESCRIPTION | QTY |
|---|---|---|---|---|
| 1 | | 178899 | Cap | 1 |
| 2 | | 353310 | Clamp | 1 |
| 3 | | 1302954 | Tube | 1 |
| 4 | | 344432 | Reservoir | 1 |
| 5 | | 1359581 | Outlet Assembly | 1 |
| 5 | | 1457312 | Hose | 1 |
| 5 | | 345453 | Outlet (Reservoir) | 1 |
| 5 | | 345454 | Cap | 1 |
| 5 | | 336550 | Bushing | 1 |
| 6 | | 340204 | Strap | 1 |
| 7 | | 1539751 | Bracket | 1 |
| 8 | | 316678 | Screw | 4 |
| 9 | | 12815 | Drain Valve | 1 |
| 10 | | 369815 | Clamp | 1 |
| 11 | | 1502000 | Clamp | 1 |
| 12 | | 1549372 | Clamp (Gas and LPG) | 1 |
| 13 | | 302238 | Screw | 4 |
| 14 | | 197066 | Washer | 4 |
| 15 | | 292678 | Lockwasher | 4 |
| 16 | | 1397697 | Shroud (Upper) | 1 |
| 17 | | 1397698 | Shroud (Lower) | 1 |
| 18 | | 1397710 | Shroud (Door) | 1 |
| 19 | | 1399310 | Washer | 2 |
| 20 | | 1399311 | Spring | 2 |
| 21 | | 1399312 | Clip | 2 |
| 22 | | 1399313 | Retainer | 2 |
| 23 | | 1399314 | Stud | 2 |
| 24 | | 15127 | Washer | 4 |
| 25 | | 222038 | Rivet | 2 |
| 26 | | 292680 | Lockwasher | 1 |
| 27 | | 1466001 | Clamp | 3 |
| 28 | | 1339457 | Clamp | 1 |
| 29 | | 292500 | Capscrew | 1 |
| 30 | | 136687 | Nut | 1 |
| 31 | | 320156 | Washer | 2 |
| 32 | | 292683 | Lockwasher | 6 |
| 33 | | 1471535 | Washer | 4 |
| 33 | **bc** | 1471535 | Washer | 6 |
| 34 | | 292681 | Lockwasher | 4 |
| 34 | **a** | 292681 | Lockwasher | 6 |
| 34 | **c** | 292681 | Lockwasher | 6 |
| 35 | | 136749 | Capscrew | 4 |
| 35 | **c** | 136749 | Capscrew | 6 |
| 36 | | 1398062 | Nut | 4 |
| 36 | **a** | 1398062 | Nut | 1 |
| 37 | | 287837 | Capscrew | 6 |
| 37 | **a** | 287837 | Capscrew | 4 |
| 38 | **a** | 1468699 | Screen (☞ Figure 1-9) | 1 |
| 38 | **d** | 1470920 | Screen (☞ Figure 1-9) | 1 |
| 38 | **b** | 1470921 | Screen (☞ Figure 1-9) | 1 |
| 38 | **c** | 1470922 | Screen (☞ Figure 1-9) | 1 |

©2004 HYSTER COMPANY

# COOLING SYSTEM

| ITEM | | PART NO. | DESCRIPTION | QTY |
|---|---|---|---|---|
| 38 | **e** | 1470923 | Screen (☞ Figure 1-9) | 1 |
| 39 | **a** | 1397807 | Mount | 2 |
| 40 | **c** | 320161 | Washer | 6 |
| 41 | **a** | 320161 | Washer | 4 |
| 42 | **a** | 1397808 | Washer | 2 |
| 43 | **a** | 292535 | Capscrew | 2 |
| 44 | | 895963 | Clamp | 1 |
| 45 | | 320159 | Washer | 1 |
| 46 | | 292682 | Lockwasher | 1 |
| 47 | | 136692 | Nut | 1 |
| 48 | | 1502000 | Clamp | 1 |
| 49 | | 1549372 | Clamp | 1 |
| 50 | | 1388911 | Radiator (Powershift) | 1 |
| 51 | | 2035359 | Hose (Gas and LPG) (Upper) | 1 |
| 52 | | 2035355 | Hose (Gas and LPG) (Lower) | 1 |
| 53 | | 2059675 | Hose (Diesel) (Lower) | 1 |
| 54 | | 2059677 | Hose (Diesel) (Upper) | 1 |
| 55 | | 1329272 | U-Nut | 4 |
| 56 | | 1549449 | Clamp (Diesel) | 2 |
| 57 | | 1394595 | Adapter (Diesel) | 1 |
| 57 | | 1394594 | Adapter (Gas and LPG) | 1 |
| 58 | | 35116 | Capscrew (Diesel) | 4 |
| 58 | | 34811 | Capscrew (Gas and LPG) | 3 |
| 59 | | 177948 | Lockwasher (Diesel) | 4 |
| 59 | | 177947 | Lockwasher (Gas and LPG) | 3 |
| 60 | | 1394581 | Drive Shaft (Gas and LPG) (☞ Figure 2-2) | 1 |
| 60 | | 1396174 | Drive Shaft (Diesel) (☞ Figure 2-2) | 1 |
| 61 | | 1356316 | Nut | 6 |
| 62 | | 1398062 | Nut | 6 |
| 63 | | 1400229 | Screen | 1 |

**FOOTNOTES:**

**a** (Long Wheel Base)
**b** (With Overhead Exhaust or UL Safety, Short Wheel Base)
**c** (With Standard Counterweight Exhaust, Long Wheel Base)
**d** (With Standard Counterweight Exhaust, Short Wheel Base)
**e** With Overhead Exhaust H4.00


©2004 HYSTER COMPANY

# NOTES

# FAN DRIVE ASSEMBLY (Figure 2-2)

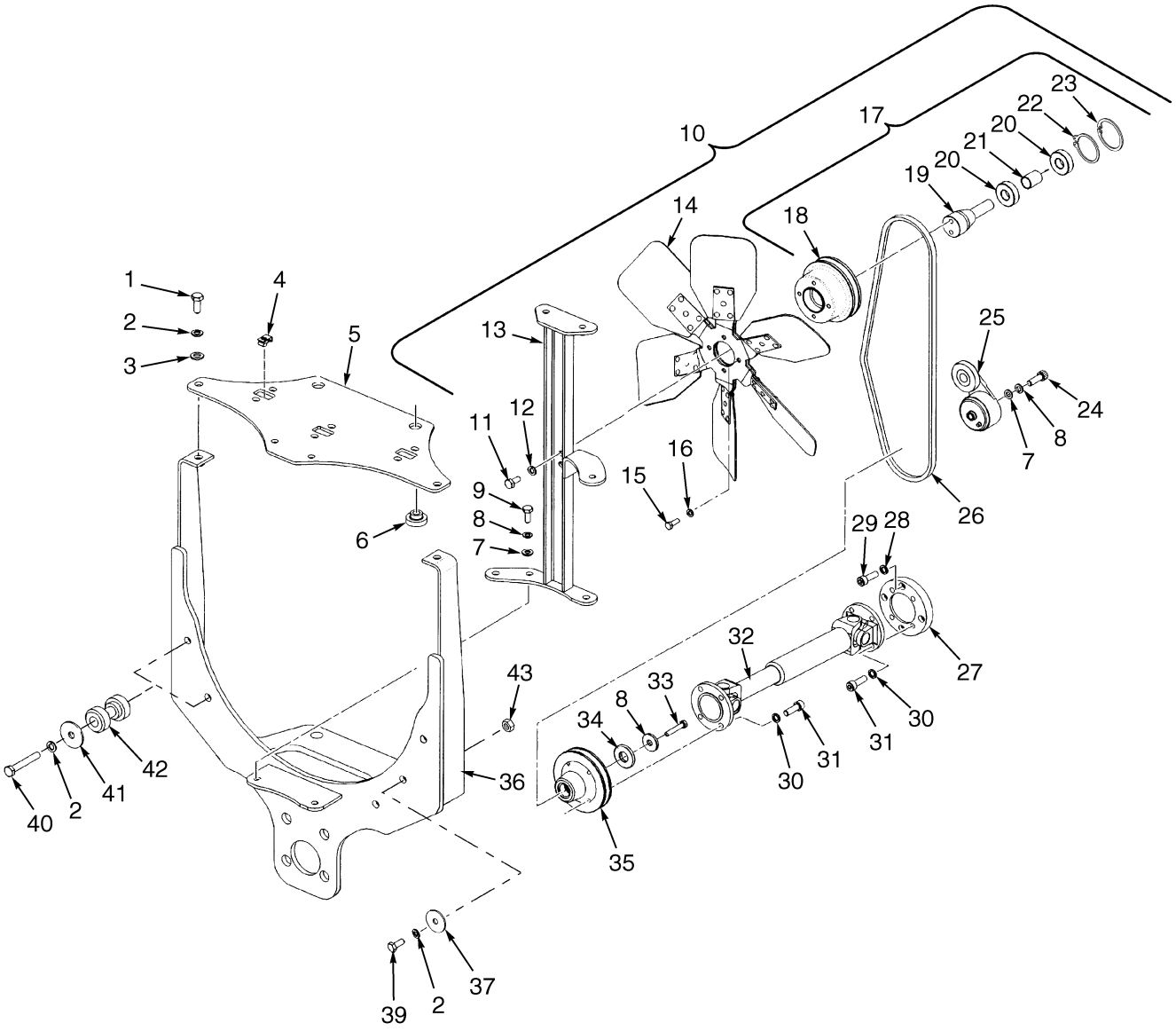


BP060015


©2004 HYSTER COMPANY

# FAN DRIVE ASSEMBLY

| ITEM | PART NO. | DESCRIPTION | QTY |
|---|---|---|---|
| 1 | 292527 | Capscrew | 2 |
| 2 | 292683 | Lockwasher | 8 |
| 3 | 320161 | Washer | 2 |
| 4 | 1398062 | Nut | 3 |
| 5 | 2035322 | Plate | 1 |
| 6 | 2029170 | Cushion (Rubber) | 4 |
| 7 | 320159 | Washer | 4 |
| 8 | 292682 | Lockwasher | 6 |
| 9 | 287854 | Capscrew | 4 |
| 10 | . . . . . | Fan Assembly | 1 |
| 11 | 287854 | Capscrew | 2 |
| 12 | 292682 | Lockwasher | 2 |
| 13 | 1499369 | Bracket | 1 |
| 14 | 1394712 | Fan (Draw Through) | 1 |
| 15 | 136749 | Capscrew | 4 |
| 16 | 292681 | Lockwasher | 4 |
| 17 | . . . . . | Fan Mount Assembly | 1 |
| 18 | 1495666 | Pulley | 1 |
| 19 | 1504380 | Pin | 1 |
| 20 | 124668 | Bearing | 4 |
| 20 | 257291 | Adhesive | AR |
| 21 | 1504256 | Spacer | 1 |
| 22 | 1531750 | Snap Ring | 1 |
| 23 | 12928 | Snap Ring | 1 |
| 24 | 292522 | Capscrew | 1 |
| 25 | 1396779 | Tensioner | 1 |
| 26 | 2048095 | V-Belt (4 Rib) | 1 |
| 27 | 1394595 | Adapter (Diesel) | 1 |
| 27 | 1394594 | Adapter (Gasoline and LPG) | 1 |
| 28 | 177948 | Lockwasher (Diesel) | 4 |
| 29 | 35116 | Capscrew (Diesel) | 4 |
| 30 | 293780 | Lockwasher | 8 |
| 31 | 296011 | Capscrew | 8 |
| 32 | 1396174 | Drive Shaft (Diesel) | 1 |
| 32 | 53065 | Flange | 2 |
| 32 | 278085 | Spider Bearing | 2 |
| 32 | 1394581 | Drive Shaft (Gasoline and LPG) | 1 |
| 32 | 53065 | Flange | 2 |
| 32 | 278085 | Spider Bearing | 2 |
| 33 | 136985 | Capscrew | 1 |
| 34 | 1396726 | Washer | 1 |
| 35 | 1495665 | Pulley (Pump Drive) | 1 |
| 36 | 1499373 | Bracket | 1 |
| 37 | 320161 | Washer | 6 |
| 39 | 287837 | Capscrew (Diesel) | 6 |
| 39 | 287837 | Capscrew (Gasoline and LPG) | 4 |
| 40 | 292535 | Capscrew | 2 |
| 41 | 1397808 | Washer (Long Wheel Base) | 2 |
| 42 | 1397807 | Mount (Long Wheel Base) | 2 |
| 43 | 136692 | Nut | 1 |

©2004 HYSTER COMPANY

# ENGINE BELT DRIVE AND ALTERNATOR MOUNTING (Figure 2-3)
## 4.3L EPA COMPLIANT ENGINE

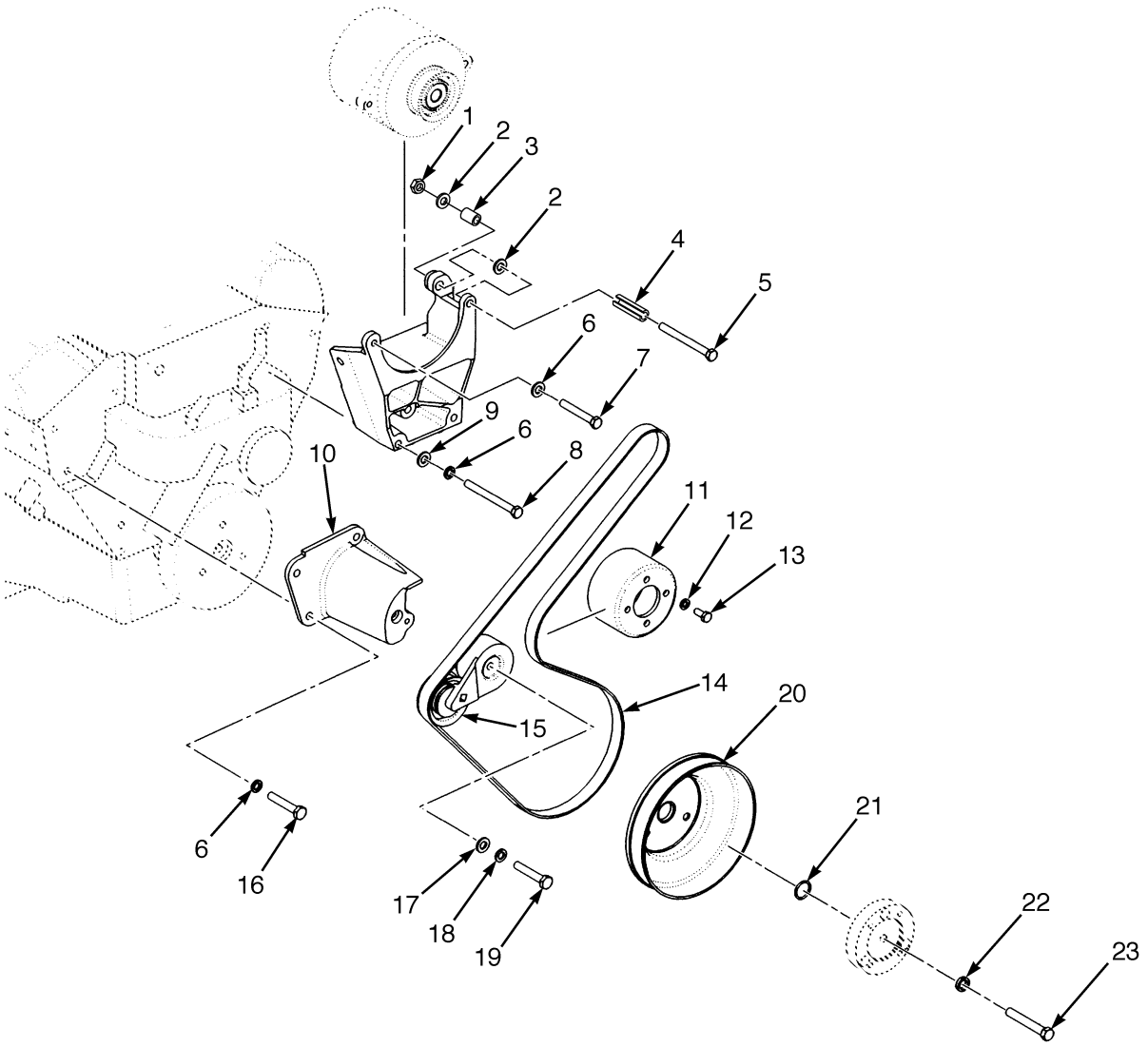


BP090126


©2004 HYSTER COMPANY

# ENGINE BELT DRIVE AND ALTERNATOR MOUNTING
## 4.3L EPA COMPLIANT ENGINE

| ITEM | PART NO. | DESCRIPTION | QTY |
|---|---|---|---|
| 1 | 139743 | Locknut | 1 |
| 2 | 261379 | Washer | 2 |
| 3 | 189338 | Spacer | 1 |
| 4 | 305100 | Sleeve | 1 |
| 5 | 18546 | Capscrew | 1 |
| 6 | 15156 | Lockwasher | 8 |
| 7 | 1527881 | Capscrew | 1 |
| 8 | 221522 | Capscrew | 3 |
| 9 | 15134 | Washer | 3 |
| 10 | 1384578 | Bracket | 1 |
| 11 | 1383204 | Pulley (Water Pump) | 1 |
| 12 | 292681 | Lockwasher | 4 |
| 13 | 136681 | Capscrew | 4 |
| 14 | 2043404 | Serpentine Belt | 1 |
| 15 | 1396779 | Tensioner | 1 |
| 16 | 16598 | Capscrew | 3 |
| 17 | 320159 | Washer | 1 |
| 18 | 292682 | Lockwasher | 1 |
| 19 | 292522 | Capscrew | 1 |
| 20 | 1377750 | Pulley | 1 |
| 21 | 39373 | O-Ring | 1 |
| 22 | 15157 | Lockwasher | 1 |
| 23 | 221546 | Capscrew | 1 |

©2004 HYSTER COMPANY

# EXHAUST (Figure 2-4)
## GAS AND LPG

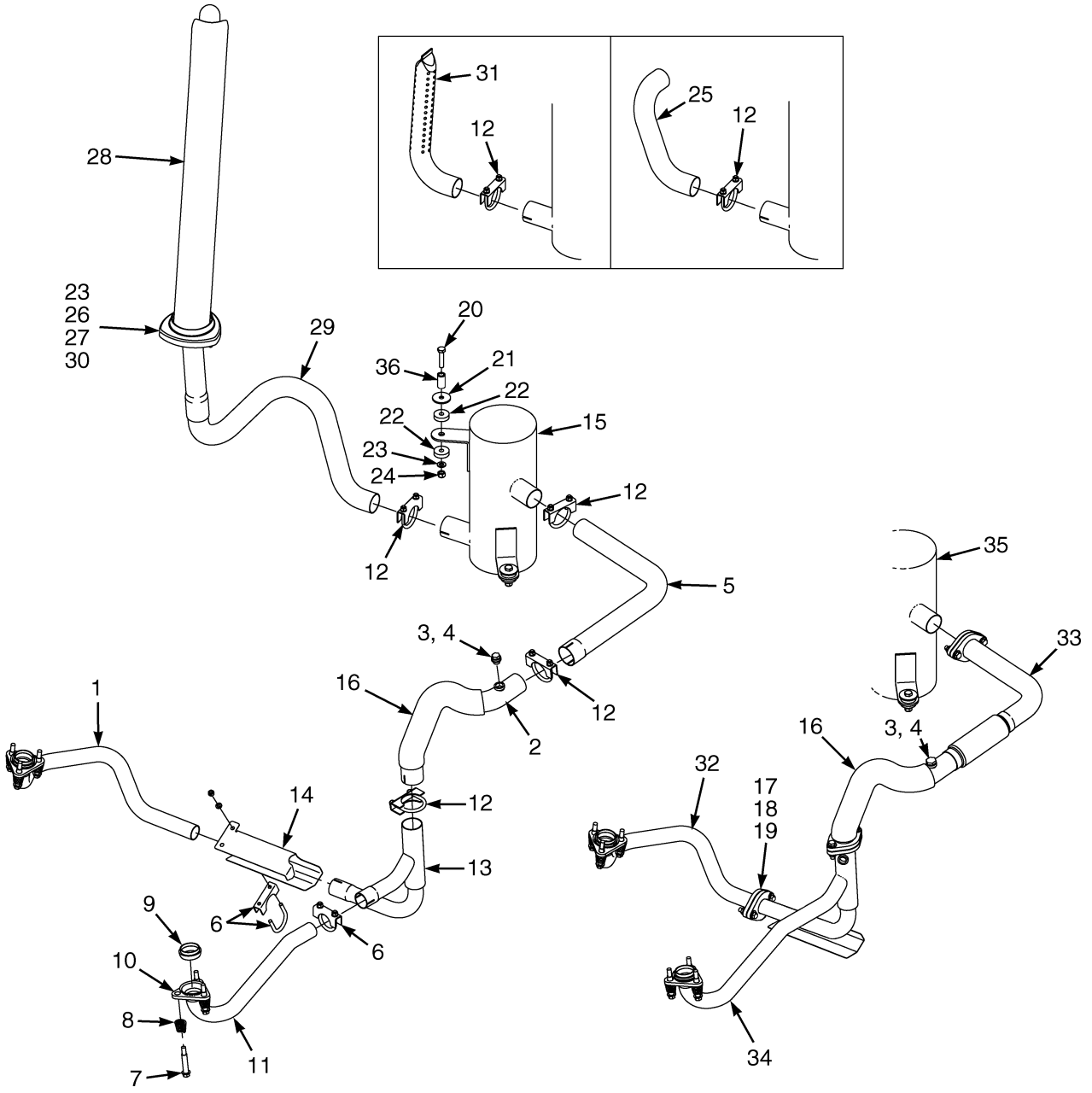


HP110010


©2004 HYSTER COMPANY

# EXHAUST
## GAS AND LPG

| ITEM | | PART NO. | DESCRIPTION | QTY |
|---|---|---|---|---|
| 1 | | 1476018 | Exhaust Pipe | 1 |
| 2 | | 1500439 | Exhaust Pipe | 1 |
| 3 | | 1396518 | Plug | 1 |
| 4 | | 2047053 | Lubricant | AR |
| 5 | | 1476107 | Exhaust Pipe | 1 |
| 6 | | 68968 | Clamp | 2 |
| 7 | | 1337118 | Bolt | 6 |
| 8 | | 1335898 | Spring | 6 |
| 9 | | 1338258 | Seal | 2 |
| 10 | | 1499514 | Flange | 2 |
| 11 | | 1476017 | Exhaust Pipe | 1 |
| 12 | | 63116 | Clamp | 3 |
| 12 | **ac** | 63116 | Clamp | 4 |
| 12 | **e** | 63116 | Clamp | 1 |
| 13 | | 1476015 | Exhaust Pipe | 1 |
| 14 | | 1397822 | Shield | 1 |
| 15 | | 2037114 | Muffler | 1 |
| 16 | **b** | 1511725 | Shield | 1 |
| 17 | **b** | 1402189 | Gasket | 3 |
| 18 | **b** | 1512403 | Capscrew | 6 |
| 19 | **b** | 1460477 | Nut (Flange) | 6 |
| 20 | | 292517 | Capscrew | 2 |
| 20 | **b** | 292509 | Capscrew | 2 |
| 20 | **d** | 292517 | Capscrew | 1 |
| 21 | | 1351176 | Washer | 2 |
| 22 | | 1351177 | Rubber Cushion | 4 |
| 23 | | 320159 | Washer | 2 |
| 23 | **cd** | 320159 | Washer | 3 |
| 23 | **b** | 320158 | Washer | 2 |
| 24 | | 316826 | Nut | 2 |
| 24 | **b** | 313828 | Nut | 2 |
| 25 | **a** | 1394803 | Exhaust Pipe | 1 |
| 26 | **c** | 287854 | Capscrew | 3 |
| 27 | **c** | 292682 | Lockwasher | 3 |
| 28 | **c** | 1396574 | Overhead Exhaust | 1 |
| 29 | **c** | 1396696 | Exhaust Pipe | 1 |
| 30 | **c** | 1351178 | Cover | 1 |
| 31 | **e** | 1537498 | Exhaust Pipe | 1 |
| 32 | **b** | 1476052 | Exhaust Pipe | 1 |
| 33 | **b** | 1476045 | Exhaust Pipe | 1 |
| 34 | **b** | 1476048 | Exhaust Pipe | 1 |
| 35 | **bd** | 2062696 | Muffler (Catalyzed) (Three-Way) | 1 |
| 36 | **b** | 1553420 | Spacer | 2 |

**FOOTNOTES:**
- **a** Counterweight
- **b** EPA Compliant
- **c** Overhead
- **d** U.L. Safety
- **e** U.L. Safety - Counterweight

©2004 HYSTER COMPANY

# EXHAUST (Figure 2-5)
## DIESEL TIER II

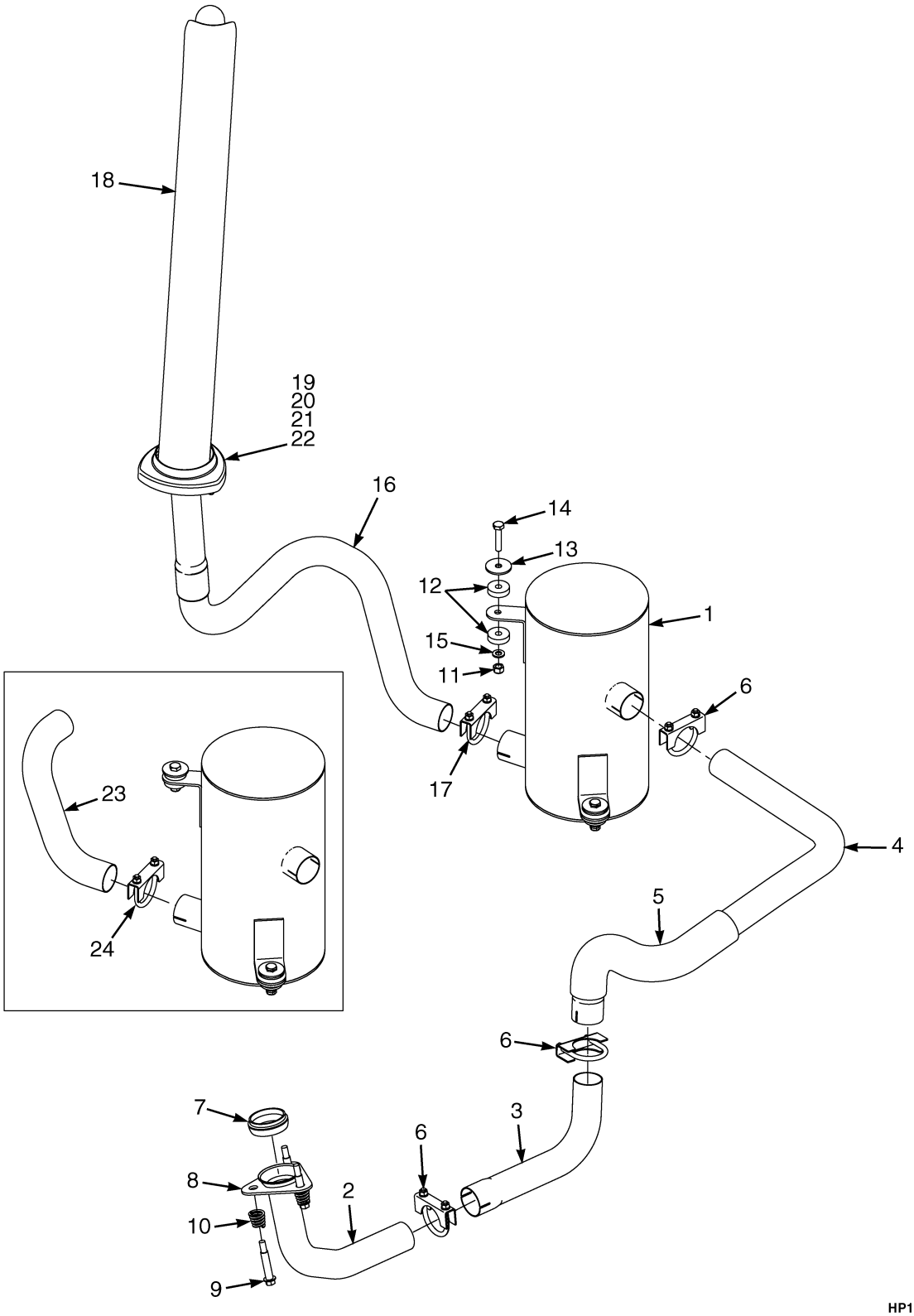



©2004 HYSTER COMPANY

# EXHAUST
## DIESEL TIER II

| ITEM | | PART NO. | DESCRIPTION | QTY |
|---|---|---|---|---|
| 1 | | 2037114 | Muffler | 1 |
| 1 | | 2037113 | Muffler (Type "DS") | 1 |
| 1 | | 2038000 | Muffler (Two-Way Catalytic) | 1 |
| 2 | | 1532537 | Exhaust Pipe | 1 |
| 3 | | 1532620 | Exhaust Pipe | 1 |
| 4 | | 1532621 | Exhaust Pipe | 1 |
| 5 | | 1399791 | Shield | 1 |
| 6 | | 63116 | Clamp | 3 |
| 7 | | 1396139 | Seal | 1 |
| 8 | | 1396079 | Adapter | 1 |
| 9 | | 1337118 | Bolt | 1 |
| 10 | | 1335898 | Spring | 1 |
| 11 | | 316826 | Nut | 2 |
| 12 | | 1351177 | Rubber Cushion | 4 |
| 13 | | 1351176 | Washer | 2 |
| 14 | | 292517 | Capscrew | 2 |
| 15 | | 320159 | Washer | 2 |
| 16 | **b** | 1396696 | Exhaust Pipe | 1 |
| 17 | **b** | 63116 | Clamp | 1 |
| 18 | **b** | 1396574 | Overhead Exhaust | 1 |
| 19 | **b** | 292682 | Lockwasher | 3 |
| 20 | **b** | 320159 | Washer | 3 |
| 21 | **b** | 287854 | Capscrew | 3 |
| 22 | **b** | 1351178 | Cover | 1 |
| 23 | **a** | 1394803 | Exhaust Pipe | 1 |
| 24 | **a** | 63116 | Clamp | 1 |

**FOOTNOTES:**
**a** Counterweight
**b** Overhead

©2004 HYSTER COMPANY

# ENGINE MOUNT (Figure 2-6)
## DIESEL TIER II

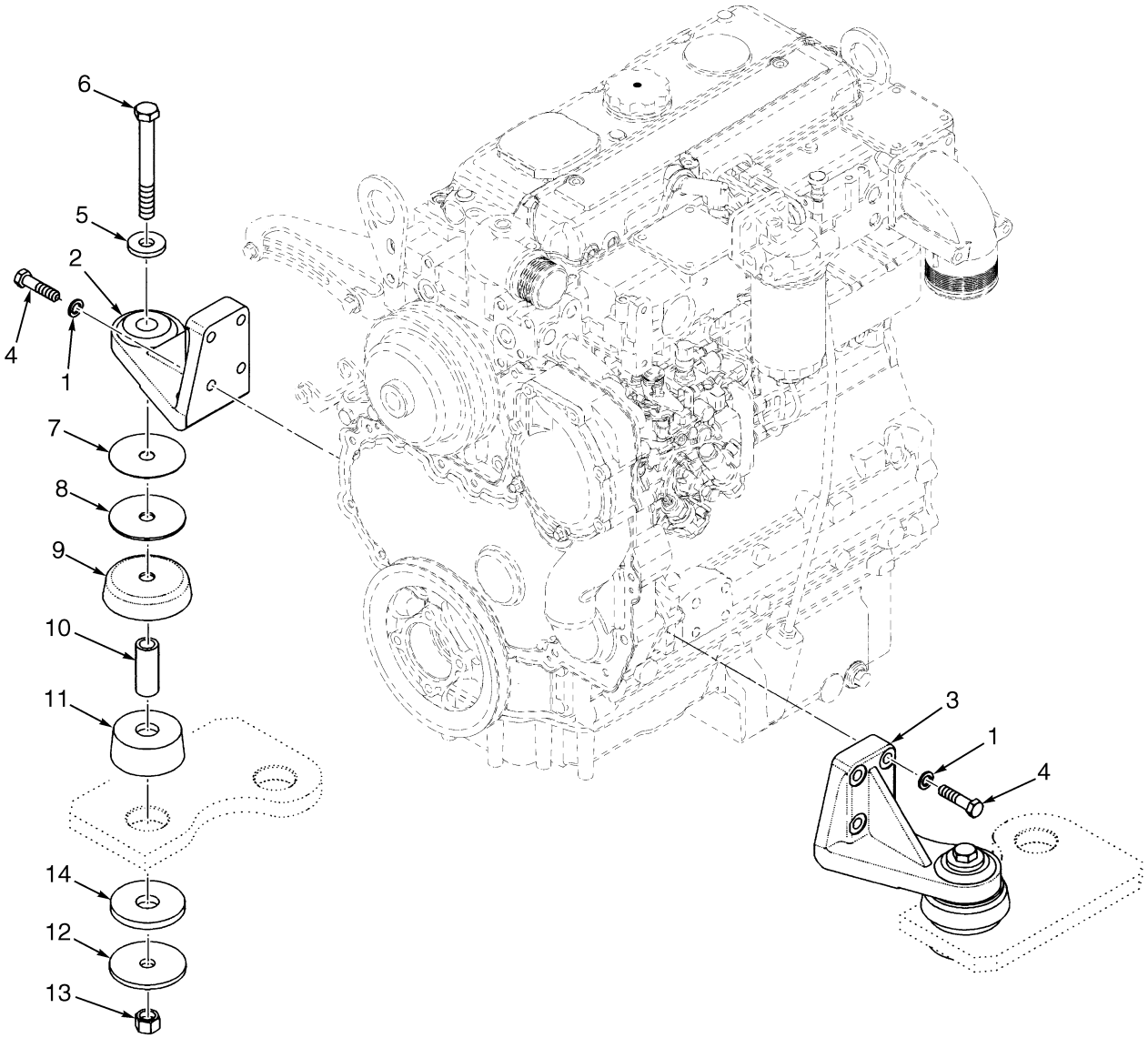


BP090099


©2004 HYSTER COMPANY

# ENGINE MOUNT
## DIESEL TIER II

| ITEM | PART NO. | DESCRIPTION | QTY |
|---|---|---|---|
| 1 | 292683 | Lockwasher | 8 |
| 2 | 1394716 | Mount (LH) | 1 |
| 3 | 1394717 | Mount (RH) | 1 |
| 4 | 293649 | Capscrew | 8 |
| 5 | 1357322 | Washer | 2 |
| 6 | 292575 | Capscrew | 2 |
| 7 | 1397762 | Shim (0.039 in.) | AR |
| 8 | 1397761 | Washer | 2 |
| 9 | 1378198 | Snubber Cup (Snubbing) | 2 |
| 10 | 1394437 | Spacer | 2 |
| 11 | 1388704 | Isolator | 2 |
| 12 | 1302938 | Washer | 2 |
| 13 | 316828 | Nut | 2 |
| 14 | 1394436 | Bumper | 2 |

©2004 HYSTER COMPANY

# ASSEMBLED ENGINE (Figure 2-7)
## DIESEL TIER II

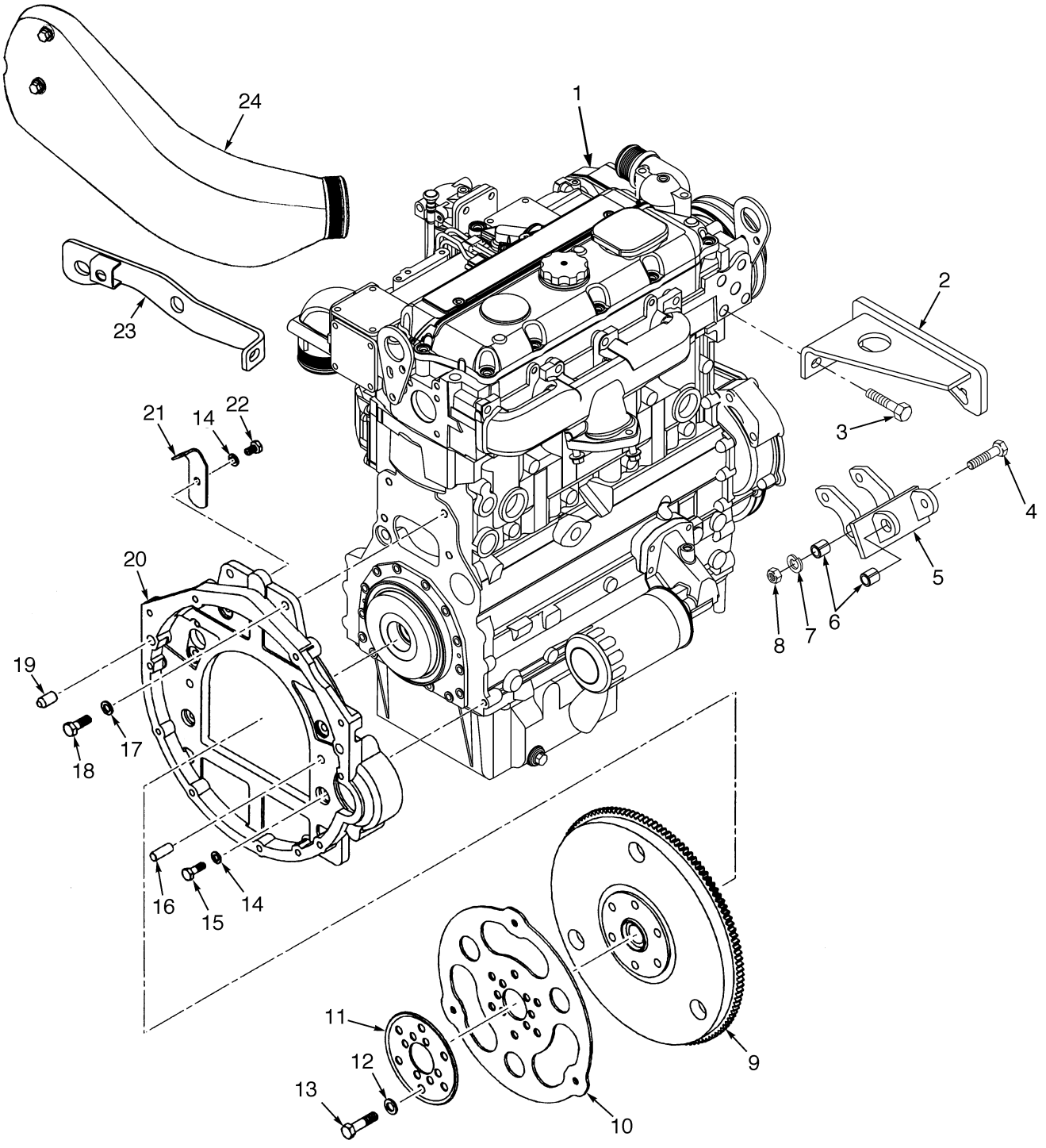


BP090100


©2004 HYSTER COMPANY

# ASSEMBLED ENGINE
## DIESEL TIER II

| ITEM | PART NO. | DESCRIPTION | QTY |
|---|---|---|---|
| 1 | 1523798 | Engine | 1 |
| 2 | 1563048 | Bracket | 1 |
| 3 | 1306371 | Screw | 2 |
| 4 | 1307897 | Capscrew | 1 |
| 5 | 1563548 | Bracket | 1 |
| 6 | 1345014 | Sleeve | 2 |
| 7 | 296421 | Washer | 1 |
| 8 | 1460477 | Nut (Flange) | 1 |
| 9 | 1388705 | Flywheel Assembly | 1 |
| 9 | 1388706 | Flywheel | 1 |
| 9 | 195856 | Ring Gear | 1 |
| 10 | 1397689 | Flexplate | 1 |
| 11 | 1388750 | Washer (Special Flex) | 1 |
| 12 | 296422 | Washer | 6 |
| 13 | 289867 | Bolt | 7 |
| 13 | 280472 | Sealant | AR |
| 14 | 292682 | Lockwasher | 7 |
| 15 | 136985 | Capscrew | 6 |
| 16 | 186420 | Pin | 2 |
| 17 | 292683 | Lockwasher | 2 |
| 18 | 292528 | Capscrew | 2 |
| 19 | 1335499 | Pin | 2 |
| 20 | 1388733 | Housing (Flywheel) | 1 |
| 21 | 1378226 | Cover | 1 |
| 22 | 292513 | Capscrew | 1 |
| 23 | 1552652 | Bracket | 1 |
| 24 | 1535414 | Air Intake | 1 |

©2004 HYSTER COMPANY

# CYLINDER BLOCK (Figure 2-8)
## DIESEL TIER II

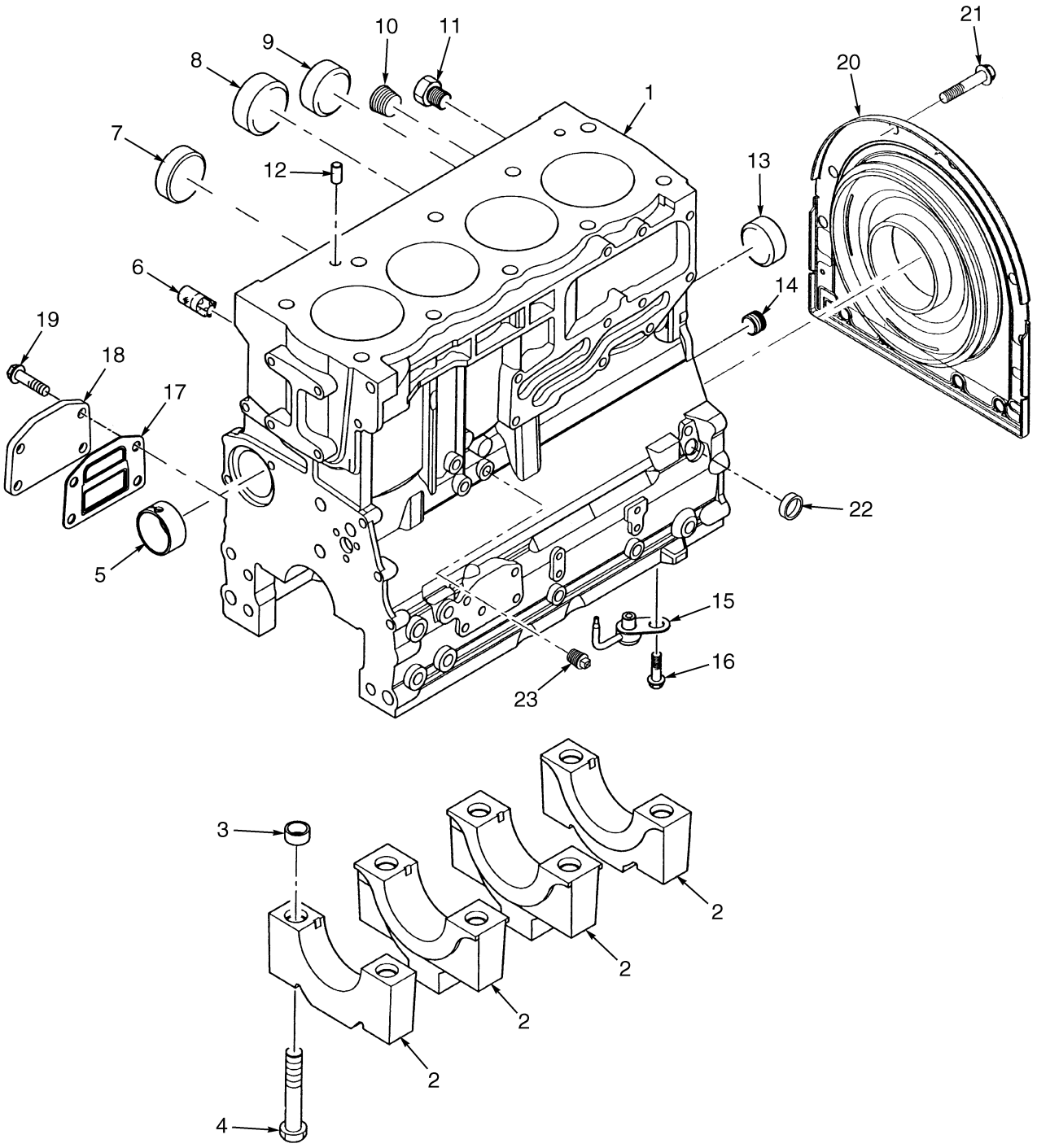


BP090101


©2004 HYSTER COMPANY

# CYLINDER BLOCK
## DIESEL TIER II

| ITEM | PART NO. | DESCRIPTION | QTY |
|---|---|---|---|
| | 1523798 | Engine | 1 |
| 1 | 1554974 | Cylinder Block Kit | 1 |
| 2 | . . . . . | Bearing Caps | 5 |
| 3 | 99576 | Thimble | 10 |
| 4 | 16794 | Capscrew | 10 |
| 5 | 1554975 | Bushing | 1 |
| 6 | 1554981 | Plug | 1 |
| 7 | 1554980 | Plug | 1 |
| 8 | 1554977 | Plug | 2 |
| 9 | 980727 | Plug | 1 |
| 10 | 15304 | Fitting | 1 |
| 11 | 1554979 | Plug | 2 |
| 12 | 1456711 | Pin | 2 |
| 13 | 1554976 | Plug | 1 |
| 14 | 1554978 | Plug | 1 |
| 15 | 1554982 | Cooling Jet | 4 |
| 16 | 1382546 | Screw | 4 |
| 17 | 1554984 | Gasket | 1 |
| 18 | 1554983 | Plate | 1 |
| 19 | 1307894 | Screw | 4 |
| 20 | 1555071 | Housing | 1 |
| 21 | 1537224 | Bolt | 10 |
| 22 | 1555421 | Plug | 1 |
| 23 | 15483 | Fitting | 1 |
| | 1555686 | Top Gasket (Includes Item 17) | 1 |

©2004 HYSTER COMPANY

# CYLINDER HEAD AND INDUCTION MANIFOLD (Figure 2-9)
## DIESEL TIER II

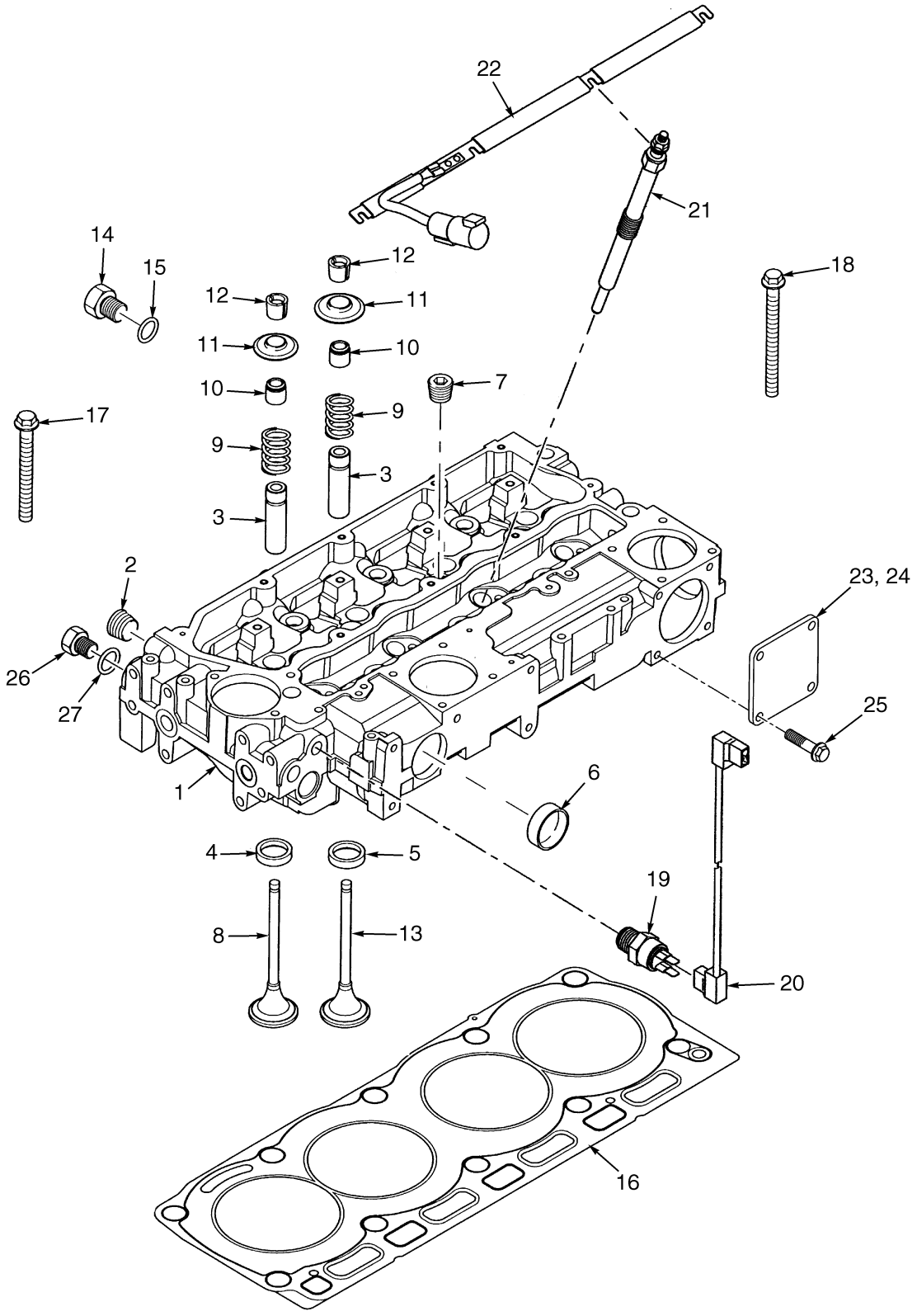


HP091047


©2004 HYSTER COMPANY

# CYLINDER HEAD AND INDUCTION MANIFOLD
## DIESEL TIER II

| ITEM | PART NO. | DESCRIPTION | QTY |
|---|---|---|---|
| | 1523798 | Engine | 1 |
| 1 | 1555072 | Cylinder Head Kit | 1 |
| 2 | 15962 | Fitting | 1 |
| 3 | 1451629 | Valve Guide | 8 |
| 4 | 1555073 | Inlet Valve Insert | 4 |
| 5 | 1555074 | Exhaust Valve Insert | 4 |
| 6 | 1388387 | Plug | 2 |
| 7 | 15304 | Fitting | 4 |
| 8 | 1555075 | Inlet Valve | 4 |
| 9 | 1555077 | Valve Spring | 8 |
| 10 | 1555076 | Seal | 8 |
| 11 | 1555078 | Cap | 8 |
| 12 | 1451636 | Keeper | 16 |
| 13 | 1555079 | Exhaust Valve | 4 |
| 14 | 1555080 | Plug | 1 |
| 15 | 1537258 | O-Ring | 1 |
| 16 | 1555081 | Gasket | 1 |
| 17 | 1555082 | Screw | 7 |
| 18 | 1555083 | Screw | 3 |
| 19 | 1555419 | Sender | 1 |
| 20 | 1555420 | Cable | 1 |
| 21 | 1555505 | Glow Plug | 4 |
| 22 | 1555506 | Bar | 3 |
| 23 | 1555689 | Plate | 3 |
| 24 | 1460209 | Sealant | AR |
| 25 | 1307894 | Screw | 12 |
| 26 | 1555080 | Plug | 1 |
| 27 | 1537258 | O-Ring | 1 |
| | 1555686 | Top Gasket (Includes Item 16) | 1 |

©2004 HYSTER COMPANY

# VALVE COVER AND ROCKER ARM SHAFT (Figure 2-10)
## DIESEL TIER II

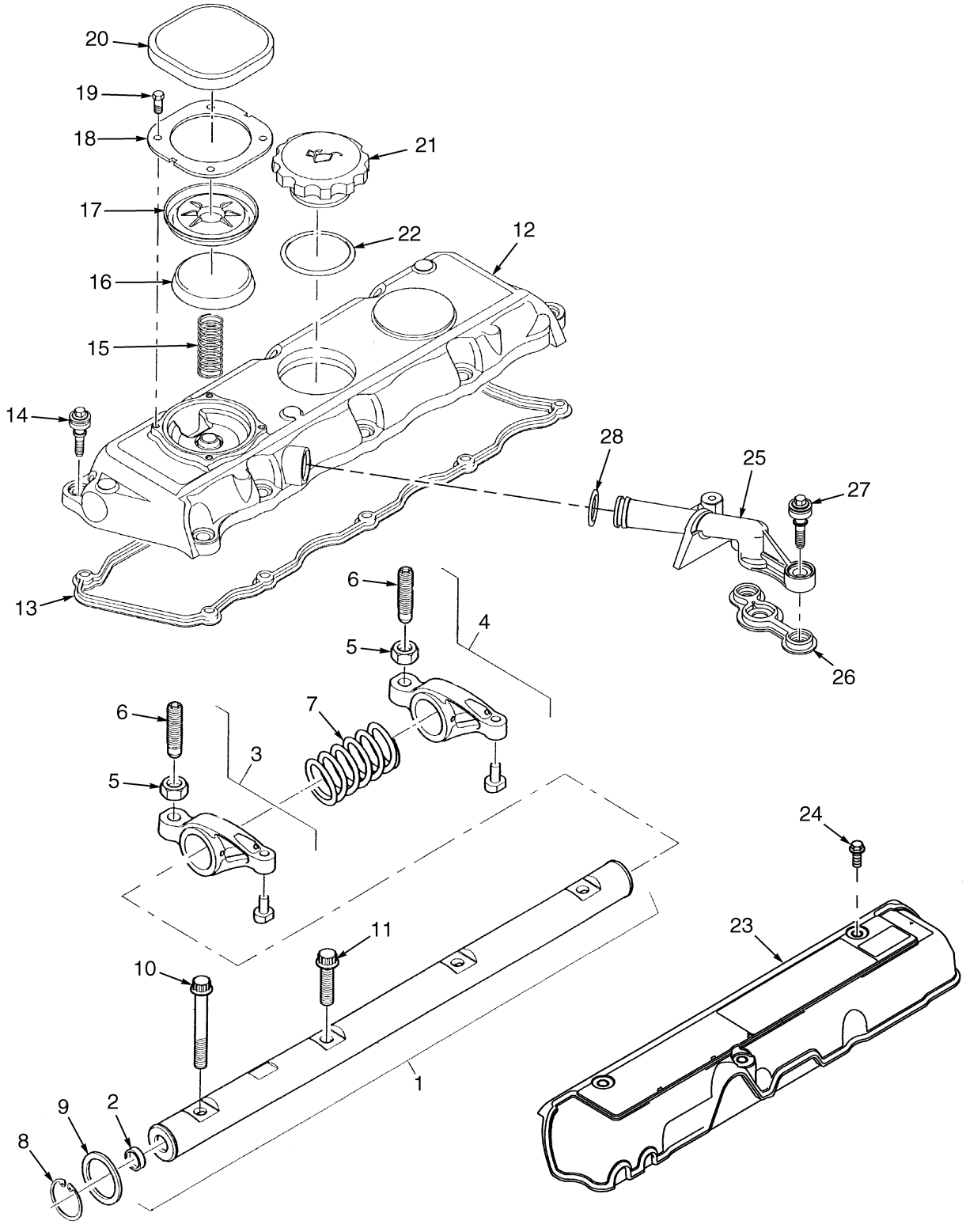


BP090102


©2004 HYSTER COMPANY

# VALVE COVER AND ROCKER ARM SHAFT
## DIESEL TIER II

| ITEM | PART NO. | DESCRIPTION | QTY |
|---|---|---|---|
| | 1523798 | Engine | 1 |
| | 1555084 | Rocker Assembly | 1 |
| 1 | 1555085 | Shaft Assembly | 1 |
| 2 | 1555086 | Plug | 2 |
| 3 | 1555088 | Rocker Arm Assembly | 4 |
| 4 | 1555092 | Rocker Arm Assembly | 4 |
| 5 | 15026 | Nut | 1 |
| 6 | 1466859 | Screw | 1 |
| 7 | 1555091 | Spring | 3 |
| 8 | 1555090 | Snap Ring | 2 |
| 9 | 1555094 | Washer | 2 |
| 10 | 1555095 | Screw | 1 |
| 11 | 1555096 | Screw | 3 |
| 12 | 1555430 | Cover Assembly | 1 |
| 13 | 1555431 | Gasket | 1 |
| 14 | 1555432 | Screw | 10 |
| 15 | 1555433 | Spring | 2 |
| 16 | 1555434 | Cap | 1 |
| 17 | 1555435 | Diaphragm | 1 |
| 18 | 1555436 | Plate | 1 |
| 19 | 1555437 | Screw | 4 |
| 20 | 1555438 | Cap | 1 |
| 21 | 1391246 | Cap Assembly | 1 |
| 22 | 1516930 | O-Ring | 1 |
| 23 | 1555447 | Cover | 1 |
| 24 | 1306361 | Screw | 3 |
| 25 | 1555448 | Breather Pipe | 1 |
| 26 | 1555449 | Gasket | 1 |
| 27 | 1555432 | Screw | 2 |
| 28 | 1555451 | O-Ring | 1 |
| | 1555686 | Top Gasket (Includes Items 13, 26) | 1 |

©2004 HYSTER COMPANY

# CRANKSHAFT AND PISTONS (Figure 2-11)
## DIESEL TIER II

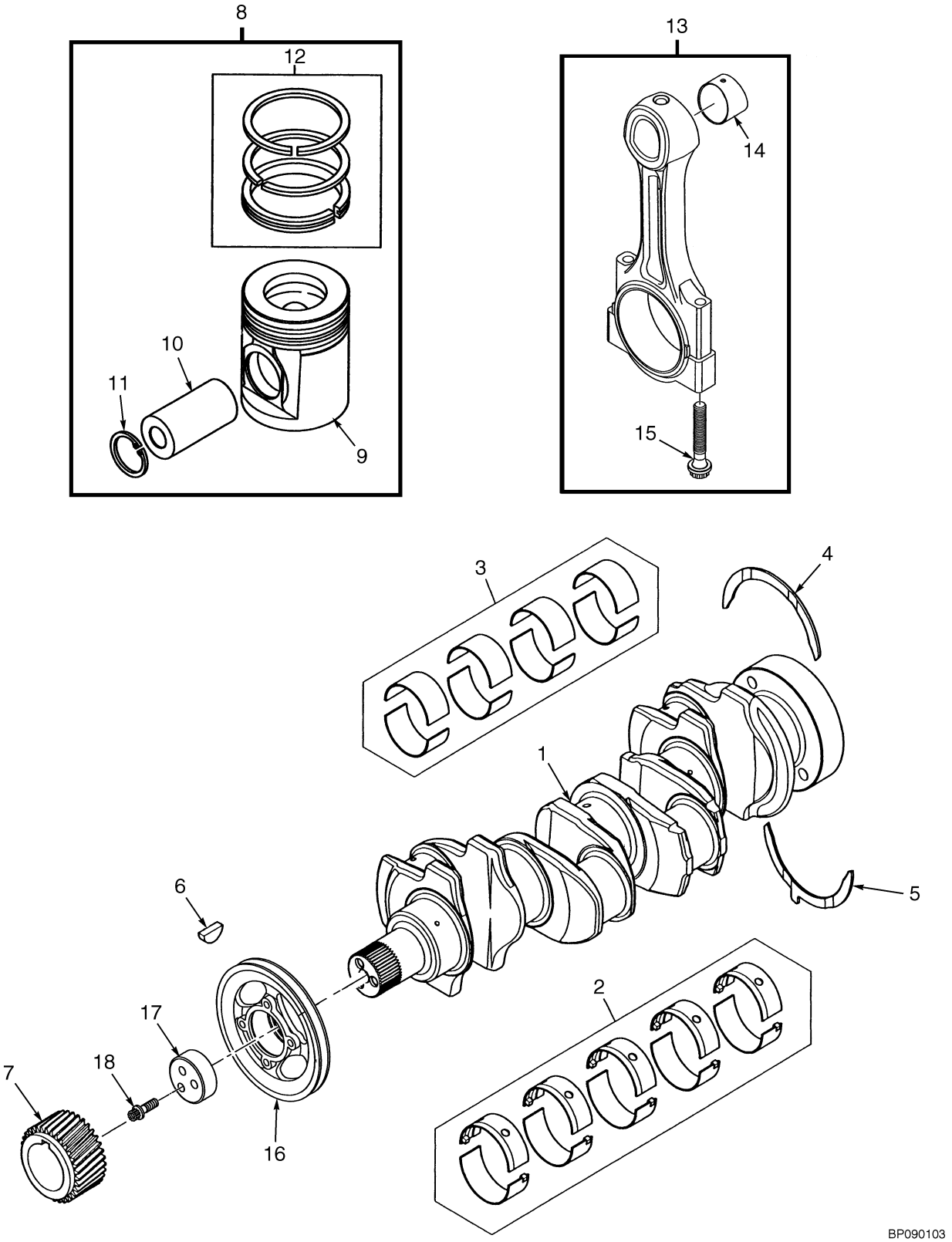



©2004 HYSTER COMPANY

# CRANKSHAFT AND PISTONS
## DIESEL TIER II

| ITEM | PART NO. | DESCRIPTION | QTY |
|---|---|---|---|
| | 1523798 | Engine | 1 |
| 1 | 1554985 | Crankshaft Assembly | 1 |
| 2 | 1554986 | Main Bearing Kit (Standard) | 1 |
| 2 | 1554988 | Main Bearing Kit (0.10 in.) | 1 |
| 2 | 1554989 | Main Bearing Kit (0.20 in.) | 1 |
| 2 | 1554990 | Main Bearing Kit (0.30 in.) | 1 |
| 3 | 1554987 | Bearing Kit (Standard) | 1 |
| 3 | 1554991 | Bearing Kit (0.10 in) | 1 |
| 3 | 1554992 | Bearing Kit (0.20 in.) | 1 |
| 3 | 1554993 | Bearing Kit (0.30 in.) | 1 |
| 4 | 842799 | Thrust Washer (Standard) | 2 |
| 4 | 161296 | Thrust Washer (0.007 in.) | 2 |
| 5 | 842800 | Thrust Washer (Standard) | 2 |
| 5 | 161297 | Thrust Washer (0.007 in.) | 2 |
| 6 | 99610 | Key | 1 |
| 7 | 1537216 | Gear | 1 |
| 8 | 1554994 | Piston and Ring Kit | 4 |
| 9 | . . . . . | Piston | 1 |
| 10 | . . . . . | Pin | 1 |
| 11 | 1451606 | Snap Ring | 2 |
| 12 | 1554995 | Piston Ring Kit | 1 |
| 13 | 1555065 | Connecting Rod Kit ("F Red") | 4 |
| 13 | 1555066 | Connecting Rod Kit ("G Orange") | 4 |
| 13 | 1555067 | Connecting Rod Kit ("H White") | 4 |
| 13 | 1555068 | Connecting Rod Kit ("J Brown") | 4 |
| 13 | 1555069 | Connecting Rod Kit ("K Purple") | 4 |
| 13 | 1555070 | Connecting Rod Kit ("L Blue") | 4 |
| 14 | 1555063 | Bushing | 1 |
| 15 | 1555064 | Bolt | 2 |
| 16 | 1306193 | Pulley | 1 |
| 17 | 1306194 | Block | 1 |
| 18 | 302713 | Screw | 3 |

©2004 HYSTER COMPANY

# OIL PAN AND PUMP (Figure 2-12)
## DIESEL TIER II

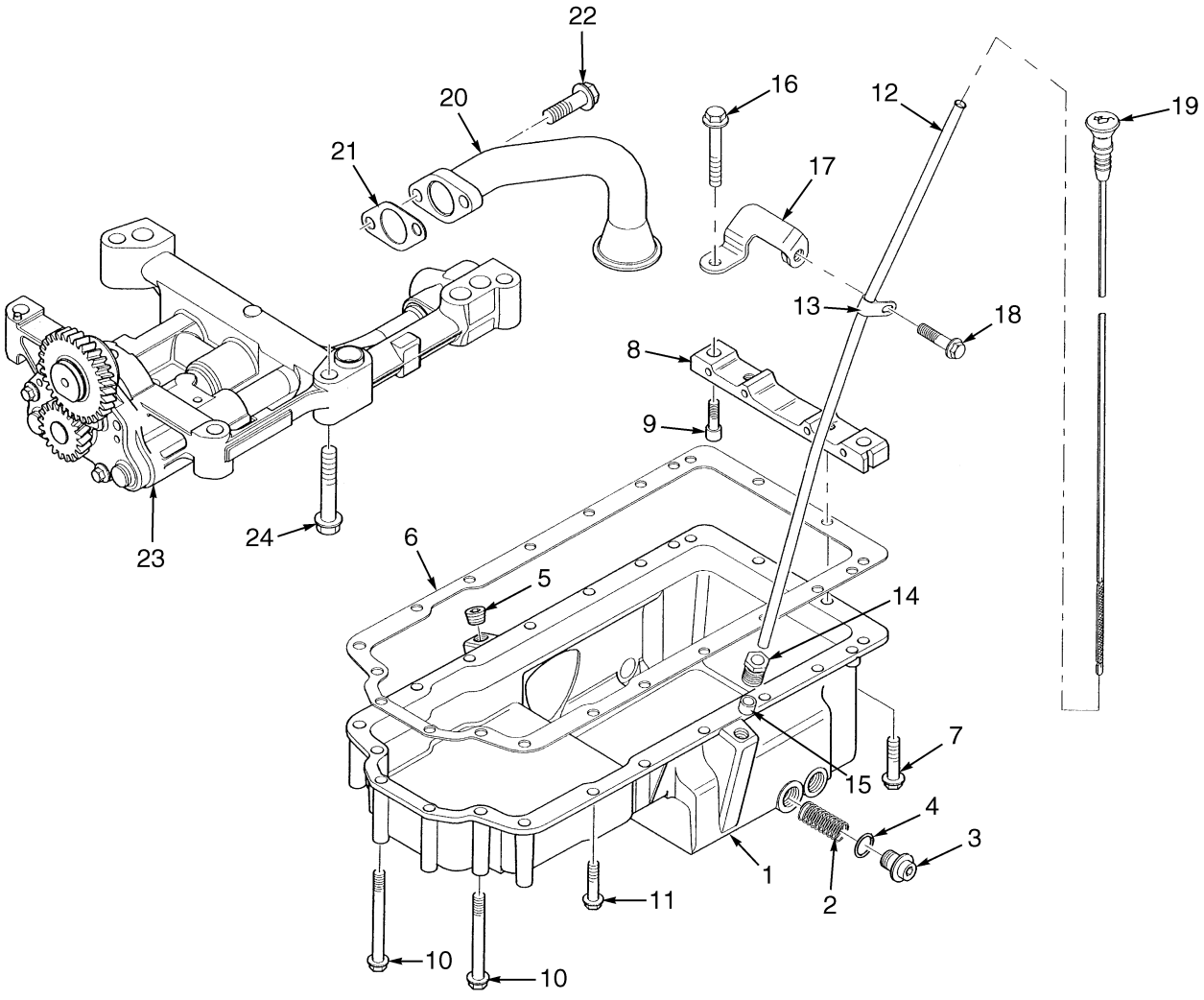


BP090104


©2004 HYSTER COMPANY

# OIL PAN AND PUMP
## DIESEL TIER II

| ITEM | PART NO. | DESCRIPTION | QTY |
|---|---|---|---|
| | 1523798 | Engine | 1 |
| 1 | 1460557 | Sump | 1 |
| 2 | 266465 | Insert | 2 |
| 3 | 377976 | Plug | 2 |
| 4 | 1306374 | O-Ring | 2 |
| 5 | 1377908 | Plug | 1 |
| 6 | 1555422 | Gasket | 1 |
| 7 | 1307894 | Screw | 2 |
| 8 | 1555423 | Bridge Piece | 1 |
| 9 | 1307875 | Screw | 2 |
| 10 | 1318965 | Screw | 6 |
| 11 | 386459 | Screw | 12 |
| 12 | 1555424 | Tube | 1 |
| 13 | 1555425 | Clip | 1 |
| 14 | 1307880 | Nut | 1 |
| 15 | 1306143 | Olive | 1 |
| 16 | 1555426 | Screw | 1 |
| 17 | 1555428 | Bracket | 1 |
| 18 | 1307883 | Screw | 1 |
| 19 | 1555427 | Dipstick | 1 |
| 20 | 1555429 | Pipe | 1 |
| 21 | 1344921 | Gasket | 1 |
| 22 | 1306358 | Screw | 2 |
| 23 | 1555490 | Oil Pump | 1 |
| 24 | 1306365 | Screw | 5 |
| | 1555729 | Bottom Gasket Kit (Includes Items 4, 21) | 1 |

©2004 HYSTER COMPANY

# WATER PUMP AND OUTLET (Figure 2-13)
## DIESEL TIER II

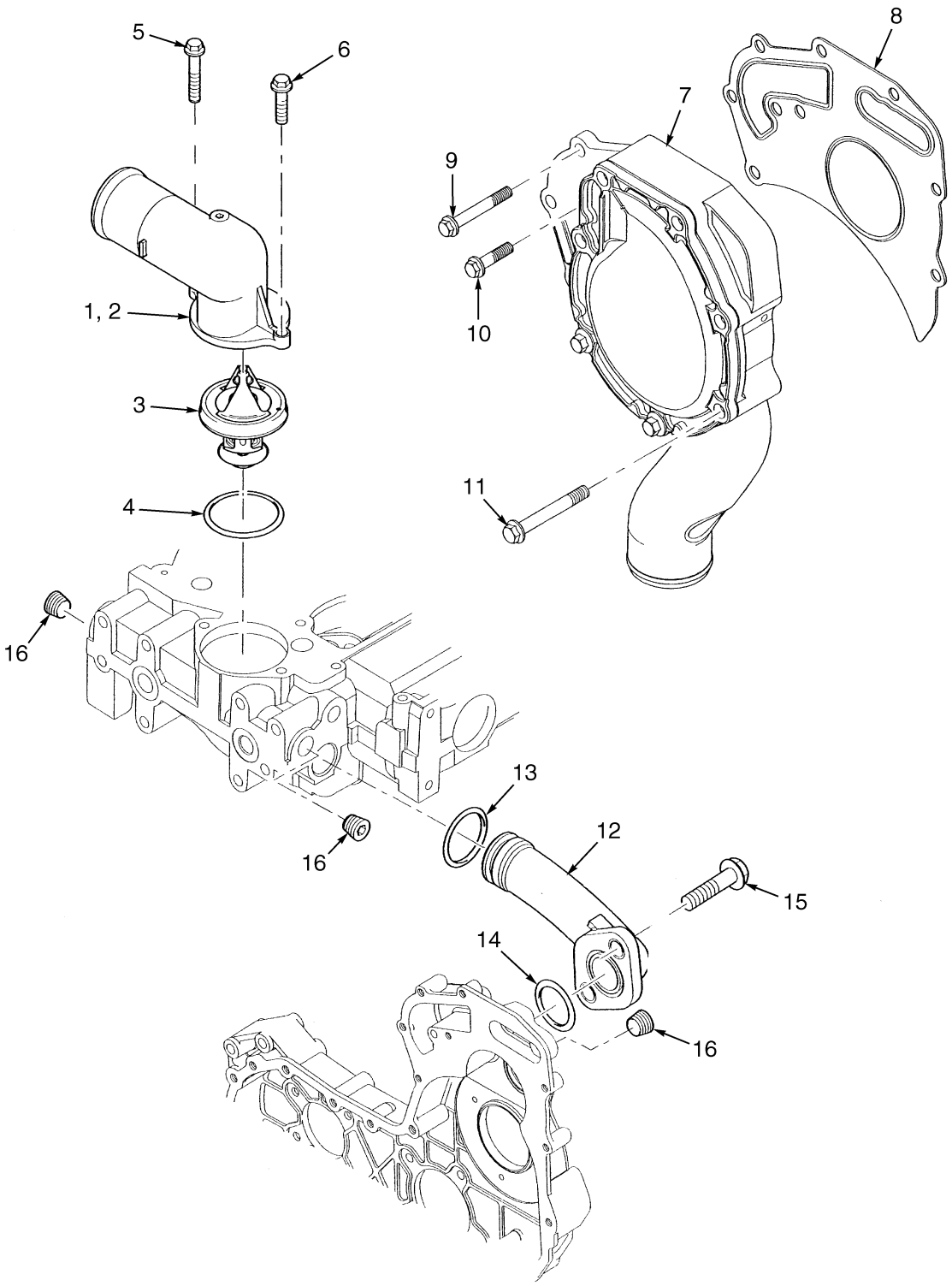


BP090105


©2004 HYSTER COMPANY

# WATER PUMP AND OUTLET
## DIESEL TIER II

| ITEM | PART NO. | DESCRIPTION | QTY |
|---|---|---|---|
| | 1523798 | Engine | 1 |
| 1 | 1555474 | Outlet Assembly | 1 |
| 2 | . . . . . | Housing | 1 |
| 3 | 1555477 | Thermostat | 1 |
| 4 | 1555478 | O-Ring | 1 |
| 5 | 1307909 | Screw | 1 |
| 6 | 1306358 | Screw | 1 |
| 7 | 1555464 | Water Pump Replacement Kit | 1 |
| 7 | 1555466 | Gear | 1 |
| 7 | 1555468 | Repair Kit | 1 |
| 8 | 1555467 | Gasket | 1 |
| 9 | 1380261 | Screw | 2 |
| 10 | 1306362 | Screw | 2 |
| 11 | 1307909 | Screw | 2 |
| 12 | 1555471 | Pipe | 1 |
| 13 | 1555472 | O-Ring | 1 |
| 14 | 1555473 | O-Ring | 1 |
| 15 | 386459 | Screw | 2 |
| 16 | 15962 | Fitting | 3 |

©2004 HYSTER COMPANY

# TIMING GEAR (Figure 2-14)
## DIESEL TIER II

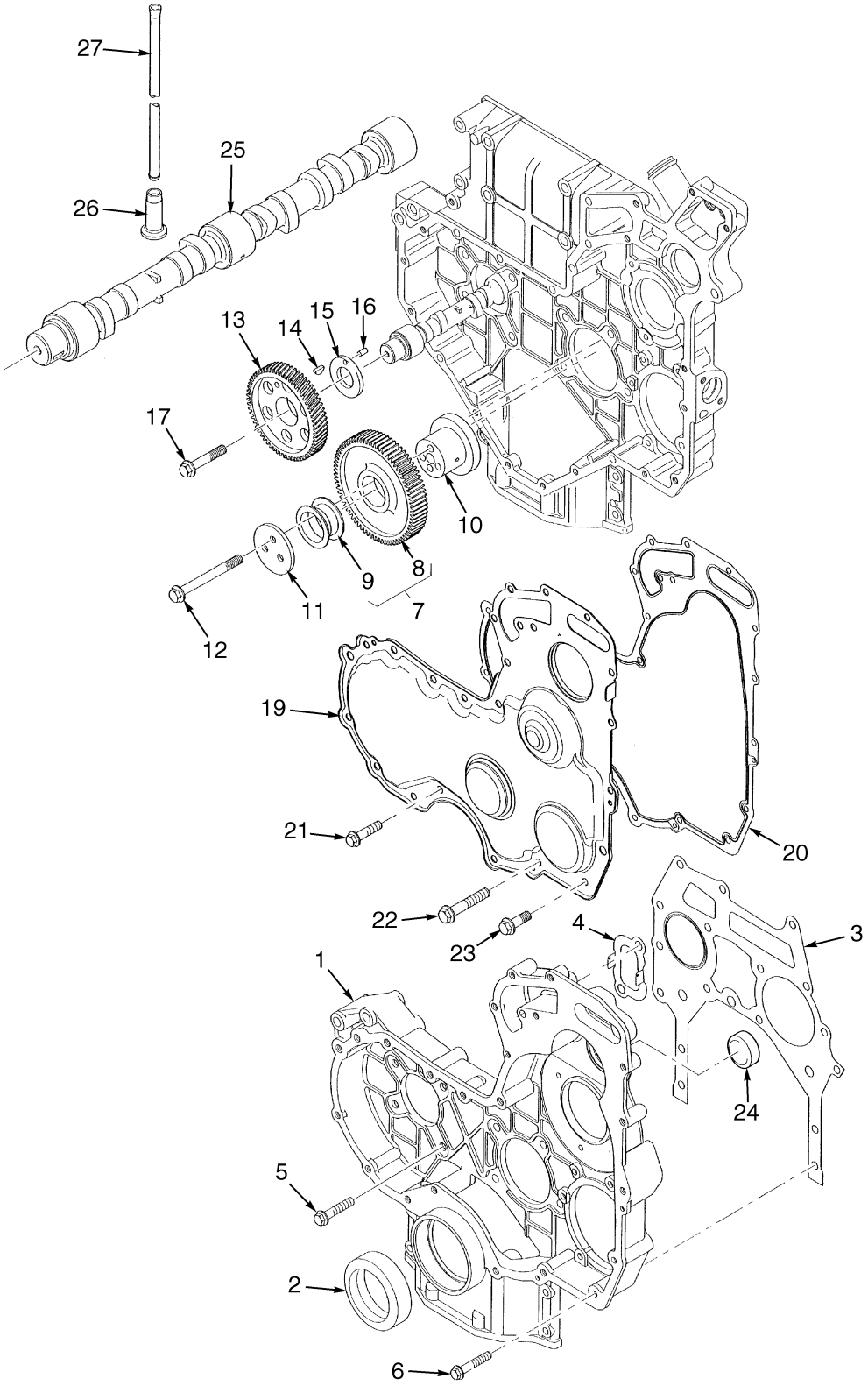


BP090106


©2004 HYSTER COMPANY

# TIMING GEAR
## DIESEL TIER II

| ITEM | PART NO. | DESCRIPTION | QTY |
|---|---|---|---|
| | 1523798 | Engine | 1 |
| 1 | 1555482 | Timing Case | 1 |
| 2 | 350399 | Seal | 1 |
| 3 | 1555483 | Gasket | 1 |
| 4 | 1555484 | Gasket | 1 |
| 5 | 386459 | Screw | 8 |
| 6 | 1306354 | Screw | 4 |
| 7 | 1555485 | Idler Gear Assembly | 1 |
| 8 | . . . . . | Idler Gear | 1 |
| 9 | 983484 | Bushing | 2 |
| 10 | 229875 | Hub | 1 |
| 11 | 1382479 | Plate | 1 |
| 12 | 1306356 | Screw | 6 |
| 13 | 1537297 | Gear | 1 |
| 14 | 99610 | Key | 1 |
| 15 | 1306364 | Washer | 1 |
| 16 | 298096 | Pin | 1 |
| 17 | 1328565 | Screw | 1 |
| 18 | 1555486 | Thrust Washer (Not Illustrated) | 1 |
| 19 | 1555487 | Cover | 1 |
| 20 | 1555488 | Gasket | 1 |
| 21 | 1307881 | Screw | 9 |
| 22 | 1307909 | Screw | 5 |
| 23 | 1306371 | Screw | 1 |
| 24 | 1555452 | Plug | 1 |
| 25 | 1555098 | Camshaft | 1 |
| 26 | 224248 | Tappet | 8 |
| 27 | 99728 | Rod | 8 |
| | 1555729 | Bottom Gasket Kit (Includes Items 3-4, 20) | 1 |

©2004 HYSTER COMPANY

# EXHAUST MANIFOLD (Figure 2-15)
## DIESEL TIER II

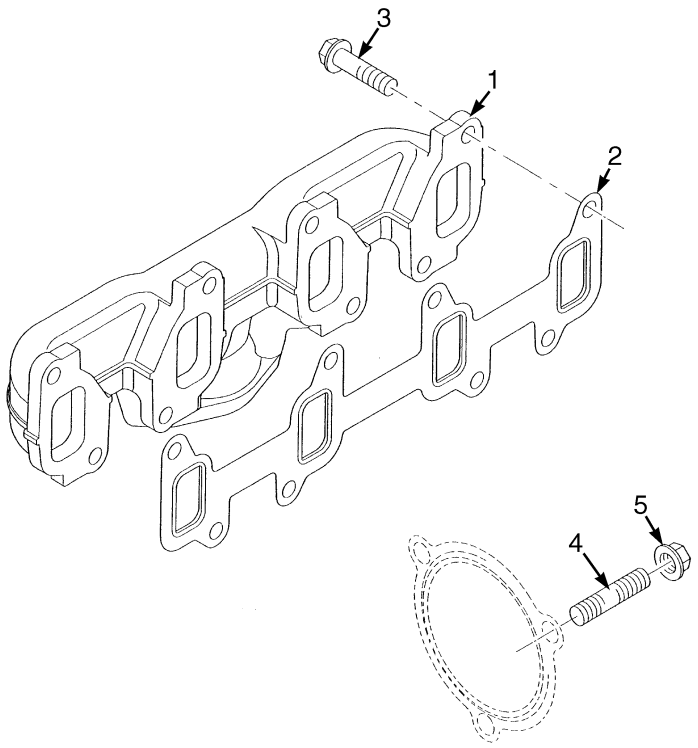


BP090107

| ITEM | PART NO. | DESCRIPTION | QTY |
|---|---|---|---|
| | 1523798 | Engine | 1 |
| 1 | 1555491 | Exhaust Manifold | 1 |
| 2 | 1555492 | Gasket | 1 |
| 3 | 1516677 | Screw | 8 |
| 4 | 1307877 | Stud | 3 |
| 5 | 1306370 | Nut | 3 |


©2004 HYSTER COMPANY

# NOTES

# OIL FILTER (Figure 2-16)
## DIESEL TIER II

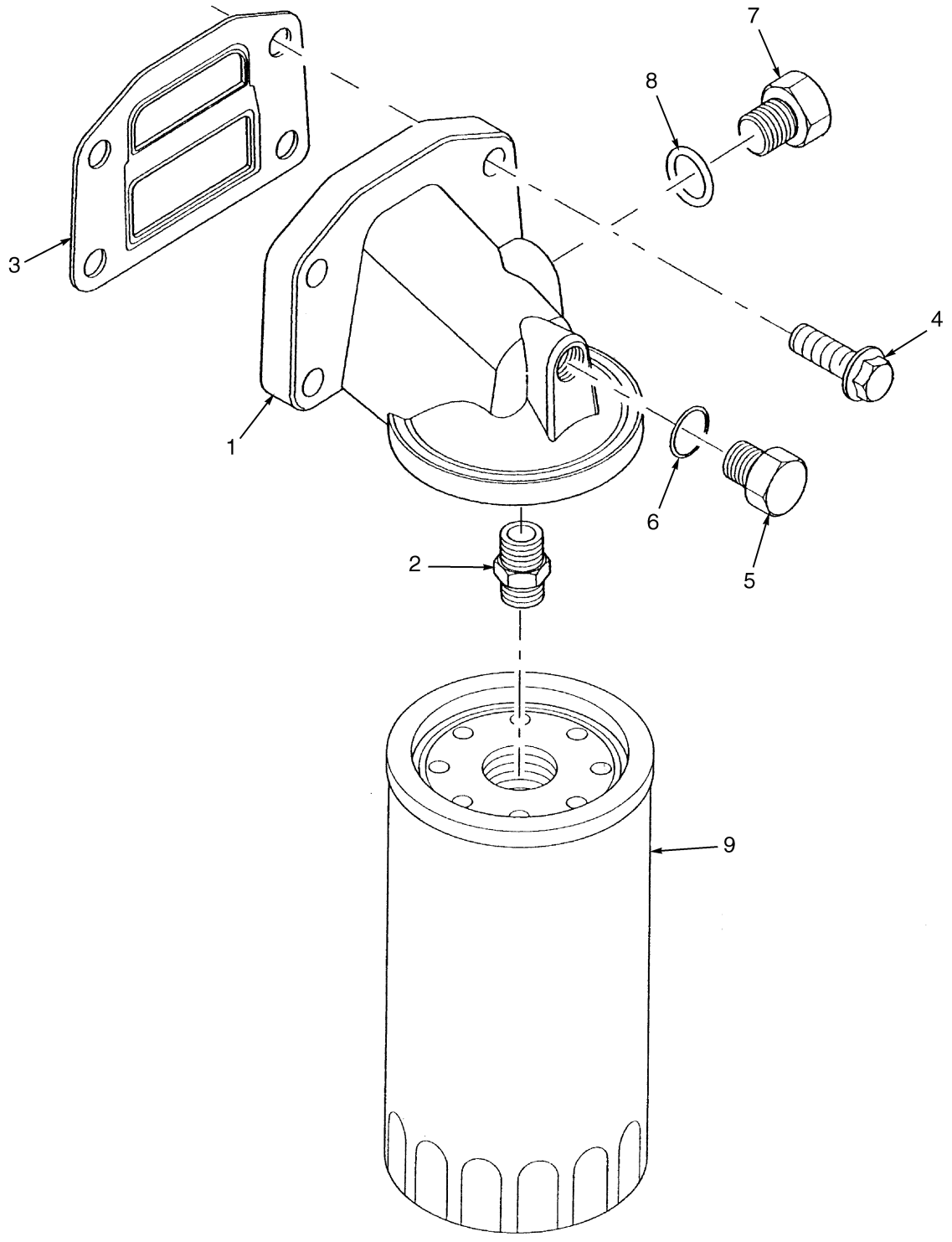



©2004 HYSTER COMPANY

# OIL FILTER
## DIESEL TIER II

| ITEM | PART NO. | DESCRIPTION | QTY |
|---|---|---|---|
| | 1523798 | Engine | 1 |
| 1 | 1555457 | Filter Head Assembly | 1 |
| 2 | 1382954 | Connector | 1 |
| 3 | 1554984 | Gasket | 1 |
| 4 | 1306354 | Screw | 4 |
| 5 | 1555459 | Plug | 1 |
| 6 | 1555460 | O-Ring | 1 |
| 7 | 1555461 | Plug | 1 |
| 8 | 1537265 | O-Ring | 1 |
| 9 | 1327905 | Oil Filter | 1 |
| | 1555729 | Bottom Gasket Kit (Includes Item 3) | 1 |

©2004 HYSTER COMPANY

# OIL COOLER (Figure 2-17)
## DIESEL TIER II

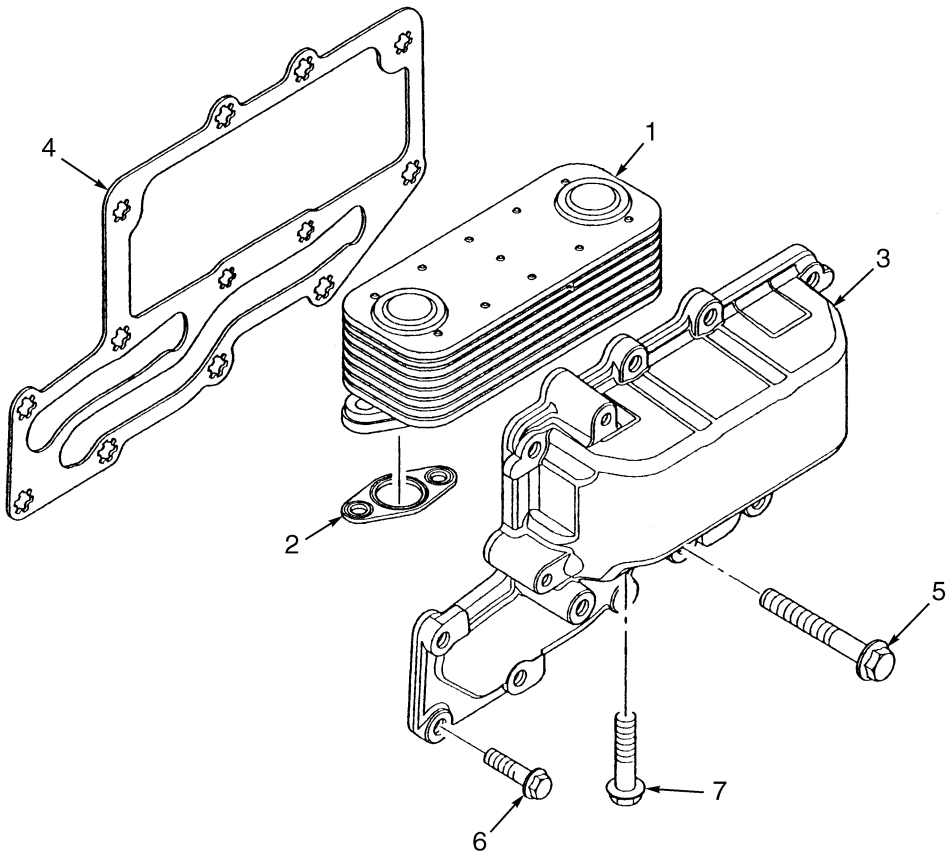


BP090109

| ITEM | PART NO. | DESCRIPTION | QTY |
|---|---|---|---|
| | 1523798 | Engine | 1 |
| | 1555453 | Oil Cooler Assembly | 1 |
| 1 | 1555454 | Cooler | 1 |
| 2 | 1555455 | Gasket | 2 |
| 3 | . . . . . | Housing | 1 |
| 4 | 1555456 | Gasket | 1 |
| 5 | 1318968 | Screw | 3 |
| 6 | 1306358 | Screw | 10 |
| 7 | 1306373 | Screw | 4 |
| | 1555729 | Bottom Gasket Kit (Includes Item 4) | 1 |


©2004 HYSTER COMPANY

# NOTES

# FUEL INJECTION PUMP (Figure 2-18)
## DIESEL TIER II

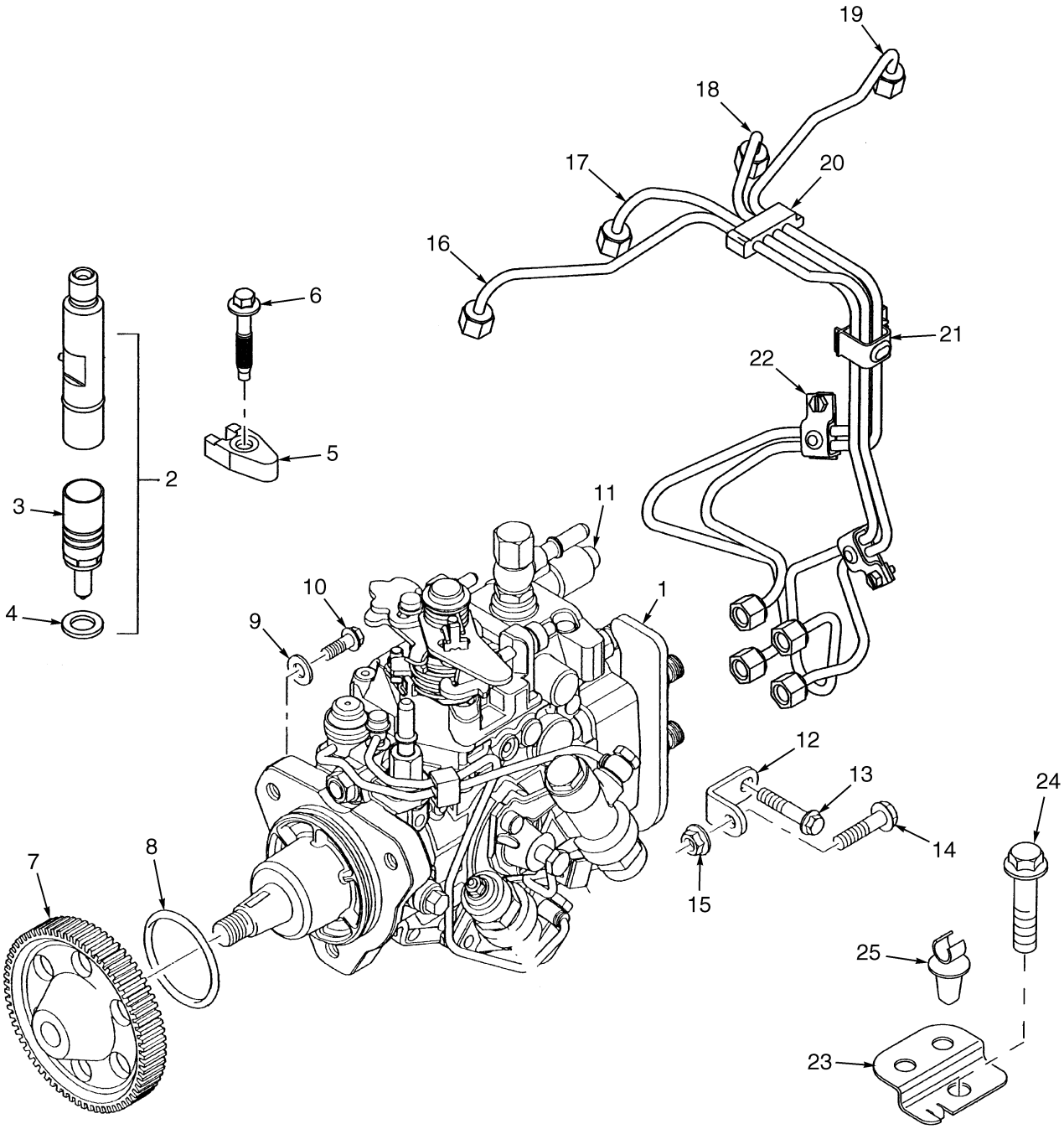


BP090110


©2004 HYSTER COMPANY

# FUEL INJECTION PUMP
## DIESEL TIER II

| ITEM | PART NO. | DESCRIPTION | QTY |
|---|---|---|---|
| | 1523798 | Engine | 1 |
| 1 | 1563921 | Fuel Injection Pump | 1 |
| 2 | 1555262 | Atomiser | 4 |
| 3 | 1555413 | Nozzle | 1 |
| 4 | 1451669 | Washer | 1 |
| 5 | 1555414 | Clamp | 4 |
| 6 | 1555415 | Screw | 4 |
| 7 | 1555101 | Gear | 1 |
| 8 | 1537238 | O-Ring | 1 |
| 9 | 1555102 | Washer | 3 |
| 10 | 1306358 | Screw | 3 |
| 11 | 1555103 | Cap | 1 |
| 12 | 1555104 | Bracket | 1 |
| 13 | 1306371 | Screw | 1 |
| 14 | 386459 | Screw | 1 |
| 15 | 1306359 | Nut | 1 |
| 16 | 1555105 | Fuel Pipe (# 1) | 1 |
| 17 | 1555106 | Fuel Pipe (# 2) | 1 |
| 18 | 1555107 | Fuel Pipe (# 3) | 1 |
| 19 | 1555108 | Fuel Pipe (# 4) | 1 |
| 20 | 1388386 | Clip | 1 |
| 21 | 1555110 | Clip | 1 |
| 22 | 1555109 | Clip | 2 |
| 23 | 1564046 | Bracket | 1 |
| 24 | 1307881 | Screw | 1 |
| 25 | 1555502 | Clip | 1 |

©2004 HYSTER COMPANY

# ROTARY EXHAUSTER (Figure 2-19)
## DIESEL TIER II

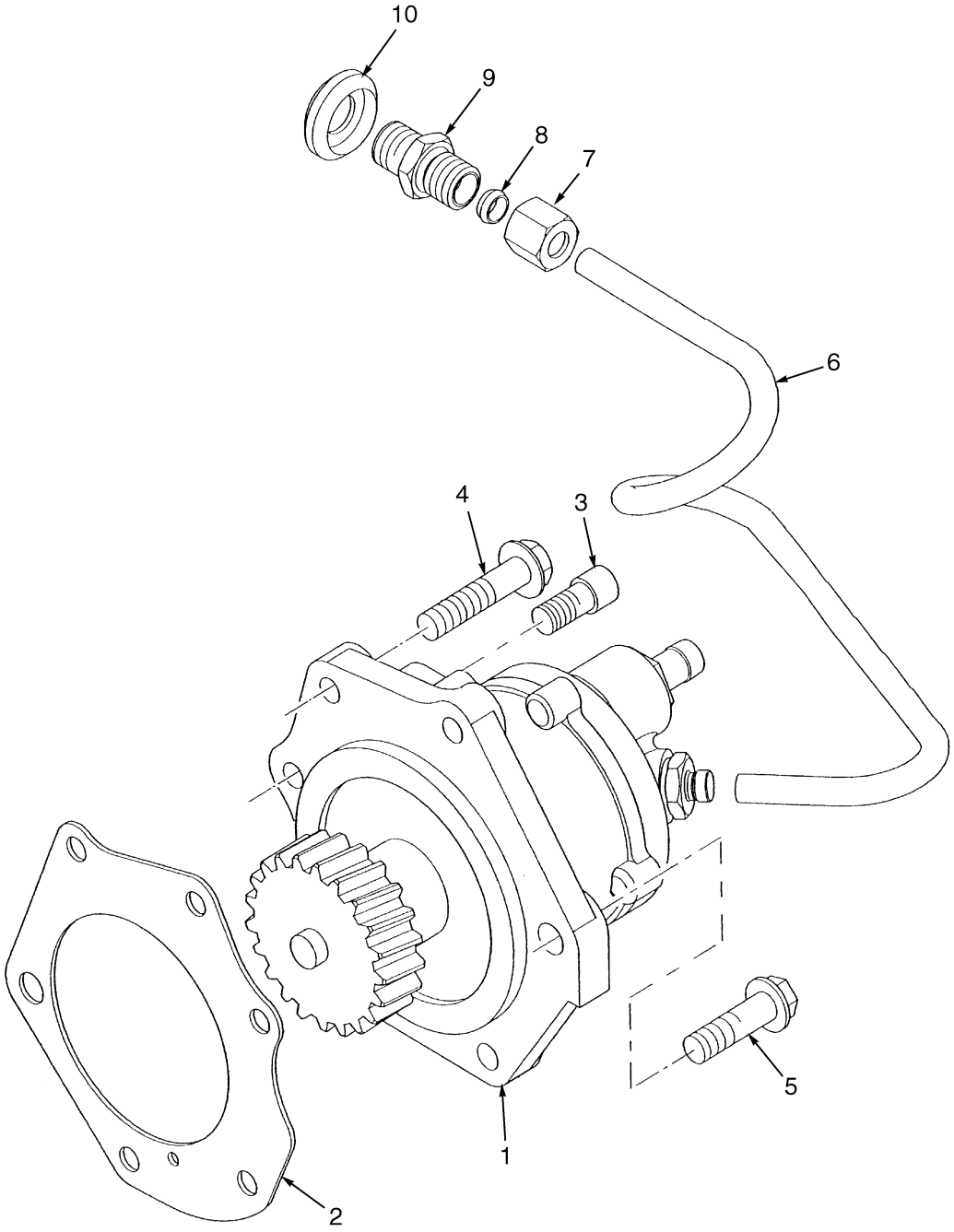


BP090111


©2004 HYSTER COMPANY

# ROTARY EXHAUSTER
## DIESEL TIER II

| ITEM | PART NO. | DESCRIPTION | QTY |
|---|---|---|---|
| | 1523798 | Engine | 1 |
| 1 | 1555489 | Rotary Exhauster | 1 |
| 2 | 1329660 | Gasket | 1 |
| 3 | 1306354 | Screw | 4 |
| 4 | 1464197 | Screw | 1 |
| 5 | 1307913 | Screw | 1 |
| 6 | 1507960 | Pipe | 1 |
| 7 | 16193 | Fitting | 2 |
| 8 | 51455 | Fitting | 2 |
| 9 | 1319028 | Adapter | 1 |
| 10 | 1515805 | Washer | 1 |

©2004 HYSTER COMPANY

# ENGINE MOUNTING (Figure 2-20)
## GASOLINE AND LPG

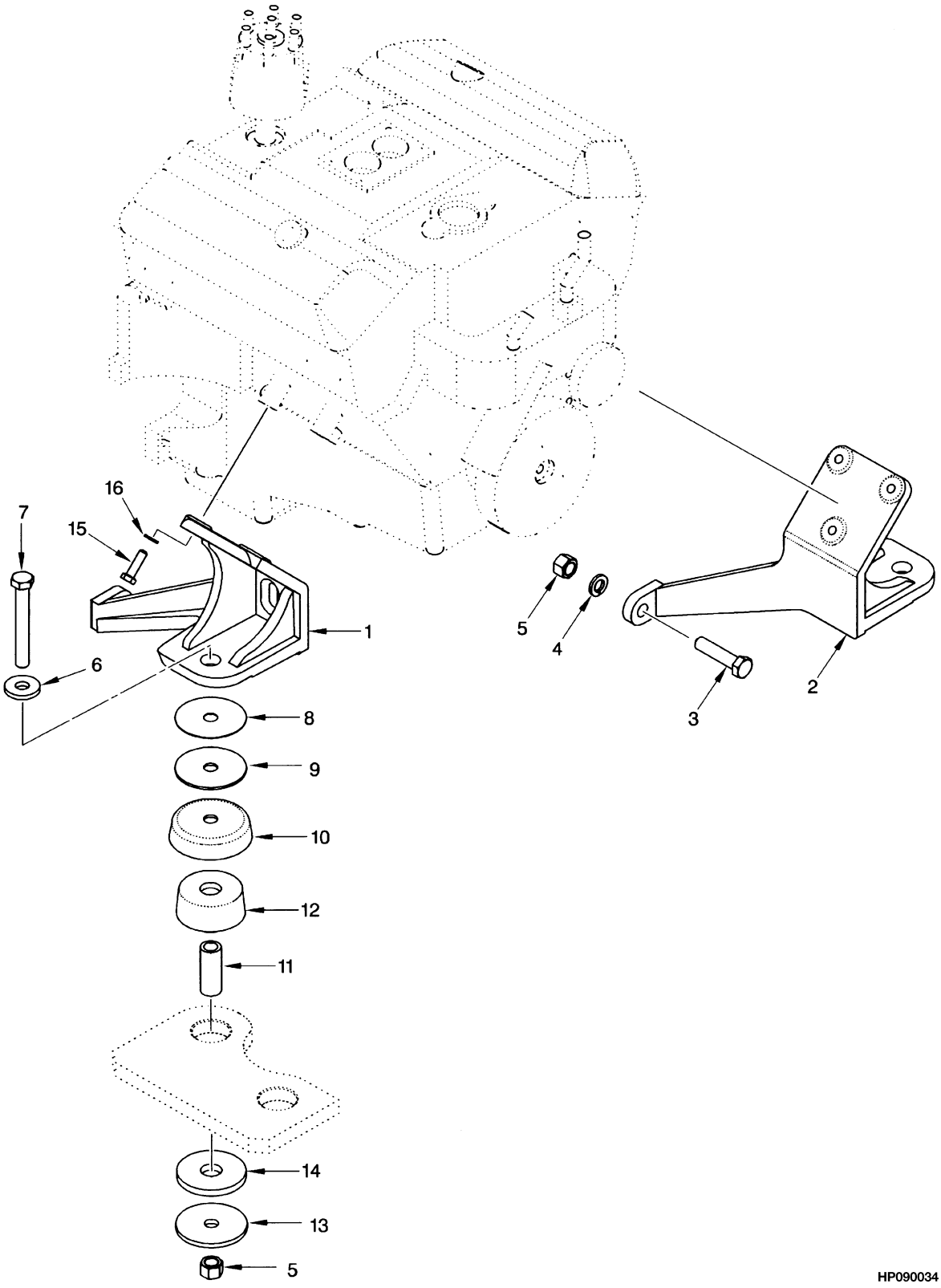



©2004 HYSTER COMPANY

# ENGINE MOUNTING
## GASOLINE AND LPG

| ITEM | PART NO. | DESCRIPTION | QTY |
|---|---|---|---|
| 1 | 1394718 | Mount (LH) | 1 |
| 2 | 1493062 | Mount (RH) | 1 |
| 3 | 293690 | Capscrew | 2 |
| 4 | 292685 | Lockwasher | 2 |
| 5 | 316828 | Nut | 4 |
| 6 | 1357322 | Washer | 2 |
| 7 | 292573 | Capscrew | 2 |
| 8 | 1397762 | Shim (0.039 in.) | AR |
| 9 | 1397761 | Washer | 2 |
| 10 | 1378198 | Snubber Cup | 2 |
| 11 | 1394437 | Spacer | 2 |
| 12 | 1388704 | Isolator | 2 |
| 13 | 1302938 | Washer | 2 |
| 14 | 1394436 | Bumper | 2 |
| 15 | 293630 | Capscrew | 6 |
| 16 | 292682 | Lockwasher | 6 |

©2004 HYSTER COMPANY

# ENGINE ASSEMBLY (Figure 2-21)
## LPG
## 4.3 L EPA COMPLIANT

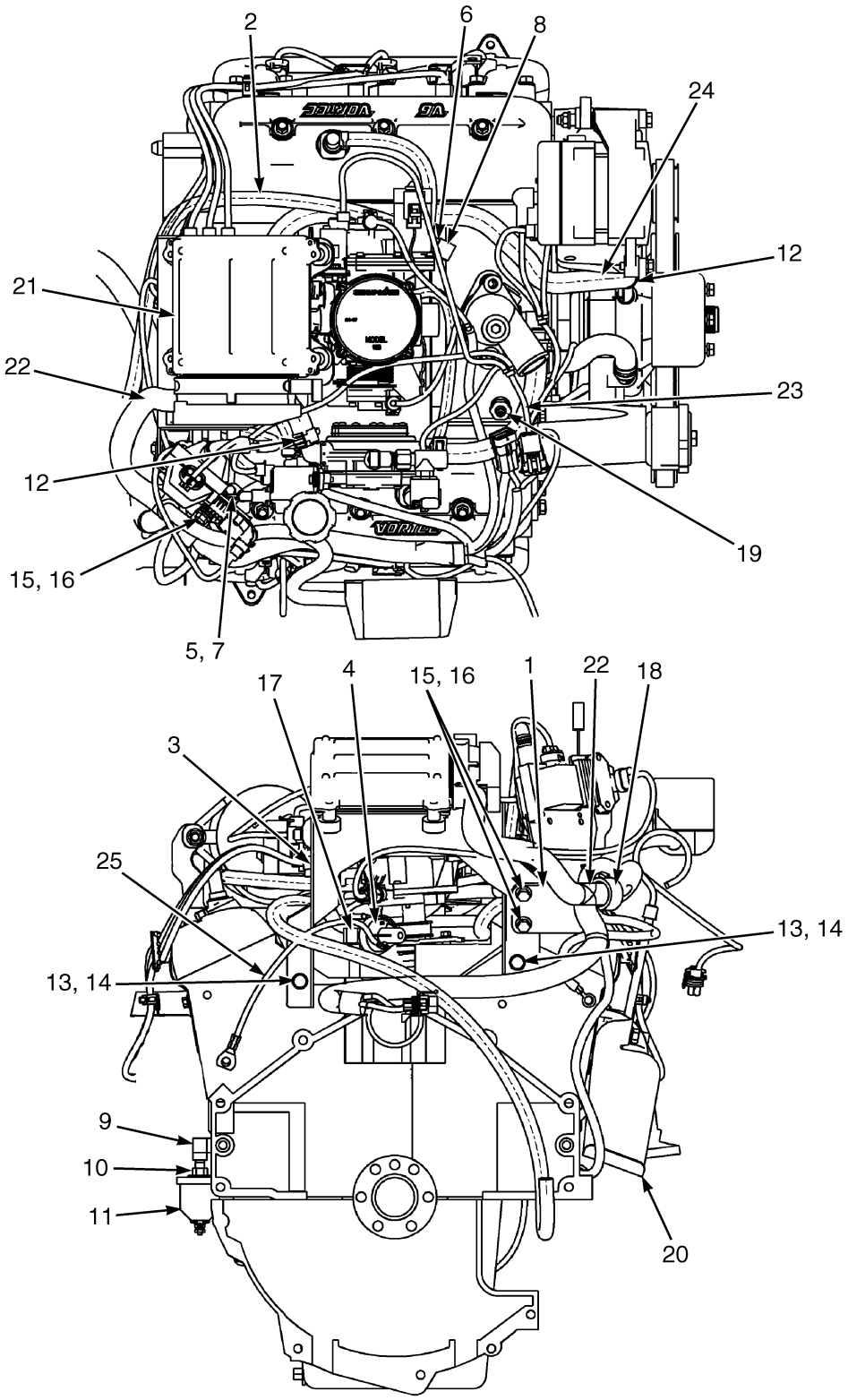


BP090127


©2004 HYSTER COMPANY

# ENGINE ASSEMBLY
## LPG
## 4.3 L EPA COMPLIANT

| ITEM | PART NO. | DESCRIPTION | QTY |
|---|---|---|---|
| 1 | 1548520 | Bracket | 1 |
| 2 | 2037906 | Hose | 1 |
| 3 | 1548244 | Bracket | 1 |
| 4 | 1545857 | Pressure Switch | 1 |
| 5 | 1514429 | Nut (Flange) | 2 |
| 6 | 168718 | Clamp | 1 |
| 7 | 1527877 | Screw | 2 |
| 8 | 201808 | Fitting | 1 |
| 9 | 16167 | Fitting | 1 |
| 10 | 69392 | Fitting | 1 |
| 11 | 1514215 | Oil Pressure Sender | 1 |
| 12 | 1501994 | Clamp | 2 |
| 13 | 18535 | Capscrew | 2 |
| 14 | 15156 | Lockwasher | 2 |
| 15 | 1527880 | Capscrew | 3 |
| 16 | 1502543 | Nut (Flange) | 3 |
| 17 | 1476145 | Fitting | 1 |
| 18 | 166112 | Clamp | 1 |
| 19 | 1319190 | Temperature Sender | 1 |
| 20 | 1502741 | Manifold (☞ Figure 2-23) | 2 |
| 21 | 2063071 | Engine Control Unit | 1 |
| 22 | 2068082 | Wire Harness (Main Engine) | 1 |
| 23 | 2067390 | Wire Harness (LPG Regulator) | 1 |
| 24 | 2066720 | Hose (Coolant) | 1 |
| 25 | 2067573 | Wire Harness (Oil Pressure Ground) | 1 |

©2004 HYSTER COMPANY

# ENGINE ASSEMBLY (Figure 2-22)
## GASOLINE
## 4.3 L EPA COMPLIANT

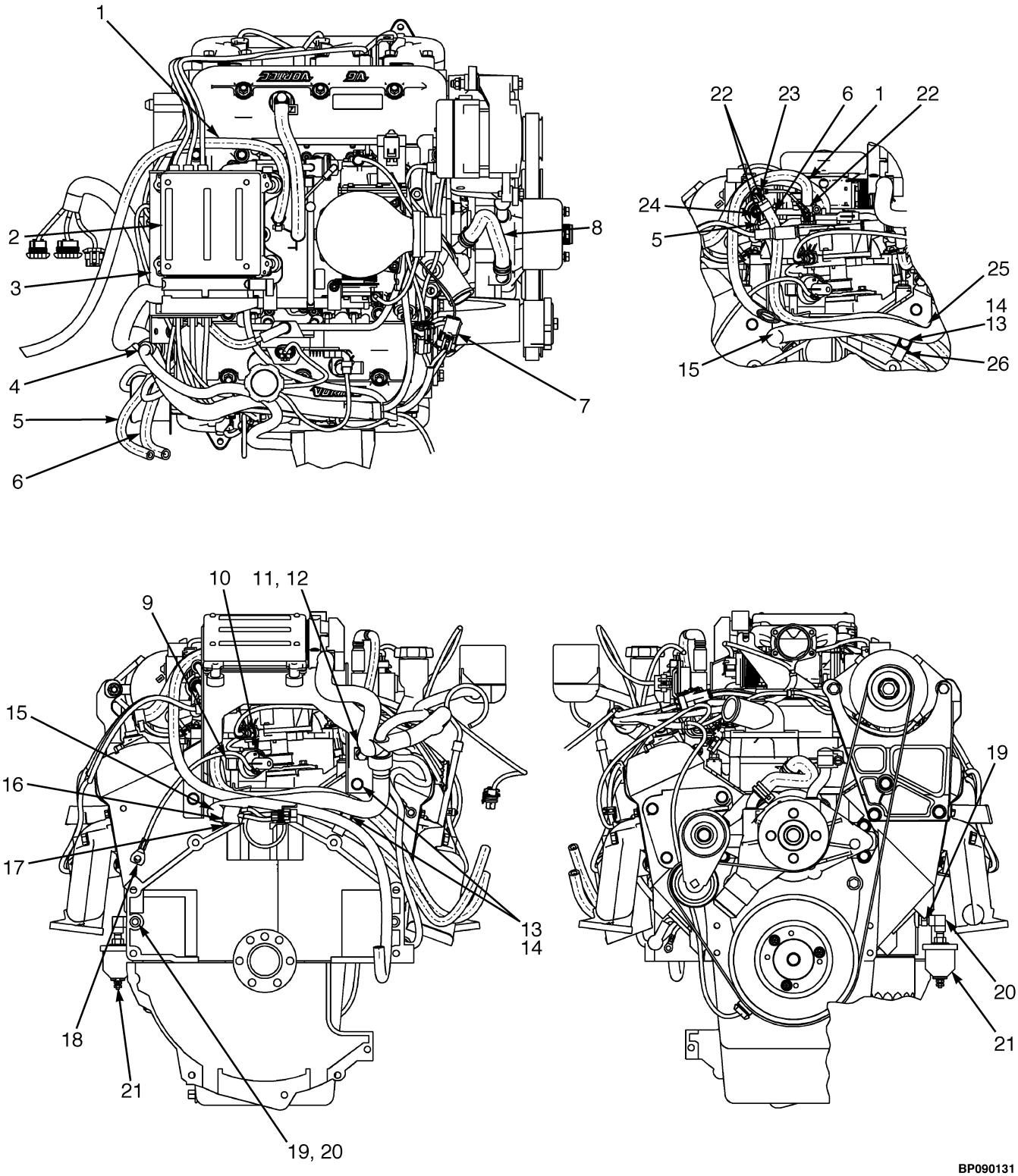



©2004 HYSTER COMPANY

# ENGINE ASSEMBLY
## GASOLINE
## 4.3 L EPA COMPLIANT

| ITEM | PART NO. | DESCRIPTION | QTY |
|---|---|---|---|
| 1 | 2037906 | Hose | 1 |
| 2 | 2063109 | Engine Control Unit | 1 |
| 3 | 1548244 | Bracket | 1 |
| 4 | 2066453 | Wire Harness (Main Engine) | 1 |
| 5 | 2066140 | Hose | 1 |
| 6 | 2065967 | Hose | 1 |
| 7 | 2066454 | Wire Harness (Injector) | 1 |
| 8 | 1401163 | Hose | 1 |
| 9 | 1476145 | Fitting | 1 |
| 10 | 1545857 | Pressure Switch | 1 |
| 11 | 1502543 | Nut (Flange) | 1 |
| 12 | 1527880 | Capscrew | 1 |
| 13 | 18535 | Capscrew | 3 |
| 14 | 15156 | Lockwasher | 9 |
| 15 | 1551680 | Bracket | 1 |
| 16 | 16663 | Capscrew | 1 |
| 17 | 15175 | Washer | 1 |
| 18 | 2067573 | Wire Harness (Oil Pressure Ground) | 1 |
| 19 | 16167 | Fitting | 1 |
| 20 | 69392 | Fitting | 1 |
| 21 | 1514215 | Oil Pressure Sender | 1 |
| 22 | 168718 | Clamp | 3 |
| 23 | 1546285 | Elbow | 1 |
| 24 | 1546283 | Elbow | 1 |
| 25 | 128408 | Clamp | 1 |
| 26 | 113341 | Clamp | 1 |

©2004 HYSTER COMPANY

# EXHAUST MANIFOLD (Figure 2-23)
## GASOLINE AND LPG
## 4.3L EPA COMPLIANT

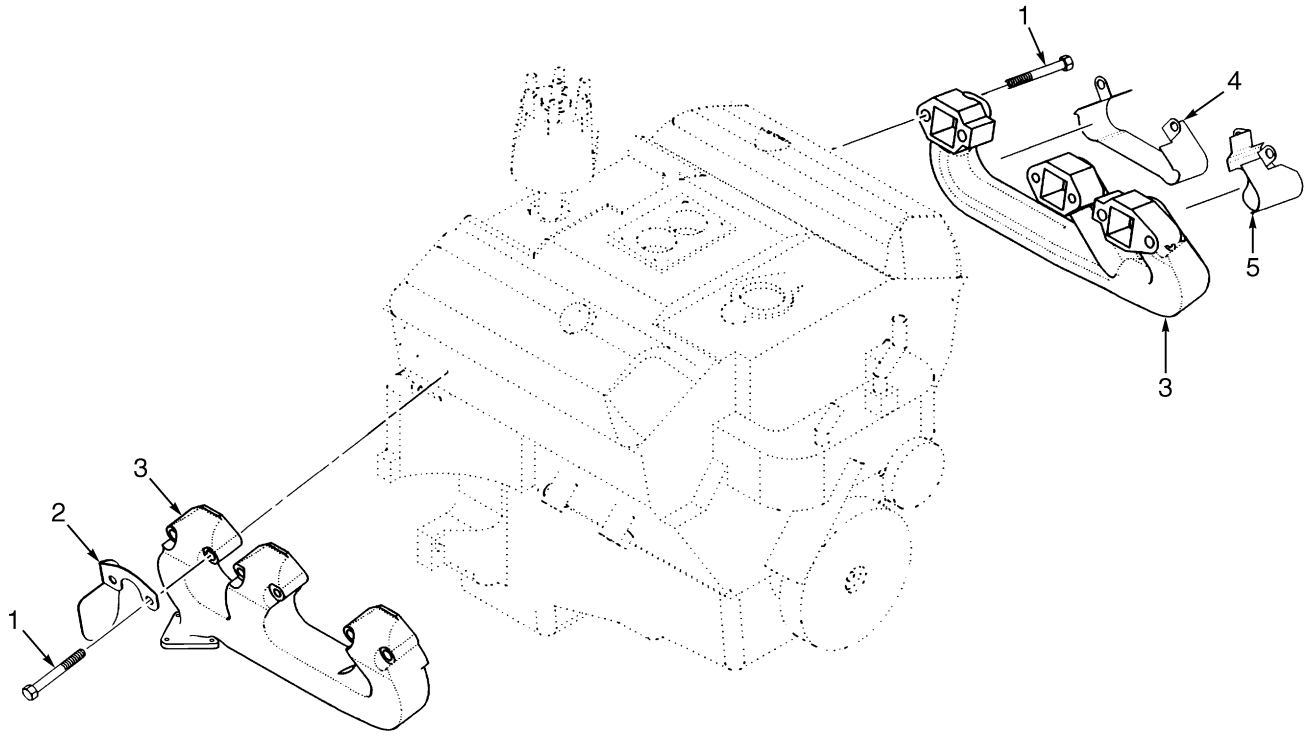


BP090136

| ITEM | PART NO. | DESCRIPTION | QTY |
|---|---|---|---|
| 1 | 1383257 | Bolt | 12 |
| 2 | 1529010 | Shield | 1 |
| 3 | 1502741 | Manifold | 2 |
| 4 | 1316488 | Shield (Spark Plug) | 2 |
| 5 | 1316494 | Shield | 2 |


©2004 HYSTER COMPANY

# NOTES

# CYLINDER BLOCK (Figure 2-24)
## GASOLINE AND LPG
## 4.3L EPA COMPLIANT

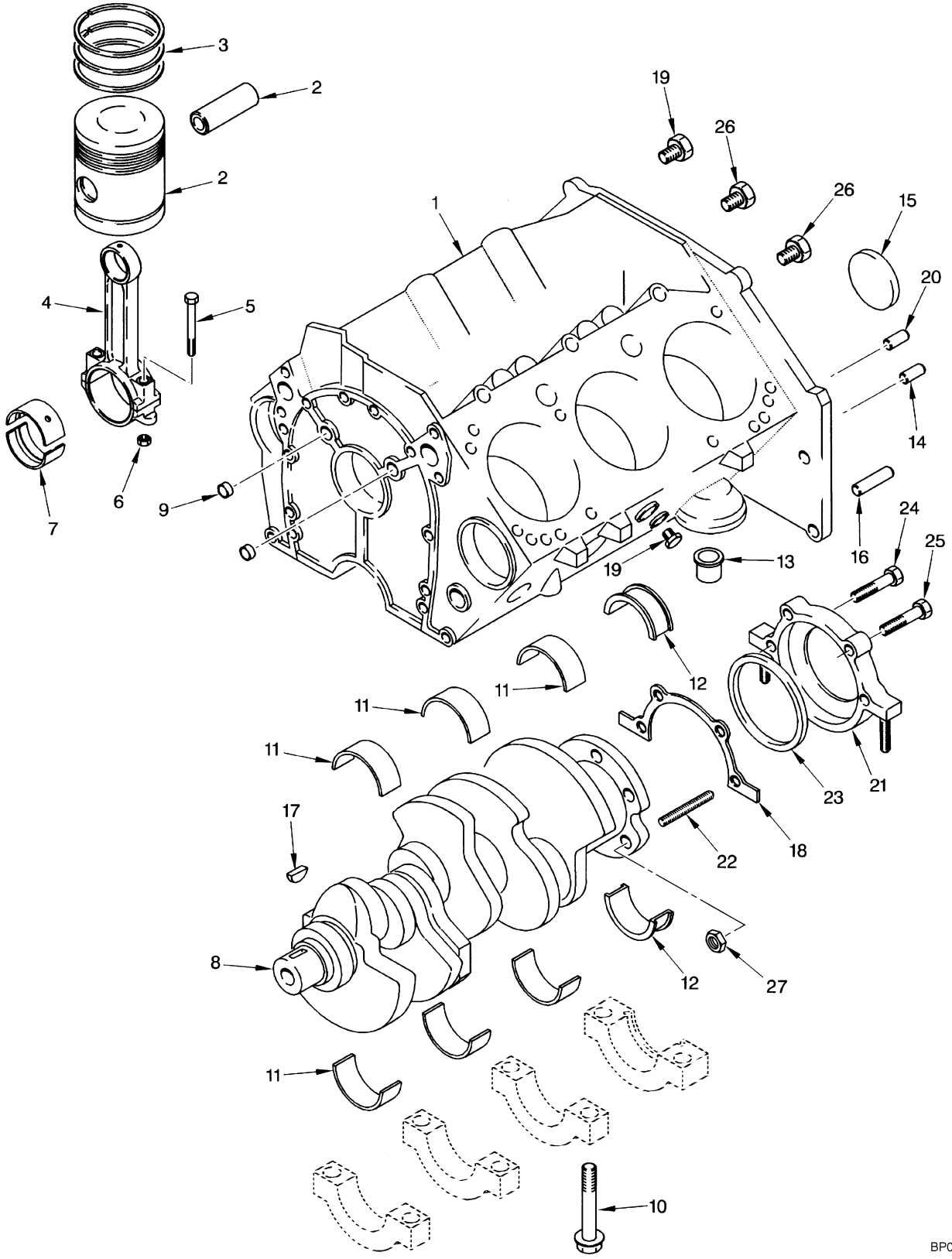



©2004 HYSTER COMPANY

# CYLINDER BLOCK
## GASOLINE AND LPG
## 4.3L EPA COMPLIANT

| ITEM | PART NO. | DESCRIPTION | QTY |
|---|---|---|---|
| | 1543776 | Engine Assembly (Gasoline) | 1 |
| | 1543978 | Engine Assembly (LPG) | 1 |
| 1 | . . . . . | Short Block Assembly | 1 |
| 2 | 1390759 | Piston and Pin Kit (Standard) (Standard) | 6 |
| 2 | 1390760 | Piston and Pin Kit (0,5 mm) | 6 |
| 3 | 1390761 | Piston Ring Kit (Standard) | 6 |
| 3 | 1390765 | Piston Ring Kit (0,5 mm) | 6 |
| 4 | 1360179 | Connecting Rod | 6 |
| 5 | 1360182 | Bolt | 2 |
| 6 | 1330450 | Nut | 2 |
| 7 | 1390770 | Bearing (Connecting Rod) (Standard) | 1 |
| 8 | 1460386 | Crankshaft | 1 |
| 9 | 388302 | Plug (RH) | 3 |
| 10 | 263842 | Bolt | 10 |
| 11 | 1558807 | Crankshaft Bearing Set (Standard) | 3 |
| 11 | 1460738 | Crankshaft Bearing Set (0.020 in.) (Crankshaft) | 3 |
| 12 | 1390773 | Crankshaft Bearing Set (0.001 in.) (Crankshaft) | 1 |
| 13 | 1514968 | Valve | 1 |
| 14 | 159977 | Pin | 4 |
| 15 | 1374313 | Plug | 1 |
| 16 | 1335499 | Pin | 2 |
| 17 | 1451319 | Key | 1 |
| 18 | 1500884 | Gasket | 1 |
| 19 | 1514267 | Plug | 2 |
| 20 | 375601 | Pin | 1 |
| 21 | 1460330 | Retainer Assembly | 1 |
| 22 | 1450555 | Stud | 2 |
| 23 | 1460331 | Seal | 1 |
| 24 | 375575 | Bolt | 1 |
| 25 | 375602 | Bolt | 1 |
| 26 | 1331341 | Plug | 3 |
| 27 | 388313 | Nut | 1 |

©2004 HYSTER COMPANY

# CAMSHAFT AND OIL PAN (Figure 2-25)
## GASOLINE AND LPG
## 4.3L EPA COMPLIANT

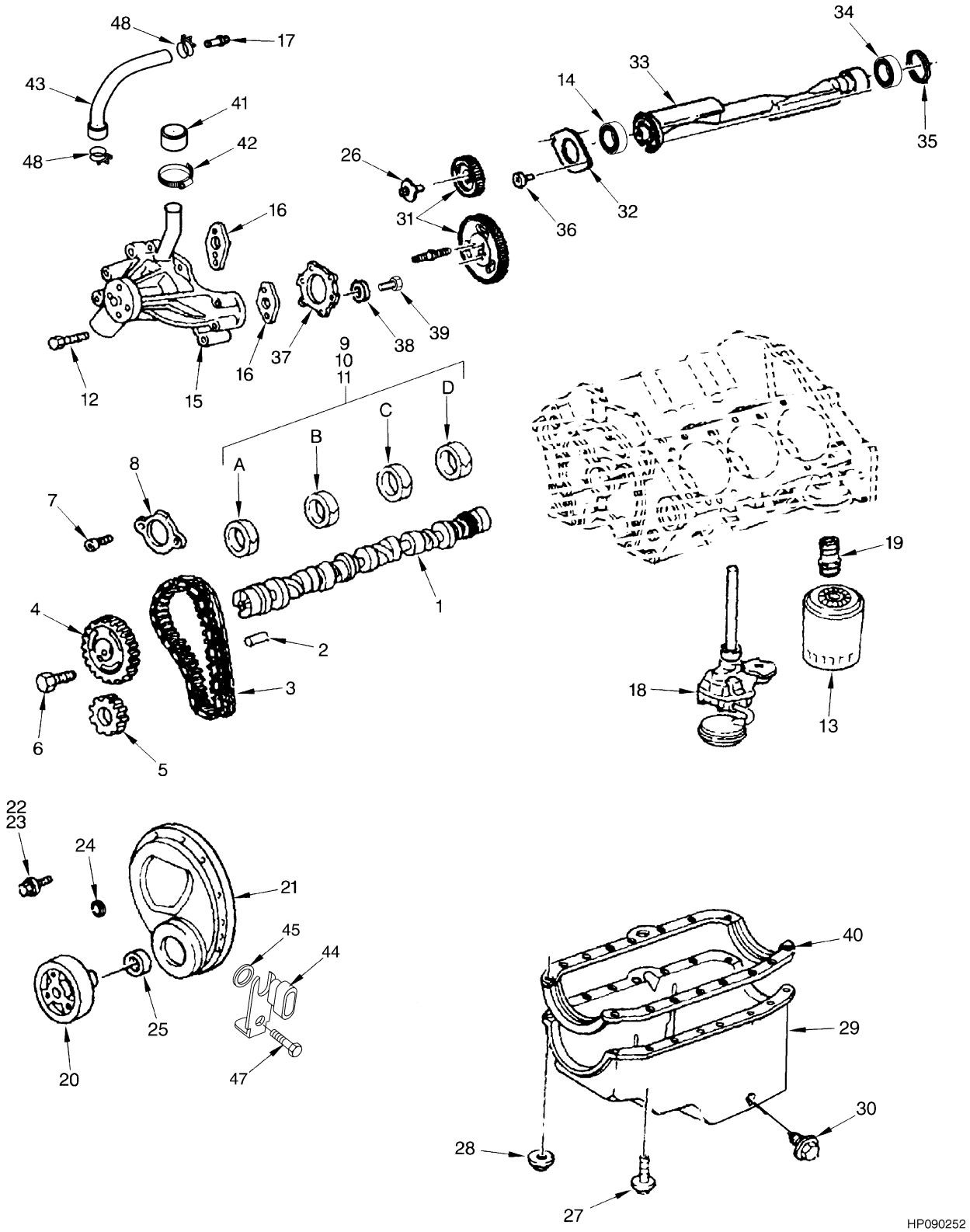



©2004 HYSTER COMPANY

# CAMSHAFT AND OIL PAN
## GASOLINE AND LPG
## 4.3L EPA COMPLIANT

| ITEM | | PART NO. | DESCRIPTION | QTY |
|---|---|---|---|---|
| | | 1543776 | Engine Assembly (Gasoline) | 1 |
| | | 1543978 | Engine Assembly (LPG) | 1 |
| 1 | | 1456111 | Camshaft | 1 |
| 2 | | 1374297 | Pin | 1 |
| 3 | | 1471556 | Chain Kit | 1 |
| 3 | | . . . . . | Timing Chain | 1 |
| 4 | | . . . . . | Sprocket | 1 |
| 5 | | . . . . . | Sprocket | 1 |
| 6 | | 1374301 | Bolt | 3 |
| 7 | | 1374299 | Bolt | 2 |
| 8 | | 1374298 | Retainer | 1 |
| 9 | **b** | 1454955 | Bearing (Position A, D) | 2 |
| 9 | **a** | 1454955 | Bearing (Position A) | 1 |
| 10 | **b** | 1454956 | Bearing (Position C) | 1 |
| 10 | **a** | 1454956 | Bearing (Position B, D) | 2 |
| 11 | **b** | 1454957 | Bearing (Position B) | 1 |
| 11 | **a** | 1454957 | Bearing (Position C) | 1 |
| 12 | | 1383257 | Bolt | 5 |
| 13 | | 1320000 | Oil Filter | 1 |
| 14 | | 1374314 | Bearing | 1 |
| 15 | | 1389100 | Water Pump | 1 |
| 16 | | 263828 | Gasket | 2 |
| 17 | | 1393350 | Nipple | 1 |
| 18 | | 1386176 | Oil Pump (☞ Figure 2-28) | 1 |
| 19 | | 375587 | Fitting | 1 |
| 20 | | 1514969 | Damper | 1 |
| 21 | | 1514268 | Cover | 1 |
| 22 | | 1386179 | Bolt | 4 |
| 23 | | 1377103 | Bolt | 2 |
| 24 | | 1389092 | Grommet | 6 |
| 25 | | 1377104 | Seal | 1 |
| 26 | | 1374317 | Bolt | 6 |
| 27 | | 1386183 | Bolt | 10 |
| 28 | | 1360178 | Nut | 1 |
| 29 | | 1471558 | Oil Pan | 1 |
| 30 | | 1460757 | Screw | 1 |
| 30 | | 1460758 | Seal | 1 |
| 31 | | 1374315 | Gear Kit | 1 |
| 32 | | 1374326 | Retainer | 1 |
| 33 | | 1377107 | Shaft | 1 |
| 34 | | 1451321 | Bearing | 1 |
| 35 | | 1374313 | Plug | 2 |
| 36 | | 1339963 | Bolt | 2 |
| 37 | | 1460322 | Gasket | 1 |
| 38 | | 369748 | Washer | 6 |
| 39 | | 1374108 | Bolt | 10 |
| 40 | | 1386184 | Gasket | 1 |
| 41 | | 1383263 | Cap | 1 |
| 42 | | 130845 | Clamp | 1 |
| 43 | | 1401163 | Hose | 1 |

©2004 HYSTER COMPANY

# CAMSHAFT AND OIL PAN
## GASOLINE AND LPG
## 4.3L EPA COMPLIANT

| ITEM | PART NO. | DESCRIPTION | QTY |
|---|---|---|---|
| 44 | 1514963 | Sensor | 1 |
| 45 | 1514964 | O-Ring | 1 |
| 46 | 1514961 | Insert (Not Illustrated) | 1 |
| 47 | 1514965 | Bolt | 1 |
| 48 | 1471560 | Clamp | 2 |
| | 1460768 | Bearing Kit (Includes Items 9-11) | 1 |
| | 1454974 | Bearing Kit (Includes Items 9-11) | 1 |

**FOOTNOTES:**

**a** GM Identifcation Number on Left Side of Rear Transmission Housing Starts with "A" Followed by 8 Digits

**b** GM Identification Number on Left Side of Rear Transmission Housing is 8 Digits


©2004 HYSTER COMPANY

# NOTES

# VALVE COVER AND INLET MANIFOLD (Figure 2-26)
## GASOLINE AND LPG
## 4.3L EPA COMPLIANT

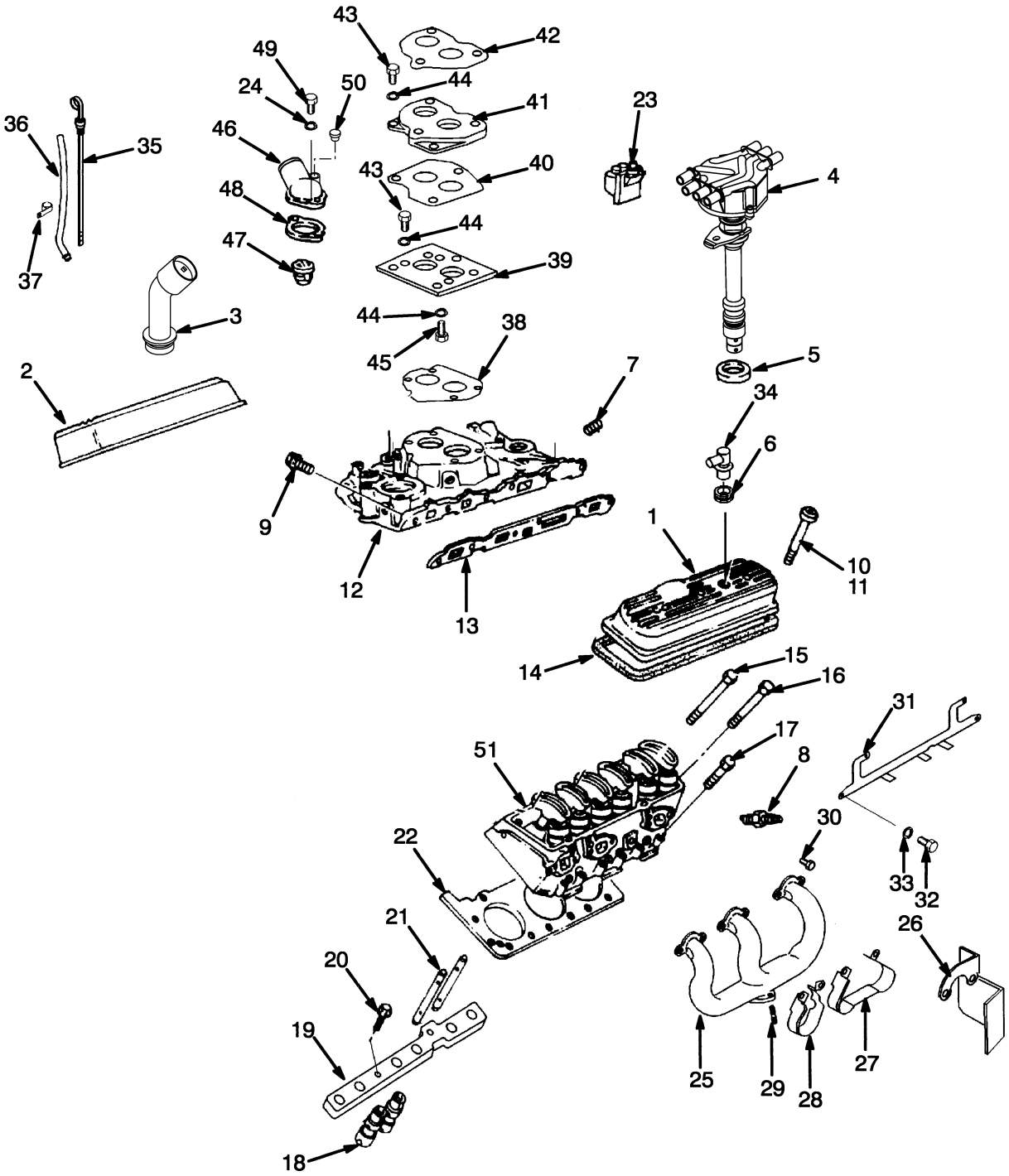


HP091048


©2004 HYSTER COMPANY

# VALVE COVER AND INLET MANIFOLD
## GASOLINE AND LPG
## 4.3L EPA COMPLIANT

| ITEM | PART NO. | DESCRIPTION | QTY |
|---|---|---|---|
| | 1543776 | Engine Assembly (Gasoline) | 1 |
| | 1543978 | Engine Assembly (LPG) | 1 |
| 1 | 1386185 | Valve Cover (RH) | 1 |
| 2 | 1389102 | Valve Cover (LH) | 1 |
| 3 | 1552141 | Oil Filler | 1 |
| 4 | 1559695 | Distributor | 1 |
| 5 | 1334423 | Gasket | 1 |
| 6 | 1374288 | Grommet | 3 |
| 7 | 1331341 | Plug (LPG) | 1 |
| 8 | 1389133 | Spark Plug | 6 |
| 8 | 1452376 | Spark Plug (Optional) | 6 |
| 9 | 1389093 | Bolt (LPG) | 8 |
| 10 | 1383904 | Grommet | 6 |
| 11 | 1374289 | Bolt | 6 |
| 12 | 1386186 | Manifold (Intake) (LPG) | 1 |
| 12 | . . . . . | Manifold (Intake) (Gasoline) (☞ Figure 2-29) | 1 |
| 13 | 1386187 | Gasket (LPG) | 1 |
| 14 | 1374293 | Gasket | 2 |
| 15 | 1377792 | Bolt | 10 |
| 16 | 1377793 | Bolt | 4 |
| 17 | 1377794 | Bolt | 10 |
| 18 | 1471559 | Lifter Assembly | 12 |
| 19 | 1389050 | Guide | 2 |
| 20 | 1389051 | Bolt | 2 |
| 21 | 1386189 | Push Rod | 12 |
| 22 | 1460333 | Gasket Kit (Cylinder Head) | 1 |
| 23 | 1386191 | Ignition Coil | 1 |
| 24 | 15156 | Lockwasher | 12 |
| 25 | 1502741 | Manifold | 1 |
| 26 | 1529010 | Shield | 1 |
| 27 | 1316488 | Shield | 2 |
| 28 | 1316494 | Shield | 2 |
| 29 | 1398105 | Stud | 3 |
| 30 | 1383257 | Bolt | 12 |
| 31 | 1383241 | Support | 1 |
| 32 | 133469 | Capscrew | 3 |
| 33 | 15154 | Lockwasher | 4 |
| 34 | 379407 | Fitting | 1 |
| 35 | 1510649 | Dipstick | 1 |
| 36 | 1514915 | Tube | 1 |
| 37 | 133696 | Clamp | 1 |
| 38 | 1383237 | Gasket | 1 |
| 39 | 1383211 | Plate | 1 |
| 40 | 1383213 | Gasket | 1 |
| 41 | 1383239 | Spacer | 1 |
| 42 | 1333806 | Gasket | 1 |
| 43 | 16836 | Capscrew | 7 |
| 44 | 15155 | Lockwasher | 10 |
| 45 | 16394 | Capscrew | 1 |
| 46 | 1317468 | Outlet | 1 |

©2004 HYSTER COMPANY

# VALVE COVER AND INLET MANIFOLD
## GASOLINE AND LPG
## 4.3L EPA COMPLIANT

| ITEM | PART NO. | DESCRIPTION | QTY |
|---|---|---|---|
| 47 | 1450696 | Thermostat | 1 |
| 48 | 1330725 | Gasket | 1 |
| 49 | 16598 | Capscrew | 2 |
| 50 | 15962 | Fitting | 3 |


©2004 HYSTER COMPANY

# NOTES

# CYLINDER HEAD (Figure 2-27)
## GASOLINE AND LPG
## 4.3L EPA COMPLIANT

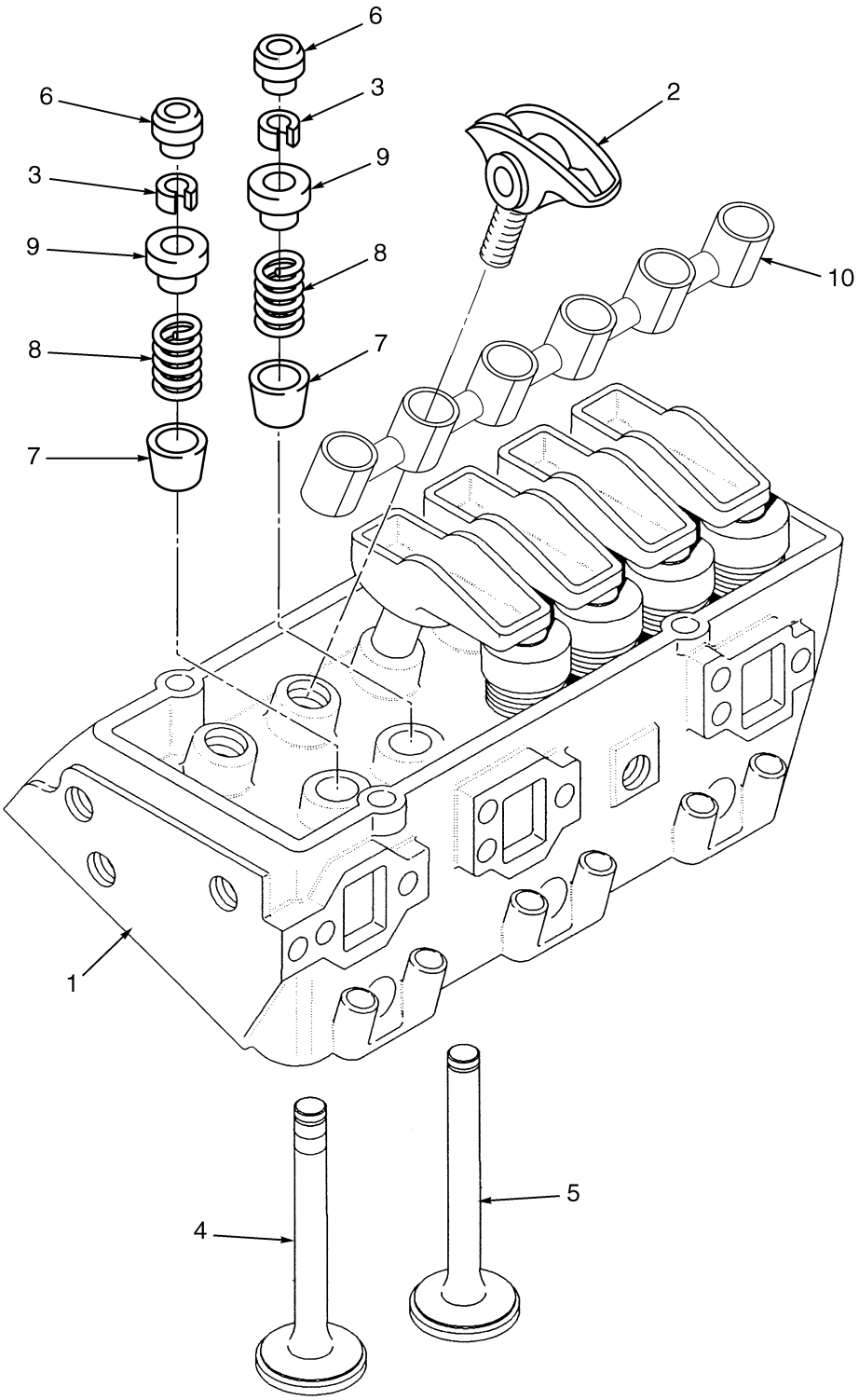


HP090254


©2004 HYSTER COMPANY

# CYLINDER HEAD
## GASOLINE AND LPG
## 4.3L EPA COMPLIANT

| ITEM | PART NO. | DESCRIPTION | QTY |
|---|---|---|---|
| | 1543776 | Engine Assembly (Gasoline) | 1 |
| | 1543978 | Engine Assembly (LPG) | 1 |
| 1 | 1471557 | Cylinder Head (Gasoline) | 2 |
| 1 | 1482700 | Cylinder Head (LPG) | 2 |
| 2 | 1471555 | Rocker Arm | 12 |
| 2 | 1389051 | Bolt | 4 |
| 3 | 1377110 | Key (Valve) | 24 |
| 4 | 1386194 | Exhaust Valve (Gasoline) | 6 |
| 4 | 1482701 | Exhaust Valve (LPG) | 6 |
| 5 | 1386195 | Inlet Valve | 6 |
| 6 | 1393127 | Cap | 12 |
| 7 | 1386197 | Seal | 12 |
| 8 | 1386198 | Spring | 12 |
| 9 | 1460384 | Seal | 12 |
| 10 | 1489643 | Pivot Support (Rocker Arm) | 2 |

©2004 HYSTER COMPANY

# OIL PUMP (Figure 2-28)
## GASOLINE AND LPG
## 4.3L EPA COMPLIANT

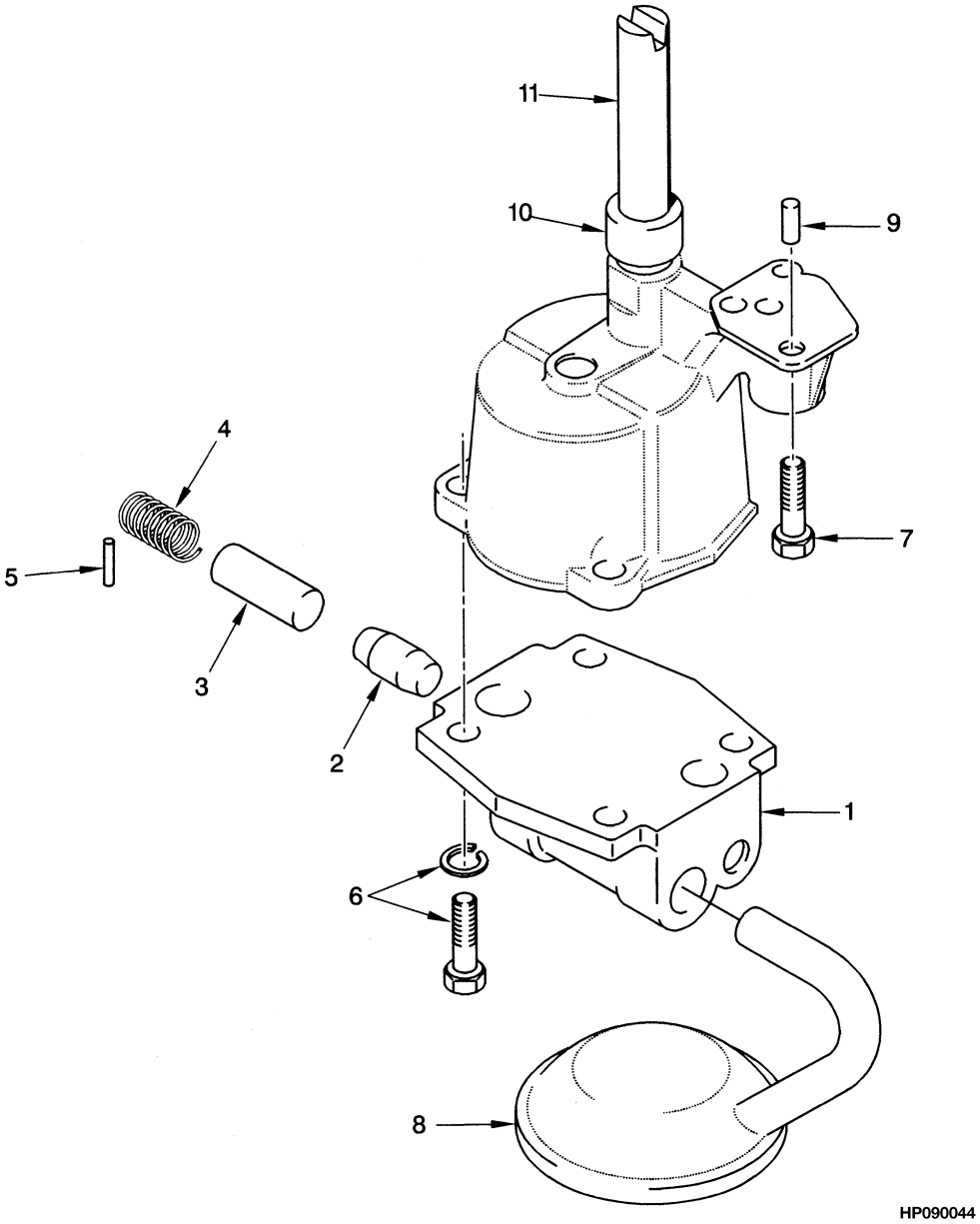



©2004 HYSTER COMPANY

# OIL PUMP
## GASOLINE AND LPG
## 4.3L EPA COMPLIANT

| ITEM | PART NO. | DESCRIPTION | QTY |
|---|---|---|---|
| | 1543776 | Engine Assembly (Gasoline) | 1 |
| | 1543978 | Engine Assembly (LPG) | 1 |
| | 1386176 | Oil Pump | 1 |
| 1 | 1374319 | Cover | 1 |
| 2 | 1338223 | Stop | 1 |
| 3 | 268573 | Regulator Valve | 1 |
| 4 | 1374320 | Spring | 1 |
| 5 | 1330453 | Pin | 1 |
| 6 | 1333541 | Screw and Washer | 2 |
| 7 | 388306 | Bolt | 1 |
| 8 | 1386177 | Screen | 1 |
| 9 | 1450941 | Pin | 2 |
| 10 | 263795 | Retainer | 1 |
| 11 | 263794 | Shaft | 1 |

©2004 HYSTER COMPANY

# INTAKE MANIFOLD AND FUEL RAIL (Figure 2-29)
## GASOLINE
## 4.3 L EPA COMPLIANT

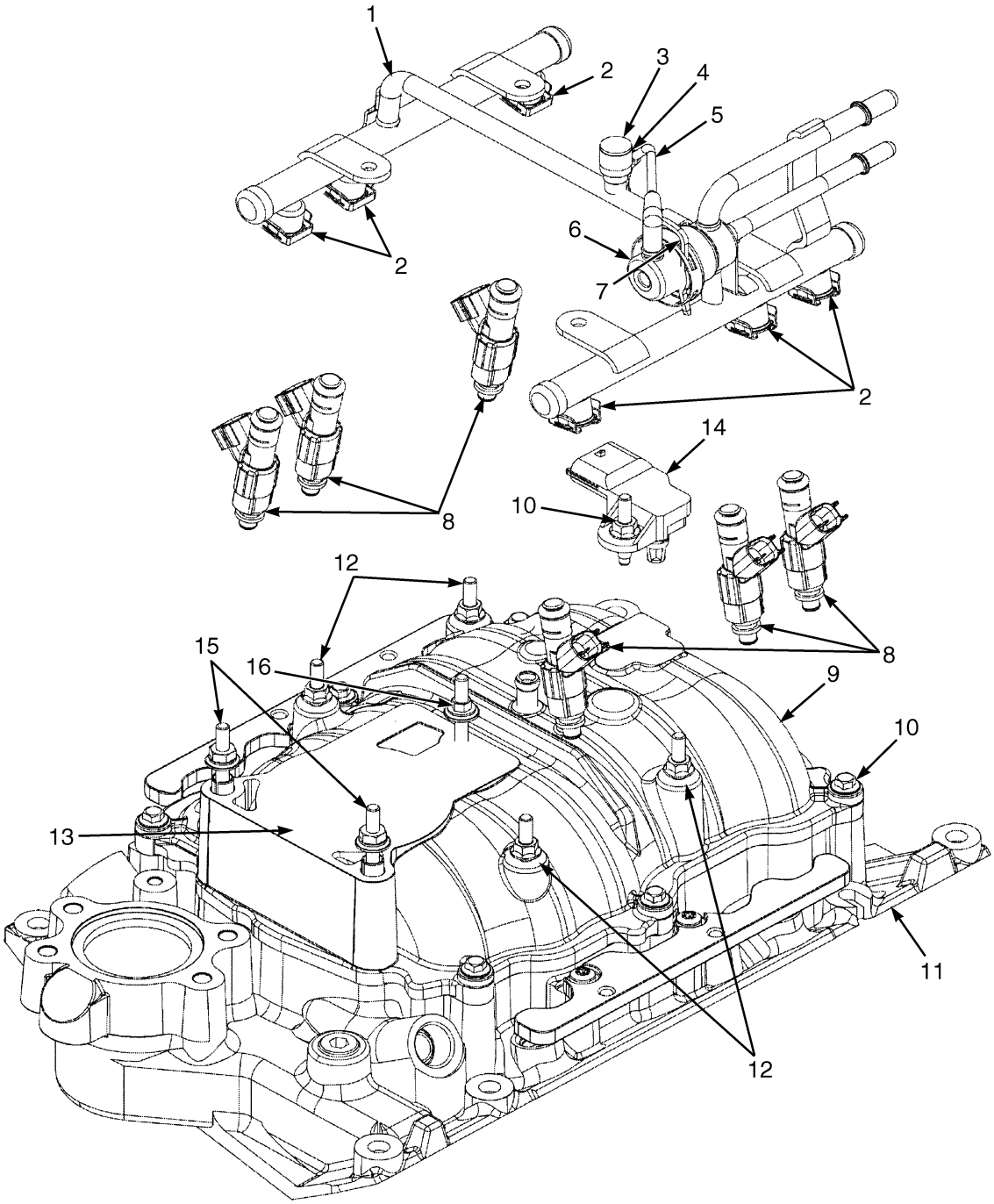


BP090124


©2004 HYSTER COMPANY

# INTAKE MANIFOLD AND FUEL RAIL
## GASOLINE
## 4.3 L EPA COMPLIANT

| ITEM | PART NO. | DESCRIPTION | QTY |
|---|---|---|---|
| | 1543776 | Engine Assembly (Gasoline) | 1 |
| 1 | 1559556 | Fuel Rail | 1 |
| 2 | 1559557 | Clip | 6 |
| 3 | 1559558 | Cap | 1 |
| 4 | 1559559 | Pressure Valve | 1 |
| 5 | 1559560 | Hose | 1 |
| 6 | 1559561 | Regulator | 1 |
| 7 | 1559562 | Retainer | 1 |
| 8 | 1559563 | Injector | 6 |
| 9 | 1559564 | Manifold (Upper) | 1 |
| 10 | 1358545 | Bolt | 7 |
| 11 | 1559565 | Manifold (Lower) | 1 |
| 12 | 1559566 | Stud | 4 |
| 13 | 1559570 | Gasket | 1 |
| 14 | 1559567 | Sensor (TMAP) | 1 |
| 15 | 1559568 | Bolt | 2 |
| 16 | 1559569 | Bolt | 1 |

©2004 HYSTER COMPANY

# DRIP SHIELD (Figure 2-30)
## GASOLINE AND LPG
## 4.3L EPA COMPLIANT

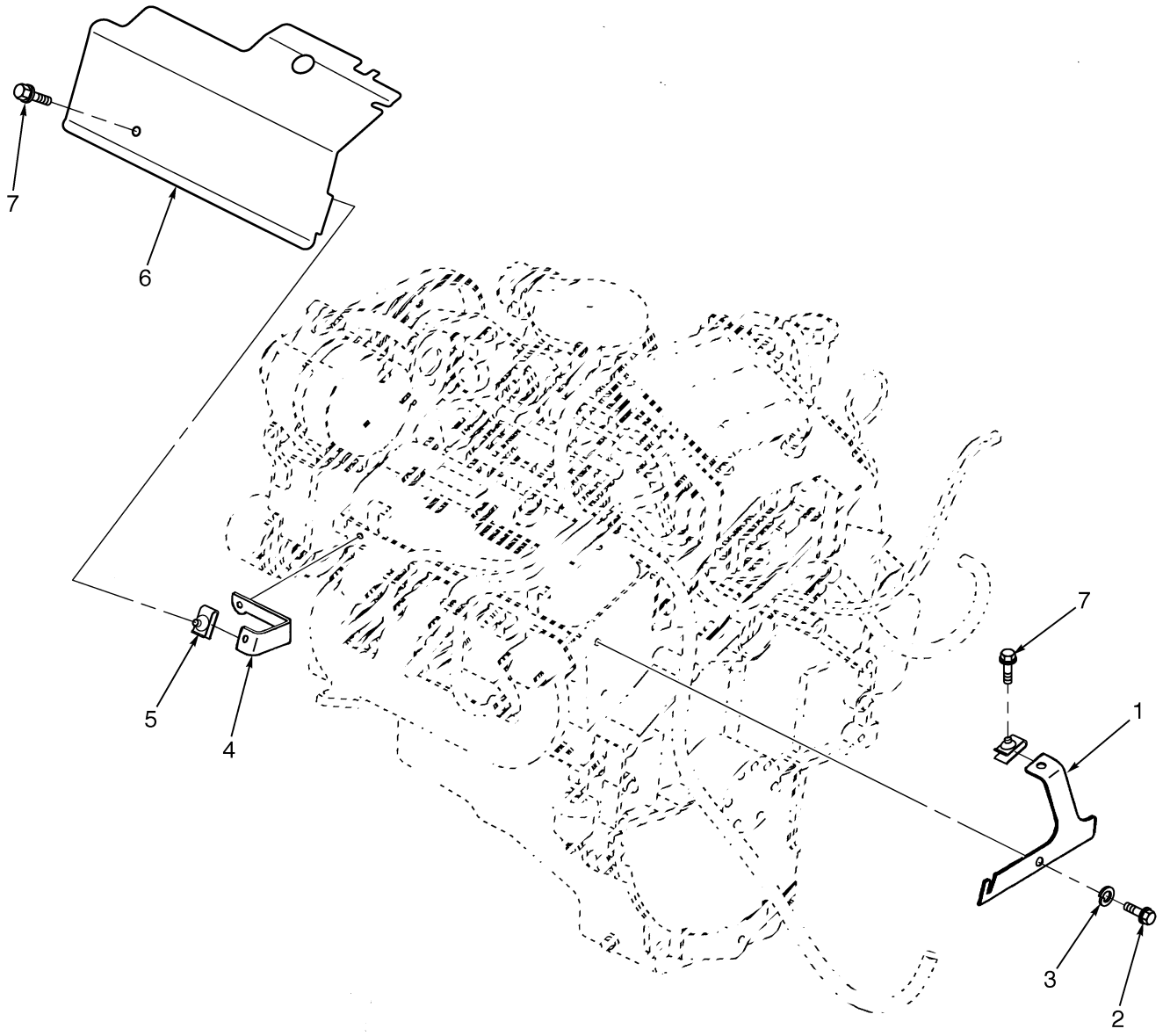


BP090095


©2004 HYSTER COMPANY

# DRIP SHIELD
## GASOLINE AND LPG
## 4.3L EPA COMPLIANT

| ITEM | PART NO. | DESCRIPTION | QTY |
|---|---|---|---|
| 1 | 1544555 | Bracket (Shield) | 1 |
| 2 | 220589 | Screw | 1 |
| 3 | 15156 | Lockwasher | 1 |
| 4 | 1551410 | Bracket (Shield) | 1 |
| 5 | 325182 | Nut | 2 |
| 6 | 1401178 | Drip Shield | 1 |
| 7 | 1534417 | Capscrew | 2 |

©2004 HYSTER COMPANY

# NOTES

# 3 FUEL SYSTEM

# SECTION 3
# FUEL SYSTEM


| DESCRIPTION | PAGE |
|---|---|
| AIR FILTER | |
| DIESEL TIER II | 3-4 |
| GAS AND LPG | 3-18 |
| AIR INTAKE AND FILTER SYSTEM | |
| DIESEL TIER II | 3-2 |
| GAS AND LPG | 3-16 |
| ENGINE FUEL SYSTEM | |
| 4.3 L EPA COMPLIANT | |
| LPG | 3-22 |
| FUEL FILTER | |
| DIESEL TIER II | 3-14 |
| FUEL FILTER AND SENDER | |
| DIESEL TIER II | 3-12 |
| FUEL PUMP AND WATER SEPERATOR | |
| DIESEL TIER II | 3-8 |
| FUEL SUPPLY SYSTEM | |
| DIESEL TIER II | 3-6 |
| GASOLINE | 3-28 |
| LPG | 3-20 |
| LPG REGULATOR | |
| 4.3 L EPA COMPLIANT | 3-26 |
| LPG TANK BRACKET | |
| FIXED | 3-32 |
| SWING OUT | 3-34 |
| SWING OUT/DROP DOWN | 3-36 |
| MONOTROL PEDAL | 3-48 |
| MONOTROL PEDAL AND BRACKET ASSEMBLY | 3-46 |
| THROTTLE ARM ASSEMBLY | 3-42 |
| THROTTLE BODY AND LPG MIXER | |
| 4.3 L EPA COMPLIANT | 3-24 |
| THROTTLE BODY ASSEMBLY | |
| 4.3 L EPA COMPLIANT | |
| GASOLINE | 3-30 |
| THROTTLE LINKAGE | |
| DIESEL TIER II | 3-44 |
| GASOLINE AND LPG | |
| FORWARD AND REVERSE LEVER | 3-38 |
| MONOTROL PEDAL | 3-40 |
| WATER SEPARATOR | |
| DIESEL TIER II | 3-10 |


©2004 HYSTER COMPANY

# AIR INTAKE AND FILTER SYSTEM (Figure 3-1)
## DIESEL TIER II

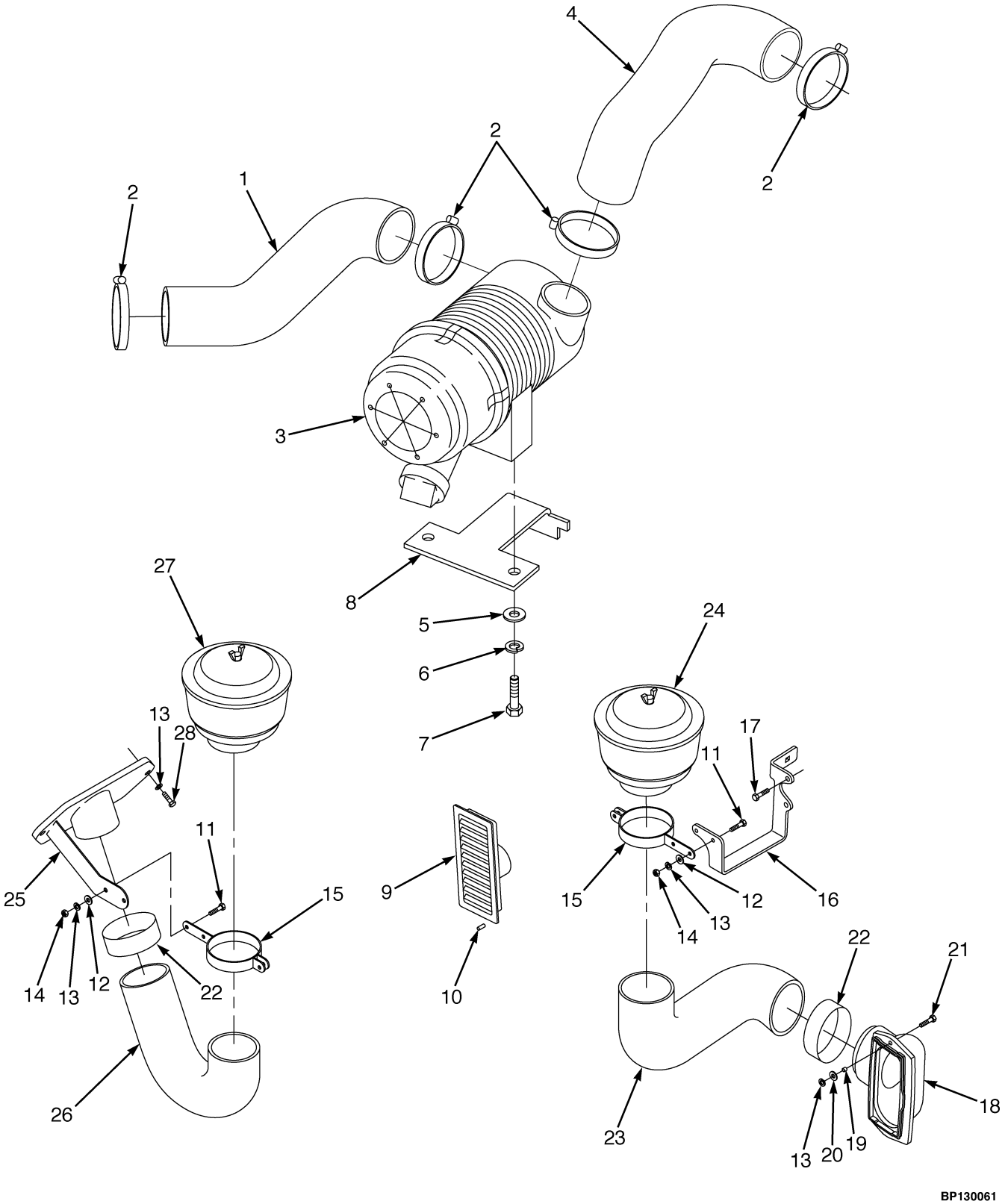



©2004 HYSTER COMPANY

# AIR INTAKE AND FILTER SYSTEM
## DIESEL TIER II

**KEY:**
**A: Standard**
**B: Heavy Duty**

| ITEM | | PART NO. | DESCRIPTION | QTY A | QTY B |
|---|---|---|---|---|---|
| 1 | | 2060461 | Hose | 1 | 1 |
| 2 | | 115696 | Clamp | 4 | 4 |
| 3 | | 2035621 | Air Filter (☞ Figure 3-2) | 1 | 1 |
| 3 | | 1462439 | Filter Element | 1 | 1 |
| 3 | | 1462441 | Cover | 1 | 1 |
| 3 | | 374923 | Valve | 1 | 1 |
| 3 | | 1462442 | Plug | 1 | 1 |
| 4 | | 1390110 | Hose | 1 | 1 |
| 5 | | 320157 | Washer | 2 | 2 |
| 6 | | 292681 | Lockwasher | 2 | 2 |
| 7 | | 136681 | Capscrew | 2 | 2 |
| 8 | | 1543536 | Bracket (Air Filter Mount) | 1 | 1 |
| 9 | | 2036475 | Grill | 1 | .. |
| 10 | | 1509037 | Plug | 2 | .. |
| 11 | | 302263 | Screw | .. | 3 |
| 11 | **a** | 302263 | Screw | .. | 3 |
| 12 | | 320156 | Washer | .. | 3 |
| 12 | **a** | 320156 | Washer | .. | 3 |
| 13 | | 292680 | Lockwasher | .. | 5 |
| 13 | **a** | 292680 | Lockwasher | .. | 5 |
| 14 | | 136687 | Nut | .. | 3 |
| 14 | **a** | 136687 | Nut | .. | 3 |
| 15 | | 1397989 | Band | .. | 1 |
| 15 | **a** | 1397989 | Band | .. | 2 |
| 16 | | 1397988 | Bracket | .. | 1 |
| 17 | | 316678 | Screw | .. | 2 |
| 18 | | 1497559 | Pre-Cleaner Port | .. | 1 |
| 19 | | 1498097 | Spacer | .. | 2 |
| 20 | | 197068 | Washer | .. | 2 |
| 21 | | 287816 | Capscrew | .. | 2 |
| 22 | | 1398002 | Clamp | .. | 1 |
| 22 | **a** | 1398002 | Clamp | .. | 1 |
| 23 | | 1397987 | Hose | .. | 1 |
| 24 | | 291974 | Pre-Cleaner | .. | 1 |
| 25 | **a** | 1392814 | Bracket | .. | 1 |
| 26 | **a** | 1392799 | Hose | .. | 2 |
| 27 | **a** | 1301167 | Pre-Cleaner | .. | 1 |
| 28 | **a** | 292501 | Capscrew | .. | 2 |

**FOOTNOTES:**
**a** With CAB

©2004 HYSTER COMPANY

# AIR FILTER (Figure 3-2)
## DIESEL TIER II

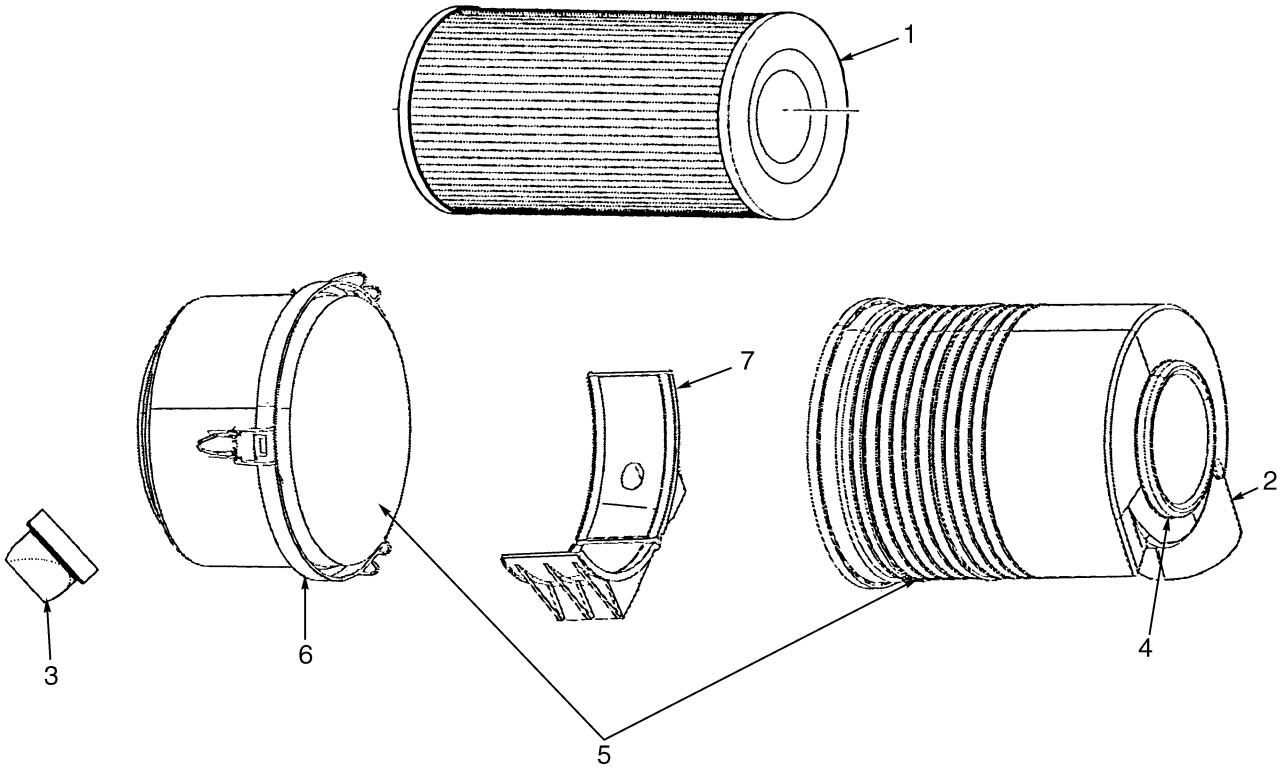


BP130038


©2004 HYSTER COMPANY

# AIR FILTER
## DIESEL TIER II

| ITEM | PART NO. | DESCRIPTION | QTY |
|---|---|---|---|
| | 2035621 | Air Filter | 1 |
| 1 | 1462439 | Filter Element | 1 |
| 2 | 1462441 | Cover | 1 |
| 3 | 374923 | Valve | 1 |
| 4 | 1462442 | Plug | 1 |
| 5 | . . . . . | Body | 1 |
| 6 | . . . . . | Clamp | 1 |
| 7 | . . . . . | Bracket | 1 |

©2004 HYSTER COMPANY

# FUEL SUPPLY SYSTEM (Figure 3-3)
## DIESEL TIER II

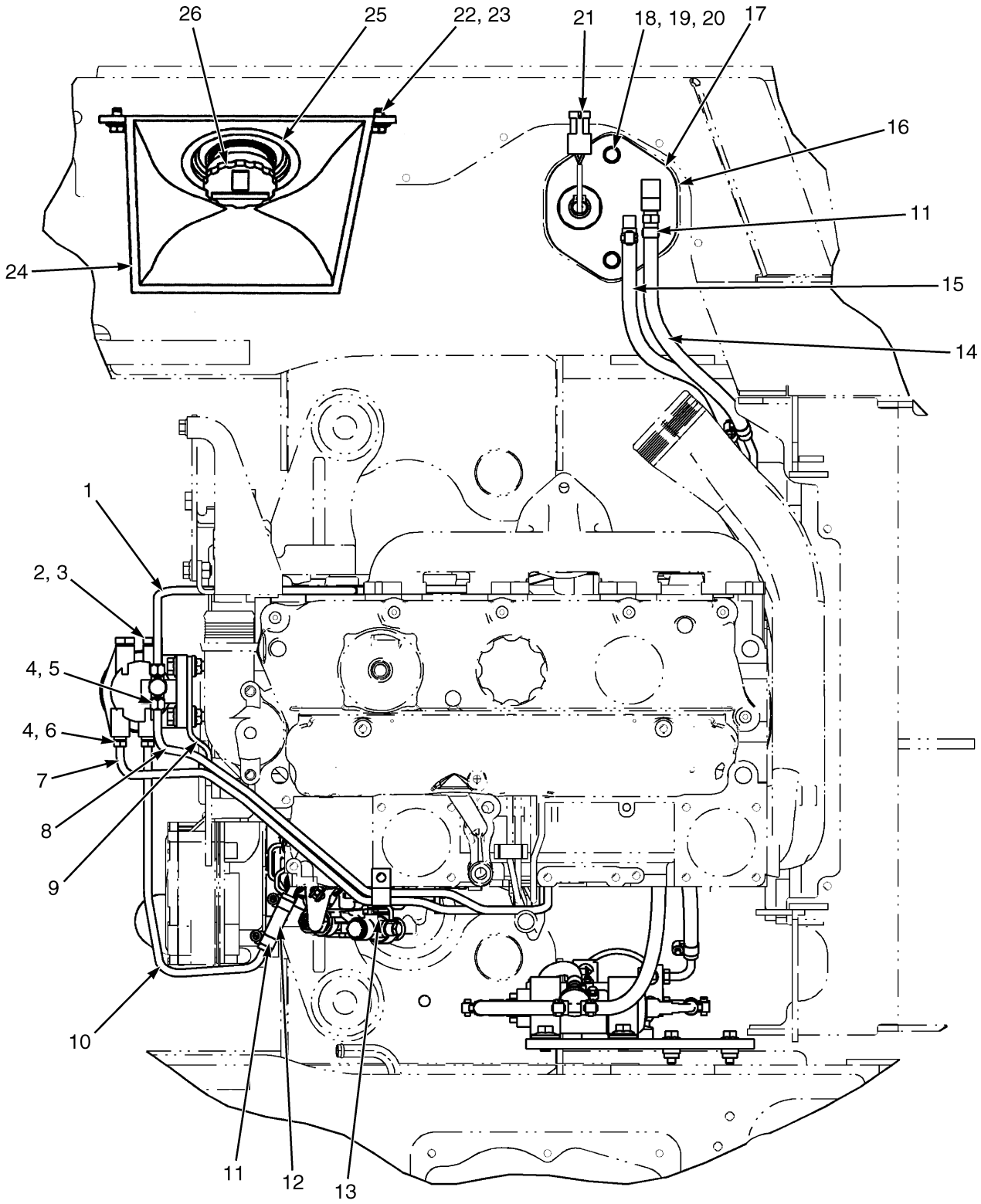


BP130078


©2004 HYSTER COMPANY

# FUEL SUPPLY SYSTEM
## DIESEL TIER II

| ITEM | PART NO. | DESCRIPTION | QTY |
|---|---|---|---|
| 1 | 1551403 | Tube | 1 |
| 2 | 1559422 | Washer | 2 |
| 3 | 173941 | Plug | 2 |
| 4 | 16177 | Fitting | 4 |
| 5 | 14773 | Fitting | 2 |
| 6 | 16100 | Fitting | 2 |
| 7 | 1551404 | Tube | 1 |
| 8 | 1551402 | Tube | 1 |
| 9 | 1557629 | Bracket | 1 |
| 10 | 1551401 | Tube | 1 |
| 11 | 168718 | Clamp | 6 |
| 12 | 878989 | Hose | 1 |
| 13 | 1399381 | Clamp | 1 |
| 14 | 1458456 | Hose | 1 |
| 15 | 193656 | Hose | 1 |
| 16 | 1343449 | Seal | 1 |
| 17 | 1559058 | Fuel Sender Assembly (☞ Figure 3-6) | 1 |
| 18 | 353000 | O-Ring | 2 |
| 19 | 320157 | Washer | 2 |
| 20 | 1339779 | Screw | 2 |
| 21 | 1371166 | Wire Harness | 1 |
| 22 | 320158 | Washer | 2 |
| 23 | 316678 | Screw | 2 |
| 24 | 1376746 | Shield | 1 |
| 25 | 1339720 | Grommet | 1 |
| 26 | 298832 | Cap | 1 |

# FUEL PUMP AND WATER SEPERATOR (Figure 3-4)
## DIESEL TIER II

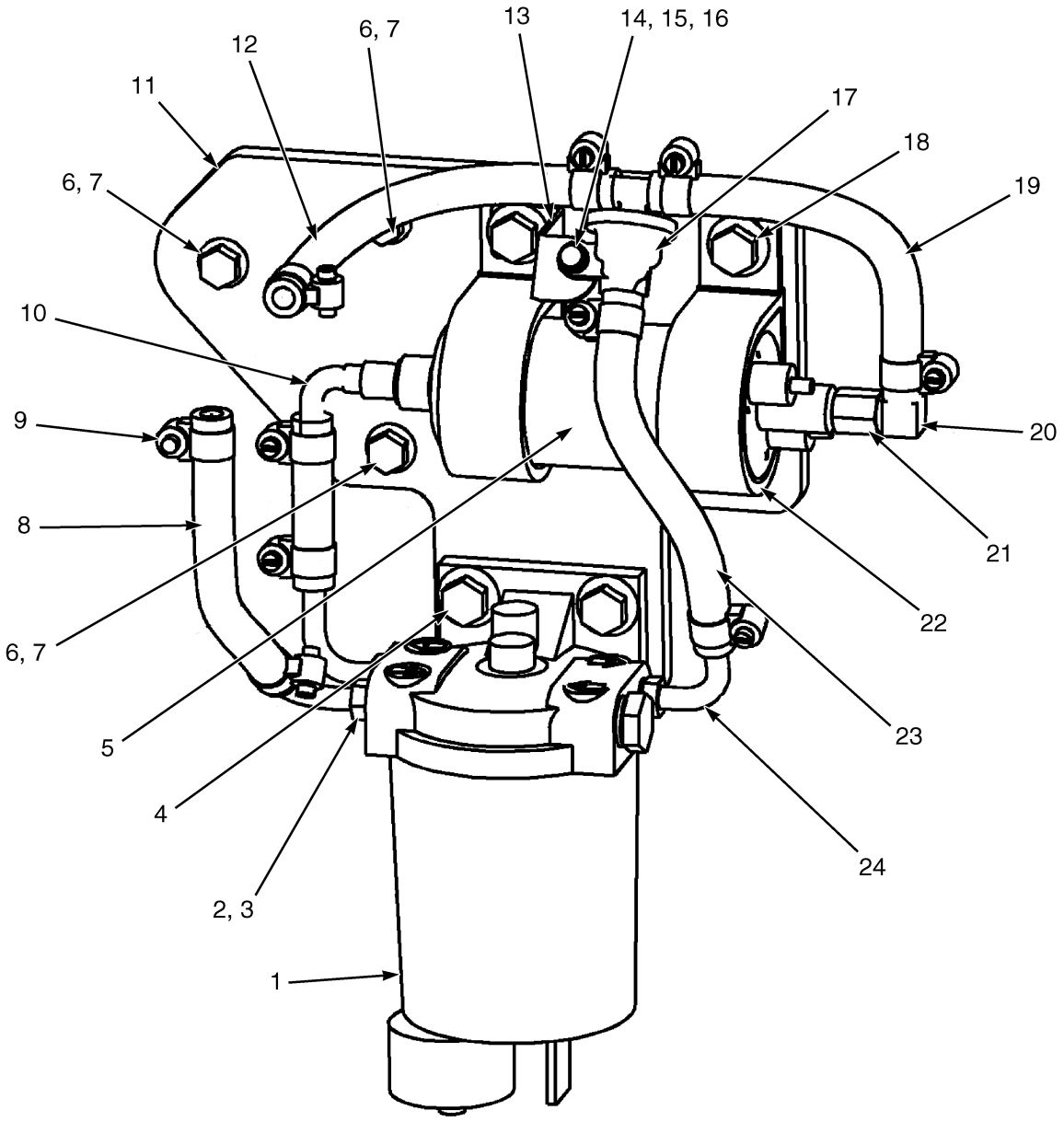


BP130079


©2004 HYSTER COMPANY

# FUEL PUMP AND WATER SEPERATOR
## DIESEL TIER II

| ITEM | PART NO. | DESCRIPTION | QTY |
|---|---|---|---|
| 1 | 1396256 | Water Separator (☞ Figure 3-5) | 1 |
| 2 | 16177 | Fitting | 3 |
| 3 | 16100 | Fitting | 3 |
| 4 | 1527883 | Capscrew | 2 |
| 5 | 1551260 | Fuel Pump | 1 |
| 6 | 1350282 | Nut | 3 |
| 7 | 1510113 | Capscrew | 3 |
| 8 | 1389365 | Hose | 1 |
| 9 | 168718 | Clamp | 10 |
| 10 | 1543933 | Fitting | 1 |
| 11 | 1551405 | Bracket | 1 |
| 12 | 225465 | Hose | 1 |
| 13 | 1554719 | Bracket | 1 |
| 14 | 320155 | Washer | 1 |
| 15 | 302246 | Screw | 1 |
| 16 | 302398 | Locknut | 1 |
| 17 | 1558148 | Regulator (Fuel Pressure) | 1 |
| 18 | 1528778 | Capscrew | 2 |
| 19 | 274334 | Hose | 1 |
| 20 | 222480 | Fitting | 1 |
| 21 | 1475493 | Fitting (Adapter) | 1 |
| 22 | 176451 | Clamp | 2 |
| 23 | 274334 | Hose | 2 |
| 24 | 1486842 | Tube | 3 |

©2004 HYSTER COMPANY

# WATER SEPARATOR (Figure 3-5)
## DIESEL TIER II

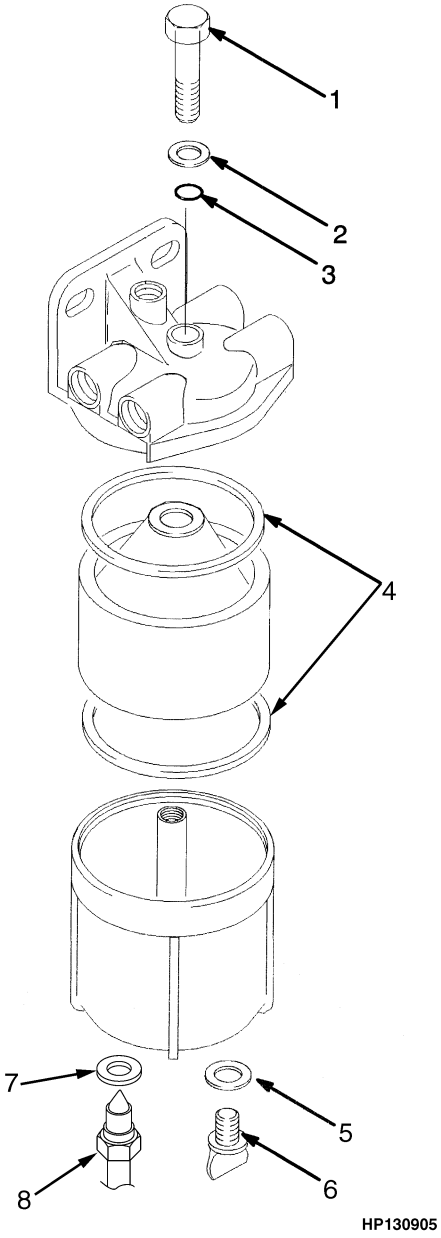



©2004 HYSTER COMPANY

# WATER SEPARATOR
## DIESEL TIER II

| ITEM | PART NO. | DESCRIPTION | QTY |
|---|---|---|---|
| | 1396256 | Water Separator | 1 |
| 1 | 1464543 | Bolt | 1 |
| 2 | 1464541 | Washer | 1 |
| 3 | 1464540 | Sealing Ring | 1 |
| 4 | 256160 | Gasket | 2 |
| 5 | 1308006 | Washer | 1 |
| 6 | 1464544 | Drain Plug | 1 |
| 7 | 1464545 | Washer | 1 |
| 8 | 1464546 | Sensor (Water) | 1 |

©2004 HYSTER COMPANY

# FUEL FILTER AND SENDER (Figure 3-6)
## DIESEL TIER II

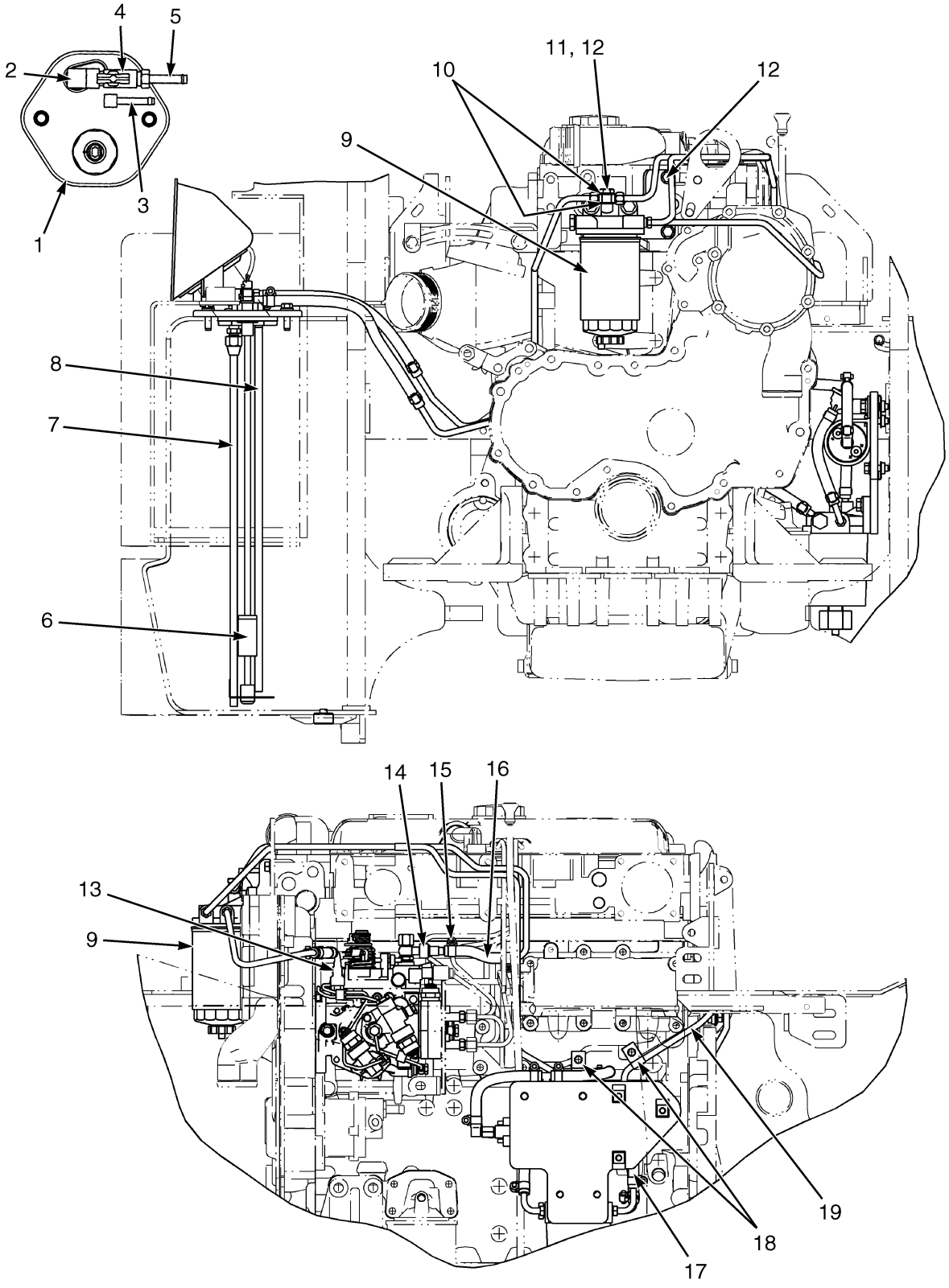



©2004 HYSTER COMPANY

# FUEL FILTER AND SENDER
## DIESEL TIER II

| ITEM | PART NO. | DESCRIPTION | QTY |
|---|---|---|---|
| 1 | 1559058 | Fuel Sender Assembly | 1 |
| 1 | 1559061 | Cover | 1 |
| 2 | 17314 | Fitting | 1 |
| 3 | 17343 | Fitting | 1 |
| 4 | 16190 | Valve | 1 |
| 5 | 1502038 | Fitting | 1 |
| 6 | 1371111 | Sender | 1 |
| 7 | 1371137 | Tube | 1 |
| 8 | 1371141 | Tube | 1 |
| 9 | 1306345 | Fuel Filter Assembly (☞ Figure 3-7) | 1 |
| 10 | 1556819 | Washer | 2 |
| 11 | 1556726 | Fitting (Banjo) | 1 |
| 12 | 1527880 | Capscrew | 2 |
| 13 | 1543933 | Fitting | 2 |
| 14 | 1544024 | Fitting | 1 |
| 15 | 168718 | Clamp | 2 |
| 16 | 1551452 | Hose | 1 |
| 17 | 878989 | Hose | 1 |
| 18 | 118748 | Clamp | 2 |
| 19 | 1552673 | Tube | 1 |

©2004 HYSTER COMPANY

# FUEL FILTER (Figure 3-7)
## DIESEL TIER II

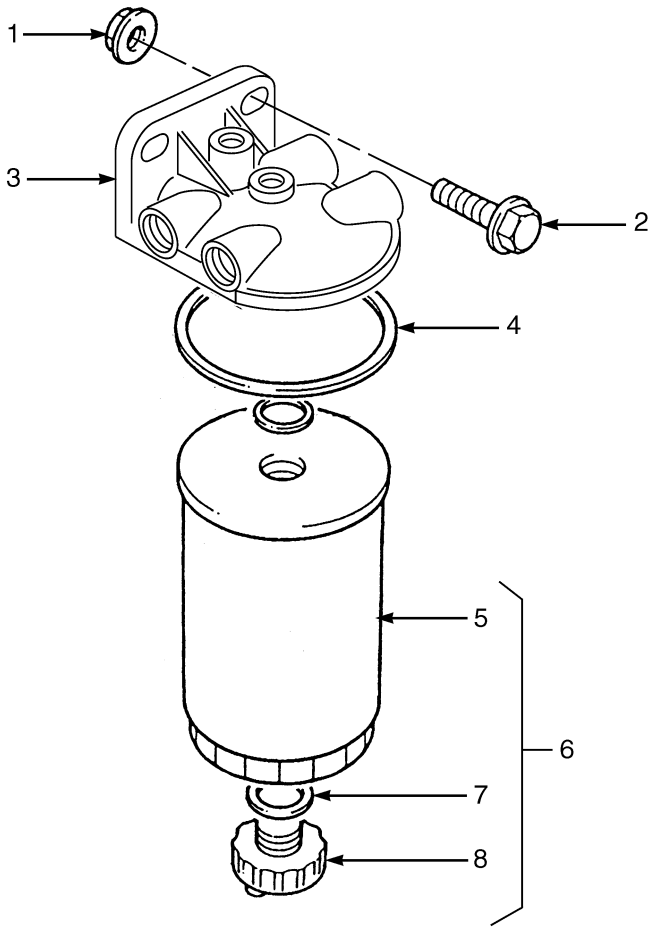


BP130081

| ITEM | PART NO. | DESCRIPTION | QTY |
|---|---|---|---|
| 1 | 1460477 | Nut (Flange) | 2 |
| 2 | 1527884 | Capscrew | 2 |
| 3 | 1474825 | Filter Head | 1 |
| 4 | . . . . . | Seal | 1 |
| 5 | . . . . . | Element | 1 |
| 5 | 1306345 | Fuel Filter Assembly | 1 |
| 6 | 1306331 | Filter Kit | 1 |
| 7 | 1308006 | Washer | 1 |
| 8 | 1308005 | Plug | 1 |


©2004 HYSTER COMPANY

# NOTES

# AIR INTAKE AND FILTER SYSTEM (Figure 3-8)
## GAS AND LPG

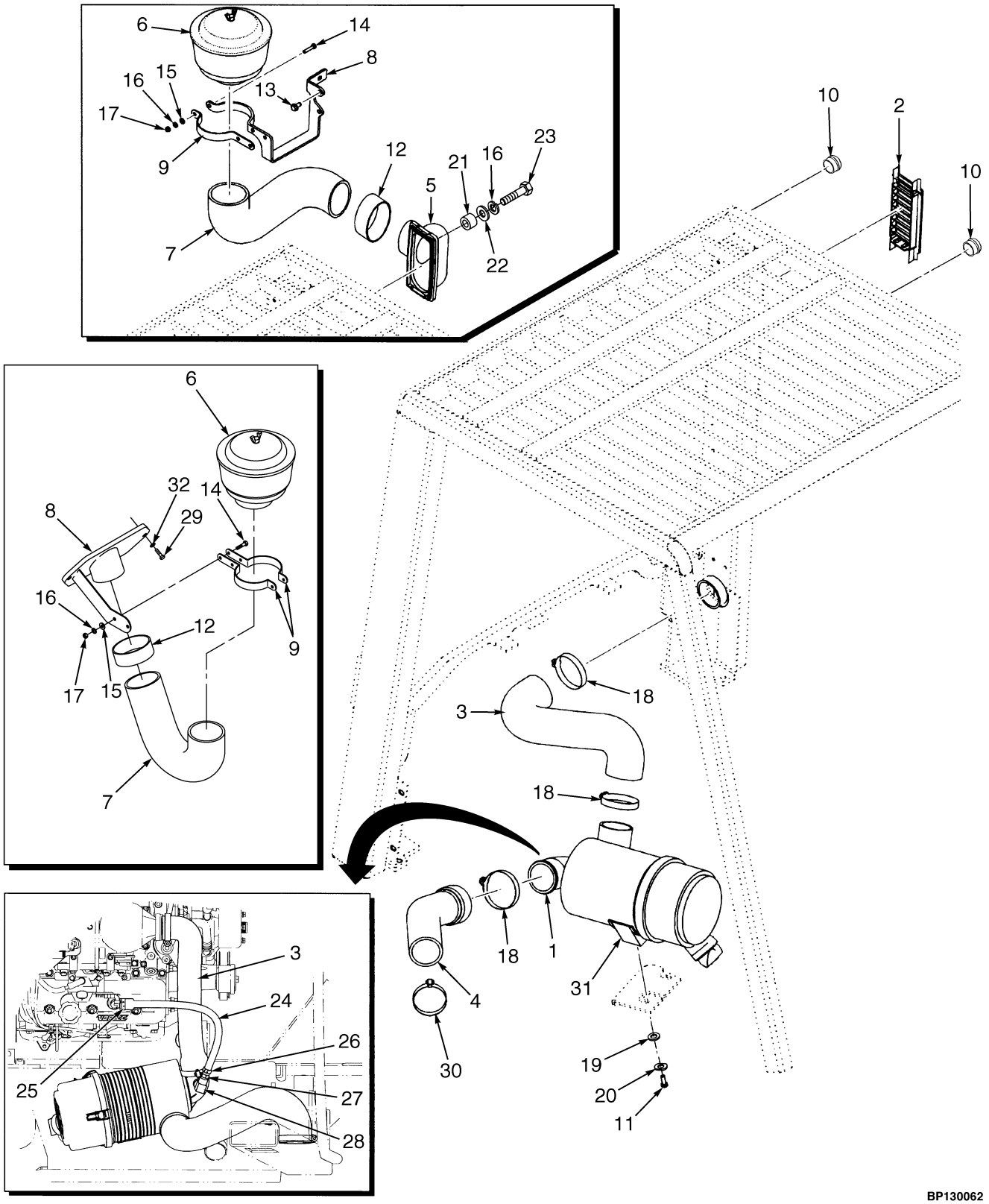



©2004 HYSTER COMPANY

# AIR INTAKE AND FILTER SYSTEM
## GAS AND LPG

**KEY:**
**A: Air Filter (Standard)**
**B: Air Filter (Heavy Duty)**

| ITEM | | PART NO. | DESCRIPTION | QTY A | QTY B |
|---|---|---|---|---|---|
| 1 | | 2062384 | Air Filter (☞ Figure 3-9) | 1 | 1 |
| 2 | | 2036475 | Grill | 1 | .. |
| 3 | | 1390110 | Hose (Outlet) | 1 | 1 |
| 4 | | 2061653 | Hose (Intake LPG) | 1 | 1 |
| 4 | | 2061656 | Hose (Intake Gasoline) | 1 | 1 |
| 5 | | 1497559 | Pre-Cleaner Port | .. | 1 |
| 6 | | 291974 | Pre-Cleaner | .. | 1 |
| 6 | | 1374205 | Cover | .. | 1 |
| 6 | | 1374206 | Bowl | .. | 1 |
| 6 | | 1374207 | Sleeve | .. | 1 |
| 6 | | 115696 | Clamp | .. | 1 |
| 7 | **a** | 1392799 | Hose | .. | 1 |
| 7 | | 1397987 | Hose (Pre-Cleaner) | .. | 1 |
| 8 | **a** | 1392814 | Bracket | .. | 1 |
| 8 | | 1397988 | Bracket | .. | 1 |
| 9 | **a** | 1397989 | Band | .. | 2 |
| 9 | | 1397989 | Band | .. | 1 |
| 10 | | 1509037 | Plug | 2 | .. |
| 11 | | 136681 | Capscrew | 2 | 2 |
| 12 | | 1398002 | Clamp | .. | 1 |
| 13 | | 316678 | Screw | .. | 2 |
| 14 | | 302263 | Screw | .. | 3 |
| 15 | | 320156 | Washer | .. | 3 |
| 16 | | 292680 | Lockwasher | .. | 5 |
| 17 | | 136687 | Nut | .. | 3 |
| 18 | | 115696 | Clamp | 3 | 3 |
| 19 | | 320157 | Washer | 2 | 2 |
| 20 | | 292681 | Lockwasher | 2 | 2 |
| 21 | | 1498097 | Spacer | .. | 2 |
| 22 | | 197068 | Washer | .. | 2 |
| 23 | | 287816 | Capscrew | .. | 2 |
| 24 | | 2066940 | Hose (Breather) | 1 | 1 |
| 25 | | 353199 | Clamp | 1 | 1 |
| 26 | | 1452463 | Clamp | 1 | 1 |
| 27 | | 102919 | Fitting | 1 | 1 |
| 28 | | 16143 | Fitting | 1 | 1 |
| 29 | **a** | 292501 | Capscrew | .. | 2 |
| 30 | | 1394008 | Clamp | 1 | 1 |
| 31 | | 1543536 | Bracket | 1 | 1 |
| 32 | **a** | 292680 | Lockwasher | .. | 5 |

**FOOTNOTES:**
**a** With CAB

©2004 HYSTER COMPANY

# AIR FILTER (Figure 3-9)
## GAS AND LPG

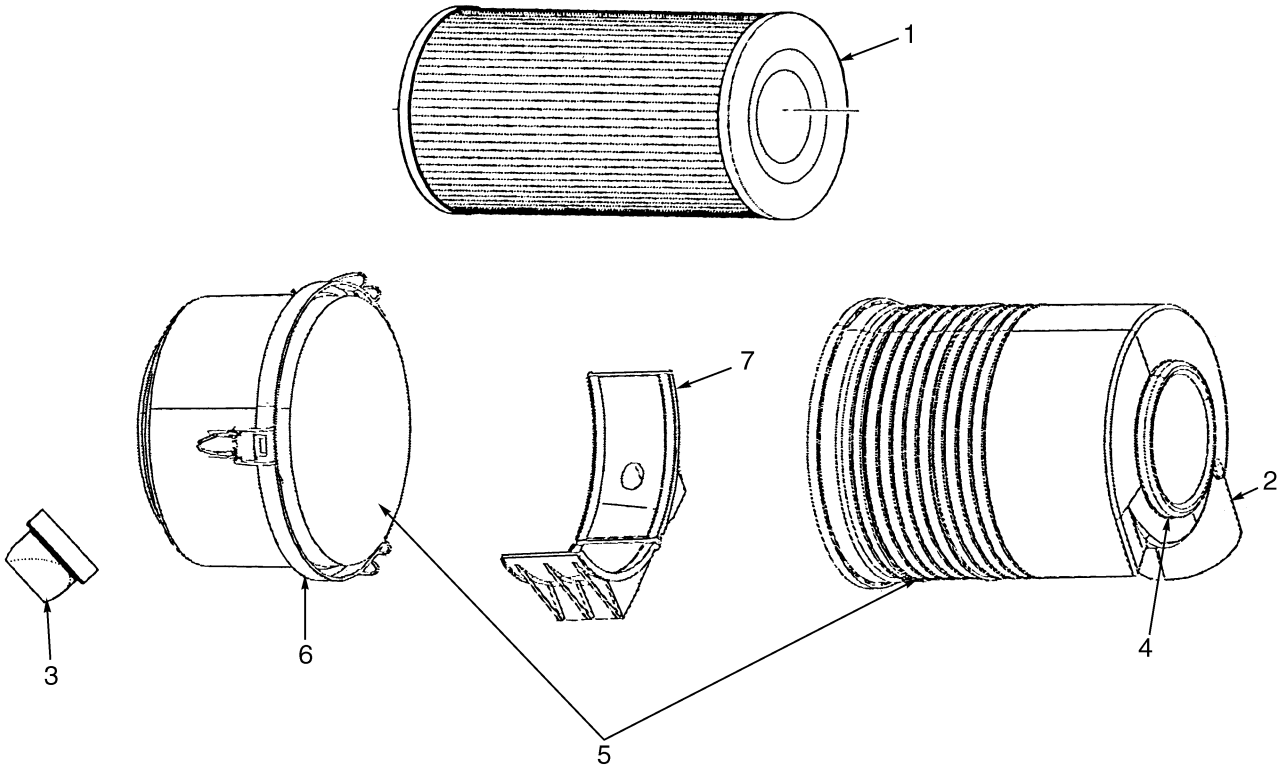


BP130038


©2004 HYSTER COMPANY

# AIR FILTER
## GAS AND LPG

| ITEM | PART NO. | DESCRIPTION | QTY |
|---|---|---|---|
| | 2062384 | Air Filter | 1 |
| 1 | 1462439 | Filter Element | 1 |
| 2 | 1462441 | Cover | 1 |
| 3 | 374923 | Valve | 1 |
| 4 | 1462442 | Plug | 1 |
| 5 | . . . . . | Body | 1 |
| 6 | . . . . . | Clamp | 1 |
| 7 | . . . . . | Bracket | 1 |

©2004 HYSTER COMPANY

# FUEL SUPPLY SYSTEM (Figure 3-10)
## LPG

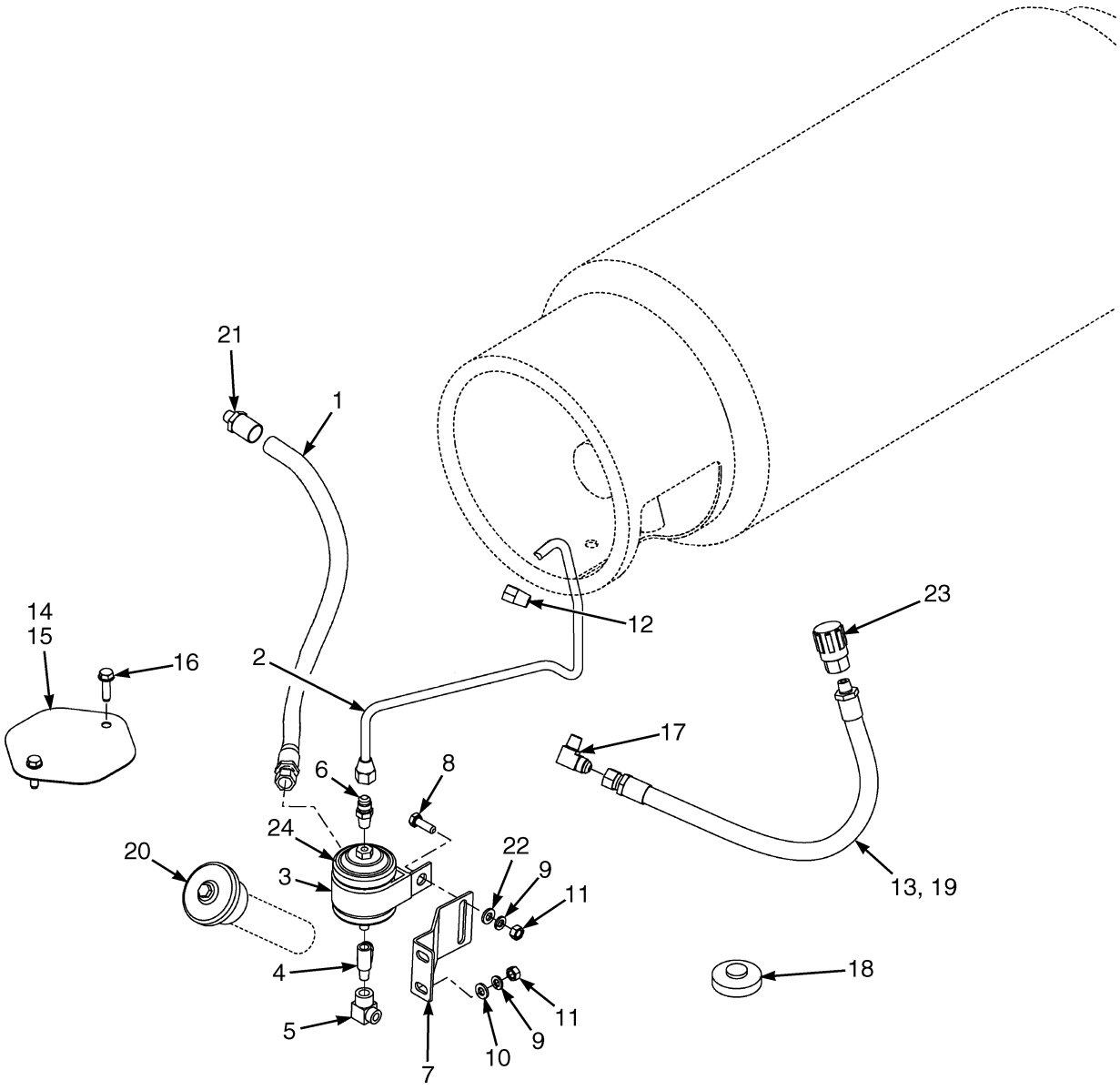


BP130072


©2004 HYSTER COMPANY

# FUEL SUPPLY SYSTEM
## LPG

| ITEM | PART NO. | DESCRIPTION | QTY |
|---|---|---|---|
| 1 | 336143 | Hose | 1 |
| 2 | 1544824 | Tube | 1 |
| 3 | 1384699 | Clamp | 1 |
| 4 | 14440 | Fitting | 1 |
| 5 | 17728 | Fitting | 1 |
| 6 | 16134 | Fitting | 1 |
| 7 | 1544793 | Bracket (LPG Filter) | 1 |
| 8 | 136749 | Capscrew | 1 |
| 9 | 292681 | Lockwasher | 3 |
| 10 | 320157 | Washer | 2 |
| 11 | 239503 | Nut | 3 |
| 12 | 101809 | Relief Valve | 1 |
| 13 | 1464890 | Hose | 1 |
| 14 | 1451568 | Plate | 1 |
| 15 | 1392738 | Gasket | 1 |
| 16 | 1339779 | Screw | 2 |
| 17 | 14358 | Fitting | 1 |
| 18 | 246869 | Fitting | 1 |
| 19 | 148271 | Loom | 1 |
| 20 | 1352123 | Cap | 1 |
| 21 | 16863 | Fitting | 1 |
| 22 | 320158 | Washer | 2 |
| 23 | 97999 | Disconnect | 1 |
| 24 | 1544792 | Filter | 1 |

©2004 HYSTER COMPANY

# ENGINE FUEL SYSTEM (Figure 3-11)
## 4.3 L EPA COMPLIANT
## LPG

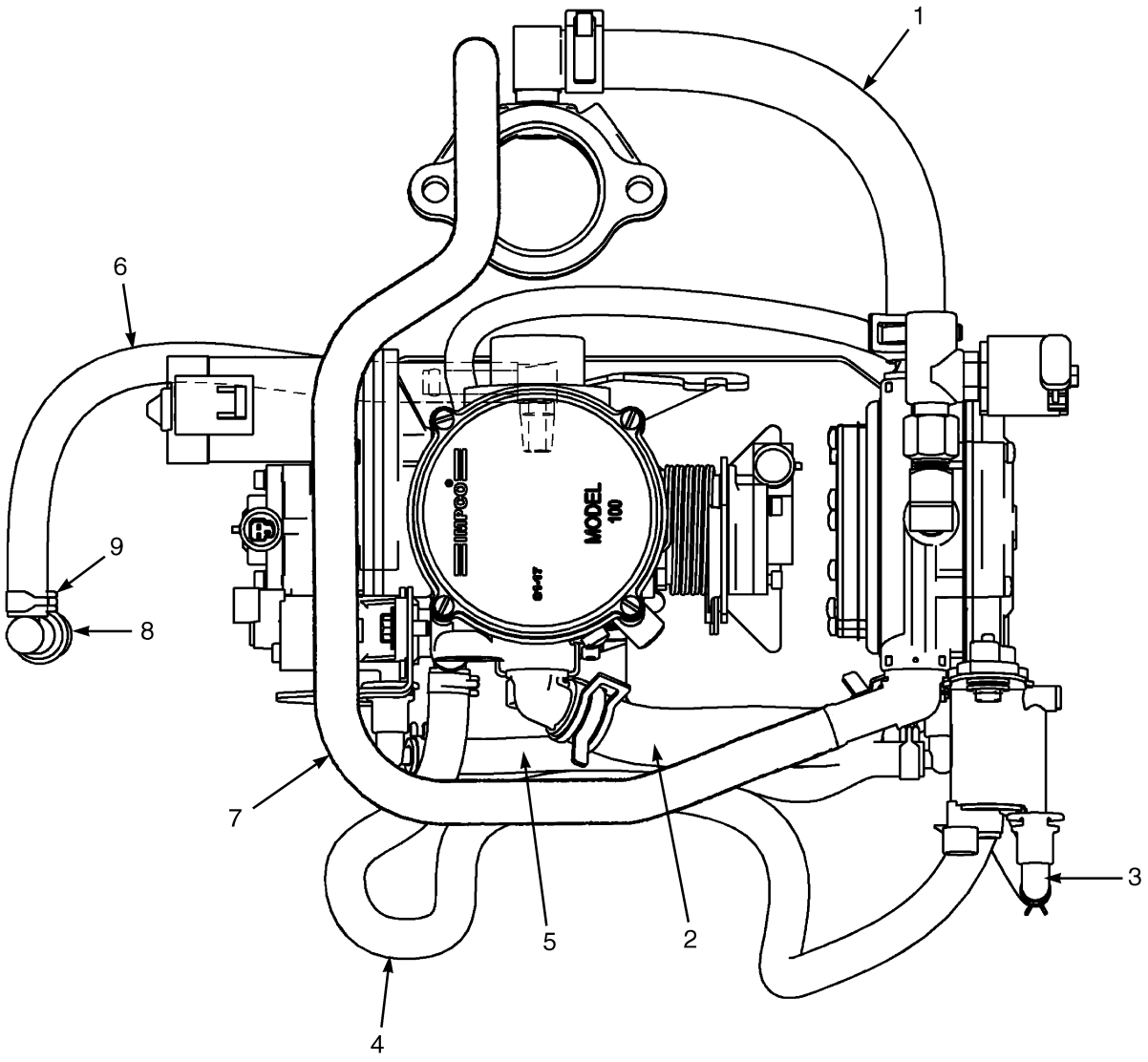


BP130068


©2004 HYSTER COMPANY

# ENGINE FUEL SYSTEM
## 4.3 L EPA COMPLIANT
## LPG

| ITEM | PART NO. | DESCRIPTION | QTY |
|---|---|---|---|
| 1 | . . . . . | Hose | 1 |
| 2 | 1558202 | Hose (Vapor) | 1 |
| 3 | 1558205 | Hose (PTV) | 1 |
| 4 | 1558543 | Hose (Balance) | 1 |
| 5 | 1558206 | Hose (Trim Valve) | 1 |
| 6 | 1558195 | Hose (PCV) | 1 |
| 7 | 2066721 | Hose (Coolant Return) | 1 |
| 8 | 1558196 | PCV Valve | 1 |
| 9 | 1558198 | Clamp | 1 |
| 10 | 1561870 | Oxygen Sensor (Not Illustrated) | 1 |

©2004 HYSTER COMPANY

# THROTTLE BODY AND LPG MIXER (Figure 3-12)
## 4.3 L EPA COMPLIANT

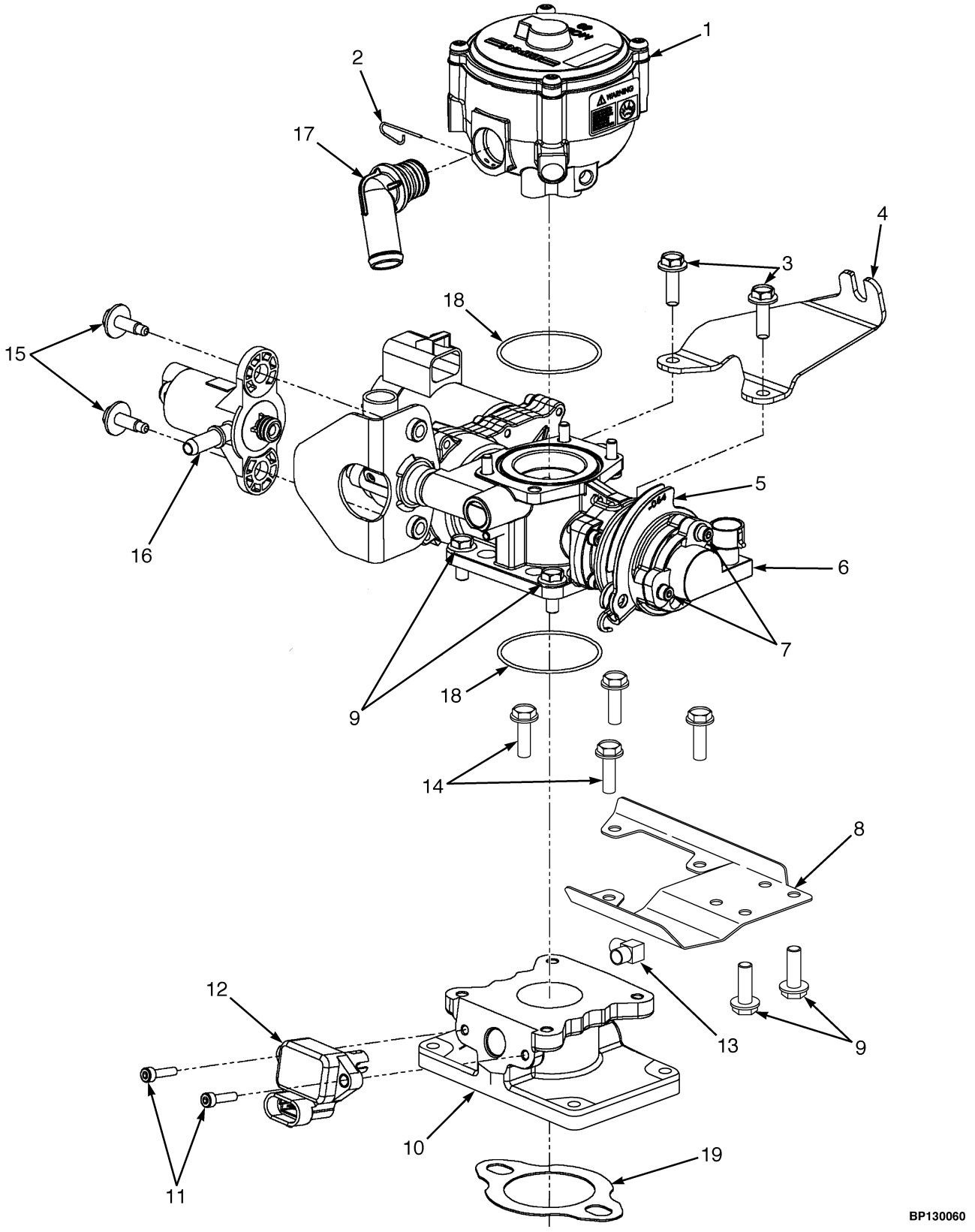



©2004 HYSTER COMPANY

# THROTTLE BODY AND LPG MIXER
## 4.3 L EPA COMPLIANT

| ITEM | PART NO. | DESCRIPTION | QTY |
|---|---|---|---|
| 1 | 1558160 | Mixer | 1 |
| 2 | 1558161 | Pin | 1 |
| 3 | 1558173 | Bolt | 4 |
| 4 | 1558163 | Bracket | 1 |
| 5 | 1558164 | Throttle Body | 1 |
| 6 | 1558165 | Sensor | 1 |
| 7 | 1558166 | Screw | 2 |
| 8 | 1558167 | Bracket | 1 |
| 9 | 1558168 | Bolt | 2 |
| 10 | 1558169 | Adapter | 1 |
| 11 | 1558170 | Screw | 2 |
| 12 | 1558171 | Sensor | 1 |
| 13 | 1361164 | Fitting | 1 |
| 14 | 1558172 | Bolt | 4 |
| 15 | 1558204 | Bolt | 1 |
| 16 | 1558175 | Fuel Valve | 1 |
| 17 | 1558176 | Fitting | 1 |
| 18 | 1558177 | O-Ring | 2 |
| 19 | 1558178 | Gasket | 1 |

©2004 HYSTER COMPANY

# LPG REGULATOR (Figure 3-13)
## 4.3 L EPA COMPLIANT

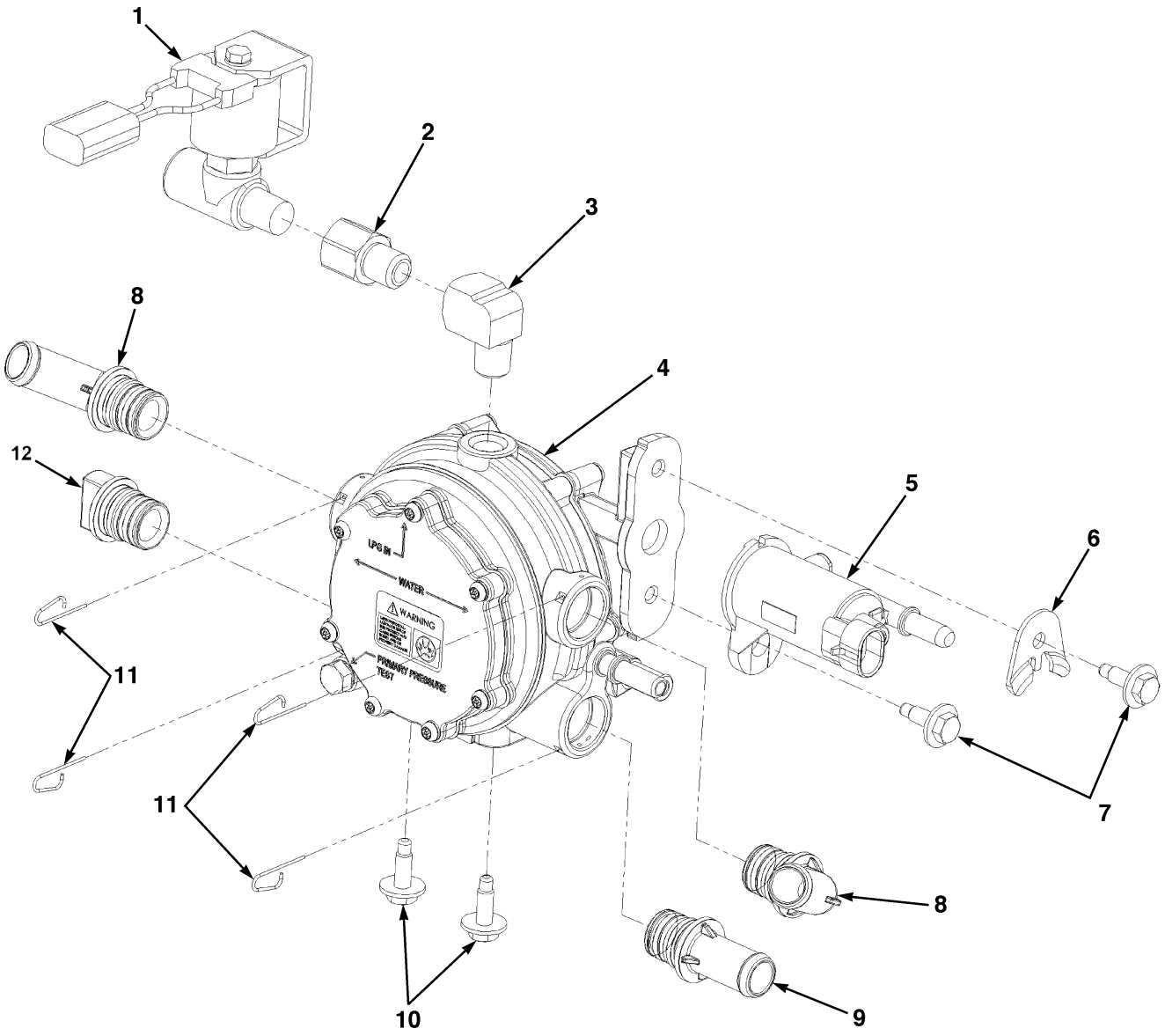


BP130051


©2004 HYSTER COMPANY

# LPG REGULATOR
## 4.3 L EPA COMPLIANT

| ITEM | PART NO. | DESCRIPTION | QTY |
|---|---|---|---|
| 1 | 1558187 | Lock-Off | 1 |
| 2 | 1558188 | Fitting | 1 |
| 3 | 1558189 | Fitting | 1 |
| 4 | 1558190 | Regulator | 1 |
| 5 | 1558191 | Pressure Reducing Valve | 1 |
| 6 | 1558192 | Clamp | 1 |
| 7 | 1558168 | Bolt | 2 |
| 8 | 1558176 | Fitting | 2 |
| 9 | 1558193 | Fitting | 1 |
| 10 | 1558168 | Bolt | 2 |
| 11 | 1558161 | Pin | 4 |
| 12 | 1558194 | Cap | 1 |

©2004 HYSTER COMPANY

# FUEL SUPPLY SYSTEM (Figure 3-14)
## GASOLINE

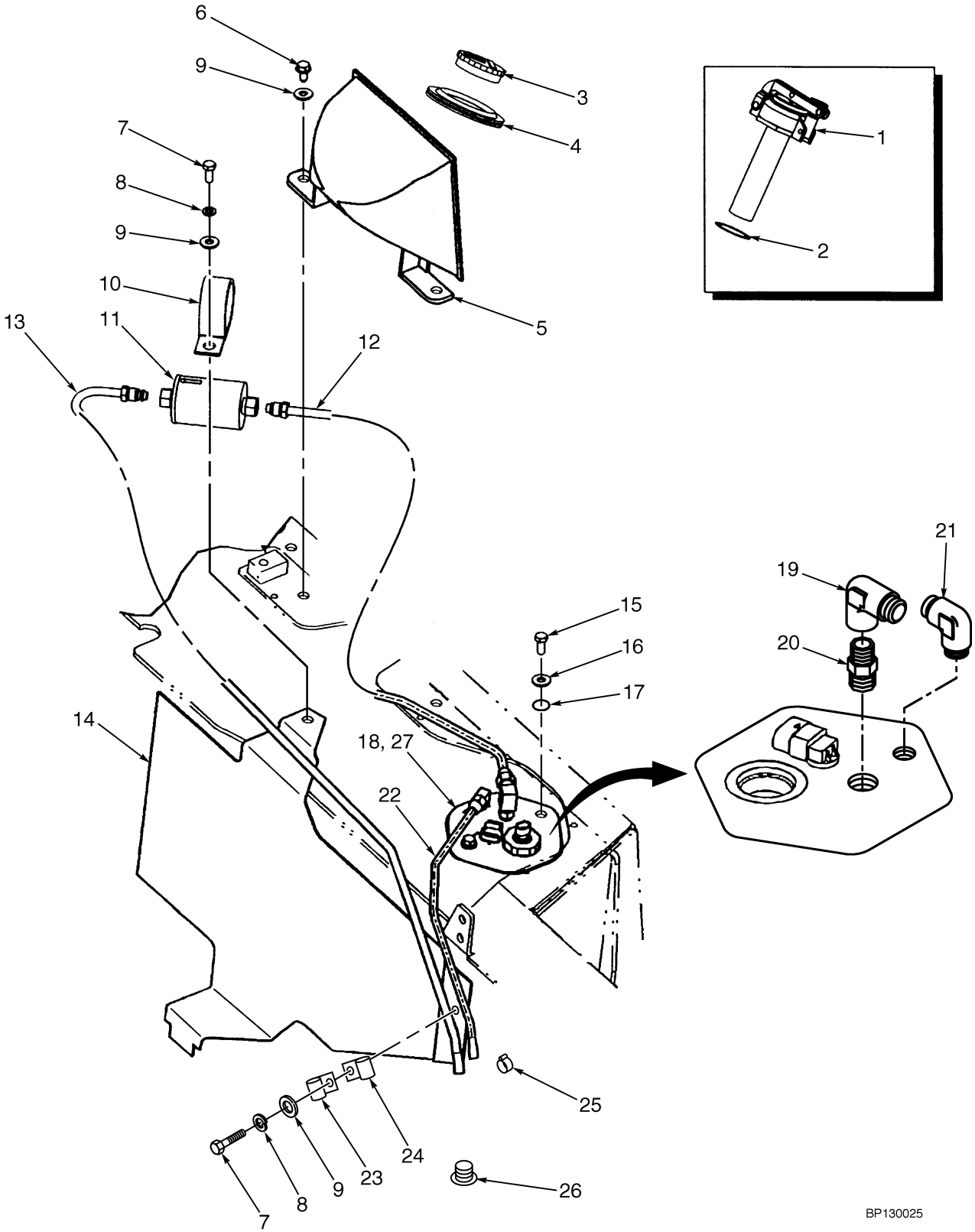



©2004 HYSTER COMPANY

# FUEL SUPPLY SYSTEM
## GASOLINE

| ITEM | PART NO. | DESCRIPTION | QTY |
|---|---|---|---|
| 1 | 63899 | Cap Assembly (GS, DS) | 1 |
| 2 | 138880 | Shim (0.020 in.) (GS, DS) | 1 |
| 3 | 298831 | Cap Assembly (Standard) | 1 |
| 4 | 1339720 | Grommet | 1 |
| 5 | 1376746 | Shield (Splash) | 1 |
| 6 | 316678 | Screw | 2 |
| 7 | 136681 | Capscrew | 2 |
| 8 | 292681 | Lockwasher | 2 |
| 9 | 320158 | Washer | 4 |
| 10 | 176451 | Clamp | 1 |
| 11 | 1330342 | Filter | 1 |
| 12 | 1546397 | Tube | 1 |
| 13 | 1546398 | Tube | 1 |
| 14 | 1399301 | Shield (Heat) | 1 |
| 15 | 1339779 | Screw | 2 |
| 16 | 320157 | Washer | 2 |
| 17 | 353000 | O-Ring | 2 |
| 18 | 1508246 | Fuel Pump And Sender | 1 |
| 19 | 14372 | Fitting | 1 |
| 20 | 16271 | Fitting | 1 |
| 21 | 42213 | Fitting | 1 |
| 22 | 1546399 | Tube | 1 |
| 23 | 164488 | Clamp (Insulated) | 1 |
| 24 | 198675 | Clamp (Insulated) | 1 |
| 25 | 168718 | Clamp | 2 |
| 26 | 246869 | Fitting (Magnetic Tank Drain Plug) | 1 |
| 27 | 1343449 | Seal | 1 |

©2004 HYSTER COMPANY

# THROTTLE BODY ASSEMBLY (Figure 3-15)
## 4.3 L EPA COMPLIANT
## GASOLINE

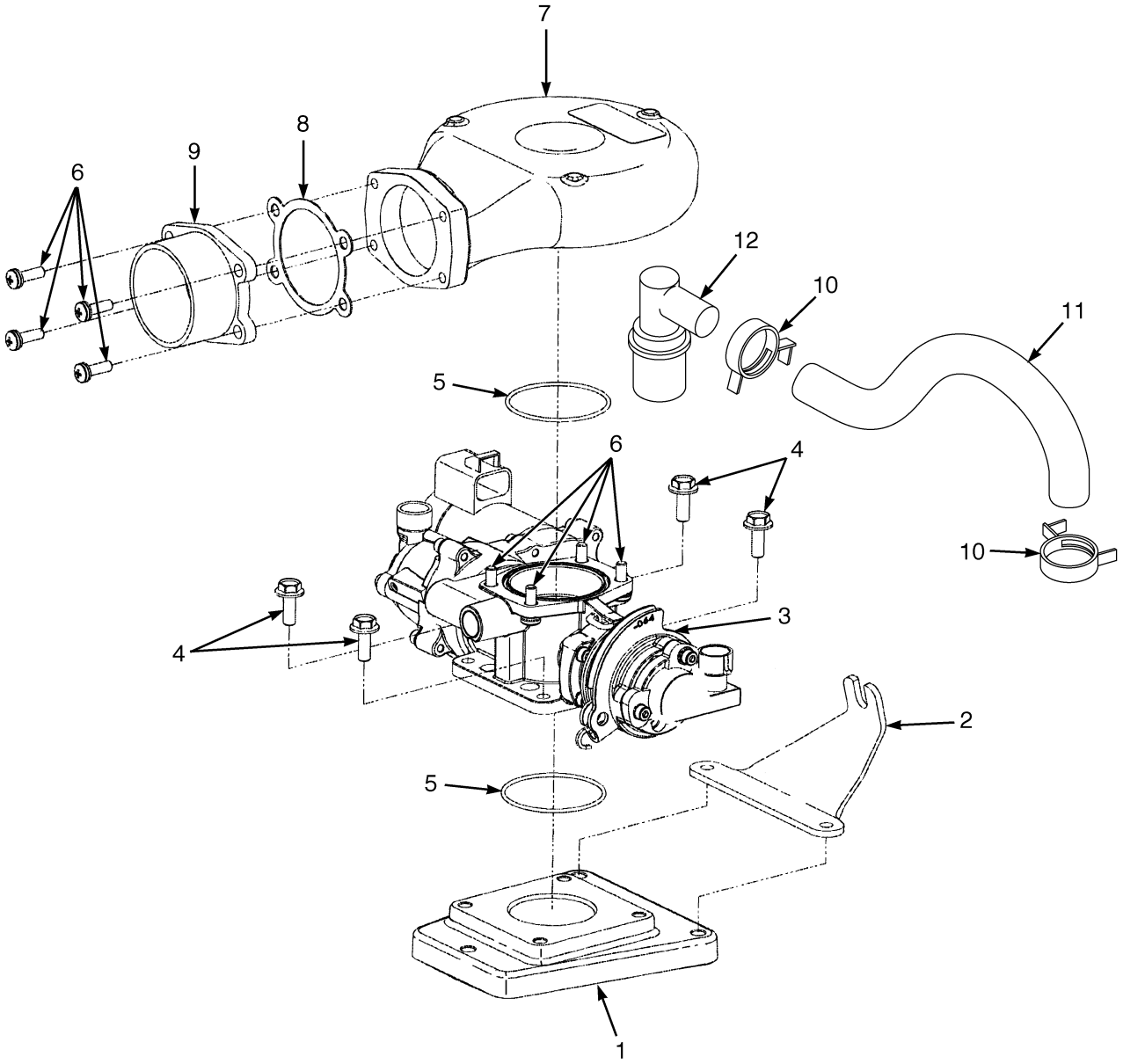


BP130064


©2004 HYSTER COMPANY

# THROTTLE BODY ASSEMBLY
## 4.3 L EPA COMPLIANT
## GASOLINE

| ITEM | | PART NO. | DESCRIPTION | QTY |
|---|---|---|---|---|
| 1 | | 1558209 | Adapter | 1 |
| 2 | | 1558210 | Bracket | 1 |
| 3 | | 1558211 | Throttle Body | 1 |
| 4 | | 1558432 | Bolt | 4 |
| 5 | | 1558177 | O-Ring | 2 |
| 6 | | 1558435 | Screw | 8 |
| 7 | | 1558433 | Bonnet | 1 |
| 8 | | 204787 | Gasket | 1 |
| 9 | | 1558434 | Bonnet Adapter | 1 |
| 10 | | . . . . . | Clamp | 2 |
| 11 | | 1558195 | Hose (PCV) | 1 |
| 12 | | 1558437 | Valve (PCV) | 1 |
| 13 | **a** | 1558436 | Gasket (Not illustrated) | 1 |
| 14 | | 1561870 | Oxygen Sensor (Not Illustrated) | 1 |

**FOOTNOTES:**
**a** Adapter to Manifold

©2004 HYSTER COMPANY

# LPG TANK BRACKET (Figure 3-16)
## FIXED

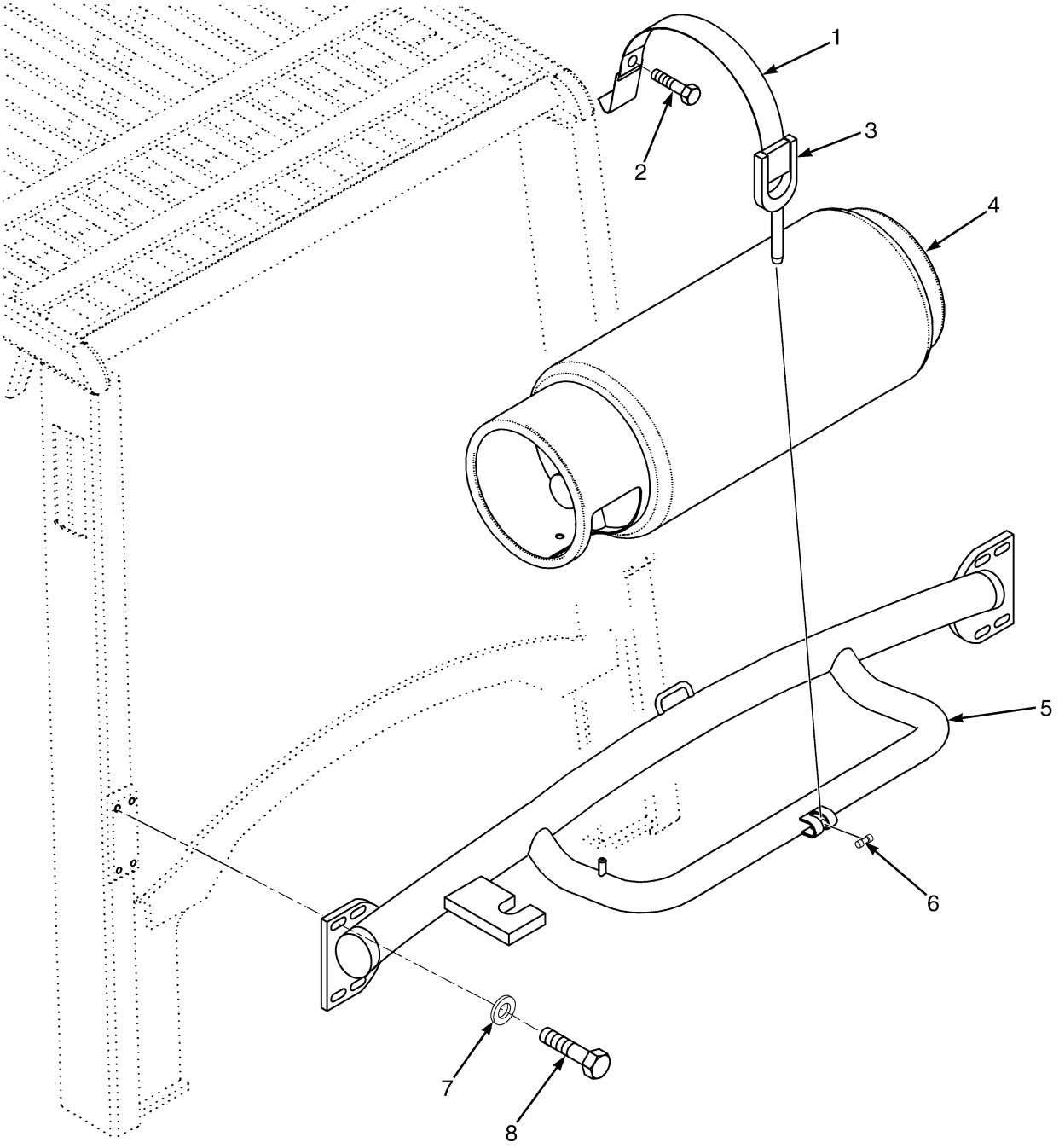



©2004 HYSTER COMPANY

# LPG TANK BRACKET
## FIXED

| ITEM | | PART NO. | DESCRIPTION | QTY |
|---|---|---|---|---|
| 1 | | 1400197 | Strap | 1 |
| 2 | | 296163 | Capscrew | 1 |
| 3 | | 196297 | Latch | 1 |
| 4 | **a** | . . . . . | LPG Tank | 1 |
| 5 | | 1495485 | Tank Bracket | 1 |
| 6 | | 147294 | Nut | 1 |
| 7 | | 320161 | Washer | 8 |
| 8 | | 292526 | Capscrew | 8 |
| 9 | | 320157 | Washer | 1 |

**FOOTNOTES:**
**a** Contact your authorized dealer for service parts.

# LPG TANK BRACKET (Figure 3-17)
## SWING OUT

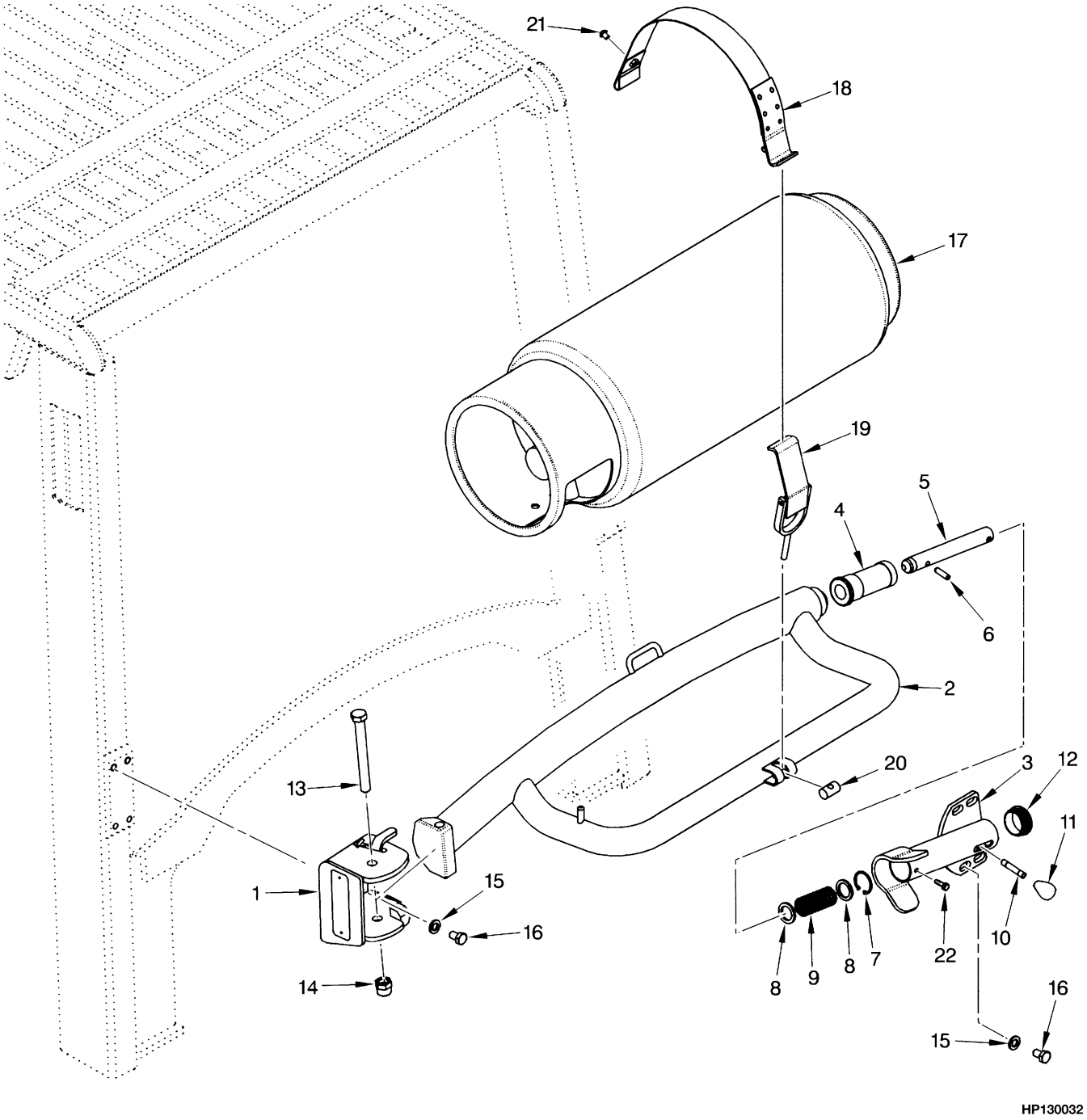



©2004 HYSTER COMPANY

# LPG TANK BRACKET
## SWING OUT

| ITEM | | PART NO. | DESCRIPTION | QTY |
|---|---|---|---|---|
| | | 1494466 | LPG Tank Bracket Assembly | 1 |
| 1 | | 1398141 | Hinge (LH) | 1 |
| 2 | | 1494460 | Swing Arm | 1 |
| 3 | | 1398143 | Receiver | 1 |
| 4 | | 1398085 | Housing (Latch) | 1 |
| 5 | | 1398086 | Shaft | 1 |
| 6 | | 302476 | Pin | 1 |
| 7 | | 1398092 | Snap Ring (Internal) | 1 |
| 8 | | 1398089 | Spring Seat | 2 |
| 9 | | 1398093 | Spring | 1 |
| 10 | | 1398097 | Shaft (Knob) | 1 |
| 11 | | 1398098 | Knob | 1 |
| 12 | | 1398099 | Plug | 1 |
| 13 | | 293700 | Capscrew | 1 |
| 14 | | 302404 | Locknut | 1 |
| 15 | | 320161 | Washer | 8 |
| 16 | | 292526 | Capscrew | 8 |
| 17 | **a** | . . . . . | Fuel Tank | 1 |
| 18 | | 1400197 | Strap | 1 |
| 19 | | 196297 | Latch | 1 |
| 20 | | 147294 | Nut | 1 |
| 21 | | 296164 | Capscrew | 1 |
| 22 | | 148962 | Capscrew | 1 |

**FOOTNOTES:**
**a** Contact your authorized dealer for service parts.

©2004 HYSTER COMPANY

# LPG TANK BRACKET (Figure 3-18)
## SWING OUT/DROP DOWN

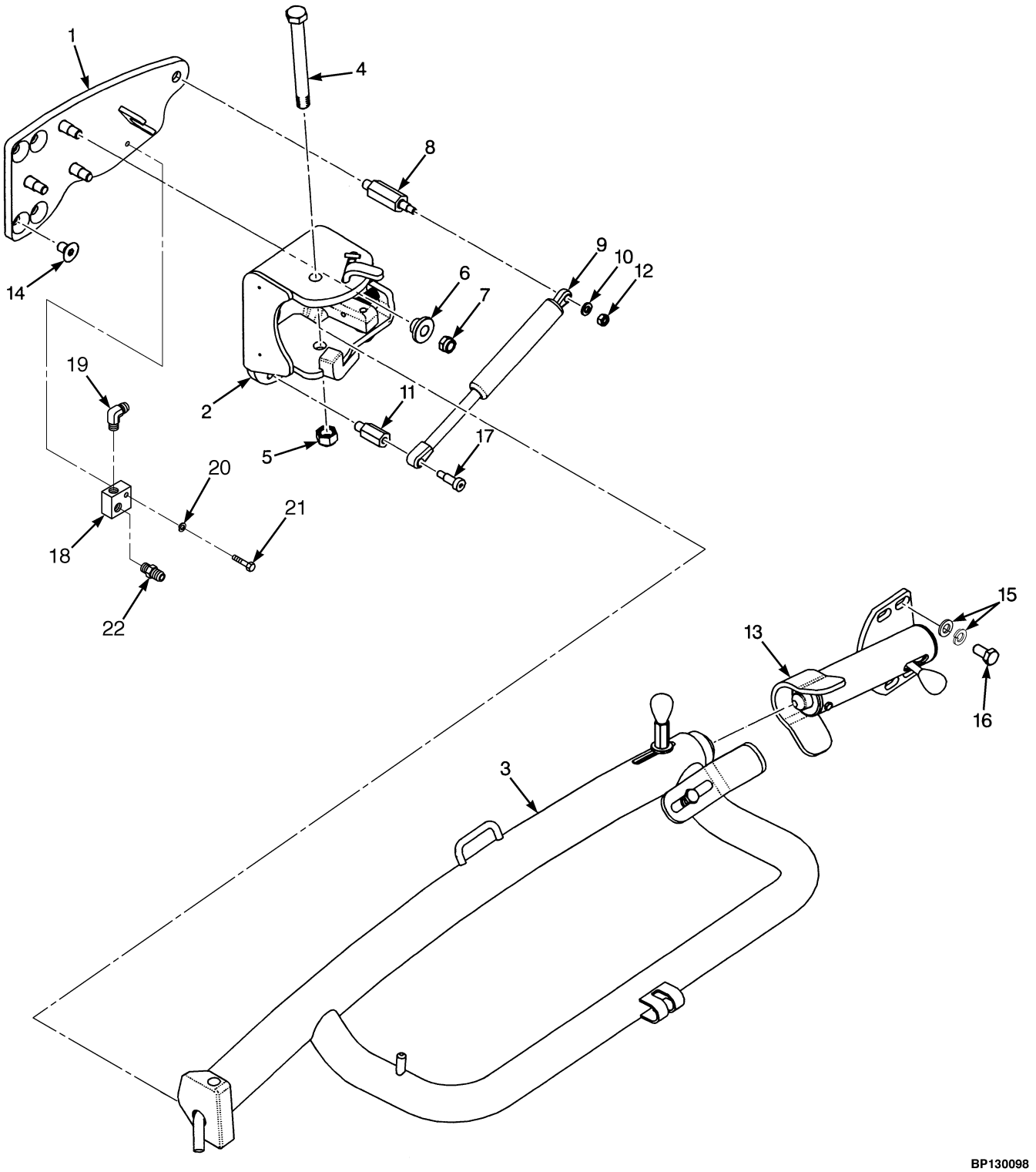



©2004 HYSTER COMPANY

# LPG TANK BRACKET
## SWING OUT/DROP DOWN

| ITEM | PART NO. | DESCRIPTION | QTY |
|---|---|---|---|
| | 1494782 | Tank Bracket Assembly | 1 |
| 1 | 1399405 | Base Plate | 1 |
| 2 | 1399406 | Hinge | 1 |
| 3 | 1494784 | Tank Carrier | 1 |
| 4 | 293700 | Capscrew | 1 |
| 5 | 302404 | Locknut | 1 |
| 6 | 1399360 | Guide Washer | 3 |
| 7 | 316837 | Nut | 3 |
| 8 | 1399407 | Post | 1 |
| 9 | 1399372 | Gas Spring | 1 |
| 10 | 320157 | Washer | 2 |
| 11 | 1399410 | Post | 1 |
| 12 | 302400 | Locknut | 1 |
| 13 | 1398144 | Latch Tube Assembly | 1 |
| 13 | 1398143 | Receiver | 1 |
| 13 | 1398087 | Latch (☞ Figure 3-17) | 1 |
| 13 | 1398097 | Shaft | 1 |
| 13 | 1398098 | Knob | 1 |
| 13 | 1398099 | Plug | 1 |
| 13 | 148962 | Capscrew | 1 |
| 14 | 296251 | Capscrew | 4 |
| 15 | 320161 | Washer | 4 |
| 15 | 292683 | Lockwasher | 4 |
| 16 | 132860 | Capscrew | 4 |
| 17 | 1399347 | Bolt | 1 |
| 18 | 1485436 | Fitting | 1 |
| 19 | 14358 | Fitting | 1 |
| 20 | 292681 | Lockwasher | 1 |
| 21 | 292508 | Capscrew | 1 |
| 22 | 16134 | Fitting | 1 |

©2004 HYSTER COMPANY

# THROTTLE LINKAGE (Figure 3-19)
## GASOLINE AND LPG
## FORWARD AND REVERSE LEVER

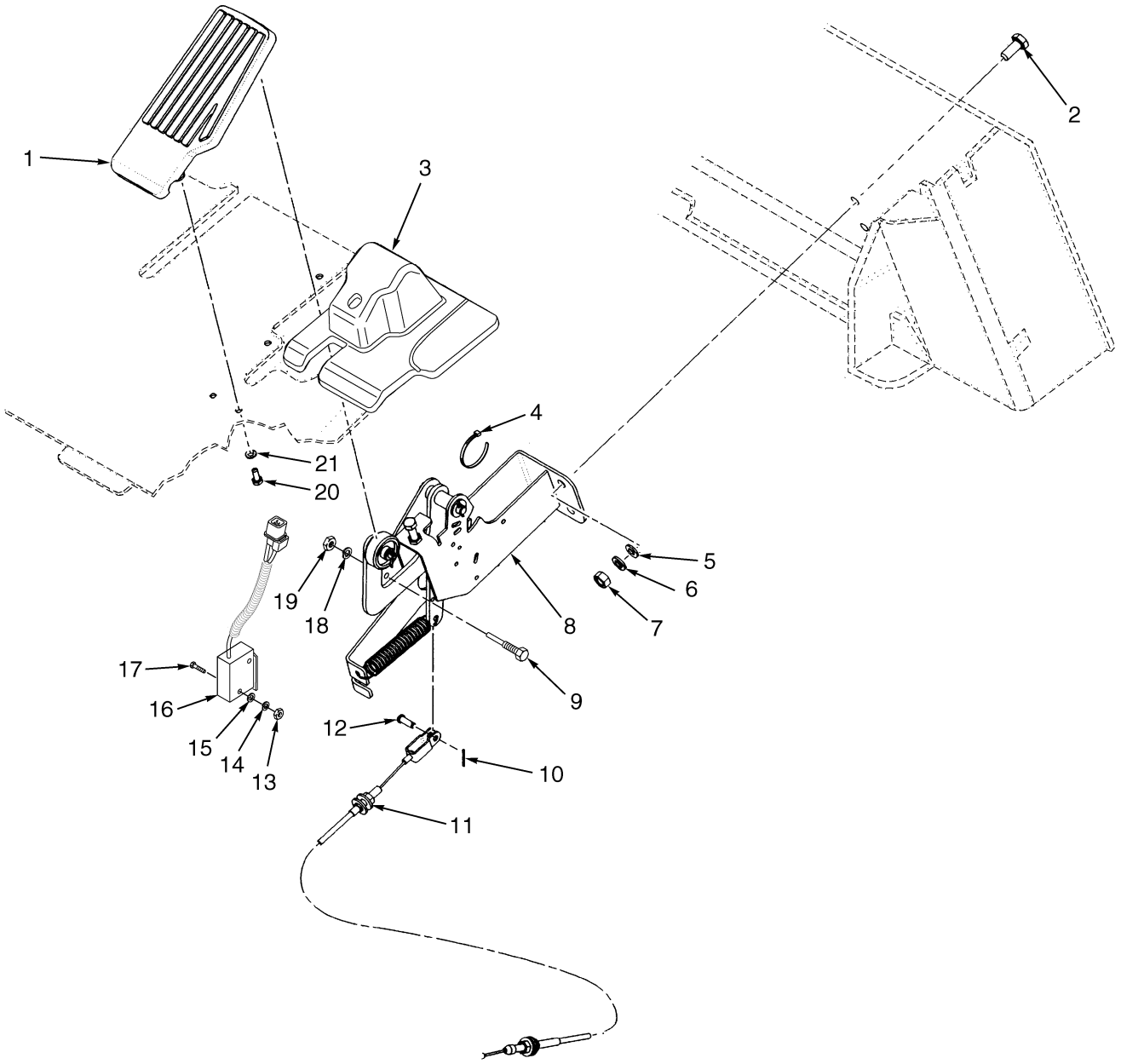



©2004 HYSTER COMPANY

# THROTTLE LINKAGE
## GASOLINE AND LPG
## FORWARD AND REVERSE LEVER

| ITEM | PART NO. | DESCRIPTION | QTY |
|---|---|---|---|
| 1 | 2027337 | Pedal | 1 |
| 2 | 287860 | Capscrew | 2 |
| 3 | 1466632 | Cover | 1 |
| 4 | 114312 | Strap Clamp | 1 |
| 5 | 320159 | Washer | 2 |
| 6 | 292682 | Lockwasher | 2 |
| 7 | 136692 | Nut | 2 |
| 8 | 1465778 | Throttle Arm Assembly (☞ Figure 3-21) | 1 |
| 9 | 1477491 | Pin | 1 |
| 10 | 15212 | Cotter Pin | 1 |
| 11 | 2062321 | Throttle Cable | 1 |
| 12 | 162836 | Rod End Pin | 1 |
| 13 | 292665 | Nut | 2 |
| 14 | 53162 | Lockwasher | 2 |
| 15 | 197064 | Washer | 2 |
| 16 | 2037112 | Switch | 1 |
| 17 | 302013 | Screw | 2 |
| 18 | 292681 | Lockwasher | 1 |
| 19 | 329069 | Nut | 1 |
| 20 | 292500 | Capscrew | 2 |
| 21 | 292680 | Lockwasher | 2 |

©2004 HYSTER COMPANY

# THROTTLE LINKAGE (Figure 3-20)
## GASOLINE AND LPG
## MONOTROL PEDAL

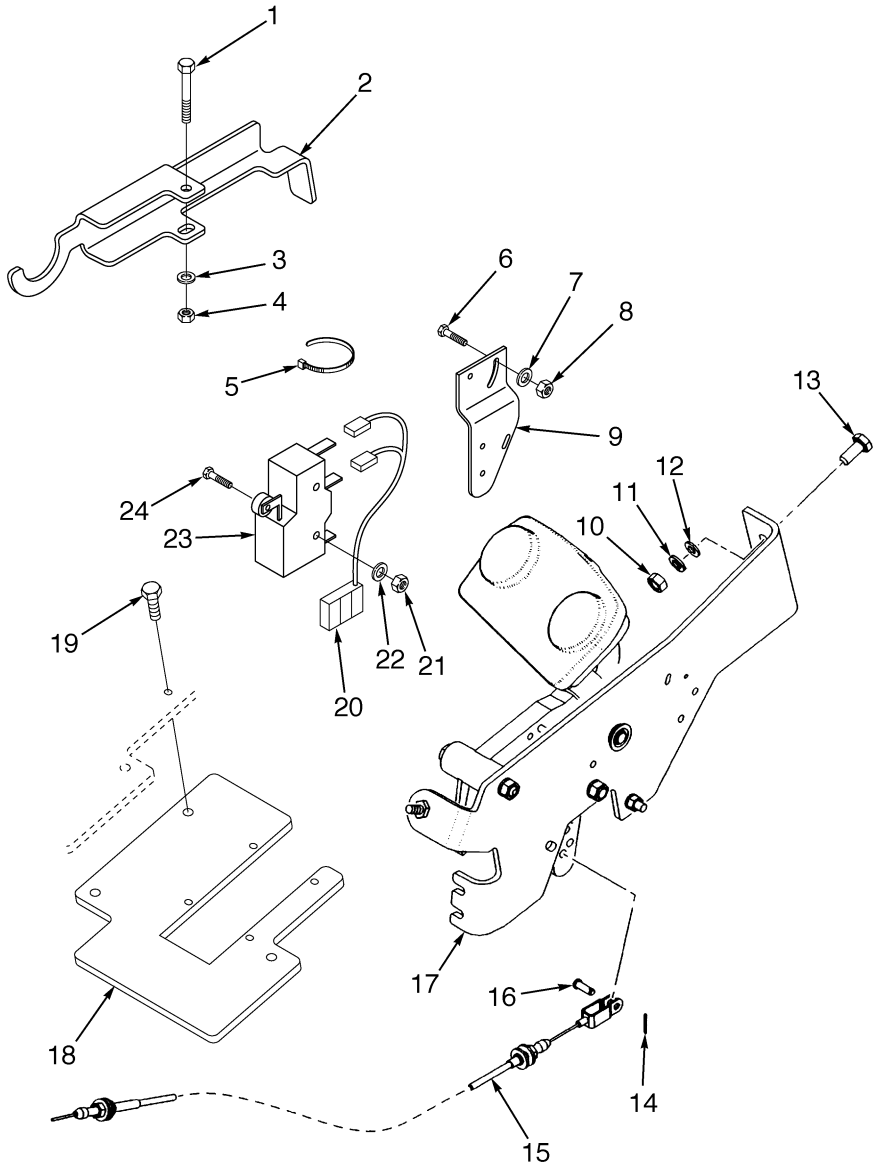


BP130033


©2004 HYSTER COMPANY

# THROTTLE LINKAGE
## GASOLINE AND LPG
## MONOTROL PEDAL

| ITEM | | PART NO. | DESCRIPTION | QTY |
|---|---|---|---|---|
| 1 | | 292505 | Capscrew | 1 |
| 2 | | 1473859 | Bracket | 1 |
| 3 | | 320156 | Washer | 1 |
| 4 | | 302399 | Nut | 1 |
| 5 | | 114312 | Strap Clamp | 2 |
| 6 | | 302024 | Screw | 2 |
| 7 | | 320154 | Washer | 2 |
| 8 | | 815597 | Nut | 2 |
| 9 | | 1473994 | Plate | 1 |
| 10 | | 136692 | Nut | 2 |
| 11 | | 292682 | Lockwasher | 2 |
| 12 | | 320159 | Washer | 2 |
| 13 | | 287860 | Capscrew | 2 |
| 14 | | 15212 | Cotter Pin | 1 |
| 15 | | 2062321 | Throttle Cable | 1 |
| 16 | | 162836 | Rod End Pin | 1 |
| 17 | | 1565899 | Pedal And Bracket Assembly (☞ Figure 3-23) | 1 |
| 18 | | 2052191 | Cover (With Cab) | 1 |
| 18 | | 2035836 | Cover (With Overhead Guard) | 1 |
| 19 | | 316678 | Screw | 3 |
| 20 | **a** | 2047717 | Wire Harness | 1 |
| 21 | | 292665 | Nut | 2 |
| 22 | | 53162 | Lockwasher | 2 |
| 23 | | 1320893 | Switch | 1 |
| 24 | | 302105 | Screw | 2 |

**FOOTNOTES:**
**a** Throttle-Up

# THROTTLE ARM ASSEMBLY (Figure 3-21)

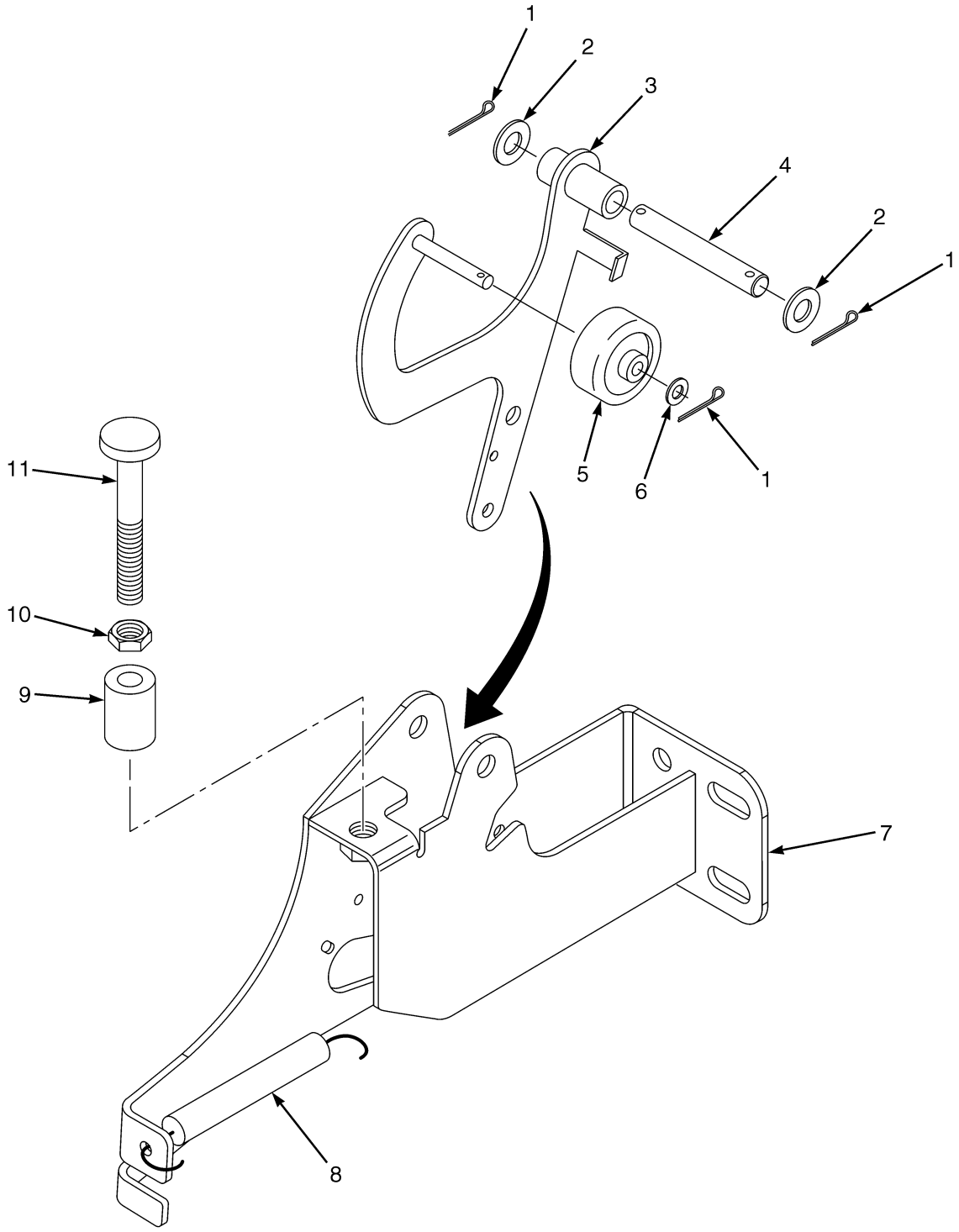



©2004 HYSTER COMPANY

# THROTTLE ARM ASSEMBLY

| ITEM | PART NO. | DESCRIPTION | QTY |
|---|---|---|---|
| | 1465778 | Throttle Arm Assembly | 1 |
| 1 | 15212 | Cotter Pin | 3 |
| 2 | 320159 | Washer | 2 |
| 3 | 1465780 | Lever | 1 |
| 3 | 1400224 | Shaft | 1 |
| 4 | 1400232 | Shaft | 1 |
| 5 | 1465799 | Roller | 1 |
| 6 | 320156 | Washer | 1 |
| 7 | 1465779 | Bracket | 1 |
| 8 | 1400223 | Spring | 2 |
| 9 | 1471496 | Spacer | 1 |
| 10 | 15001 | Nut | 1 |
| 11 | 1471541 | Stud | 1 |

©2004 HYSTER COMPANY

# THROTTLE LINKAGE (Figure 3-22)
## DIESEL TIER II

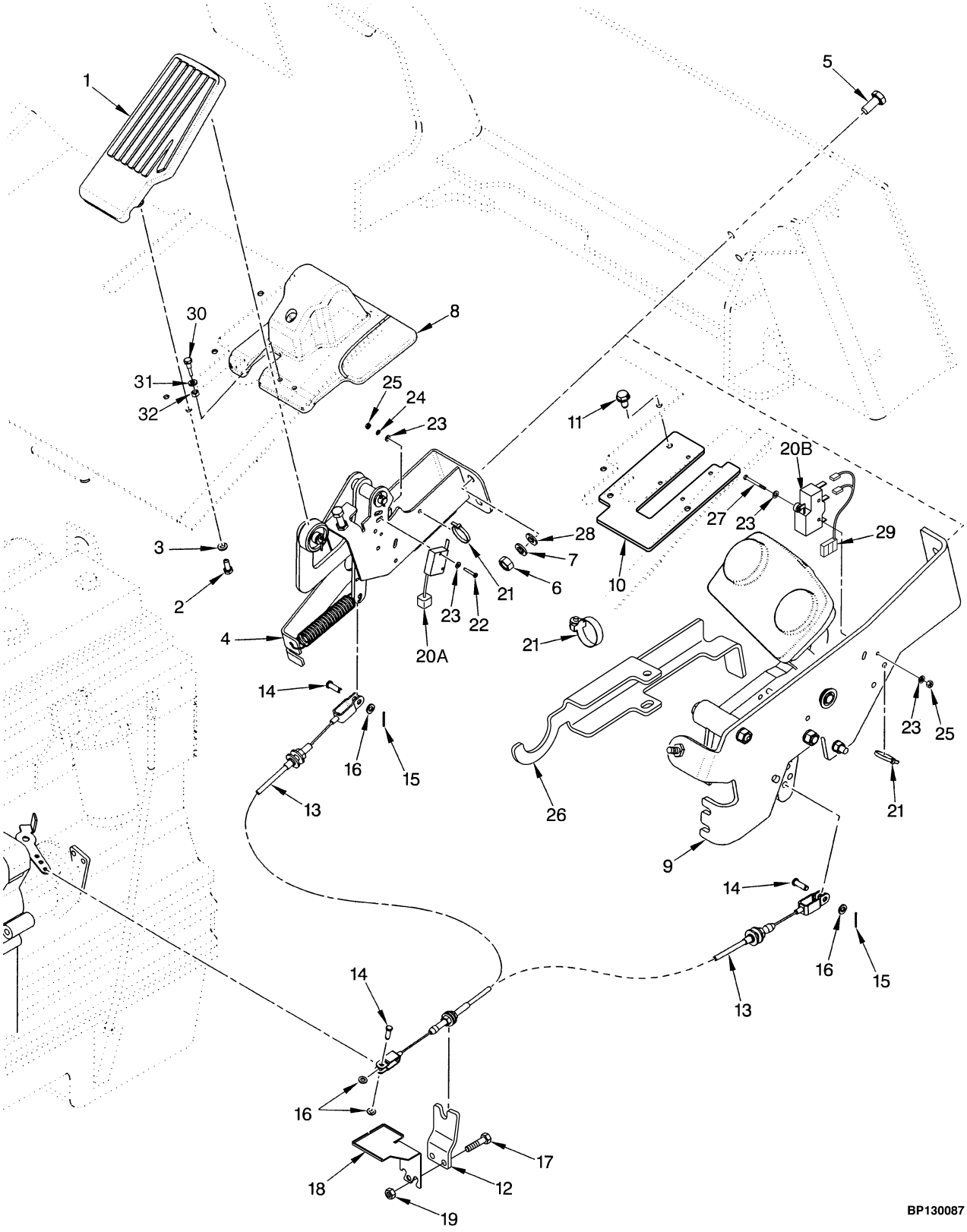



©2004 HYSTER COMPANY

# THROTTLE LINKAGE
## DIESEL TIER II

**KEY:**
**A: Forward/Reverse Lever**
**B: Monotrol Pedal**

| ITEM | | PART NO. | DESCRIPTION | QTY A | QTY B |
|---|---|---|---|---|---|
| 1 | | 2027337 | Pedal | 1 | .. |
| 2 | | 292500 | Capscrew | 2 | .. |
| 3 | | 292680 | Lockwasher | 2 | .. |
| 4 | | 1465778 | Throttle Arm Assembly (☞ Figure 3-21) | 1 | .. |
| 5 | | 287860 | Capscrew | 2 | 2 |
| 6 | | 136692 | Nut | 2 | 1 |
| 7 | | 292682 | Lockwasher | 2 | 1 |
| 8 | | 1466632 | Cover | 1 | .. |
| 9 | | 1465899 | Monotrol Pedal and Bracket Assembly (☞ Figure 3-23) | .. | 1 |
| 10 | | 2052191 | Cover (With Cab) | .. | 1 |
| 10 | | 2035836 | Cover (Without Cab) | .. | 1 |
| 11 | | 316678 | Screw | .. | 3 |
| 12 | | 1536880 | Bracket | 1 | 1 |
| 13 | | 2065703 | Throttle Cable | .. | 1 |
| 13 | | 2065704 | Throttle Cable | 1 | .. |
| 14 | | 167218 | Rod End Pin | 2 | 2 |
| 15 | | 15201 | Cotter Pin | 2 | 2 |
| 16 | | 320156 | Washer | 3 | 3 |
| 17 | | 1527877 | Screw | 2 | 2 |
| 18 | | 1539747 | Shield | 2 | 2 |
| 19 | | 1514429 | Nut (Flange) | 2 | 2 |
| 20 | | 2037112 | Switch | 1 | .. |
| 20 | | 1320893 | Switch | .. | 1 |
| 21 | | 114312 | Strap Clamp | 1 | 2 |
| 22 | | 302013 | Screw | 2 | .. |
| 23 | | 53162 | Lockwasher | 2 | 2 |
| 24 | | 197064 | Washer | 2 | .. |
| 25 | | 292665 | Nut | 2 | 2 |
| 26 | | 1473859 | Bracket | .. | 1 |
| 27 | | 302015 | Screw | .. | 2 |
| 28 | | 320159 | Washer | 2 | 2 |
| 29 | | 2047717 | Wire Harness | .. | 1 |
| 30 | **a** | 1477491 | Pin | 1 | .. |
| 31 | **a** | 292681 | Lockwasher | 1 | .. |
| 32 | **a** | 329069 | Nut | 1 | .. |

**FOOTNOTES:**
**a** Throttle-Up

# MONOTROL PEDAL AND BRACKET ASSEMBLY (Figure 3-23)

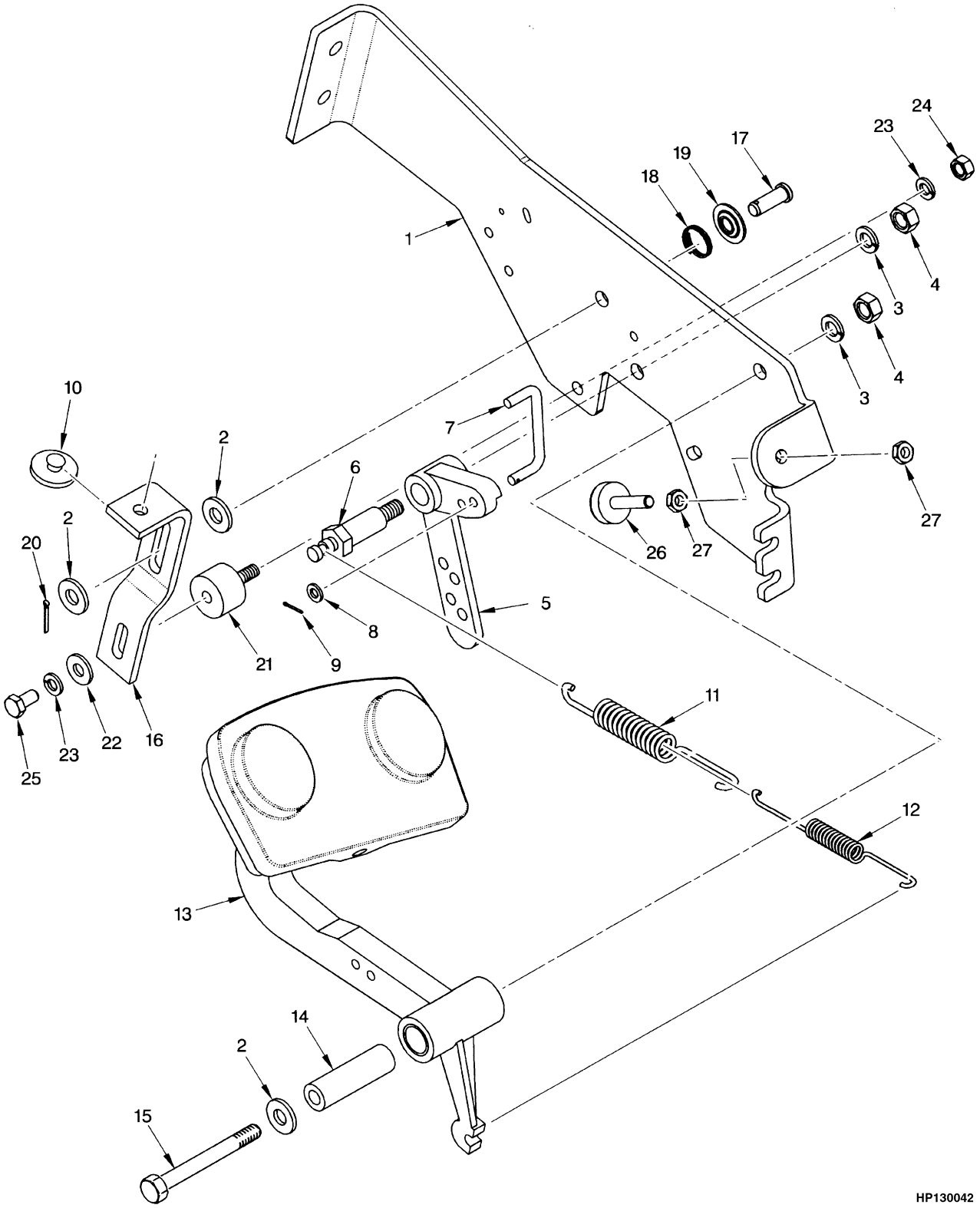



©2004 HYSTER COMPANY

# MONOTROL PEDAL AND BRACKET ASSEMBLY

| ITEM | PART NO. | DESCRIPTION | QTY |
|---|---|---|---|
| | 1465899 | Monotrol Pedal and Bracket Assembly | 1 |
| 1 | 1396151 | Bracket | 1 |
| 2 | 320160 | Washer | 3 |
| 3 | 292682 | Lockwasher | 2 |
| 4 | 136692 | Nut | 2 |
| 5 | 353164 | Crank | 1 |
| 6 | 352485 | Shaft | 1 |
| 7 | 353129 | Rod | 1 |
| 8 | 320156 | Washer | 1 |
| 9 | 15200 | Cotter Pin | 1 |
| 10 | 353195 | Bumper | 1 |
| 11 | 353143 | Spring | 1 |
| 12 | 353142 | Spring | 1 |
| 13 | 1352575 | Pedal Assembly | 1 |
| 14 | 353141 | Bushing | 1 |
| 15 | 292523 | Capscrew | 1 |
| 16 | 352950 | Bracket | 1 |
| 17 | 142 | Pin | 1 |
| 18 | 353172 | Spring | 1 |
| 19 | 353230 | Cap | 1 |
| 20 | 15212 | Cotter Pin | 1 |
| 21 | 353453 | Mount | 1 |
| 22 | 320158 | Washer | 1 |
| 23 | 292681 | Lockwasher | 2 |
| 24 | 239503 | Nut | 1 |
| 25 | 287851 | Capscrew | 1 |
| 26 | 1347088 | Stop Screw | 1 |
| 27 | 15001 | Nut | 2 |

©2004 HYSTER COMPANY

# MONOTROL PEDAL (Figure 3-24)

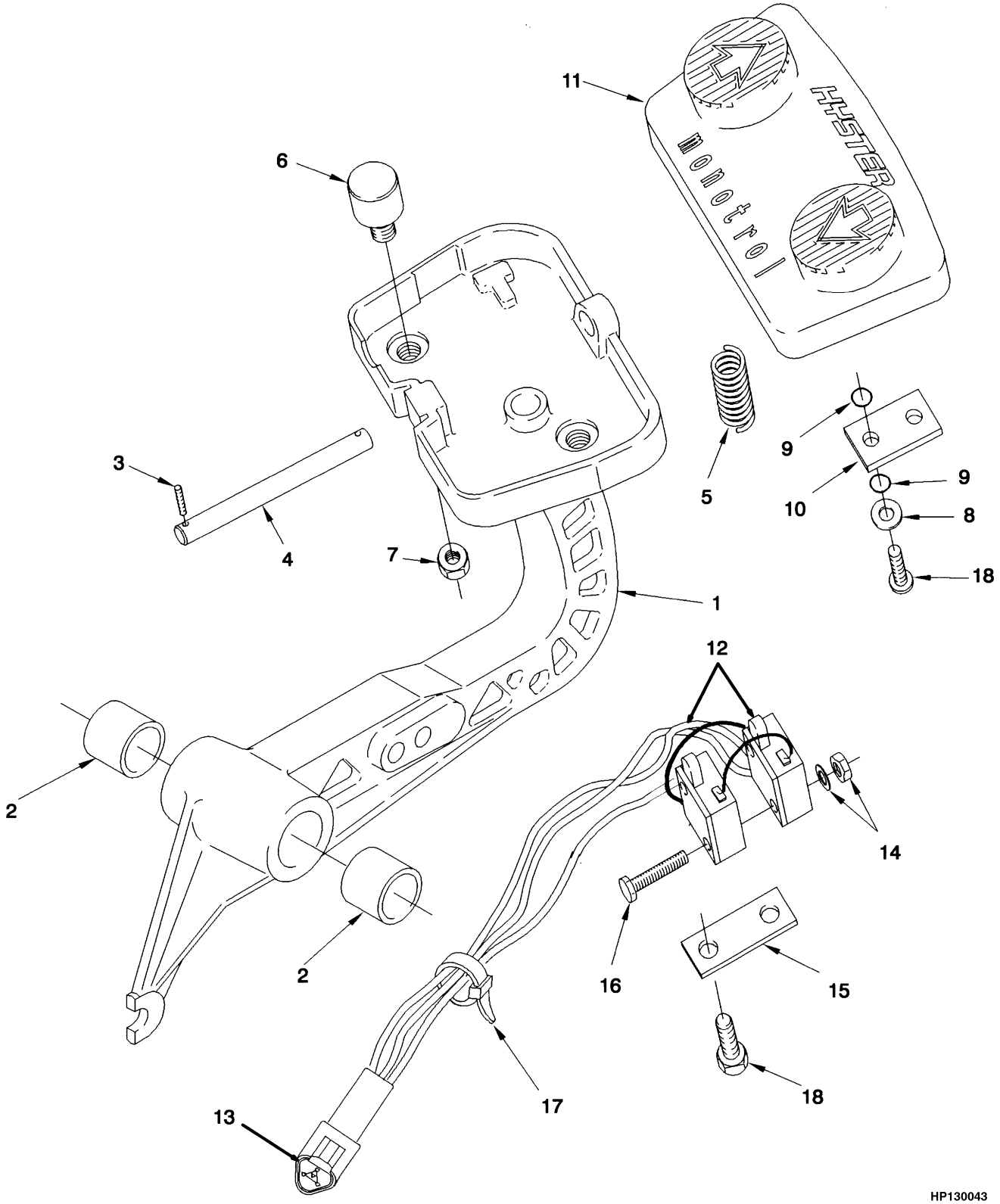



©2004 HYSTER COMPANY

# MONOTROL PEDAL

| ITEM | PART NO. | DESCRIPTION | QTY |
|---|---|---|---|
| | 1352575 | Pedal Assembly | 1 |
| 1 | 353397 | Pedal | 1 |
| 2 | 135685 | Bushing | 2 |
| 3 | 220932 | Screw | 2 |
| 3 | 360387 | Sealant | AR |
| 4 | 353154 | Pin | 1 |
| 5 | 353168 | Spring | 1 |
| 6 | 353422 | Magnet | 2 |
| 7 | 353432 | Nut | 2 |
| 8 | 353448 | Washer | 4 |
| 9 | 57568 | O-Ring | 8 |
| 10 | 359207 | Plate | 2 |
| 11 | 353175 | Pad | 1 |
| 12 | 1352090 | Switch Assembly | 1 |
| 12 | 353128 | Switch | 1 |
| 12 | 1352089 | Wire Harness | 1 |
| 13 | 1330410 | Connector | 1 |
| 13 | 1330415 | Lock | 1 |
| 13 | 1330435 | Pin | 3 |
| 14 | 53162 | Lockwasher | 2 |
| 14 | 16865 | Nut | 2 |
| 15 | 353165 | Retainer | 1 |
| 16 | 220434 | Capscrew | 2 |
| 17 | 114312 | Strap Clamp | 3 |
| 18 | 352969 | Screw | 6 |

©2004 HYSTER COMPANY

# NOTES

# 4 ELECTRICAL SYSTEM

# SECTION 4
# ELECTRICAL SYSTEM

**DESCRIPTION** **PAGE**

ALTERNATOR
PRESTOLITE BRAND
GS, LPS, DS ..... 4-22
DISTRIBUTOR ASSEMBLY
4.3 L EPA COMPLIANT ENGINE ..... 4-21
ELECTRICAL SYSTEM
ALTERNATOR AND BATTERY
G, GS, LPG AND LPS ..... 4-10
COWL ..... 4-2
DIESEL TIER II ..... 4-14
ENGINE COMPARTMENT
GASOLINE AND LPG ..... 4-8
TYPE DS ..... 4-18
INSTRUMENT PANEL ..... 4-6
STARTER
DIESEL TIER II ..... 4-24
WIRE HARNESS
MODULE
SHEET 1 OF 2 ..... 4-28
SHEET 2 OF 2 ..... 4-32
SEALED ALTERNATOR ..... 4-36
WIRE HARNESS (ENGINE)
DIESEL TIER II ..... 4-26

©2004 HYSTER COMPANY

# ELECTRICAL SYSTEM (Figure 4-1)
## COWL

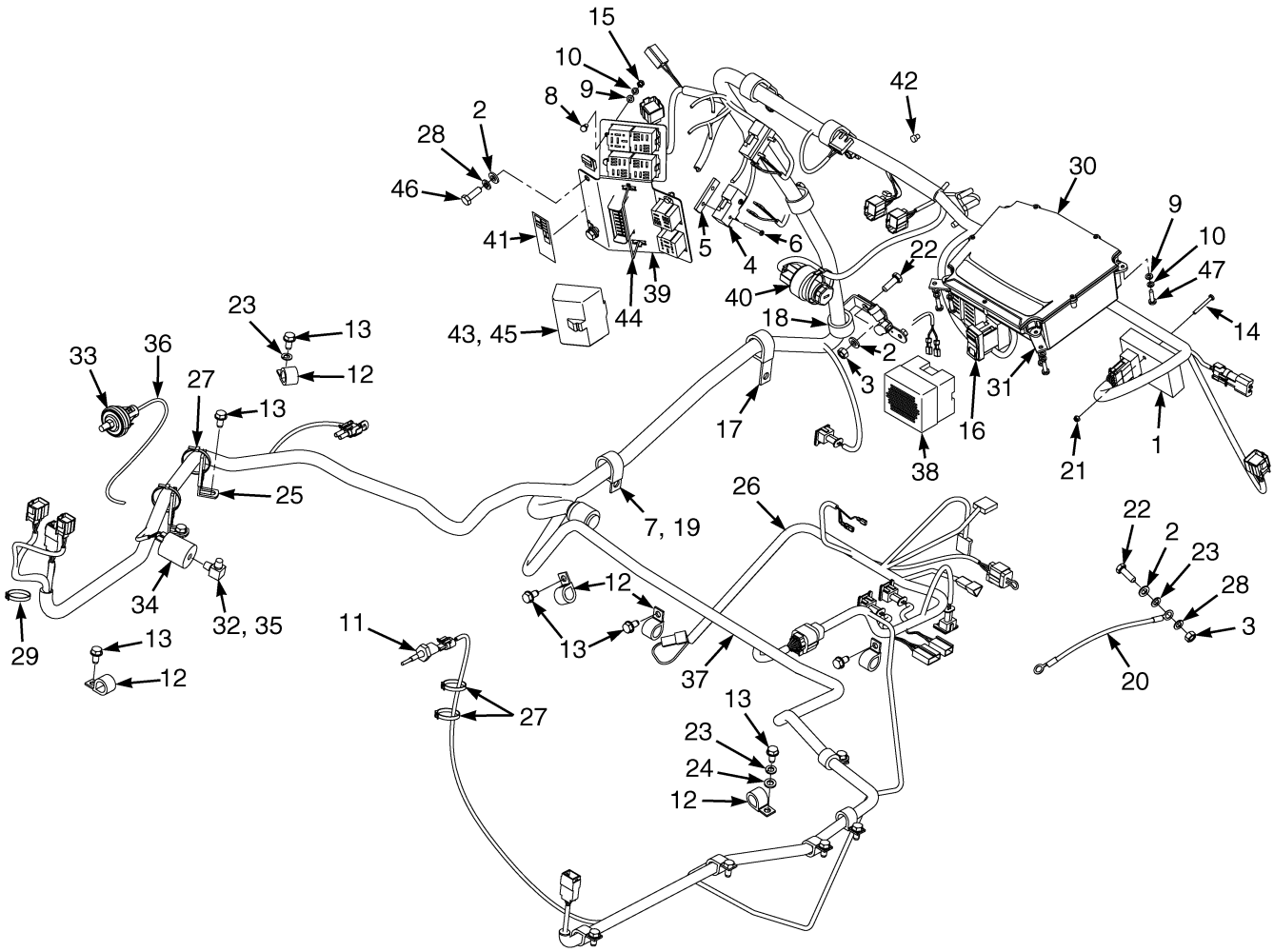


HP081418


©2004 HYSTER COMPANY

# ELECTRICAL SYSTEM
## COWL

**KEY:**
**A: Single And Two Speed Transmission (With Speed Control)**
**B: Single Speed Transmission (Without Speed Control)**

| ITEM | | PART NO. | DESCRIPTION | QTY A | QTY B |
|---|---|---|---|---|---|
| 1 | | 2059789 | Controller | 1 | .. |
| 2 | | 320157 | Washer | 15 | 15 |
| 3 | | 239503 | Nut | 10 | 10 |
| 4 | | 370868 | Switch | 2 | 2 |
| 5 | | 316132 | Spacer | 2 | 2 |
| 6 | | 86510 | Screw | 4 | 4 |
| 7 | | 178119 | Clamp | .. | 2 |
| 8 | | 302244 | Screw | 4 | 4 |
| 9 | | 320155 | Washer | 8 | 8 |
| 10 | | 292679 | Lockwasher | 8 | 8 |
| 11 | | 1384594 | Low Coolant Sensor | 1 | 1 |
| 12 | | 166285 | Clamp | 10 | 10 |
| 13 | | 316678 | Screw | 12 | 12 |
| 14 | | 296504 | Screw | 2 | .. |
| 15 | | 292668 | Nut | 4 | 4 |
| 16 | | 1397840 | Switch (Transmission Control) | 1 | .. |
| 17 | | 1310611 | Clamp | 1 | 1 |
| 18 | | 1399400 | Clamp | 3 | 3 |
| 19 | | 178119 | Clamp | 2 | .. |
| 20 | | 387892 | Wire Harness (Ground) | 1 | 1 |
| 21 | | 815597 | Nut | 2 | .. |
| 22 | | 136749 | Capscrew | 8 | 8 |
| 23 | | 296380 | Lockwasher | 4 | 4 |
| 24 | | 320158 | Washer | 1 | 1 |
| 25 | | 1350914 | Strap | 2 | 2 |
| 26 | | 2059309 | Wire Harness (Powershift Transmission Control) | 1 | 1 |
| 27 | | 137852 | Strap Clamp | 6 | 6 |
| 28 | | 292681 | Lockwasher | 4 | 4 |
| 29 | | 325897 | Clamp | 1 | 1 |
| 30 | | . . . . . | Instrument Panel (☞ Figure 4-2) | 1 | 1 |
| 31 | | 1399886 | Strap | 2 | 2 |
| 32 | **a** | 14349 | Fitting | 1 | 1 |
| 33 | **ab** | 1301648 | Low Pressure Switch | 1 | 1 |
| 34 | **b** | 1347067 | Switch (Restriction) | 1 | 1 |
| 35 | **bc** | 17650 | Fitting | 1 | 1 |
| 36 | | 2036542 | Wire Harness | 1 | 1 |
| 37 | | 2063002 | Wire Harness (Module) (Gas, LPG, Diesel) (☞ Figure 4-11, ☞ Figure 4-12) | 1 | 1 |
| 37 | | 2063000 | Wire Harness (Module) (GS, LPS, DS) (☞ Figure 4-11, ☞ Figure 4-12) | 1 | 1 |
| 38 | | 1524525 | Horn (Electric) | 1 | 1 |
| 39 | | 1492957 | Bracket | 1 | 1 |
| 40 | | 379902 | Ignition Switch | 1 | 1 |
| 40 | | 1337197 | Key Set | 1 | 1 |
| 41 | | 1515763 | Label (Fuse Panel Relays) | 1 | 1 |
| 42 | | 1363916 | Plug | 4 | 4 |
| 43 | | 370863 | Cover | 1 | 1 |
| 44 | | 370864 | Latch (Cover) | 1 | 1 |

©2004 HYSTER COMPANY

# ELECTRICAL SYSTEM
## COWL

| ITEM | PART NO. | DESCRIPTION | QTY A | QTY B |
|---|---|---|---|---|
| 45 | 1397451 | Label (Fuse Panel) | 1 | 1 |
| 46 | 136681 | Capscrew | 2 | 2 |
| 47 | 296510 | Screw | 4 | 4 |

**FOOTNOTES:**
**a** LPG
**b** Premium
**c** Standard Diesel


©2004 HYSTER COMPANY

# NOTES

# INSTRUMENT PANEL (Figure 4-2)

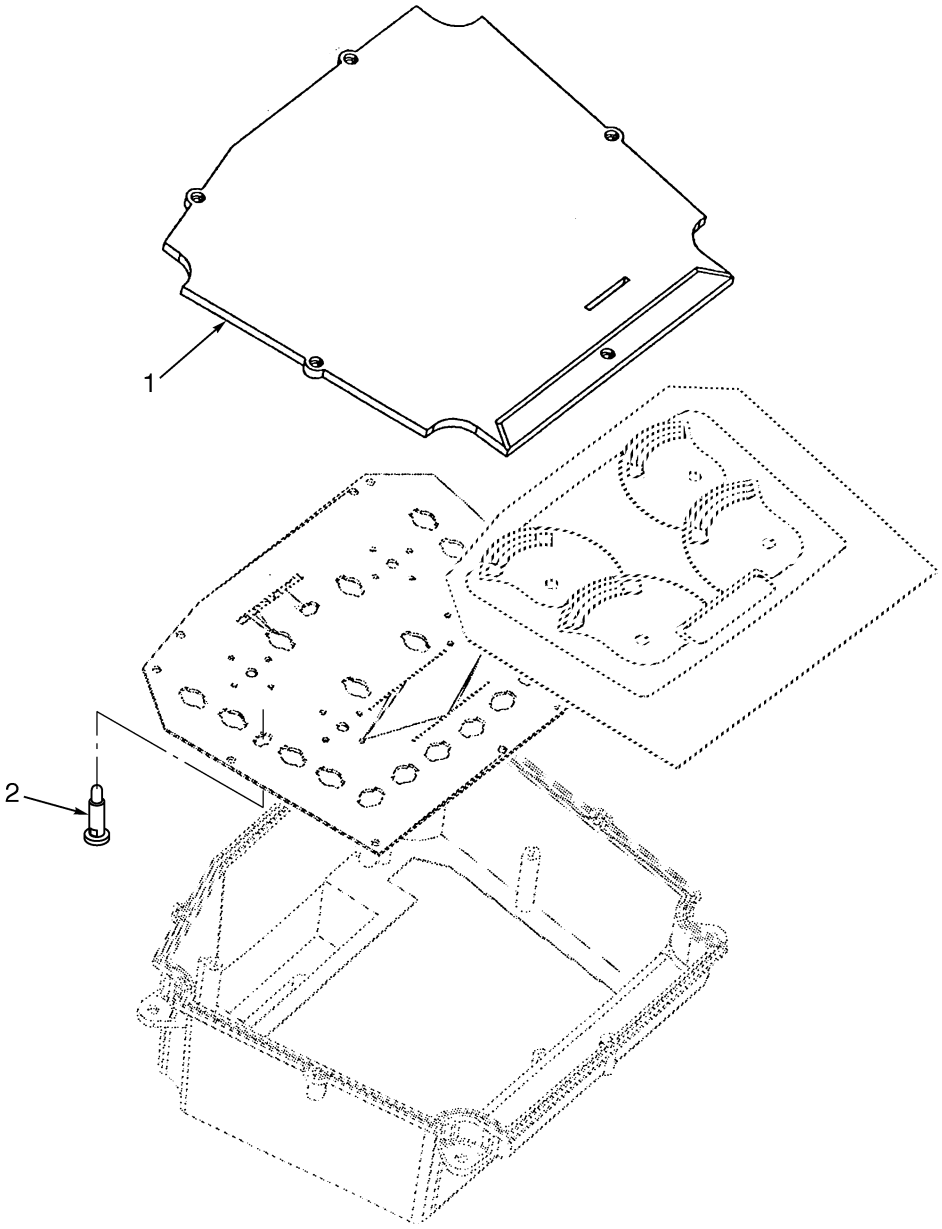


BP080174


©2004 HYSTER COMPANY

# INSTRUMENT PANEL

**KEY:**
**A: Standard**
**B: Premium**

| ITEM | PART NO. | DESCRIPTION | QTY A | QTY B |
|---|---|---|---|---|
| | 1510312 | Instrument Panel (Gas and Diesel) | 1 | .. |
| | 1510313 | Instrument Panel (LPG) | 1 | .. |
| | 1510310 | Instrument Panel (Gas and Diesel) | .. | 1 |
| | 1510311 | Instrument Panel (LPG) | .. | 1 |
| 1 | 1533858 | Cover | 1 | .. |
| 1 | 1533859 | Cover | .. | 1 |
| 2 | 1533797 | Bulb | 2 | 4 |

©2004 HYSTER COMPANY

# ELECTRICAL SYSTEM (Figure 4-3)
## ENGINE COMPARTMENT
## GASOLINE AND LPG

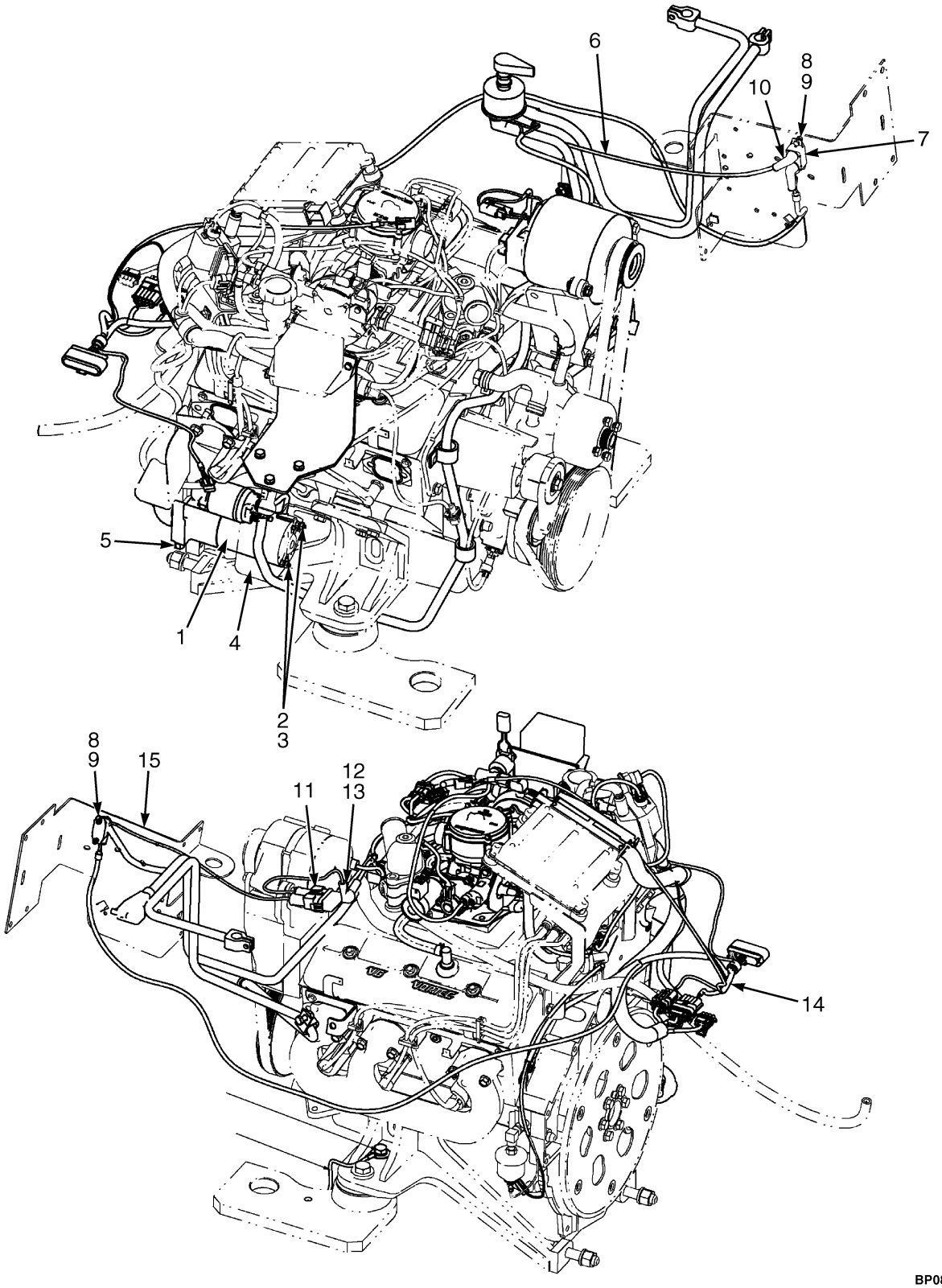



©2004 HYSTER COMPANY

# ELECTRICAL SYSTEM
## ENGINE COMPARTMENT
## GASOLINE AND LPG

| ITEM | PART NO. | DESCRIPTION | QTY |
|---|---|---|---|
| 1 | 1469604 | Starter | 1 |
| 2 | 15152 | Lockwasher | 2 |
| 3 | 15052 | Nut | 2 |
| 4 | 1533891 | Bracket | 1 |
| 5 | 1397716 | Bolt | 1 |
| 6 | 1558060 | Wire Harness (Disconnect Switch To Circuit Breaker) | 1 |
| 7 | 2044948 | Circuit Breaker (50 Amp) | 1 |
| 8 | 292667 | Nut | 4 |
| 9 | 292678 | Lockwasher | 4 |
| 10 | 190383 | Boot | 1 |
| 11 | 1549399 | Harness (Alternator To Circuit Breaker) | 1 |
| 12 | 296359 | Lockwasher | 2 |
| 13 | 136687 | Nut | 2 |
| 14 | 2062220 | Wire Harness (Interface) | 1 |
| 15 | 1551850 | Bracket | 1 |

©2004 HYSTER COMPANY

# ELECTRICAL SYSTEM (Figure 4-4)
## ALTERNATOR AND BATTERY
## G, GS, LPG AND LPS

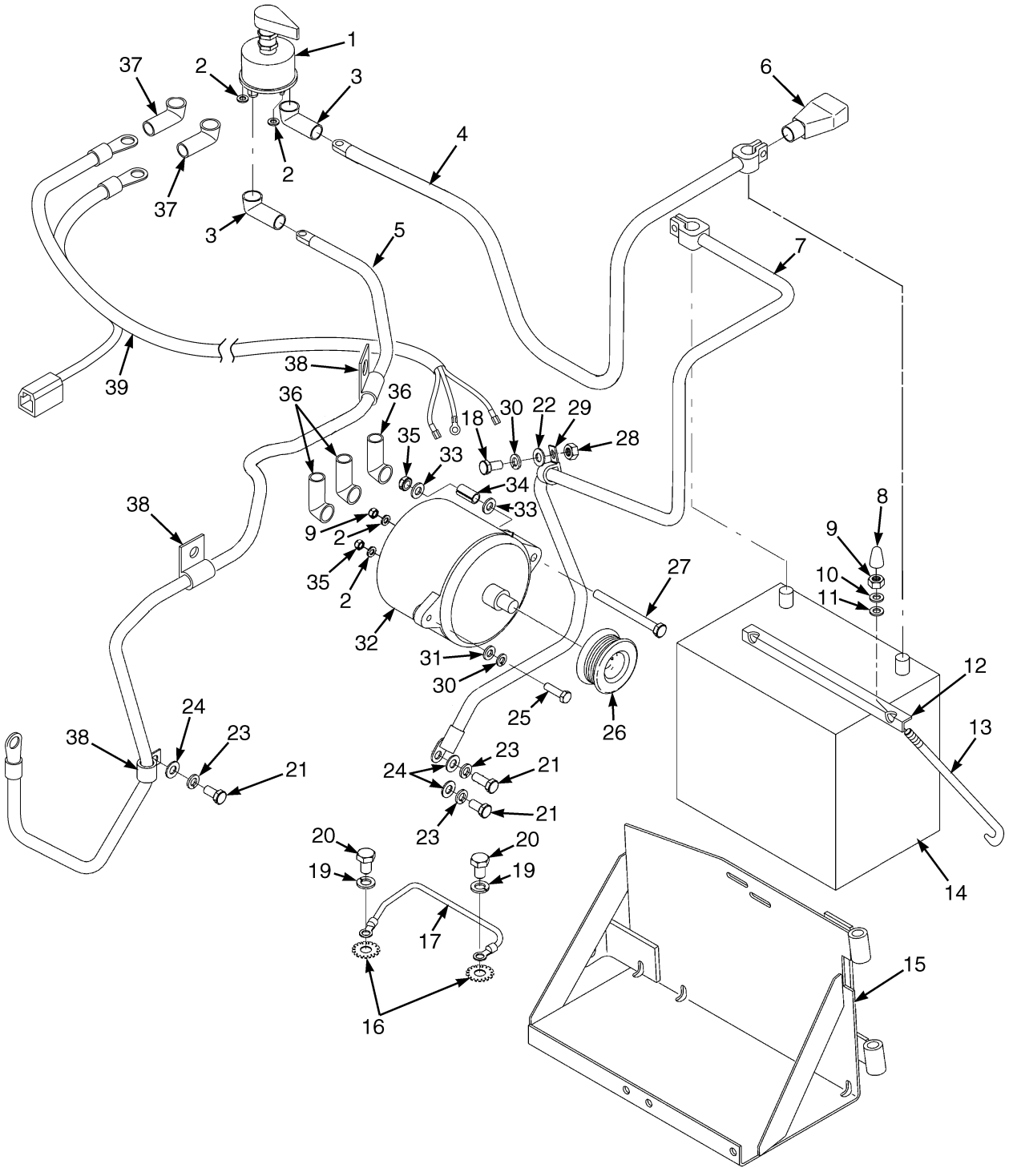


BP080185


©2004 HYSTER COMPANY

# ELECTRICAL SYSTEM
## ALTERNATOR AND BATTERY
## G, GS, LPG AND LPS

**KEY:**
**A: Gasoline and LP**
**B: GS and LPS**

| ITEM | | PART NO. | DESCRIPTION | QTY A | QTY B |
|---|---|---|---|---|---|
| 1 | | 1324517 | Switch (Disconnect) | .. | 1 |
| 2 | | 296359 | Lockwasher | 2 | .. |
| 2 | | 18500 | Washer | .. | 6 |
| 3 | | 204223 | Boot | 2 | 2 |
| 4 | | 1523472 | Battery Cable | 1 | .. |
| 4 | | 1397786 | Battery Cable | .. | 1 |
| 5 | | 1523472 | Battery Cable | 1 | .. |
| 5 | | 1397787 | Battery Cable | .. | 1 |
| 6 | | 321158 | Boot | 1 | 1 |
| 7 | | 1397783 | Battery Cable | 1 | 1 |
| 8 | | 1326939 | Cap | 3 | 3 |
| 9 | | 136687 | Nut | 2 | 2 |
| 10 | | 292680 | Lockwasher | 2 | 2 |
| 11 | | 320156 | Washer | 2 | 2 |
| 12 | | 309152 | Battery Hold Down | 1 | 1 |
| 13 | | 309124 | Link (Battery Holddown) | 2 | 2 |
| 14 | | 1383331 | Battery (Wet) | 1 | 1 |
| 15 | | 2067334 | Battery Tray | 1 | 1 |
| 16 | | 296408 | Lockwasher | 2 | 2 |
| 17 | | 1493116 | Wire Harness (Ground) | 1 | 1 |
| 18 | | 136749 | Capscrew | 1 | 1 |
| 19 | | 292683 | Lockwasher | 2 | 2 |
| 20 | | 292526 | Capscrew | 2 | 2 |
| 21 | | 16597 | Capscrew (LP, LPS) | 2 | 2 |
| 21 | | 16597 | Capscrew (G, GS,) | 3 | 3 |
| 22 | | 320158 | Washer | 4 | 4 |
| 23 | | 15156 | Lockwasher | 3 | 3 |
| 24 | | 15134 | Washer | 3 | 3 |
| 25 | | 18498 | Capscrew | .. | 1 |
| 26 | | 1392210 | Pulley | .. | 1 |
| 27 | | 18546 | Capscrew | 1 | 1 |
| 28 | | 239503 | Nut | 4 | 4 |
| 29 | | 153069 | Clamp (LP, LPS) | 1 | 1 |
| 30 | | 292681 | Lockwasher | 4 | 4 |
| 30 | | 15155 | Lockwasher | .. | 1 |
| 31 | | 18515 | Washer | .. | 1 |
| 32 | **a** | 1469597 | Alternator (G, LPG) | 1 | .. |
| 32 | | 1394001 | Alternator (GS, LPS) (☞ Figure 4-8) | .. | 1 |
| 33 | | 261379 | Washer | 2 | 2 |
| 34 | | 189338 | Spacer (Alternator Bracket) | 1 | 1 |
| 34 | | 305100 | Sleeve (Not Illustrated) | 1 | .. |
| 35 | | 287851 | Capscrew | 1 | 1 |
| 35 | | 139743 | Locknut | 1 | 1 |
| 35 | | 136687 | Nut | 2 | 2 |
| 36 | | 190383 | Boot | 1 | 3 |

©2004 HYSTER COMPANY

# ELECTRICAL SYSTEM
## ALTERNATOR AND BATTERY
## G, GS, LPG AND LPS

| ITEM | PART NO. | DESCRIPTION | QTY A | QTY B |
|---|---|---|---|---|
| 37 | 157065 | Boot | 1 | 1 |
| 38 | 153069 | Clamp | 4 | 4 |
| 39 | 2068496 | Wire Harness (☞ Figure 4-13) | .. | 1 |

**FOOTNOTES:**
**a** Includes Pulley


©2004 HYSTER COMPANY

# NOTES

# ELECTRICAL SYSTEM (Figure 4-5)
## DIESEL TIER II

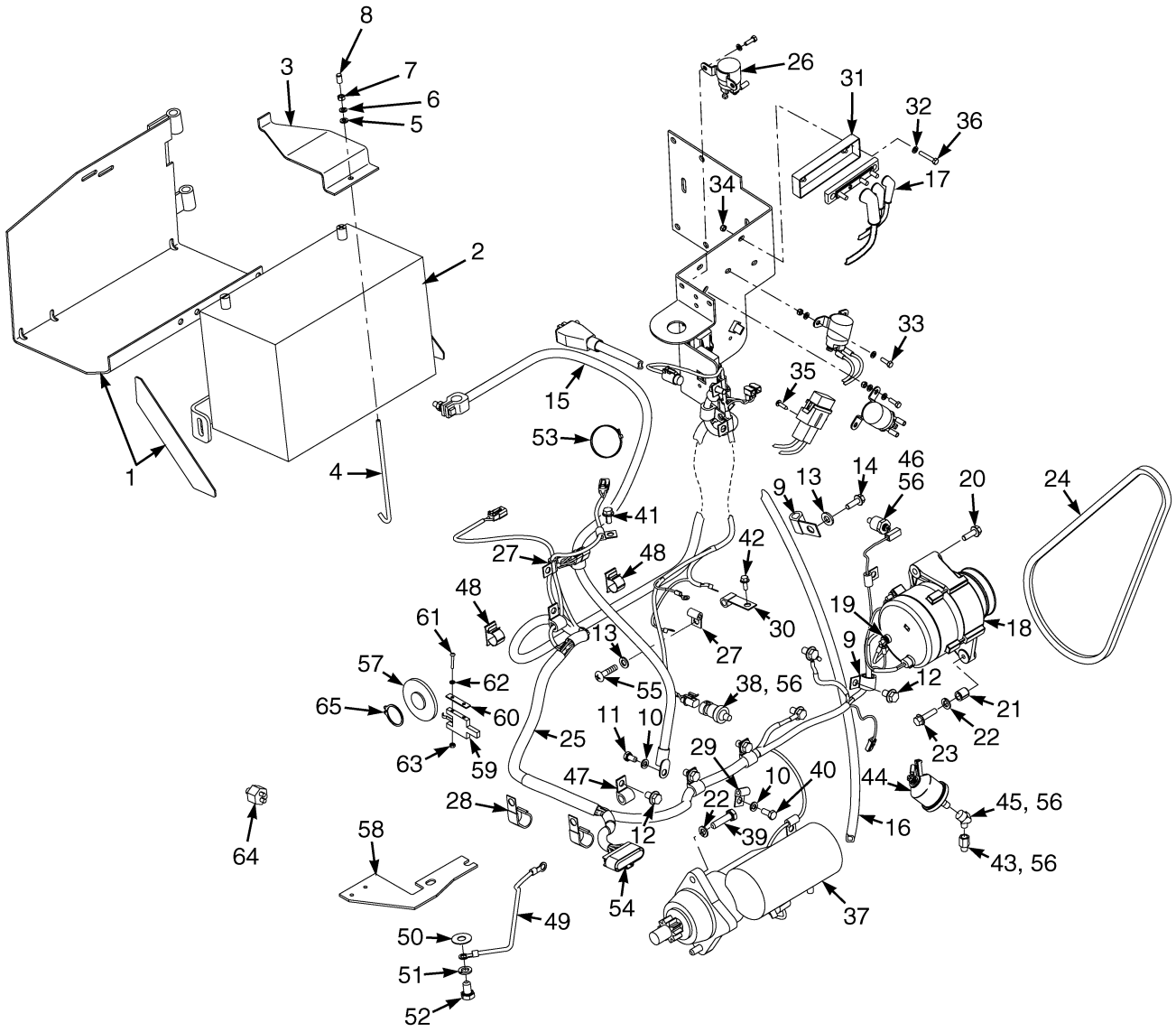


BP080186


©2004 HYSTER COMPANY

# ELECTRICAL SYSTEM
## DIESEL TIER II

| ITEM | PART NO. | DESCRIPTION | QTY |
|---|---|---|---|
| 1 | 2067334 | Battery Tray | 1 |
| 2 | 1399332 | Battery (Wet) | 1 |
| 3 | 1399333 | Battery Hold Down | 1 |
| 4 | 1399335 | Link | 1 |
| 5 | 320156 | Washer | 1 |
| 6 | 292680 | Lockwasher | 1 |
| 7 | 136687 | Nut | 3 |
| 8 | 1326939 | Cap | 1 |
| 9 | 178119 | Clamp | 1 |
| 10 | 292681 | Lockwasher | 2 |
| 11 | 287851 | Capscrew | 1 |
| 12 | 1528778 | Capscrew | 6 |
| 13 | 320157 | Washer | 3 |
| 14 | 1527880 | Capscrew | 1 |
| 15 | 1397783 | Battery Cable | 1 |
| 16 | 1536272 | Battery Cable | 1 |
| 17 | 204223 | Boot | 3 |
| 18 | 1469598 | Alternator | 1 |
| 19 | 296359 | Lockwasher | 2 |
| 20 | 1527881 | Capscrew | 1 |
| 21 | 1345014 | Sleeve | 1 |
| 22 | 292682 | Lockwasher | 3 |
| 23 | 292524 | Capscrew | 1 |
| 24 | 2039256 | V-Belt | 1 |
| 25 | 2062212 | Wire Harness (Engine) (☞ Figure 4-10) | 1 |
| 26 | 1454967 | Relay | 3 |
| 27 | 164488 | Clamp | 2 |
| 28 | 325897 | Clamp | 2 |
| 29 | 124359 | Clamp | 5 |
| 30 | 188631 | Clamp | 1 |
| 31 | 1545154 | Bus Bar (100 Amp) | 1 |
| 32 | 320155 | Washer | 18 |
| 33 | 302246 | Screw | 7 |
| 34 | 302398 | Locknut | 9 |
| 35 | 227178 | Screw | 2 |
| 36 | 302250 | Screw | 2 |
| 37 | 1388721 | Starter Motor (☞ Figure 4-9) | 1 |
| 38 | 1330353 | Sender (Oil Pressure) | 1 |
| 39 | 292515 | Capscrew | 2 |
| 40 | 136681 | Capscrew | 1 |
| 41 | 1527879 | Capscrew | 3 |
| 42 | 1527876 | Capscrew | 1 |
| 43 | 1475493 | Fitting (Adapter) | 1 |
| 44 | 1514215 | Oil Pressure Sender | 1 |
| 45 | 12821 | Fitting | 1 |
| 46 | 1319190 | Temperature Sender | 1 |
| 47 | 128408 | Clamp | 6 |
| 48 | 1548432 | Clamp | 2 |
| 49 | 1493116 | Wire Harness (Ground) | 1 |
| 50 | 296408 | Lockwasher | 1 |
| 51 | 292683 | Lockwasher | 1 |

©2004 HYSTER COMPANY

# ELECTRICAL SYSTEM
## DIESEL TIER II

| ITEM | PART NO. | DESCRIPTION | QTY |
|---|---|---|---|
| 52 | 292526 | Capscrew | 1 |
| 53 | 2004005 | Strap Clamp | 1 |
| 54 | 1402809 | Clip | 1 |
| 55 | 283149 | Capscrew | 1 |
| 56 | 246108 | Sealant | 1 |
| 57 | 387455 | Disc (Neutral Start) | 1 |
| 58 | 1324557 | Bracket | 1 |
| 59 | 1320893 | Switch | 1 |
| 60 | 316132 | Spacer | 1 |
| 61 | 86510 | Screw | 2 |
| 62 | 16743 | Lockwasher | 2 |
| 63 | 15049 | Nut | 2 |
| 64 | 387867 | Pressure Switch | 1 |
| 65 | 209417 | Snap Ring | 1 |


*See Service Manual for service procedures.*
©2004 HYSTER COMPANY

# NOTES

# ELECTRICAL SYSTEM (Figure 4-6)
## TYPE DS

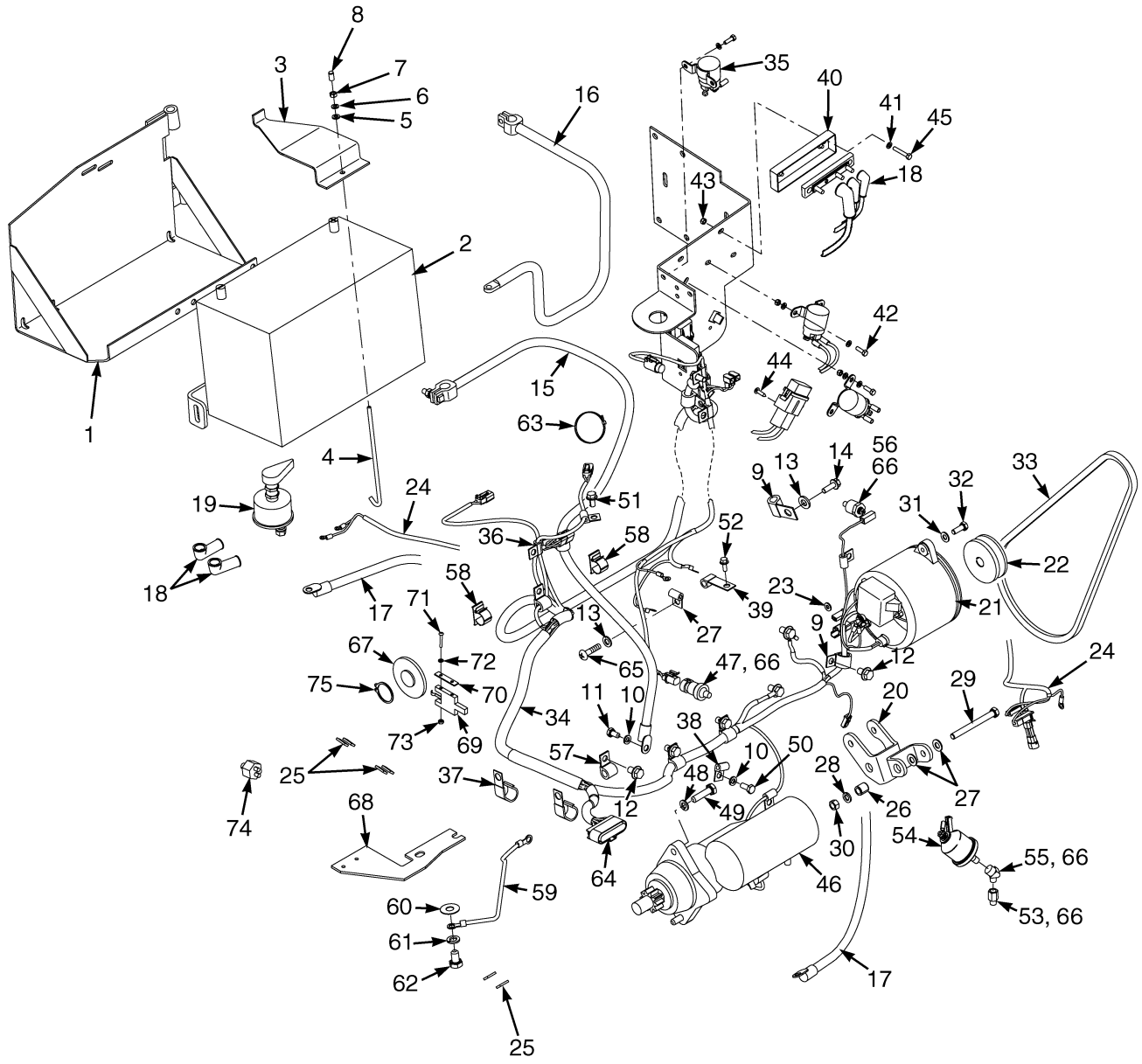


BP080187


©2004 HYSTER COMPANY

# ELECTRICAL SYSTEM
## TYPE DS

| ITEM | PART NO. | DESCRIPTION | QTY |
|---|---|---|---|
| 1 | 2067334 | Battery Tray | 1 |
| 2 | 1399332 | Battery (Wet) | 1 |
| 3 | 1399333 | Battery Hold Down | 1 |
| 4 | 1399335 | Link | 1 |
| 5 | 320156 | Washer | 1 |
| 6 | 292680 | Lockwasher | 1 |
| 7 | 136687 | Nut | 3 |
| 8 | 1326939 | Cap | 1 |
| 9 | 178119 | Clamp | 1 |
| 10 | 292681 | Lockwasher | 2 |
| 11 | 287851 | Capscrew | 1 |
| 12 | 1528778 | Capscrew | 6 |
| 13 | 320157 | Washer | 3 |
| 14 | 1527880 | Capscrew | 1 |
| 15 | 1397783 | Battery Cable | 1 |
| 16 | 1397786 | Battery Cable | 1 |
| 17 | 1544677 | Battery Cable | 1 |
| 18 | 204223 | Boot | 1 |
| 19 | 1324517 | Switch (Disconnect) | 1 |
| 20 | 1555782 | Bracket | 1 |
| 21 | 1394001 | Alternator (☞ Figure 4-8) | 1 |
| 22 | 353291 | Pulley | 1 |
| 23 | 18500 | Washer | 1 |
| 24 | 2068496 | Wire Harness (☞ Figure 4-13) | 1 |
| 25 | 387869 | Boot | 7 |
| 26 | 1345014 | Sleeve | 1 |
| 27 | 15134 | Washer | 2 |
| 28 | 15156 | Lockwasher | 1 |
| 29 | 18543 | Capscrew | 1 |
| 30 | 15056 | Nut | 1 |
| 31 | 18515 | Washer | 2 |
| 32 | 18496 | Capscrew | 1 |
| 33 | 2039256 | V-Belt | 1 |
| 34 | 2062212 | Wire Harness (Engine) (☞ Figure 4-10) | 1 |
| 35 | 1454967 | Relay | 3 |
| 36 | 164488 | Clamp | 2 |
| 37 | 325897 | Clamp | 2 |
| 38 | 124359 | Clamp | 5 |
| 39 | 188631 | Clamp | 1 |
| 40 | 1545154 | Bus Bar (100 Amp) | 1 |
| 41 | 320155 | Washer | 18 |
| 42 | 302246 | Screw | 7 |
| 43 | 302398 | Locknut | 9 |
| 44 | 227178 | Screw | 2 |
| 45 | 302250 | Screw | 2 |
| 46 | 1388721 | Starter Motor (☞ Figure 4-9) | 1 |
| 47 | 1330353 | Sender (Oil Pressure) | 1 |
| 48 | 292682 | Lockwasher | 2 |
| 49 | 292515 | Capscrew | 2 |
| 50 | 136681 | Capscrew | 1 |
| 51 | 1527879 | Capscrew | 3 |

©2004 HYSTER COMPANY

# ELECTRICAL SYSTEM
## TYPE DS

| ITEM | PART NO. | DESCRIPTION | QTY |
|---|---|---|---|
| 52 | 1527876 | Capscrew | 1 |
| 53 | 1475493 | Fitting (Adapter) | 1 |
| 54 | 1514215 | Oil Pressure Sender | 1 |
| 55 | 12821 | Fitting | 1 |
| 56 | 1319190 | Temperature Sender | 1 |
| 57 | 128408 | Clamp | 6 |
| 58 | 1548432 | Clamp | 2 |
| 59 | 1493116 | Wire Harness (Ground) | 1 |
| 60 | 296408 | Lockwasher | 1 |
| 61 | 292683 | Lockwasher | 1 |
| 62 | 292526 | Capscrew | 1 |
| 63 | 2004005 | Strap Clamp | 1 |
| 64 | 1402809 | Clip | 1 |
| 65 | 283149 | Capscrew | 1 |
| 66 | 246108 | Sealant | 1 |
| 67 | 387455 | Disc (Neutral Start) | 1 |
| 68 | 1324557 | Bracket | 1 |
| 69 | 1320893 | Switch | 1 |
| 70 | 316132 | Spacer | 1 |
| 71 | 86510 | Screw | 2 |
| 72 | 16743 | Lockwasher | 2 |
| 73 | 15049 | Nut | 2 |
| 74 | 387867 | Pressure Switch | 1 |
| 75 | 209417 | Snap Ring | 1 |


©2004 HYSTER COMPANY

# DISTRIBUTOR ASSEMBLY (Figure 4-7)
## 4.3 L EPA COMPLIANT ENGINE

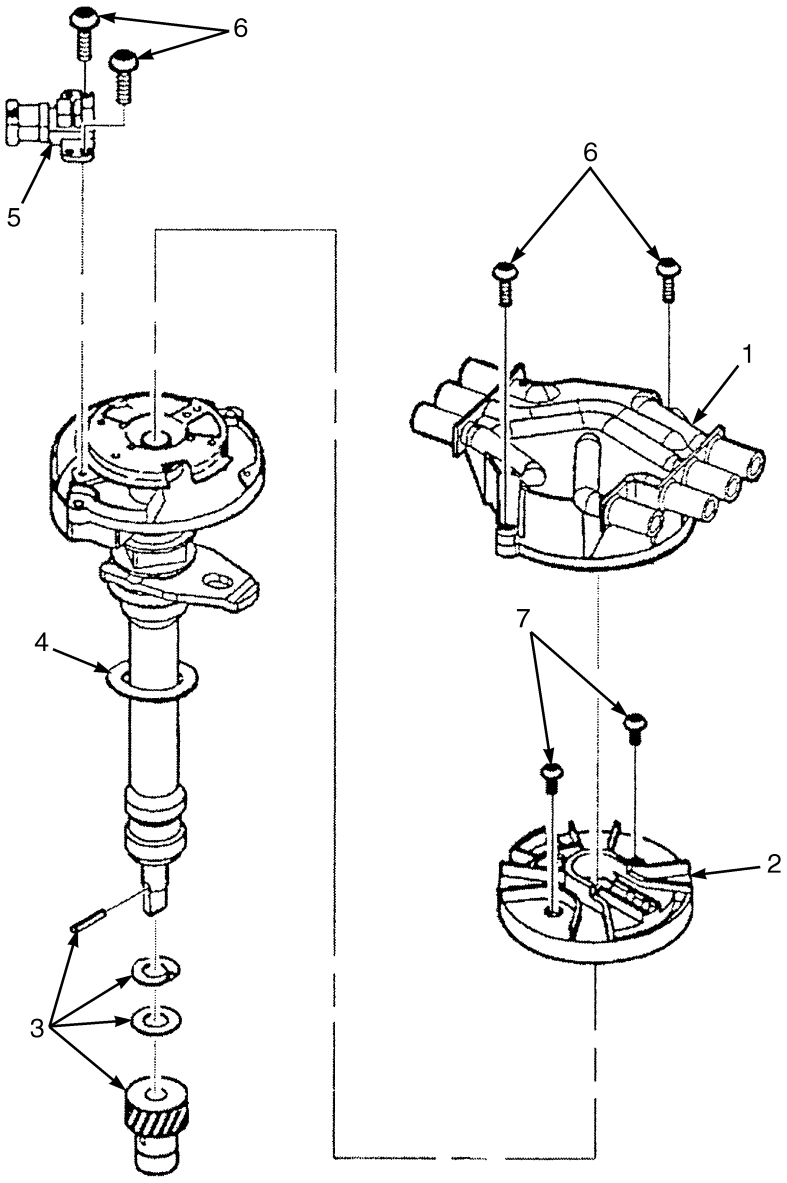


BP080184

| ITEM | PART NO. | DESCRIPTION | QTY |
|---|---|---|---|
| | 1559695 | Distributor | 1 |
| 1 | 1342528 | Cap | 1 |
| 2 | 1374329 | Rotor | 1 |
| 3 | 1559922 | Gear Kit | 1 |
| 4 | 1334423 | Gasket | 1 |
| 5 | 1559923 | Sensor | 1 |
| 6 | 1559924 | Screw | 4 |
| 7 | 1559925 | Screw | 2 |

# ALTERNATOR (Figure 4-8)
## PRESTOLITE BRAND
## GS, LPS, DS

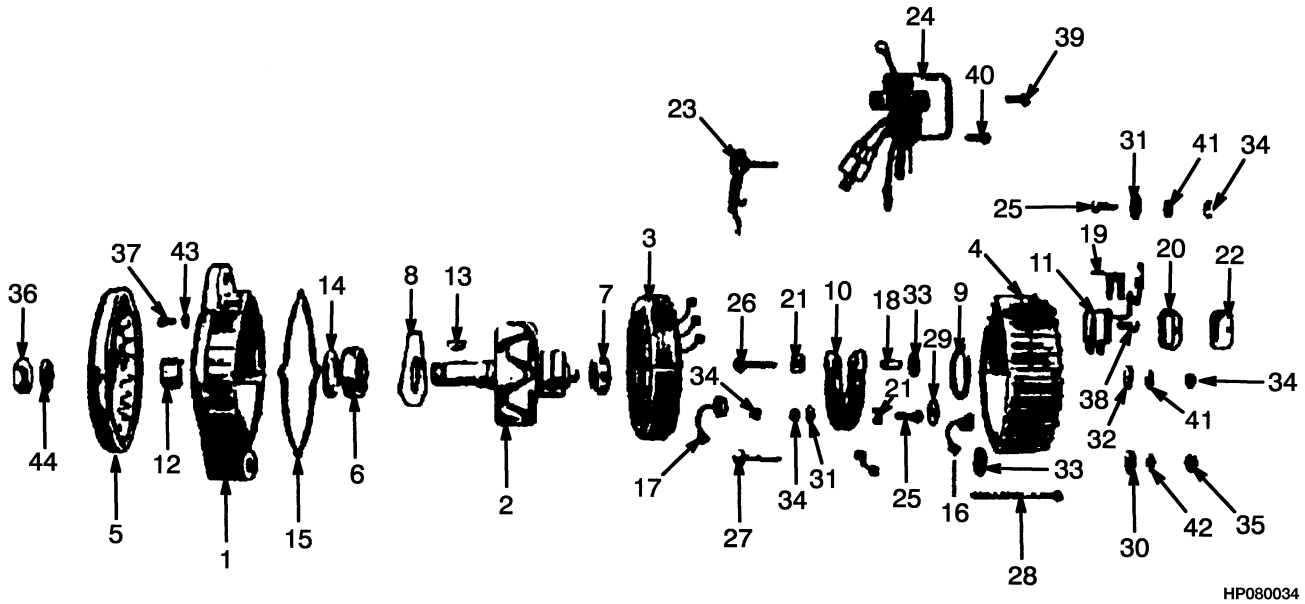



©2004 HYSTER COMPANY

# ALTERNATOR
## PRESTOLITE BRAND
## GS, LPS, DS

| ITEM | PART NO. | DESCRIPTION | QTY |
|---|---|---|---|
| | 1394001 | Alternator | 1 |
| 1 | 1453351 | Housing (Front) (Front) | 1 |
| 2 | 1453681 | Rotor Assembly | 1 |
| 3 | 1453682 | Stator Assembly | 1 |
| 4 | 295802 | Housing (Rear) (Rear) | 1 |
| 5 | 225673 | Fan | 1 |
| 6 | 248128 | Bearing (Front/Rear) | 1 |
| 7 | 386071 | Bearing (Rear) | 1 |
| 8 | 226576 | Retainer (Front) | 1 |
| 9 | 1371211 | Retainer (Rear) | 1 |
| 10 | 226578 | Heat Sink | 1 |
| 11 | 2022534 | Brush Assembly | 1 |
| 12 | 1453352 | Spacer (Fan) | 1 |
| 13 | 1453354 | Key | 1 |
| 14 | 1453358 | Seal (Front) | 1 |
| 15 | 226582 | Gasket | 1 |
| 16 | 226583 | Diode (Negative) | 1 |
| 17 | 226584 | Diode (Positive) | 1 |
| 18 | 1371212 | Sleeve | 1 |
| 19 | 2022535 | Insulation | 1 |
| 20 | 1453387 | Gasket (Cover) | 1 |
| 21 | 1371214 | Insulator | 1 |
| 22 | 2022538 | Brush Cover | 1 |
| 23 | 2022532 | Diode | 1 |
| 24 | 1453386 | Voltage Regulator | 1 |
| 25 | 1453361 | Bolt | 3 |
| 26 | 1453362 | Bolt | 1 |
| 27 | 1453363 | Bolt | 1 |
| 28 | 1453364 | Bolt | 4 |
| 29 | 1453365 | Insulator | 3 |
| 30 | 1453366 | Insulator (Round) | 1 |
| 31 | 1453367 | Insulator (Washer) | 4 |
| 32 | 1453368 | Insulator (Washer) | 1 |
| 33 | 1453369 | Insulator (Washer) | 1 |
| 33 | 1453370 | Insulator (Washer) | 1 |
| 33 | 1453371 | Insulator (Washer) | 1 |
| 34 | 1453680 | Nut | 2 |
| 34 | 1453373 | Nut | 3 |
| 35 | 1328516 | Nut | 1 |
| 36 | 1453375 | Nut | 1 |
| 37 | 1453376 | Screw | 3 |
| 38 | 1453377 | Screw | 2 |
| 39 | 1328521 | Screw | 2 |
| 40 | 1453379 | Screw | 2 |
| 41 | 1453381 | Washer | 2 |
| 42 | 1453382 | Washer | 1 |
| 43 | 1453383 | Lockwasher | 1 |
| 44 | 1453385 | Lockwasher | 1 |

©2004 HYSTER COMPANY

# STARTER (Figure 4-9)
## DIESEL TIER II

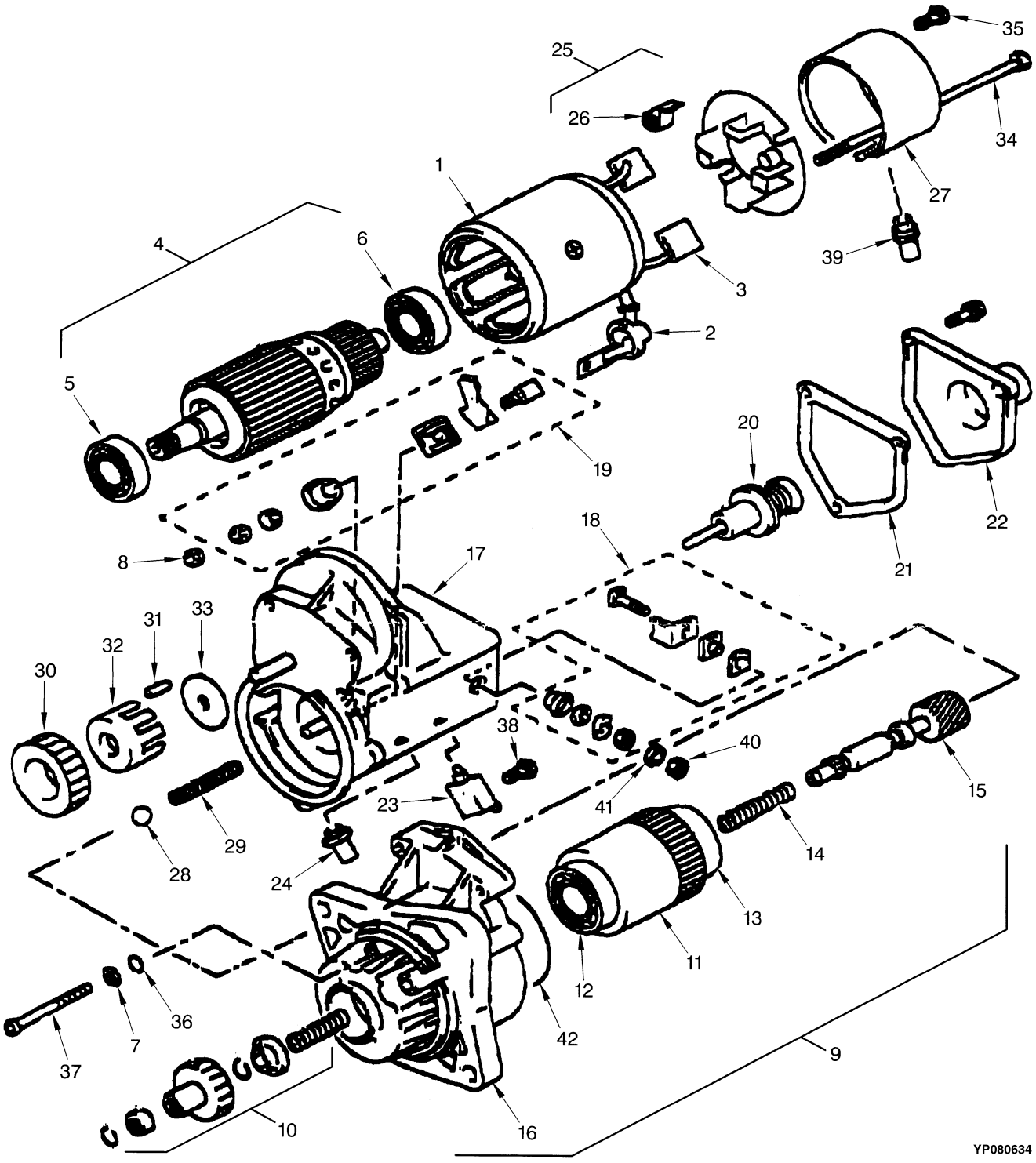



©2004 HYSTER COMPANY

# STARTER
## DIESEL TIER II

| ITEM | PART NO. | DESCRIPTION | QTY |
|---|---|---|---|
| | 1388721 | Starter Motor | 1 |
| 1 | 1462233 | Yoke Assembly | 1 |
| 2 | 1462234 | Cover | 1 |
| 3 | 1462235 | Brush Kit | 2 |
| 4 | 1462236 | Armature | 1 |
| 5 | 1462239 | Bearing (Optional) | 1 |
| 5 | 1462238 | Bearing | 1 |
| 6 | 1462240 | Bearing | 1 |
| 7 | 1390163 | Washer | 3 |
| 8 | 1462273 | Nut | 1 |
| 9 | 1462241 | Clutch Assembly | 1 |
| 10 | . . . . . | Starter Kit | 1 |
| 11 | . . . . . | Clutch Subassembly | 1 |
| 12 | . . . . . | Bearing | 1 |
| 13 | . . . . . | Bearing | 1 |
| 14 | . . . . . | Spring (Compression Coil) | 1 |
| 15 | . . . . . | Shaft | 1 |
| 16 | . . . . . | Housing | 1 |
| 17 | 1462249 | Switch Assembly | 1 |
| 18 | 1462250 | Terminal Kit (Terminal M) | 1 |
| 19 | 1462251 | Terminal Kit (Terminal C) | 1 |
| 20 | 1462252 | Plunger | 1 |
| 21 | 1462253 | Gasket (Switch) | 1 |
| 22 | 1462254 | Cover (Solenoid) | 1 |
| 23 | 1462255 | Bolt (Terminal) | 1 |
| 24 | 1462256 | Bushing | 1 |
| 25 | 1462257 | Brush Holder Assembly | 1 |
| 26 | 1462258 | Spring | 4 |
| 27 | 1462259 | Cover (DE) | 1 |
| 28 | 1462260 | Ball | 1 |
| 29 | 1462261 | Spring | 1 |
| 30 | 1462262 | Pinion | 1 |
| 31 | 1462263 | Roller | 5 |
| 32 | 1462264 | Retainer | 1 |
| 33 | 1462265 | Retainer | 1 |
| 34 | 1462266 | Bolt | 2 |
| 35 | 1462267 | Screw | 2 |
| 36 | 1390164 | O-Ring | 3 |
| 37 | 1462268 | Screw | 3 |
| 38 | 1390167 | Screw | 1 |
| 39 | 1462269 | Cover | 1 |
| 40 | 1462270 | Nut | 1 |
| 41 | 1462271 | Lockwasher | 1 |
| 42 | 1462272 | Seal | 1 |

©2004 HYSTER COMPANY

# WIRE HARNESS (ENGINE) (Figure 4-10)
## DIESEL TIER II

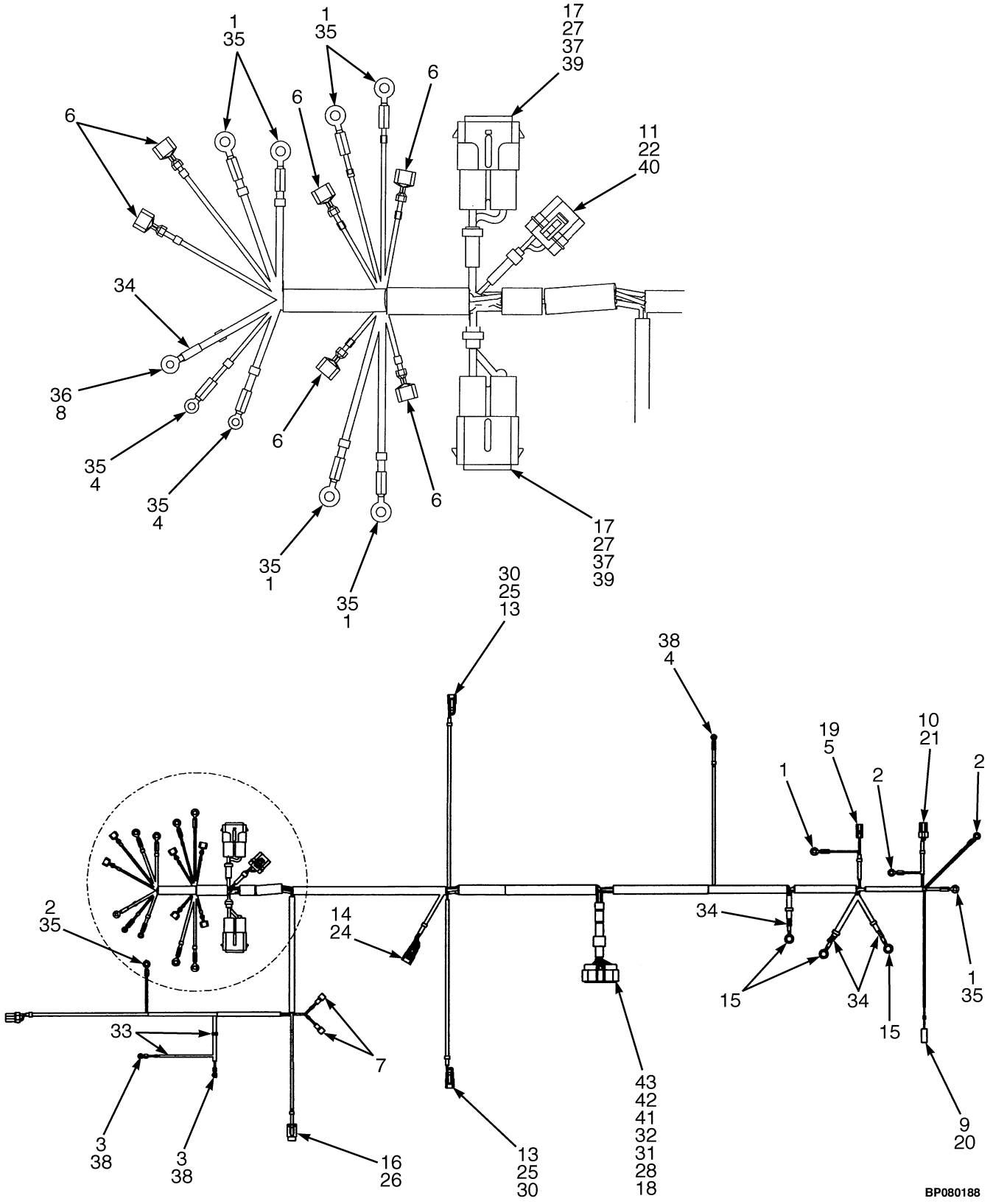



©2004 HYSTER COMPANY

# WIRE HARNESS (ENGINE)
## DIESEL TIER II

| ITEM | PART NO. | DESCRIPTION | QTY |
|---|---|---|---|
| | 2062212 | Wire Harness (Engine) | 1 |
| 1 | 129888 | Terminal | 8 |
| 2 | 129894 | Terminal | 3 |
| 3 | 148605 | Fitting | 2 |
| 4 | 148610 | Ring | 3 |
| 5 | 181046 | Connector | 1 |
| 6 | 325789 | Electrical Fitting (Female) | 6 |
| 7 | 367540 | Fitting (Female) | 2 |
| 8 | 806424 | Terminal Ring | 1 |
| 9 | 1301720 | Connector Body | 1 |
| 10 | 1323586 | Connector | 1 |
| 11 | 1330292 | Connector | 1 |
| 12 | 1330354 | Connector | 1 |
| 13 | 1330419 | Connector | 2 |
| 14 | 1330420 | Connector | 1 |
| 15 | 1354497 | Terminal | 3 |
| 16 | 1375782 | Connector | 1 |
| 17 | 1454860 | Connector | 2 |
| 18 | 1527523 | Connector | 1 |
| 19 | 134812 | Blade | 1 |
| 20 | 370730 | Blade | 1 |
| 21 | 1323576 | Terminal | 2 |
| 22 | 1330283 | Terminal | 2 |
| 23 | 1330355 | Terminal | 2 |
| 24 | 1330438 | Socket | 3 |
| 25 | 1330434 | Terminal | 4 |
| 26 | 1375783 | Socket | 1 |
| 27 | 1454828 | Terminal | 4 |
| 28 | 1402931 | Plug | 2 |
| 29 | 1330357 | Secondary Lock | 1 |
| 30 | 1330424 | Secondary Lock | 2 |
| 31 | 1402927 | Terminal | 7 |
| 32 | 1402926 | Terminal | 7 |
| 33 | 275493 | Conduit | AR |
| 34 | 222523 | Heat Shrink Tube | AR |
| 35 | 190383 | Boot | 10 |
| 36 | 204223 | Boot | 1 |
| 37 | 1454827 | Seal | 4 |
| 38 | 190382 | Boot | 3 |
| 39 | 1454862 | Cover | 2 |
| 40 | 1330293 | Cover (Fuse) | 1 |
| 41 | 1503334 | Seal | 13 |
| 42 | 1527274 | Seal | 1 |
| 43 | 1527305 | Seal | 1 |

©2004 HYSTER COMPANY

# WIRE HARNESS (Figure 4-11)
## MODULE
## SHEET 1 OF 2

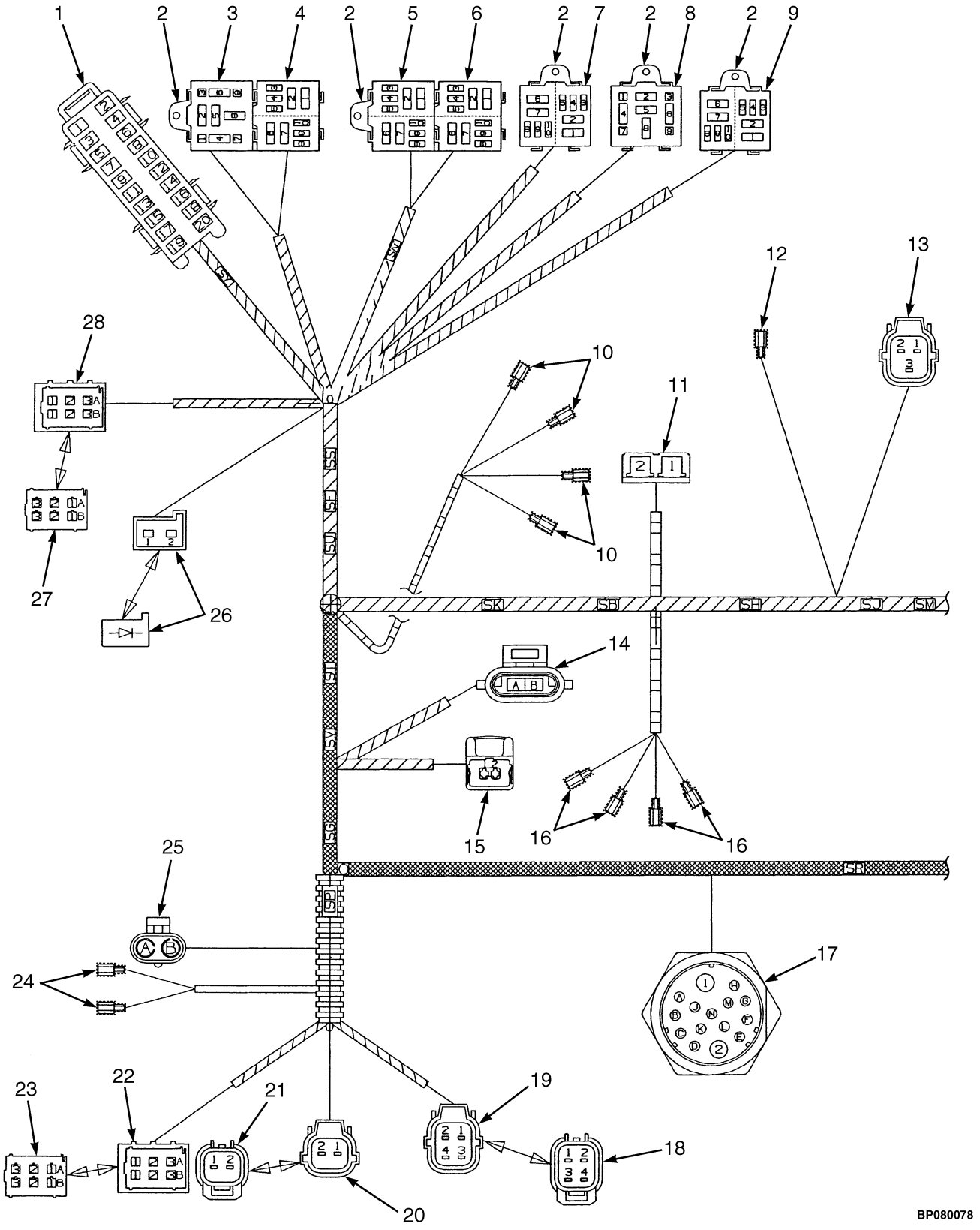



©2004 HYSTER COMPANY

# WIRE HARNESS
## MODULE
## SHEET 1 OF 2

| ITEM | PART NO. | DESCRIPTION | QTY |
|---|---|---|---|
| | 2063002 | Wire Harness (Module) (Type GS, LPS, DS) | 1 |
| | 2063000 | Wire Harness (Module) (Gas, LPG, and Diesel) | 1 |
| 1 | . . . . . | Connector Assembly (Fuse Box) | 1 |
| 1 | 1484681 | Fuse Box (10-Way) | 1 |
| 1 | 1484682 | Secondary Lock | 1 |
| 1 | 1496885 | Terminal (Positions 1, 3, 5, 7) | 4 |
| 1 | 1490250 | Bridge Piece (2-Way) (Positions 9, 11) | 2 |
| 1 | 1496884 | Bridge Piece (Positions 13, 15, 17) | 3 |
| 1 | 1389479 | Electrical Fitting | 10 |
| 1 | 1489957 | Connector (Position 12) | 1 |
| 1 | 370647 | Fuse (10 Amp) (Positions 1, 6, 7, 8, 9) | 5 |
| 1 | 1320669 | Fuse (30 Amp) (Positions 2, 3) | 2 |
| 1 | 370648 | Fuse (20 Amp) (Position 4) | 1 |
| 1 | 1310630 | Fuse (15 Amp) (Positions 5, 10) | 2 |
| 2 | 1489956 | Clip | 5 |
| 3 | . . . . . | Connector Assembly | 1 |
| 3 | 1484684 | Relay Base | 1 |
| 3 | 1389479 | Electrical Fitting | 2 |
| 3 | 1489957 | Connector | 2 |
| 3 | 1347114 | Relay | 1 |
| 4 | . . . . . | Connector Assembly (Forward Relay) | 1 |
| 5 | 1484683 | Relay Base | 1 |
| 5 | 1489957 | Connector | 2 |
| 5 | 1484719 | Terminal | 2 |
| 5 | 2035581 | Relay | 2 |
| 5 | 1489957 | Connector | 2 |
| 5 | 1484719 | Terminal | 1 |
| 5 | 2035581 | Relay | 1 |
| 5 | . . . . . | Connector Assembly (Horn Relay) | 1 |
| 5 | 1484683 | Relay Base | 1 |
| 5 | 1389479 | Electrical Fitting | 2 |
| 5 | 1484719 | Terminal | 2 |
| 5 | 2035581 | Relay | 1 |
| 5 | 1489957 | Connector | 2 |
| 5 | 1484719 | Terminal | 2 |
| 5 | 2035581 | Relay | 1 |
| 6 | . . . . . | Connector Assembly (Reverse Light Relay) | 1 |
| 6 | 1484683 | Relay Base | 1 |
| 6 | 1489957 | Connector | 2 |
| 6 | 1484719 | Terminal | 2 |
| 6 | 2035581 | Relay | 1 |
| 6 | 1489957 | Connector (Shutdown) | 2 |
| 6 | 1484719 | Terminal | 2 |
| 6 | 2035581 | Relay | 1 |
| 7 | . . . . . | Connector Assembly (Cab Power Relay) | 1 |
| 7 | 1484683 | Relay Base | 1 |
| 7 | 1389479 | Electrical Fitting | 2 |
| 7 | 1484719 | Terminal | 2 |
| 7 | 2035581 | Relay | 1 |
| 7 | 1389479 | Electrical Fitting (Light Relay) | 2 |

©2004 HYSTER COMPANY

# WIRE HARNESS
## MODULE
## SHEET 1 OF 2

| ITEM | PART NO. | DESCRIPTION | QTY |
|---|---|---|---|
| 7 | 1484719 | Terminal | 2 |
| 7 | 2035581 | Relay | 1 |
| 8 | . . . . . | Connector Assembly (Turn Signal Relay) | 1 |
| 8 | 1484684 | Relay Base | 1 |
| 8 | 1489957 | Connector | 2 |
| 8 | . . . . . | Flasher | 1 |
| 9 | . . . . . | Connector Assembly (Brake Light Relay) | 1 |
| 9 | 1484683 | Relay Base | 1 |
| 9 | 1489957 | Connector | 2 |
| 9 | 1484719 | Terminal | 2 |
| 9 | 2035581 | Relay | 1 |
| 9 | . . . . . | Spare | 1 |
| 10 | 1497265 | Housing | 4 |
| 10 | 1497262 | Terminal | 4 |
| 11 | . . . . . | Connector Assembly (Thermostat) | 1 |
| 11 | 1484661 | Housing (Receptacle) | 1 |
| 11 | 1484707 | Terminal (56 Series) | 1 |
| 11 | 1484375 | Terminal | 1 |
| 12 | 1497265 | Housing (Horn Switch) | 1 |
| 12 | 1497262 | Terminal | 1 |
| 13 | . . . . . | Connector Assembly | 1 |
| 13 | 1497294 | Housing | 1 |
| 13 | 1497300 | Retainer | 1 |
| 13 | 1484656 | Terminal (Socket) | 3 |
| 13 | 1484597 | Seal | 3 |
| 14 | . . . . . | Connector Assembly (Horn) | 1 |
| 14 | 1402878 | Connector | 1 |
| 14 | 1498493 | Retainer | 1 |
| 14 | 1498492 | Seal | 2 |
| 14 | 1482664 | Terminal | 2 |
| 15 | . . . . . | Connector Assembly (Brake Reservoir) | 1 |
| 15 | 1402922 | Connector | 1 |
| 15 | 1493436 | Terminal Socket | 2 |
| 15 | 1479109 | Wire Seal | 2 |
| 16 | 1497265 | Housing | 4 |
| 16 | 1497262 | Terminal | 4 |
| 17 | . . . . . | Connector Assembly (Engine Harness) | 1 |
| 17 | 1497228 | Terminal (Nut) | 1 |
| 17 | 1496926 | Terminal (Positions 1, 2) | 2 |
| 17 | 1496925 | Terminal (Positions C, D, F, G, H, J, K) | 7 |
| 17 | 1496924 | Terminal (Positions A, B, E, L, M, N) | 6 |
| 18 | 1497290 | Housing | 1 |
| 19 | . . . . . | Connector Assembly (Optional Lighting) | 1 |
| 19 | 1496886 | Housing | 1 |
| 19 | 1497302 | Retainer | 1 |
| 19 | 1484656 | Terminal (Socket) | 4 |
| 19 | 1484597 | Seal | 4 |
| 20 | . . . . . | Connector Assembly (Reverse Alarm) | 1 |
| 20 | 1497293 | Housing | 1 |
| 20 | 1497298 | Retainer | 1 |


©2004 HYSTER COMPANY

# WIRE HARNESS
## MODULE
## SHEET 1 OF 2

| ITEM | PART NO. | DESCRIPTION | QTY |
|---|---|---|---|
| 20 | 1484656 | Terminal (Socket) | 2 |
| 20 | 1484597 | Seal | 2 |
| 21 | 1497288 | Housing | 1 |
| 21 | 1484611 | Seal | 2 |
| 22 | . . . . . | Connector Assembly (LH Rear Light) | 1 |
| 22 | 1496791 | Housing | 1 |
| 22 | 1496788 | Terminal | 5 |
| 23 | . . . . . | Connector Assembly | 1 |
| 24 | 1497259 | Terminal | 2 |
| 24 | 1484651 | Cover | 2 |
| 25 | . . . . . | Connector Assembly (Fuel Sender) | 1 |
| 25 | 1498474 | Housing | 1 |
| 25 | 1498419 | Terminal | 2 |
| 25 | 1498496 | Seal | 2 |
| 26 | . . . . . | Connector Assembly (Reverse Diode) | 1 |
| 26 | 1484687 | Housing (Socket) | 1 |
| 26 | 1484718 | Terminal (Socket) | 2 |
| 26 | 1490252 | Diode (Single) | 1 |
| 27 | 1496790 | Housing | 1 |
| 28 | . . . . . | Connector Assembly (LH Front Light) | 1 |
| 28 | 1496791 | Housing | 1 |
| 28 | 1496788 | Terminal | 5 |

©2004 HYSTER COMPANY

# WIRE HARNESS (Figure 4-12)
## MODULE
## SHEET 2 OF 2

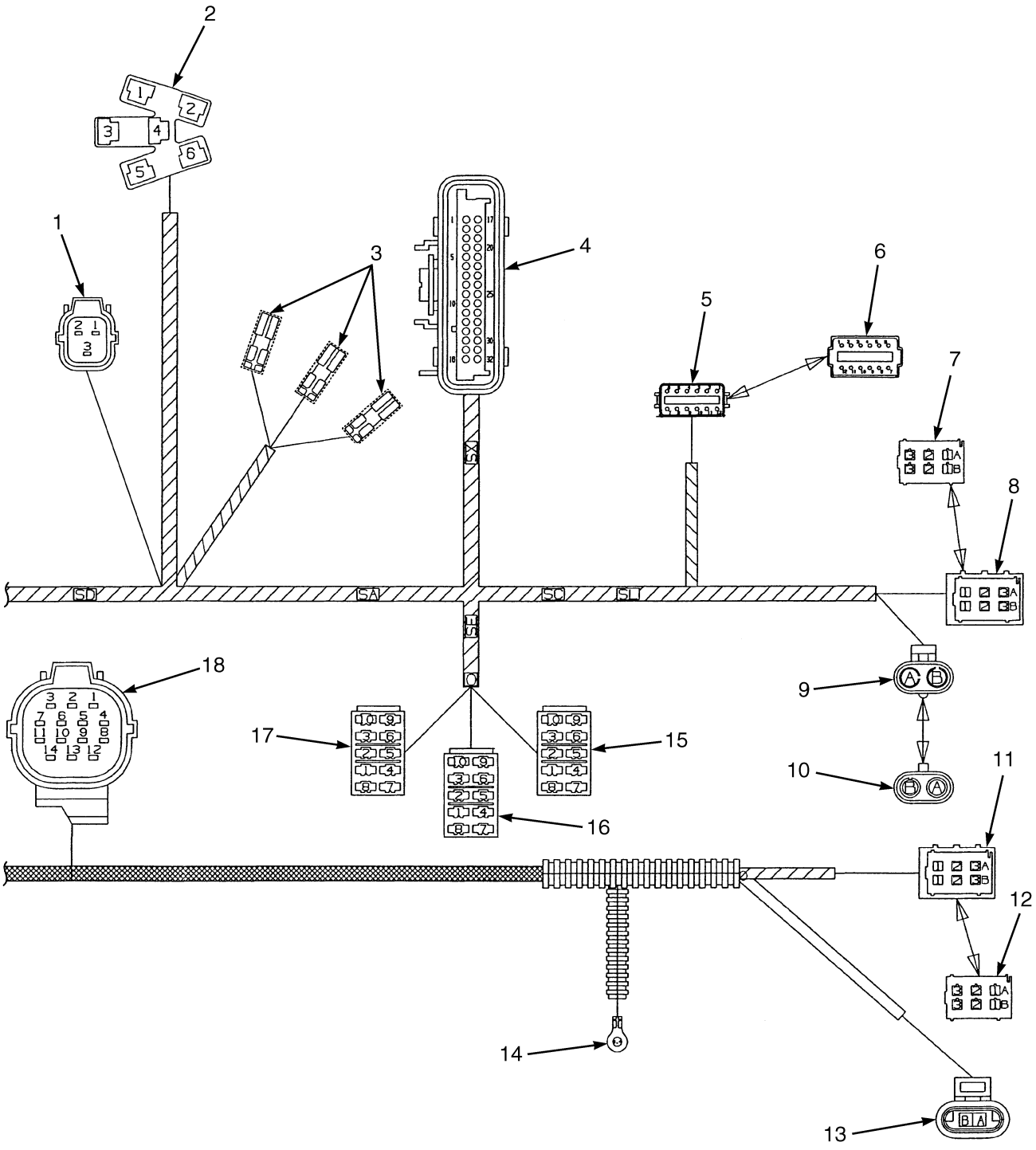


BP080079


©2004 HYSTER COMPANY

# WIRE HARNESS
## MODULE
## SHEET 2 OF 2

| ITEM | PART NO. | DESCRIPTION | QTY |
|---|---|---|---|
| | 2063002 | Wire Harness (Module) (Type GS, LPS, DS) | 1 |
| | 2063000 | Wire Harness (Module) (Gas, LPG, and Diesel) | 1 |
| 1 | . . . . . | Connector Assembly (Forward Switch) | 1 |
| 1 | 1497294 | Housing | 1 |
| 1 | 1497300 | Retainer | 1 |
| 1 | 1484656 | Terminal (Socket) | 3 |
| 1 | 1484597 | Seal | 3 |
| 2 | . . . . . | Connector Assembly (Ignition Switch) | 1 |
| 2 | 1484660 | Housing (Ignition Switch) | 1 |
| 2 | 1484707 | Terminal (56 Series) | 2 |
| 2 | 1484375 | Terminal | 1 |
| 3 | . . . . . | Connector Assembly (Indicator Switch) | 3 |
| 3 | 1493444 | Terminal | 3 |
| 3 | 1493445 | Cover | 3 |
| 4 | . . . . . | Connector Assembly (Cluster) | 1 |
| 4 | 1484670 | Retainer | 1 |
| 4 | 1471960 | Strain Relief | 1 |
| 4 | 1484672 | Insert | 1 |
| 4 | 1484671 | Seal | 1 |
| 4 | 1484710 | Terminal | 21 |
| 4 | 1352105 | Plug | 11 |
| 5 | . . . . . | Connector Assembly (High/Low Shift) | 1 |
| 5 | 1484357 | Housing (Socket) | 1 |
| 5 | 1484358 | Retainer (Socket) | 1 |
| 5 | 1330439 | Plug (Positions 6, 9, 10) | 3 |
| 5 | 1330438 | Socket | 9 |
| 6 | . . . . . | Connector Assembly (Mating Half, Item 5) | 1 |
| 6 | 1330439 | Plug | 12 |
| 6 | 1484720 | Connector | 1 |
| 7 | . . . . . | Connector Assembly (Mating Half, Item 8) | 1 |
| 7 | 1496790 | Housing | 1 |
| 8 | . . . . . | Connector Assembly (RH Front Light) | 1 |
| 8 | 1496791 | Housing | 1 |
| 8 | 1496788 | Terminal | 5 |
| 9 | . . . . . | Connector Assembly (Cab Power) | 1 |
| 9 | 1498474 | Housing | 1 |
| 9 | 1498419 | Terminal | 2 |
| 9 | 1498496 | Seal | 2 |
| 10 | . . . . . | Connector Assembly (Mating Half, Item 9) | 1 |
| 10 | 1498422 | Connector Housing | 1 |
| 11 | . . . . . | Connector Assembly (RH Rear Light) | 1 |
| 11 | 1496791 | Housing | 1 |
| 11 | 1496788 | Terminal | 5 |
| 12 | . . . . . | Connector Assembly (Mating Half, Item 11) | 1 |
| 12 | 1496790 | Housing | 1 |
| 13 | . . . . . | Connector Assembly | 1 |
| 13 | 1493460 | Housing | 1 |
| 13 | 1354237 | Terminal | 2 |
| 14 | . . . . . | Connector Assembly | 1 |
| 14 | 1493458 | Fitting (Cluster) | 1 |

©2004 HYSTER COMPANY

# WIRE HARNESS
## MODULE
## SHEET 2 OF 2

| ITEM | PART NO. | DESCRIPTION | QTY |
|---|---|---|---|
| 14 | 1484383 | Heat Shrink Tube | 1 |
| 15 | . . . . . | Connector Assembly (Transmission Lock) | 1 |
| 15 | 1484555 | Housing (Switch) | 1 |
| 15 | 1497262 | Terminal (Positions 2, 3, 7, 8) | 4 |
| 16 | . . . . . | Connector Assembly (Rear Lights) | 1 |
| 16 | 1484555 | Housing (Switch) | 1 |
| 16 | 1497262 | Terminal | 4 |
| 17 | . . . . . | Connector Assembly (Front Lights) | 1 |
| 17 | 1484555 | Housing (Switch) | 1 |
| 17 | 1497262 | Terminal | 6 |
| 18 | . . . . . | Connector Assembly (Transmission Harness) | 1 |
| 18 | 1484654 | Housing (Socket) | 1 |
| 18 | 1484655 | Retainer (Socket) | 1 |
| 18 | 1484656 | Terminal (Socket) | 14 |
| 18 | 1484597 | Seal | 14 |


©2004 HYSTER COMPANY

# NOTES

# WIRE HARNESS (Figure 4-13)
## SEALED ALTERNATOR

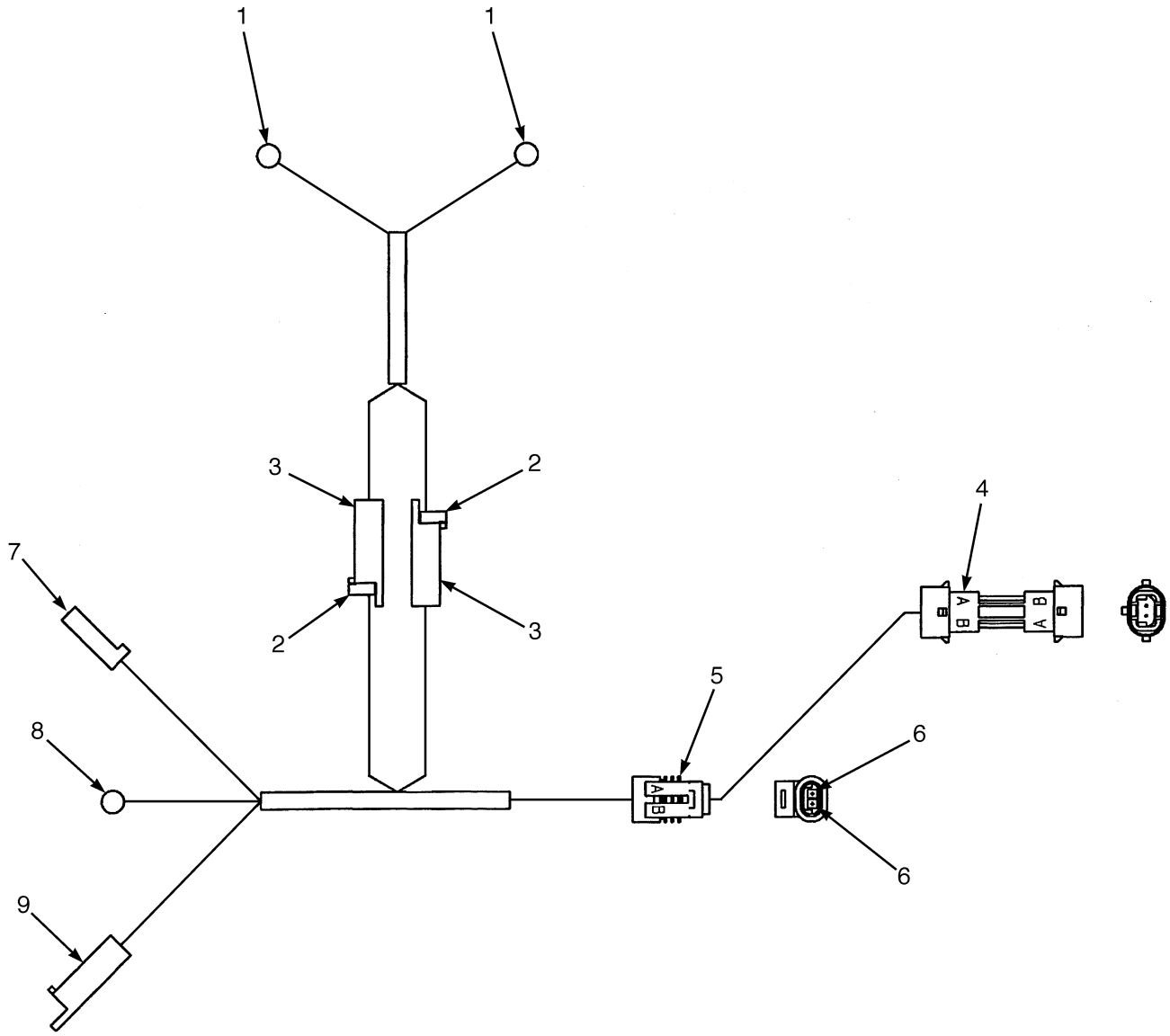


BP080204


©2004 HYSTER COMPANY

# WIRE HARNESS
## SEALED ALTERNATOR

| ITEM | PART NO. | DESCRIPTION | QTY |
|---|---|---|---|
| | 2068496 | Wire Harness | 1 |
| 1 | . . . . . | Connector Assembly (Disconnect Switch) | 2 |
| 1 | 129887 | Ring | 1 |
| 1 | 190383 | Boot | 1 |
| 2 | . . . . . | Connector Assembly | 2 |
| 2 | 181046 | Connector | 1 |
| 2 | 134812 | Blade | 1 |
| 3 | . . . . . | Connector Assembly | 2 |
| 3 | 181045 | Connector | 1 |
| 3 | 134810 | Blade | 1 |
| 4 | 1469606 | Connector (Engine Harness) | 1 |
| 5 | . . . . . | Connector Assembly | 1 |
| 5 | 1323586 | Connector | 1 |
| 6 | 1323576 | Terminal | 2 |
| 7 | . . . . . | Connector Assembly (Alternator EX) | 1 |
| 7 | 181046 | Connector | 1 |
| 7 | 134812 | Blade | 1 |
| 8 | . . . . . | Connector Assembly (Alternator 3DA) | 1 |
| 8 | 148610 | Ring | 1 |
| 8 | 190383 | Boot | 1 |
| 9 | . . . . . | Connector Assembly (Alternator FS) | 1 |
| 9 | 181045 | Connector | 1 |
| 9 | 134810 | Blade | 1 |

©2004 HYSTER COMPANY

# NOTES

# 5 TRANSMISSION

# SECTION 5
# TRANSMISSION


| DESCRIPTION | PAGE |
|---|---|
| CONTROL VALVE | |
| TRANSMISSION | 5-16 |
| DIRECTIONAL CLUTCH | |
| FORWARD | 5-14 |
| FLYWHEEL AND TORQUE CONVERTER | 5-10 |
| HIGH AND LOW VALVE | 5-19 |
| INPUT CLUTCH | |
| REVERSE | 5-12 |
| MANIFOLD VALVE | 5-18 |
| TRANSMISSION | |
| 1 OF 2 | 5-2 |
| 2 OF 2 | 5-6 |
| TRANSMISSION LINES | 5-20 |
| TRANSMISSION MOUNT | 5-22 |


©2004 HYSTER COMPANY

# TRANSMISSION (Figure 5-1)
## 1 OF 2

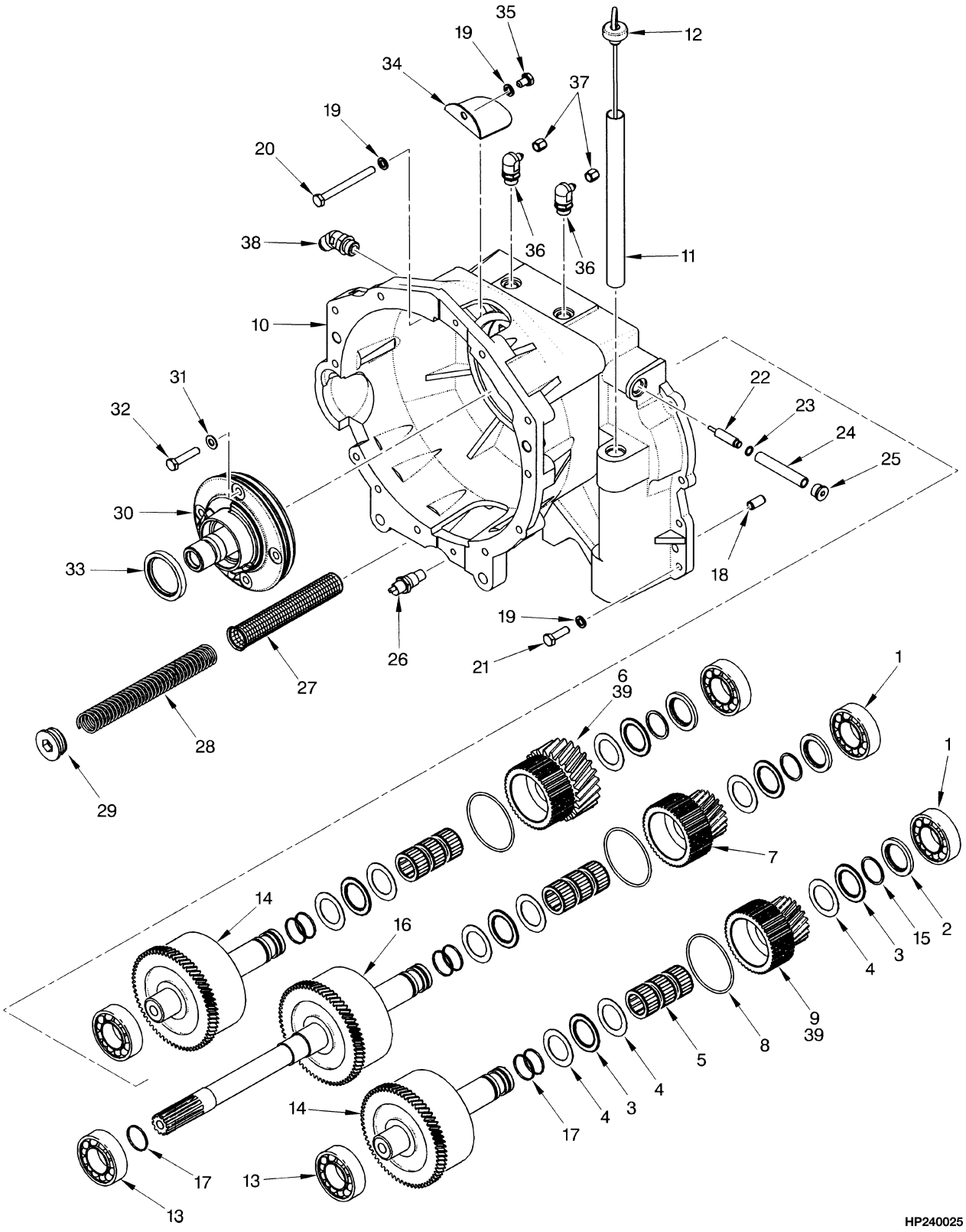



©2004 HYSTER COMPANY

# TRANSMISSION
## 1 OF 2

**KEY:**
**A: Single Speed**
**B: Two Speed**

| ITEM | PART NO. | DESCRIPTION | QTY A | QTY B |
|---|---|---|---|---|
| | 1488597 | Transmission Assembly (T86) | 1 | 1 |
| | 1488600 | Transmission Assembly (T88) | .. | 1 |
| | 1488601 | Transmission Assembly (T89) | .. | 1 |
| 1 | 41308 | Bearing | 2 | 3 |
| 2 | 1396053 | Thrust Washer | 2 | 3 |
| 3 | 346731 | Needle Bearing | 4 | 6 |
| 4 | 346696 | Thrust Washer | 6 | 9 |
| 5 | 346730 | Needle Bearing | 6 | 9 |
| 6 | 1394786 | Gear (Clutch Output) | .. | 1 |
| 7 | 1394788 | Gear (Clutch Output) | .. | 1 |
| 8 | 1386958 | O-Ring | 2 | 3 |
| 9 | 1394787 | Gear (Clutch Output) | .. | 1 |
| 10 | 1394799 | Housing | .. | 1 |
| 10 | 1394798 | Housing | 1 | .. |
| 11 | 1388752 | Tube (Dipstick) | 1 | 1 |
| 12 | 1388753 | Dipstick | 1 | 1 |
| 13 | 41208 | Bearing | 2 | 3 |
| 14 | 1488604 | Clutch Pack Assembly (Directional) (☞ Figure 5-5) | 1 | 2 |
| 15 | 346675 | Snap Ring | 2 | 3 |
| 16 | 1488602 | Clutch Pack Assembly (Input) (☞ Figure 5-4) | 1 | 1 |
| 17 | 1394794 | Ring | 5 | 7 |
| 18 | 186420 | Pin (Single Speed) | 4 | 4 |
| 19 | 292682 | Lockwasher | 16 | 16 |
| 20 | 334421 | Capscrew | 4 | 4 |
| 21 | 287860 | Capscrew | 10 | 10 |
| 22 | 1388856 | Valve Spool | 1 | 1 |
| 23 | 1394714 | Snap Ring | 1 | 1 |
| 24 | 1388857 | Spring | 1 | 1 |
| 25 | 235691 | Fitting | 1 | 1 |
| 25 | 16484 | O-Ring | 1 | 1 |
| 26 | 1322627 | Switch (Oil Temperature Warning) (Transmission) | 1 | 1 |
| 27 | 346680 | Screen | 1 | 1 |
| 28 | 1388993 | Spring (Screen) | 1 | 1 |
| 29 | 188210 | Fitting | 1 | 1 |
| 29 | 16983 | O-Ring | 1 | 1 |
| 30 | 1320018 | Charge Pump | 1 | 1 |
| 30 | 373950 | O-Ring | 1 | 1 |
| 30 | 1322333 | Bushing | 1 | 1 |
| 31 | 380524 | Washer | 1 | 1 |
| 32 | 292517 | Capscrew | 1 | 1 |
| 33 | 1498807 | Oil Seal (Double Lip) | 1 | 1 |
| 34 | 1388901 | Plate | 2 | 2 |
| 35 | 292513 | Capscrew | 2 | 2 |
| 36 | 162155 | Fitting | 2 | 2 |
| 36 | 16484 | O-Ring | 1 | 1 |
| 37 | 16923 | Fitting | 2 | 2 |

©2004 HYSTER COMPANY

# TRANSMISSION
## 1 OF 2

| ITEM | PART NO. | DESCRIPTION | QTY A | QTY B |
|---|---|---|---|---|
| 38 | 16569 | Fitting | 1 | 1 |
| 38 | 16485 | O-Ring | 1 | 1 |
| 39 | 1394789 | Gear (Output) | 2 | .. |


©2004 HYSTER COMPANY

# NOTES

# TRANSMISSION (Figure 5-2)
## 2 OF 2

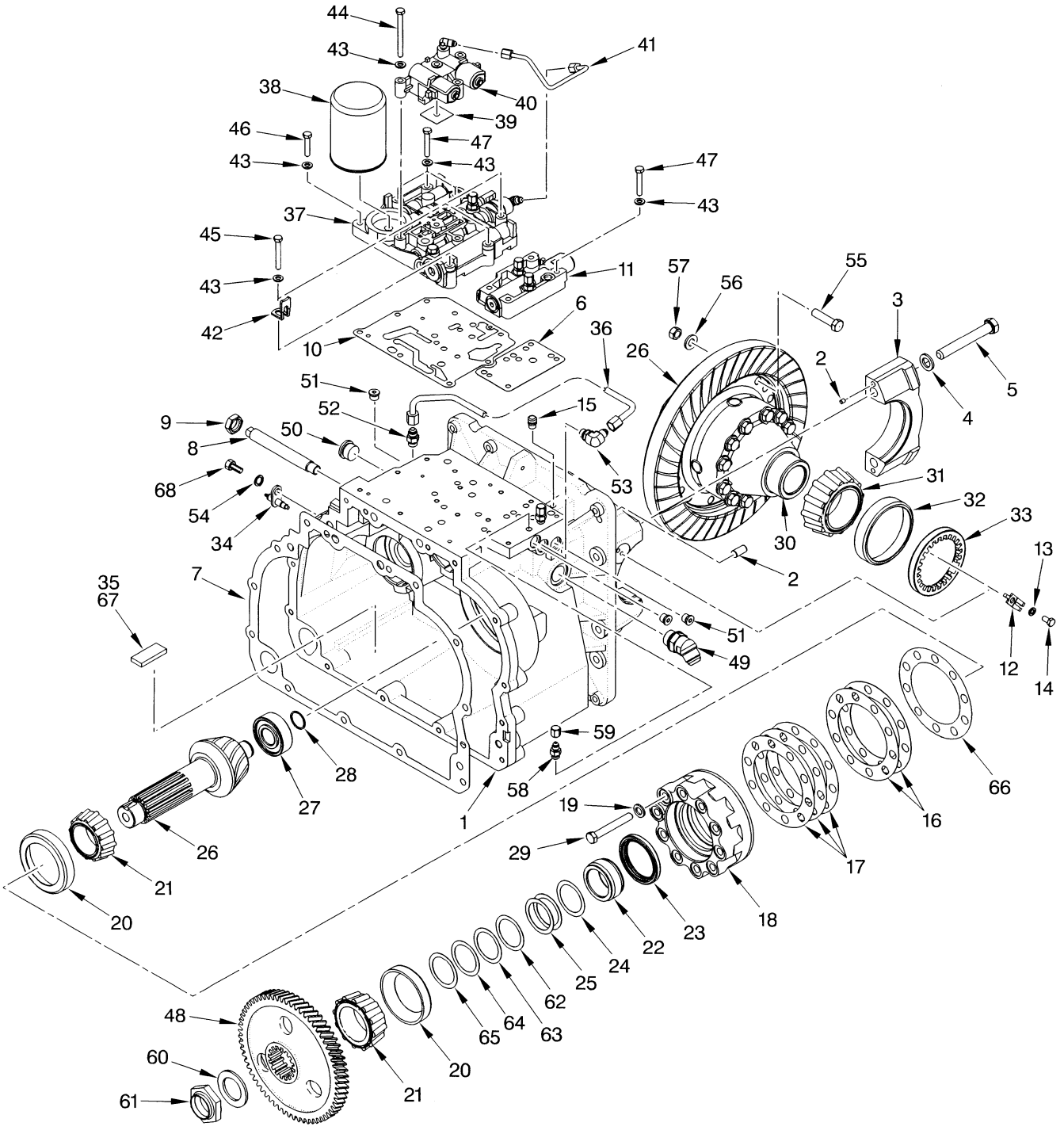


BP240023


©2004 HYSTER COMPANY

# TRANSMISSION
## 2 OF 2

**KEY:**
**A: Single Speed**
**B: Two Speed**

| ITEM | PART NO. | DESCRIPTION | QTY A | QTY B |
|---|---|---|---|---|
| | 1488597 | Transmission Assembly (T86) | 1 | .. |
| | 1488600 | Transmission Assembly (T88) | .. | 1 |
| | 1488601 | Transmission Assembly (T89) | .. | 1 |
| 1 | 1388869 | Housing | 1 | .. |
| 1 | 1388870 | Housing | .. | 1 |
| 2 | 234038 | Dowel Pin | 4 | 4 |
| 3 | 1378259 | Bearing Cap | 2 | 2 |
| 4 | 296426 | Washer (Hardened) | 4 | 4 |
| 5 | 293697 | Capscrew | 4 | 4 |
| 6 | 1394709 | Gasket | .. | 1 |
| 7 | 1388802 | Gasket (Cover) | 1 | 1 |
| 8 | 352321 | Thrust Screw | 1 | 1 |
| 9 | 1399455 | Jam Nut | 1 | 1 |
| 10 | 1386940 | Gasket (Control Valve) | 1 | 1 |
| 11 | 1388612 | Valve Assembly (☞ Figure 5-8) | .. | 1 |
| 12 | 334447 | Lock Plate | 2 | 2 |
| 13 | 292681 | Lockwasher | 2 | 2 |
| 14 | 287851 | Capscrew | 2 | 2 |
| 15 | 21420 | Plug | 1 | 1 |
| 16 | 1388697 | Shim (0.020 in.) | AR | AR |
| 17 | 1388698 | Shim (0.007 in.) | AR | AR |
| 18 | 1388678 | Carrier Housing | 1 | 1 |
| 19 | 296422 | Washer | 10 | 10 |
| 20 | 200972 | Bearing Cup | 2 | 2 |
| 21 | 143004 | Bearing Cone | 2 | 2 |
| 22 | 1388677 | Spacer | 1 | 1 |
| 23 | 1394707 | Oil Seal | 1 | 1 |
| 24 | 1385060 | Shim (0.356 in.) | AR | AR |
| 25 | 1385065 | Shim (0.635 in.) | AR | AR |
| 26 | 1397852 | Hypoid Gear Set (1830 mm Short Wheel Base) | 1 | 1 |
| 26 | 1397851 | Hypoid Gear Set (2100 mm Long Wheel Base) | 1 | 1 |
| 27 | 1388680 | Bearing | 1 | 1 |
| 28 | 1394800 | Snap Ring | 1 | 1 |
| 29 | 293657 | Capscrew | 10 | 10 |
| 30 | 1476426 | Differential Assembly (☞ Figure 6-2) | 1 | 1 |
| 31 | 271479 | Bearing Cone | 2 | 2 |
| 32 | 30162 | Bearing Cup | 2 | 2 |
| 33 | 1388735 | Nut | 2 | 2 |
| 34 | 1388804 | Speed Sensor | .. | 1 |
| 35 | 334560 | Magnet | 1 | 1 |
| 36 | 1388801 | Tube | .. | 1 |
| 37 | 1466123 | Control Valve (☞ Figure 5-6) | 1 | 1 |
| 38 | 1328691 | Filter | 1 | 1 |
| 39 | 1388573 | Gasket | 1 | 1 |
| 40 | 1400159 | Manifold Valve (☞ Figure 5-7) | 1 | 1 |
| 41 | 1302973 | Tube | 1 | 1 |

©2004 HYSTER COMPANY

# TRANSMISSION
## 2 OF 2

| ITEM | PART NO. | DESCRIPTION | QTY A | QTY B |
|---|---|---|---|---|
| 42 | 1385873 | Strap | 1 | 1 |
| 43 | 320157 | Washer | 1 | 1 |
| 44 | 346656 | Capscrew | 4 | 4 |
| 45 | 136704 | Capscrew | 3 | 3 |
| 46 | 292508 | Capscrew | 1 | 1 |
| 47 | 292509 | Capscrew | .. | 4 |
| 48 | 1385489 | Gear (Output) | .. | 1 |
| 48 | 1388747 | Gear (Output) | 1 | .. |
| 49 | 201782 | Fitting | 1 | 1 |
| 49 | 16486 | O-Ring | 1 | 1 |
| 50 | 222444 | Fitting | .. | 1 |
| 50 | 16486 | O-Ring | .. | 1 |
| 51 | 222443 | Fitting | 1 | 3 |
| 51 | 16483 | O-Ring | 1 | 1 |
| 52 | 16540 | Fitting | .. | 1 |
| 52 | 16483 | O-Ring | .. | 1 |
| 53 | 16558 | Fitting | .. | 1 |
| 53 | 16483 | O-Ring | .. | 1 |
| 54 | 292680 | Lockwasher | .. | 1 |
| 55 | 1466438 | Capscrew | 18 | 18 |
| 56 | 221771 | Washer | 18 | 18 |
| 57 | 278326 | Nut | 18 | 18 |
| 58 | 17753 | Fitting | 2 | .. |
| 58 | 16482 | O-Ring | 1 | .. |
| 58 | 222380 | Fitting | .. | 3 |
| 58 | 16482 | O-Ring | .. | 1 |
| 59 | 16923 | Fitting | 2 | 3 |
| 60 | 1388695 | Washer | 1 | 1 |
| 61 | 1390101 | Nut | 1 | 1 |
| 62 | 1385061 | Shim (0.381 in.) | AR | AR |
| 63 | 1385062 | Shim (0.406 in.) | AR | AR |
| 64 | 1385063 | Shim (0.508 in.) | AR | AR |
| 65 | 1385064 | Shim (0.559 in.) | AR | AR |
| 66 | 1388699 | Shim (0.005 in.) | AR | AR |
| 67 | 264159 | Adhesive | AR | AR |
| 68 | 148962 | Capscrew | .. | 1 |


©2004 HYSTER COMPANY

# NOTES

# FLYWHEEL AND TORQUE CONVERTER (Figure 5-3)

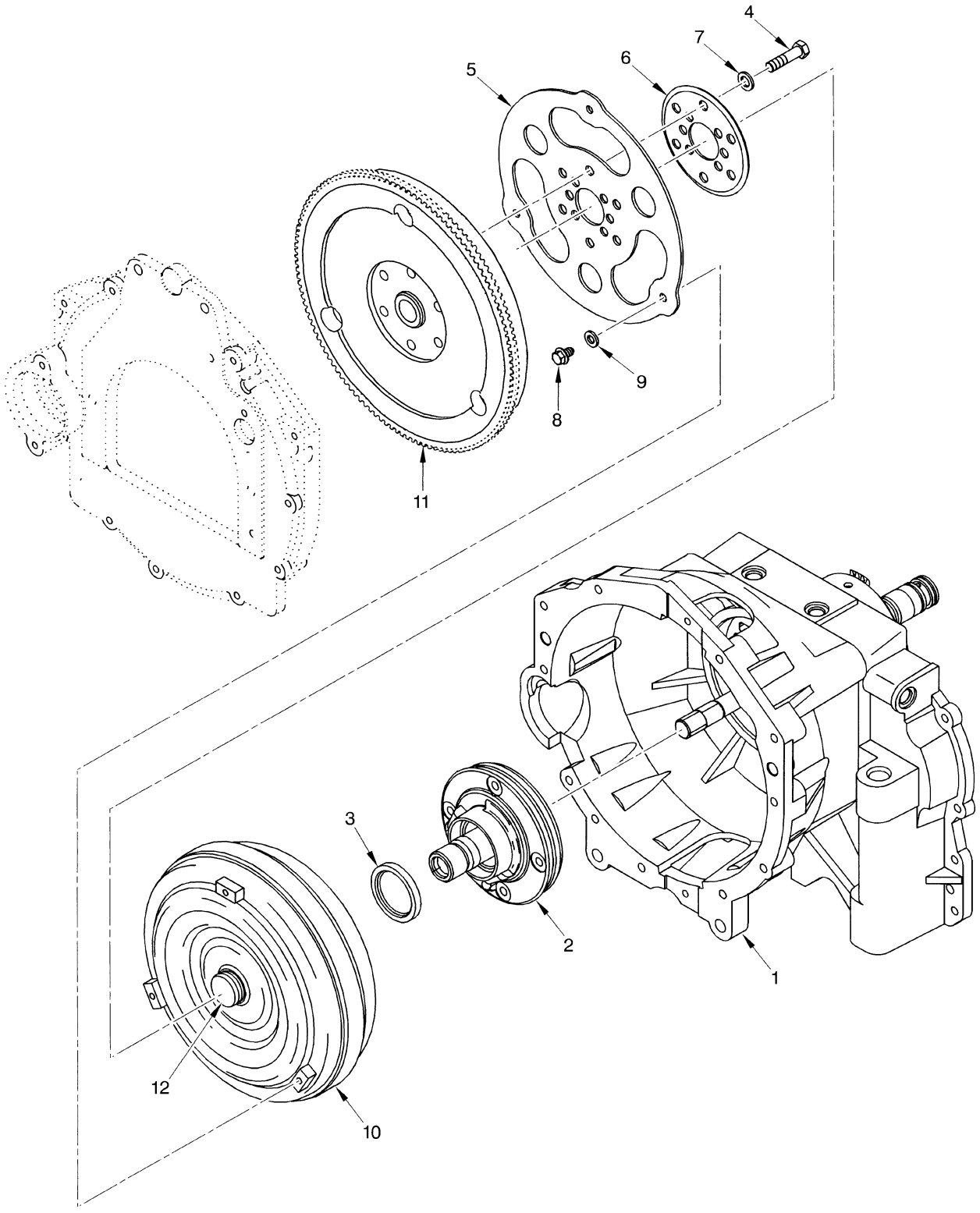


BP240024


©2004 HYSTER COMPANY

# FLYWHEEL AND TORQUE CONVERTER

**KEY:**
**A: Single Speed**
**B: Two Speed**

| ITEM | PART NO. | DESCRIPTION | QTY A | QTY B |
|---|---|---|---|---|
| | 1488597 | Transmission Assembly (T86) | 1 | .. |
| | 1488600 | Transmission Assembly (T88) | .. | 1 |
| | 1488601 | Transmission Assembly (T89) | .. | 1 |
| 1 | 1394798 | Housing | 1 | .. |
| 1 | 1394799 | Housing | .. | 1 |
| 2 | 1320018 | Charge Pump | 1 | 1 |
| 2 | 1322333 | Bushing | 1 | 1 |
| 2 | 373950 | O-Ring | 1 | 1 |
| 3 | 1498807 | Oil Seal (Double Lip) | 1 | 1 |
| 4 | 289867 | Bolt | 8 | 8 |
| 5 | 1397689 | Flexplate (Diesel) | 1 | 1 |
| 6 | 1388750 | Washer | 1 | 1 |
| 7 | 296422 | Washer | 6 | 6 |
| 8 | 1397804 | Bolt | 3 | 3 |
| 9 | 296420 | Washer | 3 | 3 |
| 10 | 1503453 | Torque Converter | 1 | 1 |
| 11 | 1388705 | Flywheel Assembly (Diesel) | 1 | 1 |
| 11 | 195856 | Ring Gear | 1 | 1 |
| 11 | 1388706 | Flywheel | 1 | 1 |
| 11 | 1399298 | Flywheel (Gasoline and LPG) | 1 | 1 |
| 12 | 251979 | Lubricant | AR | AR |

©2004 HYSTER COMPANY

# INPUT CLUTCH (Figure 5-4)
## REVERSE

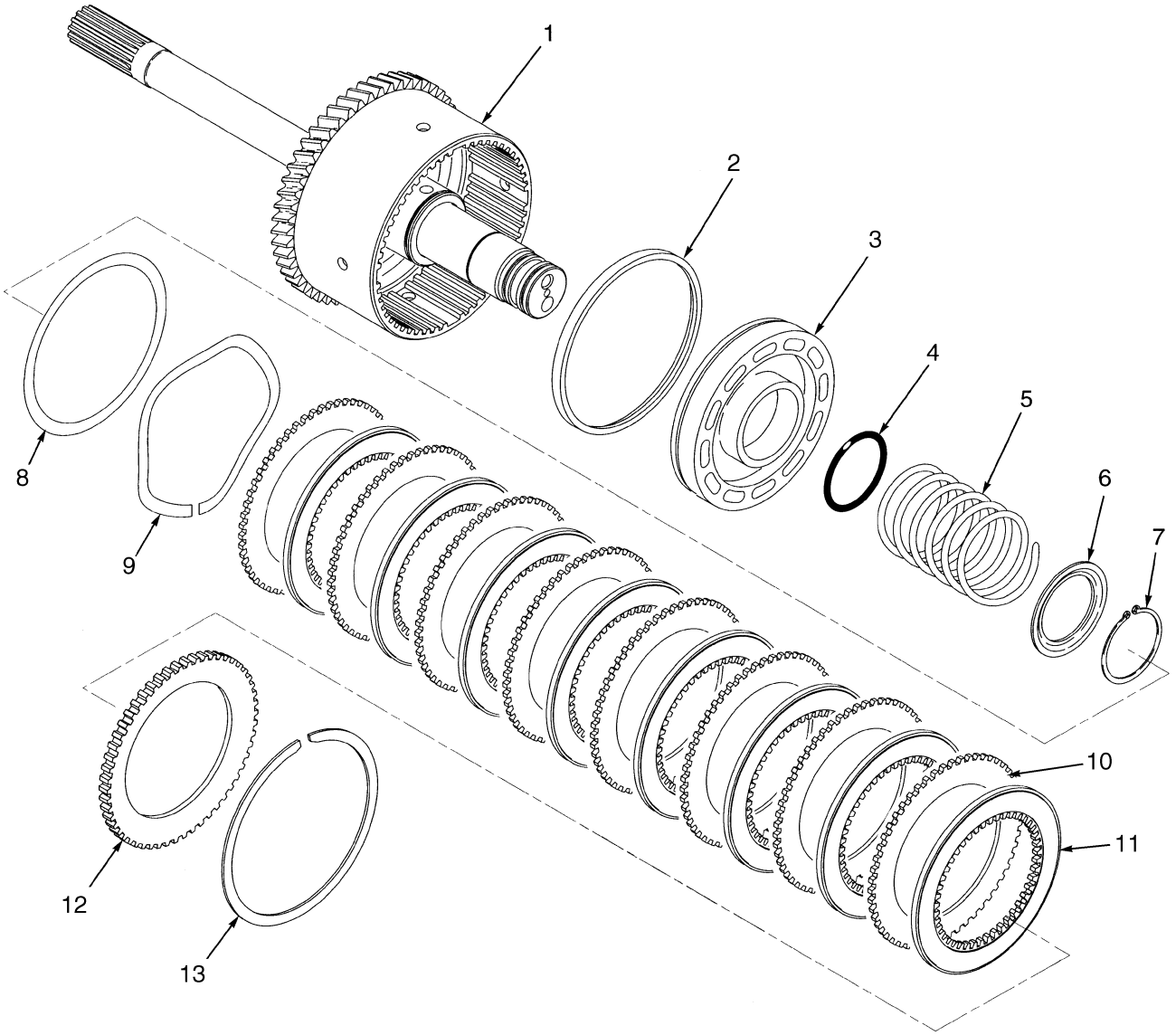


BP240026


©2004 HYSTER COMPANY

# INPUT CLUTCH
## REVERSE

**KEY:**
**A: Two Speed**
**B: Single Speed**

| ITEM | PART NO. | DESCRIPTION | QTY A | QTY B |
|---|---|---|---|---|
| | 1488602 | Clutch Pack Assembly (Input, Reverse) | 1 | 1 |
| 1 | 1396064 | Shaft Assembly | 1 | 1 |
| 2 | 334402 | Seal | 1 | 1 |
| 3 | 1523953 | Piston | 1 | 1 |
| 4 | 1394879 | O-Ring | 1 | 1 |
| 5 | 1394882 | Spring | 1 | 1 |
| 6 | 1394893 | Guide (Spring) | 1 | 1 |
| 7 | 1394912 | Snap Ring | 1 | 1 |
| 8 | 1515680 | Back-Up Washer | 1 | 1 |
| 9 | 1523551 | Wave Spring | 1 | 1 |
| 10 | 1387235 | Plate (Separator) | 8 | 8 |
| 11 | 1469301 | Plate (Friction) | 8 | 8 |
| 12 | 1394881 | Pressure Plate (0.248-0.252 in.) (Shimming) | 1 | 1 |
| 12 | 1487201 | Pressure Plate (0.272-0.276 in.) (Shimming) (Optional) | 1 | 1 |
| 12 | 1487202 | Pressure Plate (0.220-0.224 in.) (Shimming, Stepped) (Optional) | 1 | 1 |
| 12 | 1545871 | Pressure Plate (0.201-0.205 in.) (Shimming, Stepped) (Optional) | 1 | 1 |
| 13 | 334475 | Snap Ring | 1 | 1 |

©2004 HYSTER COMPANY

# DIRECTIONAL CLUTCH (Figure 5-5)
## FORWARD

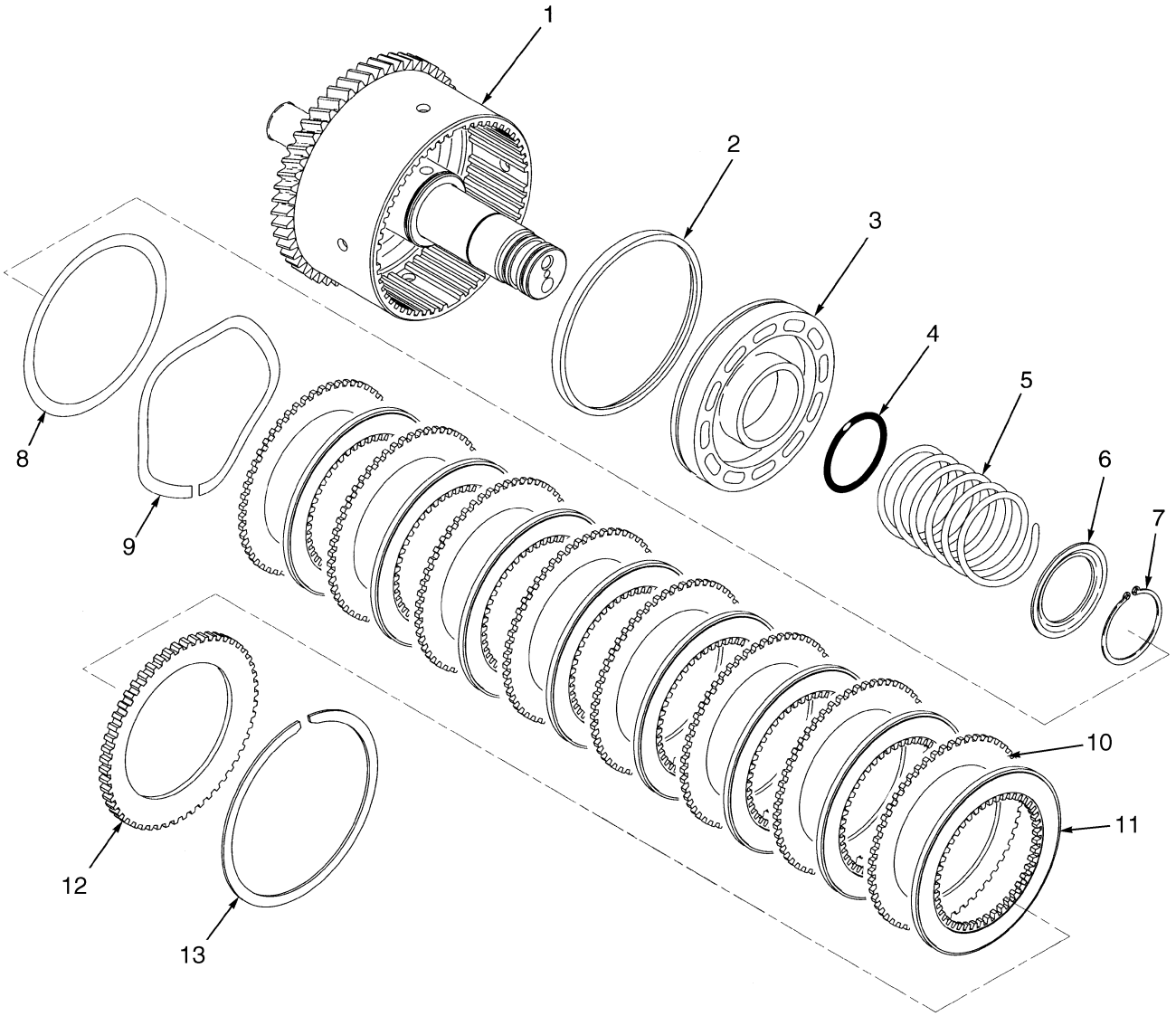


BP240027


©2004 HYSTER COMPANY

# DIRECTIONAL CLUTCH
## FORWARD

**KEY:**
**A: Single Speed**
**B: Two Speed**

| ITEM | PART NO. | DESCRIPTION | QTY A | QTY B |
|---|---|---|---|---|
| | 1488604 | Clutch Pack Assembly (Directional, Forward) | 1 | 2 |
| 1 | 1396065 | Shaft Assembly | 1 | 1 |
| 2 | 334402 | Seal | 1 | 1 |
| 3 | 1523953 | Piston | 1 | 1 |
| 4 | 1394879 | O-Ring | 1 | 1 |
| 5 | 1394882 | Spring | 1 | 1 |
| 6 | 1394893 | Guide (Spring) | 1 | 1 |
| 7 | 1394912 | Snap Ring | 1 | 1 |
| 8 | 1515680 | Back-Up Washer | AR | AR |
| 9 | 1523551 | Wave Spring | 1 | 1 |
| 10 | 1387235 | Plate (Separator) | 8 | 8 |
| 11 | 1469301 | Plate (Friction) | 8 | 8 |
| 12 | 1394881 | Pressure Plate (0.248-0.252 in.) (Shimming) | 1 | 1 |
| 12 | 1487201 | Pressure Plate (0.272-0.276 in.) (Shimming) (Optional) | 1 | 1 |
| 12 | 1487202 | Pressure Plate (0.220-0.224 in.) (Shimming, Stepped) (Optional) | 1 | 1 |
| 12 | 1545871 | Pressure Plate (0.201-0.205 in.) (Shimming, Stepped) (Optional) | 1 | 1 |
| 13 | 334475 | Snap Ring | 1 | 1 |

©2004 HYSTER COMPANY

# CONTROL VALVE (Figure 5-6)
## TRANSMISSION

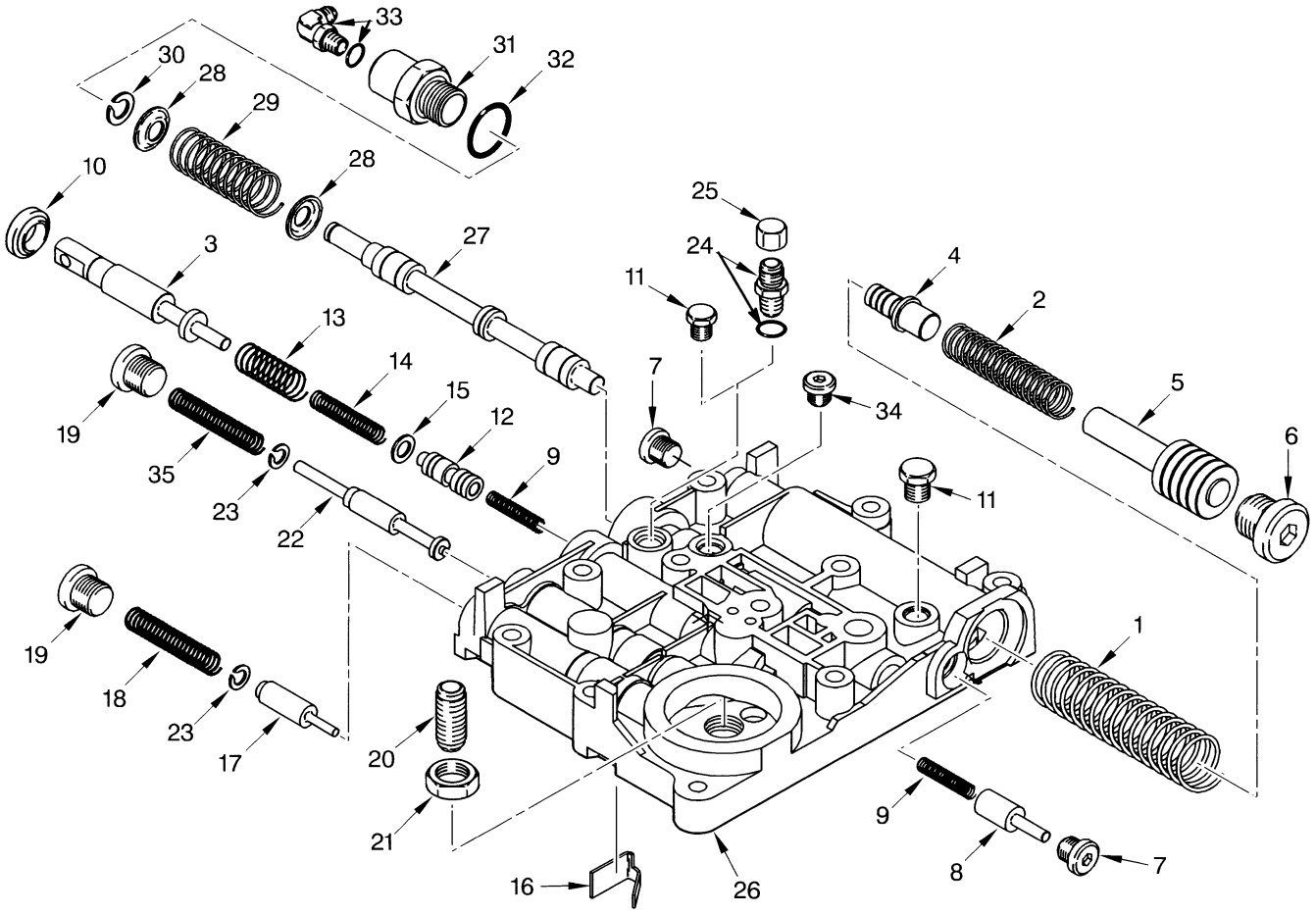


HP240029


©2004 HYSTER COMPANY

# CONTROL VALVE
## TRANSMISSION

| ITEM | PART NO. | DESCRIPTION | QTY |
|---|---|---|---|
| | 1466123 | Control Valve | 1 |
| 1 | 361876 | Spring (Accumulator) | 1 |
| 2 | 361877 | Spring (Trimmer) | 1 |
| 3 | 1337817 | Plunger (Inching) | 1 |
| 4 | 334582 | Spool (Trimmer) | 1 |
| 5 | 359221 | Spool (Accumulator) | 1 |
| 6 | 200659 | Fitting | 1 |
| 6 | 16982 | O-Ring | 1 |
| 7 | 222443 | Fitting | 2 |
| 7 | 16483 | O-Ring | 2 |
| 8 | 334542 | Spool (Dump) | 1 |
| 9 | 334543 | Spring | 2 |
| 10 | 334500 | Oil Seal | 1 |
| 11 | 14592 | Fitting | 1 |
| 11 | 16482 | O-Ring | 1 |
| 12 | 1483108 | Spool (Inching) | 1 |
| 13 | 334531 | Spring (Inching) | 1 |
| 14 | 1387230 | Spring (Inching) | 1 |
| 15 | 296418 | Washer | 1 |
| 16 | 350484 | Stop (Inching) | 1 |
| 17 | 1394710 | Spool (Regulator) | 1 |
| 18 | 1394711 | Spring (Regulator) | 1 |
| 19 | 235691 | Fitting | 2 |
| 19 | 16484 | O-Ring | 1 |
| 20 | 181766 | Nipple | 1 |
| 21 | 15032 | Nut | 1 |
| 22 | 1388924 | Spool (Pack Regulator) | 1 |
| 23 | 1394714 | Snap Ring (External) | 2 |
| 24 | 222380 | Fitting | 1 |
| 24 | 16482 | O-Ring | 1 |
| 25 | 16923 | Fitting | 1 |
| 26 | 1396637 | Body | 1 |
| 27 | 1490391 | Spool (Forward/Reverse) | 1 |
| 28 | 346648 | Cap (Forward/Reverse) | 2 |
| 29 | 346645 | Spring | 1 |
| 30 | 58936 | Snap Ring | 1 |
| 31 | 375986 | Cap (Monotrol) | 1 |
| 32 | 367945 | Gasket | 1 |
| 33 | 16556 | Fitting | 1 |
| 33 | 16481 | O-Ring | 1 |
| 34 | 134436 | Fitting | 1 |
| 34 | 16482 | O-Ring | 1 |
| 35 | 1461077 | Spring | 1 |

©2004 HYSTER COMPANY

# MANIFOLD VALVE (Figure 5-7)

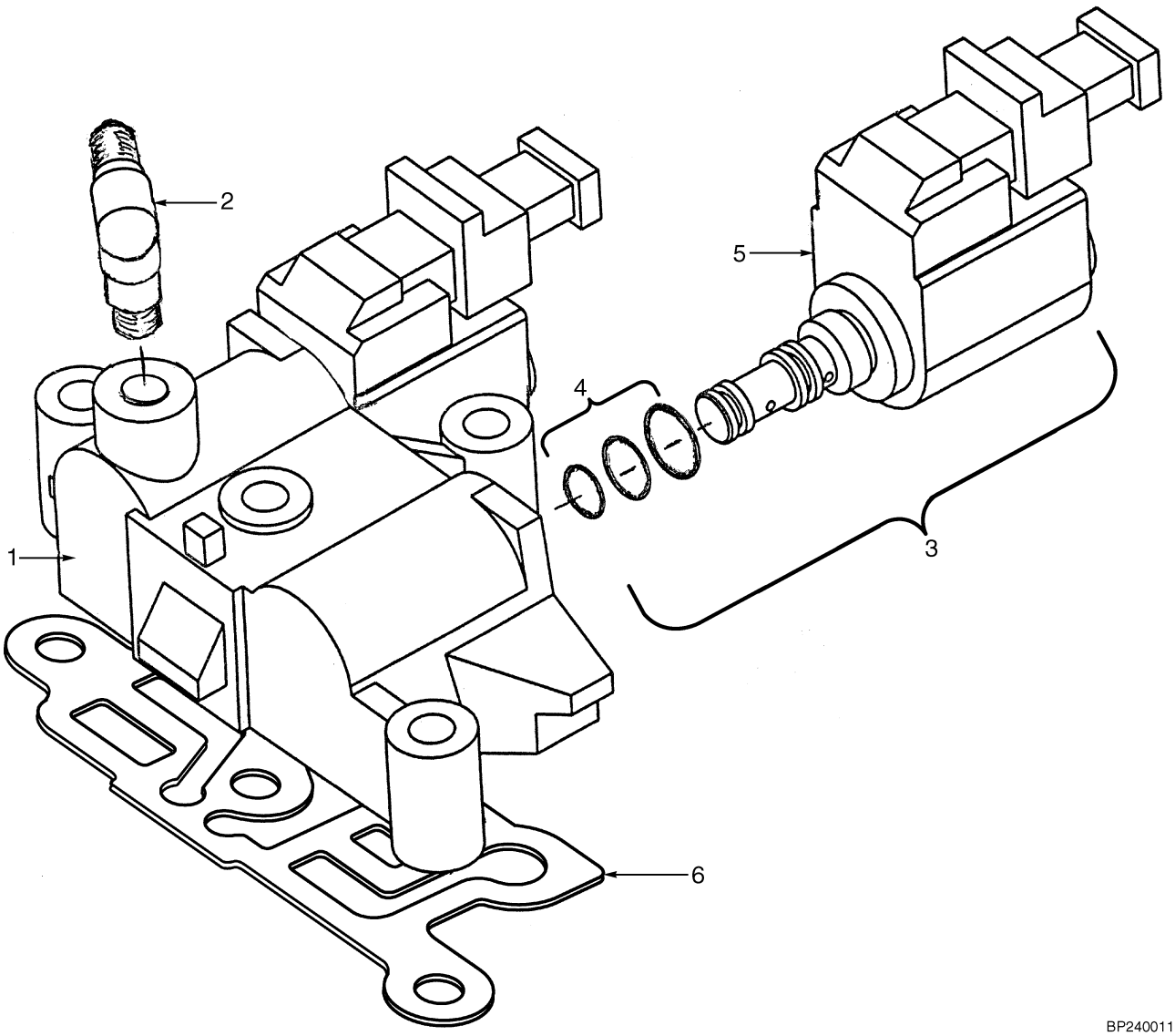


BP240011

| ITEM | | PART NO. | DESCRIPTION | QTY |
|---|---|---|---|---|
| | | 1400159 | Manifold Valve | 1 |
| 1 | | 1388563 | Manifold | 1 |
| 2 | | 14500 | Fitting | 1 |
| 2 | | 246108 | Sealant | AR |
| 3 | | 1400158 | Solenoid Valve | 2 |
| 4 | **a** | 1393160 | Seal Kit | 1 |
| 5 | | 1464144 | Coil | 1 |
| 6 | | 1388573 | Gasket | 1 |

**FOOTNOTES:**

**a** Services One Solenoid Valve


©2004 HYSTER COMPANY

# HIGH AND LOW VALVE (Figure 5-8)

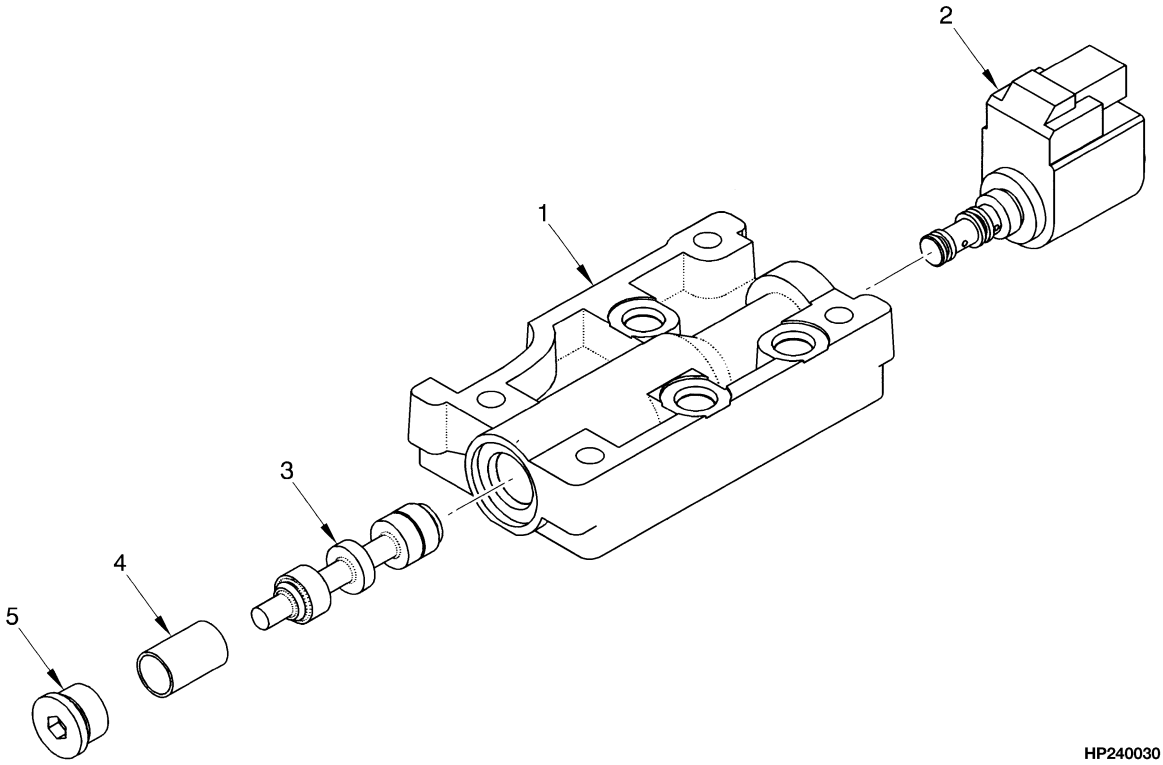


| ITEM | PART NO. | DESCRIPTION | QTY |
|---|---|---|---|
| | 1388612 | Valve Assembly | 1 |
| 1 | 1388613 | Body | 1 |
| 2 | 1400158 | Solenoid Valve | 1 |
| 2 | 1393160 | Seal Kit | 1 |
| 3 | 1388615 | Spool | 1 |
| 4 | 334531 | Spring | 1 |
| 5 | 235691 | Fitting | 1 |
| 5 | 16484 | O-Ring | 1 |

# TRANSMISSION LINES (Figure 5-9)

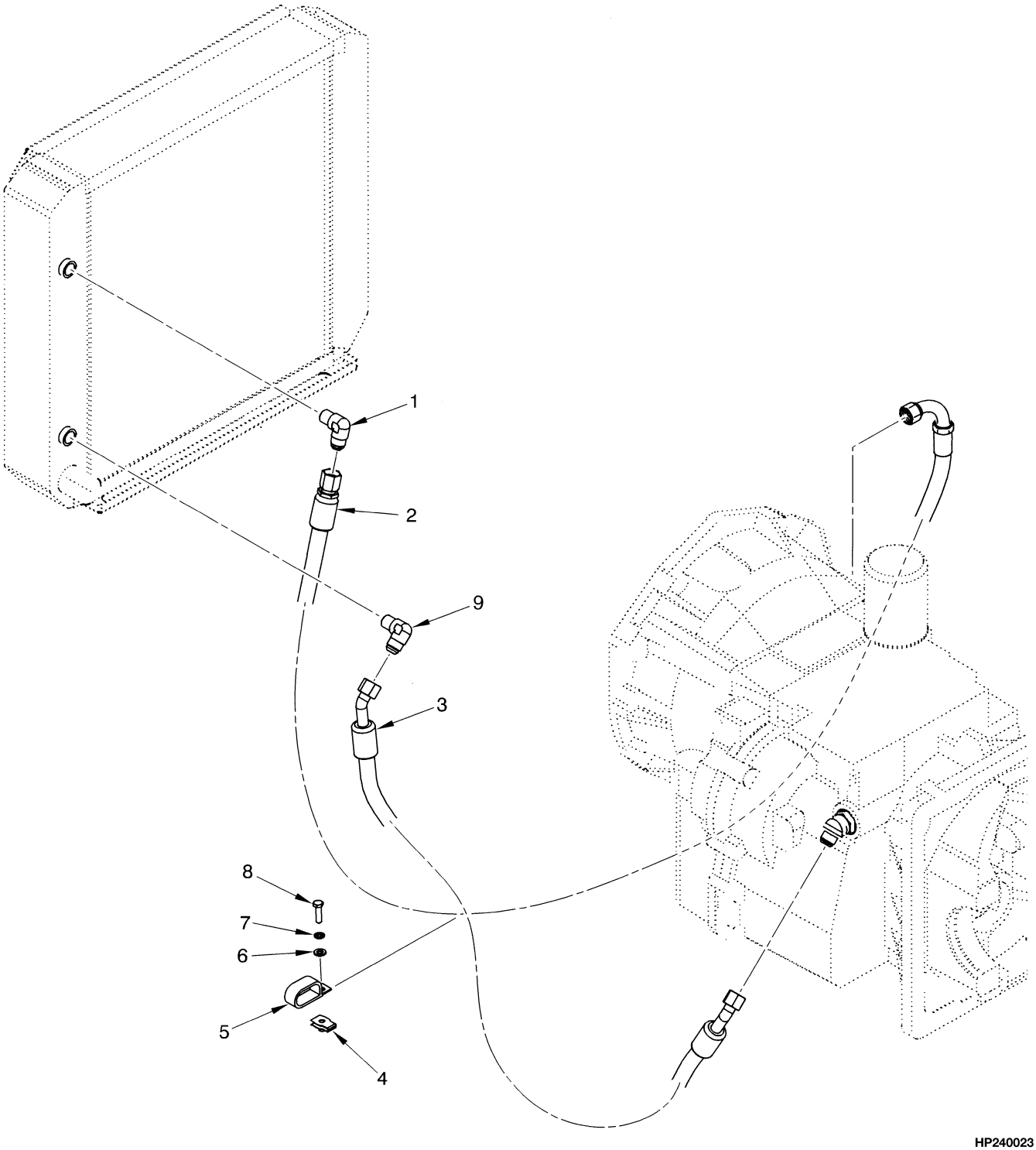



©2004 HYSTER COMPANY

# TRANSMISSION LINES

| ITEM | PART NO. | DESCRIPTION | QTY |
|---|---|---|---|
| 1 | 66885 | Fitting | 1 |
| 2 | 1397978 | Hose | 1 |
| 3 | 1397982 | Hose | 1 |
| 4 | 1393879 | Clip Nut | 2 |
| 5 | 212786 | Clamp | 2 |
| 6 | 320157 | Washer | 2 |
| 7 | 292681 | Lockwasher | 2 |
| 8 | 132861 | Capscrew | 2 |
| 9 | 201787 | Fitting | 1 |

©2004 HYSTER COMPANY

# TRANSMISSION MOUNT (Figure 5-10)

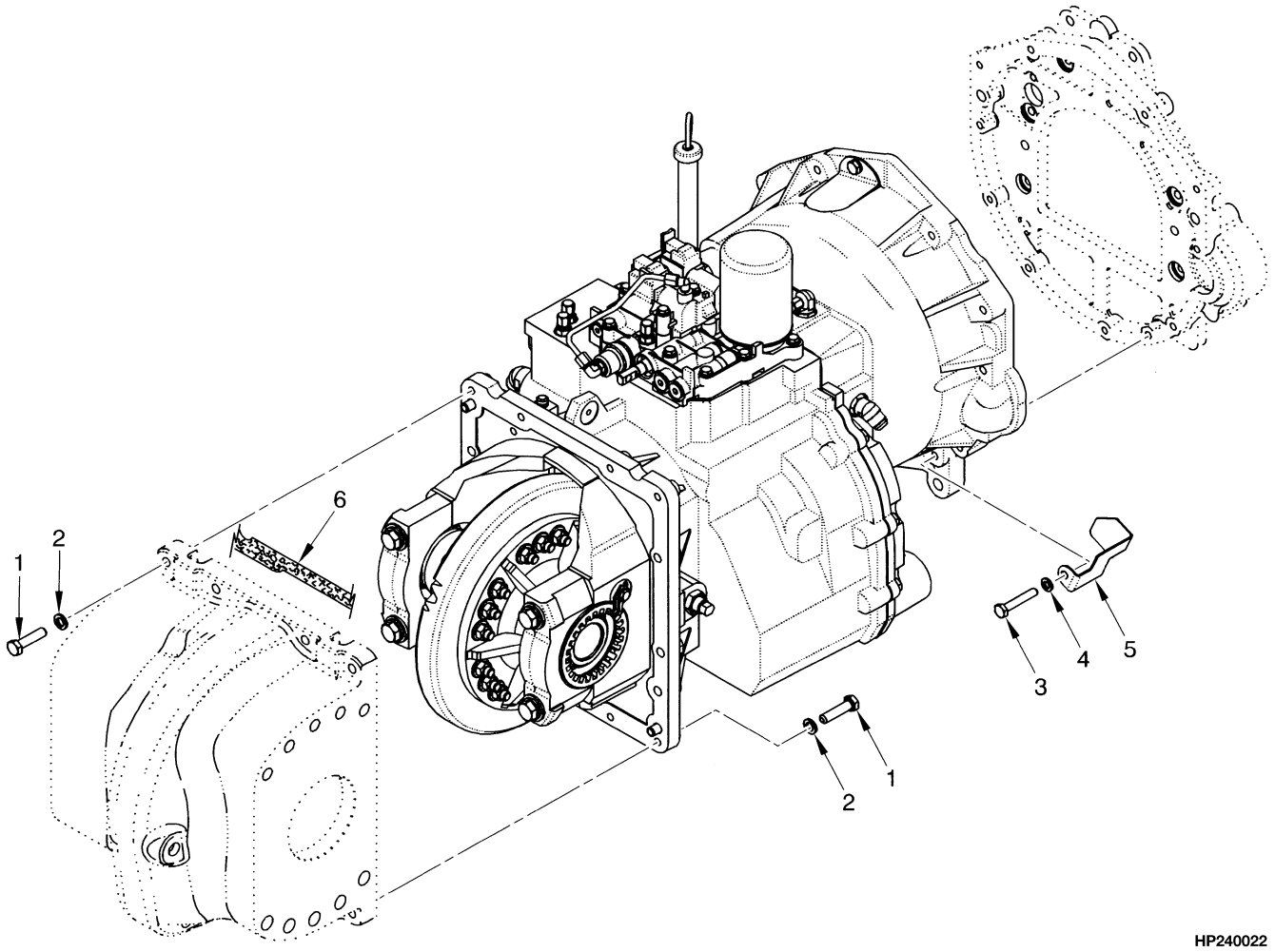


**KEY:**
**A: Single Speed**
**B: Two Speed**

| ITEM | PART NO. | DESCRIPTION | QTY A | QTY B |
|---|---|---|---|---|
| | 1488597 | Transmission Assembly (T86) | 1 | .. |
| | 1488600 | Transmission Assembly (T88) | .. | 1 |
| | 1488601 | Transmission Assembly (T89) | .. | 1 |
| 1 | 292529 | Capscrew | 15 | 15 |
| 2 | 292683 | Lockwasher | 15 | 15 |
| 3 | 292519 | Capscrew | 11 | 11 |
| 4 | 292682 | Lockwasher | 11 | 11 |
| 5 | 1397797 | Cover (Starter, Diesel) | 1 | 1 |
| 5 | 1465258 | Cover (Starter, Gas, LPG, Dual Fuel) | 1 | 1 |
| 6 | 264159 | Adhesive | AR | AR |


©2004 HYSTER COMPANY

# 6 DRIVE AXLE

# SECTION 6
# DRIVE AXLE

**DESCRIPTION** **PAGE**

DIFFERENTIAL ASSEMBLY ..... 6-5
DRIVE AXLE ..... 6-2
DRIVE TIRES AND WHEELS
SINGLE
H70-H90XM ..... 6-6
H90-H120XM ..... 6-8

©2004 HYSTER COMPANY

# DRIVE AXLE (Figure 6-1)

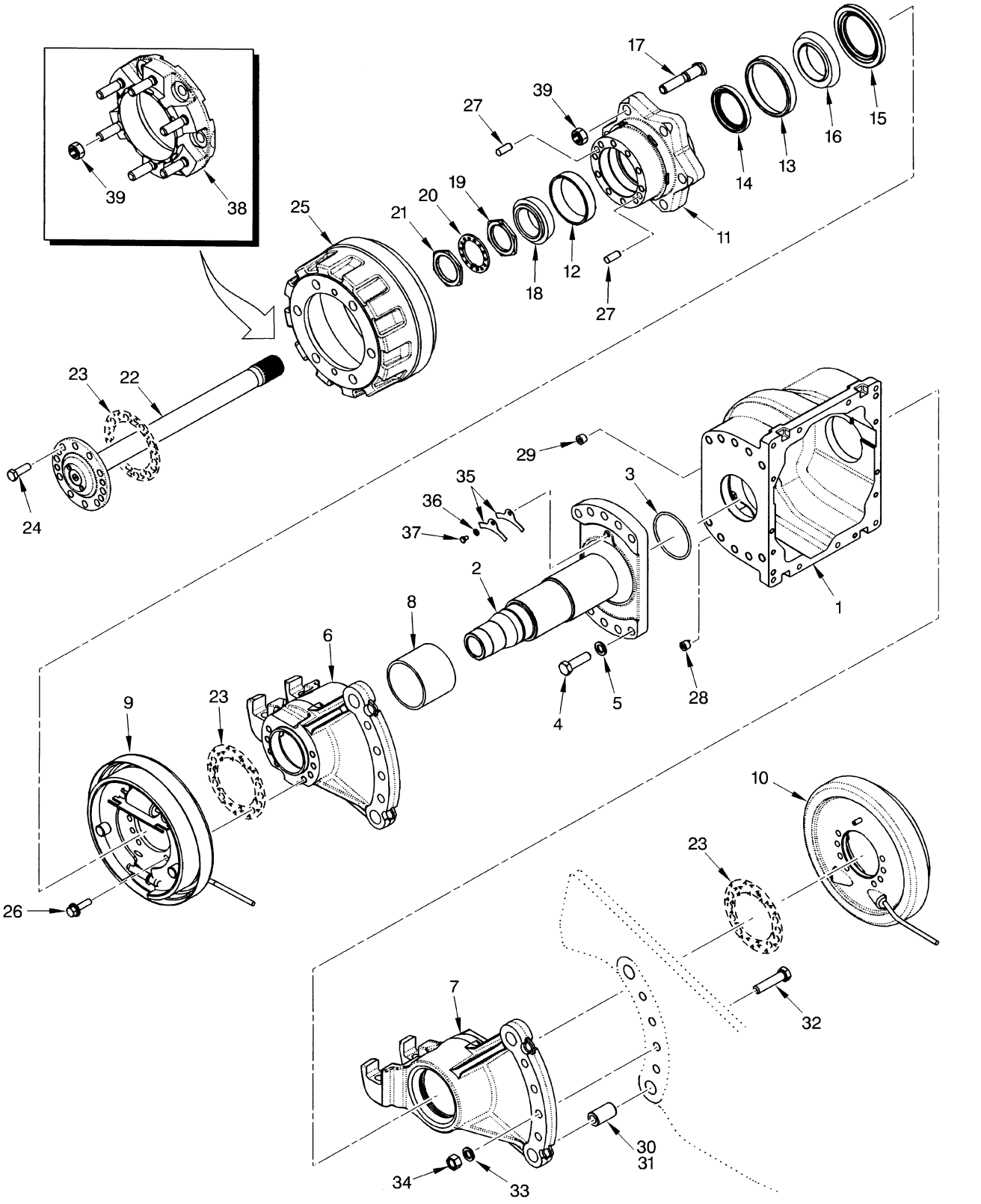



©2004 HYSTER COMPANY

# DRIVE AXLE

**KEY:**
**A: H70-90XM**
**B: H100-120XM**

| ITEM | PART NO. | DESCRIPTION | QTY A | QTY B |
|---|---|---|---|---|
| | 1529708 | Drive Axle Assembly | 1 | .. |
| | 1536722 | Drive Axle Assembly | .. | 1 |
| 1 | 1394603 | Housing | 1 | 1 |
| 2 | 1528427 | Spindle | 2 | 2 |
| 3 | 18942 | O-Ring | 2 | 2 |
| 4 | 293710 | Capscrew | 20 | 20 |
| 5 | 292687 | Lockwasher | 20 | 20 |
| 6 | 1528484 | Hanger (LH) | 1 | 1 |
| 7 | 1528410 | Hanger (RH) | 1 | 1 |
| 8 | 1394605 | Bushing | 2 | 2 |
| 9 | 1394681 | Brake Assembly (LH) (☞ Figure 8-3) | 1 | .. |
| 9 | 1536792 | Brake Assembly (LH) (☞ Figure 8-3) | .. | 1 |
| 10 | 1394682 | Brake Assembly (RH) (☞ Figure 8-4) | 1 | .. |
| 10 | 1536793 | Brake Assembly (RH) (☞ Figure 8-4) | .. | 1 |
| 11 | 1536794 | Hub Assembly | 1 | 1 |
| 11 | 1536684 | Hub | 1 | 1 |
| 12 | 30098 | Bearing Cup | 1 | 1 |
| 13 | 1313897 | Bearing Cup | 1 | 1 |
| 14 | 2035568 | Oil Seal | 1 | 1 |
| 15 | 2035569 | Oil Seal | 1 | 1 |
| 16 | 1394618 | Bearing Cone | 1 | 1 |
| 17 | 1393342 | Stud | 6 | 6 |
| 18 | 30097 | Bearing Cone | 2 | 2 |
| 19 | 1394620 | Nut | 2 | 2 |
| 20 | 1394621 | Lockwasher | 2 | 2 |
| 21 | 1394622 | Nut | 2 | 2 |
| 22 | 1394624 | Axle Shaft | 2 | 2 |
| 23 | 264159 | Adhesive | AR | AR |
| 24 | 293685 | Capscrew | 20 | 20 |
| 25 | 1479756 | Brake Drum | 2 | .. |
| 25 | 1485867 | Brake Drum | .. | 2 |
| 26 | 1394646 | Stud | 16 | 16 |
| 27 | 352220 | Pin | 4 | 4 |
| 28 | 15290 | Fitting | 1 | 1 |
| 29 | 15315 | Fitting | 1 | 1 |
| 30 | 370651 | Pin | 4 | 4 |
| 31 | 251979 | Lubricant | AR | AR |
| 32 | 292589 | Capscrew | 8 | 8 |
| 33 | 292687 | Lockwasher | 8 | 8 |
| 34 | 292620 | Nut | 8 | 8 |
| 35 | 1394661 | Shim (0.039 in.) | 4 | 4 |
| 36 | 292681 | Lockwasher | 2 | 2 |
| 37 | 287805 | Capscrew | 2 | 2 |
| 38 | 1393346 | Adapter (Dual Wheel) (2100 mm Long Wheel Base) | .. | 1 |
| 38 | 1393344 | Adapter (Dual Wheel) (1830 mm Short Wheel Base) | 1 | .. |
| 39 | 376026 | Lug Nut | 12 | 12 |

©2004 HYSTER COMPANY

# DRIVE AXLE

| ITEM | PART NO. | DESCRIPTION | QTY A | QTY B |
|---|---|---|---|---|
| 39 | 376026 | Lug Nut (Dual Wheel) | 24 | 24 |
| 39 | 1394715 | Lug Nut (Optional) | 12 | 12 |
| 39 | 1394715 | Lug Nut (Dual Wheel) (Optional) | 24 | 24 |


©2004 HYSTER COMPANY

# DIFFERENTIAL ASSEMBLY (Figure 6-2)

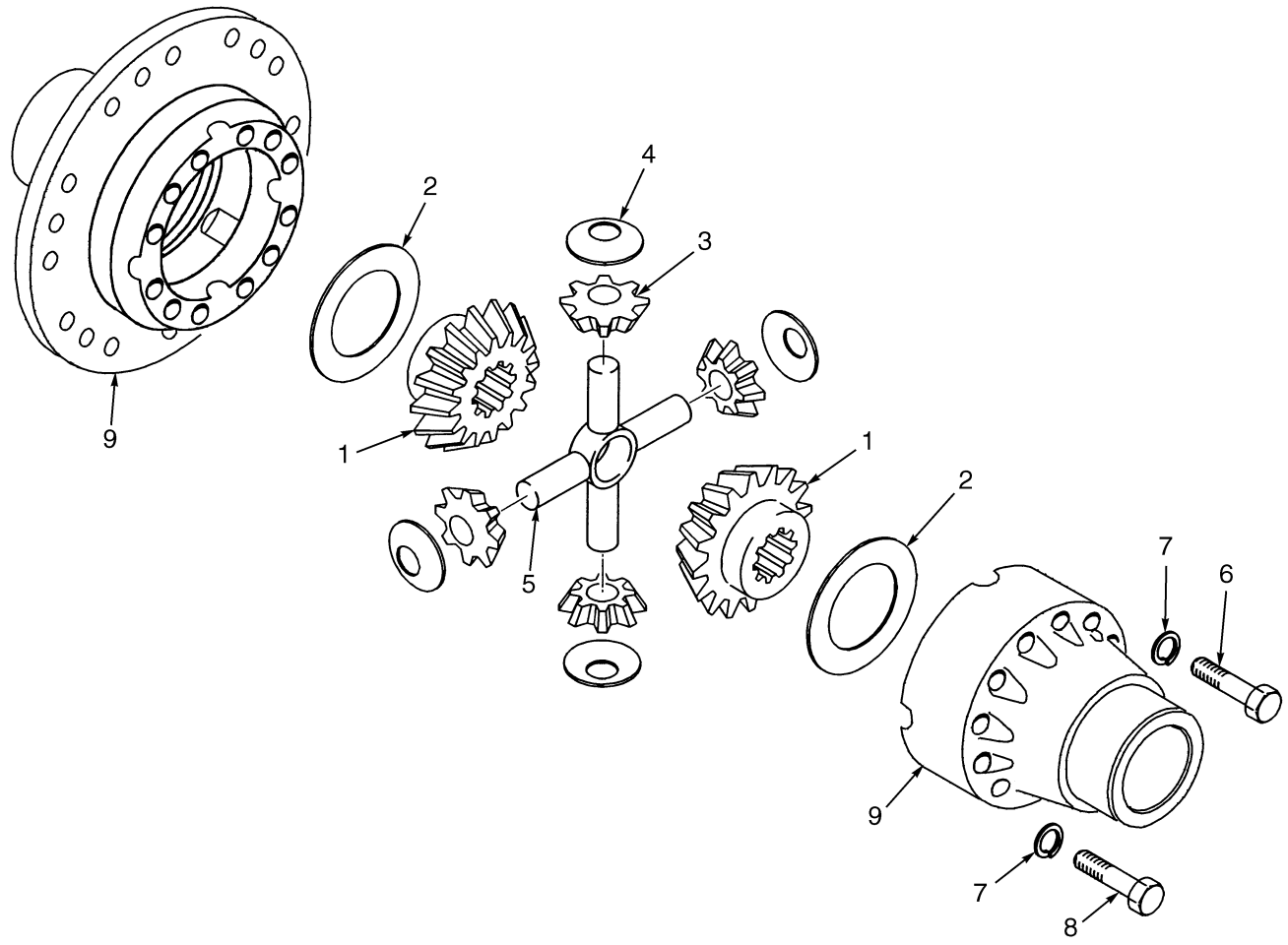


BP070003

| ITEM | PART NO. | DESCRIPTION | QTY |
|---|---|---|---|
| | 1476426 | Differential Assembly | 1 |
| 1 | 1484734 | Side Gear | 2 |
| 2 | 1484735 | Washer | 2 |
| 3 | 1484736 | Pinion | 4 |
| 4 | 1484737 | Washer | 4 |
| 5 | 1484738 | Spider | 1 |
| 6 | 1484739 | Capscrew | 8 |
| 7 | 1484741 | Washer | 12 |
| 8 | 1484740 | Bolt | 4 |
| 9 | 1484733 | Case Set | 1 |

# DRIVE TIRES AND WHEELS (Figure 6-3)
## SINGLE
## H70-H90XM

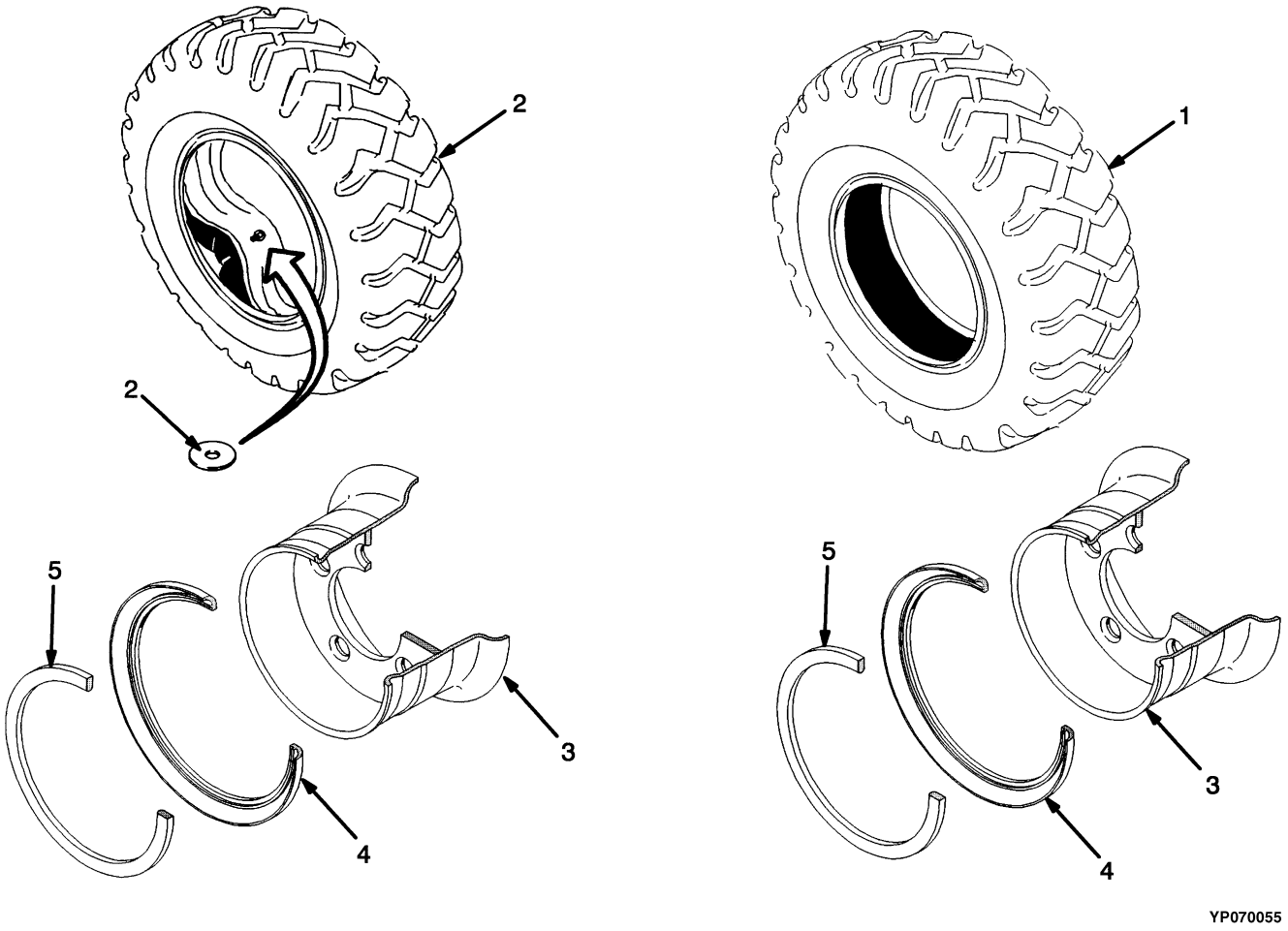



©2004 HYSTER COMPANY

# DRIVE TIRES AND WHEELS
## SINGLE
## H70-H90XM

**KEY:**
**A: 250 x 15 - Solid (H70-90XM)**
**B: 250 x 15 - 16 Ply (H70-80XM)**
**C: 250 x 15 - 18 Ply (H70-90XM)**
**D: 250/70 R15 Radial (H70-90XM)**

| ITEM | | PART NO. | DESCRIPTION | QTY A | B | C | D |
|---|---|---|---|---|---|---|---|
| 1 | | 352266 | Tire (Standard Hardness) | 2 | .. | .. | .. |
| 2 | | 1302126 | Tire Assembly | .. | .. | 2 | .. |
| 2 | | 1302127 | Tire (With Flap) | .. | .. | 1 | .. |
| 2 | | 1358184 | Tire | .. | .. | .. | 1 |
| 2 | | 1337744 | Tire Assembly | .. | .. | .. | 2 |
| 2 | | 352268 | Tire Assembly | .. | 2 | .. | .. |
| 2 | | 352269 | Tire (With Flap) | .. | 1 | .. | .. |
| 2 | | 1471830 | Tire Assembly (Tubeless) (Not Illustrated) | .. | .. | .. | 2 |
| 2 | | 1462618 | Bead Seal (Not Illustrated) | .. | .. | .. | 2 |
| 2 | | 1358195 | Tube | .. | .. | .. | 1 |
| 2 | | 352270 | Tube | .. | 1 | 1 | .. |
| 2 | | 1376007 | Washer (Valve Stem) | .. | .. | .. | 2 |
| 2 | | 1394500 | Plate (Valve Stem) | 2 | 2 | 2 | 2 |
| 2 | | 336555 | Plate (Valve Stem) (Optional) | 2 | 2 | 2 | 2 |
| 2 | | 1533587 | Plate (Valve Stem) (Optional) | 2 | 2 | 2 | 2 |
| 3 | | 2035020 | Wheel Assembly | .. | .. | .. | 2 |
| 3 | **a** | 2035020 | Wheel Assembly | 2 | 2 | 2 | .. |
| 3 | **b** | 2035021 | Wheel Assembly | 2 | 2 | 2 | .. |
| 4 | | 322637 | Side Ring | 1 | 1 | 1 | 1 |
| 5 | | 322638 | Lock Ring | 1 | 1 | 1 | 1 |

**FOOTNOTES:**
**a** Standard Tread
**b** Wide Tread

# DRIVE TIRES AND WHEELS (Figure 6-4)
## SINGLE
## H90-H120XM

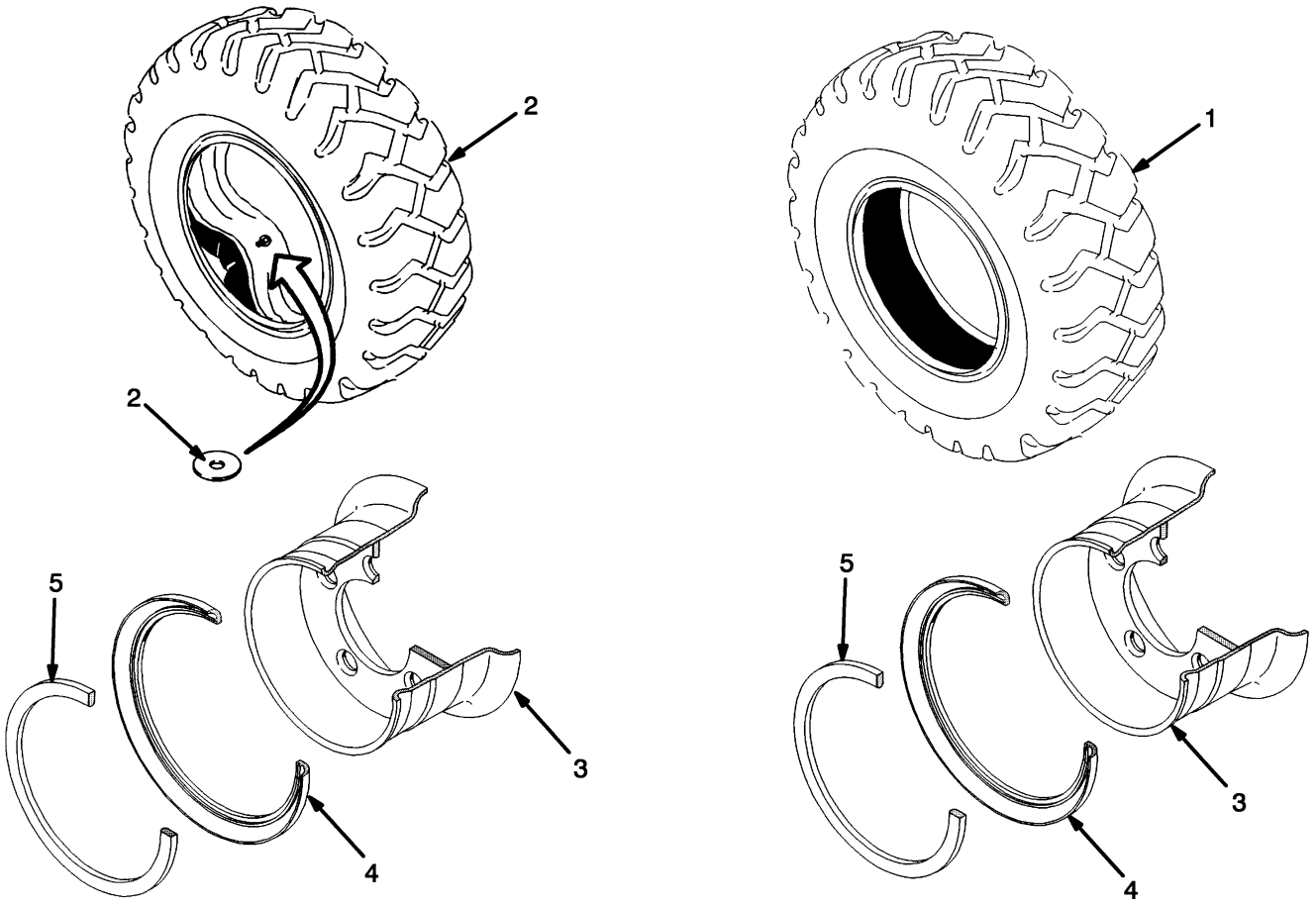



©2004 HYSTER COMPANY

# DRIVE TIRES AND WHEELS
## SINGLE
## H90-H120XM

**KEY:**
**A: 300 x 15 Solid (H100-120XM)**
**B: 300 x 15 18 Ply (H100-120XM)**
**C: 315/70 R15 Radial (H100-120XM)**
**D: 315/70 R15 Tubless Radial (H90-120XM)**

| ITEM | | PART NO. | DESCRIPTION | QTY A | B | C | D |
|---|---|---|---|---|---|---|---|
| 1 | | 336123 | Tire (Standard Hardness) | 2 | .. | .. | .. |
| 2 | | 1337745 | Tire Assembly | .. | .. | 2 | .. |
| 2 | | 1358185 | Tire | .. | .. | 1 | 1 |
| 2 | | 321043 | Tire Assembly | .. | 2 | .. | .. |
| 2 | | 321044 | Tire (With Flap) | .. | 1 | .. | .. |
| 2 | | 1471831 | Tire Assembly (Not Illustrated) | .. | .. | .. | 2 |
| 2 | | 1471595 | Seal (Not Illustrated) | .. | .. | .. | 1 |
| 2 | | 1471922 | Tubeless Bead Seal Valve (Not Illustrated) | .. | .. | .. | 1 |
| 2 | | 321045 | Tube | .. | 1 | 1 | .. |
| 2 | | 1358192 | Tube | .. | .. | 1 | .. |
| 2 | | 1376007 | Washer (Valve Stem) | .. | .. | 2 | .. |
| 2 | | 336555 | Plate (Valve Stem) (Optional) | 2 | 2 | 2 | .. |
| 2 | | 1533587 | Plate (Valve Stem) | .. | .. | .. | 2 |
| 3 | **a** | 2035022 | Wheel Assembly | 2 | 2 | 2 | .. |
| 3 | **b** | 2035023 | Wheel Assembly | 2 | 2 | .. | .. |
| 4 | | 322637 | Side Ring | 1 | 1 | 1 | .. |
| 5 | | 322638 | Lock Ring | 1 | 1 | 1 | .. |

**FOOTNOTES:**
**a** Standard Tread
**b** Wide Tread

©2004 HYSTER COMPANY

# NOTES

# 7 STEERING SYSTEM

# SECTION 7
# STEERING SYSTEM

**DESCRIPTION** **PAGE**

SHIFT LEVER ..... 7-6
STEER AXLE ..... 7-8
STEER COLUMN ..... 7-4
STEER CYLINDER ..... 7-12
STEER PUMP ..... 7-14
STEER TIRES AND WHEELS ..... 7-16
STEERING SYSTEM ..... 7-2

©2004 HYSTER COMPANY

# STEERING SYSTEM (Figure 7-1)

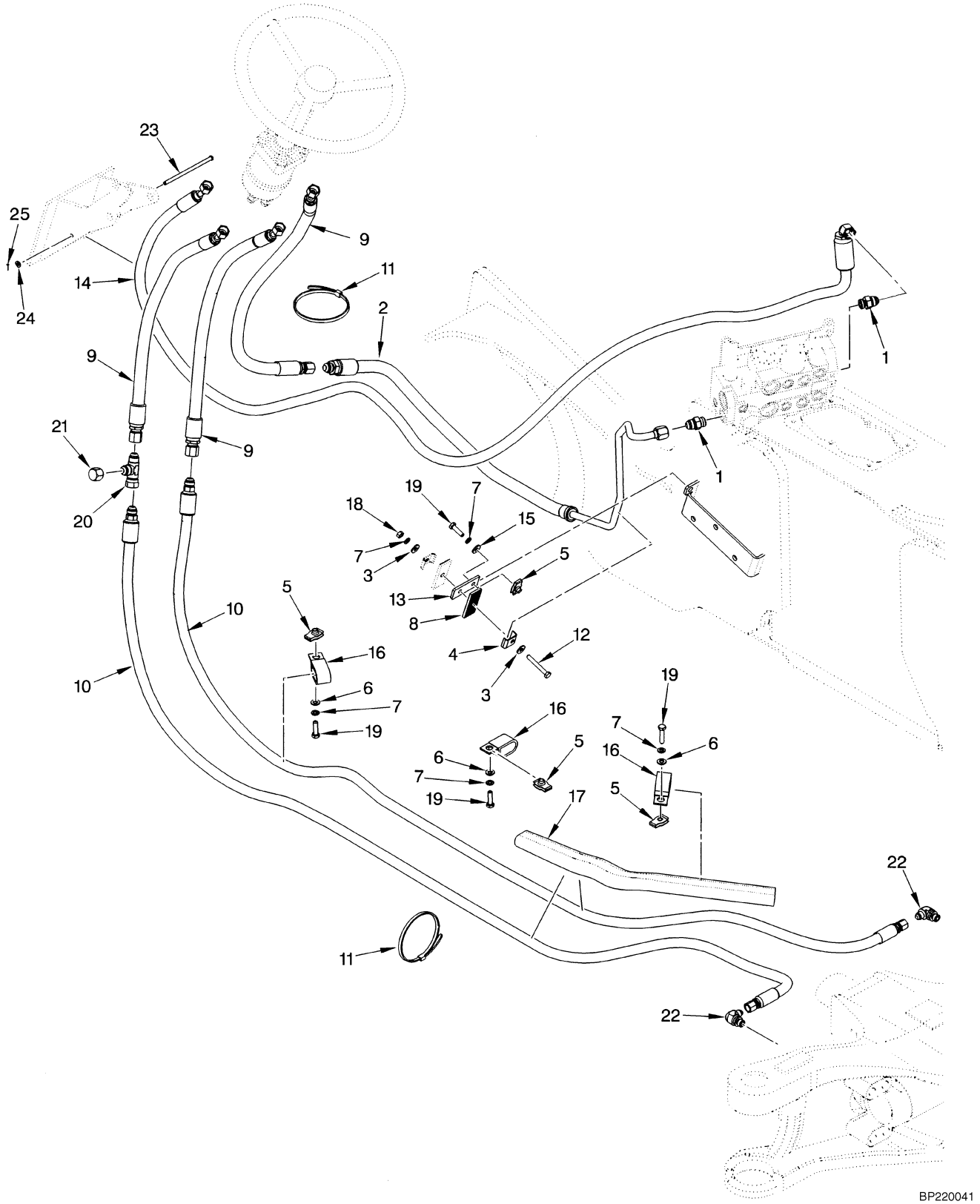



©2004 HYSTER COMPANY

# STEERING SYSTEM

| ITEM | PART NO. | DESCRIPTION | QTY |
|---|---|---|---|
| 1 | 16541 | Fitting | 1 |
| 1 | 16484 | O-Ring | 1 |
| 2 | 1543616 | Hose | 1 |
| 3 | 320158 | Washer | 6 |
| 4 | 1400244 | Clamp | 1 |
| 5 | 1393879 | Clip Nut | 5 |
| 6 | 320157 | Washer | 7 |
| 7 | 292681 | Lockwasher | 6 |
| 8 | 1399323 | Pad | 4 |
| 9 | 1396719 | Hose | 3 |
| 10 | 1397979 | Hose (1830 mm Short Wheel Base) | 2 |
| 10 | 1397980 | Hose (2100 mm Long Wheel Base) | 2 |
| 11 | 397676 | Strap Clamp | AR |
| 12 | 136704 | Capscrew | 1 |
| 13 | 1550643 | Plate | 1 |
| 14 | 1396720 | Hose | 1 |
| 15 | 320158 | Washer | 6 |
| 16 | 79377 | Clamp | 4 |
| 17 | 1358120 | Sleeve | 1 |
| 18 | 239503 | Nut | 3 |
| 19 | 132861 | Capscrew | 6 |
| 20 | 17062 | Fitting | 1 |
| 21 | 16925 | Fitting | 1 |
| 22 | 16558 | Fitting | 2 |
| 22 | 16483 | O-Ring | 1 |
| 23 | 1352616 | Rod End Pin | 1 |
| 24 | 320156 | Washer | 1 |
| 25 | 18824 | Cotter Pin | 1 |

©2004 HYSTER COMPANY

# STEER COLUMN (Figure 7-2)

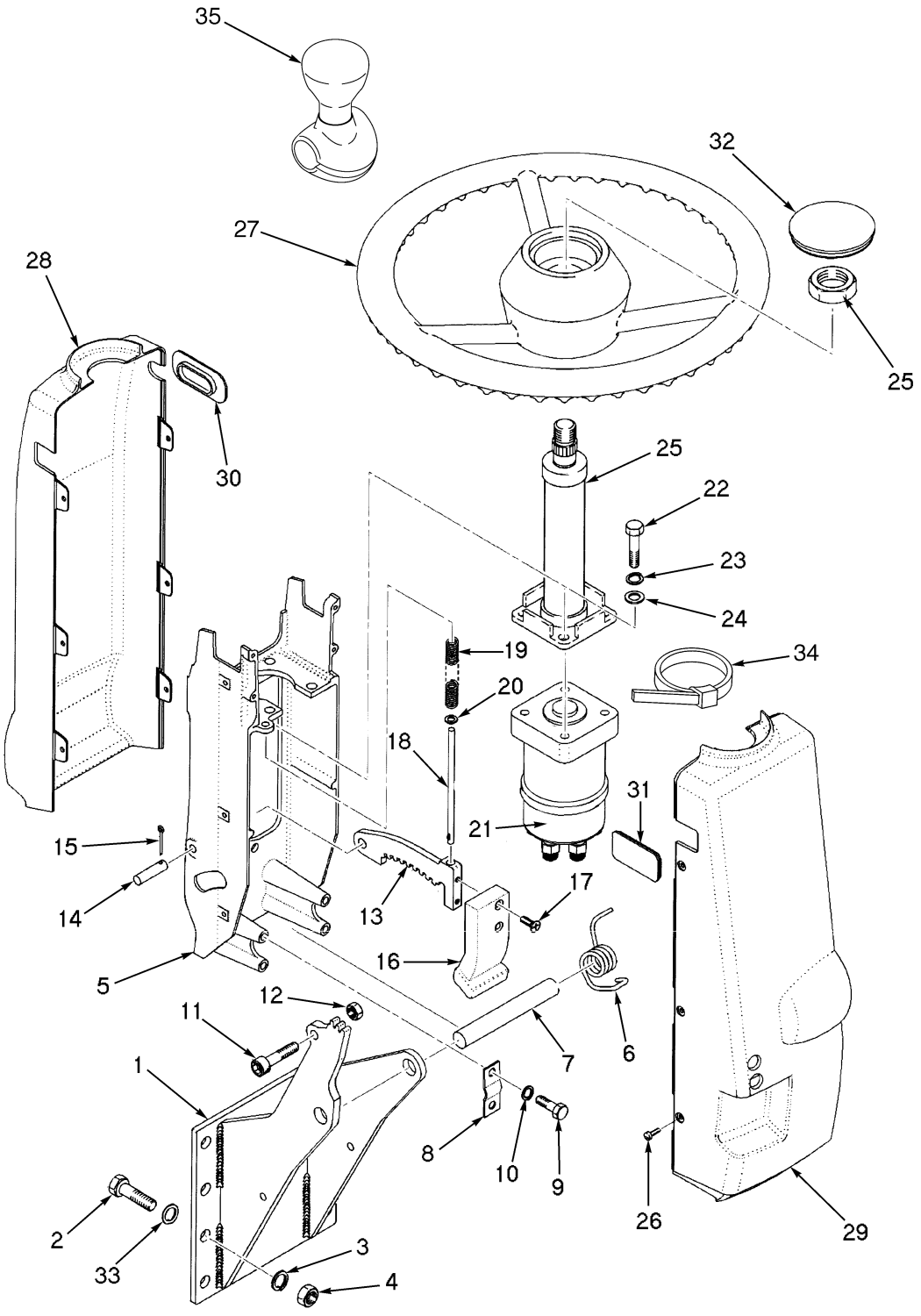


BP220042


©2004 HYSTER COMPANY

# STEER COLUMN

| ITEM | PART NO. | DESCRIPTION | QTY |
|---|---|---|---|
| 1 | 1385451 | Bracket | 1 |
| 2 | 136985 | Capscrew | 4 |
| 3 | 292682 | Lockwasher | 4 |
| 4 | 136692 | Nut | 4 |
| 5 | 1343573 | Bracket | 1 |
| 6 | 1378600 | Spring | 1 |
| 7 | 1335987 | Shaft | 1 |
| 8 | 1335967 | Plate | 2 |
| 9 | 136749 | Capscrew | 4 |
| 10 | 292681 | Lockwasher | 4 |
| 11 | 296010 | Capscrew | 1 |
| 12 | 302400 | Locknut | 1 |
| 13 | 1364271 | Latch (Gear) | 1 |
| 14 | 1343607 | Pin | 1 |
| 15 | 15212 | Cotter Pin | 1 |
| 16 | 1343574 | Latch Knob | 1 |
| 17 | 296215 | Capscrew | 2 |
| 18 | 1343572 | Rod | 1 |
| 19 | 1343537 | Spring | 1 |
| 20 | 320155 | Washer | 1 |
| 21 | 1388773 | Steer Pump (☞ Figure 7-6) | 1 |
| 22 | 16815 | Capscrew | 4 |
| 23 | 15156 | Lockwasher | 4 |
| 24 | 15134 | Washer | 4 |
| 25 | 1347025 | Steer Column | 1 |
| 25 | 345423 | Nut | 1 |
| 25 | 1382556 | Terminal Kit (Horn) | 1 |
| 26 | 1507923 | Screw | 6 |
| 27 | 1329250 | Steering Wheel | 1 |
| 28 | 1397863 | Cover (Upper) | 1 |
| 29 | 1397864 | Cover (Lower) | 1 |
| 30 | 1376743 | Plug (Without Turn Signals) | 1 |
| 31 | 1343597 | Plug | 2 |
| 32 | 1347135 | Horn Button | 1 |
| 33 | 1324577 | Washer | 4 |
| 34 | 273775 | Strap Clamp | 1 |
| 35 | 895468 | Knob | 1 |

©2004 HYSTER COMPANY

# SHIFT LEVER (Figure 7-3)

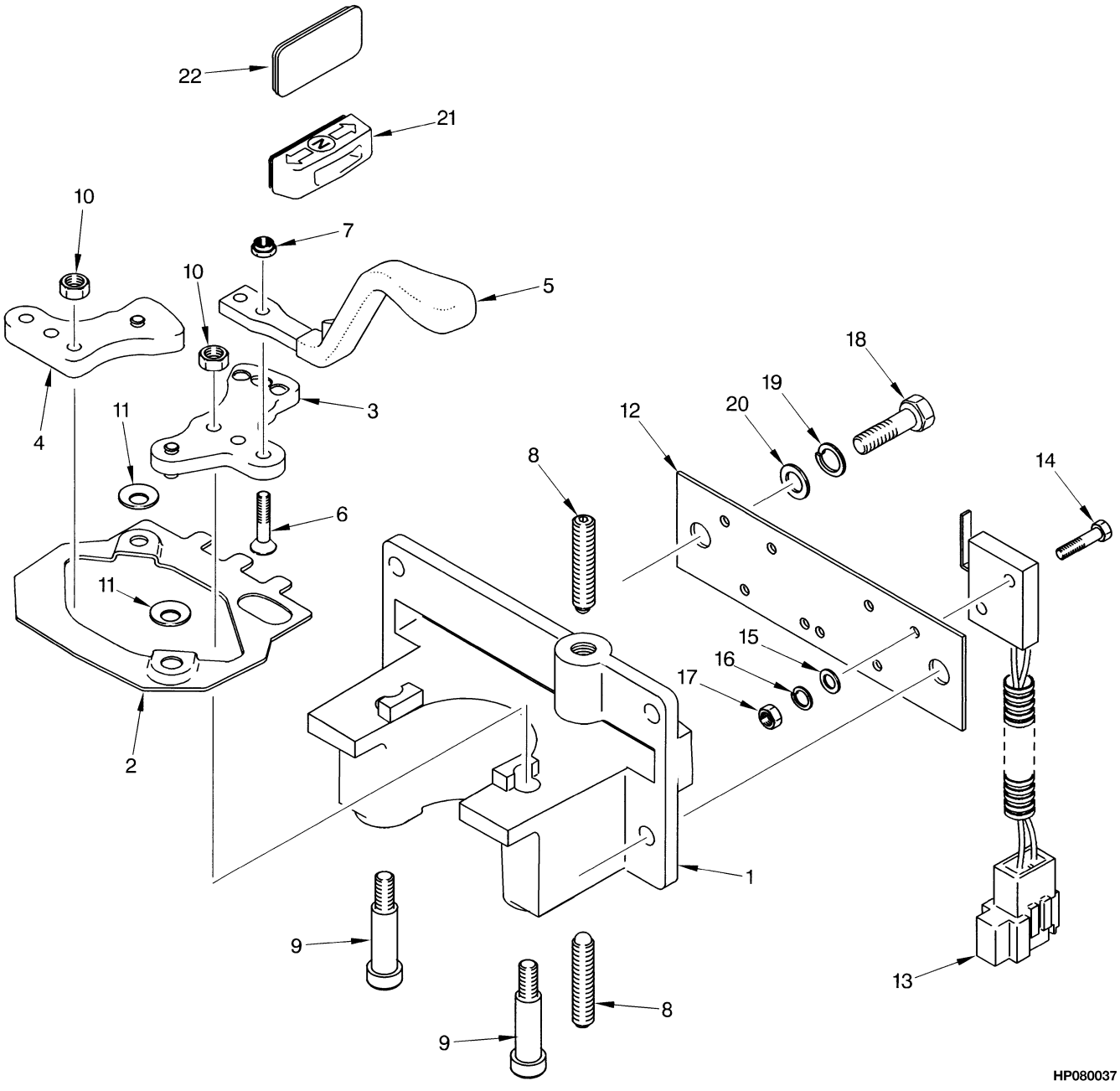



©2004 HYSTER COMPANY

# SHIFT LEVER

| ITEM | PART NO. | DESCRIPTION | QTY |
|---|---|---|---|
| | 1347004 | Shift Lever Assembly | 1 |
| 1 | 1343577 | Base | 1 |
| 2 | 1343578 | Link | 1 |
| 3 | 1343579 | Crank | 1 |
| 3 | 1343592 | Crank | 1 |
| 3 | 1356375 | Pin | 1 |
| 4 | 1343598 | Crank | 1 |
| 4 | 1347217 | Crank | 1 |
| 4 | 1356375 | Pin | 1 |
| 5 | 1343593 | Shift Lever | 1 |
| 6 | 296205 | Capscrew | 2 |
| 7 | 302398 | Locknut | 2 |
| 8 | 1491830 | Spring Plunger | 2 |
| 9 | 1343594 | Bolt | 2 |
| 10 | 136687 | Nut | 2 |
| 11 | 1354300 | Washer | 4 |
| 12 | 1343595 | Plate | 1 |
| 13 | 2035678 | Switch | 2 |
| 14 | 220273 | Screw | 4 |
| 15 | 197064 | Washer | 4 |
| 16 | 53162 | Lockwasher | 4 |
| 17 | 16865 | Nut | 4 |
| 18 | 292500 | Capscrew | 4 |
| 19 | 292680 | Lockwasher | 4 |
| 20 | 320156 | Washer | 4 |
| 21 | 1343596 | Bracket (Label) | 1 |
| 22 | 1343597 | Plug (Monotrol) | 1 |

©2004 HYSTER COMPANY

# STEER AXLE (Figure 7-4)

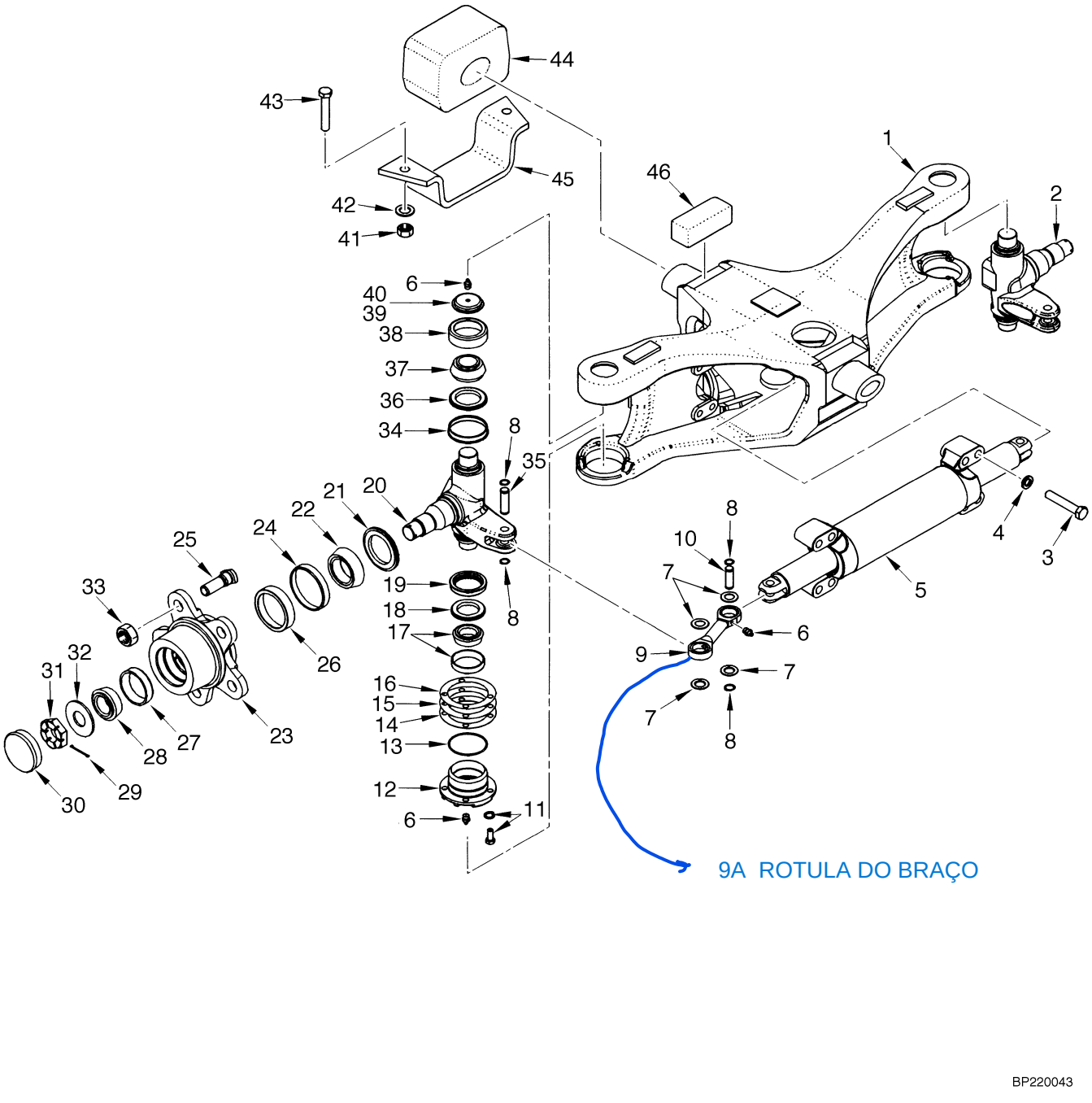



©2004 HYSTER COMPANY

# STEER AXLE

| ITEM | PART NO. | DESCRIPTION | QTY |
|---|---|---|---|
| | 1491381 | Steer Axle Assembly | 1 |
| 1 | 1388673 | Frame (Steer Axle) | 1 |
| 2 | 1388842 | Spindle (RH) | 1 |
| 3 | 293694 | Capscrew | 8 |
| 4 | 292685 | Lockwasher | 8 |
| 5 | 2035137 | Steer Cylinder (☞ Figure 7-5) | 1 |
| 6 | 13957 | Lube Fitting | 12 |
| 7 | 1345684 | Seal | 8 |
| 8 | 58903 | Snap Ring | 8 |
| 9 | 1491382 | Tie Rod Assembly | 2 |
| 9 A | 1350680 | Bearing | 1 |
| 10 | 1544971 | Pin | 2 |
| 11 | 293628 | Screw | 6 |
| 11 | 296420 | Washer | 4 |
| 12 | 1394554 | Cap Assembly | 2 |
| 12 | 1394552 | Bearing | 1 |
| 13 | 39678 | O-Ring | 2 |
| 14 | 1388848 | Shim (0.020 in.) | 2 |
| 15 | 1388847 | Shim (0.007 in.) | 2 |
| 16 | 1388846 | Shim (0.005 in.) | 2 |
| 17 | 135657 | Bearing Cone | 2 |
| 17 | 135658 | Bearing Cup | 1 |
| 18 | 266728 | Seal | 2 |
| 19 | 266733 | Seal | 2 |
| 20 | 1388670 | Spindle (LH) | 1 |
| 21 | 44542 | Oil Seal | 2 |
| 22 | 30289 | Bearing Cone | 2 |
| 23 | 1388828 | Hub Assembly | 2 |
| 23 | 1388827 | Hub | 1 |
| 24 | 164639 | Wear Sleeve | 1 |
| 25 | 1393348 | Stud (Wheel) | 5 |
| 26 | 30147 | Bearing Cup | 1 |
| 27 | 30019 | Bearing Cup | 1 |
| 28 | 230315 | Bearing Cone | 2 |
| 29 | 15226 | Cotter Pin | 2 |
| 30 | 69029 | Hub Cap | 2 |
| 31 | 1383777 | Nut (Spindle) | 2 |
| 32 | 1388832 | Washer | 2 |
| 33 | 376026 | Lug Nut | 10 |
| 33 | 1394715 | Lug Nut (Optional) | 10 |
| 34 | 153717 | Wear Sleeve | 2 |
| 35 | 1544972 | Pin | 2 |
| 36 | 153716 | Seal | 2 |
| 37 | 153715 | Bearing Cone | 2 |
| 38 | 230421 | Bearing Cup | 2 |
| 39 | 280472 | Sealant | AR |
| 40 | 1388829 | Cap | 2 |
| 41 | 300937 | Nut | 4 |
| 42 | 320161 | Washer | 8 |
| 43 | 293648 | Capscrew | 4 |
| 44 | 324864 | Mount | 2 |

©2004 HYSTER COMPANY

# STEER AXLE

| ITEM | PART NO. | DESCRIPTION | QTY |
|---|---|---|---|
| 45 | 324858 | Plate | 2 |
| 46 | 1388838 | Mount (Optional, Extra Capacity) | 2 |


©2004 HYSTER COMPANY

# NOTES

# STEER CYLINDER (Figure 7-5)

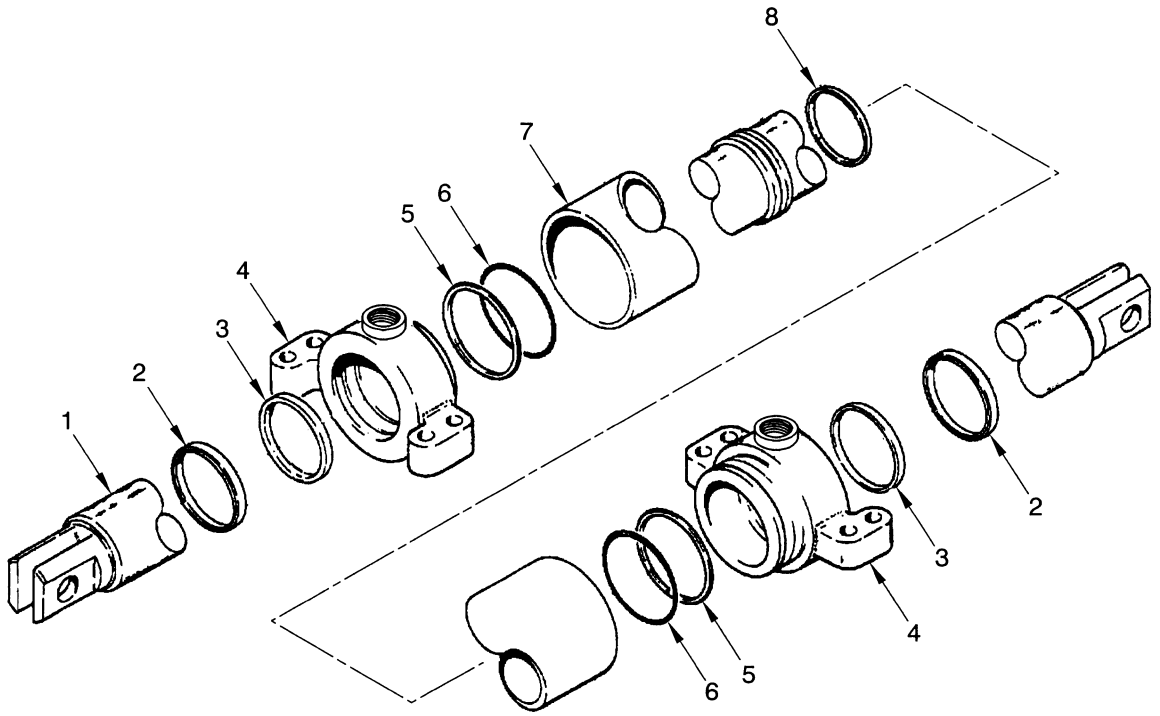


HP220211


©2004 HYSTER COMPANY

# STEER CYLINDER

| ITEM | PART NO. | DESCRIPTION | QTY |
|---|---|---|---|
| | 2035137 | Steer Cylinder (Group No. 8602499) | 1 |
| 1 | 1388657 | Rod | 1 |
| 2 | 203071 | Rod Wiper | 2 |
| 3 | 210183 | Seal | 2 |
| 4 | 1388665 | Cap | 2 |
| 5 | 270015 | Back-Up Ring | 2 |
| 6 | 79981 | O-Ring | 2 |
| 7 | 1388780 | Shell | 1 |
| 8 | 2047829 | Seal | 1 |
| | 1501409 | Seal Kit (Includes Items 2-3, 5-6, 8) | 1 |

©2004 HYSTER COMPANY

# STEER PUMP (Figure 7-6)

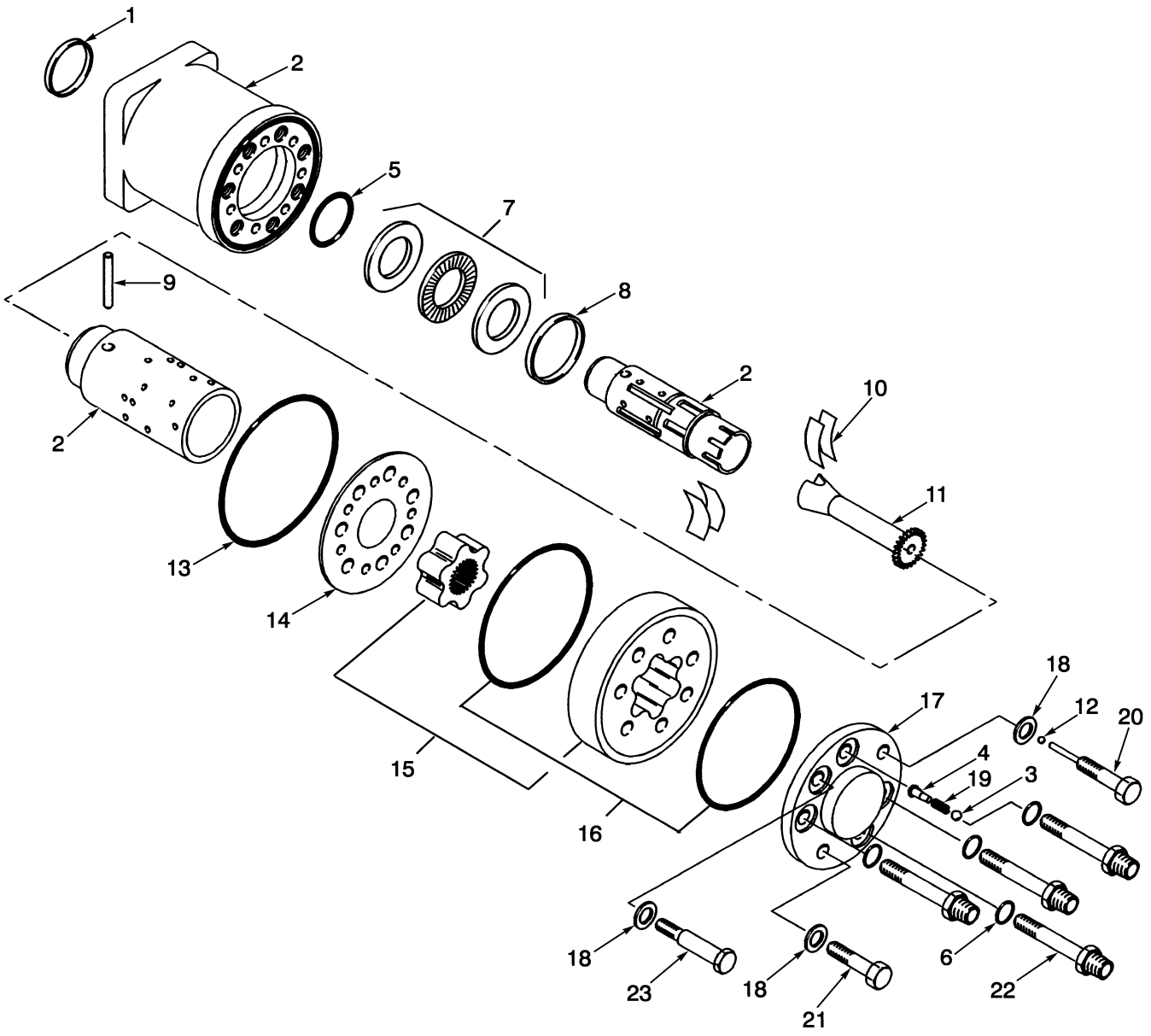


BP220018


©2004 HYSTER COMPANY

# STEER PUMP

| ITEM | PART NO. | DESCRIPTION | QTY |
|---|---|---|---|
| | 1388773 | Steer Pump | 1 |
| 1 | . . . . . | Seal Ring | 1 |
| 2 | . . . . . | Housing | 1 |
| 2 | . . . . . | Spool and Sleeve | 1 |
| 3 | 345408 | Ball | 1 |
| 4 | 1459988 | Stop | 1 |
| 5 | 2032230 | Seal | 1 |
| 6 | 15860 | O-Ring | 4 |
| 7 | 345410 | Bearing Set | 1 |
| 8 | 345411 | Ring | 1 |
| 9 | 345412 | Pin | 1 |
| 10 | 1303787 | Spring | 1 |
| 11 | 1355326 | Shaft | 1 |
| 12 | 1459984 | Ball | 1 |
| 13 | . . . . . | O-Ring | 1 |
| 14 | . . . . . | Plate | 1 |
| 15 | . . . . . | Gear Set | 1 |
| 16 | 1459989 | O-Ring | 2 |
| 17 | . . . . . | Cover | 1 |
| 18 | . . . . . | Washer | 3 |
| 19 | 1459987 | Spring | 1 |
| 20 | 366069 | Screw | 1 |
| 21 | 371344 | Capscrew | 1 |
| 22 | 1459985 | Port (Male) | 4 |
| 23 | 1459986 | Screw | 1 |
| | 1459983 | Seal Kit (Includes Items 1, 5-6, 13, 16, 18) | 1 |

©2004 HYSTER COMPANY

# STEER TIRES AND WHEELS (Figure 7-7)

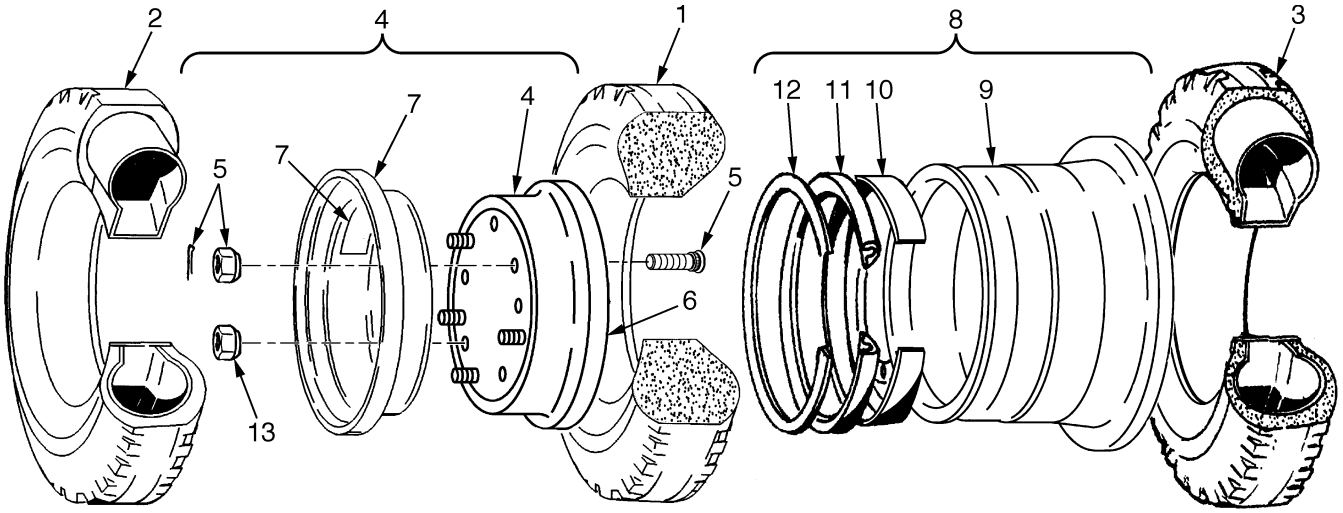


BP220044

**KEY:**
**A: 7.00 x 12 Solid**
**B: 7.00 x 12 12 Ply**
**C: 7.00 R12 Radial**

| ITEM | PART NO. | DESCRIPTION | QTY A | QTY B | QTY C |
|---|---|---|---|---|---|
| 1 | 174209 | Tire (Standard Hardness) | 2 | .. | .. |
| 2 | 130619 | Tire Assembly | .. | 2 | .. |
| 2 | 45736 | Tire (With Flap) | .. | 1 | .. |
| 2 | 45737 | Tube | .. | 1 | .. |
| 2 | 2035998 | Tire, Flap And Tube (Optional) | .. | 2 | .. |
| 2 | 2028521 | Tire, Flap And Tube (Optional) | .. | 2 | .. |
| 3 | 1337743 | Tire Assembly | .. | .. | 2 |
| 3 | 1358179 | Tire | .. | .. | 1 |
| 3 | 1358190 | Tube | .. | .. | 1 |
| 3 | 1376007 | Washer (Valve Stem) (Not Illustrated) | .. | .. | 1 |
| 3 | 1471829 | Tire Assembly (Tubeless) | .. | .. | 2 |
| 3 | 1471591 | Tubeless Bead Seal (Not Illustrated) | .. | .. | 1 |
| 3 | 1471922 | Tubeless Bead Seal Valve (Not Illustrated) | .. | .. | 1 |
| 3 | 1358179 | Tire | .. | .. | 1 |
| 4 | 1394508 | Wheel Assembly (Divided) | 2 | 2 | .. |
| 4 | 1394509 | Wheel (Outer) | 1 | 1 | .. |
| 4 | 1394510 | Wheel | 1 | 1 | .. |
| 5 | 45656 | Wheel Stud (Press Fitted) | 5 | 5 | .. |
| 5 | 11276 | Wheel Nut | 5 | 5 | .. |
| 5 | 15224 | Cotter Pin | 5 | 5 | .. |
| 6 | 288638 | Label (Warning) (Not Illustrated) | 10 | 10 | .. |
| 7 | 1394511 | Wheel (Inner) | 2 | 2 | .. |
| 7 | 1394512 | Wheel | 1 | 1 | .. |
| 7 | 288638 | Label (Warning) | 2 | 2 | .. |
| 8 | 2035044 | Wheel Assembly | .. | .. | 2 |
| 9 | 1394514 | Wheel | .. | .. | 1 |
| 10 | 806556 | Shoulder Ring | .. | .. | 1 |
| 11 | 161890 | Side Ring | .. | .. | 1 |
| 12 | 161889 | Locking Ring | .. | .. | 1 |


©2004 HYSTER COMPANY

# STEER TIRES AND WHEELS

| ITEM | PART NO. | DESCRIPTION | QTY A | QTY B | QTY C |
|---|---|---|---|---|---|
| 13 | 376026 | Lug Nut | 10 | 10 | .. |
| 13 | 1394715 | Lug Nut (Optional) | 10 | 10 | .. |

©2004 HYSTER COMPANY

# NOTES

# 8 BRAKE SYSTEM

# SECTION 8
# BRAKE SYSTEM

**DESCRIPTION** **PAGE**

BRAKE ASSEMBLY
H100-120XM ..... 8-12
H70-90XM ..... 8-8
BRAKE SYSTEM ..... 8-2
MASTER CYLINDER AND BOOSTER ASSEMBLY ..... 8-6
PARK BRAKE ..... 8-16

©2004 HYSTER COMPANY

# BRAKE SYSTEM (Figure 8-1)

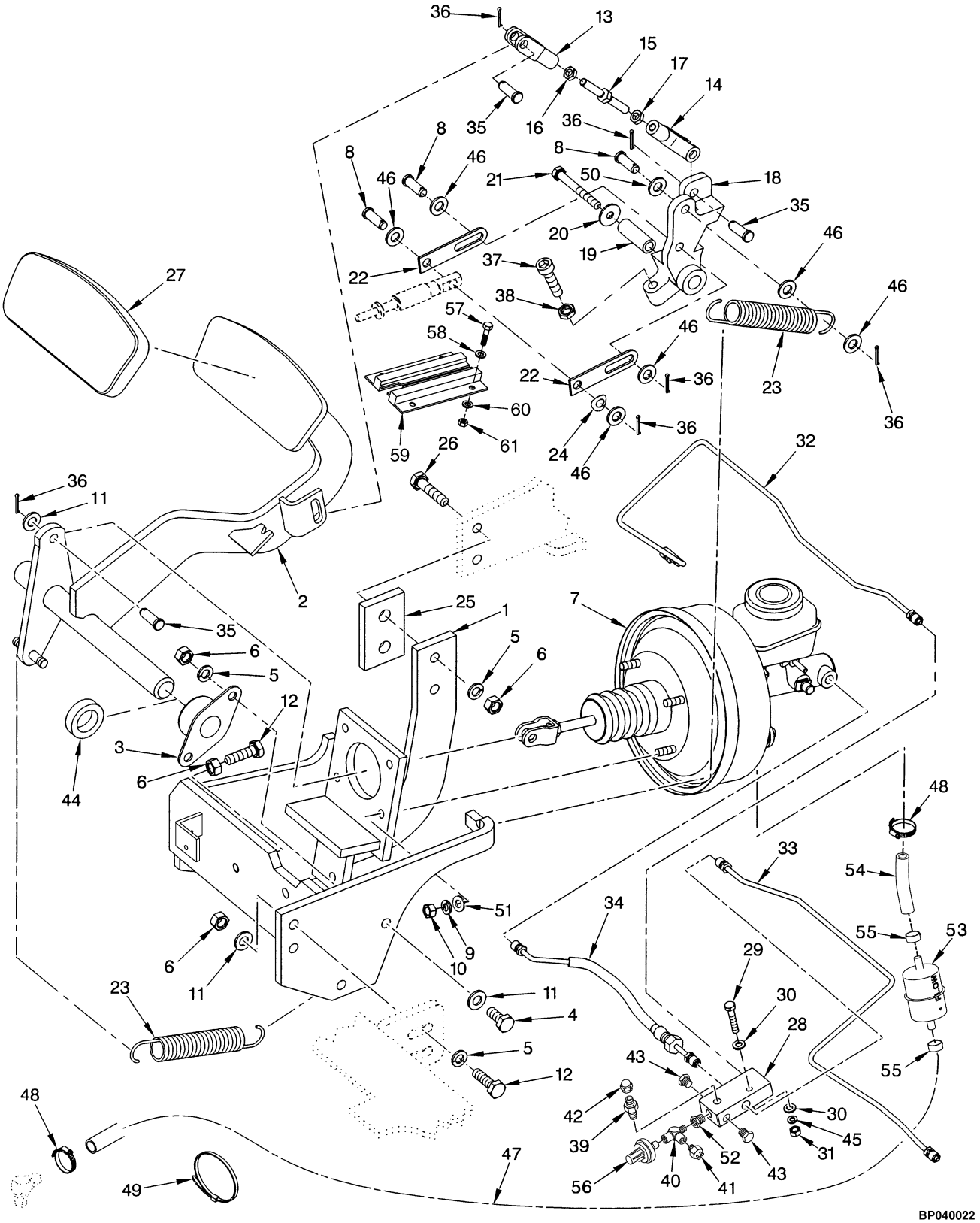



©2004 HYSTER COMPANY

# BRAKE SYSTEM

| ITEM | | PART NO. | DESCRIPTION | QTY |
|---|---|---|---|---|
| 1 | | 1553495 | Bracket | 1 |
| 2 | | 1490070 | Pedal | 1 |
| 3 | | 1327161 | Bushing | 2 |
| 4 | | 136985 | Capscrew | 3 |
| 5 | | 292682 | Lockwasher | 8 |
| 6 | | 136692 | Nut | 9 |
| 7 | | 1399276 | Master Cylinder and Booster (☞ Figure 8-2) | 1 |
| 8 | | 1378435 | Rod End Pin | 3 |
| 9 | | 292681 | Lockwasher | 4 |
| 10 | | 239503 | Nut | 4 |
| 11 | | 320159 | Washer | 6 |
| 12 | | 287860 | Capscrew | 4 |
| 13 | | 393502 | Rod End | 1 |
| 14 | | 1338262 | Rod End | 1 |
| 15 | | 1394576 | Link | 1 |
| 16 | | 15025 | Nut | 1 |
| 17 | | 16897 | Nut | 1 |
| 18 | | 1399288 | Crank (Inching) | 1 |
| 19 | | 1337108 | Spacer | 1 |
| 20 | | 332755 | Washer | 1 |
| 21 | | 136704 | Capscrew | 1 |
| 22 | | 1399289 | Link | 2 |
| 23 | | 2037760 | Spring | 2 |
| 24 | | 375984 | Washer | 1 |
| 25 | | 1397708 | Plate | 1 |
| 26 | | 292516 | Capscrew | 1 |
| 27 | | 1343630 | Pad (Pedal) | 1 |
| 28 | | 1470686 | Block | 1 |
| 29 | | 292504 | Capscrew | 1 |
| 30 | | 15172 | Washer | 2 |
| 31 | | 136687 | Nut | 1 |
| 32 | **b** | 1394815 | Tube (LH) | 1 |
| 32 | **c** | 1394817 | Tube (LH) | 1 |
| 33 | **b** | 1394816 | Tube (RH) | 1 |
| 33 | **c** | 1394818 | Tube (RH) | 1 |
| 34 | | 1394819 | Hose | 1 |
| 35 | | 142 | Pin | 3 |
| 36 | | 1351689 | Cotter Pin | 5 |
| 37 | | 302054 | Screw | 1 |
| 38 | | 292653 | Nut | 1 |
| 39 | | 16124 | Fitting | 1 |
| 40 | | 16186 | Fitting (Monotrol Pedal) | 1 |
| 41 | | 387867 | Pressure Switch (Monotrol Pedal) | 1 |
| 41 | | 1517939 | Pressure Switch | 1 |
| 42 | | 281700 | Nut | 1 |
| 43 | | 14349 | Fitting | 2 |
| 44 | | 370743 | Collar | 1 |
| 45 | | 292680 | Lockwasher | 1 |
| 46 | | 15134 | Washer | 6 |
| 47 | | 2037906 | Hose (LPG) | 1 |
| 47 | | 2037907 | Hose (Diesel) | 1 |

©2004 HYSTER COMPANY

# BRAKE SYSTEM

| ITEM | | PART NO. | DESCRIPTION | QTY |
|---|---|---|---|---|
| 48 | | 166857 | Clamp | 2 |
| 49 | | 2004005 | Strap Clamp (LPG) | 1 |
| 49 | | 2004005 | Strap Clamp (Diesel) | 4 |
| 50 | | 1397649 | Washer | 1 |
| 51 | | 320158 | Washer | 4 |
| 52 | | 16187 | Fitting | 1 |
| 53 | | 1499886 | Filter | 1 |
| 54 | | 1473099 | Hose | 1 |
| 55 | | 353198 | Clamp | 2 |
| 56 | | 387867 | Pressure Switch | 1 |
| 57 | **a** | 302237 | Screw | 4 |
| 58 | **a** | 320154 | Washer | 4 |
| 59 | **a** | 2052196 | Brush Seal | 2 |
| 60 | **a** | 292678 | Lockwasher | 4 |
| 61 | **a** | 292667 | Nut | 4 |

**FOOTNOTES:**
**a** (Europe application only)
**b** H70-80XM and H90XMS
**c** H90-120XM


©2004 HYSTER COMPANY

# NOTES

# MASTER CYLINDER AND BOOSTER ASSEMBLY (Figure 8-2)

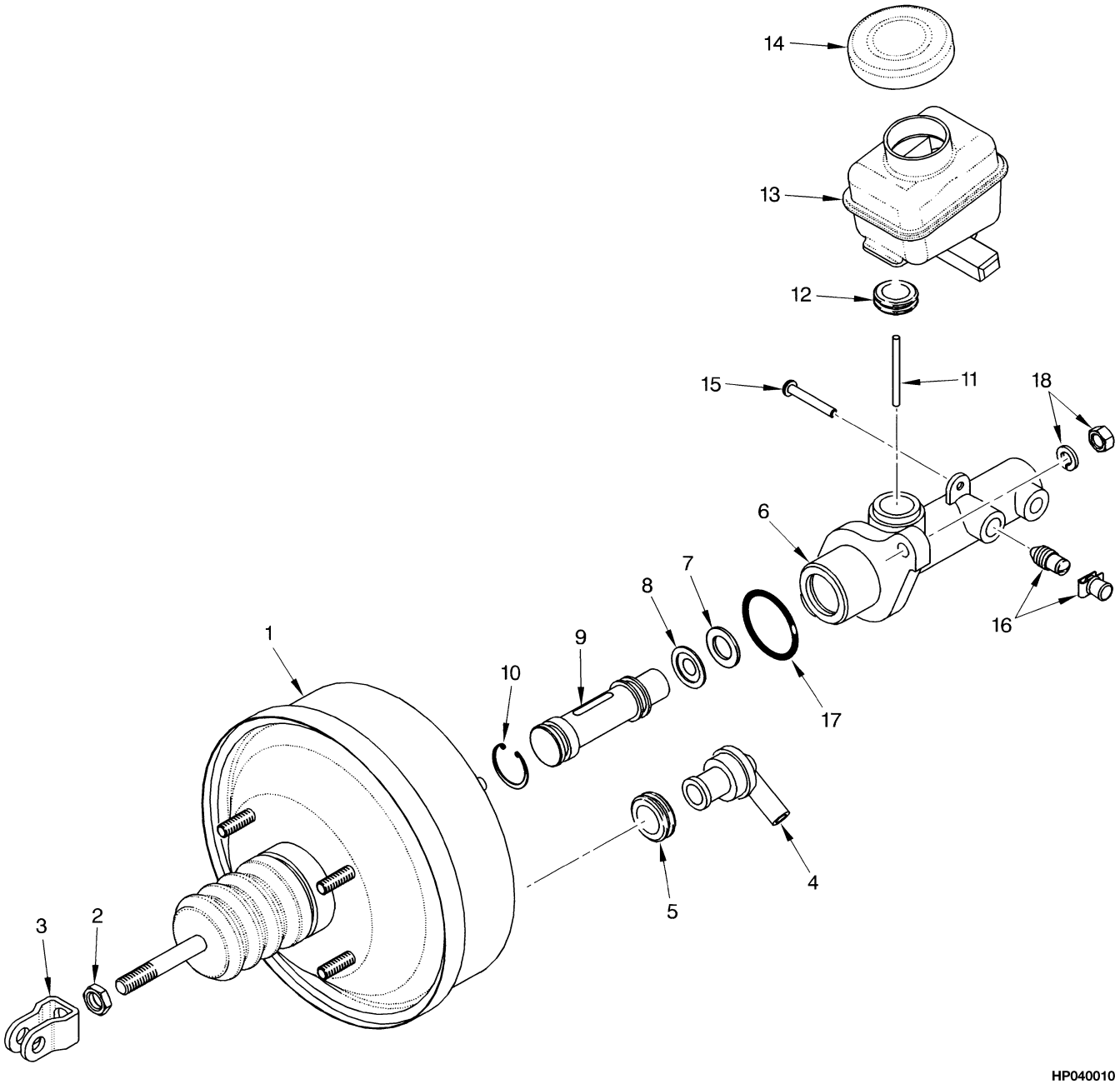



©2004 HYSTER COMPANY

# MASTER CYLINDER AND BOOSTER ASSEMBLY

| ITEM | PART NO. | DESCRIPTION | QTY |
|---|---|---|---|
| | 1399276 | Master Cylinder and Booster | 1 |
| 1 | 1463445 | Booster | 1 |
| 2 | 1463461 | Nut | 1 |
| 3 | 1463462 | Clevis | 1 |
| 4 | 1463455 | Valve | 1 |
| 5 | 1463454 | Grommet | 1 |
| 6 | 1463446 | Master Cylinder | 1 |
| 6 | 1470275 | Seal Kit | 1 |
| 7 | 1463466 | Valve Seat | 1 |
| 8 | 1463450 | Check Valve | 1 |
| 9 | 1463447 | Piston | 1 |
| 10 | 1463467 | Snap Ring | 1 |
| 11 | 1463463 | Pin | 1 |
| 12 | 1463464 | Grommet | 1 |
| 13 | 1463448 | Reservoir Assembly | 1 |
| 14 | 1463449 | Cap | 1 |
| 15 | 1463465 | Screw | 1 |
| 16 | 1463995 | Bleeder Screw | 1 |
| 17 | 1463451 | O-Ring | 1 |
| 18 | 1463993 | Spring Washer Kit | 1 |

©2004 HYSTER COMPANY

# BRAKE ASSEMBLY (Figure 8-3)
## H70-90XM

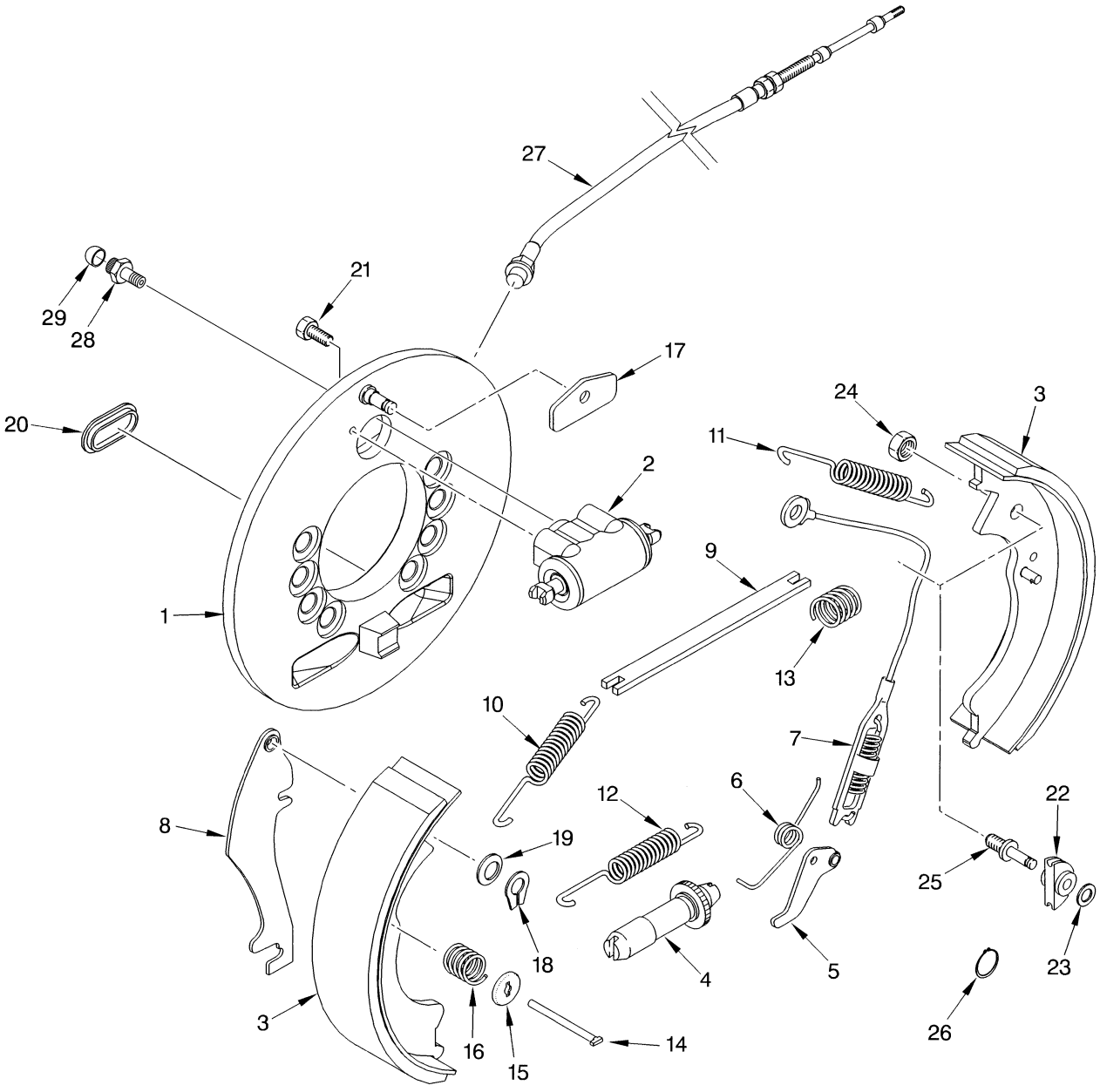



©2004 HYSTER COMPANY

# BRAKE ASSEMBLY
## H70-90XM

**KEY:**
**A: Left Hand**
**B: Right Hand**

| ITEM | PART NO. | DESCRIPTION | QTY A | QTY B |
|---|---|---|---|---|
| | 1394681 | Brake Assembly (With Park Brake Cable) | 1 | .. |
| | 1394682 | Brake Assembly (With Park Brake Cable) | .. | 1 |
| | 1463245 | Brake Assembly (LH) (Without Park Brake Cable) | 1 | .. |
| | 1463246 | Brake Assembly (RH) (Without Park Brake Cable) | .. | 1 |
| 1 | 1463242 | Plate | 1 | .. |
| 1 | 1463243 | Plate | .. | 1 |
| 2 | 1463244 | Wheel Cylinder Assembly | 1 | 1 |
| 2 | 1463223 | Wheel Cylinder Kit | 1 | 1 |
| 2 | . . . . . | Piston and Cup | 2 | 2 |
| 2 | . . . . . | Boot | 2 | 2 |
| 3 | 1463226 | Shoe and Lining Assembly Kit | 1 | .. |
| 3 | 1463229 | Shoe and Lining Assembly Kit | .. | 1 |
| 3 | . . . . . | Shoe and Lining | 1 | 1 |
| 3 | . . . . . | Shoe Lining and Pin Assembly | 1 | 1 |
| 4 | 2037327 | Adjuster | 1 | .. |
| 4 | 2037328 | Adjuster | .. | 1 |
| 5 | 2037329 | Lever | 1 | .. |
| 5 | 2037330 | Lever | .. | 1 |
| 6 | 2037331 | Spring | 1 | .. |
| 6 | 2037332 | Spring | .. | 1 |
| 7 | 2037333 | Cable And Spring Assembly | 1 | 1 |
| 8 | 2037334 | Parking Lever | 1 | .. |
| 8 | 2037335 | Parking Lever | .. | 1 |
| 9 | 2037336 | Strut | 1 | .. |
| 9 | 2037337 | Strut | .. | 1 |
| 10 | 2037338 | Spring | 1 | 1 |
| 11 | 2037339 | Spring | 1 | 1 |
| 12 | 2037340 | Spring | 1 | 1 |
| 13 | 1360797 | Spring | 1 | 1 |
| 14 | 2037323 | Pin (Shoe Hold Down) | 2 | 2 |
| 15 | 2037341 | Cup (Shoe Hold Down) | 4 | 4 |
| 16 | 2037342 | Spring (Shoe Hold Down) | 2 | 2 |
| 17 | 2037343 | Plate | 1 | 1 |
| 18 | 1338916 | Retainer | 2 | 2 |
| 19 | 1338917 | Washer | 2 | 2 |
| 20 | 1334642 | Cover | 1 | 1 |
| 21 | 2037344 | Bolt Kit | 4 | 4 |
| 22 | . . . . . | Sheave | 1 | 1 |
| 23 | . . . . . | Washer | 1 | 1 |
| 24 | . . . . . | Nut | 1 | 1 |
| 25 | . . . . . | Pin | 1 | 1 |
| 26 | 1361502 | Snap Ring | 1 | 1 |
| 27 | 1463247 | Cable (LH) (☞ Figure 8-5) | 1 | .. |
| 27 | 1463248 | Cable (RH) (☞ Figure 8-5) | .. | 1 |
| 28 | 2041967 | Bleeder Screw | 1 | 1 |
| 29 | 1361504 | Bleeder Cap | 1 | 1 |

©2004 HYSTER COMPANY

# BRAKE ASSEMBLY
## H70-90XM

| ITEM | PART NO. | DESCRIPTION | QTY A | QTY B |
|---|---|---|---|---|
| | 1464917 | Sheave Kit (Includes Items 7, 10-11, 22-25) | 1 | 1 |
| | 1464915 | Park Brake Kit (LH) (Includes Items 8-9, 13, 18-19) | 1 | .. |
| | 1464916 | Park Brake Kit (RH) (Includes Items 8-9, 18-19) | .. | 1 |
| | 2038663 | Spring Kit (Includes Items 10-12) | 1 | 1 |
| | 2037377 | Shoe Hold Down Kit (Includes Items 14-16) | 1 | 1 |


©2004 HYSTER COMPANY

# NOTES

# BRAKE ASSEMBLY (Figure 8-4)
## H100-120XM

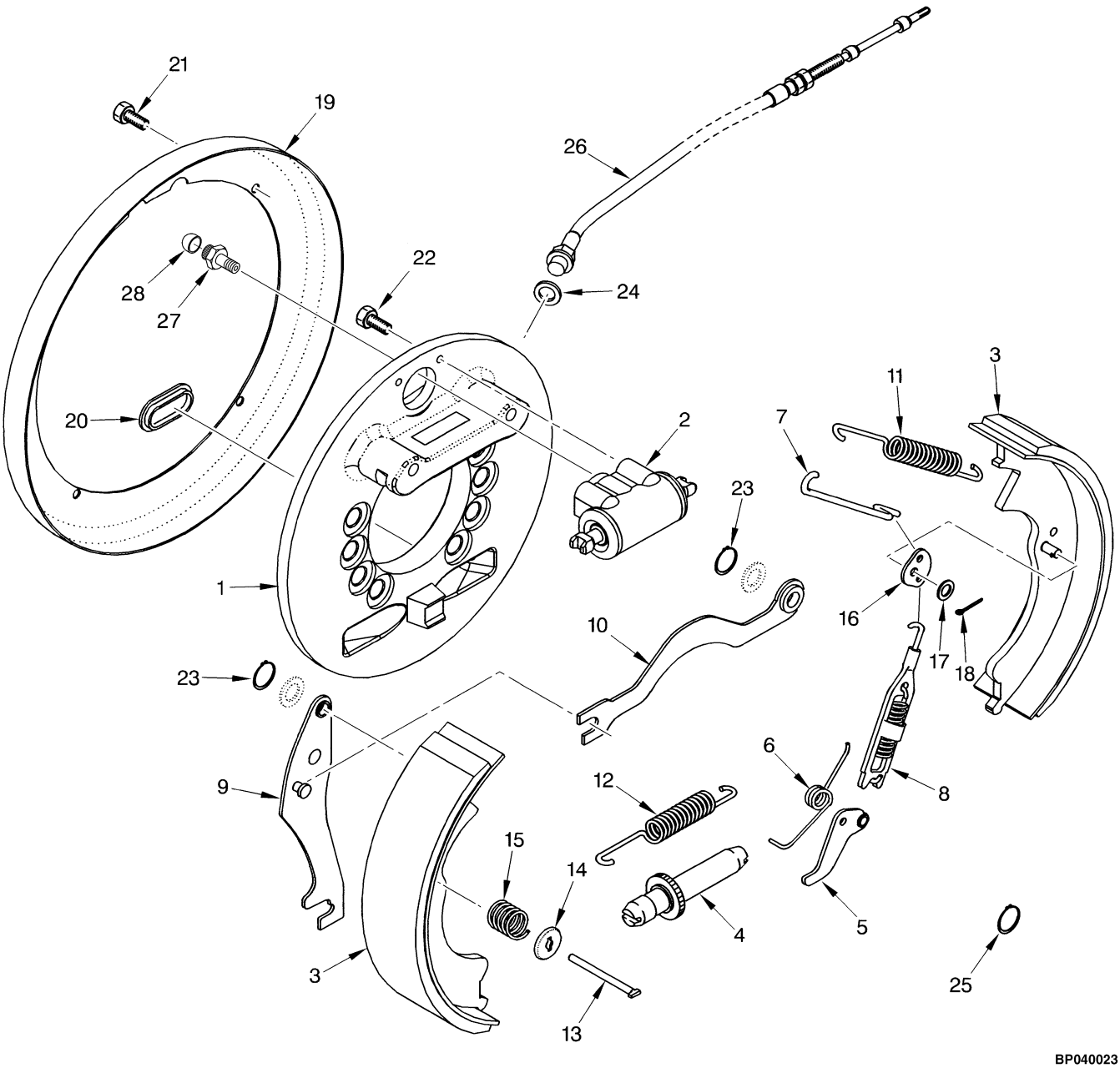



©2004 HYSTER COMPANY

# BRAKE ASSEMBLY
## H100-120XM

**KEY:**
**A: Left Hand**
**B: Right Hand**

| ITEM | PART NO. | DESCRIPTION | QTY A | QTY B |
|---|---|---|---|---|
| | 1536792 | Brake Assembly (With Park Brake Cable) | 1 | .. |
| | 1536793 | Brake Assembly (With Park Brake Cable) | .. | 1 |
| | 1539589 | Brake Assembly (Without Park Brake Cable) | 1 | .. |
| | 1539590 | Brake Assembly (Without Park Brake Cable) | .. | 1 |
| 1 | 1463339 | Plate | 1 | .. |
| 1 | 1463340 | Plate | .. | 1 |
| 2 | 1463341 | Wheel Cylinder Assembly | 1 | 1 |
| 2 | 1463231 | Wheel Cylinder Kit | 1 | 1 |
| 2 | . . . . . | Piston And Cup | 2 | 2 |
| 2 | . . . . . | Boot | 2 | 2 |
| 2 | . . . . . | Spring | 1 | 1 |
| 3 | 1532655 | Shoe and Lining Assembly Kit | 1 | .. |
| 3 | 1532656 | Shoe and Lining Assembly Kit | .. | 1 |
| 3 | . . . . . | Shoe and Lining Assembly | 1 | .. |
| 3 | . . . . . | Shoe and Lining Assembly | .. | 1 |
| 4 | 2037515 | Adjuster | 1 | .. |
| 4 | 2037516 | Adjuster | .. | 1 |
| 5 | 2037517 | Lever | 1 | .. |
| 5 | 2037518 | Lever | .. | 1 |
| 6 | 1463350 | Spring | 1 | .. |
| 6 | 1463351 | Spring | .. | 1 |
| 7 | 1463352 | Link | 1 | .. |
| 7 | 1463353 | Link | .. | 1 |
| 8 | 1463354 | Spring and Link Assembly | 1 | 1 |
| 9 | 1463355 | Lever (Parking) | 1 | .. |
| 9 | 1463356 | Lever (Parking) | .. | 1 |
| 10 | 1463357 | Strut | 1 | .. |
| 10 | 1463358 | Strut | .. | 1 |
| 11 | 1463359 | Spring | 2 | 2 |
| 12 | 2037519 | Spring | 1 | 1 |
| 13 | 2037323 | Pin (Shoe Hold Down) | 2 | 2 |
| 14 | 1463361 | Cup (Shoe Hold Down) | 4 | 4 |
| 15 | 1463362 | Spring (Shoe Hold Down) | 2 | 2 |
| 16 | 1463363 | Lever | 1 | 1 |
| 17 | 2037324 | Washer | 1 | 1 |
| 18 | 2037325 | Cotter Pin | 1 | 1 |
| 19 | 1463364 | Shield | 1 | 1 |
| 20 | 2037326 | Cover | 1 | 1 |
| 21 | 1463365 | Bolt Kit | 4 | .. |
| 22 | 1463366 | Bolt | 2 | 2 |
| 23 | 1338916 | Retainer | 2 | 2 |
| 24 | 1338917 | Washer | 2 | 2 |
| 25 | 1361502 | Snap Ring | 1 | 1 |
| 26 | 1463471 | Cable (☞ Figure 8-5) | 1 | .. |
| 26 | 1463472 | Cable (☞ Figure 8-5) | .. | 1 |

©2004 HYSTER COMPANY

# BRAKE ASSEMBLY
## H100-120XM

| ITEM | PART NO. | DESCRIPTION | QTY A | QTY B |
|---|---|---|---|---|
| 27 | 1361503 | Bleeder Screw | 1 | 1 |
| 28 | 1361504 | Bleeder Cap | 1 | 1 |


©2004 HYSTER COMPANY

# NOTES

# PARK BRAKE (Figure 8-5)

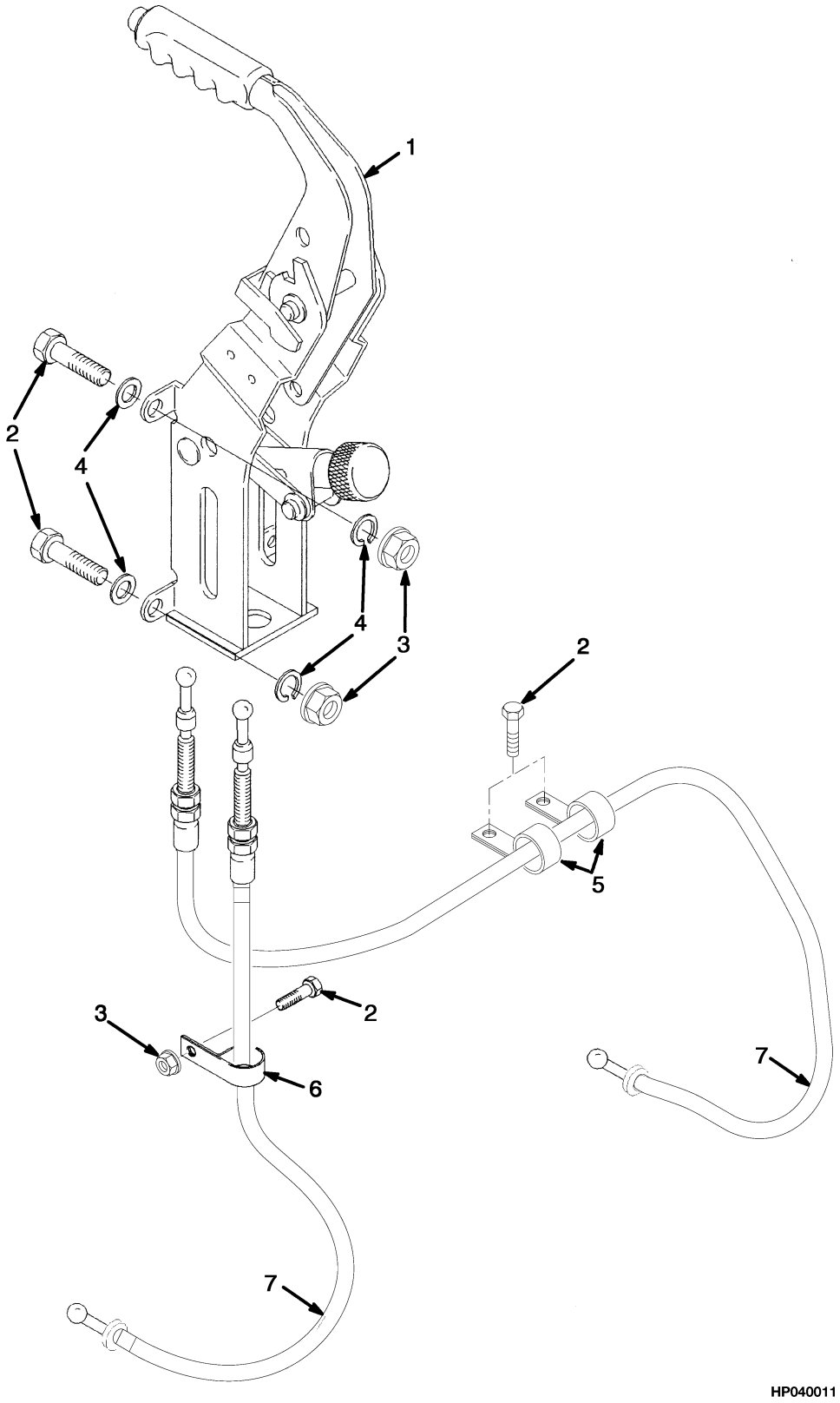



©2004 HYSTER COMPANY

# PARK BRAKE

| ITEM | | PART NO. | DESCRIPTION | QTY |
|---|---|---|---|---|
| 1 | | 1376557 | Lever Assembly (Park Brake) | 1 |
| 2 | | 136749 | Capscrew | 5 |
| 3 | | 1466011 | Nut (Flanged) | 5 |
| 4 | | 320158 | Washer | 4 |
| 5 | | 124297 | Clamp | 1 |
| 6 | | 136516 | Clamp | 2 |
| 7 | **a** | 1463247 | Cable (LH) (H70-90XM) | 2 |
| 7 | **a** | 1463248 | Cable (RH) (H70-90XM) | 2 |
| 7 | **a** | 1463471 | Cable (LH) (H100-120XM) | 2 |
| 7 | **a** | 1463472 | Cable (RH) (H100-120 XM) | 2 |

**FOOTNOTES:**

**a** Cables Are Included With Service Brake Assemblies

©2004 HYSTER COMPANY

# NOTES

# 9 HYDRAULIC SYSTEM

# SECTION 9
# HYDRAULIC SYSTEM


| DESCRIPTION | PAGE |
|---|---|
| HYDRAULIC CONTROL LINES | |
| FOUR FUNCTION | 9-8 |
| THREE FUNCTION | 9-6 |
| HYDRAULIC CONTROL VALVE | |
| THREE AND FOUR FUNCTION | 9-14 |
| HYDRAULIC CONTROL VALVE AND ATTACHING PARTS | |
| FOUR FUNCTION | |
| WITH DETENTED LEVERS | 9-12 |
| THREE FUNCTION | |
| WITH AND WITHOUT DETENTED LEVERS | 9-10 |
| HYDRAULIC FILTER HOUSING | 9-16 |
| HYDRAULIC PUMP | 9-18 |
| HYDRAULIC SYSTEM | 9-2 |
| MAST INSTALLATION | 9-20 |
| TILT CYLINDERS | 9-22 |


©2004 HYSTER COMPANY

# HYDRAULIC SYSTEM (Figure 9-1)

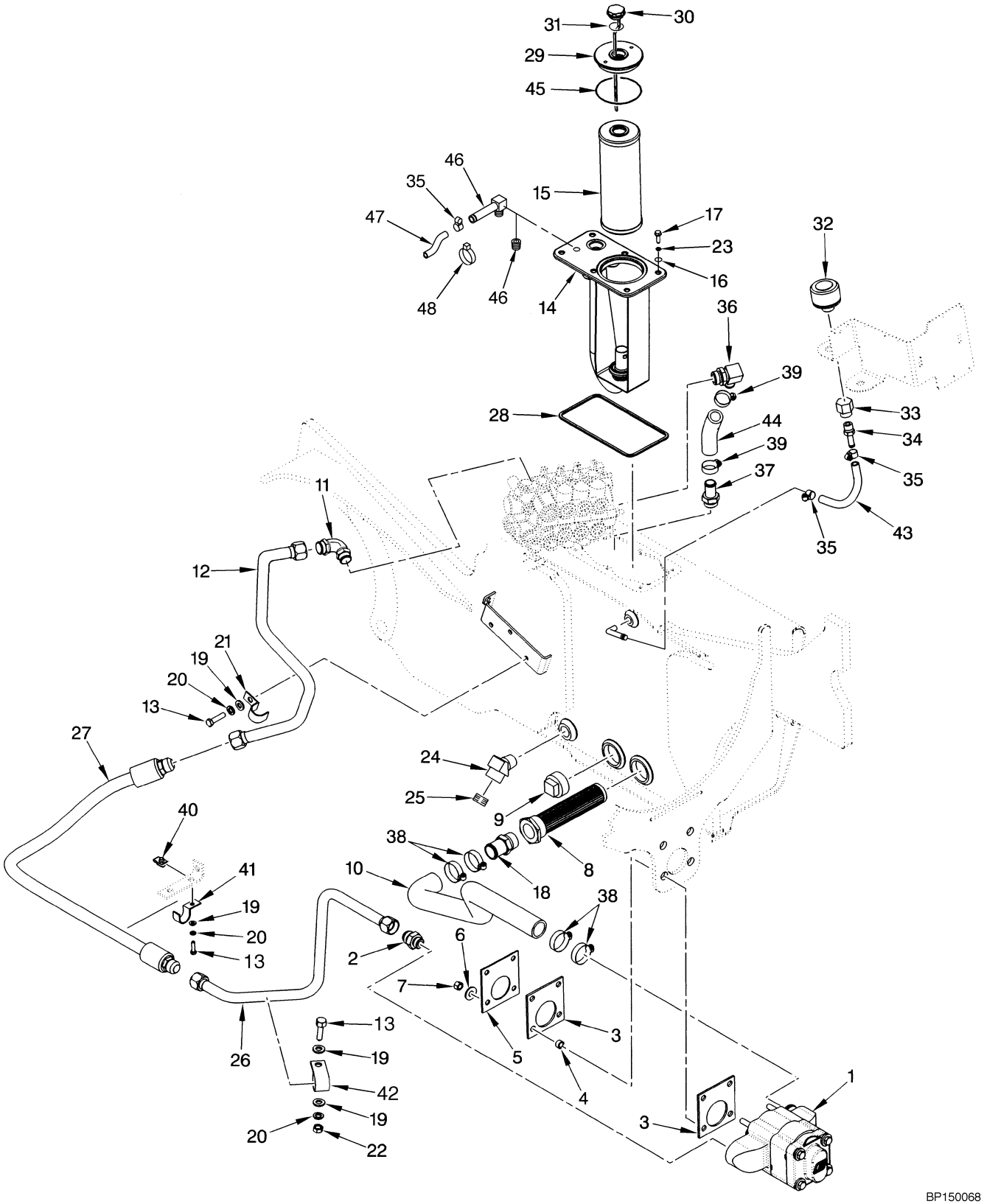



©2004 HYSTER COMPANY

# HYDRAULIC SYSTEM

| ITEM | PART NO. | DESCRIPTION | QTY |
|---|---|---|---|
| 1 | 2038201 | Hydraulic Pump (1830 mm Short Wheel Base) (☞ Figure 9-8) | 1 |
| 1 | 2038202 | Hydraulic Pump (2100 mm Long Wheel Base) (☞ Figure 9-8) | 1 |
| 2 | 142500 | Fitting | 1 |
| 2 | 16486 | O-Ring | 1 |
| 3 | 1397685 | Isolator | 2 |
| 4 | 182891 | Hose | 4 |
| 5 | 1399823 | Plate | 1 |
| 6 | 296422 | Washer | 4 |
| 7 | 300937 | Nut | 4 |
| 8 | 1388963 | Screen | 1 |
| 9 | 15310 | Fitting | 1 |
| 10 | 1394453 | Hose (Suction) | 1 |
| 11 | 1551160 | Fitting | 1 |
| 11 | 16486 | O-Ring | 1 |
| 12 | 1543615 | Tube | 1 |
| 13 | 132861 | Capscrew | 6 |
| 14 | 1397739 | Hydraulic Filter Housing (☞ Figure 9-7) | 1 |
| 15 | 2037740 | Filter Element | 1 |
| 16 | 353000 | O-Ring | 6 |
| 17 | 136681 | Capscrew | 6 |
| 18 | 183635 | Fitting | 1 |
| 19 | 320158 | Washer | 9 |
| 20 | 292681 | Lockwasher | 9 |
| 21 | 239370 | Clamp | 1 |
| 22 | 239503 | Nut | 4 |
| 23 | 320157 | Washer | 6 |
| 24 | 246869 | Fitting (Magnetic Drain Plug) | 1 |
| 25 | 15963 | Fitting | 1 |
| 26 | 1399386 | Tube | 1 |
| 27 | 1397981 | Hose | 1 |
| 28 | 1397744 | Seal Ring | 1 |
| 28 | 1477232 | Adhesive | 1 |
| 29 | 190787 | Filter Head (Filter) | 1 |
| 30 | 1397570 | Dipstick | 1 |
| 31 | 16487 | O-Ring | 1 |
| 32 | 1356393 | Breather | 1 |
| 32 | 1371445 | Breather (Optional) | 1 |
| 33 | 17706 | Fitting | 1 |
| 34 | 222473 | Fitting | 1 |
| 35 | 379405 | Clamp | 2 |
| 36 | 112470 | Fitting | 1 |
| 36 | 16487 | O-Ring | 1 |
| 37 | 88195 | Fitting | 1 |
| 37 | 16487 | O-Ring | 1 |
| 38 | 119236 | Clamp | 4 |
| 39 | 127045 | Clamp | 2 |
| 40 | 1393879 | Clip Nut | 6 |
| 41 | 1399334 | Clamp | 2 |
| 42 | 76382 | Clamp | 1 |
| 43 | 78456 | Hose | 1 |
| 44 | 1401537 | Hose | 1 |

©2004 HYSTER COMPANY

# HYDRAULIC SYSTEM

| ITEM | PART NO. | DESCRIPTION | QTY |
|---|---|---|---|
| 44 | 1475160 | Hose (Optional) | 1 |
| 44 | 325897 | Clamp | 1 |
| 45 | 39742 | O-Ring | 1 |
| 46 | 15314 | Fitting (2 FFL) | 1 |
| 46 | 102898 | Fitting (2 LFL and 3 FFL Masts) | 1 |
| 47 | 1399121 | Hose | 1 |
| 48 | 397676 | Strap Clamp | 1 |


©2004 HYSTER COMPANY

# NOTES

# HYDRAULIC CONTROL LINES (Figure 9-2)
## THREE FUNCTION

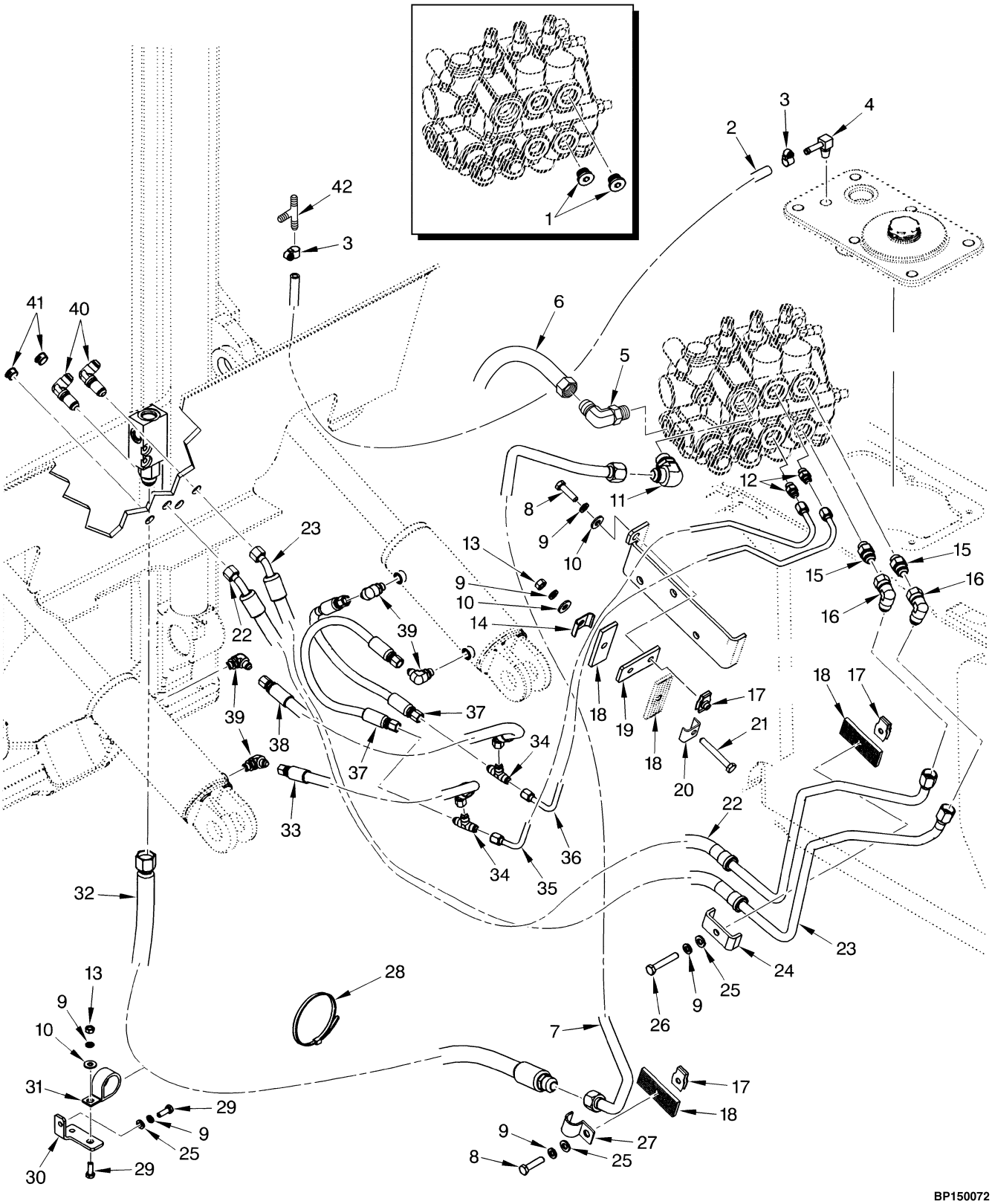



©2004 HYSTER COMPANY

# HYDRAULIC CONTROL LINES
## THREE FUNCTION

| ITEM | PART NO. | DESCRIPTION | QTY |
|---|---|---|---|
| 1 | 1363917 | Plug | 2 |
| 2 | 1399121 | Hose (3 FFL, 2 LFL) | 1 |
| 3 | 379405 | Clamp | 2 |
| 4 | 102898 | Fitting | 1 |
| 5 | 16559 | Fitting | 1 |
| 6 | 1543616 | Hose (Steering Supply) | 1 |
| 7 | 1543617 | Tube (Hoist) | 1 |
| 8 | 132861 | Capscrew | 6 |
| 9 | 292681 | Lockwasher | 5 |
| 10 | 320158 | Washer | 6 |
| 11 | 16561 | Fitting | 1 |
| 11 | 16486 | O-Ring | 1 |
| 12 | 16745 | Fitting | 2 |
| 12 | 16483 | O-Ring | 1 |
| 13 | 239503 | Nut | 4 |
| 14 | 193239 | Clamp | 1 |
| 15 | 206150 | Fitting | 2 |
| 15 | 16484 | O-Ring | 1 |
| 16 | 16882 | Fitting | 2 |
| 17 | 1393879 | Clip Nut | 6 |
| 18 | 1399323 | Pad | 3 |
| 19 | 1550643 | Plate | 2 |
| 20 | 1400244 | Clamp | 1 |
| 21 | 136704 | Capscrew | 1 |
| 22 | 1550942 | Hose And Tube Assembly | 1 |
| 23 | 1399417 | Hose And Tube Assembly | 1 |
| 24 | 1397682 | Clamp | 1 |
| 25 | 320157 | Washer | 3 |
| 26 | 292509 | Capscrew | 1 |
| 27 | 128409 | Clamp | 1 |
| 28 | 397676 | Strap Clamp | AR |
| 29 | 136749 | Capscrew | 2 |
| 30 | 2037894 | Bracket | 1 |
| 31 | 258590 | Clamp | 1 |
| 32 | 1399787 | Hose | 1 |
| 33 | 1397984 | Hose | 1 |
| 34 | 14560 | Fitting | 2 |
| 35 | 1550926 | Tube (Tilt) | 1 |
| 36 | 1550927 | Tube (Tilt) | 1 |
| 37 | 1388776 | Hose | 2 |
| 38 | 1388954 | Hose | 1 |
| 39 | 16558 | Fitting | 4 |
| 39 | 16483 | O-Ring | 1 |
| 40 | 16458 | Fitting | 2 |
| 41 | 1389590 | Plug | 2 |
| 42 | 2046871 | Fitting | 1 |

©2004 HYSTER COMPANY

# HYDRAULIC CONTROL LINES (Figure 9-3)
## FOUR FUNCTION

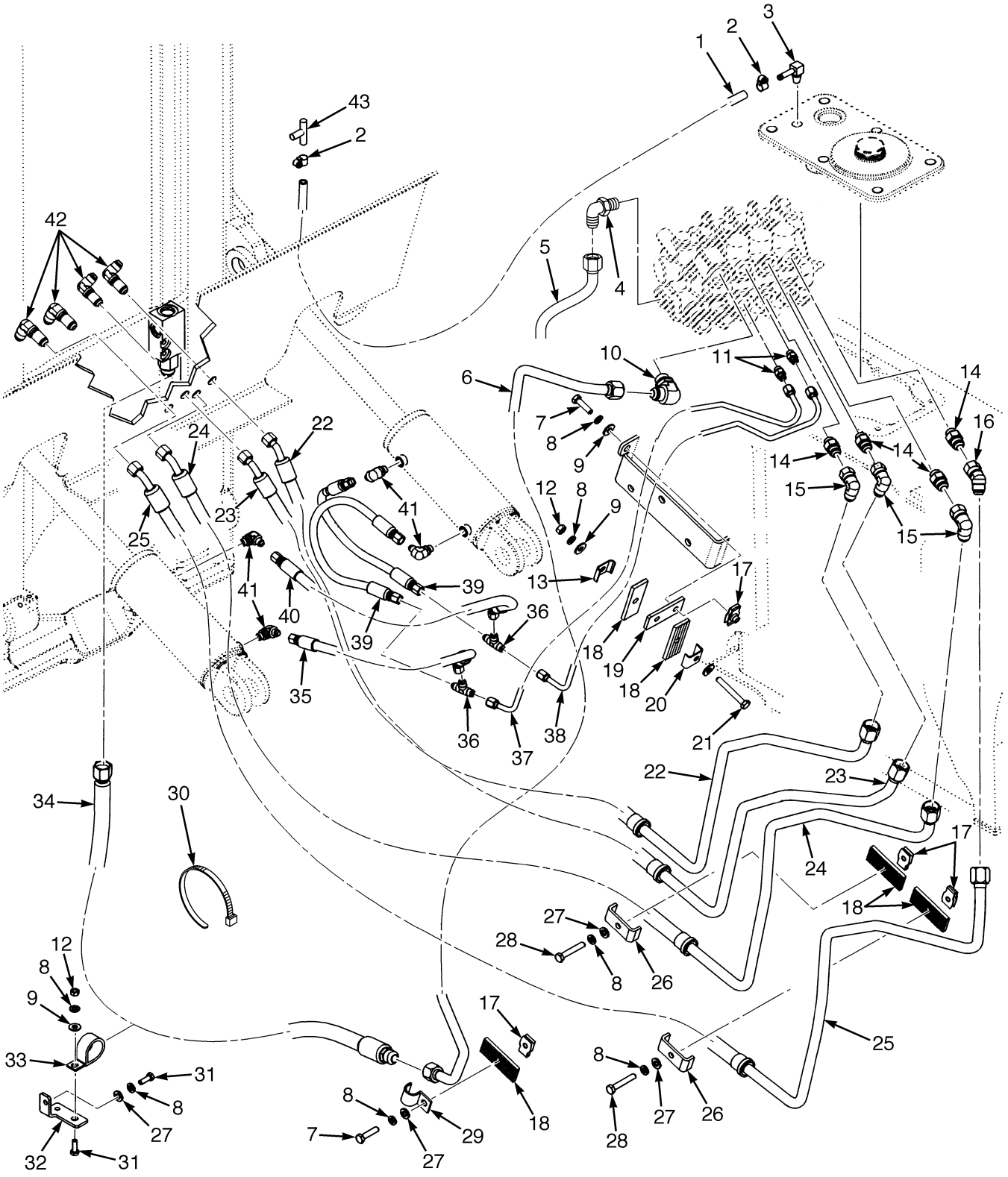


BP150073


©2004 HYSTER COMPANY

# HYDRAULIC CONTROL LINES
## FOUR FUNCTION

| ITEM | PART NO. | DESCRIPTION | QTY |
|---|---|---|---|
| 1 | 1399121 | Hose (2 LFL, 3 FFL) | 1 |
| 2 | 379405 | Clamp | 2 |
| 3 | 102898 | Fitting | 1 |
| 4 | 16559 | Fitting | 1 |
| 5 | 1543616 | Hose (Steering Supply) | 1 |
| 6 | 1543617 | Tube (Hoist) | 1 |
| 7 | 132861 | Capscrew | 1 |
| 8 | 292681 | Lockwasher | 11 |
| 9 | 320158 | Washer | 6 |
| 10 | 16561 | Fitting | 1 |
| 10 | 16486 | O-Ring | 1 |
| 11 | 16745 | Fitting | 2 |
| 11 | 16483 | O-Ring | 1 |
| 12 | 239503 | Nut | 2 |
| 13 | 193239 | Clamp | 1 |
| 14 | 206150 | Fitting | 4 |
| 14 | 16484 | O-Ring | 1 |
| 15 | 16882 | Fitting | 3 |
| 16 | 17039 | Fitting | 1 |
| 17 | 1393879 | Clip Nut | 3 |
| 18 | 1399323 | Pad | 4 |
| 19 | 1550643 | Plate | 1 |
| 20 | 1400244 | Clamp | 1 |
| 21 | 136704 | Capscrew | 1 |
| 22 | 1550942 | Hose And Tube Assembly | 1 |
| 23 | 1399417 | Hose And Tube Assembly | 1 |
| 24 | 1399419 | Hose and Tube Assembly | 1 |
| 25 | 1399420 | Hose and Tube Assembly | 1 |
| 26 | 1397682 | Clamp | 3 |
| 27 | 320157 | Washer | 4 |
| 28 | 292509 | Capscrew | 3 |
| 29 | 128409 | Clamp | 1 |
| 30 | 397676 | Strap Clamp | AR |
| 31 | 136749 | Capscrew | 2 |
| 32 | 2037894 | Bracket | 1 |
| 33 | 258590 | Clamp | 2 |
| 34 | 1399787 | Hose | 1 |
| 35 | 1397984 | Hose | 1 |
| 36 | 14560 | Fitting | 2 |
| 37 | 1550926 | Tube (Tilt) | 1 |
| 38 | 1550927 | Tube (Tilt) | 1 |
| 39 | 1388776 | Hose | 2 |
| 40 | 1388954 | Hose | 1 |
| 41 | 16558 | Fitting | 5 |
| 41 | 16483 | O-Ring | 1 |
| 42 | 16458 | Fitting | 4 |
| 43 | 2046871 | Fitting | 1 |

©2004 HYSTER COMPANY

# HYDRAULIC CONTROL VALVE AND ATTACHING PARTS (Figure 9-4)
## THREE FUNCTION
## WITH AND WITHOUT DETENTED LEVERS

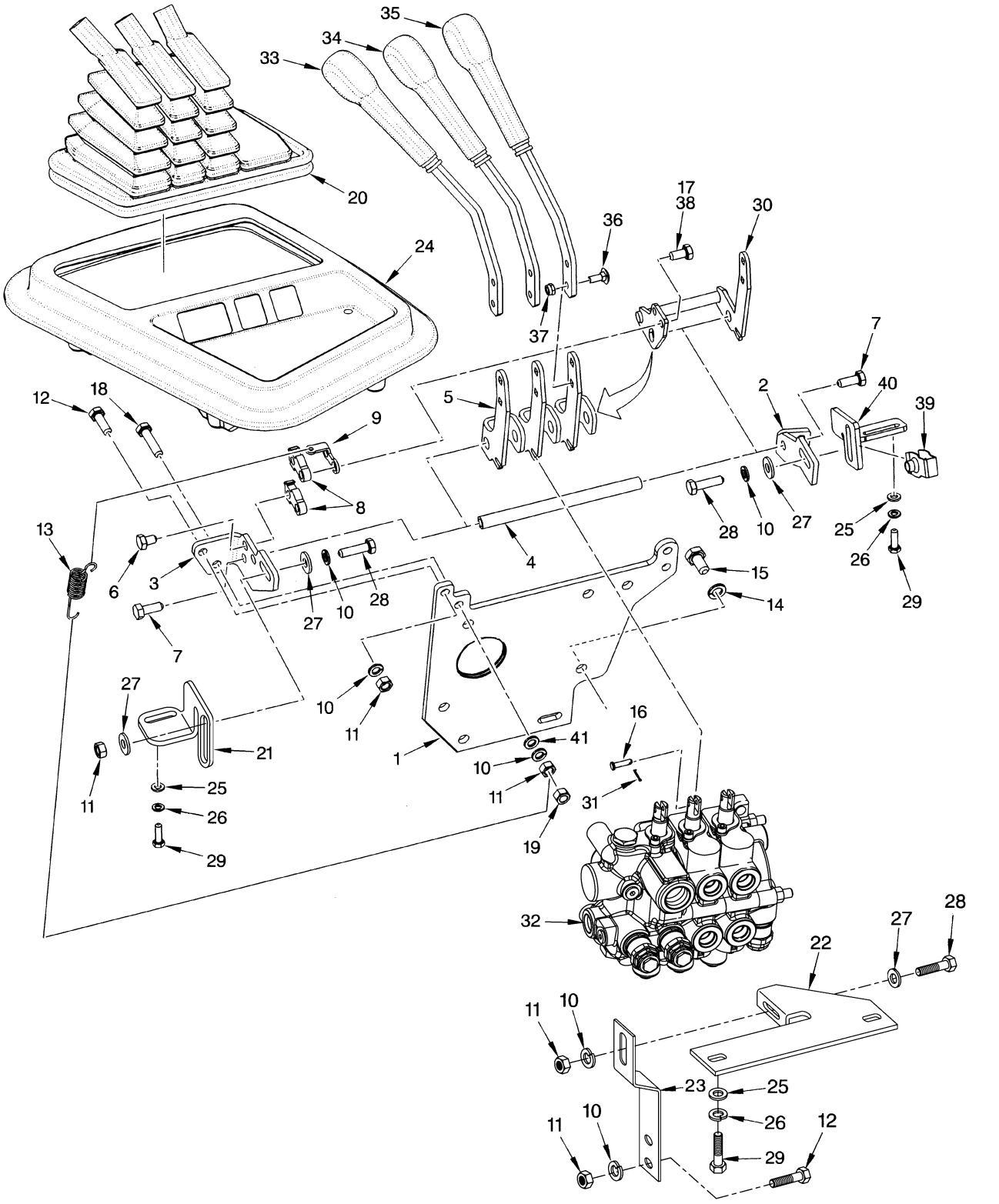


BP140020


©2004 HYSTER COMPANY

# HYDRAULIC CONTROL VALVE AND ATTACHING PARTS
## THREE FUNCTION
## WITH AND WITHOUT DETENTED LEVERS

**KEY:**
**A: With Detented Levers**
**B: Without Detented Levers**

| ITEM | PART NO. | DESCRIPTION | QTY A | QTY B |
|---|---|---|---|---|
| 1 | 1544207 | Bracket | 1 | 1 |
| 2 | 1548231 | Bracket (RH) | 1 | 1 |
| 3 | 1548232 | Bracket (LH) | 1 | 1 |
| 4 | 1343443 | Pivot | 1 | 1 |
| 5 | 1339749 | Crank | 2 | 3 |
| 5 | 1339749 | Crank | 2 | .. |
| 6 | 293611 | Capscrew | 2 | .. |
| 7 | 1328930 | Capscrew | 2 | 2 |
| 8 | 1339745 | Lock | 2 | .. |
| 9 | 1339746 | Plate | 1 | .. |
| 10 | 292681 | Lockwasher | 11 | 11 |
| 11 | 239503 | Nut | 7 | 7 |
| 12 | 136749 | Capscrew | 5 | 6 |
| 13 | 1396708 | Spring | 1 | .. |
| 14 | 292682 | Lockwasher | 3 | 3 |
| 15 | 292514 | Capscrew | 2 | 2 |
| 16 | 309109 | Rod End Pin | 3 | 3 |
| 17 | 293612 | Capscrew | 2 | .. |
| 18 | 136985 | Capscrew | 1 | .. |
| 19 | 136692 | Nut | 1 | .. |
| 20 | 2036476 | Boot | 1 | 1 |
| 21 | 1551997 | Bracket | 1 | 1 |
| 22 | 1396715 | Bracket | 1 | 1 |
| 23 | 1399380 | Strut | 1 | 1 |
| 24 | 1396108 | Cover (Without Disconnect Switch) | 1 | .. |
| 24 | 1397511 | Cover (With Disconnect Switch) | 1 | 1 |
| 25 | 320156 | Washer | 4 | 4 |
| 26 | 292680 | Lockwasher | 4 | 4 |
| 27 | 320158 | Washer | 9 | 9 |
| 28 | 176640 | Capscrew | 3 | 3 |
| 29 | 292501 | Capscrew | 4 | 4 |
| 30 | 1339770 | Crank | 1 | .. |
| 31 | 15200 | Cotter Pin | 3 | 3 |
| 32 | 1543927 | Control Valve (☞ Figure 9-6) | 1 | 1 |
| 33 | 1396014 | Lever (Hoist) | 1 | 1 |
| 34 | 1396015 | Lever (Tilt) | 1 | 1 |
| 35 | 1396016 | Lever (Auxiliary) | 2 | 1 |
| 36 | 308980 | Bolt | 6 | 6 |
| 37 | 316834 | Nut | 6 | 6 |
| 38 | 264134 | Sealant | AR | .. |
| 39 | 1393879 | Clip Nut | 2 | 2 |
| 40 | 1397678 | Bracket | 1 | 1 |
| 41 | 320159 | Washer | 1 | 1 |

©2004 HYSTER COMPANY

# HYDRAULIC CONTROL VALVE AND ATTACHING PARTS (Figure 9-5)
## FOUR FUNCTION
## WITH DETENTED LEVERS

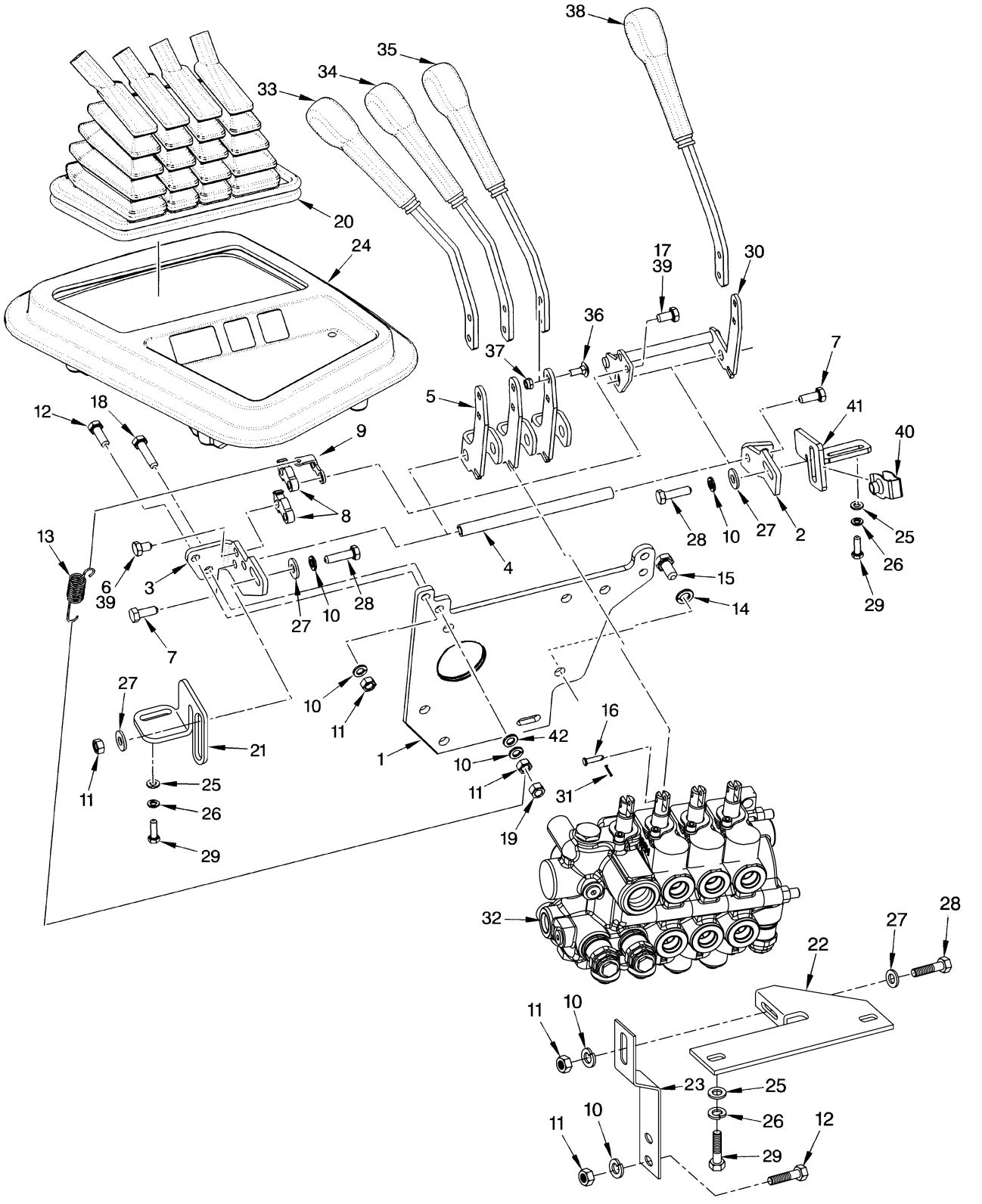


BP140022


©2004 HYSTER COMPANY

# HYDRAULIC CONTROL VALVE AND ATTACHING PARTS
## FOUR FUNCTION
## WITH DETENTED LEVERS

| ITEM | PART NO. | DESCRIPTION | QTY |
|---|---|---|---|
| 1 | 1544207 | Bracket | 1 |
| 2 | 1548231 | Bracket (RH) | 1 |
| 3 | 1548232 | Bracket (LH) | 1 |
| 4 | 1343443 | Pivot | 1 |
| 5 | 1339749 | Crank | 3 |
| 6 | 293611 | Capscrew | 2 |
| 7 | 1328930 | Capscrew | 2 |
| 8 | 1339745 | Lock | 2 |
| 9 | 1339746 | Plate | 1 |
| 10 | 292681 | Lockwasher | 11 |
| 11 | 239503 | Nut | 7 |
| 12 | 136749 | Capscrew | 5 |
| 13 | 1396708 | Spring | 1 |
| 14 | 292682 | Lockwasher | 3 |
| 15 | 292514 | Capscrew | 2 |
| 16 | 309109 | Rod End Pin | 4 |
| 17 | 293612 | Capscrew | 1 |
| 18 | 136985 | Capscrew | 1 |
| 19 | 136692 | Nut | 1 |
| 20 | 2036477 | Boot | 1 |
| 21 | 1551997 | Bracket | 1 |
| 22 | 1396715 | Bracket | 1 |
| 23 | 1399380 | Strut | 1 |
| 24 | 1396108 | Cover (Without Disconnect Switch) | 1 |
| 24 | 1397511 | Cover (With Disconnect Switch) | 1 |
| 25 | 320156 | Washer | 4 |
| 26 | 292680 | Lockwasher | 4 |
| 27 | 320158 | Washer | 9 |
| 28 | 176640 | Capscrew | 5 |
| 29 | 292501 | Capscrew | 4 |
| 30 | 1339748 | Crank | 1 |
| 31 | 15200 | Cotter Pin | 4 |
| 32 | 1543928 | Control Valve (With Detented Levers) (☞ Figure 9-6) | 1 |
| 33 | 1396014 | Lever (Hoist) | 1 |
| 34 | 1396015 | Lever (Tilt) | 1 |
| 35 | 1396016 | Lever (Auxiliary) | 2 |
| 36 | 308980 | Bolt | 8 |
| 37 | 316834 | Nut | 8 |
| 38 | 1396017 | Lever (Auxiliary) | 2 |
| 39 | 264134 | Sealant | AR |
| 40 | 1393879 | Clip Nut | 2 |
| 41 | 1397678 | Bracket | 1 |
| 42 | 320159 | Washer | 1 |

©2004 HYSTER COMPANY

# HYDRAULIC CONTROL VALVE (Figure 9-6)
## THREE AND FOUR FUNCTION

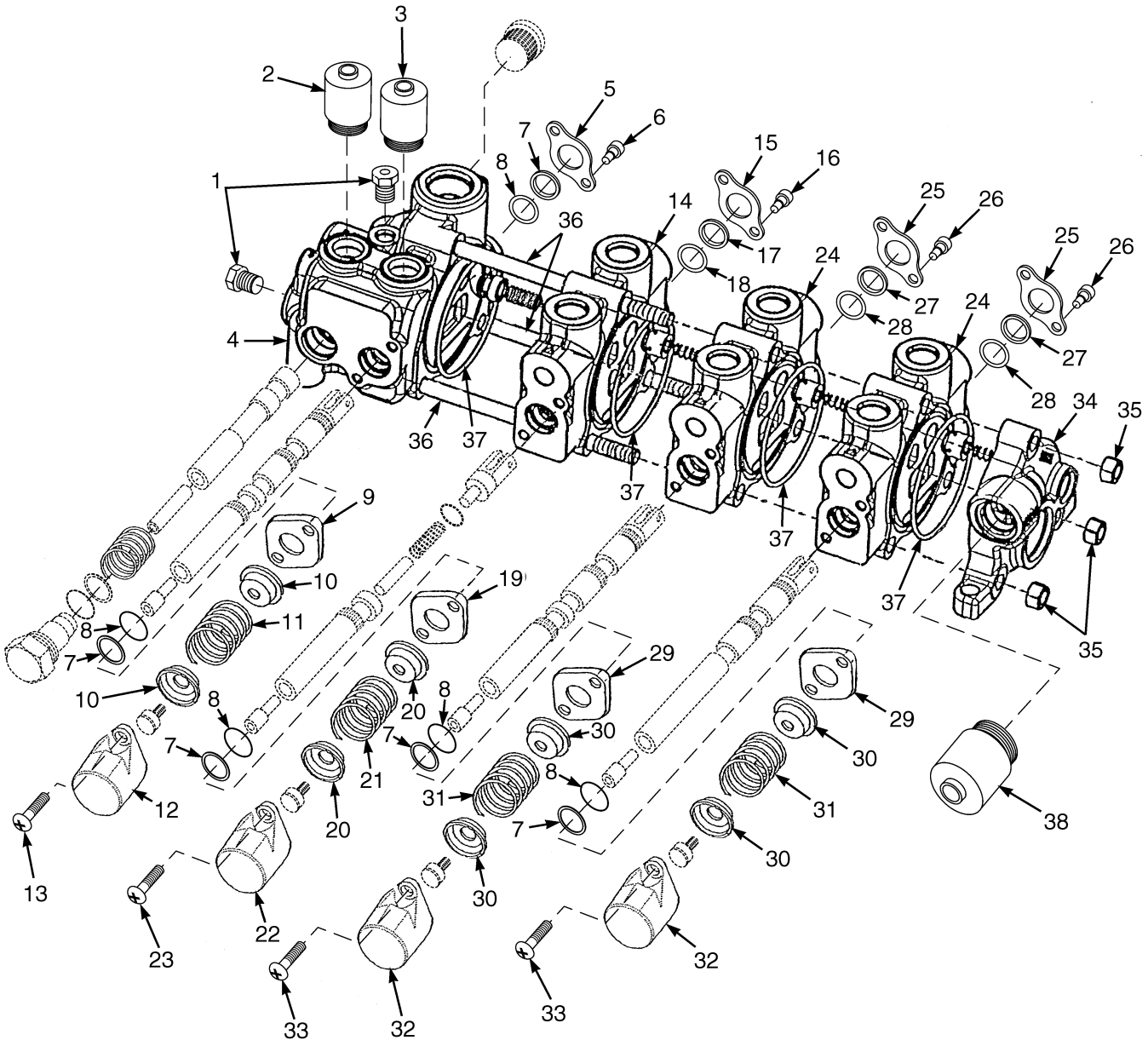


BP140027


©2004 HYSTER COMPANY

# HYDRAULIC CONTROL VALVE
## THREE AND FOUR FUNCTION

**KEY:**
**A: Three Function Valve**
**B: Four Function Valve**

| ITEM | PART NO. | DESCRIPTION | QTY A | QTY B |
|---|---|---|---|---|
| | 1543927 | Control Valve (Three Function) | 1 | .. |
| | 1543928 | Control Valve (Four Function) | .. | 1 |
| 1 | 14591 | Fitting | 2 | 2 |
| 2 | 1559975 | Valve (Steer Relief) | 1 | 1 |
| 3 | 1559973 | Valve (Main Relief) | 1 | 1 |
| 4 | 1559969 | Inlet And Hoist Spool Section | 1 | 1 |
| 5 | . . . . . | Seal Plate | 1 | 1 |
| 6 | . . . . . | Capscrew | 2 | 2 |
| 7 | . . . . . | Wiper | 2 | 2 |
| 8 | . . . . . | O-Ring | 2 | 2 |
| 9 | . . . . . | Seal Plate | 1 | 1 |
| 10 | . . . . . | Spring Seat | 2 | 2 |
| 11 | . . . . . | Spring | 1 | 1 |
| 12 | . . . . . | Cap | 1 | 1 |
| 13 | . . . . . | Capscrew | 2 | 2 |
| 14 | 1559970 | Tilt Spool Section | 1 | 1 |
| 15 | . . . . . | Seal Plate | 1 | 1 |
| 16 | . . . . . | Capscrew | 2 | 2 |
| 17 | . . . . . | Wiper | 2 | 2 |
| 18 | . . . . . | O-Ring | 2 | 2 |
| 19 | . . . . . | Seal Plate | 1 | 1 |
| 20 | . . . . . | Spring Seat | 2 | 2 |
| 21 | . . . . . | Spring | 1 | 1 |
| 22 | . . . . . | Cap | 1 | 1 |
| 23 | . . . . . | Capscrew | 2 | 1 |
| 24 | 1559971 | Accessory Spool Section (Third and Fourth Function) | 1 | 2 |
| 25 | . . . . . | Seal Plate | 1 | 1 |
| 26 | . . . . . | Capscrew | 2 | 2 |
| 27 | . . . . . | Wiper | 2 | 2 |
| 28 | . . . . . | O-Ring | 2 | 2 |
| 29 | . . . . . | Seal Plate | 1 | 1 |
| 30 | . . . . . | Spring Seat | 2 | 2 |
| 31 | . . . . . | Spring | 1 | 1 |
| 32 | . . . . . | Cap | 1 | 1 |
| 33 | . . . . . | Capscrew | 2 | 2 |
| 34 | 1559972 | Outlet Section | 1 | 1 |
| 35 | . . . . . | Nut | 3 | 3 |
| 36 | . . . . . | Tie Rod | 3 | 3 |
| 37 | . . . . . | O-Ring | 5 | 5 |
| 38 | 1559974 | Valve (Secondary Relief) | 1 | 1 |
| | 1559976 | Tie Rod Kit (Three Function) (Includes Items 35-36) | 1 | 1 |
| | 1559986 | Tie Rod Kit (Four Function) (Includes Items 35-36) | 1 | 1 |
| | 1559977 | Seal Kit (Services up to five sections) (Includes Items 7-8, 17-18, 27-28, 37) | 1 | 1 |
| | 1559978 | End Kit (Services one section) (Includes Items 5-13, 15-23, 25-33) | 1 | 1 |

©2004 HYSTER COMPANY

# HYDRAULIC FILTER HOUSING (Figure 9-7)

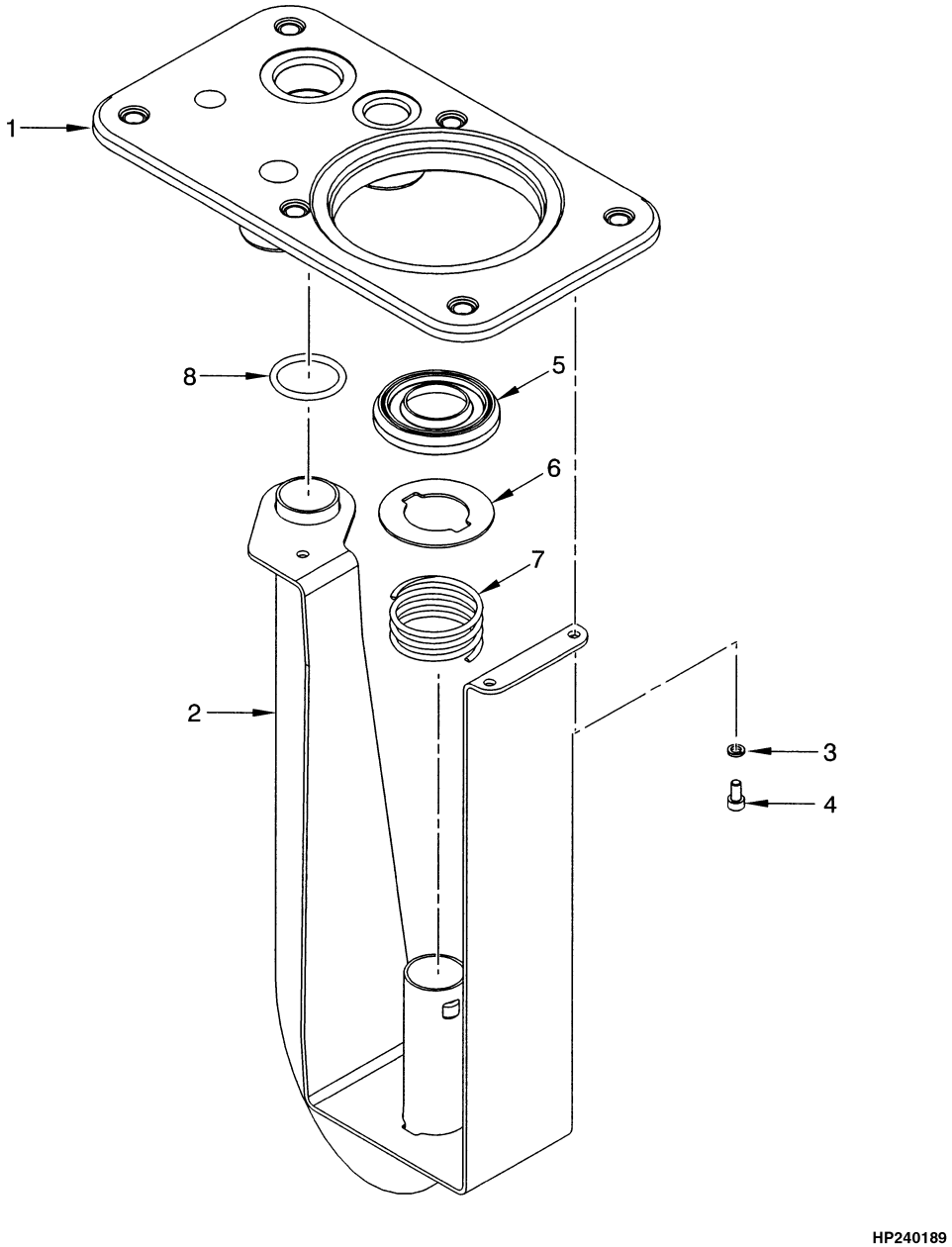



©2004 HYSTER COMPANY

# HYDRAULIC FILTER HOUSING

| ITEM | PART NO. | DESCRIPTION | QTY |
|---|---|---|---|
| | 1397739 | Hydraulic Filter Housing | 1 |
| 1 | 1397796 | Cover | 1 |
| 2 | 1397740 | Bracket (Filter) | 1 |
| 3 | 293778 | Washer | 3 |
| 4 | 293741 | Capscrew | 3 |
| 5 | 181941 | Seal (Tube) | 1 |
| 6 | 190785 | Washer | 1 |
| 7 | 190784 | Spring | 1 |
| 8 | 55434 | O-Ring | 1 |

©2004 HYSTER COMPANY

# HYDRAULIC PUMP (Figure 9-8)

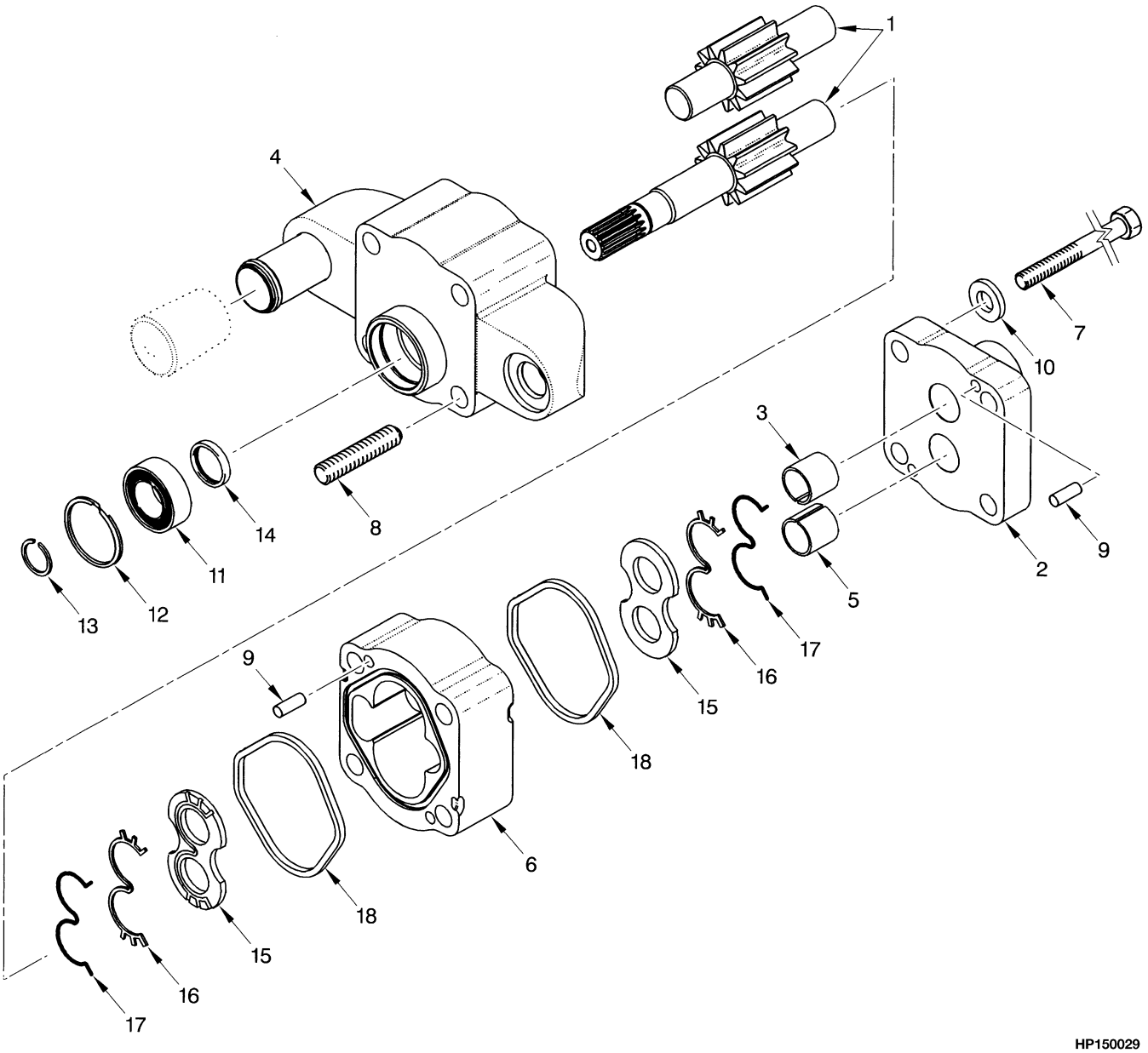



©2004 HYSTER COMPANY

# HYDRAULIC PUMP

**KEY:**
**A: 2100 mm Long Wheel Base**
**B: 1830/1880 mm Short Wheel Base**

| ITEM | PART NO. | DESCRIPTION | QTY A | QTY B |
|---|---|---|---|---|
| | 2038201 | Hydraulic Pump | .. | 1 |
| | 2038202 | Hydraulic Pump | 1 | .. |
| 1 | 1468469 | Gear Set | 1 | .. |
| 1 | 1468468 | Gear Set | .. | 1 |
| 2 | 1466442 | Cover (Port End) | 1 | 1 |
| 3 | 1360875 | Bushing | 2 | 2 |
| 4 | 1466443 | Cover (Shaft End) | 1 | 1 |
| 5 | 1360875 | Bushing | 2 | 2 |
| 6 | 1466444 | Housing | 1 | .. |
| 6 | 1468578 | Housing | .. | 1 |
| 7 | 1466446 | Capscrew | 4 | 4 |
| 8 | 1466447 | Stud | 4 | 4 |
| 9 | 1151722 | Pin | 4 | 4 |
| 10 | 176167 | Washer | 4 | 4 |
| 11 | 1466396 | Bearing | 1 | 1 |
| 12 | 311277 | Snap Ring | 1 | 1 |
| 13 | 1466397 | Snap Ring | 1 | 1 |
| 14 | 176169 | Seal | 1 | 1 |
| 15 | . . . . . | Plate | 2 | 2 |
| 16 | 1453776 | Seal | 2 | 2 |
| 17 | 1453775 | Seal | 2 | 2 |
| 18 | 176173 | Seal | 2 | 2 |
| | 1466394 | Seal Kit (Outer) (Includes Items 11-14) | 1 | 1 |
| | 1468470 | Seal Kit (Inner) (Includes Items 16-18, 21) | 1 | 1 |
| | 1468576 | Thrust Plate Kit | 1 | 1 |

©2004 HYSTER COMPANY

# MAST INSTALLATION (Figure 9-9)

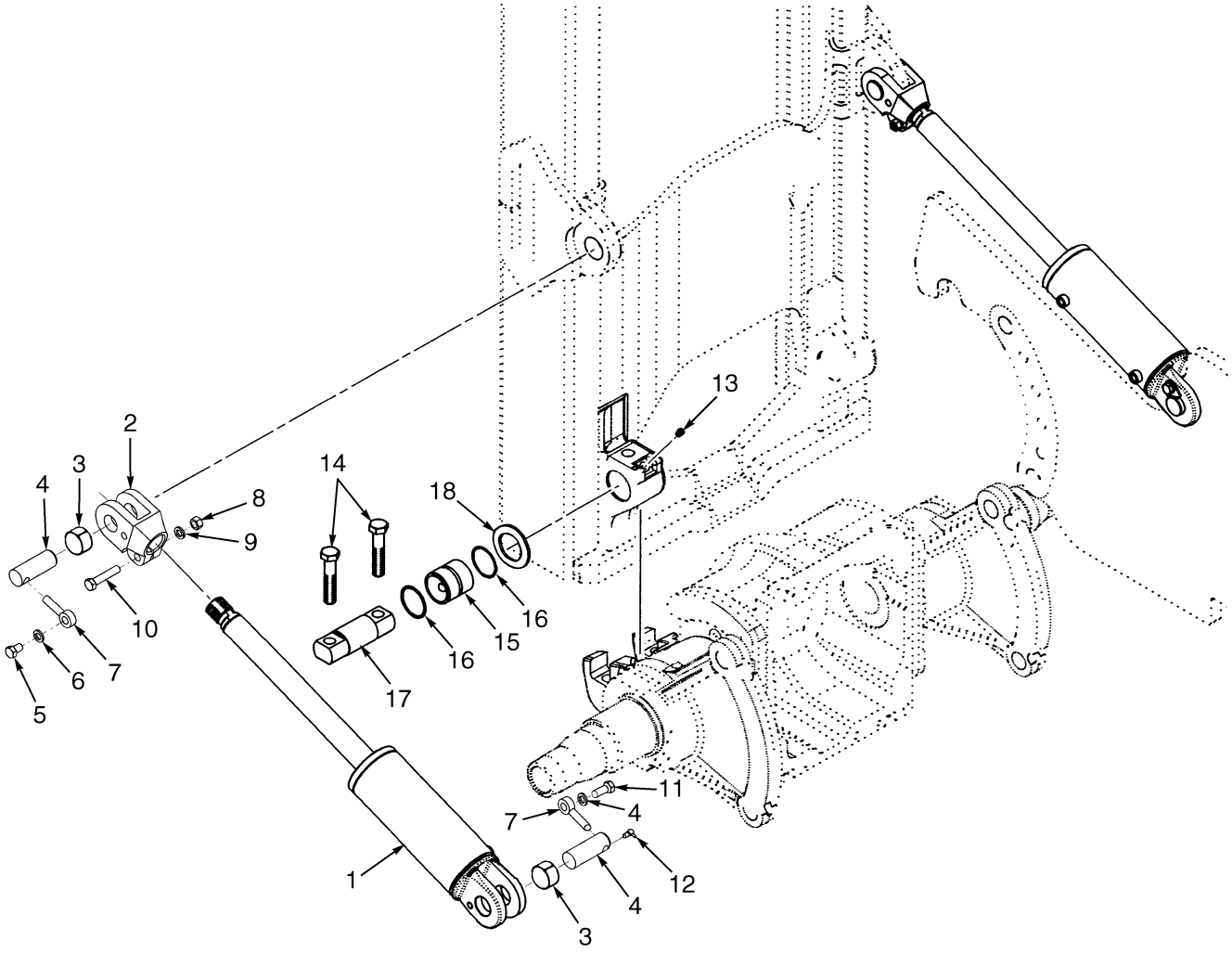



©2004 HYSTER COMPANY

# MAST INSTALLATION

| ITEM | | PART NO. | DESCRIPTION | QTY |
|---|---|---|---|---|
| 1 | **ab** | 2035312 | Tilt Cylinder (☞ Figure 9-10) | 2 |
| 1 | **c** | 2035314 | Tilt Cylinder (☞ Figure 9-10) | 2 |
| 2 | **bc** | 248462 | Rod End | 2 |
| 2 | **a** | 352288 | Rod End | 2 |
| 3 | | 192429 | Bushing | 4 |
| 4 | | 1532691 | Tilt Pin | 4 |
| 5 | | 16830 | Capscrew | 2 |
| 6 | | 15158 | Lockwasher | 2 |
| 7 | | 241079 | Anchor | 4 |
| 8 | | 216877 | Nut | 2 |
| 9 | | 292683 | Lockwasher | 4 |
| 10 | | 292531 | Capscrew | 2 |
| 11 | | 292527 | Capscrew | 2 |
| 12 | | 16001 | Lube Fitting | 4 |
| 13 | | 16015 | Lube Fitting | 2 |
| 14 | | 1394689 | Capscrew | 4 |
| 15 | | 1485449 | Bushing | 2 |
| 16 | | 1465518 | Snap Ring | 4 |
| 17 | | 1485443 | Pin | 2 |
| 18 | | 1502645 | Washer | 2 |

**FOOTNOTES:**

**a** 12° Forward/6° Back
**b** 6° Forward/12° Back
**c** 6° Forward/6° Back

©2004 HYSTER COMPANY

# TILT CYLINDERS (Figure 9-10)

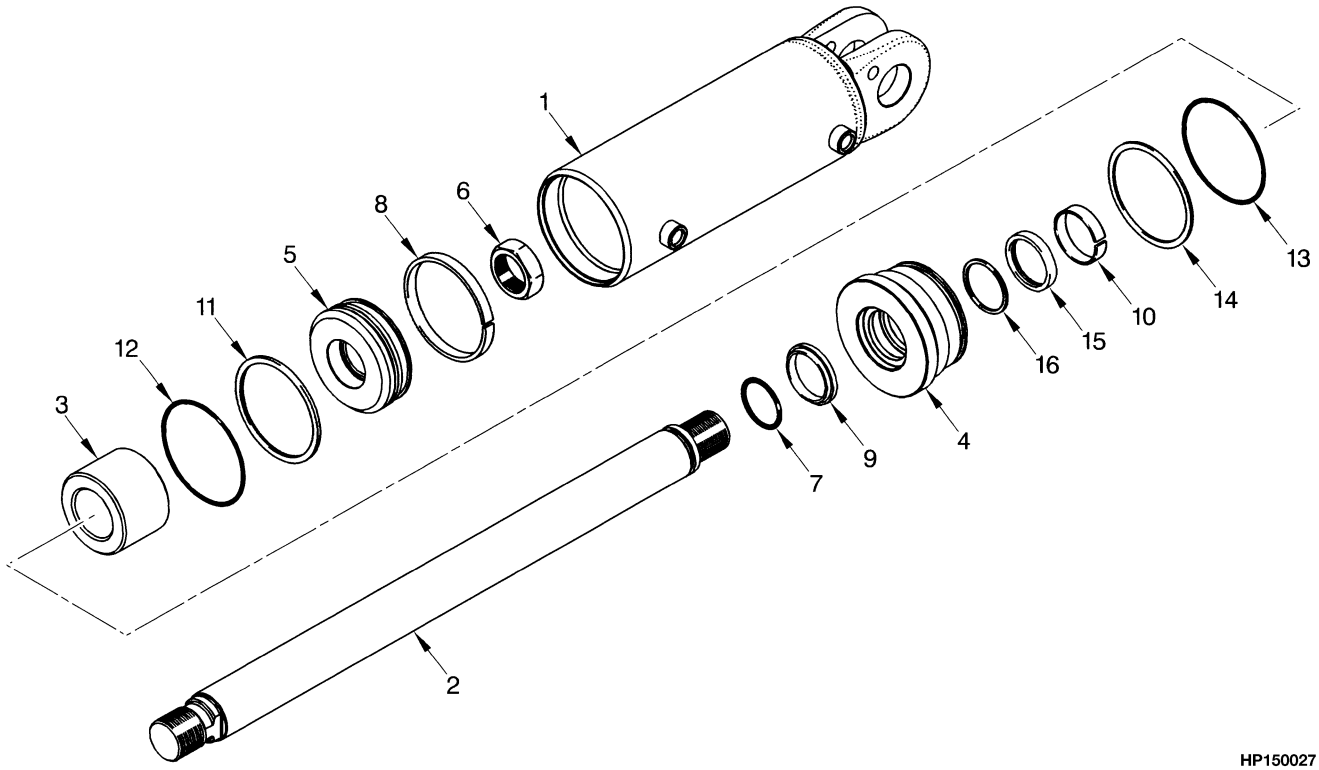


HP150027

| ITEM | | PART NO. | DESCRIPTION | QTY |
|---|---|---|---|---|
| | **a** | 2035312 | Tilt Cylinder | 2 |
| | **b** | 2035314 | Tilt Cylinder | 2 |
| 1 | | 2035315 | Tube | 1 |
| 2 | **a** | 2035316 | Rod | 1 |
| 2 | **b** | 2035318 | Rod | 1 |
| 3 | **b** | 1383031 | Spacer | 1 |
| 4 | | 1380878 | Gland | 1 |
| 5 | | 352247 | Piston | 1 |
| 6 | | 2036547 | Nut | 1 |
| 7 | | 199917 | O-Ring | 1 |
| 8 | | 352287 | Guide Ring | 1 |
| 9 | | 193554 | Rod Wiper | 1 |
| 10 | | 334155 | Wear Ring | 1 |
| 11 | | 2044372 | Piston Seal | 1 |
| 12 | | 199917 | O-Ring | 1 |
| 13 | | 46629 | O-Ring | 1 |
| 14 | | 270330 | Back-Up Ring | 1 |
| 15 | | 1381085 | Rod Seal (Rod) | 1 |
| 16 | | 638248 | Back-Up Ring | 1 |
| | | 1493306 | Seal Kit (Includes Items 7-11, 13-16) | 1 |

**FOOTNOTES:**

**a** 6° Forward/12° Back, 12° Forward/6° Back

**b** 6° Forward/6° Back


©2004 HYSTER COMPANY

# 10 MAST-TWO STAGE LIMITED FREE-LIFT

# SECTION 10
# MAST-TWO STAGE LIMITED FREE-LIFT

**DESCRIPTION** **PAGE**

CARRIAGE
TWO STAGE LIMITED FREE-LIFT ..... 10-14
HEADER HOSE
TWO STAGE LIMITED FREE-LIFT ..... 10-16
INNER MAST
TWO STAGE LIMITED FREE-LIFT ..... 10-4
MAIN LIFT
TWO STAGE LIMITED FREE-LIFT ..... 10-6
MAIN LIFT CYLINDERS
TWO STAGE LIMITED FREE-LIFT ..... 10-10
OUTER MAST
TWO STAGE LIMITED FREE-LIFT ..... 10-2

©2004 HYSTER COMPANY

# OUTER MAST (Figure 10-1)
## TWO STAGE LIMITED FREE-LIFT

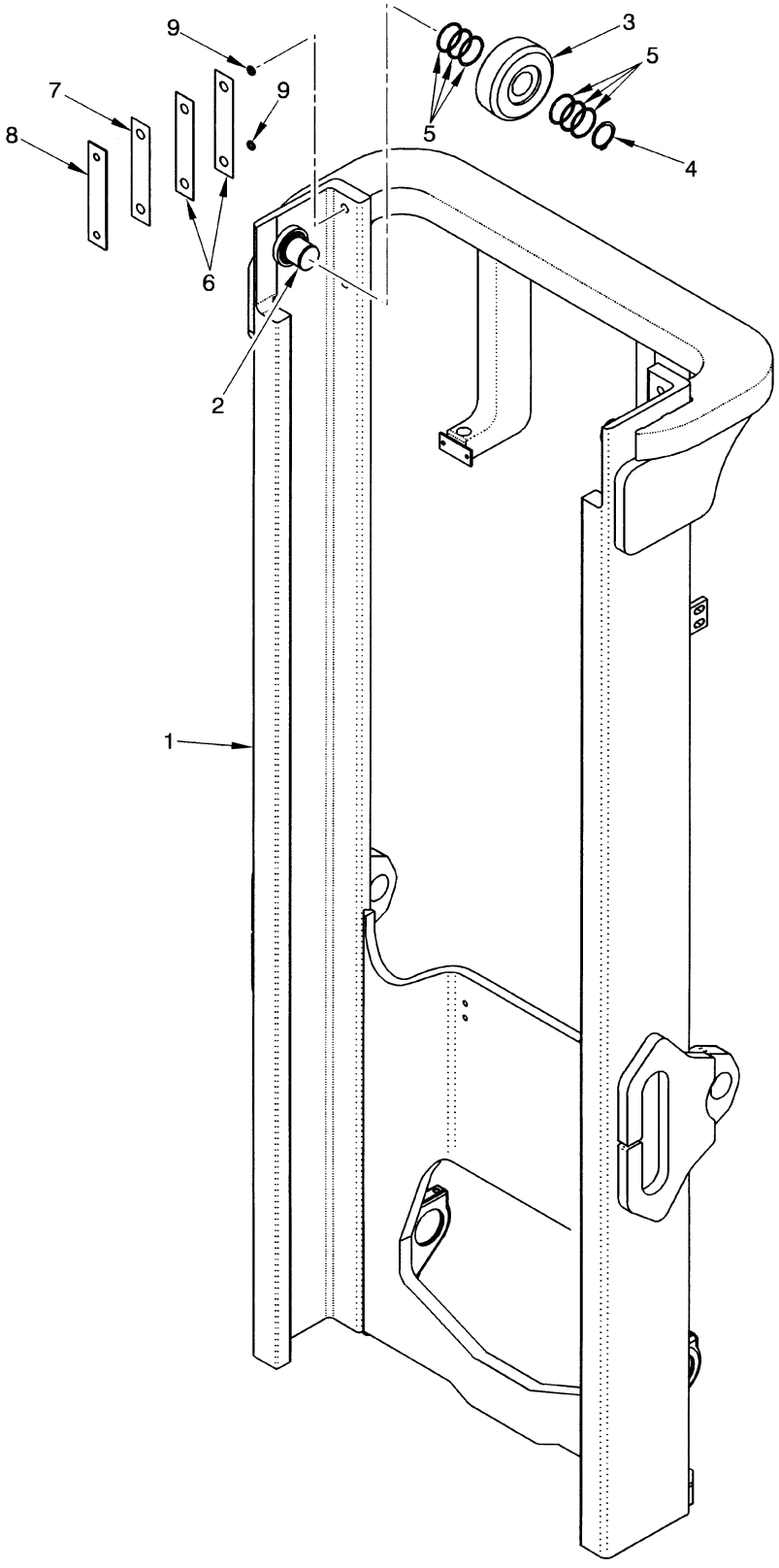



©2004 HYSTER COMPANY

# OUTER MAST
## TWO STAGE LIMITED FREE-LIFT

**H100-120XM**

| ITEM | DESCRIPTION 1 2 3 4 | LIFT HEIGHT TO BOTTOM OF FORKS | | | | |
|---|---|---|---|---|---|---|
| | | 2790 mm (109.8 in.) | 3390 mm (133.5 in.) | 3990 mm (157.1 in.) | 4190 mm (165.0 in.) | 6890 mm (271.3 in.) |
| | Mast Group Number | A750 2790 | A750 3390 | A750 3990 | A750 4190 | A750 6890 |
| 1 | Outer Mast | 1395342 | 1395348 | 1395354 | 1395356 | 1395383 |

**H70-90XM**

| ITEM | DESCRIPTION 1 2 3 4 | LIFT HEIGHT TO BOTTOM OF FORKS | | | | |
|---|---|---|---|---|---|---|
| | | 3050 mm (120.1 in.) | 3650 mm (143.7 in.) | 4150 mm (163.4 in.) | 4250 mm (167.3 in.) | 7150 mm (281.5 in.) |
| | Mast Group Number | A749 3050 | A749 3650 | A749 4150 | A749 4250 | A749 7150 |
| 1 | Outer Mast | 1395342 | 1395348 | 1395353 | 1395354 | 1395383 |

**KEY:**
**A: H70-90XM**
**B: H100-120XM**

| ITEM | PART NO. | DESCRIPTION | QTY A | QTY B |
|---|---|---|---|---|
| 1 | **a** . . . . . | Outer Mast | 1 | 1 |
| 2 | 1500744 | Stub Shaft | 2 | 2 |
| 3 | 1399204 | Load Roller | 2 | 2 |
| 4 | 1465072 | Snap Ring | 2 | 2 |
| 5 | 126765 | Shim (0.020 in.) | 12 | 12 |
| 6 | 161273 | Shim (0.020 in.) | AR | AR |
| 7 | 161272 | Shim (0.007 in.) | AR | AR |
| 8 | 104264 | Bearing Strip | 2 | 2 |
| 9 | 104506 | O-Ring | 4 | 4 |

**FOOTNOTES:**
**a** Refer to Table

©2004 HYSTER COMPANY

# INNER MAST (Figure 10-2)
## TWO STAGE LIMITED FREE-LIFT

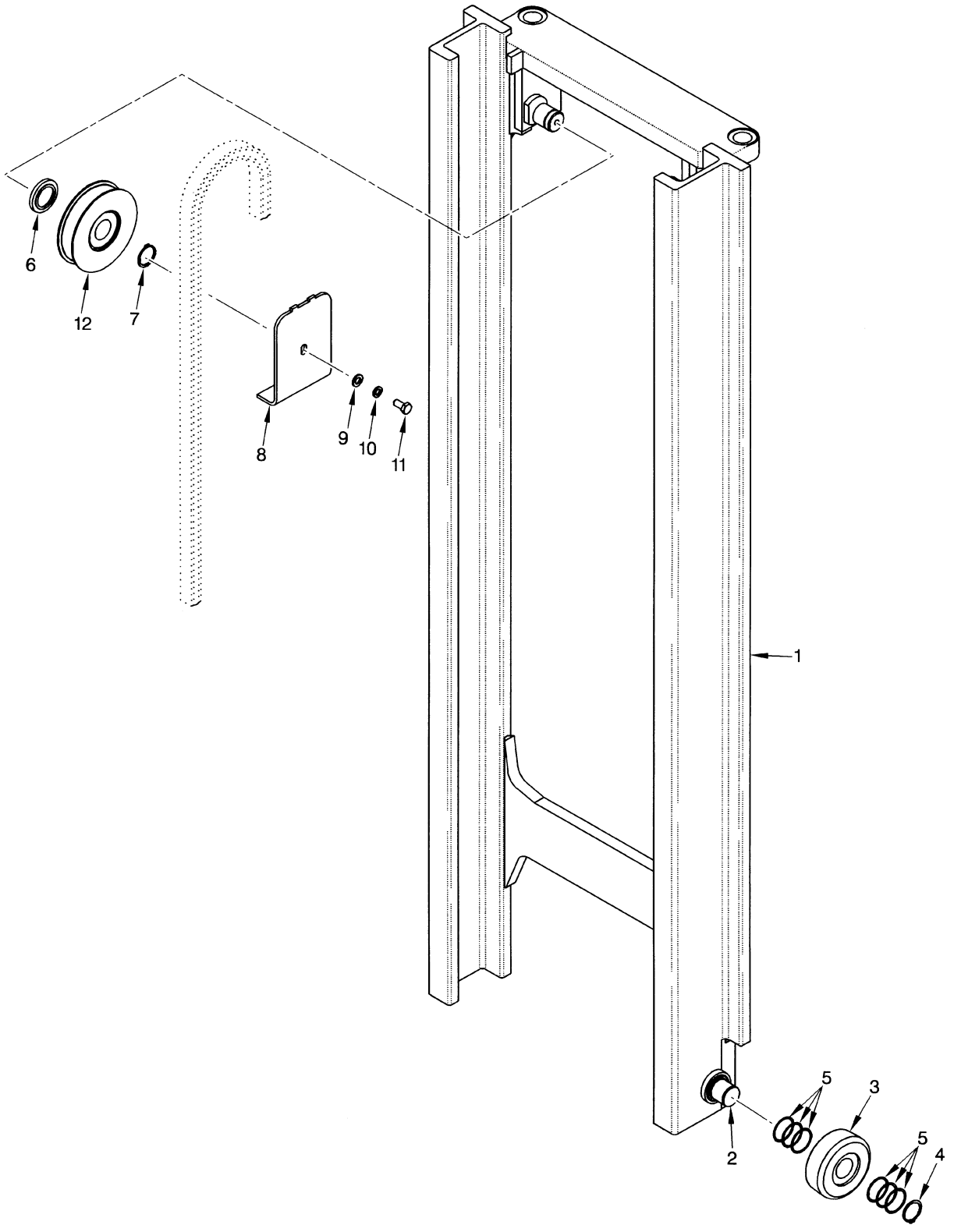



©2004 HYSTER COMPANY

# INNER MAST
## TWO STAGE LIMITED FREE-LIFT

**H100-120XM**

| ITEM | DESCRIPTION 1 2 3 4 | LIFT HEIGHT TO BOTTOM OF FORKS | | | | |
|---|---|---|---|---|---|---|
| | | 2790 mm (109.8 in.) | 3390 mm (133.5 in.) | 3990 mm (157.1 in.) | 4190 mm (165.0 in.) | 6890 mm (271.3 in.) |
| | Mast Group Number | A750 2790 | A750 3390 | A750 3990 | A750 4190 | A750 6890 |
| 1 | Inner Mast | 1395384 | 1395390 | 1395396 | 1395398 | 1395425 |

**H70-90XM**

| ITEM | DESCRIPTION 1 2 3 4 | LIFT HEIGHT TO BOTTOM OF FORKS | | | | |
|---|---|---|---|---|---|---|
| | | 3050 mm (120.1 in.) | 3650 mm (143.7 in.) | 4150 mm (163.4 in.) | 4250 mm (167.3 in.) | 7150 mm (281.5 in.) |
| | Mast Group Number | A749 3050 | A749 3650 | A749 4150 | A749 4250 | A749 7150 |
| 1 | Inner Mast | 1395384 | 1395390 | 1395395 | 1395396 | 1395425 |

**KEY:**
**A: H70-90XM**
**B: H100-120XM**

| ITEM | PART NO. | DESCRIPTION | QTY A | QTY B |
|---|---|---|---|---|
| 1 | **a** . . . . . | Inner Mast | 1 | 1 |
| 2 | 1500744 | Stub Shaft | 2 | 2 |
| 3 | 1399204 | Load Roller | 2 | 2 |
| 4 | 1465072 | Snap Ring | 2 | 2 |
| 5 | 126765 | Shim (0.020 in.) | 12 | 12 |
| 6 | 1389846 | Spacer | 2 | 2 |
| 7 | 12891 | Snap Ring | 2 | 2 |
| 8 | 1389959 | Bracket | 2 | 2 |
| 9 | 320161 | Washer | 2 | 2 |
| 10 | 292683 | Lockwasher | 2 | 2 |
| 11 | 132860 | Capscrew | 2 | 2 |
| 12 | 1387745 | Chain Sheave | 2 | .. |
| 12 | 1387744 | Chain Sheave | .. | 2 |

**FOOTNOTES:**
**a** Refer to Table

©2004 HYSTER COMPANY

# MAIN LIFT (Figure 10-3)
## TWO STAGE LIMITED FREE-LIFT

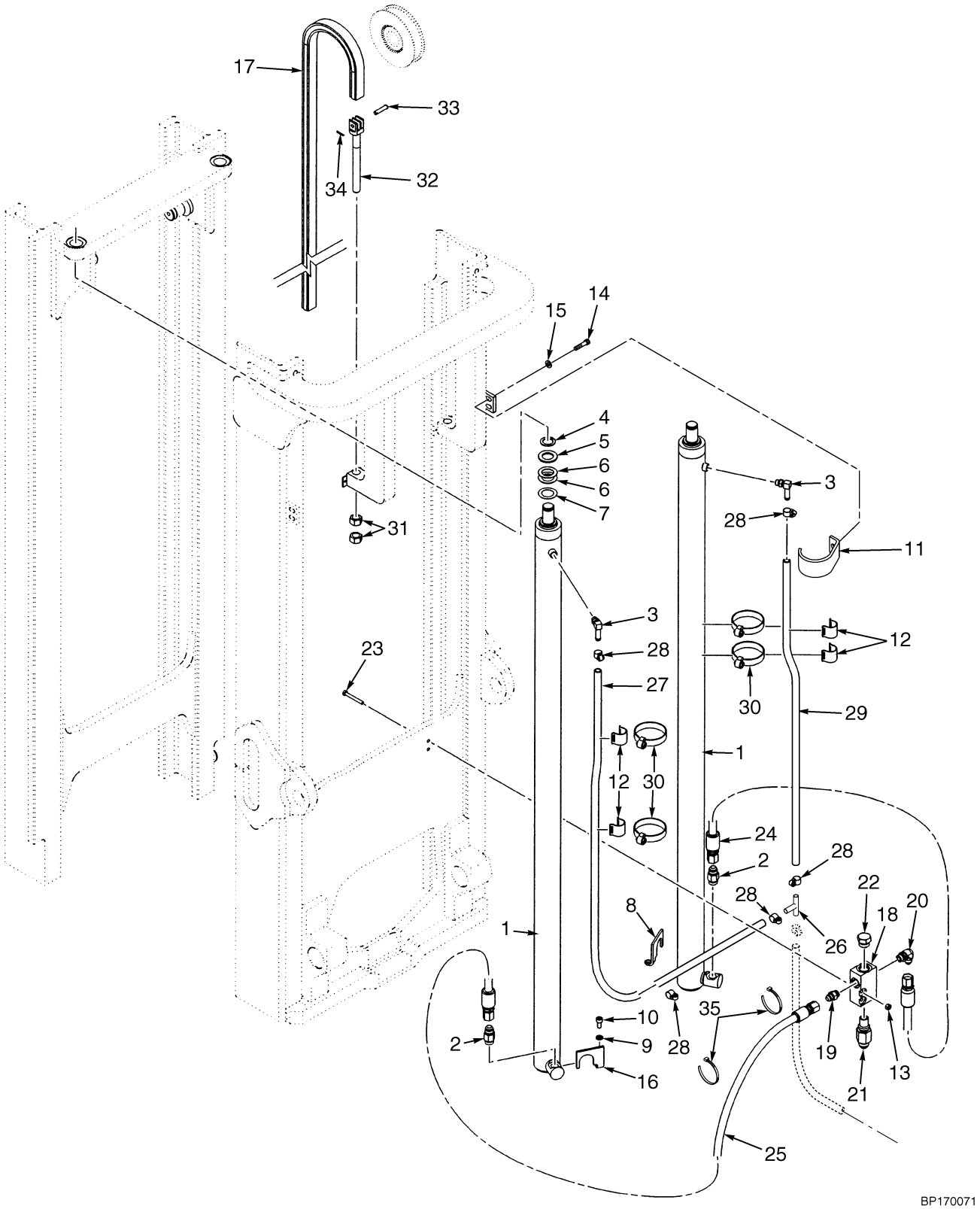



©2004 HYSTER COMPANY

# MAIN LIFT
## TWO STAGE LIMITED FREE-LIFT

**H100-120XM**

| ITEM | DESCRIPTION 1 2 3 4 | LIFT HEIGHT TO BOTTOM OF FORKS | | | | |
|---|---|---|---|---|---|---|
| | | 2790 mm (109.8 in.) | 3390 mm (133.5 in.) | 3990 mm (157.1 in.) | 4190 mm (165.0 in.) | 6890 mm (271.3 in.) |
| | Mast Group Number | A750 2790 | A750 3390 | A750 3990 | A750 4190 | A750 6890 |
| 17 | Chain | 338647 | 356916 | 356917 | 1395481 | 1395509 |
| 27 | Hose (LH) | 1399087 | 1399099 | 1399111 | 1399109 | 1399179 |
| 29 | Hose (RH) | 1399075 | 1399085 | 1399097 | 1399097 | 1399167 |

**H70-90XM**

| ITEM | DESCRIPTION 1 2 3 4 | LIFT HEIGHT TO BOTTOM OF FORKS | | | | |
|---|---|---|---|---|---|---|
| | | 3050 mm (120.1 in.) | 3650 mm (143.7 in.) | 4150 mm (163.4 in.) | 4250 mm (167.3 in.) | 7150 mm (281.5 in.) |
| | Mast Group Number | A749 3050 | A749 3650 | A749 4150 | A749 4250 | A749 7150 |
| 17 | Chain | 182342 | 191072 | 129341 | 191076 | 191030 |
| 27 | Hose (LH) | 1399092 | 1399104 | 1399108 | 1399116 | 1399184 |
| 29 | Hose (RH) | 1399078 | 1399090 | 1399096 | 1399102 | 1399176 |

**KEY:**
**A: H70-90XM**
**B: H100-120XM**

| ITEM | PART NO. | DESCRIPTION | QTY A | QTY B |
|---|---|---|---|---|
| 1 | . . . . . | Main Cylinder (☞ Figure 10-4) | 2 | 2 |
| 2 | 2035787 | Velocity Fuse | 2 | .. |
| 2 | 2036856 | Velocity Fuse | .. | 2 |
| 3 | 110178 | Fitting | 2 | 2 |
| 3 | 16483 | O-Ring | 1 | 1 |
| 4 | 304523 | Snap Ring | 2 | 2 |
| 5 | 332061 | Washer | 2 | 2 |
| 6 | 142247 | Shim (0.049 in.) | AR | AR |
| 7 | 1325120 | Shim (0.70 in.) | AR | AR |
| 8 | 1389923 | Bracket (RH) | 1 | 1 |
| 9 | 292682 | Lockwasher | 2 | 2 |
| 10 | 296024 | Capscrew | 2 | 2 |
| 11 | 1474399 | Bracket | 2 | 2 |
| 12 | 1465585 | Clamp | 4 | 4 |
| 13 | 313828 | Nut | 10 | 10 |
| 14 | 287860 | Capscrew | 4 | 4 |
| 15 | 320160 | Washer | 4 | 4 |
| 16 | 1389921 | Bracket (LH) | 1 | 1 |
| 17 | **a** . . . . . | Chain | 1 | 1 |
| 18 | 1388019 | Housing | 1 | 1 |
| 19 | 16541 | Fitting | 1 | 1 |

©2004 HYSTER COMPANY

# MAIN LIFT
## TWO STAGE LIMITED FREE-LIFT

| ITEM | | PART NO. | DESCRIPTION | QTY A | QTY B |
|---|---|---|---|---|---|
| 19 | | 16484 | O-Ring | 1 | 1 |
| 20 | | 16559 | Fitting | 1 | 1 |
| 20 | | 16484 | O-Ring | 1 | 1 |
| 21 | | 315262 | Control Valve (Lowering) | 1 | .. |
| 21 | | 319891 | Control Valve (Lowering) | .. | 1 |
| 22 | | 14603 | Fitting | 1 | 1 |
| 22 | | 16486 | O-Ring | 1 | 1 |
| 23 | | 292511 | Capscrew | 2 | 2 |
| 24 | | 1387324 | Hose | 1 | 1 |
| 25 | | 1387399 | Hose | 1 | 1 |
| 26 | | 2046871 | Fitting | 1 | 1 |
| 27 | **a** | . . . . . | Hose (LH) | 1 | 1 |
| 28 | | 379405 | Clamp | 4 | 4 |
| 29 | **a** | . . . . . | Hose (RH) | 1 | 1 |
| 30 | | 112989 | Clamp | 4 | .. |
| 30 | | 115696 | Clamp | .. | 4 |
| 31 | | 221717 | Nut | 4 | 4 |
| 32 | | 1331990 | Chain Anchor | 2 | .. |
| 32 | | 1331991 | Chain Anchor | .. | 2 |
| 33 | | 327591 | Pin (Anchor) | 2 | .. |
| 33 | | 339932 | Pin (Anchor) | .. | 2 |
| 34 | | 15222 | Cotter Pin | 2 | 2 |
| 35 | | 1360529 | Strap Clamp | 2 | 2 |

**FOOTNOTES:**
**a** Refer to Table


©2004 HYSTER COMPANY

# NOTES

# MAIN LIFT CYLINDERS (Figure 10-4)
## TWO STAGE LIMITED FREE-LIFT

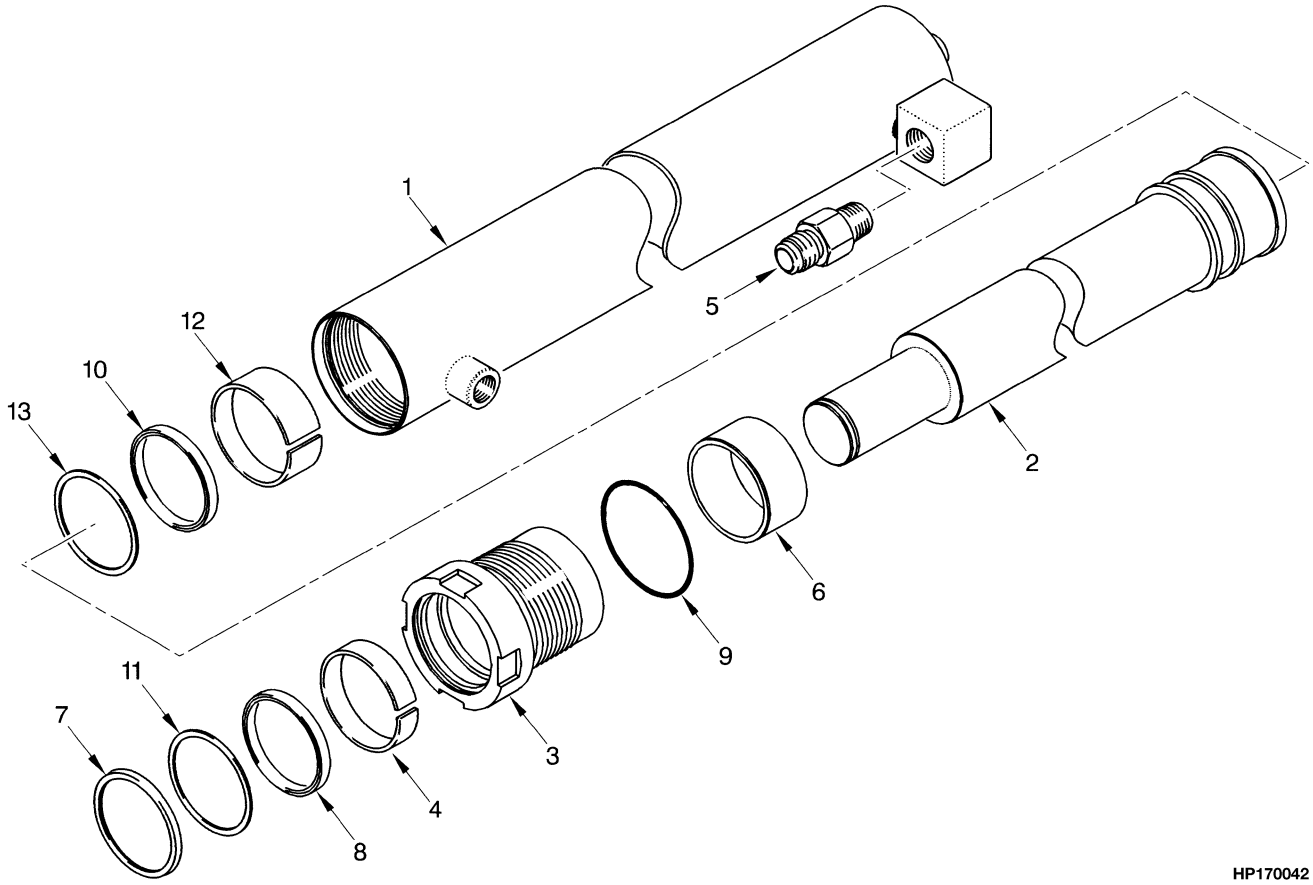



©2004 HYSTER COMPANY

# MAIN LIFT CYLINDERS
## TWO STAGE LIMITED FREE-LIFT

**H100-120XM**

| ITEM | DESCRIPTION 1 2 3 4 | LIFT HEIGHT TO BOTTOM OF FORKS | | | | |
|---|---|---|---|---|---|---|
| | | 2790 mm (109.8 in.) | 3390 mm (133.5 in.) | 3990 mm (157.1 in.) | 4190 mm (165.0 in.) | 6890 mm (271.3 in.) |
| | **Mast Group Number** | **A750 2790** | **A750 3390** | **A750 3990** | **A750 4190** | **A750 6890** |
| | **Cylinder Group Number** | **8603801** | **8603807** | **8603813** | **8603815** | **8603863** |
| | Lift Cylinder | 2035811 | 2035812 | 2035813 | 2058697 | 2058719 |
| 1 | Shell | 2036187 | 2036188 | 2036189 | 2058946 | 2058995 |
| 2 | Rod | 2036201 | 2036202 | 2036203 | 2058970 | 2059006 |
| 6 | Spacer | ---- | ---- | ---- | ---- | 2033294 |

**H70-90XM**

| ITEM | DESCRIPTION 1 2 3 4 | LIFT HEIGHT TO BOTTOM OF FORKS | | | | |
|---|---|---|---|---|---|---|
| | | 3050 mm (120.1 in.) | 3650 mm (143.7 in.) | 4150 mm (163.4 in.) | 4250 mm (167.3 in.) | 7150 mm (281.5 in.) |
| | **Mast Group Number** | **A749 3050** | **A749 3650** | **A749 4150** | **A749 4250** | **A749 7150** |
| | **Cylinder Group Number** | **8604051** | **8604057** | **8604062** | **8604063** | **8604032** |
| | Lift Cylinder | 2035804 | 2035805 | 2058739 | 2035806 | 2058730 |
| 1 | Shell | 2036181 | 2036182 | 2059037 | 2036183 | 2059016 |
| 2 | Rod | 2036195 | 2036196 | 2059062 | 2036197 | 2059027 |
| 6 | Spacer | ---- | ---- | ---- | ---- | 367139 |

**KEY:**
**A: H70-90XM**
**B: H100-120XM**

| ITEM | PART NO. | DESCRIPTION | QTY A | QTY B |
|---|---|---|---|---|
| | **c** . . . . . | Lift Cylinder | 2 | 2 |
| 1 | **c** . . . . . | Shell | 1 | 1 |
| 2 | **c** . . . . . | Rod | 1 | 1 |
| 3 | **a** 2033243 | Gland | 1 | .. |
| 3 | **b** 2033281 | Gland | 1 | .. |
| 3 | **a** 2033281 | Gland | .. | 1 |
| 3 | **b** 2033299 | Gland | .. | 1 |
| 4 | **a** 215425 | Wear Ring | 1 | .. |
| 4 | **b** 297532 | Wear Ring | 1 | .. |
| 4 | **a** 297532 | Wear Ring | .. | 1 |
| 4 | **b** 215301 | Wear Ring | .. | 1 |
| 5 | 2035787 | Velocity Fuse | 1 | .. |
| 5 | 2036856 | Velocity Fuse | .. | 1 |
| 6 | **c** . . . . . | Spacer | 1 | 1 |

©2004 HYSTER COMPANY

# MAIN LIFT CYLINDERS
## TWO STAGE LIMITED FREE-LIFT

| ITEM | | PART NO. | DESCRIPTION | QTY A | QTY B |
|---|---|---|---|---|---|
| 7 | **a** | 2036212 | Wiper Ring | 1 | .. |
| 7 | **b** | 2036213 | Wiper Ring | 1 | .. |
| 7 | **a** | 2036213 | Wiper Ring | .. | 1 |
| 7 | **b** | 2034269 | Wiper Ring | .. | 1 |
| 8 | **a** | 270077 | Rod Seal | 1 | .. |
| 8 | **b** | 327807 | Seal | 1 | .. |
| 8 | **a** | 327807 | Seal | .. | 1 |
| 8 | **b** | 201829 | Rod Seal | .. | 1 |
| 9 | **a** | 57664 | O-Ring | 1 | .. |
| 9 | **b** | 15879 | O-Ring | 1 | .. |
| 9 | | 15879 | O-Ring | .. | 1 |
| 10 | **a** | 1381061 | Seal | 1 | .. |
| 10 | **b** | 1381062 | Seal | 1 | .. |
| 10 | | 1381062 | Seal | .. | 1 |
| 11 | **a** | 638249 | Back-Up Ring | 1 | .. |
| 11 | **b** | 327808 | Back-Up Ring | 1 | .. |
| 11 | **a** | 327808 | Back-Up Ring | .. | 1 |
| 11 | **b** | 638250 | Back-Up Ring | .. | 1 |
| 12 | **a** | 297532 | Wear Ring | 1 | .. |
| 12 | **b** | 351531 | Wear Ring | 1 | .. |
| 12 | | 351531 | Wear Ring | .. | 1 |
| 13 | | 351532 | Back-Up Ring | 1 | 1 |
| | | 2035784 | Seal Kit (Class III up to 5550 mm) (Includes Items 4, 7-12) | 1 | 1 |
| | | 2035785 | Seal Kit (Class III 5550 mm and up, Class IV up to 5550 mm) (Includes Items 4, 7-13) | 1 | 1 |
| | | 2035786 | Seal Kit (Class IV 5550 mm and up) (Includes Items 4, 7-12) | 1 | 1 |

**FOOTNOTES:**
**a** Lift Height ⇒ 5550 mm
**b** Lift Height 5550 mm ⇒
**c** Refer to Table


©2004 HYSTER COMPANY

# NOTES

# CARRIAGE (Figure 10-5)
## TWO STAGE LIMITED FREE-LIFT

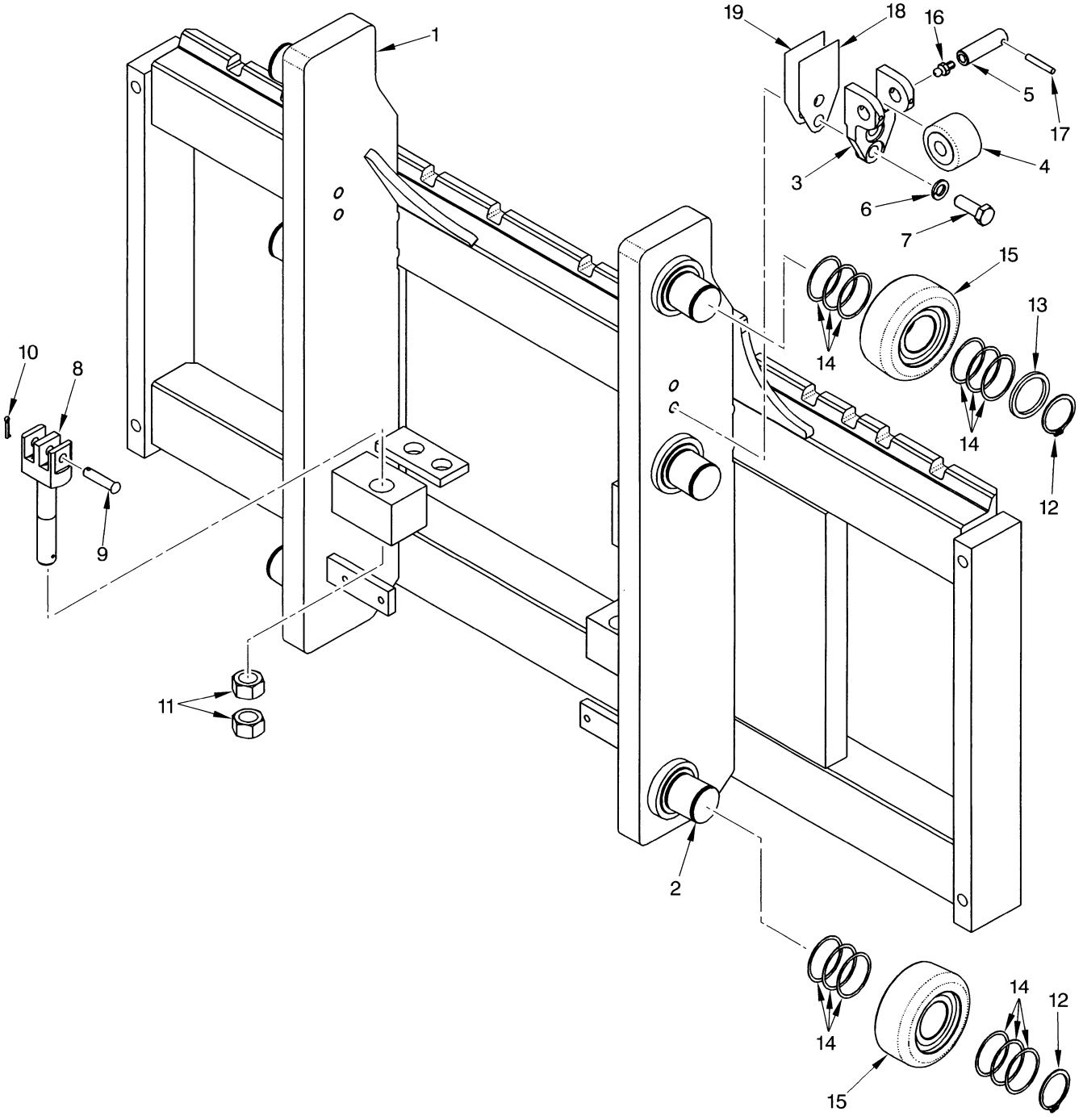



©2004 HYSTER COMPANY

# CARRIAGE
## TWO STAGE LIMITED FREE-LIFT

**KEY:**
**A: H70-90XM**
**B: H100-120XM**

| ITEM | | PART NO. | DESCRIPTION | QTY A | QTY B |
|---|---|---|---|---|---|
| | | 2035667 | Carriage Assembly (48 in.) | 1 | .. |
| | | 2035669 | Carriage Assembly (60 in.) | 1 | .. |
| | | 2035672 | Carriage Assembly (60 in.) | .. | 1 |
| 1 | | 1388092 | Frame (48 in.) | 1 | .. |
| 1 | | 1388094 | Frame (60 in.) | 1 | .. |
| 1 | | 1387448 | Frame (60 in.) | .. | 1 |
| 2 | | 1500744 | Stub Shaft | 6 | 6 |
| 3 | **a** | 1465177 | Bracket | .. | 2 |
| 4 | **a** | 1387993 | Roller | .. | 2 |
| 5 | **a** | 1465028 | Pin | .. | 2 |
| 6 | **a** | 292683 | Lockwasher | .. | 4 |
| 7 | **a** | 292528 | Capscrew | .. | 4 |
| 8 | | 1387285 | Chain Anchor | 2 | .. |
| 8 | | 1387286 | Chain Anchor | .. | 2 |
| 9 | | 327591 | Pin (Anchor) | 2 | .. |
| 9 | | 339932 | Pin (Anchor) | .. | 2 |
| 10 | | 15222 | Cotter Pin | 2 | 2 |
| 11 | | 221717 | Nut | 4 | 4 |
| 12 | | 1465072 | Snap Ring | 6 | 6 |
| 13 | | 1399224 | Spacer | 2 | 2 |
| 14 | | 1399207 | Shim (0.020 in.) | AR | AR |
| 15 | **b** | 1511882 | Load Roller ("A") | 6 | 6 |
| 15 | **b** | 1511883 | Load Roller ("B") (0,26 mm) | 6 | 6 |
| 15 | **b** | 1511884 | Load Roller ("C") (1,52 mm) | 6 | 6 |
| 16 | **a** | 16001 | Lube Fitting | .. | 2 |
| 17 | **a** | 66333 | Pin | .. | 2 |
| 18 | **a** | 192425 | Shim (0.062 in.) | .. | AR |
| 19 | **a** | 192424 | Shim (0.030 in.) | .. | AR |

**FOOTNOTES:**
**a** Attachment Carriage (H90XM, 100XM)
**b** Letter Located on Inside Surface of Load Roller

©2004 HYSTER COMPANY

# HEADER HOSE (Figure 10-6)
## TWO STAGE LIMITED FREE-LIFT

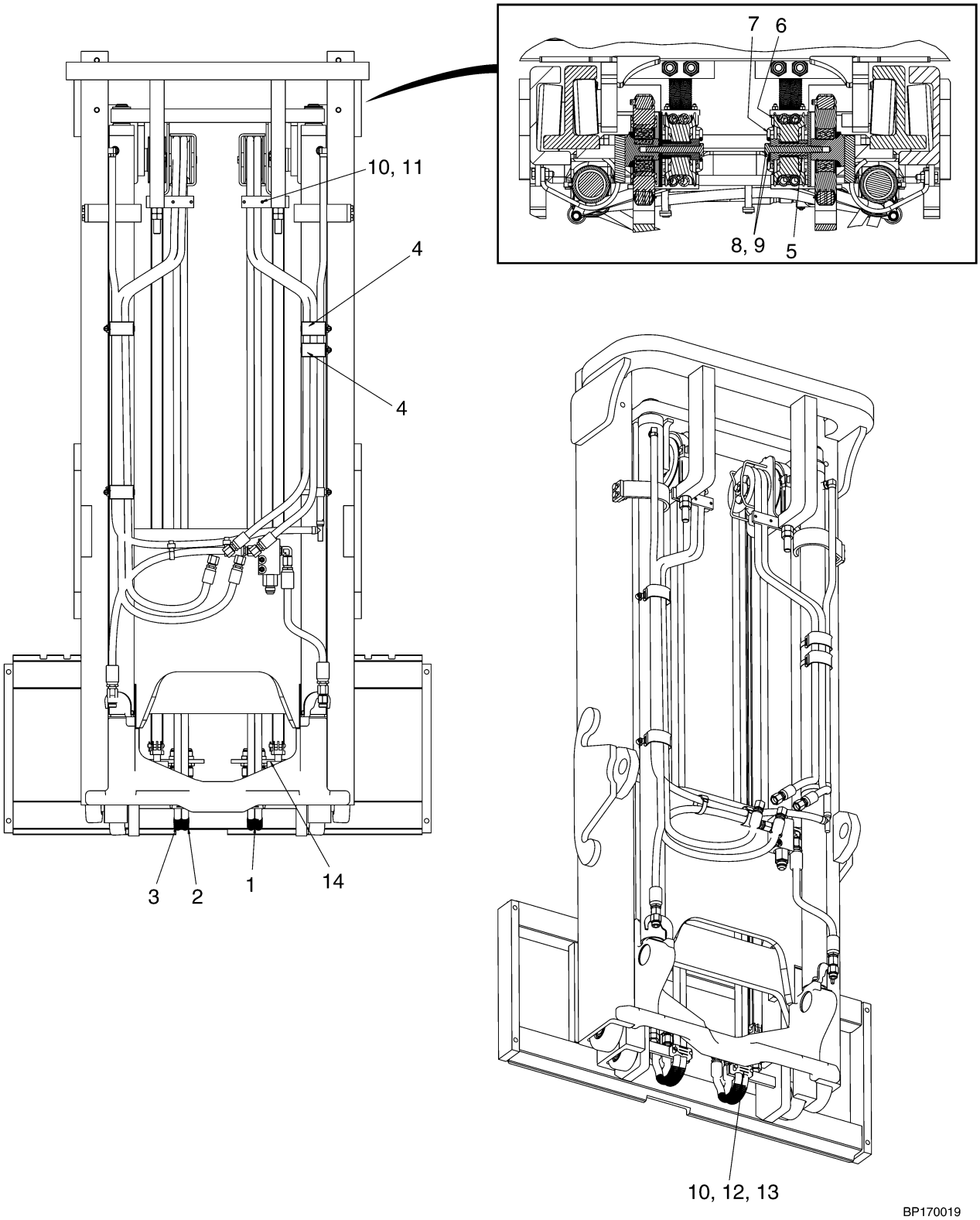



©2004 HYSTER COMPANY

# HEADER HOSE
## TWO STAGE LIMITED FREE-LIFT

### H100-120XM (THREE AND FOUR FUNCTION)

| ITEM | DESCRIPTION 1 2 3 4 | LIFT HEIGHT TO BOTTOM OF FORKS | | | | |
|---|---|---|---|---|---|---|
| | | 2790 mm (109.8 in.) | 3390 mm (133.5 in.) | 3990 mm (157.1 in.) | 4190 mm (165.0 in.) | 6890 mm (271.3 in.) |
| | Mast Group Number | A750 2790 | A750 3390 | A750 3990 | A750 4190 | A750 6890 |
| 1 | Hose | 1506889 | 1506895 | 1506901 | 1506903 | 1506930 |
| 2 | Hose (RH) | 1506932 | 1506937 | 1506943 | 1506945 | 1506972 |
| 3 | Hose (LH) | 1506894 | 1506900 | 1506906 | 1506908 | 1506977 |

### H70-90XM (THREE AND FOUR FUNCTION)

| ITEM | DESCRIPTION 1 2 3 4 | LIFT HEIGHT TO BOTTOM OF FORKS | | | | |
|---|---|---|---|---|---|---|
| | | 3050 mm (120.1 in.) | 3650 mm (143.7 in.) | 4150 mm (163.4 in.) | 4250 mm (167.3 in.) | 7150 mm (281.5 in.) |
| | Mast Group Number | A749 3050 | A749 3650 | A749 4150 | A749 4250 | A749 7150 |
| 1 | Hose | 1506889 | 1506895 | 1506900 | 1506901 | 1506930 |
| 2 | Hose (RH) | 1506932 | 1506937 | 1506942 | 1506943 | 1506972 |
| 3 | Hose (LH) | 1506894 | 1506900 | 1506905 | 1506906 | 1506977 |

**KEY:**
**A: Three Function**
**B: Four Function**

| ITEM | | PART NO. | DESCRIPTION | QTY A | QTY B |
|---|---|---|---|---|---|
| 1 | **a** | . . . . . | Hose | 2 | 2 |
| 2 | **a** | . . . . . | Hose (RH) | .. | 1 |
| 3 | **a** | . . . . . | Hose (LH) | .. | 1 |
| 4 | | 1465489 | Clamp | 2 | 4 |
| 5 | | 1477578 | Spacer | 1 | 2 |
| 6 | | 1495279 | Sheave | 1 | 2 |
| 7 | | 1477570 | Stubshaft | 1 | 2 |
| 8 | | 292683 | Lockwasher | 1 | 2 |
| 9 | | 292538 | Capscrew | 1 | 2 |
| 10 | | 2035791 | Clamp | 2 | 4 |
| 11 | | 292503 | Capscrew | 2 | 4 |
| 12 | | 287844 | Capscrew | 2 | 4 |
| 13 | | 313805 | Nut | 4 | 8 |
| 14 | | 16448 | Fitting | 2 | 4 |

**FOOTNOTES:**
**a** Refer to Table

©2004 HYSTER COMPANY

# NOTES

# 11 MAST-TWO STAGE FULL FREE-LIFT

# SECTION 11
# MAST-TWO STAGE FULL FREE-LIFT

**DESCRIPTION** **PAGE**

CARRIAGE
TWO STAGE FULL FREE-LIFT ..... 11-18
FREE-LIFT CYLINDER
TWO STAGE FULL FREE-LIFT ..... 11-14
HEADER HOSE
TWO STAGE FULL FREE-LIFT ..... 11-20
INNER MAST AND FREE LIFT
TWO STAGE FULL FREE-LIFT ..... 11-6
MAIN LIFT CYLINDERS
TWO STAGE FULL FREE-LIFT ..... 11-10
OUTER MAST AND MAIN LIFT
TWO STAGE FULL FREE-LIFT ..... 11-2

©2004 HYSTER COMPANY

# OUTER MAST AND MAIN LIFT (Figure 11-1)
## TWO STAGE FULL FREE-LIFT

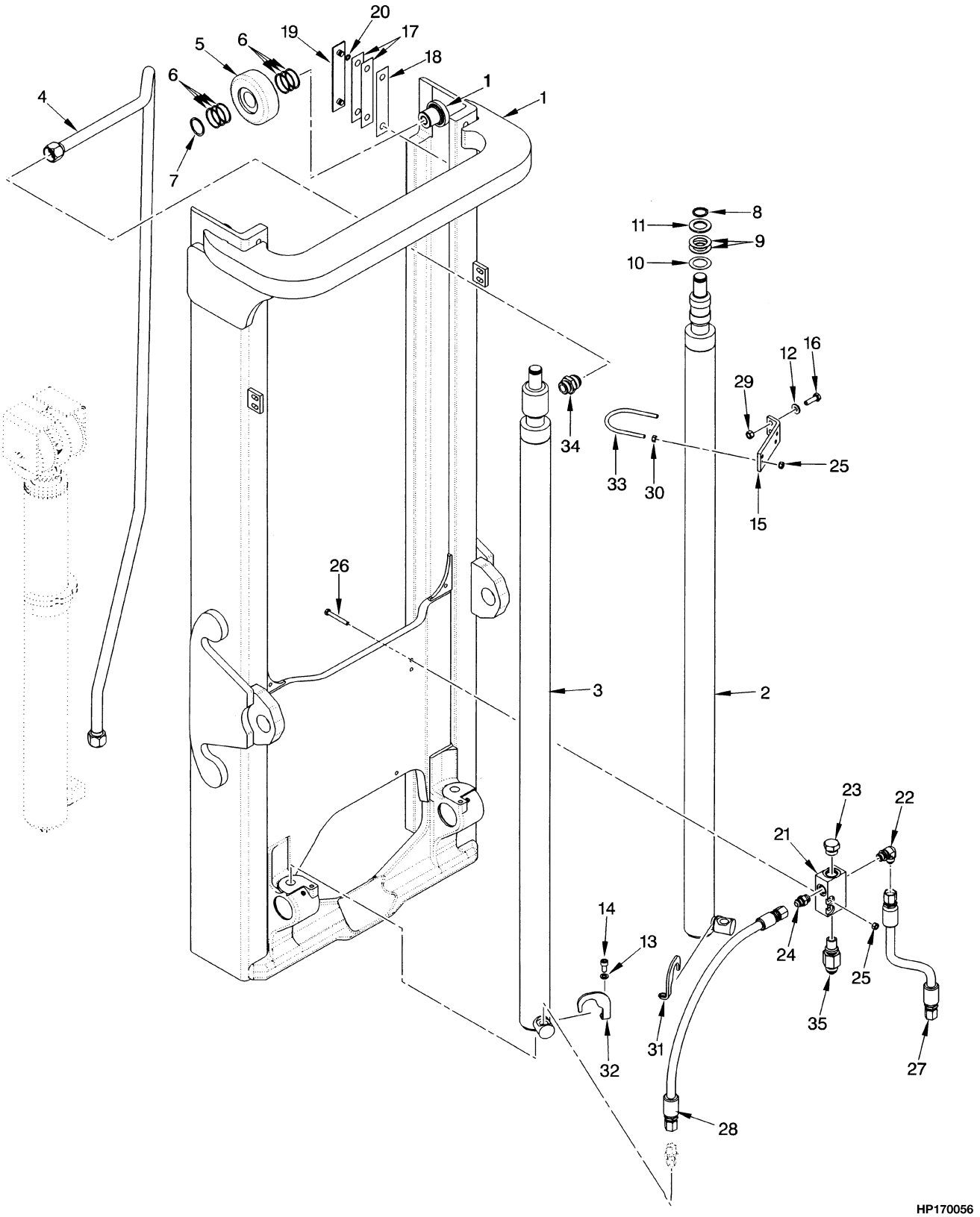



©2004 HYSTER COMPANY

# OUTER MAST AND MAIN LIFT
## TWO STAGE FULL FREE-LIFT

**H100-120XM**

| ITEM | DESCRIPTION 1 2 3 4 | LIFT HEIGHT TO BOTTOM OF FORKS | | | |
|---|---|---|---|---|---|
| | | 2790 mm (109.8 in.) | 3390 mm (133.5 in.) | 3990 mm (157.1 in.) | 5090 mm (200.4 in.) |
| | Mast Group Number | A754 2790 | A754 3390 | A754 3990 | A754 5090 |
| 1 | Outer Mast | 1465940 | 1465946 | 1465952 | 1465963 |
| 4 | Tube | 1467651 | 1467657 | 1467663 | 1467674 |

**H70-90XM**

| ITEM | DESCRIPTION 1 2 3 4 | LIFT HEIGHT TO BOTTOM OF FORKS | | | |
|---|---|---|---|---|---|
| | | 3050 mm (120.1 in.) | 3650 mm (143.7 in.) | 4250 mm (167.3 in.) | 5350 mm (210.6 in.) |
| | Mast Group Number | A753 3050 | A753 3650 | A753 4250 | A753 5350 |
| 1 | Outer Mast | 1465940 | 1465946 | 1465952 | 1465963 |
| 4 | Tube | 1467651 | 1467657 | 1467663 | 1467674 |

**KEY:**
**A: H70-90XM**
**B: H100-120XM**

| ITEM | | PART NO. | DESCRIPTION | QTY A | QTY B |
|---|---|---|---|---|---|
| 1 | a | . . . . . | Outer Mast | 1 | 1 |
| 1 | | 1500744 | Stub Shaft | 2 | 2 |
| 2 | | . . . . . | Main Cylinder (RH) (☞ Figure 11-3) | 1 | 1 |
| 3 | | . . . . . | Main Cylinder (LH) (☞ Figure 11-3) | 1 | 1 |
| 4 | a | . . . . . | Tube | 1 | 1 |
| 5 | | 1399204 | Load Roller | 2 | 2 |
| 6 | | 126765 | Shim (0.020 in.) | 12 | 12 |
| 7 | | 1465072 | Snap Ring | 2 | 2 |
| 8 | | 304523 | Snap Ring | 2 | 2 |
| 9 | | 1325120 | Shim (0.70 in.) | AR | AR |
| 10 | | 142247 | Shim (0.049 in.) | AR | AR |
| 11 | | 332061 | Washer | 2 | 2 |
| 12 | | 320160 | Washer | 4 | 4 |
| 13 | | 292682 | Lockwasher | 2 | 2 |
| 14 | | 296024 | Capscrew | 2 | 2 |
| 15 | | 1474399 | Bracket | 2 | 2 |
| 16 | | 287860 | Capscrew | 4 | 4 |
| 17 | | 161273 | Shim (0.020 in.) | AR | AR |
| 18 | | 161272 | Shim (0.007 in.) | AR | AR |
| 19 | | 104264 | Bearing Strip | 2 | 2 |
| 20 | | 104506 | O-Ring | 4 | 4 |
| 21 | | 1388019 | Housing (Control Valve) | 1 | 1 |
| 22 | | 16559 | Fitting | 1 | 1 |

©2004 HYSTER COMPANY

# OUTER MAST AND MAIN LIFT
## TWO STAGE FULL FREE-LIFT

| ITEM | PART NO. | DESCRIPTION | QTY A | QTY B |
|---|---|---|---|---|
| 22 | 16484 | O-Ring | 1 | 1 |
| 23 | 14603 | Fitting | 1 | 1 |
| 23 | 16486 | O-Ring | 1 | 1 |
| 24 | 16541 | Fitting | 1 | 1 |
| 24 | 16484 | O-Ring | 1 | 1 |
| 25 | 313828 | Nut | 6 | 6 |
| 26 | 292511 | Capscrew | 2 | 2 |
| 27 | 1387324 | Hose | 1 | 1 |
| 28 | 1387399 | Hose | 1 | 1 |
| 29 | 316826 | Nut | 4 | 4 |
| 30 | 239503 | Nut | 4 | 4 |
| 31 | 1389924 | Bracket (RH) | 1 | 1 |
| 32 | 1389922 | Bracket (LH) | 1 | 1 |
| 33 | 1389844 | U-Bolt | 2 | 2 |
| 34 | 1304349 | Fitting | 1 | 1 |
| 35 | 315262 | Control Valve (Lowering) | 1 | .. |
| 35 | 16982 | O-Ring | 1 | .. |
| 35 | 319891 | Control Valve (Lowering) | .. | 1 |
| 35 | 16982 | O-Ring | .. | 1 |

**FOOTNOTES:**
**a** Refer to Table


©2004 HYSTER COMPANY

# NOTES

# INNER MAST AND FREE LIFT (Figure 11-2)
## TWO STAGE FULL FREE-LIFT

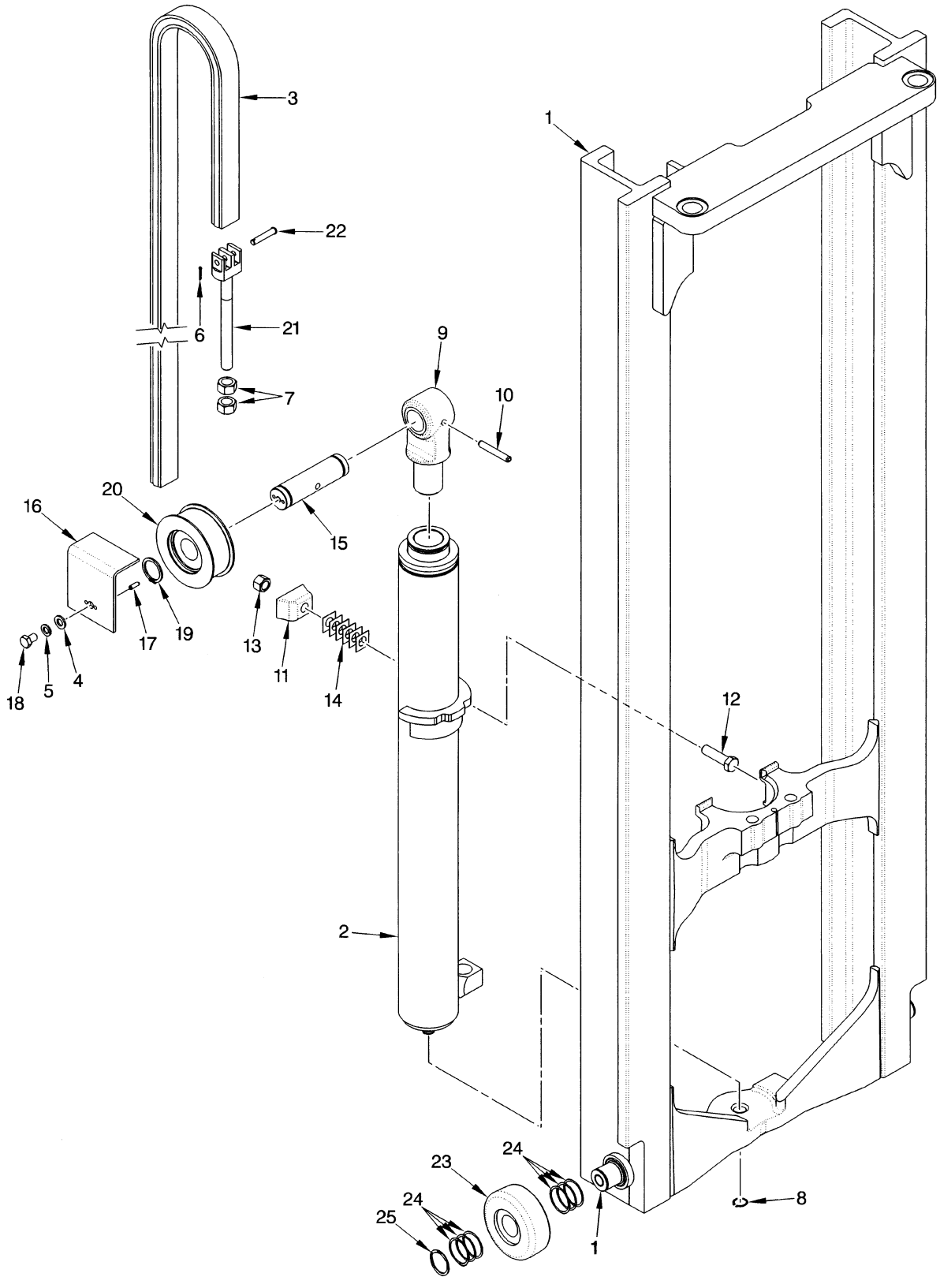



©2004 HYSTER COMPANY

# INNER MAST AND FREE LIFT
## TWO STAGE FULL FREE-LIFT

### H100-120XM

| ITEM | DESCRIPTION 1 2 3 4 | LIFT HEIGHT TO BOTTOM OF FORKS | | | |
|---|---|---|---|---|---|
| | | 2790 mm (109.8 in.) | 3390 mm (133.5 in.) | 3990 mm (157.1 in.) | 5090 mm (200.4 in.) |
| | Mast Group Number | A754 2790 | A754 3390 | A754 3990 | A754 5090 |
| 1 | Inner Mast | 1467081 | 1467087 | 1467093 | 1467104 |
| 3 | Chain | 337180 | 348827 | 366106 | 1395480 |

### H70-90XM

| ITEM | DESCRIPTION 1 2 3 4 | LIFT HEIGHT TO BOTTOM OF FORKS | | | |
|---|---|---|---|---|---|
| | | 3050 mm (120.1 in.) | 3650 mm (143.7 in.) | 4250 mm (167.3 in.) | 5350 mm (210.6 in.) |
| | Mast Group Number | A753 3050 | A753 3650 | A753 4250 | A753 5350 |
| 1 | Inner Mast | 1467081 | 1467087 | 1467093 | 1467104 |
| 3 | Chain | 337190 | 338646 | 347243 | 347247 |

| ITEM | | PART NO. | DESCRIPTION | QTY |
|---|---|---|---|---|
| 1 | **a** | . . . . . | Inner Mast | 1 |
| 1 | | 1500744 | Stub Shaft | 2 |
| 2 | | . . . . . | Free-Lift Cylinder (☞ Figure 11-4) | 1 |
| 3 | **a** | . . . . . | Chain | 1 |
| 4 | | 320161 | Washer | 2 |
| 5 | | 292683 | Lockwasher | 2 |
| 6 | | 15222 | Cotter Pin | 2 |
| 7 | | 221717 | Nut | 4 |
| 8 | | 58929 | Snap Ring | 1 |
| 9 | | 1389825 | Crosshead | 1 |
| 10 | | 302493 | Pin | 1 |
| 11 | | 2036756 | Clamp | 2 |
| 12 | | 292563 | Capscrew | 2 |
| 13 | | 316828 | Nut | 4 |
| 14 | | 1387584 | Shim | 12 |
| 15 | | 1387281 | Pin | 1 |
| 16 | | 1387519 | Guard | 2 |
| 17 | | 302472 | Pin | 2 |
| 18 | | 292526 | Capscrew | 2 |
| 19 | | 304527 | Snap Ring | 2 |
| 20 | | 1387743 | Chain Sheave | 2 |
| 21 | | 1331991 | Chain Anchor | 2 |
| 22 | | 339932 | Pin | 2 |
| 23 | | 1399204 | Load Roller | 2 |

©2004 HYSTER COMPANY

# INNER MAST AND FREE LIFT
## TWO STAGE FULL FREE-LIFT

| ITEM | PART NO. | DESCRIPTION | QTY |
|---|---|---|---|
| 24 | 126765 | Shim (0.020 in.) | 12 |
| 25 | 1465072 | Snap Ring | 2 |

**FOOTNOTES:**
**a** Refer to Table


©2004 HYSTER COMPANY

# NOTES

# MAIN LIFT CYLINDERS (Figure 11-3)
## TWO STAGE FULL FREE-LIFT

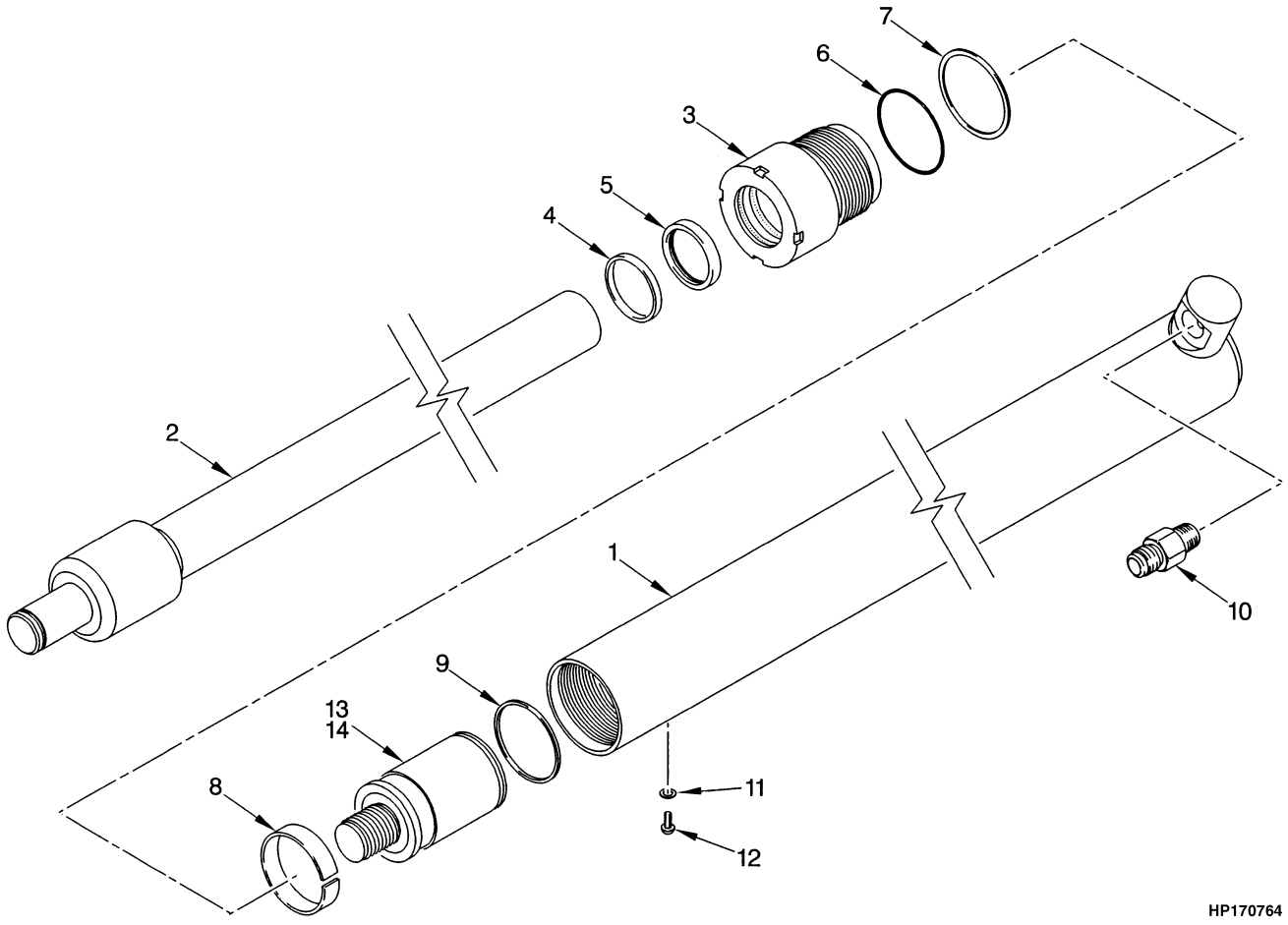



©2004 HYSTER COMPANY

# MAIN LIFT CYLINDERS
## TWO STAGE FULL FREE-LIFT

### H100-120XM LEFT HAND

| ITEM | DESCRIPTION 1 2 3 4 | LIFT HEIGHT TO BOTTOM OF FORKS | | | |
|---|---|---|---|---|---|
| | | 2790 mm (109.8 in.) | 3390 mm (133.5 in.) | 3990 mm (157.1 in.) | 5090 mm (200.4 in.) |
| | **Mast Group Number** | **A754 2790** | **A754 3390** | **A754 3990** | **A754 5090** |
| | **Cylinder Group Number** | **8502151** | **8502157** | **8502163** | **8502174** |
| | Lift Cylinder | 2038457 | 2038463 | 2038469 | 2038479 |
| 1 | Shell | 1380901 | 1380904 | 1380914 | 1380926 |
| 2 | Rod | 1400919 | 1400922 | 1400998 | 1495359 |

### H100-120XM RIGHT HAND

| ITEM | DESCRIPTION 1 2 3 4 | LIFT HEIGHT TO BOTTOM OF FORKS | | | |
|---|---|---|---|---|---|
| | | 2790 mm (109.8 in.) | 3390 mm (133.5 in.) | 3990 mm (157.1 in.) | 5090 mm (200.4 in.) |
| | **Mast Group Number** | **A754 2790** | **A754 3390** | **A754 3990** | **A754 5090** |
| | **Cylinder Group Number** | **8502101** | **8502107** | **8502113** | **8502124** |
| | Lift Cylinder | 2038415 | 2038421 | 2038427 | 2038438 |
| 1 | Shell | 1380901 | 1380904 | 1380914 | 1380926 |
| 2 | Rod | 1400913 | 1400916 | 1400997 | 1495347 |

### H70-90XM LEFT HAND

| ITEM | DESCRIPTION 1 2 3 4 | LIFT HEIGHT TO BOTTOM OF FORKS | | | |
|---|---|---|---|---|---|
| | | 3050 mm (120.1 in.) | 3650 mm (143.7 in.) | 4250 mm (167.3 in.) | 5350 mm (210.6 in.) |
| | **Mast Group Number** | **A753 3050** | **A753 3650** | **A753 4250** | **A753 5350** |
| | **Cylinder Group Number** | **8605751** | **8605757** | **8605763** | **8605774** |
| | Lift Cylinder | 2038359 | 2038365 | 2038370 | 2038375 |
| 1 | Shell | 1380901 | 1380904 | 1380914 | 1380926 |
| 2 | Rod | 1400907 | 1400910 | 1400928 | 1400976 |

©2004 HYSTER COMPANY

# MAIN LIFT CYLINDERS
## TWO STAGE FULL FREE-LIFT

### H70-90XM RIGHT HAND

| ITEM | DESCRIPTION 1 2 3 4 | LIFT HEIGHT TO BOTTOM OF FORKS | | | |
|---|---|---|---|---|---|
| | | 3050 mm (120.1 in.) | 3650 mm (143.7 in.) | 4250 mm (167.3 in.) | 5350 mm (210.6 in.) |
| | **Mast Group Number** | **A753 3050** | **A753 3650** | **A753 4250** | **A753 5350** |
| | **Cylinder Group Number** | **8605701** | **8605707** | **8605713** | **8605724** |
| | Lift Cylinder | 2038289 | 2038314 | 2038318 | 2038339 |
| 1 | Shell | 1380901 | 1380904 | 1380914 | 1380926 |
| 2 | Rod | 1400901 | 1400904 | 1400927 | 1400975 |

**KEY:**
**A: H70-90XM**
**B: H100-120XM**

| ITEM | | PART NO. | DESCRIPTION | QTY A | QTY B |
|---|---|---|---|---|---|
| | **a** | . . . . . | Lift Cylinder | 1 | 1 |
| 1 | **a** | . . . . . | Shell | 1 | 1 |
| 2 | **a** | . . . . . | Rod | 1 | 1 |
| 3 | | 1310376 | Retainer | 1 | .. |
| 3 | | 1310377 | Retainer | .. | 1 |
| 4 | | 1310370 | Rod Wiper Ring | 1 | .. |
| 4 | | 1310371 | Wiper Ring | .. | 1 |
| 5 | | 1310373 | Rod Seal | 1 | .. |
| 5 | | 1310374 | Oil Seal | .. | 1 |
| 6 | | 198518 | O-Ring | 1 | 1 |
| 7 | | 166659 | Back-Up Ring | 1 | 1 |
| 8 | | 2038675 | Wear Ring | 1 | 1 |
| 9 | | 1379063 | Piston Ring | 1 | 1 |
| 10 | | 2041965 | Velocity Fuse (RH) | 1 | .. |
| 10 | | 2035787 | Velocity Fuse (RH) | .. | 1 |
| 11 | | 190887 | Seal | 1 | 1 |
| 12 | | 295649 | Screw | 1 | 1 |
| 13 | | 1381055 | Piston (RH) | 1 | 1 |
| 13 | | 1381056 | Piston (LH) | 1 | 1 |
| 14 | | 264134 | Sealant | AR | AR |
| | | 2038676 | Seal Kit (Includes Items 4-8) | 1 | .. |
| | | 2038679 | Seal Kit (Includes Items 4-8) | .. | 1 |

**FOOTNOTES:**
**a** Refer to Table


©2004 HYSTER COMPANY

# NOTES

# FREE-LIFT CYLINDER (Figure 11-4)
## TWO STAGE FULL FREE-LIFT

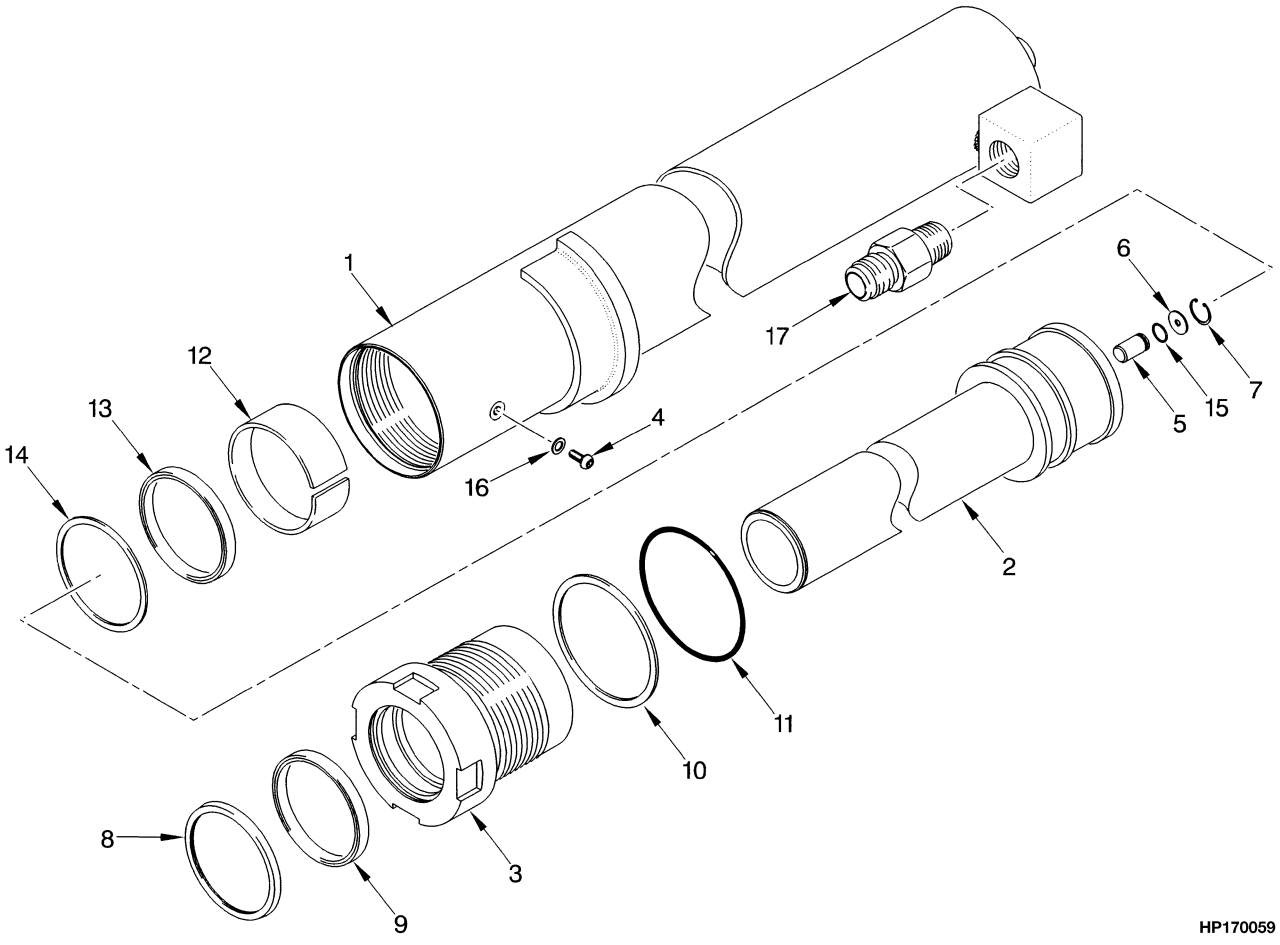



©2004 HYSTER COMPANY

# FREE-LIFT CYLINDER
## TWO STAGE FULL FREE-LIFT

**H100-120XM**

| ITEM | DESCRIPTION 1 2 3 4 | LIFT HEIGHT TO BOTTOM OF FORKS | | | |
|---|---|---|---|---|---|
| | | 2790 mm (109.8 in.) | 3390 mm (133.5 in.) | 3990 mm (157.1 in.) | 5090 mm (200.4 in.) |
| | **Mast Group Number** | **A754 2790** | **A754 3390** | **A754 3990** | **A754 5090** |
| | **Cylinder Group Number** | **8520951** | **8520956** | **8520961** | **8520976** |
| | Lift Cylinder | 2062748 | 2062115 | 2062120 | 2062135 |
| 1 | Shell | 2065887 | 2065888 | 2066423 | 2066424 |
| 2 | Rod | 2062074 | 2062079 | 2062084 | 2062099 |

**H70-90XM**

| ITEM | DESCRIPTION 1 2 3 4 | LIFT HEIGHT TO BOTTOM OF FORKS | | | |
|---|---|---|---|---|---|
| | | 3050 mm (120.1 in.) | 3650 mm (143.7 in.) | 4250 mm (167.3 in.) | 5350 mm (210.6 in.) |
| | **Mast Group Number** | **A753 3050** | **A753 3650** | **A753 4250** | **A753 5350** |
| | **Cylinder Group Number** | **8605501** | **8605506** | **8605511** | **8605522** |
| | Lift Cylinder | 2036440 | 2036442 | 2036444 | 2058799 |
| 1 | Shell | 2037868 | 2037872 | 2037875 | 2059140 |
| 2 | Rod | 2037833 | 2037837 | 2037840 | 2059157 |

**KEY:**
**A: H70-90XM**
**B: H100-120XM**

| ITEM | | PART NO. | DESCRIPTION | QTY A | QTY B |
|---|---|---|---|---|---|
| | **a** | . . . . . | Lift Cylinder | 1 | 1 |
| 1 | **a** | . . . . . | Shell | 1 | 1 |
| 2 | **a** | . . . . . | Rod | 1 | 1 |
| 3 | | 2036282 | Gland | 1 | .. |
| 3 | | 1541640 | Gland | .. | 1 |
| 4 | | 1361302 | Screw | 1 | 1 |
| 5 | | 257913 | Check Valve | 1 | 1 |
| 6 | | 297531 | Washer | 1 | 1 |
| 6 | | 637635 | Washer (Optional) | 1 | 1 |
| 7 | | 187388 | Snap Ring | 1 | 1 |
| 8 | | 2034274 | Wiper Ring | 1 | 1 |
| 9 | | 637161 | Rod Seal | 1 | 1 |
| 10 | | 164632 | Back-Up Ring | 1 | .. |
| 10 | | 615145 | Back-Up Ring | .. | 1 |
| 11 | | 15885 | O-Ring | .. | 1 |
| 11 | | 46629 | O-Ring | 1 | .. |
| 12 | | 636950 | Wear Ring | 1 | .. |

©2004 HYSTER COMPANY

# FREE-LIFT CYLINDER
## TWO STAGE FULL FREE-LIFT

| ITEM | PART NO. | DESCRIPTION | QTY A | QTY B |
|---|---|---|---|---|
| 12 | 1380982 | Wear Ring | .. | 1 |
| 13 | 637162 | Seal | 1 | .. |
| 13 | 364059 | Seal | .. | 1 |
| 14 | 638293 | Back-Up Ring | 1 | .. |
| 14 | 1381074 | Back-Up Ring | .. | 1 |
| 15 | 39348 | O-Ring | 1 | 1 |
| 16 | 190887 | Seal | 1 | 1 |
| 17 | 2038982 | Velocity Fuse | 1 | .. |
| 17 | 2038981 | Velocity Fuse | .. | 1 |
| | 2036279 | Seal Kit (Includes Items 8-16) | 1 | .. |
| | 2065889 | Seal Kit (Includes Items 8-16) | .. | 1 |

**FOOTNOTES:**
**a** Refer to Table


©2004 HYSTER COMPANY

# NOTES

# CARRIAGE (Figure 11-5)
## TWO STAGE FULL FREE-LIFT

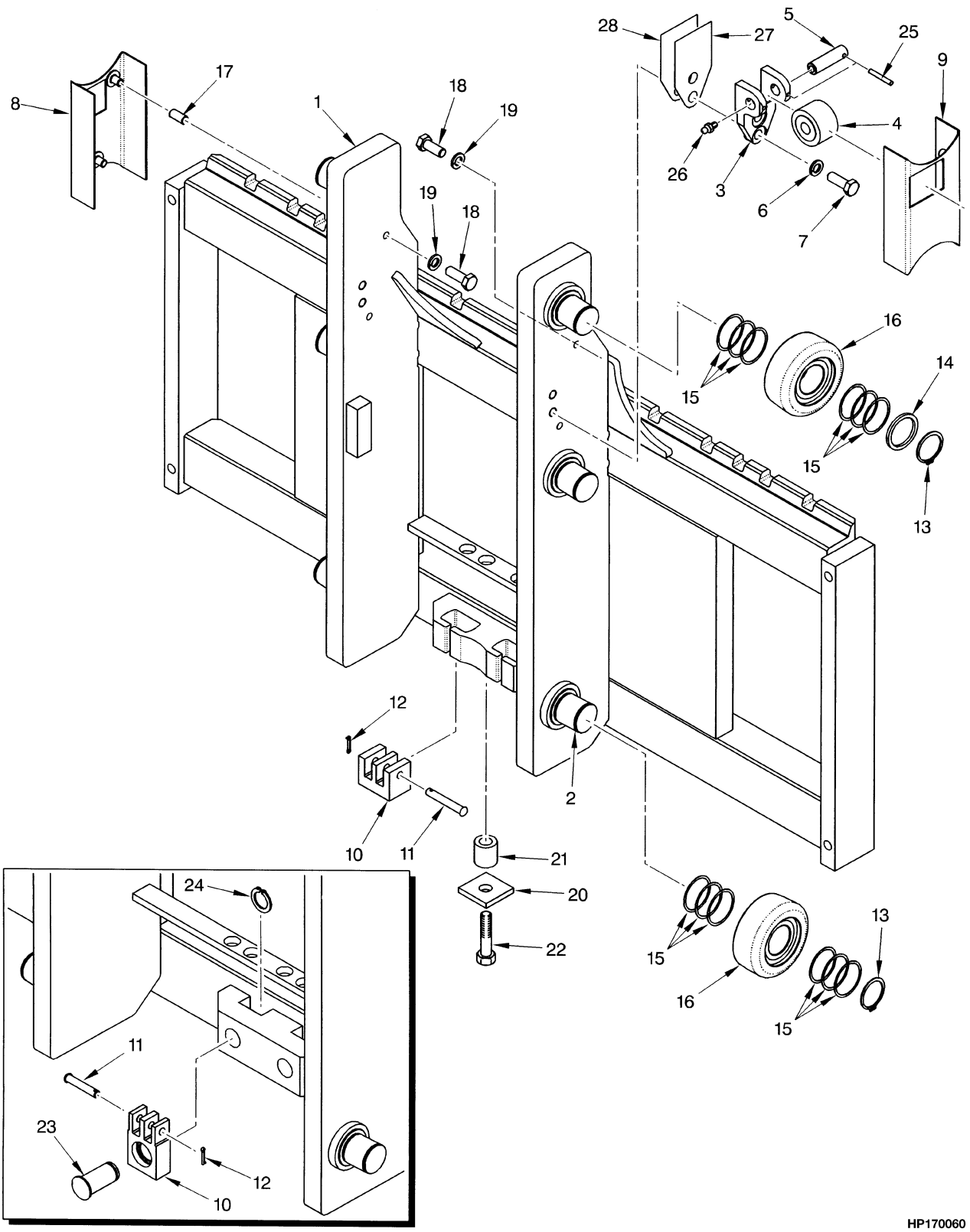



©2004 HYSTER COMPANY

# CARRIAGE
## TWO STAGE FULL FREE-LIFT

**KEY:**
**A: H70-90XM**
**B: H90-100XM**
**C: H100-120XM**

| ITEM | PART NO. | DESCRIPTION | QTY A | QTY B | QTY C |
|---|---|---|---|---|---|
| | 2038558 | Carriage (48 in.) | 1 | .. | .. |
| | 2038565 | Carriage (54 in.) | .. | 1 | .. |
| | 2038564 | Carriage (54 in.) | .. | .. | 1 |
| 1 | 1394984 | Frame (48 in.) | 1 | .. | .. |
| 1 | 1465885 | Frame (54 in.) | .. | 1 | .. |
| 1 | 1394992 | Frame (54 in.) | .. | .. | 1 |
| 2 | 1500744 | Stub Shaft | 6 | 6 | 6 |
| 3 | 1465177 | Bracket | 2 | 2 | 2 |
| 4 | 1387993 | Roller | 2 | 2 | 2 |
| 5 | 1465028 | Pin | 2 | 2 | 2 |
| 6 | 292683 | Lockwasher | 4 | 4 | 4 |
| 7 | 292528 | Capscrew | 4 | 4 | 4 |
| 8 | 319323 | Guard (LH) (LH) | 1 | 1 | 1 |
| 9 | 319322 | Guard (RH) (RH) | 1 | 1 | 1 |
| 10 | 1387548 | Chain Anchor | 2 | .. | .. |
| 10 | 341558 | Chain Anchor | .. | 2 | 2 |
| 11 | 1387549 | Pin (Anchor) | 2 | .. | .. |
| 11 | 339932 | Pin (Anchor) | .. | 2 | .. |
| 12 | 15222 | Cotter Pin | 2 | 2 | 2 |
| 13 | 1465072 | Snap Ring | 6 | 6 | 6 |
| 14 | 1399224 | Spacer | 2 | 2 | 2 |
| 15 | 126765 | Shim (0.020 in.) | AR | AR | AR |
| 16 | 1511883 | Load Roller | 6 | 6 | 6 |
| 17 | 317292 | Spacer | 4 | 4 | 4 |
| 18 | 18518 | Capscrew | 4 | 4 | 4 |
| 19 | 15155 | Lockwasher | 4 | 4 | 4 |
| 20 | 1400126 | Plate | 1 | .. | .. |
| 21 | 1400125 | Spacer | 1 | .. | .. |
| 22 | 292508 | Capscrew | 1 | .. | .. |
| 23 | 320327 | Pin | .. | 2 | 2 |
| 24 | 131358 | Snap Ring | .. | 2 | 2 |
| 25 | 66333 | Pin | .. | 2 | .. |
| 26 | 16001 | Lube Fitting | .. | 2 | .. |
| 27 | 192425 | Shim (0.062 in.) | .. | AR | .. |
| 28 | 192424 | Shim (0.030 in.) | .. | AR | .. |

©2004 HYSTER COMPANY

# HEADER HOSE (Figure 11-6)
## TWO STAGE FULL FREE-LIFT

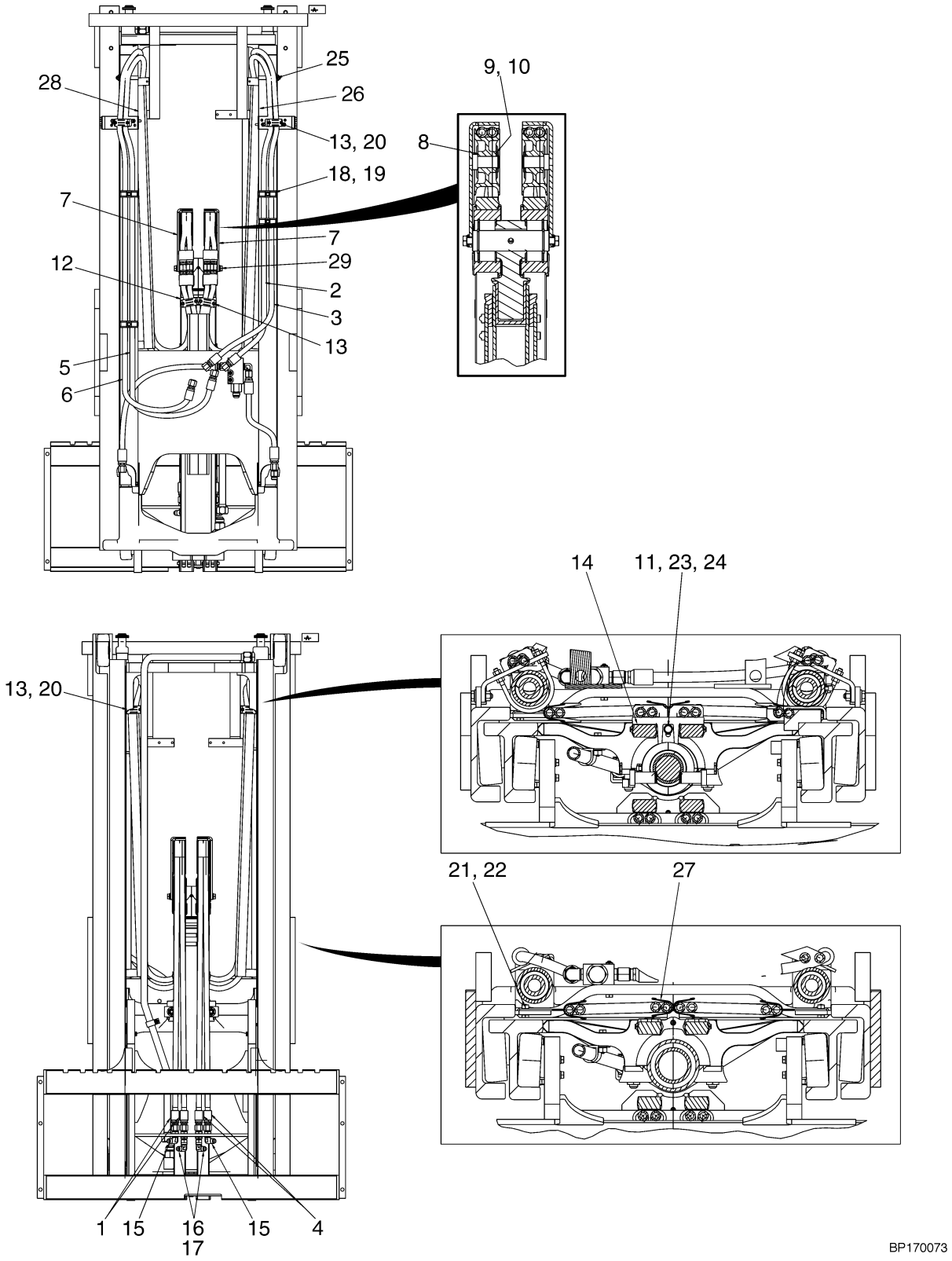



©2004 HYSTER COMPANY

# HEADER HOSE
## TWO STAGE FULL FREE-LIFT

### H100-120XM (FOUR FUNCTION)

| ITEM | DESCRIPTION 1 2 3 4 | LIFT HEIGHT TO BOTTOM OF FORKS | | | |
|---|---|---|---|---|---|
| | | 2790 mm (109.8 in.) | 3390 mm (133.5 in.) | 3990 mm (157.1 in.) | 5090 mm (200.4 in.) |
| | Mast Group Number | A754 2790 | A754 3390 | A754 3990 | A754 5090 |
| 4 | Hose | 1484276 | 1484283 | 1484289 | 1484300 |
| 5 | Hose | 1484454 | 1484460 | 1484466 | 1484477 |
| 6 | Hose | 1475834 | 1475840 | 1475846 | 1475859 |
| 28 | Channel | 1474125 | 1474131 | 1474137 | 1474148 |

### H100-120XM (THREE FUNCTION)

| ITEM | DESCRIPTION 1 2 3 4 | LIFT HEIGHT TO BOTTOM OF FORKS | | | |
|---|---|---|---|---|---|
| | | 2790 mm (109.8 in.) | 3390 mm (133.5 in.) | 3990 mm (157.1 in.) | 5090 mm (200.4 in.) |
| | Mast Group Number | A754 2790 | A754 3390 | A754 3990 | A754 5090 |
| 1 | Hose | 1484276 | 1484283 | 1484289 | 1484300 |
| 2 | Hose | 1483938 | 1483944 | 1483950 | 1483961 |
| 3 | Hose | 1475789 | 1475795 | 1475801 | 1475814 |
| 26 | Channel | 1474101 | 1474107 | 1474113 | 1474124 |
| 27 | Channel (Free-Lift) | 1474048 | 1474054 | 1474060 | 1474071 |

### H70-90XM (FOUR FUNCTION)

| ITEM | DESCRIPTION 1 2 3 4 | LIFT HEIGHT TO BOTTOM OF FORKS | | | |
|---|---|---|---|---|---|
| | | 3050 mm (120.1 in.) | 3650 mm (143.7 in.) | 4250 mm (167.3 in.) | 5350 mm (210.6 in.) |
| | Mast Group Number | A753 3050 | A753 3650 | A753 4250 | A753 5350 |
| 4 | Hose | 1484277 | 1483993 | 1483999 | 1484009 |
| 5 | Hose | 1484522 | 1484528 | 1484534 | 1484545 |
| 6 | Hose | 1475833 | 1475839 | 1475845 | 1483958 |
| 28 | Channel | 1474125 | 1474131 | 1474137 | 1474148 |

©2004 HYSTER COMPANY

# HEADER HOSE
## TWO STAGE FULL FREE-LIFT
### H70-90XM (THREE FUNCTION)

| ITEM | DESCRIPTION 1 2 3 4 | LIFT HEIGHT TO BOTTOM OF FORKS | | | |
|---|---|---|---|---|---|
| | | 3050 mm (120.1 in.) | 3650 mm (143.7 in.) | 4250 mm (167.3 in.) | 5350 mm (210.6 in.) |
| | Mast Group Number | A753 3050 | A753 3650 | A753 4250 | A753 5350 |
| 1 | Hose | 1484277 | 1483993 | 1483999 | 1484009 |
| 2 | Hose | 1475787 | 1484498 | 1484504 | 1484515 |
| 3 | Hose | 1475788 | 1475794 | 1475800 | 1475813 |
| 26 | Channel | 1474101 | 1474107 | 1474113 | 1474124 |
| 27 | Channel (Free-Lift) | 1474051 | 1474057 | 1474063 | 1474074 |

**KEY:**
**A: Three Function**
**B: Four Function**

| ITEM | | PART NO. | DESCRIPTION | QTY A | QTY B |
|---|---|---|---|---|---|
| 1 | **a** | . . . . . | Hose | 2 | .. |
| 2 | **a** | . . . . . | Hose | 1 | .. |
| 3 | **a** | . . . . . | Hose | 1 | .. |
| 4 | **a** | . . . . . | Hose | .. | 2 |
| 5 | **a** | . . . . . | Hose | .. | 1 |
| 6 | **a** | . . . . . | Hose | .. | 1 |
| 7 | | 1541242 | Bracket (RH) | 1 | .. |
| 7 | | 1541243 | Bracket (LH) | 1 | 1 |
| 8 | | 1495279 | Sheave | 1 | 2 |
| 9 | | 320171 | Washer | 1 | 2 |
| 10 | | 58902 | Snap Ring | 1 | 2 |
| 11 | | 320157 | Washer | 1 | 2 |
| 12 | | 1399243 | Clamp | 2 | 2 |
| 13 | | 2035791 | Clamp | 3 | 6 |
| 13 | | 293797 | Capscrew | 2 | 4 |
| 14 | | 1466925 | Bracket (H70-90XM) | 1 | 1 |
| 14 | | 1477080 | Bracket (H100-120XM) | 1 | 1 |
| 15 | | 16458 | Fitting | 1 | 2 |
| 16 | | 16448 | Fitting | 1 | 2 |
| 17 | | 16989 | Fitting | 1 | 2 |
| 18 | | 1465489 | Clamp | 4 | 8 |
| 19 | | 115696 | Clamp | 2 | 4 |
| 20 | | 293796 | Capscrew | 4 | 8 |
| 21 | | 136681 | Capscrew | 1 | 2 |
| 22 | | 313828 | Nut | 1 | 2 |
| 23 | | 136749 | Capscrew | 1 | 1 |
| 24 | | 292681 | Lockwasher | 1 | 1 |
| 25 | | 112989 | Clamp | 1 | .. |
| 26 | **a** | . . . . . | Channel | 1 | .. |
| 27 | **a** | . . . . . | Channel (Free-Lift) | 1 | 1 |


©2004 HYSTER COMPANY

# HEADER HOSE
## TWO STAGE FULL FREE-LIFT

| ITEM | | PART NO. | DESCRIPTION | QTY A | QTY B |
|---|---|---|---|---|---|
| 28 | **a** | . . . . . | Channel | .. | 1 |
| 29 | | 302472 | Pin | 1 | 2 |

**FOOTNOTES:**
**a** Refer to Table

©2004 HYSTER COMPANY

# NOTES

# 12 MAST-THREE STAGE FULL FREE-LIFT

# SECTION 12
# MAST-THREE STAGE FULL FREE-LIFT

**DESCRIPTION** **PAGE**

CARRIAGE
THREE STAGE FULL FREE-LIFT ..... 12-30
FREE-LIFT
THREE STAGE FULL FREE-LIFT ..... 12-18
FREE-LIFT CYLINDER
THREE STAGE FULL FREE-LIFT ..... 12-26
HEADER HOSE
THREE STAGE FULL FREE-LIFT ..... 12-32
INNER MAST
THREE STAGE FULL FREE-LIFT ..... 12-10
INTERMEDIATE MAST
THREE STAGE FULL FREE-LIFT ..... 12-6
MAIN LIFT
THREE STAGE FULL FREE-LIFT ..... 12-14
MAIN LIFT CYLINDERS
THREE STAGE FULL FREE-LIFT ..... 12-22
OUTER MAST
THREE STAGE FULL FREE-LIFT ..... 12-2

©2004 HYSTER COMPANY

# OUTER MAST (Figure 12-1)
## THREE STAGE FULL FREE-LIFT

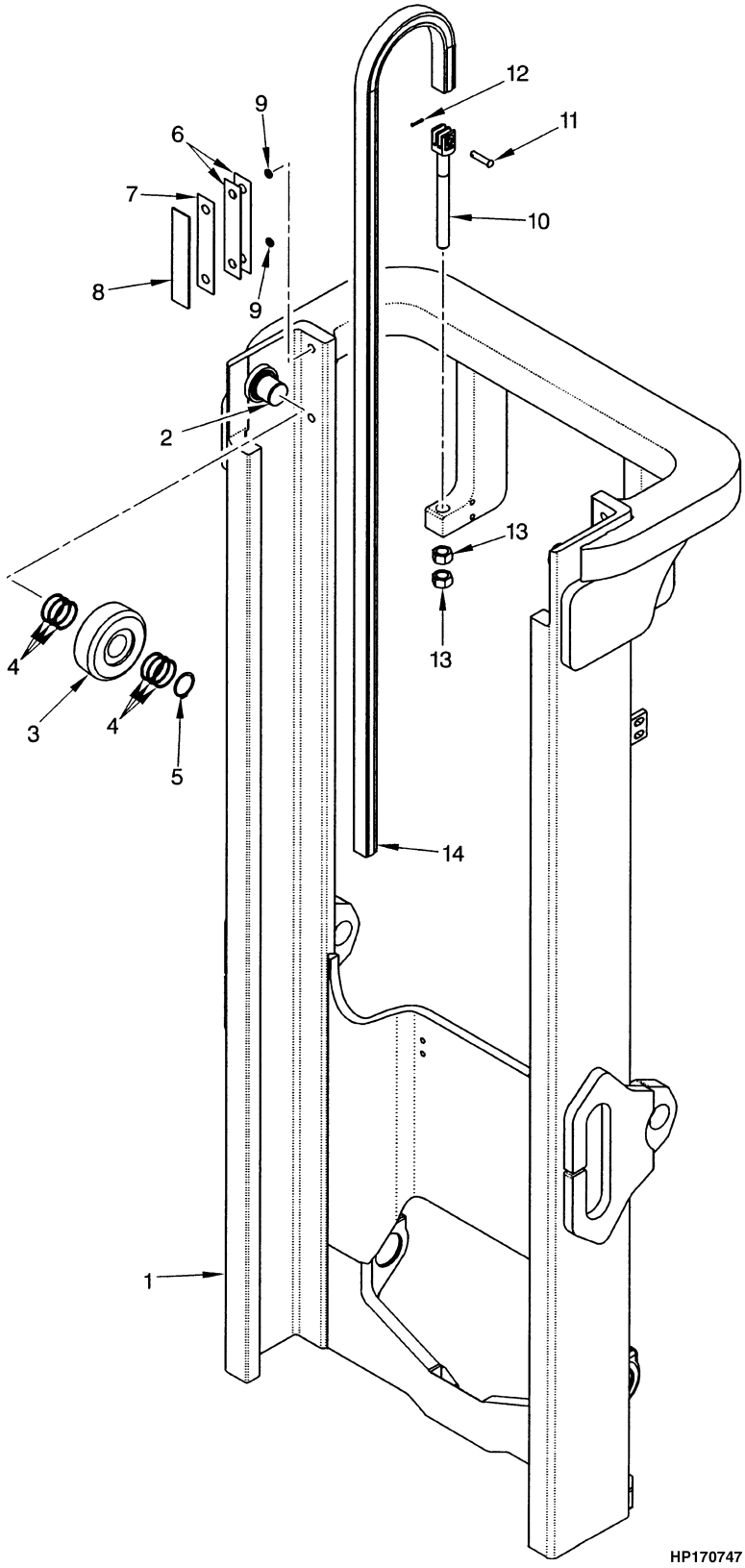



©2004 HYSTER COMPANY

# OUTER MAST
## THREE STAGE FULL FREE-LIFT

### H100-120XM

| ITEM | DESCRIPTION 1 2 3 4 | LIFT HEIGHT TO BOTTOM OF FORKS | | | |
|---|---|---|---|---|---|
| | | 4087 mm (160.9 in.) | 4387 mm (172.7 in.) | 4640 mm (182.7 in.) | 4940 mm (194.5 in.) |
| | Mast Group Number | A752 4087 | A752 4387 | A752 4640 | A752 4940 |
| 1 | Outer Mast | 1395851 | 1395853 | 1395854 | 1395856 |
| 14 | Chain (Main) | 280878 | 338647 | 152404 | 339934 |

### H100-120XM (CONT.)

| ITEM | DESCRIPTION 1 2 3 4 | LIFT HEIGHT TO BOTTOM OF FORKS | | |
|---|---|---|---|---|
| | | 5090 mm (200.4 in.) | 5240 mm (206.3 in.) | 6965 mm (274.2 in.) |
| | Mast Group Number | A752 5090 | A752 5240 | A752 6965 |
| 1 | Outer Mast | 1395857 | 1395858 | 1395872 |
| 14 | Chain (Main) | 348149 | 356916 | 1395487 |

### H70-90XM

| ITEM | DESCRIPTION 1 2 3 4 | LIFT HEIGHT TO BOTTOM OF FORKS | | | |
|---|---|---|---|---|---|
| | | 4365 mm (171.9 in.) | 4665 mm (183.7 in.) | 4900 mm (192.9 in.) | 5200 mm (204.7 in.) |
| | Mast Group Number | A751 4365 | A751 4665 | A751 4900 | A751 5200 |
| 1 | Outer Mast | 1395851 | 1395853 | 1395854 | 1395856 |
| 14 | Chain (Main) | 191081 | 182342 | 194607 | 191085 |

### H70-90XM (CONT.)

| ITEM | DESCRIPTION 1 2 3 4 | LIFT HEIGHT TO BOTTOM OF FORKS | | |
|---|---|---|---|---|
| | | 5350 mm (210.6 in.) | 5500 mm (216.5 in.) | 7825 mm (308.1 in.) |
| | Mast Group Number | A751 5350 | A751 5500 | A751 7825 |
| 1 | Outer Mast | 1395857 | 1395858 | 1395876 |
| 14 | Chain (Main) | 243976 | 191072 | 1395449 |

©2004 HYSTER COMPANY

# OUTER MAST
## THREE STAGE FULL FREE-LIFT

**KEY:**
**A: H70-90XM**
**B: H100-120XM**

| ITEM | | PART NO. | DESCRIPTION | QTY A | QTY B |
|---|---|---|---|---|---|
| 1 | **a** | . . . . . | Outer Mast | 1 | 1 |
| 2 | | 1399236 | Stubshaft | 2 | 2 |
| 3 | | 1399203 | Load Roller | 2 | 2 |
| 3 | | 1399204 | Load Roller | 2 | 2 |
| 3 | | 1399205 | Load Roller | 2 | 2 |
| 4 | | 1399207 | Shim (0.020 in.) | 12 | 12 |
| 5 | | 1465072 | Snap Ring | 2 | 2 |
| 6 | | 161273 | Shim (0.020 in.) | AR | AR |
| 7 | | 161272 | Shim (0.007 in.) | AR | AR |
| 8 | | 104264 | Bearing Strip | 2 | 2 |
| 9 | | 104506 | O-Ring | 4 | 4 |
| 10 | | 1331990 | Chain Anchor | 2 | .. |
| 10 | | 1331991 | Chain Anchor | .. | 2 |
| 11 | | 327591 | Pin (Anchor) | 2 | .. |
| 11 | | 339932 | Pin (Anchor) | .. | 2 |
| 12 | | 15222 | Cotter Pin | 2 | 2 |
| 13 | | 221717 | Nut | 4 | 4 |
| 14 | **a** | . . . . . | Chain (Main) | 2 | 2 |

**FOOTNOTES:**
**a** Refer to Table


©2004 HYSTER COMPANY

# NOTES

# INTERMEDIATE MAST (Figure 12-2)
## THREE STAGE FULL FREE-LIFT

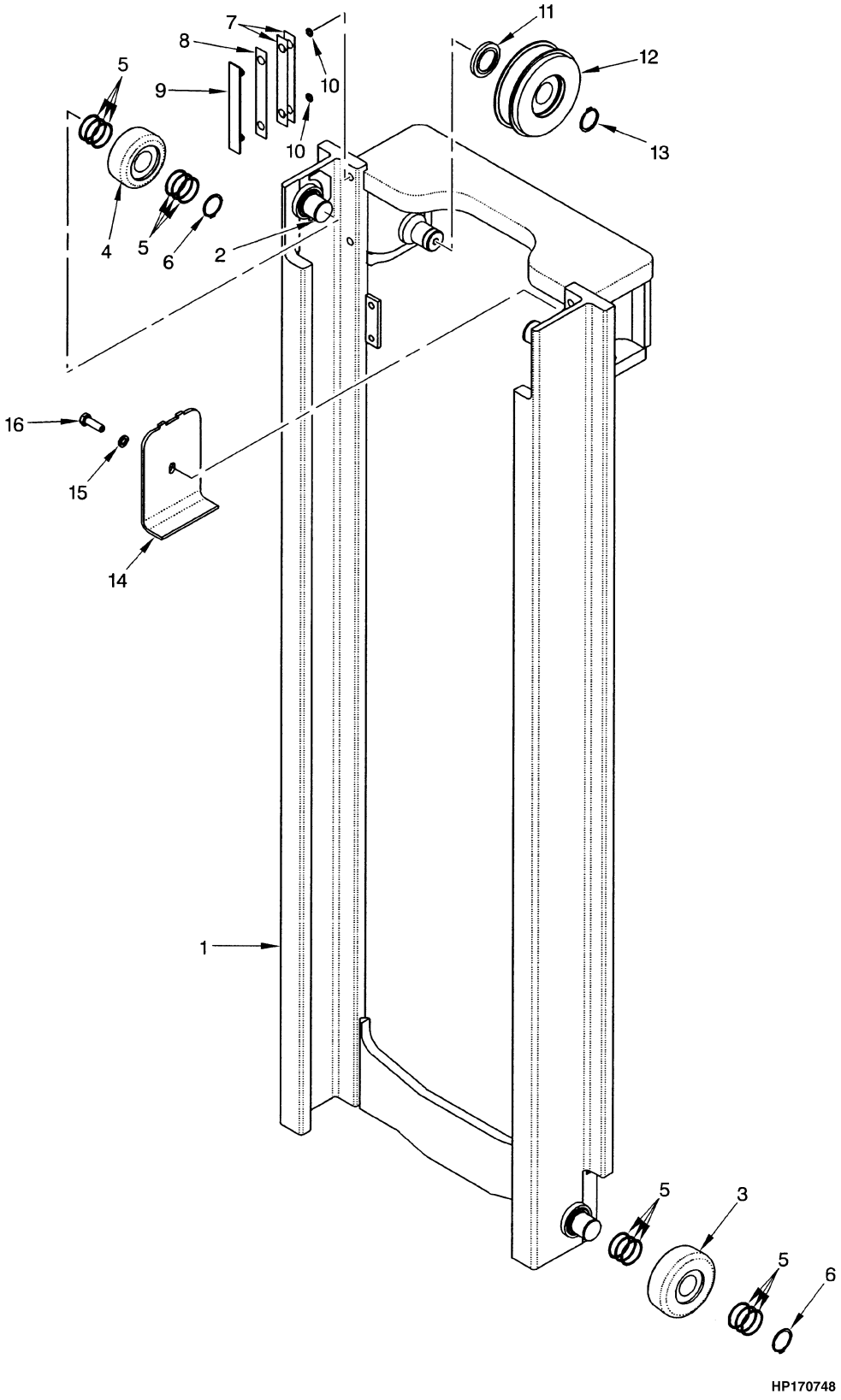



©2004 HYSTER COMPANY

# INTERMEDIATE MAST
## THREE STAGE FULL FREE-LIFT

### H100-120XM

| ITEM | DESCRIPTION 1 2 3 4 | LIFT HEIGHT TO BOTTOM OF FORKS | | | |
|---|---|---|---|---|---|
| | | 4087 mm (160.9 in.) | 4387 mm (172.7 in.) | 4640 mm (182.7 in.) | 4940 mm (194.5 in.) |
| | Mast Group Number | A752 4087 | A752 4387 | A752 4640 | A752 4940 |
| 1 | Intermediate Mast | 1395877 | 1395879 | 1395880 | 1395882 |

### H100-120XM (CONT.)

| ITEM | DESCRIPTION 1 2 3 4 | LIFT HEIGHT TO BOTTOM OF FORKS | | |
|---|---|---|---|---|
| | | 5090 mm (200.4 in.) | 5240 mm (206.3 in.) | 6965 mm (274.2 in.) |
| | Mast Group Number | A752 5090 | A752 5240 | A752 6965 |
| 1 | Intermediate Mast | 1395883 | 1395884 | 1395898 |

### H70-90XM

| ITEM | DESCRIPTION 1 2 3 4 | LIFT HEIGHT TO BOTTOM OF FORKS | | | |
|---|---|---|---|---|---|
| | | 4365 mm (171.9 in.) | 4665 mm (183.7 in.) | 4900 mm (192.9 in.) | 5200 mm (204.7 in.) |
| | Mast Group Number | A751 4365 | A751 4665 | A751 4900 | A751 5200 |
| 1 | Intermediate Mast | 1395877 | 1395879 | 1395880 | 1395882 |

### H70-90XM (CONT.)

| ITEM | DESCRIPTION 1 2 3 4 | LIFT HEIGHT TO BOTTOM OF FORKS | | |
|---|---|---|---|---|
| | | 5350 mm (210.6 in.) | 5500 mm (216.5 in.) | 5950 mm (234.3 in.) |
| | Mast Group Number | A751 5350 | A751 5500 | A751 5950 |
| 1 | Intermediate Mast | 1395883 | 1395884 | 1395902 |

**KEY:**
**A: H3.50XM, H4.00XM, H4.00XMS**
**B: H4.00XM, H4.50XM, H5.00XM, H5.50XM**

| ITEM | PART NO. | DESCRIPTION | QTY A | QTY B |
|---|---|---|---|---|
| 1 | **a** . . . . . | Intermediate Mast | 1 | 1 |
| 2 | 1500744 | Stub Shaft | 4 | 4 |
| 3 | 1399204 | Load Roller | 2 | 2 |
| 4 | 1511883 | Load Roller | 2 | 2 |
| 5 | 126765 | Shim (0.020 in.) | 24 | 24 |
| 6 | 1465072 | Snap Ring | 4 | 4 |

©2004 HYSTER COMPANY

# INTERMEDIATE MAST
## THREE STAGE FULL FREE-LIFT

| ITEM | PART NO. | DESCRIPTION | QTY A | QTY B |
|---|---|---|---|---|
| 7 | 131716 | Shim (0.020 in.) | AR | AR |
| 8 | 131715 | Shim (0.007 in.) | AR | AR |
| 9 | 215211 | Bearing Strip | 2 | 2 |
| 10 | 104506 | O-Ring | 4 | 4 |
| 11 | 1389846 | Spacer | 2 | 2 |
| 12 | 1389780 | Chain Sheave | 2 | .. |
| 12 | 1389779 | Chain Sheave | .. | 2 |
| 13 | 12891 | Snap Ring | 2 | 2 |
| 14 | 1389959 | Bracket (Chain Guard) | 1 | 1 |
| 15 | 292683 | Lockwasher | 1 | 1 |
| 16 | 246001 | Capscrew | 1 | 1 |

**FOOTNOTES:**
**a** Refer to Table


©2004 HYSTER COMPANY

# NOTES

# INNER MAST (Figure 12-3)
## THREE STAGE FULL FREE-LIFT

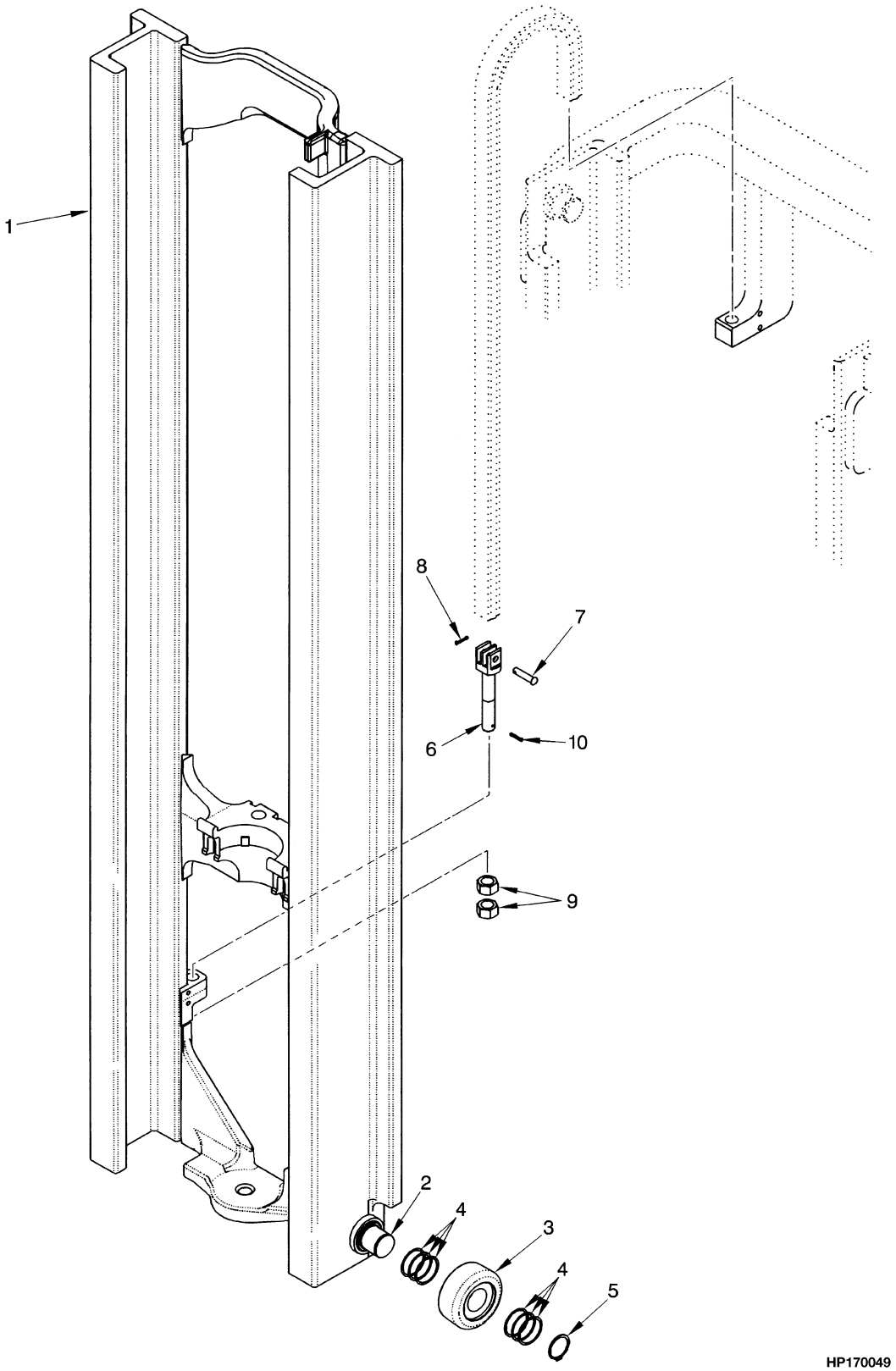



©2004 HYSTER COMPANY

# INNER MAST
## THREE STAGE FULL FREE-LIFT

### H100-120XM

| ITEM | DESCRIPTION 1 2 3 4 | LIFT HEIGHT TO BOTTOM OF FORKS | | | |
|---|---|---|---|---|---|
| | | 4087 mm (160.9 in.) | 4387 mm (172.7 in.) | 4640 mm (182.7 in.) | 4940 mm (194.5 in.) |
| | Mast Group Number | A752 4087 | A752 4387 | A752 4640 | A752 4940 |
| 1 | Inner Mast | 1395903 | 1395905 | 1395906 | 1395908 |

### H100-120XM (CONT.)

| ITEM | DESCRIPTION 1 2 3 4 | LIFT HEIGHT TO BOTTOM OF FORKS | | |
|---|---|---|---|---|
| | | 5090 mm (200.4 in.) | 5240 mm (206.3 in.) | 6965 mm (274.2 in.) |
| | Mast Group Number | A752 5090 | A752 5240 | A752 6965 |
| 1 | Inner Mast | 1395909 | 1395910 | 1395924 |

### H70-90XM

| ITEM | DESCRIPTION 1 2 3 4 | LIFT HEIGHT TO BOTTOM OF FORKS | | | |
|---|---|---|---|---|---|
| | | 4365 mm (171.9 in.) | 4665 mm (183.7 in.) | 4900 mm (192.9 in.) | 5200 mm (204.7 in.) |
| | Mast Group Number | A751 4365 | A751 4665 | A751 4900 | A751 5200 |
| 1 | Inner Mast | 1395903 | 1395905 | 1395906 | 1395908 |

### H70-90XM (CONT.)

| ITEM | DESCRIPTION 1 2 3 4 | LIFT HEIGHT TO BOTTOM OF FORKS | | |
|---|---|---|---|---|
| | | 5350 mm (210.6 in.) | 5500 mm (216.5 in.) | 7825 mm (308.1 in.) |
| | Mast Group Number | A751 5350 | A751 5500 | A751 7825 |
| 1 | Inner Mast | 1395909 | 1395910 | 1395928 |

**KEY:**
**A: H70-90XM**
**B: H100-120XM**

| ITEM | PART NO. | DESCRIPTION | QTY A | QTY B |
|---|---|---|---|---|
| 1 | **a** . . . . . | Inner Mast | 1 | 1 |
| 2 | 1500744 | Stub Shaft | 2 | 2 |
| 3 | 1511882 | Load Roller | 2 | 2 |
| 3 | 1511883 | Load Roller | 2 | 2 |
| 3 | 1511884 | Load Roller | 2 | 2 |
| 4 | 1399207 | Shim (0.020 in.) | 12 | 12 |

©2004 HYSTER COMPANY

# INNER MAST
## THREE STAGE FULL FREE-LIFT

| ITEM | PART NO. | DESCRIPTION | QTY A | QTY B |
|---|---|---|---|---|
| 5 | 1465072 | Snap Ring | 2 | 2 |
| 6 | 1387285 | Chain Anchor | 2 | .. |
| 6 | 1387286 | Chain Anchor | .. | 2 |
| 7 | 327591 | Pin (Anchor) | 2 | .. |
| 7 | 339932 | Pin (Anchor) | .. | 2 |
| 8 | 15222 | Cotter Pin | 2 | 2 |
| 9 | 221717 | Nut | 4 | 4 |
| 10 | 15224 | Cotter Pin | 2 | 2 |

**FOOTNOTES:**
**a** Refer to Table


©2004 HYSTER COMPANY

# NOTES

# MAIN LIFT (Figure 12-4)
## THREE STAGE FULL FREE-LIFT

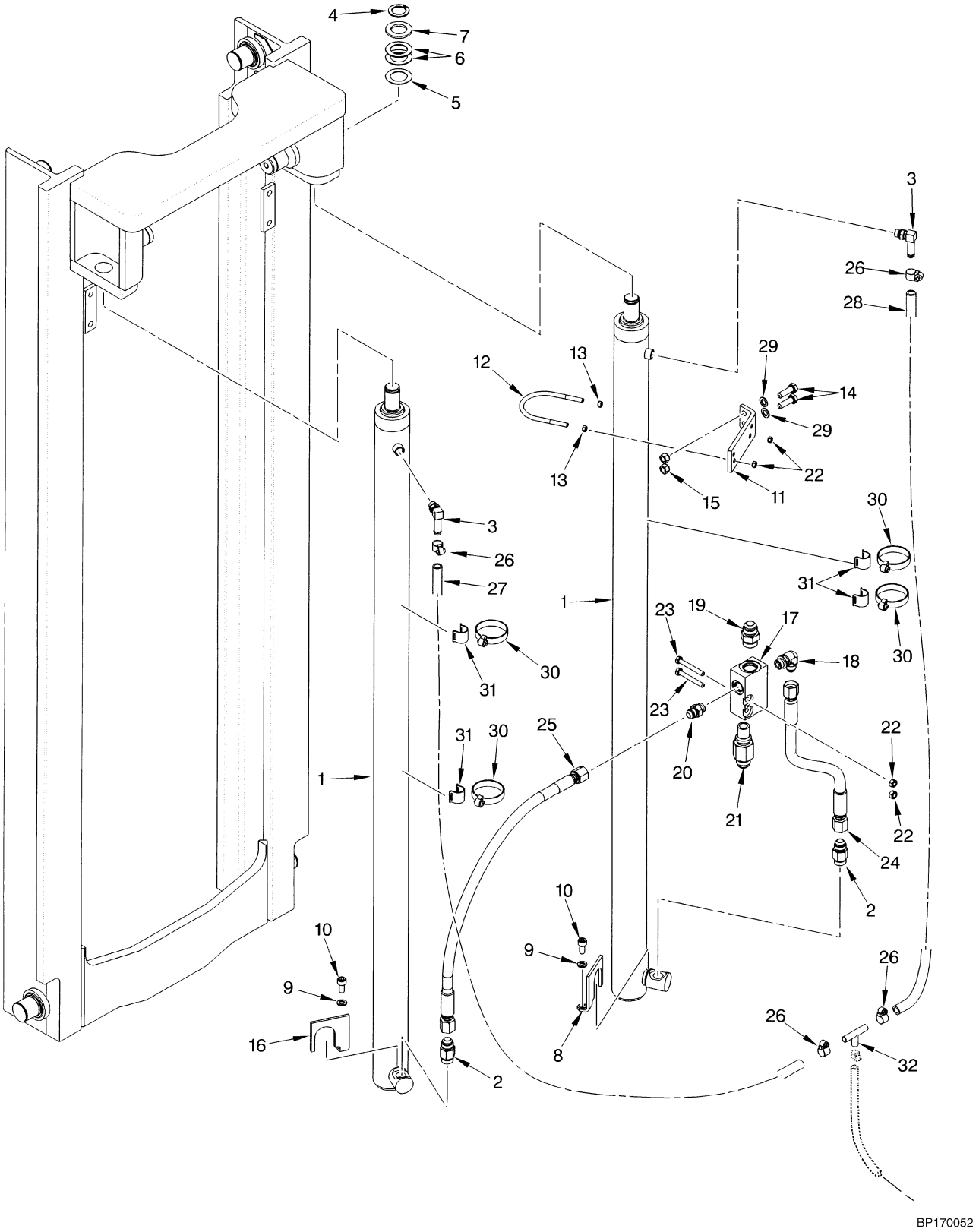



©2004 HYSTER COMPANY

# MAIN LIFT
## THREE STAGE FULL FREE-LIFT

### H100-120XM

| ITEM | DESCRIPTION 1 2 3 4 | LIFT HEIGHT TO BOTTOM OF FORKS | | | |
|---|---|---|---|---|---|
| | | 4087 mm (160.9 in.) | 4387 mm (172.7 in.) | 4640 mm (182.7 in.) | 4940 mm (194.5 in.) |
| | Mast Group Number | A752 4087 | A752 4387 | A752 4640 | A752 4940 |
| 27 | Hose (LH) | 1399090 | 1399094 | 1399096 | 1399100 |
| 28 | Hose (RH) | 1486838 | 980929 | 1474605 | 1399078 |

### H100-120XM (CONT.)

| ITEM | DESCRIPTION 1 2 3 4 | LIFT HEIGHT TO BOTTOM OF FORKS | | |
|---|---|---|---|---|
| | | 5090 mm (200.4 in.) | 5240 mm (206.3 in.) | 6965 mm (274.2 in.) |
| | Mast Group Number | A752 5090 | A752 5240 | A752 6965 |
| 27 | Hose (LH) | 1399102 | 1399104 | 1399136 |
| 28 | Hose (RH) | 1399080 | 1399082 | 1399114 |

### H70-90XM

| ITEM | DESCRIPTION 1 2 3 4 | LIFT HEIGHT TO BOTTOM OF FORKS | | | |
|---|---|---|---|---|---|
| | | 4365 mm (171.9 in.) | 4665 mm (183.7 in.) | 4900 mm (192.9 in.) | 5200 mm (204.7 in.) |
| | Mast Group Number | A751 4365 | A751 4665 | A751 4900 | A751 5200 |
| 27 | Hose (LH) | 1399092 | 1399096 | 1399099 | 1399103 |
| 28 | Hose (RH) | 127518 | 1474605 | 1399077 | 1399081 |

### H70-90XM (CONT.)

| ITEM | DESCRIPTION 1 2 3 4 | LIFT HEIGHT TO BOTTOM OF FORKS | | |
|---|---|---|---|---|
| | | 5350 mm (210.6 in.) | 5500 mm (216.5 in.) | 7825 mm (308.1 in.) |
| | Mast Group Number | A751 5350 | A751 5500 | A751 7825 |
| 27 | Hose (LH) | 1399105 | 1399107 | 1399146 |
| 28 | Hose (RH) | 1399083 | 1399085 | 1399124 |

©2004 HYSTER COMPANY

# MAIN LIFT
## THREE STAGE FULL FREE-LIFT

**KEY:**
**A: H70-90XM**
**B: H100-120XM**

| ITEM | | PART NO. | DESCRIPTION | QTY A | QTY B |
|---|---|---|---|---|---|
| 1 | | . . . . . | Main Cylinder (☞ Figure 12-6) | 2 | 2 |
| 2 | | 2036478 | Velocity Fuse | 2 | .. |
| 2 | | 2036857 | Velocity Fuse | .. | 2 |
| 3 | | 110178 | Fitting | 2 | 2 |
| 3 | | 16483 | O-Ring | 1 | 1 |
| 4 | | 304523 | Snap Ring | 2 | 2 |
| 5 | | 1325120 | Shim (0.70 in.) | AR | AR |
| 6 | | 142247 | Shim (0.049 in.) | AR | AR |
| 7 | | 332061 | Washer | 1 | 1 |
| 8 | | 1389924 | Bracket (RH) | 1 | 1 |
| 9 | | 292682 | Lockwasher | 2 | 2 |
| 10 | | 296024 | Capscrew | 2 | 2 |
| 11 | | 1474399 | Bracket | 2 | 2 |
| 12 | | 1389844 | U-Bolt | 2 | .. |
| 12 | | 1389845 | U-Bolt | .. | 2 |
| 13 | | 239503 | Nut | 4 | 4 |
| 14 | | 287860 | Capscrew | 4 | 4 |
| 15 | | 316826 | Nut | 4 | 4 |
| 16 | | 1389922 | Bracket (LH) | 1 | 1 |
| 17 | | 1388019 | Housing (Control Valve) | 1 | 1 |
| 18 | | 16559 | Fitting | 1 | 1 |
| 18 | | 16484 | O-Ring | 1 | 1 |
| 19 | | 16543 | Fitting | 1 | 1 |
| 19 | | 16486 | O-Ring | 1 | 1 |
| 20 | | 16541 | Fitting | 1 | 1 |
| 20 | | 16484 | O-Ring | 1 | 1 |
| 21 | | 315262 | Control Valve (Lowering) | 1 | .. |
| 21 | | 319891 | Control Valve (Lowering) | .. | 1 |
| 22 | | 313828 | Nut | 6 | 6 |
| 23 | | 292511 | Capscrew | 2 | 2 |
| 24 | | 1387324 | Hose | 1 | 1 |
| 25 | | 1387399 | Hose | 1 | 1 |
| 26 | | 379405 | Clamp | 4 | 4 |
| 27 | **a** | . . . . . | Hose (LH) | 1 | 1 |
| 28 | **a** | . . . . . | Hose (RH) | 1 | 1 |
| 29 | | 320160 | Washer | 4 | 4 |
| 30 | | 1465585 | Clamp | 4 | 4 |
| 31 | | 112989 | Clamp | 4 | .. |
| 31 | | 115696 | Clamp | .. | 4 |
| 32 | | 2046871 | Fitting | 1 | 1 |

**FOOTNOTES:**
**a** Refer to Table


©2004 HYSTER COMPANY

# NOTES

# FREE-LIFT (Figure 12-5)
## THREE STAGE FULL FREE-LIFT

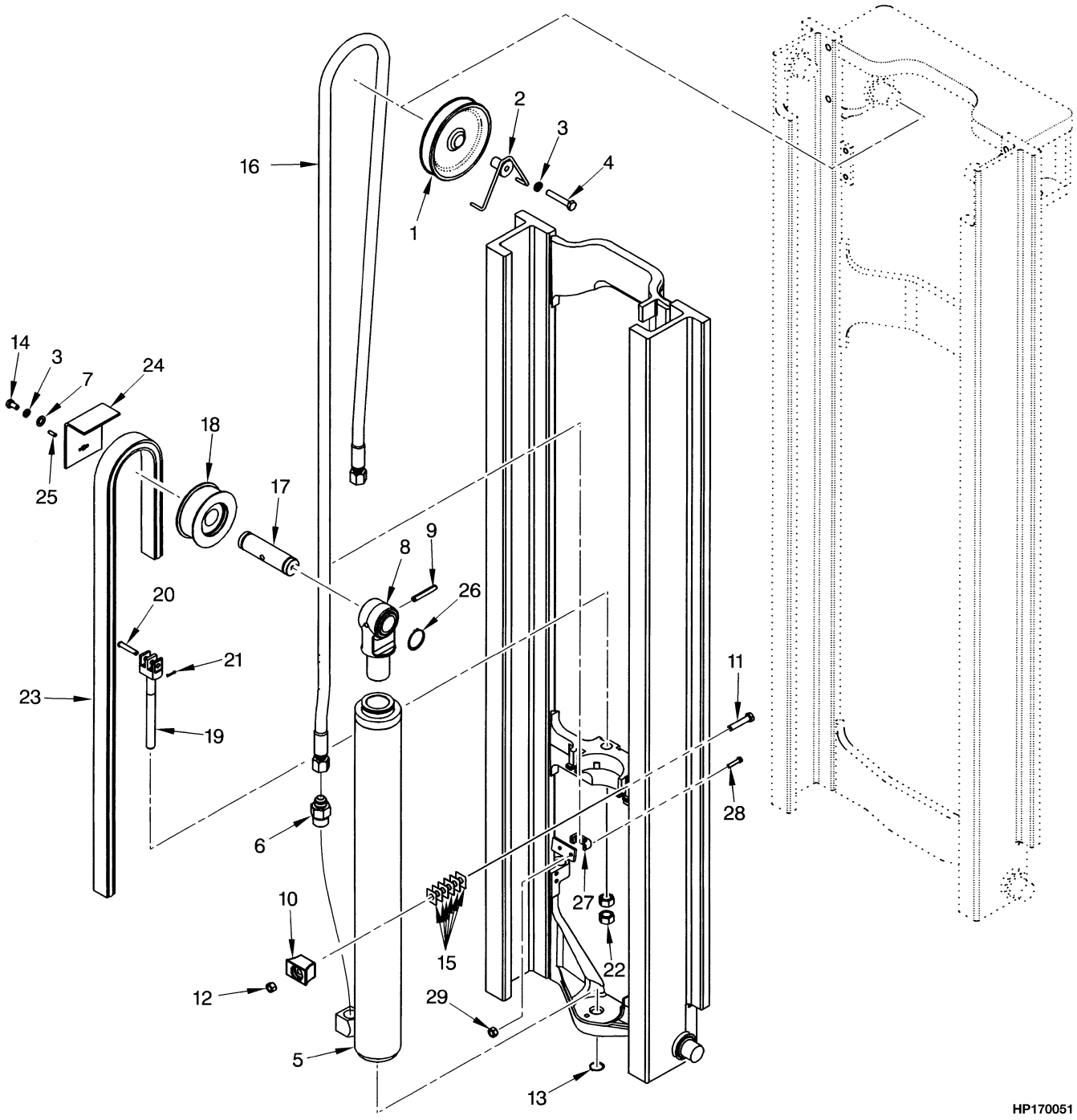



©2004 HYSTER COMPANY

# FREE-LIFT
## THREE STAGE FULL FREE-LIFT

### H100-120XM

| ITEM | DESCRIPTION 1 2 3 4 | LIFT HEIGHT TO BOTTOM OF FORKS | | | |
|---|---|---|---|---|---|
| | | 4087 mm (160.9 in.) | 4387 mm (172.7 in.) | 4640 mm (182.7 in.) | 4940 mm (194.5 in.) |
| | Mast Group Number | A752 4087 | A752 4387 | A752 4640 | A752 4940 |
| 16 | Hose | 1387963 | 1387965 | 1387966 | 1387968 |
| 23 | Chain (Free-Lift) | 297640 | 337189 | 337190 | 348827 |

### H100-120XM (CONT.)

| ITEM | DESCRIPTION 1 2 3 4 | LIFT HEIGHT TO BOTTOM OF FORKS | | |
|---|---|---|---|---|
| | | 5090 mm (200.4 in.) | 5240 mm (206.3 in.) | 6965 mm (274.2 in.) |
| | Mast Group Number | A752 5090 | A752 5240 | A752 6965 |
| 16 | Hose | 1387969 | 1387970 | 1387988 |
| 23 | Chain (Free-Lift) | 320397 | 339933 | 338649 |

### H70-90XM

| ITEM | DESCRIPTION 1 2 3 4 | LIFT HEIGHT TO BOTTOM OF FORKS | | | |
|---|---|---|---|---|---|
| | | 4365 mm (171.9 in.) | 4665 mm (183.7 in.) | 4900 mm (192.9 in.) | 5200 mm (204.7 in.) |
| | Mast Group Number | A751 4365 | A751 4665 | A751 4900 | A751 5200 |
| 16 | Hose | 1387963 | 1387965 | 1387966 | 1387968 |
| 23 | Chain (Free-Lift) | 337190 | 348827 | 339933 | 338646 |

### H70-90XM (CONT.)

| ITEM | DESCRIPTION 1 2 3 4 | LIFT HEIGHT TO BOTTOM OF FORKS | | |
|---|---|---|---|---|
| | | 5350 mm (210.6 in.) | 5500 mm (216.5 in.) | 7825 mm (308.1 in.) |
| | Mast Group Number | A751 5350 | A751 5500 | A751 7825 |
| 16 | Hose | 1387969 | 1387970 | 1387986 |
| 23 | Chain (Free-Lift) | 280878 | 366106 | 339875 |

©2004 HYSTER COMPANY

# FREE-LIFT
## THREE STAGE FULL FREE-LIFT

**KEY:**
**A: H70-90XM**
**B: H100-120XM**

| ITEM | | PART NO. | DESCRIPTION | QTY A | QTY B |
|---|---|---|---|---|---|
| 1 | | 2036778 | Sheave | 1 | 1 |
| 2 | | 1387553 | Stubshaft | 1 | 1 |
| 3 | | 292683 | Lockwasher | 4 | 4 |
| 4 | | 292531 | Capscrew | 1 | 1 |
| 5 | | . . . . . | Free-Lift Cylinder (☞ Figure 12-7) | 1 | 1 |
| 6 | | 2036478 | Velocity Fuse | 1 | .. |
| 6 | | 2036857 | Velocity Fuse | .. | 1 |
| 7 | | 320161 | Washer | 2 | 2 |
| 8 | | 1389825 | Crosshead | 1 | 1 |
| 9 | | 302493 | Pin | 1 | 1 |
| 10 | | 2036756 | Clamp | 1 | 1 |
| 11 | | 292564 | Capscrew | 2 | 2 |
| 12 | | 316828 | Nut | 2 | 2 |
| 13 | | 58929 | Snap Ring | 1 | 1 |
| 14 | | 292526 | Capscrew | 2 | 2 |
| 15 | | 1387584 | Shim | 12 | 12 |
| 16 | **a** | . . . . . | Hose | 1 | 1 |
| 17 | | 1387281 | Pin | 1 | 1 |
| 18 | | 1387743 | Chain Sheave | 2 | 2 |
| 18 | | 1387740 | Sheave | 1 | 1 |
| 18 | | 40667 | Snap Ring | 1 | 1 |
| 18 | | 126764 | Bearing | 1 | 1 |
| 19 | | 1331991 | Chain Anchor | 2 | 2 |
| 20 | | 339932 | Pin (Anchor) | 2 | 2 |
| 21 | | 15222 | Cotter Pin | 2 | 2 |
| 22 | | 221717 | Nut | 4 | 4 |
| 23 | **a** | . . . . . | Chain (Free-Lift) | 2 | 2 |
| 24 | | 1387519 | Guard | 2 | 2 |
| 25 | | 302472 | Pin | 2 | 2 |
| 26 | | 304527 | Snap Ring | 2 | 2 |
| 27 | | 1387479 | Clamp | 1 | 1 |
| 28 | | 287844 | Capscrew | 2 | 2 |
| 29 | | 313805 | Nut | 2 | 2 |

**FOOTNOTES:**
**a** Refer to Table


©2004 HYSTER COMPANY

# NOTES

# MAIN LIFT CYLINDERS (Figure 12-6)
## THREE STAGE FULL FREE-LIFT

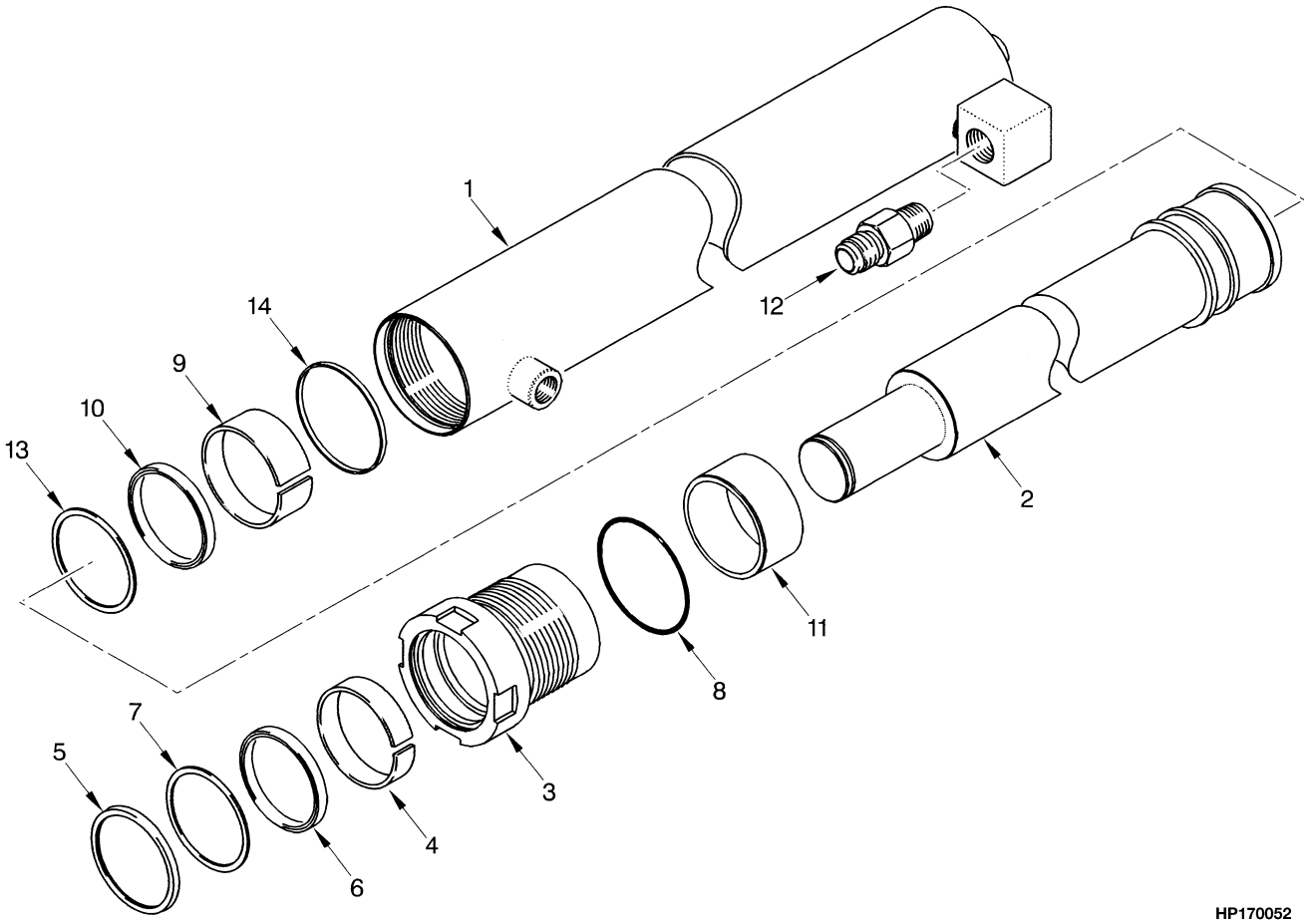



©2004 HYSTER COMPANY

# MAIN LIFT CYLINDERS
## THREE STAGE FULL FREE-LIFT

### H100-120XM

| ITEM | DESCRIPTION 1 2 3 4 | LIFT HEIGHT TO BOTTOM OF FORKS | | | |
|---|---|---|---|---|---|
| | | 4087 mm (160.9 in.) | 4387 mm (172.7 in.) | 4640 mm (182.7 in.) | 4940 mm (194.5 in.) |
| | **Mast Group Number** | **A752 4087** | **A752 4387** | **A752 4640** | **A752 4940** |
| | **Cylinder Group Number** | **8604451** | **8604453** | **8604454** | **8604456** |
| | Lift Cylinder | 2036406 | 2036392 | 2036393 | 2036407 |
| 1 | Shell | 2037876 | 2037877 | 2037878 | 2037879 |
| 2 | Rod | 2037841 | 2037842 | 2037844 | 2037845 |

### H100-120XM (CONT.)

| ITEM | DESCRIPTION 1 2 3 4 | LIFT HEIGHT TO BOTTOM OF FORKS | | |
|---|---|---|---|---|
| | | 5090 mm (200.4 in.) | 5240 mm (206.3 in.) | 6965 mm (274.2 in.) |
| | **Mast Group Number** | **A752 5090** | **A752 5240** | **A752 6965** |
| | **Cylinder Group Number** | **8604457** | **8604458** | **8604470** |
| | Lift Cylinder | 2058776 | 2036408 | 2058786 |
| 1 | Shell | 2058020 | 2037880 | 2058031 |
| 2 | Rod | 2059115 | 2037846 | 2059126 |

### H70-90XM

| ITEM | DESCRIPTION 1 2 3 4 | LIFT HEIGHT TO BOTTOM OF FORKS | | | |
|---|---|---|---|---|---|
| | | 4365 mm (171.9 in.) | 4665 mm (183.7 in.) | 4900 mm (192.9 in.) | 5200 mm (204.7 in.) |
| | **Mast Group Number** | **A751 4365** | **A751 4665** | **A751 4900** | **A751 5200** |
| | **Cylinder Group Number** | **8604401** | **8604403** | **8604404** | **8604406** |
| | Lift Cylinder | 2036386 | 2036387 | 2036388 | 2036389 |
| 1 | Shell | 2037882 | 2037883 | 2037884 | 2037885 |
| 2 | Rod | 2037856 | 2037857 | 2037858 | 2037859 |

©2004 HYSTER COMPANY

# MAIN LIFT CYLINDERS
## THREE STAGE FULL FREE-LIFT

### H70-90XM (CONT.)

| ITEM | DESCRIPTION 1 2 3 4 | LIFT HEIGHT TO BOTTOM OF FORKS | | |
|---|---|---|---|---|
| | | 5350 mm (210.6 in.) | 5500 mm (216.5 in.) | 7825 mm (308.1 in.) |
| | Mast Group Number | A751 5350 | A751 5500 | A751 7825 |
| | Cylinder Group Number | 8604407 | 8604408 | 8604424 |
| | Lift Cylinder | 2058758 | 2036390 | 2058773 |
| 1 | Shell | 2059079 | 2037886 | 2059094 |
| 2 | Rod | 2059097 | 2037860 | 2059112 |

**KEY:**
**A: H70-90XM**
**B: H100-120XM**

| ITEM | | PART NO. | DESCRIPTION | QTY A | QTY B |
|---|---|---|---|---|---|
| | **a** | . . . . . | Lift Cylinder | 2 | 2 |
| 1 | **a** | . . . . . | Shell | 1 | 1 |
| 2 | **a** | . . . . . | Rod | 1 | 1 |
| 3 | | 2033243 | Gland | 1 | .. |
| 3 | | 2033299 | Gland | .. | 1 |
| 4 | | 215425 | Wear Ring | 1 | .. |
| 4 | | 215301 | Wear Ring | .. | 1 |
| 5 | | 2036212 | Wiper Ring (Rod) | 1 | .. |
| 5 | | 2034269 | Wiper Ring (Rod) | .. | 1 |
| 6 | | 201829 | Rod Seal | .. | 1 |
| 6 | | 270077 | Rod Seal | 1 | .. |
| 7 | | 638249 | Back-Up Ring | 1 | .. |
| 7 | | 638250 | Back-Up Ring | .. | 1 |
| 8 | | 57664 | O-Ring | 1 | .. |
| 8 | | 15879 | O-Ring | .. | 1 |
| 9 | | 297532 | Wear Ring | 1 | .. |
| 9 | | 351531 | Wear Ring | .. | 1 |
| 10 | | 1381061 | Seal (Piston) | 1 | .. |
| 10 | | 1381062 | Seal (Piston) | .. | 1 |
| 11 | | 2066437 | Spacer (7825 mm) | 1 | .. |
| 11 | | 2035200 | Spacer (6965 mm) | .. | 1 |
| 12 | | 2035787 | Velocity Fuse | 1 | .. |
| 12 | | 2036856 | Velocity Fuse | .. | 1 |
| 13 | | 638249 | Back-Up Ring | 1 | .. |
| 13 | | 351532 | Back-Up Ring | .. | 1 |
| 14 | | 1379063 | Piston Ring | 1 | .. |
| 14 | | 2036479 | Piston Ring | .. | 1 |
| | | 2036277 | Seal Kit (Includes Items 4-10, 13-14) | 1 | .. |
| | | 2036278 | Seal Kit (Includes Items 4-10, 13-14) | .. | 1 |

**FOOTNOTES:**
**a** Refer to Table


©2004 HYSTER COMPANY

# NOTES

# FREE-LIFT CYLINDER (Figure 12-7)
## THREE STAGE FULL FREE-LIFT

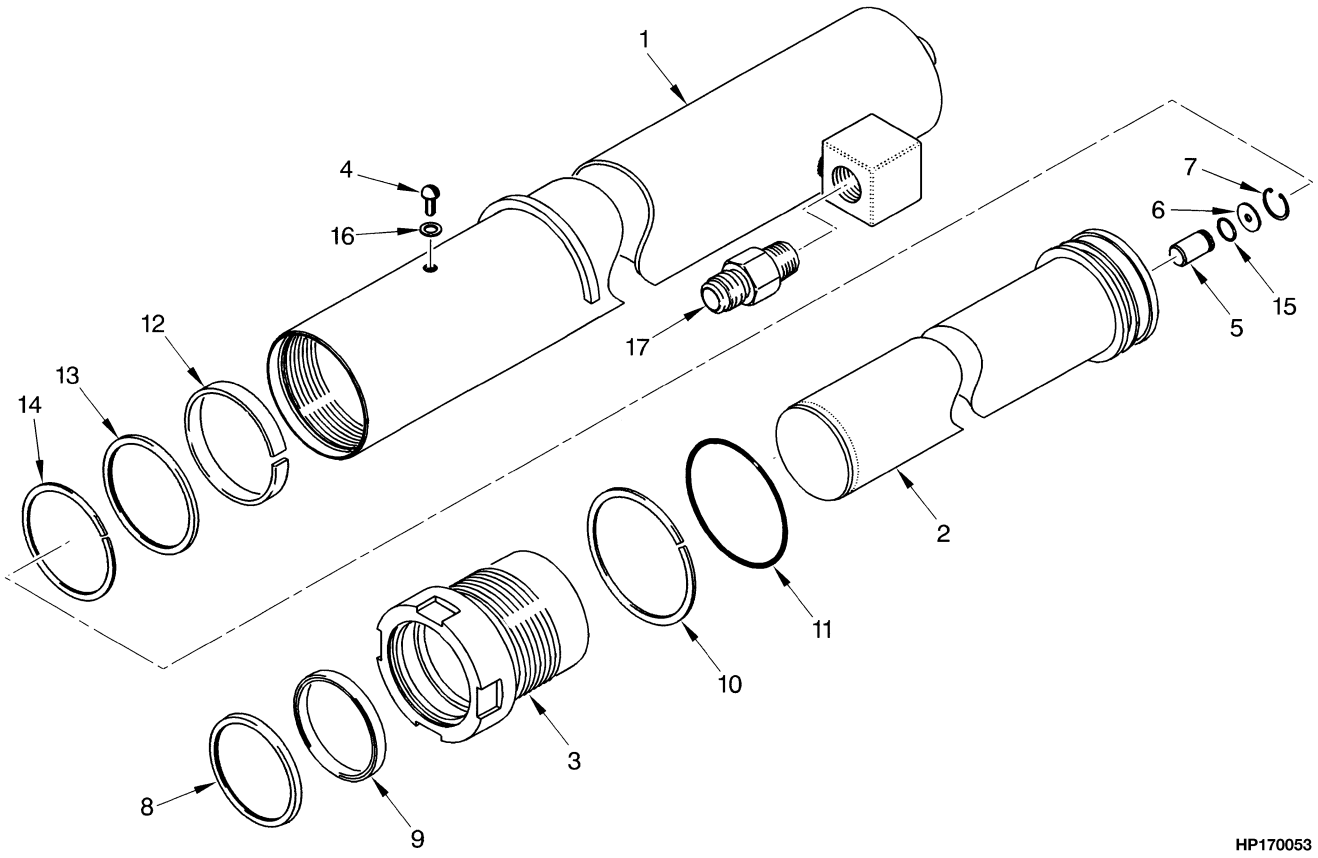



©2004 HYSTER COMPANY

# FREE-LIFT CYLINDER
## THREE STAGE FULL FREE-LIFT

### H100-120XM

| ITEM | DESCRIPTION 1 2 3 4 | LIFT HEIGHT TO BOTTOM OF FORKS | | | |
|---|---|---|---|---|---|
| | | 4087 mm (160.9 in.) | 4387 mm (172.7 in.) | 4640 mm (182.7 in.) | 4940 mm (194.5 in.) |
| | **Mast Group Number** | **A752 4087** | **A752 4387** | **A752 4640** | **A752 4940** |
| | **Cylinder Group Number** | **8520951** | **8520953** | **8520954** | **8520956** |
| | Lift Cylinder | 2062748 | 2062113 | 2062114 | 2062115 |
| 1 | Shell | 2065887 | 2066450 | 2066005 | 2065888 |
| 2 | Rod | 2062074 | 2062076 | 2062077 | 2062079 |

### H100-120XM (CONT.)

| ITEM | DESCRIPTION 1 2 3 4 | LIFT HEIGHT TO BOTTOM OF FORKS | | |
|---|---|---|---|---|
| | | 5090 mm (200.4 in.) | 5240 mm (206.3 in.) | 6965 mm (274.2 in.) |
| | **Mast Group Number** | **A752 5090** | **A752 5240** | **A752 6965** |
| | **Cylinder Group Number** | **8520957** | **8520958** | **8520970** |
| | Lift Cylinder | 2062116 | 2062117 | 2062129 |
| 1 | Shell | 2066451 | 2066006 | 2066452 |
| 2 | Rod | 2062080 | 2062081 | 2062093 |

### H70-90XM

| ITEM | DESCRIPTION 1 2 3 4 | LIFT HEIGHT TO BOTTOM OF FORKS | | | |
|---|---|---|---|---|---|
| | | 4365 mm (171.9 in.) | 4665 mm (183.7 in.) | 4900 mm (192.9 in.) | 5200 mm (204.7 in.) |
| | **Mast Group Number** | **A751 4365** | **A751 4665** | **A751 4900** | **A751 5200** |
| | **Cylinder Group Number** | **8605501** | **8605503** | **8605504** | **8605506** |
| | Lift Cylinder | 2036440 | 2036422 | 2036441 | 2036442 |
| 1 | Shell | 2037868 | 2037870 | 2037871 | 2037872 |
| 2 | Rod | 2037833 | 2037835 | 2037836 | 2037837 |

©2004 HYSTER COMPANY

# FREE-LIFT CYLINDER
## THREE STAGE FULL FREE-LIFT

### H70-90XM (CONT.)

| ITEM | DESCRIPTION 1 2 3 4 | LIFT HEIGHT TO BOTTOM OF FORKS | | |
|---|---|---|---|---|
| | | 5350 mm (210.6 in.) | 5500 mm (216.5 in.) | 7825 mm (308.1 in.) |
| | **Mast Group Number** | **A751 5350** | **A751 5500** | **A751 7825** |
| | **Cylinder Group Number** | **8605507** | **8605508** | **8605524** |
| | Lift Cylinder | 2058788 | 2036443 | 2058801 |
| 1 | Shell | 2059128 | 2037873 | 2059142 |
| 2 | Rod | 2059145 | 2037838 | 2059159 |

**KEY:**
**A: H70-90XM**
**B: H100-120XM**

| ITEM | | PART NO. | DESCRIPTION | QTY A | QTY B |
|---|---|---|---|---|---|
| | **a** | . . . . . | Lift Cylinder | 1 | 1 |
| 1 | **a** | . . . . . | Shell | 1 | 1 |
| 2 | **a** | . . . . . | Rod | 1 | 1 |
| 3 | | 2036282 | Gland | 1 | .. |
| 3 | | 2036283 | Gland | .. | 1 |
| 4 | | 1361302 | Screw | 1 | 1 |
| 5 | | 257913 | Check Valve | 1 | 1 |
| 6 | | 297531 | Washer | 1 | 1 |
| 6 | | 637635 | Washer (Optional) | 1 | 1 |
| 7 | | 187388 | Snap Ring | 1 | 1 |
| 8 | | 2034274 | Wiper Ring (Rod) | 1 | 1 |
| 9 | | 637161 | Rod Seal (Rod) | 1 | 1 |
| 10 | | 164632 | Back-Up Ring | 1 | .. |
| 10 | | 615145 | Back-Up Ring | .. | 1 |
| 11 | | 15885 | O-Ring | .. | 1 |
| 11 | | 46629 | O-Ring | 1 | .. |
| 12 | | 636950 | Wear Ring | 1 | .. |
| 12 | | 636952 | Wear Ring | .. | 1 |
| 13 | | 637162 | Seal | 1 | .. |
| 13 | | 637164 | Seal | .. | 1 |
| 14 | | 638293 | Back-Up Ring | 1 | .. |
| 14 | | 638295 | Back-Up Ring | .. | 1 |
| 15 | | 39348 | O-Ring | 1 | 1 |
| 16 | | 190887 | Seal | 1 | 1 |
| 17 | | 2036478 | Velocity Fuse | 1 | .. |
| 17 | | 2036857 | Velocity Fuse | .. | 1 |
| | | 2036279 | Seal Kit (Includes Items 8-16) | 1 | .. |
| | | 2036280 | Seal Kit (Includes Items 8-16) | .. | 1 |

**FOOTNOTES:**
**a** Refer to Table


©2004 HYSTER COMPANY

# NOTES

# CARRIAGE (Figure 12-8)
## THREE STAGE FULL FREE-LIFT

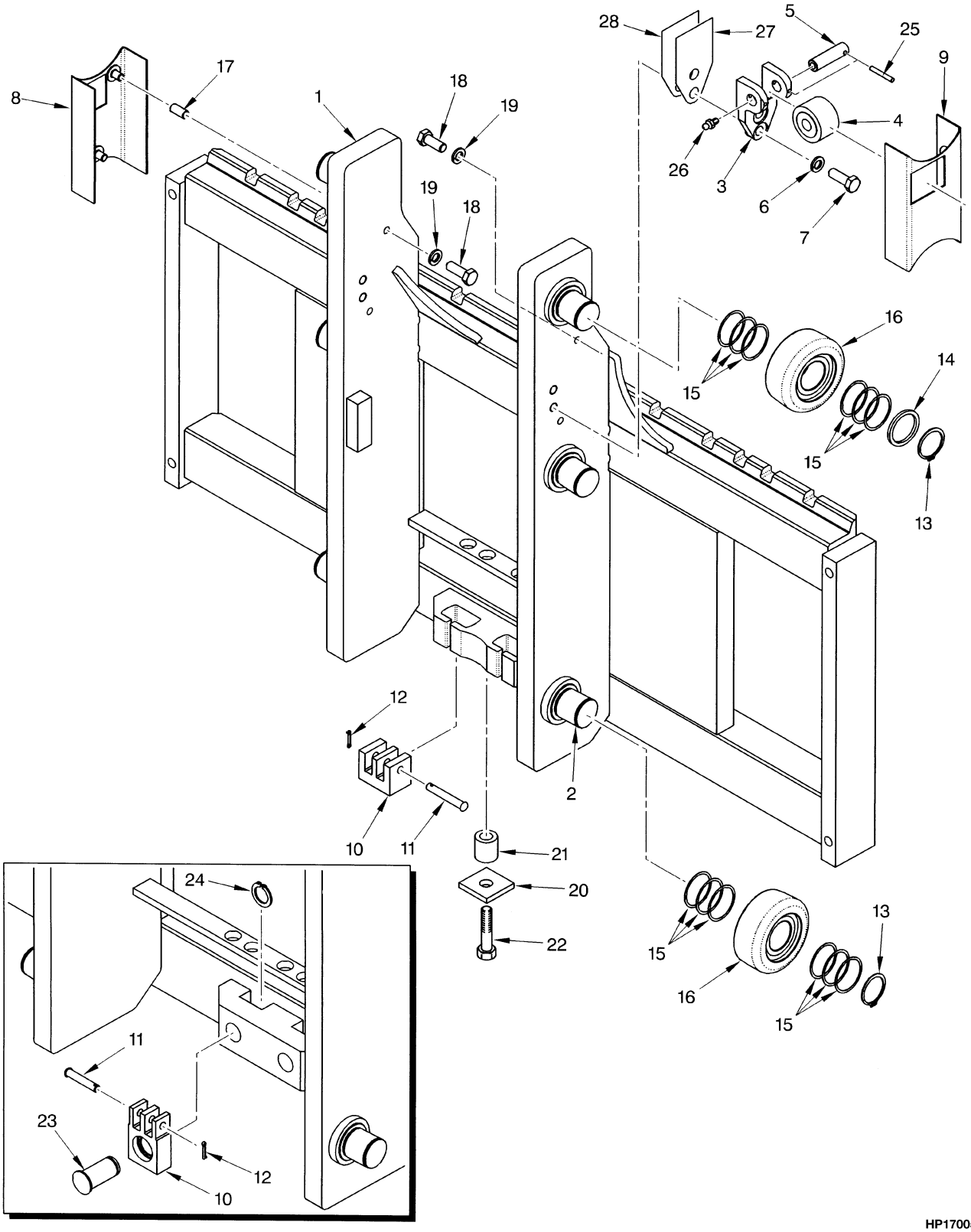



©2004 HYSTER COMPANY

# CARRIAGE
## THREE STAGE FULL FREE-LIFT

**KEY:**
**A: H70-90XM**
**B: H100-120XM**

| ITEM | | PART NO. | DESCRIPTION | QTY A | QTY B |
|---|---|---|---|---|---|
| | | 2035792 | Carriage (48 in.) | 1 | .. |
| | | 2035794 | Carriage (60 in.) | 1 | .. |
| | | 2035796 | Carriage (54 in.) | .. | 1 |
| | **a** | 2037707 | Carriage (54 in.) | .. | 1 |
| | | 2035797 | Carriage (60 in.) | .. | 1 |
| 1 | | 1387457 | Frame (48 in.) | 1 | .. |
| 1 | | 1387459 | Frame (60 in.) | 1 | .. |
| 1 | | 1387497 | Frame (54 in.) | .. | 1 |
| 1 | **a** | 1465228 | Frame (54 in.) | .. | 1 |
| 1 | | 1387498 | Frame (60 in.) | .. | 1 |
| 2 | | 1500744 | Stub Shaft | 6 | 6 |
| 3 | **a** | 1465177 | Bracket | .. | 2 |
| 4 | **a** | 1387993 | Roller | .. | 2 |
| 5 | **a** | 1465028 | Pin | .. | 2 |
| 6 | | 292683 | Lockwasher | .. | 4 |
| 7 | | 292528 | Capscrew | .. | 4 |
| 8 | | 319323 | Guard (LH) (LH) | 1 | 1 |
| 9 | | 319322 | Guard (RH) (RH) | 1 | 1 |
| 10 | | 1387548 | Chain Anchor | 2 | .. |
| 10 | | 1480392 | Chain Anchor | .. | 2 |
| 11 | | 1387549 | Pin (Anchor) | 2 | .. |
| 11 | | 339932 | Pin (Anchor) | .. | 2 |
| 12 | | 15222 | Cotter Pin | 2 | 2 |
| 13 | | 1465072 | Snap Ring | 6 | 6 |
| 14 | | 1399224 | Spacer | 2 | 2 |
| 15 | | 126765 | Shim (0.020 in.) | 24 | 24 |
| 16 | | 1511883 | Load Roller ("B") (0,26 mm) | 6 | 6 |
| 17 | | 317292 | Spacer | 4 | 4 |
| 18 | | 18518 | Capscrew | 4 | 4 |
| 19 | | 15155 | Lockwasher | 4 | 4 |
| 20 | | 1400126 | Plate | 1 | .. |
| 21 | | 1400125 | Spacer | 1 | .. |
| 22 | | 292512 | Capscrew | 1 | .. |
| 23 | | 320327 | Pin | .. | 2 |
| 24 | | 131358 | Snap Ring | .. | 2 |
| 25 | **a** | 66333 | Pin | .. | 2 |
| 26 | **a** | 16001 | Lube Fitting | .. | 2 |
| 27 | **a** | 192425 | Shim (0.062 in.) | .. | AR |
| 28 | **a** | 192424 | Shim (0.030 in.) | .. | AR |

**FOOTNOTES:**
**a** Attachment Carriage (H90XM, 100XM)

©2004 HYSTER COMPANY

# HEADER HOSE (Figure 12-9)
## THREE STAGE FULL FREE-LIFT

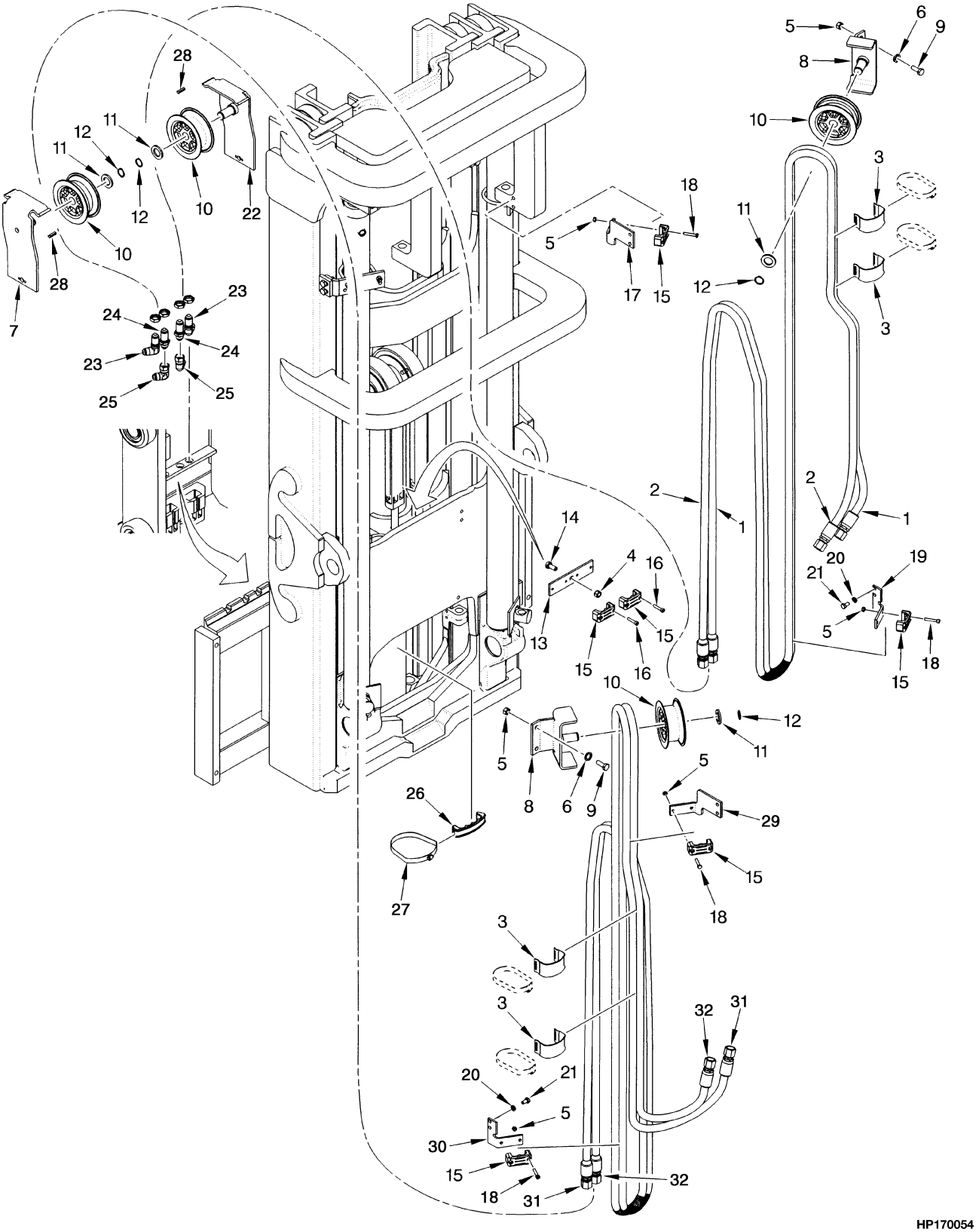



©2004 HYSTER COMPANY

# HEADER HOSE
## THREE STAGE FULL FREE-LIFT

### FOUR FUNCTION H100-120XM

| ITEM | DESCRIPTION 1 2 3 4 | LIFT HEIGHT TO BOTTOM OF FORKS | | | |
|---|---|---|---|---|---|
| | | 4087 mm (160.9 in.) | 4387 mm (172.7 in.) | 4640 mm (182.7 in.) | 4940 mm (194.5 in.) |
| | Mast Group Number | A752 4087 | A752 4387 | A752 4640 | A752 4940 |
| 31 | Hose (LH) | 1399482 | 1399489 | 1399493 | 1399498 |
| 32 | Hose (RH) | 1399481 | 1399485 | 1399491 | 1399273 |

### FOUR FUNCTION H100-120XM (CONT.)

| ITEM | DESCRIPTION 1 2 3 4 | LIFT HEIGHT TO BOTTOM OF FORKS | | |
|---|---|---|---|---|
| | | 5090 mm (200.4 in.) | 5240 mm (206.3 in.) | 6965 mm (274.2 in.) |
| | Mast Group Number | A752 5090 | A752 5240 | A752 6965 |
| 31 | Hose (LH) | 1399500 | 1399503 | 1473105 |
| 32 | Hose (RH) | 1399499 | 1399501 | 1399541 |

### FOUR FUNCTION H70-90XM

| ITEM | DESCRIPTION 1 2 3 4 | LIFT HEIGHT TO BOTTOM OF FORKS | | | |
|---|---|---|---|---|---|
| | | 4365 mm (171.9 in.) | 4665 mm (183.7 in.) | 4900 mm (192.9 in.) | 5200 mm (204.7 in.) |
| | Mast Group Number | A751 4365 | A751 4665 | A751 4900 | A751 5200 |
| 31 | Hose (LH) | 1473100 | 1399492 | 1399270 | 1399500 |
| 32 | Hose (RH) | 1399274 | 1399490 | 1399494 | 1399499 |

### FOUR FUNCTION H70-90XM (CONT.)

| ITEM | DESCRIPTION 1 2 3 4 | LIFT HEIGHT TO BOTTOM OF FORKS | | |
|---|---|---|---|---|
| | | 5350 mm (210.6 in.) | 5500 mm (216.5 in.) | 7825 mm (308.1 in.) |
| | Mast Group Number | A751 5350 | A751 5500 | A751 7825 |
| 31 | Hose (LH) | 1399503 | 1399506 | 1399549 |
| 32 | Hose (RH) | 1399501 | 1399504 | 1399548 |

©2004 HYSTER COMPANY

# HEADER HOSE
## THREE STAGE FULL FREE-LIFT

### THREE FUNCTION H100-120XM

| ITEM | DESCRIPTION 1 2 3 4 | LIFT HEIGHT TO BOTTOM OF FORKS | | | |
|---|---|---|---|---|---|
| | | 4087 mm (160.9 in.) | 4387 mm (172.7 in.) | 4640 mm (182.7 in.) | 4940 mm (194.5 in.) |
| | Mast Group Number | A752 4087 | A752 4387 | A752 4640 | A752 4940 |
| 1 | Hose (LH) | 1399475 | 1399477 | 1399482 | 1399487 |
| 2 | Hose (RH) | 1399475 | 1399479 | 1399482 | 1399488 |

### THREE FUNCTION H100-120XM (CONT.)

| ITEM | DESCRIPTION 1 2 3 4 | LIFT HEIGHT TO BOTTOM OF FORKS | | |
|---|---|---|---|---|
| | | 5090 mm (200.4 in.) | 5240 mm (206.3 in.) | 6965 mm (274.2 in.) |
| | Mast Group Number | A752 5090 | A752 5240 | A752 6965 |
| 1 | Hose (LH) | 1399266 | 1467327 | 1399532 |
| 2 | Hose (RH) | 1399492 | 1399493 | 1399533 |

### THREE FUNCTION H70-90XM

| ITEM | DESCRIPTION 1 2 3 4 | LIFT HEIGHT TO BOTTOM OF FORKS | | | |
|---|---|---|---|---|---|
| | | 4365 mm (171.9 in.) | 4665 mm (183.7 in.) | 4900 mm (192.9 in.) | 5200 mm (204.7 in.) |
| | Mast Group Number | A751 4365 | A751 4665 | A751 4900 | A751 5200 |
| 1 | Hose (LH) | 1399268 | 1399480 | 1399484 | 1399266 |
| 2 | Hose (RH) | 1399476 | 1399480 | 1399483 | 1399266 |

### THREE FUNCTION H70-90XM (CONT.)

| ITEM | DESCRIPTION 1 2 3 4 | LIFT HEIGHT TO BOTTOM OF FORKS | | |
|---|---|---|---|---|
| | | 5350 mm (210.6 in.) | 5500 mm (216.5 in.) | 7825 mm (308.1 in.) |
| | Mast Group Number | A751 5350 | A751 5500 | A751 7825 |
| 1 | Hose (LH) | 1467327 | 1399496 | 1399543 |
| 2 | Hose (RH) | 1399493 | 1399495 | 1399543 |


©2004 HYSTER COMPANY

# HEADER HOSE
## THREE STAGE FULL FREE-LIFT

**KEY:**
**A: Three Function**
**B: Four Function**

| ITEM | | PART NO. | DESCRIPTION | QTY A | QTY B |
|---|---|---|---|---|---|
| 1 | **a** | . . . . . | Hose (LH) | 1 | .. |
| 2 | **a** | . . . . . | Hose (RH) | 1 | .. |
| 3 | | 1465489 | Clamp | 2 | 4 |
| 4 | | 316826 | Nut | 1 | 1 |
| 5 | | 313805 | Nut | 4 | 8 |
| 6 | | 292682 | Lockwasher | 2 | 4 |
| 7 | | 1387523 | Bracket (Hose Mounting) (LH) | .. | 1 |
| 8 | | 1387523 | Bracket (Hose and Chain Guard) | 2 | 4 |
| 9 | | 287860 | Capscrew | 2 | 4 |
| 10 | | 1332705 | Sheave | 2 | 2 |
| 11 | | 320171 | Washer | 2 | 2 |
| 12 | | 58902 | Snap Ring | 2 | 2 |
| 13 | | 1389828 | Bracket | 1 | 1 |
| 14 | | 287854 | Capscrew | 1 | 1 |
| 15 | | 2035791 | Clamp | 3 | 6 |
| 16 | | 293796 | Capscrew | 2 | 4 |
| 17 | | 1474496 | Bracket (RH) | 1 | .. |
| 18 | | 292503 | Capscrew | 4 | 8 |
| 19 | | 1387327 | Bracket (RH) | 1 | 1 |
| 20 | | 292681 | Lockwasher | 2 | 4 |
| 21 | | 287851 | Capscrew | 2 | 4 |
| 22 | | 1399217 | Bracket (Hose Mounting) (RH) | 1 | .. |
| 23 | | 16458 | Fitting | 1 | 2 |
| 24 | | 16448 | Fitting | 1 | 2 |
| 25 | | 16989 | Fitting | 1 | 2 |
| 26 | | 1388018 | Spacer | 1 | 1 |
| 27 | | 1399243 | Clamp | 1 | 1 |
| 28 | | 302472 | Pin (Spring) | 1 | 2 |
| 29 | | 1474497 | Bracket (LH) | .. | 1 |
| 30 | | 1389854 | Bracket (LH) | .. | 1 |
| 31 | **a** | . . . . . | Hose (LH) | .. | 1 |
| 32 | **a** | . . . . . | Hose (RH) | .. | 1 |

**FOOTNOTES:**
**a** Refer to Table

©2004 HYSTER COMPANY

# NOTES

# 13 OPTIONS

# SECTION 13
# OPTIONS


| DESCRIPTION | PAGE |
|---|---|
| ACCUMULATOR | |
| MAST LOAD DAMPENING | 13-42 |
| AUXILARY TUBE EXTENSION KIT | |
| TWO AND THREE STAGE FULL FREE-LIFT | 13-64 |
| TWO STAGE LIMITED FREE-LIFT | 13-62 |
| BACK-UP ALARM | 13-4 |
| CAB | |
| ATTACHING PARTS | |
| 1 OF 6 | 13-16 |
| 2 OF 6 | 13-18 |
| 3 OF 6 | 13-20 |
| 4 OF 6 | 13-22 |
| 5 OF 6 | 13-24 |
| 6 OF 6 | 13-26 |
| DOOR ASSEMBLY | |
| LEFT HAND | 13-28 |
| RIGHT HAND | 13-30 |
| WIRE HARNESSES | 13-32 |
| CAB WIRE HARNESS | |
| HEADLIGHT AND HANDHELD LIGHT | 13-35 |
| WORKLIGHTS AND STROBE LIGHT | 13-34 |
| DRIVE TIRES AND WHEELS | |
| DUAL | 13-70 |
| DUAL MIRRORS | |
| WITHOUT CAB | 13-14 |
| FENDER EXTENSIONS | 13-68 |
| FRONT HEADLIGHTS | |
| WITHOUT CAB | 13-8 |
| HEATER INSTALLATION | |
| DIESEL TIER II | 13-40 |
| GASOLINE | 13-36 |
| LPG | 13-38 |
| INTEGRAL SIDE-SHIFT ASSEMBLY | |
| H100XM-120XM (54 AND 60 INCH) | |
| TWO AND THREE STAGE FULL-FREE-LIFT | 13-58 |
| H100XM-H120XM (54 AND 60-INCH) | |
| TWO STAGE LIMITED FREE-LIFT | 13-48 |
| H70XM - H90XM (48 AND 60-INCH) | |
| TWO STAGE LIMITED FREE-LIFT | 13-44 |
| H70XM-90XM (48 AND 60 INCH) | |
| TWO AND THREE STAGE FULL FREE-LIFT | 13-52 |
| INTEGRAL SIDE-SHIFT CARRIAGE | |
| H100XM - H120XM (54 AND 60-INCH) | |
| TWO STAGE LIMITED FREE-LIFT | 13-50 |
| H100XM-H120XM (54 AND 60 INCH) | |
| TWO AND THREE STAGE FULL FREE-LIFT | 13-60 |
| H70XM - H90XM (48 AND 60-INCH) | |
| TWO STAGE LIMITED FREE-LIFT | 13-46 |
| H70XM-90XM (48 INCH) | |
| TWO AND THREE STAGE FULL FREE-LIFT | 13-54 |


©2004 HYSTER COMPANY

# SECTION 13
# OPTIONS (Continued)


| DESCRIPTION | PAGE |
|---|---|
| H70XM-H90XM (60 INCH) | |
| TWO AND THREE STAGE FULL FREE-LIFT | 13-56 |
| LIFTING EYES | 13-67 |
| QUICK DISCONNECT FITTINGS | 13-66 |
| REAR DRIVE LIGHT | |
| WITHOUT CAB | 13-10 |
| STROBE LIGHT | |
| AMBER | |
| WITHOUT CAB | 13-12 |
| WIRE HARNESS | |
| BACK-UP ALARM | 13-6 |



©2004 HYSTER COMPANY

# NOTES

# BACK-UP ALARM (Figure 13-1)

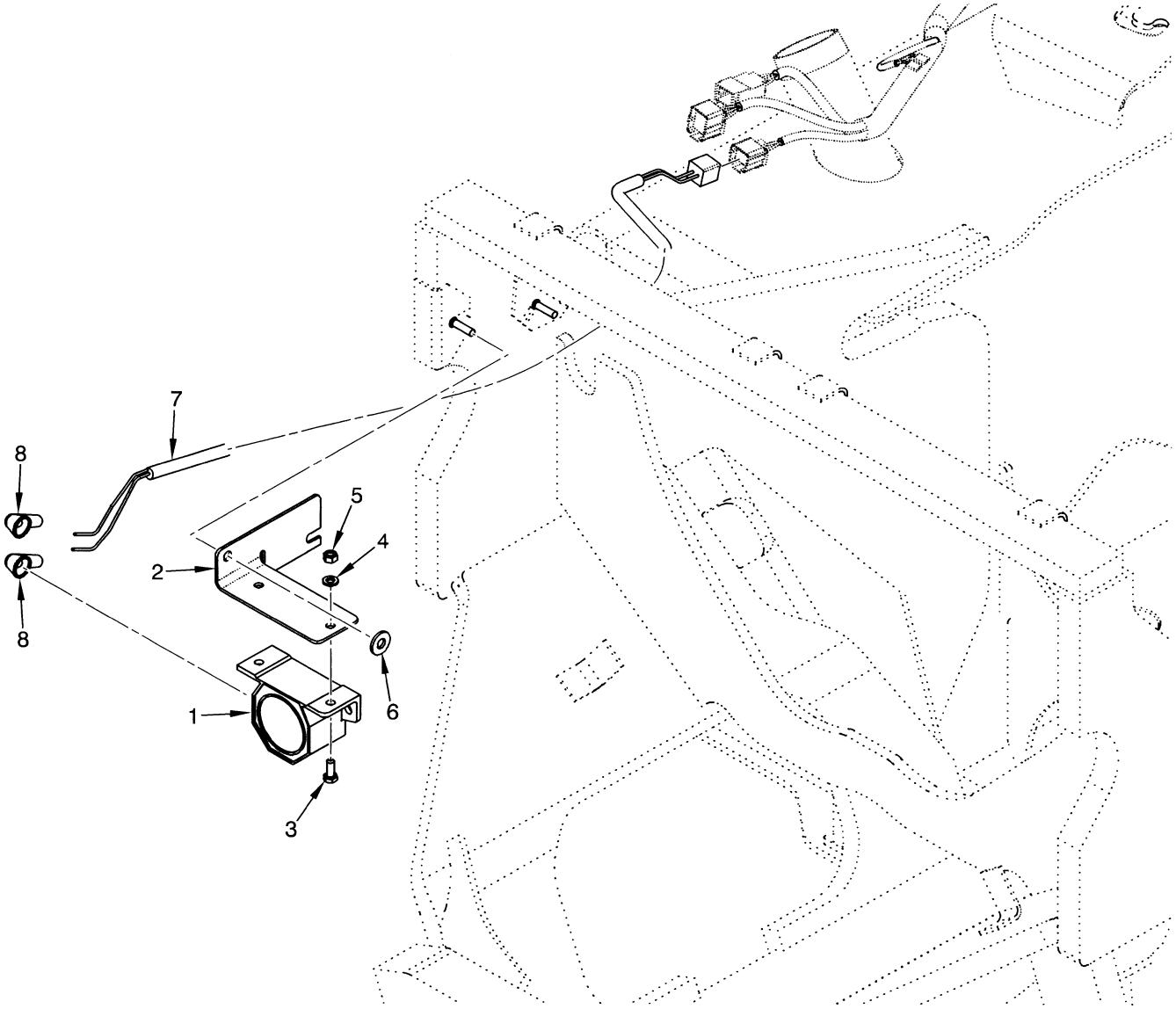



©2004 HYSTER COMPANY

# BACK-UP ALARM

| ITEM | PART NO. | DESCRIPTION | QTY |
|---|---|---|---|
| 1 | 1339947 | Alarm (82-102 dbA) | 1 |
| 1 | 1350733 | Alarm (87 dbA) | 1 |
| 1 | 1350734 | Alarm (97 dbA) | 1 |
| 1 | 1350735 | Alarm (102 dbA) | 1 |
| 1 | 1350736 | Alarm (107 dbA) | 1 |
| 2 | 1466997 | Bracket | 1 |
| 3 | 292500 | Capscrew | 2 |
| 4 | 320156 | Washer | 2 |
| 5 | 302399 | Nut | 2 |
| 6 | 320158 | Washer | 1 |
| 7 | 2036924 | Wire Harness (☞ Figure 13-2) | 1 |
| 8 | 190382 | Boot | 2 |

# WIRE HARNESS (Figure 13-2)
## BACK-UP ALARM

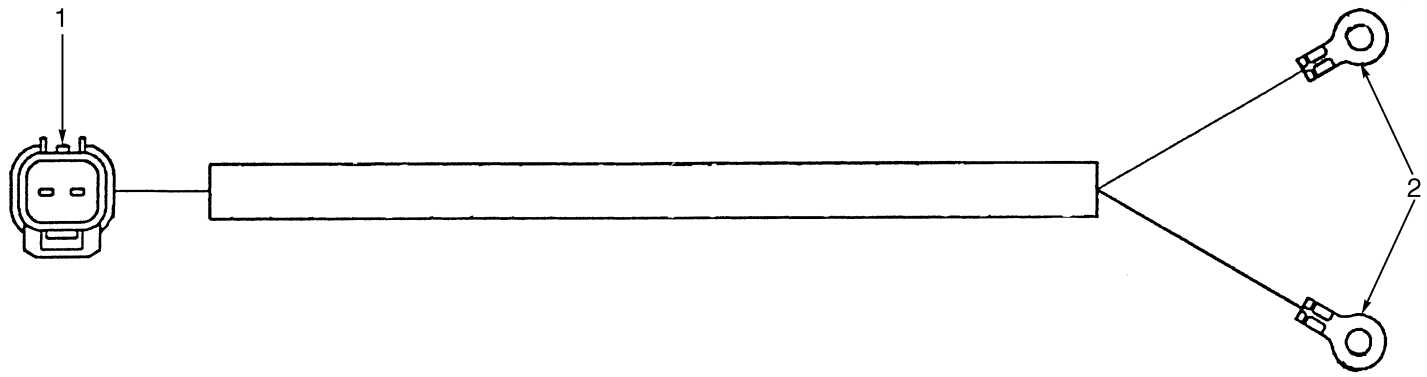


BP080058

| ITEM | PART NO. | DESCRIPTION | QTY |
|---|---|---|---|
| | 2036924 | Wire Harness | 1 |
| 1 | 1497288 | Housing | 1 |
| 1 | 1497299 | Retainer | 1 |
| 1 | 1484596 | Terminal (Pin) | 2 |
| 1 | 1484597 | Seal | 2 |
| 2 | 252293 | Ring | 2 |


©2004 HYSTER COMPANY

# NOTES

# FRONT HEADLIGHTS (Figure 13-3)
## WITHOUT CAB

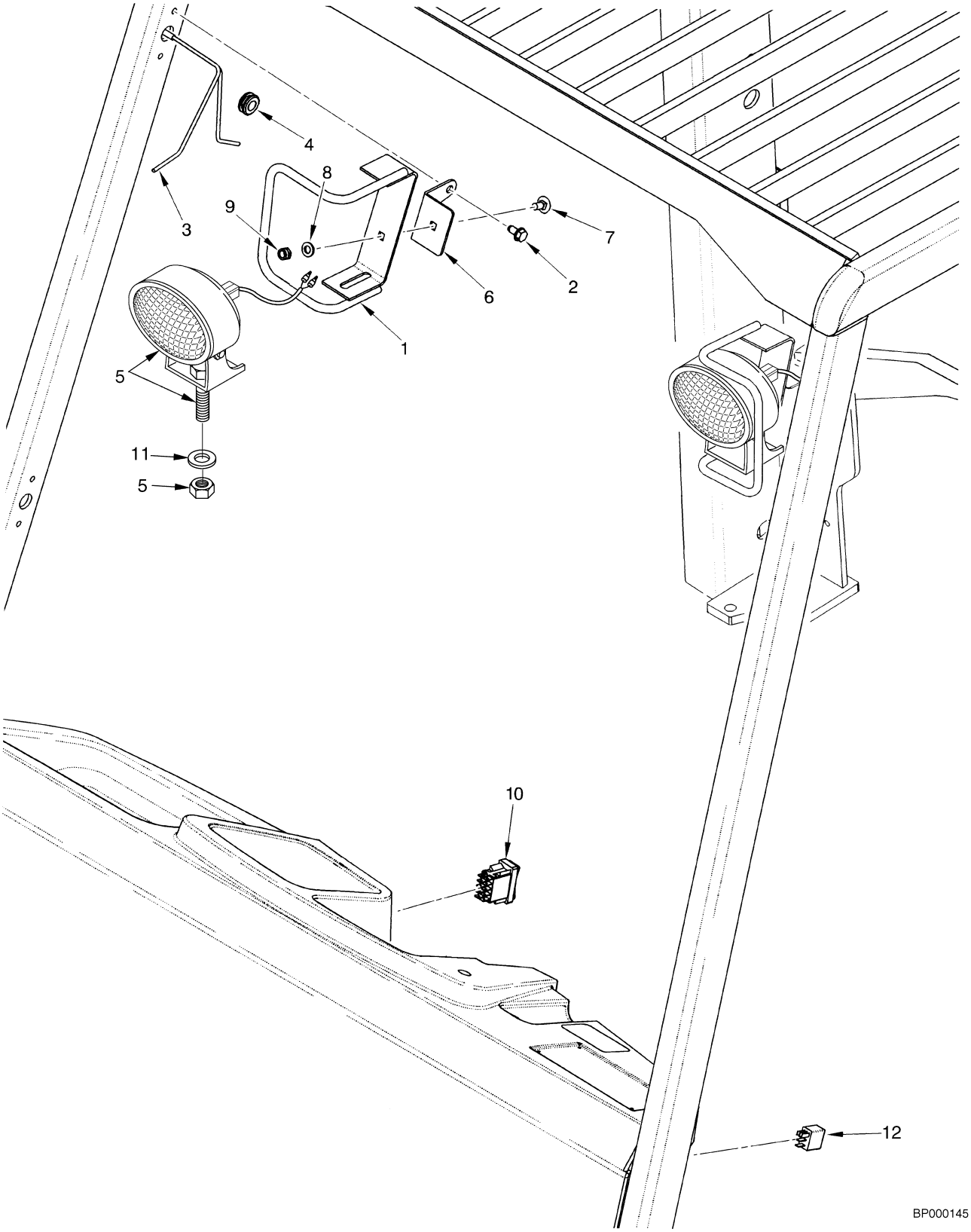



©2004 HYSTER COMPANY

# FRONT HEADLIGHTS
## WITHOUT CAB

| ITEM | PART NO. | DESCRIPTION | QTY |
|---|---|---|---|
| 1 | 1375172 | Bracket (LH) | 1 |
| 1 | 1375171 | Bracket (RH) | 1 |
| 2 | 316678 | Screw | 4 |
| 3 | 2036544 | Wire Harness | 2 |
| 4 | 1367645 | Grommet | 2 |
| 5 | 1531982 | Headlight | 2 |
| 5 | . . . . . | Bolt | 1 |
| 5 | . . . . . | Nut | 1 |
| 6 | 1375169 | Bracket | 2 |
| 7 | 1375168 | Bolt | 2 |
| 8 | 296418 | Washer | 2 |
| 9 | 316835 | Nut | 2 |
| 10 | 1397694 | Switch | 1 |
| 11 | 320158 | Washer | 2 |
| 12 | 2035581 | Relay | 1 |

©2004 HYSTER COMPANY

# REAR DRIVE LIGHT (Figure 13-4)
## WITHOUT CAB

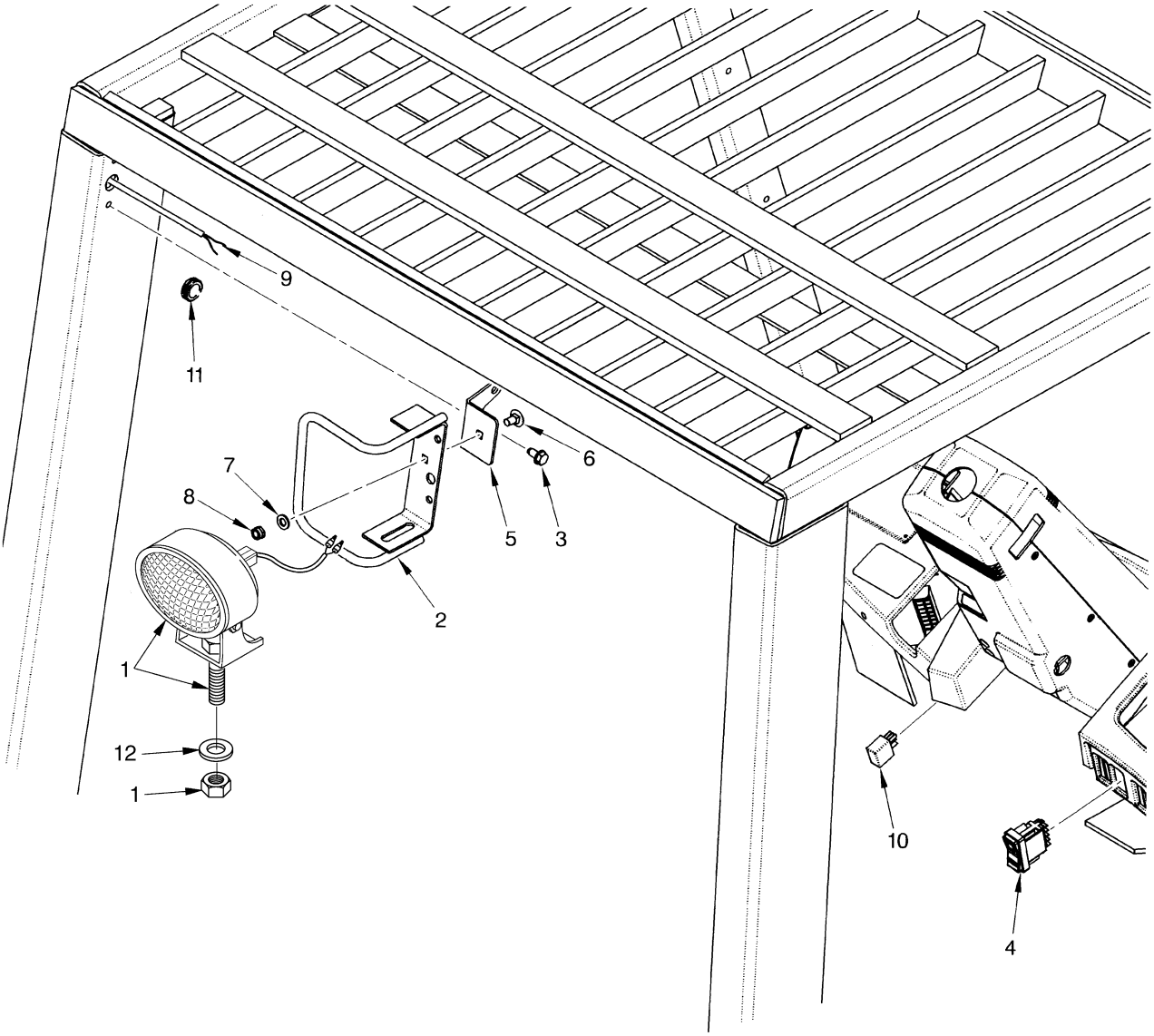


BP000148


©2004 HYSTER COMPANY

# REAR DRIVE LIGHT
## WITHOUT CAB

| ITEM | PART NO. | DESCRIPTION | QTY |
|---|---|---|---|
| 1 | 1531982 | Headlight | 1 |
| 1 | . . . . . | Bolt | 1 |
| 1 | . . . . . | Nut | 1 |
| 2 | 1376579 | Bracket | 1 |
| 3 | 316678 | Screw | 2 |
| 4 | 1399766 | Switch | 1 |
| 5 | 1375169 | Bracket | 1 |
| 6 | 1375168 | Bolt | 1 |
| 7 | 296418 | Washer | 1 |
| 8 | 316835 | Nut | 1 |
| 9 | 2036541 | Wire Harness | 1 |
| 10 | 2035581 | Relay | 1 |
| 11 | 1491175 | Grommet | 1 |
| 12 | 320158 | Washer | 1 |

©2004 HYSTER COMPANY

# STROBE LIGHT (Figure 13-5)
## AMBER
## WITHOUT CAB

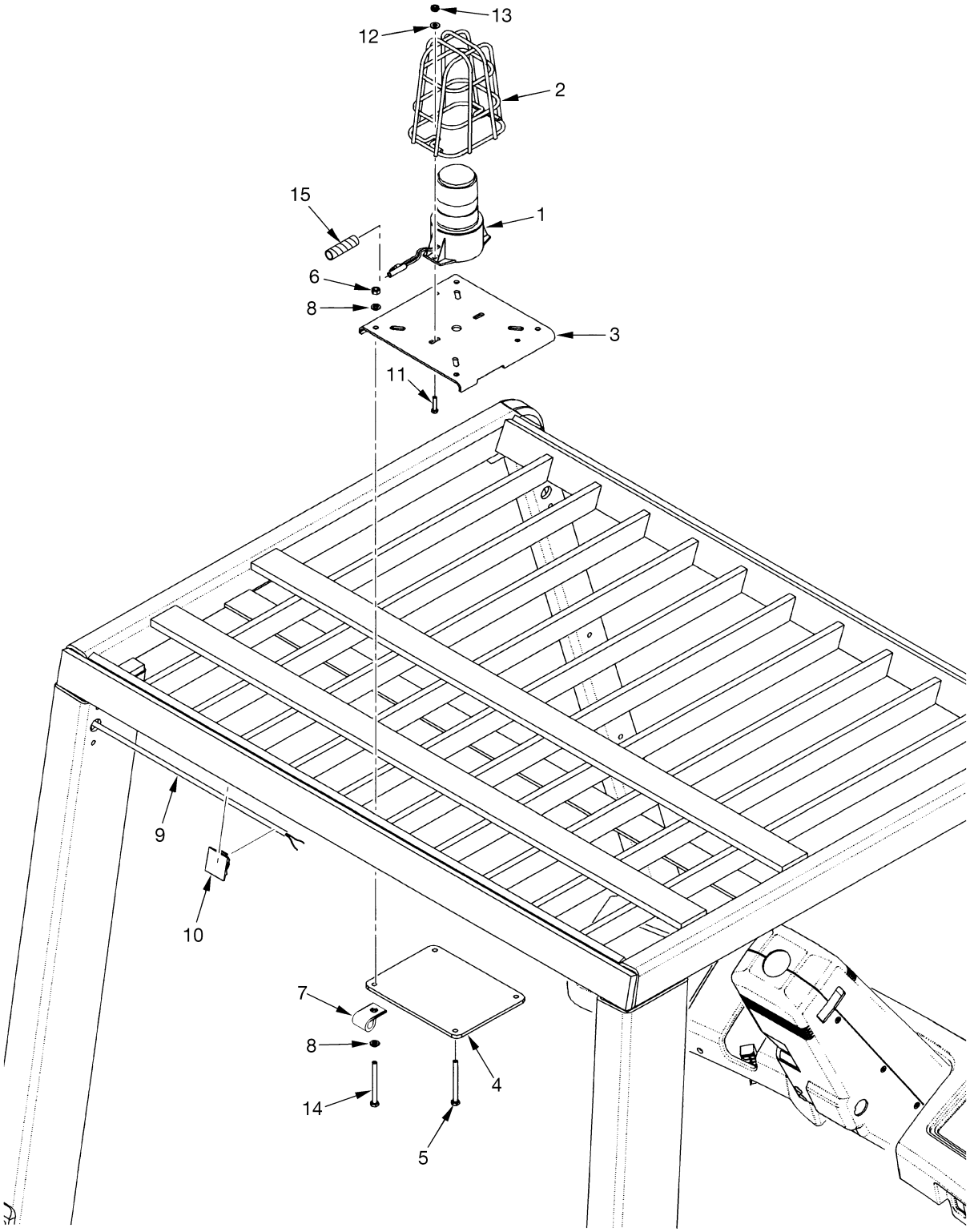


BP000149


©2004 HYSTER COMPANY

# STROBE LIGHT
## AMBER
## WITHOUT CAB

| ITEM | PART NO. | DESCRIPTION | QTY |
|---|---|---|---|
| 1 | 1399474 | Strobe Light Assembly | 1 |
| 1 | 1382130 | Strobe Light (12-80 VDC) | 1 |
| 1 | 1309775 | Bulb | 1 |
| 1 | 1526082 | Lens (Amber) | 1 |
| 1 | 1324308 | Electrical Fitting | 1 |
| 1 | 1324307 | Electrical Fitting | 1 |
| 1 | 1324310 | Terminal (Amber) | 1 |
| 1 | 1324309 | Connector | 1 |
| 2 | 1302024 | Guard | 1 |
| 3 | 1399764 | Bracket | 1 |
| 4 | 1399762 | Plate | 1 |
| 5 | 337239 | Capscrew | 3 |
| 6 | 313805 | Nut | 4 |
| 7 | 164488 | Clamp | 1 |
| 8 | 320156 | Washer | 5 |
| 9 | 2036541 | Wire Harness | 1 |
| 10 | 1301727 | Clamp | 4 |
| 11 | 220498 | Screw | 2 |
| 12 | 197067 | Washer | 2 |
| 13 | 230882 | Nut | 2 |
| 14 | 1456686 | Capscrew | 1 |

©2004 HYSTER COMPANY

# DUAL MIRRORS (Figure 13-6)
## WITHOUT CAB

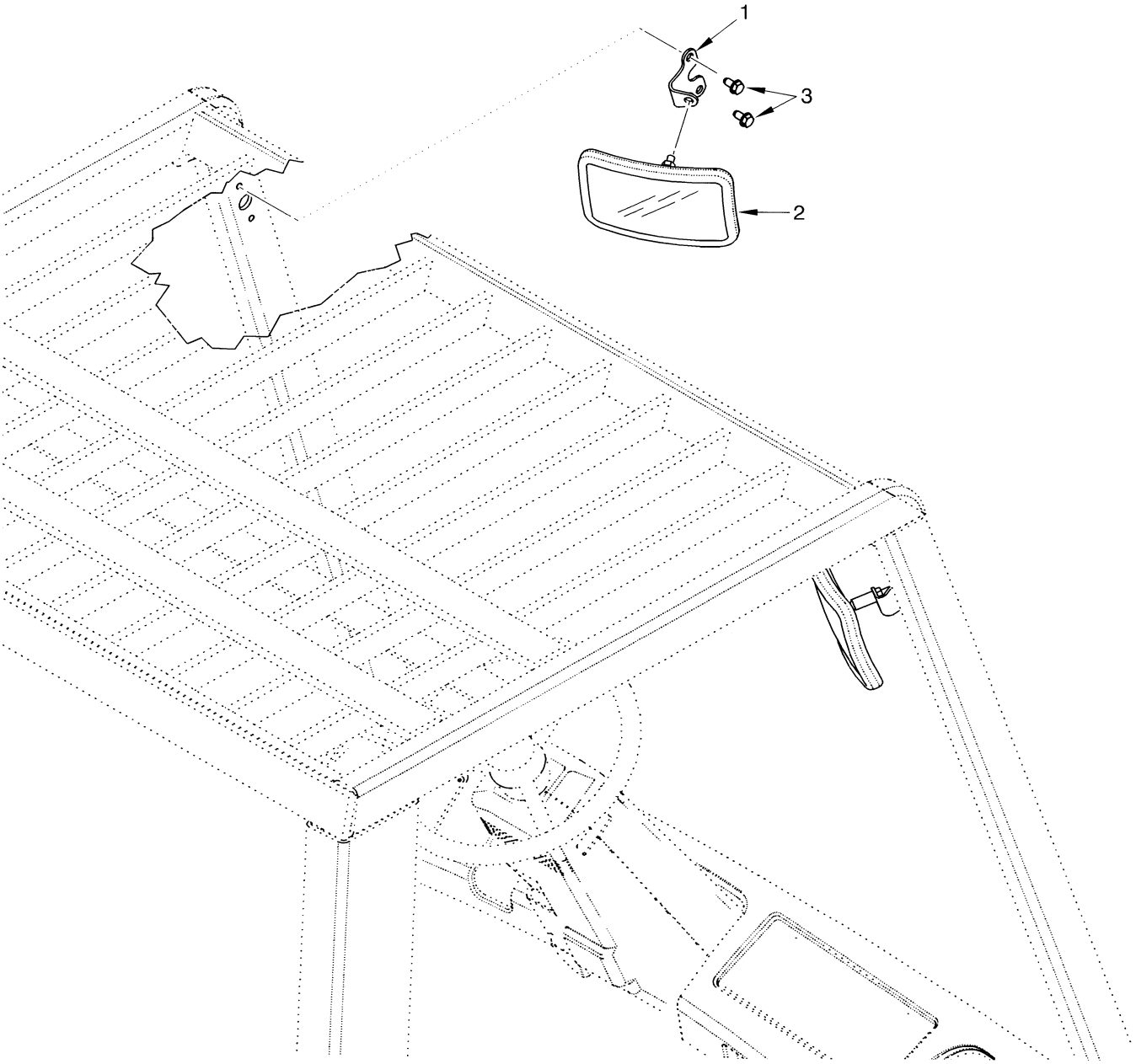


HP000029

| ITEM | PART NO. | DESCRIPTION | QTY |
|---|---|---|---|
| 1 | 1356520 | Bracket | 2 |
| 2 | 1301286 | Mirror | 2 |
| 3 | 316678 | Screw | 4 |


©2004 HYSTER COMPANY

# NOTES

# CAB (Figure 13-7)
## ATTACHING PARTS
## 1 OF 6

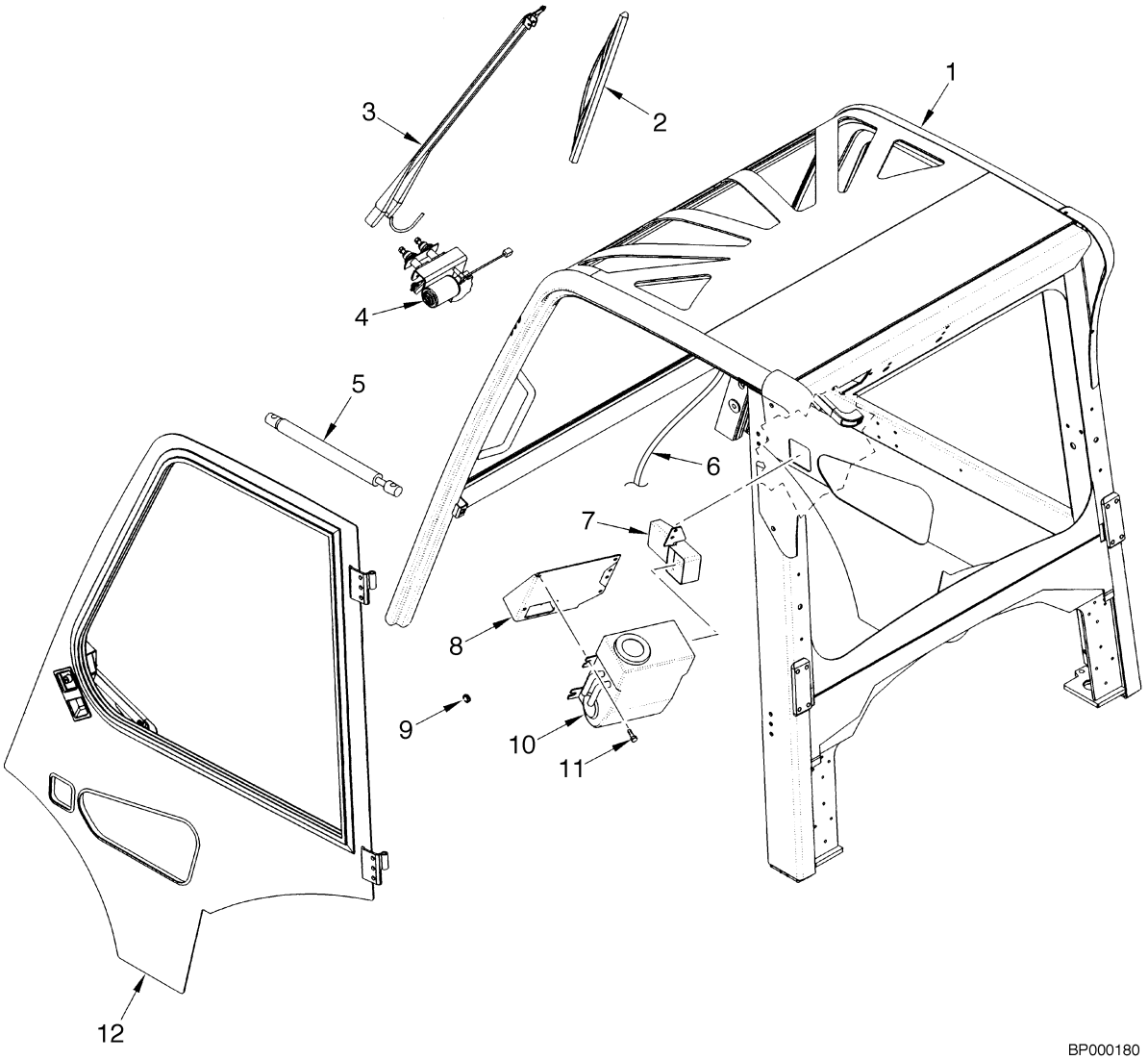



©2004 HYSTER COMPANY

# CAB
## ATTACHING PARTS
## 1 OF 6

| ITEM | PART NO. | DESCRIPTION | QTY |
|---|---|---|---|
| 1 | . . . . . | Cab Assembly | 1 |
| 2 | 1520927 | Wiper blade | 1 |
| 3 | 1393493 | Wiper Arm | 1 |
| 4 | 1393492 | Wiper Motor | 1 |
| 5 | 1393471 | Gas Spring | 2 |
| 6 | 1505287 | Wire Harness (☞ Figure 13-15) | 1 |
| 7 | 1474951 | Heat Duct | 1 |
| 8 | 1474950 | Bracket | 1 |
| 9 | 1474703 | Grommet | 1 |
| 10 | 1393540 | Heater | 1 |
| 11 | 1468311 | Screw | 6 |
| 12 | 1474701 | Door Assembly (LH) (☞ Figure 13-13) | 1 |
| 12 | 1474702 | Door Assembly (RH) (☞ Figure 13-14) | 1 |

©2004 HYSTER COMPANY

# CAB (Figure 13-8)
## ATTACHING PARTS
## 2 OF 6

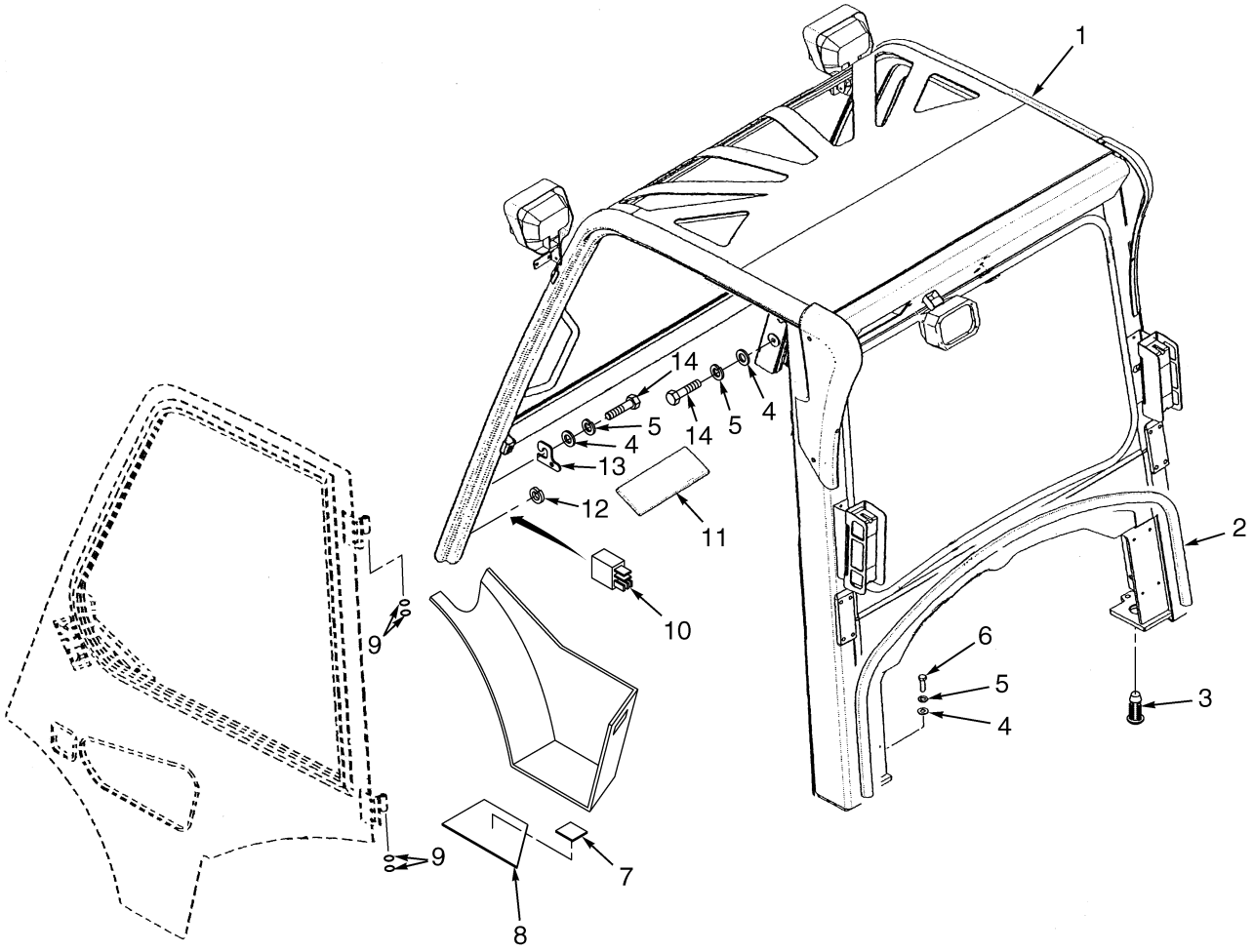


BP000142


©2004 HYSTER COMPANY

# CAB
## ATTACHING PARTS
## 2 OF 6

| ITEM | PART NO. | DESCRIPTION | QTY |
|---|---|---|---|
| 1 | . . . . . | Cab Assembly | 1 |
| 2 | 1465740 | Seal | 1 |
| 3 | 1363916 | Plug | 2 |
| 4 | 296423 | Washer | 6 |
| 5 | 292683 | Lockwasher | 6 |
| 6 | 293645 | Capscrew | 4 |
| 7 | 1330920 | Label (No Riders) (Used with item 8) | 2 |
| 7 | 355844 | Adhesive (Used with item 8) | AR |
| 8 | 1479092 | Step Floormat (LH) | 1 |
| 8 | 1479093 | Step Floormat (RH) | 1 |
| 9 | 1301700 | Bushing (Brass) | AR |
| 10 | 2035581 | Relay (Cab Power) | 1 |
| 11 | 1400207 | Cover | 1 |
| 12 | 260045 | Grommet | 2 |
| 13 | 1392740 | Shim (0.039 in.) | AR |
| 14 | 293647 | Capscrew | 2 |

©2004 HYSTER COMPANY

# CAB (Figure 13-9)
## ATTACHING PARTS
## 3 OF 6

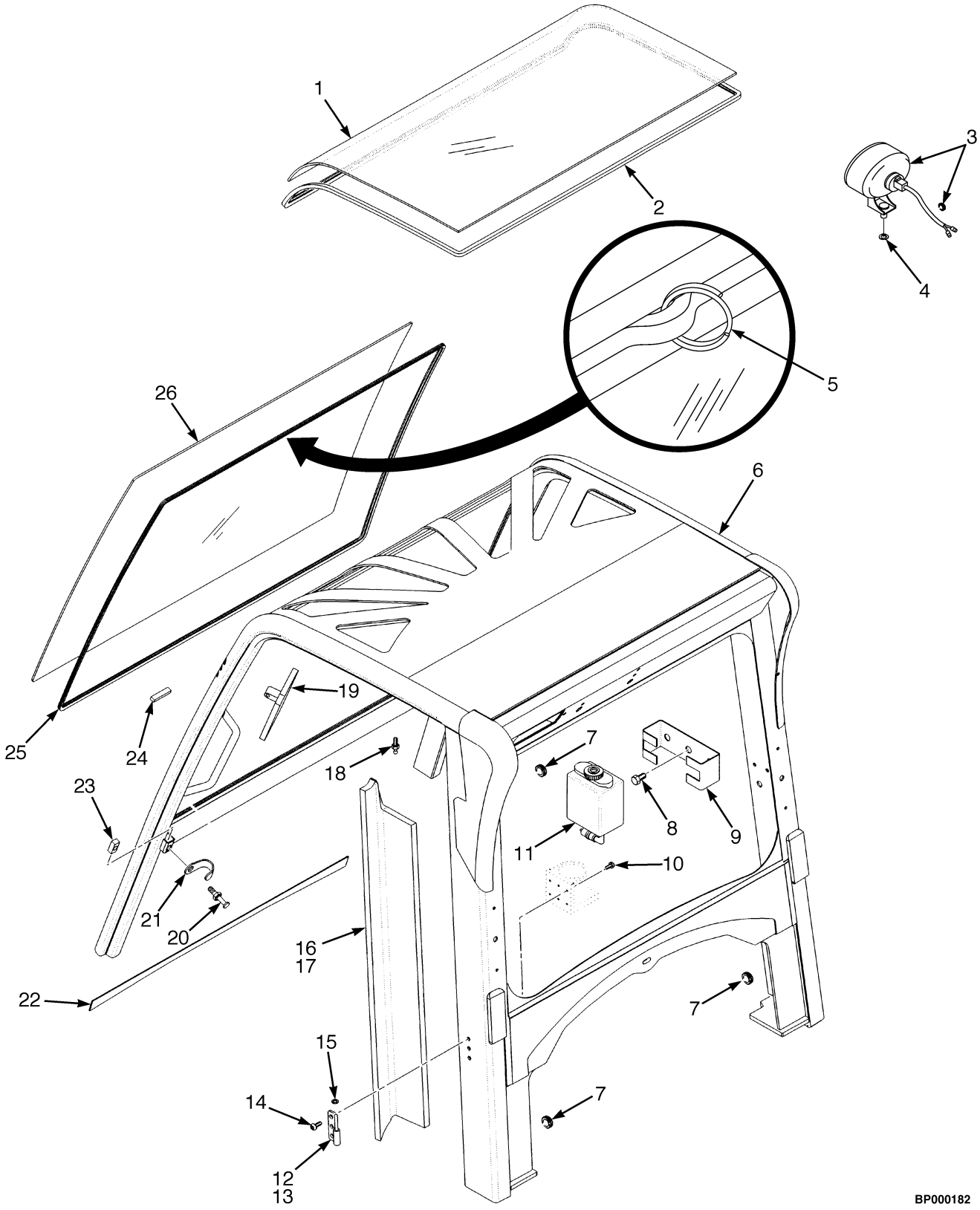



©2004 HYSTER COMPANY

# CAB
## ATTACHING PARTS
## 3 OF 6

| ITEM | PART NO. | DESCRIPTION | QTY |
|---|---|---|---|
| | . . . . . | Cab Assembly | 1 |
| 1 | 1502769 | Skylight | 1 |
| 2 | 1502770 | Tape (Sealing) | 1 |
| 3 | 1531982 | Headlight | 2 |
| 3 | 1393517 | Grommet | 2 |
| 4 | 296419 | Washer | 14 |
| 5 | 1502768 | Quick Release Ring | 4 |
| 6 | 1474957 | Frame | 1 |
| 7 | 1393511 | Grommet | 5 |
| 8 | 1468309 | Screw | 2 |
| 9 | 1474954 | Bracket | 1 |
| 10 | 1468307 | Screw | 5 |
| 11 | 1393543 | Reservoir Bottle | 1 |
| 12 | 1474952 | Hinge (LH) | 2 |
| 13 | 1474953 | Hinge (RH) | 2 |
| 14 | 1468311 | Screw | 12 |
| 15 | 1468312 | Washer | 4 |
| 16 | 1393453 | Post Cover (LH) | 1 |
| 17 | 1393454 | Post Cover (RH) | 1 |
| 18 | 1393472 | Ball Stud | 2 |
| 19 | 1485806 | Mirror (Second) | 1 |
| 19 | 1485807 | Bracket (Second Mirror) | 1 |
| 20 | 1393486 | Striker Bolt | 2 |
| 21 | 1393541 | Guard | 2 |
| 22 | 1393455 | Cover (Front) | 1 |
| 23 | 1393488 | Block (Mounting) | 1 |
| 24 | 1474709 | Block | 2 |
| 25 | 1504083 | Glue Kit (Front Window) | 1 |
| 25 | 1502771 | Activator | AR |
| 25 | 1502772 | Glue | AR |
| 26 | 1504084 | Window (Front) | 1 |
| | 1474820 | Sealant (Not Illustrated) | 1 |
| | 1474821 | Adhesive (Not Illustrated) | 1 |
| | 1393503 | Activator (Not Illustrated) | 1 |

©2004 HYSTER COMPANY

# CAB (Figure 13-10)
## ATTACHING PARTS
## 4 OF 6

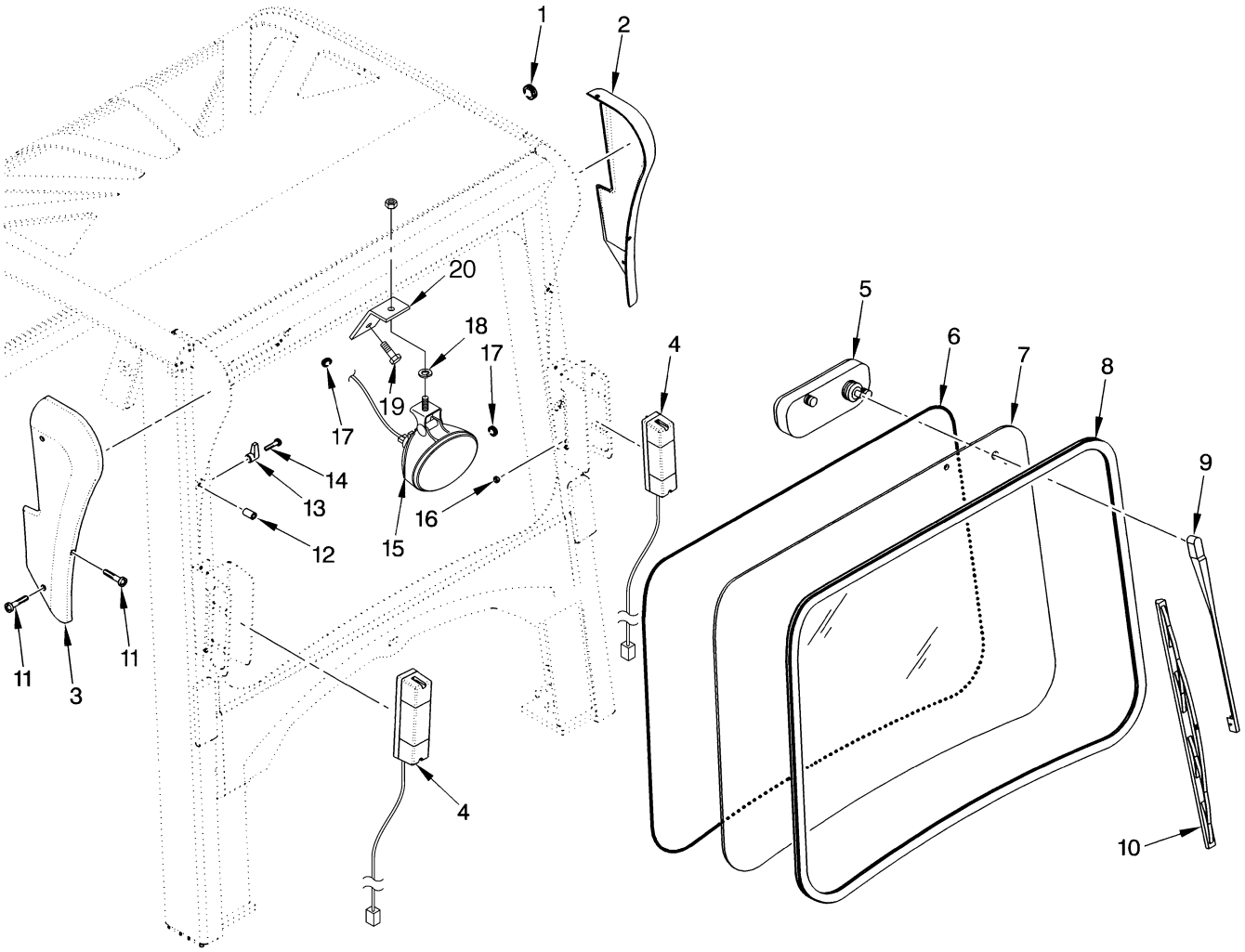


BP000183


©2004 HYSTER COMPANY

# CAB
## ATTACHING PARTS
## 4 OF 6

| ITEM | PART NO. | DESCRIPTION | QTY |
|---|---|---|---|
| | . . . . . | Cab Assembly | 1 |
| 1 | 1393511 | Grommet | 2 |
| 2 | 1393451 | Ear (LH) | 1 |
| 3 | 1393452 | Ear (RH) | 1 |
| 4 | 1553084 | Brake and Back-Up Light | 2 |
| 4 | 177521 | Bulb (12 Volt) | 1 |
| 4 | 1302258 | Bulb | 2 |
| 4 | 1376439 | Lens (Clear) | 1 |
| 4 | 1376440 | Lens (Red) | 1 |
| 4 | 1380757 | Lens (Amber) | 1 |
| 4 | 1376446 | Screw | 2 |
| 5 | 1393504 | Wiper Motor | 1 |
| 6 | 1393497 | Seal (Rubber) | 1 |
| 7 | 1493909 | Window (Rear) | 1 |
| 8 | 1393466 | Seal (Rubber) | 1 |
| 9 | 1393505 | Wiper Arm | 1 |
| 10 | 1474955 | Wiper Blade | 1 |
| 11 | 302047 | Screw | 6 |
| 12 | 1474710 | Insert | 12 |
| 13 | 1393458 | Hanger (Coat) | 1 |
| 14 | 1468307 | Screw | 1 |
| 15 | 1531982 | Headlight | 1 |
| 16 | 302324 | Nut | 4 |
| 17 | 1393514 | Grommet | 5 |
| 18 | 296419 | Washer | 1 |
| 19 | 292500 | Capscrew | 1 |
| 20 | 1546322 | Bracket | 1 |

©2004 HYSTER COMPANY

# CAB (Figure 13-11)
## ATTACHING PARTS
## 5 OF 6

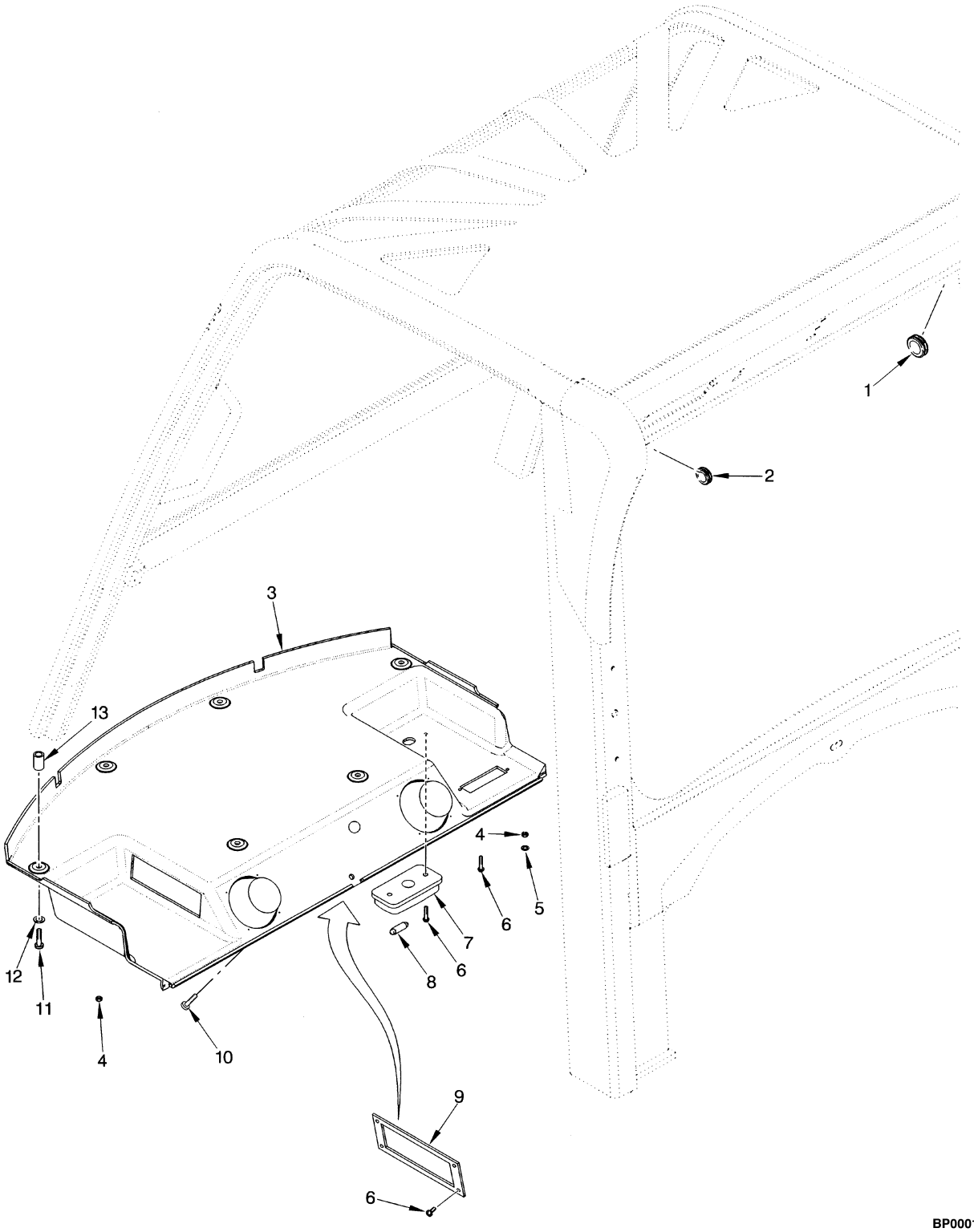



©2004 HYSTER COMPANY

# CAB
## ATTACHING PARTS
## 5 OF 6

| ITEM | PART NO. | DESCRIPTION | QTY |
|---|---|---|---|
| | . . . . . | Cab Assembly | 1 |
| 1 | 1474704 | Grommet | 1 |
| 2 | 1393511 | Grommet | 1 |
| 3 | 1393524 | Headliner | 1 |
| 4 | 292667 | Nut | 16 |
| 5 | 296415 | Washer | 2 |
| 6 | 302023 | Screw | 8 |
| 7 | 1393528 | Dome Light | 1 |
| 8 | 1393527 | Bulb | 1 |
| 9 | 1474956 | Plate | 1 |
| 10 | 1468320 | Screw | 8 |
| 11 | 302049 | Screw | 7 |
| 12 | 1468321 | Washer | 7 |
| 13 | 1474711 | Insert | 9 |

©2004 HYSTER COMPANY

# CAB (Figure 13-12)
## ATTACHING PARTS
## 6 OF 6

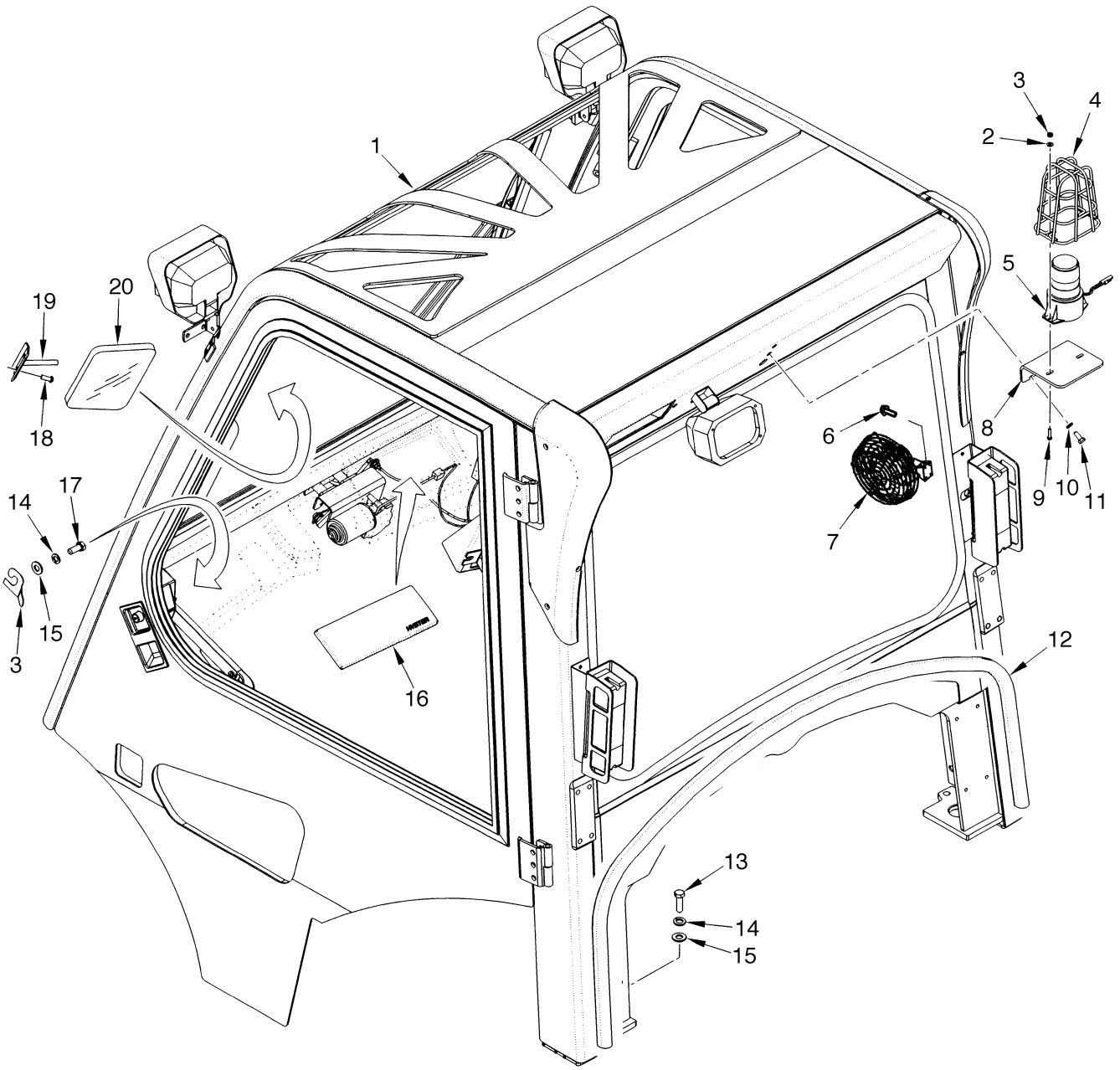


BP000178


©2004 HYSTER COMPANY

# CAB
## ATTACHING PARTS
## 6 OF 6

| ITEM | PART NO. | DESCRIPTION | QTY |
|---|---|---|---|
| 1 | . . . . . | Cab Assembly | 1 |
| 2 | 197067 | Washer | 2 |
| 3 | 1392740 | Shim (0.039 in.) | AR |
| 3 | 230882 | Nut | 2 |
| 4 | 1302024 | Guard | 1 |
| 5 | 1399474 | Strobe Light Assembly | 1 |
| 5 | 1382131 | Lens (Amber) | 1 |
| 5 | 1309775 | Bulb | 1 |
| 6 | 293726 | Screw (Allen) | 3 |
| 7 | 1503620 | Fan | 1 |
| 8 | 1392797 | Bracket | 1 |
| 9 | 220498 | Screw | 2 |
| 10 | 292681 | Lockwasher | 2 |
| 11 | 136681 | Capscrew | 2 |
| 12 | 1465740 | Seal | 1 |
| 13 | 293647 | Capscrew | 2 |
| 14 | 292683 | Lockwasher | 6 |
| 15 | 296423 | Washer | 6 |
| 16 | 1400207 | Cover | 1 |
| 17 | 293645 | Capscrew | 4 |
| 18 | 369242 | Capscrew | 2 |
| 19 | 1392818 | Bracket | 1 |
| 20 | 1392819 | Mirror | 1 |

©2004 HYSTER COMPANY

# CAB (Figure 13-13)
## DOOR ASSEMBLY
## LEFT HAND

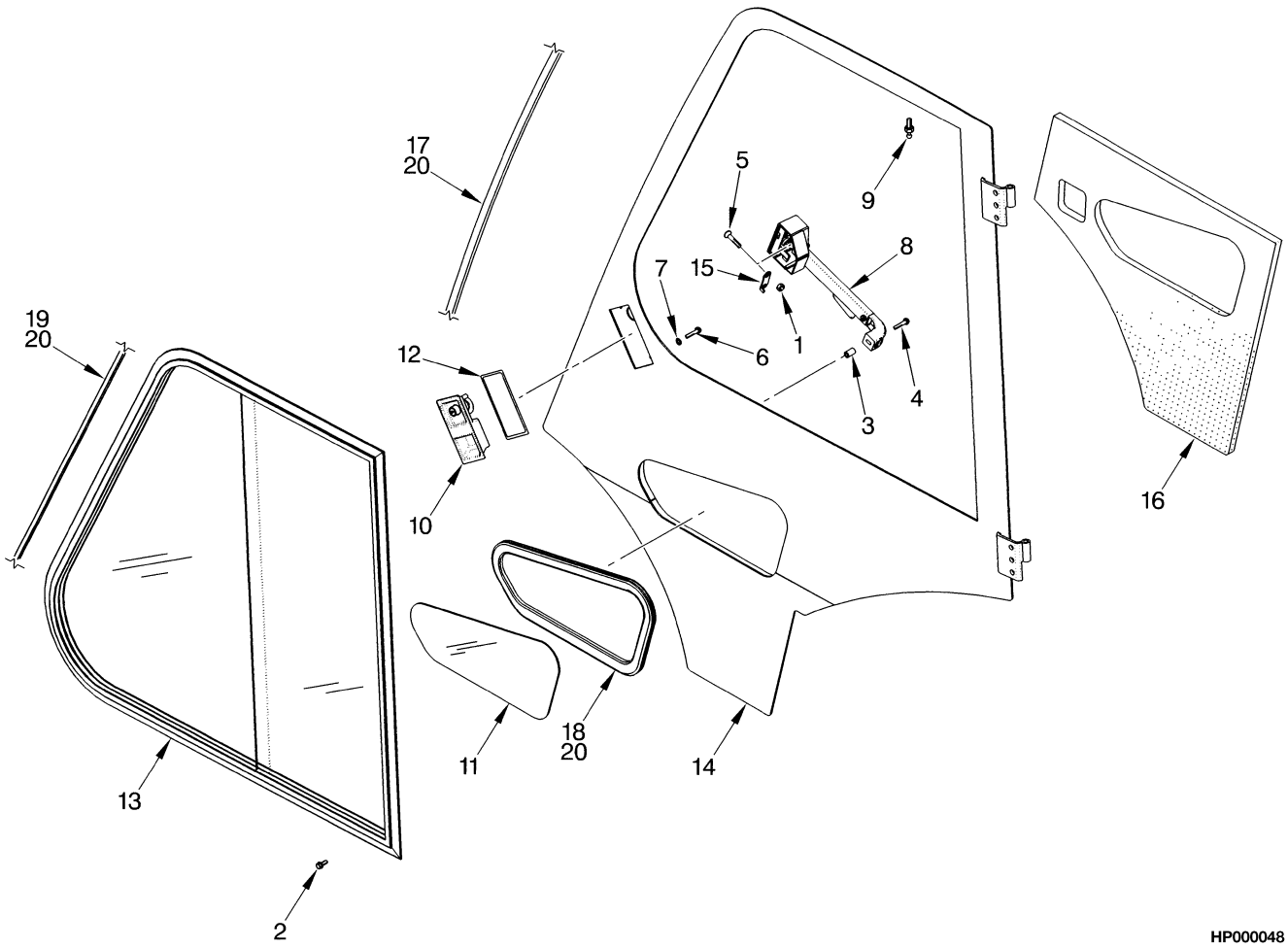



©2004 HYSTER COMPANY

# CAB
## DOOR ASSEMBLY
## LEFT HAND

| ITEM | PART NO. | DESCRIPTION | QTY |
|---|---|---|---|
| | 1474701 | Door Assembly (Left Hand) | 1 |
| 1 | 316835 | Nut | 2 |
| 2 | 1474765 | Screw | 11 |
| 3 | 1474710 | Insert | 1 |
| 4 | 302048 | Screw | 1 |
| 5 | 296229 | Capscrew | 2 |
| 6 | 1468310 | Screw | 3 |
| 7 | 1474766 | Washer | 3 |
| 8 | 1393479 | Handle | 1 |
| 9 | 1393472 | Ball Stud | 1 |
| 10 | 1393480 | Latch | 1 |
| 11 | 1393464 | Window (Lower) | 1 |
| 12 | 1393485 | Seal | 1 |
| 13 | 1504094 | Window Assembly (LH) | 1 |
| 13 | 1504085 | Glass (LH Front Sliding) | 1 |
| 13 | 1504086 | Glass (LH Rear Fixed) | 1 |
| 13 | 1504089 | Latch | 1 |
| 14 | 1474959 | Frame (Door) | 1 |
| 15 | 1474960 | Plate (Door Lock) | 1 |
| 16 | 1393467 | Cover (Door) | 1 |
| 17 | 1393463 | Seal | 1 |
| 18 | 1474767 | Window Seal (Lower) | 1 |
| 19 | 1474768 | Seal (Sliding Window) | 1 |
| 20 | 1474820 | Sealant | 1 |
| | 1474821 | Adhesive (Not Illustrated) | 1 |
| | 1493913 | Door Key (Not Illustrated) | 1 |

©2004 HYSTER COMPANY

# CAB (Figure 13-14)
## DOOR ASSEMBLY
## RIGHT HAND

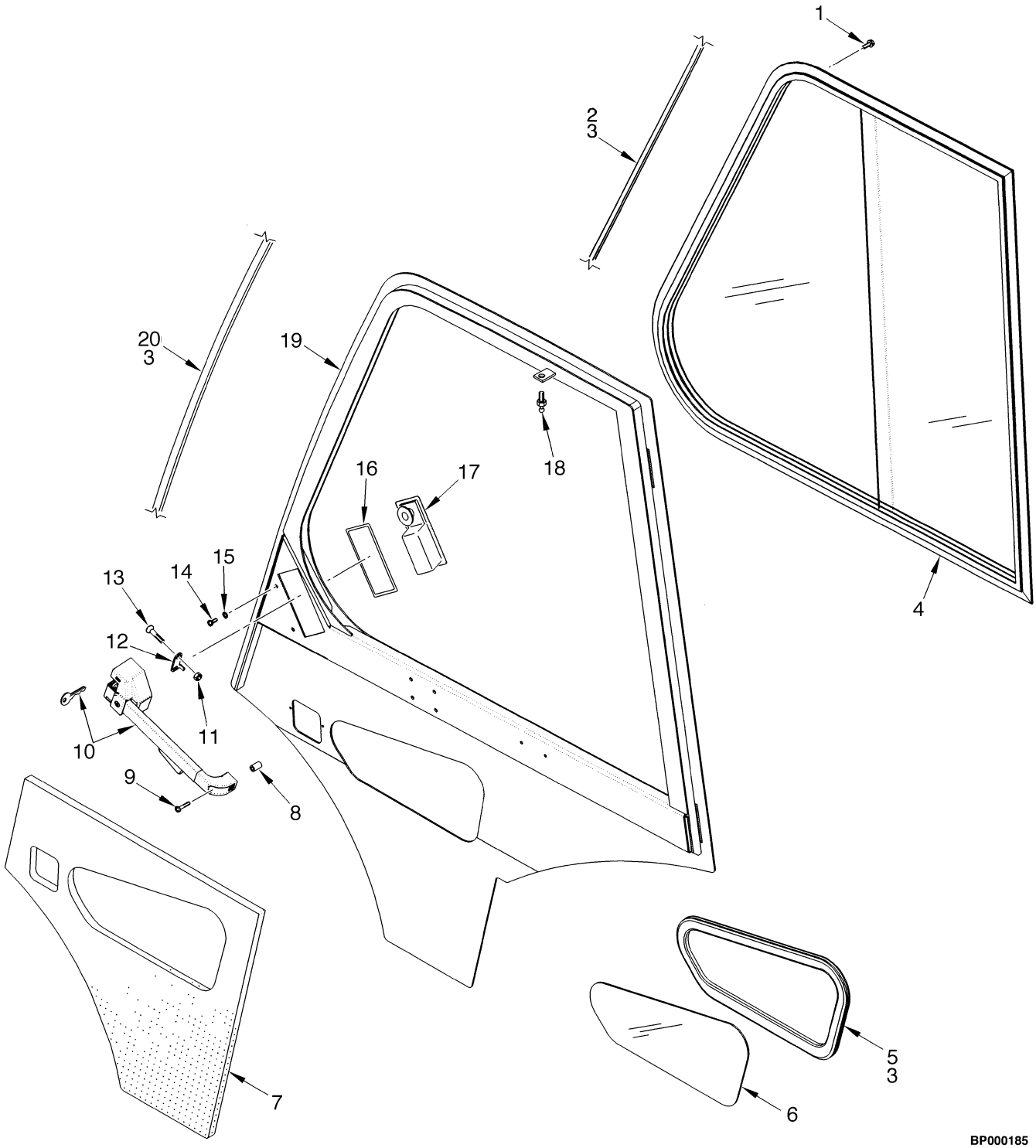



©2004 HYSTER COMPANY

# CAB
## DOOR ASSEMBLY
## RIGHT HAND

| ITEM | PART NO. | DESCRIPTION | QTY |
|---|---|---|---|
| | 1474702 | Door Assembly | 1 |
| 1 | 1474765 | Screw | 12 |
| 2 | 1474768 | Seal (Sliding Window) | 1 |
| 3 | 1474820 | Sealant | 1 |
| 4 | 1504095 | Window Assembly (RH) | 1 |
| 4 | 1504088 | Glass (RH) (Rear Fixed) | 1 |
| 4 | 1504087 | Glass (RH) (Front Sliding) | 1 |
| 4 | 1504089 | Latch | 1 |
| 5 | 1474767 | Window Seal (Lower) | 1 |
| 6 | 1393464 | Window (Lower) | 1 |
| 7 | 1393468 | Cover (Door) | 1 |
| 8 | 1474710 | Insert | 1 |
| 9 | 302048 | Screw | 1 |
| 10 | 1393482 | Handle | 1 |
| 10 | 1493913 | Door Key | 1 |
| 11 | 316835 | Nut | 2 |
| 12 | 1474961 | Plate (Door Lock) | 1 |
| 13 | 296229 | Capscrew | 2 |
| 14 | 1468310 | Screw | 3 |
| 15 | 1474766 | Washer | 3 |
| 16 | 1393485 | Seal | 1 |
| 17 | 1393483 | Latch | 1 |
| 18 | 1393472 | Ball Stud | 1 |
| 19 | 1474962 | Frame (Door) | 1 |
| 20 | 1393463 | Seal | 1 |

©2004 HYSTER COMPANY

# CAB (Figure 13-15)
## WIRE HARNESSES

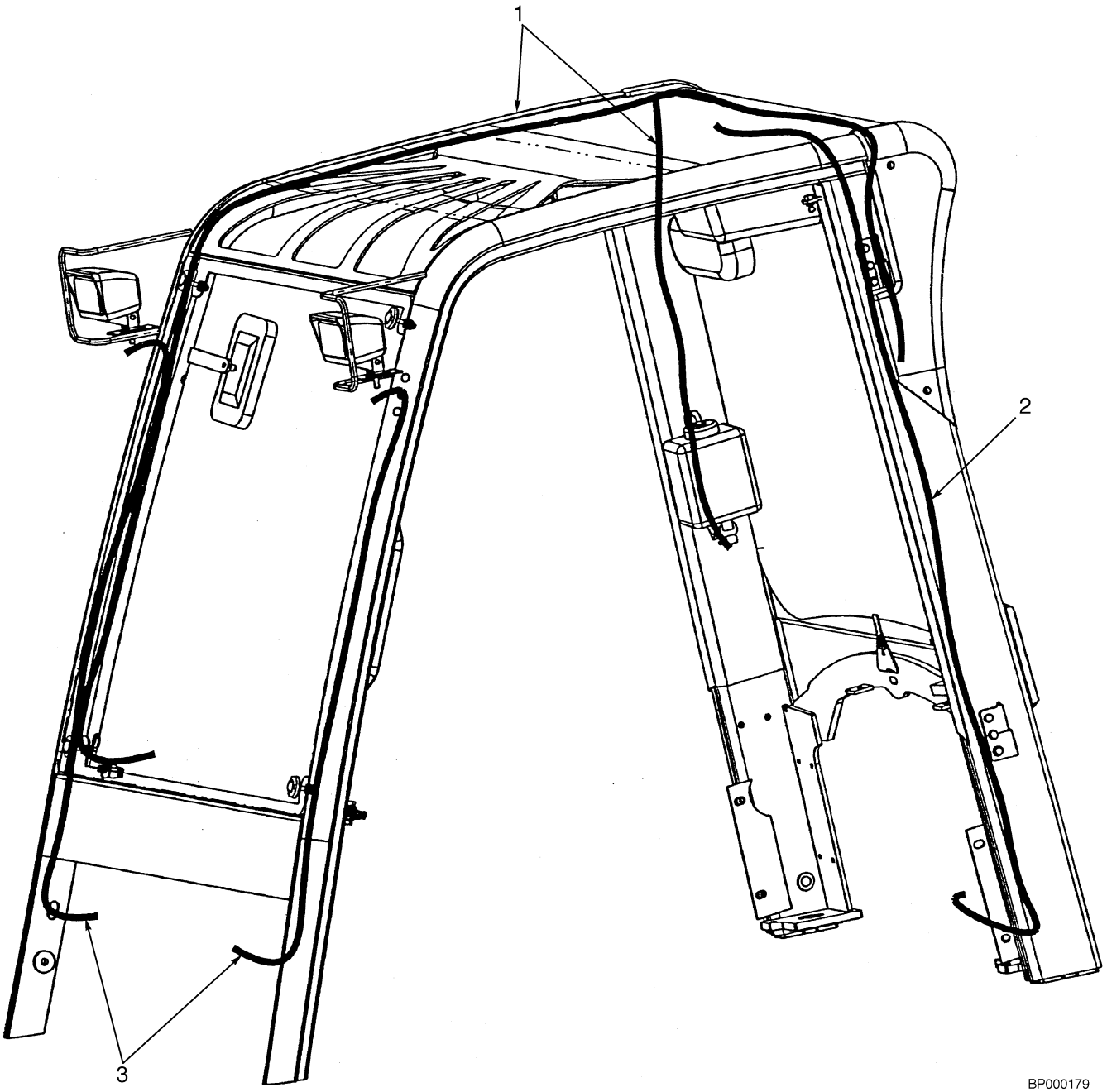


| ITEM | | PART NO. | DESCRIPTION | QTY |
|---|---|---|---|---|
| 1 | | 1505287 | Wire Harness (Main) | 1 |
| 1 | **a** | 1494692 | Wiper Switch (Front) | 1 |
| 1 | **a** | 1494693 | Wiper Switch (Rear) | 1 |
| 1 | **a** | 1494673 | Heater Blower Switch | 1 |
| 1 | **a** | 1393547 | Switch Panel | 1 |
| 1 | **a** | 1393537 | Relay | 1 |


©2004 HYSTER COMPANY

# CAB
## WIRE HARNESSES

| ITEM | PART NO. | DESCRIPTION | QTY |
|---|---|---|---|
| 2 | 2036541 | Wire Harness (Auxilary) (☞ Figure 13-16) | 1 |
| 3 | 2036544 | Wire Harness (Headlights) (☞ Figure 13-17) | 1 |

**FOOTNOTES:**
**a** Not Illustrated

©2004 HYSTER COMPANY

# CAB WIRE HARNESS (Figure 13-16)
## WORKLIGHTS AND STROBE LIGHT

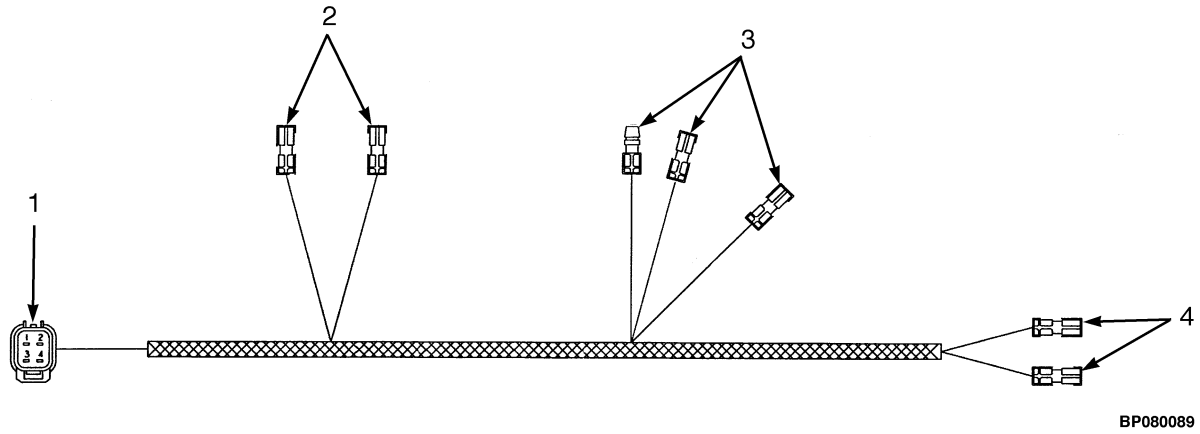


| ITEM | PART NO. | DESCRIPTION | QTY |
|---|---|---|---|
| | 2036541 | Wire Harness | 1 |
| 1 | . . . . . | Connector Assembly (Module Connection) | 1 |
| 1 | 1497290 | Housing | 1 |
| 1 | 1497303 | Retainer | 1 |
| 1 | 1484596 | Terminal (Pin) | 3 |
| 1 | 1484597 | Seal | 3 |
| 1 | 1484594 | Terminal (Pin) | 1 |
| 1 | 1484595 | Seal | 1 |
| 2 | . . . . . | Connector Assembly (LH Work Light) | 2 |
| 2 | 1324310 | Terminal | 2 |
| 3 | 1324309 | Connector | 2 |
| 3 | . . . . . | Connector Assembly (Strobe or Accessory) | 1 |
| 3 | 1324310 | Terminal | 2 |
| 3 | 1324309 | Connector | 2 |
| 3 | 1324308 | Electrical Fitting | 1 |
| 3 | 1324307 | Electrical Fitting | 1 |
| 4 | . . . . . | Connector Assembly (RH Work Light) | 2 |
| 4 | 1324310 | Terminal | 2 |
| 4 | 1324309 | Connector | 2 |


©2004 HYSTER COMPANY

# CAB WIRE HARNESS (Figure 13-17)
## HEADLIGHT AND HANDHELD LIGHT

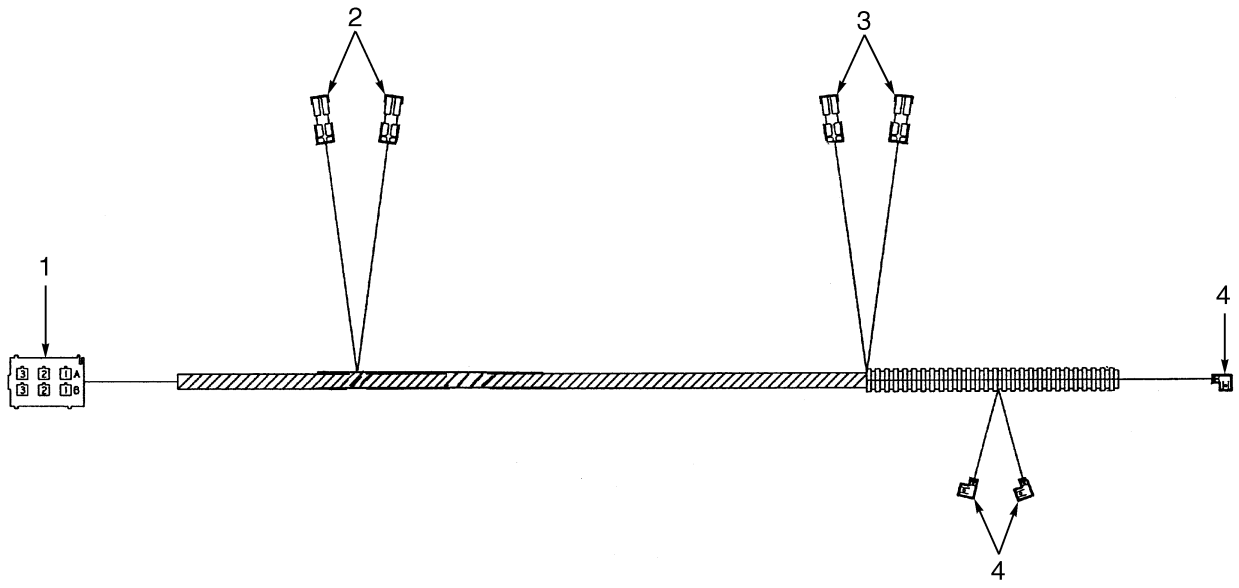


BP000143

| ITEM | PART NO. | DESCRIPTION | QTY |
|---|---|---|---|
| | 2036544 | Wire Harness | 1 |
| 1 | 1496789 | Terminal | 5 |
| 1 | 1496790 | Housing (Module) | 1 |
| 2 | 1324309 | Connector | 2 |
| 2 | 1324310 | Terminal | 2 |
| 3 | 1324309 | Connector | 2 |
| 3 | 1324310 | Terminal (Headlight) | 2 |
| 4 | 367540 | Fitting (Female) | 3 |

©2004 HYSTER COMPANY

# HEATER INSTALLATION (Figure 13-18)
## GASOLINE

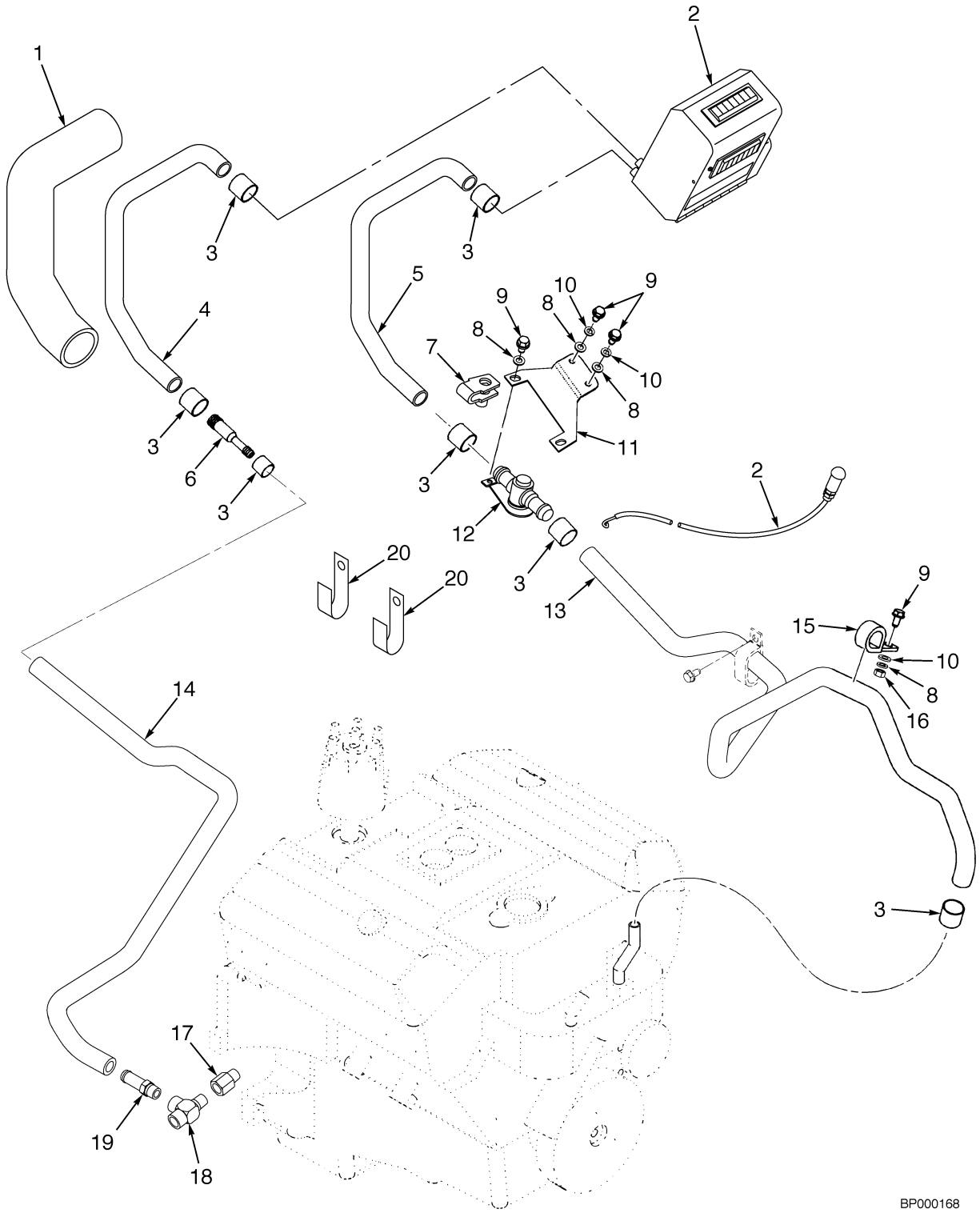



©2004 HYSTER COMPANY

# HEATER INSTALLATION
## GASOLINE

| ITEM | PART NO. | DESCRIPTION | QTY |
|---|---|---|---|
| 1 | 1358120 | Sleeve | 1 |
| 2 | 1527516 | Heater | 1 |
| 2 | . . . . . | Cable | 1 |
| 3 | 127045 | Clamp | 8 |
| 4 | 1545786 | Hose (Return) | 1 |
| 5 | 1545785 | Hose (Supply) | 1 |
| 6 | 1399822 | Coupling | 1 |
| 7 | 1480237 | Nut-Clip | 2 |
| 8 | 320157 | Washer | 5 |
| 9 | 136681 | Capscrew | 5 |
| 10 | 292681 | Lockwasher | 3 |
| 11 | 1543530 | Bracket | 1 |
| 12 | 1300741 | Valve (Heater) | 1 |
| 13 | 2040752 | Hose (Supply) | 1 |
| 14 | 2050576 | Hose (Return) | 1 |
| 15 | 1310611 | Clamp (Insulated) | 1 |
| 16 | 239503 | Nut | 1 |
| 17 | 17642 | Fitting | 1 |
| 18 | 154452 | Fitting | 1 |
| 19 | 138710 | Fitting | 1 |
| 20 | 251994 | Clamp (Insulated) | 2 |

©2004 HYSTER COMPANY

# HEATER INSTALLATION (Figure 13-19)
## LPG

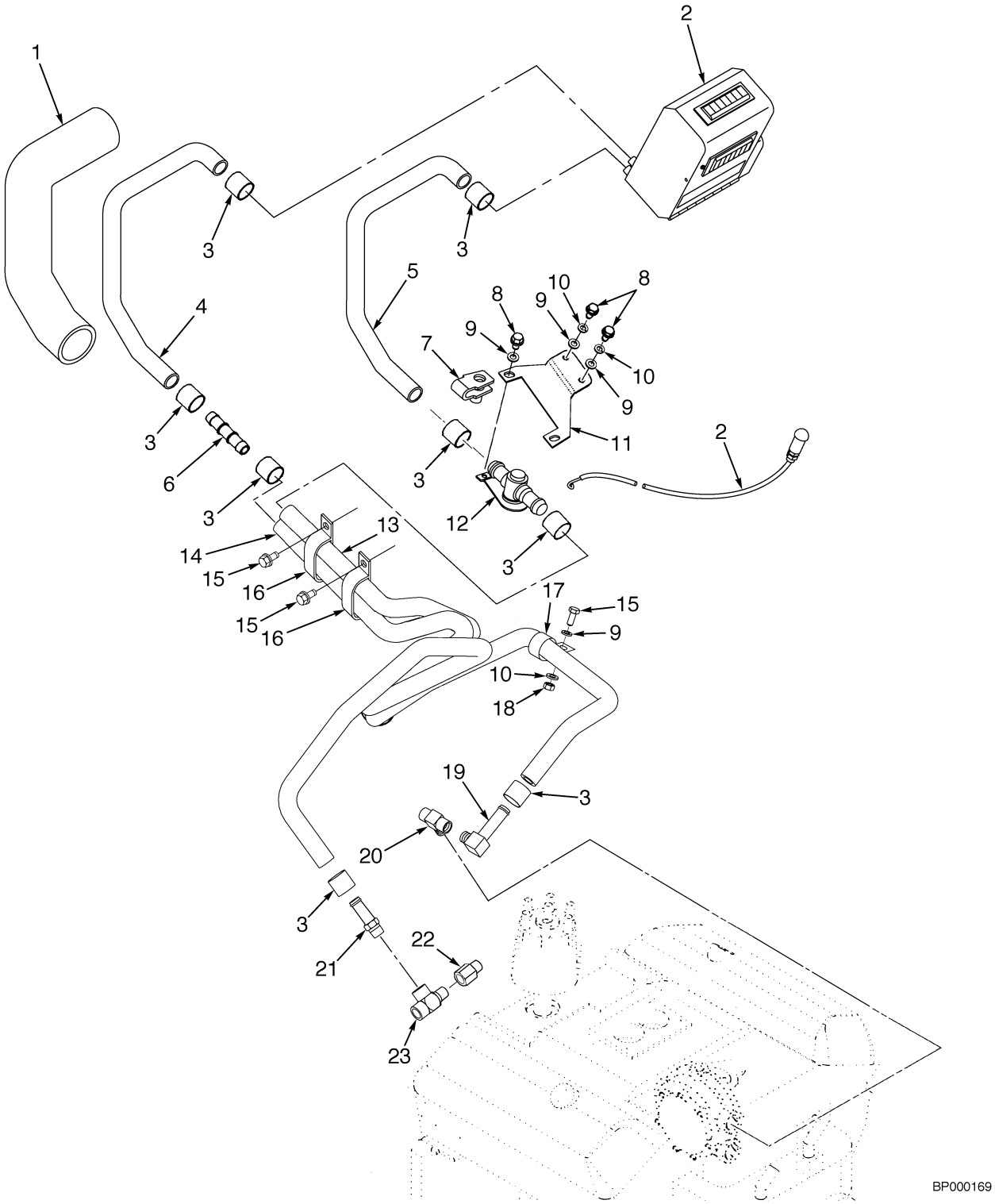



©2004 HYSTER COMPANY

# HEATER INSTALLATION
## LPG

| ITEM | PART NO. | DESCRIPTION | QTY |
|---|---|---|---|
| 1 | 1358120 | Sleeve | 1 |
| 2 | 1527516 | Heater | 1 |
| 2 | . . . . . | Cable | 1 |
| 3 | 127045 | Clamp | 8 |
| 4 | 1545786 | Hose (Return) | 1 |
| 5 | 1545785 | Hose (Supply) | 1 |
| 6 | 1399822 | Coupling | 1 |
| 7 | 1480237 | Nut-Clip | 2 |
| 8 | 136681 | Capscrew | 5 |
| 9 | 320157 | Washer | 5 |
| 10 | 292681 | Lockwasher | 3 |
| 11 | 1543530 | Bracket | 1 |
| 12 | 1300741 | Valve | 1 |
| 13 | 2040752 | Hose (Supply) | 1 |
| 14 | 2050576 | Hose (Return) | 1 |
| 15 | 316678 | Screw | 4 |
| 16 | 251994 | Clamp (Insulated) | 3 |
| 17 | 1310611 | Clamp (Insulated) | 1 |
| 18 | 239503 | Nut | 1 |
| 19 | 125305 | Fitting | 1 |
| 20 | 17665 | Fitting | 1 |
| 21 | 17642 | Fitting | 1 |
| 22 | 154452 | Fitting | 1 |
| 23 | 138710 | Fitting | 1 |

©2004 HYSTER COMPANY

# HEATER INSTALLATION (Figure 13-20)
## DIESEL TIER II

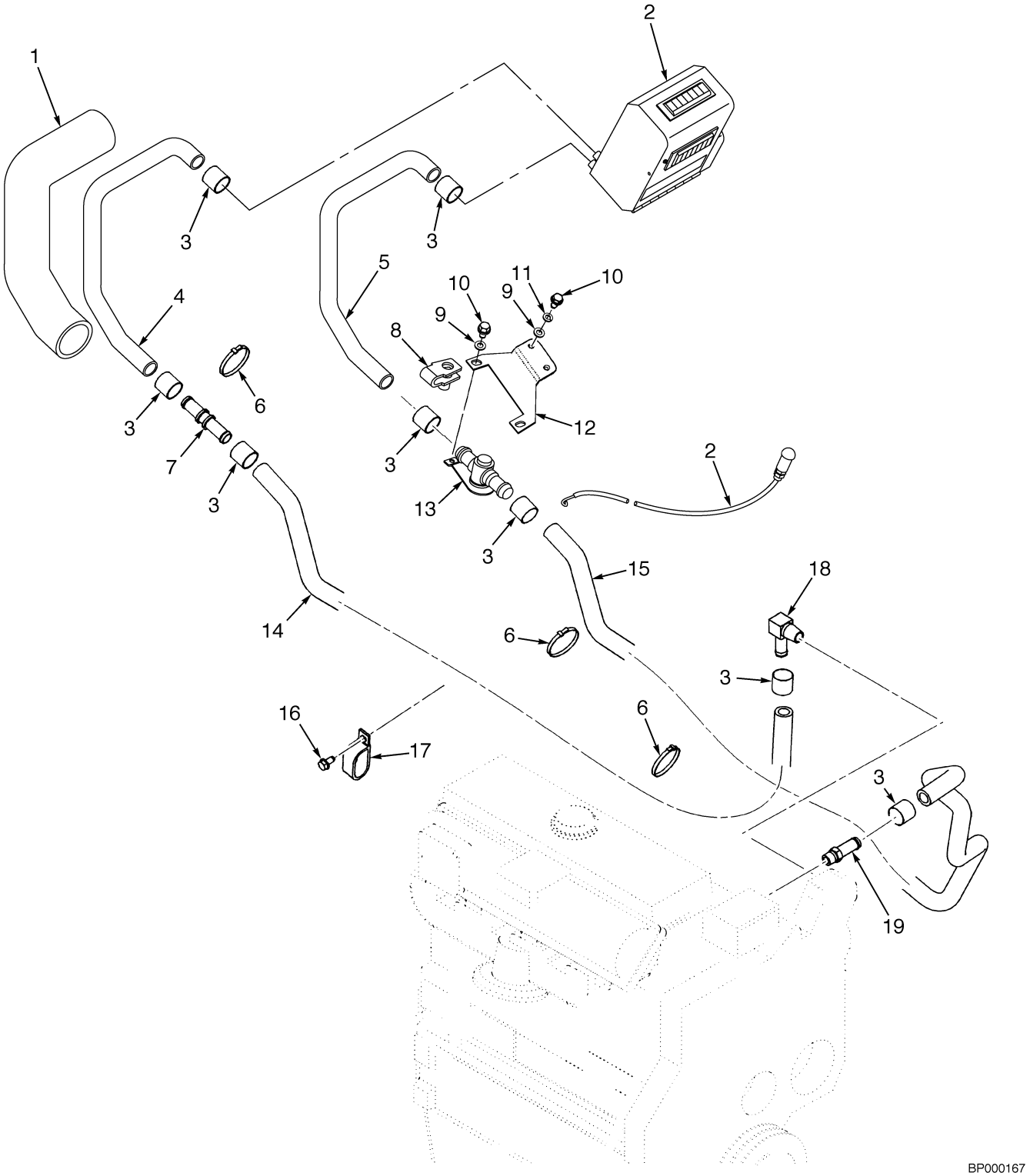



©2004 HYSTER COMPANY

# HEATER INSTALLATION
## DIESEL TIER II

| ITEM | PART NO. | DESCRIPTION | QTY |
|---|---|---|---|
| 1 | 1358120 | Sleeve | 1 |
| 2 | 1527516 | Heater | 1 |
| 2 | . . . . . | Cable | 1 |
| 3 | 127045 | Clamp | 8 |
| 4 | 1545786 | Hose (Return) | 1 |
| 5 | 1545785 | Hose (Supply) | 1 |
| 6 | 2004005 | Strap Clamp | 3 |
| 7 | 1399822 | Coupling | 1 |
| 8 | 1480237 | Nut-Clip | 2 |
| 9 | 320157 | Washer | 4 |
| 10 | 136681 | Capscrew | 2 |
| 11 | 292681 | Lockwasher | 6 |
| 12 | 1543530 | Bracket | 1 |
| 13 | 1300741 | Valve | 1 |
| 14 | 2040752 | Hose (Return) | 1 |
| 15 | 2040751 | Hose (Supply) | 1 |
| 16 | 316678 | Screw | 4 |
| 17 | 251994 | Clamp (Insulated) | 4 |
| 18 | 16155 | Fitting | 1 |
| 19 | 16156 | Fitting | 1 |

©2004 HYSTER COMPANY

# ACCUMULATOR (Figure 13-21)
## MAST LOAD DAMPENING

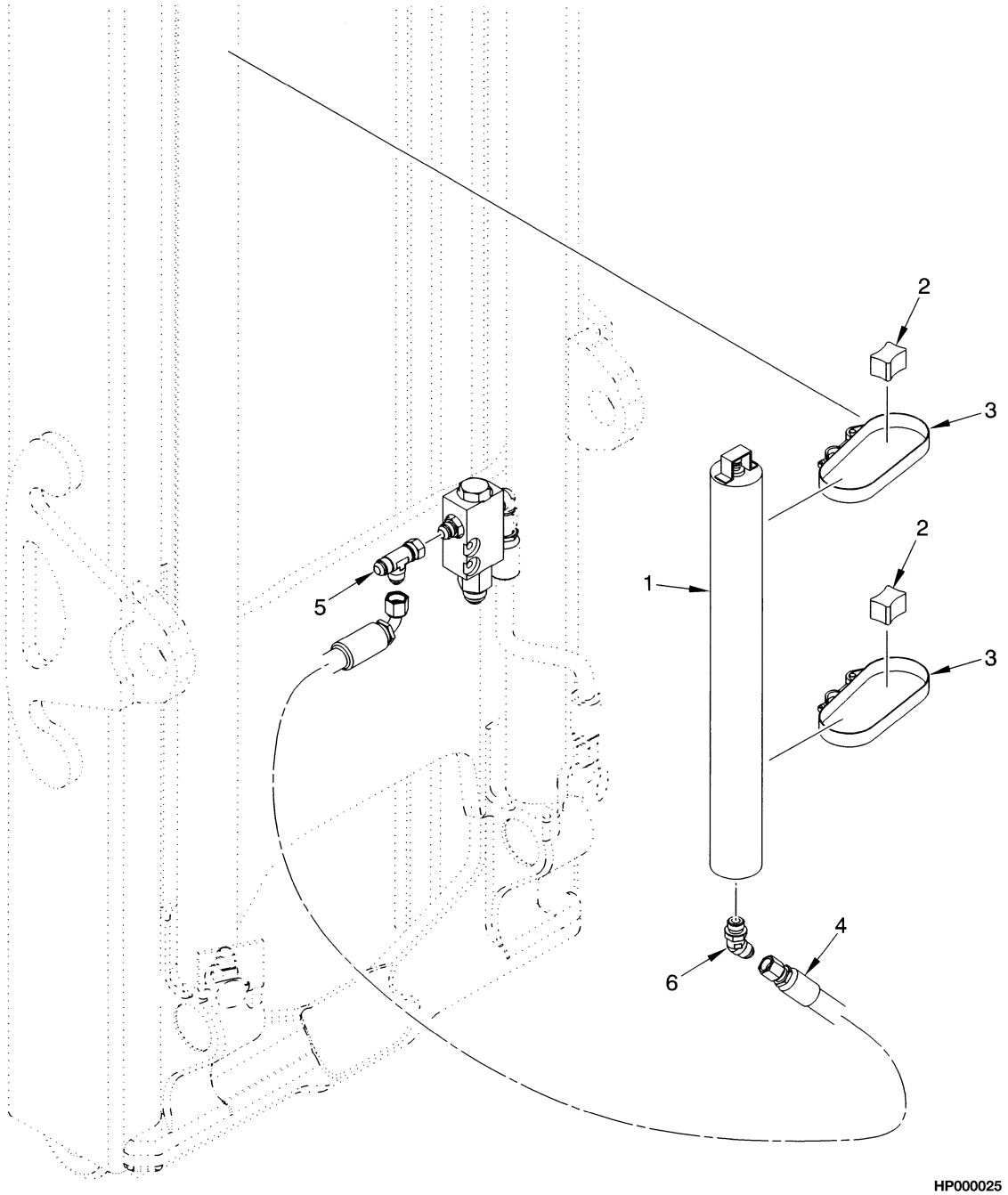


| ITEM | PART NO. | DESCRIPTION | QTY |
|---|---|---|---|
| 1 | 1465897 | Accumulator | 1 |
| 2 | 1466337 | Spacer | 2 |
| 3 | 1466472 | Clamp | 2 |
| 4 | 1466415 | Hose | 1 |
| 5 | 16568 | Fitting | 1 |
| 5 | 16484 | O-Ring | 1 |
| 6 | 17062 | Fitting | 1 |


©2004 HYSTER COMPANY

# NOTES

# INTEGRAL SIDE-SHIFT ASSEMBLY (Figure 13-22)
## H70XM - H90XM (48 AND 60-INCH)
## TWO STAGE LIMITED FREE-LIFT

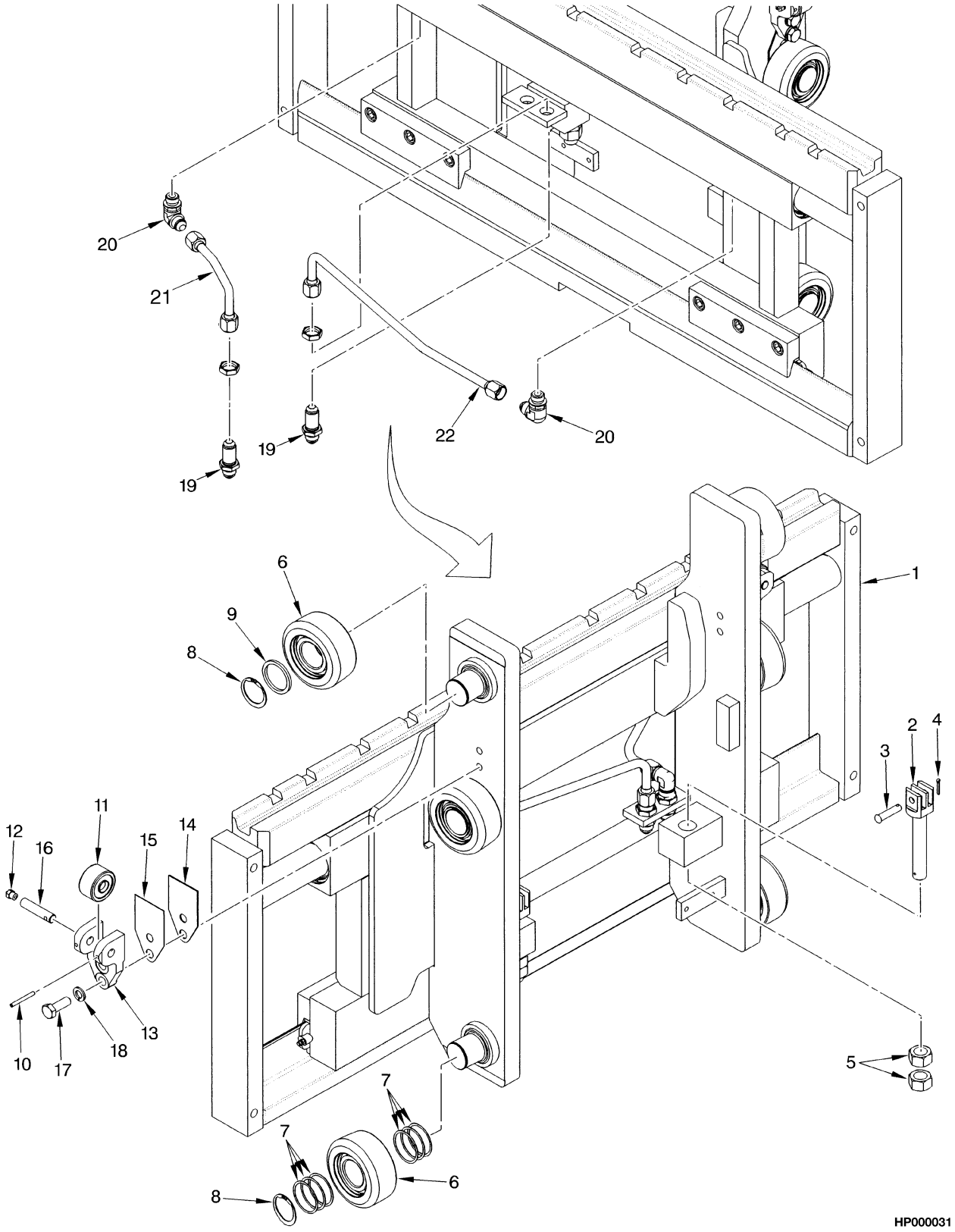



©2004 HYSTER COMPANY

# INTEGRAL SIDE-SHIFT ASSEMBLY
## H70XM - H90XM (48 AND 60-INCH)
## TWO STAGE LIMITED FREE-LIFT

| ITEM | PART NO. | DESCRIPTION | QTY |
|---|---|---|---|
| | 2037951 | Carriage Assembly (48 in.) (Group No. 8502066) | 1 |
| | 2037952 | Carriage Assembly (60 in.) (Group No. 8502067) | 1 |
| 1 | 2037943 | Carriage (48 in.) | 1 |
| 1 | 2037944 | Carriage (60 in.) | 1 |
| 2 | 1387285 | Chain Anchor | 2 |
| 3 | 327591 | Pin | 2 |
| 4 | 15222 | Cotter Pin | 2 |
| 5 | 221717 | Nut | 4 |
| 6 | 1511883 | Load Roller | 6 |
| 7 | 126765 | Shim (0.020 in.) | 24 |
| 8 | 1465072 | Snap Ring | 6 |
| 9 | 1399224 | Spacer | 2 |
| 10 | 66333 | Pin | 2 |
| 11 | 1387993 | Roller | 2 |
| 12 | 16001 | Lube Fitting | 2 |
| 13 | 1465177 | Bracket | 2 |
| 14 | 192425 | Shim (0.062 in.) | AR |
| 15 | 192424 | Shim (0.030 in.) | AR |
| 16 | 1465028 | Pin | 2 |
| 17 | 292528 | Capscrew | 4 |
| 18 | 292683 | Lockwasher | 4 |
| 19 | 16448 | Fitting | 2 |
| 20 | 16559 | Fitting | 2 |
| 20 | 16484 | O-Ring | 1 |
| 21 | 1499104 | Hose | 1 |
| 22 | 1499103 | Hose | 1 |

©2004 HYSTER COMPANY

# INTEGRAL SIDE-SHIFT CARRIAGE (Figure 13-23)
## H70XM - H90XM (48 AND 60-INCH)
## TWO STAGE LIMITED FREE-LIFT

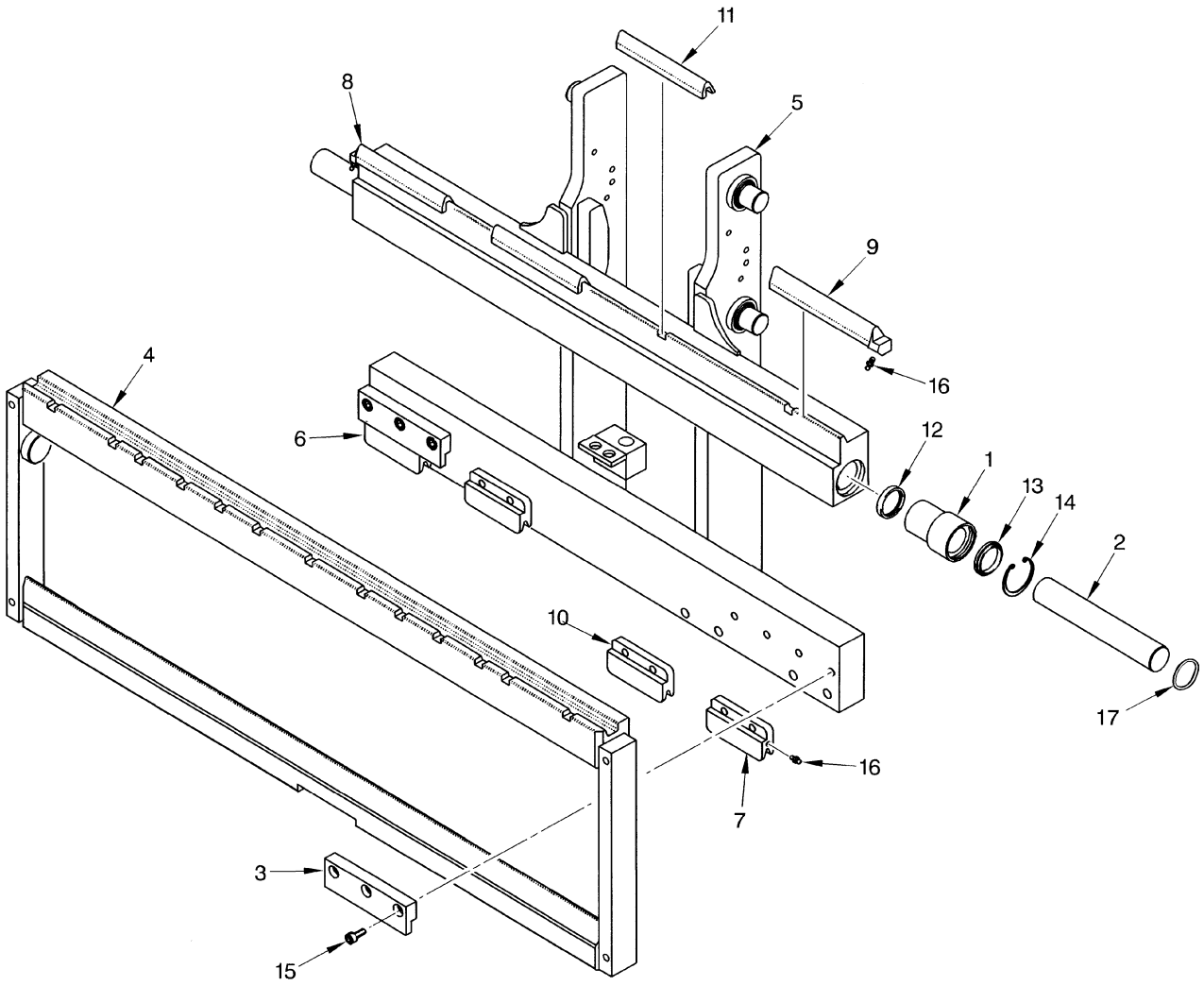


HP000036


©2004 HYSTER COMPANY

# INTEGRAL SIDE-SHIFT CARRIAGE
## H70XM - H90XM (48 AND 60-INCH)
## TWO STAGE LIMITED FREE-LIFT

| ITEM | PART NO. | DESCRIPTION | QTY |
|---|---|---|---|
| | 2037943 | Carriage (48 in.) | 1 |
| | 2037944 | Carriage (60 in.) | 1 |
| 1 | 1467151 | Bushing | 2 |
| 2 | 1467153 | Rod | 2 |
| 3 | 1467154 | Hook | 2 |
| 4 | 1532640 | Apron (48 in.) | 1 |
| 4 | 1532643 | Apron (60 in.) | 1 |
| 5 | 1467769 | Frame (48 in.) | 1 |
| 5 | 1467771 | Frame (60 in.) | 1 |
| 6 | 1467145 | Bearing Strip (RH Lower) | 1 |
| 7 | 1467146 | Bearing Strip (LH Lower) | 1 |
| 8 | 1467147 | Bearing Strip (RH Upper) | 1 |
| 9 | 1467148 | Bearing Strip (LH Upper) | 1 |
| 10 | 1467201 | Bearing Strip (Lower Center) (60 in.) | 2 |
| 11 | 1467200 | Bearing Strip (Upper Center) (60 in.) | 2 |
| 12 | 1467149 | Seal | 2 |
| 13 | 1467150 | Wiper Ring | 2 |
| 14 | 1467632 | Snap Ring | 2 |
| 15 | 1467633 | Screw | 6 |
| 16 | 16041 | Lube Fitting | 8 |
| 17 | 39365 | O-Ring | 2 |

©2004 HYSTER COMPANY

# INTEGRAL SIDE-SHIFT ASSEMBLY (Figure 13-24)
## H100XM-H120XM (54 AND 60-INCH)
## TWO STAGE LIMITED FREE-LIFT

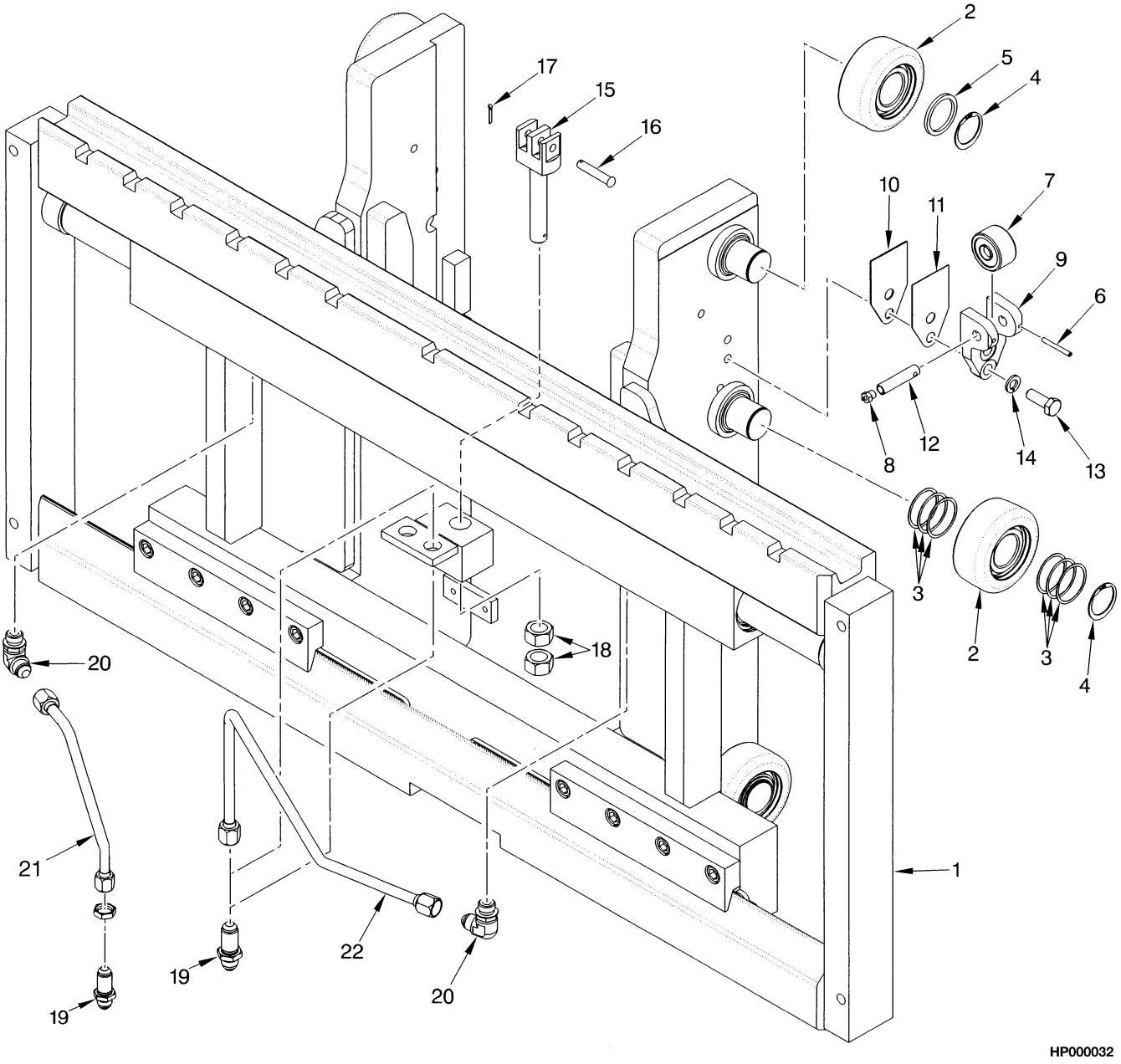



©2004 HYSTER COMPANY

# INTEGRAL SIDE-SHIFT ASSEMBLY
## H100XM-H120XM (54 AND 60-INCH)
## TWO STAGE LIMITED FREE-LIFT

| ITEM | PART NO. | DESCRIPTION | QTY |
|---|---|---|---|
| | 2037953 | Carriage Assembly (54 in.) (Group No. 8502068) | 1 |
| | 2037954 | Carriage Assembly (60 in.) (Group No. 8502069) | 1 |
| 1 | 2037945 | Carriage (54 in.) | 1 |
| 1 | 2037946 | Carriage (60 in.) | 1 |
| 2 | 1511883 | Load Roller | 6 |
| 3 | 1399207 | Shim (0.020 in.) | 24 |
| 4 | 1465072 | Snap Ring | 6 |
| 5 | 1399224 | Spacer | 2 |
| 6 | 66333 | Pin | 2 |
| 7 | 1387993 | Roller | 2 |
| 8 | 16001 | Lube Fitting | 2 |
| 9 | 1465177 | Bracket | 2 |
| 10 | 192425 | Shim (0.062 in.) | AR |
| 11 | 192424 | Shim (0.030 in.) | AR |
| 12 | 1465028 | Pin | 2 |
| 13 | 292528 | Capscrew | 4 |
| 14 | 292683 | Lockwasher | 4 |
| 15 | 1387286 | Chain Anchor | 2 |
| 16 | 339932 | Pin | 2 |
| 17 | 15222 | Cotter Pin | 2 |
| 18 | 221717 | Nut | 4 |
| 19 | 16448 | Fitting | 2 |
| 20 | 16559 | Fitting | 2 |
| 20 | 16484 | O-Ring | 1 |
| 21 | 1499102 | Hose | 1 |
| 22 | 1499101 | Hose | 1 |

©2004 HYSTER COMPANY

# INTEGRAL SIDE-SHIFT CARRIAGE (Figure 13-25)
## H100XM - H120XM (54 AND 60-INCH)
## TWO STAGE LIMITED FREE-LIFT

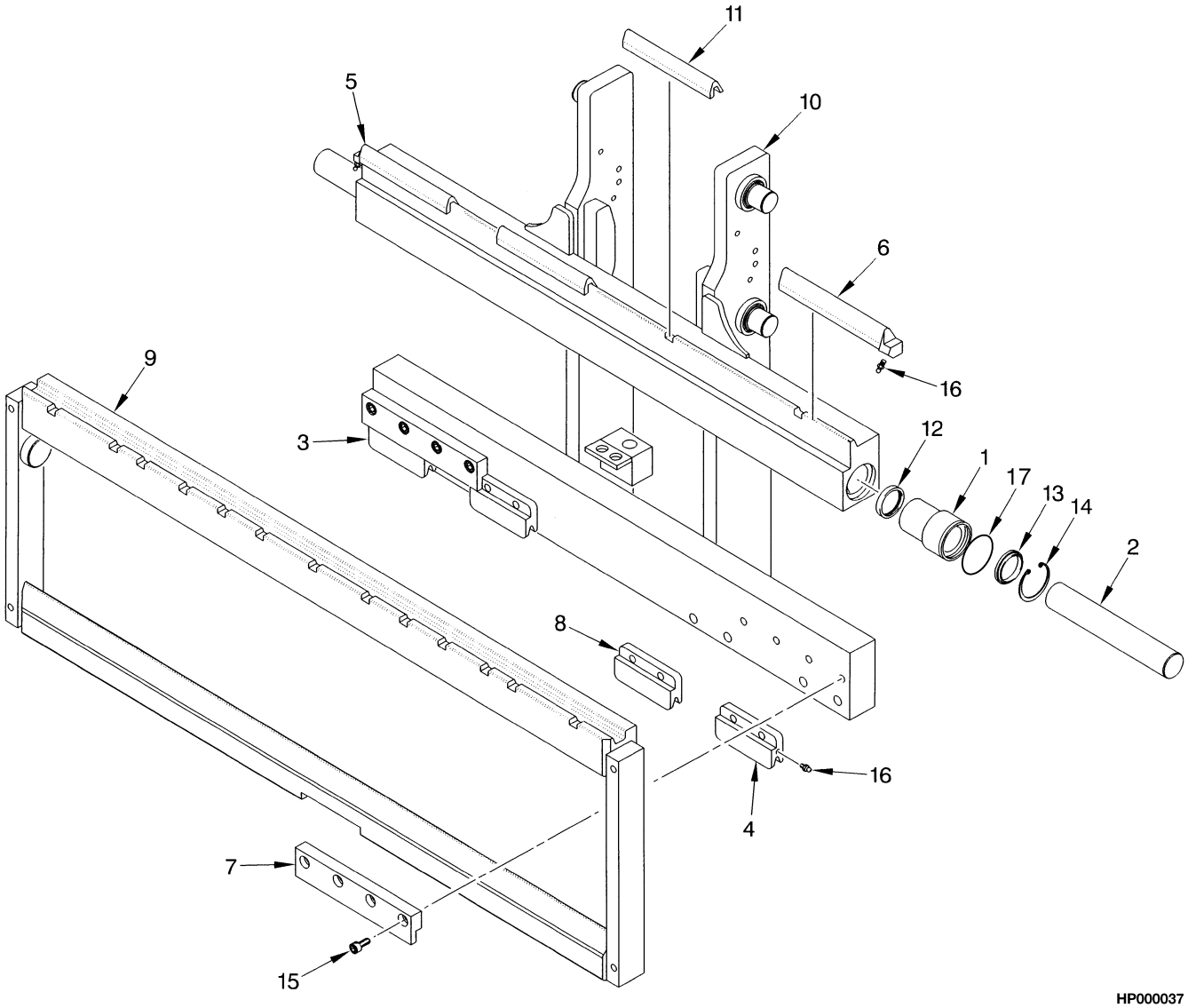



©2004 HYSTER COMPANY

# INTEGRAL SIDE-SHIFT CARRIAGE
## H100XM - H120XM (54 AND 60-INCH)
## TWO STAGE LIMITED FREE-LIFT

| ITEM | PART NO. | DESCRIPTION | QTY |
|---|---|---|---|
| | 2037945 | Carriage (54 in.) | 1 |
| | 2037946 | Carriage (60 in.) | 1 |
| 1 | 1467204 | Bushing | 2 |
| 2 | 1467205 | Rod | 2 |
| 3 | 1467145 | Bearing Strip (RH Lower) | 1 |
| 4 | 1467146 | Bearing Strip (LH Lower) | 1 |
| 5 | 1467147 | Bearing Strip (RH Upper) | 1 |
| 6 | 1467148 | Bearing Strip (LH Upper) | 1 |
| 7 | 1467206 | Hook | 2 |
| 8 | 1467201 | Bearing Strip (Lower Center) | 2 |
| 9 | 1532638 | Apron (54 in.) | 1 |
| 9 | 1532639 | Apron (60 in.) | 1 |
| 10 | 1467774 | Frame (54 in.) | 1 |
| 10 | 1467776 | Frame (60 in.) | 1 |
| 11 | 1467200 | Bearing Strip (Upper Center) | 2 |
| 12 | 1467202 | Seal | 2 |
| 13 | 1467203 | Wiper Ring | 2 |
| 14 | 1467634 | Snap Ring | 2 |
| 15 | 1467633 | Screw | 8 |
| 16 | 16041 | Lube Fitting | 8 |
| 17 | 39366 | O-Ring | 2 |

©2004 HYSTER COMPANY

# INTEGRAL SIDE-SHIFT ASSEMBLY (Figure 13-26)
## H70XM-90XM (48 AND 60 INCH)
## TWO AND THREE STAGE FULL FREE-LIFT

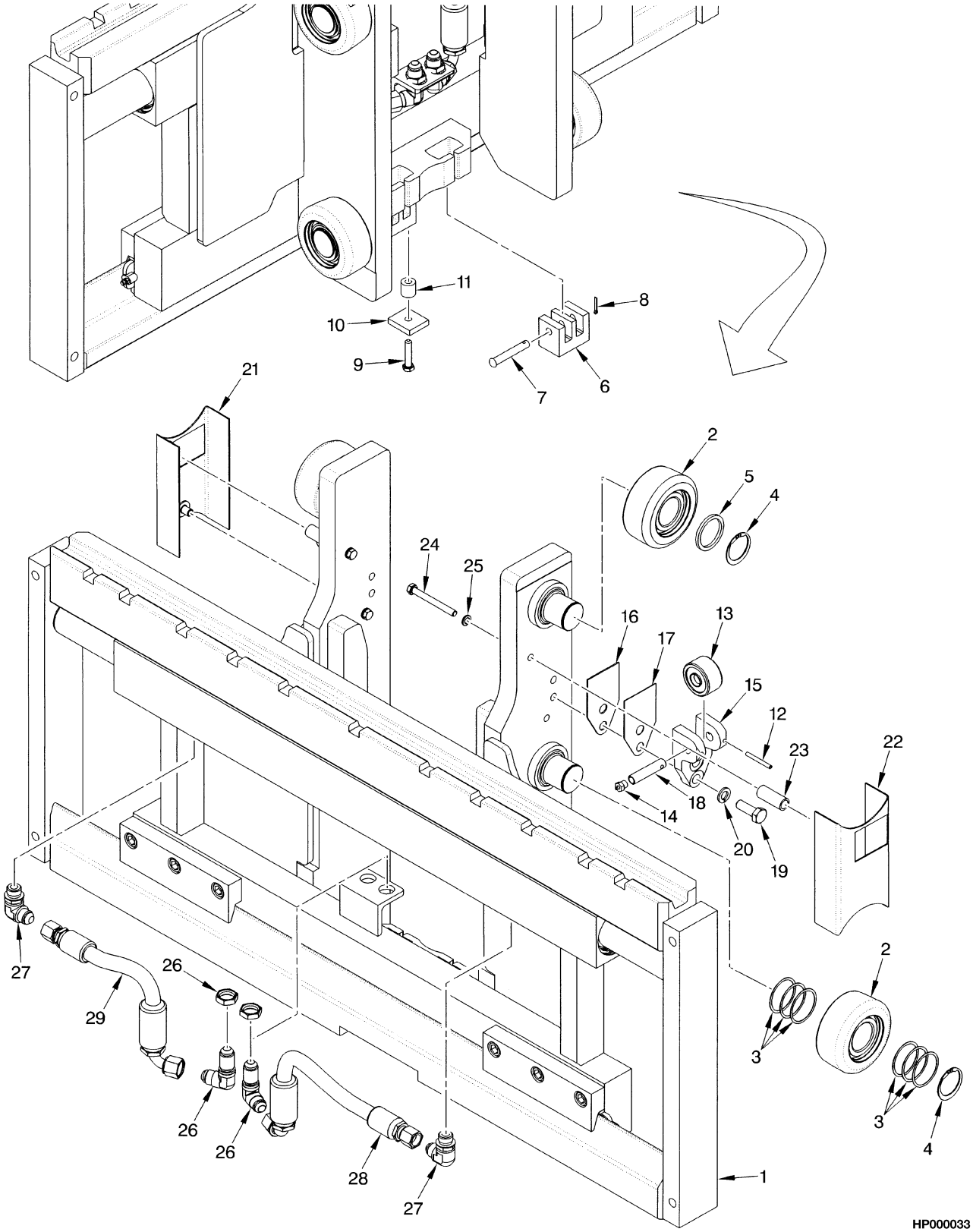



©2004 HYSTER COMPANY

# INTEGRAL SIDE-SHIFT ASSEMBLY
## H70XM-90XM (48 AND 60 INCH)
## TWO AND THREE STAGE FULL FREE-LIFT

| ITEM | PART NO. | DESCRIPTION | QTY |
|---|---|---|---|
| | **b** 2038594 | Carriage Assembly (48 in.) (Group No. 8502090) | 1 |
| | **b** 2038596 | Carriage Assembly (60 in.) (Group No. 8502091) | 1 |
| | **a** 2037955 | Carriage Assembly (48 in.) (Group No. 8502070) | 1 |
| | **a** 2037956 | Carriage Assembly (60 in.) (Group No. 8502071) | 1 |
| 1 | . . . . . | Carriage Frame (☞ Figure 13-27, ☞ Figure 13-28) | 1 |
| 2 | 1511883 | Load Roller | 6 |
| 3 | 126765 | Shim (0.020 in.) | 24 |
| 4 | 1465072 | Snap Ring | 6 |
| 5 | 1399224 | Spacer | 2 |
| 6 | 1387548 | Chain Anchor | 2 |
| 7 | 1387549 | Pin | 2 |
| 8 | 15222 | Cotter Pin | 2 |
| 9 | 292508 | Capscrew | 1 |
| 10 | 1400126 | Plate | 1 |
| 11 | 1400125 | Spacer | 1 |
| 12 | 66333 | Pin | 2 |
| 13 | 1387993 | Roller | 2 |
| 14 | 16001 | Lube Fitting | 2 |
| 15 | 1465177 | Bracket | 2 |
| 16 | 192425 | Shim (0.062 in.) | AR |
| 17 | 192424 | Shim (0.030 in.) | AR |
| 18 | 1465028 | Pin | 2 |
| 19 | 292528 | Capscrew | 4 |
| 20 | 292683 | Lockwasher | 4 |
| 21 | 319322 | Guard (RH) | 1 |
| 22 | 319323 | Guard (LH) | 1 |
| 23 | 317292 | Spacer | 4 |
| 24 | 18518 | Capscrew | 4 |
| 25 | 15155 | Lockwasher | 4 |
| 26 | 16458 | Fitting | 2 |
| 27 | 16559 | Fitting | 2 |
| 27 | 16484 | O-Ring | 1 |
| 28 | 1499105 | Hose | 1 |
| 29 | 1499106 | Hose | 1 |

**FOOTNOTES:**
**a** Three Stage Full Free-Lift
**b** Two Stage Full Free-Lift

©2004 HYSTER COMPANY

# INTEGRAL SIDE-SHIFT CARRIAGE (Figure 13-27)
## H70XM-90XM (48 INCH)
## TWO AND THREE STAGE FULL FREE-LIFT

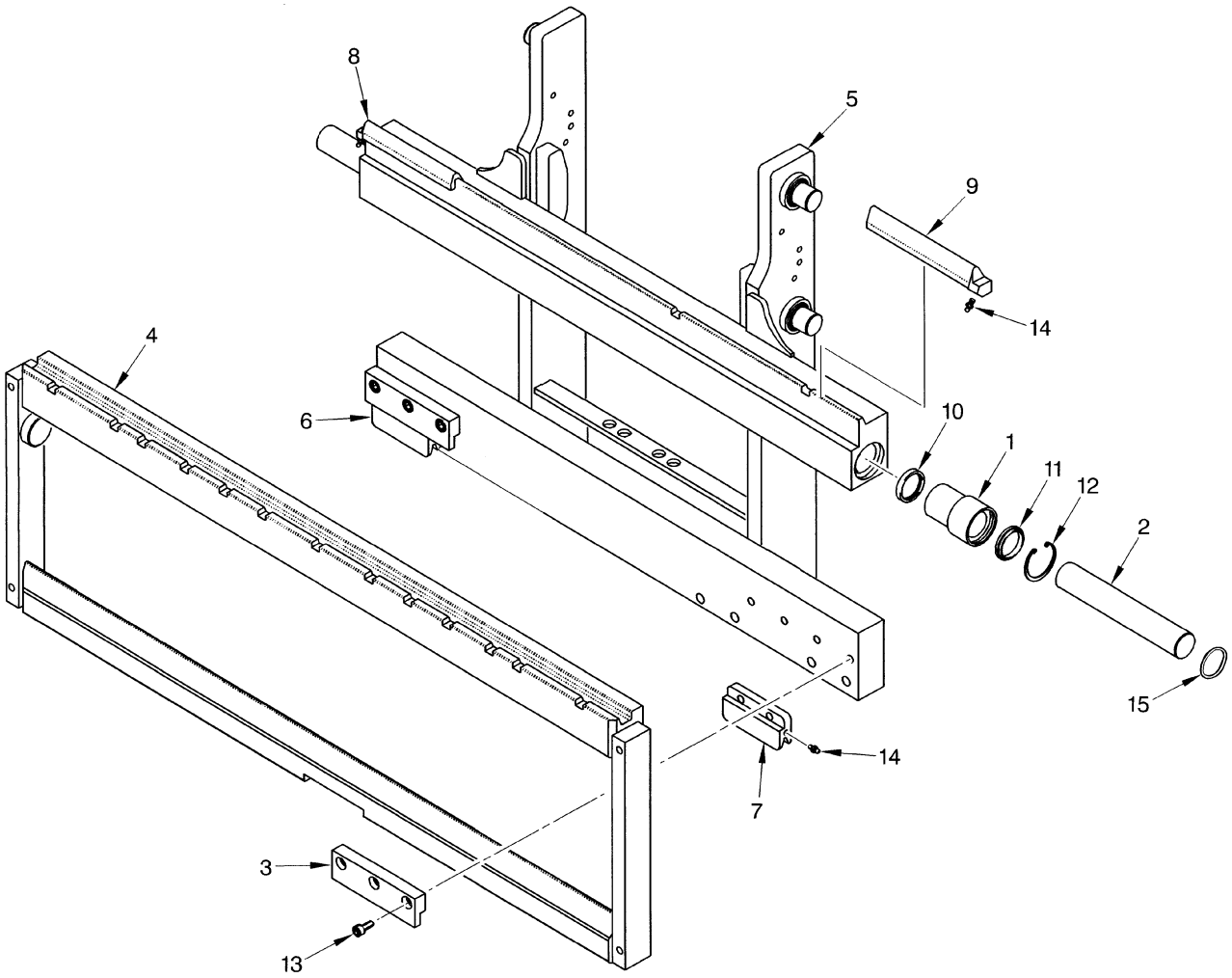


HP000038


©2004 HYSTER COMPANY

# INTEGRAL SIDE-SHIFT CARRIAGE
## H70XM-90XM (48 INCH)
## TWO AND THREE STAGE FULL FREE-LIFT

| ITEM | | PART NO. | DESCRIPTION | QTY |
|---|---|---|---|---|
| | **b** | 2038595 | Carriage (48 in.) | 1 |
| | **a** | 2037947 | Carriage (48 in.) | 1 |
| 1 | | 1467151 | Bushing | 2 |
| 2 | | 1467153 | Rod | 2 |
| 3 | | 1467154 | Hook | 2 |
| 4 | | 1532640 | Apron | 1 |
| 5 | **b** | 1483336 | Frame | 1 |
| 5 | **a** | 1467770 | Frame | 1 |
| 6 | | 1467145 | Bearing Strip (RH Lower) | 1 |
| 7 | | 1467146 | Bearing Strip (LH Lower) | 1 |
| 8 | | 1467147 | Bearing Strip (RH Upper) | 1 |
| 9 | | 1467148 | Bearing Strip (LH Upper) | 1 |
| 10 | | 1467149 | Seal | 2 |
| 11 | | 1467150 | Wiper Ring | 2 |
| 12 | | 1467632 | Snap Ring | 2 |
| 13 | | 1467633 | Screw | 6 |
| 14 | | 16041 | Lube Fitting | 8 |
| 15 | | 39365 | O-Ring | 2 |

**FOOTNOTES:**
**a** Three Stage Full Free-Lift
**b** Two Stage Full Free-Lift

©2004 HYSTER COMPANY

# INTEGRAL SIDE-SHIFT CARRIAGE (Figure 13-28)
## H70XM-H90XM (60 INCH)
## TWO AND THREE STAGE FULL FREE-LIFT

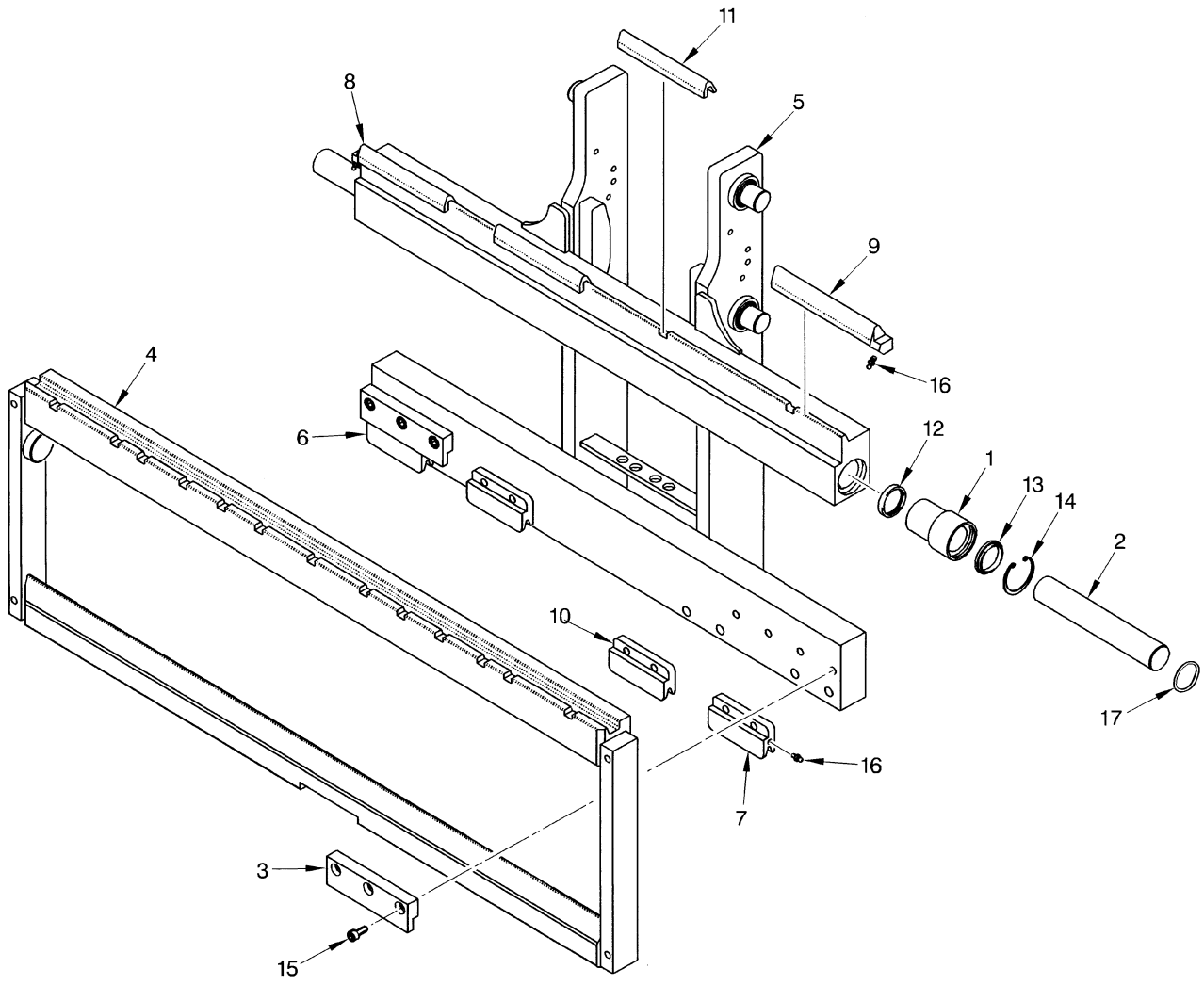


HP000039


©2004 HYSTER COMPANY

# INTEGRAL SIDE-SHIFT CARRIAGE
## H70XM-H90XM (60 INCH)
## TWO AND THREE STAGE FULL FREE-LIFT

| ITEM | | PART NO. | DESCRIPTION | QTY |
|---|---|---|---|---|
| | **b** | 2038599 | Carriage (60 in.) | 1 |
| | **a** | 2037948 | Carriage (60 in.) | 1 |
| 1 | | 1467151 | Bushing | 2 |
| 2 | | 1467153 | Rod | 2 |
| 3 | | 1467154 | Hook | 2 |
| 4 | | 1532643 | Apron | 1 |
| 5 | **b** | 1483335 | Frame | 1 |
| 5 | **a** | 1467772 | Frame | 1 |
| 6 | | 1467145 | Bearing Strip (RH Lower) | 1 |
| 7 | | 1467146 | Bearing Strip (LH Lower) | 1 |
| 8 | | 1467147 | Bearing Strip (RH Upper) | 1 |
| 9 | | 1467148 | Bearing Strip (LH Upper) | 1 |
| 10 | | 1467201 | Bearing Strip (Lower Center) | 2 |
| 11 | | 1467200 | Bearing Strip (Upper Center) | 2 |
| 12 | | 1467149 | Seal | 2 |
| 13 | | 1467150 | Wiper Ring | 2 |
| 14 | | 1467632 | Snap Ring | 2 |
| 15 | | 1467633 | Screw | 6 |
| 16 | | 16041 | Lube Fitting | 4 |
| 17 | | 39365 | O-Ring | 2 |

**FOOTNOTES:**
**a** Three Stage Full Free-Lift
**b** Two Stage Full Free-Lift

©2004 HYSTER COMPANY

# INTEGRAL SIDE-SHIFT ASSEMBLY (Figure 13-29)
## H100XM-120XM (54 AND 60 INCH)
## TWO AND THREE STAGE FULL-FREE-LIFT

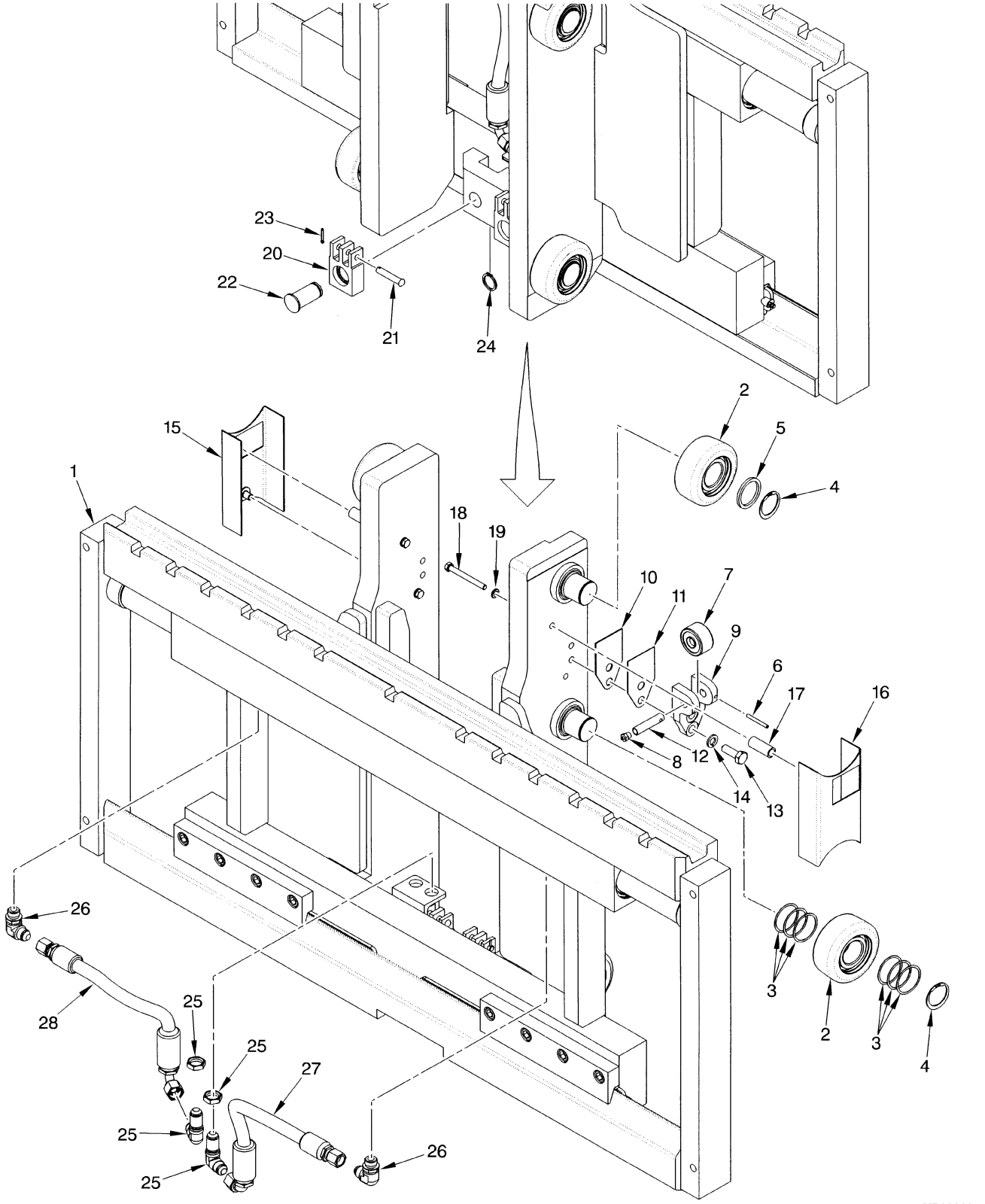



©2004 HYSTER COMPANY

# INTEGRAL SIDE-SHIFT ASSEMBLY
## H100XM-120XM (54 AND 60 INCH)
## TWO AND THREE STAGE FULL-FREE-LIFT

| ITEM | | PART NO. | DESCRIPTION | QTY |
|---|---|---|---|---|
| | **b** | 2038597 | Carriage Assembly (54 in.) (Group No. 8502092) | 1 |
| | **b** | 2038598 | Carriage Assembly (60 in.) (Group No. 8502093) | 1 |
| | **a** | 2037957 | Carriage Assembly (54 in.) (Group No. 8502072) | 1 |
| | **a** | 2037958 | Carriage Assembly (60 in.) (Group No. 8502073) | 1 |
| 1 | | . . . . . | Carriage Frame (☞ Figure 13-30) | 1 |
| 2 | | 1511883 | Load Roller | 6 |
| 3 | | 126765 | Shim (0.020 in.) | 24 |
| 4 | | 1465072 | Snap Ring | 6 |
| 5 | | 1399224 | Spacer | 2 |
| 6 | | 66333 | Pin | 2 |
| 7 | | 1387993 | Roller | 2 |
| 8 | | 16001 | Lube Fitting | 2 |
| 9 | | 1465177 | Bracket | 2 |
| 10 | | 192425 | Shim (0.062 in.) | AR |
| 11 | | 192424 | Shim (0.030 in.) | AR |
| 12 | | 1465028 | Pin | 2 |
| 13 | | 292528 | Capscrew | 4 |
| 14 | | 292683 | Lockwasher | 4 |
| 15 | | 319322 | Guard (RH) | 1 |
| 16 | | 319323 | Guard (LH) | 1 |
| 17 | | 317292 | Spacer | 4 |
| 18 | | 18520 | Capscrew | 3 |
| 18 | | 18518 | Capscrew | 1 |
| 19 | | 15155 | Lockwasher | 4 |
| 20 | | 1480392 | Chain Anchor | 2 |
| 21 | | 339932 | Pin | 2 |
| 22 | | 320327 | Pin | 2 |
| 23 | | 15222 | Cotter Pin | 2 |
| 24 | | 131358 | Snap Ring | 2 |
| 25 | | 16458 | Fitting | 2 |
| 26 | | 16559 | Fitting | 2 |
| 26 | | 16484 | O-Ring | 1 |
| 27 | | 1499107 | Hose | 1 |
| 28 | | 1499108 | Hose | 1 |

**FOOTNOTES:**
**a** Three Stage Full Free-Lift
**b** Two Stage Full Free-Lift

# INTEGRAL SIDE-SHIFT CARRIAGE (Figure 13-30)
## H100XM-H120XM (54 AND 60 INCH)
## TWO AND THREE STAGE FULL FREE-LIFT

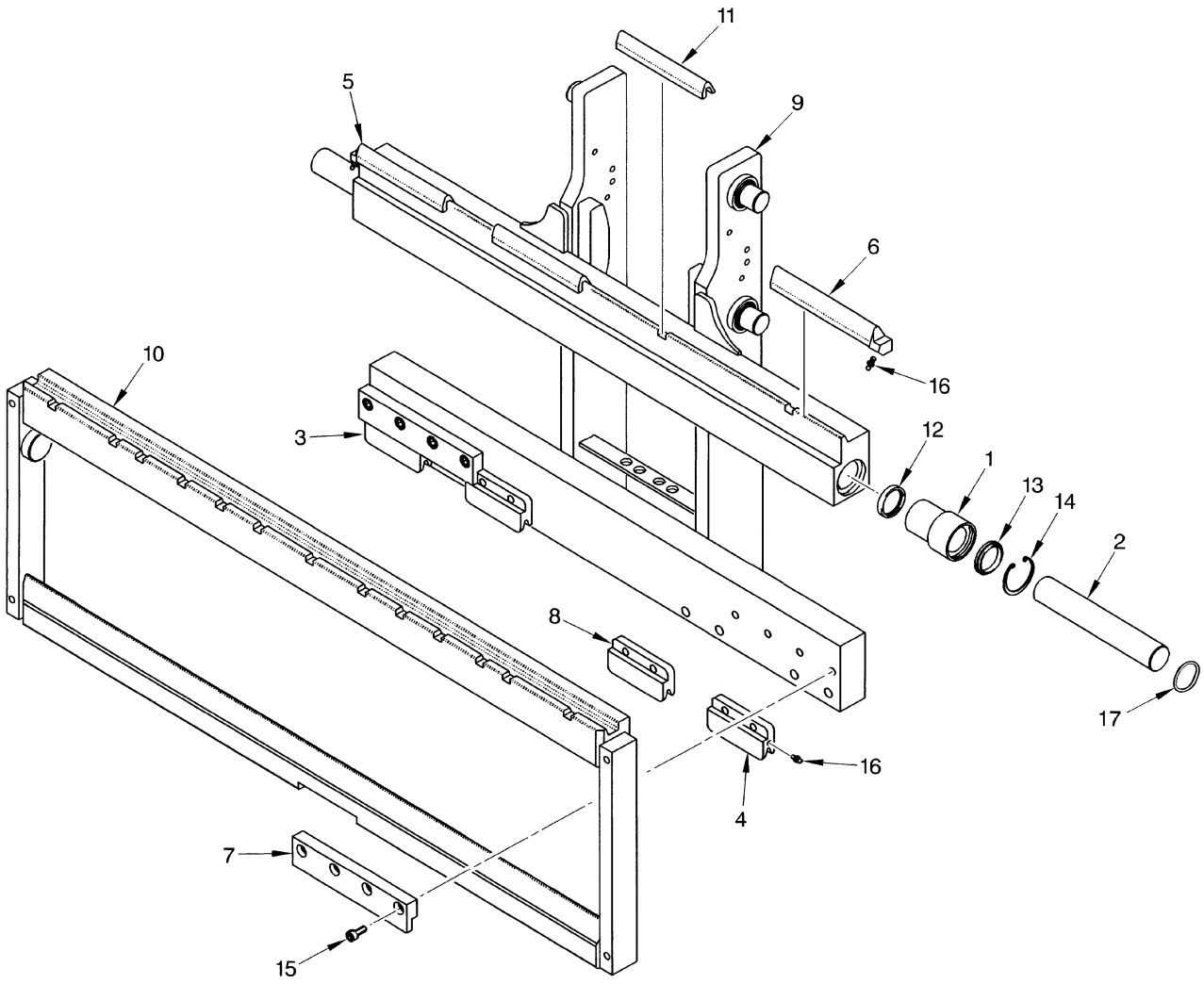


HP000040


©2004 HYSTER COMPANY

# INTEGRAL SIDE-SHIFT CARRIAGE
## H100XM-H120XM (54 AND 60 INCH)
## TWO AND THREE STAGE FULL FREE-LIFT

| ITEM | | PART NO. | DESCRIPTION | QTY |
|---|---|---|---|---|
| | **b** | 2038600 | Carriage (54 in.) | 1 |
| | **b** | 2038601 | Carriage (60 in.) | 1 |
| | **a** | 2037949 | Carriage (54 in.) | 1 |
| | **a** | 2037950 | Carriage (60 in.) | 1 |
| 1 | | 1467204 | Bushing | 2 |
| 2 | | 1467205 | Rod | 2 |
| 3 | | 1467145 | Bearing Strip (RH Lower) | 1 |
| 4 | | 1467146 | Bearing Strip (LH Lower) | 1 |
| 5 | | 1467147 | Bearing Strip (RH Upper) | 1 |
| 6 | | 1467148 | Bearing Strip (LH Upper) | 1 |
| 7 | | 1467206 | Hook | 2 |
| 8 | | 1467201 | Bearing Strip (Lower Center) | 2 |
| 9 | **b** | 1483331 | Frame (60 in.) | 1 |
| 9 | **b** | 1483333 | Frame (54 in.) | 1 |
| 9 | **a** | 1467773 | Frame (54 in.) | 1 |
| 9 | **a** | 1467775 | Frame (60 in.) | 1 |
| 10 | | 1532638 | Apron (54 in.) | 1 |
| 10 | | 1532639 | Apron (60 in.) | 1 |
| 11 | | 1467200 | Bearing Strip (Upper Center) | 2 |
| 12 | | 1467202 | Seal | 2 |
| 13 | | 1467203 | Wiper Ring | 2 |
| 14 | | 1467634 | Snap Ring | 2 |
| 15 | | 1467633 | Screw | 8 |
| 16 | | 16041 | Lube Fitting | 8 |
| 17 | | 39366 | O-Ring | 2 |

**FOOTNOTES:**
**a** Three Stage Full Free-Lift
**b** Two Stage Full Free-Lift

©2004 HYSTER COMPANY

# AUXILARY TUBE EXTENSION KIT (Figure 13-31)
## TWO STAGE LIMITED FREE-LIFT

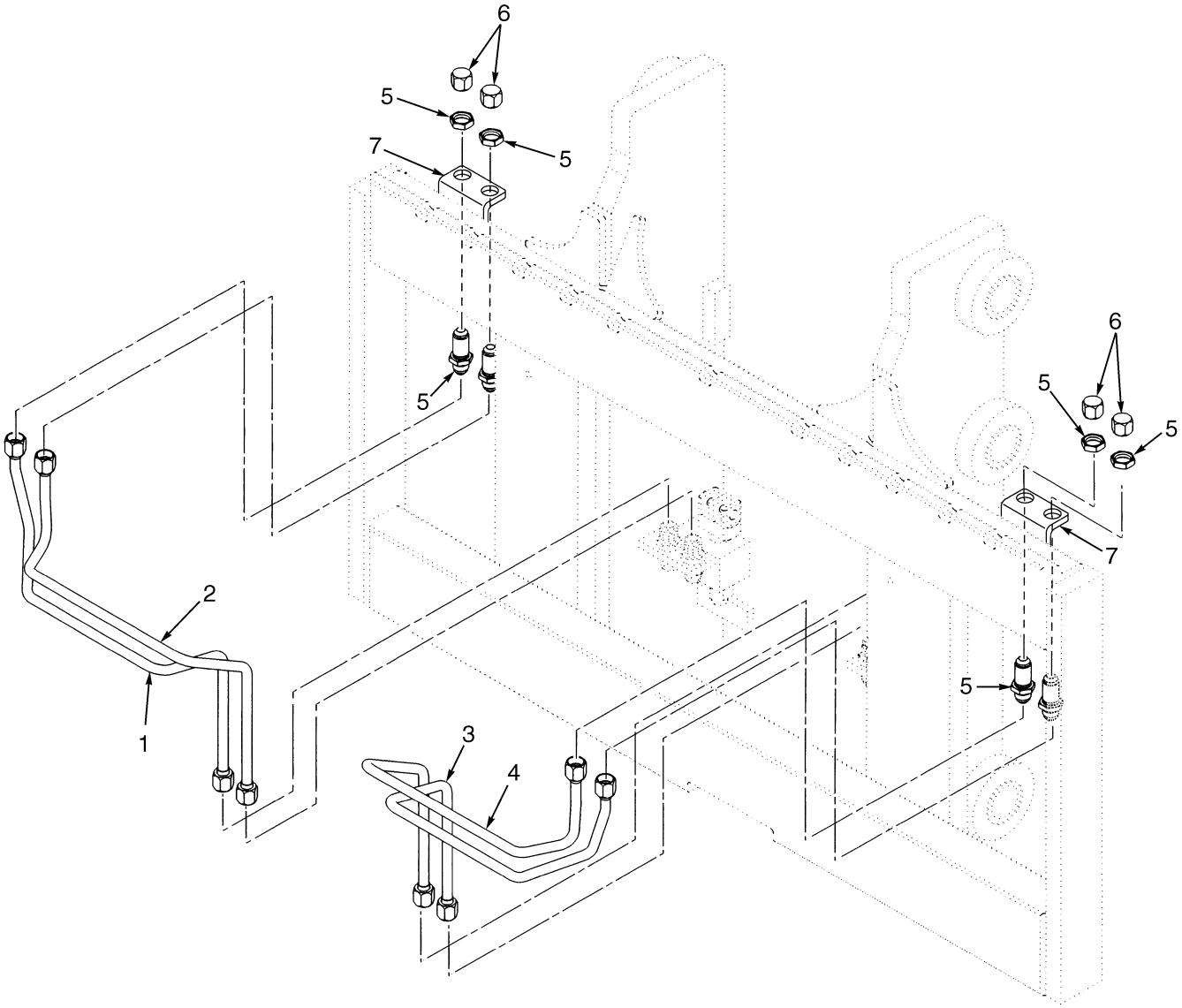


HP000022


©2004 HYSTER COMPANY

# AUXILARY TUBE EXTENSION KIT
## TWO STAGE LIMITED FREE-LIFT

**KEY:**
**A: Three Function**
**B: Four Function**

| ITEM | PART NO. | DESCRIPTION | QTY A | QTY B |
|---|---|---|---|---|
| 1 | 1400128 | Tube (Mast A749) | 1 | 1 |
| 1 | 1400134 | Tube (Mast A750) | 1 | 1 |
| 2 | 1400129 | Tube (Mast A749) | 1 | 1 |
| 2 | 1400135 | Tube (Mast A750) | 1 | 1 |
| 3 | 1400130 | Tube (Mast A749) | .. | 1 |
| 3 | 1400136 | Tube (Mast A750) | .. | 1 |
| 4 | 1400131 | Tube (Mast A749) | .. | 1 |
| 4 | 1400137 | Tube (Mast A750) | .. | 1 |
| 5 | 16448 | Fitting | 2 | 4 |
| 6 | 16925 | Fitting | 2 | 4 |
| 7 | 1400127 | Bracket | 1 | 2 |
| | 1465157 | Tube Kit (Mast A749) (Includes Items 1-2, 5-7) | 1 | .. |
| | 1465158 | Tube Kit (Mast A749) (Includes Items 3-7) | .. | 1 |
| | 1465159 | Tube Kit (Mast A750) (Includes Items 1-2, 5-7) | 1 | .. |
| | 1465160 | Tube Kit (Mast A750) (Includes Items 3-7) | .. | 1 |

©2004 HYSTER COMPANY

# AUXILARY TUBE EXTENSION KIT (Figure 13-32)
## TWO AND THREE STAGE FULL FREE-LIFT

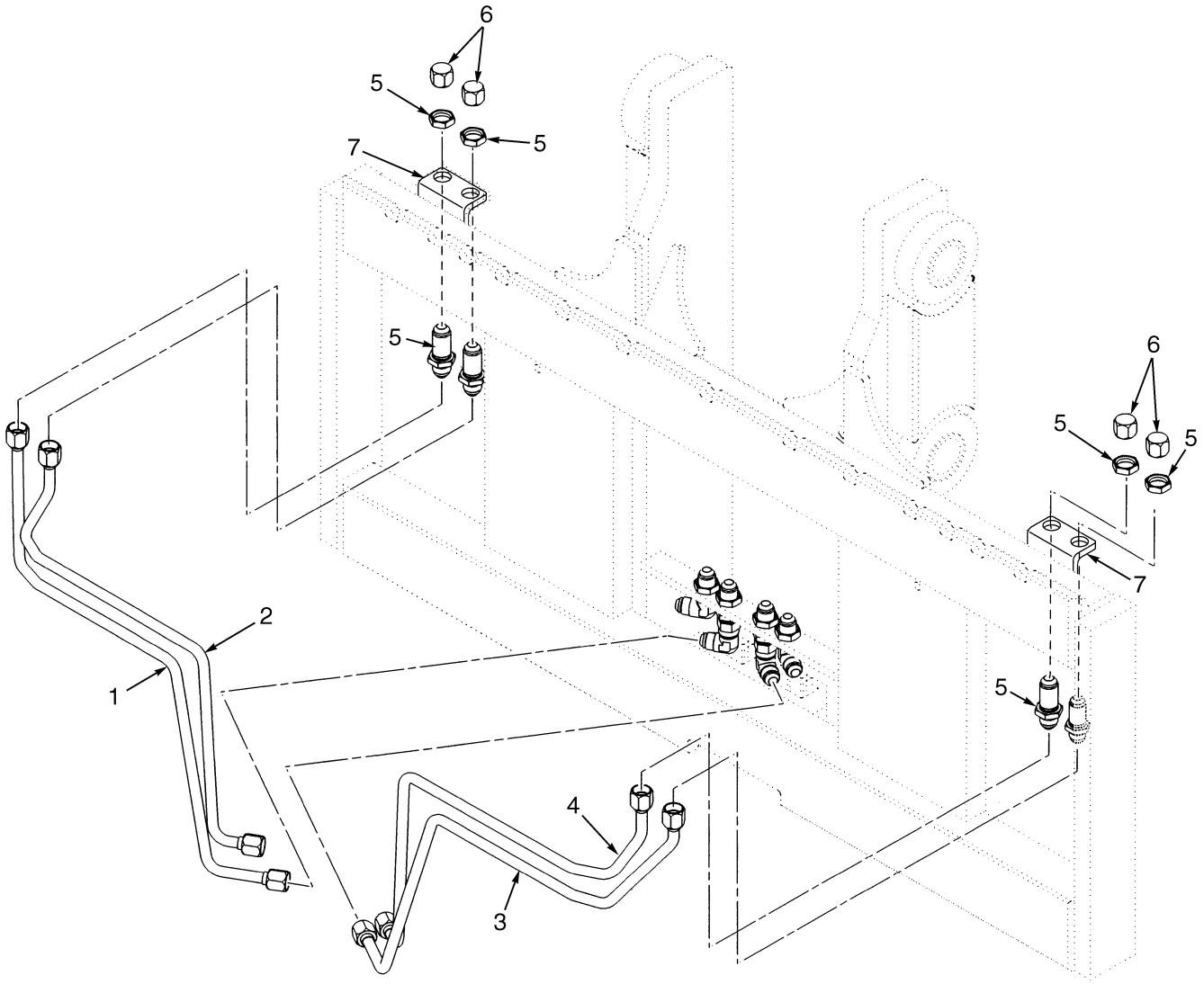


HP000023


©2004 HYSTER COMPANY

# AUXILARY TUBE EXTENSION KIT
## TWO AND THREE STAGE FULL FREE-LIFT

**KEY:**
**A: Three Function**
**B: Four Function**

| ITEM | PART NO. | DESCRIPTION | QTY A | QTY B |
|---|---|---|---|---|
| 1 | 1400138 | Tube (Mast A751) | 1 | .. |
| 1 | 1400144 | Tube (Mast A752) | 1 | .. |
| 2 | 1400139 | Tube (Mast A751) | 1 | .. |
| 2 | 1400145 | Tube (Mast A752) | 1 | .. |
| 3 | 1400140 | Tube (Mast A751) | .. | 1 |
| 3 | 1400146 | Tube (Mast A752) | .. | 1 |
| 4 | 1400141 | Tube (Mast A751) | .. | 1 |
| 4 | 1400147 | Tube (Mast A752) | .. | 1 |
| 5 | 16448 | Fitting | 2 | 4 |
| 6 | 16925 | Fitting | 2 | 4 |
| 7 | 1400127 | Bracket | 1 | 2 |
| | 1465322 | Tube Kit (Mast A751) (Includes Items 1-2, 5-7) | 1 | .. |
| | 1465323 | Tube Kit (Mast A751) (Includes Items 3-7) | .. | 1 |
| | 1465324 | Tube Kit (Mast A752) (Includes Items 1-2, 5-7) | 1 | .. |
| | 1465325 | Tube Kit (Mast A752) (Includes Items 3-7) | .. | 1 |

©2004 HYSTER COMPANY

# QUICK DISCONNECT FITTINGS (Figure 13-33)

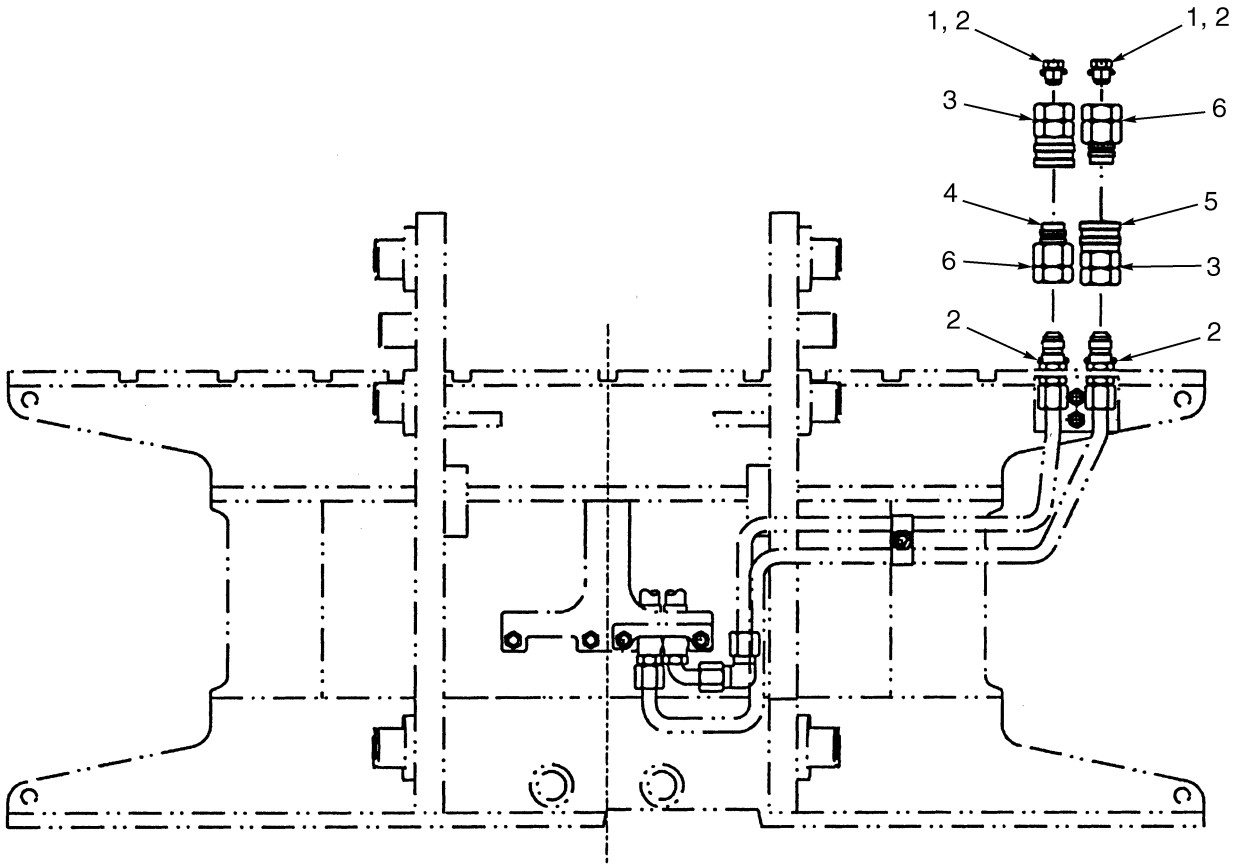


BP000139

| ITEM | PART NO. | DESCRIPTION | QTY |
|---|---|---|---|
| 1 | 17321 | Fitting | 2 |
| 2 | 16484 | O-Ring | 4 |
| 3 | 1377953 | Fitting | 2 |
| 4 | 181266 | Dust Plug | 1 |
| 5 | 181298 | Dust Cap | 1 |
| 6 | 1377954 | Fitting | 1 |


©2004 HYSTER COMPANY

# LIFTING EYES (Figure 13-34)

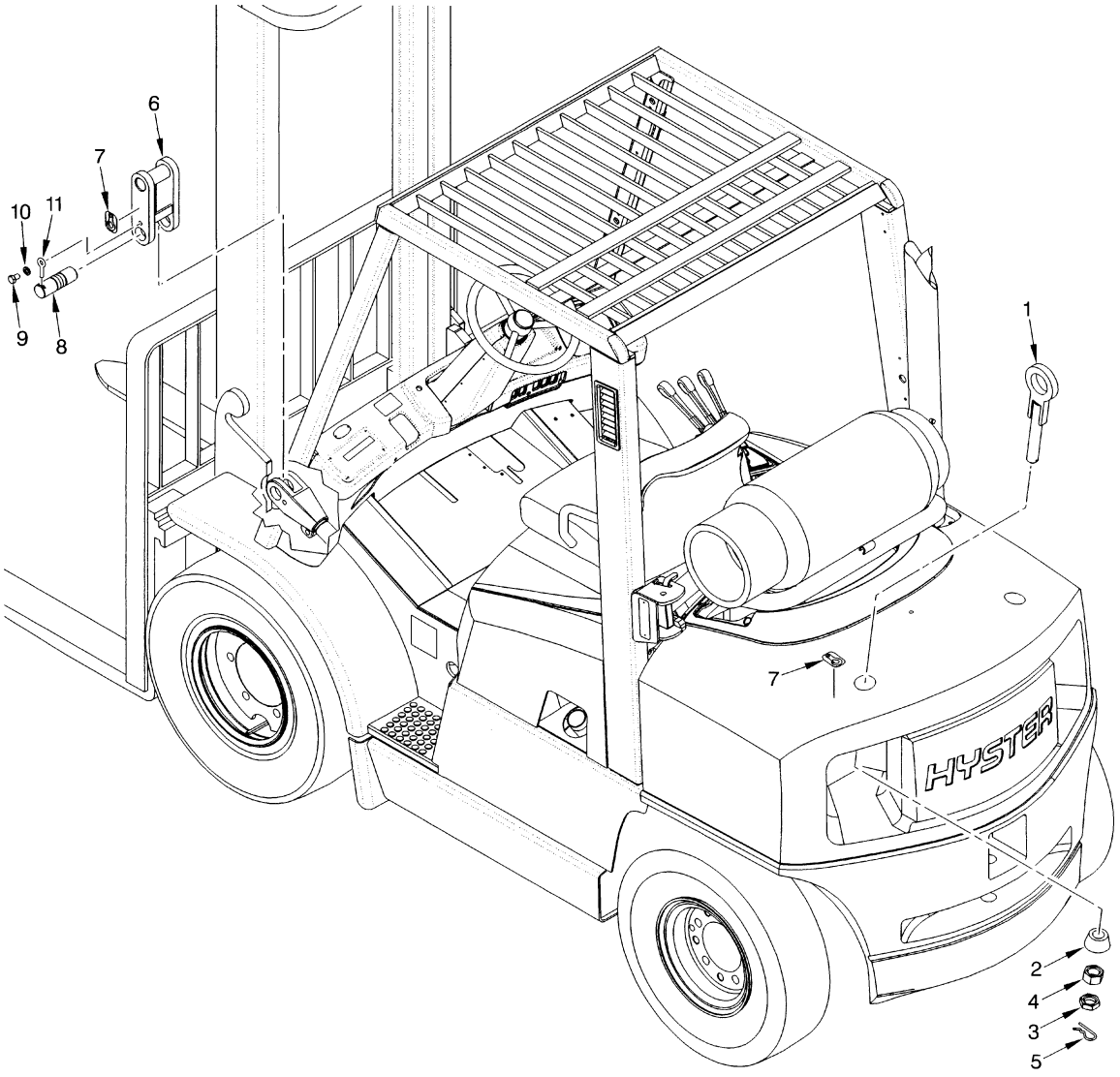


BP000163

| ITEM | PART NO. | DESCRIPTION | QTY |
|---|---|---|---|
| 1 | 1476416 | Eye Bolt (Rear) | 2 |
| 2 | 1488915 | Anchor (H70XM) | 2 |
| 2 | 1474318 | Anchor (H80-120XM) | 2 |
| 3 | 296140 | Nut | 2 |
| 4 | 292661 | Nut | 2 |
| 5 | 15246 | Cotter Pin | 2 |
| 6 | 1474335 | Shackle (Front) | 2 |
| 7 | 316448 | Label (Lifting Eye) | 4 |
| 8 | 1532748 | Tilt Pin (Extended) | 2 |
| 9 | 16830 | Capscrew | 2 |
| 10 | 15158 | Lockwasher | 2 |
| 11 | 241079 | Anchor | 2 |

©2004 HYSTER COMPANY

# FENDER EXTENSIONS (Figure 13-35)

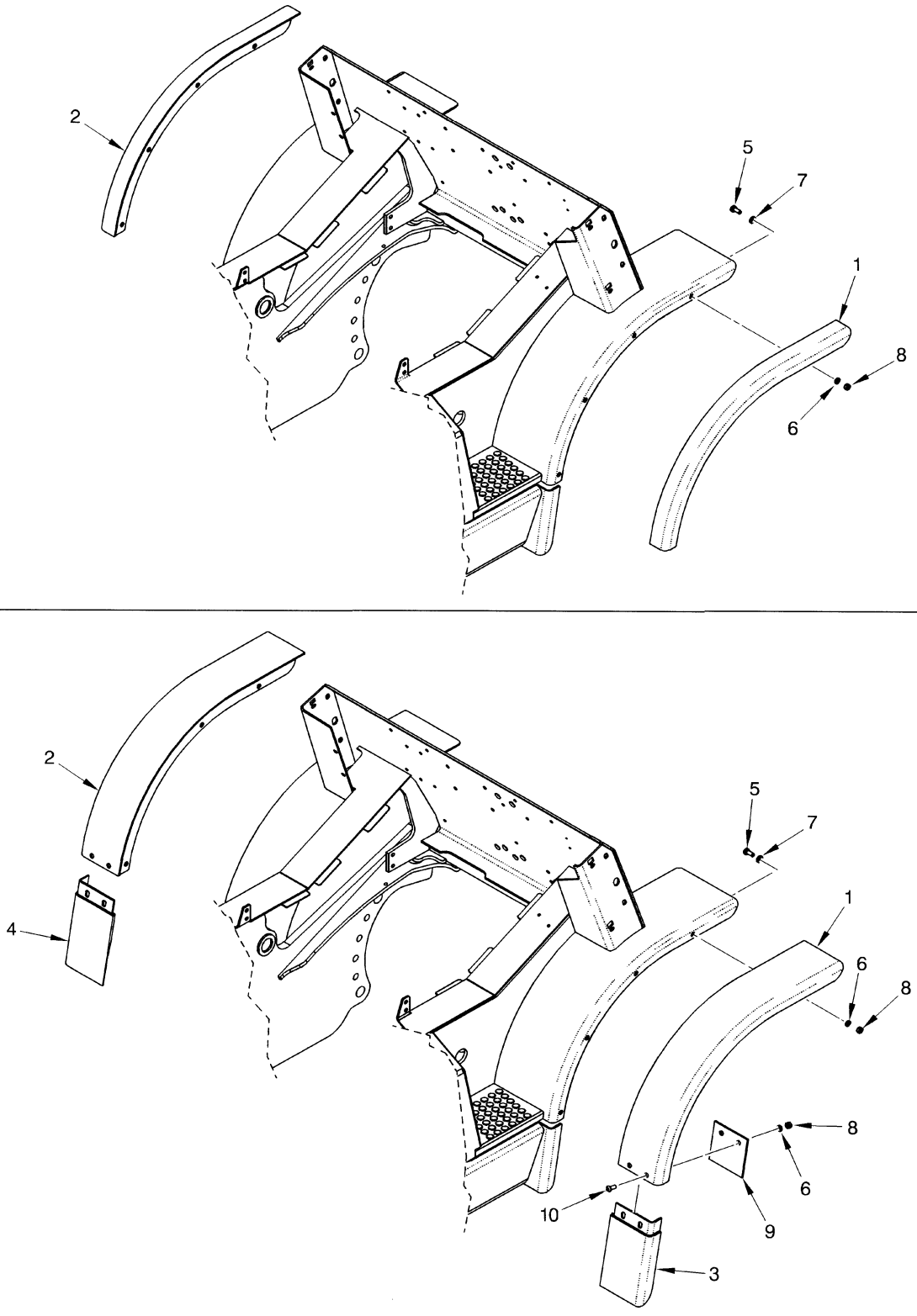



©2004 HYSTER COMPANY

# FENDER EXTENSIONS

**KEY:**
**A: 250 x 15 Single Wheel (H70-90XM)**
**B: 300 x 15 Single Wheel (H100-120XM)**
**C: 7.00 x 15 Dual Wheel (H70-90XM)**
**D: 8.25 x 15 Dual Wheel (H100-120XM)**

| ITEM | PART NO. | DESCRIPTION | QTY A | B | C | D |
|---|---|---|---|---|---|---|
| 1 | 1396526 | Fender Extension (RH) | 1 | .. | .. | .. |
| 1 | 1397500 | Fender Extension (RH) | .. | 1 | .. | .. |
| 1 | 1396527 | Fender Extension (RH) | .. | .. | 1 | .. |
| 1 | 1396528 | Fender Extension (RH) | .. | .. | .. | 1 |
| 2 | 1396534 | Fender Extension (LH) | 1 | .. | .. | .. |
| 2 | 1397502 | Fender Extension (LH) | .. | 1 | .. | .. |
| 2 | 1396535 | Fender Extension (LH) | .. | .. | 1 | .. |
| 2 | 1396536 | Fender Extension (LH) | .. | .. | .. | 1 |
| 3 | 1398127 | Mud Flap (RH) | .. | .. | 1 | .. |
| 3 | 1398128 | Mud Flap (RH) | .. | .. | .. | 1 |
| 4 | 1398132 | Mud Flap (LH) | .. | .. | .. | 1 |
| 4 | 1398131 | Mud Flap (LH) | .. | .. | 1 | .. |
| 5 | 287854 | Capscrew | 1 | 1 | 1 | 1 |
| 6 | 292682 | Lockwasher | 8 | 8 | .. | .. |
| 6 | 292682 | Lockwasher | .. | .. | 12 | 12 |
| 7 | 296420 | Washer | 8 | 8 | 8 | 8 |
| 8 | 136692 | Nut | 8 | 8 | .. | .. |
| 8 | 136692 | Nut | .. | .. | 12 | 12 |
| 9 | 1399432 | Plate | .. | .. | 2 | 2 |
| 10 | 1384659 | Capscrew | .. | .. | 4 | 4 |

©2004 HYSTER COMPANY

# DRIVE TIRES AND WHEELS (Figure 13-36)
## DUAL

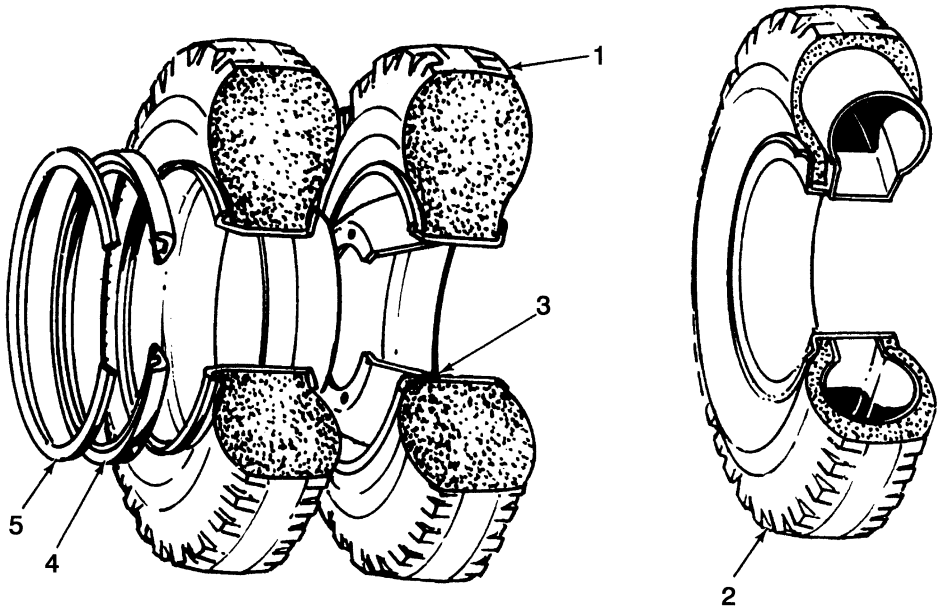


**KEY:**
**A: 7.00 x 15 Solid (H70-90XM)**
**B: 7.00 x 15 Pneumatic (H70-90XM)**
**C: 8.25 x 15 Solid (H100-120XM)**
**D: 8.25 x 15 - 12 Ply (H100-120XM)**

| ITEM | PART NO. | DESCRIPTION | QTY A | B | C | D |
|---|---|---|---|---|---|---|
| 1 | 174214 | Tire (Standard Hardness) | 4 | .. | .. | .. |
| 1 | 237050 | Tire (Standard Hardness) | .. | 4 | .. | .. |
| 2 | 137134 | Tire Assembly | .. | 4 | .. | .. |
| 2 | 137135 | Tire (With Flap) | .. | 1 | .. | .. |
| 2 | 137136 | Tube | .. | 1 | .. | .. |
| 2 | 130616 | Tire Assembly | .. | .. | .. | 4 |
| 2 | 129846 | Tire (With Flap) | .. | .. | .. | 1 |
| 2 | 25722 | Tube | .. | .. | .. | 1 |
| 3 | 2035024 | Wheel Assembly | 4 | 4 | .. | .. |
| 3 | 2035025 | Wheel Assembly | .. | .. | 4 | 4 |
| 4 | 322637 | Side Ring | 1 | 1 | 1 | 1 |
| 5 | 322638 | Lock Ring | 1 | 1 | 1 | 1 |
| 6 | 1394500 | Plate (Valve Stem) (Not Illustrated) | 4 | 4 | 4 | 4 |
| 7 | 1393344 | Adapter (Not Illustrated) | 2 | 2 | 2 | 2 |


©2004 HYSTER COMPANY

# 14 NUMERICAL INDEX

# SECTION 14
# NUMERICAL INDEX


| PART NO. | PG | ITEM |
|---|---|---|
| 142 | 3-47 | 17 |
| | 8-3 | 35 |
| 11276 | 7-16 | 5 |
| 12815 | 2-5 | 9 |
| 12821 | 4-15 | 45 |
| | 4-20 | 55 |
| 12891 | 10-5 | 7 |
| | 12-8 | 13 |
| 12928 | 2-9 | 23 |
| 13957 | 7-9 | 6 |
| 14349 | 4-3 | 32 |
| | 8-3 | 43 |
| 14358 | 3-21 | 17 |
| | 3-37 | 19 |
| 14372 | 3-29 | 19 |
| 14440 | 3-21 | 4 |
| 14500 | 5-18 | 2 |
| 14560 | 9-7 | 34 |
| | 9-9 | 36 |
| 14591 | 9-15 | 1 |
| 14592 | 5-17 | 11 |
| 14603 | 10-8 | 22 |
| | 11-4 | 23 |
| 14773 | 3-7 | 5 |
| 15001 | 1-7 | 17 |
| | 3-43 | 10 |
| | 3-47 | 27 |
| 15025 | 8-3 | 16 |
| 15026 | 2-25 | 5 |
| 15032 | 5-17 | 21 |
| 15049 | 4-16 | 63 |
| | 4-20 | 73 |
| 15052 | 4-9 | 3 |
| 15056 | 4-19 | 30 |
| 15086 | 1-5 | 18 |
| 15127 | 1-5 | 23 |
| | 2-5 | 24 |
| 15134 | 1-5 | 17 |
| | 2-11 | 9 |
| | 4-11 | 24 |
| | 4-19 | 27 |
| | 7-5 | 24 |
| | 8-3 | 46 |
| 15152 | 4-9 | 2 |
| 15154 | 1-5 | 22 |
| | 2-59 | 33 |
| 15155 | 2-59 | 44 |
| | 4-11 | 30 |
| | 11-19 | 19 |
| | 12-31 | 19 |
| | 13-53 | 25 |
| | 13-59 | 19 |
| 15156 | 1-5 | 19 |
| | 2-11 | 6 |
| | 2-47 | 14 |
| | 2-49 | 14 |
| | 2-59 | 24 |
| | 2-69 | 3 |
| | 4-11 | 23 |
| | 4-19 | 28 |
| | 7-5 | 23 |
| 15157 | 2-11 | 22 |
| 15158 | 9-21 | 6 |
| | 13-67 | 10 |
| 15172 | 8-3 | 30 |
| 15175 | 1-11 | 19 |
| | 1-13 | 35 |
| | 2-49 | 17 |
| 15200 | 3-47 | 9 |
| | 9-11 | 31 |
| | 9-13 | 31 |
| 15201 | 3-45 | 15 |
| 15212 | 1-9 | 7 |
| | 3-39 | 10 |
| | 3-41 | 14 |
| | 3-43 | 1 |
| | 3-47 | 20 |
| | 7-5 | 15 |
| 15222 | 10-8 | 34 |
| | 10-15 | 10 |
| | 11-7 | 6 |
| | 11-19 | 12 |
| | 12-4 | 12 |
| | 12-12 | 8 |
| | 12-20 | 21 |
| | 12-31 | 12 |
| | 13-45 | 4 |
| | 13-49 | 17 |
| | 13-53 | 8 |
| | 13-59 | 23 |
| 15224 | 7-16 | 5 |
| | 12-12 | 10 |
| 15226 | 7-9 | 29 |
| 15246 | 13-67 | 5 |
| 15290 | 6-3 | 28 |
| 15304 | 2-21 | 10 |
| | 2-23 | 7 |
| 15310 | 9-3 | 9 |
| 15314 | 9-4 | 46 |
| 15315 | 6-3 | 29 |
| 15483 | 2-21 | 23 |
| 15860 | 7-15 | 6 |
| 15879 | 10-12 | 9 |
| | 10-12 | 9 |
| | 12-24 | 8 |
| 15885 | 11-15 | 11 |
| | 12-28 | 11 |
| 15962 | 2-23 | 2 |
| | 2-31 | 16 |
| | 2-60 | 50 |
| 15963 | 9-3 | 25 |
| 16001 | 9-21 | 12 |
| | 10-15 | 16 |
| | 11-19 | 26 |
| | 12-31 | 26 |
| | 13-45 | 12 |
| | 13-49 | 8 |
| | 13-53 | 14 |
| | 13-59 | 8 |
| 16015 | 9-21 | 13 |
| 16041 | 13-47 | 16 |
| | 13-51 | 16 |
| | 13-55 | 14 |
| | 13-57 | 16 |
| | 13-61 | 16 |
| 16100 | 3-7 | 6 |
| | 3-9 | 3 |
| 16124 | 8-3 | 39 |
| 16134 | 3-21 | 6 |
| | 3-37 | 22 |
| 16143 | 3-17 | 28 |
| 16155 | 13-41 | 18 |
| 16156 | 13-41 | 19 |
| 16167 | 2-47 | 9 |
| | 2-49 | 19 |
| 16177 | 3-7 | 4 |
| | 3-9 | 2 |
| 16186 | 8-3 | 40 |
| 16187 | 8-4 | 52 |
| 16190 | 3-13 | 4 |
| 16193 | 2-43 | 7 |
| 16271 | 3-29 | 20 |
| 16394 | 2-59 | 45 |
| 16448 | 10-17 | 14 |
| | 11-22 | 16 |
| | 12-35 | 24 |
| | 13-45 | 19 |
| | 13-49 | 19 |
| | 13-63 | 5 |
| | 13-65 | 5 |
| 16458 | 9-7 | 40 |
| | 9-9 | 42 |
| | 11-22 | 15 |
| | 12-35 | 23 |
| | 13-53 | 26 |
| | 13-59 | 25 |
| 16481 | 5-17 | 33 |
| 16482 | 5-8 | 58 |
| | 5-8 | 58 |
| | 5-17 | 11 |
| | 5-17 | 24 |
| | 5-17 | 34 |
| 16483 | 5-8 | 51 |
| | 5-8 | 52 |
| | 5-8 | 53 |
| | 5-17 | 7 |
| | 7-3 | 22 |
| | 9-7 | 12 |
| | 9-7 | 39 |
| | 9-9 | 11 |
| | 9-9 | 41 |
| | 10-7 | 3 |
| | 12-16 | 3 |
| 16484 | 5-3 | 25 |
| | 5-3 | 36 |
| | 5-17 | 19 |
| | 5-19 | 5 |
| | 7-3 | 1 |
| | 9-7 | 15 |
| | 9-9 | 14 |
| | 10-7 | 19 |
| | 10-8 | 20 |
| | 11-3 | 22 |
| | 11-4 | 24 |
| | 12-16 | 18 |
| | 12-16 | 20 |
| | 13-42 | 5 |
| | 13-45 | 20 |
| | 13-49 | 20 |
| | 13-53 | 27 |
| | 13-59 | 26 |
| | 13-66 | 2 |
| 16485 | 5-4 | 38 |
| 16486 | 5-8 | 49 |
| | 5-8 | 50 |
| | 9-3 | 2 |
| | 9-3 | 11 |
| | 9-7 | 11 |
| | 9-9 | 10 |
| | 10-8 | 22 |
| | 11-4 | 23 |
| | 12-16 | 19 |
| 16487 | 9-3 | 31 |
| | 9-3 | 36 |
| | 9-3 | 37 |
| 16540 | 5-8 | 52 |
| 16541 | 7-3 | 1 |
| | 10-7 | 19 |


©2004 HYSTER COMPANY

*See Service Manual for service procedures.*

# NUMERICAL INDEX (Continued)

| PART NO. | PG | ITEM |
|---|---|---|
| | 11-4 | 24 |
| | 12-16 | 20 |
| 16543 | 12-16 | 19 |
| 16556 | 5-17 | 33 |
| 16558 | 5-8 | 53 |
| | 7-3 | 22 |
| | 9-7 | 39 |
| | 9-9 | 41 |
| 16559 | 9-7 | 5 |
| | 9-9 | 4 |
| | 10-8 | 20 |
| | 11-3 | 22 |
| | 12-16 | 18 |
| | 13-45 | 20 |
| | 13-49 | 20 |
| | 13-53 | 27 |
| | 13-59 | 26 |
| 16561 | 9-7 | 11 |
| | 9-9 | 10 |
| 16568 | 13-42 | 5 |
| 16569 | 5-3 | 38 |
| 16597 | 4-11 | 21 |
| | 4-11 | 21 |
| 16598 | 2-11 | 16 |
| | 2-60 | 49 |
| 16663 | 2-49 | 16 |
| 16743 | 4-16 | 62 |
| | 4-20 | 72 |
| 16745 | 9-7 | 12 |
| | 9-9 | 11 |
| 16794 | 2-21 | 4 |
| 16815 | 7-5 | 22 |
| 16830 | 9-21 | 5 |
| | 13-67 | 9 |
| 16836 | 2-59 | 43 |
| 16863 | 3-21 | 21 |
| 16865 | 3-49 | 14 |
| | 7-7 | 17 |
| 16882 | 9-7 | 16 |
| | 9-9 | 15 |
| 16897 | 8-3 | 17 |
| 16923 | 5-3 | 37 |
| | 5-8 | 59 |
| | 5-17 | 25 |
| 16925 | 7-3 | 21 |
| | 13-63 | 6 |
| | 13-65 | 6 |
| 16982 | 5-17 | 6 |
| | 11-4 | 35 |
| | 11-4 | 35 |
| 16983 | 5-3 | 29 |
| 16989 | 11-22 | 17 |
| | 12-35 | 25 |
| 17039 | 9-9 | 16 |
| 17062 | 7-3 | 20 |
| | 13-42 | 6 |
| 17314 | 3-13 | 2 |
| 17321 | 13-66 | 1 |
| 17343 | 3-13 | 3 |
| 17642 | 13-37 | 17 |
| | 13-39 | 21 |
| 17650 | 4-3 | 35 |
| 17665 | 13-39 | 20 |
| 17706 | 9-3 | 33 |
| 17728 | 3-21 | 5 |
| 17753 | 5-8 | 58 |
| 18462 | 1-5 | 21 |
| 18496 | 4-19 | 32 |
| 18498 | 4-11 | 25 |
| 18500 | 4-11 | 2 |
| | 4-19 | 23 |
| 18515 | 1-11 | 9 |
| | 4-11 | 31 |
| | 4-19 | 31 |
| 18518 | 11-19 | 18 |
| | 12-31 | 18 |
| | 13-53 | 24 |
| | 13-59 | 18 |
| 18520 | 13-59 | 18 |
| 18535 | 2-47 | 13 |
| | 2-49 | 13 |
| 18543 | 4-19 | 29 |
| 18546 | 2-11 | 5 |
| | 4-11 | 27 |
| 18727 | 1-11 | 8 |
| 18762 | 1-5 | 16 |
| 18824 | 7-3 | 25 |
| 18942 | 6-3 | 3 |
| 21420 | 5-7 | 15 |
| 25722 | 13-70 | 2 |
| 30019 | 7-9 | 27 |
| 30097 | 6-3 | 18 |
| 30098 | 6-3 | 12 |
| 30147 | 7-9 | 26 |
| 30162 | 5-7 | 32 |
| 30289 | 7-9 | 22 |
| 34811 | 2-6 | 58 |
| 35116 | 2-6 | 58 |
| | 2-9 | 29 |
| 39348 | 11-16 | 15 |
| | 12-28 | 15 |
| 39365 | 13-47 | 17 |
| | 13-55 | 15 |
| | 13-57 | 17 |
| 39366 | 13-51 | 17 |
| | 13-61 | 17 |
| 39373 | 2-11 | 21 |
| 39678 | 7-9 | 13 |
| 39742 | 9-4 | 45 |
| 40667 | 12-20 | 18 |
| 41208 | 5-3 | 13 |
| 41308 | 5-3 | 1 |
| 42213 | 3-29 | 21 |
| 44542 | 7-9 | 21 |
| 45656 | 7-16 | 5 |
| 45736 | 7-16 | 2 |
| 45737 | 7-16 | 2 |
| 46629 | 9-22 | 13 |
| | 11-15 | 11 |
| | 12-28 | 11 |
| 51455 | 2-43 | 8 |
| 53065 | 2-9 | 32 |
| | 2-9 | 32 |
| 53162 | 3-39 | 14 |
| | 3-41 | 22 |
| | 3-45 | 23 |
| | 3-49 | 14 |
| | 7-7 | 16 |
| 55434 | 9-17 | 8 |
| 57568 | 3-49 | 9 |
| 57664 | 10-12 | 9 |
| | 12-24 | 8 |
| 58902 | 11-22 | 10 |
| | 12-35 | 12 |
| 58903 | 7-9 | 8 |
| 58929 | 11-7 | 8 |
| | 12-20 | 13 |
| 58936 | 5-17 | 30 |
| 63116 | 2-13 | 12 |
| | 2-13 | 12 |
| | 2-13 | 12 |
| | 2-15 | 6 |
| | 2-15 | 17 |
| | 2-15 | 24 |
| 63899 | 3-29 | 1 |
| 66333 | 10-15 | 17 |
| | 11-19 | 25 |
| | 12-31 | 25 |
| | 13-45 | 10 |
| | 13-49 | 6 |
| | 13-53 | 12 |
| | 13-59 | 6 |
| 66885 | 5-21 | 1 |
| 68968 | 2-13 | 6 |
| 69029 | 7-9 | 30 |
| 69392 | 2-47 | 10 |
| | 2-49 | 20 |
| 76382 | 9-3 | 42 |
| 78456 | 9-3 | 43 |
| 79377 | 7-3 | 16 |
| 79981 | 7-13 | 6 |
| 86510 | 4-3 | 6 |
| | 4-16 | 61 |
| | 4-20 | 71 |
| 88195 | 9-3 | 37 |
| 97999 | 3-21 | 23 |
| 99576 | 2-21 | 3 |
| 99610 | 2-27 | 6 |
| | 2-33 | 14 |
| 99728 | 2-33 | 27 |
| 101809 | 3-21 | 12 |
| 102898 | 9-4 | 46 |
| | 9-7 | 4 |
| | 9-9 | 3 |
| 102919 | 3-17 | 27 |
| 104264 | 10-3 | 8 |
| | 11-3 | 19 |
| | 12-4 | 8 |
| 104506 | 10-3 | 9 |
| | 11-3 | 20 |
| | 12-4 | 9 |
| | 12-8 | 10 |
| 110178 | 10-7 | 3 |
| | 12-16 | 3 |
| 112470 | 9-3 | 36 |
| 112989 | 10-8 | 30 |
| | 11-22 | 25 |
| | 12-16 | 31 |
| 113341 | 2-49 | 26 |
| 114312 | 3-39 | 4 |
| | 3-41 | 5 |
| | 3-45 | 21 |
| | 3-49 | 17 |
| 115696 | 3-3 | 2 |
| | 3-17 | 6 |
| | 3-17 | 18 |
| | 10-8 | 30 |
| | 11-22 | 19 |
| | 12-16 | 31 |
| 118748 | 3-13 | 18 |
| 119236 | 9-3 | 38 |
| 124297 | 8-17 | 5 |
| 124359 | 4-15 | 29 |
| | 4-19 | 38 |
| 124668 | 2-9 | 20 |
| 125305 | 13-39 | 19 |
| 126764 | 12-20 | 18 |
| 126765 | 10-3 | 5 |


©2004 HYSTER COMPANY

# NUMERICAL INDEX (Continued)

| PART NO. | PG | ITEM |
|---|---|---|
| | 10-5 | 5 |
| | 11-3 | 6 |
| | 11-7 | 24 |
| | 11-19 | 15 |
| | 12-7 | 5 |
| | 12-31 | 15 |
| | 13-45 | 7 |
| | 13-53 | 3 |
| | 13-59 | 3 |
| 127045 | 9-3 | 39 |
| | 13-37 | 3 |
| | 13-39 | 3 |
| | 13-41 | 3 |
| 127518 | 12-16 | 28 |
| 128408 | 2-49 | 25 |
| | 4-15 | 47 |
| | 4-20 | 57 |
| 128409 | 9-7 | 27 |
| | 9-9 | 29 |
| 129341 | 10-7 | 17 |
| 129846 | 13-70 | 2 |
| 129887 | 4-37 | 1 |
| 129888 | 4-27 | 1 |
| 129894 | 4-27 | 2 |
| 130616 | 13-70 | 2 |
| 130619 | 7-16 | 2 |
| 130845 | 2-55 | 42 |
| 131358 | 11-19 | 24 |
| | 12-31 | 24 |
| | 13-59 | 24 |
| 131715 | 12-8 | 8 |
| 131716 | 12-7 | 7 |
| 132860 | 3-37 | 16 |
| | 10-5 | 11 |
| 132861 | 5-21 | 8 |
| | 7-3 | 19 |
| | 9-3 | 13 |
| | 9-7 | 8 |
| | 9-9 | 7 |
| 133469 | 2-59 | 32 |
| 133696 | 2-59 | 37 |
| 134436 | 5-17 | 34 |
| 134810 | 4-37 | 3 |
| | 4-37 | 9 |
| 134812 | 4-27 | 19 |
| | 4-37 | 2 |
| | 4-37 | 7 |
| 135657 | 7-9 | 17 |
| 135658 | 7-9 | 17 |
| 135685 | 3-49 | 2 |
| 136516 | 8-17 | 6 |
| 136681 | 2-11 | 13 |
| | 3-3 | 7 |
| | 3-17 | 11 |
| | 3-29 | 7 |
| | 4-4 | 46 |
| | 4-15 | 40 |
| | 4-19 | 50 |
| | 9-3 | 17 |
| | 11-22 | 21 |
| | 13-27 | 11 |
| | 13-37 | 9 |
| | 13-39 | 8 |
| | 13-41 | 10 |
| 136687 | 1-23 | 5 |
| | 2-5 | 30 |
| | 3-3 | 14 |
| | 3-3 | 14 |
| | 3-17 | 17 |
| | 4-9 | 13 |
| | 4-11 | 9 |
| | 4-11 | 35 |
| | 4-15 | 7 |
| | 4-19 | 7 |
| | 7-7 | 10 |
| | 8-3 | 31 |
| 136692 | 2-6 | 47 |
| | 2-9 | 43 |
| | 3-39 | 7 |
| | 3-41 | 10 |
| | 3-45 | 6 |
| | 3-47 | 4 |
| | 7-5 | 4 |
| | 8-3 | 6 |
| | 9-11 | 19 |
| | 9-13 | 19 |
| | 13-69 | 8 |
| | 13-69 | 8 |
| 136704 | 5-8 | 45 |
| | 7-3 | 12 |
| | 8-3 | 21 |
| | 9-7 | 21 |
| | 9-9 | 21 |
| 136749 | 1-7 | 28 |
| | 1-19 | 5 |
| | 2-5 | 35 |
| | 2-5 | 35 |
| | 2-9 | 15 |
| | 3-21 | 8 |
| | 4-3 | 22 |
| | 4-11 | 18 |
| | 7-5 | 9 |
| | 8-17 | 2 |
| | 9-7 | 29 |
| | 9-9 | 31 |
| | 9-11 | 12 |
| | 9-13 | 12 |
| | 11-22 | 23 |
| 136985 | 1-7 | 36 |
| | 2-9 | 33 |
| | 2-19 | 15 |
| | 7-5 | 2 |
| | 8-3 | 4 |
| | 9-11 | 18 |
| | 9-13 | 18 |
| 137134 | 13-70 | 2 |
| 137135 | 13-70 | 2 |
| 137136 | 13-70 | 2 |
| 137852 | 4-3 | 27 |
| 138710 | 13-37 | 19 |
| | 13-39 | 23 |
| 138880 | 3-29 | 2 |
| 139743 | 2-11 | 1 |
| | 4-11 | 35 |
| 142247 | 10-7 | 6 |
| | 11-3 | 10 |
| | 12-16 | 6 |
| 142500 | 9-3 | 2 |
| 143004 | 5-7 | 21 |
| 145639 | 1-11 | 18 |
| | 1-13 | 36 |
| 147294 | 3-33 | 6 |
| | 3-35 | 20 |
| 148271 | 3-21 | 19 |
| 148605 | 4-27 | 3 |
| 148610 | 4-27 | 4 |
| | 4-37 | 8 |
| 148962 | 3-35 | 22 |
| | 3-37 | 13 |
| | 5-8 | 68 |
| 152404 | 12-4 | 14 |
| 153069 | 4-11 | 29 |
| | 4-12 | 38 |
| 153715 | 7-9 | 37 |
| 153716 | 7-9 | 36 |
| 153717 | 7-9 | 34 |
| 154065 | 1-27 | 28 |
| 154066 | 1-27 | 28 |
| 154067 | 1-27 | 28 |
| 154452 | 13-37 | 18 |
| | 13-39 | 22 |
| 157065 | 4-11 | 37 |
| 159977 | 2-53 | 14 |
| 161272 | 10-3 | 7 |
| | 11-3 | 18 |
| | 12-4 | 7 |
| 161273 | 10-3 | 6 |
| | 11-3 | 17 |
| | 12-4 | 6 |
| 161296 | 2-27 | 4 |
| 161297 | 2-27 | 5 |
| 161889 | 7-16 | 12 |
| 161890 | 7-16 | 11 |
| 162155 | 5-3 | 36 |
| 162836 | 3-39 | 12 |
| | 3-41 | 16 |
| 164488 | 3-29 | 23 |
| | 4-15 | 27 |
| | 4-19 | 36 |
| | 13-13 | 7 |
| 164632 | 11-15 | 10 |
| | 12-28 | 10 |
| 164639 | 7-9 | 24 |
| 166112 | 2-47 | 18 |
| 166285 | 4-3 | 12 |
| 166659 | 11-12 | 7 |
| 166818 | 1-27 | 22 |
| 166857 | 8-3 | 48 |
| 167218 | 3-45 | 14 |
| 168718 | 2-47 | 6 |
| | 2-49 | 22 |
| | 3-7 | 11 |
| | 3-9 | 9 |
| | 3-13 | 15 |
| | 3-29 | 25 |
| 170658 | 1-27 | 8 |
| | 1-27 | 31 |
| 173941 | 3-7 | 3 |
| 174209 | 7-16 | 1 |
| 174214 | 13-70 | 1 |
| 176167 | 9-19 | 10 |
| 176169 | 9-19 | 14 |
| 176173 | 9-19 | 18 |
| 176451 | 3-9 | 22 |
| | 3-29 | 10 |
| 176640 | 1-9 | 14 |
| | 9-11 | 28 |
| | 9-13 | 28 |
| 177521 | 13-23 | 4 |
| 177947 | 2-6 | 59 |
| 177948 | 2-6 | 59 |
| | 2-9 | 28 |
| 178119 | 4-3 | 7 |
| | 4-3 | 19 |
| | 4-15 | 9 |
| | 4-19 | 9 |
| 178899 | 2-5 | 1 |
| 179414 | 1-27 | 27 |

©2004 HYSTER COMPANY

# NUMERICAL INDEX (Continued)

| PART NO. | PG | ITEM |
|---|---|---|
| 179415 | 1-27 | 27 |
| 179416 | 1-27 | 27 |
| 179417 | 1-27 | 27 |
| 179420 | 1-27 | 27 |
| 179423 | 1-27 | 27 |
| 181045 | 4-37 | 3 |
| | 4-37 | 9 |
| 181046 | 4-27 | 5 |
| | 4-37 | 2 |
| | 4-37 | 7 |
| 181266 | 13-66 | 4 |
| 181298 | 13-66 | 5 |
| 181766 | 5-17 | 20 |
| 181941 | 9-17 | 5 |
| 182342 | 10-7 | 17 |
| | 12-4 | 14 |
| 182891 | 9-3 | 4 |
| 183635 | 9-3 | 18 |
| 186420 | 2-19 | 16 |
| | 5-3 | 18 |
| 187388 | 11-15 | 7 |
| | 12-28 | 7 |
| 188210 | 5-3 | 29 |
| 188631 | 4-15 | 30 |
| | 4-19 | 39 |
| 189338 | 2-11 | 3 |
| | 4-11 | 34 |
| 190382 | 4-27 | 38 |
| | 13-5 | 8 |
| 190383 | 4-9 | 10 |
| | 4-11 | 36 |
| | 4-27 | 35 |
| | 4-37 | 1 |
| | 4-37 | 8 |
| 190784 | 9-17 | 7 |
| 190785 | 9-17 | 6 |
| 190787 | 9-3 | 29 |
| 190887 | 11-12 | 11 |
| | 11-16 | 16 |
| | 12-28 | 16 |
| 191030 | 10-7 | 17 |
| 191072 | 10-7 | 17 |
| | 12-4 | 14 |
| 191076 | 10-7 | 17 |
| 191081 | 12-4 | 14 |
| 191085 | 12-4 | 14 |
| 192424 | 10-15 | 19 |
| | 11-19 | 28 |
| | 12-31 | 28 |
| | 13-45 | 15 |
| | 13-49 | 11 |
| | 13-53 | 17 |
| | 13-59 | 11 |
| 192425 | 10-15 | 18 |
| | 11-19 | 27 |
| | 12-31 | 27 |
| | 13-45 | 14 |
| | 13-49 | 10 |
| | 13-53 | 16 |
| | 13-59 | 10 |
| 192429 | 9-21 | 3 |
| 193239 | 9-7 | 14 |
| | 9-9 | 13 |
| 193554 | 9-22 | 9 |
| 193656 | 3-7 | 15 |
| 194607 | 12-4 | 14 |
| 195856 | 2-19 | 9 |
| | 5-11 | 11 |
| 196297 | 3-33 | 3 |
| | 3-35 | 19 |
| 197064 | 3-39 | 15 |
| | 3-45 | 24 |
| | 7-7 | 15 |
| 197066 | 2-5 | 14 |
| 197067 | 13-13 | 12 |
| | 13-27 | 2 |
| 197068 | 3-3 | 20 |
| | 3-17 | 22 |
| 198518 | 11-12 | 6 |
| 198675 | 3-29 | 24 |
| 199917 | 9-22 | 7 |
| | 9-22 | 12 |
| 200659 | 5-17 | 6 |
| 200972 | 5-7 | 20 |
| 201782 | 5-8 | 49 |
| 201787 | 5-21 | 9 |
| 201808 | 2-47 | 8 |
| 201829 | 10-12 | 8 |
| | 12-24 | 6 |
| 203071 | 7-13 | 2 |
| 204223 | 4-11 | 3 |
| | 4-15 | 17 |
| | 4-19 | 18 |
| | 4-27 | 36 |
| 204787 | 3-31 | 8 |
| 206150 | 9-7 | 15 |
| | 9-9 | 14 |
| 209417 | 4-16 | 65 |
| | 4-20 | 75 |
| 210183 | 7-13 | 3 |
| 212786 | 5-21 | 5 |
| 215211 | 12-8 | 9 |
| 215301 | 10-11 | 4 |
| | 12-24 | 4 |
| 215425 | 10-11 | 4 |
| | 12-24 | 4 |
| 216877 | 9-21 | 8 |
| 220273 | 7-7 | 14 |
| 220434 | 3-49 | 16 |
| 220498 | 13-13 | 11 |
| | 13-27 | 9 |
| 220589 | 2-69 | 2 |
| 220932 | 3-49 | 3 |
| 221522 | 2-11 | 8 |
| 221546 | 2-11 | 23 |
| 221717 | 10-8 | 31 |
| | 10-15 | 11 |
| | 11-7 | 7 |
| | 12-4 | 13 |
| | 12-12 | 9 |
| | 12-20 | 22 |
| | 13-45 | 5 |
| | 13-49 | 18 |
| 221733 | 1-11 | 4 |
| 221771 | 1-31 | 3 |
| | 5-8 | 56 |
| 222029 | 1-11 | 17 |
| 222038 | 2-5 | 25 |
| 222380 | 5-8 | 58 |
| | 5-17 | 24 |
| 222443 | 5-8 | 51 |
| | 5-17 | 7 |
| 222444 | 5-8 | 50 |
| 222473 | 9-3 | 34 |
| 222480 | 3-9 | 20 |
| 222523 | 4-27 | 34 |
| 224248 | 2-33 | 26 |
| 225465 | 3-9 | 12 |
| 225673 | 4-23 | 5 |
| 226576 | 4-23 | 8 |
| 226578 | 4-23 | 10 |
| 226582 | 4-23 | 15 |
| 226583 | 4-23 | 16 |
| 226584 | 4-23 | 17 |
| 227178 | 4-15 | 35 |
| | 4-19 | 44 |
| 229875 | 2-33 | 10 |
| 230315 | 7-9 | 28 |
| 230421 | 7-9 | 38 |
| 230882 | 13-13 | 13 |
| | 13-27 | 3 |
| 234038 | 5-7 | 2 |
| 235691 | 5-3 | 25 |
| | 5-17 | 19 |
| | 5-19 | 5 |
| 237050 | 13-70 | 1 |
| 239370 | 9-3 | 21 |
| 239503 | 1-17 | 12 |
| | 3-21 | 11 |
| | 3-47 | 24 |
| | 4-3 | 3 |
| | 4-11 | 28 |
| | 7-3 | 18 |
| | 8-3 | 10 |
| | 9-3 | 22 |
| | 9-7 | 13 |
| | 9-9 | 12 |
| | 9-11 | 11 |
| | 9-13 | 11 |
| | 11-4 | 30 |
| | 12-16 | 13 |
| | 13-37 | 16 |
| | 13-39 | 18 |
| 241079 | 9-21 | 7 |
| | 13-67 | 11 |
| 243976 | 12-4 | 14 |
| 246001 | 12-8 | 16 |
| 246108 | 4-16 | 56 |
| | 4-20 | 66 |
| | 5-18 | 2 |
| 246869 | 3-21 | 18 |
| | 3-29 | 26 |
| | 9-3 | 24 |
| 248128 | 4-23 | 6 |
| 248462 | 9-21 | 2 |
| 251979 | 5-11 | 12 |
| | 6-3 | 31 |
| 251994 | 13-37 | 20 |
| | 13-39 | 16 |
| | 13-41 | 17 |
| 252293 | 13-6 | 2 |
| 256160 | 3-11 | 4 |
| 257291 | 2-9 | 20 |
| 257913 | 11-15 | 5 |
| | 12-28 | 5 |
| 258590 | 9-7 | 31 |
| | 9-9 | 33 |
| 260045 | 13-19 | 12 |
| 261379 | 2-11 | 2 |
| | 4-11 | 33 |
| 263794 | 2-65 | 11 |
| 263795 | 2-65 | 10 |
| 263828 | 2-55 | 16 |
| 263842 | 2-53 | 10 |
| 264134 | 1-5 | 20 |
| | 9-11 | 38 |
| | 9-13 | 39 |
| | 11-12 | 14 |


©2004 HYSTER COMPANY

# NUMERICAL INDEX (Continued)

| PART NO. | PG | ITEM |
|---|---|---|
| 264144 | 1-7 | 34 |
| 264159 | 5-8 | 67 |
| | 5-22 | 6 |
| | 6-3 | 23 |
| 266465 | 2-29 | 2 |
| 266728 | 7-9 | 18 |
| 266733 | 7-9 | 19 |
| 268573 | 2-65 | 3 |
| 270015 | 7-13 | 5 |
| 270077 | 10-12 | 8 |
| | 12-24 | 6 |
| 270330 | 9-22 | 14 |
| 271479 | 5-7 | 31 |
| 273775 | 7-5 | 34 |
| 274334 | 3-9 | 19 |
| | 3-9 | 23 |
| 275493 | 4-27 | 33 |
| 278085 | 2-9 | 32 |
| | 2-9 | 32 |
| 278326 | 5-8 | 57 |
| 280472 | 2-19 | 13 |
| | 7-9 | 39 |
| 280878 | 12-4 | 14 |
| | 12-20 | 23 |
| 281700 | 8-3 | 42 |
| 283149 | 4-16 | 55 |
| | 4-20 | 65 |
| 287805 | 6-3 | 37 |
| 287816 | 3-3 | 21 |
| | 3-17 | 23 |
| 287837 | 2-5 | 37 |
| | 2-5 | 37 |
| | 2-9 | 39 |
| | 2-9 | 39 |
| 287844 | 10-17 | 12 |
| | 12-20 | 28 |
| 287851 | 1-7 | 26 |
| | 3-47 | 25 |
| | 4-11 | 35 |
| | 4-15 | 11 |
| | 4-19 | 11 |
| | 5-7 | 14 |
| | 12-35 | 21 |
| 287854 | 2-9 | 9 |
| | 2-9 | 11 |
| | 2-13 | 26 |
| | 2-15 | 21 |
| | 12-35 | 14 |
| | 13-69 | 5 |
| 287860 | 3-39 | 2 |
| | 3-41 | 13 |
| | 3-45 | 5 |
| | 5-3 | 21 |
| | 8-3 | 12 |
| | 10-7 | 14 |
| | 11-3 | 16 |
| | 12-16 | 14 |
| | 12-35 | 9 |
| 288638 | 7-16 | 6 |
| | 7-16 | 7 |
| 289867 | 2-19 | 13 |
| | 5-11 | 4 |
| 291974 | 3-3 | 24 |
| | 3-17 | 6 |
| 292500 | 2-5 | 29 |
| | 3-39 | 20 |
| | 3-45 | 2 |
| | 7-7 | 18 |
| | 13-5 | 3 |
| | 13-23 | 19 |
| 292501 | 3-3 | 28 |
| | 3-17 | 29 |
| | 9-11 | 29 |
| | 9-13 | 29 |
| 292503 | 10-17 | 11 |
| | 12-35 | 18 |
| 292504 | 8-3 | 29 |
| 292505 | 3-41 | 1 |
| 292508 | 3-37 | 21 |
| | 5-8 | 46 |
| | 11-19 | 22 |
| | 13-53 | 9 |
| 292509 | 2-13 | 20 |
| | 5-8 | 47 |
| | 9-7 | 26 |
| | 9-9 | 28 |
| 292511 | 10-8 | 23 |
| | 11-4 | 26 |
| | 12-16 | 23 |
| 292512 | 12-31 | 22 |
| 292513 | 2-19 | 22 |
| | 5-3 | 35 |
| 292514 | 9-11 | 15 |
| | 9-13 | 15 |
| 292515 | 4-15 | 39 |
| | 4-19 | 49 |
| 292516 | 8-3 | 26 |
| 292517 | 2-13 | 20 |
| | 2-13 | 20 |
| | 2-15 | 14 |
| | 5-3 | 32 |
| 292519 | 5-22 | 3 |
| 292522 | 2-9 | 24 |
| | 2-11 | 19 |
| 292523 | 3-47 | 15 |
| 292524 | 4-15 | 23 |
| 292526 | 3-33 | 8 |
| | 3-35 | 16 |
| | 4-11 | 20 |
| | 4-15 | 52 |
| | 4-20 | 62 |
| | 11-7 | 18 |
| | 12-20 | 14 |
| 292527 | 2-9 | 1 |
| | 9-21 | 11 |
| 292528 | 2-19 | 18 |
| | 10-15 | 7 |
| | 11-19 | 7 |
| | 12-31 | 7 |
| | 13-45 | 17 |
| | 13-49 | 13 |
| | 13-53 | 19 |
| | 13-59 | 13 |
| 292529 | 5-22 | 1 |
| 292531 | 9-21 | 10 |
| | 12-20 | 4 |
| 292535 | 2-6 | 43 |
| | 2-9 | 40 |
| 292538 | 10-17 | 9 |
| 292563 | 11-7 | 12 |
| 292564 | 12-20 | 11 |
| 292573 | 2-45 | 7 |
| 292575 | 2-17 | 6 |
| 292589 | 6-3 | 32 |
| 292614 | 1-17 | 5 |
| 292620 | 6-3 | 34 |
| 292653 | 8-3 | 38 |
| 292656 | 1-31 | 4 |
| 292661 | 13-67 | 4 |
| 292665 | 3-39 | 13 |
| | 3-41 | 21 |
| | 3-45 | 25 |
| 292667 | 4-9 | 8 |
| | 8-4 | 61 |
| | 13-25 | 4 |
| 292668 | 4-3 | 15 |
| 292678 | 2-5 | 15 |
| | 4-9 | 9 |
| | 8-4 | 60 |
| 292679 | 4-3 | 10 |
| 292680 | 1-23 | 4 |
| | 1-25 | 14 |
| | 2-5 | 26 |
| | 3-3 | 13 |
| | 3-3 | 13 |
| | 3-17 | 16 |
| | 3-17 | 32 |
| | 3-39 | 21 |
| | 3-45 | 3 |
| | 4-11 | 10 |
| | 4-15 | 6 |
| | 4-19 | 6 |
| | 5-8 | 54 |
| | 7-7 | 19 |
| | 8-3 | 45 |
| | 9-11 | 26 |
| | 9-13 | 26 |
| 292681 | 1-7 | 27 |
| | 1-17 | 11 |
| | 1-19 | 4 |
| | 2-5 | 34 |
| | 2-5 | 34 |
| | 2-5 | 34 |
| | 2-9 | 16 |
| | 2-11 | 12 |
| | 3-3 | 6 |
| | 3-17 | 20 |
| | 3-21 | 9 |
| | 3-29 | 8 |
| | 3-37 | 20 |
| | 3-39 | 18 |
| | 3-45 | 31 |
| | 3-47 | 23 |
| | 4-3 | 28 |
| | 4-11 | 30 |
| | 4-15 | 10 |
| | 4-19 | 10 |
| | 5-7 | 13 |
| | 5-21 | 7 |
| | 6-3 | 36 |
| | 7-3 | 7 |
| | 7-5 | 10 |
| | 8-3 | 9 |
| | 9-3 | 20 |
| | 9-7 | 9 |
| | 9-9 | 8 |
| | 9-11 | 10 |
| | 9-13 | 10 |
| | 11-22 | 24 |
| | 12-35 | 20 |
| | 13-27 | 10 |
| | 13-37 | 10 |
| | 13-39 | 10 |
| | 13-41 | 11 |
| 292682 | 2-6 | 46 |
| | 2-9 | 8 |
| | 2-9 | 12 |
| | 2-11 | 18 |

# NUMERICAL INDEX (Continued)

| PART NO. | PG | ITEM |
|---|---|---|
| | 2-13 | 27 |
| | 2-15 | 19 |
| | 2-19 | 14 |
| | 2-45 | 16 |
| | 3-39 | 6 |
| | 3-41 | 11 |
| | 3-45 | 7 |
| | 3-47 | 3 |
| | 4-15 | 22 |
| | 4-19 | 48 |
| | 5-3 | 19 |
| | 5-22 | 4 |
| | 7-5 | 3 |
| | 8-3 | 5 |
| | 9-11 | 14 |
| | 9-13 | 14 |
| | 10-7 | 9 |
| | 11-3 | 13 |
| | 12-16 | 9 |
| | 12-35 | 6 |
| | 13-69 | 6 |
| | 13-69 | 6 |
| 292683 | 1-5 | 9 |
| | 1-21 | 6 |
| | 1-31 | 5 |
| | 2-5 | 32 |
| | 2-9 | 2 |
| | 2-17 | 1 |
| | 2-19 | 17 |
| | 3-37 | 15 |
| | 4-11 | 19 |
| | 4-15 | 51 |
| | 4-20 | 61 |
| | 5-22 | 2 |
| | 9-21 | 9 |
| | 10-5 | 10 |
| | 10-15 | 6 |
| | 10-17 | 8 |
| | 11-7 | 5 |
| | 11-19 | 6 |
| | 12-8 | 15 |
| | 12-20 | 3 |
| | 12-31 | 6 |
| | 13-19 | 5 |
| | 13-27 | 14 |
| | 13-45 | 18 |
| | 13-49 | 14 |
| | 13-53 | 20 |
| | 13-59 | 14 |
| 292685 | 2-45 | 4 |
| | 7-9 | 4 |
| 292687 | 6-3 | 5 |
| | 6-3 | 33 |
| 292689 | 1-17 | 6 |
| 293603 | 1-23 | 2 |
| 293611 | 9-11 | 6 |
| | 9-13 | 6 |
| 293612 | 9-11 | 17 |
| | 9-13 | 17 |
| 293628 | 7-9 | 11 |
| 293630 | 2-45 | 15 |
| 293644 | 1-21 | 4 |
| 293645 | 13-19 | 6 |
| | 13-27 | 17 |
| 293646 | 1-21 | 7 |
| 293647 | 13-19 | 14 |
| | 13-27 | 13 |
| 293648 | 7-9 | 43 |
| 293649 | 2-17 | 4 |
| 293657 | 1-5 | 5 |
| | 5-7 | 29 |
| 293658 | 1-5 | 6 |
| 293685 | 6-3 | 24 |
| 293690 | 2-45 | 3 |
| 293694 | 7-9 | 3 |
| 293697 | 5-7 | 5 |
| 293700 | 3-35 | 13 |
| | 3-37 | 4 |
| 293710 | 6-3 | 4 |
| 293726 | 13-27 | 6 |
| 293741 | 9-17 | 4 |
| 293778 | 9-17 | 3 |
| 293780 | 2-9 | 30 |
| 293796 | 11-22 | 20 |
| | 12-35 | 16 |
| 293797 | 11-22 | 13 |
| 295649 | 11-12 | 12 |
| 295802 | 4-23 | 4 |
| 296010 | 7-5 | 11 |
| 296011 | 2-9 | 31 |
| 296024 | 10-7 | 10 |
| | 11-3 | 14 |
| | 12-16 | 10 |
| 296140 | 13-67 | 3 |
| 296163 | 3-33 | 2 |
| 296164 | 3-35 | 21 |
| 296205 | 7-7 | 6 |
| 296215 | 7-5 | 17 |
| 296229 | 13-29 | 5 |
| | 13-31 | 13 |
| 296251 | 3-37 | 14 |
| 296359 | 4-9 | 12 |
| | 4-11 | 2 |
| | 4-15 | 19 |
| 296380 | 4-3 | 23 |
| 296408 | 4-11 | 16 |
| | 4-15 | 50 |
| | 4-20 | 60 |
| 296415 | 13-25 | 5 |
| 296418 | 5-17 | 15 |
| | 13-9 | 8 |
| | 13-11 | 7 |
| 296419 | 13-21 | 4 |
| | 13-23 | 18 |
| 296420 | 5-11 | 9 |
| | 7-9 | 11 |
| | 13-69 | 7 |
| 296421 | 2-19 | 7 |
| 296422 | 1-5 | 15 |
| | 2-19 | 12 |
| | 5-7 | 19 |
| | 5-11 | 7 |
| | 9-3 | 6 |
| 296423 | 1-5 | 7 |
| | 1-21 | 5 |
| | 1-31 | 3 |
| | 13-19 | 4 |
| | 13-27 | 15 |
| 296426 | 5-7 | 4 |
| 296504 | 4-3 | 14 |
| 296510 | 4-4 | 47 |
| 296511 | 1-9 | 26 |
| 297531 | 11-15 | 6 |
| | 12-28 | 6 |
| 297532 | 10-11 | 4 |
| | 10-11 | 4 |
| | 10-12 | 12 |
| | 12-24 | 9 |
| 297640 | 12-20 | 23 |
| 298096 | 2-33 | 16 |
| 298831 | 3-29 | 3 |
| 298832 | 3-7 | 26 |
| 300937 | 7-9 | 41 |
| | 9-3 | 7 |
| 300939 | 1-5 | 4 |
| 302013 | 3-39 | 17 |
| | 3-45 | 22 |
| 302015 | 3-45 | 27 |
| 302023 | 13-25 | 6 |
| 302024 | 3-41 | 6 |
| 302047 | 13-23 | 11 |
| 302048 | 13-29 | 4 |
| | 13-31 | 9 |
| 302049 | 13-25 | 11 |
| 302054 | 8-3 | 37 |
| 302105 | 3-41 | 24 |
| 302237 | 8-4 | 57 |
| 302238 | 2-5 | 13 |
| 302244 | 4-3 | 8 |
| 302246 | 3-9 | 15 |
| | 4-15 | 33 |
| | 4-19 | 42 |
| 302250 | 4-15 | 36 |
| | 4-19 | 45 |
| 302263 | 3-3 | 11 |
| | 3-3 | 11 |
| | 3-17 | 14 |
| 302324 | 13-23 | 16 |
| 302398 | 1-9 | 27 |
| | 1-25 | 7 |
| | 3-9 | 16 |
| | 4-15 | 34 |
| | 4-19 | 43 |
| | 7-7 | 7 |
| 302399 | 3-41 | 4 |
| | 13-5 | 5 |
| 302400 | 1-9 | 16 |
| | 3-37 | 12 |
| | 7-5 | 12 |
| 302402 | 1-5 | 5 |
| | 1-5 | 8 |
| 302404 | 3-35 | 14 |
| | 3-37 | 5 |
| 302472 | 11-7 | 17 |
| | 11-23 | 29 |
| | 12-20 | 25 |
| | 12-35 | 28 |
| 302476 | 3-35 | 6 |
| 302493 | 11-7 | 10 |
| | 12-20 | 9 |
| 302713 | 2-27 | 18 |
| 304523 | 10-7 | 4 |
| | 11-3 | 8 |
| | 12-16 | 4 |
| 304527 | 11-7 | 19 |
| | 12-20 | 26 |
| 305100 | 2-11 | 4 |
| | 4-11 | 34 |
| 308980 | 9-11 | 36 |
| | 9-13 | 36 |
| 309109 | 9-11 | 16 |
| | 9-13 | 16 |
| 309124 | 4-11 | 13 |
| 309152 | 4-11 | 12 |
| 311277 | 9-19 | 12 |
| 313805 | 10-17 | 13 |
| | 12-20 | 29 |
| | 12-35 | 5 |


©2004 HYSTER COMPANY

# NUMERICAL INDEX (Continued)

| PART NO. | PG | ITEM |
|---|---|---|
| | 13-13 | 6 |
| 313828 | 2-13 | 24 |
| | 10-7 | 13 |
| | 11-4 | 25 |
| | 11-22 | 22 |
| | 12-16 | 22 |
| 315262 | 10-8 | 21 |
| | 11-4 | 35 |
| | 12-16 | 21 |
| 316132 | 4-3 | 5 |
| | 4-16 | 60 |
| | 4-20 | 70 |
| 316448 | 13-67 | 7 |
| 316678 | 1-5 | 12 |
| | 1-7 | 35 |
| | 1-21 | 3 |
| | 2-5 | 8 |
| | 3-3 | 17 |
| | 3-7 | 23 |
| | 3-17 | 13 |
| | 3-29 | 6 |
| | 3-41 | 19 |
| | 3-45 | 11 |
| | 4-3 | 13 |
| | 13-9 | 2 |
| | 13-11 | 3 |
| | 13-14 | 3 |
| | 13-39 | 15 |
| | 13-41 | 16 |
| 316826 | 1-7 | 38 |
| | 2-13 | 24 |
| | 2-15 | 11 |
| | 11-4 | 29 |
| | 12-16 | 15 |
| | 12-35 | 4 |
| 316828 | 2-17 | 13 |
| | 2-45 | 5 |
| | 11-7 | 13 |
| | 12-20 | 12 |
| 316834 | 9-11 | 37 |
| | 9-13 | 37 |
| 316835 | 1-7 | 12 |
| | 13-9 | 9 |
| | 13-11 | 8 |
| | 13-29 | 1 |
| | 13-31 | 11 |
| 316837 | 3-37 | 7 |
| 317292 | 11-19 | 17 |
| | 12-31 | 17 |
| | 13-53 | 23 |
| | 13-59 | 17 |
| 319322 | 11-19 | 9 |
| | 12-31 | 9 |
| | 13-53 | 21 |
| | 13-59 | 15 |
| 319323 | 11-19 | 8 |
| | 12-31 | 8 |
| | 13-53 | 22 |
| | 13-59 | 16 |
| 319891 | 10-8 | 21 |
| | 11-4 | 35 |
| | 12-16 | 21 |
| 320154 | 3-41 | 7 |
| | 8-4 | 58 |
| 320155 | 1-25 | 6 |
| | 3-9 | 14 |
| | 4-3 | 9 |
| | 4-15 | 32 |
| | 4-19 | 41 |
| | 7-5 | 20 |
| 320156 | 1-9 | 8 |
| | 1-25 | 13 |
| | 2-5 | 31 |
| | 3-3 | 12 |
| | 3-3 | 12 |
| | 3-17 | 15 |
| | 3-41 | 3 |
| | 3-43 | 6 |
| | 3-45 | 16 |
| | 3-47 | 8 |
| | 4-11 | 11 |
| | 4-15 | 5 |
| | 4-19 | 5 |
| | 7-3 | 24 |
| | 7-7 | 20 |
| | 9-11 | 25 |
| | 9-13 | 25 |
| | 13-5 | 4 |
| | 13-13 | 8 |
| 320157 | 1-7 | 37 |
| | 1-9 | 15 |
| | 3-3 | 5 |
| | 3-7 | 19 |
| | 3-17 | 19 |
| | 3-21 | 10 |
| | 3-29 | 16 |
| | 3-33 | 9 |
| | 3-37 | 10 |
| | 4-3 | 2 |
| | 4-15 | 13 |
| | 4-19 | 13 |
| | 5-8 | 43 |
| | 5-21 | 6 |
| | 7-3 | 6 |
| | 9-3 | 23 |
| | 9-7 | 25 |
| | 9-9 | 27 |
| | 11-22 | 11 |
| | 13-37 | 8 |
| | 13-39 | 9 |
| | 13-41 | 9 |
| 320158 | 1-7 | 20 |
| | 1-17 | 10 |
| | 2-13 | 23 |
| | 3-7 | 22 |
| | 3-21 | 22 |
| | 3-29 | 9 |
| | 3-47 | 22 |
| | 4-3 | 24 |
| | 4-11 | 22 |
| | 7-3 | 3 |
| | 7-3 | 15 |
| | 8-4 | 51 |
| | 8-17 | 4 |
| | 9-3 | 19 |
| | 9-7 | 10 |
| | 9-9 | 9 |
| | 9-11 | 27 |
| | 9-13 | 27 |
| | 13-5 | 6 |
| | 13-9 | 11 |
| | 13-11 | 12 |
| 320159 | 1-7 | 10 |
| | 2-6 | 45 |
| | 2-9 | 7 |
| | 2-11 | 17 |
| | 2-13 | 23 |
| | 2-13 | 23 |
| | 2-15 | 15 |
| | 2-15 | 20 |
| | 3-39 | 5 |
| | 3-41 | 12 |
| | 3-43 | 2 |
| | 3-45 | 28 |
| | 8-3 | 11 |
| | 9-11 | 41 |
| | 9-13 | 42 |
| 320160 | 3-47 | 2 |
| | 10-7 | 15 |
| | 11-3 | 12 |
| | 12-16 | 29 |
| 320161 | 2-6 | 40 |
| | 2-6 | 41 |
| | 2-9 | 3 |
| | 2-9 | 37 |
| | 3-33 | 7 |
| | 3-35 | 15 |
| | 3-37 | 15 |
| | 7-9 | 42 |
| | 10-5 | 9 |
| | 11-7 | 4 |
| | 12-20 | 7 |
| 320171 | 11-22 | 9 |
| | 12-35 | 11 |
| 320327 | 11-19 | 23 |
| | 12-31 | 23 |
| | 13-59 | 22 |
| 320397 | 12-20 | 23 |
| 321043 | 6-9 | 2 |
| 321044 | 6-9 | 2 |
| 321045 | 6-9 | 2 |
| 321158 | 4-11 | 6 |
| 322637 | 6-7 | 4 |
| | 6-9 | 4 |
| | 13-70 | 4 |
| 322638 | 6-7 | 5 |
| | 6-9 | 5 |
| | 13-70 | 5 |
| 324858 | 7-9 | 45 |
| 324864 | 7-9 | 44 |
| 325182 | 2-69 | 5 |
| 325789 | 4-27 | 6 |
| 325897 | 4-3 | 29 |
| | 4-15 | 28 |
| | 4-19 | 37 |
| | 9-4 | 44 |
| 327591 | 10-8 | 33 |
| | 10-15 | 9 |
| | 12-4 | 11 |
| | 12-12 | 7 |
| | 13-45 | 3 |
| 327807 | 10-12 | 8 |
| | 10-12 | 8 |
| 327808 | 10-12 | 11 |
| | 10-12 | 11 |
| 329069 | 3-39 | 19 |
| | 3-45 | 32 |
| 332061 | 10-7 | 5 |
| | 11-3 | 11 |
| | 12-16 | 7 |
| 332755 | 8-3 | 20 |
| 334155 | 9-22 | 10 |
| 334402 | 5-13 | 2 |
| | 5-15 | 2 |
| 334421 | 5-3 | 20 |
| 334447 | 5-7 | 12 |
| 334475 | 5-13 | 13 |
| | 5-15 | 13 |

©2004 HYSTER COMPANY

# NUMERICAL INDEX (Continued)

| PART NO. | PG | ITEM |
|---|---|---|
| 334500 | 5-17 | 10 |
| 334531 | 5-17 | 13 |
| | 5-19 | 4 |
| 334542 | 5-17 | 8 |
| 334543 | 5-17 | 9 |
| 334560 | 5-7 | 35 |
| 334582 | 5-17 | 4 |
| 335553 | 1-11 | 14 |
| 335988 | 1-11 | 16 |
| 335991 | 1-11 | 15 |
| 336123 | 6-9 | 1 |
| 336143 | 3-21 | 1 |
| 336550 | 2-5 | 5 |
| 336555 | 6-7 | 2 |
| | 6-9 | 2 |
| 337180 | 11-7 | 3 |
| 337189 | 12-20 | 23 |
| 337190 | 11-7 | 3 |
| | 12-20 | 23 |
| 337239 | 13-13 | 5 |
| 338646 | 11-7 | 3 |
| | 12-20 | 23 |
| 338647 | 10-7 | 17 |
| | 12-4 | 14 |
| 338649 | 12-20 | 23 |
| 339875 | 12-20 | 23 |
| 339932 | 10-8 | 33 |
| | 10-15 | 9 |
| | 11-7 | 22 |
| | 11-19 | 11 |
| | 12-4 | 11 |
| | 12-12 | 7 |
| | 12-20 | 20 |
| | 12-31 | 11 |
| | 13-49 | 16 |
| | 13-59 | 21 |
| 339933 | 12-20 | 23 |
| 339934 | 12-4 | 14 |
| 340044 | 1-27 | 31 |
| 340204 | 2-5 | 6 |
| 341558 | 11-19 | 10 |
| 344432 | 2-5 | 4 |
| 345408 | 7-15 | 3 |
| 345410 | 7-15 | 7 |
| 345411 | 7-15 | 8 |
| 345412 | 7-15 | 9 |
| 345423 | 7-5 | 25 |
| 345453 | 2-5 | 5 |
| 345454 | 2-5 | 5 |
| 346645 | 5-17 | 29 |
| 346648 | 5-17 | 28 |
| 346656 | 5-8 | 44 |
| 346675 | 5-3 | 15 |
| 346680 | 5-3 | 27 |
| 346696 | 5-3 | 4 |
| 346730 | 5-3 | 5 |
| 346731 | 5-3 | 3 |
| 347243 | 11-7 | 3 |
| 347247 | 11-7 | 3 |
| 348149 | 12-4 | 14 |
| 348827 | 11-7 | 3 |
| | 12-20 | 23 |
| 350399 | 2-33 | 2 |
| 350484 | 5-17 | 16 |
| 351531 | 10-12 | 12 |
| | 10-12 | 12 |
| | 12-24 | 9 |
| 351532 | 10-12 | 13 |
| | 12-24 | 13 |
| 352220 | 6-3 | 27 |
| 352247 | 9-22 | 5 |
| 352266 | 6-7 | 1 |
| 352268 | 6-7 | 2 |
| 352269 | 6-7 | 2 |
| 352270 | 6-7 | 2 |
| 352287 | 9-22 | 8 |
| 352288 | 9-21 | 2 |
| 352321 | 5-7 | 8 |
| 352485 | 3-47 | 6 |
| 352950 | 3-47 | 16 |
| 352969 | 3-49 | 18 |
| 353000 | 3-7 | 18 |
| | 3-29 | 17 |
| | 9-3 | 16 |
| 353128 | 3-49 | 12 |
| 353129 | 3-47 | 7 |
| 353141 | 3-47 | 14 |
| 353142 | 3-47 | 12 |
| 353143 | 3-47 | 11 |
| 353154 | 3-49 | 4 |
| 353164 | 3-47 | 5 |
| 353165 | 3-49 | 15 |
| 353168 | 3-49 | 5 |
| 353172 | 3-47 | 18 |
| 353175 | 3-49 | 11 |
| 353195 | 3-47 | 10 |
| 353198 | 8-4 | 55 |
| 353199 | 3-17 | 25 |
| 353230 | 3-47 | 19 |
| 353291 | 4-19 | 22 |
| 353310 | 2-5 | 2 |
| 353397 | 3-49 | 1 |
| 353422 | 3-49 | 6 |
| 353432 | 3-49 | 7 |
| 353448 | 3-49 | 8 |
| 353453 | 3-47 | 21 |
| 355844 | 13-19 | 7 |
| 356916 | 10-7 | 17 |
| | 12-4 | 14 |
| 356917 | 10-7 | 17 |
| 359207 | 3-49 | 10 |
| 359221 | 5-17 | 5 |
| 360387 | 3-49 | 3 |
| 361876 | 5-17 | 1 |
| 361877 | 5-17 | 2 |
| 364059 | 11-16 | 13 |
| 364807 | 1-11 | 6 |
| 364808 | 1-11 | 7 |
| 364854 | 1-11 | 12 |
| 364914 | 1-11 | 3 |
| 366069 | 7-15 | 20 |
| 366106 | 11-7 | 3 |
| | 12-20 | 23 |
| 367139 | 10-11 | 6 |
| 367420 | 1-32 | 1 |
| 367421 | 1-32 | 1 |
| 367422 | 1-32 | 1 |
| 367423 | 1-32 | 1 |
| 367424 | 1-32 | 1 |
| 367540 | 4-27 | 7 |
| | 13-35 | 4 |
| 367945 | 5-17 | 32 |
| 369242 | 13-27 | 18 |
| 369748 | 2-55 | 38 |
| 369815 | 2-5 | 10 |
| 370258 | 1-27 | 33 |
| 370599 | 1-7 | 30 |
| 370647 | 4-29 | 1 |
| 370648 | 4-29 | 1 |
| 370651 | 6-3 | 30 |
| 370730 | 4-27 | 20 |
| 370743 | 8-3 | 44 |
| 370863 | 4-3 | 43 |
| 370864 | 4-3 | 44 |
| 370868 | 4-3 | 4 |
| 371344 | 7-15 | 21 |
| 373950 | 5-3 | 30 |
| | 5-11 | 2 |
| 374923 | 3-3 | 3 |
| | 3-5 | 3 |
| | 3-19 | 3 |
| 375575 | 2-53 | 24 |
| 375587 | 2-55 | 19 |
| 375601 | 2-53 | 20 |
| 375602 | 2-53 | 25 |
| 375629 | 1-7 | 29 |
| | 1-9 | 22 |
| 375984 | 8-3 | 24 |
| 375986 | 5-17 | 31 |
| 376026 | 6-3 | 39 |
| | 6-3 | 39 |
| | 7-9 | 33 |
| | 7-16 | 13 |
| 377976 | 2-29 | 3 |
| 379197 | 1-11 | 10 |
| 379198 | 1-11 | 11 |
| 379199 | 1-11 | 22 |
| 379405 | 9-3 | 35 |
| | 9-7 | 3 |
| | 9-9 | 2 |
| | 10-8 | 28 |
| | 12-16 | 26 |
| 379407 | 2-59 | 34 |
| 379697 | 1-11 | 23 |
| 379698 | 1-11 | 20 |
| 379902 | 4-3 | 40 |
| 380524 | 5-3 | 31 |
| 383116 | 1-11 | 13 |
| 386071 | 4-23 | 7 |
| 386459 | 2-29 | 11 |
| | 2-31 | 15 |
| | 2-33 | 5 |
| | 2-41 | 14 |
| 387455 | 4-16 | 57 |
| | 4-20 | 67 |
| 387867 | 4-16 | 64 |
| | 4-20 | 74 |
| | 8-3 | 41 |
| | 8-4 | 56 |
| 387869 | 4-19 | 25 |
| 387892 | 4-3 | 20 |
| 388302 | 2-53 | 9 |
| 388306 | 2-65 | 7 |
| 388313 | 2-53 | 27 |
| 389688 | 1-27 | 7 |
| 389692 | 1-27 | 5 |
| 393502 | 8-3 | 13 |
| 397676 | 7-3 | 11 |
| | 9-4 | 48 |
| | 9-7 | 28 |
| | 9-9 | 30 |
| 615145 | 11-15 | 10 |
| | 12-28 | 10 |
| 636950 | 11-15 | 12 |
| | 12-28 | 12 |
| 636952 | 12-28 | 12 |
| 637161 | 11-15 | 9 |
| | 12-28 | 9 |


©2004 HYSTER COMPANY

# NUMERICAL INDEX (Continued)

| PART NO. | PG | ITEM |
|---|---|---|
| 637162 | 11-16 | 13 |
| | 12-28 | 13 |
| 637164 | 12-28 | 13 |
| 637635 | 11-15 | 6 |
| | 12-28 | 6 |
| 638248 | 9-22 | 16 |
| 638249 | 10-12 | 11 |
| | 12-24 | 7 |
| | 12-24 | 13 |
| 638250 | 10-12 | 11 |
| | 12-24 | 7 |
| 638293 | 11-16 | 14 |
| | 12-28 | 14 |
| 638295 | 12-28 | 14 |
| 806424 | 4-27 | 8 |
| 806556 | 7-16 | 10 |
| 815597 | 3-41 | 8 |
| | 4-3 | 21 |
| 842799 | 2-27 | 4 |
| 842800 | 2-27 | 5 |
| 864738 | 1-28 | 38 |
| 864739 | 1-27 | 37 |
| 864740 | 1-27 | 34 |
| 864763 | 1-27 | 36 |
| 864765 | 1-27 | 35 |
| 878989 | 3-7 | 12 |
| | 3-13 | 17 |
| 895468 | 7-5 | 35 |
| 895963 | 2-6 | 44 |
| 980727 | 2-21 | 9 |
| 980929 | 12-16 | 28 |
| 983484 | 2-33 | 9 |
| 1151722 | 9-19 | 9 |
| 1300107 | 1-11 | 5 |
| 1300741 | 13-37 | 12 |
| | 13-39 | 12 |
| | 13-41 | 13 |
| 1301167 | 3-3 | 27 |
| 1301286 | 13-14 | 2 |
| 1301648 | 4-3 | 33 |
| 1301700 | 13-19 | 9 |
| 1301720 | 4-27 | 9 |
| 1301727 | 13-13 | 10 |
| 1302024 | 13-13 | 2 |
| | 13-27 | 4 |
| 1302126 | 6-7 | 2 |
| 1302127 | 6-7 | 2 |
| 1302258 | 13-23 | 4 |
| 1302938 | 2-17 | 12 |
| | 2-45 | 13 |
| 1302954 | 2-5 | 3 |
| 1302973 | 5-7 | 41 |
| 1303787 | 7-15 | 10 |
| 1304349 | 11-4 | 34 |
| 1304971 | 1-23 | 11 |
| 1306143 | 2-29 | 15 |
| 1306193 | 2-27 | 16 |
| 1306194 | 2-27 | 17 |
| 1306331 | 3-14 | 6 |
| 1306345 | 3-13 | 9 |
| | 3-14 | 5 |
| 1306354 | 2-33 | 6 |
| | 2-37 | 4 |
| | 2-43 | 3 |
| 1306356 | 2-33 | 12 |
| 1306358 | 2-29 | 22 |
| | 2-31 | 6 |
| | 2-38 | 6 |
| | 2-41 | 10 |
| 1306359 | 2-41 | 15 |
| 1306361 | 2-25 | 24 |
| 1306362 | 2-31 | 10 |
| 1306364 | 2-33 | 15 |
| 1306365 | 2-29 | 24 |
| 1306370 | 2-34 | 5 |
| 1306371 | 2-19 | 3 |
| | 2-33 | 23 |
| | 2-41 | 13 |
| 1306373 | 2-38 | 7 |
| 1306374 | 2-29 | 4 |
| 1307875 | 2-29 | 9 |
| 1307877 | 2-34 | 4 |
| 1307880 | 2-29 | 14 |
| 1307881 | 2-33 | 21 |
| | 2-41 | 24 |
| 1307883 | 2-29 | 18 |
| 1307894 | 2-21 | 19 |
| | 2-23 | 25 |
| | 2-29 | 7 |
| 1307897 | 2-19 | 4 |
| 1307909 | 2-31 | 5 |
| | 2-31 | 11 |
| | 2-33 | 22 |
| 1307913 | 2-43 | 5 |
| 1308005 | 3-14 | 8 |
| 1308006 | 3-11 | 5 |
| | 3-14 | 7 |
| 1309775 | 13-13 | 1 |
| | 13-27 | 5 |
| 1310370 | 11-12 | 4 |
| 1310371 | 11-12 | 4 |
| 1310373 | 11-12 | 5 |
| 1310374 | 11-12 | 5 |
| 1310376 | 11-12 | 3 |
| 1310377 | 11-12 | 3 |
| 1310611 | 4-3 | 17 |
| | 13-37 | 15 |
| | 13-39 | 17 |
| 1310630 | 4-29 | 1 |
| 1313897 | 6-3 | 13 |
| 1316488 | 2-50 | 4 |
| | 2-59 | 27 |
| 1316494 | 2-50 | 5 |
| | 2-59 | 28 |
| 1317468 | 2-59 | 46 |
| 1318965 | 2-29 | 10 |
| 1318968 | 2-38 | 5 |
| 1319028 | 2-43 | 9 |
| 1319190 | 2-47 | 19 |
| | 4-15 | 46 |
| | 4-20 | 56 |
| 1320000 | 2-55 | 13 |
| 1320018 | 5-3 | 30 |
| | 5-11 | 2 |
| 1320669 | 4-29 | 1 |
| 1320893 | 3-41 | 23 |
| | 3-45 | 20 |
| | 4-16 | 59 |
| | 4-20 | 69 |
| 1322333 | 5-3 | 30 |
| | 5-11 | 2 |
| 1322627 | 5-3 | 26 |
| 1323576 | 4-27 | 21 |
| | 4-37 | 6 |
| 1323586 | 4-27 | 10 |
| | 4-37 | 5 |
| 1324307 | 13-13 | 1 |
| | 13-34 | 3 |
| 1324308 | 13-13 | 1 |
| | 13-34 | 3 |
| 1324309 | 13-13 | 1 |
| | 13-34 | 3 |
| | 13-34 | 3 |
| | 13-34 | 4 |
| | 13-35 | 2 |
| | 13-35 | 3 |
| 1324310 | 13-13 | 1 |
| | 13-34 | 2 |
| | 13-34 | 3 |
| | 13-34 | 4 |
| | 13-35 | 2 |
| | 13-35 | 3 |
| 1324517 | 4-11 | 1 |
| | 4-19 | 19 |
| 1324557 | 4-16 | 58 |
| | 4-20 | 68 |
| 1324577 | 7-5 | 33 |
| 1325120 | 10-7 | 7 |
| | 11-3 | 9 |
| | 12-16 | 5 |
| 1325271 | 1-27 | 9 |
| 1326939 | 4-11 | 8 |
| | 4-15 | 8 |
| | 4-19 | 8 |
| 1327161 | 8-3 | 3 |
| 1327905 | 2-37 | 9 |
| 1328516 | 4-23 | 35 |
| 1328521 | 4-23 | 39 |
| 1328565 | 2-33 | 17 |
| 1328691 | 5-7 | 38 |
| 1328930 | 9-11 | 7 |
| | 9-13 | 7 |
| 1329250 | 7-5 | 27 |
| 1329272 | 2-6 | 55 |
| 1329660 | 2-43 | 2 |
| 1330283 | 4-27 | 22 |
| 1330292 | 4-27 | 11 |
| 1330293 | 4-27 | 40 |
| 1330342 | 3-29 | 11 |
| 1330353 | 4-15 | 38 |
| | 4-19 | 47 |
| 1330354 | 4-27 | 12 |
| 1330355 | 4-27 | 23 |
| 1330357 | 4-27 | 29 |
| 1330410 | 3-49 | 13 |
| 1330415 | 3-49 | 13 |
| 1330419 | 4-27 | 13 |
| 1330420 | 4-27 | 14 |
| 1330424 | 4-27 | 30 |
| 1330434 | 4-27 | 25 |
| 1330435 | 3-49 | 13 |
| 1330438 | 4-27 | 24 |
| | 4-33 | 5 |
| 1330439 | 4-33 | 5 |
| | 4-33 | 6 |
| 1330450 | 2-53 | 6 |
| 1330453 | 2-65 | 5 |
| 1330725 | 2-60 | 48 |
| 1330917 | 1-27 | 20 |
| 1330919 | 1-27 | 16 |
| 1330920 | 1-27 | 3 |
| | 13-19 | 7 |
| 1331341 | 2-53 | 26 |
| | 2-59 | 7 |
| 1331990 | 10-8 | 32 |
| | 12-4 | 10 |
| 1331991 | 10-8 | 32 |
| | 11-7 | 21 |

# NUMERICAL INDEX (Continued)

| PART NO. | PG | ITEM |
|---|---|---|
| | 12-4 | 10 |
| | 12-20 | 19 |
| 1332705 | 12-35 | 10 |
| 1333001 | 1-33 | 1 |
| 1333002 | 1-33 | 1 |
| 1333003 | 1-33 | 1 |
| 1333004 | 1-33 | 1 |
| 1333541 | 2-65 | 6 |
| 1333806 | 2-59 | 42 |
| 1334423 | 2-59 | 5 |
| | 4-21 | 4 |
| 1334642 | 8-9 | 20 |
| 1334790 | 1-9 | 13 |
| 1335129 | 1-27 | 17 |
| 1335137 | 1-27 | 15 |
| 1335499 | 2-19 | 19 |
| | 2-53 | 16 |
| 1335763 | 1-17 | 9 |
| 1335898 | 2-13 | 8 |
| | 2-15 | 10 |
| 1335967 | 7-5 | 8 |
| 1335987 | 7-5 | 7 |
| 1336605 | 1-27 | 19 |
| 1337108 | 8-3 | 19 |
| 1337118 | 2-13 | 7 |
| | 2-15 | 9 |
| 1337197 | 4-3 | 40 |
| 1337743 | 7-16 | 3 |
| 1337744 | 6-7 | 2 |
| 1337745 | 6-9 | 2 |
| 1337817 | 5-17 | 3 |
| 1338178 | 1-27 | 1 |
| 1338223 | 2-65 | 2 |
| 1338258 | 2-13 | 9 |
| 1338262 | 8-3 | 14 |
| 1338286 | 1-9 | 18 |
| 1338916 | 8-9 | 18 |
| | 8-13 | 23 |
| 1338917 | 8-9 | 19 |
| | 8-13 | 24 |
| 1339457 | 2-5 | 28 |
| 1339672 | 1-27 | 32 |
| 1339720 | 3-7 | 25 |
| | 3-29 | 4 |
| 1339745 | 9-11 | 8 |
| | 9-13 | 8 |
| 1339746 | 9-11 | 9 |
| | 9-13 | 9 |
| 1339748 | 9-13 | 30 |
| 1339749 | 9-11 | 5 |
| | 9-11 | 5 |
| | 9-13 | 5 |
| 1339770 | 9-11 | 30 |
| 1339779 | 3-7 | 20 |
| | 3-21 | 16 |
| | 3-29 | 15 |
| 1339947 | 13-5 | 1 |
| 1339963 | 2-55 | 36 |
| 1342528 | 4-21 | 1 |
| 1343443 | 9-11 | 4 |
| | 9-13 | 4 |
| 1343449 | 3-7 | 16 |
| | 3-29 | 27 |
| 1343537 | 7-5 | 19 |
| 1343572 | 7-5 | 18 |
| 1343573 | 7-5 | 5 |
| 1343574 | 7-5 | 16 |
| 1343577 | 7-7 | 1 |
| 1343578 | 7-7 | 2 |
| 1343579 | 7-7 | 3 |
| 1343592 | 7-7 | 3 |
| 1343593 | 7-7 | 5 |
| 1343594 | 7-7 | 9 |
| 1343595 | 7-7 | 12 |
| 1343596 | 7-7 | 21 |
| 1343597 | 7-5 | 31 |
| | 7-7 | 22 |
| 1343598 | 7-7 | 4 |
| 1343607 | 7-5 | 14 |
| 1343630 | 8-3 | 27 |
| 1344921 | 2-29 | 21 |
| 1345014 | 2-19 | 6 |
| | 4-15 | 21 |
| | 4-19 | 26 |
| 1345684 | 7-9 | 7 |
| 1345939 | 1-27 | 10 |
| 1347004 | 7-7 | |
| 1347025 | 7-5 | 25 |
| 1347043 | 1-9 | 23 |
| 1347045 | 1-9 | 24 |
| 1347067 | 4-3 | 34 |
| 1347088 | 1-7 | 16 |
| | 3-47 | 26 |
| 1347114 | 4-29 | 3 |
| 1347135 | 7-5 | 32 |
| 1347217 | 7-7 | 4 |
| 1350215 | 1-9 | 6 |
| 1350282 | 3-9 | 6 |
| 1350285 | 1-7 | 11 |
| 1350680 | 7-9 | 9 |
| 1350733 | 13-5 | 1 |
| 1350734 | 13-5 | 1 |
| 1350735 | 13-5 | 1 |
| 1350736 | 13-5 | 1 |
| 1350914 | 4-3 | 25 |
| 1351098 | 1-5 | 3 |
| 1351176 | 2-13 | 21 |
| | 2-15 | 13 |
| 1351177 | 2-13 | 22 |
| | 2-15 | 12 |
| 1351178 | 2-13 | 30 |
| | 2-15 | 22 |
| 1351473 | 1-11 | 1 |
| 1351689 | 8-3 | 36 |
| 1352089 | 3-49 | 12 |
| 1352090 | 3-49 | 12 |
| 1352105 | 4-33 | 4 |
| 1352123 | 3-21 | 20 |
| 1352190 | 1-27 | 29 |
| 1352575 | 3-47 | 13 |
| | 3-49 | |
| 1352616 | 7-3 | 23 |
| 1354140 | 1-11 | 2 |
| 1354165 | 1-27 | 12 |
| 1354171 | 1-27 | 23 |
| 1354237 | 4-33 | 13 |
| 1354300 | 7-7 | 11 |
| 1354497 | 4-27 | 15 |
| 1355326 | 7-15 | 11 |
| 1356137 | 1-27 | 4 |
| 1356316 | 2-6 | 61 |
| 1356375 | 7-7 | 3 |
| | 7-7 | 4 |
| 1356377 | 1-21 | 10 |
| 1356393 | 9-3 | 32 |
| 1356520 | 13-14 | 1 |
| 1357322 | 2-17 | 5 |
| | 2-45 | 6 |
| 1358120 | 7-3 | 17 |
| | 13-37 | 1 |
| | 13-39 | 1 |
| | 13-41 | 1 |
| 1358179 | 7-16 | 3 |
| | 7-16 | 3 |
| 1358184 | 6-7 | 2 |
| 1358185 | 6-9 | 2 |
| 1358190 | 7-16 | 3 |
| 1358192 | 6-9 | 2 |
| 1358195 | 6-7 | 2 |
| 1358545 | 2-67 | 10 |
| 1359581 | 2-5 | 5 |
| 1359587 | 1-7 | 31 |
| 1360178 | 2-55 | 28 |
| 1360179 | 2-53 | 4 |
| 1360182 | 2-53 | 5 |
| 1360529 | 10-8 | 35 |
| 1360797 | 8-9 | 13 |
| 1360875 | 9-19 | 3 |
| | 9-19 | 5 |
| 1361164 | 3-25 | 13 |
| 1361302 | 11-15 | 4 |
| | 12-28 | 4 |
| 1361502 | 8-9 | 26 |
| | 8-13 | 25 |
| 1361503 | 8-13 | 27 |
| 1361504 | 8-9 | 29 |
| | 8-14 | 28 |
| 1362714 | 1-7 | 25 |
| 1363916 | 1-21 | 9 |
| | 4-3 | 42 |
| | 13-19 | 3 |
| 1363917 | 1-21 | 8 |
| | 9-7 | 1 |
| 1364259 | 1-7 | 21 |
| 1364271 | 7-5 | 13 |
| 1367645 | 13-9 | 4 |
| 1371111 | 3-13 | 6 |
| 1371137 | 3-13 | 7 |
| 1371141 | 3-13 | 8 |
| 1371166 | 3-7 | 21 |
| 1371211 | 4-23 | 9 |
| 1371212 | 4-23 | 18 |
| 1371214 | 4-23 | 21 |
| 1371445 | 9-3 | 32 |
| 1374108 | 2-55 | 39 |
| 1374205 | 3-17 | 6 |
| 1374206 | 3-17 | 6 |
| 1374207 | 3-17 | 6 |
| 1374288 | 2-59 | 6 |
| 1374289 | 2-59 | 11 |
| 1374293 | 2-59 | 14 |
| 1374297 | 2-55 | 2 |
| 1374298 | 2-55 | 8 |
| 1374299 | 2-55 | 7 |
| 1374301 | 2-55 | 6 |
| 1374313 | 2-53 | 15 |
| | 2-55 | 35 |
| 1374314 | 2-55 | 14 |
| 1374315 | 2-55 | 31 |
| 1374317 | 2-55 | 26 |
| 1374319 | 2-65 | 1 |
| 1374320 | 2-65 | 4 |
| 1374326 | 2-55 | 32 |
| 1374329 | 4-21 | 2 |
| 1374549 | 1-27 | 24 |
| 1374750 | 1-11 | 21 |
| 1375150 | 1-11 | |
| 1375168 | 13-9 | 7 |


©2004 HYSTER COMPANY

# NUMERICAL INDEX (Continued)

| PART NO. | PG | ITEM |
|---|---|---|
| | 13-11 | 6 |
| 1375169 | 13-9 | 6 |
| | 13-11 | 5 |
| 1375171 | 13-9 | 1 |
| 1375172 | 13-9 | 1 |
| 1375782 | 4-27 | 16 |
| 1375783 | 4-27 | 26 |
| 1376007 | 6-7 | 2 |
| | 6-9 | 2 |
| | 7-16 | 3 |
| 1376439 | 13-23 | 4 |
| 1376440 | 13-23 | 4 |
| 1376446 | 13-23 | 4 |
| 1376557 | 8-17 | 1 |
| 1376579 | 13-11 | 2 |
| 1376743 | 7-5 | 30 |
| 1376746 | 3-7 | 24 |
| | 3-29 | 5 |
| 1377103 | 2-55 | 23 |
| 1377104 | 2-55 | 25 |
| 1377107 | 2-55 | 33 |
| 1377110 | 2-63 | 3 |
| 1377750 | 2-11 | 20 |
| 1377792 | 2-59 | 15 |
| 1377793 | 2-59 | 16 |
| 1377794 | 2-59 | 17 |
| 1377908 | 2-29 | 5 |
| 1377953 | 13-66 | 3 |
| 1377954 | 13-66 | 6 |
| 1378168 | 1-5 | 2 |
| 1378197 | 1-5 | 3 |
| 1378198 | 2-17 | 9 |
| | 2-45 | 10 |
| 1378226 | 2-19 | 21 |
| 1378259 | 5-7 | 3 |
| 1378435 | 8-3 | 8 |
| 1378509 | 1-27 | 27 |
| 1378600 | 7-5 | 6 |
| 1379063 | 11-12 | 9 |
| | 12-24 | 14 |
| 1380261 | 2-31 | 9 |
| 1380757 | 13-23 | 4 |
| 1380878 | 9-22 | 4 |
| 1380901 | 11-12 | 1 |
| 1380904 | 11-12 | 1 |
| 1380914 | 11-12 | 1 |
| 1380926 | 11-12 | 1 |
| 1380982 | 11-15 | 12 |
| 1381055 | 11-12 | 13 |
| 1381056 | 11-12 | 13 |
| 1381061 | 10-12 | 10 |
| | 12-24 | 10 |
| 1381062 | 10-12 | 10 |
| | 10-12 | 10 |
| | 12-24 | 10 |
| 1381074 | 11-16 | 14 |
| 1381085 | 9-22 | 15 |
| 1382126 | 1-23 | 22 |
| 1382130 | 13-13 | 1 |
| 1382131 | 13-27 | 5 |
| 1382479 | 2-33 | 11 |
| 1382546 | 2-21 | 16 |
| 1382556 | 7-5 | 25 |
| 1382954 | 2-37 | 2 |
| 1383031 | 9-22 | 3 |
| 1383204 | 2-11 | 11 |
| 1383211 | 2-59 | 39 |
| 1383213 | 2-59 | 40 |
| 1383237 | 2-59 | 38 |
| 1383239 | 2-59 | 41 |
| 1383241 | 2-59 | 31 |
| 1383257 | 2-50 | 1 |
| | 2-55 | 12 |
| | 2-59 | 30 |
| 1383263 | 2-55 | 41 |
| 1383331 | 4-11 | 14 |
| 1383777 | 7-9 | 31 |
| 1383904 | 2-59 | 10 |
| 1384578 | 2-11 | 10 |
| 1384594 | 4-3 | 11 |
| 1384659 | 13-69 | 10 |
| 1384699 | 3-21 | 3 |
| 1385060 | 5-7 | 24 |
| 1385061 | 5-8 | 62 |
| 1385062 | 5-8 | 63 |
| 1385063 | 5-8 | 64 |
| 1385064 | 5-8 | 65 |
| 1385065 | 5-7 | 25 |
| 1385102 | 1-27 | 14 |
| 1385449 | 1-17 | 1 |
| 1385451 | 7-5 | 1 |
| 1385457 | 1-17 | 1 |
| 1385489 | 5-8 | 48 |
| 1385498 | 1-9 | 19 |
| 1385535 | 1-7 | 18 |
| 1385873 | 5-7 | 42 |
| 1386176 | 2-55 | 18 |
| | 2-65 | |
| 1386177 | 2-65 | 8 |
| 1386179 | 2-55 | 22 |
| 1386183 | 2-55 | 27 |
| 1386184 | 2-55 | 40 |
| 1386185 | 2-59 | 1 |
| 1386186 | 2-59 | 12 |
| 1386187 | 2-59 | 13 |
| 1386189 | 2-59 | 21 |
| 1386191 | 2-59 | 23 |
| 1386194 | 2-63 | 4 |
| 1386195 | 2-63 | 5 |
| 1386197 | 2-63 | 7 |
| 1386198 | 2-63 | 8 |
| 1386940 | 5-7 | 10 |
| 1386958 | 5-3 | 8 |
| 1387230 | 5-17 | 14 |
| 1387235 | 5-13 | 10 |
| | 5-15 | 10 |
| 1387281 | 11-7 | 15 |
| | 12-20 | 17 |
| 1387285 | 10-15 | 8 |
| | 12-12 | 6 |
| | 13-45 | 2 |
| 1387286 | 10-15 | 8 |
| | 12-12 | 6 |
| | 13-49 | 15 |
| 1387324 | 10-8 | 24 |
| | 11-4 | 27 |
| | 12-16 | 24 |
| 1387327 | 12-35 | 19 |
| 1387330 | 1-31 | 2 |
| 1387341 | 1-31 | 1 |
| 1387342 | 1-31 | 1 |
| 1387345 | 1-31 | 1 |
| 1387346 | 1-31 | 1 |
| 1387349 | 1-31 | 1 |
| 1387399 | 10-8 | 25 |
| | 11-4 | 28 |
| | 12-16 | 25 |
| 1387448 | 10-15 | 1 |
| 1387457 | 12-31 | 1 |
| 1387459 | 12-31 | 1 |
| 1387479 | 12-20 | 27 |
| 1387497 | 12-31 | 1 |
| 1387498 | 12-31 | 1 |
| 1387519 | 11-7 | 16 |
| | 12-20 | 24 |
| 1387523 | 12-35 | 7 |
| | 12-35 | 8 |
| 1387548 | 11-19 | 10 |
| | 12-31 | 10 |
| | 13-53 | 6 |
| 1387549 | 11-19 | 11 |
| | 12-31 | 11 |
| | 13-53 | 7 |
| 1387553 | 12-20 | 2 |
| 1387584 | 11-7 | 14 |
| | 12-20 | 15 |
| 1387740 | 12-20 | 18 |
| 1387743 | 11-7 | 20 |
| | 12-20 | 18 |
| 1387744 | 10-5 | 12 |
| 1387745 | 10-5 | 12 |
| 1387904 | 1-31 | 1 |
| 1387963 | 12-20 | 16 |
| 1387965 | 12-20 | 16 |
| 1387966 | 12-20 | 16 |
| 1387968 | 12-20 | 16 |
| 1387969 | 12-20 | 16 |
| 1387970 | 12-20 | 16 |
| 1387986 | 12-20 | 16 |
| 1387988 | 12-20 | 16 |
| 1387993 | 10-15 | 4 |
| | 11-19 | 4 |
| | 12-31 | 4 |
| | 13-45 | 11 |
| | 13-49 | 7 |
| | 13-53 | 13 |
| | 13-59 | 7 |
| 1388018 | 12-35 | 26 |
| 1388019 | 10-7 | 18 |
| | 11-3 | 21 |
| | 12-16 | 17 |
| 1388092 | 10-15 | 1 |
| 1388094 | 10-15 | 1 |
| 1388386 | 2-41 | 20 |
| 1388387 | 2-23 | 6 |
| 1388563 | 5-18 | 1 |
| 1388573 | 5-7 | 39 |
| | 5-18 | 6 |
| 1388612 | 5-7 | 11 |
| | 5-19 | |
| 1388613 | 5-19 | 1 |
| 1388615 | 5-19 | 3 |
| 1388657 | 7-13 | 1 |
| 1388665 | 7-13 | 4 |
| 1388670 | 7-9 | 20 |
| 1388673 | 7-9 | 1 |
| 1388677 | 5-7 | 22 |
| 1388678 | 5-7 | 18 |
| 1388680 | 5-7 | 27 |
| 1388695 | 5-8 | 60 |
| 1388697 | 5-7 | 16 |
| 1388698 | 5-7 | 17 |
| 1388699 | 5-8 | 66 |
| 1388704 | 2-17 | 11 |
| | 2-45 | 12 |
| 1388705 | 2-19 | 9 |
| | 5-11 | 11 |
| 1388706 | 2-19 | 9 |

©2004 HYSTER COMPANY

# NUMERICAL INDEX (Continued)

| PART NO. | PG | ITEM |
|---|---|---|
| | 5-11 | 11 |
| 1388721 | 4-15 | 37 |
| | 4-19 | 46 |
| | 4-25 | |
| 1388733 | 2-19 | 20 |
| 1388735 | 5-7 | 33 |
| 1388747 | 5-8 | 48 |
| 1388750 | 2-19 | 11 |
| | 5-11 | 6 |
| 1388752 | 5-3 | 11 |
| 1388753 | 5-3 | 12 |
| 1388773 | 7-5 | 21 |
| | 7-15 | |
| 1388776 | 9-7 | 37 |
| | 9-9 | 39 |
| 1388780 | 7-13 | 7 |
| 1388801 | 5-7 | 36 |
| 1388802 | 5-7 | 7 |
| 1388804 | 5-7 | 34 |
| 1388827 | 7-9 | 23 |
| 1388828 | 7-9 | 23 |
| 1388829 | 7-9 | 40 |
| 1388832 | 7-9 | 32 |
| 1388838 | 7-10 | 46 |
| 1388842 | 7-9 | 2 |
| 1388846 | 7-9 | 16 |
| 1388847 | 7-9 | 15 |
| 1388848 | 7-9 | 14 |
| 1388856 | 5-3 | 22 |
| 1388857 | 5-3 | 24 |
| 1388869 | 5-7 | 1 |
| 1388870 | 5-7 | 1 |
| 1388879 | 1-17 | 1 |
| 1388880 | 1-17 | 1 |
| 1388882 | 1-17 | 1 |
| 1388883 | 1-17 | 1 |
| 1388898 | 1-17 | 3 |
| 1388901 | 5-3 | 34 |
| 1388911 | 2-6 | 50 |
| 1388924 | 5-17 | 22 |
| 1388954 | 9-7 | 38 |
| | 9-9 | 40 |
| 1388963 | 9-3 | 8 |
| 1388993 | 5-3 | 28 |
| 1389050 | 2-59 | 19 |
| 1389051 | 2-59 | 20 |
| | 2-63 | 2 |
| 1389092 | 2-55 | 24 |
| 1389093 | 2-59 | 9 |
| 1389100 | 2-55 | 15 |
| 1389102 | 2-59 | 2 |
| 1389133 | 2-59 | 8 |
| 1389365 | 3-9 | 8 |
| 1389479 | 4-29 | 1 |
| | 4-29 | 3 |
| | 4-29 | 5 |
| | 4-29 | 7 |
| | 4-29 | 7 |
| 1389590 | 9-7 | 41 |
| 1389779 | 12-8 | 12 |
| 1389780 | 12-8 | 12 |
| 1389825 | 11-7 | 9 |
| | 12-20 | 8 |
| 1389828 | 12-35 | 13 |
| 1389844 | 11-4 | 33 |
| | 12-16 | 12 |
| 1389845 | 12-16 | 12 |
| 1389846 | 10-5 | 6 |
| | 12-8 | 11 |
| 1389854 | 12-35 | 30 |
| 1389921 | 10-7 | 16 |
| 1389922 | 11-4 | 32 |
| | 12-16 | 16 |
| 1389923 | 10-7 | 8 |
| 1389924 | 11-4 | 31 |
| | 12-16 | 8 |
| 1389959 | 10-5 | 8 |
| | 12-8 | 14 |
| 1390101 | 5-8 | 61 |
| 1390110 | 3-3 | 4 |
| | 3-17 | 3 |
| 1390163 | 4-25 | 7 |
| 1390164 | 4-25 | 36 |
| 1390167 | 4-25 | 38 |
| 1390759 | 2-53 | 2 |
| 1390760 | 2-53 | 2 |
| 1390761 | 2-53 | 3 |
| 1390765 | 2-53 | 3 |
| 1390770 | 2-53 | 7 |
| 1390773 | 2-53 | 12 |
| 1391246 | 2-25 | 21 |
| 1392210 | 4-11 | 26 |
| 1392718 | 1-7 | 5 |
| 1392738 | 3-21 | 15 |
| 1392740 | 13-19 | 13 |
| | 13-27 | 3 |
| 1392797 | 13-27 | 8 |
| 1392799 | 3-3 | 26 |
| | 3-17 | 7 |
| 1392814 | 3-3 | 25 |
| | 3-17 | 8 |
| 1392818 | 13-27 | 19 |
| 1392819 | 13-27 | 20 |
| 1393127 | 2-63 | 6 |
| 1393160 | 5-18 | 4 |
| | 5-19 | 2 |
| 1393342 | 6-3 | 17 |
| 1393344 | 6-3 | 38 |
| | 13-70 | 7 |
| 1393346 | 6-3 | 38 |
| 1393348 | 7-9 | 25 |
| 1393350 | 2-55 | 17 |
| 1393451 | 13-23 | 2 |
| 1393452 | 13-23 | 3 |
| 1393453 | 13-21 | 16 |
| 1393454 | 13-21 | 17 |
| 1393455 | 13-21 | 22 |
| 1393458 | 13-23 | 13 |
| 1393463 | 13-29 | 17 |
| | 13-31 | 20 |
| 1393464 | 13-29 | 11 |
| | 13-31 | 6 |
| 1393466 | 13-23 | 8 |
| 1393467 | 13-29 | 16 |
| 1393468 | 13-31 | 7 |
| 1393471 | 13-17 | 5 |
| 1393472 | 13-21 | 18 |
| | 13-29 | 9 |
| | 13-31 | 18 |
| 1393479 | 13-29 | 8 |
| 1393480 | 13-29 | 10 |
| 1393482 | 13-31 | 10 |
| 1393483 | 13-31 | 17 |
| 1393485 | 13-29 | 12 |
| | 13-31 | 16 |
| 1393486 | 13-21 | 20 |
| 1393488 | 13-21 | 23 |
| 1393492 | 13-17 | 4 |
| 1393493 | 13-17 | 3 |
| 1393497 | 13-23 | 6 |
| 1393503 | 13-21 | 29 |
| 1393504 | 13-23 | 5 |
| 1393505 | 13-23 | 9 |
| 1393511 | 13-21 | 7 |
| | 13-23 | 1 |
| | 13-25 | 2 |
| 1393514 | 13-23 | 17 |
| 1393517 | 13-21 | 3 |
| 1393524 | 13-25 | 3 |
| 1393527 | 13-25 | 8 |
| 1393528 | 13-25 | 7 |
| 1393537 | 13-32 | 1 |
| 1393540 | 13-17 | 10 |
| 1393541 | 13-21 | 21 |
| 1393543 | 13-21 | 11 |
| 1393547 | 13-32 | 1 |
| 1393879 | 5-21 | 4 |
| | 7-3 | 5 |
| | 9-3 | 40 |
| | 9-7 | 17 |
| | 9-9 | 17 |
| | 9-11 | 39 |
| | 9-13 | 40 |
| 1394001 | 4-11 | 32 |
| | 4-19 | 21 |
| | 4-23 | |
| 1394008 | 3-17 | 30 |
| 1394436 | 2-17 | 14 |
| | 2-45 | 14 |
| 1394437 | 2-17 | 10 |
| | 2-45 | 11 |
| 1394453 | 9-3 | 10 |
| 1394500 | 6-7 | 2 |
| | 13-70 | 6 |
| 1394508 | 7-16 | 4 |
| 1394509 | 7-16 | 4 |
| 1394510 | 7-16 | 4 |
| 1394511 | 7-16 | 7 |
| 1394512 | 7-16 | 7 |
| 1394514 | 7-16 | 9 |
| 1394552 | 7-9 | 12 |
| 1394554 | 7-9 | 12 |
| 1394576 | 8-3 | 15 |
| 1394581 | 2-6 | 60 |
| | 2-9 | 32 |
| 1394594 | 2-6 | 57 |
| | 2-9 | 27 |
| 1394595 | 2-6 | 57 |
| | 2-9 | 27 |
| 1394603 | 6-3 | 1 |
| 1394605 | 6-3 | 8 |
| 1394618 | 6-3 | 16 |
| 1394620 | 6-3 | 19 |
| 1394621 | 6-3 | 20 |
| 1394622 | 6-3 | 21 |
| 1394624 | 6-3 | 22 |
| 1394646 | 6-3 | 26 |
| 1394661 | 6-3 | 35 |
| 1394681 | 6-3 | 9 |
| | 8-9 | |
| 1394682 | 6-3 | 10 |
| | 8-9 | |
| 1394689 | 9-21 | 14 |
| 1394707 | 5-7 | 23 |
| 1394709 | 5-7 | 6 |
| 1394710 | 5-17 | 17 |
| 1394711 | 5-17 | 18 |
| 1394712 | 2-9 | 14 |


©2004 HYSTER COMPANY

# NUMERICAL INDEX (Continued)

| PART NO. | PG | ITEM |
|---|---|---|
| 1394714 | 5-3 | 23 |
| | 5-17 | 23 |
| 1394715 | 6-4 | 39 |
| | 6-4 | 39 |
| | 7-9 | 33 |
| | 7-17 | 13 |
| 1394716 | 2-17 | 2 |
| 1394717 | 2-17 | 3 |
| 1394718 | 2-45 | 1 |
| 1394786 | 5-3 | 6 |
| 1394787 | 5-3 | 9 |
| 1394788 | 5-3 | 7 |
| 1394789 | 5-4 | 39 |
| 1394794 | 5-3 | 17 |
| 1394798 | 5-3 | 10 |
| | 5-11 | 1 |
| 1394799 | 5-3 | 10 |
| | 5-11 | 1 |
| 1394800 | 5-7 | 28 |
| 1394803 | 2-13 | 25 |
| | 2-15 | 23 |
| 1394815 | 8-3 | 32 |
| 1394816 | 8-3 | 33 |
| 1394817 | 8-3 | 32 |
| 1394818 | 8-3 | 33 |
| 1394819 | 8-3 | 34 |
| 1394879 | 5-13 | 4 |
| | 5-15 | 4 |
| 1394881 | 5-13 | 12 |
| | 5-15 | 12 |
| 1394882 | 5-13 | 5 |
| | 5-15 | 5 |
| 1394893 | 5-13 | 6 |
| | 5-15 | 6 |
| 1394912 | 5-13 | 7 |
| | 5-15 | 7 |
| 1394984 | 11-19 | 1 |
| 1394992 | 11-19 | 1 |
| 1395342 | 10-3 | 1 |
| 1395348 | 10-3 | 1 |
| 1395353 | 10-3 | 1 |
| 1395354 | 10-3 | 1 |
| 1395356 | 10-3 | 1 |
| 1395383 | 10-3 | 1 |
| 1395384 | 10-5 | 1 |
| 1395390 | 10-5 | 1 |
| 1395395 | 10-5 | 1 |
| 1395396 | 10-5 | 1 |
| 1395398 | 10-5 | 1 |
| 1395425 | 10-5 | 1 |
| 1395449 | 12-4 | 14 |
| 1395480 | 11-7 | 3 |
| 1395481 | 10-7 | 17 |
| 1395487 | 12-4 | 14 |
| 1395509 | 10-7 | 17 |
| 1395851 | 12-4 | 1 |
| 1395853 | 12-4 | 1 |
| 1395854 | 12-4 | 1 |
| 1395856 | 12-4 | 1 |
| 1395857 | 12-4 | 1 |
| 1395858 | 12-4 | 1 |
| 1395872 | 12-4 | 1 |
| 1395876 | 12-4 | 1 |
| 1395877 | 12-7 | 1 |
| 1395879 | 12-7 | 1 |
| 1395880 | 12-7 | 1 |
| 1395882 | 12-7 | 1 |
| 1395883 | 12-7 | 1 |
| 1395884 | 12-7 | 1 |
| 1395898 | 12-7 | 1 |
| 1395902 | 12-7 | 1 |
| 1395903 | 12-11 | 1 |
| 1395905 | 12-11 | 1 |
| 1395906 | 12-11 | 1 |
| 1395908 | 12-11 | 1 |
| 1395909 | 12-11 | 1 |
| 1395910 | 12-11 | 1 |
| 1395924 | 12-11 | 1 |
| 1395928 | 12-11 | 1 |
| 1396009 | 1-9 | 20 |
| 1396012 | 1-9 | 20 |
| 1396014 | 9-11 | 33 |
| | 9-13 | 33 |
| 1396015 | 9-11 | 34 |
| | 9-13 | 34 |
| 1396016 | 9-11 | 35 |
| | 9-13 | 35 |
| 1396017 | 9-13 | 38 |
| 1396024 | 1-5 | 10 |
| 1396039 | 1-21 | 1 |
| 1396053 | 5-3 | 2 |
| 1396064 | 5-13 | 1 |
| 1396065 | 5-15 | 1 |
| 1396079 | 2-15 | 8 |
| 1396108 | 9-11 | 24 |
| | 9-13 | 24 |
| 1396139 | 2-15 | 7 |
| 1396147 | 1-9 | 1 |
| 1396148 | 1-9 | 2 |
| 1396151 | 3-47 | 1 |
| 1396174 | 2-6 | 60 |
| | 2-9 | 32 |
| 1396256 | 3-9 | 1 |
| | 3-11 | |
| 1396518 | 2-13 | 3 |
| 1396526 | 13-69 | 1 |
| 1396527 | 13-69 | 1 |
| 1396528 | 13-69 | 1 |
| 1396534 | 13-69 | 2 |
| 1396535 | 13-69 | 2 |
| 1396536 | 13-69 | 2 |
| 1396574 | 2-13 | 28 |
| | 2-15 | 18 |
| 1396625 | 1-7 | 5 |
| 1396626 | 1-7 | 4 |
| 1396637 | 5-17 | 26 |
| 1396641 | 1-9 | 5 |
| 1396658 | 1-7 | 41 |
| 1396696 | 2-13 | 29 |
| | 2-15 | 16 |
| 1396708 | 9-11 | 13 |
| | 9-13 | 13 |
| 1396715 | 9-11 | 22 |
| | 9-13 | 22 |
| 1396719 | 7-3 | 9 |
| 1396720 | 7-3 | 14 |
| 1396726 | 2-9 | 34 |
| 1396779 | 2-9 | 25 |
| | 2-11 | 15 |
| 1397451 | 4-3 | 45 |
| 1397500 | 13-69 | 1 |
| 1397502 | 13-69 | 2 |
| 1397511 | 9-11 | 24 |
| | 9-13 | 24 |
| 1397570 | 9-3 | 30 |
| 1397647 | 1-25 | 1 |
| 1397649 | 8-4 | 50 |
| 1397651 | 1-25 | 1 |
| 1397678 | 9-11 | 40 |
| | 9-13 | 41 |
| 1397682 | 9-7 | 24 |
| | 9-9 | 26 |
| 1397685 | 9-3 | 3 |
| 1397689 | 2-19 | 10 |
| | 5-11 | 5 |
| 1397694 | 13-9 | 10 |
| 1397697 | 2-5 | 16 |
| 1397698 | 2-5 | 17 |
| 1397708 | 8-3 | 25 |
| 1397710 | 2-5 | 18 |
| 1397716 | 4-9 | 5 |
| 1397739 | 9-3 | 14 |
| | 9-17 | |
| 1397740 | 9-17 | 2 |
| 1397744 | 9-3 | 28 |
| 1397761 | 2-17 | 8 |
| | 2-45 | 9 |
| 1397762 | 2-17 | 7 |
| | 2-45 | 8 |
| 1397783 | 4-11 | 7 |
| | 4-15 | 15 |
| | 4-19 | 15 |
| 1397786 | 4-11 | 4 |
| | 4-19 | 16 |
| 1397787 | 4-11 | 5 |
| 1397796 | 9-17 | 1 |
| 1397797 | 5-22 | 5 |
| 1397804 | 5-11 | 8 |
| 1397807 | 2-6 | 39 |
| | 2-9 | 42 |
| 1397808 | 2-6 | 42 |
| | 2-9 | 41 |
| 1397822 | 2-13 | 14 |
| 1397840 | 4-3 | 16 |
| 1397851 | 5-7 | 26 |
| 1397852 | 5-7 | 26 |
| 1397863 | 7-5 | 28 |
| 1397864 | 7-5 | 29 |
| 1397957 | 1-7 | 2 |
| 1397958 | 1-7 | 2 |
| 1397960 | 1-7 | 3 |
| 1397963 | 1-7 | 7 |
| 1397964 | 1-7 | 6 |
| 1397978 | 5-21 | 2 |
| 1397979 | 7-3 | 10 |
| 1397980 | 7-3 | 10 |
| 1397981 | 9-3 | 27 |
| 1397982 | 5-21 | 3 |
| 1397984 | 9-7 | 33 |
| | 9-9 | 35 |
| 1397987 | 3-3 | 23 |
| | 3-17 | 7 |
| 1397988 | 3-3 | 16 |
| | 3-17 | 8 |
| 1397989 | 3-3 | 15 |
| | 3-3 | 15 |
| | 3-17 | 9 |
| | 3-17 | 9 |
| 1398002 | 3-3 | 22 |
| | 3-3 | 22 |
| | 3-17 | 12 |
| 1398009 | 1-5 | 13 |
| 1398062 | 1-19 | 6 |
| | 2-5 | 36 |
| | 2-5 | 36 |
| | 2-6 | 62 |
| | 2-9 | 4 |
| 1398085 | 3-35 | 4 |

©2004 HYSTER COMPANY

# NUMERICAL INDEX (Continued)

| PART NO. | PG | ITEM |
|---|---|---|
| 1398086 | 3-35 | 5 |
| 1398087 | 3-37 | 13 |
| 1398089 | 3-35 | 8 |
| 1398092 | 3-35 | 7 |
| 1398093 | 3-35 | 9 |
| 1398097 | 3-35 | 10 |
| | 3-37 | 13 |
| 1398098 | 3-35 | 11 |
| | 3-37 | 13 |
| 1398099 | 3-35 | 12 |
| | 3-37 | 13 |
| 1398105 | 2-59 | 29 |
| 1398127 | 13-69 | 3 |
| 1398128 | 13-69 | 3 |
| 1398131 | 13-69 | 4 |
| 1398132 | 13-69 | 4 |
| 1398141 | 3-35 | 1 |
| 1398143 | 3-35 | 3 |
| | 3-37 | 13 |
| 1398144 | 3-37 | 13 |
| 1399075 | 10-8 | 29 |
| 1399077 | 12-16 | 28 |
| 1399078 | 10-8 | 29 |
| | 12-16 | 28 |
| 1399080 | 12-16 | 28 |
| 1399081 | 12-16 | 28 |
| 1399082 | 12-16 | 28 |
| 1399083 | 12-16 | 28 |
| 1399085 | 10-8 | 29 |
| | 12-16 | 28 |
| 1399087 | 10-8 | 27 |
| 1399090 | 10-8 | 29 |
| | 12-16 | 27 |
| 1399092 | 10-8 | 27 |
| | 12-16 | 27 |
| 1399094 | 12-16 | 27 |
| 1399096 | 10-8 | 29 |
| | 12-16 | 27 |
| 1399097 | 10-8 | 29 |
| 1399099 | 10-8 | 27 |
| | 12-16 | 27 |
| 1399100 | 12-16 | 27 |
| 1399102 | 10-8 | 29 |
| | 12-16 | 27 |
| 1399103 | 12-16 | 27 |
| 1399104 | 10-8 | 27 |
| | 12-16 | 27 |
| 1399105 | 12-16 | 27 |
| 1399107 | 12-16 | 27 |
| 1399108 | 10-8 | 27 |
| 1399109 | 10-8 | 27 |
| 1399111 | 10-8 | 27 |
| 1399114 | 12-16 | 28 |
| 1399116 | 10-8 | 27 |
| 1399121 | 9-4 | 47 |
| | 9-7 | 2 |
| | 9-9 | 1 |
| 1399124 | 12-16 | 28 |
| 1399136 | 12-16 | 27 |
| 1399146 | 12-16 | 27 |
| 1399167 | 10-8 | 29 |
| 1399176 | 10-8 | 29 |
| 1399179 | 10-8 | 27 |
| 1399184 | 10-8 | 27 |
| 1399203 | 12-4 | 3 |
| 1399204 | 10-3 | 3 |
| | 10-5 | 3 |
| | 11-3 | 5 |
| | 11-7 | 23 |
| | 12-4 | 3 |
| | 12-7 | 3 |
| 1399205 | 12-4 | 3 |
| 1399207 | 10-15 | 14 |
| | 12-4 | 4 |
| | 12-11 | 4 |
| | 13-49 | 3 |
| 1399217 | 12-35 | 22 |
| 1399224 | 10-15 | 13 |
| | 11-19 | 14 |
| | 12-31 | 14 |
| | 13-45 | 9 |
| | 13-49 | 5 |
| | 13-53 | 5 |
| | 13-59 | 5 |
| 1399236 | 12-4 | 2 |
| 1399243 | 11-22 | 12 |
| | 12-35 | 27 |
| 1399266 | 12-35 | 1 |
| | 12-35 | 2 |
| 1399268 | 12-35 | 1 |
| 1399270 | 12-35 | 31 |
| 1399273 | 12-35 | 32 |
| 1399274 | 12-35 | 32 |
| 1399276 | 8-3 | 7 |
| | 8-7 | |
| 1399288 | 8-3 | 18 |
| 1399289 | 8-3 | 22 |
| 1399298 | 5-11 | 11 |
| 1399301 | 3-29 | 14 |
| 1399310 | 2-5 | 19 |
| 1399311 | 2-5 | 20 |
| 1399312 | 2-5 | 21 |
| 1399313 | 2-5 | 22 |
| 1399314 | 2-5 | 23 |
| 1399323 | 7-3 | 8 |
| | 9-7 | 18 |
| | 9-9 | 18 |
| 1399332 | 4-15 | 2 |
| | 4-19 | 2 |
| 1399333 | 4-15 | 3 |
| | 4-19 | 3 |
| 1399334 | 9-3 | 41 |
| 1399335 | 4-15 | 4 |
| | 4-19 | 4 |
| 1399337 | 1-9 | 11 |
| 1399338 | 1-9 | 12 |
| 1399347 | 3-37 | 17 |
| 1399360 | 3-37 | 6 |
| 1399372 | 3-37 | 9 |
| 1399380 | 9-11 | 23 |
| | 9-13 | 23 |
| 1399381 | 3-7 | 13 |
| 1399386 | 9-3 | 26 |
| 1399399 | 1-9 | 9 |
| 1399400 | 4-3 | 18 |
| 1399405 | 3-37 | 1 |
| 1399406 | 3-37 | 2 |
| 1399407 | 3-37 | 8 |
| 1399410 | 3-37 | 11 |
| 1399417 | 9-7 | 23 |
| | 9-9 | 23 |
| 1399419 | 9-9 | 24 |
| 1399420 | 9-9 | 25 |
| 1399432 | 13-69 | 9 |
| 1399455 | 5-7 | 9 |
| 1399474 | 13-13 | 1 |
| | 13-27 | 5 |
| 1399475 | 12-35 | 1 |
| | 12-35 | 2 |
| 1399476 | 12-35 | 2 |
| 1399477 | 12-35 | 1 |
| 1399479 | 12-35 | 2 |
| 1399480 | 12-35 | 1 |
| | 12-35 | 2 |
| 1399481 | 12-35 | 32 |
| 1399482 | 12-35 | 31 |
| | 12-35 | 1 |
| | 12-35 | 2 |
| 1399483 | 12-35 | 2 |
| 1399484 | 12-35 | 1 |
| 1399485 | 12-35 | 32 |
| 1399487 | 12-35 | 1 |
| 1399488 | 12-35 | 2 |
| 1399489 | 12-35 | 31 |
| 1399490 | 12-35 | 32 |
| 1399491 | 12-35 | 32 |
| 1399492 | 12-35 | 31 |
| | 12-35 | 2 |
| 1399493 | 12-35 | 31 |
| | 12-35 | 2 |
| 1399494 | 12-35 | 32 |
| 1399495 | 12-35 | 2 |
| 1399496 | 12-35 | 1 |
| 1399498 | 12-35 | 31 |
| 1399499 | 12-35 | 32 |
| 1399500 | 12-35 | 31 |
| 1399501 | 12-35 | 32 |
| 1399503 | 12-35 | 31 |
| 1399504 | 12-35 | 32 |
| 1399506 | 12-35 | 31 |
| 1399532 | 12-35 | 1 |
| 1399533 | 12-35 | 2 |
| 1399541 | 12-35 | 32 |
| 1399543 | 12-35 | 1 |
| | 12-35 | 2 |
| 1399548 | 12-35 | 32 |
| 1399549 | 12-35 | 31 |
| 1399760 | 1-5 | 14 |
| 1399762 | 13-13 | 4 |
| 1399764 | 13-13 | 3 |
| 1399766 | 13-11 | 4 |
| 1399784 | 1-23 | 19 |
| | 1-25 | 10 |
| 1399787 | 9-7 | 32 |
| | 9-9 | 34 |
| 1399791 | 2-15 | 5 |
| 1399809 | 1-23 | 1 |
| | 1-25 | |
| 1399810 | 1-23 | 1 |
| | 1-25 | |
| 1399813 | 1-25 | 9 |
| 1399814 | 1-25 | 9 |
| 1399815 | 1-23 | 18 |
| | 1-25 | 8 |
| 1399816 | 1-25 | 5 |
| 1399817 | 1-25 | 4 |
| 1399818 | 1-25 | 2 |
| 1399820 | 1-25 | 3 |
| 1399822 | 13-37 | 6 |
| | 13-39 | 6 |
| | 13-41 | 7 |
| 1399823 | 9-3 | 5 |
| 1399829 | 1-25 | 11 |
| 1399830 | 1-25 | 12 |
| 1399873 | 1-27 | 25 |
| 1399874 | 1-27 | 25 |
| 1399875 | 1-27 | 25 |
| 1399876 | 1-27 | 25 |


©2004 HYSTER COMPANY

# NUMERICAL INDEX (Continued)

| PART NO. | PG | ITEM |
|---|---|---|
| 1399877 | 1-27 | 25 |
| 1399878 | 1-27 | 25 |
| 1399885 | 1-27 | 13 |
| 1399886 | 4-3 | 31 |
| 1399919 | 1-33 | 1 |
| 1399920 | 1-33 | 1 |
| 1399921 | 1-33 | 1 |
| 1399922 | 1-33 | 1 |
| 1400125 | 11-19 | 21 |
| | 12-31 | 21 |
| | 13-53 | 11 |
| 1400126 | 11-19 | 20 |
| | 12-31 | 20 |
| | 13-53 | 10 |
| 1400127 | 13-63 | 7 |
| | 13-65 | 7 |
| 1400128 | 13-63 | 1 |
| 1400129 | 13-63 | 2 |
| 1400130 | 13-63 | 3 |
| 1400131 | 13-63 | 4 |
| 1400134 | 13-63 | 1 |
| 1400135 | 13-63 | 2 |
| 1400136 | 13-63 | 3 |
| 1400137 | 13-63 | 4 |
| 1400138 | 13-65 | 1 |
| 1400139 | 13-65 | 2 |
| 1400140 | 13-65 | 3 |
| 1400141 | 13-65 | 4 |
| 1400144 | 13-65 | 1 |
| 1400145 | 13-65 | 2 |
| 1400146 | 13-65 | 3 |
| 1400147 | 13-65 | 4 |
| 1400151 | 1-23 | 6 |
| 1400152 | 1-23 | 7 |
| 1400153 | 1-23 | 8 |
| 1400154 | 1-23 | 9 |
| 1400158 | 5-18 | 3 |
| | 5-19 | 2 |
| 1400159 | 5-7 | 40 |
| | 5-18 | |
| 1400180 | 1-9 | 25 |
| 1400197 | 3-33 | 1 |
| | 3-35 | 18 |
| 1400207 | 13-19 | 11 |
| | 13-27 | 16 |
| 1400223 | 3-43 | 8 |
| 1400224 | 3-43 | 3 |
| 1400229 | 2-6 | 63 |
| 1400232 | 3-43 | 4 |
| 1400244 | 7-3 | 4 |
| | 9-7 | 20 |
| | 9-9 | 20 |
| 1400901 | 11-12 | 2 |
| 1400904 | 11-12 | 2 |
| 1400907 | 11-12 | 2 |
| 1400910 | 11-12 | 2 |
| 1400913 | 11-12 | 2 |
| 1400916 | 11-12 | 2 |
| 1400919 | 11-12 | 2 |
| 1400922 | 11-12 | 2 |
| 1400927 | 11-12 | 2 |
| 1400928 | 11-12 | 2 |
| 1400975 | 11-12 | 2 |
| 1400976 | 11-12 | 2 |
| 1400997 | 11-12 | 2 |
| 1400998 | 11-12 | 2 |
| 1401163 | 2-49 | 8 |
| | 2-55 | 43 |
| 1401178 | 2-69 | 6 |
| 1401537 | 9-3 | 44 |
| 1402189 | 2-13 | 17 |
| 1402809 | 4-16 | 54 |
| | 4-20 | 64 |
| 1402878 | 4-30 | 14 |
| 1402922 | 4-30 | 15 |
| 1402926 | 4-27 | 32 |
| 1402927 | 4-27 | 31 |
| 1402931 | 4-27 | 28 |
| 1450555 | 2-53 | 22 |
| 1450696 | 2-59 | 47 |
| 1450941 | 2-65 | 9 |
| 1451319 | 2-53 | 17 |
| 1451321 | 2-55 | 34 |
| 1451568 | 3-21 | 14 |
| 1451606 | 2-27 | 11 |
| 1451629 | 2-23 | 3 |
| 1451636 | 2-23 | 12 |
| 1451669 | 2-41 | 4 |
| 1452376 | 2-59 | 8 |
| 1452463 | 3-17 | 26 |
| 1453351 | 4-23 | 1 |
| 1453352 | 4-23 | 12 |
| 1453354 | 4-23 | 13 |
| 1453358 | 4-23 | 14 |
| 1453361 | 4-23 | 25 |
| 1453362 | 4-23 | 26 |
| 1453363 | 4-23 | 27 |
| 1453364 | 4-23 | 28 |
| 1453365 | 4-23 | 29 |
| 1453366 | 4-23 | 30 |
| 1453367 | 4-23 | 31 |
| 1453368 | 4-23 | 32 |
| 1453369 | 4-23 | 33 |
| 1453370 | 4-23 | 33 |
| 1453371 | 4-23 | 33 |
| 1453373 | 4-23 | 34 |
| 1453375 | 4-23 | 36 |
| 1453376 | 4-23 | 37 |
| 1453377 | 4-23 | 38 |
| 1453379 | 4-23 | 40 |
| 1453381 | 4-23 | 41 |
| 1453382 | 4-23 | 42 |
| 1453383 | 4-23 | 43 |
| 1453385 | 4-23 | 44 |
| 1453386 | 4-23 | 24 |
| 1453387 | 4-23 | 20 |
| 1453680 | 4-23 | 34 |
| 1453681 | 4-23 | 2 |
| 1453682 | 4-23 | 3 |
| 1453775 | 9-19 | 17 |
| 1453776 | 9-19 | 16 |
| 1454827 | 4-27 | 37 |
| 1454828 | 4-27 | 27 |
| 1454860 | 4-27 | 17 |
| 1454862 | 4-27 | 39 |
| 1454955 | 2-55 | 9 |
| | 2-55 | 9 |
| 1454956 | 2-55 | 10 |
| | 2-55 | 10 |
| 1454957 | 2-55 | 11 |
| | 2-55 | 11 |
| 1454967 | 4-15 | 26 |
| | 4-19 | 35 |
| 1454974 | 2-56 | 51 |
| 1456111 | 2-55 | 1 |
| 1456686 | 13-13 | 14 |
| 1456711 | 2-21 | 12 |
| 1457312 | 2-5 | 5 |
| 1458264 | 1-33 | 1 |
| 1458456 | 3-7 | 14 |
| 1459983 | 7-15 | 24 |
| 1459984 | 7-15 | 12 |
| 1459985 | 7-15 | 22 |
| 1459986 | 7-15 | 23 |
| 1459987 | 7-15 | 19 |
| 1459988 | 7-15 | 4 |
| 1459989 | 7-15 | 16 |
| 1460209 | 2-23 | 24 |
| 1460322 | 2-55 | 37 |
| 1460330 | 2-53 | 21 |
| 1460331 | 2-53 | 23 |
| 1460333 | 2-59 | 22 |
| 1460384 | 2-63 | 9 |
| 1460386 | 2-53 | 8 |
| 1460477 | 2-13 | 19 |
| | 2-19 | 8 |
| | 3-14 | 1 |
| 1460557 | 2-29 | 1 |
| 1460738 | 2-53 | 11 |
| 1460757 | 2-55 | 30 |
| 1460758 | 2-55 | 30 |
| 1460768 | 2-56 | 50 |
| 1461077 | 5-17 | 35 |
| 1462233 | 4-25 | 1 |
| 1462234 | 4-25 | 2 |
| 1462235 | 4-25 | 3 |
| 1462236 | 4-25 | 4 |
| 1462238 | 4-25 | 5 |
| 1462239 | 4-25 | 5 |
| 1462240 | 4-25 | 6 |
| 1462241 | 4-25 | 9 |
| 1462249 | 4-25 | 17 |
| 1462250 | 4-25 | 18 |
| 1462251 | 4-25 | 19 |
| 1462252 | 4-25 | 20 |
| 1462253 | 4-25 | 21 |
| 1462254 | 4-25 | 22 |
| 1462255 | 4-25 | 23 |
| 1462256 | 4-25 | 24 |
| 1462257 | 4-25 | 25 |
| 1462258 | 4-25 | 26 |
| 1462259 | 4-25 | 27 |
| 1462260 | 4-25 | 28 |
| 1462261 | 4-25 | 29 |
| 1462262 | 4-25 | 30 |
| 1462263 | 4-25 | 31 |
| 1462264 | 4-25 | 32 |
| 1462265 | 4-25 | 33 |
| 1462266 | 4-25 | 34 |
| 1462267 | 4-25 | 35 |
| 1462268 | 4-25 | 37 |
| 1462269 | 4-25 | 39 |
| 1462270 | 4-25 | 40 |
| 1462271 | 4-25 | 41 |
| 1462272 | 4-25 | 42 |
| 1462273 | 4-25 | 8 |
| 1462439 | 3-3 | 3 |
| | 3-5 | 1 |
| | 3-19 | 1 |
| 1462441 | 3-3 | 3 |
| | 3-5 | 2 |
| | 3-19 | 2 |
| 1462442 | 3-3 | 3 |
| | 3-5 | 4 |
| | 3-19 | 4 |
| 1462618 | 6-7 | 2 |
| 1463223 | 8-9 | 2 |
| 1463226 | 8-9 | 3 |

©2004 HYSTER COMPANY

# NUMERICAL INDEX (Continued)

| PART NO. | PG | ITEM |
|---|---|---|
| 1463229 | 8-9 | 3 |
| 1463231 | 8-13 | 2 |
| 1463242 | 8-9 | 1 |
| 1463243 | 8-9 | 1 |
| 1463244 | 8-9 | 2 |
| 1463245 | 8-9 | |
| 1463246 | 8-9 | |
| 1463247 | 8-9 | 27 |
| | 8-17 | 7 |
| 1463248 | 8-9 | 27 |
| | 8-17 | 7 |
| 1463339 | 8-13 | 1 |
| 1463340 | 8-13 | 1 |
| 1463341 | 8-13 | 2 |
| 1463350 | 8-13 | 6 |
| 1463351 | 8-13 | 6 |
| 1463352 | 8-13 | 7 |
| 1463353 | 8-13 | 7 |
| 1463354 | 8-13 | 8 |
| 1463355 | 8-13 | 9 |
| 1463356 | 8-13 | 9 |
| 1463357 | 8-13 | 10 |
| 1463358 | 8-13 | 10 |
| 1463359 | 8-13 | 11 |
| 1463361 | 8-13 | 14 |
| 1463362 | 8-13 | 15 |
| 1463363 | 8-13 | 16 |
| 1463364 | 8-13 | 19 |
| 1463365 | 8-13 | 21 |
| 1463366 | 8-13 | 22 |
| 1463445 | 8-7 | 1 |
| 1463446 | 8-7 | 6 |
| 1463447 | 8-7 | 9 |
| 1463448 | 8-7 | 13 |
| 1463449 | 8-7 | 14 |
| 1463450 | 8-7 | 8 |
| 1463451 | 8-7 | 17 |
| 1463454 | 8-7 | 5 |
| 1463455 | 8-7 | 4 |
| 1463461 | 8-7 | 2 |
| 1463462 | 8-7 | 3 |
| 1463463 | 8-7 | 11 |
| 1463464 | 8-7 | 12 |
| 1463465 | 8-7 | 15 |
| 1463466 | 8-7 | 7 |
| 1463467 | 8-7 | 10 |
| 1463471 | 8-13 | 26 |
| | 8-17 | 7 |
| 1463472 | 8-13 | 26 |
| | 8-17 | 7 |
| 1463993 | 8-7 | 18 |
| 1463995 | 8-7 | 16 |
| 1464144 | 5-18 | 5 |
| 1464197 | 2-43 | 4 |
| 1464540 | 3-11 | 3 |
| 1464541 | 3-11 | 2 |
| 1464543 | 3-11 | 1 |
| 1464544 | 3-11 | 6 |
| 1464545 | 3-11 | 7 |
| 1464546 | 3-11 | 8 |
| 1464864 | 1-31 | 1 |
| 1464865 | 1-31 | 1 |
| 1464890 | 3-21 | 13 |
| 1464909 | 1-7 | 40 |
| 1464915 | 8-10 | 31 |
| 1464916 | 8-10 | 32 |
| 1464917 | 8-9 | 30 |
| 1465028 | 10-15 | 5 |
| | 11-19 | 5 |
| | 12-31 | 5 |
| | 13-45 | 16 |
| | 13-49 | 12 |
| | 13-53 | 18 |
| | 13-59 | 12 |
| 1465072 | 10-3 | 4 |
| | 10-5 | 4 |
| | 10-15 | 12 |
| | 11-3 | 7 |
| | 11-8 | 25 |
| | 11-19 | 13 |
| | 12-4 | 5 |
| | 12-7 | 6 |
| | 12-11 | 5 |
| | 12-31 | 13 |
| | 13-45 | 8 |
| | 13-49 | 4 |
| | 13-53 | 4 |
| | 13-59 | 4 |
| 1465157 | 13-63 | 8 |
| 1465158 | 13-63 | 9 |
| 1465159 | 13-63 | 10 |
| 1465160 | 13-63 | 11 |
| 1465177 | 10-15 | 3 |
| | 11-19 | 3 |
| | 12-31 | 3 |
| | 13-45 | 13 |
| | 13-49 | 9 |
| | 13-53 | 15 |
| | 13-59 | 9 |
| 1465228 | 12-31 | 1 |
| 1465258 | 5-22 | 5 |
| 1465322 | 13-65 | 8 |
| 1465323 | 13-65 | 9 |
| 1465324 | 13-65 | 10 |
| 1465325 | 13-65 | 11 |
| 1465443 | 1-21 | 1 |
| 1465489 | 10-17 | 4 |
| | 11-22 | 18 |
| | 12-35 | 3 |
| 1465518 | 9-21 | 16 |
| 1465545 | 1-34 | 1 |
| 1465546 | 1-34 | 1 |
| 1465547 | 1-34 | 1 |
| 1465548 | 1-34 | 1 |
| 1465585 | 10-7 | 12 |
| | 12-16 | 30 |
| 1465740 | 1-21 | 11 |
| | 13-19 | 2 |
| | 13-27 | 12 |
| 1465778 | 3-39 | 8 |
| | 3-43 | |
| | 3-45 | 4 |
| 1465779 | 3-43 | 7 |
| 1465780 | 3-43 | 3 |
| 1465799 | 3-43 | 5 |
| 1465885 | 11-19 | 1 |
| 1465897 | 13-42 | 1 |
| 1465899 | 3-45 | 9 |
| | 3-47 | |
| 1465940 | 11-3 | 1 |
| 1465946 | 11-3 | 1 |
| 1465952 | 11-3 | 1 |
| 1465963 | 11-3 | 1 |
| 1466001 | 2-5 | 27 |
| 1466011 | 8-17 | 3 |
| 1466123 | 5-7 | 37 |
| | 5-17 | |
| 1466337 | 13-42 | 2 |
| 1466394 | 9-19 | 19 |
| 1466396 | 9-19 | 11 |
| 1466397 | 9-19 | 13 |
| 1466415 | 13-42 | 4 |
| 1466416 | 1-7 | 42 |
| 1466438 | 5-8 | 55 |
| 1466442 | 9-19 | 2 |
| 1466443 | 9-19 | 4 |
| 1466444 | 9-19 | 6 |
| 1466446 | 9-19 | 7 |
| 1466447 | 9-19 | 8 |
| 1466472 | 13-42 | 3 |
| 1466632 | 3-39 | 3 |
| | 3-45 | 8 |
| 1466859 | 2-25 | 6 |
| 1466925 | 11-22 | 14 |
| 1466997 | 13-5 | 2 |
| 1467081 | 11-7 | 1 |
| 1467087 | 11-7 | 1 |
| 1467093 | 11-7 | 1 |
| 1467104 | 11-7 | 1 |
| 1467145 | 13-47 | 6 |
| | 13-51 | 3 |
| | 13-55 | 6 |
| | 13-57 | 6 |
| | 13-61 | 3 |
| 1467146 | 13-47 | 7 |
| | 13-51 | 4 |
| | 13-55 | 7 |
| | 13-57 | 7 |
| | 13-61 | 4 |
| 1467147 | 13-47 | 8 |
| | 13-51 | 5 |
| | 13-55 | 8 |
| | 13-57 | 8 |
| | 13-61 | 5 |
| 1467148 | 13-47 | 9 |
| | 13-51 | 6 |
| | 13-55 | 9 |
| | 13-57 | 9 |
| | 13-61 | 6 |
| 1467149 | 13-47 | 12 |
| | 13-55 | 10 |
| | 13-57 | 12 |
| 1467150 | 13-47 | 13 |
| | 13-55 | 11 |
| | 13-57 | 13 |
| 1467151 | 13-47 | 1 |
| | 13-55 | 1 |
| | 13-57 | 1 |
| 1467153 | 13-47 | 2 |
| | 13-55 | 2 |
| | 13-57 | 2 |
| 1467154 | 13-47 | 3 |
| | 13-55 | 3 |
| | 13-57 | 3 |
| 1467200 | 13-47 | 11 |
| | 13-51 | 11 |
| | 13-57 | 11 |
| | 13-61 | 11 |
| 1467201 | 13-47 | 10 |
| | 13-51 | 8 |
| | 13-57 | 10 |
| | 13-61 | 8 |
| 1467202 | 13-51 | 12 |
| | 13-61 | 12 |
| 1467203 | 13-51 | 13 |
| | 13-61 | 13 |
| 1467204 | 13-51 | 1 |
| | 13-61 | 1 |


*See Service Manual for service procedures.*
©2004 HYSTER COMPANY

# NUMERICAL INDEX (Continued)

| PART NO. | PG | ITEM |
|---|---|---|
| 1467205 | 13-51 | 2 |
| | 13-61 | 2 |
| 1467206 | 13-51 | 7 |
| | 13-61 | 7 |
| 1467327 | 12-35 | 1 |
| 1467338 | 1-23 | 23 |
| 1467340 | 1-23 | 24 |
| 1467342 | 1-23 | 25 |
| 1467343 | 1-23 | 24 |
| 1467344 | 1-23 | 27 |
| 1467345 | 1-23 | 28 |
| 1467347 | 1-23 | 29 |
| 1467523 | 1-15 | 1 |
| 1467524 | 1-15 | 2 |
| 1467525 | 1-15 | 3 |
| 1467526 | 1-15 | 4 |
| 1467527 | 1-15 | 5 |
| 1467529 | 1-15 | 7 |
| 1467531 | 1-15 | 6 |
| 1467632 | 13-47 | 14 |
| | 13-55 | 12 |
| | 13-57 | 14 |
| 1467633 | 13-47 | 15 |
| | 13-51 | 15 |
| | 13-55 | 13 |
| | 13-57 | 15 |
| | 13-61 | 15 |
| 1467634 | 13-51 | 14 |
| | 13-61 | 14 |
| 1467651 | 11-3 | 4 |
| 1467657 | 11-3 | 4 |
| 1467663 | 11-3 | 4 |
| 1467674 | 11-3 | 4 |
| 1467769 | 13-47 | 5 |
| 1467770 | 13-55 | 5 |
| 1467771 | 13-47 | 5 |
| 1467772 | 13-57 | 5 |
| 1467773 | 13-61 | 9 |
| 1467774 | 13-51 | 10 |
| 1467775 | 13-61 | 9 |
| 1467776 | 13-51 | 10 |
| 1468023 | 1-23 | 15 |
| 1468024 | 1-23 | 16 |
| 1468025 | 1-23 | 17 |
| 1468027 | 1-23 | 30 |
| 1468032 | 1-23 | 20 |
| 1468033 | 1-23 | 21 |
| 1468307 | 13-21 | 10 |
| | 13-23 | 14 |
| 1468309 | 13-21 | 8 |
| 1468310 | 13-29 | 6 |
| | 13-31 | 14 |
| 1468311 | 13-17 | 11 |
| | 13-21 | 14 |
| 1468312 | 13-21 | 15 |
| 1468320 | 13-25 | 10 |
| 1468321 | 13-25 | 12 |
| 1468468 | 9-19 | 1 |
| 1468469 | 9-19 | 1 |
| 1468470 | 9-19 | 20 |
| 1468472 | 1-13 | |
| | 1-15 | |
| 1468473 | 1-13 | |
| | 1-15 | |
| 1468576 | 9-19 | 21 |
| 1468578 | 9-19 | 6 |
| 1468699 | 1-19 | 2 |
| | 2-5 | 38 |
| 1469301 | 5-13 | 11 |
| | 5-15 | 11 |
| 1469317 | 1-9 | 21 |
| 1469597 | 4-11 | 32 |
| 1469598 | 4-15 | 18 |
| 1469604 | 4-9 | 1 |
| 1469606 | 4-37 | 4 |
| 1470009 | 1-7 | 23 |
| 1470010 | 1-7 | 22 |
| 1470021 | 1-7 | 33 |
| 1470152 | 1-13 | 1 |
| 1470153 | 1-13 | 1 |
| 1470155 | 1-13 | 37 |
| 1470156 | 1-13 | 38 |
| 1470157 | 1-13 | 39 |
| 1470158 | 1-13 | 40 |
| 1470159 | 1-13 | 34 |
| 1470160 | 1-15 | 8 |
| 1470161 | 1-13 | 42 |
| 1470163 | 1-13 | 29 |
| 1470164 | 1-13 | 41 |
| 1470275 | 8-7 | 6 |
| 1470686 | 8-3 | 28 |
| 1470920 | 1-19 | 1 |
| | 2-5 | 38 |
| 1470921 | 1-19 | 1 |
| | 2-5 | 38 |
| 1470922 | 1-19 | 1 |
| | 2-5 | 38 |
| 1470923 | 1-19 | 1 |
| | 2-5 | 38 |
| 1471496 | 3-43 | 9 |
| 1471535 | 1-19 | 3 |
| | 2-5 | 33 |
| | 2-5 | 33 |
| 1471541 | 3-43 | 11 |
| 1471555 | 2-63 | 2 |
| 1471556 | 2-55 | 3 |
| 1471557 | 2-63 | 1 |
| 1471558 | 2-55 | 29 |
| 1471559 | 2-59 | 18 |
| 1471560 | 2-56 | 48 |
| 1471591 | 7-16 | 3 |
| 1471595 | 6-9 | 2 |
| 1471829 | 7-16 | 3 |
| 1471830 | 6-7 | 2 |
| 1471831 | 6-9 | 2 |
| 1471866 | 1-7 | 32 |
| 1471922 | 6-9 | 2 |
| | 7-16 | 3 |
| 1471960 | 4-33 | 4 |
| 1473099 | 8-4 | 54 |
| 1473100 | 12-35 | 31 |
| 1473105 | 12-35 | 31 |
| 1473859 | 3-41 | 2 |
| | 3-45 | 26 |
| 1473994 | 3-41 | 9 |
| 1474048 | 11-22 | 27 |
| 1474051 | 11-22 | 27 |
| 1474054 | 11-22 | 27 |
| 1474057 | 11-22 | 27 |
| 1474060 | 11-22 | 27 |
| 1474063 | 11-22 | 27 |
| 1474071 | 11-22 | 27 |
| 1474074 | 11-22 | 27 |
| 1474101 | 11-22 | 26 |
| 1474107 | 11-22 | 26 |
| 1474113 | 11-22 | 26 |
| 1474124 | 11-22 | 26 |
| 1474125 | 11-22 | 28 |
| 1474131 | 11-22 | 28 |
| 1474137 | 11-22 | 28 |
| 1474148 | 11-22 | 28 |
| 1474318 | 13-67 | 2 |
| 1474335 | 13-67 | 6 |
| 1474399 | 10-7 | 11 |
| | 11-3 | 15 |
| | 12-16 | 11 |
| 1474496 | 12-35 | 17 |
| 1474497 | 12-35 | 29 |
| 1474605 | 12-16 | 28 |
| 1474701 | 13-17 | 12 |
| | 13-29 | |
| 1474702 | 13-17 | 12 |
| | 13-31 | |
| 1474703 | 13-17 | 9 |
| 1474704 | 13-25 | 1 |
| 1474709 | 13-21 | 24 |
| 1474710 | 13-23 | 12 |
| | 13-29 | 3 |
| | 13-31 | 8 |
| 1474711 | 13-25 | 13 |
| 1474765 | 13-29 | 2 |
| | 13-31 | 1 |
| 1474766 | 13-29 | 7 |
| | 13-31 | 15 |
| 1474767 | 13-29 | 18 |
| | 13-31 | 5 |
| 1474768 | 13-29 | 19 |
| | 13-31 | 2 |
| 1474820 | 13-21 | 27 |
| | 13-29 | 20 |
| | 13-31 | 3 |
| 1474821 | 13-21 | 28 |
| | 13-29 | 21 |
| 1474825 | 3-14 | 3 |
| 1474950 | 13-17 | 8 |
| 1474951 | 13-17 | 7 |
| 1474952 | 13-21 | 12 |
| 1474953 | 13-21 | 13 |
| 1474954 | 13-21 | 9 |
| 1474955 | 13-23 | 10 |
| 1474956 | 13-25 | 9 |
| 1474957 | 13-21 | 6 |
| 1474959 | 13-29 | 14 |
| 1474960 | 13-29 | 15 |
| 1474961 | 13-31 | 12 |
| 1474962 | 13-31 | 19 |
| 1475160 | 9-3 | 44 |
| 1475493 | 3-9 | 21 |
| | 4-15 | 43 |
| | 4-20 | 53 |
| 1475787 | 11-22 | 2 |
| 1475788 | 11-22 | 3 |
| 1475789 | 11-22 | 3 |
| 1475794 | 11-22 | 3 |
| 1475795 | 11-22 | 3 |
| 1475800 | 11-22 | 3 |
| 1475801 | 11-22 | 3 |
| 1475813 | 11-22 | 3 |
| 1475814 | 11-22 | 3 |
| 1475833 | 11-22 | 6 |
| 1475834 | 11-22 | 6 |
| 1475839 | 11-22 | 6 |
| 1475840 | 11-22 | 6 |
| 1475845 | 11-22 | 6 |
| 1475846 | 11-22 | 6 |
| 1475859 | 11-22 | 6 |
| 1476015 | 2-13 | 13 |
| 1476017 | 2-13 | 11 |

©2004 HYSTER COMPANY

# NUMERICAL INDEX (Continued)

| PART NO. | PG | ITEM |
|---|---|---|
| 1476018 | 2-13 | 1 |
| 1476045 | 2-13 | 33 |
| 1476048 | 2-13 | 34 |
| 1476052 | 2-13 | 32 |
| 1476107 | 2-13 | 5 |
| 1476145 | 2-47 | 17 |
| | 2-49 | 9 |
| 1476416 | 13-67 | 1 |
| 1476422 | 1-5 | 24 |
| 1476426 | 5-7 | 30 |
| | 6-5 | |
| 1476761 | 1-5 | 11 |
| 1477080 | 11-22 | 14 |
| 1477166 | 1-32 | 4 |
| | 1-34 | 4 |
| 1477232 | 9-3 | 28 |
| 1477237 | 1-32 | 7 |
| | 1-34 | 7 |
| 1477491 | 3-39 | 9 |
| | 3-45 | 30 |
| 1477570 | 10-17 | 7 |
| 1477578 | 10-17 | 5 |
| 1479090 | 1-33 | 1 |
| 1479092 | 13-19 | 8 |
| 1479093 | 13-19 | 8 |
| 1479109 | 4-30 | 15 |
| 1479756 | 6-3 | 25 |
| 1480019 | 1-17 | 7 |
| 1480237 | 13-37 | 7 |
| | 13-39 | 7 |
| | 13-41 | 8 |
| 1480392 | 12-31 | 10 |
| | 13-59 | 20 |
| 1482664 | 4-30 | 14 |
| 1482700 | 2-63 | 1 |
| 1482701 | 2-63 | 4 |
| 1483108 | 5-17 | 12 |
| 1483331 | 13-61 | 9 |
| 1483333 | 13-61 | 9 |
| 1483335 | 13-57 | 5 |
| 1483336 | 13-55 | 5 |
| 1483828 | 1-15 | 9 |
| 1483938 | 11-22 | 2 |
| 1483944 | 11-22 | 2 |
| 1483950 | 11-22 | 2 |
| 1483958 | 11-22 | 6 |
| 1483961 | 11-22 | 2 |
| 1483993 | 11-22 | 4 |
| | 11-22 | 1 |
| 1483999 | 11-22 | 4 |
| | 11-22 | 1 |
| 1484009 | 11-22 | 4 |
| | 11-22 | 1 |
| 1484276 | 11-22 | 4 |
| | 11-22 | 1 |
| 1484277 | 11-22 | 4 |
| | 11-22 | 1 |
| 1484283 | 11-22 | 4 |
| | 11-22 | 1 |
| 1484289 | 11-22 | 4 |
| | 11-22 | 1 |
| 1484300 | 11-22 | 4 |
| | 11-22 | 1 |
| 1484357 | 4-33 | 5 |
| 1484358 | 4-33 | 5 |
| 1484375 | 4-30 | 11 |
| | 4-33 | 2 |
| 1484383 | 4-33 | 14 |
| 1484454 | 11-22 | 5 |
| 1484460 | 11-22 | 5 |
| 1484466 | 11-22 | 5 |
| 1484477 | 11-22 | 5 |
| 1484498 | 11-22 | 2 |
| 1484504 | 11-22 | 2 |
| 1484515 | 11-22 | 2 |
| 1484522 | 11-22 | 5 |
| 1484528 | 11-22 | 5 |
| 1484534 | 11-22 | 5 |
| 1484545 | 11-22 | 5 |
| 1484555 | 4-34 | 15 |
| | 4-34 | 16 |
| | 4-34 | 17 |
| 1484594 | 13-34 | 1 |
| 1484595 | 13-34 | 1 |
| 1484596 | 13-6 | 1 |
| | 13-34 | 1 |
| 1484597 | 4-30 | 13 |
| | 4-30 | 19 |
| | 4-31 | 20 |
| | 4-33 | 1 |
| | 4-34 | 18 |
| | 13-6 | 1 |
| | 13-34 | 1 |
| 1484611 | 4-31 | 21 |
| 1484651 | 4-31 | 24 |
| 1484654 | 4-34 | 18 |
| 1484655 | 4-34 | 18 |
| 1484656 | 4-30 | 13 |
| | 4-30 | 19 |
| | 4-30 | 20 |
| | 4-33 | 1 |
| | 4-34 | 18 |
| 1484660 | 4-33 | 2 |
| 1484661 | 4-30 | 11 |
| 1484670 | 4-33 | 4 |
| 1484671 | 4-33 | 4 |
| 1484672 | 4-33 | 4 |
| 1484681 | 4-29 | 1 |
| 1484682 | 4-29 | 1 |
| 1484683 | 4-29 | 5 |
| | 4-29 | 5 |
| | 4-29 | 6 |
| | 4-29 | 7 |
| | 4-30 | 9 |
| 1484684 | 4-29 | 3 |
| | 4-30 | 8 |
| 1484687 | 4-31 | 26 |
| 1484707 | 4-30 | 11 |
| | 4-33 | 2 |
| 1484710 | 4-33 | 4 |
| 1484718 | 4-31 | 26 |
| 1484719 | 4-29 | 5 |
| | 4-29 | 5 |
| | 4-29 | 5 |
| | 4-29 | 5 |
| | 4-29 | 6 |
| | 4-29 | 6 |
| | 4-29 | 7 |
| | 4-29 | 7 |
| | 4-30 | 9 |
| 1484720 | 4-33 | 6 |
| 1484733 | 6-5 | 9 |
| 1484734 | 6-5 | 1 |
| 1484735 | 6-5 | 2 |
| 1484736 | 6-5 | 3 |
| 1484737 | 6-5 | 4 |
| 1484738 | 6-5 | 5 |
| 1484739 | 6-5 | 6 |
| 1484740 | 6-5 | 8 |
| 1484741 | 6-5 | 7 |
| 1485280 | 1-7 | 6 |
| 1485281 | 1-7 | 7 |
| 1485436 | 3-37 | 18 |
| 1485443 | 9-21 | 17 |
| 1485449 | 9-21 | 15 |
| 1485806 | 13-21 | 19 |
| 1485807 | 13-21 | 19 |
| 1485867 | 6-3 | 25 |
| 1486838 | 12-16 | 28 |
| 1486842 | 3-9 | 24 |
| 1487201 | 5-13 | 12 |
| | 5-15 | 12 |
| 1487202 | 5-13 | 12 |
| | 5-15 | 12 |
| 1488597 | 5-3 | |
| | 5-7 | |
| | 5-11 | |
| | 5-22 | |
| 1488600 | 5-3 | |
| | 5-7 | |
| | 5-11 | |
| | 5-22 | |
| 1488601 | 5-3 | |
| | 5-7 | |
| | 5-11 | |
| | 5-22 | |
| 1488602 | 5-3 | 16 |
| | 5-13 | 1 |
| 1488604 | 5-3 | 14 |
| | 5-15 | |
| 1488915 | 13-67 | 2 |
| 1489643 | 2-63 | 10 |
| 1489956 | 4-29 | 2 |
| 1489957 | 4-29 | 1 |
| | 4-29 | 3 |
| | 4-29 | 5 |
| | 4-29 | 5 |
| | 4-29 | 5 |
| | 4-29 | 6 |
| | 4-29 | 6 |
| | 4-30 | 8 |
| | 4-30 | 9 |
| 1490070 | 8-3 | 2 |
| 1490250 | 4-29 | 1 |
| 1490252 | 4-31 | 26 |
| 1490391 | 5-17 | 27 |
| 1490766 | 1-23 | 13 |
| 1491175 | 13-11 | 11 |
| 1491381 | 7-9 | |
| 1491382 | 7-9 | 9 |
| 1491830 | 7-7 | 8 |
| 1492957 | 4-3 | 39 |
| 1493062 | 2-45 | 2 |
| 1493116 | 4-11 | 17 |
| | 4-15 | 49 |
| | 4-20 | 59 |
| 1493147 | 1-5 | 1 |
| 1493148 | 1-5 | 1 |
| 1493306 | 9-22 | 17 |
| 1493436 | 4-30 | 15 |
| 1493444 | 4-33 | 3 |
| 1493445 | 4-33 | 3 |
| 1493458 | 4-33 | 14 |
| 1493460 | 4-33 | 13 |
| 1493909 | 13-23 | 7 |
| 1493913 | 13-29 | 22 |
| | 13-31 | 10 |
| 1494076 | 1-13 | 2 |


©2004 HYSTER COMPANY

# NUMERICAL INDEX (Continued)

| PART NO. | PG | ITEM |
|---|---|---|
| 1494077 | 1-13 | 2 |
| 1494460 | 3-35 | 2 |
| 1494466 | 3-35 | |
| 1494673 | 13-32 | 1 |
| 1494692 | 13-32 | 1 |
| 1494693 | 13-32 | 1 |
| 1494782 | 3-37 | |
| 1494784 | 3-37 | 3 |
| 1494888 | 1-21 | 12 |
| 1495279 | 10-17 | 6 |
| | 11-22 | 8 |
| 1495347 | 11-12 | 2 |
| 1495359 | 11-12 | 2 |
| 1495485 | 3-33 | 5 |
| 1495665 | 2-9 | 35 |
| 1495666 | 2-9 | 18 |
| 1496788 | 4-31 | 22 |
| | 4-31 | 28 |
| | 4-33 | 8 |
| | 4-33 | 11 |
| 1496789 | 13-35 | 1 |
| 1496790 | 4-31 | 27 |
| | 4-33 | 7 |
| | 4-33 | 12 |
| | 13-35 | 1 |
| 1496791 | 4-31 | 22 |
| | 4-31 | 28 |
| | 4-33 | 8 |
| | 4-33 | 11 |
| 1496884 | 4-29 | 1 |
| 1496885 | 4-29 | 1 |
| 1496886 | 4-30 | 19 |
| 1496924 | 4-30 | 17 |
| 1496925 | 4-30 | 17 |
| 1496926 | 4-30 | 17 |
| 1497228 | 4-30 | 17 |
| 1497259 | 4-31 | 24 |
| 1497262 | 4-30 | 10 |
| | 4-30 | 12 |
| | 4-30 | 16 |
| | 4-34 | 15 |
| | 4-34 | 16 |
| | 4-34 | 17 |
| 1497265 | 4-30 | 10 |
| | 4-30 | 12 |
| | 4-30 | 16 |
| 1497288 | 4-31 | 21 |
| | 13-6 | 1 |
| 1497290 | 4-30 | 18 |
| | 13-34 | 1 |
| 1497293 | 4-30 | 20 |
| 1497294 | 4-30 | 13 |
| | 4-33 | 1 |
| 1497298 | 4-30 | 20 |
| 1497299 | 13-6 | 1 |
| 1497300 | 4-30 | 13 |
| | 4-33 | 1 |
| 1497302 | 4-30 | 19 |
| 1497303 | 13-34 | 1 |
| 1497559 | 3-3 | 18 |
| | 3-17 | 5 |
| 1498097 | 3-3 | 19 |
| | 3-17 | 21 |
| 1498419 | 4-31 | 25 |
| | 4-33 | 9 |
| 1498422 | 4-33 | 10 |
| 1498474 | 4-31 | 25 |
| | 4-33 | 9 |
| 1498492 | 4-30 | 14 |
| 1498493 | 4-30 | 14 |
| 1498496 | 4-31 | 25 |
| | 4-33 | 9 |
| 1498807 | 5-3 | 33 |
| | 5-11 | 3 |
| 1499101 | 13-49 | 22 |
| 1499102 | 13-49 | 21 |
| 1499103 | 13-45 | 22 |
| 1499104 | 13-45 | 21 |
| 1499105 | 13-53 | 28 |
| 1499106 | 13-53 | 29 |
| 1499107 | 13-59 | 27 |
| 1499108 | 13-59 | 28 |
| 1499369 | 2-9 | 13 |
| 1499373 | 2-9 | 36 |
| 1499514 | 2-13 | 10 |
| 1499886 | 8-4 | 53 |
| 1500439 | 2-13 | 2 |
| 1500744 | 10-3 | 2 |
| | 10-5 | 2 |
| | 10-15 | 2 |
| | 11-3 | 1 |
| | 11-7 | 1 |
| | 11-19 | 2 |
| | 12-7 | 2 |
| | 12-11 | 2 |
| | 12-31 | 2 |
| 1500784 | 1-32 | 5 |
| | 1-34 | 5 |
| 1500786 | 1-33 | 4 |
| | 1-34 | 5 |
| 1500884 | 2-53 | 18 |
| 1501259 | 1-27 | 26 |
| 1501409 | 7-13 | 9 |
| 1501994 | 2-47 | 12 |
| 1502000 | 2-5 | 11 |
| | 2-6 | 48 |
| 1502038 | 3-13 | 5 |
| 1502543 | 2-47 | 16 |
| | 2-49 | 11 |
| 1502645 | 9-21 | 18 |
| 1502741 | 2-47 | 20 |
| | 2-50 | 3 |
| | 2-59 | 25 |
| 1502768 | 13-21 | 5 |
| 1502769 | 13-21 | 1 |
| 1502770 | 13-21 | 2 |
| 1502771 | 13-21 | 25 |
| 1502772 | 13-21 | 25 |
| 1503334 | 4-27 | 41 |
| 1503453 | 5-11 | 10 |
| 1503620 | 13-27 | 7 |
| 1504083 | 13-21 | 25 |
| 1504084 | 13-21 | 26 |
| 1504085 | 13-29 | 13 |
| 1504086 | 13-29 | 13 |
| 1504087 | 13-31 | 4 |
| 1504088 | 13-31 | 4 |
| 1504089 | 13-29 | 13 |
| | 13-31 | 4 |
| 1504094 | 13-29 | 13 |
| 1504095 | 13-31 | 4 |
| 1504256 | 2-9 | 21 |
| 1504380 | 2-9 | 19 |
| 1505287 | 13-17 | 6 |
| | 13-32 | 1 |
| 1506889 | 10-17 | 1 |
| 1506894 | 10-17 | 3 |
| 1506895 | 10-17 | 1 |
| 1506900 | 10-17 | 3 |
| | 10-17 | 1 |
| 1506901 | 10-17 | 1 |
| 1506903 | 10-17 | 1 |
| 1506905 | 10-17 | 3 |
| 1506906 | 10-17 | 3 |
| 1506908 | 10-17 | 3 |
| 1506930 | 10-17 | 1 |
| 1506932 | 10-17 | 2 |
| 1506937 | 10-17 | 2 |
| 1506942 | 10-17 | 2 |
| 1506943 | 10-17 | 2 |
| 1506945 | 10-17 | 2 |
| 1506972 | 10-17 | 2 |
| 1506977 | 10-17 | 3 |
| 1507923 | 7-5 | 26 |
| 1507960 | 2-43 | 6 |
| 1508246 | 3-29 | 18 |
| 1509037 | 3-3 | 10 |
| | 3-17 | 10 |
| 1510113 | 3-9 | 7 |
| 1510310 | 4-7 | |
| 1510311 | 4-7 | |
| 1510312 | 4-7 | |
| 1510313 | 4-7 | |
| 1510649 | 2-59 | 35 |
| 1511725 | 2-13 | 16 |
| 1511882 | 10-15 | 15 |
| | 12-11 | 3 |
| 1511883 | 10-15 | 15 |
| | 11-19 | 16 |
| | 12-7 | 4 |
| | 12-11 | 3 |
| | 12-31 | 16 |
| | 13-45 | 6 |
| | 13-49 | 2 |
| | 13-53 | 2 |
| | 13-59 | 2 |
| 1511884 | 10-15 | 15 |
| | 12-11 | 3 |
| 1512403 | 2-13 | 18 |
| 1513907 | 1-7 | 13 |
| 1514215 | 2-47 | 11 |
| | 2-49 | 21 |
| | 4-15 | 44 |
| | 4-20 | 54 |
| 1514267 | 2-53 | 19 |
| 1514268 | 2-55 | 21 |
| 1514429 | 2-47 | 5 |
| | 3-45 | 19 |
| 1514915 | 2-59 | 36 |
| 1514961 | 2-56 | 46 |
| 1514963 | 2-55 | 44 |
| 1514964 | 2-56 | 45 |
| 1514965 | 2-56 | 47 |
| 1514968 | 2-53 | 13 |
| 1514969 | 2-55 | 20 |
| 1515680 | 5-13 | 8 |
| | 5-15 | 8 |
| 1515763 | 4-3 | 41 |
| 1515805 | 2-43 | 10 |
| 1516677 | 2-34 | 3 |
| 1516930 | 2-25 | 22 |
| 1517939 | 8-3 | 41 |
| 1518858 | 1-7 | 13 |
| 1519441 | 1-33 | 1 |
| 1519442 | 1-33 | 1 |
| 1520927 | 13-17 | 2 |
| 1523472 | 4-11 | 4 |
| | 4-11 | 5 |

©2004 HYSTER COMPANY

# NUMERICAL INDEX (Continued)

| PART NO. | PG | ITEM |
|---|---|---|
| 1523551 | 5-13 | 9 |
| | 5-15 | 9 |
| 1523715 | 1-21 | 1 |
| 1523718 | 1-21 | 1 |
| 1523732 | 1-32 | 3 |
| | 1-33 | 3 |
| | 1-34 | 3 |
| 1523734 | 1-32 | 2 |
| | 1-33 | 2 |
| | 1-34 | 2 |
| 1523737 | 1-32 | 6 |
| | 1-34 | 6 |
| 1523739 | 1-32 | 8 |
| | 1-34 | 8 |
| 1523741 | 1-33 | 5 |
| | 1-34 | 6 |
| 1523742 | 1-33 | 6 |
| | 1-34 | 8 |
| 1523798 | 2-19 | 1 |
| | 2-21 | |
| | 2-23 | |
| | 2-25 | |
| | 2-27 | |
| | 2-29 | |
| | 2-31 | |
| | 2-33 | |
| | 2-34 | |
| | 2-37 | |
| | 2-38 | |
| | 2-41 | |
| | 2-43 | |
| 1523953 | 5-13 | 3 |
| | 5-15 | 3 |
| 1524525 | 4-3 | 38 |
| 1525248 | 1-9 | 10 |
| 1526082 | 13-13 | 1 |
| 1527274 | 4-27 | 42 |
| 1527305 | 4-27 | 43 |
| 1527470 | 1-17 | 8 |
| 1527516 | 13-37 | 2 |
| | 13-39 | 2 |
| | 13-41 | 2 |
| 1527523 | 4-27 | 18 |
| 1527876 | 4-15 | 42 |
| | 4-19 | 52 |
| 1527877 | 2-47 | 7 |
| | 3-45 | 17 |
| 1527879 | 4-15 | 41 |
| | 4-19 | 51 |
| 1527880 | 2-47 | 15 |
| | 2-49 | 12 |
| | 3-13 | 12 |
| | 4-15 | 14 |
| | 4-19 | 14 |
| 1527881 | 2-11 | 7 |
| | 4-15 | 20 |
| 1527883 | 3-9 | 4 |
| 1527884 | 3-14 | 2 |
| 1528410 | 6-3 | 7 |
| 1528427 | 6-3 | 2 |
| 1528484 | 6-3 | 6 |
| 1528778 | 3-9 | 18 |
| | 4-15 | 12 |
| | 4-19 | 12 |
| 1529010 | 2-50 | 2 |
| | 2-59 | 26 |
| 1529238 | 1-7 | 19 |
| 1529708 | 6-3 | |
| 1531579 | 1-7 | 8 |
| 1531582 | 1-7 | 1 |
| 1531750 | 2-9 | 22 |
| 1531982 | 13-9 | 5 |
| | 13-11 | 1 |
| | 13-21 | 3 |
| | 13-23 | 15 |
| 1532537 | 2-15 | 2 |
| 1532620 | 2-15 | 3 |
| 1532621 | 2-15 | 4 |
| 1532638 | 13-51 | 9 |
| | 13-61 | 10 |
| 1532639 | 13-51 | 9 |
| | 13-61 | 10 |
| 1532640 | 13-47 | 4 |
| | 13-55 | 4 |
| 1532643 | 13-47 | 4 |
| | 13-57 | 4 |
| 1532655 | 8-13 | 3 |
| 1532656 | 8-13 | 3 |
| 1532691 | 9-21 | 4 |
| 1532748 | 13-67 | 8 |
| 1533587 | 6-7 | 2 |
| | 6-9 | 2 |
| 1533797 | 4-7 | 2 |
| 1533858 | 4-7 | 1 |
| 1533859 | 4-7 | 1 |
| 1533891 | 4-9 | 4 |
| 1534417 | 2-69 | 7 |
| 1535414 | 2-19 | 24 |
| 1536272 | 4-15 | 16 |
| 1536684 | 6-3 | 11 |
| 1536722 | 6-3 | |
| 1536792 | 6-3 | 9 |
| | 8-13 | |
| 1536793 | 6-3 | 10 |
| | 8-13 | |
| 1536794 | 6-3 | 11 |
| 1536880 | 3-45 | 12 |
| 1537216 | 2-27 | 7 |
| 1537224 | 2-21 | 21 |
| 1537238 | 2-41 | 8 |
| 1537258 | 2-23 | 15 |
| | 2-23 | 27 |
| 1537265 | 2-37 | 8 |
| 1537297 | 2-33 | 13 |
| 1537498 | 2-13 | 31 |
| 1539589 | 8-13 | |
| 1539590 | 8-13 | |
| 1539747 | 3-45 | 18 |
| 1539751 | 2-5 | 7 |
| 1541242 | 11-22 | 7 |
| 1541243 | 11-22 | 7 |
| 1541640 | 11-15 | 3 |
| 1541805 | 1-23 | 10 |
| 1543530 | 13-37 | 11 |
| | 13-39 | 11 |
| | 13-41 | 12 |
| 1543536 | 3-3 | 8 |
| | 3-17 | 31 |
| 1543615 | 9-3 | 12 |
| 1543616 | 7-3 | 2 |
| | 9-7 | 6 |
| | 9-9 | 5 |
| 1543617 | 9-7 | 7 |
| | 9-9 | 6 |
| 1543776 | 2-53 | |
| | 2-55 | |
| | 2-59 | |
| | 2-63 | |
| | 2-65 | |
| | 2-67 | |
| 1543927 | 9-11 | 32 |
| | 9-15 | |
| 1543928 | 9-13 | 32 |
| | 9-15 | |
| 1543933 | 3-9 | 10 |
| | 3-13 | 13 |
| 1543978 | 2-53 | |
| | 2-55 | |
| | 2-59 | |
| | 2-63 | |
| | 2-65 | |
| 1544024 | 3-13 | 14 |
| 1544207 | 9-11 | 1 |
| | 9-13 | 1 |
| 1544555 | 2-69 | 1 |
| 1544677 | 4-19 | 17 |
| 1544739 | 1-23 | 12 |
| 1544743 | 1-23 | 14 |
| 1544792 | 3-21 | 24 |
| 1544793 | 3-21 | 7 |
| 1544824 | 3-21 | 2 |
| 1544971 | 7-9 | 10 |
| 1544972 | 7-9 | 35 |
| 1545154 | 4-15 | 31 |
| | 4-19 | 40 |
| 1545785 | 13-37 | 5 |
| | 13-39 | 5 |
| | 13-41 | 5 |
| 1545786 | 13-37 | 4 |
| | 13-39 | 4 |
| | 13-41 | 4 |
| 1545857 | 2-47 | 4 |
| | 2-49 | 10 |
| 1545871 | 5-13 | 12 |
| | 5-15 | 12 |
| 1546283 | 2-49 | 24 |
| 1546285 | 2-49 | 23 |
| 1546322 | 13-23 | 20 |
| 1546397 | 3-29 | 12 |
| 1546398 | 3-29 | 13 |
| 1546399 | 3-29 | 22 |
| 1548231 | 9-11 | 2 |
| | 9-13 | 2 |
| 1548232 | 9-11 | 3 |
| | 9-13 | 3 |
| 1548244 | 2-47 | 3 |
| | 2-49 | 3 |
| 1548432 | 4-15 | 48 |
| | 4-20 | 58 |
| 1548520 | 2-47 | 1 |
| 1549372 | 2-5 | 12 |
| | 2-6 | 49 |
| 1549399 | 4-9 | 11 |
| 1549449 | 2-6 | 56 |
| 1550643 | 7-3 | 13 |
| | 9-7 | 19 |
| | 9-9 | 19 |
| 1550926 | 9-7 | 35 |
| | 9-9 | 37 |
| 1550927 | 9-7 | 36 |
| | 9-9 | 38 |
| 1550942 | 9-7 | 22 |
| | 9-9 | 22 |
| 1551160 | 9-3 | 11 |
| 1551260 | 3-9 | 5 |
| 1551401 | 3-7 | 10 |
| 1551402 | 3-7 | 8 |
| 1551403 | 3-7 | 1 |


©2004 HYSTER COMPANY

# NUMERICAL INDEX (Continued)

| PART NO. | PG | ITEM |
|---|---|---|
| 1551404 | 3-7 | 7 |
| 1551405 | 3-9 | 11 |
| 1551410 | 2-69 | 4 |
| 1551452 | 3-13 | 16 |
| 1551680 | 2-49 | 15 |
| 1551850 | 4-9 | 15 |
| 1551997 | 9-11 | 21 |
| | 9-13 | 21 |
| 1552141 | 2-59 | 3 |
| 1552652 | 2-19 | 23 |
| 1552673 | 3-13 | 19 |
| 1553084 | 13-23 | 4 |
| 1553420 | 2-13 | 36 |
| 1553495 | 8-3 | 1 |
| 1554719 | 3-9 | 13 |
| 1554974 | 2-21 | 1 |
| 1554975 | 2-21 | 5 |
| 1554976 | 2-21 | 13 |
| 1554977 | 2-21 | 8 |
| 1554978 | 2-21 | 14 |
| 1554979 | 2-21 | 11 |
| 1554980 | 2-21 | 7 |
| 1554981 | 2-21 | 6 |
| 1554982 | 2-21 | 15 |
| 1554983 | 2-21 | 18 |
| 1554984 | 2-21 | 17 |
| | 2-37 | 3 |
| 1554985 | 2-27 | 1 |
| 1554986 | 2-27 | 2 |
| 1554987 | 2-27 | 3 |
| 1554988 | 2-27 | 2 |
| 1554989 | 2-27 | 2 |
| 1554990 | 2-27 | 2 |
| 1554991 | 2-27 | 3 |
| 1554992 | 2-27 | 3 |
| 1554993 | 2-27 | 3 |
| 1554994 | 2-27 | 8 |
| 1554995 | 2-27 | 12 |
| 1555063 | 2-27 | 14 |
| 1555064 | 2-27 | 15 |
| 1555065 | 2-27 | 13 |
| 1555066 | 2-27 | 13 |
| 1555067 | 2-27 | 13 |
| 1555068 | 2-27 | 13 |
| 1555069 | 2-27 | 13 |
| 1555070 | 2-27 | 13 |
| 1555071 | 2-21 | 20 |
| 1555072 | 2-23 | 1 |
| 1555073 | 2-23 | 4 |
| 1555074 | 2-23 | 5 |
| 1555075 | 2-23 | 8 |
| 1555076 | 2-23 | 10 |
| 1555077 | 2-23 | 9 |
| 1555078 | 2-23 | 11 |
| 1555079 | 2-23 | 13 |
| 1555080 | 2-23 | 14 |
| | 2-23 | 26 |
| 1555081 | 2-23 | 16 |
| 1555082 | 2-23 | 17 |
| 1555083 | 2-23 | 18 |
| 1555084 | 2-25 | |
| 1555085 | 2-25 | 1 |
| 1555086 | 2-25 | 2 |
| 1555088 | 2-25 | 3 |
| 1555090 | 2-25 | 8 |
| 1555091 | 2-25 | 7 |
| 1555092 | 2-25 | 4 |
| 1555094 | 2-25 | 9 |
| 1555095 | 2-25 | 10 |
| 1555096 | 2-25 | 11 |
| 1555098 | 2-33 | 25 |
| 1555101 | 2-41 | 7 |
| 1555102 | 2-41 | 9 |
| 1555103 | 2-41 | 11 |
| 1555104 | 2-41 | 12 |
| 1555105 | 2-41 | 16 |
| 1555106 | 2-41 | 17 |
| 1555107 | 2-41 | 18 |
| 1555108 | 2-41 | 19 |
| 1555109 | 2-41 | 22 |
| 1555110 | 2-41 | 21 |
| 1555262 | 2-41 | 2 |
| 1555413 | 2-41 | 3 |
| 1555414 | 2-41 | 5 |
| 1555415 | 2-41 | 6 |
| 1555419 | 2-23 | 19 |
| 1555420 | 2-23 | 20 |
| 1555421 | 2-21 | 22 |
| 1555422 | 2-29 | 6 |
| 1555423 | 2-29 | 8 |
| 1555424 | 2-29 | 12 |
| 1555425 | 2-29 | 13 |
| 1555426 | 2-29 | 16 |
| 1555427 | 2-29 | 19 |
| 1555428 | 2-29 | 17 |
| 1555429 | 2-29 | 20 |
| 1555430 | 2-25 | 12 |
| 1555431 | 2-25 | 13 |
| 1555432 | 2-25 | 14 |
| | 2-25 | 27 |
| 1555433 | 2-25 | 15 |
| 1555434 | 2-25 | 16 |
| 1555435 | 2-25 | 17 |
| 1555436 | 2-25 | 18 |
| 1555437 | 2-25 | 19 |
| 1555438 | 2-25 | 20 |
| 1555447 | 2-25 | 23 |
| 1555448 | 2-25 | 25 |
| 1555449 | 2-25 | 26 |
| 1555451 | 2-25 | 28 |
| 1555452 | 2-33 | 24 |
| 1555453 | 2-38 | |
| 1555454 | 2-38 | 1 |
| 1555455 | 2-38 | 2 |
| 1555456 | 2-38 | 4 |
| 1555457 | 2-37 | 1 |
| 1555459 | 2-37 | 5 |
| 1555460 | 2-37 | 6 |
| 1555461 | 2-37 | 7 |
| 1555464 | 2-31 | 7 |
| 1555466 | 2-31 | 7 |
| 1555467 | 2-31 | 8 |
| 1555468 | 2-31 | 7 |
| 1555471 | 2-31 | 12 |
| 1555472 | 2-31 | 13 |
| 1555473 | 2-31 | 14 |
| 1555474 | 2-31 | 1 |
| 1555477 | 2-31 | 3 |
| 1555478 | 2-31 | 4 |
| 1555482 | 2-33 | 1 |
| 1555483 | 2-33 | 3 |
| 1555484 | 2-33 | 4 |
| 1555485 | 2-33 | 7 |
| 1555486 | 2-33 | 18 |
| 1555487 | 2-33 | 19 |
| 1555488 | 2-33 | 20 |
| 1555489 | 2-43 | 1 |
| 1555490 | 2-29 | 23 |
| 1555491 | 2-34 | 1 |
| 1555492 | 2-34 | 2 |
| 1555502 | 2-41 | 25 |
| 1555505 | 2-23 | 21 |
| 1555506 | 2-23 | 22 |
| 1555686 | 2-21 | 24 |
| | 2-23 | 28 |
| | 2-25 | 29 |
| 1555689 | 2-23 | 23 |
| 1555729 | 2-29 | 25 |
| | 2-33 | 28 |
| | 2-37 | 10 |
| | 2-38 | 8 |
| 1555782 | 4-19 | 20 |
| 1556726 | 3-13 | 11 |
| 1556819 | 3-13 | 10 |
| 1557629 | 3-7 | 9 |
| 1558060 | 4-9 | 6 |
| 1558148 | 3-9 | 17 |
| 1558160 | 3-25 | 1 |
| 1558161 | 3-25 | 2 |
| | 3-27 | 11 |
| 1558163 | 3-25 | 4 |
| 1558164 | 3-25 | 5 |
| 1558165 | 3-25 | 6 |
| 1558166 | 3-25 | 7 |
| 1558167 | 3-25 | 8 |
| 1558168 | 3-25 | 9 |
| | 3-27 | 7 |
| | 3-27 | 10 |
| 1558169 | 3-25 | 10 |
| 1558170 | 3-25 | 11 |
| 1558171 | 3-25 | 12 |
| 1558172 | 3-25 | 14 |
| 1558173 | 3-25 | 3 |
| 1558175 | 3-25 | 16 |
| 1558176 | 3-25 | 17 |
| | 3-27 | 8 |
| 1558177 | 3-25 | 18 |
| | 3-31 | 5 |
| 1558178 | 3-25 | 19 |
| 1558187 | 3-27 | 1 |
| 1558188 | 3-27 | 2 |
| 1558189 | 3-27 | 3 |
| 1558190 | 3-27 | 4 |
| 1558191 | 3-27 | 5 |
| 1558192 | 3-27 | 6 |
| 1558193 | 3-27 | 9 |
| 1558194 | 3-27 | 12 |
| 1558195 | 3-23 | 6 |
| | 3-31 | 11 |
| 1558196 | 3-23 | 8 |
| 1558198 | 3-23 | 9 |
| 1558202 | 3-23 | 2 |
| 1558204 | 3-25 | 15 |
| 1558205 | 3-23 | 3 |
| 1558206 | 3-23 | 5 |
| 1558209 | 3-31 | 1 |
| 1558210 | 3-31 | 2 |
| 1558211 | 3-31 | 3 |
| 1558432 | 3-31 | 4 |
| 1558433 | 3-31 | 7 |
| 1558434 | 3-31 | 9 |
| 1558435 | 3-31 | 6 |
| 1558436 | 3-31 | 13 |
| 1558437 | 3-31 | 12 |
| 1558543 | 3-23 | 4 |
| 1558807 | 2-53 | 11 |
| 1559058 | 3-7 | 17 |
| | 3-13 | 1 |

©2004 HYSTER COMPANY

# NUMERICAL INDEX (Continued)

| PART NO. | PG | ITEM |
|---|---|---|
| 1559061 | 3-13 | 1 |
| 1559422 | 3-7 | 2 |
| 1559556 | 2-67 | 1 |
| 1559557 | 2-67 | 2 |
| 1559558 | 2-67 | 3 |
| 1559559 | 2-67 | 4 |
| 1559560 | 2-67 | 5 |
| 1559561 | 2-67 | 6 |
| 1559562 | 2-67 | 7 |
| 1559563 | 2-67 | 8 |
| 1559564 | 2-67 | 9 |
| 1559565 | 2-67 | 11 |
| 1559566 | 2-67 | 12 |
| 1559567 | 2-67 | 14 |
| 1559568 | 2-67 | 15 |
| 1559569 | 2-67 | 16 |
| 1559570 | 2-67 | 13 |
| 1559695 | 2-59 | 4 |
| | 4-21 | |
| 1559922 | 4-21 | 3 |
| 1559923 | 4-21 | 5 |
| 1559924 | 4-21 | 6 |
| 1559925 | 4-21 | 7 |
| 1559969 | 9-15 | 4 |
| 1559970 | 9-15 | 14 |
| 1559971 | 9-15 | 24 |
| 1559972 | 9-15 | 34 |
| 1559973 | 9-15 | 3 |
| 1559974 | 9-15 | 38 |
| 1559975 | 9-15 | 2 |
| 1559976 | 9-15 | 39 |
| 1559977 | 9-15 | 41 |
| 1559978 | 9-15 | 42 |
| 1559986 | 9-15 | 40 |
| 1561870 | 3-23 | 10 |
| | 3-31 | 14 |
| 1563048 | 2-19 | 2 |
| 1563548 | 2-19 | 5 |
| 1563921 | 2-41 | 1 |
| 1564046 | 2-41 | 23 |
| 1565899 | 3-41 | 17 |
| 2004005 | 4-16 | 53 |
| | 4-20 | 63 |
| | 8-4 | 49 |
| | 8-4 | 49 |
| | 13-41 | 6 |
| 2020517 | 1-27 | 2 |
| 2021207 | 1-7 | 9 |
| 2021395 | 1-17 | 4 |
| 2022532 | 4-23 | 23 |
| 2022534 | 4-23 | 11 |
| 2022535 | 4-23 | 19 |
| 2022538 | 4-23 | 22 |
| 2027337 | 3-39 | 1 |
| | 3-45 | 1 |
| 2028521 | 7-16 | 2 |
| 2029170 | 2-9 | 6 |
| 2032230 | 7-15 | 5 |
| 2033243 | 10-11 | 3 |
| | 12-24 | 3 |
| 2033281 | 10-11 | 3 |
| | 10-11 | 3 |
| 2033294 | 10-11 | 6 |
| 2033299 | 10-11 | 3 |
| | 12-24 | 3 |
| 2034269 | 10-12 | 7 |
| | 12-24 | 5 |
| 2034274 | 11-15 | 8 |
| | 12-28 | 8 |
| 2034459 | 1-27 | 30 |
| 2034906 | 1-23 | 3 |
| 2035020 | 6-7 | 3 |
| | 6-7 | 3 |
| 2035021 | 6-7 | 3 |
| 2035022 | 6-9 | 3 |
| 2035023 | 6-9 | 3 |
| 2035024 | 13-70 | 3 |
| 2035025 | 13-70 | 3 |
| 2035044 | 7-16 | 8 |
| 2035137 | 7-9 | 5 |
| | 7-13 | |
| 2035200 | 12-24 | 11 |
| 2035312 | 9-21 | 1 |
| | 9-22 | |
| 2035314 | 9-21 | 1 |
| | 9-22 | |
| 2035315 | 9-22 | 1 |
| 2035316 | 9-22 | 2 |
| 2035318 | 9-22 | 2 |
| 2035322 | 2-9 | 5 |
| 2035355 | 2-6 | 52 |
| 2035359 | 2-6 | 51 |
| 2035568 | 6-3 | 14 |
| 2035569 | 6-3 | 15 |
| 2035581 | 4-29 | 5 |
| | 4-29 | 5 |
| | 4-29 | 5 |
| | 4-29 | 5 |
| | 4-29 | 6 |
| | 4-29 | 6 |
| | 4-29 | 7 |
| | 4-30 | 7 |
| | 4-30 | 9 |
| | 13-9 | 12 |
| | 13-11 | 10 |
| | 13-19 | 10 |
| 2035621 | 3-3 | 3 |
| | 3-5 | |
| 2035667 | 10-15 | |
| 2035669 | 10-15 | |
| 2035672 | 10-15 | |
| 2035678 | 7-7 | 13 |
| 2035784 | 10-12 | 14 |
| 2035785 | 10-12 | 15 |
| 2035786 | 10-12 | 16 |
| 2035787 | 10-7 | 2 |
| | 10-11 | 5 |
| | 11-12 | 10 |
| | 12-24 | 12 |
| 2035791 | 10-17 | 10 |
| | 11-22 | 13 |
| | 12-35 | 15 |
| 2035792 | 12-31 | |
| 2035794 | 12-31 | |
| 2035796 | 12-31 | |
| 2035797 | 12-31 | |
| 2035798 | 1-9 | 3 |
| 2035800 | 1-21 | 2 |
| 2035804 | 10-11 | |
| 2035805 | 10-11 | |
| 2035806 | 10-11 | |
| 2035811 | 10-11 | |
| 2035812 | 10-11 | |
| 2035813 | 10-11 | |
| 2035836 | 3-41 | 18 |
| | 3-45 | 10 |
| 2035980 | 1-9 | 4 |
| 2035998 | 7-16 | 2 |
| 2036142 | 1-7 | 24 |
| 2036143 | 1-7 | 14 |
| 2036181 | 10-11 | 1 |
| 2036182 | 10-11 | 1 |
| 2036183 | 10-11 | 1 |
| 2036187 | 10-11 | 1 |
| 2036188 | 10-11 | 1 |
| 2036189 | 10-11 | 1 |
| 2036195 | 10-11 | 2 |
| 2036196 | 10-11 | 2 |
| 2036197 | 10-11 | 2 |
| 2036201 | 10-11 | 2 |
| 2036202 | 10-11 | 2 |
| 2036203 | 10-11 | 2 |
| 2036212 | 10-11 | 7 |
| | 12-24 | 5 |
| 2036213 | 10-12 | 7 |
| | 10-12 | 7 |
| 2036277 | 12-24 | 15 |
| 2036278 | 12-24 | 16 |
| 2036279 | 11-16 | 18 |
| | 12-28 | 18 |
| 2036280 | 12-28 | 19 |
| 2036282 | 11-15 | 3 |
| | 12-28 | 3 |
| 2036283 | 12-28 | 3 |
| 2036386 | 12-24 | |
| 2036387 | 12-24 | |
| 2036388 | 12-24 | |
| 2036389 | 12-24 | |
| 2036390 | 12-24 | |
| 2036392 | 12-24 | |
| 2036393 | 12-24 | |
| 2036406 | 12-24 | |
| 2036407 | 12-24 | |
| 2036408 | 12-24 | |
| 2036422 | 12-28 | |
| 2036440 | 11-15 | |
| | 12-28 | |
| 2036441 | 12-28 | |
| 2036442 | 11-15 | |
| | 12-28 | |
| 2036443 | 12-28 | |
| 2036444 | 11-15 | |
| 2036475 | 3-3 | 9 |
| | 3-17 | 2 |
| 2036476 | 9-11 | 20 |
| 2036477 | 9-13 | 20 |
| 2036478 | 12-16 | 2 |
| | 12-20 | 6 |
| | 12-28 | 17 |
| 2036479 | 12-24 | 14 |
| 2036541 | 13-11 | 9 |
| | 13-13 | 9 |
| | 13-32 | 2 |
| | 13-34 | |
| 2036542 | 4-3 | 36 |
| 2036544 | 13-9 | 3 |
| | 13-33 | 3 |
| | 13-35 | |
| 2036547 | 9-22 | 6 |
| 2036756 | 11-7 | 11 |
| | 12-20 | 10 |
| 2036778 | 12-20 | 1 |
| 2036856 | 10-7 | 2 |
| | 10-11 | 5 |
| | 12-24 | 12 |
| 2036857 | 12-16 | 2 |
| | 12-20 | 6 |
| | 12-28 | 17 |


*See Service Manual for service procedures.*
©2004 HYSTER COMPANY

# NUMERICAL INDEX (Continued)

| PART NO. | PG | ITEM |
|---|---|---|
| 2036863 | 1-7 | 39 |
| 2036866 | 1-7 | 15 |
| 2036875 | 1-9 | 17 |
| 2036924 | 13-5 | 7 |
| | 13-6 | |
| 2037112 | 3-39 | 16 |
| | 3-45 | 20 |
| 2037113 | 2-15 | 1 |
| 2037114 | 2-13 | 15 |
| | 2-15 | 1 |
| 2037323 | 8-9 | 14 |
| | 8-13 | 13 |
| 2037324 | 8-13 | 17 |
| 2037325 | 8-13 | 18 |
| 2037326 | 8-13 | 20 |
| 2037327 | 8-9 | 4 |
| 2037328 | 8-9 | 4 |
| 2037329 | 8-9 | 5 |
| 2037330 | 8-9 | 5 |
| 2037331 | 8-9 | 6 |
| 2037332 | 8-9 | 6 |
| 2037333 | 8-9 | 7 |
| 2037334 | 8-9 | 8 |
| 2037335 | 8-9 | 8 |
| 2037336 | 8-9 | 9 |
| 2037337 | 8-9 | 9 |
| 2037338 | 8-9 | 10 |
| 2037339 | 8-9 | 11 |
| 2037340 | 8-9 | 12 |
| 2037341 | 8-9 | 15 |
| 2037342 | 8-9 | 16 |
| 2037343 | 8-9 | 17 |
| 2037344 | 8-9 | 21 |
| 2037377 | 8-10 | 34 |
| 2037515 | 8-13 | 4 |
| 2037516 | 8-13 | 4 |
| 2037517 | 8-13 | 5 |
| 2037518 | 8-13 | 5 |
| 2037519 | 8-13 | 12 |
| 2037707 | 12-31 | |
| 2037740 | 9-3 | 15 |
| 2037760 | 8-3 | 23 |
| 2037833 | 11-15 | 2 |
| | 12-28 | 2 |
| 2037835 | 12-28 | 2 |
| 2037836 | 12-28 | 2 |
| 2037837 | 11-15 | 2 |
| | 12-28 | 2 |
| 2037838 | 12-28 | 2 |
| 2037840 | 11-15 | 2 |
| 2037841 | 12-24 | 2 |
| 2037842 | 12-24 | 2 |
| 2037844 | 12-24 | 2 |
| 2037845 | 12-24 | 2 |
| 2037846 | 12-24 | 2 |
| 2037856 | 12-24 | 2 |
| 2037857 | 12-24 | 2 |
| 2037858 | 12-24 | 2 |
| 2037859 | 12-24 | 2 |
| 2037860 | 12-24 | 2 |
| 2037868 | 11-15 | 1 |
| | 12-28 | 1 |
| 2037870 | 12-28 | 1 |
| 2037871 | 12-28 | 1 |
| 2037872 | 11-15 | 1 |
| | 12-28 | 1 |
| 2037873 | 12-28 | 1 |
| 2037875 | 11-15 | 1 |
| 2037876 | 12-24 | 1 |
| 2037877 | 12-24 | 1 |
| 2037878 | 12-24 | 1 |
| 2037879 | 12-24 | 1 |
| 2037880 | 12-24 | 1 |
| 2037882 | 12-24 | 1 |
| 2037883 | 12-24 | 1 |
| 2037884 | 12-24 | 1 |
| 2037885 | 12-24 | 1 |
| 2037886 | 12-24 | 1 |
| 2037894 | 9-7 | 30 |
| | 9-9 | 32 |
| 2037906 | 2-47 | 2 |
| | 2-49 | 1 |
| | 8-3 | 47 |
| 2037907 | 8-3 | 47 |
| 2037943 | 13-45 | 1 |
| | 13-47 | |
| 2037944 | 13-45 | 1 |
| | 13-47 | |
| 2037945 | 13-49 | 1 |
| | 13-51 | |
| 2037946 | 13-49 | 1 |
| | 13-51 | |
| 2037947 | 13-55 | |
| 2037948 | 13-57 | |
| 2037949 | 13-61 | |
| 2037950 | 13-61 | |
| 2037951 | 13-45 | |
| 2037952 | 13-45 | |
| 2037953 | 13-49 | |
| 2037954 | 13-49 | |
| 2037955 | 13-53 | |
| 2037956 | 13-53 | |
| 2037957 | 13-59 | |
| 2037958 | 13-59 | |
| 2037998 | 1-5 | 5 |
| 2038000 | 2-15 | 1 |
| 2038201 | 9-3 | 1 |
| | 9-19 | |
| 2038202 | 9-3 | 1 |
| | 9-19 | |
| 2038289 | 11-12 | |
| 2038314 | 11-12 | |
| 2038318 | 11-12 | |
| 2038339 | 11-12 | |
| 2038359 | 11-12 | |
| 2038365 | 11-12 | |
| 2038370 | 11-12 | |
| 2038375 | 11-12 | |
| 2038415 | 11-12 | |
| 2038421 | 11-12 | |
| 2038427 | 11-12 | |
| 2038438 | 11-12 | |
| 2038457 | 11-12 | |
| 2038463 | 11-12 | |
| 2038469 | 11-12 | |
| 2038479 | 11-12 | |
| 2038558 | 11-19 | |
| 2038564 | 11-19 | |
| 2038565 | 11-19 | |
| 2038594 | 13-53 | |
| 2038595 | 13-55 | |
| 2038596 | 13-53 | |
| 2038597 | 13-59 | |
| 2038598 | 13-59 | |
| 2038599 | 13-57 | |
| 2038600 | 13-61 | |
| 2038601 | 13-61 | |
| 2038663 | 8-10 | 33 |
| 2038675 | 11-12 | 8 |
| 2038676 | 11-12 | 17 |
| 2038679 | 11-12 | 18 |
| 2038981 | 11-16 | 17 |
| 2038982 | 11-16 | 17 |
| 2039256 | 4-15 | 24 |
| | 4-19 | 33 |
| 2040751 | 13-41 | 15 |
| 2040752 | 13-37 | 13 |
| | 13-39 | 13 |
| | 13-41 | 14 |
| 2041965 | 11-12 | 10 |
| 2041967 | 8-9 | 28 |
| 2043404 | 2-11 | 14 |
| 2044372 | 9-22 | 11 |
| 2044948 | 4-9 | 7 |
| 2046871 | 9-7 | 42 |
| | 9-9 | 43 |
| | 10-8 | 26 |
| | 12-16 | 32 |
| 2047053 | 2-13 | 4 |
| 2047717 | 3-41 | 20 |
| | 3-45 | 29 |
| 2047829 | 7-13 | 8 |
| 2048095 | 2-9 | 26 |
| 2050576 | 13-37 | 14 |
| | 13-39 | 14 |
| 2052191 | 3-41 | 18 |
| | 3-45 | 10 |
| 2052196 | 8-4 | 59 |
| 2053467 | 1-27 | 18 |
| 2058020 | 12-24 | 1 |
| 2058031 | 12-24 | 1 |
| 2058697 | 10-11 | |
| 2058719 | 10-11 | |
| 2058730 | 10-11 | |
| 2058739 | 10-11 | |
| 2058758 | 12-24 | |
| 2058773 | 12-24 | |
| 2058776 | 12-24 | |
| 2058786 | 12-24 | |
| 2058788 | 12-28 | |
| 2058799 | 11-15 | |
| 2058801 | 12-28 | |
| 2058946 | 10-11 | 1 |
| 2058970 | 10-11 | 2 |
| 2058995 | 10-11 | 1 |
| 2059006 | 10-11 | 2 |
| 2059016 | 10-11 | 1 |
| 2059027 | 10-11 | 2 |
| 2059037 | 10-11 | 1 |
| 2059062 | 10-11 | 2 |
| 2059079 | 12-24 | 1 |
| 2059094 | 12-24 | 1 |
| 2059097 | 12-24 | 2 |
| 2059112 | 12-24 | 2 |
| 2059115 | 12-24 | 2 |
| 2059126 | 12-24 | 2 |
| 2059128 | 12-28 | 1 |
| 2059140 | 11-15 | 1 |
| 2059142 | 12-28 | 1 |
| 2059145 | 12-28 | 2 |
| 2059157 | 11-15 | 2 |
| 2059159 | 12-28 | 2 |
| 2059309 | 4-3 | 26 |
| 2059675 | 2-6 | 53 |
| 2059677 | 2-6 | 54 |
| 2059789 | 4-3 | 1 |
| 2060461 | 3-3 | 1 |
| 2061653 | 3-17 | 4 |

©2004 HYSTER COMPANY

# NUMERICAL INDEX (Continued)

| PART NO. | PG | ITEM |
|---|---|---|
| 2061656 | 3-17 | 4 |
| 2062074 | 11-15 | 2 |
| | 12-28 | 2 |
| 2062076 | 12-28 | 2 |
| 2062077 | 12-28 | 2 |
| 2062079 | 11-15 | 2 |
| | 12-28 | 2 |
| 2062080 | 12-28 | 2 |
| 2062081 | 12-28 | 2 |
| 2062084 | 11-15 | 2 |
| 2062093 | 12-28 | 2 |
| 2062099 | 11-15 | 2 |
| 2062113 | 12-28 | |
| 2062114 | 12-28 | |
| 2062115 | 11-15 | |
| | 12-28 | |
| 2062116 | 12-28 | |
| 2062117 | 12-28 | |
| 2062120 | 11-15 | |
| 2062129 | 12-28 | |
| 2062135 | 11-15 | |
| 2062212 | 4-15 | 25 |
| | 4-19 | 34 |
| | 4-27 | |
| 2062220 | 4-9 | 14 |
| 2062321 | 3-39 | 11 |
| | 3-41 | 15 |
| 2062384 | 3-17 | 1 |
| | 3-19 | |
| 2062696 | 2-13 | 35 |
| 2062748 | 11-15 | |
| | 12-28 | |
| 2063000 | 4-3 | 37 |
| | 4-29 | |
| | 4-33 | |
| 2063002 | 4-3 | 37 |
| | 4-29 | |
| | 4-33 | |
| 2063071 | 2-47 | 21 |
| 2063109 | 2-49 | 2 |
| 2065703 | 3-45 | 13 |
| 2065704 | 3-45 | 13 |
| 2065887 | 11-15 | 1 |
| | 12-28 | 1 |
| 2065888 | 11-15 | 1 |
| | 12-28 | 1 |
| 2065889 | 11-16 | 19 |
| 2065967 | 2-49 | 6 |
| 2066005 | 12-28 | 1 |
| 2066006 | 12-28 | 1 |
| 2066140 | 2-49 | 5 |
| 2066423 | 11-15 | 1 |
| 2066424 | 11-15 | 1 |
| 2066437 | 12-24 | 11 |
| 2066450 | 12-28 | 1 |
| 2066451 | 12-28 | 1 |
| 2066452 | 12-28 | 1 |
| 2066453 | 2-49 | 4 |
| 2066454 | 2-49 | 7 |
| 2066720 | 2-47 | 24 |
| 2066721 | 3-23 | 7 |
| 2066940 | 3-17 | 24 |
| 2067334 | 4-11 | 15 |
| | 4-15 | 1 |
| | 4-19 | 1 |
| 2067390 | 2-47 | 23 |
| 2067573 | 2-47 | 25 |
| | 2-49 | 18 |
| 2068082 | 2-47 | 22 |
| 2068496 | 4-12 | 39 |
| | 4-19 | 24 |
| | 4-37 | |
| 2309799 | 1-27 | 11 |


©2004 HYSTER COMPANY

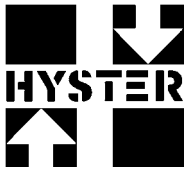
HYSTER