RUTHZIL TRATOR COMERCIAL DE PEÇAS LTDA 11 97083-6812 ROLANDO

H930S H940S HYUNDAI MANUAL SERVIÇO INGLÊS

1. STRUCTURE

This service manual has been prepared as an aid to improve the quality of repairs by giving the serviceman an accurate understanding of the product and by showing him the correct way to perform repairs and make judgements. Make sure you understand the contents of this manual and use it to full effect at every opportunity.
This service manual mainly contains the necessary technical information for operations performed in a service workshop.
For ease of understanding, the manual is divided into the following sections.

Structure and function

This group explains the structure and function of each component. It serves not only to give an understanding of the structure, but also serves as reference material for troubleshooting.

Operational checks and troubleshooting

This group explains the system operational checks and troubleshooting charts correlating problem to remedy.

Tests and adjustments

This group explains checks to be amide before and after performing repairs, as well as adjustments to be made at completion of the checks and repairs.

Disassembly and assembly

This section explains the order to be followed when removing, installing, disassembling or assembling each component, as well as precautions to be taken for these operations.

The specifications contained in this shop manual are subject to change at any time and without any advance notice. Contact your Hyundai distributor for the latest information.

2. HOW TO READ THE SERVICE MANUAL

Distribution and updating

Any additions, amendments or other changes will be sent to HYUNDAI distributors.
Get the most up-to-date information before you start any work.

Filing method

1. See the page number on the bottom of the page.
   File the pages in correct order.
2. Following examples shows how to read the page number.
   Example 1

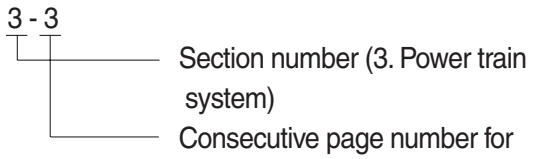

3. Additional pages : Additional pages are indicated by a hyphen(-) and number after the page number. File as in the example.

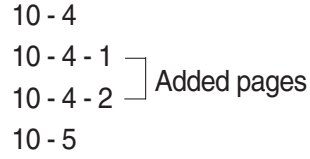

Revised edition mark (①②③…)

When a manual is revised, an edition mark is recorded on the bottom outside corner of the pages.

Revisions

Revised pages are shown at the list of revised pages on the between the contents page and section 1 page.

Symbols

So that the shop manual can be of ample practical use, important places for safety and quality are marked with the following symbols.

Symbol	Item	Remarks
	Safety	Special safety precautions are necessary when performing the work.
		Extra special safety precautions are necessary when performing the work because it is under internal pressure.
※	Caution	Special technical precautions or other precautions for preserving standards are necessary when performing the work.

3. CONVERSION TABLE

Method of using the Conversion Table

The Conversion Table in this section is provided to enable simple conversion of figures. For details of the method of using the Conversion Table, see the example given below.

Example

1. Method of using the Conversion Table to convert from millimeters to inches
   Convert 55 mm into inches.

   (1) Locate the number 50 in the vertical column at the left side, take this as ⓐ, then draw a horizontal line from ⓐ.

   (2) Locate the number 5in the row across the top, take this as ⓑ, then draw a perpendicular line down from ⓑ.

   (3) Take the point where the two lines cross as ⓒ. This point ⓒ gives the value when converting from millimeters to inches. Therefore, 55 mm = 2.165 inches.

2. Convert 550 mm into inches.

   (1) The number 550 does not appear in the table, so divide by 10 (move the decimal point one place to the left) to convert it to 55 mm.

   (2) Carry out the same procedure as above to convert 55 mm to 2.165 inches.

   (3) The original value (550 mm) was divided by 10, so multiply 2.165 inches by 10 (move the decimal point one place to the right) to return to the original value.
   This gives 550 mm = 21.65 inches.

Millimeters to inches

1mm = 0.03937 in

	0	1	2	3	4	5 ⓑ	6	7	8	9
0		0.039	0.079	0.118	0.157	0.197	0.236	0.276	0.315	0.354
10	0.394	0.433	0.472	0.512	0.551	0.591	0.630	0.669	0.709	0.748
20	0.787	0.827	0.866	0.906	0.945	0.984	1.024	1.063	1.102	1.142
30	1.181	1.220	1.260	1.299	1.339	1.378	1.417	1.457	1.496	1.536
40	1.575	1.614	1.654	1.693	1.732	1.772	1.811	1.850	1.890	1.929
ⓐ 50	1.969	2.008	2.047	2.087	2.126	ⓒ 2.165	2.205	2.244	2.283	2.323
60	2.362	2.402	2.441	2.480	2.520	2.559	2.598	2.638	2.677	2.717
70	2.756	2.795	2.835	2.874	2.913	2.953	2.992	3.032	3.071	3.110
80	3.150	3.189	3.228	3.268	3.307	3.346	3.386	3.425	3.465	3.504
90	3.543	3.583	3.622	3.661	3.701	3.740	3.780	3.819	3.858	3.898

Millimeters to inches

1mm = 0.03937in

	0	1	2	3	4	5	6	7	8	9
0		0.039	0.079	0.118	0.157	0.197	0.236	0.276	0.315	0.354
10	0.394	0.433	0.472	0.512	0.551	0.591	0.630	0.669	0.709	0.748
20	0.787	0.827	0.866	0.906	0.945	0.984	1.024	1.063	1.102	1.142
30	1.181	1.220	1.260	1.299	1.339	1.378	1.417	1.457	1.496	1.536
40	1.575	1.614	1.654	1.693	1.732	1.772	1.811	1.850	1.890	1.929
50	1.969	2.008	2.047	2.087	2.126	2.165	2.205	2.244	2.283	2.323
60	2.362	2.402	2.441	2.480	2.520	2.559	2.598	2.638	2.677	2.717
70	2.756	2.795	2.835	2.874	2.913	2.953	2.992	3.032	3.071	3.110
80	3.150	3.189	3.228	3.268	3.307	3.346	3.386	3.425	3.465	3.504
90	3.543	3.583	3.622	3.661	3.701	3.740	3.780	3.819	3.858	3.898

Kilogram to Pound

1kg = 2.2046lb

	0	1	2	3	4	5	6	7	8	9
0		2.20	4.41	6.61	8.82	11.02	13.23	15.43	17.64	19.84
10	22.05	24.25	26.46	28.66	30.86	33.07	35.27	37.48	39.68	41.89
20	44.09	46.30	48.50	50.71	51.91	55.12	57.32	59.5.	61.73	63.93
30	66.14	68.34	70.55	72.75	74.96	77.16	79.37	81.57	83.78	85.98
40	88.18	90.39	92.59	94.80	97.00	99.21	101.41	103.62	105.82	108.03
50	110.23	112.44	114.64	116.85	119.05	121.25	123.46	125.66	127.87	130.07
60	132.28	134.48	136.69	138.89	141.10	143.30	145.51	147.71	149.91	152.12
70	154.32	156.53	158.73	160.94	163.14	165.35	167.55	169.76	171.96	174.17
80	176.37	178.57	180.78	182.98	185.19	187.39	189.60	191.80	194.01	196.21
90	198.42	200.62	202.83	205.03	207.24	209.44	211.64	213.85	216.05	218.26

Liter to U.S. Gallon

1 ℓ = 0.2642 U.S.Gal

	0	1	2	3	4	5	6	7	8	9
0		0.264	0.528	0.793	1.057	1.321	1.585	1.849	2.113	2.378
10	2.642	2.906	3.170	3.434	3.698	3.963	4.227	4.491	4.755	5.019
20	5.283	5.548	5.812	6.6076	6.340	6.604	6.869	7.133	7.397	7.661
30	7.925	8.189	8.454	8.718	8.982	9.246	9.510	9.774	10.039	10.303
40	10.567	10.831	11.095	11.359	11.624	11.888	12.152	12.416	12.680	12.944
50	13.209	13.473	13.737	14.001	14.265	14.529	14.795	15.058	15.322	15.586
60	15.850	16.115	16.379	16.643	16.907	17.171	17.435	17.700	17.964	18.228
70	18.492	18.756	19.020	19.285	19.549	19.813	20.077	20.341	20.605	20.870
80	21.134	21.398	21.662	21.926	22.190	22.455	22.719	22.983	23.247	23.511
90	23.775	24.040	24.304	24.568	24.832	25.096	25.631	25.625	25.889	26.153

Liter to U.K. Gallon

1 ℓ = 0.21997 U.K.Gal

	0	1	2	3	4	5	6	7	8	9
0		0.220	0.440	0.660	0.880	1.100	1.320	1.540	1.760	1.980
10	2.200	2.420	2.640	2.860	3.080	3.300	3.520	3.740	3.950	4.179
20	4.399	4.619	4.839	5.059	5.279	5.499	5.719	5.939	6.159	6.379
30	6.599	6.819	7.039	7.259	7.479	7.969	7.919	8.139	8.359	8.579
40	8.799	9.019	9.239	9.459	9.679	9.899	10.119	10.339	10.559	10.778
50	10.998	11.281	11.438	11.658	11.878	12.098	12.318	12.528	12.758	12.978
60	13.198	13.418	13.638	13.858	14.078	14.298	14.518	14.738	14.958	15.178
70	15.398	15.618	15.838	16.058	16.278	16.498	16.718	16.938	17.158	17.378
80	17.598	17.818	18.037	18.257	18.477	18.697	18.917	19.137	19.357	19.577
90	19.797	20.017	20.237	20.457	20.677	20.897	21.117	21.337	21.557	21.777

kgf · m to lbf · ft

1kgf · m = 7.233lbf · ft

	0	1	2	3	4	5	6	7	8	9
		7.2	14.5	21.7	28.9	36.2	43.4	50.6	57.9	65.1
10	72.3	79.6	86.8	94.0	101.3	108.5	115.7	123.0	130.2	137.4
20	144.7	151.9	159.1	166.4	173.6	180.8	188.1	195.3	202.5	209.8
30	217.0	224.2	231.5	238.7	245.9	253.2	260.4	267.6	274.9	282.1
40	289.3	396.6	303.8	311.0	318.3	325.5	332.7	340.0	347.2	354.4
50	361.7	368.9	376.1	383.4	390.6	397.8	405.1	412.3	419.5	426.8
60	434.0	441.2	448.5	455.7	462.9	470.2	477.4	484.6	491.8	499.1
70	506.3	513.5	520.8	528.0	535.2	542.5	549.7	556.9	564.2	571.4
80	578.6	585.9	593.1	600.3	607.6	614.8	622.0	629.3	636.5	643.7
90	651.0	658.2	665.4	672.7	679.9	687.1	694.4	701.6	708.8	716.1
100	723.3	730.5	737.8	745.0	752.2	759.5	766.7	773.9	781.2	788.4
110	795.6	802.9	810.1	817.3	824.6	831.8	839.0	846.3	853.5	860.7
120	868.0	875.2	882.4	889.7	896.9	904.1	911.4	918.6	925.8	933.1
130	940.3	947.5	954.8	962.0	969.2	976.5	983.7	990.9	998.2	10005.4
140	1012.6	1019.9	1027.1	1034.3	1041.5	1048.8	1056.0	1063.2	1070.5	1077.7
150	1084.9	1092.2	1099.4	1106.6	1113.9	1121.1	1128.3	1135.6	1142.8	1150.0
160	1157.3	1164.5	1171.7	1179.0	1186.2	1193.4	1200.7	1207.9	1215.1	1222.4
170	1129.6	1236.8	1244.1	1251.3	1258.5	1265.8	1273.0	1280.1	1287.5	1294.7
180	1301.9	1309.2	1316.4	1323.6	1330.9	1338.1	1345.3	1352.6	1359.8	1367.0
190	1374.3	1381.5	1388.7	1396.0	1403.2	1410.4	1417.7	1424.9	1432.1	1439.4

kgf/cm² to lbf/in²

1kgf / cm² = 14.2233lbf / in²

	0	1	2	3	4	5	6	7	8	9
		14.2	28.4	42.7	56.9	71.1	85.3	99.6	113.8	128.0
10	142.2	156.5	170.7	184.9	199.1	213.4	227.6	241.8	256.0	270.2
20	284.5	298.7	312.9	327.1	341.4	355.6	369.8	384.0	398.3	412.5
30	426.7	440.9	455.1	469.4	483.6	497.8	512.0	526.3	540.5	554.7
40	568.9	583.2	597.4	611.6	625.8	640.1	654.3	668.5	682.7	696.9
50	711.2	725.4	739.6	753.8	768.1	782.3	796.5	810.7	825.0	839.2
60	853.4	867.6	881.8	896.1	910.3	924.5	938.7	953.0	967.2	981.4
70	995.6	1010	1024	1038	1053	1067	1081	1095	1109	1124
80	1138	1152	1166	1181	1195	1209	1223	1237	1252	1266
90	1280	1294	1309	1323	1337	1351	1365	1380	1394	1408
100	1422	1437	1451	1465	1479	1493	1508	1522	1536	1550
110	1565	1579	1593	1607	1621	1636	1650	1664	1678	1693
120	1707	1721	1735	1749	1764	1778	1792	1806	1821	1835
130	1849	2863	1877	1892	1906	1920	1934	1949	1963	1977
140	1991	2005	2020	2034	2048	2062	2077	2091	2105	2119
150	2134	2148	2162	2176	2190	2205	2219	2233	2247	2262
160	2276	2290	2304	2318	2333	2347	2361	2375	2389	2404
170	2418	2432	2446	2460	2475	2489	2503	2518	2532	2546
180	2560	2574	2589	5603	2617	2631	2646	2660	2674	2688
200	2845	2859	2873	2887	2901	2916	2930	2944	2958	2973
210	2987	3001	3015	3030	3044	3058	3072	3086	3101	3115
220	3129	3143	3158	3172	3186	3200	3214	3229	3243	3257
230	3271	3286	3300	3314	3328	3343	3357	3371	3385	3399
240	3414	3428	3442	3456	3470	3485	3499	3513	3527	3542

TEMPERATURE

Fahrenheit-Centigrade Conversion.

A simple way to convert a fahrenheit temperature reading into a centigrade temperature reading or vice verse is to enter the accompanying table in the center or boldface column of figures.

These figures refer to the temperature in either Fahrenheit or Centigrade degrees.

If it is desired to convert from Fahrenheit to Centigrade degrees, consider the center column as a table of Fahrenheit temperatures and read the corresponding Centigrade temperature in the column at the left.

If it is desired to convert from Centigrade to Fahrenheit degrees, consider the center column as a table of Centigrade values, and read the corresponding Fahrenheit temperature on the right.

˚C		˚F	˚C		˚F	˚C		˚F	˚C		˚F
-40.4	-40	-40.0	-11.7	11	51.8	7.8	46	114.8	27.2	81	117.8
-37.2	-35	-31.0	-11.1	12	53.6	8.3	47	116.6	27.8	82	179.6
-34.4	-30	-22.0	-10.6	13	55.4	8.9	48	118.4	28.3	83	181.4
-31.7	-25	-13.0	-10.0	14	57.2	9.4	49	120.2	28.9	84	183.2
-28.9	-20	-4.0	-9.4	15	59.0	10.0	50	122.0	29.4	85	185.0
-28.3	-19	-2.2	-8.9	16	60.8	10.6	51	123.8	30.0	86	186.8
-27.8	-18	-0.4	-8.3	17	62.6	11.1	52	125.6	30.6	87	188.6
-27.2	-17	1.4	-7.8	18	64.4	11.7	53	127.4	31.1	88	190.4
-26.7	-16	3.2	-6.7	20	68.0	12.8	55	131.0	32.2	90	194.0
-26.1	-15	5.0	-6.7	20	68.0	12.8	55	131.0	32.2	90	194.0
-25.6	-14	6.8	-6.1	21	69.8	13.3	56	132.8	32.8	91	195.8
-25.0	-13	8.6	-5.6	22	71.6	13.9	57	134.6	33.3	92	197.6
-24.4	-12	10.4	-5.0	23	73.4	14.4	58	136.4	33.9	93	199.4
-23.9	-11	12.2	-4.4	24	75.2	15.0	59	138.2	34.4	94	201.2
-23.3	-10	14.0	-3.9	25	77.0	15.6	60	140.0	35.0	95	203.0
-22.8	-9	15.8	-3.3	26	78.8	16.1	61	141.8	35.6	96	204.8
-22.2	-8	17.6	-2.8	27	80.6	16.7	62	143.6	36.1	97	206.6
-21.7	-7	19.4	-2.2	28	82.4	17.2	63	145.4	36.7	98	208.4
-21.1	-6	21.2	-1.7	29	84.2	17.8	64	147.2	37.2	99	210.2
-20.6	-5	23.0	-1.1	35	95.0	21.1	70	158.0	51.7	125	257.0
-20.0	-4	24.8	-0.6	31	87.8	18.9	66	150.8	40.6	105	221.0
-19.4	-3	26.6	0	32	89.6	19.4	67	152.6	43.3	110	230.0
-18.9	-2	28.4	0.6	33	91.4	20.0	68	154.4	46.1	115	239.0
-18.3	-1	30.2	1.1	34	93.2	20.6	69	156.2	48.9	120	248.0
-17.8	0	32.0	1.7	35	95.0	21.1	70	158.0	51.7	125	257.0
-17.2	1	33.8	2.2	36	96.8	21.7	71	159.8	54.4	130	266.0
-16.7	2	35.6	2.8	37	98.6	22.2	72	161.6	57.2	135	275.0
-16.1	3	37.4	3.3	38	100.4	22.8	73	163.4	60.0	140	284.0
-15.6	4	39.2	3.9	39	102.2	23.3	74	165.2	62.7	145	293.0
-15.0	5	41.0	4.4	40	104.0	23.9	75	167.0	65.6	150	302.0
-14.4	6	42.8	5.0	41	105.8	24.4	76	168.8	68.3	155	311.0
-13.9	7	44.6	5.6	42	107.6	25.0	77	170.6	71.1	160	320.0
-13.3	8	46.4	6.1	43	109.4	25.6	78	172.4	73.9	165	329.0
-12.8	9	48.2	6.7	44	111.2	26.1	79	174.2	76.7	170	338.0
-12.2	10	50.0	7.2	45	113.0	26.7	80	176.0	79.4	172	347.0

CONTENTS

SECTION 1 GENERAL

Group 1 Safety Hints 1-1
Group 2 Specifications 1-10
Group 3 Operational Checkout Record Sheet 1-17

SECTION 2 ENGINE

Group 1 Structure 2-1
Group 2 Engine Speed and Stall rpm 2-11

SECTION 3 POWER TRAIN SYSTEM

Group 1 Structure and Function 3-1
Group 2 Operational Checks and Troubleshooting 3-17
Group 3 Test and Adjustments 3-25
Group 4 Disassembly and Assembly 3-27

SECTION 4 BRAKE SYSTEM

Group 1 Structure and Function 4-1
Group 2 Operational Checks and Troubleshooting 4-7
Group 3 Tests and Adjustments 4-11

SECTION 5 STEERING SYSTEM

Group 1 Structure and Function 5-1
Group 2 Operational Checks and Troubleshooting 5-9
Group 3 Tests and Adjustments 5-16
Group 4 Disassembly and Assembly 5-23

SECTION 6 WORK EQUIPMENT

Group 1 Structure and Function 6-1
Group 2 Operational Checks and Troubleshooting 6-74
Group 3 Tests and Adjustments 6-87
Group 4 Disassembly and Assembly 6-99

SECTION 7 ELECTRICAL SYSTEM

Group 1 Component Location ····· 7-1
Group 2 Electrical Circuit ····· 7-3
Group 3 Monitoring System ····· 7-26
Group 4 Switches ····· 7-31
Group 5 Electrical Component Specification ····· 7-40
Group 6 Connectors ····· 7-46

SECTION 1 GENERAL

Group 1 Safety Hints 1-1
Group 2 Specifications 1-10
Group 3 Operational Checkout Record Sheet 1-17

GROUP 1 SAFETY HINTS

FOLLOW SAFE PROCEDURE

Unsafe work practices are dangerous. Understand service procedure before doing work; Do not attempt shortcuts.

WEAR PROTECTIVE CLOTHING

Wear close fitting clothing and safety equipment appropriate to the job.

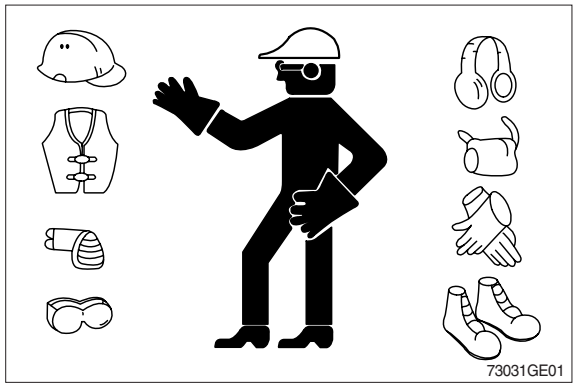

WARN OTHERS OF SERVICE WORK

Unexpected machine movement can cause serious injury.
Before performing any work on the wheel loader, attach a 「**Do Not Operate**」 tag on the right side controller lever.

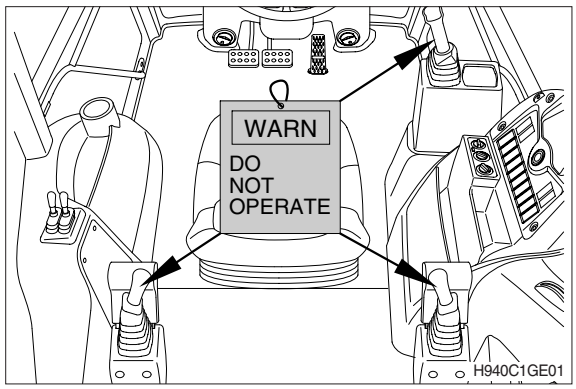

USE HANDHOLDS AND STEPS

Falling is one of the major causes of personal injury.
When you get on and off the machine, always maintain a three point contact with the steps and handrails and face the machine. Do not use any controls as handholds.
Never jump on or off the machine. Never mount or dismount a moving machine.
Be careful of slippery conditions on platforms, steps, and handrails when leaving the machine.

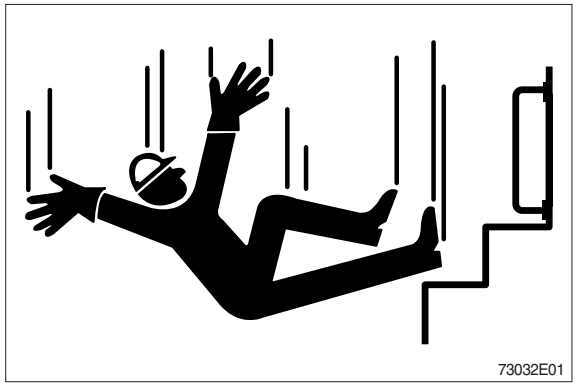

PREPARE FOR EMERGENCIES

Be prepared if a fire starts.

Keep a first aid kit and fire extinguisher handy.

Keep emergency numbers for doctors, ambulance service, hospital, and fire department near your telephone.

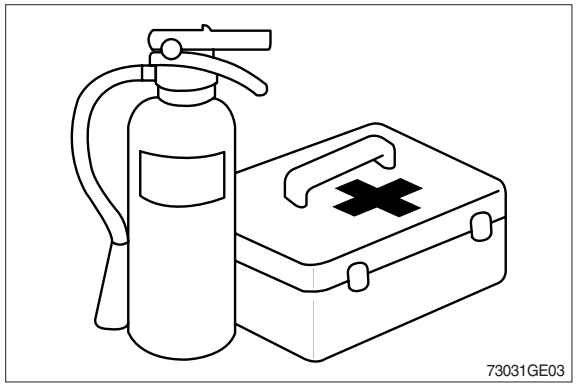

WORK IN CLEAN AREA

Before starting a job :

- Clean work area and machine.
- Make sure you have all necessary tools to do your job.
- Have the right parts on hand.
- Read all instructions thoroughly; Do not attempt shortcuts.

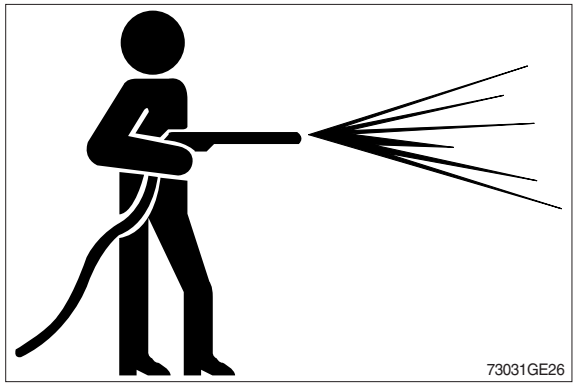

PROTECT AGAINST FLYING DEBRIS

Guard against injury from flying pieces of metal or debris; Wear goggles or safety glasses.

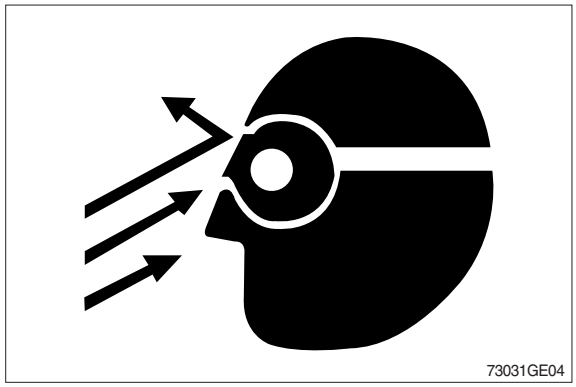

PROTECT AGAINST NOISE

Prolonged exposure to loud noise can cause impairment or loss of hearing.

Wear a suitable hearing protective device such as earmuffs or earplugs to protect against objectionable or uncomfortable loud noises.

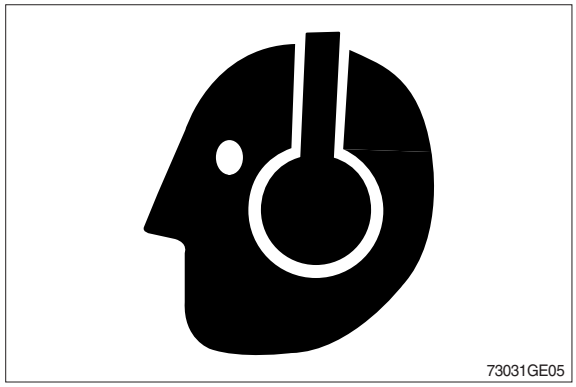

PARK MACHINE SAFELY

Before working on the machine:

- Park machine on a level surface.
- Lower bucket to the ground.
- Turn key switch to OFF to stop engine. Remove key from switch.
- Press down to switch off safety switch.
- Allow engine to cool.

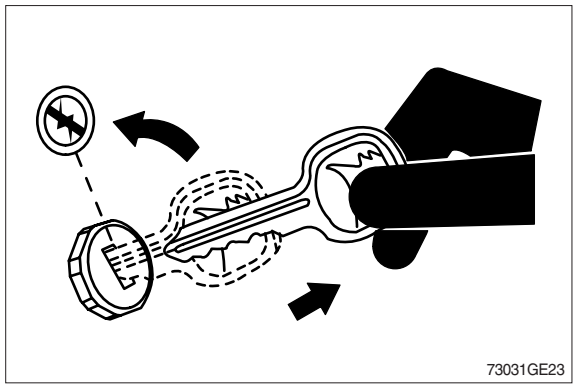

SUPPORT MACHINE PROPERLY

Always lower the attachment or implement to the ground before you work on the machine. If you must work on a lifted machine or attachment, securely support the machine or attachment.

Do not support the machine on cinder blocks, hollow tiles, or props that may crumble under continuous load.
Do not work under a machine that is supported solely by a jack. Follow recommended procedures in this manual.

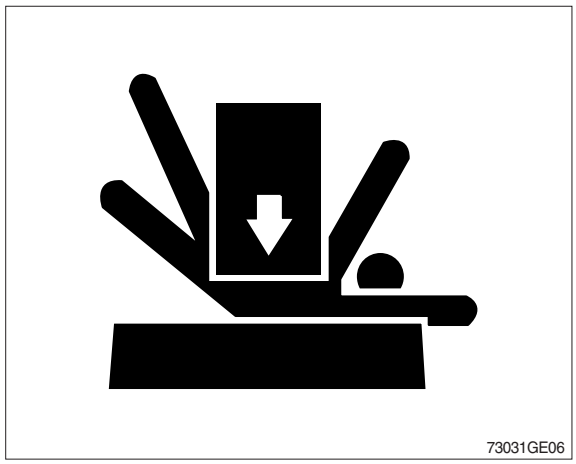

SERVICE COOLING SYSTEM SAFELY

Explosive release of fluids from pressurized cooling system can cause serious burns.

Shut off engine. Only remove filler cap when cool enough to touch with bare hands.



HANDLE FLUIDS SAFELY-AVOID FIRES

Handle fuel with care; It is highly flammable. Do not refuel the machine while smoking or when near open flame or sparks. Always stop engine before refueling machine.
Fill fuel tank outdoors.

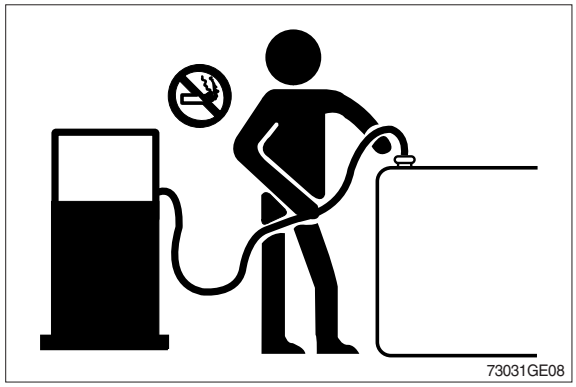

Store flammable fluids away from fire hazards. Do not incinerate or puncture pressurized containers.

Make sure machine is clean of trash, grease, and debris.

Do not store oily rags ; They can ignite and burn spontaneously.

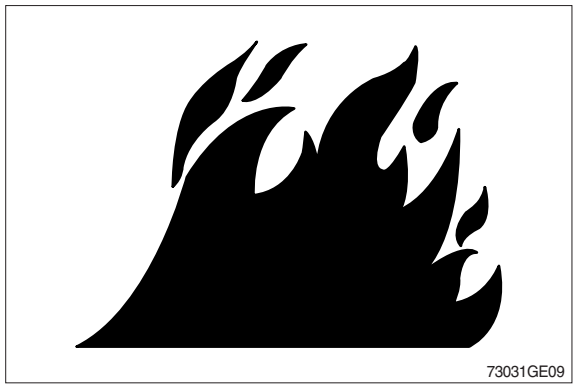

BEWARE OF EXHAUST FUMES

Prevent asphyxiation. Engine exhaust fumes can cause sickness or death.

If you must operate in a building, be positive there is adequate ventilation. Either use an exhaust pipe extension to remove the exhaust fumes or open doors and windows to bring enough outside air into the area.

REMOVE PAINT BEFORE WELDING OR HEATING

Avoid potentially toxic fumes and dust.

Hazardous fumes can be generated when paint is heated by welding, soldering, or using a torch.

Do all work outside or in a well ventilated area. Dispose of paint and solvent properly.

Remove paint before welding or heating:

- If you sand or grind paint, avoid breathing the dust. Wear an approved respirator.
- If you use solvent or paint stripper, remove stripper with soap and water before welding. Remove solvent or paint stripper containers and other flammable material from area. Allow fumes to disperse at least 15 minutes before welding or heating.

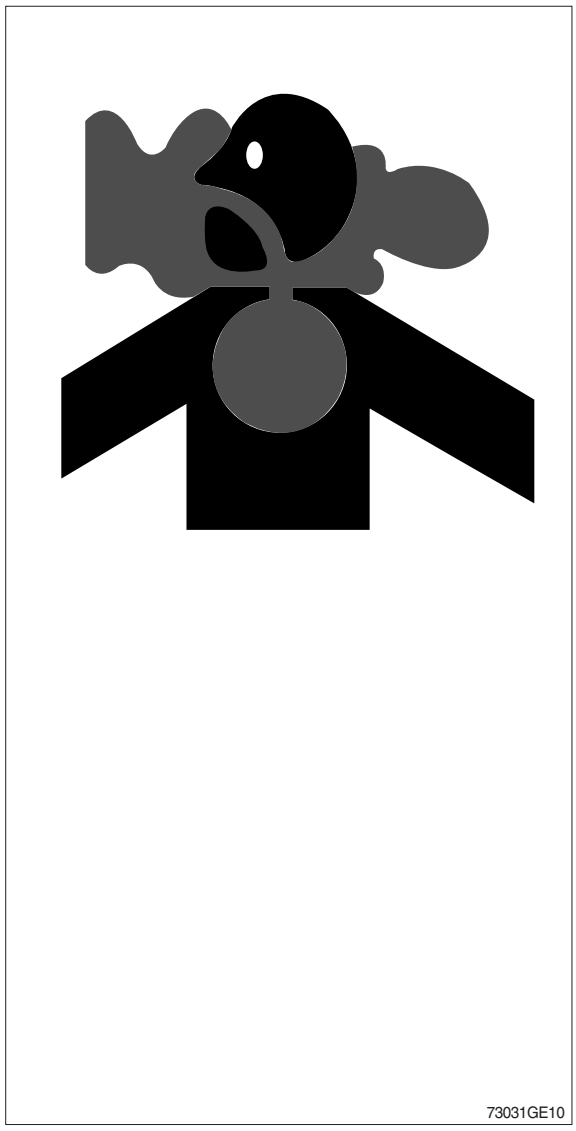

ILLUMINATE WORK AREA SAFELY

Illuminate your work area adequately but safely. Use a portable safety light for working inside or under the machine. Make sure the bulb is enclosed by a wire cage. The hot filament of an accidentally broken bulb can ignite spilled fuel or oil.

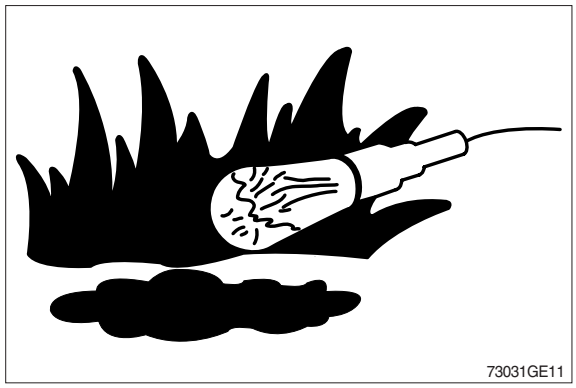

SERVICE MACHINE SAFELY

Tie long hair behind your head. Do not wear a necktie, scarf, loose clothing or necklace when you work near machine tools or moving parts. If these items were to get caught, severe injury could result.

Remove rings and other jewelry to prevent electrical shorts and entanglement in moving parts.

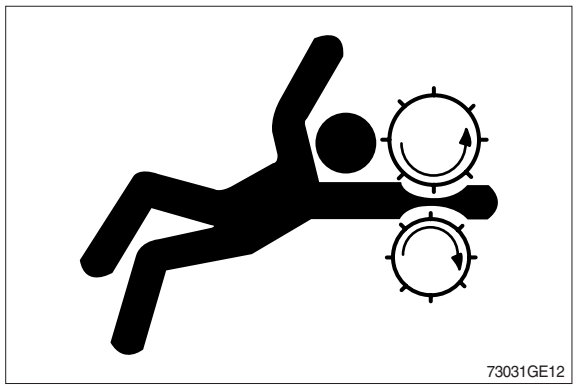

STAY CLEAR OF MOVING PARTS

Entanglements in moving parts can cause serious injury.

To prevent accidents, use care when working around rotating parts.

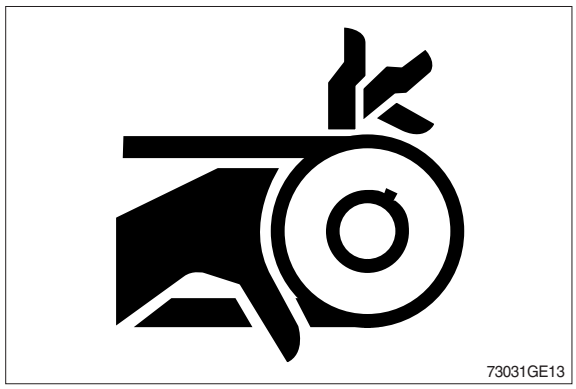

AVOID HIGH PRESSURE FLUIDS

Escaping fluid under pressure can penetrate the skin causing serious injury.

Avoid the hazard by relieving pressure before disconnecting hydraulic or other lines. Tighten all connections before applying pressure.

Search for leaks with a piece of cardboard. Protect hands and body from high pressure fluids.

If an accident occurs, see a doctor immediately. Any fluid injected into the skin must be surgically removed within a few hours or gangrene may result.


73031GE14

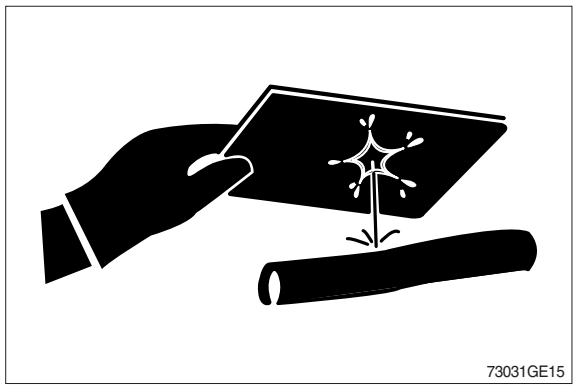
73031GE15

AVOID HEATING NEAR PRESSURIZED FLUID LINES

Flammable spray can be generated by heating near pressurized fluid lines, resulting in severe burns to yourself and bystanders. Do not heat by welding, soldering, or using a torch near pressurized fluid lines or other flammable materials.

Pressurized lines can be accidentally cut when heat goes beyond the immediate flame area. Install fire resisting guards to protect hoses or other materials.

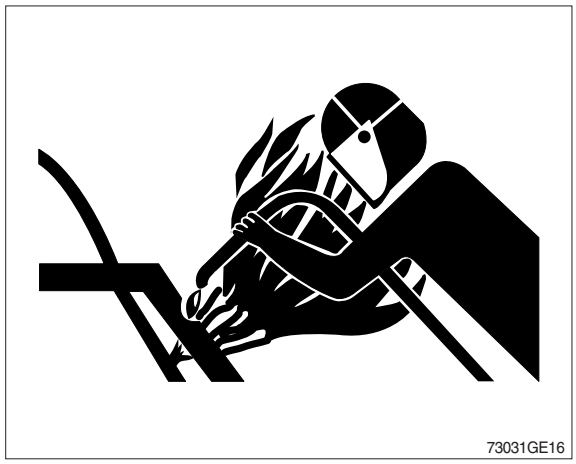
73031GE16

PREVENT BATTERY EXPLOSIONS

Keep sparks, lighted matches, and flame away from the top of battery. Battery gas can explode.

Never check battery charge by placing a metal object across the posts. Use a volt-meter or hydrometer.

Do do not charge a frozen battery; It may explode. Warm battery to 16˚C (60˚F).


73031GE17

PREVENT ACID BURNS

Sulfuric acid in battery electrolyte is poisonous. It is strong enough to burn skin, eat holes in clothing, and cause blindness if splashed into eyes.

1. Avoid the hazard by:
2. Filling batteries in a well-ventilated area.
3. Wearing eye protection and rubber gloves. Avoiding breathing fumes when electrolyte is added.
4. Avoiding spilling of dripping electrolyte.
5. Use proper jump start procedure.

1. If you spill acid on yourself:
2. Flush your skin with water. Apply baking soda or lime to help neutralize the acid.
3. Flush your eyes with water for 10-15 minutes. Get medical attention immediately.

1. If acid is swallowed:
2. Drink large amounts of water or milk. Then drink milk of magnesia, beaten eggs, or vegetable oil.
3. Get medical attention immediately.

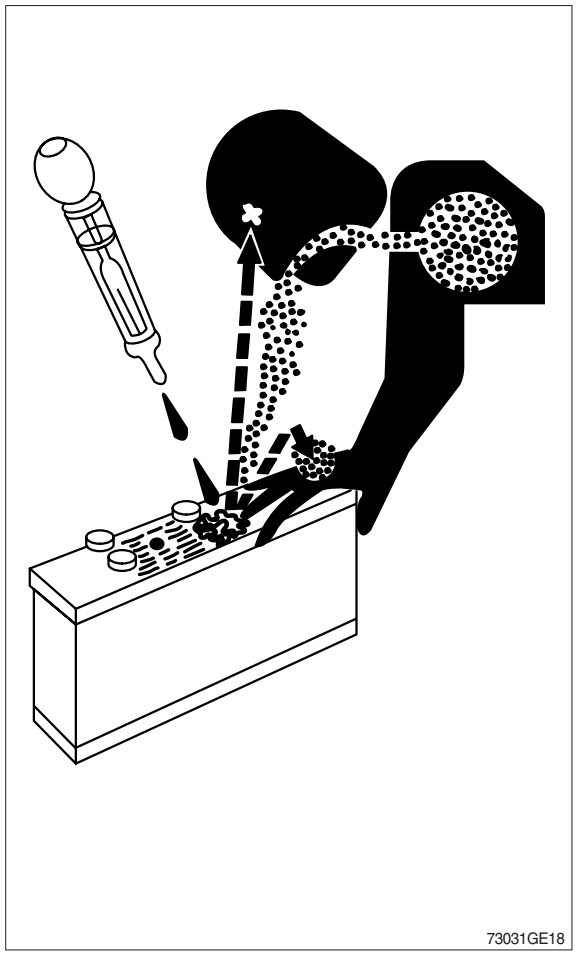

USE TOOLS PROPERLY

Use tools appropriate to the work. Makeshift tools, parts, and procedures can create safety hazards.

Use power tools only to loosen threaded tools and fasteners.

For loosening and tightening hardware, use the correct size tools. Avoid bodily injury caused by slipping wrenches.

Use only recommended replacement parts. (See Parts catalogue.)

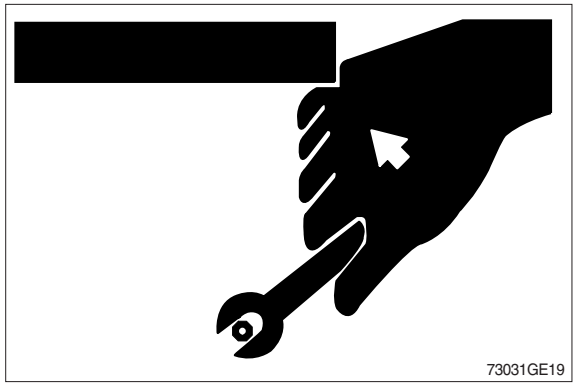

SERVICE TIRES SAFELY

Explosive separation of a tire and rim parts can cause serious injury or death.

Do not attempt to mount a tire unless you have the proper equipment and experience to perform the job.

Always maintain the correct tire pressure. Do not inflate the tires above the recommended pressure. Never weld or heat a wheel and tire assembly. The heat can cause an increase in air pressure resulting in a tire explosion.
Welding can structurally weaken or deform the wheel.

When inflating tires, use a clip-on chuck and extension hose long enough to allow you to stand to one side and not in front of or over the tire assembly. Use a safety cage if available.

Check wheels for low pressure, cuts, bubbles, damaged rims or missing lug bolts and nuts.

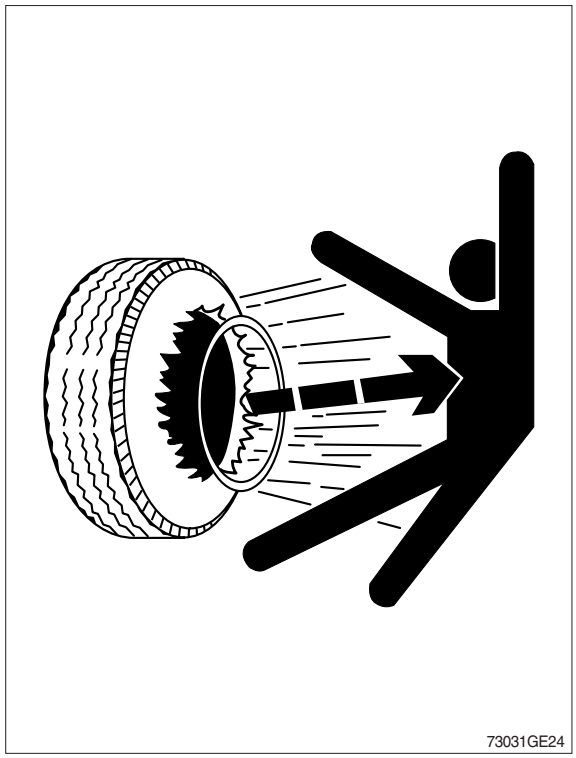

USE PROPER LIFTING EQUIPMENT

Lifting heavy components incorrectly can cause severe injury or machine damage.

Follow recommended procedure for removal and installation of components in the manual.

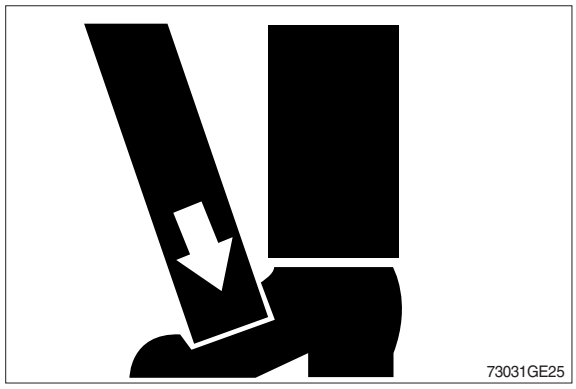

DISPOSE OF FLUIDS PROPERLY

Improperly disposing of fluids can harm the environment and ecology. Before draining any fluids, find out the proper way to dispose of waste from your local environmental agency.

Use proper containers when draining fluids. Do not use food or beverage containers that may mislead someone into drinking from them.

DO NOT pour oil into the ground, down a drain, or into a stream, pond, or lake. Observe relevant environmental protection regulations when disposing of oil, fuel, coolant, brake fluid, filters, batteries, and other harmful waste.

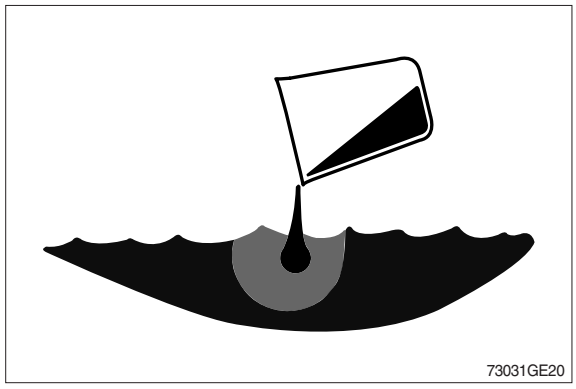

REPLACE SAFETY SIGNS

Replace missing or damaged safety signs. See the machine operator's manual for correct safety sign placement.

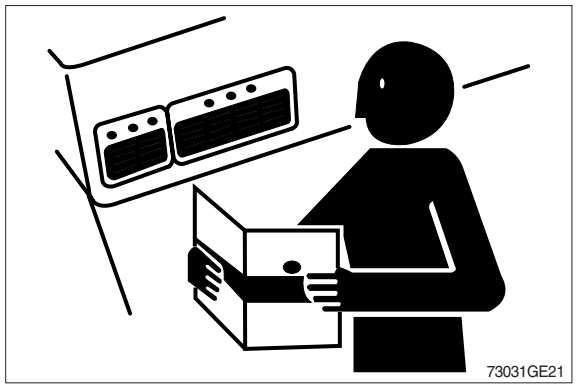

LIVE WITH SAFETY

Before returning machine to customer, make sure machine is functioning properly, especially the safety systems. Install all guards and shields.

KEEP ROPS INSTALLED PROPERLY

Make certain all parts are reinstalled correctly if the roll-over protective structure (ROPS) is loosened or removed for any reason. Tighten mounting bolts to proper torque.

The protection offered by ROPS will be impaired if ROPS is subjected to structural damage, is involved in an overturn incident, or is in any way altered by welding, bending, drilling, or cutting. A damaged ROPS should be replaced, not reused.

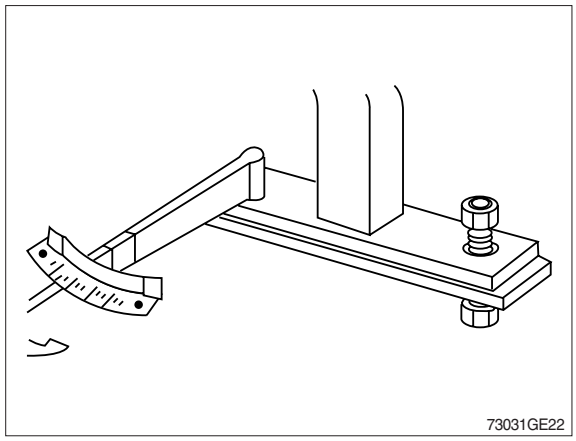

GROUP 2 SPECIFICATION

1. MAJOR COMPONENT

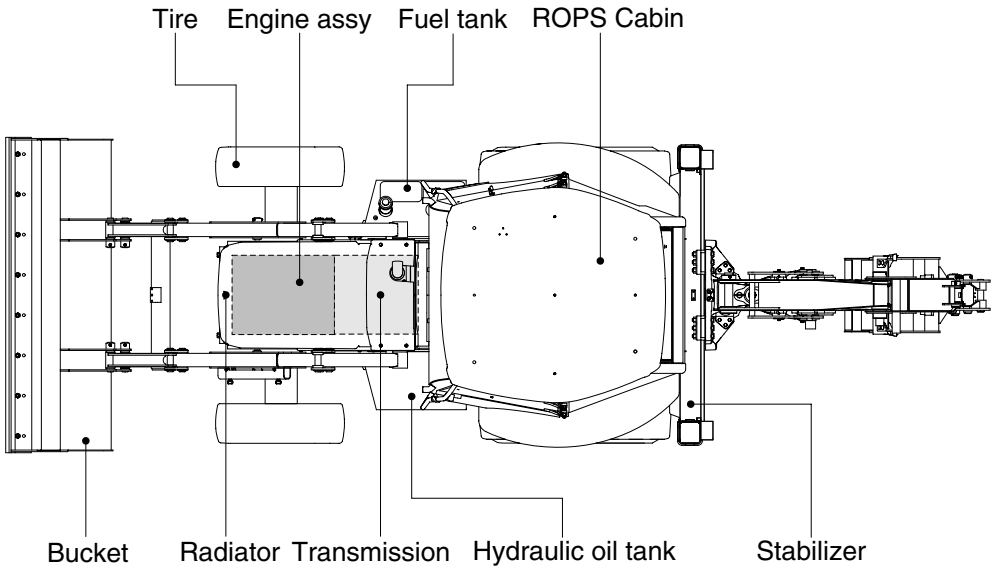

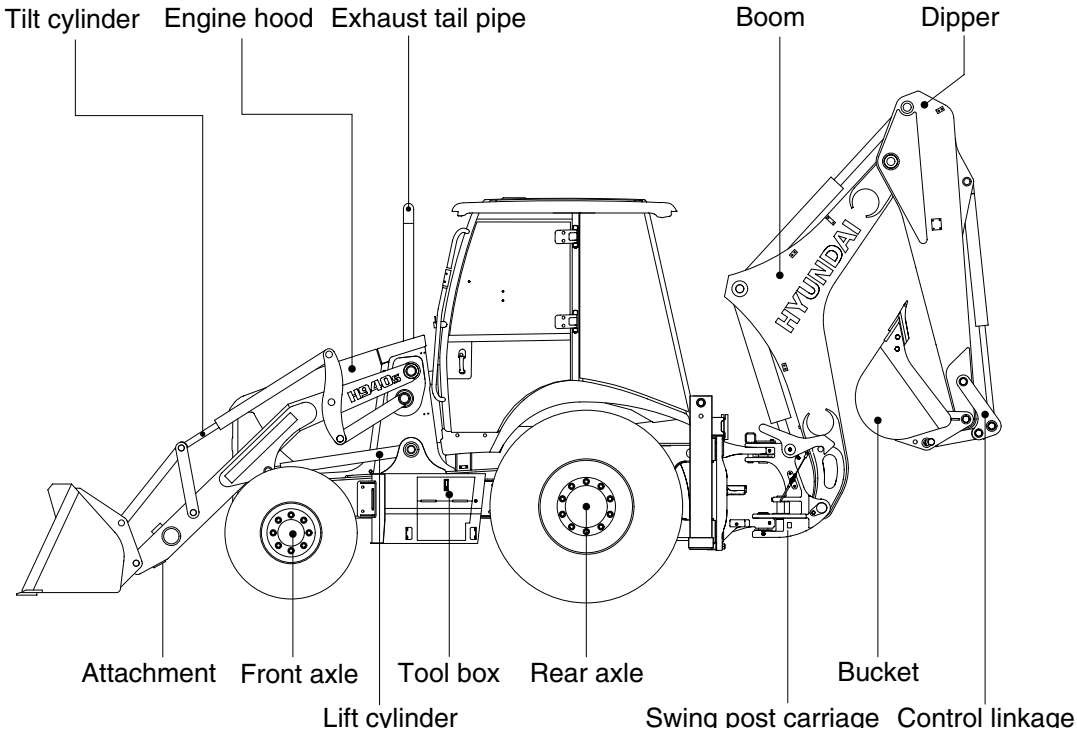

H940S2SP01

2. SPECIFICATIONS

1) H930S/H940S

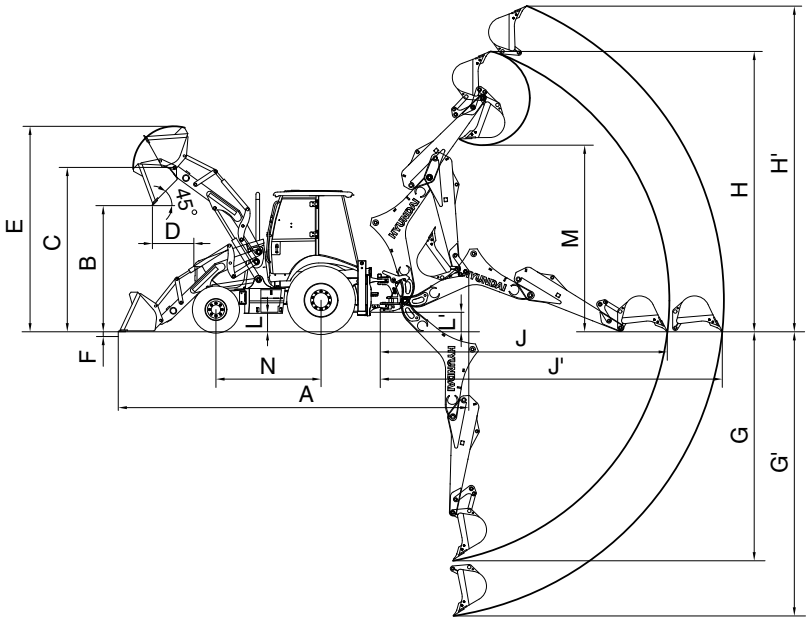

H940S2SP02

Description			Unit	Specification	
				H940S	H930S
Operating weight	Standard dipper and GP bucket		kg (lb)	7900 (17420)	7830 (17260)
	Extendible dipper and MP bucket		kg (lb)	8500 (18740)	8440 (18610)
Transport length	GP bucket			5800 (19' 0")	←
	MP bucket			5930 (19' 5")	←
Transport height	Standard dipper			3800 (12' 6")	←
	Extendible dipper			3800 (12' 6")	←
Transport width	GP bucket			2305 (7' 7")	←
	MP bucket			2350 (7' 9")	←
Loader data	Overall length	A		7250 (23' 9")	←
	Dump clearance	B		2710 (8' 11")	←
	Hinge pin height	C		3450 (11' 4")	←
	Dump reach	D		805 (2' 7")	←
	Max loading height	E		4230 (13' 11")	←
	Depth of bucket down	F	mm (ft-in)	96 (0' 4")	←
	Wheel base	N		2200 (7' 3")	←
Backhoe data	Max digging depth (STD)	G		4220 (13' 10")	4240 (13' 11")
	Max digging depth (EXT)	G'		5345 (17' 6")	5365 (17' 7")
	Max digging height (STD)	H		5665 (18' 7")	5610 (18' 5")
	Max digging height (EXT)	H'		6340 (20' 10")	6285 (20' 7")
	Max digging reach (STD)	J		5820 (19' 1")	5770 (18' 11")
	Max digging reach (EXT)	J'		6830 (22' 5")	6780 (22' 3")
	Minimum ground clearance	L		355 (1' 2")	←
	Height of outrigger	L'		305 (1' 0")	←
	Max dumping height (STD)	M		3740 (12' 3")	3795 (12' 5")
	Max dumping height (OPT)	M'		4415 (14' 6")	4470 (14' 8")

3. SPECIFICATION FOR MAJOR COMPONENTS

1) ENGINE

Item	Specification	
	H940S	H930S
Manufacture	PERKINS	
Model	1104C-44T	
Type	4-stroke, turbocharged	4-stroke, turbocharged
Non-road emission standards	Certified to EPA Tier 2 / EU stage II	
Piston displacement	4.4 ℓ (1.2 U.S.gal)	
Fuel	Diesel	
Rated horse power (Gross)	100 hp (74.5 kW) at 2200 rpm	92 hp (68.5 kW) at 2200 rpm
Maximum torque at 1350 rpm	42 kgf · m (301 lbf · ft)	40 kgf · m (291 lbf · ft)
Alternator	100 amp	
Battery	12V	

2) MAIN PUMP

Item		Specification	
		H940S	H930S
Type		Fixed displacement double gear pump	
Capacity	Steering	31 cc/rev	31 cc/rev
	Attachment	35 cc/rev	31 cc/rev
Maximum operating pressure		250 kgf/cm^2 (3560 psi)	
Rated oil quantity	Steering	68 ℓ /min (18.0 U.S.gpm)	68 ℓ /min (18.0 U.S.gpm)
	Attachment	77 ℓ /min (20.3 U.S.gpm)	68 ℓ /min (18.0 U.S.gpm)
Rated speed		2200 rpm	

3) MAIN CONTROL VALVE FOR LOADER

Item		Specification
Type		2 spool (option : 3 spool)
Operating method		Manual control
Main relief valve pressure		250 kgf/cm^2 (3560 psi)
Unloading relief valve pressure		220 kgf/cm^2 (3130 psi)
Overload relief valve pressure	Bucket out	175 kgf/cm^2 (2490 psi)
	Bucket in	300 kgf/cm^2 (4270 psi)

4) MAIN CONTROL VALVE FOR BACKHOE

Item		Unit	Specification
Type		-	6 spool (option : 7 spool)
Operating method		-	Hydraulic pilot control & Manual control
Main relief valve pressure		kgf/cm^2 (psi)	250 (3560)
Overload relief valve pressure	Boom up	kgf/cm^2 (psi)	280 (3980)
	Boom down	kgf/cm^2 (psi)	280 (3980)
	Swing LH, RH	kgf/cm^2 (psi)	250 (3560)
	Bucket in	kgf/cm^2 (psi)	280 (3980)
	Bucket out	kgf/cm^2 (psi)	280 (3980)
	Dipper in	kgf/cm^2 (psi)	280 (3980)
	Dipper out	kgf/cm^2 (psi)	280 (3980)

5) STEERING UNIT

Item	Unit	Specification		
Type	-	Dynamic load sensing, non load reaction		
		Emergency 4WD	2WD	4WD
Displacement	cc/rev	156 + 59	160	160
Relief valve pressure	kgf/cm^2 (psi)	248 (3530)	175 (2490)	210 (2990)
Overload relief valve pressure	kgf/cm^2 (psi)	303 (4310)	235 (3340)	265 (3770)

6) PILOT SUPPLY UNIT (option)

Item	Unit	Specification
Reducing & relief valve pressure	kgf/cm^2 (psi)	30 (430)
Safety solenoid valve	Voltage	DC 12V
	Ampere	1.8 A

7) ACCUMULATOR (option)

Item	Unit	Specification	
		Ride control	Pilot supply
Type	-	Nitrogen	
Capacity	ℓ	1.5	0.35
Precharge pressure	kgf/cm^2 (psi)	30 (430)	15 (215)
Max working pressure	kgf/cm^2 (psi)	350 (4980)	170 (2420)

8) REMOTE CONTROL VALVE (option)

Item		Unit	Specification		
			For backhoe	For stabilizer	For loader
Type		-	Pressure reducing type		
Operating	Minimum	kgf/cm^2 (psi)	4 (57)	5.5 (78)	5 (70)
	Maximum	kgf/cm^2 (psi)	26 (370)	26 (370)	16.5 (235)
Single operation angle		degree	19	23.5	16.5

9) LINE FILTER (option)

Item	Unit	Specification
Filtration rating	μm	10
Max working pressure	kgf/cm^2 (psi)	280 (3980)
Bypass cracking pressure	kgf/cm^2 (psi)	7 (100)

10) DOUBLE PILOT CHECK VALVE FOR STABILIZER

Item	Unit	Specification
Max working pressure	kgf/cm^2 (psi)	350 (4980)
Cracking pressure	kgf/cm^2 (psi)	4.5 (64)
Pilot ratio	-	1 : 5.5

11) TIRES

Item	Unit	Specification
Front	2WD	11L-16 (standard)
	4WD	12.5/80-18 (option)
Rear	-	18.4-26 (standard)
		16.9-28 (option)
		21L-24 (option)

12) POWERTRAIN

Item		Specification			
Transmission		4-Speed helical-cut gears, full powershift with hydraulic control standard, electric clutch cutoff on loader lever			
Maximum travel speed with standard (18.4-26 tire)					( ) : option
H930S	Gear	1st	2nd	3rd	4th
	Forward (km/hr)	5.6	10.2	20.6	36.0
	Reverse (km/hr)	7.1	12.8	(20.3)	N/A
H940S	Gear	1st	2nd	3rd	4th
	Forward (km/hr)	5.7	10.3	20.7	36.5
	Reverse (km/hr)	7.1	13.0	(20.5)	N/A
Torque converter (ratio)		1 : 2.53			
Differential lock		Front : Conventional Rear : Hydraulic lock (push-button activation)			
Steering		Hydrostatic power and emergency steering			
Brake	Service	Hydraulic wet disc, mounted inboard, self-adjusting and self-equalizing			
	Parking	Spring applied, hydraulically releases, wet, multi disc independent of service brakes with electric switch control			

13) BUCKET

Item		Capacity (liters)	Width (mm)	Weight (kg)
Loader	GP	800	2250	385
	MP	1000	2350	730
Backhoe	H930S	170	630	131
	H940S	200	610	156

14) RECOMMENDED LUBRICANTS

Use only oils listed below or equivalent.

Do not mix different brand oil.

Service point	Kind of fluid	Capacity ℓ (U.S. gal)	Ambient temperature °C (°F) -20 (-4) / -10 (14) / 0 (32) / 10 (50) / 20 (68) / 30 (86) / 40 (104)
Engine oil pan	Engine oil	8 (2.1)	SAE 30 SAE 10W SAE 10W-30 SAE 15W-40
Torque converter Transmission	Engine oil	18 (4.6)	SAE 10W-30 SAE 15W-40
Axle	UTTO	Front (4WD) : 8 (2.1) Rear : 16 (4.2)	UTTO
Hydraulic tank	Hydraulic oil	Tank: 50 (13.2) System: 93 (24.6)	ISO VG 32 ISO VG 46 ISO VG 68
Fuel tank	Diesel fuel	127 (33.5)	ASTM D975 NO.1 ASTM D975 NO.2
Fitting (grease nipple)	Grease	As required	NLGI NO.1 NLGI NO.2
Radiator	Mixture of antifreeze and water 50 : 50	20 (5.3)	Ethylene glycol base permanent type

· SAE : Society of Automotive Engineers
· API : American Petroleum Institute
· ISO : International Organization for Standardization
· NLGI : National Lubricating Grease Institute
· ASTM : American Society of Testing and Material
· UTTO : Universal Tractor Transmission Oil

GROUP 3 OPERATIONAL CHECKOUT RECORD SHEET

- Owner :
- Date :
- Hours :
- Serial No. :
- Technician :

※ **Use this sheet to record operational checkout results.**
Perform the operational check before installing any test equipment.

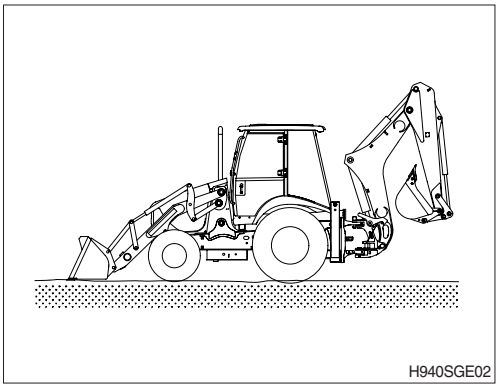
H940SGE02

Item	OK	NOT OK	Comments

1. Monitor indicator and gauge checks (engine OFF)

- Hourmeter and gauge check ☐ ☐ _____
- Battery check ☐ ☐ _____
- Monitor indicator circuit check ☐ ☐ _____
- Cluster turn signals and warning indicator check ☐ ☐ _____

2. Transmission, axle and engine, neutral start switch and reverse warning alarm switch checks

- Transmission control lever and neutral ☐ ☐ _____
- Neutral start and reverse warning ☐ ☐ _____
- Alarm circuit checks ☐ ☐ _____

3. Monitor indicator and gauge checks (engine running)

- Monitor display and alternator output checks ☐ ☐ _____
- Monitor bypass circuit and seat belt indicator check ☐ ☐ _____
- Monitor primary and secondary level check ☐ ☐ _____
- Transmission oil warm up procedure ☐ ☐ _____
- Transmission temperature lamp check ☐ ☐ _____

4. Brake system and clutch cut off checks

- Park brake capacity check ☐ ☐ _____
- Park brake transmission lockout check ☐ ☐ _____
- Service brake pump flow check ☐ ☐ _____
- Service brake capacity check ☐ ☐ _____
- Brake accumulator precharge check ☐ ☐ _____
- Brake system leakage check ☐ ☐ _____
- Service brake pedal check ☐ ☐ _____
- Service and park brake system drag check ☐ ☐ _____
- Clutch cut off check ☐ ☐ _____

5. Driving checks

- Transmission oil warm up procedure ☐ ☐ _____
- Transmission noise check ☐ ☐ _____
- Speedometer check ☐ ☐ _____
- Transmission kick down system check ☐ ☐ _____
- 1st, 2nd, 3rd and 4th speed clutch pack drag check ☐ ☐ _____
- Transmission pressure, pump flow and leakage check ☐ ☐ _____
- Transmission shift modulation check ☐ ☐ _____
- Torque converter check ☐ ☐ _____
- Engine power check ☐ ☐ _____

6. Hydraulic system checks

- Hydraulic system warm up procedure ☐ ☐ _____
- Hydraulic pump performance check ☐ ☐ _____
- Pilot control valve boom float check ☐ ☐ _____
- Boom down solenoid valve check ☐ ☐ _____
- Control valve lift check ☐ ☐ _____
- Bucket rollback circuit relief valve check ☐ ☐ _____
- Bucket dump circuit relief
  - Low pressure check ☐ ☐ _____
  - High pressure check ☐ ☐ _____
- Boom and bucket cylinder drift check ☐ ☐ _____
- Boom down solenoid valve leakage check ☐ ☐ _____
- Pilot controller check ☐ ☐ _____
- Return to dig check ☐ ☐ _____
- Boom height kickout check-if equipped ☐ ☐ _____

7. Steering system checks

- Steering unit check ☐ ☐ _____
- Steering system leakage check ☐ ☐ _____

8. Accessory checks

- Operating lights check ☐ ☐ _____
- Work light check ☐ ☐ _____
- Brake light check ☐ ☐ _____
- Cab light check ☐ ☐ _____
- Horn circuit check ☐ ☐ _____
- Windshield washer and wiper check ☐ ☐ _____
- Defroster blower check ☐ ☐ _____
- Heater/Air conditioner blower check ☐ ☐ _____
- Heater functional check ☐ ☐ _____
- Air conditioner functional check ☐ ☐ _____
- Start aid system check ☐ ☐ _____

9. Cab components and vandal protection checks

- Cab door latch check ☐ ☐ _____
- Cab door hold open latch check ☐ ☐ _____
- Cab door release button check ☐ ☐ _____
- Cab door lock check ☐ ☐ _____
- Cab door window check ☐ ☐ _____
- Cab window latch check ☐ ☐ _____
- Steering column adjustment check ☐ ☐ _____
- Seat and seat belt check ☐ ☐ _____
- Air intake filter door check ☐ ☐ _____
- Engine side panels check ☐ ☐ _____
- Radiator cap access door check ☐ ☐ _____
- Boom lock check ☐ ☐ _____
- Service decal check ☐ ☐ _____

SECTION 2 ENGINE

Group 1 Structure 2-1
Group 2 Engine Speed and Stall rpm 2-11

GROUP 1 STRUCTURE

1. STRUCTURE (1/2)

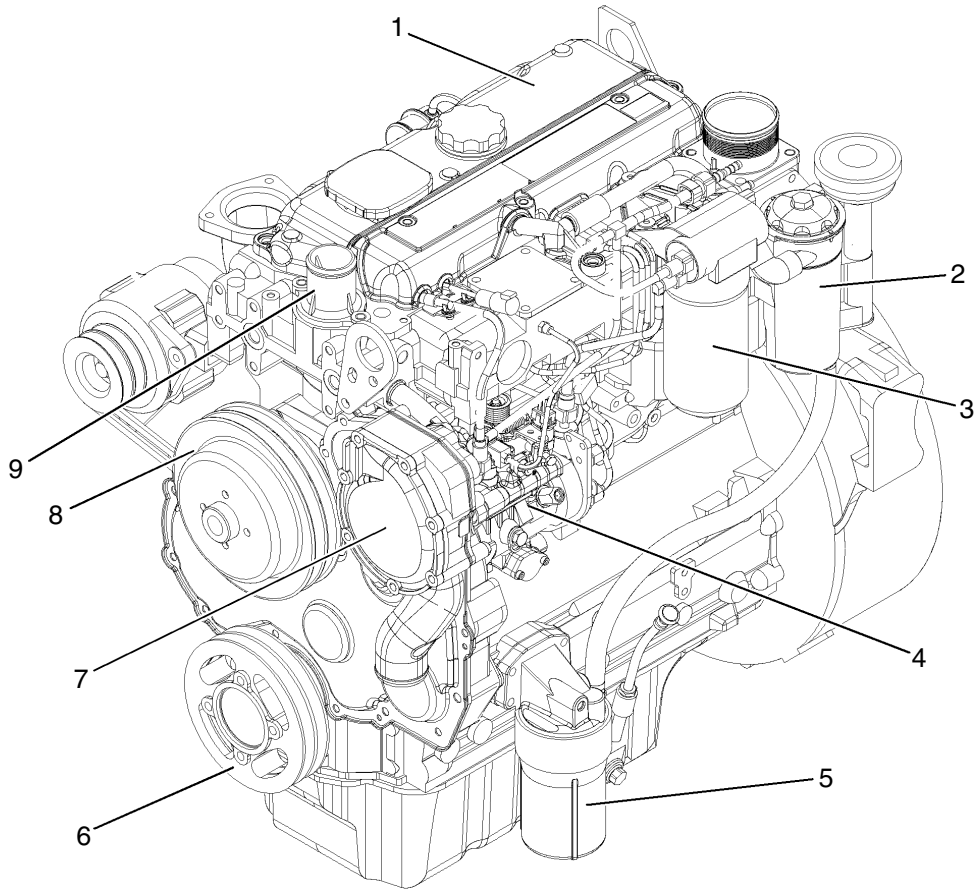

H940S2EG01

1	Valve mechanism cover	4	Fuel injection pump	7	Water pump
2	Crankcase breather	5	Engine oil filter	8	Fan pulley
3	Fuel filter	6	Crankshaft pulley	9	Water temperature regulator housing

STRUCTURE (2/2)

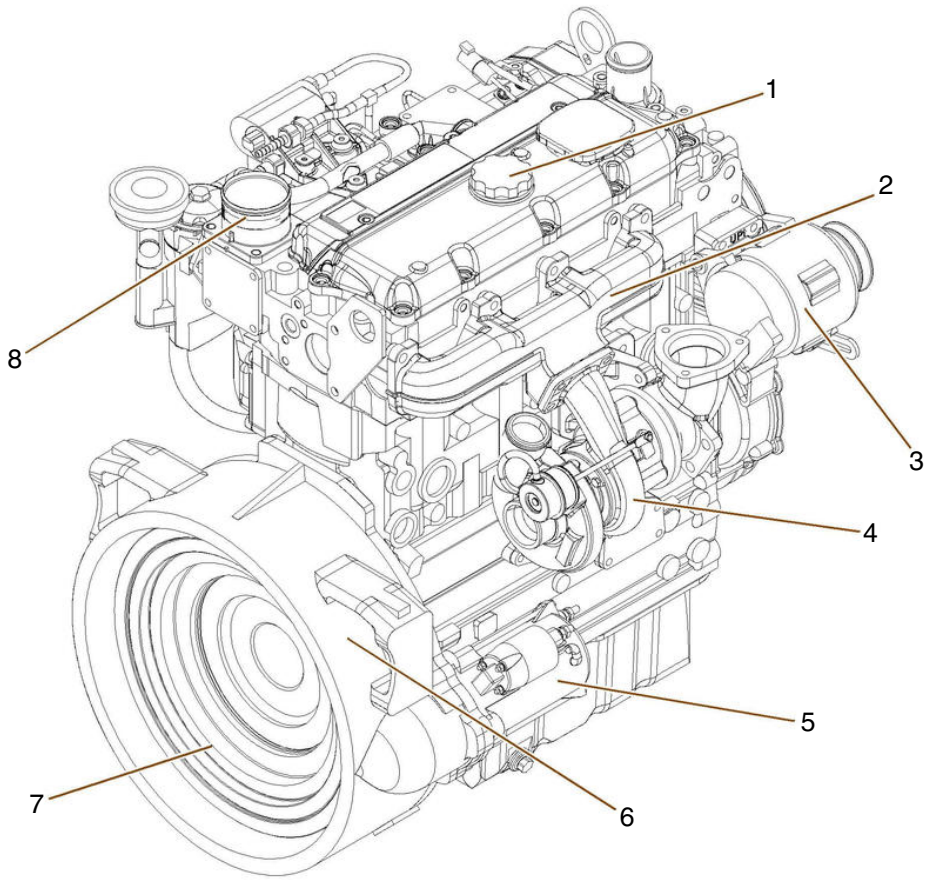

H940S2EG02

1	Oil filler cap	4	Turbocharger	7	Flywheel
2	Exhaust manifold	5	Start motor	8	Air intake
3	Alternator	6	Flywheel housing		

2. FUEL SYSTEM

The fuel transfer pump draws fuel from the fuel tank and through the water separator. When the fuel goes through the water separator, any water in the fuel will go to the bottom of the bowl. The fuel transfer pump sends the fuel at a low pressure to the fuel filter. From the fuel filter, the fuel goes through the supply line to the fuel injection pump.

The fuel injection pump sends fuel through the high pressure fuel line to each of the fuel injectors. The fuel injector sprays the fuel into the cylinder. Fuel that is not injected flows through the fuel return line to the top of the fuel filter, back to the fuel tank.

The engine must not be started until the fuel injection pump is full of fuel that is free of air. The fuel injection pump requires fuel for lubrication. The precision parts of the pump are easily damaged without lubrication.

The fuel system must be primed when any of the following conditions occur :

- The fuel filter is changed.
- The fuel line is removed.
- The fuel injection pump is removed.

3. AIR INLET AND EXHAUST SYSTEM

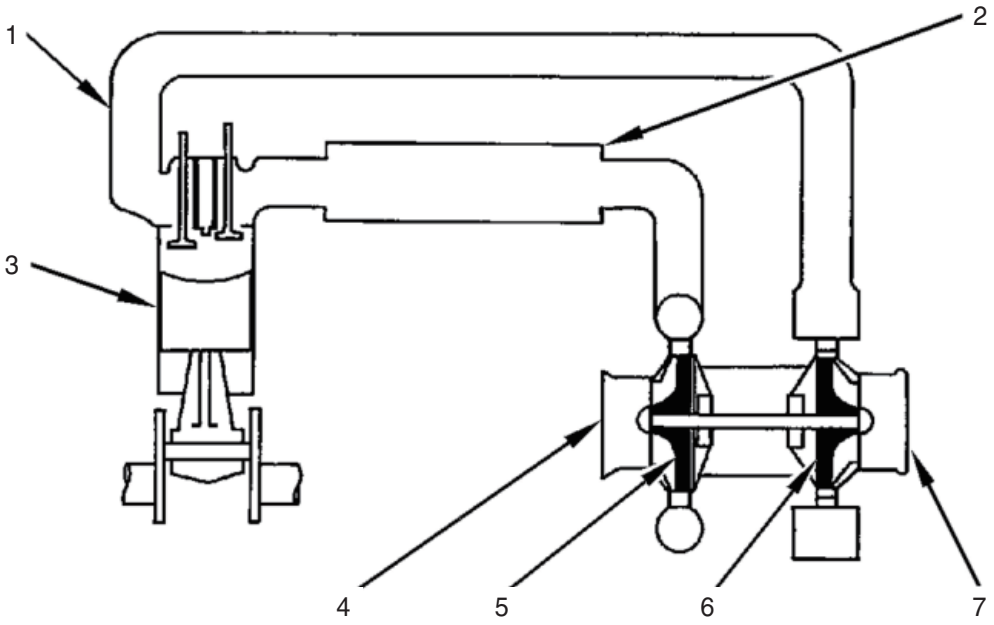

H940S2EG01

1 Exhaust manifold
2 Intake manifold
3 Engine cylinders
4 Air intake
5 Turbocharger compressor wheel
6 Turbocharger turbine wheel
7 Exhaust outlet

Engines which are naturally aspirated pull outside air through an air cleaner directly into the inlet manifold (2). The air flows from the intake manifold to the engine cylinders (3). The fuel is mixed with the air in the engine cylinders. After the fuel combustion occurs in the engine cylinder, the exhaust gases flow directly to the outside air through the exhaust manifold (1).

Turbocharged engines pull outside air through an air cleaner into the air intake (4) of the turbocharger. The suction is caused by the turbocharger compressor wheel (5). Then, the turbocharger compressor wheel compresses the air. The air flows through the intake manifold (2) which directs an even distribution of the air to each engine cylinder (3). Air is pulled into the engine cylinder (3) during the intake stroke of the piston. Then, the air is mixed with fuel from the fuel injectors.

Each piston makes four strokes :
1. Intake
2. Compression
3. Power
4. Exhaust

The sequence of the strokes by all of the pistons in all of the engine cylinders provide constant air flow through the inlet system during the engine operation.

The exhaust stroke and the timing of the valve mechanism pushes combustion gases through the open exhaust valve into the exhaust manifold (1).
The exhaust gases flow through the blades of the turbocharger turbine wheel (6) which causes the turbine wheel and the compressor wheel to turn.
Then, the exhaust gases flow through the exhaust outlet (7) of the turbocharger to the outside.

The air inlet system is also equipped with a crankcase ventilation system. The intake strokes of the pistons pull in atmospheric air to the crankcase.

4. TURBOCHARGER

※ The turbocharger is not serviceable.

A turbocharger increases the temperature and the density of the air that is sent to the engine cylinder.
This condition causes a lower temperature of ignition to develop earlier in the compression stroke.
The compression stroke is also timed in a more accurate way with the fuel injection. Surplus air lowers the temperature of combustion. This surplus air also provides internal cooling.

A turbocharger improves the following aspects of engine performance :

- Power output is increased.
- Fuel efficiency is improved.
- Engine torque is increased.
- Durability of the engine is improved.
- Emissions from the engine are reduced.

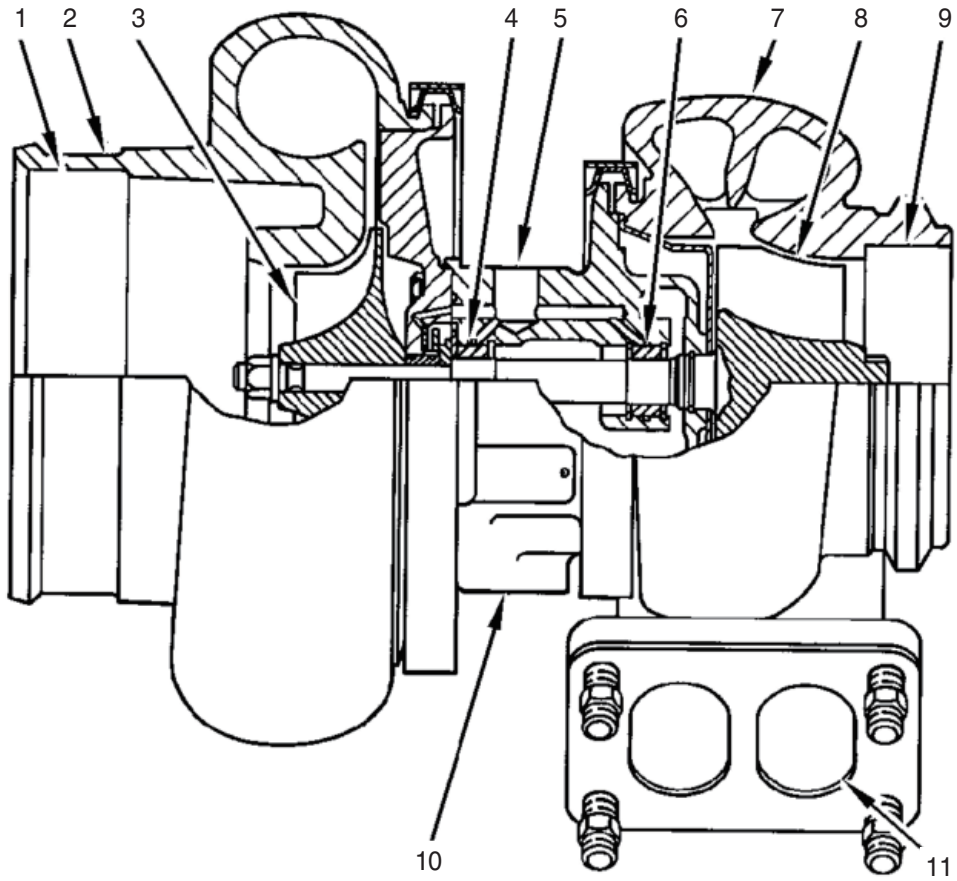

H940S2EG02

1	Air intake	5	Oil inlet port	9	Exhaust outlet
2	Compressor housing	6	Bearing	10	Oil outlet port
3	Compressor wheel	7	Turbine housing	11	Exhaust inlet
4	Bearing	8	Turbine wheel		

A turbocharger is installed between the exhaust and intake manifolds. The turbocharger is driven by exhaust gases which flow through the exhaust inlet (11). The energy of the exhaust gas turns the turbine wheel (8). Then, the exhaust gas flows out of the turbine housing (7) through the exhaust outlet (9).

The turbine wheel and the compressor wheel (3) are installed on the same shaft. Therefore, the turbine wheel and the compressor wheel rotate at the same rpm. The compressor wheel is enclosed by the compressor housing (2). The compressor wheel compresses the intake air (1). The intake air flows into the engine cylinders through the inlet valves of the cylinders.

The oil from the main gallery of the cylinder block flows through the oil inlet port (5) in order to lubricate the turbocharger bearings (4) and (6). The pressurized oil passes through the bearing housing of the turbocharger. The oil is returned through the oil outlet port (10) to the oil pan.

The turbocharger has a wastegate. The wastegate is controlled by the boost pressure. This allows some of the exhaust to bypass the turbocharger at higher engine speeds. The wastegate is a type of valve that automatically opens at a preset level of boost pressure in order to allow exhaust gas to flow around the turbine. The wastegate allows the design of the turbocharger to be more effective at lower engine speeds.

The wastegate is controlled by a diaphragm. One side of this diaphragm is open to the atmosphere. The other side of this diaphragm is open to the manifold pressure.

5. CYLINDER HEAD AND VALVES

The valves and the valve mechanism control the flow of the air and the exhaust gases in the cylinder during engine operation. The cylinder head assembly has two valves for each cylinder. Each valve has one valve spring. The ports for the inlet valves are on the left side of the cylinder head. The ports for the exhaust valves are on the right side of the cylinder head. Steel valve seat inserts are installed in the cylinder head for both the inlet and the exhaust valves. The valve seat inserts can be replaced.

The valves are installed in valve guides. The valve guides can be replaced. The exhaust valve guide has a counterbore in order to prevent the seizure of the valve stem. The seizure of the valve stem is caused by a buildup of carbon under the head of the valve.

The inlet and the exhaust valves are opened and closed by the rotation and movement of the following components :

- Crankshaft
- Camshaft
- Valve lifters
- Pushrods
- Rocker arms
- Valve springs

The camshaft gear is driven by the crankshaft gear. The camshaft and the crankshaft are timed together.

When the camshaft turns, the valve lifters and the pushrods are moved up and down. The pushrods move the rocker arms. The movement of the rocker arms open the valves. The opening and closing of the valves is timed with the firing sequence of the engine. The valve springs push the valves back to the closed position.

6. LUBRICATION SYSTEM

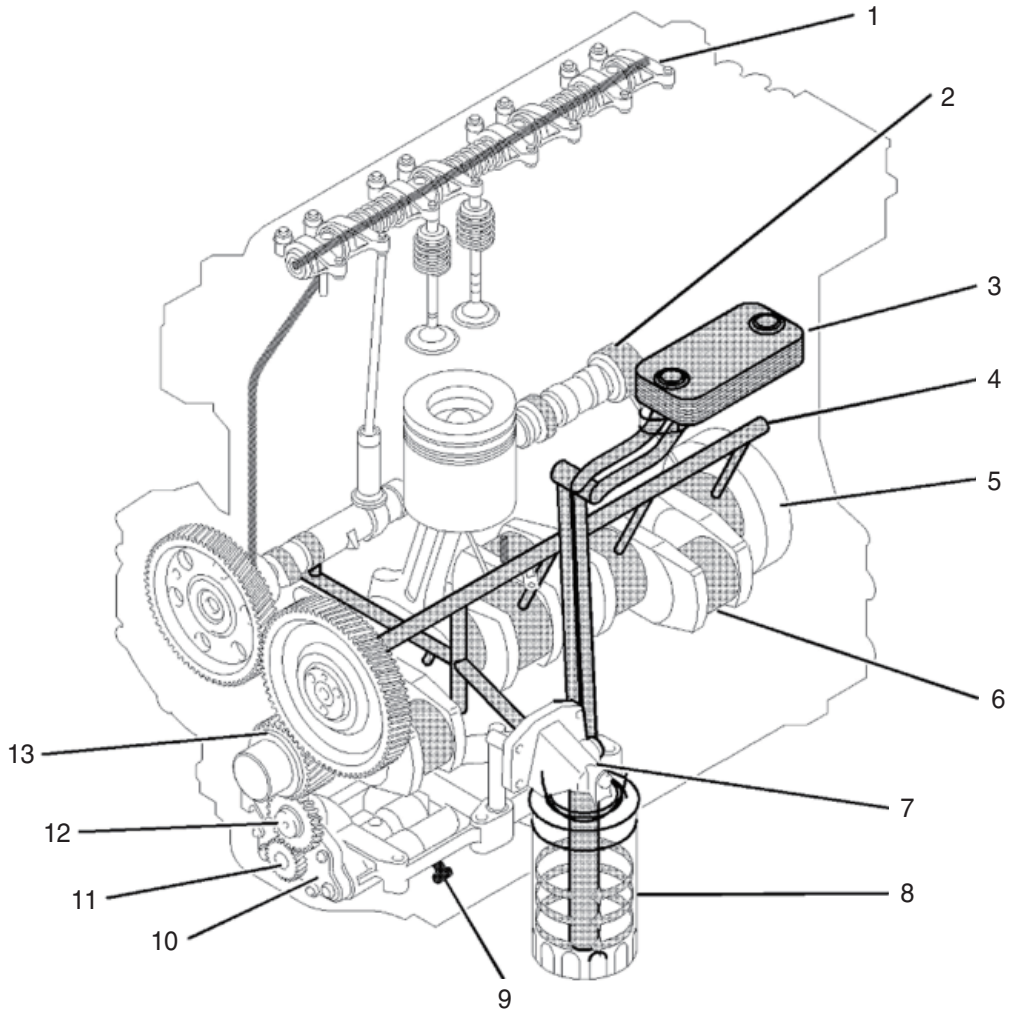

H940S2EG03

Lubricating oil from the oil pan flows through a strainer and a pipe (9) to the suction side of the engine oil pump (10). Pressure for the lubrication system is supplied by the oil pump . The crankshaft gear (13) drives a lower idler gear (12). The lower idler gear drives the oil pump gear (11). The pump has an inner rotor and an outer rotor. The axis of rotation of the rotors are off-center relative to each other. There is an interference fit between the inner rotor and the drive shaft.

The inner rotor has five lobes which mesh with the six lobes of the outer rotor. When the pump rotates, the distance increases between the lobes of the outer rotor and the lobes of the inner rotor in order to create suction. When the distance decreases between the lobes, pressure is created.

The lubricating oil flows from the outlet side of the oil pump (10) through a passage to the oil filter head (7). The oil then flows from the oil filter head through a passage to a plate type oil cooler for the engine. The oil cooler is located on the left side of the cylinder block.

From the oil cooler, the oil returns through a passage to the oil filter head. The oil then flows through a bypass valve that permits the lubrication system to function if the oil filter becomes blocked. Under normal conditions, the oil then flows to the oil filter (8).

The oil flows from the oil filter through a passage that is drilled across the cylinder block to the oil gallery (4). The oil gallery is drilled through the total length of the left side of the cylinder block. If the oil filter is on the right side of the engine, the oil flows through a passage that is drilled across the cylinder block to

the pressure gallery.

Lubricating oil from the oil gallery flows through high pressure passages to the main bearings of the crankshaft (5). Then, the oil flows through the passages in the crankshaft to the connecting rod bearing journals (6). The pistons and the cylinder bores are lubricated by the splash of oil and the oil mist.

Lubricating oil from the main bearings flows through passages in the cylinder block to the journals of the camshaft. Then, the oil flows from the second journal of the camshaft (2) at a reduced pressure to the cylinder head. The oil then flows through the center of the rocker shaft (1) to the rocker arm levers. The valve stems, the valve springs and the valve lifters are lubricated by the splash and the oil mist.

The hub of the idler gear is lubricated by oil from the oil gallery. The timing gears are lubricated by the splash from the oil.

An external line from the cylinder block supplies oil to the turbocharger. The oil then flows through a return line to the oil pan.

Engines have piston cooling jets that are supplied with oil from the oil gallery. The piston cooling jets spray lubricating oil on the underside of the pistons in order to cool the pistons.

7. COOLING SYSTEM

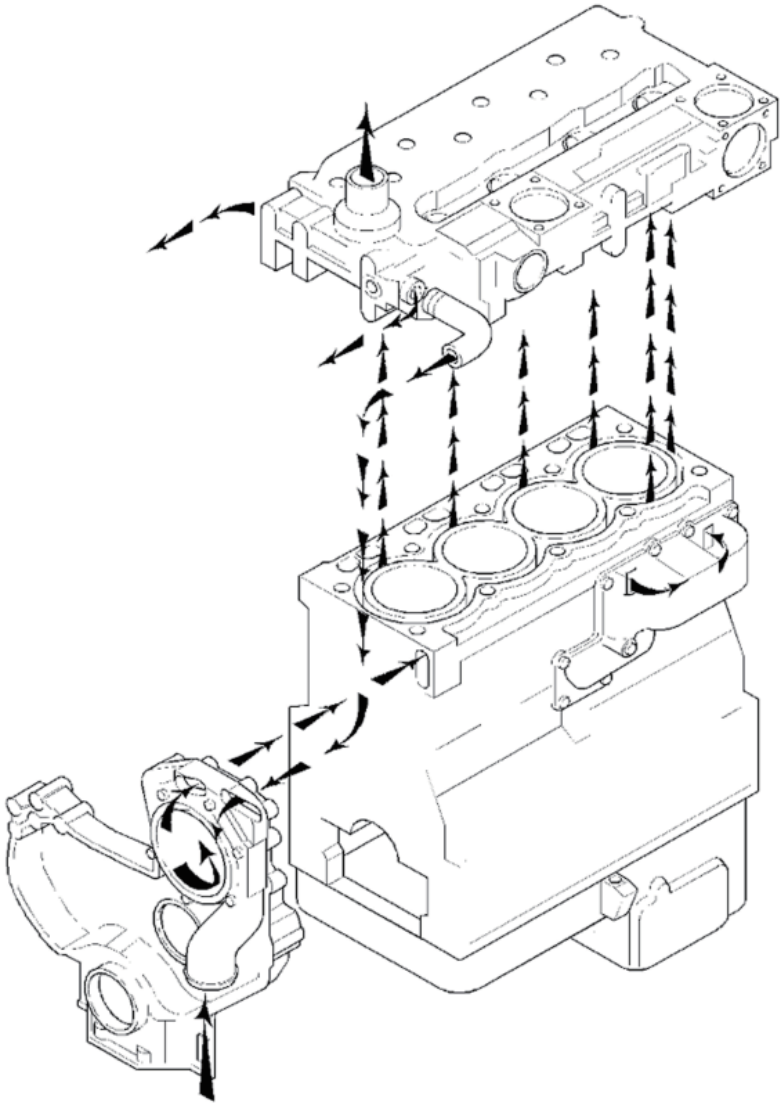

H940S2EG05

The coolant flows from the bottom of the radiator to the centrifugal water pump. The water pump assists in the flow of the coolant through the system. The water pump is installed on the front of the timing case. The water pump is gear-driven by the fuel injection pump gear.

The water pump forces the coolant through a passage in the front of the timing case to the water jacket in the top left side of the cylinder block. The coolant continues to the rear of the cylinder block.

The main flow of the coolant passes from the rear of the cylinder block into the rear of the cylinder head. The coolant flows forward through the cylinder head and into the water temperature regulator housing. If the water temperature regulator is closed, the coolant goes directly through a bypass to the inlet side of the water pump. If the water temperature regulator is open, the bypass is closed and the coolant flows to the top of the radiator.

From the rear of the cylinder block, some of the coolant passes into the modine oil cooler (if equipped). The modine oil cooler is located on the left side of the cylinder block. The coolant passes through the oil cooler before being returned through an external line to the inlet side of the water pump.

From the rear of the cylinder block, some of the coolant passes into the oil cooler. The oil cooler is located on the left side of the cylinder block with no external lines. The coolant flows around the element of the oil cooler before being returned to the rear of the cylinder block.

GROUP 2 ENGINE SPEED & STALL RPM

1. TEST CONDITION

1) Normal temperature of the whole system
- Coolant : Approx 80˚C (176˚F)
- Hydraulic oil : 45 ± 5˚C (113 ± 10˚F)
- Transmission oil : 75 ± 5˚C (167 ± 10˚F)

2) Normal operating pressure : See page 6-92, 93.

2. SPECIFICATION

Engine speed, rpm							
Model	High idle (backhoe)	High idle (loader)	Low idle	Hyd stall (backhoe)	Hyd stall (loader)	Converter stall	Full stall
H930S	2300±50	2340±50	1000±50	2220±70	2220±70	1980±70	1720±100
H940S	2300±50	2380±50	1000±50	2230±70	2230±70	2030±70	1690±100

3. ENGINE RPM CHECK

Remark : If the checked data is not normal, it indicates that the related system is not working properly. Therefore, it is required to check the related system pressure : See page 6-92, 93.

1) Hydraulic stall rpm (loader / backhoe)

- Start the engine and raise the bucket approx 45 ㎝ (1.5 ft) as the figure.
- Press the accelerator pedal fully and operate the loader / backhoe bucket control lever to the retract position fully.
- Check the engine rpm at the above condition.

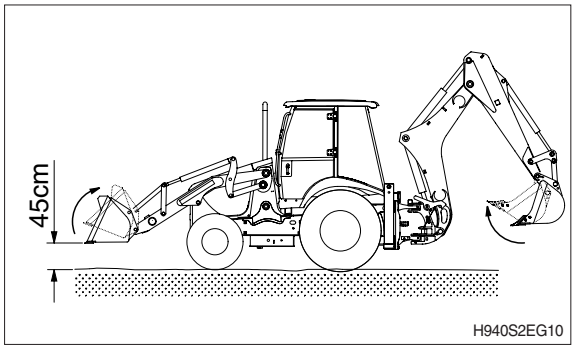

H940S2EG10

2) Convertor stall rpm

- Start the engine and lower the loader bucket on the ground as the figure.
- Press the brake pedal and accelerator pedal fully.
- Shift the transmission lever to the 4th forward position.
- Check the engine rpm at the above condition.

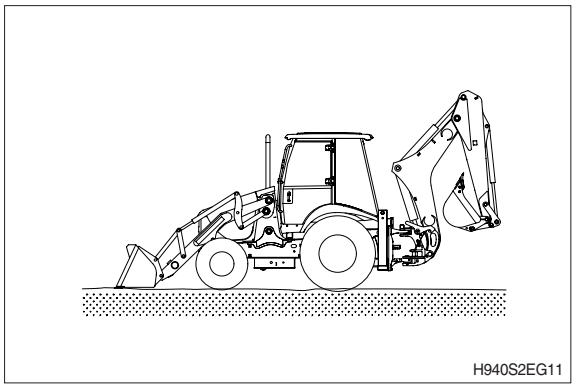
H940S2EG11

3) Full stall rpm

- Start the engine and raise the loader bucket approx 45 ㎝ (1.5 ft) as the figure.
- Press the brake pedal and accelerator pedal fully.
- Shift the transmission lever to the 4th forward position and operate the loader bucket lever to the retract position fully.
- Check the engine rpm at the above condition.

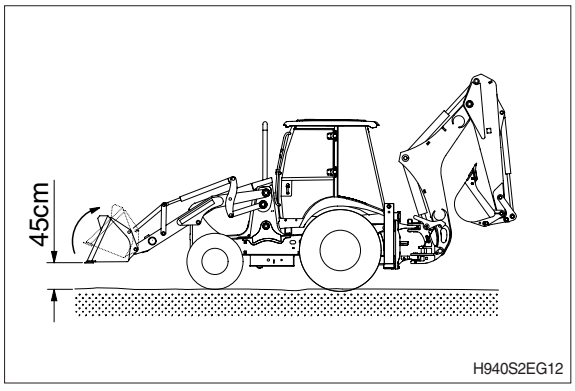

H940S2EG12

SECTION 3 POWER TRAIN SYSTEM

Group 1 Structure and Function ····· 3-1
Group 2 Operational Checks and Troubleshooting ····· 3-17
Group 3 Test and Adjustments ····· 3-25
Group 4 Disassembly and Assembly ····· 3-27

SECTION 3 POWER TRAIN SYSTEM

GROUP 1 STRUCTURE AND FUNCTION

1. POWER TRAIN COMPONENT OVERVIEW

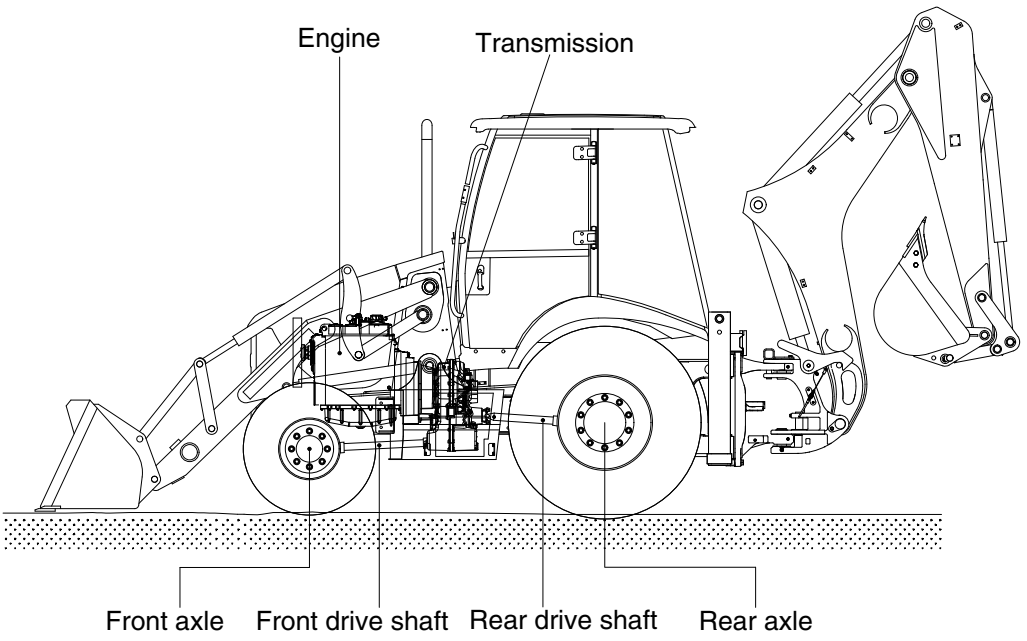

H940S3PT01

The power train consists of the following components:

- Transmission
- Rear drive shaft only (2 wheel drive)
- Front and rear drive shafts (4 wheel drive)
- Front and rear axles

Engine power is transmitted to the transmission through the torque converter.

The transmission is a hydraulically engaged four speed forward, three speed reverse countershaft type power shift transmission. A multi-disc type parking brake is located in the rear axle.

The transmission outputs through universal joints to two drive shaft assemblies. The front drive shaft is a telescoping shaft which drives the front axle. The front axle is mounted directly to the loader front frame. The front axle is equipped with conventional differential.

The rear axle is equipped with hydraulic lock differential.

The power transmitted to front axle and rear axle is reduced by the pinion gear and ring gear of differential. It then passes from the differential to the sun gear shaft (axle shaft) of final drive.

The power of the sun gear is reduced by a planetary mechanism and is transmitted through the planetary hub to the wheel.

2. HYDRAULIC CIRCUIT (2 WHEEL DRIVE)

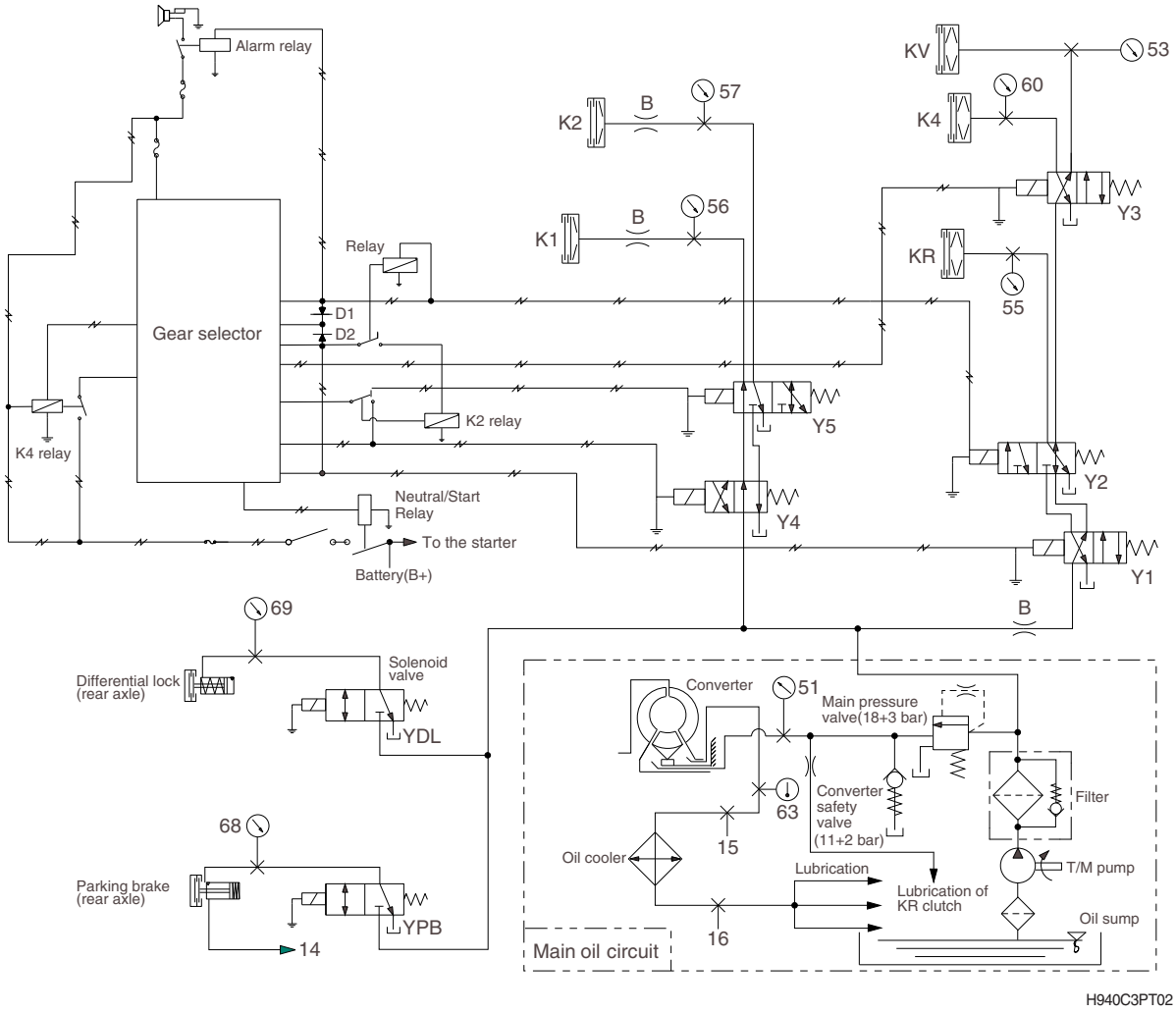

H940C3PT02

B Orifice
KV Forward clutch
KR Reverse clutch
K1 Clutch
K2 Clutch
K4 Clutch
Y1~Y5 Solenoid valves to the control valves

Speed	Forward				Reverse		Neutral	Engaged clutch	Current No. of the measuring points
	1	2	3	4	1	2	N		
Y1	X	X	X	X				K4	60
Y2					X	X		KR	55
Y5	X		X		X			K1	56
Y4		X		X		X		KV	53
Y3	X	X			X	X		K2	57
Engaged clutches	KV,K1	KV,K2	K4,K1	K4,K2	KR,K1	KR,K2		-	-

X : Pressure regulator under voltage

※ Refer to page 3-25 for measuring points.

HYDRAULIC CIRCUIT (4 WHEEL DRIVE)

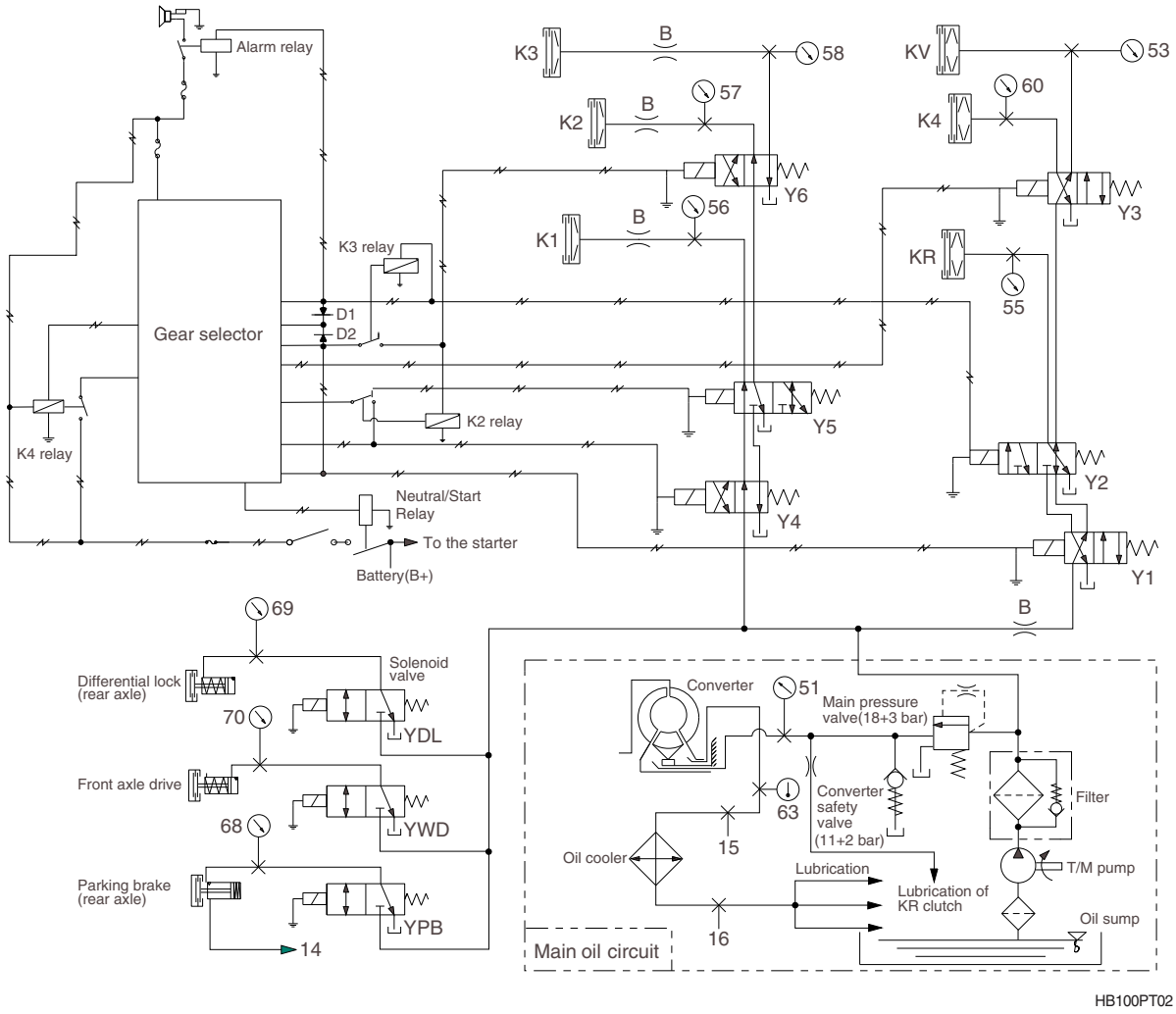

HB100PT02

B	Orifice	K2	Clutch
KV	Forward clutch	K3	Clutch
KR	Reverse clutch	K4	Clutch
K1	Clutch	Y1~Y6	Solenoid valves to the control valves

Speed	Forward				Reverse			Neutral	Engaged clutch	Current No. of the measuring points
	1	2	3	4	1	2	3	N		
Y1	X	X	X	X					K4	60
Y2					X	X	X		KR	55
Y5	X		X		X				K1	56
Y4		X		X		X	X		K3	58
Y6							X		KV	53
Y3	X	X			X	X			K2	57
Engaged clutches	KV,K1	KV,K2	K4,K1	K4,K2	KR,K1	KR,K2	KR, K3		-	-

X : Pressure regulator under voltage

※ Refer to page 3-25 for measuring points.

3. TORQUE CONVERTER

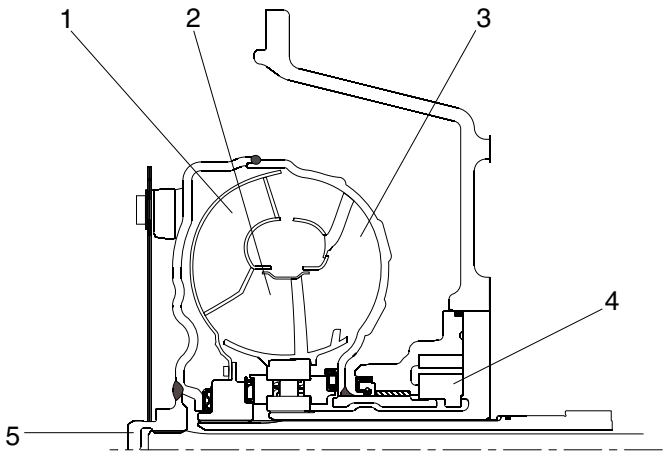

HB100PT03

1	Turbine	3	Pump	5	Input flange
2	Stator	4	Transmission pump		

The converter is working according to the Trilok-system, i.e. it assumes at high turbine speed the characteristics, and with it the favorable efficiency of a fluid clutch.
The converter is designed according to the engine power so that the most favorable operating conditions are obtained for each installation case.

The Torque converter is composed of 3 main components :
Pump wheel - turbine wheel - stator (reaction member)

These 3 impeller wheels are arranged in such a ring-shape system that the fluid is streaming through the circuit components in the indicated order.

Pressure oil from the transmission pump is constantly streaming through the converter. In this way, the converter can fulfill its task to multiply the torque of the engine and at the same time, the heat created in the converter is dissipated via the escaping oil.
The oil which is streaming out of the pump wheel, enters the turbine wheel and is there inversed in the direction of flow.

According to the rate of reversion, the turbine wheel and with it also the output shaft is receiving a more or less high reaction torque. The stator (reaction member), following the turbine, has the task to reverse the oil streaming out of the turbine once more and to deliver it under the suitable discharge direction to the pump wheel.
Due to the reversion, the stator receiving a reaction torque.
The relation turbine torque/pump torque is called torque multiplication. This is the higher, the greater the speed difference of pump wheel and turbine wheel will be.

Therefore, the maximum torque multiplication is created at stationary turbine wheel.
With increasing output speed, the torque multiplication is decreasing. The adaption of the output speed to a certain required output torque will be infinitely variable and automatically achieved by the torque converter.

when the turbine speed is reaching about 80% of the pump speed, the torque multiplication becomes 1.0 i.e. the turbine torque becomes equal to that of the pump torque.
From this point on, the converter is working similar to a fluid clutch.

A stator freewheel serves to improve the efficiency in the upper driving range, in the torque multiplication range it is backing-up the torque upon the housing, and is released in the clutch range.
In this way, the stator can rotate freely.

Function of a hydrodynamic torque converter (schematic view)

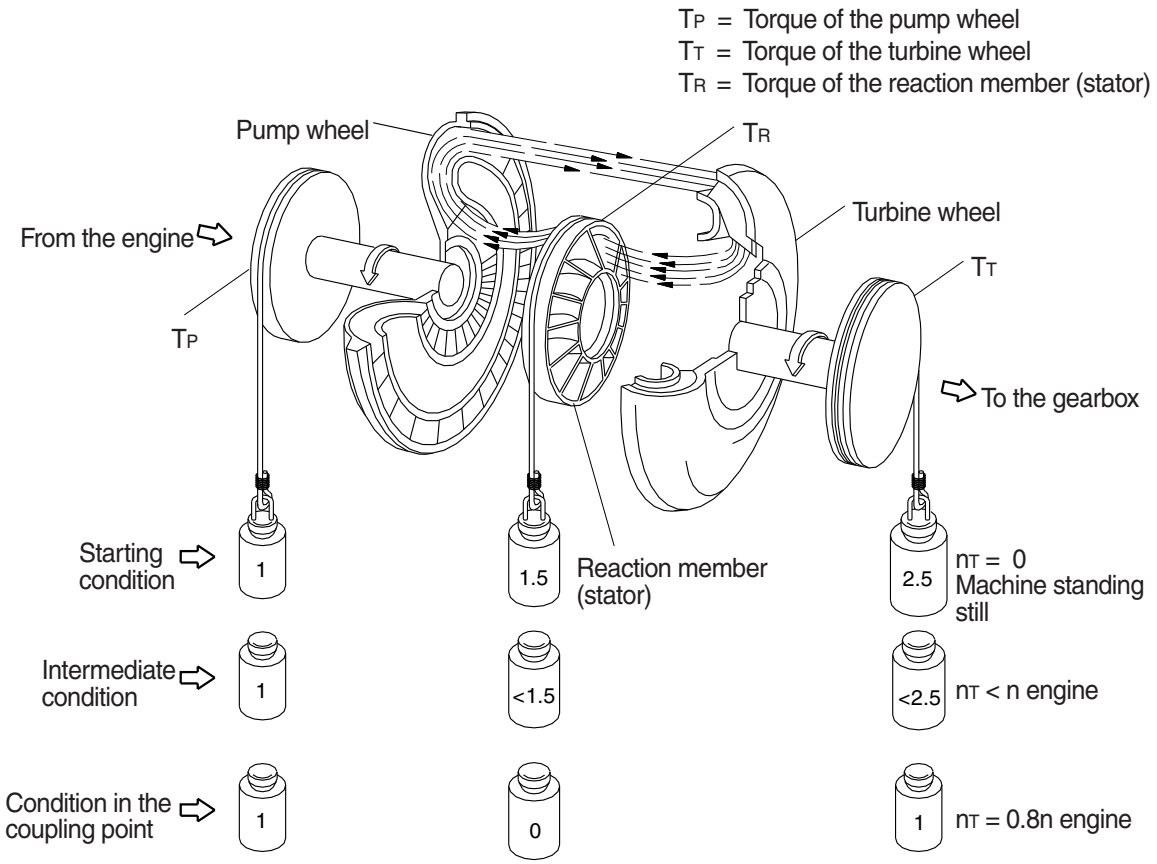

7577APT100

4. TRANSMISSION

1) LAYOUT (2 WHEEL DRIVE)

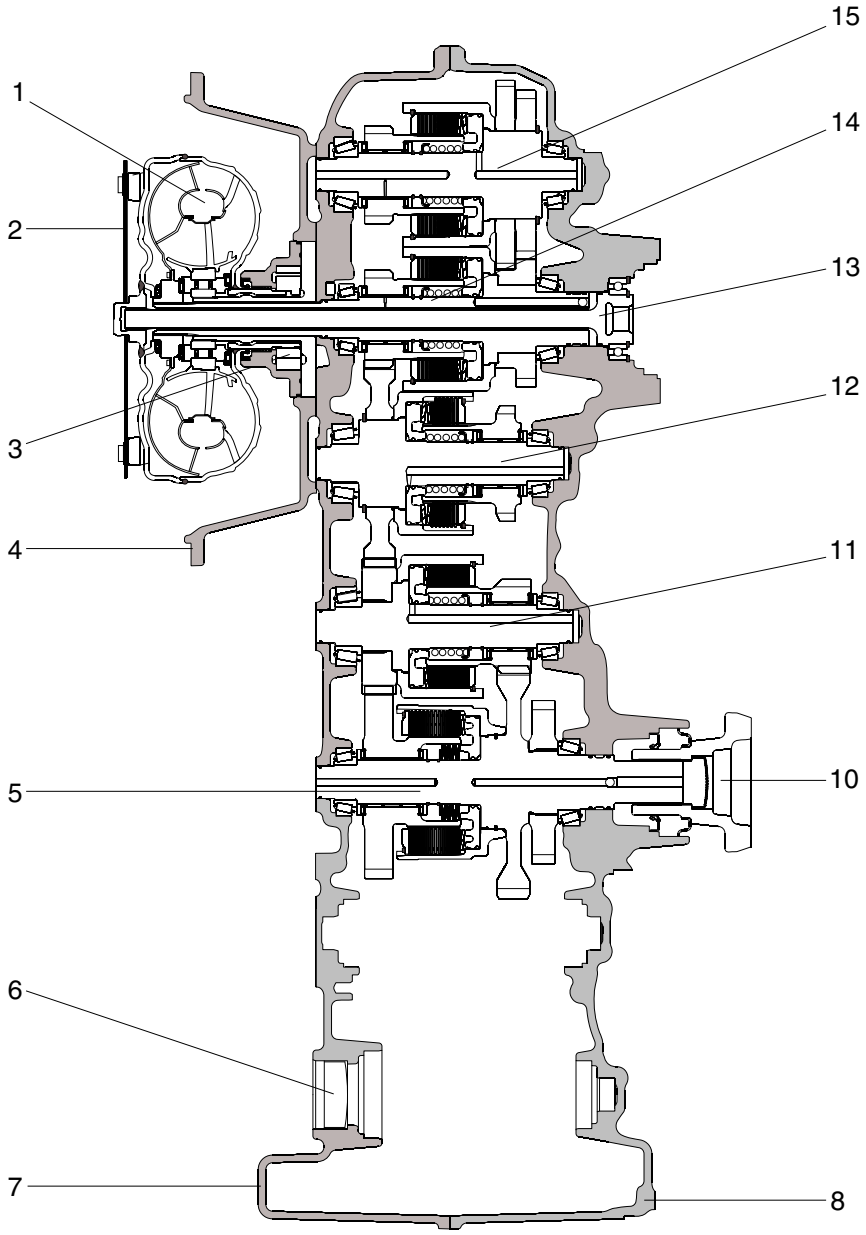

H940C3PT03

1	Converter	6	Mounting provision for front wheel drive	11	Clutch shaft (K1)
2	Flexplate for direct mount	7	Transmission housing-front	12	Clutch shaft (K4)
3	Transmission pump	8	Transmission housing-rear	13	Engine-dependent power take-off
4	Converter bellhousing	10	Output flange	14	Input shaft / clutch shaft (KR)
5	Clutch shaft (K2)			15	Clutch shaft (KV)

LAYOUT (4 WHEEL DRIVE)

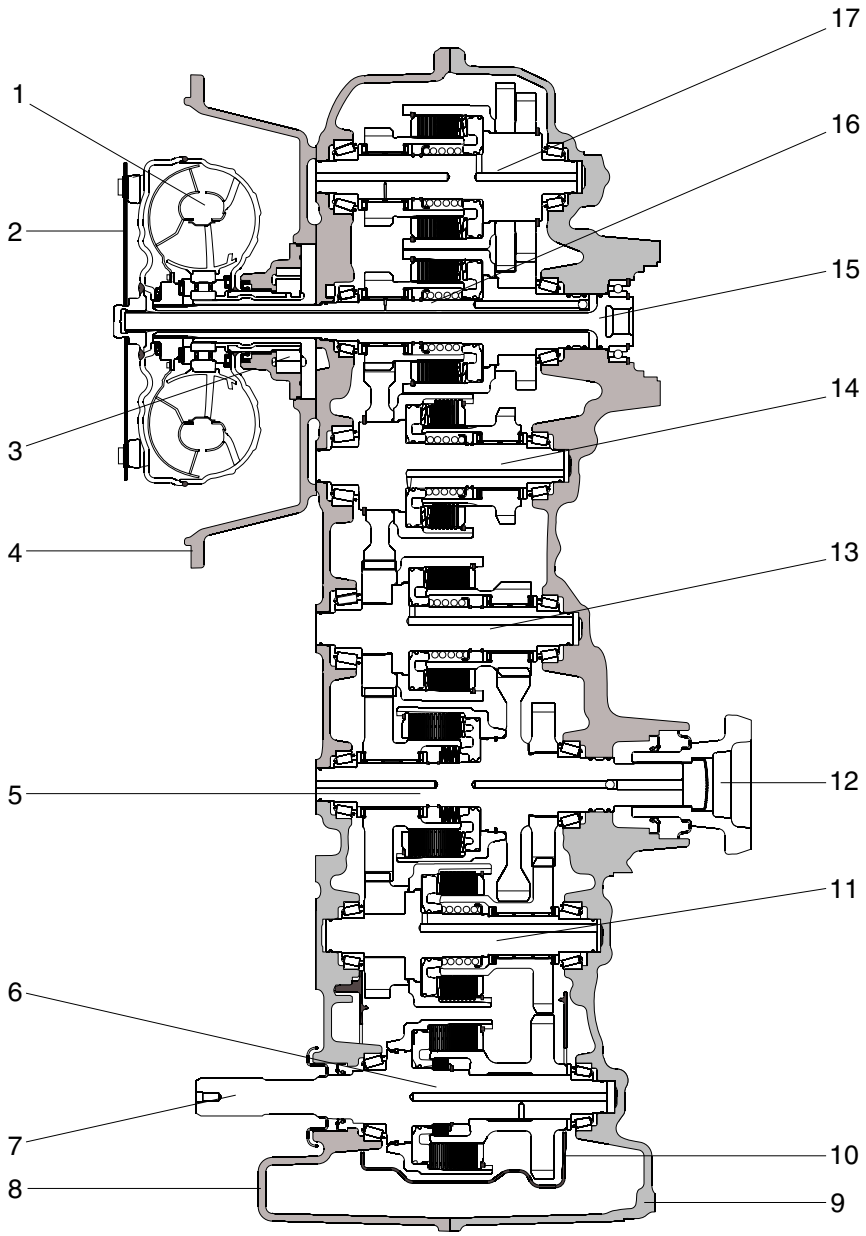

HB100PT04

1	Converter	7	Output for front axle	13	Clutch shaft (K1)
2	Flexplate for direct mount	8	Transmission housing-front	14	Clutch shaft (K4)
3	Transmission pump	9	Transmission housing-rear	15	Engine-dependent power take-off
4	Converter bellhousing	10	Screen sheet	16	Input shaft / clutch shaft (KR)
5	Clutch shaft (K2)	11	Clutch shaft (K3)	17	Clutch shaft (KV)
6	Front wheel drive	12	Output flange		

2) INSTALLATION VIEW

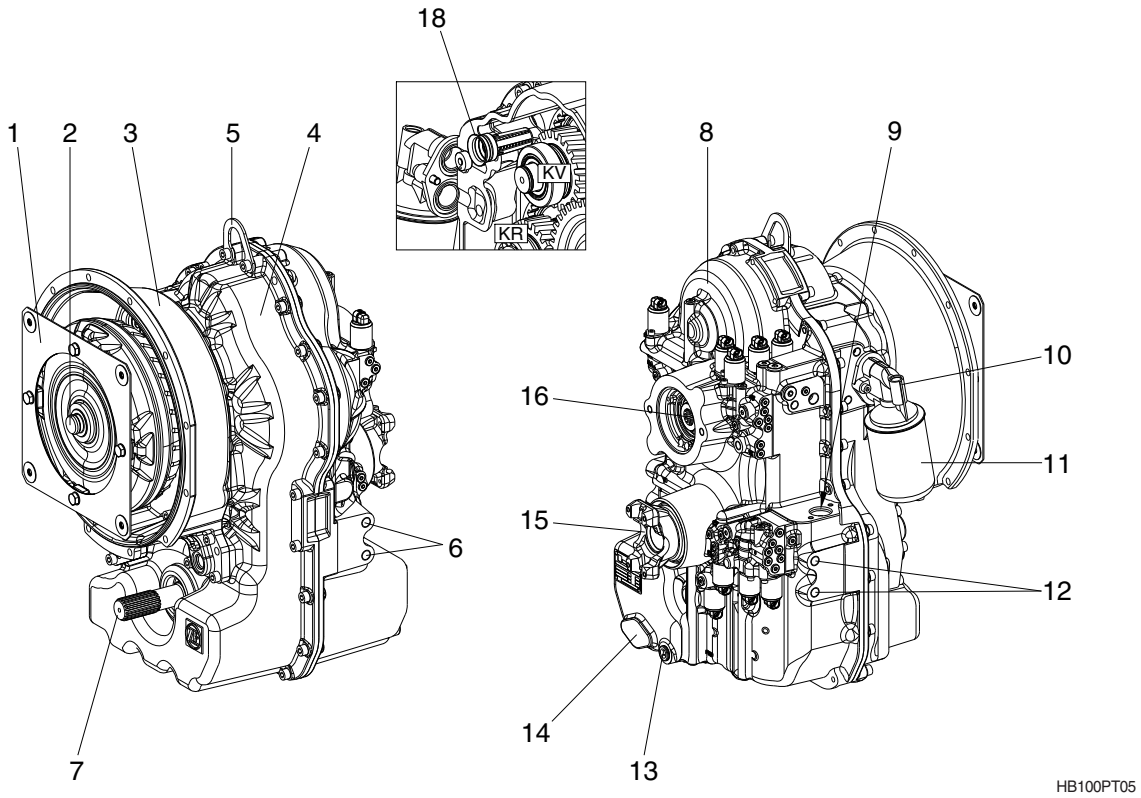

1 Direct mount via flexplate
2 Converter
3 Converter bellhousing
4 Transmission housing - front part
5 Transport bracket
6 Transmission mounting holes M16
7 Input shaft front wheel drive (4 wheel drive only)
8 Transmission housing -rear part
9 Oil filler and oil dipstick
10 Filter head
11 Filter
12 Transmission mounting holes M16
13 Oil drain plug 7/8" 14 UNF
14 Mounting provision for oil filler tube with oil dipstick (option)
15 Output flange
16 Engine-dependent power take-off (PTO)
18 Converter safety valve

3) OPERATION OF TRANSMISSION

(1) Gearbox diagram

① The multi-speed reversing transmission in countershaft design is powershiftable by hydraulically actuated multi-disk clutches.
All gears are in constant mesh and carried on anti-friction bearings.
The gears, bearings and clutches are cooled and lubricated with oil.
The 4 speed transmission is equipped with 6 multi-disk clutches.
In shifting operation, the respective disk package is compressed by a piston which is movable in axial direction and pressurized by pressure oil.
A compression spring pushes the piston of clutches KV, KR, K1, K3 and K4 back and thus releases the disk package.
A cup spring package pushes the piston of clutch K2 back.

KV = Clutch forward
KR = Clutch reverse/input
K1 = Clutch 1st speed
K2 = Clutch 2nd speed/output
K3 = Clutch 3rd speed
K4 = Clutch 4th speed

Driving direction	Speed	Clutch
Forward	1	KV/K1
	2	KV/K2
	3	K4/K1
	4	K4/K2
Reverse	1	KR/K1
	2	KR/K2
	3	KR/K3

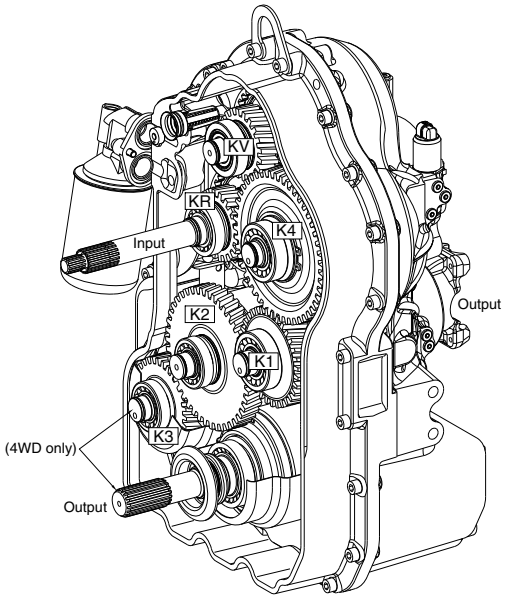

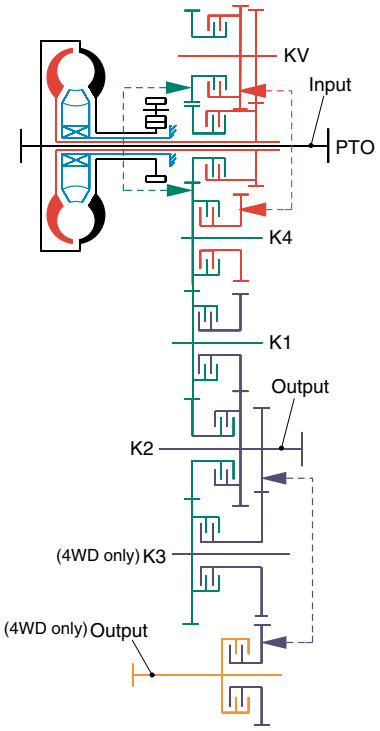

Transmission schematics

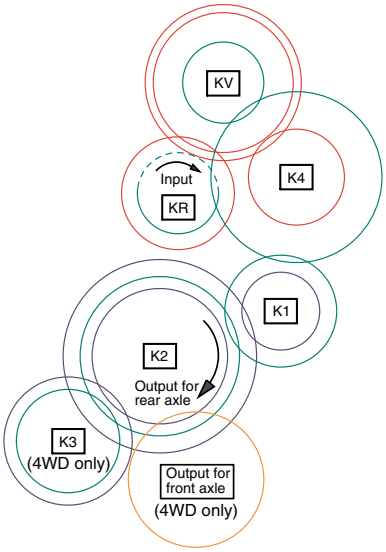

Gear schematics

H940C3PT06

② Forward

In forward, forward clutch and K1, K2, K3, K4 clutch are engaged.

Forward clutch and K1, K2, K3, K4 clutch are actuated by the hydraulic pressure applied to the clutch piston.

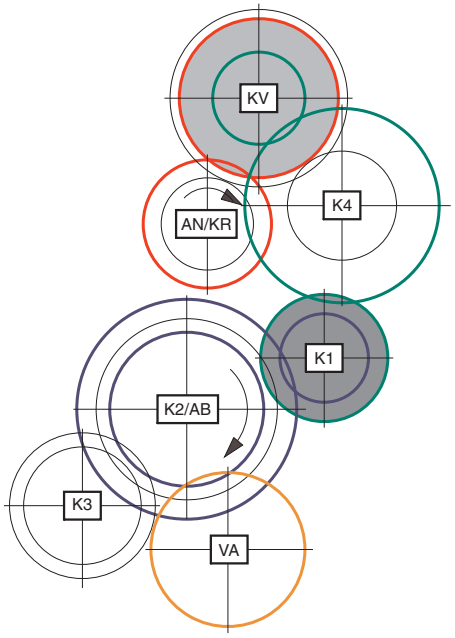

1st gear forward

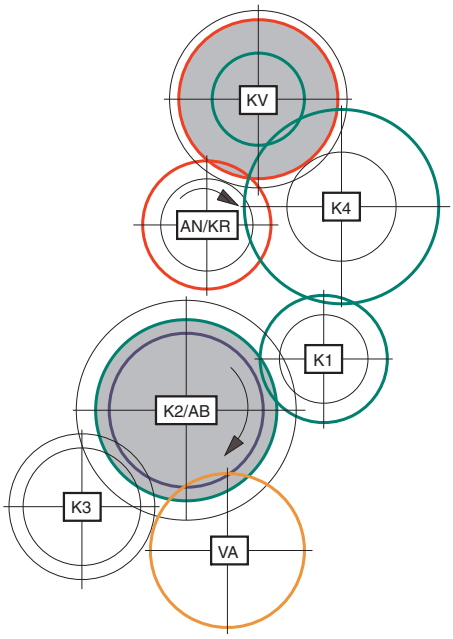

2nd gear forward

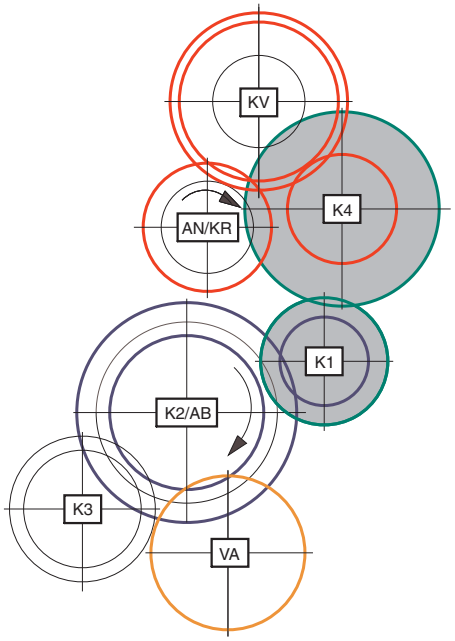

3rd gear forward

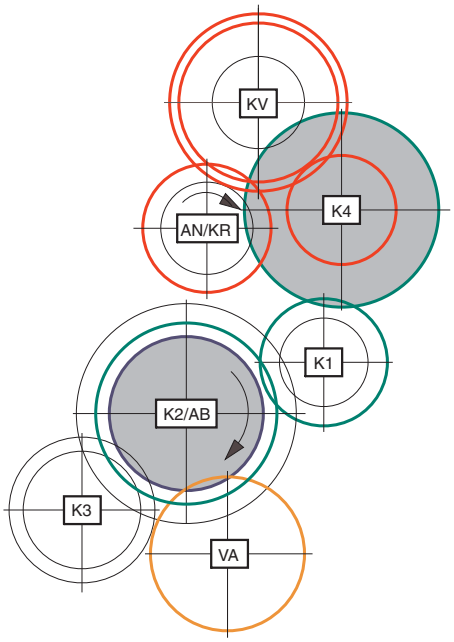

4th gear forward

HB100PT13

KR/AN = Clutch reverse/input
KV = Clutch forward
K1 = Clutch 1st speed
K2/AB = Clutch 2nd speed/output
K3 = Clutch 3rd speed (4 wheel drive only)
K4 = Clutch 4th speed
VA = Front wheel drive (4 wheel drive only)

③ Reverse

In reserve, reserve clutch KR and K1, K2, K3 clutch are engaged.

Reverse clutch and K1, K2, K3 are actuated by the hydraulic pressure applied to the clutch piston.

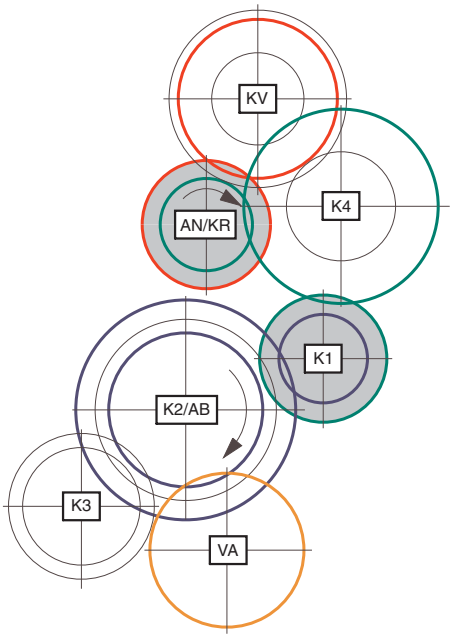

1st gear reverse

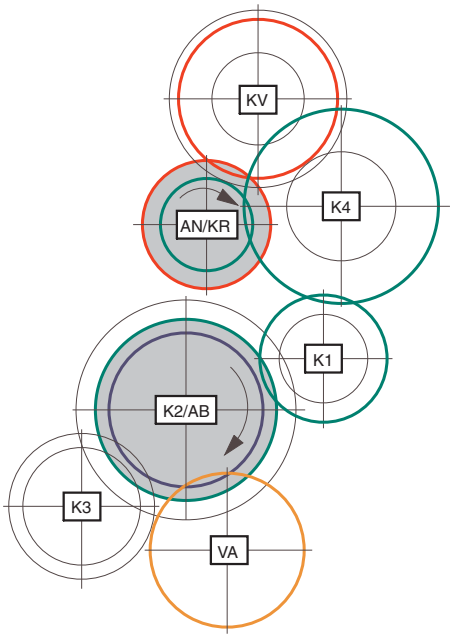

2nd gear reverse

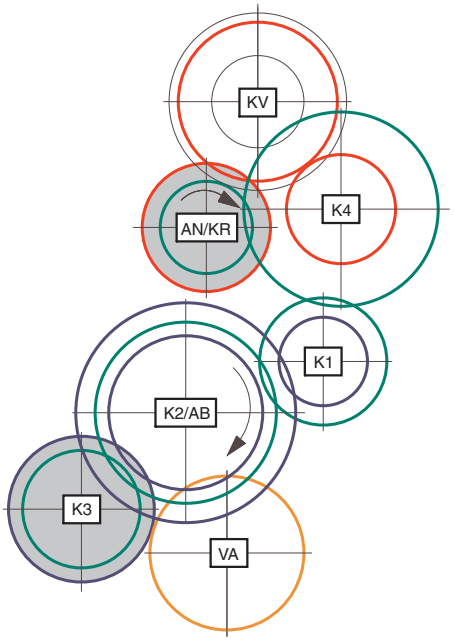

3rd gear reverse

KR/AN = Clutch reverse/input
KV = Clutch forward
K1 = Clutch 1st speed
K2/AB = Clutch 2nd speed/output
K3 = Clutch 3rd speed (4 wheel drive only)
K4 = Clutch 4th speed
VA = Front wheel drive (4 wheel drive only)

HB100PT12

4) GEAR SELECTOR

The gear selector is designed for the mounting on the steering column left side. The gear positions (speeds) 1 to 4 are selected by a rotative motion and the driving direction (Forward (F) - Neutral (N) - Reverse (R) by tilting the lever.

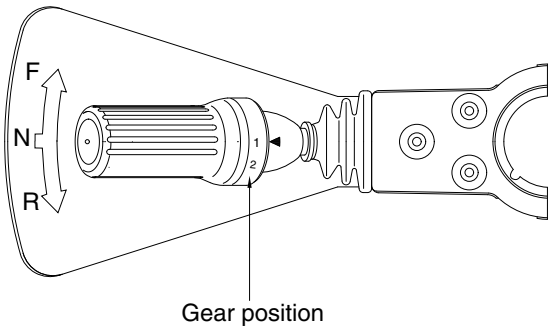

Gear selector wiring

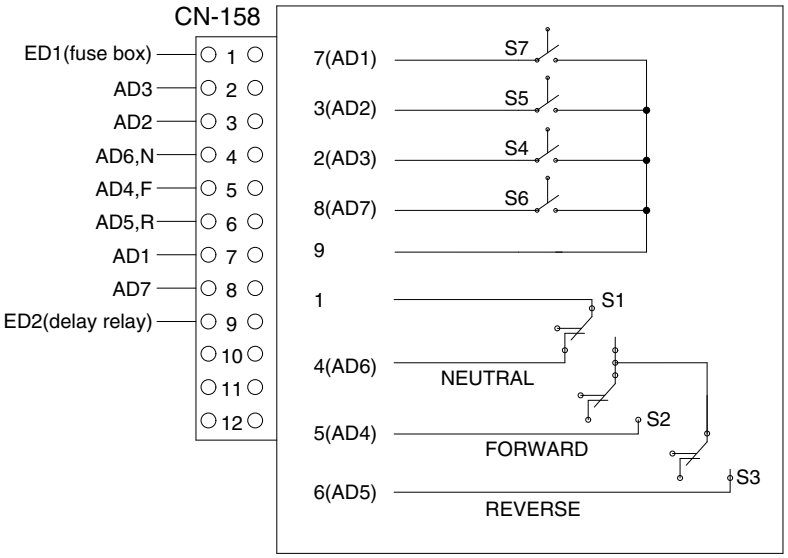

HB100PT26

Gear selector

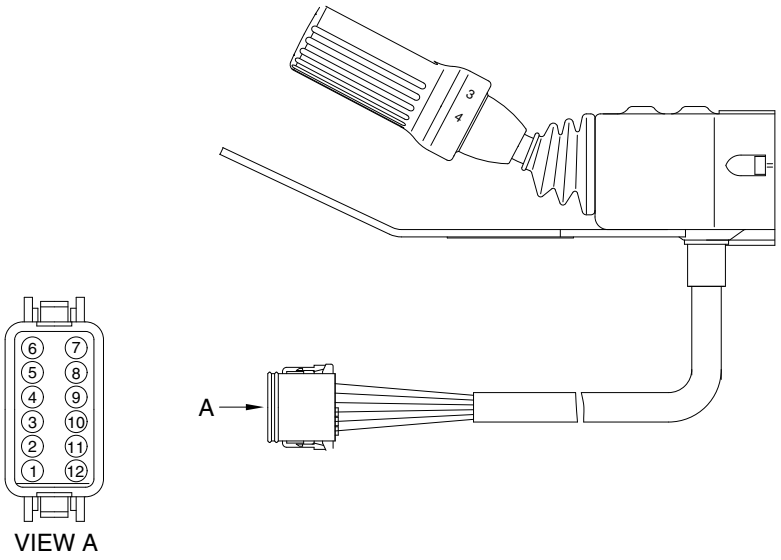

HB100PT27

Encoding gear selector

Output										
Digital inputs		Digital outputs			Selection of direction			Speed range gear			
Symbol	Pin	Symbol		Pin	F	N	R	1	2	3	4
ED1 (VP)	1	AD4	Y1 (F)	5	X						
		AD5	Y2 (R)	6			X				
		AD6	Y3 (N)	4		X					
ED2 (VP)	9	AD1	Y3	7				X	X		
		AD2	Y4	3					X		X
		AD3	Y5	2				X		X	
		AD7	Y6	8						X	

X : Pressure regulator under voltage

VP Supply voltage F Forward N Neutral R Reverse Y Solenoid valve Y1~Y6

5. AXLE

1) STRUCTURE

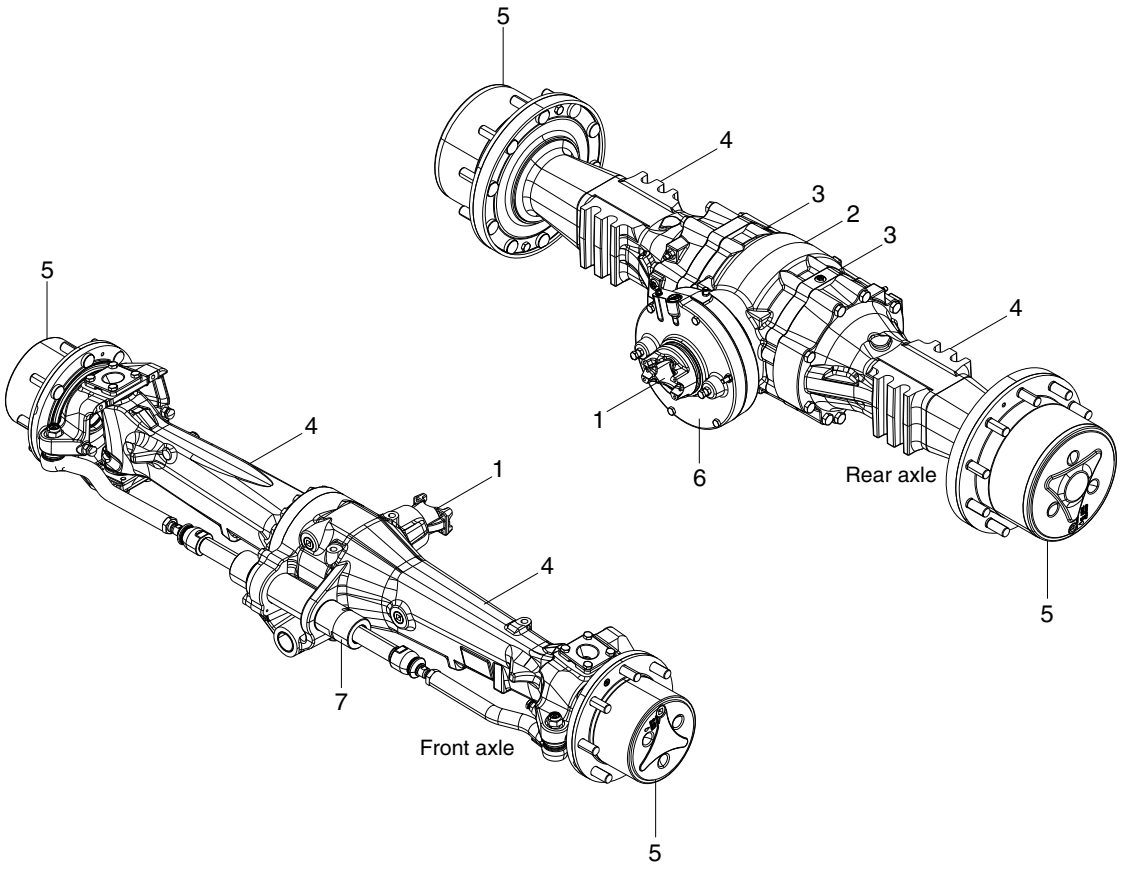

HB100PT10

1	Input	4	Axle housing	7	Steering cylinder
2	Axle drive housing	5	Output unit		
3	Bearing housing	6	Parking brake		

2) DIFFERENTIAL

(1) Description

When the machine makes a turn, the outside wheel must rotate faster than the inside wheel. A differential is a device which continuously transmits power to the right and left wheels while allowing them to turn a different speeds, during a turn.

The power from the drive shaft passes through bevel pinion (1) and is transmitted to the bevel gear (2). The bevel gear changes the direction of the motive force by 90 degree, and at the same time reduces the speed.

It then transmits the motive force through the differential (3) to the axle gear shaft (4).

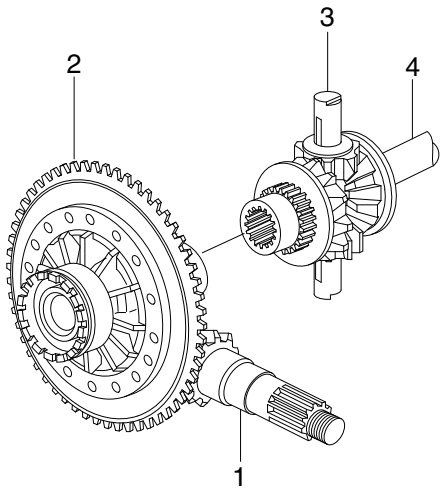

770-3 [3-26(1)]

(2) When driving straight forward

When the machine is being driven straight forward and the right and left wheels are rotating at the same speed, so the pinion gear inside the differential assembly do not rotate. The motive force of the carrier is send through the pinion gear and the side gear, therefore the power is equally transmitted to the left and right axle gear shaft.

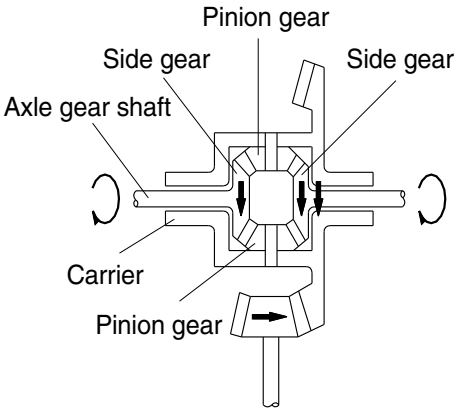

770-3 [3-26(2)]

(3) When turning

When turning, the rotating speed of the left and right wheels is different, so the pinion gear and side gear inside the differential assembly rotate in accordance with the difference between the rotating speed of the left and right wheels.

The power of the carrier is then transmitted to the axle gear shafts.

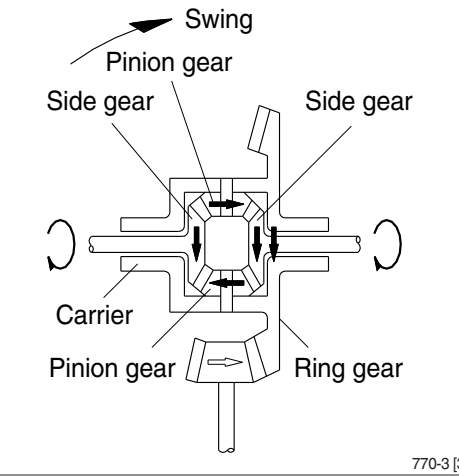

770-3 [3-26(3)]

6. TIRE AND WHEEL

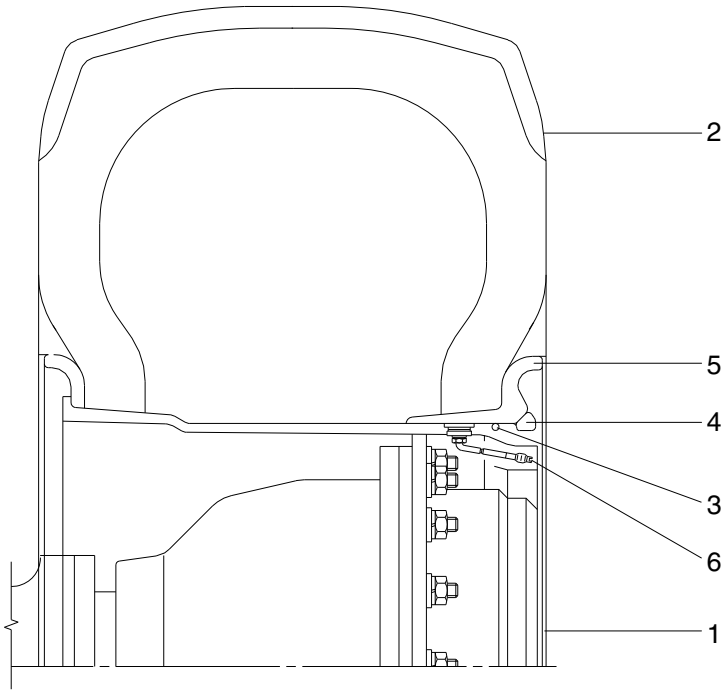

7407APT10

1	Wheel rim	3	O-ring	5	Side ring
2	Tire	4	Lock ring	6	Valve assembly

1) The tire acts to absorb the shock from the ground surface to the machine, and at the same time they must rotate in contact with the ground to gain the power which drives the machine.

2) Various types of tires are available to suit the purpose. Therefore it is very important to select the correct tires for the type of work and bucket capacity.

GROUP 2 OPERATIONAL CHECKS AND TROUBLESHOOTING

1. POWER TRAIN OPERATIONAL CHECKS

This procedure is designed so that the mechanic can make a quick check of the system using a minimum amount of diagnostic equipment. If you need additional information, read Structure and function, Group 1.

A location will be required which is level and has adequate space to complete the checks.

The engine and all other major components must be at operating temperature for some checks.

Locate system check in the left column and read completely, following the sequence from left to right. Read each check completely before performing.

At the end of each check, if no problem is found (OK), that check is complete or an additional check is needed. If problem is indicated (NOT OK), you will be given repair required and group location. If verification is needed, you will be given next best source of information :

Chapter 2 : Troubleshooting
Group 3 : Tests and adjustments

※ **Transmission oil must be at operating temperature for these checks.**

Item	Description	Service action
Transmission oil warm-up procedure	 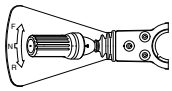 Start engine. Apply service brakes and release parking brake. Move gear selector lever to 3rd speed. Move gear selector lever to forward "F" position. Increase engine speed to high idle for 30 seconds. Move gear selector lever to neutral "N" position and run for 15 seconds. Repeat procedure until warm-up operation is completed.	**OK** Check completed.
Gear selector lever Engine OFF.	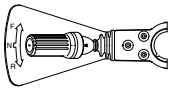 Move gear selector lever to each position. **NOTE** : Gear selector lever position changes slightly as steering column is tilted. **FEEL** : Lever must move freely through all positions.	**OK** Check completed. **NOT OK** Repair lock or replace switch.
Transmission noise check Engine running.	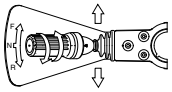 Run engine at approximately 1600 rpm. Drive unit with transmission in each forward and reverse speed. LISTEN : Transmission must not make excessive noise in any range. Engine rpm must not "lug down" as unit is shifted between gears.	**OK** Check completed. **NOT OK** Go to transmission makes excessive noise, chapter 2 in this group.
Forward, reverse and 4th speed clutch pack drag check ※ **Transmission must be warmed up for this check.** Engine running.	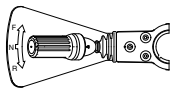 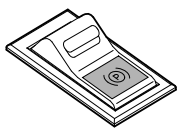 Park machine on level surface. Apply service brakes. Move gear selector lever to neutral. Move gear selector lever to 1st. Release parking brake and service brakes. Run engine at low idle. **LOOK** : Machine must not move in either direction. **NOTE** : If unit moves forward, either the forward pack or the 4th speed pack is dragging.	**OK** Check completed. **NOT OK** If unit moves, repair transmission.

Item	Description	Service action
Torque converter check	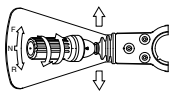 Start engine. Apply service brakes and release parking brake. Move gear selector lever to 4th speed. Move gear selector control lever to forward "F" position. Increase engine speed to high idle. **LOOK** : Torque converter stall rpm must be within the following range. Stall rpm : H930S (1980±70) H940S (2030±70) Move gear selector control lever to neutral "N" position and run for 15 seconds.	**OK** Check completed. **NOT OK** If stall rpm are too low or too high, problem may be engine power or torque converter. **IF OK** Replace transmission torque converter.

2. TROUBLESHOOTING

1) TRANSMISSION

※ **Diagnose malfunction charts are arranged from most probable and simplest to verify, to least likely, more difficult to verify. Remember the following steps when troubleshooting a problem :**

Step 1. Operational check out procedure (See group 3 in section 1.)
Step 2. Operational checks (In this group.)
Step 3. Troubleshooting
Step 4. Tests and/or adjustments (See group 3.)

Problem	Cause	Remedy
Transmission slippage	Low oil level.	Add oil.
	Wrong oil grade.	Change oil.
	Leak in transmission control valve or gasket.	Remove valve and inspect gaskets.
	Low transmission pump flow due to worn pump.	Do transmission pump flow test.
	Weak or broken pressure regulating valve spring.	Do transmission system pressure test.
Machine will not move	Low oil level.	Add oil.
	Applied park brake.	Check parking brake fuse. Check continuity to parking brake switch.
	Malfunctioning parking brake solenoid valve.	Remove and inspect parking brake solenoid valve. Check for power to solenoid valve.
	Excessive leakage in transmission element.	Do transmission element leakage test using system pressure.
	Worn clutch disks.	Repair transmission.
	Low or no transmission pressure.	See transmission pressure is low in this group.
	Service brake will not release.	Do brake pedal operational check. Do service and park system drag checks.
	Failed torque converter.	Do torque converter stall test. If engine pull down in normal, torque converter is good.
	Broken shafts or gears.	Drain transmission to determine if large pieces of metal contamination are present.
	Broken drive shafts.	Inspect drive shafts and universal joints for external damage. Repair.
Machine does not engage in low gear	Malfunctioning transmission control solenoid valve.	Check solenoid valve.
	Stuck spool in transmission control valve.	Remove and inspect transmission control valve spools.

Problem	Cause	Remedy
Transmission pressure is low (all gears)	Low oil level.	Check transmission oil level and refill if necessary.
	Stuck transmission pressure regulating valve or broken spring.	Remove transmission pressure regulating valve. Inspect for damage (See transmission control valve).
	Failed control valve gasket.	Inspect transmission control valve for external leakage. Remove control valve. Inspect or replace gasket.
Transmission system pressure is low (one or two gears)	Failed transmission pump.	Do pump flow test.
	Failed transmission control valve gasket.	Inspect transmission control valve for external leakage. Remove control valve. Inspect or replace gasket.
	Leakage in clutch piston or seal ring.	Disassemble and repair.
Transmission shifts too late	Low oil level (aeration of oil).	Add oil.
	Low transmission pressure.	Do transmission system pressure test.
	Restricted transmission pump suction screen.	Remove and clean screen.
	Low transmission pump flow.	Do transmission pump flow test.
	Excessive transmission element leakage.	Do transmission element leakage test using system pressure.
	Restricted oil passages between control valve and transmission elements.	Remove control valve and inspect oil passage.
	Incorrect transmission oil.	Change oil (SAE 10W-30/15W-40)
Transmission shifts too fast	System pressure too high.	Do transmission system pressure test.
	Broken piston return spring.	Disassemble and inspect clutch.
	Incorrect transmission oil.	Change oil (SAE 10W-30/15W-40).

Problem	Cause	Remedy
Transmission hydraulic system overheats	High oil level.	Transmission overfilled or hydraulic pump seal leaking.
	Low oil level.	Add oil.
	Wrong oil grade.	Change oil.
	Pinched, restricted or leaking lube lines.	Check cooler lines.
	Machine operated in too high gear range.	Operate machine in correct gear range.
	Malfunction in temperature gauge or sensor.	Install temperature sensor the verify temperature. Do tachometer/temperature reader installation procedure.
	Restricted air flow through oil cooler.	Do oil cooler flow test.
	Internally restricted oil cooler.	Do oil cooler restriction test.
	Leakage in transmission hydraulic system.	Do transmission system pressure, element leakage test.
	Malfunction in converter relief valve.	Do converter out pressure test.
	Low transmission pump output.	Do transmission pump flow test.
Excessive transmission noise (Under load or no load)	Too low engine low idle.	Check engine low idle speed.
	Worn parts or damaged in transmission.	Drain transmission oil via plug. Inspect for metal particles. Repair as necessary.
	Low or no lube.	Do converter-out and lube pressure test. Do transmission pump flow test.
Foaming oil	Incorrect type of oil.	Change oil.
	High oil level.	Transmission overfilled or hydraulic pump seal leaking.
	Low oil level.	Add oil.
	Air leak on suction side of pump.	Check oil pickup tube on side of transmission.
Machine vibrates	Aerated oil.	Add oil.
	Low engine speed.	Check engine speed.
	Failed universal joints on transmission drive shaft or differential drive shafts.	Check universal joints.

Problem	Cause	Remedy
Machine lacks power and acceleration	Engine high idle speed set too low.	Check high idle adjustment.
	Incorrect transmission oil.	Change oil.
	Aerated oil.	Add oil.
	Low transmission pressure.	Do transmission system pressure test.
	Warped transmission clutch.	Do transmission clutch drag checks.
	Torn transmission control valve gasket.	Inspect gasket.
	Brake drag.	Do brake drag check.
	Failed torque converter.	Do torque converter stall speed test.
	Low engine power.	Do engine power test.
Torque converter stall RPM too high	Aerated oil.	Run machine to check for bubbles in oil.
	Stuck open converter relief valve.	Do converter-out pressure test.
	Leakage in torque converter seal.	Do converter-out pressure test.
	Torque converter not transferring power (Bent fins, broken stator).	Replace torque converter.
Torque converter stall RPM too low	Low engine power.	Do engine power test.
	Mechanical malfunction.	Remove and inspect torque converter.

2) DIFFERENTIAL / AXLE

Problem	Cause	Remedy
Differential low on oil	External leakage.	Inspect axle and differential for leaks.
Excessive differential and/or axle noise	Low oil level in differential.	Check oil. Remove drain plug and inspect for metal particles in differential case. Disassemble and determine cause.
	Incorrect type of oil.	Change oil
	Dragging brakes.	Do brake check.
	Failed pinion bearing.	Remove and inspect pinion. Check to ensure pinion housing was indexed.
	Incorrect gear mesh pattern between ring and pinion gear.	Remove pinion gear housing and inspect ring and pinion gear.
	Failed differential pinion gears and/or cross shafts.	Remove differential housing drain plug and inspect for metal particles. Disassemble and inspect.
	Failed axle bearing.	Do axle bearing adjustment check.
	Mechanical failure in axle planetary.	Remove differential. Inspect, repair.
Oil seeping from outer axle seal	Excessive end play in axle.	Do axle bearing adjustment check.
	Worn outer bearing and/or cup.	Disassemble and inspect outer axle bearing, cup, spacer, and seal. Replace, if necessary.
	Overfilled differential.	Check differential oil return system for excessive internal restriction.
Axle overheats	Low differential oil.	Add oil.
	Overfilled differential.	See differential overfills with oil in this group.
	Brake drag.	See brakes drag in this group.

3) DRIVE LINE

Problem	Cause	Remedy
Excessive drive line vibration or noise	Yokes not in line on drive shafts.	Inspect. Align drive shaft yokes.
	Worn front drive line support bearing.	Inspect, repair.
	Bent drive shaft.	Inspect all drive shafts. Replace.
	Loose yoke retaining nuts (drive shafts wobble at high speed).	Inspect. Replace.
	Lack of lubrication.	Lubricate with proper grade of grease.

GROUP 3 TESTS AND ADJUSTMENTS

1. TRANSMISSION MEASURING POINTS AND CONNECTIONS

The measurements have to be carried out at hot transmission (about 80~95˚C).

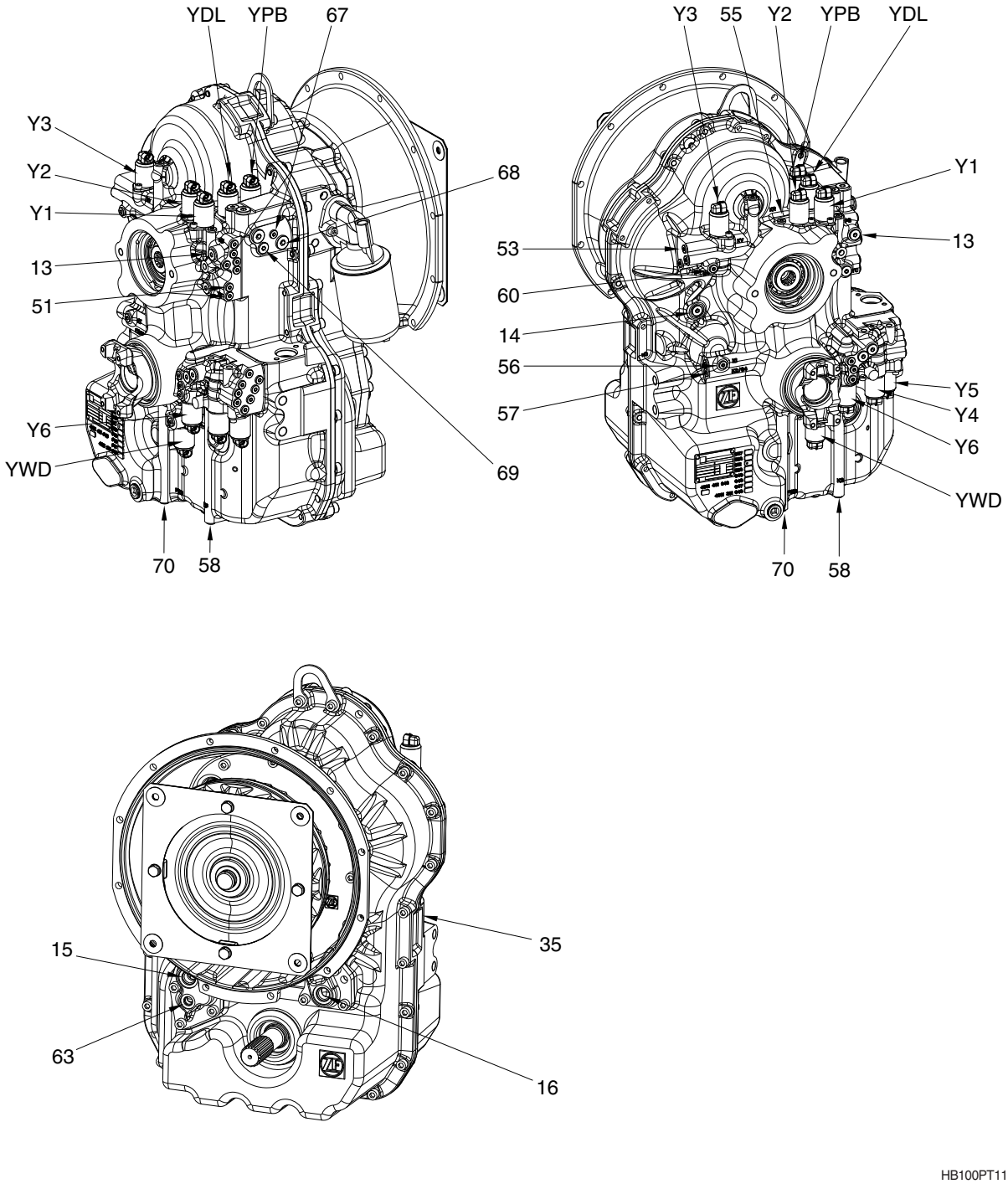

HB100PT11

1) OIL PRESSURE AND TEMPERATURE

Port	Description			Size
51	Before the converter - opening pressure 11+2 bar			M10×1
53	Forward clutch	18+3 bar	KV	M10×1
55	Reverse clutch	18+3 bar	KR	M10×1
56	Clutch	18+3 bar	K1	M10×1
57	Clutch	18+3 bar	K2	M10×1
★ 58	Clutch	18+3 bar	K3	M10×1
60	Clutch	18+3 bar	K4	M10×1
63	Temperature after the converter 100°C ; short term 120°C			M14×1.5
67	System pressure	18+3 bar		M10×1
68	Parking brake	18+3 bar	YPB	3/4"-18UNF
69	Differential lock	18+3 bar	YDL	9/16"-18UNF
★ 70	Front wheel drives	18+3 bar	YWD	M10×1

★ : 4 wheel drive only

2) CONNECTIONS

Port	Description	Size
13	Connection to parking brake (rear axle)	9/16"-18UNF
14	Connection return flow into the transmission pump	9/16"-18UNF
15	Connection to oil cooler	7/8"-14UNF
16	Connection from oil cooler	7/8"-14UNF

3) INDUCTIVE SENSOR

Port	Description		Size
35	Inductive sensor	n speedometer (option)	M18×1.5

4) VALVES

Port	Description
Y1~Y6	Control valves
★ YWD	Front wheel drive
YDL	Differential lock (rear axle)
YPB	Parking brake (rear axle)

★ : 4 wheel drive only

1. TRANSMISSION

1) DISASSEMBLY

Solenoid valves, inductive sensor, screw plugs and nozzles (orifices)

(1) Loosen cylindrical screws, remove bracket and pull solenoid valves off the holes.

※ Mark solenoid valves (different versions).

1 = Y3 (control valve)
2 = YPB (parking brake - rear axle)
3 = YDL (differential lock - rear axle)
4 = Y1 (control valve)
5 = Y2 (control valve)
6 = Y5 (control valve)
7 = Y4 (control valve)
8 = Y6 (control valve)
9 = YWD (front wheel drive)

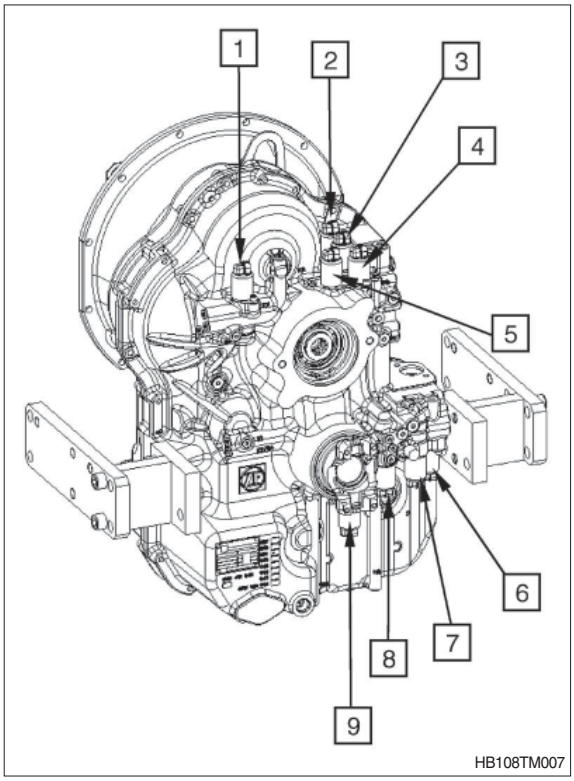

※ Version with inductive sensor (option).

(2) Loosen inductive sensor (1).

※ Remove O-ring.

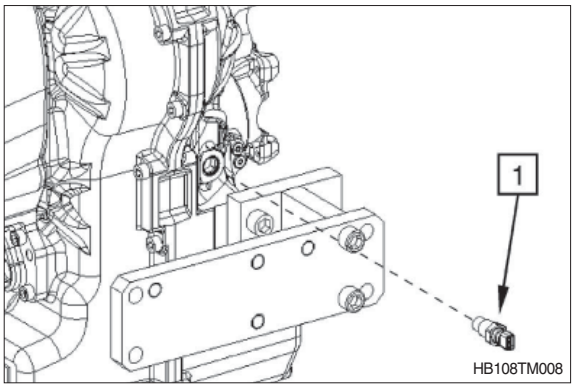

(3) Pull output flange (1) off the output shaft.

※ Remove all screw plugs and nozzles (orifices).

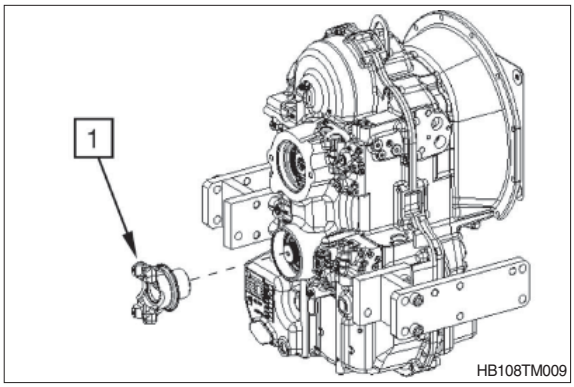

2) DISASSEMBLY OF ENGINE CONNECTION, MAIN PRESSURE VALVE AND CONVERTER SAFETY VALVE

(1) Engine connection

① Loosen hexagon screws (1) and separate flexplate (2) from converter (3).

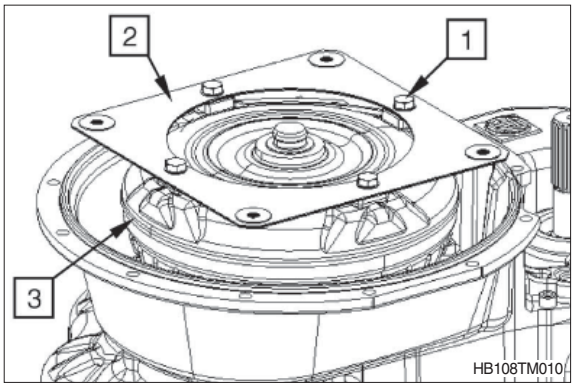

② Pull off converter (1) by hand.

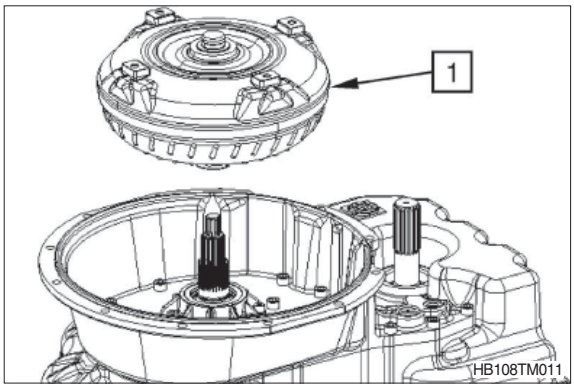

③ Loosen bolted connection between converter bellhousing/housing (1) and transmission pump/housing (2).

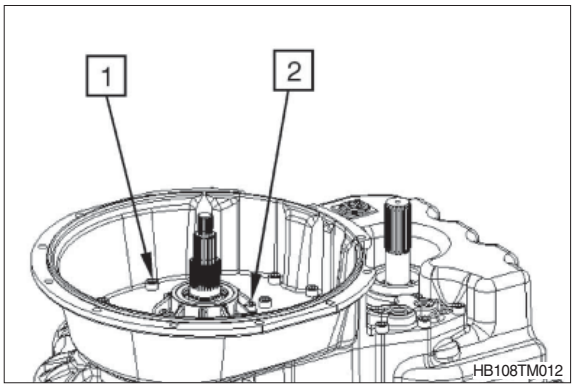

④ Loosen screw plug "measuring point 63" (1).

※ Remove O-ring.

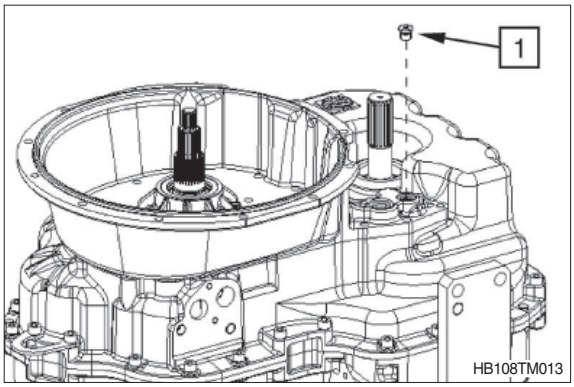

⑤ Separate converter bellhousing from the mounting face of the transmission housing by means of slight hits with a plastic hammer.

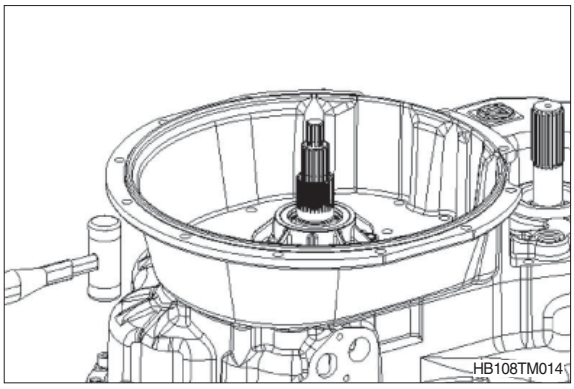

⑥ Remove converter bellhousing by means of assembly lever.

※ Difficult disassembly due to fixing by cylindrical pins.

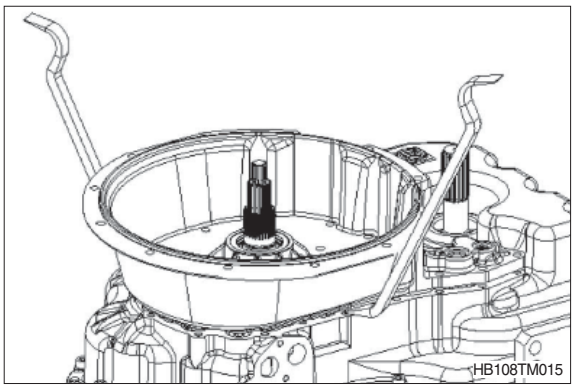

⑦ If required, remove both cylindrical pins (1).

⑧ Remove filter (2).

※ Transmission pump cannot be separated from the housing until the 4 cylindrical screws of the housing inner side have been loosened.

⚠ Fit adjusting screws to ensure that the transmission pump is centered at the housing after the 4 cylindrical screws have been loosened.

(S) Adjusting screws (M10) 5870 204 007

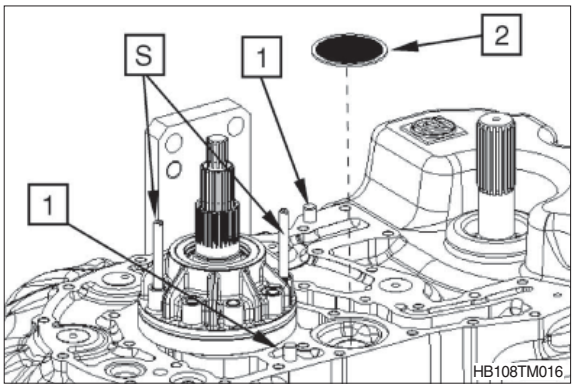

(2) Main pressure valve and converter safety valve

① Loosen screw plug (1) and remove main pressure valve (control pressure valve) :

Main pressure valve consists of:
1 = Screw plug
2 = O-ring
3 = Piston
4 = Spacer ring
5 = Compression spring

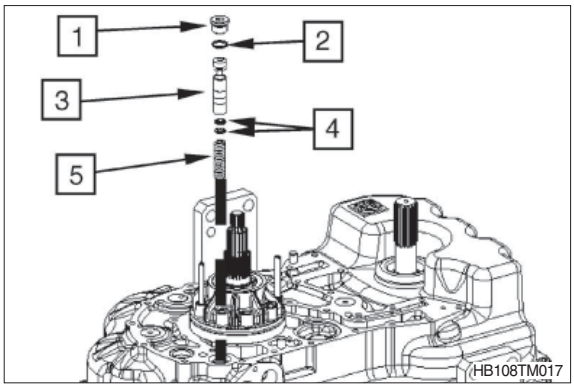

※ Functional check of converter safety valve (1).
Use a screwdriver to check the movability of the ball in the valve.

※ If the valve is o.k., it does not need to be removed.

※ Valve assy is installed in the housing-not visible.

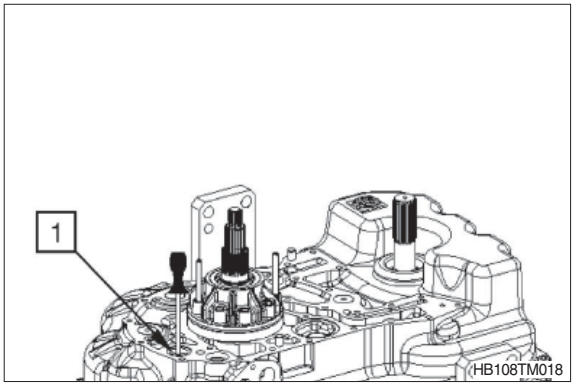

3) REMOVAL OF CLUTCHES, CENTRAL SHAFT AND DISASSEMBLY OF TRANSMISSION PUMP

(1) Removal of clutches

① Force out cylindrical pins (1).
Loosen bolted connection (2) of housing front and rear part.

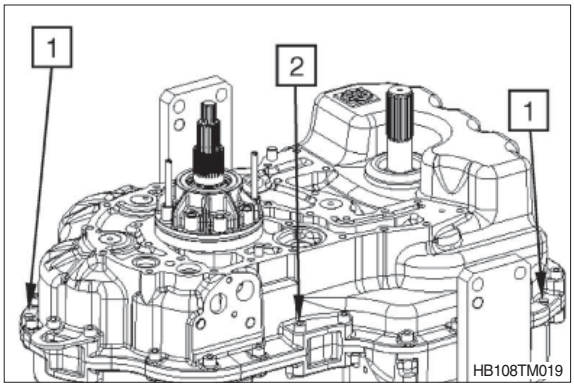

② Separate housing front part from transmission housing rear part by means of lifting device (approx. 1 cm).

③ Use the plastic hammer to reset the output shaft (1) of the front wheel drive to its initial position, thus separating the screen sheet (2) from the shaft of the clutch.

(S) Eye bolts assortment 5870 204 002

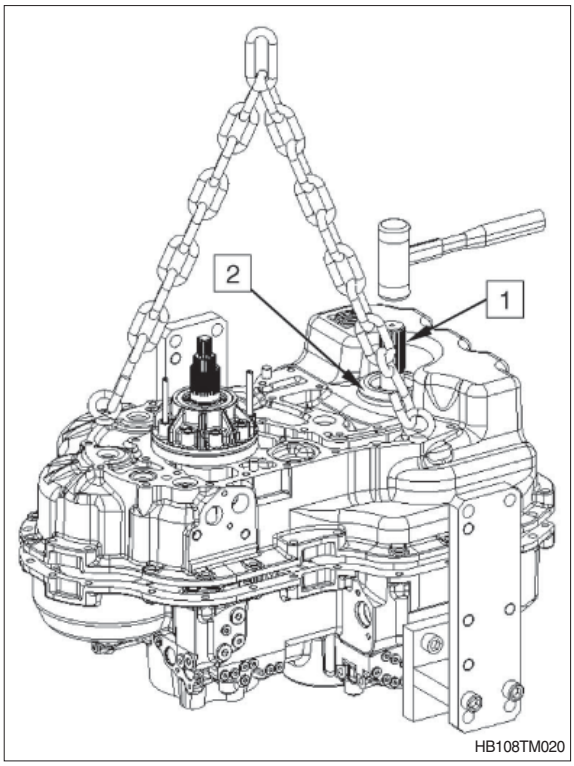

④ Remove screen sheet (1) and separate transmission housing front part by means of lifting device.

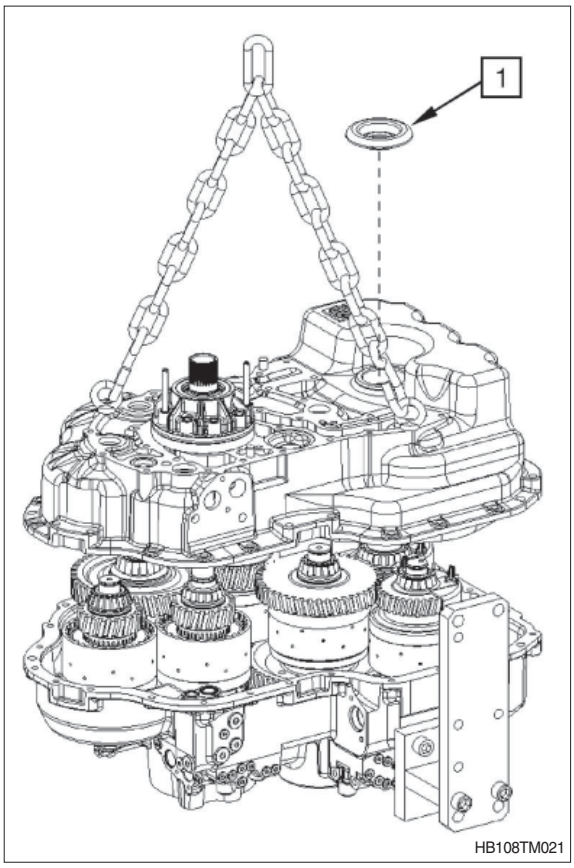

⑤ Designation of clutches:
KV = Forward clutch (directional clutch)
KR = Reverse clutch (directional clutch)
K1 = K1 clutch (gear clutch)
K2 = K2 clutch (gear clutch)
K3 = K3 clutch (gear clutch)
K4 = K4 clutch (directional clutch)
VA = Front wheel drive clutch

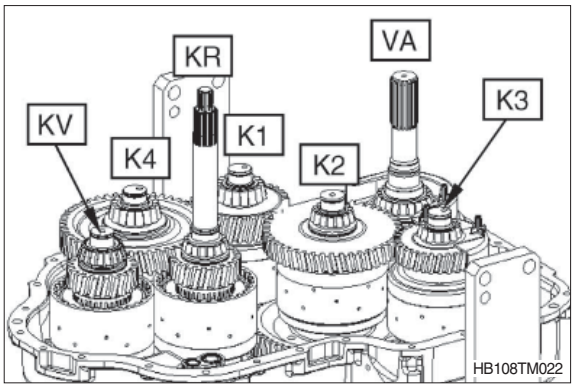

⑥ Remove K4 clutch.

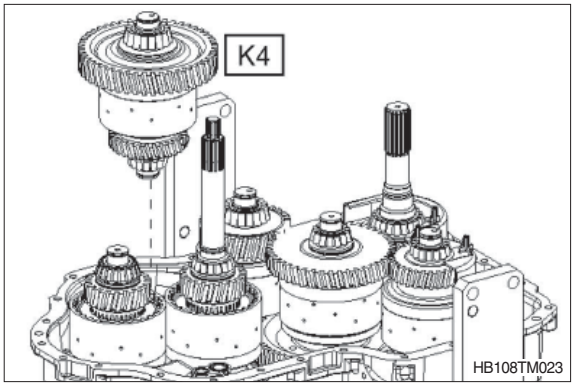

⑦ Slightly lift clutch (K2) and remove clutch (K1).

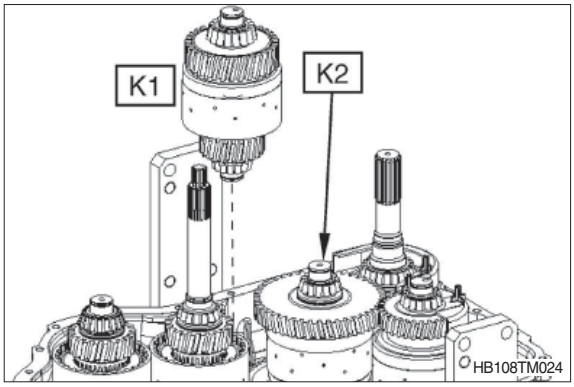

⑧ Lift KV and KR clutch off the bearing outer rings jointly and then remove them one after the other.

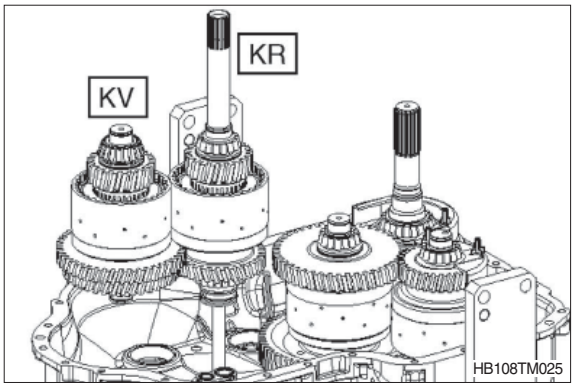

⑨ Jointly remove VA, K2 and K3 clutch together with screen sheet (1).

⑩ Use the lifting device to jointly lift VA and K3 clutch together with K2 clutch, and then remove the components one after the other.

(S) Eyebolts 5870 204 080

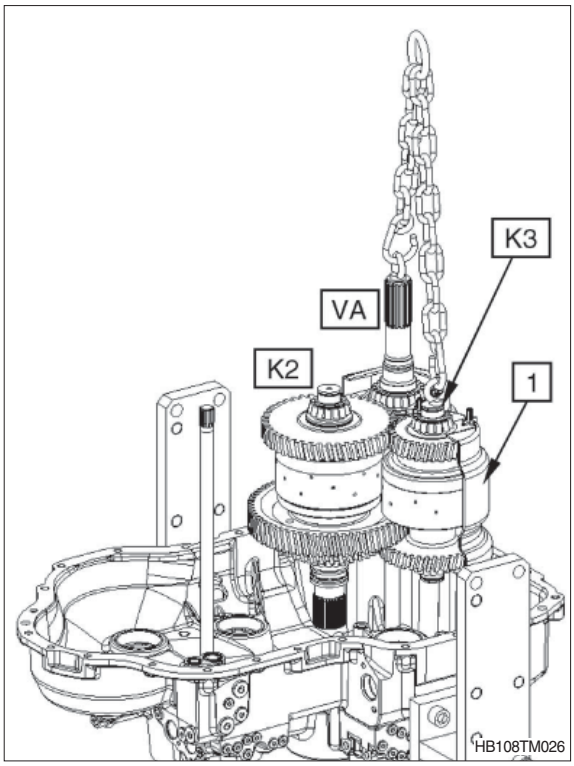

⑪ Snap out retaining ring (1) and remove central shaft (2).

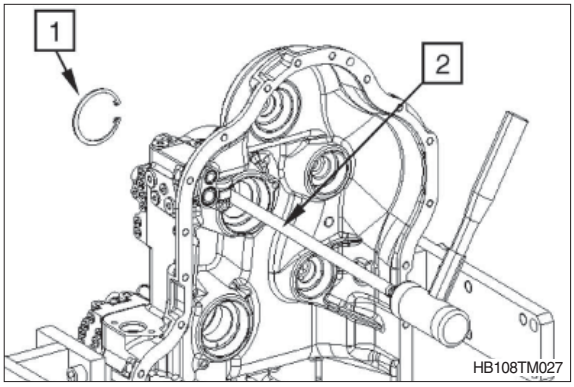

⑫ Snap out rectangular ring (1).

⑬ Press ball bearing (2) off the central shaft (3).

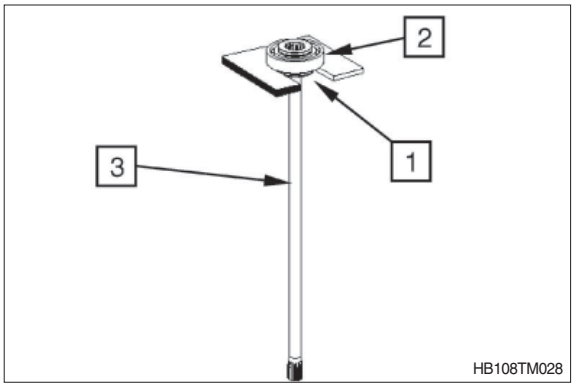

⑭ Remove O-rings (1).

⑮ Remove all bearing outer rings (2) from the housing rear part.

※ If the tapered roller bearings of clutches are not replaced, it is imperative to ensure the previous pairing (bearing outer ring / bearing inner ring).

※ Bearing outer ring and bearing inner ring must be marked.

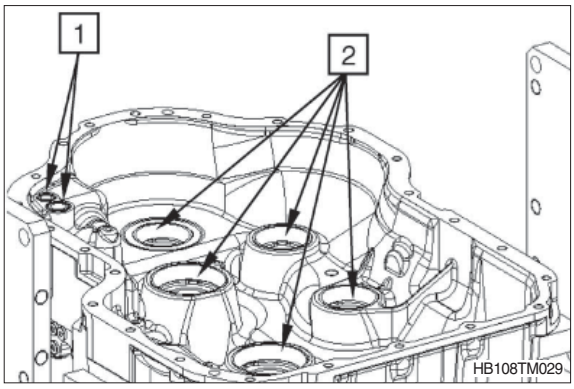

⑯ Loosen the cylindrical screws (1) and remove suction tube (2) .

⑰ Remove all bearing outer rings (3) from the housing front part.

※ If the tapered roller bearings of clutches and input are not replaced, it is imperative to ensure the previous pairing (bearing outer ring / bearing inner ring).

※ Bearing outer ring and bearing inner ring must be marked.

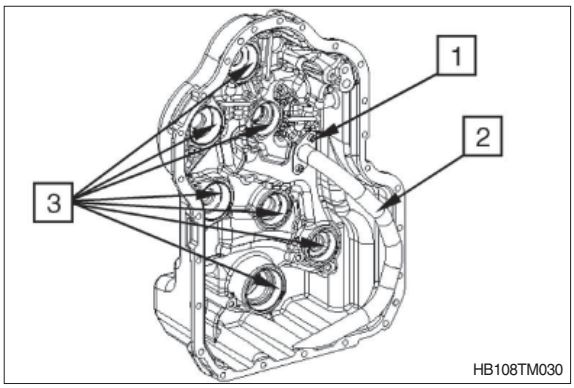

(2) Disassembly of transmission pump

① Loosen cylindrical screws (3 and 4) and remove transmission pump.

⚠ Pay attention so that the transmission pump does not drop.

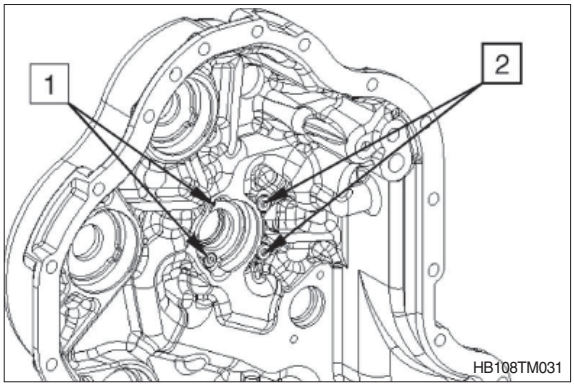

② Remove transmission pump (1).

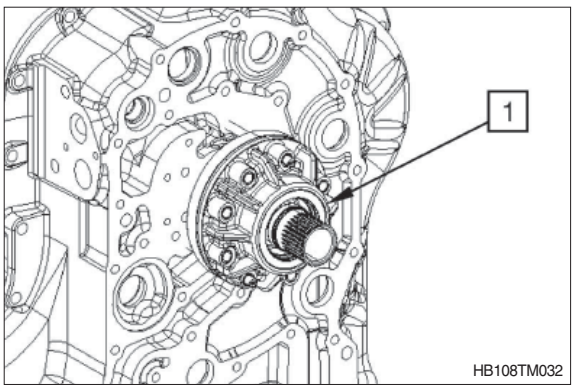

③ Remove O-ring (1).
④ Loosen cylindrical screws (2).

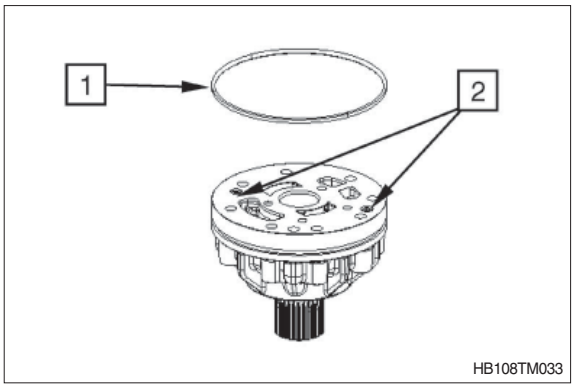

※ **Check transmission pump:**
In case of wear marks in the pump housing, stator hollow shaft or on the inner and outer rotor, the complete transmission pump must be replaced.

1 = Stator hollow shaft
2 = Inner rotor
3 = Outer rotor
4 = Pump housing

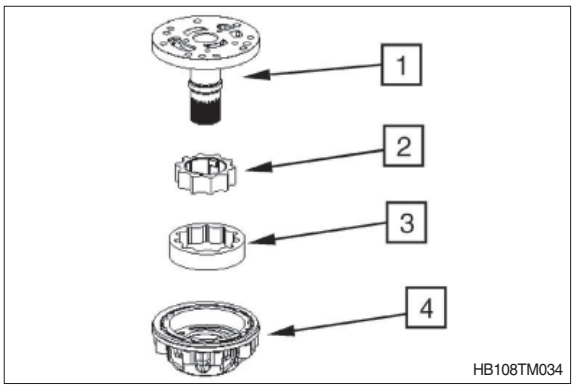

⑤ Remove shaft seal ring (1) from the pump housing (2).

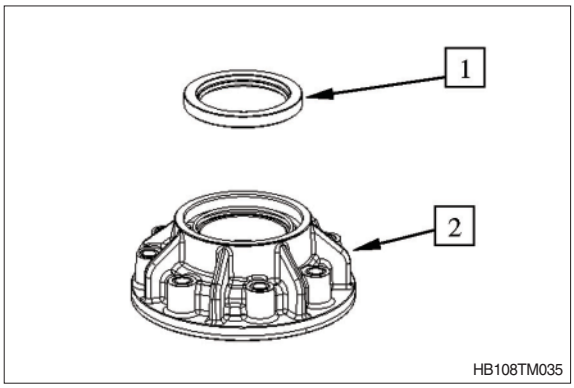

4) DISASSEMBLY CLUTCHES

(1) KR clutch / input

① Snap out rectangular ring (1).

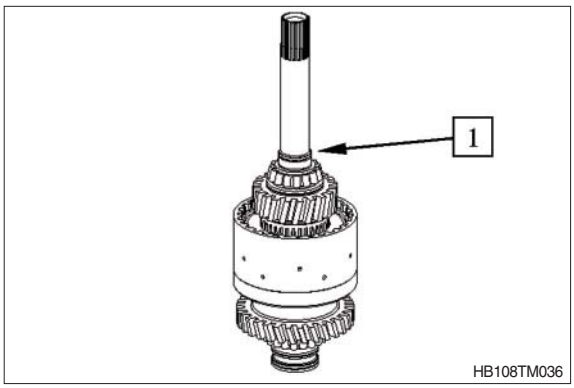

② Pull off bearing inner ring with inner disk carrier (1).

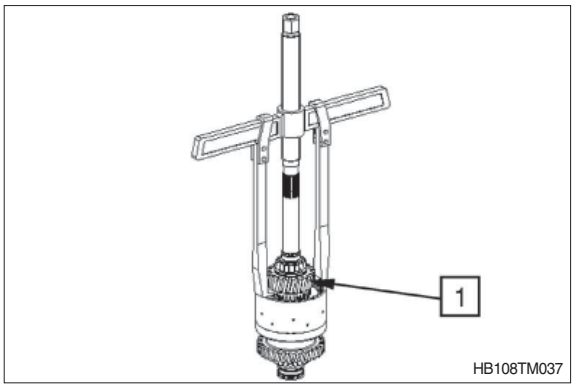

③ Remove bearing inner ring (1), axial bearing assy (2) and inner disk carrier (3).

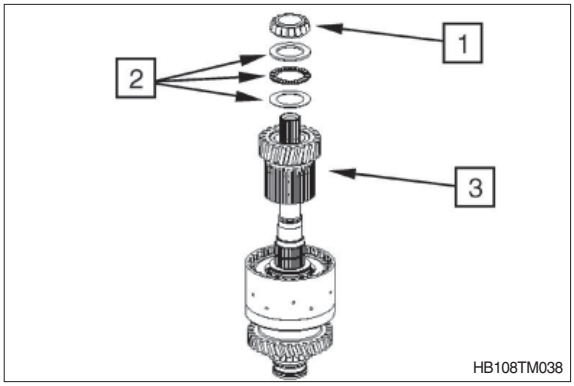

④ Remove needle cage (1).

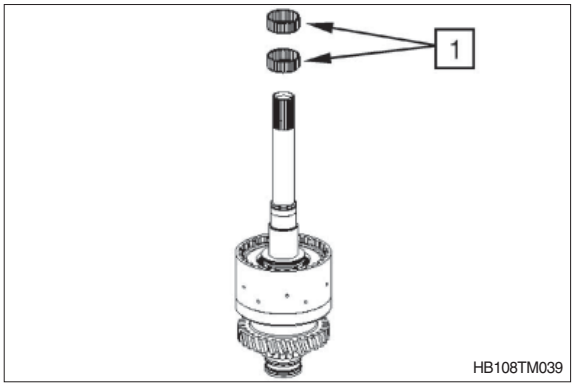

⑤ Remove axial bearing assy (1).

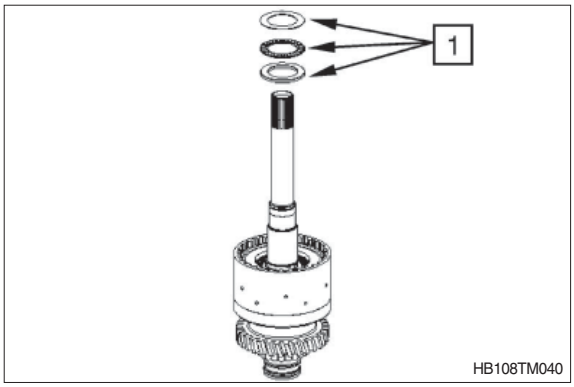

⑥ Remove snap ring (1).

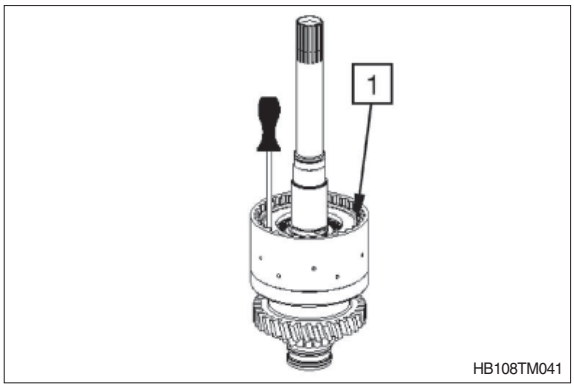

⑦ Remove end plate (1), disk package (2) and plate assy with cup springs (3) from the disk carrier.

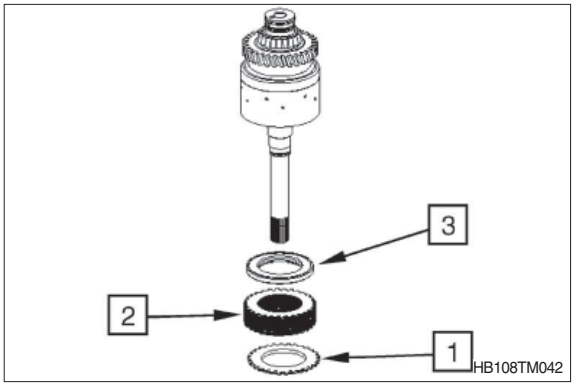

⑧ Remove retaining ring (1) at axial bearing contact.

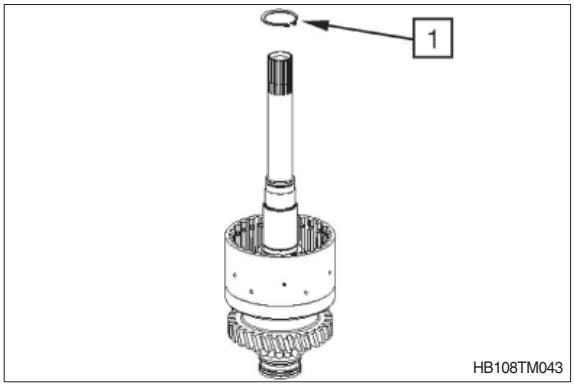

⑨ Preload compression spring and remove snap ring (1).

(S) Assembly aid 5870 345 114

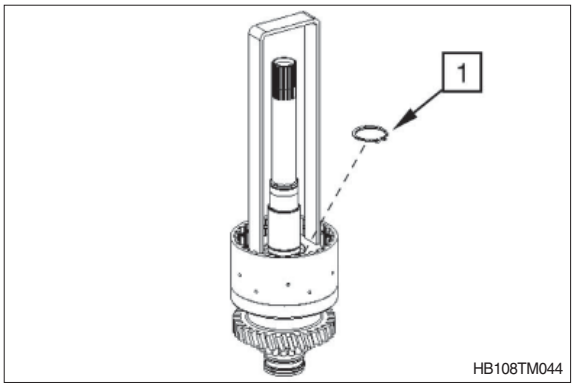

⑩ Remove spring cup (1) and compression spring (2).

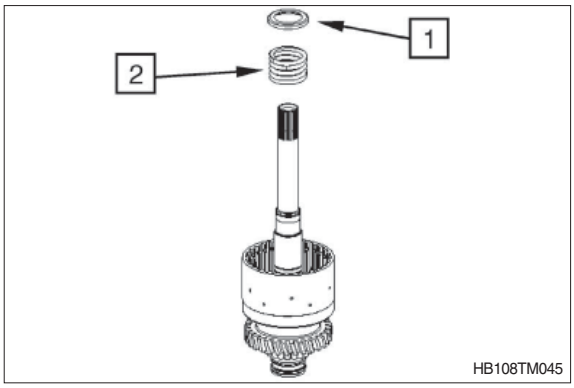

⑪ By means of compressed air (see arrow), press piston (1) off the shaft/disk carrier and remove it.

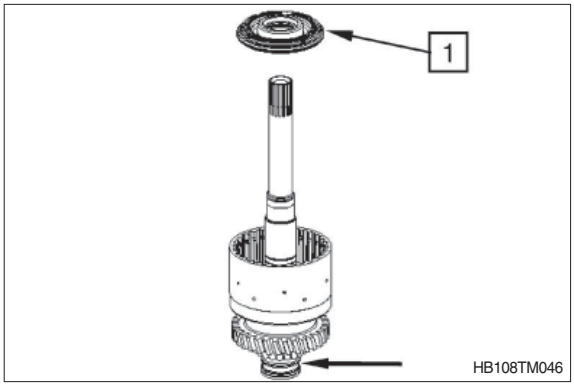

⑫ Remove both O-rings (1 and 2).

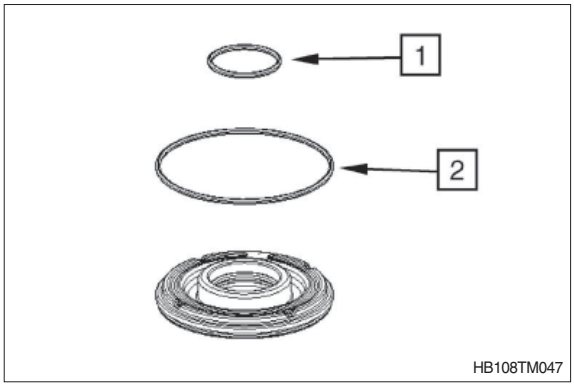

⑬ Snap out rectangular rings (1).

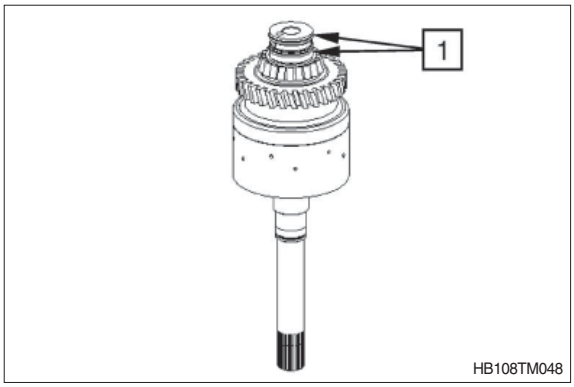

⑭ Pull tapered roller bearing (inner ring) off the shaft.

(S) Grab sleeve 5873 001 026
(S) Basic tool 5873 001 000

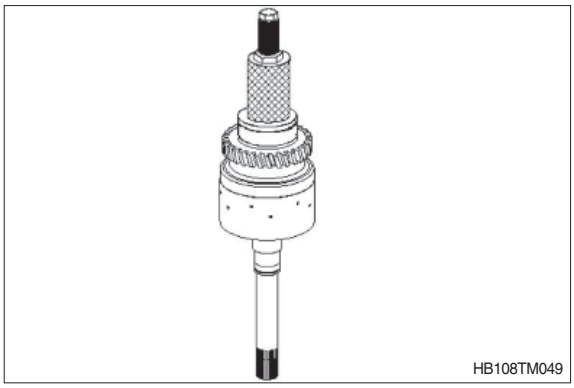

※ The input shaft (1) cannot be disassembled.
It is supplied by the spare parts service only as a complete assy which consists of:

1A = Ball
1B = Helical gear
1C = Disk carrier
1D = Input shaft

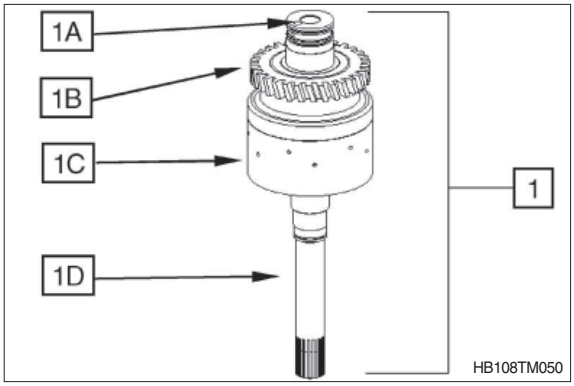

(2) KV clutch

① Snap out rectangular ring (1).

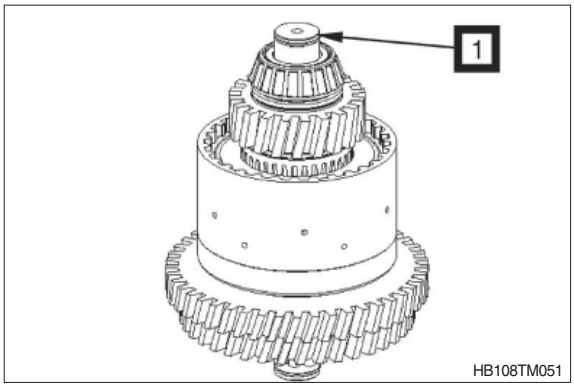

② Pull off bearing inner ring with inner disk carrier (1).

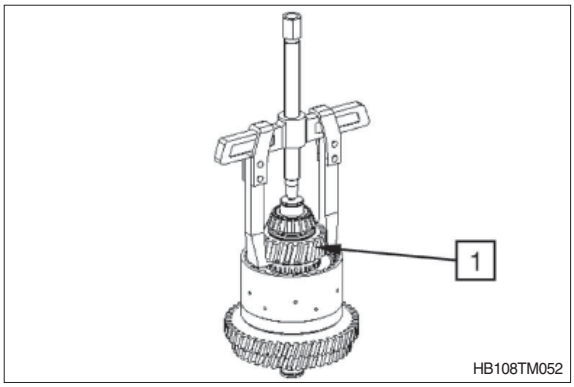

③ Remove bearing inner ring (1), axial bearing assy (2) and inner disk carrier (3).

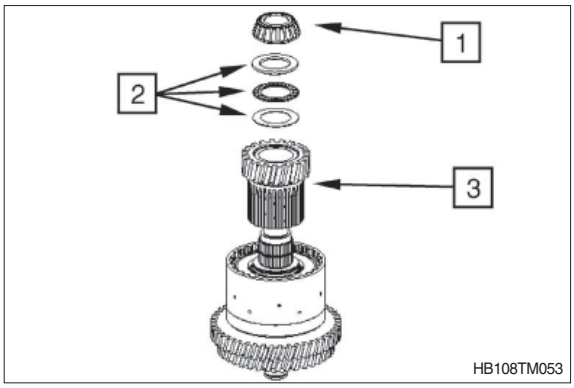

④ Remove needle cage (1).

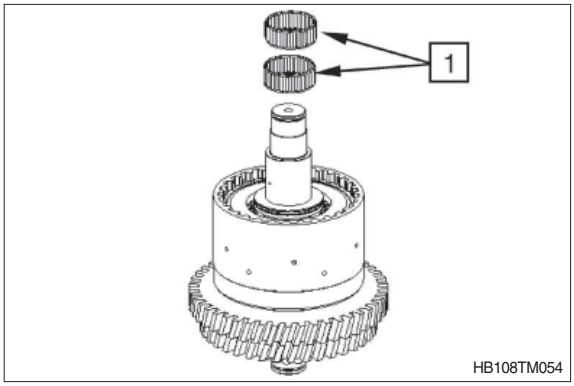

⑤ Remove axial bearing assy (1).

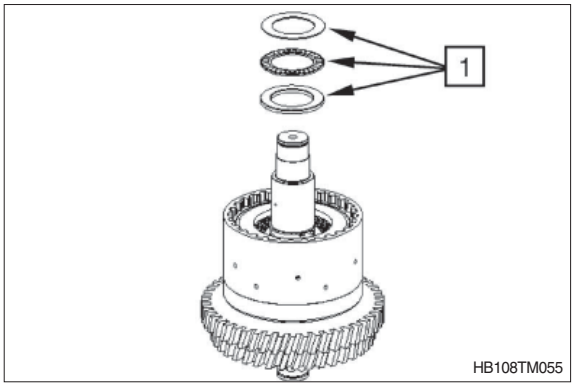

⑥ Remove snap ring (1).

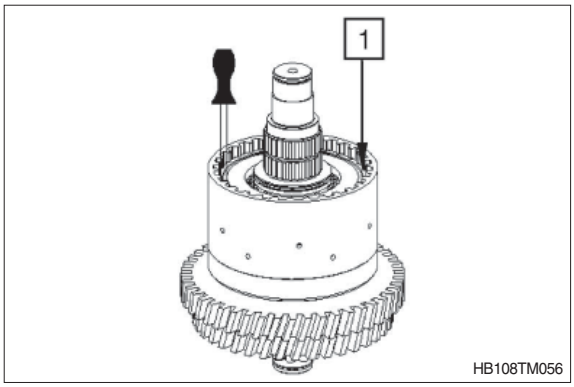

⑦ Remove end plate (1), disk package (2) and plate assy with cup springs (3) from the disk carrier.

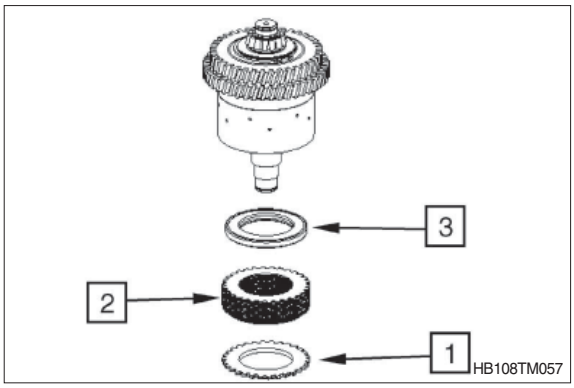

⑧ Remove retaining ring (1) at axial bearing contact.

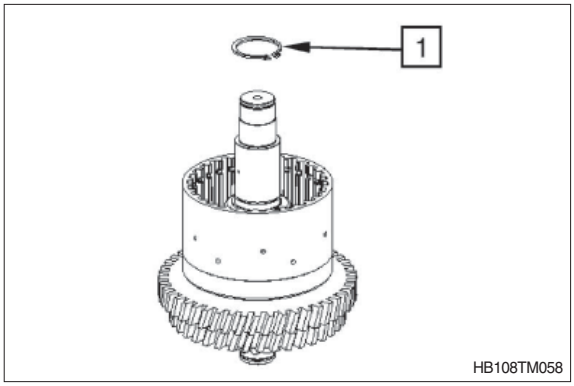

⑨ Preload compression spring and remove snap ring (1).

(S) Assembly aid 5870 345 114

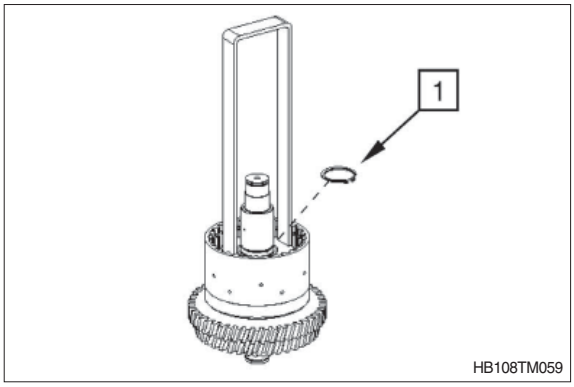

⑩ Remove spring cup (1) and compression spring (2).

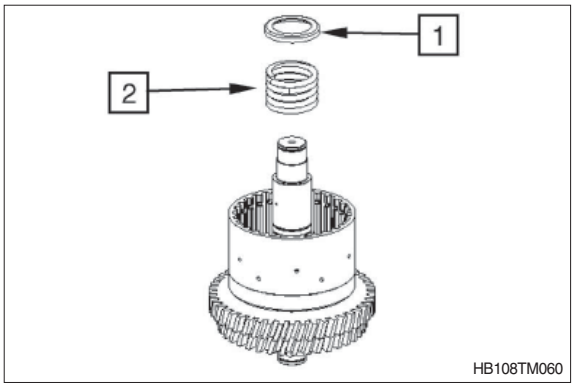

⑪ By means of compressed air (see arrow), press piston (1) off the shaft/disk carrier and remove it.

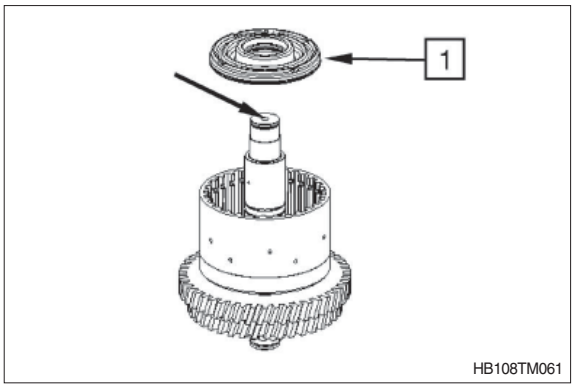

⑫ Remove both O-rings (1 and 2).

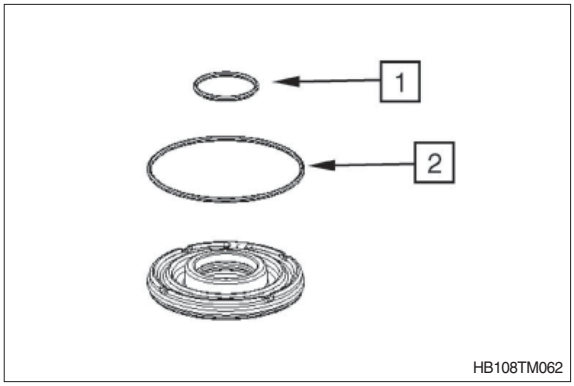

⑬ Snap out rectangular ring (1).

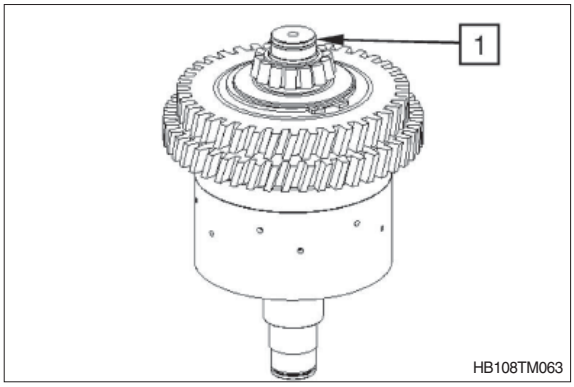

⑭ Pull tapered roller bearing (inner ring) off the shaft.

(S) Grab sleeve	5873 000 029
(S) Basic tool	5873 000 001

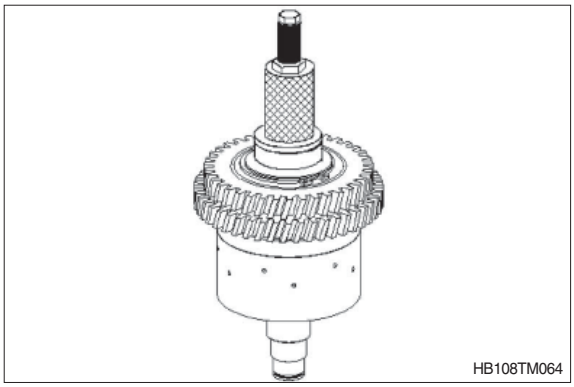

※ The clutch (1) cannot be disassembl-ed. It is supplied by the spare parts service only as a complete assy which consists of:

1A = Retaining ring
1B = Helical gear
1C = Helical gear
1D = Disk carrier
1E = Shaft

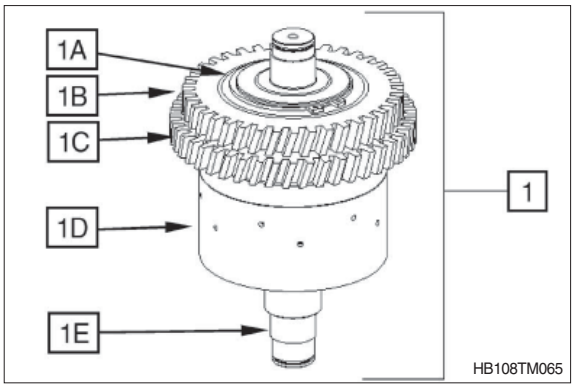

(3) K1 clutch

① Snap out rectangular ring (1).

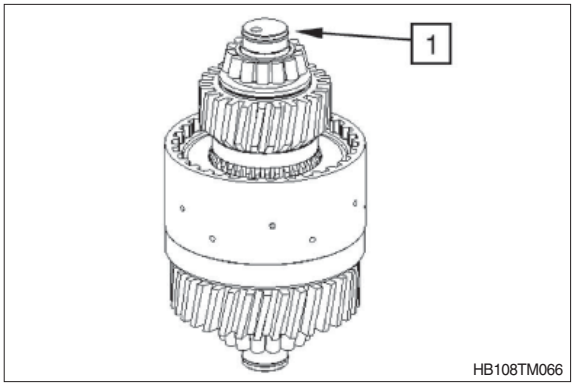

② Pull off bearing inner ring with inner disk carrier (1).

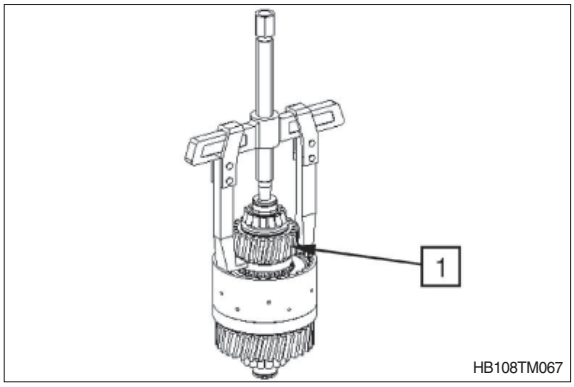

③ Remove bearing inner ring (1), axial bearing assy (2) and inner disk carrier (3).

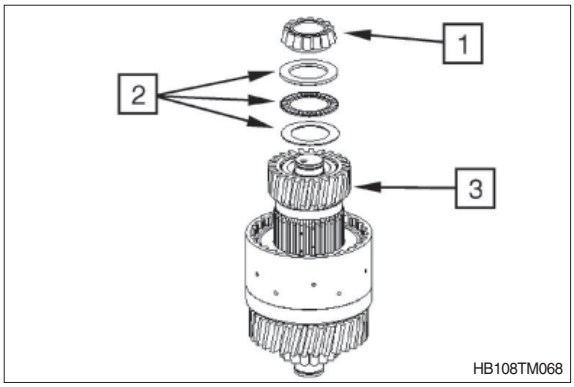

④ Remove needle cage (1).

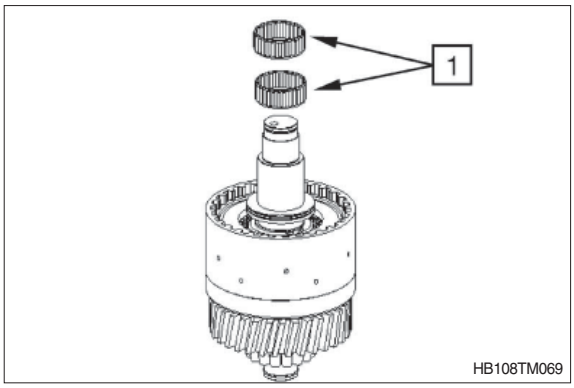

⑤ Remove axial bearing assy (1).

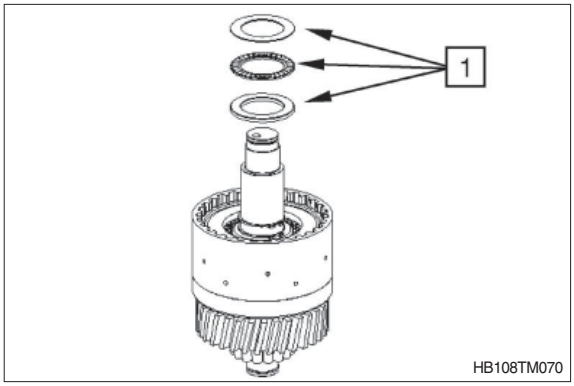

⑥ Remove snap ring (1).

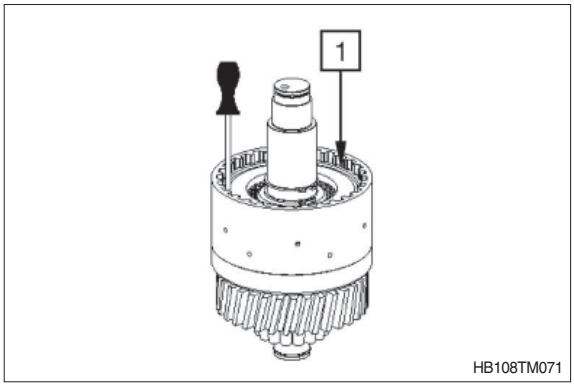

⑦ Remove end plate (1), disk package (2) and cup springs (3) from the disk carrier.

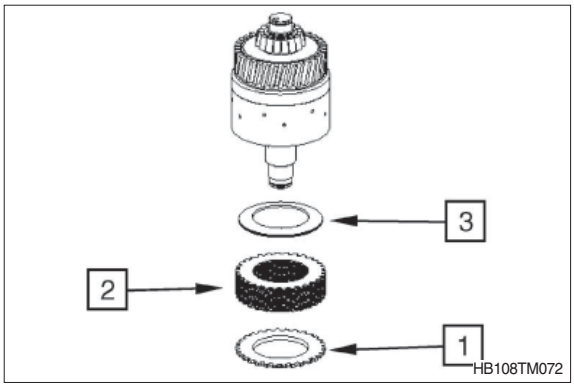

⑧ Remove retaining ring (1) at axial bearing contact.

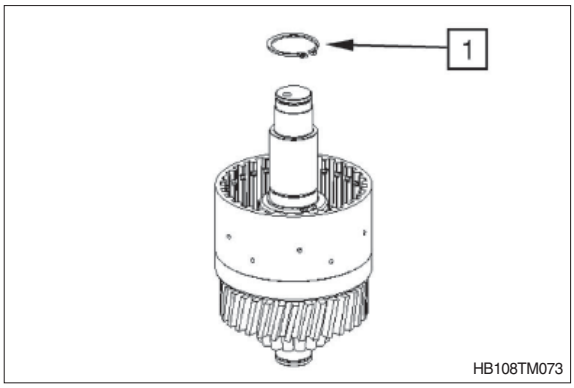

⑨ Preload compression spring and remove snap ring (1).

(S) Assembly aid 5870 345 114

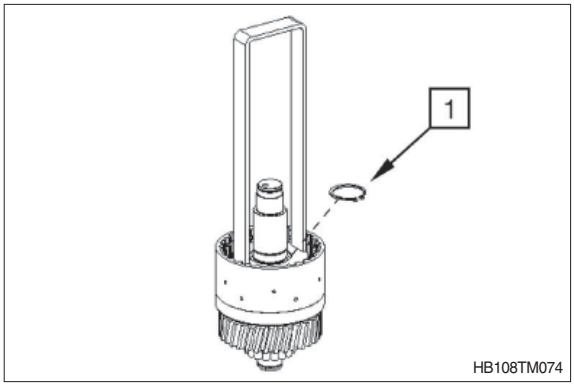

⑩ Remove spring cup (1) and compression spring (2).

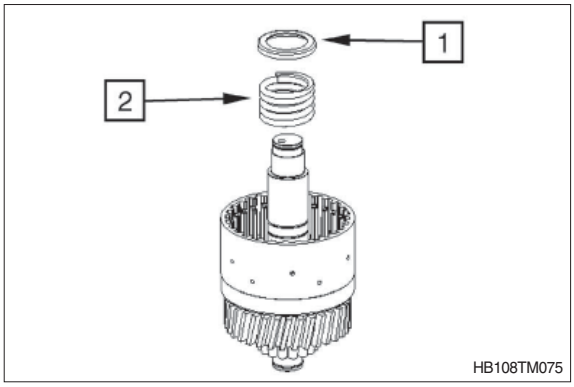

⑪ By means of compressed air (see arrow), press piston (1) off the shaft/disk carrier and remove it.

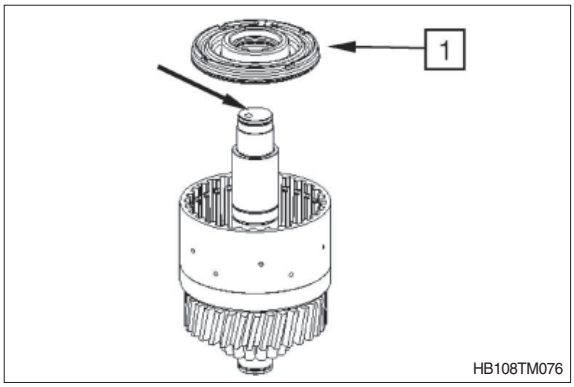

⑫ Remove both O-rings (1 and 2).

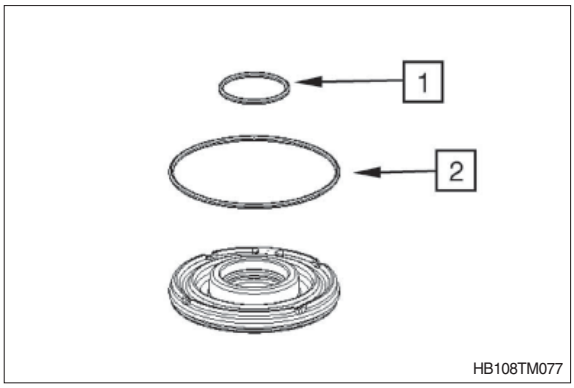

⑬ Snap out rectangular ring (1).

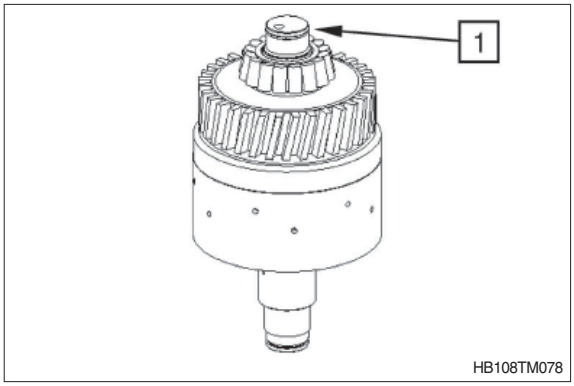

⑭ Pull tapered roller bearing (inner ring) off the shaft.

(S) Grab sleeve	5873 011 011
(S) Basic tool	5873 001 000

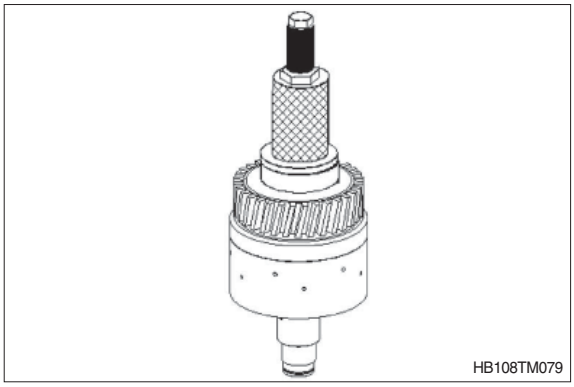

※ The clutch (1) cannot be disassembl-ed. It is supplied by the spare parts service only as a complete assy which consists of:

1A = Helical gear
1B = Disk carrier
1C = Shaft

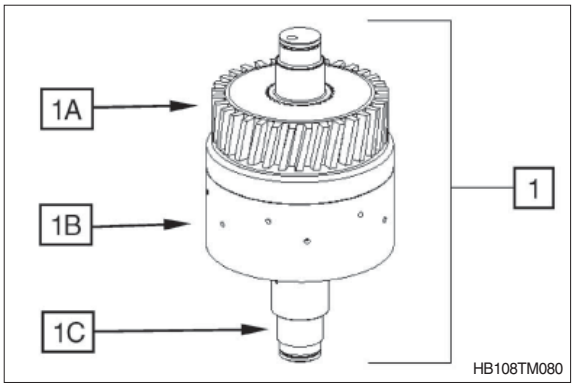

(4) K2 clutch

① Snap out rectangular ring (1).

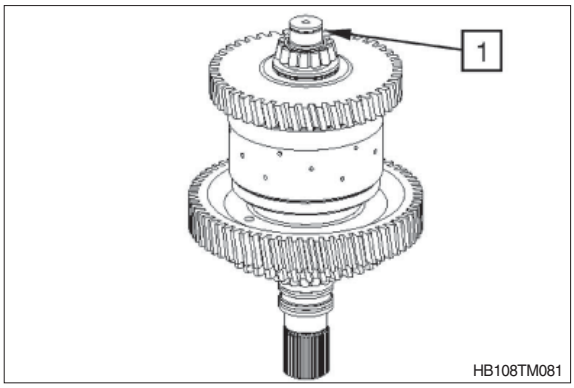

② Pull off bearing inner ring with inner disk carrier (1).

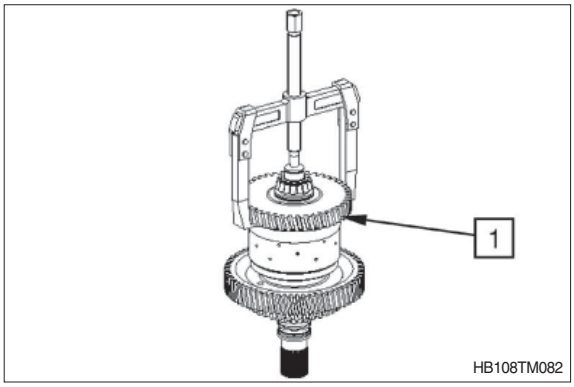

③ Remove bearing inner ring (1), axial bearing assy (2) and inner disk carrier (3).

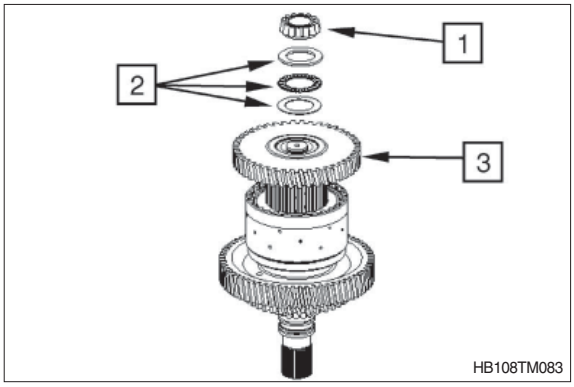

④ Remove needle cage (1) and bushing (2).

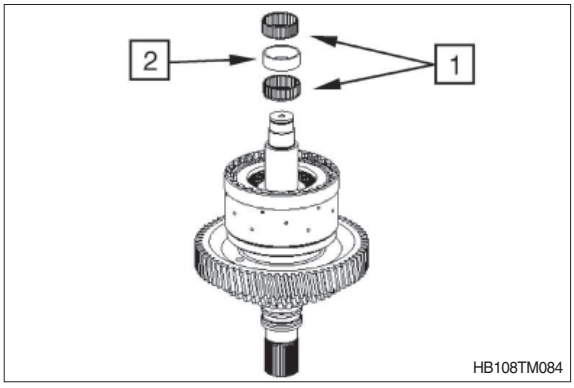

⑤ Remove axial bearing assy (1).

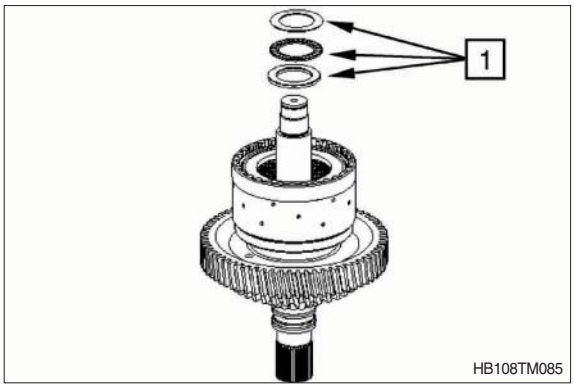

⑥ Remove snap ring (1).

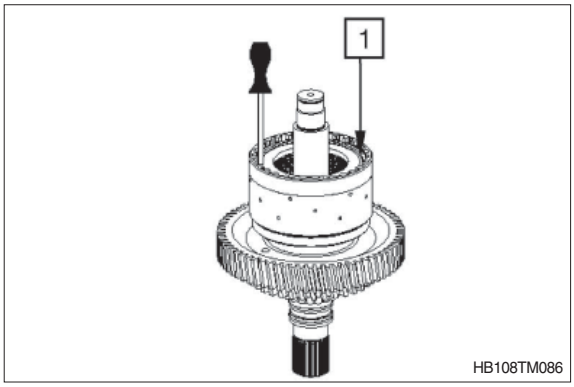

⑦ Remove end plate (1), disk package (2) and cup springs (3) from the disk carrier.

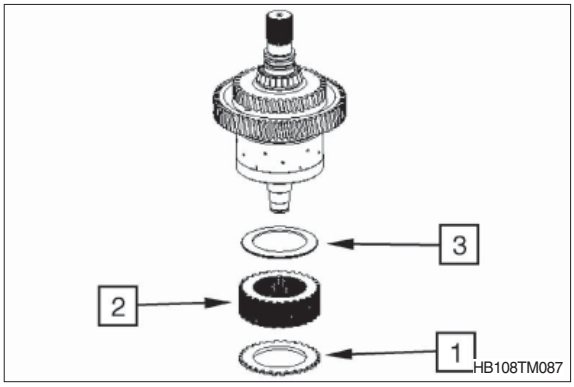

⑧ Remove retaining ring (1) at axial bearing contact.

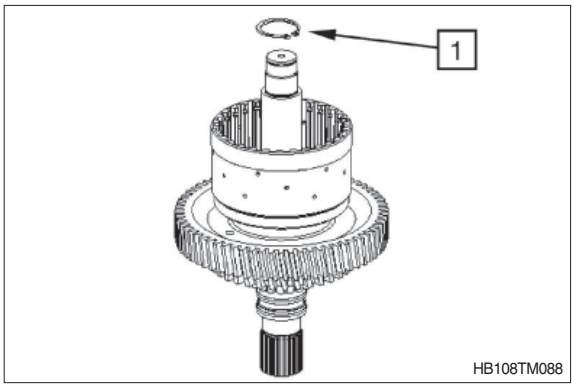

⑨ Preload cup springs and remove snap ring (1).

(S) Assembly aid 5870 345 114

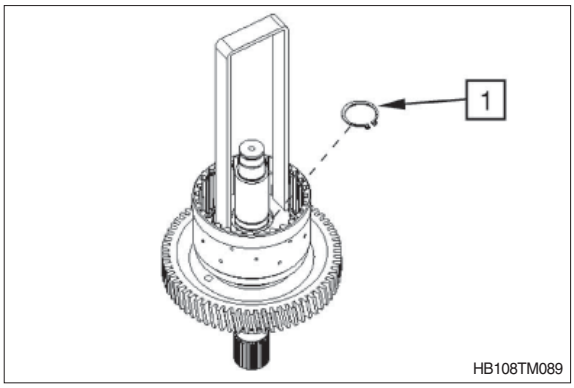

⑩ Remove axial washer (1) and cup springs (2).

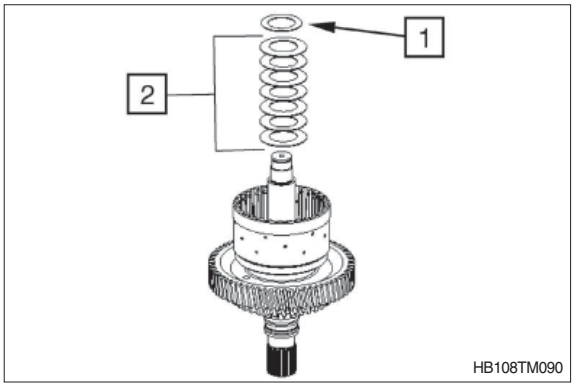

⑪ By means of compressed air (see arrow), press piston (1) off the shaft/disk carrier and remove it.

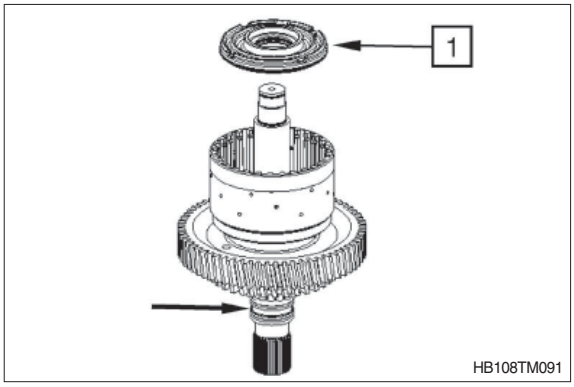

⑫ Remove both O-rings (1 and 2).

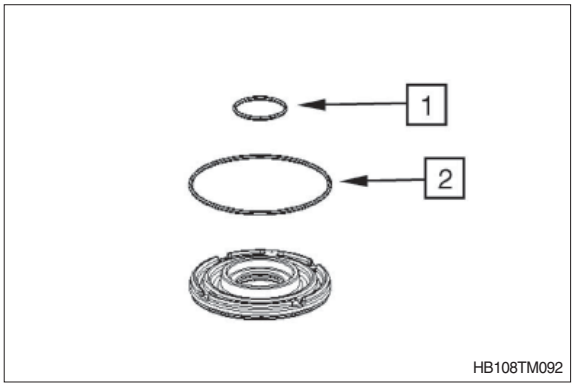

⑬ Snap out rectangular rings (1).

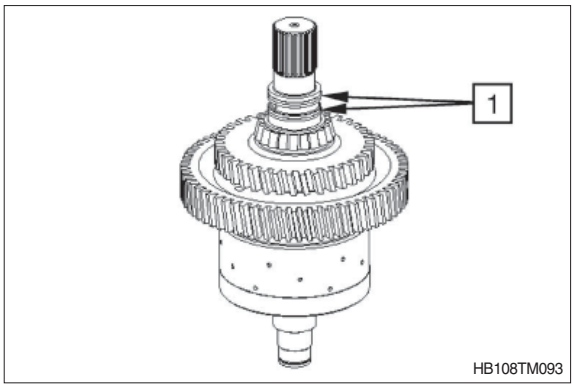

⑭ Pull tapered roller bearing (inner ring) off the shaft.

(S) Grab sleeve 5873 001 026
(S) Basic tool 5873 001 000

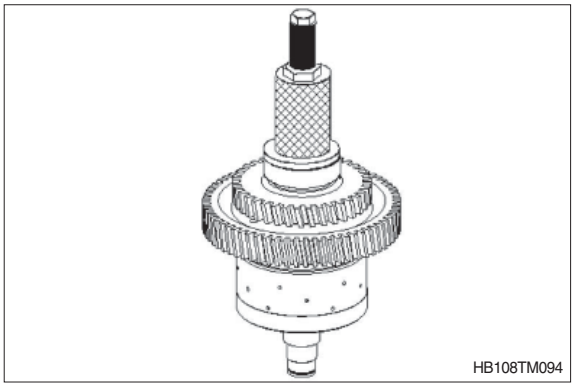

※ The clutch (1) cannot be disassembl-ed. It is supplied by the spare parts service only as a complete assy which consists of:

1A = Ball
1B = Helical gear
1C = Shaft
1D = Disk carrier

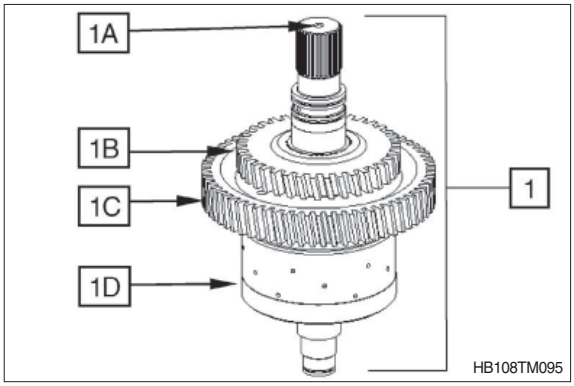

(5) K3 clutch

① Snap out rectangular ring (1).

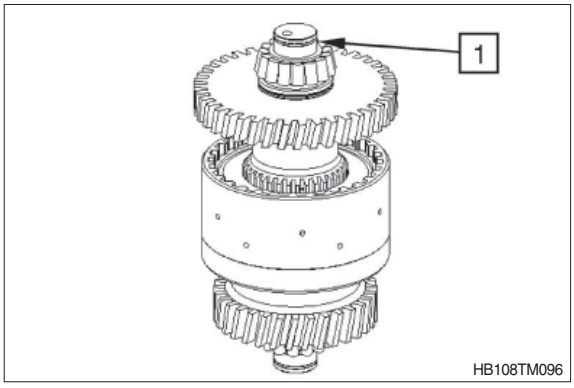

② Pull off bearing inner ring with inner disk carrier (1).

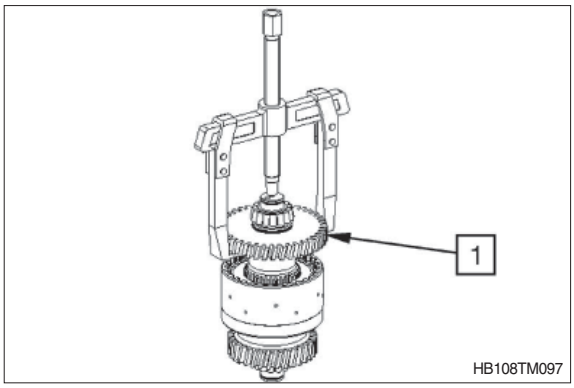

③ Remove bearing inner ring (1), axial bearing assy (2) and inner disk carrier (3).

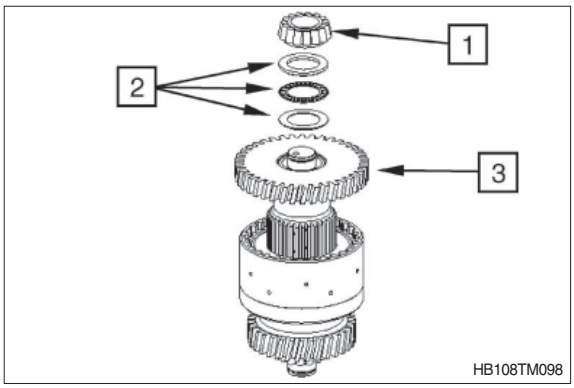

④ Remove needle cage (1) and bushing (2).

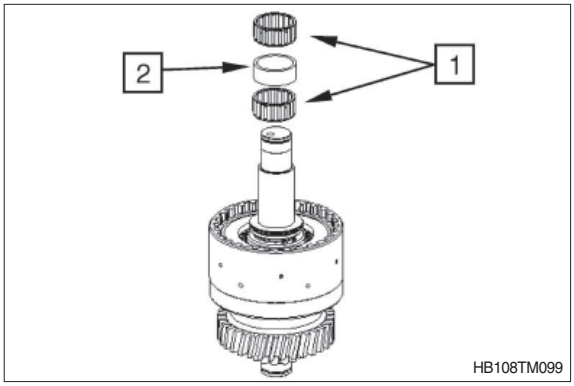

⑤ Remove axial bearing assy (1).

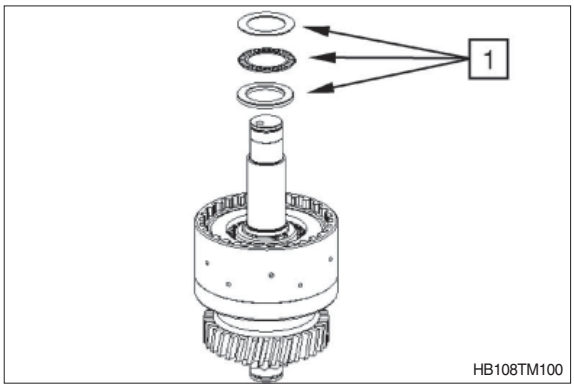

⑥ Remove snap ring (1).

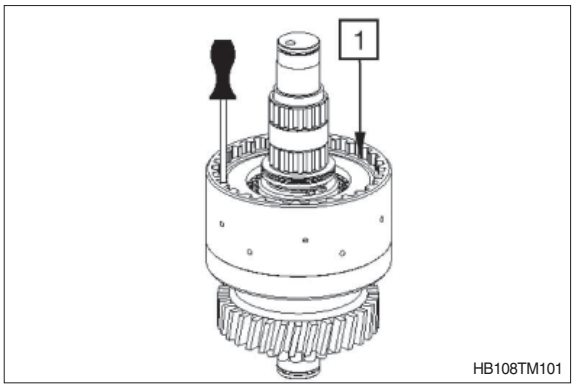

⑦ Remove end plate (1), disk package (2) and cup springs (3) from the disk carrier.

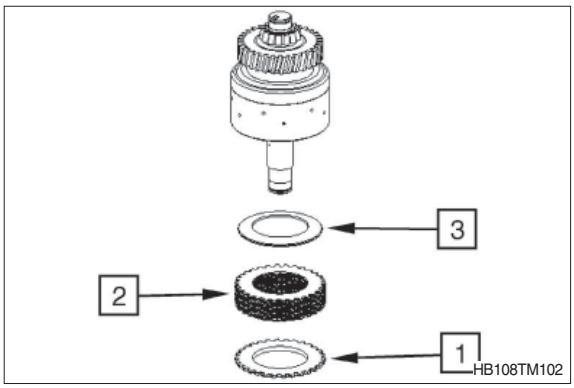

⑧ Preload compression spring and remove snap ring (1).

(S) Assembly aid 5870 345 114

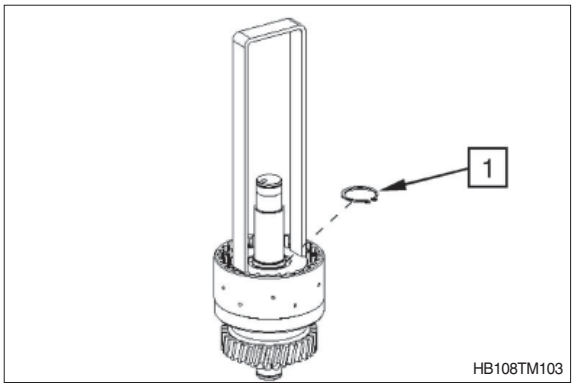

⑨ Remove spring cup (1) and compression spring (2).

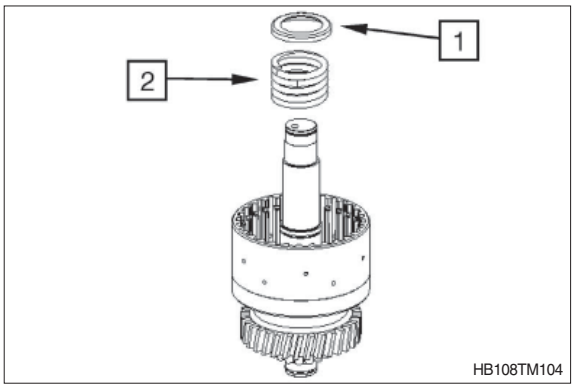

⑩ By means of compressed air (see arrow), press piston (1) off the shaft/ disk carrier and remove it.

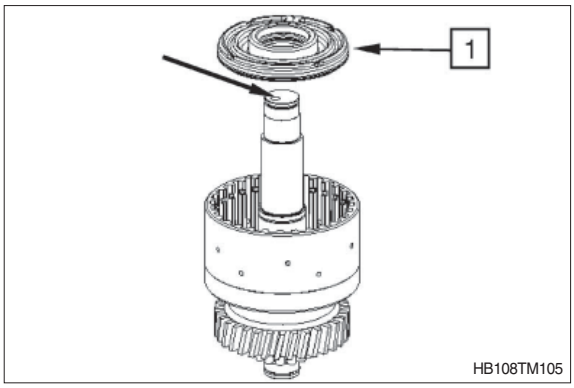

⑪ Remove both O-rings (1 and 2).

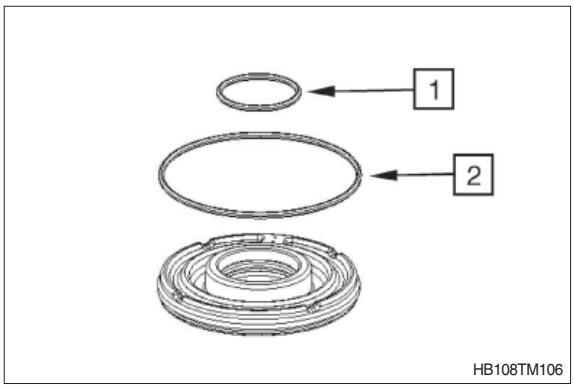

⑫ Snap out rectangular ring (1).

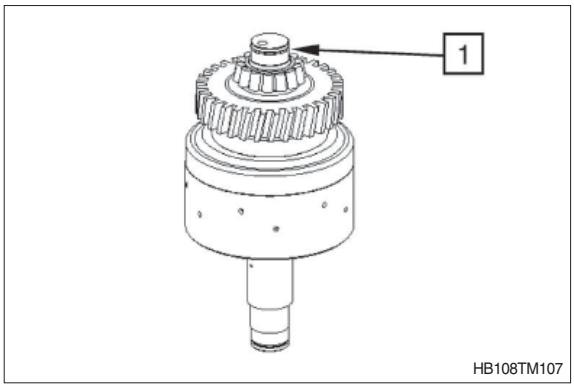

⑬ Pull tapered roller bearing (inner ring) off the shaft.

(S) Grab sleeve	5873 000 029
(S) Basic tool	5873 000 001

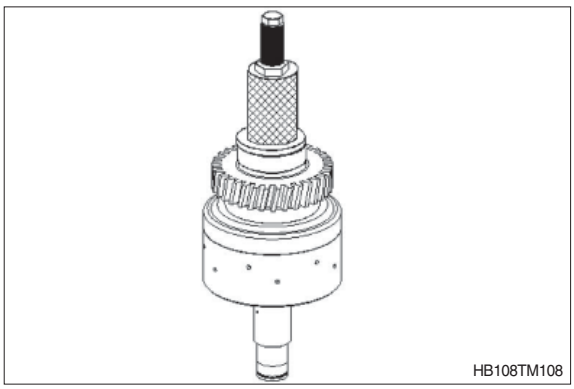

※ The clutch (1) cannot be disassembled.
It is supplied by the spare parts service only as a complete assy which consists of:

1A = Helical gear
1B = Shaft
1C = Disk carrier

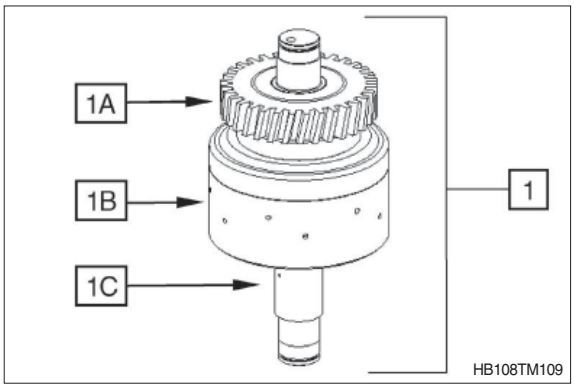

(6) K4 clutch

① Snap out rectangular ring (1).

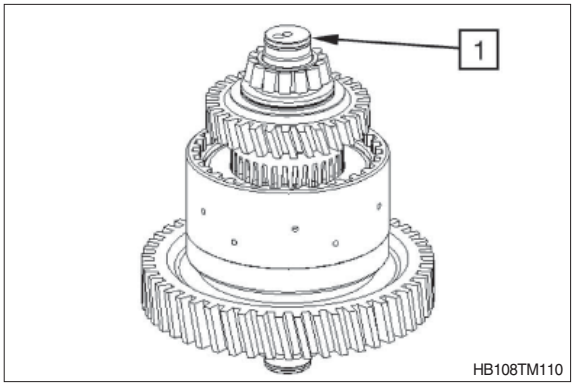

② Pull off bearing inner ring with inner disk carrier (1).

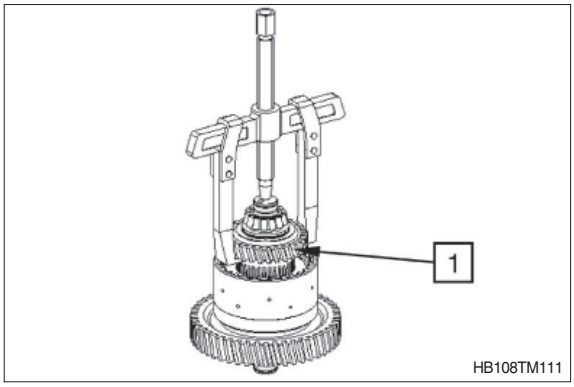

③ Remove bearing inner ring (1), axial bearing assy (2) and inner disk carrier (3).

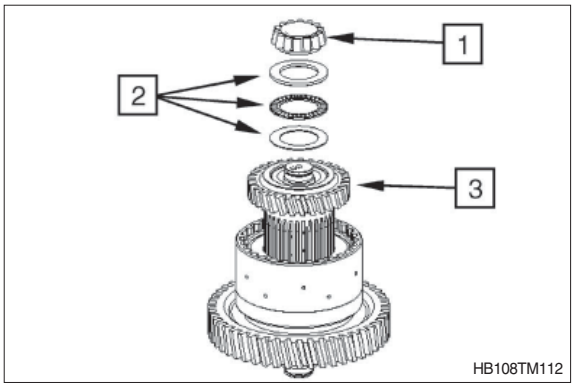

④ Remove needle cage (1).

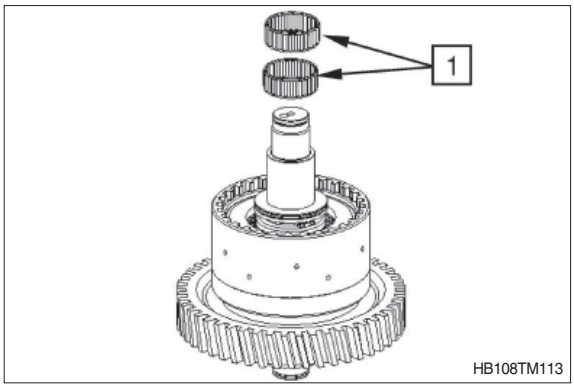

⑤ Remove axial bearing assy (1).

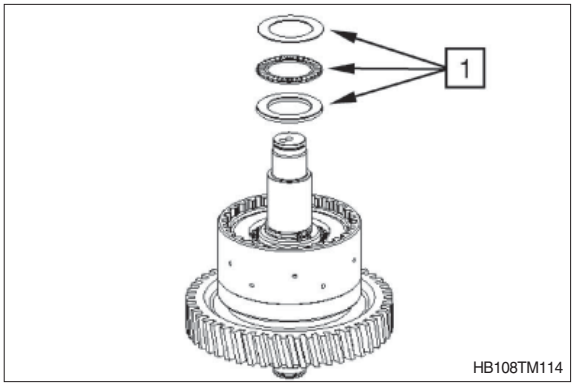

⑥ Remove snap ring (1).

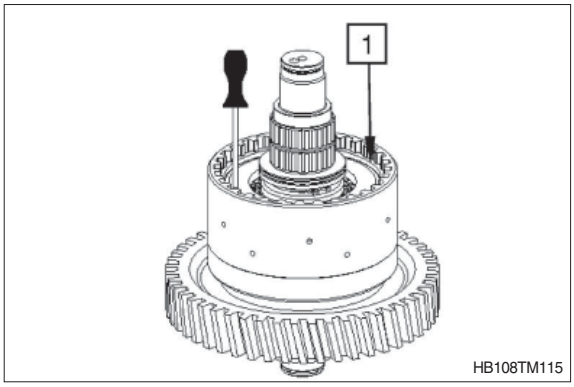

⑦ Remove end plate (1), disk package (2) and plate assy with cup springs (3) from the disk carrier.

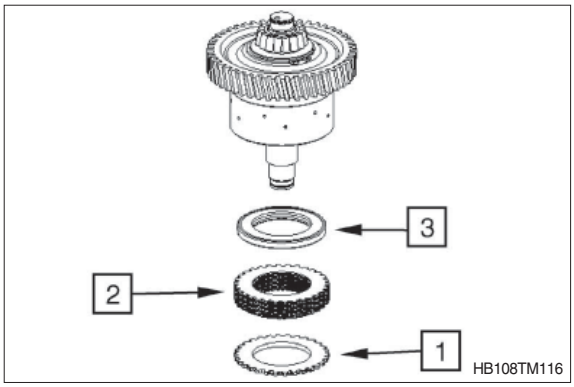

⑧ Remove retaining ring (1) at axial bearing contact.

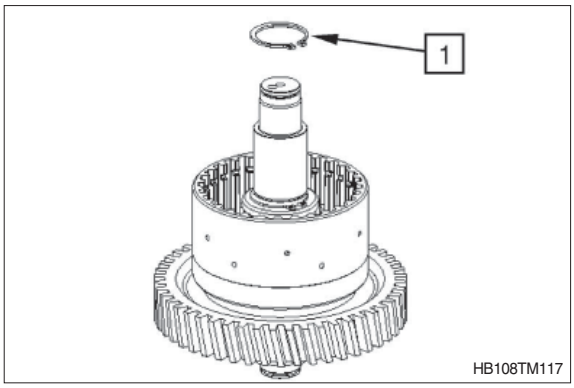

⑨ Preload compression spring and remove snap ring (1).

(S) Assembly aid 5870 345 114

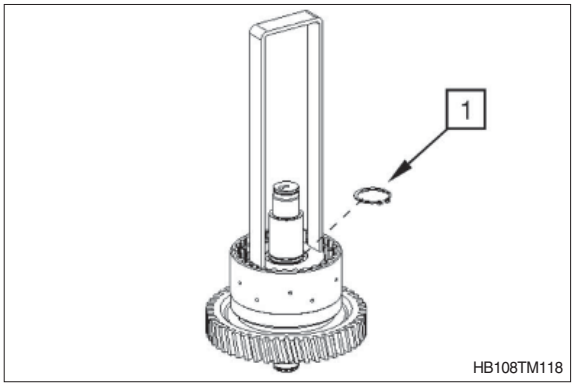

⑩ Remove spring cup (1) and compression spring (2).

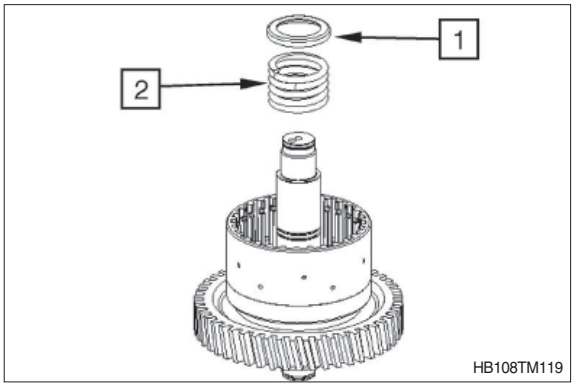

⑪ By means of compressed air (see arrow), press piston (1) off the shaft/disk carrier and remove it.

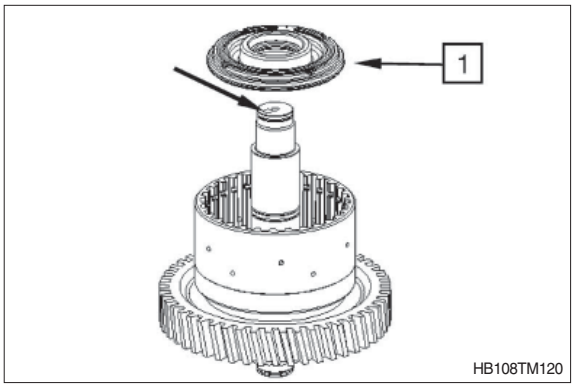

⑫ Remove both O-rings (1 and 2).

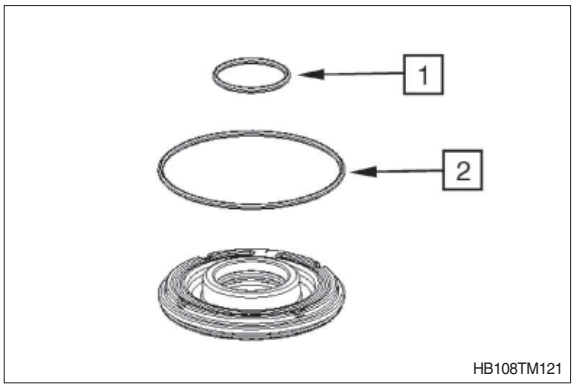

⑬ Snap out rectangular ring (1).

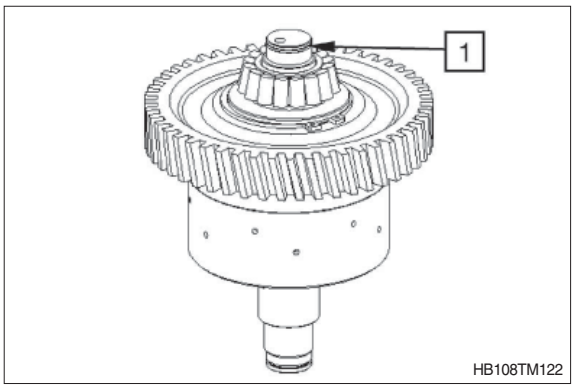

⑭ Pull tapered roller bearing (inner ring) off the shaft.

(S) Grab sleeve 5873 011 011
(S) Basic tool 5873 001 000

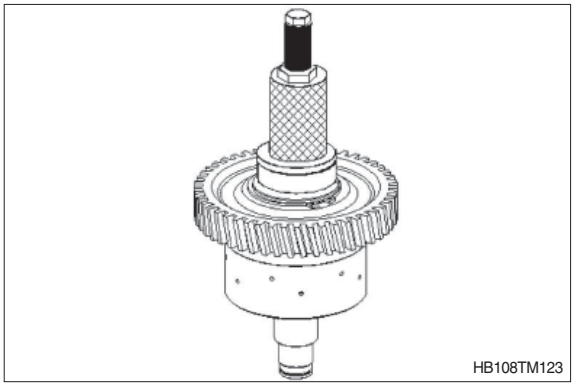

※ The clutch (1) cannot be disassembled.
It is supplied by the spare parts service only as a complete assy which consists of:

1A = Retaining ring
1B = Helical gear
1C = Disk carrier
1D = Shaft

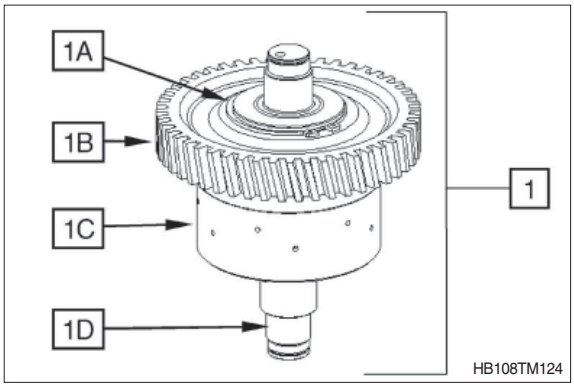

(7) Front wheel drive (VA)

① Snap out rectangular ring (1).

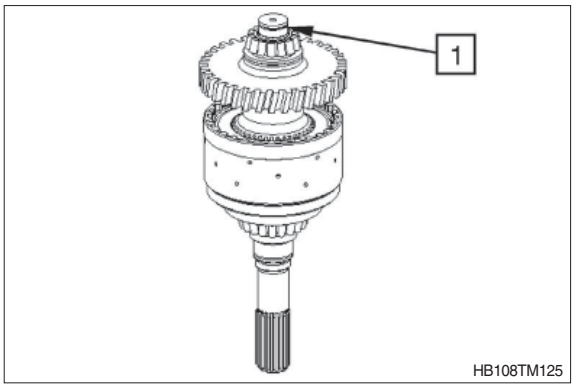

② Pull tapered roller bearing (inner ring) off the shaft.

(S) Grab sleeve	5873 000 029
(S) Basic tool	5873 000 001

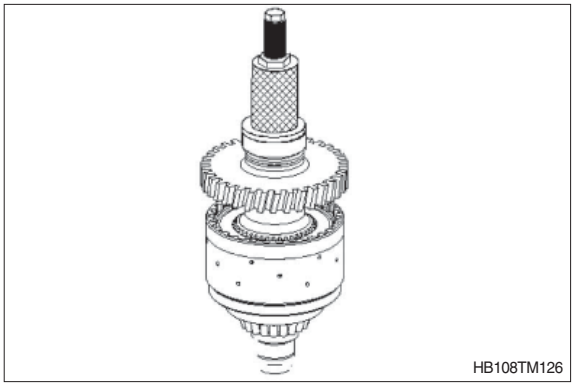

③ Remove running disk (1).

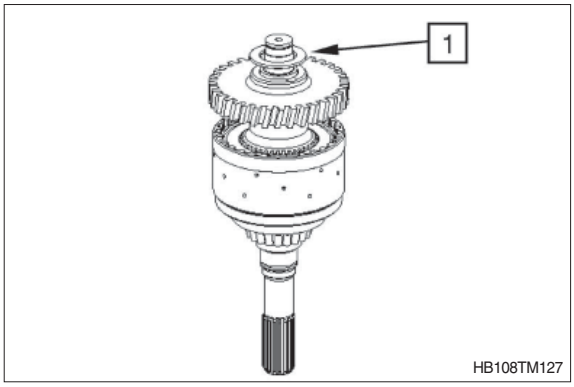

④ Pull off inner disk carrier (1).

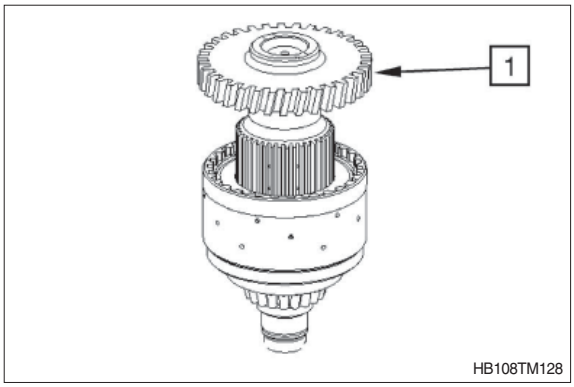

⑤ Remove snap ring (1).

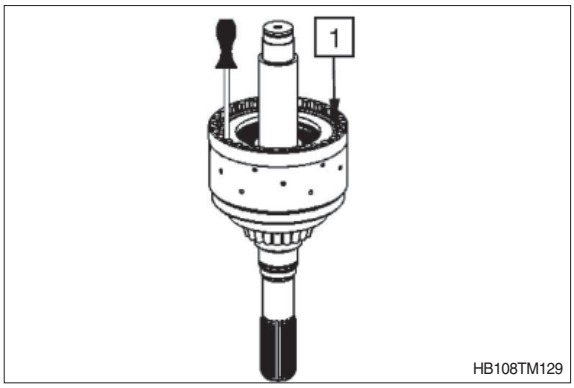

⑥ Remove end plate (1) and disk package (2) from the disk carrier.

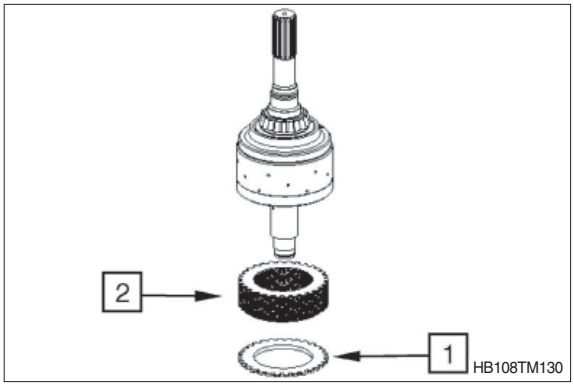

⑦ Preload cup springs and remove snap ring (1).

(S) Assembly aid 5870 506 128

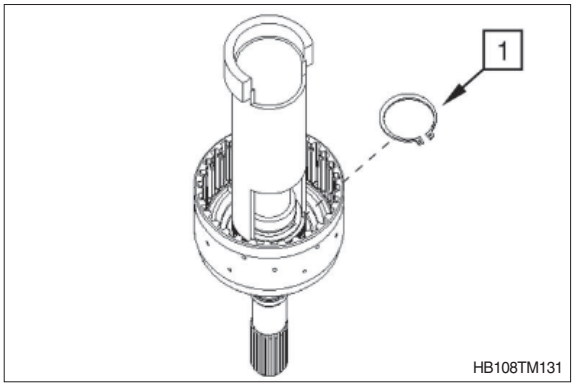

⑧ Remove washer (1) and cup springs (2).

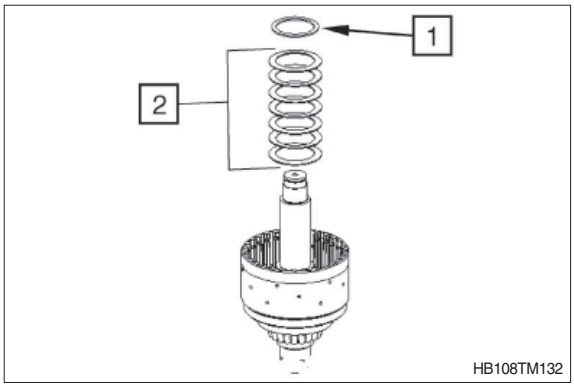

⑨ By means of compressed air (see arrow), press piston (1) off the shaft/disk carrier and remove it.

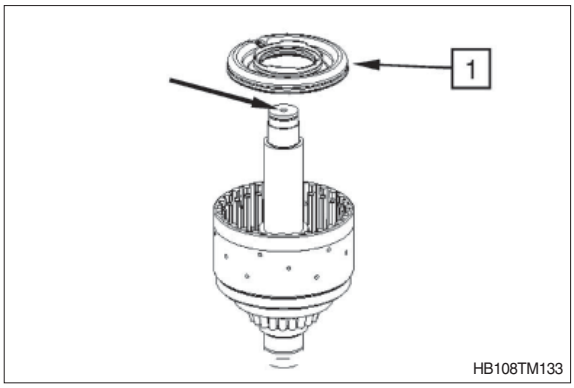

⑩ Pull tapered roller bearing (inner ring) off the shaft.

(S) Grab sleeve 5873 001 026
(S) Basic tool 5873 001 000

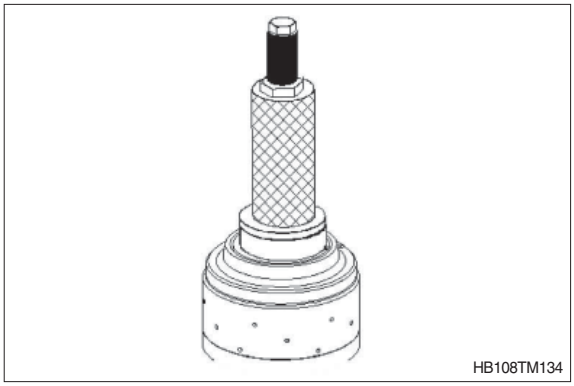

※ The clutch (1) cannot be disassembled.
It is supplied by the spare parts service only as a complete assy which consists of:

1A = Shaft
1B = Disk carrier

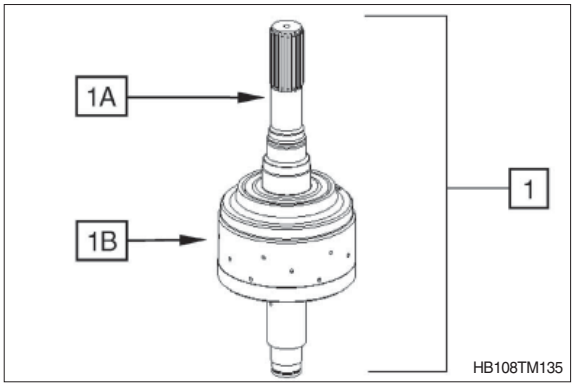

5) REASSEMBLY OF CLUTCHES

(1) KR clutch / input

※ The input shaft (1) is supplied by the spare parts service only as a complete assy which consists of:

1A = Ball
1B = Helical gear
1C = Disk carrier
1D = Input shaft

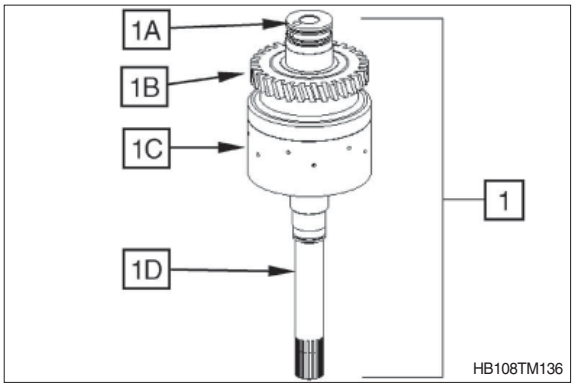

① Heat up bearing inner ring (approx. 120˚C).

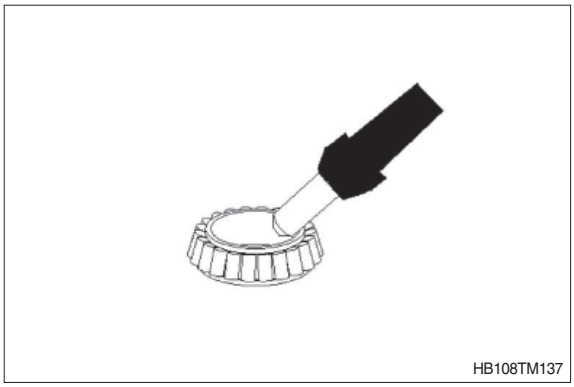

② Mount bearing inner ring (1) until contact is obtained.
Fit rectangular rings 50×2.5 (2).

⚠ Wear protective gloves.

※ Adjust bearing inner ring after cooling-down.

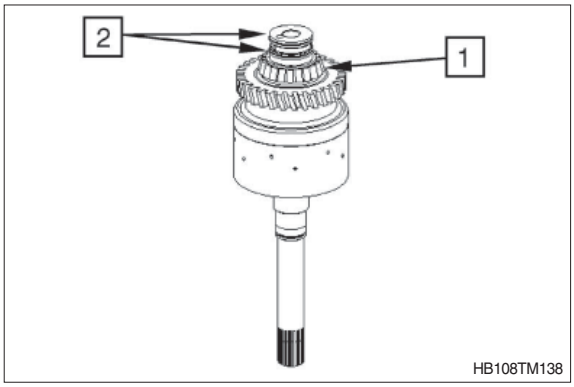

③ Insert both O-rings (1 and 2) into the piston grooves and oil them.

1 = 40×3
2 = 104.5×3

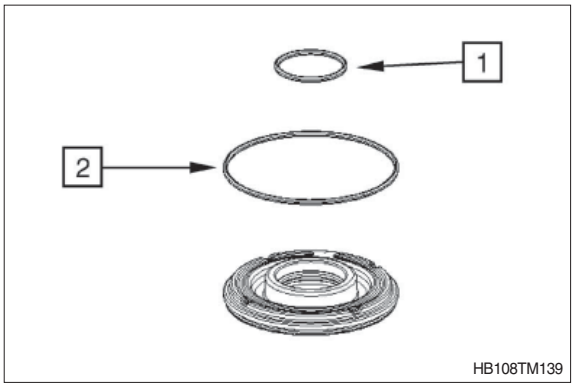

④ Insert piston (1) into the disk carrier.

※ Pay attention to the installation position, see figure.

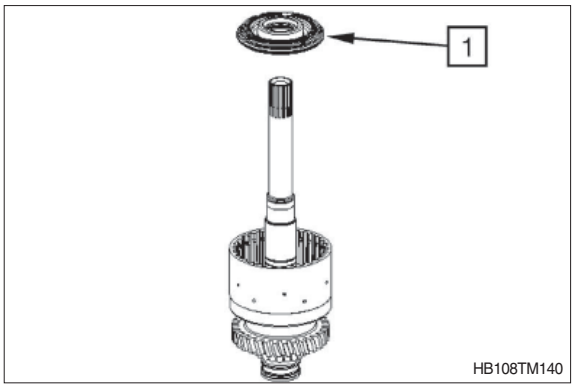

⑤ Use a hand-operated press to place piston into the disk carrier by means of the assembly aid.

(S) Assembly aid 5870 345 114

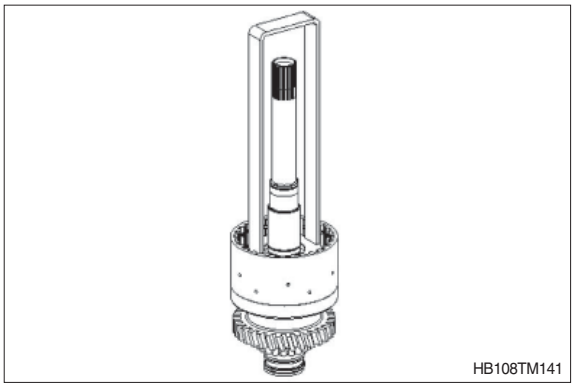

⑥ Mount compression spring (1) and spring cup (2).

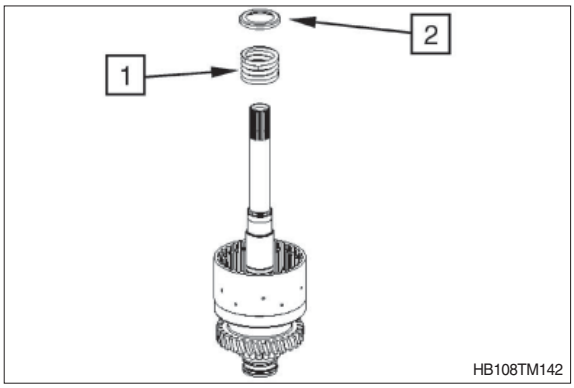

⑦ By means of the assembly aid, preload compression spring under a hand-operated press until the retaining ring 40×1.75 (1) can be snapped in.

(S) Assembly aid 5870 345 114

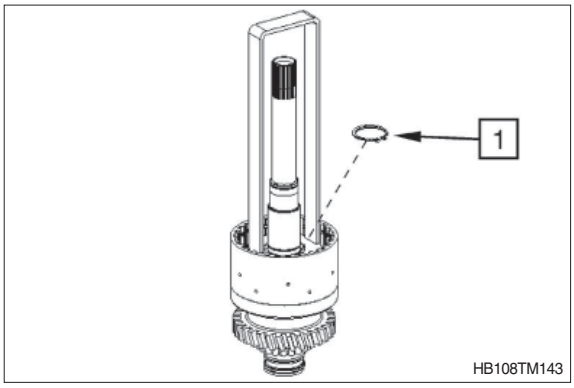

⑧ Mount plate assy with cup springs (1), with the open side showing towards the piston.

※ Installation position of plate see also the next figure ⑨.

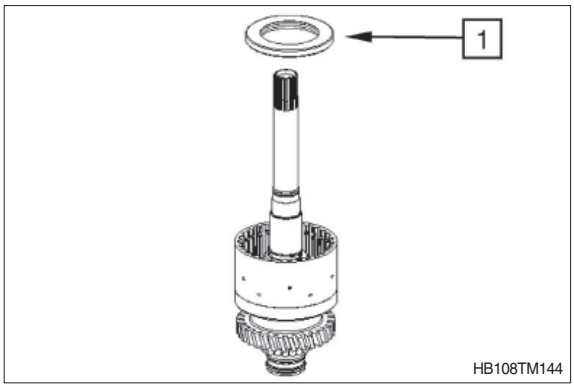

⑨ Fit plate (1) according to sketch (see arrow).

Legend:
1 = Plate assy with cup springs
2 = Compression spring with spring cup and retaining ring
3 = Piston with O-rings
4 = Input shaft assy

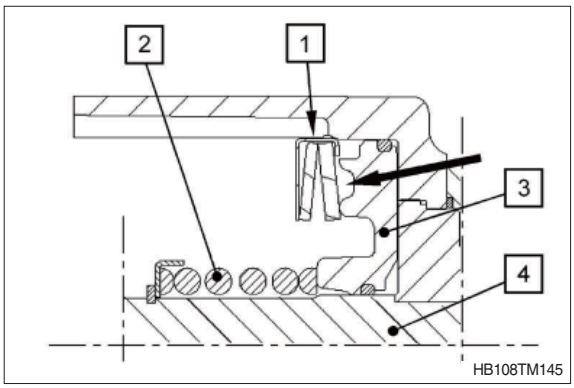

⑩ Install outer and inner disks alternately into the disk carrier (3) as shown in the night figure, starting with an outer disk and ending with an inner disk.

Legend:
1 = Outer disks (10 pcs)
2 = Inner disks (10 pcs)
3 = Input shaft assy

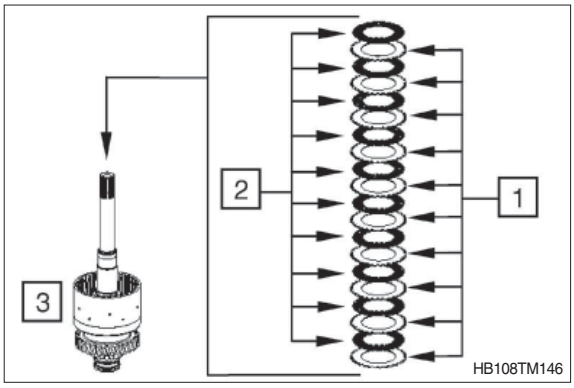

⑪ Mount end plate (1) with the flat side showing towards the disk package and fix it by means of snap ring (2) (e.g. thickness = 2.5 mm / recommended value).

※ Pay attention to the installation position of the end plate.

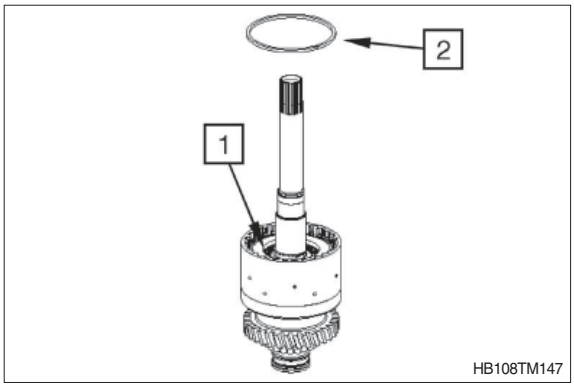

⑫ Equally press on end plate with F (approx 1.8 kg to 2.0 kg) and set dial indicator to "zero".

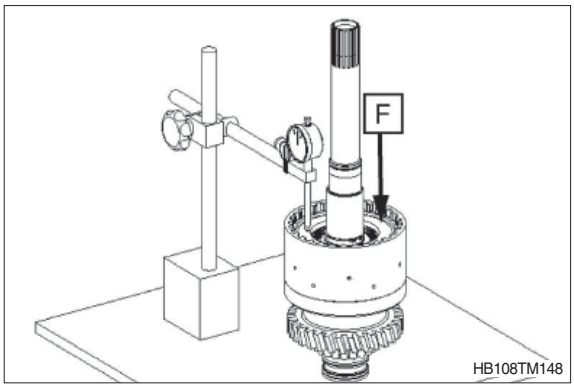

⑬ Then press end plate against the snap ring (upwards) and read the disk clearance.

※ Disk clearance: 2.0 to 2.3 mm

※ In case of deviations, the disk clearance must be corrected with an appropriate snap ring (optional thickness = 2.0 ~ 3.5 mm / available in steps of 0.25 mm)

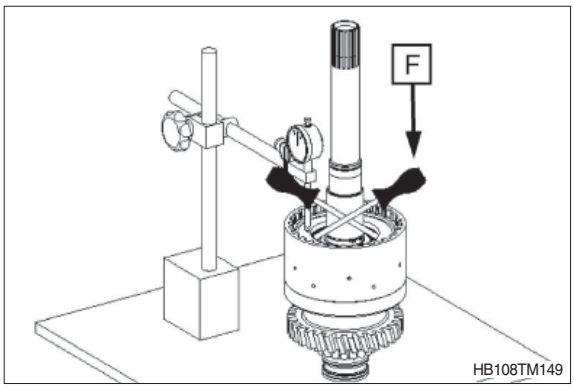

⑭ Snap retaining ring 40×1.75 (1) into the groove.

※ Contact for axial bearing - see figure ⑮.

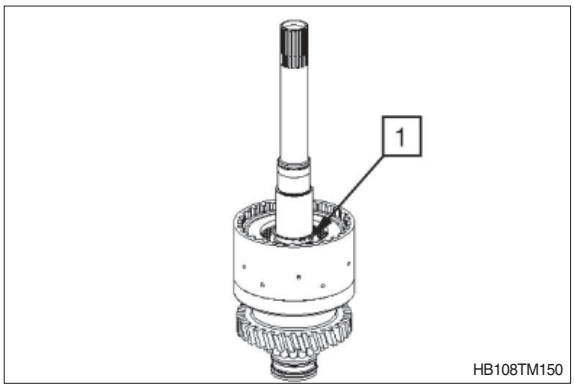

⑮ Mount running disk 40×60×3.5 (1), axial needle cage 40×60×3 (2) and axial washer 40×60×1 (3) and oil them.

※ Mount running disk (1), with the chamfer showing towards the retaining ring.

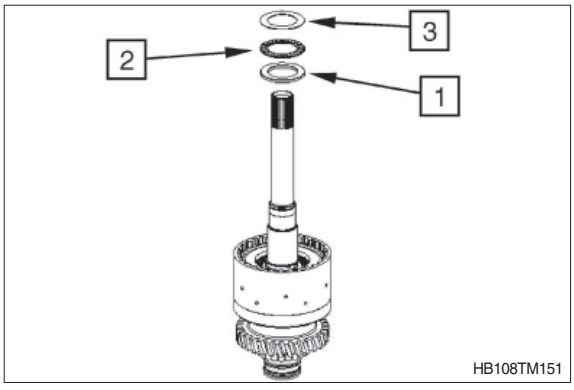

⑯ Mount needle cage 40×45×17 (1) and oil it.

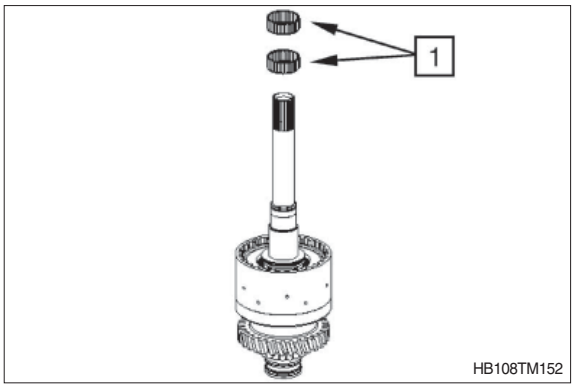

⑰ Mount inner disk carrier until contact is obtained.

⑱ Install inner disks by short ccw/cw rotations of the inner disk carrier (1).

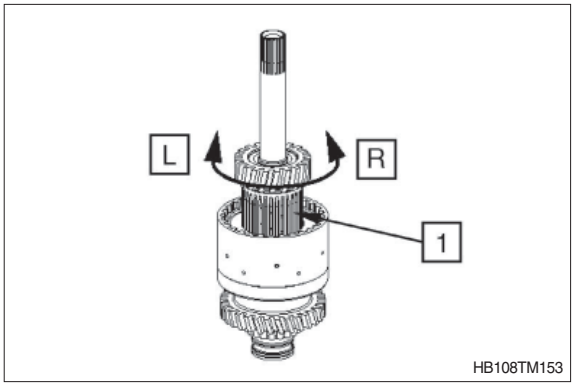

⑲ Mount axial washer 40×60×1 (1), axial needle cage 40×60×3 (2) and running disk (3) 40×60×3.5 and oil them.

※ Mount running disk (3), with the chamfer showing towards the tapered roller bearing.

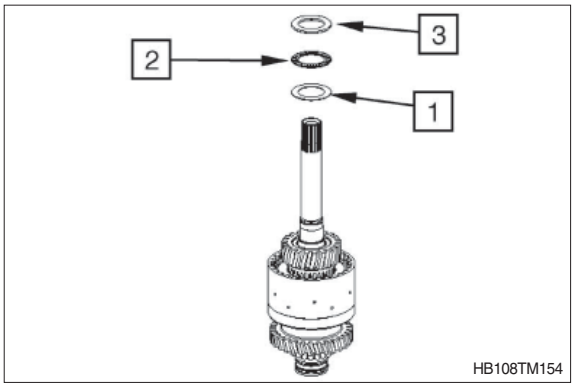

⑳ Heat up bearing inner ring (approx. 120˚C).

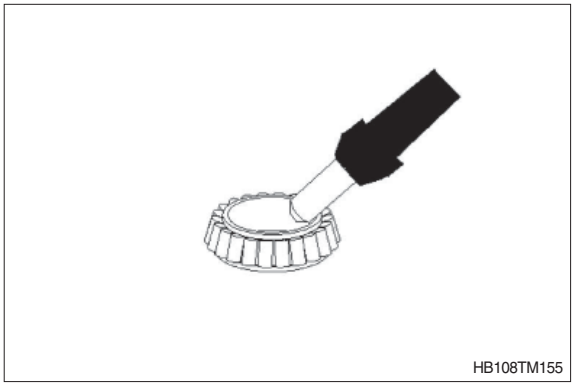

㉑ Mount bearing inner ring (1) until contact is obtained.

㉒ Fit rectangular ring 30×2 (2).

⚠ Wear protective gloves.

※ Adjust bearing inner ring after cooling-down.

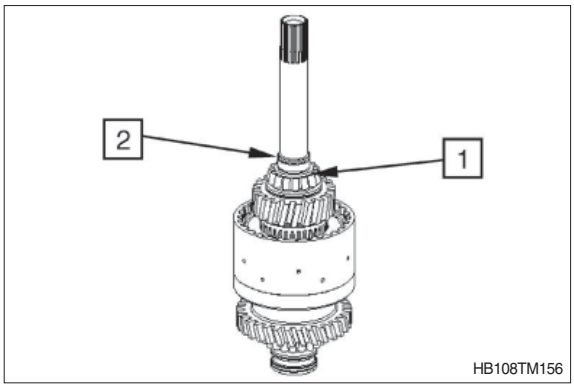

※ Check closing and opening of the clutch by means of compressed air at the hole (see arrow).
Closing and opening of the clutch must be clearly audible.

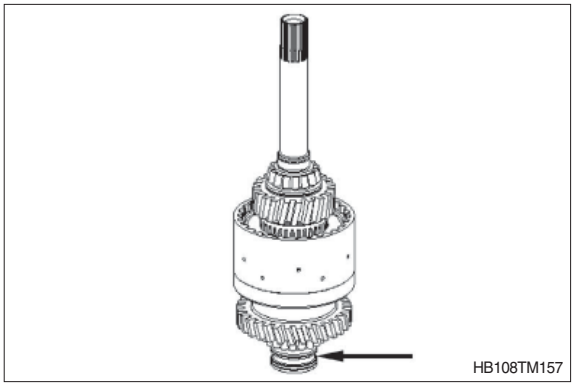

(2) KV clutch

※ The clutch (1) is supplied by the spare parts service only as a complete assy which consists of:

1A = Retaining ring
1B = Helical gear
1C = Helical gear
1D = Disk carrier
1E = Shaft

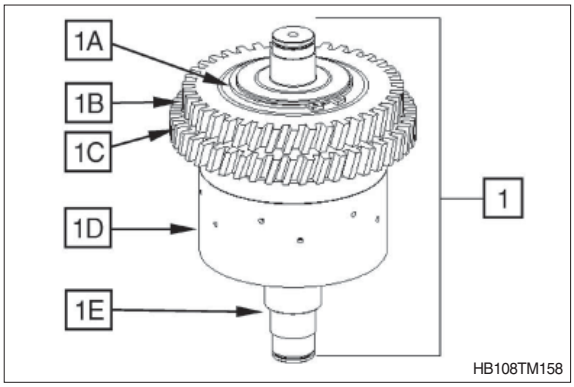

① Heat up bearing inner ring (approx. 120˚C).

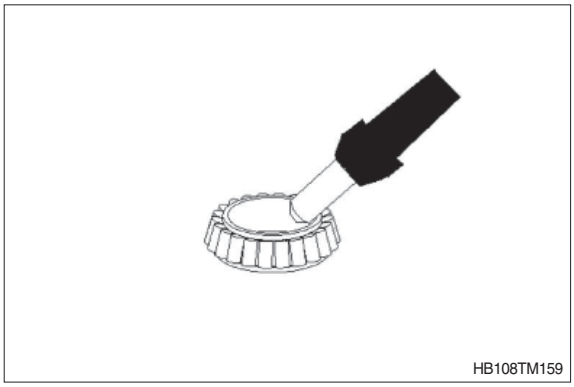

② Mount bearing inner ring (1) until contact is obtained.

③ Fit rectangular ring 30×2 (2).

⚠ Wear protective gloves.

※ Adjust bearing inner ring after cooling-down.

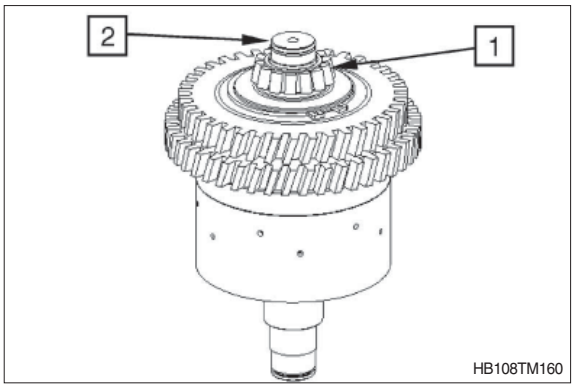

④ Insert both O-rings (1 and 2) into the piston grooves and oil them.

1 = 40×3
2 = 104.5×3

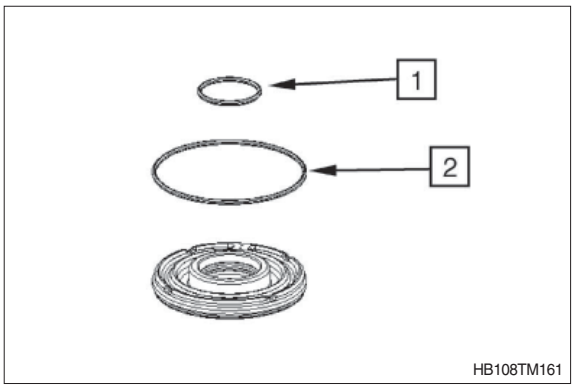

⑤ Insert piston (1) into the disk carrier.

※ Pay attention to the installation position, see figure.

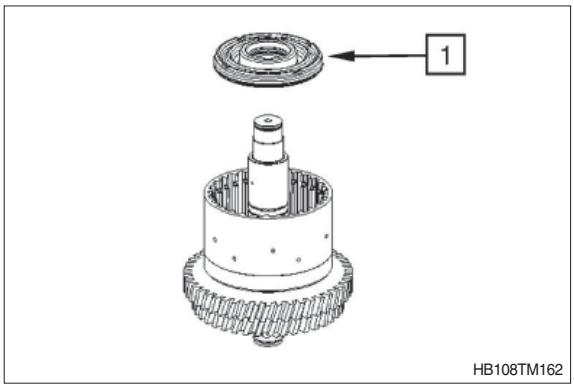

⑥ Use a hand-operated press to place piston into the disk carrier by means of the assembly aid.

(S) Assembly aid 5870 345 114

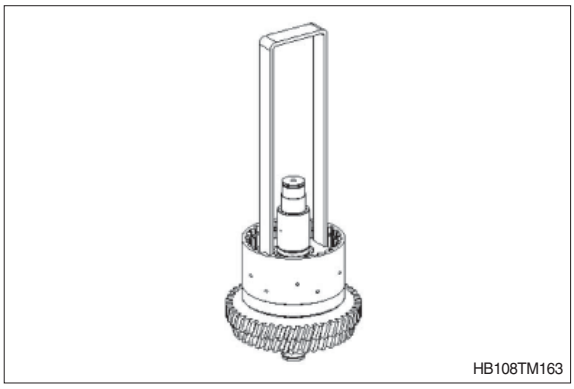

⑦ Mount compression spring (1) and spring cup (2).

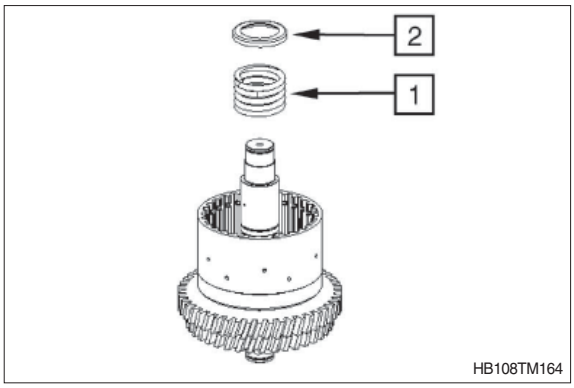

⑧ By means of the assembly aid, preload compression spring under a hand-operated press until the retaining ring 40×1.75 (1) can be snapped in.

(S) Assembly aid 5870 345 114

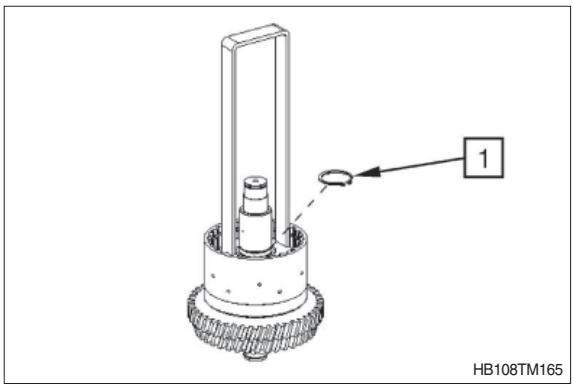

⑨ Mount plate assy with cup springs (1), with the open side showing towards the piston.

※ Installation position of plate see also figure ⑩.

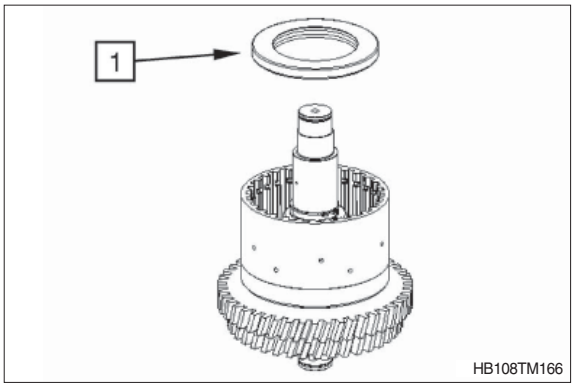

⑩ Fit plate (1) according to sketch (see arrow).

Legend:
1 = Plate assy with cup springs
2 = Compression spring with spring cup and retaining ring
3 = Piston with O-rings
4 = Input shaft assy

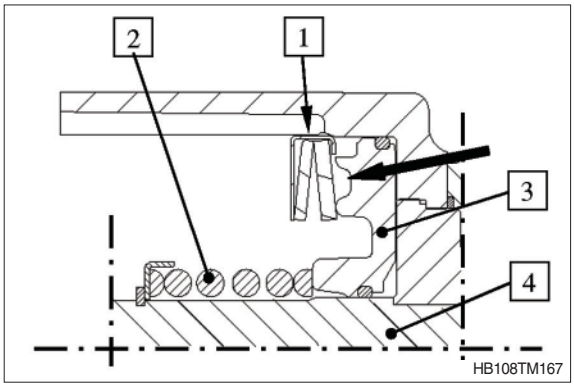

⑪ Install outer and inner disks alternately into the disk carrier (3) as shown in figure, starting with an outer disk and ending with an inner disk.

Legend:
1 = Outer disks (10 pcs)
2 = Inner disks (10 pcs)
3 = Clutch assy

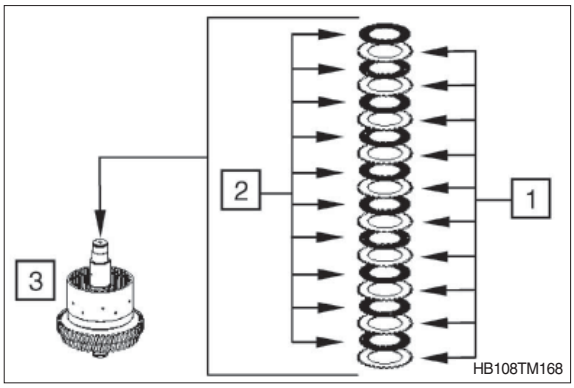

⑫ Mount end plate (1) with the flat side showing towards the disk package and fix it by means of snap ring (2) (e.g. thickness = 2.5 mm / recommended value).

※ Pay attention to the installation position of the end plate.

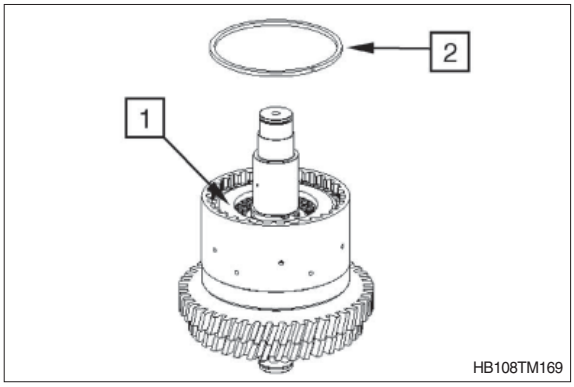

⑬ Equally press on end plate with F (approx. 1.8 kg to 2.0 kg) and set dial indicator to "zero".

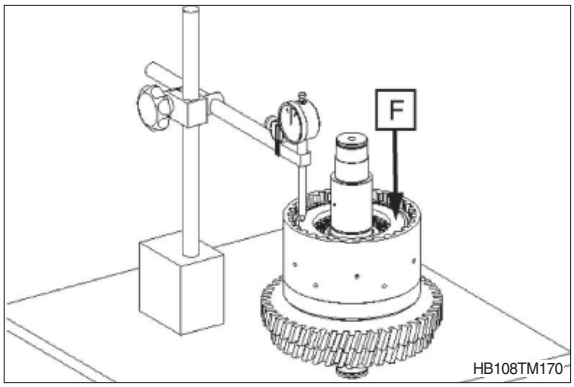

⑭ Then press end plate against the snap ring (upwards) and read the disk clearance.

※ Disk clearance: 2.0 to 2.3 mm

※ In case of deviations, the disk clearance must be corrected with an appropriate snap ring (optional thickness = 2.0 ~ 3.5 mm / available in steps of 0.25 mm)

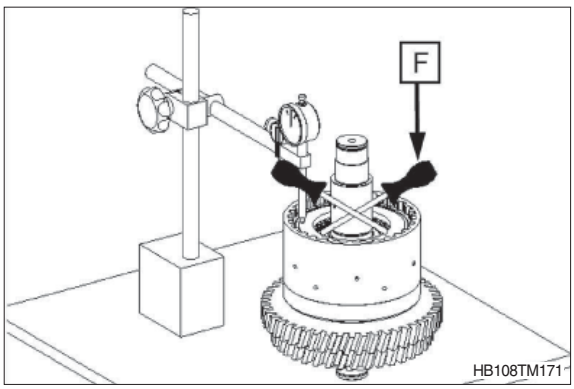

⑮ Snap retaining ring 40×1.75 (1) into the groove.

※ Contact for axial bearing - see the next figure ⑯.

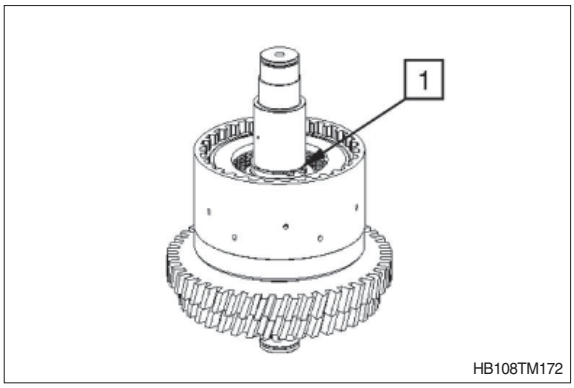

⑯ Mount running disk 40×60×3.5 (1), axial needle cage 40×60×3 (2) and axial washer 40×60×1 (3) and oil them.

※ Mount running disk (1), with the chamfer showing towards the retaining ring.

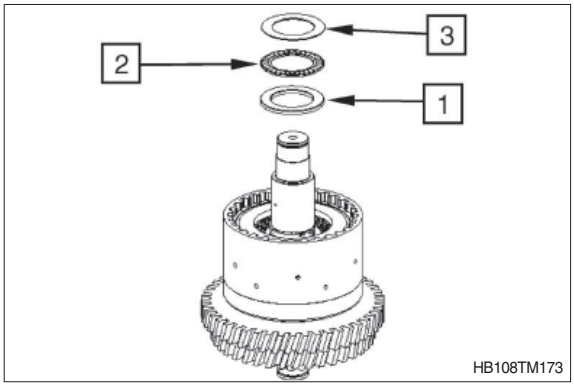

⑰ Mount needle cage 40×45×17 (1) and oil it.

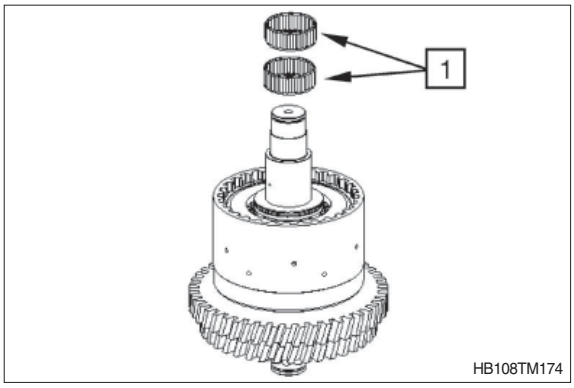

⑱ Mount inner disk carrier until contact is obtained.

⑲ Install inner disks by short ccw/cw rotations of the inner disk carrier (1).

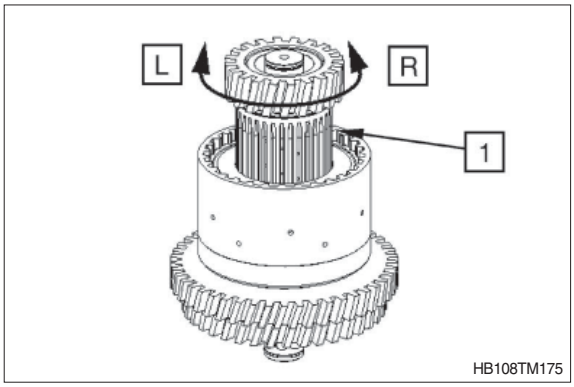

⑳ Mount axial washer 40×60×1 (1), axial needle cage 40×60×3 (2) and running disk (3) 40×60×3.5 and oil them.

※ Mount running disk (3), with the chamfer showing towards the tapered roller bearing.

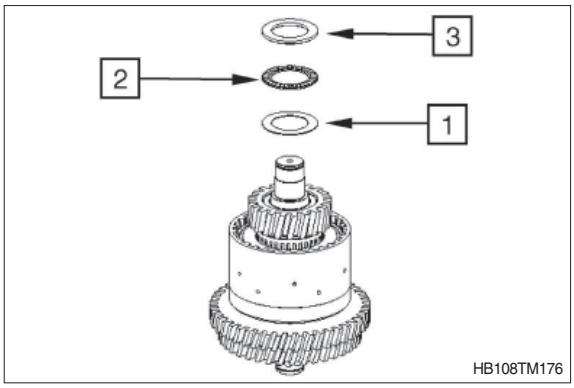

㉑ Heat up bearing inner ring (approx. 120˚C).

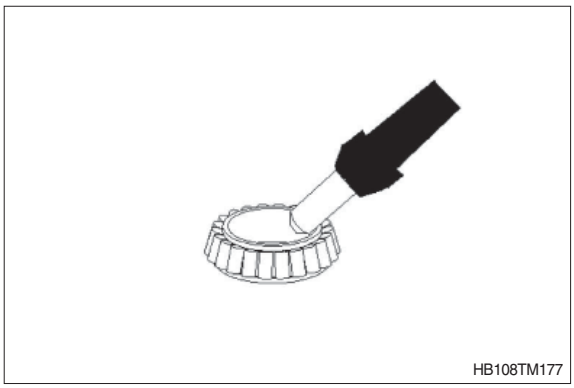

㉒ Mount bearing inner ring (1) until contact is obtained.

㉓ Fit rectangular ring 30×2 (2).

⚠ Wear protective gloves.

※ Adjust bearing inner ring after cooling-down.

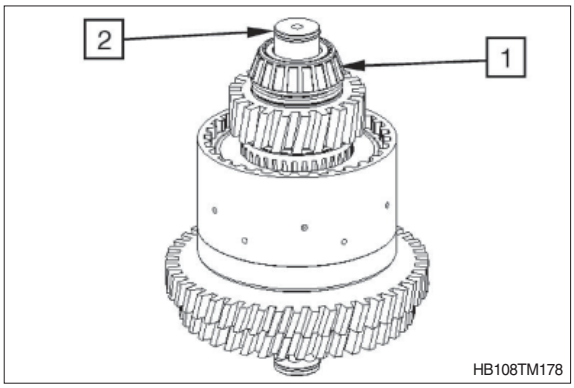

※ Check closing and opening of the clutch by means of compressed air at the hole (see arrow).
Closing and opening of the clutch must be clearly audible.

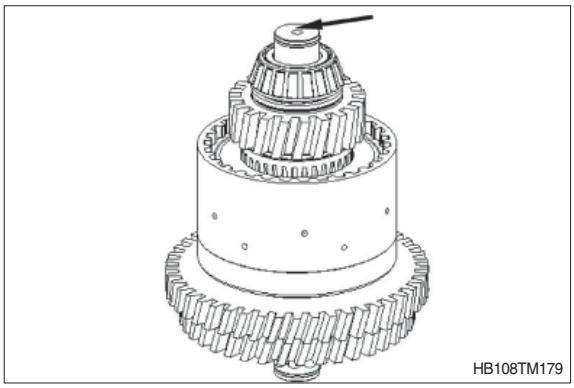

(3) K1 clutch

※ The clutch (1) is supplied by the spare parts service only as a complete assy which consists of:

1A = Helical gear
1B = Disk carrier
1C = Shaft

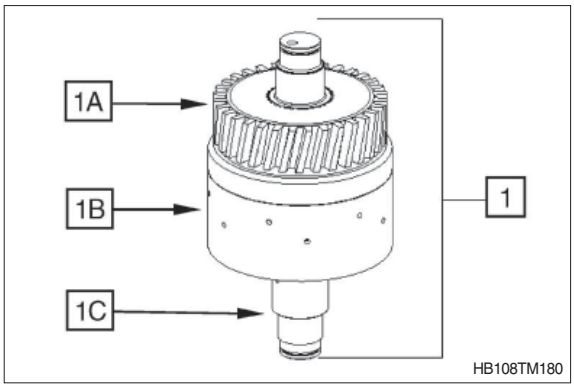

① Heat up bearing inner ring (approx. 120˚C).

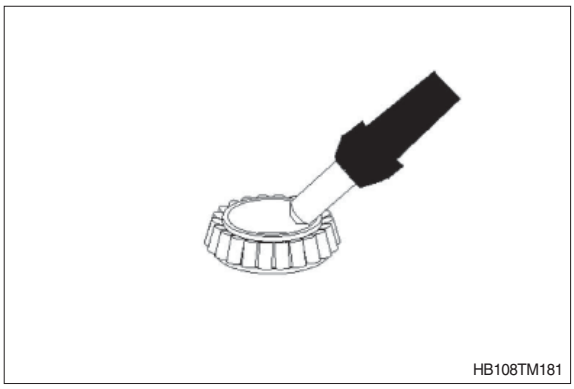

② Mount bearing inner ring (1) until contact is obtained.
③ Fit rectangular ring 30×2 (2).

⚠ Wear protective gloves.

※ Adjust bearing inner ring after cooling-down.

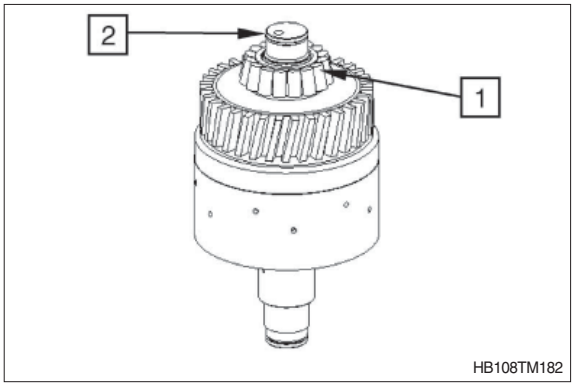

④ Insert both O-rings (1 and 2) into the piston grooves and oil them.

1 = 40×3
2 = 104.5×3

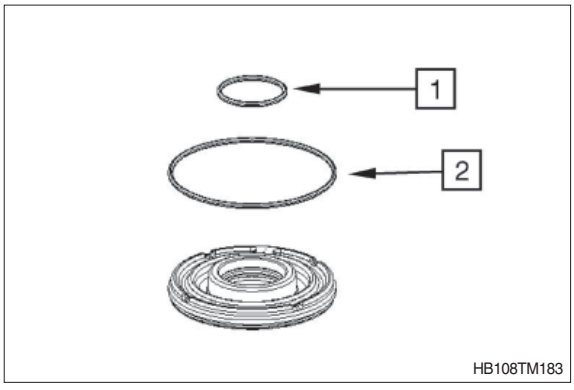

⑤ Insert piston (1) into the disk carrier.

※ Pay attention to the installation position, see figure.

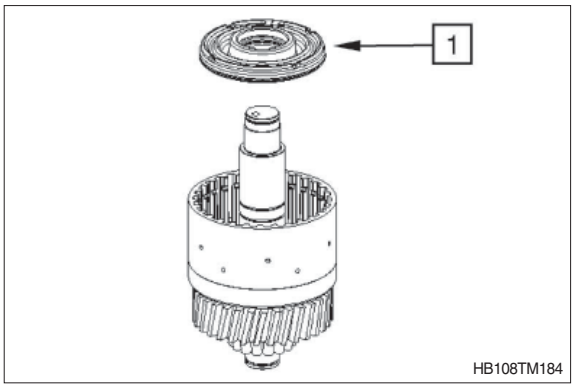

⑥ Use a hand-operated press to place piston into the disk carrier by means of the assembly aid.

(S) Assembly aid 5870 345 114

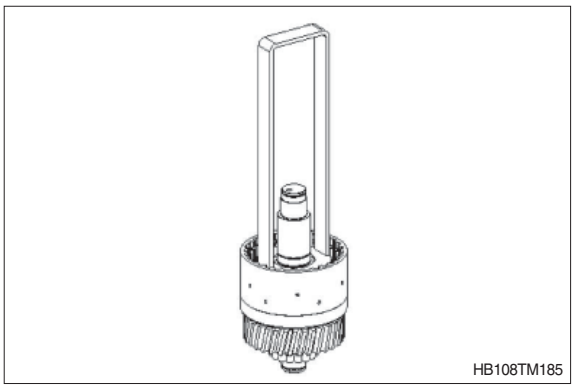

⑦ Mount compression spring (1) and spring cup (2).

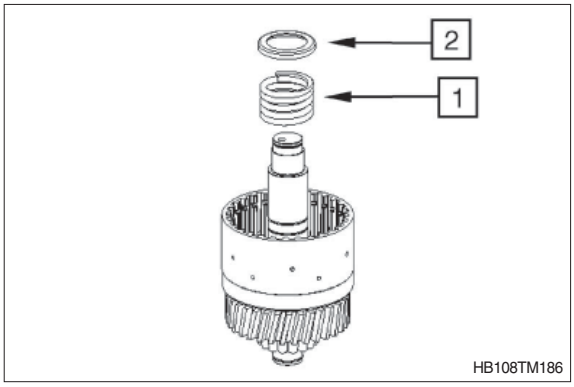

⑧ By means of the assembly aid, preload compression spring under a hand-operated press until the retaining ring 40×1.75 (1) can be snapped in.

(S) Assembly aid 5870 345 114

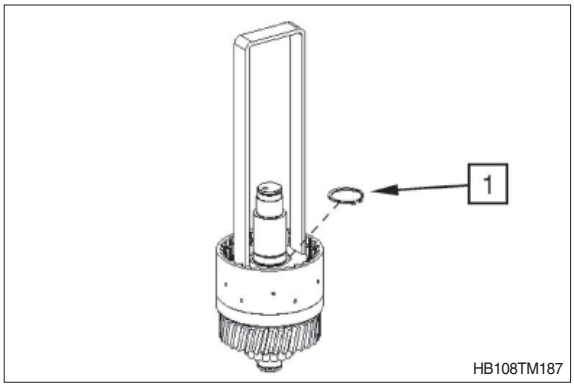

⑨ Mount cup spring 112×75×2.55 (1) with the convex side showing towards the piston.

※ Installation position of cup spring see also the next figure ⑩.

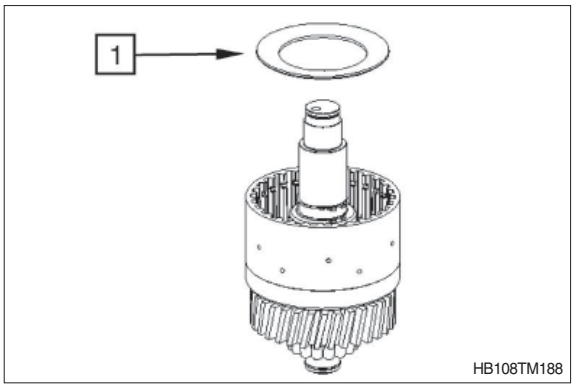

⑩ Install cup spring (1) according to the sketch.

Legend:
1 = Cup spring 112×75×2.55 (convex side towards the piston)
2 = Compression spring with spring cup and retaining ring
3 = Piston with O-rings
4 = Clutch assy

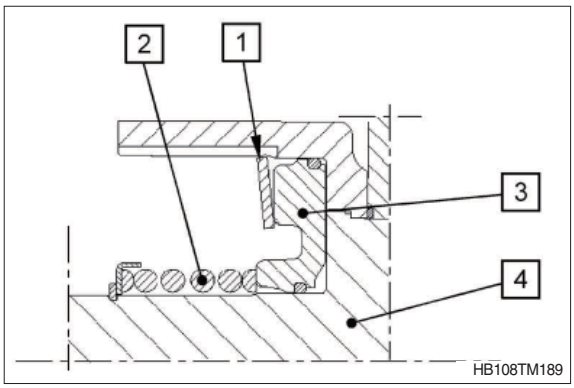

⑪ Install outer and inner disks alternately into the disk carrier (3) as shown in figure, starting with an outer disk and ending with an inner disk.

Legend:
1 = Outer disks (10 pcs)
2 = Inner disks (10 pcs)
3 = Clutch assy

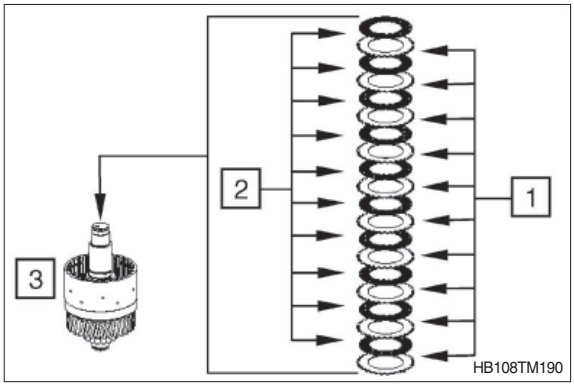

⑫ Mount end plate (1) with the flat side showing towards the disk package and fix it by means of snap ring (2) (e.g. thickness = 2.5 mm / recommended value).

※ Pay attention to the installation position of the end plate.

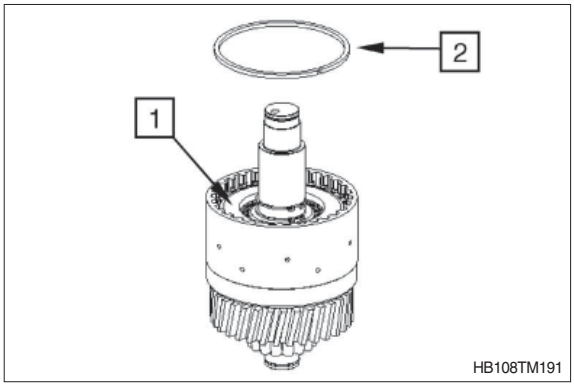

⑬ Equally press on end plate with F (approx. 1.8 kg to 2.0 kg) and set dial indicator to "zero".

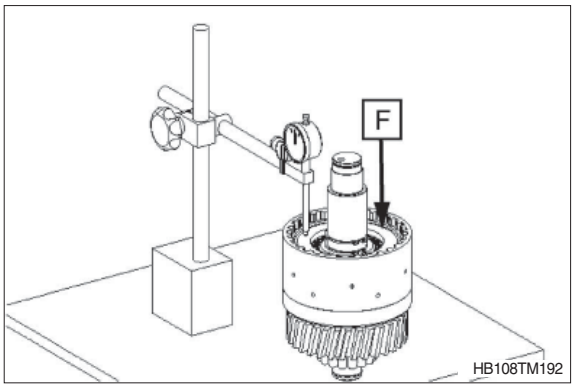

⑭ Then press end plate against the snap ring (upwards) and read the disk clearance.

※ Disk clearance : 2.0 to 2.3 mm

※ In case of deviations, the disk clearance must be corrected with an appropriate snap ring (optional thickness = 2.0 ~ 3.5 mm / available in steps of 0.25 mm)

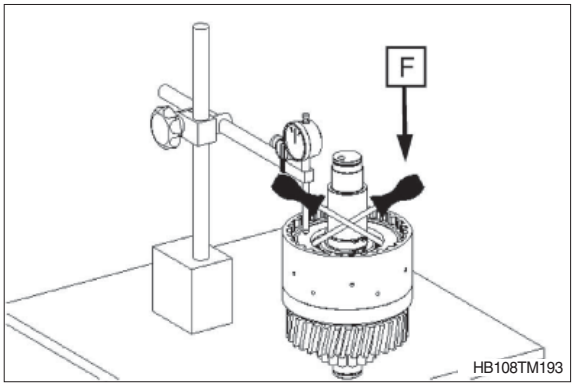

⑮ Snap retaining ring 40×1.75 (1) into the groove.

※ Contact for axial bearing - see the next figure ⑯.

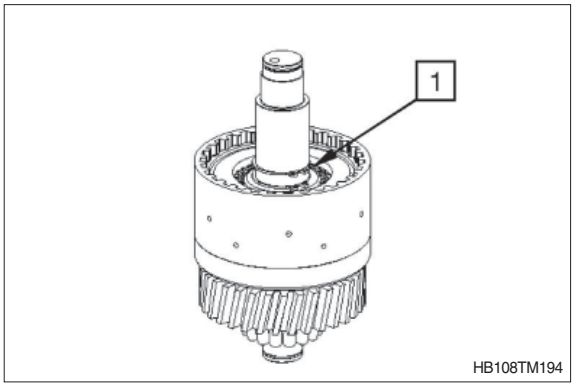

⑯ Mount running disk 40×60×3.5 (1), axial needle cage 40×60×3 (2) and axial washer 40×60×1 (3) and oil them.

※ Mount running disk (1), with the chamfer showing towards the retaining ring.

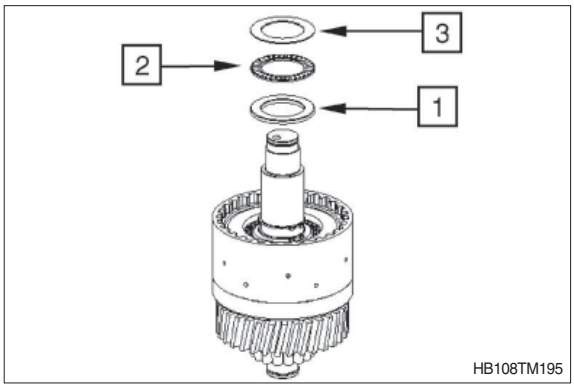

⑰ Mount needle cage 40×45×17 (1) and oil it.

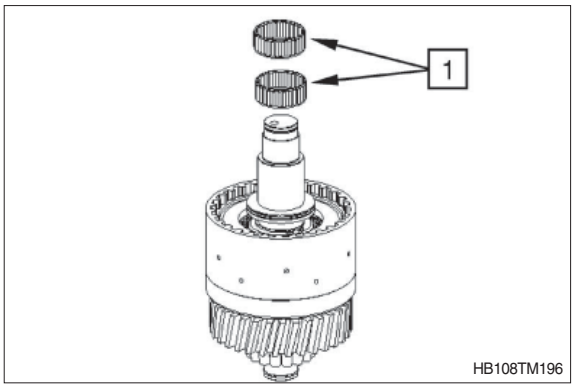

⑱ Mount inner disk carrier until contact is obtained.

⑲ Install inner disks by short ccw/cw rotations of the inner disk carrier (1).

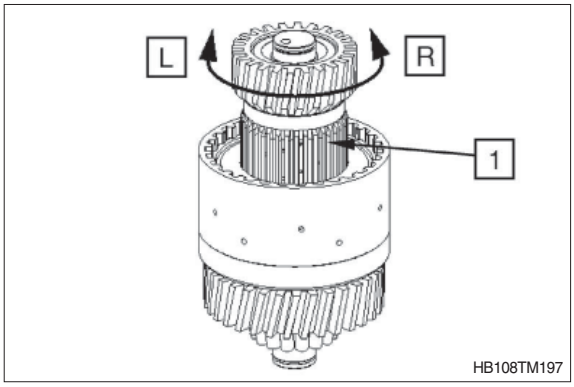

⑳ Mount axial washer 40×60×1 (1), axial needle cage 40×60×3 (2) and running disk (3) 40×60×3.5 and oil them.

※ Mount running disk (3), with the chamfer showing towards the tapered roller bearing.

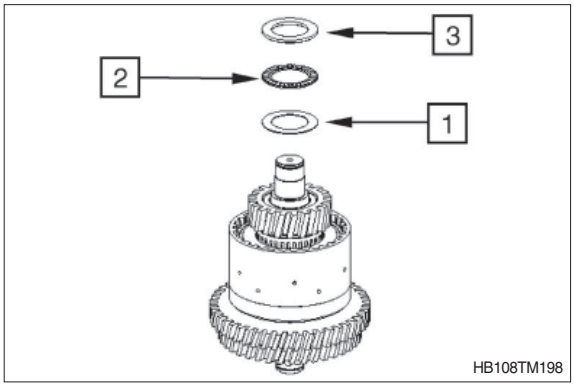

㉑ Heat up bearing inner ring (approx. 120˚C).

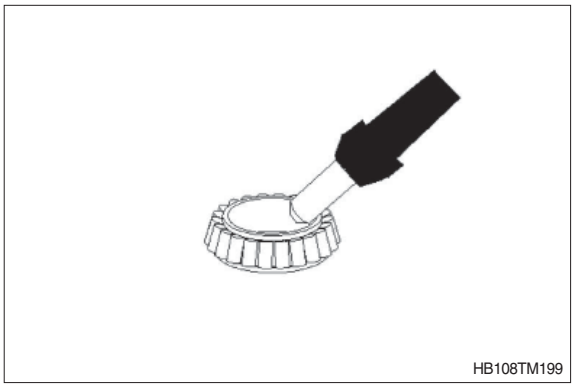

㉒ Mount bearing inner ring (1) until contact is obtained.

㉓ Fit rectangular ring 30×2 (2).

⚠ Wear protective gloves.

※ Adjust bearing inner ring after cooling-down.

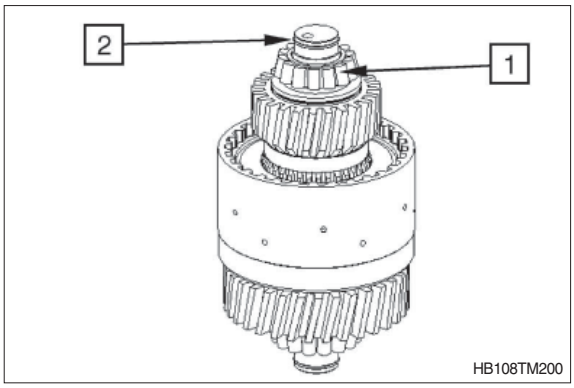

※ Check closing and opening of the clutch by means of compressed air at the hole (see arrow).
Closing and opening of the clutch must be clearly audible.

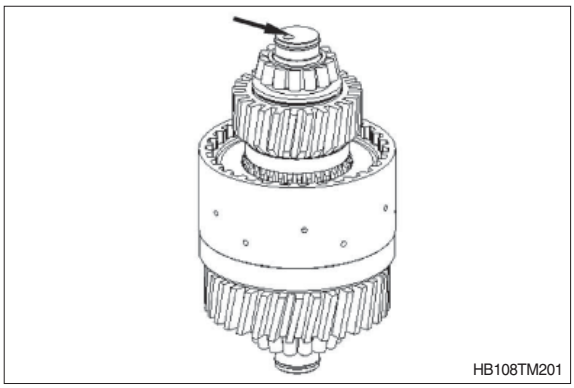

(4) K2 clutch

※ The clutch (1) is supplied by the spare parts service only as a complete assy which consists of:

1A = Ball
1B = Shaft
1C = Helical gear
1D = Disk carrier

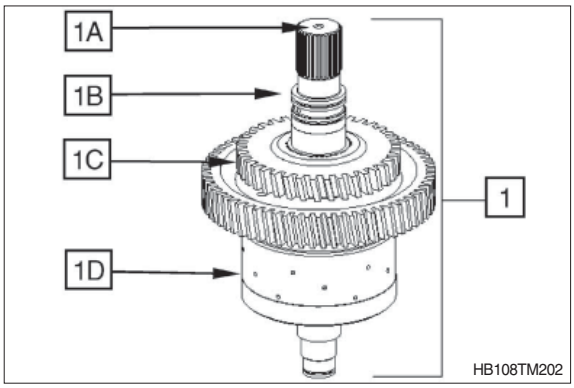

① Heat up bearing inner ring (approx. 120˚C).

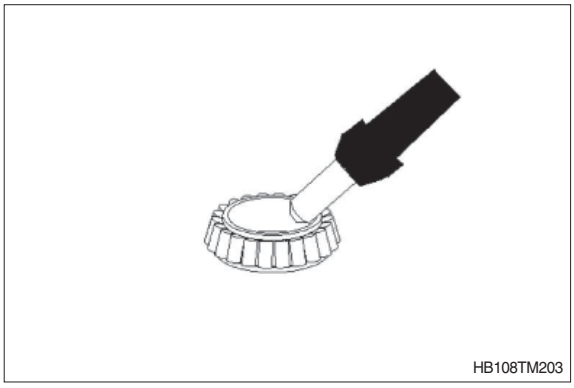

② Mount bearing inner ring (1) until contact is obtained.

③ Fit rectangular rings 50×2.5 (2).

⚠ Wear protective gloves.

※ Adjust bearing inner ring after cooling-down.

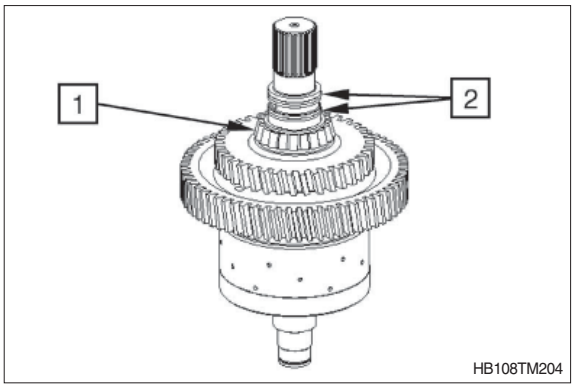

④ Insert both O-rings (1 and 2) into the piston grooves and oil them.

1 = 40×3
2 = 115×3

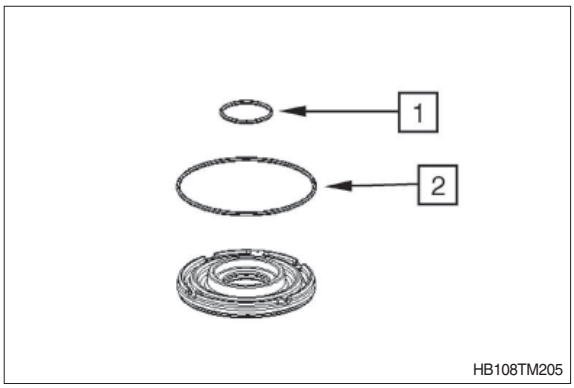

⑤ Insert piston (1) into the disk carrier.

※ Pay attention to the installation position, see figure.

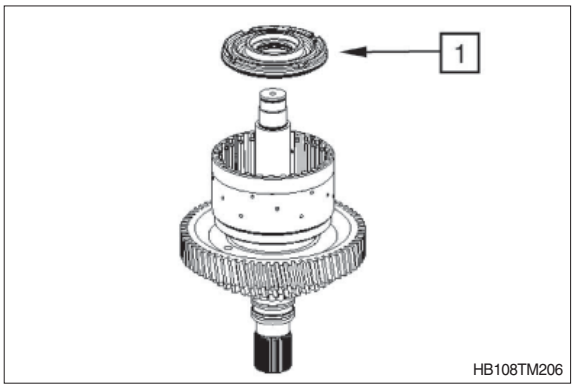

⑥ Use a hand-operated press to place piston into the disk carrier by means of the assembly aid.

(S) Assembly aid 5870 345 114

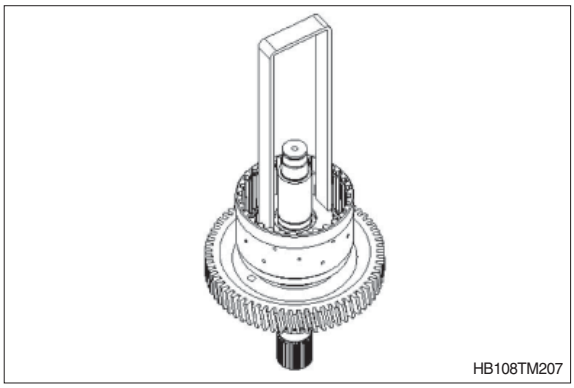

⑦ Mount cup spring package (1) and axial washer (2).

※ Installation position of cup springs see the next figure ⑧.

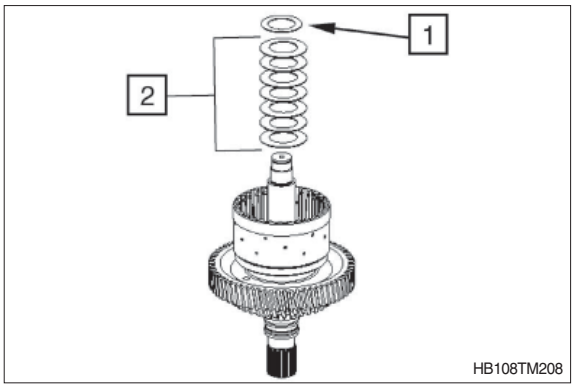

⑧ Fit cup springs according to the sketch.

Legend:
1 = Clutch
2 = Piston with O-rings
3 = Cup springs (7 pcs)
4 = Axial washer (40×60×1)
5 = Retaining ring (40×1.75)

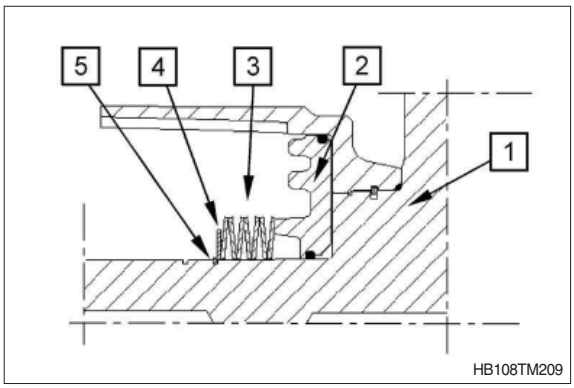

⑨ By means of the assembly aid, preload cup springs under a hand-operated press until the retaining ring 40×1.75 (1) can be snapped in.

(S) Assembly aid 5870 345 114

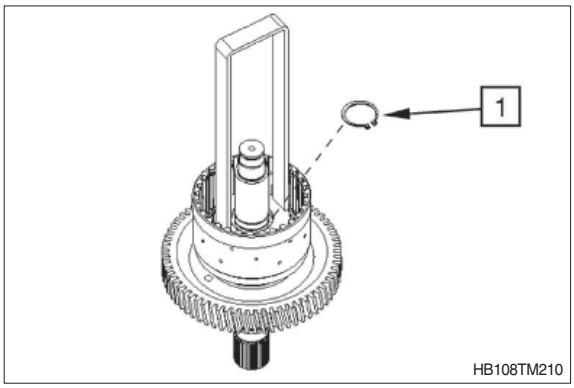

⑩ Mount cup spring 122.7×87×2.55 (1) with the convex side showing towards the piston.

※ Installation position of cup spring see also the next figure ⑪.

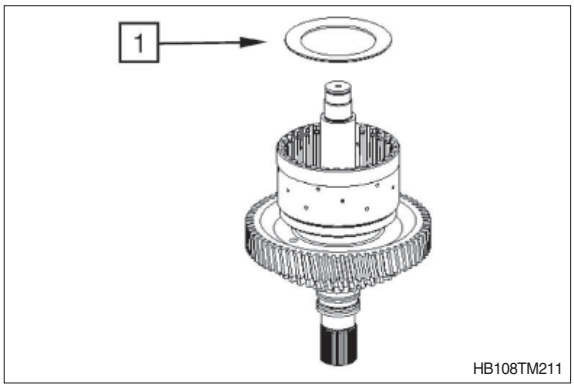

⑪ Install cup spring (1) according to the sketch.

Legend:
1 = Cup spring 122.7×87×2.55 (convex side showing towards the piston)
2 = Compression spring with spring cup and retaining ring
3 = Piston with O-rings
4 = Clutch assy

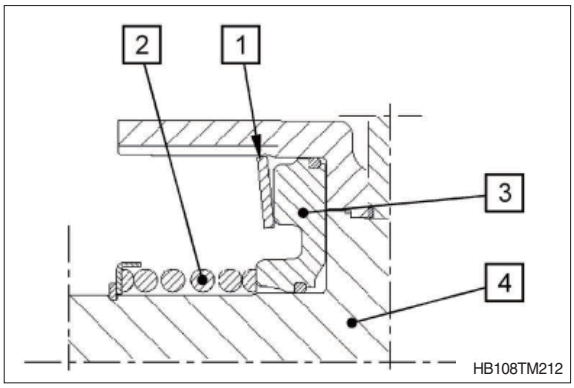

⑫ Install outer and inner disks alternately into the disk carrier (3) as shown in figure, starting with an outer disk and ending with an inner disk.

Legend:
1 = Outer disks (13 pcs)
2 = Inner disks (13 pcs)
3 = Clutch assy

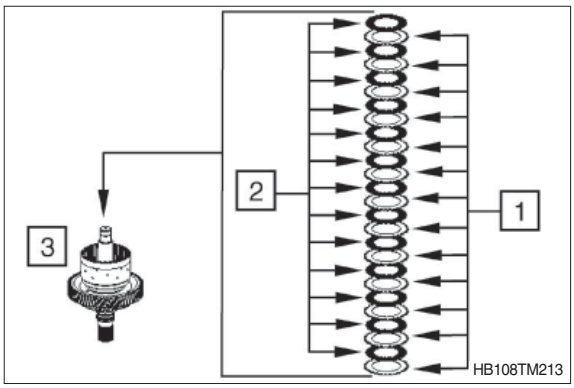

⑬ Mount end plate (1) with the flat side showing towards the disk package and fix it by means of snap ring (2) (e.g. thickness = 2.5 mm / recommended value).

※ Pay attention to the installation position of the end plate.

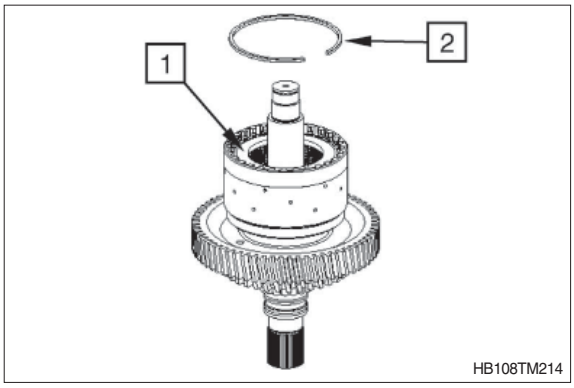

⑭ Equally press on end plate with F (approx. 1.8 kg to 2.0 kg) and set dial indicator to "zero".

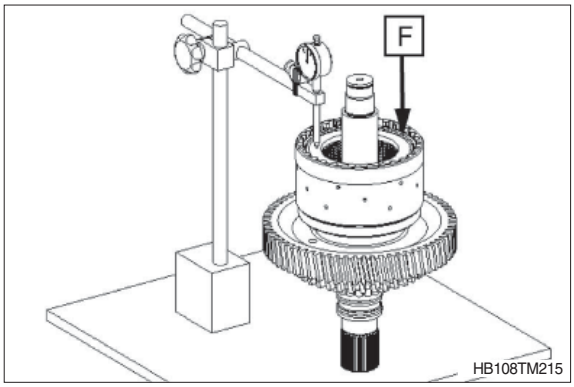

⑮ Then press end plate against the snap ring (upwards) and read the disk clearance.

※ Disk clearance : 2.2 to 2.5 mm

※ In case of deviations, the disk clearance must be corrected with an appropriate snap ring (optional thickness = 2.0 ~ 3.5 mm / available in steps of 0.25 mm)

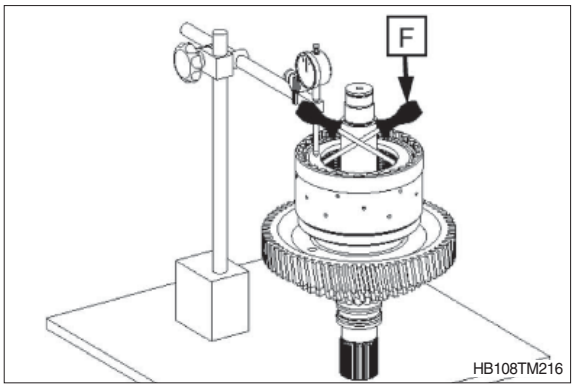

⑯ Snap retaining ring 40×1.75 (1) into the groove.

※ Contact for axial bearing - see figure ⑰.

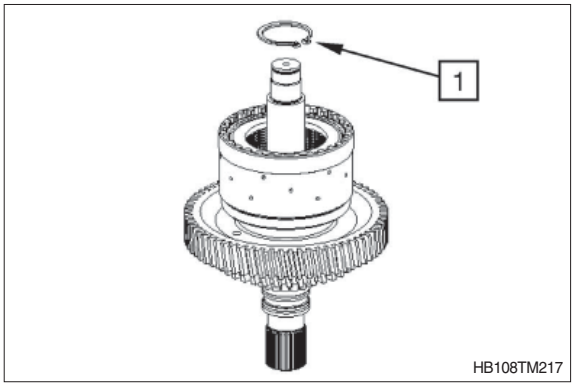

⑰ Mount running disk 40×60×3.5 (1), axial needle cage 40×60×3 (2) and axial washer 40×60×1 (3) and oil them.

※ Mount running disk (1), with the chamfer showing towards the retaining ring.

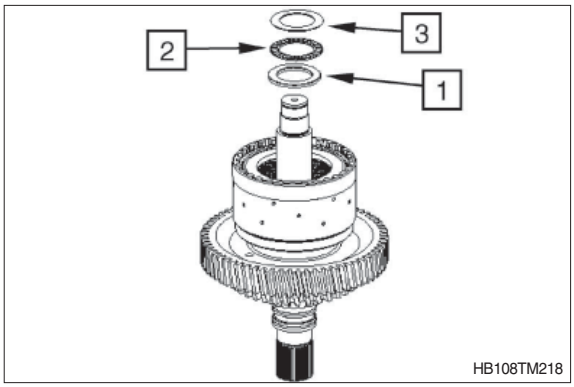

⑱ Mount needle cage 40×45×17 (1) and bushing (2) and oil them.

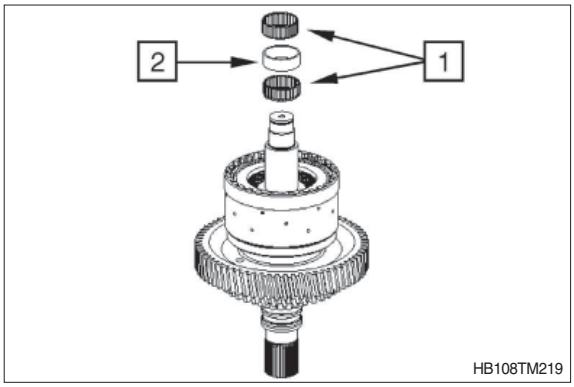

⑲ Mount inner disk carrier until contact is obtained.

⑳ Install inner disks by short ccw/cw rotations of the inner disk carrier (1).

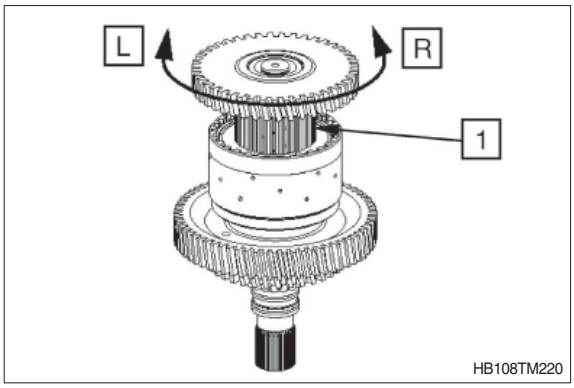

㉑ Mount axial washer 40×60×1 (1), axial needle cage 40×60×3 (2) and running disk (3) 40×60×3.5 and oil them.

※ Mount running disk (3), with the chamfer showing towards the tapered roller bearing.

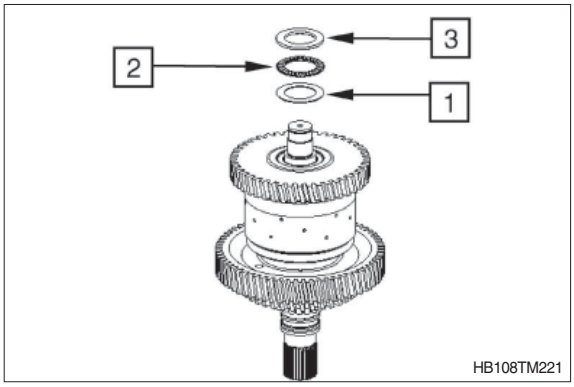

㉒ Heat up bearing inner ring (approx. 120˚C).

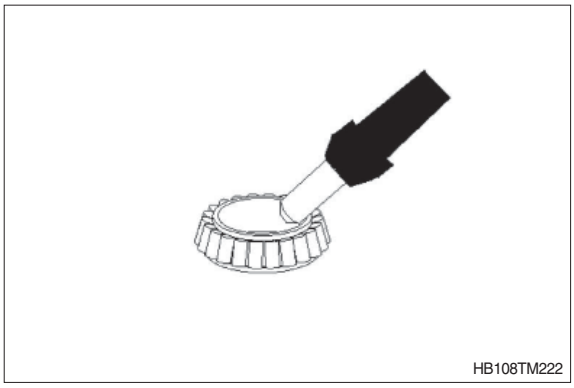

㉓ Mount bearing inner ring (1) until contact is obtained.

㉔ Fit rectangular ring 30×2 (2).

⚠ Wear protective gloves.

※ Adjust bearing inner ring after cooling-down.

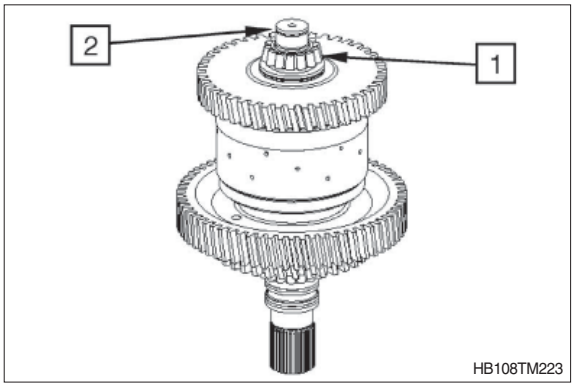

※ Check closing and opening of the clutch by means of compressed air at the hole (see arrow).
Closing and opening of the clutch must be clearly audible.

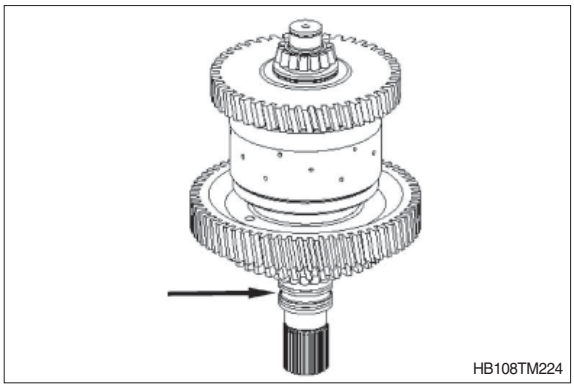
HB108TM224

(5) K3 clutch

※ The clutch (1) is supplied by the spare parts service only as a complete assy which consists of:

1A = Helical gear
1B = Disk carrier
1C = Shaft

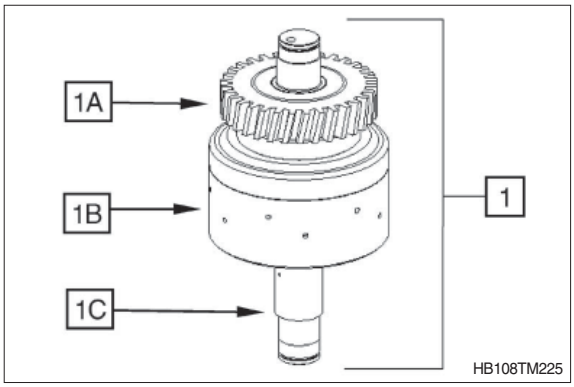

HB108TM225

① Heat up bearing inner ring (approx. 120˚C).

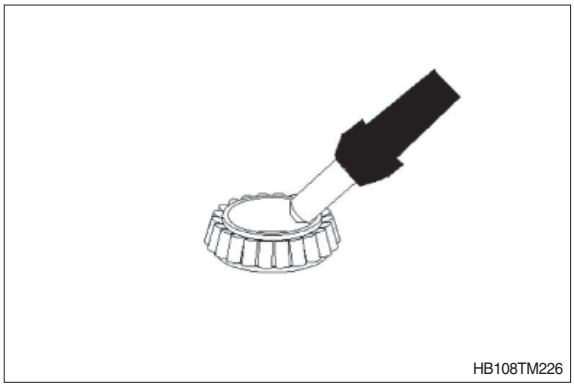
HB108TM226

② Mount bearing inner ring (1) until contact is obtained.
③ Fit rectangular rings 30×2 (2).

⚠ Wear protective gloves.

※ Adjust bearing inner ring after cooling-down.

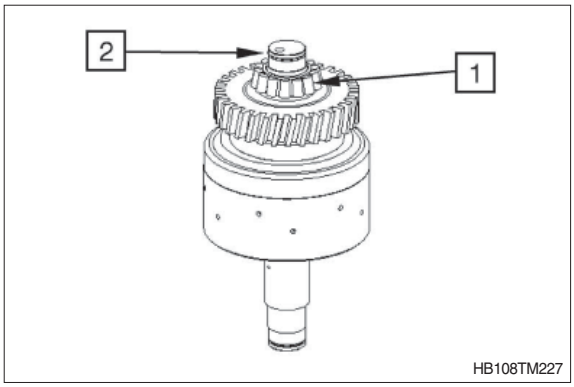

HB108TM227

④ Insert both O-rings (1 and 2) into the piston grooves and oil them.

1 = 40×3
2 = 104.5×3

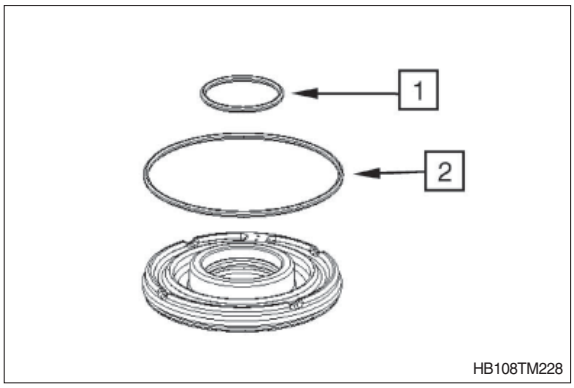

⑤ Insert piston (1) into the disk carrier.

※ Pay attention to the installation position, see figure.

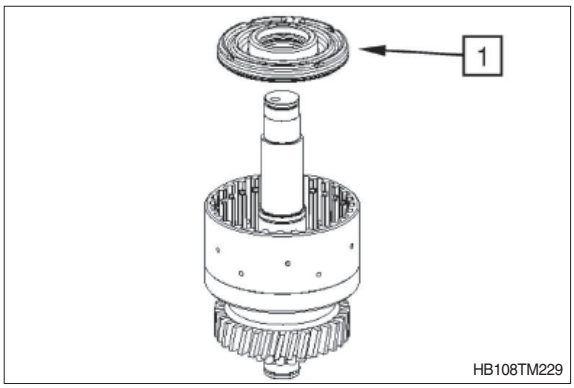

⑥ Use a hand-operated press to place piston into the disk carrier by means of the assembly aid.

(S) Assembly aid 5870 345 114

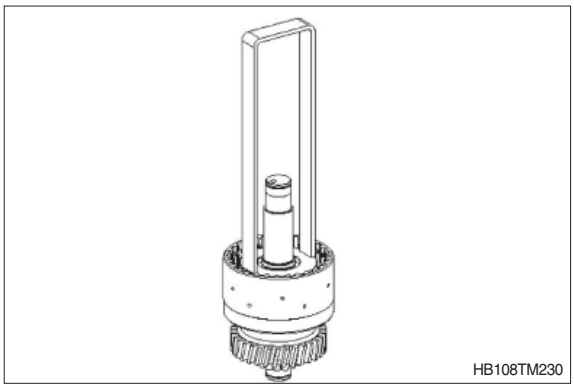

⑦ Mount compression spring (1) and spring cup (2).

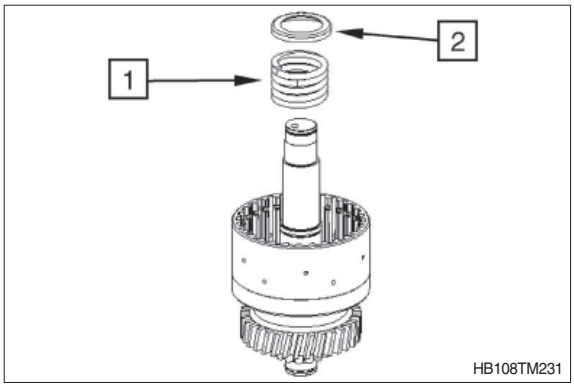

⑧ By means of the assembly aid, preload compression spring under a hand-operated press until the retaining ring 40×1.75 (1) can be snapped in.

(S) Assembly aid 5870 345 114

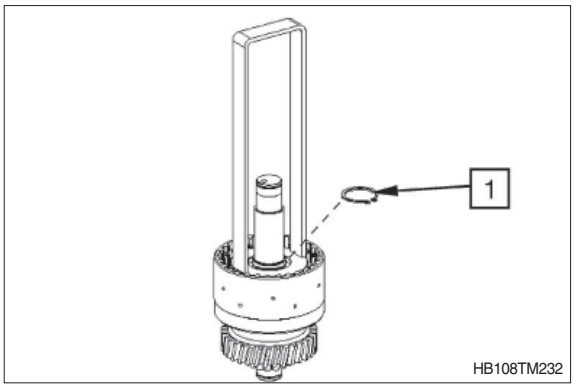

⑨ Mount cup spring 112×75×2.55 (1) with the convex side showing towards the piston.

※ Installation position of cup spring see also the next figure ⑩.

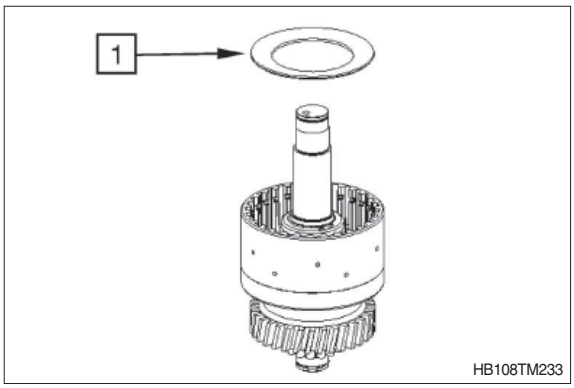

⑩ Install cup spring (1) according to the sketch.

Legend:
1 = Cup spring 112×75×2.55 (convex side showing towards the piston)
2 = Compression spring with spring cup and retaining ring
3 = Piston with O-rings
4 = Clutch assy

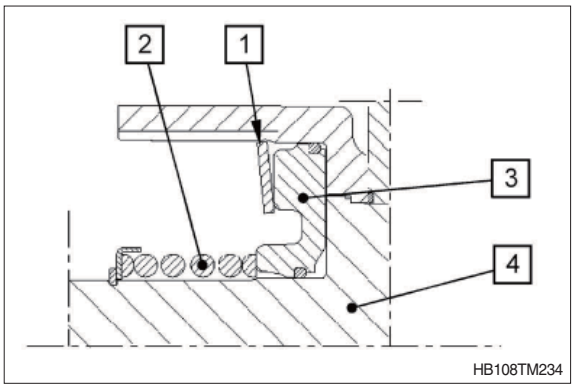

⑪ Install outer and inner disks alternately into the disk carrier (3) as shown in figure, starting with an outer disk and ending with an inner disk.

Legend:
1 = Outer disks (9 pcs)
2 = Inner disks (9 pcs)
3 = Clutch assy

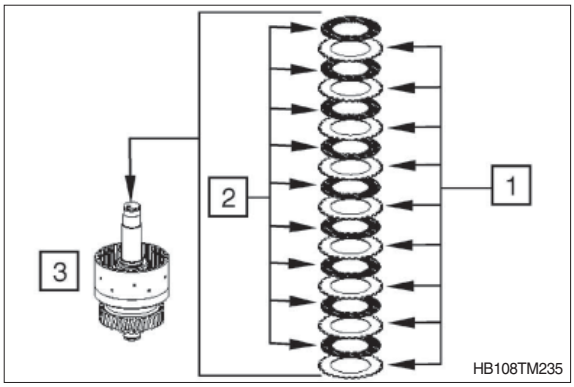

⑫ Mount end plate (1) with the flat side showing towards the disk package and fix it by means of snap ring (2) (e.g. thickness = 2.5 mm / recommended value).

※ Pay attention to the installation position of the end plate.

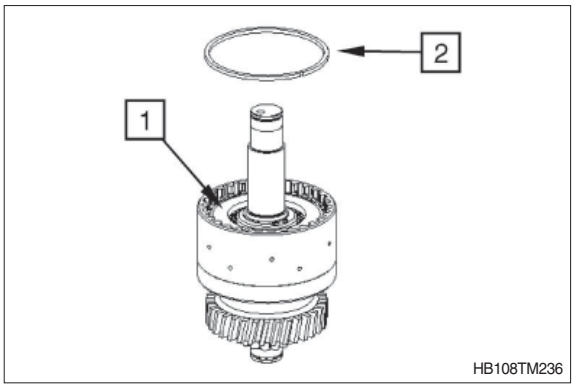

⑬ Equally press on end plate with F (approx. 1.8 kg to 2.0 kg) and set dial indicator to "zero".

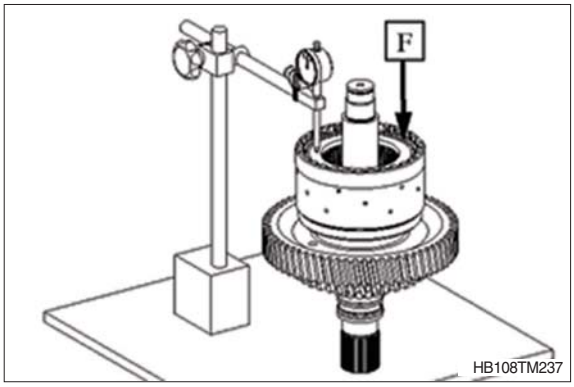

⑭ Then press end plate against the snap ring (upwards) and read the disk clearance.

※ Disk clearance : 1.8 to 2.1 mm

※ In case of deviations, the disk clearance must be corrected with an appropriate snap ring (optional thickness = 2.0 ~ 3.5 mm / available in steps of 0.25 mm)

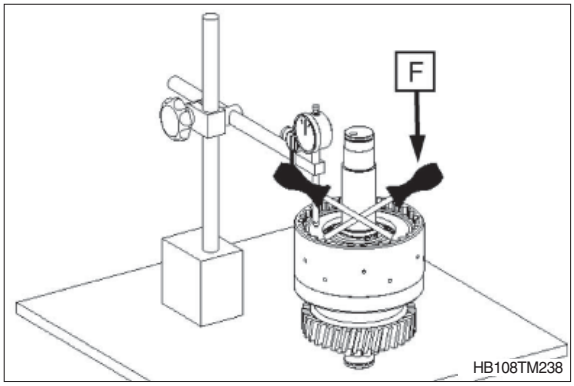

⑮ Mount running disk 35×52×3.5 (1), axial needle cage 35×52×2 (2) and axial washer 35×52×1 (3) and oil them.

※ Mount running disk (1), with the chamfer showing towards the retaining ring.

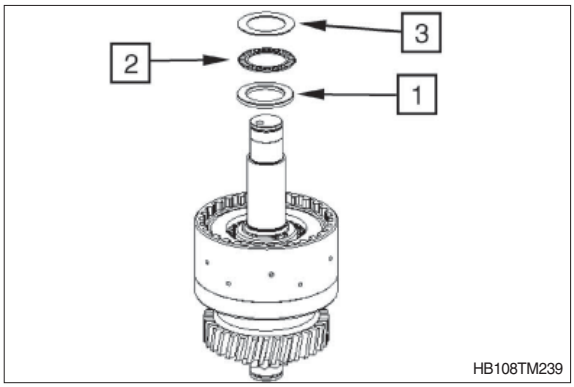

⑯ Mount needle cage 35×42×18 (1) and bushing (2) and oil them.

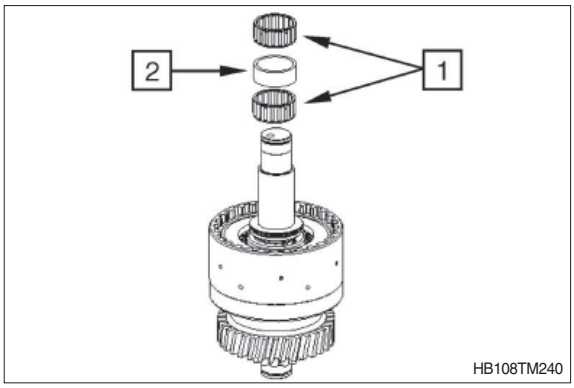

⑰ Mount inner disk carrier until contact is obtained.

⑱ Install inner disks by short ccw/cw rotations of the inner disk carrier (1).

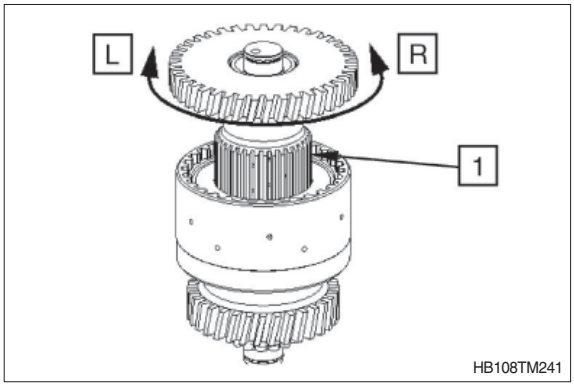

⑲ Mount axial washer 35×52×1 (1), axial needle cage 35×52×2 (2) and running disk (3) 35×52×3.5 and oil them.

※ Mount running disk (3), with the chamfer showing towards the tapered roller bearing.

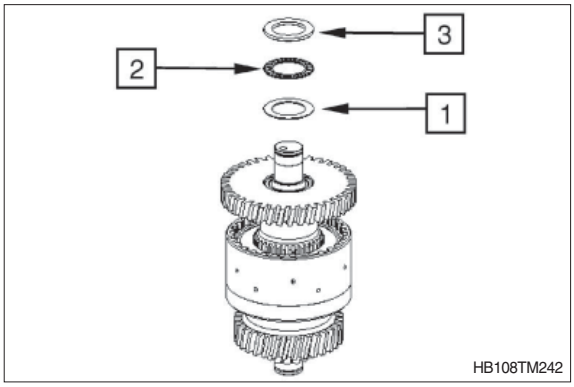

⑳ Heat up bearing inner ring (approx. 120˚C).

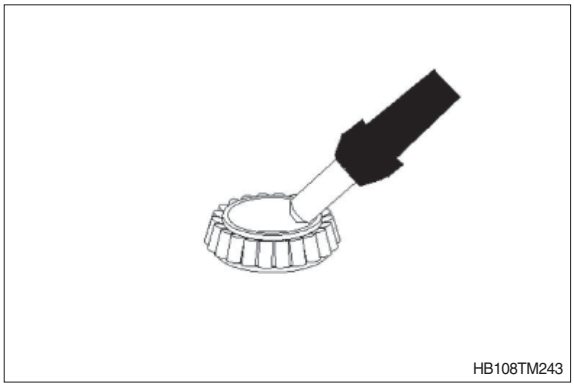

㉑ Mount bearing inner ring (1) until contact is obtained.

㉒ Fit rectangular ring 30×2 (2).

⚠ Wear protective gloves.

※ Adjust bearing inner ring after cooling-down.

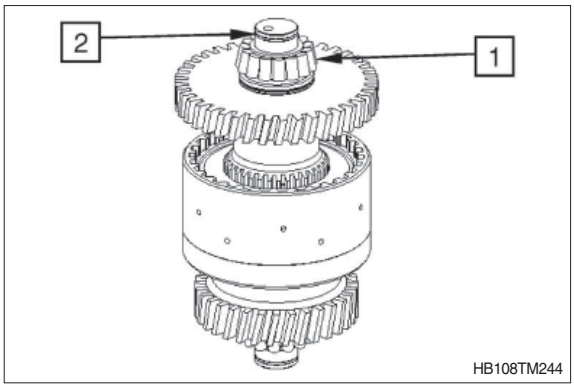

※ Check closing and opening of the clutch by means of compressed air at the hole (see arrow).
Closing and opening of the clutch must be clearly audible.

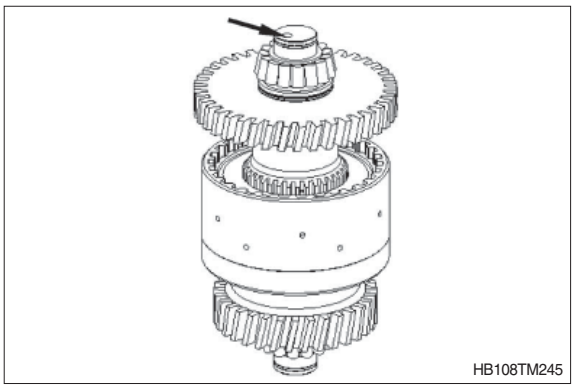

(6) K4 clutch

※ The clutch (1) is supplied by the spare parts service only as a complete assy which consists of:

1A = Retaining ring
1B = Helical gear
1C = Disk carrier
1D = Shaft

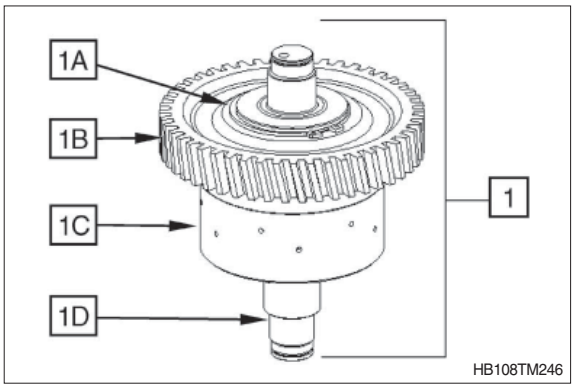

① Heat up bearing inner ring (approx. 120˚C).

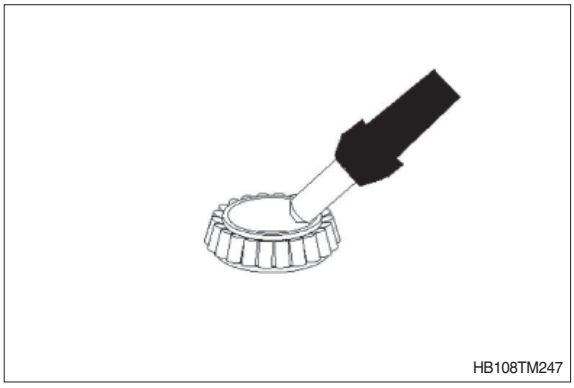

② Mount bearing inner ring (1) until contact is obtained.

③ Fit rectangular rings 30×2 (2).

⚠ Wear protective gloves.

※ Adjust bearing inner ring after cooling-down.

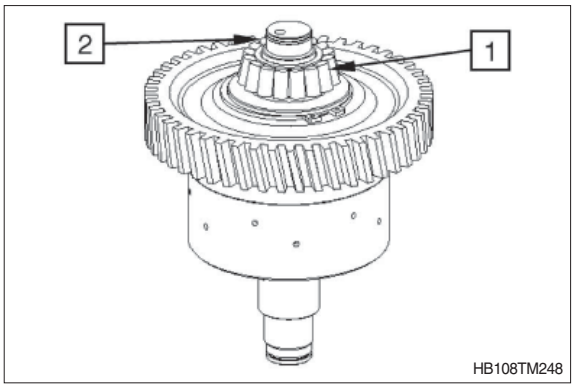

④ Insert both O-rings (1 and 2) into the piston grooves and oil them.

1 = 40×3
2 = 104.5×3

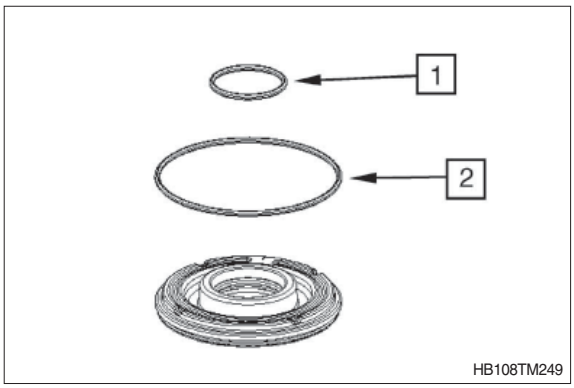

⑤ Insert piston (1) into the disk carrier.

※ Pay attention to the installation position, see figure.

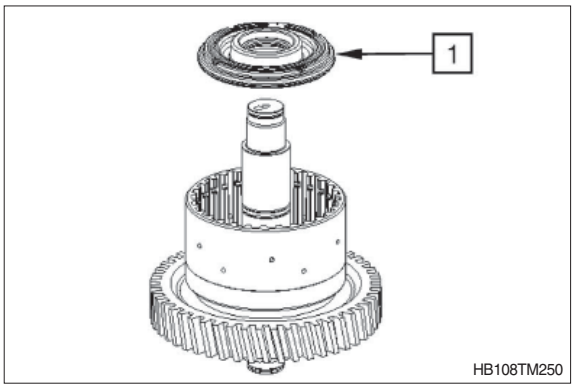

⑥ Use a hand-operated press to place piston into the disk carrier by means of the assembly aid.

(S) Assembly aid 5870 345 114

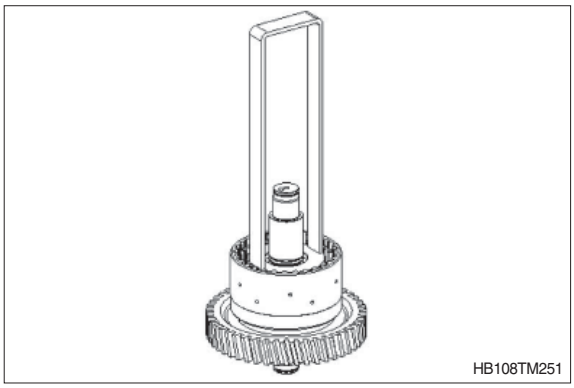

⑦ Mount compression spring (1) and spring cup (2).

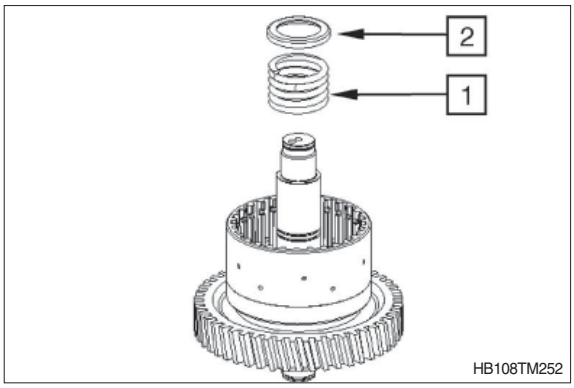

⑧ By means of the assembly aid, preload compression spring under a hand-operated press until the retaining ring 40×1.75 (1) can be snapped in.

(S) Assembly aid 5870 345 114

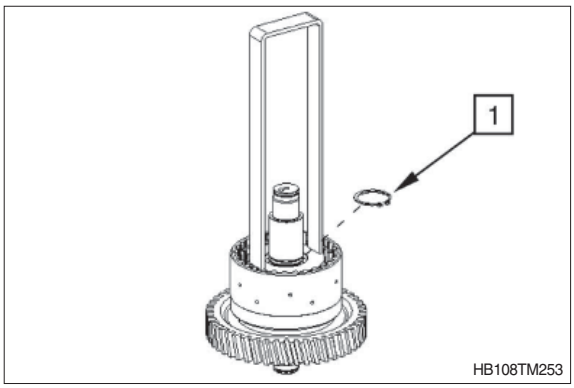

⑨ Mount plate assy with cup springs (1), with the open side showing towards the piston.

※ Installation position of plate see also the next figure ⑩.

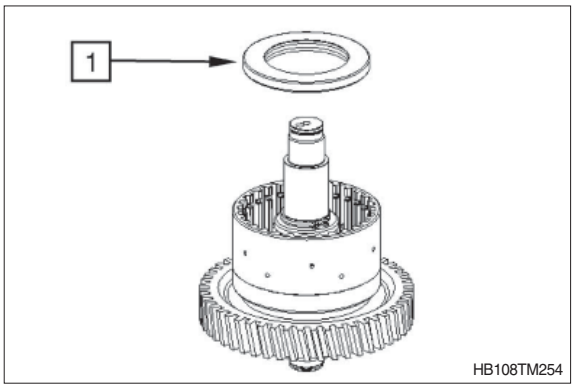

⑩ Fit plate (1) according to sketch (see arrow).

Legend:
1 = Plate assy with cup springs
2 = Compression spring with spring cup and retaining ring
3 = Piston with O-rings
4 = Input shaft assy

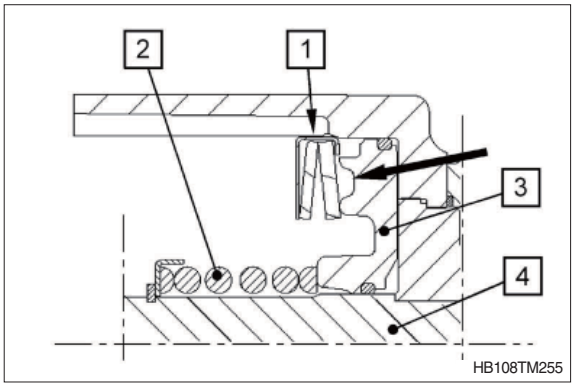

⑪ Install outer and inner disks alternately into the disk carrier (3) as shown in figure, starting with an outer disk and ending with an inner disk.

Legend:
1 = Outer disks (7 pcs)
2 = Inner disks (7 pcs)
3 = Clutch assy

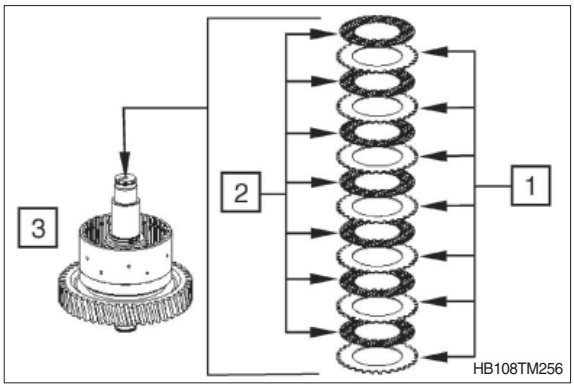

⑫ Mount end plate (1) with the flat side showing towards the disk package and fix it by means of snap ring (2) (e.g. thickness = 2.5 mm / recommended value).

※ Pay attention to the installation position of the end plate.

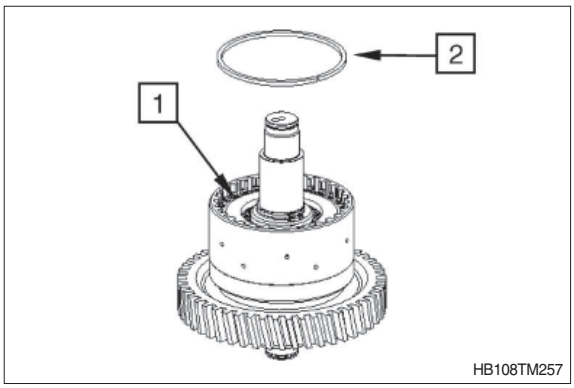

⑬ Equally press on end plate with F (approx. 1.8 kg to 2.0 kg) and set dial indicator to "zero".

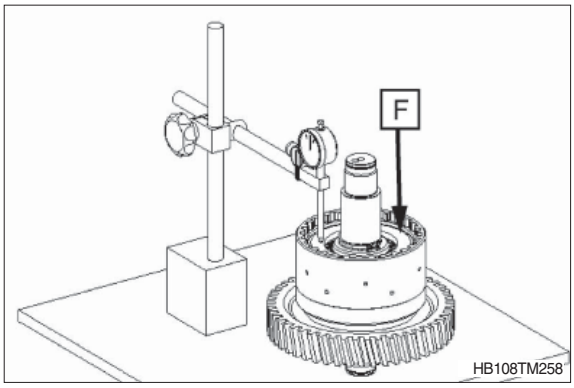

⑭ Then press end plate against the snap ring (upwards) and read the disk clearance.

※ Disk clearance : 1.4 to 1.7 mm

※ In case of deviations, the disk clearance must be corrected with an appropriate snap ring (optional thickness = 2.0 ~ 3.5 mm / available in steps of 0.25 mm)

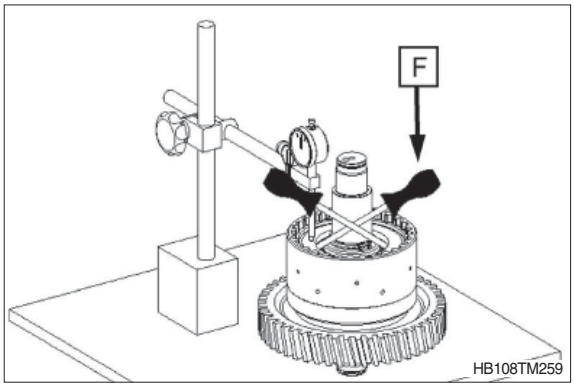

⑮ Snap retaining ring 40×1.75 (1) into the groove.

※ Contact for axial bearing - see the next figure ⑯.

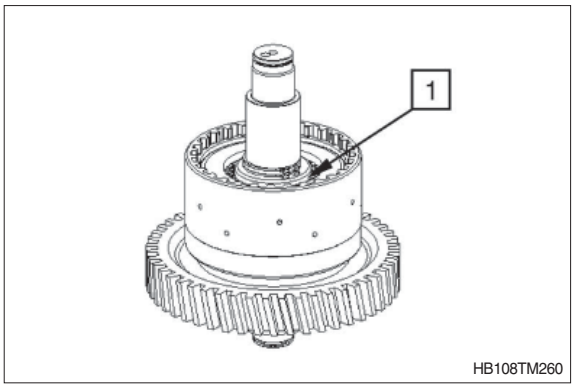

⑯ Mount running disk 40×60×3.5 (1), axial needle cage 40×60×3 (2) and axial washer 40×60×1 (3) and oil them.

※ Mount running disk (1) with the chamfer showing towards the retaining ring.

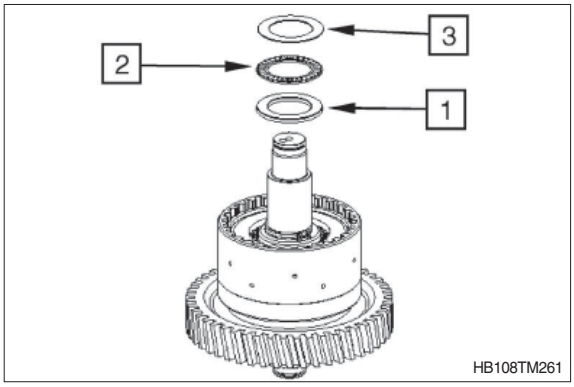

⑰ Mount needle cage 40×45×17 (1) and oil it.

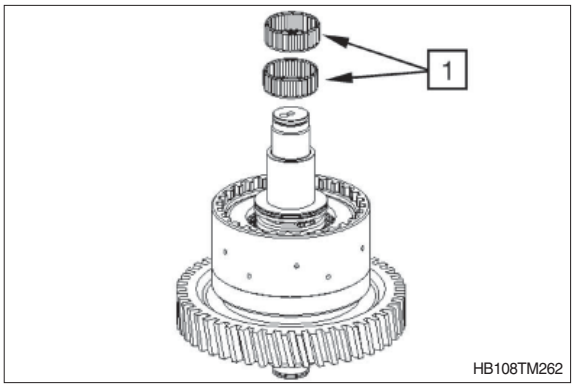

⑱ Mount inner disk carrier until contact is obtained.

⑲ Install inner disks by short ccw/cw rotations of the inner disk carrier (1).

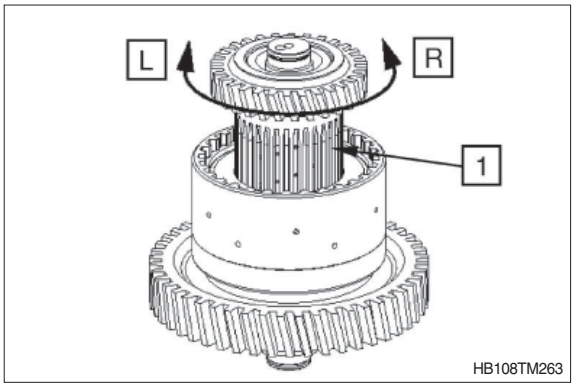

⑳ Mount axial washer 40×60×1 (1), axial needle cage 40×60×3 (2) and running disk (3) 40×60×3.5 and oil them.

※ Mount running disk (3), with the chamfer showing towards the tapered roller bearing.

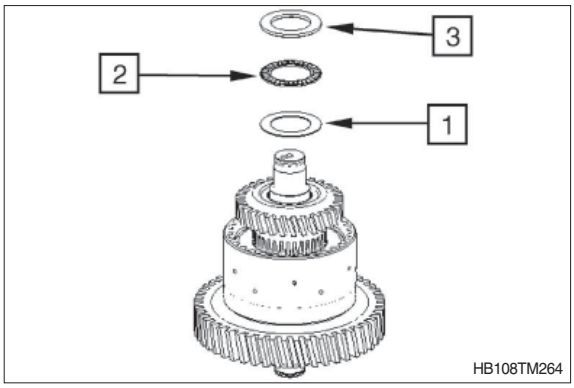

㉑ Heat up bearing inner ring (approx. 120˚C).

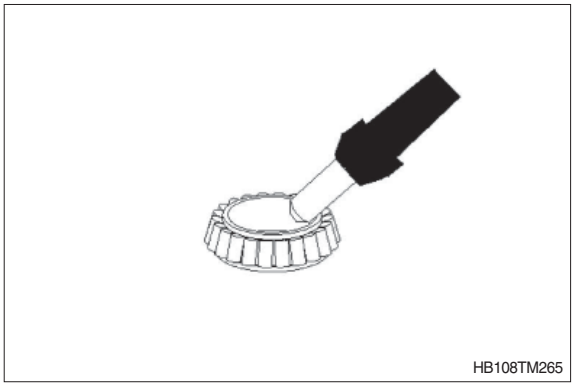

㉒ Mount bearing inner ring (1) until contact is obtained.

㉓ Fit rectangular ring 30×2 (2).

⚠ Wear protective gloves.

※ Adjust bearing inner ring after cooling-down.

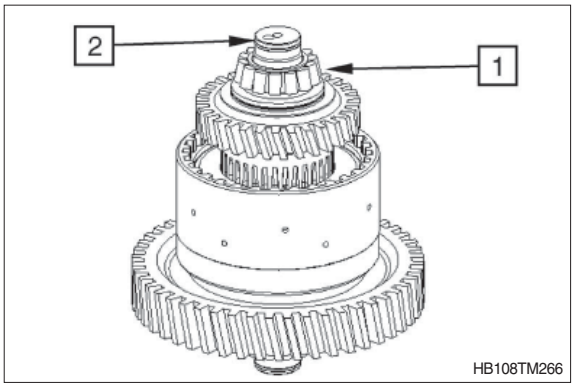

※ Check closing and opening of the clutch by means of compressed air at the hole (see arrow).
Closing and opening of the clutch must be clearly audible.

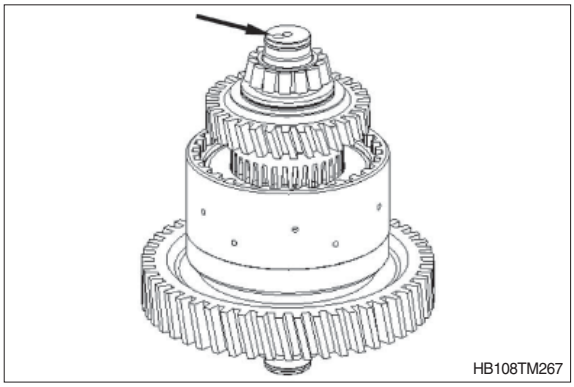

(7) Front wheel drive (VA)

※ The clutch (1) is supplied by the spare parts service only as a complete assy which consists of:

1A = Shaft
1B = Disk carrier

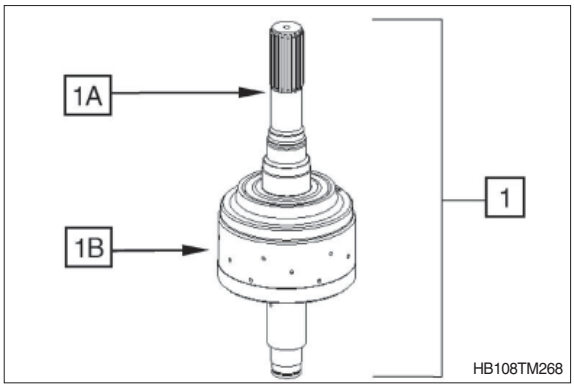

① Heat up bearing inner ring (approx. 120˚C).

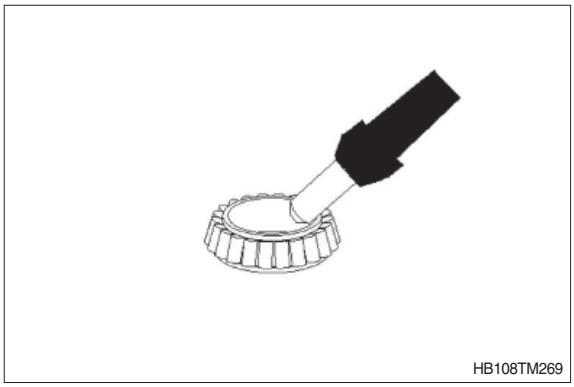

② Mount bearing inner ring (1) until contact is obtained.

⚠ Wear protective gloves.

※ Adjust bearing inner ring after cooling-down.

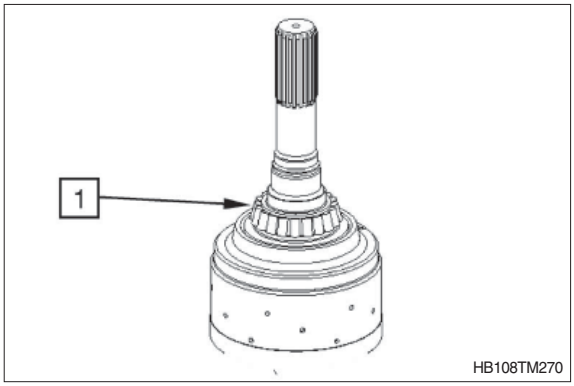

③ Insert piston (1) into the disk carrier.

※ Oil both sealing lips.

※ Pay attention to the installation position, see figure.

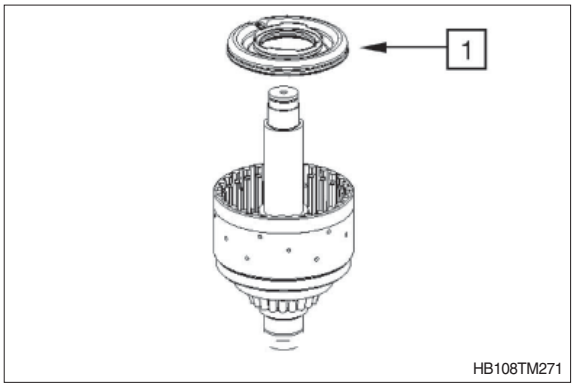

④ Use a hand-operated press to place piston into the disk carrier by means of the assembly aid.

(S) Assembly aid 5870 345 114

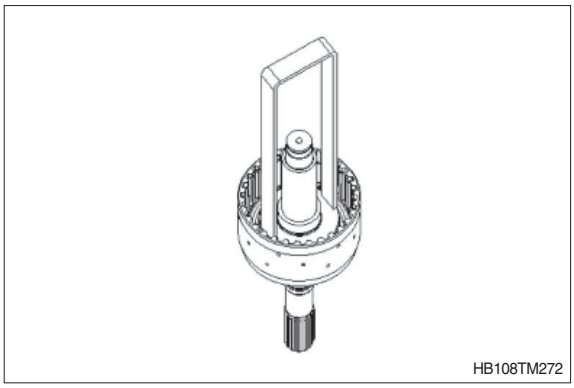

⑤ Mount cup spring package (1) and washer (2).

※ Installation position of cup springs see the next figure ⑥.

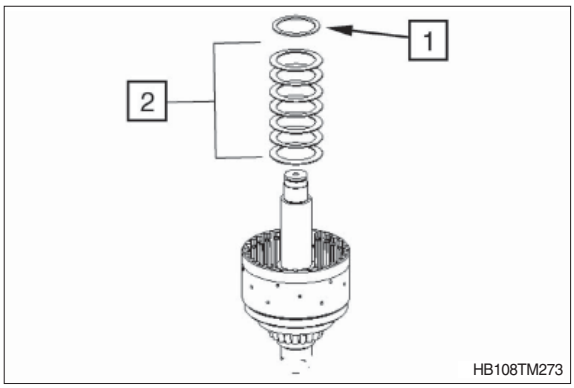

⑥ Fit cup springs according to the sketch.

Legend:
1 = Clutch
2 = Piston
3 = Cup springs (7 pcs)
4 = Washer
5 = Retaining ring (50×2)

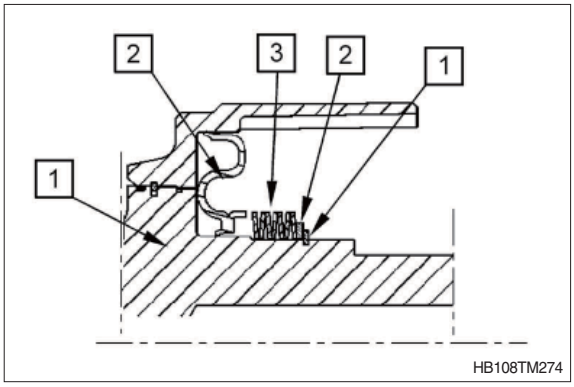

⑦ By means of the assembly aid, preload cup springs under a handoperated press until the retaining ring 50×2 (1) can be snapped in.

(S) Assembly aid 5870 506 128

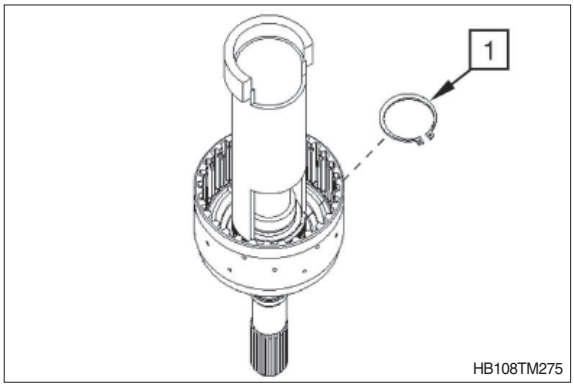

⑧ Install outer and inner disks alternately into the disk carrier (3) as shown in figure, starting with an outer disk and ending with an inner disk.

Legend:
1 = Outer disks (12 pcs)
2 = Inner disks (12 pcs)
3 = Clutch assy

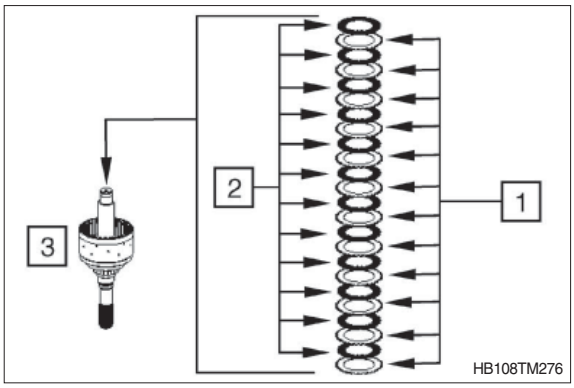

⑨ Mount end plate (1) with the flat side showing towards the disk package and fix it by means of snap ring (2) (e.g. thickness = 2.5 mm / recommended value).

※ Pay attention to the installation position of the end plate.

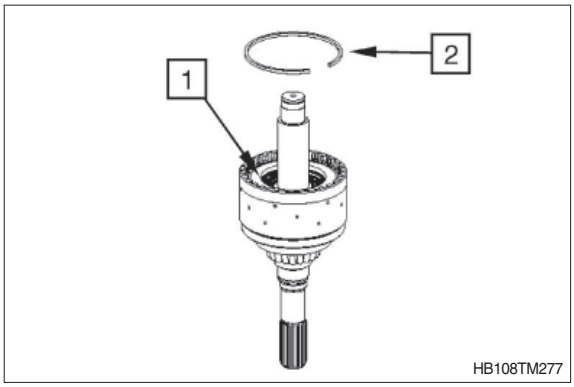

⑩ Equally press on end plate with F (approx. 1.8 kg to 2.0 kg) and set dial indicator to "zero".

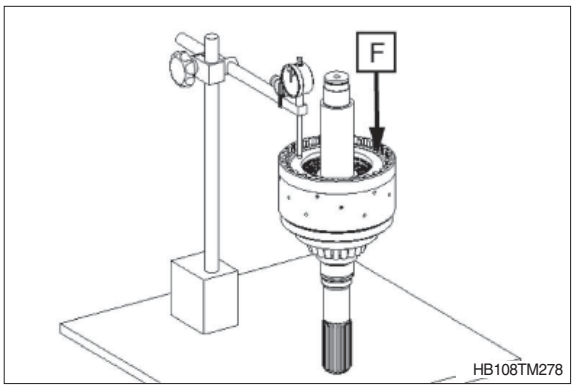

⑪ Then press end plate against the snap ring (upwards) and read the disk clearance.

Disk clearance : 2.3 to 2.8 mm

※ In case of deviations, the disk clearance must be corrected with an appropriate snap ring (optional thickness = 2.0 ~ 4.0 mm / available in steps of 0.25 mm)

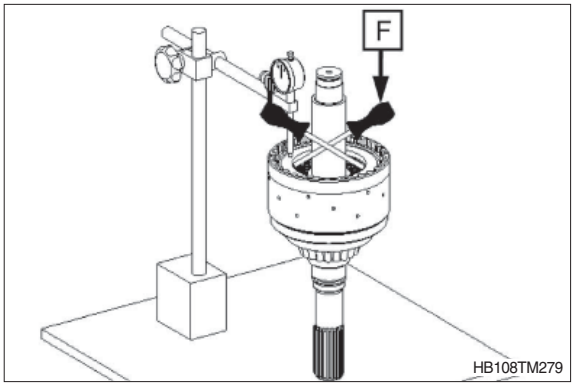

⑫ Mount inner disk carrier until contact is obtained.

Install inner disks by short ccw/cw rotations of the inner disk carrier (1).

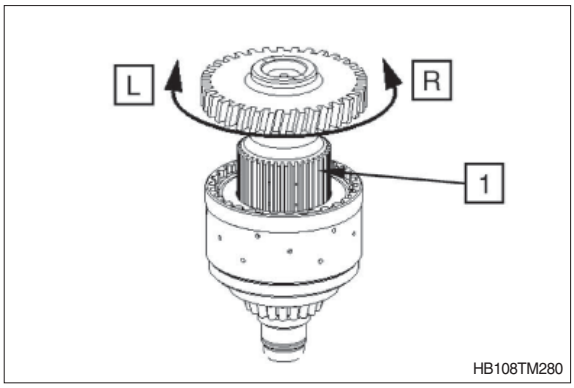

⑬ Mount running disk 40×60×3.5 (1).

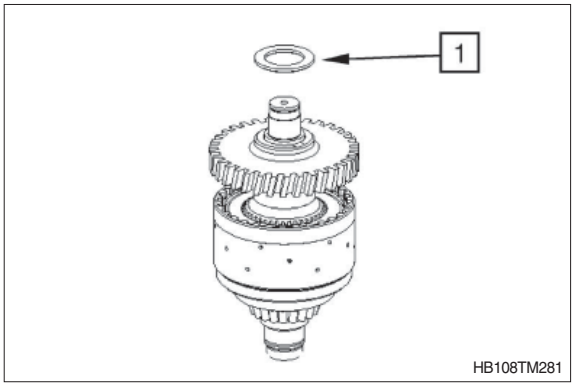

⑭ Heat up bearing inner ring (approx. 120°C).

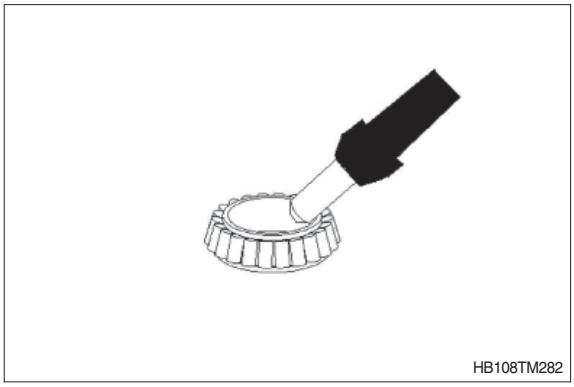

⑮ Mount bearing inner ring (1) until contact is obtained.

Fit rectangular ring 30×2 (2).

⚠ Wear protective gloves.

※ Adjust bearing inner ring after cooling-down.

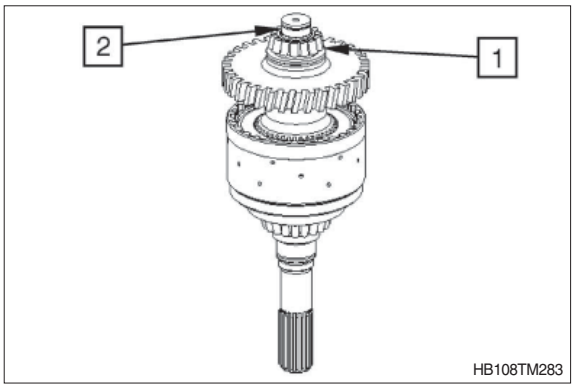

※ Check closing and opening of the clutch by means of compressed air at the hole (see arrow).
Closing and opening of the clutch must be clearly audible.

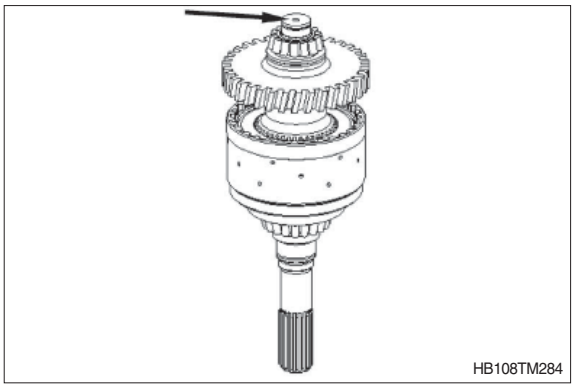

6) REINSTALLATION AND REASSEMBLY OF TRANSMISSION PUMP, OIL SUCTION TUBE AND OIL FILLER TUBE, CONTROL PRESSURE AND CONVERTER SAFETY VALVE, COARSE FILTER AND CLUTCHES

(1) Reassembly of transmission pump

※ In case of wear marks in the pump housing, stator hollow shaft, inner rotor, outer rotor and on the sliding bearing, the pump assy must be replaced.

Legend:
1 = Stator hollow shaft
2 = Inner rotor
3 = Outer rotor
4 = Pump housing with sliding bearing

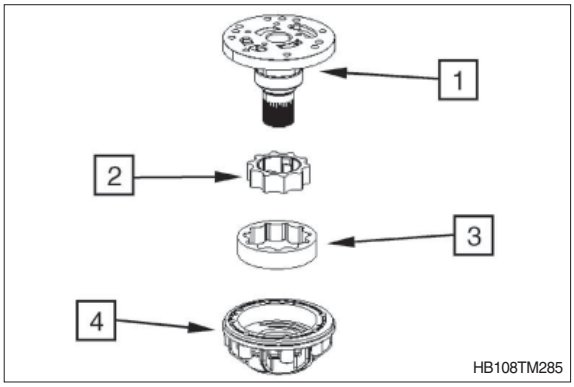

② With the sealing lip showing downwards, carefully insert the shaft seal 55×75×8 (1) into the pump housing (2) until contact is obtained.

※ Fill space between sealing lip and dust lip with grease.

※ **Outer diameter :**
- If rubber-coated : wet with spirit
- If made of metal : apply sealing agent loctite No. 574.

(S) Driver tool 5870 048 219

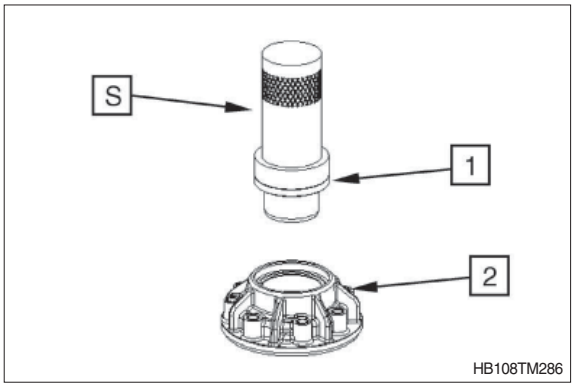

③ Fit outer rotor (1) and inner rotor (2).

※ The driver pins of the inner rotor (see arrows) are to be fitted in upward direction.

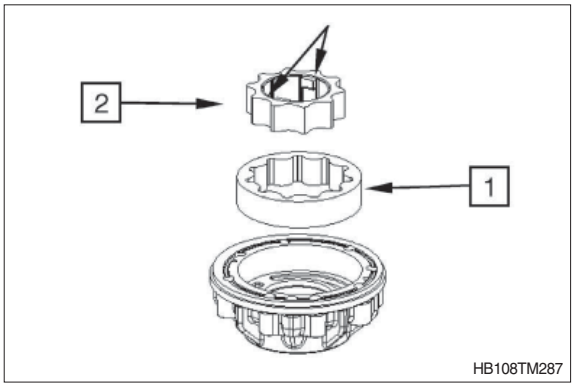

④ Fit stator hollow shaft (1).

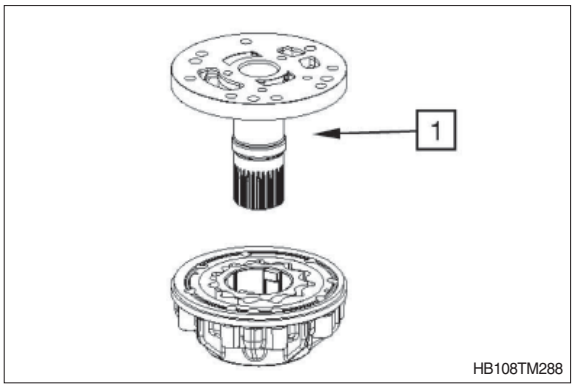

⑤ Fix stator hollow shaft radially with two cylindrical screws (1).

※ Do not tighten the cylindrical screws – just turn them in until contact is obtained and then turn them back by approx. 1/2 rotation.

Place O-ring (2) 135×3 into the annular groove and grease it.

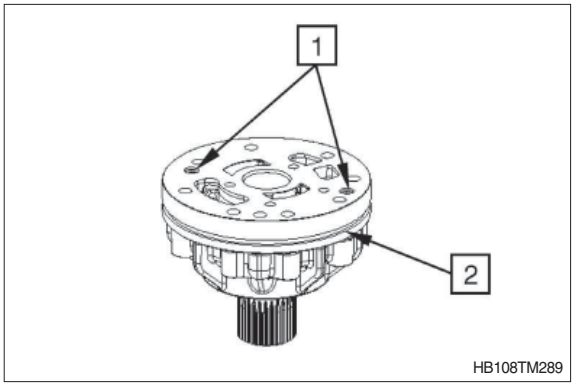

(2) Oil suction tube and oil filter tube

① Mount O-ring 30×3 (1) onto the suction tube (2) and grease it.

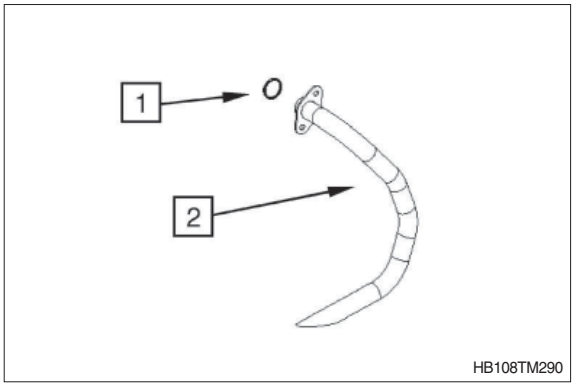

② Fix suction tube (1) with cylindrical screws M8×16 (2).

· Tightening torque M8/8.8×16 ;
2.35 kgf · m (17.0 lbf · ft)

※ When reusing the cylindrical screws these must be secured with loctite #243.

※ New cylindrical screws are already provided with adhesive (microcapsule). The microcapsule bursts when the screw is turned in, wets screw and nut thread and hardens.

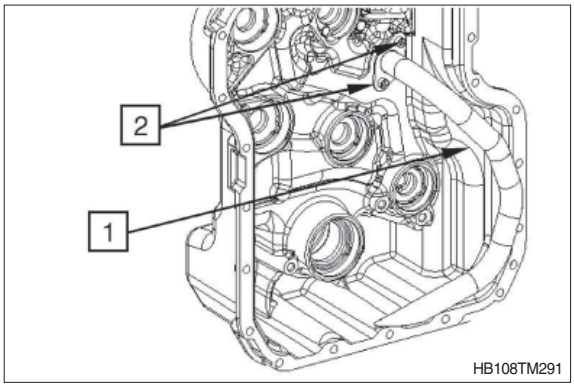

③ Insert tube (1) into the transmission housing by means of driver tool (S).

(S) Driver tool 5870 048 309

※ Use the driver tool to obtain the correct offset.

※ Apply loctite #574 onto the surface (A).

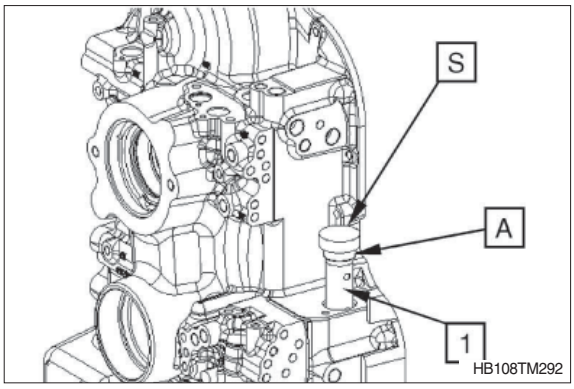

(3) Coarse filter

① Insert filter (1).

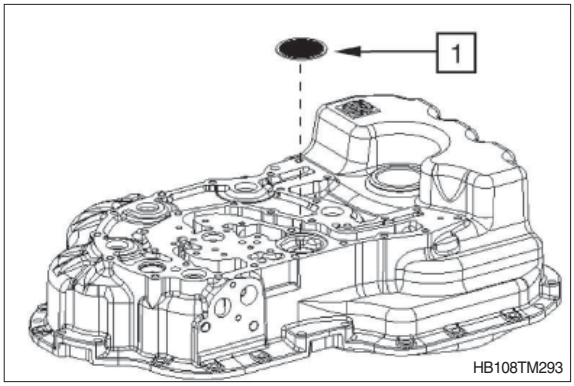

(4) Reinstallation of converter safety valve

① Insert valve (1) with drift (S) into the housing until contact is obtained.

(S) Drift 5870 705 012

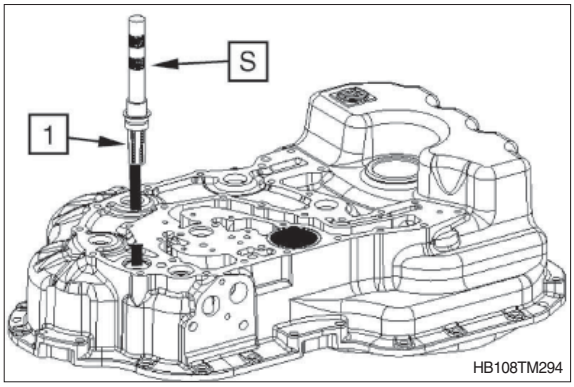

(5) Reassembly of main pressure valve (control pressure)

① Insert main pressure valve (1).
Main pressure valve consists of:
2 = Piston
3 = Spacer ring (2 pcs)
recommended value 5 mm
4 = Compression spring

※ The main pressure 16+3 bar is determined by means of the spacer rings.

※ Gradation of available spacer rings see spare parts list.

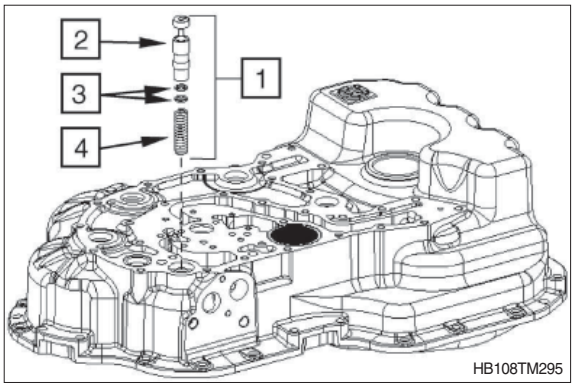

② Fit screw plug M22×1.5 (1) with O-ring 19×2.

· Tightening torque :
5.1 kgf · m (36.9 lbf · ft)

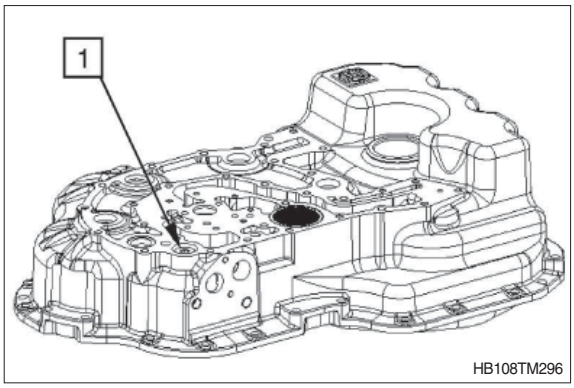

(6) Reinstallation of transmission pump

① Fit two adjusting screws (S) and position converter bellhousing (1) equally until contact is obtained.

※ Pay attention to the hole pattern.
※ Wet mounting face with loctite #574.

(S) Adjusting screws (M10)5870 204 007

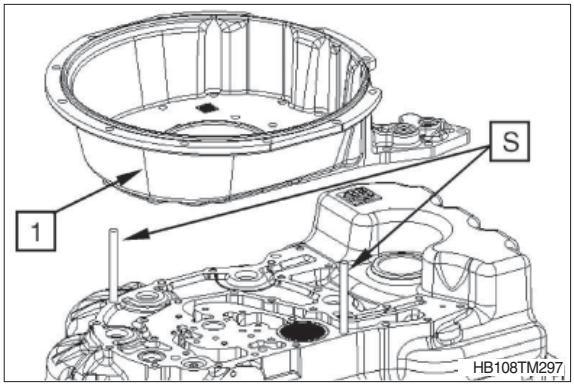

② Force the cylindrical pins 12×24 (1) into the holes (blind holes) until contact is obtained.

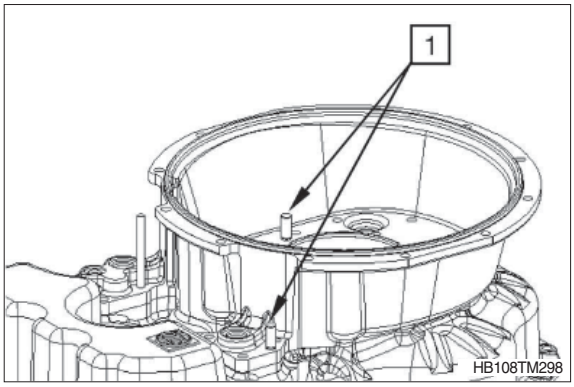

③ Fix converter bellhousing (1) with cylindrical screws M10×30 (2).

· Tightening torque (M10/8.8×30) ;
4.69 kgf · m (33.9 lbf · ft)

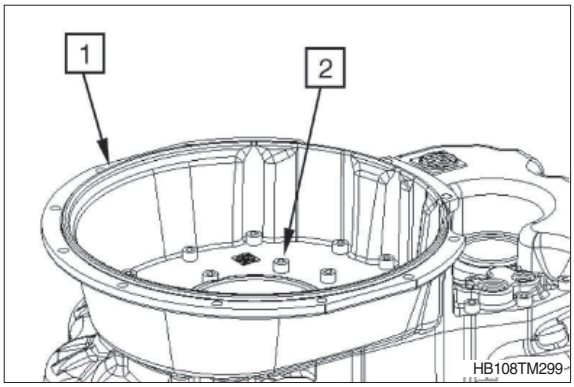

④ Fit two adjusting screws (S) and mount preassembled pump (1).

※ Pay attention to the hole pattern.

(S) Adjusting screws (M8) 5870 204 011

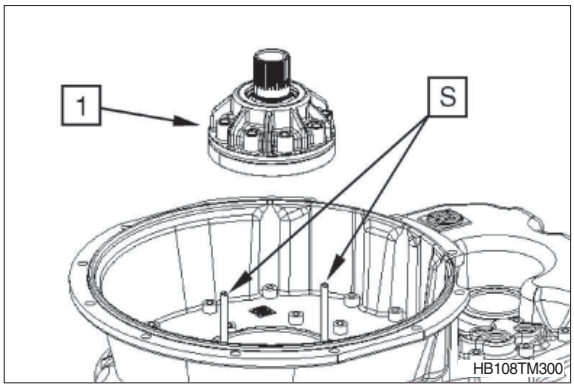

⑤ Position transmission pump with 3 cylindrical screws (1) M8×60 (3×120° offset position) equally until contact is obtained.

※ Do not damage (shear off) the O-ring.

⑥ Fix transmission pump with cylindrical screws M8x60 (1).

· Tightening torque (M8/8.8×60) ;
2.35 kgf · m (17.0 lbf · ft)

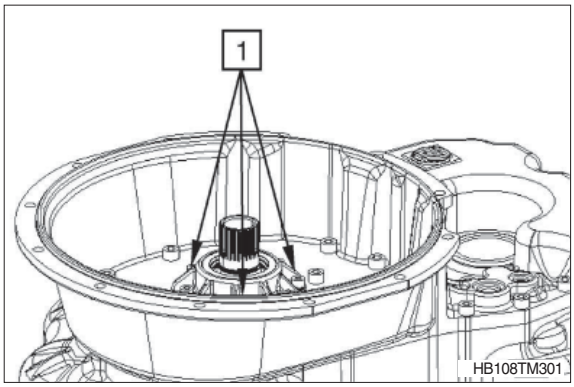

⑦ Fix pump with cylindrical screws (1 and 2).
1 = M8×16
2 = M8×35

· Tightening torque (M8/8.8×16) ;
2.35 kgf · m (17.0 lbf · ft)

· Tightening torque (M8/8.8×35) ;
2.35 kgf · m (17.0 lbf · ft)

※ New cylindrical screws are to be fitted on a general basis.

※ These cylindrical screws are already provided with adhesive (microcapsule). The microcapsule bursts when the screw is turned in, wets screw and nut thread and hardens.

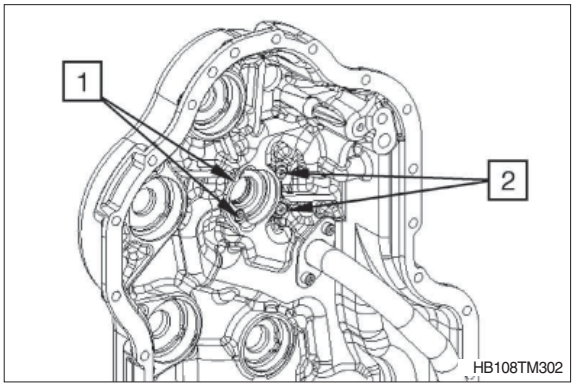

(7) Reinstallation of clutches

① Insert all bearing outer rings (1) into the bearing holes of both housing parts (see figures).

※ Place bearing outer rings into the bearing holes using assembly grease.

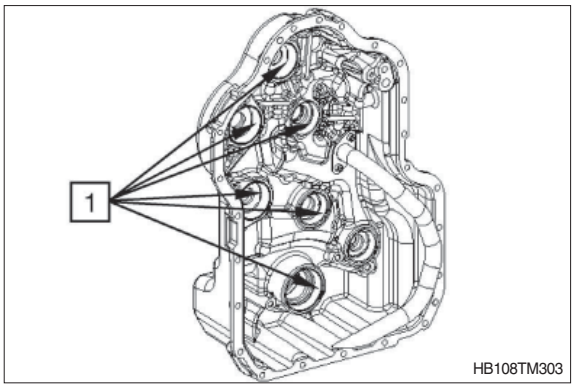

※ If the tapered roller bearings of clutches and input are not replaced, it is imperative to ensure the previous pairing (bearing inner ring/bearing outer ring) - see figures TM029, 030 at page 3-32.

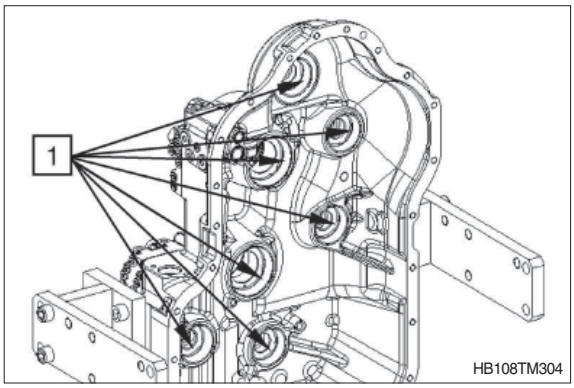

Reinstallation of K2, K3 and front wheel drive

② Align and grease rectangular rings 50×2.5 (4) and rectangular rings 30×2 (6), as well as those of the front wheel drive.

③ Hold K3 clutch (5) and front wheel drive (1) by means of the lifting device, position K2 clutch (2) and screen sheet (3) at K3 clutch (5), and then jointly insert the assembly.

(S) Eyebolts 5870 204 080

※ Bolts (8) of the screen sheet must be fixed into the pilot holes (7).

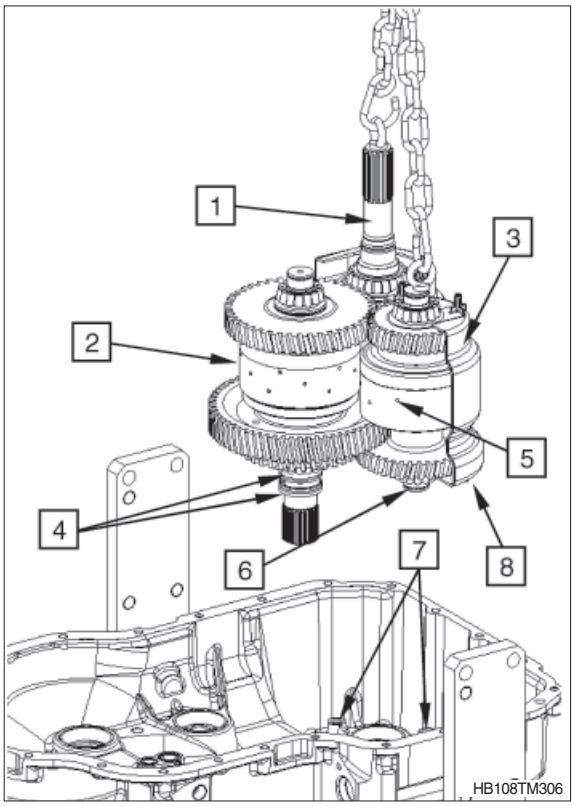

Reinstallation of K1

④ Align and grease rectangular ring 30×2 (2).

⑤ Position K1 clutch (1).

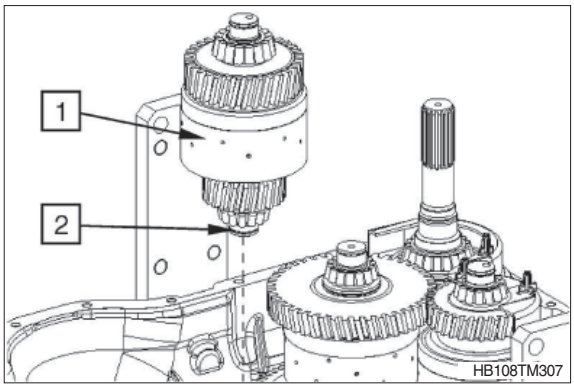

Reinstallation of KV and KR

⑥ Align and grease rectangular rings 50×2 (4) and rectangular ring 30×2 (3).

⑦ Jointly position KV clutch (1) and KR clutch (2).

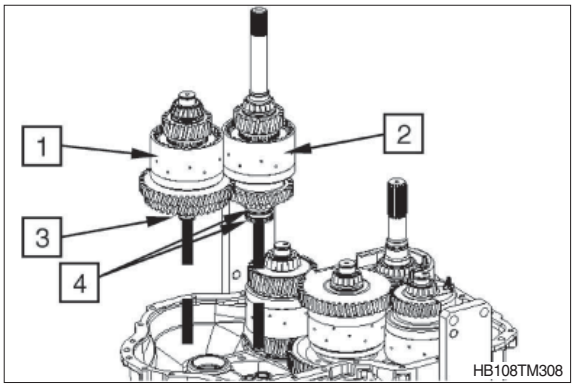

Reinstallation of K4

⑧ Align and grease rectangular ring 30×2 (1).

⑨ Position K4 clutch (2).

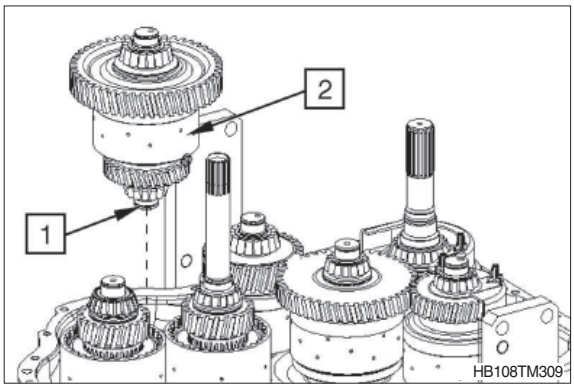

⑩ Place O-rings (5 and 6) into the hole and grease them. Align and grease rectangular rings (1, 2, 3, 4, 8 and 9).

1 = Rectangular ring 30×2 (KV clutch)
2 = Rectangular ring 30×2 (K4 clutch)
3 = Rectangular ring 35×2 (KR clutch)
4 = Rectangular ring 30×2 (K1 clutch)
5 = O-ring 15×2
6 = O-ring 21.89×2.62
7 = ····· (front wheel drives)
8 = Rectangular ring 30×2 (K2 clutch)
9 = Rectangular ring 30×2 (K3 clutch)

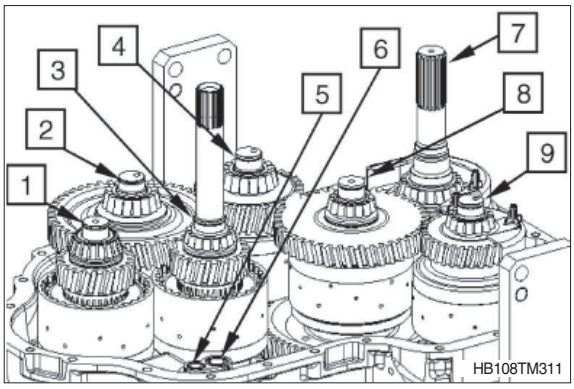

⑪ Use the lifting device to carefully bring the transmission housing front part into contact position.

※ Bolts (1) of the screen sheet must be fixed into the pilot holes.

※ Wet mounting face with loctite # 574.

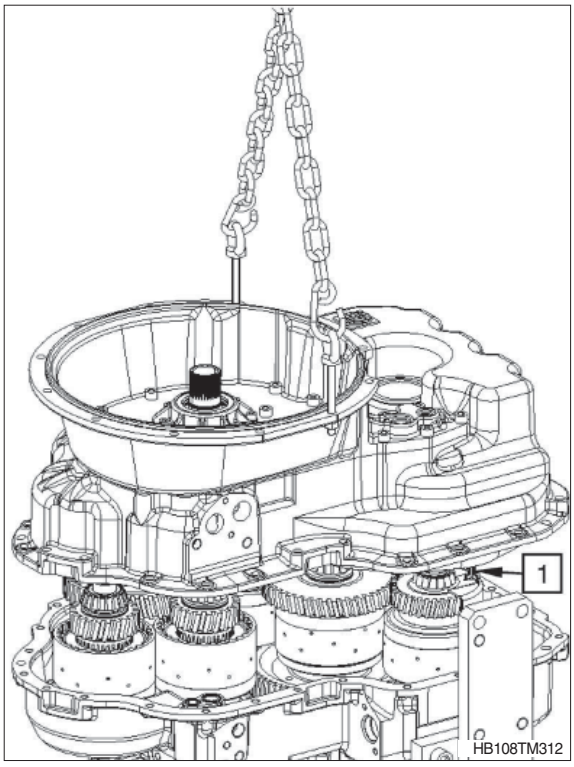

⑫ Hand-tighten the transmission housings crosswise with 2 cylindrical screws (1).

⑬ Fit cylindrical pins 12×24 (2) centrically to the mounting face.

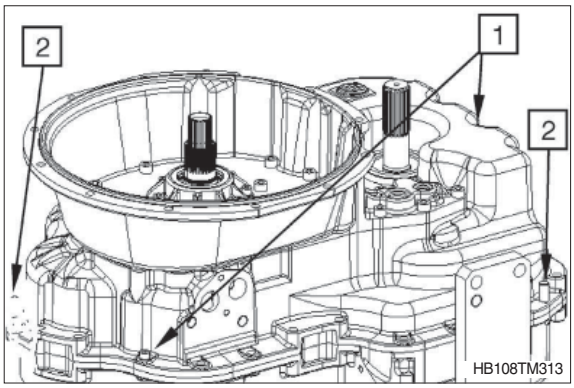

⑭ Fix transmission housing front and rear part by means of cylindrical screws (1 and 2).

⑮ Fit bracket (3).

Cylindrical screw (1) M10×30 (14 EA)
Cylindrical screw (2) M10×50 (10 EA)

· Tightening torque M10/8.8×30 ;
4.69 kgf · m (33.9 lbf · ft)

· Tightening torque M10/8.8×50 ;
4.69 kgf · m (33.9 lbf · ft)

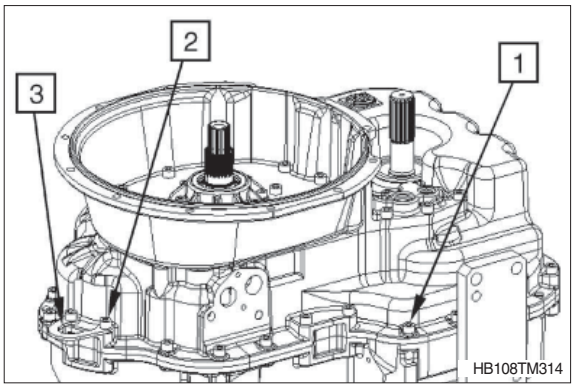

7) REASSEMBLY OF REAR AXLE OUTPUT FLANGE AND SCREW PLUG AT MEASURING POINT "63" AFTER THE CONVERTER, AND SEALING OF VERSION WITH AND WITHOUT FRONT WHEEL DRIVE

(1) Reassembly of rear axle output flange

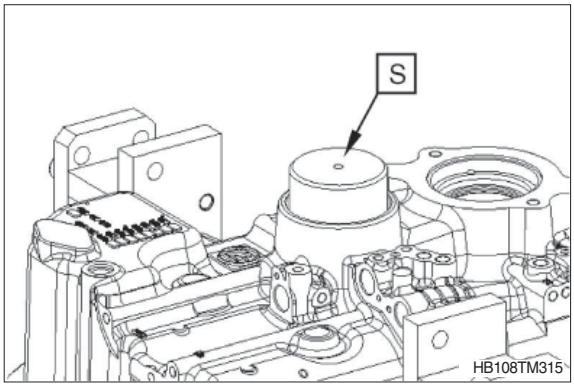

① Use driver tool (S) to fit the shaft seal 60×90×8 (1) until contact position, with the sealing lip showing towards the oil sump (see figure below).

(S) Driver tool 5870 048 200

※ Fill space between sealing lip and dust lip with grease.

※ Wet rubber-coated outer diameter with spirit.

※ Use the driver tool to obtain the correct offset.

※ **Installation situation - rear axle output**

1 = Shaft seal 60×90×8
2 = Screen sheet
3 = Closing cover
4 = Output flange
5 = K2 clutch shaft
6 = Transmission housing

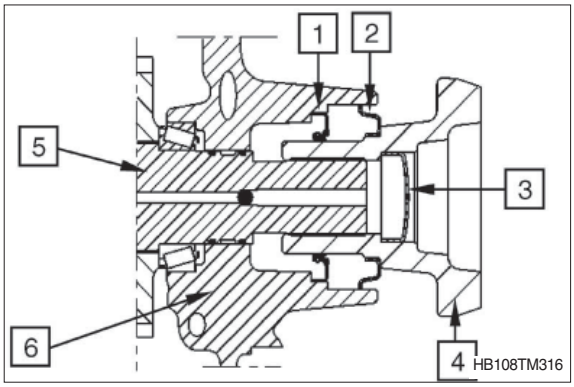

② Press closing cover (3) into the flange (4) until contact is obtained (see figure above).

※ Apply loctite #518 to the closing cover.

※ Use suitable pressure piece; closing cover must not be deformed.

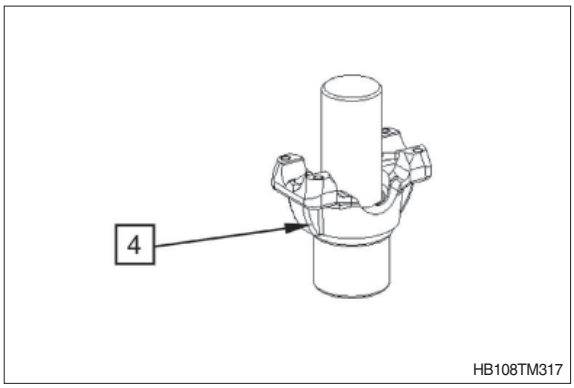

③ Press screen sheet (2) onto the flange (4) until contact is obtained.

※ Use suitable pressure piece; screen sheet must not be deformed.

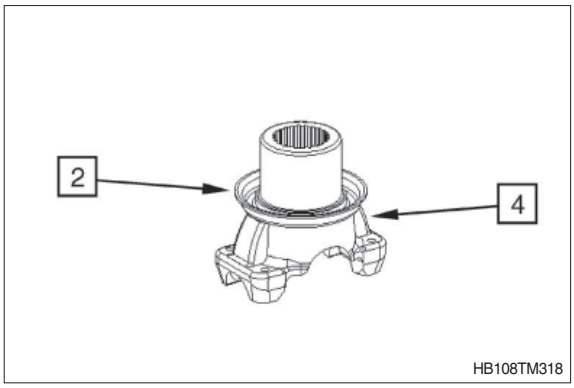

④ Mount output flange (4) until contact position.

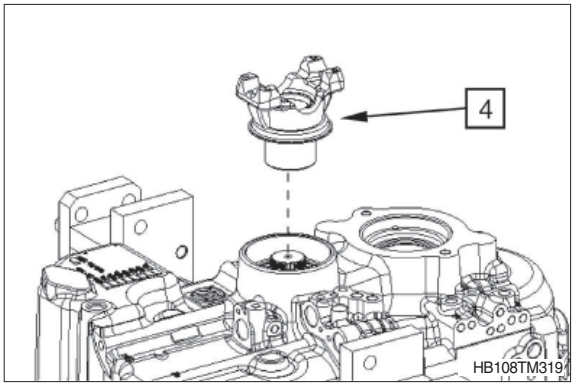

(2) Sealing of front-wheel-drive

① Use driver tool (S) to fit the shaft seal 40×62×7 (1) until contact position, with the sealing lip showing towards the oil sump (see figure below).

(S) Driver tool 5870 048 310

※ Fill space between sealing lip and dust lip with grease.

※ Wet rubber-coated outer diameter with spirit.

※ Use the driver tool to obtain the correct offset.

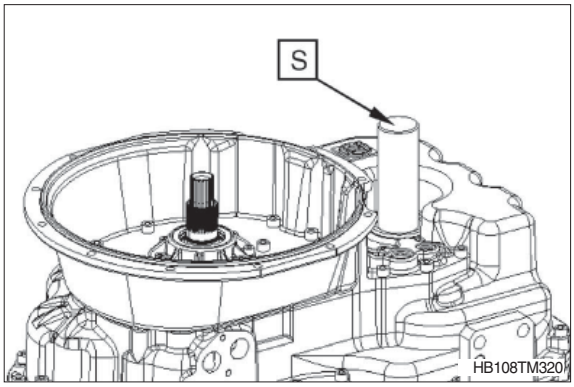

Installation situation

1 = Shaft seal 40×62×7
2 = Screen sheet
3 = VA clutch shaft
4 = Transmission housing

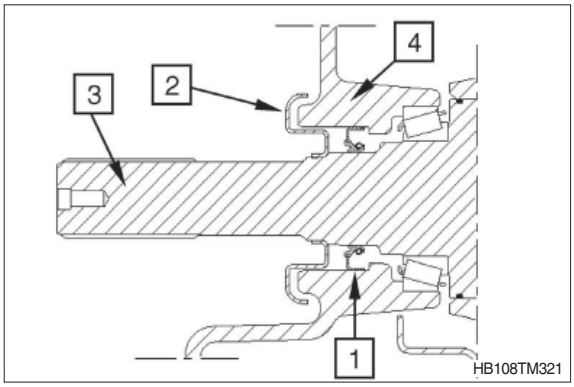

② Use the driver tool (S) to install screen sheet (2) onto the VA clutch shaft (3) until contact position (see figure TM321 of previous page).

(S) Driver tool 5870 048 310

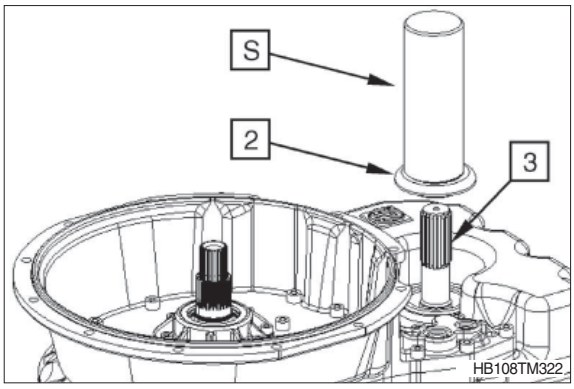

(3) Reassembly of screw plug at measuring point "63"

① Fit screw plug M14×1.5 (1) with new O-ring 11×2 (2).

· Tightening torque ;

2.55 kgf · m (18.4 lbf · ft)

※ Refer to page 3-23 for measuring point 63.

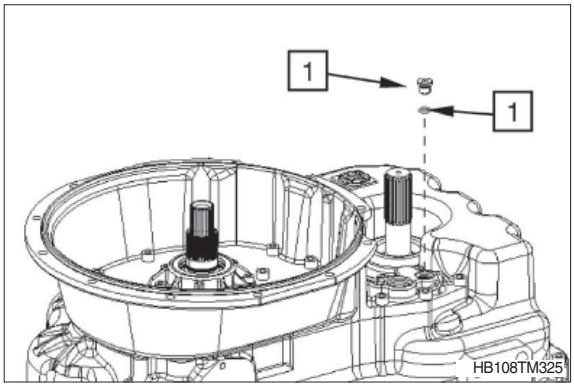

8) REINSTALLATION OF NOZZLES (ORIFICES), SCREW PLUGS, SOLENOID VALVES, INDUCTIVE SENSOR AND MOUNTING PROVISION FOR OIL FILLER TUBE

(1) Reinstallation of nozzles (orifices)

① Fit nozzle M10×1 ø1.55 (1) for the directional clutches KV, KR and K4.

· Tightening torque ;
1.02 kgf · m (7.38 lbf · ft)

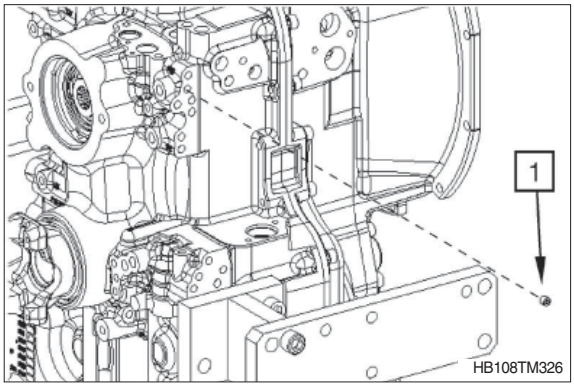

② Fit nozzles for the gear clutches K1, K2 and K3.

1 = Nozzle (K1) M10×1 ø1.4
2 = Nozzle (K2) M 8 ø1.7
3 = Nozzle (K3) M 8 ø1.4

· Tightening torque M8, M10×1 ;
1.02 kgf · m (7.38 lbf · ft)

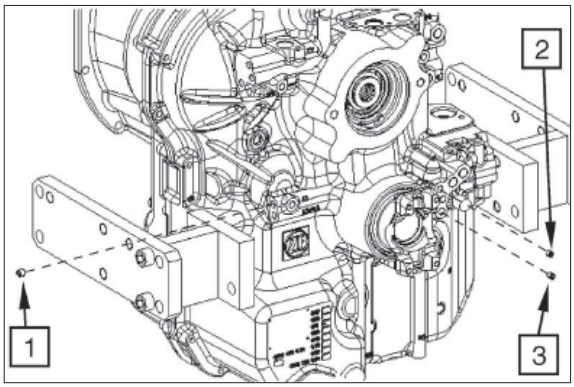

(2) Reinstallation of screw plugs

① Install all screw plugs with O-rings.

1 = Screw plug 3/4 -16 UNF;
O-ring 16.36×2.21 (2 EA)
2 = Screw plug M10×1;
O-ring 8×1.5 (36 EA)
3 = Screw plug 9/16 -18 UNF;
O-ring 11.89×1.98 (3 EA)

· Tightening torque 3/4 -16 UNF ;
2.86 kgf · m (20.7 lbf · ft)
· Tightening torque M10×1 ;
0.61 kgf · m (4.43 lbf · ft)
· Tightening torque 9/16 -18 UNF ;
1.53 kgf · m (11.1 lbf · ft)

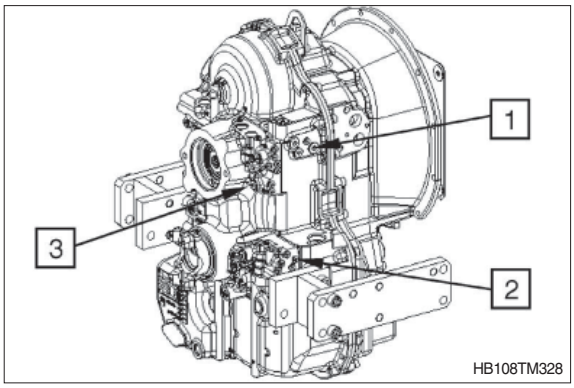

(3) Reinstallation of solenoid valves

① Insert solenoid valves (1 and 2) into the transmission housing and fix them by means of bracket and cylindrical screw M6×12 (3).

1 = Solenoid valve - parking brake - rear axle
2 = Solenoid valve - differential lock – rear axle

· Tightening torque M6/8.8 ;
0.97 kgf · m (7.01 lbf · ft)

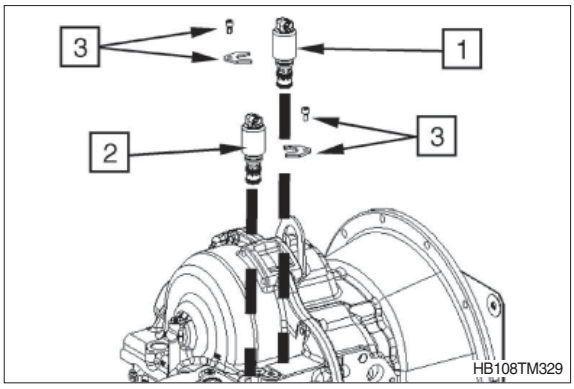

② Insert solenoid valve Y2 (1) into the transmission housing and fix it by means of bracket and cylindrical screw M6×12 (2).

· Tightening torque M6/8.8 ;
0.97 kgf · m (7.01 lbf · ft)

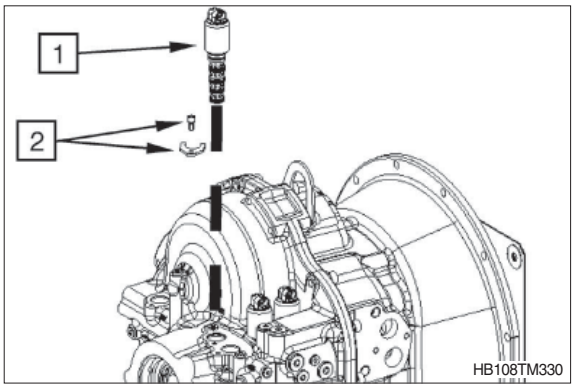

③ Insert solenoid valves Y1 (1) and Y3 (2) into the transmission housing and fix them by means of bracket and cylindrical screw M6×12 (3).

· Tightening torque M6/8.8 ;
0.97 kgf · m (7.01 lbf · ft)

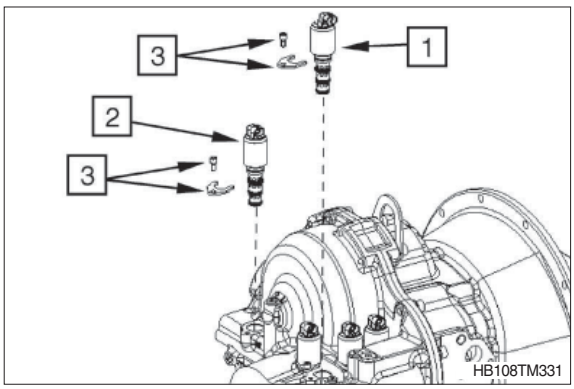

④ Insert solenoid valve YWD (1) into the transmission housing and fix it by means of bracket and cylindrical screw M6×12 (2).

· Tightening torque M6/8.8 ;
0.97 kgf · m (7.01 lbf · ft)

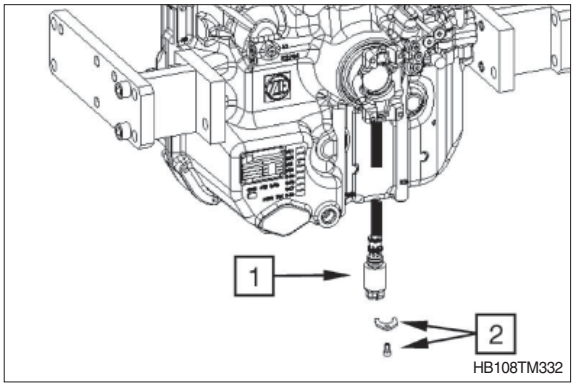

⑤ Insert solenoid valve Y5 (1) into the transmission housing and fix it by means of bracket and cylindrical screw M6×12 (2).

· Tightening torque M6/8.8 ;
0.97 kgf · m (7.01 lbf · ft)

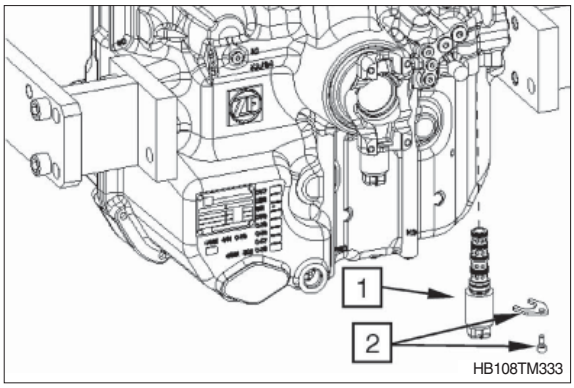

⑥ Insert solenoid valves Y6 (1) and Y4 (2) into the transmission housing and fix them by means of bracket and cylindrical screw M6×12 (3).

· Tightening torque M6/8.8 ;
0.97 kgf · m (7.01 lbf · ft)

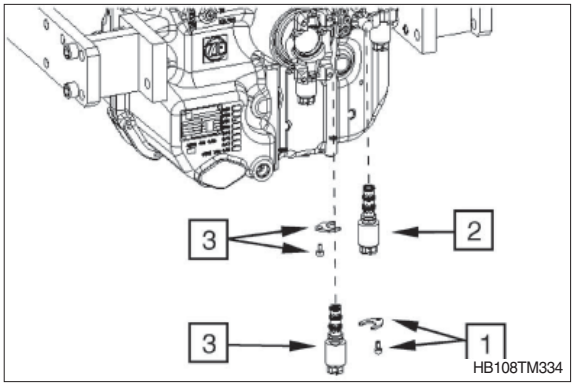

(4) Reinstallation of inductive sensor (option)

① Install inductive sensor (1) with O-ring 15×2 (2).

· Tightening torque ;
3.06 kgf · m (22.1 lbf · ft)

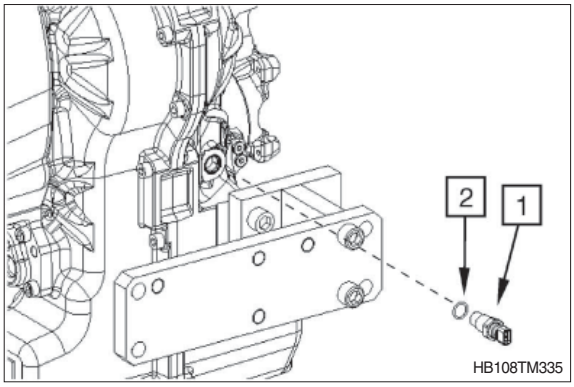

(5) Mounting provision for oil filler tube (option)

① Fix closing cover (2) and seal (3) with hexagon screws (1).

· Tightening torque (M8/8.8×18) ;
3.47 kgf · m (25.1 lbf · ft)

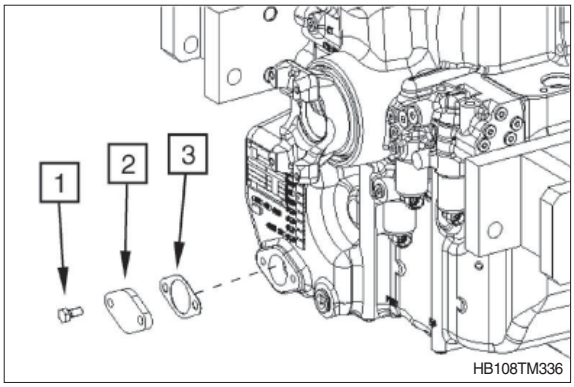

9) REASSEMBLY OF PTO

(1) Press ball bearing 45×75×16 (1) onto the pump shaft (2) until contact is obtained.

(2) Fit rectangular ring 50×2.5 (3).

(3) Grease and centrically align rectangular ring.

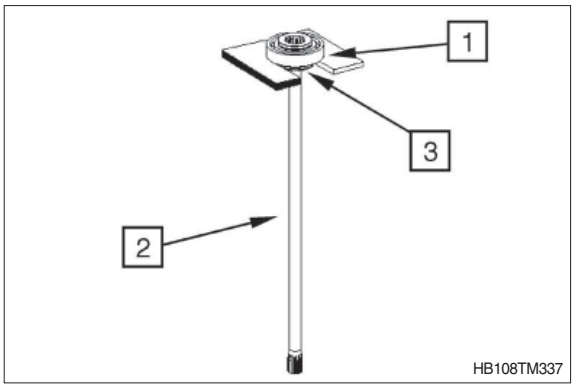

(4) Mount pump shaft (2) until contact is obtained and fix it by means of retaining ring 75×2.5 (1).

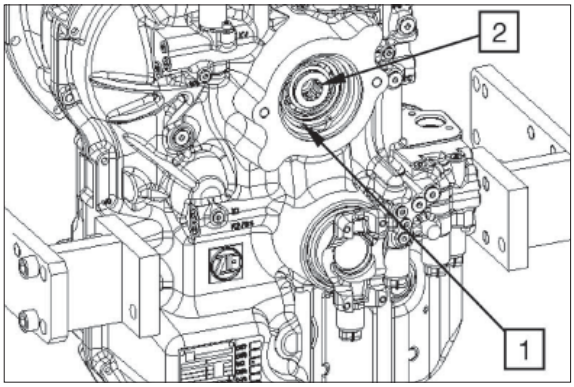

10) REASSEMBLY OF ENGINE CONNECTION

(1) Mount converter (1) until contact is obtained.

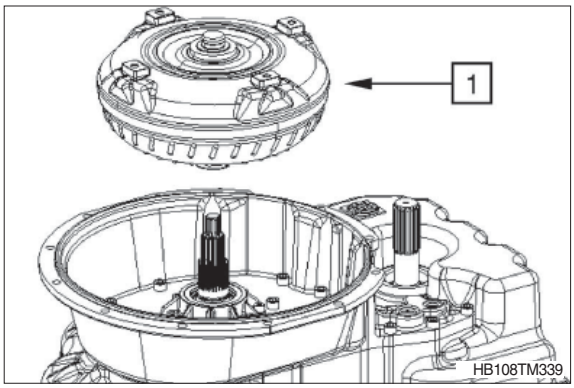

(2) Position 1 washer/each / thickness=1.0 mm (4 EA) (1) onto the flexplate mounting webs (4 EA).

(3) Place flexplates (2).

※ Pay attention to the installation position! Spot- welded reinforcing disks of the flexplate to be arranged towards the outside - see arrows.

(4) Mount washer (3) onto the hexagon screw M10×16 (4) and fix flexplates.

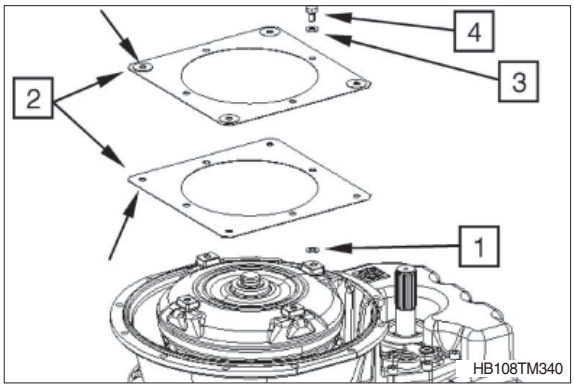

(5) Tighten hexagon screws (1).

· Tightening torque (M10/8.8×16) ;
4.69 kgf · m (33.9 lbf · ft)

※ When reusing the hexagon screws these must be secured with loctite 243.

※ New hexagon screws are already provided with adhesive (microcapsule). The microcapsule bursts when the screw is turned in , wets screw and nut thread and hardens.

⚠ Fix converter axially.
Risk of injury.

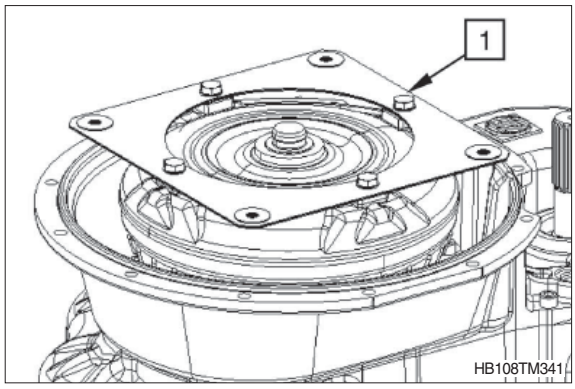

11) REASSEMBLY OF FILTER AND OIL DRAIN PLUG

(1) Place O-rings 34.2×3 (1) into the holes and grease them.

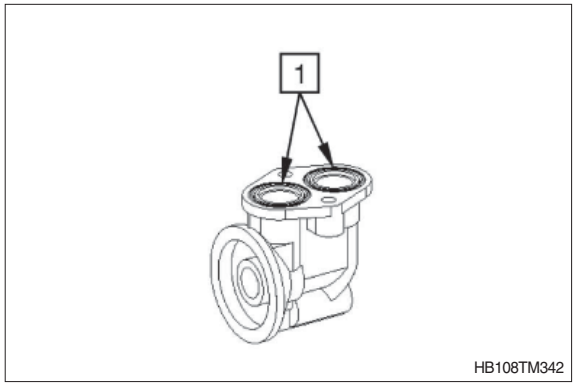

(2) Attach filter head (1) with cylindrical screws M8×30 (2).

· Tightening torque (M8/8.8×30) ;
2.35 kgf · m (17.0 lbf · ft)

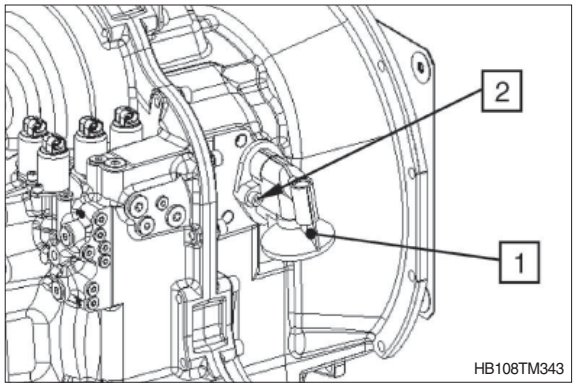

※ The filter (1) has to be fitted as follows:

- Slightly oil the seal
- Turn in the filter until contact with the sealing surface is obtained, and then tighten it by hand with approx. 1/3 to 1/2 rotation.

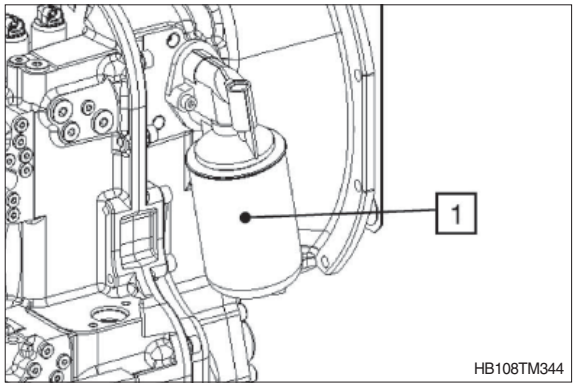

(3) Fit oil drain plug 7/8-14 UN 2A (1).

· Tightening torque (7/8-14 UN 2A) ;
3.06 kgf · m (22.1 lbf · ft)

(4) Fix identification plate (2) by means of 4 grooved pins 3×5.

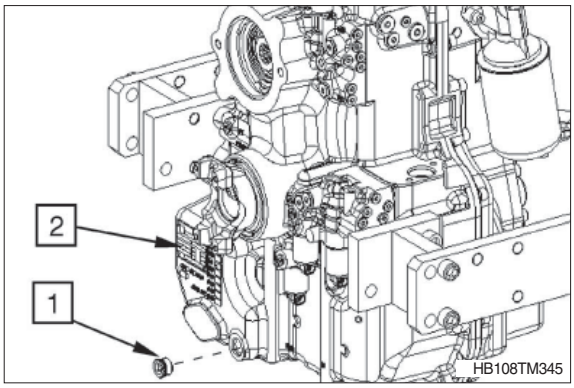

※ Before putting the transmission into operation, fill it with specified oil (SAE 15W-40).

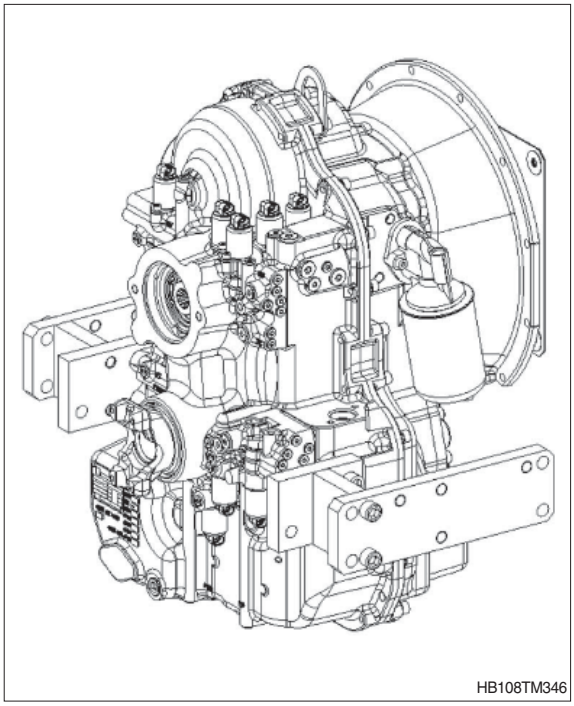

2. 2-WHEEL DRIVE FRONT AXLE

1) STEERING CYLINDER GROUP DISASSEMBLY

※ Some of the following pictures may not show exactly your axle, but the process is the same.

(1) Loosen the tie rod lock nut of some turns till it is over the end of the threaded pin. Beat the nut with a hammer to remove the steering arm from the swivel housing.

※ Don't beat on the end of the threaded pin.

※ This is a destructive operation for the nut.

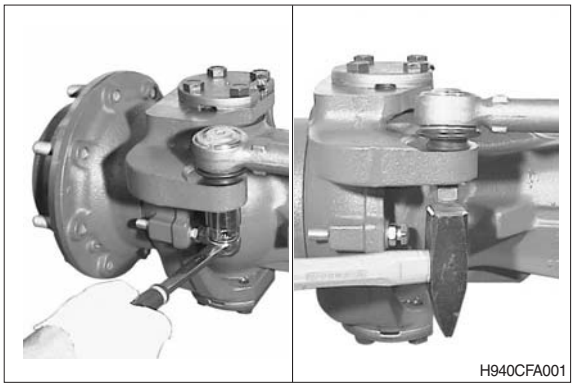

(2) Loosen the nuts (2), remove and inspect the tie rod (1).
Unscrew the fastening screws (3) and remove the steering cylinder (4), using a soft hammer.
Remove only parts that need overhauling or replacement

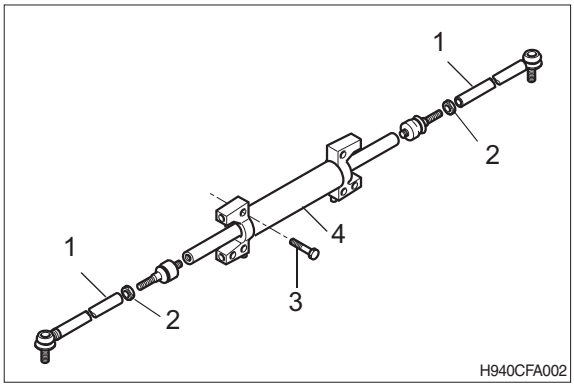

(3) Remove the cylinder heads (5) and the rod (7) from cylinder body (6).
Collect all the seal rings (8) from the rod and the cylinder heads.

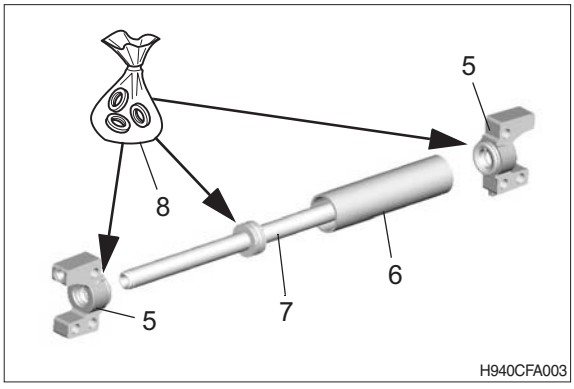

2) WHEEL HUB GROUP DISASSEMBLY

※ Before disassembling the wheel hub, it is advisable to secure it with a belt or a rope on a hoist or any other supporting device, in order to avoid its accidental fall that could damage either the operator or the wheel hub group.
Some of the following pictures may not show exactly your axle, but the process is the same.

(1) Remove the plug (1) from the cover (2).
Remove the wheel hub cover (2) using a appropriate extractor or a lever.
Remove the O-ring (3), check the conditions and replace it if necessary.
Unscrew and remove the three screws (4).
Remove the thrust washer (5).

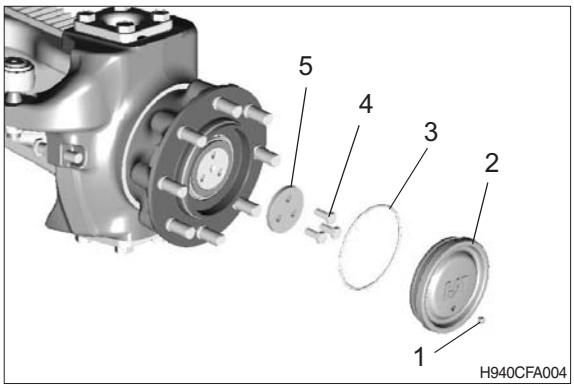

⚠ Before removing the king pins, secure the wheel hub (6) using a belt or a rope to a hoist or any other supporting device. Remove the wheel hub, using levers and a hammer to facilitate the operation.

※ Do not damage the bearings.

※ Collect the bearing cone (7) and check its conditions.

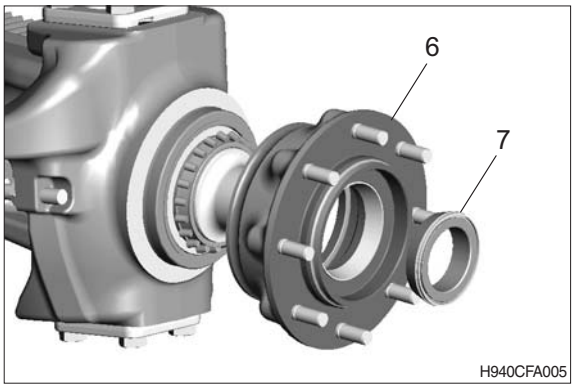

(2) Position the wheel hub (6) on a flat surface and remove the bearing cups (8) and (9) out, on both sides of the wheel hub, using a driver and a hammer.

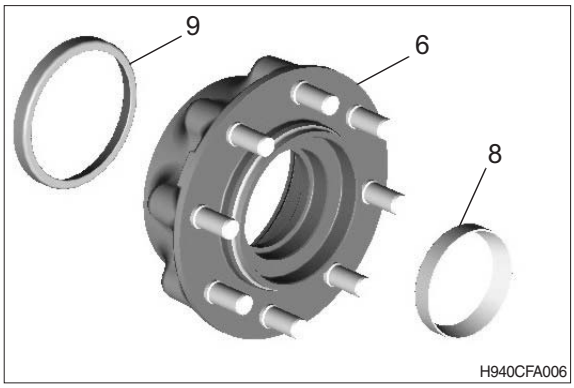

(3) Remove the bearing cone (11) from the swivel housing end, using a suitable extractor.
Remove the seal ring (10) out using a lever.

※ This is a destructive operation for the seal ring.

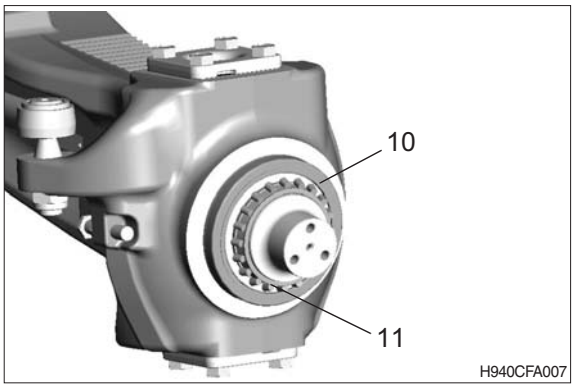

3) SWIVEL HOUSING DISASSEMBLY

※ Some of the following pictures may not show exactly your axle, but the process is the same.

(1) Unscrew and remove the fastening screws from the upper and lower king pins.

⚠ Before removing the king pins, secure the swivel housing with a belt to a supporting device. Remove the king pins

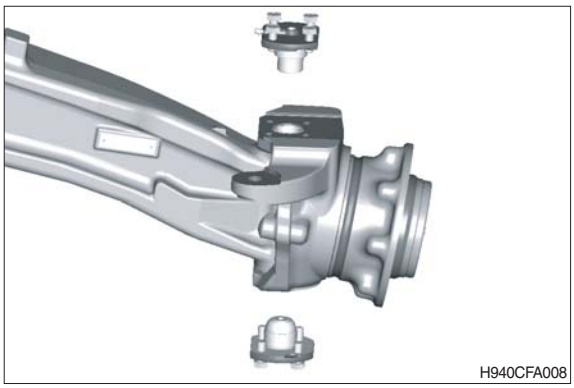

(2) Remove the swivel housing from the axle beam.

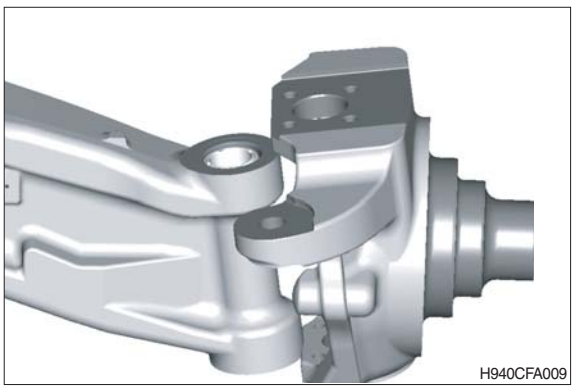

(3) Collect the belleville washers.

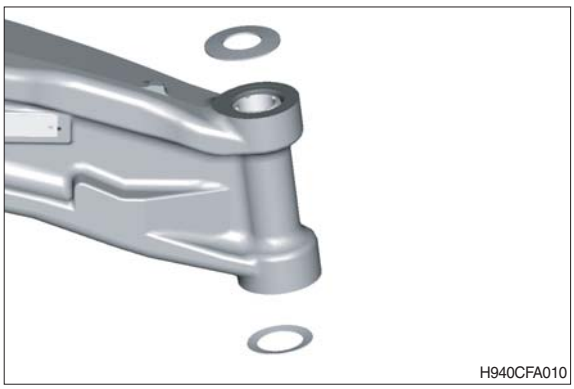

4) AXLE BEAM GROUP DISASSEMBLY

※ Some of the following pictures may not show exactly your axle, but the process is the same.

(1) Remove the upper bushings and the ball bearing cups from king pin seats with a suitable extractor only if replacement is required.

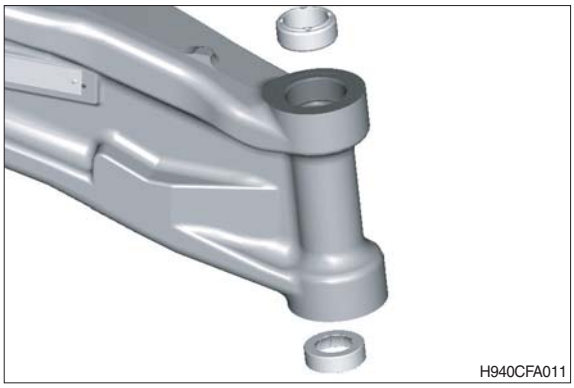
H940CFA011

(2) Remove the rear and front seals from the pivot using a suitable tool.

※ This is a destructive operation for the seal rings.
Remove the rear and front bushings from the axle beam pivot only if replacement is necessary.

※ This is a destructive operation for the bushings. Pay attention not to damage the bushing seats.

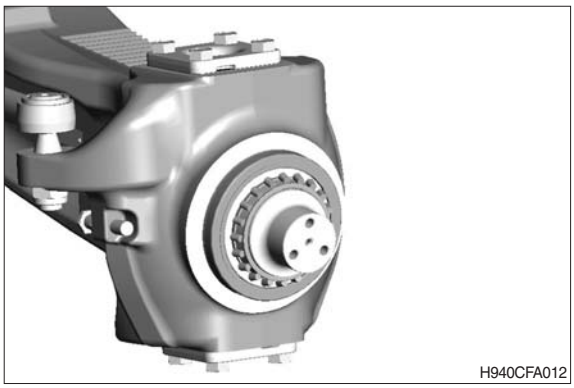
H940CFA012

5) AXLE BEAM DISASSEMBLY

※ Some of the following pictures may not show exactly your axle, but the process is the same.

※ To make the assembly easier, it is advisable to cool the upper bushings and the lower cups at a temperature under -100 °C.
Fit the bushings (1) into upper king pin seats with the driver (CA715448) and a hammer. Fit the ball bearing cups (2) into lower king pin seats with the driver (CA715451) and a hammer.

※ Wear safety gloves

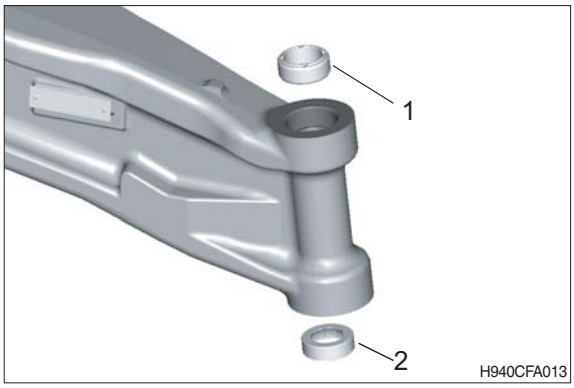

(1) Grease carefully the king pin seats with specific grease.
Place the belleville washers on the king pin seats.

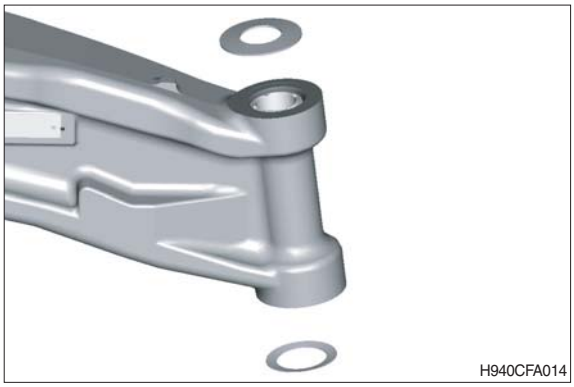

※ To make the assembly easier, it is advisable to cool the bushings at a temperature lower than -100 °C.
Install two new bushings and two new seal rings in the pivot on the axle beam, using special tool (CA715549) and (CA715164).

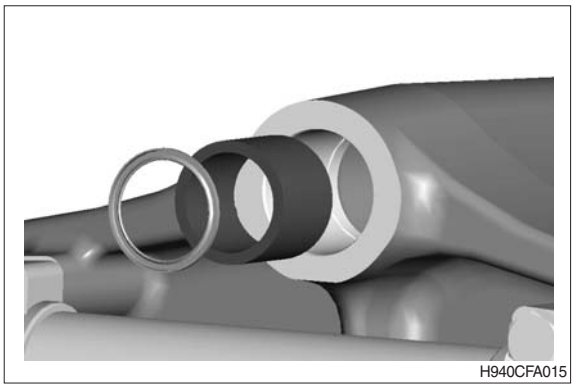

6) SWIVEL HOUSING DISASSEMBLY

※ Some of the following pictures may not show exactly your axle, but the process is the same.

(1) If the ball bearing cone has been previously removed, reassemble it on lower king pin with special tool (CA715451) under a press.

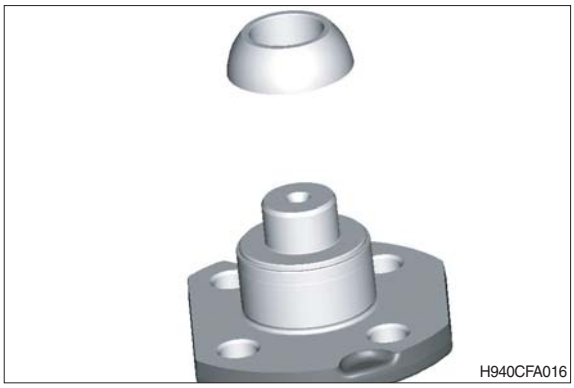
H940CFA016

(2) Grease and assemble the bearing cone on the swivel housing end using a driver (CA715491) and a hammer.


H940CFA017

※ Secure the swivel housing using a rope. Place the swivel housing on axle beam seat.

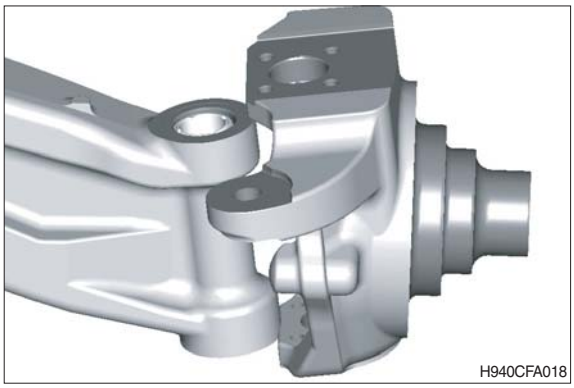
H940CFA018

(3) Assemble the upper and lower king pins and tighten the fastening screws to the tightening torque (See page 3-127).

※ Pay attention not to move the belleville washers from their seat.

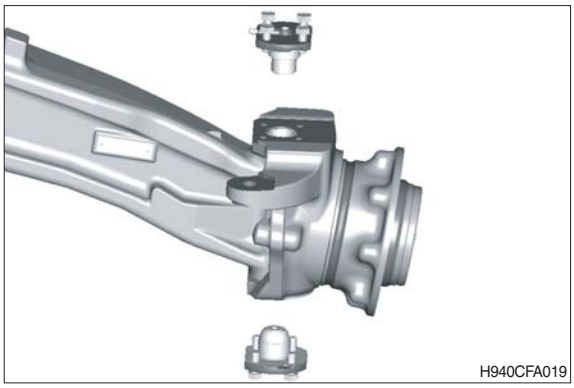
H940CFA019

7) WHEEL HUB GROUP DISASSEMBLY

※ Some of the following pictures may not show exactly your axle, but the process is the same.

(1) Position the wheel hub on a workbench and force the both bearing cups in position using the special tool (CA715085) and (CA715504) under a press or using a hammer.
Assemble a new seal ring into the wheel hub using the special tool (CA715525) and a hammer.



⚠ **Secure the wheel hub (1) using a belt or a rope to a hoist or any other supporting device.**

(2) Install the wheel hub on the swivel housing.

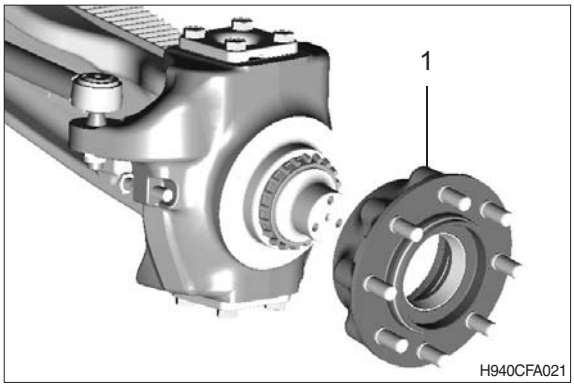

(3) Grease and install the bearing cone on the swivel housing.
Apply loctite 270 on the thread of the three screws (2).
Position the thrust washer (3).
Screw and tighten the three screws (2) to the tightening torque (See page 3-127) using a dynamometric wrench.

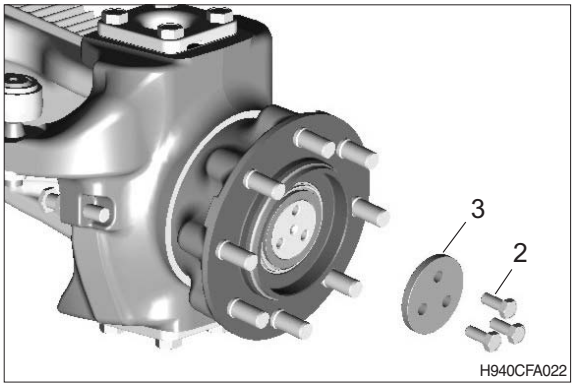

(4) Grease and install a new O-ring (4) on the wheel hub cover (5).
Assemble the cover (5) on the wheel hub using a suitable driver.

※ Do not damage the O-ring.
Position and tighten the plug (6) to the tightening torque (See page 3-127).

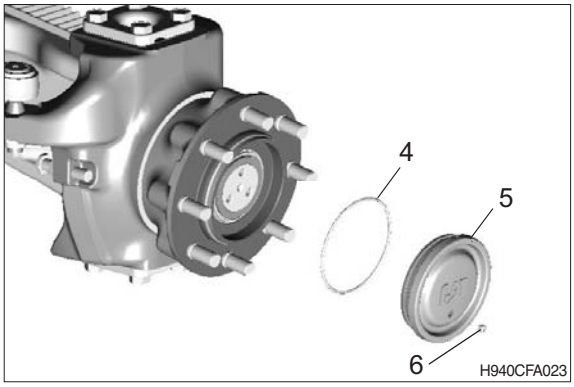

8) STEERING CYLINDER ASSEMBLY

※ Some of the following pictures may not show exactly your axle, but the process is the same.

(1) Assemble new seal rings (1) on the rod and on the cylinder heads (3).
Insert the rod (2) into the cylinder body (4) and assemble the cylinder heads (3).

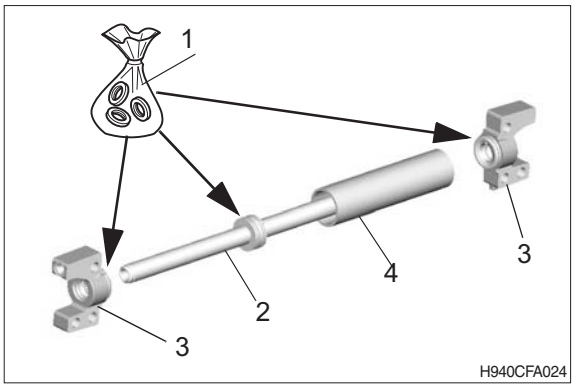

(2) Assemble the ball joints (5) to the ends of the cylinder rod and tighten using torque wrench to the tightening torque (See page 3-127).

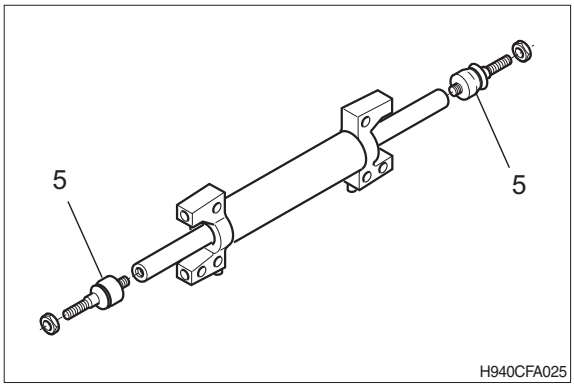

(3) Apply loctite 496 on the axle beam/cylinder heads contact surface cylinder (2).
Apply loctite 270 on the thread of fastening screws (4).
Assemble and tighten the fastening screws (6) of the steering cylinder heads (3) using torque wrench to the tightening torque (See page 3-127).

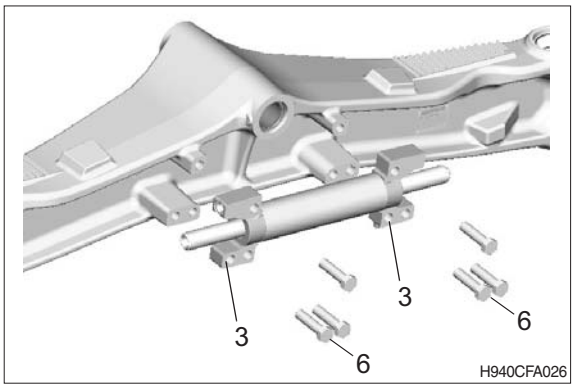

(4) Align the swivel housings with the axle (parallel wheel hub).
Screw the guide rod so that the ball joint can be inserted into the swivel housing arm.

※ It is important to unscrew the locking nut to carry out this operation.

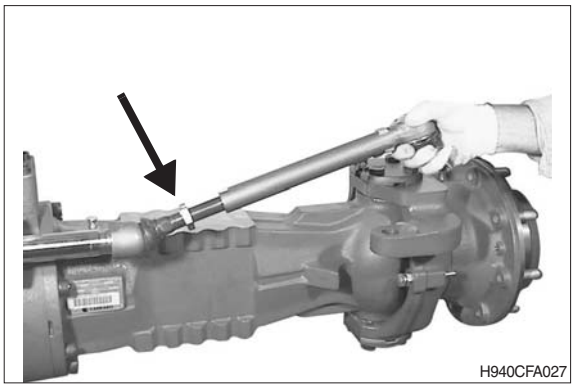

(5) Insert the ball joint into its own seat on the swivel housing.
Assemble and tighten the lock nut using torque wrench to the tightening torque (See page 3-127).

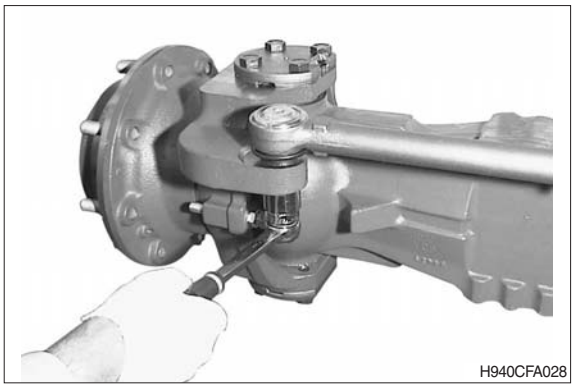
H940CFA028

9) TOE-IN ADJUSTMENT

※ Some of the following pictures may not show exactly your axle, but the process is the same.

(1) Put two equal one-meter-long linear bars on the wheel sides and lock them with two nuts on the wheel hub stud bolt.

※ The two bars should be fixed on their middle so that they are perpendicular to the supporting surface and parallel to the pinion shaft axis. Align the two bars.

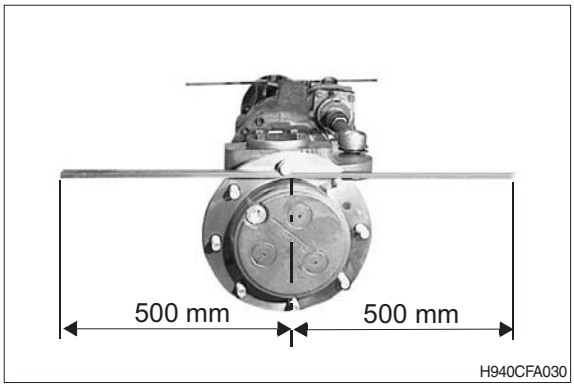

H940CFA030

(2) Measure the distance in mm (M) between the bars ends with a tapeline.

※ Keep the minimum value, swinging the measurement point.

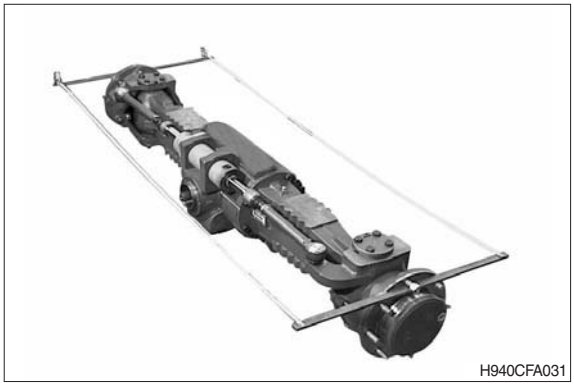
H940CFA031

(3) Check that the difference of the measurements between the bar ends is within the prescribed tolerance range.
The nominal toe-in value (A) is referred to the external diameter of the wheel hubs flange, therefore the measered value (M) at the bars ends must be related to the ratio between lenght of the bar and flange diameter :
Nominal toe-in = A^{-3}_{-6}
Measured toe-in = M^{-12}_{-24}

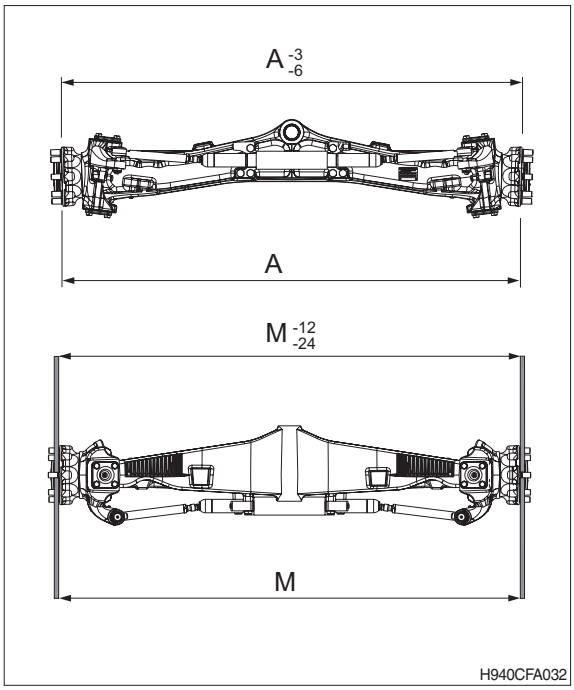

(4) If the difference of the measurements between the bar ends is not within the prescribed tolerance range adjust the toe-in, screwing and unscrewing both steering arm tie rods, until toe-in value is within the prescribed range.

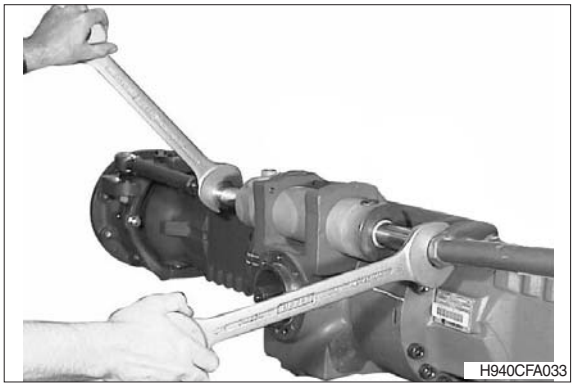

(5) After adjusting, tighten the steering arm nuts to the tightening torque (See page 3-127).

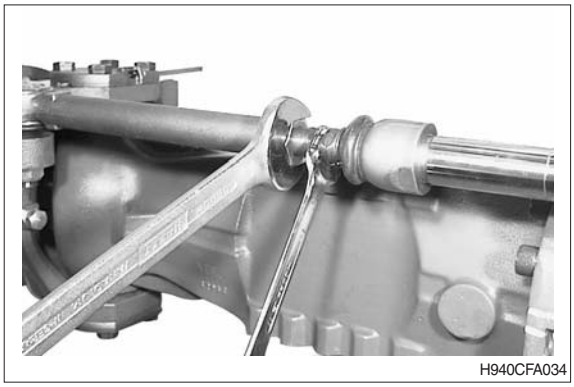

10) TIGHTENING TORQUES

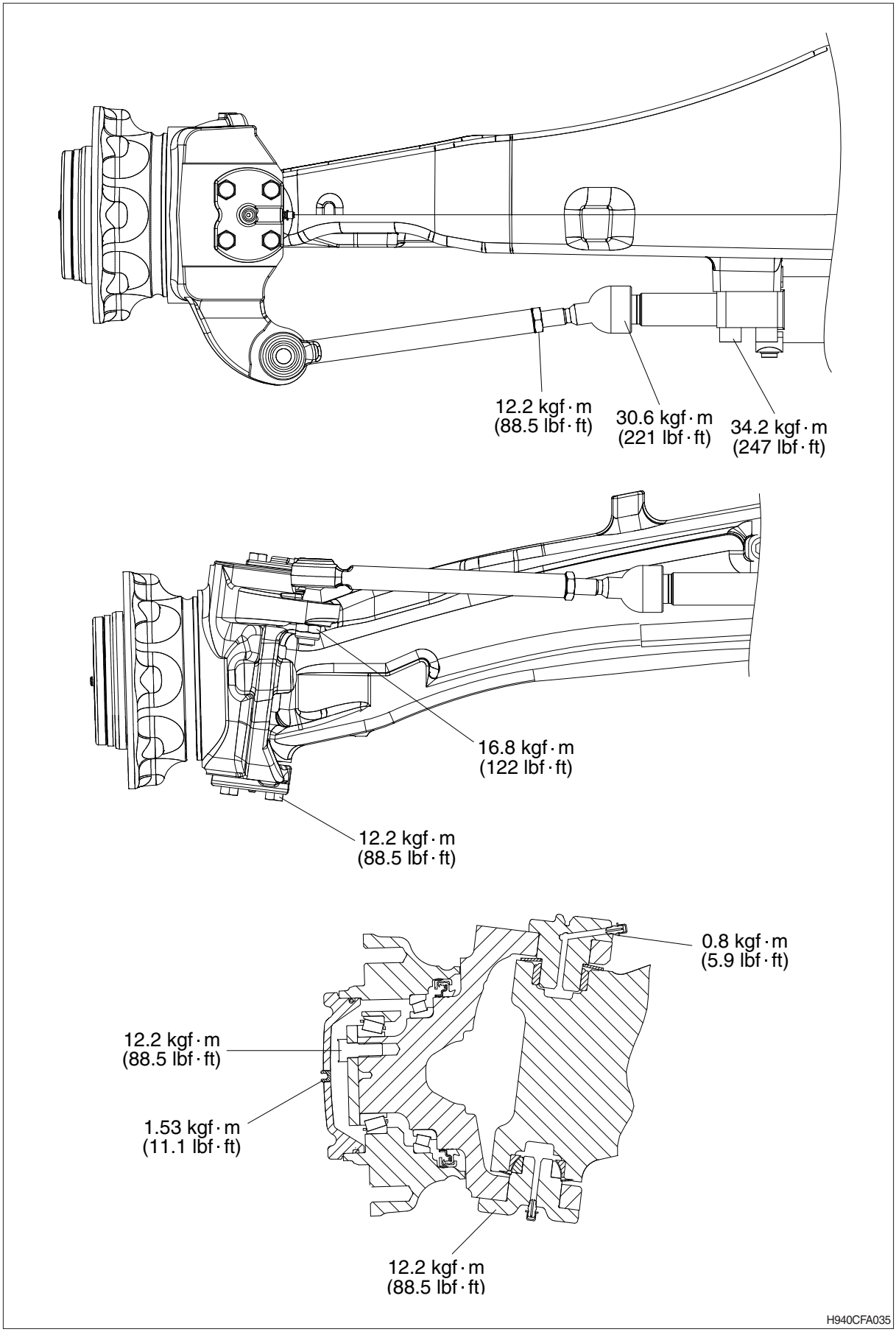

11) TROUBLESHOOTING

Problem	Cause	Action
Axle beam body bent	Vehicle over loaded Vehicle's accident Load bump	Replace axle beam body
Worn out or pitted bearings	Insufficient lubrication Contaminated oil Excessive use Normal wear out	Replace bearings.
Grease leakage from seals	Insufficient lubrication Wheel hub seal assembled incorrectly Seal lip damaged Contaminated oil	Replace the gasket or seal and matching surface if damaged.
Noise while driving	Worn out bearings Wheel hub bearings insufficient lubrication Poor or wrong lubricant	Replace Add grease Replace
Constant noise	Worn out bearings	Replace

12) SPECICAL TOOLS

Handle (CA119033) 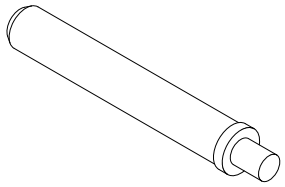	Driver for bearings (CA715085) 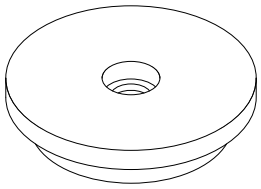	Driver for seal rings (CA715525) 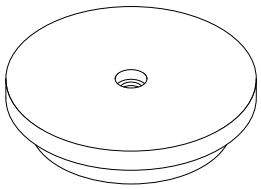
Driver (CA715451) 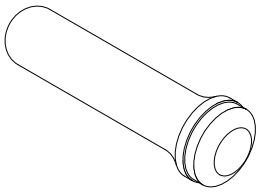	Driver (CA715548) 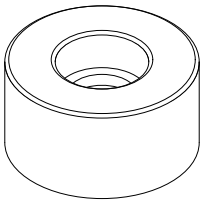	Driver (CA715164) 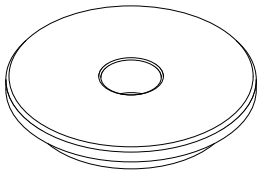
Driver (CA715491) 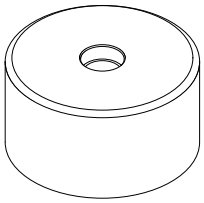	Driver (CA715504) 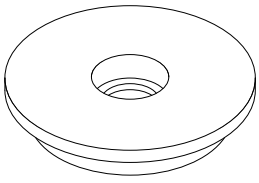	Driver (CA715549) 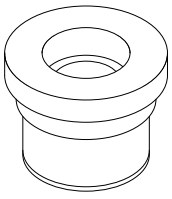

3. 4-WHEEL DRIVE FRONT AXLE

1) DISASSEMBLY OUTPUT

(1) Fix the axle to the assembly truck.

(S) Assembly truck	5870 350 000
(S) Fixtures	5870 350 139
(S) Fixing bracket	5870 350 140

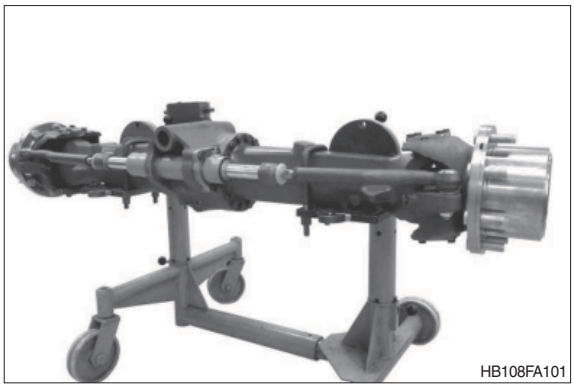
HB108FA101

(2) Loosen the screw plug and drain oil from the axle.

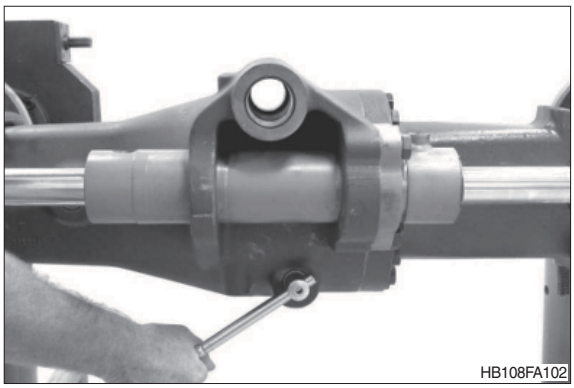
HB108FA102

(3) Loosen the screw plug and drain oil from the planetary carrier.

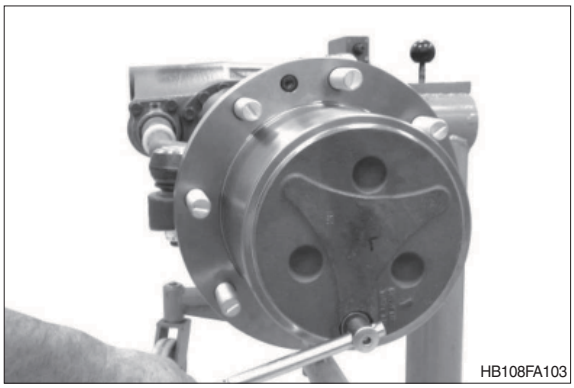
HB108FA103

(4) Loosen the cylindrical screws and pull the planetary carrier from the hub.

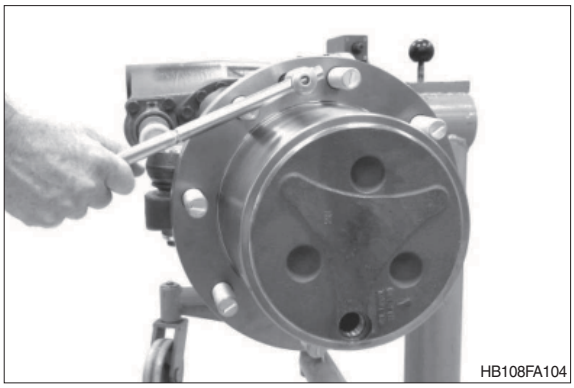
HB108FA104

(5) Disengage the retaining ring.

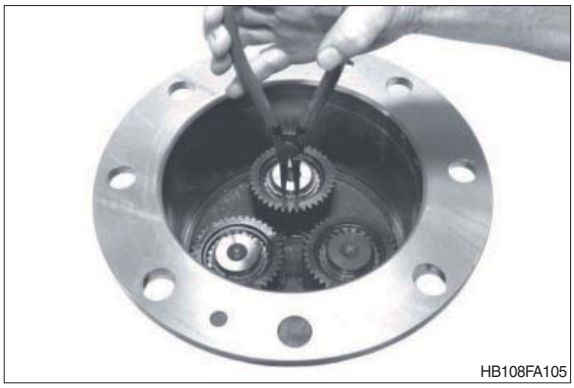
HB108FA105

(6) Pull off the planetary gear with the cylindrical roller bearing.

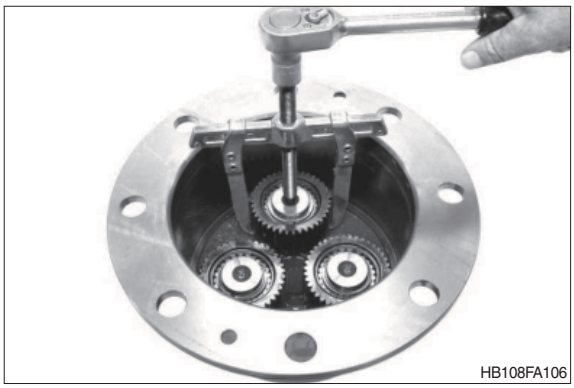
HB108FA106

(7) Loosen the locking screws.

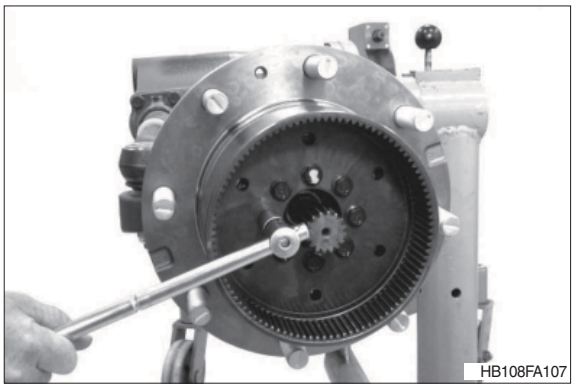
HB108FA107

(8) Pull the ring gear with a three-armed puller from the knuckle housing/from the bushes.

(S) Pressure piece 5870 100 080

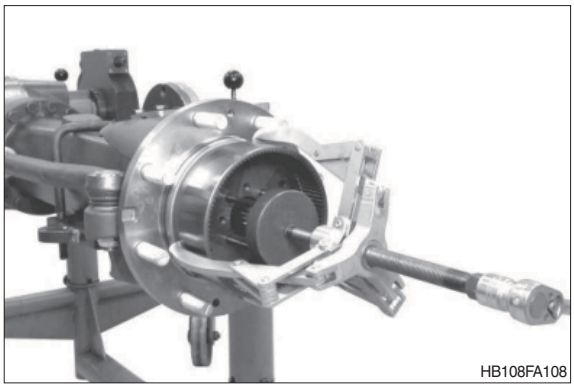
HB108FA108

(9) Pull the hub with a two-armed puller from the knuckle housing.

(S) Pressure piece 5870 100 080

※ Pay attention to the releasing bearing inner ring.

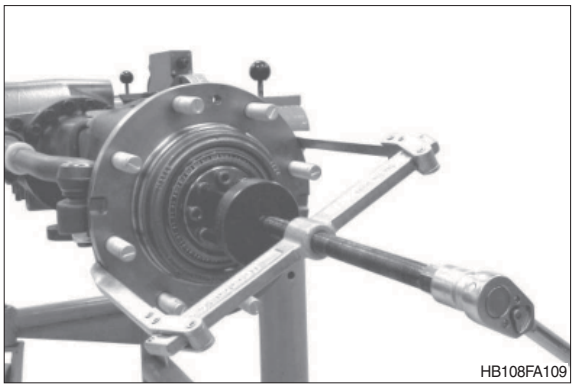
HB108FA109

(10) Force the cassette type sealing out of the hub.

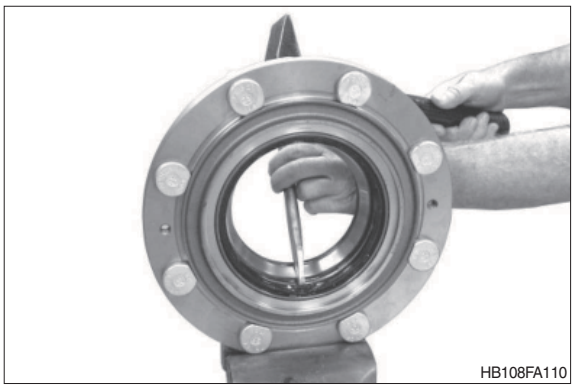
HB108FA110

(11) Force both bearing outer rings out of the hub and remove the O-ring (see arrow).

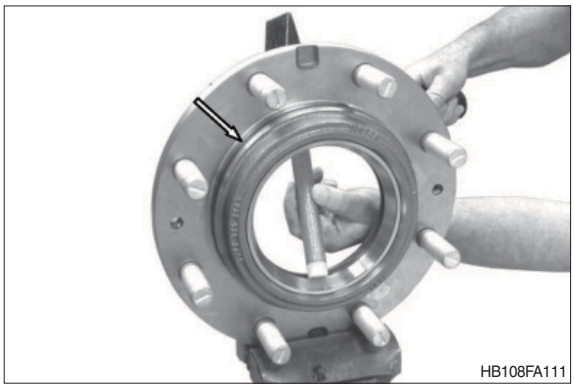
HB108FA111

(12) Pull the bearing inner ring from the knuckle housing.

(S) Rapid grip 5873 013 015
(S) Pressure piece 5870 100 080

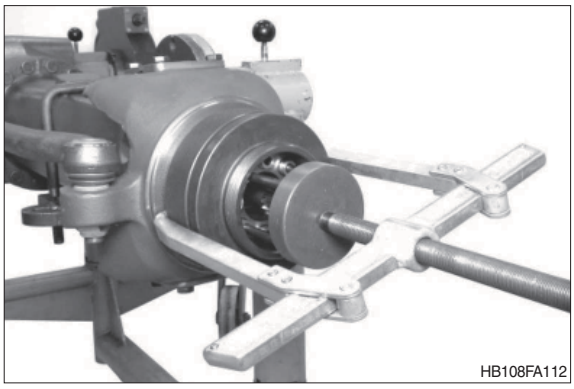
HB108FA112

(13) Loosen the hexagon nut.

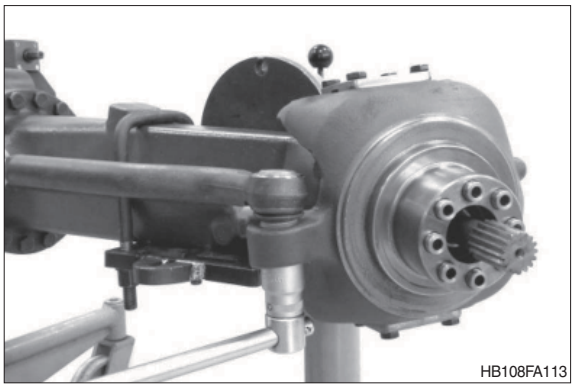

(14) Press the tie rod with a forcing device (S) out of the knuckle housing.

(S) Forcing device 5870 080 041

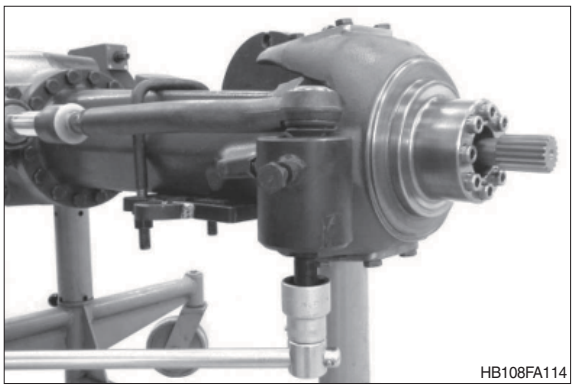

(15) Loosen the hexagon screws on both bearing bolts.

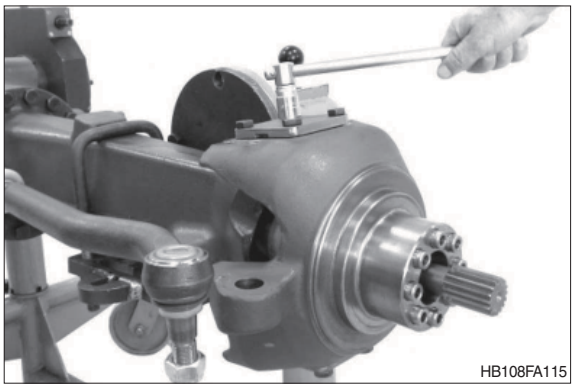

(16) Use a lever to remove both bearing bolts from the knuckle housing.

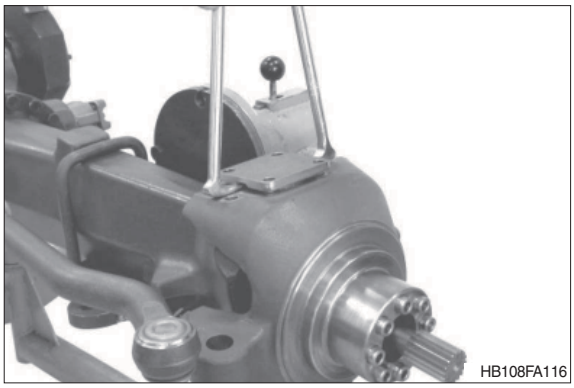

(17) Press the bearing inner ring and the shaft seal ring with the cutoff device (S) from the bearing bolt.

(S) Cut-off device 5870 300 024

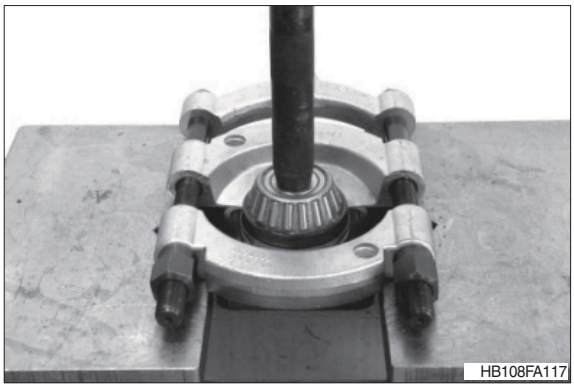

(18) Separate the knuckle housing with the double U-joint shaft from the axle housing.

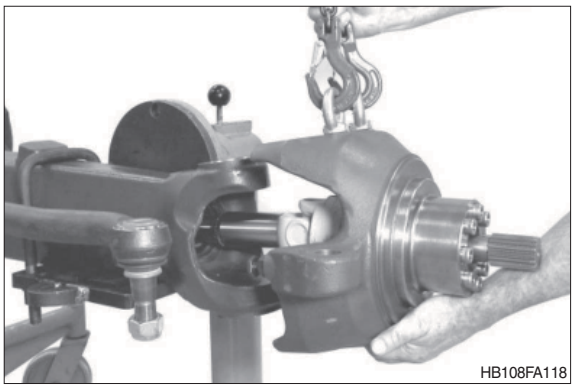

(19) Force the retaining ring apart and pull the sun gear shaft from the double U-joint shaft.

(S) Pliers 5870 900 026

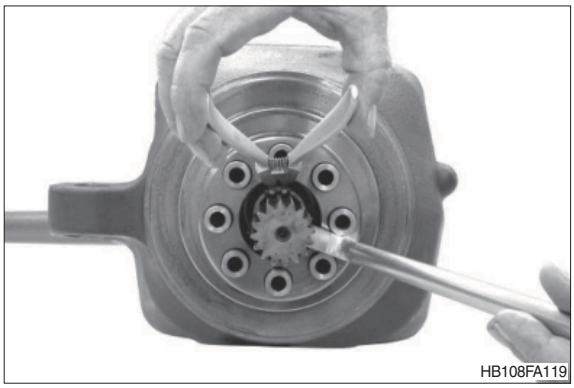

(20) Disengage the retaining ring out of the annular groove of the double U-joint shaft.

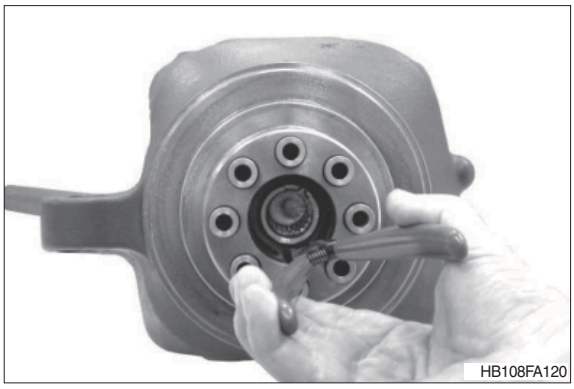

(21) Press the double U-joint shaft out of the knuckle housing.

(S) Extracting tool 5870 000 017

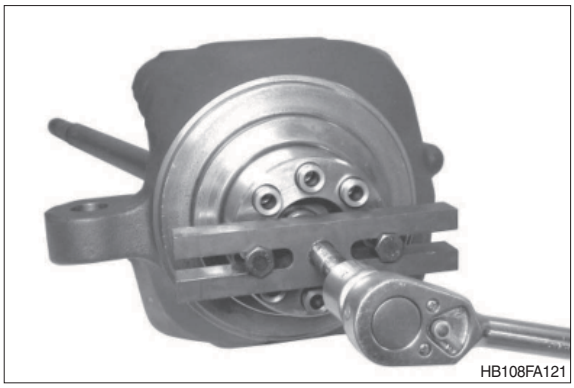
HB108FA121

(22) Pull the shaft seal out of the housing hole.

(S) Internal extractor 5870 300 007
(S) Counter support 5870 300 003

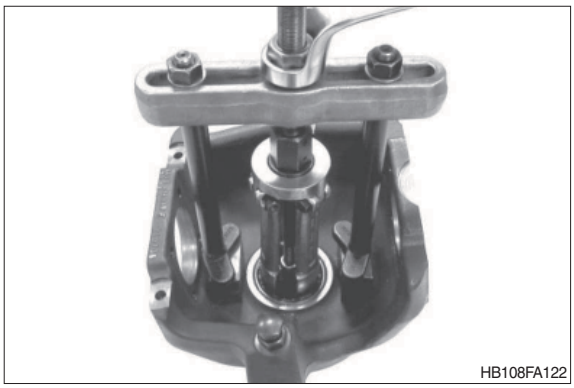
HB108FA122

(23) Disengage the retaining ring and press the releasing ball bearing out of the knuckle housing.

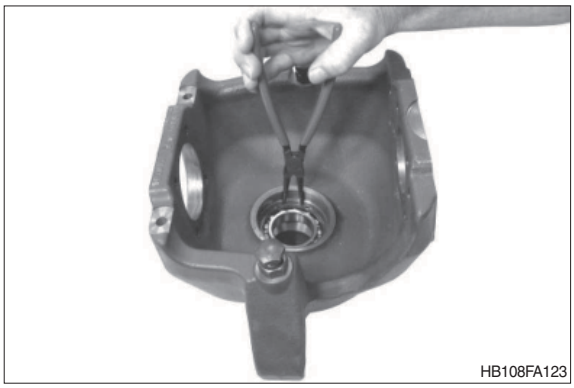
HB108FA123

(24) If necessary provide the bushes with threads (M12) and use a striker (S) to pull them out of the housing.

(S) Striker 5870 650 001


HB108FA124

(25) Pull both bearing outer rings out of the pivot bearing holes.

(S) Internal extractor 5870 300 007
(S) Counter support 5870 300 003

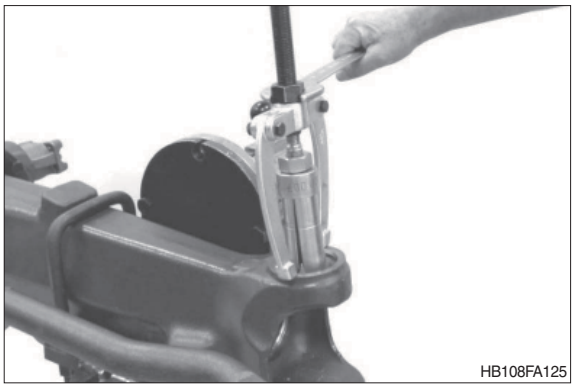
HB108FA125

(26) Pull shaft seal and bush out of the axle housing.

(S) Internal extractor 5870 300 007
(S) Counter support 5870 300 003

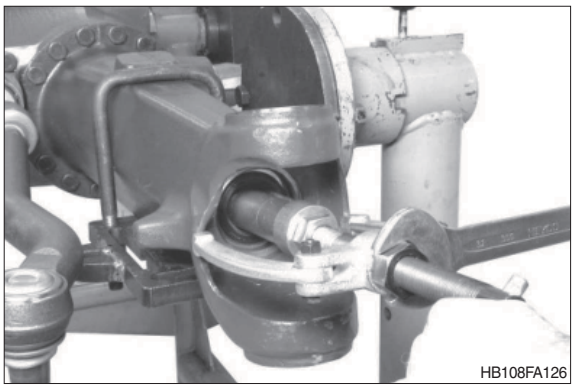
HB108FA126

2) DISASSEMBLY STEERING

(1) Heat the piston rod with a hot air blower.

⚠ **The axial joint is mounted with loctite #243.**

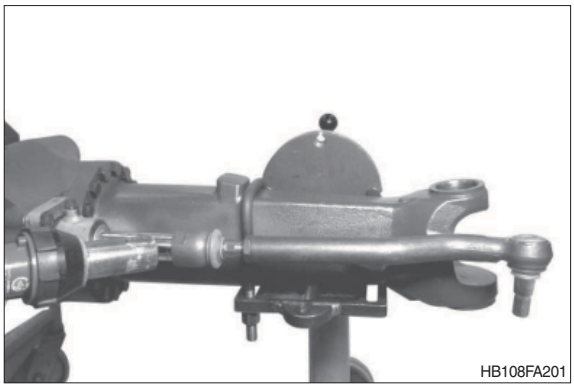
HB108FA201

(2) Separate the tie rod from the piston rod.

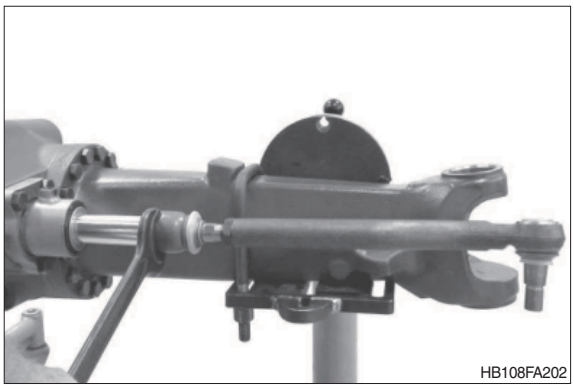
HB108FA202

(3) Loosen the hexagon screws.

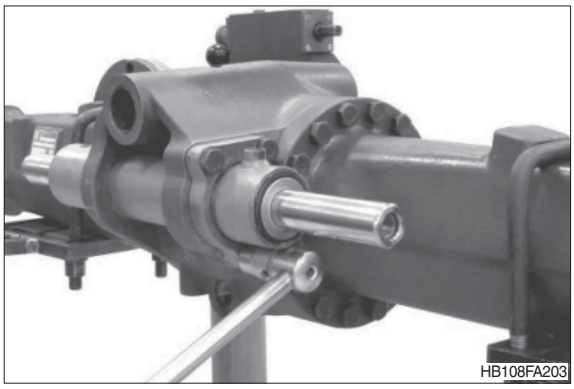
HB108FA203

(4) Force the complete steering cylinder out of the axle housing holes.

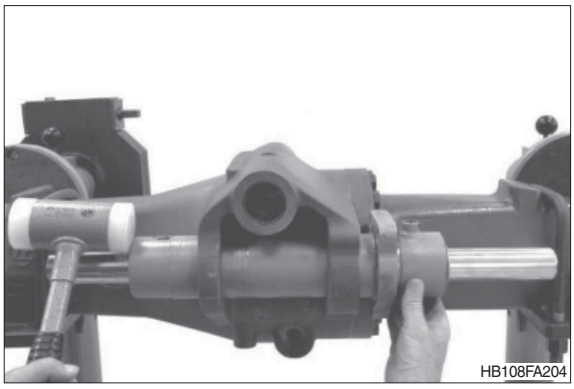
HB108FA204

(5) Unsnap the ring and remove the releasing flange.

(S) Pliers 5870 900 026

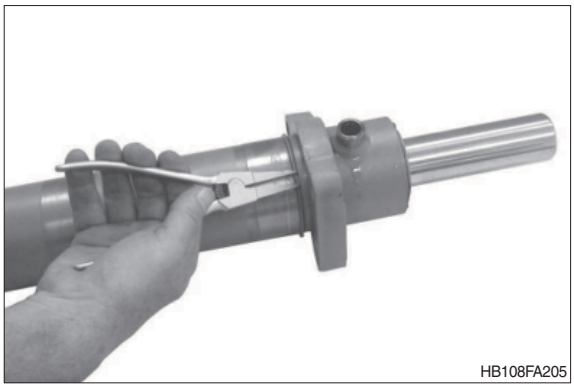

(6) Unsnap the retaining ring.

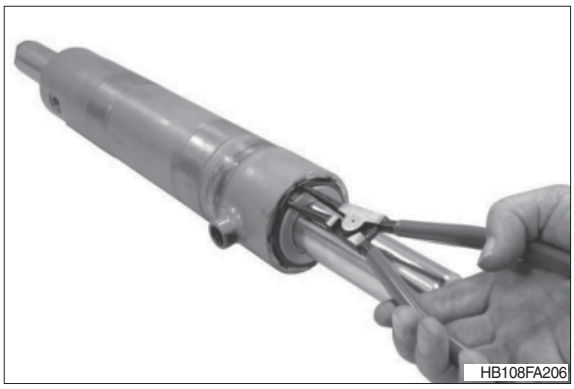

(7) Push or force the plug into the cylindrical tube, until it is possible to unsnap the retaining ring (see sketch below).

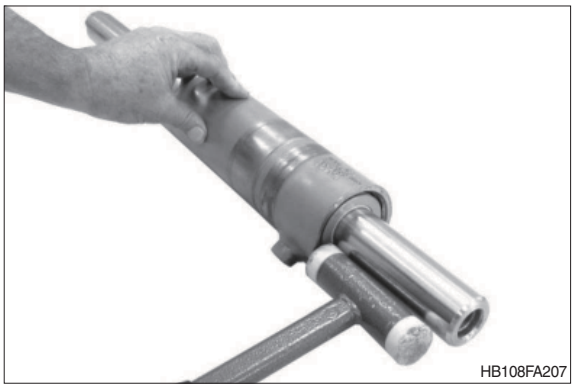

(8) Comment on sketch

1 = Cylindrical tube
2 = Retaining ring
3 = Plug
4 = Piston rod

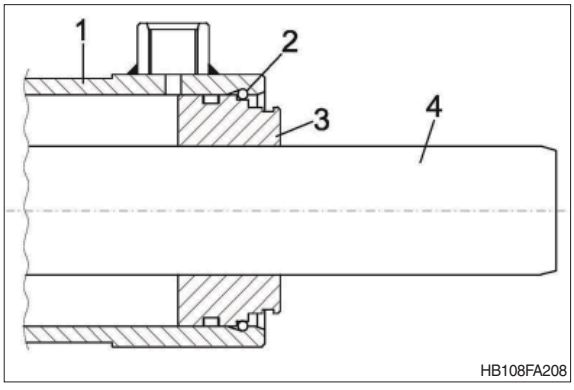

(9) Unsnap the retaining ring.



(10) Force the piston rod with the plug out of the cylindrical tube.
Then remove all sealing elements from piston rod, plug and cylindrical tube.

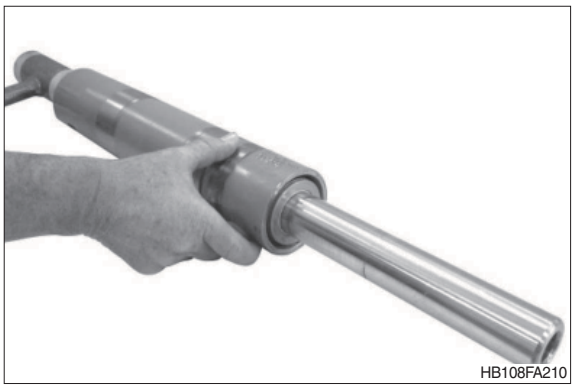

3) DISASSEMBLY INPUT

(1) Secure the axle housing with the lifting device and loosen the screw joint.
Then separate the axle housings.

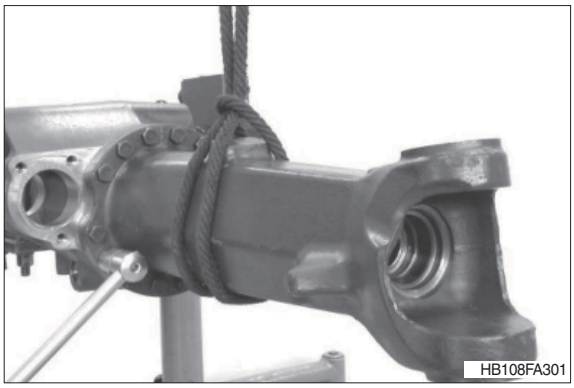

(2) Pull the bearing outer ring with a striker out of the bearing hole and remove the shim lying behind.
Remove the O-ring (see arrow).

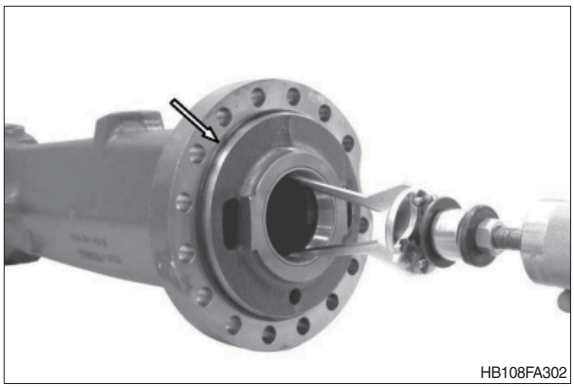

(3) Lift the differential out of the axle housing.

※ The disassembly of the differential is described from page 3-143.

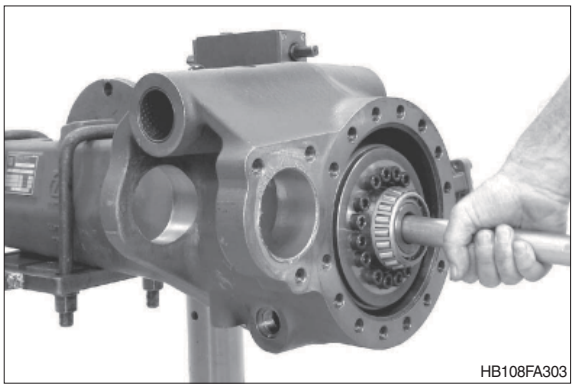

(4) Pull the bearing outer ring with a striker out of the bearing hole and remove the shim lying behind.

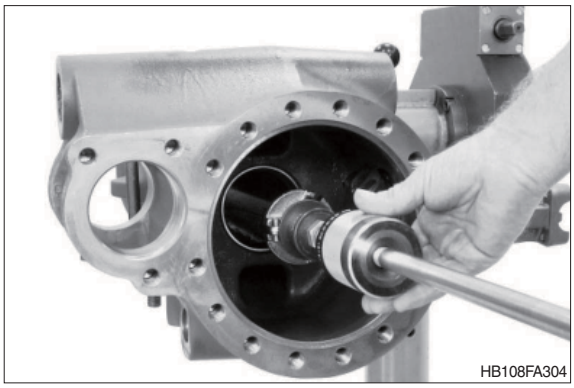

(5) Loosen the hexagon nut and remove the shim lying behind.

(S) Clamping fork 5870 240 025

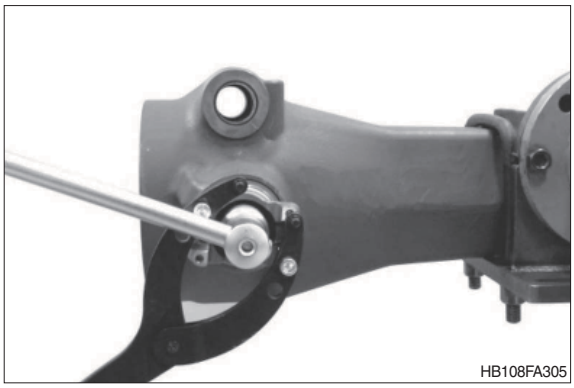

(6) Pull the yoke from the input pinion.

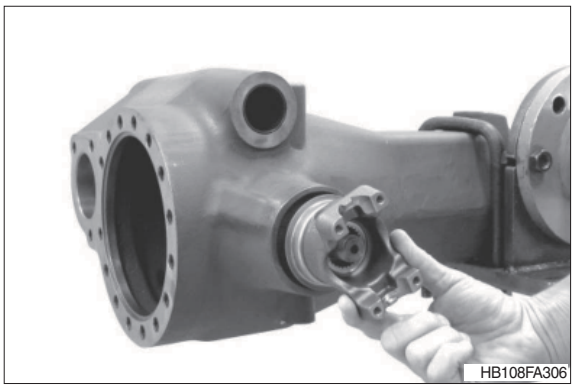

(7) Press the screen sheet with the cut-off device (S) from the yoke.

(S) Cut-off device 5870 300 024

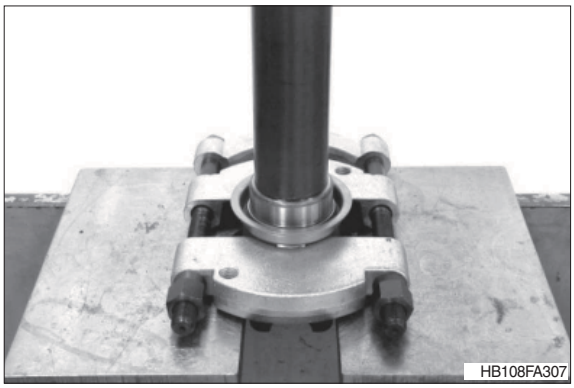

(8) Force the input pinion out of the axle housing.

※ If the pinion bearing should not be replaced, special care must be taken that the outer bearing inner ring is always in contact position with the bearing outer ring when forcing the input pinion out.

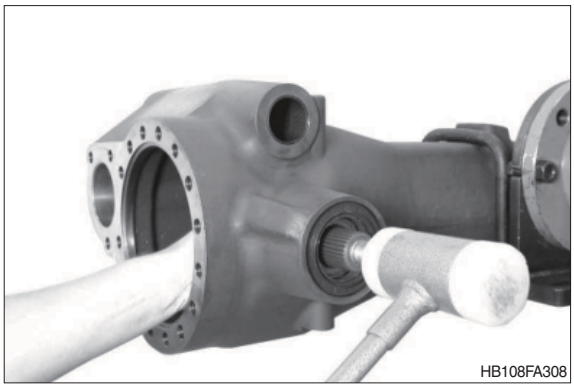

(9) Remove spacer ring and bush.

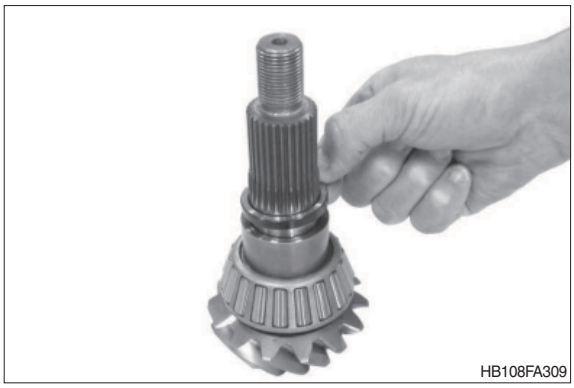

(10) Pull the roller bearing from the input pinion and remove the releasing shim.

(S) Grab sleeve	5873 001 031
(S) Basic device	5873 001 000



(11) Use a lever to remove the shaft seal ring from the axle housing and remove the releasing roller bearing.

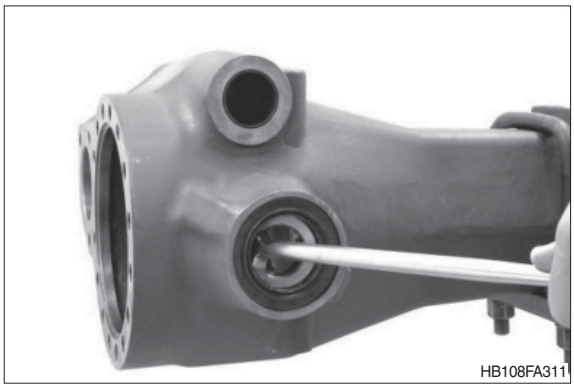

(12) Pull the bearing outer ring out of the outer bearing hole.

(S) Internal extractor	5870 300 019
(S) Counter support	5870 300 020

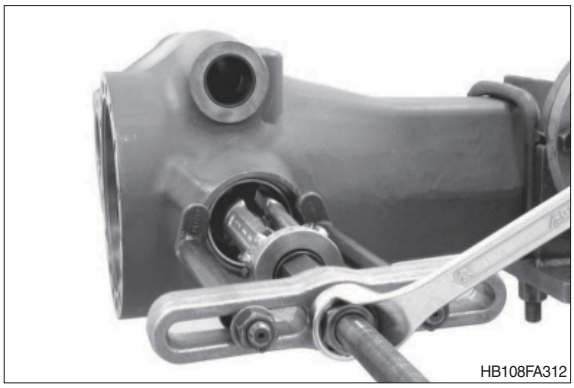

(13) Force the bearing outer ring out of the inner bearing hole.

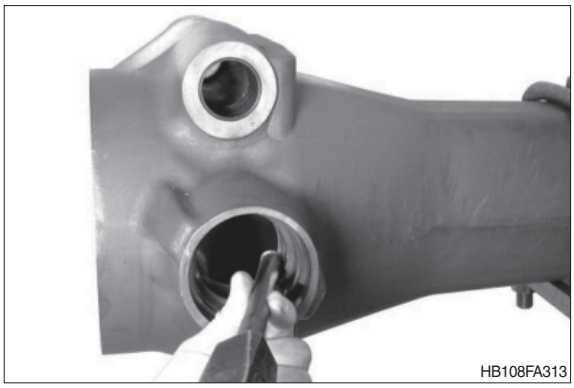
HB108FA313

(14) If necessary, pull both bushes out of the axle housing.

(S) Internal extractor 5870 300 005
(S) Counter support 5870 300 003

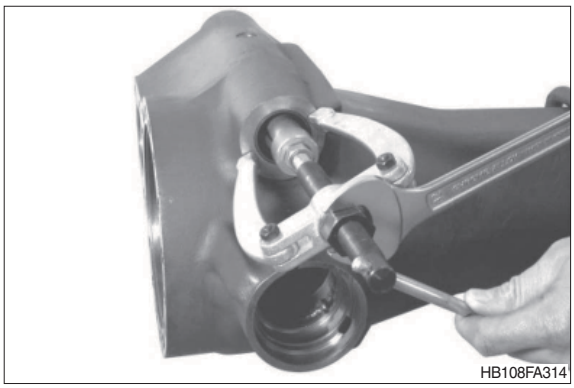
HB108FA314

4) DISASSEMBLY DIFFERENTIAL

(1) Pull both roller bearings from the differential carrier.

(S) Grab sleeve 5873 001 020
(S) Basic device 5873 001 000


HB108FA401

(2) Use a press to fix the differential and loosen the cylindrical screws.

※ Cylindrical screws are mounted with loctite #243.

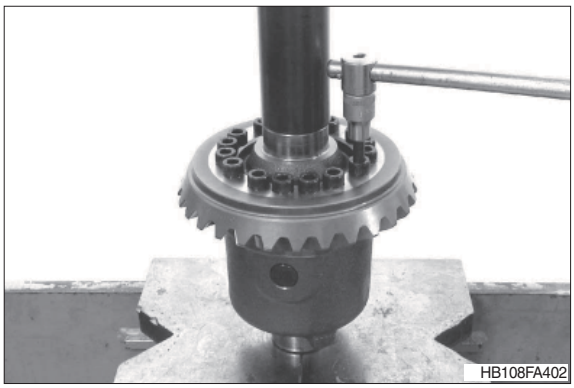
HB108FA402

(3) Press crown wheel from differential carrier and cover.

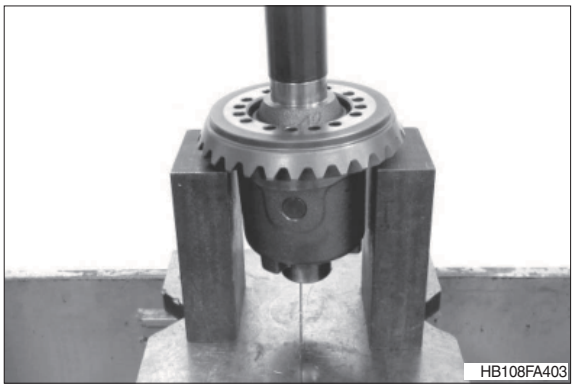
HB108FA403

(4) Lift the axle bevel gear with thrust washer and constant spacer out of the differential carrier.


HB108FA404

(5) Insert the slotted pin into the differential shaft until contact is obtained.


HB108FA405

(6) Pull the differential shaft out of the housing and remove the releasing single parts.
Then force the slotted pin out of the differential shaft.

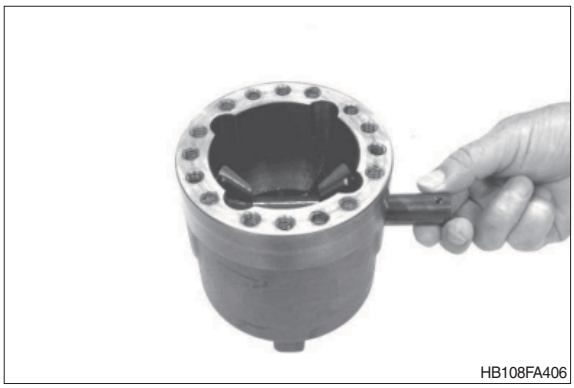
HB108FA406

5) REASSEMBLY OF DIFFERENTIAL

(1) Preassemble the single parts as shown on the right sketch.

1 = Axle bevel gear
2 = Thrust washer
3 = Constant spacer

※ Oil all single parts with axle oil.

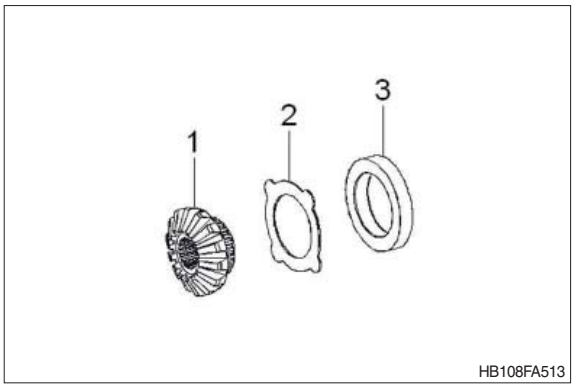

(2) Insert the preassembled axle bevel gear into the differential carrier.

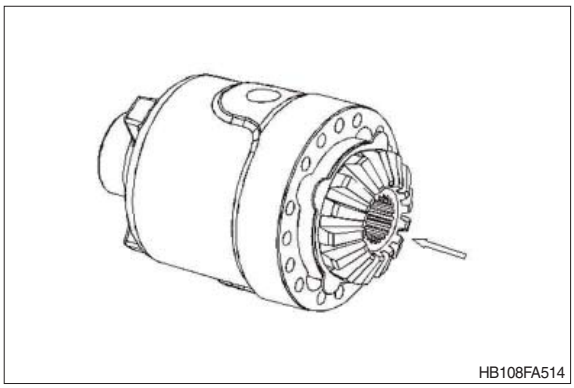

(3) Insert both axle bevel gears with thrust washers into the differential carrier and fix them with the differential shaft.

※ Pay attention to the radial installation position of thrust washers and differential shaft.

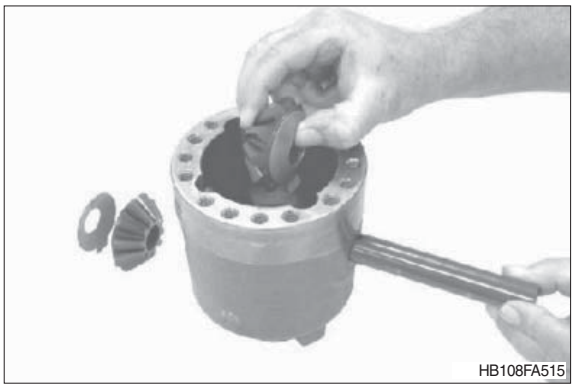

(4) Fix the differential shaft with a slotted pin.

※ Pay attention that the installation depth of differential carrier and differential shaft (see sketch (5)) is the same.



(5) Comment on sketch:

1 = Differential carrier
2 = Slotted pin
3 = Differential shaft

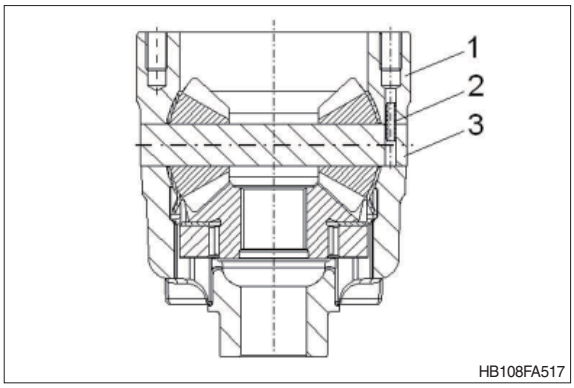

(6) Preassemble the second axle bevel gear.

1 = Axle bevel gear
2 = Thrust washer
3 = Constant spacer

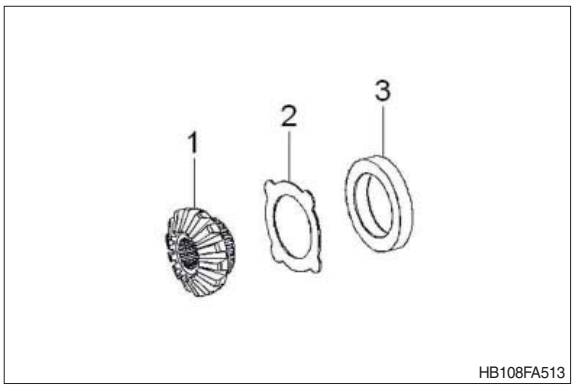

(7) Insert the preassembled axle bevel gear into the differential carrier.

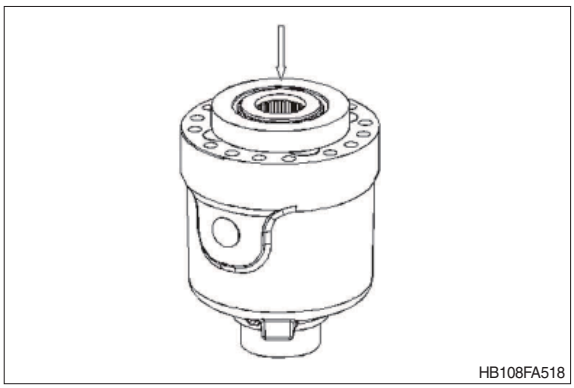

(8) Mount two adjusting screws (S) and install the cover.

(S) Adjusting screws 5870 204 007



(9) Heat the crown wheel and mount until contact position with the differential carrier is obtained.

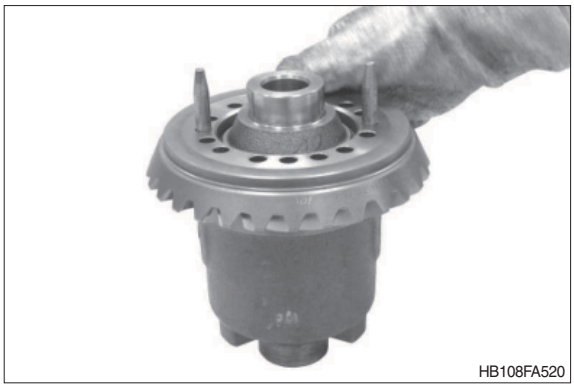
HB108FA520

(10) Use a press to fix the differential and fix the crown wheel with cylindrical screws.

· Tightening torque (M10/10.9) :
6.93 kgf · m (50.2 lbf · ft)

※ Wet the thread of the cylindrical screws with loctite #243.

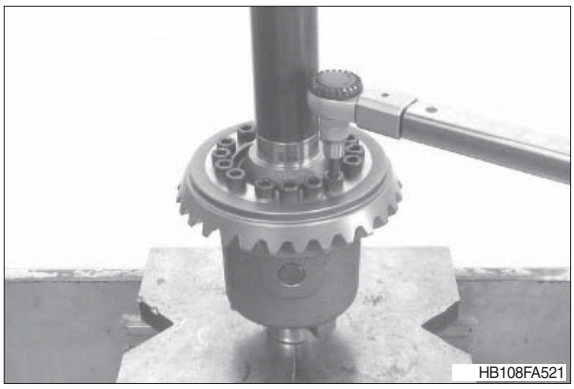
HB108FA521

(11) Heat both roller bearings and mount them until contact is obtained.

※ Adjust the bearing after cooling down.

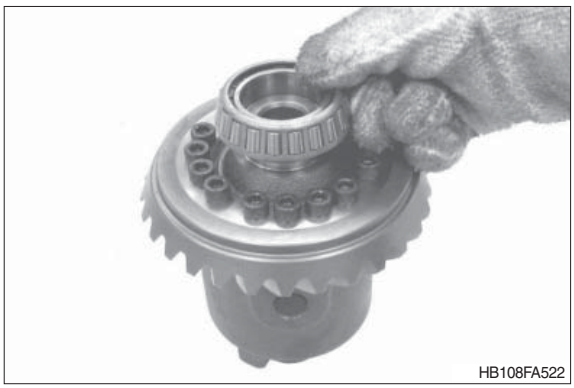
HB108FA522

6) REASSEMBLY INPUT

※ If crown wheel or input pinion are damaged, both parts must be replaced together. When reinstalling a complete bevel gear set, pay attention that input pinion and crown wheel have identical mating numbers.

(1) Installation of input pinion

① Undercool the outer bearing outer ring (see arrow) and use the assembly fixture (S) to bring it into contact position with the bearing hole.

(S) Assembly fixture	5870 345 049
(S) Pressure rings	5870 345 056

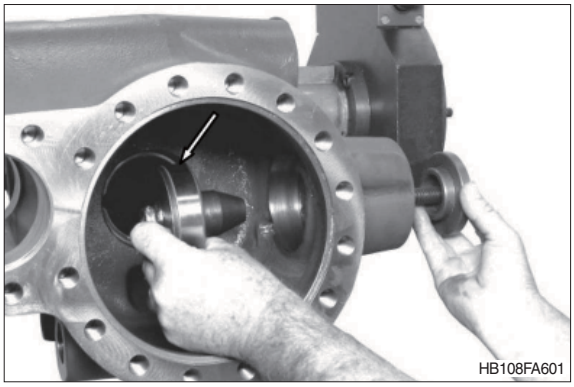
HB108FA601

② Undercool the bearing outer ring and insert until contact position with the bearing hole is obtained.

(S) Driver tool	5870 058 062
(S) Handle	5870 260 002

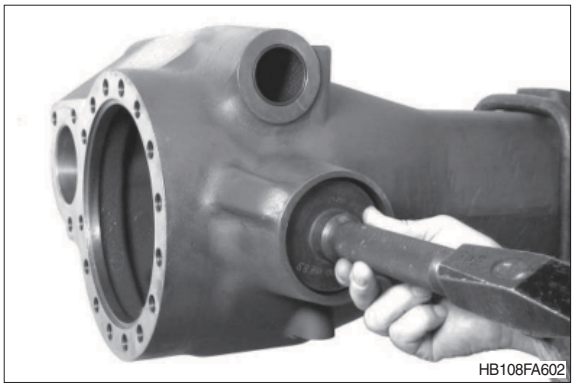
HB108FA602

Determine the thickness of the shim to obtain a correct contact pattern

※ Perform the following measuring operations with utmost accuracy. Inaccurate measurements result in a defective contact pattern and require to disassemble and reassemble the input pinion one more time.

① Read dimension I on the axle housing.
Dimension I e.g. ····· 130.55 mm

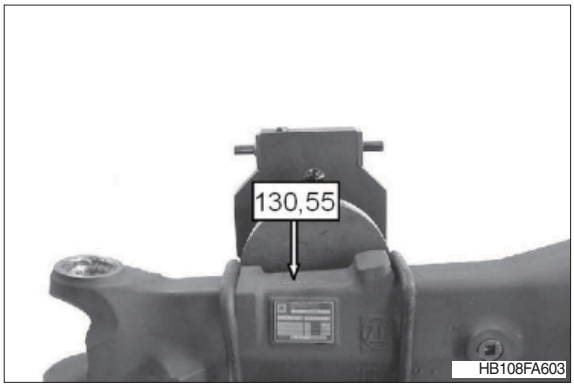

② Read dimension II (pinion dimension)
Dimension II e.g. ····· 97.00 mm

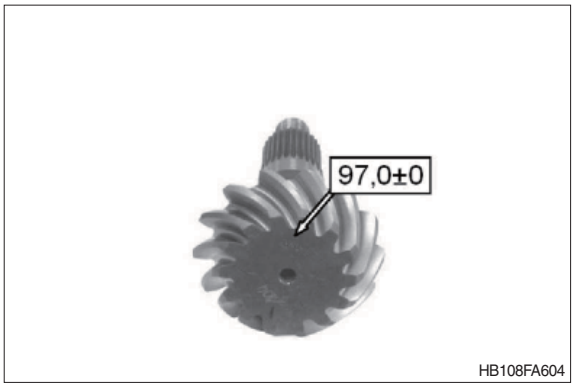

③ Determine dimension III (bearing width).
Dimension III e.g. ····· 30.35 mm

Calculation example A :

Dimension II ·····	97.00 mm
Dimension III ·····	+ 30.35 mm
Leads to X	= 127.35 mm

Calculation example B :

Dimension I ·····	130.55 mm
Dimension X ·····	- 127.35 mm
Difference = shim	**s = 3.20 mm**

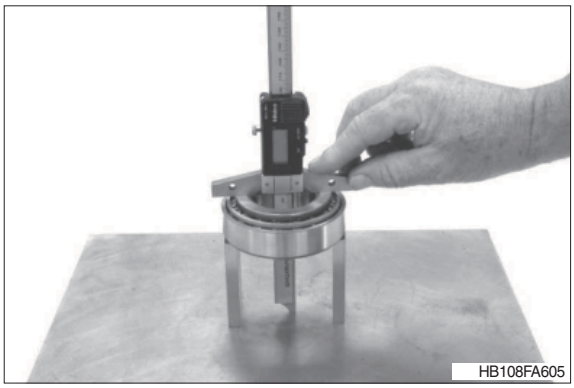

④ Insert the determined shim e.g. s = 3.20 mm.

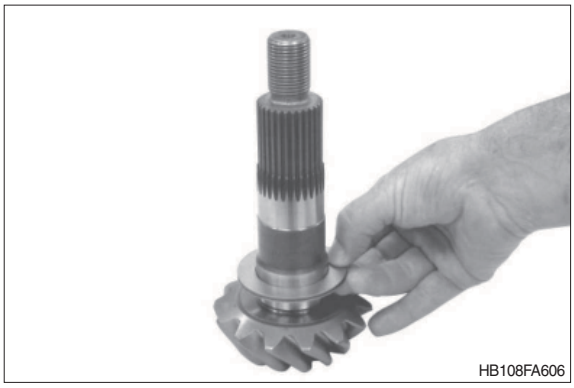

⑤ Heat the roller bearing and mount until contact is obtained.

※ Adjust the bearing after cooling down.

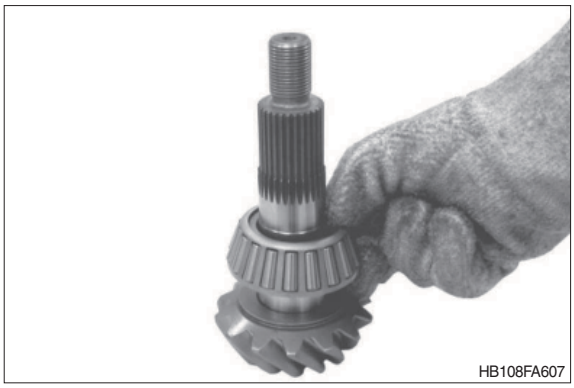

Setting of the rolling torque of the input pinion bearing 0.1~0.31 kgf · m (without shaft seal ring)

① Mount bush (1) and spacer (2), e.g. s = 6.40 mm.

※ Experience has shown that the required rolling torque is reached when reusing the shims being removed during disassembly (e.g. s = 6.40 mm).
A later check of the rolling torque, however, is absolutely necessary.

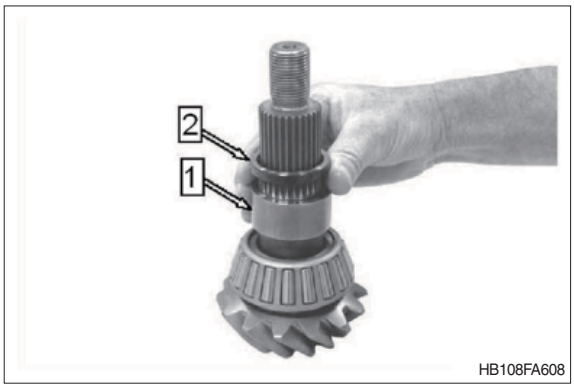

② Insert the preassembled input pinion into the axle housing and mount the heated roller bearing until contact is obtained.

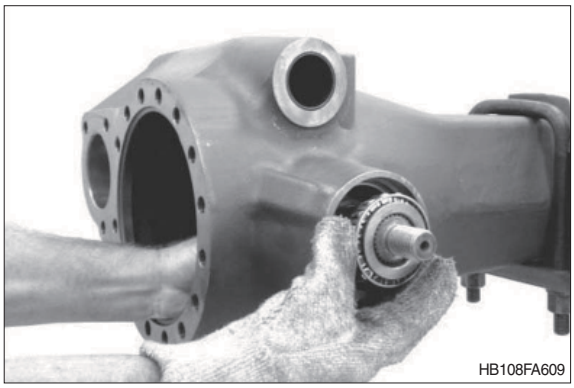

③ Press the screen sheet (see arrow) onto the yoke until contact is obtained.

※ The shaft seal ring is only mounted after acceptance of the contact pattern (see page 3-155).

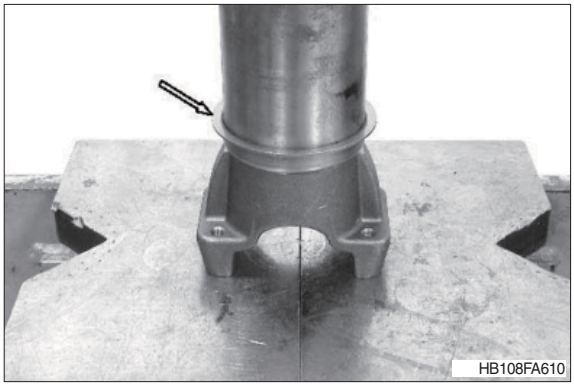

④ Mount the yoke and fix it with disk and hexagon nut.

· Tightening torque :
45.9 kgf · m (332 lbf · ft)

(S) Clamping fork 5870 240 025

※ First use the old hexagon nut (self securing), which has been removed during disassembly.

⚠ **While tightening, rotate the input pinion several times in both directions.**

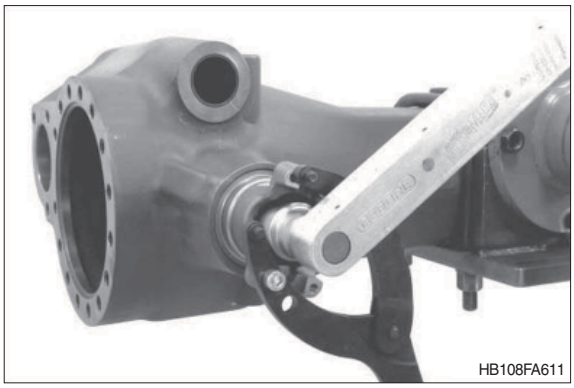
HB108FA611

⑤ Check the rolling torque (0.1~0.31 kgf · m without shaft seal ring).

※ With new bearings try to achieve the upper value of the rolling torque.

⚠ **In case of deviations from the necessary rolling torque correct with a corresponding spacer ring (figure FA608, page 3-150), as specified below.**

Insufficient rolling torque - mount a thinner spacer ring.

Excessive rolling torque - mount a thicker spacer ring.

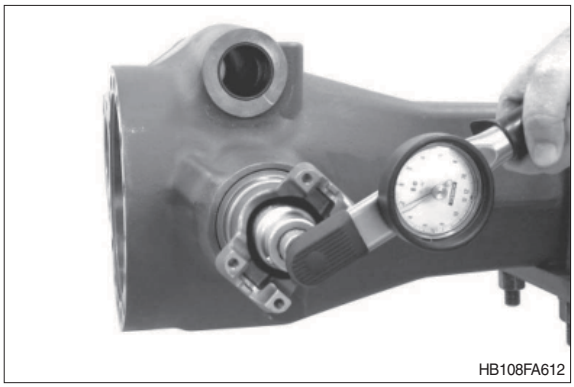
HB108FA612

(2) Setting of the backlash of crown wheel set and bearing preload of the differential

Backlash = 0.12 ··· 0.24 mm
Bearing preload = 0.10 ··· 0.15 mm (corresponds to a bearing rolling torque of 0.31~0.41 kgf · m [2.24~2.97 lbf · ft])

※ Pivot the axle housing 90°.

① Insert the shim e.g. s = 0.90 mm (recommended value) into the bearing hole and adjust the bearing outer ring until contact is obtained.

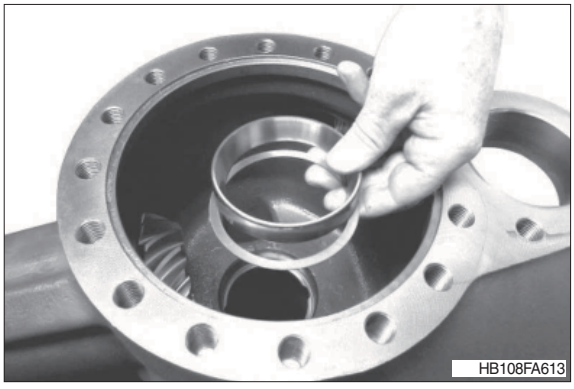
HB108FA613

② Cover some drive and coast flanks with marking ink.


HB108FA614

③ Insert the preassembled differential into the axle housing.

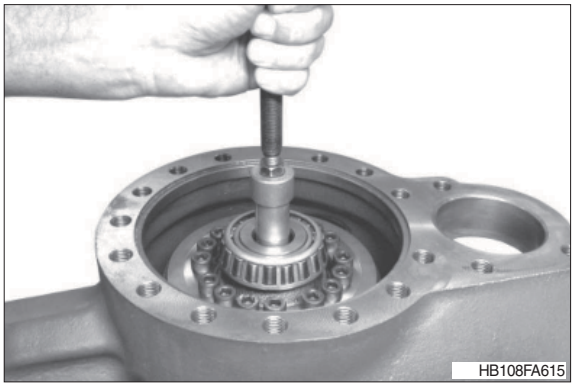
HB108FA615

④ Mount the bearing outer ring.

※ Rotate differential and bearing outer ring in both directions, in order to assure that the rollers are positioned correctly.

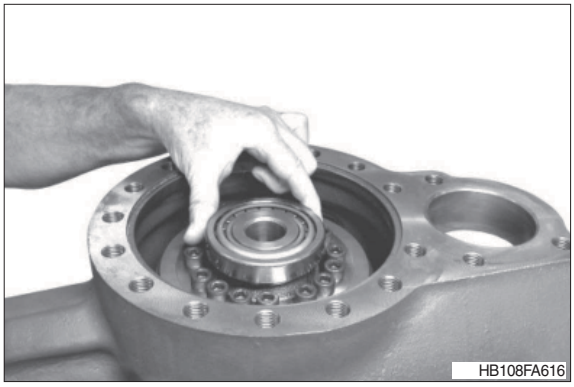
HB108FA616

⑤ Align the differential centrically and determine dimension I, between the mounting face of the axle housing and the front face of the bearing outer ring.

Dimension I e.g. ····· 9.50 mm

(S) Straightedge 5870 200 022

※ Take several measuring points to find the average value.

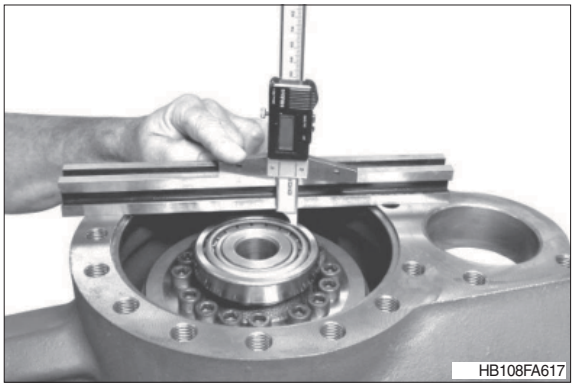
HB108FA617

⑥ Determine dimension II, between the mounting face of the axle housing (part II) and the contact face of the bearing outer ring.

Dimension II e.g. ····· 8.80 mm

Calculation example C :

Dimension I ·····	9.50 mm
Dimension II ·····	- 8.80 mm
Difference =	0.70 mm
Required bearing preload e.g.	+ 0.10 mm
Leads to shim s =	**0.80 mm**

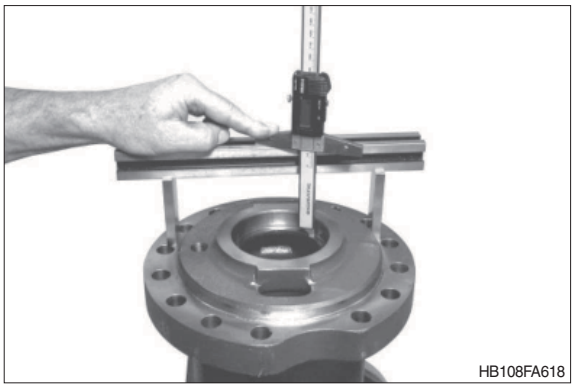
HB108FA618

⑦ Insert the determined shim e.g. s = 0.80 into the bearing hole and adjust the bearing outer ring until contact is obtained.

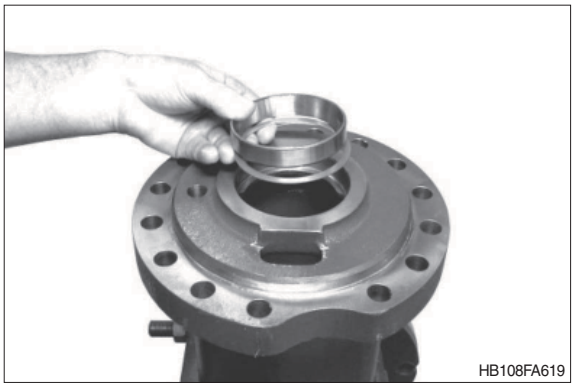
HB108FA619

⑧ Mount the axle housing (part II) with the lifting device.

※ Provisionally mount the axle housing without O-ring.

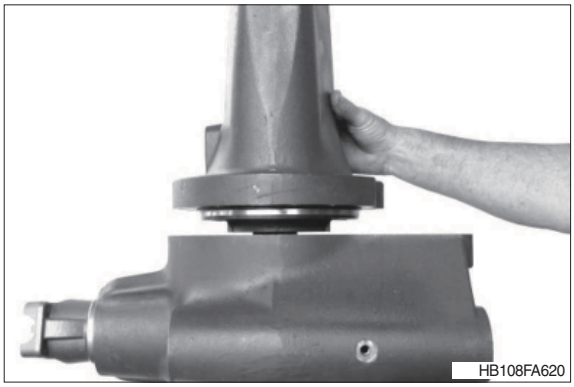
HB108FA620

⑨ Check the gap between the two axle housings with a feeler gauge.

※ If the shim (according to calculation example C, s = 0.80 mm) has been determined correctly, the gap width is approx. 0.10 mm.

⚠ Take several measuring points to find the average value.

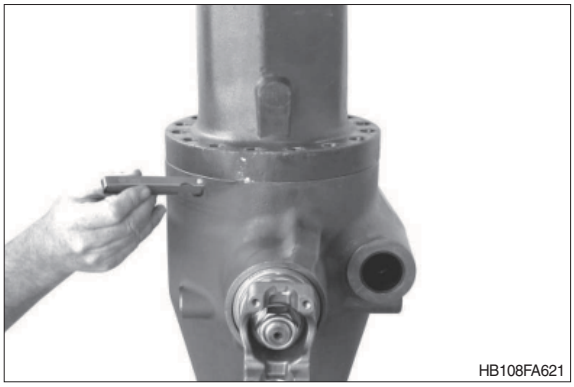
HB108FA621

⑩ Tighten the axle housing parts with hexagon screws until contact is obtained.

· Tightening torque (M16/10.9) :
28.6 kgf · m (207 lbf · ft)

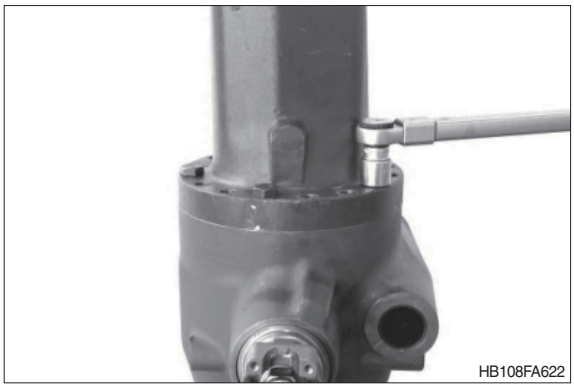
HB108FA622

⑪ Pivot the axle housing 90° and fix the torsion bar (S) with the cone connection (S) in the hole of the cover (differential).

(S) Torsion bar 5870 206 001
(S) Cone connection 5870 206 003

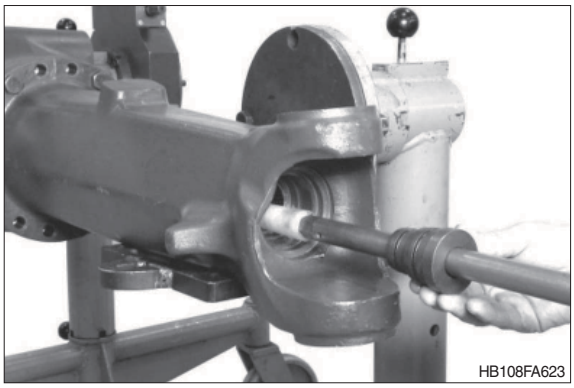
HB108FA623

⑫ Place the dial indicator right-angled through the oil drain hole at a tooth flank of the crown wheel and check the backlash.

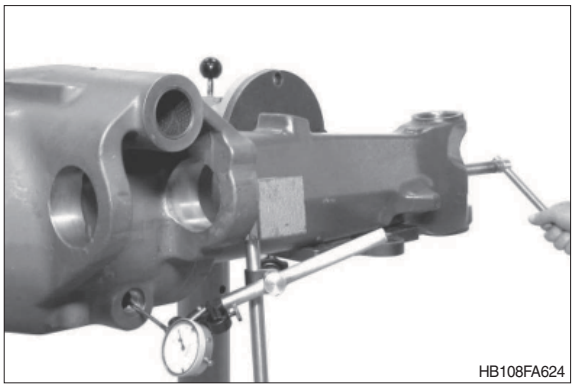
HB108FA624

⚠ In case of deviations from the necessary backlash (0.12 ... 0.24 mm) correct with the corresponding shims.

- **Insufficient backlash** – mount a thicker shim (figure FA613).
  The shim to determine the bearing preload (figure FA619), must be accordingly thinner.
- **Excessive backlash** – mount a thinner shim (figure FA613).
  The shim to determine the bearing preload (figure FA619) must be accordingly thicker.

※ **Check the contact pattern:**
Rotate the yoke to roll the crown wheel several times in both directions over the input pinion.
Then separate the axle housings and remove the differential again.
Compare the received contact pattern with contact pattern examples of page 3-227.

⚠ In case of a contact pattern deviation it is imperative to correct the measuring failures which occurred when determin-ing the shim (figure FA606**, page 3-149).**

⑬ Insert the differential again into the axle housing after checking the contact pattern.

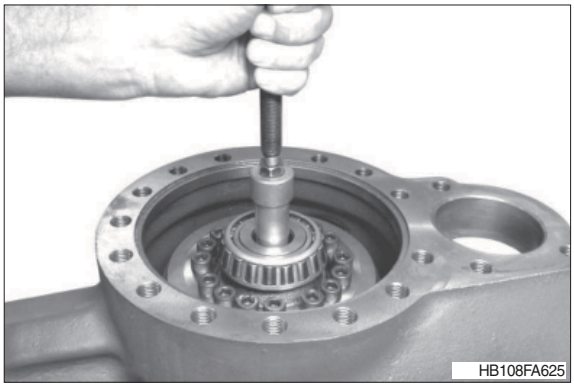
HB108FA625

⑭ Grease the O-ring (see arrow) and mount it to the axle housing (part II). Then mount the axle housing (part II) until contact is obtained.

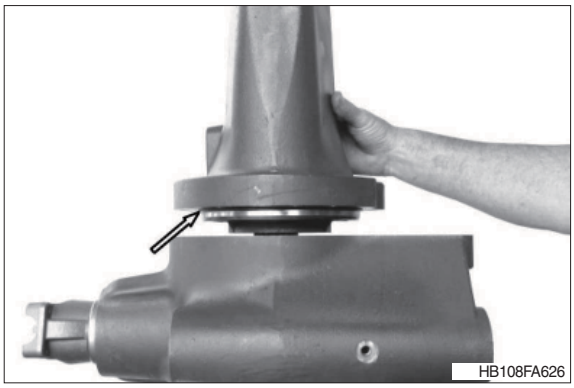
HB108FA626

⑮ Finally tighten the axle housing with hexagon screws.

· Tightening torque (M16/10.9) :
28.6 kgf · m (207 lbf · ft)

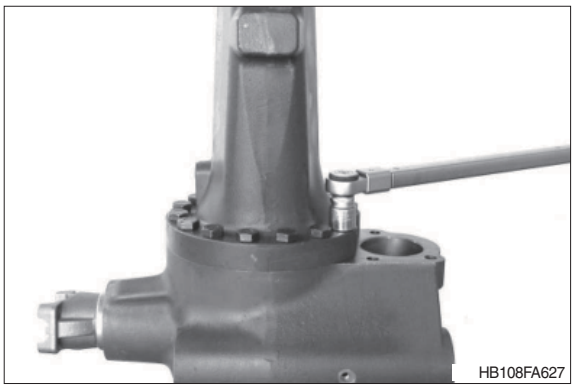
HB108FA627

(3) Mount the shaft seal ring (yoke)

① Loosen the hexagon nut and pull the yoke from the input pinion.

(S) Clamping fork 5870 240 025

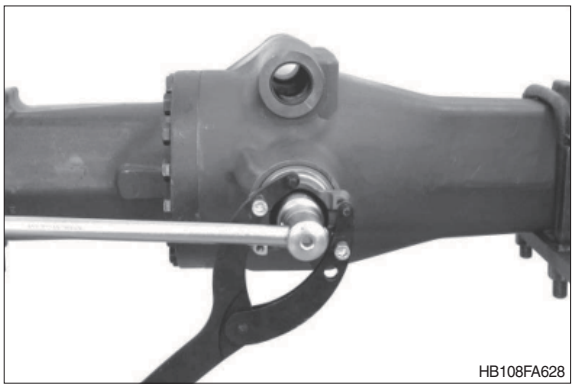
HB108FA628

② Mount the shaft seal ring with the seal lip showing to the oil chamber.
(S) Driver tool 5870 048 269

※ Use the specified driver (S) to obtain the exact installation position of the shaft seal ring.

⚠ Just before the assembly wet the outer diameter of the shaft seal ring with spirit and fill the space between seal and dust lip with grease.

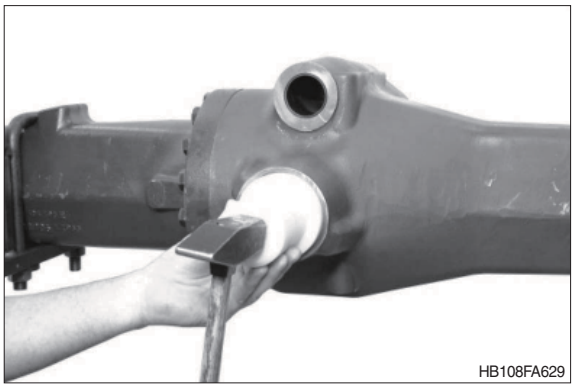
HB108FA629

③ Mount the yoke and finally tighten with disk and **"new"** hexagon nut (self securing).

· Tightening torque :
45.9 kgf · m (332 lbf · ft)

(S) Clamping fork 5870 240 025

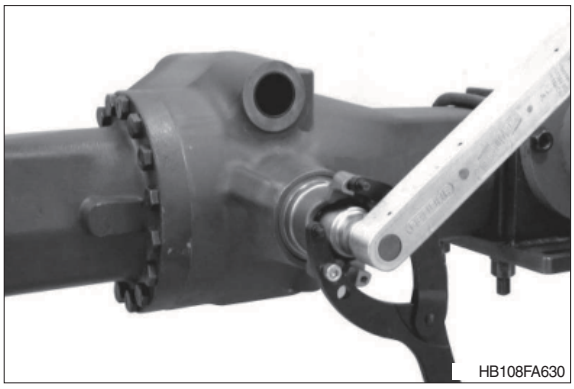

7) REASSEMBLY OUTPUT

(1) Mount the knuckle housing

① Flush-mount the bush into the axle housing.

(S) Driver tool	5870 055 081
(S) Handle	5870 260 002

⚠ **Pay attention to the radial installation position, the latching/cross joint of the bush must be showing upwards (12 o'clock) in installed condition.**

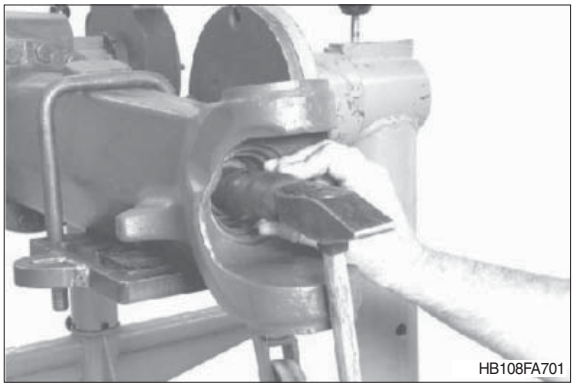

② Flush mount the shaft seal ring into the axle housing with the seal lip showing to the oil chamber.

(S) Driver tool	5870 048 156
(S) Driver tool	5870 048 157

⚠ **Right before the assembly wet the outer diameter of the shaft seal ring with spirit and fill the space between the seal lips with grease.**

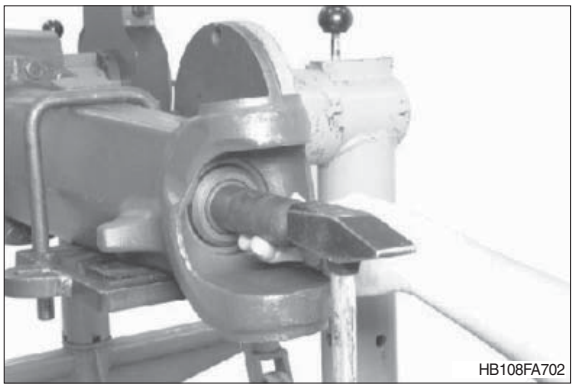

③ Mount both bearing outer rings until contact position with the pivot bearing holes is obtained.

(S) Driver tool	5870 058 047
(S) Driver tool	5870 058 062
(S) Handle	5870 260 002

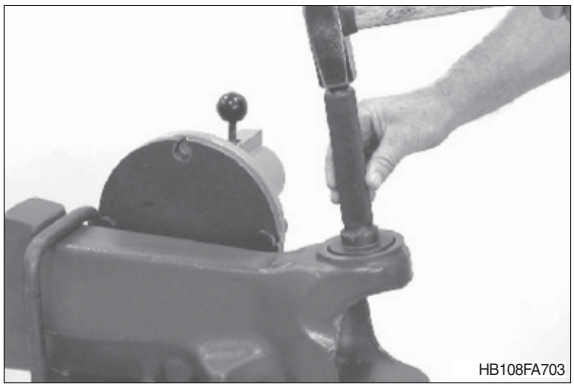

④ Insert the bushes until contact position with the holes of the knuckle housing is obtained.

(S) Mandrel	5870 100 011

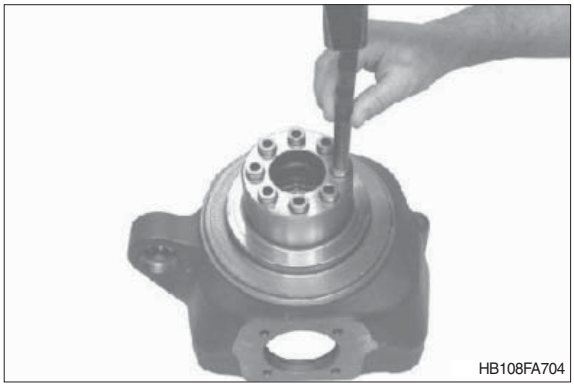

⑤ Insert the ball bearing into the knuckle housing until contact position is obtained.

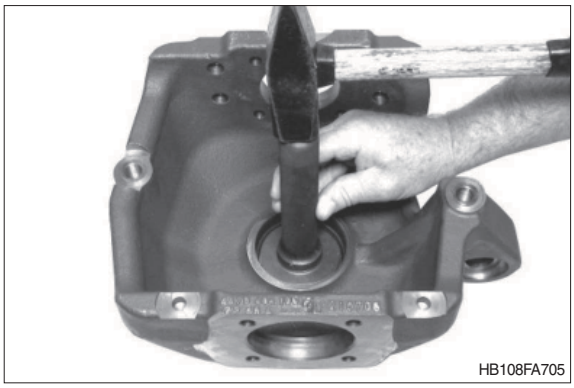
HB108FA705

⑥ Fix the ball bearing with a retaining ring.

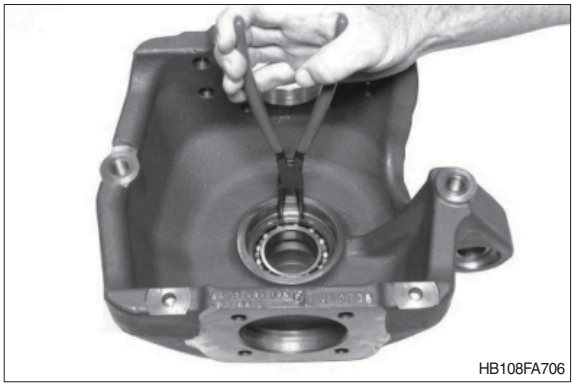
HB108FA706

⑦ Insert the cassette type seal ring into the knuckle housing.

(S) Driver tool 5870 048 307

※ The use of the specified driver tool (S) ensures that the installation position of the cassette type ring is correct.

⚠ Right before the assembly wet the outer diameter of the cassette type seal ring with spirit.

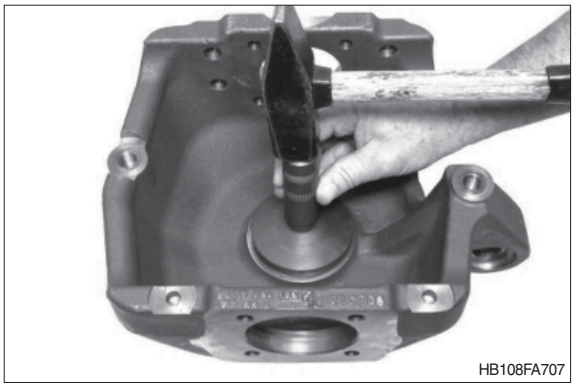
HB108FA707

Mount the double U-joint shaft

① Insert the double U-joint shaft into the knuckle housing.

※ Right before the assembly wet the cassette type seal ring with spirit.

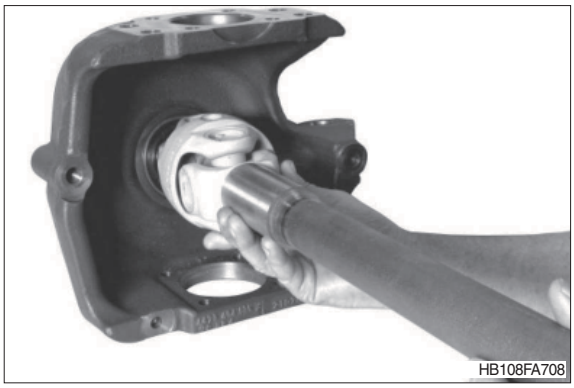
HB108FA708

② Pull the double U-joint shaft into the knuckle housing until contact is obtained.

(S) Internal extractor 5870 300 014
(S) Counter support 5870 300 003

※ Place the internal extractor (S) into the groove of the double U-joint shaft.

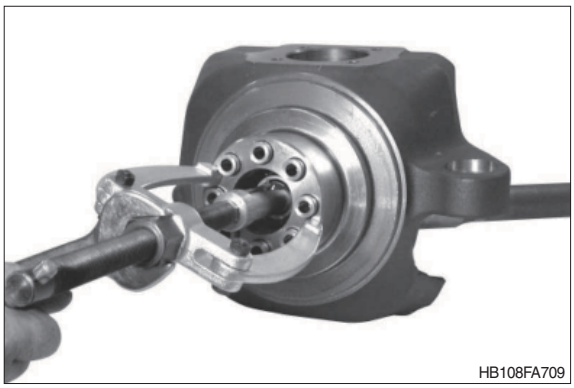
HB108FA709

③ Fix the double U-joint shaft with a retaining ring.

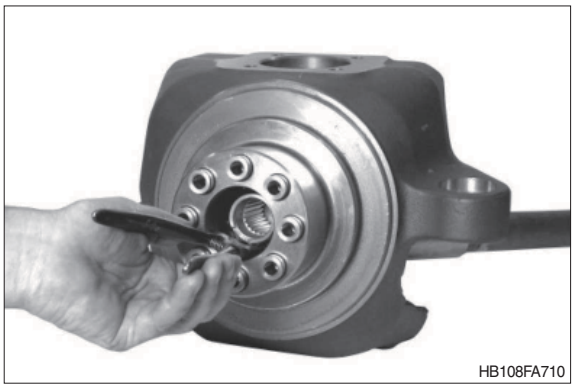
HB108FA710

④ Insert the retaining ring into the groove of the double U-joint shaft.


HB108FA711

⑤ Insert the sun gear shaft into the double U-joint shaft, until the retaining ring (figure FA711) engages into the annular groove (see arrow).

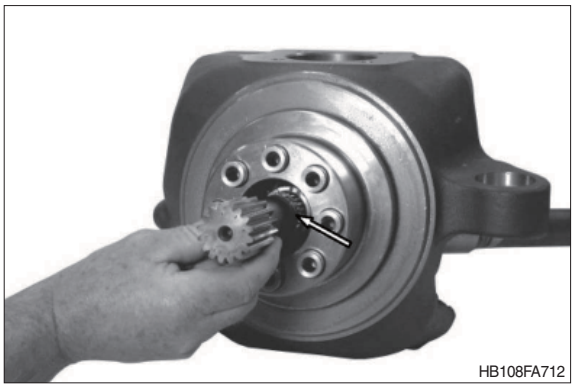
HB108FA712

Mount the pivot bearing

① Press the shaft seal ring over the collar of the bearing bolt.

(S) Driver tool 5870 048 251
(S) Driver tool 5870 048 252

※ The use of the specified driver tool (S) ensures that the installation position of the shaft seal ring is correct.

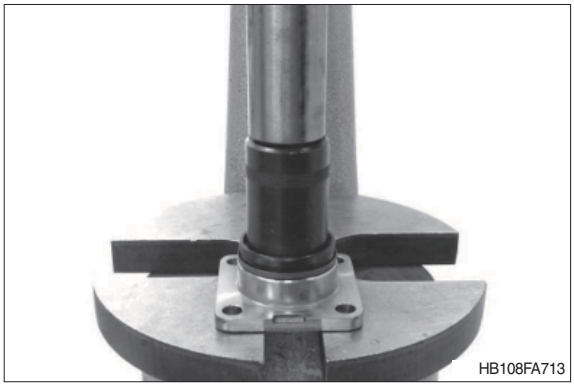
HB108FA713

② Press the roller bearing onto the bearing bolts until contact position is obtained.
Then wet the collar of the bearing bolts (see arrow) with anticorrosive agent (Weicon Anti-Seize).

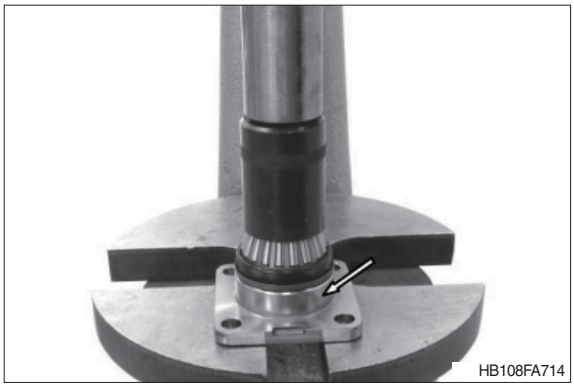
HB108FA714

③ Bring the knuckle housing into correct position at the axle housing.

※ Thereby mount the double U-joint shaft into the axle housing until the teeth of the joint fork are mounted to the differential (axle bevel gear).

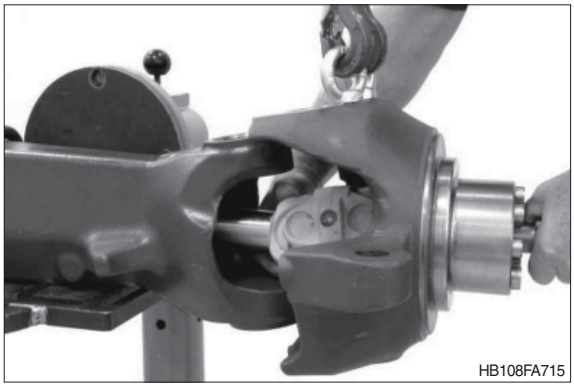
HB108FA715

④ Fix the knuckle housing with preassembled bearing bolts (figure FA716, 717).

※ Insert the roller bearing with long-term lubricant (e.g. grease Renolit 283 EP 2). Just before the assembly wet the shaft seal ring with spirit.

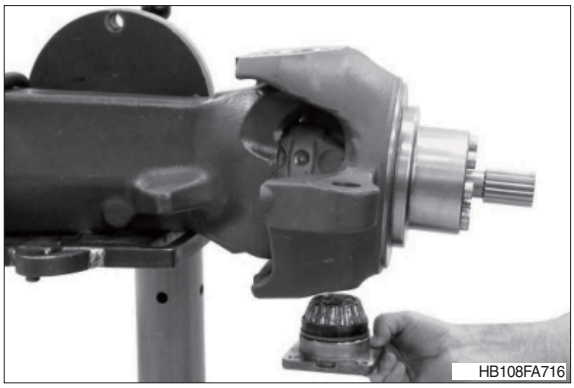
HB108FA716

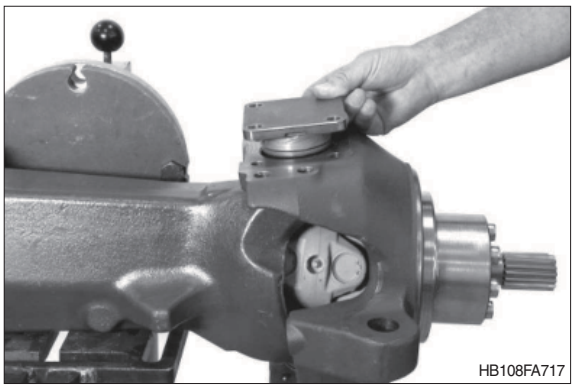
HB108FA717

⑤ Fix both bearing bolts with hexagon screws.

· Tightening torque (M12/10.9) :
11.9 kgf · m (86.3 lbf · ft)

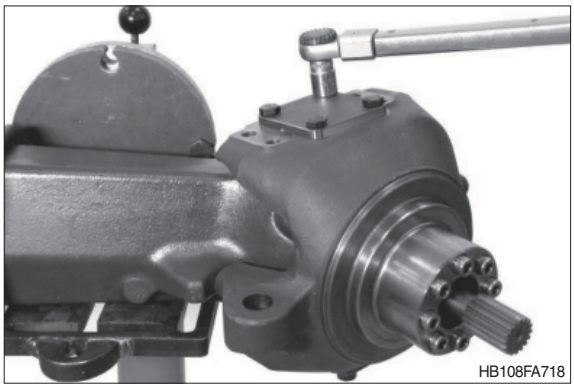
HB108FA718

(2) Mount the hub

① Press the wheel bolts into the hub until contact position is obtained.

(S) Wheel bolt puller – basic tool
5870 610 010
(S) Insert (M22×1.5) 5870 610 002

※ The special tool (S) is only intended for repair solutions when replacing single wheel bolts with mounted hub.

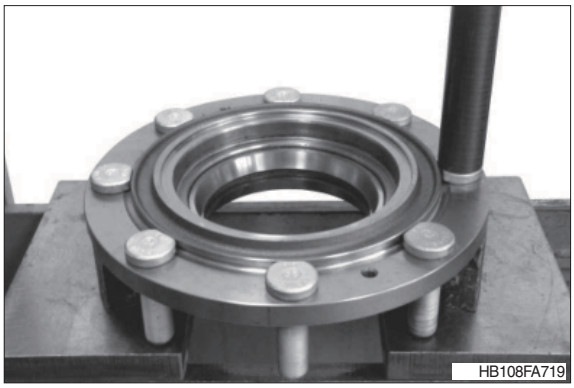
HB108FA719

② Press both bearing outer rings in until contact position is obtained.

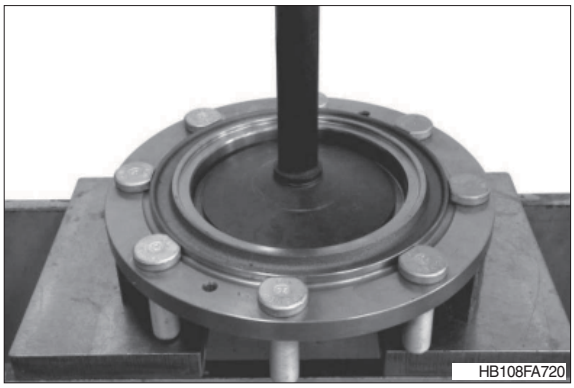

③ Press the cassette type seal with the label OUT SIDE showing outwards (upwards) into flush position with the hub.

(S) Driver tool 5870 051 035

※ The use of the specified driver tool (S) ensures that the installation position of the cassette type seal ring is correct.

⚠ Just before the assembly wet the outer diameter of the cassette type seal ring with spirit.

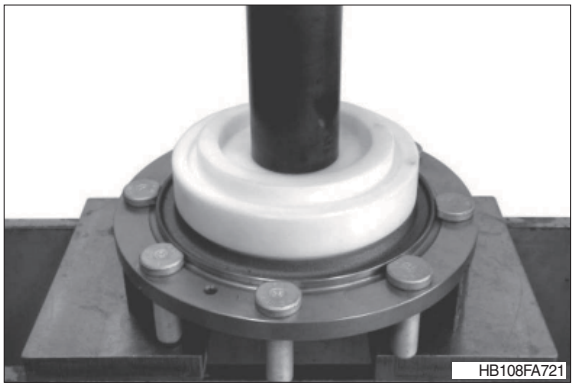

④ Heat the roller bearing and mount until contact position with the knuckle housing is obtained.

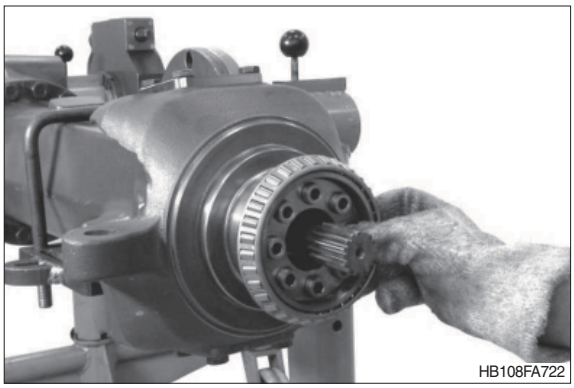

⑤ Mount the preassembled hub.

※ Right before the assembly wet the seal lips of the shaft seal ring with spirit.

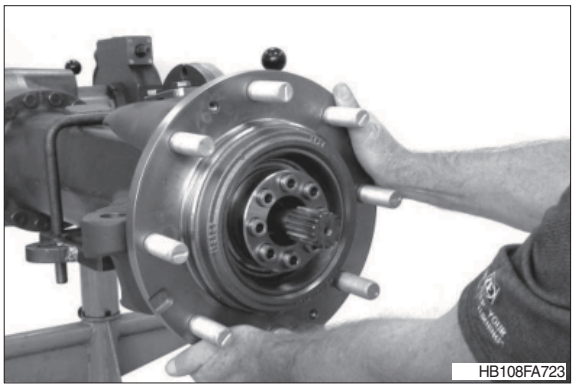

⑥ Heat the roller bearing and mount until contact position is obtained.

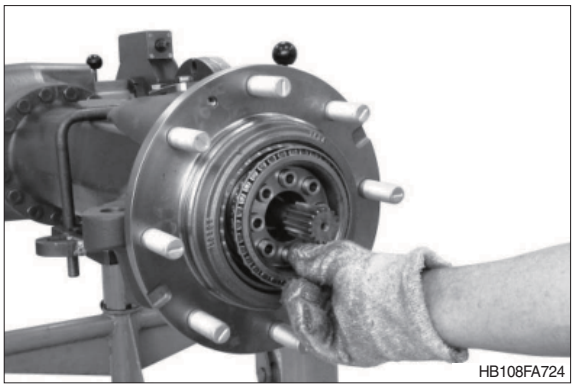
HB108FA724

⑦ Mount the ring gear and pre- tighten with the old retaining screws (which have been removed during disassembly) until contact position is obtained.
Then loosen the retaining screws again and finally tighten the ring gear with **new** retaining screws.

· Tightening torque :
9.18 kgf · m (66.4 lbf · ft)

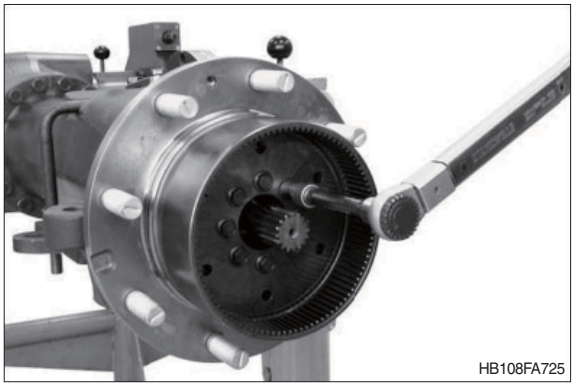
HB108FA725

⑧ Insert the O-ring (see arrow) into the annular groove of the hub and grease.

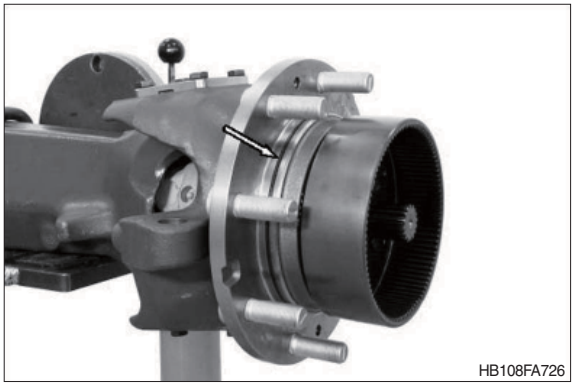
HB108FA726

(3) Mount the planetary carrier

① Insert the cylindrical roller bearing into the planetary gear – for this purpose press the cylindrical roller bearing through the packaging sleeve until the snap ring engages into the annular groove of the planetary gear.

※ The packaging sleeve is used as assembly aid.
1 = Cylindrical roller bearing
2 = Packaging sleeve
3 = Snap ring
4 = Planetary gear

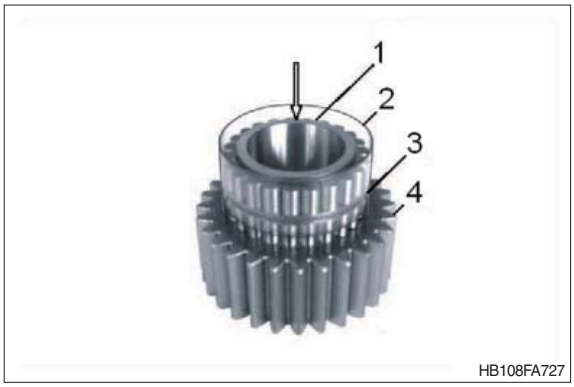

HB108FA727

② Heat the bearing inner ring and mount the planetary gear until contact position is obtained.

※ Mount the bearing inner ring with the large radius showing to the planetary carrier (downwards).

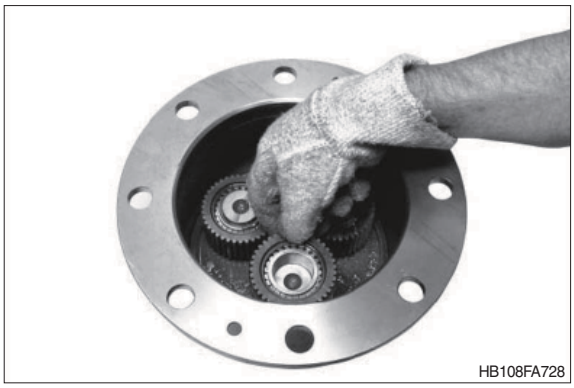
HB108FA728

③ Fix the planetary gear with a retaining ring.

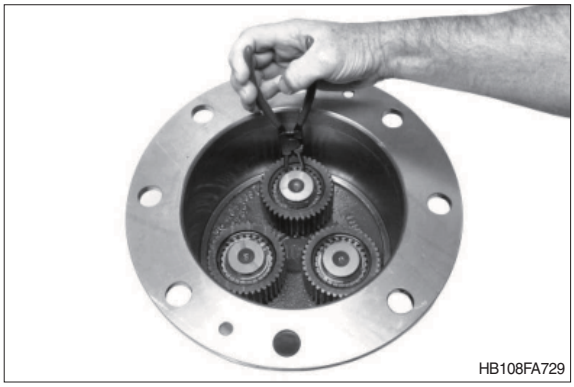
HB108FA729

④ Mount the planetary carrier and fix it with cylindrical screws.

· Tightening torque (M10/8.8) :
3.26 kgf · m (23.6 lbf · ft)

※ Prior to putting the axle into operation, fill it with specified oil.

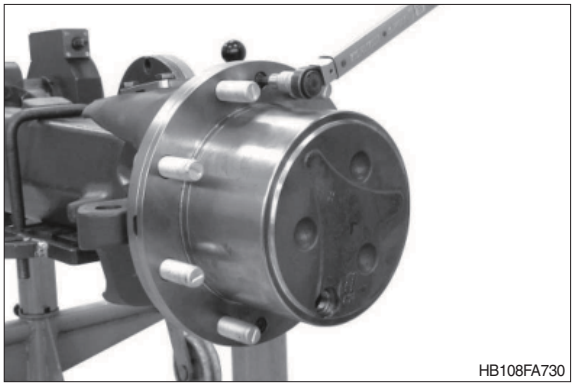
HB108FA730

8) REASSEMBLY STEERING

(1) Preassemble the steering

① Pre-assemble the cylindrical tube as shown on the sketch.

1 = Cylindrical tube
2 = Rod seal
3 = Scraper

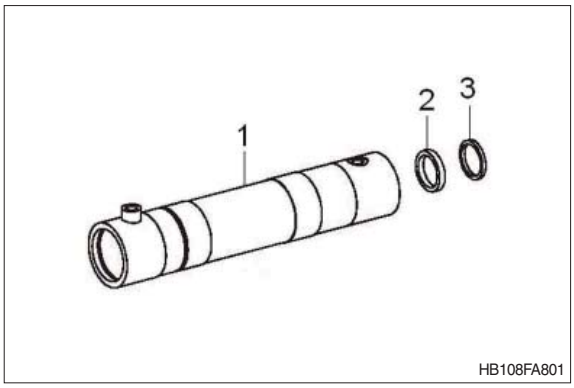

HB108FA801

② Pre-assemble the piston rod as shown on the sketch.

1 = Piston rod
2 = Guide ring
3 = Piston seal
4 = Spacer part

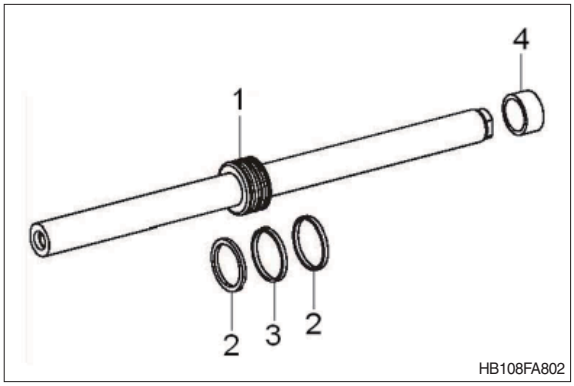

HB108FA802

③ Pre-assemble the plug as shown on the sketch.

1 = Plug
2 = Dual ring
3 = Rod seal
4 = Scraper

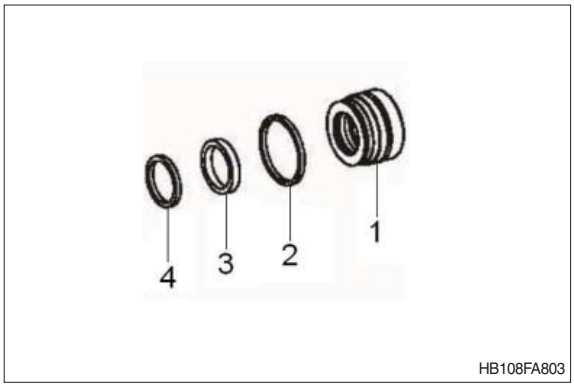

HB108FA803

④ Push the preassembled piston rod into the cylindrical tube until contact position is obtained.

※ Slightly oil all seal elements before inserting the piston rod.


HB108FA804

⑤ Push the preassembled plug into the cylindrical tube, until the retaining ring (see sketch below) can be mounted.

※ Slightly oil all seal elements before inserting the plugs.

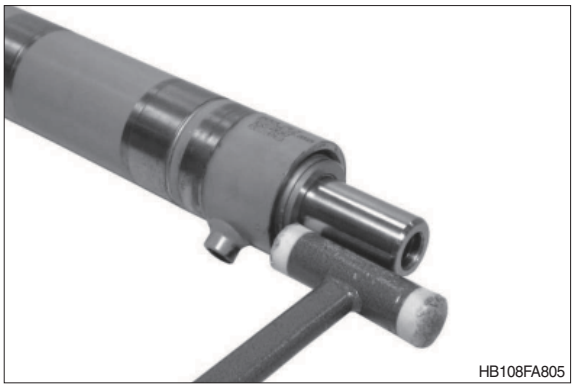

⑥ Engage the retaining ring into the groove of the cylindrical roller.

※ Installation position, see also sketch ⑧.

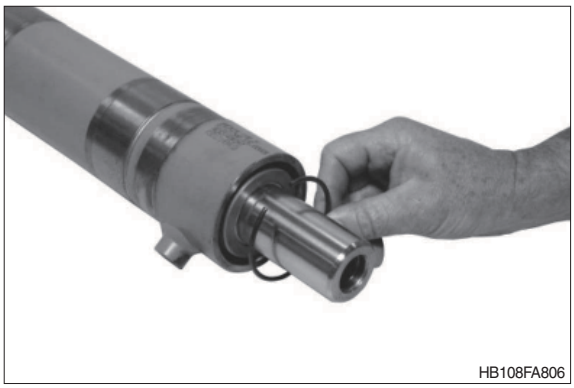

⑦ Use the piston rod to bring the plug in contact position with the retaining ring.

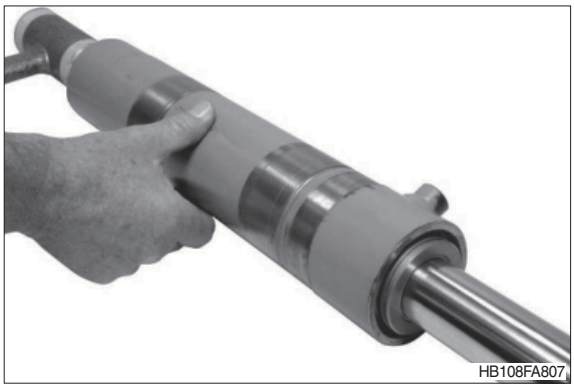

⑧ Fill the space (X) between plug and cylindrical tube with grease.

Comment on sketch:

1 = Retaining ring
2 = Plug
3 = Piston rod
4 = Cylindrical tube
X = Space grease filling

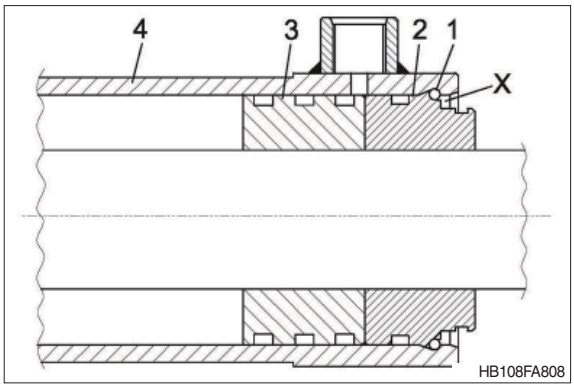

⑨ Use a retaining ring to fix the plug.



⑩ Mount the flange and fix with a ring.

(S) Pliers 5870 900 026

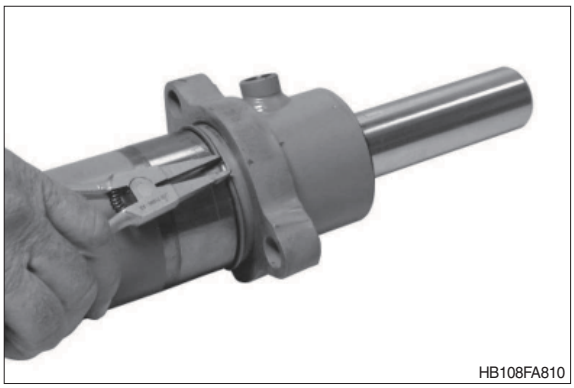

(2) Mount the steering

① Wet the contact faces (cylindrical tube/ axle housing, see arrows) with anti-corrosion agent (Weicon Anti-Seize).

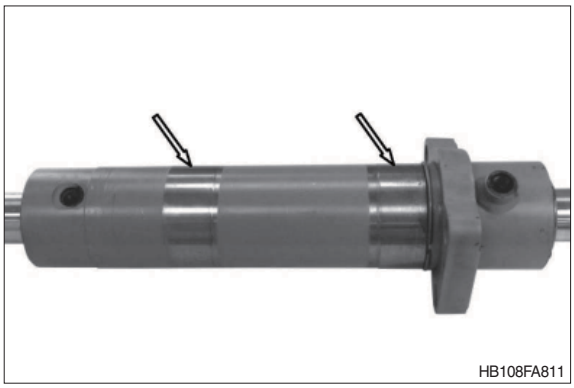

② Mount the pre-assembled steering cylinder into the holes of the axle housing.

Then fix the steering cylinder with hexagon screws.

· Tightening torque :
24.5 kgf · m (177 lbf · ft)

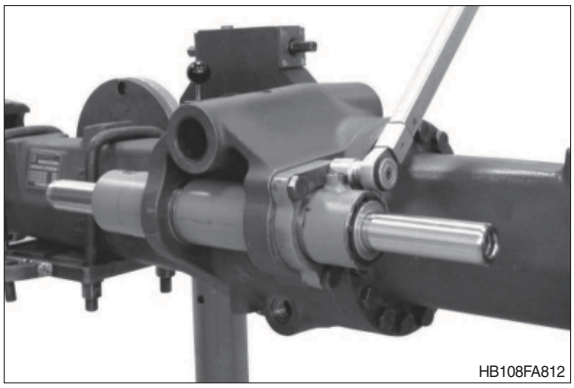

③ Screw hexagon nut and ball joint to the axial joint.

※ Operation (figure FA813~815) must be implemented on both tie rods.


HB108FA813

④ Fix the preassembled tie rod to the piston rod.

· Tightening torque :
30.6 kgf · m (221 lbf · ft)

※ Wet the thread of the axial joint with loctite #243.

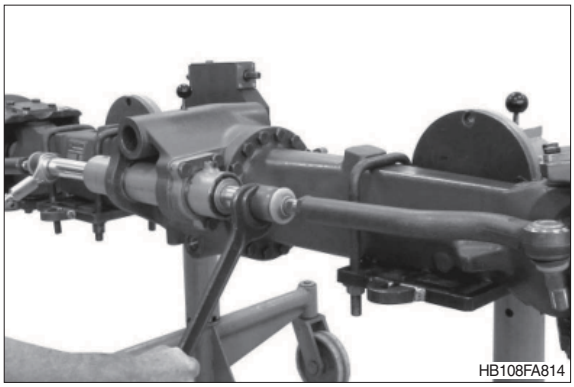
HB108FA814

⑤ Mount the tie rod to the joint housing and fix with **new** hexagon nut (self-securing).

· Output torque : 10.2 kgf · m (73.8 lbf · ft)
· Tightening rotation angle ··· = 180° $^{+45°}$

※ First tighten the hexagon nut with a tightening torque of 10.2 kgf·m (73.8 lbf·ft) ±15%.
Then mark the position of the hexagon nut and retighten with a rotation angle of 180°$^{+45°}$.

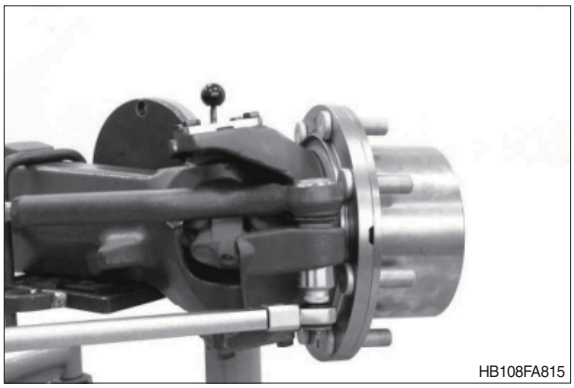
HB108FA815

⑥ Flush mount the bushes on both sides into the axle housing.

(S) Driver tool	5870 058 018
(S) Handle	5870 260 002

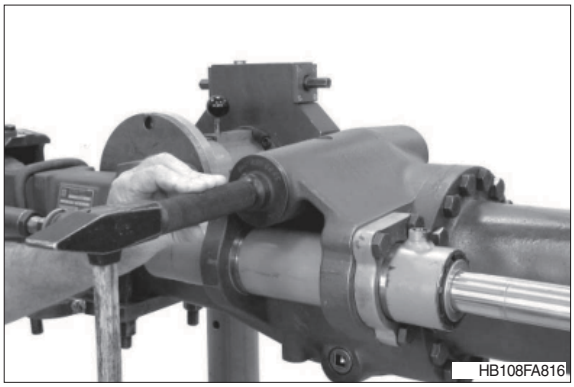
HB108FA816

(3) Adjustment and check of track

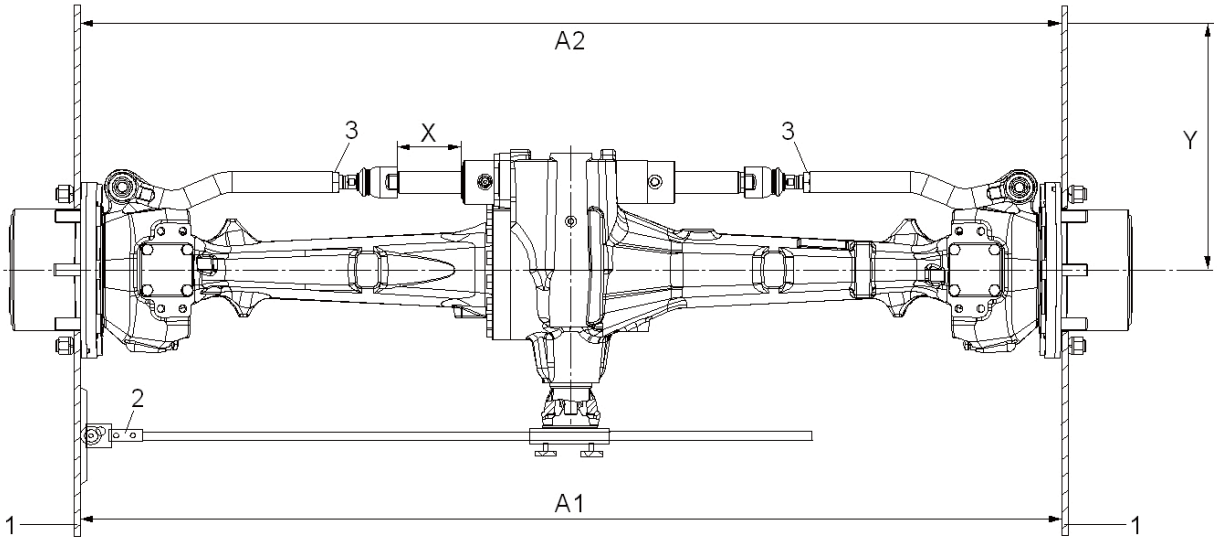

HB108FA817

Basic track setting

Bring the piston rod into central position.

Setting of dimension X = 121.75 mm (measured between front face/steering cylinder and front face/axial joint).

※ The axial position of the piston rod may no more be changed during track setting.
Mount the straightedges (1) in horizontal and central axis position.
Fix the measuring device (2) to the yoke.
Loosen the hexagon nut (3) and set the length of the tie rod (axial joint), until 0° (= track setting of zero mm) can be read on the measuring device (2).

※ For a toe-in and toe-out setting, which might be required, stick to the vehicle manufacturer's specification.

※ Carry out setting on both output sides.

Comment on sketch:

1 = (S) Straightedges 5870 200 029
2 = (S) Measuring device 5870 200 033
3 = Hexagon nut
X = Setting dimension 121.75 mm

Check track setting (0°) :

Determine dimension A1.
Turn both outputs by 180° – Dimension A2 must be identical with dimension A1.
Dimension Y = distance between wheel center and rim flange.
Then fix both tie rods (axial joint) with hexagon nut (3).

· Tightening torque : 30.6 kgf · m (221 lbf · ft)

(4) Setting of steering angle

※ If track setting should be carried out, the setting of the steering angle should only be carried out after completion of the track setting.

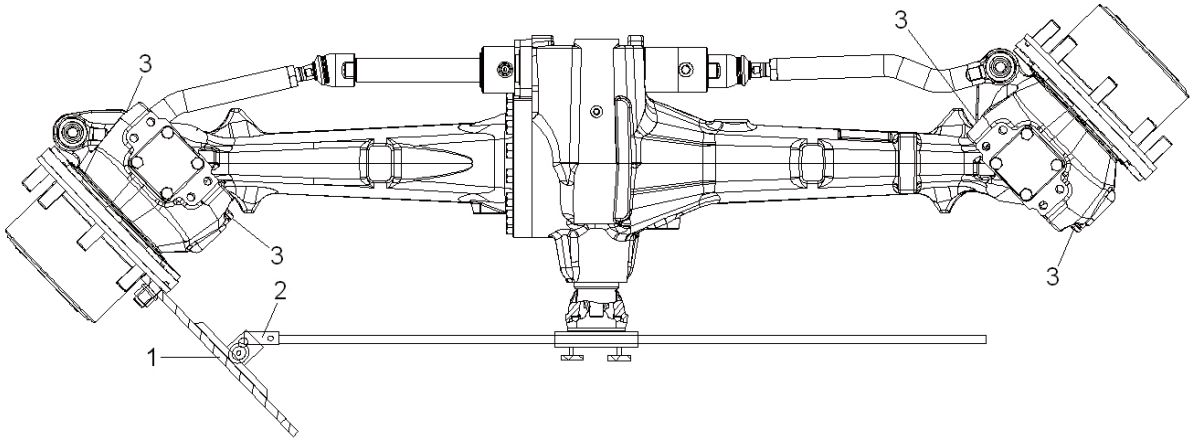

HB108FA818

Mount the straightedge (1) in horizontal and central axis position.
Fix the measuring device (2) to the yoke.
Pivot the output until the steering angle (e.g. 52°) can be read on the measuring device (2).
Then bring the stop screws (3) into contact position with the axle housing and lock them with hexagon nuts.

· Tightening torque (M14×1.5) : 15.3 kgf · m (111 lbf · ft)

※ The value of the required steering value can be taken from the vehicle manufacturer's specifications.

※ Carry out the setting on both output sides.

Comment on sketch:

1 = (S) Straightedge 5870 200 029
2 = (S) Measuring device 5870 200 033
3 = Stop screws

(5) Leakage test of the steering

Use a HP pump to check the steering for leakage in **both** steering directions.
Build up test pressure p = 200 bar (thereby bleed the pressure chamber).
Then close the connection to the HP pump with a shut-off valve.
During a 20 second testing time a pressure decrease of max. 5 bar is permitted.

※ Test medium : Engine oils SAE 10W

(S) HP pump 5870 287 007
(S) Threaded coupling 5870 950 115

4. REAR AXLE (2 & 4-WHEEL DRIVE)

1) DISASSEMBLY - OUTPUT UNIT

Parking brake (multi-disc brake)

1 = Input
2 = Axle drive housing
3 = Bearing housing
4 = Axle housing
5 = Output unit
6 = Parking brake

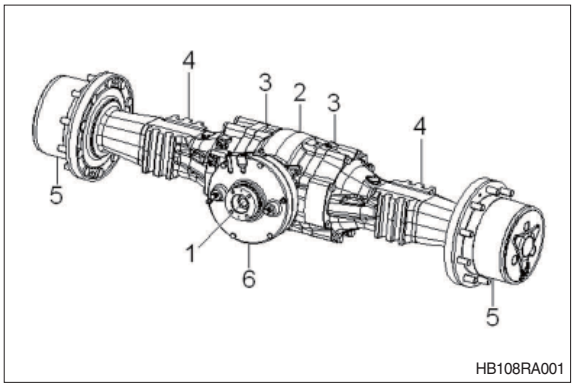

HB108RA001

(1) Mount axle on assembly truck.

Assembly truck	5870 350 000
Fixtures	5870 350 139
Fixing bracket	5870 350 140

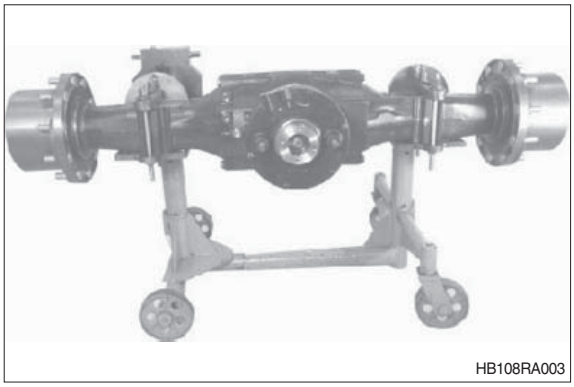
HB108RA003

(2) Remove screw plug (arrow) and drain oil from the axle.

※ Use suitable collector-environmental protection.

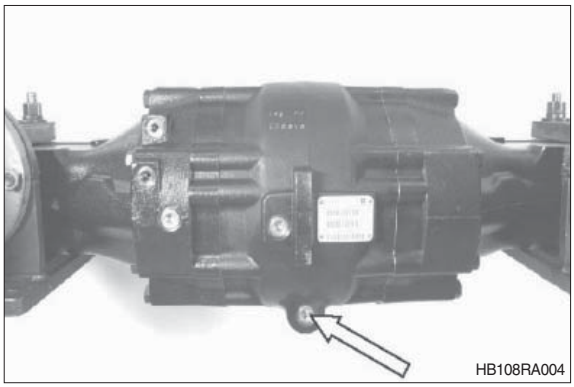
HB108RA004

(3) To rotate the output (oil drain hole in 6 o'clock position – see figure RA006) equalize the brake fixing on the axle which was removed from the vehicle by turning in the two emergency breathing screws (arrows).

※ Turn in both emergency breathing screws evenly.

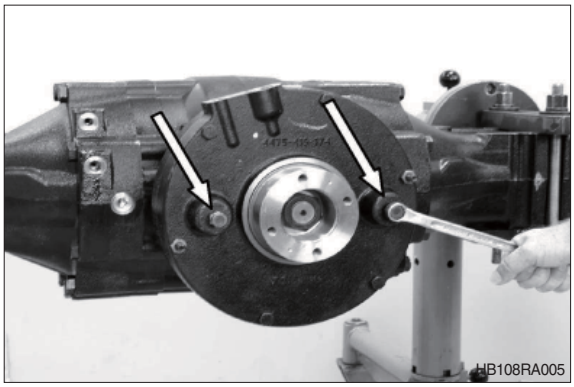
HB108RA005

(4) Remove screw plug (arrow) and drain oil from both output units.

※ Use suitable collector – environmental protection.

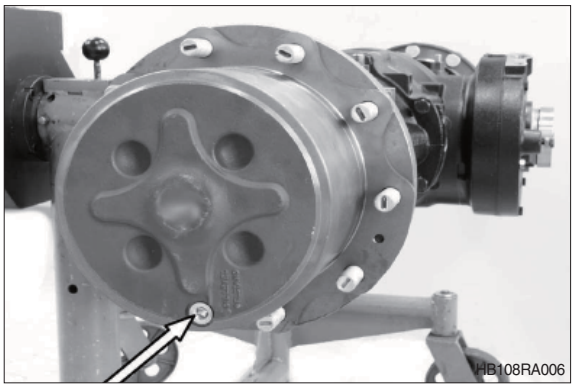

(5) Loosen both hex screws (arrows) of planetary carrier fixing.

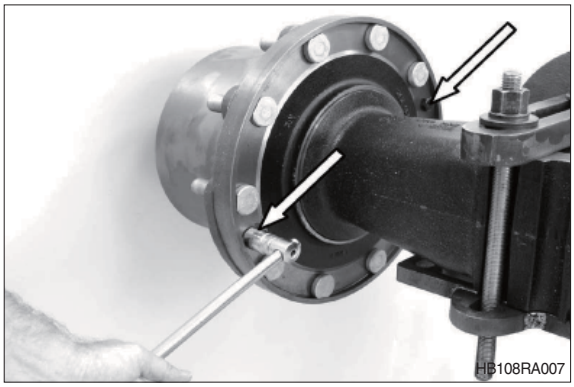

(6) Take up planetary carrier by means of a lifting strap and pull it off the hub.

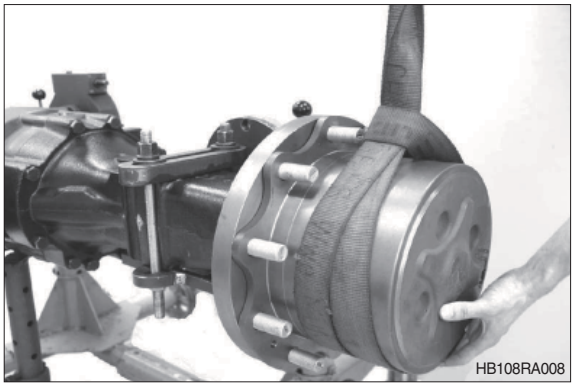

(7) Snap out retaining ring.

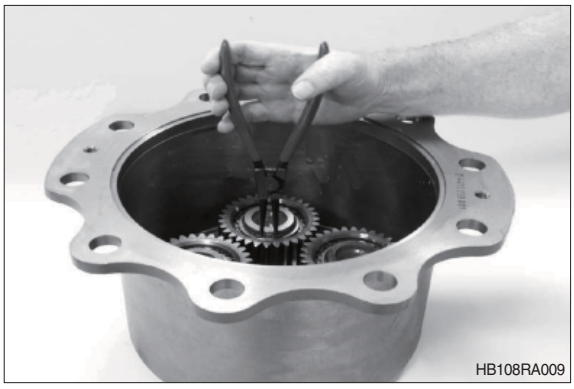

(8) Pull off planetary gear.
Disassemble the remaining planetary gears in the same way.

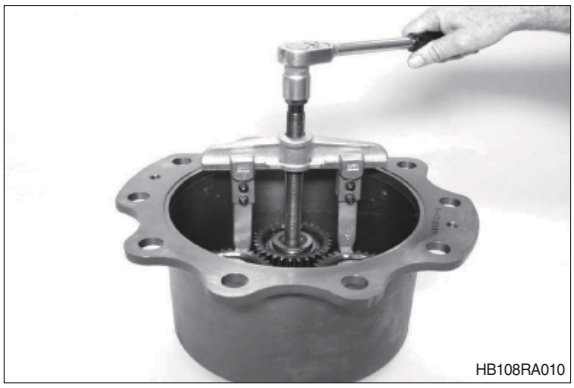

(9) Pull out sun gear shaft and remove O-ring (arrow).

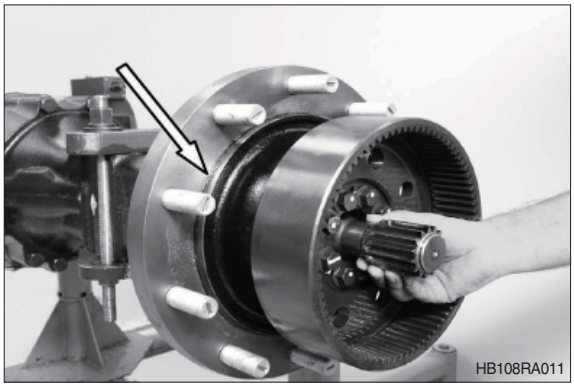

(10) Loosen locking screws of internal gear bolting.

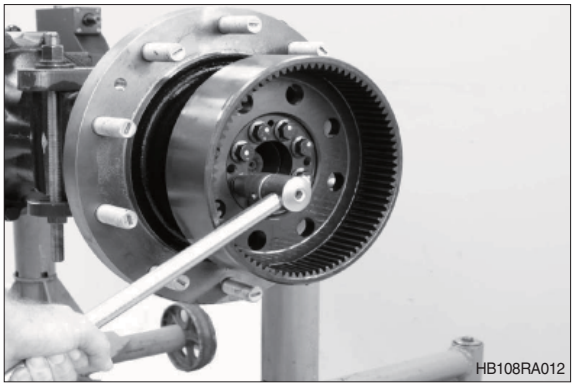

(11) Insert two adjusting screws (M14 – see arrows) and press internal gear evenly off the axle housing by means of puller screws.

Adjusting screws (M14) 5870 204 022

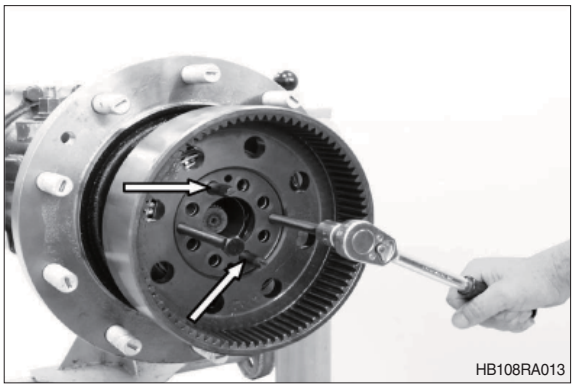

(12) If required – remove bushings from internal gear.
For this purpose fit bushings with thread and pull them out by means of a striker.


HB108RA014

※ To ensure functioning replace shaft seal (cassette-type sealing) after any disassembly of hub - see figure RA016.

(13) Pull hub off the axle housing using a pressure piece and a two-armed puller.

※ Pay attention that releasing bearing inner ring does not drop.

Lifting bracket 5870 281 043

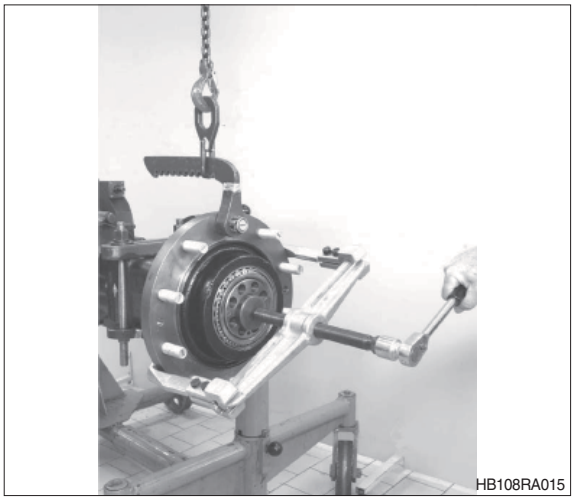
HB108RA015

(14) Lift off shaft seal (arrow) with lever and remove both bearing outer rings from hub.

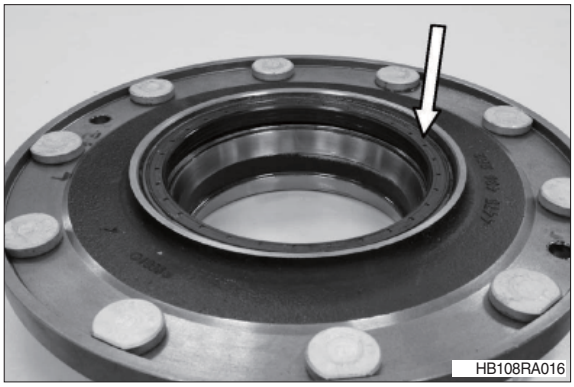
HB108RA016

(15) Pull bearing inner ring off the axle housing.

Grab sleeve 5873 004 026

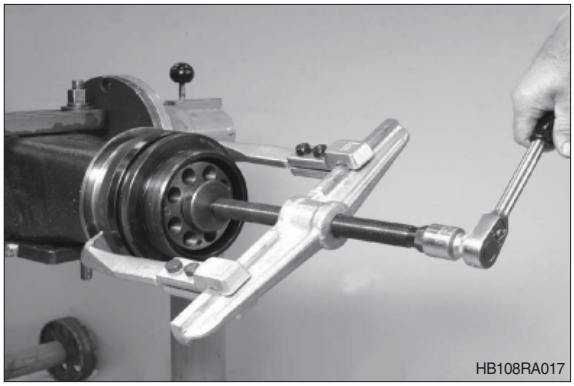
HB108RA017

2) DISASSEMBLY
SERVICE BRAKE (multi disc brake)

(1) Legend :

1 = Service brake (multi disc brake)
1a = Crown wheel side
1b = Side opposite of crown wheel
2 = Differential
3 = Differential lock (100% lock)
4 = Axle drive housing
5 = Bearing housing (crown wheel side)
6 = Axle housing (crown wheel side)
7 = Bearing housing (side opposite of crown wheel)
8 = Axle housing (side opposite of crown wheel)

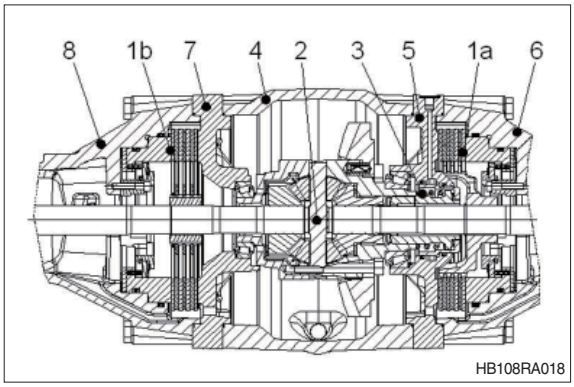

HB108RA018

※ The description below shows the disassembly of the service brake on the axle housing (crown wheel side). The service brake on the other axle housing (side opposite of crown wheel) must be disassembled in the same way to a large extent.

⚠ **Secure axle by means of a support, see arrow.**

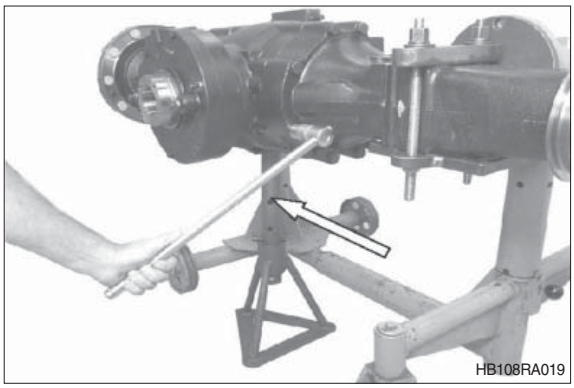
HB108RA019

(2) Loosen screws (axle housing/bearing housing/axle drive housing-crown wheel side).

(3) Take up axle housing by means of a lifting strap, insert two adjusting screws (M16) – see arrows – and separate axle housing from bearing housing.

※ Pay attention that releasing O-rings do not drop.

Adjusting screws	5870 204 053
Assembly lever	5870 345 065

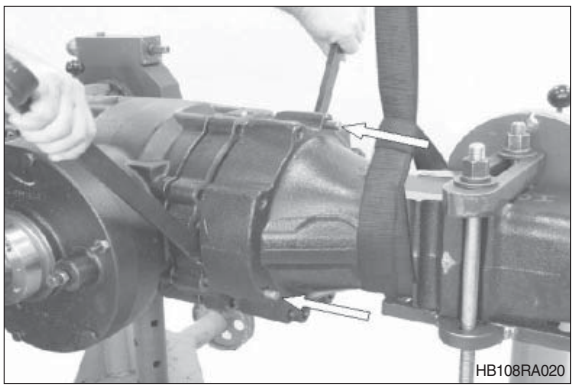
HB108RA020

(4) Remove cpl. stub shaft (with inner disc carrier) from axle housing.

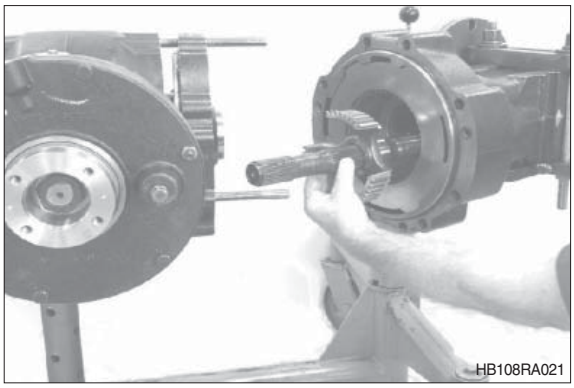

(5) Unsnap retaining ring and pull inner disc carrier from the stub shaft.

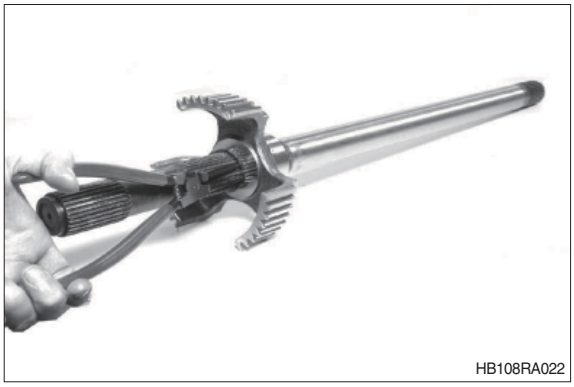

(6) Take disc package out of axle housing.

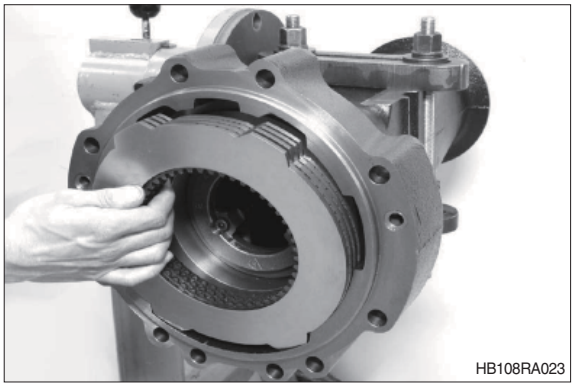

(7) Remove O-rings (arrows 1+2).

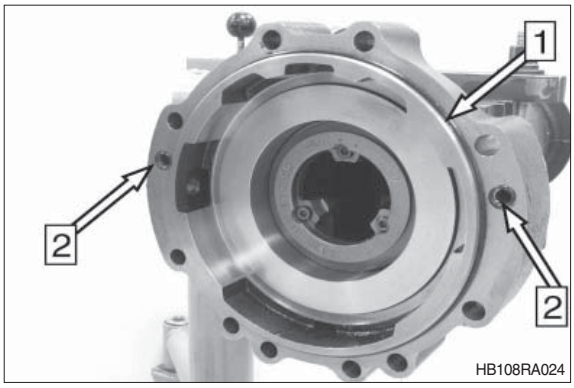

(8) Loosen screws and remove cpl. ring.

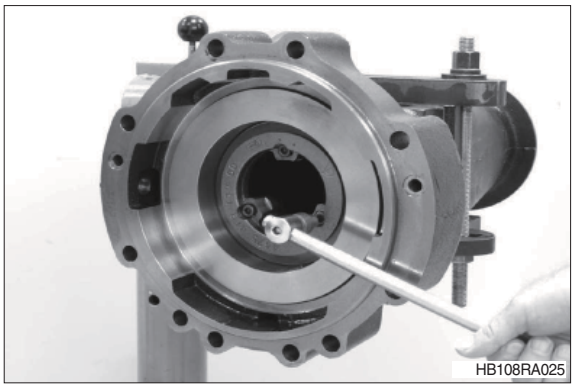
HB108RA025

(9) Equalize cup spring preload by a press, unsnap retaining ring and remove washer.

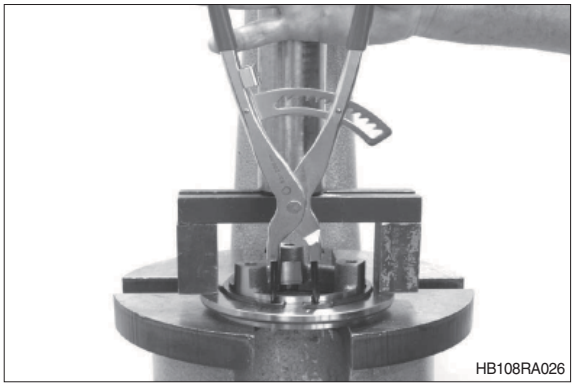
HB108RA026

(10) Press off piston by means of compressed air, remove washer and cup spring behind.

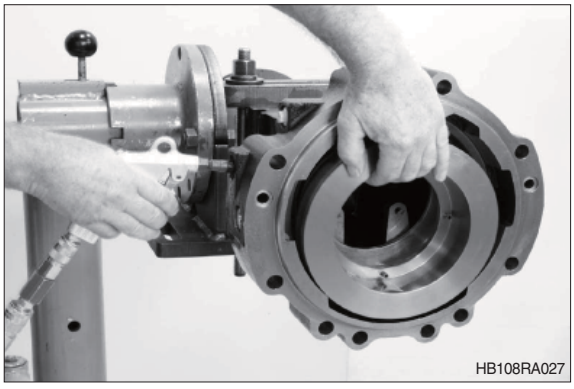
HB108RA027

(11) Remove sealing elements from axle housing and piston-see arrows.

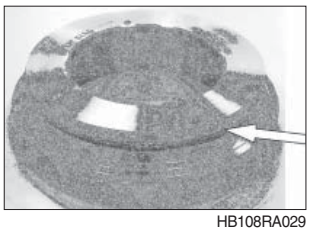
HB108RA029

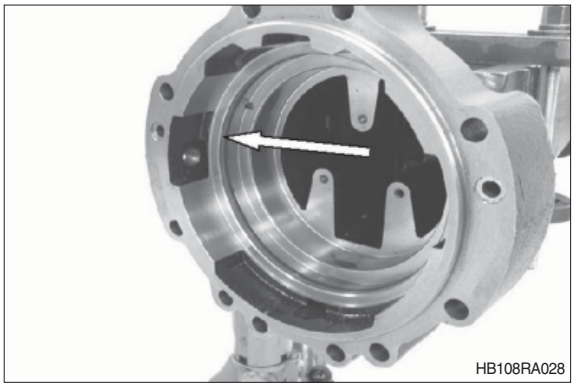
HB108RA028

3) DISASSEMBLY-DIFFERENTIAL WITH 100% LOCK

(1) If it is necessary to dismantle the differential and/or the input pinion, separate the axle housing assy (crown wheel side-see item 6) from bearing housing/axle drive housing.

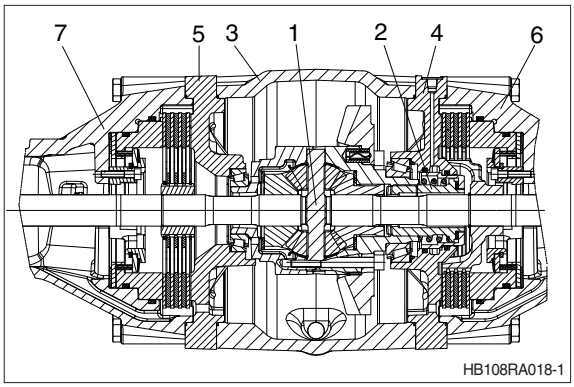

Legend to sketch no. 1:
1 = Differential
2 = Differential lock (100% lock)
3 = Axle drive housing
4 = Bearing housing (crown wheel side)
5 = Bearing housing (side opposite of crown wheel)
6 = Axle housing (crown wheel side)
7 = Axle housing (side opposite of crown wheel)

⚠ Secure axle by means of a support, see arrow.

(2) Loosen screws (axle housing/bearing housing/axle drive housing-crown wheel side).

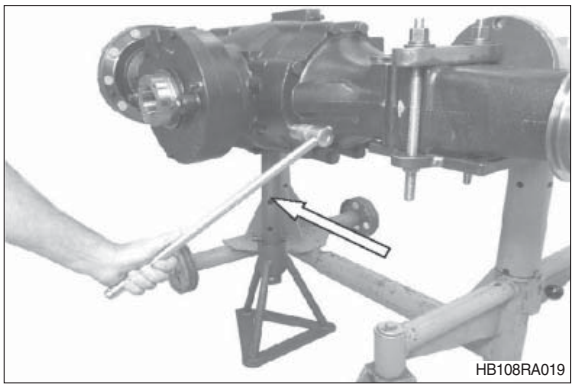

(3) Take up axle housing by means of lifting strap, insert two adjusting screws (M16) – see arrows – and separate axle housing from bearing housing.

※ Pay attention that releasing O-rings do not drop.

Adjusting screws	5870 204 053
Assembly lever	5870 345 065

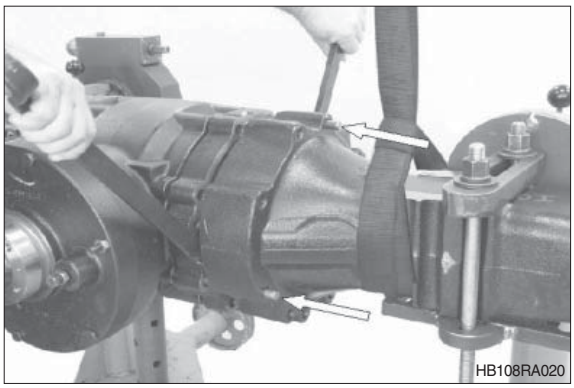

(4) Remove bearing housing.

※ Pay attention that releasing O-rings do not drop.

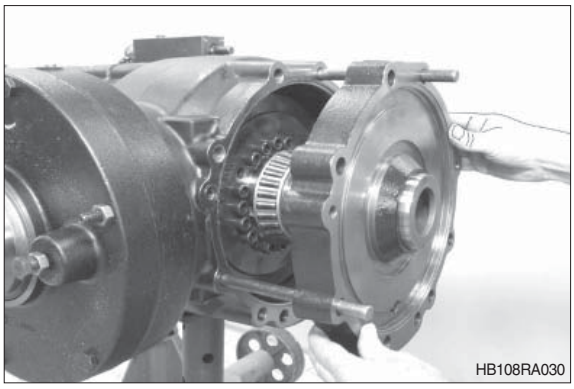

(5) Press off piston by means of compressed air and remove O-ring (arrow).

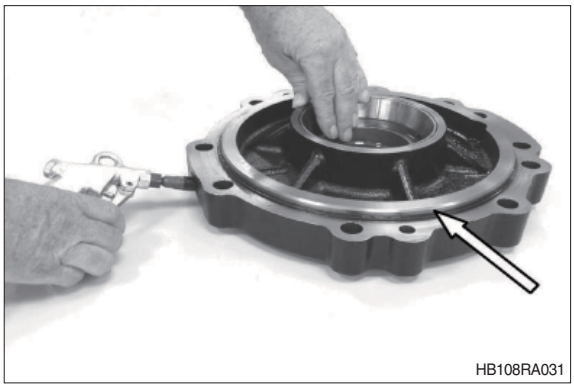

(6) Remove bearing outer ring and shim (differential bearing preload).

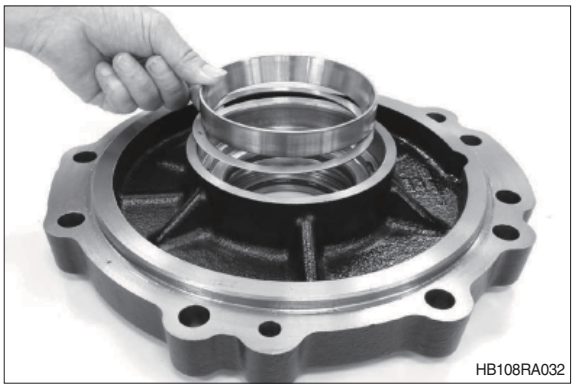

(7) Remove sealing elements (arrows) from bearing housing.

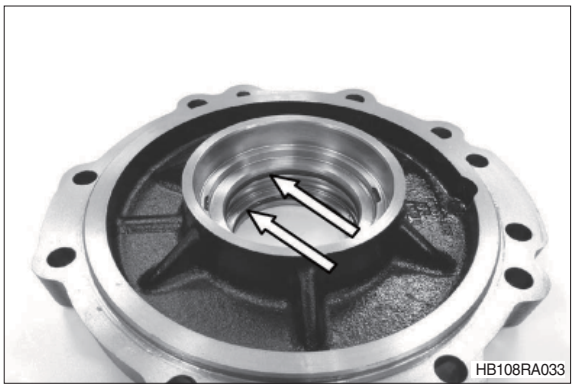

(8) Take cpl. locking slide out of differential.

Remove O-rings (arrows).

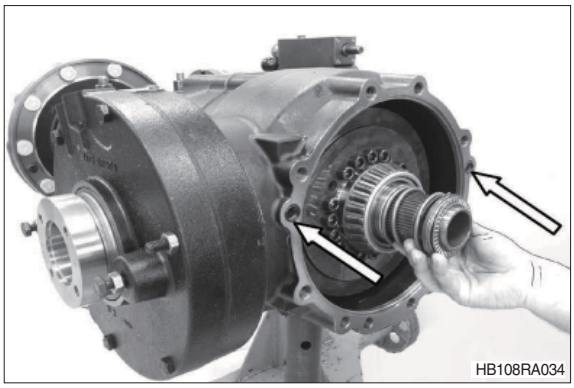

(9) Single parts of locking slide
1 = Locking slide
2 = Compression spring
3 = Axial needle cage

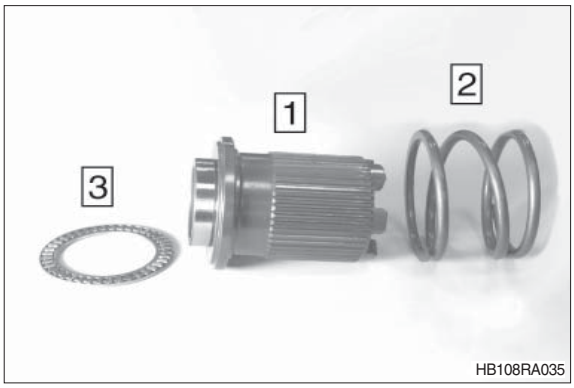

(10) Remove both hexagon screws (arrows) of planetary carrier fixing (output on side opposite of crown wheel).

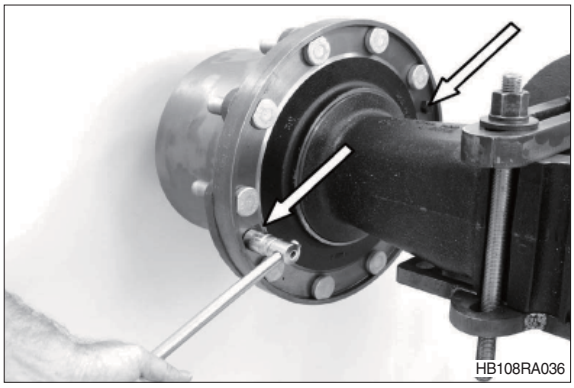

(11) Take up planetary carrier by means of lifting strap and pull it off the hub.

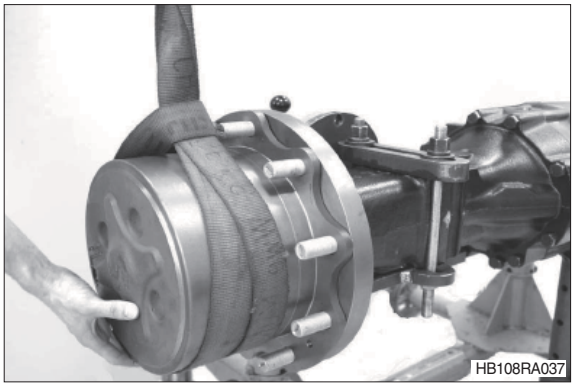

(12) Pull off sun gear shaft and stub shaft.

※ Pay attention that releasing differential does not drop.

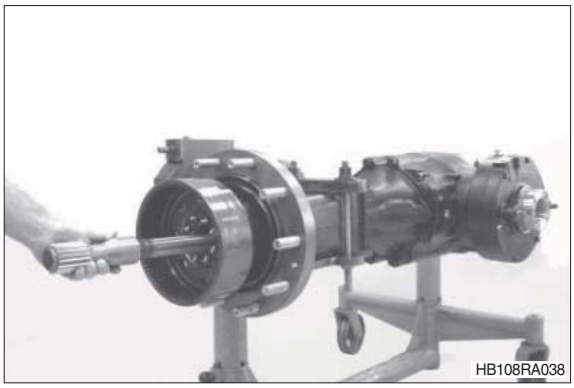

(13) Bring axle in upright position and lift differential out of the axle.

Internal extractor	5870 300 019
Eye nut	5870 204 073

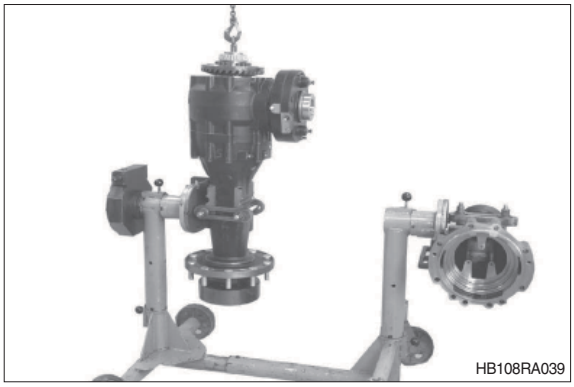

(14) Pull off bearing inner ring.

Grab sleeve	5873 002 027
Basic tool	5873 002 001



(15) Pull off bearing inner ring.

Grab sleeve	5873 001 059
Basic tool	5873 001 001


HB108RA041

(16) Loosen screws.

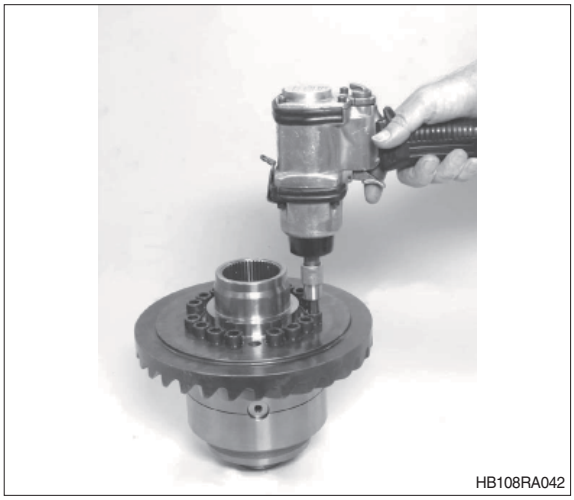
HB108RA042

(17) Separate differential carrier halves and remove single parts.


HB108RA043

(18) Separate crown wheel from differential carrier.

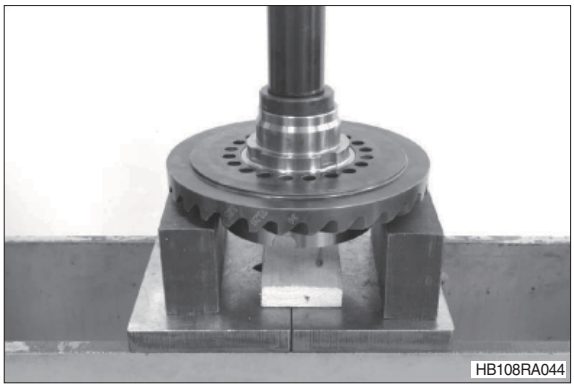

(19) Remove bearing outer ring and the shim behind (backlash).

※ Mark shim (position/bearing allocation).

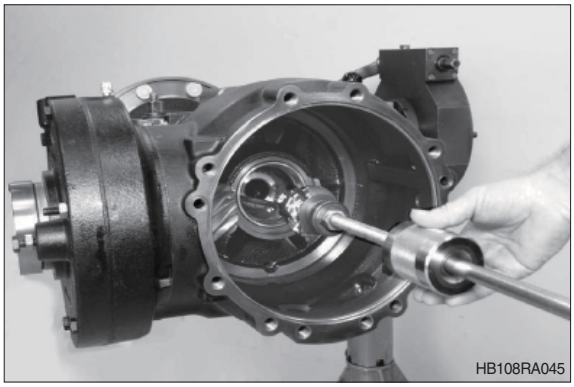

4) DISASSEMBLY - INPUT

※ The below description shows the disassembly of the input on the axle with parking brake (multi-disc brake).

⚠ Secure axle by means of a support-see arrow.

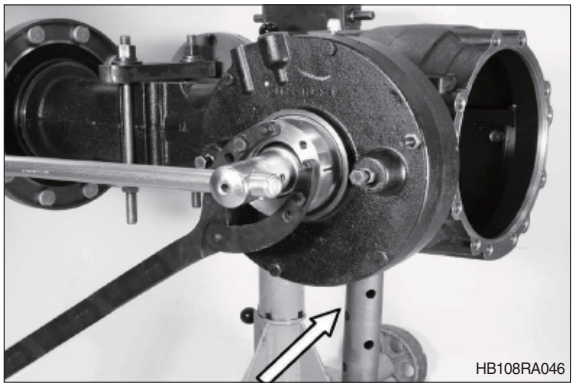

(1) Fix input flange using a clamping fork, loosen hexagon nut and pull off input flange.

Difficult disassembly. Hexagon nut has been located with locking compound (loctite), if required, heat up hexagon nut with hot air blower.

Clamping fork 5870 240 025

(2) If required – lift off shaft seal with lever.

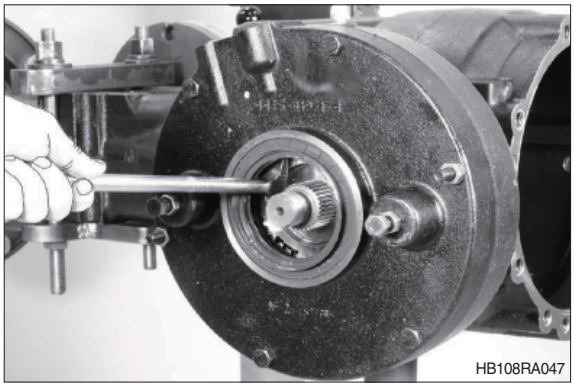

(3) Work steps figure RA048~051.

Remove hexagon screws of brake housing bolted connection and loosen the two hexagon nuts evenly (brake housing is subject to compression spring preload).

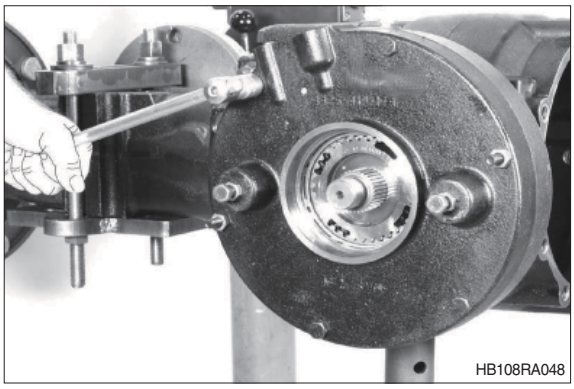

(4) Take off the cpl. brake housing cover.

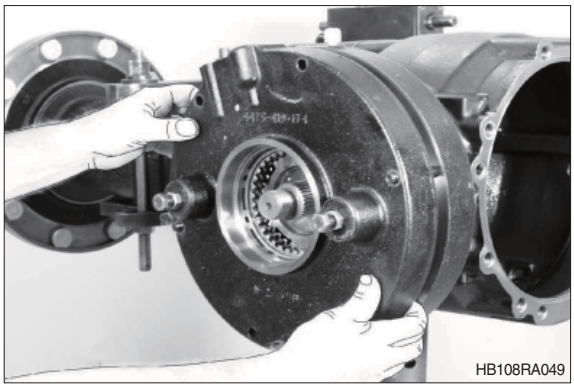
HB108RA049

(5) Remove disc carrier.

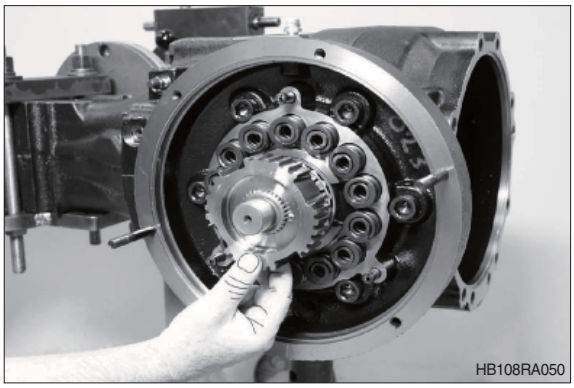
HB108RA050

(6) Remove compression springs.

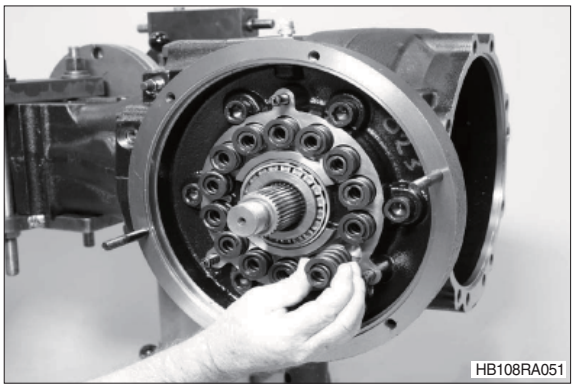
HB108RA051

(7) Press off input pinion by means of two-armed puller – pay attention that releasing bearing inner ring does not drop.

※ The input pinion can also be dismantled on the disassembled brake housing.

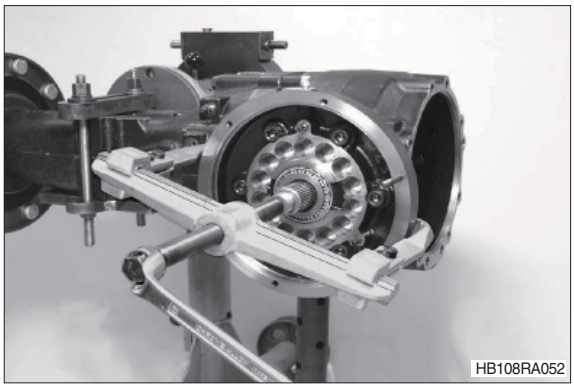
HB108RA052

(8) Remove spacer ring (arrow) from input pinion and pull off bearing inner ring.

Grab sleeve	5873 001 037
Basic tool	5873 001 000

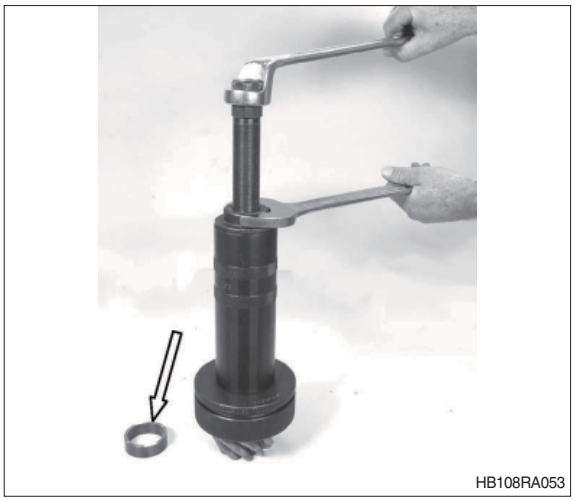
HB108RA053

(9) Drive internal bearing outer ring off the housing hole - pay attention that releasing shim (contact pattern/ bevel gear set) does not drop.

※ Mark shim (strength/position and bearing allocation).

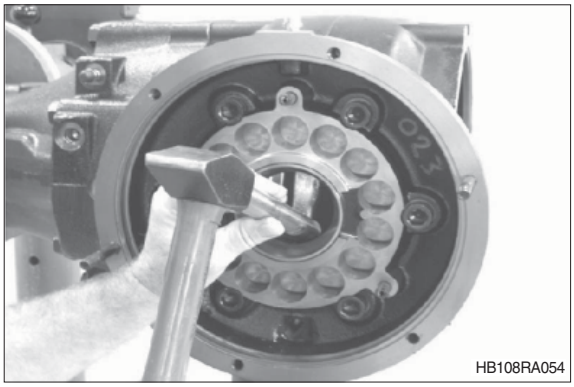
HB108RA054

(10) Pull out external bearing outer ring.

Internal extractor	5870 300 019
Counter support	5870 300 020

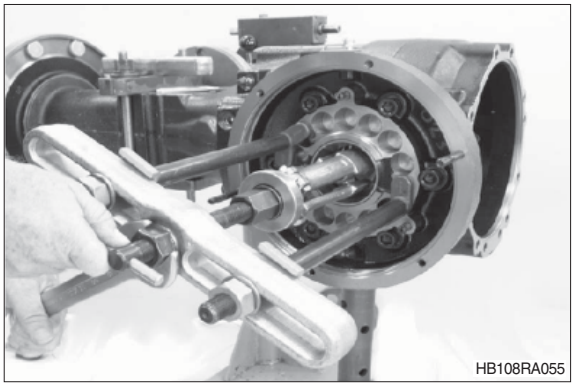
HB108RA055

(11) Loosen cylinder screws, turn in two adjusting screws (M16)-see arrows-and separate brake housing by means of slight hits with a plastic hammer.

Adjusting screws (M16)	5870 204 023

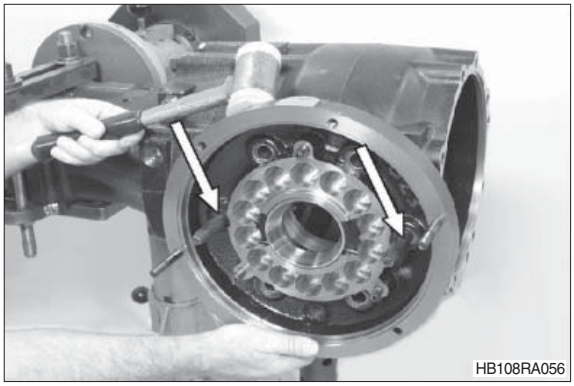
HB108RA056

5) DISASSEMBLY
PARKING BRAKE (multi disc brake)

※ Disassembly of parking brake (multi-disc brake) was shown as part of the whole disassembly of the axle- disassembly, however, can also be made on the fully mounted axle.

⚠ Secure axle by means of a support - see arrow.

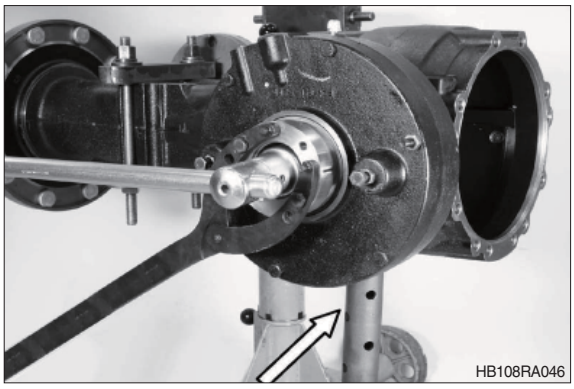

(1) Fix input flange using a clamping fork, loosen hexagon nut and pull off input flange.

※ Difficult disassembly. Hexagon nut has been located with locking compound (loctite), if required, heat up hexagon nut with hot air blower.

Clamping fork 5870 240 025

(2) If required – lift off shaft seal with lever.

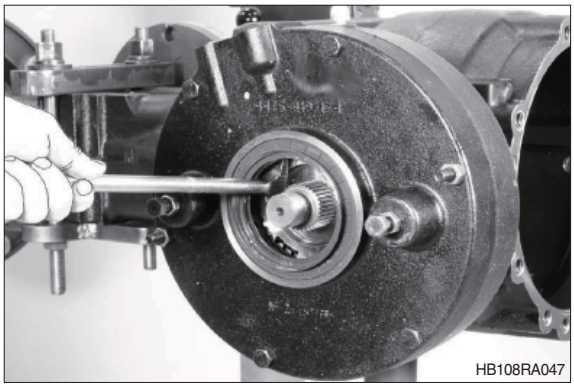

(3) Remove hexagon screws of brake housing bolted connection and loosen the two hexagon nuts evenly (brake housing is subject to compression spring preload).

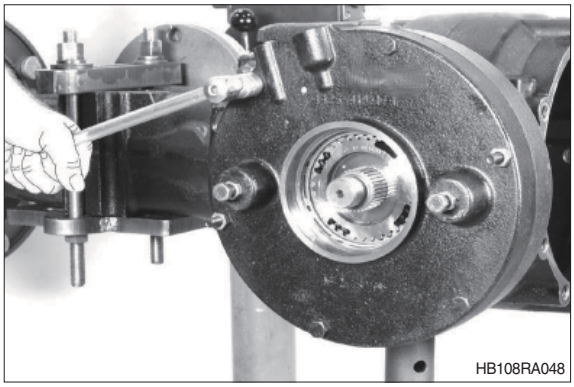

(4) Take off the cpl. brake housing cover.

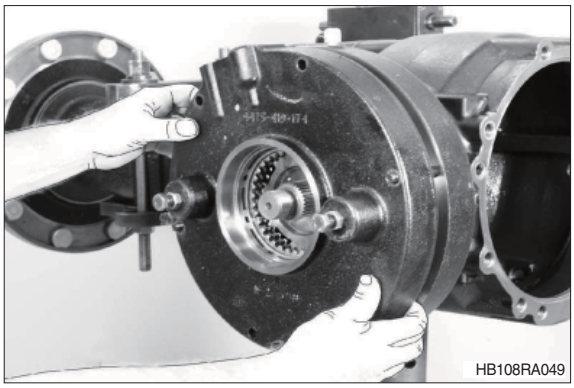
HB108RA049

(5) Remove disc carrier.

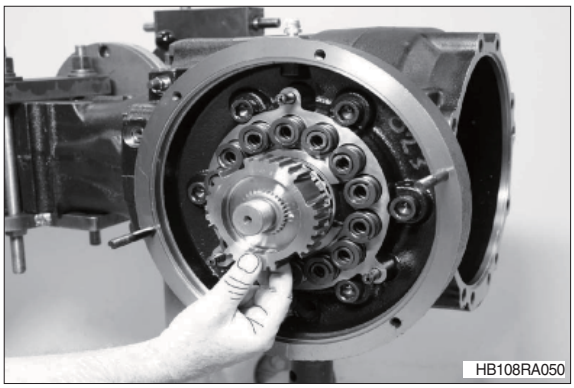
HB108RA050

(6) Remove compression springs.

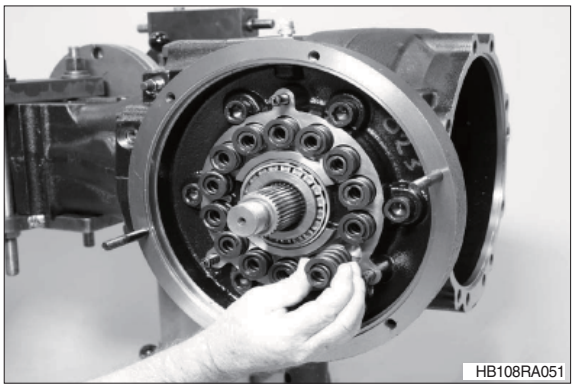
HB108RA051

(7) Press piston out of brake housing cover by means of compressed air.

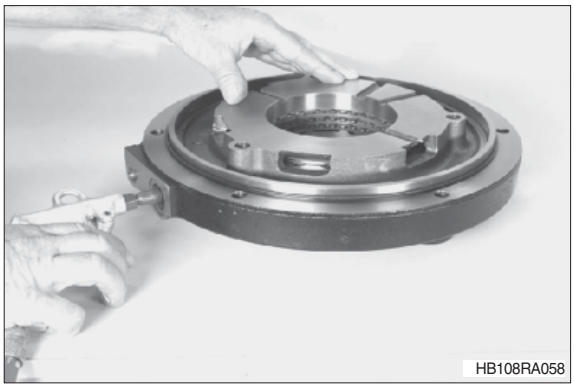
HB108RA058

(8) Take disc package out of brake housing cover.


HB108RA059

(9) Remove sealing elements-see arrows- from the grooves of the brake housing cover.

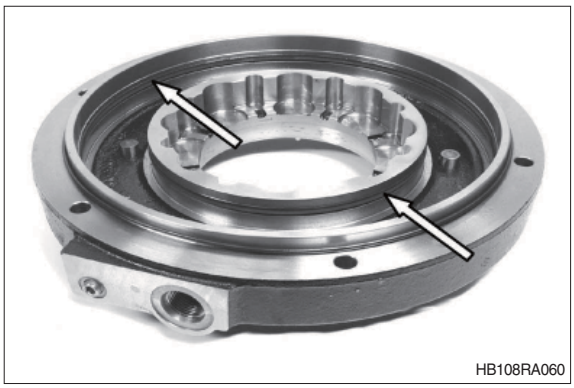
HB108RA060

(10) Pull off both bolts (with O-ring). Remove O-ring (arrow).

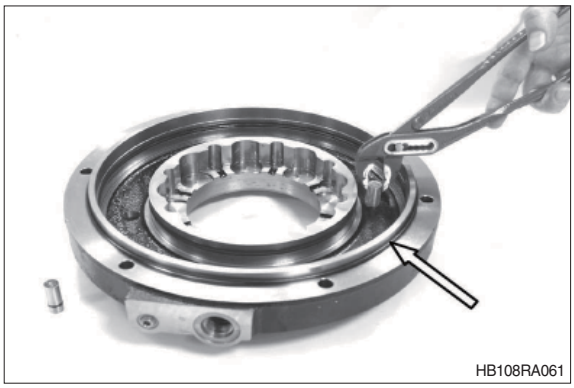
HB108RA061

(11) If required, disassemble brake housing (figure RA062+063) : For this purpose, the cpl. differential must be dismounted first-in this connection see parts of section **3) Disassembly differential of page 3-176.**

Press-off input pinion using a two-armed puller-pay attention that releasing bearing inner ring does not drop.

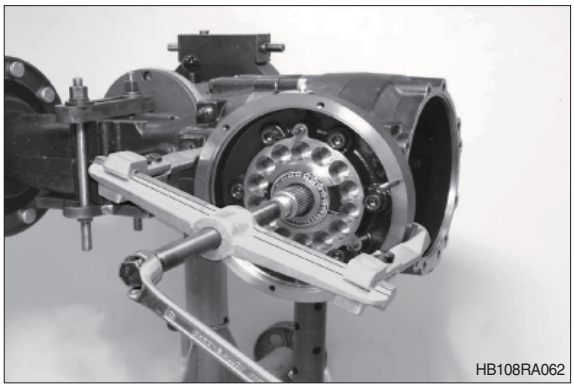
HB108RA062

(12) Loosen cylinder screws, turn in two adjusting screws (M16)-see arrows-and separate brake housing by means of slight hits with a plastic hammer.

Adjusting screws (M16) 5870 204 023

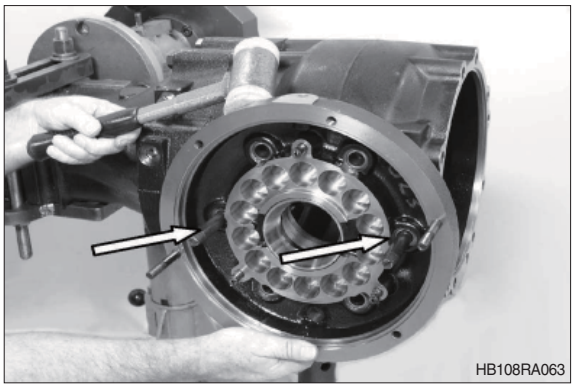

6) REASSEMBLY - INPUT

※ The adjacent figure shows the INPUT in the axle with parking brake (multi-disc brake).

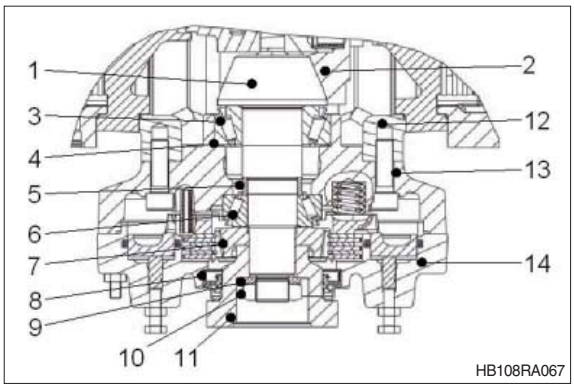

Legend :

1 = Input pinion
2 = Crown wheel
3 = Inner roller bearing
4 = Shim (contact pattern)
5 = Adjust ring (rolling torque)
6 = Outer roll bearing
7 = Disc carrier
8 = Shaft seal
9 = Washer
10 = Hexagon nut
11 = Flange
12 = Axle drive housing
13 = Brake housing
14 = Brake housing cover

(1) Determine shim for pinion position required to obtain an optimum contact pattern on the bevel gear set (crown wheel/pinion) :

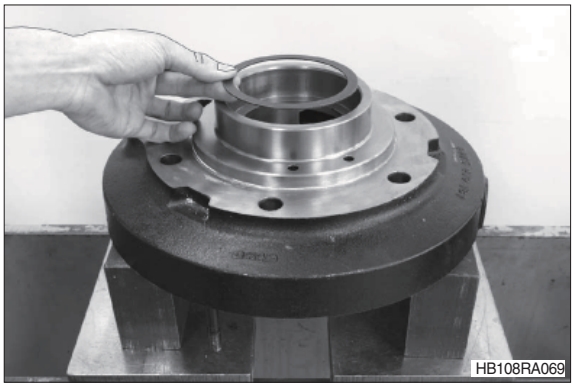

① Insert shim (e.g. S = 1.60 mm) into hole of brake housing.

※ We would recommend to reinstall the shim found during disassembly (e.g. S = 1.60 mm – refer to disassembly instructions, page 3-187, figure RA056) into the inner bearing hole /pinion bearing.

※ As an alternative, e.g. when assembling new parts (pinion or roller bearing) – a basic setting of the required pinion position can be made as described below (figure RA075~078).

※ The contact pattern required on the bevel gear set, however, is decisive. Any deviation – see contact pattern check on page 3-204 figure RA106, demands a correction of the pinion position by a corresponding shim.

② Insert bearing outer ring until contact is obtained.

Driver	5870 058 078
Grip	5870 260 002

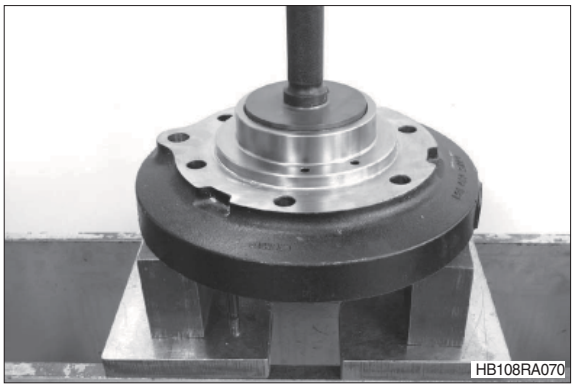
HB108RA070

③ Insert bearing outer ring until contact is obtained.

Driver	5870 058 078
Grip	5870 260 002

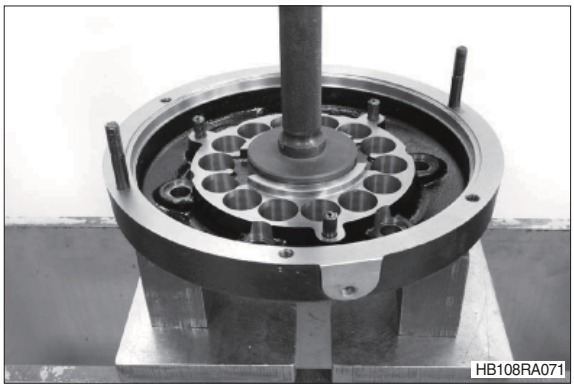
HB108RA071

④ Apply sealing agent (loctite #574) to contact face of brake housing /axle drive housing.

※ Area around oil return hole (arrow) must fully be wet.

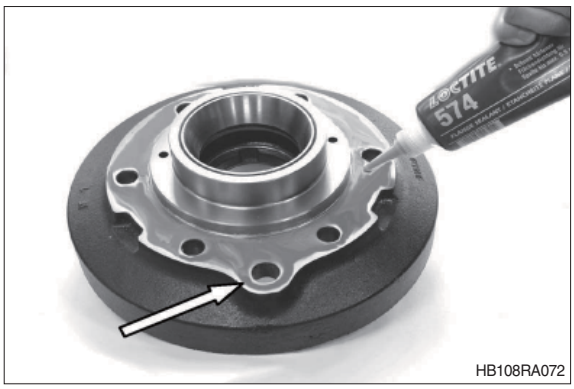

HB108RA072

⑤ Mount pre-assembled brake housing and fix with cylinder screws.

※ Ensure a correct installation position regarding oil return hole location.

· Tightening torque (M16/8.8) :
19.9 kgf · m (144 lbf · ft)

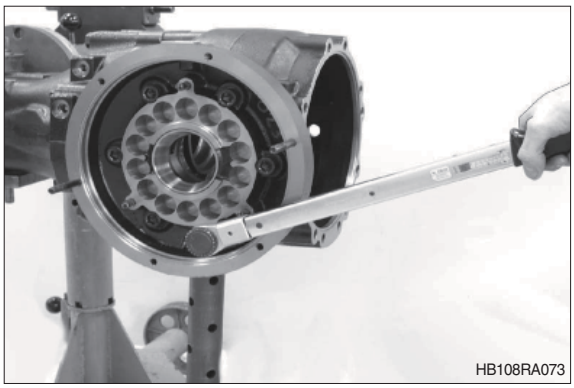
HB108RA073

Basic setting of pinion position :

① Read dimension I = dimension for production/axle drive housing (from axle center line to bearing contact/inner bearing hole) from brake housing (position-see arrow).

Dimension I e.g. ····· 165.04 mm

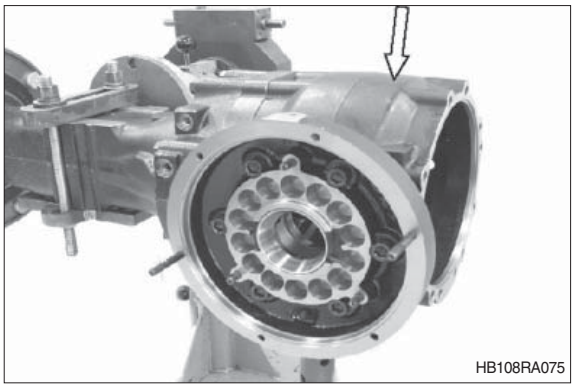
HB108RA075

② Just for assembly of a **new** brake housing (figure RA075+076) :

Determine dimension X (contact face/ brake housing to locating face tapered roller bearing) of brake housing OLD and brake housing NEW.

※ Any difference caused by production must be taken into consideration accordingly in dimension I (see figure RA075).

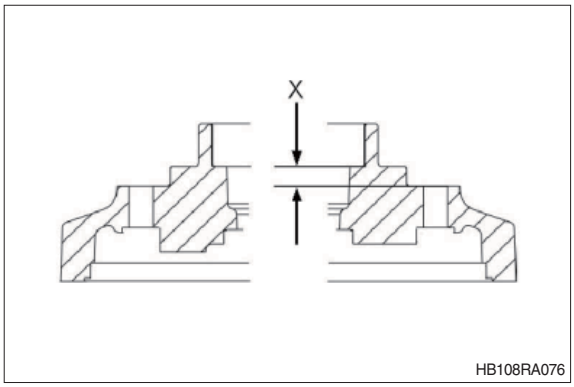

HB108RA076

③ Read pinion dimension (distance standard dimension = 127.0) from pinion, in case of a + or - deviation of the distance standard dimension caused by production, the actual value is indicated on the pinion.
e.g. :
Pinion dimension - without + or - deviation = 127.0 mm
Pinion dimension - with a $^{+0.1}$ deviation = 127.1 mm
Pinion dimension - with a $^{-0.1}$ deviation = 126.9 mm

Dimension II (pinion dimension) e.g.
····· 126.90 mm


HB108RA077

④ Determine dimension III bearing width, making sure that the rollers are located without clearance (rotate bearing inner ring in both directions several times-roller setting).

Since the installed roller bearing is subject to a preload in installation position, deduct an experience value of $_{-0.05}$ mm.

Dimension III = e.g. ····· 36.60 mm
-0.05 mm → 36.55 mm

Calculation example e.g. :
Dimension I ····· 165.04 mm
Dimension II + III (126.90+36.55) ·····
····· -163.45 mm
Result ····· = 1.59 mm
Required shim S ····· 1.60 mm

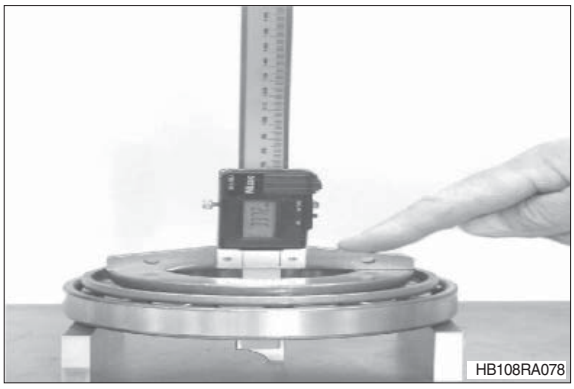
HB108RA078

(2) Rolling torque setting of input pinion bearing:

① Mount heated bearing inner ring until contact is obtained and readjust after cooling-down.
Install spacer ring (s = optional).

※ We recommend to reinstall the spacer ring found during disassembly (e.g. s = 16.8 mm).
If the originally mounted shim (contact pattern/bevel gear set) – see page 3-192, figure RA069 – was replaced, also install a spacer ring adjusted by the same correction value.

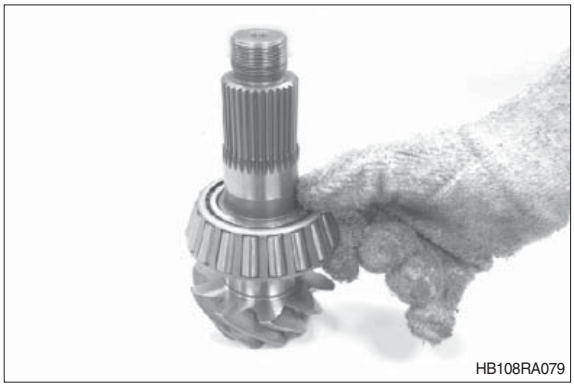
HB108RA079

※ However, the required bearing rolling torque is decisive, for assembly of:
New rolling bearing (without shaft seal) :
0.15~0.31 kgf · m (1.11~2.21lbf · ft)
Old rolling bearing (without shaft seal) :
0.05~0.01 kgf · m (0.36~0.74 lbf · ft)
Try to achieve upper value.
(Old = reinstalled rolling bearing).
Any deviation from the required rolling bearing - see bearing rolling torque check (figure RA084) – demands a correction of the bearing rolling torque by a corresponding spacer ring.

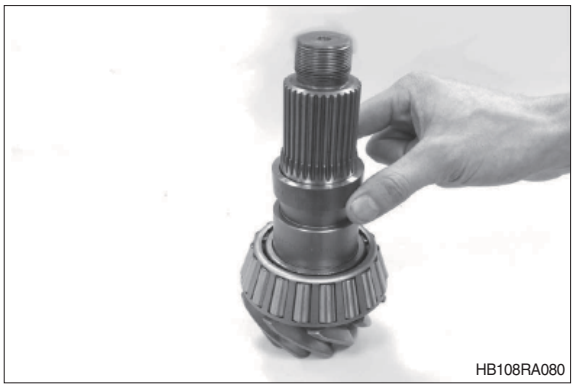
HB108RA080

② Insert pre-assembled input pinion, mount heated bearing inner ring until contact is obtained.

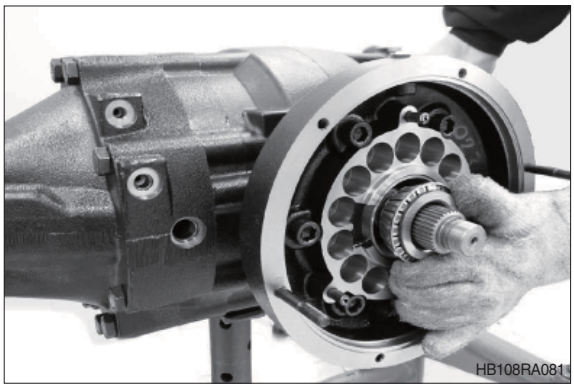
HB108RA081

③ Mount disc carrier (arrow). Pay attention to installation position.

Install flange.

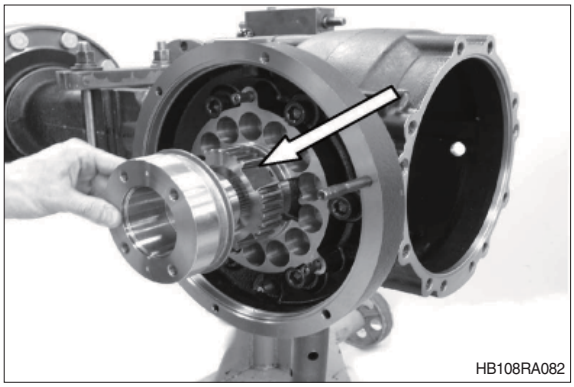
HB108RA082

④ Fix flange with washer and hexagon nut.

※ During tightening rotate pinion in both directions several times (roller setting).

· Tightening torque (M30×1.5) :
61.2 kgf · m (443 lbf · ft)

Clamping fork 5870 240 025

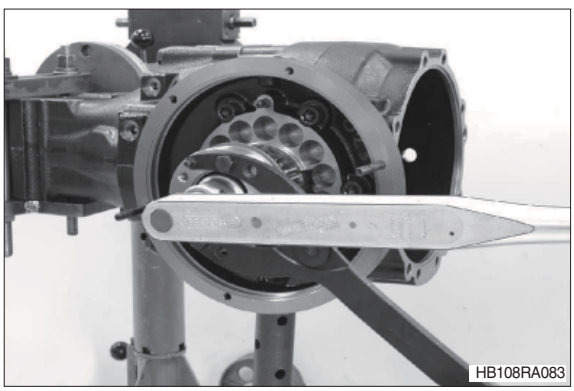
HB108RA083

⑤ **Check rolling torque of pinion bearing.**

Required bearing rolling torque when using:

New rolling bearing (without shaft seal) :
0.15~0.31 kgf · m (1.11~2.21 lbf · ft)
Old rolling bearing (without shaft seal) :
0.05~0.01 kgf · m (0.36~0.74 lbf · ft)
Try to achieve upper value.
(Old = reused roller bearing).

※ Any deviation from the required rolling torque requires a correction by a corresponding spacer ring (see figure RA080, page 3-196).

※ If results of contact pattern check are positive, mount shaft seal and input flange according to the descriptions in page 3-222.

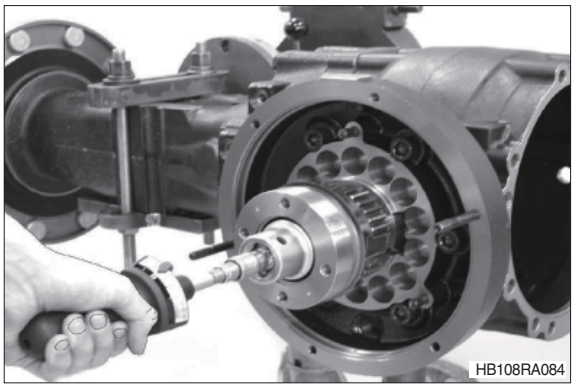
HB108RA084

7) REASSEMBLY - DIFFERENTIAL WITH 100% LOCK

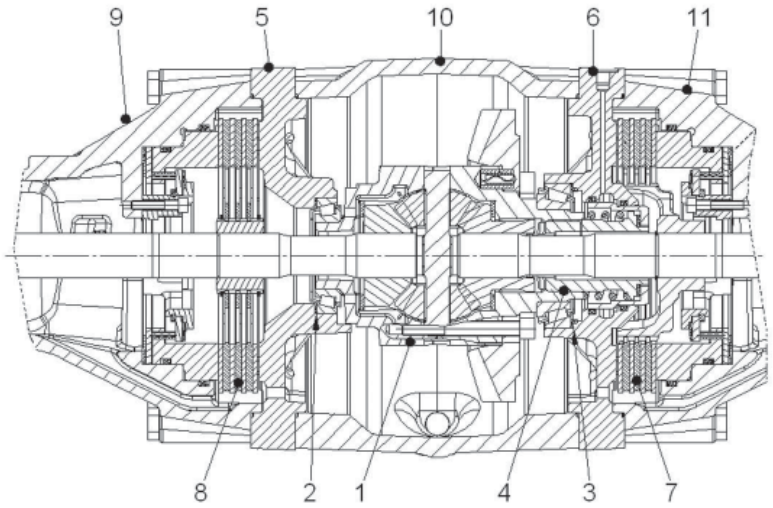

HB108RA085

1 Differential
2 Shim (backlash)
3 Shim (diff. bearing rolling torque)
4 Differential lock (100% lock)
5 Bearing housing (side opposite of crown wheel)
6 Bearing housing (crown wheel side)
7 Multi-disc brake - service brake (crown wheel side)
8 Multi-disc brake - service brake (side opposite of crown wheel)
9 Axle housing
10 Axle drive housing
11 Axle housing

(1) Install slotted pins (arrows) into differential carrier half I – observing the assembly instructions, see figure RA087.

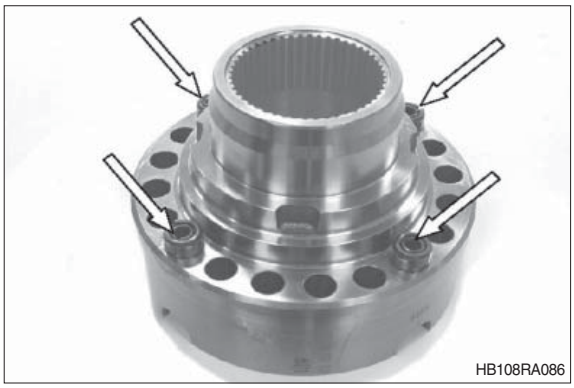

HB108RA086

(2) Assembly instructions:

Locate slotted pin (s) with slot in direction of force (arrow).

In case of double slotted pins - bring the slots in a 180 degrees offset position to each other.

To sketch:

1 = Differential carrier
2 = Slotted pin
3 = Slotted pin (just for version with double slotted pins)
X = Direction of force

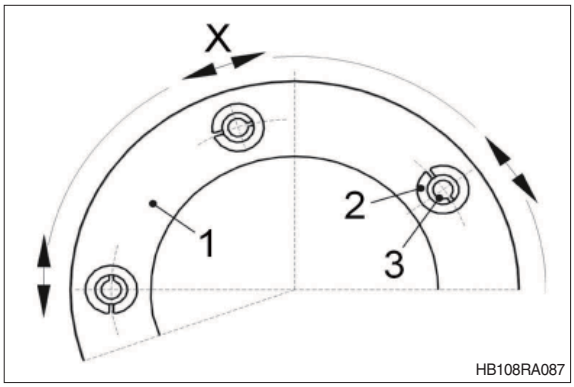

HB108RA087

(3) Insert thrust washer and axle bevel gear into differential carrier half I.

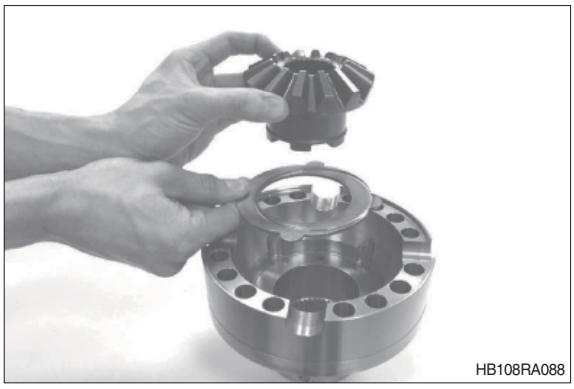

(4) Legend to sketch

1 = Differential spider
2 = Spider gear
3 = Thrust washer

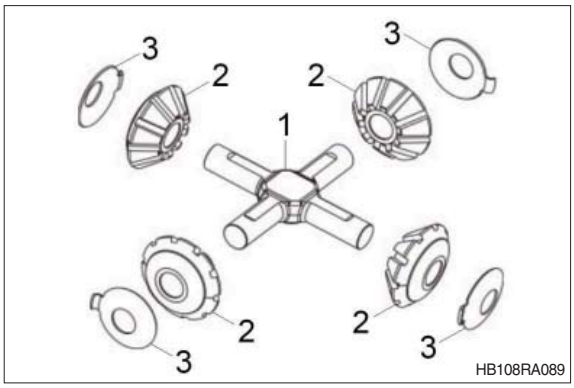

(5) Mount spider gears and thrust washers on differential spider and insert in differential carrier half I.

※ Ensure radial installation position of thrust washers.
Tab to show straight upwards (see arrows).

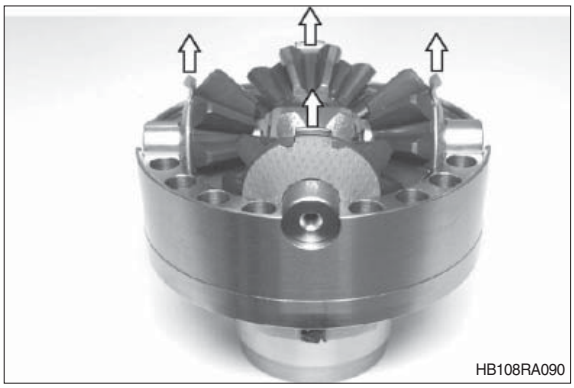

(6) Position axle bevel gear (arrow) on differential spider.
Fix thrust washer with grease (assembly aid), in differential carrier half II.

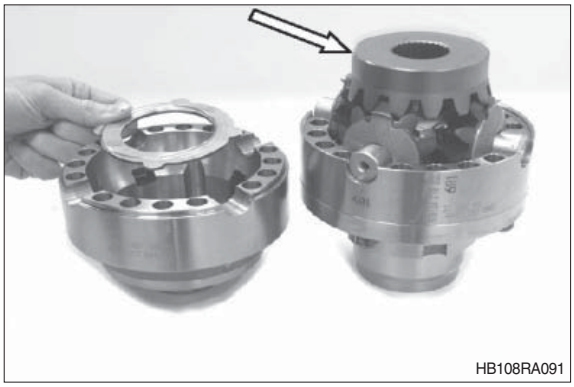

(7) Position pre-assembled differential carrier half II on differential carrier half I.

※ Ensure radial installation of both differential carrier halves – punch-marked no. …. (see arrow) corresponds to radial position marking.

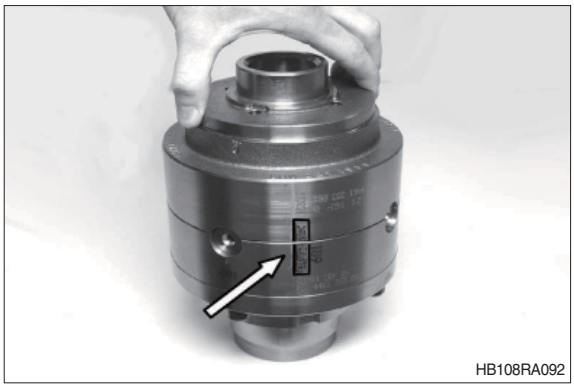
HB108RA092

(8) Position crown wheel on slotted pins and press onto differential carrier until contact is obtained.

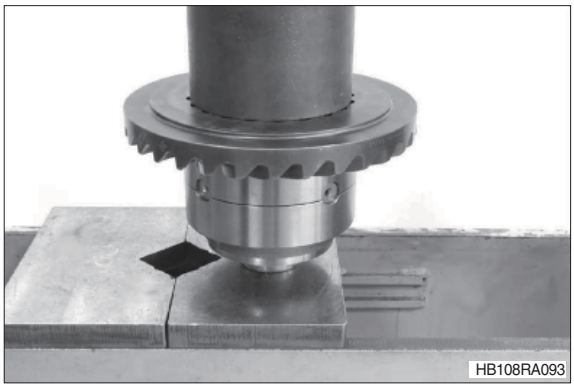
HB108RA093

(9) Fix differential by means of a press and connect differential carrier halves with cylinder screws.

· Tightening torque (M 12/12.9) :
13.8 kgf · m (99.6 lbf · ft)

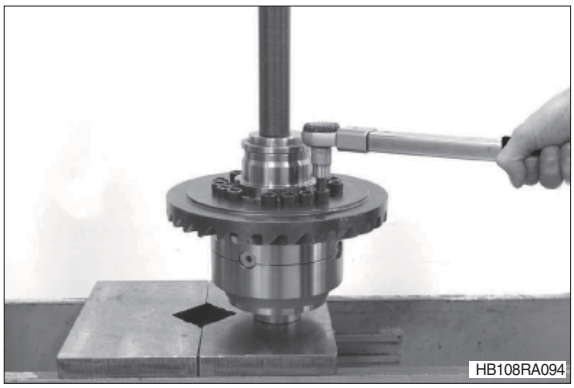
HB108RA094

(10) Install both bearing inner rings.

※ Use suitable support (arrow) – differential must not be supported on bearing cage.

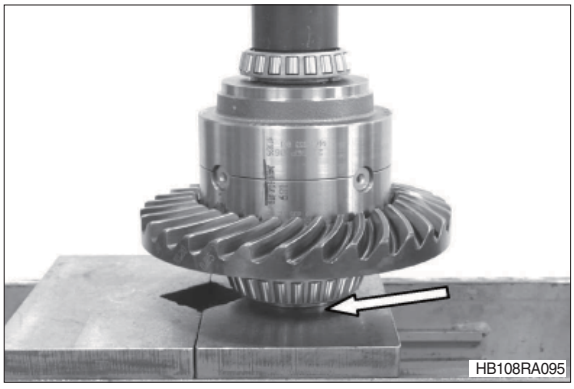
HB108RA095

(11) Cover some tooth flanks of crown wheel with marking ink (for contact pattern check – see figure RA106, page 3-204).



(12) Bring axle into vertical position.
Insert shim (backlash) into hole of axle housing and locate bearing outer ring until contact.
We would recommend to reinstall the shim found during disassembly – refer to disassembly instructions page 3-184, figure RA045 - (e.g. s = 1.70 mm)

※ The required backlash, however, is decisive for the shim (s), to be used – see figure RA103, page 3-203.

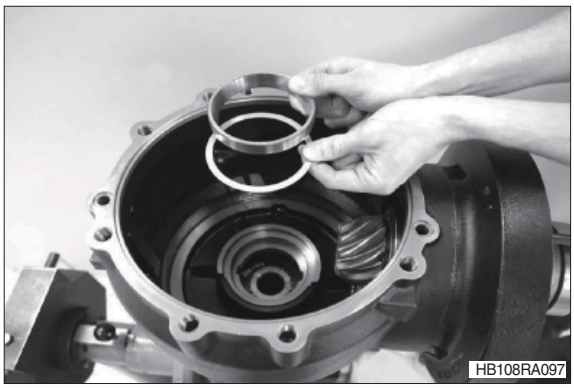

(13) Insert preassembled differential.

Internal extractor	5870 300 019
Eye nut	5870 204 027

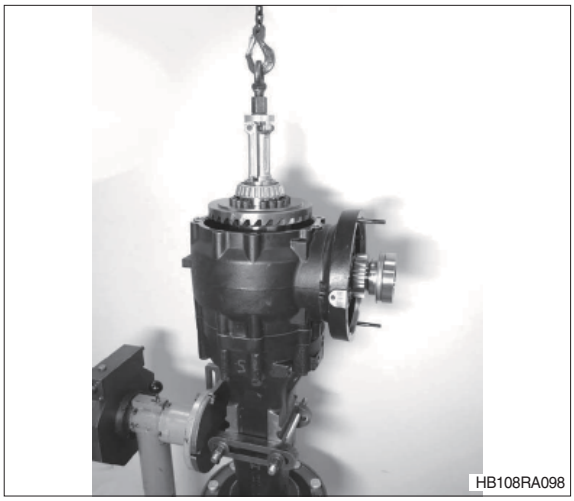

(14) Position bearing outer ring on bearing inner ring, until all rollers are located without clearance.

※ For the following determination of dimension pay attention to an exact contact of the bearing outer ring and a correct positioning of the differential.

Determine dimension A - from mounting face/axle drive housing to front face/bearing outer ring (take measurements at several points and find out mean value).

Dimension I e.g. ····· 6.64 mm

Straightedge 5870 200 022

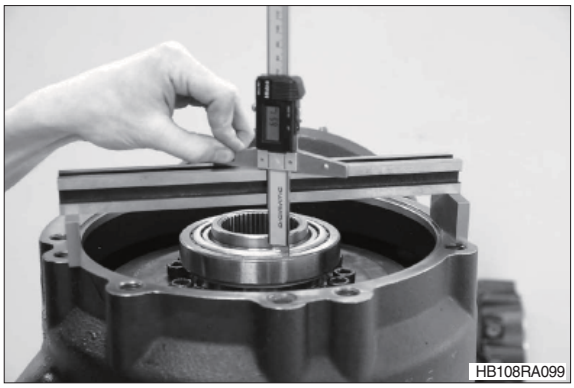
HB108RA099

(15) Determine dimension II – from mounting face /bearing housing to bearing hole/ bearing outer ring contact.

Dimension Z e.g. ····· 5.35 mm

Calculation example :

Dimension I e.g. ····· 6.64 mm
Dimension II e.g. ····· – 5.35 mm
Difference ····· 1.29 mm
Bearing preload ····· + 0.10 mm
Result ····· = 1.39 mm
Required shim (s)····· = 1.40 mm

※ A bearing preload of 0.10 mm corresponds to a bearing rolling torque of approximate 0.10~0.41 kgf · m (0.72~2.95 lbf · ft), if new bevel roller bearings are used.

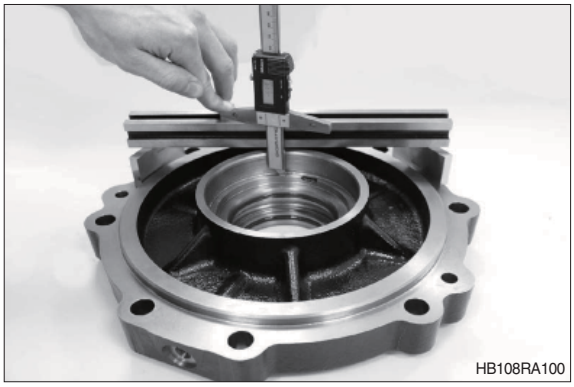
HB108RA100

(16) Insert determined shim (e.g. s = 1.40 mm) into hole of bearing housing and locate bearing outer ring until contact.

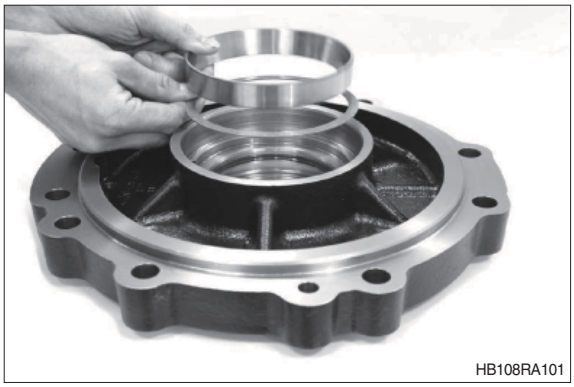
HB108RA101

(17) Mount preassembled bearing housing (without O-rings). Bring it to contact position and fix provisionally with hexagon screws (3x with washer, L = 70 mm).

※ Rotate differential in both directions several times – roller setting (also see below figure).

· Tightening torque (M16/8.8) :
19.9 kgf · m (144 lbf · ft)

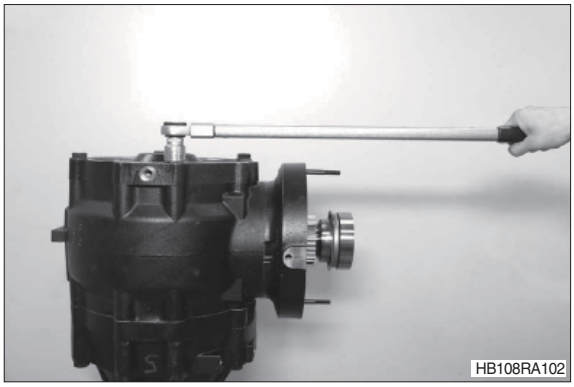
HB108RA102

Check of backlash and of bevel gear set contact pattern:

(18) Insert cylinder screw (2) into internal extractor (1) and fix straightedge (3) and internal extractor in the hole of the differential carrier.

※ Internal extractor must not be positioned in the axle bevel gear.

Internal extractor	5870 300 019
Cylinder screw (M20)	0636 101 468
Straightedge	5870 200 087

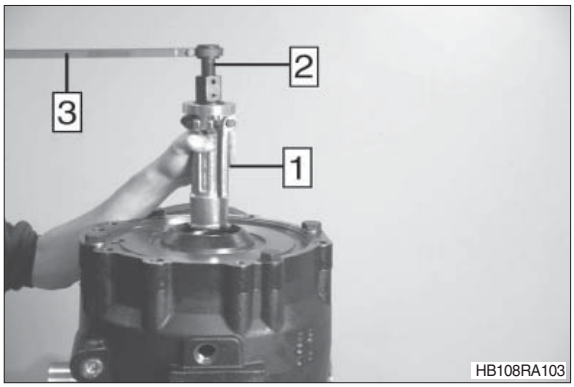

HB108RA103

(19) Place dial indicator (3) at right angles to the straight edge (1) within a distance corresponding to the outer diameter of the crown wheel (r = approx 126 mm) –and check backlash.
Backlash 0.15~0.25

※ Any deviation from the required backlash requires its correction with corresponding shim (s) - see figure RA097, page 3-187.
A correction of the shim/backlash also requires a counter-correction of shim/diff bearing rolling torque - see figure RA101.

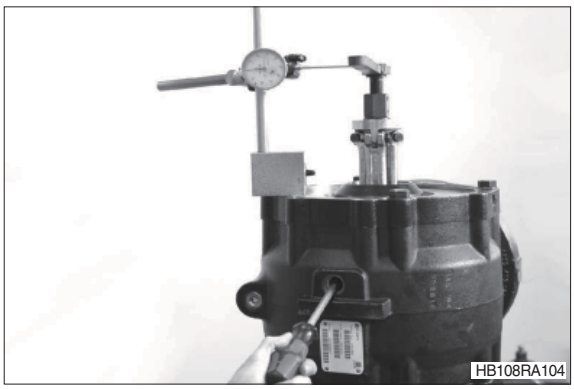
HB108RA104

(20) For contact pattern check, roll input pinion against crown wheel in both directions (drive and coast side engagement).

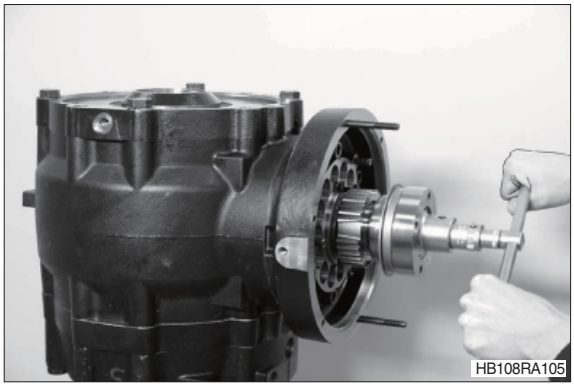
HB108RA105

(21) Remove differential again.
Compare contact pattern with contact pattern examples on page 3-227.

※ If contact pattern differs considerably, use a corresponding shim (see figure RA069, page 3-192) for correction.

A correction of the shim/contact pattern also influences the backlash – check once again (see figure RA104).


HB108RA106

(22) Place sun gear shaft and stub shaft into the planetary carrier (output opposite to crown wheel).

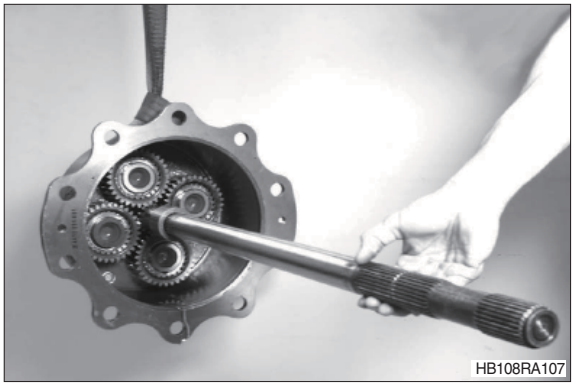
HB108RA107

(23) Mount planetary carrier, and insert stub shaft into the planetary carrier (service brake).

※ Pay attention to mounted O-ring (arrow).

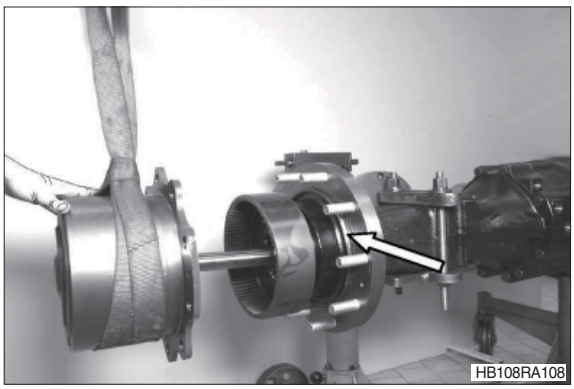
HB108RA108

(24) Fix planetary carrier with hexagon screws.

※ Insert hexagon screws with locking compound (loctite #243).

· Tightening torque (M12/8.8) :
5.61 kgf · m (40.6 lbf · ft)

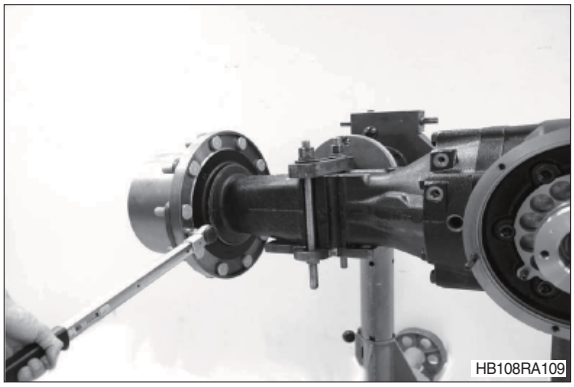
HB108RA109

(25) Relocate differential, and insert stub shaft into the axle bevel gear.

Internal extractor 5870 300 019
Eye nut 5870 204 027

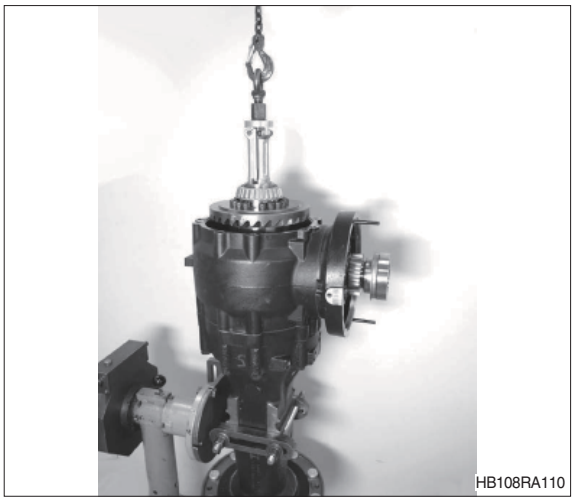

(26) Install adjusting screws (1) and fix both O-rings (2) with grease (assembly aid) into the countersinks of the axle drive housing.

Adjusting screws/M16 (1 set = 2 pcs.)
5870 204 053

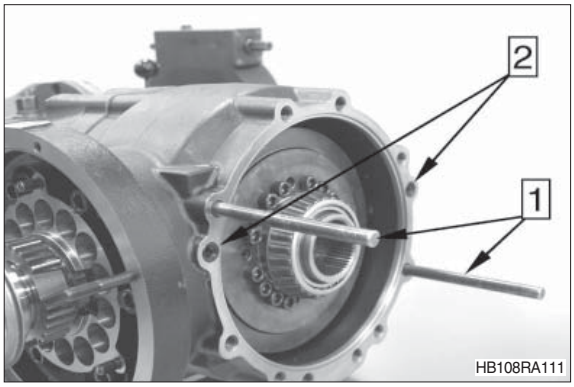

(27) Insert locking slide with mounted compression spring.

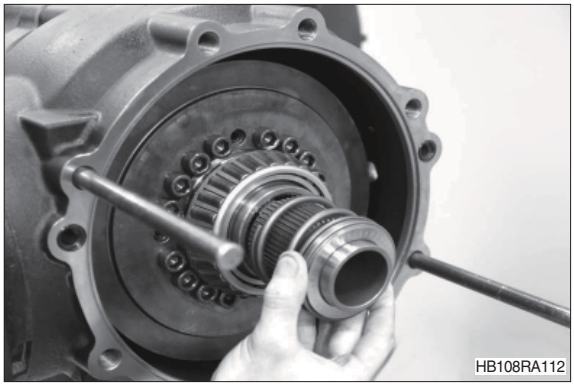

(28) Mount axial needle cage on locking slide. Fix axial needle cage with grease – assembly aid.

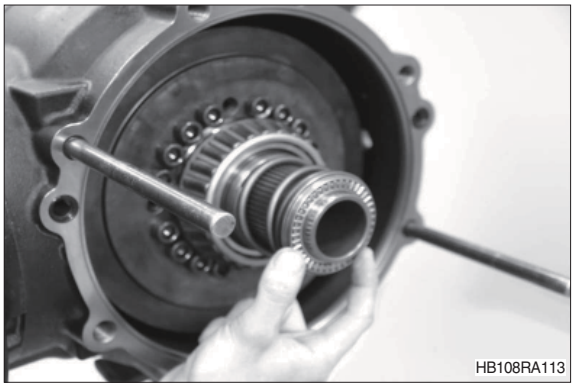

(29) Oil both grooved rings (1 + 2) and place into annular grooves of the bearing housing – paying attention to the installation position (see detailed sketch).
Install O-ring (3).

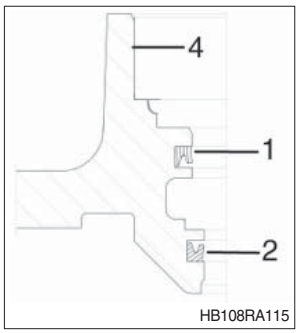

1 = Grooved ring
2 = Grooved ring
3 = O-ring
4 = Bearing housing

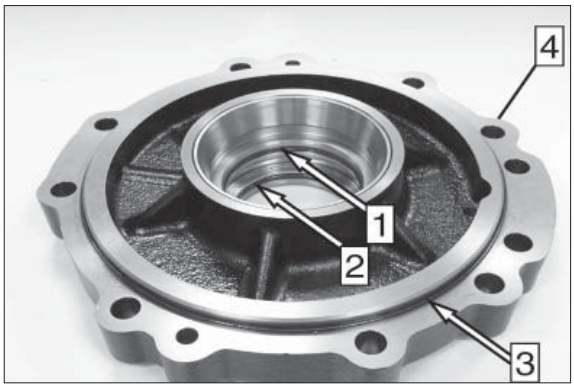

(30) Oil sealing surface and insert piston.

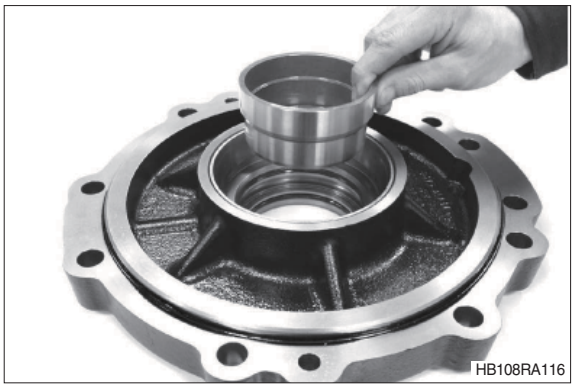

(31) Press piston to contact position.

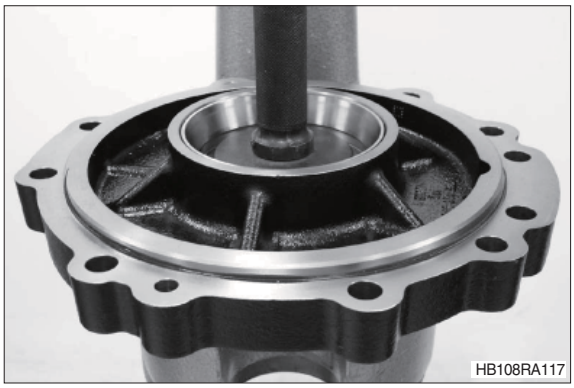

(32) Mount preassembled bearing housing.

※ Check leakage of 100% lock.
- See page 3-213, figure RA141.

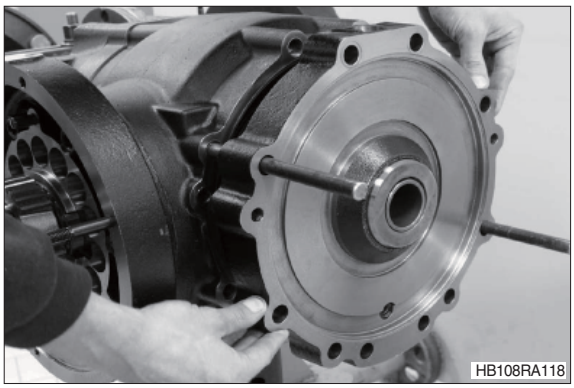

8) ASSEMBLY - SERVICE BRAKE (multi-disc brake)

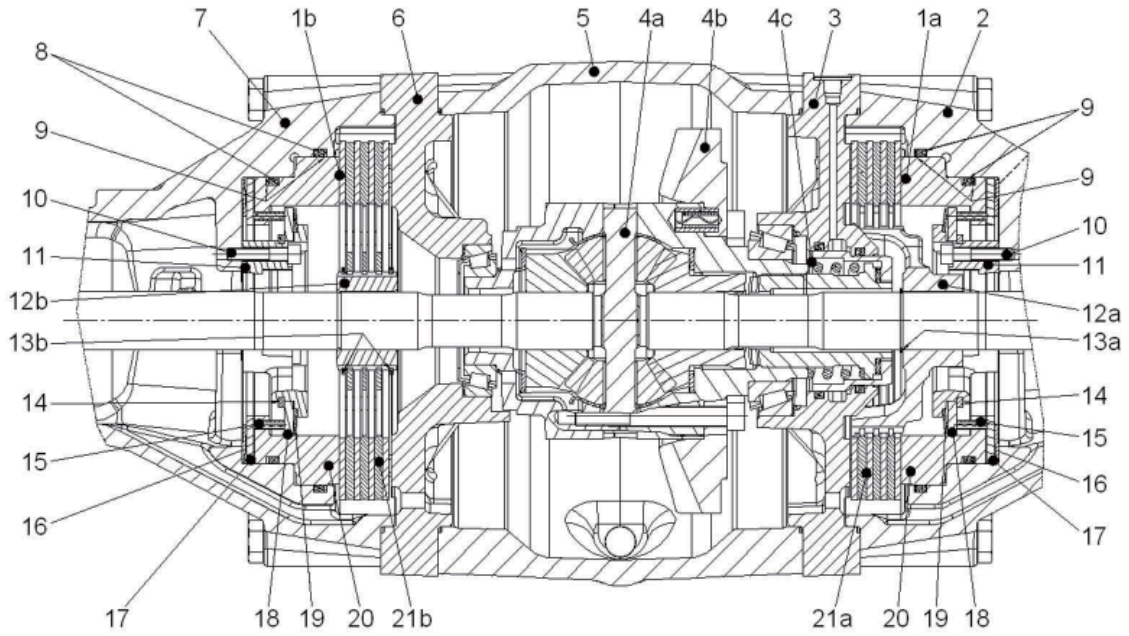

HB108RA119

1	Service brake (multi-disc brake)	12	Disc carrier
1a	Crown wheel side (CS)	12a	Disc carrier (CS)
1b	Side opposite of crown wheel (SOC)	12b	Disc carrier (SOC)
2	Axle housing (CS)	13	Retaining ring
3	Bearing housing (CS)	13a	Retaining ring (CS)
4	Differential assy	13b	Retaining rings (SOC)
4a	Differential	14	Retaining ring
4b	Crown wheel	15	Slotted pin
4c	100% lock	16	Cup spring
5	Axle drive housing	17	Washer
6	Bearing housing (SOC)	18	Washer
7	Axle housing (SOC)	19	Cup spring
8	Grooved ring	20	Piston
9	Back-up ring	21	Disc package
10	Cylinder screw	21a	Disc package (CS)
11	Ring	21b	Disc package (SOC)

※ Below, the reassembly of the service brake on the axle housing (CS = crown wheel side) is shown. For reassembly of the service brake on the other axle housing (SOC = side opposite of crown wheel) proceed in the same way.

(1) Insert sealing elements (2+3 – see below sketch) into annular groove (arrow) of the axle housing.

※ Pay attention to installation position of the sealing elements.

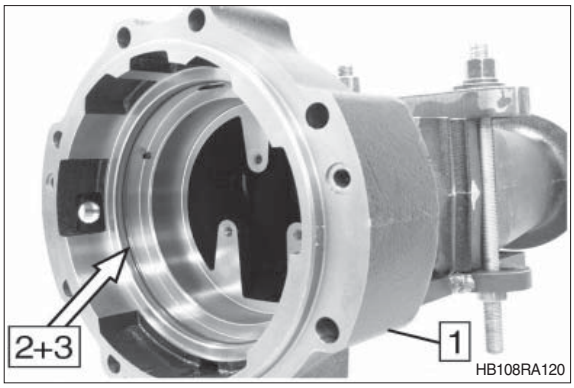

(2) 1 = Axle housing
2 = Back-up ring
3 = Grooved ring
4 = Grooved ring
5 = Back-up ring
6 = Piston
7 = Slotted pins

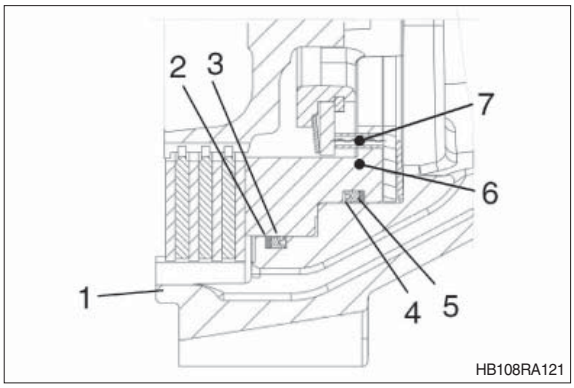

(3) Insert sealing elements (4+5 – see sketch) into annular groove (arrow) of piston (6).

※ Pay attention to installation position of sealing elements.

Flush-mount slotted pins (7) (front face) into piston (6), or relocate – if not dismantled.

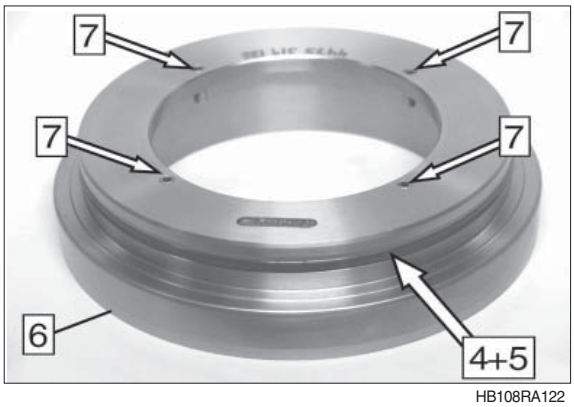

(4) 1 = Axle housing
2 = Cup spring
3 = Washer
4 = Piston
5 = Ring
6 = Cup spring
7 = Washer
8 = Retaining ring

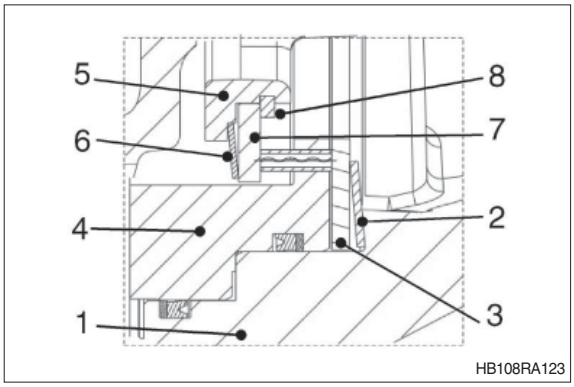

(5) Locate cup spring (2) – **paying attention to correct installation position (see sketch RA123)** - and washer (3) into axle housing (1).

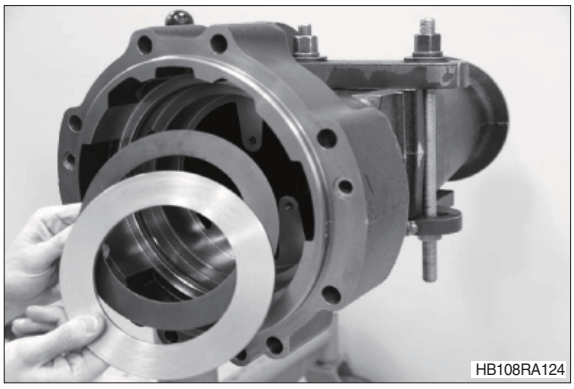

(6) Oil grooved rings and sealing surfaces of axle housing and piston.
Mount pre-assembled piston (1).

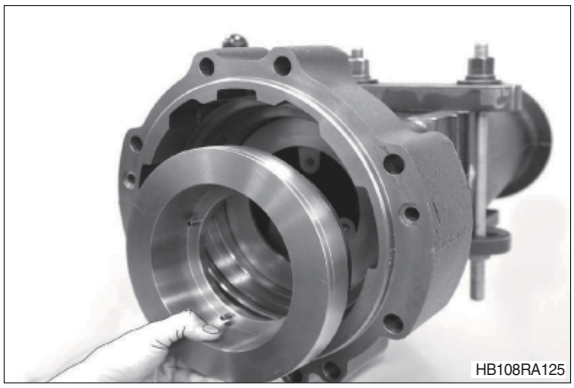

(7) Push piston to contact position using a two-armed puller and a pressure plate.

※ Pay attention to the slotted pins placed in the piston.
Ensure that position of located slotted pins does not change – pressure plate may only touch piston front face.

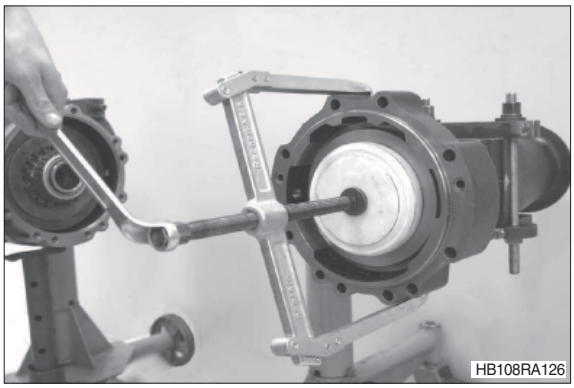

(8) Mount cup spring (6) – **paying attention to correct installation position (see sketch RA123)** - and washer (7) on ring (5).



(9) Press down cup spring preload using a press, and snap in retaining ring (8).

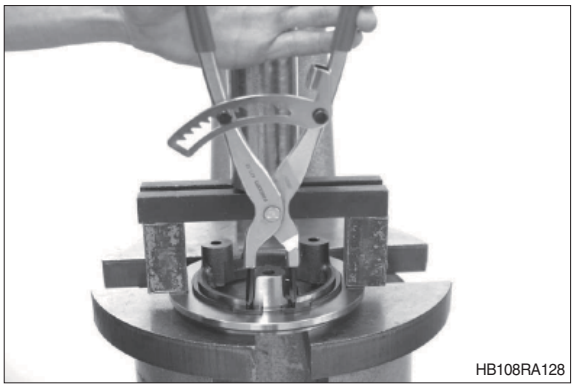

(10) Insert preassembled ring and fix with cylinder screws.

※ Install cylinder screws with locking compound (loctite #262).

· Tightening torque (M8/8.8) :
2.35 kgf · m (17 lbf · ft)

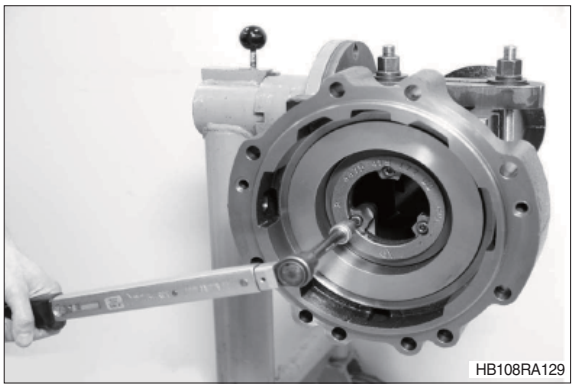

(11) 1 = Outer discs
2 = Inner discs (lined discs)

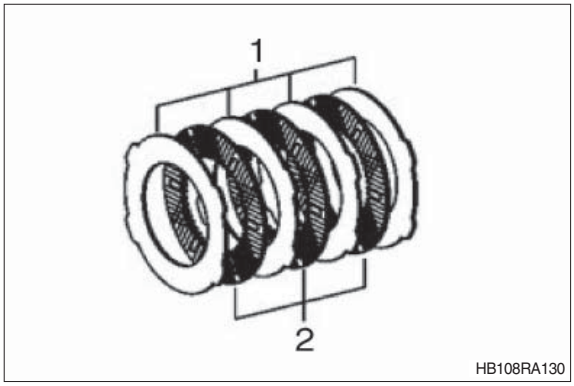

(12) Locate disc package – **taking the disc arrangement into consideration (see sketch above).**

※ Fix outside disc with grease – assembly aid.

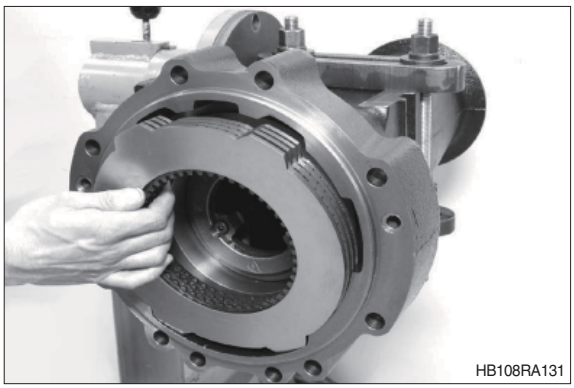

(13) Mount disc carrier – **paying attention to correct installation position (see figure)** –and snap in retaining ring.

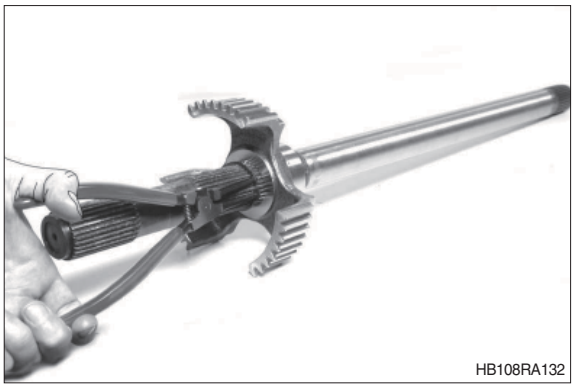

(14) Insert pre-assembled stub shaft until all inner discs are mounted.

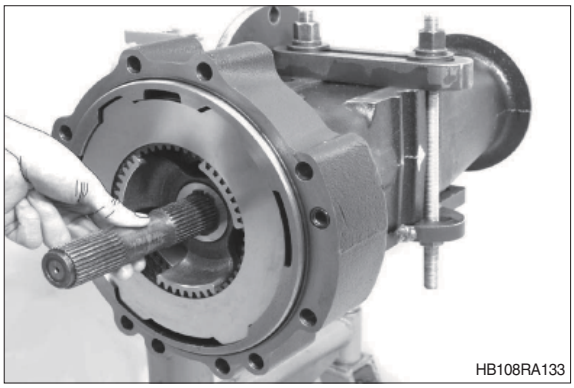

(15) Mount sun gear shaft to inserted stub shaft – assembly aid (for central position of stub shaft).

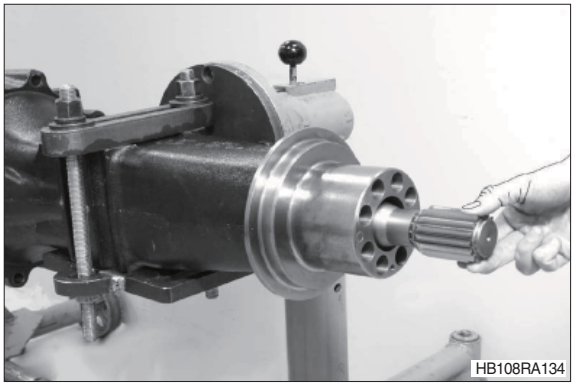

(16) Fix both O-rings (1) with grease (assembly aid) into countersinks of the axle housing.
Oil O-ring (2) and install on the axle housing.

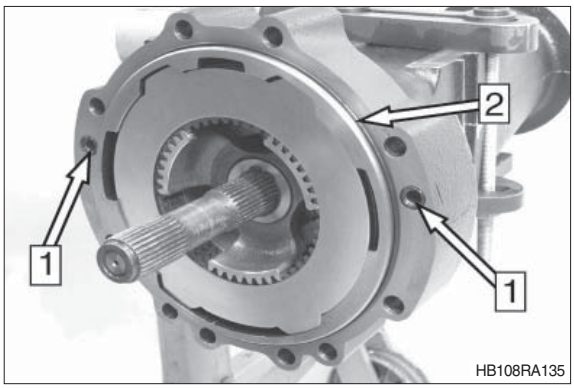

(17) Take up cpl. axle half by means of a lifting strap and position it on bearing housing/ axle drive housing – and insert stub shaft into gearing of the axle bevel gear (differential).

※ Pay attention to O-rings installed in the axle drive housing (see page 3-205, figure RA111) and in the axle housing (page 3-211, figure RA135).

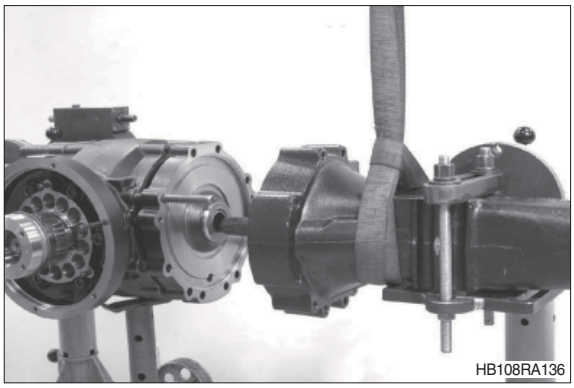
HB108RA136

(18) Bring axle housing equally to contact position and fix it by means of hexagon screws.

※ Rotate differential in both directions several times – roller setting.

· Tightening torque (M 16/8.8) :
19.9 kgf · m (144 lbf · ft)

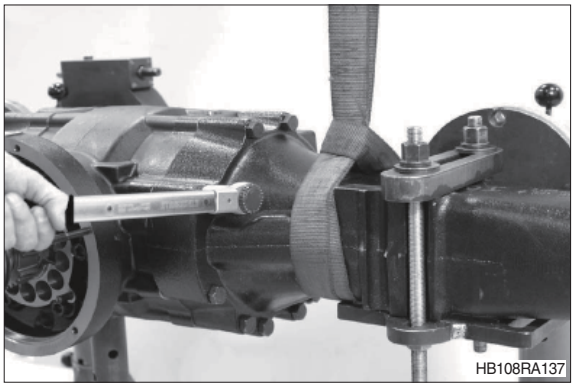
HB108RA137

Leakage test of multi-disc brake

① Mount breather valve (arrow) and connect HP-pump.

HP pump	5870 287 007
Threaded coupling (9/16"-18UNF)	5870 950 115
Oil collector bottle	5870 286 072

※ Completely breathe brake prior to test start.

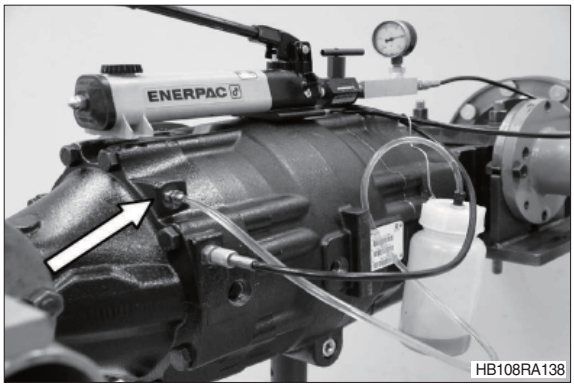

HB108RA138

Leakage test:

Build up test pressure p = 60 bar $^{-10\ bar}$ and close shut-off valve of HP pump (maintain pressure).
A pressure drop of max 3 bar is allowed during a 2 minute testing time.

Test media:

Motor oils SAE-10W ;
API-SE,
ATF-oils : Dexron of II D

Disc clearance test of service brake:

※ The brake must fully be breathed for obtaining an objective test result of the disc clearance.

① Pressurize brake by HP pump with p = 60 bar $_{-10\ bar}$, then release brake and check disc clearance X using a feeler gauge – also refer to the next sketch.

Disc clearance X nom. = 0.4 ~ 0.75 mm



※ If the required disc clearance X is not obtained, assembly was not carried out properly, and another disassembly and reassembly is imperative.

HP pump 5870 287 007
Threaded coupling (9/16"-18UNF)
5870 950 115
Feeler gauge 5870 200 113

1 = Piston
2 = Outer disc
3 = Inner disc (lined disc)
X = Disc clearance (0.4 ~ 0.75 mm)

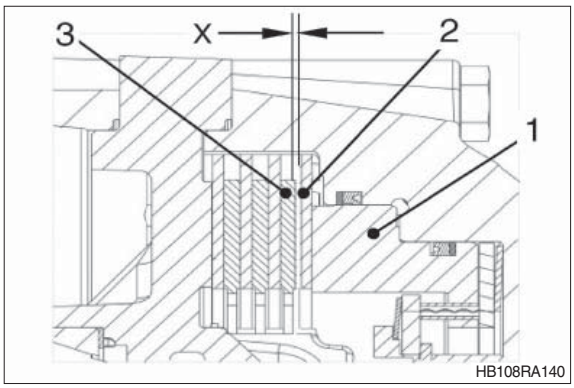

Leakage test of differential look (100% lock) :

① Prior to starting the test, bleed pressure chamber and then check 100% lock.

Test:
Build up test pressure p = 13 bar and close shut-off valve of HP pump.

※ No pressure drop is allowed during a 2 minute testing time.

HP pump 5870 287 007
Threaded coupling (7/16-20 UNF)
5870 950 135

Test media:
Motor oils SAE-10W ;
API-SE,
ATF-oils : Dexron of II D

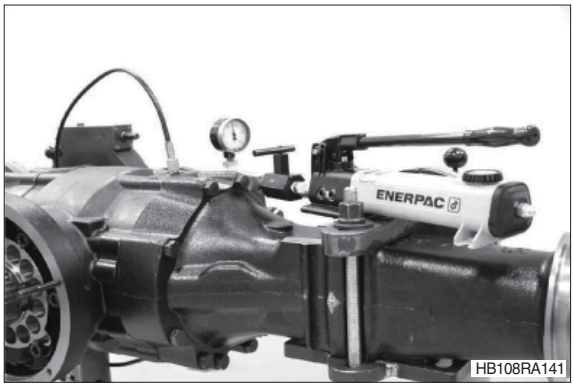

9) DISASSEMBLY - OUTPUT UNIT

1 = Axle housing
2 = Hub
3 = Shaft seal
4 = Roller bearing (hub bearing)
5 = Internal gear
6 = Planetary gears
7 = Planetary carrier
8 = Sun gear shaft

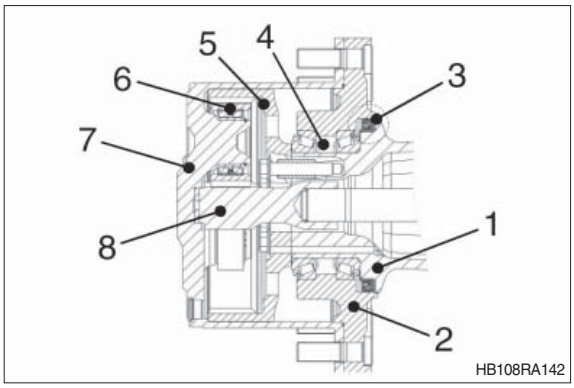

HB108RA142

(1) Mount wheel bolt.

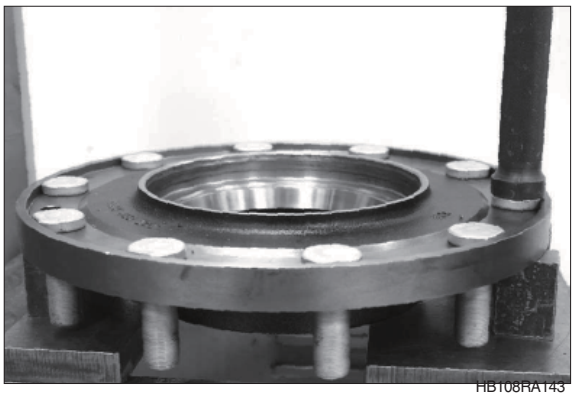
HB108RA143

(2) Install both bearing outer rings of hub bearing until contact is obtained.

※ Hub must not be supported on wheel bolts.

Driver tool	5870 051 012
Handle	5870 260 004

※ To ensure functioning, always use a new shaft seal when reassembling the hub – also refer to disassembly instructions page 3-175, figure RA015.

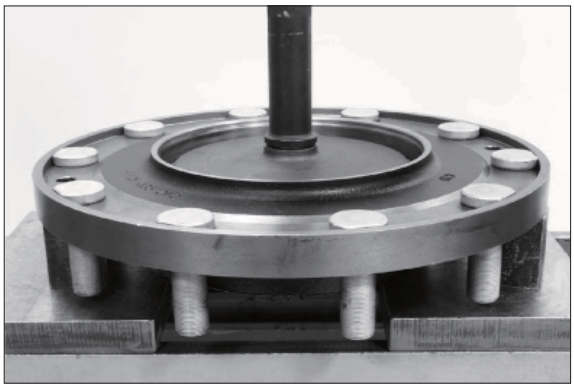
HB108RA144

(3) Apply sealing agent to contact face shaft seal/hub (loctite #574).
Mount shaft seal observing the correct installation position (labeling OUT-SIDE showing upwards / outwards) and the correct offset X –see detailed sketch.

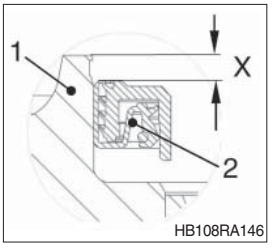

1 = Hub
2 = shaft seal
X = installation dimension 5^{+1} mm

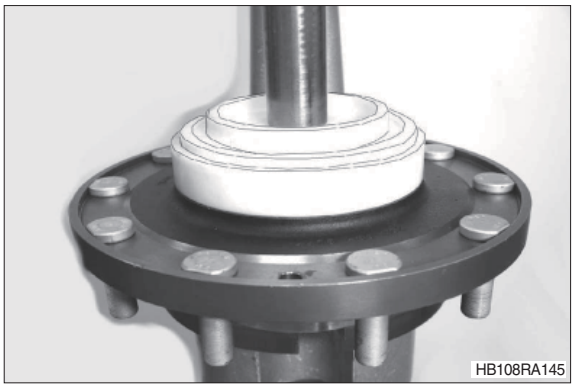

Driver tool 5870 051 057

(4) Mount heated bearing inner ring until contact.

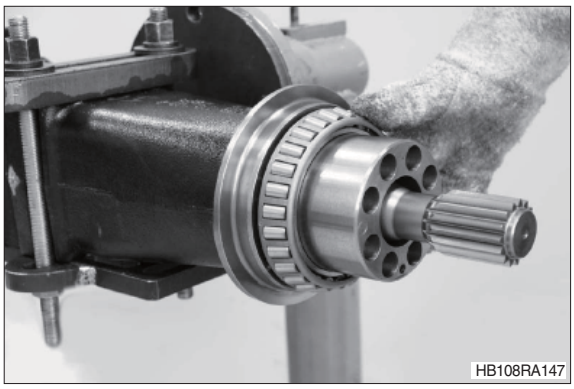

※ Just before fitting, wet the contact face shaft seal/axle housing with spirit – assembly aid.

(5) Mount preassembled hub until contact and fix it with heated external bearing inner ring.

Lifting bracket 5870 281 043

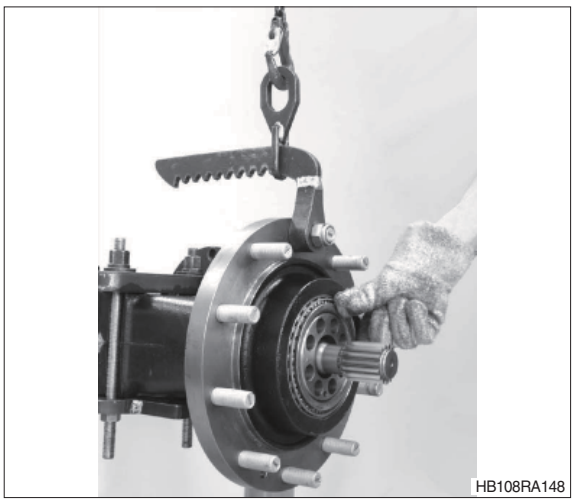

(6) If disassembled – insert bushings into the internal gear until contact is obtained.

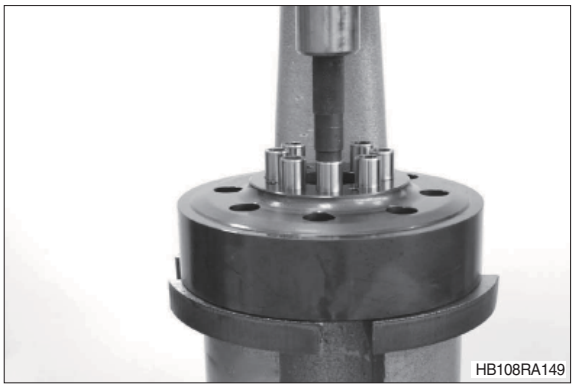

(7) Mount preassembled internal gear and equally bring to contact position using the **old** locking screws (from disassembly).

※ Rotate hub in both directions several times – roller setting.

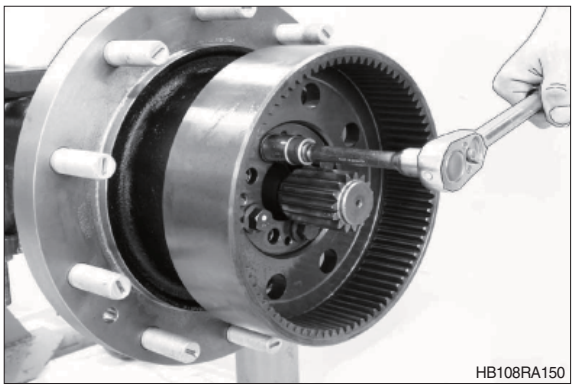

(8) Finally fix internal gear with **new** locking screws.

⚠ **Locking screws are permitted for one-time use only.**

· Tightening torque (M14/12.9) :
25.5 kgf · m (184 lbf · ft)

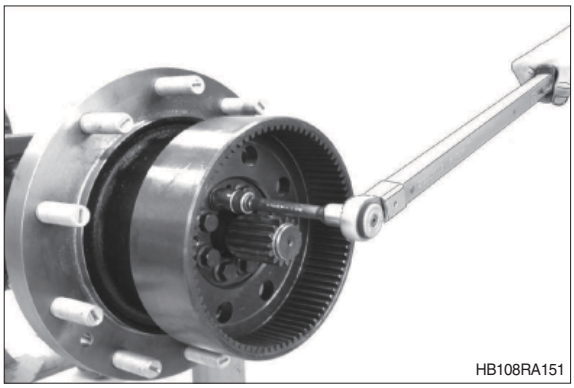

(9) Just for new parts assembly:
Insert cylinder roller bearing into the planetary gear – by pressing the roller bearing into the planetary gear by the assembly sleeve (arrow) until the snap ring engages into the annular groove of the planetary gear.

1 = Planetary gear
2 = Roller bearing (with bearing inner ring /cylinder rollers/axial washers and snap ring)
3 = Assembly sleeve

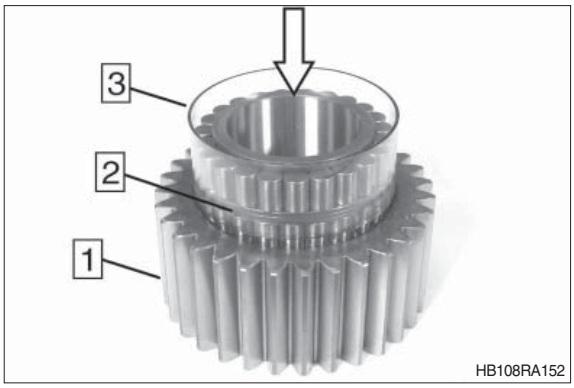

(10) Heat preassembled planetary gear (bearing inner ring) and install until contact, with large radius /bearing inner ring showing downwards (arrow).

※ Adjust bearing inner ring/planetary gear after cooling down.

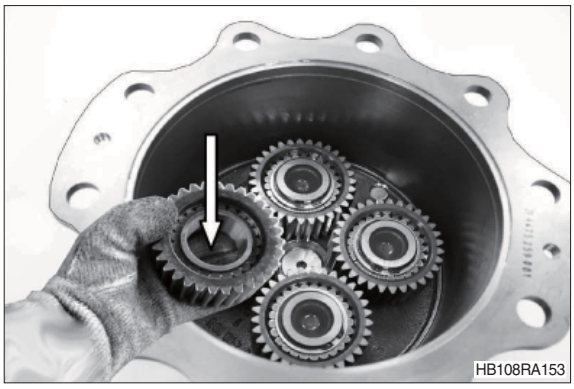
HB108RA153

(11) Snap in retaining ring.

⚠ **Check contact position of retaining ring on groove base and readjust.**

※ For assembly of the other planetary gears proceed in the same way.

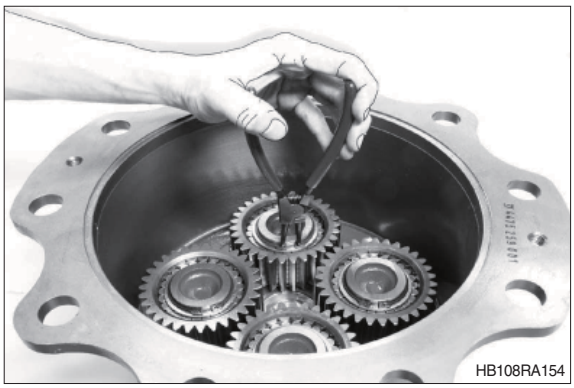
HB108RA154

(12) If disassembled – install stop pin (arrow).

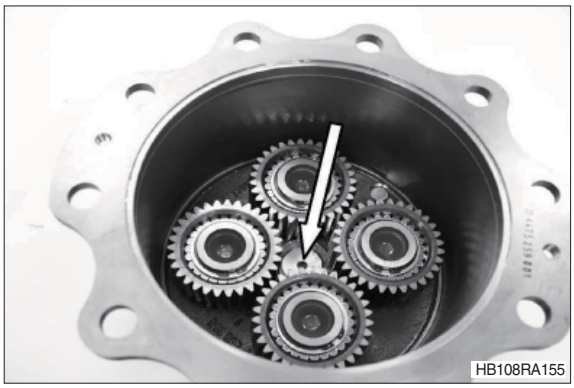
HB108RA155

(13) Oil O-ring (arrow-1) and install on collar of hub.

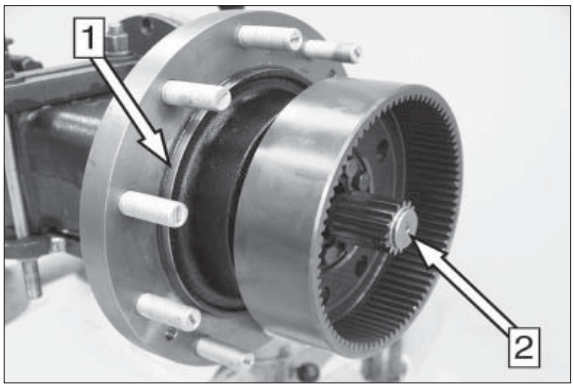

HB108RA156

(14) Take sun gear shaft (see arrow -2 / figure RA156) out of axle housing and insert in the preassembled planetary carrier – assembly aid.

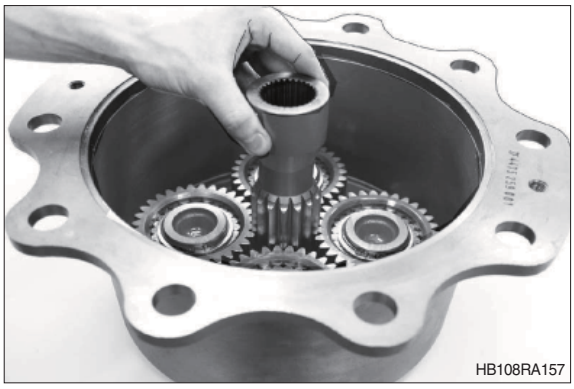
HB108RA157

(15) Take up preassembled planetary carrier by means of lifting strap and mount it on the hub –installing stub shaft into sun gear shaft.

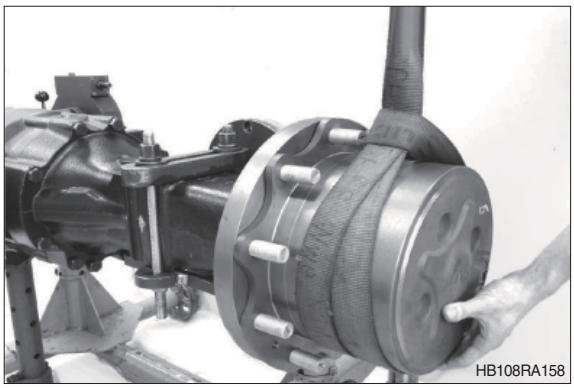
HB108RA158

(16) Fix planetary carrier with hexagon screws.

※ Insert hexagon screws with locking compound (loctite #243).

· Tightening torque (M12/8.8) :
5.61 kgf · m (40.6 lbf · ft)

※ Prior to putting into operation fill the axle with oil.

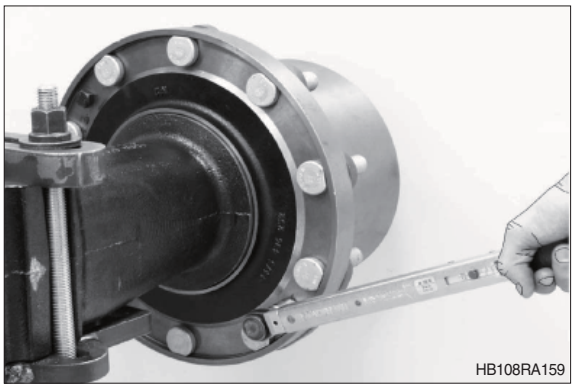
HB108RA159

10) REASSEMBLY

PARKING BRAKE (multi-disc brake)

For reassembly of the brake housing (1) see reassembly description of the input pinion – page 3-192~194.

(1) Insert all compression springs (2+3) into the holes of the brake housing (1).

Just for assembly of new parts, or if dismantled:

※ Install slotted pins (4) – with slots of slotted pins in a 180° offset position – and stud bolts (5).

※ Insert stud bolts with locking agent (loctite #262).

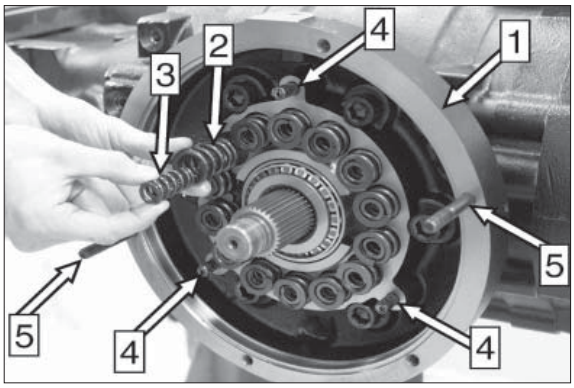

HB108RA160

1 = Brake housing cover
2 = Grooved ring
3 = Grooved ring
4 = Piston
5 = Bolt
6 = O-ring
7 = Hex. screw
8 = Hex. nut
9 = O-ring

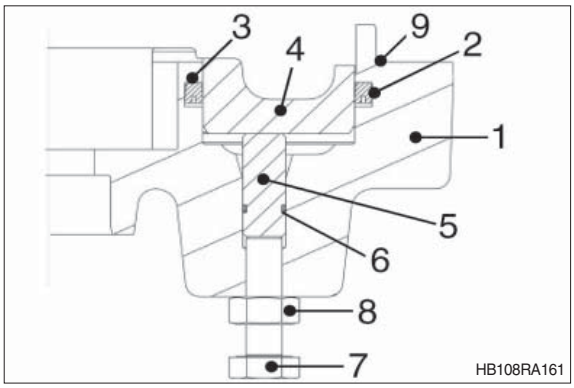

HB108RA161

(2) Oil both grooved rings (arrow) and insert them into the brake housing cover – **observing the installation position, see sketch RA161.**

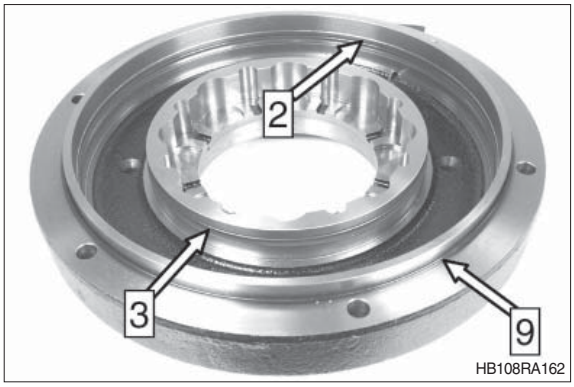

HB108RA162

(3) Insert both bolts (arrows) with O-ring into the brake housing cover – **observing the installation position, see sketch RA161.**

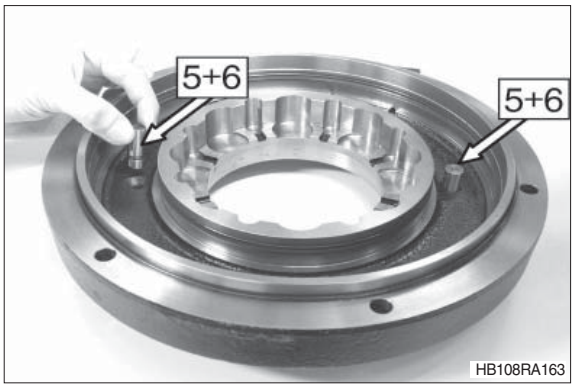

(4) 1 = Outer discs (steel discs)
2 = Inner discs (lined discs)

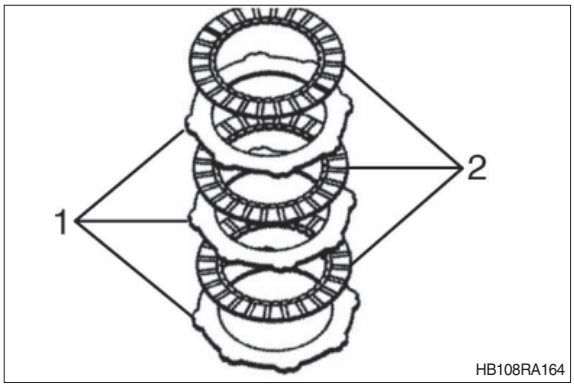

(5) Insert disc package into the brake housing cover – **observing the disc arrangement (see sketch above) starting with an outer disc.**

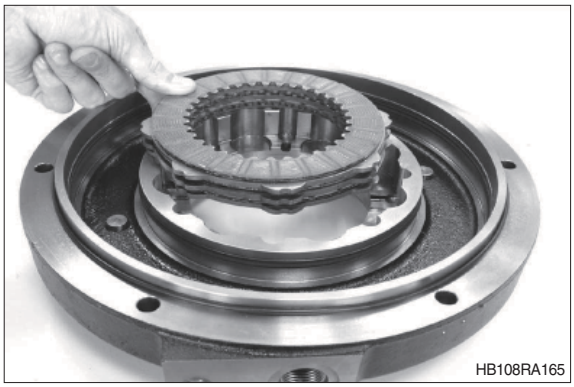

(6) Oil sealing surface of piston and of brake housing cover and press piston into the brake housing cover to contact position.

※ Press in piston without tilting – risk of damage to grooved rings and piston.

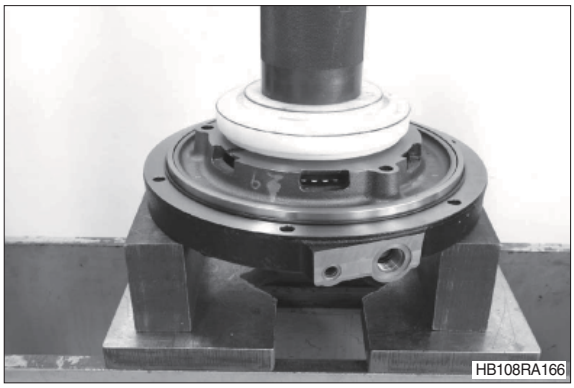

(7) Mount preassembled brake housing cover and fix with hexagon nuts (arrows).

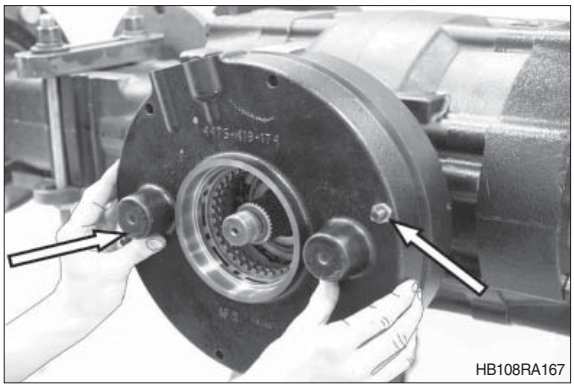
HB108RA167

(8) Insert disc carrier so that all discs (inner discs) are mounted.

※ Ensure a correct installation position of the disc carrier – countersink/input flange contact to show outwards (arrow).

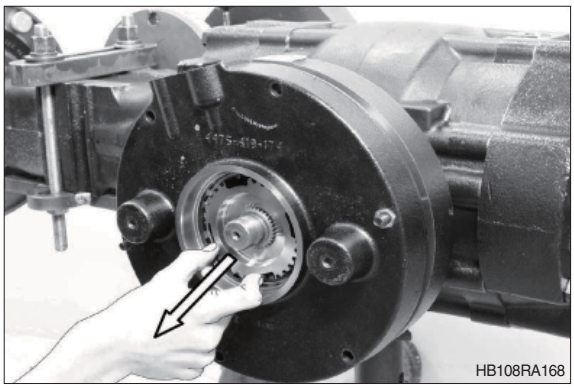
HB108RA168

(9) Bring brake housing cover to contact position **evenly** by hexagon nuts and hexagon screws, then fix it finally.

※ Hereby install disc carrier accordingly, to ensure all inner discs remain mounted.

· Tightening torque (M10/8.8) :
4.69 kgf · m (33.9 lbf · ft)

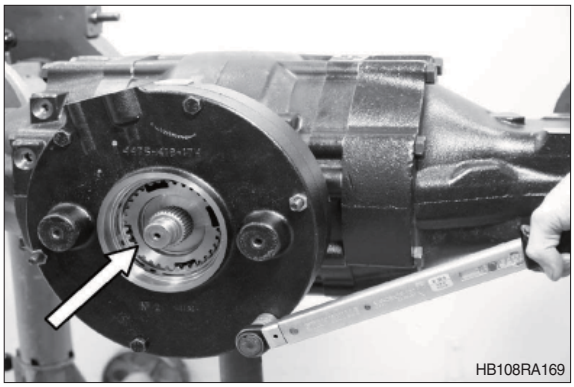
HB108RA169

Shaft seal/input flange

1 = Brake housing cover
2 = Shaft seal
3 = Screen sheet
4 = Input flange
5 = Washer
6 = Hex nut
7 = Input pinion
Z = detailed sketch – installation dimension/shaft seal

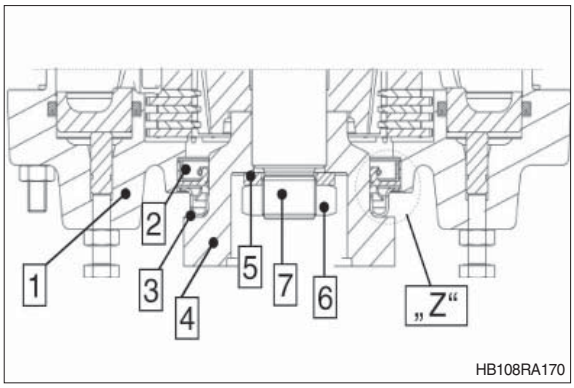

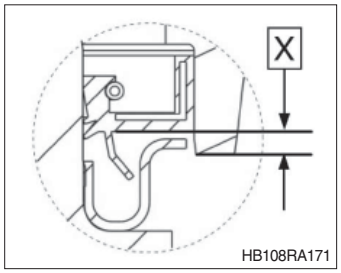

X = installation dimension 3.5 $^{+0.5}$ mm

① Insert shaft seal (2) – **observing installation dimension X (see detailed sketch, Z)**.

Contact surface (outer diameter) of shaft seal:
- If rubber-coated, wet with spirit (assembly aid)
- If made of metal, apply sealing agent (loctite #574)

Grease shaft seal around the sealing and dust lip.

※ Pay attention to a plane installation position of the shaft seal – use the specified driver tool to ensure an exact installation position of the shaft seal.

Driver tool 5870 048 308

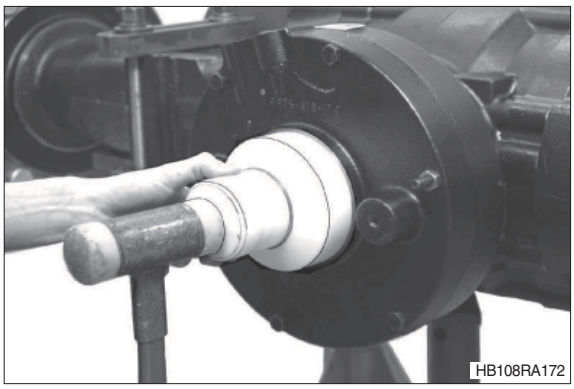

② Just for new parts assembly:
Mount screen sheet (3)on input flange (4) and bring to contact position.

※ Ensure correct installation position of screen sheet– also see sketch RA170, previous page and detailed sketch, Z.
Install screen sheet without deforming it – use suitable driver tool.

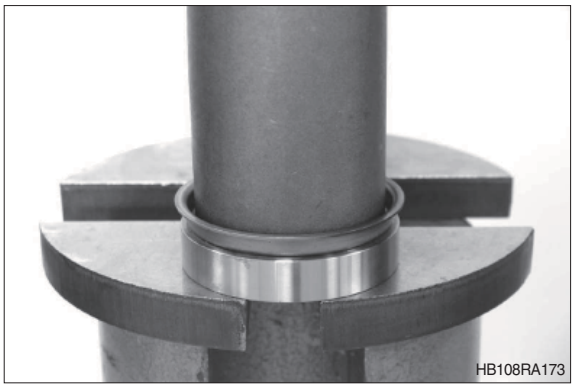
HB108RA173

③ Mount preassembled input flange.

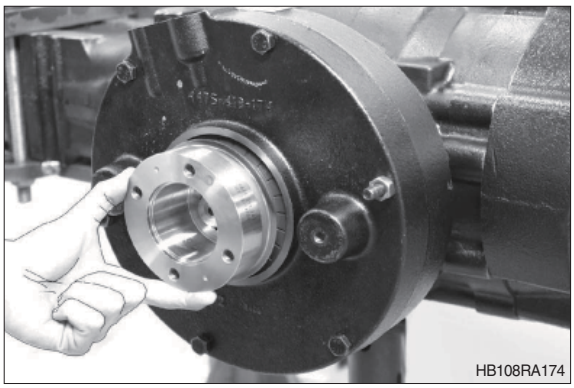
HB108RA174

⚠ Secure axle by using a support (arrow) – risk of accident.

④ Fix flange with washer (5) and hexagon nut (6).
While tightening rotate pinion in both directions several times (roller setting).

※ Install hexagon nut with locking compound (loctite #262).

· Tightening torque (M30 × 1.5) :
61.2 kgf · m (443 lbf · ft)

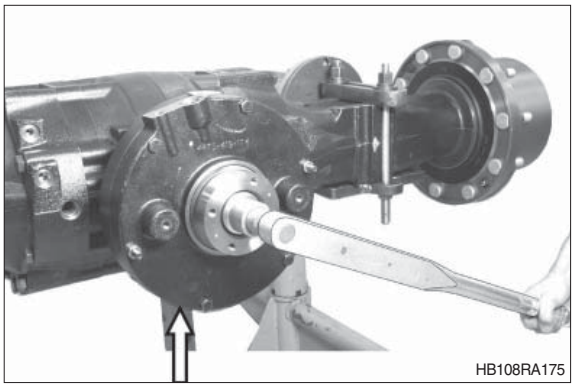
HB108RA175

Check break-away torque of multi-disc brake:

⚠ Secure axle by using a support – risk of accident.

① Fix locating piece (arrow) on input flange and check break-away torque of parking brake (do not place torque wrench on hexagon nut of input flange fixing).

※ Break-away torque of parking brake = min 102 kgf · m (738 lbf · ft).

※ In case of a proper parking brake functioning, a break-away (slipping) of < 102 kgf · m is not allowed.

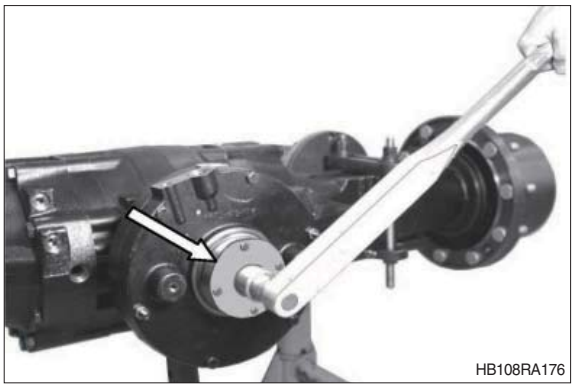
HB108RA176

Setting of emergency breathing of multi-disc brake:

1 = Brake housing cover
2 = Hexagon screw
3 = Hexagon nut

Y = Installation dimension → 29^{+2} mm

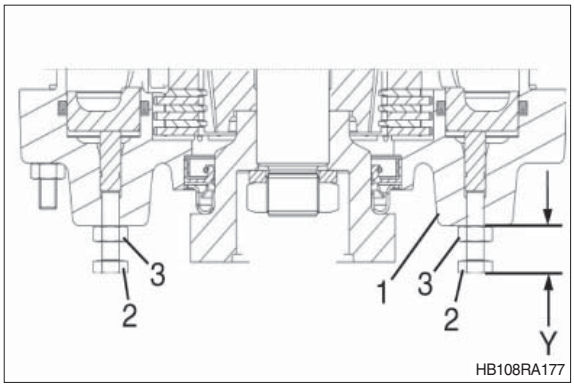

HB108RA177

① Install both emergency breather screws, observing the installation dimension Y – see sketch.

· Tightening torque (M10 × 1) :
4.69 kgf · m (33.9 lbf · ft)

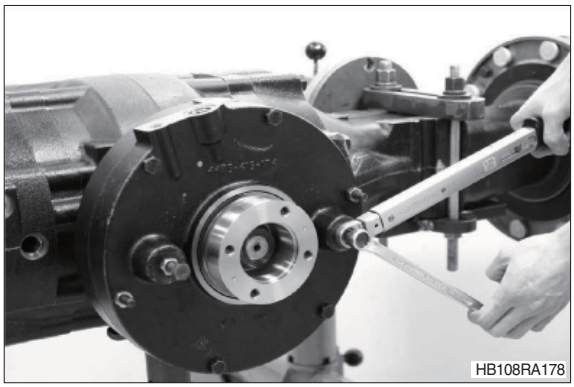
HB108RA178

Leakage test of multi disc brake:

① Mount breather (1) and screw plug (2).

※ Install screw plug with sealing agent – (loctite #574).

· Tightening torque (1-breather) :
0.61 kgf · m (4.43 lbf · ft)

· Tightening torque (2-screw plug) :
2.55 kgf · m (18.4 lbf · ft)

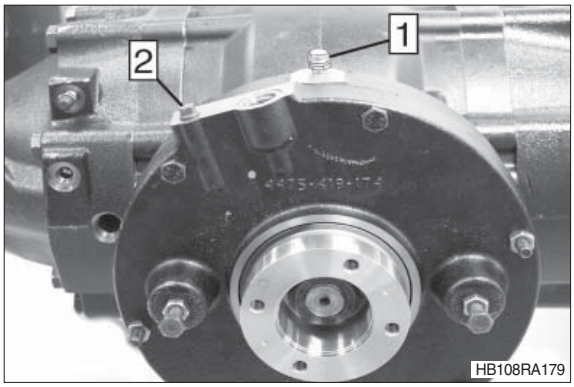

HB108RA179

② Check:
Prior to staring the test, bleed pressure chamber and then pressurize multi-disc brake several times.
Build up test pressure p = 13 bar and close shut-off valve of HP pump.

※ A pressure drop of max ≤ 1 bar is permissible during a 4-minute test duration.

Test media:
Motor oils SAE-10 W corresponds API-SE.
ATF-oils, Dexron of II D.

HP pump 5870 287 007
Reducing adapter (7/8" to G 1/4") 5870 950 159
Threaded coupling (G ¼") 5870 950 104

※ Prior to putting into operation fill the axle with oil.

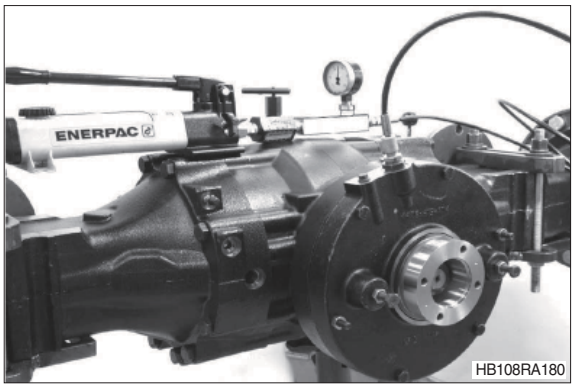

11) COMPLETION OF AXLE

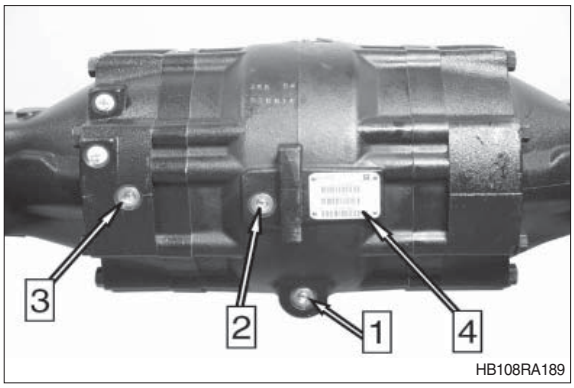

1 = Oil drain plug
2 = Oil filler/level check plug
3 = Brake control plug
4 = Identification plate

① Fit all screw plugs with **new** O-ring and install them.

· Tightening torque (7/8" – 14 UN) :
3.06 kgf · m (22.1 lbf · ft)

Just for assembly of new parts or if disassembled:

Fix identification plate with grooved pins.

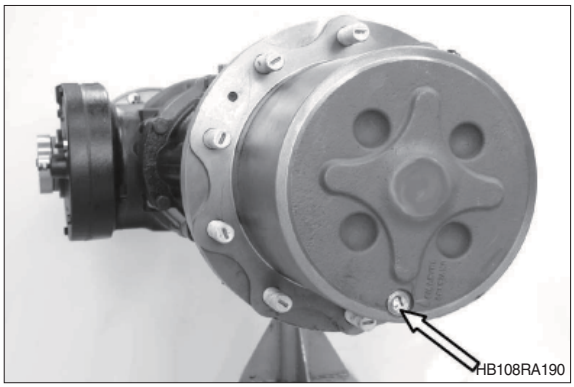

※ Fit screw plugs (arrow) of both output units with new O-ring and mount them.

· Tightening torque (7/8" – 14 UN) :
3.06 kgf · m (22.1 lbf · ft)

Check axle regarding leakage:

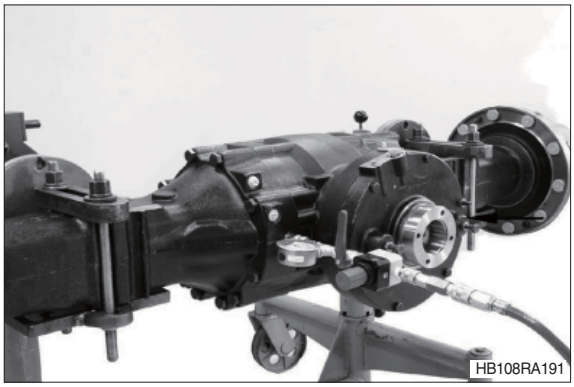

※ Max test pressure = 0.5 bar must not be exceeded here – risk of damage.

① Mount air connection into brake control hole of axle housing.
Pressurize axle with a test pressure of = 0.5 bar – and close shutoff valve.

※ No pressure drop is allowed during a 3-minute testing time.

Air connection	5870 286 079
Connection plug	0664 462 467
Reducing adapter (7/8" to G ¼")	5870 950 159

② Remove air connection, then fit screw plug with new O-ring and install it.

· Tightening torque (7/8" – 14 UN) :
3.06 kgf · m (22.1 lbf · ft)

※ Prior to putting into operation fill the axle with oil.

※ EXAMPLES OF GEAR-TOOTH CONTACT PATTERNS

- Applied the paint (or red lead) on the surface of several bevel gear teeth.
- Turn the pinioin gear and check the contact pattern.

Correct pattern

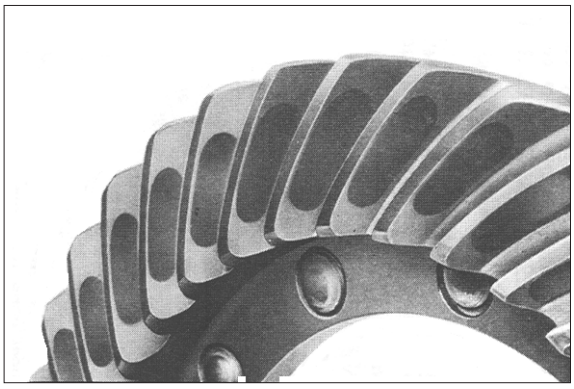

WTHAX16

Concave side

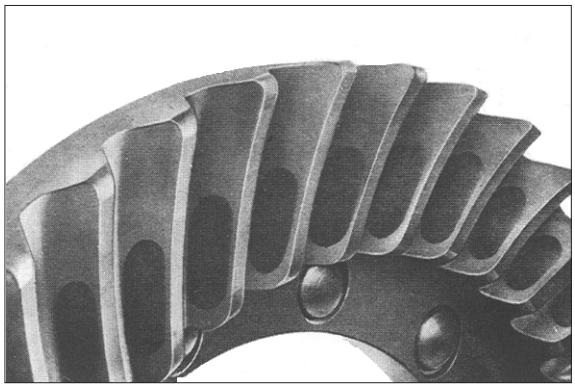

WTHAX17

Convex side

※ ADJUSTMENT

Incorrect pattern : high contact

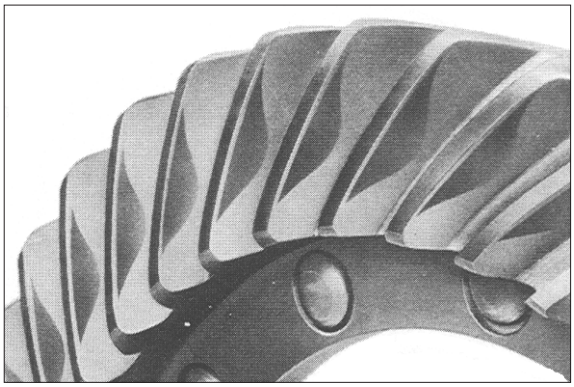

WTHAX18

Concave side

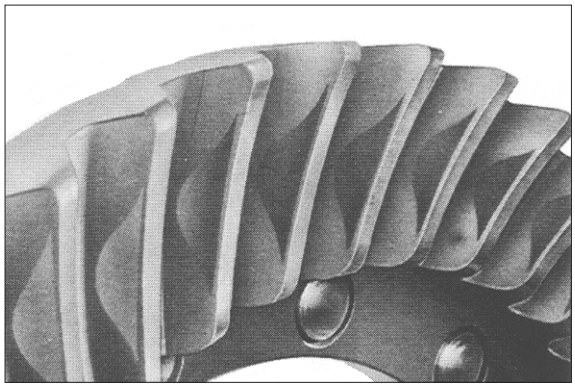

WTHAX19

Convex side

- Reduce the distance (-)

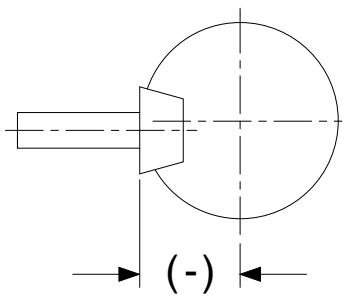

WTHAX20

Incorrect pattern, low contact

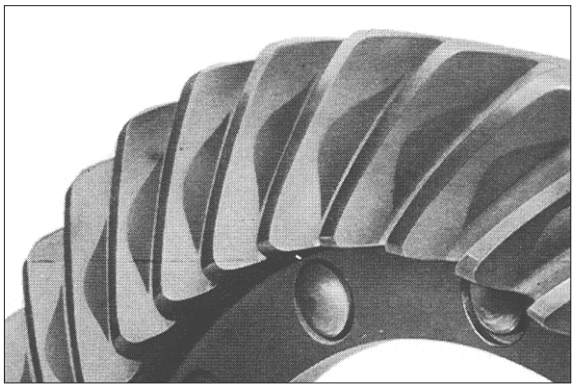

WTHAX21

Concave side

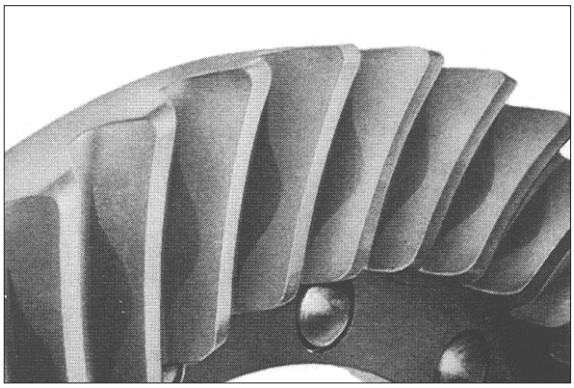

WTHAX22

Convex side

- Add the distance (+)

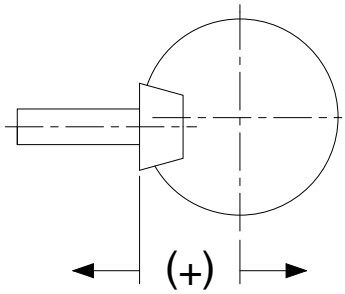

WTHAX23

SECTION 4 BRAKE SYSTEM

Group 1 Structure and Function ····· 4-1
Group 2 Operational Checks and Troubleshooting ····· 4-13
Group 3 Tests and Adjustments ····· 4-17
Group 4 Disassembly and Assembly ····· 4-18

GROUP 1 STRUCTURE AND FUNCTION

1. OUTLINE

1) MASTER CYLINDER TYPE

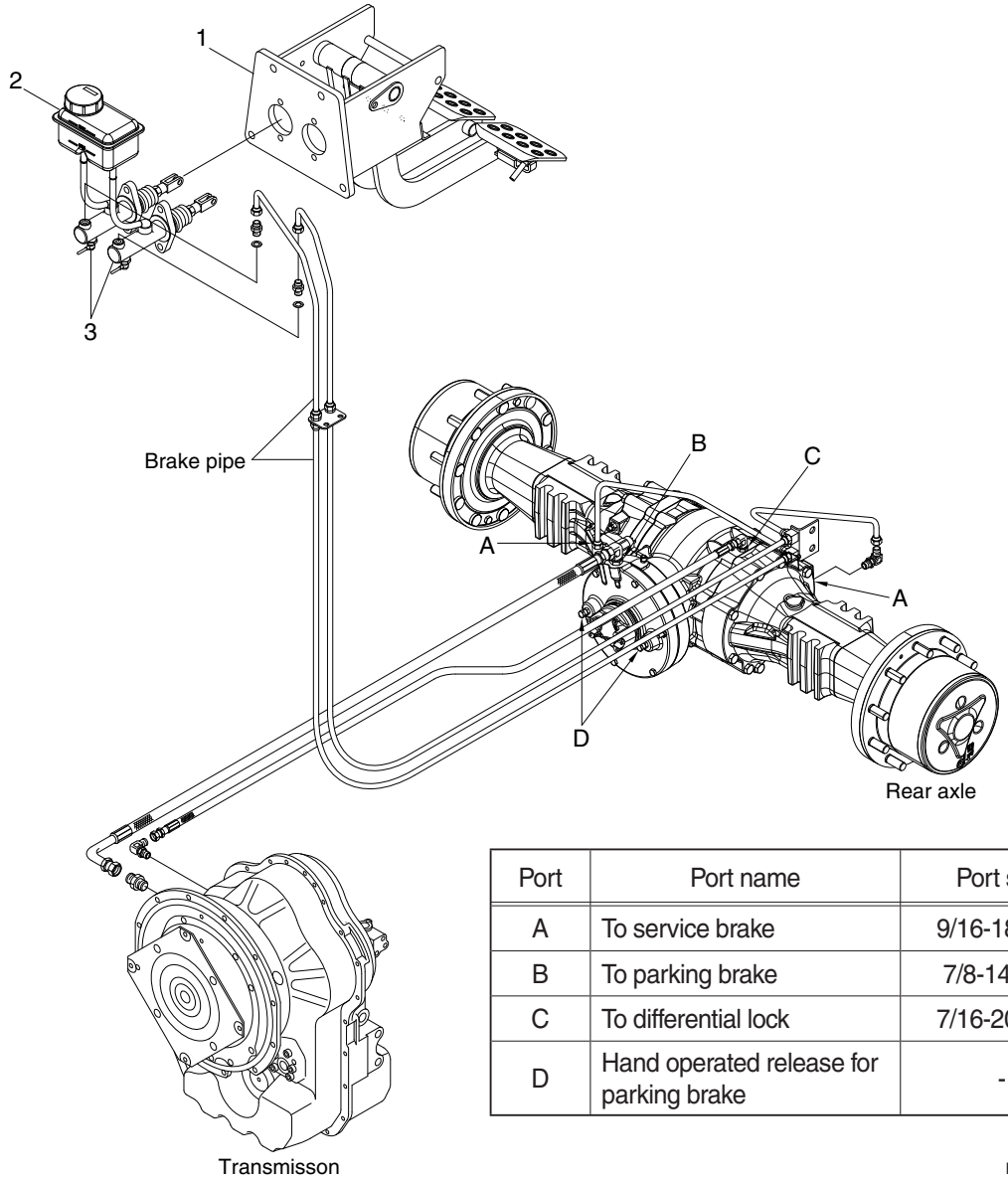

Port	Port name	Port size
A	To service brake	9/16-18UNF
B	To parking brake	7/8-14UNF
C	To differential lock	7/16-20UNF
D	Hand operated release for parking brake	-

H940C4BS01

1 Brake pedal & bracket assembly
2 Reservoir tank assembly
3 Brake master cylinder

OPERATION

Compensating master cylinders overcome the problem of unequal wear between the right and left brake. The units incorporate both master cylinder and compensating valve.
Each brake has its own master cylinder, brake pedals, servo units and associated pipework. Both master cylinders have one common reservoir.

2) BOOSTER TYPE (OPT)

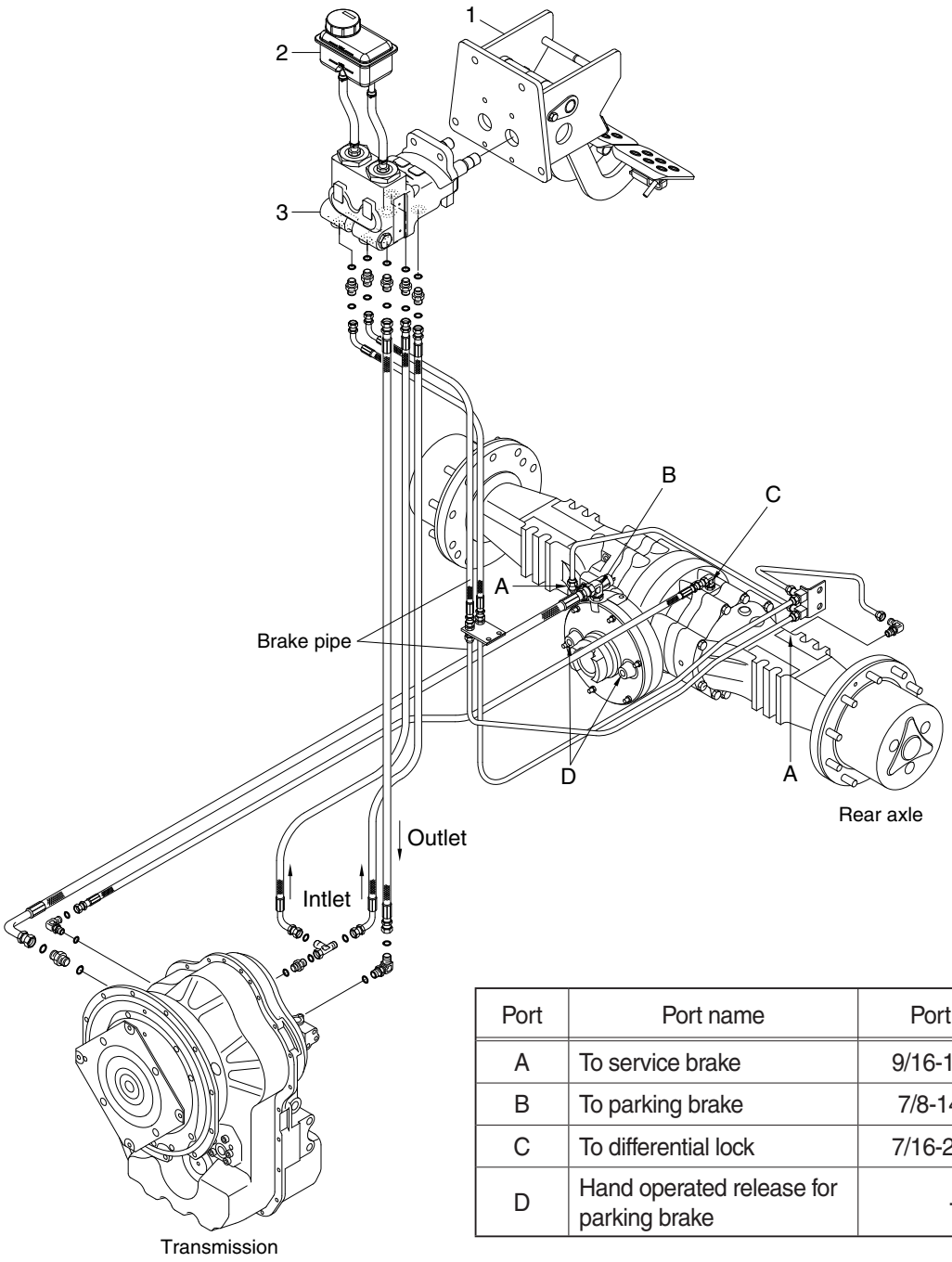

Port	Port name	Port size
A	To service brake	9/16-18UNF
B	To parking brake	7/8-14UNF
C	To differential lock	7/16-20UNF
D	Hand operated release for parking brake	-

H940C4BS01-1

1 Brake pedal & bracket assembly
2 Reservoir tank assembly
3 Brake valve

2. SPECIFICATION

1) SERVICE BRAKES

Item	Specification
Type	Oil-immersed multi-plate disc, self-adjust
Actuation	Hydraulic servo assisted.
Location	Inside the rear axle center casing (2 brake packs).

2) MASTER CYLINDER

Item	Specification
Type	Compensated master cylinder.
Number of cylinders	2
Piston diameter × stroke	Ø 32 × 20 mm

3) BRAKE VALVE (BOOSTER TYPE)

Item	Specification
Type	Boosted brake master cylinder.
Number of cylinders	2
Piston diameter × stroke	Ø 31.75 × 28.58 mm

4) PARKING BRAKE

Item	Specification
Type	Oil-immersed multi-plate disc.
Actuation	Hydraulic
Location	Inside the rear axle input casing.

3. MASTER CYLINDER

1) STRUCTURE

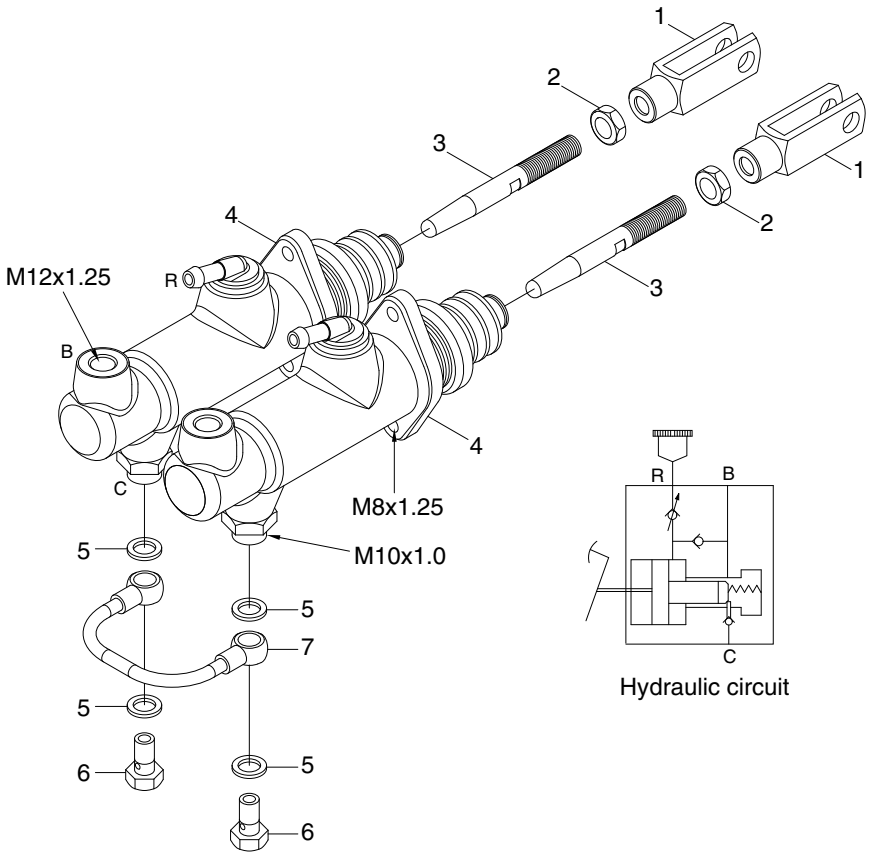

HB100BS04

1	Fork	4	Master cylinder assy	7	Hose
2	Hexagon nut	5	Cooper washer		
3	Push rod	6	Screw		

2) BLEEDING

(1) Low pressure bleeding

① Unscrew the bleeding valve of the brake.
② Push the brake pedal up to the stroke's end.
③ Screw the bleeding valve.
④ Release the brake pedal.
⑤ Wait for about 10 seconds.
⑥ Repeat point ① to ⑤ until no more air bubbles come from the bleeding valve.

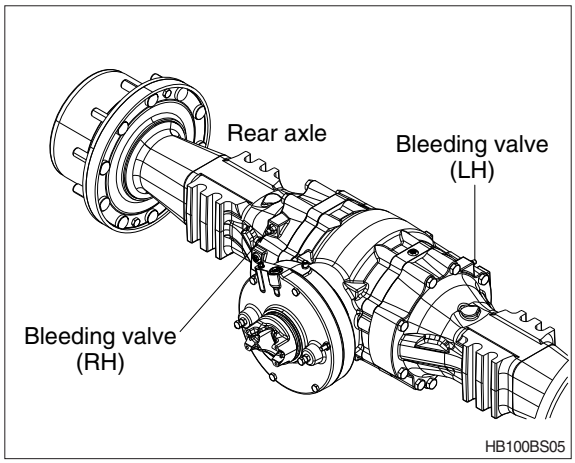

(2) High pressure bleeding

① Push the brake pedal.
② Unscrew the bleeding valve keeping the pedal applied.
③ When the fluid has been flowed, screw the bleeding valve.
④ Release the brake pedal.
⑤ Wait for about 10 seconds.
⑥ Repeat point ① to ⑤ until :
- No more air bubbles come from the bleeding valve
- The applied pedal is not too spongy but stiff (stroke quite short)

3) SINGLE CYLINDER OPERATION

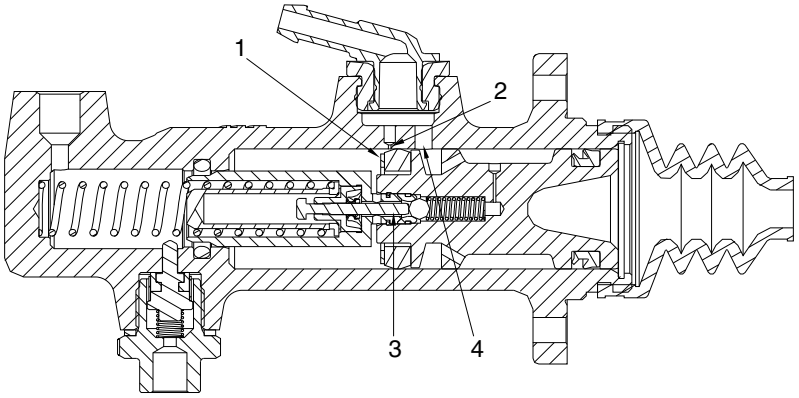

HB100BS02

When the braking line is bleeded correctly, power cylinder is full of braking fluid.
When the cylinder is actuated, the seal (1) closes the feeding hole (2) increasing the pressure in the braking line.
When the pre-setted pressure is achieved, the switch valve (3) closes and the line is pressurized by the smaller bore section of the cylinder.
As the force on push rod is released, the valve (3) opens and let the brake fluid flow to the tank through the discharge hole (4).

4) TWIN CYLINDER-COMPENSATING OPERATION

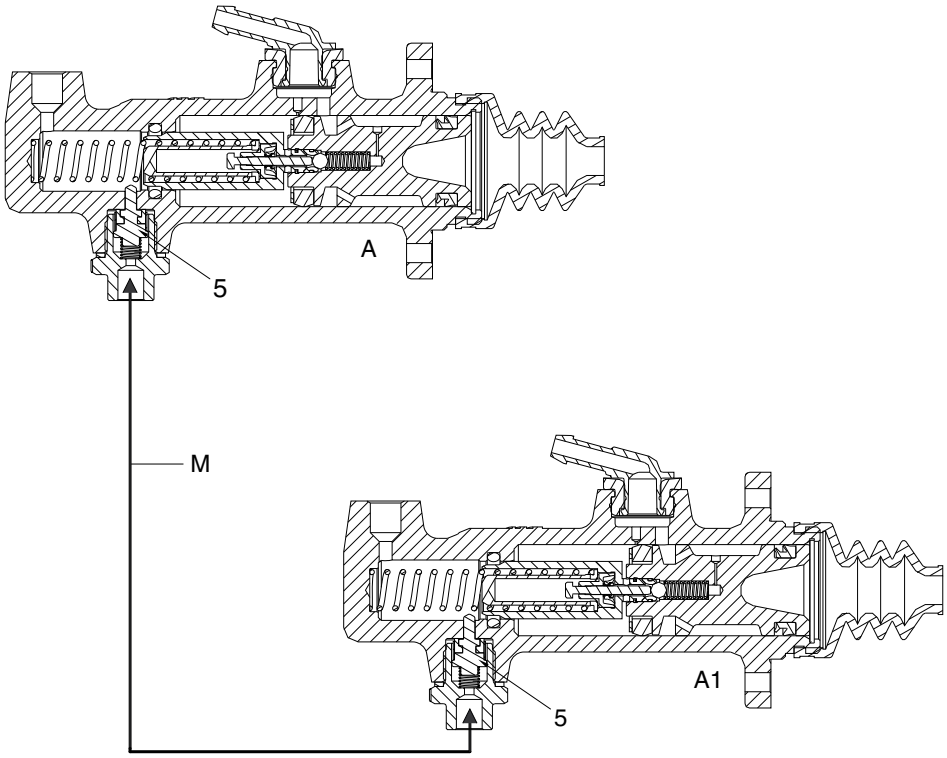

HB100BS03

When the pedals are pushed down, the function of the power cylinders is as described in the single cylinder operation.
If brakes require for any reason different displacements, a sort of compensation is required to avoid different pressure in the two different lines.
Pedals operate the pistons down the bores activating the compensating valves (5).
When the valves (5) in both cylinders are activated, fluid is displaced from A to A1 via bridge pipe M until the pressure are equalised. In this condition both compensating valves are open and both brakes are applied evenly.

4. BRAKE VALVE (BOOSTER TYPE)

1) STRUCTURE

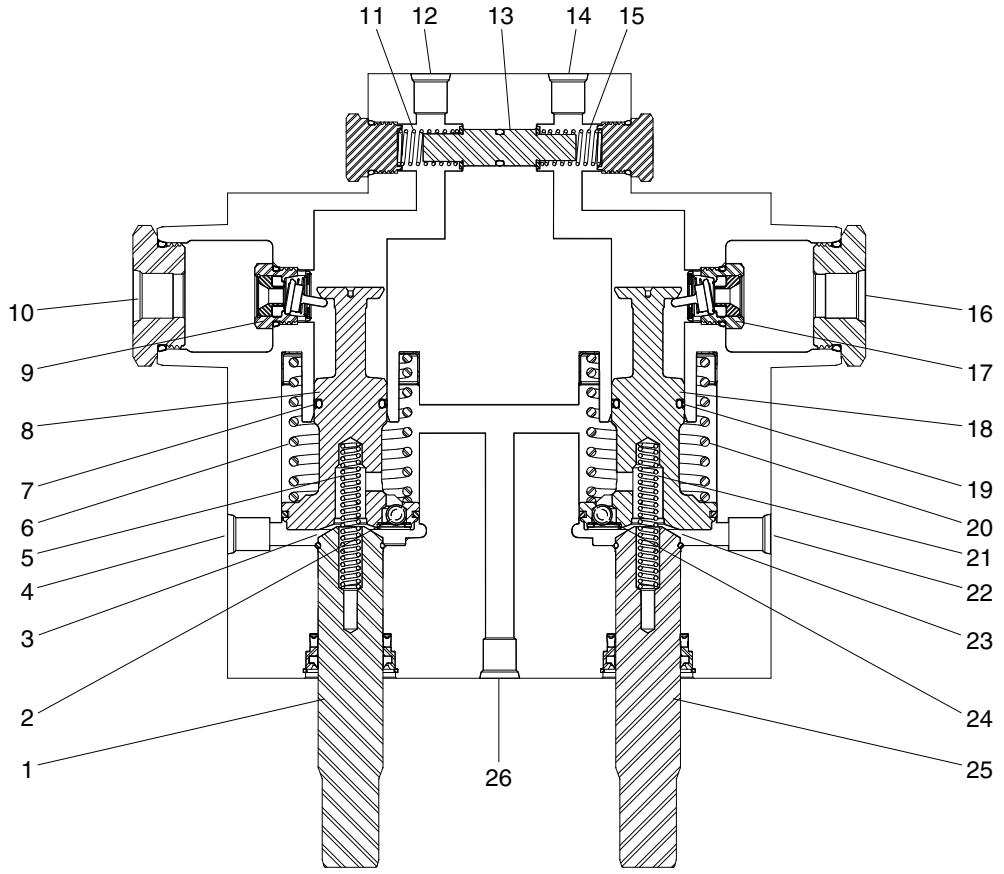

H940CB4SM01

1	Push rod	10	Resevoir tank port	19	Seal
2	Check ball	11	Spring	20	Spring
3	Land	12	Brake port, LH	21	Spring
4	Inlet port	13	Spool	22	Inlet port
5	Spring	14	Brake port, RH	23	Land
6	Spring	15	Spring	24	Check ball
7	Seal	16	Resevoir tank port	25	Push rod
8	Piston	17	Valve assembly	26	Outlet port
9	Valve assembly	18	Piston		

2) OPERATION

(1) Neutral position (brakes released)

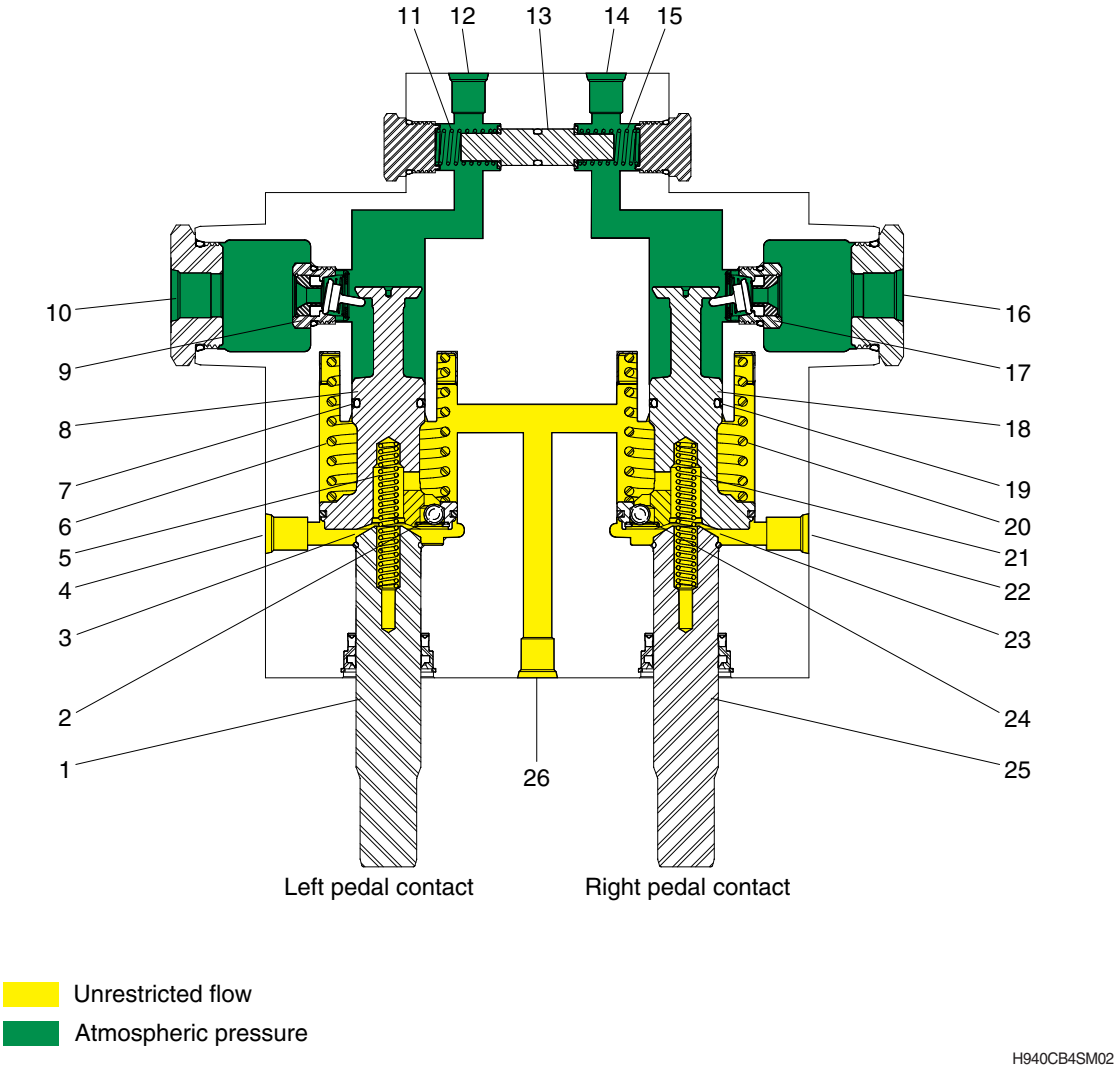

Oil from the hydraulic system enters ports (4 & 22) separately. This oil flows through land areas (3 & 23), through the center of pistons (8 & 18) and on to the outlet port (26).

The two halves of the master cylinder reservoir are open to one another. Hydraulic oil enters the master cylinder reservoir at port (10 & 16). A small flow of oil through the attached connection keeps the master cylinder reservoir full.

In the neutral position, pistons (8 & 18) are fully retracted and valve assemblies (9 & 17) are open. The brake system is at reservoir pressure through brake ports (12 & 14).

Pedals are held in the neutral position by springs (5 & 6) and springs (20 & 21).

(2) Both pedals applied

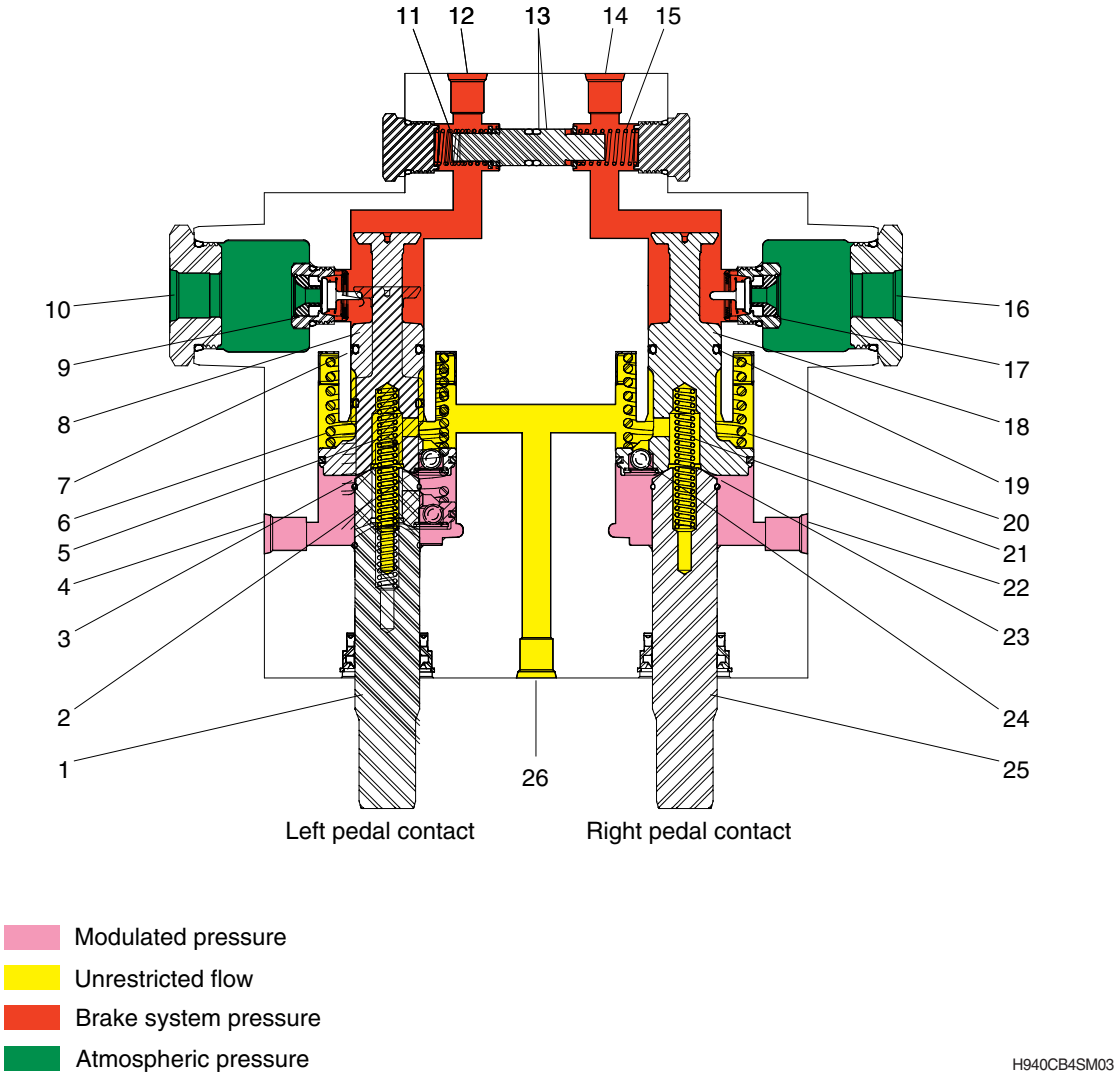

Oil from the hydraulic system enters ports (4 & 22) separately and drains to outlet port (26). Both pedals are depressed forcing springs (5 & 21) to compress. Oil flowing through land areas (3 & 23) becomes restricted. Oil flow moves to close check balls (2 & 24).

Restricted oil flow at lands (3 & 23) causes pressure to act against the large diameter of pistons (8 & 18). Pistons (8 & 18) move to compress springs (6 & 20). As more push rod displacement occurs, valve assemblies (9 & 17) close, stopping brake system oil from moving to reservoir or atmosphere pressure. Additional movement of the push rods and pistons (8 & 18) forces brake system oil to the brakes causing brakes to fill through ports (12 & 14). If the brakes consume slightly different amounts of oil, spool (13) moves against either spring (11 or 15) to satisfy the original amount of brake oil of whichever side has the most required.

After the brakes are filled, higher brake pressure is developed by the inlet oil pressure being modulated at lands (3 & 23), causing piston (8 & 18) to generate a higher pressure at the brake ports. Brake pedal modulated feel is determined by the hydraulic areas of push rods (1 & 25) and modulated pressure at lands (3 & 23).

Maximum boosted brake pressure is limited by the inlet oil pressure at ports (4 & 22).

Additional pedal effort can cause higher brake pressure and is dependent only by the amount of pedal force applied.

(3) One pedal applied

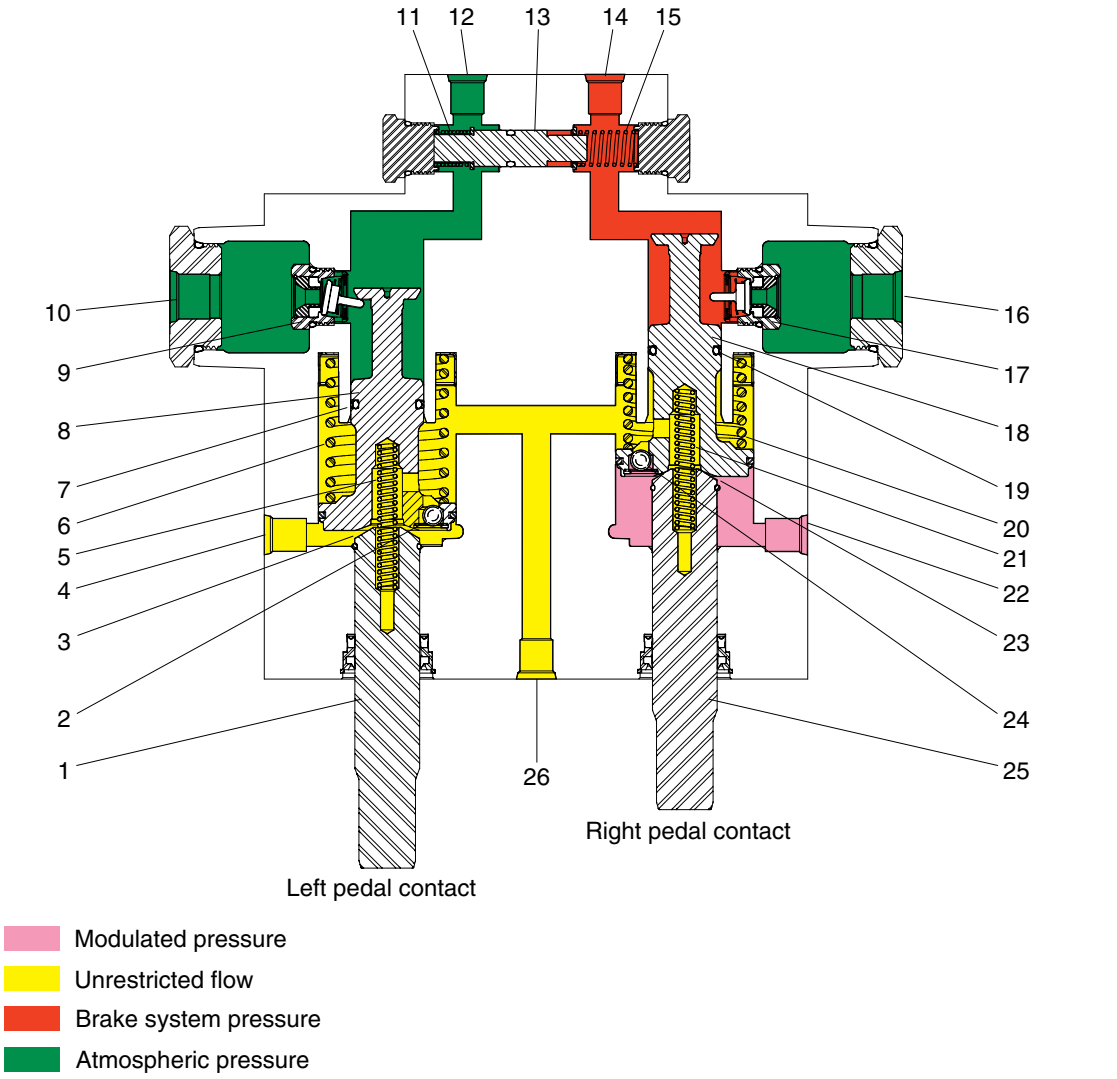

H940CB4SM04

When only one pedal is applied, the opposite side brake remains at reservoir pressure. This system works the same as described in page 4-10 except piston (13) moves full stroke then stops and brake pressure is developed by the same means as described in page 4-10. The effort required on one pedal is one half that of the effort when applying both pedals to obtain the same brake pressure.

(4) Both pedals applied (power-off condition)

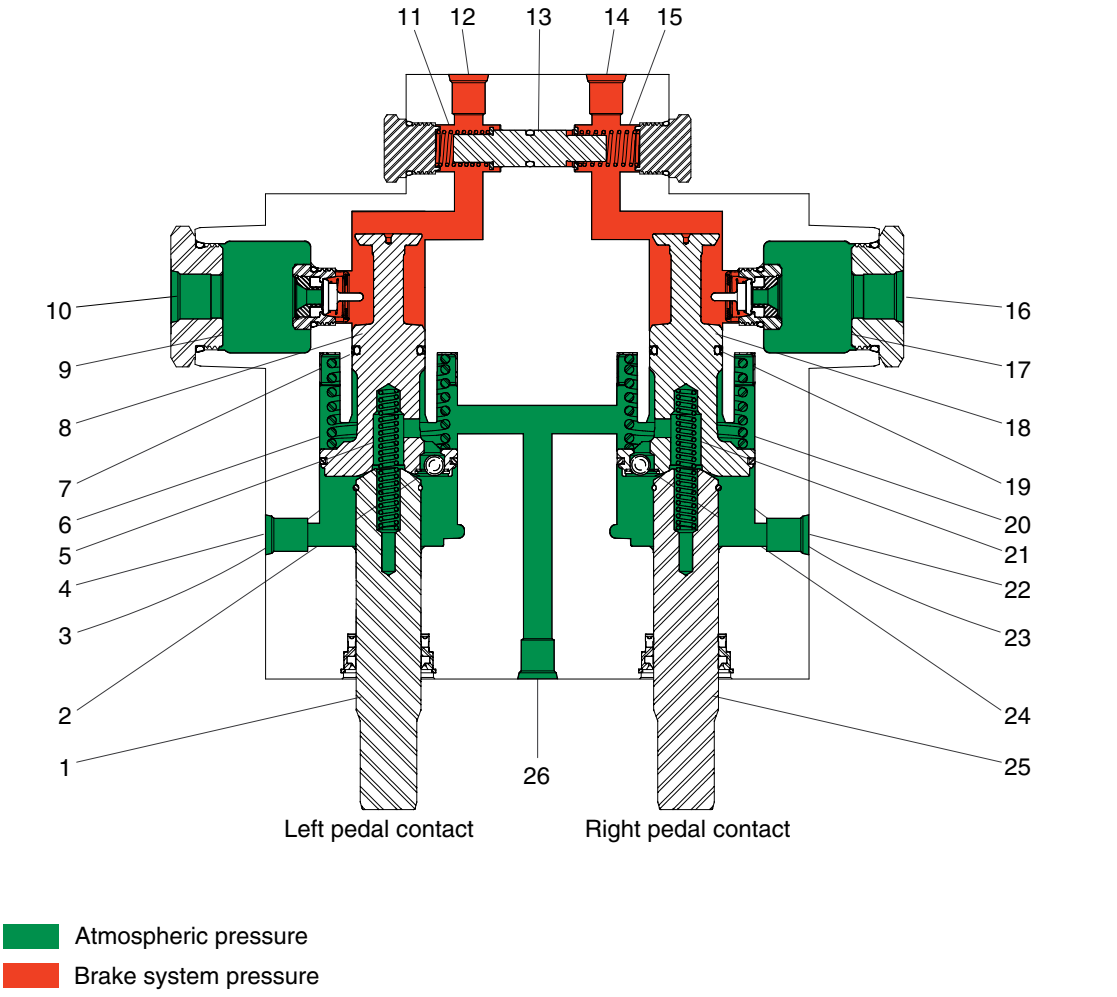

When the engine in not running (power-off condition) one or both brakes can be actuated manually. When push rods (1 & 25) are displaced by the pedals, springs (5 & 21) compress until lands (3 & 23) are mechanically closed. Additional push rod displacement forces pistons (8 & 18) to move. Valve assemblies (9 & 17) close, stopping oil from going to the hydraulic reservoir. More push rod travel fills the brakes and pressure is developed by providing pedal force. The amount of pressure to the brake depends on how hard the pedals are pushed. When the pedals return to the neutral position, valve assemblies (9 & 17) open and return brakes to reservoir pressure.

GROUP 2 OPERATIONAL CHECKS AND TROUBLESHOOTING

1. OPERATIONAL CHECKS

1) BRAKE PIPING

(1) Check pipes, hoses and joints for damage, oil leakage or interference.
(2) Operate brake pedal and check operating force when pedal is depressed. Check also change in operating force, and change in position of pedal when pedal is kept depressed.

2) The brakes generate a high temperature when operating, this means that the casing will be hot to touch, this condition is normal.

2. TROUBLESHOOTING

Problem	Cause	Remedy
Insufficient braking force	· Hydraulic system leaks oil. · Hydraulic system leaks air. · Disk worn. · Hydraulic system clogged.	· Repair and add oil. · Bleed air. · Replace. · Clean.
Brake acting unevenly. (Machine is turned to one side during braking.)	· Tires unequally inflated. · Brake out of adjustment. · Disk surface roughened. · Wheel bearing out of adjustment. · Hydraulic system clogged.	· Adjust tire pressure. · Adjust. · Repair by polishing or replace. · Adjust or replace. · Clean.
Brake trailing.	· Pedal has no play. · Piston cup faulty. · Hydraulic system clogged. · Wheel bearing out of adjustment.	· Adjust. · Replace. · Clean. · Adjust or replace.
Brake chirps	· Brake trailing. · Piston fails to return. · Disk worn. · Disk surface roughened.	· See above. Brake trailing. · Replace. · Replace. · Repair by polishing or replace.
Brake squeaks	· Disk surface roughened. · Disk worn.	· Repair by polishing or replace. · Replace.
Large pedal stroke	· Brake out of adjustment. · Hydraulic line sucking air. · Oil leaks from hydraulic line, or lack of oil. · Disk worn.	· Adjust. · Bleed air. · Check and repair or add oil. · Replace.
Pedal dragging.	· Twisted push rod caused by improperly fitted brake valve.	· Adjust.

Problem	Cause	Remedy
One or more brakes do not apply. (Brake travel not excessive, brake not pulling to one side)	· Master cylinder fault. · Friction and free plate distortion.	· Check master cylinder in single and coupled pedal modes to identify fault area, service as required. · Check friction and free plates.
Pedal travel excessive. (But not touching floor)	· Air in hydraulic system. · Leak in hydraulic system. · Friction and free plate distortion.	· Check fluid reservoir level. Check for fluid and air leaks, repair as required. · Check for fluid loss at master cylinder and brake piston, all pipes and fittings for loose connections. Repair as required. · Renew friction and free plates - both sides.
Applying one brake (pedal unlocked) also partially engages the other brake.	· Valve stem seal inside (non active) master cylinder piston not sealing.	· Renew master cylinder piston.
Pedal hard to operate.	· Tightness at pedal pivot. · Fluid contamination and seal damage. · Misaligned push rod or pedal. · Kinked or crushed brake pipes.	· Inspect pedal pivot. Free-off and lubricate. · Flush system and renew all hydraulic seals. · Check and repair as required. · Check and renew brake pipework.
Pedal touches floor under constant pressure-no fluid loss.	· Master cylinder fault. · Friction and free plate distortion. · Air in hydraulic system.	· Check master cylinder in single and coupled pedal modes to identify fault area, service as required. · Renew friction and free plates - both sides. · Check fluid reservoir level. Check for fluid and air leaks, repair as required.
Pedal touches floor under constant pressure-and fluid loss.	· External fluid leaks. · Internal fluid leaks.	· Visually check brake circuit for fluid loss, service as required. · Do brake piston seal leakage test.
Pulling to one side when pedals locked together.	· Compensating feature not working. · Braking system inoperative on one side. · Friction plates worn beyond limits or distorted on one side. · Badly adjusted push rods.	· Inspect master cylinder compensating operation. Check if blockage in bridging pipe. Service as required. · Unlatch pedals to test circuits individually. · Renew friction and free plates - both sides. · Adjust push rod (1㎜ minimum)

Problem	Cause	Remedy
Poor braking (not pulling to one side).	· Friction plates worn beyond limits or distorted. · Master cylinder fault. · Incorrect or low axle oil.	· Renew friction and free plates - both sides of relevant axle. · Check master cylinder in single and coupled pedal modes to identify fault area, service as required. · Fill axle with correct type of oil.
Brakes not releasing.	· Brake pedal spring fault. · Master cylinder fault (plunger stuck in bore). · Blocked hole in master cylinder reservoir cap. · Brake pedal free travel incorrect. · Fluid contamination and seal damage. · Kinked or crushed brake pipes. · Friction and free plates not free on splines or dowels.	· Fit a new spring. · Check master cylinder in single and coupled pedal modes to identify fault area, service as required. · Fit a new reservoir cap. · Adjust pedal free travel. · Flush system and renew hydraulic seals. · Check and renew pipes as required. · Check friction and free plates for free movement, renew if required - both sides of relevant axle.
Excessive brake noise in operation.	· Deterioration of axle oil or wrong type of axle oil. · Axle oil loss. · Friction plates worn beyond limits. · Friction and free plates in poor condition.	· Change axle oil. · Refill axle with correct oil and check for leaks. · Renew friction and free plates. · Check for distortion or surface pitting and roughness of friction and free plates (annular grooving of free plates is acceptable).
Fluid loss when machine standing for instance - overnight.	· Severe damage or slight cut or nick in the brake piston seal. Do brake piston seal leakage test.	· Strip axle, replace seal.

1. CHECKING THE FOOT BRAKE FLUID LEVEL

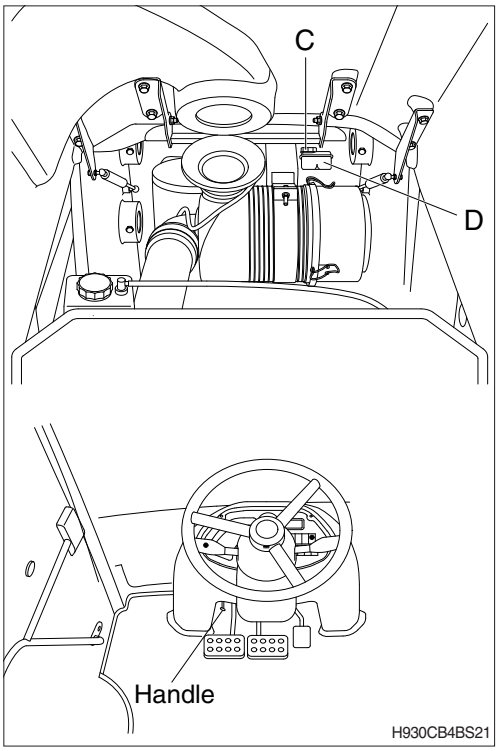

⚠ Faulty brakes can kill. Do not use the machine until the fault has been put right.

1) Park the machine on firm level ground, engage the park brake and set the FNR lever to neutral.

2) Lower the loader arms and the backhoe to the ground. Switch OFF the engine and remove the starter key.

3) Pull the handle and open the engine cover.

4) Visually check the level, MAX level is marked on the reservoir (D).

5) Add fluid if necessary.

※ If the level has fallen a long way below the MAX mark, get the system checked by your Hyundai dealer.

6) Refit the reservoir cap (C). Wipe up any spillage.

※ Use HHI genuine brake oil or mineral base oil (ISO VG 10, Azolla ZS 10) only.

⚠ Do not use synthetic or vegetable base automotive brake oil (DOT3, 4, 5, 5.1 and etc.).

⚠ Using of regular brake oil (DOT 3, 4, 5, 5.1 and etc) cause the malfunction of brake system due to the serious damages of seals in brake master cylinder.

- If the oil becomes dark, change brand-new oil immediately.
- Water pollution is never allowed.
- Do not mix different type oil.

1. BRAKE VALVE (BOOSTER TYPE)

1) STRUCTURE

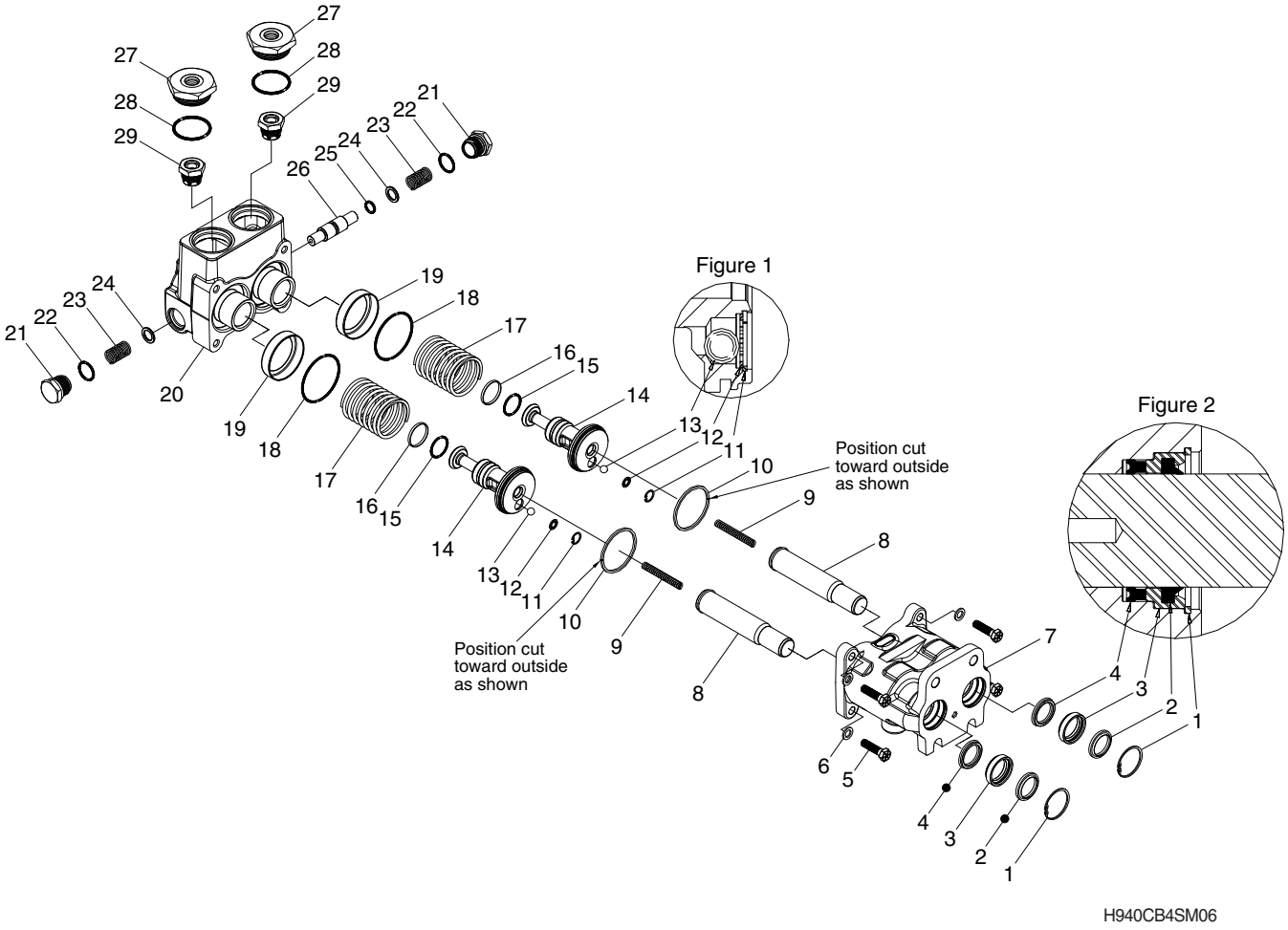

1	Retaining ring	11	Retainer	21	Plug
2	Seal	12	Washer	22	O-ring
3	Retainer	13	Ball	23	Spring
4	Seal	14	Piston	24	Washer
5	Cap screw	15	O-ring	25	O-ring
6	Washer	16	Seal	26	Spool
7	Housing	17	Spring	27	Plug
8	Push rod	18	O-ring	28	O-ring
9	Spring	19	Retainer	29	Tip valve assembly
10	Piston ring	20	Housing		

2) DISASSEMBLY

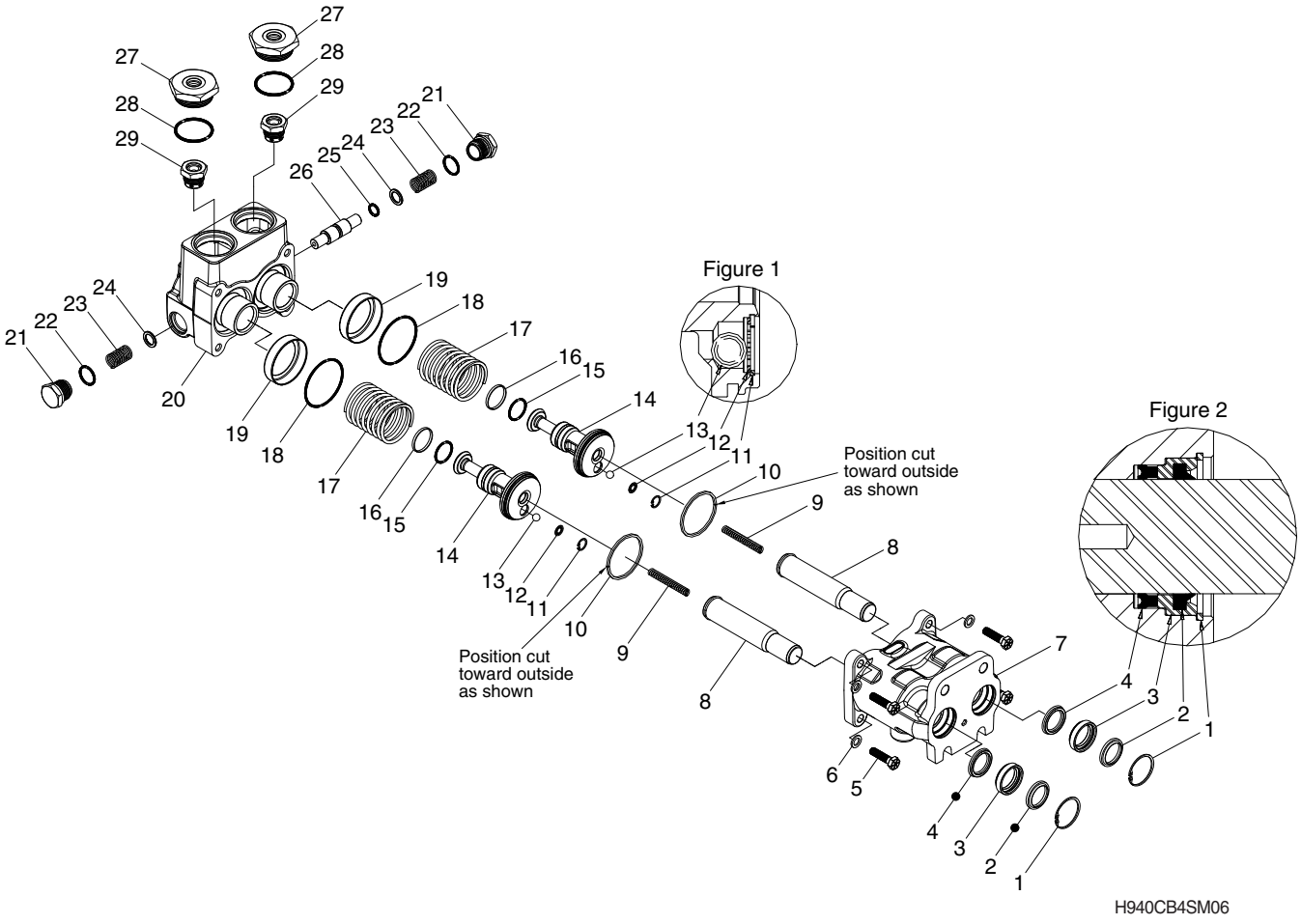

(1) Remove valve assembly from machine by disconnecting necessary fluid lines. Remove mounting bolts and drain fluid from assembly.

(2) Remove reservoir plugs (27) from housing (20).
Remove O-rings (28) from reservoir plugs (27).

(3) Remove tip valve assemblies (29) from housing (20).
Tip valve assemblies (29) are not field serviceable.
Service by replacement only.

(4) Housings (7 & 20) are under spring tension. To separate housing halves, position mounting flange on housing (7) face down and clamp in a vise. Apply downward pressure on housing (20) while evenly loosening four cap screws (5). It may be necessary to twist on housing (20) to break the two sections apart.
Remove four cap screws (5) and four washers (6) while carefully separating housing halves.

(5) Remove springs (9), piston (14) assemblies, springs (17), O-rings (18) and retainers (19).

(6) Remove retaining ring (11), washer (12) and ball (13) from pistons (14).

(7) Remove piston ring (10), seal (16) and O-ring (15) from pistons (14).

(8) Remove push rods (8) from housing (7). Do not remove retaining rings from push rods (8).

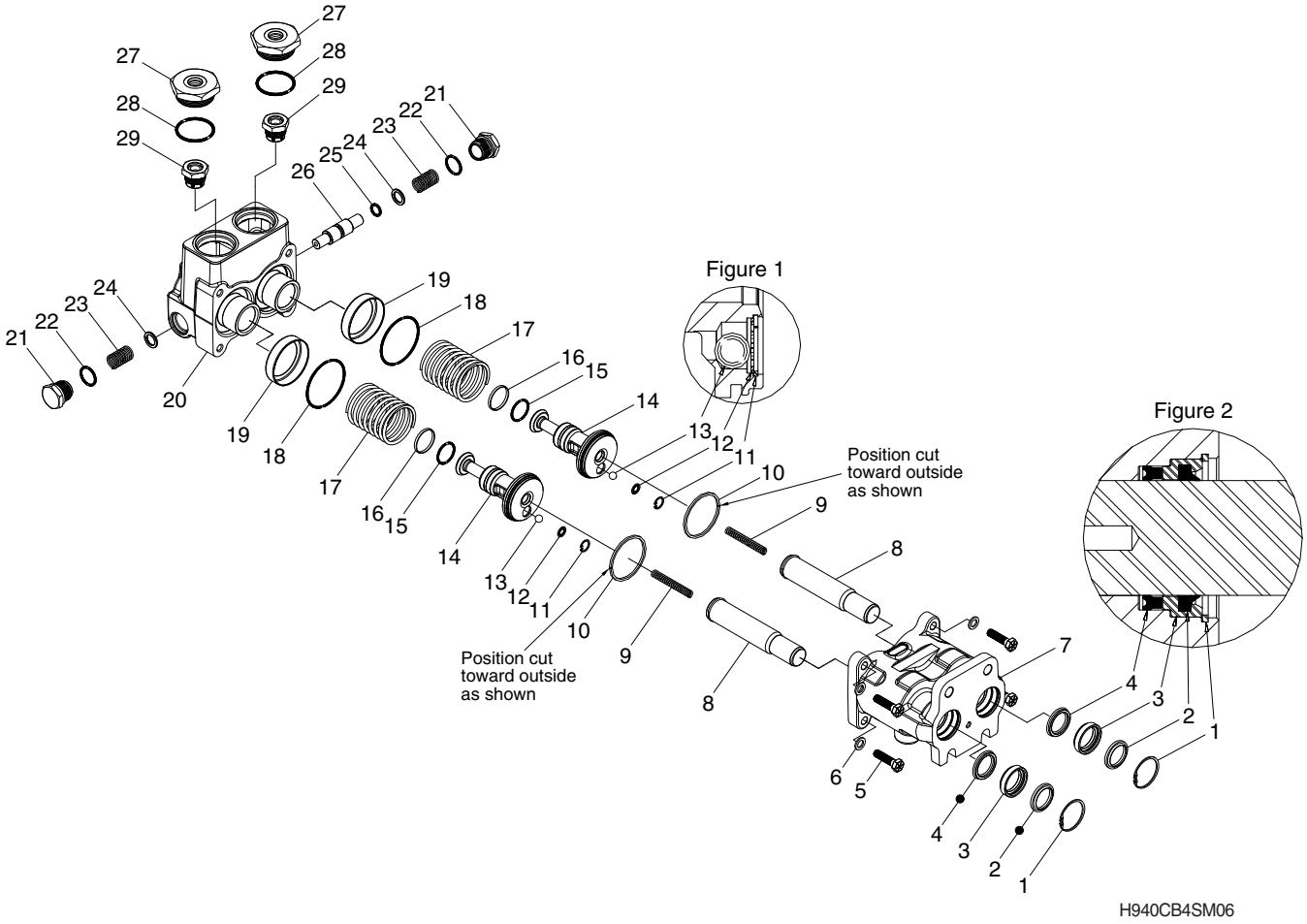

(9) Retainer (3) need not be removed to service seals (2 & 4). Carefully remove wiper seal (2) by inserting a small screw driver along the outer perimeter of wiper seal (2) and prying out. Remove seal (4) using a dull pointed pick tool. See figure 2.

※ Be careful not to scratch or mar insert (2) or housing bore.

If retainers (3) require replacement, remove retaining rings (1) and seals (2 & 4) as indicated. With housing (7) flange face down in a vise, use a plastic or wooden dowel through housing (7) bore to evenly tap on retainers (3) to remove. An inside bearing puller can also be used to remove retainers (3).

(10) Remove plugs (21), springs (23) and washers (24) from housing (20). Remove O-rings (22) from plugs (21).

(11) Use a plastic or wooden dowel to carefully remove spool (26) from housing (20). Remove O-ring (25) from spool (26).

※ Be careful not to scratch or mar spool (26) or housing bore.

3) ASSEMBLY

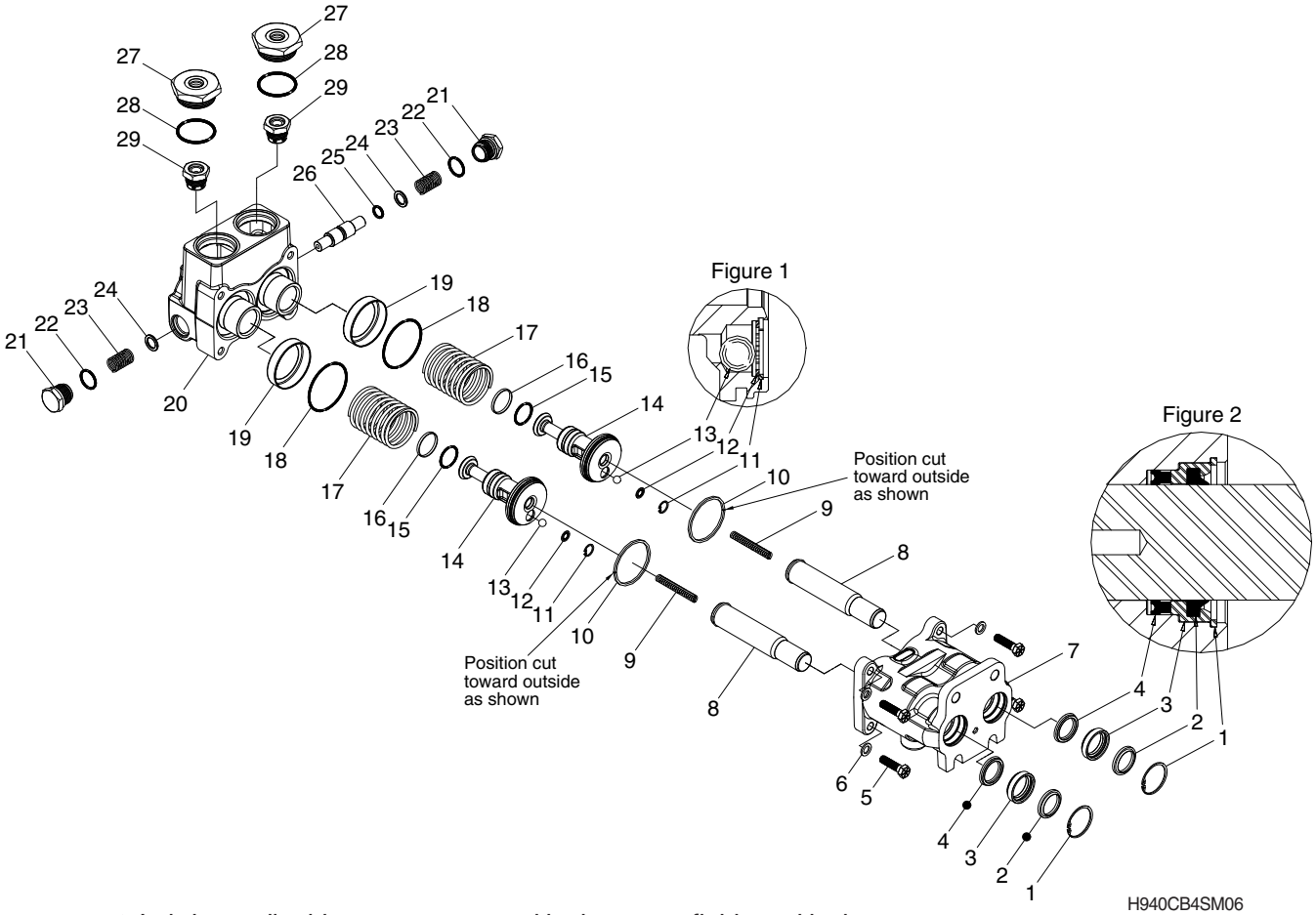

※ Lubricate all rubber components with clean type fluid used in the system.

(1) Thoroughly clean housings and all parts with clean solvent and allow to dry before proceeding. Lubricate all parts and housing bores with clean type fluid used in the system.

(2) Install new O-ring (25) on spool (26). Carefully install spool (26) in housing (20).

※ Be careful not to scratch or mar spool (26) or housing bore.

(3) Install new O-rings (22) on plugs (21). Install washers (24), springs (23) and plugs (21) in housing (20). Be sure washers (24) are properly positioned over spool (26).
Torque plugs (21) 5.5~6.2 kgf · m (40~45 lbf · ft).

(4) Install new seals (4), new wiper seals (2) and retaining rings (1) in housing (7). Note direction of cups (4) and wiper seals (2). See figure 2. If retainers (3) require replacement, install new seals (4) in new retainers (3) as shown. Place a thin coat of bearing grease on outside diameter of new retainers (3) and carefully tap into place. Install new wiper seals (2) and retaining rings (1). See figure 2.

(5) Install ball (13), washer (12) and retainer (11) into pistons (14). Be sure retainers (11) are properly seated in groove. See figure 1.

(6) Install new piston ring (10) and new O-ring (15) on pistons (14). Be sure the cut on piston rings (10) match the position when installed into housing (7) bores.

(7) Install seal (16) in pistons (14) groove over top O-rings (15). Seals (16) will stretch and become oversized when being installed. These seals must be resized before final assembly. To resize seals (16), lubricate seals (16), pistons (14) and housing (20) bores with clean type fluid used in the system. Carefully insert each piston (14) assembly in the proper housing (20) bore being careful not to extrude seal (16). Allow each piston (14) assembly to remain in the housing bores for at least 10 minutes. Proceed to next step while waiting.

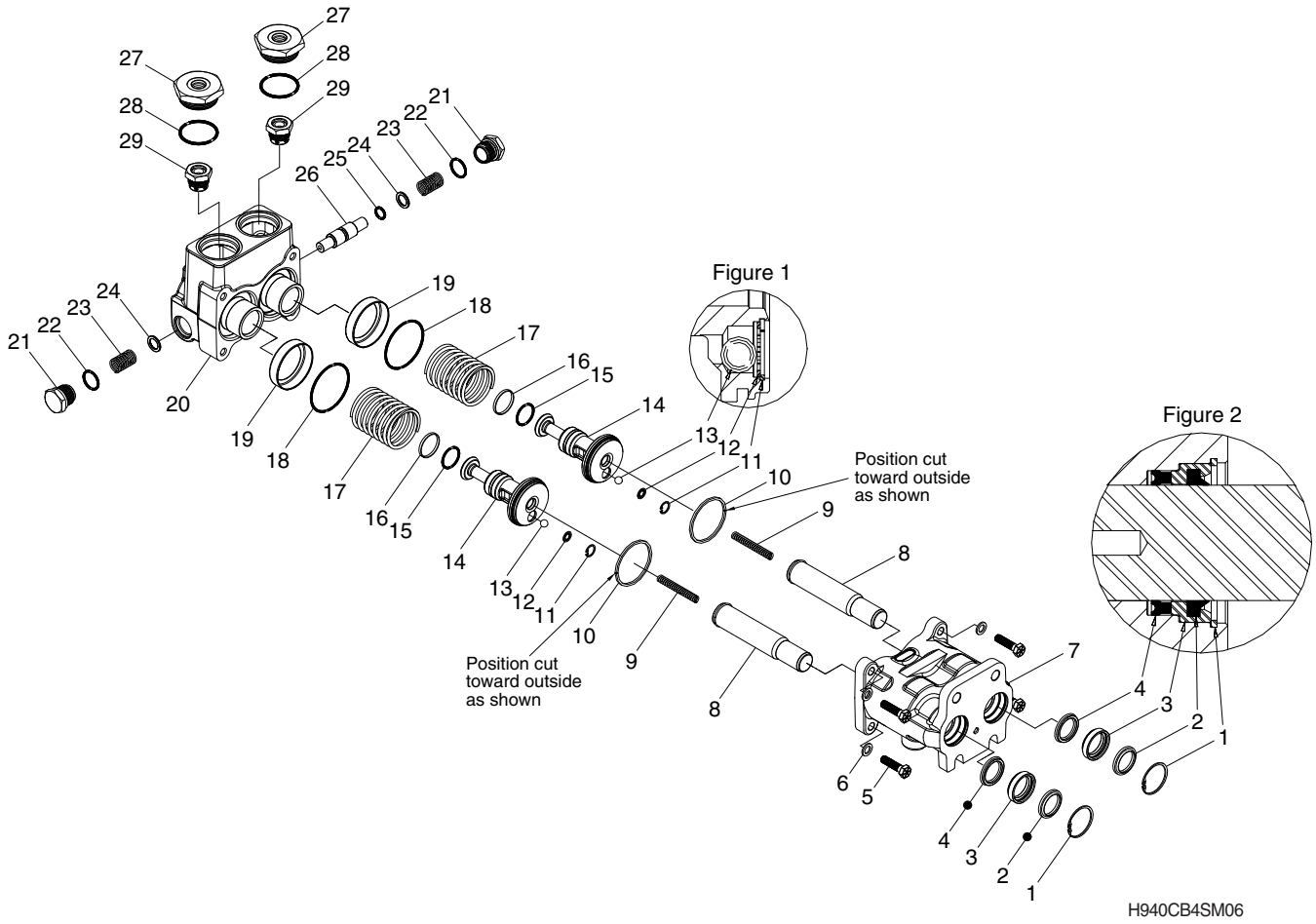

(8) Rub clean type fluid used in the system on the outer diameter of push rods (8) and housing (7) bores. Fully insert push rods (8) into housing (7) bores.

(9) Place springs (9) into push rods (8).

(10) Install retainers (19) in housing (20). Install new O-rings (18) over retainers (19).

(11) Steps 11 & 12 must be done quickly so seals (16) remain the proper size and form. Remove piston (14) assemblies from housing (20) bores and install in housing (7) bores. Be sure the cut on piston rings (10) match the position when installed into housing (7) bores.

(12) Install springs (17). Place housing (20) over springs (17) and align housing (20) bores with pistons (14). Be careful not to damage seals (16). While applying downward pressure on housing (20), install two cap screws (5) and washers (6) diagonal from each other and finger tighten to hold the assembly together.

(13) Install the remaining two cap screws (5) and washers (6). Evenly torque the four cap screws (5) 3.0~3.9 kgf · m (22~25 lbf · ft).

(14) While installing tip valve assemblies (29) in housing (20), push rods (8) inward approximately 1/2 inch. Torque tip valve assemblies (29) 4.2~4.8 kgf · m (30~35 lbf · ft).

(15) Install new O-rings (28) on reservoir plugs (27). Install reservoir plugs (27) in housing (20) and torque 6.2~8.3 kgf · m (45~60 lbf · ft).

(16) Properly reinstall valve on machine. Be sure all lines are properly connected and do not leak.

SECTION 5 STEERING SYSTEM

Group 1 Structure and Function ····· 5-1
Group 2 Operational Checks and Troubleshooting ····· 5-9
Group 3 Tests and Adjustments ····· 5-16
Group 4 Disassembly and Assembly ····· 5-23

GROUP 1 STRUCTURE AND FUNCTION

1. OUTLINE

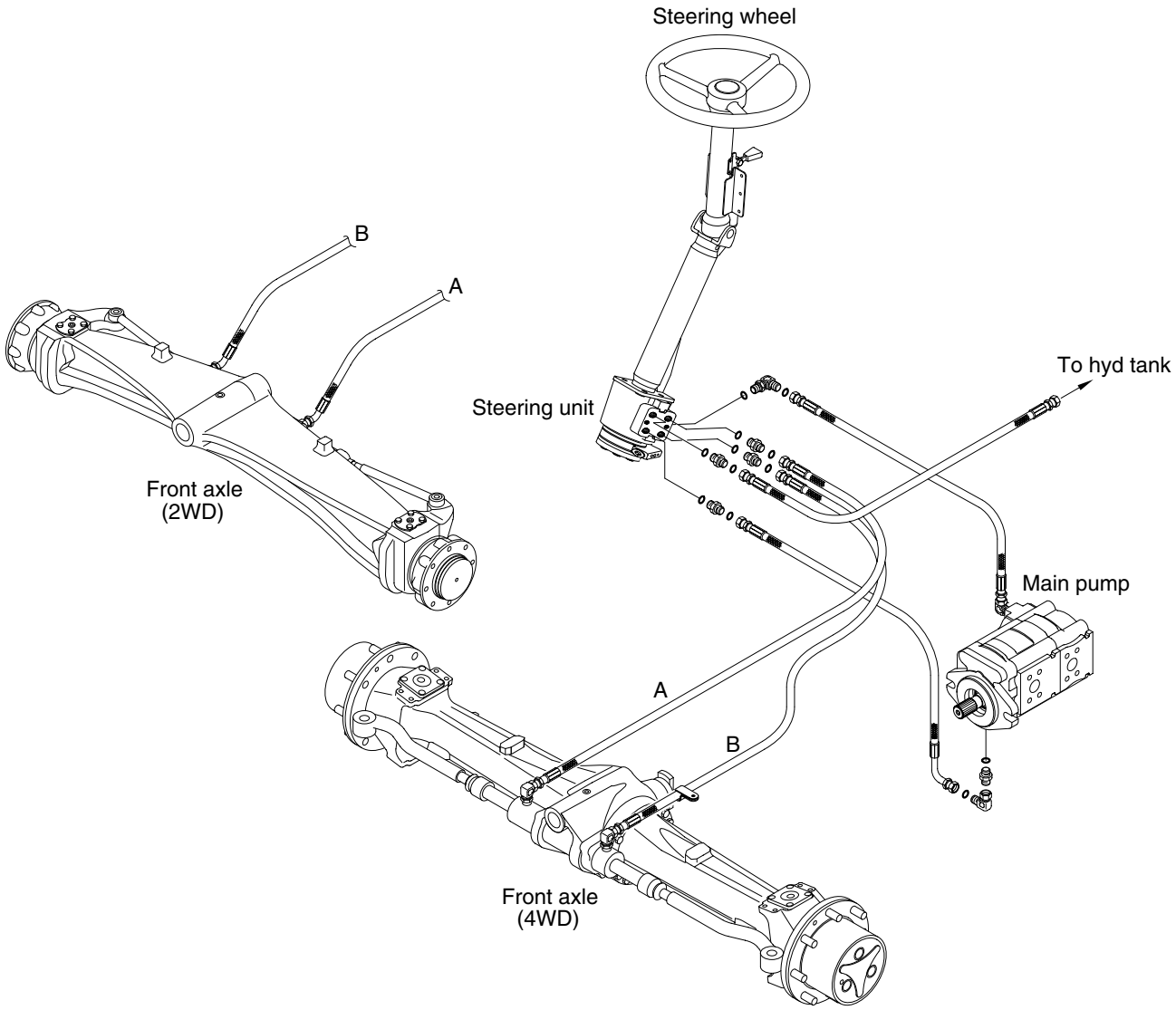

H940C5SE01

The main components of the steering system are the priority valve in main pump, load sensing steer unit, hydraulic tank and front power track rod ram.
When the steering wheel is turned, a pressure demand is sensed at the priority valve in main pump via load sensing line LS.
Oil from the main pump is then distributed via the priority valve to the steer unit, which then directs the oil to the front power track rod ram until the required steering lock is achieved.
When the steering lock is held, the pressure signal LS ceases, flow from the main pump is now distributed to the main hydraulic circuit via the priority valve in main pump.
Maximum steering system pressure is controlled by a relief valve located in the steering unit.

2. HYDRAULIC CIRCUIT

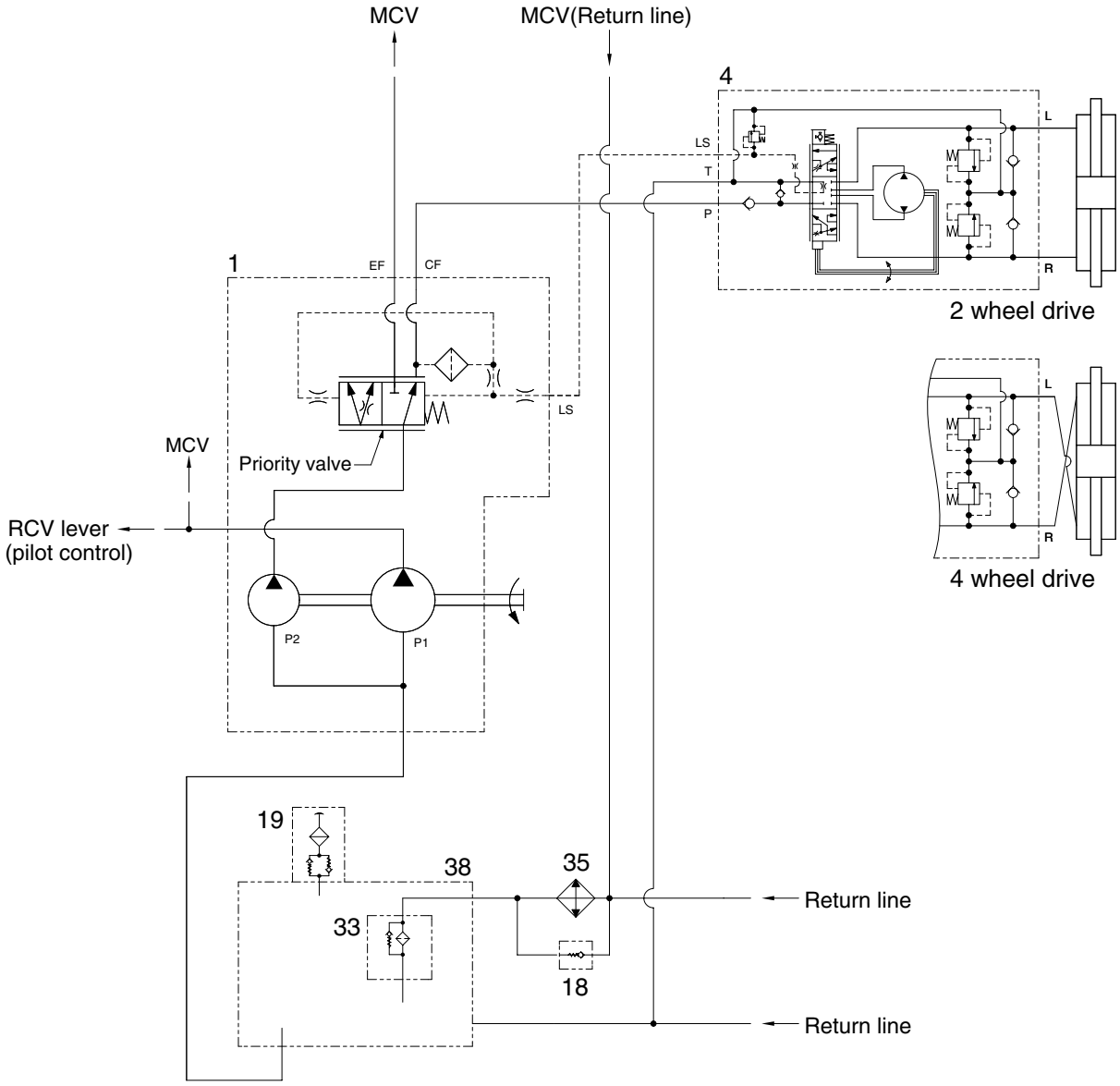

H940C5SE02

1	Main pump	19	Air breather	38	Hydraulic tank
4	Steering unit	33	Return filter		
18	By-pass check valve	35	Oil cooler		

1) NEUTRAL

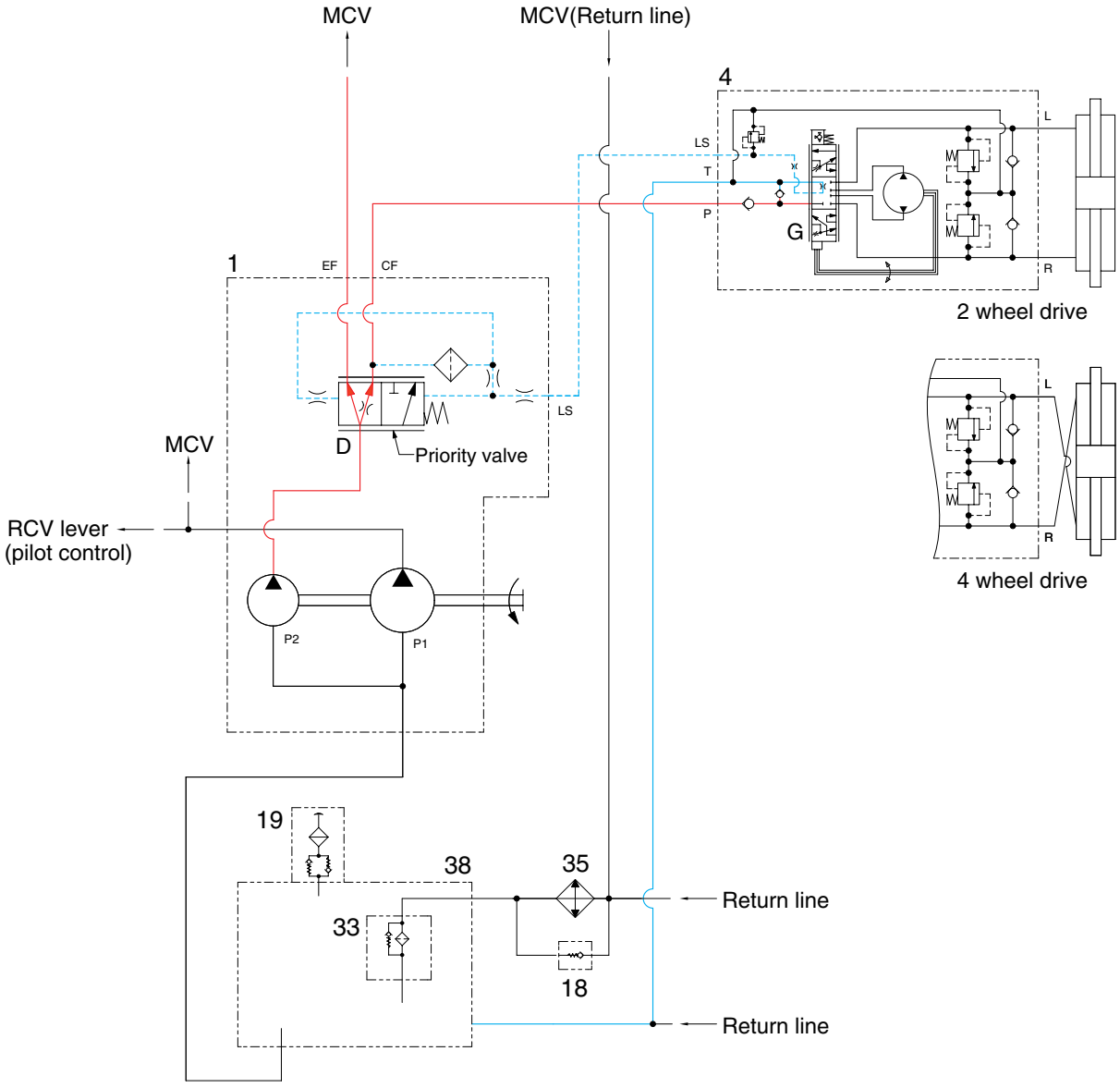

H940C5SE03

- The steering wheel is not being operated so control spool (G) does not move.
- The oil from the main pump (1) enters port P of steering unit (4) and the inlet pressure oil moves the priority valve spool (D).
- Almost all of pump flow goes to the main control valve through the EF port and partly flows into the hydraulic tank (38) through the spool (G).

2) LEFT TURN

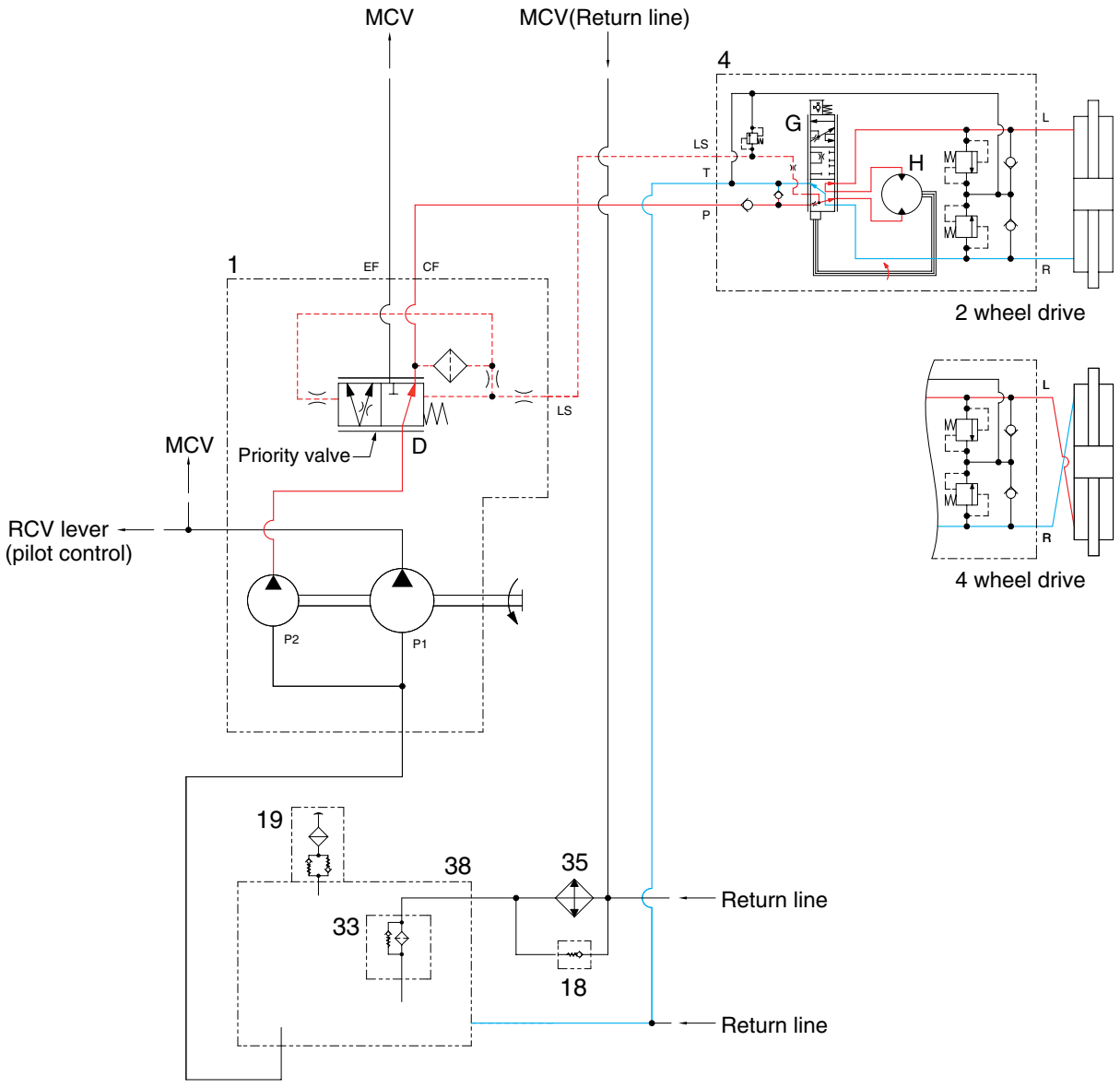

H940C5SE04

- When the steering wheel is turned to the left, the spool (G) within the steering unit (4) connected with steering column turns in left hand direction.
- At this time, the oil discharged from the main pump (1) flows into the spool (G) of the steering unit through the spool (D) of priority valve built in main pump (1) and flows the gerotor (H).
- Oil flow from the gerotor (H) flows back into the spool (G) where it is directed out the left work port (L).
- Oil returned from cylinder returns to hydraulic tank (38).
- When the above operation is completed, the machine turns to the left.

3) RIGHT TURN

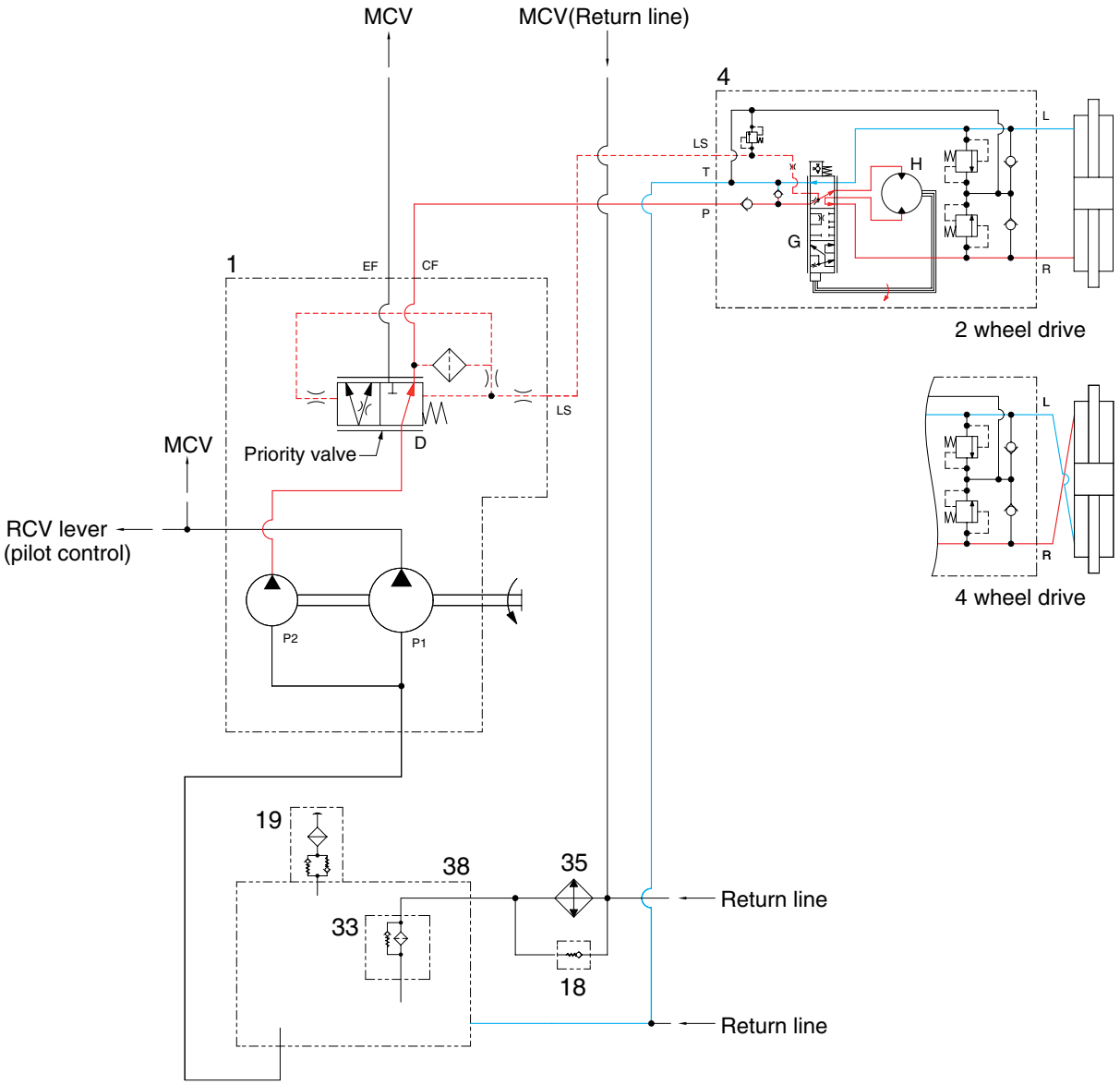

H940C5SE05

- When the steering wheel is turned to the right, the spool (G) within the steering unit (4) connected with steering column turns in right hand direction.
- At this time, the oil discharged from the main pump (1) flows into the spool (G) of the steering unit through the spool (D) of priority valve built in main pump (1) and flows the gerotor (H).
- Oil flow from the gerotor (H) flows back into the spool (G) where it is directed out the right work port (R).
- Oil returned from cylinder returns to hydraulic tank (38).
- When the above operation is completed, the machine turns to the right.

3. STEERING UNIT

1) STRUCTURE (WITHOUT EMERGENCY STEERING, STD)

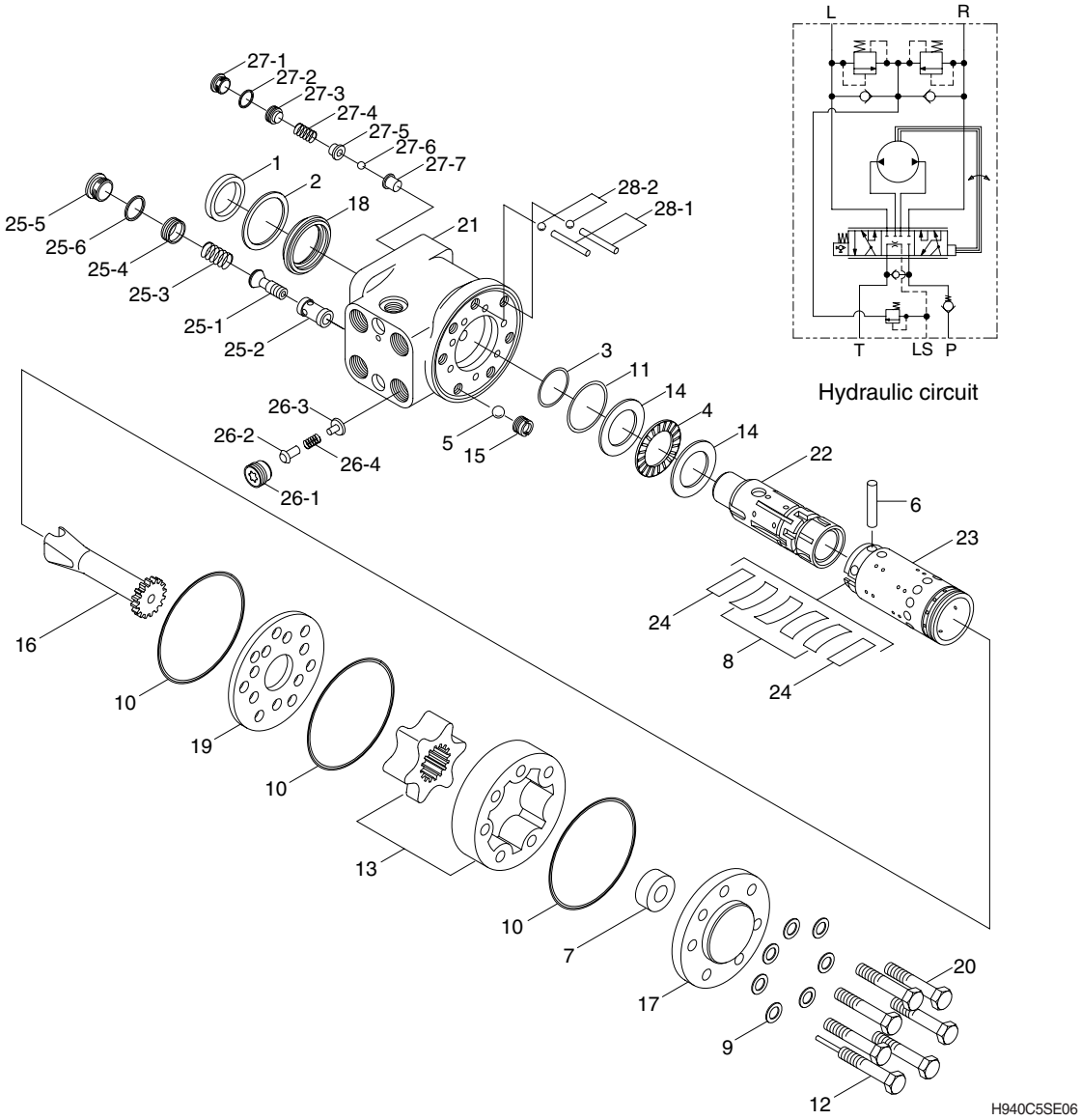

1	Dust seal	17	End cap	26-1	Plug
2	Retaining seal	18	Gland bushing	26-2	Poppet
3	Cap seal	19	Plate	26-3	Spring seat
4	Thrust bearing	20	Cap screw	26-4	Spring
5	Ball	21	Housing	27	Shock valve
6	Pin	22	Spool	27-1	Plug
7	Spacer	23	Sleeve	27-2	Washer
8	Centering spring	24	Plate spring	27-3	Fixed plug
9	Washer	25	Relief valve	27-4	Spring
10	O-ring	25-1	Spool	27-5	Spring seat
11	O-ring	25-2	Bushing	27-6	Ball
12	Screw	25-3	Spring	27-7	Ball seat
13	Gerotor set	25-4	Spring seat	28	Suction valve
14	Bearing race	25-5	Plug	28-1	Rolled pin
15	Bore screw	25-6	O-ring	28-2	Ball
16	Drive	26	P port check valve		

STRUCTURE (WITH EMERGENCY STEERING, OPT)

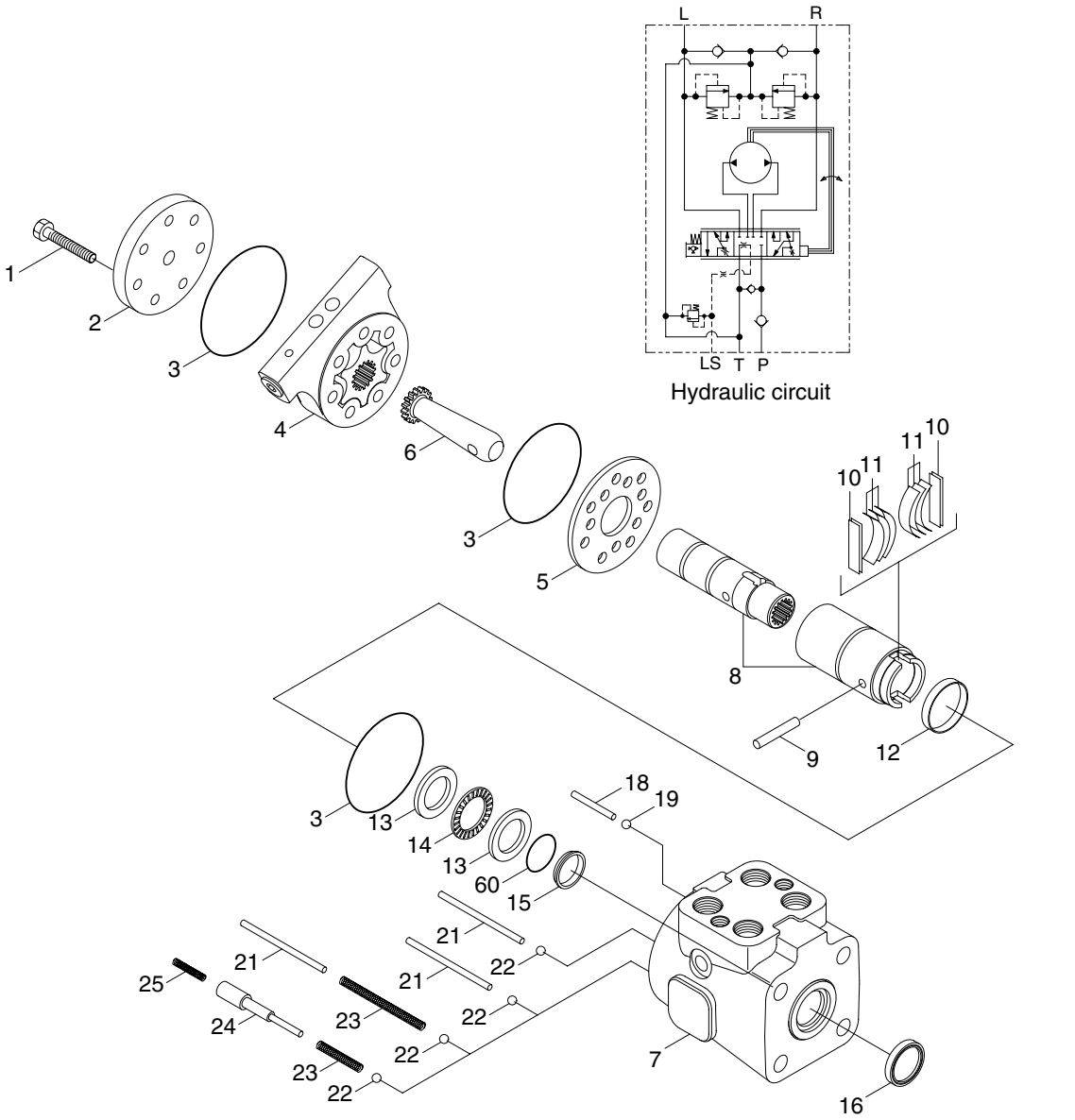

1	Cap screw	9	Pin	18	Roll pin
2	End cap	10	Spring spacer	19	Ball
3	O-ring	11	Centering spring	21	Roll pin
4	Gerotor	12	Retainer spring	22	Ball
5	Spacer plate	13	Bearing race	23	Compression spring
6	Drive	14	Needle thrust bearing	24	Anti cavitation plug retainer
7	Valve housing	15	Seal	25	Compression spring
8	Spool/sleeve	16	Dust seal		

2) OPERATION

The steering unit consists of a rotary valve and a rotary meter.

Via a steering column the steering unit is connected to the steering wheel of the machine.

When the steering wheel is turned, oil is directed from the steering system pump via the rotary valve (spool and sleeve) and rotary meter (gear wheel set) to the cylinder ports L or R, depending on the direction of turn. The rotary meter meters the oil flow to the steering cylinder in proportion to the angular rotation of the steering wheel.

Spool is connected directly to the drive shaft of steering wheel. It is connected to sleeve by cross pin (not in contact with the spool when the steering wheel is at neutral) and center spring.

Cardan shaft is meshed at the top with cross pin and forms one unit with sleeve.

At the same time, it is meshed with gear rim of the gerotor set by spline.

There are four ports in valve body. They are connected to the pump circuit, tank circuit, and the head, and left and right steering cylinder. In addition, the pump port and tank port are connected inside the body by the check valve. Therefore, if there is any failure in the pump of engine, oil can be sucked in directly from the tank through the check valve.

GROUP 2 OPERATIONAL CHECKS AND TROUBLESHOOTING

1. OPERATIONAL CHECKS

This procedure is designed so the service man can make a quick check of the steering system using a minimum amount of diagnostic equipment. If you need additional information, prefer to structure and function in group 1.

A location will be required which is level and has adequate space to complete the checks.

The engine and all other major components must be at operating temperature for some checks.

Locate system check in the left column and read completely, following this sequence from left to right. Read each check completely before performing.

At the end of each check, if no problem is found (OK), that check is complete or an additional check is needed. If problem is indicated (NOT OK), you will be give repair required and group location. If verification is needed, you will be give next best source of information :

- Chapter 2 : Troubleshooting
- Group 3 : Tests and adjustments

※ Hydraulic oil must be at operating temperature for these checks (refer to page 6-90).

Item	Description	Service action
Steering unit check	Run engine at low idle. Turn steering wheel until frames are at maximum right and then left positions. **LOOK** : Frames must move smoothly in both directions. When steering wheel is stopped, frames must stop. **FEEL** : Excessive effort must not be required to turn steering wheel. **NOTE** : It is normal for steering to drift from stops when steering wheel is released.	**OK** Check completed. **NOT OK** Go to next check.
Steering system leakage check Heat hydraulic oil to operating temperature. Run engine at high idle.	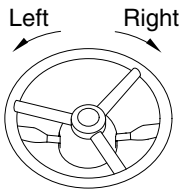 Turn steering wheel rapidly until frames are against stop. Hold approximately 2kg on steering wheel. Count steering wheel revolutions for 1 minute. Repeat test in opposite direction. **LOOK** : Steering wheel should rotate less than 7rpm. **NOTE** : Use good judgment; Excessive steering wheel rpm does not mean steering will be affected.	**OK** Check completed. **NOT OK** Do steering system leakage test in group 3 to isolate the leakage.
Priority valve (in main pump) low pressure check	Park machine on a hard surface. Hold brake pedal down. Run engine at high idle. Steer machine to the right and left as far as possible. **LOOK** : Machine must turn at least half way to the right and left stops.	**OK** Check completed. **NOT OK** Do priority valve pressure test in group 3.
Priority valve (in main pump valve) high pressure check Run engine at high idle.	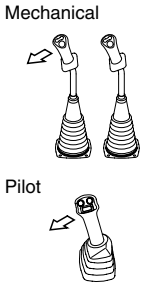 Steer to steering stop and release steering wheel. Roll bucket back and hold over relief and observe engine rpm. Turn steering wheel to steering stop and hold, observe engine rpm. **LOOK** : Steering stall engine rpm must be higher than hydraulic stall rpm.	**OK** Check completed. **NOT OK** Priority pressure is set too high. Do priority valve pressure test in group 3.

2. TROUBLESHOOTING

※ Diagnose malfunction charts are arranged from most probable and simplest to verify, to least likely, more difficult to verify. Remember the following steps when troubleshooting a problem :

Step 1. Operational check out procedure (see group 3 in section 1)

Step 2. Operational checks (in this group)

Step 3. Troubleshooting

Step 4. Tests and adjustments (see group 3)

Problem	Cause	Remedy
No steering	Low oil level.	Add recommended oil.
	Failed main pump (P1).	Remove and inspect return filter for metal pump particles.
	Failed main pump drive.	Do main pump flow test.
	Stuck priority valve spool.	Remove and inspect priority valve spool in main pump.
	Broken priority valve spring.	Remove and inspect spring.
	Relief valve in steering unit stuck open.	Do relief cartridge leakage test.
No hydraulic functions steering normal	Stuck open system relief valve.	Replace relief valve.
	Pressed safety switch	Release safety switch.
	Plugged pilot line filter.	Inspect and replace.
	Failed hydraulic pump.	Remove and inspect the pump.
	Low secondary pressure of RCV.	Check the pressure and replace if necessary.
Steering wheel difficult to turn.	Tires not inflated to correct pressure.	Inflate tire to correct pressure.
	Insufficient hydraulic fluid.	Check for leaks and fill up the hydraulic tank as required.
	Leaks in the relevant hoses or component connections.	Check hoses and connections for leaks.
	Air in the hydraulic system.	Bleed system - bleed the load sense line.
	Low pump flow.	Check pump flow, if required service or replace pump.
	Steer relief valve set incorrectly.	Check pressure setting of steer unit relief valve, adjust as required.
	Worn or damaged parts in the steer control valve.	Remove and inspect.
	Priority valve not operating correctly.	Check if priority valve is sticking, repair as required. Check the load sense line from the steering unit to the priority valve in main pump for signs of leaking or poor connection.
	Mechanical failure.	Check for damaged axle components, such as rams, trackrods, linkages etc.

Problem	Cause	Remedy
Machine will not turn when the steering wheel turned	Insufficient hydraulic fluid.	Check for leaks and fill up the hydraulic tank as required.
	Leaks in the relevant hoses or component connections.	Check hoses and connections for leaks.
	Air in the hydraulic system.	Bleed system - bleed the load sense line.
	Low pump flow.	Check pump flow, if required service or replace pump.
	Steer relief valve set incorrectly.	Check pressure setting of steer unit relief valve, adjust as required.
	Worn or damaged parts in the steering unit	Remove and inspect.
	Priority valve in main pump not operating correctly.	Check if the priority valve is sticking, repair as required. Check the load sense line from the steerring unit to the priority valve for signs of leaking or poor connection.
	Mechanical failure.	Check for damaged axle components, such as rams, trackrods, linkages etc.
	Steer column splined shaft not fully engaged in steering unit.	Check shaft engagement.
	Power track rod failure.	Check power track rod for signs of damage, leaks etc.
Slow or hard steering	Too much friction in the mechanical parts of the machine.	Lubricate bearings and joints of steering column or repair if necessary. Check steering column installation.
	Cold oil.	Warm the hydraulic oil.
	Low priority valve pressure setting.	Do priority valve pressure test. Clean or replace cartridge in steering unit.
	Worn hydraulic pump.	Do hydraulic pump performance check .
	Sticking priority valve spool.	Remove and inspect.
	Broken priority valve spring.	Remove and inspect.
Constant steering to maintain straight travel	Air in system.	Check for foamy oil.
	Leakage in steering system.	Do steering system leakage check.
	Worn steering unit.	Do steering system leakage check. Do steering unit neutral leakage test in group 3.
	Leaf spring without spring force or broken.	Replace leaf springs.
	Spring in double shock valve broken.	Replace shock valve.
	Gear wheel set worn.	Replace gear wheel set.
	Cylinder seized or piston seals worn.	Replace defects parts.

Problem	Cause	Remedy
Slow steering wheel movement will not cause any frame movement	Leakage in steering unit gerotor. Worn steering unit gerotor.	Do steering system leakage check. Do steering leakage check.
Steering wheel can be turned against steering stop	Leakage in steering system.	Do steering system leakage check.
Steering wheel turns with no resistance	Broken steering column or splined coupling. Lack of oil in steering unit. Leakage in steering system.	Remove and inspect. Start engine and check steering operation. Do steering system leakage test in group 3.
Erratic steering	Air in oil. Low oil level. Sticking priority valve spool. Loose cylinder piston. Damaged steering unit.	Check for foamy oil. Add recommended oil. Remove and inspect spool. Remove rod to inspect piston. Remove and inspect.
Spongy or soft steering	Air in oil. Low oil level.	Check for foamy oil. Add recommended oil.
Free play at steering wheel	Loose steering wheel nut. Worn or damaged splines on steering column or unit.	Tighten. Inspect.
Steering unit binding or steering wheel does not immediately return to neutral when released	Binding in steering column or misalignment of column. High return pressure. Contamination in steering unit. Large particles of contamination in steering unit.	Inspect. Check for a pinched or damaged return line. Inspect hydraulic filter for contamination. Repair cause of contamination. Flush hydraulic system. Inspect hydraulic filter for contamination. Repair cause of contamination. Flush hydraulic system.

Problem	Cause	Remedy
Steering unit locks up	Large particles of contamination in steering unit.	Inspect hydraulic filter for contamination. Repair cause of contamination. Flush hydraulic system.
	★ Thermal shock	Do priority valve LS port flow test in group 3. This oil flow provides a warm-up flow to steering unit when not using the steering.
	Worn or damaged steering unit.	Repair or replace steering unit.
Abrupt steering wheel oscillation	Improperly timed gerotor gear in steering unit.	Time gerotor gear.
Steering wheel turns by itself	Lines connected to wrong port.	Reconnect lines.
Vibration in steering system or hoses jump	High priority valve setting.	Do priority valve pressure test.
Neutral position of steering wheel cannot be obtained, i.e. there is a tendency towards "motoring"	Steering column and steering unit out of line.	Align the steering column with steering unit.
	Too little or no play between steering column and steering unit input shaft.	Adjust the play and, if necessary, shorten the splines journal.
	Pinching between inner and outer spools.	Contact the nearest service shop.
"Motoring" effect. The steering wheel can turn on its own.	Leaf springs are stuck or broken and have therefore reduced spring force.	Replace leaf springs.
	Inner and outer spools pinch, possibly due to dirt.	Clean steering unit or contact the nearest service shop.
	Return pressure in connection with the reaction between differential cylinder and steering unit too high.	Reduce return pressure.
	Oil is needed in the tank.	Fill with clean oil and bleed the system.
	Steering cylinder worn.	Replace or repair cylinder.
	Gear wheel set worn.	Replace gear wheel set.
	Spacer across cardan shaft forgotten.	Install spacer.

★ Thermal shock is caused by a large temperature differential (Approx 30˚C, 50˚F) between the steering unit and hydraulic oil. If the steering is not operated for a long period of time and the orifice in the bottom of the priority valve spool is plugged, the steering unit may bind up when the steering is operated if the hydraulic oil is hot enough.

Problem	Cause	Remedy
Backlash	Cardan shaft fork worn or broken.	Replace cardan shaft.
	Leaf springs without spring force or broken.	Replace leaf springs.
	Worn splines on the steering column.	Replace steering column.
"Shimmy" effect. The steered wheels vibrate. (Rough tread on tires gives vibrations)	Air in the steering cylinder.	Bleed cylinder. Find and remove the reason for air collection.
	Mechanical connections or wheel bearings worn.	Replace worn parts.
	High priority valve setting pressure.	Set pressure as regular value.
Steering wheel can be turned slowly in one or both directions without the steered wheels turning.	One or both shock valves are leaky or are missing in steering valve.	Clean or replace defective of missing valves.
Steering is too slow and heavy when trying to turn quickly.	Insufficient oil supply to steering unit, pump defective or number of revolutions too low.	Replace pump or increase number of revolutions.
	Relief valve setting too low.	Adjust valve to correct setting.
	Relief valve sticking owing to dirt.	Clean the valve.
	Spool in priority valve sticking owing to dirt.	Clean the valve, check that spool moves easily without spring.
	Too weak spring in priority valve.	Replace spring by a stronger.
"Kick back" in steering wheel from system. Kicks from wheels.	Fault in the system.	Contact authorized man or shop.
Heavy kick-back in steering wheel in both directions.	Wrong setting of cardan shaft and gearwheel set.	Correct setting as shown in service manual.
urning the steering wheel activates the steered wheels opposite.	Hydraulic hoses for the steering cylinders have been switched around.	Connect lines to correct ports.
Hard point when starting to turn the steering wheel	Spring force in priority valve too weak.	Replace spring by a stronger.
	Oil is too thick (cold).	Let motor run until oil is warm.
Too little steering force (possibly to one side only).	Pump pressure too low.	Correct pump pressure.
	Too little steering cylinder.	Fit a larger cylinder.
	Piston rod area of the differential cylinder too large compared with piston diameter.	Fit cylinder with thinner piston rod or 2 differential cylinders.
Leakage at either input shaft, end cover, gearwheel set, housing or top part.	Shaft defective.	Replace shaft seal.
	Screws loose.	Tighten screws.
	Washers or O-rings defective.	Replace.

GROUP 3 TESTS AND ADJUSTMENTS

1. HYDRAULIC OIL CLEAN UP PROCEDURE USING PORTABLE FILTER CADDY

※ Service equipment and tool.
- Portable filter caddy
- Two 3658 mm (12 ft) × 1" I.D. 100R1 hoses with 3/4 M NPT ends
- Quick disconnect fittings
- Discharge wand
- Various size fittings and hoses

※ Brake system uses oil from hydraulic oil tank. Flush all lines in the steering system.
Disassemble and clean major components for steering system.
Steering components may fail if steering system is not cleaned after hydraulic oil tank contamination.

1) If hydraulic system is contaminated due to a major component failure, remove and disassemble steering cylinders to clean debris from cylinders.

2) Install a new return filter element. Clean filter housing before installing new element.

※ For a failure that creates a lot of debris, remove access cover from hydraulic oil tank. Drain and clean hydraulic oil tank of fill the specified oil to hydraulic oil tank through upper cover.

3) To minimize oil loss, pull a vacuum in hydraulic oil tank using a vacuum pump. Connect filter caddy suction line to drain port at bottom of hydraulic oil tank using connector. Check to be sure debris has not closed drain port.

4) Put filter caddy discharge line into hydraulic oil tank filter hole so end is as far away from drain port as possible to obtain a through cleaning of oil.

5) Start the filter caddy. Check to be sure oil is flowing through the filters.
Operate filter caddy approximately 10 minutes so oil in hydraulic oil tank is circulated through filter a minimum of four times.

※ Hydraulic oil tank capacity : 60 ℓ
(15.9 U.S. gal)

Leave filter caddy operating for the next steps.

6) Start the engine and run it at high idle.

※ For the most effective results, cleaning procedure must start with the smallest capacity circuit then proceed to the next largest capacity circuit.

7) Operate all functions, one at a time, through a complete cycle. Also include all auxiliary hydraulic functions.

Repeat procedure until the total system capacity has circulated through filter caddy seven times, approximately 30 minutes.
Each function must go through a minimum of three complete cycles for a through cleaning for oil.

※ Filtering time for machines with auxiliary hydraulic functions must be increased because system capacity is larger.

8) Stop the engine. Remove the filter caddy.

9) Install a new return filter element.

10) Check oil level in hydraulic oil tank ; Add oil if necessary.

2. TEST TOOLS

1) CLAMP-ON ELECTRONIC TACHOMETER INSTALLATION

- Service equipment and tools

  Tachometer

  A : Clamp on tachometer.

  Remove paint using emery cloth and connect to a straight section of injection line within 100 mm (4in) of pump. Finger tighten only-do not over tighten.

  B : Black clip (-). Connect to main frame.

  C : Red clip (+). Connect to transducer.

  D : Tachometer readout. Install cable.

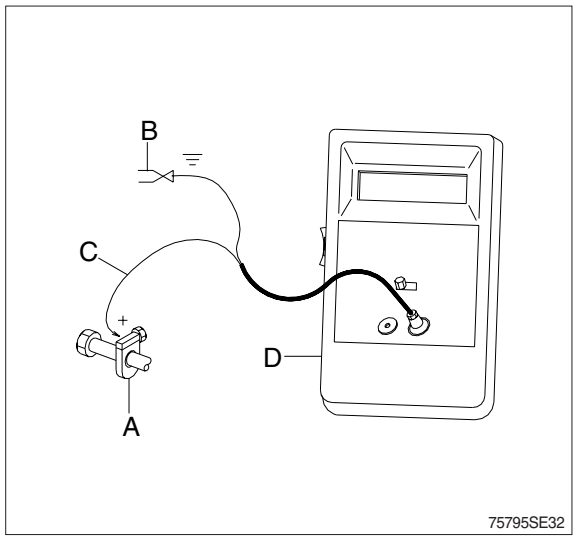

2) DIGITAL THERMOMETER INSTALLATION

- Service equipment and tools

  Digital thermometer

  A : Temperature probe.

  Fasten to a bare metal line using a tie band. Wrap with shop towel.

  B : Cable.

  C : Digital thermometer.

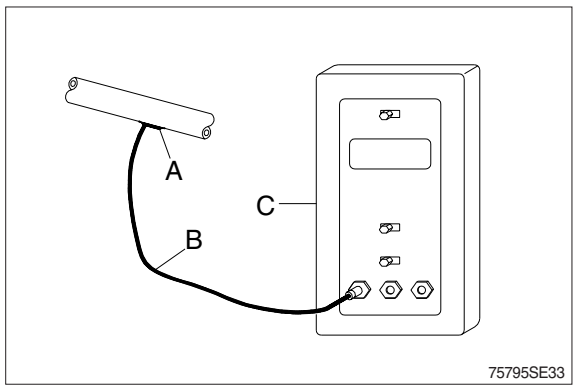

3) DISPLAY MONITOR TACHOMETER

The display monitor tachometer is accurate enough for test work.



3. STEERING SYSTEM RESTRICTION TEST

· **SPECIFICATION**

Oil temperature 45±5˚C (113±9˚F)
Engine speed High idle
Maximum pressure 25MPa (250 bar, 3560 psi) at steering unit

· **GAUGE AND TOOL**

Gauge 0~7 MPa (0~70 bar, 0~1000 psi) 1EA

· This test will check for restrictions in the steering system which can cause overheating of hydraulic oil.

1) Install temperature reader.
(see temperature reader installation procedure in this group).

2) Heat hydraulic oil to specifications.
(see hydraulic oil warm up procedure at page 6-90).

3) Connect fitting (A) and gauge to steering unit.

⚠ Do not operate steering or loader functions or test gauge may be damaged.

4) Run engine at specification and read pressure gauges.

If pressure is more than specification at the steering unit, inspect priority valve in the pump for a stuck spool. Make sure orifice plugs installed in ends of priority valve spool. Check for plugged orifice in priority valve LS port.

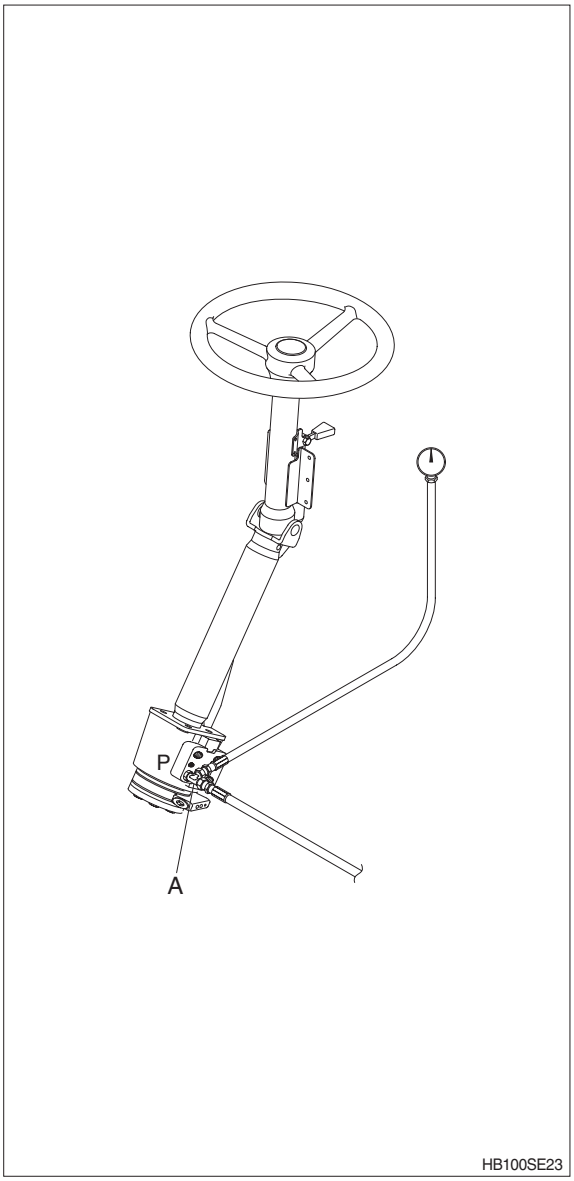

4. STEERING UNIT LEAKAGE TEST

· **SPECIFICATION**

Oil temperature	45±5˚C (113±9˚F)
Engine speed	High idle
Maximum leakage	10 ℓ /min

· **GAUGE AND TOOL**

Temperature reader
Measuring container (approx. 20 ℓ)
Stop watch

1) Install temperature reader.
(see temperature reader installation procedure in this group).

2) Heat hydraulic oil to specifications.
(see hydraulic oil warm up procedure at page 6-90).

3) Disconnect return hose from fitting.
Install cap fitting.

4) Run engine at specifications. Rotate steering wheel against locking bar using approximately 1.2 kgf · m of force.
Measure oil flow from return hose for 1 minute.

5) Leakage is greater than specifications, repair or replace steering unit.

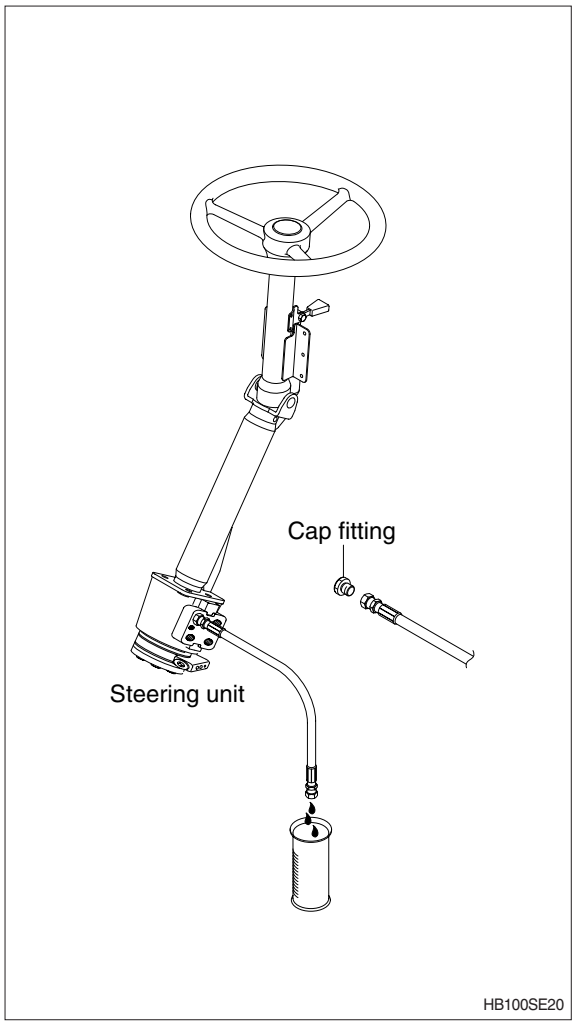

5. STEERING UNIT PRESSURE TEST

· **SPECIFICATION**

Oil temperature	45±5˚C (113±9˚F)
Engine speed	High idle
Oil pressure	25 MPa
	(250 bar, 3560 psi)

· **GAUGE AND TOOL**

Gauge 0~35 MPa (0~350 bar, 0~5000 psi)
Temperature reader

1) Connect gauge to test port.
2) Install temperature reader (See installation procedure in this group).
3) Heat hydraulic oil to specifications (See hydraulic oil warm up procedure at page 6-90).
4) Run engine at specifications and turn steering wheel rapidly hold approximately 22N (5lb force) pressure on wheel with frames locked.
   If steering wheel is turned slowly, it will continue to with the frames locked.
   This will give an incorrect pressure reading.

※ If steering wheel continues to turn rapidly with the frames locked, steering system leakage is indicated.

   Read pressure gauge. This is the steering valve relief pressure.

5) If pressure in not to specification, turn adjusting screw in relief cartridge using a hex head wrench (8 mm) to adjust pressure.
6) If pressure cannot be adjusted to specification, disassemble and inspect steering valve.

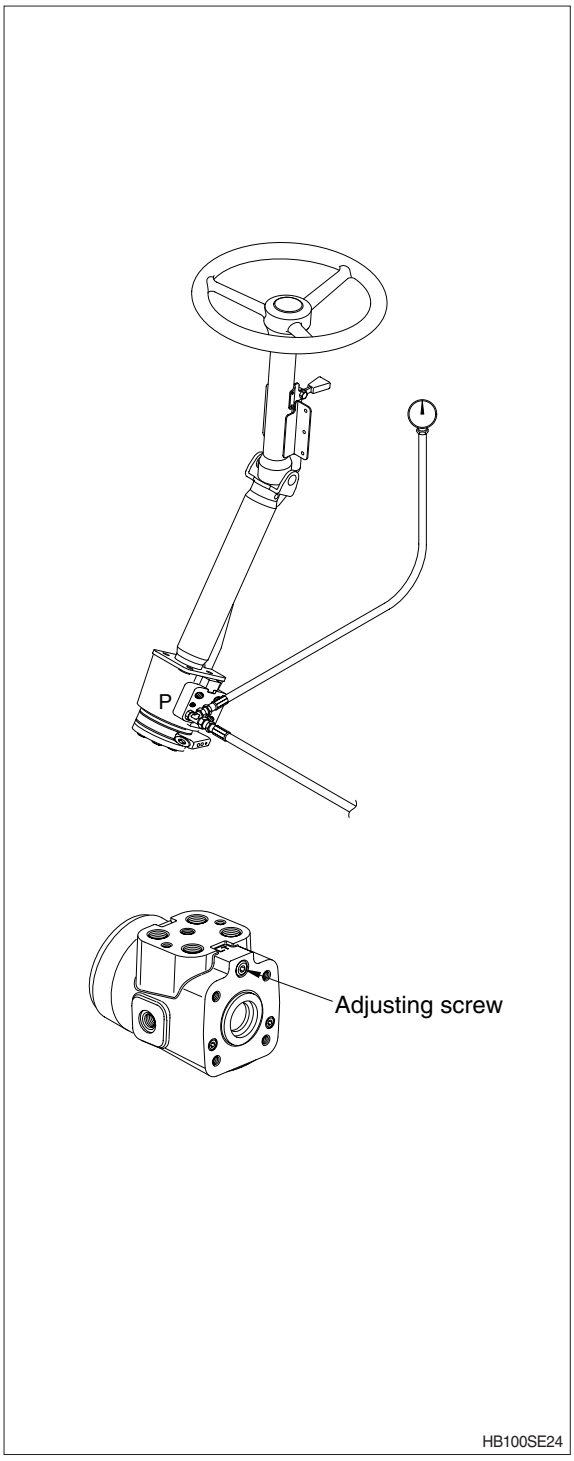

6. PRIORITY VALVE "LS" PORT FLOW TEST

· **SPECIFICATION**

Oil temperature 45±5˚C (113±9˚F)
Engine speed Low idle
Maximum leakage 0.5 m ℓ /min (0.13 gpm)

· **GAUGE AND TOOL**

Temperature reader
Measuring container
Stop watch

Priority valve LS port flow test will check for a plugged or missing orifice in the priority valve spool in the main pump. A plugged orifice will block warm up flow to the steering unit which can cause thermal shock. (See for an explanation of thermal shock, page 5-14).

A missing orifice can cause the pump to be loaded to high pressure at all times causing overheating.

1) Install temperature reader.
(See temperature reader installation procedure in this group)

2) Heat hydraulic oil to specifications. (See hydraulic oil warm up procedure at page 6-90)

3) Disconnect line from LS port and install plug (A).

4) Connect line (B) to LS port on main pump.

5) Start engine and run at specification.

6) Measure flow from LS port for 1 minute.

If flow is low, low steering system neutral pressure or a plugged orifice in bottom priority valve spool is indicated.

If flow is high, remove priority valve spool and inspect for a missing orifice.

Do hydraulic system restriction test in this group.

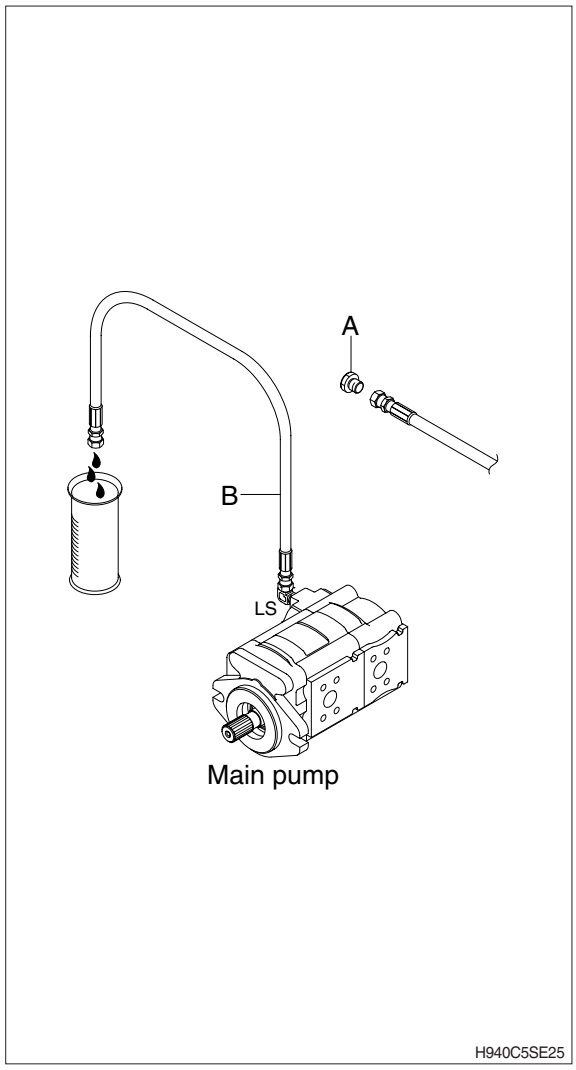

1. STEERING UNIT (WITHOUT EMERGENCY STEERING, STD)

1) STRUCTURE

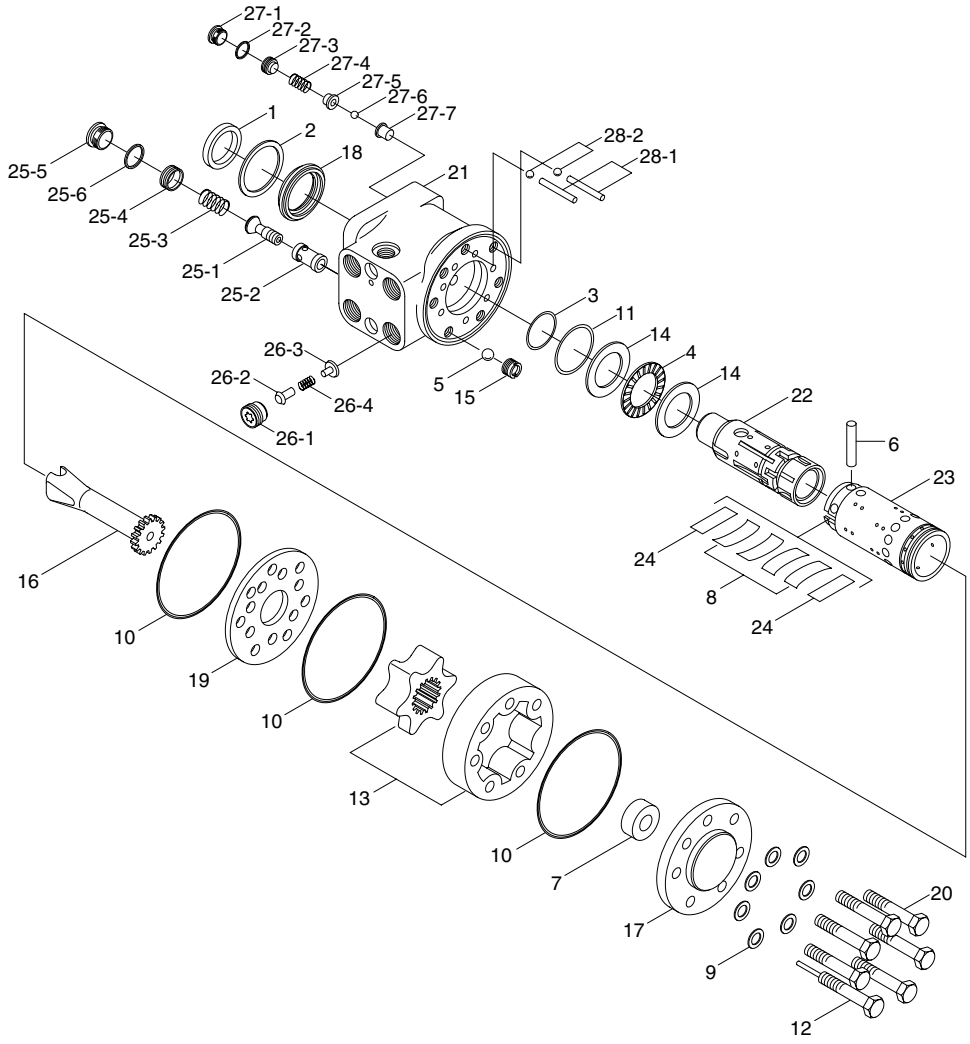

H940C5SE06

1	Dust seal	17	End cap	26-1	Plug
2	Retaining seal	18	Gland bushing	26-2	Poppet
3	Cap seal	19	Plate	26-3	Spring seat
4	Thrust bearing	20	Cap screw	26-4	Spring
5	Ball	21	Housing	27	Shock valve
6	Pin	22	Spool	27-1	Plug
7	Spacer	23	Sleeve	27-2	Washer
8	Centering spring	24	Plate spring	27-3	Fixed plug
9	Washer	25	Relief valve	27-4	Spring
10	O-ring	25-1	Spool	27-5	Spring seat
11	O-ring	25-2	Bushing	27-6	Ball
12	Screw	25-3	Spring	27-7	Ball seat
13	Gerotor set	25-4	Spring seat	28	Suction valve
14	Bearing race	25-5	Plug	28-1	Rolled pin
15	Bore screw	25-6	O-ring	28-2	Ball
16	Drive	26	P port check valve		

2) TOOLS AND MATERIALS

(1) Tools required

① Soft-jawed vice
② Screw driver (flat-bladed end type)
③ Torque wrench
④ Sockets (Hexagonal 13 mm)

(2) Materials required

① Clean solvent
② Air pressure source

(3) Tools optional

① Spring installation tool
② Oil based paint or marker



· Spring installation tool and flat-end driver

3) DISASSEMBLY

(1) Preparation

※ **Make the service job more easier by keeping the following recommendations:**
- Having read and understood this manual thoroughly.
- Working in a clean, well-lighted place.
- Setting the proper tools and helping material neatly.
- Having an adequate amount of clean petroleum-based solvent.

⚠ **Be extremely careful when using any solvent. Since solvent are naturally flammable, even a small amount of solvent cause explosion or fire resulting in injury or death.**

※ **First, read the manual thoroughly.**
Please, read this manual first before you disassemble the steering unit or any of its components. It provides important and vital information on parts and procedures to service the steering unit.

※ **Prepare the tools and other requirement**
The steering unit has the approximate size of W×D (91 mm×93 mm) and varying height depending on the displacement. Refer to "Tools and Materials" section for tools and items required to service the steering unit.

※ **Clean the steering unit**
Clean off outside dirt before you disconnect the unit from the system.
Remove steering column and hose fittings and immediately drain it off and plug ports and lines.
Clean and dry the steering unit before you start to disassemble the unit.
As you disassemble the steering unit, clean all parts by soaking them in the solvent and blow them dry.

※ The temperature of the steering unit and the working fluid can reach over 80˚C as the system operates. When the steering unit is hot to touch, wait until it cools down enough to start the servicing.

⚠ **Be sure to comply with other requirements for the compressed air.**

(2) Disassembly

① Clamp the unit in vice.

Clamp lightly on both sides of the unit, making spline end of the housing facing down.
Use soft jawed vice or add protective material between jaws and the unit. Do not over tight the housing.

② Remove the 6 cap screws, one rolled screw, and washers.

Remove the cap screws and a rolled screw with 13 mm socket. Inspect for damaged threads, bent or broken bolts. Remove the washer under the bolt head and discard them.

③ Lift end cap and O-ring seal.

Lift end cap and O-ring seal. Discard the O-ring seal. Inspect for good bolt sealing.
Check the wear or scoring from rotor set. A polished pattern on the rotor side caused by rotor set is normal.

④ Remove gerotor.

Remove gerotor. Be careful not to drop the inner rotor. The drive link stays in the steering unit.
Discard the O-ring seal. Inspect the gerotor for nicks, scoring, spalling, or chipping on any internal contacting surfaces. Replace the entire set if there is any damage on them.

⑤ Lift spacer, drive link and plate.

Lift spacer, if exist, drive link and plate. Discard the O-ring seal. Inspect the plate for cracks, surface scoring, discoloration. A polished pattern on the gerotor side is normal.

⑥ Remove bore screw and the ball.

Turn out the bore screw by thin bladed screw driver. Remove the housing from the vice then remove the ball from the hole. Check the ball for wear or scoring.

⑦ Remove the rolled pin and ball.

Remove the rolled pins and balls from the suction valve. Check the ball and rolled pin for wear or scoring

⑧ Remove the retaining ring.

Place housing on clean soft cloth, gerotor end down, to protect surface finish. Use thin bladed screw driver to pry retaining ring from housing. Check if there is any bent or corrosion on it.



⑨ **Remove bushing and cap seal.**

Lift spool and sleeve assembly up just far enough to free gland busing from housing. Remove bushing and cap seal and discard.

⑩ **Remove bearing races and thrust bearing.**

Remove two bearing races and needle thrust bearing and O-ring seal from spool and sleeve assembly. Discard the O-ring seal. Inspect the bearing races and thrust bearing for wear, stain, corrosion, and a complete set of retained rollers.

⑪ **Remove spool and sleeve.**

Turn the housing over and push down gently, so that spool and sleeve assembly stand out enough from 14 hole end of housing. Remove spool and sleeve slowly. While pulling the sleeve and spool assembly, slowly rotate it to prevent the stuck. During the pulling, pin may slide out from spool and sleeve to lock the assembly into housing. Slowly pull, push, and at the same time rotate the assembly until they can be pulled out easily. Do not apply excessive force to the assembly. Inspect the spool and sleeve for wear or scratch. A polished stipe pattern on the housing side of sleeve are normal. Inspect the spline for excessive damage.

⑫ **Extract pin from spool and sleeve.**

Push and pull pin off from spool and sleeve. Inspect the pin for nicks, severe wear, or corrosion.

⑬ **Remove centering spring.**

Push spool partially to spline end, then carefully remove centering springs from spool by hand.
Slowly rotate the spool and check the rotation. It should be rotate by fingertip force smoothly.
Slowly rotate spool and pull it from spring slot end of the sleeve. Low input torque unit uses four centering springs and two plate springs. Standard input torque unit uses six centering springs. Inspect the centering springs for the excessive bent, crack, or corrosion. Carefully inspect the spool surface to see if there is any damage on it.

⑭ **Don't remove relef, shock and P-port check valve.**

Remove relef, shock and P-port check valve then setting pressure is changed. Don't removed the relef, shock and P-port check valve.

4) ASSEMBLY

(1) Preparation

※ Make the service job more easier by keeping the following:
- Having read and understood this manual thoroughly.
- Working in a clean, well-lighted place.
- Setting the proper tools and helping material neatly.
- Having an adequate amount of clean petroleum-based solvent.

⚠ **Be extremely careful when using any solvent. Since solvent are naturally flammable, even a small amount of solvent cause explosion or fire resulting in injury or death.**

※ **Thoroughly check all the machined surfaces.**
All mating surfaces should be thoroughly checked now. Replace any parts that have scratches that could cause leakage. Do not grind these machined surfaces because it is dangerous to do so and the surfaces are machined with high precision technology.

※ **Since the most moving parts are manufactured to meet high precision requirement, the sharp edges on them could act as knives. Handle carefully with those parts to prevent from cutting your fingers.**

※ **Clean and lubricate the parts**
Clean all metal parts in new petroleum-based solvent. Blow them dry with compressed air.
Do not use cloth or paper towel to wipe them dry because lint or other matter can get into the components and eventually into the hydraulic system.

※ **Keep parts separately. Replace all seals and lubricate them with clean petroleum jelly.**
Lubricate machined surfaces and bearings with clean hydraulic fluid.
This helps them to be installed easily and provide initial lubrication.
Do not use excessive lubricant on seals for gerotor section.

⚠ **Be sure to comply with other requirements for the compressed air.**

(2) Assembly

① Assemble spool and sleeve.

Insert spool carefully in sleeve to the spring end. Rotate spool while parts are sliding together. Test for free rotation. Spool should rotate smoothly in sleeve with fingertip force at splined end. Align spring slots.

② Install the centering spring.

Stand all springs with the notched side pointed down. Arrange the springs that the arched side of each set (2 or 3 leaves) contacts on each other.
Put the two plate springs between them if the unit is low input torque type.
Standard input torque units use six centering (arched) springs, while low input torque units use four centering (arched) springs with two plate (straight) springs in the center.



First Insert spring installation tool through the openings in the spool and sleeve.
See the figure. Insert one end of the entire centering spring set with notched side toward the spool and sleeve into the spring installation tool.
Compress and push springs into the spool and sleeve assembly while the installation tool only prevents the spring from falling apart.
Keep pressure on spring ends while withdrawing installation tool and pushing forward until the springs are engaged with sleeve.
Push them down to the spool until the tip and the side are flush with the sleeve.

The centering springs can also be installed by hand. Install two outside springs first and add the others one at a time in between them.

③ **Insert pin.**

Insert pin through the hole of spool and sleeve assembly until it is flush with the sleeve.

④ **Install spool and sleeve assembly.**

Put the housing on a flat surface so that 14 hole end of it face upward. Position spool and sleeve assembly so that splined end of spool enters 14 hole end of housing first. Push assembly gently into the housing bore with slight rotating action. Turn the housing and the assembly over and push the housing until parts are flush at 14 hole end of housing. With spool assembly in this flush position, check for free rotation within housing by fingertip force at splined end.

⑤ **Install O-ring, bearing and bearing race.**

Install O-ring seal on the spline end which is now the top of the housing. Install two bearing races and needle thrust bearing on the spool. Make sure the bearing is positioned between the bearing races.

⑥ **Install gland bushing.**

Gland bushing is pre-assembled with dust seal and cap seal. Making sure the dust seal face upward, install gland bushing over spool end with twisting motion. Tap bushing in place with soft material. Make sure the bushing is in contact evenly with bearing race.

⑦ **Install retaining ring.**

After positioning the ring, pry around ring circumference with screw driver to properly set in the housing groove.

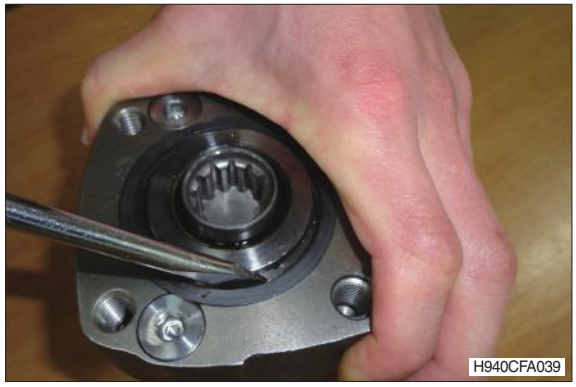

⑧ **Clamp housing in vice.**

Clamp lightly on the side of housing, making spline end of the housing facing down.

⑨ **Install rolled pin and ball.**

Insert the ball and the rolled pin into the suction valve in screwed holes.(2 places)

⑩ **Install manual steering check valve.**

Insert the ball and fix the bore screw by turning it with screw driver.
Make sure the bore screw is flush or slightly below the top 14 hole surface of housing.

⑪ **Install O-ring seal and plate.**

Check spool and sleeve are flush or slightly below the top of housing. Install O-ring seal into the housing groove and then put the plate over them. Align bolt holes in plate with tapped holes in housing.

⑫ **Install drive link.**

Rotate spool and sleeve assembly by turning the spline until pin is parallel with port face. Install drive link, making certain that drive link is engaged with pin. Mark drive on spline side parallel to the engaging slot and port face. This mark will be used to adjust the proper timing between gerotor and the spool and sleeve assembly. See the below figure.

⑬ **Install the O-ring seal and the gerotor set.**

Install O-ring onto the gerotor groove, then put them on the housing. Make sure the seal side faces down to the plate and drive link. Align one pair of opposite star valleys of inner rotor with the mark on the drive link. So that eventually valleys align with the pin. The correct relative positioning between the spool and sleeve assembly cross pin and the gerotor star is critical for the proper valve timing. See the right figure.

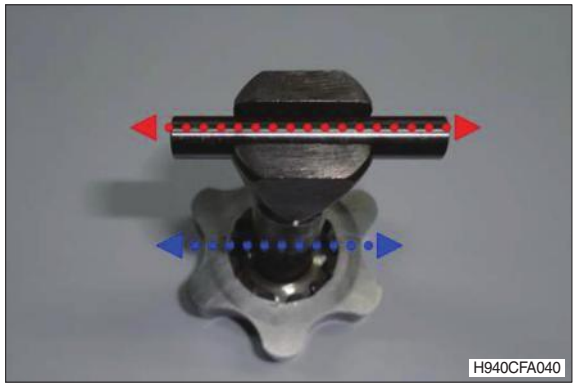

Align bolt holes of the outer rotor without disengaging inner rotor from drive link.

⑭ **Install spacer, seal and end cap.**

Install O-ring in the end cap. Put them on the gerotor. Align the holes between gerotor and end cap.

⑮ **Tighten the cap screws.**

Making sure the seal washers are engaged in cap screw, install the 6 end cap screw and one rolled screw.

The rolled screw must be put in the manual operation check valve hole.

Pre-tighten screws to 1.73 kgf · m (12.5 lbf · ft) in a criss-cross pattern. Final torque to the screw is 2.86 kgf · m (20.7 lbf · ft).

5) TROUBLESHOOTING

Problem	Cause	Remedy
Oil leakage	Fittings loose, worn or damaged. Deteriorated seals by excessive heat. Loose screw or its deteriorated sealing. Internal seals worn or damaged. Damaged seal grooves. Housing crack.	Check and replace the damaged parts. Replace the seals. Replace the sealing and tighten screw appropriately. Replace it. Replace the unit or related parts. Replace the unit.
Noise or vibration	Air inclusion in the system. Valve timing error when the unit is assembled. Control valve damage or clogging.	Bleed the air. Correct the timing. Replace the valve.
Heavy steering operation	Lack of sufficient oil supply. Excessive heat. Broken pump. Leakage in the line or connections. Clogged orifice. High back pressure.	Check the pump and the line. Locate the heat source and correct it. Replace it. Replace it. Disassemble, clean and reassemble it. Adjust the pressure.
Irregular or no response	Broken pump. Excessive heat. Broken centering spring. Misalignment with column. Incorrect piping to the four port. Parts missing. High back pressure. Corrosion on the moving parts.	Replace it. Locate the heat source and remove it. Replace it. Disassemble and adjust it. Correct it. Install the parts correctly. Adjust the pressure. Replace it.

2. STEERING UNIT (WITH EMERGENCY STEERING, OPT)

1) STRUCTURE

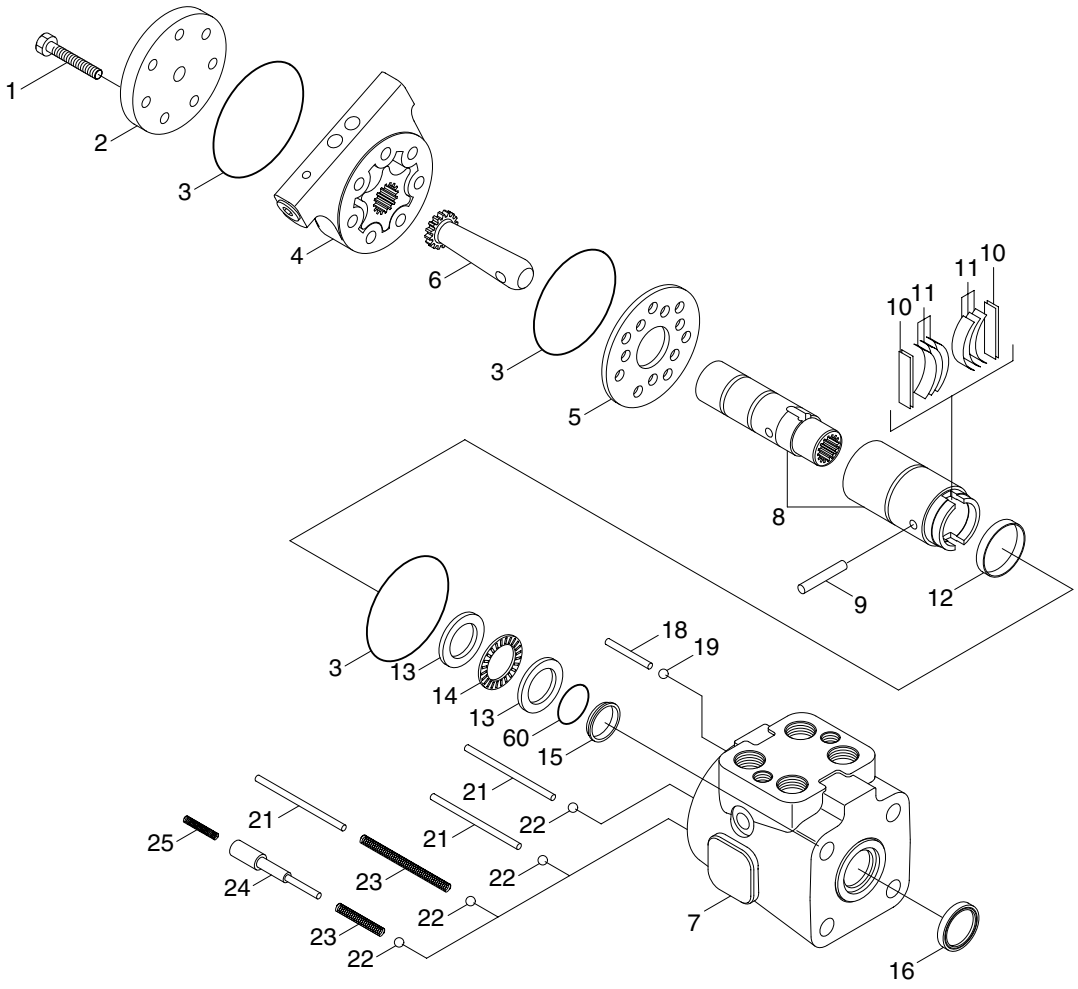

H940C5SE07

1	Cap screw	9	Pin	18	Roll pin
2	End cap	10	Spring spacer	19	Ball
3	O-ring	11	Centering spring	21	Roll pin
4	Gerotor	12	Retainer spring	22	Ball
5	Spacer plate	13	Bearing race	23	Compression spring
6	Drive	14	Needle thrust bearing	24	Anti cavitation plug retainer
7	Valve housing	15	Seal	25	Compression spring
8	Spool/sleeve	16	Dust seal		

2) INTRODUCTION

(1) Most repairs require the removal of the control unit from the machine.
(2) Cleanliness is extremely important.
(3) Clean the port areas thoroughly before disconnecting the hydraulic lines.
(4) Plug the control unit ports and cover open hydraulic lines immediately after they have been disconnected.
(5) Drain the oil and clean the exterior of the control unit before making repairs.
(6) Wash all metal parts in clean solvent.
(7) Use filtered, moisture-free compressed air to dry the parts.
Do not wipe them dry with paper towels or cloth - lint in a hydraulic system will cause damage.
(8) Always use new seals when reassembling hydraulic control units.
(9) Lubricate new rubber seals with a petroleum jelly installation.
(10) Torque all bolts over gasketed joints, then repeat the torquing sequence to make up for gasket compression.

After all repairs are complete it is essential to verify the accuracy of control unit repairs on an authorized test stand.

3) TOOLS

(1) Screwdriver (102~152 ㎜ [4~6"] long, × 3 ㎜ [118"] thin flat blade)
(2) 1/2" socket for current hexagon head cap screws.
(3) Breaker bar wrench.
(4) Torque wrench (3 ㎏f · m [22 lbf · ft] capacity).
(5) 1/4" hexagon key.
(6) Special tools : Plunger and sleeve

4) DISASSEMBLY

※ **Cleanliness is extremely important when repairing a steering control unit. Work in a clean area. Before disconnecting lines, clean port area of unit thoroughly. Use a wire brush to remove foreign material and debris from around exterior joints of the unit.**
We recommend that you keep the unit in a vise during disassembly. Follow the clamping procedures explained throughout the manual.

(1) Clamp unit in vice, meter end up. Clamp lightly on edges of port face sides.
Use protective material on vice jaws.
Housing distortion could result if jaws are overtightened.

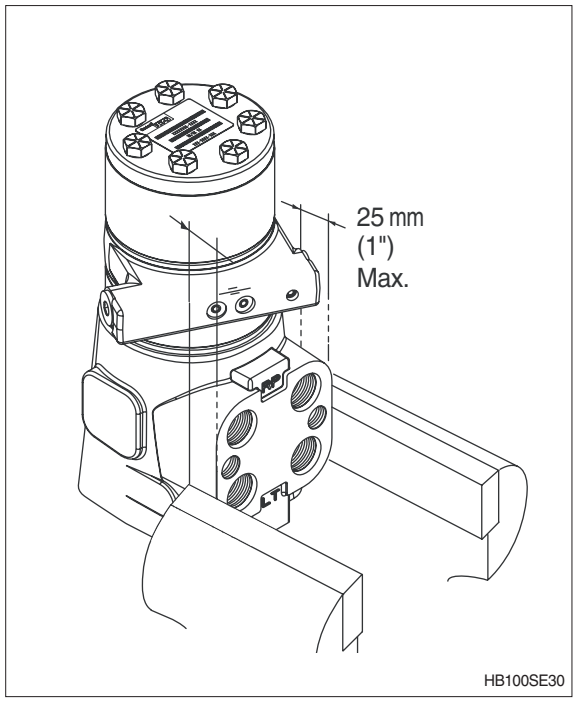

(2) Remove (5/16") cap screws.

(3) Remove end cap.

(4) Remove seal.

※ **This unit has a low slip sealed gerotor star, this unit includes a ring seal and a back-up ring.**
Remove these parts.

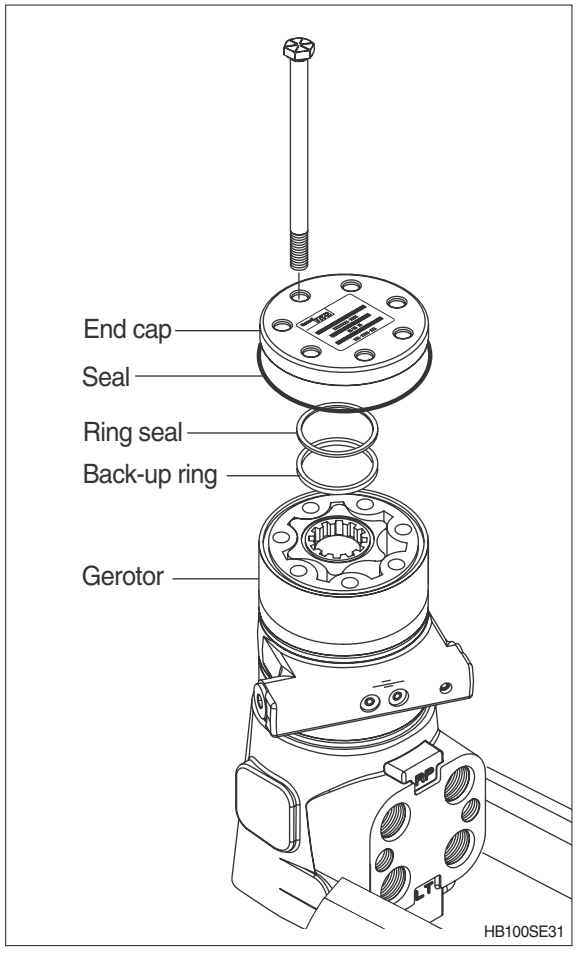

(5) Remove gerotor (meter).
Be careful not to drop star.

(6) Remove seal from valve plate.

(7) Remove valve plate.

(8) Remove seal from valve sub assembly.

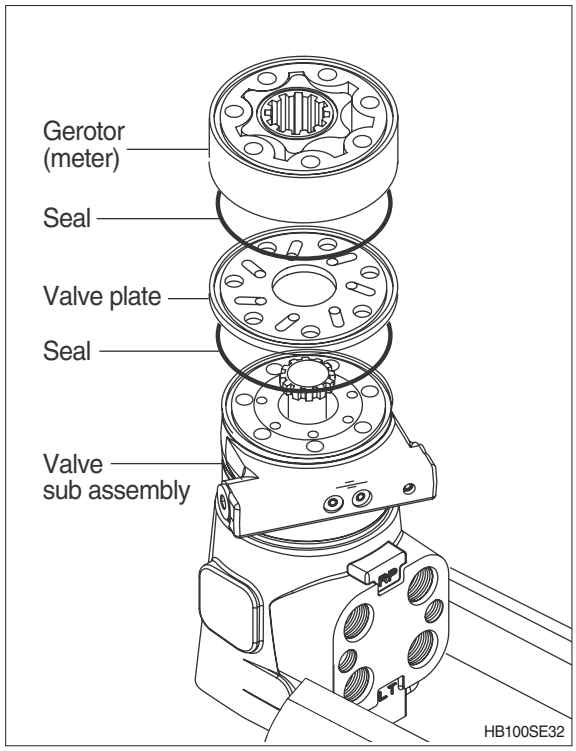

(9) Remove valve sub assembly

(10) Remove seal from valve plate.

(11) Remove valve plate.

(12) Remove the first of the two drives.

(13) Remove seal from gerotor (meter).

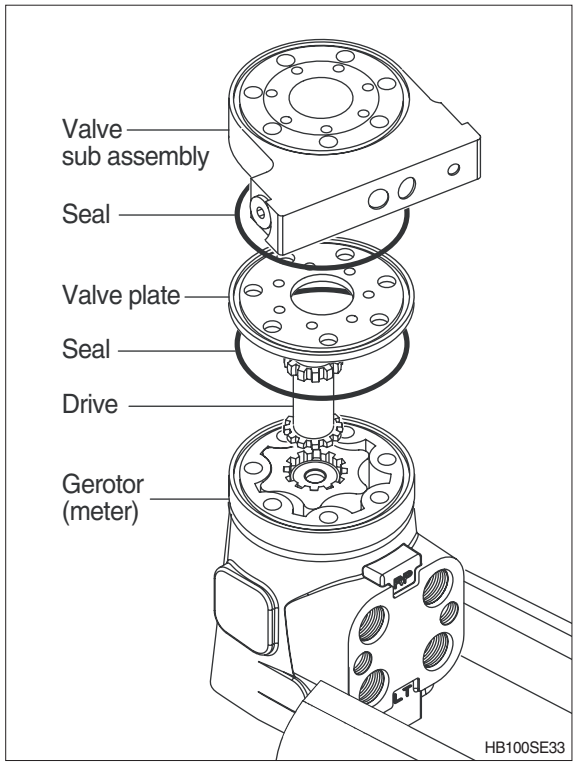

(14) Remove gerotor (meter).
Be careful not to drop star.

(15) Remove seal from spacer plate.

(16) Remove spacer plate.

(17) Remove seal from housing.

(18) Pull drive and twist to remove drive spool and sleeve assembly from housing.

(19) Remove housing from vice.

※ **Do not bind spool and sleeve in housing. Rotate spool and sleeve assembly slowly when removing it from housing.**

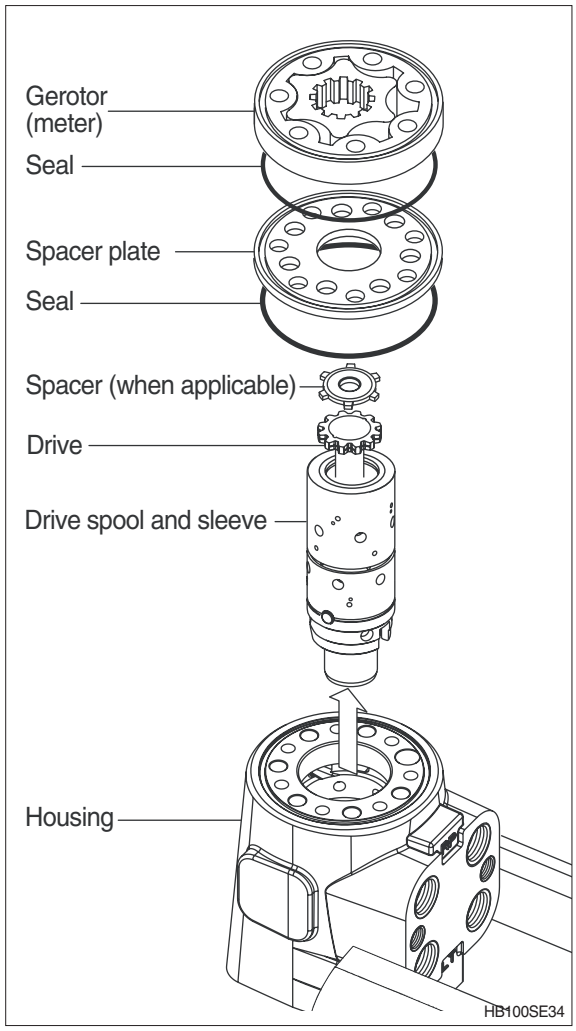

(20) Carefully remove bearing and races, anti-cavitation valves and manual steering check valve (roll pin and ball) from bolt holes by tipping housing gerotor side down (see figure).

(21) Do not remove any valves other than manual steering check valve assembly and anti-cavitation valve assembly. All other valves are factory preset and are non-serviceable.

(22) Carefully remove seal with a thin-blade screw driver.
Do not scratch seal groove with screw driver.

(23) Use thin bladed screw driver to pry dust seal from housing. Do not damage housing.

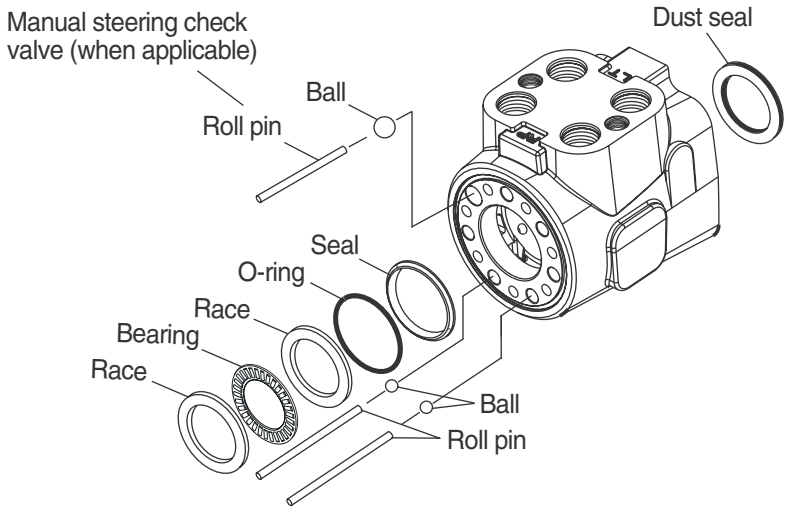

HB100SE35

(24) Push pin from spool and sleeve assembly.

(25) Remove drive.

(26) Push spool partially from control end of sleeve, then carefully remove centering springs and retaining ring from spool by hand (see figure).

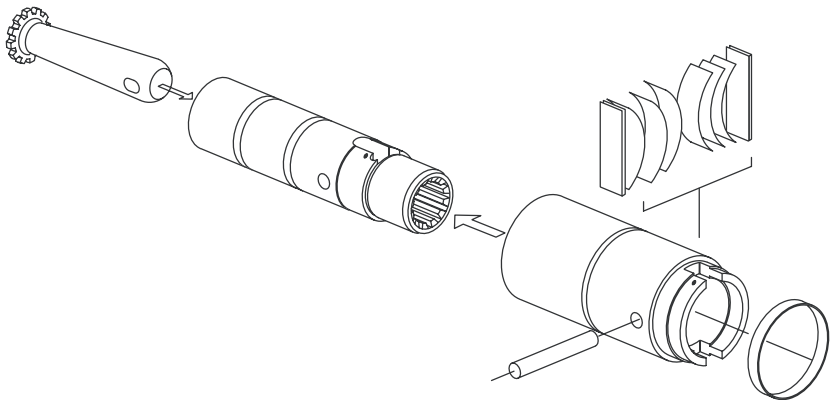

HB100SE36

(27) Disassemble valve sub-assembly as shown in figure.

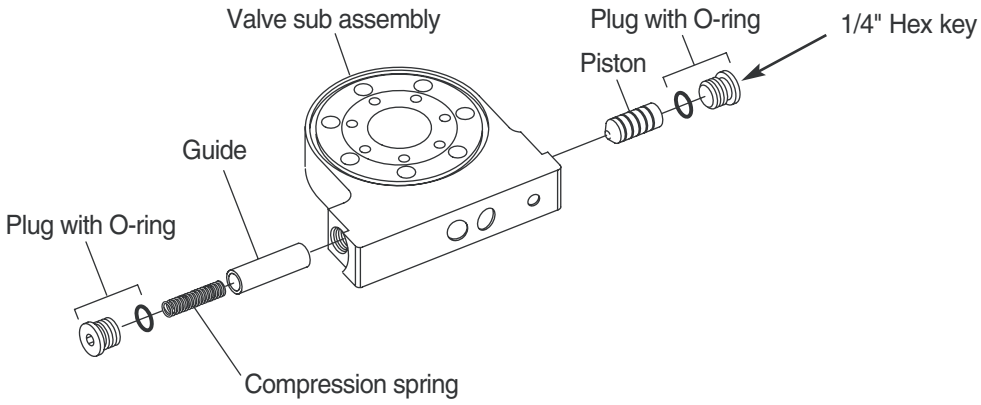

HB100SE37

5) ASSEMBLY

※ **Assembly cleanliness**

Check all mating surfaces. Replace any parts that have scratches or burrs that could cause leakage. Clean all metal parts in clean solvent. Blow dry with air. Do not wipe dry with cloth or paper towel because lint or other matter can get into the hydraulic system and cause damage. Do not use grit paper or file or grind these parts.

※ Lubricate all seals with clean petroleum jelly. A good service policy is to replace all old seals with new seals. Do not use excessive lubricant on seals for meter section.

(1) Reassemble valve parts with new O-rings on plugs.

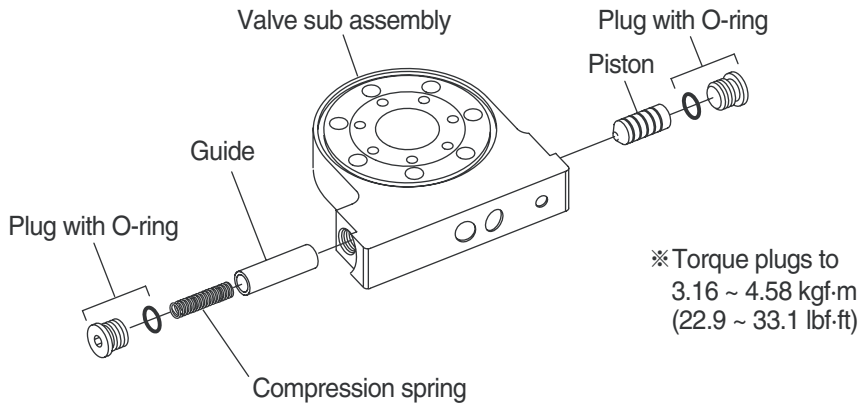

HB100SE38

(2) Place housing on a flat work area on a clean lint free cloth.
Install press-fit 24.9 ㎜ (0.98") ID seal in housing with metal surface of seal facing toward housing.

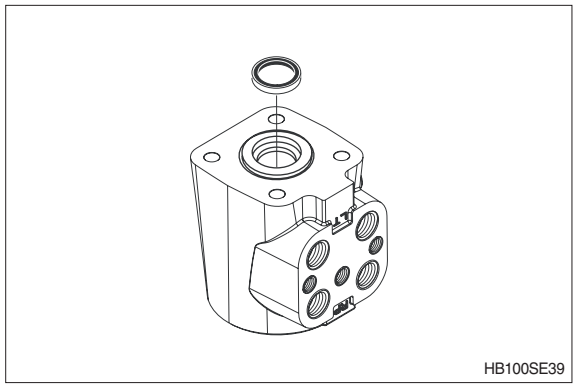

HB100SE39

2-Piece shaft seal installation

(3) For installation of O-ring and seal

① Place housing on a flat work area as shown in figure.
② Lubricate seal and O-ring with hydraulic oil before installation.
③ Align tool sleeve with housing bore.

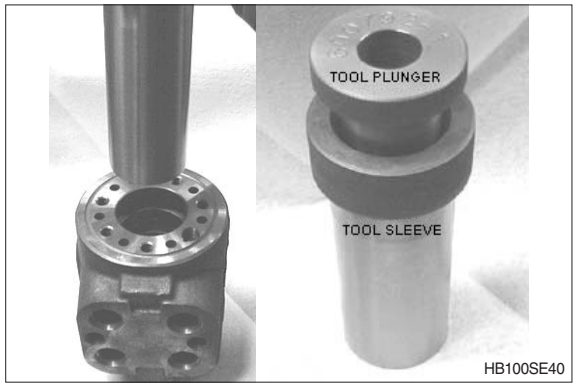

HB100SE40

④ Insert tool sleeve into housing bore.

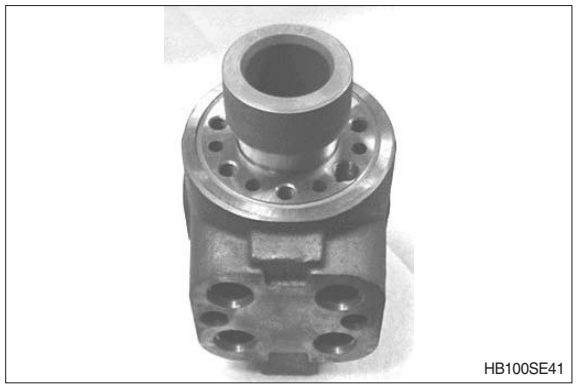
HB100SE41

⑤ Place O-ring on tool plunger.

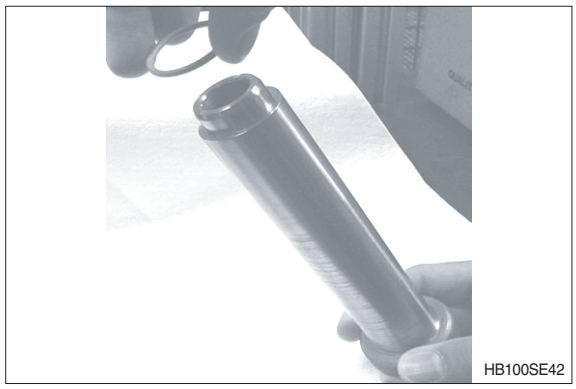
HB100SE42

⑥ Align seal with tool plunger cross section L shape of seal should be upside down.


HB100SE43

⑦ Push seal onto plunger.
Lip of seal should be between O-ring and tool plunger. No gap should exist between O-ring and seal.


HB100SE44

⑧ Align tool plunger with tool sleeve.

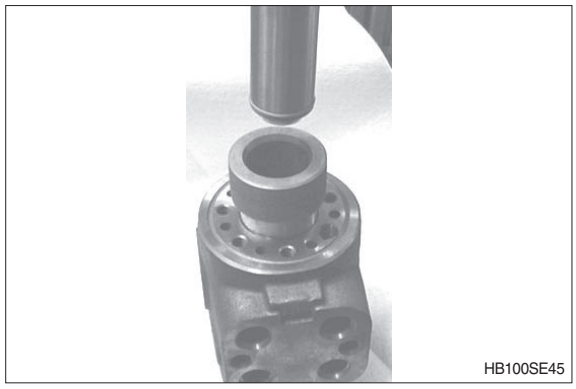
HB100SE45

⑨ Push tool plunger into tool sleeve until it bottoms out, rotate 1/4 turn.

⑩ While holding sleeve in housing, withdraw tool plunger.

⑪ Withdraw tool sleeve.

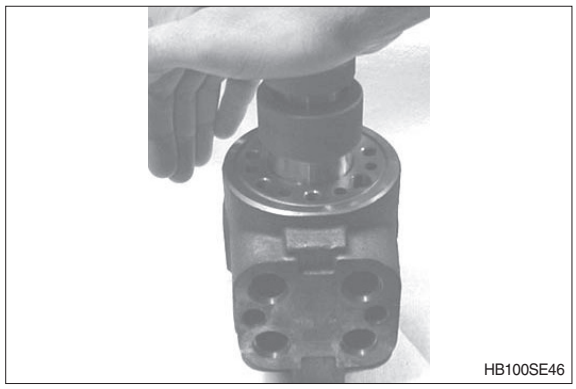
HB100SE46

⑫ Inspect seal installation.
Seal and O-ring must both be within shaft seal counterbore of housing.

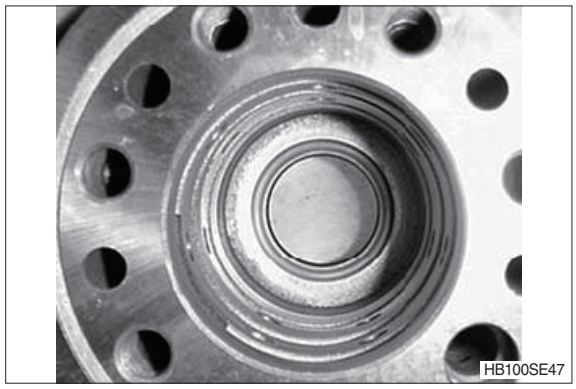
HB100SE47

(4) Clamp housing in vice.

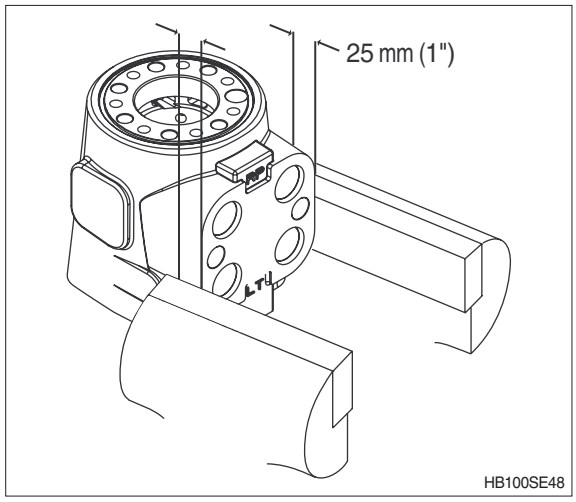

HB100SE48

(5) Install two bearing races and thrust bearing as shown in figure.

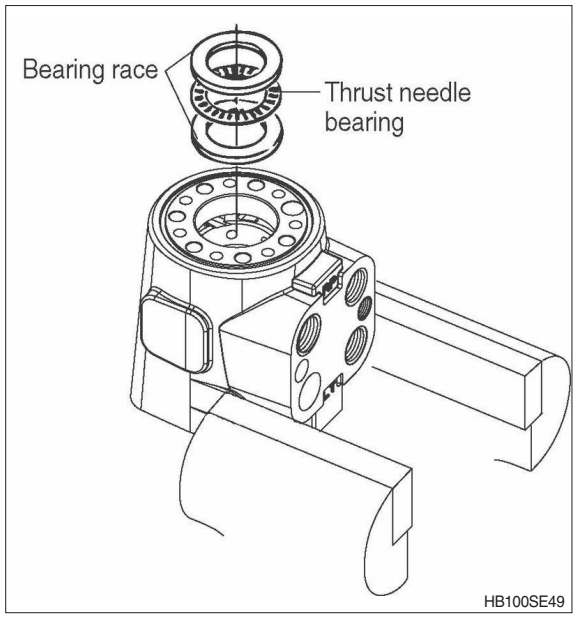

(6) Assemble spool and sleeve carefully so that spring slots line up at the same end. Rotate spool while sliding parts together. Test for free rotation. Spool should rotate smoothly in sleeve with fingertip force applied at splined end.
Align spring slots and identification marks (figure) in spool and sleeve and stand parts on end of bench.

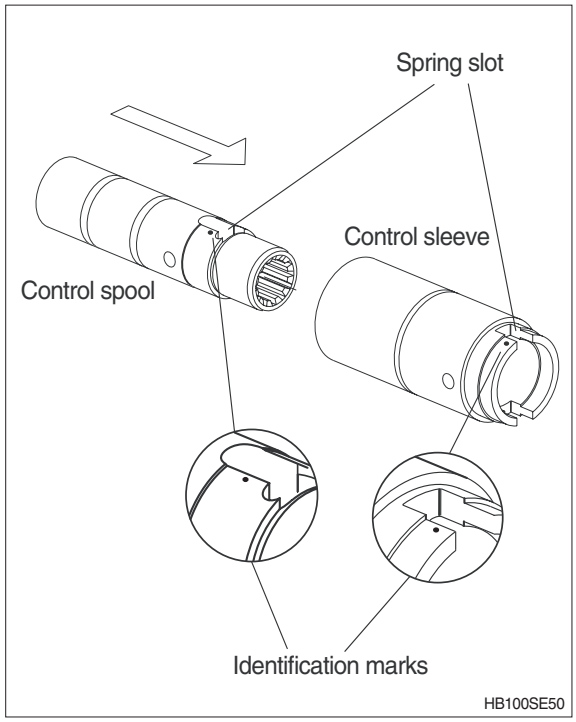

(7) Installation of spring spacers and springs, hold spring retainer at an angle as shown (see figure reference number 1), insert spring spacers and springs one at a time in sequence noted by reference numbers 2~9, then position spring retainer correctly over all these parts. Adjust alignment of spring parts with a small screwdriver.

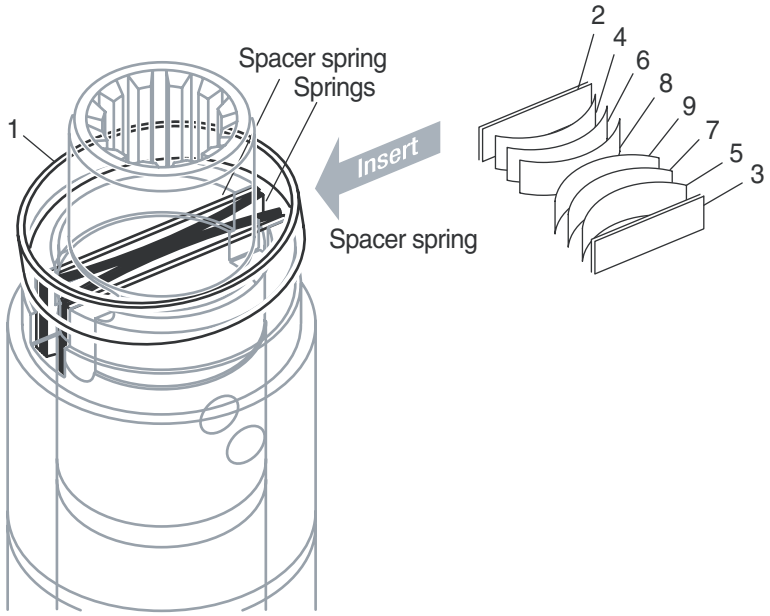

HB100SE51

(8) Assemble drive and spool/sleeve.

(9) Insert pin through spool and sleeve assembly through hole in drive, until pin is flush at both sides of sleeve.

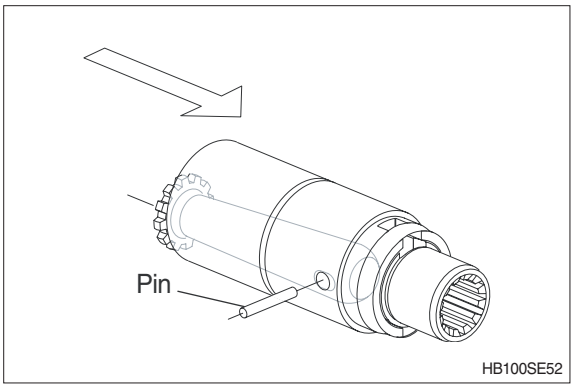

HB100SE52

(10) Position spool and sleeve assembly so that splined end of spool enters 14 hole end of housing first.

※ While inserting spool and sleeve assembly into housing, make sure parts do not tilt out of position.
Push assembly gently into place with slight rotating action. Bring spool assembly entirely within housing bore until parts are flush at 14 hole end of housing. With spool assembly in this flush position, check for free rotation within housing by turning assembly with fingertip force at splined end.

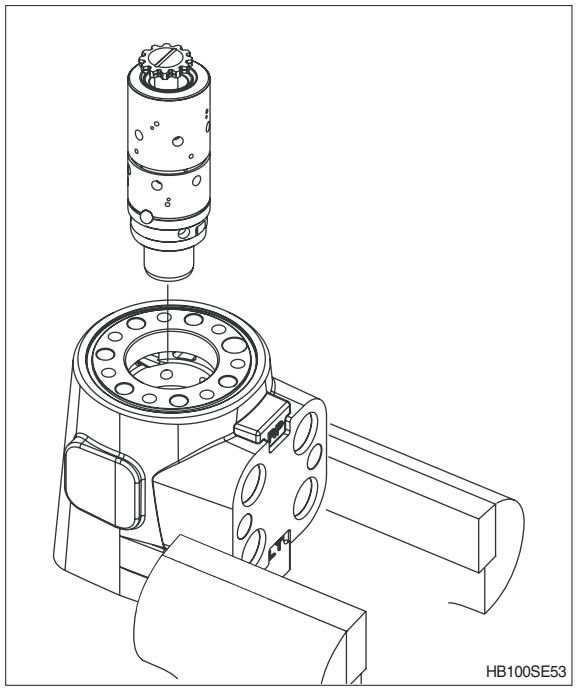

(11) Install 72.6 mm (2.86") ID O-ring in housing.

(12) Install anti-cavitation valves and manual steering check valve (if used) in holes, as shown in figure. After installing balls, inspect holes to make sure they are properly seated.

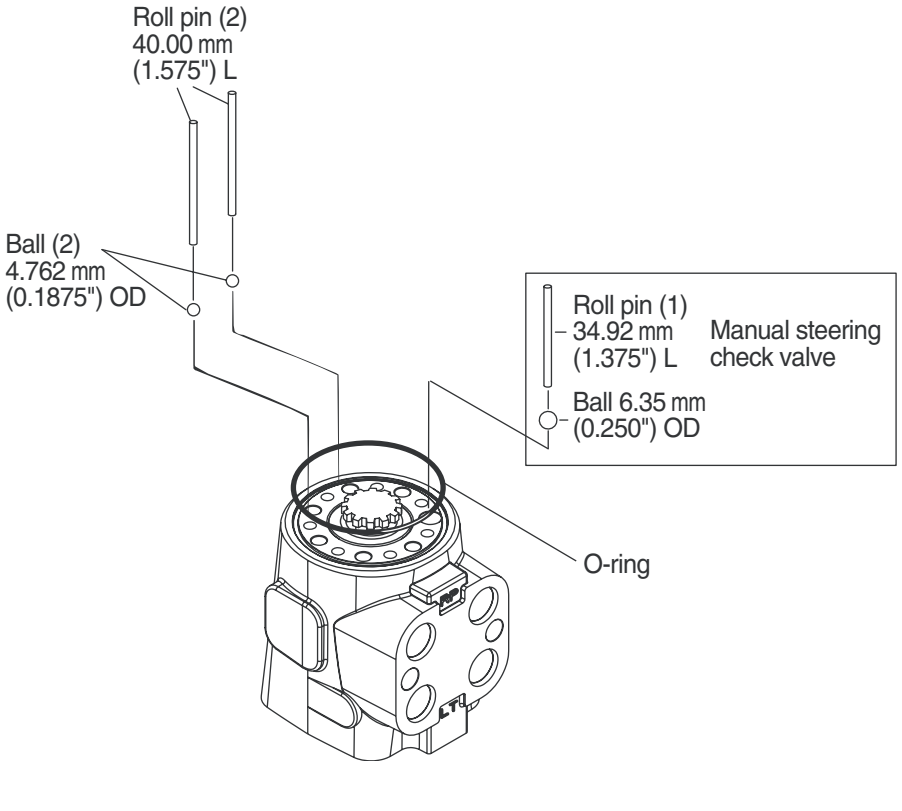

※ **Timing reference data**

Align star valleys (reference A) with marked drive 1 and drive 2 (reference B). Valleys must align with pin. Note parallel relationship of reference lines A, B, C, and D in figure. Align bolt holes without disengaging gerotor (meter) from drive.

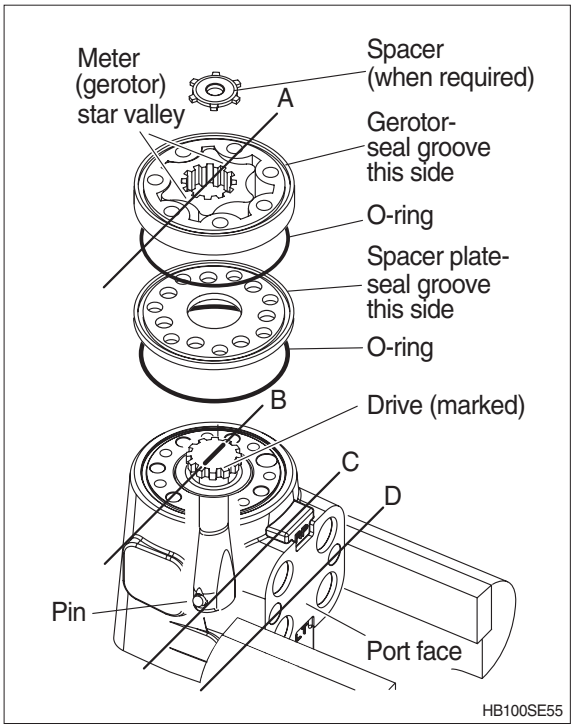

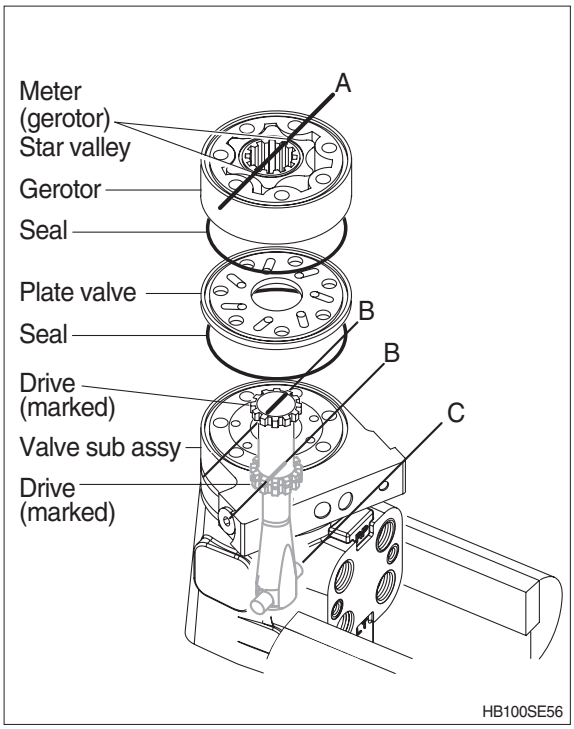

(13) Lubricate and install 72.6 mm (2.86") ID seal in gerotor (meter).

(14) Install spacer plate. Align bolt holes in spacer plate with tapped holes in housing.

(15) Lubricate and install 72.6 mm (2.86") ID seal in spacer plate.

(16) Install gerotor (meter) seal groove up, note position of star valleys in relation to marked drive.

(17) Install drive spacer when required.

(18) Lubricate and install 72.6 mm (2.86") ID seal in gerortor ring.

(19) Position second marked drive correctly over marked first drive.

(20) Install valve plate.

(21) Lubricate and install 72.6 (2.86") ID seal in valve plate.

(22) Install valve sub assembly, see figure for correct position.

※ Check to insure that spool and sleeve are flush or slightly below 14 hole surface of housing.
Clean upper surface of housing by wiping with palm of clean hand. Clean each of the flat surfaces of meter section parts in a similar way just before reassembly. Do not use cloth or paper to clean surfaces.

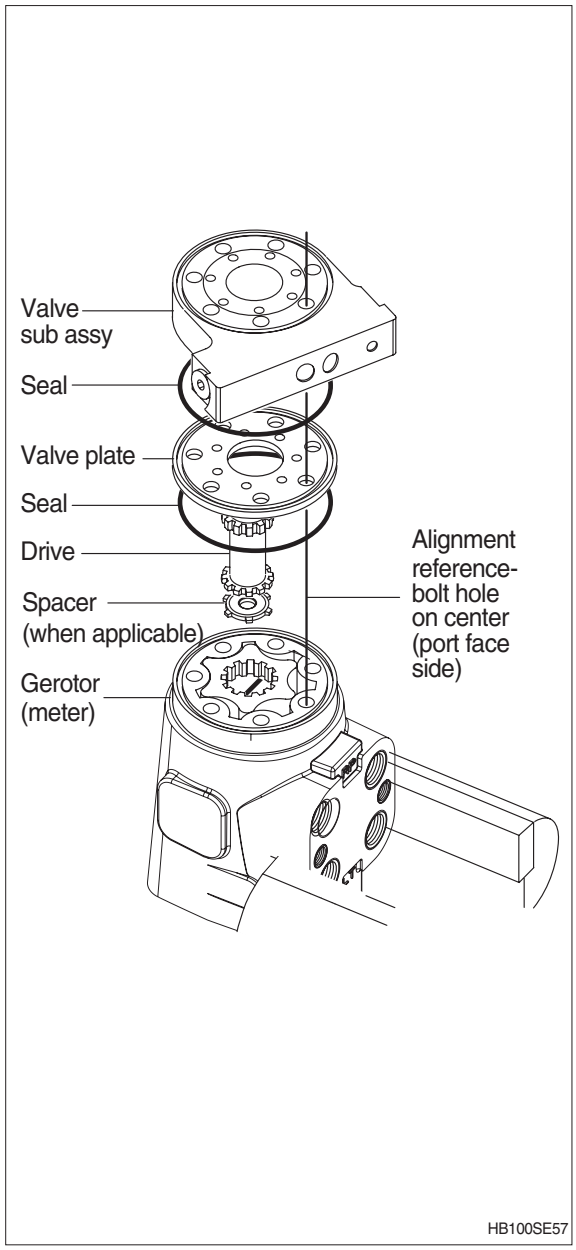

SECTION 6 WORK EQUIPMENT

Group 1 Structure and Function ····· 6-1
Group 2 Operational Checks and Troubleshooting ····· 6-74
Group 3 Tests and Adjustments ····· 6-87
Group 4 Disassembly and Assembly ····· 6-99

GROUP 1 STRUCTURE AND FUNCTION

1. HYDRAULIC SYSTEM OUTLINE

The loader and backhoe hydraulic system is a open center system which is supplied with flow from the fixed displacement double gear pump.
The backhoe hydraulic system is a pilot operated and the loader hydraulic system is operated by linkage.

Oil is drawn from the hydraulic tank by the hydraulic pump. The pump has two sections, P1 and P2.

The hydraulic pump is mounted on the rear of the transmission and is driven by the engine via a driveshaft.

Oil from pump section P1 flows direct to the loader control valve. Oil from the small section P2, flows to steering unit, and in neutral circuit flows through the priority valve in pump to the loader control valve and then to join the flow from P1 at the loader control valve.

From the loader control valve neutral gallery, oil flows via a high pressure carry-over line to the backhoe valve.

Some of the exhaust oil flows directly back to the tank through a filter and some of the exhaust oil returns to tank via the hydraulic oil cooler.

To help prevent backhoe dipper cylinder and loader lift cylinder cavitation, there is a check valve fitted to the return line. The check valve raises approximately 5 bar (75 lbf/in^2) of pressure in the line, which improves the operation of the respective anti-cavitation valves.

The hydraclamp exhaust hose is fitted. The hose connects the hydraclamp spool directly into the exhaust circuit. This prevents the clamp from **locking-up** when the sideshifting operation is required.

2. HYDRAULIC CIRCUIT (MECHANICAL CONTROL)

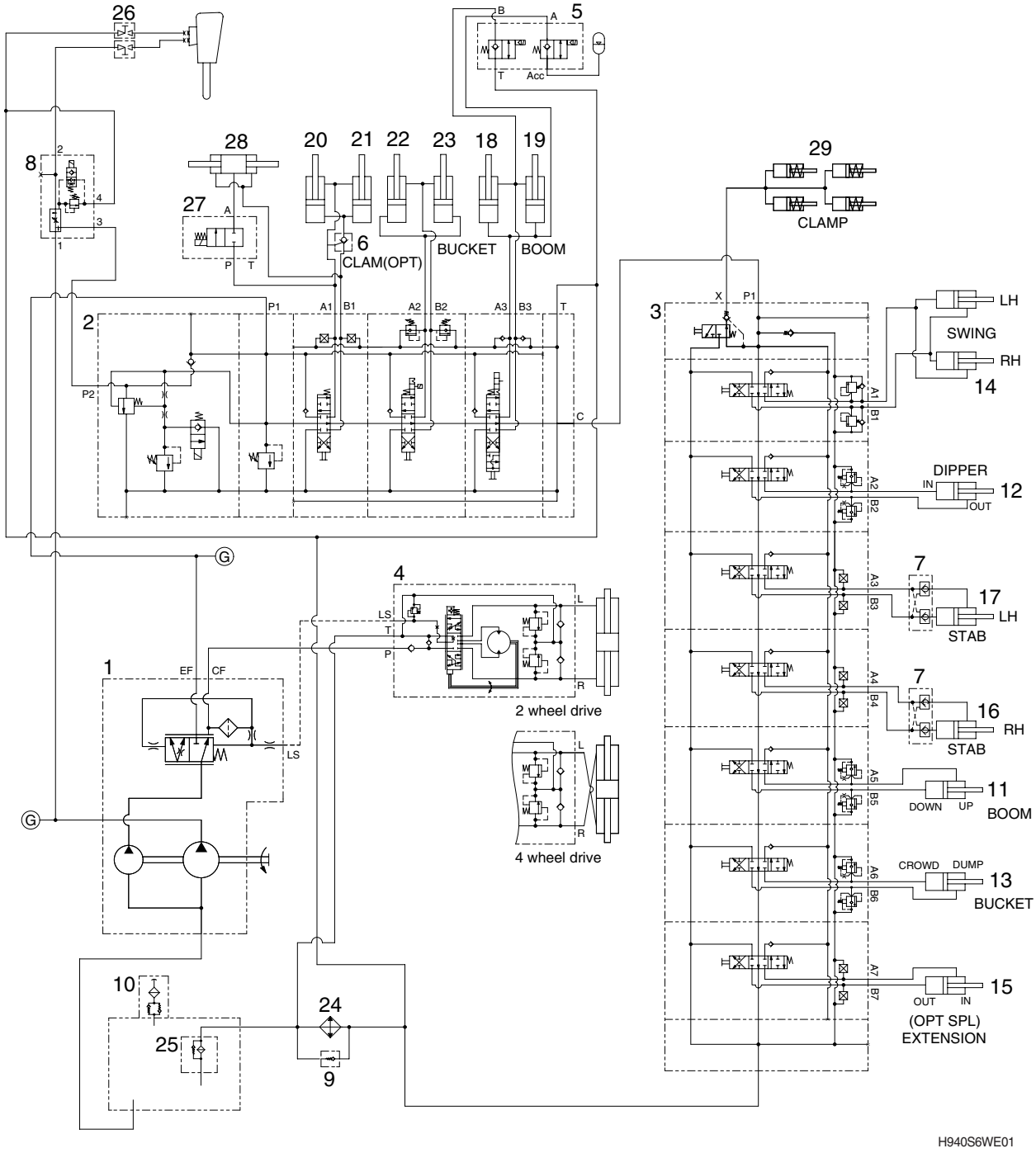

H940S6WE01

1	Main pump	11	Boom cylinder	21	Clam cylinder-RH (opt)
2	Main control valve (loader)	12	Dipper cylinder	22	Loader bucket cylinder-LH
3	Main control valve (backhoe)	13	Bucket cylinder	23	Loader bucket cylinder-RH
4	Steering unit	14	Swing cylinder	24	Oil cooler
5	Ride control valve (opt)	15	Extension cylinder (opt)	25	Return filter
6	Pilot check valve (opt)	16	Stabilizer cylinder-RH	26	Stop valve (opt)
7	Double pilot check valve	17	Stabilizer cylinder-LH	27	Quick coupler valve
8	Breaker valve (opt)	18	Loader boom cylinder-RH	28	Quick coupler-loader
9	By-pass check valve	19	Loader boom cylinder-LH	29	Clamp cylinder
10	Air breather	20	Clam cylinder-LH (opt)	Ⓖ	Gauge port

HYDRAULIC CIRCUIT (PILOT CONTROL)

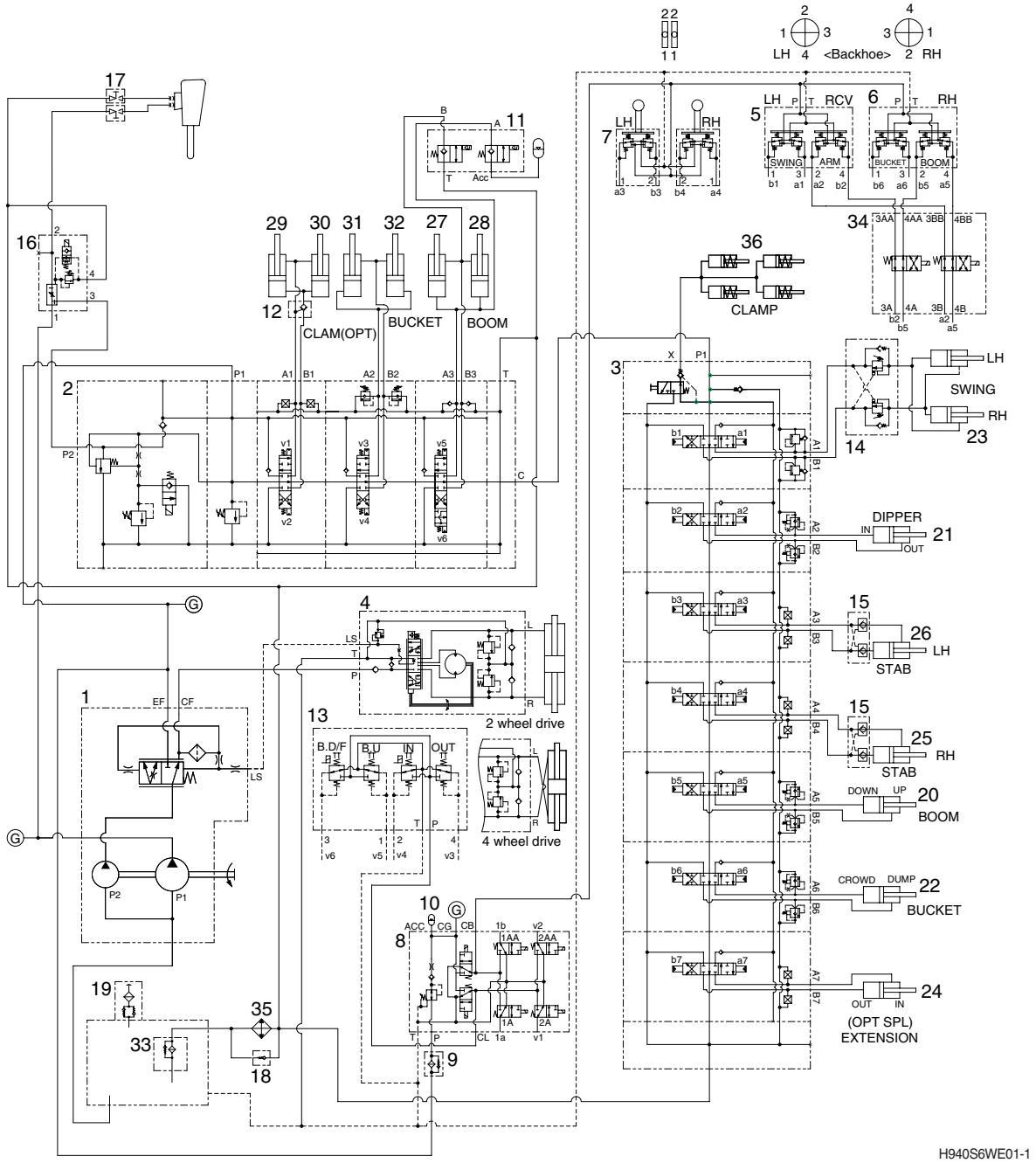

1 Main pump
2 Main control valve (loader)
3 Main control valve (backhoe)
4 Steering unit
5 Remote control valve-LH
6 Remote control valve-RH
7 Stabilizer lever
8 Pilot supply unit
5- cartridge sol valve (opt)
9 Line filter
10 Accumulator
11 Ride control valve (opt)
12 Pilot check valve (opt)
13 Remote control lever (loader)
14 Swing damping valve (opt)
15 Double pilot check valve
16 Breaker valve (opt)
17 Stop valve (opt)
18 By-pass check valve
19 Air breather
20 Boom cylinder
21 Dipper cylinder
22 Bucket cylinder
23 Swing cylinder
24 Extension cylinder (opt)
25 Stabilizer cylinder-RH
26 Stabilizer cylinder-LH
27 Loader boom cylinder-LH
28 Loader boom cylinder-RH
29 Clam cylinder-LH (opt)
30 Clam cylinder-RH (opt)
31 Loader bucket cylinder-LH
32 Loader bucket cylinder-RH
33 Return filter
34 Pattern exchanger valve (opt)
35 Oil cooler
36 Clamp cylinder
Ⓖ Gauge port

3. LOADER HYDRAULIC CIRCUIT (PILOT CONTROL)

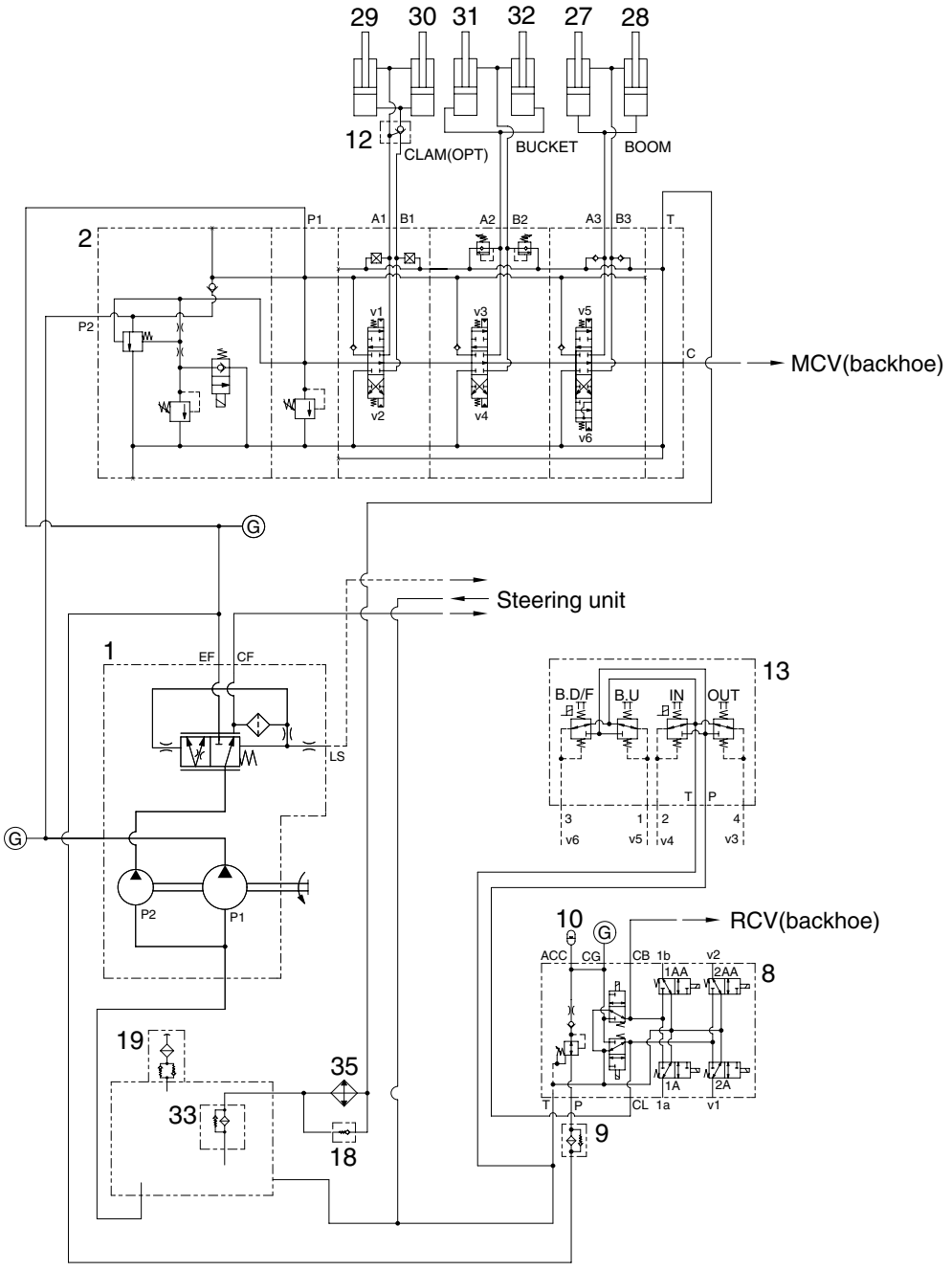

H940C6WE02

1	Main pump	13	Remote control lever (loader)	30	Clam cylinder-RH
2	Main control valve (loader)	18	By-pass check valve	31	Loader bucket cylinder-LH
8	Pilot supply unit	19	Air breather	32	Loader bucket cylinder-RH
	5- cartridge sol valve (opt)	27	Loader boom cylinder-LH	33	Return filter
9	Line filter	28	Loader boom cylinder-RH	35	Oil cooler
10	Accumulator	29	Clam cylinder-LH	Ⓖ	Gauge port
12	Pilot check valve (opt)				

1) WHEN THE RCV LEVER IS IN THE RAISE POSITION

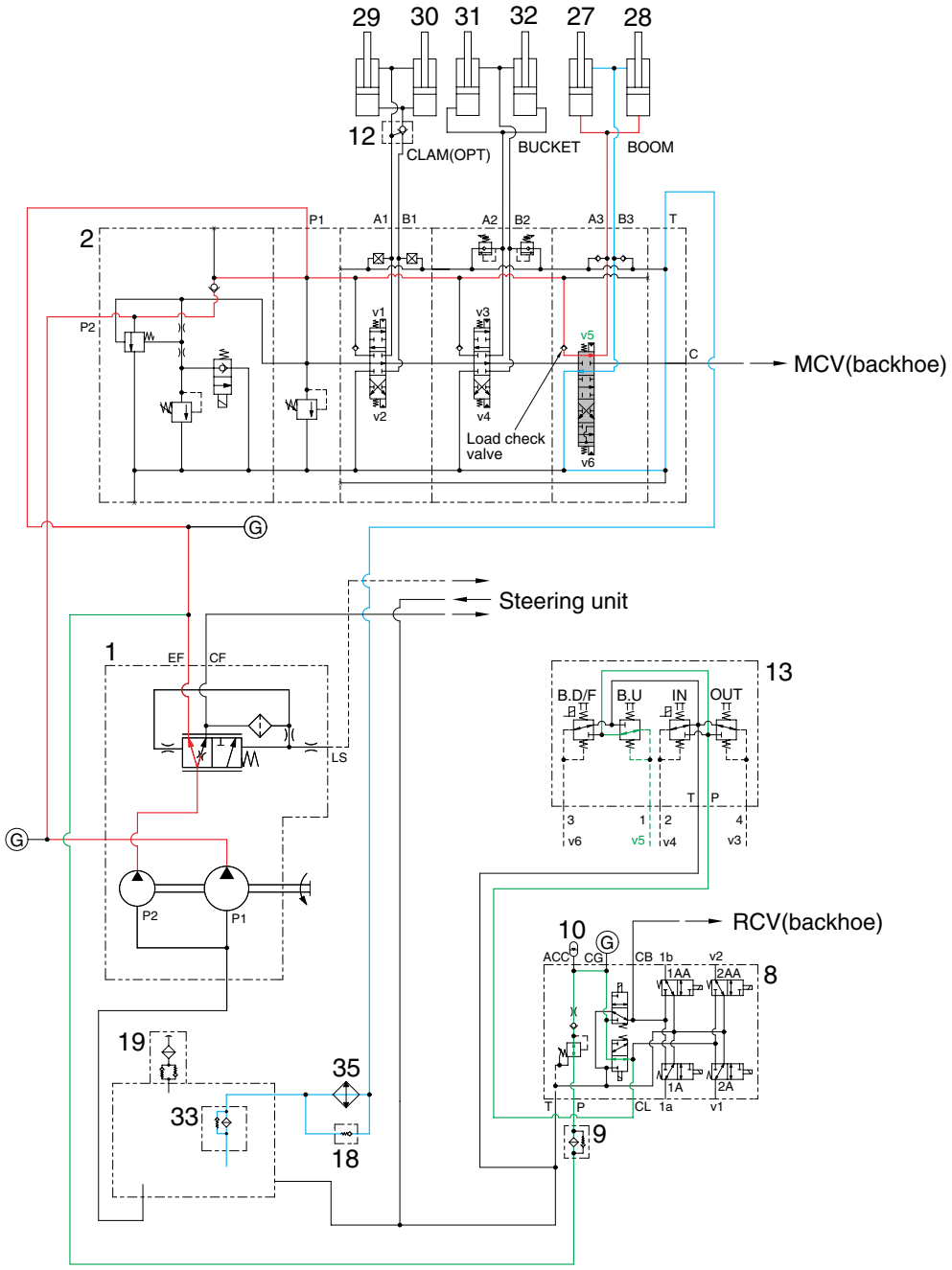

H940C6WE03

- When the loader RCV lever is pulled back, the boom spool is moved to raise position.
- The oil from main pump (1) flows into loader main control valve (2) and then goes to the large chamber of boom cylinder (27, 28) by pushing the load check valve of the boom spool.
- The oil from the small chamber of boom cylinder (27, 28) returns to hydraulic oil tank through the boom spool at the same time.
- When this happens, the boom goes up.

2) WHEN THE RCV LEVER IS IN THE LOWER POSITION

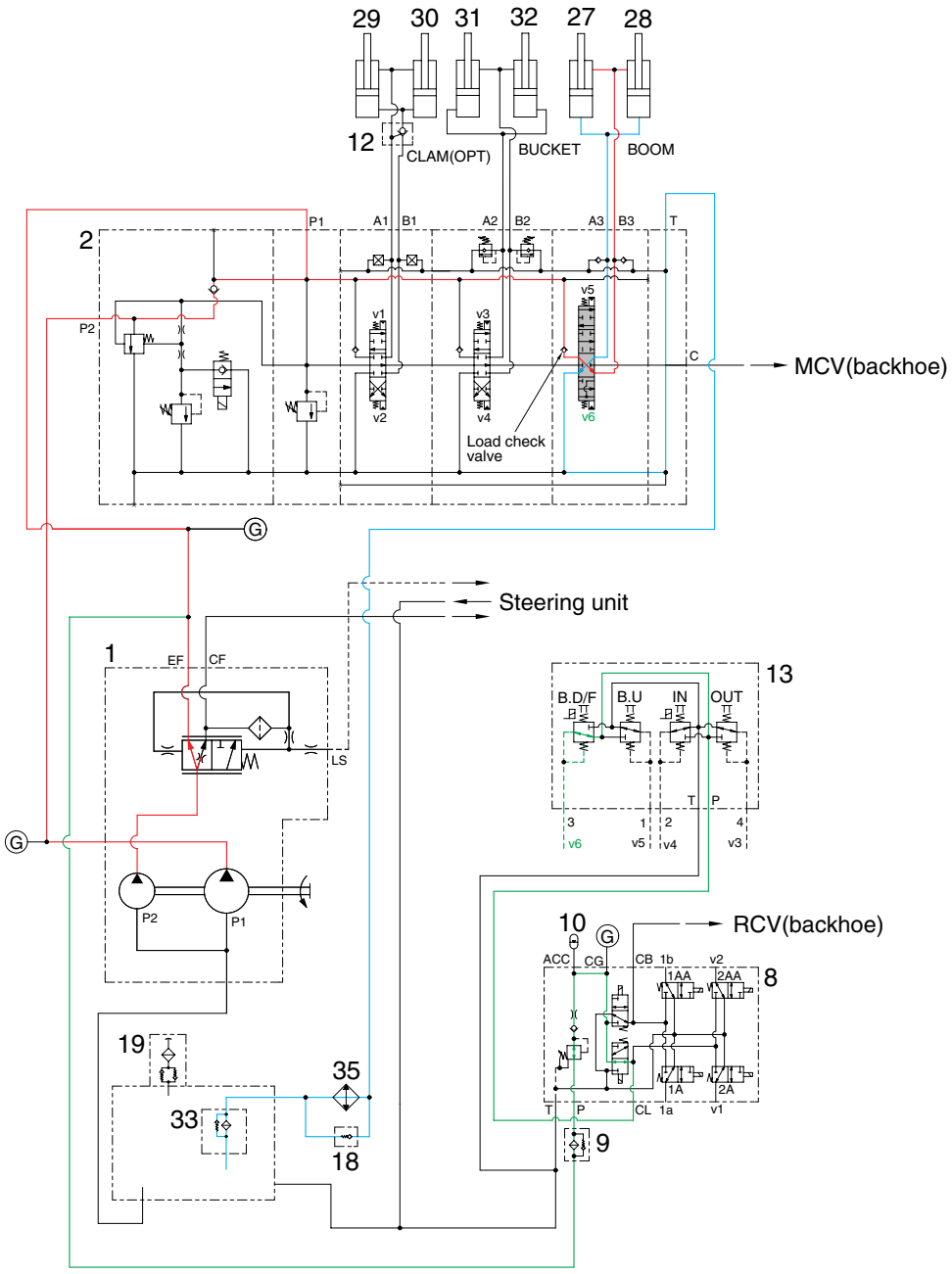

H940C6WE04

- When the loader RCV lever is pushed forward, the boom spool is moved to lower position.
- The oil from main pump (1) flows into loader main control valve (2) and then goes to small chamber of boom cylinder (27, 28) by pushing the load check valve of the boom spool.
- The oil returned from large chamber of boom cylinder (27, 28) returns to hydraulic tank through the boom spool at the same time.
- When the lowering speed of boom is faster, the return oil from the large chamber of boom cylinder combines with the oil from the pump through the check valve, and flows into the small chamber of the cylinder.

  This prevents cylinder cavitation by the negative pressure when the pump flow cannot match the boom down speed.

3) WHEN THE RCV LEVER IS IN THE FLOAT POSITION

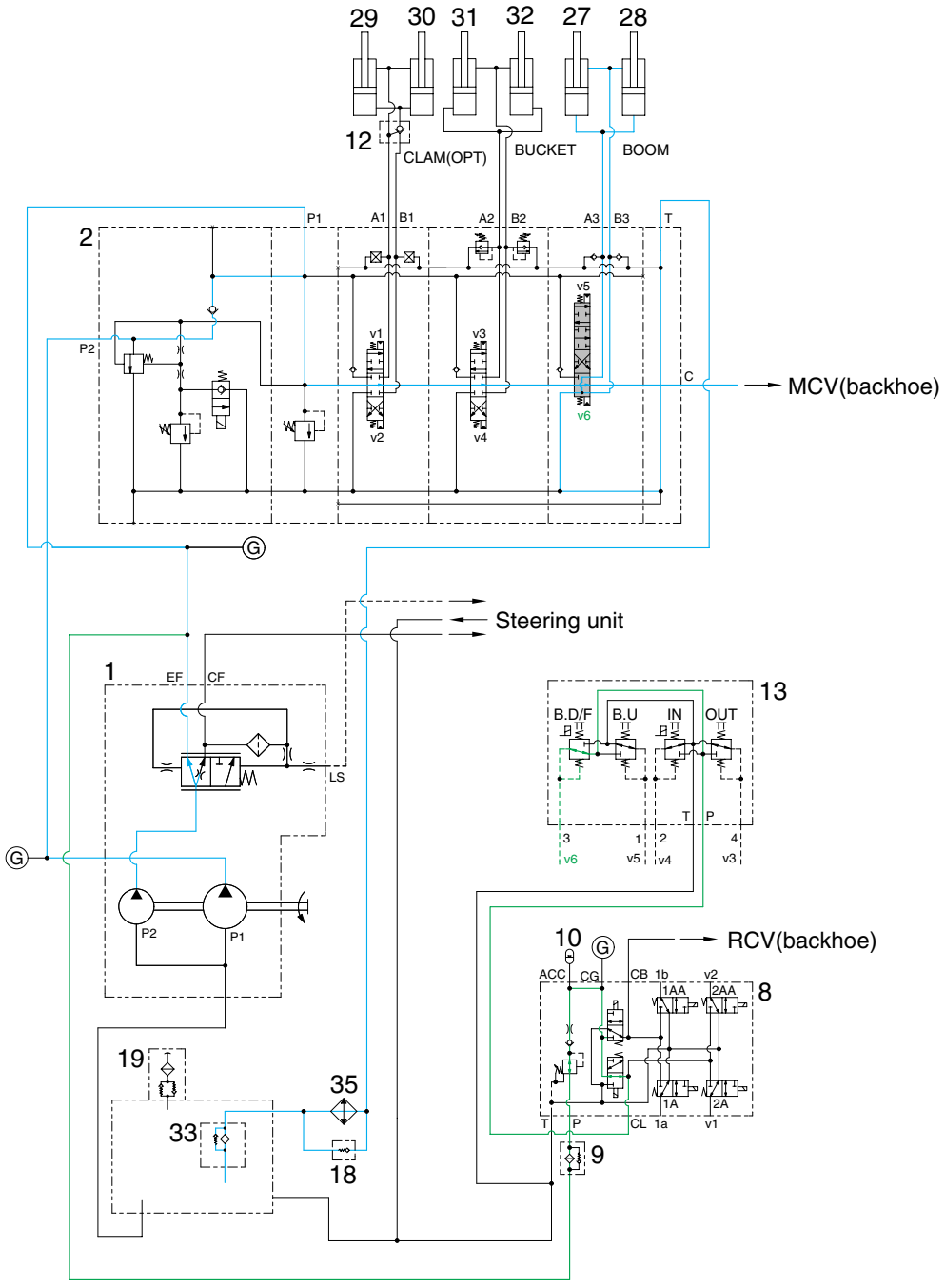

H940C6WE05

- When the loader RCV lever is pushed further forward from the lower position, the boom spool is moved to floating position.
- The work ports (A3), (B3) and the small chamber and the large chamber are connected to the return passage, so the boom will be lowered due to it's own weight.
- In this condition, when the bucket is in contact with the ground, it can be move up and down in accordance with the shape of the ground.

4) WHEN THE RCV LEVER IS IN THE DUMP POSITION

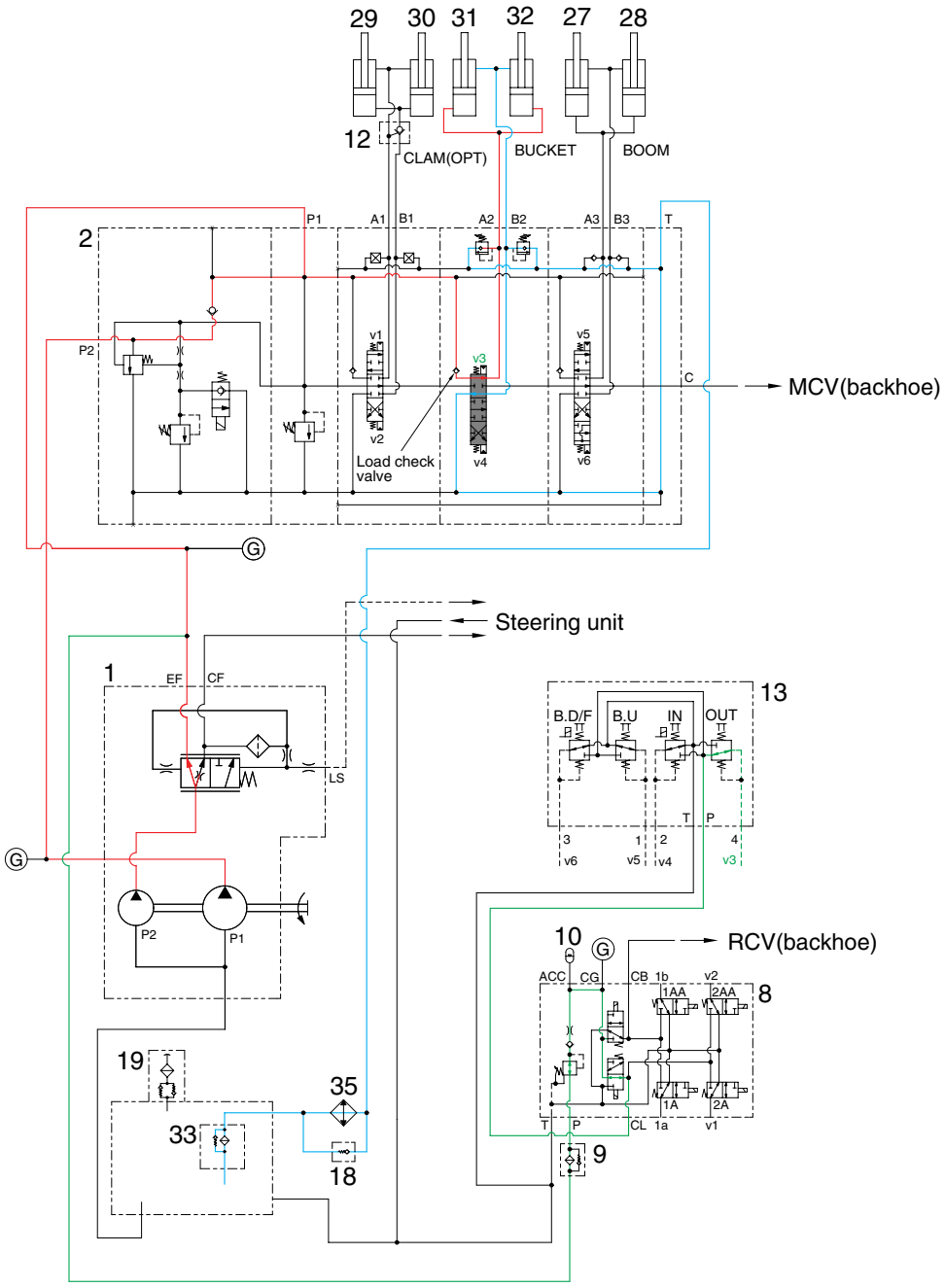

H940C6WE07

- If the loader RCV lever is pushed right, the bucket spool is moved to dump position.
- The oil from main pump (1) flows into loader main control valve (2) and then goes to the large chamber of bucket cylinder (31, 32) by pushing the load check valve of the bucket spool.
- The oil at the small chamber of bucket cylinder (31, 32) returns to hydraulic tank through the bucket spool.
- When this happens, the bucket is dumped.
- When the dumping speed of bucket is faster, the oil returned from the small chamber of bucket cylinder combines with the oil from the pump, and flows into the large chamber of the cylinder.
  This prevents cylinder cavitation by the negative pressure when the pump flow cannot match the bucket dump speed.

5) WHEN THE RCV LEVER IS IN THE ROLL BACK (retract) POSITION

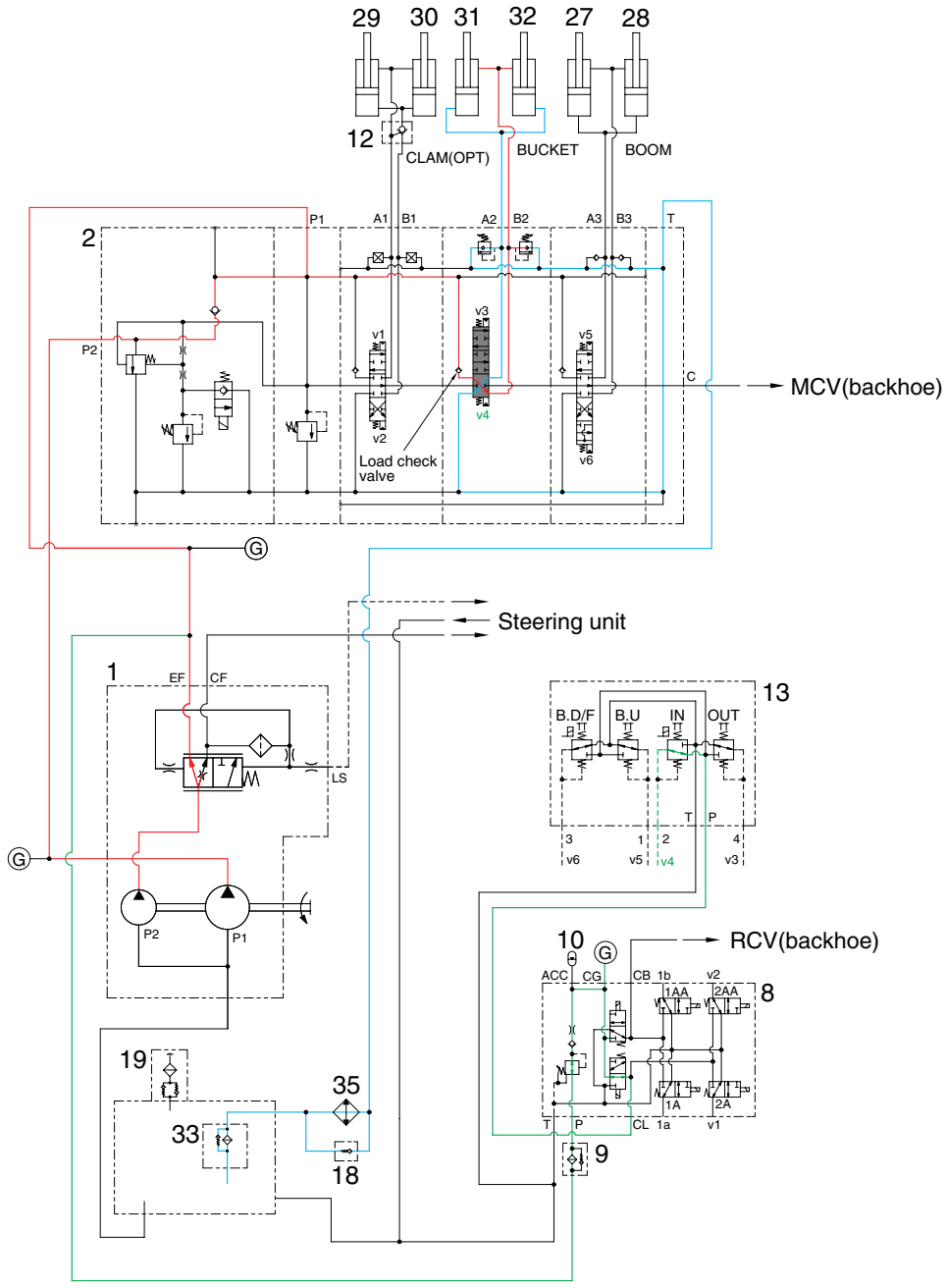

H940C6WE06

- If the loader RCV lever is pulled left, the bucket spool is moved to roll back position.
- The oil from main pump (1) flows into loader main control valve (2) and then goes to the small chamber of bucket cylinder (31, 32) by pushing the load check valve of the bucket spool.
- The oil at the large chamber of bucket cylinder (31, 32) returns to hydraulic tank.
- When this happens, the bucket roll back.
- When the rolling speed of bucket is faster, the return oil from the large chamber of bucket cylinder combines with the oil from the pump, and flows into the small chamber of the cylinder.
  This prevents cylinder cavitation by the negative pressure when the pump flow cannot match the bucket rolling speed.

6) LOW SPEED CONTROL FUNCTION

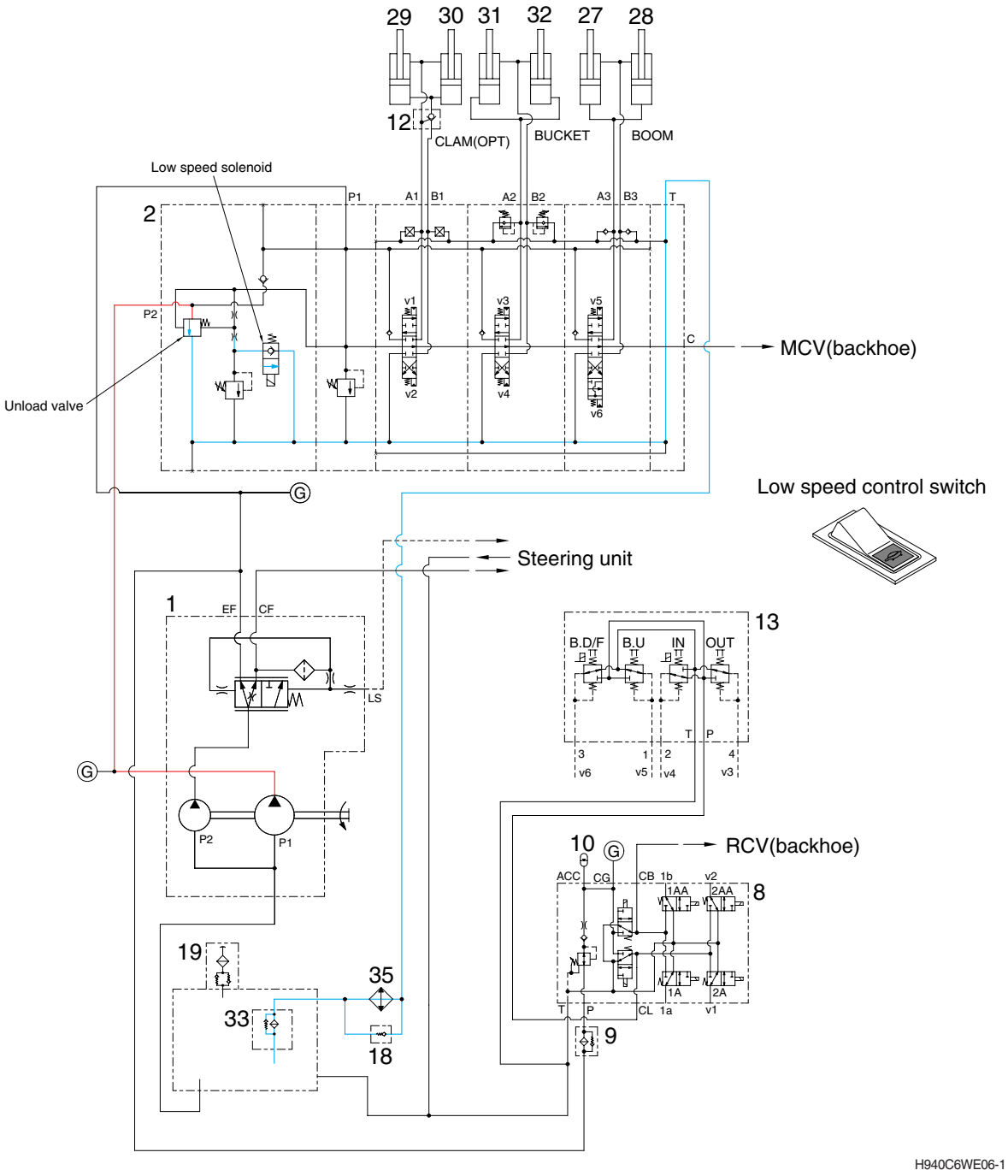

H940C6WE06-1

· If the low speed control switch is pushed ON, the low speed solenoid is energized .
Then unload valve is opened and the oil from P1 pump return to the tank.
This makes loader speed slow.

7) RIDE CONTROL FUNCTION (OPTION)

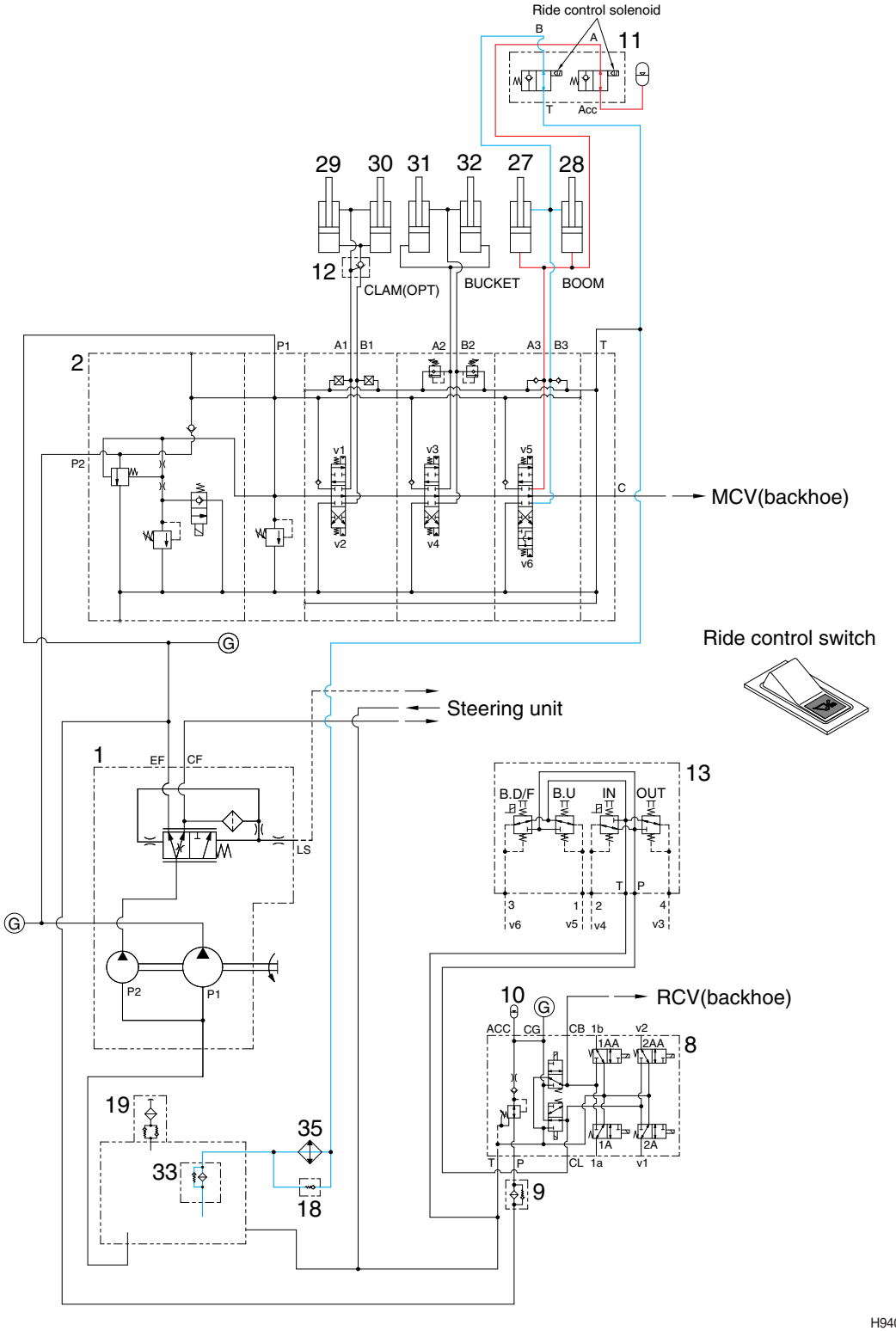

H940C6WE147

- When the ride control switch is operated, the solenoids on the ride control valve (11) are energized.
- Hydraulic oil from the large chamber of boom cylinder is dead ended at the loader control valve and is connected to the accumulator. Hydraulic oil from the small chamber of boom cylinder is connected to tank to make up or dissipate oil as required.

4. BACKHOE HYDRAULIC CIRCUIT (PILOT CONTROL)

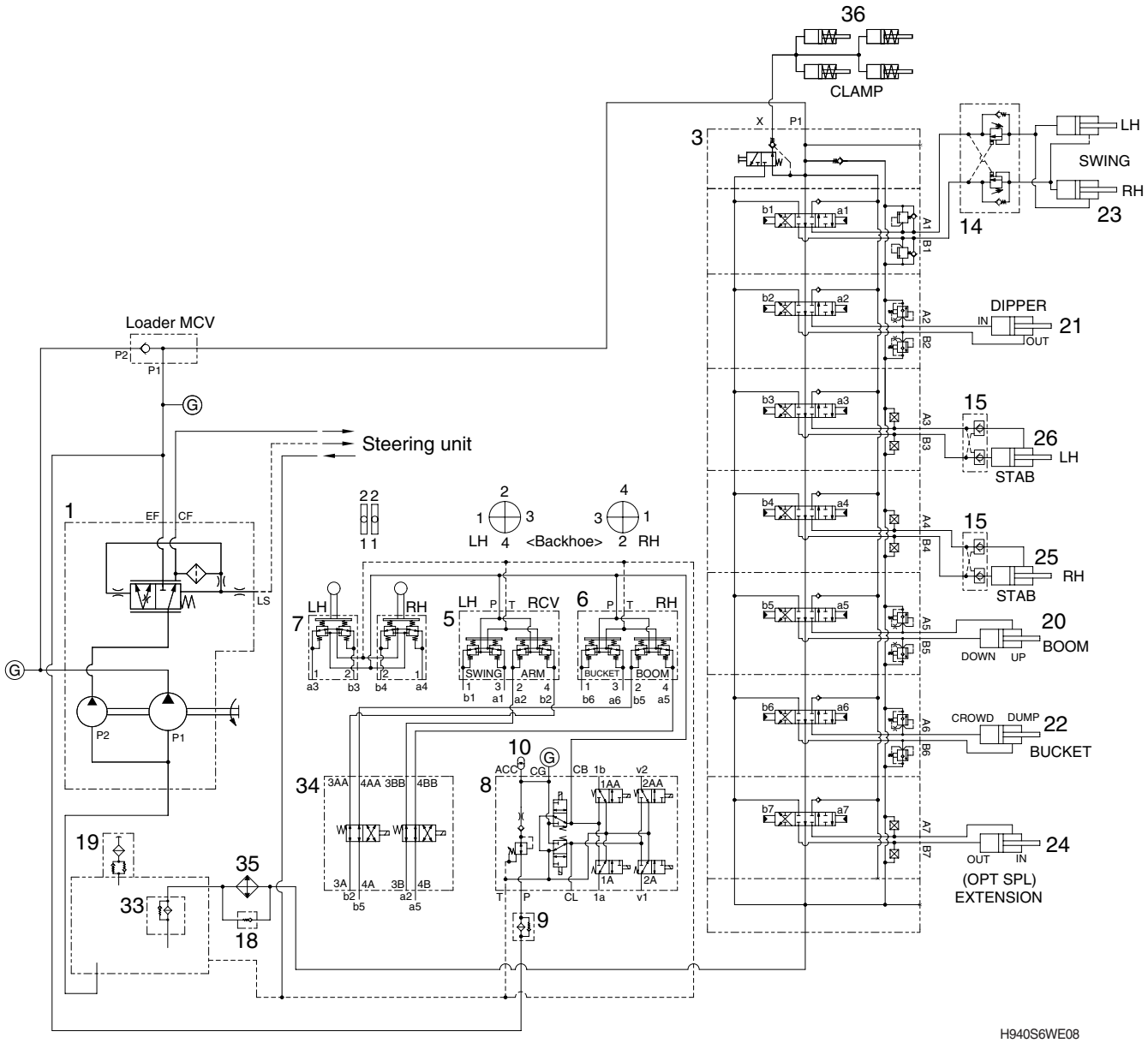

1	Main pump	14	Swing damping valve (opt)	24	Extension cylinder (opt)
3	Main control valve (backhoe)	15	Double pilot check valve	25	Stabilizer cylinder-RH
5	Remote control valve-LH	18	By-pass check valve	26	Stabilizer cylinder-LH
6	Remote control valve-RH	19	Air breather	33	Return filter
7	Stabilizer lever	20	Boom cylinder	34	Pattern exchanger valve (opt)
8	Pilot supply unit	21	Dipper cylinder	35	Oil cooler
	5- cartridge sol valve (opt)	22	Bucket cylinder	36	Clamp cylinder
9	Line filter	23	Swing cylinder	Ⓖ	Gauge port
10	Accumulator				

1) BOOM UP OPERATION

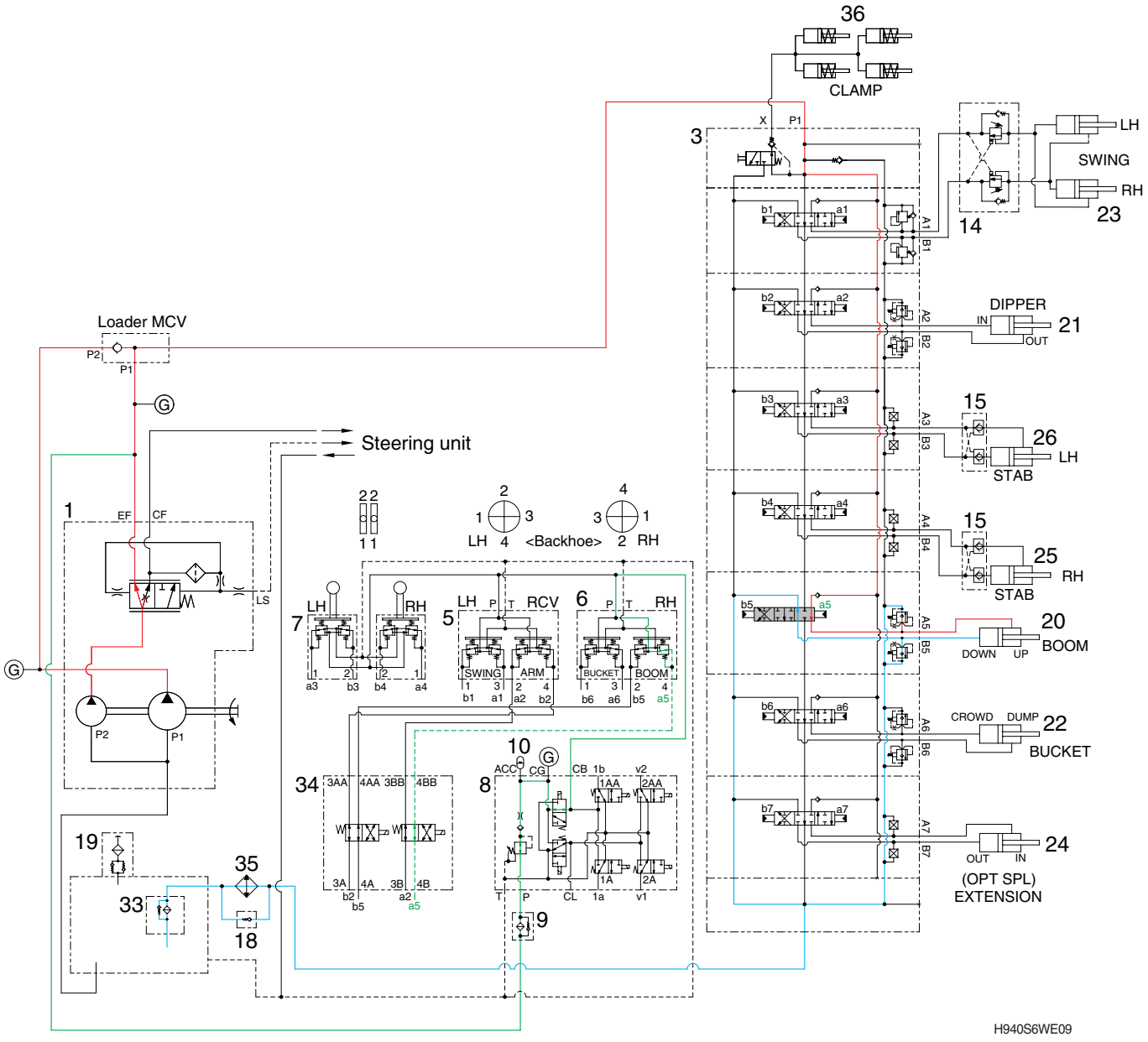

When the backhoe right control lever is pulled back, the boom spool in the main control valve (3) is moved to the up position by the pilot oil pressure from the remote control valve (6).
The oil from the pump (P1, P2) flows into the main control valve and then goes to the small chamber of boom cylinders. At the same time, the oil from the large chamber of boom cylinders returns to the hydraulic oil tank through the boom spool in the main control valve. When this happens, the boom goes up. The excessive pressure in the boom cylinder rod end circuit is prevented by relief valve.

2) BOOM DOWN OPERATION

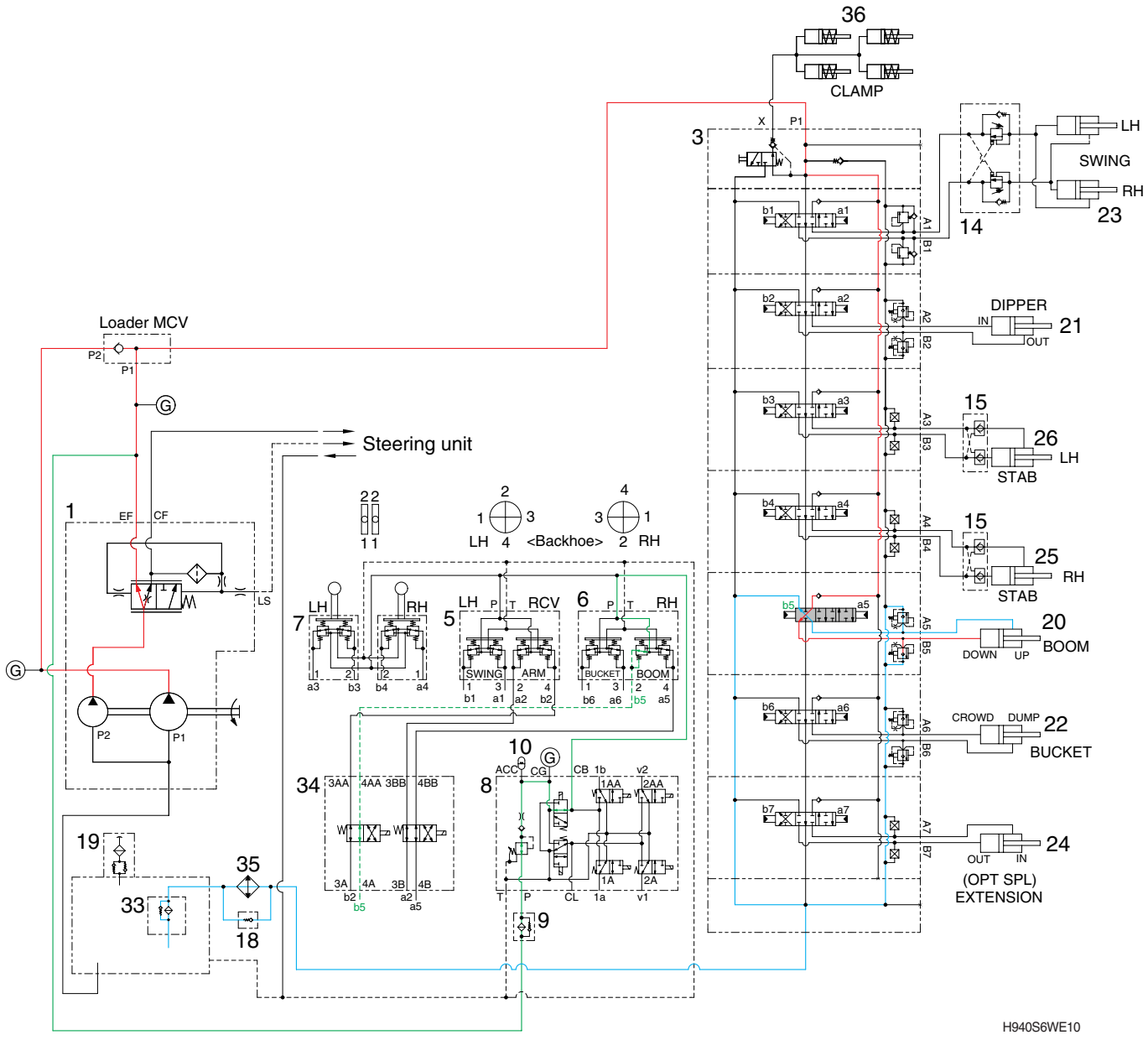

When the backhoe right control lever is pushed forward, the boom spool in the main control valve (3) is moved to the down position by the pilot oil pressure from the remote control valve (6).
The oil from the pump (P1, P2) flows into the main control valve and then goes to the large chamber of boom cylinders. At the same time, the oil from the small chamber of boom cylinders returns to the hydraulic tank through the boom spool in the main control valve.
The excessive pressure in the boom cylinder bottom end circuit is prevented by the relief valve.

3) DIPPER ROLL IN OPERATION

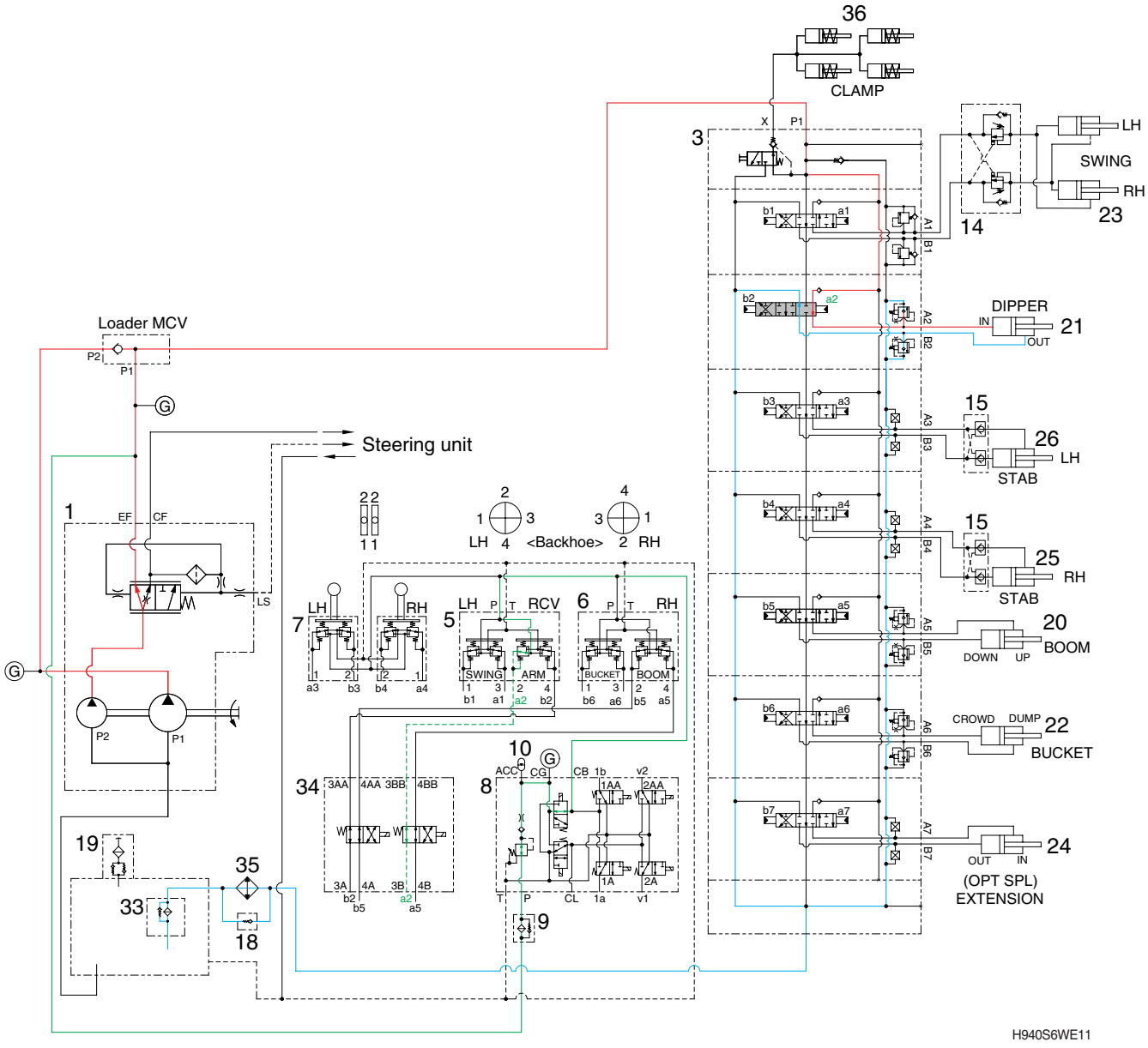

When the backhoe left control lever is pulled back, the dipper spool in the main control valve (3) is moved the to roll in position by the pilot oil pressure from the remote control valve (5).

The oil from the pump (P1, P2) flows into the main control valve and then goes to the large chamber of dipper cylinder.

At the same time, the oil from small chamber of dipper cylinder returns to the hydraulic oil tank through the dipper spool in the main control valve. When this happens, the dipper rolls in.

4) DIPPER ROLL OUT OPERATION

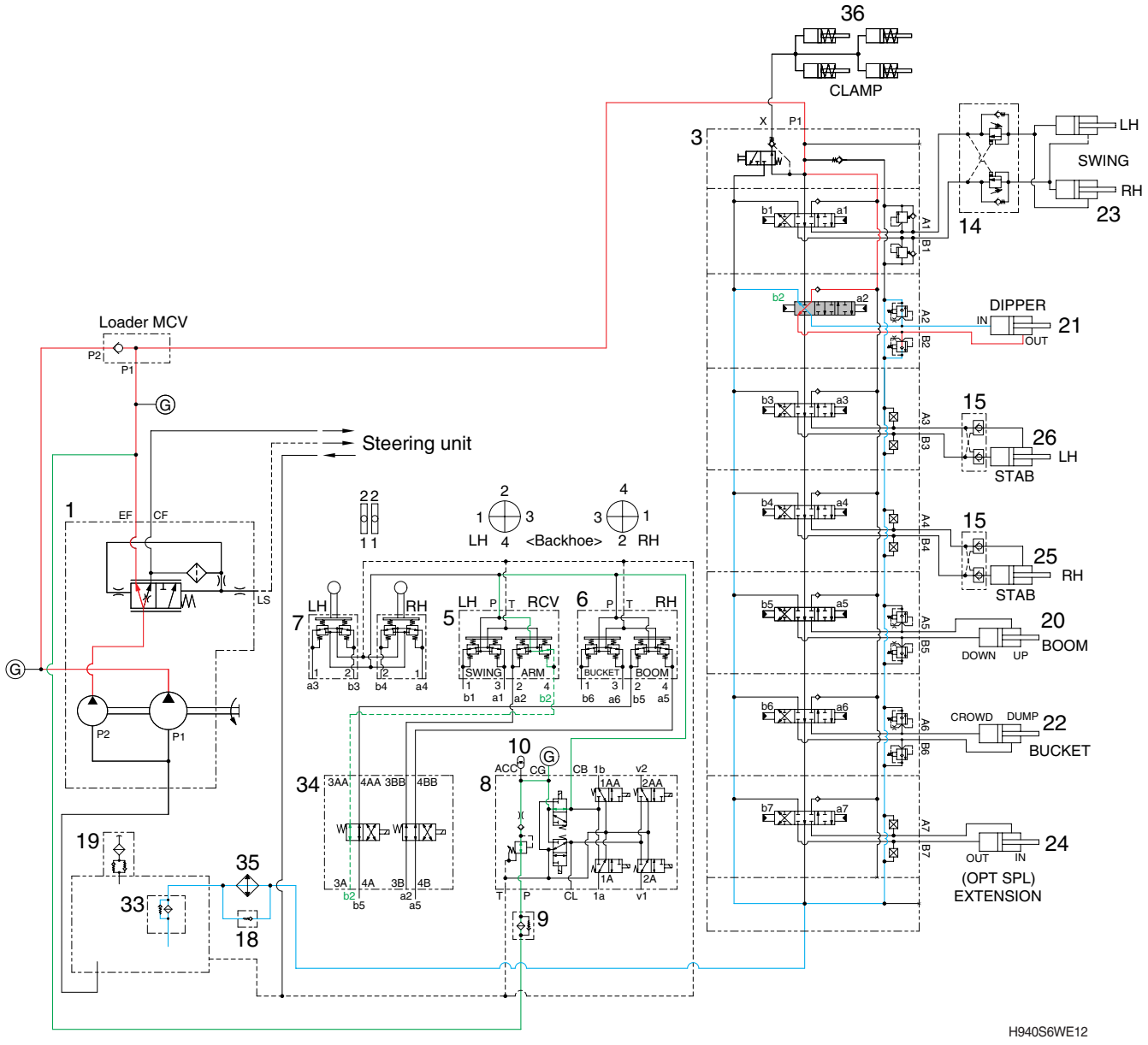

When the backhoe left control lever is pushed forward, the dipper spool in the main control valve (3) is moved to the roll out position by the pilot oil pressure from the remote control valve (5).

The oil from the pump (P1, P2) flows into the main control valve and then goes to the small chamber of dipper cylinder.

At the same time, the oil from the large chamber of dipper cylinder returns to the hydraulic oil tank through the dipper spool in the main control valve. When this happens, the dipper rolls out.

5) BUCKET CROWD OPERATION

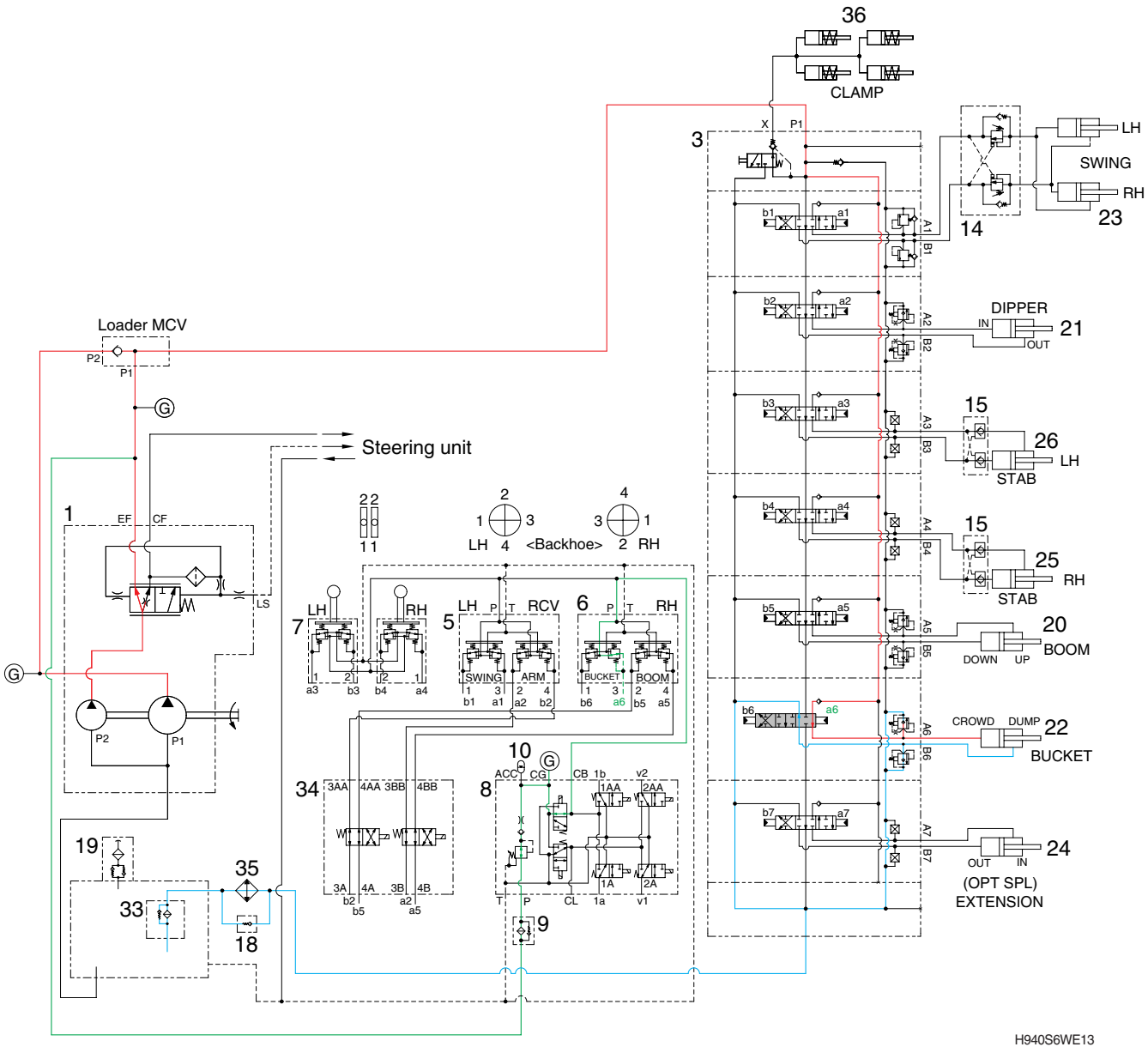

When the backhoe right control lever is pulled left, the bucket spool in the main control valve (3) is moved to the crowd position by the pilot oil pressure from the remote control valve (6).

The oil from the pump (P1, P2) flows into the main control valve and then goes to the large chamber of bucket cylinder.

At the same time, the oil from the small chamber of bucket cylinder returns to the hydraulic oil tank through the boom spool in the main control valve. When this happens, the bucket crowd.

6) BUCKET DUMP OPERATION

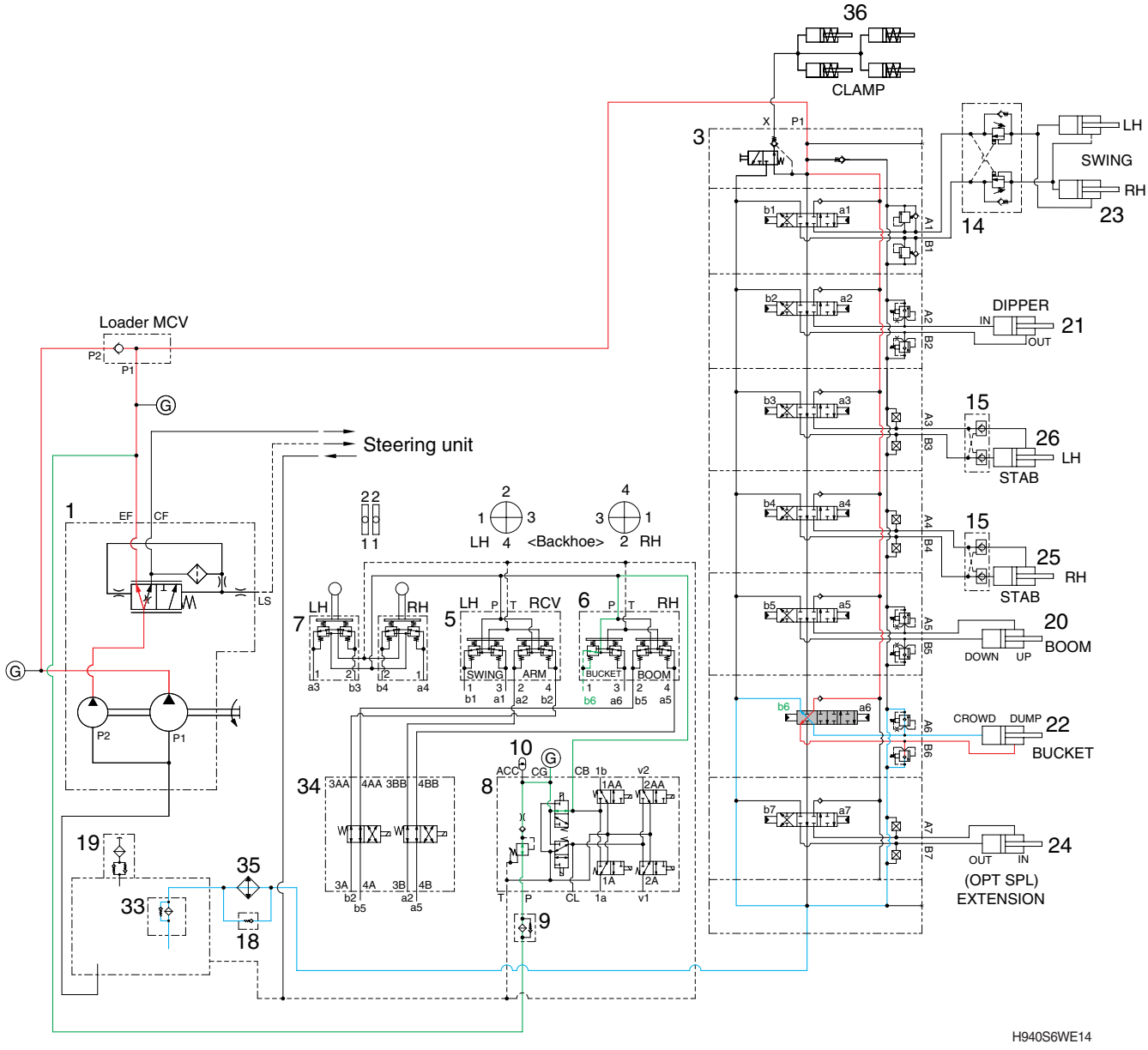

When the backhoe right control lever is pushed right, the bucket spool in the main control valve (3) is moved to the dump position by the pilot oil pressure from the remote control valve (6).

The oil from the pump flows into the main control valve and then goes to the small chamber of bucket cylinder.

At the same time, the oil from the large chamber of bucket cylinder returns to the hydraulic oil tank through the bucket spool in the main control valve. When this happens, the bucket dump.

7) BOOM SWING OPERATION

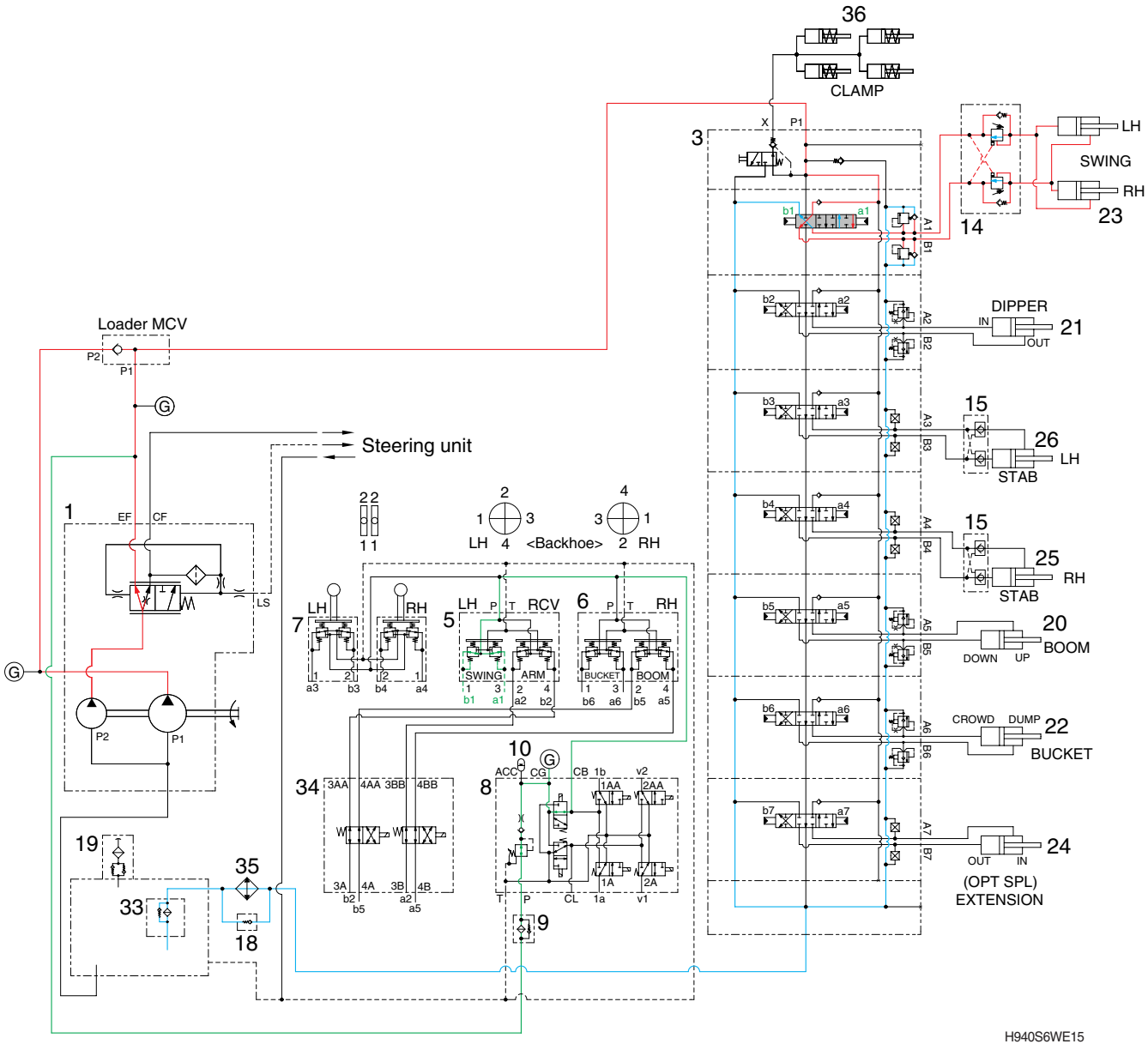

When the backhoe left control lever is pushed left or right, the swing spool in the main control valve (3) is moved to the left or right swing position by the pilot oil pressure from the remote control valve (5).
The oil from the pump (P1, P2) flows into the main control valve and then goes to the boom swing cylinder.
At the same time, the return oil from the boom swing cylinder returns to the hydraulic oil tank through the boom swing spool in the main control valve. When this happens, the boom swings to the left or right.

8) STABILIZER UP OPERATION

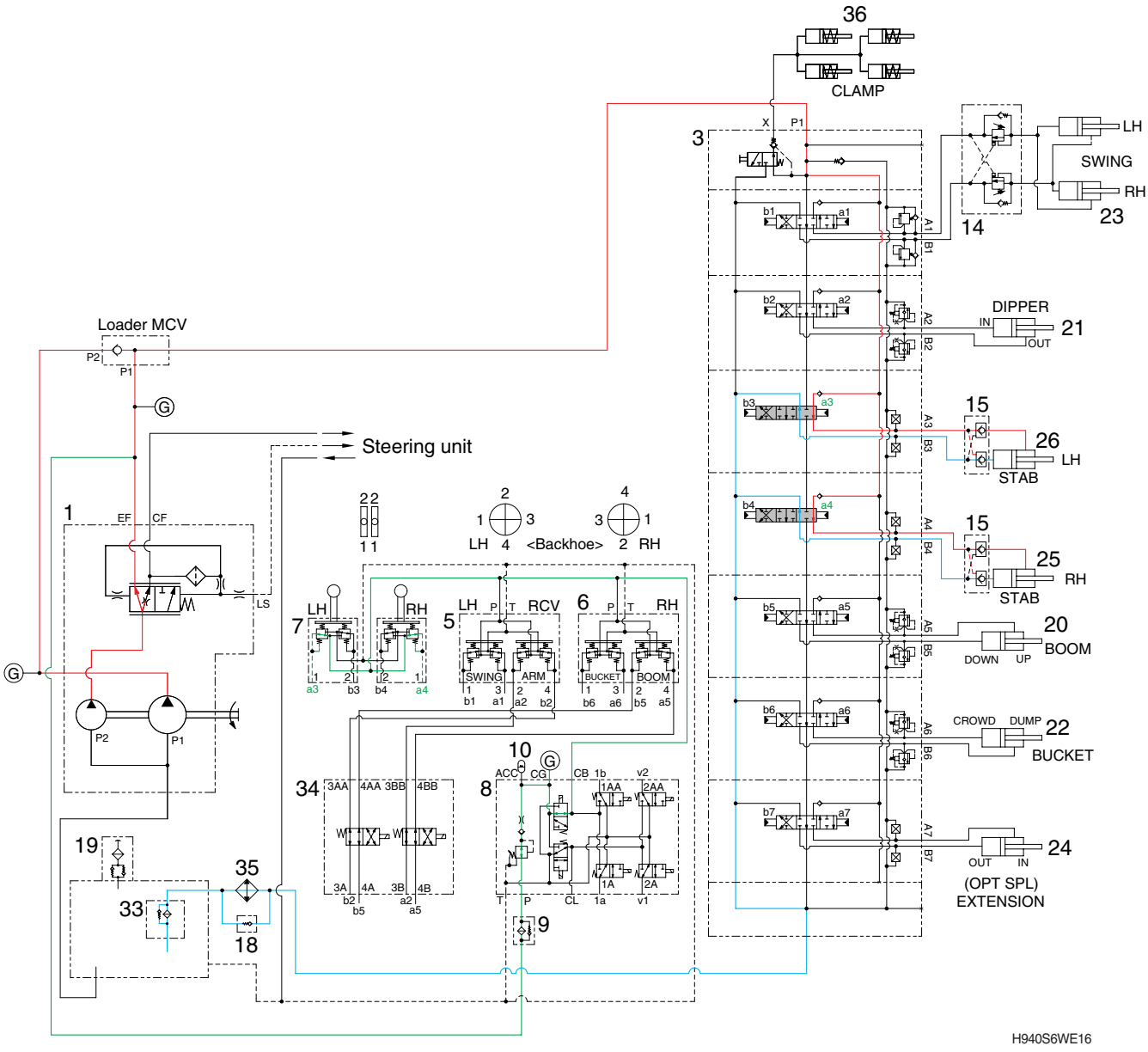

When the stabilizer control levers (7) are pulled back, the spools in the main control valve (3) are moved to the stabilizer up position by the pilot oil pressure from the remote control valve (7).

The oil from the pump (P1, P2) flows into the main control valve and then goes to the small chambers of stabilzer cylinders.

At the same time, the oil from the large chambers of stabilizer cylinders return to the hydraulic oil tank through the spools in the main control valve. When this happens, the stabilizers go up.

Each stabilizer (LH or RH) is operated separately.

9) STABILIZER DOWN OPERATION

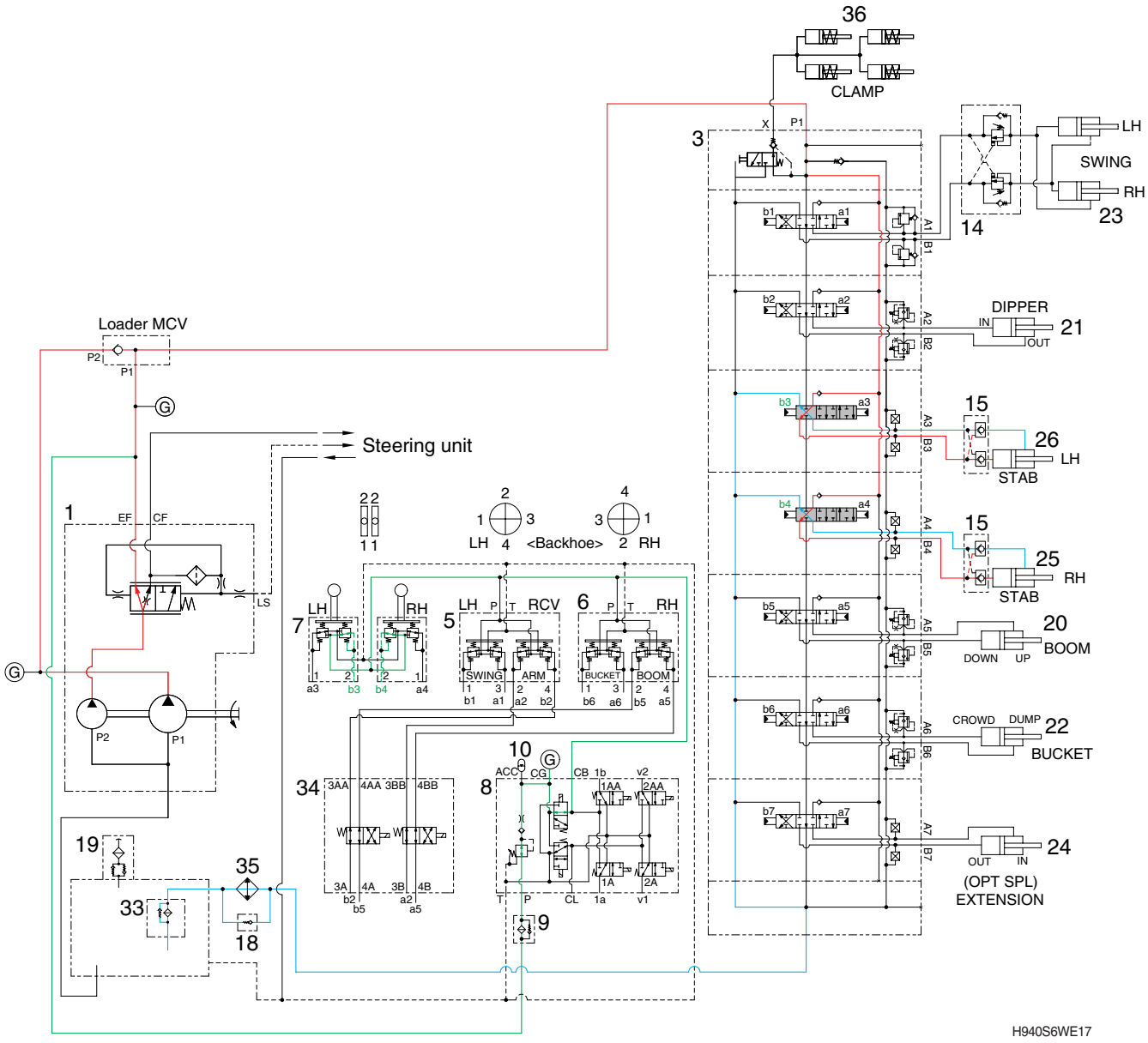

When the stabilizer control levers (7) are pushed forward, the spools in the main control valve (3) are moved to the stabilizer down position by the pilot oil pressure from the remote control valve (7).
The oil from the pump (P1, P2) flows into the main control valve and then goes to the large chambers of stabilizer cylinders.
At the same time, the oil from the small chambers of stabilizer cylinders return to the hydraulic oil tank through the spools in the main control valve. When this happens, the stabilizers go down.
Each stabilizer (LH or RH) is operated separately.

10) CLAMP LOCK OPERATION

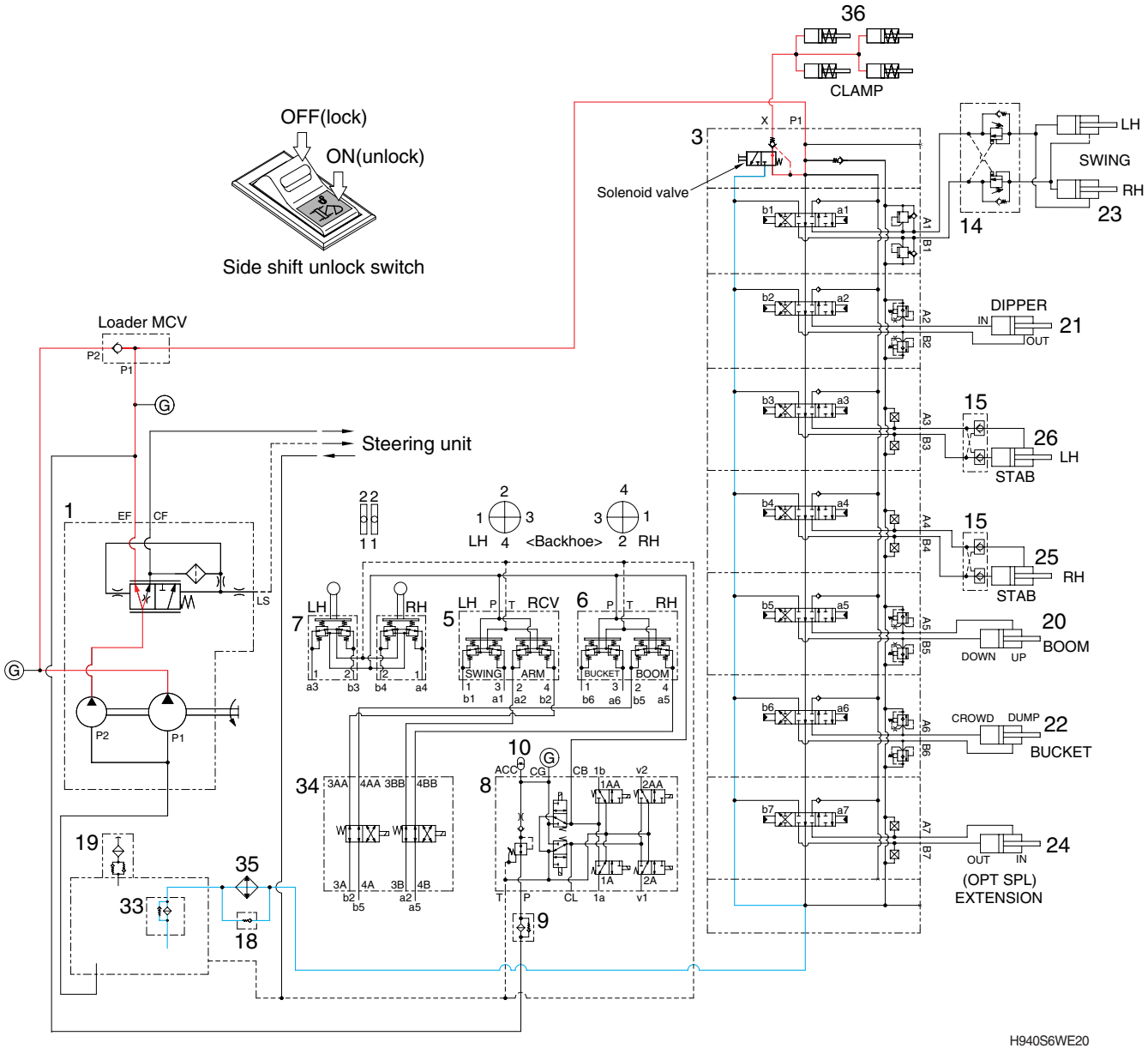

When the side shift unlock switch is in the OFF position (not pressed), the solenoid valve is deenergized. The solenoid valve opens the pressure passage to clamp cylinder. Then, the clamp is locked.

11) CLAMP RELEASE OPERATION

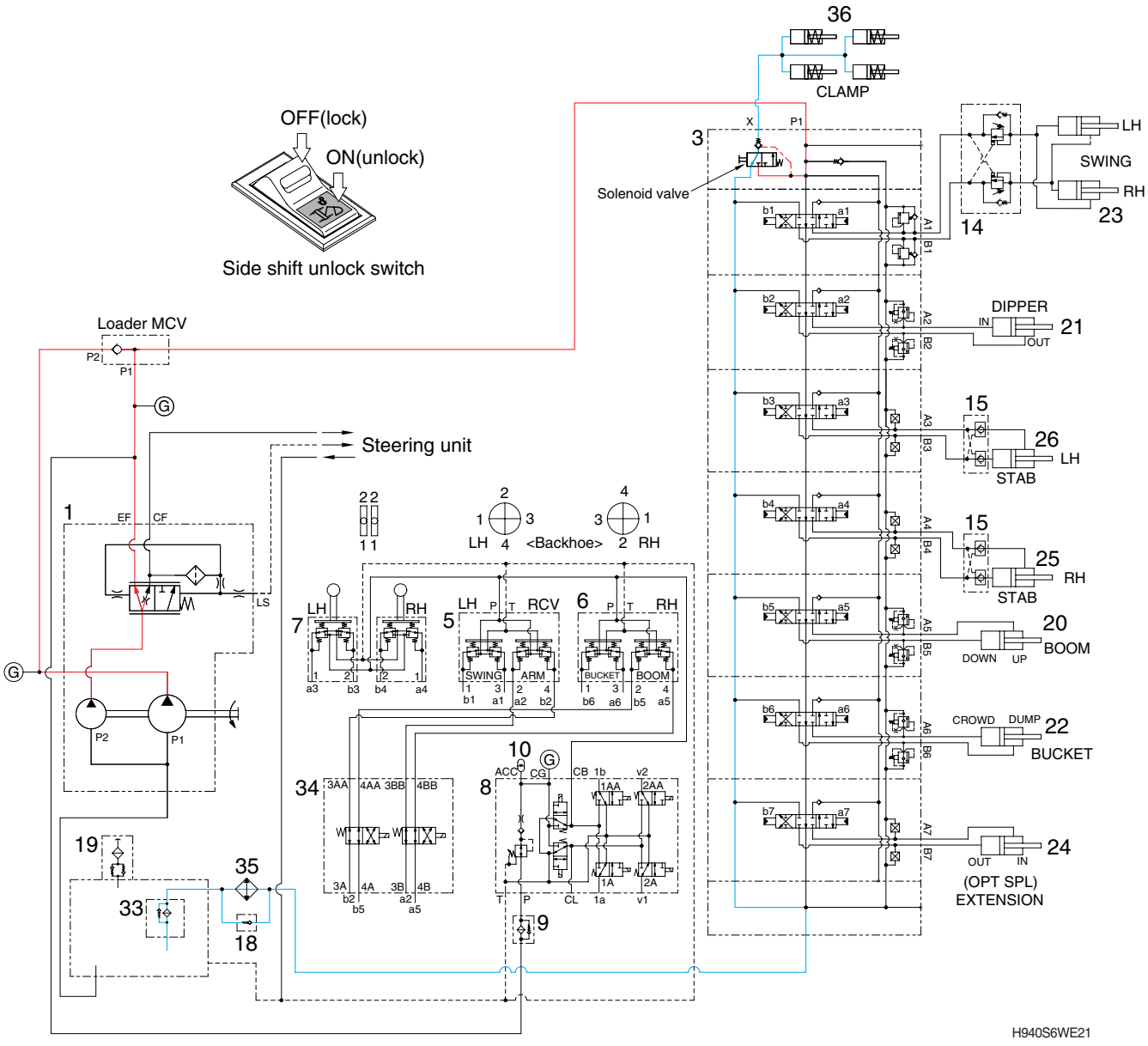

When the side shift unlock switch is in the ON position (pressed down), the solenoid valve is energized. The solenoid valve opens the clamp cylinder to the drain port (tank).
Oil from the clamp cylinder is drained to the tank. Then, the clamp is unlocked.

5. MAIN PUMP

1) STRUCTURE (1/2)

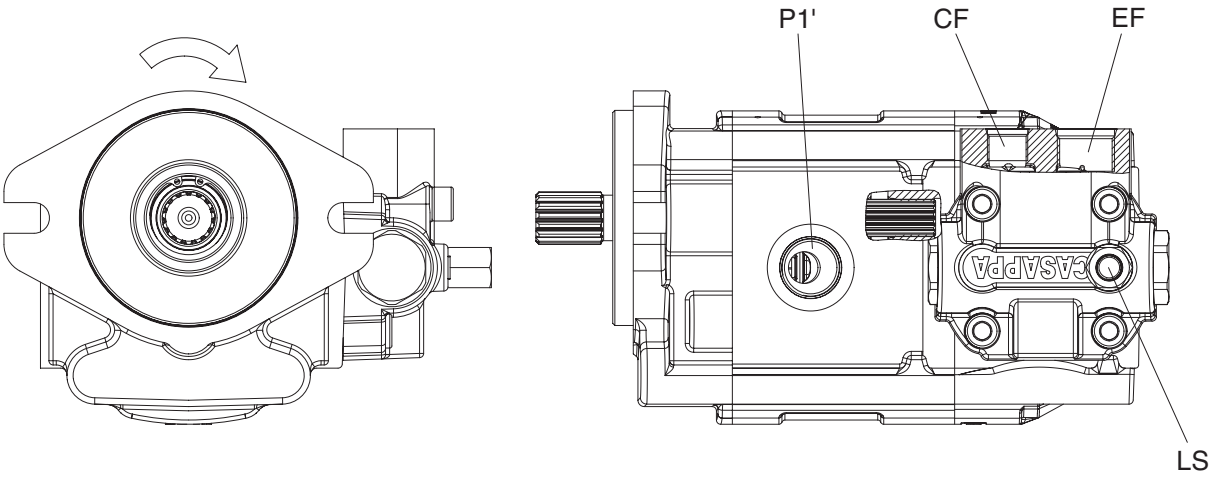

Port	Port name	Port size
DF	To steering unit	3/4-16 UNF
EF	To MCV	1-1/16-12 UN
LS	To steering unit LS port	7/16-20 UNF
P1'	To RCV lever/loader MCV	1-1/16-12 UN

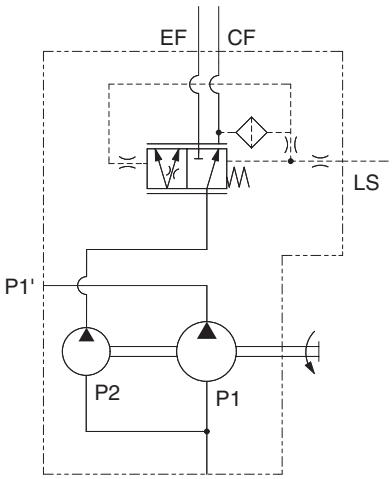

Hydraulic circuit

H940C6WE20

Item		Specification	
		H940S	H930S
Type		Fixed displacement double gear pump	
Capacity	P1 pump	35 cc/rev	31 cc/rev
	P2 pump	31 cc/rev	31 cc/rev
Maximum operating pressure		250 kgf/cm^2 (3560 psi)	
Rated oil quantity	P1 pump	77 ℓ /min (20.3 U.S.gpm)	68 ℓ /min (18.0 U.S.gpm)
	P2 pump	68 ℓ /min (18.0 U.S.gpm)	68 ℓ /min (18.0 U.S.gpm)
Rated speed		2200 rpm	

STRUCTURE (2/2)

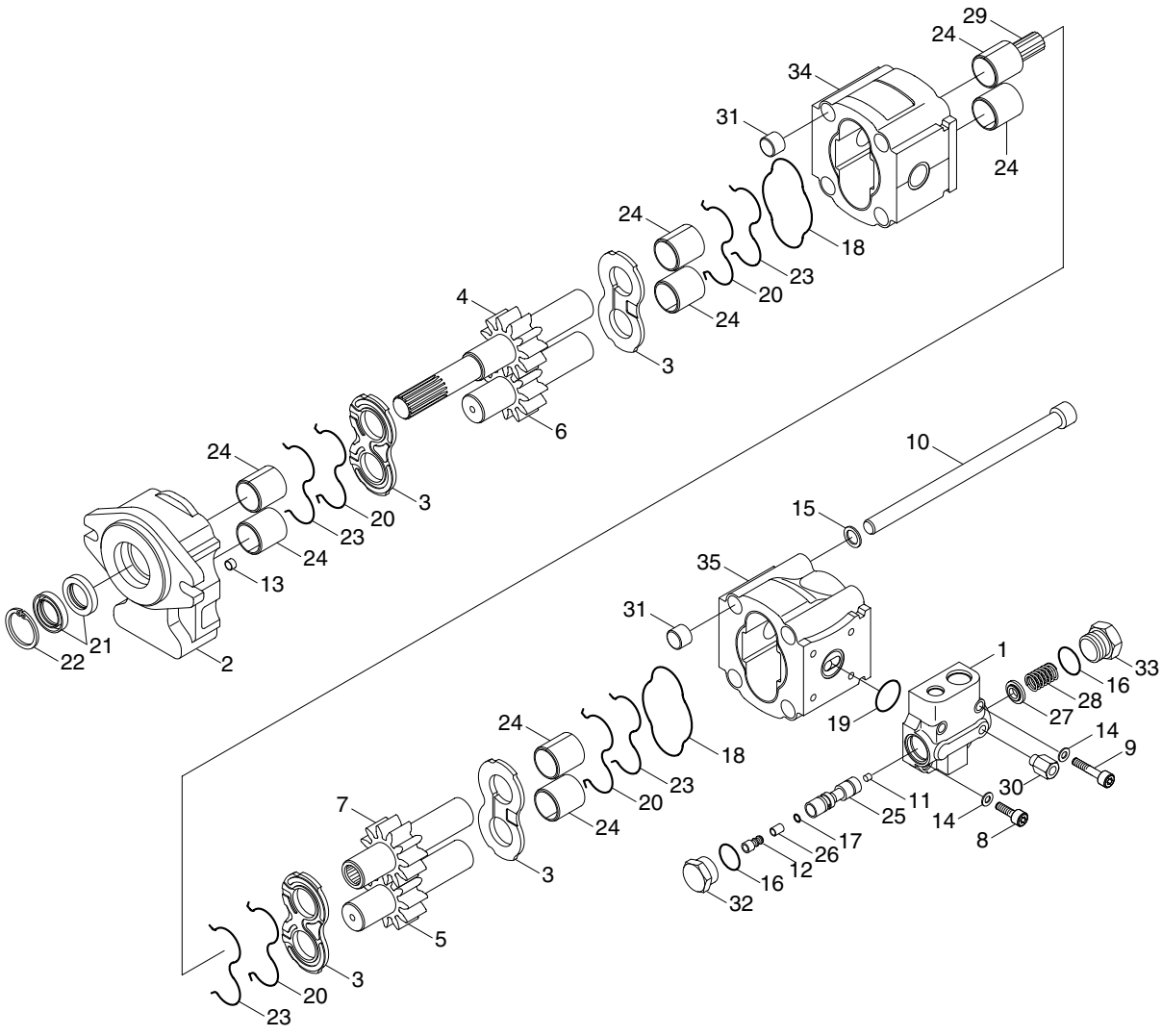

H940C6WE21

1	Rear end cover	13	Screw	25	Spool
2	Front cover	14	Washer	26	Filter
3	Thrust plate	15	Washer	27	Spring seat
4	Drive shaft	16	O-ring seal	28	Spring
5	Driven gear	17	O-ring seal	29	Hub
6	Driven gear	18	Ring	30	Connector
7	Drive shaft	19	O-ring seal	31	Steel bushing
8	Screw	20	Seal	32	Plug
9	Screw	21	Shaft seal	33	Plug
10	Screw	22	Ring	34	Body
11	Screw	23	Ring	35	Body
12	Screw	24	Sleeve bearing		

2) INSTRUCTION

Hydraulic pumps used for the work equipment hydraulic units on construction machinery are pressure loaded type gear pumps. This gear pump could run under 250 kgf/cm^2 (3560 psi) maximum.

The pressure loaded type gear pump is designed so that the clearance between the gear and the side plate can be automatically adjusted according to the delivery pressure.

Therefore, the oil leakage from the side plate is less than that in the case of the fixed side plate type under a high discharge pressure.

Consequently, no significant reduction of the pump delivery occurs, even when the pump is operated under pressure.

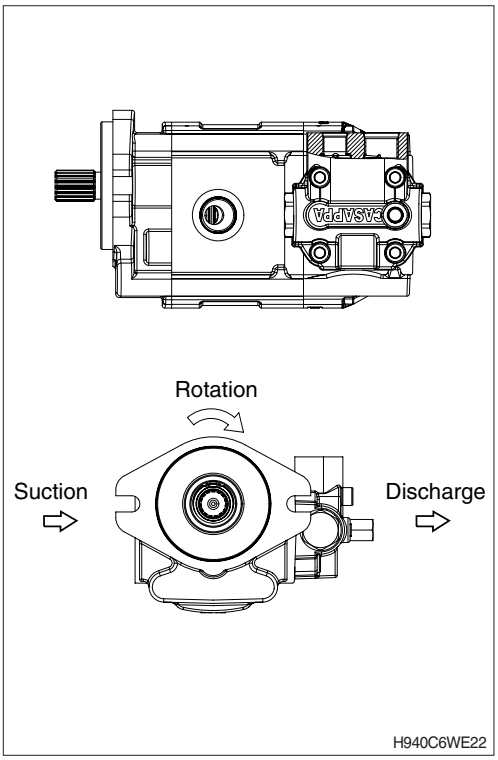

3) PRINCIPLE OF OPERATION

(1) Mechanism for delivering oil

The below drawing shows the operational principle of an external gear pump on which two gears are rotation in mach.

The oil entering through the suction port is trapped in the space between two gear teeth, and is delivered to the discharge port as the gear rotates.

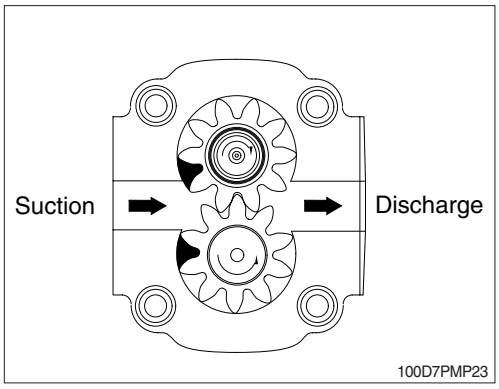

Except for the oil at at the above of the gear teeth, is trapped between the gears teeth, the oil trapped between the gear teeth, is prevented from returning to the suction side with the gears in mesh.

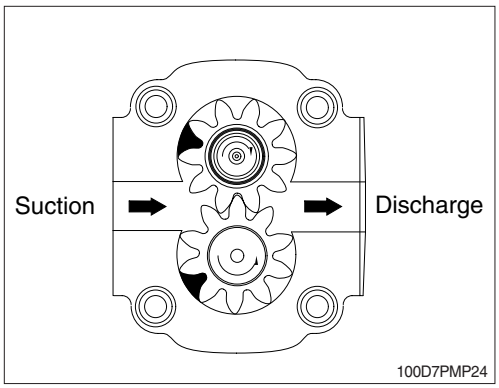

Since the gears are constantly delivering oil, the oil delivered to the discharge port is forced out of the port. The amount of discharge increases with the rotation speed of the gear.

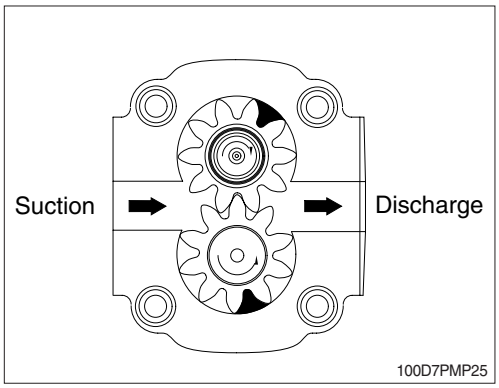

If there is no resistance in the oil passage into which the discharged oil flows, the oil merely flows through the passage, producing no increase in pressure.

If however, the oil passage is blocked with something like a hydraulic cylinder, there will be no other place for the oil to flow, so the oil pressure will rise. But the pressure which rises in this way never to higher, once the hydraulic cylinder piston starts moving because of the oil pressure. As described earlier, the pump produces the oil flow, but not the oil pressure. We can therefore conclude that pressure is a consequence of load. In other words, the pressure depends on a counterpart.

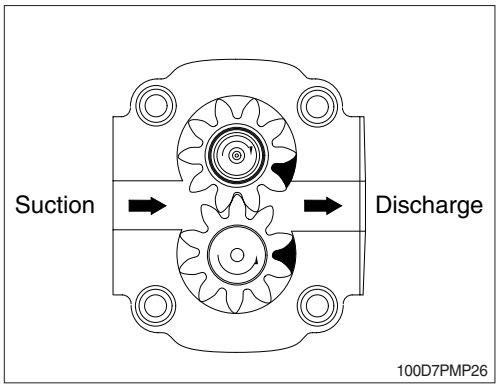

(2) Internal oil leakage

Oil leaks from a place under higher pressure to place under lower pressure, provided that a gap or a clearance exists in between.

In the gear pump, small clearance are provided between the gear and the case and between the gear and the side plate to allow the oil to leak out and to serve as a lubricant so that the pump will be protected from seizure and binding.

The drawing shows how the leaked oil flows in the pump. As such, there is always oil leakage in the pump from the discharge side(under higher pressure) to the suction side. The delivery of the pump is reduced by an amount equal to the pump discharge.

In addition, the delivery of the pump will also decrease as the amount of oil leakage increase because of expanded radial clearance resulting from the wear of pump parts, the lower oil viscosity resulting from increases on the oil temperate, and the initial use of low viscosity oil.

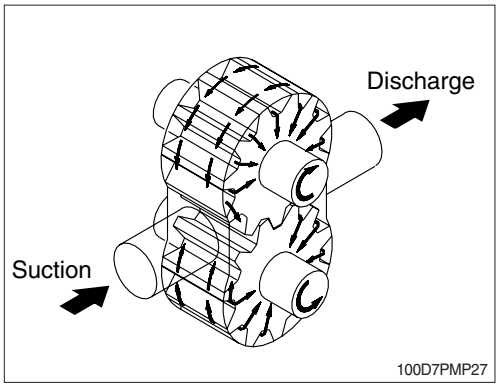

(3) Forces acting on the gear

The gear, whose outer surface is subjected to oil pressure, receives force jointing towards its center. Due to the action of the delivery pressure, the oil pressure in higher on the delivery side of the pump, and due to suction pressure, is lower on the suction side.

In the intermediate section, the pressure will gradually lower as the position moves from the delivery side to the suction side. This phenomenon is shown in the drawing(refer to right figure).

In addition, the gears in mesh will receive interacting forces. These forces pushing the gears toward the suction side are received by the bearings. Since the gears are pressed toward the suction side by these forces, the radial clearance becomes smaller on the suction side in the case. In some pumps, the clearance may become zero, thus allowing the gear teeth and the case to come into light contact.

For this reason, and excessive increase in the delivery pressure must be avoided, since it will produce a large force which will act on the gears, placing an overload on the bearings, and resulting on a shortened service life of the bearing or interference of the gear with the case.

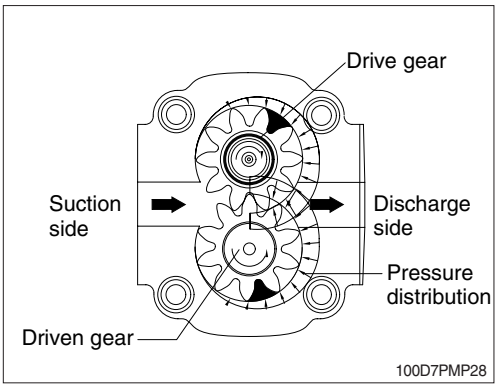

4) GENERAL REFERENCE

(1) Installation

The direction of rotation of single-rotation pumps must be the same as that of the drive shaft. Check that the coupling flange correctly aligns the transmission shaft and the pump shaft. Flexible couplings should be used (never rigid fittings) which will not generate an axial or radial load on the pump shaft.

(2) Starting up

Check that all circuit connections are tight and that entire system is completely clean. Insert the oil in the tank, using a filter. Bleed the circuit assist on filling. Set the pressure relief valves to the lowest possible setting. Turn on the system for a few moments at minimum speed, then bleed the circuit again and check the level of oil in the tank. In the difference between pump temperature and fluid temperature exceeds 10˚C, rapidly switch the system on and off to heat it up gradually. Then gradually increase the pressure and speed of rotation until the pre-set operating levels as specified in the catalogue are attained.

(3) Periodical checks-maintenance

Keep the outside surface clean especially in the area of the drive shaft seal. In fact, abrasive power can accelerate wear on the seal and cause leakage. Replace filters regularly to keep the fluid clean. The oil level must be checked and oil replaced periodically depending on the system's operating conditions.

6. LOADER MAIN CONTROL VALVE

1) STRUCTURE (1/2)

(1) Mechanical control

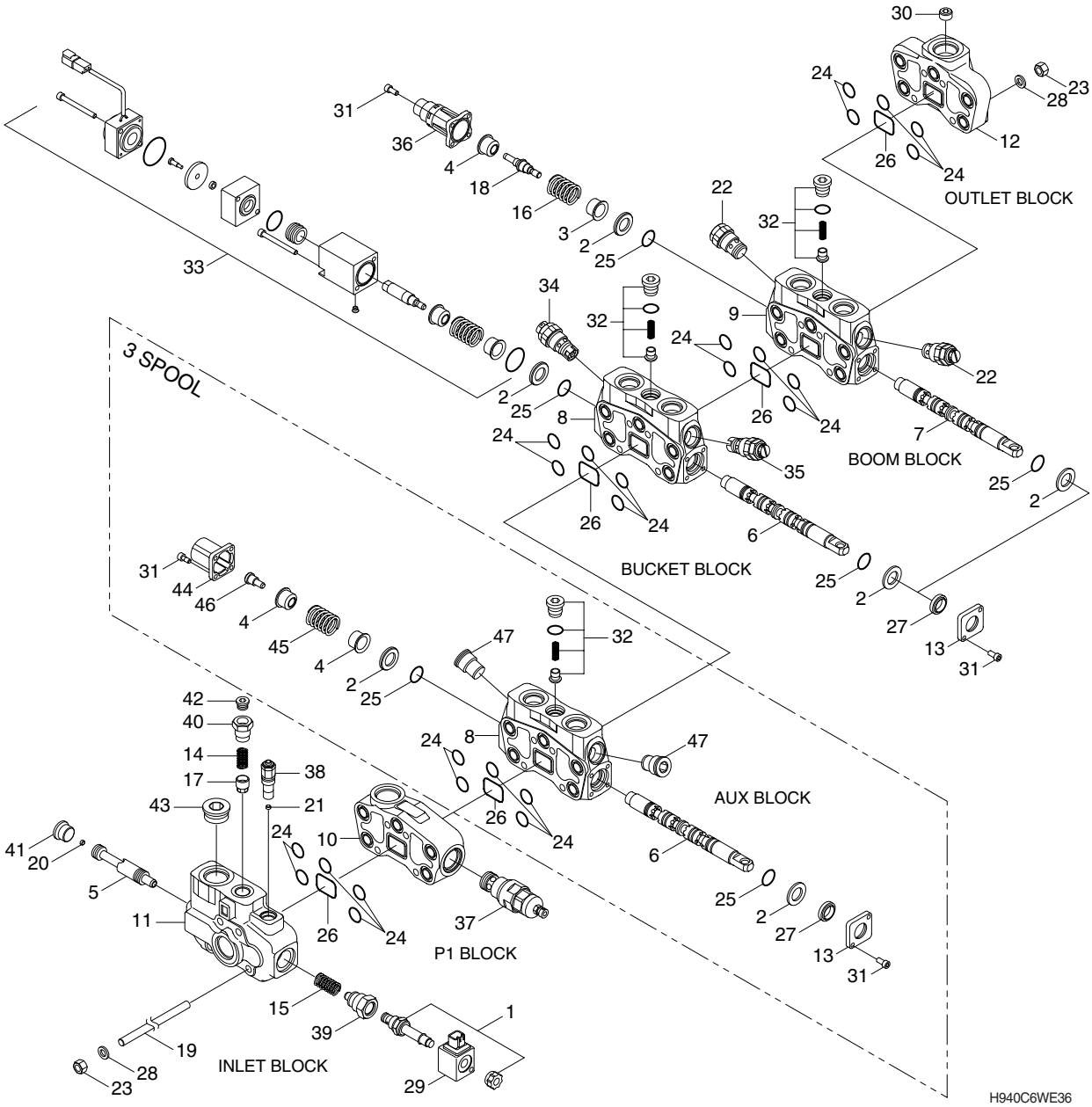

1	Solenoid valve	14	Spring	25	Seal	37	Valve
2	Spacer	15	Spring	26	O-ring	38	Cartridge
3	Bushing	16	Spring (B type)	27	Seal	39	Inlet cover joint
4	Bushing control kit	17	Poppet	28	Spring washer	40	Adapter
5	Unloader spool	18	Detent kit	29	Body	41	Plug
6	Spool	19	Tie rod	30	Conical plug	42	Plug
8	Element	20	Screw	31	Screw	43	Plug
9	Element	21	Screw	32	Check valve	44	End cap
10	Element	22	Cartridge	34	Valve	45	Spring
11	Inlet cover	23	Nut	35	Valve	46	Screw
12	Outlet cover	24	O-ring	36	Cover kit	47	Plug
13	Flange						

(2) Pilot control

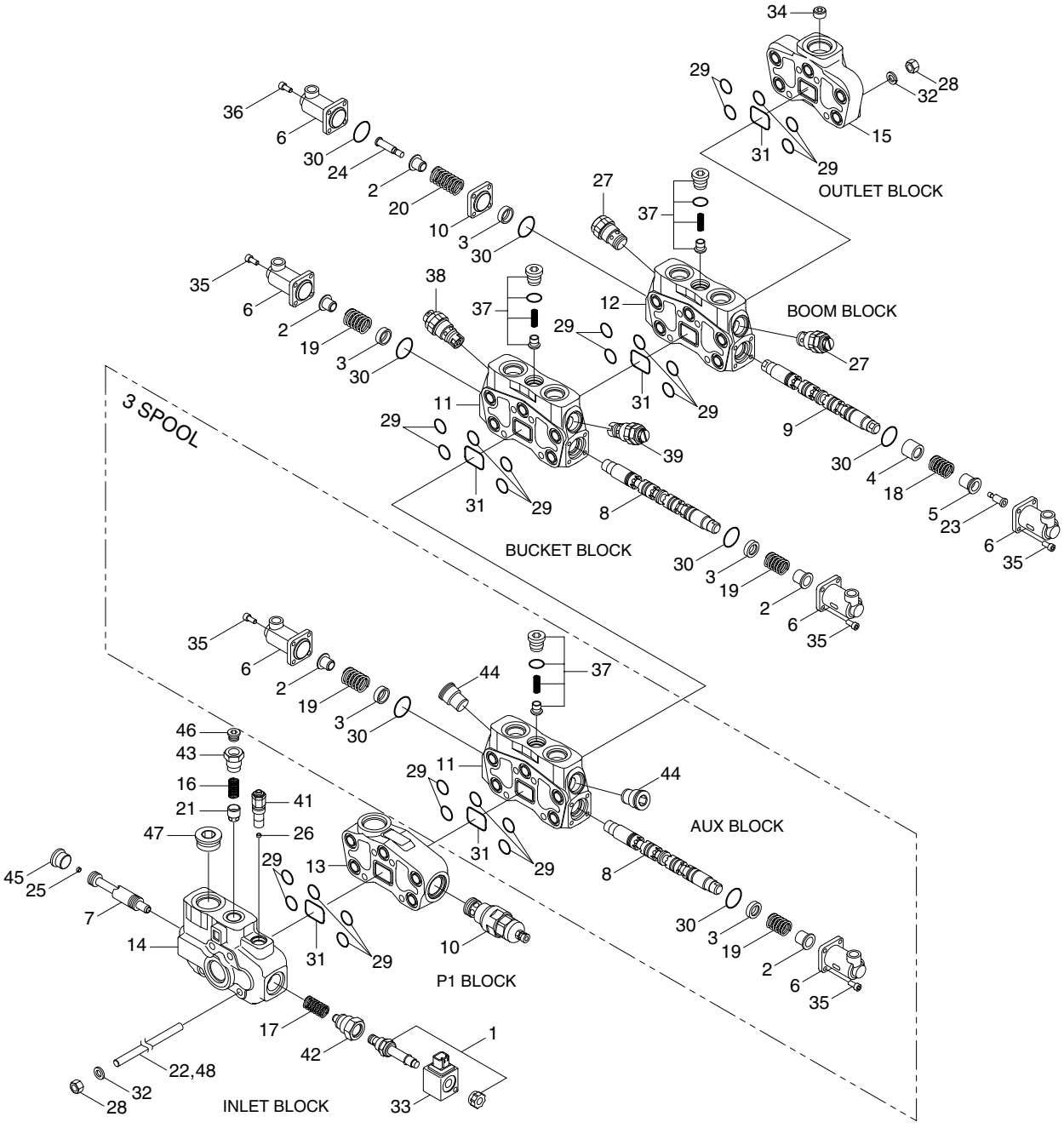

1	Solenoid valve	13	Element	25	Screw	37	Check valve
2	Spring cap	14	Inlet cover	26	Screw	38	Valve
3	Bushing	15	Outlet cover	27	Cartridge	39	Valve
4	Bushing	16	Spring	28	Nut	40	Valve
5	Bushing	17	Spring	29	O-ring	41	Cartridge
6	Cap	18	Spring	30	O-ring	42	Inlet cover joint
7	Spool	19	Spring	31	O-ring	43	Adapter
8	Spool	20	Spring control kit	32	Spring washer	44	Plug
9	Spool	21	Poppet	33	Coil	45	Plug
10	Spacer	22	Tie rod	34	Conical plug	46	Plug
11	Element	23	Screw	35	Bolt	47	Plug
12	Element	24	Screw	36	Screw		

STRUCTURE (2/2, Mechanical control)

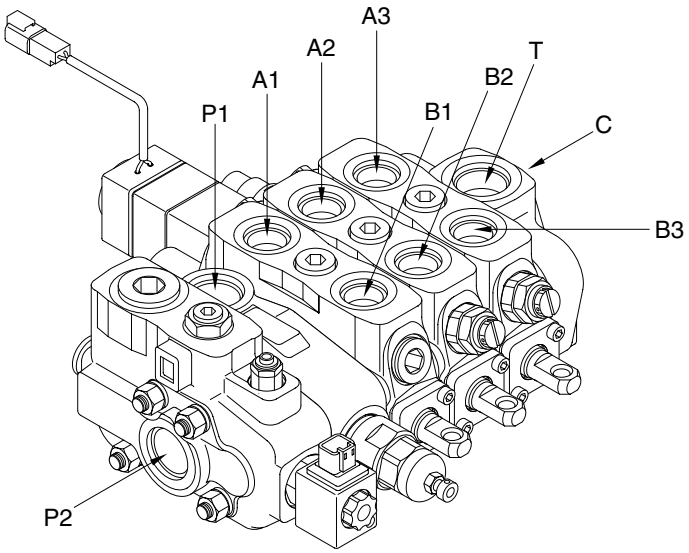

HB100WE41

Port	Port name	Port size
P1	From main pump	1-5/16" UNF-2B
P2	From main pump	1-5/16" UNF-2B
T	To tank (drain)	1-5/16" UNF-2B
C	To MCV (backhoe)	1-5/16" UNF-2B
A1, B1	Auxiliary port	1-1/16" UNF-2B
A2, B2	Bucket cylinder port	1-1/16" UNF-2B
A3, B3	Boom cylinder port	1-1/16" UNF-2B

Item		Specification
Type		2 spool (opt : 3 spool)
Operating method		Manual control
Main relief valve pressure		250 kgf/cm^2 (3560 psi)
Unloading relief valve pressure		220 kgf/cm^2 (3130 psi)
Overload relief valve pressure	Bucket out	175 kgf/cm^2 (2490 psi)
	Bucket in	300 kgf/cm^2 (4270 psi)

2) BOOM SECTION OPERATION (Mechanical control)

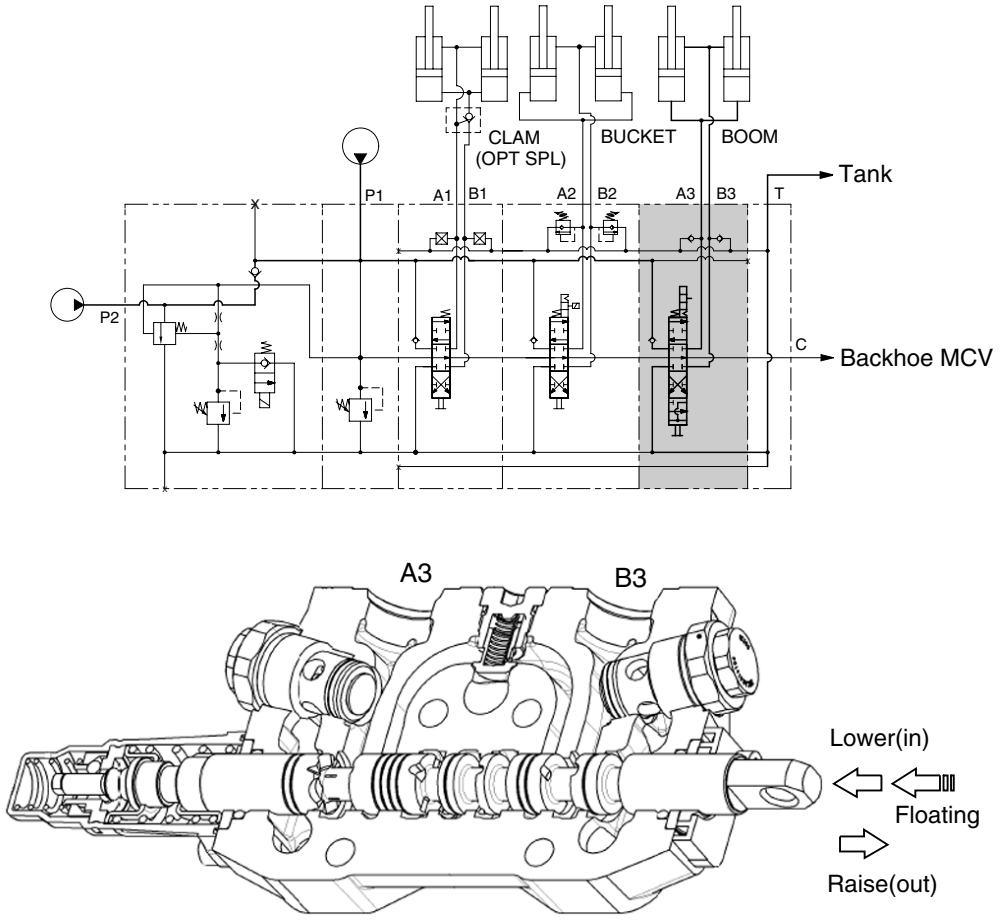

HB100WE42

(1) Spool in neutral

If the control lever is not operated, the oil supplied from the pump ports (P1 & P2) passes through the neutral passage of loader MCV to the backhoe MCV and then returns to the tank.

(2) Boom raise position (when the boom lever is pulled back)

When the boom spool out, the pressured oil supplied from the pumps (P1 & P2) flow through the port (A3) into boom cylinder.

The return oil from cylinder port (B3) flows into the tank via the low pressure passage.

(3) Boom lower position (when the boom lever is pushed)

When the boom spool in, the pressured oil supplied from the pumps (P1 & P2) flow through the port (B3) into boom cylinder.

The return oil from cylinder port (A3) flows into the tank via the low pressure passage.

(4) Boom float position (when the boom lever is in the float position)

When the boom spool in 4th position, the pressured oil supplied from the pumps (P1 & P2) flow through the neutral passage of loader MCV to the backhoe MCV and then returns to the tank.

The return oil from cylinder port (A3 & B3) flows into the tank via the low pressure passage.

3) BUCKET SECTION OPERATION (Mechanical control)

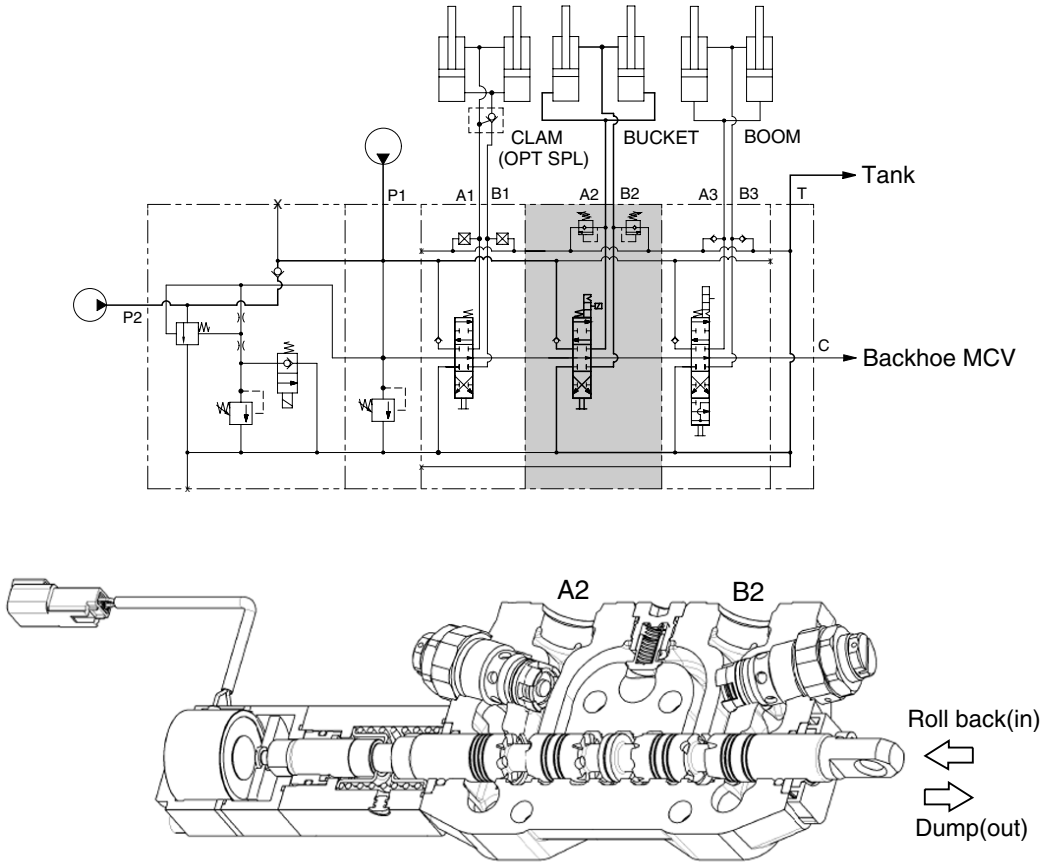

HB100WE43

(1) Spool in neutral

If the control lever is not operated, the oil supplied from the pump ports (P1 & P2) passes through the neutral passage of loader MCV to the backhoe MCV and then returns to the tank.

(2) Bucket roll back position (when moving the control lever to your left)

When the bucket spool in, the pressured oil supplied from the pumps (P1 & P2) flow through the port (B2) into bucket cylinder.

The return oil from cylinder port (A2) flows into the tank via the low pressure passage.

(3) Bucket dump position (when moving the control lever to your right)

When the bucket spool out, the pressured oil supplied from the pumps (P1 & P2) flow through the port (A2) into bucket cylinder.

The return oil from cylinder port (B2) flows into the tank via the low pressure passage.

4) INLET SECTION WITH UNLOAD OPERATION (Mechanical control)

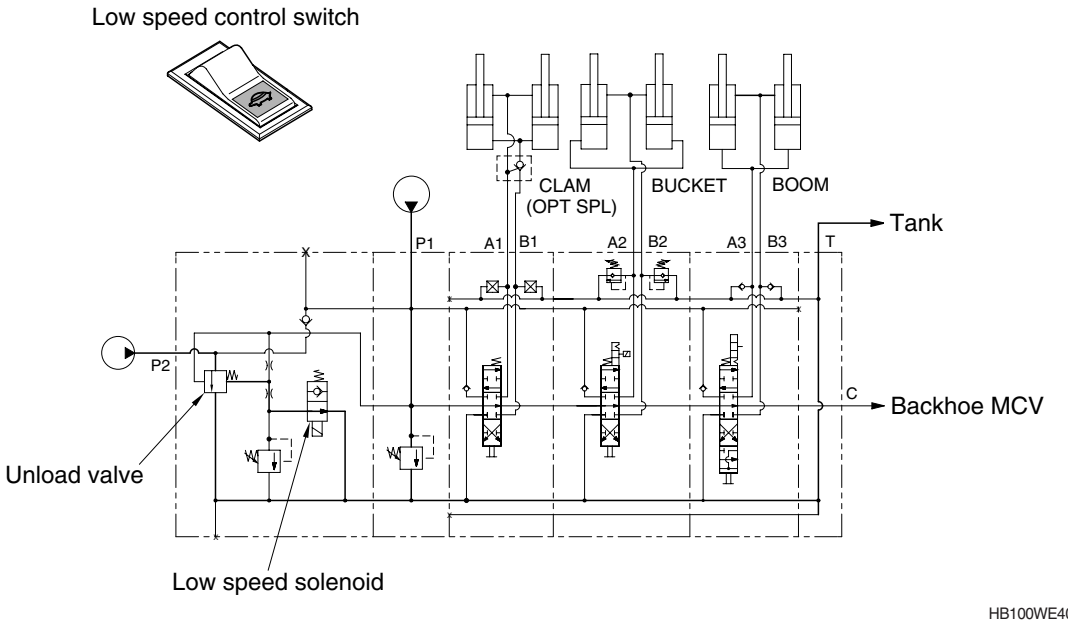

(1) Switch in neutral

If the low speed control switch at the side console is not operated, the oil supplied from the pump ports (P1 & P2) is joined and passes through the neutral passage of loader MCV to the backhoe MCV and then returns to the tank.

(2) Unloading position (when pushed the switch)

If the switch at the side console is operated, the oil supplied from the pump port (P1) passes through the neutral passage of loader MCV to work port.

On the other hand, the oil supplied from the pump port (P2) passes through the unload valve in inlet section returns to the tank.

5) AUXILIARY SECTION OPERATION (CLAM, OPTION)

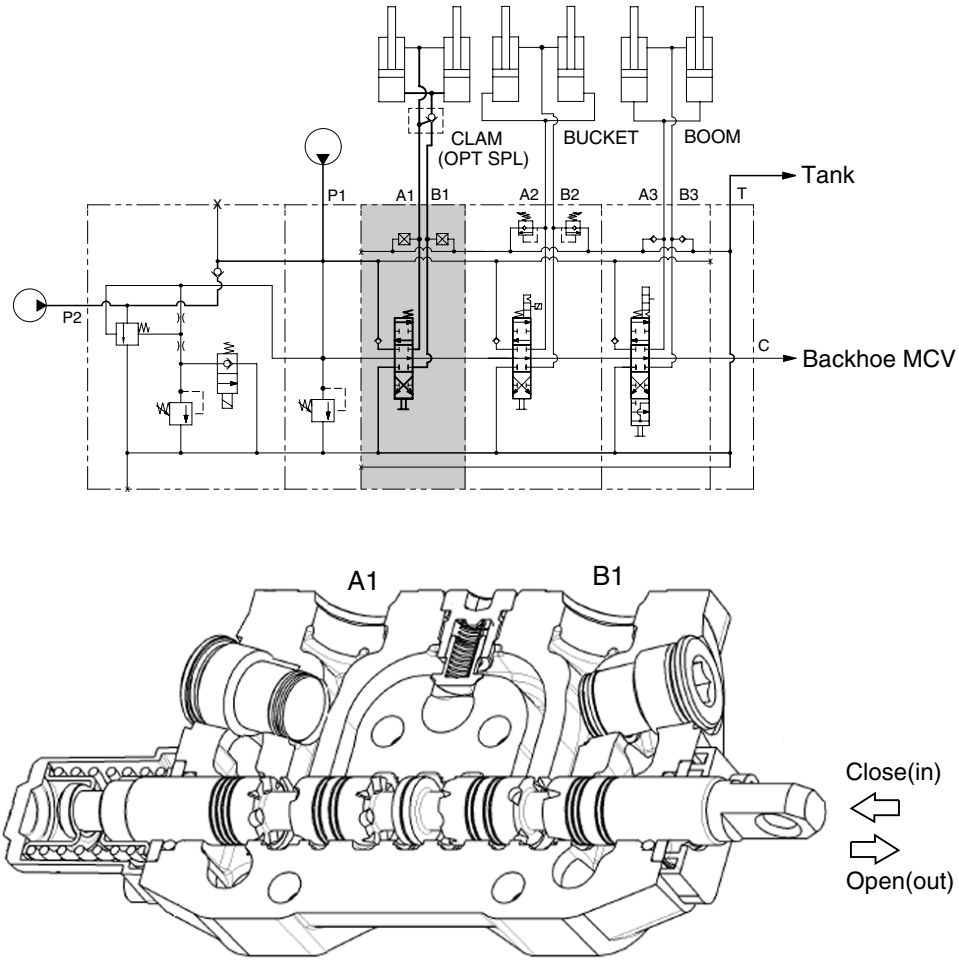

HB100WE45

(1) Spool in neutral

If the control lever is not operated, the oil supplied from the pump ports (P1 & P2) passes through the neutral passage of loader MCV to the backhoe MCV and then returns to the tank.

(2) Clam open position (when the clam lever is pushed)

When the clam spool out, the pressured oil supplied from the pumps (P1 & P2) flow through the port (A1) into clam cylinder.

The return oil from cylinder port (B1) flows into the tank via the low pressure passage.

(3) Clam close position (when the clam lever is pulled back)

When the clam spool in, the pressured oil supplied from the pumps (P1 & P2) flow through the cylinder port (B1) into clam cylinder.

The return oil from cylinder port (A1) flows into the tank via the low pressure passage.

7. BACKHOE MAIN CONTROL VALVE

1) STRUCTURE (1/2)

(1) Mechanical control (1/3)

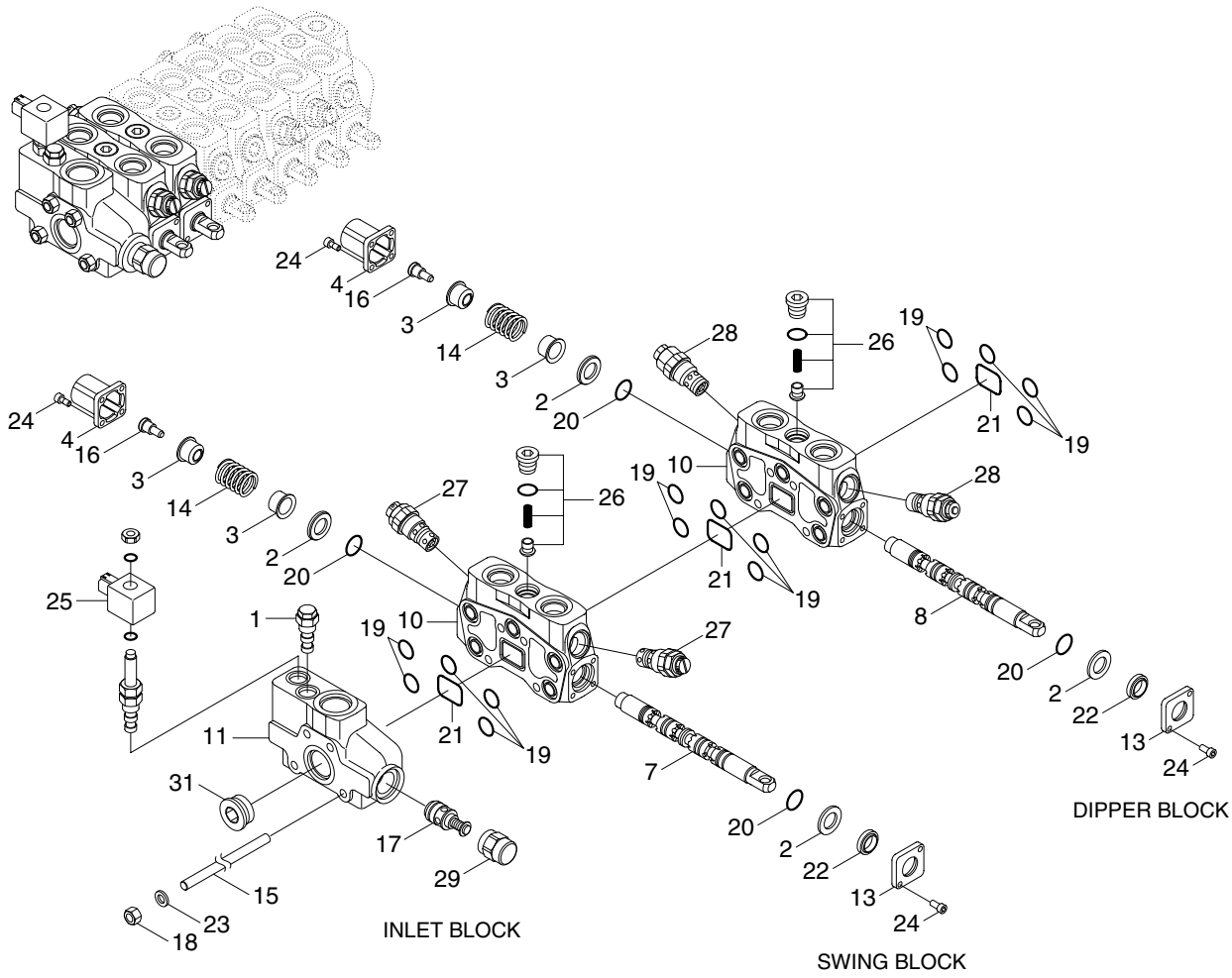

H940S6WE33

1	Cartridge	14	Control kit	23	Spring washer
2	Spacer	15	Tie rod	24	Screw
3	Bushing control kit	16	Screw	25	Body
4	End cap	17	Valve kit	26	Check valve
7	Spool	18	Nut	27	Relief valve
8	Spool	19	O-ring	28	Relief valve
10	Block	20	Seal	29	Plug assembly
11	Inlet cover	21	O-ring	31	Plug
13	Flange	22	Seal		

Mechanical control (2/3)

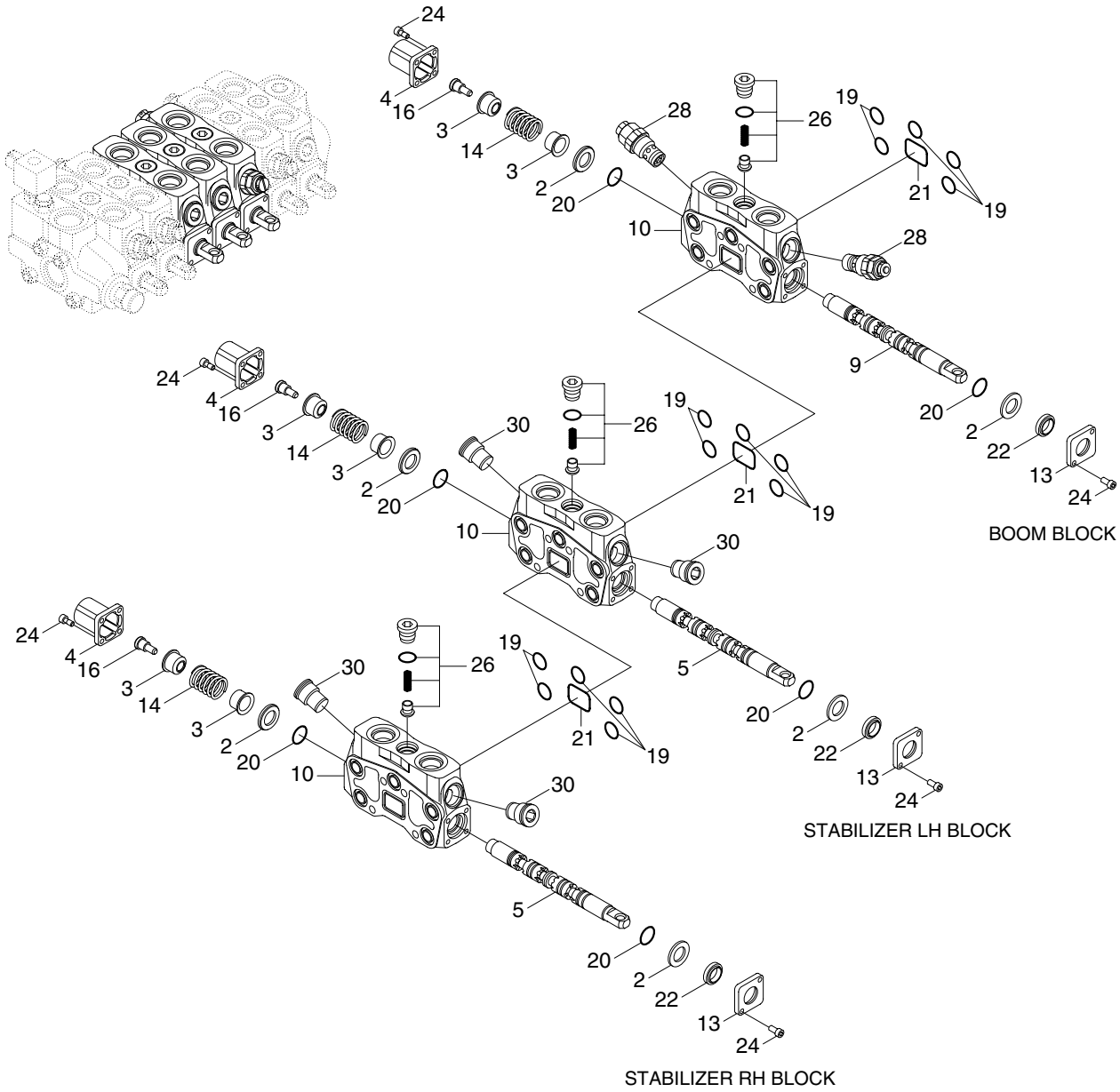

2	Spacer	13	Flange	22	Seal
3	Bushing control kit	14	Control kit	24	Screw
4	End cap	16	Screw	26	Check valve
5	Spool	19	O-ring	28	Relief valve
9	Spool	20	Seal	30	Plug
10	Block	21	O-ring		

Mechanical control (3/3)

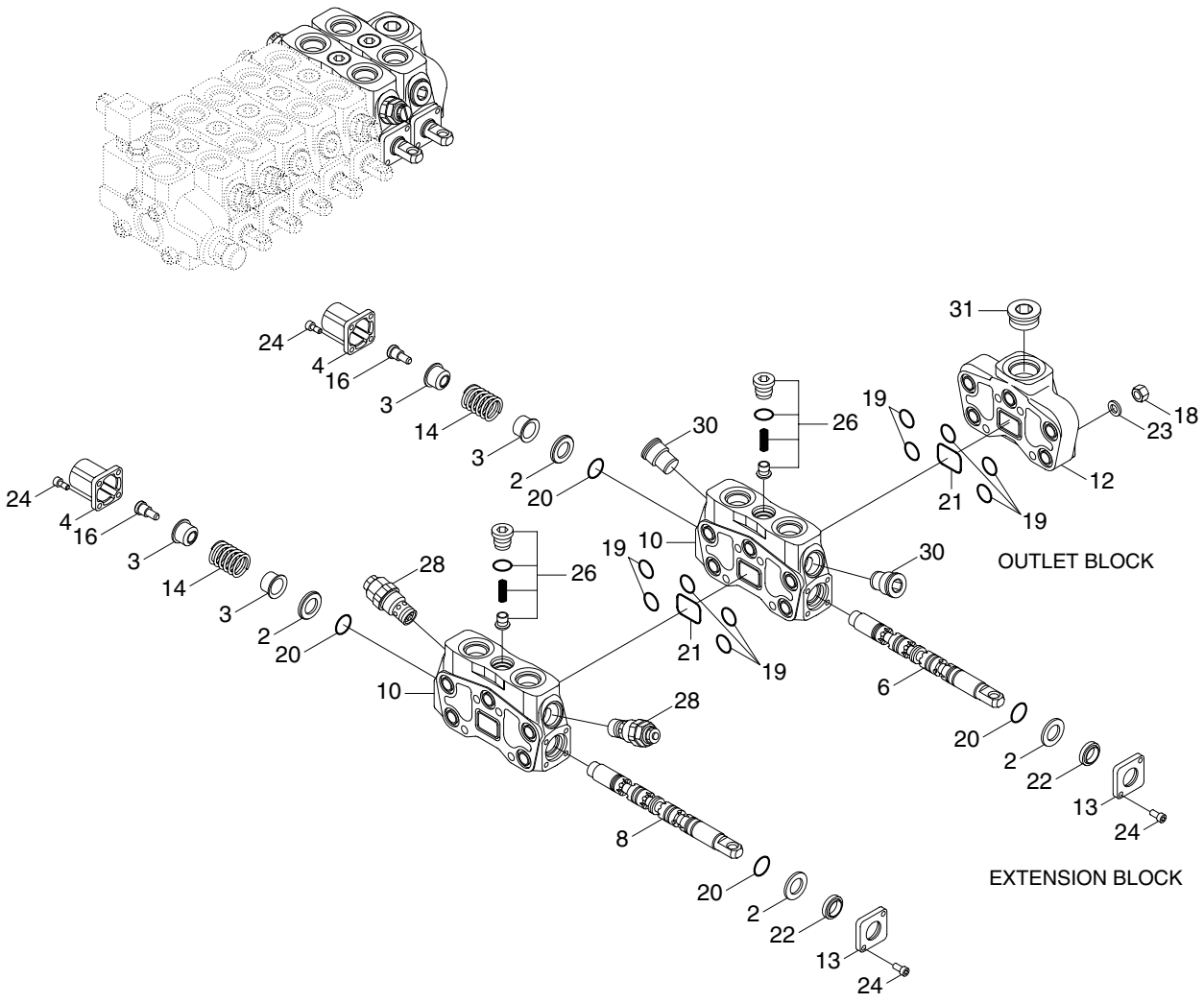

H940S6WE35

2	Spacer	13	Flange	22	Seal
3	Bushing control kit	14	Control kit	23	Spring washer
4	End cap	16	Screw	24	Screw
6	Spool	18	Nut	26	Check valve
8	Spool	19	O-ring	28	Relief valve
10	Block	20	Seal	30	Plug
12	Outlet cover	21	O-ring	31	Plug

(2) Pilot control (1/3)

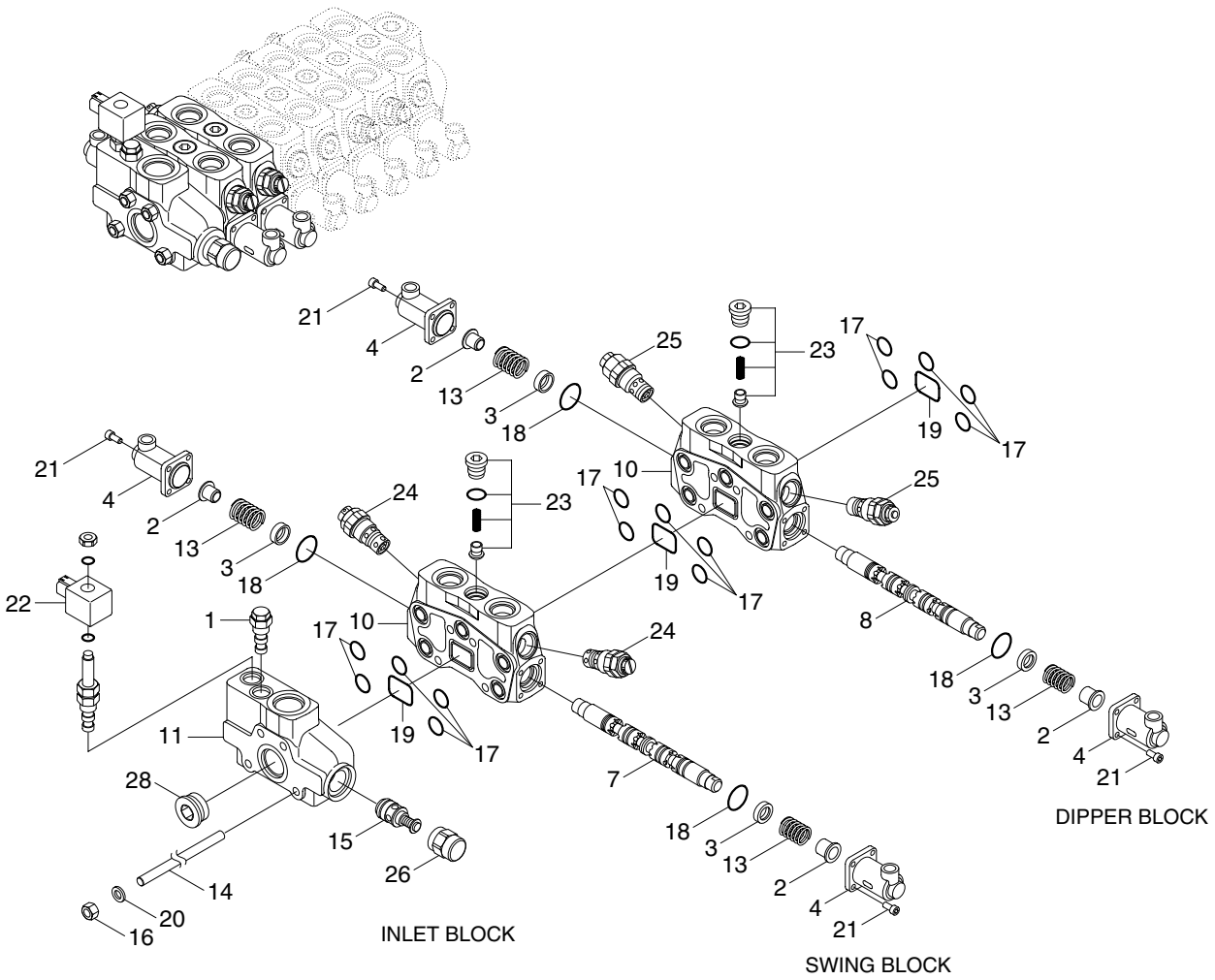

1	Cartridge	13	Spring	21	Bolt
2	Spring cap	14	Tie rod	22	Check valve
3	Bushing	15	Valve kit	23	Relief valve
4	End cap	16	Nut	24	Relief valve
7	Spool	17	O-ring	25	Relief valve
8	Spool	18	O-ring	26	Plug assembly
10	Block	19	O-ring	28	Plug
11	Inlet cover	20	Spring washer		

Pilot control (2/3)

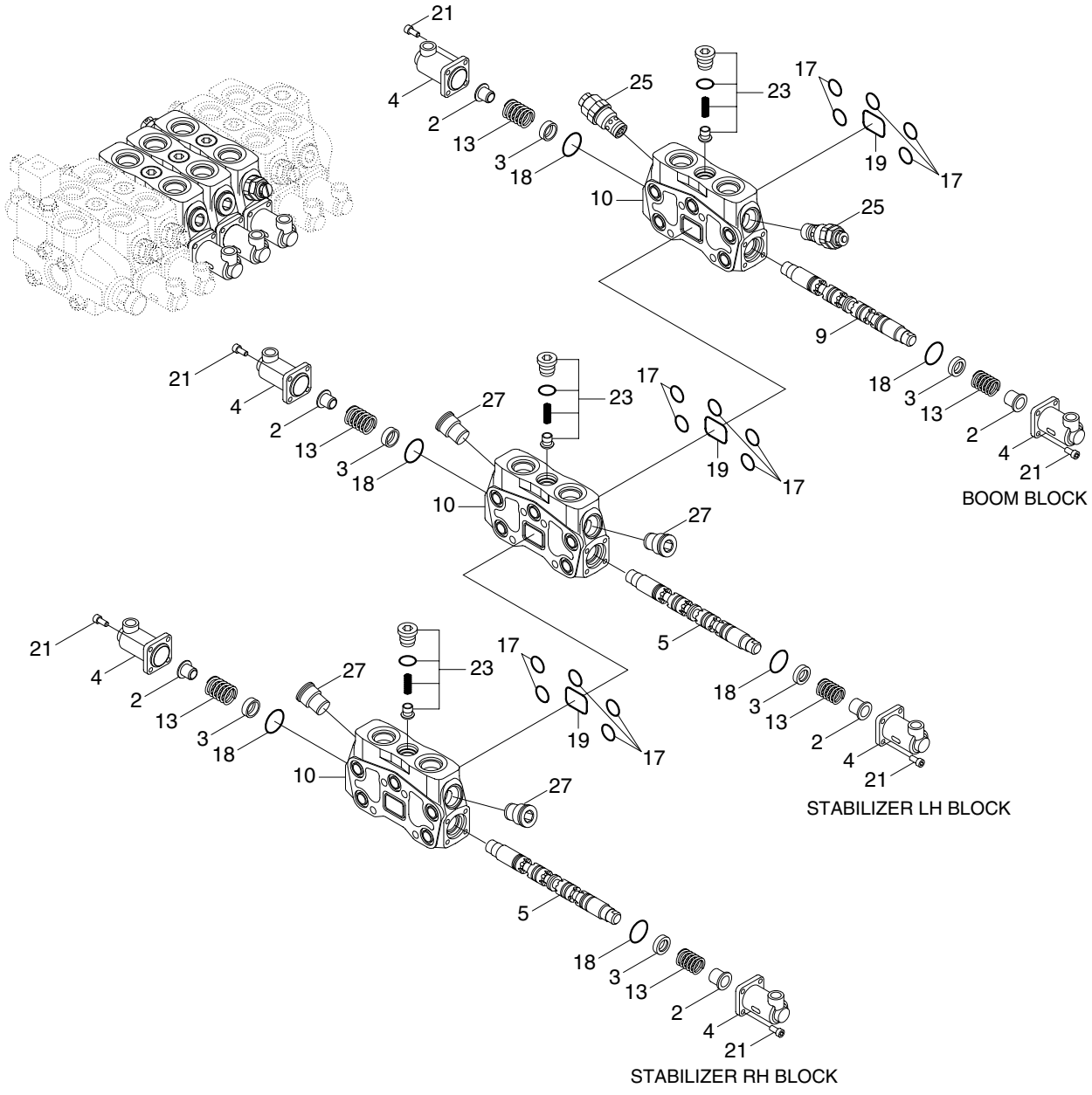

2	Spring cap	10	Block	21	Bolt
3	Bushing	13	Spring	23	Check valve
4	End cap	17	O-ring	25	Relief valve
5	Spool	18	O-ring	27	Plug
9	Spool	19	O-ring		

Pilot control (3/3)

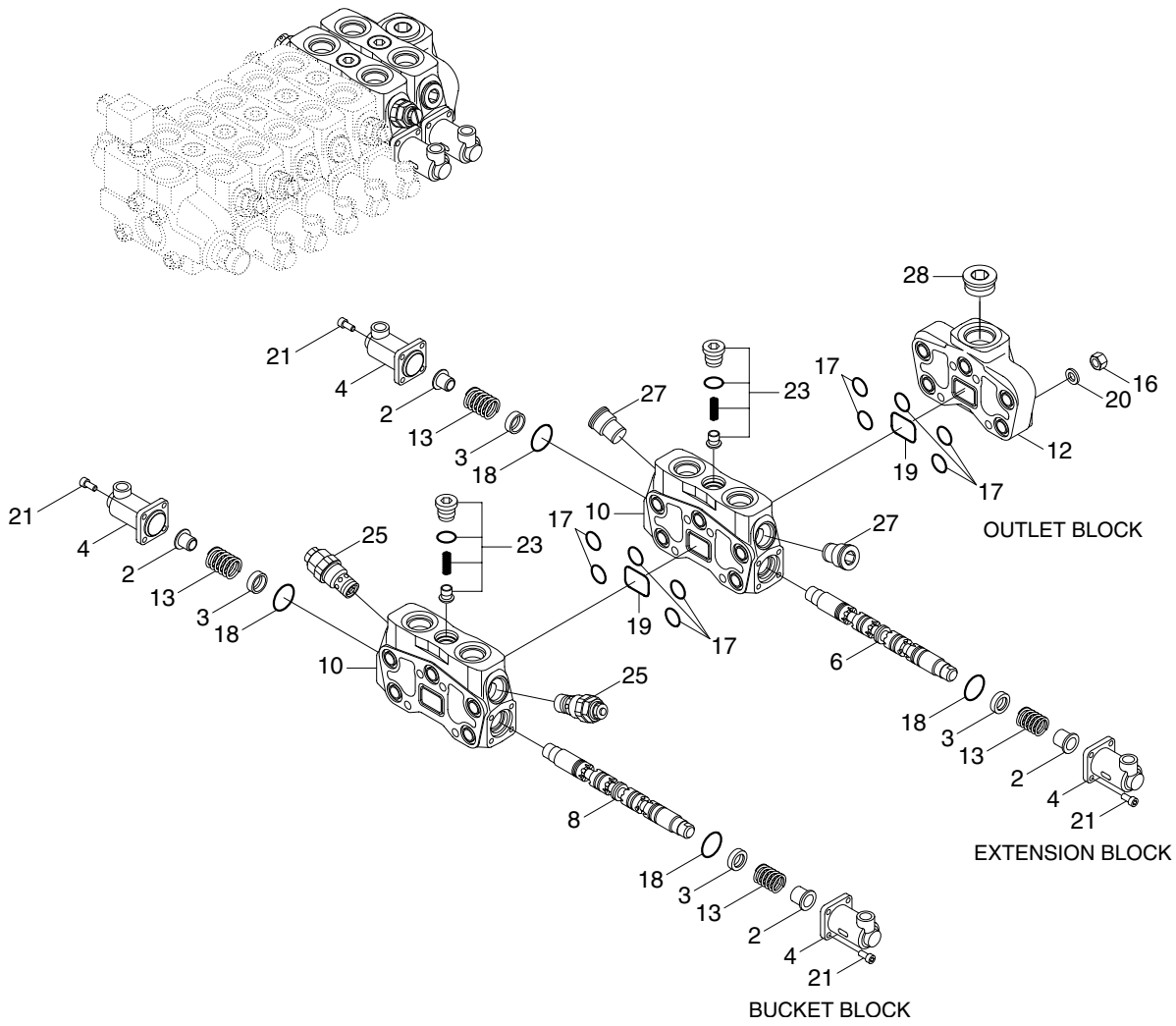

H940S6WE42

2	Spring cap	12	Outlet cover	20	Spring washer
3	Bushing	13	Spring	21	Bolt
4	End cap	16	Nut	23	Check valve
6	Spool	17	O-ring	25	Relief valve
8	Spool	18	O-ring	27	Plug
10	Block	19	O-ring	28	Plug

STRUCTURE (2/2, pilot control)

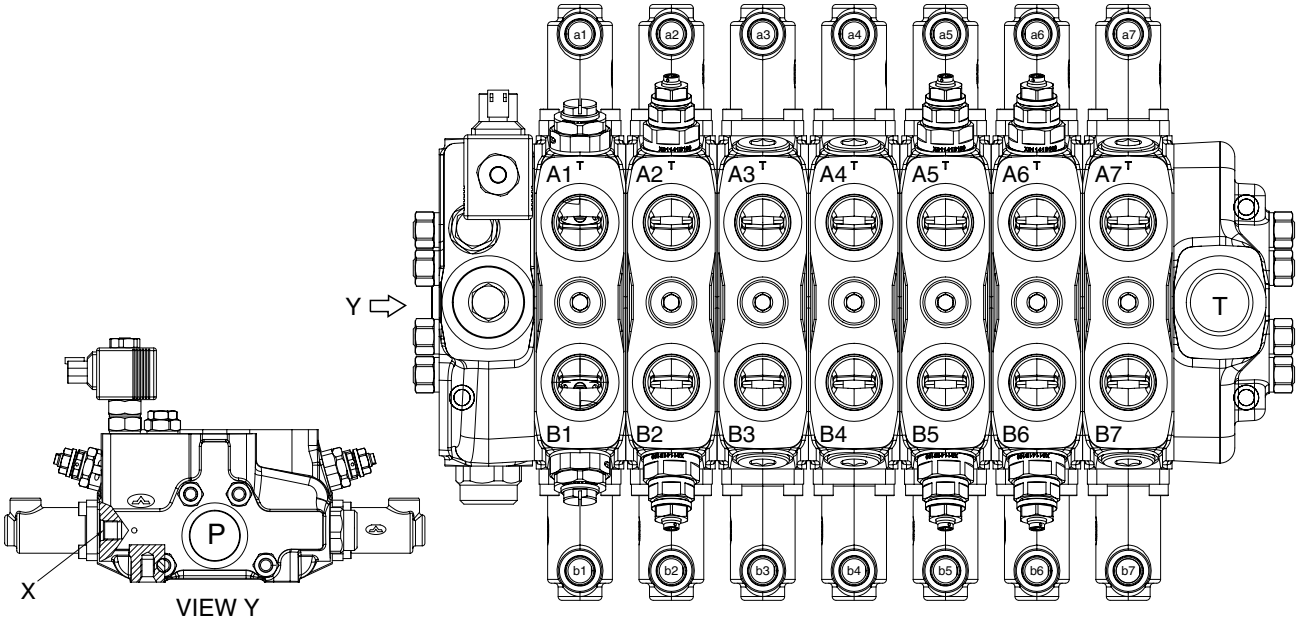

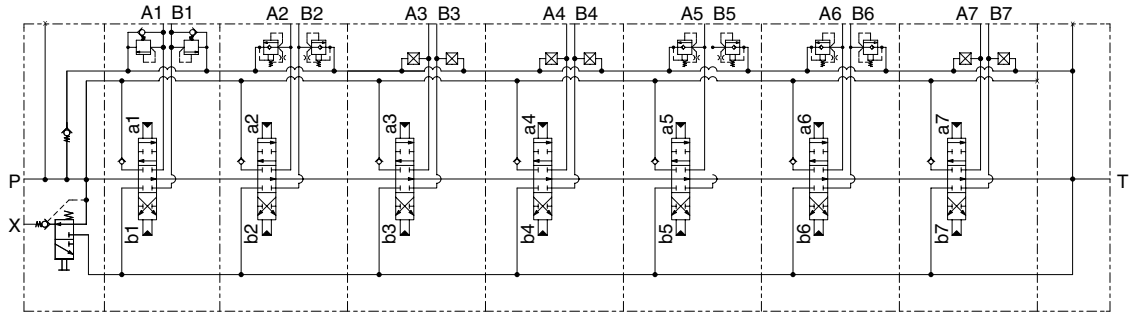

H940S6WE46

Port	Port name	Port size
P	From main pump	1-5/16"-12UN
T	To tank (return)	1-5/16"-12UN
A1, B1	Boom swing cylinder port	1-1/16"-12UN
A2, B2	Dipper cylinder port	1-1/16"-12UN
A3, B3	Stabilizer cylinder port-LH	1-1/16"-12UN
A4, B4	Stabilizer cylinder port-RH	1-1/16"-12UN
A5, B5	Boom cylinder port	1-1/16"-12UN
A6, B6	Bucket cylinder port	1-1/16"-12UN
A7, B7	Dipper extension cylinder port	1-1/16"-12UN
X	Clamp cylinder port	9/16"-18UNF

Item		Specification
Type		6 spool (opt : 7 spool)
Operating method		Hydraulic pilot control
Main relief valve pressure		250 kgf/cm^2 (3560 psi)
Overload relief valve pressure	Boom up	280 kgf/cm^2 (3980 psi)
	Boom down	280 kgf/cm^2 (3980 psi)
	Swing LH, RH	250 kgf/cm^2 (3560 psi)
	Bucket in	280 kgf/cm^2 (3980 psi)
	Bucket out	280 kgf/cm^2 (3980 psi)
	Dipper in	280 kgf/cm^2 (3980 psi)
	Dipper out	280 kgf/cm^2 (3980 psi)

2) SWING SECTION OPERATION (PILOT CONTROL)

(1) Spool in neutral

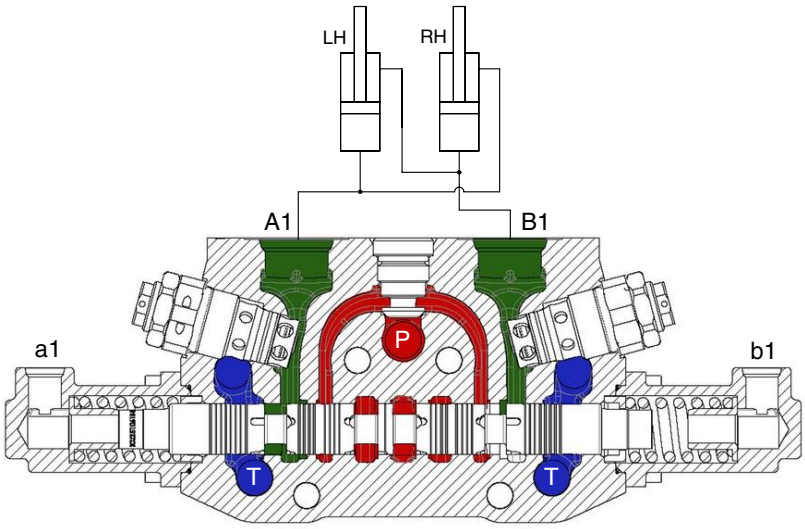

H940C6WE50

If the control lever is not operated, the oil supplied from the pump port (P) passes through the neutral passage to the low pressure passage at the outlet section, and then returns to the tank port (T).

(2) Swing left position (when moving the swing lever to your left)

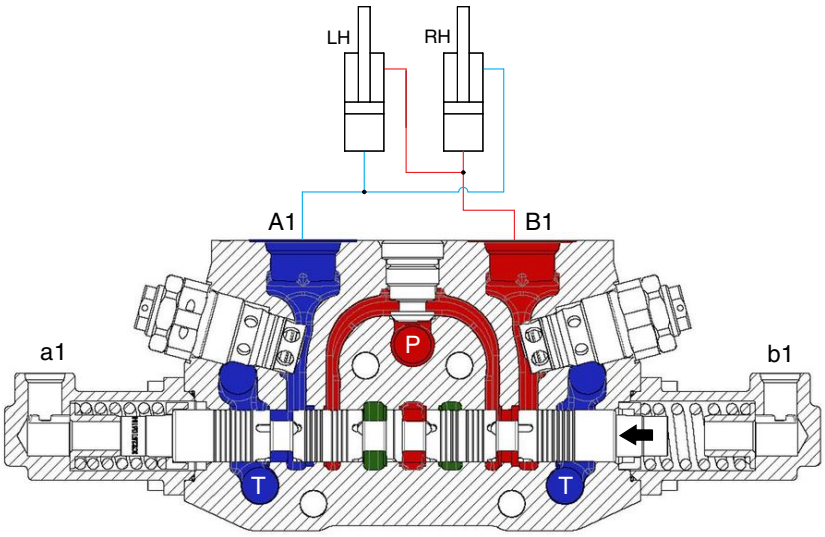

H940C6WE51

When the swing spool moves to the left, the pressure oil supplied from the pump flow through cylinder port (B1) into swing cylinders.
The return oil from cylinder port (A1) flows into the tank via the low pressure passage.

(3) Swing right position (when moving the swing lever to your right)

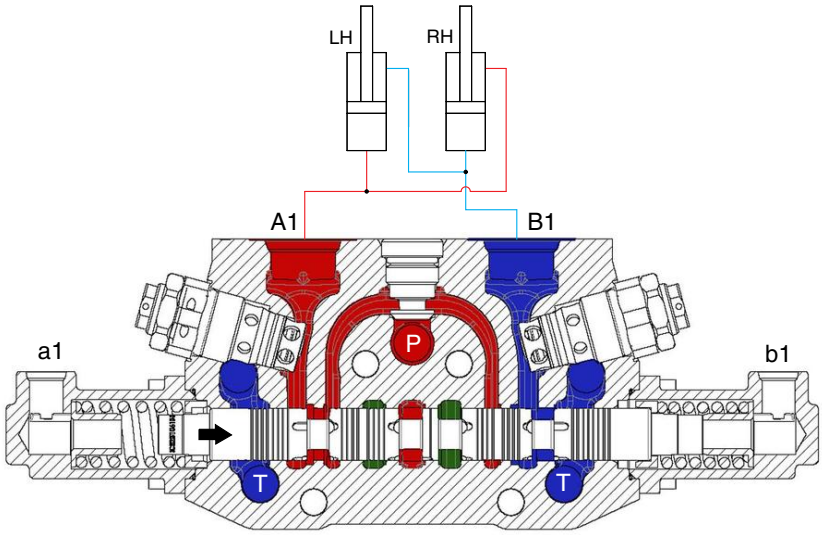

H940C6WE52

When the swing spool moves to the right, the pressure oil supplied from the pump flow through cylinder port (A1) into swing cylinder.
The return oil from cylinder port (B1) flows into the tank via the low pressure passage.

3) DIPPER SECTION OPERATION

(1) Spool in neutral

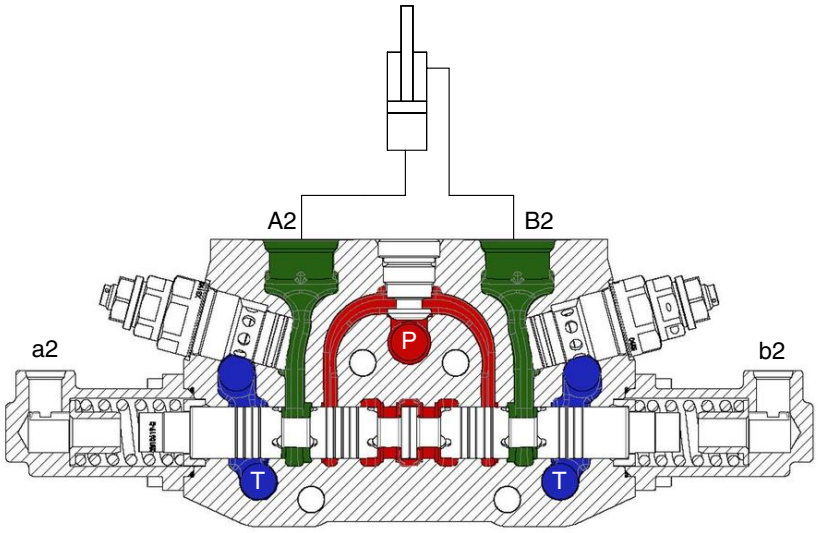

H940C6WE53

If the control lever is not operated, the oil supplied from the pump port (P) passes through the neutral passage to the low pressure passage at the outlet section, and then returns to the tank port (T).

(2) Dipper in position (when dipper lever is pulled back)

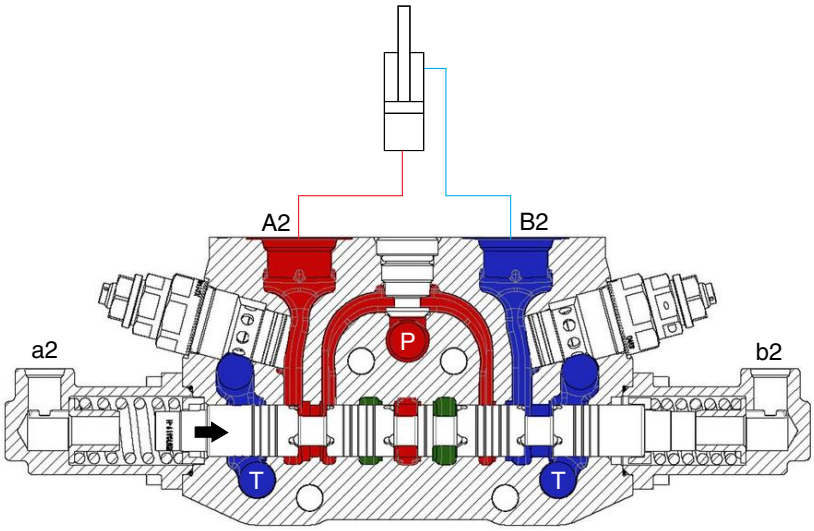

H940C6WE54

When the dipper spool moves to the right, the pressure oil supplied from the pump flow through cylinder port (A2) into dipper cylinder.
The return oil from cylinder port (B2) flows into the tank via the low pressure passage.

(3) Dipper out position (when dipper lever is pushed)

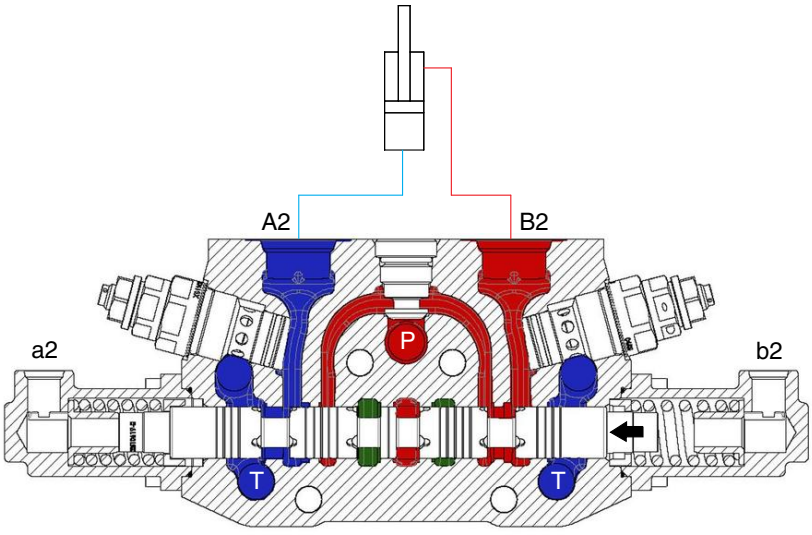

H940C6WE55

When the dipper spool moves to the left, the pressure oil supplied from the pump flow through cylinder port (B2) into dipper cylinder.
The return oil from cylinder port (A2) flows into the tank via the low pressure passage.

4) STABILIZER SECTION OPERATION

(1) Spool in neutral

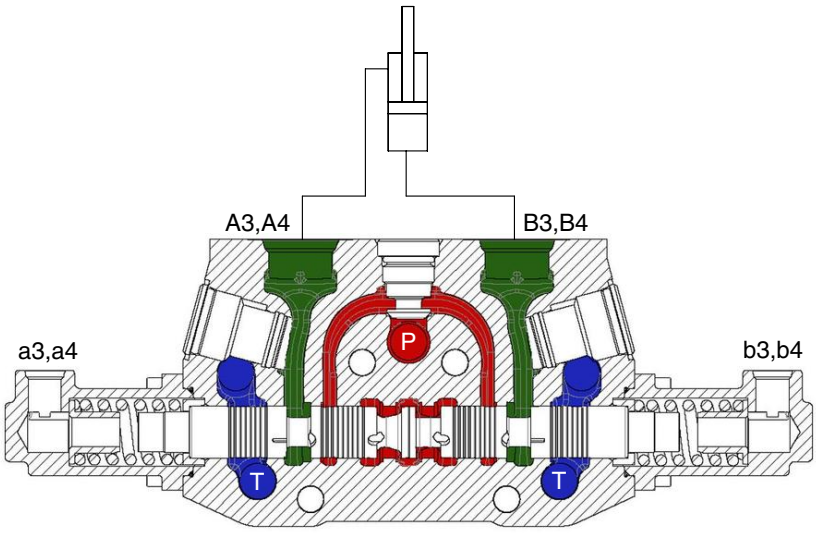

H940C6WE56

If the control lever is not operated, the oil supplied from the pump port (P) passes through the neutral passage to the low pressure passage at the outlet section, and then returns to the tank port (T).

(2) Stabilizer up position (when stabilizer lever is pulled back)

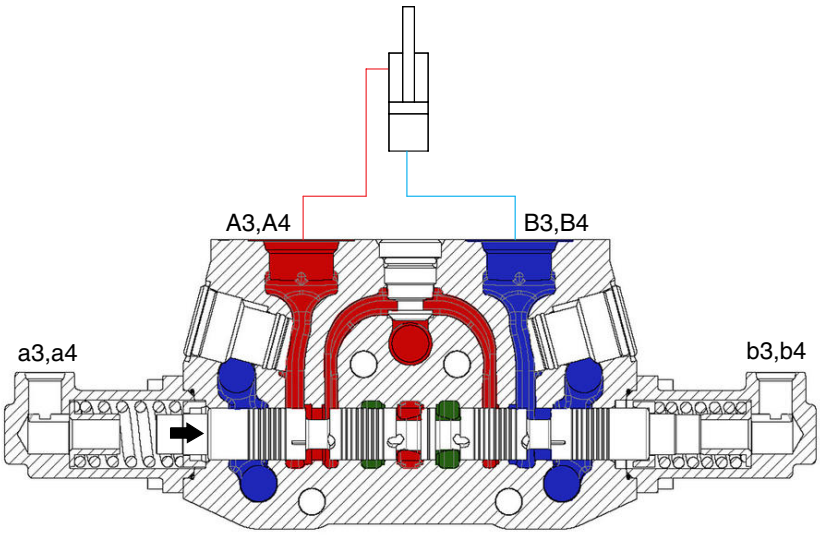

H940C6WE57

When the stabilizer spool moves to the right, the pressure oil supplied from the pump flow through cylinder port (A3, A4) into stabilizer cylinder.
The return oil from cylinder port (B3, B4) flows into the tank via the low pressure passage.

(3) Stabilizer down position (when stabilizer lever is pushed forward)

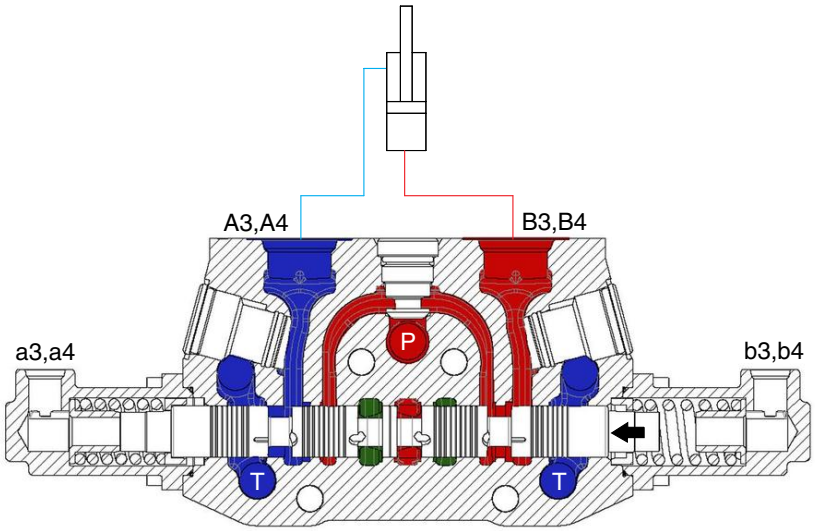

H940C6WE58

When the stabilizer spool moves to the left, the pressure oil supplied from the pump flow through cylinder port (B3, B4) into stabilizer cylinder.
The return oil from cylinder port (A3, A4) flows into the tank via the low pressure passage.

5) BOOM SECTION OPERATION

(1) Spool in neutral

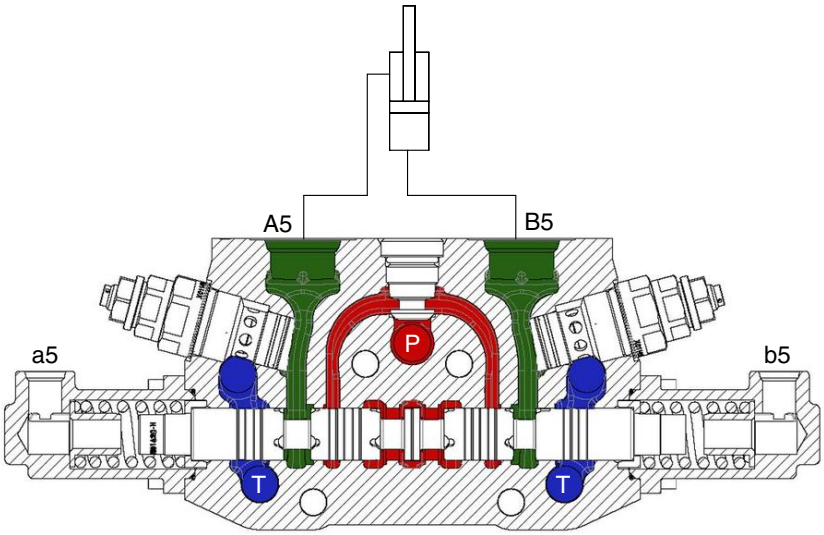

H940C6WE59

If the control lever is not operated, the oil supplied from the pump port (P) passes through the neutral passage to the low pressure passage at the outlet section, and then returns to the tank port (T).

(2) Boom up position (when boom lever is pulled back)

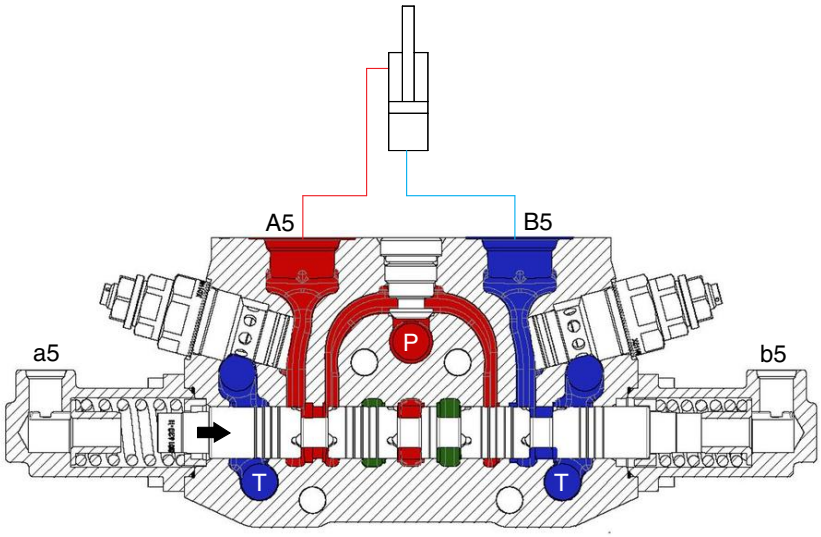

H940C6WE60

When the boom spool moves to the right, the pressure oil supplied from the pump flow through cylinder port (A5) into boom cylinder.
The return oil from cylinder port (B5) flows into the tank via the low pressure passage.

(3) Boom down position (when boom lever is pushed forward)

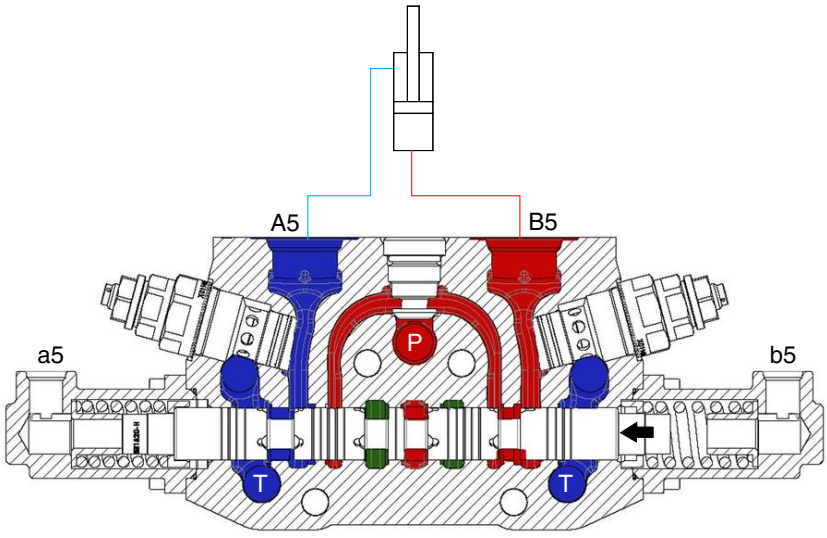

H940C6WE61

When the boom spool moves to the left, the pressure oil supplied from the pump flow through cylinder port (B5) into boom cylinder.
The return oil from cylinder port (A5) flows into the tank via the low pressure passage.

6) BUCKET SECTION OPERATION

(1) Spool in neutral

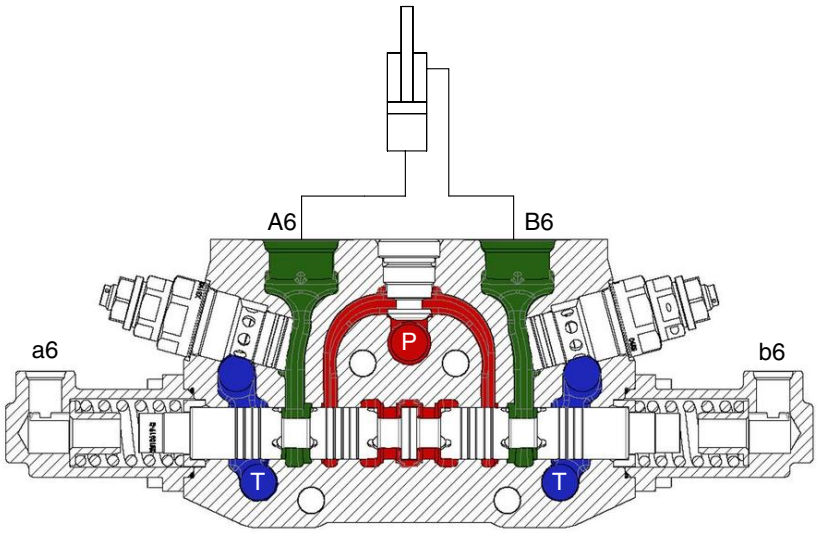

H940C6WE65

If the control lever is not operated, the oil supplied from the pump port (P) passes through the neutral passage to the low pressure passage at the outlet section, and then returns to the tank port (T).

(2) Bucket crowd position (when moving the bucket lever to your left)

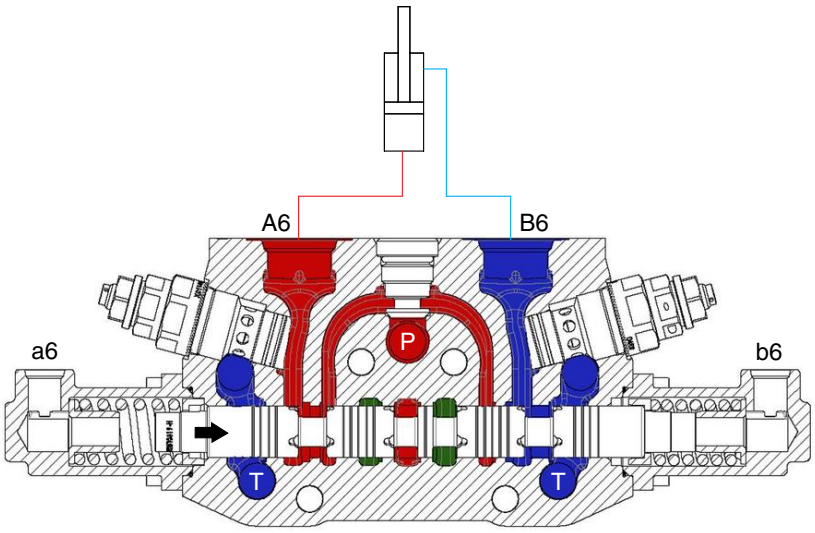

H940C6WE66

When the bucket spool moves to the right, the pressure oil supplied from the pump flow through cylinder port (A6) into bucket cylinder.
The return oil from cylinder port (B6) flows into the tank via the low pressure passage.

(3) Bucket dump position (when moving the bucket to your right)

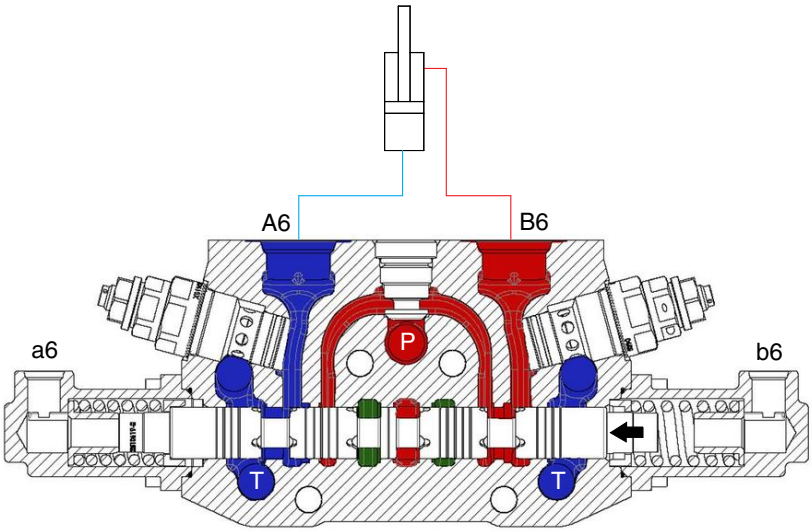

H940C6WE67

When the bucket spool moves to the left, the pressure oil supplied from the pump flow through cylinder port (B6) into bucket cylinder.
The return oil from cylinder port (A6) flows into the tank via the low pressure passage.

7) EXTENDED DIPPER SECTION OPERATION

(1) Spool in neutral

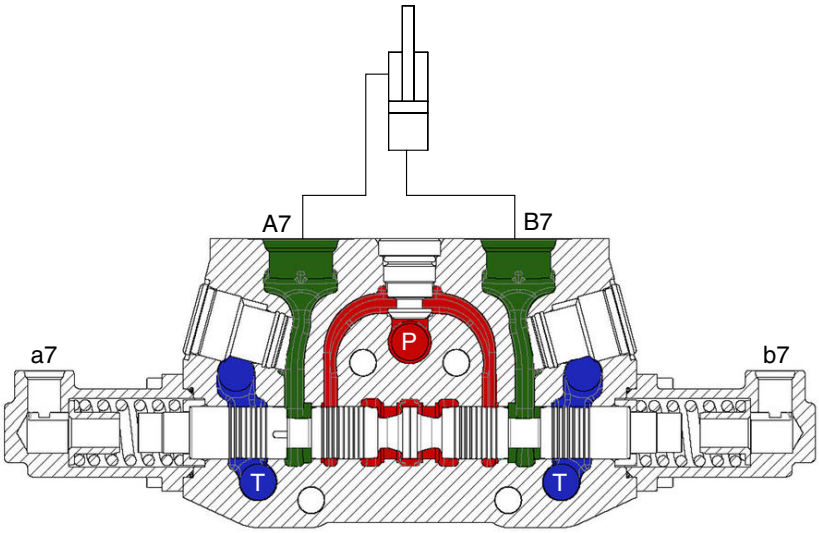

H940C6WE62

If the control lever is not operated, the oil supplied from the pump port (P) passes through the neutral passage to the low pressure passage at the outlet section, and then returns to the tank port (T).

(2) Extended dipper in position (when the left side of pedal is pressed)

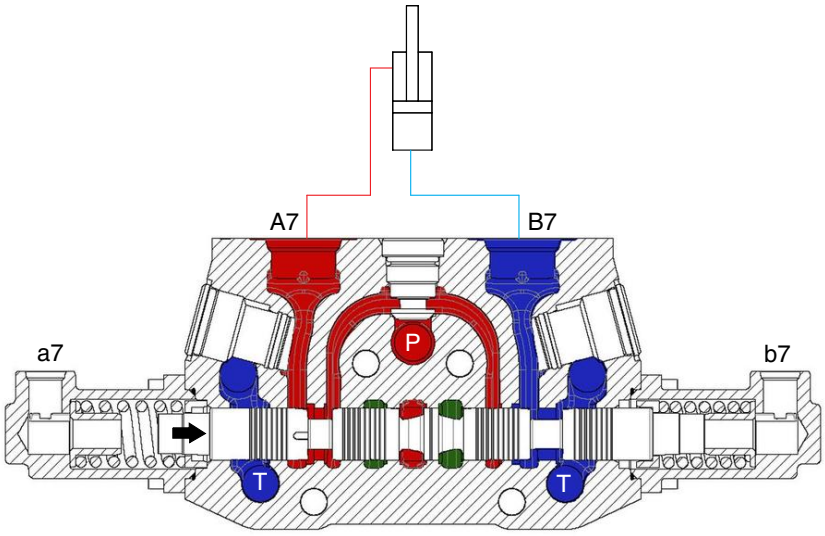

H940C6WE63

When the extended spool moves to the right, the pressure oil supplied from the pump flow through cylinder port (A7) into extended cylinder.
The return oil from cylinder port (B7) flows into the tank via the low pressure passage.

(3) Extended dipper out position (when right side of pedal is pressed)

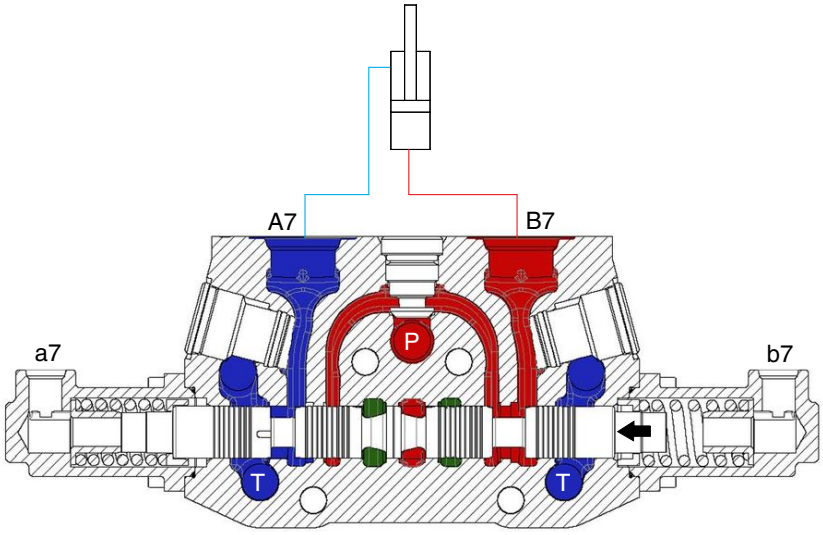

H940C6WE63

When the extended spool moves to the left, the pressure oil supplied from the pump flow through cylinder port (B7) into extended dipper cylinder.
The return oil from cylinder port (A7) flows into the tank via the low pressure passage.

8) CLAMP SECTION OPERATION

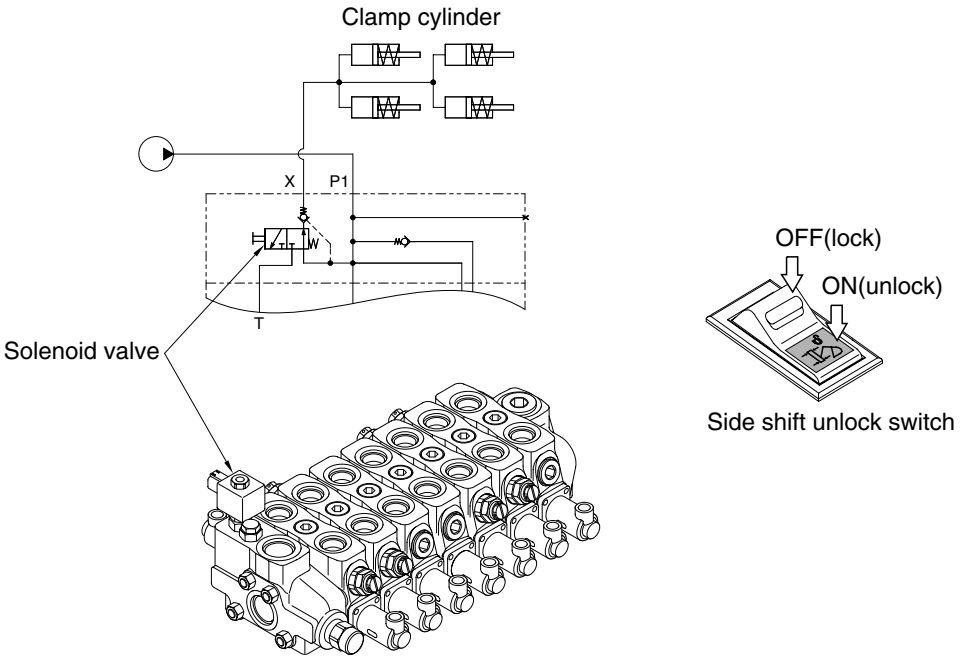

H940S6WE124

※ When the backhoe is being used for excavating duties, the carriage assembly must be **clamped** to the side shift rearframe.
The clamp control valve assembly is positioned in the inlet section of backhoe control valve block and is connected directly to the pressure passage.
The valve operates in conjunction with solenoid valve housed in the side of the MCV block.

(1) Clamps pressurized position

When the side shift unlock switch is in the OFF position (not pressed), the solenoid valve is de-energized. The solenoid valve open the pressure passage to clamp cylinder.
When an backhoe service is operated, pressure is generated in pressure passage, then the clamp is locked.

(2) Clamps released position - Not precision control machines

When the side shift unlock switch is in the ON position (pressed down), the solenoid valve is energized. The solenoid valve open the clamp cylinder to the drain port (tank).
Oil from the clamp cylinder is drained to tank. Then, the clamp is unlocked.

8. BACKHOE RCV LEVER

1) STRUCTURE

The casing has the oil inlet port P (primary pressure) and the oil outlet port T (tank). In addition the secondary pressure is taken out through ports 1, 2, 3 and 4 provided at the bottom face.

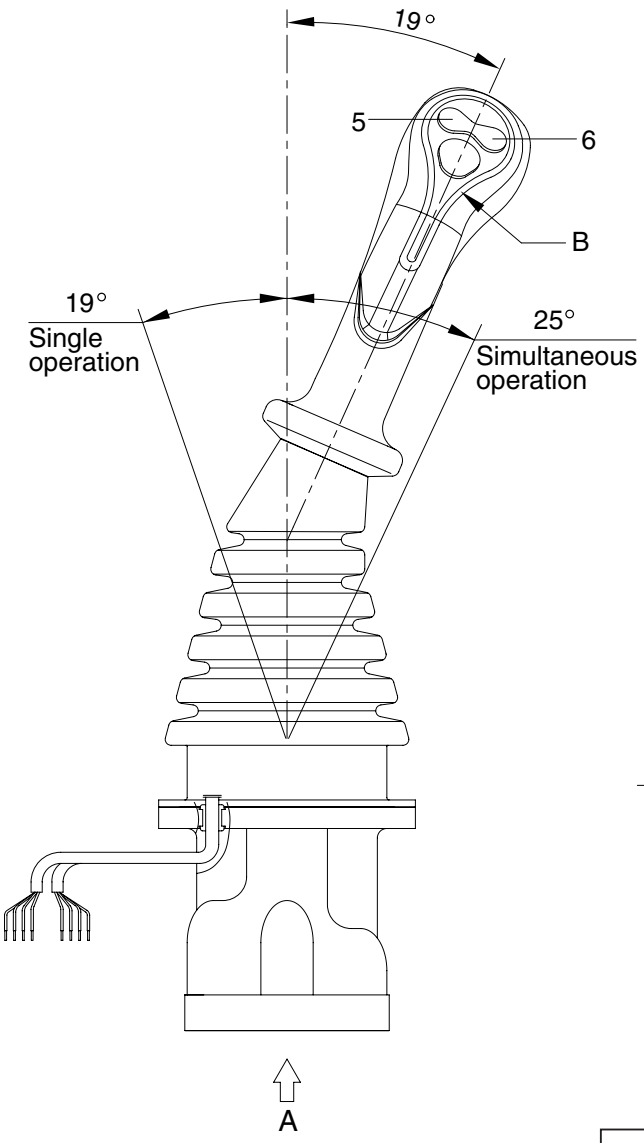

Switches

No.	LH	RH
5	Dipper extend	Horn
6	Dipper retract	Breaker

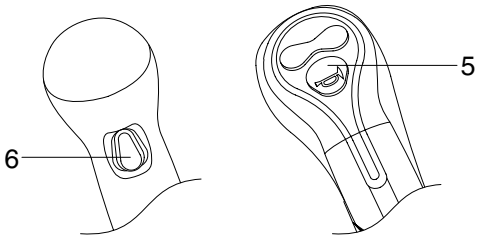

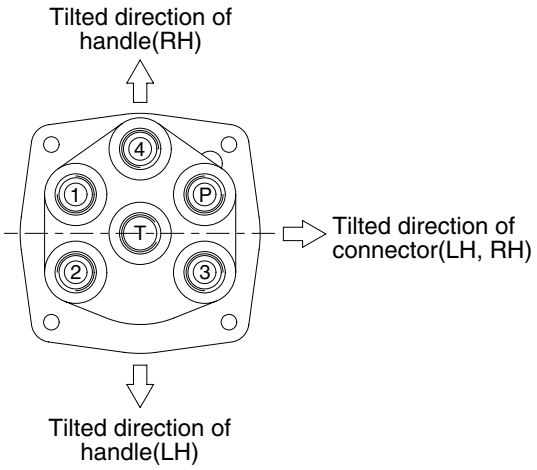

VIEW A

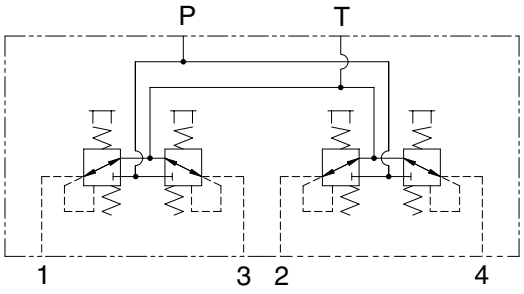

Hydraulic circuit

Port	LH	RH	Port size
P	Pilot oil inlet port	Pilot oil inlet port	PF 3/8
T	Pilot oil return port	Pilot oil return port	
1	Left swing port	Bucket out port	
2	Arm in port	Boom down port	
3	Right swing port	Bucket in port	
4	Arm out port	Boom up port	

H940C6WE70

CROSS SECTION

The construction of the pilot valve is shown in the attached cross section drawing. The casing has vertical holes in which reducing valves are assembled.

The pressure reducing section is composed of the spool (4), spring (6) for setting secondary pressure, return spring (10), stopper (8), spring seat (7, 13) and shim (5). The spring for setting the secondary pressure has been generally so preset that the secondary pressure is 5 to 20.5 kgf/cm^2 (depending on the type). The spool is pushed against the push rod (9, 11) by the return spring.

When the push rod is pushed down by tilting the handle, the spring seat comes down simultaneously and changes setting of the secondary pressure spring.

CROSS SECTION

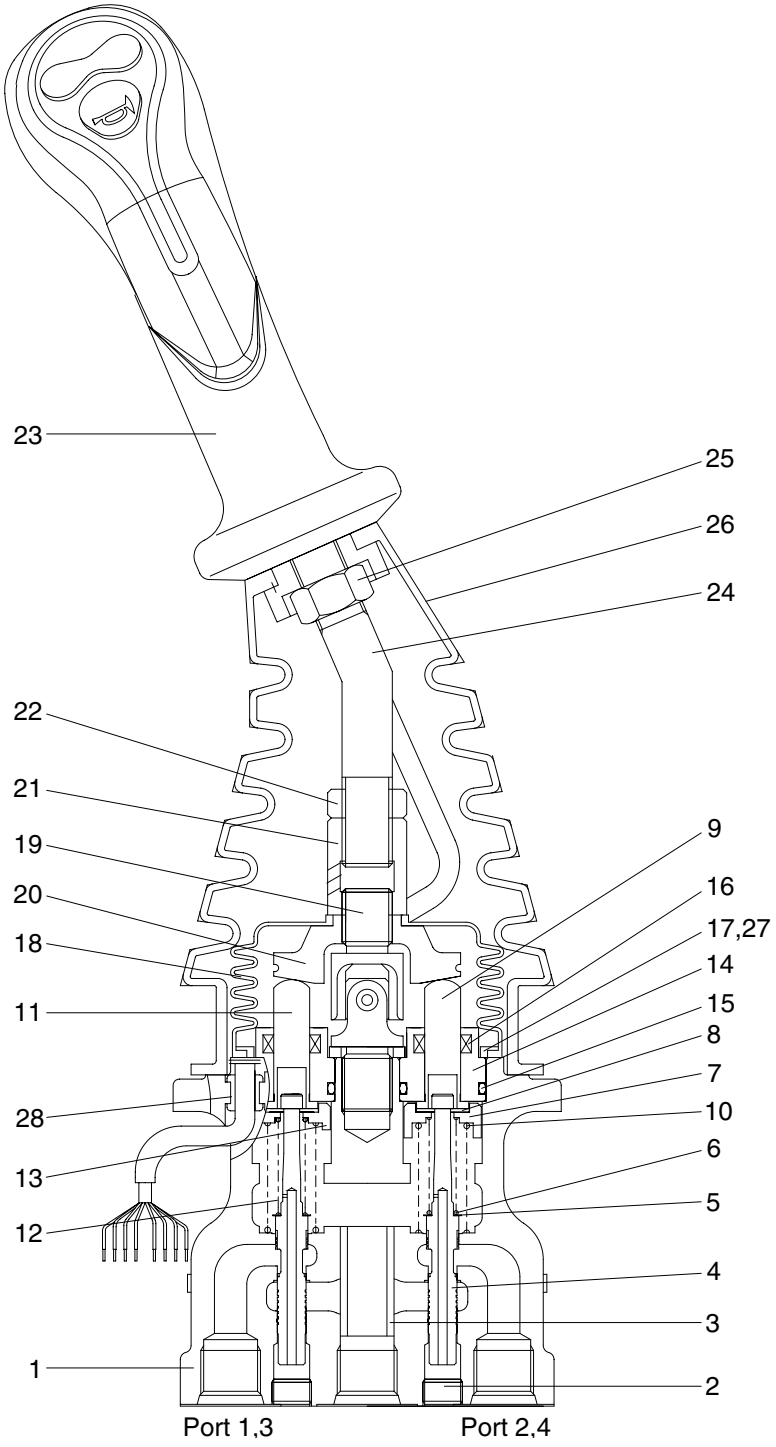

H940C6WE71

1	Case	8	Stopper	15	O-ring	22	Lock nut
2	Plug	9	Push rod	16	Rod seal	23	Handle assembly
3	Bushing	10	Spring	17	Plate	24	Handle bar
4	Spool	11	Push rod	18	Boot	25	Nut
5	Shim	12	Spring	19	Joint assembly	26	Boot
6	Spring	13	Spring seat	20	Swash plate	27	Spring pin
7	Spring seat	14	Plug	21	Adjusting nut	28	Bushing

2) FUNCTIONS

(1) Fundamental functions

The pilot valve is a valve that controls the spool stroke, direction, etc of a main control valve. This function is carried out by providing the spring at one end of the main control valve spool and applying the output pressure (secondary pressure) of the pilot valve to the other end.

For this function to be carried out satisfactorily, the pilot valve is composed of the following elements.

① Inlet port (P) where oil is supplied from hydraulic pump.

② Output ports (1, 2, 3 & 4) to apply pressure supplied from inlet port to ends of control valve spools.

③ Tank port (T) necessary to control the above output pressure.

④ Spool to connect output port to inlet port or tank port.

⑤ Mechanical means to control output pressure, including springs that work on the above spools.

(2) Functions of major sections

The functions of the spool (4) are to receive the supply oil pressure from the hydraulic pump at its port P, and to change over oil paths to determine whether the pressure oil of port P is led to output ports 1, 2, 3 & 4 or the output port pressure oil to tank port T.

The spring (6) works on this spool to determine the output pressure.

The change the deflection of this spring, the push rod (9,11) is inserted and can slide in the plug (14).

For the purpose of changing the displacement of the push rod through the swash plate (20) and adjusting nut (21) are provided the handle (23) that can be tilted in any direction around the fulcrum of the universal joint (19) center.

The spring (10) works on the case (1) and spring seat (7, 13) and tries to return the push rod (9,11) to the zero-displacement position irrespective of the output pressure, securing its resetting to the center position.

This also has the effect of a reaction spring to give appropriate control feeling to the operator.

3) OPERATION

The operation of the pilot valve will be described on the basis of the hydraulic circuit diagram shown below and the attached operation explanation drawing.

The diagram shown below is the typical application example of the pilot valve.

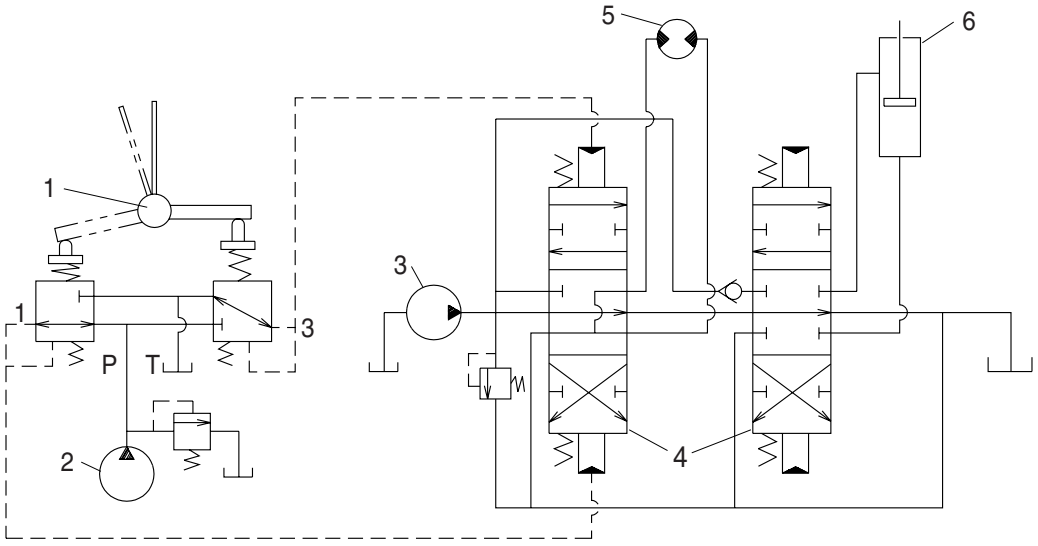

2-70

1	Pilot valve	3	Main pump	5	Hydraulic motor
2	Pilot pump	4	Main control valve	6	Hydraulic cylinder

(1) Case where handle is in neutral position

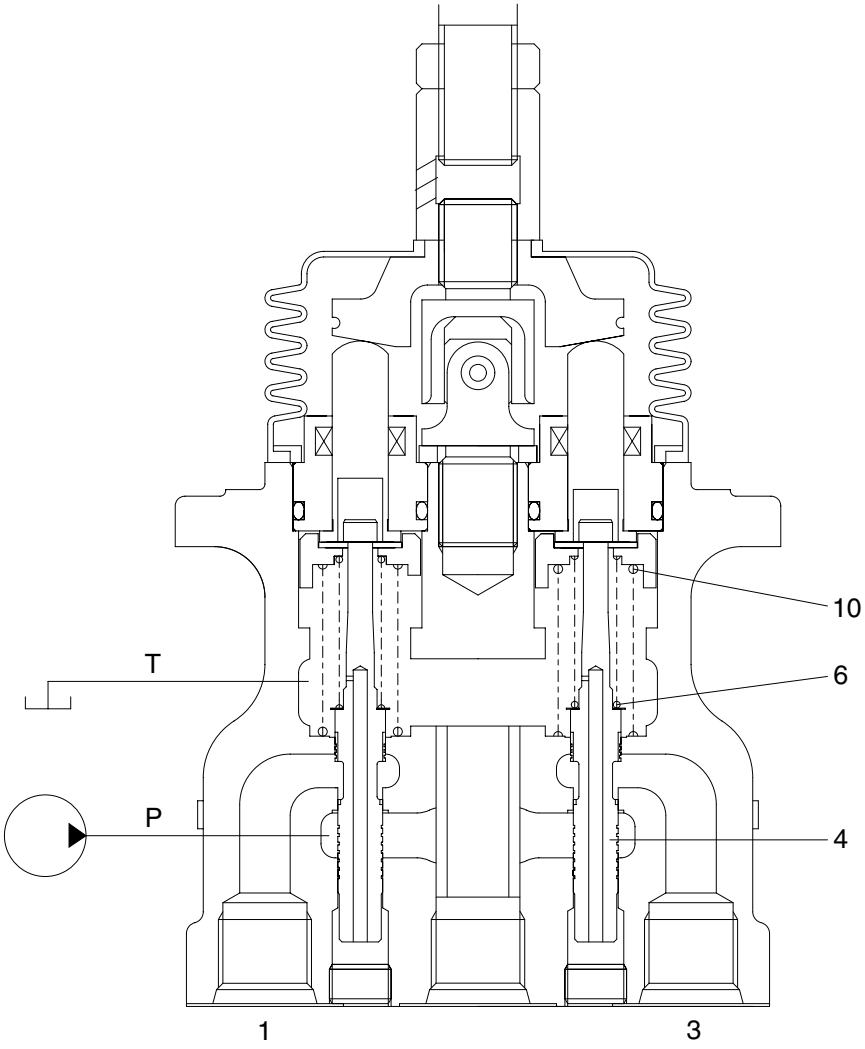

21092RL03

The force of the spring (6) that determines the output pressure of the pilot valve is not applied to the spool (4). Therefore, the spool is pushed up by the spring (10) to the position of port (1, 3) in the operation explanation drawing. Then, since the output port is connected to tank port T only, the output port pressure becomes equal to tank pressure.

(2) Case where handle is tilted

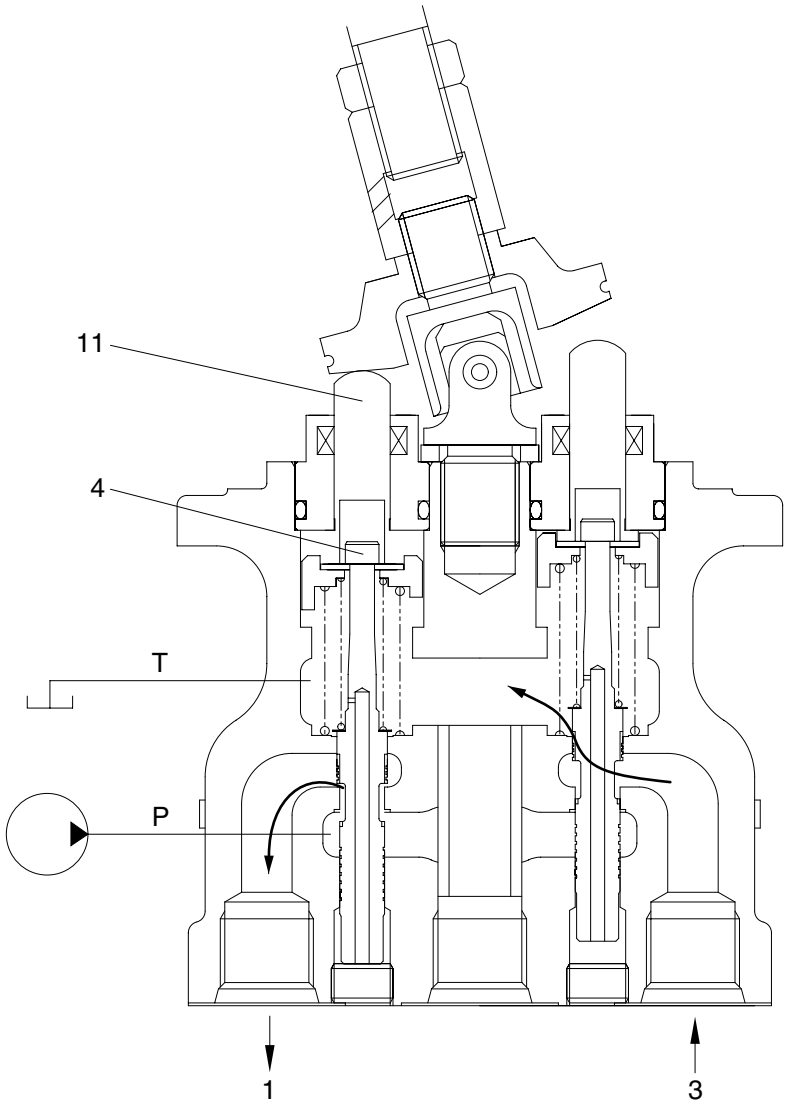

21092RL04

When the push rod (11) is stroked, the spool (4) moves downwards.
Then port P is connected with port (1) and the oil supplied from the pilot pump flows through port (1) to generate the pressure.
When the pressure at port (1) increases to the value corresponding to the spring force set by tilting the handle, the hydraulic pressure force balances with the spring force. If the pressure at port (1) increases higher than the set pressure, port P is disconnected from port (1) and port T is connected with port (1). If it decreases lower than the set pressure, port P is connected with port (1) and port T is disconnected from port 1.
In this manner the secondary pressure is kept at the constant value.
Besides, in some type, when the handle is tilted more than a certain angle, the upper end of the spool contacts with the inside bottom of the push rod and the output pressure is left to be connected with port P.

9. LOADER CYLINDERS

1) BOOM CYLINDER

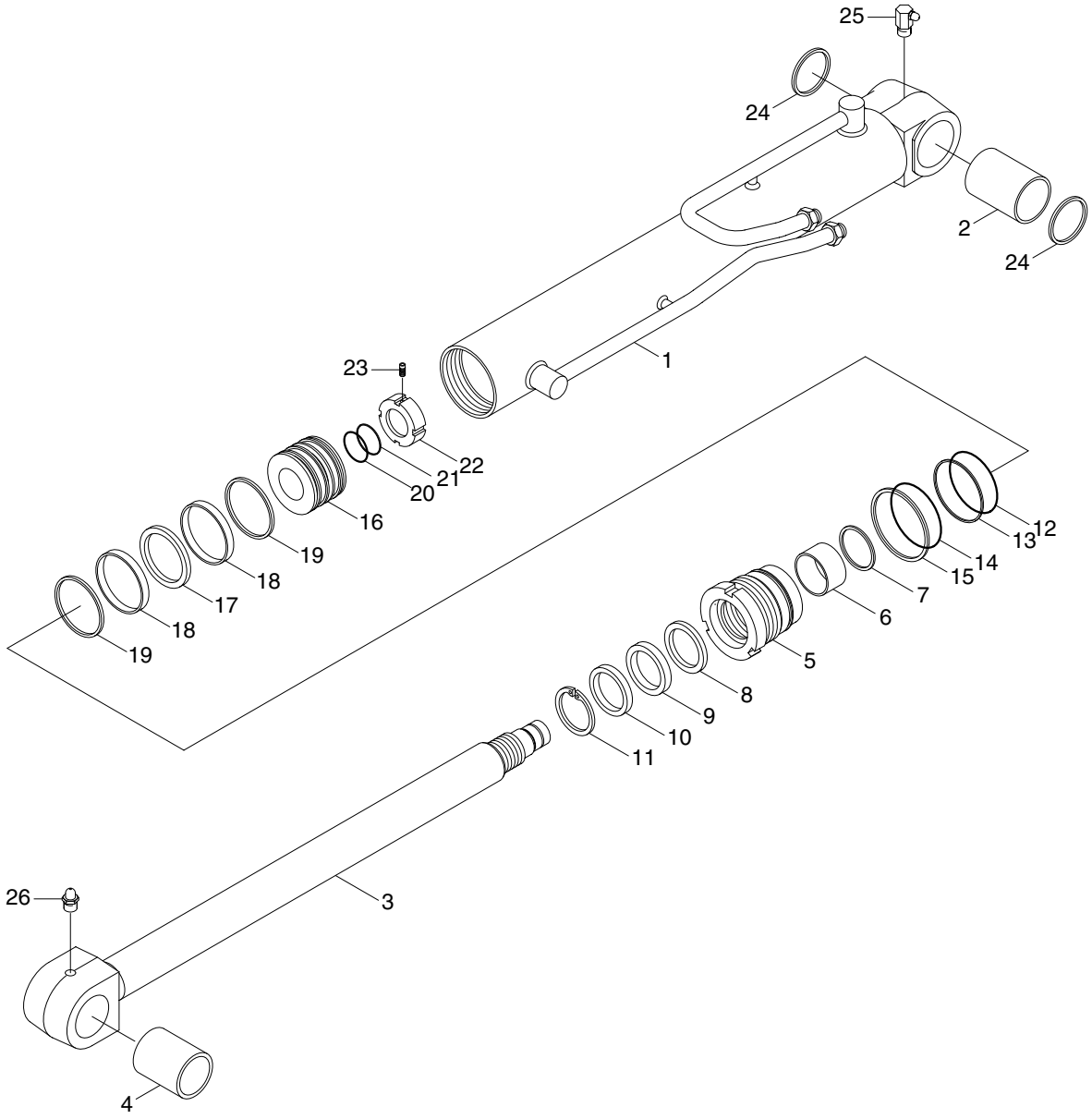

H940C6WE135

1	Tube assembly	10	Dust wiper	19	Dust ring
2	Pin bushing	11	Retaining ring	20	O-ring
3	Rod assembly	12	O-ring	21	Back up ring
4	Pin bushing	13	Back up ring	22	Piston nut
5	Rod cover	14	O-ring	23	Set screw
6	Rod bushing	15	Washer	24	Pin wiper
7	Retaining ring	16	Piston	25	Grease nipple
8	Buffer seal	17	Piston seal	26	Grease nipple
9	U-packing	18	Wear ring		

2) BUCKET CYLINDER

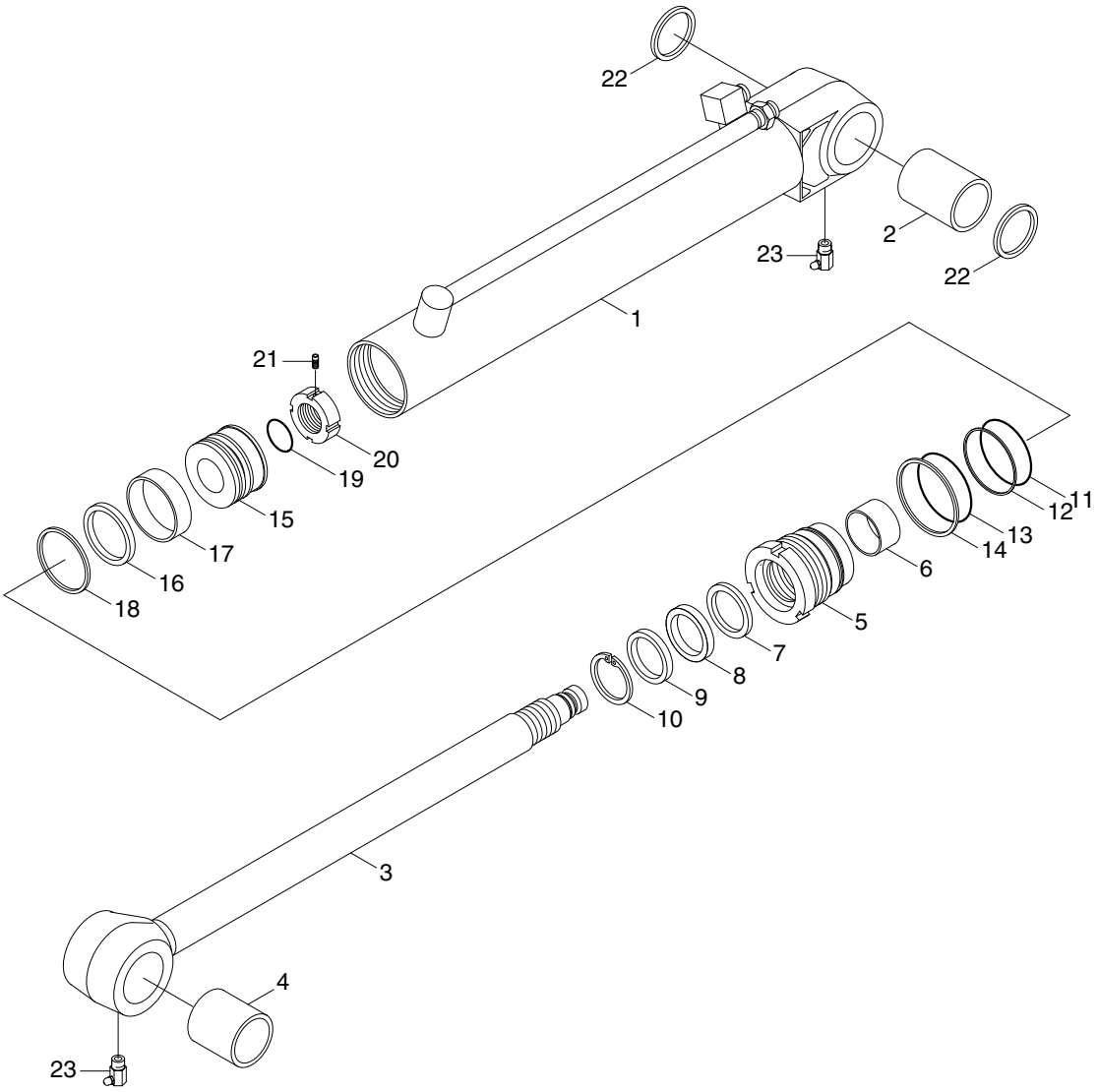

H940C6WE136

1	Tube assembly	9	Dust wiper	17	Wear ring
2	Pin bushing	10	Retaining ring	18	Dust ring
3	Rod assembly	11	O-ring	19	O-ring
4	Pin bushing	12	Back up ring	20	Piston nut
5	Rod cover	13	O-ring	21	Set screw
6	Rod bushing	14	Washer	22	Pin wiper
7	Buffer seal	15	Piston	23	Grease nipple
8	U-packing	16	Piston seal		

3) CLAM CYLINDER (OPTION)

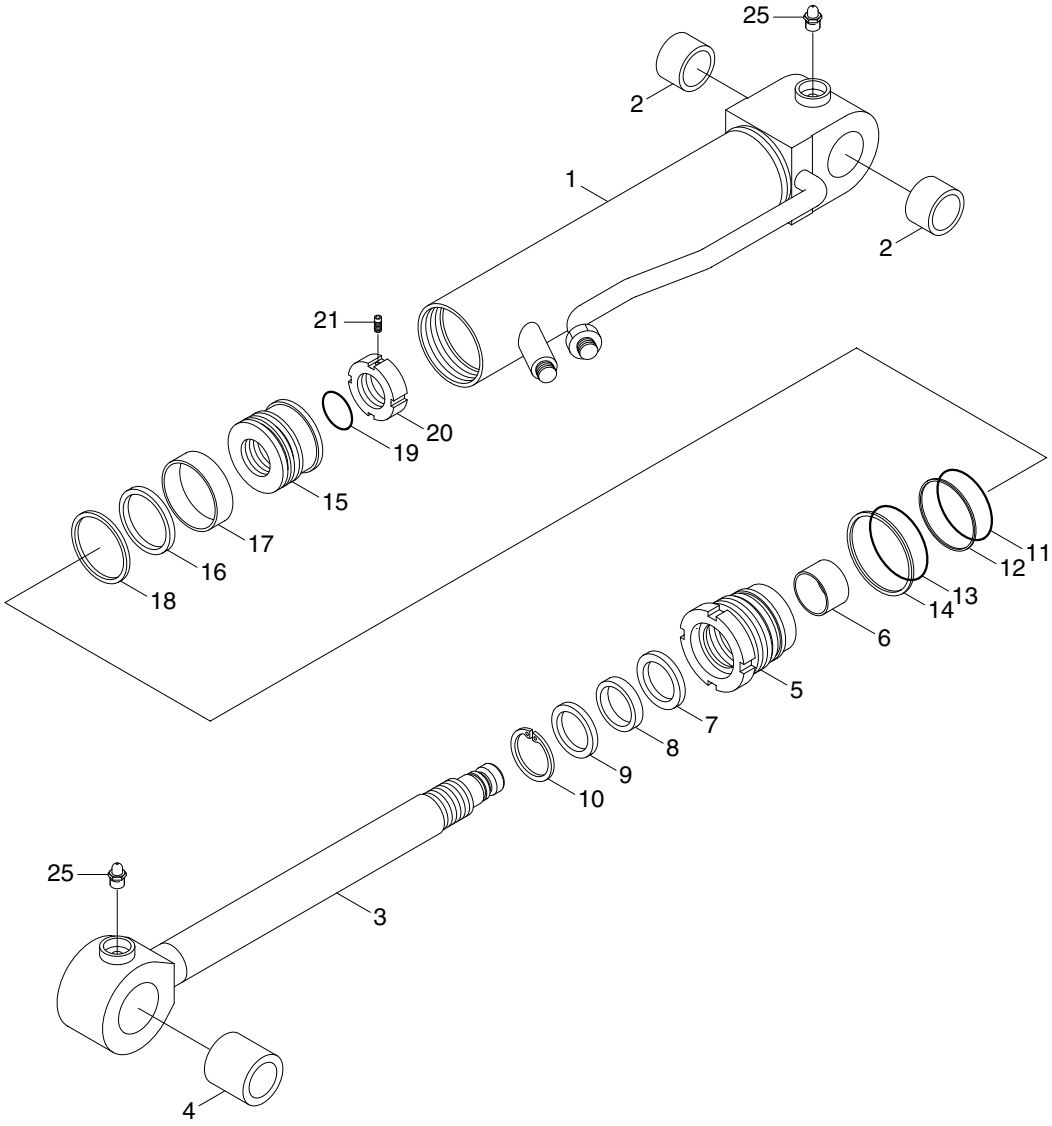

H940C6WE137

1	Tube assembly	9	Dust wiper	17	Wear ring
2	Pin bushing	10	Retaining ring	18	Dust ring
3	Rod assembly	11	O-ring	19	O-ring
4	Pin bushing	12	Back up ring	20	Piston nut
5	Rod cover	13	O-ring	21	Set screw
6	Rod bushing	14	Washer	25	Grease nipple
7	Buffer seal	15	Piston		
8	U-packing	16	Piston seal		

10. BACKHOE CYLINDERS

1) BOOM CYLINDER

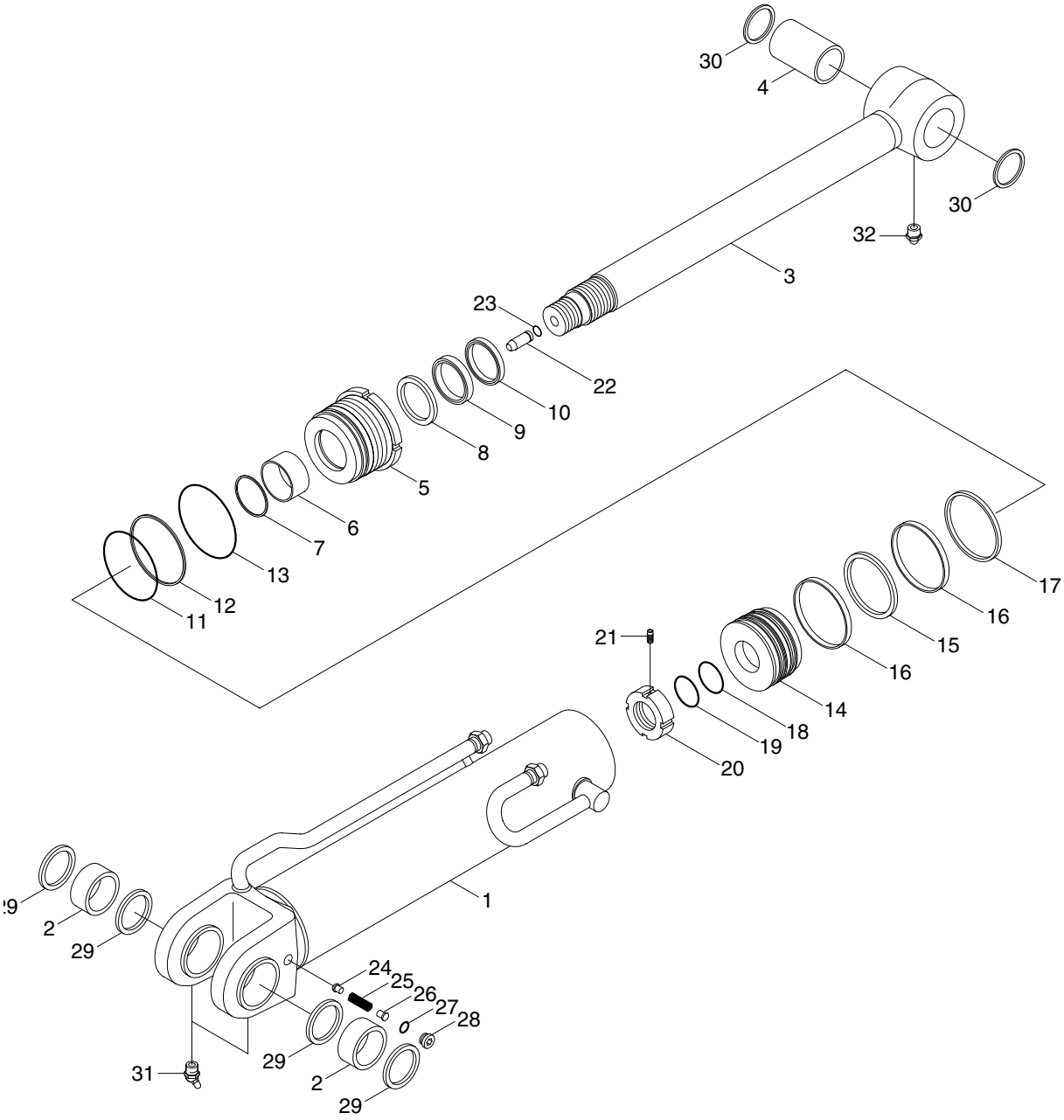

H940C6WE130

1	Tube assembly	12	Back up ring	23	Stop ring
2	Pin bushing	13	O-ring	24	Check valve
3	Rod assembly	14	Piston	25	Spring
4	Pin bushing	15	Piston seal	26	Bracket
5	Rod cover	16	Wear ring	27	O-ring
6	Rod bushing	17	Dust ring	28	Plug
7	Retaining ring	18	O-ring	29	Pin wiper
8	Buffer seal	19	Back up ring	30	Pin wiper
9	U-packing	20	Piston nut	31	Grease nipple
10	Dust wiper	21	Set screw	32	Grease nipple
11	O-ring	22	Cushion plunger		

2) DIPPER CYLINDER

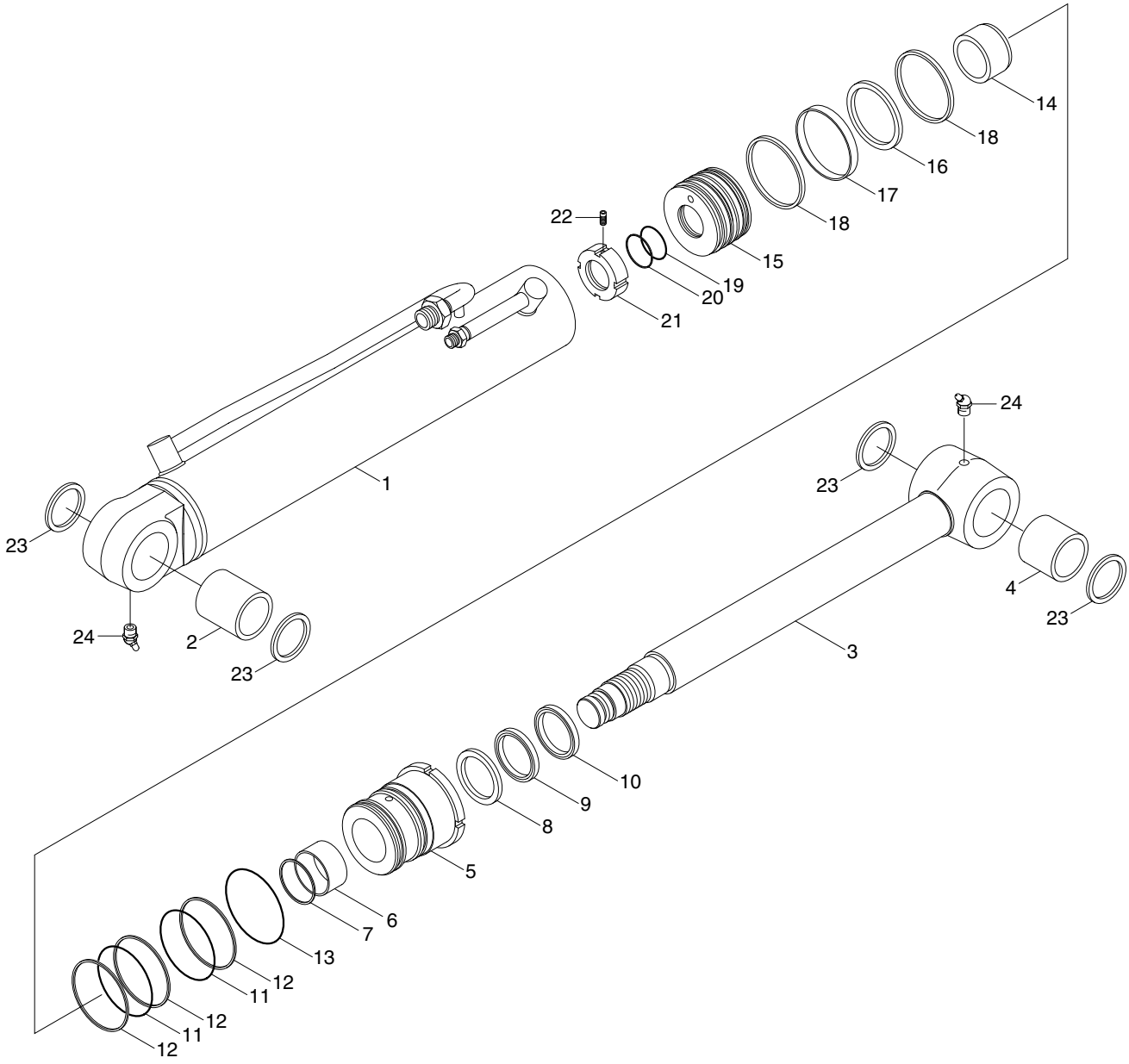

H940C6WE131

1	Tube assembly	9	U-packing	17	Wear ring
2	Pin bushing	10	Dust wiper	18	Dust ring
3	Rod assembly	11	O-ring	19	O-ring
4	Pin bushing	12	Back up ring	20	Back up ring
5	Rod cover	13	O-ring	21	Piston nut
6	Rod bushing	14	Cushion ring	22	Set screw
7	Retaining ring	15	Piston	23	Pin wiper
8	Buffer seal	16	Piston seal	24	Grease nipple

3) BUCKET CYLINDER

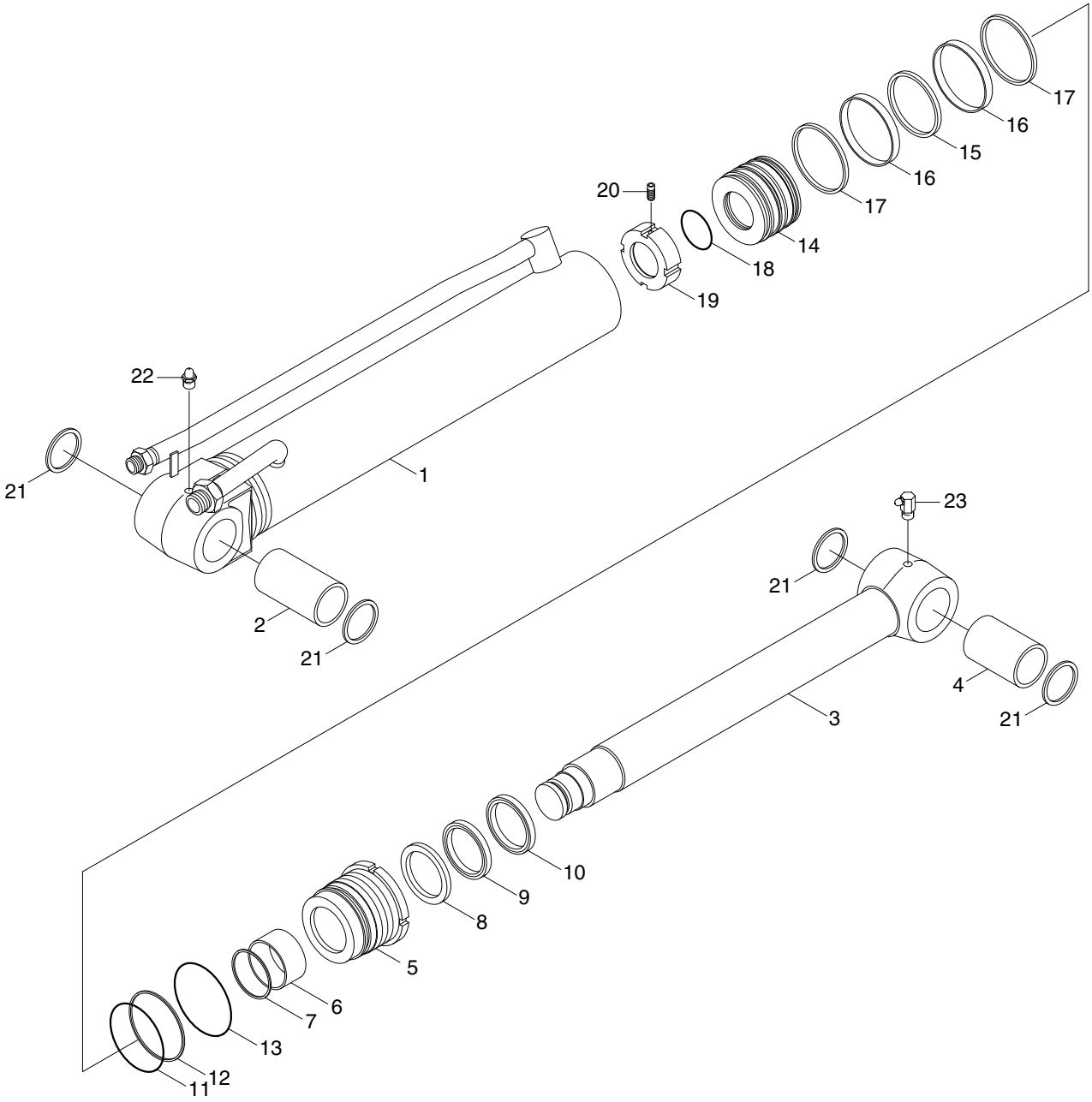

H940C6WE132

1	Tube assembly	9	U-packing	17	Dust ring
2	Pin bushing	10	Dust wiper	18	O-ring
3	Rod assembly	11	O-ring	19	Piston nut
4	Pin bushing	12	Back up ring	20	Set screw
5	Rod cover	13	O-ring	21	Pin wiper
6	Rod bushing	14	Piston	22	Grease nipple
7	Retaining ring	15	Piston seal	23	Grease nipple
8	Buffer seal	16	Wear ring		

4) BOOM SWING CYLINDER

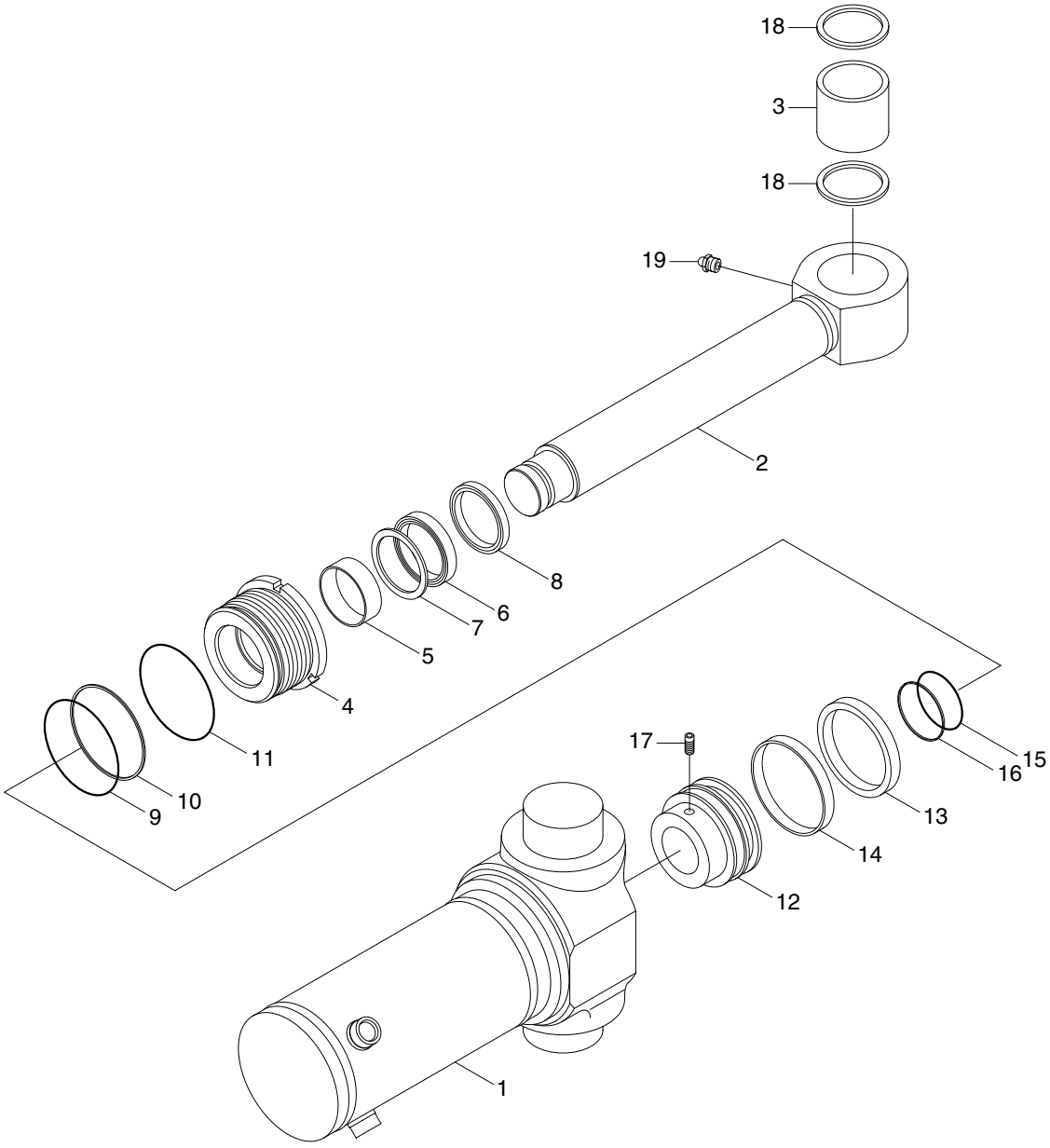

H940C6WE133

1	Tube assembly	8	Dust wiper	14	Wear ring
2	Rod assembly	9	O-ring	15	O-ring
3	Pin bushing	10	Back up ring	16	Back up ring
4	Rod cover	11	O-ring	17	Set screw
5	Rod bushing	12	Piston	18	Pin wiper
6	U-packing	13	Piston seal	19	Grease nipple
7	Back up ring				

5) STABILIZER CYLINDER

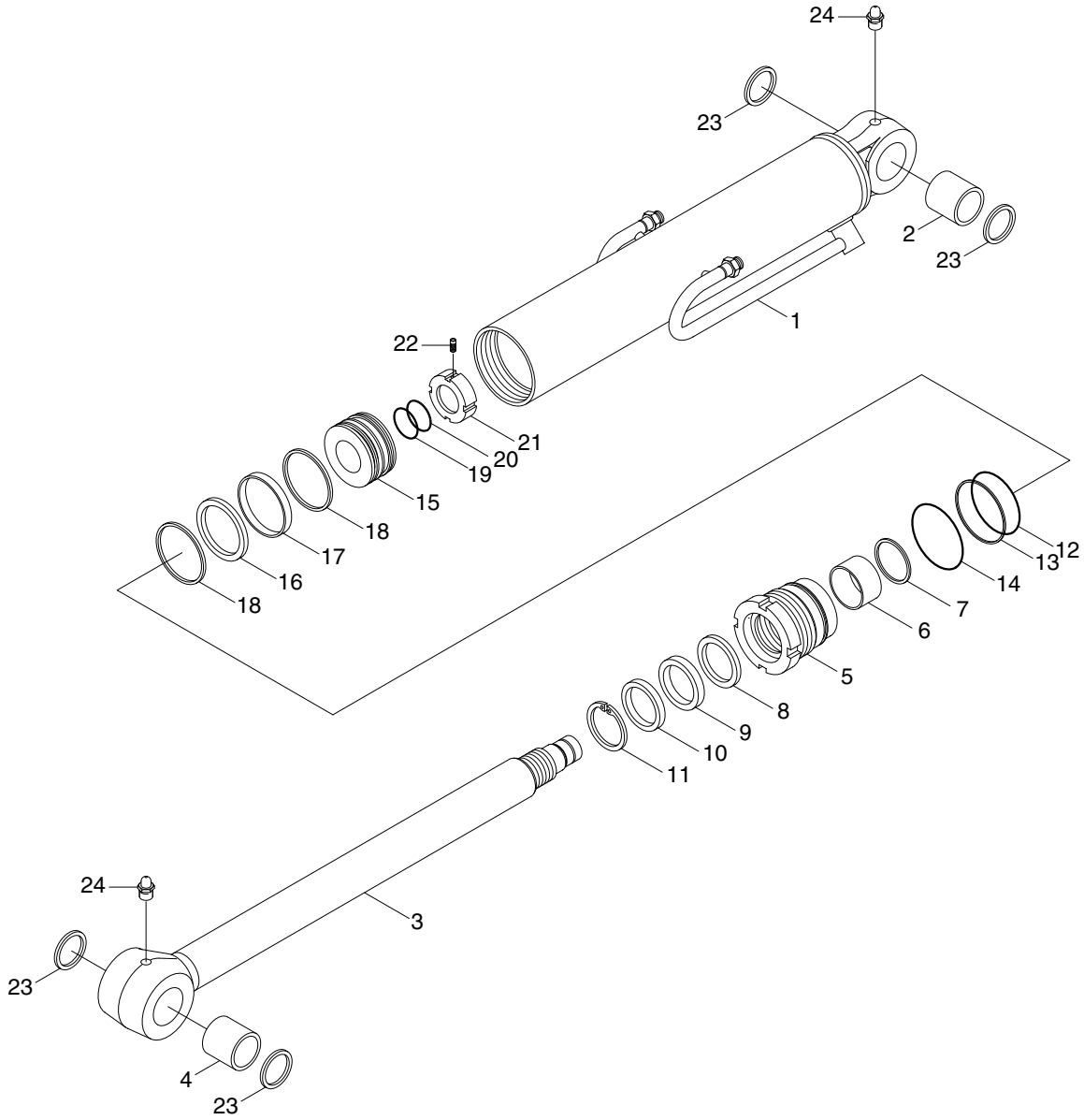

H940C6WE134

1	Tube assembly	9	U-packing	17	Wear ring
2	Pin bushing	10	Dust wiper	18	Dust ring
3	Rod assembly	11	Retaining ring	19	O-ring
4	Pin bushing	12	O-ring	20	Back up ring
5	Rod cover	13	Back up ring	21	Piston nut
6	Rod bushing	14	O-ring	22	Set screw
7	Retaining ring	15	Piston	23	Pin wiper
8	Buffer seal	16	Piston seal	24	Grease nipple

6) CLAMP CYLINDER

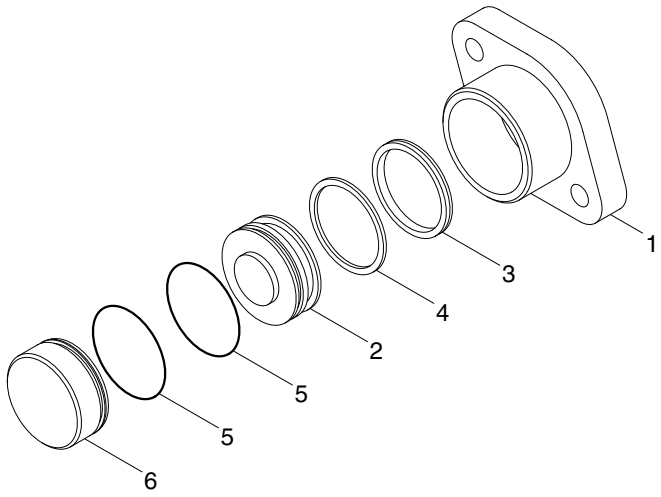

H940S6WE135

1	Body	3	U-packing	5	O-ring
2	Piston	4	Back up ring	6	Cover

7) EXTENSION CYLINDER (OPTION)

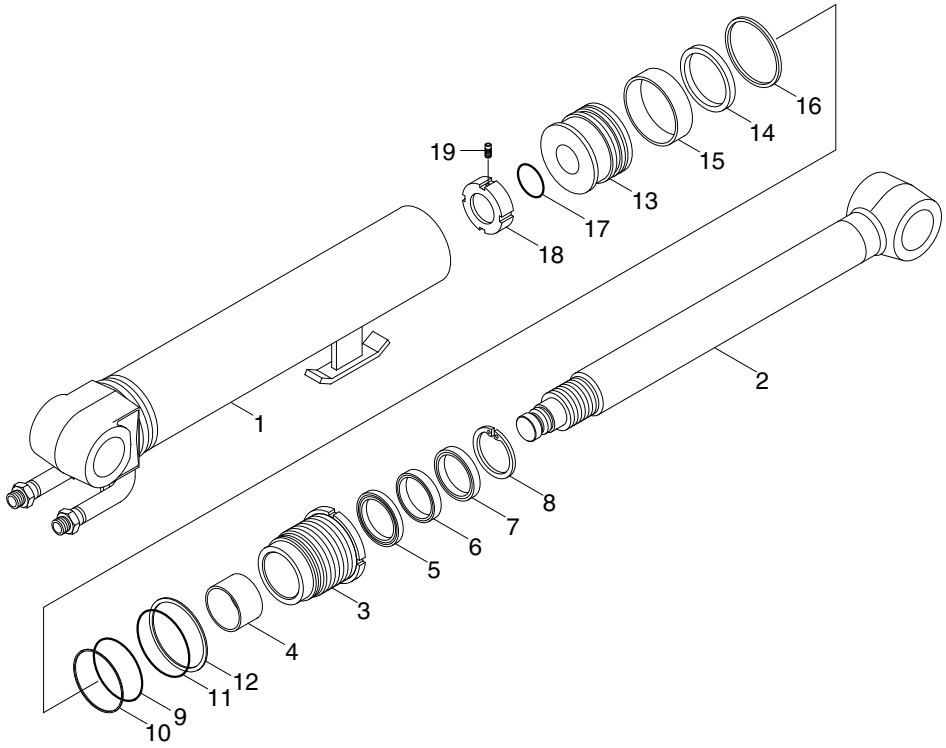

H940S6WE138

1	Tube assembly	8	Retaining ring	15	Wear ring
2	Rod assembly	9	O-ring	16	Dust ring
3	Rod cover	10	Back up ring	17	O-ring
4	Rod bushing	11	O-ring	18	Piston nut
5	Buffer seal	12	Washer	19	Set screw
6	U-packing	13	Piston		
7	Dust wiper	14	Piston seal		

11. HYDRAULIC OIL TANK

1) STRUCTURE

- The oil from the hydraulic tank is sent from the pump through main control valve to the cylinders. In the return circuit, the oil from various parts merges.
- A part of oil is cooled in the oil cooler (If equipped), passes through the hydraulic filter and returns to the hydraulic tank (1-1).
- If the hydraulic return oil filter becomes clogged, return filter bypass valve (4) acts to allow the oil to return directly to the hydraulic tank (1-1). This prevents damage to the hydraulic filter (3). The bypass valve (4) is also actuated when negative pressure is generated in the circuit.

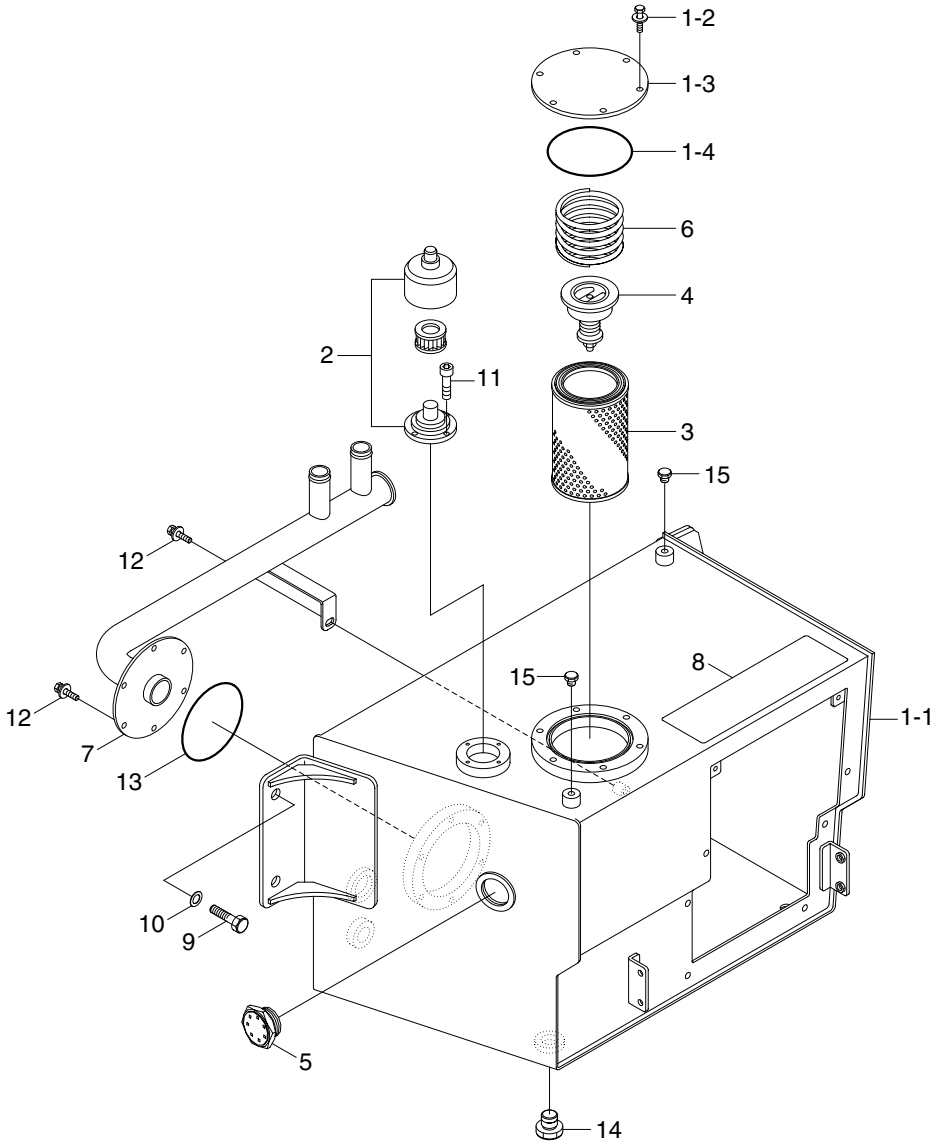

H940C6WE72

1-1	Hydraulic tank	4	By pass valve	10	Hardened washer
1-2	Bolt	5	Sight gauge	11	Socket bolt
1-3	Cover	6	Spring	12	Bolt
1-4	O-ring	7	Pipe wa	13	O-ring
2	Air breather	8	Non slip tape	14	Plug
3	Element assy	9	Bolt	15	Plug

2) RETURN OIL FILTER BYPASS VALVE

(1) When the filter is clogged

Bypass valve (1) is opened and the oil returns directly to the tank without passing through the filter.

Bypass valve set pressure : 1.36 kg/cm^2 (19.3 psi)

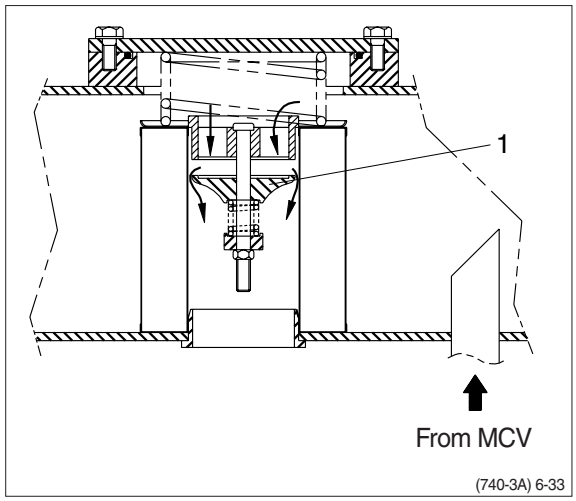

3) AIR BREATHER

The air breather is equipped with the capacity to perform three functions simultaneously-as an air filter, breathing valve, and as a lubrication opening.

(1) Preventing negative pressure inside the tank

The tank is a pressurized sealed type, so negative pressure is formed inside the hydraulic tank when the oil level drops during operations. When this happens, the difference in pressure between the tank and the outside atmospheric pressure opens the poppet in the breather, and air from the outside is let into the tank or prevent negative pressure.

(2) Preventing excessive pressure inside the tank

When the hydraulic cylinder is being used, the oil level in the hydraulic system increases and as temperature rises. If the hydraulic pressure rises above the set pressure, breather is actuated to release the hydraulic pressure inside the tank.

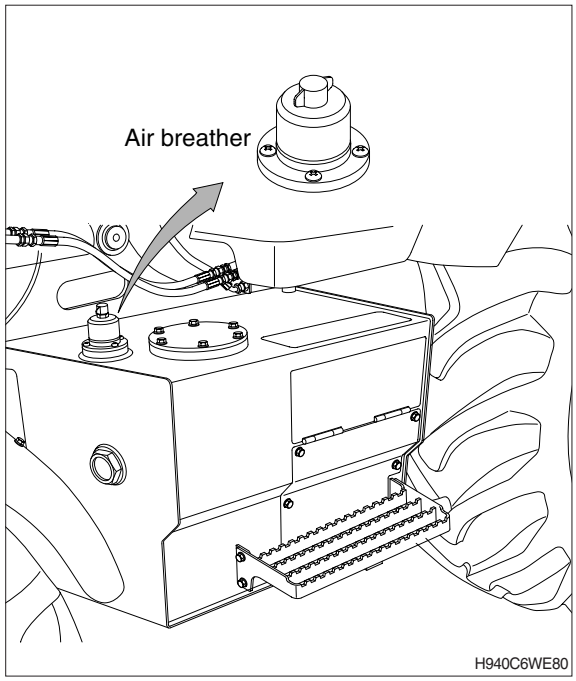

12. ACCUMULATOR

The accumulator is installed at the pilot oil supply unit. When the boom is left the raised position, and the control levers are operated with the engine stopped the pressure of the compressed nitrogen gas inside the accumulator sends pilot pressure to the control valve to actuate it and allow the boom and bucket to come down under their own weight.

Type of gas	Nitrogen gas (N_2)
Volume of gas	0.35 ℓ (0.1 U.S.gal)
Charging pressure of gas	15 kg/cm^2 (213 psi)
Max actuating pressure	170 kg/cm^2 (2420 psi)

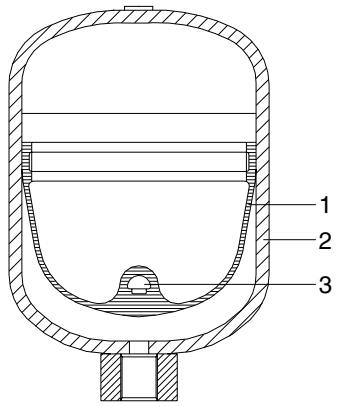

1 Diaphragm
2 Steel pressure vessel
3 Closure button

7803AWE56

13. RIDE CONTROL VALVE

Item	Description
Diameter	125 mm
Mounting height	403 mm
Capacity	1.5 ℓ
Max working pressure	357 kgf/cm^2
Precharge pressure (at 20˚C)	31 ± 1 kgf/cm^2
Precharge gas	Nitrogen
Portsize (A, B, T)	3/4-16UNF

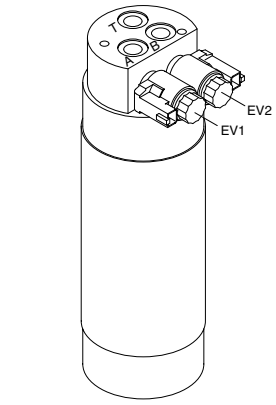

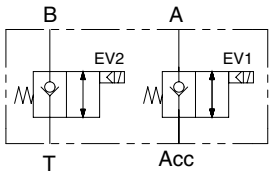

Hydraulic circuit

HB100WE26

GROUP 2 OPERATIONAL CHECKS AND TROUBLESHOOTING

1. OPERATIONAL CHECKS

This procedure is designed so the mechanic can make a quick check of the system using a minimum amount of diagnostic equipment. If you need additional information, read structure and function, Group 1.
A location will be required which is level and has adequate space to complete the checks.

The engine and all other major components must be at operating temperature for some checks.

Locate system check in the left column and read completely, following the sequence from left to right. Read each check completely before performing.

At the end of each check, if no problem is found (OK), that check is complete or an additional check is needed. If problem is indicated (NOT OK), you will be given repair required and group location.
If verification is needed, you will be given next best source of information:

- Chapter 2 : Troubleshooting
- Group 3 : Tests and adjustments

※ Hydraulic oil must be at operating temperature for these checks (refer to page 6-90).

Item	Description	Service action
Hydraulic system warm-up procedure Run engine at high idle.	Hold a hydraulic function over relief to heat oil. (don't keep relief condition over 5 seconds at a time) Periodically cycle all hydraulic functions to distribute warm oil. Repeat procedure until oil is at operating temperature. **FEEL** : Hydraulic reservoir must be uncomfortable to hold your hand against. (approximately 40 ~50˚C)	**OK** Check completed.
Hydraulic pump performance check Heat hydraulic oil to operating temperature. Run engine at high idle.	With bucket flat on ground, actuate boom raise. Time how long it takes to raise boom to full height. **LOOK** : Boom must raise to full height in less than 7 seconds.	**OK** Check completed. **NOT OK** Do priority valve (in pump) high pressure check. **IF OK** Do steering system leakage check at page 5-20. **IF OK** Do main hydraulic pump flow test at page 6-91.
Control valve lift check Run machine at low idle.	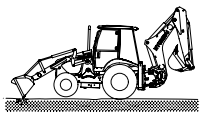 With bucket partially dumped, lower boom to raise front of machine. Slowly move boom control lever (RCV lever) to boom lower position. Slowly move bucket control lever to bucket dump position. **LOOK** : Boom must not raise before moving down. Bucket must not rollback before dumping.	**OK** Check complete. **NOT OK** Repair lift checks in loader control valve.

Item	Description	Service action
Bucket rollback circuit relief valve check	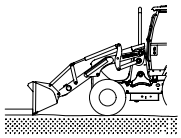 Position bucket at a 45˚ angle against an immovable object. Engage transmission in 3rd speed forward. **LOOK** : Bucket angle must not change.	**OK** Check complete. **NOT OK** Replace boom lower check valve.
Bucket dump circuit relief valve low pressure check	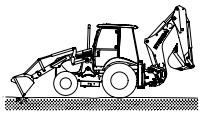 Raise front of machine which bucket at 45˚ angle. Backdrag with bucket while observing bucket angle. **LOOK** : Bucket must not rollback	**OK** Go to next check. **NOT OK** Do loader system and circuit relief valve test at page 6-92.
Pilot control valve float check Run engine at low idle.	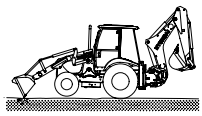 With the bucket partially dumped, lower boom to raise front of machine. Push control lever to the float detent position and release lever. **LOOK** : Front of machine lower to the ground and valve must remain in float position when lever is released.	**OK** Check complete. **NOT OK** Do pilot control valve pressure test in group 3.

Item	Description	Service action
Boom cylinder leakage check Heat hydraulic oil to operating temperature.	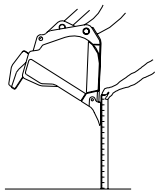 Dump bucket until teeth or cutting edge is perpendicular to the ground. Raise boom until cutting edge is about 1 m (3 ft) above ground. Stop engine. Measure drift from tooth or cutting edge to ground for 1 minute. Wait 10 minutes. Measure drift from tooth or cutting edge to ground for 1 minute. **LOOK** : Compare the drift rate between the first measurement and the second measurement.	**OK** Drift is approximately the same between first and second measurement. Repair loader control valve or circuit relief valve. **NOT OK** If drift is considerably less on second measurement, repair cylinder.
Bucket cylinder leakage check Heat hydraulic oil to operating temperature.	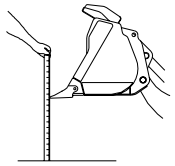 Raise bucket about 1 m (3 ft) off ground with bucket level. Stop engine. Place a support under boom. Measure drift from tooth or cutting edge to ground for 1 minute. Wait 10 minutes. Measure drift from tooth or cutting edge to ground for 1 minute. **LOOK** : Compare the drift rates between the first measurement and the second measurement.	**OK** Drift is approximately the same between first and second measurement. Repair loader control valve or circuit relief valve at page 6-92. **NOT OK** Drift is considerably less on second measurement. Repair cylinder.
Check valve of safety valve leakage check Heat hydraulic oil to operating temperature.	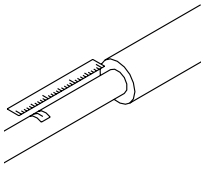 Put bucket level and position about 1.2 m (4 ft) above ground. Place a piece of tape on cylinder rod at least 51 mm (2 in) from rod guide. Run engine at low idle in safety-release position. **LOOK** : Bucket must not drift up.	**OK** Check complete. **NOT OK** Check or replace safety valve.
Pilot control valve (RCV lever) check	 Stop engine. Turn key switch to OFF position. Move control lever to all positions and then release. **LOOK** : Lever must return to neutral when released from all positions.	**OK** Check completed. **NOT OK** Repair pilot control valve.

Item	Description	Service action
Bucket leveler (positioner) check Run engine at low idle.	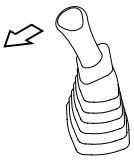 Position bucket fully dumped just above ground level. Move control lever to bucket leveler detent position and release. **LOOK** : Bucket must rollback to the level position and control lever must return to neutral. If bucket is in a rolled back position when key is turned ON, control lever must be returned to neutral manually if placed in the bucket leveler detent position. After bucket is dumped once, bucket leveler will work normally.	**OK** Check complete. **NOT OK** Do bucket leveler checks.

※ LOADER HYDRAULIC CYLINDER CYCLE TIME

1) MEASUREMENT CONDITION

- Coolant temperature : Inside operating range
- Steering position : Neutral
- Hydraulic temperature : 40~50˚C
- Bucket : Unloaded
- Engine speed : High idling

※Cycle time unit : seconds

Function	H930S	H940S
Boom raise	3.6±0.3	3.5±0.3
Boom lower (float)	4.5±0.4	4.5±0.4
Bucket dump	2.1±0.2	2.0±0.2
Bucket roll back	2.0±0.2	1.9±0.2

2) MEASURING TOOL

- Stop watch (1EA)

3) MEASURING PROCEDURE

(1) Lifting time of boom

Set the bucket near the maximum tilt back position and at the lowest position on the ground. Raise the bucket and measure the time taken for bucket to reach the maximum height of the boom.

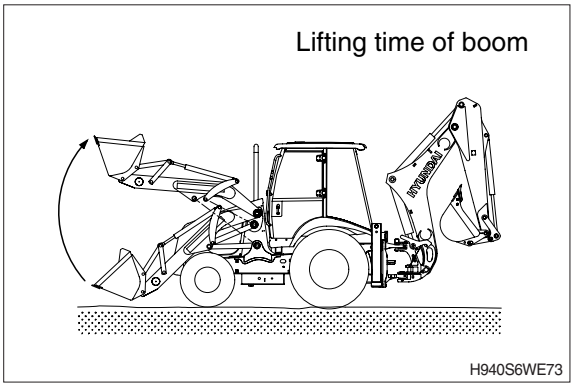

(2) Lowering time boom

Set the bucket horizontal with the boom at the maximum height, lower the bucket and measure the taken for the bucket to reach the lowest position on the ground.

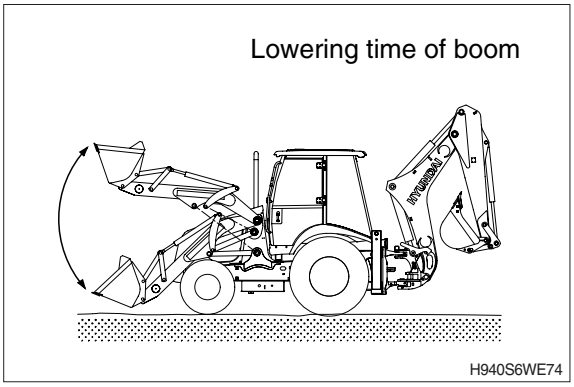

(3) Dumping time of bucket

Raise the boom to the maximum height and measure the time taken for the bucket to move from the maximum tilt back position to the maximum dump position

(4) Roll back time of bucket

Raise the boom to the maximum height and measure the time taken for the bucket to reach the maximum tilt back position.

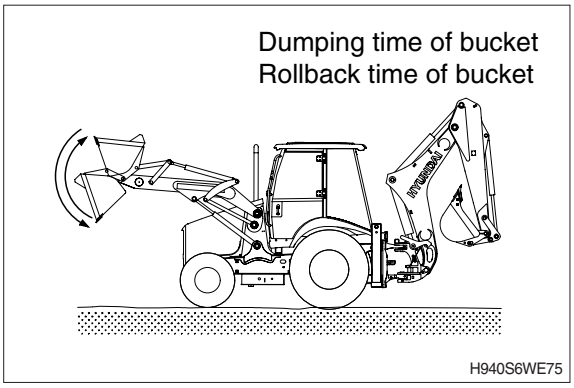

※ BACKHOE HYDRAULIC CYLINDER CYCLE TIME

(1) Measure the cycle time of the boom, dipper and bucket cylinders.

(2) Preparation

① To measure the cycle time of the boom cylinders:
With the dipper rolled out and the empty bucket rolled out, lower the bucket to the ground, as shown.

② To measure the cycle time of the dipper cylinder.
With the empty bucket rolled in, position the dipper so that it is vertical to the ground. Lower the boom until the bucket is 0.5 m above the ground.

③ To measure the cycle time of the bucket cylinder.
The empty bucket should be positioned at midstroke between roll-in and roll-out, so that the sideplate edges are vertical to the ground.

④ Keep the hydraulic oil temperature at 45±5˚C.

Boom cylinder

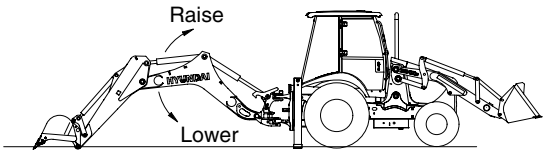

Dipper cylinder

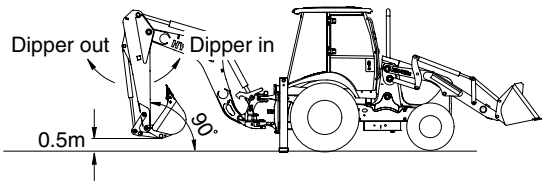

Bucket cylinder

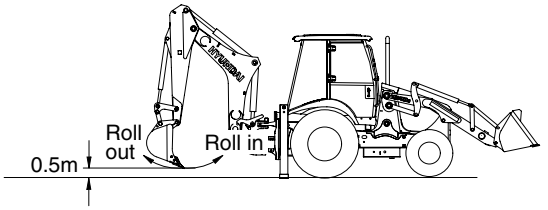

H940S6WE76

(3) Measurement

To measure cylinder cycle times.

① **Boom cylinders**
Measure the time it takes to raise the boom, and the time it takes to lower the boom. To do so, position the boom at one stroke end then move the control lever to the other stroke end as quickly as possible.

② **Dipper cylinder**
Measure the time it takes to roll in the dipper, and the time it takes to roll out the dipper. To do so, position the bucket at one stroke end, then move the control lever to the other stroke end as quickly as possible.

③ **Bucket cylinders**

Measure the time it takes to roll in the bucket, and the time it takes to roll out the bucket. To do so, position the bucket at one stroke end, then move the control lever to the other stroke end as quickly as possible.

- Repeat each measurement 3 times and calculate the average values.

※Cycle time unit : seconds

Function	H930S	H940S
Boom raise	2.6±0.3	2.5±0.3
Boom lower	2.6±0.3	2.6±0.3
Dipper in	3.3±0.4	3.2±0.4
Dipper out	2.6±0.3	2.5±0.3
Bucket in	2.2±0.3	2.1±0.3
Bucket out	2.1±0.3	2.0±0.3

2. TROUBLESHOOTING

※ Diagnose malfunction charts are arranged from most probable and simplest to verify, to least likely, more difficult to verify. Remember the following steps when troubleshooting a problem :

Step 1. Operational check out procedure (see section 1)
Step 2. Operational checks (see group 2)
Step 3. Troubleshooting
Step 4. Tests and adjustments (see group 3)

Problem	Cause	Remedy
Noisy hydraulic pump	Low oil supply or wrong viscosity.	Fill reservoir with recommended oil.
	Plugged or pinched suction line.	Clean or replace line.
	Air in oil.	Check for foamy oil. Tighten connections. Replace O-rings and or lines.
	Loose or missing hydraulic line clamps.	Tighten or replace clamps.
	Hydraulic lines in contract with frame.	Inspect and repair.
	Worn or damaged pump.	Do hydraulic pump performance check in group 2. Do hydraulic pump flow test in group 3.
No or Slow hydraulic functions	Failed or worn hydrualic pump.	Do performance check.
	Cold oil.	Warm oil up.
	Slow engine speed.	Adjust engine speed. Check high idle speed.
	Suction line air leak.	Check for foamy oil.
	Low oil supply.	Add recommended oil.
	Wrong oil viscosity.	Use recommended oil.
	Oil leaking past cylinders or control valve.	Check cylinder drift in group 2.
	Blocked or damaged line.	Inspect lines.
	Faulty or misadjusted pilot oil supply unit.	Do pilot oil supply unit pressure test in group 3.
	Faulty pilot control valve (RCV).	Do pilot control valve (RCV) pressure test in group 3.
	Binding main control valve spool.	Inspect valve.
	Faulty priority valve in pump.	Check priority valve specification.

Problem	Cause	Remedy
No steering or hydraulic function	Low oil level.	Add recommended oil.
	Failed hydraulic pump.	Remove and inspect return filter for metal pump particles.
	Failed main hydraulic pump drive.	Remove main hydraulic pump and inspect drive gear.
No hydraulic functions steering normal	Failed hydraulic pump.	Remove and inspect return filter for metal pump particles, or replace the pump.
	Failed line filter.	Remove and inspect line filter for RCV.
	Faulty safety valve.	Safety valve leakage test or ON, OFF function test.
	Stuck open system and port relief valve.	Replace relief valve.
	Faulty or misadjusted pilot supply unit.	Do pilot supply unit pressure test in group 3.
Boom float function does not work	Low pilot control pressure.	Do pilot supply unit pressure test in group 3.
	Faulty pilot control valve (RCV).	Do pilot control valve pressure test.
	Main control valve spool binding in bore.	Do pressure reducing valve pressure test.
One hydraulic function does not work.	Faulty pilot control valve (RCV).	Do pilot control valve pressure test.
	Stuck open port relief valve.	Replace relief valve.
	Oil leaking past cylinder packings.	Do boom and bucket cylinder leakage test in group 3.
	Blockage in oil lines or valve.	Inspect lines for damage. Disconnect and inspect lines for internal blockage.
	Main control valve spool stuck in bore.	Inspect and repair valve.
Low hydraulic power	Leakage within work circuit.	Do cylinder drift check in group 3.
	Low system relief valve (main relief valve) setting.	Do loader system and port relief valve pressure test in group 3.
	Low port relief valve setting.	Do loader system and port relief valve pressure test in group 3.
	Faulty or misadjusted pilot oil supply unit .	Do pilot oil supply unit pressure test in group 3.
	Leaking system relief valve.	Remove and inspect valve.
	Worn hydraulic pump.	Do hydraulic pump performance check .
	Faulty pilot control valve (RCV).	Do pilot control valve(RCV) pressure test in group 3.

Problem	Cause	Remedy
Function drifts down	Leaking cylinders.	Do cylinder leakage checks in group 3.
	Leaking seals in circuit relief valve (port relief valve) or valve stuck open.	Inspect seals. Replace relief valve.
	Leaking main control valve.	Repair or replace valve section.
Boom drifts up	Leakage in boom down spool.	Remove and inspect boom down spool.
Boom down does not work (engine off)	Safety valve not operated.	Operate valve.
	Stuck pilot control valve.	Inspect.
	Faulty line filter.	Remove and inspect filter.
	Accumulation not operated.	Inspect.
	Main control valve spool stuck.	Inspect and repair valve.
Oil overheats	Low oil viscosity in hot weather.	Use recommended oil.
	Excessive load.	Reduce load.
	Holding hydraulic system over relief.	Reduce load.
	Leakage in work circuit.	Do boom and bucket cylinder leakage test in group 3.
	Plugged fins in oil cooler.	Inspect and clean oil cooler.
	Internally plugged oil cooler.	Do hydraulic oil cooler restriction test.
	Incorrect system or circuit relief valve setting.	Do loader system and circuit relief valve pressure test in group 3.
	Restriction in oil lines or main control valve.	Inspect for dented or kinked lines.
	Pinched or restricted priority valve in pump LS line.	Run engine at low idle. Steer machine back and forth. If engine load decreases while steering, a restricted LS line or priority valve malfunction is indicated. Do priority valve LS port flow test in group 3.
	Leaking system main relief valve.	Remove and inspect valve and seals.
	Worn hydraulic pump (internal leakage).	Do hydraulic pump performance check.
Function drops before raising when valve is activated	Stuck open lift check valve.	Do control valve lift check in group 2.

Problem	Cause	Remedy
Hydraulic oil foams	Low oil level.	Add recommended oil.
	Wrong oil.	Change to recommended oil.
	Water in oil.	Change oil.
	Loose or faulty suction lines (air leak in system).	Tighten or install new lines.
Remote control valve (RCV) leaking	Leaking plunger seals.	Remove, inspect and replace plunger seals.

MAIN CONTROL VALVE (BACKHOE)

1) Abnormal operation of the actuators connected to the control block

Problem	Cause	Remedy
Lack of strength at all actuators	Main relief valve defective.	Take a pressure measurement. Replace main relief valve.
	Main relief valve out of adjustment.	Make necessary adjustments.
Lack of force on one actuator only	Port relief valve out of adjustment.	Reset to original pressure.
	Port relief valve blocked "open" (return to tank).	Replace port relief valve.
Movement performance slow	Hydraulic operator adjustable stop nut out of adjustment.	Make necessary adjustments.
	Individual compensator pressure blocked.	Replace housing + pressure compensator assembly.
Lack of load hole	Load hold check valve failure.	Replace housing + valve assembly
	Excessive clearance between the housing and the spool.	Replace housing + spool assembly
Simultaneous movement malfunction	Blockage of the individual compensator orifice.	Remove and clean individual compensator.
	Individual pressure compensator blocked.	Replace the housing + pressure compensator assembly.
	LS line leakage.	Replace LS flow regulator.

2) Abnormal machine operation

Problem	Cause	Remedy
Engine remains under load after spools are returned to neutral	Flow regulator blocked.	Replace flow regulator.
	Flow regulator filter clogged.	Replace the filter.

3) Abnormal control block operation

Problem	Cause	Remedy
Increase of force on controls or spool return defective	Control block assembly tie rods too tight. - A : 0.99 kgf · m (7.16 lbf · ft)	Check tightening torque (A). ※ Remove control block from its fixation points.

4) Visual defects

Problem	Cause	Remedy
Oil leakage at pressure relief valves and plugs	Seals defective.	Remove pressure relief valve or plug and replace seals.
Oil leakage between elements	Seals between elements defective.	Remove working sections and replace seals.
Oil leaking from hydraulic operator housing	Seal between housing and body defective.	Replace seal.
	Seal of adjustable stop nut defective.	Replace seal.

1. HYDRAULIC OIL CLEAN UP PROCEDURE USING PORTABLE FILTER CADDY

※ Service equipment and tool
- Portable filter caddy
- Two 4000 mm × 1in 100R1 Hoses
- Quick disconnect fittings.
- Discharge wand
- Various size fittings.

※ Loader system uses oil from hydraulic oil tank. Flush all lines in the loader, pilot system. Disassemble and clean major components for hydraulic system.

1) If hydraulic system is contaminated due to a major component failure, remove and disassemble steering cylinders to clean debris from cylinders.

2) Install a new return filter element. Inspect filter housing before installing new element.

※ For a failure that creates a lot of debris, remove access cover from hydraulic oil tank. Drain and clean hydraulic oil tank of fill the specified oil to hydraulic oil tank through upper cover.

3) To minimize oil loss, pull a vacuum in hydraulic oil tank using a vacuum pump. Connect filter caddy suction line to drain port at bottom of hydraulic oil tank using connector. Check to be sure debris has not closed drain port.

4) Put filter caddy discharge line into hydraulic oil tank filler hole so end is as far away from drain port as possible to obtain a thorough cleaning of oil.

5) Start the filter caddy. Check to be sure oil is flowing through the filters.
   Operate filter caddy approximately 10 minutes so oil in hydraulic oil tank is circulated through filter a minimum of four times.
※ Hydraulic oil tank capacity : 60 *l* (15.9 U.S. gal)
   Leave filter caddy operation for the next steps.

6) Start the engine and run it at high idle.
※ For the most effective results, cleaning procedure must start with the smallest capacity circuit then proceed to the next largest capacity circuit.

7) Operate all functions, one at a time, through a complete cycle in the following order: Clam, steering, bucket, and boom. Also include all auxiliary hydraulic functions. Repeat procedure until the total system capacity has circulated through filter caddy seven times, approximately 30 minutes.
   Each function must go through a minimum of three complete cycles for a through cleaning for oil.
※ Filtering time for machines with auxiliary hydraulic functions must be increased because system capacity is larger.

8) Stop the engine. Remove the filter caddy.

9) Install a new return filter element.

10) Check oil level in reservoir; Add oil if necessary.

3. TEST TOOLS

1) CLAMP-ON ELECTRONIC TACHOMETER INSTALLATION

· Service equipment and tools
Tachometer

A : Clamp on tachometer.
Remove paint using emery cloth and connect to a straight section of injection line within 100 mm (4 in) of pump. Finger Tighten only-do not over tighten.

B : Black clip (-). Connect to main frame.

C : Red clip (+). Connect to transducer.

D : Tachometer readout. Install cable.

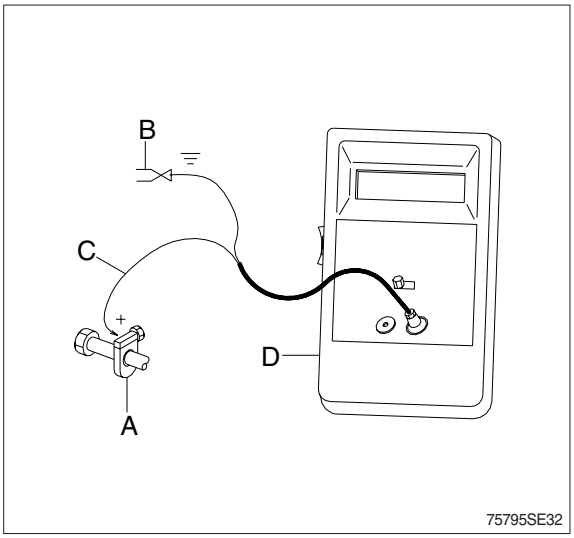

2) DIGITAL THERMOMETER INSTALLATION

· Service equipment and tools
Digital thermometer

A : Temperature probe.
Fasten to a bare metal line using a tie band. Wrap with shop towel.

B : Cable.

C : Digital thermometer.

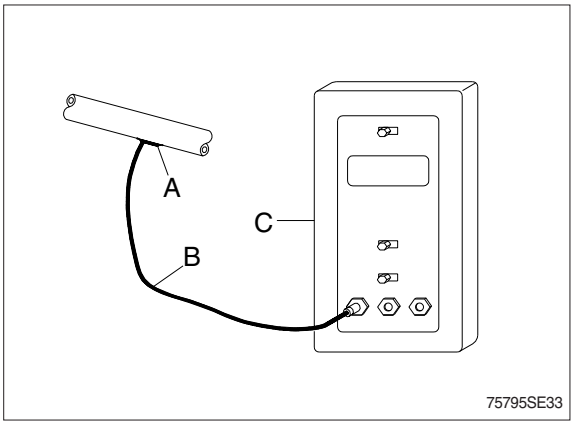

3) DISPLAY MONITOR TACHOMETER

The display monitor tachometer is accurate enough for test work.



4. HYDRAULIC OIL WARM UP PROCEDURE

1) Install temperature reader (see temperature reader installation procedure in this group).
2) Run engine at high idle.
3) Hold a hydraulic function over relief to heat the oil.
4) Periodically cycle all hydraulic functions to distribute warm oil.
5) Heat oil to test specification (approx. 45˚C).

5. MAIN HYDRAULIC PUMP FLOW TEST

· **SPECIFICATION**

Oil temperature 45±5˚C (113±41˚F)
Engine speed 2200±50 rpm
Test pressure 250±10 bar (3560 psi)
Maximum pump flow

Unit : ℓ/min (U.S. gpm)

Item	H940S	H930S
P1 pump	77 (20.3)	68 (18.0)
P2 pump (CF)	68 (18.0)	68 (18.0)

· **FLOW METER GAUGE AND TOOL**

Gauge 0~35 MPa (0~350 bar, 0~5000 psi)
Temperature reader

1) Make test connections.
2) Install temperature reader.
   (see temperature reader installation procedure in this group)
3) Heat hydraulic oil to specifications.
   (see hydraulic oil warm up procedure in this group)
4) Run engine at test specifications.
5) Close flow meter loading valve to increase pressure to test specifications.
6) Read flow meter.
7) If flow is below specifications, check suction line and suction pressure for abnormality before removing pump.

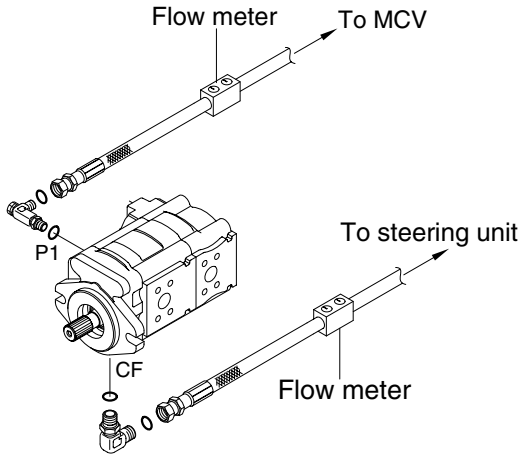

H940C6WE77

6. MAIN CONTROL VALVE PRESSURE TEST (LOADER)

· **SPECIFICATION**

Oil temperature (40~50˚C)

Relief valve	Engine speed	Relief pressure
System (M)	High	250±5 kgf/cm² (3560±70 psi)
Bucket rollback (R)	Low	300±5 kgf/cm² (4270±70 psi)
Bucket dump (D)	Low	175±5 kgf/cm² (2490±70 psi)
Unloading (U)	Low	220±5 kgf/cm² (3130±70 psi)

· Gauge and tool

Gauge 0~35 MPa (0~350 bar, 0~5000 psi)

M : System (main) relief valve

R : Bucket rollback relief valve

D : Bucket dump relief valve

U : Unloading valve

1) Install fitting and pressure gauge to test port in pump delivery line.

2) Install temperature reader.
(see temperature reader installation procedure in this group)

3) Heat hydraulic oil to specifications.
(see hydraulic oil warm up procedure in this group)

4) To check the system relief valve (M), run engine at high idle. Lower boom to bottomed position.
Slowly activate boom down function while watching pressure gauge. If pressure is not to specification, loosen lock nut on system relief valve (M) and adjust to specification.

※ Do not adjust the system relief valve above 250 kg/cm² (3560 psi). Damage to the pump will result from excessive pressure settings.

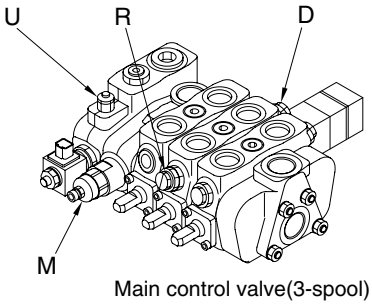

Main control valve(3-spool)

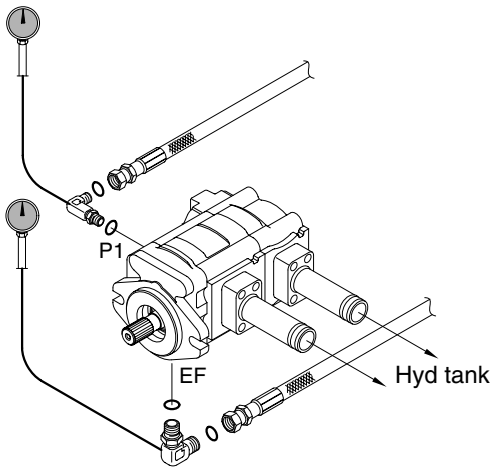

H940C6WE81

7. MAIN CONTROL VALVE PRESSURE TEST (BACKHOE)

· **SPECIFICATION**

Oil temperature 45±5˚C(113±9˚F)

Relief valve	Engine speed	Relief pressure
System	High	250±5 kgf/cm² (3560±70 psi)
Boom raise (U) Boom down (W) Bucket rollback (R) Bucket dump (D) Dipper in (N) Dipper out (O)	Low	280±5 kgf/cm² (3980±70 psi)
Boom swing, LH/RH (S)	Low	250±5 kgf/cm² (3560±70 psi)

· **GAUGE AND TOOL**

Gauge 0~35 MPa (0~350 bar, 0~5000 psi)

U : Boom raise relief valve
W : Boom down relief valve
R : Bucket rollback relief valve
D : Bucket dump relief valve
N : Dipper in relief valve
O : Dipper out relief valve
S : Boom swing relief valve

1) Install pressure gauge to plate in pump delivery line.

2) Install temperature reader.
(See temperature reader installation procedure in this group.)

3) Heat hydraulic oil to specifications.
(See hydraulic oil warm up procedure in this group.)

4) To check the system relief valve(M), run engine at high idle. Lower boom to bottomed position.
Slowly activate boom down function while watching pressure gauge. If pressure is not to specification, loosen lock nut on system relief valve(M) and adjust to specification.

※ Do not adjust the system relief valve above 250 kgf/cm² (3560 psi). Damage to the pump will result from excessive pressure settings.

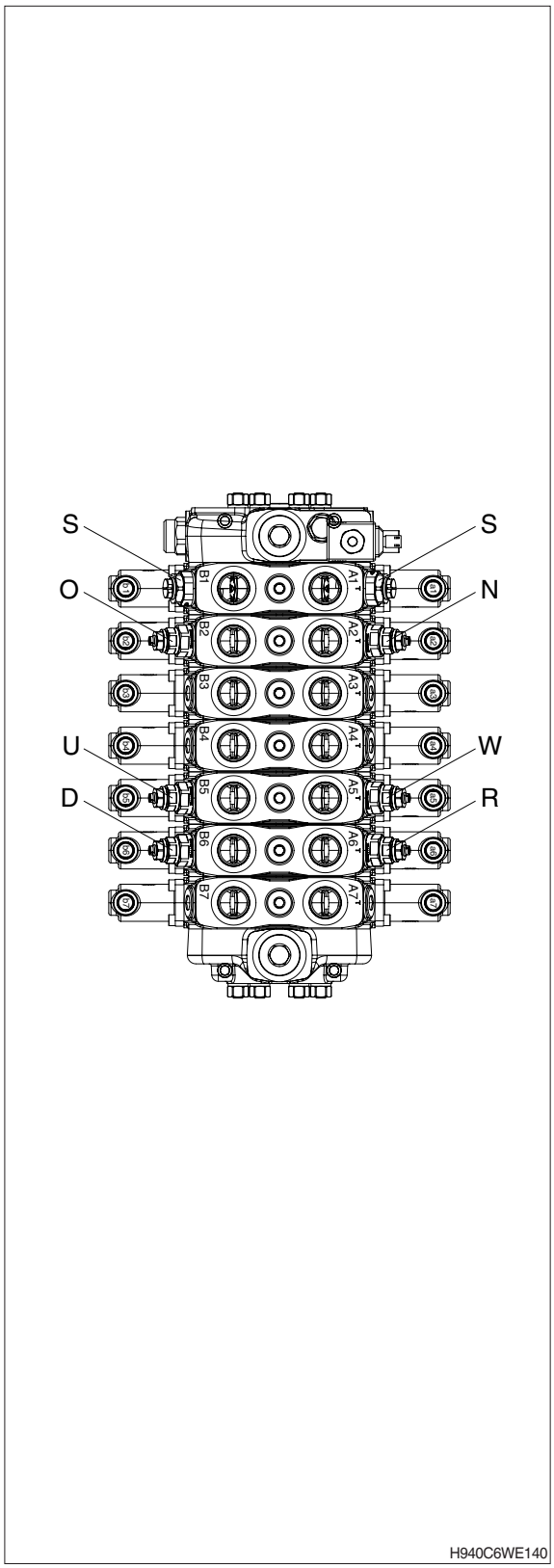

8. HYDRAULIC SYSTEM RESTRICTION TEST

· **SPECIFICATION**

Oil temperature 45±5˚C(113±9˚F)
Engine speed High idle
Maximum pressure at steering unit
2 MPa (20 bar, 285 psi)
Maximum pressure at main control valve
1.5 MPa (15 bar, 213 psi)

· **GAUGE AND TOOL**

Gauge 0~7 MPa (0~70 bar, 0~1000 psi) 2EA
This test will check for restrictions in the hydraulic system which can cause overheating of hydraulic oil.

1) Install temperature reader.
(see temperature reader installation procedure in this group)

2) Heat hydraulic oil to specifications.
(see hydraulic oil warm up procedure in this group)

3) Connect fitting and gauge to steering valve.

4) Connect fitting and gauge to main control valve.

⚠ **Do not operate steering or loader functions or test gauge may be damaged.**

5) Run engine at specification and read pressure gauges.

If pressure is more than specification at the loader control valve, check for a kinked, dented or obstructed hydraulic line. Check loader control valve for a binding spool.

If pressure is more than specification at the steering unit, inspect neutral condition of the steering unit and steering valve for a stuck spool. Make sure orifice plugs are installed in ends of priority valve spool.
Check for plugged orifice in priority valve and dynamic signal orifice on steering valve body.

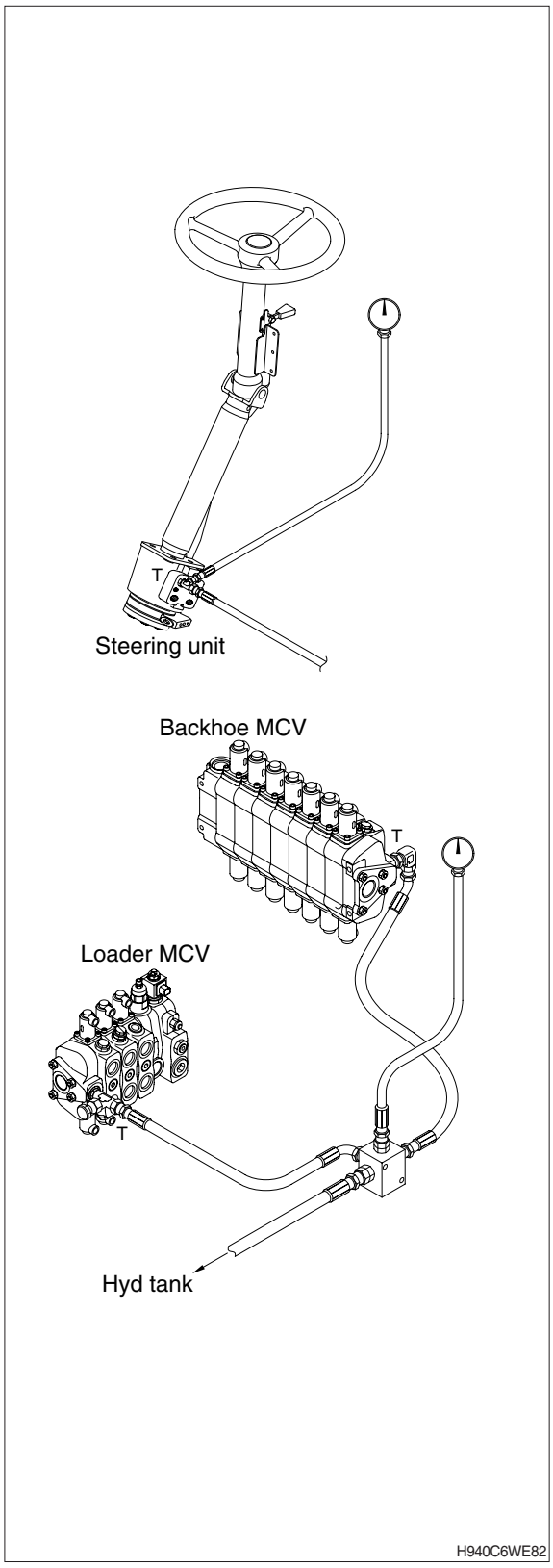

9. CYLINDER DRIFT TEST

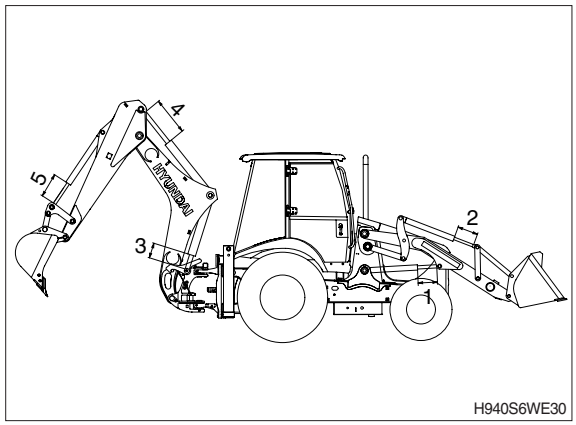

· **SPECIFICATION**

Oil temperature 45±5˚C(113±9˚F)
Boom horizontal
Bucket horizontal
Bucket unloaded

Unit : mm

No.	Item	Standard value
1	Retraction of boom cylinder rod (loader)	≤30
2	Retraction of bucket cylinder rod (loader)	≤30
3	Retraction of boom cylinder rod (backhoe)	≤20
4	Retraction of dipper cylinder rod (backhoe)	≤20
5	Retraction of bucket cylinder rod (backhoe)	≤20

· **GAUGE AND TOOL**

Stop watch
Temperature reader

⚠ Put the safety lock lever in the lock position.

⚠ Do not go under the work equipment.

1) Set the boom and bucket horizontal, then stop the engine.
2) Stop the engine, wait for 5 minutes, then start measuring.
3) Measure the amount the boom and bucket cylinder rods retract during 15 minutes.

10. CYLINDER LEAKAGE TEST

· **SPECIFICATION**

Oil temperature	45±5°C(113±9°F)
Engine speed	Low idle
Maximum leakage	12 cc /10 min

· **GAUGE AND TOOL**

Temperature reader
Stop watch
Measuring container

1) Fasten temperature sensor to head end port of cylinder to be tested. Cover sensor with a shop towel.

2) Heat hydraulic oil to specifications (see hydraulic oil warm up procedure in this group).

⚠ Never work under raised equipment unless it is supported with a hoist or support stands.

3) Full extend the cylinder to be tested. If testing the boom cylinders, restrain boom in the fully raised position using a hoist or a stand.

※ Check cylinders for leakage in the fully extended position only. In the retracted position contacts the end of the cylinder and seals off piston seal leakage.

4) Remove and plug cylinder rod end hose or line.

5) Run engine at slow idle. Activate control lever to extend cylinder for 1 minute over relief while measuring leakage for open port.

If leakage is within specification, excessive cylinder drift is caused by leakage in the loader control valve or circuit relief valve.

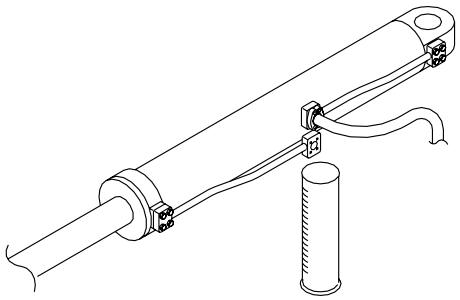

(770-3ATM) 6-56

11. PILOT OIL SUPPLY UNIT PRESSURE TEST

· **SPECIFICATION**

Oil temperature 45±5°C (113±9°F)
Engine speed Low idle and stop
Pilot pressure setting (backhoe)
30 kgf/cm² (430psi)
Pilot pressure setting (stabilizer)
30 kgf/cm² (430psi)
Reducing & relief valve setting pressure
30 kgf/cm² (430psi)
Accumulator precharging pressure
15 kgf/cm² (215psi)

· **GAUGE AND TOOL**

Gauge 0~7MPa(0~70bar, 0~1000psi)

The pilot supply unit consist of the pressure reducing & relief valve, solenoid valve and an accumulator. This regulates pressure to the pilot control circuit.

1) Connect gauge to test port on the block.
2) Install temperature reader.
(See temperature reader installation procedure in this group.)
3) Heat hydraulic oil to specification.(See hydraulic oil warm up procedure in this group.)
4) Run engine at low idle for 1 minute and stop engine, wait for 5 minutes. Then start measuring.
5) If pressure in not within specifications, replace valve. The valve is staked and should not be adjusted.

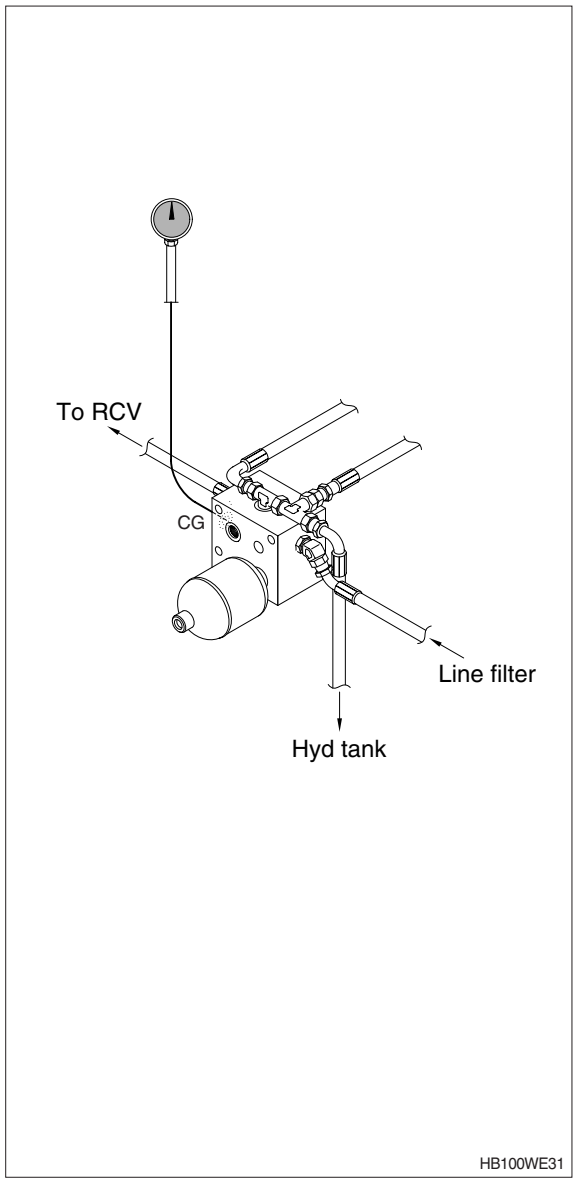

12. HYDRAULIC OIL FILTER INSPECTION PROCEDURE

1) Lower the bucket to the ground, stop the engine, move the control lever back and forth several times, and clean all over the upper surface of the hydraulic oil tank.

2) Remove the bolts (1) and take out the filter case cover (2) and O-ring (3).

3) Remove the spring (4) and bypass valve (5).

4) Remove the filter element (6) from the tank.

5) Check the element and the filter case bottom for debris. Excessive amounts of brass and steel particles can indicate a failed hydraulic pump or a pump failure in process. A rubber type of material can indicated cylinder packing or other packing failure.

※ The hydraulic oil filter in the filter case of the hydraulic oil tank should be replaced every 250 operating hours or more often. When the filter element is replaced, please keep as follows.

(1) Clean the inside of the filter case.

(2) Place new element in the proper positions inside the filter case.

(3) Install the bypass valve and spring. Make sure the element stand upright, and check for complete contact of the element bottom with the filter case bottom.

(4) Install the O-ring and filter case covers. Tighten them with bolt. Replace the O-ring with new one if damaged.sa

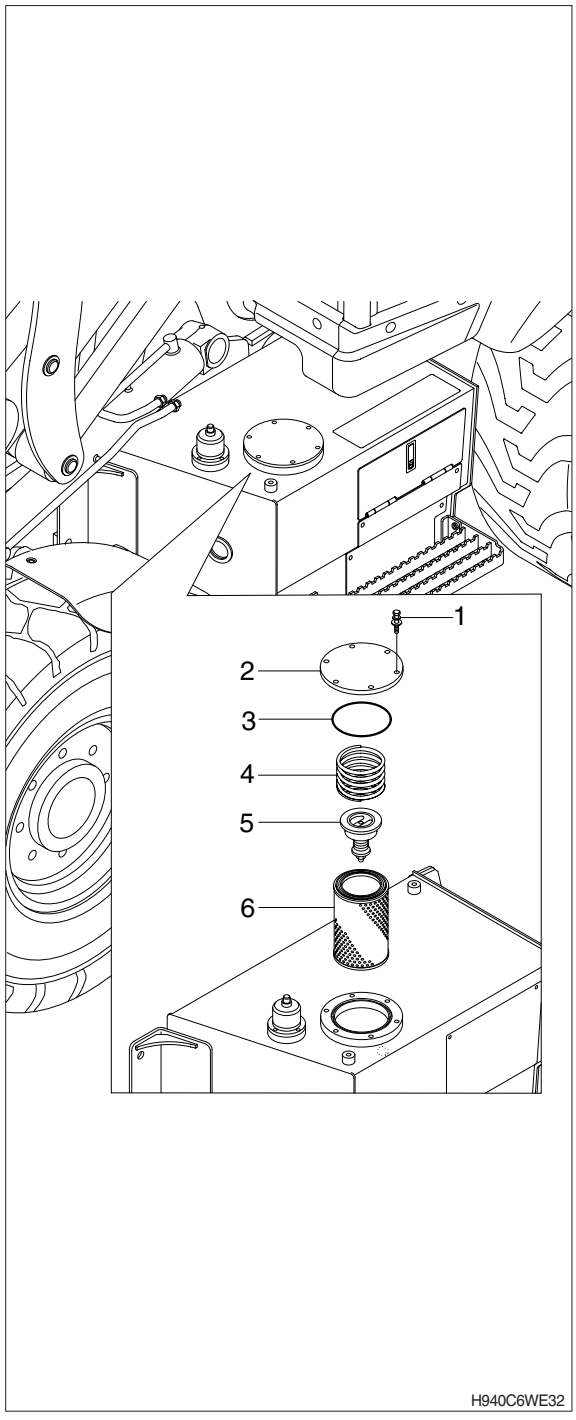

1. MAIN PUMP

1) STRUCTURE

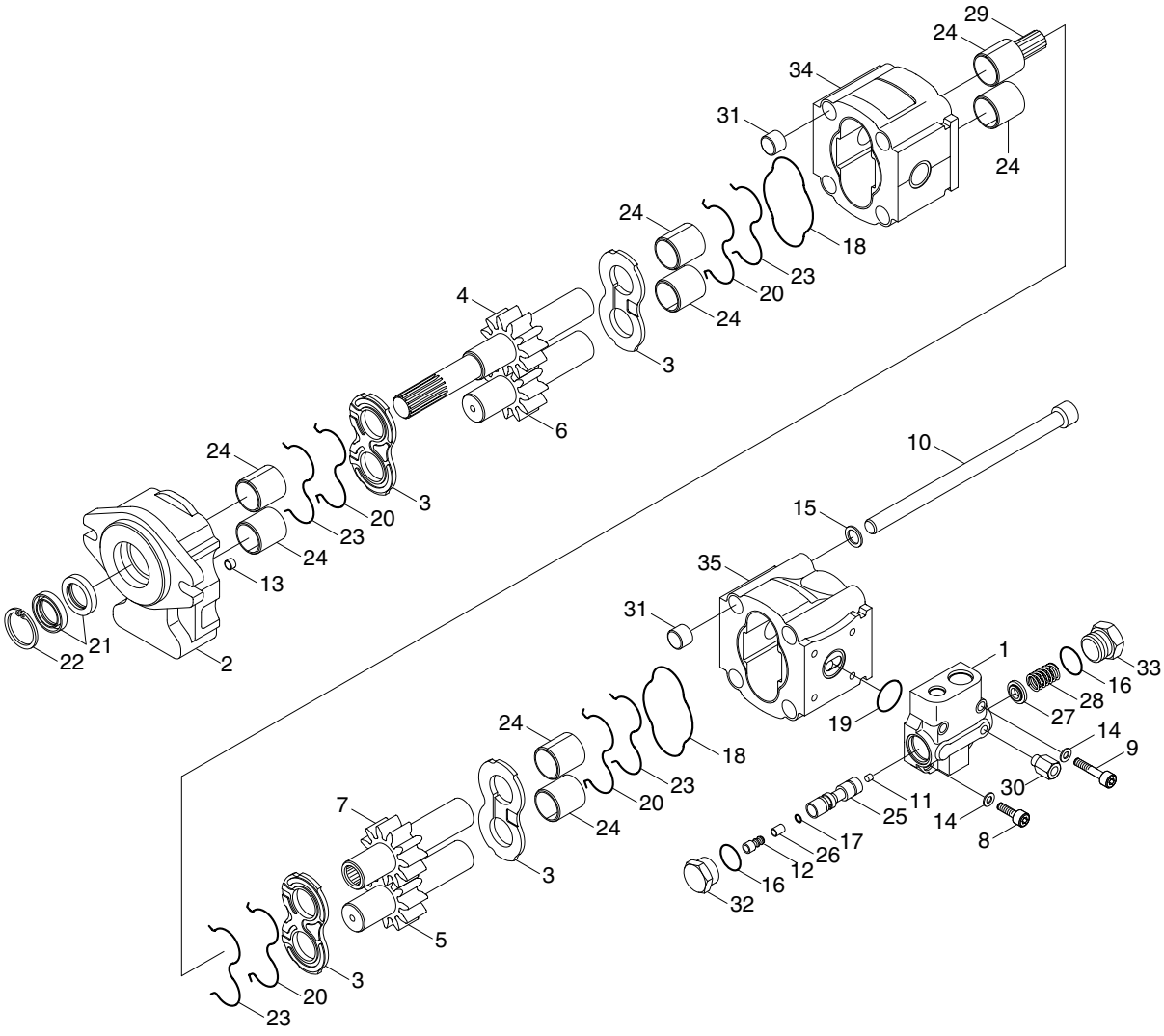

HB100WE21

1	Rear end cover	13	Screw	25	Spool
2	Front cover	14	Washer	26	Filter
3	Thrust plate	15	Washer	27	Spring seat
4	Drive shaft	16	O-ring seal	28	Spring
5	Driven gear	17	O-ring seal	29	Hub
6	Driven gear	18	Ring	30	Connector
7	Drive shaft	19	O-ring seal	31	Steel bushing
8	Screw	20	Seal	32	Plug
9	Screw	21	Shaft seal	33	Plug spring
10	Screw	22	Ring	34	Body
11	Screw	23	Ring	35	Body
12	Screw	24	Sleeve bearing		

2) GENERAL INSTRUCTIONS

(1) Check immediately that any spare parts you receive have not been damaged in shipment.
(2) Always work in a clean environment.
(3) Wash all components in solvent and blow dry with compressed air before refitting.
(4) Take care not to damage rubber seals.
(5) Avoid damaging precision machined surfaces.
(6) Components should fit into their housings without excessive force. If force is necessary, this normally means that the component does not have the correct dimensional tolerances of is aligned incorrectly.
(7) When hand pressure is insufficient, only use presses or rubber hammer to fit components.
(8) Never strike components with steel hammers.
(9) Steel bushing must be fitted only with a suitable press.
(10) Do not use hammers to fit bearings.
(11) Always respect the direction of rotation when assembling components.

3) DISASSEMBLY

(1) LS priority valve

① Loosen and remove the assembling bolts and washers from the valve.



H940C6MP01

② Loosen and remove plug and take out spring & spool. (Only when it is needed to replace components inside).

※ Pay attention not to give any damage on the surface of the spool and contamination to the orifices prearranged at the spool.

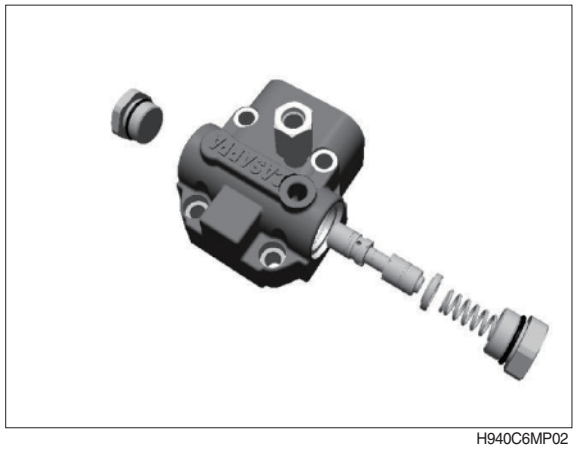

H940C6MP02

(2) Mounting flange

① Loosen and remove the assembling bolts and washers from the pump.



H940C6MP03

② Remove mounting flange taking care to keep it as straight as possible during removal.
Tap around the edge with rubber mallet in order to break away from the body.

※ Ensure that while removing it, the drive shaft and other components remain position.

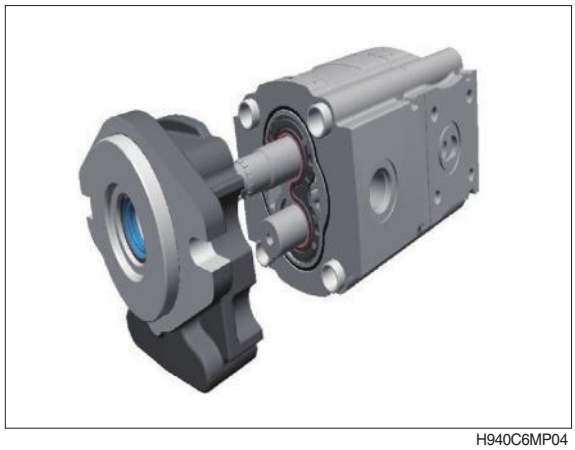

H940C6MP04

③ Remove shaft seal with (-) screwdriver and take out snap ring with proper tool and shaft seal again.

※ Take out the shaft seals only needed.
Shaft seals disassembled from the mounting flange is not reusable.

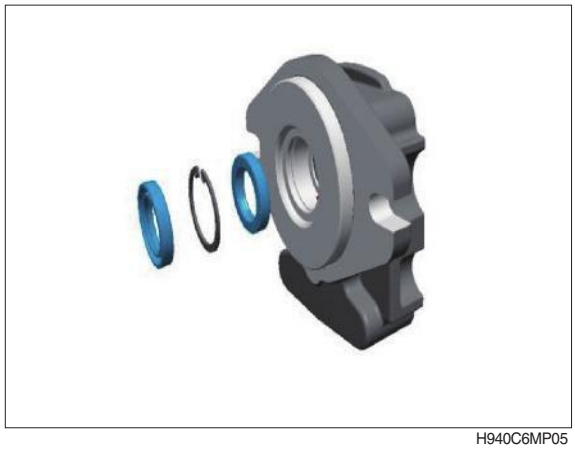

H940C6MP05

(3) 1st working section

① Remove the pressure plate with prearranged parts, O-ring & back up ring from the working section and examine it carefully.



H940C6MP06

② Pull out driving gear & driven gear keeping gears as straight as possible.

③ Remove other pressure plate on rear side with same way for front side.

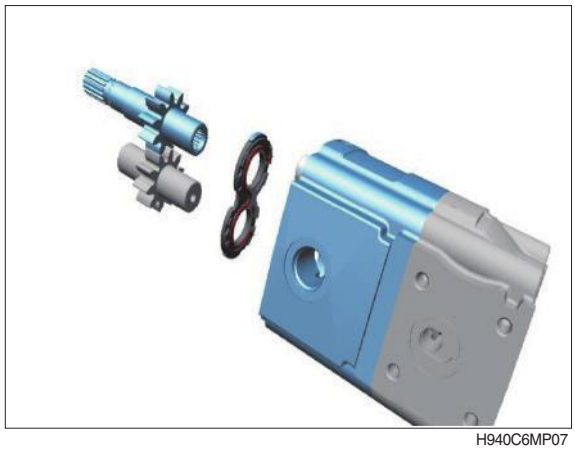

H940C6MP07

④ Remove square O-ring on the groove of body.

⑤ Remove through shaft and front body.

※ Tap around marked points with rubber mallet all around to break away first body from second.
Do not wedge between the bodies, it may give serious damage on the surface.

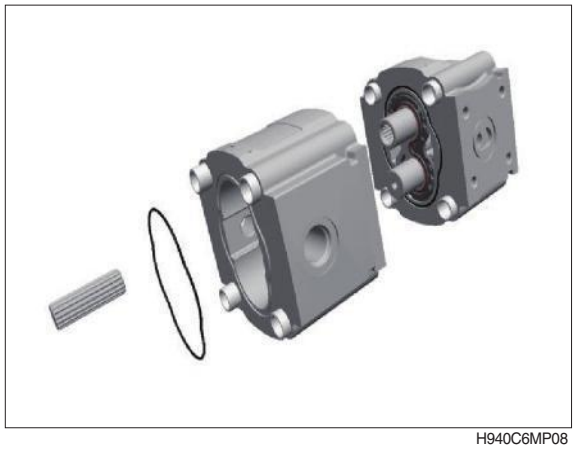

H940C6MP08

(4) 2nd working section

① Remove all components inside of second body with same way for 1st section.

② Remove the square O-ring if necessary.



H940C6MP09

4) ASSEMBLY

(1) Preassemble

Pressure plates

① Locate O-ring into the groove on the aluminum pressure plate.

② Locate back-up ring upon the O-ring.

③ Smear clean grease on the O-ring & back-up ring to fix their position while moving.



H940C6MP10

Working body

① Insert square rings into grooves.
Shape of square ring is different depend on type of bodies.

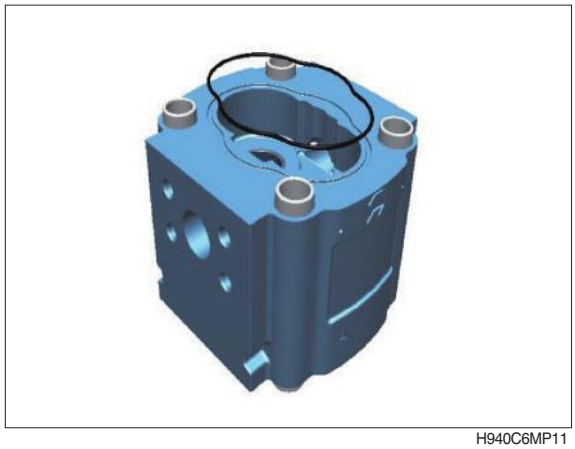

H940C6MP11

Mounting flange

① Locate shaft seal inside shaft hole to the end.

② Insert snap ring and locate it into the groove prearranged on the mounting flange.

③ Locate shaft seal again but different direction.



H940C6MP12

LS - priority valve

① Insert the spool prearranged all orifice first, and spring, plugs.

· Torque value of both sides plugs :
10.2 kgf · m (73.8 lbf · ft)

· Torque value of LS plug :
1.53 kgf · m (11.1 lbf · ft)

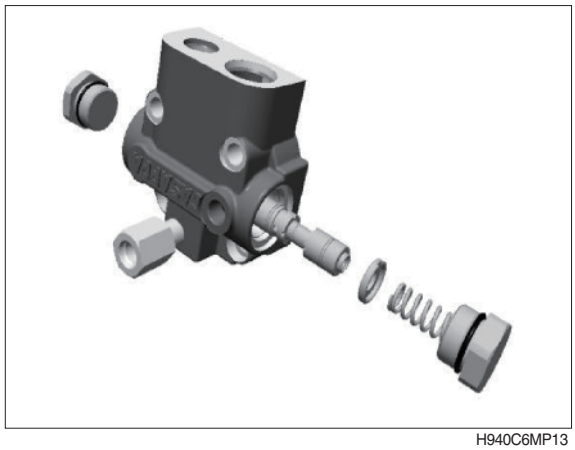

H940C6MP13

(2) Assembling

① Prepare cleaned 2nd body prearranged guard pins and square O-ring.

② Insert a pressure plate prearranged O-ring & back-up ring inside of body.

※ Opened area of O-ring should face to suction side. And O-ring side should face to the body.



H940C6MP14

③ Locate driving gear and driven gear keeping as straight as possible during assembling.

④ Locate one of pressure plates prepared.

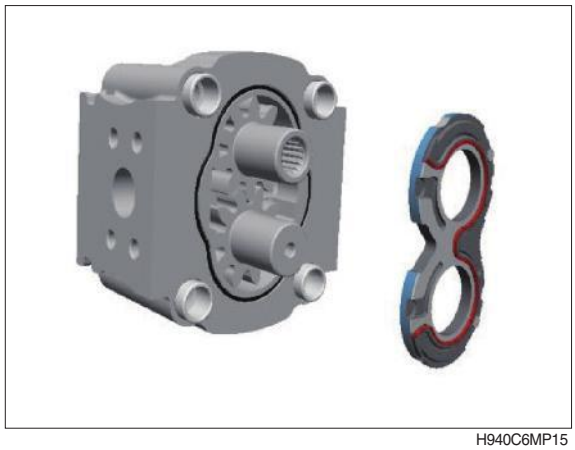

H940C6MP15

⑤ Locate 1st body on the 2nd body tapping around the body with rubber mallet to fit it completely.

⑥ Locate through shaft on the driving gear.

⑦ Locate pressure plate with same way for 2nd body.

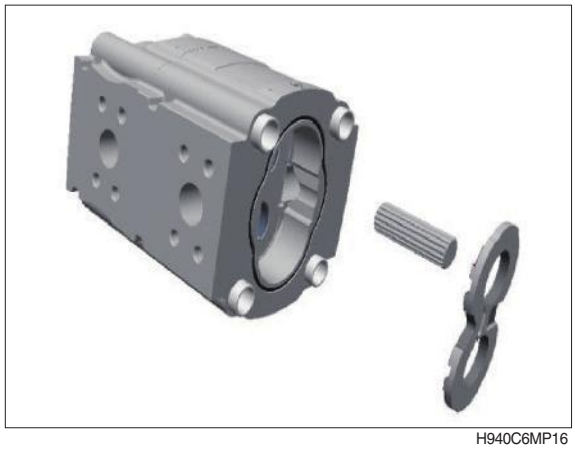

H940C6MP16

⑧ Locate driving gear and driven gear and last pressure plate also.

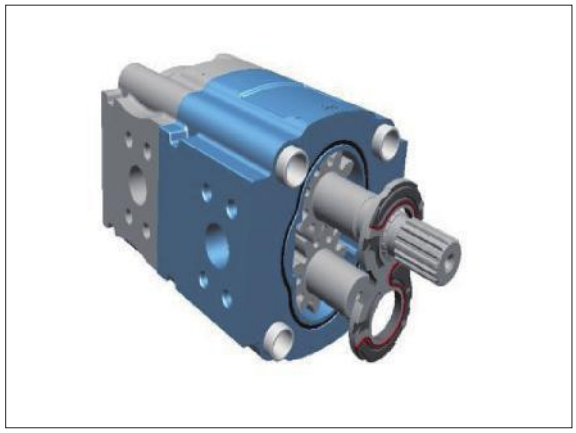

H940C6MP17

⑨ Assemble mounting flange to the body, taking care not to give any damage on the shaft seals by sharp edge of shaft.

※ Smear clean grease on the lips of shaft seals before assembling.



H940C6MP18

⑩ Assemble the bolts and tighten the bolts with in a crisscross pattern to a torque value of 14.3 kgf · m (103 lbf · ft).

⑪ Check that the pump rotates freely when the drive shaft is turned by hand, if not a possible, plate seal may be pinched.

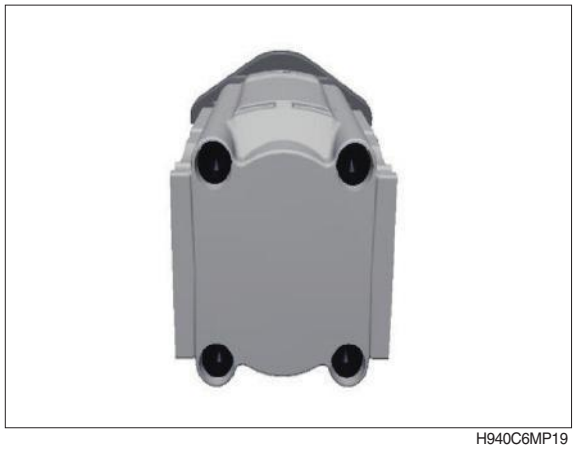

H940C6MP19

⑫ Locate an O-ring into the groove on the body.

⑬ Locate preassembled LS - priority valve on the 1st working section and tighten the bolts with in a crisscross pattern to a torque value of 7.14 kgf · m (51.6 lbf · ft).



H940C6MP20

2. LOADER MAIN CONTROL VALVE

1) STRUCTURE

(1) Mechanical control

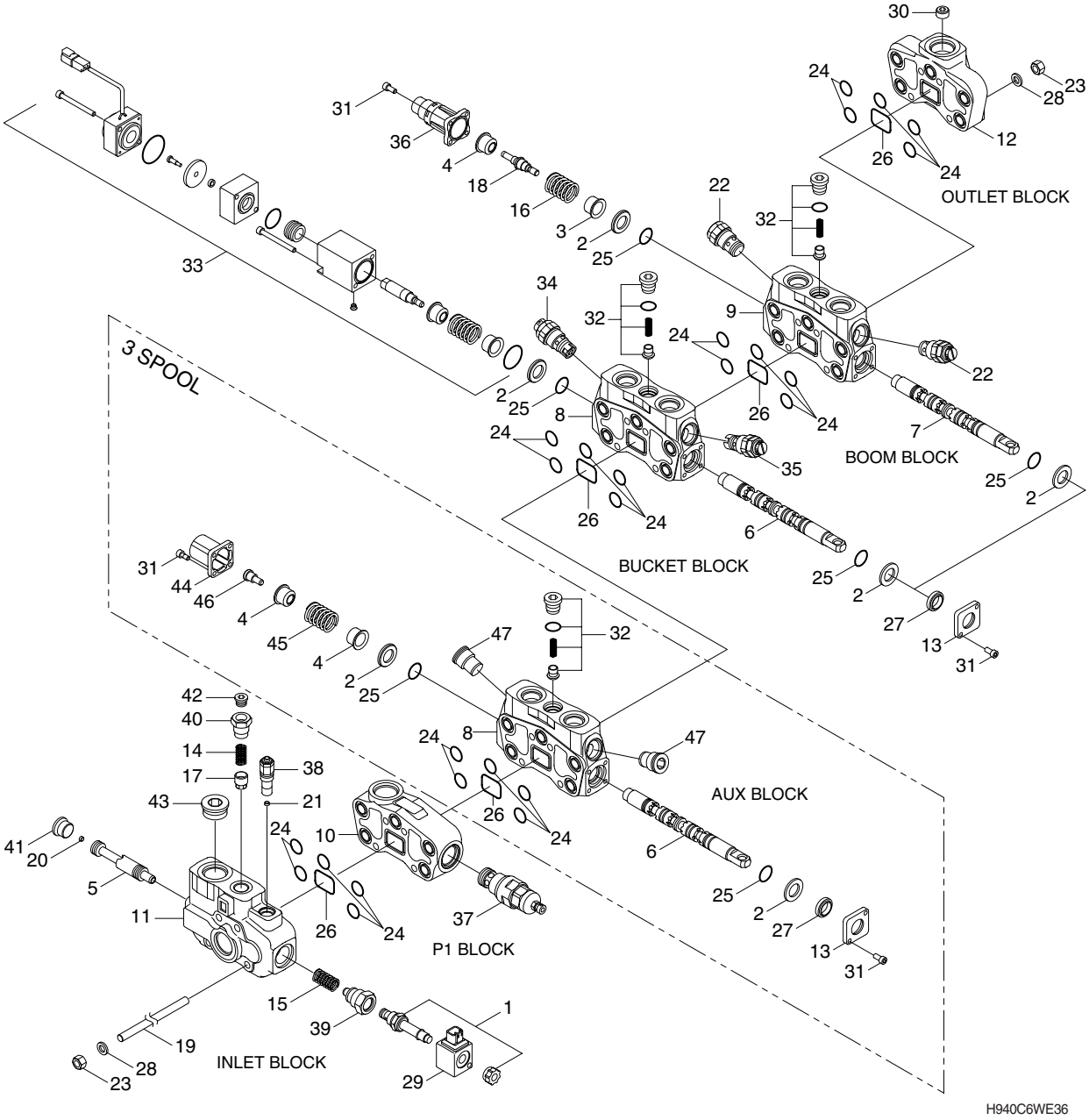

1	Solenoid valve	14	Spring	25	Seal	37	Valve
2	Spacer	15	Spring	26	O-ring	38	Cartridge
3	Bushing	16	Spring (B type)	27	Seal	39	Inlet cover joint
4	Bushing control kit	17	Poppet	28	Spring washer	40	Adapter
5	Unloader spool	18	Detent kit	29	Body	41	Plug
6	Spool	19	Tie rod	30	Conical plug	42	Plug
8	Element	20	Screw	31	Screw	43	Plug
9	Element	21	Screw	32	Check valve	44	End cap
10	Element	22	Cartridge	34	Valve	45	Spring
11	Inlet cover	23	Nut	35	Valve	46	Screw
12	Outlet cover	24	O-ring	36	Cover kit	47	Plug
13	Flange						

(2) Pilot control

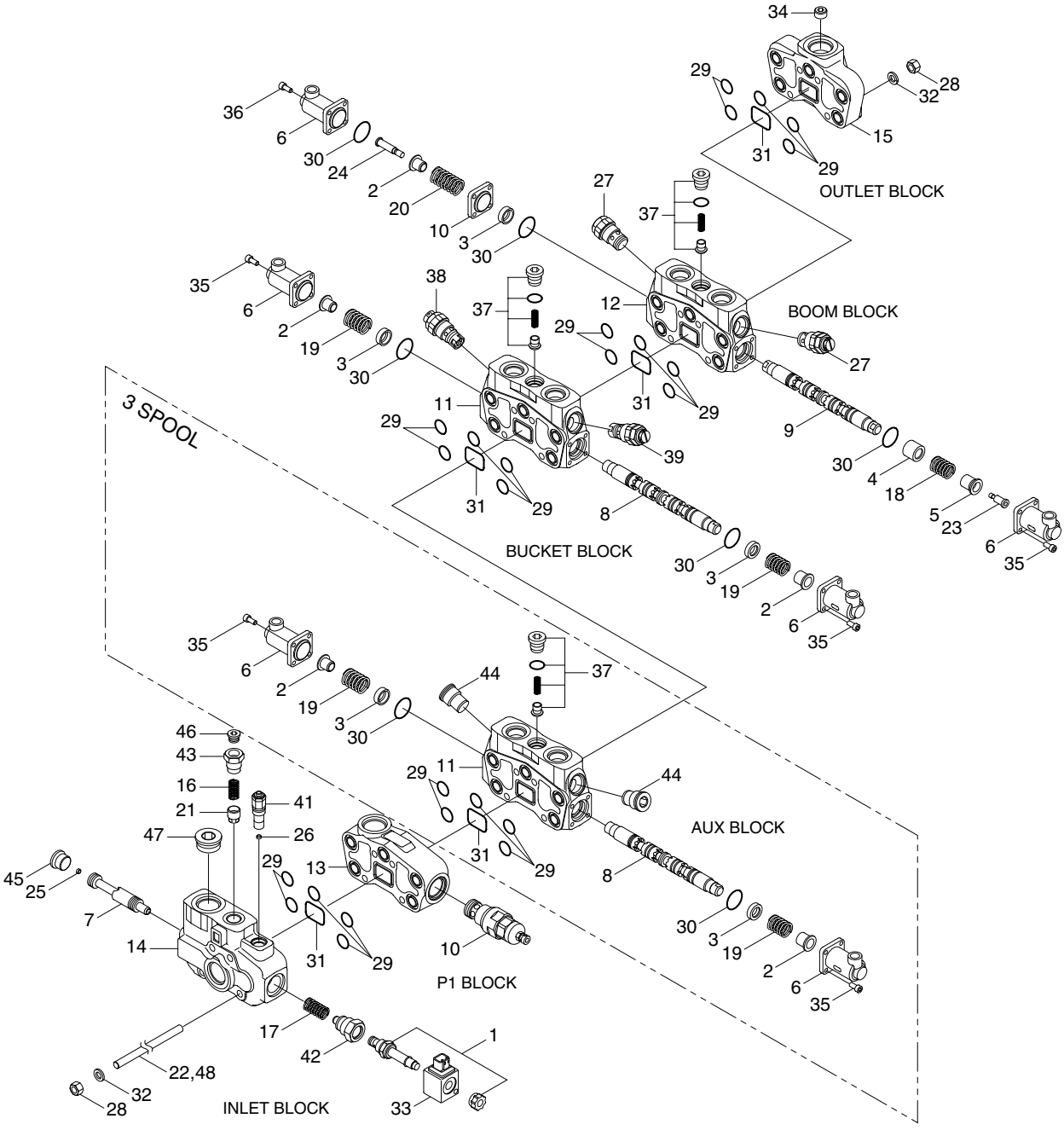

1	Solenoid valve	13	Element	25	Screw	37	Check valve
2	Spring cap	14	Inlet cover	26	Screw	38	Valve
3	Bushing	15	Outlet cover	27	Cartridge	39	Valve
4	Bushing	16	Spring	28	Nut	40	Valve
5	Bushing	17	Spring	29	O-ring	41	Cartridge
6	Cap	18	Spring	30	O-ring	42	Inlet cover joint
7	Spool	19	Spring	31	O-ring	43	Adapter
8	Spool	20	Spring control kit	32	Spring washer	44	Plug
9	Spool	21	Poppet	33	Coil	45	Plug
10	Spacer	22	Tie rod	34	Conical plug	46	Plug
11	Element	23	Screw	35	Bolt	47	Plug
12	Element	24	Screw	36	Screw		

2) INITIAL SETUP OF THE VALVE ON ASSEMBLY BENCH

(1) Clean the table.
(2) Wear safety goggles.
(3) Place the stacked valve with inlet to the left side as shown in the picture.
(4) Clean the valve using compressed air so that valve is free from any dust or dirt.


HB100WE91

3) CHECK VALVE ASSEMBLY

(1) Assemble the check valve into the check valve cavity.
(2) Make sure that O-ring is present in the check valve.


HB100WE92

(3) Tighten in to 4.28 kgf · m (31 lbf · ft) torque (wrench 08) using pneumatic torque gun.


HB100WE93

4) P PORT PLUG ASSEMBLY

(1) Close the top inlet port with SAE 16 plug and tighten it to 4.28 kgf · m (31 lbf · ft) torque (wrench 12) using pneumatic torque gun. (Make sure that O-ring is present in the plug.)


HB100WE94

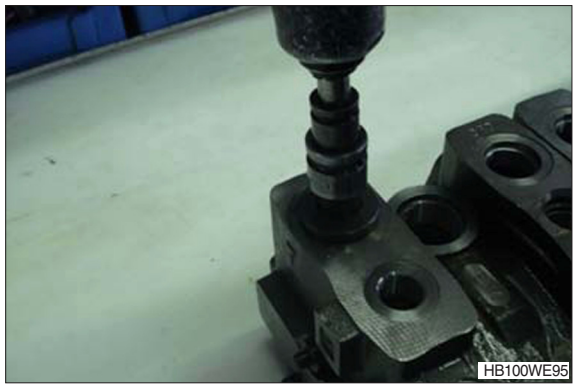

5) MANOMETER PLUG ASSEMBLY

(1) Insert the poppet in the manometer cavity.
(2) Then insert the spring on to the poppet.

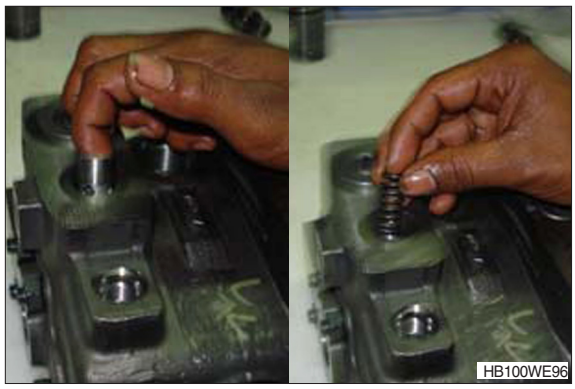

(3) Insert the spacer on top of the spring.

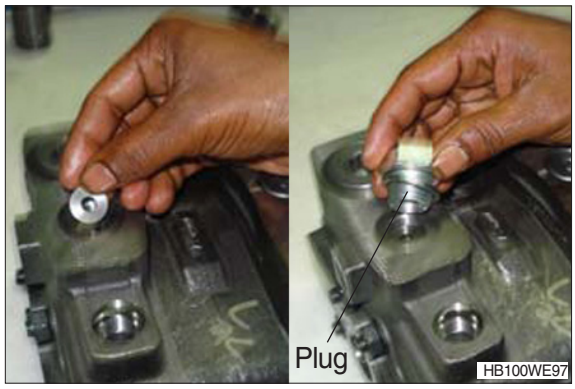

(4) Assemble the BSP 1/2" plug and tighten it to 4.28 kgf · m (31 lbf · ft) torque (wrench 27) using pneumatic torque gun. (Make sure that washer is present in the plug.)



6) PRIORITY INLET SPOOL ASSEMBLY

(1) Insert orifice of (ø 0.75 mm) in the spool as shown in picture.

(2) Lubricate the spool cavity with hyspin VG46.



(3) Insert the spool into the spool cavity with orifice face should go inside.

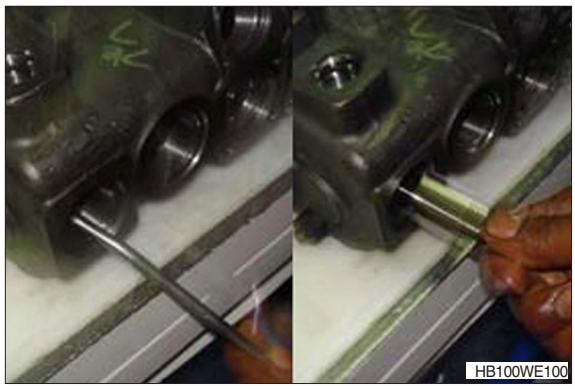

(4) Insert the spring on to the spool seat.

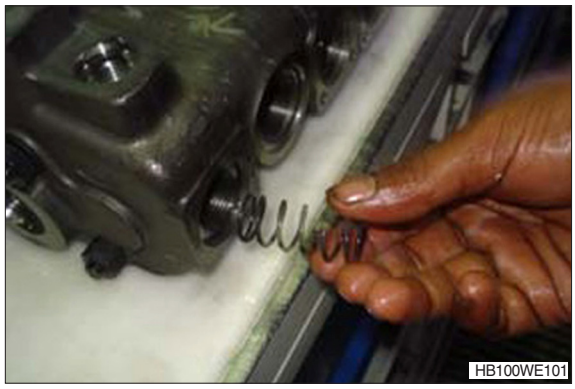

(5) Assemble the adapter and tighten it to 4.28 kgf · m (31 lbf · ft) torque (wrench 32) using pneumatic torque gun. (Make sure that washer & O-rings are present in the adapter.

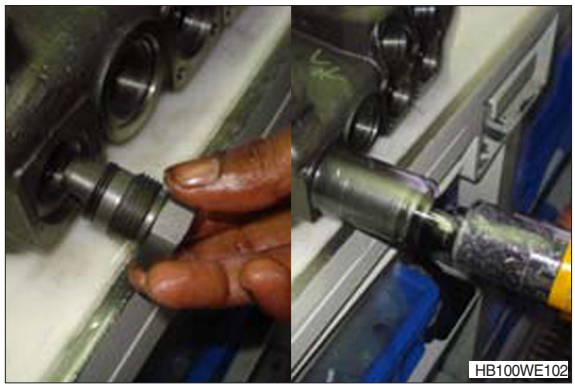

(6) Plug the other side of the spool cavity with M22×1.5 mm plug and tighten it to 4.28 kgf · m (31 lbf · ft) torque (wrench 12) using pneumatic torque gun. (Make sure that O-ring is present in the adapter.)

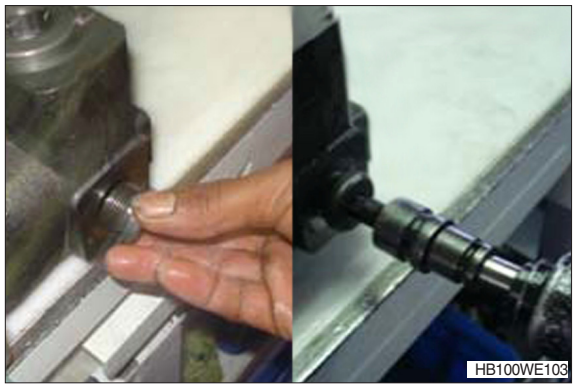

7) UNLOADING SOLENOID VALVE ASSEMBLY

(1) Assemble the solenoid as shown in the picture and tighten it to 5.10 kgf · m (36.9 lbf · ft) torque (wrench 24) using pneumatic torque gun.

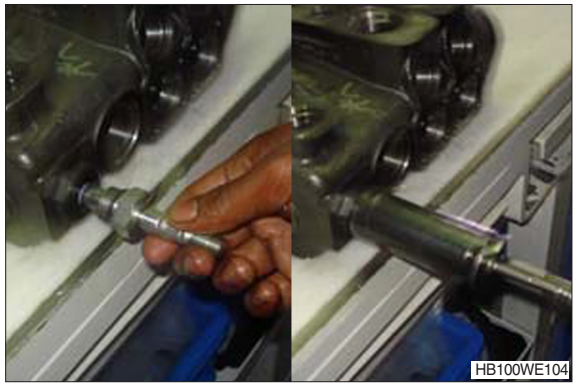

(2) Insert the coil into the solenoid.

(3) Assemble the insulator.

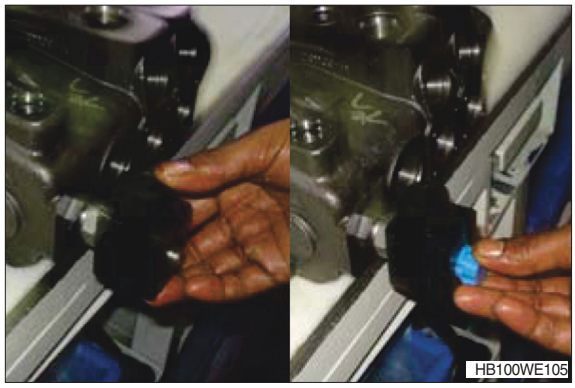

8) LS VALVE ASSEMBLY

(1) Insert orifice of (ø1.25 mm) in the LS cavity as shown in picture.



(2) Assemble the LS valve into LS cavity and tighten it to 2.45 kgf · m (17.7 lbf · ft) torque (wrench 19) using pneumatic torque gun.

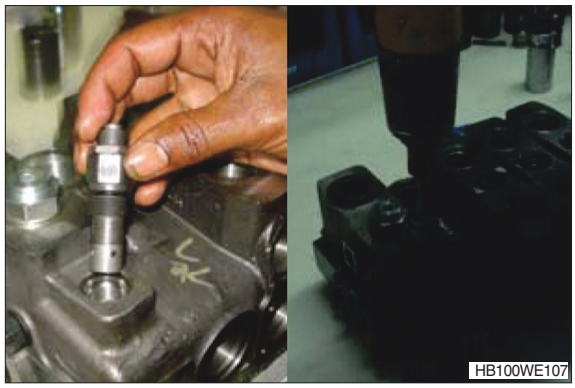

9) MAIN RELIEF VALVE ASSEMBLY

(1) Assemble main relief valve into the main relief valve cavity as shown in picture and tighten it to 4.28 kgf · m (31 lbf · ft) torque (wrench 36) using pneumatic torque gun.

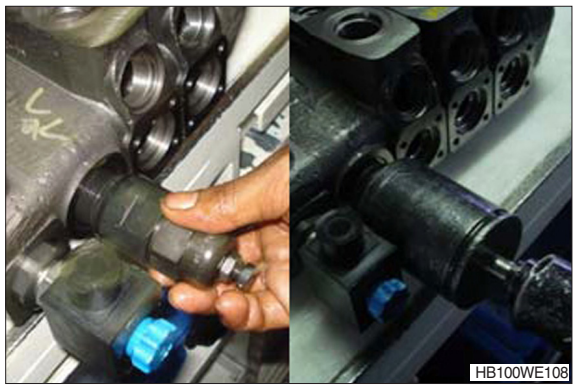

10) PORT RELIEF VALVE ASSEMBLY

(1) Assemble the port relief valve into the port relief valve cavity as describe below and tighten it to 2.45 kgf · m (17.7 lbf · ft) torque (wrench 19) using pneumatic torque gun.

- 1st section (from inlet) : ZTAL-00195
- 2nd section (bucket) : ZTAL-00305/00306
- 3rd section (boom) : ZTAL-00148

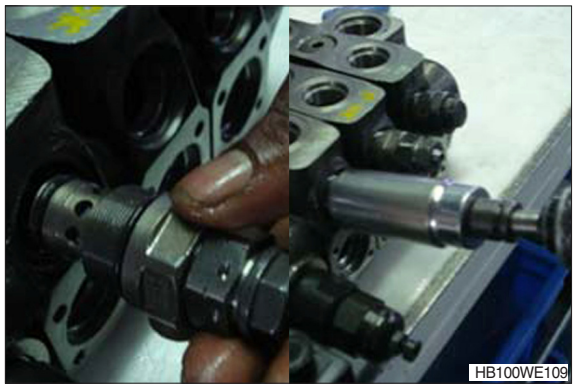

11) PORT RELIEF VALVE CAVITY PLUG ASSEMBLY

(1) Plug remaining port relief cavities with P3T plugs (i.e. on B1 & B2 port) and tighten it to 4.28 kgf · m (31 lbf · ft) torque (wrench 12) using pneumatic torque gun.



12) SPOOL ASSEMBLY

(1) Lubricate all the spool cavities with hyspin VG46.

(2) Insert spool as describe below with eye end of the spool is on the lever side.

- 1st section (Aux) :
  ZTAL-00167 (mechanical)
  ZTAL-00293 (pilot)
- 2nd section (bucket) :
  ZTAL-00167 (mechanical)
  ZTAL-00293 (pilot)
- 3rd section (boom) :
  ZTAL-00168(mechanical)
  ZTAL-00308 (pilot)

(3) Move the spools in and out two to three times for free movement.

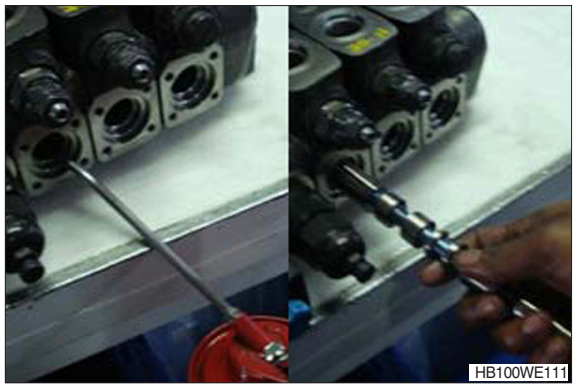

13) O-RING AND SPACER ASSEMBLY ON CONTROL KIT SIDE

(1) Assemble the O-ring in the O-ring groove as shown in the picture.

(2) Assemble the spacer into the spacer groove provided in spool cavity (chamfered face should go inside the cavity).



14) CONTROL KIT ASSEMBLY ON BOTH SIDE OF THE VALVE

(1) Apply a drop of loctite #270 thread locker on control kit screw threads.

(2) Place control kit spring in between two bushes as shown, and then assemble these into the spool with control kit screw.



(3) Tighten the control kit to 0.99 kgf · m (7.16 lbf · ft) torque (wrench 04) using pneumatic torque gun.

(4) Lubricate the proper quantity of grease to all control kits.

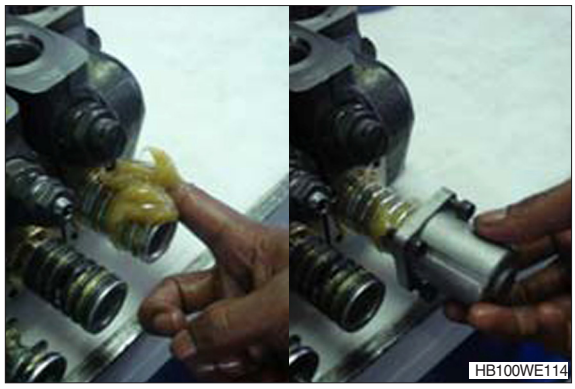

(5) Assemble the end cap with M6 screws and tighten to 0.67 kgf · m (4.85 lbf · ft) torque using pneumatic torque gun.

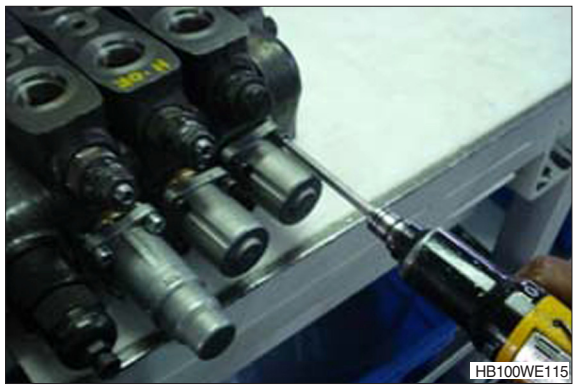

15) LEVER KIT ASSEMBLY

(1) Assemble the O-ring in the O-ring groove as shown in the picture.

(2) Assemble the spacer into the spacer groove provided in spool cavity (chamfered face should go inside the cavity)

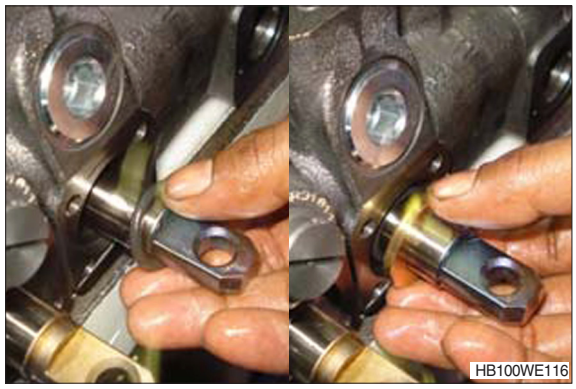

(3) Assemble lever cap and tighten it with M6 screws to 0.99 kgf · m (7.16 lbf · ft) torque using pneumatic torque gun.

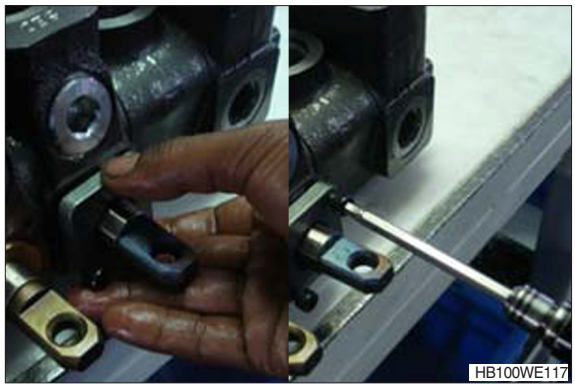

16) RE PLUG ASSEMBLY

(1) Assemble the RE plug (M18×1.5 ㎜) in tank port as shown in the picture and tighten it with allen key.



17) COMPLETE VALVE ASSEMBLY



3. BACKHOE MAIN CONTROL VALVE

1) STRUCTURE

(1) Mechanical control (1/3)

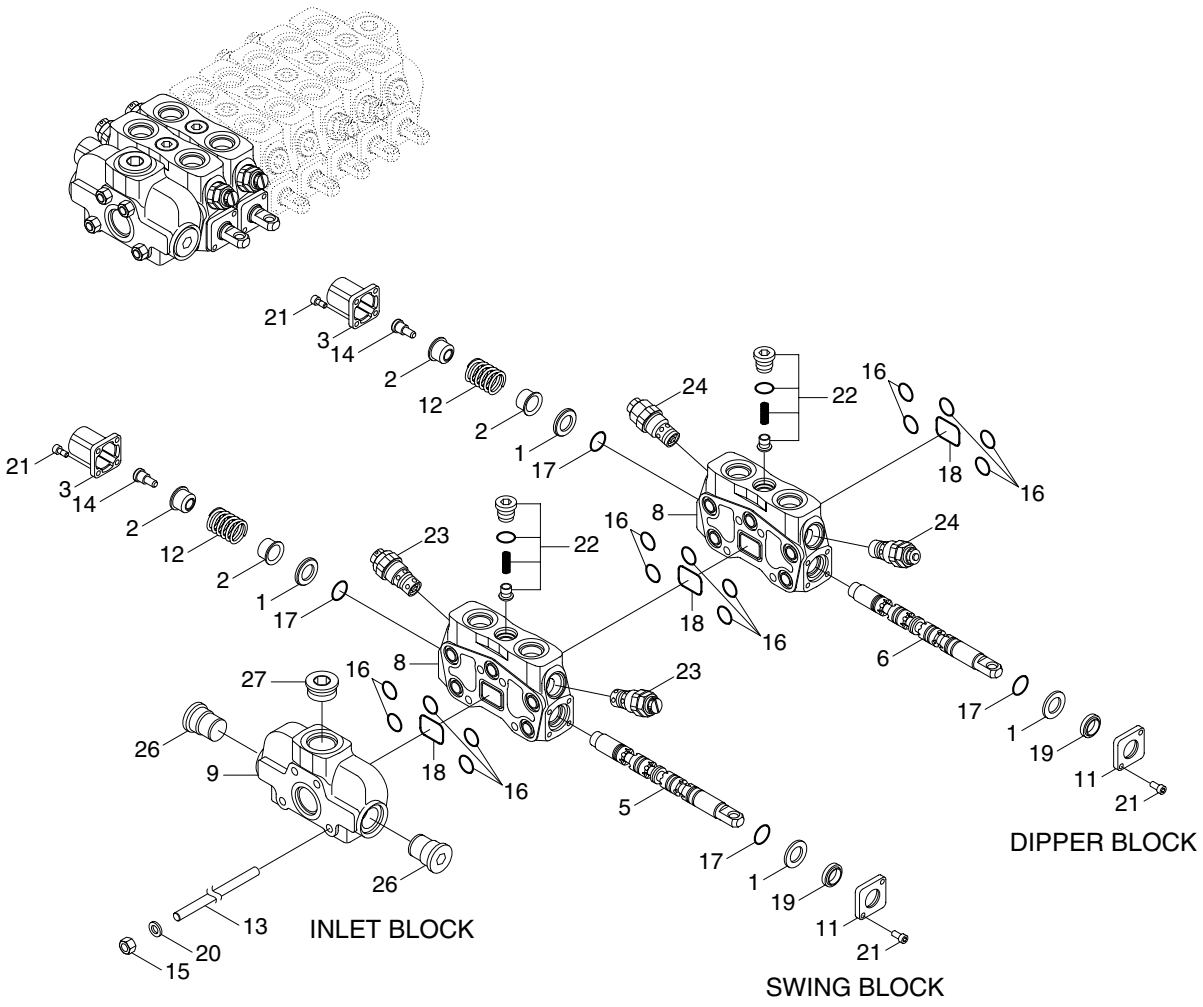

H940C6WE33

1	Spacer	12	Control kit	20	Spring washer
2	Bushing control kit	13	Tie rod	21	Screw
3	End cap	14	Screw	22	Check valve
5	Spool	15	Nut	23	Relief valve
6	Spool	16	O-ring	24	Relief valve
8	Block	17	Seal	26	Plug assembly
9	Inlet cover	18	O-ring	27	Plug
11	Flange	19	Seal		

Mechanical control (2/3)

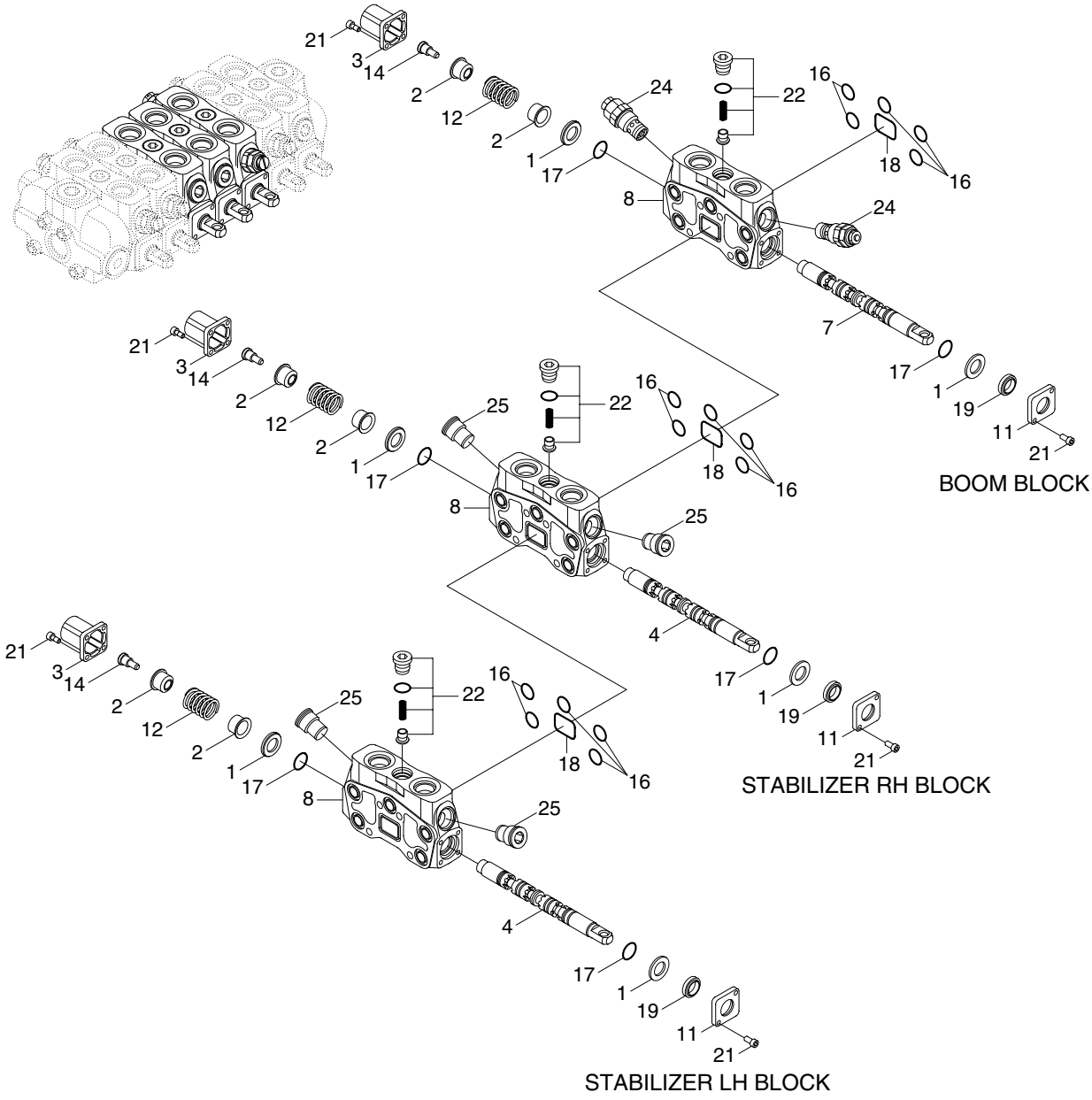

1	Spacer	11	Flange	19	Seal
2	Bushing control kit	12	Control kit	21	Screw
3	End cap	14	Screw	22	Check valve
4	Spool	16	O-ring	24	Relief valve
7	Spool	17	Seal	25	Plug
8	Block	18	O-ring		

Mechanical control (3/3)

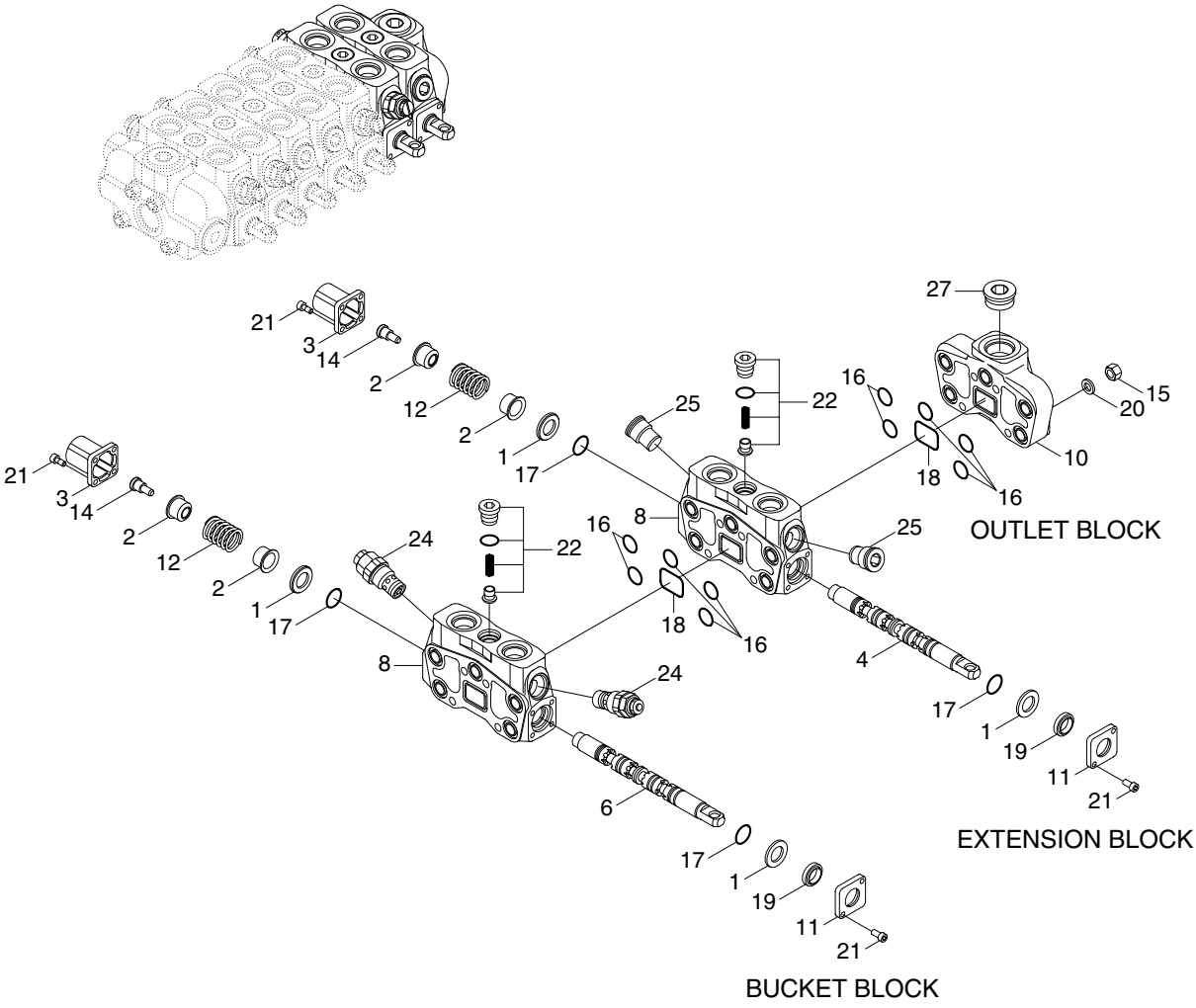

H940C6WE35

1	Spacer	11	Flange	19	Seal
2	Bushing control kit	12	Control kit	20	Spring washer
3	End cap	14	Screw	21	Screw
4	Spool	15	Nut	22	Check valve
6	Spool	16	O-ring	24	Relief valve
8	Block	17	Seal	25	Plug
10	Outlet cover	18	O-ring	27	Plug

(2) Pilot control (1/3)

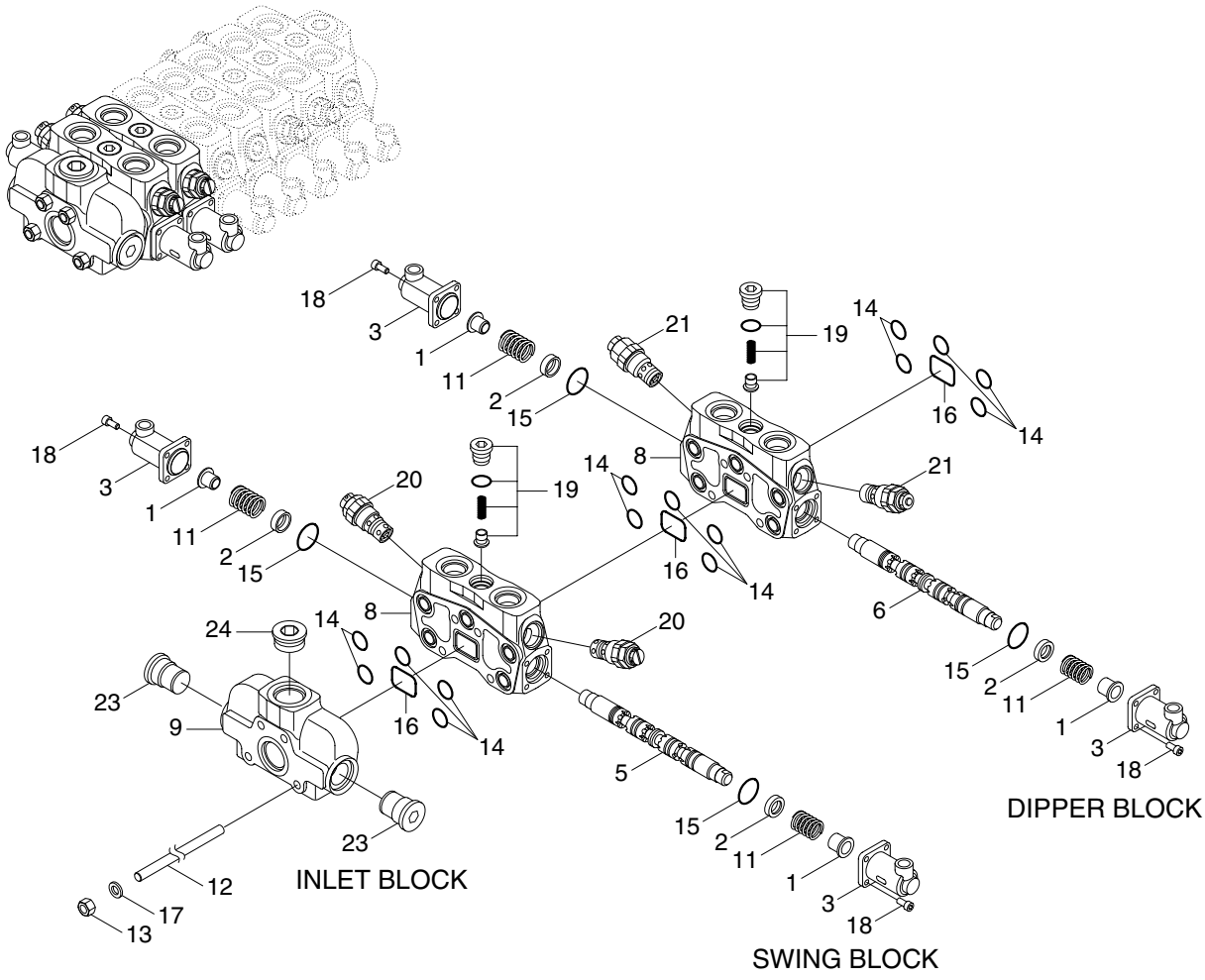

H940C6WE40

1	Spring cap	11	Spring	17	Spring washer
2	Bushing	12	Tie rod	18	Bolt
3	End cap	13	Nut	19	Check valve
5	Spool	14	O-ring	20	Relief valve
6	Spool	15	O-ring	21	Relief valve
8	Block	16	O-ring	23	Plug assembly
9	Inlet cover				

Pilot control (2/3)

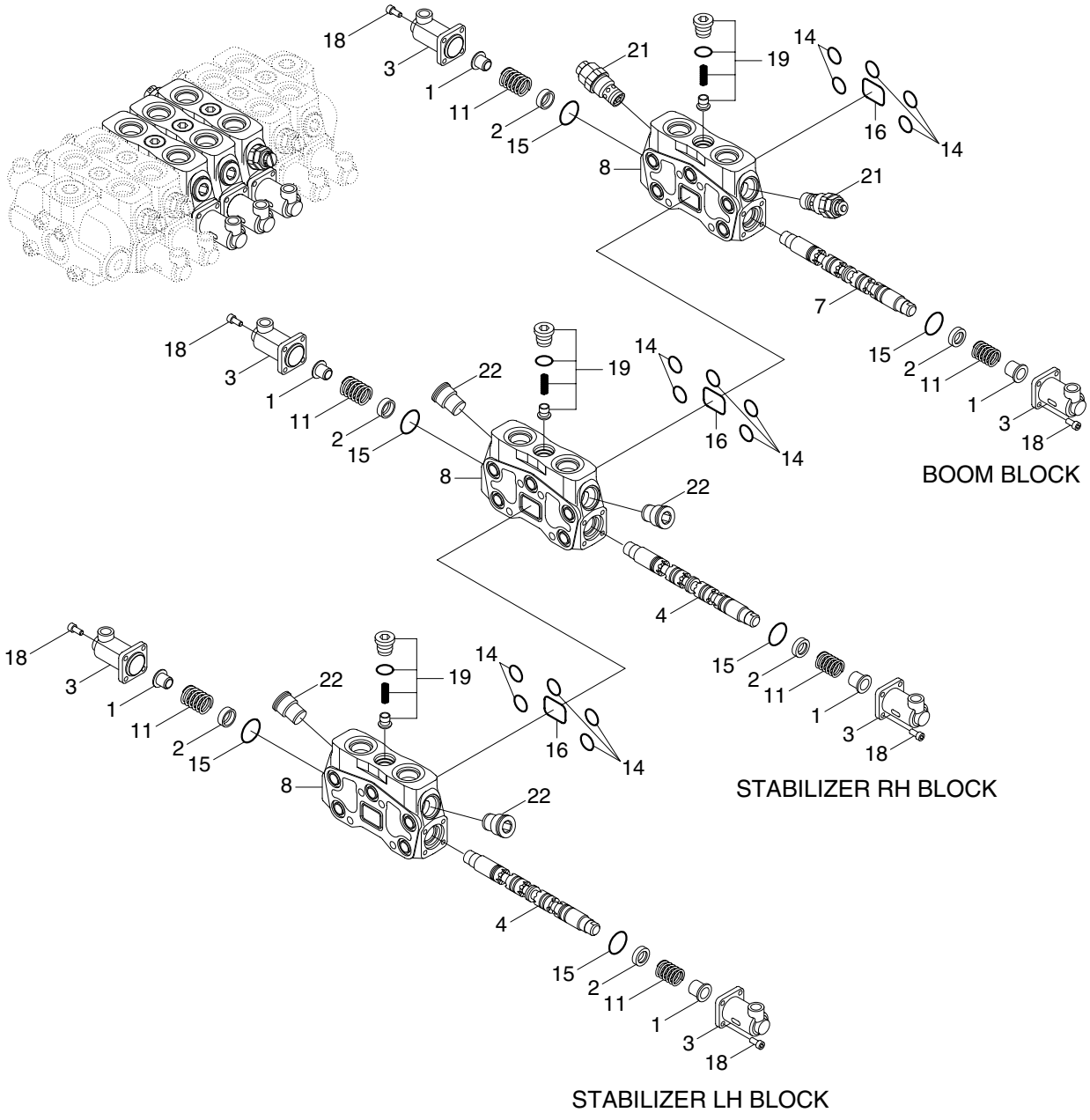

1	Spring cap	8	Block	18	Bolt
2	Bushing	11	Spring	19	Check valve
3	End cap	14	O-ring	21	Relief valve
4	Spool	15	O-ring	22	Plug
7	Spool	16	O-ring		

Pilot control (3/3)

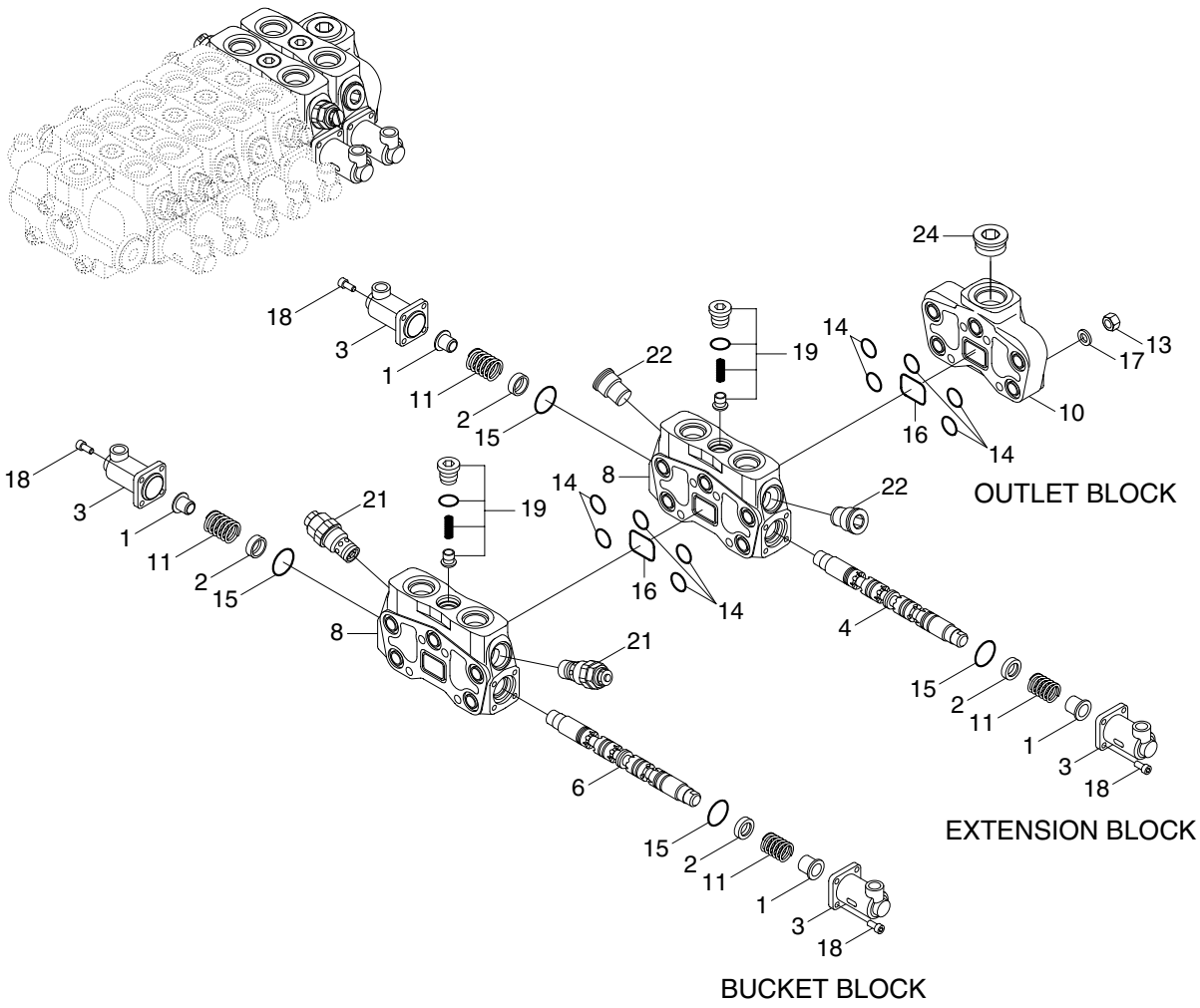

H940C6WE42

1	Spring cap	10	Outlet cover	17	Spring washer
2	Bushing	11	Spring	18	Bolt
3	End cap	13	Nut	19	Check valve
4	Spool	14	O-ring	21	Relief valve
6	Spool	15	O-ring	22	Plug
8	Block	16	O-ring	24	Plug

2) INITIAL SETUP OF THE VALVE ON ASSEMBLY BENCH

(1) Clean the table.
(2) Wear safety goggles.
(3) Place the stacked valve with inlet to the left side as shown in the picture.
(4) Clean the valve using compressed air so that valve is free from any dust or dirt.


H940C6MCV01

3) LOAD DROP CHECK VALVE ASSEMBLY

(1) Assemble the check valve into the check valve cavity.
(2) Make sure that O-ring is present in the check valve.


H940C6MCV02

(3) Tighten in to 4.28 kgf · m (31 lbf · ft) torque (wrench 08) using pneumatic torque gun.


H940C6MCV03

4) P AND T PORT PLUG ASSEMBLY

(1) Close the top inlet port and top outlet port with SAE 16 plug and tighten it to 4.28 kgf · m (31 lbf · ft) torque (wrench 17) using pneumatic torque gun. (Make sure that O-ring is present in the plug.)


H940C6MCV04



5) F KIT ASSEMBLY

(1) Insert the F kit in the F kit cavity.

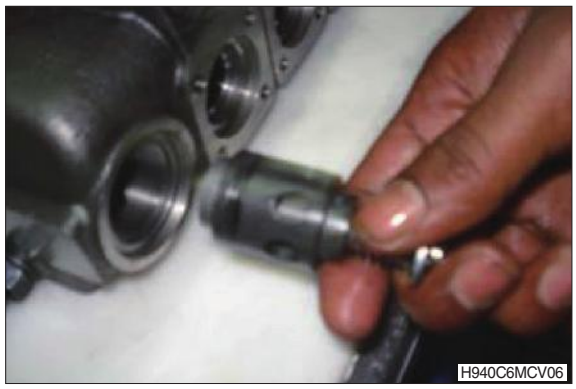

(2) Assemble the F plug and tighten it to 4.28 kgf · m (31 lbf · ft) torque (wrench 32) using pneumatic torque gun. (Make sure that washer is present in the plug.)



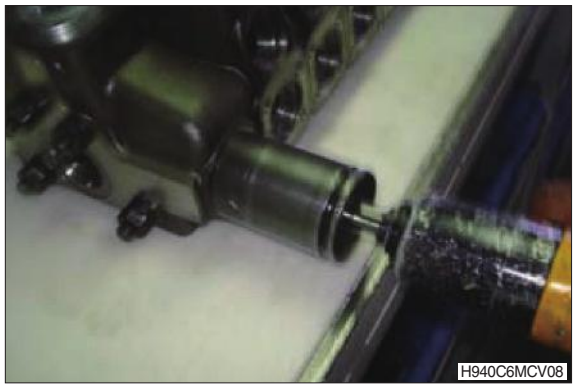

6) CHECK VALVE ASSEMBLY

(1) Assemble the check valve kit into the check valve kit cavity and tighten it to 2.45 kgf · m (17.7 lbf · ft) torque (wrench 24) using pneumatic torque gun.



7) ER2 VALVE ASSEMBLY

(1) Assemble the electrical R2 kit into the ER2 kit cavity and tighten it to 2.45 kgf · m (17.7 lbf · ft) torque (Wrench 24) using pneumatic torque gun (make sure that O-ring is present in the kit).



(2) Insert the coil into the solenoid.

(3) Assemble the lock nut and tighten with allen key.

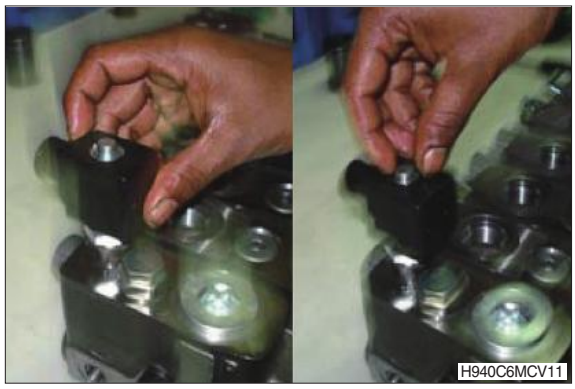



8) PORT RELIEF VALVE ASSEMBLY

(1) Assemble the port relief valve into the port relief valve cavity as describe below and tighten it to 2.45 kgf · m (17.7 lbf · ft) torque (wrench 19) using pneumatic torque gun.

- 1st section (from inlet) : ZTAL-00275
- 2nd section (dipper) : ZTAL-00276
- 5th section (boom) : ZTAL-00276
- 6th section (bucket) : ZTAL-00276

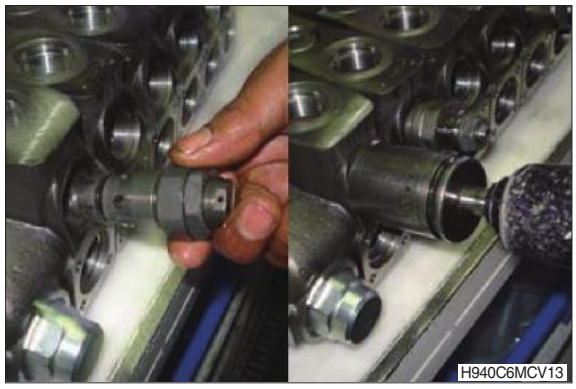

9) PORT RELIEF VALVE CAVITY PLUG ASSEMBLY

(1) Plug remaining port relief cavities with P3T plugs (i.e. on A3, B3, A4 & B4 port) and tighten it to 4.28 kgf · m (31 lbf · ft) torque (wrench 12) using pneumatic torque gun.

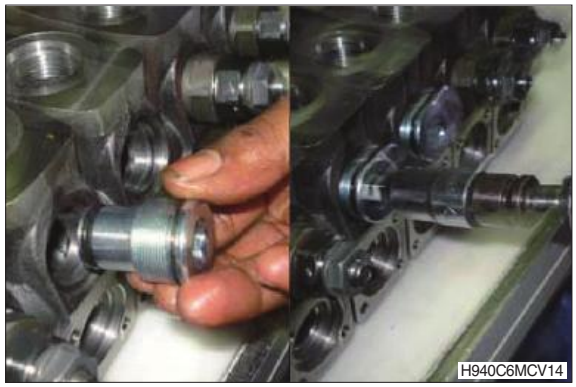

10) SPOOL ASSEMBLY

(1) Lubricate all the spool cavities with hyspin VG46.

(2) Insert spool as describe below with eye end of the spool is on the F kit side.

- 1st section : ZTAL-00265 (1TX spool)
- 2nd section to 6th section : ZTAL-00266/00264 (normal spool)

(3) Move the spools in and out two to three times for free movement.

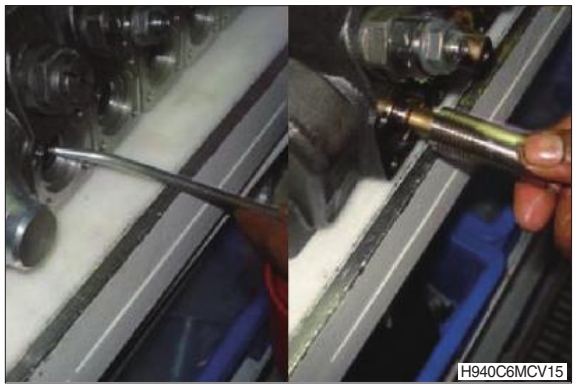

11) O-RING AND SPACER ASSEMBLY ON CONTROL KIT SIDE

(1) Assemble the O-ring in the O-ring groove as shown in the picture.

(2) Assemble the spacer into the spacer groove provided in spool cavity (chamfered face should go inside the cavity).

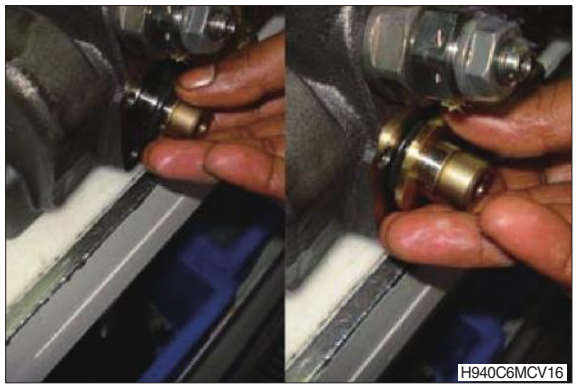
H940C6MCV16

12) CONTROL KIT ASSEMBLY ON BOTH SIDE OF THE VALVE

(1) Apply a drop of loctite #270 thread locker on control kit screw threads.

(2) Place control kit spring in between two bushes as shown, and then assemble these into the spool with control kit screw.


H940C6MCV17

(3) Tighten the control kit to 0.99 kgf · m (7.16 lbf · ft) torque (wrench 05) using pneumatic torque gun.

(4) Lubricate the proper quantity of grease to all control kits.


H940C6MCV18

(5) Assemble the end cap with M6 screws and tighten to 0.67 kgf · m (4.85 lbf · ft) torque using pneumatic torque gun.


H940C6MCV19

13) LEVER KIT ASSEMBLY

(1) Assemble the O-ring in the O-ring groove as shown in the picture.

(2) Assemble the spacer into the spacer groove provided in spool cavity (chamfered face should go inside the cavity)

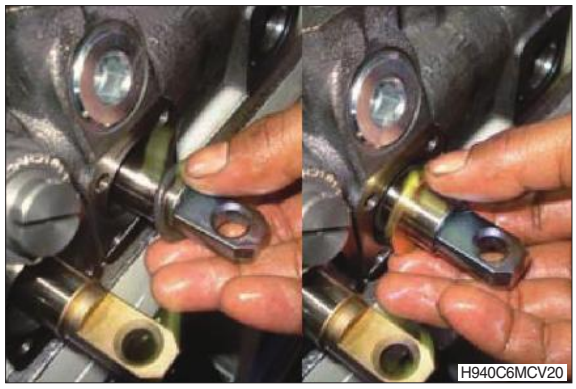

(3) Assemble lever cap and tighten it with M5 screws to 0.99 kgf · m (7.16 lbf · ft) torque using pneumatic torque gun.

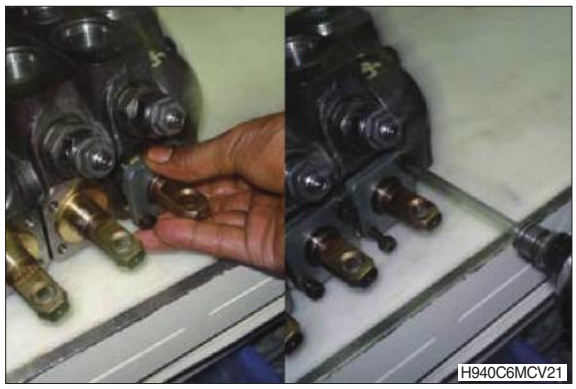

14) COMPLETE VALVE ASSEMBLY



4. RCV LEVER

1) STRUCTURE

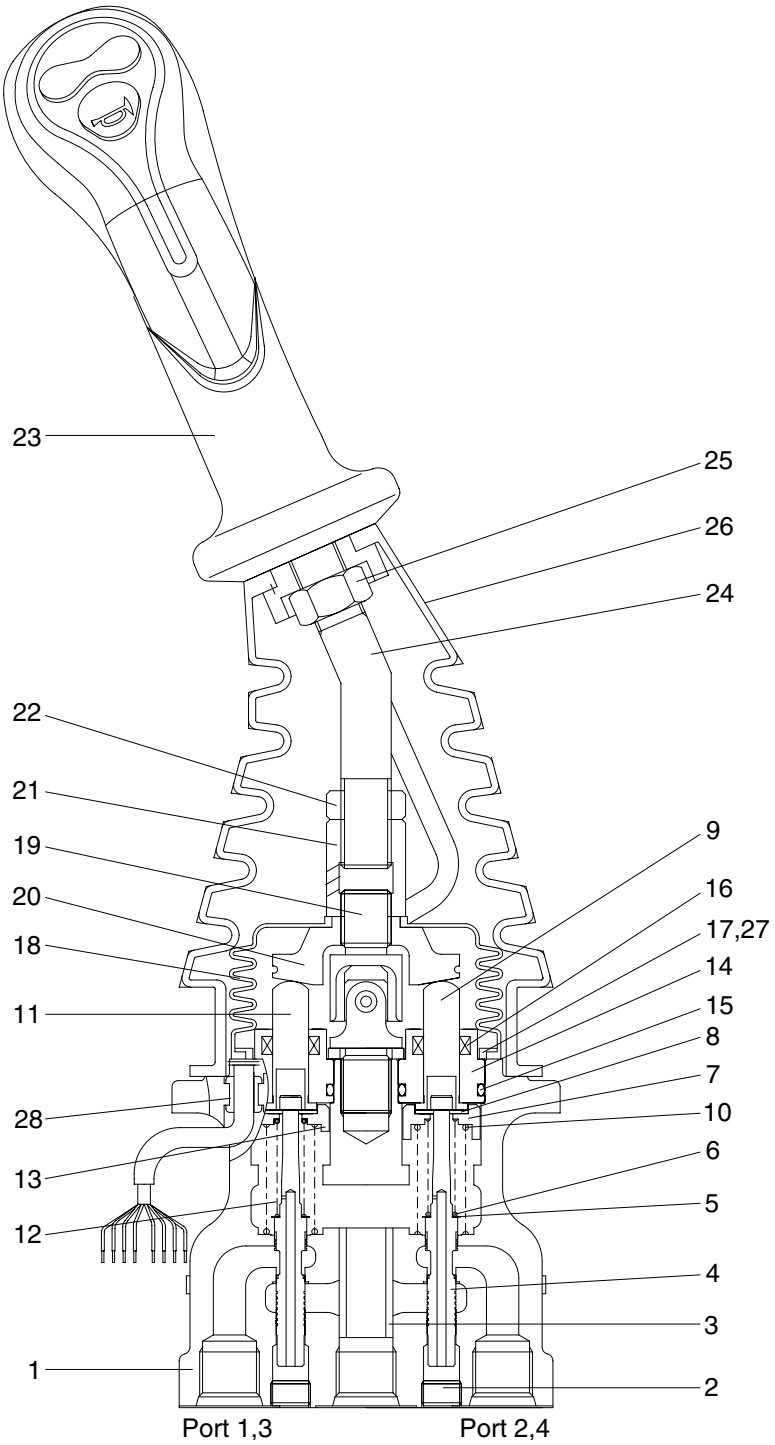

H940C6WE71

1	Case	8	Stopper	15	O-ring	22	Lock nut
2	Plug	9	Push rod	16	Rod seal	23	Handle assembly
3	Bushing	10	Spring	17	Plate	24	Handle bar
4	Spool	11	Push rod	18	Boot	25	Nut
5	Shim	12	Spring	19	Joint assembly	26	Boot
6	Spring	13	Spring seat	20	Swash plate	27	Spring pin
7	Spring seat	14	Plug	21	Adjusting nut	28	Bushing

2) TOOLS AND TIGHTENING TORQUE

(1) Tools

Tool name	Remark	
Allen wrench	6	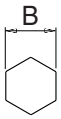
Spanner	22	
	27	
(+) Driver	Length 150	
(-) Driver	Width 4~5	
Torque wrench	Capable of tightening with the specified torques	

(2) Tightening torque

Part name	Item	Size	Torque	
			kgf · m	lbf · ft
Plug	2	PT 1/8	3.0	21.7
Joint	19	M14	3.5	25.3
Swash plate	20	M14	5.0±0.35	36.2±2.5
Adjusting nut	21	M14	5.0±0.35	36.2±2.5
Lock nut	22	M14	5.0±0.35	36.2±2.5

3) DISASSEMBLY

(1) Clean pilot valve with kerosene.

※ Put blind plugs into all ports

(2) Fix pilot valve in a vise with copper (or lead) sheets.

(3) Remove end of boot (26) from case (1) and take it out upwards.

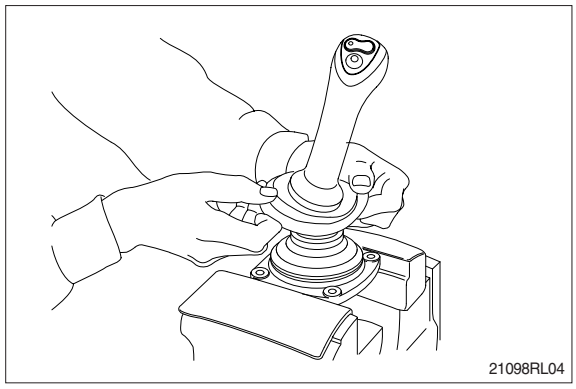

※ For valve with switch, remove cord also through hole of casing.

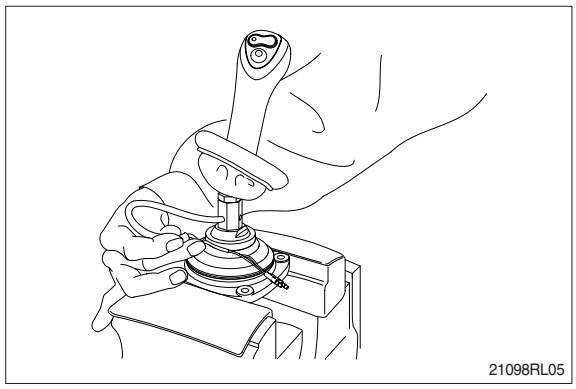

(4) Loosen lock nut (22) and adjusting nut (21) with spanners on them respectively, and take out handle section as one body.

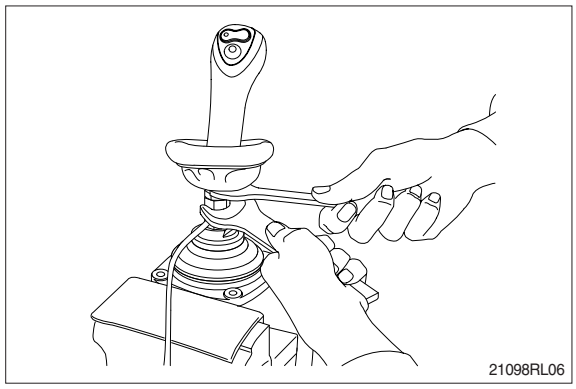

(5) Remove the boot (18).

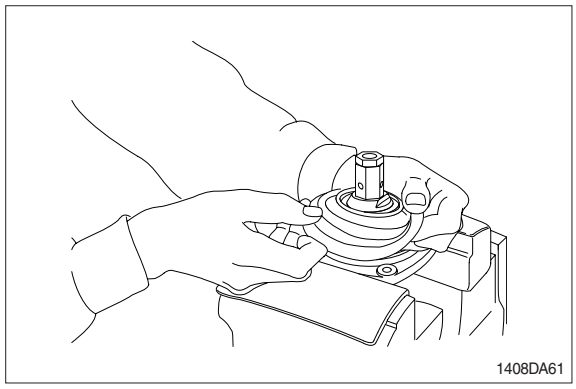

(6) Loosen adjusting nut (21) and swash plate (20) with spanners on them respectively, and remove them.

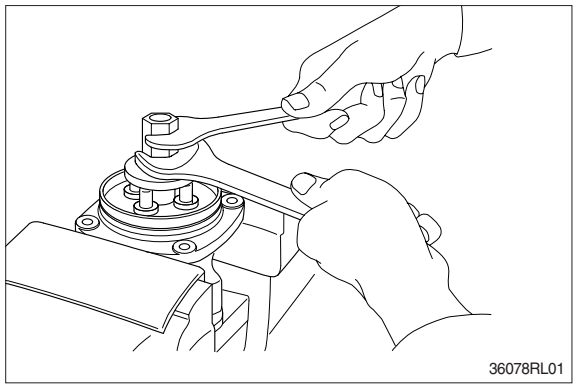

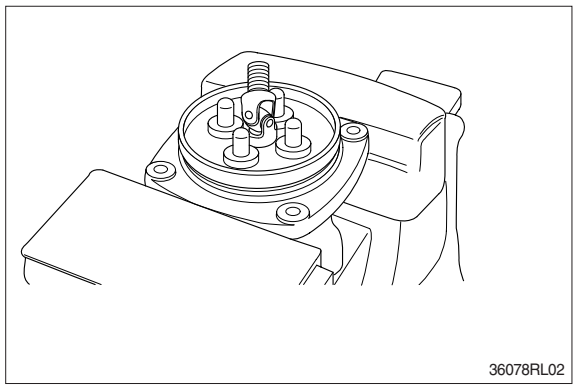

(7) Turn joint anticlockwise to loosen it, utilizing jig (Special tool).

※ When return spring (10) is strong in force, plate (17), plug (14) and push rod (11) will come up on loosening joint.
Pay attention to this.

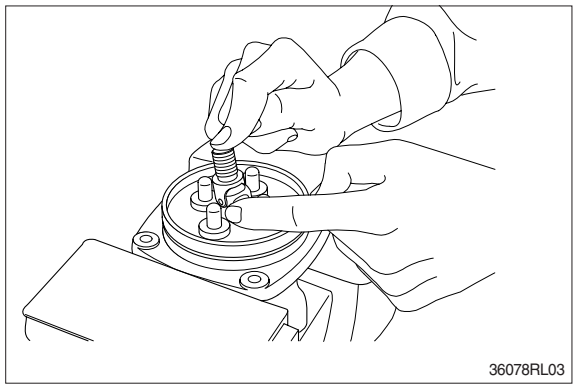

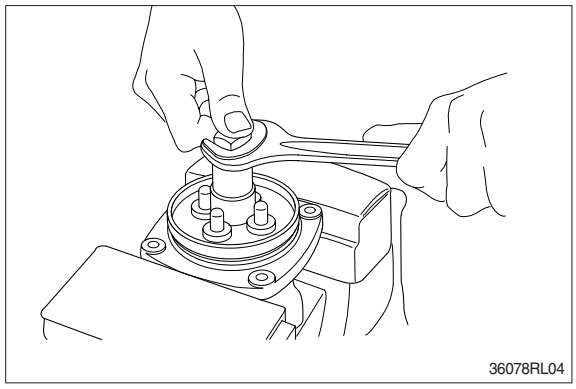

(8) Remove plate (17).

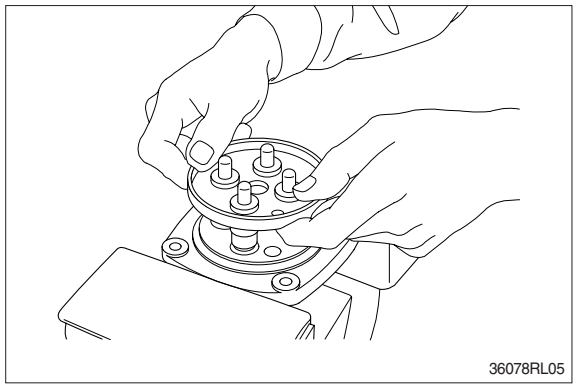

(9) When return spring (10) is weak in force, plug (14) stays in casing because of sliding resistance of O-ring.

※ Take it out with minus screwdriver.
Take it out, utilizing external periphery groove of plug and paying attention not to damage it by partial loading.

※ During taking out, plug may jump up due to return spring (10) force.
Pay attention to this.

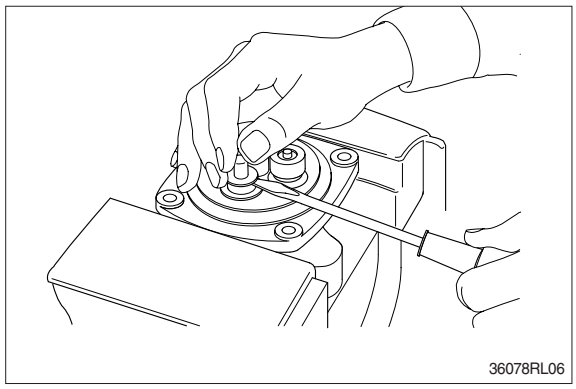

(10) Remove reducing valve subassembly and return spring (10) out of casing.

※ Record relative position of reducing valve subassembly and return springs.

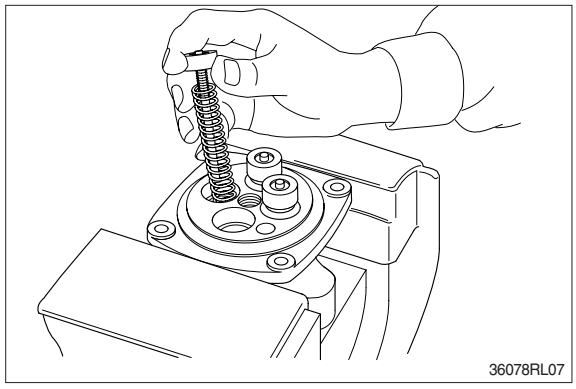

(11) Loosen hexagon socket head plug(2) with hexagon socket screw key.

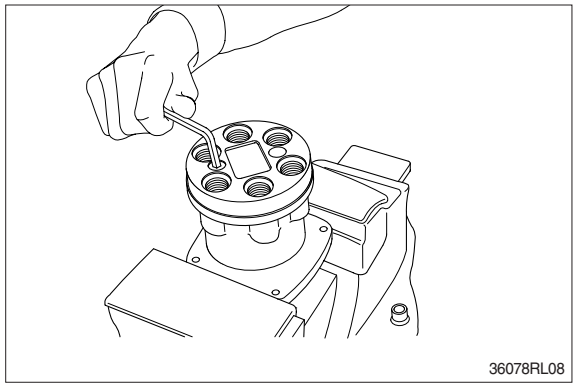

(12) For disassembling reducing valve section, stand it vertically with spool (4) bottom placed on flat workbench. Push down spring seat (7) and remove two pieces of semicircular stopper (8) with tip of small minus screwdriver.

※ Pay attention not to damage spool surface.

※ Record original position of spring seat (7).

※ Do not push down spring seat more than 6mm.

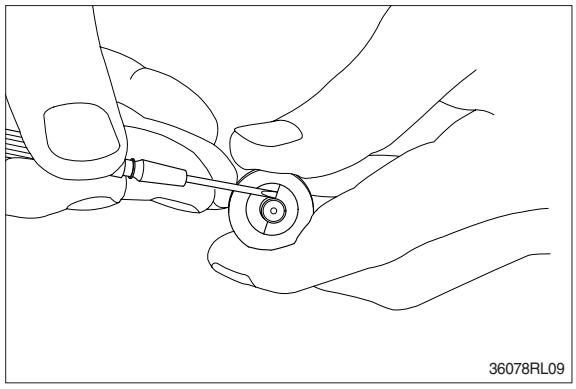

(13) Separate spool (4), spring seat (7), spring (6) and shim (5) individually.

※ Until being assembled, they should be handled as one subassembly group.

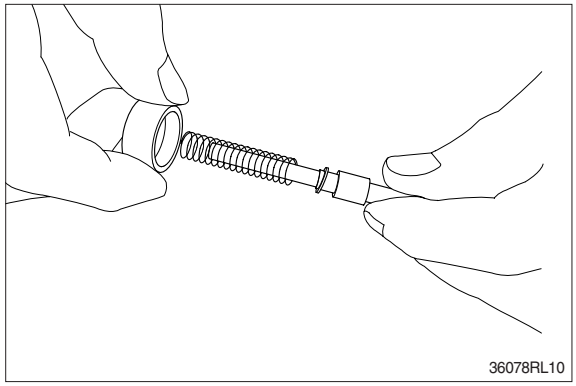

(14) Take push rod (11) out of plug (14).

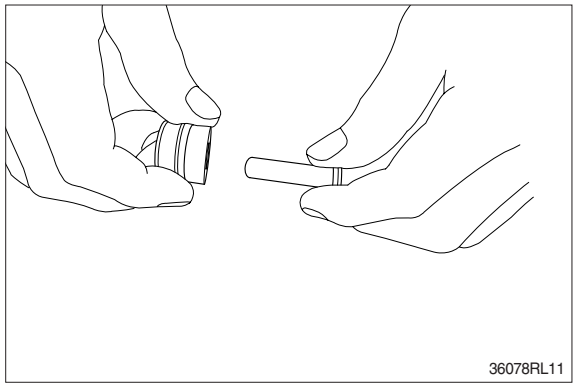

(15) Remove O-ring (15) and seal (16) from plug (14).
Use small minus screwdriver or so on to remove this seal.

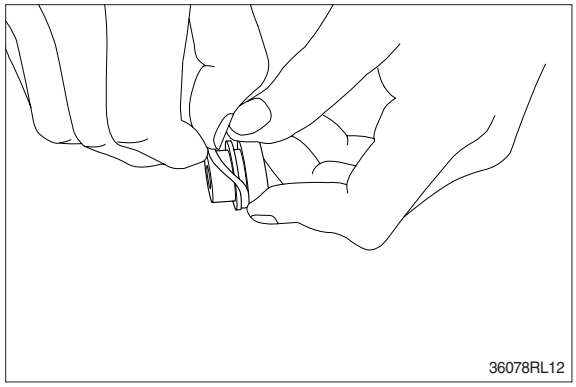

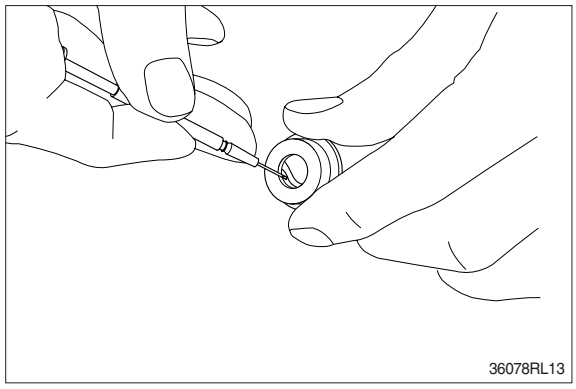

(16) Remove lock nut (22) and then boot (26).

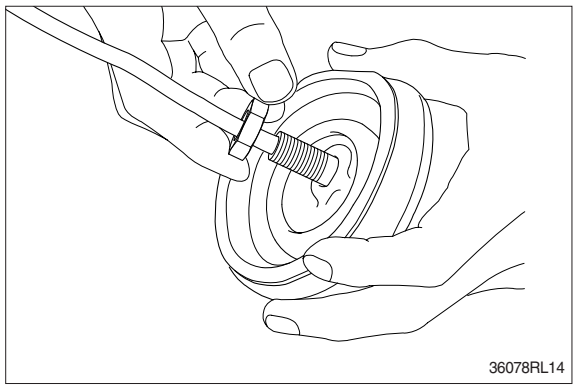

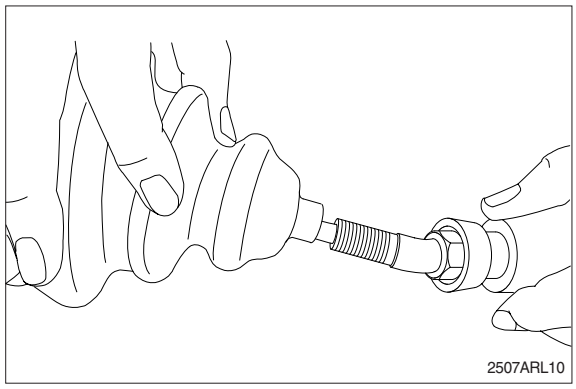

(16) Cleaning of parts

① Put all parts in rough cleaning vessel filled with kerosene and clean them (rough cleaning).

※ If dirty part is cleaned with kerosene just after putting it in vessel, it may be damaged. Leave it in kerosene for a while to loosen dust and dirty oil.

※ If this kerosene is polluted, parts will be damaged and functions of reassembled valve will be degraded.
Therefore, control cleanliness of kerosene fully.

② Put parts in final cleaning vessel filled with kerosene, turning it slowly to clean them even to their insides (finish cleaning).

※ Do not dry parts with compressed air, since they will be damaged and/or rusted by dust and moisture in air.

(17) Rust prevention of parts

Apply rust-preventives to all parts.

※ If left as they after being cleaned, they will be rusted and will not display their functions fully after being reassembled.

4) ASSEMBLY

(1) Tighten hexagon socket head plug (2) to the specified torque.

※ Tighten two bolts alternately and slowly.

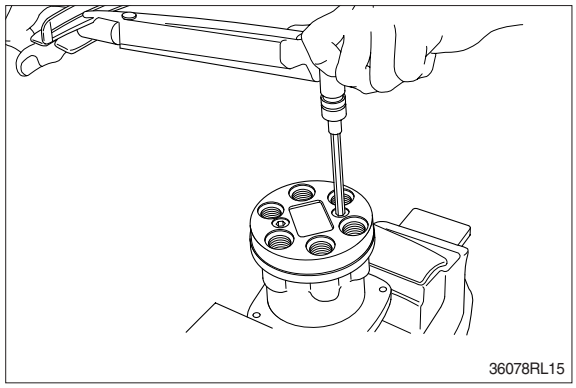

(2) Put shim (5), springs (6) and spring seat (7) onto spool (4) in this order.

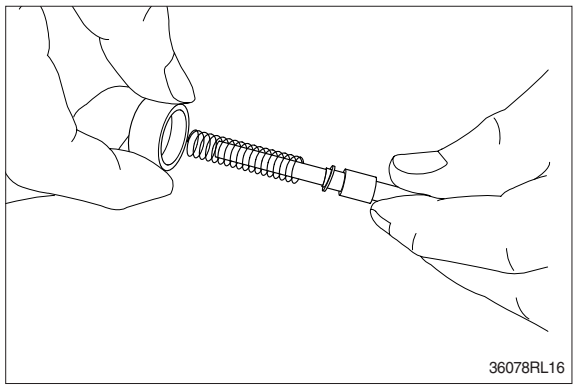

(3) Stand spool vertically with its bottom placed on flat workbench, and with spring seat pushed down, put two pieces of semicircular stopper (8) on spring seat without piling them on.

※ Assemble stopper (8) so that its sharp edge side will be caught by head of spool. Do not push down spring seat more than 6mm.

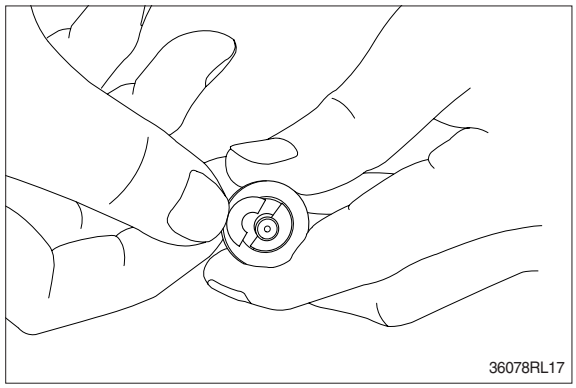

(4) Assemble spring (10) into casing (1). Assemble reducing valve subassembly into casing.

※ Assemble them to their original positions.

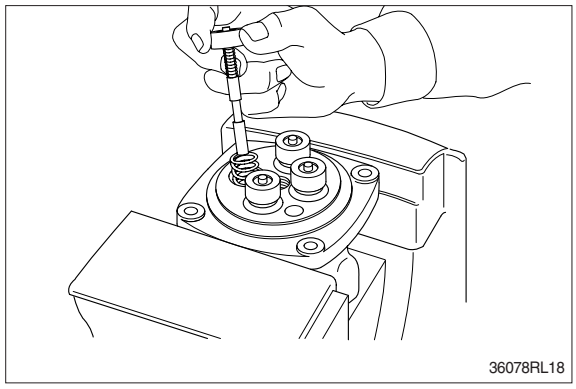

(5) Assemble O-ring (15) onto plug (14).

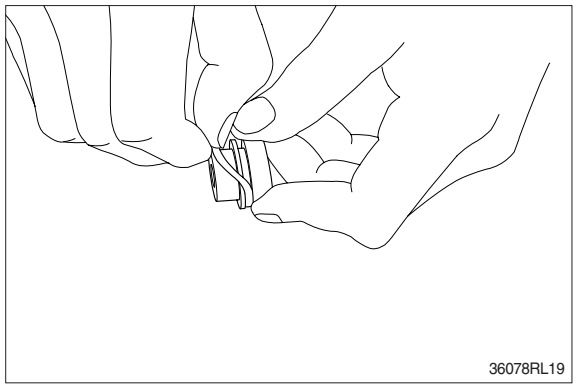

(6) Assemble seal (16) to plug (14).

※ Assemble seal in such lip direction as shown below.

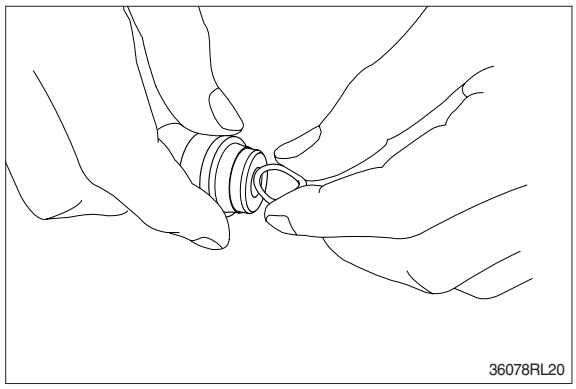

(7) Assemble push rod (11) to plug (14).

※ Apply working oil on push-rod surface.

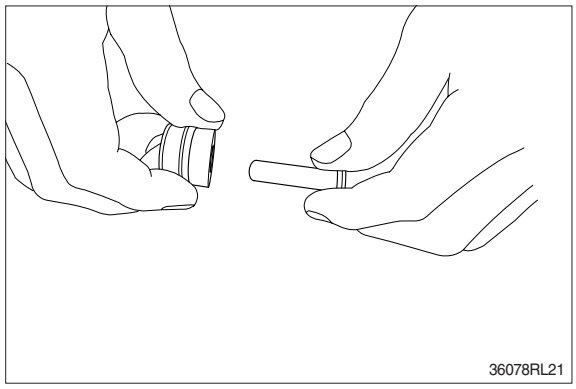

(8) Assemble plug subassembly to casing.

※ When return spring is weak in force, subassembly stops due to resistance of O-ring.

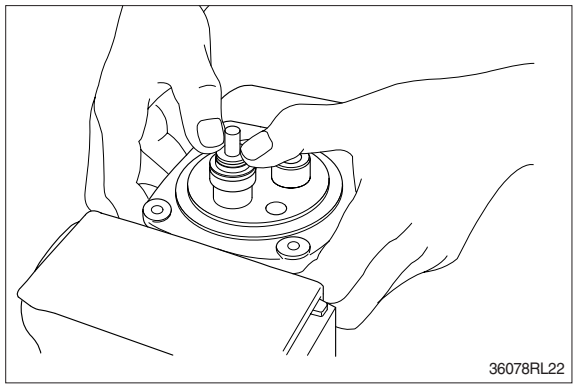

(9) When return spring is strong in force, assemble 4 sets at the same time, utilizing plate (17), and tighten joint (19) temporarily.

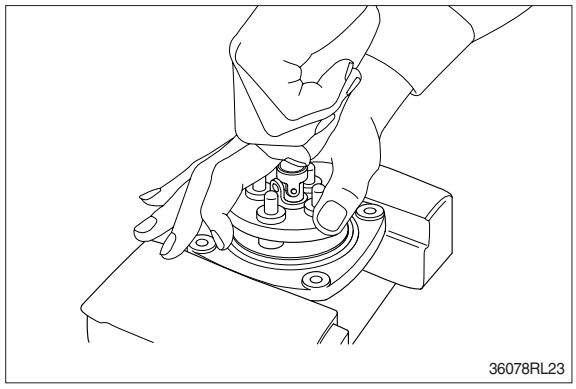

(10) Fit plate (17).

(11) Tighten joint (19) with the specified torque to casing, utilizing jig.

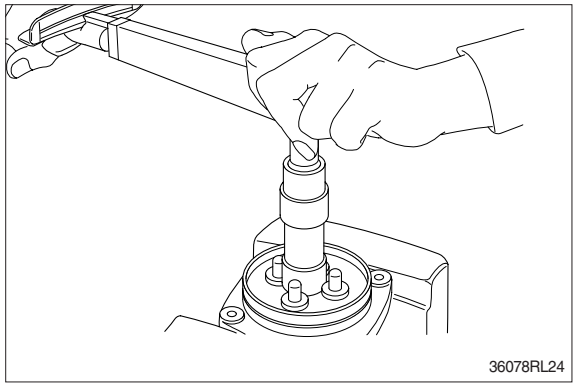

(12) Assemble swash plate (20) to joint (19).

※ Screw it to position that it contacts with 4 push rods evenly.

※ Do not screw it over.

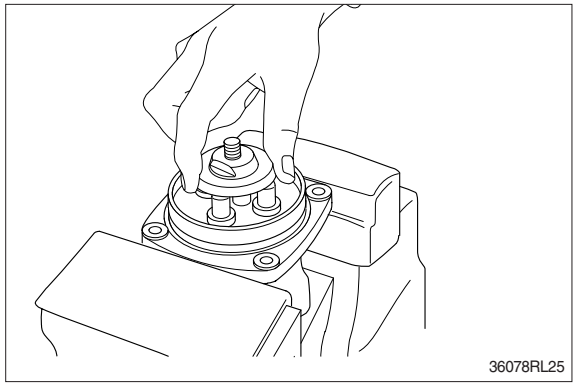

(13) Assemble adjusting nut (21), apply spanner to width across flat of plate (20) to fix it, and tighten adjusting nut to the specified torque.

※ During tightening, do not change position of disk.

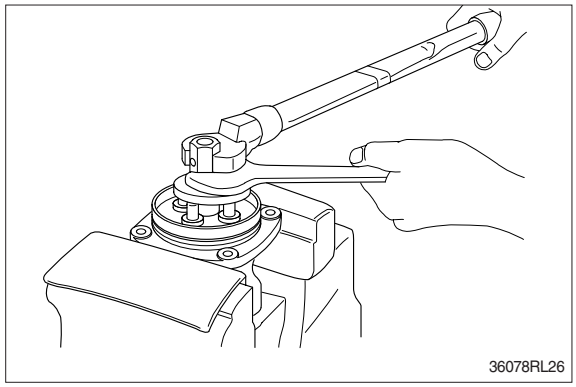

(14) Fit boot (18) to plate.

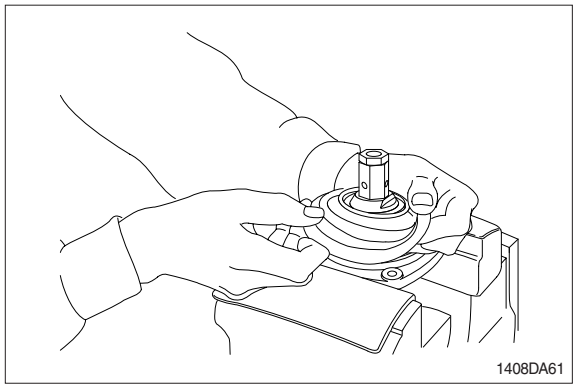

(15) Fit boot (26) and lock nut (22), and handle subassembly is assembled completely.

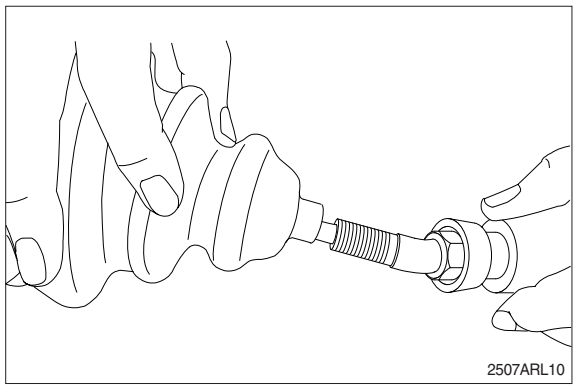

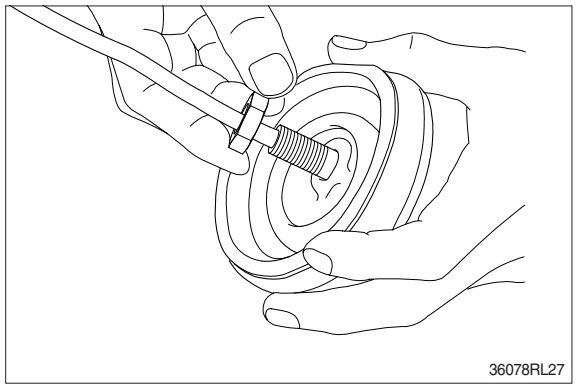

(16) Pull out cord and tube through adjusting nut hole provided in direction 60° to 120° from casing hole.

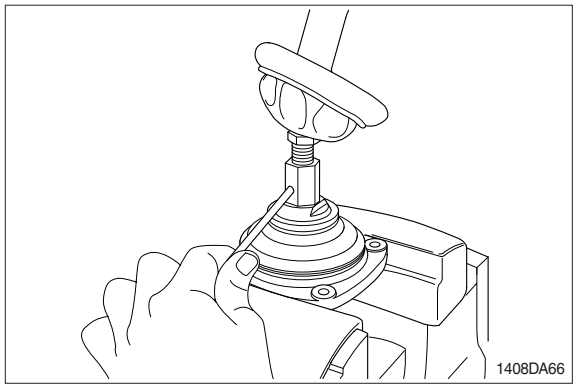

(17) Assemble bushing (27) to plate and pass cord and tube through it.

※ Provide margin necessary to operation.

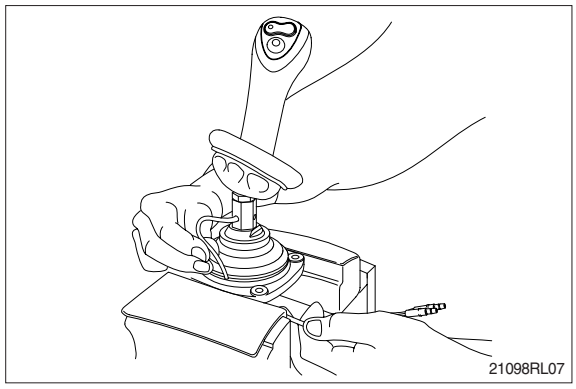

(18) Determine handle direction, tighten lock nut (22) to specified torque to fix handle.

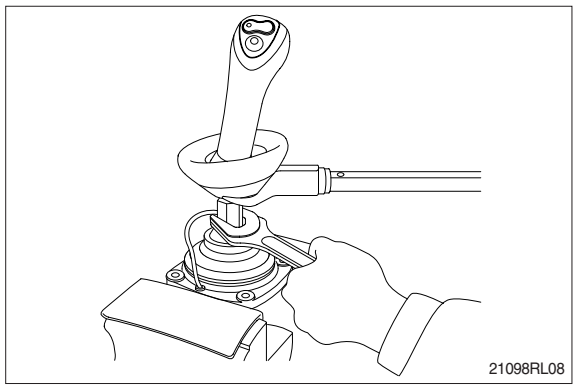

(19) Apply grease to rotating section of joint and contacting faces of disk and push rod.

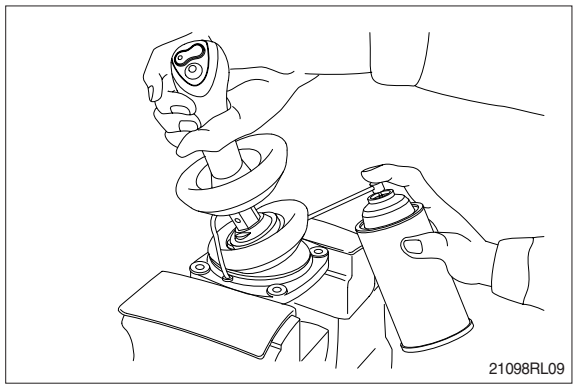

(20) Assemble lower end of bellows to casing.

(21) Inject volatile rust-preventives through all ports and then put blind plugs in ports.

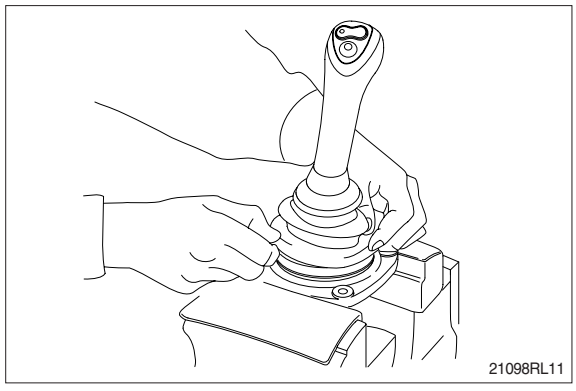

SECTION 7 ELECTRICAL SYSTEM

Group 1 Component Location 7-1
Group 2 Electrical Circuit 7-3
Group 3 Monitoring System 7-26
Group 4 Switches 7-31
Group 5 Electrical Component Specification 7-40
Group 6 Connectors 7-46

GROUP 1 COMPONENT LOCATION

1. LOCATION 1

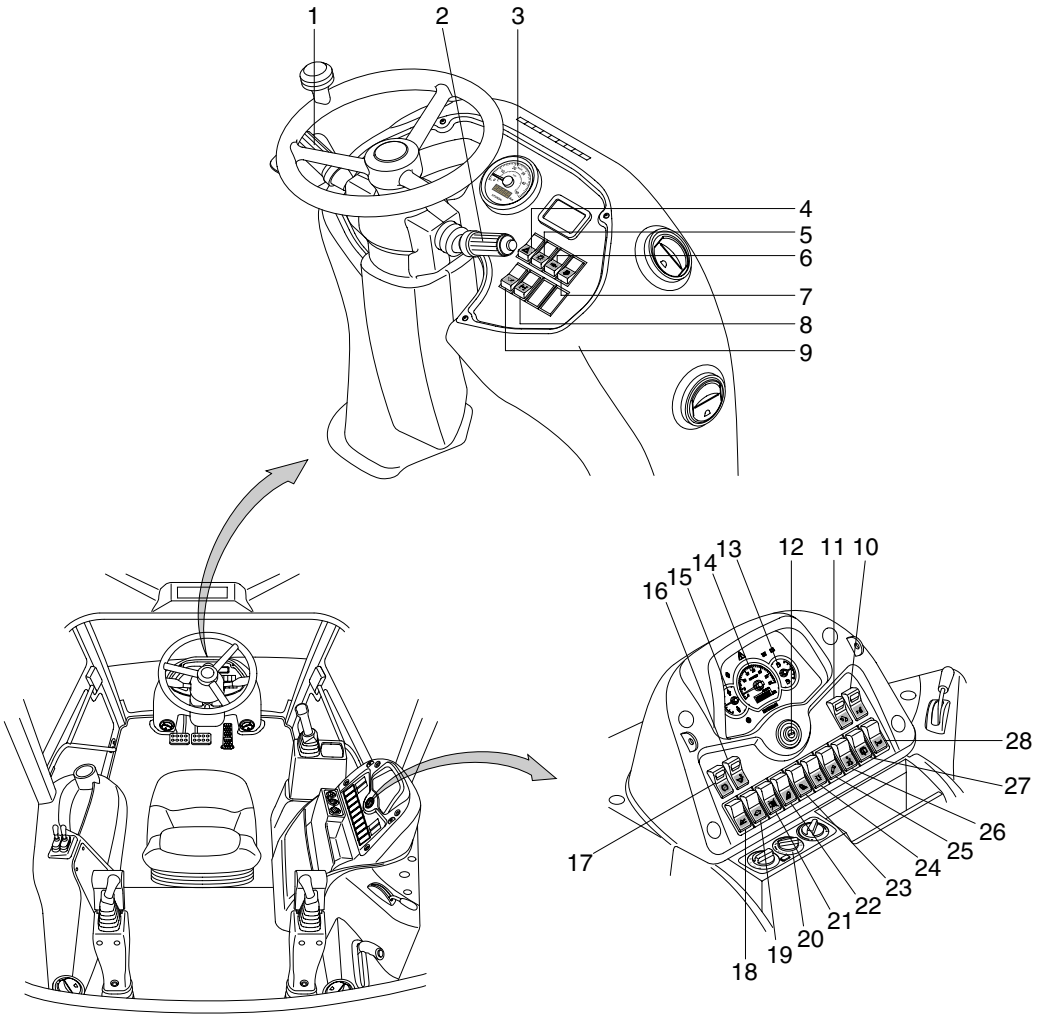

H940S7EL80

1 Gear selector
2 Multi-function switch
3 Speed meter
4 Hazard warning switch
5 Side and head light switch
6 Differential lock switch
7 Fuel warmer switch
8 4 Wheel drive select switch
9 Ride control switch
10 Control pattern change switch (opt)
11 Safety switch (backhoe)
12 Starting switch
13 Fuel level gauge
14 RPM gauge
15 Coolant temp gauge
16 Safety switch (loader)
17 Parking brake switch
18 Return to dig switch
19 Low speed control switch
20 Air conditioner & heater switch
21 Buzzer stop switch
22 Front work lights switch
23 Rear work lights switch
24 Beacon switch
25 Breaker switch
26 Side shift unlock switch
27 Rear window wiper switch
28 Rear wiper switch

2. LOCATION 2

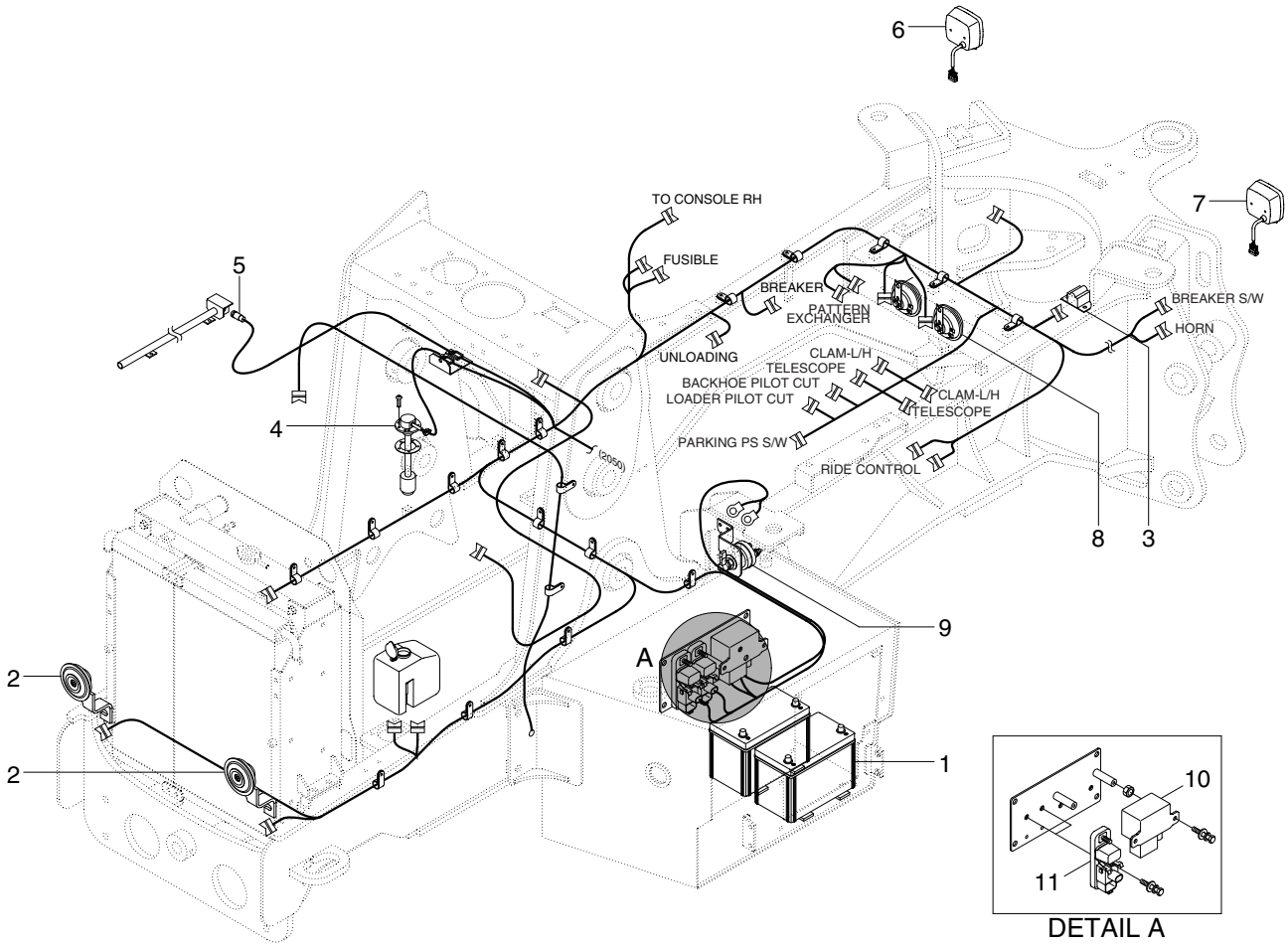

H940C7EL81

1	Battery	5	Proximity switch	9	Master switch
2	Horn	6	Combination lamp - LH	10	Grid relay
3	Back buzzer	7	Combination lamp - RH	11	Power relay
4	Fuel sender	8	Hone		

1. ELECTRICAL CIRCUIT (1/3, MECHANICAL)

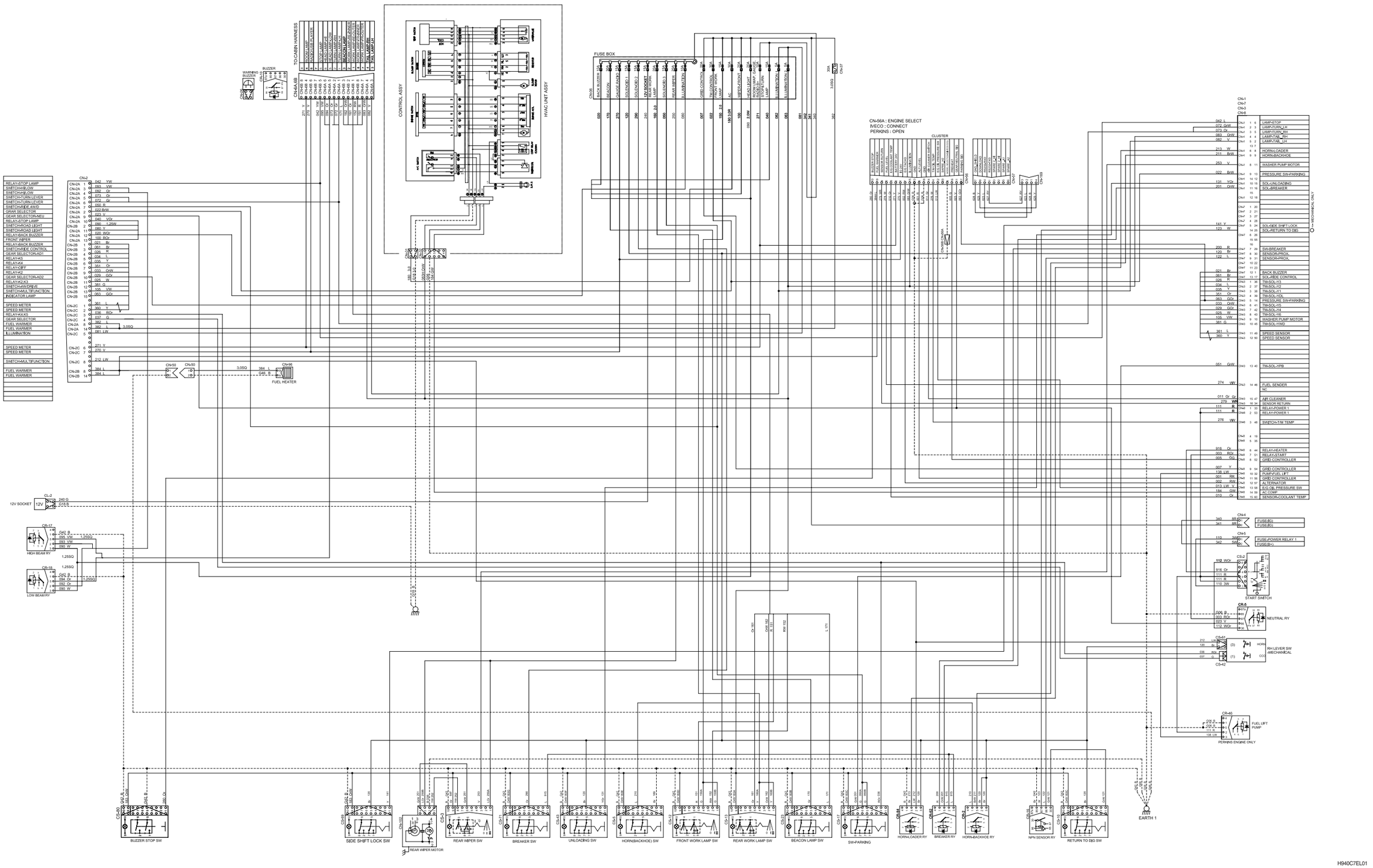

H940C7EL01

ELECTRICAL CIRCUIT (1/3, PILOT)

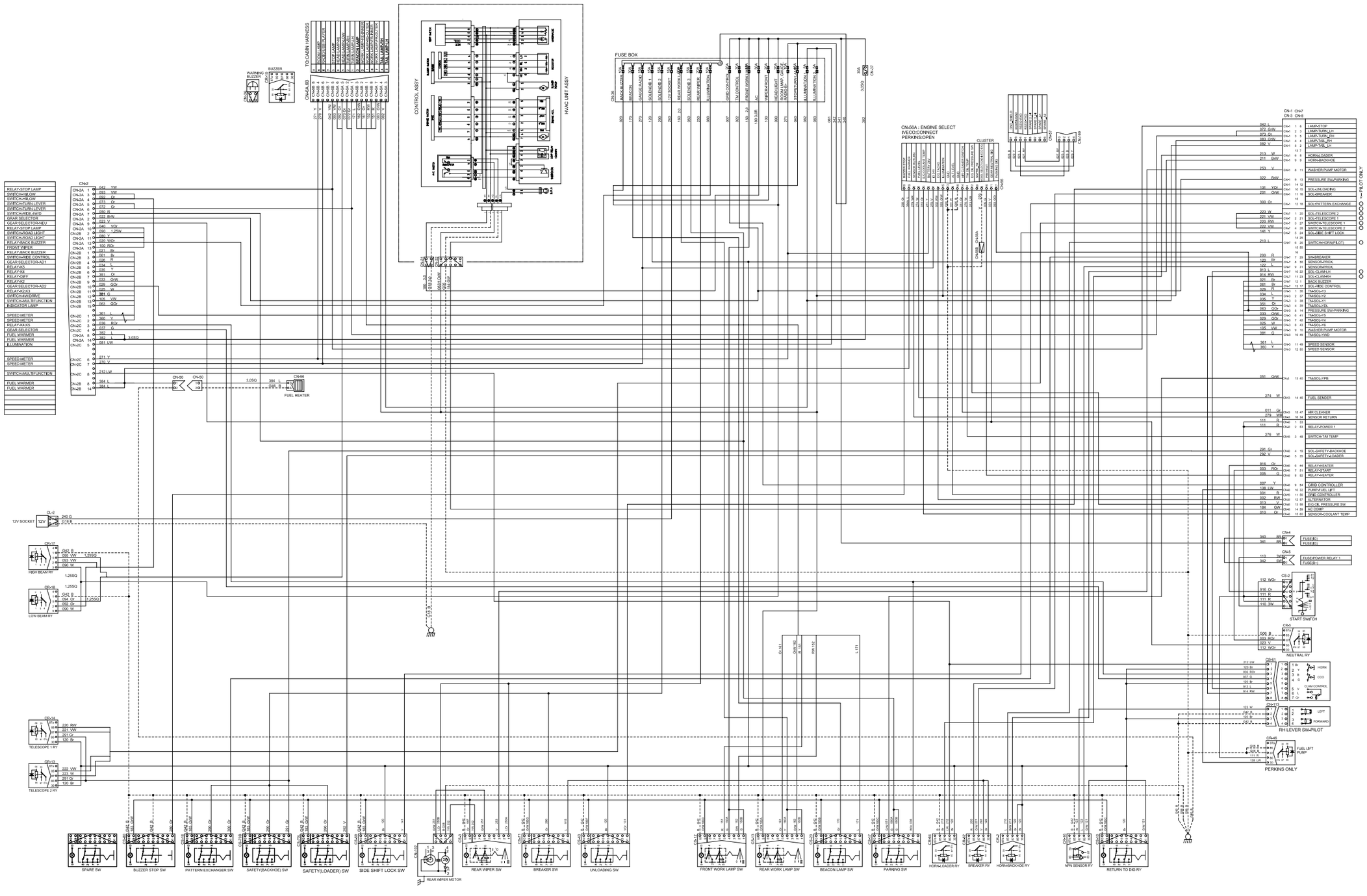

H940C7EL01-1

2. ELECTRICAL CIRCUIT (2/3, MECHANICAL & PILOT)

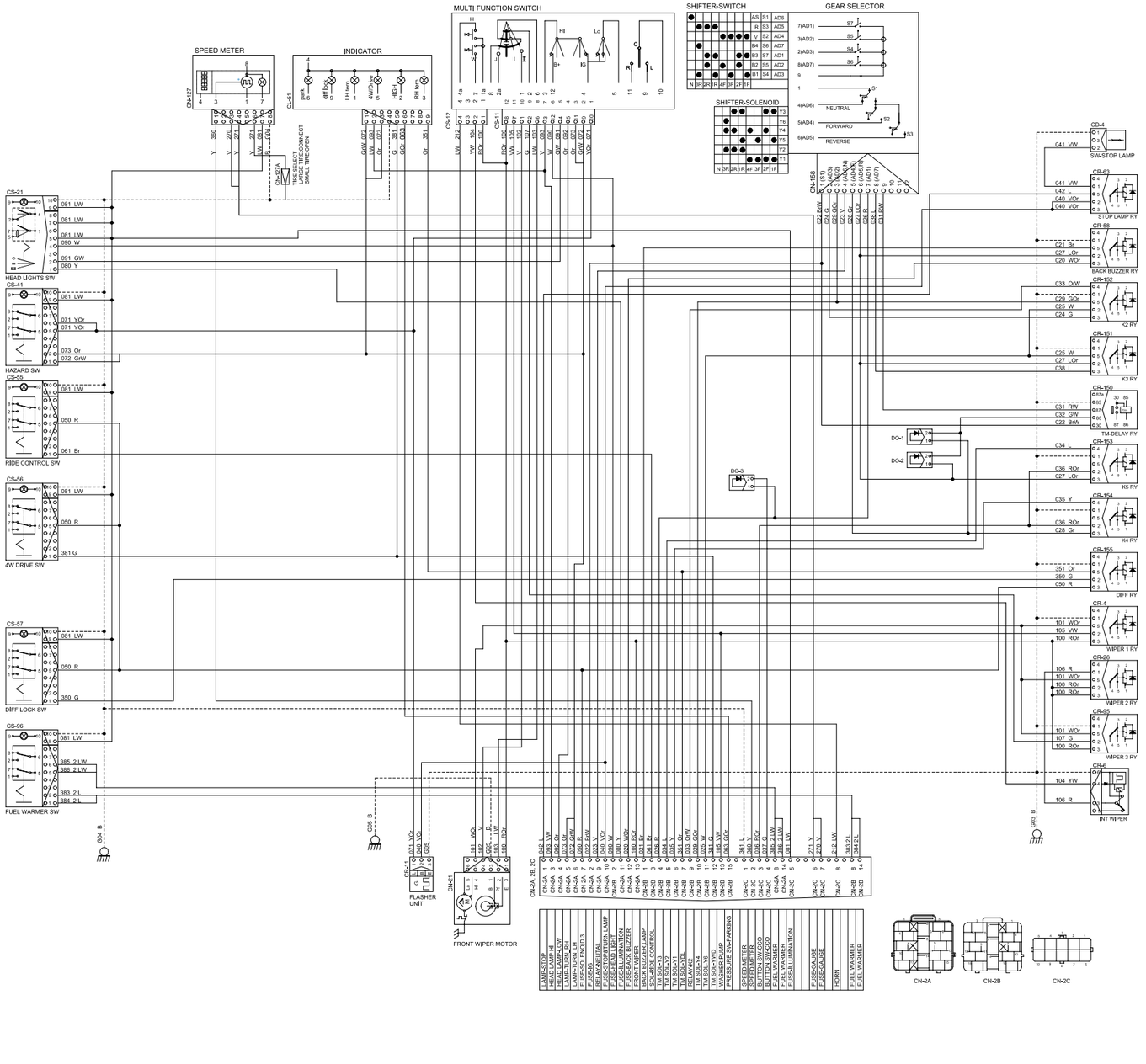

CAB TYPE

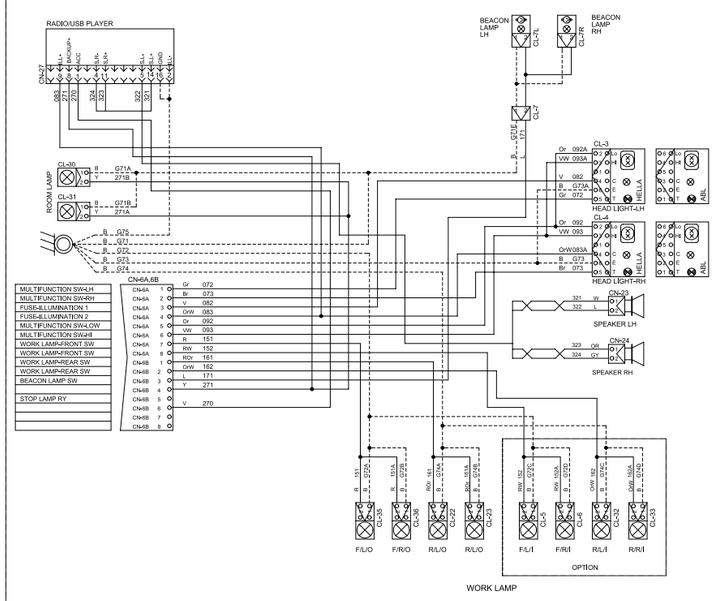

CANOPY TYPE

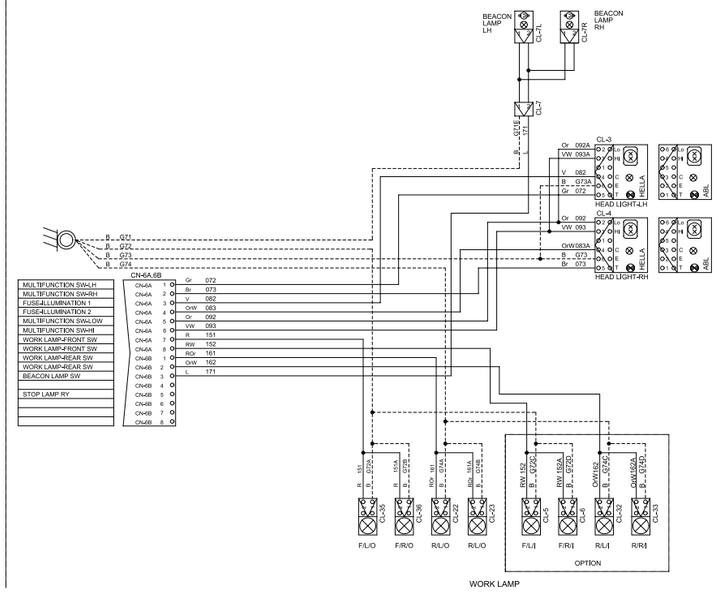

H940S7EL02

3. ELECTRICAL CIRCUIT (3/3, MECHANICAL)

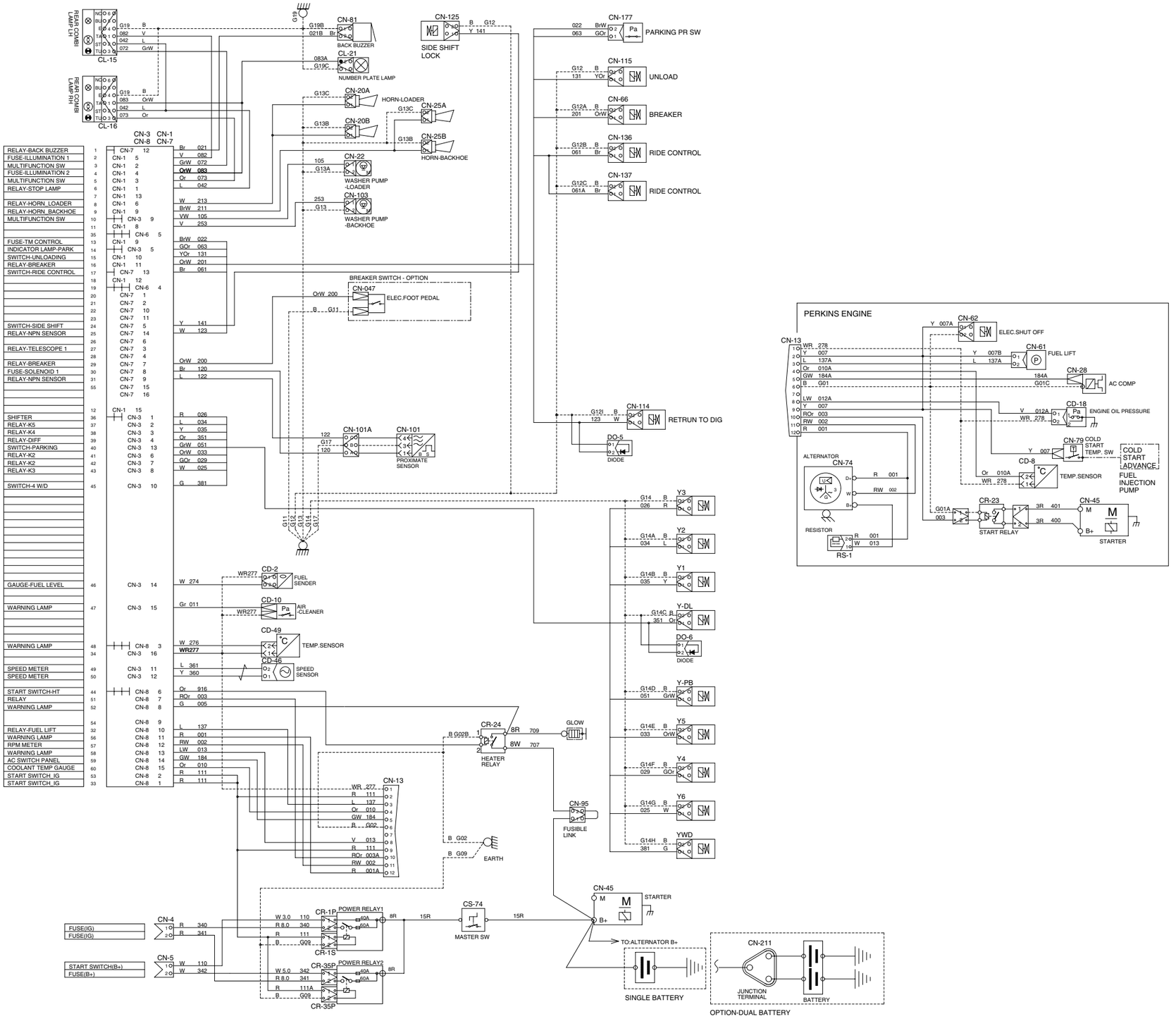

H940S7EL03

ELECTRICAL CIRCUIT (3/3, PILOT)

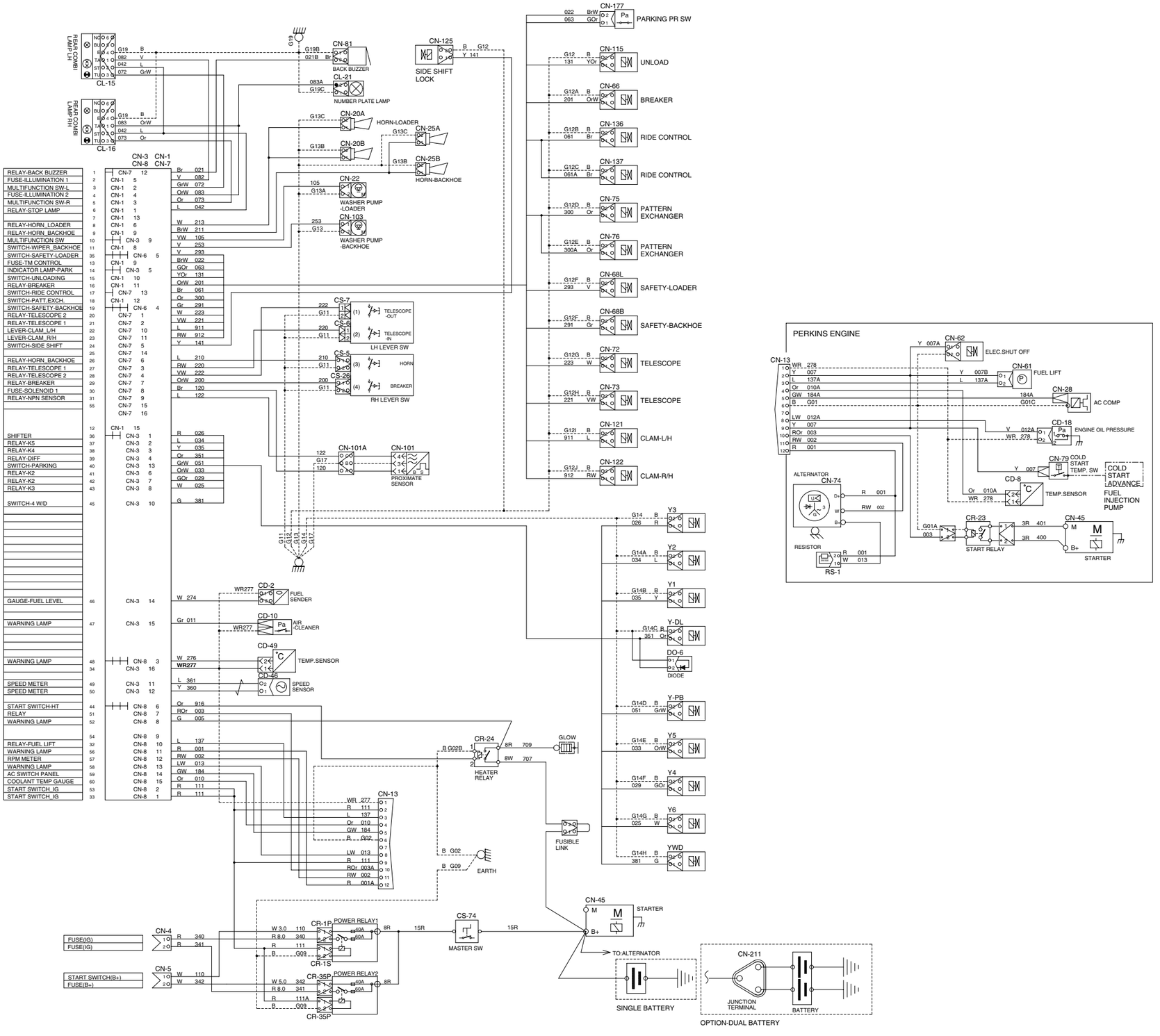

H940S7EL03-1

MEMORANDUM


Robex
HYUNDAI HEAVY INDUSTRIES CO., LTD.
CONSTRUCTION EQUIPMENT DIV.

1. ILLUMINATION CIRCUIT

1) OPERATING FLOW

Fuse box [CN-37] → Head light switch [CS-21 (1)] → Switch ON, 1st step
→ [CS-21 (5, 7)] → All switch indicator lamp ON
→ Fuse box [CN-37, ILL 1] → I/conn [CN-6A (3)]
→ LH Rear combi lamp ON [CL-15 (1)]
→ LH Head lamp ON [CL-3 (4)]
→ Fuse box [CN-37, ILL 2] → I/conn [CN-6A (4)]
→ RH Rear combi lamp ON [CL-16 (1)]
→ RH Head lamp ON [CL-4 (4)]
→ I/conn [CN-1 (4)] → Number plate lamp [CL-21 (2)]

2) CHECK POINT

Engine	Key switch	Check point	Voltage
OFF	ON	① - GND (switch input) ② - GND (switch output) ③ - GND (to light)	12V

※ GND : Ground

ILLUMINATION CIRCUIT

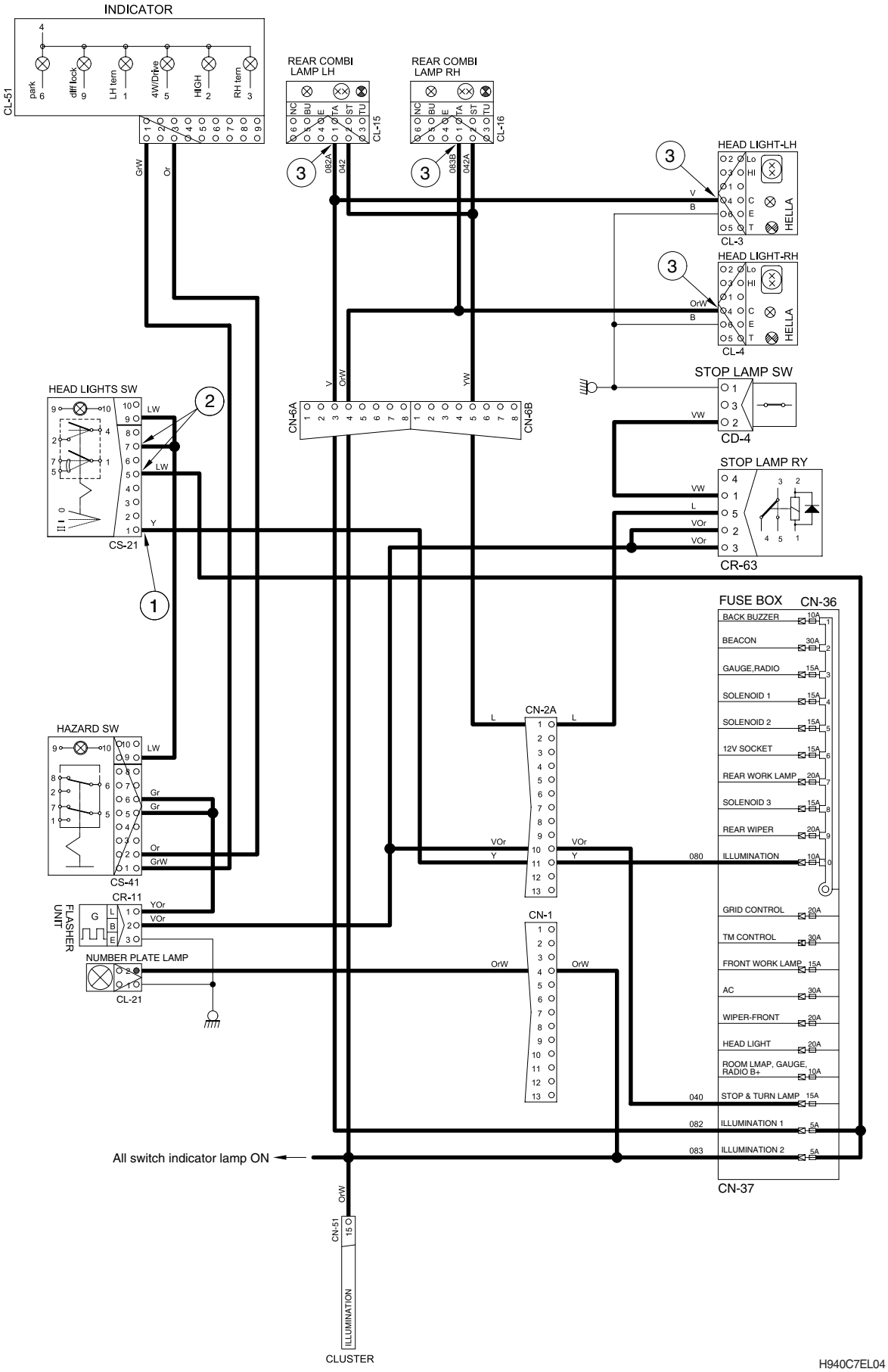

H940C7EL04

2. HEAD LIGHT CIRCUIT

1) OPERATING FLOW

Fuse box [CN-37] → Head light switch [CS-21 (1)] → Light switch ON, 2nd step [CS-21 (2)]
→ Multi function switch [CS-11 (4)]
→ Multi function switch MIDDLE [CS-11(5)] → I/conn [CN-2A (4)]
→ Low beam relay [CR-18 (5)] → I/conn [CN-6A (5)]
→ LH Head light low beam ON [CL-3 (2)]
→ RH Head light low beam ON [CL-4 (2)]
→ Multi function switch DOWN [CS-11(3)] → I/conn [CN-2A (3)]
→ High beam relay [CR-17 (5)] → I/conn [CN-6A (6)]
→ LH Head light high beam ON [CL-3 (3)]
→ RH Head light high beam ON [CL-4 (3)]
→ Cluster high beam pilot lamp ON [CN-51 (2)]

2) CHECK POINT

Engine	Key switch	Check point	Voltage
OFF	ON	① - GND (switch input) ② - GND (switch output) ③ - GND (multi function input) ④ - GND (multi function output, low beam) ⑤ - GND (multi function output, high beam)	12V

※ GND : Ground

HEAD LIGHT CIRCUIT

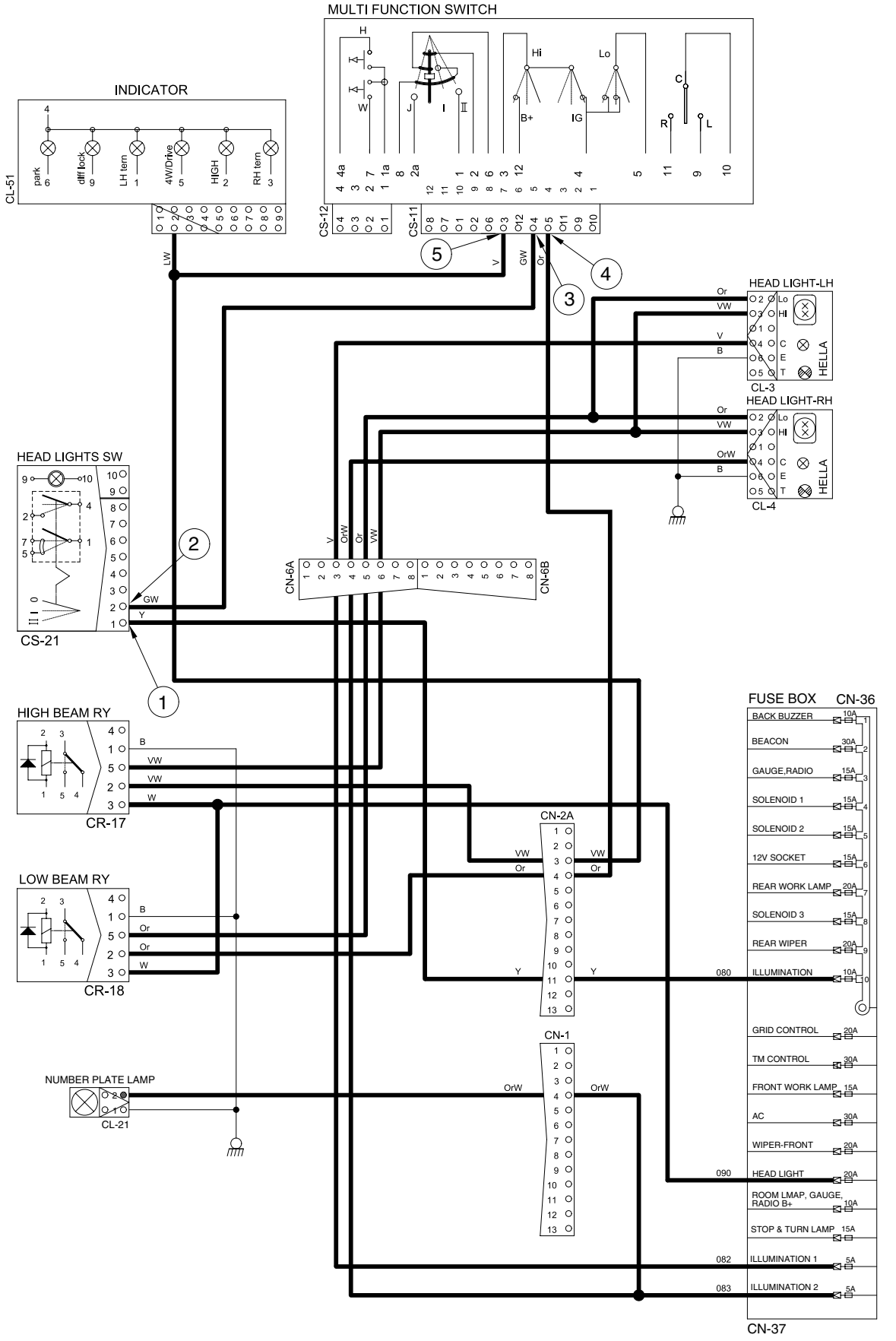

H940C7EL05

3. WORK LIGHT SWITCH

1) OPERATING FLOW

(1) Work lamp switch ON (1st step)

Front work lamp switch [CS-12 (1)→(5)] → I/conn [CN-6A (7)]
- LH Front work lamp, outside [CL-35 (2)]
- RH Front work lamp, outside [CL-36 (2)]

Rear work lamp switch [CS-13 (1)→(5)] → I/conn [CN-6B (1)]
- LH Rear work lamp, outside [CL-22 (2)]
- RH Rear work lamp, outside [CL-23 (2)]

(2) Work lamp switch ON (2nd step)

Front work lamp switch [CS-12 (4)→(2)] → I/conn [CN-6A (8)]
- LH Front work lamp, inside [CL-5 (2)]
- RH Front work lamp, inside [CL-6 (2)]

Rear work lamp switch [CS-13 (4)→(2)] → I/conn [CN-6B (2)]
- LH Rear work lamp, inside [CL-32 (2)]
- RH Rear work lamp, inside [CL-33 (2)]

2) CHECK POINT

Engine	Key switch	Check point	Voltage
OFF	ON	① - GND (work lamp power input) ② - GND (work lamp power output) ③ - GND (front work lamp) ④ - GND (rear work lamp)	12V

※ GND : Ground

WORK LIGHT SWITCH

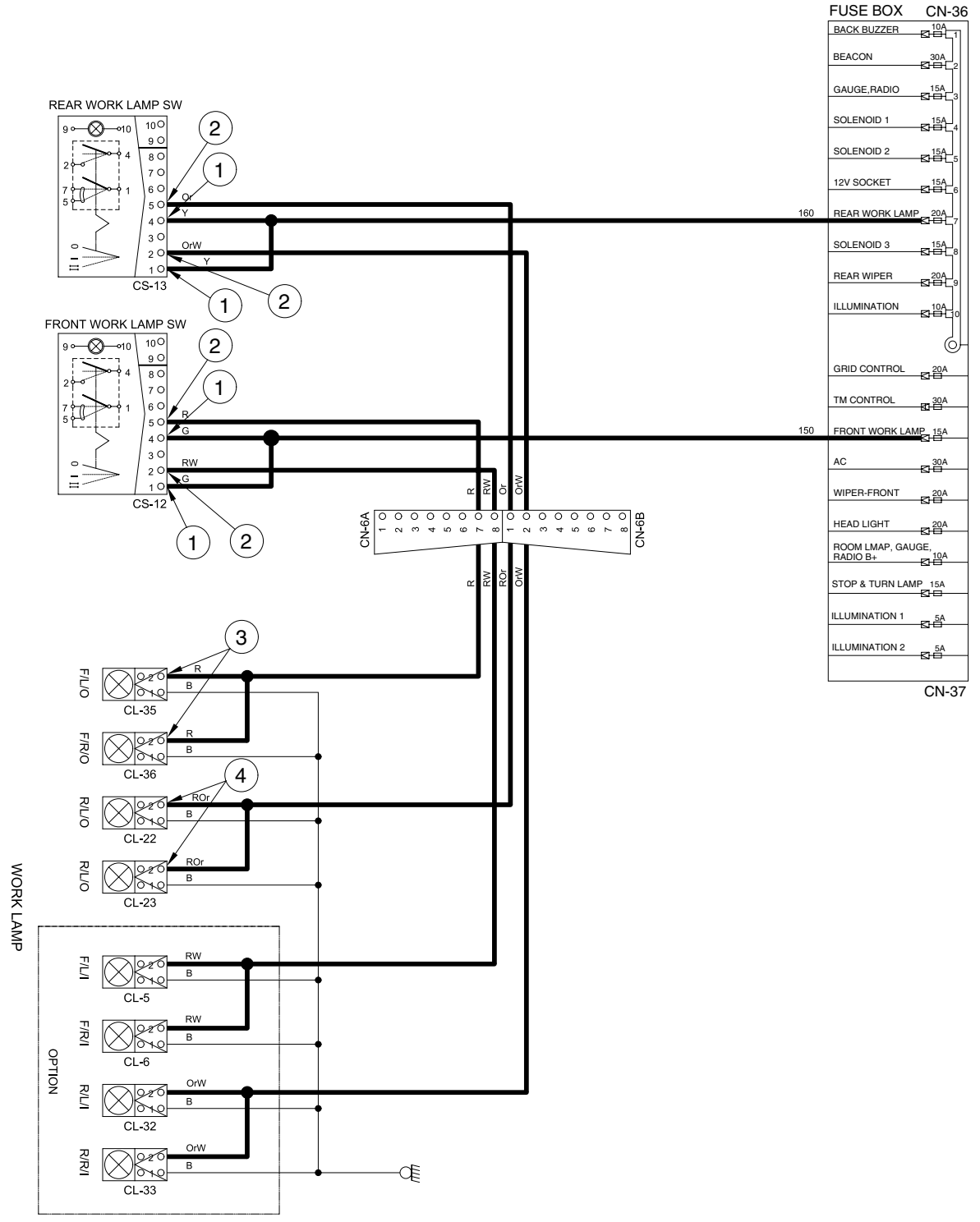

H940C7EL06

4. STARTING CIRCUIT

1) OPERATING FLOW

Battery(+) terminal → Master switch [(CS-74)]
→ Power relay 1 [CR-1P] → I/conn [CN-5 (1)] → Start switch [CS-2 (1)]
→ Power relay 2 [CR-35P] → I/conn [CN-5 (2)] → Fuse box [CN-37]

※ The gear selector lever is neutral position. It is necessary condition before the starting.
The gear selector has an output signal which is activated whenever the shift lever is in the neutral position. This signal can be used to control a relay and prevent engine from starting whenever the shift lever is not in the neutral position.

(1) When start key switch is in ON position

Start switch ON → Start switch [CS-2 (2, 3)] → I/conn [CN-8 (1, 2)]
→ Power relay 1 [CR-1S(1) → CR-1P(2)] → I/conn [CN-4 (1)]
→ Fuse box [CN-36]
→ Power relay 2 [CR-35S(1) → CR-35P(2)] → I/conn [CN-4 (2)]
→ Fuse box [CN-37]

(2) When start key switch is in START position

Start switch START [CS-2 (6)] → Start safety relay [CR-5 (87a)→(87)] → I/conn [CN-8 (7)] → I/conn [CN-13 (10)] → Start relay [CR-23] →
Starter (terminal B^+ and M connector of start motor)

2) CHECK POINT

Engine	Key switch	Check point	Voltage
Running	ON	① - GND (battery B^+) ② - GND (Power relay) ③ - GND (start key B terminal) ④ - GND (start key BR, ACC terminal) ⑤ - GND (start key C terminal) ⑥ - GND (start safety relay output)	12 V

※ GND : Ground

STARTING SWITCH

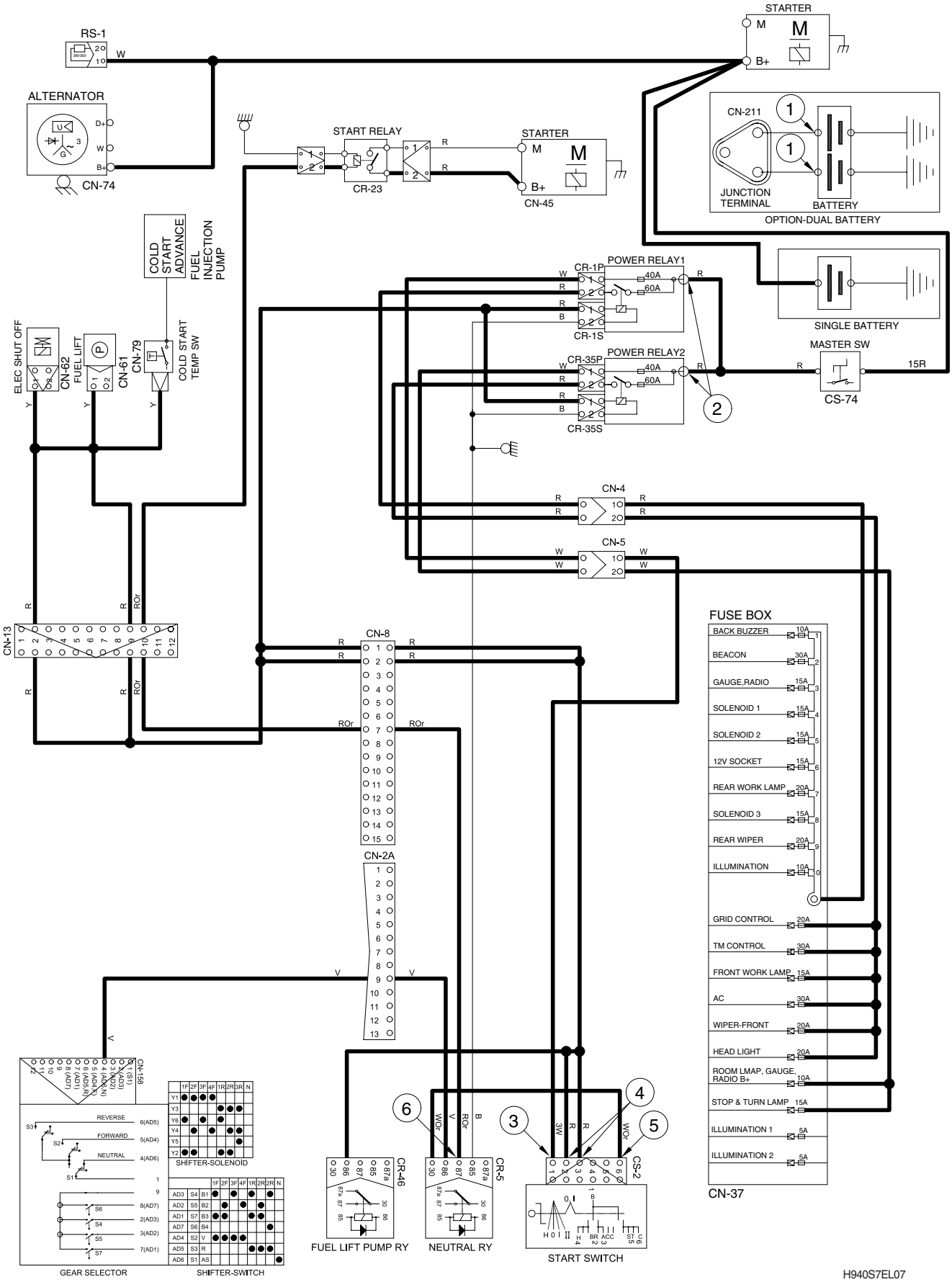

5. CHARGING CIRCUIT

When the starter is activated and the engine is started, the operator releases the key switch to the ON position.

Charging current generated by operating alternator flows into the battery.

The current also flows from alternator to each electrical component and controller through the fuse box.

1) OPERATING FLOW

(1) Warning flow

Altermator [CN-74 (D^+)] → I/conn [CN-13 (12)] → I/conn [CN-8 (11)] →
Charge warning lamp ON [CL-56 (6)]

(2) Charging flow

Alternator → Starter (B^+) → Battery(+) terminal → Charging

2) CHECK POINT

Engine	Key switch	Check point	Voltage
OFF	ON	① - GND (battery) ② - GND (alternator B^+) ③ - GND (alternator D^+)	12V

※ GND : Ground

※ MCU : Machine control unit

CHARGING CIRCUIT

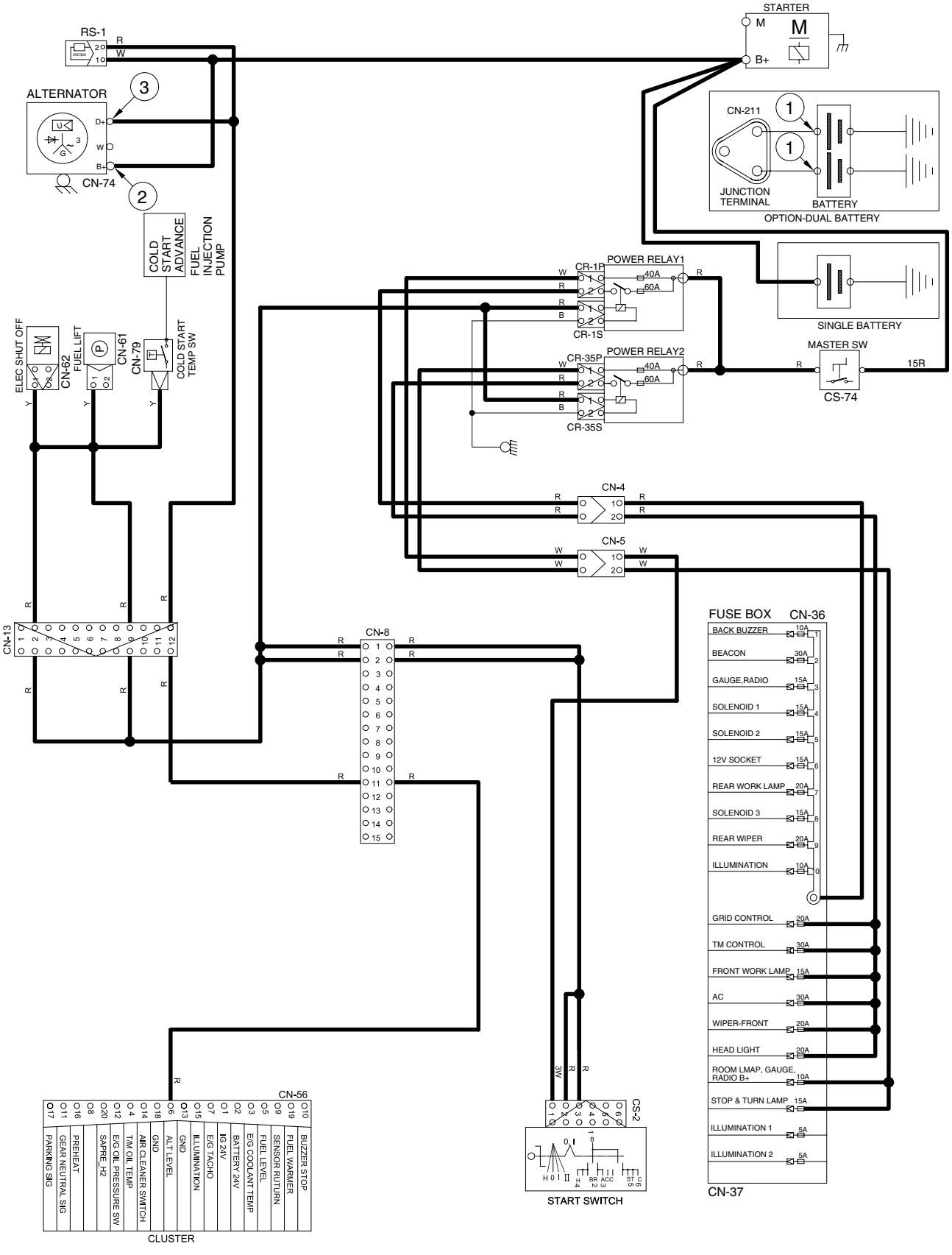

H940SEL08

6. PREHEATING CIRCUIT

Combustion chamber glow plugs are used in order to give satisfactory starting of low ambient temperatures.

1) OPERATING FLOW

Start switch ON → Start switch [CS-2 (4)] → I/conn [CN-8 (9)]

→ Heater relay [CR-24 (2)] → Pre-heater ON

→ Heater relay [CR-24 (1)] → I/conn [CN-8 (8)] → Warning lamp ON [CN-56 (16)]

2) CHECK POINT

Engine	Key switch	Check point	Voltage
STOP	HEAT	① - GND (battery B^+) ② - GND (fuse box) ③ - GND (heater relay)	12V

※ GND : Ground

PREHEATING CIRCUIT

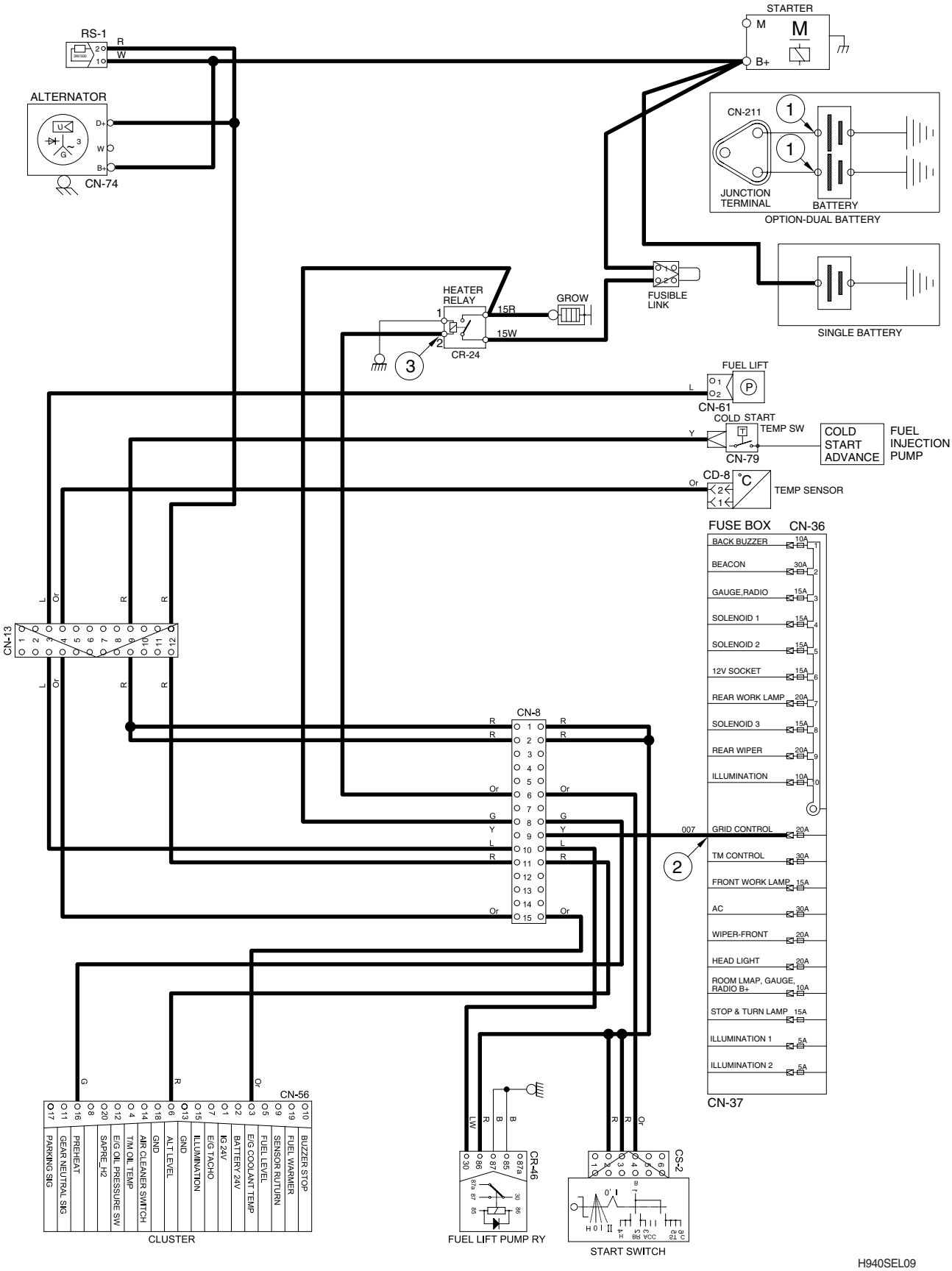

H940SEL09

7. ELECTRIC PARKING, DECLUTCH CIRCUIT

1) OPERATING FLOW

(1) Parking OFF

Fuse box [No.8] → Parking switch OFF [CS-17 (7)] → I/conn [CN-8 (13)]
→ T/M solenoid valve ON (activated) [Y-PB(1)] → Parking brake released (by hydraulic pressure)

(2) Parking ON

Fuse box [No.8] → Parking switch ON → [CS-17 (2)] → I/conn [CN-2C (3)]
→ Relay-K4 [CR-154 (3)→(5)]
→ Relay-K5 [CR-153 (3)→(5)]
→ Parking brake applied (by spring force)

(3) Declutch ON

Clutch cut-off switch ON [CS-61 (4)] → I/conn [CN-2C (4)] → DIODE 3 [(2)→(1)]
→ I/conn [CN-3 (1)] → Gear selector lever [CN-158 (7)]

2) CHECK POINT

Engine	Key switch	Check point	Voltage
Running	ON	① - GND (parking switch input) ② - GND (parking switch output) ③ - GND (parking solenoid) ④ - GND (clutch cut-off switch input)	12V

※ GND : Ground

ELECTRIC PARKING, PILOT CUT OFF CIRCUIT

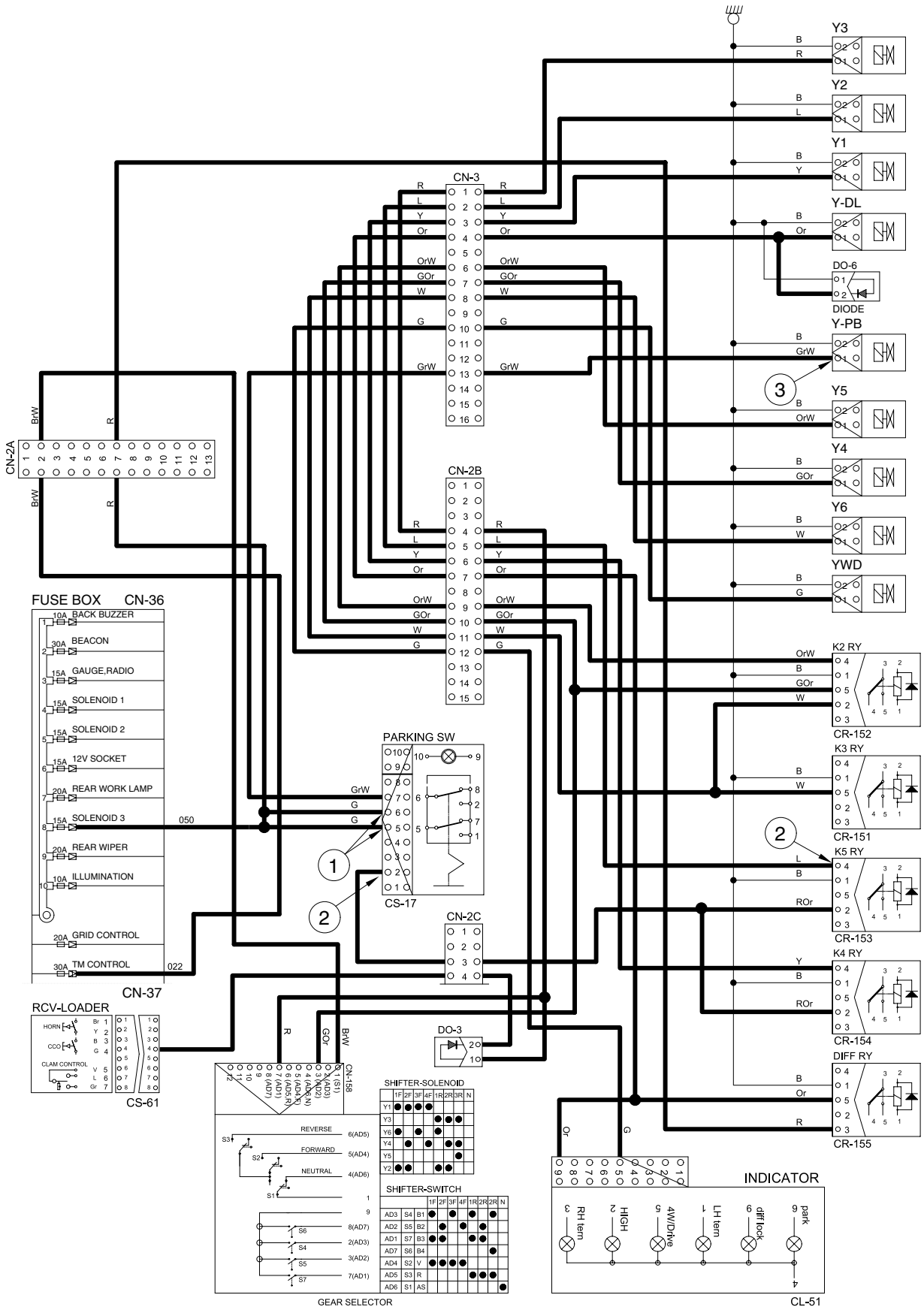

H940C7EL10

8. WIPER AND WASHER CIRCUIT

1) OPERATING FLOW

Fuse box[CN-37] → Wiper relay 1 [CR-4 (3)]
→ Wiper relay 2 [CR-26 (2), (3)]
→ Wiper relay 3 [CR-95 (3)]
→ Front wiper motor [CN-21 (1)]
→ Multi function switch [CS-11 (8), CS-12 (1)]

Fuse box[No.9] → Rear wiper switch [CS-3 (1)]
→ Rear wiper motor [CN-102 (3)]

(1) Front washer switch ON

① Washer switch ON [CS-11 (8)→(7)] → I/conn [CN-2B (13)] → I/conn [CN-3 (9)] → Washer operating
→ Wiper relay 1 [CR-4 (3)→(5)]
→ Front wiper motor [CN-21 (5)]
→ Wiper motor operating (low)

(2) Front wiper switch ON

① **INT position**

Wiper switch ON [CS-12 (1)→(2)] → INT relay [CR-6 (4)→(3)] →
Wiper relay 2 [CR-26 (3)→(5)] → Front wiper motor [CN-21(5)] →
Front wiper motor intermittently operating

② **Lo position**

Wiper switch ON [CS-11 (8)→(2)] → Wiper relay 3 [CR-26 (3)→(5)] →
Front wiper motor [CN-21 (5)] → Front wiper motor operating (low)

③ **Hi position**

Wiper switch ON [CS-11 (8)→(1)] → Front wiper motor [CN-21(4)] →
Front wiper motor operating (high)

(3) Auto-parking (when switch OFF)

Switch OFF → Fuse box [CN-37] → Front wiper motor [CN-21 (1)→(2)] →
Multi function switch [CS-12 (6)→(2)] → Wiper relay 3 [CR-26 (3)→(5)] →
Front wiper motor [CN-21 (5)] → Wiper motor stop

(4) Rear wiper and washer switch

① **Wiper switch ON** (1st step)

Wiper switch ON [CS-3 (1)→(6)] → Rear wiper motor [CN-102(4)] → Rear wiper motor operating

② **Washer switch ON** (2nd step)

Washer switch ON [CS-3 (1)→(3)] → I/conn [CN-1 (8)] → Rear washer tank [CN-103(1)] →
Washer operating

2) CHECK POINT

Condition	Check point	
Engine : Stop Key switch : ON Voltage : 12V	① - GND (front wiper switch power input) ② - GND (rear wiper switch power input) ③ - GND (wiper relay power input) ④ - GND (front wiper motor Lo power input) ⑤ - GND (front wiper motor High power input)	⑥ - GND (front washer power output) ⑦ - GND (rear washer power output) ⑧ - GND (front wiper motor power output) ⑨ - GND (rear wiper motor power output)

※ GND : Ground

WIPER AND WASHER CIRCUIT

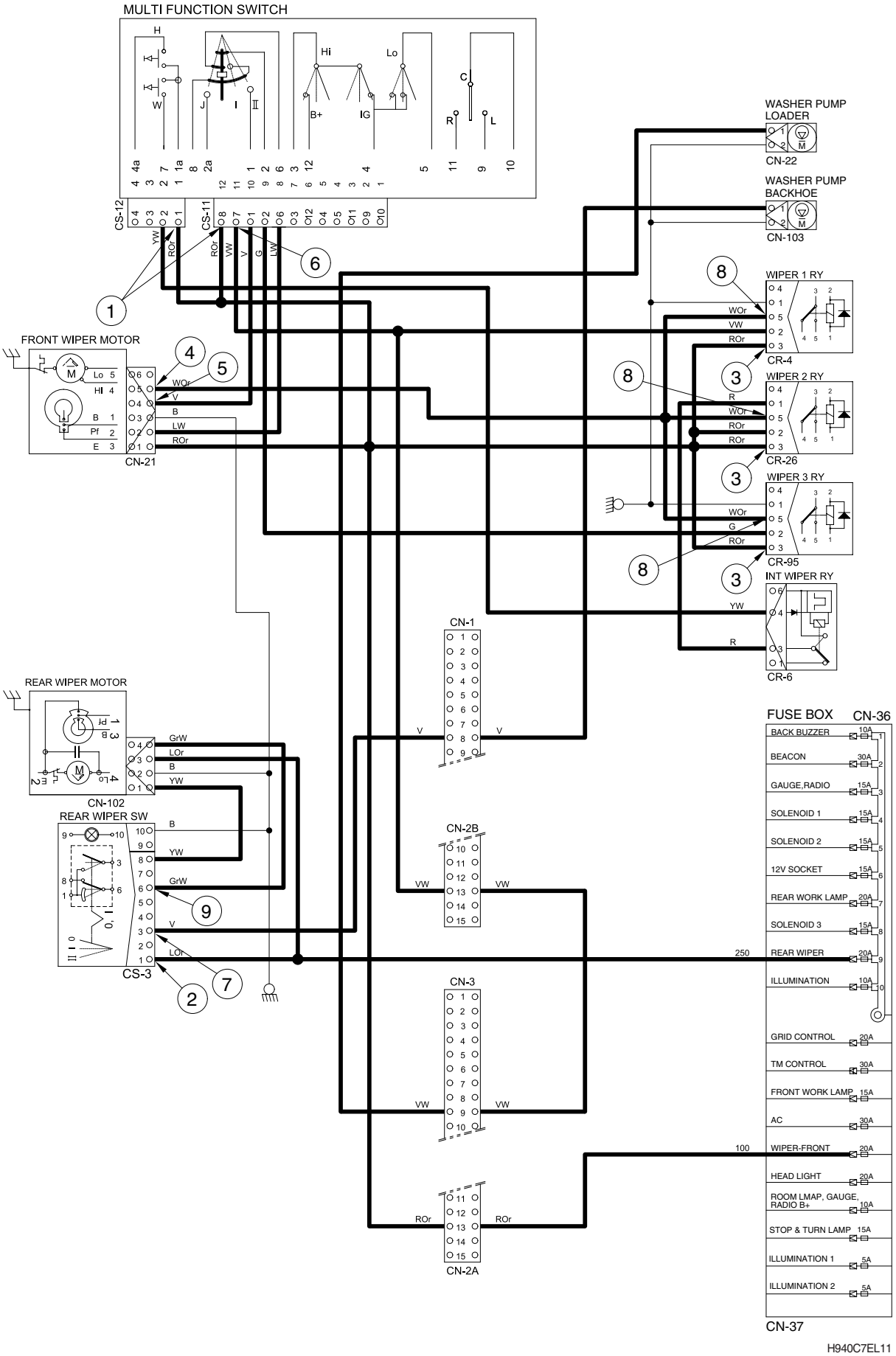

HAZARD, TURN AND ROTARY CIRCUIT

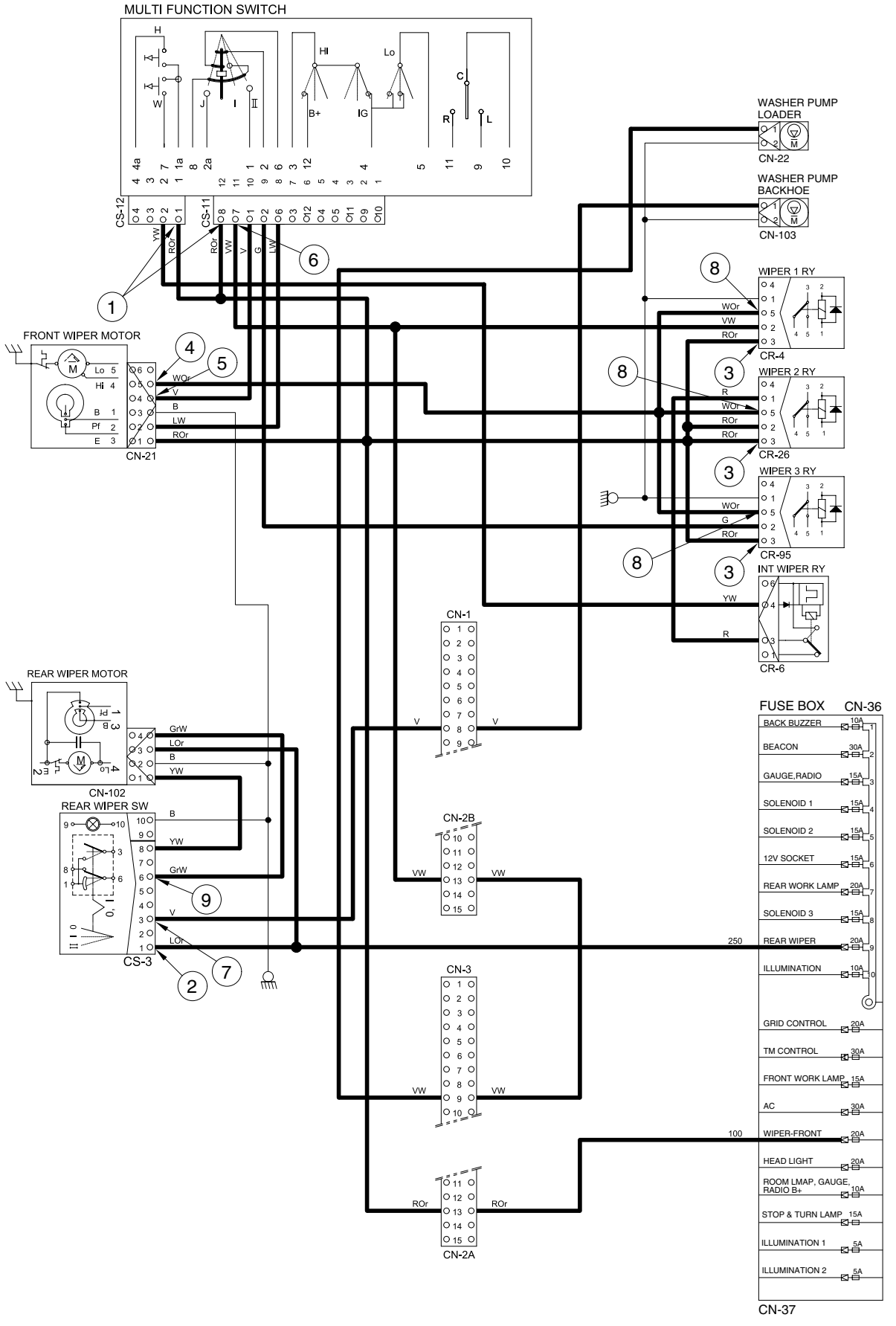

GROUP 3 MONITORING SYSTEM

The indicators are located on the front console and additional instruments and gauges are located at the side of the driver's seat.

1) FRONT CONSOLE

The master warning light and indicator lamps are located in the front console.

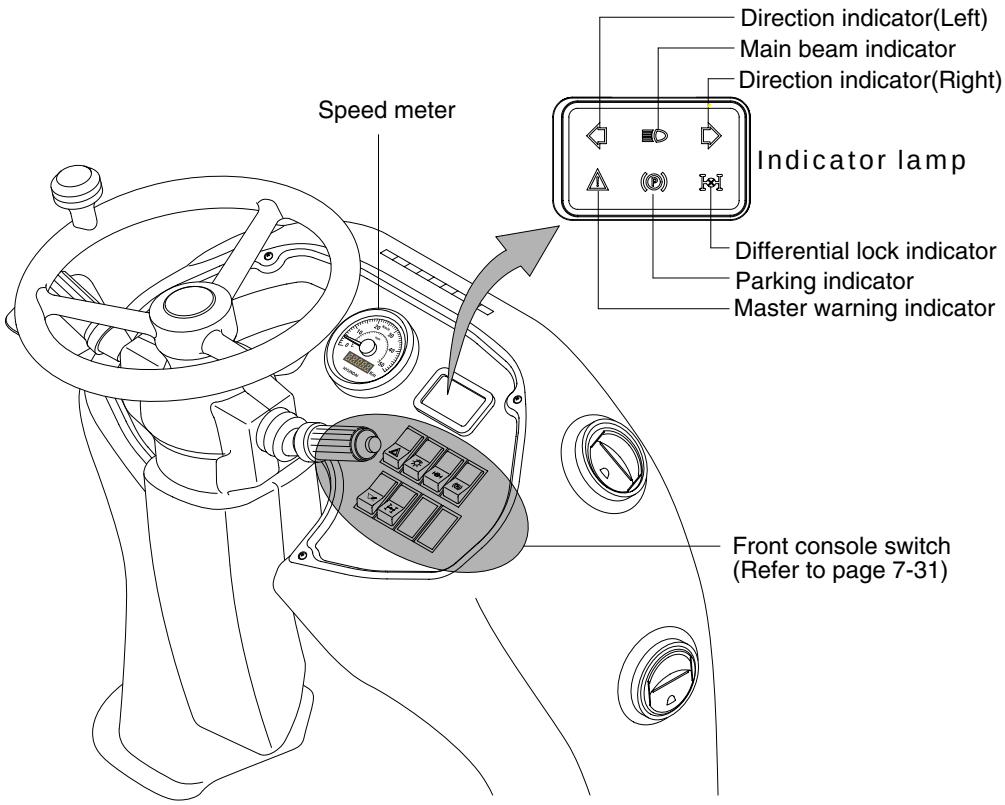

H940C7EL70

(1) Indicator lamps

① Main beam indicator

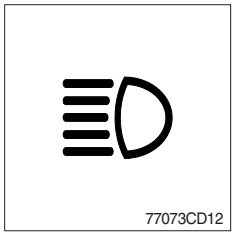

- This lamp works when the illuminating direction is upward.
- This lamp comes ON when the dimmer switch is operated, e.g., when passing another vehicle.

② Direction indicators

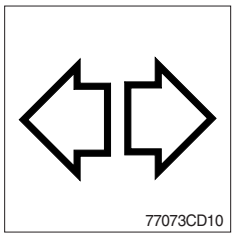

- This lamp flashes when the signal indicator lever is moved.

③ Parking indicator



- When the parking brake is actuated, the lamp lights ON.

※ Check the lamp is OFF before driving.

④ Differential lock indicator

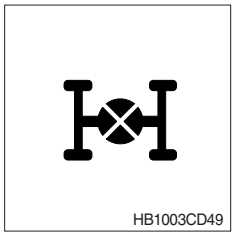

- When the differential lock is actuated, the lamp lights ON.

⑤ 4 Wheel drive indicator (option)

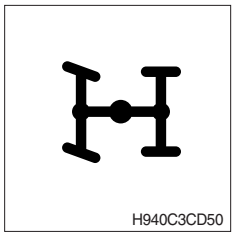

- When the 4 wheel drive is actuated, the lamp lights ON.

(2) Speedometer (option)



① Indicates the road speed in miles per hour (MPH) and/or kilometers per hours (km/h).

② Also, shows total traveling mileage of the machine.

2) SIDE CONSOLE

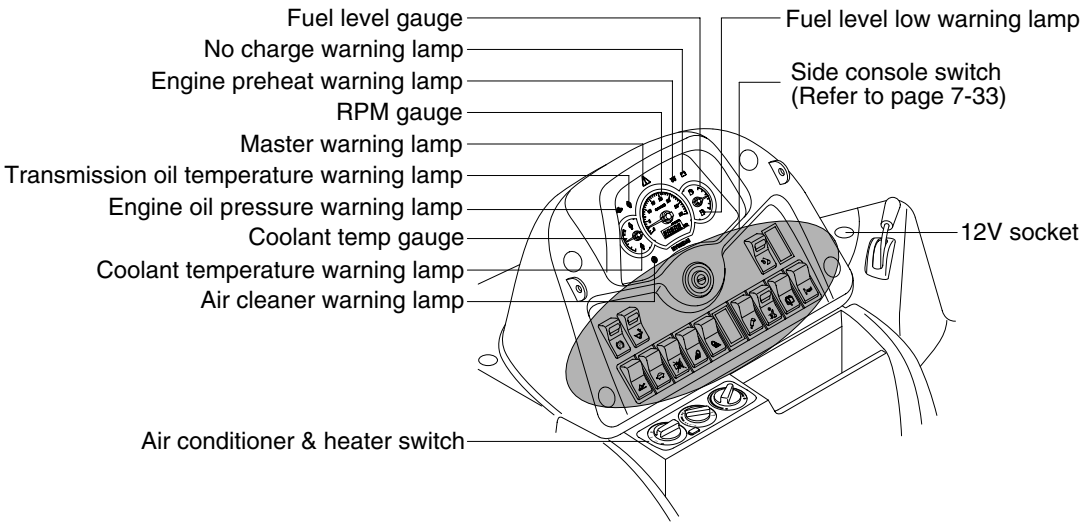

H940S7EL71

(1) RPM gauge



H940C3CD45

① Indicates the engine speed in revolutions per minute (rpm). The rpm is shown on the outer ring. Each division is 100 rpm.

② Records the total running time of the engine. Use it to keep a check of running hours during maintenance intervals.

(2) Coolant temperature gauge

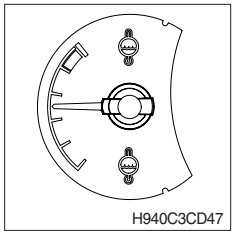

H940C3CD47

① Indicates the temperature of the engine coolant. The gauge pointer will gradually swing upwards as the coolant temperature rises.

(3) Fuel level gauge

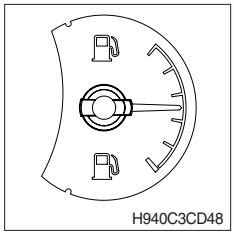

H940C3CD48

① Indicates the level of diesel fuel in the fuel tank. Do not let the fuel tank run dry, or air will enter the fuel system.

(4) 12V socket

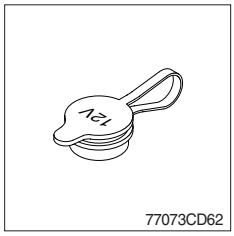

① Utilize the power of 12 V as your need and do not exceed power of 12 V, 30 W.

(5) Warning lamps with audible alarm

※ If below lamps come on while the engine is running, stop the engine as soon as it is safe to do so. Do not use the machine until the fault is put right.

① No charge warning lamp

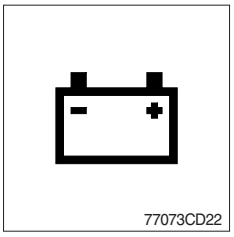

- This lamp is ON when key ON, it is turned OFF after starting the engine.
- Check the battery charging circuit when this lamp comes ON, during engine operation.

② Engine preheat warning lamp

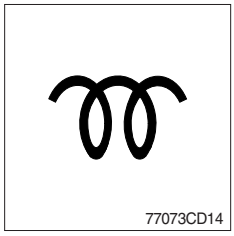

- This lamp lights ON when start switch is turned clockwise to the ON position. Light will turn off after approximately 10~20 seconds, depending on engine coolant temperature, indicating that preheating is completed.
- When the lamp goes out, the operator should start cranking the engine.

③ Engine oil pressure warning lamp

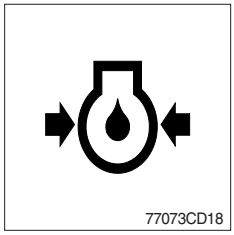

- This lamp is comes ON after starting the engine because of the low oil pressure.
- If the lamp comes ON during engine operation, shut OFF engine immediately. Check oil level.

④ Transmission oil temperature warning lamp

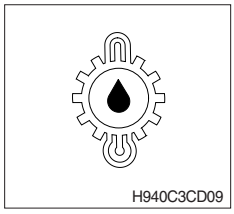

- This lamp informs the operator that transmission oil is above the specified temperature.
  - · **ON** : Abnormal
  - · **OFF** : Normal

※ When this lamp lights up during operation, stop the engine and check the machine.

⑤ Air cleaner warning lamp

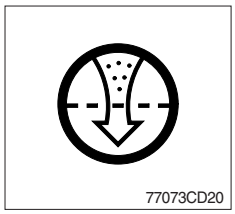

- This lamp lights ON when the filter of air cleaner is clogged.

※ Check the filter and clean or replace it when the lamp is ON.

⑥ Master warning lamp



① This master warning lamp will illuminate when any of the below warning lights are illuminated.
Air cleaner blocked ; Engine preheat ; Transmission oil temperature ; Engine oil pressure ; No charge ; Fuel level low ; Coolant temperature.

※ When this warning lamp lights ON, machine must be checked or serviced as soon as possible.

⑦ Fuel level low warning lamp

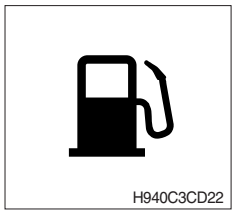

- Fill the fuel immediately when the lamp is turned ON.

⑧ Coolant temperature warning lamp

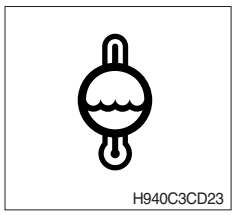

- This lamp is turned ON when the temperature of coolant is over the normal temperature (104°C, 219°F).

※ Check the cooling system when the lamp is ON.

GROUP 4 SWITCHES

1) START SWITCH

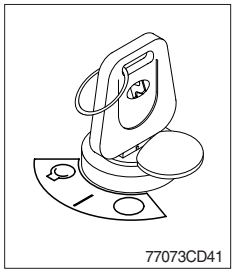

① There are three positions, OFF, ON and START.

- ◯ (OFF) : None of electrical circuits activate.
- | (ON) : All the systems of machine operate.
- (START) : Use when starting the engine. Release key immediately after starting.

⚠ Key must be in the ON position with engine running to maintain electrical and hydraulic function and prevent serious machine damage.

2) FRONT CONSOLE SWITCHES

Each switch has an insert with a graphic symbol, this symbol and the switch descriptions are detailed below.

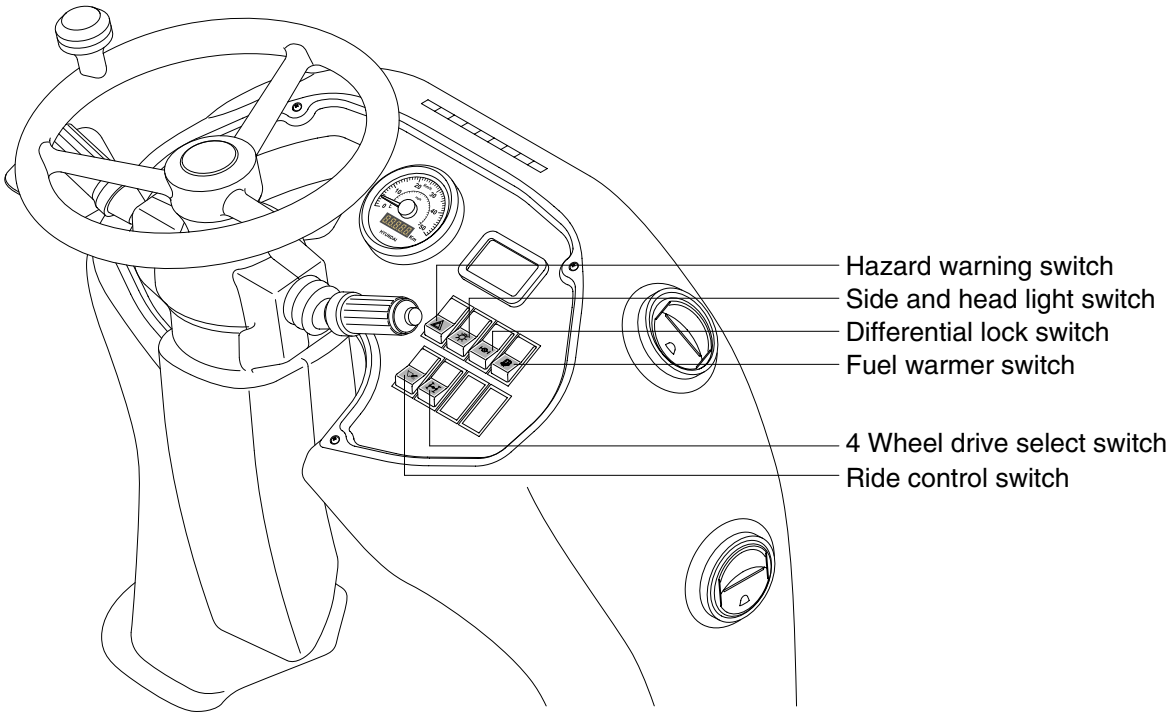

H940C3CD60

(1) Side lights and headlights switch

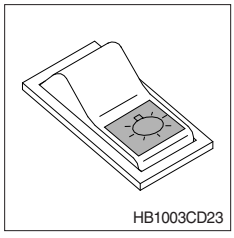

① This switch use to operate the side lights and head lights by two steps.

- 1st step : Side lights come ON.
- 2nd step : Head lights come ON.

(2) 4 Wheel drive select switch (option)

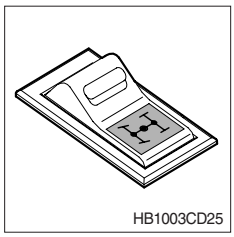

① Press this switch for 4 wheel drive mode.

※ Use 2 wheel drive mode when driving long distance or high speed.

※ Use 4 wheels drive mode when operating in heavy duty site conditions, for instance, deep mud, undulating surfaces, slurry etc.

(3) Differential lock switch

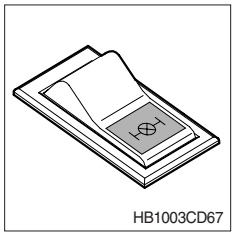

① This switch is used to apply differential lock.
The differential lock gives equal power to both rear wheels and is used in conditions when traction is poor.

※ Make sure that this switch must be on when machine is stationary and neutral position of FNR lever.

⚠ Do not switch on driving. Otherwise it will cause the failure of differential and differential lock system.

(4) Fuel warmer switch (option)

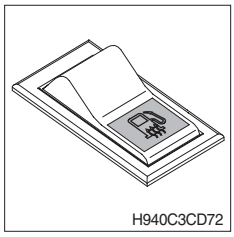

① This is used to operate the fuel warmer system in cold weather.

② Turn engine starting switch to "ON" position and press the fuel warmer switch ON.
Then, start engine after waiting about 1-2 minutes.
More time may take according to ambient temperature.

※ It is recommended to press this switch off when the coolant temperature reaches about 50˚C.

(5) Ride control switch (if fitted)

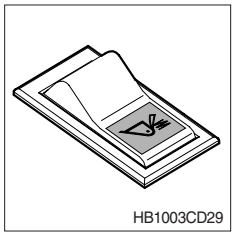

① This switch is used to operate the ride control system.

② The ride control system will smooth the ride of the machine during traveling uneven grounds.

(6) Hazard warning switch

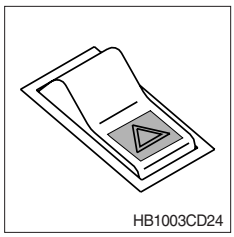

① Press to switch on the hazard warning lights. A light on the instrument panel flashes with the outside light.

3) SIDE CONSOLE SWITCHES

Each switch has an insert with a graphic symbol, this symbol and the switch descriptions are detailed below. The pilot lamp is turned ON when operating these switches.

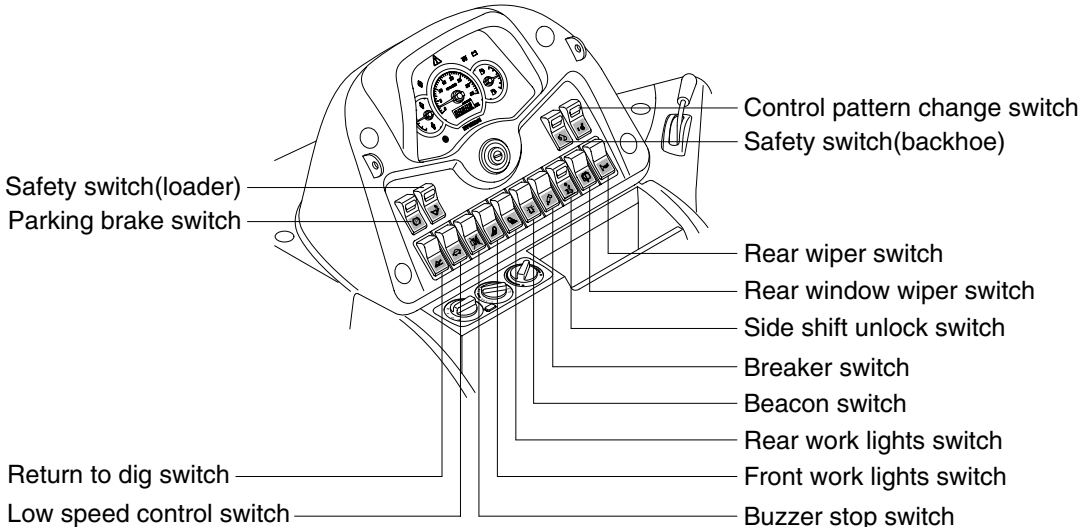

H940S3CD61

(1) Buzzer stop switch

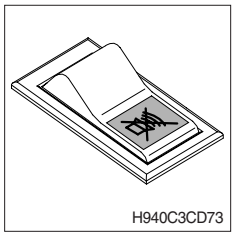

H940C3CD73

① This switch is used to stop the buzzer sound when the machine has a problem.
In this case, if the switch is pressed, the sound will be stopped.

※ Be sure to check machine for problems.

(2) Beacon switch (option)

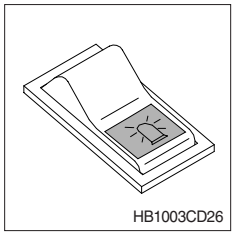

HB1003CD26

① Press to switch on the flashing beacon.

(3) Rear window wiper switch (option)

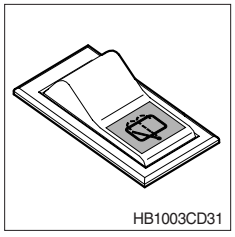

HB1003CD31

① Press to switch on the rear window wiper. Press again to operate the washer. Note that the wiper will self-park when switched off.

(4) Rear work lights switch

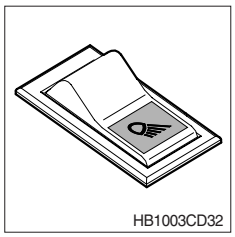

① Press down to switch on the rear work lights. The work lights will work independently of the main lights circuit.

(5) Front work lights switch

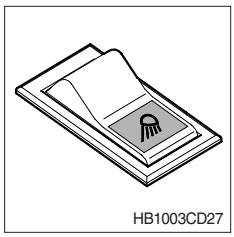

① Press to switch on the front work lights. The work lights will work independently of the main lights circuit.

⚠ Do not drive on the road with the work lights switched on. You can interfere with other drivers visibility and cause an accident.

(6) Return to dig switch (option)

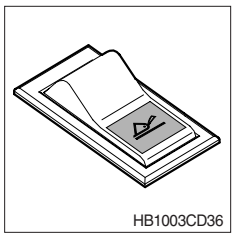

① This switch is use to roll the shovel from the rolled forward position into digging position quickly and easily.

※ Refer to page 3-21 for details in operator's manual.

(7) Low speed control switch

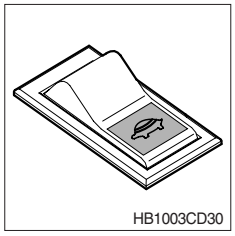

① This switch is used to slow move the loader & backhoe operation.

② If this switch is pressed, the flow from one of two hydraulic pumps is drained to the hydraulic tank directly.

※ Press on this switch when traveling on the road.

(8) Parking brake switch

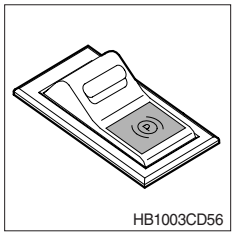

① This is used to apply the parking brake.

※ Refer to page 3-19 for details in operator's manual.

(9) Breaker switch (option)

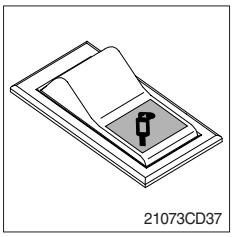

① This switch is used to select breaker operation.

※ The breaker operates only when this switch is selected.

(10) Safety switch (backhoe, option)

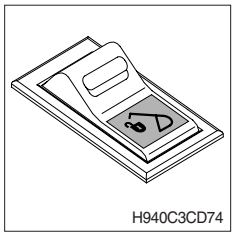

① Press down to switch off safety switch.
The control lever of backhoe and stabilizer lever are disabled from operation.

※ Be sure to switch off position when leaving from operator's seat.

(11) Safety switch (loader, option)

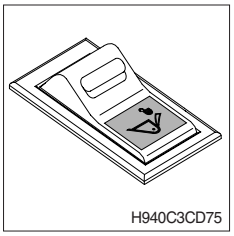

① Press down to switch off safety switch.
The control lever of loader are disabled from operation.

※ Be sure to switch off position when leaving from operator's seat.

(12) Control pattern change switch (if fitted, option)

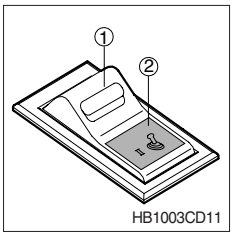

① This switch is used to change the backhoe controls.
- Position ① : ISO type (+) pattern
- Position ② : Hyundai A type (+) pattern

※ Refer to the page 3-22 for the details in operator's manual.

(13) Side shift unlock switch

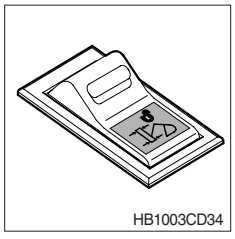

① This switch is used to move the side shifting the backhoe.

※ Refer to the page 4-16 for the details in operator's manual.

4) MULTI-FUNCTION SWITCH

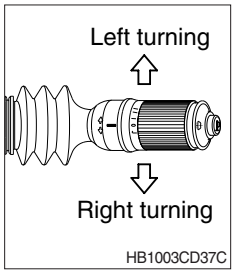

(1) Turning switch

① This switch is used to warn or signal the turning direction of the machine to other vehicles or equipment.

② Push the lever up for turning left, pull the lever down for turning right.

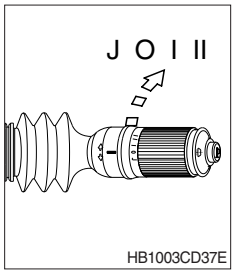

(2) Windscreen wiper

① Rotate the lever barrel to switch the window screen wipers on and off. The following functions are available.

J	Intermittent wipe	I	Slow
O	OFF	II	Fast

② The wipers will self-park when switched off.

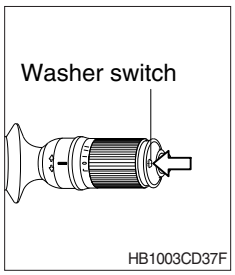

(3) Windscreen washer

Push the button towards the steering wheel to operate the windscreen washer.

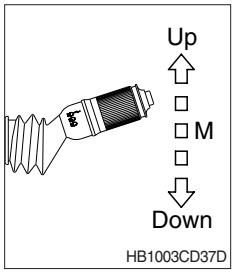

(4) Dimmer switch

① This switch is used to turn the head lights direction.

② Switch positions

- Up : To flash for passing
- Middle : Head lights low beam ON
- Down : Head lights high beam ON

③ If you release the switch when it's in up position, the switch will return to middle.

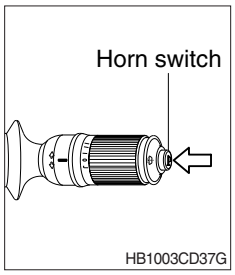

(5) Horn

Push the button on the top of the multifunction switch, the horn will sound.

5) SWITCHES ON CONTROL LEVERS

PILOT

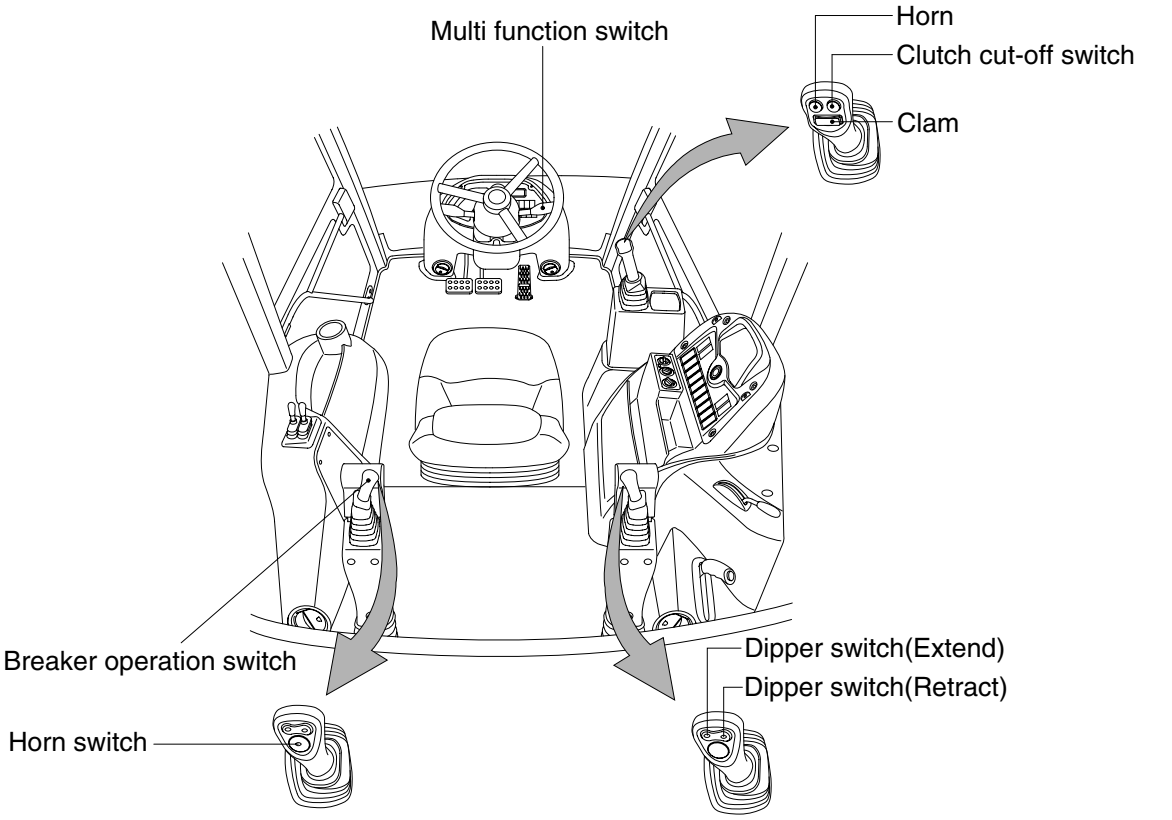

H940C3CD65-1

MECHANICAL

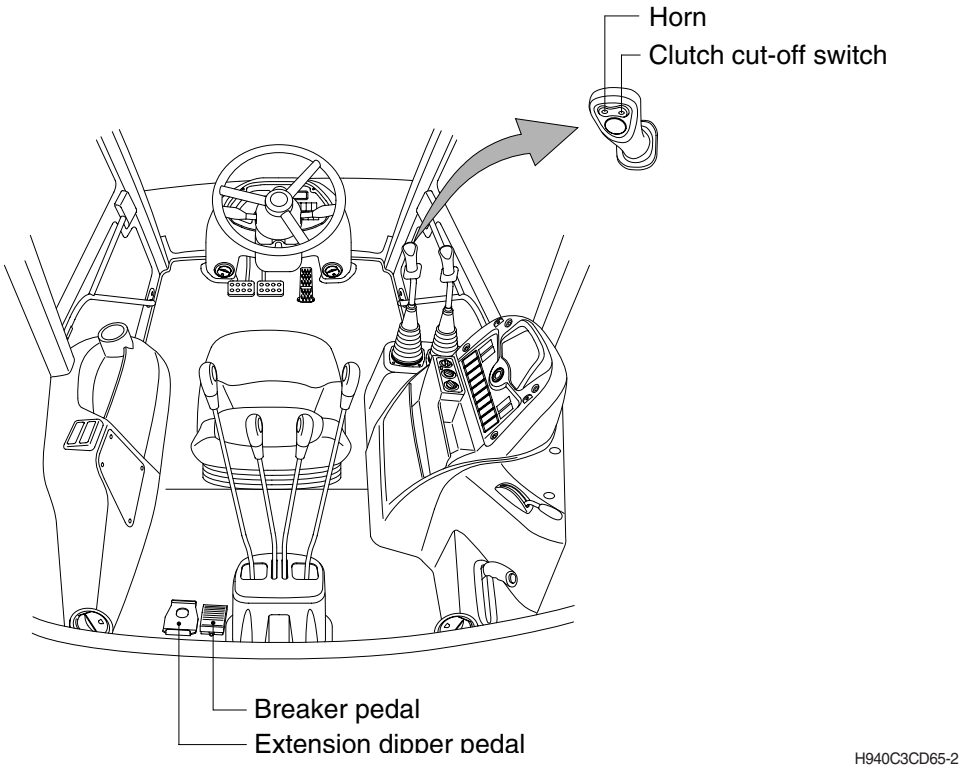

H940C3CD65-2

(1) Extending dipper switch/pedal (if fitted)

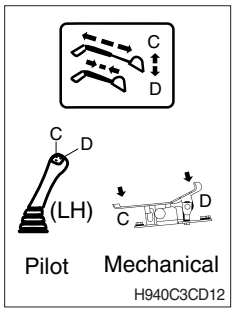

① This switch is at the top of left side (backhoe side) control lever.
On pressing switch "C", the dipper extends.
On pressing switch "D" the dipper retracts.

※ Refer to the page 4-16 details in operator's manual.

(2) Breaker operation switch (if fitted)

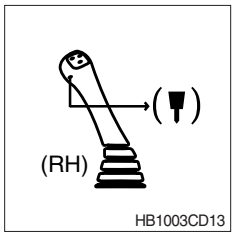

① This switch is at the top of right side control lever (backhoe side).
On pressing this switch, the breaker operates.

(3) Breaker pedal (if fitted)

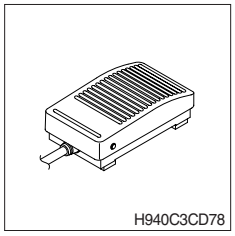

① This switch is used to operate the breaker. On pressing this pedal the breaker operates.

(4) Horn switch

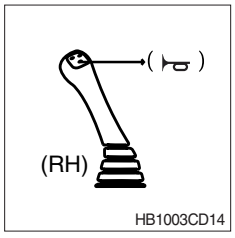

① This switch is at the top of right side control lever (backhoe side).
On pressing this switch, the horn sounds.

(5) Clutch cut-off switch

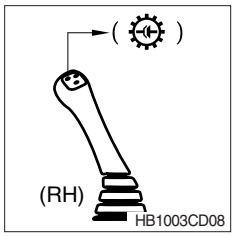

① This switch is at the top of right side control lever (loader side).
On pressing, the transmission is cut-off from the engine. This gives more power to the loader.

(6) Clam switch

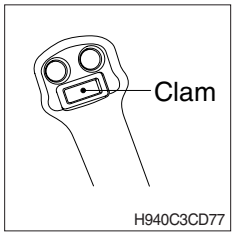

(1) This switch is at top of right side control lever (loader side).
(2) On pressing this swtich, the clam operates.

6) MASTER SWITCH

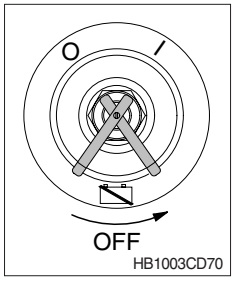

(1) This switch is used to shut off the entire electrical system.

(2) I : The battery remains connected to the electrical system.
O : The battery is disconnected to the electrical system.

※ **Never turn the master switch to O (OFF) with the engine running. Engine and electrical system damage could result.**

7) CAB INTERIOR LIGHT

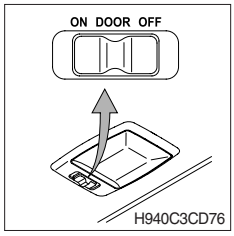

(1) Remove ON/OFF to switch on the cab interior light.
Make sure the light is turned off when you intend to leave the machine for a long period of time.

GROUP 5 ELECTRICAL COMPONENT SPECIFICATION

Part name	Symbol	Specifications	Check item
Battery	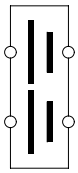	12V × 100Ah (1EA) : STD 12V × 100Ah (2EA) : OPT	Gravity 1.280 over : over charged 1.280 ~ 1.250 : normal 1.250 below : discharged
Start key	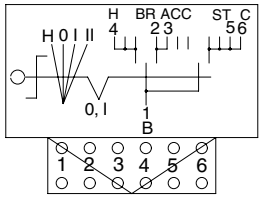 CS-2	B-BR : 24V 1A B-ACC : 24V 10A B-R2 : 20V 40A	Resistance between each pin Key off : ∞ Ω (for each pin) Key on : 0 Ω (for pin 1-2 & 1-3) Start : 0 Ω (for pin 1-5)
Parking pressure switch	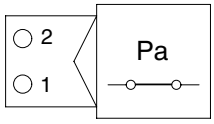 CN-177	N.C type	Resistance 0 Ω : normal (close)
Solenoid	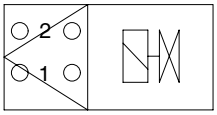 CN-66 CN-73 CN-114 CN-122 CN-68 CN-75 CN-115 CN-136 CN-72 CN-76 CN-121 CN-137	-	-
Air cleaner pressure switch	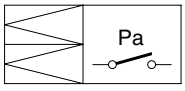 CD-10	Max load : 6W N.O type	Resistance ∞ Ω : normal (open)
Fuel sender	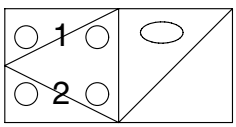 CD-2	-	Resistance at fuel levels Full level : 7 Ω 1/2 level : 32.5 Ω Empty : 95 Ω

Part name	Symbol	Specifications	Check item
Relay (4pin)	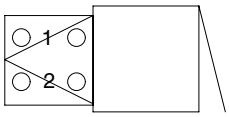 CR-6	12V 2.5A	Intermittent operating time 4.5±1 sec
Relay (5pin)	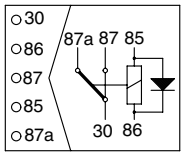 CR-2 CR-10 CR-14 CR-46 CR-84 CR-5 CR-13 CR-16 CR-62	12V 25A	Resistance normal : about 105 Ω (for pin 85~86) 0 Ω (for pin 30~87) ∞ Ω (for pin 30~87)
Proximate switch	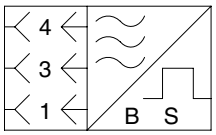 CN-101	12V NPN N.O	Voltage between 0V pin B-C
Water temperature sensor	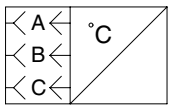 CD-8	-	Resistance normal : ∞ Ω 105˚C over : 0 Ω 80˚C : 304~342 Ω 20˚C : 2262~2760 Ω
Speaker	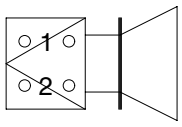 CN-23(LH) CN-24(RH)	4 Ω 20W	Resistance normal : 4 Ω
Switch (locking type)	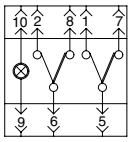 CS-4 CS-16 CS-41 CS-56 CS-70 CS-5 CS-17 CS-43 CS-57 CS-71 CS-10 CS-23 CS-55 CS-69 CS-96	12V 11A	Resistance at switch off position ∞ Ω between pin 1-5 and 2-6 0 Ω between pin 5-7 and 6-8

Part name	Symbol	Specifications	Check item
Switch (non-locking type)	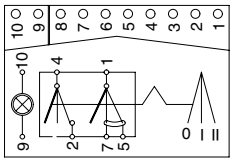 CS-12 CS-13 CS-21	12V 16A	Resistance at switch off position ∞ Ω between pin 1-5 and 2-6 0 Ω between pin 5-7 and 6-8
Work lamp, Number plate lamp	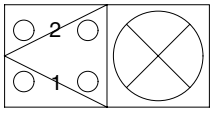 CL-5 CL-22 CL-33 CL-6 CL-23 CL-35 CL-21 CL-32 CL-36	12V 55W	Resistance normal : 1.2 Ω
Beacon lamp	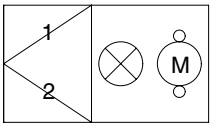 CL-7L CL-7R	12V 55W (H1 TYPE)	Resistance normal : 1.1 Ω
Room lamp	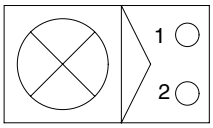 CL-30 CL-31	12V 10W	Resistance normal : a few Ω
Horn	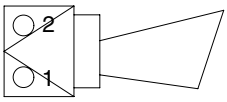 CN-25A CN-25B	12V 3A	Operation by external power source - Conncet 12V power to (+) terminal - Ground the (-) terminal
Radio / USB player	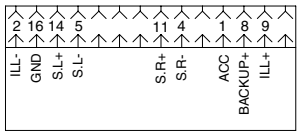 CN-27	12V 20W/Ch	-

Part name	Symbol	Specifications	Check item
Warning buzzer	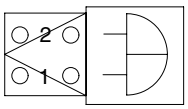 CN-26	12V/24V 90±5dB (ℓm)	-
Washer pump	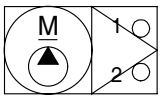 CN-22 (FR) CN-103 (RR)	12V	Resistance normal : 26.4 Ω (for pin1-2)
Wiper motor	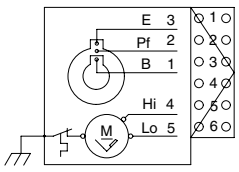 CN-21 (FR) CN-102 (RR)	12V 2-speed Auto parking	-
Alternator	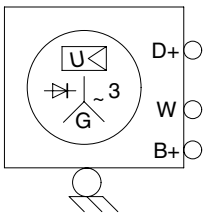 CN-74	12V 100A	Voltage normal : 12~14V
Starter	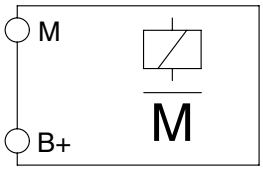 CN-45	Nippondenso 12V	Operating or not
Start relay	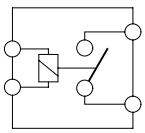 CR-23	12V 60A	Coil resistance normal : 1-2 Ω Switch connection ∞ Ω at normal open position 0 Ω when engaged

Part name	Symbol	Specifications	Check item
Blower	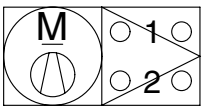	12V 15A	Resistance at each switch position normal : 0.5-2 Ω
Flasher unit	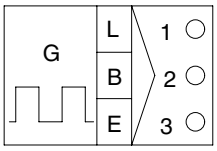 CR-11	12V 85 ~ 190 C/M 50dB	-
Head lamp	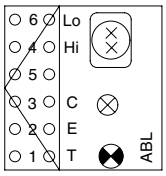 CL-3 CL-4	12V 55W (H3, H7 TYPE) 12V 21W (P21W) 12V 4W (T4W)	Resistance normal : a few Ω
Combi lamp (rear)	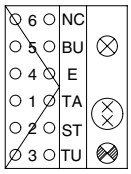 CL-15(LH) CL-16(RH)	12V 5W (R5W) 2 × 12V 21W (P21W)	-
Master switch	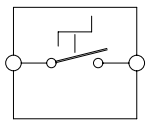 CS-74	Continuous capacity : 180Amp Push in capacity : 1000Amp	-
T/M temp switch	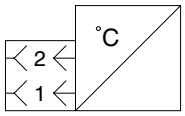 CD-49	-	Resistance 120˚C : ON

Part name	Symbol	Specifications	Check item
Heater relay	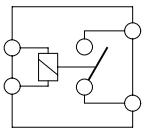 CR-24	12V/150A	Coil resistance 37~44 Ω
Power relay	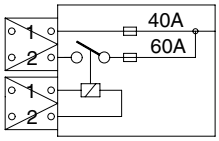 CR-1 CR-35	12V/70A	Switched : Fuse 60A Non-switched : Fuse 40A
Back-up buzzer	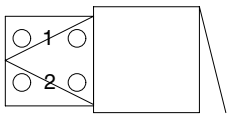 CN-81	12V/24V 107dB	Operation by external power source - Connect 12V power to (+) terminal - Ground the (-) terminal

GROUP 6 CONNECTORS

1. CONNECTOR DESTINATION

Connector number	Type	No. of pin	Destination	Connector part No.	
				Female	Male
CN-1	TYCO	15	I/conn (RH console harness-frame harness)	368301-1	285262-1
CN-2A	TYCO	15	I/conn (main harness-dashboard harness)	368301-1	285262-1
CN-2B	TYCO	15	I/conn (dashboard harness-main harness)	368301-1	285262-1
CN-2C	TYCO	10	I/conn (dashboard harness-main harness)	174655-2	174657-2
CN-4	KET	2	Power 1	7123-4125-50	-
CN-5	SWP	2	Power 2	S813-030200	-
CN-6A	TYCO	8	I/conn (main harness-cab harness)	174982-2	174984-2
CN-6B	TYCO	8	I/conn (cab harness-main harness)	174982-2	174984-2
CN-7	AMP	16	I/conn (main harness-cab harness)	368047-1	368050-1
CN-13	DEUTSCH	12	I/conn (frame harness-engine harness)	DT06-12S-EP06	DT04-12P
CN-20	MOLEX	2	Horn	36825-0211	-
CN-21	HW090 sealed	6	Front wiper motor	936257-1	-
CN-22	KET	2	Front washer tank	MG640605	-
CN-23	KET	2	Speaker (LH)	7123-1520	-
CN-24	KET	2	Speaker (RH)	7123-1520	-
CN-25	MOLEX	2	Horn	36825-0211	-
CN-26	250	2	Warning buzzer	S810-002202	-
CN-27	PA	16	MP3 player	PK145-16017	-
CN-27A	Econo seal	8	USB connector	174984-2	-
CN-28	250	1	Comp (Air con)	S810-001202	-
CN-45	AMP	1	Starter	171809-2	-
CN-56	AMP	20	Cluster	174047-2	-
CN-65	DEUTSCH	2	Back up buzzer	DT06-2S-EP06	-
CN-66	DEUTSCH	2	Breaker	DT06-2S-EP06	-
CN-68	DEUTSCH	2	Safety	DT06-2S-EP06	-
CN-74	G&H	2	Alternator	18130-000-000	-
CN-81	DEUTSCH	2	Back buzzer	DT06-2S-EP06	-
CN-101	DEUTSCH	3	Proximate	DT06-3S-EP06	-
CN-102	HW090 sealed	4	Rear wiper motor	S810-004213	-
CN-103	KET	2	Rear washer tank	MG640605	-
CN-104	AMP	8	RPM gauge	1-1318119-4	-
CN-107	250	4	Fuel gauge	S810-004202	-
CN-114	DEUTSCH	2	Return to dig	DT06-2S-EP06	-

Connector number	Type	No. of pin	Destination	Connector part No.	
				Female	Male
CN-127	AMP	8	Speed meter	1-1318119-4	-
CN-137	DEUTSCH	2	Ride control	DT06-2S-EP06	-
CN-158	DEUTSCH	12	Gear shift lever	-	DT04-12P
CN-177	RUBBER CAP	2	Parking pressure	21EA-00310	-
Relay					
CR-4	TYCO	5	Wiper relay 1	VCFM-1002	-
CR-6	250	6	Wiper relay (1 NT)	S810-006202	-
CR-11	HELLA	5	Flasher unit	8JA-003-526-001	-
CR-23	SWP	2	Start relay	S810-002302	-
	KET	2		MG610320	-
CR-24	Shur	2	Preheater relay	282080-1	-
CR-26	TYPO	5	Wiper relay 2	VCFM-1002	-
CR-58	TYPO	5	Back up relay	VCFM-1002	-
CR-63	TYPO	5	Stop lamp relay	VCFM-1002	-
CR-95	TYPO	5	Wiper relay 3	VCFM-1002	-
CR-150	HELLA	5	T/M relay	8JA-003-526-001	-
Switch					
CS-2	SWP	6	Start key switch	S814-006000	-
CS-3	SWF	10	Rear wiper switch	593757	-
CS-4	SWF	10	Safety switch	593757	-
CS-5	SWF	10	Horn switch	593757	-
CS-10	SWF	10	Return to dig switch	593757	-
CS-11	DEUTSCH	12	Multifunction switch	DT06-12S	-
CS-12	SWF	10	Front lamp switch	593757	-
CS-13	SWF	10	Rear lamp switch	593757	-
CS-17	SWF	10	Parking switch	593757	-
CS-21	SWF	10	Main light switch	593757	-
CS-23	SWF	10	Beacon switch	593757	-
CS-41	SWF	10	Hazard switch	593757	-
CS-55	SWF	10	Ride control switch	593757	-
CS-56	SWF	10	4-Wheel drive switch	593757	-
CS-57	SWF	10	Differential lock switch	593757	-
CS-61	DEUTSCH	2	Horn button	DT04-2P	-
CS-69	SWP	10	Side shift lock switch	593757	-
CS-71	SWF	10	Breaker switch	593757	-
CS-80	SWF	10	Buzzer stop switch	593757	-
CS-96	SWF	10	Fuel warmer switch	593757	-

Connector number	Type	No. of pin	Destination	Connector part No.	
				Female	Male
Light					
CL-2	250	2	Socket	S810-002202	-
CL-3	DEUTSCH	6	Head light (LH)	DT06-6S	-
CL-4	DEUTSCH	6	Head light (RH)	DT06-6S	-
CL-5	DEUTSCH	2	Work light (LH, front, in)	DT06-2S	-
CL-6	DEUTSCH	2	Work light (RH, front, in)	DT06-2S	-
CL-7	AMP	2	Beacon lamp	S810-002202	-
CL-15	Econo seal	6	Combi lamp (RR, LH)	174264-2	-
CL-16	Econo seal	6	Combi lamp (RR, RH)	174264-2	-
CL-21	SWP	2	Numberplate lamp	S822-014000	-
CL-22	DEUTSCH	2	Work light (LH, rear, out)	DT06-2S	-
CL-23	DEUTSCH	2	Work light (RH, rear, out)	DT06-2S	-
CL-30	KET	2	Room lamp	MG610392	-
CL-31	KET	2	Room lamp	MG610392	-
CL-32	DEUTSCH	2	Work light (LH, rear, in)	DT06-2S	-
CL-33	DEUTSCH	2	Work light (RH, rear, in)	DT06-2S	-
CL-35	DEUTSCH	2	Work light (LH, front, out)	DT06-2S	-
CL-36	DEUTSCH	2	Work light (RH, front, out)	DT06-2S	-
CL-51	KUM	9	Indicator work light	PH845-09010	-
Sensor, sender					
CD-2	DEUTSCH	2	Fuel sendor	DT06-2S-EP06	-
CD-4	TYCO	3	Stop lamp pressure switch	174359-2	-
CD-8	PACKARD	3	Coolant temperature switch	12065287	-
CD-10	Ring term	2	Air cleaner switch	R1.25-4	-
CD-18	AMP	1	Engine oil pressure switch	282079-2	-
CD-46	AMP	2	Output speed sensor	85202-1	-
CD-49	AMP	2	T/M temperature sensor	85202-1	-

BACKHOE LOADER H930S / H940S

- FOREWORD
- CONTENTS
- SECTION 1
  - GENERAL
    - Group 1 Safety Hints
    - Group 2 Specifications
    - Group 3 Operation Checkout Record Sheet
- SECTION 2
  - ENGINE
    - Group 1 Structure and Function
    - Group 2 Engine speed & stall RPM
- SECTION 3
  - POWER TRAIN SYSTEM
    - Group 1 Structure and Function
    - Group 2 Operational Checks and Troubleshooting
    - Group 3 Test and Adjustments
    - Group 4 Disassembly and Assembly
- SECTION 4
  - BRAKE SYSTEM
    - Group 1 Structure and Function
    - Group 2 Operational Checks and Troubleshooting
    - Group 3 Test and Adjustments
    - Group 4 Disassembly and Assembly
- SECTION 5
  - STEERING SYSTEM
    - Group 1 Structure and Function
    - Group 2 Operational Checks and Troubleshooting
    - Group 3 Test and Adjustments
    - Group 4 Disassembly and Assembly
- SECTION 6
  - WORK EQUIPMENT
    - Group 1 Structure and Function
    - Group 2 Operational Checks and Troubleshooting
    - Group 3 Test and Adjustments
    - Group 4 Disassembly and Assembly
- SECTION 7
  - ELECTRICAL SYSTEM
    - Group 1 Component Location
    - Group 2 Electrical Circuit
    - Group 3 Monitoring System
    - Group 4 Switches
    - Group 5 Electrical Component Specification
    - Group 6 Connectors