RUTHZIL TRATOR COMERCIAL DE PEÇAS LTDA 11 97083-6812 ROLANDO

HD11

CRAWLER TRACTOR

Parts Catalog

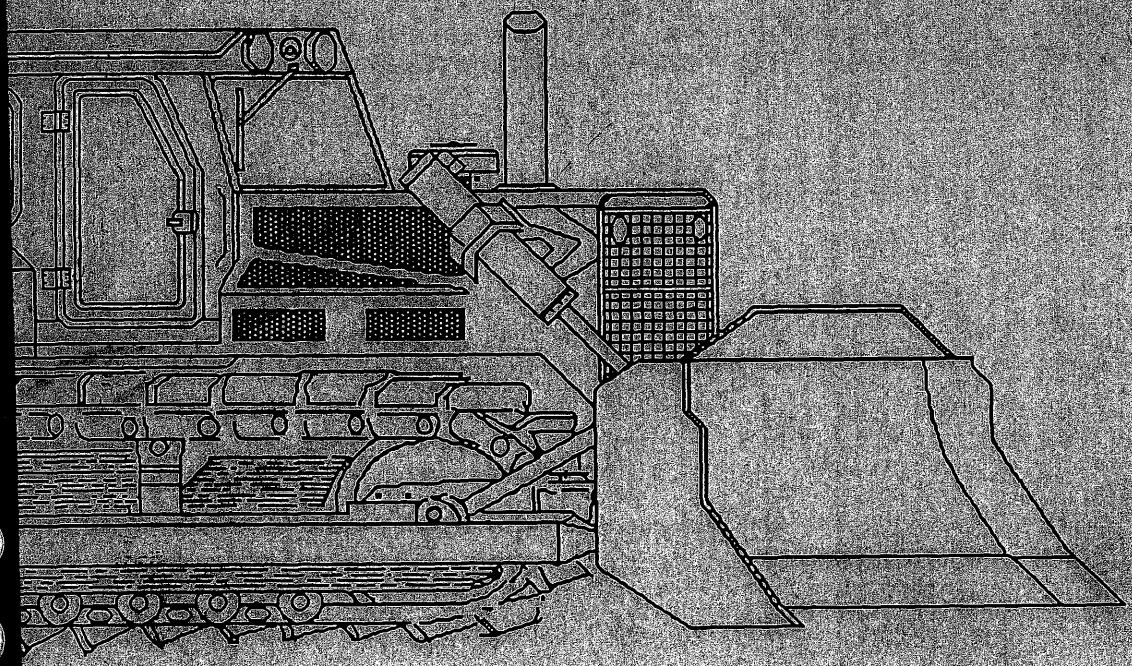

Form 70656800
English 1/89

HD-11
crawler tractors

parts catalog

S/N 101 thru 12200

Form 70656800 English

⚠ WARNING

STUDY THE OPERATION AND MAINTENANCE INSTRUCTION MANUAL THROUGH BEFORE STARTING, OPERATING, MAINTAINING, FUELING OR SERVICING THIS MACHINE.

NOTICE

Allis-Chalmers Corporation and Fiat S.p.A. entered into a joint venture agreement to combine their manufacture, sale and service of construction machinery products throughout the world after January 1, 1974.

In view of the new enterprise, wherever in this publication reference is made to Allis-Chalmers or your Allis-Chalmers dealer, such reference is intended to identify Fiat-Allis Construction Machinery, Inc. or your Fiat-Allis dealer.

Also, for this new enterprise, a new series of 8-digit part numbers is in effect. This change is accomplished by eliminating the "check digit" wherever it may appear, and then, to this basic part number, prefixing a "7" (or "7" plus one or more zeros) to make a full 8-digit part number.

Examples:

667367	becomes 70667367
0688917-4	becomes 70688917
3060101-7	becomes 73060101

All part numbers listed herein must be changed per the above formula before ordering.

ADDITIONAL PUBLICATIONS AVAILABLE
FOR
MODEL HD11 TRACTOR (Pr. S/N 12201)
(See NOTE below)

FORM NO.	DESCRIPTION	SERIAL NO.
Parts Catalogs		
643833	Injection Pump	All
646993	Dozer	All
646888	Independent Hydraulic System	All
647078	TR11 Ripper	All
626163	F100 Cable Control Unit (Front-mounted)	All
626048	75 Cable Control Unit (Rear-mounted)	All
3033010	TSB11	All
Operating Instructions and Field Maintenance Manual		
626089	HD11B	Pr. S/N 6427
626136	HD11B, E, F	6427 - 10000
629748	HD11EC, FC	Pr. S/N 10001
645225	HD11B	10001 - UP
645226	HD11E, EC	10001 - UP
626095	Dozer (BD, BDC, GD, GDC Models)	All
626110	Dozer (HA, HS, CA, CS Models) & 75, F100 Cable Control Units	All
3033010	TSB11	All
628298 (Spanish) 628299 (Portuguese) 628300 (French)	All HD11	All

Service Manuals

Item No.	Form No.	Description	Serial Numbers		
			HD11B-F-S	HD11E - ES	HD11EC-FC
1	645121	Engine (10000 & 11000)	6427 - up	6427 - up	6427 - up
2	645652	Turbocharger	— —	10000 - up	10000 - up
3	649317	Engine Clutch	6911 - up	6911 - up	— —
4	655381	Engine Clutch & Torque Converter	— —	— —	All
5	654797	Trans., Bevel Gear, Drive Shaft U-Joint	6473 - 10000	6473 - 10000	Pr. S/N 10000
6	649913	Trans., Bevel Gear, Drive Shaft U-Joint	10001 - up	10001 - up	10001 - up
7	650433	Steering Clutches & Brakes	All	Pr. S/N 10001	Pr. S/N 10001
8	648095	Steering Clutches & Brakes	— —	10001 - up	10001 - up
9	649726	Final Drives	All	All	All
10	645550	Truck Frames & Track	7538 - up	7538 - up	7538 - up
11	644308	Dozer & 75, F100 Cable Control Unit	(For CA-CS-HA-HS-HI Dozer Models only)		
		For information on early units order complete HD11 SERVICE MANUAL FORM 626147			

Some items listed above are also available in Foreign Languages as shown in the chart below:

Item No.	ESPAÑOL (Spanish)	FRANÇAIS (French)	PORTUGUÊS (Portuguese)
1	*646134	—	—
2	649446	649448	649447
3	—	—	—
4	—	—	—
5	—	—	—
6	—	656632	656631
7	—	—	—
8	656639	656641	—
9	656636	656638	656637
10	650413	650415	650414
11	647073	647495	647071
12	—	—	—
* 646134 Complete for HD11B only			

NOTE: Order from local Fiat-Allis Dealer

IMPORTANT

All parts listed herein, which have no specific usage indicated, are applicable to all models. Those parts which are used only on specific models are so indicated.

Attaching parts such as bolts, nuts, rivets, screws, washers, etc., are indented immediately following the parts which they attach.

Parts indicated with a square (□) are also available in packaged sets. Refer to section titled "PACKAGED PARTS".

The terms "right" and "left" used throughout this parts catalog are determined by facing the direction of forward travel.

INSTRUCTIONS FOR ORDERING PARTS

At the time this parts catalog was published the listed part numbers were current. It is our policy to constantly improve our machines and therefore, part numbers and design may change. When ordering parts, verify part numbers through your dealer's parts catalog which is up to date with all latest part numbers.

Order parts from the dealer covering the local territory.

ALWAYS GIVE THE MODEL AND SERIAL NUMBER OF MACHINE. IF PARTS ARE FOR AN ASSEMBLY WHICH HAS A MODEL AND/OR SERIAL NUMBER (SUCH AS ENGINE ASSEMBLY, PUMP ASSEMBLY), ALSO INCLUDE THIS INFORMATION.

To obtain parts promptly, give part name and part number.

Give post office address, town, county and state where parts are to be shipped. Also specify whether material is to be shipped by freight, express or parcel post.

Confirm all telephone or telegraph orders in writing.

Parts for standard motor accessories such as generators and starting motors should be ordered from authorized Service Stations maintained by manufacturers of these units throughout the country.

No credit will be allowed on parts unless they are returned to the dealer from whom they were purchased; from there they will be returned, at the customer's expense, to the factory for inspection.

Unless claims for shortages or errors are made immediately upon receipt of goods, they will not be considered.

When broken goods are received, a full description of the damage should be made by the carrier agent on the freight bill. If this description is insisted upon, full damage can always be collected from the transportation company.

No responsibility is assumed for delay or damage to merchandise while in transit. Our responsibility ceases upon delivery of shipment to the transportation company from whom a receipt is received showing that shipment was in good condition when delivered to them; therefore, claims (if any) should be filed with the transportation company

The right is reserved to change the construction or material of any parts where it seems desirable to do so without incurring the obligation of installing such changes on units already delivered.

(Specifications and design subject to change without notice)

MODEL IDENTIFICATION

The models listed in this Parts Catalog and their identifying symbols are indicated below. This symbol is stamped in front of the tractor serial number on each model.

MODEL SYMBOL	ENGINE MODEL	DESCRIPTION
HD11B	HD-516 (Prior to tr. #6427)	38-link standard track, wrap-around radiator guard, mechanical drive, naturally-aspirated diesel engine
	10000 (Eff. tr. #6427)	
HD11E	HD-516 (Prior to tr. #6427)	41-link standard track, wrap-around radiator gurad, mechanical drive, naturally-aspirated diesel engine
	10000 (Tr.#6427 thru #10000)	
	11000 (Eff. tr. #10001)	40-link standard track, wrap-around radiator guard, mechanical drive, turbo-charged diesel engine
HD11EC	10000 (Prior to tr. #10001)	41-link standard track, wrap-around radiator guard, hydraulic torque converter drive, naturally-aspirated diesel engine
	11000 (Eff. tr. #10001)	40-link standard track, wrap-around radiator guard, hydraulic torque converter drive, turbo-charged diesel engine
HD11ES	HD-516 (Prior to tr. #6427)	41-link standard track, hinged radiator guard, mechanical drive, naturally-aspirated diesel engine
	10000 (Tr.#6427 thru #10000)	
HD11S	HD-516 (Prior to tr. #6427)	38-link standard track, hinged radiator guard, mechanical drive, naturally-aspirated diesel engine
	10000 (Tr.#6427 thru #10000)	
	11000 (Eff. tr. #10001)	38-link standard track, hinged radiator guard, mechanical drive, turbo-charged diesel engine
HD11F	HD-516 (Prior to tr. #6427)	44-link standard track, hinged radiator guard, mechanical drive, naturally-aspirated diesel engine
	10000 (Tr.#6427 thru #10000)	
HD11FC	10000 (Tr.#6427 thru #10000)	44-link standard track, hinged radiator guard, hydraulic torque converter drive, naturally-aspirated diesel engine

RECORD YOUR SERIAL NUMBERS BELOW

TRACTOR SERIAL NO. _____

ENGINE SERIAL NO. _____

_____

_____

SERIAL NUMBER LOCATIONS

TRACTOR SERIAL NO. On rear face of steering clutch housing at the upper right hand corner. Also on small plate attached to the cowl.

ENGINE SERIAL NO. On plate attached to the left hand side of the cylinder block near the rear end. Also on small plate attached to the cowl.

ALPHABETICAL INDEX

Air Cleaner - - - - - - - - 150, 152, 153, 157, 158, 161, 163
Air Heater - - - - - - - - - - - - - - - - - 169, 171, 175, 177
Air Pre-Cleaner Extension - - - - - - - - - - - - - - 579
Air Restriction Indicator - - - - - - - - 158, 161, 163, 164
Batteries and Cables - - - - - - - - - - - - - 553. 555, 557
Battery Box Lock - 510
Battery Boxes - - - - - - - - - - - - - - - - - 497, 499, 509
Bevel Gear and Shaft - - - - - - - - - - - - - - - 312, 313
Bottom Guards - - - - - - - - - - - - - - - - - - 386, 389
Brake Control - - - - - - - - - - - - - - - - - - - 365, 371
Brakes - 365, 373, 379
Bumper - 381
Cab - 599
Camshaft - 40, 42
Canopy - 597
Connecting Rod - 24, 25
Control Valve and Lines - - - - - - - - - - - - - - - - 361
Conversion Tables - - - - - - - - - - - - - - - - - - - 16
Cowl - 478, 479, 480
Crankcase Guard - - - - - - - - - - - - - - - 383, 386, 389
Crankshaft - 28
Cylinder Block - 21
Cylinder Head - 32, 37
Cylinder Sleeve - 21
Drawbar - 436, 438
Elements
  Air Cleaner - - - - - - - - - - - - - - - 157, 158, 161, 163
  Engine Clutch Oil Filter - - - - - - - - - - - - - - 243
  Engine Oil Filter - - - - - - - - - - - - - - - - - 55, 59, 61
  Fuel Filter - - - - - - - - - - - - - - - - - - 89, 90, 92, 94
  Heavy-Duty Fuel Filter - - - - - - - - - - - - - 74, 76, 77
  Heavy-Duty Oil Filter - - - - - - - - - - - - - - 74, 76, 77
  Hyd. Steering Control Filter - - - - - - - - - - - 360
  Torque Converter Oil - - - - - - - - - - - - - - - - 247
  Transmission Oil Filter - - - - - - - - - - - - - - 303
Engine and Mounting - - - - - - - - - - - - - - - - - - 18
Engine Clutch - - - - - - - - - - - - - - 215, 219, 223, 227
Engine Clutch Brake - - - - - - - - - - - - - - - 217, 241
Engine Clutch Control - - - - - - - - - - - - 235, 237, 239
Engine Clutch Oiling System - - - - - - - - - - - - - - 243
Engine Decelerator - - - - - - - - - - - - - - - - - 127, 129, 131
Engine Primer - 165
Engine Shut-Off Control - - - - - - - - - - - 132, 135, 137
Engine Side Screens - - - - - - - - - - - - - - - - 570, 572
Equalizing Spring - - - - - - - - - - - - - - - - - - - 392
Exhaust Extension - - - - - - - - - - - - - - - - - - - 579
Exhaust Pipe - - - - - - - - - - - - - - - - - 141, 142, 143, 145
Fan - 185, 187, 189, 191
Fan Belt - 183, 185
Fan Belt Tightener - - - - - - - - - - - - - - - - - - - 180
Fan Drive - 183
Fan Guard - - - - - - - - - - - - - - - - - - 185, 187, 189, 191
Filters
  Engine Clutch Oil - - - - - - - - - - - - - - - - - - 243
  Fuel - 89, 90, 92, 94
  Heavy-Duty Fuel - - - - - - - - - - - 79, 80, 83, 85, 87
  Heavy-Duty Oil - - - - - - - - - - - - 65, 66, 69, 71, 73
  Hydraulic Steering Oil - - - - - - - - - - - - - - - 357
  Oil - 55, 57, 58, 61
  Torque Converter Oil - - - - - - - - - - - - - - - - 247
  Transmission Oil - - - - - - - - - - 296, 298, 307, 308
Final Drive
  Housing - - - - - - - - - - - - - - - - - - - 319, 321, 325
  Intermediate Shaft - - - - - - - - - - - - - - - - - 328
  Pinion Shaft - 330
  Outboard Bearing and Seal - - - - - - - - - - - - - 333
  Sprocket, Shaft and Gear - - - - - - - - - - - - - - 335
Floor - 490, 492, 494
Flywheel and Housing - - - - - - - - - - - - - - - - - - 31
Forward High-Low Gear Shift - - - - - - - - - 281, 283
Front Fenders - - - - - - - - - - - - - - - - - 471, 473, 474
Fuel Lines - 96, 98, 101
Fuel Tank - 102, 103
Fuel Tank and Seat Guard - - - - - - - - - - - - 582, 583
Gauges
  Air Restriction Indicator - - - - - - - 158, 161, 163, 164
  Ammeter - - - - - - - - - - - - - - - - - 539, 541, 545, 546
  Bevel Gear Comp. Oil Level - - - - - - - 301, 321, 325
  Engine Oil Level - - - - - - - - - - - - - - - - - - - 44
  Engine Oil Pressure - - - - - - - - - 539, 541, 545, 550
  Engine Temperature - - - - - - - - - 539, 541, 545, 546
  Fuel Level - 102, 103
  Fuel Pressure - - - - - - - - - - - - - 539, 541, 545, 547
  Hour Meter - 564, 566
  Odometer - 569
  Torque Converter Oil Level - - - - - - - - - - - - 247
  Track Wear - 604, 607
  Trans. Lube Oil Pressure - - - - - - - - - - - 545, 548
  Trans. Oil Level - - - - - - - - - - - - - - - 258, 261, 264
Gear Shift - - - - - - - - - - - - - 281, 283, 287, 289, 293
Generator - - - - - - - - - - - - - - - - - - - 526, 528, 530
Generator Regulator - - - - - - - - - - - - - - - - - - - 532
Grille Screens - 581
Heat Exchanger - 206
Hood - 475, 477, 579
Hood Side Plates - - - - - - - - - - - - - 574, 575, 576, 577
Hose Parts - 6
Hour Meter - 564, 566

ALPHABETICAL INDEX

Hydraulic Steering Control ---------- 351, 357
Hydraulic Track Adjuster ---------- 427
Injection Fuel Return Lines ----------105, 107
Injection Nozzles and Lines ----------112, 114
Injection Pump---------- 109, 111
Instruments ----------539, 541, 545, 546
Lights
  Dash ----------539, 541, 545, 546
  Head ---------- 515, 519, 523
  Rear Flood ---------- 562
  Tail---------- 558, 560
Lights and Wiring ---------- 515, 519, 523
Lubricating Oil Filter and Cooler ---------- 61
Main Frame ---------- 382
Manifolds
  Exhaust ---------- 139
  Intake---------- 138
  Water Outlet ---------- 209, 210, 212
Muffler ----------141, 142
Numerical Index ---------- 608
Odometer ---------- 569
Oil Cooler---------- 52, 53, 61
Oil Pan ---------- 44
Packaged Parts ---------- 10
Painting and Marking ---------- 511
Piston ----------24, 25
Power Pulley ---------- 595
Power Take-off ---------- 584, 587, 591
Pull Hook ---------- 382
Pumps
  Air Heater ----------169, 171, 175, 177
  Engine Clutch Oil ---------- 243
  Engine Pressure Oil----------49
  Engine Primer ---------- 165
  Fuel Injection ---------- 109, 111
  Torque Converter Oil ---------- 247
  Transmission Oil------- 296, 298, 305, 307, 309
  Scavenging Oil---------- 47
  Steering Control Oil ---------- 351, 357
  Water ---------- 203
Radiator---------- 197
Radiator Curtain ---------- 194
Radiator Guard ---------- 441 thru 468
Radiator Screen ---------- 197
Radiator Shell ---------- 439
Radiator Support ---------- 201
Rear Fenders ---------- 481, 482, 484, 486, 488
Rear Flood Light ---------- 562
Rigid Beam---------- 390
Seat---------- 497, 499, 503
Speed Selection Gear Shift ---------- 287, 289
Starter---------- 533, 534, 536
Steering Clutches---------- 315, 317
Steering Clutch & Final Drive Housing---319, 321, 325
Steering Levers and Linkage -----337, 341, 343, 347
Steering Pump Drive ---------- 39
Street Plate ---------- 435
Tail Light----------558, 560
Thermostat ---------- 209, 210, 212
Throttle Control---------- 119, 123, 125
Timing Gear Housing ---------- 26
Tool Box ----------497, 499, 604, 607
Tools ---------- 604, 607
Torque Converter ---------- 223, 227
Torque Converter Oil Supply ---------- 247
Track ----------428, 430, 432, 434
Track Frame ---------- 395, 399
Track Idler---------- 419, 421
Track Release---------- 424
Track Roller---------- 411, 413
Track Roller Guards-----401, 402, 403, 405, 406, 409
Track Sprocket ---------- 335
Track Supporting Roller ---------- 417
Transmission
  Assembly ---------- 256, 262, 264, 267
  Case ---------- 258, 261, 263, 266, 268
  Intermediate Shaft ---------- 271
  Pinion Shaft---------- 275, 279
  Reverse Shaft ---------- 274
  Top Shaft ---------- 269, 270
Transmission Dry Sump Conversion --------- 301
Transmission Guards ---------- 385
Transmission Oiling System-----296, 298, 307, 309
Turbocharger ---------- 147
Universal Joint ---------- 252, 253, 255
Valves
  Air Heater Check---------- 171, 175, 177
  Brake ---------- 373
  Engine Oil Pressure Regulating ---------- 21
  Exhaust ---------- 32, 37
  Hydraulic Track Relief ----------427
  Injection Pump Pressure Relief ------ 105, 107
  Intake ---------- 32, 37
  Pressure Oil Pump Relief ---------- 49
  Steering Control---------- 351, 361
Valve Operating Mechanism---------- 40, 42
Water Outlet Manifold---------- 209, 210, 212
Water Pump ---------- 203

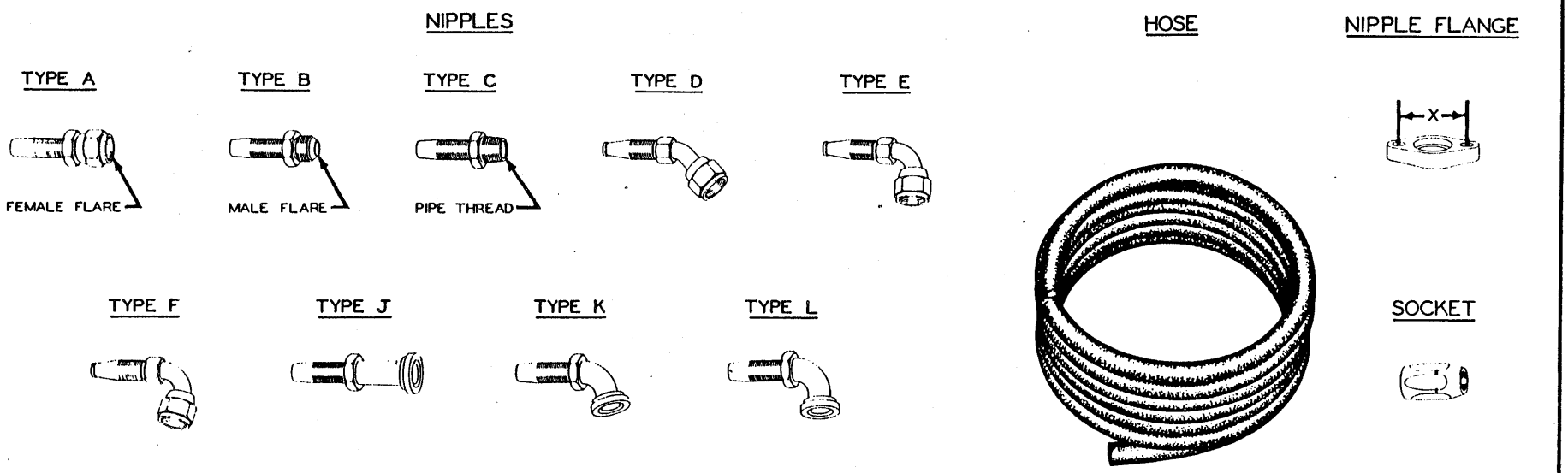

HOSE PARTS

NOTE: Refer to right hand column for identity of interchangeable crimped-type hose (fittings not re-usable). Assembly number shown in left hand column indicates available replacement hose assembly with re-usable components; where no assembly number is listed, hose assembly is not available from factory but may be constructed in the field from data indicated.

HOSE ASSEMBLY NO. (See NOTE)	BULK HOSE (25' roll)	HOSE LENGTH (inches)	NIPPLE (#1 end)			NIPPLE (#2 end)			SOCKET (both ends)	NIPPLE FLANGE		CRIMPED-TYPE HOSE (See NOTE)
			Including SOCKET	NIPPLE only	Type	Including SOCKET	NIPPLE only	Type		Part No.	X Dim	Part No.
094095	919155	21-1/8	920849	920302	A	920857	919079	B	919075			645230
094456	919156	41-1/4	920850	920303	A	920858	919080	B	919076			644555
094465	919155	18-3/4	920857	919079	B	920864	919082	E	919075			
094602	919156	37-1/2	902850	920303	A	920865	919081	E	919076			645232
094674	919196	34-1/4	920847	920301	A	920862	919194	E	919143			644682
095410	919196	34-1/4	920862	919194	E	920862	919194	E	919143			651520
095412	919196	35	920862	919194	E	920862	919194	E	919143			
095441	919155	30-3/4	920857	919079	B	920864	919082	E	919075			645243
095874	919155	28-1/4	920849	920302	A	920864	919082	E	919075			

095887	919156	13-3/4	920850	920303	A	920865	919081	E	919076			
096002	919156	36-1/2	920850	920303	A	920865	919081	E	919076			639414
096003	919155	42-3/4	920849	920302	A	920864	919082	E	919075			
096095	919218	32-1/4	920865	919081	E	920865	919081	E	919076			
096098	919218	44	920865	919081	E	920865	919081	E	919076			
096116	919217	91-1/2	920864	919082	E	920864	919082	E	919075			
096117	919217	84-1/2	902864	919082	E	920864	919082	E	919075			
096122	919155	18-3/4	920857	919079	B	920836	919073	C	919075			
099527	920222	10-13/16	921033	921034	A	920843	919467	C	919282			
620709	919155	21-1/8	920849	920302	A	920836	919073	C	919075			644005
621292	919196	30	920847	920301	A	920862	919194	E	919143			
622431	919196	70	920847	920301	A	920862	919194	E	919143			
632147	919196	34-1/4	920877	919207	D	920862	919194	E	919143			
4335557	919196	7-7/8	920847	920301	A	920833	919200	C	919143			
4335567	920222	9-7/16		920173	L (short)		920141	L (long)	919282	919274	2-1/4"	
										919251	3"	
4335583	919196	10-1/8	920847	920301	A	920862	919194	E	919143			
4335716	919196	10-5/8	920847	920301	A	920833	919200	C	919143			
4335897	919155	7-3/4	920849	920302	A	920836	919073	C	919075			
4335898	919155	19-1/2	920849	920302	A	920864	919082	E	919075			
4335931	919196	7	920862	919194	E (short)	920869	919253	E (long)	919143			
4335935	919155	15-1/2	920849	920302	A	920864	919082	E	919075			
4337532	920222	6-7/16		920173	L (short)		920195	L (long)	919282	919251	3"	
4339568	920388	30		920806	A		920806	A	None			
4339569	920388	26		920806	A		920806	A	None			
4354675	919217	13	920849	920302	A	920849	920302	A	919075			
4376906	919196	16-3/8	920847	920301	A	920862	919194	E	919143			
	919156	14-5/8	920865	919081	E	920865	919081	E	919076			620941
	919156	12-1/8	920850	920303	A	920865	919081	E	919076			637871
	919155	22-1/4	920857	919079	B	920879	919159	D	919075			637872
	919155	13-1/4	920864	919082	E	920864	919082	E	919075			637873
	919156	32-5/8	920858	919080	B	920880	919254	D	919076			637890

(Continued)

	919156	23-7/8	920858	919080	B	920865	919081	E	919076			638706
	919155	91-3/8	920849	920302	A	920864	919082	E	919075			639411
	919155	93-1/4	920864	919082	E	920864	919082	E	919075			639412
	919156	59-1/4	920865	919081	E	920865	919081	E	919076			639413
	919218	6-3/4	920850	920303	A	920880	919254	D	919076			641125
	919196	30-7/8	920855	919144	B	920862	919194	E	919143			641649
	919196	26	920847	920301	A	920855	919144	B	919143			641650
	920222	44-3/8		920173	L		920173	L	919282	919274	2-1/4"	641680
	920222	36-7/8		920173	L		920173	L	919282	919274	2-1/4"	641711
	919196	50	920847	920301	A	920855	919144	B	919143			642145
	919156	131-3/4	920880	919254	D	920865	919081	E	919076			642519
	919156	115-3/8	920880	919254	D	920872	919158	E	919076			642520
	919156	16-1/4	920880	919254	D	920865	919081	E	919076			642521
	919156	21	920850	920303	A	920880	919254	D	919076			642537
	919156	26	920850	920303	A	920865	919081	E	919076			643429
	919196	35	920847	920301	A	920855	919144	B	919143			643971
	920221	54-3/4	920867	919277	E		921787	J	919281	921786	1-7/8"	643989
	920222	24-5/8	920868	920144	E		921726	F	919282			643990
	920221	48-5/8	920882	919278	D		921787	J	919281	921786	1-7/8"	643991
	920221	25-1/2	920852	920344	A	920867	919277	E	919281			644003
	919156	50-3/4"	920865	919081	E	920865	919081	E	919076			644004
	920222	9-9/16	921033	921034	A	920843	919467	C	919282			644011
	919156	32-5/8	920858	919080	B	920865	919081	E	919076			644012
	920222	32	921033	921034	A	921033	921034	A	919282			644013
	919196	8-3/4	920847	920301	A	920862	919194	E	919143			644046
	919196	26-3/4	920847	920301	A	920862	919194	E	919143			644213
	919196	39-1/2	920847	920301	A	920862	919194	E	919143			644697
	919156	15-1/2	920858	919080	B	920838	919074	C	919076			645235
	919155	8-5/8	920857	919079	B	920864	919082	E	919075			645462
	919156	56-3/4	920850	920303	A	920865	919081	E	919076			646917
	919156	7-3/8	920880	919254	D	920865	919081	E	919076			646988
	919196	32-1/4	920847	920301	A	920833	919200	C	919143			647915

	920222	14-1/2	921033	921034	A		921496	K	919282	919274	2-1/4"	647924
	920222	8-1/4	921033	921034	A		921496	K	919282	919274	2-1/4"	647925
	919156	18	920865	919081	E		919175	F	919076			647930
	919155	8	920849	920302	A	920857	919079	B	919075			648230
	919156	10	920850	920303	A	920858	919080	B	919076			648388
	919196	8	920877	919207	D	920862	919194	E	919143			655089

PACKAGE NUMBER		DESCRIPTION
------		BLOCK KIT, clutch camshaft (See page 221)
------		CLUTCH KIT, over-running, torque converter (See page 229)
4354309		GASKET KIT, cylinder head (Tractors prior to #6427)
	6	4251987 O-RING, valve lifter cover nut
	1	4300145 GASKET, engine water outlet elbow
	2	4335279 GASKET, cylinder head cover
	2	4337764 GASKET, valve lifter cover
	6	4338511 GASKET, exhaust manifold
	6	4346138 GASKET, intake manifold
	1	4346330 GASKET, water manifold connecting
	1	4347824 GASKET, supercharger drain flange (Discard. Not for HD11)
	2	4347940 GASKET, thermostat housing
	2	4348133 GASKET, breather tube
	6	4348278 GASKET, water manifold
	2	4349031 GASKET, supercharger (Discard. Not for HD11)
	1	4349384 GASKET, intake manifold cover (Discard. Not for HD11)
	1	4354294 GASKET,ASSEMBLY, front cylinder head
	1	4354295 GASKET ASSEMBLY, rear cylinder head
	6	4511204 GASKET, injection nozzle
4354291		GASKET KIT, cylinder head (Tractors #6427 and up)
	4	4252796 O-RING, water manifold type
	1	4300145 GASKET, engine water outlet elbow (Effective with tractor #7999)
	2	4336148 GASKET, rocker cover
	4	4336182 GASKET, water manifold
	1	4336263 GASKET, thermostat housing
	1	4336266 GASKET, engine water outlet elbow (Used prior to tractor #7999)
	2	4337764 GASKET, valve lifter cover
	6	4338511 GASKET, exhaust manifold
	6	4346138 GASKET, intake manifold
	2	4348133 GASKET, breather tube
	1	4354294 GASKET ASSEMBLY, front cylinder head
	1	4354295 GASKET ASSEMBLY, rear cylinder head
	6	4378031 GASKET, injection nozzle
	4	923574 O-RING, water by-pass tube (Used prior to engine #10-7976)
4335833		GASKET KIT, intermediate, cylinder block (Tractors prior to #6427)
	2	035249 GASKET, oil drain plug
	2	4113897 GASKET, oil regulating valve nut
	5	4253106 O-RING, oil filter lines
	1	4335056 GASKET, water pump volute
	1	4335712 GASKET, cover plate
	1	4336345 GASKET, timing gear housing cover
	1	4336897 RING, flywheel housing to crankcase
	1	4346169 GASKET, oil pipe
	2	4346441 GASKET, oil pipe
	1	4346456 GASKET, water inlet pipe
	1	4346744 GASKET, water pump
	1	4347031 GASKET, water by-pass pipe
	1	4347120 GASKET, timing hole cover
	1	4347554 GASKET, oil filter (Early units)
	2	4347655 GASKET, oil line elbow (Early units)
	1	4348126 GASKET, timing gear cover
	1	4348136 GASKET, timing gear housing
	1	4348184 GASKET, oil cooler water outlet
	1	4348185 GASKET, oil cooler water inlet

(Continued)

PACKAGE NUMBER		DESCRIPTION
4335833		GASKET KIT, intermediate, cylinder block (Tractors prior to #6427)(Con't)
	2	4348215 GASKET, oil pipe
	1	4348218 GASKET, oil pipe
	1	4349011 GASKET, fan drive
	2	4349984 GASKET, oil cooler
	1	4362458 GASKET, scavenging oil pump cover
	2	4367089 GASKET, (Discard. Not for HD11)
	2	4373069 GASKET, oil pan cover
	1	4376605 GASKET, cover plate
4336577		GASKET KIT, intermediate, cylinder block (Tractors #6427 thru #10000)
	2	035249 GASKET, oil drain plug
	1	923589 O-RING, fan drive
	1	923814 O-RING, steering pump drive
	2	4113897 GASKET, oil regulating valve nut
	1	4253106 O-RING, oil filter
	1	4254624 O-RING, camshaft hole plug
	1	4335056 GASKET, water pump volute
	3	4335577 GASKET, oil filter hose
	1	4335578 GASKET, oil filter hose
	1	4335712 GASKET, cover plate (Discard. Not for HD11)
	1	4336345 GASKET, (Discard. Not applicable)
	1	4336897 RING, flywheel housing to crankcase
	1	4346169 GASKET, oil pipe
	2	4346441 GASKET, oil pipe
	1	4346456 GASKET, water inlet pipe
	1	4346744 GASKET, water pump
	1	4347031 GASKET, water by-pass flange
	1	4347120 GASKET, timing hole cover
	1	4348126 GASKET, timing gear cover
	1	4348136 GASKET, timing gear housing
	1	4348184 GASKET, oil cooler water outlet
	1	4348185 GASKET, oil cooler water inlet
	2	4348215 GASKET, oil pipe
	1	4348218 GASKET, oil pipe
	1	4349011 GASKET, fan drive
	1	4362458 GASKET, scavenging oil pump cover
	1	4371289 GASKET (Discard. Not for HD11)
	2	4373069 GASKET, oil pan cover
4339826		GASKET KIT, intermediate, cylinder block (Tractors #10001 and up)
	2	035249 GASKET, oil drain plug
	2	923376 O-RING, flywheel housing dowel
	1	923589 O-RING, fan drive
	1	923814 O-RING, steering pump drive
	1	4254182 O-RING, flywheel to crankshaft
	1	4254624 O-RING, camshaft hole plug
	1	4335056 GASKET, water pump volute
	1	4336436 GASKET, oil drain flange
	1	4336676 GASKET, timing hole cover
	1	4336897 RING, sealing, flywheel housing to crankcase
	1	4339150 GASKET, filter head to block
	1	4339151 GASKET, oil cooler to block
	1	4346169 GASKET, oil pipe
	2	4346441 GASKET, oil pipe
	1	4346456 GASKET, water inlet pipe
	1	4346744 GASKET, water pump
	1	4347031 GASKET, water by-pass flange
	1	4347120 GASKET, oil filler hole cover
	1	4348126 GASKET, timing gear cover
	1	4348136 GASKET, timing gear housing

(Continued)

PACKAGE NUMBER	DESCRIPTION
4339826	GASKET KIT, intermediate, cylinder block (Tractors #10001 and up)(Con't)
	1 4348184 GASKET, filter head to block
	1 4348185 GASKET, oil cooler water inlet
	2 4348215 GASKET, oil pipe
	1 4348218 GASKET, oil pipe
	1 4362458 GASKET, oil pump cover
	2 4373069 GASKET, oil pan cover
------	GASKET KIT, turbocharger mounting (See TURBOCHARGER)
------	LINING KIT, brake band (See BRAKES)
4337973	PISTON AND SLEEVE KIT (Tractors prior to #6427)
	1 4254608 RETAINER, piston pin
	1 4336408 RING SET, piston
	1 4337971 SLEEVE, cylinder
	2 4337972 O-RING, cylinder sleeve
	1 4347281 PIN, piston
	1 4348077 PISTON
4337975	PISTON AND SLEEVE KIT (Effective with tractor #6427 but later discontinued with engine #10-11021. If replacing entire set. order 6 PISTON AND SLEEVE KITS 4338650 and 1 CYLINDER HEAD GASKET KIT 4354291)
	2 4255465 RETAINER, piston pin
	1 4336512 PISTON
	1 4336578 RING SET, piston
	1 4337395 PIN, piston
	1 4337971 SLEEVE, cylinder
	2 4337972 O-RING, cylinder sleeve
4338650	PISTON AND SLEEVE KIT (Effective with engine #10-11022)
	2 4255465 RETAINER, piston pin
	1 4336512 PISTON
	1 4336578 RING SET, piston
	1 4337395 PIN, piston
	2 4337972 O-RING, cylinder sleeve
	1 4338648 SLEEVE, cylinder
------	RING SETS, piston (See PISTON AND CONNECTING ROD section)
------	SEAL KITS, final drive (See pages 333 and 335)
------	SEAL KIT, track idler (See pages 419 and 421)
------	SEAL KIT, track supporting roller (See page 417)
------	SEAL KIT, track roller (See pages 411 and 413)
654507	STARTER KIT (Provides solenoid-type starter to replace original mechanical type)
	1 4387529 MOTOR, starting
	1 091181 CABLE, switch to starter
	1 095860 CABLE, switch to ammeter
	1 240962 SWITCH ASSEMBLY, starter
	1 S-4415 WIRING DIAGRAM
------	TRANSFER KITS (See PAINTING AND MARKING)

PACKAGE PARTS

PACKAGE NUMBER	DESCRIPTION
631989	TRACK FRAME KIT, left (For frame replacement on Model HD11B,S tractors prior to #7632)
	1 631861 FRAME ASSEMBLY, left
	2 630752 BLOCK, tapped, spring seat capscrew
	12 631617 BLOCK, tapped, track roller capscrews
	12 631998 SHIM, tractor leveling
	1 637763 BRACKET, track idler, left
	1 637764 BRACKET, track idler, right
	3 900819 WASHER, plain, U.S. std., 5/8"
	1 ------ INSTRUCTION SHEET
631990	TRACK FRAME KIT, right (For frame replacement on Model HD11B,S tractors prior to #7632)
	1 631862 FRAME ASSEMBLY, right
	2 630752 BLOCK, tapped, spring seat capscrew
	12 631617 BLOCK, tapped, track roller capscrews
	12 631998 SHIM, tractor leveling
	1 637763 BRACKET, track idler, left
	1 637764 BRACKET, track idler, right
	3 900819 WASHER, plain, U.S. std., 5/8"
	1 ------ INSTRUCTION SHEET
631993	TRACK FRAME KIT, left (For frame replacement on Model HD11E,EC,ES tractors prior to #7538)
	1 631835 FRAME ASSEMBLY, left
	2 630752 BLOCK, tapped, spring seat capscrews
	14 631617 BLOCK, tapped, track roller capscrews
	14 631998 SHIM, tractor leveling
	1 637763 BRACKET, track idler, left
	1 637764 BRACKET, track idler, right
	3 900819 WASHER, plain, U.S. std., 5/8"
	1 ------ INSTRUCTION SHEET
631994	TRACK FRAME KIT, right (For frame replacement on Model HD11E,EC, ES tractors prior to #7538)
	1 631836 FRAME ASSEMBLY, right
	2 630752 BLOCK, tapped, spring seat capscrews
	14 631617 BLOCK, tapped, track roller capscrews
	14 631998 SHIM, tractor leveling
	1 637763 BRACKET, track idler, left
	1 637764 BRACKET, track idler, right
	3 900819 WASHER, plain, U.S. std., 5/8"
	1 ------ INSTRUCTION SHEET
632115	TRACK FRAME KIT, left (For frame replacement on Model HD11E with special 44-link track on tractors prior to #7609)
	1 632075 FRAME ASSEMBLY, left
	16 631617 BLOCK, track roller capscrews
	2 631665 BLOCK, track release capscrews
	2 631666 BLOCK, track release capscrews
	16 631998 SHIM, tractor leveling
	1 637763 BRACKET, track idler, left
	1 637764 BRACKET, track idler, right
	3 900819 WASHER, plain, U.S. std., 5/8"
	1 ------ INSTRUCTION SHEET

PACKAGED PARTS

PACKAGE NUMBER	DESCRIPTION
632116	TRACK FRAME KIT, right (For frame replacement on Model HD11E with special 44-link track on tractors prior to #7609)
	1 632076 FRAME ASSEMBLY, right
	16 631617 BLOCK, track roller capscrews
	2 631665 BLOCK, track release capscrews
	2 631666 BLOCK, spring seat capscrews
	16 631998 SHIM, tractor leveling
	1 637763 BRACKET, track idler, left
	1 637764 BRACKET, track idler, right
	1 900819 WASHER, plain, U.S. std., 5/8"
	1 ------ INSTRUCTION SHEET
634823	TRACK FRAME KIT, left (For frame replacement on Model HD11F, FC tractors prior to #4629)
	1 634821 FRAME ASSEMBLY, left
	1 622847 SHAFT, track idler
	2 622850 RETAINER, track idler bearing
	2 622855 RETAINER, track idler seal
	16 631617 BLOCK, tapped, track roller capscrews
	2 631665 BLOCK, tapped, track release capscrews
	4 631666 BLOCK, tapped, rigid beam capscrews
	16 631998 SHIM, tractor leveling
	1 637763 BRACKET, track idler, left
	1 637764 BRACKET, track idler, right
	3 900819 WASHER, plain, U.S. std., 5/8"
634824	TRACK FRAME KIT, right (For frame replacement on Model HD11F, FC tractors prior to #4629)
	1 634822 FRAME ASSEMBLY, right
	1 622847 SHAFT, track idler
	2 622850 RETAINER, track idler bearing
	2 622855 RETAINER, track idler seal
	16 631617 BLOCK, tapped, track roller capscrews
	2 631665 BLOCK, tapped, track release capscrews
	4 631666 BLOCK, tapped, rigid beam capscrews
	16 631998 SHIM, tractor leveling
	1 637763 BRACKET, track idler, left
	1 637764 BRACKET, track idler, right
	3 900819 WASHER, plain, U.S. std., 5/8"
631991	TRACK FRAME KIT, left (For frame replacement on Model HD11F, FC tractors #4629 thru #7608)
	1 631863 FRAME ASSEMBLY, left
	16 631617 BLOCK, tapped, track roller capscrews
	2 631665 BLOCK, tapped, track release capscrews
	4 631666 BLOCK, tapped, rigid beam capscrews
	16 631998 SHIM, tractor leveling
	1 637763 BRACKET, track idler, left
	1 637764 BRACKET, track idler, right
	3 900819 WASHER, plain, U.S. std., 5/8"
	1 ------ INSTRUCTION SHEET
631992	TRACK FRAME KIT, right (For frame replacement on Model HD11F, FC tractors #4629 thru #7608)
	1 631864 FRAME ASSEMBLY, right
	16 631617 BLOCK, tapped, track roller capscrews
	2 631665 BLOCK, tapped, track release capscrews
	4 631666 BLOCK, tapped, rigid beam capscrews
	16 631998 SHIM, tractor leveling
	1 637763 BRACKET, track idler, left
	1 637764 BRACKET, track idler, right
	3 900819 WASHER, plain, U.S. std., 5/8"
	1 ------ INSTRUCTION SHEET

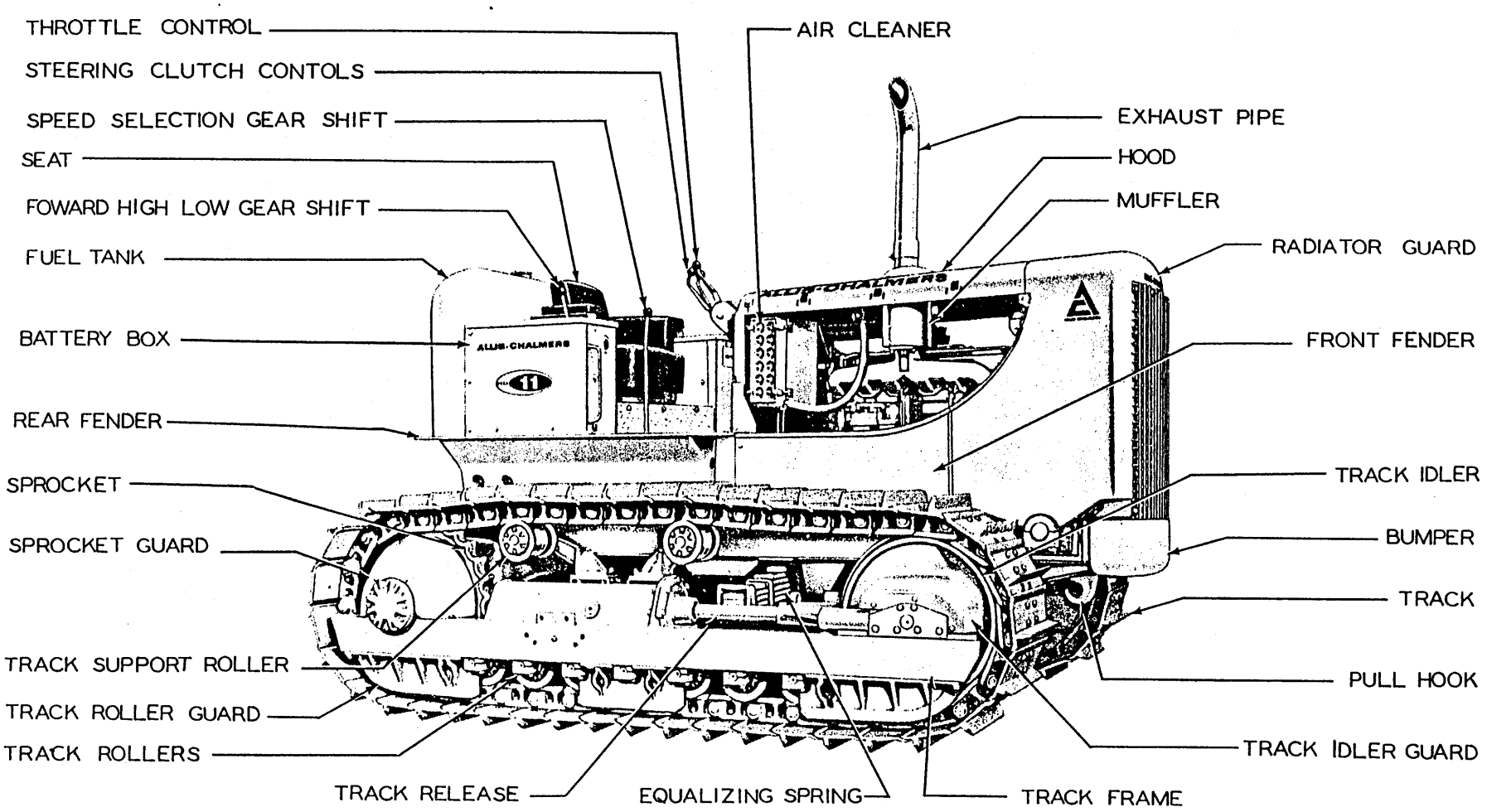

MODEL HD11B TRACTOR (w/ long track) T-72807

DECIMAL AND METRIC EQUIVALENTS OF FRACTIONS OF AN INCH

Inches		Millimeters	Inches		Millimeters
Fractions	Decimals		Fractions	Decimals	
1/64	.015625	.397	33/64	.515625	13.097
1/32	.03125	.794	17 32	.53125	13.494
3/64	.046875	1.191	35/64	.546875	13.891
1/16	.0625	1.588	9/16	.5625	14.288
5/64	.078125	1.984	37/64	.578125	14.684
3/32	.09375	2.381	19 32	.59375	15.081
7/64	.109375	2.778	39/64	.609375	15.478
1/8	.125	3.175	5/8	.625	15.875
9/64	.140625	3.572	41/64	.640625	16.272
5/32	.15625	3.969	21 32	.65625	16.669
11/64	.171875	4.366	43/64	.671875	17.066
3/16	.1875	4.763	11/16	.6875	17.463
13/64	.203125	5.159	45/64	.703125	17.859
7/32	.21875	5.556	23 32	.71875	18.256
15/64	.234375	5.953	47/64	.734375	18.653
1/4	.250	6.350	3/4	.750	19.050
17/64	.265625	6.747	49/64	.765625	19.447
9/32	.28125	7.144	25 32	.78125	19.844
19/64	.296875	7.541	51/64	.796875	20.241
5/16	.3125	7.938	13/16	.8125	20.638
21/64	.328125	8.334	53/64	.828125	21.034
11/32	.34375	8.731	27 32	.84375	21.431
23/64	.359375	9.128	55/64	.859375	21.828
3/8	.375	9.525	7/8	.875	22.225
25/64	.390625	9.922	57/64	.890625	22.622
13/32	.40625	10.319	29 32	.90625	23.019
27/64	.421875	10.716	59/64	.921875	23.416
7/16	.4375	11.113	15/16	.9375	23.813
29/64	.453125	11.509	61/64	.953125	24.209
15/32	.46875	11.906	31 32	.96875	24.606
31/64	.484375	12.303	63/64	.984375	25.003
1/2	.500	12.700	1	1.000	25.400

VOLUME AND WEIGHT CONVERSION CONSTANTS — U.S. TO METRIC

Pints x .4732 = Liters
Quarts x .9463 = Liters
Gallons x 3.7853 = Liters
Pounds x .4536 = Kilograms

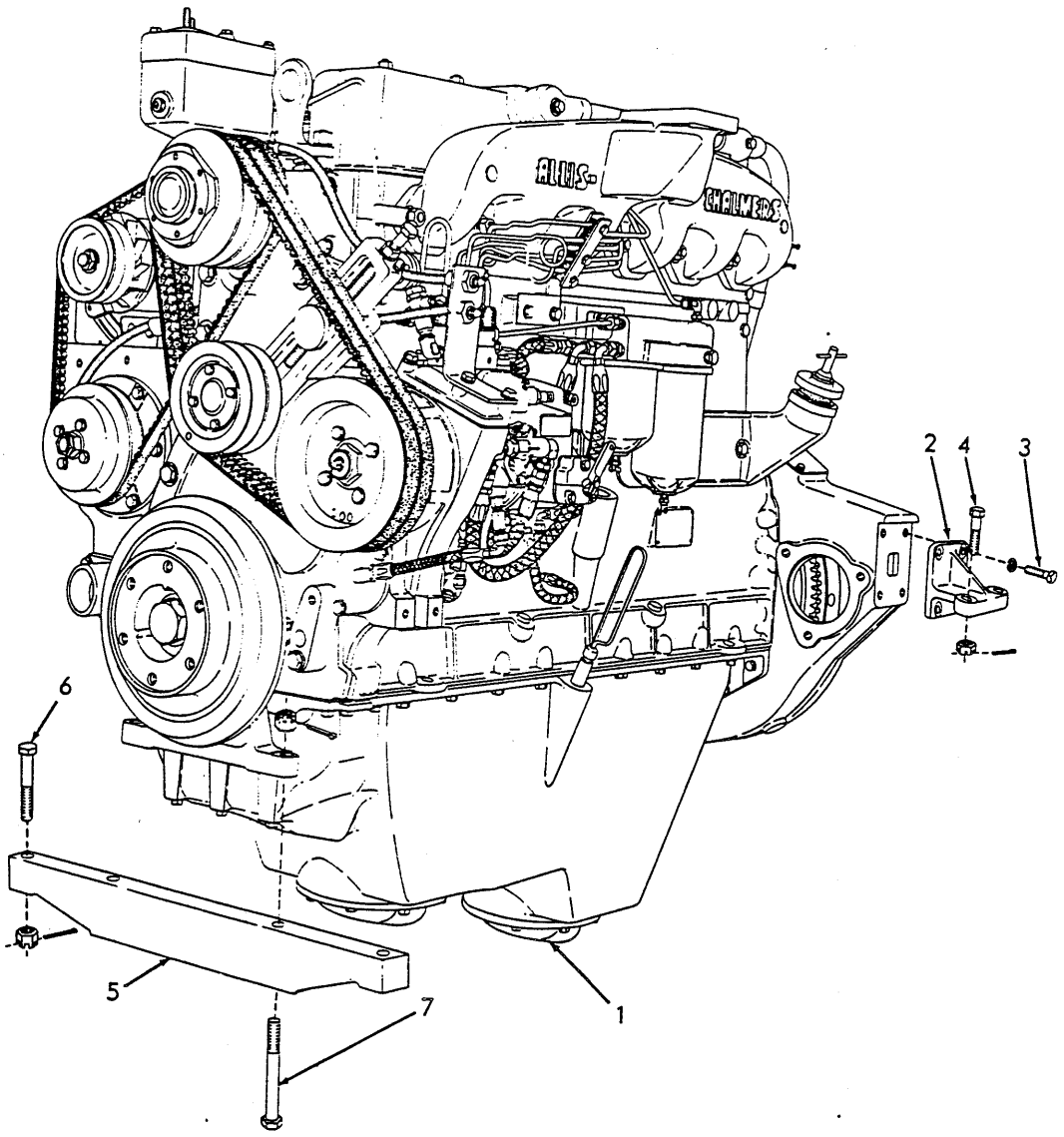

ENGINE AND MOUNTING T-27441

* Tractors prior to serial No. 10001
** Tractors serial No. 10001 and up

ITEM	PART NO.	QTY. *	QTY. **	DESCRIPTION
1	------	1	-	ENGINE ASSEMBLY (Tractors prior to #6427)(Discontinued. Order components)
	-------	1	-	ENGINE ASSEMBLY (Models HD11B, E, ES,S, F with dry clutch. Tractors #6427 thru #6910)(Discontinued. Order components)
	-------	1	-	ENGINE ASSEMBLY (Models HD11B, E, ES, S, F with oil clutch. Tractors #6911 and up)(Discontinued. Order components)
	4337482	1	-	ENGINE ASSEMBLY (Models HD11EC, FC)
	4339590	-	1	ENGINE ASSEMBLY (Model HD11B)
	4339587	-	1	ENGINE ASSEMBLY (Models HD11E, S)
	4339588	-	1	ENGINE ASSEMBLY (Model HD11EC)

NOTE: Engines include generator, oil and fuel filters but do not include air cleaner, fan, starter or the 1st stage fuel filter element. This element must be added if tractor is not equipped with special Heavy-duty Fuel Filter.

(Continued)

ITEM	PART NO.	QTY. *	QTY. **	DESCRIPTION
2	084493	2	2	BRACKET, engine supporting, rear
3	035190	8	8	CAPSCREW, 1/2"NC x 1-1/2"
	904208	8	8	LOCKWASHER, 1/2"
4	638907	4	4	CAPSCREW, rear mounting (drilled-end, 5/8"NF x 2-1/4")
	912840	4	4	NUT, slotted, 5/8"NF
	900806	4	4	PIN, cotter, 1/8" x 1"
5	084517	1	-	SUPPORT, front
5	642562	-	1	SUPPORT, front
6	642563	2	2	CAPSCREW, drilled-end, 5/8"NF x 3-1/2"
	913230	2	2	NUT, high, slotted, 5/8"NF
	900806	2	2	PIN, cotter, 1/8" x 1"
7	638881	2	-	CAPSCREW, front mounting (drilled-end, 5/8"NF x 5-1/4")
7	091984	-	2	CAPSCREW, front mounting (drilled-end, 5/8"NF x 5")
	913230	2	2	NUT, high, slotted, 5/8"NF
	900806	2	2	PIN, cotter, 1/8" x 1"

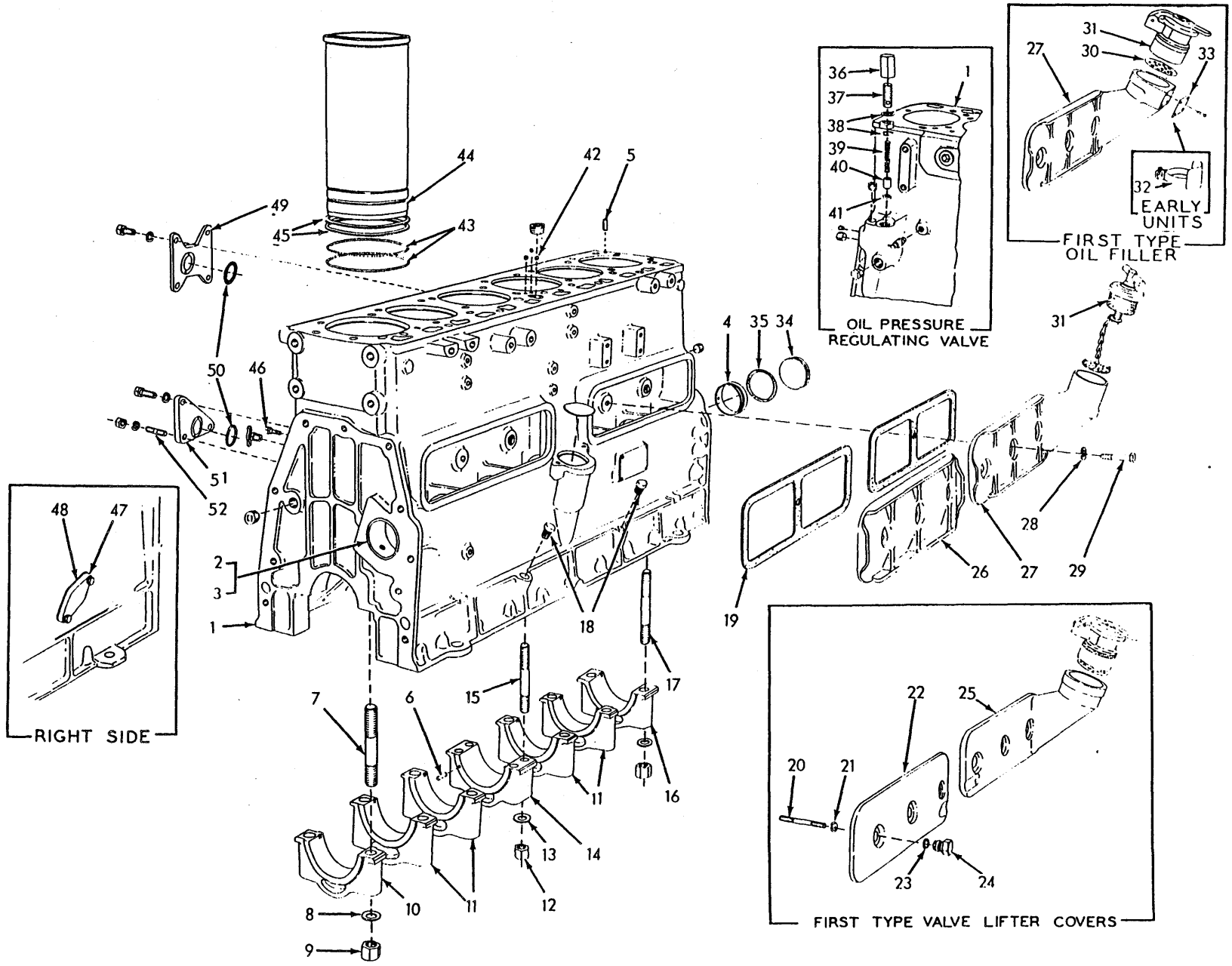

T-13180

CYLINDER BLOCK

ITEM	PART NO.	QTY.	DESCRIPTION
1	------	1	BLOCK ASSEMBLY (Used prior to engine #10-4030. Order BLOCK ASSY. 4338151, 1 each LINE ASSY. 4336574, O-RING 4253106, PLATE 4034292, GASKET 4347655, STUD 4335371, NUT 910195, LOCKWASHER 904208, 2 CAPSCREWS 919224, 2 CAPSCREWS 916271, 4 LOCKWASHERS 904206. If for engines prior to #90846 also include 1 TUBE ASSY. 4335043, 1 TUBE ASSY. 4349309, 2 each BRACKET 4349291, ELBOW 4335381, ELBOW 911017 and ELBOW 913039)
	4338151	1	BLOCK ASSEMBLY (Includes items 2 thru 18, 41, 42, 46 thru 52 and hardware indented below)(Effective with engine #10-4030)
	910015	1	PLUG, expansion, 2-1/8" diam. (Used prior to tractor #6427)
	910017	1	PLUG, expansion, 2-3/8" diam. (Effective with tractor #6427)
	919134	3	PLUG, pipe, hex-hd., 1/8"NPT
	920333	2	PLUG, pipe, hex-hd., 3/8"NPT
	917970	2	PLUG, pipe, hex-socket, 1/2"NPT
	920416	1	PLUG, pipe, hex-hd., 1/2"NPT
	918851	1	PLUG, pipe, hex-socket, 3/4"NPT
	918888	1	PLUG, pipe, hex-socket, 1"NPT (Effective with tractor#6427)
	901666	1	PLUG, pipe, ctsk-hd., 1"NPT (Used in service replacement block only)
	912415	2	COCK, drain, 1/4"NPT (1 less used on engines prior to #10-4030)
2	4346100	1	BEARING, camshaft, front (standard size)
	4347416	1	BEARING, camshaft, front (.010" undersize)
3	4346099	2	BEARING, camshaft, intermediate (standard size)
	4347419	2	BEARING, camshaft, intermediate (.010" undersize)
4	4346108	1	BEARING, camshaft, rear (standard size)
	4347413	1	BEARING, camshaft, rear (.010" undersize)
5	4336432	4	PIN, dowel, cylinder head (Effective with tractor #6427)
6	------	4	PIN, dowel, crankshaft thrust flange (See CRANKSHAFT)
7	4348829	2	STUD, front main bearing cap (3/4" diam., 5-1/2" long)(Used prior to engine #10-10626)
	4339037	2	CAPSCREW, front main bearing cap (3/4"NC x 3-15/16")(Effective with engine #10-10626)
8	4354175	12	WASHER, main bearing stud
9	4346191	12	NUT, main bearing stud (3/4"NF)(Used prior to engine #10-10626)
10	4349630	1	*CAP, front main bearing
11	4349632	4	*CAP, intermediate main bearing
12	4346322	4	NUT, center main bearing stud (5/8"NF)(Used prior to engine #10-10626)
13	4389910	4	WASHER, center main bearing stud

*Replacement bearing caps are semi-finished and must be line-bored after installing

(Continued)

ITEM	PART NO.	QTY.	DESCRIPTION
14	4349629	1	*CAP, center main bearing
15	------	4	STUD, center main bearing cap (5/8" diam.)(Used prior to engine #10-10626. Order CAPSCREW 4339038)
	4339038	4	CAPSCREW, center main bearing cap (5/8"NC x 3-13/16")(Effective with engine #10-10626)
16	4349631	1	*CAP, rear main bearing
17	------	10	STUD, rear and intermediate main bearing caps (3/4" diam., 5-7/8" long)(Used prior to engine #10-10626. Order CAPSCREW 4339036)
	4339036	10	CAPSCREW, rear and intermediate main bearing caps (3/4"NC x 4-5/16")(Effective with engine #10-10626)
18	4362338	2	PLUG, crankcase
19	4337764	2	□GASKET, valve lifter cover
			NOTE: Items 20 thru 25 comprise the FIRST TYPE VALVE LIFTER COVERS used prior to engine serial No. 10-4251
20	4346653	6	STUD, valve lifter cover
21	4253520	6	RING, snap, valve lifter cover nut
22	------	1	COVER, valve lifter, front (Order items 26, 28 and 29)
23	4251987	6	□O-RING, valve lifter cover nut
24	4347126	6	NUT, valve lifter cover
25	------	1	COVER, valve lifter, rear (Order items 27, 28 and 29)
			NOTE: Items 26 thru 29 comprise the SECOND TYPE VALVE LIFTER COVERS effective with engine serial No. 10-4251
26	4354635	1	COVER, valve lifter, front
27	4338674	1	COVER, valve lifter, rear (For engines prior to #10-10814 also order CLOSURE ASSEMBLY 4354449)
28	4335456	6	WASHER, valve lifter cover bolt
29	4335455	6	BOLT, valve lifter cover
30	4335022	1	STRAINER, oil filler (Used prior to engine #10-10814)
31	4366461	1	CAP ASSEMBLY, oil filler (Serviced only as a unit)(Used prior to engine #10-10814)
	4354449	1	CLOSURE ASSEMBLY, oil filler (Serviced only as a unit)(Effective with engine #10-10814)
32	4379291	1	PLATE AND STRAP ASSEMBLY, oil data (Used prior to engine #10-6426)

*Replacement bearing caps are semi-finished and must be line-bored after installing

□Also see PACKAGED PARTS

(Continued)

ITEM	PART NO.	QTY.	DESCRIPTION
33	4379141	1	PLATE, oil date (Used on engines #10-6426 thru #10-10813)
	904516	4	SCREW, drive, #6 x 1/4"
34	917724	1	PLUG, expansion, 2-3/4" diam. (Used prior to engine #10-4308)
	4335534	1	PLUG, camshaft hole (grooved for O-ring)(Effective with engine #10-4308)
35	4254624	1	□O-RING, camshaft hole plug (Effective with engine #10-4308)
36	------	1	NUT, cap, oil pressure regulating valve (Used prior to engine #10-11205. Order SCREW 4389058)
37	------	1	SCREW, oil pressure regulating valve (Used prior to engine #10-11205. Order SCREW 4389058)
	4389058	1	SCREW, oil pressure regulating valve (Nylok insert)(Effective with engine #10-11205)
	910847	1	NUT, jam, 3/4"NF
38	4113897	2	□GASKET, regulating valve nut (Used prior to engine #10-11205)
39	4660358	1	SPRING, oil pressure regulating valve
40	4500230	1	PISTON, oil pressure regulating valve
41	4347465	1	INSERT, oil pressure regulating valve seat
42	4347061	1	RESTRICTOR, oil passage (Additional 2 used on engine prior to #90846)
43	4346184	12	O-RING, cylinder sleeve (black)(Used prior to engine #10-6951)
	4337972	12	□O-RING, cylinder sleeve (red)(Effective with engine #10-6951)
44	4337971	6	□SLEEVE, cylinder (Used prior to engine #10-11022. If for engines prior to #10-6951 also order O-RING 4337972)(If replacing entire set order 6 Piston and Sleeve Kits 4338650 and 1 Cylinder Head Gasket Kit 4354291)
	4338648	6	□SLEEVE, cylinder (Effective with engine #10-11022)
45	4348857	-	SHIM, cylinder sleeve (.005" thick)
	4348856	-	SHIM, cylinder sleeve (.008" thick)
	4348859	-	SHIM, cylinder sleeve (.010" thick)
	4348858	-	SHIM, cylinder sleeve (.015" thick)
	4348900	-	SHIM, cylinder sleeve (.020" thick)
			Use as required when re-machining cylinder blocks
46	4335777	2	CAPSCREW, crankcase pad (3/8"NC x 3/4", nylok)(Effective with engine #10-4308
47	4339604	1	PLATE, cover, turbocharger oil drain hole
	918683	2	CAPSCREW, 1/2"NC x 1-1/8"
	904208	2	LOCKWASHER, 1/2"
48	4336436	1	□ GASKET, oil drain hole cover
			Effective with engine #10-11293. Not used on units with turbocharger

NOTE: Items listed below are furnished only with service replacement cylinder block and are not original equipment

49	4335369	1	PLATE, cover, oil gallery hole, upper
	916311	4	CAPSCREW, 1/2"NC x 1-1/4"
	904208	4	LOCKWASHER, 1/2"
50	4253106	2	O-RING, oil gallery hole cover plates
51	4335782	1	PLATE, cover, oil gallery hole, lower
	919230	1	CAPSCREW, 1/2"NC x 1-3/8"
52	4305073	2	STUD
	904208	3	LOCKWASHER, 1/2"
	910195	2	NUT, 1/2"NF

□Also see PACKAGED PARTS

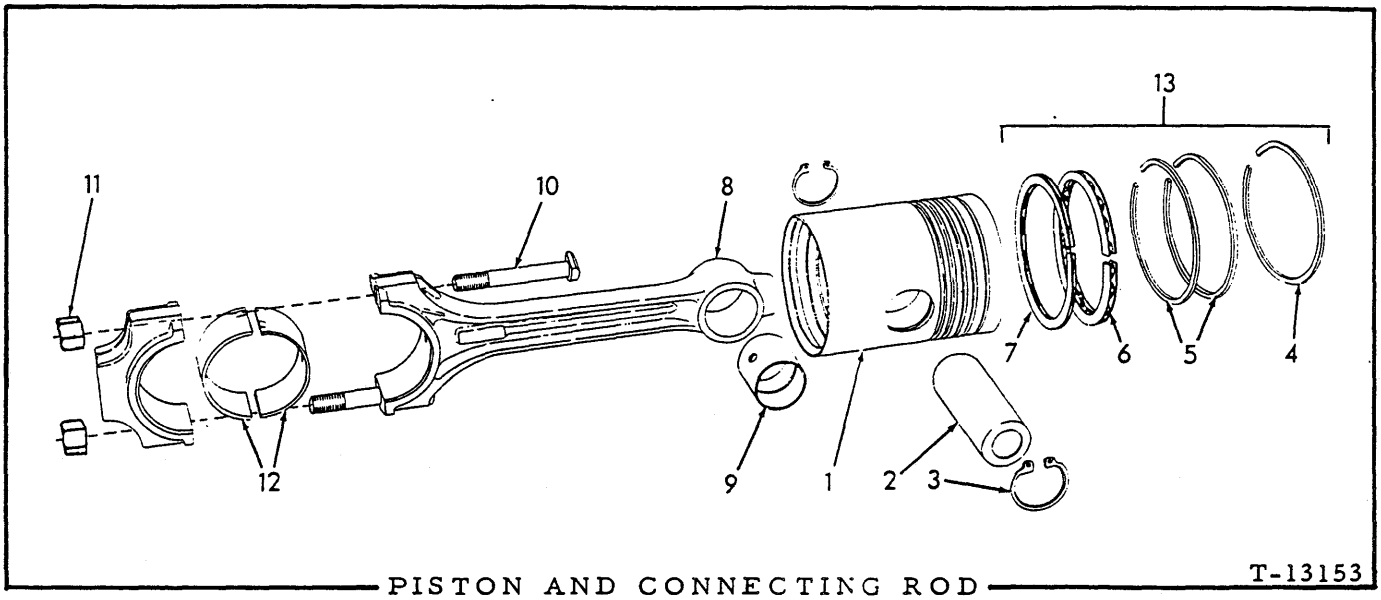

PISTON AND CONNECTING ROD T-13153

USAGE: Tractors prior to serial No. 6427 (516 series engine)

ITEM	PART NO.	QTY.	DESCRIPTION
1	4348077	6	□PISTON
2	4347281	6	□PIN, piston
3	4254608	12	□RETAINER, piston pin
4	4347458	6	RING, compression (top groove) } See item 13
5	4347235	12	RING, compression (2nd and 3rd grooves) } See item 13
6	------	6	RING, oil control (4th groove)(Order item 13)
7	4336190	6	RING, oil control (5th groove)(See item 13)
8	4354188	6	ROD ASSEMBLY, connecting (Includes items 9 thru 11)
9	4340081	6	BUSHING, connecting rod
10	4354179	12	BOLT, connecting rod
11	4354748	12	NUT, connecting rod bolt
12	4337701	12	BEARING, connecting rod (standard size)
	4337702	12	BEARING, connecting rod (.010" undersize)
	4337703	12	BEARING, connecting rod (.020" undersize)
	4337704	12	BEARING, connecting rod (.030" undersize)
	4337705	12	BEARING, connecting rod (.040" undersize)
13	4336408	6	□RING SET (Includes parts for one (1) piston only; items 4 thru 7)
			□Also see PACKAGED PARTS

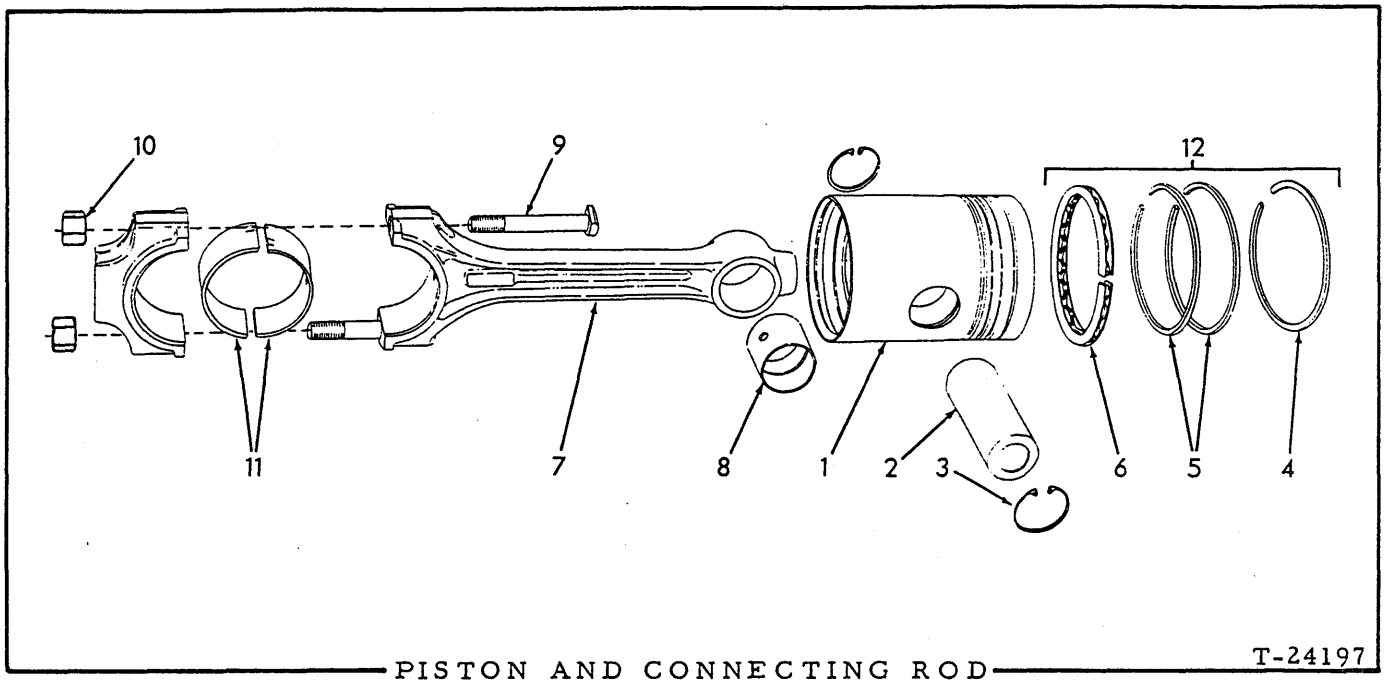

PISTON AND CONNECTING ROD T-24197

USAGE: Tractors serial No. 6427 and up (10000 and 11000 series engines)

ITEM	PART NO.	QTY.	DESCRIPTION
1	4336512	6	□PISTON
2	4337395	6	□PIN, piston
3	4255465	12	□RETAINER, piston pin
4	4347458	6	RING, compression (top groove)(See item 12)
5	4347235	12	RING, compression (See item 12)
6	4336559	6	RING, oil control (See item 12)
7	4354788	6	ROD ASSEMBLY, connecting (Includes items 8 thru 10)
8	4339017	6	BUSHING, connecting rod
9	4354179	12	BOLT, connecting rod
10	4354748	12	NUT, connecting rod bolt
11	4337701	12	BEARING, connecting rod (standard size)
	4337702	12	BEARING, connecting rod (.010" undersize)
	4337703	12	BEARING, connecting rod (.020" undersize)
	4337704	12	BEARING, connecting rod (.030" undersize)
	4337705	12	BEARING, connecting rod (.040" undersize)
12	4336578	6	□RING SET (Includes parts for one (1) piston only; items 4, 5 and 6)

□Also see PACKAGED PARTS

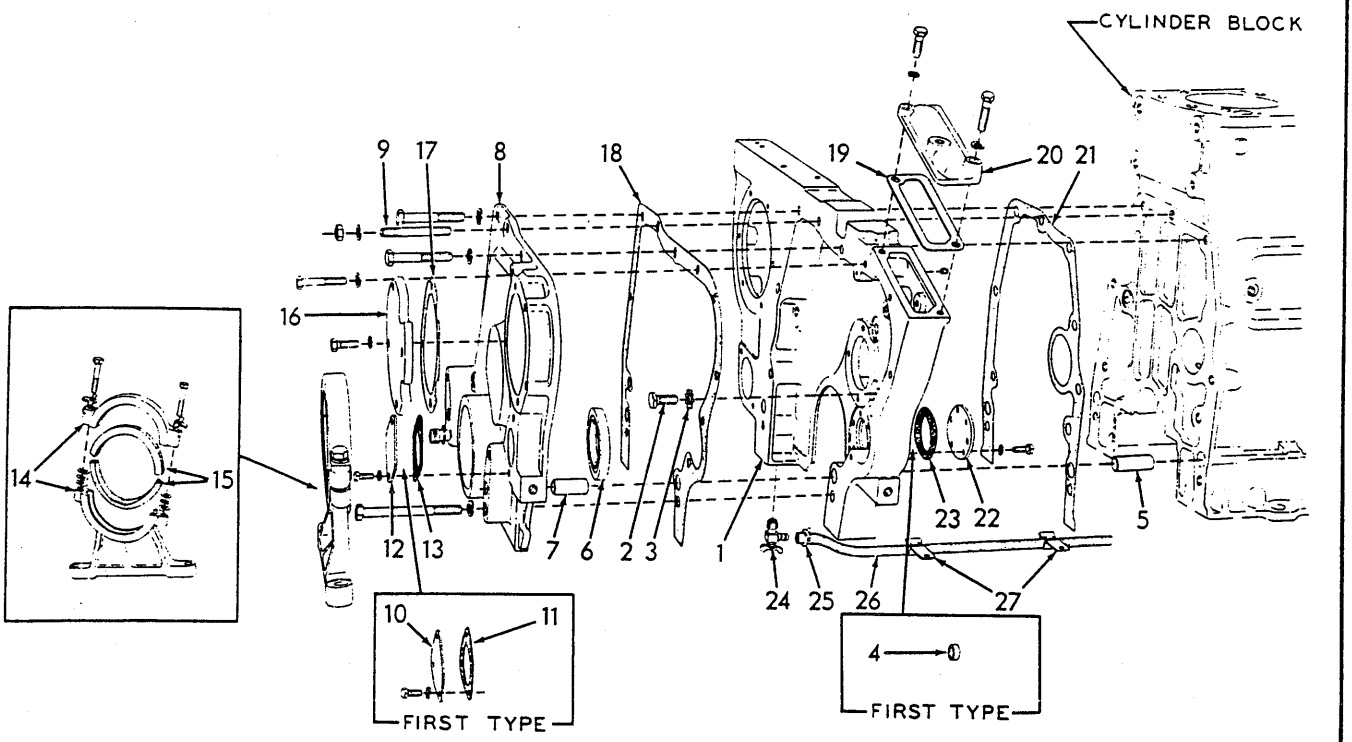

TIMING GEAR HOUSING T-13176

* Used prior to engine serial No. 10-4332
** Effective with engine serial No. 10-4332

ITEM	PART NO.	QTY. *	QTY. **	DESCRIPTION
1	------	1	-	HOUSING, timing gear (Order 1 HOUSING 4337228, 2 PLUG 917970, and items 22 and 23)
	4337228	-	1	HOUSING, timing gear
	919134	-	1	PLUG, pipe, hex-hd., 1/8"NPT (Used prior to engine #10-5896)
	917970	-	1	PLUG, pipe, hex-socket, 1/2"NPT
2	4004054	3	3	CAPSCREW, 1/2"NC x 1-1/16"
3	4253490	3	3	LOCKWASHER
4	4253924	1	-	PLUG, cup (3/4" O. D.)
5	4346246	2	2	PIN, dowel, timing gear housing
6	------	1	1	SEAL, oil, crankshaft (2-1/2" I. D.)(Used prior to engine #10-7156. Order SEAL 4026447)
	4026447	-	1	SEAL, oil, crankshaft (2-7/32" I. D.)(Effective with engine #10-7156)
7	4348107	2	2	PIN, dowel, timing gear cover
8	------	1	-	COVER ASSY. timing gear housing (Order COVER ASSY. 4337281, 1 PLATE 4335711, 1 GASKET 4335712, 2 CAPSCREW 916274 and 1 CAPSCREW 921299)
	4337281	-	1	COVER ASSY., timing gear housing (Includes item 7)(If for tractors prior to #6427, also order 1 CAPSCREW 921299)
	915969	3	3	CAPSCREW, 1/2"NC x 3"
	916319	1	1	CAPSCREW, 1/2"NC x 3-1/2"
	919232	2	2	CAPSCREW, 1/2"NC x 4-3/4" (1 less used effective with tractor #6427)
	921299	-	1	CAPSCREW, hex-socket-hd., 1/2"NC x 4" (Effective with tractor #6427)
	919287	5	3	CAPSCREW, 3/8"NC x 1-7/8"
	916274	-	2	CAPSCREW, 3/8"NC x 2-1/4"
	904208	6	6	LOCKWASHER, 1/2"
	904206	5	5	LOCKWASHER, 3/8"

(Continued)

TIMING GEAR HOUSING (Continued)

ITEM	PART NO.	QTY. *	QTY. **	DESCRIPTION
9	915969	1	1	CAPSCREW, 1/2"NC x 3" (Used prior to engine #10-4030)
	908191	1	1	WASHER, plain, copper, 1/2"
	4335371	1	1	STUD, timing gear housing (Effective with engine #10-4030)
	904208	1	1	LOCKWASHER, 1/2"
	910195	1	1	NUT, 1/2"NF
10	4348285	1	-	PLATE, timing gear cover
	916277	3	-	CAPSCREW, 5/16"NC x 5/8"
	917330	3	-	WASHER, plain, copper, 5/16"
11	4376605	1	-	□GASKET, cover plate
12	4335711	-	1	PLATE, timing gear cover (Used prior to tractor #6069 excl.#5490 and #6044)
13	4335712	-	1	□GASKET, cover plate (Used prior to tractor #6069 excl.#5490 and #6044)
14	4335067	1	1	BRACKET, engine mounting (Includes cap)
	916009	10	10	WASHER, shimming (1/32" thick)
	4254891	2	2	CAPSCREW, 1/2"NC x 2-1/2"
	4335550	2	2	LOCKWASHER
15	4364864	2	2	LINER, engine mounting bracket(rubber)(Used prior to engine #10-6001)
	4336491	-	2	LINER, engine mounting bracket (nylon)(Effective with engine #10-6001)
16	4348310	1	1	PLATE,cover, injection pump driving gear (Used prior to engine#10-4855)
	916269	4	4	CAPSCREW,3/8"NC x 7/8"
	904206	4	4	LOCKWASHER, 3/8"
17	4349011	1	1	GASKET, cover plate (Used prior to engine #10-4855)
18	4348126	1	1	□GASKET, timing gear housing cover
19	4347120	1	1	□GASKET, timing hole cover
20	4347119	1	1	COVER, fuel pump timing hole (Used prior to engine #10-5896)
	919225	2	2	CAPSCREW, 3/8"NC x 1-3/8"
	904206	2	2	LOCKWASHER, 3/8"
	4336524	-	1	COVER, fuel pump timing hole (Effective with engine #10-5896)
	919225	-	1	CAPSCREW, 3/8"NC x 1-3/8"
	919287	-	1	CAPSCREW, 3/8"NC x 1-7/8"
	904206	-	2	LOCKWASHER, 3/8"
21	4348136	1	1	□GASKET, timing gear housing
22	4336346	-	1	COVER, timing gear housing (Used prior to tractor #6069 excl.#5490 and #6044)
	916277	-	6	CAPSCREW, 5/16"NC x 5/8"
	917330	-	6	WASHER, plain, copper, 5/16"
23	4336345	-	1	□GASKET, housing cover (Used prior to tractor #6069 excl.#5490 and 6044)
24	079751	1	-	COCK, drain (1/4"NPT)(Used prior to tractor #2562)
	089894	1	1	COCK, drain (3/8"NPT)(Effective with tractor #2562)
25	089879	1	-	CLAMP, drain hose (Used prior to tractor #2562)
	089107	1	1	CLAMP, drain hose (Effective with tractor #2562)
26	089607	1	-	HOSE, water drain (3/8"I. D.)(Used prior to tractor #2562)
	091996	1	-	HOSE, water drain (5/8"I. D. x22" long)(Used on tractors #2562 thru #4059)
	092652	1	1	HOSE, water drain (5/8"I. D. x 26" long)(Effective with tractor #4060)
27	092758	2	2	CLIP, supporting, water drain hose (Effective with tractor #4060)

□ Also see PACKAGED PARTS

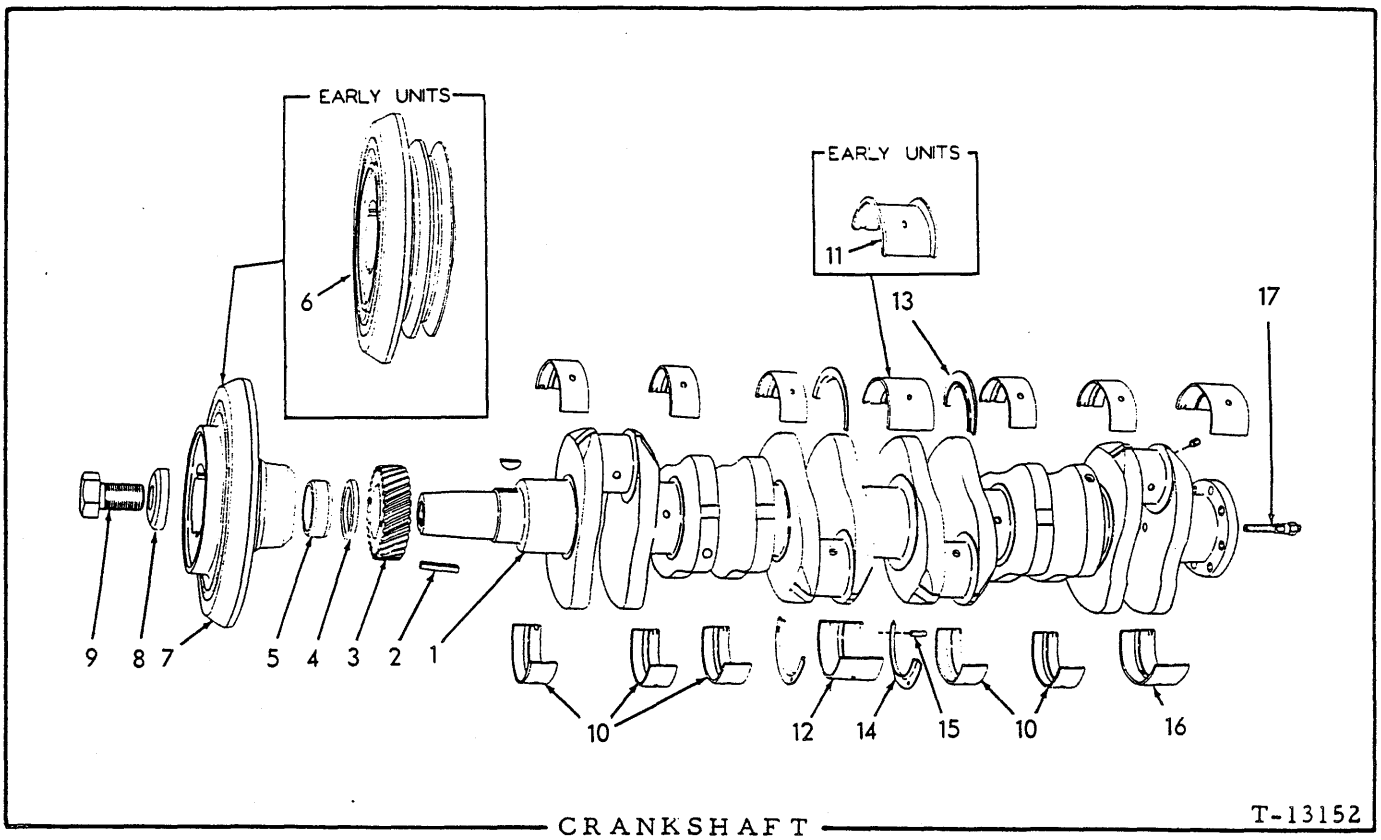

CRANKSHAFT

* Engines prior to serial No. 10-4980
** Effective with engine serial No. 10-4980

ITEM	PART NO.	QTY. *	QTY. **	DESCRIPTION	
1	4357334	1	1	CRANKSHAFT ASSEMBLY (Includes PLUGS indented below)	
	917673	6	6	PLUG, pipe, hex-socket, 1/8"NPT	
	919840	1	1	PLUG, pipe, hex-hd., 1/4"NPT (Not used on units with dry clutch)	
2	4003490	1	1	KEY, crankshaft pulley	
3	4346205	1	1	GEAR, crankshaft (Used prior to engine #10-6779)	
	4337060	-	1	GEAR, crankshaft (hardened)(Effective with engine #10-6779)	
	905127	1	1	KEY, "B" woodruff, 5/16" x 1"	
4	4374391	1	1	SPACER, front oil seal sleeve (Used prior to engine #10-7156)	Cannot be used with replacement SEAL 4026447
5	4374390	1	1	SLEEVE, front oil seal (Used prior to engine #10-7156)	
6	4347815	1	-	PULLEY, crankshaft (Used prior to engine #10-4855)	
7	4335937	1	1	DAMPER, vibration (Effective with engine #10-4855)	

(Continued)

ITEM	PART NO.	QTY. *	QTY. **	DESCRIPTION
8	4371503	1	1	WASHER, crankshaft pulley bolt
9	4347897	1	1	CAPSCREW, crankshaft pulley
10	4337710	10	10	BEARING, front and intermediate main (standard size)
	4337711	10	10	BEARING, front and intermediate main (.010" undersize)
	4337712	10	10	BEARING, front and intermediate main (.020" undersize)
	4337713	10	10	BEARING, front and intermediate main (.030" undersize)
	4337714	10	10	BEARING, front and intermediate main (.040" undersize)
11	4337062	2	-	BEARING, center main (standard size)
	4337063	2	-	BEARING, center main (.010" undersize)
	4337064	2	-	BEARING, center main (.020" undersize)
	4337065	2	-	BEARING, center main (.030" undersize)
	4337066	2	-	BEARING, center main (.040" undersize)
12	4348991	-	1	BEARING, center main (standard size)
	4348992	-	1	BEARING, center main (.010" undersize)
	4348993	-	1	BEARING, center main (.020" undersize)
	4348994	-	1	BEARING, center main (.030" undersize)
	4348995	-	1	BEARING, center main (.040" undersize)
13	4337683	-	2	FLANGE, thrust, center main, upper (standard size)
	4337684	-	2	FLANGE, thrust, center main, upper (.005" oversize)
	4337685	-	2	FLANGE, thrust, center main, upper (.010" oversize)
	4337686	-	2	FLANGE, thrust, center main, upper (.015" oversize)
14	4337687	-	2	FLANGE, thrust, center main, lower (standard size)
	4337688	-	2	FLANGE, thrust, center main, lower (.005" oversize)
	4337689	-	2	FLANGE, thrust, center main, lower (.010" oversize)
	4337690	-	2	FLANGE, thrust, center main, lower (.015" oversize)
15	4250898	-	4	PIN, dowel, thrust flange
16	4337698	2	2	BEARING, rear main (standard size)
	4337699	2	2	BEARING, rear main (.010" undersize)
	4337700	2	2	BEARING, rear main (.020" undersize)
	4337715	2	2	BEARING, rear main (.030" undersize)
	4337716	2	2	BEARING, rear main (.040" undersize)
17	084584	1	1	WICK ASSEMBLY, oiling, flywheel bearing (Serviced only as a unit) (Used only with dry clutch tractors, prior to #6911)

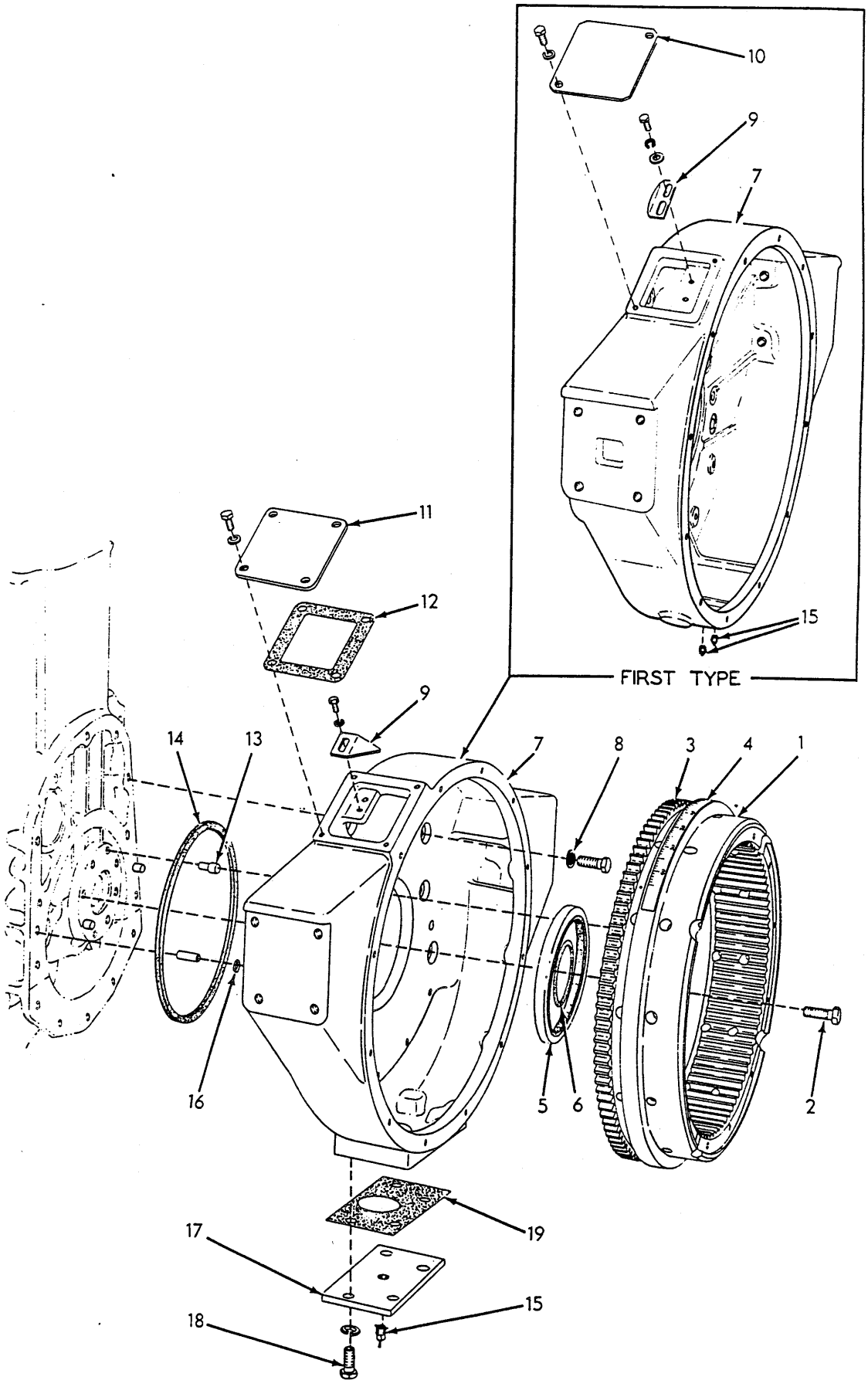

FLYWHEEL AND HOUSING

FLYWHEEL AND HOUSING

* Models HD11B, E, ES, S, F with dry clutch. Tractors prior to serial No. 6911.
** Models HD11B, E, ES, S, F with oil clutch. Tractors serial No. 6911 and up
*** Models HD11EC, FC

ITEM	PART NO.	QUANTITY *	**	***	DESCRIPTION
1	4338544-2	1	-	-	FLYWHEEL ASSY. (Includes item 3)
	4338498-1	-	1	-	FLYWHEEL ASSY. (Includes item 3)
	4338499-9	-	-	1	FLYWHEEL ASSY. (Includes item 3)
2	4255343-8	6	6	-	BOLT, flywheel (1-1/4" long)
	4255337-0	-	-	6	BOLT, flywheel (1-1/2" long)
3	4341292-3	1	1	-	GEAR, ring
	4304907-1	-	-	1	GEAR, ring
4	4336621-0	1	-	-	STRIP, timing marks (Used prior to engine #10-11071)
4A	4027282-5	1	1	1	SLEEVE, wear (Provides new seal surface for worn flywheels. Requires use of larger oil Seal 4027280-9)
5	4338219-1	1	-	-	SEAL, oil, crankshaft rear end (5-3/8" I.D. single lip) (Original equipment)
	4338440-3	-	1	1	SEAL, oil, crankshaft rear end (5-3/8" I.D. dual lip) (Original equipment)
	4027280-9	1	2	2	SEAL, oil, crankshaft rear end (5-1/2" I.D. single-lip) (Service replacement. Used with item 4A only)
	4338771-1	-	1	1	SHIM, seal spacing (Used with SEAL 4338440-3 only prior to engine #10-10151 on HD11EC, FC and engine #10-10271 on other models)
5A	4027439-1	-	1	1	SPACER, oil seal (Installed between 4027280-9 Seals)
6	4254182-1	-	1	1	O-RING. flywheel to crankshaft (Effective with engine #10-10151 on HD11EC, FC and engine #10-10271 on other models)
7	---------	1	-	-	HOUSING, flywheel (Used prior to engine #10-6507. Order HOUSING 4339603-5, POINTER 4336609-5, COVER 4336634-3 and GASKET 4336676-4)
	4339603-5	1	-	1	HOUSING, flywheel (Effective with engine #10-6507 on units with dry clutch)(When making first replacement also order CAPSCREW 0923239-8)
	4339605-0	-	1	-	HOUSING, flywheel (When making first replacement also order CAPSCREW 0923239-8)
	0923239-8	1	1	1	CAPSCREW, Nylok, 1/2"NC x 3/4"(Not original equipment)
	0917021-8	2	2	2	PIN, dowel, 1/2" x1"
	0916311-4	9	9	9	CAPSCREW, 1/2"NC x 1-1/4"
8	0904208-6	9	-	-	LOCKWASHER, 1/2" (Used prior to engine #10-6507)
	4376749-0	9	9	9	WASHER, sealing (Effective with engine #10-6507 on units with dry clutch)
9	4348410-4	1	-	-	POINTER, timing (Used prior to engine #10-6507)
	4336609-5	1	1	1	POINTER, timing (Effective with engine #10-6507 on units with dry clutch)
	0916284-3	2	2	2	CAPSCREW, 1/4"NC x 1/2"
	0904204-5	2	2	2	LOCKWASHER, 1/4"

Also see PACKAGED PARTS

(Continued)

FLYWHEEL AND HOUSING (Continued)

ITEM	PART NO.	QUANTITY *	**	***	DESCRIPTION
10	4348253-8	1	-	-	COVER, timing hole (Used prior to engine #10-6507)
	0916284-3	2	-	-	CAPSCREW, 1/4"NC x 1/2"
	0904204-5	2	-	-	LOCKWASHER, 1/4"
11	4336634-3	1	1	1	COVER, timing hole (Effective with engine #10-6507 on units with dry clutch)
	0915343-8	4	4	4	CAPSCREW, 1/4"NC x 5/8" } 2 less used on tractors
	0904204-5	4	4	4	LOCKWASHER, 1/4" } #10001 and up
12	4336676-4	1	1	1	☐ GASKET, timing hole cover (Effective with engine #10-6507 on units with dry clutch)
13	4500300-1	2	2	2	DOWEL, flywheel to crankshaft
13A	4359168-4	-	1	1	SLUG KIT, dowel sealing (Consists of 2 lead slugs)
14	4336897-6	1	1	1	☐ RING, sealing, flywheel housing to crankcase
15	4336771-3	1	-	-	PLUG ASSY., drain (Includes cotter pin)(1 additional used on engines prior to #10-6507)
16	0923376-8	2	2	2	☐ O-RING, flywheel housing dowel pin hole (Effective with engine #10-6507 on units with dry clutch)
17	0628512-6	1	-	-	COVER, bottom, flywheel housing (Effective with engine #10-6507)
18	0035061-1	4	-	-	CAPSCREW, 1/2"NC x 1-1/4"
	0904208-6	4	-	-	LOCKWASHER, 1/2"
19	0629141-3	1	-	-	GASKET, flywheel housing bottom cover (Effective with engine #10-6507)

☐ Also see PACKAGED PARTS

CYLINDER HEAD

USAGE: Tractors prior to serial No. 6427 (516 series engine)

ITEM	PART NO.	QTY.	DESCRIPTION
1	4336489-2	2	HEAD ASSY., cylinder (Includes items 9, 14, 15 and PLUGS indented below)
	0917673-6	4	PLUG, pipe, hex-socket, 1/8"NPT
	0918851-7	10	PLUG, pipe, hex-socket, 3/4"NPT
2	4347505-2	2	PLATE, end
	0915987-2	8	CAPSCREW, 1/2"NC x 1-1/2"
	0904208-6	8	LOCKWASHER, 1/2"
3	4034282-6	2	STUD, cylinder head (1/2" x 9")(Also attaches lifting eye)
	4372725-4	2	STUD, cylinder head (1/2" x 8-1/2")
4	4372724-7	6	STUD, cylinder head (1/2" x 7-5/8")
5	4339509-4	24	STUD, cylinder head (5/8" x 8")
6	4354294-3	1	☐ GASKET ASSY., cylinder head, front (shown) } Each includes item 6A
	4354295-0	1	☐ GASKET ASSY., cylinder head, rear (opposite) } Each includes item 6A
6A	4339848-6	6	GASKET, fire ring (cylinder sealing)(Not original equipment)
7	4348079-7	6	VALVE, intake
8	4348090-4	6	VALVE, exhaust

☐ Also see PACKAGED PARTS

(Continued)

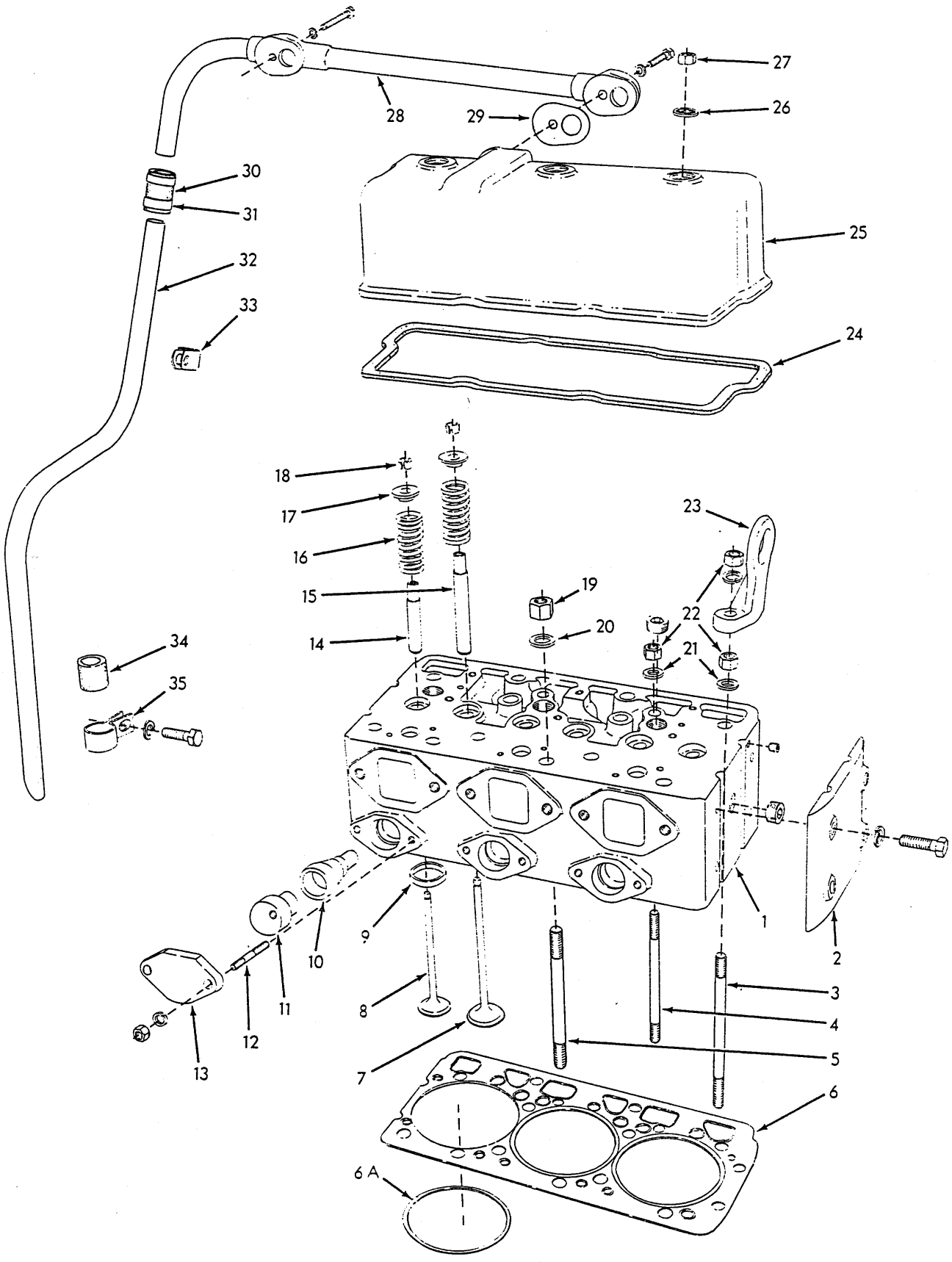

CYLINDER HEAD (First type)

T-13178

ITEM	PART NO.	QTY.	DESCRIPTION
9	4346146	6	INSERT, exhaust valve seat (standard size)
	4337215	6	INSERT, exhaust valve seat (.005" oversize)
10	4345658	6	CELL ASSEMBLY, energy (Includes orifice and pin. Serviced only as a unit)
11	4341123	6	PLUG, energy cell
12	4335573	12	STUD, energy cell clamp
	904206	12	LOCKWASHER, 3/8"
	910123	12	NUT, 3/8"NF
13	4346543	6	RETAINER, energy cell
14	4346093	6	GUIDE, exhaust valve
15	4346092	6	GUIDE, intake valve
16	4345412	12	SPRING, valve
17	4343799	12	RETAINER, valve spring
18	4347270	24	LOCK, valve spring retainer (half only)
19	4388202	24	NUT, cylinder head stud (5/8"NF)
20	4354490	24	WASHER, cylinder head nut (for 5/8" stud)
21	4372864	14	WASHER, cylinder head nut (for 1/2" stud)
22	4388205	14	NUT, cylinder head stud (1/2"NF)
23	4347619	2	EYE, engine lifting
24	4335279	2	□GASKET, rocker cover
25	4347514	2	COVER, rocker
26	4364131	6	WASHER, sealing, rocker cover nut (Used prior to engine #10-4453)
	4375938	6	WASHER, sealing, rocker cover nut (Effective with engine #10-4453)
27	910986	6	NUT, rocker cover (Used prior to engine #10-4453)
	906985	6	WASHER, plain, U.S. std., 7/16"
	4375937	6	NUT, rocker cover (Nylok) (Effective with engine #10-4453)
28	4349305	1	TUBE, breather, upper section
	916274	1	CAPSCREW, 3/8"NC x 2-1/4" (Used prior to engine #96989)
	916273	1	CAPSCREW, 3/8"NC x 1-3/4" (Effective with engine #96989)
	912069	1	CAPSCREW, 3/8"NC x 2-1/2"
	904206	2	LOCKWASHER, 3/8"

□Also see PACKAGED PARTS

(Continued)

ITEM	PART NO.	QTY.	DESCRIPTION
29	4348133	2	□GASKET, breather tube
30	4347924	1	HOSE, breather tube
31	4253453	2	CLAMP, breather tube hose
32	4347923	1	TUBE, breather, lower section
33	4254173	1	CLIP, breather tube supporting, upper
34	4371324	1	INSULATOR, breather tube (rubber)
35	4371323	1	CLIP, breather tube supporting, lower
	915408	1	CAPSCREW, 3/8"NC x 3/4"
	904206	1	LOCKWASHER, 3/8"

□Also see PACKAGED PARTS

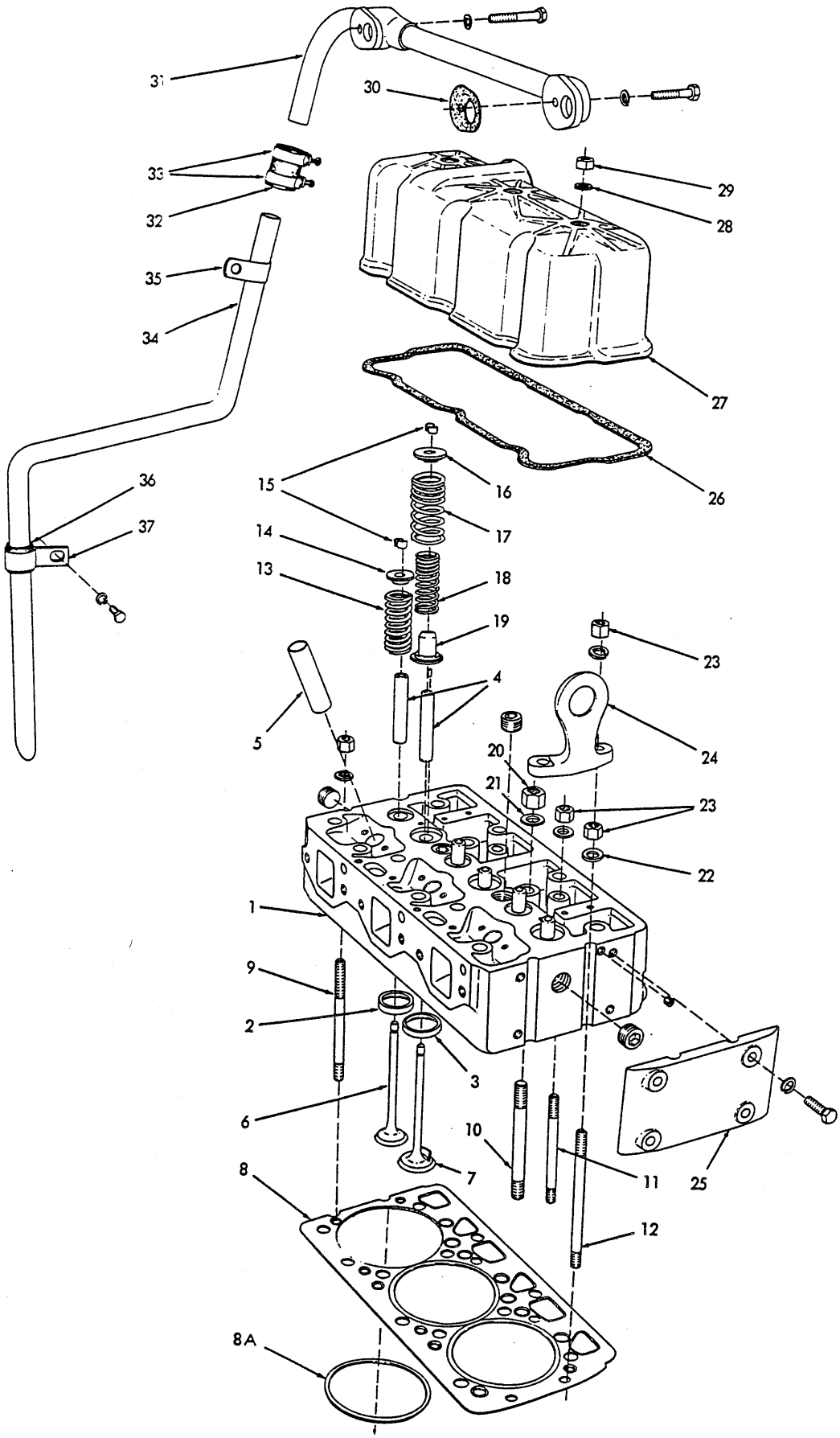

CYLINDER HEAD (Second type)

T-24202

CYLINDER HEAD

USAGE: Tractors serial No. 6427 and up (10000 and 11000 series engines)

ITEM	PART NO.	QTY.	DESCRIPTION	
1	4339548	2	HEAD ASSEMBLY, cylinder (Includes items 2 thru 5 and hardware indented below)	
	917673	4	PLUG, pipe, hex-socket, 1/8"NPT	
	920340	8	PLUG, pipe, hex-socket, 3/4"NPT	
	917560	6	PIN, dowel, 3/16" x 3/8" (intake valve locator)	
2	4336419	6	INSERT, exhaust valve seat (standard size)	5/16" thick. Used prior to engine #10-11912
	4336602	6	INSERT, exhaust valve seat (.005" oversize)	
	4339547	6	INSERT, exhaust valve seat (standard size)	13/32" thick. Effective with engine #10-11912
	4339625	6	INSERT, exhaust valve seat (.005" oversize)	
3	4336418	6	INSERT, intake valve seat (standard size)	5/16" thick. Used prior to engine #10-11912
	4336601	6	INSERT, intake valve seat (.005" oversize)	
	4339546	6	INSERT, intake valve seat (standard size)	13/32" thick. Effective with engine #10-11912
	4339624	6	INSERT, intake valve seat (.005" oversize)	
4	4336586	12	GUIDE, valve stem	
5	4336157	6	SLEEVE, injection nozzle	
6	4336128	6	VALVE, exhaust	
7	4336127	6	VALVE, intake	
8	4354294	1	□ GASKET ASSEMBLY, cylinder head, front (shown)	Each includes item 8A
	4354295	1	□ GASKET ASSEMBLY, cylinder head, rear (opposite)	
8A	4339848	6	GASKET, fire ring (cylinder sealing)(Effective with engine #10-13216)	
9	4339499	2	STUD, cylinder head (1/2" x 7-1/4")	
	4339434	2	STUD, cylinder head (1/2" x 8-5/8")(Also attaches rear lifting eye)	
10	4339505	24	STUD, cylinder head (5/8" x 6-1/2")	
11	4339498	4	STUD, cylinder head (1/2" x 6-1/8")	
12	4339497	2	STUD, cylinder head (1/2" x 7-3/8")(Also attaches front lifting eye)	
13	4336131	6	SPRING, exhaust valve	
14	4343799	6	RETAINER, exhaust valve spring	
15	4376497	24	LOCK, valve spring retainer (half-only)	
16	4336153	6	RETAINER, intake valve spring	
17	4336129	6	SPRING, intake valve, outer	
18	4336130	6	SPRING, intake valve, inner	
19	4336758	6	LOCATOR, intake valve	

□ Also see PACKAGED PARTS

(Continued)

CYLINDER HEAD (Continued)

ITEM	PART NO.	QTY.	DESCRIPTION
20	4388202	20	NUT, cylinder head stud (5/8"NF)
	4354407	4	NUT, cylinder head stud (5/8"NF, Nylok)(For end studs only)
21	4354490	24	WASHER, cylinder head nut (For 5/8" stud)
22	4372864	14	WASHER, cylinder head nut (For 1/2" stud)
23	4388205	14	NUT, cylinder head stud (1/2"NF)
24	4347619	2	EYE, engine lifting
25	4336178	2	PLATE, end
	916191	8	CAPSCREW, 7/16"NC x 1-1/2"
	904207	8	LOCKWASHER, 7/16"
26	4336148	2	□GASKET, rocker cover
27	4336146	2	COVER, rocker
28	4376749	6	WASHER, sealing, rocker cover nut
29	4375937	6	NUT, rocker cover
30	4348133	2	□GASKET, breather tube
31	4349305	1	TUBE, breather, upper section
	916273	1	CAPSCREW, 3/8"NC x 1-3/4"
	912069	1	CAPSCREW, 3/8"NC x 2-1/2"
	904206	2	LOCKWASHER, 3/8"
32	4347924	1	HOSE, breather tube
33	4253453	2	CLAMP, breather tube hose
34	4338310	1	TUBE, breather, lower section
35	4254173	1	CLIP, breather tube supporting, upper
36	4371324	1	INSULATOR, breather tube (rubber)
37	4371323	1	CLIP, breather tube supporting, lower
	915408	1	CAPSCREW, 3/8"NC x 3/4"
	904206	1	LOCKWASHER, 3/8"

□Also see PACKAGED PARTS

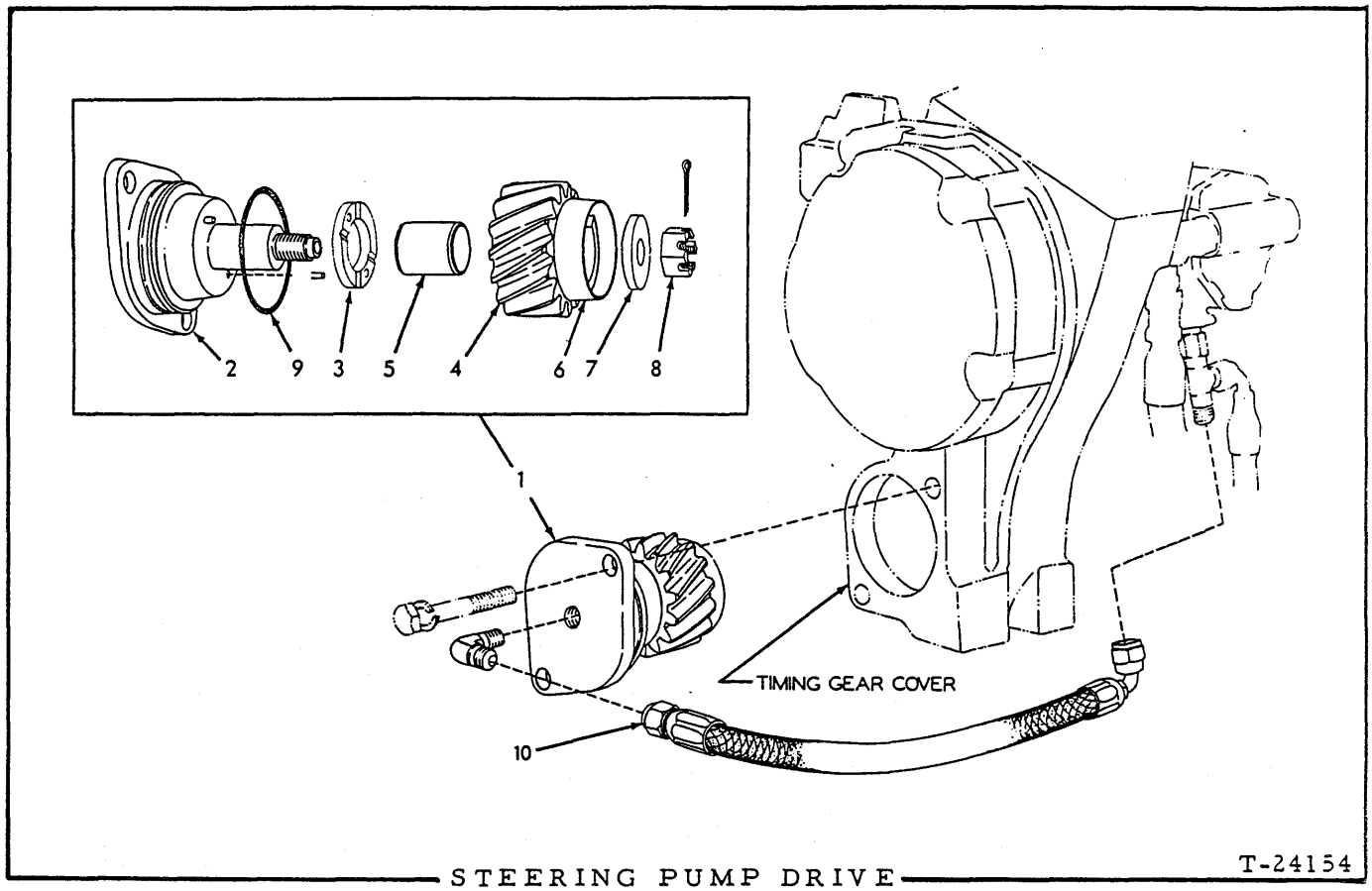

STEERING PUMP DRIVE T-24154

USAGE: Tractors serial No. 6069 and up including Nos. 6044 and 5490

ITEM	PART NO.	QTY.	DESCRIPTION
1	4338168	1	DRIVE ASSEMBLY (Consists of items 2 thru 9; also ELBOW 919173)
	------	2	CAPSCREW (See TIMING GEAR HOUSING section)
2	4335694	1	SHAFT ASSEMBLY (Includes PINS indented below)
	919242	2	PIN, roll, 1/8" x 3/8" (dowel)
3	4376598	1	WASHER, thrust
4	4339750	1	GEAR ASSEMBLY (Includes items 5 and 6)
5	4335654	1	BUSHING, drive gear
6	4338161	1	SLEEVE, drive gear
7	4335655	1	WASHER, gear retaining
8	919115	1	NUT, gear retaining (1/2"NF, left hand thread)
	900801	1	PIN, cotter, 3/32" x 3/4"
9	923814	1	□O-RING, drive sealing.
10	4335583	1	HOSE ASSEMBLY, lubricating (See page 6 for parts)
	919173	1	ELBOW, flare type, 1/4" tube, 1/8"NPT male

□Also see PACKAGED PARTS

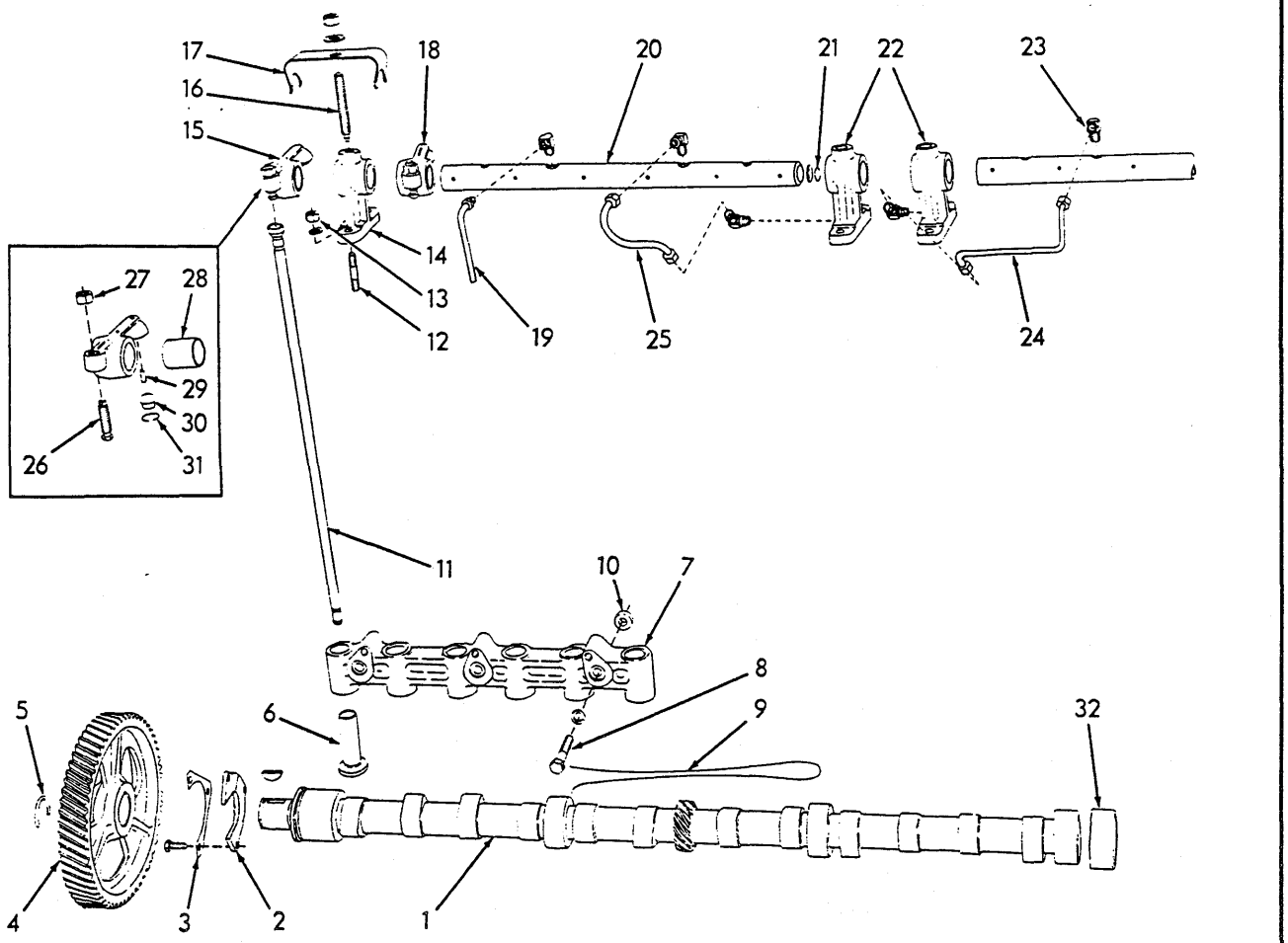

VALVE OPERATING MECHANISM T-13177

USAGE: Tractors prior to serial No. 6427 (516 series engine)

* Used prior to engine serial No. 90846
** Effective with engine serial No. 90846

ITEM	PART NO.	QTY. *	QTY. **	DESCRIPTION
1	4347508	1	1	CAMSHAFT
	905126	1	1	KEY, #5 woodruff, 1/4" x 1"
2	4349257	1	1	COLLAR, camshaft thrust
	916277	3	3	CAPSCREW, 5/16"NC x 5/8"
3	4025391	1	1	PLATE, capscrew locking
4	4346206	1	1	GEAR, camshaft
5	4346307	1	1	RING, snap, gear retaining
6	4338299	12	12	LIFTER, valve
7	4347511	2	2	BRACKET, valve lifter
8	4335548	6	6	CAPSCREW, 3/8"NC x 1-7/8"
	904206	6	6	LOCKWASHER, 3/8"
9	4335547	2	2	WIRE, locking

(Continued)

ITEM	PART NUMBER	QTY. *	QTY. **	DESCRIPTION
10	4347832	4	4	DOWEL, hollow, valve lifter bracket
11	4346209	12	12	ROD, push
12	4506946	12	12	STUD, rocker shaft bracket (3/8"NC x 3/8"NF x 1-9/16")
	904206	12	12	LOCKWASHER, 3/8"
13	4348440	12	12	NUT, heat-treated, 3/8"NF
14	4346992	4	-	BRACKET, rocker shaft (No. 1, 2, 5 and 6 cylinders)
	4335057	-	4	BRACKET, rocker shaft (No. 1, 2, 5 and 6 cylinders)
15	4346017	6	6	ARM ASSEMBLY, rocker, intake valve (Includes items 26 thru 31)
16	4348130	2	2	SCREW, rocker shaft retaining (3" long, dog-pt.)
	4348129	4	4	STUD, rocker arm retaining clip (2-5/8" long)
	912298	6	6	WASHER, plain, SAE std., 7/16"
	910986	6	6	NUT, 7/16"NF
17	4338143	6	6	CLIP, spring, rocker arm retaining
18	4346018	6	6	ARM ASSEMBLY, rocker, exhaust valve (Includes items 26 thru 31)
19	4349157	2	2	TUBE ASSEMBLY, rocker shaft overflow (Includes nut)
	913040	2	-	ELBOW, inverted flare, 90°, 1/4" tube, 1/4"NPT male
	913039	-	2	ELBOW, inverted flare, 90°, 1/4" tube, 1/8"NPT male
20	4347462	2	-	SHAFT ASSEMBLY, rocker arm (Includes 910002 PLUGS)
	4335399	-	2	SHAFT ASSEMBLY, rocker arm (Includes items 21 and PLUGS indented below)
	910002	4	4	PLUG, expansion, 3/4" diam.
21	4254363	-	4	RING, snap, rocker shaft (Effective with engine #10-4271)
22	4346992	2	-	BRACKET, rocker shaft (No. 3 and 4 cylinders)
	4349291	-	2	BRACKET, rocker shaft (No. 3 and 4 cylinders)
23	4335381	-	2	ELBOW, rocker shaft tube (restricted)
24	4349309	-	1	TUBE ASSEMBLY, rear shaft oil supply (Includes NUTS and SLEEVES indented below)
	911437	-	2	NUT, compression fitting, 1/4" tube
	911435	-	2	SLEEVE, compression fitting, 1/4" tube
	911017	-	1	ELBOW, compression type, 1/4" tube, 1/8"NPT mlae
25	4335043	-	1	TUBE ASSEMBLY, front shaft oil supply (Incldues NUTS and SLEEVES indented below)
	911437	-	2	NUT, compression fitting, 1/4" tube
	911435	-	2	SLEEVE, compression fitting, 1/4" tube
	911017	-	1	ELBOW, compression type, 1/4" tube, 1/8"NPT male
26	4304051	12	12	SCREW, valve lash adjustment
27	4348440	12	12	NUT, valve lash adjustment screw
28	4660369	12	12	BUSHING, rocker arm
29	4364422	12	12	WICK, oiling, rocker ball
30	4661329	12	12	BALL, rocker arm
31	4661328	12	12	RETAINER, rocker arm ball
32	------	-	-	BEARING, camshaft (See CYLINDER BLOCK)

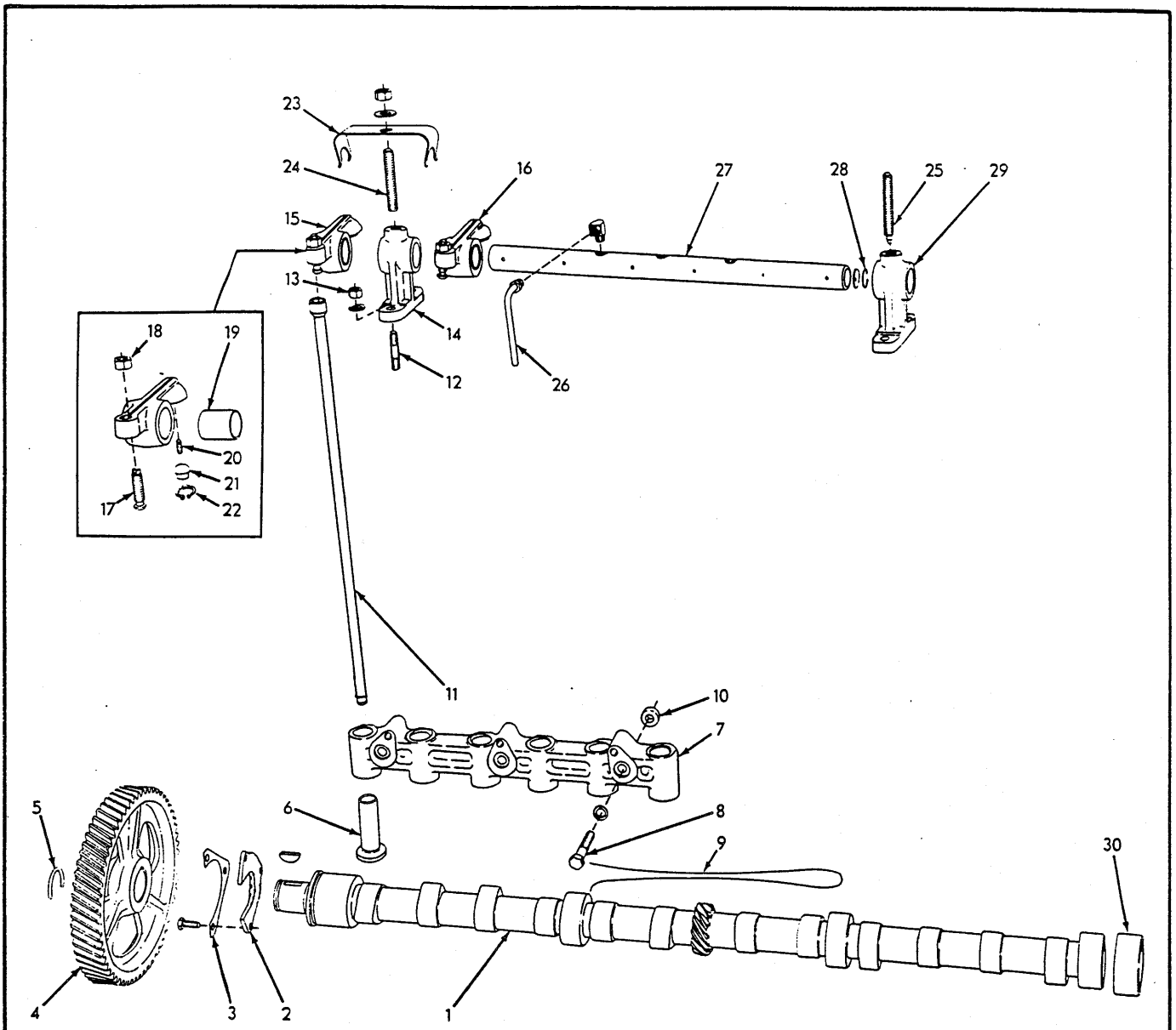

VALVE OPERATING MECHANISM T-27404

USAGE: Tractors serial No. 6427 and up (10000 and 11000 series engine)

ITEM	PART NO.	QTY.	DESCRIPTION
1	4337723	1	CAMSHAFT
	905126	1	KEY, #5 woodruff, 1/4" x 1"
2	4349257	1	COLLAR, camshaft thrust
	916277	3	CAPSCREW, 5/16"NC x 5/8"
3	4025391	1	PLATE, capscrew locking
4	4346206	1	GEAR, camshaft (Used prior to engine #10-6779)
	4337045	1	GEAR, camshaft (hardened)(Effective with engine #10-6779)
5	4346307	1	RING, snap, gear retaining

(Continued)

ITEM	PART NO.	QTY.	DESCRIPTION
6	4338299	12	LIFTER, valve
7	4347511	2	BRACKET, valve lifter
8	4335548	6	CAPSCREW, 3/8"NC x 1-7/8"
	904206	6	LOCKWASHER 3/8"
9	4335547	2	WIRE, locking
10	4347832	4	DOWEL, hollow, valve lifter bracket
11	4336234	12	ROD, push
12	4506946	12	STUD, rocker shaft bracket
	904206	12	LOCKWASHER, 3/8"
13	4348440	12	NUT, heat-treated, 3/8"NF
14	4336143	4	BRACKET, rocker shaft, end
15	4337478	6	ARM ASSEMBLY, rocker, intake valve (Includes items 17 thru 22)
16	4337479	6	ARM ASSEMBLY, rocker, exhaust valve (Includes items 17 thru 22)
17	4336646	12	SCREW, valve lash adjustment
18	4348440	12	NUT, valve lash adjustment screw
19	4660369	12	BUSHING, rocker arm
20	4364422	12	WICK, oiling, rocker ball
21	4379305	12	BALL, rocker arm
22	4385480	12	RING, snap, rocker arm ball
23	4338143	6	CLIP, spring, rocker arm retaining
	912298	6	WASHER, plain, SAE std., 7/16"
	910986	6	NUT, 7/16"NF
24	4348129	4	STUD, rocker cover (2-5/8" long)
25	4348130	2	SCREW, rocker shaft retaining (3" long, dog-pt.)
26	4349157	2	TUBE ASSEMBLY, rocker shaft overflow (Includes nut)
	913039	2	ELBOW, inverted flare, 90°, 1/4" tube, 1/8"NPT male
27	4336145	2	SHAFT ASSEMBLY, rocker arm (Includes item 28 and PLUGS indented below)
	910002	4	PLUG, expansion, 3/4" diam.
28	4254363	4	RING, snap, rocker shaft
29	4336142	2	BRACKET, rocker shaft, center
30	-------	1	BEARING, camshaft (See CYLINDER BLOCK)

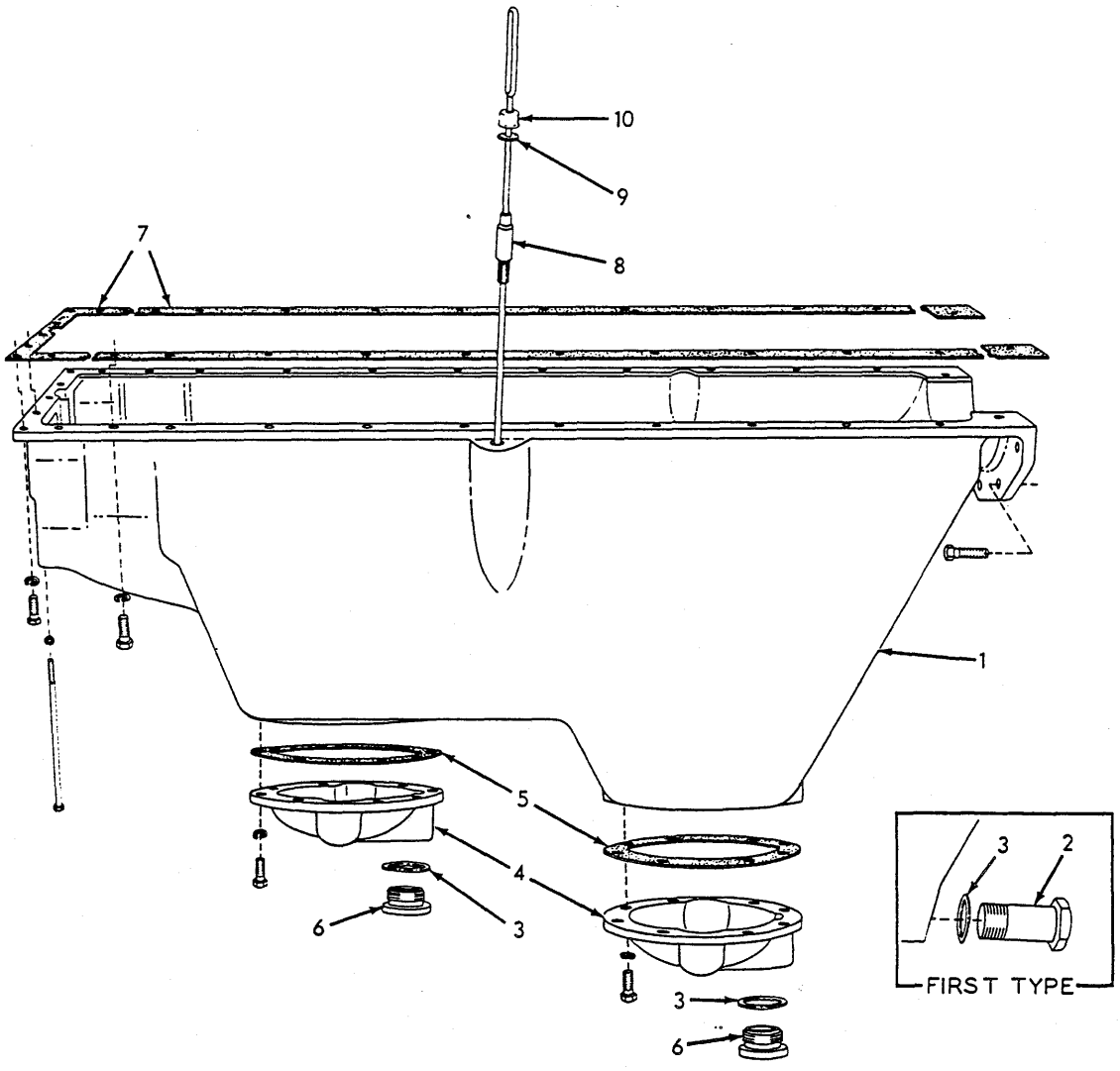

OIL PAN

* Engines prior to serial No. 10-4078
** Engine serial No. 10-4078 and up

ITEM	PART NO.	QTY. *	QTY. **	DESCRIPTION
1	------	1	-	PAN, oil (Order PAN 4337466, GAUGE 4336872 and items 3 thru 6)
1	4337466	-	1	PAN, oil
	919224	29	29	CAPSCREW, 3/8"NC x 1-1/8" (5 less used on tractors with oil clutch)
	920539	-	5	CAPSCREW, Nylok, 3/8"NC x 1" (Used only on tractors with oil clutch)
	914392	2	2	CAPSCREW, 5/16"NC x 1"
	919787	3	3	CAPSCREW, 5/16"NC x 6-1/2"
	904206	29	29	LOCKWASHER, 3/8" (5 less used on tractors with oil clutch)
	904205	5	5	LOCKWASHER, 5/16"
2	4347544	1	-	PLUG, oil drain

(Continued)

ITEM	PART NO.	QTY. *	QTY. **	DESCRIPTION
3	035249	1	2	□GASKET, oil drain plug
4	4373770	-	2	COVER, clean-out
	916271	-	16	CAPSCREW, 3/8"NC x 1"
	904206	-	16	LOCKWASHER, 3/8"
5	4373069	-	2	□GASKET, clean-out cover
6	035250	-	2	PLUG, oil drain
7	4347543	1	1	GASKET SET, oil pan (5 pieces)
8	4349037	1	1	ADAPTOR, oil level gauge
9	4506607	1	1	SEAL, oil level gauge
10	4336872	1	1	GAUGE, oil level

□Also see PACKAGED PARTS

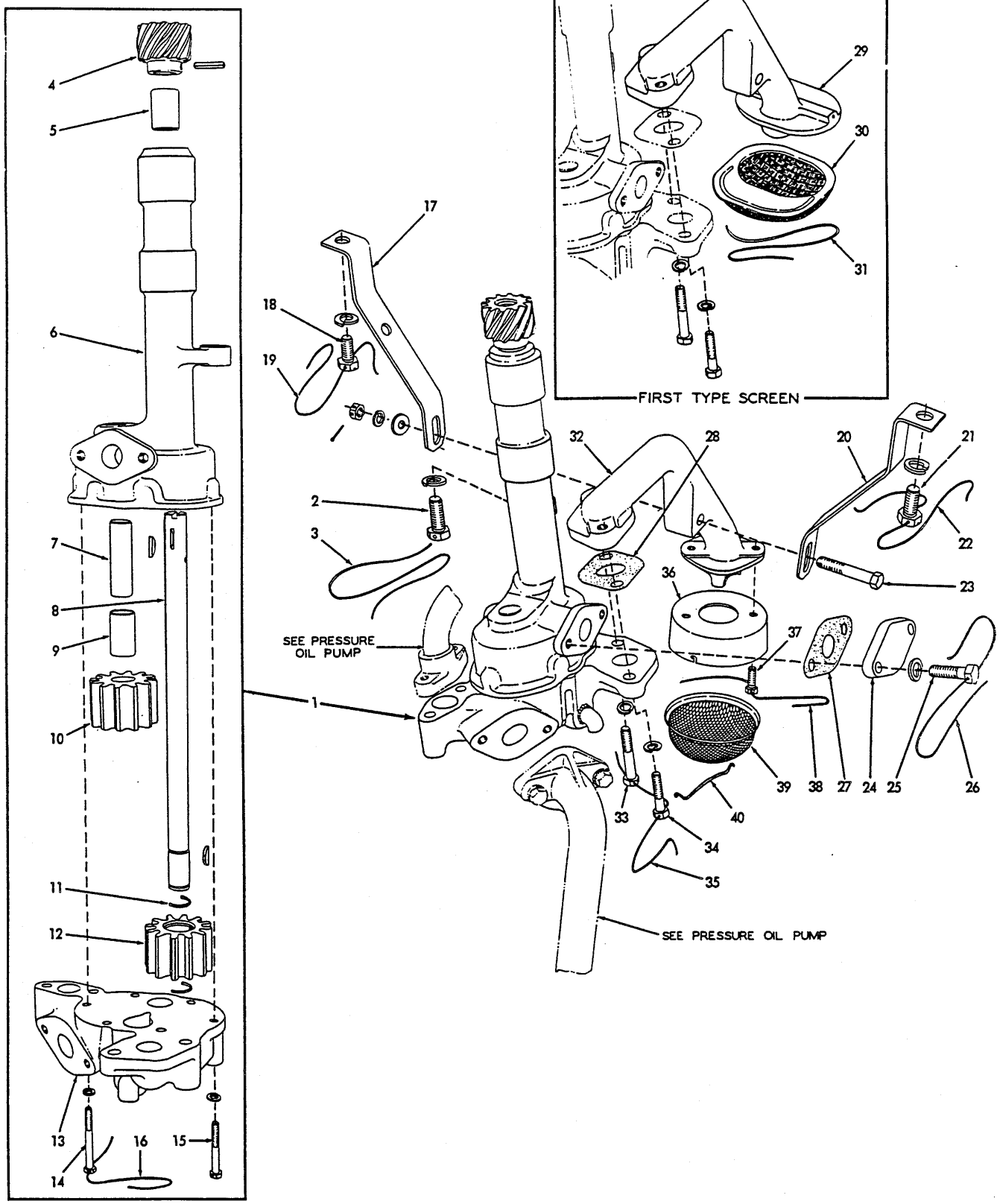

SCAVENGING OIL PUMP

SCAVENGING OIL PUMP

* Used prior to engine serial No. 10-4028
** Effective with engine serial No. 10-4028

ITEM	PART NO.	QTY. *	QTY. **	DESCRIPTION
1	4335004	1	1	PUMP ASSEMBLY, scavenging (Consists of items 4 thru 16)
2	4311869	1	1	CAPSCREW, drilled-hd., 1/2"NC x 1-1/4"
3	4509035	1	1	WIRE, locking, #18 x 10"
	904208	1	1	LOCKWASHER, 1/2"
4	4660408	1	1	GEAR, pump driving
	917466	1	1	PIN, roll, 3/16" x 1-1/8"
5	4346327	2	2	BUSHING, pump body
6	4346125	1	1	BODY ASSEMBLY (Includes items 5 and 7)
7	4660409	1	1	SHAFT, stub
8	4347893	1	1	SHAFT, drive
	905122	2	2	KEY, #7 woodruff, 1/8" x 3/4"
9	4660412	1	1	BUSHING, pumping gear
10	4660410	1	1	GEAR ASSEMBLY, pumping (Includes item 9)
11	4251141	2	2	RING, snap, drive shaft
12	4660407	1	1	GEAR, pumping (keywayed)
13	4335000	1	1	COVER, pump body
14	910899	5	-	CAPSCREW, 1/4"NC x 2"
	4335167	-	5	CAPSCREW, drilled-hd., 1/4"NC x 2"
15	913299	1	-	CAPSCREW, 1/4"NC x 2-1/4"
	4335168	-	1	CAPSCREW, drilled-hd., 1/4"NC x 2-1/4"
	904204	6	6	LOCKWASHER, 1/4"
16	4348691	-	3	WIRE, locking, #18 x 6"
17	4347578	1	1	BRACKET, suction pipe bracing, left
18	916308	1	-	CAPSCREW, 1/2"NC x 7/8"
	4375812	-	1	CAPSCREW, drilled-hd., 1/2"NC x 1"
	904208	1	1	LOCKWASHER, 1/2"
19	4348691	-	1	WIRE, locking, #18 x 6"
20	4347577	1	1	BRACKET, suction pipe bracing, right
21	916308	1	-	CAPSCREW, 1/2"NC x 7/8"
	4375812	-	1	CAPSCREW, drilled-hd., 1/2"NC x 1"
	904208	1	1	LOCKWASHER, 1/2"
22	4348691	-	1	WIRE, locking, #18 x 6"
23	916274	1	-	CAPSCREW, suction pipe to brace (3/8"NC x 2-1/4")
	900817	1	-	WASHER, plain, U.S. std., 3/8"
	904206	1	-	LOCKWASHER, 3/8"
	910324	1	-	NUT, 3/8"NC
	4335153	-	1	CAPSCREW, suction pipe to brace (drilled-end)
	912597	-	1	WASHER, plain
	904206	-	1	LOCKWASHER, 3/8"
	914773	-	1	NUT, slotted, 3/8"NC
	900802	-	1	PIN, cotter, 3/32" x 1"

(Continued)

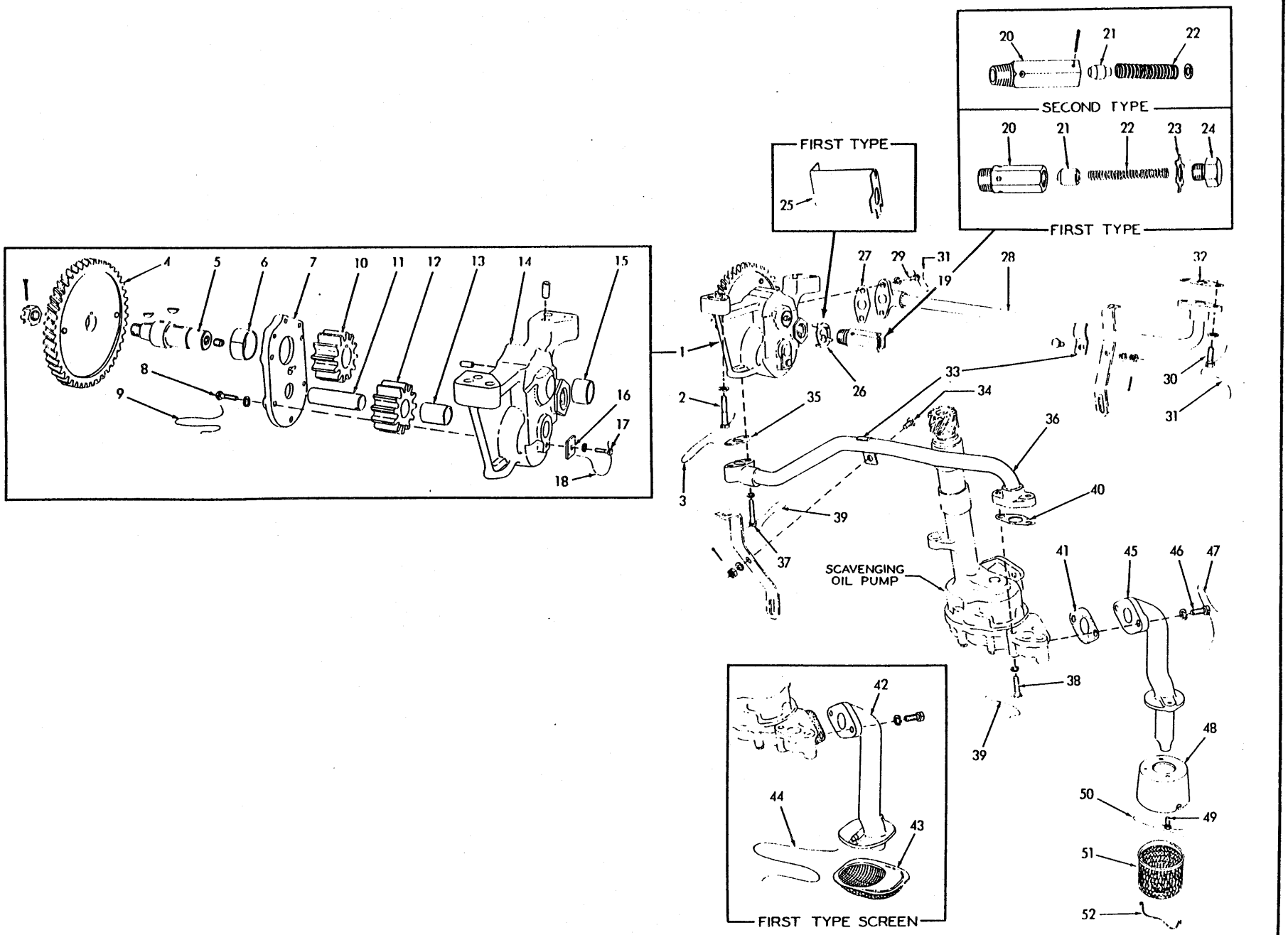

PRESSURE OIL PUMP.

T-13181

SCAVENGING OIL PUMP (Continued)

ITEM	PART NO.	QTY. *	QTY. **	DESCRIPTION
24	4347575	1	1	COVER, side, pump body
25	916271	2	-	CAPSCREW, 3/8"NC x 1"
	4365867	-	2	CAPSCREW, drilled-hd., 3/8"NC x 1"
	904206	2	2	LOCKWASHER, 3/8"
26	4509035	-	1	WIRE, locking, #18 x 10"
27	4362458	1	1	□GASKET, pump body side cover
28	4346441	1	1	□GASKET, scavenging pump suction pipe
29	------	1	-	PIPE, suction, scavenging pump (Order items 32 thru 40)
	916274	1	-	CAPSCREW, 3/8"NC x 2-1/4"
	919225	1	-	CAPSCREW, 3/8"NC x 1-3/8"
	904206	2	-	LOCKWASHER, 3/8"
30	4500270	1	-	SCREEN, oil
31	4335110	1	-	WIRE, oil screen retaining (1/16" x 18")
32	4335048	-	1	PIPE, suction
33	4349382	-	1	CAPSCREW, drilled-hd., 3/8"NC x 2-1/4"
34	4335264	-	1	CAPSCREW, drilled-hd., 3/8"NC x 1-3/8"
	904206	-	2	LOCKWASHER, 3/8"
35	4509035	-	1	WIRE, locking, #18 x 10"
36	4348684	-	1	COVER, oil screen
37	4374129	-	2	CAPSCREW, drilled-hd., 5/16"NC x 3/4"
38	4509035	-	1	WIRE, locking, #18 x 10"
39	4348683	-	1	SCREEN, oil
40	4348682	-	1	RETAINER, oil screen

□Also see PACKAGED PARTS

PRESSURE OIL PUMP

* Engines prior to serial No. 10-4078
** Engines serial No. 10-4078 and up

1	4348886	1	1	PUMP ASSEMBLY (Consists of items 4 thru 18)(Used prior to engine #10-6779)
	4337059	-	1	PUMP ASSEMBLY (Consists of items 4 thru 18. Has hardened driving gear)(Effective with engine #10-6779)
2	916273	4	-	CAPSCREW, 3/8"NC x 1-3/4"
	4348692	-	4	CAPSCREW, drilled-hd., 3/8"NC x 1-3/4"
	904206	4	4	LOCKWASHER, 3/8"
3	4509035	-	2	WIRE, locking (#18 x 10")
4	4348352	1	1	GEAR, driving (Used prior to engine #10-6779)
	4337047	-	1	GEAR, driving (hardened)(Effective with engine #10-6779)

(Continued)

PRESSURE OIL PUMP (Continued)

ITEM	PART NO.	QTY. *	QTY. **	DESCRIPTION
5	4348894	1	1	SHAFT, upper
	917673	1	1	PLUG, pipe, hex-socket, 1/8"NPT
	910224	2	2	KEY, #6 woodruff, 5/32" x 5/8"
	912840	1	1	NUT, slotted, 5/8"NF
	900807	1	1	PIN, cotter, 1/8" x 1-1/4"
6	4347659	1	1	BUSHING, pump cover
7	4348044	1	1	COVER ASSEMBLY (Includes item 6)
8	4875601	6	6	CAPSCREW, drilled-hd., 1/4"NC x 7/8"
	904204	6	6	LOCKWASHER, 1/4"
9	4348691	3	3	WIRE, locking (#18 x 6")
10	4348042	1	-	GEAR, upper (12 teeth)(Used prior to engine #10-3939)
	4348883	1	1	GEAR, upper (10 teeth)(Effective with engine #10-3939)
11	4348038	1	1	SHAFT, lower
12	4348040	1	-	GEAR ASSEMBLY, lower (12 teeth. Includes item 13)(Used prior to engine #10-3939)
	4348891	1	1	GEAR ASSEMBLY, lower (10 teeth. Includes item 13)(Effective with engine #10-3939)
13	4348083	1	1	BUSHING, lower gear
14	------	1	-	HOUSING ASSEMBLY (Used prior to engine #10-3939. Order HOUSING ASSY. 4348885, GEAR 4348883 and GEAR ASSY. 4348881)
	4348885	1	1	HOUSING ASSEMBLY (Includes item 15 and dowel PINS indented below)(Effective with engine #10-3939)
	917554	1	1	PIN, dowel, 1/4" x 1/2"
	917546	2	2	PIN, dowel, 3/8" x 5/8"
15	4348303	1	1	BUSHING, pump housing
16	4348020	1	1	RETAINER, lower shaft
17	916284	1	-	CAPSCREW, 1/4"NC x 1/2"
	4349378	-	1	CAPSCREW, drilled-hd., 1/4"NC x 1/2"
	904204	1	1	LOCKWASHER, 1/4"
18	4348769	-	1	WIRE, locking (#18 x 4")
19	4354573	1	1	VALVE ASSEMBLY, pressure relief (Consists of items 20 thru 22)
20	------	1	1	BODY, pressure relief valve — Not serviced separately
21	------	1	1	PISTON, pressure relief valve — Not serviced separately
22	------	1	1	SPRING, pressure relief valve (Used prior to engine #10-13097 and #11-11898. Order item 19)
	4354568	-	1	SPRING, pressure relief valve (Effective with engine #10-13097
	913168	-	1	WASHER, plain and #11-11898)
	916001	-	1	PIN, roll, 3/16" x 1"
23	------	1	1	WASHER, locking, relief valve cap — Used prior to engine #10-13097 and #11-11898. Order item 19
24	------	1	1	CAP, relief valve — Used prior to engine #10-13097 and #11-11898. Order item 19

(Continued)

ITEM	PART NO.	QTY. *	QTY. **	DESCRIPTION
25	------	1	-	LOCK, oil pressure relief valve (Used prior to engine #76808. Order item 26)
26	4347938	1	1	LOCK, oil pressure relief valve (Effective with engine #76808)
27	4348215	1	1	□GASKET, discharge pipe to pump
28	4335382	1	1	PIPE, pump discharge
29	915813	2	-	CAPSCREW, 5/16"NC x 7/8"
	4320227	-	2	CAPSCREW, drilled-hd., 5/16"NC x 7/8"
	904205	2	2	LOCKWASHER, 5/16"
30	916271	2	-	CAPSCREW, 3/8"NC x 1"
	4346483	-	2	CAPSCREW, drilled-hd., 3/8"NC x 1-1/4"
	904206	2	2	LOCKWASHER, 3/8"
31	4509035	-	2	WIRE, locking (#18 x 10")
32	4346169	1	1	□GASKET, discharge pipe to crankcase
33	4347572	2	2	CLAMP, pipe supporting
34	915408	2	-	CAPSCREW, 3/8"NC x 3/4"
	4335152	-	2	CAPSCREW, drilled end, 3/8"NC x 3/4"
	904206	2	2	LOCKWASHER, 3/8"
	910324	2	-	NUT, 3/8"NC
	914773	-	2	NUT, slotted, 3/8"NC
	900802	-	2	PIN, cotter, 3/32" x 1"
35	4348218	1	1	□GASKET, suction pipe to pressure pump
36	4335384	1	1	PIPE, suction, front section
37	917135	2	-	CAPSCREW, 5/16"NC x 1-5/8"
	4349375	-	2	CAPSCREW, drilled-hd., 5/16"NC x 1-5/8"
38	903774	2	-	CAPSCREW, 5/16"NC x 2"
	4349383	-	2	CAPSCREW, drilled-hd., 5/16"NC x 2"
	904205	4	4	LOCKWASHER, 5/16"
39	4509035	-	2	WIRE, locking (#18 x 10")
40	4348215	1	1	□GASKET, front suction pipe to scavenging pump
41	4346441	1	1	□GASKET, rear suction pipe to scavenging pump
42	4335096	1	-	PIPE, suction, rear section
	919224	2	-	CAPSCREW, 3/8"NC x 1-1/8"
	904206	2	-	LOCKWASHER, 3/8"
43	4500270	1	-	SCREEN, oil
44	4335110	1	-	WIRE, oil screen retaining (1/16" x 18")
45	4335050	-	1	PIPE, suction, rear section
46	4304980	-	2	CAPSCREW, drilled-hd., 3/8"NC x 1-1/8"
	904206	-	2	LOCKWASHER, 3/8"
47	4348689	-	1	WIRE, locking (#18 x 13")
48	4389732	-	1	COVER, oil screen
49	4374129	-	2	CAPSCREW, drilled-hd., 5/16"NC x 3/4"
50	4509035	-	1	WIRE, locking (#18 x 10")
51	4374127	-	1	SCREEN, oil
52	4376294	-	1	RETAINER, oil screen

□Also see PACKAGED PARTS

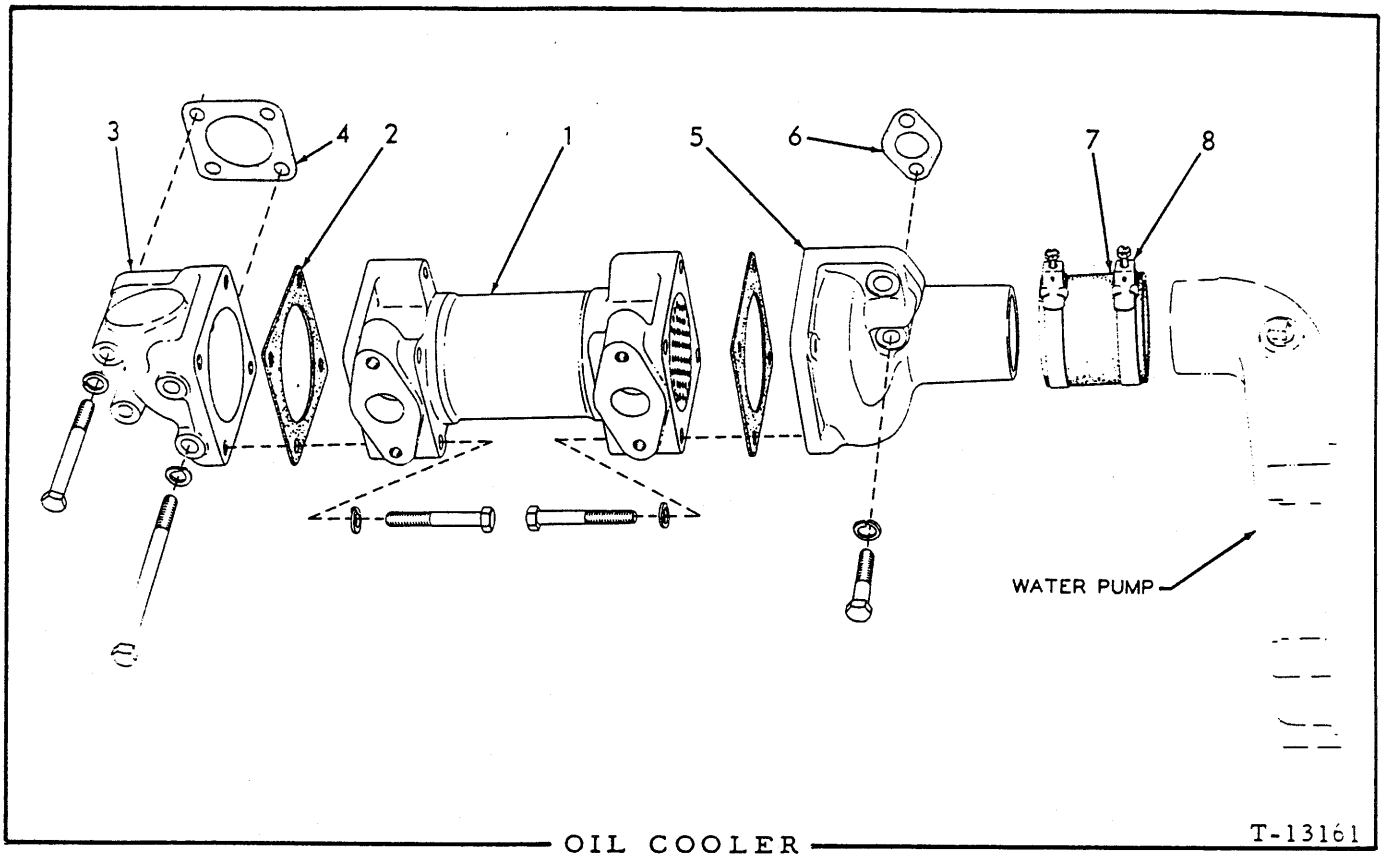

OIL COOLER T-13161

USAGE: Models HD11B, E, ES, S, F with dry clutch. Tractors prior to serial No. 6911

ITEM	PART NO.	QTY.	DESCRIPTION
1	4336596	1	COOLER, lubricating oil (If for engines prior to #10-4445, also order 4 CAPSCREW 912069)
	916271	4	CAPSCREW, 3/8"NC x 1" (Used prior to engine #10-4445)
	912069	8	CAPSCREW, 3/8"NC x 2-1/2" (4 less used on engines prior to #10-4445)
	904206	8	LOCKWASHER, 3/8"
2	4349984	2	□GASKET, oil cooler
3	4348099	1	CONNECTION, water outlet
	919227	2	CAPSCREW, 3/8"NC x 3-1/4"
	918778	2	CAPSCREW, 3/8"NC x 4-3/4"
	904206	4	LOCKWASHER, 3/8"
4	4348184	1	□GASKET, water outlet
5	4348100	1	CONNECTION, water inlet
	916273	2	CAPSCREW, 3/8"NC x 1-3/4"
	904206	2	LOCKWASHER, 3/8"
6	4348185	1	□GASKET, water inlet
7	4506737	1	HOSE, water pump to cooler
8	4253922	2	CLAMP, hose

□Also see PACKAGED PARTS

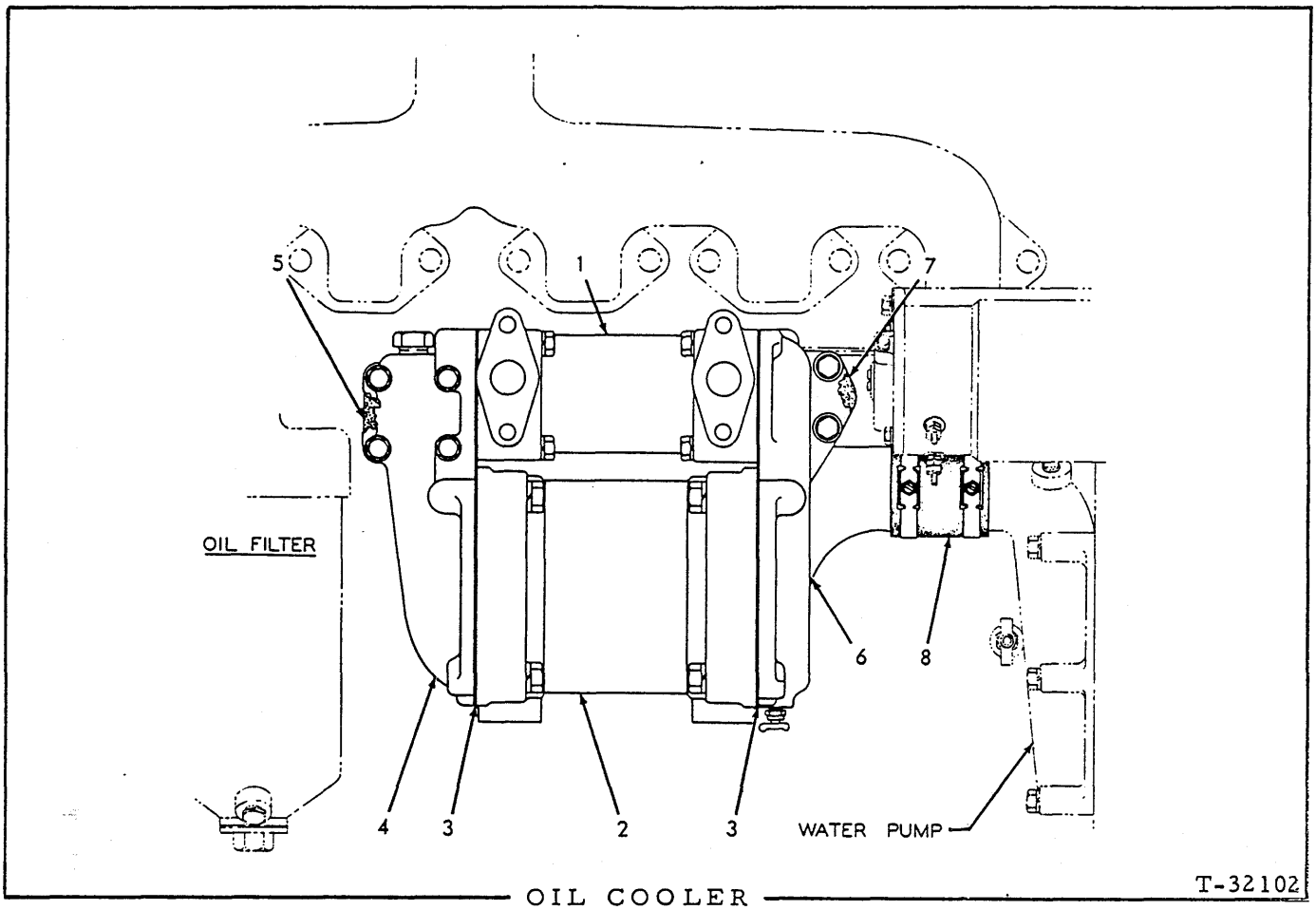

OIL COOLER

USAGE: All Model HD11EC, FC tractors prior to serial No. 10001; also Model HD11B, E, ES, S, F tractors serial No. 6911 thru No. 10000 with oil clutch.

ITEM	PART NO.	QTY.	DESCRIPTION
1	4336596	1	COOLER, engine oil
	920030	2	CAPSCREW, 3/8"NC x 2-3/8"
	912069	6	CAPSCREW, 3/8"NC x 2-1/2"
	904206	8	LOCKWASHER, 3/8"
2	4337521	1	COOLER, torque converter oil (Models HD11EC, FC)
	903641	8	CAPSCREW, 1/2"NC x 2-1/4"
	904208	8	LOCKWASHER, 1/2"
	4338186	1	COOLER, engine clutch oil (Models HD11B, E, ES, S, F)
	916313	8	CAPSCREW, 1/2"NC x 1-3/4"
	904208	8	LOCKWASHER, 1/2"
3	4337524	2	GASKET, oil coolers
4	4337522	1	CONNECTION, water outlet
	918778	4	CAPSCREW, 3/8"NC x 4-3/4"
	904206	4	LOCKWASHER, 3/8"
5	4348184	1	□ GASKET, water outlet
6	4337523	1	CONNECTION, water inlet
	919224	2	CAPSCREW, 3/8"NC x 1-1/8"
	904206	2	LOCKWASHER, 3/8"
	4255363	1	COCK, drain, 1/4"NPT
7	4348185	1	□ GASKET, water inlet
8	4506737	1	HOSE, water pump to coolers
	4253922	2	CLAMP, hose

□ Also see PACKAGED PARTS

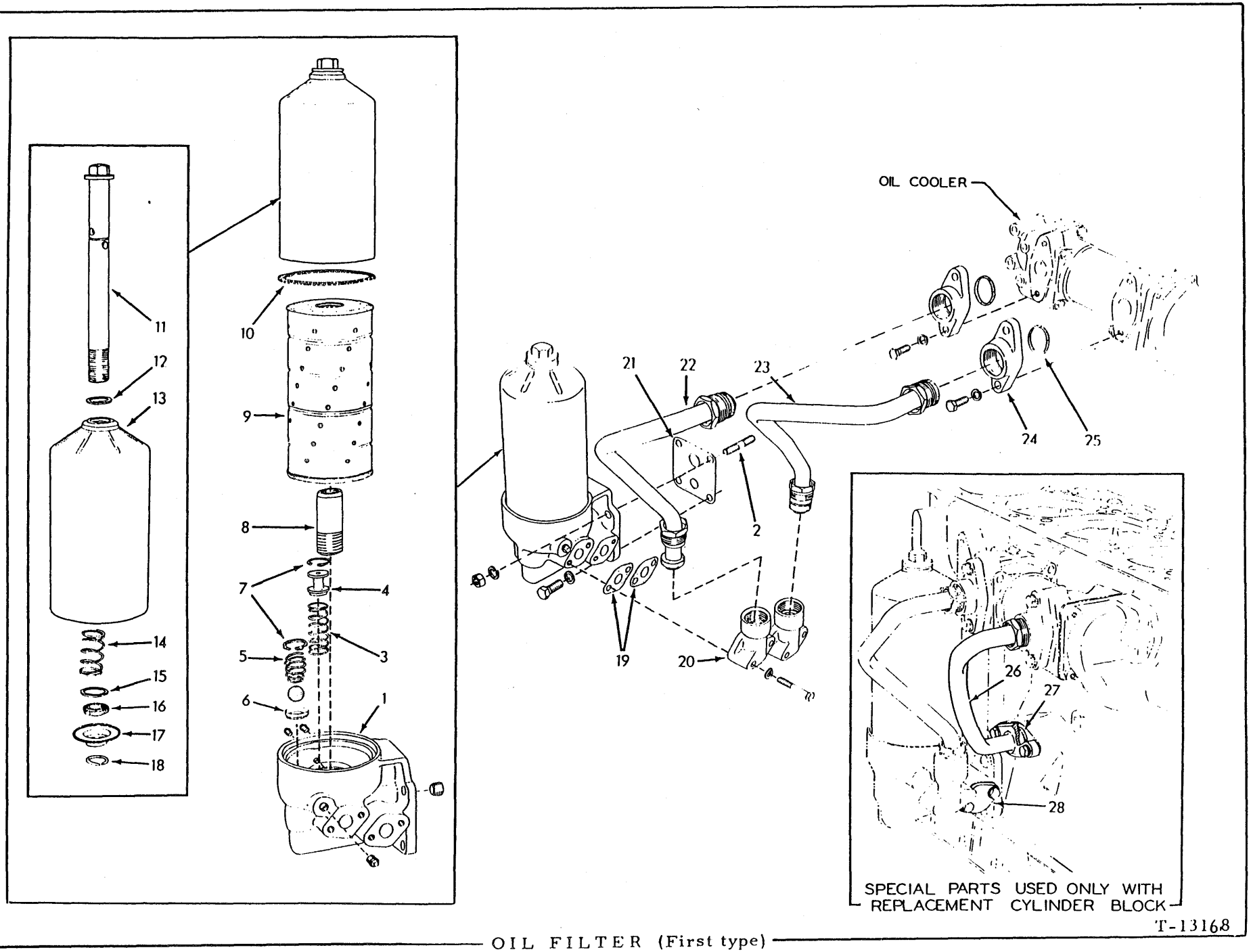

OIL FILTER (First type)

OIL FILTER

USAGE: Models HD11B, E, ES, S, F. Engines prior to serial No. 10-4030 only

ITEM	PART NO.	QTY.	DESCRIPTION
1	4349133	1	BASE ASSEMBLY (Includes items 3 thru 8; also PLUGS and BALL indented below)
	901651	2	PLUG, pipe, 1/8"NPT
	901652	1	PLUG, pipe, 1/4"NPT
	904223	1	PLUG, pipe, ctsk-hd., 1/2"NPT
	917015	1	BALL, steel, 7/8" diam.
	919230	2	CAPSCREW, 1/2"NC x 1-3/8"
2	4305073	2	STUD, (1/2"NC x 1/2"NF x 1-3/4")
	904208	4	LOCKWASHER, 1/2"
	910195	2	NUT, 1/2"NF
3	4348087	1	SPRING, by-pass valve
4	4348086	1	VALVE, by-pass
5	4347190	1	SPRING, check valve
6	4348580	1	INSERT, check valve seat
7	4253766	2	RING, snap, valve retaining
8	4371443	1	ADAPTER, center bolt
9	4371021	1	ELEMENT KIT, oil filter (Includes item 10)
10	4372325	1	GASKET, oil filter body
11	4374735	1	BOLT, center
12	4041103	1	GASKET, filter center bolt
13	4371040	1	BODY, oil filter
14	4371036	1	SPRING, filter element
15	4348268	1	WASHER, filter element seal
16	4348270	1	SEAL, filter element
17	4348269	1	ADAPTER, filter element
18	4253195	1	RING, snap, filter center bolt
19	4347655	2	□GASKET, oil line elbow
20	4347654	2	FLANGE, oil line
	916274	4	CAPSCREW, 3/8"NC x 2-1/4"
	904206	4	LOCKWASHER, 3/8"
21	4347554	1	□GASKET, filter to crankcase
22	4347661	1	LINE ASSEMBLY, filter to cooler (Includes nuts and sealing RING 918253)
	918253	2	RING, Sealastic, 7/8" tube (rubber)

□Also see PACKAGED PARTS

(Continued)

ITEM	PART NO.	QTY.	DESCRIPTION
23	4347663	1	LINE ASSEMBLY, cooler to filter (Includes nuts and sealing RING 918253)
	918253	2	RING, Sealastic, 7/8" tube (rubber)
24	4348279	2	FLANGE, oil cooler
	919224	4	CAPSCREW, 3/8"NC x 1-1/8"
	904206	4	LOCKWASHER, 3/8"
25	4253106	2	□O-RING, sealing, oil cooler flange
			NOTE: Following items were not used as original equipment and are required only when replacement cylinder block is installed.
26	4336574	1	LINE ASSEMBLY, oil cooler to block (Includes NUT and RING indented below)
	917741	1	NUT, Sealastic, 7/8" tube
	918327	1	RING, Sealastic, 7/8" tube (Includes ferrule)
	919224	2	CAPSCREW 3/8"NC x 1-1/8"
	904206	2	LOCKWASHER, 3/8"
27	4253106	1	□O-RING, oil cooler return line
28	4034292	1	PLATE, cover, oil filter base
	916271	2	CAPSCREW, 3/8"NC x 1"
	904206	2	LOCKWASHER, 3/8"

□Also see PACKAGED PARTS

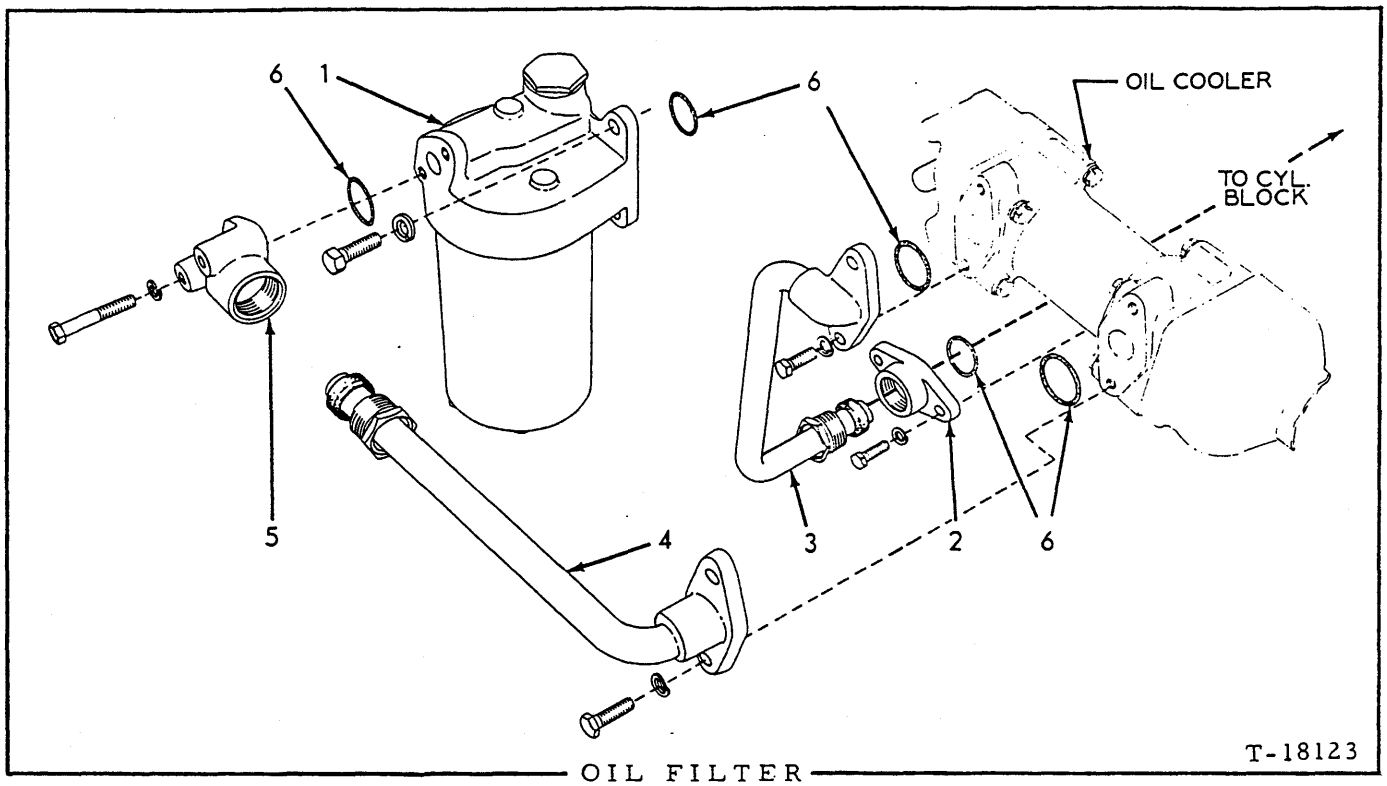

OIL FILTER

USAGE: Models HD11B, E, ES, S, F. Engines serial No. 10-4030 thru 10-4331 only

ITEM	PART NO.	QTY.	DESCRIPTION
1	4335338	1	FILTER ASSEMBLY (See page 59 for parts)
	919230	4	CAPSCREW, 1/2"NC x 1-3/8"
	904208	4	LOCKWASHER, 1/2"
2	4348279	1	FLANGE, crankcase oil line
	919224	2	CAPSCREW, 3/8"NC x 1-1/8"
	904206	2	LOCKWASHER, 3/8"
3	4335331	1	LINE ASSEMBLY, oil cooler to crankcase (Includes NUT and RING indented below)
	917741	1	NUT, male, Sealastic, 7/8" tube
	918327	1	RING, Sealastic, 7/8" tube (Includes ferrule)
	919224	2	CAPSCREW, 3/8"NC x 1-1/8"
	904206	2	LOCKWASHER, 3/8"
4	4335323	1	LINE ASSEMBLY, oil filter to cooler (Includes NUT and RING indented below)
	917741	1	NUT, male, Sealastic, 7/8" tube
	918327	1	RING, Sealastic, 7/8" tube (Includes ferrule)
	919224	2	CAPSCREW, 3/8"NC x 1-1/8"
	904206	2	LOCKWASHER, 3/8"
5	4335334	1	FLANGE, oil line connection
	912069	2	CAPSCREW, 3/8"NC x 2-1/2"
	904206	2	LOCKWASHER, 3/8"
6	4253106	5	□ O-RING, oil lines

□ Also see PACKAGED PARTS

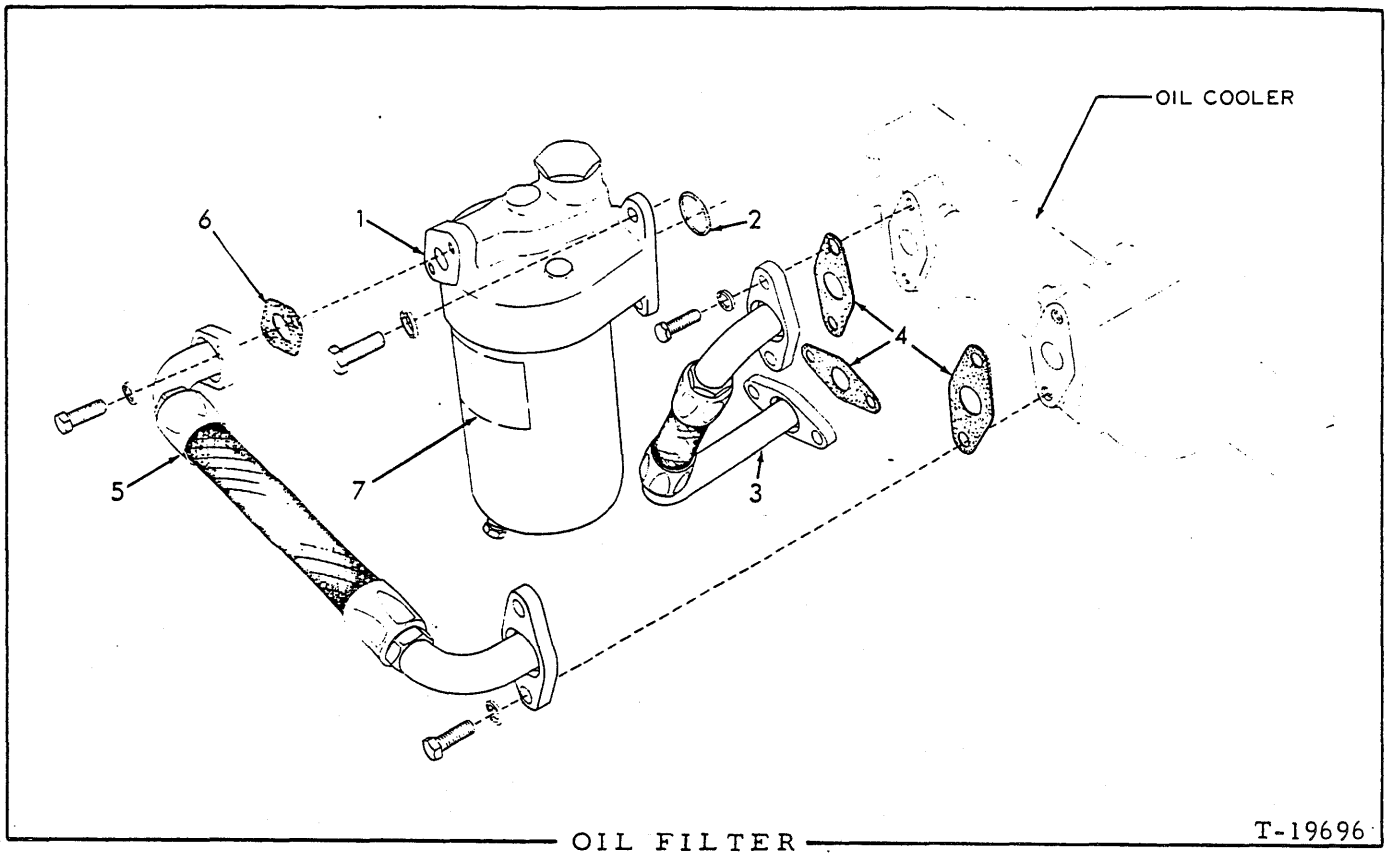

OIL FILTER T-19696

USAGE: All Model HD11EC,FC tractors prior to serial No. 10001; also Models HD11B,E,ES,S,F effective with engine serial No. 10-4332 but later discontined with tractor serial No. 10001.

ITEM	PART NO.	QTY.	DESCRIPTION
1	4335338	1	FILTER ASSEMBLY (See page 59 for parts)
	919230	4	CAPSCREW, 1/2"NC x 1-3/8"
	904208	4	LOCKWASHER, 1/2"
2	4253106	1	□O-RING, filter to cylinder block
3	4337532	1	HOSE ASSEMBLY, oil cooler to crankcase (See page 6 for parts)
	919224	4	CAPSCREW, 3/8"NC x 1-1/8"
	904206	4	LOCKWASHER, 3/8"
4	4335577	3	□GASKET, oil hose
5	4335567	1	HOSE ASSEMBLY, oil filter to cooler (See page 6 for parts)
	919224	4	CAPSCREW, 3/8"NC x 1-1/8"
	904206	4	LOCKWASHER, 3/8"
6	4335578	1	□GASKET, hose to filter
7	------	1	TRANSFER (See PAINTING AND MARKING)

□Also see PACKAGED PARTS

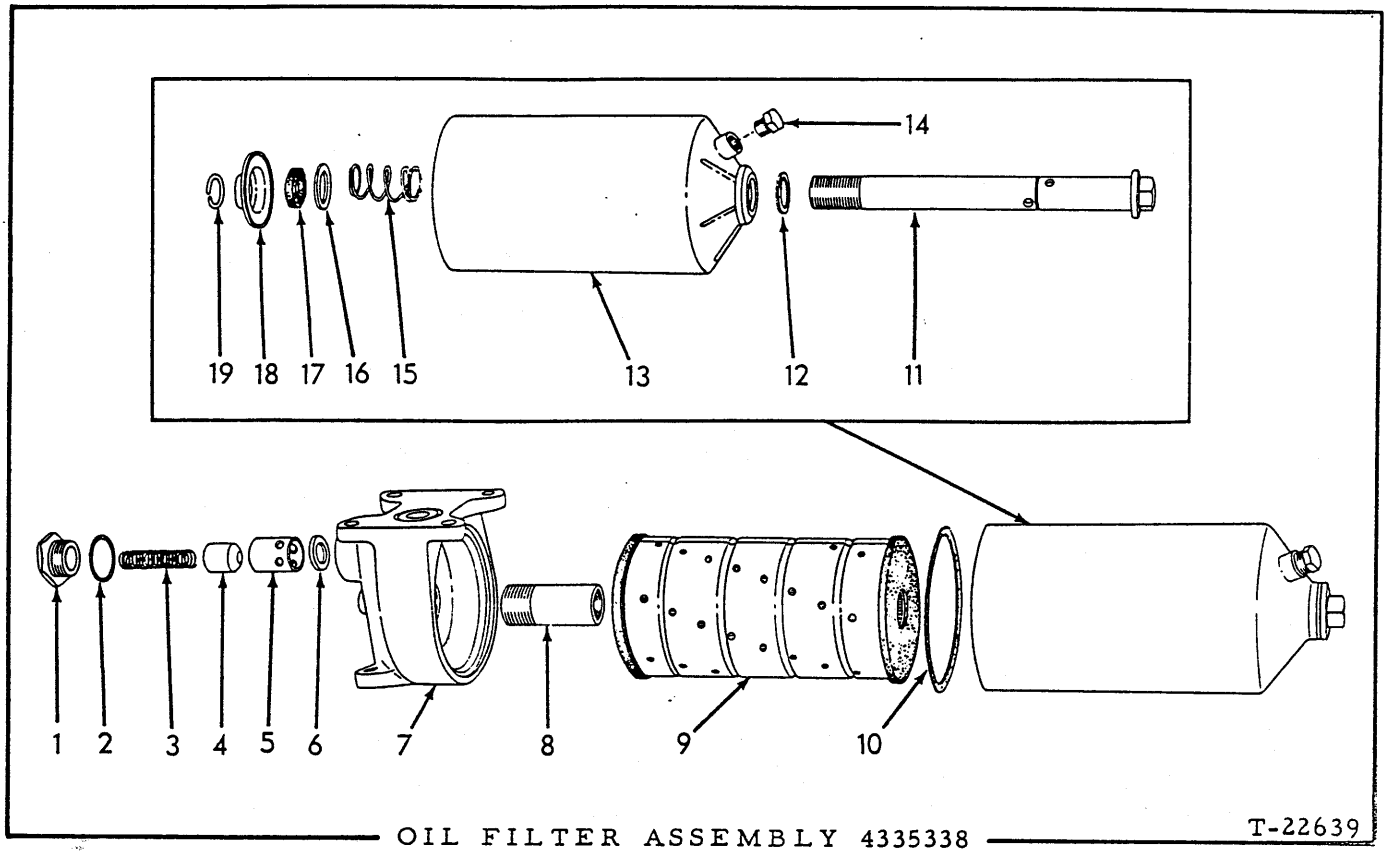

OIL FILTER ASSEMBLY 4335338

USAGE: See pages 57 and 58

ITEM	PART NO.	QTY.	DESCRIPTION
1	4373610	1	CAP, by-pass valve
2	4253751	1	GASKET, by-pass valve cap
3	4335666	1	SPRING, by-pass valve
4	4373613	1	PISTON, by-pass valve
5	4373612	1	SLEEVE, by-pass valve piston
6	4373614	1	SEAT, by-pass valve piston
7	4335339	1	HEAD ASSEMBLY (Includes items 1 thru 6)
8	4371443	1	ADAPTER, center bolt
9	4371021	1	ELEMENT KIT, oil filter (Includes item 10)
10	4372325	1	GASKET, oil filter body
11	4374735	1	BOLT, center
12	4041103	1	GASKET, filter center bolt
13	4335352	1	BODY, oil filter
14	918951	1	PLUG, pipe, hex-hd., 3/8"NPT
15	4371036	1	SPRING, filter element
16	4348268	1	WASHER, filter element seal
17	4348270	1	SEAL, filter element
18	4348269	1	ADAPTER, filter element
19	4253195	1	RING, snap, filter center bolt

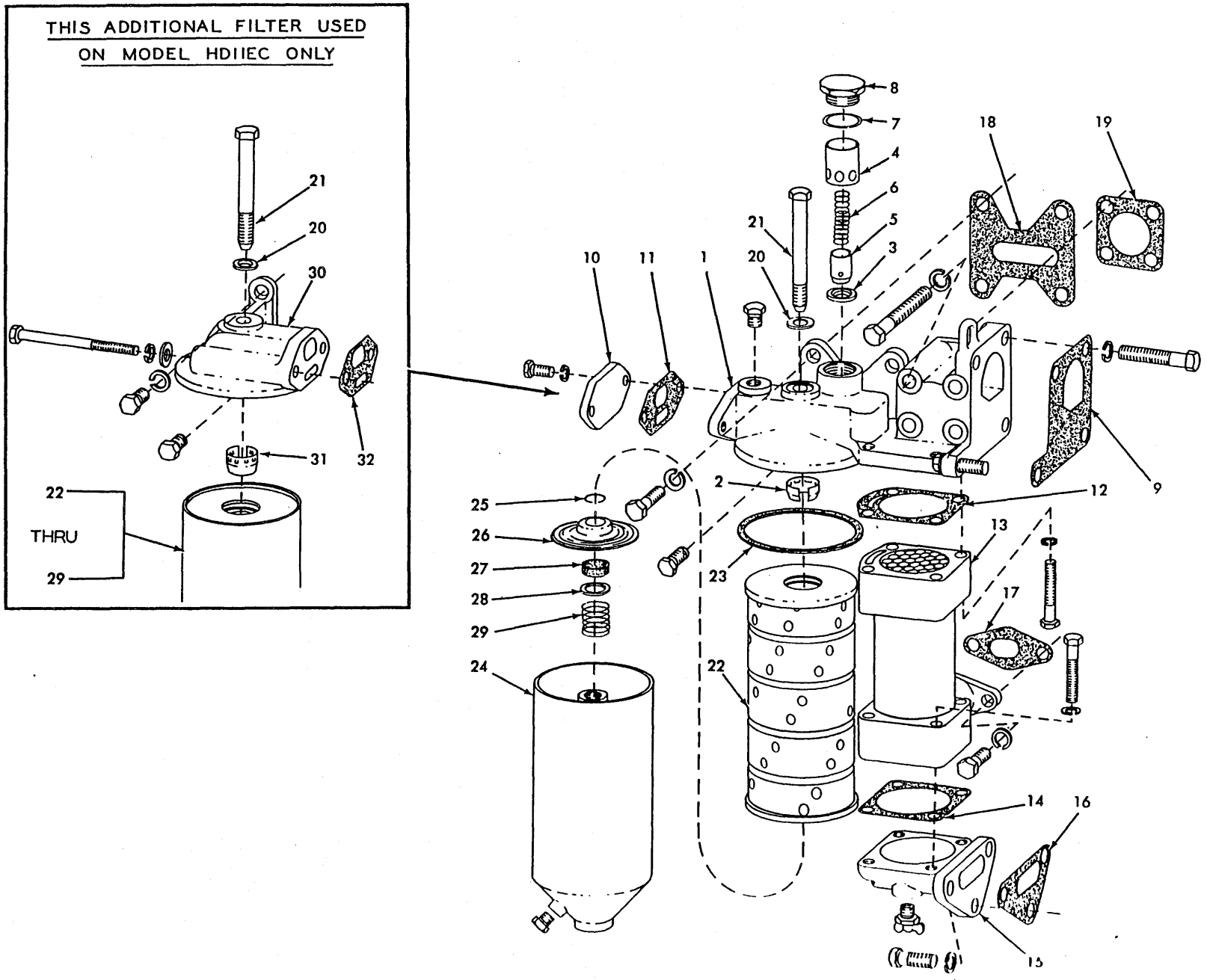

LUBRICATING OIL FILTER AND COOLER

LUBRICATING OIL FILTER AND COOLER

USAGE: Tractors serial No.10001 and up

* Models HD11B, E, S
** Model HD11EC

ITEM	PART NO.	QTY. *	QTY. **	DESCRIPTION
1	4339198	1	1	HEAD ASSEMBLY (Includes items 2 thru 8)
	920333	1	-	PLUG, pipe, hex-hd., 3/8"NPT (HD11B only)
	920541	3	3	CAPSCREW, Nylok, 1/2"NC x 1-1/2"
	920540	1	1	CAPSCREW, Nylok, 1/2"NC x 1-1/4"
	920574	3	3	CAPSCREW, 1/2"NC x 1-3/8"
	915969	1	1	CAPSCREW, 1/2"NC x 3"
	904208	6	6	LOCKWASHER, 1/2"
	919293	4	4	CAPSCREW, 3/8"NC x 5"
	904206	4	4	LOCKWASHER, 3/8"
2	4379263	1	1	ADAPTOR, cartridge centering, upper
3	4373614	1	1	SEAT, by-pass valve
4	4373612	1	1	SLEEVE, by-pass valve piston
5	4373613	1	1	PISTON, by-pass valve
6	4335666	1	1	SPRING, by-pass valve
7	4253751	1	1	GASKET, by-pass valve cap
8	4373610	1	1	CAP, by-pass valve
9	4339128	1	1	GASKET, filter head
10	4339114	1	-	COVER, filter head
	916272	2	-	CAPSCREW, 3/8"NC x 1-1/4"
	904206	2	-	LOCKWASHER, 3/8"
11	4339123	1	-	GASKET, filter head cover
12	4339118	1	1	GASKET, oil cooler to filter head
13	4339124	1	1	COOLER, lubricating oil
	912069	8	8	CAPSCREW, 3/8"NC x 2-1/2"
	921076	2	2	CAPSCREW, 3/8"NC x 1-1/4" (To block)
	904206	10	10	LOCKWASHER, 3/8"
14	4349984	1	1	GASKET, oil cooler to adaptor
15	4339121	1	1	ADAPTOR, oil cooler
	912415	1	1	COCK, drain, 1/4"NPT
	915987	3	3	CAPSCREW, 1/2"NC x 1-1/2"
	904208	3	3	LOCKWASHER, 1/2"
16	4339127	1	1	GASKET, oil cooler adaptor
17	4339151	1	1	□ GASKET, cooler to block
18	4339150	1	1	□ GASKET, filter head to block, rear
19	4348184	1	1	□ GASKET, filter head to block, front
20	4376749	1	2	WASHER, sealing, filter body capscrew
21	4339022	1	2	CAPSCREW, oil filter body
22	4371021	1	2	CARTRIDGE ASSEMBLY, oil filter (Includes item 23)

□ Also see PACKAGED PARTS

(Continued)

LUBRICATING OIL FILTER AND COOLER (Continued)

ITEM	PART NO.	QTY. *	QTY. **	DESCRIPTION
23	4372325	1	2	GASKET, oil filter body
24	4339021	1	2	BODY, oil filter
	918951	1	2	PLUG, pipe, hex-hd., 3/8"NPT
25	4379269	1	2	RING, snap, adaptor retaining
26	4055971	1	2	ADAPTOR, cartridge centering, lower
27	4053409	1	2	SEAL, cartridge adaptor
28	4053410	1	2	WASHER, cartridge adaptor seal
29	4379268	1	2	SPRING, cartridge retaining
30	4339454	-	1	HEAD ASSEMBLY, rear filter (Includes item 31)
	920682	-	2	CAPSCREW, 3/8"NC x 5-1/2"
	904206	-	2	LOCKWASHER, 3/8"
	922465	-	2	WASHER, plain
	916311	-	1	CAPSCREW, 1/2"NC x 1-1/4"
	904208	-	1	LOCKWASHER, 1/2"
	921865	-	1	CAPSCREW, Nylok, 1/2"NC x 1"
31	4379263	-	1	ADAPTOR, cartridge centering, upper
32	4339123	-	1	GASKET, filter interconnection

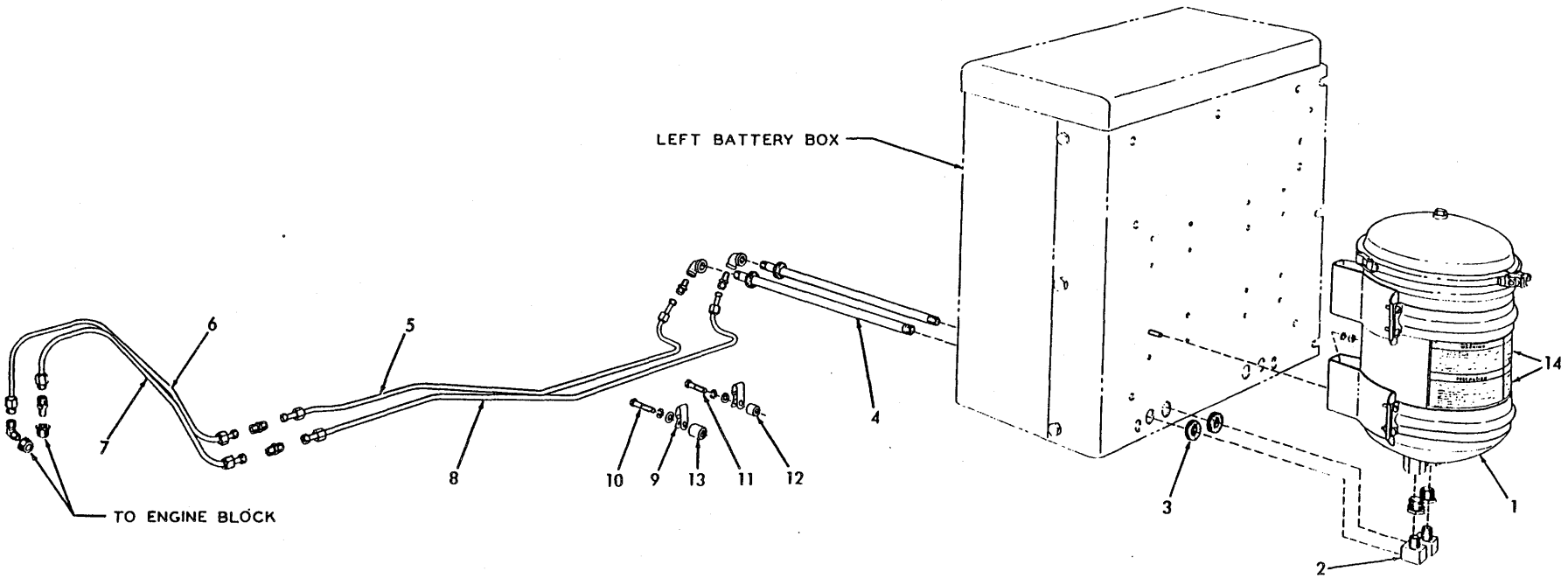

HEAVY-DUTY OIL FILTER (First type. Models HD11B, E, ES and S)

HEAVY-DUTY OIL FILTER

USAGE: Special equipment. Applicable to Model HD11B, E, ES, S tractors prior to serial No. 4415. Supplements standard oil filter.

ITEM	PART NO.	QTY.	DESCRIPTION
1	082442	1	FILTER ASSEMBLY, lubricating oil (See page 74 for parts)
	910167	8	CAPSCREW, 5/16"NF x 3/4"
	904205	8	LOCKWASHER, 5/16"
	913636	8	NUT, 5/16"NF
2	055245	2	ELBOW, filter tube (90°, 3/8"NPT, male and female)
	904271	2	BUSHING, pipe reducing, 1/2"NPT to 3/8"NPT
3	036888	4	GROMMET, tube protecting (rubber)
4	085785	2	PIPE, filter tube
	905014	2	ELBOW, 90°, pipe reducing, 3/8"NPT to 1/4"NPT
5	085853	1	TUBE, oil supply, rear section
	918325	2	NUT, Sealastic, 3/8" tube
	915367	2	RING, Sealastic, 3/8" tube (Includes ferrule)
	915368	1	CONNECTOR, Sealastic, 3/8" tube, 1/4"NPT male
	915386	1	UNION, Sealastic, 3/8" tube
6	087740	1	TUBE, oil supply, front section
	918325	2	NUT, Sealastic, 3/8" tube
	915367	2	RING, Sealastic, 3/8" tube (Includes ferrule)
	915369	1	ELBOW, Sealastic, 90°, 3/8" tube, 1/4"NPT male
	901839	1	BUSHING, pipe reducing, 1/2"NPT to 1/4"NPT
7	------	1	TUBE, oil return, front section (Discontinued)
	918325	2	NUT, Sealastic, 3/8" tube
	915367	2	RING, Sealastic, 3/8" tube (Includes ferrule)
	915368	1	CONNECTOR, Sealastic, 3/8" tube, 1/4"NPT male
	901826	1	BUSHING, pipe reducing, 3/8"NPT to 1/4"NPT
8	085856	1	TUBE, oil return, rear section
	918325	2	NUT, Sealastic, 3/8" tube
	915367	2	RING, Sealastic, 3/8" tube (Includes ferrule)
	915368	1	CONNECTOR, Sealastic, 3/8" tube, 1/4"NPT male
	915386	1	UNION, Sealastic, 3/8" tube
9	055676	2	CLIP, tube supporting (for two 3/8" diam. tubes, 13/32" bolt-hole)
10	046419	1	CAPSCREW, 3/8"NF x 2"
11	035336	1	CAPSCREW, 3/8"NF x 1-3/4"
	904206	2	LOCKWASHER, 3/8"
	911115	2	WASHER, plain, SAE std., 3/8"
12	044721	1	SPACER, tube supporting clip (3/4" thick)
13	073106	1	SPACER, tube supporting clip (1" thick)
14	------	-	TRANSFERS, warning (See PAINTING AND MARKING)

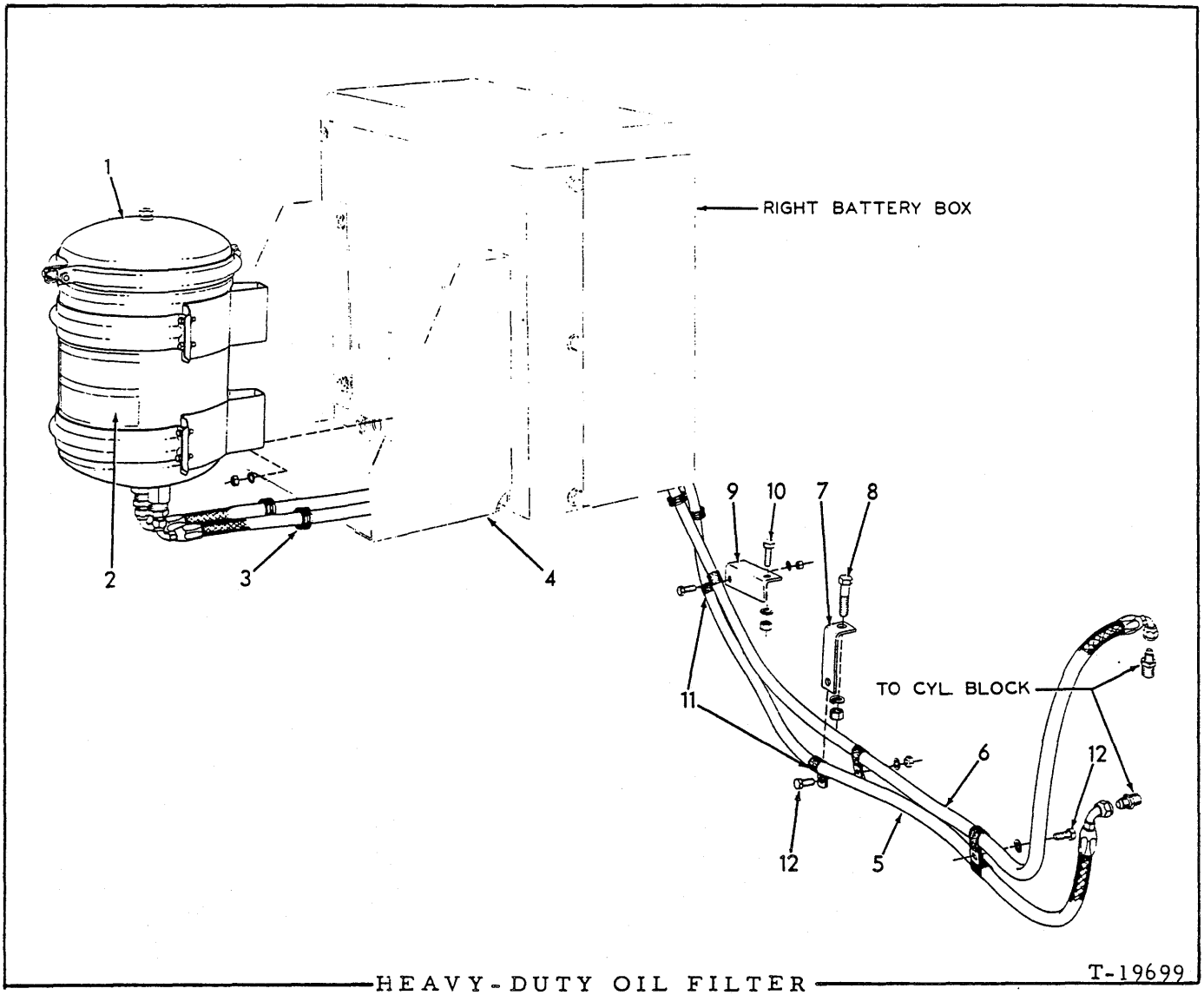

HEAVY-DUTY OIL FILTER T-19699

USAGE: Special equipment. Applicable to Model HD11EC tractors prior to serial No. 10001; also Model HD11B,E,ES,S tractors serial No. 4415 thru No. 10000. Supplements standard oil filter.

ITEM	PART NO.	QTY.	DESCRIPTION
1	082442	1	FILTER ASSEMBLY (See page 74 for parts)
	910167	8	CAPSCREW, 5/16"NF x 3/4"
	904205	8	LOCKWASHER, 5/16"
	913636	8	NUT, 5/16"NF
2	------	-	TRANSFER, warning (See PAINTING AND MARKING)
3	096034	4	GROMMET, hose protecting
4	------	-	BRACKETS, mounting (See HEAVY-DUTY FUEL FILTER)
5	096117	1	HOSE ASSEMBLY, oil supply (See page 6 for parts)
	919127	1	CONNECTOR, flare type, 3/8" tube, 1/2"NPT male
	919062	1	CONNECTOR, flare type, 3/8" tube, 1/4"NPT male

ITEM	PART NO.	QTY.	DESCRIPTION
6	096116	1	HOSE ASSEMBLY, oil return (See page 6 for parts)
	919127	1	CONNECTOR, flare type, 3/8" tube, 1/2"NPT male
	919172	1	CONNECTOR, flare type, 3/8" tube, 3/8"NPT male
7	096118	1	BRACKET, hose supporting, front
8	035067	1	CAPSCREW 1/2"NF x 2"
	904208	1	LOCKWASHER, 1/2"
	911043	1	NUT, 1/2"NF
9	096120	1	BRACKET, hose supporting, rear
10	035073	1	CAPSCREW, 1/2"NF x 1-3/4"
	904208	1	LOCKWASHER, 1/2"
	911043	1	NUT, 1/2"NF
11	094422	6	CLIP, hose supporting
12	035167	3	CAPSCREW, 3/8"NF x 7/8"
	904206	3	LOCKWASHER, 3/8"
	911041	2	NUT, 3/8"NF

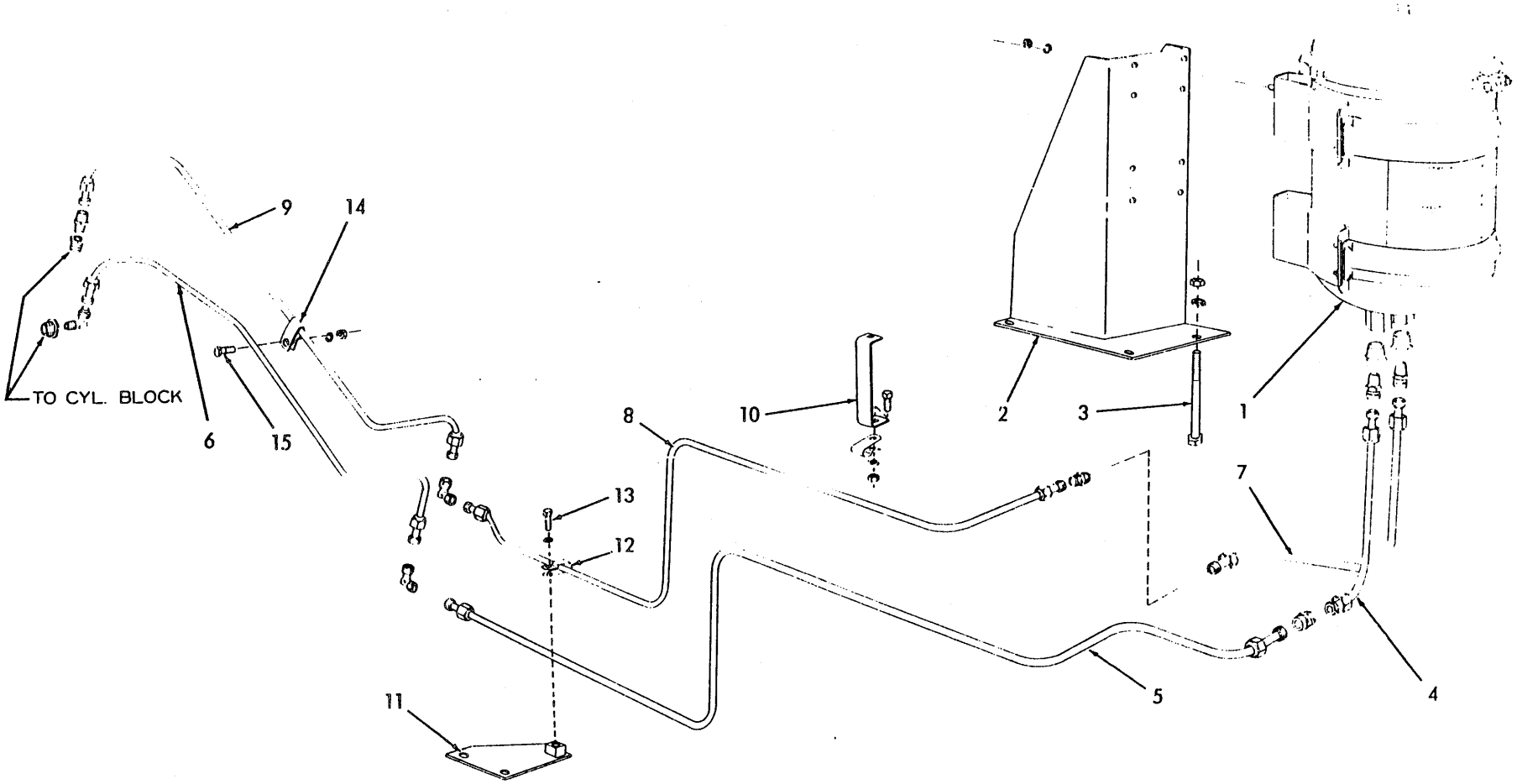

HEAVY-DUTY OIL FILTER (First type. Model HD11F)

HEAVY-DUTY OIL FILTER

USAGE: Special equipment. Applicable to Model HD11F tractors prior to serial No. 4415. Supplements standard oil filter.

ITEM	PART NO.	QTY.	DESCRIPTION
1	082442	1	FILTER ASSEMBLY, lubricating oil (See page 74 for parts)
	910167	8	CAPSCREW, 5/16"NF x 3/4"
	904205	8	LOCKWASHER, 5/16"
	913636	8	NUT, 5/16"NF
2	631927	1	BRACKET, filter mounting
3	054896	4	CAPSCREW, 1/2"NF x 5"
	904208	4	LOCKWASHER, 1/2"
	911043	4	NUT, 1/2"NF
4	087031	1	TUBE, oil supply, rear section
	918325	2	NUT, Sealastic, 3/8" tube
	915367	2	RING, Sealastic, 3/8" tube (Includes ferrule)
	901839	1	BUSHING, pipe reducing, 1/2"NPT to 1/4"NPT
	915368	1	CONNECTOR, Sealastic, 3/8" tube, 1/4"NPT male
	915386	1	UNION, Sealastic, 3/8" tube
5	087050	1	TUBE, oil supply, center section
	918325	2	NUT, Sealastic, 3/8" tube
	915367	2	RING, Sealastic, 3/8" tube (Includes ferrule)
6	089195	1	TUBE, oil supply, front section
	918325	2	NUT, Sealastic, 3/8" tube
	915367	2	RING, Sealastic, 3/8" tube (Includes ferrule)
	915370	1	ELBOW, union, Sealastic, 3/8" tube
	915369	1	ELBOW, Sealastic, 90°, 3/8" tube, 1/4"NPT male
	901839	1	BUSHING, pipe reducing, 1/2"NPT to 1/4"NPT
7	087032	1	TUBE, oil return, rear section
	918325	2	NUT, Sealastic, 3/8" tube
	915367	2	RING, Sealastic, 3/8" tube (Includes ferrule)
	901839	1	BUSHING, pipe reducing, 1/2"NPT to 1/4"NPT
	915368	1	CONNECTOR, Sealastic, 3/8" tube, 1/4"NPT male
	915386	1	UNION, Sealastic, 3/8" tube
8	087058	1	TUBE, oil return, center section
	918325	2	NUT, Sealastic, 3/8" tube
	915367	2	RING, Sealastic, 3/8" tube (Includes ferrule)
9	089196	1	TUBE, oil return, front section
	918325	2	NUT, Sealastic, 3/8" tube
	915367	2	RING, Sealastic, 3/8" tube (Includes ferrule)
	915370	1	ELBOW, union, Sealastic, 3/8" tube
	915368	1	CONNECTOR, Sealastic, 3/8" tube, 1/4"NPT male
	901826	1	BUSHING, pipe reducing, 3/8"NPT to 1/4"NPT
10	------	1	BRACKET, tube supporting (Discontinued)
11	089099	1	PLATE, tube supporting
12	055676	3	CLIP, tube supporting (for two 3/8" diam. tubes, 13/32" bolt-hole)
13	036032	3	CAPSCREW, 3/8"NF x 3/4"
	904206	3	LOCKWASHER, 3/8"
	911041	2	NUT, 3/8"NF

(Continued)

HEAVY-DUTY OIL FILTER (Continued)

ITEM	PART NO.	QTY.	DESCRIPTION
14	042672	1	CLIP, tube supporting (for two 3/8" diam. tubes, 7/16" bolt-hole)
15	036032	1	CAPSCREW, 3/8"NF x 3/4"
	904206	1	LOCKWASHER, 3/8"
	911041	1	NUT, 3/8"NF

NOTE: See PAINTING AND MARKING for transfers

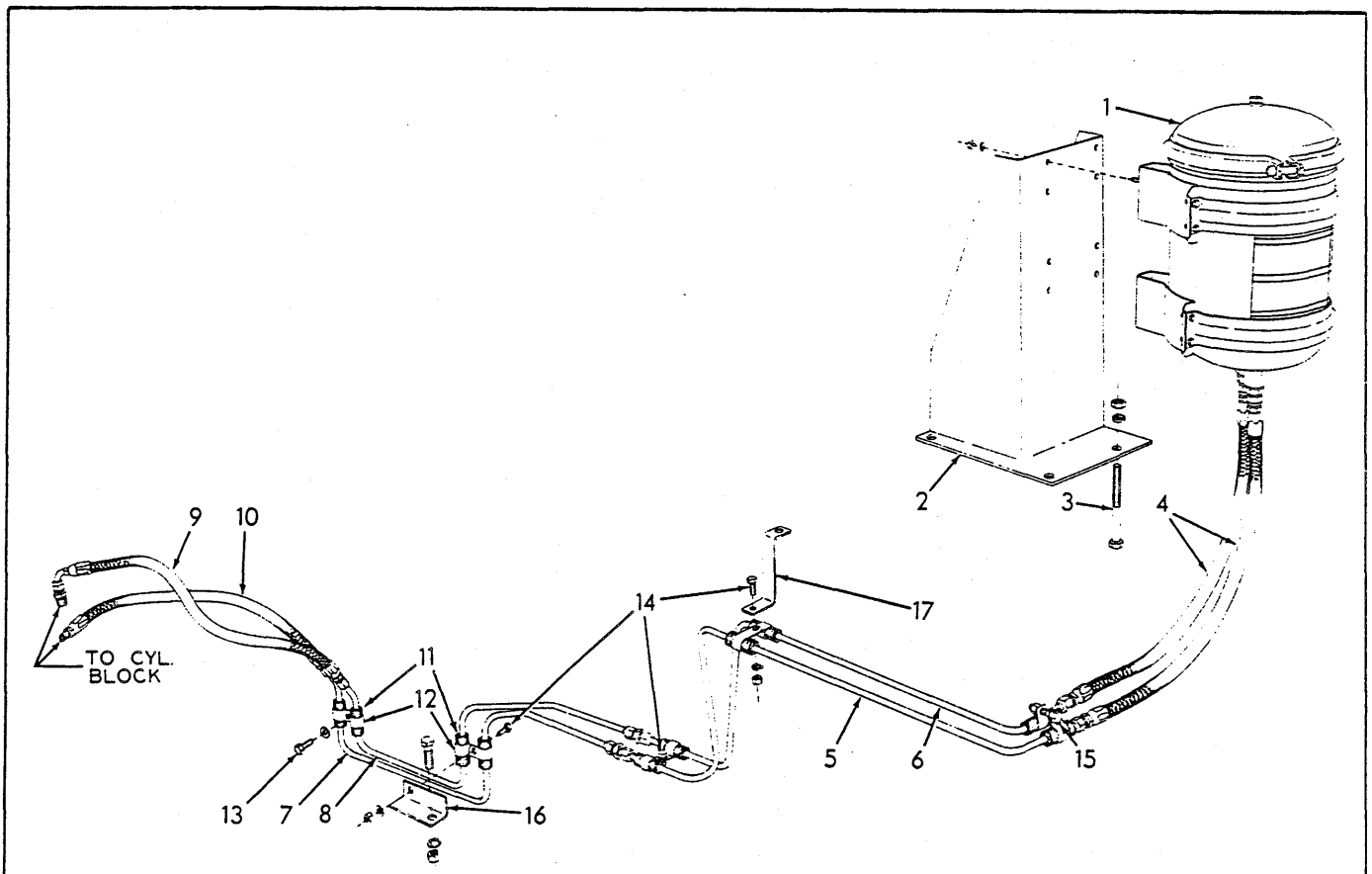

HEAVY-DUTY OIL FILTER T-22549

HEAVY-DUTY OIL FILTER

USAGE: Special equipment. Applicable to Model HD11FC tractors prior to serial No. 10001; also Model HD11F tractors serial No. 4415 thru No. 10000. Supplements standard oil filter.

ITEM	PART NO.	QTY.	DESCRIPTION
1	082442	1	FILTER ASSEMBLY, lubricating oil (See page 74 for parts)
	910167	8	CAPSCREW, 5/16"NF x 3/4"
	904205	8	LOCKWASHER, 5/16"
	913636	8	NUT, 5/16"NF
2	631927	1	BRACKET, filter mounting
3	054896	4	CAPSCREW, 1/2"NF x 5"
	904208	4	LOCKWASHER, 1/2"
	911043	4	NUT, 1/2"NF
4	094095	2	HOSE ASSEMBLY, rear (See page 6 for parts)
	919127	2	CONNECTOR, flare type, 3/8" tube, 1/2"NPT male
5	094871	1	TUBE ASSEMBLY, oil supply, rear section (Includes nuts)
6	094880	1	TUBE ASSEMBLY, oil return, rear section (Includes nuts)
7	094887	1	TUBE ASSEMBLY, oil supply, front section (Includes nuts)
	919065	1	UNION, flare type, 3/8" tube
8	094379	1	TUBE ASSEMBLY, oil return, front section (Includes nuts)
	919065	1	UNION, flare type, 3/8" tube
9	094465	1	HOSE ASSEMBLY, oil return, front (See page 6 for parts)
	919172	1	CONNECTOR, flare type, 3/8" tube, 3/8"NPT male
10	096122	1	HOSE ASSEMBLY, oil supply, front (See page 6 for parts)
11	093751	10	BOOT, tube protecting (rubber)
12	055234	10	CLIP, tube supporting
13	035979	1	CAPSCREW, 3/8"NF x 5/8"
14	036032	3	CAPSCREW, 3/8"NF x 3/4"
15	203188	1	CAPSCREW, 3/8"NF x 1-1/2"
	904206	5	LOCKWASHER, 3/8"
	911041	3	NUT, 3/8"NF
16	094889	1	ANGLE, tube supporting
	913607	1	CAPSCREW, 1/2"NF x 1-5/8"
	904208	1	LOCKWASHER, 1/2"
	911043	1	NUT, 1/2"NF
17	094863	1	BRACKET, tube supporting

NOTE: See PAINTING AND MARKING for transfers

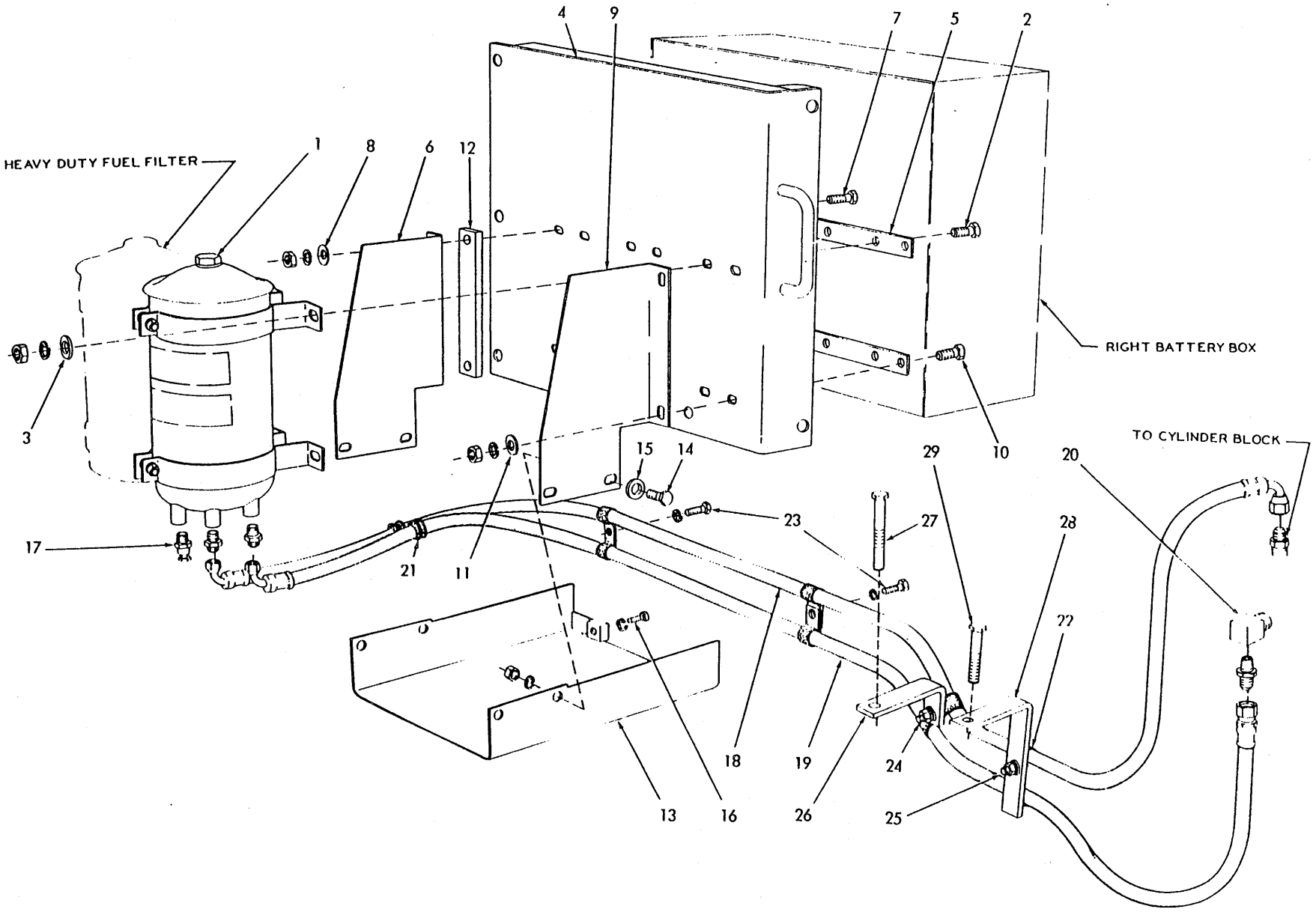

HEAVY-DUTY OIL FILTER (Late units)

T-41853

HEAVY-DUTY OIL FILTER

USAGE: Special equipment. Supplements standard oil filter.

ITEM	PART NO.	QTY.	DESCRIPTION
1	098363	1	FILTER ASSEMBLY ("Walker". See page 76 for parts)(Used prior to August 1965)
	654674	1	FILTER ASSEMBLY ("Briggs". See page 77 for parts)(Effective August 1965)
2	035018	4	CAPSCREW, 1/2"NF x 1-1/2"
3	064531	4	WASHER, plain
	904208	4	LOCKWASHER, 1/2"
	911043	4	NUT, 1/2"NF
4	639421	1	COVER, right battery box (Replaces standard COVER 639905)
5	099830	2	PLATE, reinforcing
6	099831	1	BRACKET, channel supporting, rear
7	035067	2	CAPSCREW, 1/2"NF x 2"
8	064531	2	WASHER, plain
	904208	2	LOCKWASHER, 1/2"
	911043	2	NUT, 1/2"NF
9	099832	1	BRACKET, channel supporting, front
10	035067	2	CAPSCREW, 1/2"NF x 2"
11	064531	2	WASHER, plain
	904208	2	LOCKWASHER, 1/2"
	911043	2	NUT, 1/2"NF
12	639416	2	BAR, bracket spacing
13	639419	1	CHANNEL, hose protecting
14	070469	4	CAPSCREW, 1/2"NF x 1-1/4"
15	064531	4	WASHER, plain
	904208	4	LOCKWASHER, 1/2"
	911043	4	NUT, 1/2"NF
16	070469	2	CAPSCREW, 1/2"NF x 1-1/4"
	904208	2	LOCKWASHER, 1/2"
17	633519	1	COCK, drain, 3/8"NPT
18	639412	1	HOSE, oil supply (See page 6)
	919172	2	CONNECTOR, flare type, 3/8" tube, 3/8"NPT male
19	639411	1	HOSE, oil return (See page 6)
	919062	1	CONNECTOR, flare type, 3/8" tube, 1/4"NPT male
	919172	1	CONNECTOR, flare type, 3/8" tube, 3/8"NPT male
20	644115	1	ELBOW, oil return line
21	093748	2	GROMMET, hose protecting, rear
22	094467	8	CLIP, hose supporting
23	036032	2	CAPSCREW, 3/8"NF x 3/4" (Early units)
	035244	2	CAPSCREW, 3/8"NC x 3/4" (Late units)
24	035167	1	CAPSCREW, 3/8"NF x 7/8"
25	036034	1	CAPSCREW, 3/8"NF x 1"
	904206	4	LOCKWASHER, 3/8"
	911041	2	NUT, 3/8"NF
	911115	1	WASHER, plain, SAE std., 3/8"
26	639417	1	ANGLE, hose supporting, rear
27	042430	1	CAPSCREW, 1/2NF x 3-1/4"
28	618103	1	ANGLE, hose supporting, front
29	035068	1	CAPSCREW, 1/2"NF x 2-1/4"

NOTE: See PAINTING AND MARKING for transfers

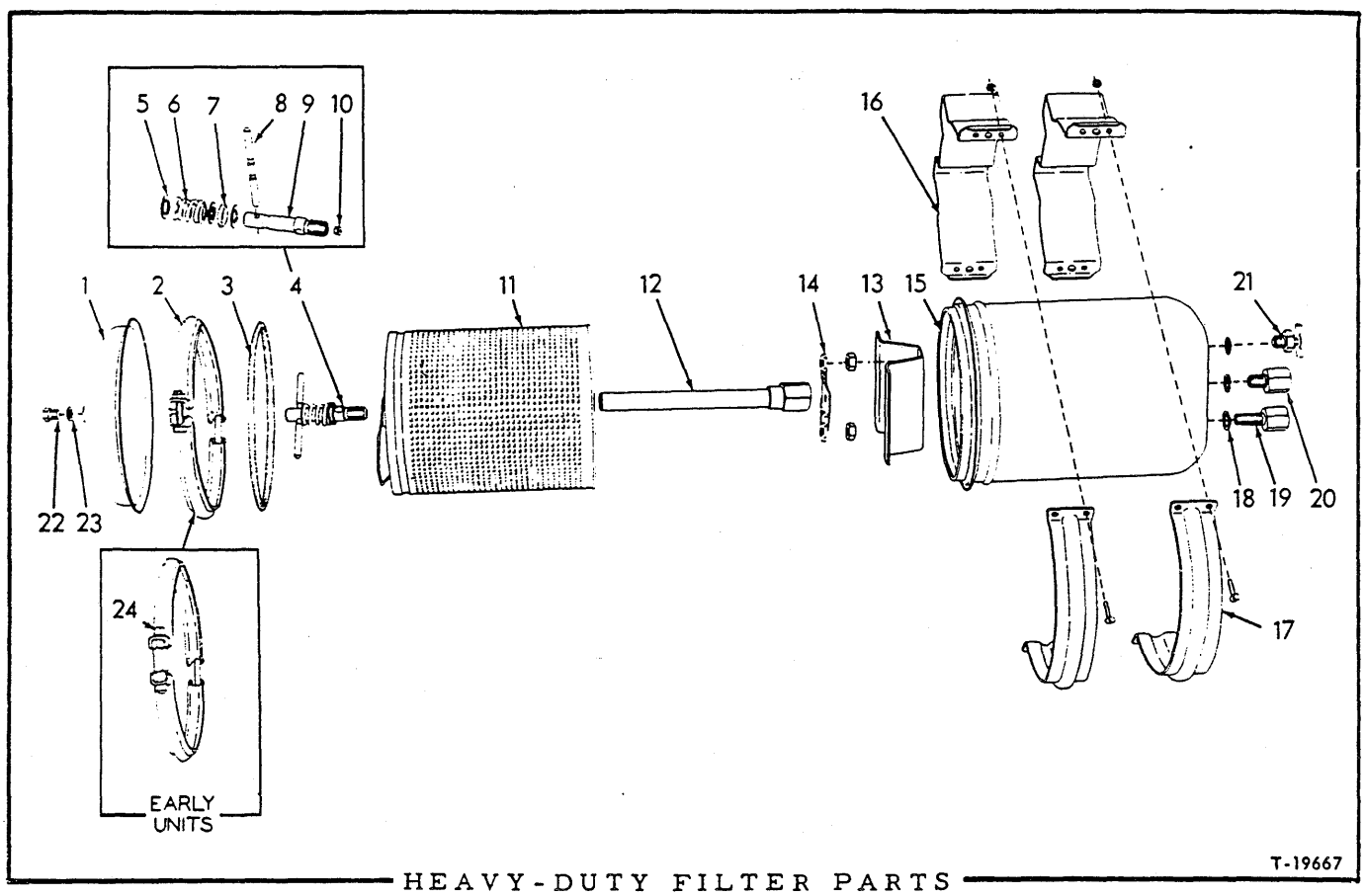

HEAVY-DUTY FILTER PARTS

* 082441 FILTER ASSEMBLY, fuel (See pages 79 thru 85)
** 082442 FILTER ASSEMBLY, oil (See pages 65 thru 71)

ITEM	PART NO.	QTY. *	QTY. **	DESCRIPTION
1	082505	1	1	COVER
2	630540	1	1	RING ASSEMBLY, cover retaining
3	082449	1	1	GASKET, cover
4	082492	1	-	HOLD-DOWN ASSEMBLY, filter element (Includes items 5 thru 9)
	082493	-	1	HOLD-DOWN ASSEMBLY, filter element (Includes items 5 thru 10)
5	082489	3	3	WASHER, element hold-down
6	082490	1	1	SPRING, element hold-down
7	082487	1	1	SEAL, element hold-down
8	082488	1	1	HANDLE, element hold-down
9	------	1	1	STUD, element hold-down (Not serviced separately)
10	082491	-	1	PLUG, orifice, element hold-down
11	091540	1	1	ELEMENT, filtering (Original equipment)
	637957	1	1	ELEMENT, filtering (Optional)

(Continued)

ITEM	PART NO.	QTY. *	QTY. **	DESCRIPTION
12	076668	1	1	TUBE ASSEMBLY, outlet (Includes nut)
13	096816	1	1	SUPPORT, filter element
	911049	2	2	NUT, jam, 5/8"NF
14	096815	1	1	RETAINER, element support nut
15	------	1	1	HOUSING (Not serviced separately)
16	082444	2	2	BRACKET, mounting
17	082443	2	2	BAND, mounting bracket
	900576	8	8	SCREW, machine, 1/4"NC x 3/4"
	911024	8	8	NUT, 1/4"NC
18	063891	3	3	GASKET
19	063890	-	1	VALVE ASSEMBLY, inlet check (Includes 1 spring, 1 ring, 1 cup. Serviced only as a unit)
	063889	1	-	BOLT, hollow
20	080758	-	1	VALVE ASSEMBLY, outlet check (Includes 1 spring, 1 ring, 1 cup. Serviced only as a unit)
	063889	1	-	BOLT, hollow
21	094167	1	1	COCK, drain
22	084897	1	1	PLUG, venting
23	084899	1	1	WASHER, venting plug
24	098038	1	1	BOLT ASSEMBLY, cover retaining ring (Includes nuts)(Early units only)

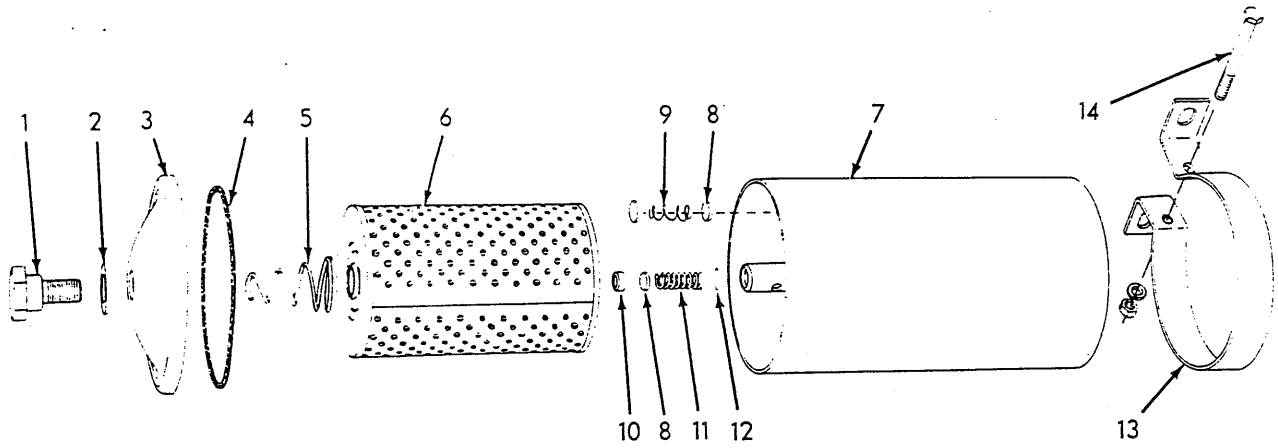

HEAVY-DUTY FILTER PARTS ("Walker") T-24009

* 098363 FILTER ASSEMBLY, oil (See page 73)
** 098364 FILTER ASSEMBLY, fuel (See page 87)

ITEM	PART NO.	QTY. *	QTY. **	DESCRIPTION
1	098433	1	1	BOLT, cover
2	098435	1	1	GASKET, cover bolt
3	098436	1	1	COVER
4	098437	1	1	GASKET, cover
5	098438	1	1	SPRING, element hold-down
6	098441	1	1	ELEMENT KIT (Includes item 4)
7	098440	1	-	SHELL ASSEMBLY (Includes items 8 thru 12)
	910002	1	-	PLUG, expansion, 3/4" diam.
	098439	-	1	SHELL
8	098444	2	-	VALVE, check, inlet and outlet
9	098446	1	-	SPRING, inlet check valve
10	099746	1	-	SLEEVE, outlet check valve
11	098443	1	-	SPRING, outlet check valve
12	098445	1	-	PIN, retaining, outlet valve spring
13	098434	2	2	BRACKET, mounting
14	042265	2	2	CAPSCREW, 3/8"NF x 3-1/4"
	904206	2	2	LOCKWASHER, 3/8"
	911041	2	2	NUT, 3/8"NF

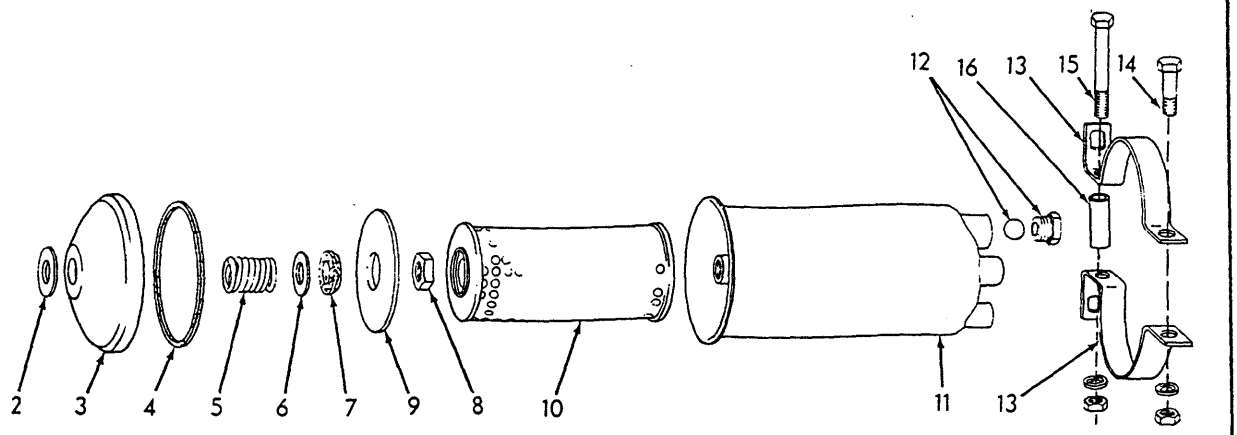

T-71312

HEAVY-DUTY FILTER PARTS ("Briggs")

* 654674 FILTER ASSEMBLY, oil (See page 73)
** 654673 FILTER ASSEMBLY, fuel (See page 87)

	PART NO.	QTY. *	QTY. **	DESCRIPTION
	647680	1	-	VALVE ASSEMBLY, by-pass (Includes ball, spring and retainer) (Serviced only as a unit)
	647432	-	1	CAPSCREW, cover retaining
	647436	1	1	WASHER, cover retaining capscrew
3	647446	1	1	COVER, tank
4	647448	1	1	GASKET, tank cover
5	647439	1	1	SPRING, element retaining
6	647449	1	1	WASHER, element retaining spring (steel)
7	647450	1	1	WASHER, sealing, cover retaining capscrew (cork)
8	647455	1	1	NUT
9	647453	1	1	PLATE, element retaining
10	647513	1	1	ELEMENT KIT (Includes item 4)
11	654720	1	-	TANK
	654719	-	1	TANK
12	654721	1	-	BUSHING, oil inlet
	905366	1	-	BALL, steel, 11/16" diam. (check valve)
13	647554	4	4	STRAP, mounting
14	013059	2	2	CAPSCREW, 3/8"NC x 2"
15	041915	2	2	CAPSCREW, 3/8"NC x 3-1/2"
	904206	4	4	LOCKWASHER, 3/8"
	911026	4	4	NUT, 3/8"NC
16	654717	2	2	PIPE, spacing, mounting strap

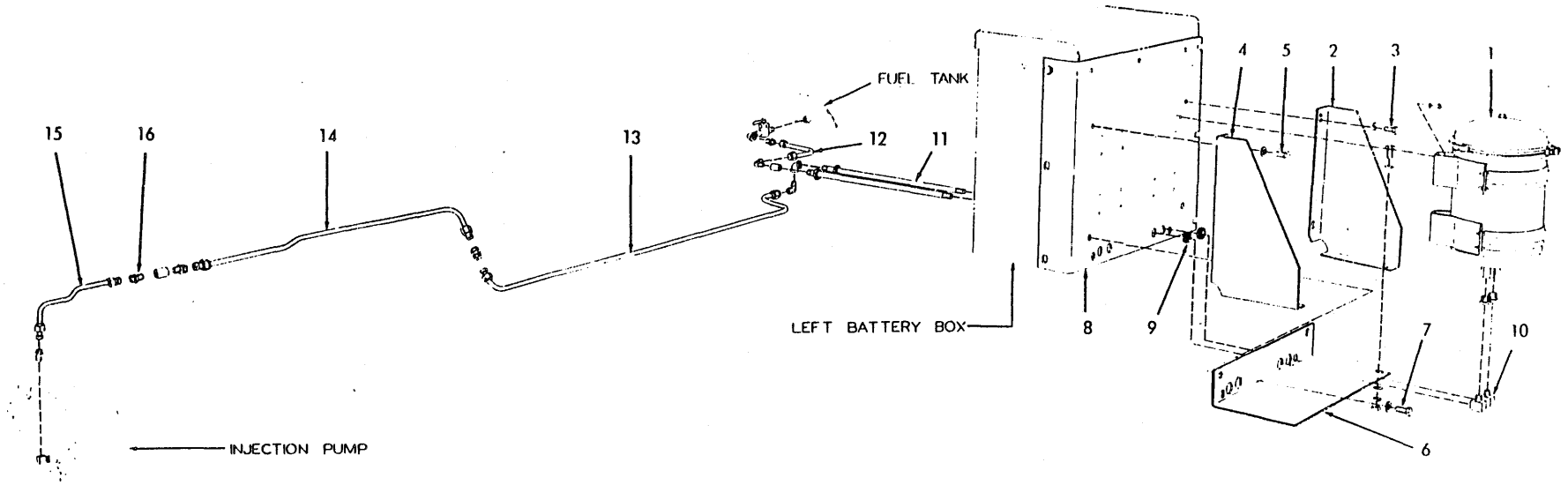

HEAVY-DUTY FUEL FILTER (First type. Models HD11B, E, ES and S)

HEAVY-DUTY FUEL FILTER

USAGE: Special equipment. Applicable to Model HD11B, E, ES, S tractors prior to serial No. 4415. Replaces standard first-stage fuel filter.

ITEM	PART NO.	QTY.	DESCRIPTION
1	082441	1	FILTER ASSEMBLY, fuel (See page 74 for parts)
	910167	8	CAPSCREW, 5/16"NF x 3/4"
	904205	8	LOCKWASHER, 5/16"
	913636	8	NUT, 5/16"NF
2	083760	1	BRACKET filter protecting, rear
3	070467	2	CAPSCREW, 1/2"NF x 1"
	910244	4	WASHER, plain, SAE std., 1/2"
	904208	2	LOCKWASHER, 1/2"
	911043	2	NUT, 1/2"NF
4	083759	1	BRACKET, filter protecting, front
5	070467	2	CAPSCREW, 1/2"NF x 1"
	910244	4	WASHER, plain, SAE std., 1/2"
	904208	2	LOCKWASHER, 1/2"
	911043	2	NUT, 1/2"NF
6	085319	1	PLATE, bracing, filter protecting brackets
7	070467	4	CAPSCREW, 1/2"NF x 1"
	910244	8	WASHER, plain, SAE std., 1/2"
	904208	4	LOCKWASHER, 1/2"
	911043	4	NUT, 1/2"NF
8	085820	1	COVER, left battery box (Replaces standard COVER 641073)
9	036888	4	GROMMET, filter pipe (rubber)
10	055245	2	ELBOW, filter tube (90°, 3/8"NPT male and female)
	904271	2	BUSHING, pipe reducing, 1/2"NPT to 3/8"NPT
11	085785	2	PIPE, filter
12	085825	1	TUBE, tank to filter
	918564	2	NUT, Sealastic, 1/2" tube
	915377	2	RING, Sealastic, 1/2" tube (Includes ferrule)
	901765	1	COUPLING, pipe, 3/8"NPT
	915380	1	ELBOW, Sealastic, 1/2" tube, 3/8"NPT male
	915378	1	CONNECTOR, Sealastic, 1/2" tube, 3/8"NPT male
13	085816	1	TUBE, filter to pump, rear section
	918564	2	NUT, Sealastic, 1/2" tube
	915377	2	RING, Sealastic, 1/2" tube (Includes ferrule)
	901678	1	ELBOW, pipe, 90°, 3/8"NPT
	915380	1	ELBOW, Sealastic, 1/2" tube, 3/8"NPT male
	915379	1	UNION, Sealastic, 1/2" tube
14	087871	1	TUBE, filter to pump, center section
	918564	2	NUT, Sealastic, 1/2" tube
	915377	2	RING, Sealastic, 1/2" tube (Includes ferrule)
	915378	1	CONNECTOR, Sealastic, 1/2" tube, 3/8"NPT male
	901765	1	COUPLING, pipe, 3/8" NPT
15	4347905	1	LINE, filter to pump, front section
	918325	2	NUT, Sealastic, 3/8" tube
	915367	2	RING, Sealastic, 3/8" tube (Includes ferrule)
	915368	1	CONNECTOR, Sealastic, 3/8" tube, 1/4"NPT male
	914588	1	ELBOW, street, brass, 90°, 1/4"NPT
16	4254097	1	CONNECTOR, Sealastic, 3/8" tube, 3/8"NPT male

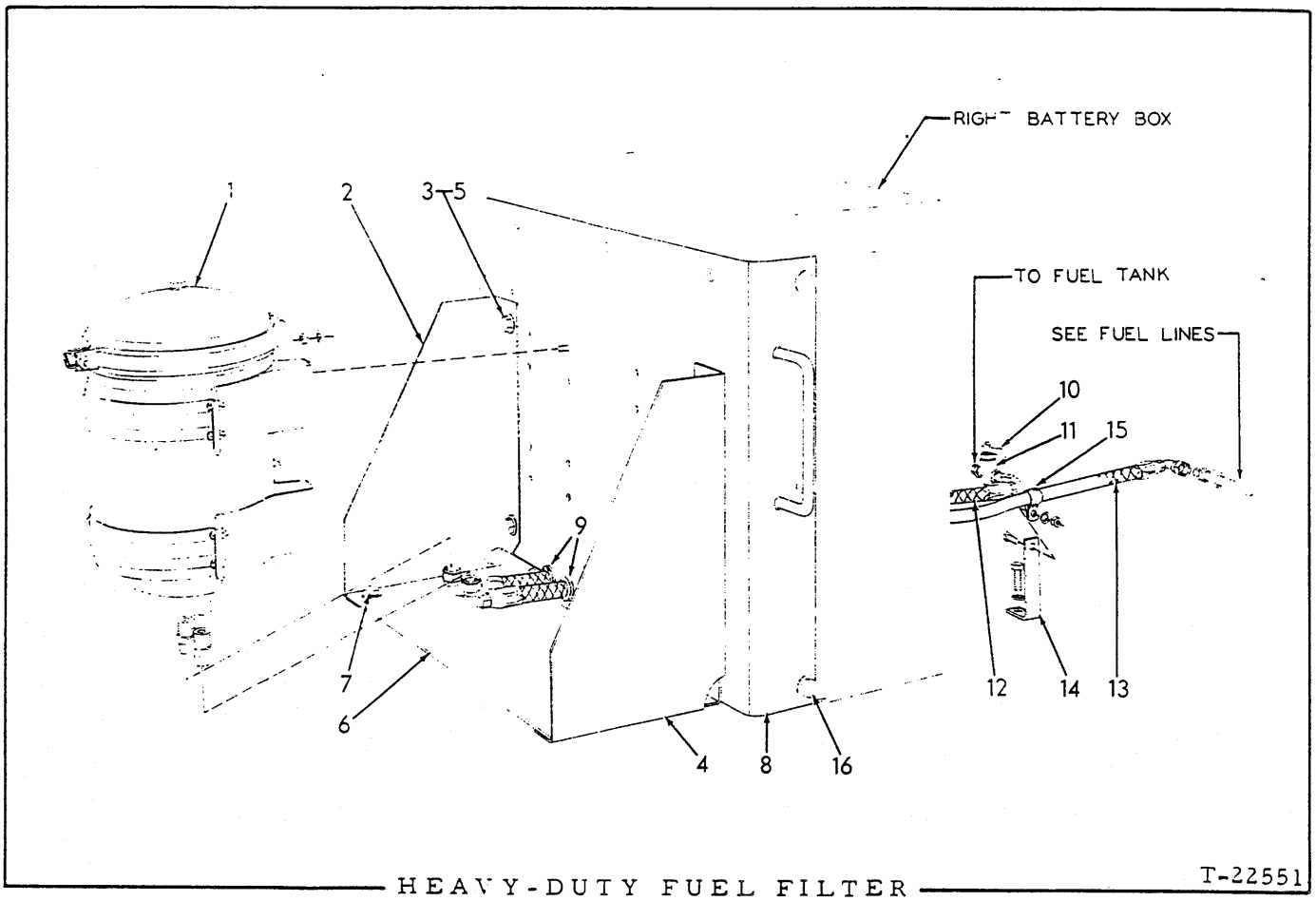

HEAVY-DUTY FUEL FILTER T-22551

USAGE: Special equipment. Applicable to Model HD11EC tractors prior to serial No. 10001; also Model HD11B,E,ES,S tractors serial No. 4415 thru No. 10000. Requires removal of first stage fuel filter element.

ITEM	PART NO.	QTY.	DESCRIPTION
1	082441	1	FILTER ASSEMBLY, fuel (See page 74 for parts)
	910167	8	CAPSCREW, 5/16"NF x 3/4"
	904205	8	LOCKWASHER, 5/16"
	913636	8	NUT, 5/16"NF
2	083759	1	BRACKET, filter protecting, rear
3	070467	2	CAPSCREW, 1/2"NF x 1"
	910244	4	WASHER, plain, SAE std., 1/2"
	904208	2	LOCKWASHER, 1/2"
	911043	2	NUT, 1/2"NF
4	083760	1	BRACKET, filter protecting, front
5	070467	2	CAPSCREW, 1/2"NF x 1"
	910244	4	WASHER, plain, SAE std., 1/2"
	904208	2	LOCKWASHER, 1/2"
	911043	2	NUT, 1/2"NF
6	095122	1	PLATE, bracing, filter protecting brackets
7	070467	2	CAPSCREW, 1/2"NF x 1"
	910244	4	WASHER, plain, SAE std., 1/2"
	904208	2	LOCKWASHER, 1/2"
	911043	2	NUT, 1/2"NF

(Continued)

HEAVY-DUTY FUEL FILTER (Continued)

ITEM	PART NO.	QTY.	DESCRIPTION
8	641091	1	COVER, right battery box (Replaces standard COVER 641074)
9	096034	4	GROMMET, filter pipe (rubber)
10	082189	1	HANDLE, fuel shut-off cock
11	092727	1	COCK, fuel shut-off (Includes item 10)
12	096095	1	HOSE ASSEMBLY, tank to filter (See page 6 for parts)
	919063	1	CONNECTOR, flare type, 1/2" tube, 3/8"NPT male
	919128	1	CONNECTOR, flare type, 1/2" tube, 1/2"NPT male
13	096098	1	HOSE ASSEMBLY, filter to tube union (See page 6 for parts)
	919128	1	CONNECTOR, flare type, 1/2" tube, 1/2"NPT male
14	096113	1	BRACKET, hose supporting
	035018	1	CAPSCREW, 1/2"NF x 1-1/2"
	904208	1	LOCKWASHER, 1/2"
15	094422	1	CLIP, hose supporting
	035167	1	CAPSCREW, 3/8"NF x 7/8"
	904206	1	LOCKWASHER, 3/8"
	911041	1	NUT, 3/8"NF
16	------	-	CAPSCREW (See Seat Group)

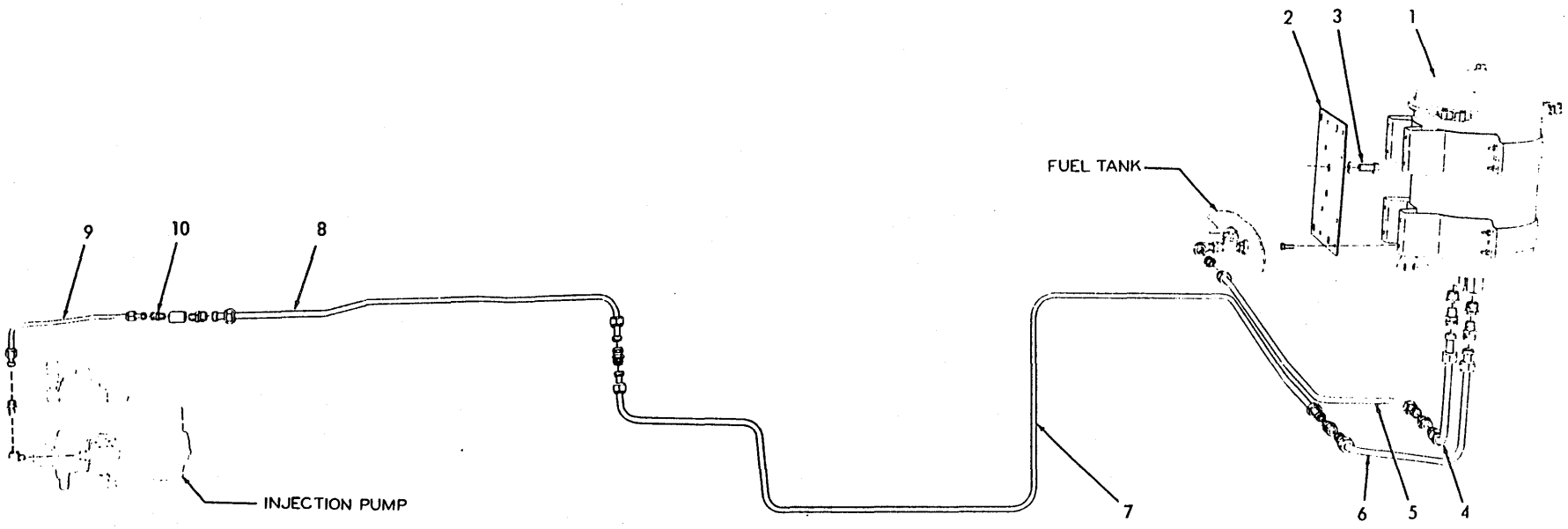

HEAVY-DUTY FUEL FILTER (First type, Model HDFF)

HEAVY-DUTY FUEL FILTER

USAGE: Special equipment. Applicable to Model HD11F tractors prior to serial No. 4415. Replaces standard first-stage fuel filter.

ITEM	PART NO.	QTY.	DESCRIPTION
1	082441	1	FILTER ASSEMBLY, fuel (See page 74 for parts)
	910167	8	CAPSCREW, 5/16"NF x 3/4"
	904205	8	LOCKWASHER, 5/16"
	913636	8	NUT, 5/16"NF
2	086890	1	BRACKET, filter mounting
3	035525	4	CAPSCREW, 1/2"NF x 1-1/8"
	904208	4	LOCKWASHER, 1/2"
4	087053	1	TUBE, tank to filter, left section
	918564	2	NUT, Sealastic, 1/2" tube
	915377	2	RING, Sealastic, 1/2" tube (Includes ferrule)
	915379	1	UNION, Sealastic, 1/2" tube
	915378	1	CONNECTOR, Sealastic, 1/2" tube, 3/8"NPT
	904271	1	BUSHING, pipe reducing, 1/2"NPT to 3/8"NPT
5	086981	1	TUBE, fuel tank to filter, right section
	918564	2	NUT, Sealastic, 1/2" tube
	915377	2	RING, Sealastic, 1/2" tube (Includes ferrule)
	915378	1	CONNECTOR, Sealastic, 1/2" tube, 3/8"NPT male
6	087049	1	TUBE, filter to pump, rear section
	918564	2	NUT, Sealastic, 1/2" tube
	915377	2	RING, Sealastic, 1/2" tube (Includes ferrule)
	904271	1	BUSHING, pipe reducing, 1/2"NPT to 3/8"NPT
	915378	1	CONNECTOR, Sealastic, 1/2" tube, 3/8"NPT
7	------	1	TUBE, filter to pump, intermediate rear section (Not available)
	918564	2	NUT, Sealastic, 1/2" tube
	915377	2	RING, Sealastic, 1/2" tube (Includes ferrule)
	915379	2	UNION, Sealastic, 1/2" tube
8	087871	1	TUBE filter to pump, intermediate front section
	918564	2	NUT, Sealastic, 1/2" tube
	915377	2	RING, Sealastic, 1/2" tube (Includes ferrule)
	915378	1	CONNECTOR, Sealastic, 1/2" tube, 3/8"NPT male
	901765	1	COUPLING, pipe, 3/8"NPT
9	4347905	1	LINE, filter to pump, front section
	918325	2	NUT, Sealastic, 3/8" tube
	915367	2	RING, Sealastic, 3/8" tube (Includes ferrule)
	915368	1	CONNECTOR, Sealastic, 3/8" tube, 1/4"NPT male
	915488	1	ELBOW, street, brass, 90°, 1/4"NPT
10	4254097	1	CONNECTOR, Sealastic, 3/8" tube, 3/8"NPT male

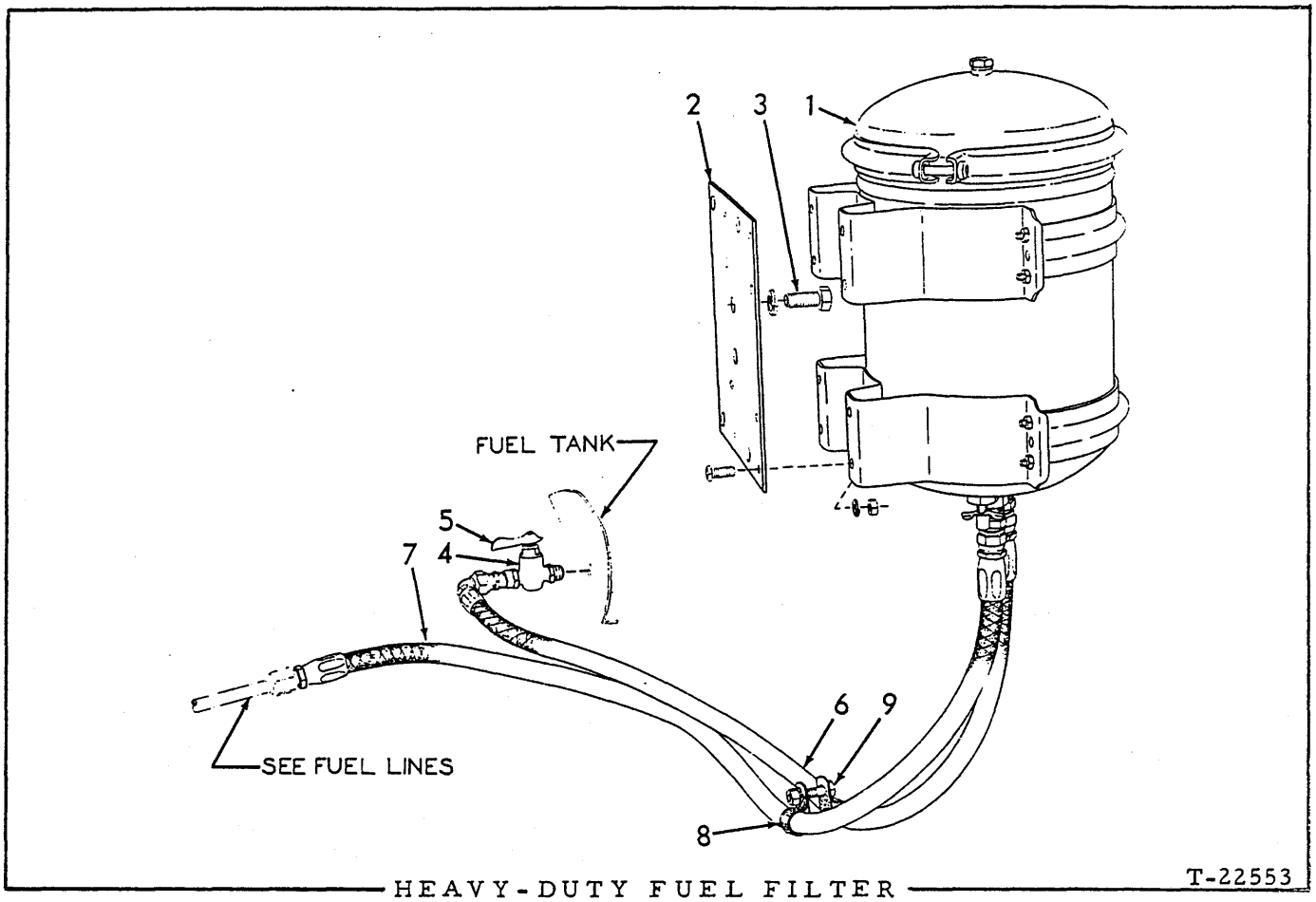

HEAVY-DUTY FUEL FILTER T-22553

USAGE: Special equipment. Applicable to Model HD11FC tractors prior to serial No. 10001; also Model HD11F tractors serial No. 4415 thru No. 10000. Requires removal of first-stage fuel filter element.

ITEM	PART NO.	QTY.	DESCRIPTION
1	082441	1	FILTER ASSEMBLY, fuel (See page 74 for parts)
	910167	8	CAPSCREW, 5/16"NF x 3/4"
	904205	8	LOCKWASHER, 5/16"
	913636	8	NUT, 5/16"NF
2	086890	1	BRACKET, filter mounting
3	035525	4	CAPSCREW, 1/2"NF x 1-1/8"
	904208	4	LOCKWASHER, 1/2"
4	092727	1	COCK, fuel shut-off (Includes item 5)
5	082189	1	HANDLE, fuel shut-off cock
6	094602	1	HOSE ASSEMBLY, tank to filter (See page 6 for parts)
	919063	1	CONNECTOR, flare type, 1/2" tube, 3/8"NPT male
	919128	1	CONNECTOR, flare type, 1/2" tube, 1/2"NPT male
7	094456	1	HOSE ASSEMBLY, filter to fuel tube (See page 6 for parts)
	919128	1	CONNECTOR, flare type, 1/2" tube, 1/2"NPT male
8	621304	2	CLIP, hose supporting
9	203188	1	CAPSCREW, 3/8"NF x 1-1/2"
	911115	2	WASHER, plain, SAE std., 3/8"
	904206	1	LOCKWASHER, 3/8"
	911041	1	NUT, 3/8"NF

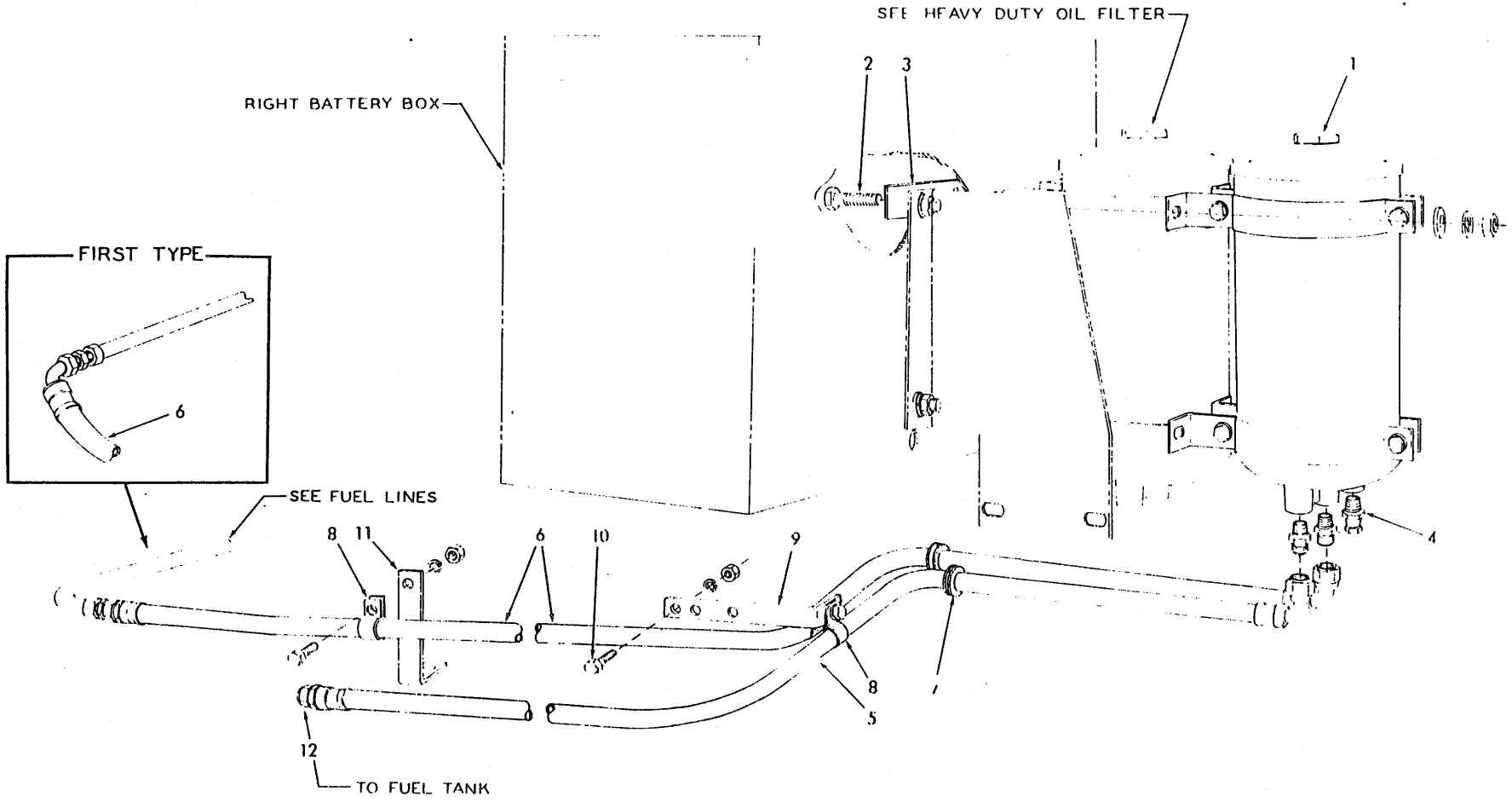

HEAVY-DUTY FUEL FILTER (Late units)

F-72321

HEAVY-DUTY FUEL FILTER

USAGE: Special equipment. Applicable to tractor serial No. 10001 and up. Supplements standard fuel filter.

ITEM	PART NO.	QTY.	DESCRIPTION
1	098364	1	FILTER ASSEMBLY ("Walker". See page 76 for parts)(Used prior to August 1965)
	654673	1	FILTER ASSEMBLY ("Briggs". See page 77 for parts)(Effective August 1965)
2	035018	4	CAPSCREW, 1/2"NF x 1-1/2"
	064531	4	WASHER, plain
	904208	4	LOCKWASHER, 1/2"
	911043	4	NUT, 1/2"NF
3	099830	2	PLATE, reinforcing
4	633519	1	COCK, drain, 3/8"NPT
5	639414	1	HOSE, tank to filter (See page 6)
	919063	1	CONNECTOR, flare type, 1/2" tube, 3/8"NPT male
6	639413	1	HOSE, filter to fuel line (See page 6)(Used prior to tractor #10452)
	646917	1	HOSE, filter to fuel line (See page 6)(Effective with tractor #10452)
	919063	1	CONNECTOR, flare type, 1/2" tube, 3/8"NPT male
7	644876	2	GROMMET, hose protecting
8	622992	3	CLIP, hose supporting
	036032	2	CAPSCREW, 3/8"NF x 7/8"
	904206	2	LOCKWASHER, 3/8"
	911041	2	NUT, 3/8"NF
9	639415	1	ANGLE, hose supporting
10	614478	3	CAPSCREW, 1/2"NF x 1-3/8"
	904208	3	LOCKWASHER, 1/2"
	911043	3	NUT, 1/2"NF
11	630280	1	ANGLE, hose supporting
12	------	-	See FUEL LINES for shut-off valve and fittings

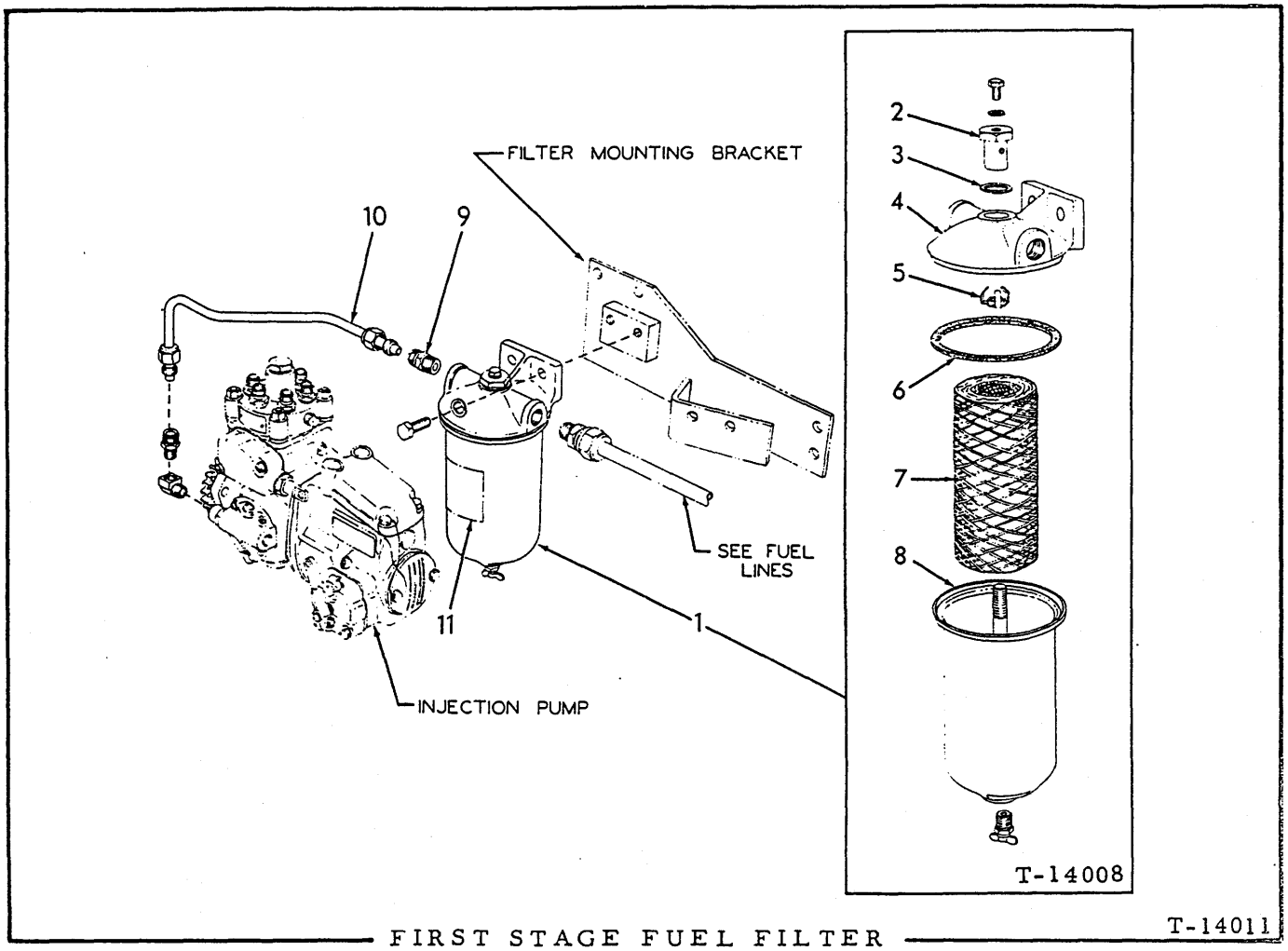

T-14011

FIRST STAGE FUEL FILTER

USAGE: Standard equipment on tractors prior to serial No. 4415. Not used on tractors equipped with Heavy-duty Fuel Filter.

ITEM	PART NO.	QTY.	DESCRIPTION
1	4347786	1	FILTER ASSEMBLY, fuel (Consists of items 2 thru 8)
	919224	2	CAPSCREW, 3/8"NC x 1-1/8"
	904206	2	LOCKWASHER, 3/8"
2	4051483	1	NUT, shell retaining
	919288	1	CAPSCREW, 1/4"NC x 3/8"
	914686	1	WASHER, plain, copper, 1/4" I. D.
3	4051484	1	GASKET, shell retaining nut
4	4347790	1	HEAD, filter
5	4051485	1	GUIDE, element centering
6	4040013	1	GASKET, filter shell
7	4055563	1	ELEMENT ASSEMBLY, filter (Includes item 6)
8	4354416	1	SHELL ASSEMBLY, filter (Includes items 2, 3, 5, 7 and COCK 912415)
	912415	1	COCK, drain, 1/4"NPT
9	4254097	1	CONNECTOR, fuel line (Sealastic, 3/8" tube, 3/8"NPT male)
10	4347905	1	LINE, filter to injection pump
	918325	2	NUT, Sealastic, 3/8" tube
	915367	2	RING, Sealastic, 3/8" tube (Includes ferrule)
	915368	1	CONNECTOR, Sealastic, 3/8" tube, 1/4"NPT male
	914588	1	ELBOW, street, brass, 90°, 1/4"NPT
11	------	-	TRANSFER (See PAINTING AND MARKING)

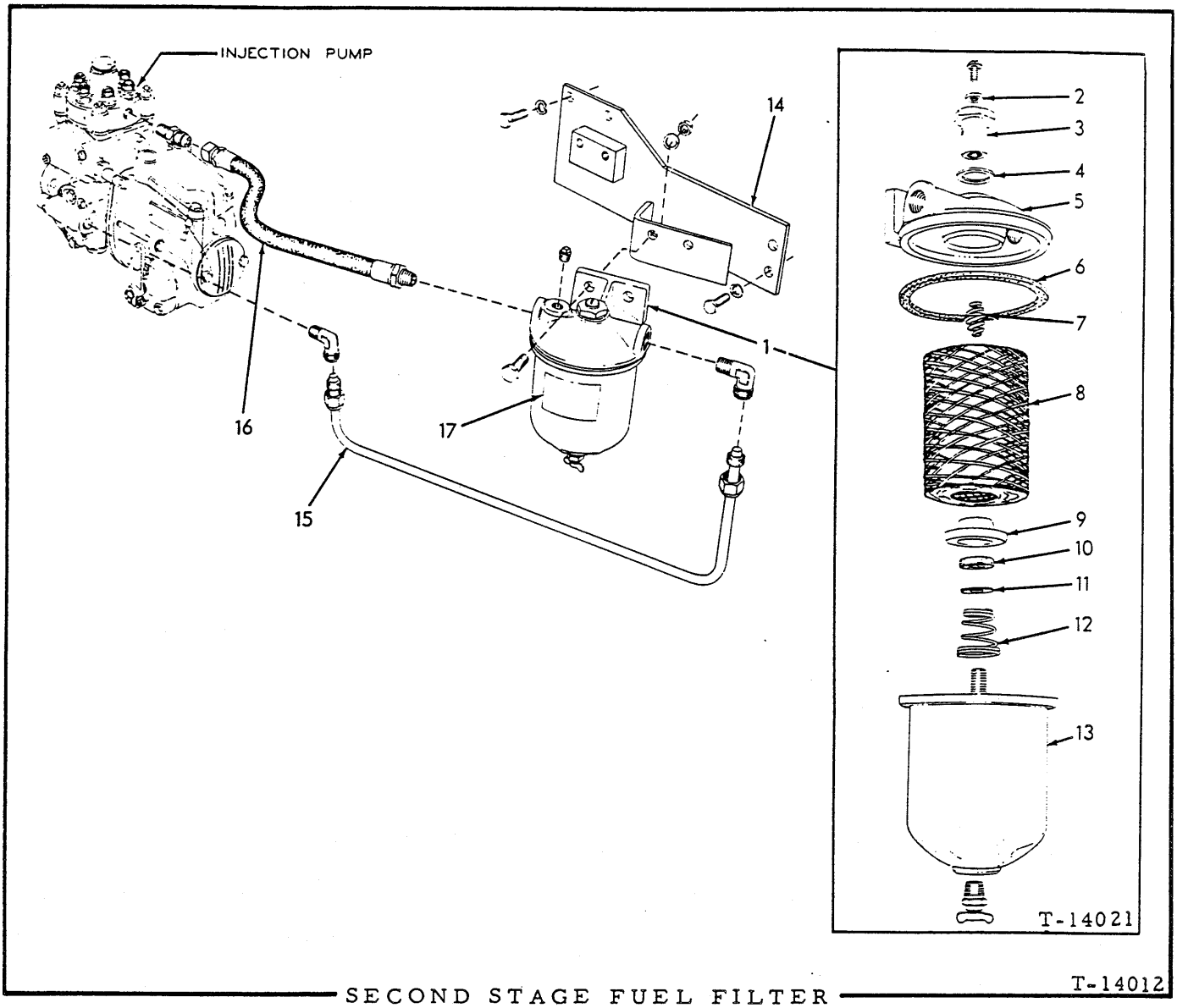

SECOND STAGE FUEL FILTER T-14012

USAGE: Tractors prior to serial No. 4415

ITEM	PART NO.	QTY.	DESCRIPTION
1	4349146	1	FILTER ASSEMBLY, fuel (Includes items 2 thru 13)
	901652	1	PLUG, pipe, 1/4"NPT
	919224	2	CAPSCREW, 3/8"NC x 1-1/8"
	904206	2	LOCKWASHER, 3/8"
	910324	2	NUT, 3/8"NC
2	065577	1	GASKET, bleeding screw
3	4051483	1	NUT, shell retaining
	915432	1	SCREW, machine, 1/4"NC x 5/16"
4	4051484	1	GASKET, shell retaining nut
5	4347790	1	HEAD, filter (3/8"NPT connections)(Used prior to engine #91856)
	4349147	1	HEAD, filter (1/4"NPT connections)(Effective with engine #91856)

(Continued)

SECOND STAGE FUEL FILTER (Continued)

ITEM	PART NO.	QTY.	DESCRIPTION
6	4040013	1	GASKET, shell
7	4055913	1	GUIDE, element centering
8	4056633	1	ELEMENT KIT, (Includes items 6, 10 and 11)
9	4052173	1	PLATE, element seating
10	------	1	GASKET, element seating plate (Furnished only as part of item 8)
11	------	1	WASHER, seating plate gasket (Furnished only as part of item 8)
12	4052174	1	SPRING, element
13	065582	1	SHELL, filter
	912415	1	COCK, drain, 1/4"NPT
14	4335235	1	BRACKET, filter mounting
	916269	2	CAPSCREW, 3/8"NC x 7/8"
	904206	2	LOCKWASHER, 3/8"
	915813	2	CAPSCREW, 5/16"NC x 7/8"
	904205	2	LOCKWASHER, 5/16"
15	4347907	1	LINE, pump to filter
	918325	2	NUT, Sealastic, 3/8" tube (Includes swivel collar)
	915367	2	RING ASSEMBLY, Sealastic, 3/8" tube (Includes ferrule)
	915369	2	ELBOW, Sealastic, 90°, 3/8" tube, 1/4"NPT male
	901826	1	BUSHING, pipe reducing, 3/8"NPT to 1/4"NPT (Used prior to engine #91856)
16	------	1	HOSE, filter to pump (12-1/4" long)(Used prior to engine #91856. Order HOSE 4504056)
	918598	1	TEE, pipe reducing, 1/4"NPT side, 1/4"NPT and 3/8"NPT ends
	916641	1	NIPPLE, pipe, 3/8"NPT x 1-1/2"
	4504056	1	HOSE, filter to pump (14" long)(Effective with engine #91856)
	912324	1	CONNECTOR, flare type, 3/8" tube, 1/4"NPT male
17	------	-	TRANSFER (See PAINTING AND MARKING)

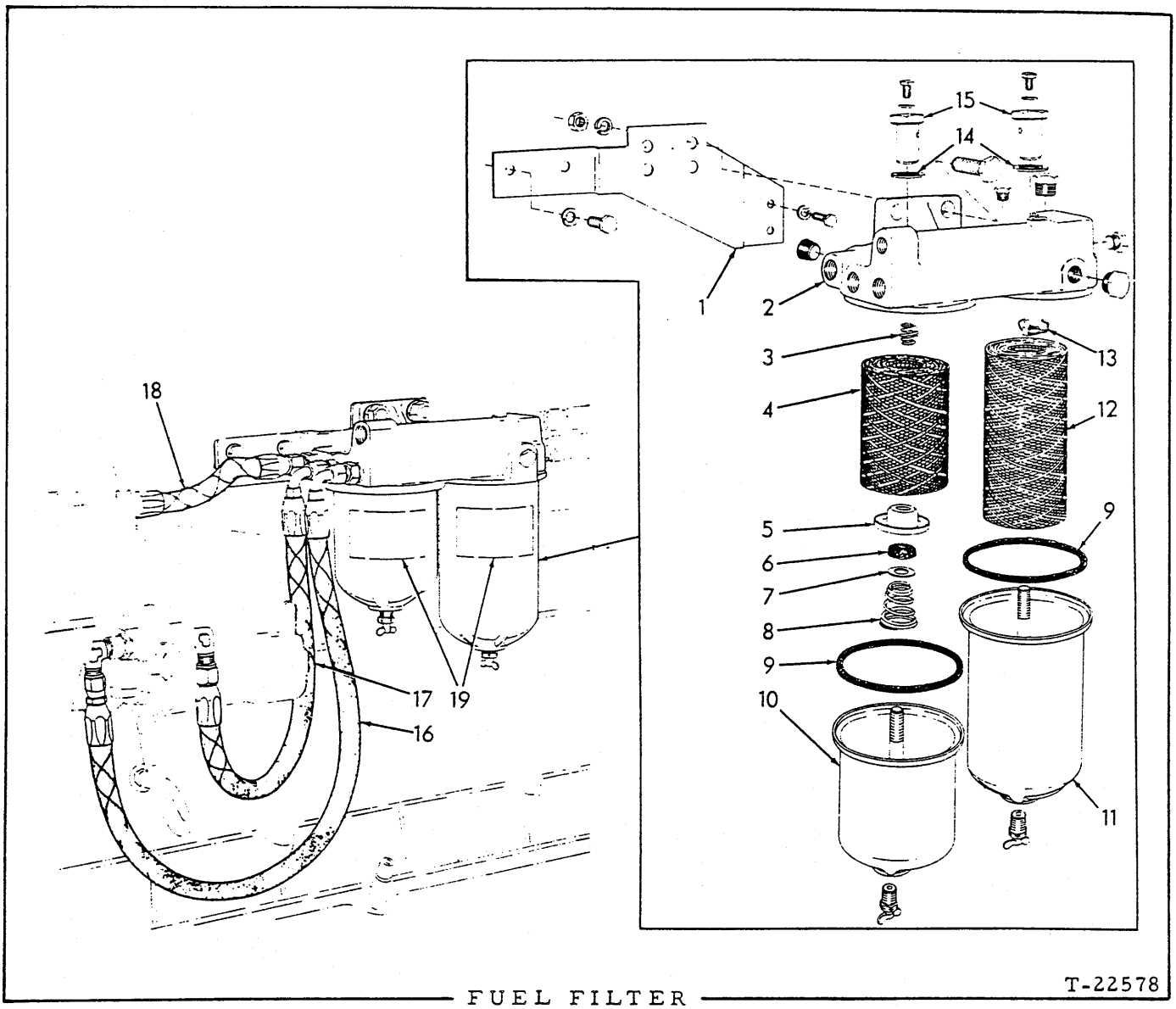

FUEL FILTER

USAGE: Tractors serial No. 4415 thru No. 10000

ITEM	PART NO.	QTY.	DESCRIPTION
			NOTE: Also see page 80 for supplementary Heavy-Duty Fuel Filter.
1	4336589	1	BRACKET, filter mounting
	916271	2	CAPSCREW, 3/8"NC x 1"
	904206	2	LOCKWASHER, 3/8"
	915813	2	CAPSCREW, 5/16"NC x 7/8"
	904205	2	LOCKWASHER, 5/16"
2	4389051	1	HEAD ASSEMBLY (Includes PLUGS indented below)(If for engines prior to #10-11917 also order 2 NUTS 4389113 and 1 reducing BUSHING 901826)
	919134	2	PLUG, pipe, hex-hd., 1/8"NPT
	919840	1	PLUG, pipe, hex-hd., 1/4"NPT (Engines prior to #10-11917)
	920333	3	PLUG, pipe, hex-hd., 3/8"NPT (1 less used on engines prior to #10-11917)
	918887	1	PLUG, hex-socket, 3/8"NPT
	919230	2	CAPSCREW, 1/2"NC x 1-3/8"
	904208	2	LOCKWASHER, 1/2"
	910325	2	NUT, 1/2"NC

(Continued)

FUEL FILTER (Continued)

ITEM	PART NO.	QTY.	DESCRIPTION
3	4055913	1	GUIDE, element centering, second stage filter
4	4056633	1	ELEMENT KIT, second stage filter (Includes items 6, 7 and 9)
5	4052173	1	PLATE, element seating, second stage filter
6	------	1	GASKET, element seat plate (Furnished only as part of item 4)
7	------	1	WASHER, seating plate gasket (Furnished only as part of item 4)
8	4052174	1	SPRING, second stage filter
9	4040013	2	GASKET, filter shell
10	065582	1	SHELL, second stage filter
	912415	1	COCK, drain, 1/4"NPT
11	4354416	1	SHELL ASSEMBLY, first stage filter (Includes items 12 thru 15 and COCK 912415)
	912415	1	COCK, drain, 1/4"NPT
12	4055563	1	ELEMENT ASSEMBLY, first stage filter (Includes item 9)(Not used when Heavy-Duty Fuel Filter is installed)
13	4051485	1	GUIDE, element centering, first stage filter
14	4051484	2	GASKET, shell retaining nut
15	4051483	2	NUT, shell retaining (1-3/16" long)(Engines prior to #10-11917)
	4389113	2	NUT, shell retaining (1-9/16" long)(Engines #10-11917 and up)
	919288	2	CAPSCREW, 1/4"NC x 3/8"
	914686	2	WASHER, plain, copper, 1/4" I.D.
16	4335898	1	HOSE ASSEMBLY, first stage filter to transfer pump (See page 6 for parts)
	919172	1	CONNECTOR, flare type, 3/8" tube, 3/8"NPT male
	4337251	1	ELBOW, flare type, 3/8" tube, 1/4"NPT male
17	4335935	1	HOSE ASSEMBLY, transfer pump to second stage filter (See page 6 for parts)
	919062	1	CONNECTOR, flare type, 3/8" tube, 1/4"NPT male (Engines prior to #10-11917)
	919172	1	CONNECTOR, flare type, 3/8" tube, 3/8"NPT male (Engines #10-11917 and up)
	4337251	1	ELBOW, flare type, 3/8" tube, 1/4"NPT male
18	4335897	1	HOSE ASSEMBLY, filter to injection pump (See page 6 for parts)
	919172	1	CONNECTOR, flare type, 3/8" tube, 3/8"NPT male
19	------	2	TRANSFER (See PAINTING AND MARKING)

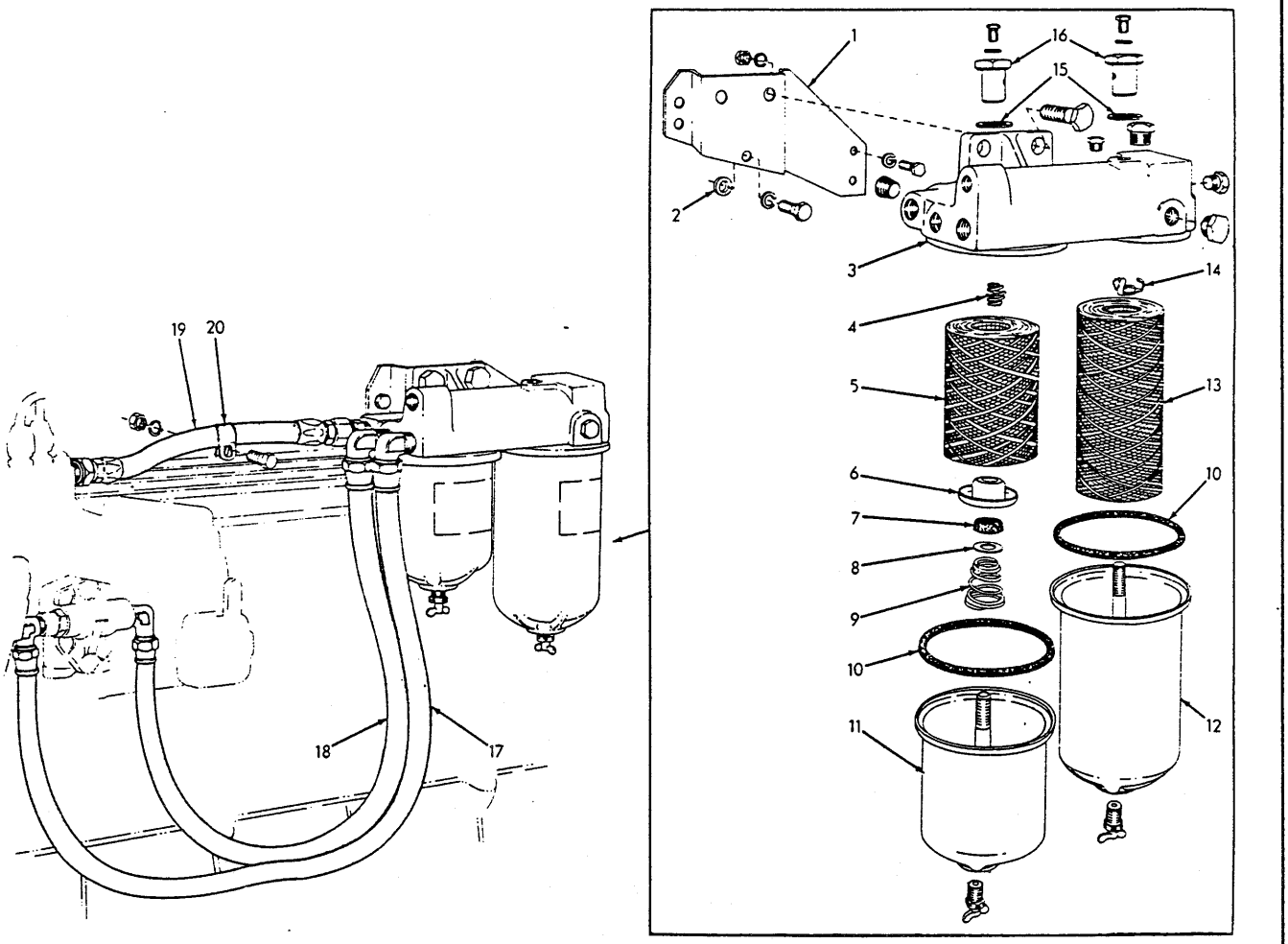

FUEL FILTER

USAGE: Tractors serial No. 10001 and up

ITEM	PART NO.	QTY.	DESCRIPTION
			NOTE: Also see page 87 for supplementary Heavy-Duty Fuel Filter
1	4339111	1	BRACKET, filter mounting
	920028	4	CAPSCREW, 5/16"NC x 13/16"
	915813	1	CAPSCREW, 5/16"NC x 7/8"
	904205	5	LOCKWASHER, 5/16"
2	4352332	1	WASHER, spacing, mounting bracket
3	4389051	1	HEAD ASSEMBLY (Includes PLUGS indented below)
	919134	2	PLUG, pipe, hex-hd., 1/8"NPT
	920333	3	PLUG, pipe, hex-hd., 3/8"NPT
	918887	2	PLUG, hex-socket, 3/8"NPT
	919230	2	CAPSCREW, 1/2"NC x 1-3/8"
	904208	2	LOCKWASHER, 1/2"
	910325	2	NUT, 1/2"NC

(Continued)

ITEM	PART NO.	QTY.	DESCRIPTION
4	4055913	1	GUIDE,element centering, second stage filter
5	4056633	1	ELEMENT KIT, second stage filter (Includes items 7, 8 and 10)
6	4052173	1	PLATE, element seating, second stage filter
7	------	1	GASKET, element seat plate (Furnished only as part of item 5)
8	------	1	WASHER, seating plate gasket (Furnished only as part of item 5)
9	4052174	1	SPRING, second stage filter
10	4040013	2	GASKET, filter shell
11	065582	1	SHELL, second stage filter
	912415	1	COCK, drain, 1/4"NPT
12	4354416	1	SHELL ASSEMBLY, first stage filter (Includes items 13 thru 16 and COCK 912415)
	912415	1	COCK, drain, 1/4"NPT
13	4055563	1	ELEMENT ASSEMBLY, first stage filter (Includes item 10)(Not used when Heavy-Duty Fuel Filter is installed)
14	4051485	1	GUIDE, element centering, first stage filter
15	4051484	2	GASKET, shell retaining nut
16	4389113	2	NUT, shell retaining
	919288	2	CAPSCREW, 1/4"NC x 3/8"
	914686	2	WASHER, plain, copper, 1/4"I. D.
17	4339568	1	HOSE, first stage filter to transfer pump (See page 6 for parts)(Not used on tractors equipped with special Heavy-duty Fuel Filter)
	919136	1	ELBOW, flare type, 3/8" tube, 3/8"NPT male
	4337251	1	ELBOW, flare type, 3/8" tube, 1/4"NPT male
18	4339569	1	HOSE, transfer pump to second stage filter (See page 6 for parts)
	919136	1	ELBOW, flare type, 3/8" tube, 3/8"NPT male
	4337251	1	ELBOW, flare type, 3/8" tube, 1/4"NPT male
19	4354675	1	HOSE ASSEMBLY, filter to injection pump (See page 6 for parts)
	919172	1	CONNECTOR, flare type, 3/8" tube, 3/8"NPT male
	920316	1	ELBOW, flare type, 45°, 3/8" tube, 1/4"NPT male
20	094422	1	CLIP, hose supporting (Attaches to control linkage bracket)
	035167	1	CAPSCREW, 3/8"NF x 7/8"
	904206	1	LOCKWASHER, 3/8"
	911041	1	NUT, 3/8"NF

NOTE: See PAINTING AND MARKING for transfers

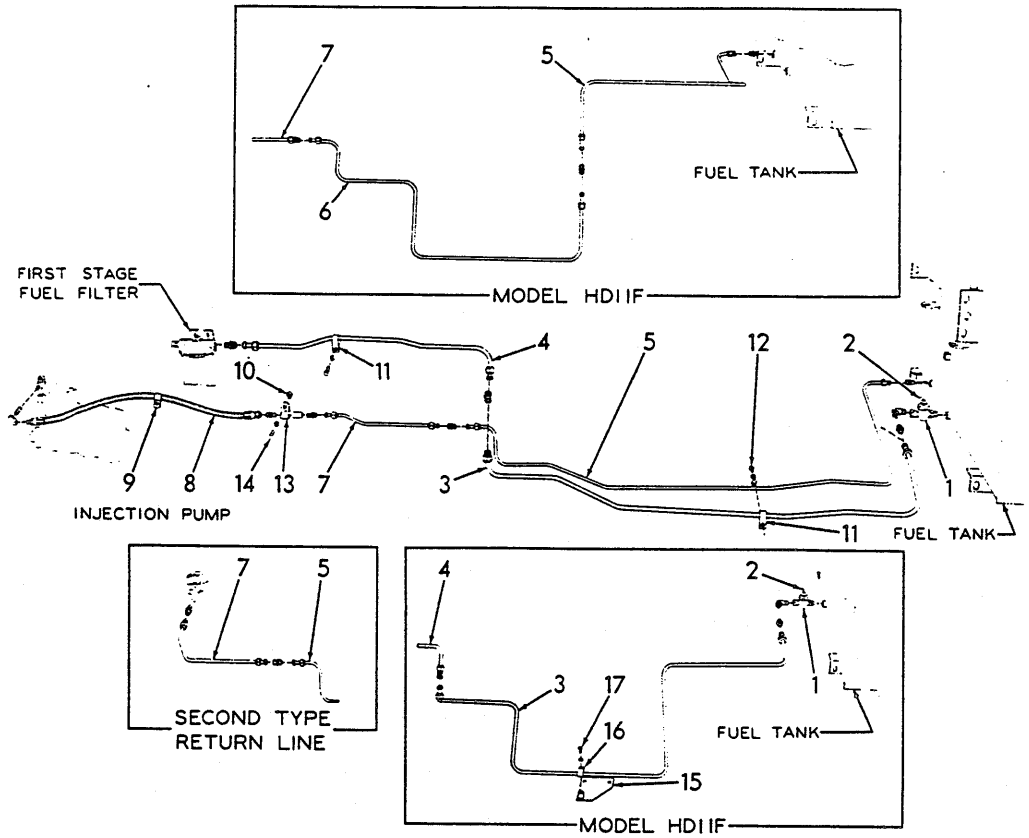

FUEL LINES T-16306

USAGE: Tractors prior to serial No. 4415

* Models HD11B, E, ES, S
** Model HD11F

ITEM	PART NO.	QTY. *	QTY. **	DESCRIPTION
1	092727	1	1	COCK, fuel shut-off (Includes item 2)
	901723	1	1	ELBOW, street, 90°, 3/8"NPT
2	082189	1	1	HANDLE, fuel shut-off cock
3	084574	1	-	ΔTUBE, fuel supply, rear section
	089044	-	1	ΔTUBE, fuel supply, rear section
	918564	2	2	NUT, Sealastic, 1/2" tube
	915377	2	2	RING, Sealastic, 1/2" tube (Includes ferrule)
	915378	1	1	CONNECTOR, Sealastic, 1/2" tube, 3/8"NPT male
	915379	1	1	UNION, Sealastic, 1/2" tube
4	086953	1	1	ΔTUBE, fuel supply, front section
	918564	2	2	NUT, Sealastic, 1/2" tube
	915377	2	2	RING, Sealastic, 1/2" tube (Includes ferrule)
	915378	1	1	CONNECTOR, Sealastic, 1/2" tube, 3/8"NPT male
5	084575	1	-	TUBE, fuel return, rear section
	087023	-	1	ΔTUBE, fuel return, rear section
	087052	-	1	TUBE, fuel return, rear section (Required for tractors equipped with Heavy-duty Fuel Filter)
	918325	2	2	NUT, Sealastic, 3/8" tube
	915367	2	2	RING, Sealastic, 3/8" tube (Includes ferrule)
	915368	1	1	CONNECTOR, Sealastic, 3/8" tube, 1/4"NPT male
	915386	1	1	UNION, Sealastic, 3/8" tube

ΔIndicates parts not used on tractors equipped with Heavy-duty Fuel Filter.

(Continued)

FUEL LINES (Pr. to S/N 4415)(Continued)

ITEM	PART NO.	QTY. *	QTY. **	DESCRIPTION
6	089083	-	1	TUBE, fuel return, center section
	918325	-	2	NUT, Sealastic, 3/8" tube
	915367	-	2	RING, Sealastic, 3/8" tube (Includes ferrule)
	915386	-	1	UNION, Sealastic, 3/8" tube
7	086951	1	1	TUBE, fuel return, front section (Used prior to engine #10-3871)
	092797	1	1	TUBE, fuel return, front section (Effective with engine #10-3871)
	918325	2	2	NUT, Sealastic, 3/8" tube
	915367	2	2	RING, Sealastic, 3/8" tube (Includes ferrule)
	915368	1	1	CONNECTOR, Sealastic, 3/8" tube, 1/4"NPT male
8	086954	1	1	HOSE, fuel return (Used prior to engine #10-3871)
	912324	1	1	CONNECTOR, flared fitting, 1/4"NPT male
	901677	1	1	ELBOW, pipe, 90°, 1/4"NPT
	901479	1	1	NIPPLE, pipe, 1/4"NPT x 1-1/2"
	901764	1	1	COUPLING, pipe, 1/4"NPT
9	047381	1	1	CLIP, hose supporting (5/8" diam., 13/32" bolt-hole)(Used prior to engine #10-3871)
10	087082	1	1	SPACER, tube supporting clips (Used prior to engine #10-3871)
11	055232	5	2	CLIP, tube supporting (For one 1/2" diam. tube and one 3/8" diam. tube, 13/32" bolt-hole)
	915809	1	1	CAPSCREW, 5/16"NC x 3/4" Effective with engine #10-3871
	904205	1	1	LOCKWASHER, 5/16"
12	036032	4	1	CAPSCREW, 3/8"NF x 3/4"
	904206	4	1	LOCKWASHER, 3/8"
	911115	4	-	WASHER, plain, SAE std., 3/8"
13	076498	1	1	CLIP, hose supporting (1/2" diam., 13/32" bolt-hole)(Used prior to engine #11-3871)
14	037450	1	1	CAPSCREW, 5/16"NC x 1-1/4"
	904205	1	1	LOCKWASHER, 5/16"
15	089099	-	1	PLATE, tube supporting clip
16	055233	-	3	CLIP, tube supporting (For one 1/2" diam. tube and one 3/8" diam. tube, 13/32" bolt-hole)
17	036032	-	3	CAPSCREW, 3/8"NF x 3/4"
	904206	-	3	LOCKWASHER, 3/8"

FUEL LINES

USAGE: Tractors serial No. 4415 thru No. 10000

* Models HD11B, E, EC, ES, S
** Models HD11F, FC

ITEM	PART NO.	QTY. *	QTY. **	DESCRIPTION
1	092727	1	1	COCK, fuel shut-off (Includes item 2)
2	082189	1	1	HANDLE, fuel shut-off cock
3	095887	1	-	HOSE ASSEMBLY, fuel supply line, rear (See page 6 for parts)(Not used when HEAVY-DUTY FUEL FILTER is installed)
	919063	1	-	CONNECTOR, flare type, 1/2" tube, 3/8"NPT male
	645235	-	1	HOSE, fuel supply line, rear (See page 6)(Not used when HEAVY-DUTY FUEL FILTER is installed)
4	093682	1	-	TUBE ASSEMBLY, fuel supply line (Includes nuts)
	094664	-	1	TUBE ASSEMBLY, fuel supply line (Includes nuts)
	919066	2	1	UNION, flare type, 1/2" tube
5	096002	1	1	HOSE ASSEMBLY, fuel supply line, front (See page 6 for parts)
	919063	1	1	CONNECTOR, flare type, 1/2" tube, 3/8"NPT male

(Continued)

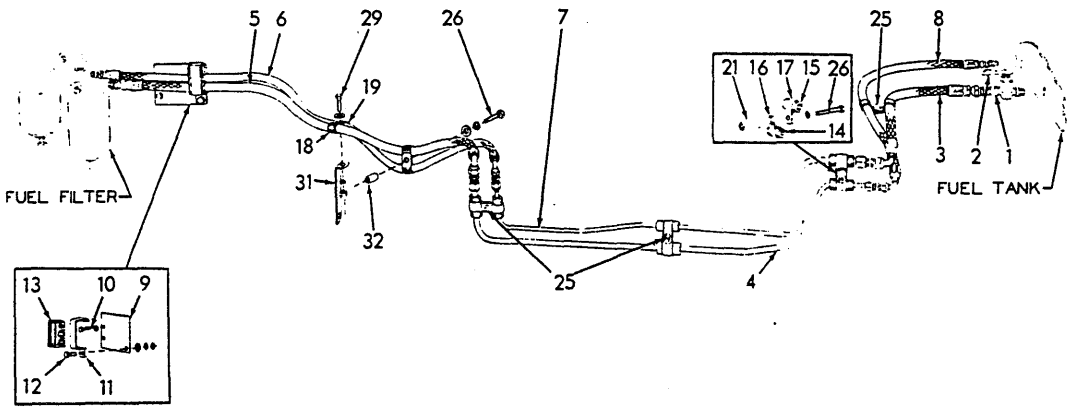

MODELS HD11B, E, EC, ES, S T-19666

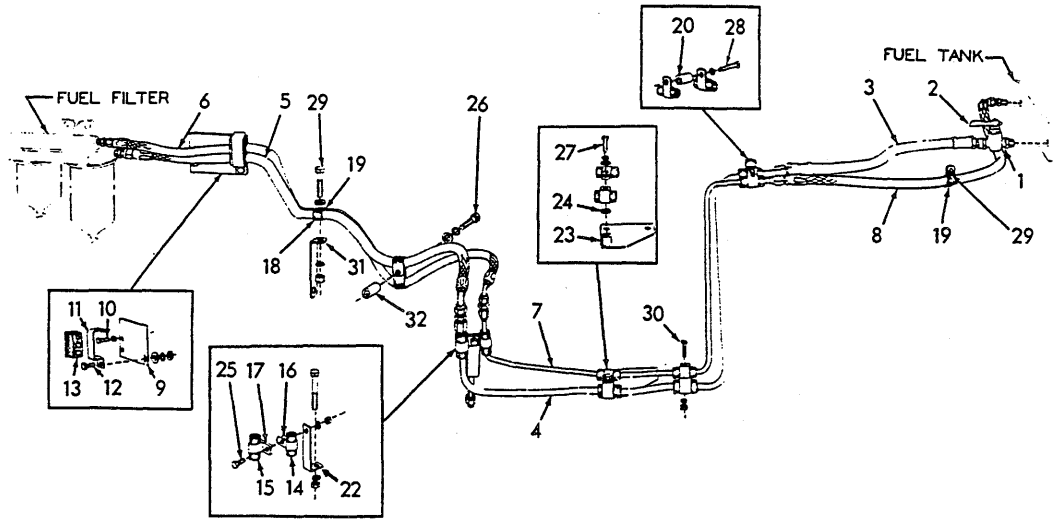

MODELS HD11F, FC T-22555

FUEL LINES (Second type)(Continued)

ITEM	PART NO.	QTY. *	QTY. **	DESCRIPTION
6	096003	1	1	HOSE ASSEMBLY, fuel return line, front (See page 6 for parts)
	919062	1	1	CONNECTOR, flare type, 3/8" tube, 1/4"NPT male
7	093298	1	-	TUBE ASSEMBLY, fuel return line (Includes nuts)
	094581	-	1	TUBE ASSEMBLY, fuel return line (Includes nuts)
	919065	2	1	UNION, flare type, 3/8" tube
8	095874	1	-	HOSE ASSEMBLY, fuel return line, rear (See page 6 for parts)
	095441	-	1	HOSE ASSEMBLY, fuel return line, rear (See page 6 for parts)
	919062	1	1	CONNECTOR, flare type, 3/8" tube, 1/4"NPT male
9	645244	1	1	PLATE, supporting, front hose clamp
10	054130	2	2	CAPSCREW, 5/16"NC x 7/8"
	904205	2	2	LOCKWASHER, 5/16"
11	094964	1	1	CLAMP, front hose supporting
12	036034	1	1	CAPSCREW, 3/8"NF x 1"
	044973	1	1	WASHER, plain
	904206	1	1	LOCKWASHER, 3/8"
	911041	1	1	NUT, 3/8"NF

(Continued)

FUEL LINES (Second type)(Continued)

ITEM	PART NO.	QTY. *	QTY. **	DESCRIPTION
13	094966	1	1	BLOCK, hose supporting (rubber)
14	093751	3	4	BOOT, protecting, return tube (rubber)
15	093752	3	4	BOOT, protecting, supply tube (rubber)
16	055234	3	4	CLIP, supporting, return tube
17	097534	3	4	CLIP, supporting, supply tube
18	094467	3	2	CLIP, supporting, supply hose
19	094422	3	3	CLIP, supporting, return hose
20	617952	-	1	BLOCK, clip spacing (1-3/16" long)
21	094756	1	-	BLOCK, clip spacing (1-3/4" long)
22	096164	-	1	ANGLE, clip supporting
	914132	-	1	CAPSCREW, 1/2"NF x 2-3/4"
	904208	-	1	LOCKWASHER, 1/2"
	911043	-	1	NUT, 1/2"NF
23	089099	-	1	PLATE, clip supporting
24	044973	-	1	WASHER, clip spacing (3/16" thick)
25	036032	3	1	CAPSCREW, clip attaching (3/8"NF x 3/4")
	904206	1	1	LOCKWASHER, 3/8"
	911041	1	1	NUT, 3/8"NF
26	045174	2	1	CAPSCREW, clip attaching (3/8"NF x 2-1/2")
	904206	2	1	LOCKWASHER, 3/8"
	911115	2	1	WASHER, plain, SAE std., 3/8"
27	036034	-	1	CAPSCREW, clip attaching (3/8"NF x 1")
	904206	-	1	LOCKWASHER, 3/8"
	911115	-	1	WASHER, plain, SAE std., 3/8"
28	046419	-	1	CAPSCREW, clip attaching (3/8"NF x 2")
	904206	-	1	LOCKWASHER, 3/8"
29	035167	1	2	CAPSCREW, clip attaching (3/8"NF x 7/8")
	911115	1	2	WASHER, plain, SAE std., 3/8"
	904206	1	2	LOCKWASHER, 3/8"
	911041	1	1	NUT, 3/8"NF
30	012992	-	1	CAPSCREW, clip attaching (3/8"NF x 1-1/4")
	904206	-	1	LOCKWASHER, 3/8"
	911041	-	1	NUT, 3/8"NF
31	631110	1	1	ANGLE, hose supporting (Effective with tractor #6427)
32	068924	1	1	BOSS, clip spacing

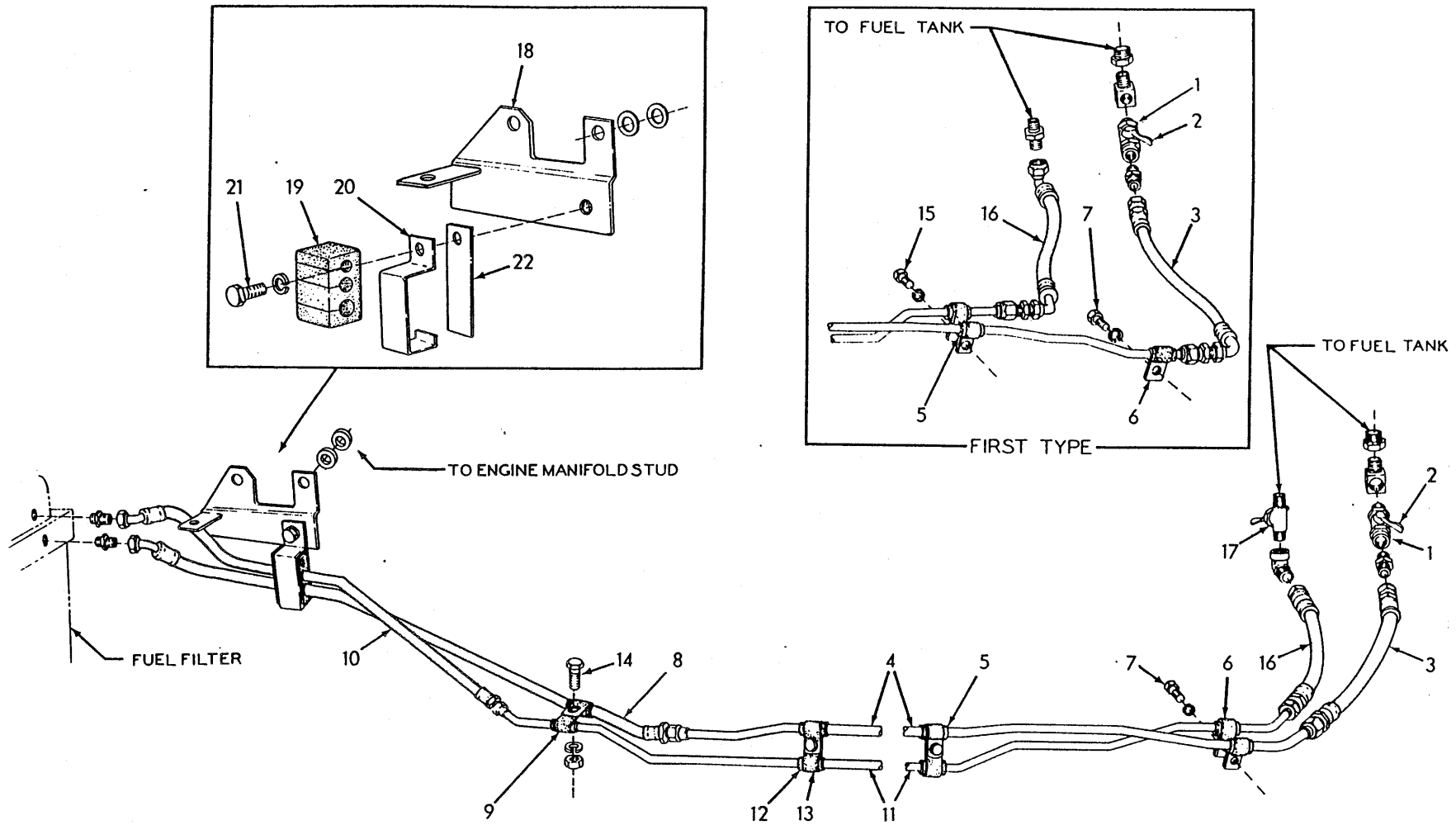

FUEL LINES (Third type)

T-41849

FUEL LINES

USAGE: Tractors serial No. 10001 and up

* Tractors prior to serial No. 10452
** Tractors serial No. 10452 and up

ITEM	PART NO.	QTY. *	QTY. **	DESCRIPTION
1	092727	1	1	COCK, fuel shut-off (Includes item 2)
	915389	1	1	ELBOW, street, brass, 90°, 3/8"NPT
	904271	1	1	BUSHING, pipe reducing, 1/2"NPT to 3/8"NPT
2	082189	1	1	HANDLE, fuel shut-off cock
3	637871	1	-	HOSE, fuel supply line, rear (See page 6) } Not used when special Heavy-duty Fuel Filter is installed
	648388	-	1	HOSE, fuel supply line, rear (See page 6) } Not used when special Heavy-duty Fuel Filter is installed
	919063	1	1	CONNECTOR, flare type, 1/2" tube, 3/8"NPT male
4	637868	1	-	TUBE ASSEMBLY, fuel supply line (Includes nuts)
	919066	1	-	UNION, flare type, 1/2" tube
	645464	-	1	TUBE ASSEMBLY, fuel supply line (Includes nuts)
5	093752	4	3	BOOT, protecting, supply tube (rubber)
6	097534	4	3	CLIP, supporting, supply tube
7	035244	1	1	CAPSCREW, 3/8"NC x 3/4"
	904206	1	1	LOCKWASHER, 3/8"
8	637890	1	1	HOSE, fuel supply line, front (See page 6)
	919063	1	1	CONNECTOR, flare type, 1/2" tube, 3/8"NPT male
9	643932	1	1	CLIP, supporting, fuel supply hose
10	637872	1	1	HOSE, fuel return line, front (See page 6)
	919062	1	1	CONNECTOR, flare type, 3/8" tube, 1/4"NPT male
11	637869	1	-	TUBE ASSEMBLY, fuel return line (Includes nuts)
	919065	1	-	UNION, flare type, 3/8" tube
	645463	-	1	TUBE ASSEMBLY, fuel return line (Includes nuts)
12	093751	4	4	BOOT, protecting, return tube (rubber)
13	055234	4	4	CLIP, supporting, return type
14	035167	1	1	CAPSCREW, 3/8"NF x 7/8"
15	036032	1	1	CAPSCREW, 3/8"NF x 3/4"
	904206	2	2	LOCKWASHER, 3/8"
	911041	1	1	NUT, 3/8"NF
16	637873	1	-	HOSE, fuel return line, rear (See page 6)
	645462	-	1	HOSE, fuel return line (See page 6)(Used prior to tractor #10889)
	919062	1	1	CONNECTOR, flare type, 3/8" tube, 1/4"NPT male
	648230	-	1	HOSE, fuel return line , rear (See page 6)(Effective with tractor #10889)
	921852	-	1	ELBOW, flare type, 90° 3/8" tube, 1/4" NPT female
17	914378	-	1	VALVE, shut-off, fuel return line (1/4"NPT ends)(Effective with tractor #10889)
18	644520	1	1	PLATE, fuel line supporting
	910244	4	4	WASHER, plain, SAE std., 1/2"
19	644531	1	1	BLOCK, hose supporting (rubber)
20	644529	1	1	CLAMP, hose supporting block
21	036034	1	1	CAPSCREW, 3/8"NF x 1" (Early units)
	035439	-	1	CAPSCREW, 3/8"NC x 1" (Late units)
	904206	1	1	LOCKWASHER, 3/8"
22	641562	1	1	STRAP, hose supporting block

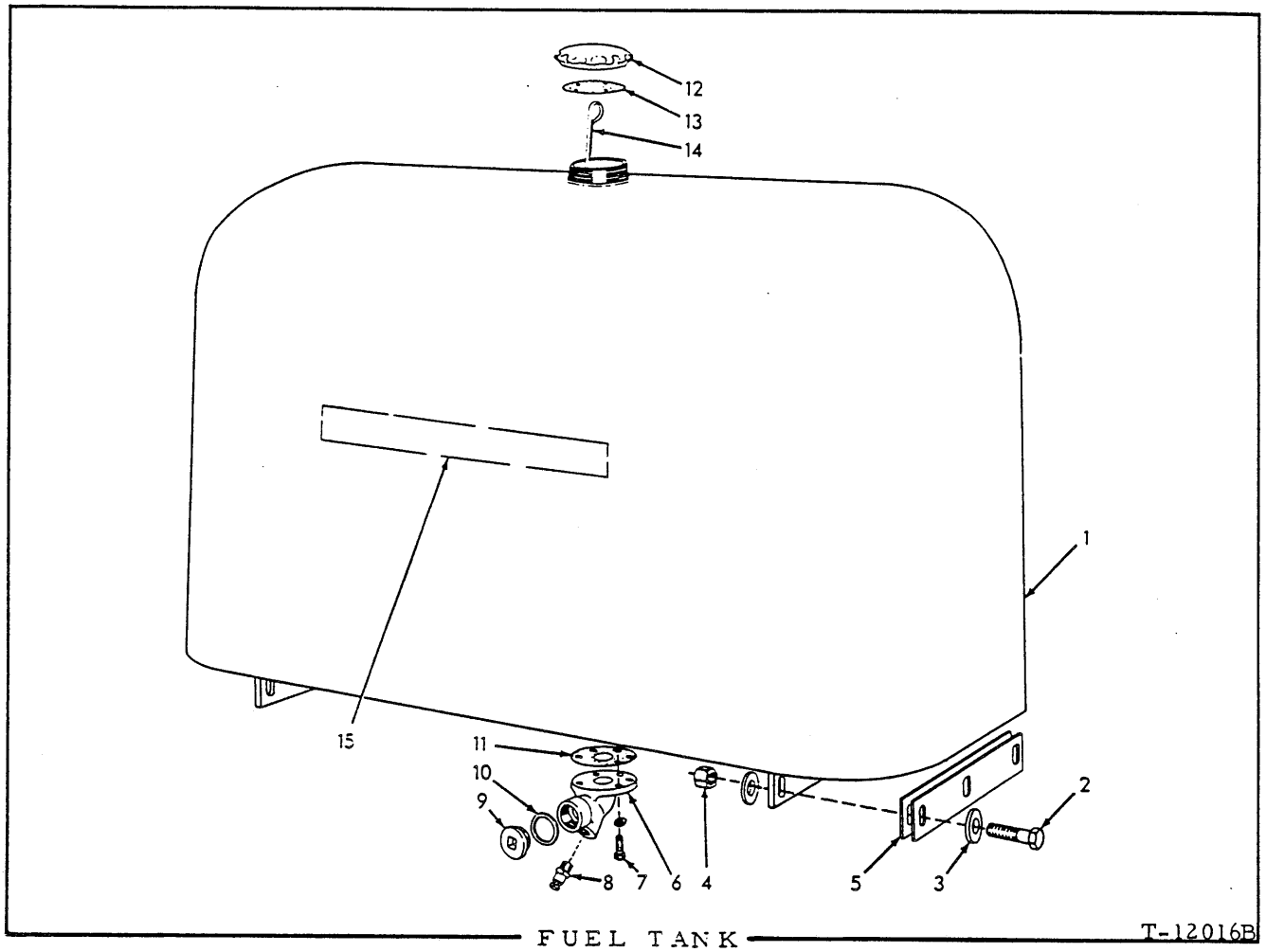

FUEL TANK

USAGE: Tractors prior to serial No. 10001

ITEM	PART NO.	QTY.	DESCRIPTION
1	650229	1	TANK, fuel (If for tractors prior to #4710, also order 1 BRACE 096951, 2 PLATE 096939, 4 CAPSCREW 614478, 4 LOCKWASHER 904208 and 4 NUT 911043)
2	035067	6	CAPSCREW, 1/2"NF x 2"
	904208	4	LOCKWASHER, 1/2" (Used with special heavy fenders only)
3	064531	12	WASHER, plain } 4 less used on tractors with
4	038234	6	NUT, high, 1/2"NF } special heavy fenders
5	087468	6	SHIM, tank mounting (Use as req'd)
6	052360	1	ELBOW, fuel tank drain
7	036034	5	CAPSCREW, 3/8"NF x 1"
	904206	5	LOCKWASHER, 3/8"
8	633519	1	COCK, fuel tank drain
9	050594	1	PLUG, clean-out, fuel tank drain elbow
10	050595	1	GASKET, clean-out plug
11	050787	1	GASKET, fuel tank drain elbow
12	642744	1	CAP, fuel tank
13	065613	1	GASKET, fuel tank cap
14	097735	1	GAUGE, fuel level
15	------	-	TRANSFER (See PAINTING AND MARKING)

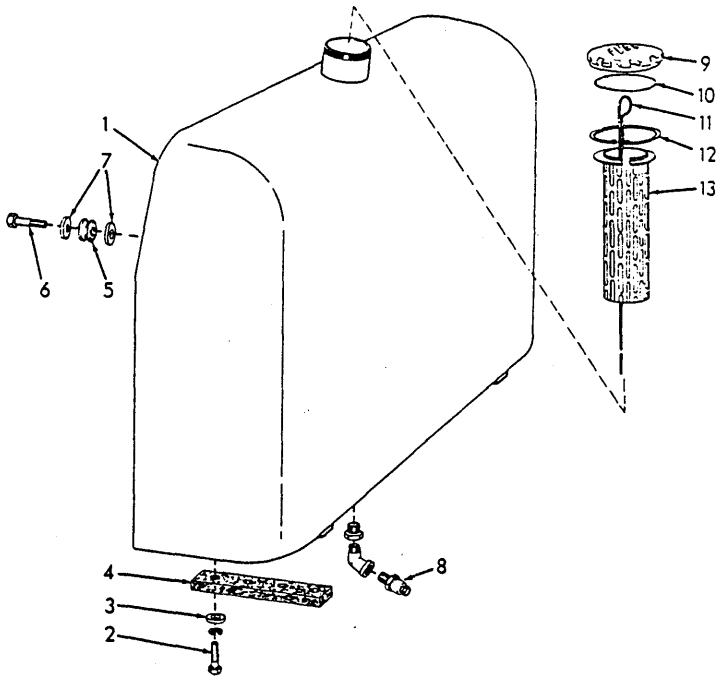

FUEL TANK T-41848

USAGE: Tractors serial No. 10001 and up.

ITEM	PART NO.	QTY.	DESCRIPTION
1	650230	1	TANK, fuel
2	035073	8	CAPSCREW, 1/2"NF x 1-3/4"
	904208	8	LOCKWASHER, 1/2"
3	064531	8	WASHER, plain
4	640619	2	PAD, fuel tank
5	642441	4	SNUBBER, vibration
6	035068	4	CAPSCREW, 1/2"NF x 2-1/4"
7	092163	8	WASHER, vibration snubber
8	633519	1	COCK, drain
	910149	1	ELBOW, street, 45°, 3/8"NPT
	902071	1	BUSHING, pipe reducing, 1"NPT to 3/8"NPT
9	642744	1	CAP, filler
10	065613	1	GASKET, filler cap
11	053100	1	GAUGE, fuel level
12	621775	1	RING, snap, fuel strainer } Effective with tractor #11373
13	642749	1	STRAINER, fuel }

NOTE: See PAINTING AND MARKING for transfers

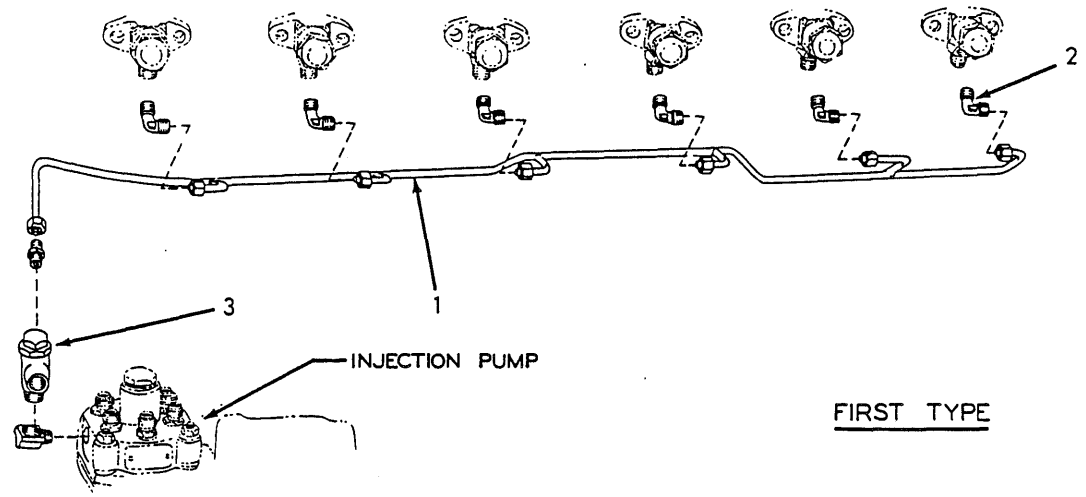

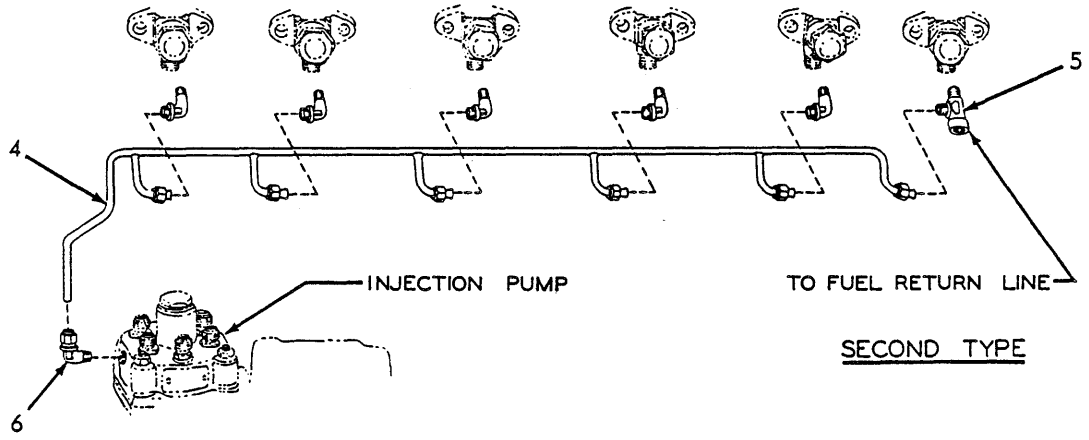

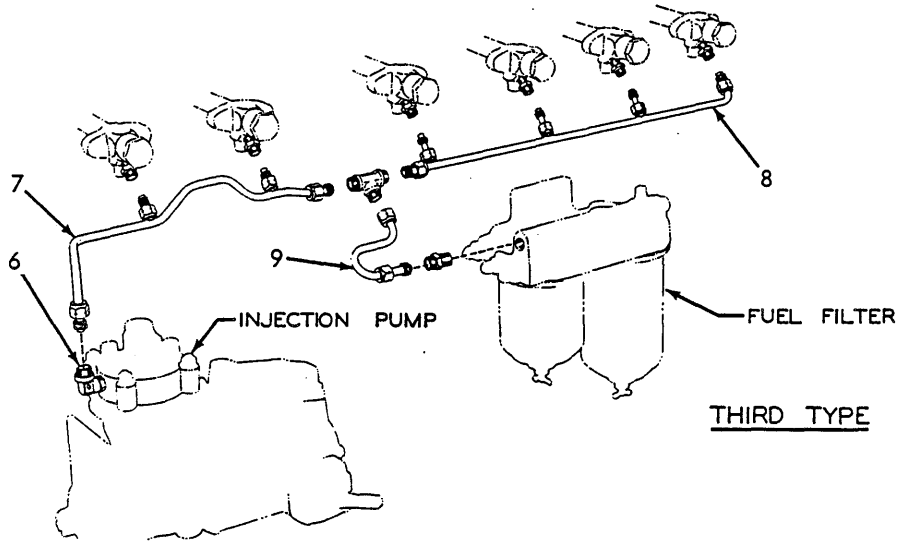

INJECTION FUEL RETURN LINES (First type)

INJECTION FUEL RETURN LINES

USAGE: Tractors prior to serial No. 6427 (516 series engine)

* Used prior to engine serial No. 10-3871
** Used on engines serial No. 10-3871 thru 10-4331 (Tractor No. 4415)
*** Effective with engine serial No. 10-4332 (Tractor No. 4415)

ITEM	PART NO.	QUANTITY *	**	***	DESCRIPTION
1	4347915	1	-	-	MANIFOLD ASSEMBLY (Includes NUTS and SLEEVES indented below)
	911437	7	-	-	NUT, compression fitting, 1/4" tube
	911435	7	-	-	SLEEVE, compression fitting, 1/4" tube
	914626	1	-	-	CONNECTOR, compression type, 1/4" tube, 1/8"NPT male
2	4349376	6	-	-	ELBOW, compression type, 1/4" tube, 1/8"NPT male
3	4515303	1	-	-	VALVE ASSEMBLY, pressure relief
	914588	1	-	-	ELBOW, street, brass, 90°, 1/4"NPT
4	4335146	-	1	-	MANIFOLD ASSEMBLY (Includes NUTS and SLEEVES indented below)
	917809	-	5	-	NUT, Imperial, 1/4" tube
	918804	-	1	-	NUT, Imperial, 5/16" tube
	917806	-	5	-	SLEEVE, Imperial, 1/4" tube
	918802	-	1	-	SLEEVE, Imperial, 5/16" tube
	919040	-	5	-	ELBOW, Imperial, 1/4" tube, 1/8"NPT male
5	4335164	-	1	-	TEE, service, Imperial, 5/16" tube, 1/8"NPT male, 1/4"NPT female
6	4348705	-	1	1	ELBOW ASSEMBLY (Restricted. Includes NUT and SLEEVE indented below)
	918804	-	1	1	NUT, Imperial, 5/16" tube
	918802	-	1	1	SLEEVE, Imperial, 5/16" tube
7	4335932	-	-	1	TUBE ASSEMBLY, front (Includes NUTS and SLEEVES indented below)
	917809	-	-	2	NUT, Imperial, 1/4" tube
	918804	-	-	1	NUT, Imperial, 5/16" tube
	917806	-	-	2	SLEEVE, Imperial, 1/4" tube
	918802	-	-	1	SLEEVE, Imperial, 5/16" tube
	919800	-	-	2	CONNECTOR, Imperial, 1/4" tube, 1/8"NPT male
8	4335913	-	-	1	TUBE ASSEMBLY, rear (Includes NUTS and SLEEVES indented below)
	917809	-	-	3	NUT, Imperial, 1/4" tube
	918804	-	-	2	NUT, Imperial, 5/16" tube
	917806	-	-	3	SLEEVE, Imperial, 1/4"
	918802	-	-	2	SLEEVE, Imperial, 5/16"
	919800	-	-	3	CONNECTOR, Imperial, 1/4" tube, 1/8"NPT male
	921143	-	-	1	CONNECTOR, Imperial, 5/16" tube, 1/8"NPT male
9	4349644	-	-	1	TUBE ASSEMBLY, manifold tubes to filter (Includes NUTS and SLEEVES indented below)
	918804	-	-	2	NUT, Imperial, 5/16" tube
	918802	-	-	2	SLEEVE, Imperial, 5/16" tube
	919798	-	-	1	TEE, union, Imperial, 5/16" tube
	920548	-	-	1	CONNECTOR, Imperial, 5/16" tube, 1/4"NPT male

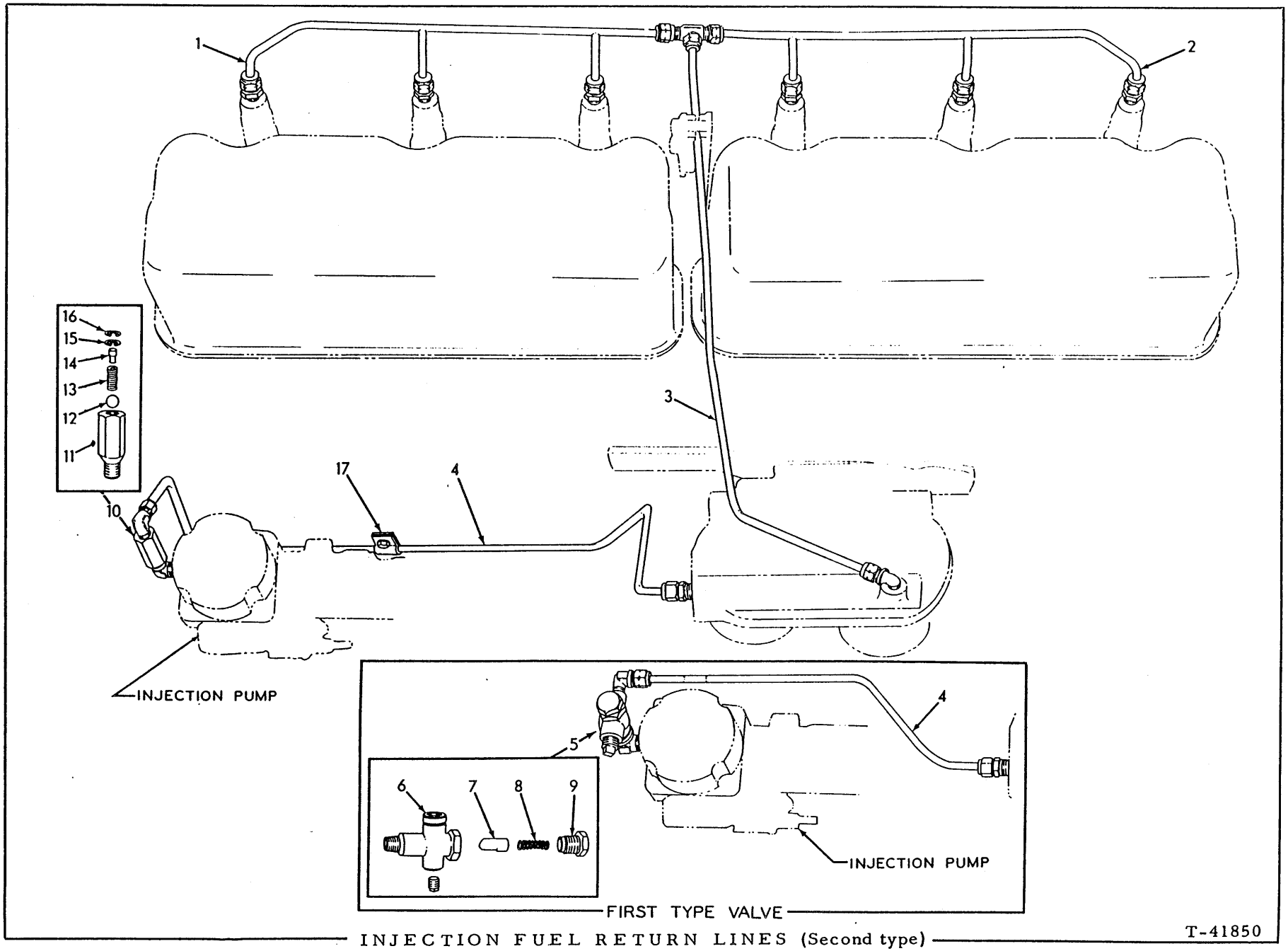

INJECTION FUEL RETURN LINES (Second type)

T-41850

INJECTION FUEL RETURN LINES

USAGE: Tractors serial No. 6427 and up (10000 and 11000 series engines)

* Engines prior to serial No. 10-6781
** Effective with engine serial No. 10-6781 but later discontinued on tractor serial No. 10001
*** Tractors serial No. 10001 and up

ITEM	PART NO.	QUANTITY *	**	***	DESCRIPTION
1	4336546	1	1	1	MANIFOLD ASSEMBLY, front (Includes NUTS and SLEEVES indented below)
	917809	4	4	4	NUT, Imperial, 1/4" tube
	917806	4	4	4	SLEEVE, Imperial, 1/4" tube
	919800	3	3	3	CONNECTOR, Imperial, 1/4" tube, 1/8"NPT male
2	4336547	1	1	1	MANIFOLD ASSEMBLY, rear (Includes NUTS and SLEEVES indented below)
	917809	4	4	4	NUT, Imperial, 1/4" tube
	917806	4	4	4	SLEEVE, Imperial, 1/4" tube
	919800	3	3	3	CONNECTOR, Imperial, 1/4" tube, 1/8"NPT male
3	4336687	1	1	-	TUBE ASSEMBLY, manifolds to filter (Includes NUTS and SLEEVES indented below)(Used prior to engine #10-7563)
	4338463	-	1	-	TUBE ASSEMBLY, manifolds to filter (Includes NUTS and SLEEVES indented below)(Effective with engine #10-7563)
	4339113	-	-	1	TUBE ASSEMBLY, manifolds to filter (Includes NUTS and SLEEVES indented below)
	917809	2	2	2	NUT, Imperial, 1/4" tube
	917806	2	2	2	SLEEVE, Imperial, 1/4" tube
	919797	1	1	1	TEE, union, Imperial, 1/4" tube
	919481	1	1	1	ELBOW, Imperial, 1/4" tube, 1/4"NPT male
4	4336549	1	-	-	TUBE ASSEMBLY, pump to filter (Includes NUTS and SLEEVES indented below)
	4337223	-	1	-	TUBE ASSEMBLY, pump to filter (Includes NUTS and SLEEVES indented below)
	4339112	-	-	1	TUBE ASSEMBLY, pump to filter (Includes NUTS and SLEEVES indented below)
	917809	2	2	2	NUT, Imperial, 1/4" tube
	917806	2	2	2	SLEEVE, Imperial, 1/4" tube
	920242	1	1	1	CONNECTOR, Imperial, 1/4" tube, 1/8"NPT male
	919040	1	-	-	ELBOW, Imperial, 1/4" tube, 1/8"NPT male
	919481	-	1	1	ELBOW, Imperial, 1/4" tube, 1/4"NPT male
5	4515304	1	-	-	VALVE ASSEMBLY, pressure relief (Consists of items 6 thru 9)
	914588	1	-	-	ELBOW, street, brass, 90°, 1/4"NPT
6	------	1	-	-	BODY, relief valve (Not serviced separately)
	901651	1	-	-	PLUG, pipe, 1/8"NPT
7	4041015	1	-	-	VALVE, pressure relief
8	4050685	1	-	-	SPRING, pressure relief valve
9	4051304	1	-	-	SCREW, pressure relief valve

(Continued)

INJECTION FUEL RETURN LINES (Continued)

ITEM	PART NO.	QUANTITY *	**	***	DESCRIPTION
10	4337015	-	1	1	VALVE ASSEMBLY, pressure relief (Consists of items 11 thru 16)
	914588	-	1	1	ELBOW, street, brass, 90°, 1/4"NPT
11	------	-	1	1	BODY, relief valve (Not serviced separately)
12	4337022	-	1	1	BALL, relief valve
13	4337023	-	1	1	SPRING, relief valve
14	4337019	-	1	1	STOP, relief valve
15	4255017	-	1	1	E-RING, relieve valve stop
16	4255020	-	1	1	RING, snap, relief valve
17	4253435	-	-	1	CLAMP, tube supporting
	916277	-	-	1	CAPSCREW, 5/16"NC x 5/8"
	904205	-	-	1	LOCKWASHER, 5/16"

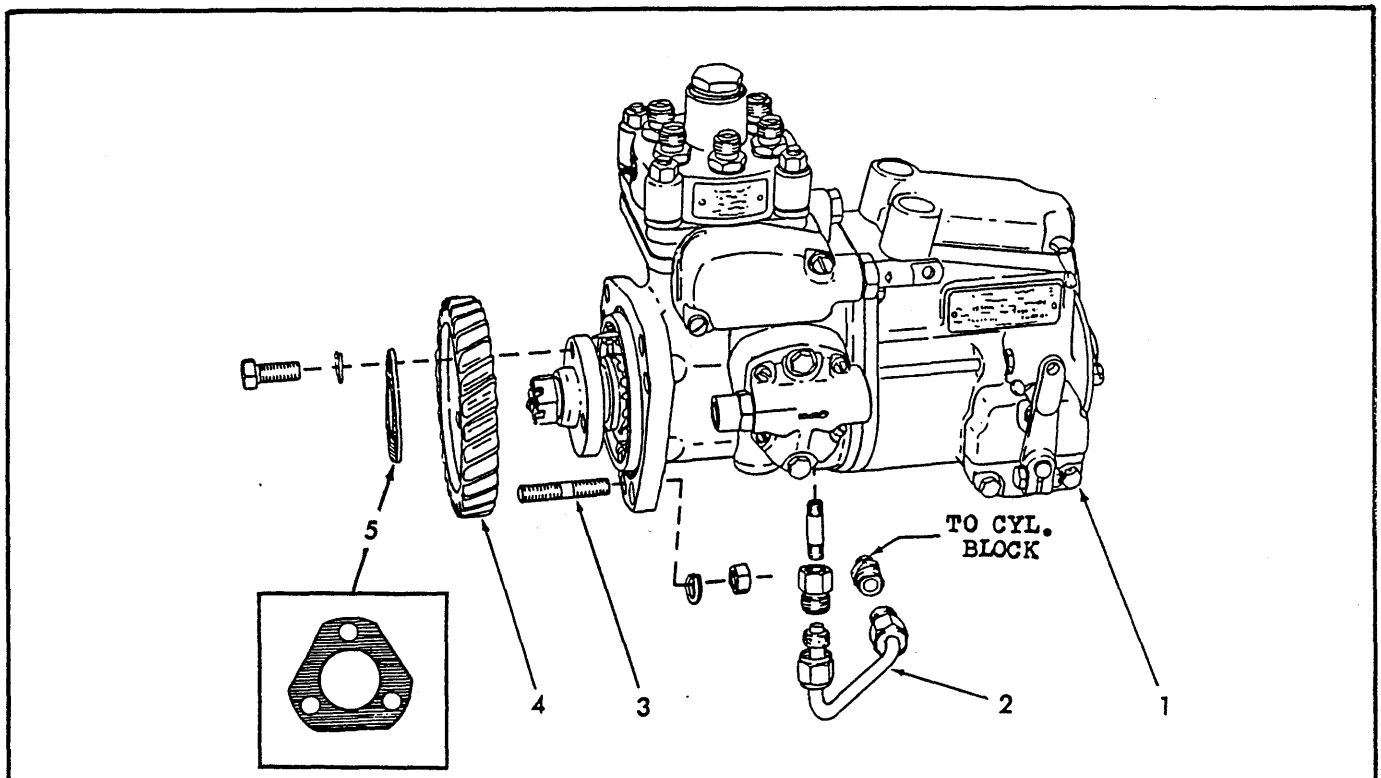

INJECTION PUMP T-24091

USAGE: Engines prior to serial No. 10-4855

ITEM	PART NO.	QTY.	DESCRIPTION
1	4347866	1	PUMP ASSEMBLY, fuel injection (See your Allis-Chalmers dealer for service)
2	4348474	1	LINE, oil, cylinder block to pump (Used prior to engine #10-4332)
	918235	2	NUT, Sealastic, 5/16" tube
	915852	2	RING, Sealastic, 5/16" tube (Includes ferrule)
	915854	1	CONNECTOR, Sealastic, 5/16" tube, 1/8"NPT male
	917980	1	CONNECTOR, Sealastic, 5/16" tube, 1/8"NPT female
	910205	1	NIPPLE, pipe, 1/8"NPT x 1-1/4"
	4335557	1	HOSE ASSEMBLY, oil, cylinder block to pump (See page 6 for parts) (Effective with engine #10-4332)
	919171	1	CONNECTOR, flare type, 1/4" tube, 1/8"NPT male
3	4337224	3	STUD, pump attaching (3/8" diam.)
	904206	3	LOCKWASHER, 3/8"
	910123	3	NUT, 3/8"NF
4	4348438	1	GEAR, pump drive
	916382	3	CAPSCREW, 3/8"NF x 7/8"
	904206	3	LOCKWASHER, 3/8"
5	4347836	1	WASHER, serrated, pump drive gear

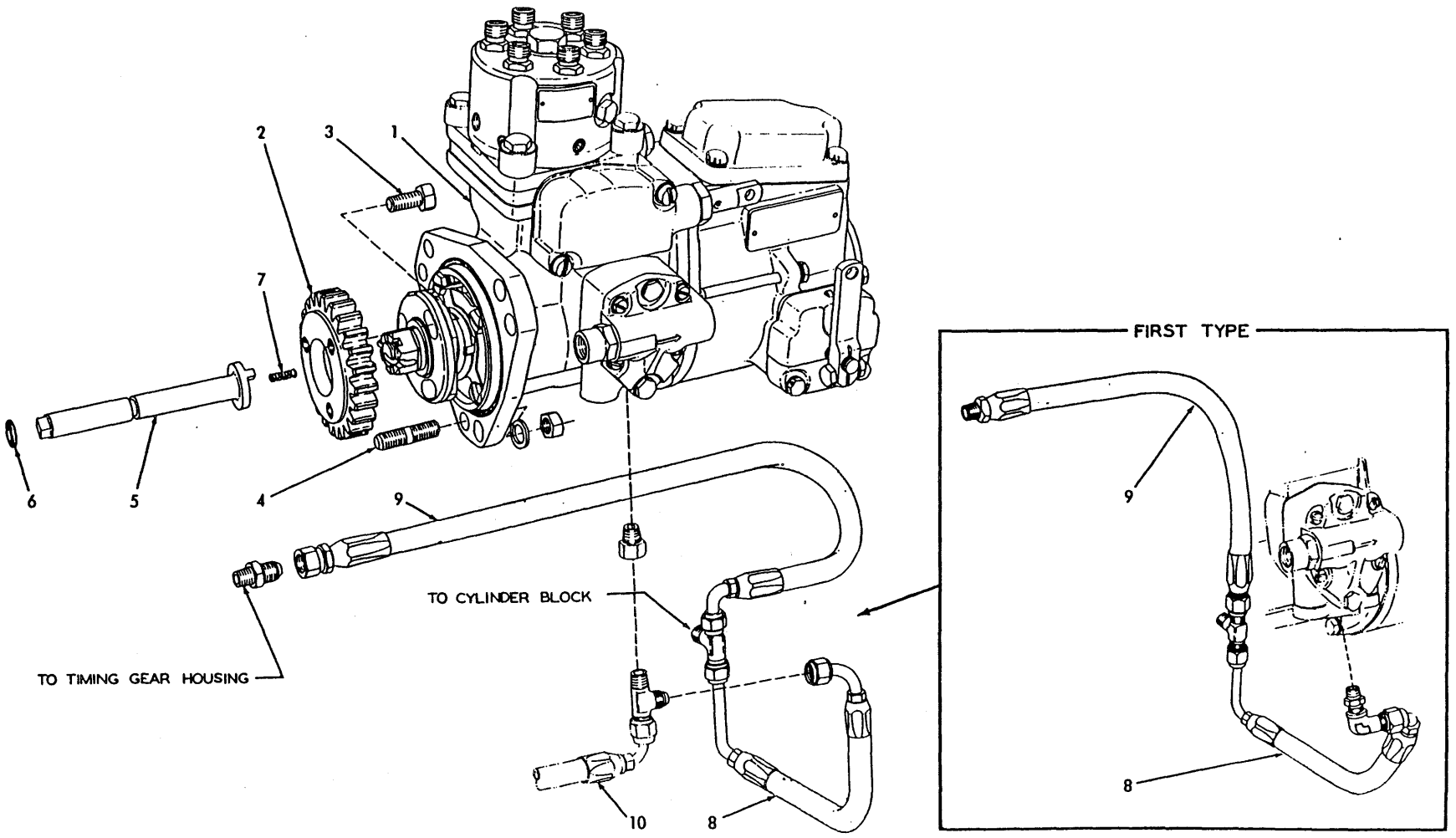

T-24203

INJECTION PUMP (Second type)

INJECTION PUMP

USAGE: Engines serial No. 10-4855 and up

* Used prior to tractor serial No. 6069 excluding Nos. 5490 and 6044
** Effective with tractor serial No. 6069 including Nos. 5490 and 6044

ITEM	PART NO.	QTY. *	QTY. **	DESCRIPTION
1	4336338	1	1	PUMP ASSEMBLY (Model HD11B, E, ES, S, F tractors prior to #6427)
	4339880	-	1	PUMP ASSEMBLY (Model HD11B, E, ES, S, F tractors #6427 thru #10000)
	4338308	-	1	PUMP ASSEMBLY (Model HD11EC, FC tractors prior to #10001)
	4354276	-	1	PUMP ASSEMBLY (Model HD11B tractors #10001 and up)
	4339886	-	1	PUMP ASSEMBLY (Model HD11E, S tractors #10001 and up)
	4354213	-	1	PUMP ASSEMBLY (Model HD11EC tractors #10001 and up)
				NOTE: Consult your Allis-Chalmers dealer for pump service
2	4347834	1	1	GEAR, pump coupling
3	916381	3	3	CAPSCREW, 3/8"NF x 3/4"
4	4337224	3	3	STUD, pump attaching (3/8" diam.)
	904206	3	3	LOCKWASHER, 3/8"
	910123	3	3	NUT, 3/8"NF
5	4335444	1	1	SHAFT, timing
6	923663	1	1	O-RING, timing shaft
7	4346704	1	1	SPRING, timing shaft
8	4335931	1	1	HOSE ASSEMBLY, cylinder block to injection pump (See page 6 for parts)
	920215	1	-	NIPPLE, hex, 1/8"NPT
	919249	1	-	ELBOW, flare type, 1/4" tube, 1/8"NPT female
	919773	1	1	TEE, flare type, 1/4" tube, 1/8"NPT male side
	917032	-	1	ADAPTER, extension, 1/8"NPT male and female
	919345	-	1	TEE, flare type, 1/4" tube, 1/8"NPT male end
9	4335716	1	-	HOSE ASSEMBLY, cylinder block to gear housing (See page 6 for parts)
	4376906	-	1	HOSE ASSEMBLY, cylinder block to gear housing (See page 6 for parts)
	919171	-	1	CONNECTOR, flare type, 1/4" tube, 1/8"NPT male
10	------	-	1	HOSE ASSEMBLY (See STEERING PUMP DRIVE)

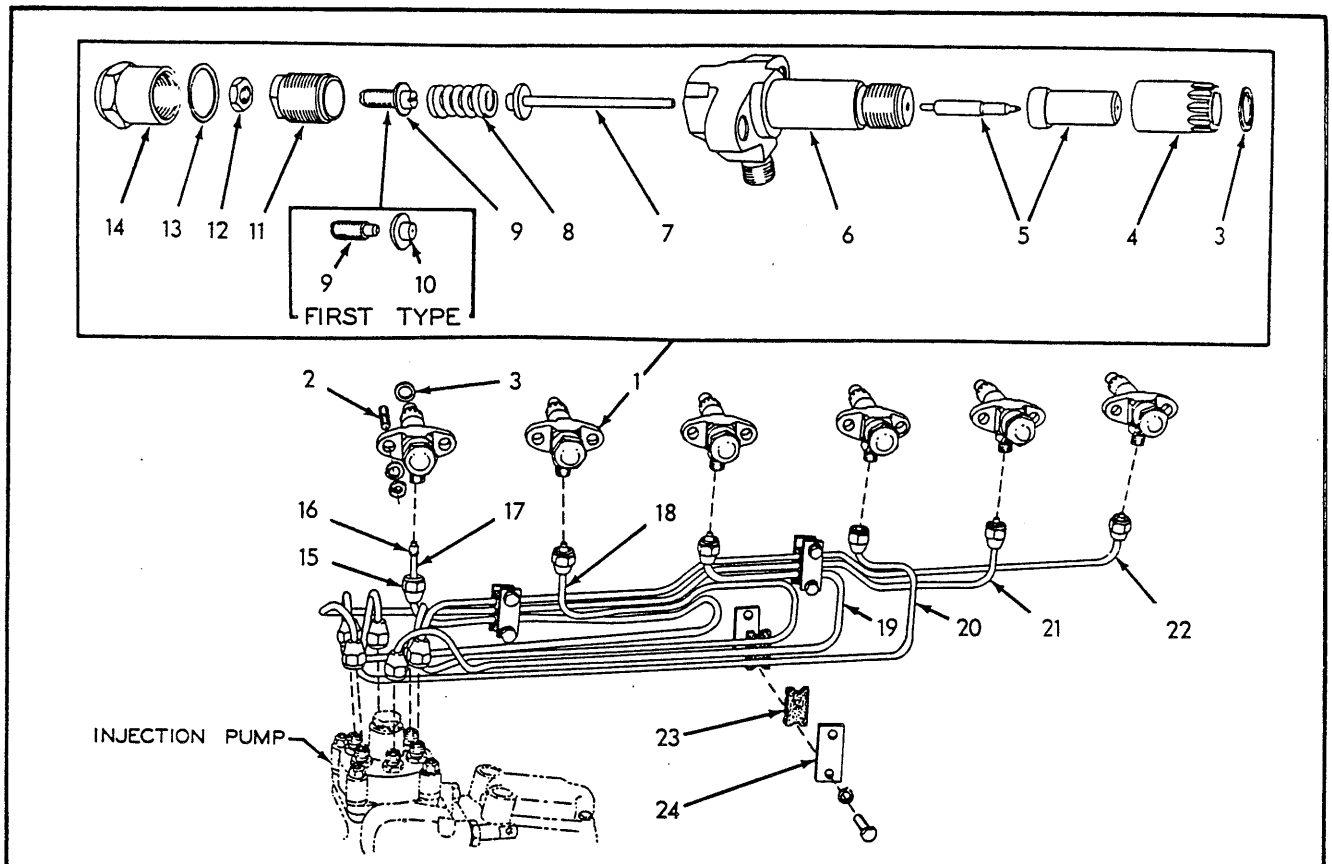

INJECTION NOZZLES AND LINES T-24087

USAGE: Tractors prior to serial No. 6427 (516 series engine)

ITEM	PART NO.	QTY.	DESCRIPTION
1	4346227	6	HOLDER ASSEMBLY, injection nozzles (Includes items 3 thru 14)
2	4335573	12	STUD, injection nozzle holder
	910123	12	NUT, 3/8"NF
	904206	12	LOCKWASHER, 3/8"
3	4511204	6	□GASKET, injection nozzle holder
4	4511217	6	NUT, injection nozzle
5	4380445	6	NOZZLE ASSEMBLY, injection (1 Body and 1 Valve)
6	------	6	BODY, nozzle holder (Not serviced separately)
7	4040552	6	SPINDLE, nozzle holder
8	4371121	6	SPRING, nozzle holder
9	------	6	SCREW, nozzle holder (First type)(Order SCREW 4047538)
	4047538	6	SCREW, nozzle holder (Second type)
10	------	6	SEAT, nozzle holder spring (Used with First type SCREW only. Order SCREW 4047538)
11	4040096	6	NUT, nozzle holder spring

□Also see PACKAGED PARTS

(Continued)

INJECTION NOZZLES AND LINES (Continued)

ITEM	PART NUMBER	QTY.	DESCRIPTION
12	4040098	6	NUT, nozzle holder screw
13	4372113	6	GASKET, nozzle holder cap
14	4040099	6	CAP, nozzle holder
15	4504409	12	NUT, fuel injection line
16	4501149	12	SLEEVE, fuel injection line
17	4347596	1	LINE, fuel injection (#1 cylinder)
18	4347597	1	LINE, fuel injection (#2 cylinder)
19	4347598	1	LINE, fuel injection (#3 cylinder)
20	4347599	1	LINE, fuel injection (#4 cylinder)
21	4347600	1	LINE, fuel injection (#5 cylinder)
22	4347601	1	LINE, fuel injection (#6 cylinder)
23	4507359	6	SPACER, fuel injection lines (rubber)
24	4347649	6	PLATE, fuel injection line clamping
	903773	6	CAPSCREW, 5/16"NC x 1-1/4"
	904205	6	LOCKWASHER, 5/16"

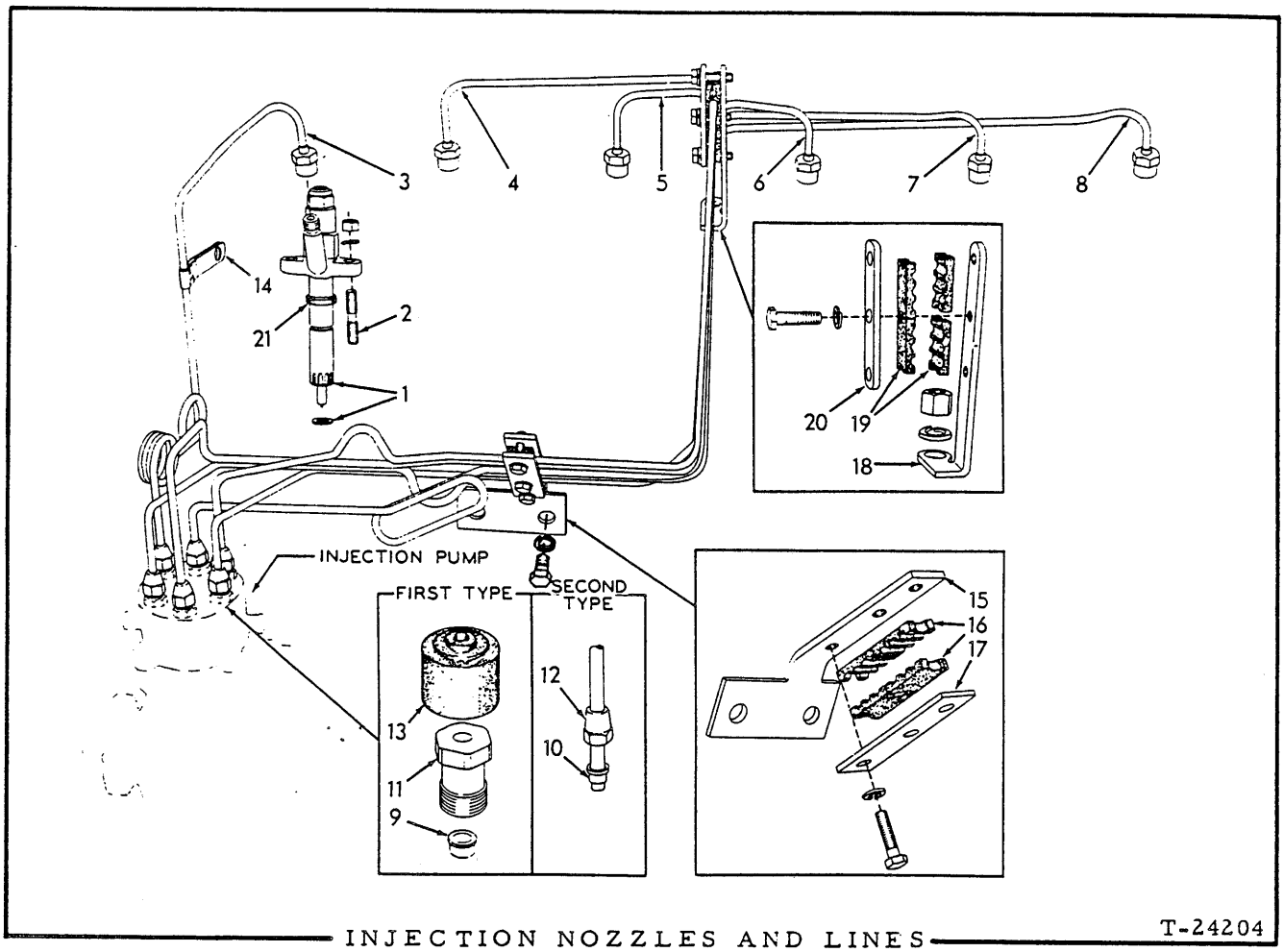

INJECTION NOZZLES AND LINES T-24204

USAGE: Tractors serial No. 6427 and up (10000 and 11000 series engine)

* Engines prior to serial No. 10-6805 (HD11B, E, ES, S, F) and No. 10-6899 (HD11EC, FC)
** Engines serial No. 10-6805 thru 10-7562 (HD11B, E, ES, S, F) and No. 10-6899 thru 10-7562 (HD11EC, FC)
*** Engines serial No. 10-7563 and up (all models)

ITEM	PART NO.	QUANTITY *	**	***	DESCRIPTION
1	4336566	6	6	-	HOLDER ASSEMBLY, injection nozzle (See page 116 for parts)(Used prior to engine #10-7107. Order HOLDER ASSEMBLY 4380654)
	4380654	6	6	6	HOLDER ASSEMBLY, injection nozzle (See page 117 for parts)(Effective with engine #10-7107)
2	4336209	12	12	12	STUD, injection nozzle holder
	910123	12	12	12	NUT, 3/8"NF
	904206	12	12	12	LOCKWASHER, 3/8"
3	------	1	-	-	TUBE ASSEMBLY, fuel injection (#1 cylinder)
	4337805	-	1	-	TUBE ASSEMBLY, fuel injection (#1 cylinder)
	4338428	-	-	1	TUBE ASSEMBLY, fuel injection (#1 cylinder)
4	------	1	-	-	TUBE ASSEMBLY, fuel injection (#2 cylinder)
	4337806	-	1	-	TUBE ASSEMBLY, fuel injection (#2 cylinder)
	4338429	-	-	1	TUBE ASSEMBLY, fuel injection (#2 cylinder)

(Continued)

ITEM	PART NO.	QUANTITY *	**	***	DESCRIPTION
5	------	1	-	-	TUBE ASSEMBLY, fuel injection (#3 cylinder)
	4337807	-	1	-	TUBE ASSEMBLY, fuel injection (#3 cylinder)
	4338430	-	-	1	TUBE ASSEMBLY, fuel injection (#3 cylinder)
6	------	1	-	-	TUBE ASSEMBLY, fuel injection (#4 cylinder)
	4337808	-	1	-	TUBE ASSEMBLY, fuel injection (#4 cylinder)
	4338431	-	-	1	TUBE ASSEMBLY, fuel injection (#4 cylinder)
7	------	1	-	-	TUBE ASSEMBLY, fuel injection (#5 cylinder)
	4337809	-	1	-	TUBE ASSEMBLY, fuel injection (#5 cylinder)
	4338432	-	-	1	TUBE ASSEMBLY, fuel injection (#5 cylinder)
8	------	1	-	-	TUBE ASSEMBLY, fuel injection (#6 cylinder)
	4337810	-	1	-	TUBE ASSEMBLY, fuel injection (#6 cylinder)
	4338433	-	-	1	TUBE ASSEMBLY, fuel injection (#6 cylinder)
					NOTE: Each Tube Assembly listed above includes Nut and Sleeve for the upper end. Where part No. is not listed, order the corresponding Tube Assembly of later design and include with each 1 SLEEVE 4501149, 1 SLEEVE 4054096, 1 NUT 4504409 and 1 FITTING 4054095. When replacing entire set of tubes (items 3 thru 8) for engines prior to serial No. 10-7563, order latest type as listed above.
9	4052556	6	-	-	SLEEVE, injection tube, lower end
10	4501149	-	6	6	SLEEVE, injection tube, lower end
11	4052555	6	-	-	FITTING, injection tube, lower end
12	4504409	-	6	6	NUT, injection tube, lower end
13	4053156	6	-	-	CAP, injection tube fitting (rubber)
14	4339207	1	1	1	CLIP, fuel injection tube (#1 cylinder)
15	4336530	1	1	1	BRACKET, tube supporting, lower
	916271	2	2	2	CAPSCREW, 3/8"NC x 1"
	904206	2	2	2	LOCKWASHER, 3/8"
16	4336532	2	2	2	SPACER, injection tubes, lower
17	4336531	1	1	1	PLATE, clamping, injection tubes, lower
	914392	3	3	3	CAPSCREW, 5/16"NC x 1"
	904205	3	3	3	LOCKWASHER, 5/16"
18	4336249	1	1	1	BRACKET, tube supporting, upper
	910195	1	1	1	NUT, 1/2"NF
	904208	1	1	1	LOCKWASHER, 1/2"
19	4507359	4	4	4	SPACER, injection tubes, upper
20	4336250	1	1	1	CLAMP, injection tubes, upper
	914670	3	3	3	CAPSCREW, 5/16"NC x 1-1/8"
	904205	3	3	3	LOCKWASHER, 5/16"
21	4025385	12	12	12	SHIELD, dirt

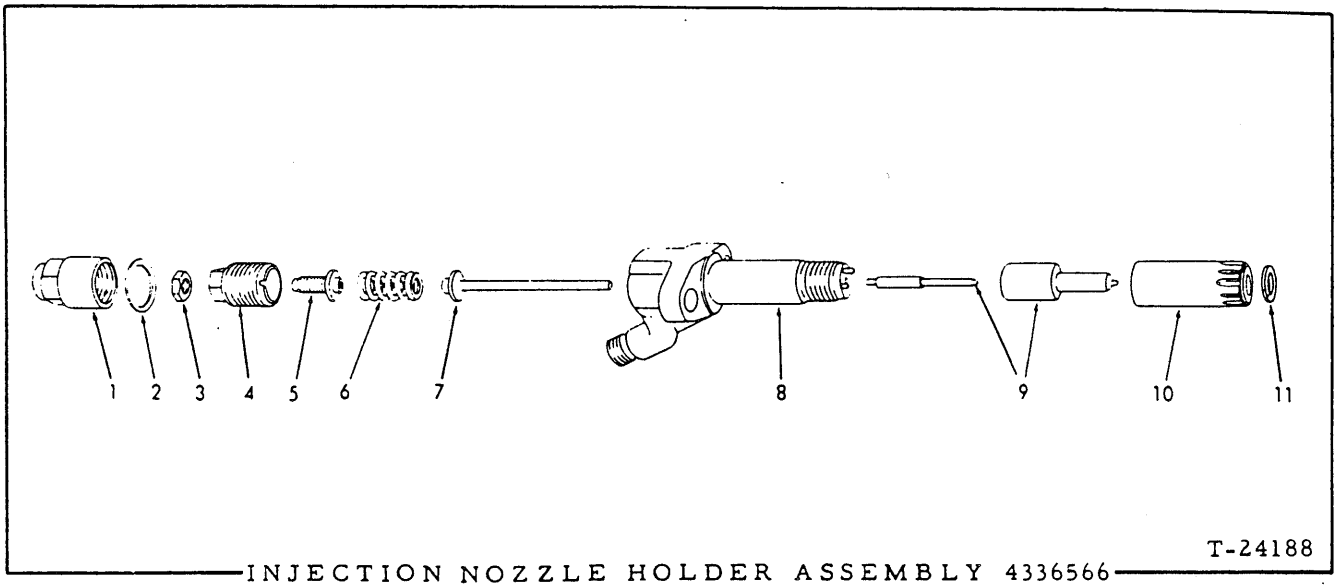

INJECTION NOZZLE HOLDER ASSEMBLY 4336566

USAGE: See page 114

ITEM	PART NO.	QTY.	DESCRIPTION
			NOTE: Quantities indicated are for one (1) assembly only
1	4052715	1	CAP, protecting
2	4049282	1	GASKET, protecting cap
3	4050523	1	NUT, adjusting screw
4	4050520	1	NUT, spindle retaining
5	4051839	1	SCREW, adjusting
6	4050519	1	SPRING, nozzle spindle
7	4052714	1	SPINDLE ASSEMBLY (Serviced only as a unit)
8	-------	1	BODY (Not serviced separately)
9	4380685	1	NOZZLE ASSEMBLY, injection (Includes item 11)
10	4050516	1	NUT, nozzle retaining
11	4378031	1	□ GASKET, nozzle holder

□Also see PACKAGED PARTS

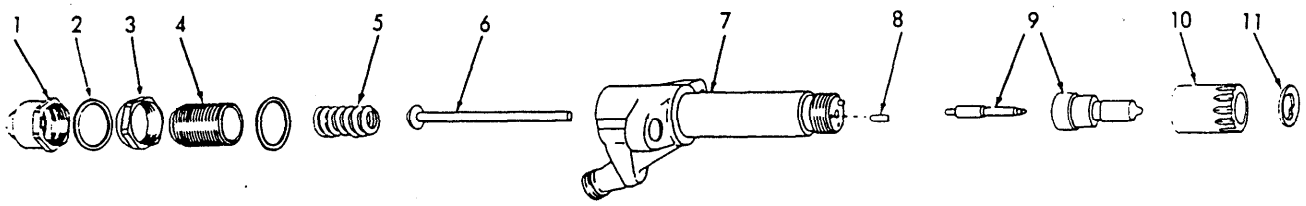

INJECTION NOZZLE HOLDER ASSEMBLY 4380654 T-335CC

USAGE: See page 114

ITEM	PART NO.	QTY.	DESCRIPTION
			NOTE: Quantities indicated are for one (1) Holder Assembly only
1	4378032	1	NUT, cap
2	4511243	2	GASKET, cap nut
3	4511213	1	NUT, locking
4	4378033	1	SCREW, adjusting
5	4380652	1	SPRING
6	4380656	1	ROD, spindle
7	-------	1	BODY (Not serviced separately)
8	922943	2	PIN, nozzle locating
9	4380651	1	NOZZLE ASSEMBLY (Includes item 11)
10	4380662	1	NUT, nozzle retaining
11	4378031	1	□ GASKET, nozzle holder

□ Also see PACKAGED PARTS

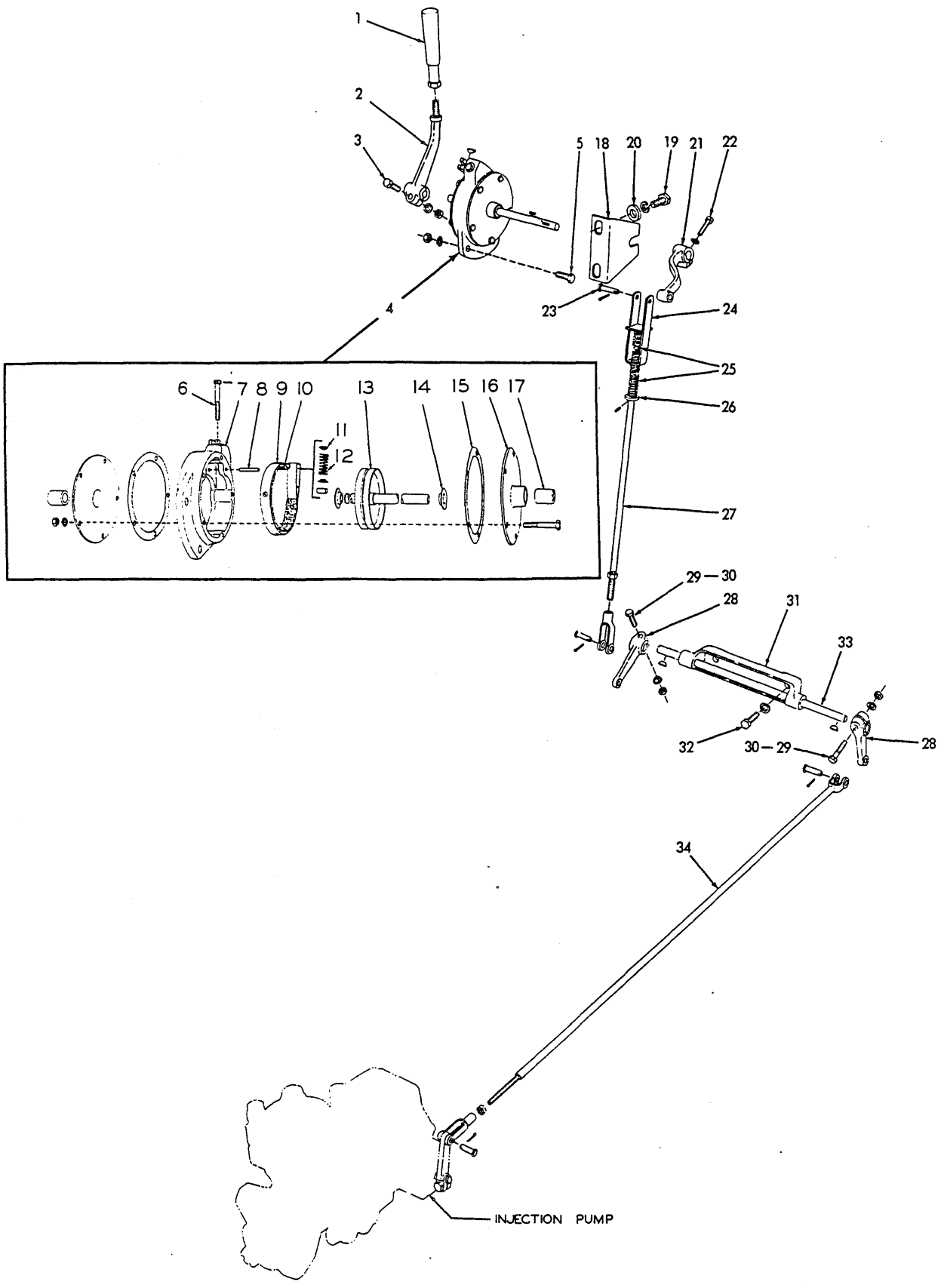

THROTTLE CONTROL (First type)

THROTTLE CONTROL

USAGE: Tractors prior to serial No. 6427

ITEM	PART NUMBER	QTY.	DESCRIPTION
1	078620	1	GRIP, operating lever
2	076544	1	LEVER, operating
	905121	1	KEY, #5 woodruff, 1/8" x 5/8"
3	203188	1	CAPSCREW, 3/8"NF x 1-1/2"
	904206	1	LOCKWASHER, 3/8"
	911041	1	NUT, 3/8"NF
4	087290	1	THROTTLE ASSEMBLY (Consists of items 6 thru 17)
5	036034	2	CAPSCREW, 3/8"NF x 1"
	904206	2	LOCKWASHER, 3/8"
	911041	2	NUT, 3/8"NF
6	068862	1	CAPSCREW, friction band adjustment
	904020	1	PIN, cotter, 1/16" x 1"
	901150	1	NUT, square, 1/4"NC
7	068859	1	HOUSING
8	068869	1	PIN, friction band
9	068861	1	BAND ASSEMBLY, friction (Includes item 10)
10	068864	1	LINING, friction band
	915707	4	RIVET, tubular, brass, 3/16" x 9/64"
11	069349	2	COLLAR, friction band spring
12	068911	1	SPRING, friction band
13	087291	1	DRUM AND SHAFT
14	069996	2	WASHER, thrust
15	068865	2	GASKET, housing cover plate
16	068866	2	PLATE ASSEMBLY, housing cover (Includes item 17)
	914892	5	CAPSCREW, 1/4"NF x 1-3/4"
	904204	5	LOCKWASHER, 1/4"
	911040	5	NUT, 1/4"NF
17	071800	2	BUSHING, throttle shaft
18	088952	1	BRACKET, shaft supporting (Effective with tractor #935)
19	035190	2	CAPSCREW, 1/2"NC x 1-1/2"
	904208	2	LOCKWASHER, 1/2"
20	064531	2	WASHER, plain
21	084659	1	LEVER, throttle shaft
	905121	1	KEY, #5 woodruff, 1/8" x 5/8"
22	037450	1	CAPSCREW, 5/16"NC x 1-1/4"
	904205	1	LOCKWASHER, 5/16"
23	082875	1	PIN, vertical rod yoke
	900942	1	PIN, cotter, 3/32" x 5/8"
24	078967	1	YOKE, vertical rod
25	035910	2	SPRING, vertical rod

(Continued)

THROTTLE CONTROL (Continued)

ITEM	PART NUMBER	QTY.	DESCRIPTION	
26	044973	1	WASHER, vertical rod	
27	084513	1	ROD, vertical	
	911041	1	NUT, 3/8"NF	
	916202	1	PIN, roll, 1/8" x 7/8"	
	628736	1	YOKE, rod end, adjustable, 3/8"NF	
	078810	1	PIN, yoke, 3/8" diam.	
	900942	1	PIN, cotter, 3/32" x 5/8"	
28	081619	2	LEVER, cross shaft (When replacing on tractors #2111 thru #2366 also order item 29)	
	905121	2	KEY, #5 woodruff, 1/8" x 5/8"	
29	041981	2	CAPSCREW, 5/16"NF x 1-1/2"	Used on all tractors except Nos. 2111 thru 2366.
	904205	2	LOCKWASHER, 5/16"	
	913636	2	NUT, 5/16"NF	
30	203188	2	CAPSCREW, 3/8"NF x 1-1/2"	Used on tractors #2111 thru #2366 only
	904206	2	LOCKWASHER, 3/8"	
	911041	2	NUT, 3/8"NF	
31	084580	1	BRACKET, cross shaft	
32	012992	2	CAPSCREW, 3/8"NF x 1-1/4"	
	904206	2	LOCKWASHER, 3/8"	
33	084731	1	SHAFT, cross	
34	084453	1	ROD, horizontal	
	911040	1	NUT, 1/4"NC	
	628737	1	YOKE, rod end, adjustable, 1/4"NF	
	078810	1	PIN, yoke, 3/8" diam. (rear)	
	628738	1	PIN, yoke, 1/4" diam. (front)	
	900942	1	PIN, cotter, 3/32" x 5/8"	
	900970	1	PIN, cotter, 1/16" x 1/2"	

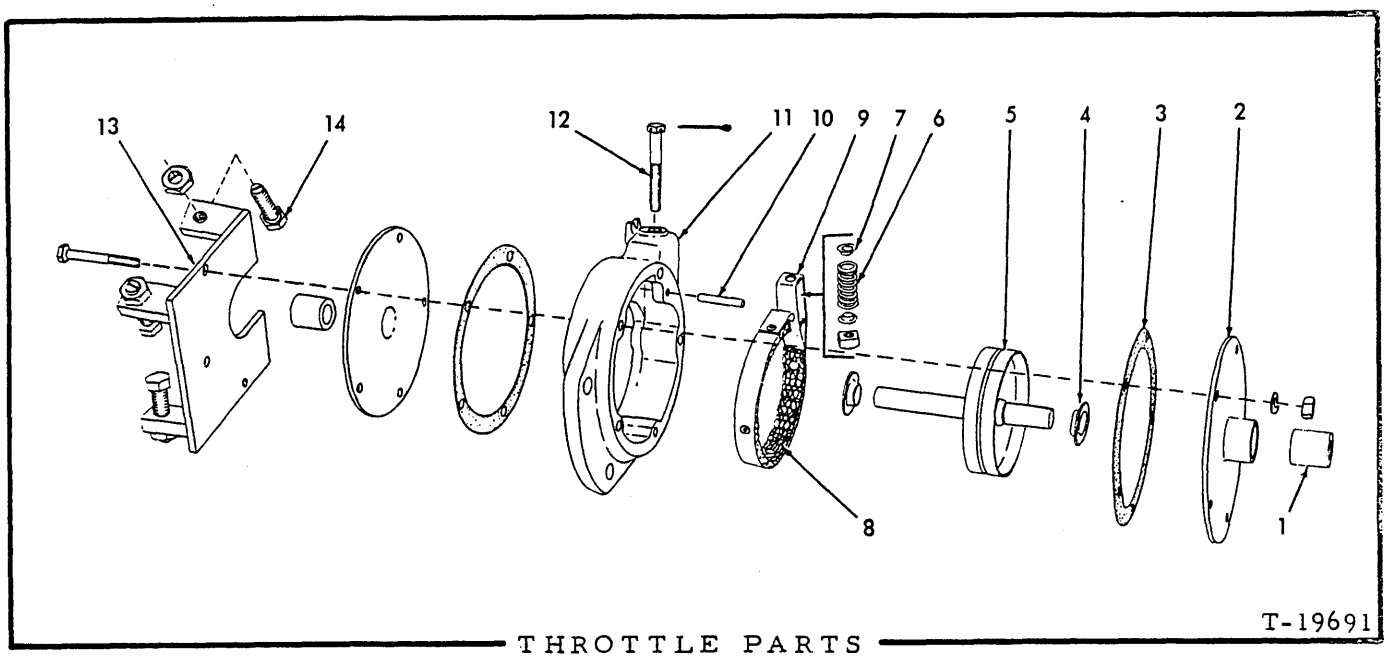

THROTTLE PARTS

USAGE: See page 123

* Throttle Assembly 094989
** Throttle Assembly 095536

ITEM	PART NO.	QTY. *	QTY. **	DESCRIPTION
1	071800	2	2	BUSHING, throttle shaft
2	068866	2	2	PLATE ASSEMBLY, housing cover (Includes item 1)
3	068865	2	2	GASKET, cover plate
4	069996	2	2	WASHER, thrust
5	069998	1	-	DRUM AND SHAFT
	095535	-	1	DRUM AND SHAFT
6	068911	1	1	SPRING, friction band
7	069349	2	2	COLLAR, friction band spring
8	068864	1	1	LINING, friction band
	915707	4	4	RIVET, tubular, brass, 1/4" x 9/64"
9	068861	1	1	BAND ASSEMBLY, friction (Includes item 8)
10	068869	1	1	PIN, friction band
11	068859	1	1	HOUSING
12	068862	1	1	CAPSCREW, friction band adjustment
	904020	1	1	PIN, cotter, 1/16" x 1"
	901150	1	1	NUT, square, 1/4"NC
13	094990	1	1	PLATE, stop
	916933	3	3	CAPSCREW, 1/4"NF x 2"
	914892	2	2	CAPSCREW, 1/4"NF x 1-3/4"
	904204	5	5	LOCKWASHER, 1/4"
	911040	5	5	NUT, 1/4"NF
14	634650	4	4	CAPSCREW, stop
	911034	4	4	NUT, jam, 3/8"NC

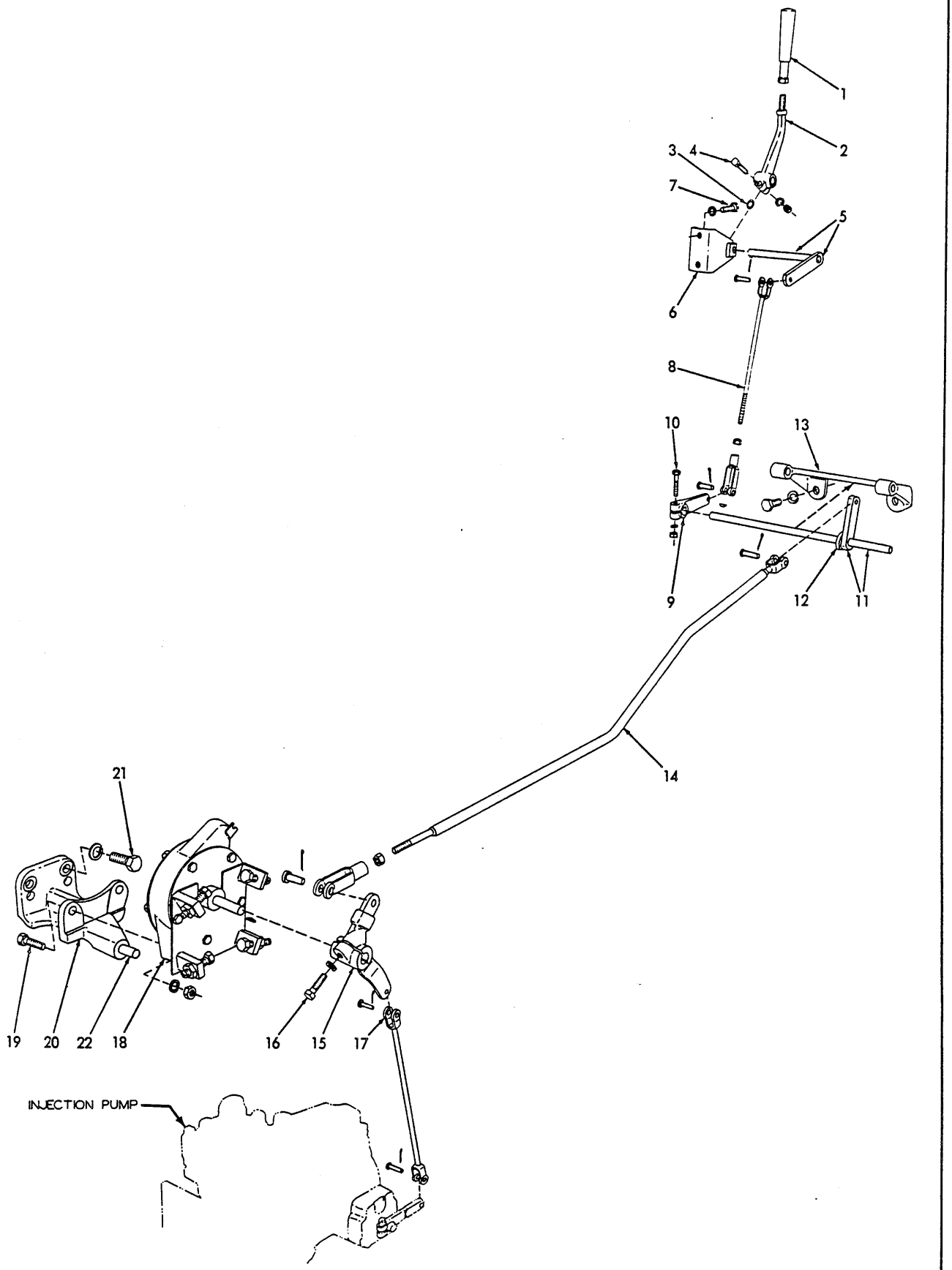

THROTTLE CONTROL (Second type)

THROTTLE CONTROL

USAGE: Tractors serial No. 6427 thru No. 10000

ITEM	PART NO.	QTY.	DESCRIPTION
1	078620	1	GRIP, throttle lever
2	076544	1	LEVER, throttle operating
3	620544	1	WASHER, locking
4	203188	1	CAPSCREW, 3/8"NF x 1-1/2"
	904206	1	LOCKWASHER, 3/8"
	911041	1	NUT, 3/8"NF
5	620080	1	SHAFT, throttle lever
6	620393	1	BRACKET, shaft
7	036034	2	CAPSCREW, 3/8"NF x 1"
	904206	2	LOCKWASHER, 3/8"
8	620391	1	ROD, rear
	911041	1	NUT, 3/8"NF
	628736	1	YOKE, rod end, adjustable, 3/8"NF
	078810	2	PIN, yoke, 3/8" diam.
	900942	2	PIN, cotter, 3/32" x 5/8"
9	081619	1	LEVER, cross shaft
	905121	1	KEY, #5 woodruff, 1/8" x 5/8"
10	041981	1	CAPSCREW, 5/16"NF x 1-1/2"
	904205	1	LOCKWASHER, 5/16"
	913636	1	NUT, 5/16"NF
11	620069	1	SHAFT, cross
12	620543	1	WASHER, spacing, cross shaft lever
13	095399	1	BRACKET, cross shaft
	917831	2	CAPSCREW, 1/2"NF x 1-3/8"
	904208	2	LOCKWASHER, 1/2"
14	620077	1	ROD, front
	911041	1	NUT, 3/8"NF
	628736	1	YOKE, rod end, adjustable, 3/8"NF
	078810	2	PIN, yoke, 3/8" diam.
	900942	2	PIN, cotter, 3/32" x 5/8"
15	094988	1	BELLCRANK (For tractors without Engine Decelerator)
	905121	1	KEY, #5 woodruff, 1/8" x 5/8"
16	045295	1	CAPSCREW, 5/16"NC x 1"
	904205	1	LOCKWASHER, 5/16"
17	094287	1	ROD, bellcrank to pump
	628738	2	PIN, yoke, 1/4" diam.
	900970	2	PIN, cotter, 1/16" x 1/2"
18	095536	1	THROTTLE ASSEMBLY (See page 121 for parts)(For tractors with Engine Decelerator)
	094989	1	THROTTLE ASSEMBLY (See page 121 for parts)(For tractors without Engine Decelerator)
19	012992	2	CAPSCREW, 3/8"NF x 1-1/4"
	904206	2	LOCKWASHER, 3/8"
	911041	2	NUT, 3/8"NF
20	094997	1	BRACKET ASSEMBLY, throttle supporting (Includes item 22)
21	035733	2	CAPSCREW, 1/2"NC x 1-3/8"
	904208	2	LOCKWASHER, 1/2"
22	094998	1	PIN, throttle bracket

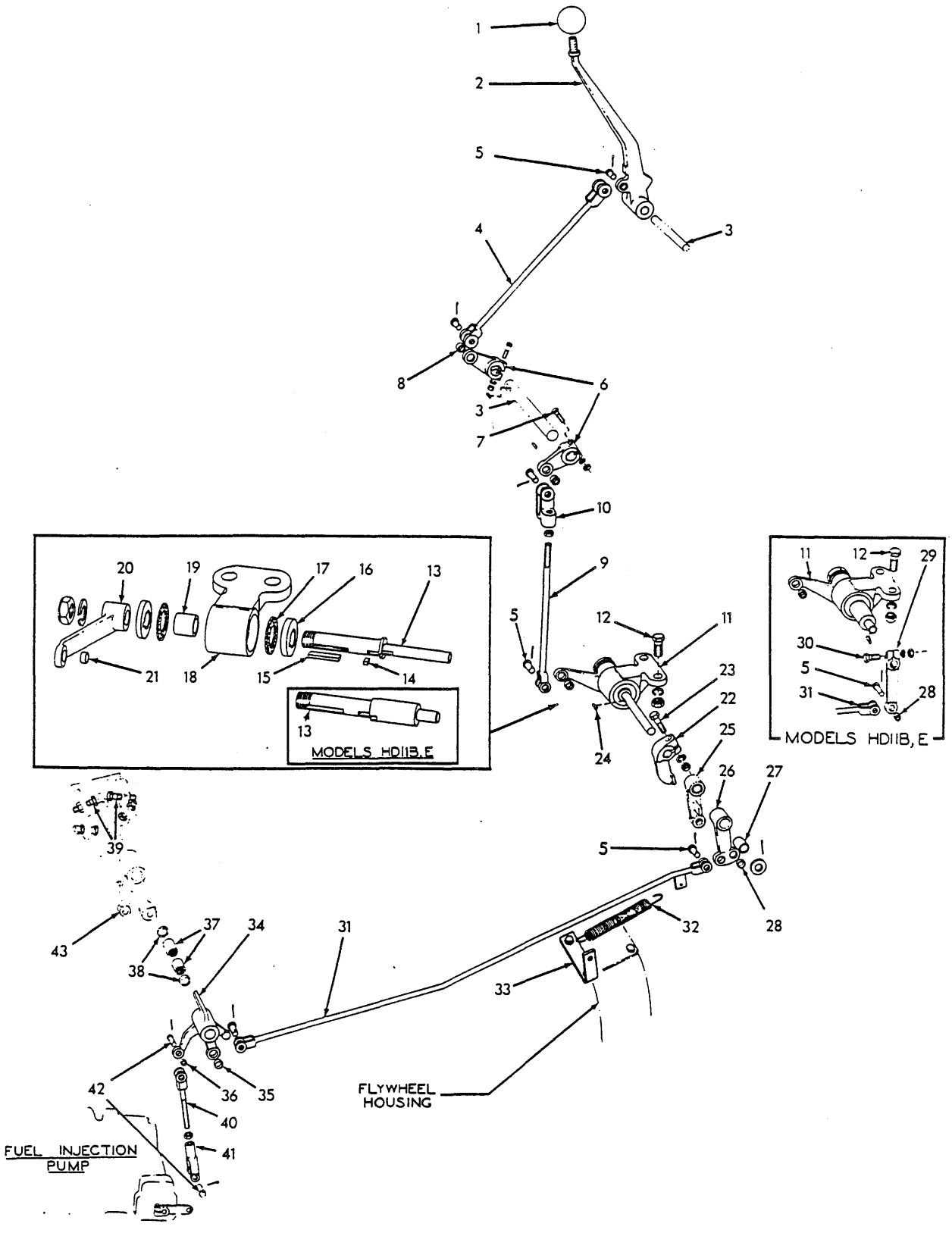

THROTTLE CONTROL (Third type) T-41886

THROTTLE CONTROL

USAGE: Tractors serial No. 10001 and up

* Models HD11B, E, S. Standard equipment
** Model HD11EC; also HD11E, E, S when equipped with special engine decelerator

ITEM	PART NO.	QTY. *	QTY. **	DESCRIPTION
1	090020	1	1	KNOB, throttle lever
2	631975	1	1	LEVER, throttle
3	------	-	-	SHAFT, operating lever (See STEERING LEVERS AND LINKAGE)
4	622004	1	1	ROD, upper
5	078810	6	6	PIN, yoke, control rod
	900942	6	6	PIN, cotter, 3/32" x 5/8"
6	630836	2	2	LEVER ASSEMBLY, upper and intermediate rods (Includes item 8)
	905123	2	2	KEY, #9 woodruff, 3/16" x 3/4"
7	046419	2	2	CAPSCREW, 3/8"NF x 2"
	904206	2	2	LOCKWASHER, 3/8"
	911041	2	2	NUT, 3/8"NF
8	624584	2	2	BUSHING, lever, upper and intermediate rods
9	631651	1	1	ROD, intermediate, upper
	911048	1	1	NUT, jam, 3/8"NF
10	634074	1	1	YOKE, intermediate upper rod
11	634087	-	1	FRICTION ASSEMBLY (Consists of items 13 thru 21)
	910244	-	1	WASHER, plain, SAE std., 1/2"
	900806	-	1	PIN, cotter, 1/8" x 1"
	643898	1	-	FRICTION ASSEMBLY (Consists of items 13 thru 21)
12	614478	2	2	CAPSCREW, 1/2"NF x 1-3/8"
	904208	2	2	LOCKWASHER, 1/2"
	911043	2	2	NUT, 1/2"NF
13	634088	-	1	SHAFT, throttle levers
	643897	1	-	SHAFT, throttle levers
	904369	1	1	LOCKWASHER, 3/4"
	914452	1	1	NUT, elastic stop, 3/4"
14	632716	1	1	KEY, friction washer (short)
15	916024	1	1	KEY, friction washer and lever (3/16" x 3/16" x 1-1/4")
16	632710	2	2	WASHER, friction
17	632747	2	2	DISC, friction
18	632766	1	1	HOUSING ASSEMBLY, friction (Includes item 19)
19	632752	1	1	BUSHING, friction housing
20	633122	1	1	LEVER ASSEMBLY, friction (Includes item 21)
21	624584	1	1	BUSHING, friction lever

(Continued)

ITEM	PART NO.	QTY. *	QTY. **	DESCRIPTION
22	633123	-	1	LEVER, friction shaft
23	041981	-	1	CAPSCREW, 5/16"NF x 1-1/2"
	904205	-	1	LOCKWASHER, 5/16"
	913636	-	1	NUT, 5/16"NF
24	632756	-	1	KEY, friction shaft lever
25	------	-	-	LEVER ASSEMBLY (See ENGINE DECELERATOR)
26	631496	-	1	LEVER ASSEMBLY, intermediate lower rod (Includes items 27 and 28)
27	631476	-	1	BUSHING, intermediate lower rod lever (large)
28	624584	1	2	BUSHING, intermediate lower rod lever (small)
29	633469	1	-	LEVER ASSEMBLY, intermediate lower rod (Includes item 28)
	905119	1	-	KEY, #3 woodruff, 1/8" x 1/2"
30	041981	1	-	CAPSCREW, 5/16"NF x 1-1/2"
	904205	1	-	LOCKWASHER, 5/16"
	913636	1	-	NUT, 5/16"NF
31	644568	1	1	ROD, intermediate, lower
32	043881	-	1	SPRING, intermediate lower rod
33	634072	-	1	BRACKET, intermediate lower rod spring
	034964	-	2	CAPSCREW, 1/4"NC x 3/4" Also attach timing hole cover
	904204	-	2	LOCKWASHER, 1/4"
34	644543	1	1	LEVER ASSEMBLY, lower rod (Includes items 35 and 36)
35	624584	1	1	BUSHING, lower rod lever (large)
36	624585	1	1	BUSHING, lower rod lever (small)
37	043021	2	2	BEARING, needle, lower rod lever
38	096921	2	2	SEAL, bearing
39	634650	2	2	CAPSCREW, lever stop (3/8"NC x 1-1/2")
	911034	2	2	NUT, jam, 3/8"NC
40	634189	1	1	ROD, lower
	910267	1	1	NUT, jam, 1/4"NF
41	628737	1	1	YOKE, lower rod
42	628738	2	2	PIN, lower rod
	900970	2	2	PIN, cotter, 1/16" x 1/2"
43	------	-	-	LEVER ASSEMBLY (See ENGINE SHUT-OFF CONTROL)

ENGINE DECELERATOR

USAGE: Special equipment on Model HD11B, E, ES, S, F tractors serial No. 6427 thru No. 10000. Special equipment on Model HD11EC, FC tractors serial No. 6427 thru No. 6510; standard equipment on tractors serial No. 6511 thru No. 10000.

ITEM	PART NO.	QTY.	DESCRIPTION
1	620767	1	LEVER ASSEMBLY, pedal (Includes item 2)
2	063222	2	BUSHING, pedal lever
3	035018	1	CAPSCREW, pedal stop (1/2"NF x 1-1/2")
	913830	1	NUT, jam, 1/2"NF
4	098389	1	SHAFT, pedal lever
	918111	1	PIN, roll, 1/8" x 1"
5	620571	1	BRACKET, pedal lever
6	070469	2	CAPSCREW, 1/2"NF x 1-1/4"
	904208	2	LOCKWASHER, 1/2"
7	092881	1	ROD, pedal lever
	911041	1	NUT, 3/8"NF
	628736	1	YOKE, rod end, adjustable, 3/8"NF
	078810	1	PIN, yoke, 3/8" diam.
	900942	1	PIN, cotter, 3/32" x 5/8"
7A	078810	1	PIN, pedal lever rod yoke (Used prior to tractor #7447)
	900942	1	PIN, cotter, 3/32" x 5/8"
7A	088566	1	PIN, pedal lever rod yoke (Effective with tractor #7447)
	900942	1	PIN, cotter, 3/32" x 5/8"
8	620099	1	SHAFT, cross
	905121	1	KEY, #5 woodruff, 1/8" x 5/8"
9	620573	1	BRACKET, cross shaft
	917831	2	CAPSCREW, 1/2"NF x 1-3/8"
	904208	2	LOCKWASHER, 1/2"
10	034258	1	SPRING, cross shaft
11	097646	1	LEVER, cross shaft
12	041981	1	CAPSCREW, 5/16"NF x 1-1/2"
	904205	1	LOCKWASHER, 5/16"
	913636	1	NUT, 5/16"NF
13	095525	1	LEVER, cross shaft
14	072438	1	SPRING, cross shaft lever
15	620119	1	ROD, control adjustment, rear
	919763	1	NUT, 3/8"NF, left hand thread
	078810	1	PIN, yoke, 3/8" diam.
	900942	1	PIN, cotter, 3/32" x 5/8"
16	095421	1	NUT, control adjustment
17	620100	1	ROD, control adjustment, front
	911041	1	NUT, 3/8"NF

(Continued)

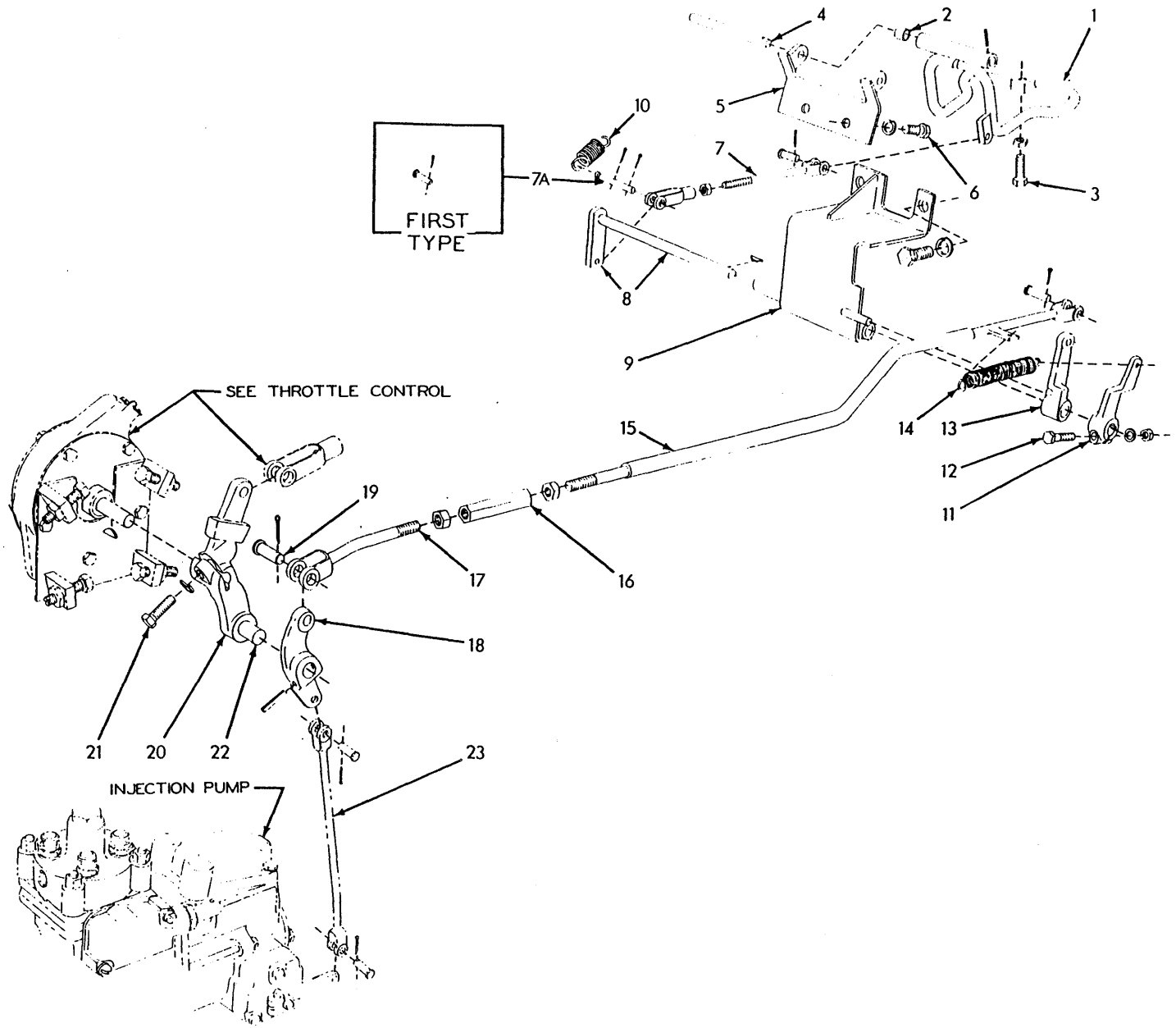

ENGINE DECELERATOR (First type)

T-27465

ENGINE DECELERATOR (First type)(Continued)

ITEM	PART NO.	QTY.	DESCRIPTION
18	095213	1	BELLCRANK, control rod
	916001	1	PIN, roll, 3/16" x 1"
19	083625	1	PIN, front control rod
	900942	1	PIN, cotter, 3/32" x 5/8"
20	095555	1	BELLCRANK ASSEMBLY (Includes item 22)(Replaces standard bellcrank. See THROTTLE CONTROL)
	905121	1	KEY, #5 woodruff, 1/8" x 5/8"
21	045295	1	CAPSCREW, 5/16"NC x 1"
	904205	1	LOCKWASHER, 5/16"
22	096258	1	PIN, bellcrank
23	------	1	ROD (See THROTTLE CONTROL)

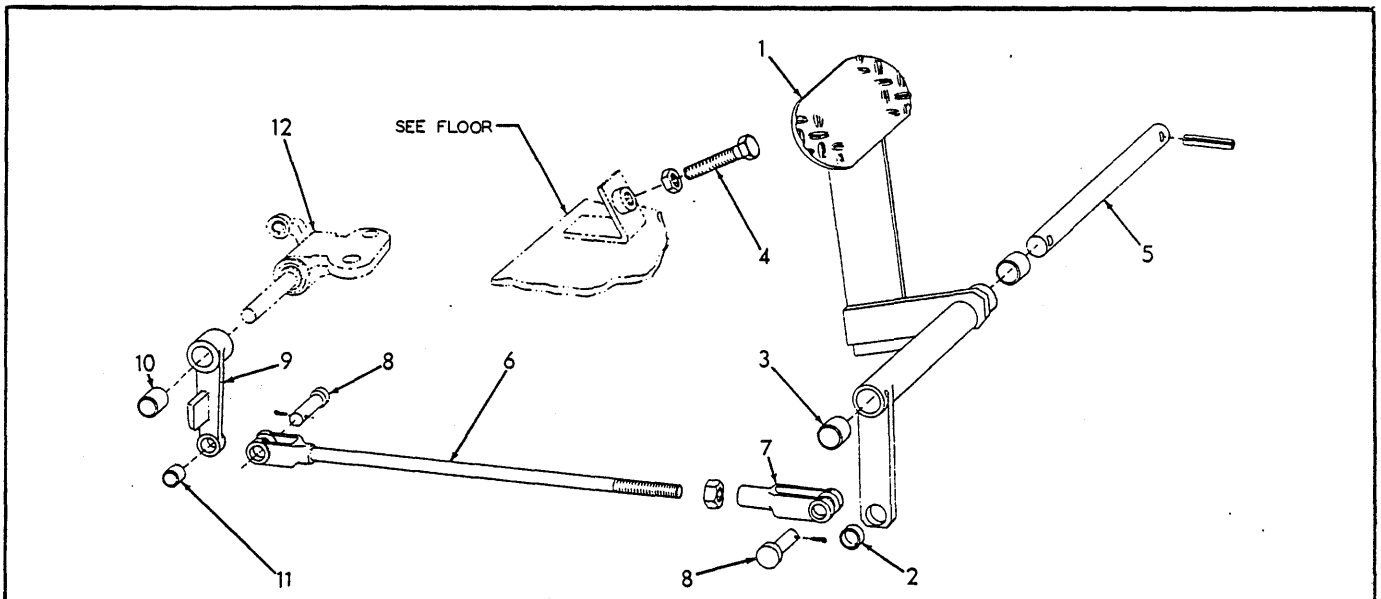

ENGINE DECELERATOR T-41885

USAGE: Special equipment on Model HD11B,S tractors serial No. 10001 and up

ITEM	PART NO.	QTY.	DESCRIPTION
1	638038	1	PEDAL ASSEMBLY (Includes items 2 and 3)
2	624584	1	BUSHING, pedal (small)
3	063222	2	BUSHING, pedal (large)
4	089900	1	CAPSCREW, pedal stop (1/2"NF)(Early units)
	913830	1	NUT, jam, 1/2"NF
	648477	1	CAPSCREW, pedal stop (1/2"NC)(Late units)
	911035	1	NUT, jam, 1/2"NC
5	631646	1	SHAFT, pedal
	918111	1	PIN, roll, 1/8" x 1"
6	638012	1	ROD, lever
	911048	1	NUT, jam, 3/8"NF
7	628736	1	YOKE, lever rod
8	078810	2	PIN, yoke, lever rod
	900942	2	PIN, cotter, 3/32" x 5/8"
9	631498	1	LEVER ASSEMBLY, friction shaft (Includes items 10 and 11)
10	631476	1	BUSHING, friction shaft lever (7/8" O. D.)
11	624584	1	BUSHING, friction shaft lever (1/2" O. D.)
12	------	-	FRICTION ASSEMBLY (See THROTTLE CONTROL)

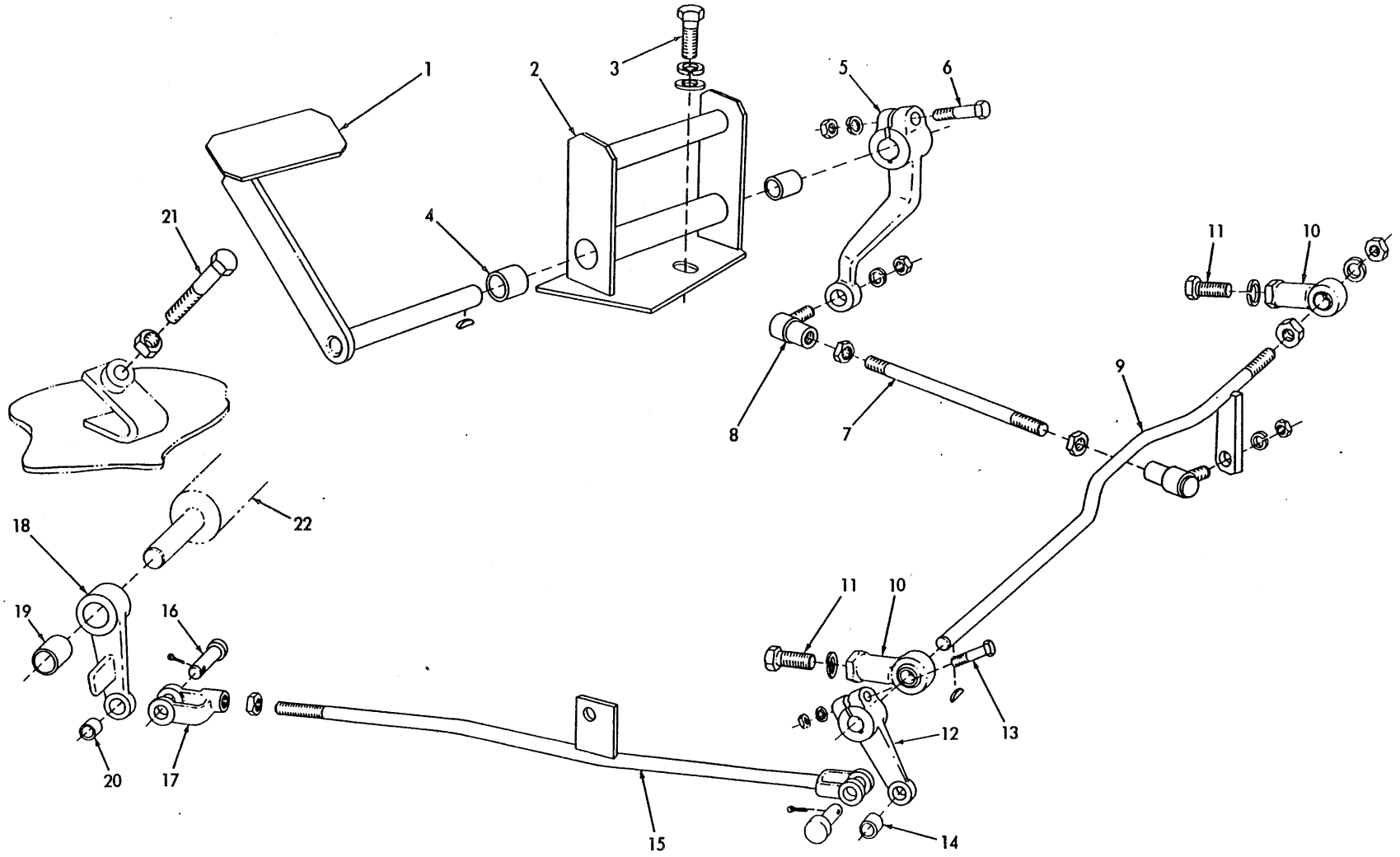

ENGINE DECELERATOR (Second type. Models HD11E, EC)

T-41887

ENGINE DECELERATOR

USAGE: Special equpment on Model HD11E tractors serial No. 10001 and up; standard on HD11EC

ITEM	PART NO.	QTY.	DESCRIPTION
1	642177	1	PEDAL
2	642765	1	BRACKET ASSEMBLY, pedal supporting (Includes item 4)
3	070469	2	CAPSCREW, 1/2"NF x 1-1/4"
	035061	1	CAPSCREW, 1/2"NC x 1-1/4"
	904208	3	LOCKWASHER, 1/2"
	064531	3	WASHER, plain
4	063222	2	BUSHING, bracket
5	642125	1	LEVER, pedal
	905119	1	KEY, #3 woodruff, 1/8" x 1/2"
6	041981	1	CAPSCREW, 5/16"NF x 1-1/2"
	904205	1	LOCKWASHER, 5/16"
	913636	1	NUT, 5/16"NF
7	642130	1	ROD, right
	911048	2	NUT, jam, 3/8"NF
8	642270	2	JOINT, ball, right rod
	904206	2	LOCKWASHER, 3/8"
	911048	2	NUT, 3/8"NF
9	642269	1	SHAFT, pivot, lever
	913830	1	NUT, jam, 1/2"NF
	904208	1	LOCKWASHER, 1/2"
	911043	1	NUT, 1/2"NF
10	638732	2	END, rod, shaft supporting
11	035525	2	CAPSCREW, 1/2"NF x 1-1/8"
	904208	2	LOCKWASHER, 1/2"
12	642271	1	LEVER ASSEMBLY, pivot shaft (Includes item 14)
	905119	1	KEY, #3 woodruff, 1/8" x 1/2"
13	041981	1	CAPSCREW, 5/16"NF x 1-1/2"
	904205	1	LOCKWASHER, 5/16"
	913636	1	NUT, 5/16"NF
14	624584	1	BUSHING, pivot shaft lever
15	642262	1	ROD, left
	911048	1	NUT, jam, 3/8"NF
16	078810	2	PIN, yoke, left rod
	900942	2	PIN, cotter, 3/32" x 5/8"
17	634074	1	YOKE, left rod
18	631498	1	LEVER ASSEMBLY, friction shaft (Includes items 19 and 20)
19	631476	1	BUSHING, friction shaft lever (7/8" O. D.)
20	624584	1	BUSHING, friction shaft lever (1/2" O. D.)
21	057605	1	CAPSCREW, pedal stop (1/2"NF)(Early units)
	913830	1	NUT, jam, 1/2"NF
	649274	1	CAPSCREW, pedal stop (1/2"NC)(Late units)
	911035	1	NUT, jam, 1/2"NC
22	------	-	FRICTION ASSEMBLY (See THROTTLE CONTROL)

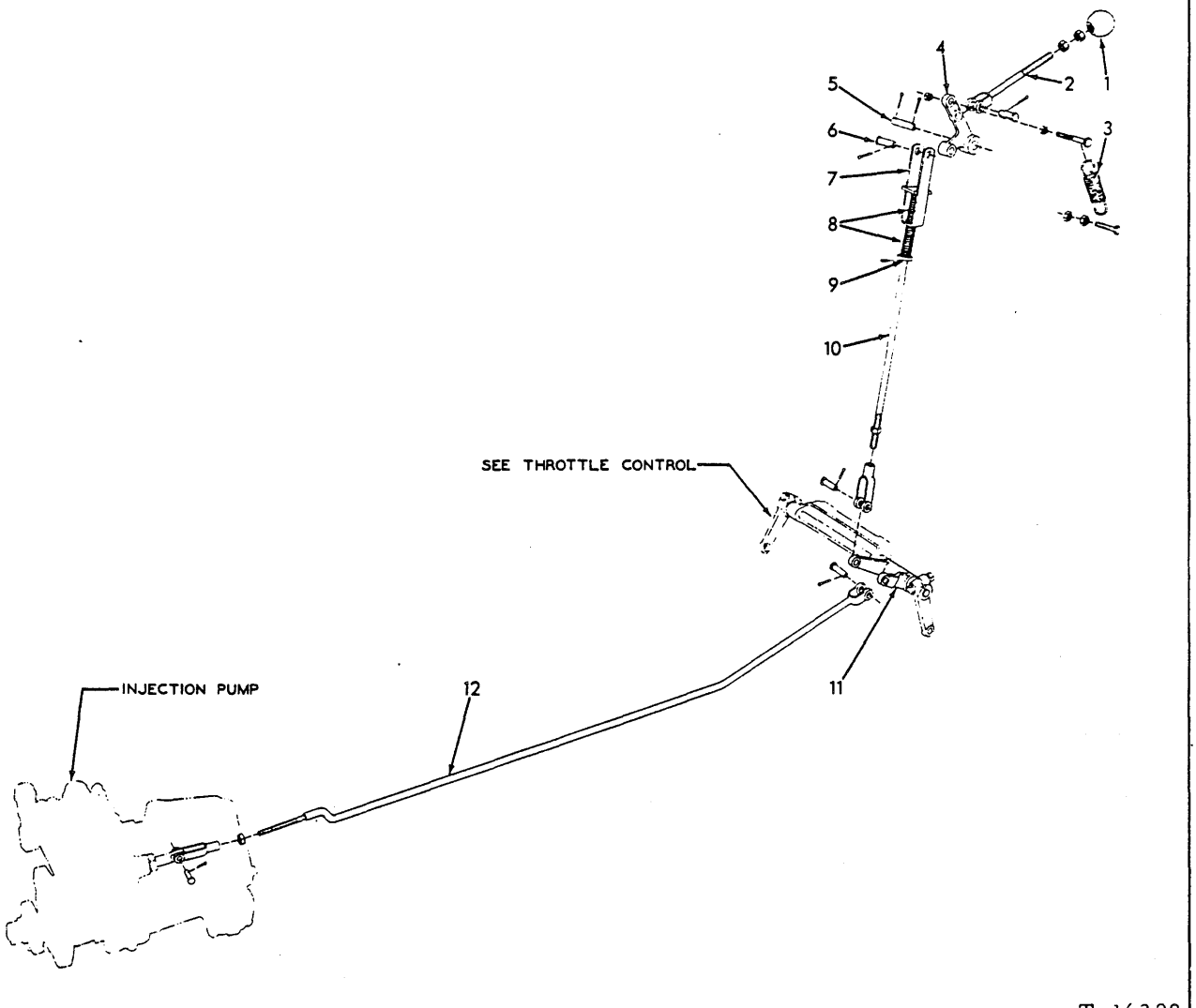

ENGINE SHUT-OFF CONTROL

USAGE: Tractors prior to serial No. 6427

ITEM	PART NO.	QTY.	DESCRIPTION
1	091855	1	KNOB, engine shut-off rod
2	084526	1	ROD, upper
	078810	1	PIN, yoke, 3/8" diam.
	900942	1	PIN, cotter, 3/32" x 5/8"
	911048	2	NUT, jam, 3/8"NF
3	034253	1	SPRING, upper lever
	912177	1	CAPSCREW, 1/4"NF x 1-1/4"
	916933	1	CAPSCREW, 1/4"NF x 2"
	911040	4	NUT, 1/4"NF
4	084729	1	LEVER, upper
5	084741	1	PIN, upper lever
	910967	2	PIN, cotter, 1/8" x 7/8"

(Continued)

ITEM	PART NUMBER	QTY.	DESCRIPTION
6	082875	1	PIN, intermediate rod upper yoke
	900942	1	PIN, cotter, 3/32" x 5/8"
7	078967	1	YOKE, intermediate rod, upper
8	035910	2	SPRING, intermediate rod
9	044973	1	WASHER, intermediate rod
10	084524	1	ROD, intermediate
	911041	1	NUT, 3/8"NF
	916202	1	PIN, roll, 1/8" x 7/8"
	628736	1	YOKE, rod end, adjustable, 3/8"NF
	078810	1	PIN, yoke, 3/8" diam.
	900942	1	PIN, cotter, 3/32" x 5/8"
11	087303	1	LEVER, lower
12	087349	1	ROD, lower
	911040	1	NUT, 1/4"NF
	628737	1	YOKE, rod end, adjustable, 1/4"NF
	628738	1	PIN, yoke, 1/4" diam.
	900970	1	PIN, cotter, 1/16" x 1/2"
	078810	1	PIN, yoke, 3/8" diam.
	900942	1	PIN, cotter, 3/32" x 5/8"

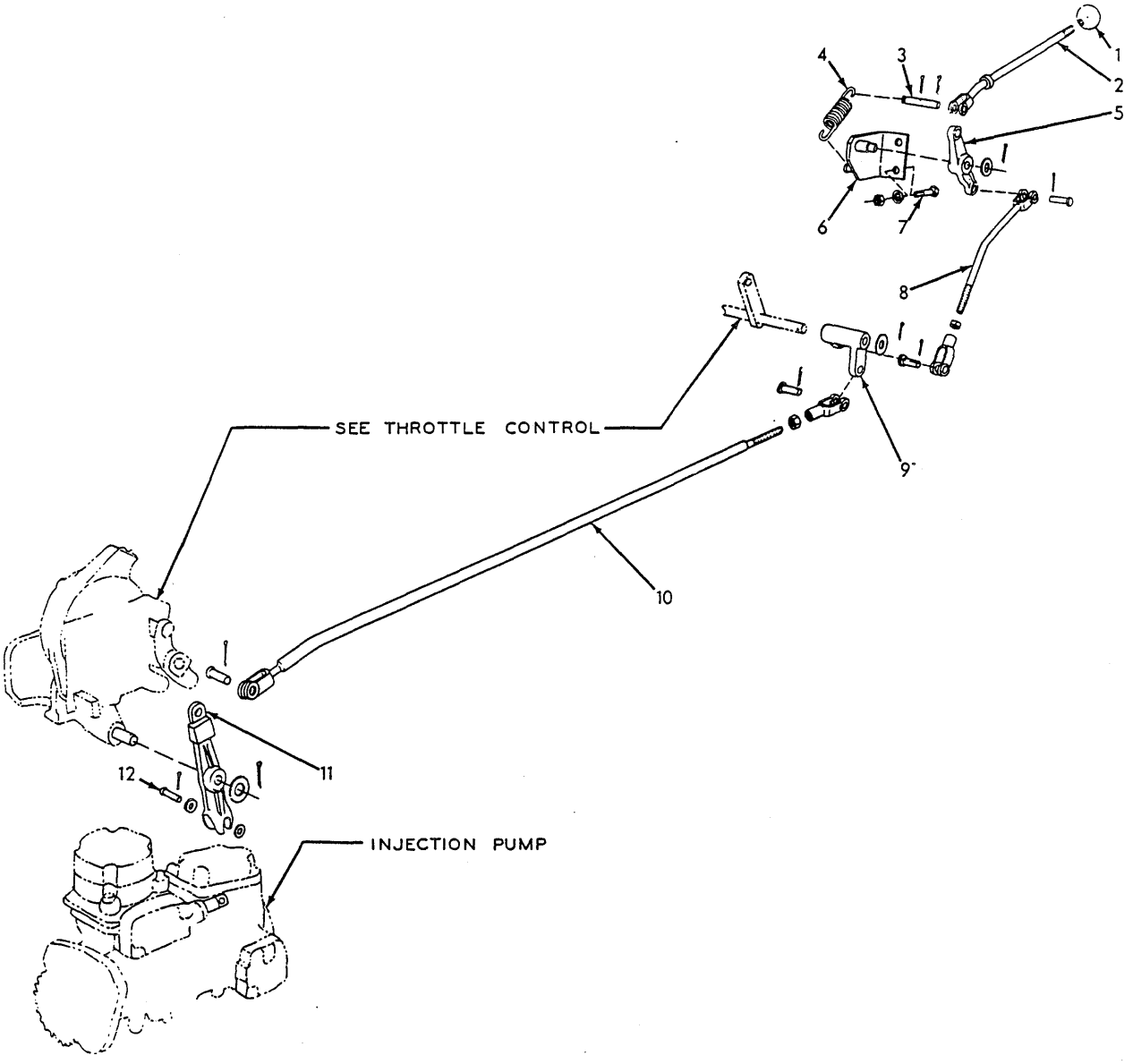

ENGINE SHUT-OFF CONTROL (Second type)

ENGINE SHUT-OFF CONTROL

USAGE: Tractors serial No. 6427 thru No. 10000

ITEM	PART NO.	QTY.	DESCRIPTION
1	091855	1	KNOB
2	620110	1	ROD, rear
3	088566	1	PIN, rear rod
	900942	1	PIN, cotter, 3/32" x 5/8"
4	088428	1	SPRING, bellcrank
5	094285	1	BELLCRANK, rear
	910244	1	WASHER, plain, SAE std., 1/2"
	910967	1	PIN, cotter, 1/8" x 7/8"
6	097705	1	ANGLE, supporting, rear bellcrank
7	036034	2	CAPSCREW, 3/8"NF x 1"
	904206	2	LOCKWASHER, 3/8"
	911041	2	NUT, 3/8"NF
8	620387	1	ROD, intermediate
	911041	1	NUT, 3/8"NF
	628736	1	YOKE, rod end, adjustable, 3/8"NF
	078810	2	PIN, yoke, 3/8" diam.
	900942	2	PIN, cotter, 3/32" x 5/8"
9	620066	1	LEVER, cross shaft
	910244	1	WASHER, plain, SAE std., 1/2"
	910967	1	PIN, cotter, 1/8" x 7/8"
10	620075	1	ROD, front
	911041	1	NUT, 3/8"NF
	628736	1	YOKE, rod end, adjustable, 3/8"NF
	078810	2	PIN, yoke, 3/8" diam.
	900942	2	PIN, cotter, 3/32" x 5/8"
11	094987	1	BELLCRANK, front
	910244	1	WASHER, plain, SAE std., 1/2"
	910967	1	PIN, cotter, 1/8" x 7/8"
12	088470	1	PIN, front bellcrank
	911114	2	WASHER, plain, SAE std., 1/4"
	900970	1	PIN, cotter, 1/16" x 1/2"

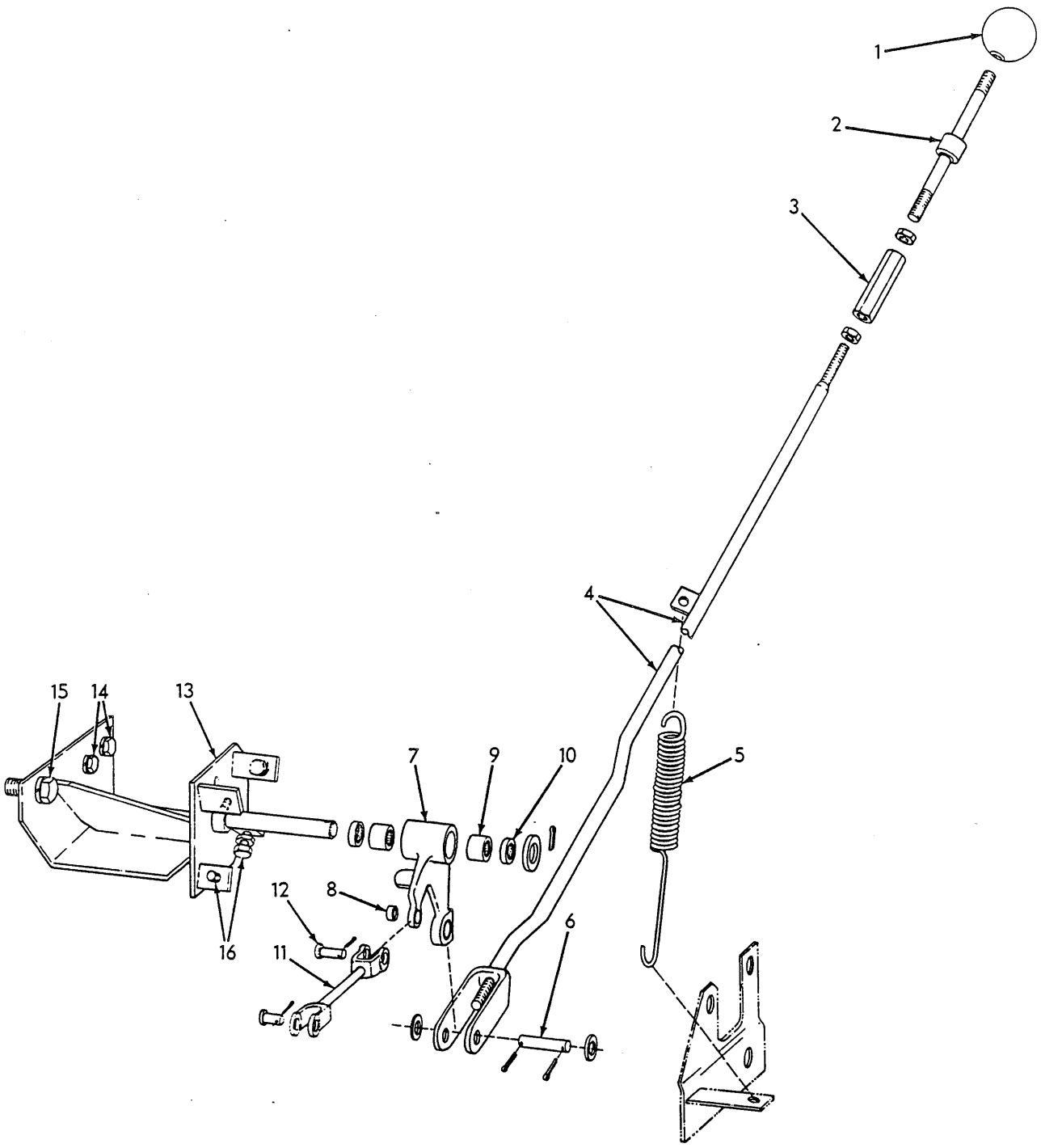

ENGINE SHUT-OFF CONTROL (Third type) T-41888

ENGINE SHUT- OFF CONTROL

USAGE: Tractors serial No. 10001 and up

ITEM	PART NO.	QTY.	DESCRIPTION
1	091855	1	KNOB, shut-off rod
2	631555	1	ROD, upper
	919763	1	NUT, 3/8"NF (left-hand thread)
3	095421	1	NUT, control adjustment
4	644573	1	ROD, intermediate
	911048	1	NUT, jam, 3/8"NF
5	097663	1	SPRING, retracting
6	631477	1	PIN, yoke, intermediate rod
	911115	2	WASHER, plain, SAE std., 3/8"
	900942	2	PIN, cotter, 3/32" x 5/8"
7	644560	1	LEVER ASSEMBLY, intermediate rod (Includes item 8)
8	624585	1	BUSHING, intermediate rod lever
9	043021	2	BEARING, needle, intermediate rod lever
10	096921	2	SEAL, bearing
11	634192	1	ROD, lower
12	628738	2	PIN, yoke, lower rod
	900970	2	PIN, cotter, 1/16" x 1/2"
13	644565	1	BRACKET, supporting, control linkage
14	035439	2	CAPSCREW, 3/8"NC x 1"
	904206	2	LOCKWASHER, 3/8"
15	035220	1	CAPSCREW, 1/2"NC x 1-1/8"
	904208	1	LOCKWASHER, 1/2"
	910244	1	WASHER, plain, SAE std., 1/2"
	900806	1	PIN, cotter, 1/8" x 1"
16	634650	2	CAPSCREW, lever stop (3/8"NC x 1-1/2")
	911034	2	NUT, jam, 3/8"NC

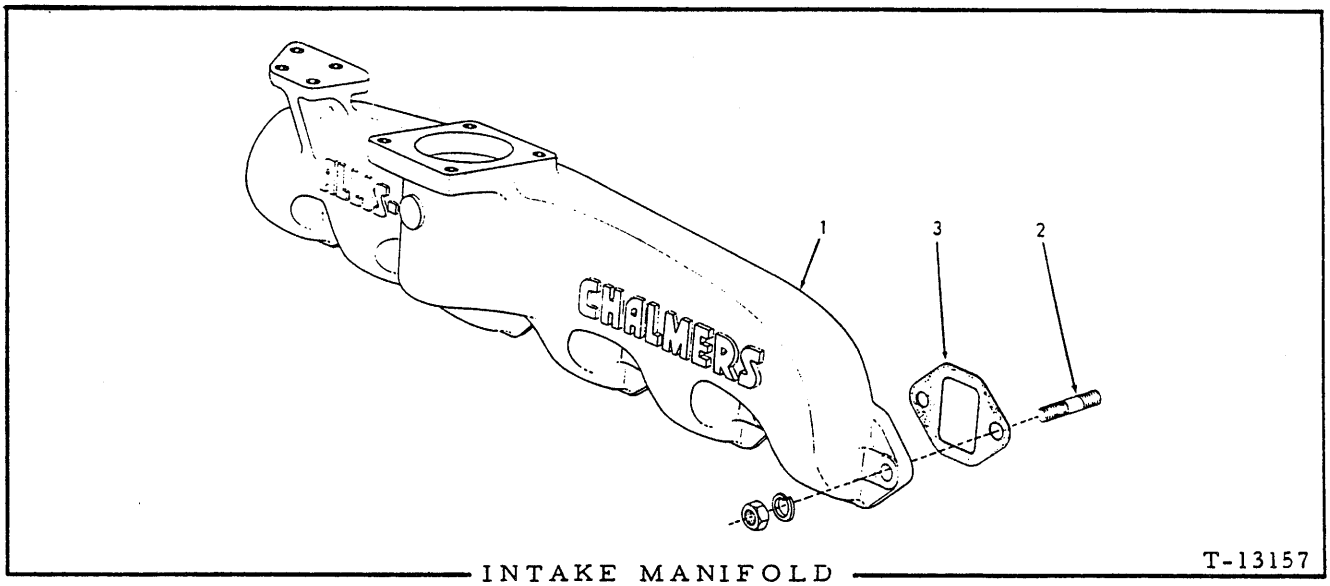

INTAKE MANIFOLD T-13157

* Tractors prior to serial No. 10001
** Tractors serial No. 10001 and up

ITEM	PART NO.	QTY. *	QTY. **	DESCRIPTION
1	4336202	1	-	MANIFOLD, intake
	901652	3	-	PLUG, pipe, 1/4"NPT (Used prior to engine #10-4995)
	4338684	-	1	MANIFOLD, intake
2	4339378	-	2	STUD, intake manifold (2-1/2" long)(Not for Model HD11B)
	4346208	12	10	STUD, intake manifold (2-1/8" long)(Additional 2 used on Model HD11B tractors #10001 and up)
	904208	12	12	LOCKWASHER, 1/2"
	910325	12	12	NUT, 1/2"NC
3	4346138	6	6	□GASKET, intake manifold

□Also see PACKAGED PARTS

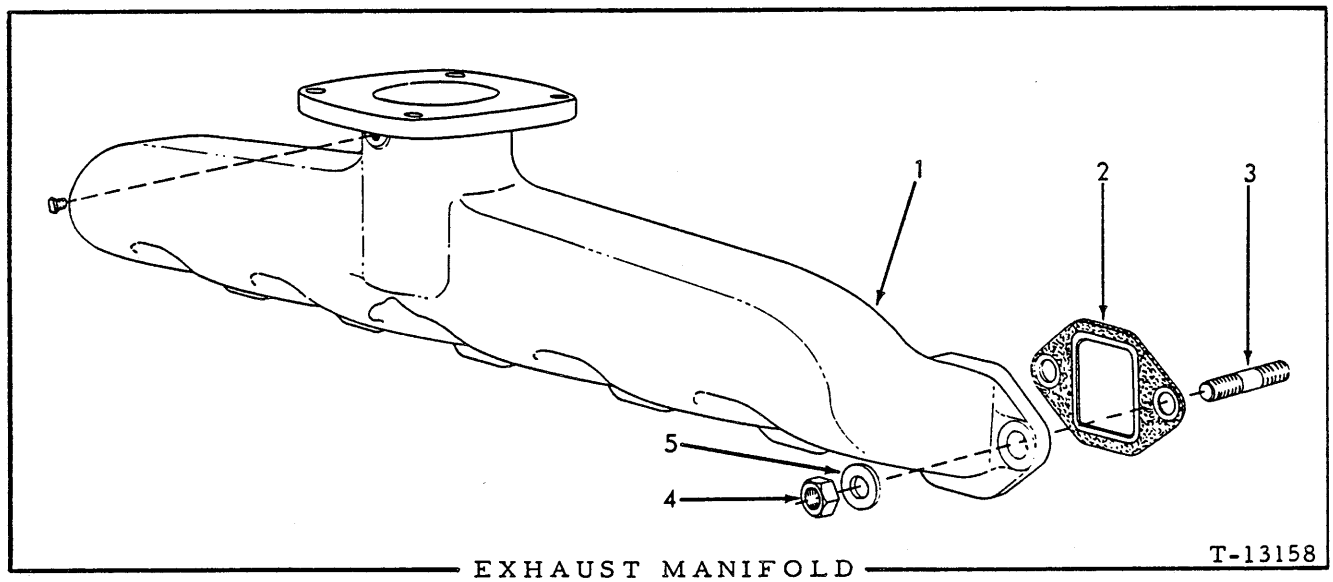

EXHAUST MANIFOLD T-13158

EXHAUST MANIFOLD

USAGE: All tractors prior to serial No. 10001; also Model HD11B tractors serial No. 10001 and up.

ITEM	PART NO.	QTY.	DESCRIPTION
1	4339515	1	MANIFOLD, exhaust
	919840	1	PLUG, pipe, hex-hd., 1/4"NPT
2	4338511	6	□GASKET, exhaust manifold
3	4346208	12	STUD, exhaust manifold
4	4253270	12	NUT, manifold stud
5	4371107	12	WASHER, plain, manifold stud nut

□Also see PACKAGED PARTS

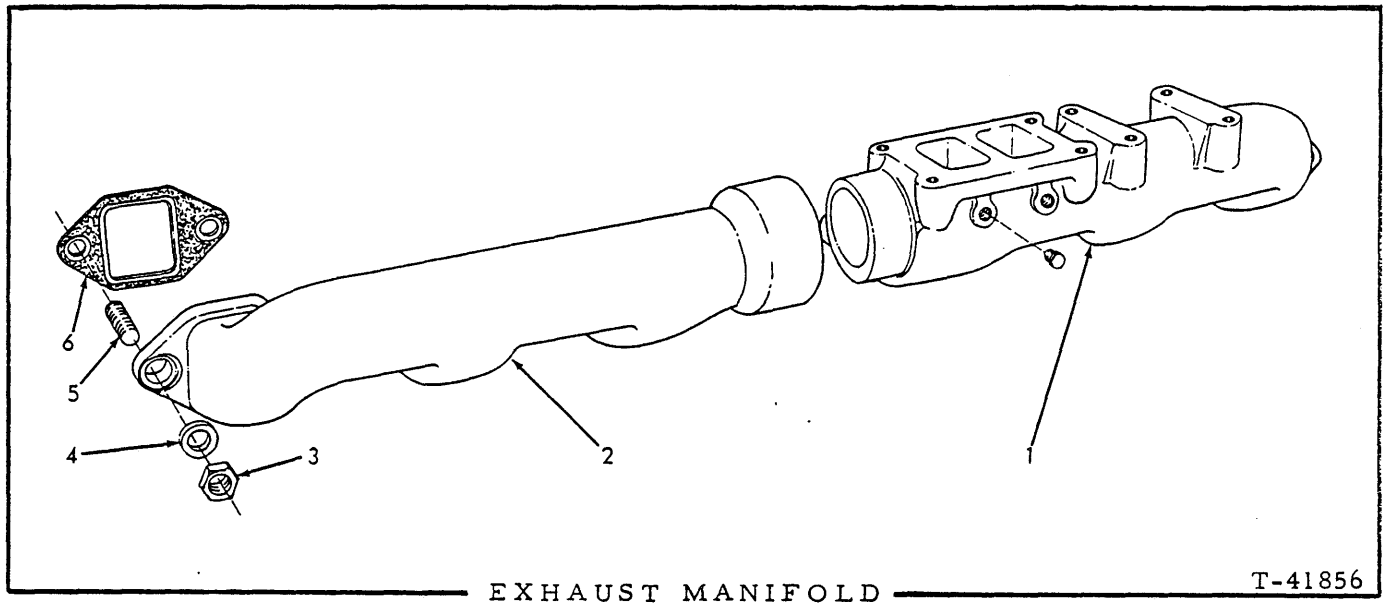

EXHAUST MANIFOLD T-41856

USAGE: Model HD11E,EC,S tractors serial No. 10001 and up

ITEM	PART NO.	QTY.	DESCRIPTION
1	4339511	1	MANIFOLD, front
	919840	2	PLUG, pipe, hex-hd., 1/4"NPT
2	4335623	1	MANIFOLD, rear
3	4253270	12	NUT, manifold stud
4	4371107	12	WASHER, plain, stud nut
5	4346208	12	STUD, exhaust manifold
6	4338511	6	□GASKET, exhaust manifold

□Also see PACKAGED PARTS

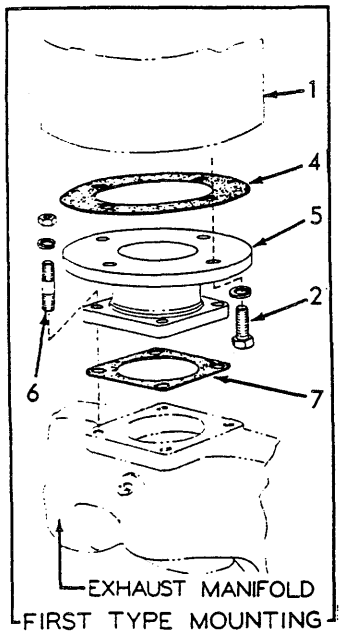

FIRST TYPE MOUNTING

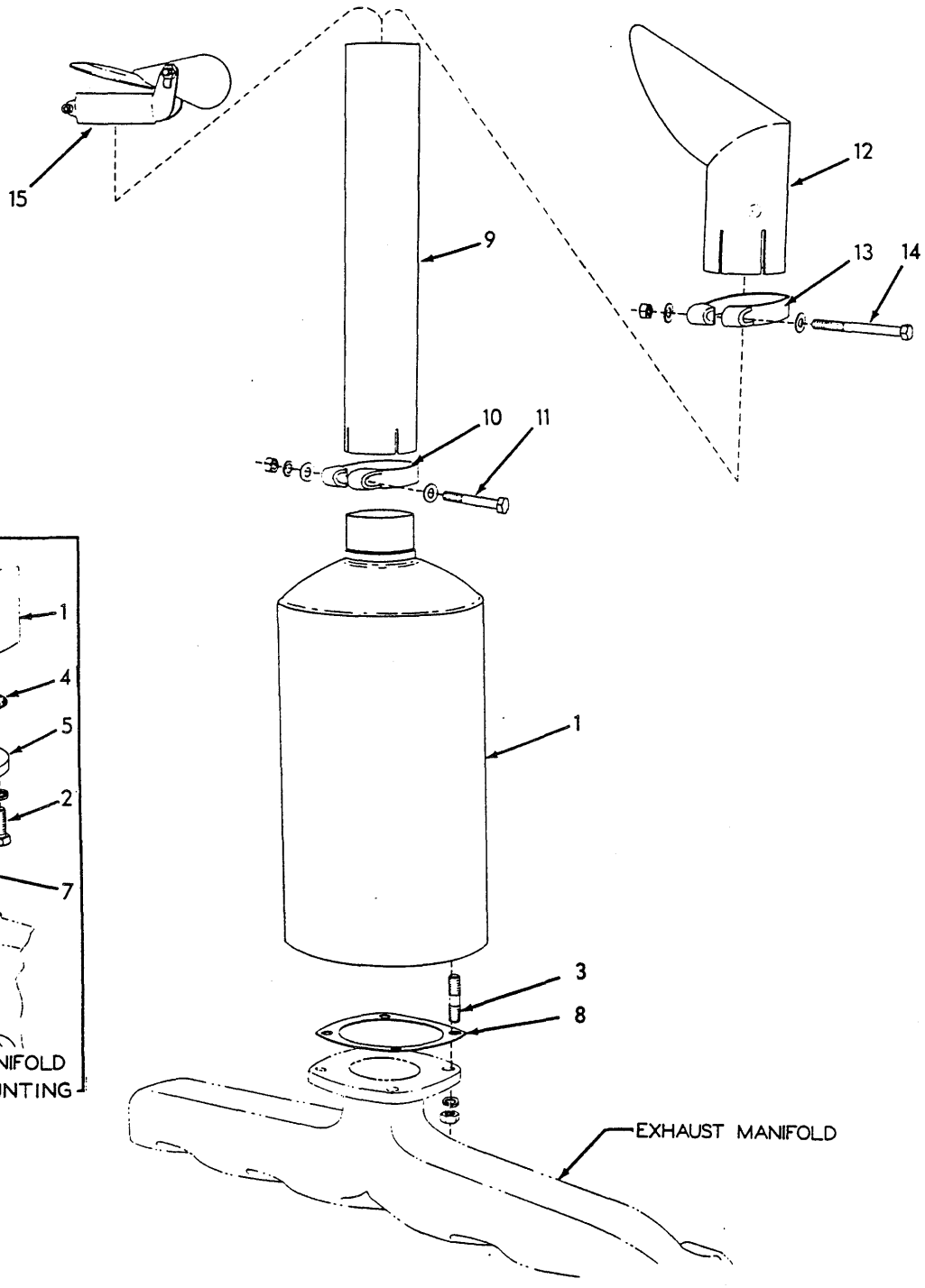

MUFFLER (First type)

MUFFLER

USAGE: Tractors prior to serial No. 6427

* Used prior to tractor serial No. 1192
** Effective with tractor serial No. 1192

ITEM	PART NO.	QTY. *	QTY. **	DESCRIPTION
				NOTE: See page 579 for special exhaust pipe extension
1	087748	1	1	MUFFLER
2	035061	4	-	CAPSCREW, 1/2"NC x 1-1/4"
3	4346208	-	4	STUD (1/2" diam.)
	904208	4	4	LOCKWASHER, 1/2"
	917260	-	4	NUT, brass, 1/2"NC
4	084884	1	-	GASKET, muffler to adapter
5	084501	1	-	ADAPTER, muffler to manifold
6	4346208	4	-	STUD (1/2" diam.)
	904208	4	-	LOCKWASHER, 1/2"
	917260	4	-	NUT, brass, 1/2"NC
7	084885	1	-	GASKET, adapter to manifold
8	4366244	-	1	GASKET, muffler to manifold
9	084890	1	1	PIPE, exhaust
10	084887	1	1	CLAMP, exhaust pipe
11	041913	1	1	CAPSCREW, 3/8"NF x 2-7/8"
	911115	2	2	WASHER, plain, SAE std., 3/8"
	904206	1	1	LOCKWASHER, 3/8"
	911041	1	1	NUT, 3/8"NF
				NOTE: The following items are Special Equipment
12	085280	1	1	SHIELD, rain, exhaust pipe
13	084887	1	1	CLAMP, exhaust pipe rain shield
14	053619	1	1	CAPSCREW, 3/8"NF x 3-3/4"
	911115	2	2	WASHER, plain, SAE std., 3/8"
	911041	1	1	NUT, 3/8"NF
15	085088	1	1	RAINCAP, exhaust pipe

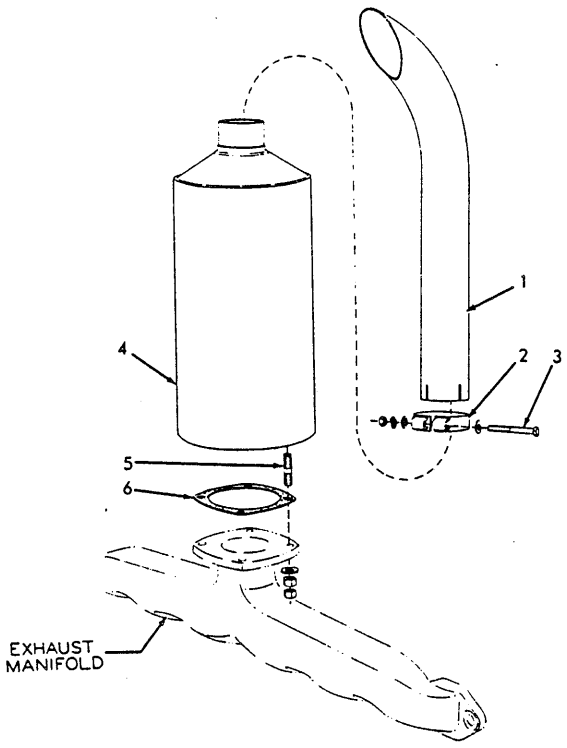

T-27456

MUFFLER

USAGE: Tractors serial No. 6427 thru No. 10000; also Model HD11B tractors serial No. 10001 and up with optional oil bath air cleaner

ITEM	PART NO.	QTY.	DESCRIPTION
			NOTE: See page 579 for special exhaust pipe extension
1	620332	1	PIPE, exhaust
2	084887	1	CLAMP, exhaust pipe
3	051897	1	CAPSCREW, 3/8"NF x 3"
	900817	2	WASHER, plain, U.S. std., 3/8"
	904206	1	LOCKWASHER, 3/8"
	911041	1	NUT, 3/8"NF
4	087748	1	MUFFLER
5	4339378	4	STUD (1/2" diam.)
	099376	4	WASHER, plain
	917260	8	NUT, brass, 1/2"NC
6	4366244	1	GASKET, muffler to manifold

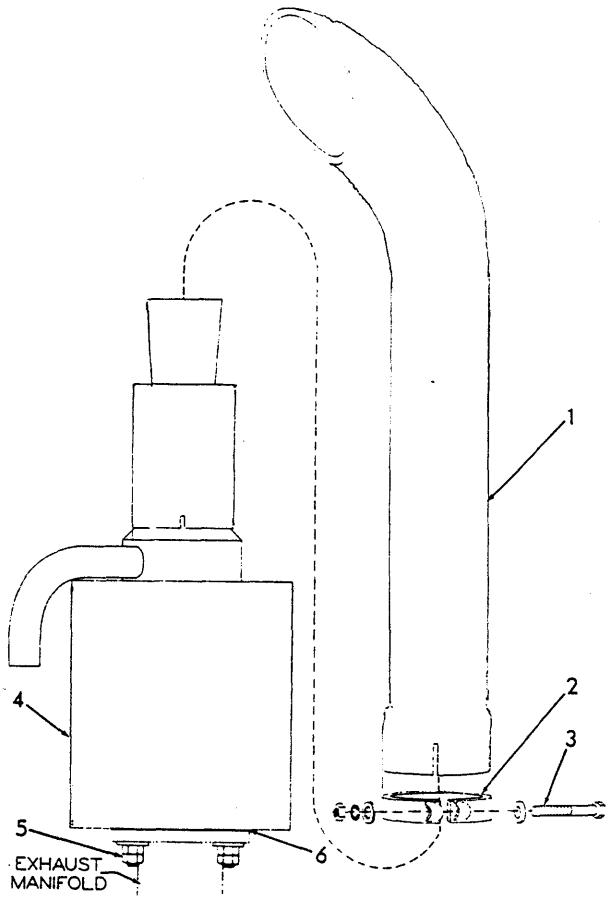

EXHAUST PIPE

T-41847

USAGE: Model HD11B tractors serial No. 10001 and up with standard dry-type air cleaner.

ITEM	PART NO.	QTY.	DESCRIPTION
1	638287	1	PIPE, exhaust
2	646078	1	CLAMP, exhaust pipe
3	051897	1	CAPSCREW, 3/8"NF x 3"
	900817	2	WASHER, plain, U.S. std., 3/8"
	904206	1	LOCKWASHER, 3/8"
	911041	1	NUT, 3/8"NF
4	634273	1	ASPIRATOR, air cleaner
5	4339378	4	STUD, attaching
	099376	4	WASHER, plain
	917260	8	NUT, brass, 1/2"NC
6	4366244	1	GASKET, exhaust flange

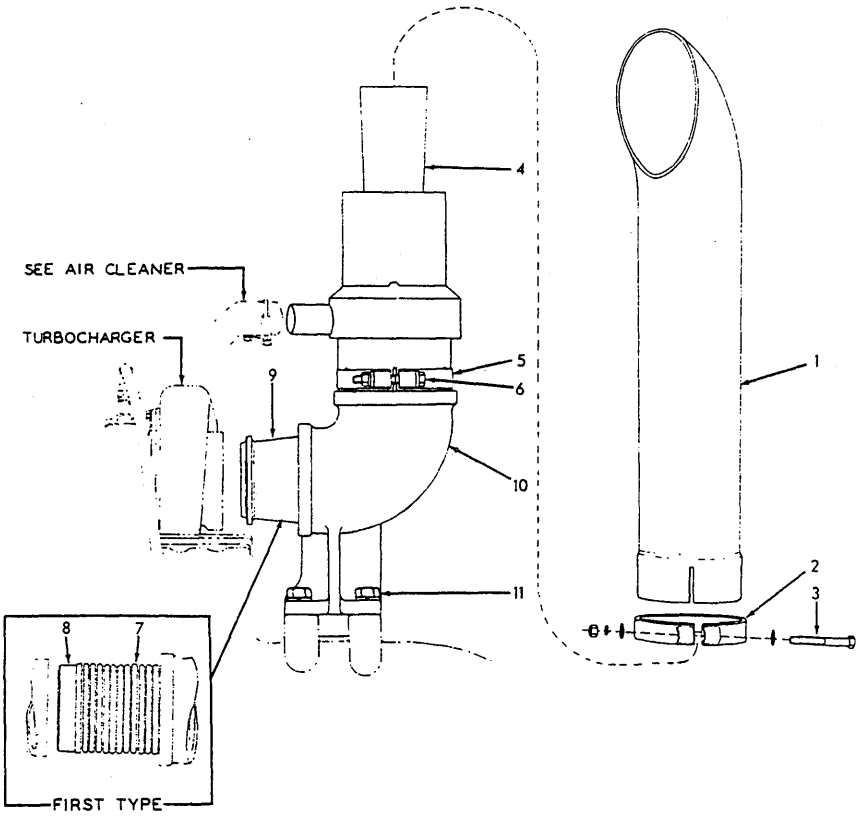

EXHAUST PIPE T-41846

USAGE: Model HD11 E,EC,S tractors serial No. 10001 and up

* Units with standard dry-type air cleaner
** Units with optional oil-bath air cleaner

ITEM	PART NO.	QTY. *	QTY. **	DESCRIPTION
1	644045	1	-	PIPE, exhaust
	656660	-	1	PIPE, exhaust
2	644001	1	-	CLAMP, exhaust pipe
	638922	-	1	CLAMP, exhaust pipe
3	051897	1	1	CAPSCREW, 3/8"NF x 3"
	900817	2	2	WASHER, plain, U.S. std., 3/8"
	904206	1	1	LOCKWASHER, 3/8"
	911041	1	1	NUT, 3/8"NF
4	651354	1	-	ASPIRATOR, air cleaner
5	644001	1	-	CLAMP, air cleaner aspirator
6	051897	1	-	CAPSCREW, 3/8"NF x 3"
	900817	2	-	WASHER, plain, U.S. std., 3/8"
	904206	1	-	LOCKWASHER, 3/8"
	911041	1	-	NUT, 3/8"NF
7	------	1	-	HOSE, exhaust outlet (metal) } Used prior to engine #11-11877. Order item 9.
8	------	1	-	ADAPTOR, exhaust outlet hose }
9	4354714	1	1	DIFFUSER, exhaust (Effective with engine #11-11877)
10	4354821	1	1	DIFFUSER, exhaust elbow
11	4255003	4	4	CAPSCREW, stainless steel, 3/8"NC x 1-1/4"
	904206	4	4	LOCKWASHER, 3/8"

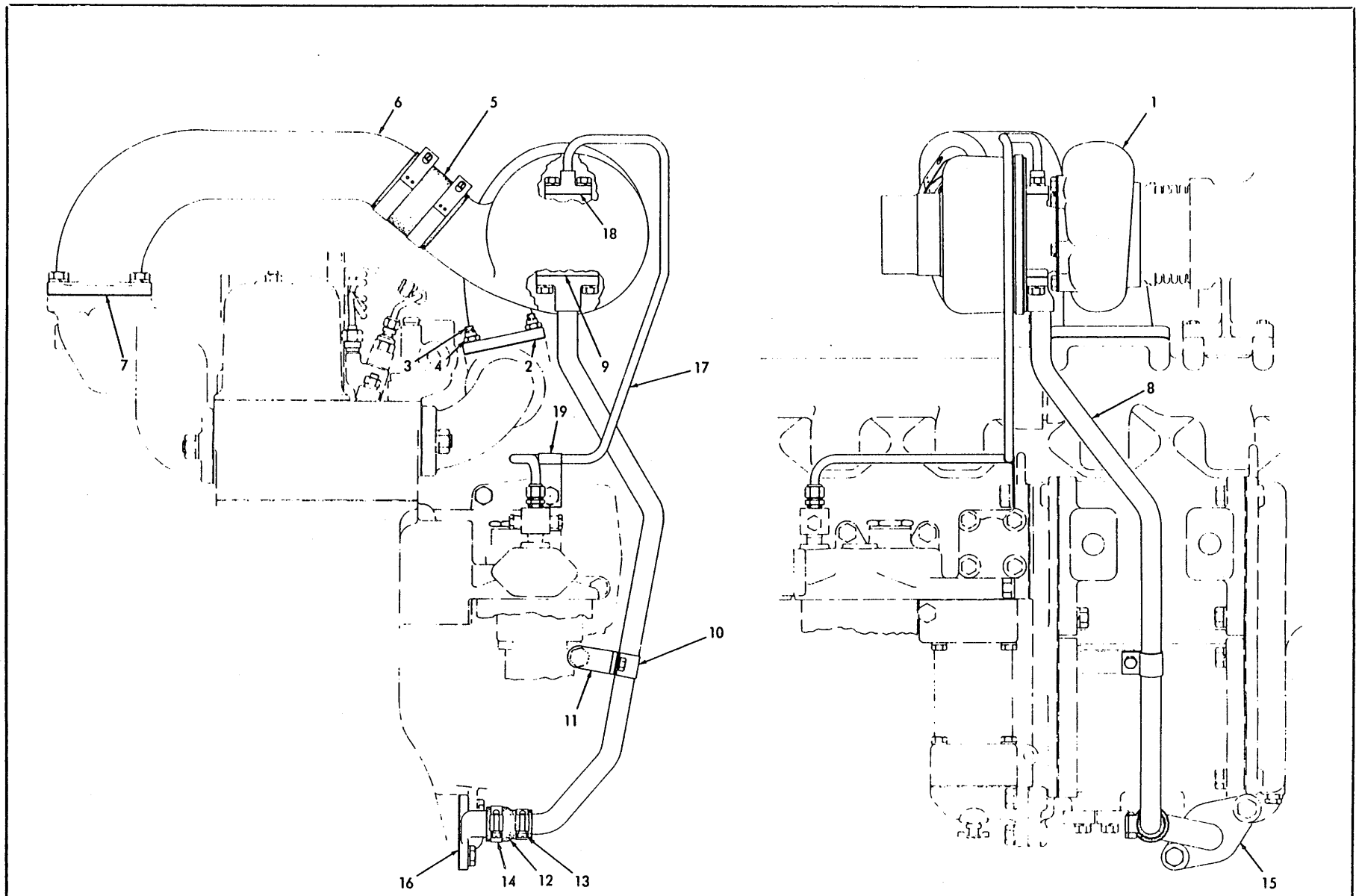

TURBOCHARGER

T-70430

TURBOCHARGER

USAGE: Models HD11E, EC, S, tractors serial No. 10001 and up

ITEM	PART NO.	QTY.	DESCRIPTION	
1	4339212	1	TURBOCHARGER ASSEMBLY (Engines prior to #11-12098) (Order TURBOCHARGER ASSEMBLY 4354698)	See page 149 for parts
	4354698	1	TURBOCHARGER ASSEMBLY (Engines #11-12098 and up)	
2	4336558	1	GASKET, turbocharger mounting (See item 20)	
3	4339535	4	STUD, turbocharger mounting	
4	4385387	4	NUT, stainless, 3/8"NC	
	913544	4	WASHER, plain	
5	4388349	1	HOSE, air discharge elbow	
	4255644	2	CLAMP, hose	
6	4339585	1	ELBOW, air discharge (See ENGINE AIR HEATER for optional Elbow)	
	919840	1	PLUG, pipe, hex-hd., 1/4"NPT (Not used when engine primer is installed)	
	919230	4	CAPSCREW, 1/2"NC x 1-3/8"	
	904208	4	LOCKWASHER, 1/2"	
7	4349193	1	GASKET, air discharge elbow (See item 20)	
8	4339370	1	LINE, oil drain	
	916269	2	CAPSCREW, 3/8"NC x 7/8"	
	904206	2	LOCKWASHER, 3/8"	
9	4339532	1	GASKET, oil drain line (See item 20)	
10	4255606	1	CLAMP, supporting, oil drain line	
	915809	1	CAPSCREW, 5/16"NC x 3/4"	
	904205	1	LOCKWASHER, 5/16"	
	910323	1	NUT, 5/16"NC	
11	4354450	1	BRACKET, supporting, oil drain line	
12	4379723	1	ADAPTOR, oil drain line (rubber)	
13	4254968	1	CLAMP, hose, 1-3/16" diam.	
14	4254991	1	CLAMP, hose, 1-7/16" diam.	
15	4339496	1	FLANGE, oil drain line	
	919230	1	CAPSCREW, 1/2"NC x 1-3/8"	
	904208	1	LOCKWASHER, 1/2"	
16	4336436	1	GASKET, oil drain line flange	
17	4339518	1	TUBE ASSEMBLY, oil feed (Includes SLEEVE and NUT indented below)	
	917807	1	SLEEVE, Sealastic, 3/8" tube	
	917810	1	NUT, Sealastic, 3/8" tube	
	920700	1	CONNECTOR, Sealastic, 3/8" tube, 3/8"NPT male	
	916269	2	CAPSCREW, 3/8"NC x 7/8"	
	904206	2	LOCKWASHER, 3/8"	
18	4339533	1	GASKET, oil feed tube (See item 20)	
19	4375953	1	CLAMP, supporting, oil feed tube	
20	4339827	-	GASKET KIT (Consists of items 2, 7, 9 and 18)(Not illustrated)	

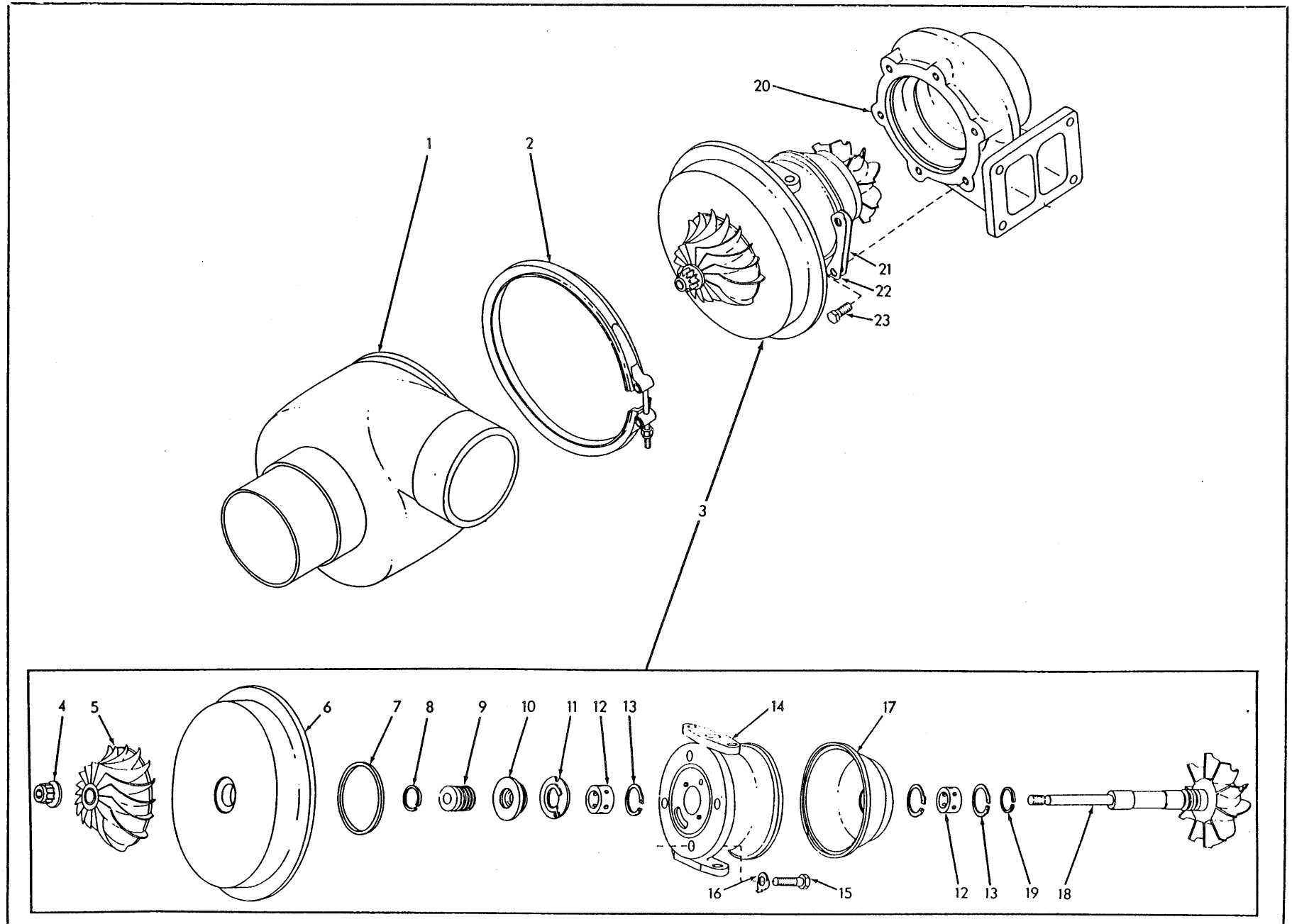

TURBOCHARGER PARTS

T-70408

* 4339212 TURBOCHARGER (Early units)
** 4354698 TURBOCHARGER (Late units)

See page 147

ITEM	PART NO.	QTY. *	QTY. **	DESCRIPTION
1	4056303	1	1	HOUSING ASSEMBLY, compressor (Includes impeller shroud and locating pin)
2	4056302	1	1	COUPLING, compressor housing
3	4056285	1	-	HOUSING ASSEMBLY, center (Consists of items 4 thru 19)
	4059050	-	1	HOUSING ASSEMBLY, center (Consists of items 4 thru 18)
4	4056291	1	1	LOCKNUT, impeller retaining
5	4056290	1	1	IMPELLER, compressor
6	4056292	1	1	BACKPLATE ASSEMBLY (Includes thrust washer and orifice pin)
7	4056300	1	1	RING, end plate sealing
8	4055195	1	1	RING, sealing, turbine wheel shaft, compressor end
9	4056289	1	1	SPACER, thrust
10	4056288	1	-	COLLAR, thrust
	4059029	-	1	COLLAR, thrust
11	4056294	1	1	BEARING, thrust
12	4056295	2	2	BEARING, turbine wheel
13	4056296	3	3	RING, snap, bearing retaining
14	4056286	1	-	HOUSING ASSEMBLY, center (Includes dowels)
	4059024	-	1	HOUSING ASSEMBLY, center (Includes dowels)
15	4181061	4	4	BOLT, backplate attaching
16	4056298	4	4	LOCKPLATE, back plate attaching bolt
17	4056293	1	1	SHROUD, heat, turbine end
18	4056287	1	-	WHEEL, turbine
	4059049	-	1	WHEEL, turbine
19	4056297	1	-	RING, sealing, turbine wheel shaft, exhaust end (Engines prior to #11-12098)
20	4056301	1	-	HOUSING, turbine
	4059051	-	1	HOUSING, turbine
21	4056306	3	3	PLATE, clamp, center housing
22	4056305	3	3	LOCKPLATE, clamp plate bolt
23	4056314	3	3	BOLT, clamp plate (3/8"NC x 5/8")

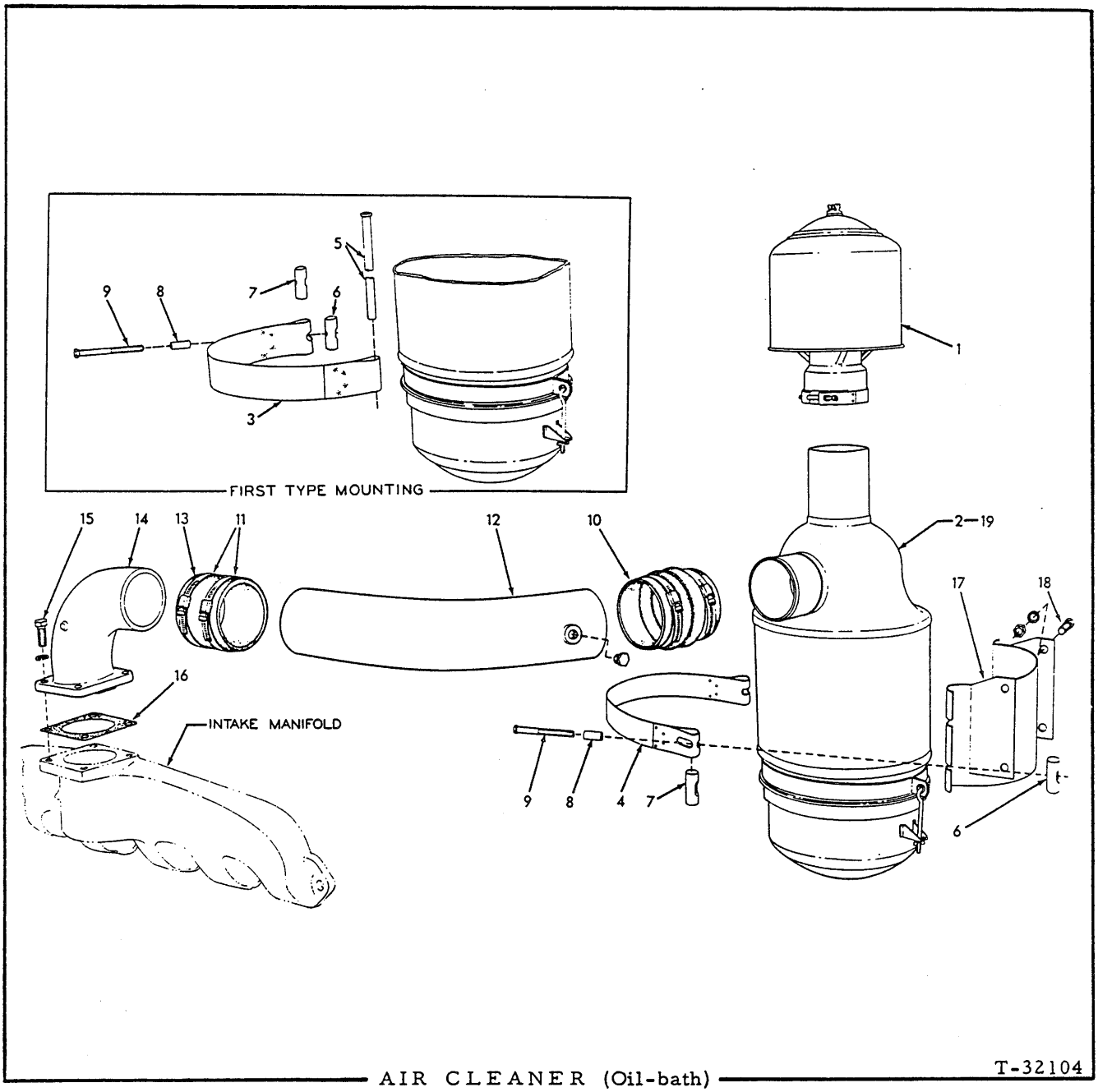

AIR CLEANER (Oil-bath) T-32104

USAGE: Tractors prior to serial No. 10001. Standard equipment on tractors prior to serial No. 7376; optional on later units. Also see page 157 for dry-type air cleaner.

* Tractors prior to serial No. 6427
** Tractors serial No. 6427 thru 6472
*** Tractors serial No. 6473 and up

ITEM	PART NO.	QUANTITY *	**	***	DESCRIPTION
1	074099	1	1	1	PRE-CLEANER ASSEMBLY, air (See page 154 for parts)
2	089646	1	1	1	CLEANER ASSEMBLY, air (See page 154 for parts)

(Continued)

ITEM	PART NO.	QUANTITY *	**	***	DESCRIPTION
3	------	2	-	-	BAND, air cleaner mounting (3" wide) (Order BAND 620333)
	620333	-	2	-	BAND, air cleaner mounting (2" wide)
4	622884	-	-	2	BAND, air cleaner mounting
5	084915	1	1	-	PIN, anchor, mounting band
6	052970	2	2	-	PIN, mounting band (threaded hole, 3" long)
	081796	-	-	4	PIN, mounting band (threaded hole, 2" long)
7	052969	2	-	-	PIN, mounting band (plain hole, 3" long)
	081795	-	2	4	PIN, mounting band (plain hole, 2" long)
8	053667	2	2	4	SPACER, mounting band capscrew
9	082937	2	-	-	CAPSCREW, mounting band (3/8"NC x 4-1/2")
	086238	-	2	4	CAPSCREW, mounting band (3/8"NC x 3-3/4")
10	084508	1	1	1	HOSE, rear
11	921916	4	4	4	CLAMP, hose, 3-7/8" to 4-3/4" diam.
12	084859	1	1	1	TUBE, air
	919840	1	1	1	PLUG, pipe, hex-hd., 1/4"NPT (Not used when Engine Primer is installed)
13	084421	1	1	1	HOSE, front
14	084385	1	1	1	ELBOW, air inlet (Also see pages 169, 171 and 175 for special elbow used with Engine Air Heater)
15	035061	4	4	4	CAPSCREW, 1/2"NC x 1-1/4"
	904208	4	4	4	LOCKWASHER, 1/2"
16	084868	1	1	4	GASKET, air inlet elbow
17	622888	-	-	1	SADDLE, air cleaner
18	070467	-	-	3	CAPSCREW, 1/2"NF x 1"
	070469	-	-	1	CAPSCREW, 1/2"NF x 1-1/4"
	904208	-	-	4	LOCKWASHER, 1/2"
	911043	-	-	4	NUT, 1/2"NF

NOTE: See PAINTING AND MARKING for transfers

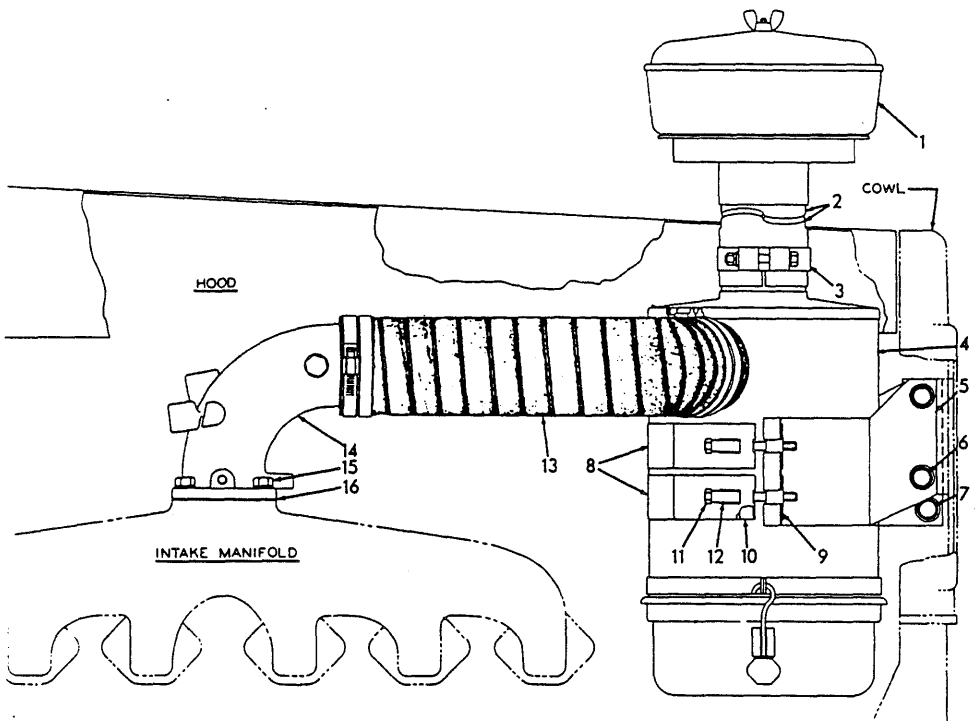

AIR CLEANER (Oil-bath) T-72456

USAGE: Special Equipment on Model HD11B tractors serial No. 10001 and up. See page 158 for standard dry-type air cleaner

ITEM	PART NO.	QTY.	DESCRIPTION
1	650473	1	PRE-CLEANER ASSEMBLY, air (See page 155 for parts)
2	654938	1	TUBE, air inlet
3	634091	1	CLAMP, air inlet tube
	916389	1	CAPSCREW, 3/8"NF x 3-1/4"
	044973	2	WASHER, plain
	904206	1	LOCKWASHER, 3/8"
	911041	1	NUT, 3/8"NF
4	4025956	1	CLEANER ASSEMBLY, air (See page 155 for parts)
5	654892	1	SADDLE, mounting
6	035221	1	CAPSCREW, 1/2"NC x 1"
7	035061	3	CAPSCREW, 1/2"NC x 1-1/4"
	904208	4	LOCKWASHER, 1/2"
	064531	4	WASHER, plain
8	654961	2	BAND, air cleaner mounting
9	081796	4	PIN, mounting band (threaded hole)
10	081795	4	PIN, mounting band (plain hole)
11	086238	4	CAPSCREW, mounting band
12	053667	4	SPACER, mounting band capscrew
13	650552	1	HOSE, cleaner to manifold
	921916	4	CLAMP, hose, 3-3/4" to 4-3/4" diam.
14	622432	1	ELBOW, air inlet
	919840	1	PLUG, pipe, hex-hd., 1/4"NPT
	919134	1	PLUG, pipe, hex-hd., 1/8"NPT
15	035061	4	CAPSCREW, 1/2"NC x 1-1/4"
	904208	4	LOCKWASHER, 1/2"
16	084868	1	GASKET, air inlet elbow

NOTE: See PAINTING AND MARKING for transfers

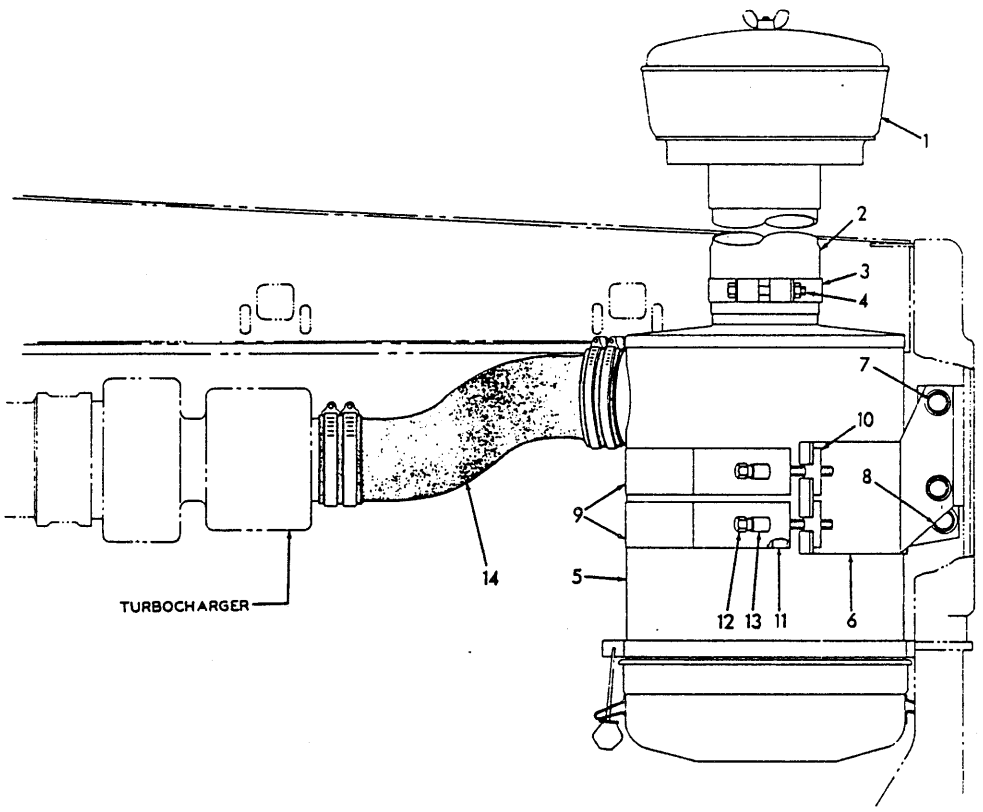

AIR CLEANER (Oil-bath) T-72380

USAGE: Special equipment on Model HD11E,EC.S tractors serial No. 10001 and up. See page 161 for standard dry-type air cleaner

ITEM	PART NO.	QTY.	DESCRIPTION
1	655272	1	PRE-CLEANER ASSEMBLY, air (See page 155 for parts)
2	622685	1	TUBE, air inlet
3	639725	1	CLAMP, air inlet tube
4	051897	1	CAPSCREW, 3/8"NF x 3"
	900817	2	WASHER, plain, U.S. std., 3/8"
	904206	1	LOCKWASHER, 3/8"
	911041	1	NUT, 3/8"NF
5	655270	1	CLEANER ASSEMBLY, air (See page 155 for parts)
6	656663	1	SADDLE, mounting
7	035221	2	CAPSCREW, 1/2"NC x 1"
8	035061	2	CAPSCREW, 1/2"NC x 1-1/4"
	904208	4	LOCKWASHER, 1/2"
	064531	4	WASHER, plain
9	622884	2	BAND, air cleaner mounting
10	081796	4	PIN, mounting band (threaded hole)
11	081795	4	PIN, mounting band (plain hole)
12	086238	4	CAPSCREW, mounting band
13	053667	4	SPACER, mounting band capscrew
14	656665	1	HOSE, cleaner to turbocharger
	921916	4	CLAMP, hose, 3-3/4" to 4-3/4" diam.

NOTE: See PAINTING AND MARKING for transfer

AIR PRE-CLEANER ASSEMBLY 074099

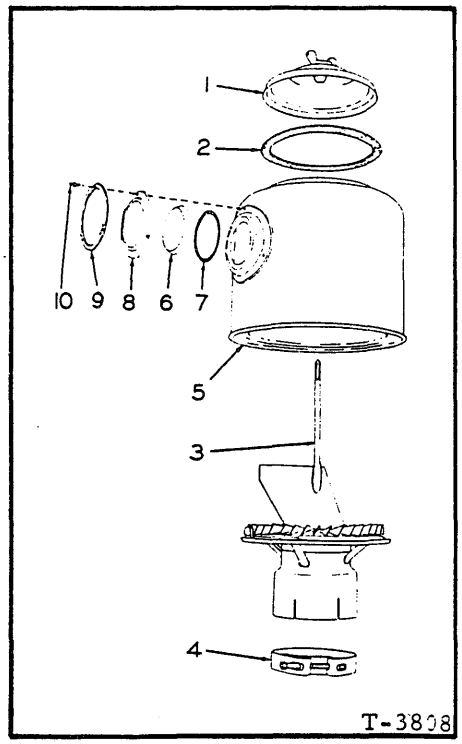

USAGE: See page 150

ITEM	PART NO.	QTY.	DESCRIPTION
1	044255	1	CAP ASSEMBLY (Includes wing nut)
2	044256	1	GASKET, cap
3	074100	1	BODY
4	065413	1	CLAMP ASSEMBLY (Includes screw)
5	058723	1	SHELL ASSEMBLY (Includes items 6 thru 10)
6	043860	1	GLASS, window
7	043852	1	GASKET, window glass
8	043853	1	RETAINER, window glass
9	043991	1	RING, window glass retainer
10	043856	3	SCREW ASSEMBLY (Includes lockwasher)

AIR CLEANER ASSEMBLY 089646

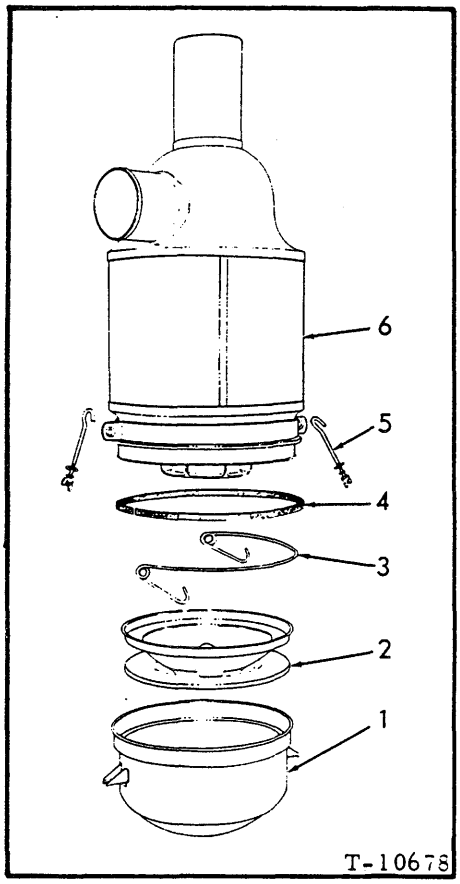

USAGE: See page 150

1	073536	1	CUP, oil
2	078904	1	BAFFLE, air
3	059149	1	RING, air baffle retaining
4	059144	1	GASKET, oil cup
5	059294	2	BOLT ASSEMBLY, oil cup (Includes nut and washers)
6	------	1	BODY (Not serviced separately)

AIR CLEANER PARTS

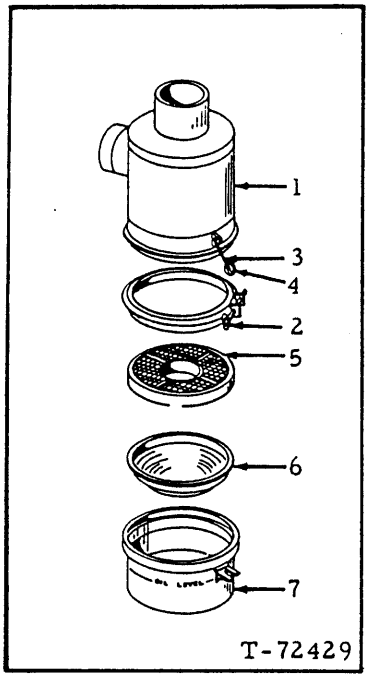

* 4025956 CLEANER ASSEMBLY (10" diam.)(See page 152)
** 655270 CLEANER ASSEMBLY (12" diam.)(See page 153)

ITEM	PART NO.	QTY. *	QTY. **	DESCRIPTION
1	------	1	1	BODY ASSEMBLY (Not serviced separately)
2	------	1	-	BAND ASSEMBLY (Not serviced separately)
	4055456	-	1	BAND ASSEMBLY (Includes screw and nut)
3	4055454	2	2	BOLT ASSEMBLY (Includes item 4)
4	4055455	2	2	NUT, wing
5	4056636	1	-	ELEMENT, filtering
	4055451	-	1	ELEMENT, filtering
6	4056637	1	-	CUP, inner
	4055452	-	1	CUP, inner
7	4056638	1	-	CUP, outer
	4055453	-	1	CUP, outer

AIR PRE-CLEANER PARTS

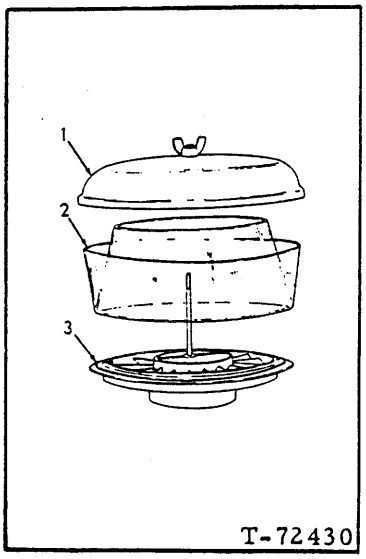

* 650473 PRE-CLEANER ASSEMBLY (See page 152)
** 655272 PRE-CLEANER ASSEMBLY (See page 153)

1	651268	1	1	COVER
2	651270	1	1	BOWL, sediment (clear plastic)
3	654122	1	-	SLEEVE ASSEMBLY (3-3/4"I. D.) } Each includes center stud
	650386	-	1	SLEEVE ASSEMBLY (4-1/2"I. D.) } Each includes center stud

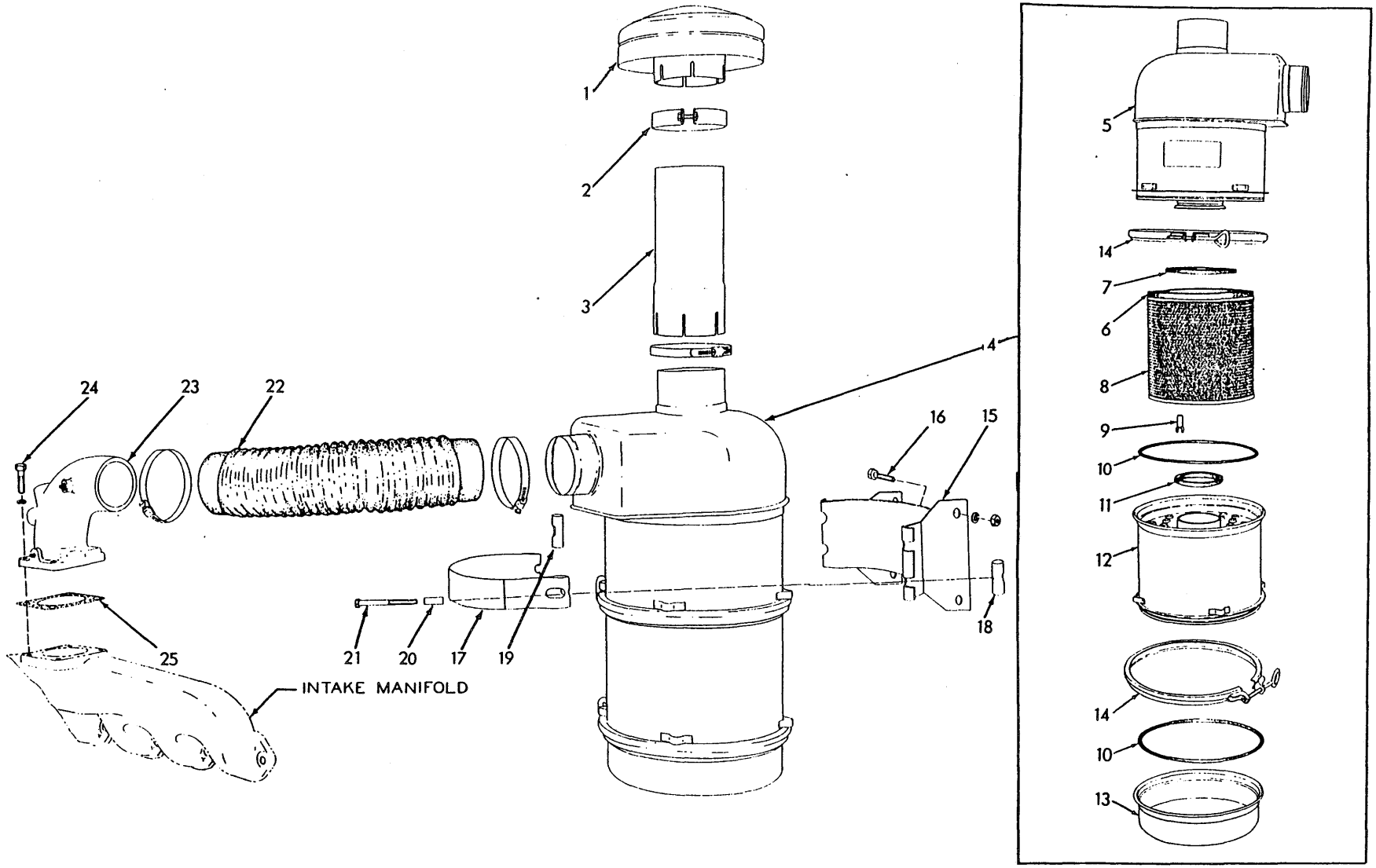

AIR CLEANER (Dry-type)

AIR CLEANER (Dry-type)

USAGE: Standard equipment on tractors serial No. 7376 thru No. 10000; optional on prior units. See page 150 for oil-bath air cleaner

ITEM	PART NO.	QTY.	DESCRIPTION
1	621979	1	CAP, rain (Includes item 2)
2	632650	1	CLAMP ASSEMBLY, rain cap (Includes bolt and nut)
3	622685	1	TUBE, air inlet
	921916	1	CLAMP, adjustable, 3-7/8" to 4-3/4" diam.
4	621980	1	CLEANER ASSEMBLY, air (Includes items 5 thru 14)
5	622892	1	BODY, upper
6	------	1	GASKET, filter element, upper (Not serviced separately)
7	------	1	GASKET, filter element, lower (Not serviced separately)
8	622893	1	ELEMENT ASSEMBLY, filter (Includes items 6 and 7)
9	620719	3	NUT, wing, element retaining
10	622895	2	GASKET, air pre-cleaner, outer
11	622898	1	GASKET, air pre-cleaner, inner
12	622894	1	PRE-CLEANER ASSEMBLY, air (Serviced only as a unit)
13	622896	1	CUP, dust
14	622897	2	CLAMP ASSEMBLY (Includes screw)
15	622887	1	SADDLE, air cleaner mounting
16	070467	3	CAPSCREW, 1/2"NF x 1"
	070469	1	CAPSCREW, 1/2"NF x 1-1/4"
	904208	4	LOCKWASHER, 1/2"
	911043	4	NUT, 1/2"NF
17	622884	2	BAND, air cleaner mounting
18	081796	4	PIN, mounting band (threaded hole)
19	081795	4	PIN, mounting band (plain hole)
20	053667	4	SPACER, mounting band capscrew
21	086238	4	CAPSCREW, mounting band (3/8"NC x 3-3/4")
22	622590	1	HOSE, air
	921916	2	CLAMP, hose, 3-7/8" to 4-3/4" diam.
23	622432	1	ELBOW, air inlet (Also see page 175 for special elbow used with Engine Air-Heater)
	919840	1	PLUG, pipe, hex-hd., 1/4"NPT (Not used when Engine Primer is installed)
	919134	1	PLUG, pipe, hex-hd., 1/8"NPT (Not used when Air Restriction Indicator is installed)
24	035061	4	CAPSCREW, 1/2"NC x 1-1/4"
	904208	4	LOCKWASHER, 1/2"
25	084868	1	GASKET, air inlet elbow

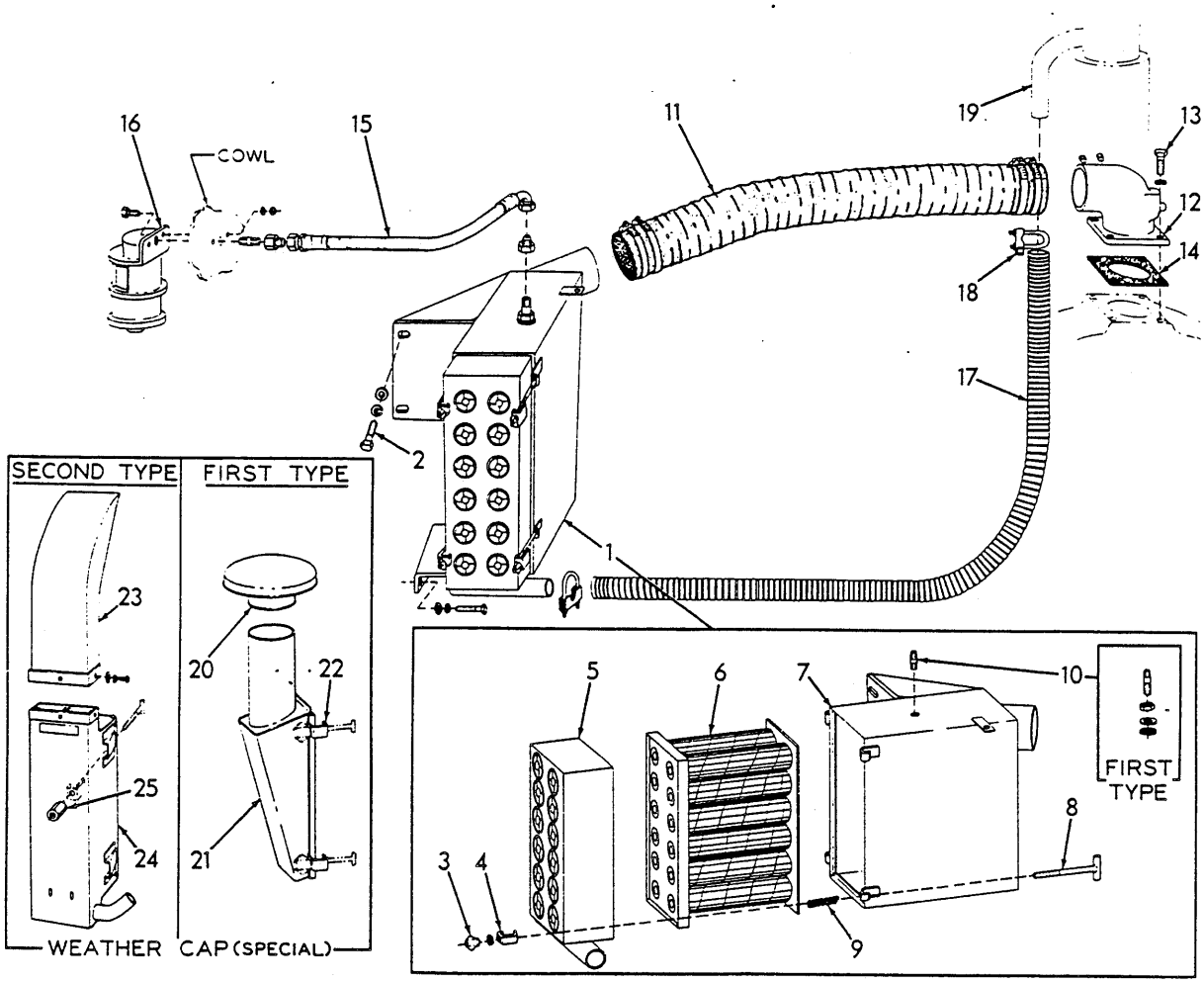

AIR CLEANER (Dry-type) T-41844

USAGE: Model HD11B tractors serial No. 10001 and up. See page 152 for optional oil-bath air cleaner

ITEM	PART NO.	QTY.	DESCRIPTION
1	634272	1	CLEANER ASSEMBLY, air (Consists of items 3 thru 10)
2	070469	4	CAPSCREW, 1/2"NF x 1-1/4" (Early units)
	035061	4	CAPSCREW, 1/2"NC x 1-1/4" (Late units)
	904208	4	LOCKWASHER, 1/2"
	064531	4	WASHER, plain
3	056863	4	NUT, wing, pre-cleaner panel bolt
	904205	4	LOCKWASHER, 5/16"
4	196662	4	HOOK, pre-cleaner panel
5	640625	1	PANEL, pre-cleaner
6	638731	1	CARTRIDGE
7	640626	1	HOUSING ASSEMBLY, air cleaner (Includes items 3, 4, 8, 9, 10)

(Continued)

ITEM	PART NO.	QTY.	DESCRIPTION	
8	196663	4	T-BOLT, pre-cleaner panel	
9	650301	4	SPRING, pre-cleaner panel bolt	
	638713	1	ADAPTER, restriction indicator (Includes filter)	Used prior to tractor #11250
	911048	1	NUT, jam, 3/8"NF	
	900817	1	WASHER, plain, U.S. std., 3/8"	
10	638727	1	GASKET, adapter	
	650302	1	ADAPTER, restriction indicator (Includes filter)(Effective with tractor #11250)	
11	646542	1	HOSE, air inlet	
	921914	2	CLAMP, hose, 2-5/16" to 3-1/4" diam.	
	921916	2	CLAMP, hose, 3-13/16" to 4-3/4" diam.	
12	622432	1	ELBOW, air inlet	
	919840	1	PLUG, pipe, hex-hd., 1/4"NPT (Remove when installing engine primer)	
	919134	1	PLUG, pipe, hex-hd., 1/8"NPT	
13	035061	4	CAPSCREW, 1/2"NC x 1-1/4"	
	904208	4	LOCKWASHER, 1/2"	
14	084868	1	GASKET, air inlet elbow	
15	644046	1	HOSE, restriction indicator (See page 6)	
	919174	2	CONNECTOR, flare type, 1/4" tube, 1/8"NPT female	
	904273	1	NIPPLE, pipe, 1/8"NPT x 1"	
16	631564	1	INDICATOR, air restriction (Serviced only as a unit)	
	912789	2	CAPSCREW, 1/4"NF x 3/4"	
	904204	2	LOCKWASHER, 1/4"	
	911040	2	NUT, 1/4"NF	
17	643911	1	HOSE, aspirator	
18	634093	2	CLAMP ASSEMBLY, aspirator hose (Serviced only as a unit)	
19	------	1	ASPIRATOR (See EXHAUST PIPE)	
			NOTE: Items listed below are special equipment	
20	624438	1	CAP, weather	FIRST TYPE
21	646781	1	INTAKE, weather cap adapting	
22	646771	4	HOOK, intake retaining (Replaces item 4)	
23	651044	1	PANEL, air intake (Replaces standard PANEL 640625)	SECOND TYPE
24	650895	1	ADAPTER, air intake	
	047478	4	CAPSCREW, 1/4"NC x 5/8"	
	904204	4	LOCKWASHER, 1/4"	
	911114	4	WASHER, plain, SAE std., 1/4"	
25	655140	4	NUT, air intake panel	
			NOTE: See PAINTING AND MARKING for transfers	

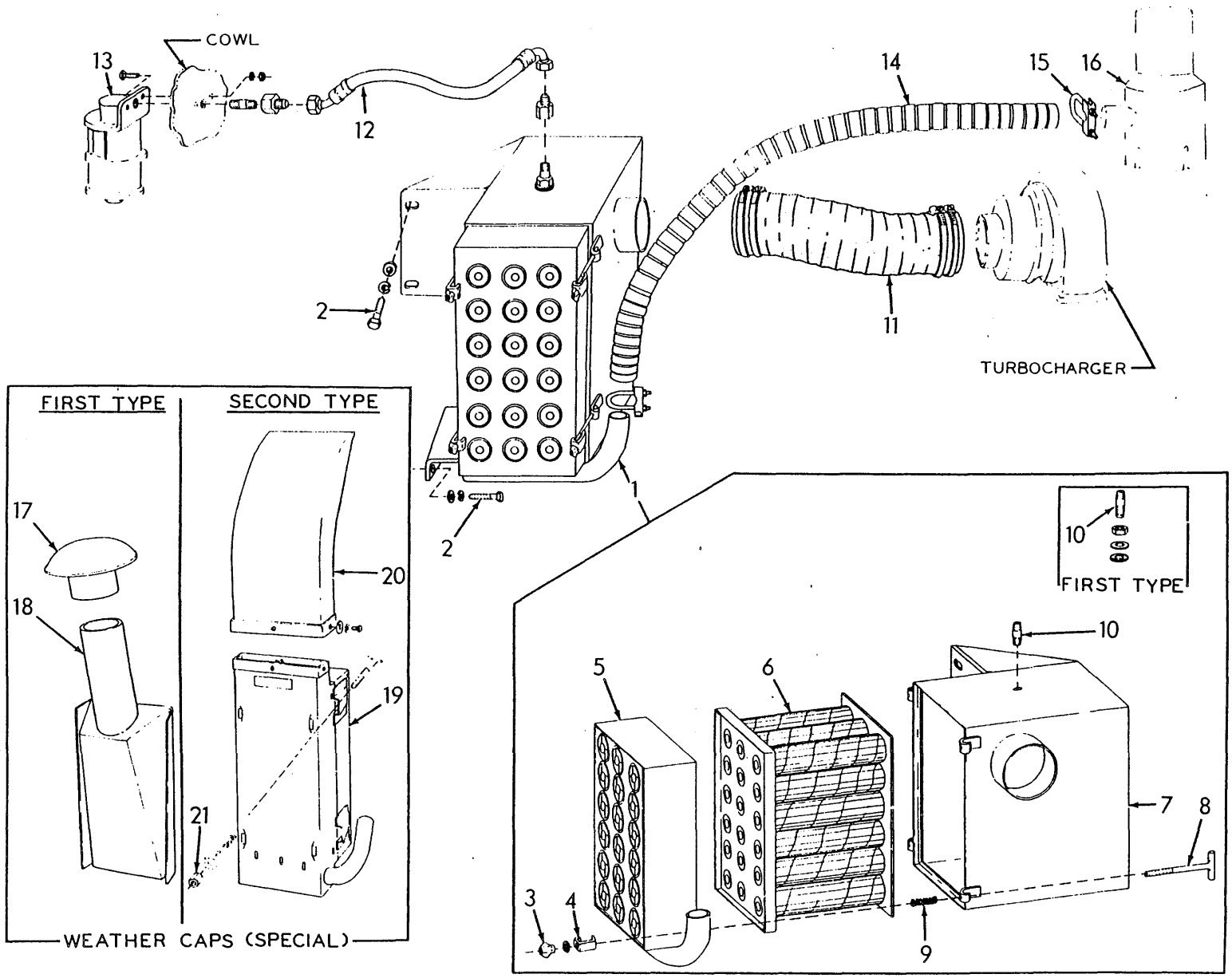

AIR CLEANER (Dry-type)

T-41845

AIR CLEANER (Dry type)

USAGE: Model HD11E.EC,S tractors serial No. 10001 thru No. 11524. see page 153 for optional oil-bath air cleaner.

ITEM	PART NO.	QTY.	DESCRIPTION
1	644071	1	CLEANER ASSEMBLY, air (Consists of items 3 thru 10)
2	070469	4	CAPSCREW, 1/2"NF x 1-1/4" (Early units)
	035061	4	CAPSCREW, 1/2"NC x 1-1/4" (Late units)
	904208	4	LOCKWASHER, 1/2"
	064531	4	WASHER, plain
3	056863	4	NUT, wing, pre-cleaner panel
	904205	4	LOCKWASHER, 5/16"
4	196662	4	HOOK, pre-cleaner panel
5	644079	1	PANEL, pre-cleaner
6	644042	1	CARTRIDGE
7	644080	1	HOUSING ASSEMBLY, air cleaner (Includes items 3, 4, 8, 9, 10)
8	196663	4	T-BOLT, pre-cleaner panel
9	650301	4	SPRING, pre-cleaner panel T-bolt
10	638713	1	ADAPTER, restriction indicator (Includes filter) — Used prior to tractor #11252
	911048	1	NUT, jam, 3/8"NF
	900817	1	WASHER, plain, U.S. std., 3/8"
	638727	1	GASKET, adapter
	650302	1	ADAPTER, restriction indicator (1/8"NPT nipple. Includes filter) (Effective with tractor #11252)
11	644032	1	HOSE, air inlet
	922200	4	CLAMP, hose, 3-5/16" to 4-5/16" diam.
12	655089	1	HOSE, restriction indicator (See page 6)
	919174	2	CONNECTOR, flare type, 1/4" tube, 1/8"NPT female
	904273	1	NIPPLE, pipe, 1/8"NPT x 1"
13	631564	1	INDICATOR, air restriction (Serviced only as a unit)
	912789	2	CAPSCREW, 1/4"NF x 3/4"
	904204	2	LOCKWASHER, 1/4"
	911040	2	NUT, 1/4"NF
14	644033	1	HOSE, aspirator
15	644034	2	CLAMP ASSEMBLY, aspirator hose (Serviced only as a unit)
16	------	1	ASPIRATOR (See EXHAUST PIPE)

NOTE: Items listed below are special equipment

17	624438	1	CAP, weather — FIRST TYPE
18	646773	1	INTAKE, weather cap adapting — FIRST TYPE
19	651043	1	PANEL, air intake (Replaces standard PANEL 644079) — SECOND TYPE
20	650896	1	ADAPTER, air intake — SECOND TYPE
	047478	4	CAPSCREW, 1/4"NC x 5/8" — SECOND TYPE
	904204	4	LOCKWASHER, 1/4" — SECOND TYPE
	911114	4	WASHER, plain, SAE std., 1/4" — SECOND TYPE
21	655140	4	NUT, air intake panel — SECOND TYPE

NOTE: See PAINTING AND MARKING for transfers

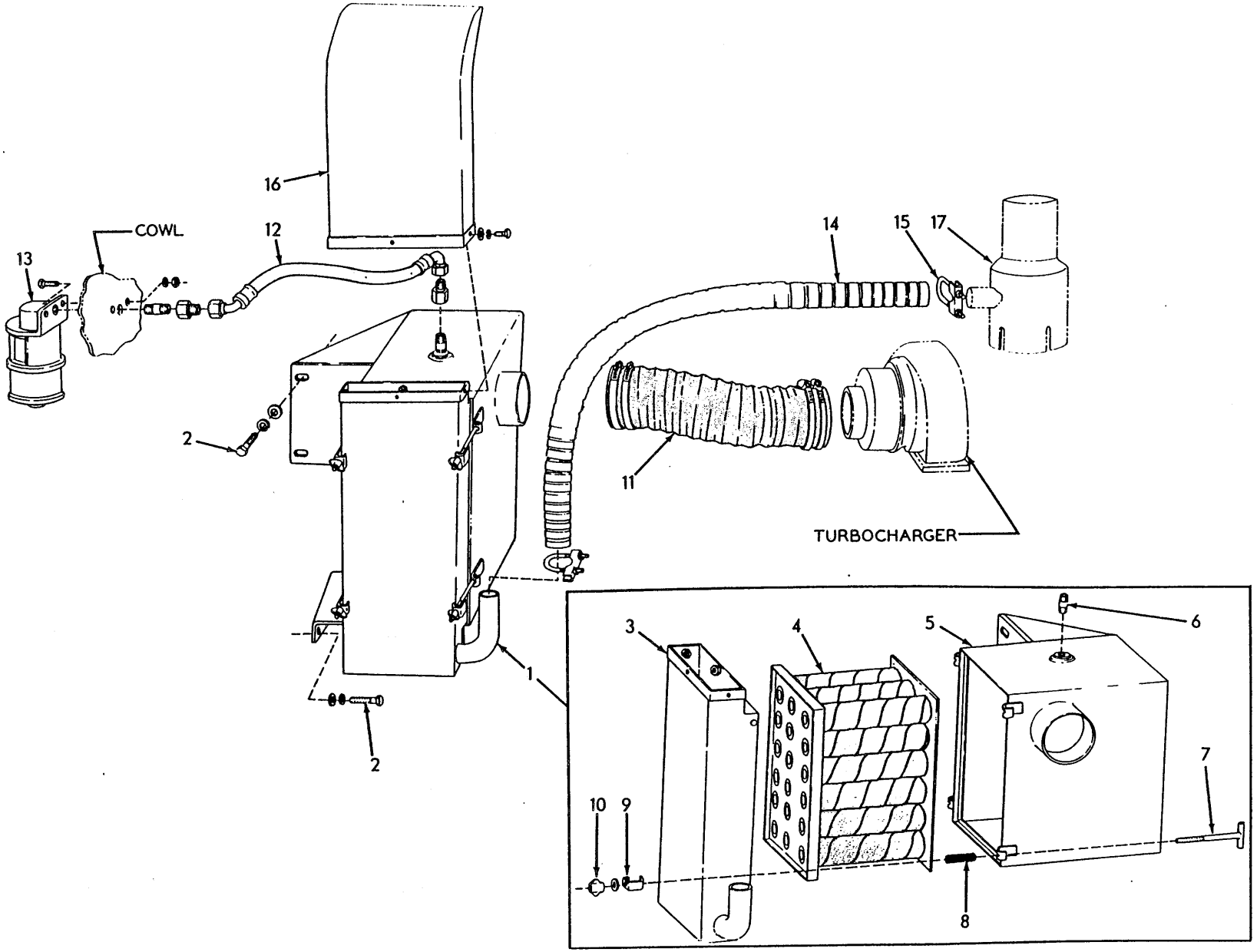

AIR CLEANER (Dry type)

AIR CLEANER (Dry type)

USAGE: Models HD11E, EC, S tractors serial No. 11525 and up. See page 153 for optional oil-bath air cleaner

ITEM	PART NO.	QTY.	DESCRIPTION
1	650948	1	CLEANER ASSEMBLY, air (Consists of items 3 thru 10)
2	035061	4	CAPSCREW, 1/2"NC x 1-1/4"
	904208	4	LOCKWASHER, 1/2"
	064531	4	WASHER, plain
3	650941	1	PRE-CLEANER
4	644042	1	CARTRIDGE, pre-cleaner
5	644080	1	HOUSING ASSEMBLY, air cleaner (Includes items 6 thru 10)
6	650302	1	ADAPTER, restriction indicator
7	196663	4	T-BOLT, pre-cleaner
8	650301	4	SPRING, pre-cleaner bolt
9	196662	4	HOOK, pre-cleaner
10	056863	4	NUT, wing, pre-cleaner bolt
	904205	4	LOCKWASHER, 5/16"
11	644032	1	HOSE, air inlet
	922200	4	CLAMP, hose, 3-5/16" to 4-5/16" diam.
12	655089	1	HOSE, restriction indicator (See page 6)
	919174	2	CONNECTOR, flare type, 1/4" tube, 1/8"NPT female
	904273	1	NIPPLE, pipe, 1/8"NPT x 1"
13	631564	1	INDICATOR, air restriction (Serviced only as a unit)
	912789	2	CAPSCREW, 1/4"NF x 3/4"
	904204	2	LOCKWASHER, 1/4"
	911040	2	NUT, 1/4"NF
14	644033	1	HOSE, aspirator
15	644034	2	CLAMP ASSEMBLY, aspirator hose (Serviced only as a unit)
16	650896	1	ADAPTER, air intake
	047478	4	CAPSCREW, 1/4"NC x 5/8"
	904204	4	LOCKWASHER, 1/4"
	911114	4	WASHER, plain, SAE std., 1/4"
17	------	1	ASPIRATOR (See EXHAUST PIPE)

NOTE: See PAINTING AND MARKING for transfers

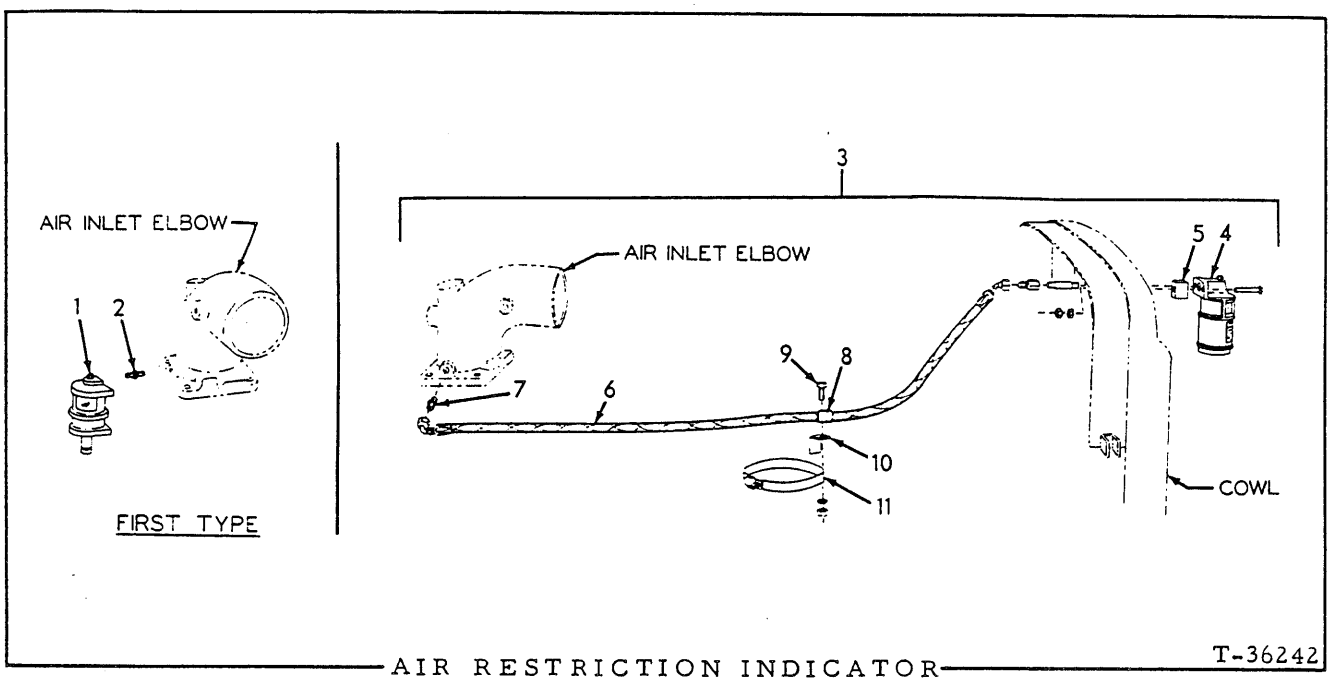

AIR RESTRICTION INDICATOR T-36242

USAGE: Special equipment. For use with dry-type air cleaner only on tractors prior to serial No. 10001

* First type. Mounted on air inlet elbow
** Second type. Remote-mounted

ITEM	PART NO.	QTY. *	QTY. **	DESCRIPTION
1	------	1	-	INDICATOR ASSEMBLY (Order item 3)
2	622447	1	-	FITTING, connector (Includes filter)
3	632148	-	1	INDICATOR KIT (Consists of items 4 thru 11)
4	631564	-	1	INDICATOR only
	912178	-	2	CAPSCREW, 1/4"NF x 1-1/2"
	904204	-	2	LOCKWASHER, 1/4"
	911040	-	2	NUT, 1/4"NF
5	632146	-	2	BLOCK, spacing
6	632147	-	1	HOSE ASSEMBLY (See page 6 for parts)
	919174	-	1	CONNECTOR, flare type, 1/4" tube, 1/8"NPT female
	915405	-	1	NIPPLE, pipe, 1/8"NPT x 1-3/4"
7	631769	-	1	FITTING, safety (Includes filter)
8	094527	-	1	CLIP, hose supporting
9	036032	-	1	CAPSCREW, 3/8"NF x 3/4"
	904206	-	1	LOCKWASHER, 3/8"
	911041	-	1	NUT, 3/8"NF
10	042928	-	1	CLIP, hose supporting (angle)
11	921916	-	1	CLAMP, hose, 3-7/8" to 4-3/4" diam.

NOTE: See PAINTING AND MARKING for transfer

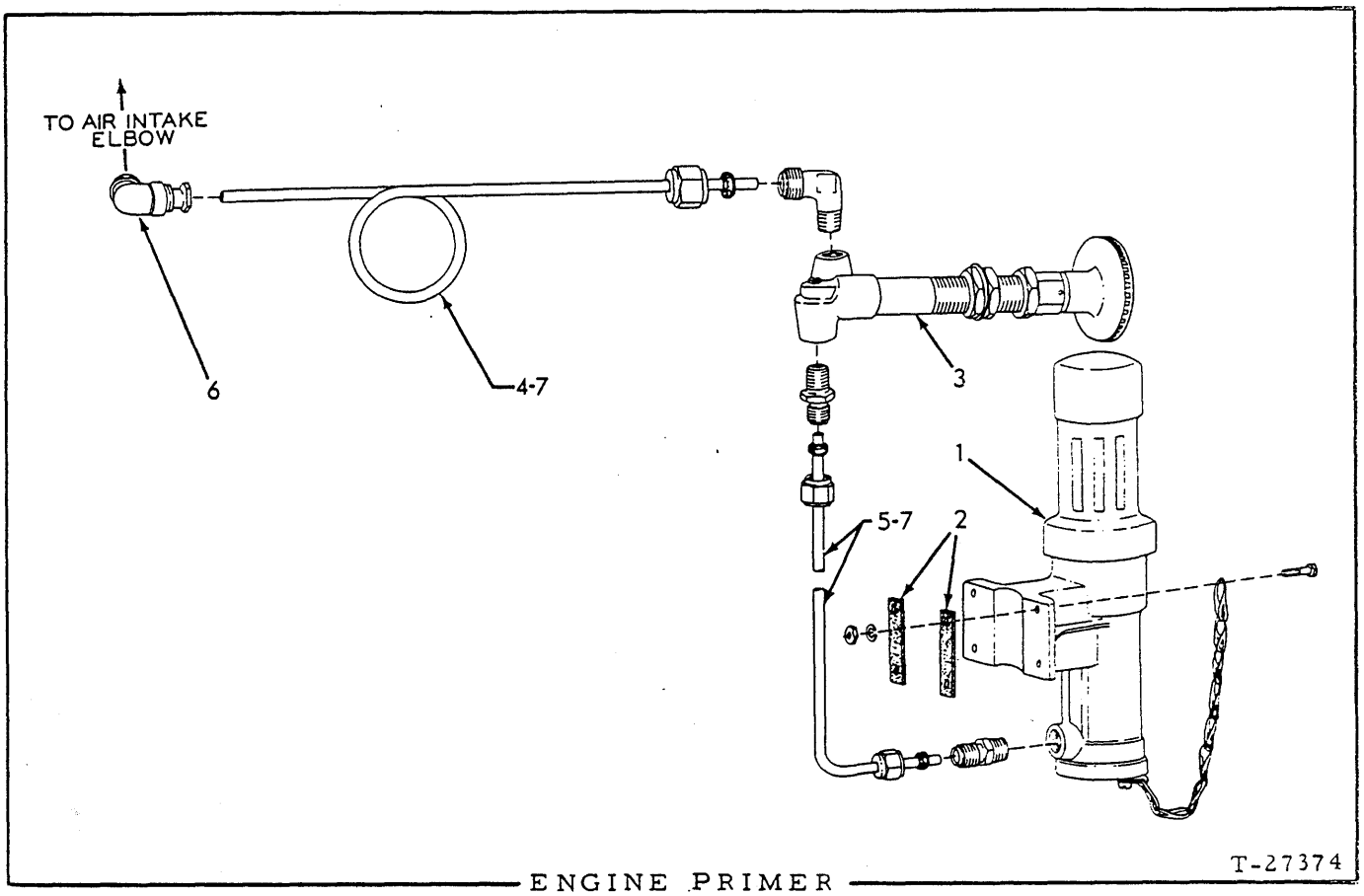

ENGINE PRIMER

USAGE: Special equipment. For all units except those equipped with Air Heater

ITEM	PART NO.	QTY.	DESCRIPTION
1	075771	1	DISPENSER ASSEMBLY, priming fuel (See page 166 for parts)
	913464	4	CAPSCREW, #10-24NC x 7/8"
	904203	4	LOCKWASHER, #10
	901310	4	NUT, #10-24NC
2	066261	6	GASKET, dispenser mounting
3	092160	1	PUMP ASSEMBLY (See page 167 for parts)
4	094698	1	TUBE (18" long. flared end)(Early units only)
	919100	1	NUT, flare type, 1/8" tube
	919099	1	SLEEVE, flare type, 1/8" tube
	919093	1	ELBOW, flare type, 90°, 1/8" tube, 1/8"NPT male
	------	1	TUBE (Order item 7)
	915488	1	NUT, Sealastic, 1/8" tube
	915486	1	RING, Sealastic, 1/8" tube (Includes ferrule)
	915557	1	ELBOW, Sealastic, 1/8" tube, 1/8"NPT male
5	094699	1	TUBE ASSEMBLY (18" long. Includes nuts)(Early units only)
	919094	2	CONNECTOR, flare type, 1/8" tube, 1/8"NPT male
	------	1	TUBE (Order item 7)
	915488	2	NUT, Sealastic, 1/8" tube
	915486	2	RING, Sealastic, 1/8" tube (Includes ferrule)
	915556	2	CONNECTOR, Sealastic, 1/8" tube, 1/8"NPT male
6	066517	1	ELBOW ASSEMBLY, fuel spray (Includes nozzle, nut and sleeve. Serviced only as a unit)
7	066253	1	TUBING, copper, 1/8"O.D., 10 ft. roll (Use as req'd)

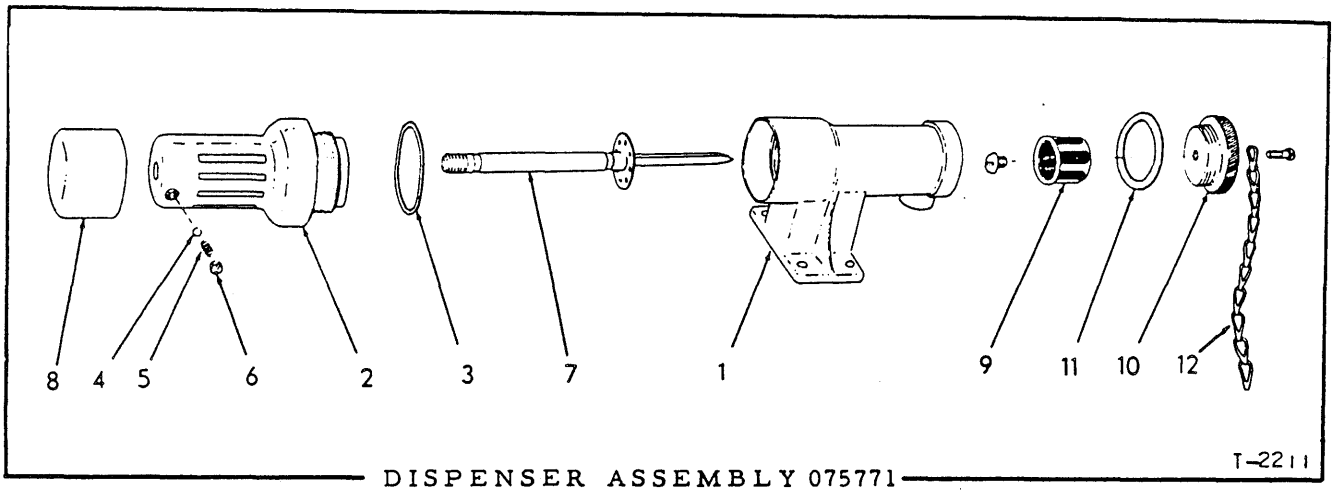

DISPENSER ASSEMBLY 075771

USAGE: See page 165

ITEM	PART NO.	QTY.	DESCRIPTION
1	068878	1	BODY, fuel dispenser
2	068879	1	CHAMBER, fuel dispenser
3	069164	1	GASKET, fuel dispenser chamber
4	905357	1	BALL, steel, 3/16" diam.
5	066251	1	SPRING, plunger locking ball
6	066252	1	PLUG, retaining, locking ball spring
7	066255	1	PLUNGER, fuel dispenser
8	068881	1	KNOB, fuel dispenser plunger
9	068875	1	STRAINER, fuel dispenser
	915432	1	SCREW, machine, 1/4"NC x 5/16"
10	075770	1	PLUG, fuel dispenser strainer
11	068876	1	GASKET, fuel dispenser strainer plug
12	075769	1	CHAIN, strainer plug retaining
	901781	1	SCREW, machine, fil-hd., #10-32NF x 1/2"

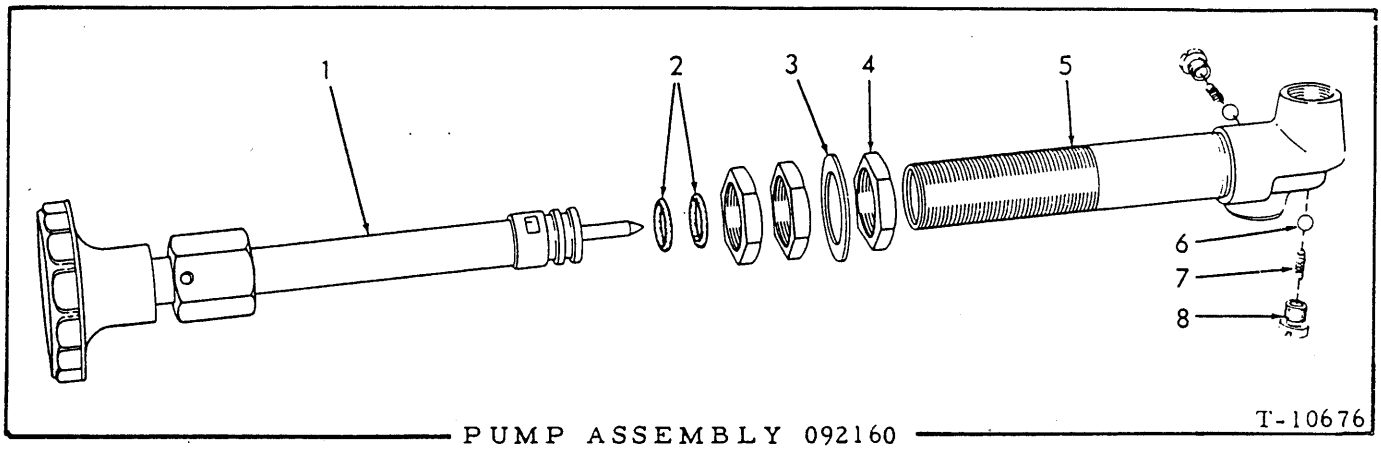

PUMP ASSEMBLY 092160

USAGE: See pages 165 , 169 , 171, 175 and 177

ITEM	PART NO.	QTY.	DESCRIPTION
1	------	1	PISTON ASSEMBLY (Not serviced separately)
2	923560	2	O-RING, plunger
3	066873	1	WASHER, mounting
4	066872	3	NUT, mounting
5	------	1	BARREL ASSEMBLY (Not serviced separately)
6	066876	2	BALL, check valve (5/32" diam.)
7	066875	2	SPRING, check valve
8	066874	2	RETAINER, check valve

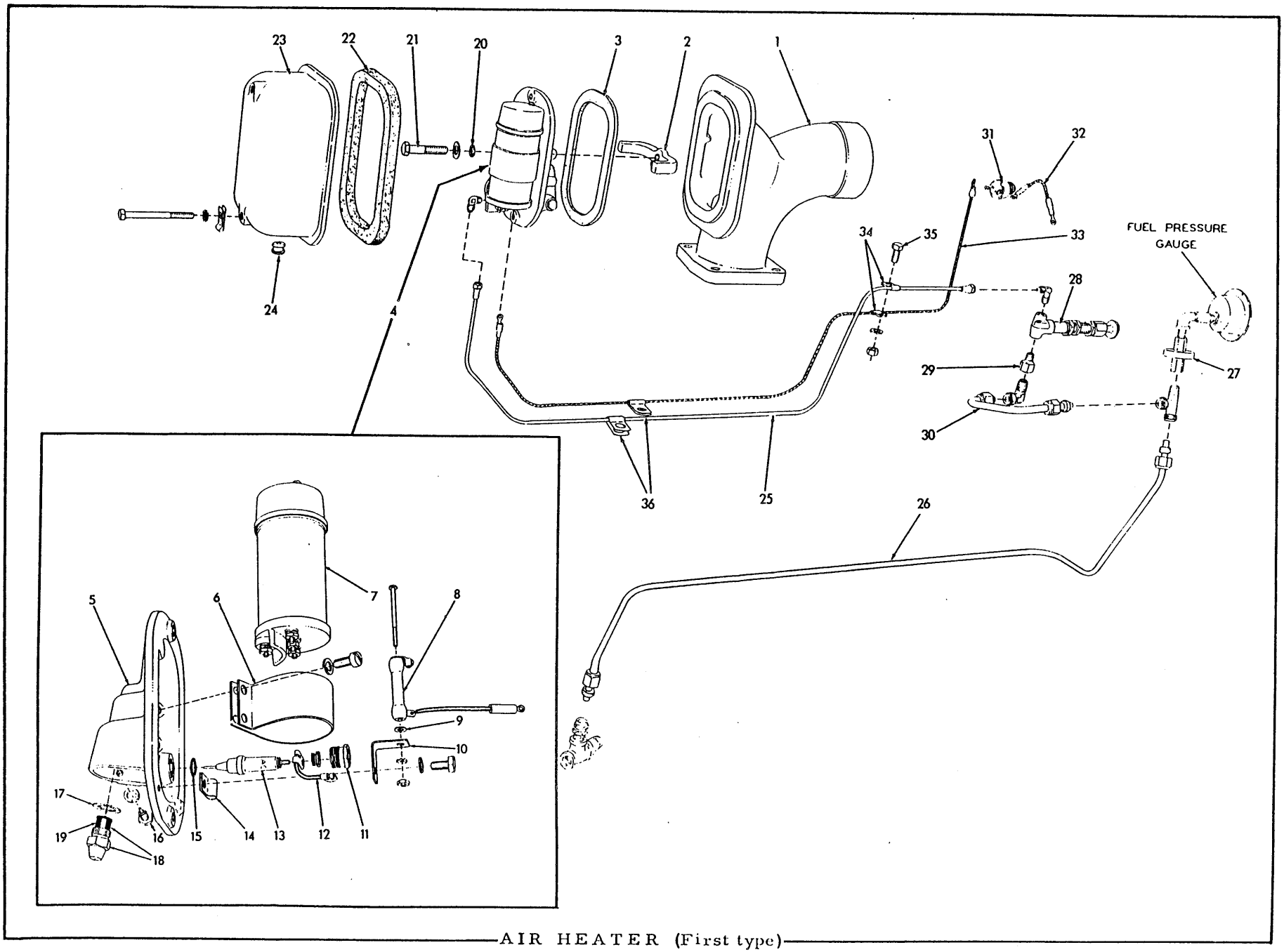

AIR HEATER (First type)

AIR HEATER (First type)

USAGE: Prior to April 1958. Optional equipment in place of Engine Primer

ITEM	PART NO.	QTY.	DESCRIPTION
1	086667	1	ELBOW, air intake (Replaces standard air cleaner elbow)
2	5183129	1	CLAMP, air heater
3	5150020	1	GASKET, air heater to air intake elbow
4	5193222	1	HEATER ASSEMBLY, engine air (Consists of items 5 thru 19)
5	5153385	1	BODY, air heater
6	631199	1	BRACKET, ignition coil mounting
	912226	2	SCREW, machine, fil-hd., 1/4"NC x 5/8"
	904204	2	LOCKWASHER, 1/4"
7	097026	1	COIL, ignition (Serviced only as a unit)
8	630830	1	RESISTOR
	915922	1	SCREW, machine, #8-32 x 2-1/4"
	907154	1	NUT, #8-32
	915923	1	WASHER, external teeth, #8
9	631198	1	WASHER, insulating
10	630829	1	BRACKET, resistor mounting
	919288	1	CAPSCREW, 1/4"NC x 3/8"
	904204	1	LOCKWASHER, 1/4"
11	630828	1	NUT, insulator retaining
12	5154125	1	LEAD, coil to insulator (high tension)
13	631226	1	INSULATOR PACKAGE (Includes terminal nut and item 15)
14	238136	1	CLIP, fuel tube (3/16" diam., 9/32" bolt-hole)
15	631566	1	GASKET, insulator
16	630827	1	SCREW ASSEMBLY, electrode (1 screw, 1 electrode)
	904204	1	LOCKWASHER, 1/4"
17	630787	1	WASHER, spray nozzle
18	631224	1	NOZZLE ASSEMBLY, spray (Includes item 19)
19	631225	1	STRAINER ASSEMBLY, spray nozzle (1 body and 1 screen)
20	040400	1	GASKET, heater attaching capscrew
21	013059	1	CAPSCREW, heater attaching (3/8"NC x 2")
	911115	1	WASHER, plain, SAE std., 3/8"

(Continued)

ITEM	PART NO.	QTY.	DESCRIPTION
22	5154066	1	GASKET, air heater cover (felt)
23	5158071	1	COVER, air heater
	913189	2	CAPSCREW, 5/16"NC x 2-1/2"
	904205	2	LOCKWASHER, 5/16"
24	023176	1	GROMMET, air heater cover (rubber)
25	050767	1	TUBE ASSEMBLY, pump to heater (Includes 2 NUTS 913676)(Used prior to November 1956)
	913676	2	NUT, flare type, 3/16" tube
	910268	2	ELBOW, flare type, 3/16" tube, 1/8"NPT male
	088471	1	HOSE, pump to heater (36" long)(Effective November 1956)
	910161	1	ELBOW, flare type, 1/4" tube, 1/8"NPT male
	907059	1	ELBOW, street, 90°, 1/8"NPT
	910856	1	ADAPTER, reducing, 1/4"NPT female to 1/8"NPT male
26	087605	1	TUBE, fuel pressure gauge (Replaces standard TUBE 086952. Used prior to tractor #1955)
	090968	1	TUBE, fuel pressure gauge (Replaces standard TUBE 090868. Effective with tractor #1955)
	918325	2	NUT, Sealastic, 3/8" tube
	915367	2	RING, Sealastic, 3/8" tube (Includes ferrule)
27	------	1	RESTRICTOR (See INSTRUMENTS)
28	092160	1	PUMP ASSEMBLY (See page 167 for parts)
29	910856	1	ADAPTER, reducing (1/4"NPT female to 1/8"NPT male
30	------	1	TUBE, pump to fuel pressure gauge line (Discontinued)
	918325	2	NUT, Sealastic, 3/8" tube
	915367	2	RING, Sealastic, 3/8" tube (Includes ferrule)
	915369	1	ELBOW, Sealastic, 90°, 3/8" tube, 1/4"NPT male
	915859	1	TEE, service, Sealastic, 3/8" tube
31	031337	1	SWITCH, push button (Includes mounting nut)
32	051006	1	CABLE, air heater switch to light switch (4-1/2" long)
33	084520	1	CABLE, switch to air heater (46" long)
34	200479	5	CLIP, tube and cable supporting (3/16" diam., 13/32" bolt-hole)(2 less used effective November 1956)
	040796	1	CLIP, hose supporting (3/8" diam., 13/32" bolt-hole)(Effective November 1956)
35	036032	1	CAPSCREW, 3/8"NF x 3/4"
	904206	1	LOCKWASHER, 3/8"
	911041	1	NUT, 3/8"NF
36	223502	2	CLIP, tube and cable supporting (3/16" diam., 17/32" bolt-hole)(1 less used effective November 1956)
	034152	2	CLIP, hose supporting (7/16" diam., 17/32" bolt-hole) (Effective November 1956)

AIR HEATER (Second type)

USAGE: Effective April 1958 but later discontinued with tractor serial No. 4415. Optional equipment in place of Engine Primer.

ITEM	PART NO.	QTY.	DESCRIPTION
1	------	1	ELBOW, air intake (Replaces standard air cleaner elbow) (Order 1 each ELBOW 622433, PLUG 901651 and PLUG 901652)
2	035061	4	CAPSCREW, 1/2"NC x 1-1/4"
	904208	4	LOCKWASHER, 1/2"
3	084868	1	GASKET, air intake elbow
4	644133	1	BRACKET, resistor mounting
	912226	1	SCREW, machine, fil-hd., 1/4"NC x 5/8"
	904204	1	LOCKWASHER, 1/4"
5	631198	1	WASHER, insulating
6	630830	1	RESISTOR
	915922	1	SCREW, machine, #8-32 x 2-1/4"
	915923	1	LOCKWASHER, external teeth, #8
	907154	1	NUT, #8-32
7	631199	1	BRACKET, ignition coil mounting
	912226	2	SCREW, machine, fil-hd., 1/4"NC x 5/8"
	904204	2	LOCKWASHER, 1/4"
8	097026	1	COIL, ignition (Serviced only as a unit)
9	088038	1	BUSHING. spray nozzle
10	630787	1	WASHER, spray nozzle
11	631225	1	STRAINER ASSEMBLY, spray nozzle (1 body and 1 screen)
12	631224	1	NOZZLE ASSEMBLY, spray (Includes item 11)
13	631566	1	GASKET, insulator
14	631226	1	INSULATOR PACKAGE (Includes terminal nut and item 13)
15	630828	1	NUT, insulator retaining
16	630827	1	SCREW ASSEMBLY, electrode (1 screw and 1 electrode)
	904204	1	LOCKWASHER, 1/4"
17	074887	1	CABLE, coil to insulator
18	223502	3	CLIP, cable supporting (3/16" diam., 17/32" bolt-hole)
19	084520	1	CABLE, switch to coil
20	200479	2	CLIP, supporting, switch cable (3/16" diam., 13/32" bolt-hole)
21	051006	1	CABLE, air heater switch to light switch
22	031337	1	SWITCH, push-button
23	------	1	TUBE, pump to fuel pressure gauge line (Discontinued)
	918325	2	NUT, Sealastic, 3/8" tube
	915367	2	RING, Sealastic, 3/8" tube (Includes ferrule)
	915369	1	ELBOW, Sealastic, 90°, 3/8" tube, 1/4"NPT male
	915859	1	TEE, service, Sealastic, 3/8" tube

(Continued)

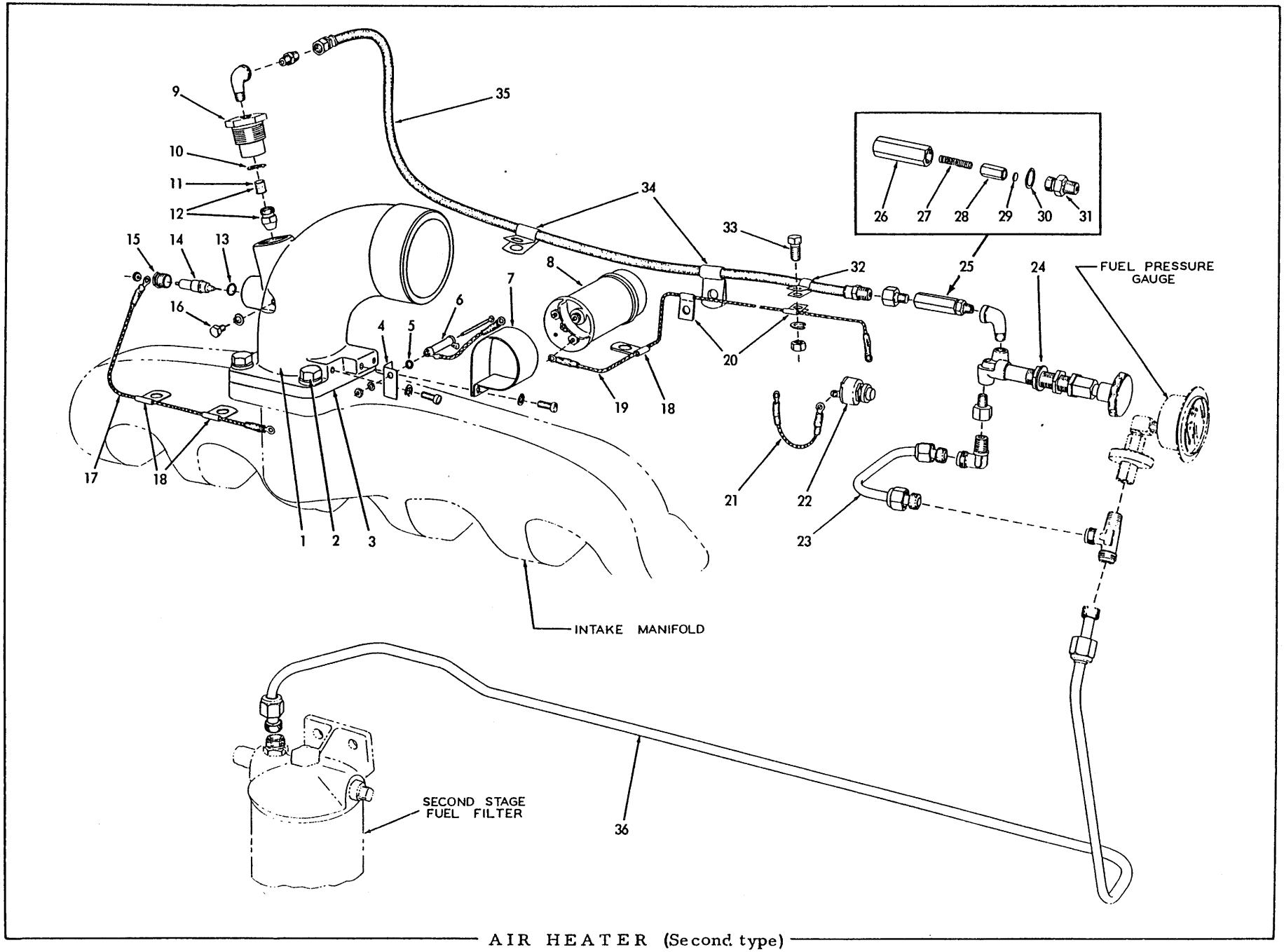

AIR HEATER (Second type)

ITEM	PART NO.	QTY.	DESCRIPTION
24	092160	1	PUMP ASSEMBLY (See page 167 for parts)
	907059	1	ELBOW, street, 90°, 1/8"NPT
	910856	1	ADAPTER, reducing , 1/4"NPT female to 1/8"NPT male
25	094642	1	VALVE ASSEMBLY, check (Consists of items 26 thru 31)
26	094890	1	BODY, check valve
27	048603	1	SPRING, check valve
28	048608	1	PLUNGER, check valve
29	048606	1	DISC, check valve
30	630713	1	WASHER, check valve
31	092793	1	CONNECTOR, check valve
32	040796	1	CLIP, hose supporting (3/8" diam., 13/32" bolt-hole)
33	036032	1	CAPSCREW, 3/8"NF x 3/4"
	904206	1	LOCKWASHER, 3/8"
	911041	1	NUT, 3/8"NF
34	034152	2	CLIP, hose supporting (7/16" diam., 17/32" bolt-hole)
35	088471	1	HOSE, pump to nozzle
	907059	1	ELBOW, street, 90°, 1/8"NPT
	910141	1	CONNECTOR, flare type, 1/4" tube, 1/8"NPT male
	910856	1	ADAPTER, reducing, 1/4"NPT female to 1/8"NPT male
36	090968	1	TUBE, fuel pressure gauge (Replaces standard TUBE 090868)
	918325	2	NUT, Sealastic, 3/8" tube
	915367	2	RING, Sealastic, 3/8" tube (Includes ferrule)

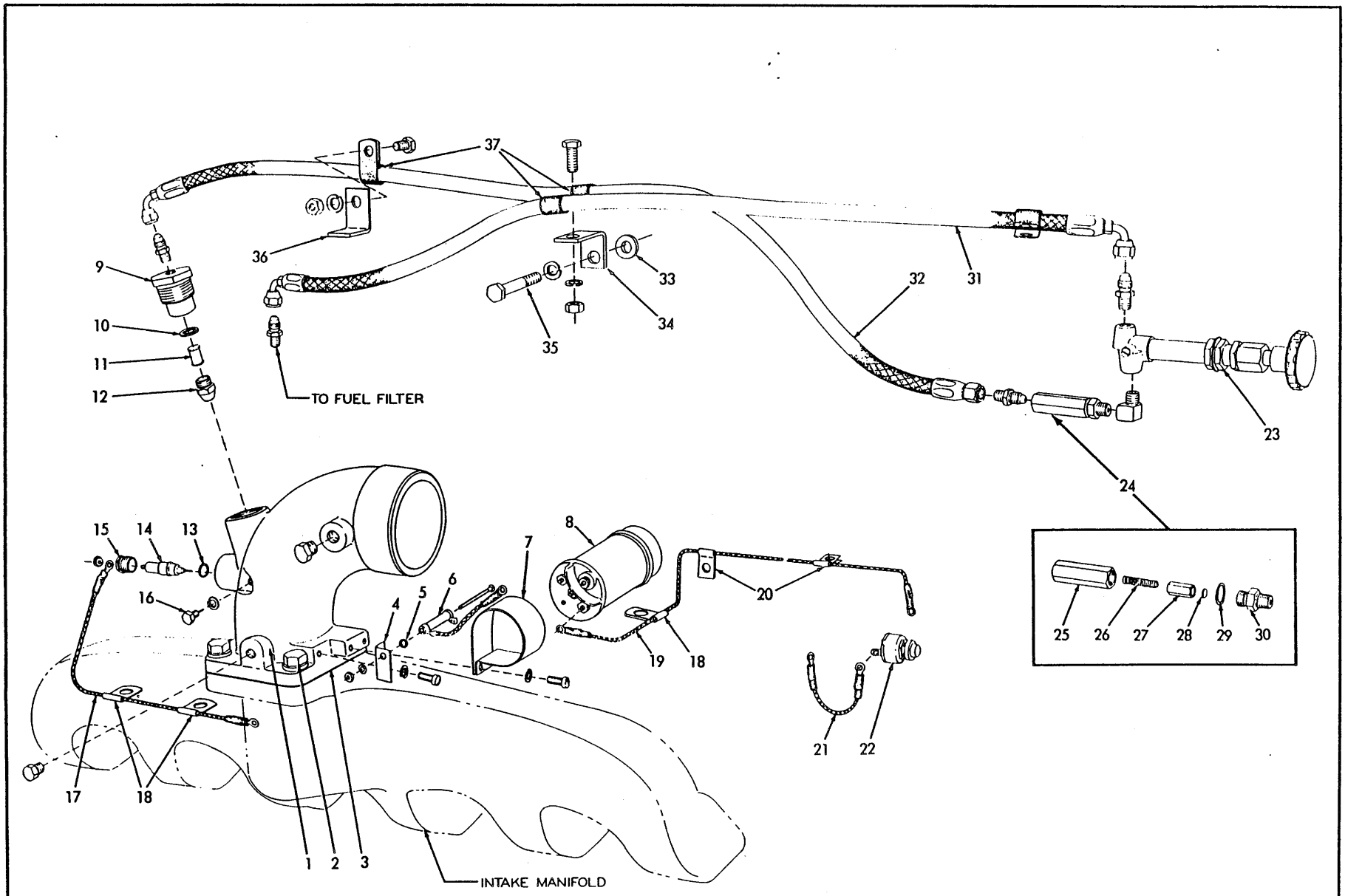

AIR HEATER (Third type)

AIR HEATER (Third type)

USAGE: Tractors serial No. 4415 thru No. 10000. Optional equipment in place of Engine Primer.

ITEM	PART NO.	QTY.	DESCRIPTION
1	622433	1	ELBOW, air intake (Replaces standard air cleaner elbow) (If for tractors prior to #6473, also order PLUG 919134 and PLUG 919840)
	919134	1	PLUG, pipe, hex-hd., 1/8"NPT
	919840	1	PLUG, pipe, hex-hd., 1/4"NPT
2	035061	4	CAPSCREW, 1/2"NC x 1-1/4"
	904208	4	LOCKWASHER, 1/2"
3	084868	1	GASKET, air intake elbow
4	644133	1	BRACKET, resistor mounting
	912226	1	SCREW, machine, fil-hd., 1/4"NC x 5/8"
	904204	1	LOCKWASHER, 1/4"
5	631198	1	WASHER, insulating
6	630830	1	RESISTOR
	915922	1	SCREW, machine, #8-32 x 2-1/4"
	915923	1	LOCKWASHER, external teeth, #8
	907154	1	NUT, #8-32
7	631199	1	BRACKET, ignition coil mounting
	912226	2	SCREW, machine, fil-hd., 1/4"NC x 5/8"
	904204	2	LOCKWASHER, 1/4"
8	097026	1	COIL, ignition (Serviced only as a unit)
9	088038	1	BUSHING, spray nozzle
10	630787	1	WASHER, spray nozzle
11	631225	1	STRAINER ASSEMBLY, spray nozzle (1 body and 1 screen)
12	631224	1	NOZZLE ASSEMBLY, spray (Includes item 11)
13	631566	1	GASKET, insulator
14	631226	1	INSULATOR PACKAGE (Includes terminal nut and item 13)
15	630828	1	NUT, insulator retaining
16	630827	1	SCREW ASSEMBLY, electrode (1 screw and 1 electrode)
	904204	1	LOCKWASHER, 1/4"
17	074887	1	CABLE, coil to insulator
18	223502	3	CLIP, cable supporting (3/16" diam., 17/32" bolt-hole)
19	084520	1	CABLE, switch to coil
20	200479	2	CLIP, supporting, switch cable (3/16" diam., 13/32" bolt-hole)
21	051006	1	CABLE, air heater switch to light switch (Used prior to tractor #6473)
22	031337	1	SWITCH, push-button (Used prior to tractor #6473)
23	092160	1	PUMP ASSEMBLY (See page 167 for parts)
	915399	1	ELBOW, street, brass, 90°, 1/8"NPT
24	094642	1	VALVE ASSEMBLY, check (Consists of items 25 thru 30)

(Continued)

AIR HEATER (Third type)(Continued)

ITEM	PART NO.	QTY.	DESCRIPTION
25	094890	1	BODY, check valve
26	048603	1	SPRING, check valve
27	048608	1	PLUNGER, check valve
28	048606	1	DISC, check valve
29	630713	1	WASHER, check valve
30	092793	1	CONNECTOR, check valve
31	095410	1	HOSE ASSEMBLY, fuel filter to pump (See page 6 for parts)
	919171	2	CONNECTOR, flare type, 1/4" tube, 1/8"NPT male
32	094674	1	HOSE ASSEMBLY, pump to nozzle (See page 6 for parts)
	919171	2	CONNECTOR, flare type, 1/4" tube, 1/8"NPT male
33	044973	1	WASHER, spacing, supporting angle
34	094867	1	ANGLE, hose and cable supporting
35	058936	1	CAPSCREW, 3/8"NC x 2-3/4" (Replaces standard capscrew on engine breather)
	904206	1	LOCKWASHER, 3/8"
36	094875	1	ANGLE, hose supporting
37	094527	4	CLIP, hose supporting
	036032	2	CAPSCREW, 3/8"NF x 3/4"
	035167	1	CAPSCREW, 3/8"NF x 7/8"
	904206	3	LOCKWASHER, 3/8"
	911041	3	NUT, 3/8"NF

AIR HEATER (Fourth type)

USAGE: Tractors serial No. 10001 and up. Optional equipment in place of Engine Primer.

* Model HD11B
** Models HD11E, EC, S

ITEM	PART NO.	QTY. *	QTY. **	DESCRIPTION
1	622433	1	-	ELBOW, air intake (Replaces standard ELBOW 622432)
	644476	-	1	ELBOW, air intake (Replaces standard ELBOW 4339585)
	919134	1	-	PLUG, pipe, hex-hd., 1/8"NPT
	919840	1	1	PLUG, pipe, hex-hd., 1/4"NPT
2	035061	4	-	CAPSCREW, 1/2"NC x 1-1/4"
	919230	-	4	CAPSCREW, 1/2"NC x 1-3/8"
	904208	4	4	LOCKWASHER, 1/2"
3	084868	1	1	GASKET, air intake elbow
4	644133	1	1	BRACKET, resistor mounting
	912226	1	-	SCREW, machine, fil-hd., 1/4"NC x 5/8"
	904204	1	-	LOCKWASHER, 1/4"
5	631198	1	1	WASHER, insulating
6	630830	1	1	RESISTOR
	915922	1	1	SCREW, machine, #8-32 x 2-1/4"
	915923	1	1	LOCKWASHER, external teeth, #8
	907154	1	1	NUT, #8-32
7	631199	1	1	BRACKET, ignition coil mounting
	912226	2	2	SCREW, machine, fil-hd., 1/4"NC x 5/8"
	904204	2	2	LOCKWASHER, 1/4"
8	097026	1	1	COIL, ignition (Serviced only as a unit)
9	088038	1	1	BUSHING, spray nozzle
10	630787	1	1	WASHER, spray nozzle
11	631225	1	1	STRAINER ASSEMBLY, spray nozzle (1 body and 1 screen)
12	631224	1	1	NOZZLE ASSEMBLY, spray (Includes item 11)
13	631566	1	1	GASKET, insulator
14	631226	1	1	INSULATOR PACKAGE (Includes terminal nut and item 13)
15	630828	1	1	NUT, insulator retaining
16	630827	1	1	SCREW ASSEMBLY, electrode (1 screw and 1 electrode)
	904204	1	1	LOCKWASHER, 1/4"
17	074887	1	-	CABLE, coil to insulator
	095860	-	1	CABLE, coil to insulator
18	644883	3	-	CLIP, cable supporting (1/8" diam., 17/32" bolt-hole)
19	084520	1	-	CABLE, switch to coil
	644225	-	1	CABLE, switch to coil

(Continued)

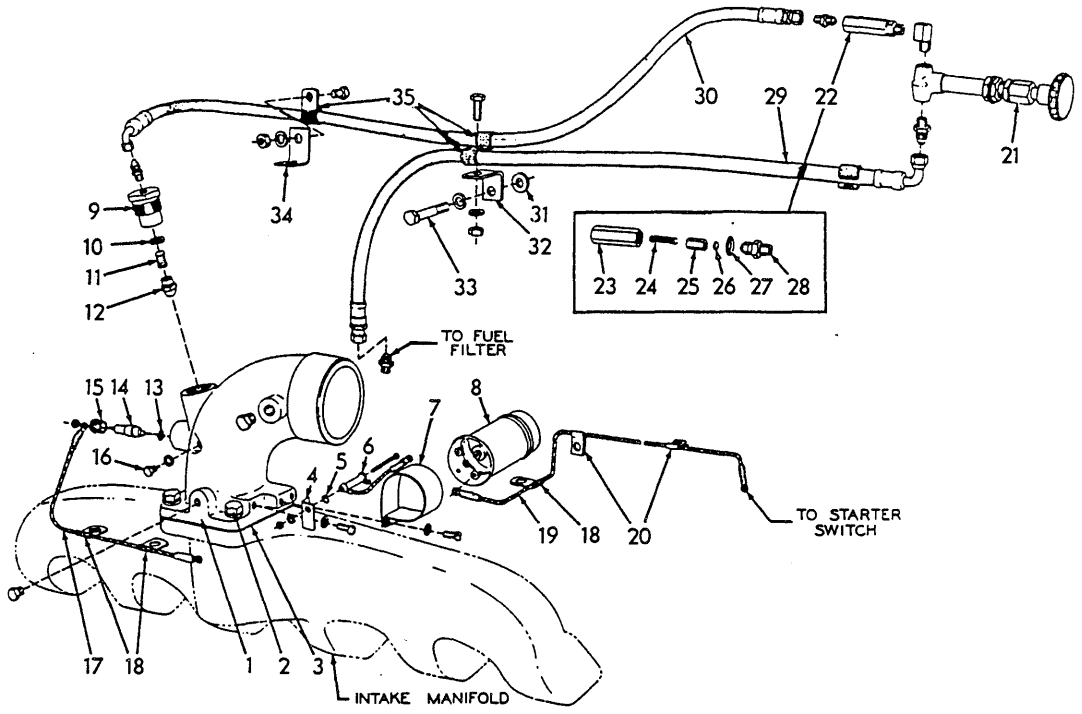

MODEL HD11B

T-41895

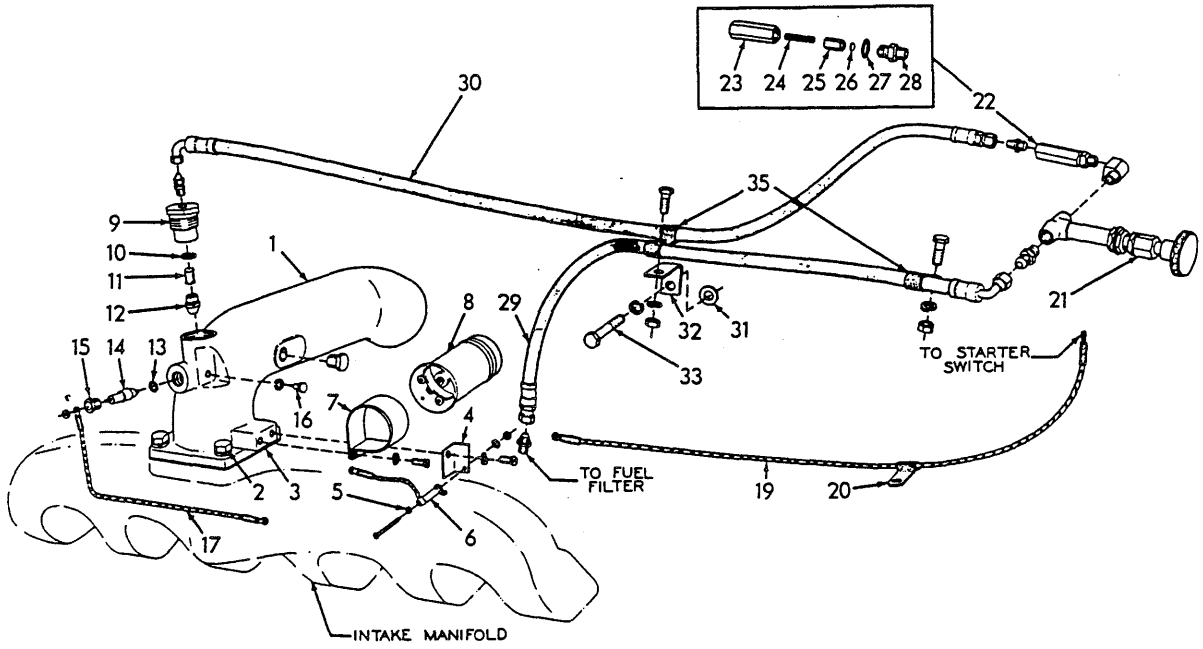

MODEL HD11E, EC, S

T-41896

AIR HEATER (Fourth type)

ITEM	PART NO.	QTY. *	QTY. **	DESCRIPTION
20	639388	2	1	CLIP, supporting, switch cable (1/8" diam., 13/32" bolt-hole)
21	092160	1	1	PUMP ASSEMBLY (See page 83 for parts)
	915399	1	1	ELBOW, street, brass, 90°, 1/8"NPT
22	094642	1	1	VALVE ASSEMBLY, check (Consists of items 23 thru 28)
23	094890	1	1	BODY, check valve
24	048603	1	1	SPRING, check valve
25	048608	1	1	PLUNGER, check valve
26	048606	1	1	DISC, check valve
27	630713	1	1	WASHER, check valve
28	092793	1	1	CONNECTOR, check valve
29	644682	1	1	HOSE, fuel filter to pump (See page 6)
	919171	2	2	CONNECTOR, flare type, 1/4" tube, 1/8"NPT male
30	644697	1	-	HOSE, pump to nozzle (See page 6)
	644213	-	1	HOSE, pump to nozzle (See page 6)
	919171	2	2	CONNECTOR, flare type, 1/4" tube, 1/8"NPT male
31	044973	1	1	WASHER, spacing, supporting angle
32	094867	1	-	ANGLE, hose and cable supporting
	638834	-	1	ANGLE, hose and cable supporting
33	058936	1	1	CAPSCREW, 3/8"NC x 2-3/4" (Replaces standard capscrew on engine breather)
	904206	1	1	LOCKWASHER, 3/8"
34	094875	1	-	ANGLE, hose supporting
35	094527	4	3	CLIP, hose supporting
	036032	2	1	CAPSCREW, 3/8"NF x 3/4"
	035167	1	1	CAPSCREW, 3/8"NF x 7/8"
	904206	3	2	LOCKWASHER, 3/8"
	911041	3	2	NUT, 3/8"NF

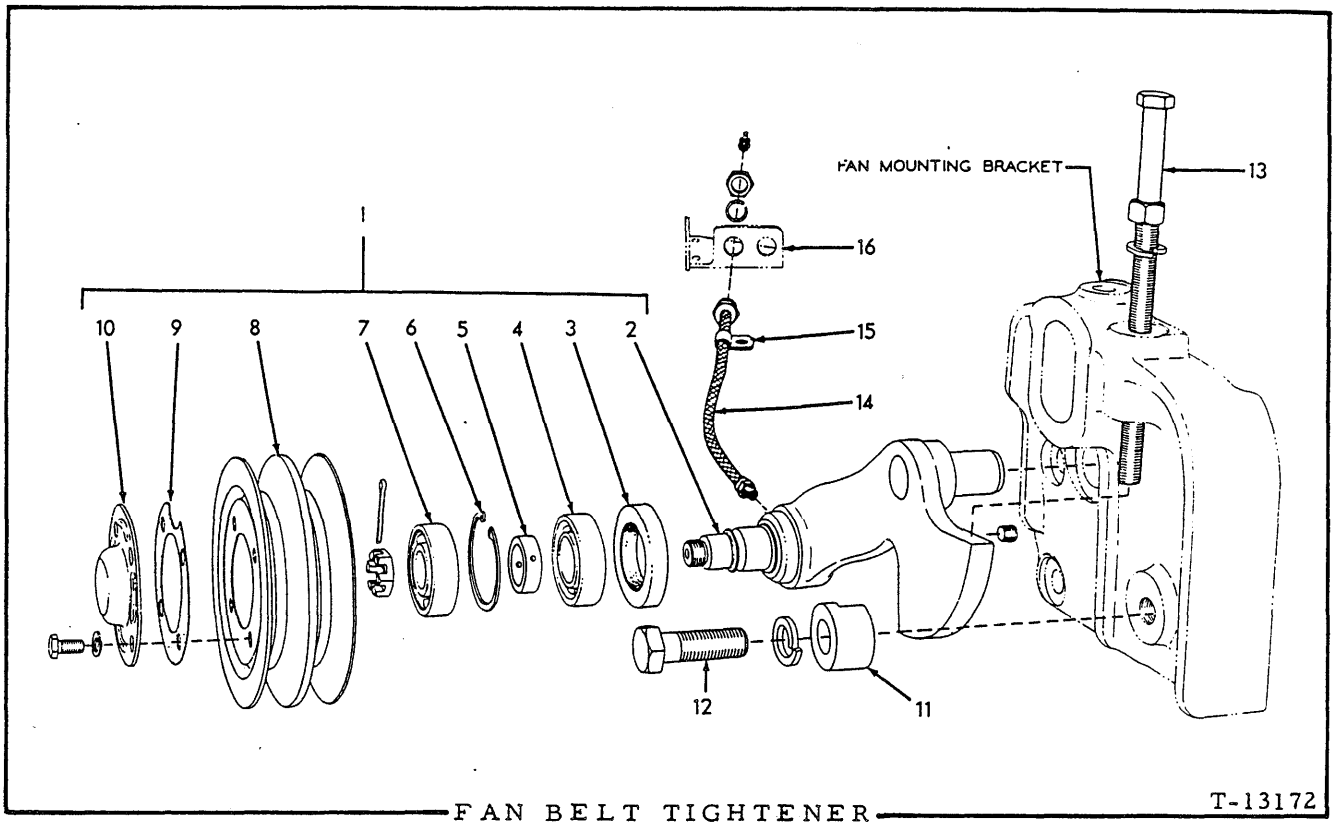

FAN BELT TIGHTENER

USAGE: Engines prior to serial No. 10-4855

ITEM	PART NO.	QTY.	DESCRIPTION
1	4348419	1	PULLEY ASSEMBLY, fan belt tightener (Consists of items 2 thru 10)
2	4348420	1	ARM ASSEMBLY (Includes PLUG and FITTING indented below)
	910230	1	PLUG, pipe, slotted-hd., 1/8"NPT
	914465	1	FITTING, lubricating, straight, 1/8"NPT (Used prior to tractor #994)
	913470	1	NUT, jam, slotted, 5/8"NF
	900807	1	PIN, cotter, 1/8" x 1-1/4"
3	4253765	1	SEAL, oil
4	4253862	1	BEARING, ball, rear
5	4348121	1	SPACER, bearing
6	4252137	1	RING, snap, pulley retaining
7	042979	1	BEARING, ball, front
8	4348421	1	PULLEY
9	4348122	1	GASKET, pulley cover
10	4348118	1	COVER, pulley
	915809	4	CAPSCREW, 5/16"NC x 3/4"
	904205	4	LOCKWASHER, 5/16"

(Continued)

ITEM	PART NO.	QTY.	DESCRIPTION
11	4348442	1	CLAMP, locking
12	4347842	1	CAPSCREW, locking clamp (5/8"NC x 2")
	904209	1	LOCKWASHER, 5/8"
13	4348205	1	SCREW, belt adjustment (1/2"NC x 8")
	904208	1	LOCKWASHER, 1/2"
	910510	1	NUT, jam, 1/2"NC
14	045507	1	HOSE, fan belt tightener lubrication (Effective with tractor #994)
	915276	1	FITTING, lubricating, 90°, 1/8"NPT
	904209	1	LOCKWASHER, 5/8"
	911049	1	NUT, jam, 5/8"NF
15	040796	1	CLIP, hose supporting (Effective with tractor #994)
16	------	1	BRACKET (See GENERATOR)

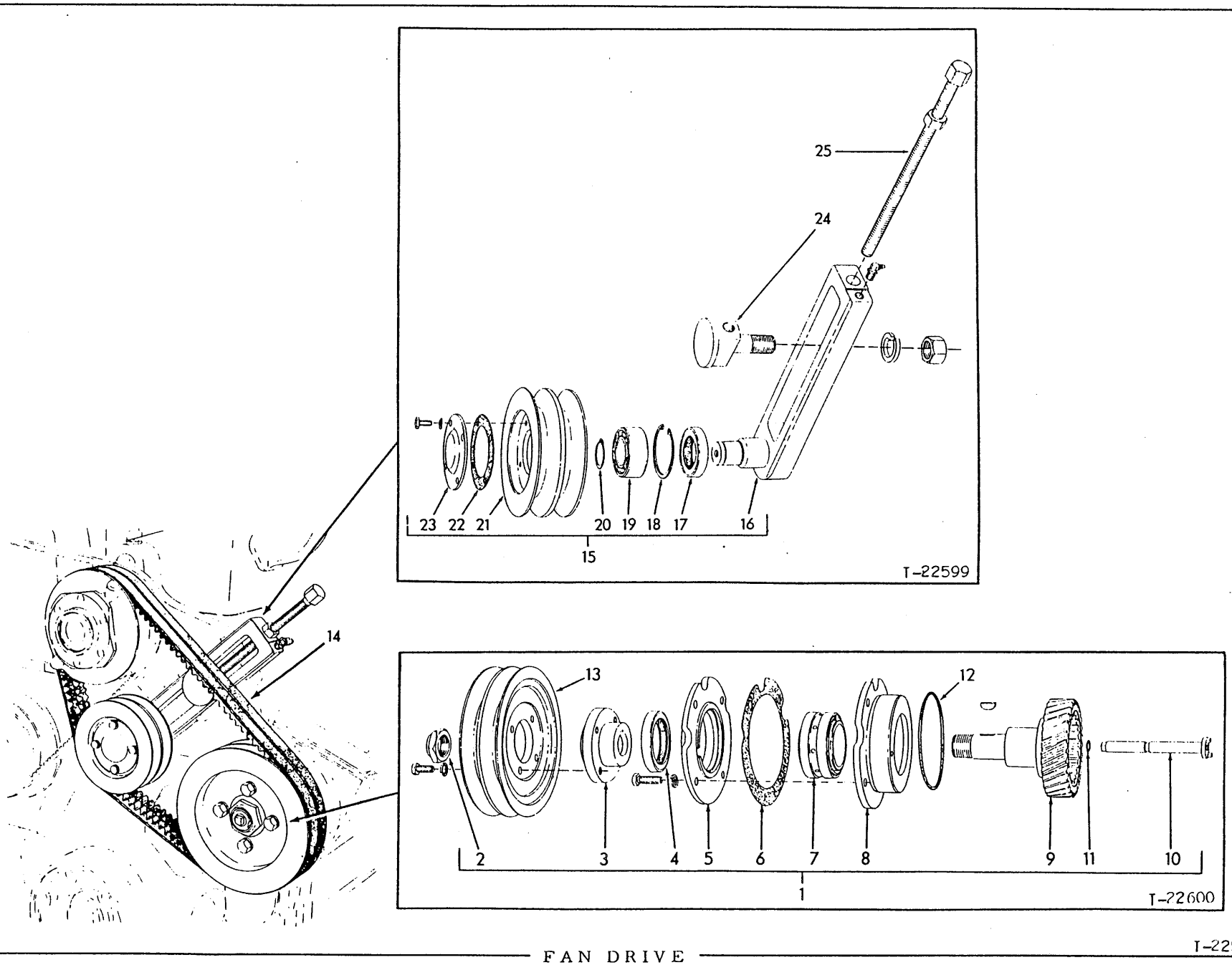
25
24
23
22
21
20
19
18
17
16
15
T-22599
14
13
12
2
3
4
5
6
7
8
9
11
10
1
T-22600
T-22598

FAN DRIVE

FAN DRIVE

USAGE: Effective with engine serial No. 10-4855

ITEM	PART NO.	QTY.	DESCRIPTION
1	4336259	1	DRIVE ASSEMBLY (Consists of items 2 thru 11)(Used prior to engine #10-6779)
	4337416	1	DRIVE ASSEMBLY (Hardened gear)(Consists of items 2 thru 11) (Effective with engine #10-6779)
2	4335476	1	NUT, flange retaining
3	4336257	1	FLANGE, pulley mounting
4	4349736	1	SEAL, oil
5	4349674	1	FLANGE, seal retaining
	916272	4	CAPSCREW, 3/8"NC x 1-1/4"
	904206	4	LOCKWASHER, 3/8"
6	4349011	1	□GASKET, seal retaining flange
7	4253825	1	BEARING, roller
8	4349014	1	RETAINER, bearing
9	4335443	1	GEAR, fan drive (Used prior to engine #10-6779)
	4337189	1	GEAR, fan drive (Hardened)(Effective with engine #10-6779)
	917755	1	KEY, #91 woodruff, 1/4" x 3/4"
10	------	1	SHAFT, pump timing } See INJECTION PUMP
11	------	1	O-RING, pump timing shaft } See INJECTION PUMP
12	923589	1	□O-RING, drive mounting
13	4336258	1	PULLEY, fan drive
	916225	4	CAPSCREW, 3/8"NF x 1"
	904206	4	LOCKWASHER, 3/8"
14	4349778	2	BELT, fan drive (Supplied in matched sets)(Model HD11B,E,ES,S,F tractors prior to serial No. 10001)
	4337757	2	BELT, fan drive (Supplied in matched sets)(Tractors serial No. 10001 and up; also Model HD11EC,FC tractors prior to serial No. 10001)
15	4349660	1	IDLER ASSEMBLY, belt tightening (Consists of item 16 thru 23)
16	4336587	1	SLIDE, fan idler
	915275	1	FITTING, lubricating, 65°, 1/8"NPT
17	4254670	1	SEAL, oil
18	4254100	1	RING, snap, rear
19	4255031	1	BEARING, ball
20	4254673	1	RING, snap, front (Beveled type)(Used prior to engine #10-5656)
	4253555	1	RING, snap, front (Straight type)(Effective with engine #10-5656)
21	4349662	1	PULLEY
22	4347752	1	GASKET, pulley cover
23	4347751	1	COVER, pulley
	915343	4	CAPSCREW, 1/4"NC x 5/8
	904204	4	LOCKWASHER, 1/4"
24	4349666	1	BOLT, clamping, fan idler slide
	904369	1	LOCKWASHER, 3/4"
	910175	1	NUT, 3/4"NF
25	4349667	1	CAPSCREW, fan belt adjustment
	910325	1	NUT, 1/2"NC

□Also see PACKAGED PARTS

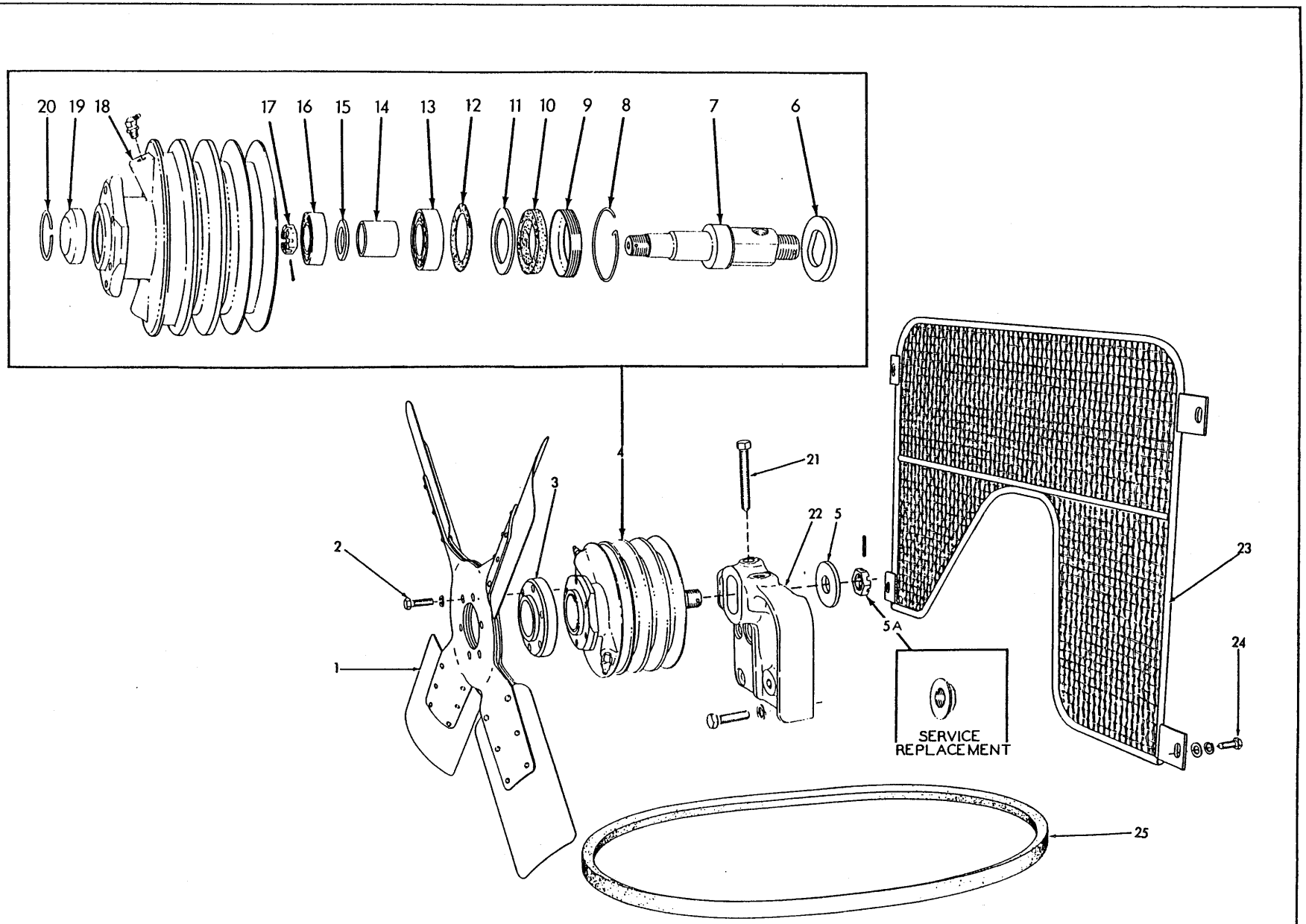

FAN (First type)

FAN

USAGE: Engines prior to serial No. 10-4855.

ITEM	PART NO.	QTY.	DESCRIPTION
1	096070	1	FAN (Suction type. Standard equipment)
	085288	1	FAN (Push type. Special equipment)
2	053616	6	CAPSCREW, 3/8"NC x 1-3/4" (For suction fan)
	044249	6	CAPSCREW, 3/8"NC x 1-1/8" (For push fan)
	904206	6	LOCKWASHER, 3/8"
3	088526	1	SPACER, fan (3/4" thick)(For use with suction fan only)
	098324	1	SPACER, fan (1/8" thick)(For use with push fan only)
4	4339464	1	HUB ASSEMBLY (Consists of items 6 thru 20)
5	4371703	1	WASHER, plain, spindle clamping, rear
5A	911174	1	NUT, jam, slotted, 1"NF } Original equipment
	915946	1	PIN, roll, 5/32" x 1-1/4" } Original equipment
	4339459	1	NUT, flanged (Service replacement. Discard WASHER 4371703 when installing)
6	4056232	1	WASHER, plain, spindle clamping, front
7	4056068	1	SPINDLE (When making first replacement also order NUT 4339459)
8	4371707	1	LOCKWIRE, fan hub
9	4040386	1	RETAINER, spindle sealing washer
10	4040385	1	WASHER, spindle sealing (cork)
11	4040384	1	WASHER, retaining, rear bearing
12	4640976	1	GASKET, bearing retaining washer
13	4253863	1	BEARING, ball, rear
14	4040383	1	SPACER, spindle bearings
15	4640978	1	WASHER, spacing, front bearing
16	4253862	1	BEARING, ball, front
17	4348502	1	NUT, spindle
	911064	1	PIN, cotter, 1/8" x 1-3/8"
18	4337046	1	HUB, fan
	914465	1	FITTING, lubricating, straight, 1/8"NPT (Used prior to engine #93088)
	915274	2	FITTING, lubricating, 45°, 1/8"NPT (Effective with engine #93088)
19	088561	1	CAP, hub
20	4042081	1	RING, snap, cap retaining (Effective with engine #93088)
21	4003603	1	SCREW, fan belt adjustment
22	4348423	1	BRACKET, fan mounting
	916314	4	CAPSCREW, 1/2"NC x 2"
	904208	4	LOCKWASHER, 1/2"
23	------	1	GUARD, fan (Special equipment. Order GUARD 098166)
24	036034	4	CAPSCREW, 3/8"NF x 1"
	904206	4	LOCKWASHER, 3/8"
	044973	4	WASHER, plain
25	4335452	2	BELT, fan driving (Furnished in matched pairs)

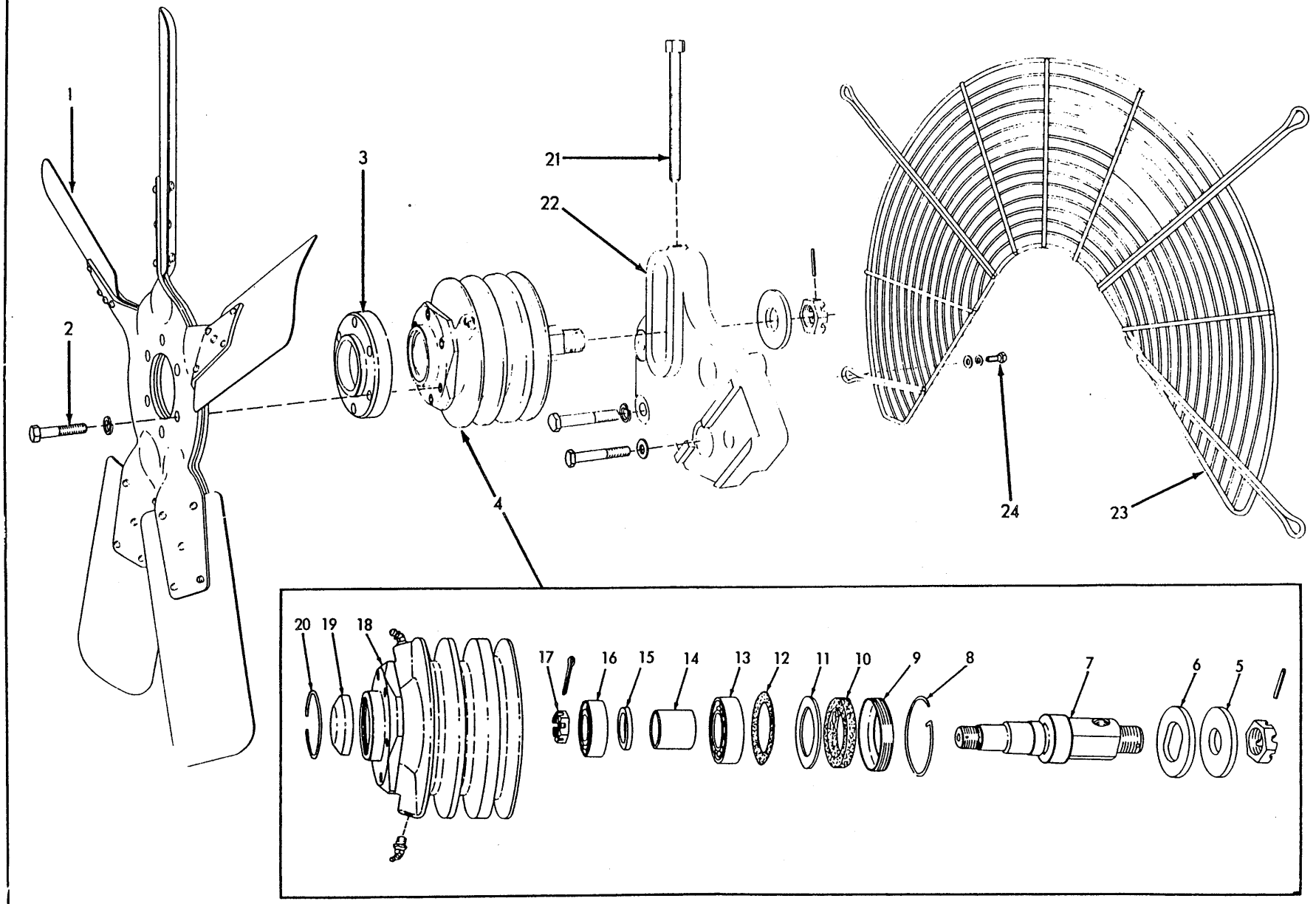

FAN (Second type)

FAN

USAGE: Engines serial No. 10-4855 thru 10-5895

ITEM	PART NO.	QTY.	DESCRIPTION
			NOTE: See FAN DRIVE for fan belt
1	096070	1	FAN (Suction type) (Standard equipment)
	085288	1	FAN (Push type) (Special equipment)
2	053616	6	CAPSCREW, 3/8"NC x 1-3/4" (For suction fan)
	035439	6	CAPSCREW, 3/8"NC x 1" (For push fan)
	904206	6	LOCKWASHER, 3/8"
3	088526	1	SPACER, fan (For use with suction fan only)
4	4349668	1	HUB ASSEMBLY (Consists of items 5 thru 20)
5	4371703	1	WASHER, plain, spindle clamping, rear
6	4056232	1	WASHER, plain, spindle clamping, front
7	4349670	1	SPINDLE
	911174	1	NUT, jam, slotted, 1"NF (rear)
	915946	1	PIN, roll, 5/32" x 1-1/4"
8	4371707	1	LOCKWIRE, fan hub
9	4040386	1	RETAINER, spindle sealing washer
10	4040385	1	WASHER, spindle sealing (cork)
11	4040384	1	WASHER, retaining, rear bearing
12	4640976	1	GASKET, bearing retaining washer
13	4253863	1	BEARING, ball, rear
14	4040383	1	SPACER, spindle bearings
15	4640978	1	WASHER, spacing, front bearing
16	4253862	1	BEARING, ball, front
17	4348502	1	NUT, spindle
	911064	1	PIN, cotter, 1/8" x 1-3/8"
18	4349669	1	HUB, fan
	915274	2	FITTING, lubricating, 45°, 1/8"NPT
19	088561	1	CAP, hub
20	4042081	1	RING, snap, cap retaining
21	4349671	1	SCREW, fan adjustment
22	-------	1	BRACKET, fan mounting (Order BRACKET 4336522)
	915969	4	CAPSCREW, 1/2"NC x 3"
	904208	3	LOCKWASHER, 1/2"
	913432	1	WASHER, plain
23	098166	1	GUARD, fan (Special equipment)
24	036034	4	CAPSCREW, 3/8"NF x 1"
	044973	4	WASHER, plain
	904206	4	LOCKWASHER, 3/8"

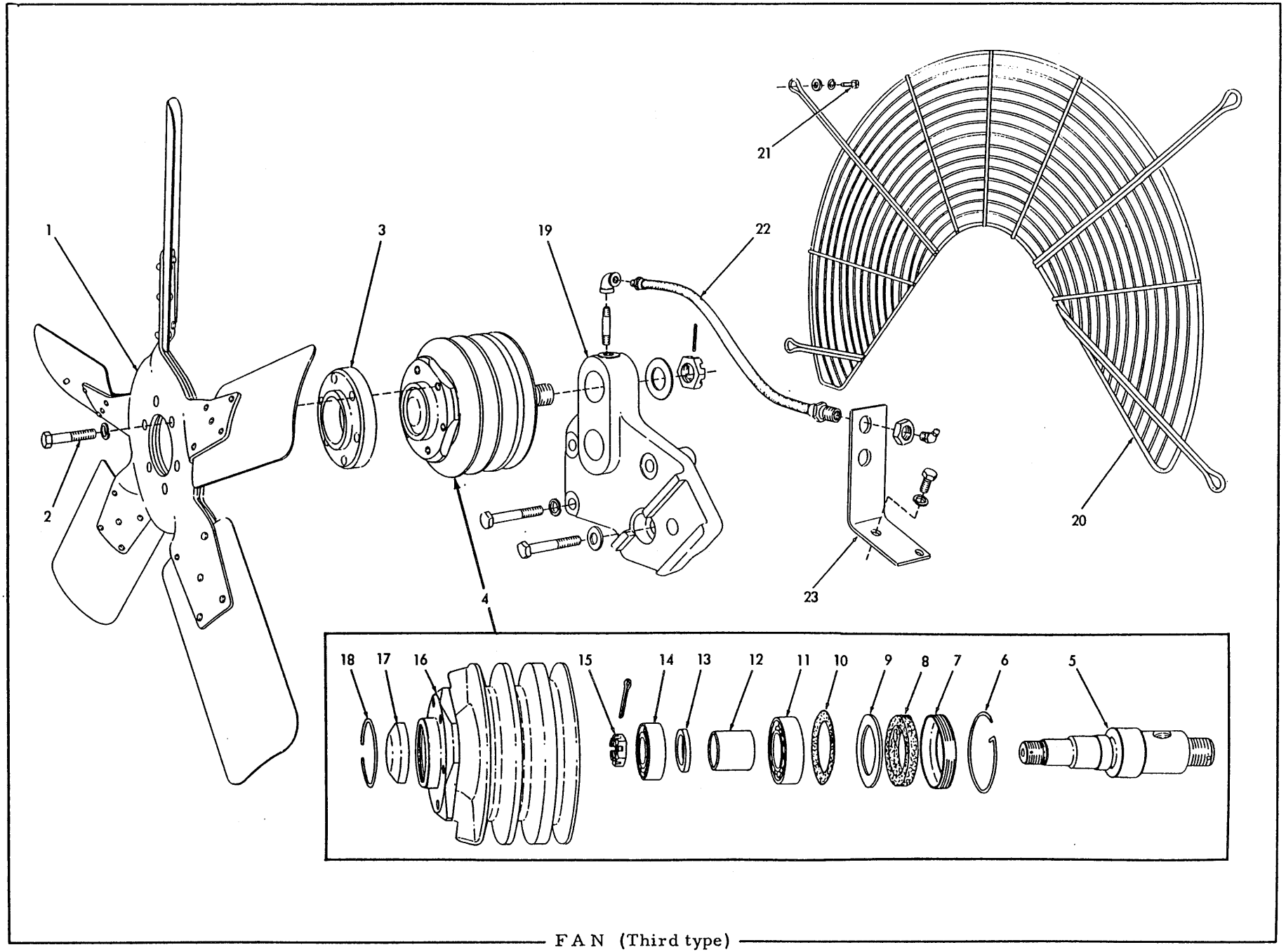

FAN (Third type)

FAN

USAGE: Effective with engine serial No. 10-5896 but later discontinued with tractor serial No. 10001

* Models HD11B, E, ES, S, F
** Models HD11EC, FC

ITEM	PART NO.	QTY. *	QTY. **	DESCRIPTION
				NOTE: See FAN DRIVE for fan belt
1	096070	1	-	FAN (Suction type, 5-blade)(Standard)
1	085288	1	-	FAN (Push type, 4-blade)(Special)
1	------	-	1	FAN (Push type, 8-blade)(Standard. Order FAN 648751)
1	------	-	1	FAN (Suction type, 8-blade)(Special. Order FAN 648752)
2	035439	6	6	CAPSCREW, 3/8"NC x 1"
2	053616	6	-	CAPSCREW, 3/8"NC x 1-3/4" (For Fan 096070 only)
2	904206	6	6	LOCKWASHER, 3/8"
3	088526	1	-	SPACER, fan (For use with Fan 096070 only)
4	4336520	1	-	HUB ASSEMBLY (Consists of items 5 thru 18)
4	4337728	-	1	HUB ASSEMBLY (Consists of items 5 thru 18)
	911174	1	1	NUT, jam, slotted, 1"NF
	911159	1	1	WASHER, plain, SAE std., 1"
	915946	1	1	PIN, roll, 5/32" x 1-1/4"
5	4336521	1	1	SPINDLE
6	4371707	1	1	LOCKWIRE, fan hub
7	4040386	1	1	RETAINER, spindle sealing washer
8	4040385	1	1	WASHER, spindle sealing (cork)
9	4040384	1	1	WASHER, retaining, rear bearing
10	4640976	1	1	GASKET, bearing retaining washer
11	4253863	1	1	BEARING, ball, rear
12	4040383	1	1	SPACER, spindle bearings
13	4640978	1	1	WASHER, spacing, front bearing
14	4253862	1	1	BEARING, ball, front
15	4348502	1	1	NUT, spindle
	911064	1	1	PIN, cotter, 1/8" x 1-3/8"
16	4336529	1	-	HUB, fan (6-1/8" diam.)
16	4337729	-	1	HUB, fan (7-1/2" diam.)
17	088561	1	1	CAP, hub
18	4042081	1	1	RING, snap, cap retaining

(Continued)

FAN (Third type)(Continued)

ITEM	PART NO.	QTY. *	QTY. **	DESCRIPTION
19	4336522	1	1	BRACKET, fan mounting
	915969	4	4	CAPSCREW, 1/2"NC x 3"
	904208	3	3	LOCKWASHER, 1/2"
	913432	1	1	WASHER, plain
20	098166	1	1	GUARD, fan (Standard equipment on Models HD11EC, FC with push fan; special equipment on all other models)
21	036034	4	4	CAPSCREW, 3/8"NF x 1"
	044973	4	4	WASHER, plain
	904206	4	4	LOCKWASHER, 3/8"
22	4336526	1	1	HOSE, lubricating (14-1/2" long)
	915405	1	1	NIPPLE, pipe, 1/8"NPT x 1-3/4"
	901676	1	1	ELBOW, pipe, 1/8"NPT
	915274	1	1	FITTING, lubricating, 45°, 1/8"NPT
	911049	1	1	NUT, jam, 5/8"NF
23	4336523	1	1	BRACKET, lubricating hose
	915408	1	1	CAPSCREW, 3/8"NC x 3/4"
	904206	1	1	LOCKWASHER, 3/8"

F A N (Fourth type)

USAGE: Tractors serial No. 10001 and up

ITEM	PART NO.	QTY.	DESCRIPTION
			NOTE: See FAN DRIVE for fan belt
1	648752	1	FAN (Suction type)(Standard on HD11B, E, S)
	648751	1	FAN (Push type) } Optional for HD11B, E, S
	649906	1	FAN ASSEMBLY (Reversible) } Optional for HD11B, E, S
	648753	1	FAN (Push type)(Standard on HD11EC)
	648754	1	FAN (Suction type) } Optional for HD11EC
	649905	1	FAN ASSEMBLY (Reversible) } Optional for HD11EC
2	035439	6	CAPSCREW, 3/8"NC x 1"
	904206	6	LOCKWASHER, 3/8"
3	4336522	1	BRACKET, fan mounting
	915969	4	CAPSCREW, 1/2"NC x 3"
	904208	3	LOCKWASHER, 1/2"
	913432	1	WASHER, plain
4	4337728	1	HUB ASSEMBLY (Consists of items 5 thru 18)
	911174	1	NUT, jam, slotted, 1"NF
	911159	1	WASHER, plain, SAE std., 1"
	915946	1	PIN, roll, 5/32" x 1-1/4"
5	4336521	1	SPINDLE
6	4371707	1	LOCKWIRE, fan hub
7	4040386	1	RETAINER, spindle sealing washer
8	4040385	1	WASHER, spindle sealing (cork)
9	4040384	1	WASHER, retaining, rear bearing
10	4640976	1	GASKET, bearing retaining washer
11	4253863	1	BEARING, ball rear
12	4040383	1	SPACER, spindle bearings
13	4640978	1	WASHER, spacing, front bearing
14	4253862	1	BEARING, ball, front
15	4348502	1	NUT, spindle
	911064	1	PIN, cotter, 1/8" x 1-3/8"
16	4337729	1	HUB, fan
17	088561	1	CAP, hub
18	4042081	1	RING, snap, cap retaining

(Continued)

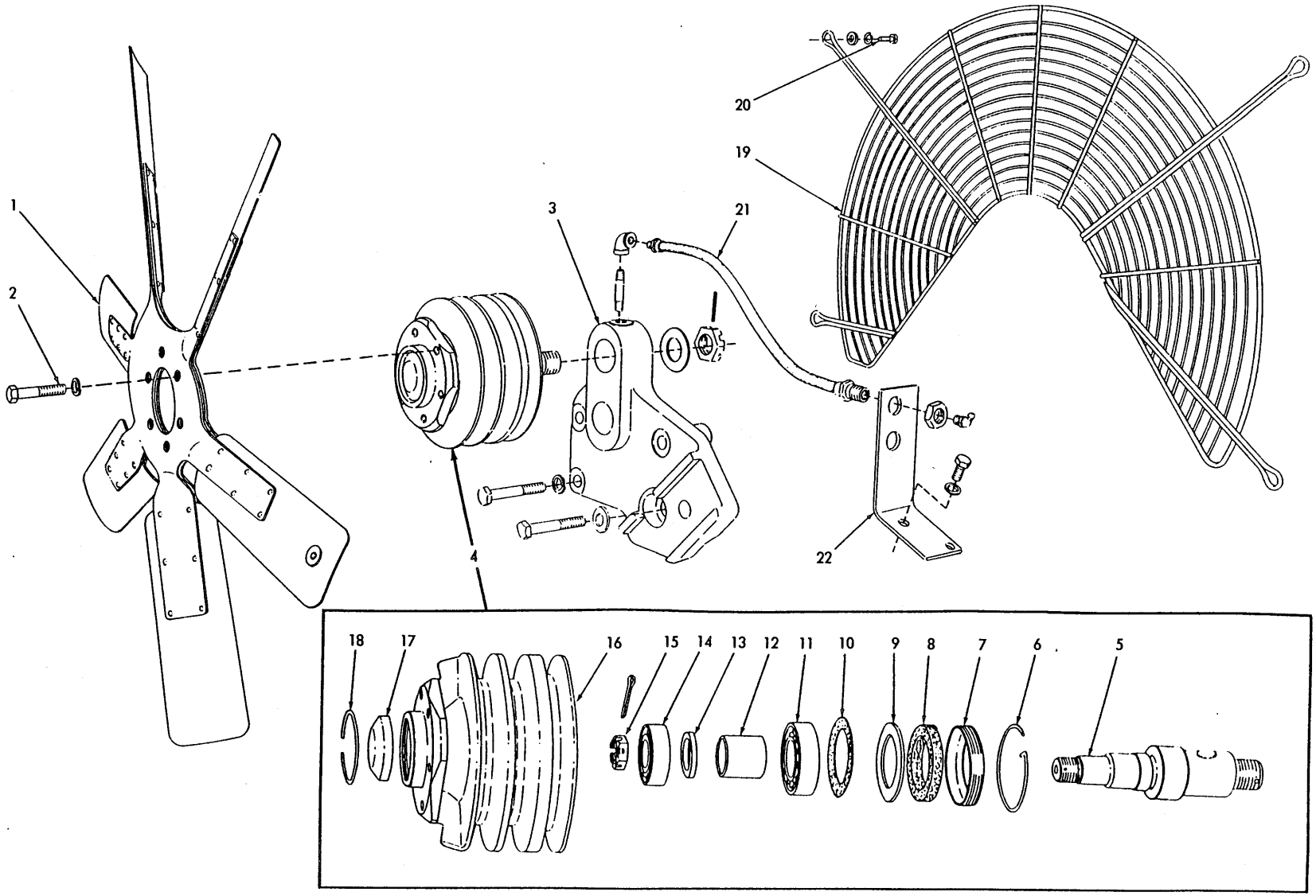

FAN (Fourth type)

T-41843

ITEM	PART NO.	QTY.	DESCRIPTION
19	634362	1	GUARD, fan (Models HD11B,E,S. Special equipment)
	645536	1	GUARD, fan (Model HD11EC. Standard equipment on units with push-type fan)
20	036034	4	CAPSCREW, 3/8"NF x 1" (Early units)
	035439	4	CAPSCREW, 3/8"NC x 1" (Late units)
	044973	4	WASHER, plain.
	904206	4	LOCKWASHER, 3/8"
21	4336526	1	HOSE, lubricating (14-1/2" long)
	915405	1	NIPPLE, pipe, 1/8"NPT x 1-3/4"
	901676	1	ELBOW, pipe, 1/8"NPT
	915274	1	FITTING, lubricating, 45°, 1/8"NPT
	911049	1	NUT, jam, 5/8"NF
22	4336523	1	BRACKET, lubricating hose
	915408	1	CAPSCREW, 3/8"NC x 3/4"
	904206	1	LOCKWASHER, 3/8"

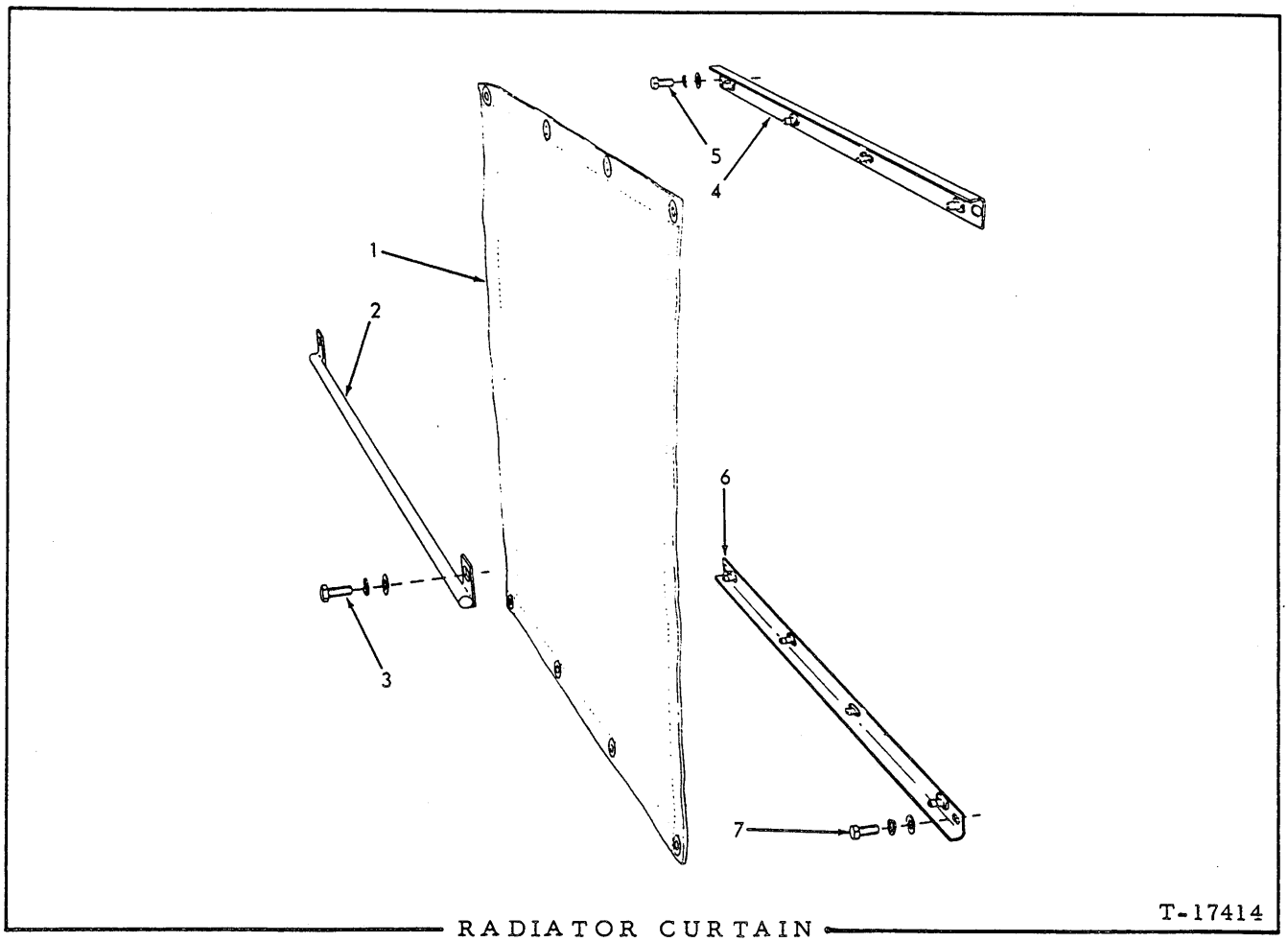

T-17414

RADIATOR CURTAIN

USAGE: Special equipment. Used only on tractors equipped with suction fan.

* All units except late Model HD11EC
** Model HD11EC tractors serial No. 10001 and up

ITEM	PART NO.	QTY. *	QTY. **	DESCRIPTION	
1	085136	1	-	CURTAIN	
	645837	-	1	CURTAIN	
2	085135	1	-	ROD, curtain supporting	
	645833	-	1	ROD, curtain supporting	
3	012992	2	2	CAPSCREW, 3/8"NF x 1-1/4"	
	904206	2	2	LOCKWASHER, 3/8"	
	044973	2	2	WASHER, plain	
4	651170	1	-	BRACKET ASSEMBLY, curtain attaching, upper	Include fasteners
	651163	-	1	BRACKET ASSEMBLY, curtain attaching, upper	Include fasteners
5	012992	2	2	CAPSCREW, 3/8"NF x 1-1/4"	
	904206	2	2	LOCKWASHER, 3/8"	
	044973	2	2	WASHER, plain	

(Continued)

ITEM	PART NO.	QTY. *	QTY. **	DESCRIPTION	
6	651171	1	-	BRACKET ASSEMBLY, curtain attaching, lower	Include fasteners
	651164	-	1	BRACKET ASSEMBLY, curtain attaching, lower	
7	012992	2	2	CAPSCREW, 3/8"NF x 1-1/4"	
	904206	2	2	LOCKWASHER, 3/8"	
	044973	2	2	WASHER, plain	

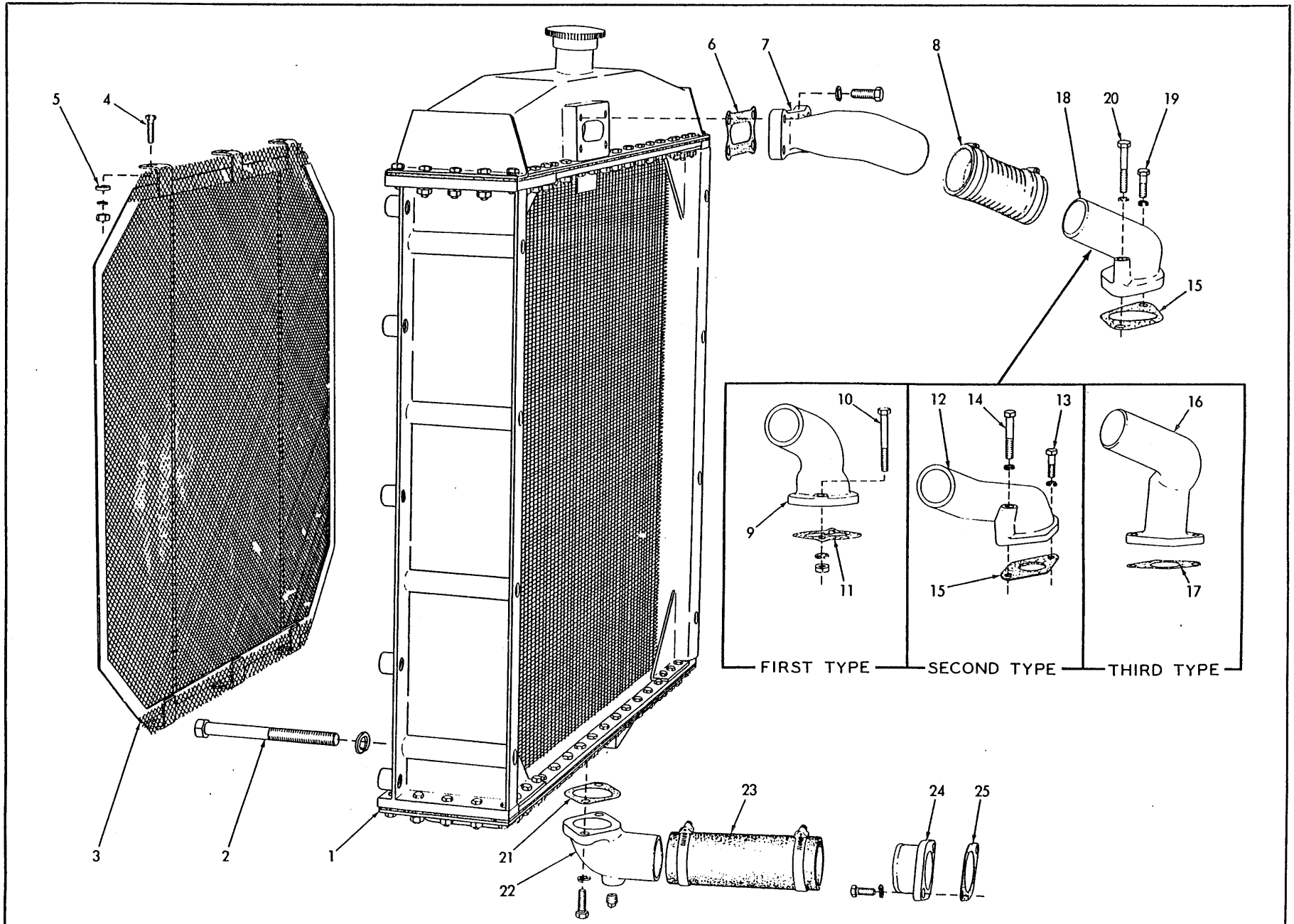

RADIATOR

T-13170

RADIATOR

* Models HD11B, E, ES, S, F
** Models HD11EC, FC

ITEM	PART NO.	QTY. *	QTY. **	DESCRIPTION
1	093339	1	-	RADIATOR ASSEMBLY (Standard. Not used on Model HD11E tractors #10001 thru #10893)
1	624637	1	1	RADIATOR ASSEMBLY (Standard. For Model HD11EC, FC tractors prior to #10001; also Model HD11E tractors #10001 thru #10893)
1	645482	-	1	RADIATOR ASSEMBLY (Standard. For Model HD11EC tractors #10001 and up)
1	095224	1	-	RADIATOR ASSEMBLY (Special. Has armored tubes at rear of core) (Used prior to tractor #8138. Order RADIATOR ASSEMBLY 632164)
1	632164	1	1	RADIATOR ASSEMBLY (Special. Has armored tubes at rear of core) (Effective with tractor #8138 on Models HD11B, E, ES, S, F; also used on Model HD11EC, FC tractors prior to #10001)
1	645782	-	1	RADIATOR ASSEMBLY (Special. Has armored tubes at rear of core)(For Model HD11EC tractors #10001 and up)
1	644815	1	1	RADIATOR ASSEMBLY (Special. Has in-line core tubes to minimize clogging)(Model HD11EC, FC tractors prior to #10001; also Model HD11B, E, S tractors #10001 and up)
1	645733	-	1	RADIATOR ASSEMBLY (Special. Has in-line core tubes to minimize clogging)(Model HD11EC tractors #10001 and up)
2	023574	8	-	CAPSCREW, 5/8"NF x 7-1/4" (Tractors prior to #11379) — For RADIATORS 093339 and 095224 only
2	649298	8	-	CAPSCREW, 5/8"NC x 7-1/4" (Tractors #11379 and up) — For RADIATORS 093339 and 095224 only
2	065468	8	8	CAPSCREW, 5/8"NF x 8-1/4" (Not for HD11B, E tractors after #11378) — For all RADIATORS except 093339 and 095224
2	649852	8	8	CAPSCREW, 5/8"NC x 8-1/4" (HD11B, E tractors #11379 and up only) — For all RADIATORS except 093339 and 095224
2	904209	8	8	LOCKWASHER, 5/8" — For all RADIATORS except 093339 and 095224

NOTE: See page 199 for radiator parts

3	085039	1	1	SCREEN, radiator (Not for Model HD11EC tractors after #10000) — Special equipment. Not used with pusher fan or armored core radiator
3	645913	-	1	SCREEN, radiator (Model HD11EC tractors #10001 and up only) — Special equipment. Not used with pusher fan or armored core radiator
4	046321	6	6	CAPSCREW, 5/16"NC x 1-1/2" — 2 additional used on Model HD11EC tractors #10001 and up
5	092665	6	6	WASHER, plain — 2 additional used on Model HD11EC tractors #10001 and up
	904205	6	6	LOCKWASHER, 5/16" — 2 additional used on Model HD11EC tractors #10001 and up
	911025	6	6	NUT, 5/16"NC — 2 additional used on Model HD11EC tractors #10001 and up
6	084888	1	1	GASKET, radiator inlet elbow
7	084042	1	1	ELBOW, radiator inlet
	916197	4	4	CAPSCREW, 7/16"NC x 1-1/4"
	904207	4	4	LOCKWASHER, 7/16"

(Continued)

ITEM	PART NO.	QTY. *	QTY. **	DESCRIPTION
8	093628	1	-	HOSE, radiator inlet (9" long)(Used prior to tractor #6427)
	088349	1	1	HOSE, radiator inlet (4-1/2" long)(Effective with tractor #6427)
	921913	2	2	CLAMP, hose, 1-7/8" to 2-3/4" diam.
9	084003	1	-	ELBOW, engine water outlet (Used prior to tractor #437)
10	919227	2	-	CAPSCREW, 3/8"NC x 3-1/4"
	904206	2	-	LOCKWASHER, 3/8"
	911041	2	-	NUT, 3/8"NF
11	4346656	1	-	GASKET, engine water outlet elbow (Used prior to tractor #437)
12	088326	1	-	ELBOW, engine water outlet (Used on tractors #437 thru #6426)
13	043886	1	-	CAPSCREW, 7/16"NC x 1"
14	088736	1	-	CAPSCREW, 7/16"NC x 3"
	904207	2	-	LOCKWASHER, 7/16"
15	4300145	1	1	□GASKET, engine water outlet elbow (Used on tractors #437 thru #6426; also tractors #7999 and up excluding #8001)
16	620334	1	1	ELBOW, engine water outlet (Used on tractors #6427 thru #7998 including #8001)
17	4336266	1	1	□GASKET, engine water outlet elbow (Used on tractors #6427 thru #7998 including #8001)
18	634244	1	1	ELBOW, engine water outlet (Effective with tractor #7999 excluding #8001)
19	043886	1	1	CAPSCREW, 7/16"NC x 1"
20	088736	1	1	CAPSCREW, 7/16"NC x 3"
	904207	2	2	LOCKWASHER, 7/16"
21	4310257	1	1	GASKET, radiator outlet elbow
22	084010	1	1	ELBOW, radiator outlet
	901652	1	1	PLUG, pipe, 1/4"NPT
	916197	2	2	CAPSCREW, 7/16"NC x 1-1/4"
	904207	2	2	LOCKWASHER, 7/16"
23	634378	1	1	HOSE, radiator outlet
	921914	2	2	CLAMP, hose, 2-5/16" to 3-1/4" diam.
24	4347872	1	1	PIPE, engine water inlet
	916271	2	2	CAPSCREW, 3/8"NC x 1"
	904206	2	2	LOCKWASHER, 3/8"
25	4346456	1	1	□GASKET, water inlet pipe

□Also see PACKAGED PARTS

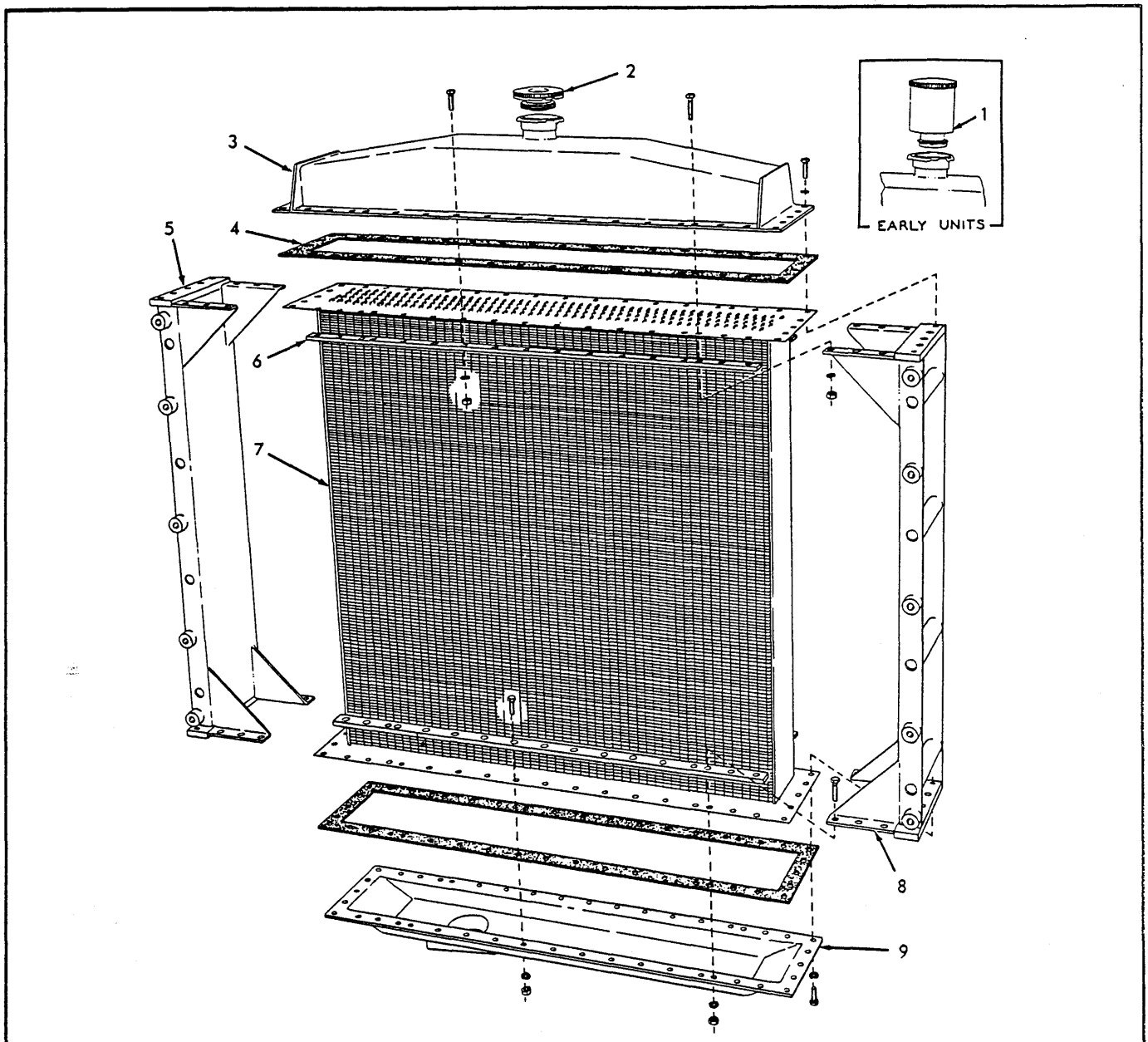

RADIATOR PARTS

* RADIATOR ASSEMBLY 093339
* RADIATOR ASSEMBLY 095224
** RADIATOR ASSEMBLY 624637
** RADIATOR ASSEMBLY 632164
** RADIATOR ASSEMBLY 644815
*** RADIATOR ASSEMBLY 645482
*** RADIATOR ASSEMBLY 645782
*** RADIATOR ASSEMBLY 645733

See page 197

ITEM	PART NO.	QUANTITY *	**	***	DESCRIPTION
1	087377	1	-	-	CAP, pressure (Early units. For 093339 RADIATOR only)
2	092028	1	-	-	CAP, pressure (4 lb.)
	087528	-	1	1	CAP, pressure (7 lb.)

(Continued)

ITEM	PART NO.	QUANTITY *	**	***	DESCRIPTION
3	70087955	1	-	-	TANK, top
	70629064	-	1	-	TANK, top
	70645948	-	-	1	TANK, top
	70914392	26	26	26	CAPSCREW, 5/16"NC x 1"
	70903773	18	18	18	CAPSCREW, 5/16"NC x 1-1/4"
	70904205	44	44	44	LOCKWASHER, 5/16"
	70911025	38	38	38	NUT, 5/16"NC
4	70087041	2	-	-	GASKET, core
	70629067	-	2	-	GASKET, core
	70645951	-	-	2	GASKET, core
5	70087043	1	-	-	SIDE, radiator core, right
	70638792	-	1	1	SIDE, radiator core, right
6	70087040	4	4	-	CLAMP, radiator core flange
	70645950	-	-	4	CLAMP, radiator core flange
7	70087538	1	-	-	CORE (Standard)
	70665196	1	-	-	CORE (Special. Heavy in-line type for severe service)
	------	1	-	-	CORE (Armored)(Discontinued. Order RADIATOR ASSEMBLY 632164. Can also replace with CORE 087538 or 70665196)
	70629069	-	1	-	CORE (Standard)
	70632471	-	1	-	CORE (Armored)
	70644814	-	1	-	CORE (In-line core tubes)
	70645952	-	-	1	CORE (Standard)
	70645954	-	-	1	CORE (Armored)
	70645953	-	-	1	CORE (In-line core tubes)
8	70087042	1	-	-	SIDE, radiator core, left
	70638791	-	1	1	SIDE, radiator core, left
9	70087044	1	-	-	TANK, bottom
	70629068	-	1	-	TANK, bottom
	70645949	-	-	1	TANK, bottom
	70914392	26	26	26	CAPSCREW, 5/16"NC x 1"
	70903773	18	18	18	CAPSCREW, 5/16"NC x 1-1/4"
	70904205	44	44	44	LOCKWASHER, 5/16"
	70911025	40	40	40	NUT, 5/16"NC

(Revised December 1979)

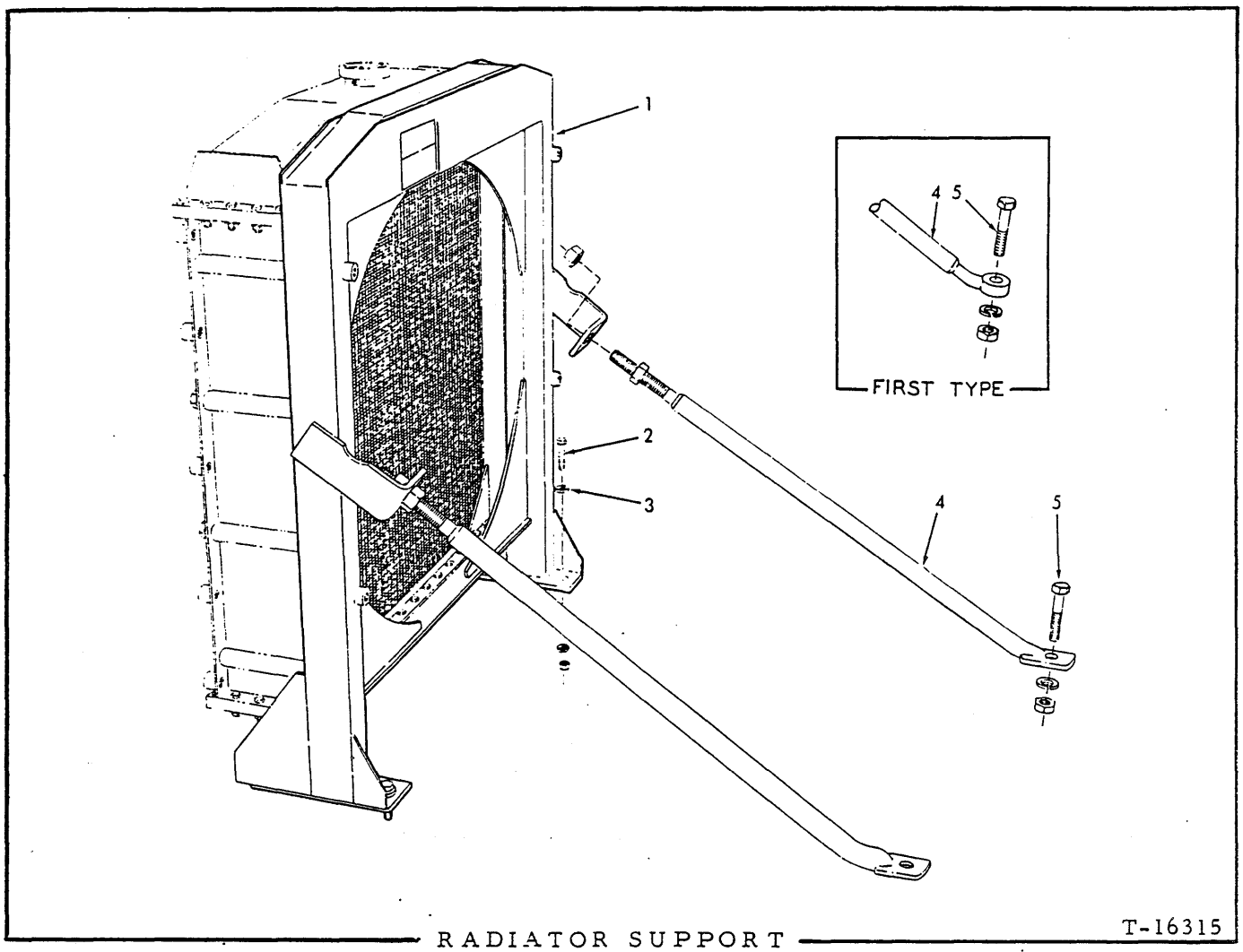

RADIATOR SUPPORT T-16315

USAGE: Standard on Models HD11B,E,EC; also special equipment on Model HD11ES,S tractors prior to serial No. 10001. Not used with light-duty Radiator Shell.

* Tractors prior to serial No. 10001
** Tractors serial No. 10001 and up

ITEM	PART NO.	QTY. *	QTY. **	DESCRIPTION
1	096821	1	-	SUPPORT, radiator (Used prior to tractor #7999 including #8001)
	634360	1	-	SUPPORT, radiator (Effective with tractor #7999 excluding #8001)
	634468	-	1	SUPPORT, radiator (Models HD11B,E)
	645466	-	1	SUPPORT, radiator (Model HD11EC)
2	035067	4	4	CAPSCREW, 1/2"NF x 2"
3	064531	4	4	WASHER, plain
	904208	4	4	LOCKWASHER, 1/2"
	911043	4	4	NUT, 1/2"NF
4	093583	2	-	ROD, bracing
	634101	-	2	BRACE
	911046	4	4	NUT, 7/8"NF
5	052527	2	-	CAPSCREW, 3/4"NF x 3-1/2"
	012526	-	2	CAPSCREW, 3/4"NF x 3-1/4"
	904369	2	2	LOCKWASHER, 3/4"
	911045	2	2	NUT, 3/4"NF

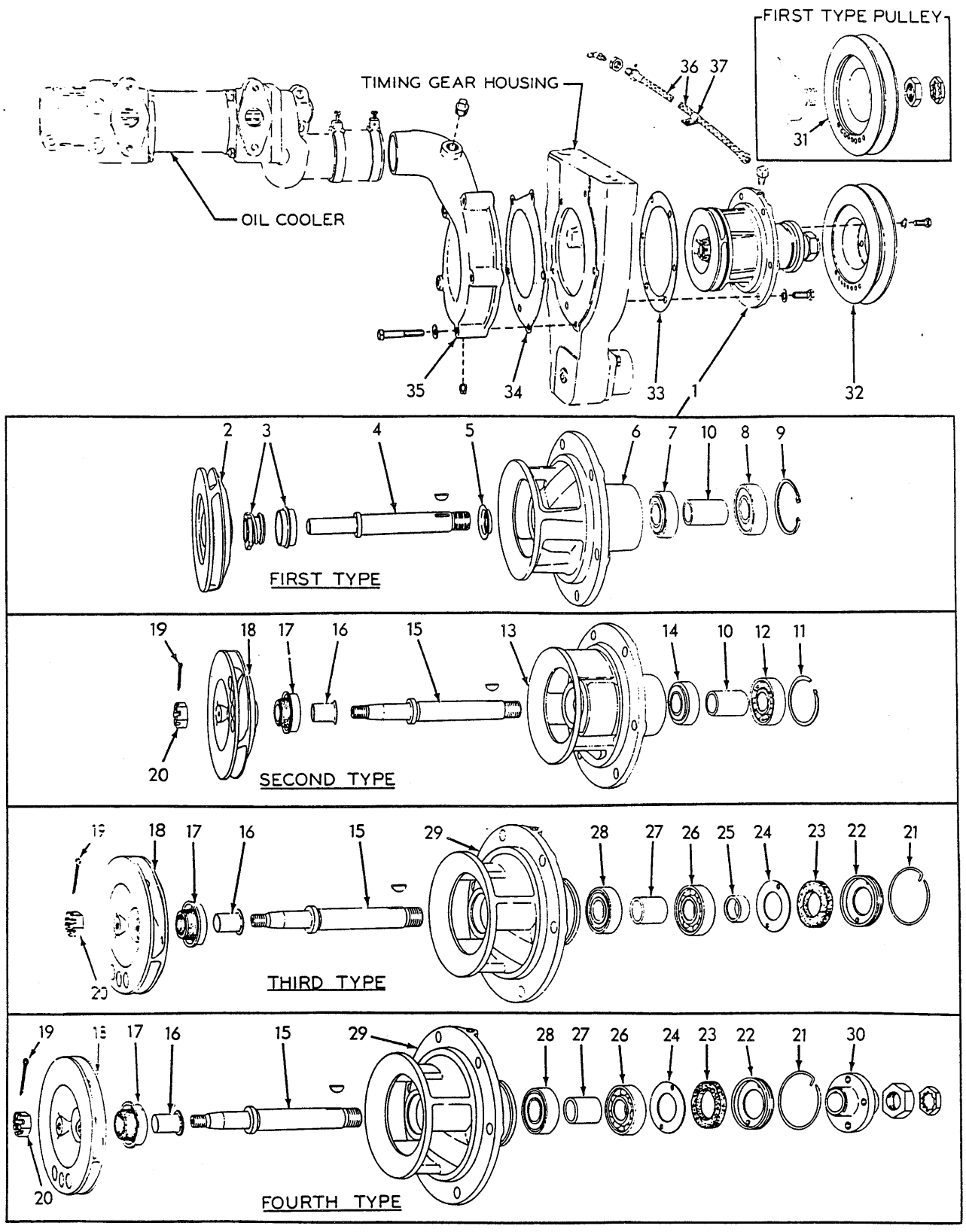
FIRST TYPE PULLEY
TIMING GEAR HOUSING
OIL COOLER
FIRST TYPE
SECOND TYPE
THIRD TYPE
FOURTH TYPE

T-15208

WATER PUMP

* FIRST TYPE - Used prior to engine #77093
** SECOND TYPE - Used on engines #77093 thru #96166
*** THIRD TYPE - Used on engines #96167 thru #10-4257
**** FOURTH TYPE - Effective with engine #10-4258

ITEM	PART NO.	QUANTITY *	**	***	****	DESCRIPTION
						NOTE: See GENERATOR for listing of driving belt.
1	------	1	1	1	-	PUMP ASSEMBLY (Order PUMP ASSY. 4338662, PULLEY 4335809, 4 CAPSCREWS 916206 and 4 LOCKWASHERS 904205)
1	4338662	-	-	-	1	PUMP ASSEMBLY (Consists of items 15 thru 24 and 26 thru 30)
	916271	6	6	6	6	CAPSCREW, 3/8"NC x 1"
	904206	6	6	6	6	LOCKWASHER, 3/8"
2	4346293	1	-	-	-	IMPELLER
3	4346296	1	-	-	-	SEAL ASSEMBLY (Serviced only as a unit)
4	4347431	1	-	-	-	SHAFT
	905121	1	-	-	-	KEY, #5 woodruff, 1/8" x 5/8"
5	4346952	1	-	-	-	RING, water slinger
6	4346953	1	-	-	-	HOUSING
7	4253478	1	-	-	-	BEARING, ball, rear
8	4253479	1	-	-	-	BEARING, ball, front
9	4347115	1	-	-	-	RING, snap, bearing retaining
10	4346951	1	1	-	-	SPACER, bearing
11	4041134	-	1	-	-	RING, snap
12	4253917	-	1	-	-	BEARING, ball, front
13	------	-	1	-	-	HOUSING (Not serviced)
14	4253914	-	1	-	-	BEARING, ball, rear
15	4348757	-	1	1	1	SHAFT ASSEMBLY (Includes item 16)
	905121	-	1	1	1	KEY, #5 woodruff, 1/8" x 5/8"
16	4507084	-	1	1	1	FLINGER, water
17	4507091	-	1	1	1	SEAL ASSEMBLY (Serviced only as a unit)
18	4339103	-	1	1	1	IMPELLER ASSEMBLY (Includes ceramic insert)
19	4041097	-	1	1	1	PIN, cotter, impeller nut
20	4375686	-	1	1	1	NUT, impeller retaining
21	4371707	-	-	1	1	LOCKWIRE, snap, sealing washer retainer
22	4044206	-	-	1	-	RETAINER, sealing washer
22	4335320	-	-	-	1	RETAINER, sealing washer

(Continued)

WATER PUMP (Continued)

ITEM	PART NO.	QUANTITY *	**	***	****	DESCRIPTION
23	4044205	-	-	1	-	WASHER, sealing
	4348825	-	-	-	1	WASHER, sealing
24	4044209	-	-	1	1	WASHER, retaining
25	4044207	-	-	1	-	SPACER, driving pulley
26	4044210	-	-	1	1	BEARING, ball, front
27	4044211	-	-	1	1	SPACER, bearing
28	4044212	-	-	1	1	BEARING, ball, rear
29	4338663	-	-	1	1	BODY, water pump
30	4335808	-	-	-	1	FLANGE, driving pulley
	910847	-	-	-	1	NUT, 3/4"NF
	917680	-	-	-	1	NUT, Pal locking, 3/4"NF
31	4348393	1	1	1	-	PULLEY
	910847	1	1	1	-	NUT, 3/4"NF
	917680	1	1	1	-	NUT, Pal locking, 3/4"NF
32	4335809	-	-	-	1	PULLEY, driving (7-1/8" diam.)(Used prior to engine #10-4855)
	4349675	-	-	-	1	PULLEY, driving (5-15/16" diam.)(Effective with engine #10-4855)
	916206	-	-	-	4	CAPSCREW, 5/16"NF x 7/8"
	904205	-	-	-	4	LOCKWASHER, 5/16"
33	4346744	1	1	1	1	□ GASKET, water pump
34	4335056	1	1	1	1	□ GASKET, water pump volute
35	4348330	1	1	-	-	VOLUTE (Has external drain)(Used prior to engine #91809)
	901651	1	1	-	-	PLUG, pipe, 1/8"NPT
	4349953	-	1	1	1	VOLUTE (Has internal drain)(Effective with engine #91809)
	920131	1	1	1	1	PLUG, pipe, 3/8"NPT
	916274	5	5	5	5	CAPSCREW, 3/8"NC x 2-1/4"
	904206	5	5	5	5	LOCKWASHER, 3/8"
36	045507	-	-	1	1	HOSE, lubricating (12-1/4" long)(Used prior to engine #10-5896)
	915276	-	-	1	1	FITTING, lubricating, 90°, 1/8"NPT
	914463	-	-	1	1	ADAPTER, 90°, 1/8"NPT male and female
	904209	-	-	1	1	LOCKWASHER, 5/8"
	911049	-	-	1	1	NUT, jam, 5/8"NF
	4336527	-	-	-	1	HOSE, lubricating (26-5/8" long)(Effective with engine #10-5896)
	914463	-	-	-	1	ADAPTER, 90°, 1/8"NPT male and female
	915274	-	-	-	1	FITTING, lubricating, 45°, 1/8"NPT
	911049	-	-	-	1	NUT, jam, 5/8"NF
37	4251849	-	-	-	1	CLIP, hose supporting (Effective with engine #10-5896)

□Also see PACKAGED PARTS

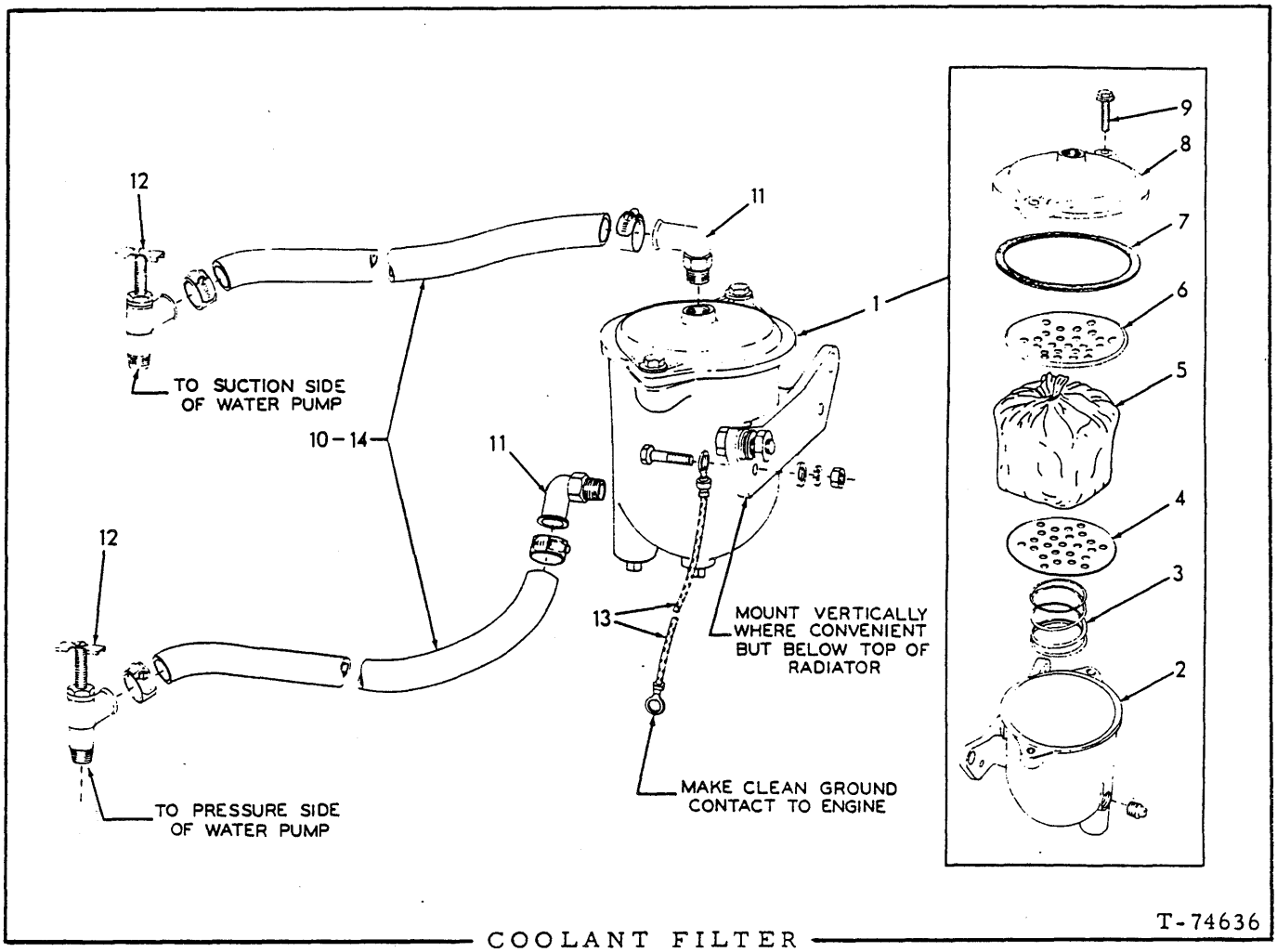

COOLANT FILTER

USAGE: Special equipment

ITEM	PART NO.	QTY.	DESCRIPTION
-	4357825	1	FILTER KIT (Consists of items 1 thru 13)
1	4387474	1	FILTER ASSEMBLY, water (Consists of items 2 thru 9. Has element for use with permanent anti-freeze)
	916311	2	CAPSCREW, 1/2"NC x 1-1/4"
	910244	2	WASHER, plain, SAE std., 1/2"
	904208	2	LOCKWASHER, 1/2"
	910325	2	NUT, 1/2"NC
	914670	2	CAPSCREW, 5/16"NC x 1-1/8"
	910335	2	WASHER, plain, SAE std.. 5/16"
	904205	2	LOCKWASHER, 5/16"
	910323	2	NUT, 5/16"NC
2	4055031	1	BODY, filter
	920131	2	PLUG, pipe, 3/8"NPT
3	4054569	1	SPRING, filter element
4	4054568	1	PLATE, filter element. lower

(Continued)

(Added July 1968)

COOLANT FILTER (Continued)

ITEM	PART NO.	QTY.	DESCRIPTION
5	4058830	1	ELEMENT KIT, filter (Includes item 9)(Cannot be used with permanent anti-freeze)
	4058831	1	ELEMENT KIT, filter (Includes item 9)(Can be used with permanent anti-freeze)
6	4055034	1	PLATE, filter element, upper
7	4054566	1	GASKET, filter cover
8	4055032	1	COVER, filter
9	4055033	2	BOLT ASSEMBLY, filter cover (Includes washer)
10	-------	1	HOSE (86" length. Cut to suit installation)(For service replacement order item 14)
	921911	4	CLAMP, hose, 11/16" to 1-1/4" diam.
11	4255286	2	ELBOW, water hose (90°. 5/8" nipple, 3/8"NPT)
12	4255772	2	VALVE, water shut-off (90°, 5/8" nipple, 3/8"NPT)
13	4059367	1	CABLE, ground
14	920722	-	HOSE, rubber, 5/8"I. D., 25 ft. roll (Use as required)

(Added July 1968)

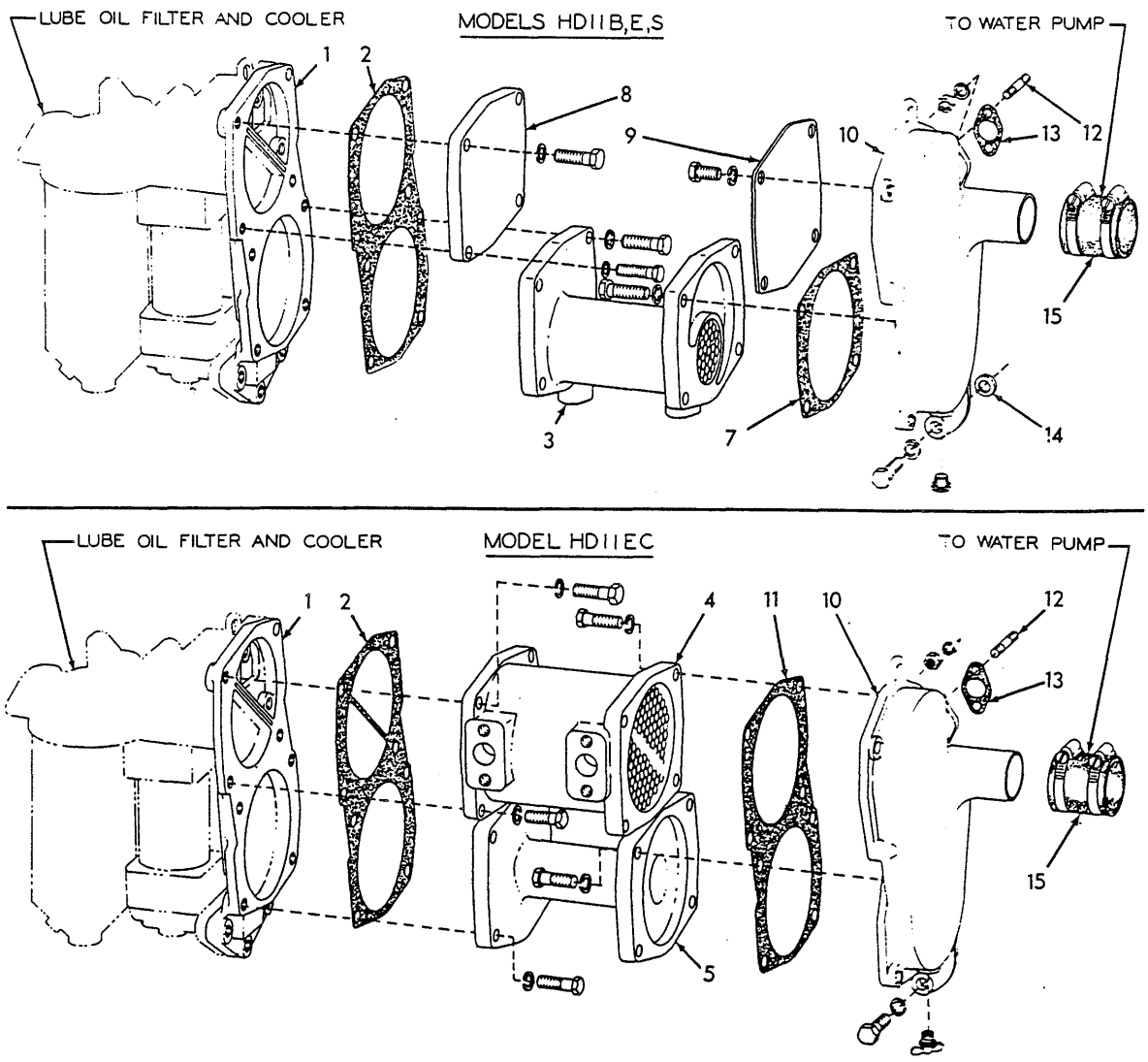

HEAT EXCHANGER T-41945

USAGE: Tractors serial No. 10001 and up

* Models HD11B, E, S
** Model HD11EC

ITEM	PART NO.	QTY. *	QTY. **	DESCRIPTION
1	4339116	1	1	COVER, rear
2	4339698	1	-	GASKET, rear cover
	4339697	-	1	GASKET, rear cover
3	4339209	1	-	EXCHANGER, heat, engine clutch oil
	916313	8	-	CAPSCREW, 1/2"NC x 1-3/4"
	904208	8	-	LOCKWASHER, 1/2"

(Continued)

ITEM	PART NO.	QTY. *	QTY. **	DESCRIPTION
4	4339120	-	1	EXCHANGER, heat, torque converter oil
	916313	-	4	CAPSCREW, 1/2"NC x 1-3/4"
	904208	-	4	LOCKWASHER, 1/2"
	916255	-	1	CAPSCREW, 7/16"NC x 1-3/4"
	904207	-	1	LOCKWASHER, 7/16"
5	4339216	-	1	TUBE, connecting
	916313	-	8	CAPSCREW, 1/2"NC x 1-3/4"
	904208	-	8	LOCKWASHER, 1/2"
7	4339115	1	-	GASKET, front cover
8	4339218	1	-	COVER, water passage, rear
	916255	1	-	CAPSCREW, 7/16"NC x 1-3/4"
	904207	1	-	LOCKWASHER, 7/16"
	916313	2	-	CAPSCREW, 1/2"NC x 1-3/4"
	904208	2	-	LOCKWASHER, 1/2"
9	4339217	1	-	COVER, water passage, front
	916308	4	-	CAPSCREW, 1/2"NC x 7/8"
	904208	4	-	LOCKWASHER, 1/2"
10	4339125	1	1	COVER, front
	919840	1	1	PLUG, pipe, hex-hd., 1/4"NPT (Not for early Model HD11EC)
	912415	-	1	COCK, drain, 1/4"NPT (Early units only)
	921556	1	1	CAPSCREW, 1/2"NC x 2"
	904208	1	1	LOCKWASHER, 1/2"
11	4339698	-	1	GASKET, front cover
12	4514091	2	2	STUD, attaching, front cover
	917705	2	2	NUT
	904206	2	2	LOCKWASHER, 3/8"
13	4348185	1	1	□GASKET, front cover to block
14	4252784	1	-	WASHER, spacing, front cover (Model HD11B only)
15	4506737	1	1	HOSE, water pump to cooler
	4253922	2	2	CLAMP, hose

□Also see PACKAGED PARTS

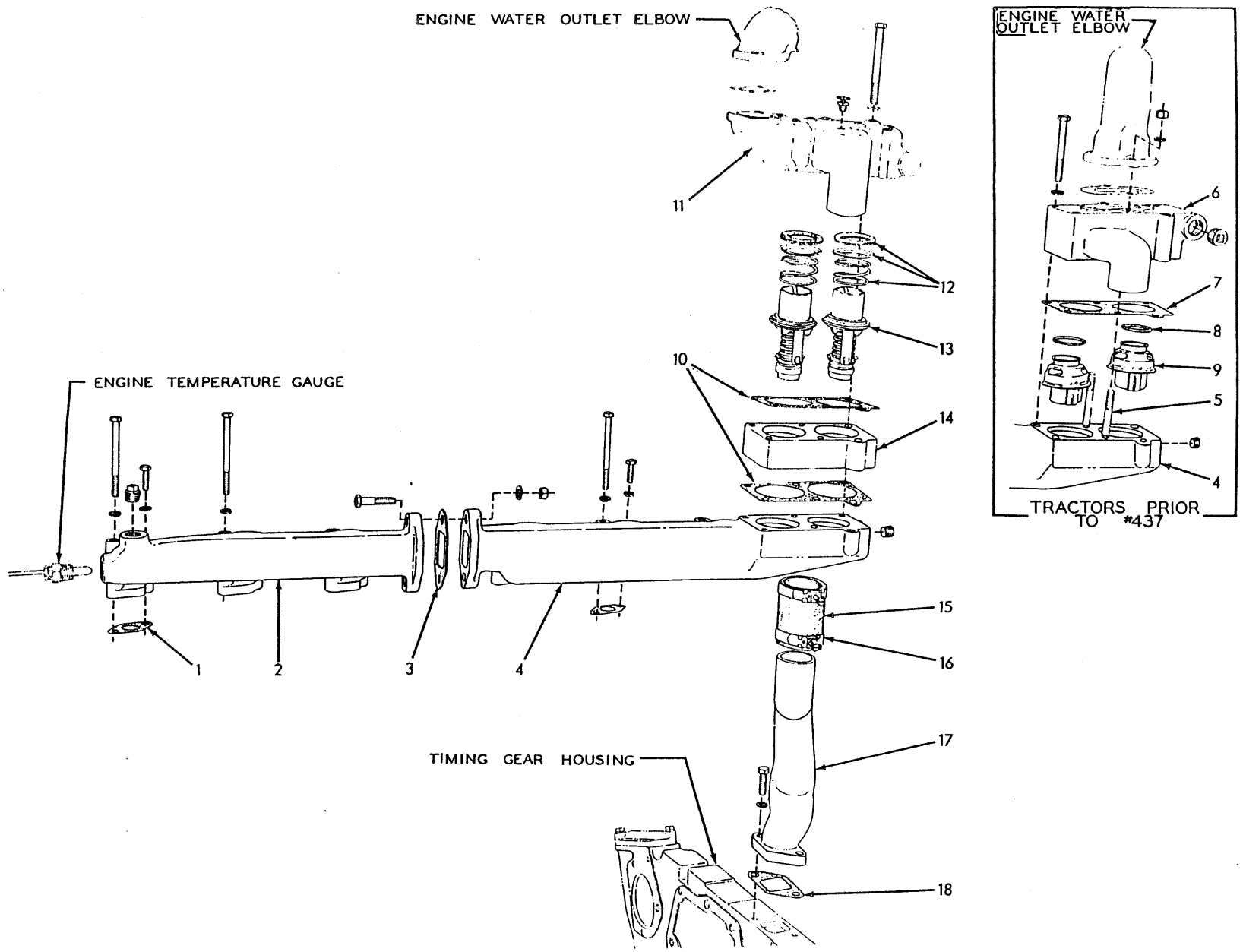

WATER OUTLET MANIFOLD (First type)

WATER OUTLET MANIFOLD

USAGE: Tractors prior to serial No. 6427

* Used prior to tractor serial No. 437
** Effective with tractor serial No. 437

ITEM	PART NO.	QTY. *	QTY. **	DESCRIPTION
1	4348278	6	6	□GASKET, water manifold
2	4349296	1	1	MANIFOLD, water outlet, rear
	912726	1	1	PLUG, pipe, 3/4"NPT
	914392	3	3	CAPSCREW, 5/16"NC x 1"
	917016	1	1	CAPSCREW, 5/16"NC x 3-1/2"
	917277	2	2	CAPSCREW, 5/16"NC x 3-3/4"
	904205	6	6	LOCKWASHER, 5/16"
	914492	2	2	CAPSCREW, 3/8"NF x 1-7/8"
	904206	2	2	LOCKWASHER, 3/8"
	910123	2	2	NUT, 3/8"NF
3	4346330	1	1	□GASKET, water manifold connecting
4	4347509	1	1	MANIFOLD, water outlet, front
	904260	1	1	PLUG, pipe, ctsk-hd., 3/8"NPT
	914392	3	3	CAPSCREW, 5/16"NC x 1"
	917277	3	3	CAPSCREW, 5/16"NC x 3-3/4"
	904205	6	6	LOCKWASHER, 5/16"
5	------	2	-	STUD, water outlet elbow (See RADIATOR)
6	4347537	1	-	HOUSING, thermostat
	904223	1	-	PLUG, pipe, ctsk-hd., 1/2"NPT
	920275	4	-	CAPSCREW, 3/8"NC x 3"
	904206	4	-	LOCKWASHER, 3/8"
7	4346332	1	-	GASKET, thermostat housing
8	4252855	2	-	RING, thermostat sealing
9	4512372	2	-	THERMOSTAT
10	4347940	-	2	□GASKET, thermostat housing
11	4335244	-	1	HOUSING ASSEMBLY, thermostat (Includes brass insert)
	918778	-	6	CAPSCREW, 3/8"NC x 4-3/4"
	904206	-	6	LOCKWASHER, 3/8"
	912415	-	1	COCK, T-handle, 1/4"NPT (Effective with engine #95?68)
12	4375678	-	2	SEAL ASSEMBLY, thermostat (1 seal, 1 spring, 1 retainer. Serviced only as a unit)
13	4363280	-	2	THERMOSTAT
14	4347932	-	1	SPACER, thermostat housing
15	4337602	1	1	HOSE, water by-pass pipe
16	4255012	2	2	CLAMP, hose
17	4348097	1	1	PIPE, water by-pass
	919224	2	2	CAPSCREW, 3/8"NC x 1-1/8"
	904206	2	2	LOCKWASHER, 3/8"
18	4347031	1	1	□GASKET, water by-pass pipe

□Also see PACKAGED PARTS

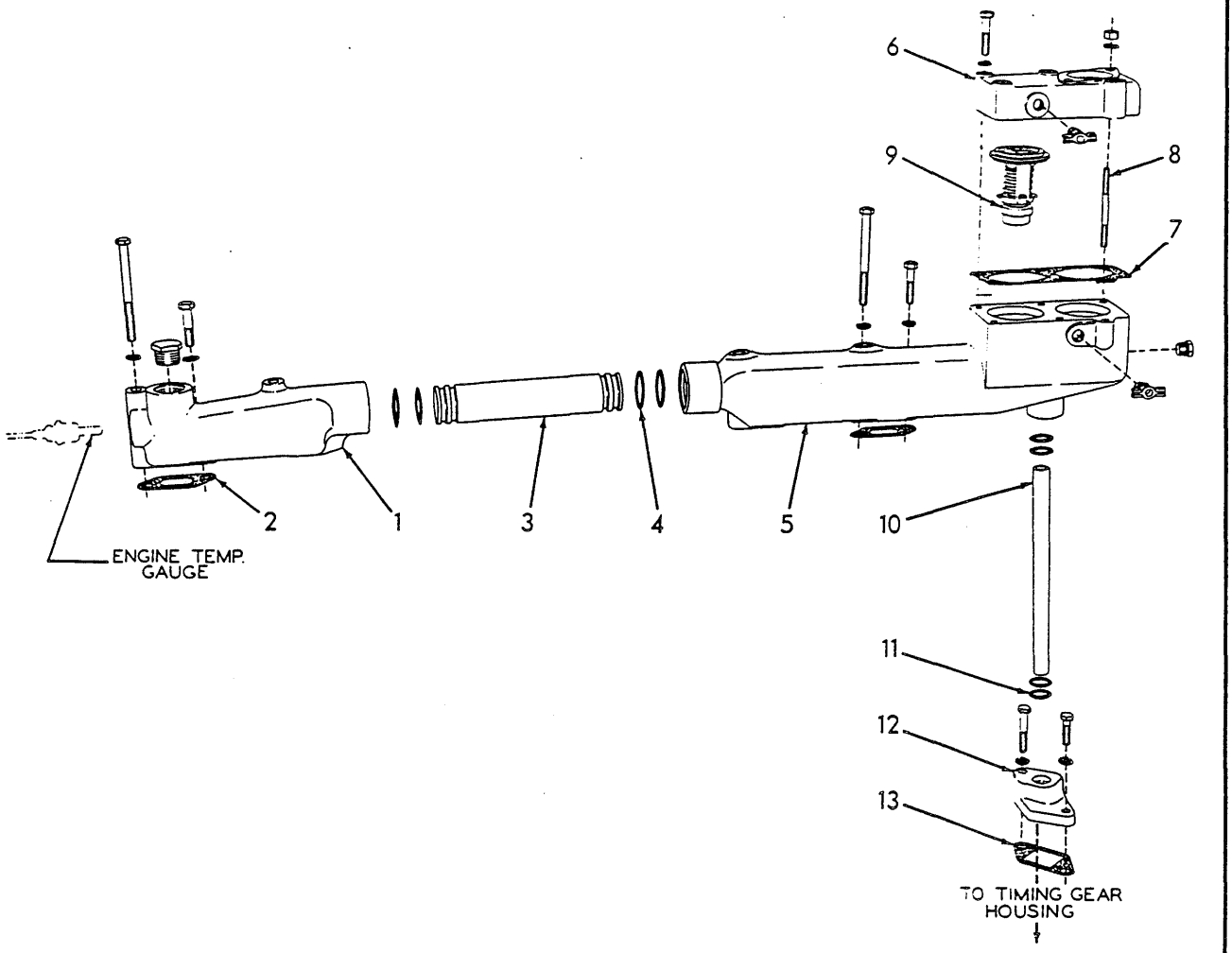

WATER OUTLET MANIFOLD T-24206

USAGE: Effective with tractor serial No. 6427 but later discontinued with engine serial No. 10-7976

ITEM	PART NO.	QTY.	DESCRIPTION
1	4336506	1	MANIFOLD, water outlet, rear
	920525	1	PLUG, pipe, hex-hd., 3/4"NPT
	914847	2	CAPSCREW, 3/8"NC x 1-1/2"
	916275	2	CAPSCREW, 3/8"NC x 3-3/4"
	904206	4	LOCKWASHER, 3/8"
2	4336182	4	□GASKET, water manifold
3	4336156	1	TUBE, water manifold connecting
4	4252796	4	□O-RING, water manifold connecting tube
			□Also see PACKAGED PARTS

(Continued)

ITEM	PART NO.	QTY.	DESCRIPTION
5	4336260	1	MANIFOLD, water outlet, front
	920333	1	PLUG, pipe, hex-hd., 3/8"NPT
	914847	2	CAPSCREW, 3/8"NC x 1-1/2"
	916275	2	CAPSCREW, 3/8"NC x 3-3/4"
	904206	4	LOCKWASHER, 3/8"
	912415	1	COCK, T-handle, 1/4"NPT (air venting)
6	4336264	1	HOUSING, thermostat
	912415	1	COCK, T-handle, 1/4"NPT (air venting)
	916274	4	CAPSCREW, 3/8"NC x 2-1/4"
	904206	4	LOCKWASHER, 3/8"
7	4336263	1	□GASKET, thermostat housing
8	4336261	2	STUD, thermostat housing
	910123	2	NUT, 3/8"NF
	904206	2	LOCKWASHER, 3/8"
9	4379916	1	THERMOSTAT (170°)
	4378269	1	THERMOSTAT (180°)
10	4336268	1	TUBE, water by-pass
11	923574	4	□O-RING, water by-pass tube
12	4336267	1	FLANGE, water by-pass
	919224	1	CAPSCREW, 3/8"NC x 1-1/8"
	910948	1	CAPSCREW, 3/8"NC x 2"
	904206	2	LOCKWASHER, 3/8"
13	4347031	1	□GASKET, water by-pass pipe

□Also see PACKAGED PARTS

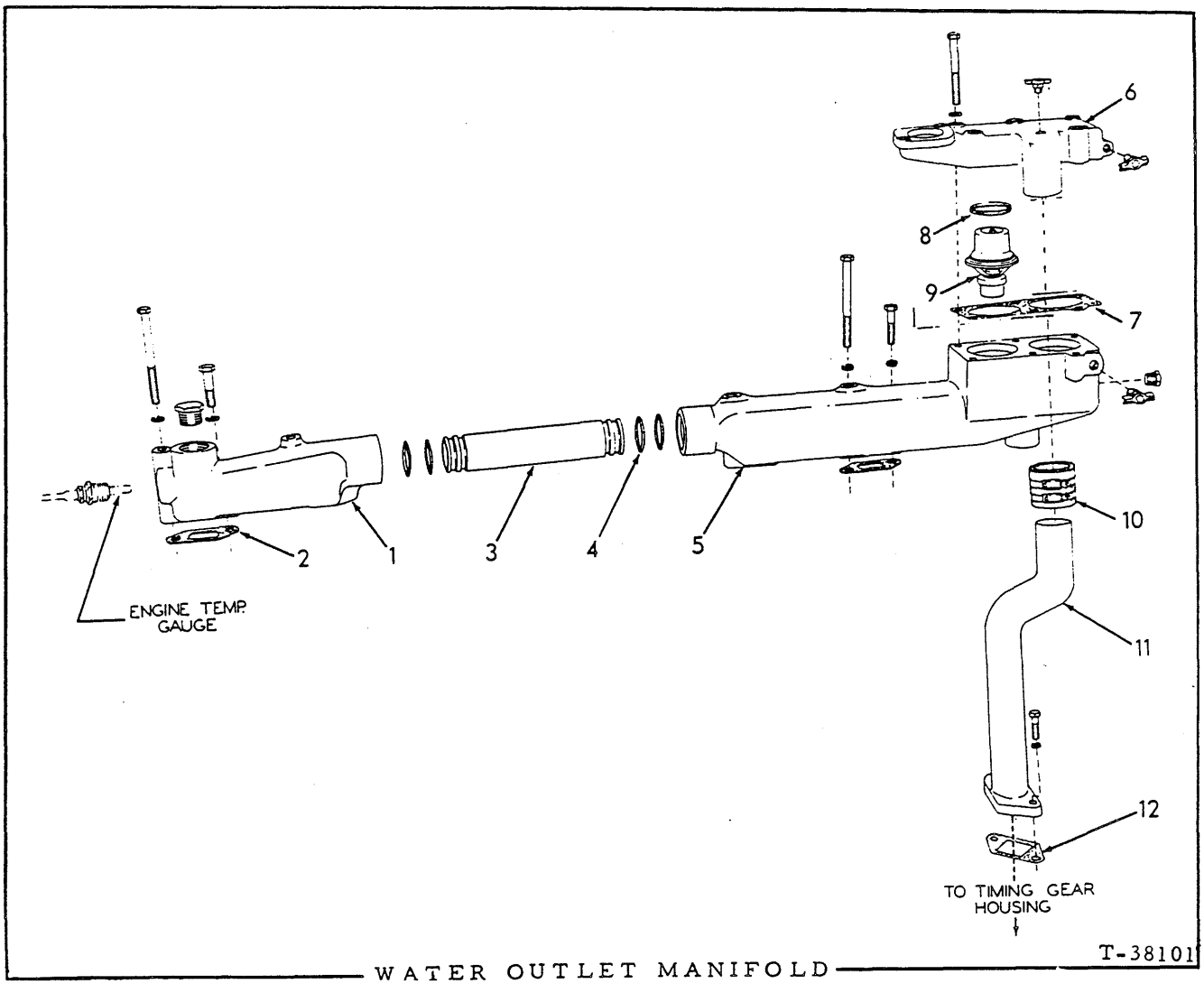

WATER OUTLET MANIFOLD

USAGE: Engine serial No. 10-7976 and up

ITEM	PART NO.	QTY.	DESCRIPTION
1	4336506	1	MANIFOLD, water outlet, rear
	920525	1	PLUG, pipe, hex-hd., 3/4"NPT
	914847	2	CAPSCREW, 3/8"NC x 1-1/2"
	916275	2	CAPSCREW, 3/8"NC x 3-3/4"
	904206	4	LOCKWASHER, 3/8"
2	4336182	4	□GASKET, water manifold
3	4336156	1	TUBE, water manifold connecting
4	4252796	4	□O-RING, water manifold connecting tube
5	4338243	1	MANIFOLD, water outlet, front
	920333	1	PLUG, hex-hd., 3/8"NPT
	914847	2	CAPSCREW, 3/8"NC x 1-1/2"
	916275	2	CAPSCREW, 3/8"NC x 3-3/4"
	904206	4	LOCKWASHER, 3/8"
	912415	1	COCK, T-handle, 1/4"NPT (air venting)

□Also see PACKAGED PARTS

(Continued)

WATER OUTLET MANIFOLD (Continued)

ITEM	PART NO.	QTY.	DESCRIPTION
6	4358754	1	HOUSING ASSEMBLY, thermostat (Includes item 8)
	912415	2	COCK, T-handle, 1/4"NPT (air vent and drain)
	919227	6	CAPSCREW, 3/8"NC x 3-1/4"
	904206	6	LOCKWASHER, 3/8"
7	4336263	1	□GASKET, thermostat housing
8	4317554	2	SEAL, thermostat
9	4354537	2	THERMOSTAT
10	4337602	1	HOSE, water by-pass pipe
	4255012	2	CLAMP, hose
11	4338242	1	PIPE, water by-pass
	919224	2	CAPSCREW, 3/8"NC x 1-1/8"
	904206	2	LOCKWASHER, 3/8"
12	4347031	1	□GASKET, water by-pass pipe

□Also see PACKAGED PARTS

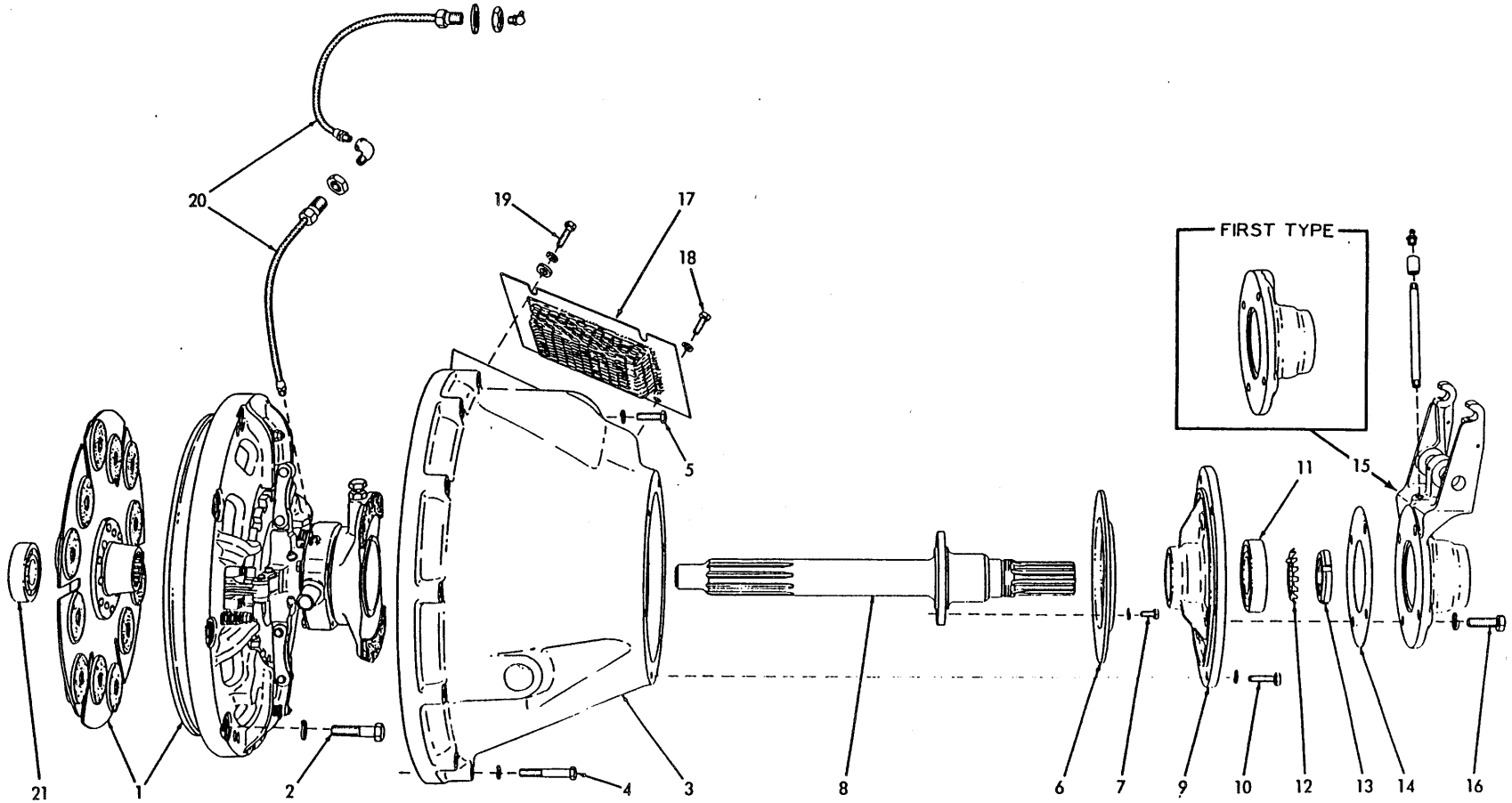

ENGINE CLUTCH AND HOUSING (Dry clutch. Models HD11B, E, ES, S, F)

T-13999

ENGINE CLUTCH AND HOUSING
(Dry Clutch)

USAGE: Model HD11B, E, ES, S, F tractors prior to serial No. 10001. Standard on units prior to serial No. 6911; optional thereafter.

ITEM	PART NO.	QTY.	DESCRIPTION
1	083870	1	CLUTCH ASSEMBLY (See page 217 for parts)
2	921556	9	CAPSCREW, 1/2"NC x 2"
	904208	9	LOCKWASHER, 1/2"
3	082716	1	HOUSING
4	056721	11	CAPSCREW, 3/8"NC x 2-1/2"
5	013058	1	CAPSCREW, 3/8"NC x 1-1/4"
	904206	12	LOCKWASHER, 3/8"
6	050579	1	DISC, brake
7	083270	6	CAPSCREW, 5/16"NF x 5/8"
	904205	6	LOCKWASHER, 5/16"
8	083091	1	SHAFT, clutch
9	083121	1	RETAINER, clutch shaft rear bearing
10	013058	6	CAPSCREW, 3/8"NC x 1-1/4"
	904206	6	LOCKWASHER, 3/8"
11	042847	1	BEARING, ball, clutch shaft, rear
12	030123	1	WASHER, locking, rear bearing nut
13	030107	1	NUT, clutch shaft rear bearing
14	050647	1	GASKET, rear bearing cap
15	051597	1	CAP, rear bearing (Used prior to tractor #6069 excluding #6044 and #5490)
	099546	1	CAP, rear bearing (Effective with tractor #6069 including #6044 and #5490)
	914465	1	FITTING, lubricating, straight, 1/8"NPT
	901763	1	COUPLING, pipe, 1/8"NPT
	901475	1	NIPPLE, pipe, 1/8"NPT x 5"
16	035733	4	CAPSCREW, 1/2"NC x 1-3/8"
	904208	4	LOCKWASHER, 1/2"
17	081140	1	PLATE, engine clutch inspection
18	035439	2	CAPSCREW, 3/8"NC x 1"
	904206	2	LOCKWASHER, 3/8"
19	013058	2	CAPSCREW, 3/8"NC x 1-1/4"
	904206	2	LOCKWASHER, 3/8"
	044973	2	WASHER, plain
20	053899	2	HOSE, lubricating, clutch shifting bearing (10-1/2" long)
	911100	1	WASHER, plain, SAE std., 5/8" (Used prior to tractor #6069 excluding #6044 and #5490)
	064810	1	WASHER, plain (Effective with tractor #6069 including #6044 and #5490)
	911049	2	NUT, jam, 5/8"NF
	914465	1	FITTING, lubricating, straight, 1/8"NPT (Used prior to tractor #6069 excluding #6044 and #5490)
	915276	1	FITTING, lubricating, 90°, 1/8"NPT (Effective with tractor #6069 including #6044 and #5490)
	907059	1	ELBOW, street, 90°, 1/8"NPT
21	099133	1	BEARING, ball, clutch shaft, front

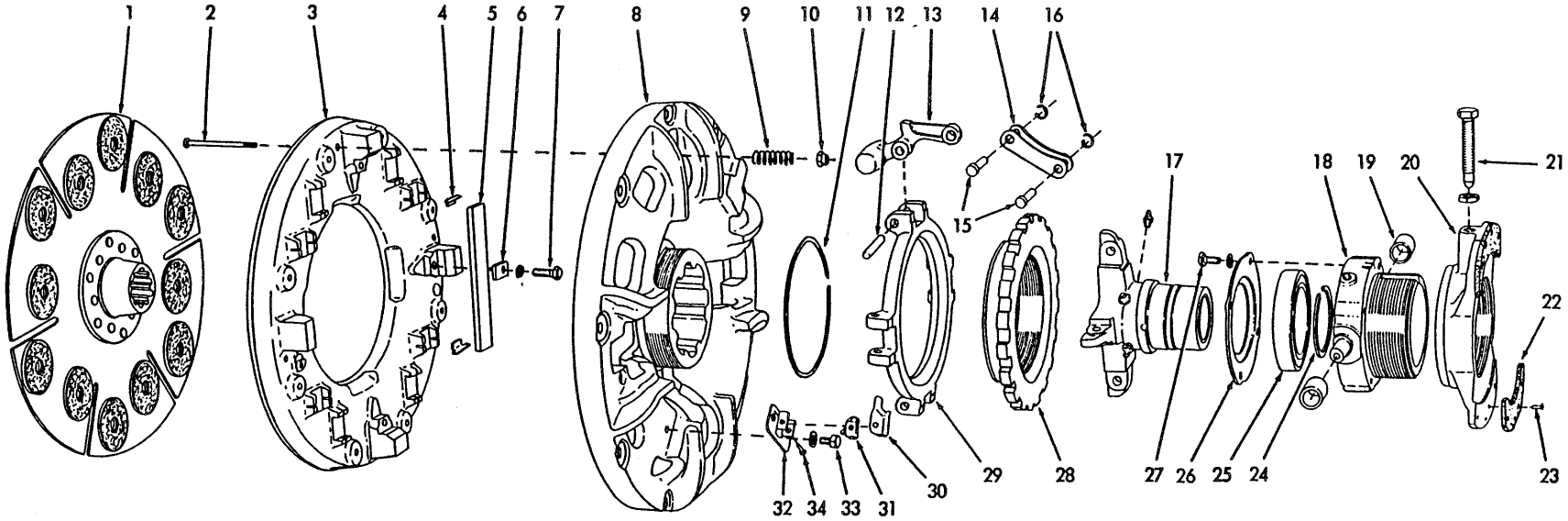

CLUTCH ASSEMBLY 083870

CLUTCH ASSEMBLY 083870

USAGE: See page 215

ITEM	PART NO.	QTY.	DESCRIPTION
1	082910	1	PLATE ASSEMBLY, drive (Has Ceramic friction discs)
2	073926	4	SCREW, retracting spring (fil-hd., 5/16"NF x 3-3/8")
3	073919	1	PLATE, pressure
4	073920	8	PAD, wear
5	073921	4	BEAM, actuating lever
6	073922	4	PLATE, beam retaining
7	036034	4	CAPSCREW, 3/8"NF x 1"
	904206	4	LOCKWASHER, 3/8"
8	073899	1	PLATE, back
9	078667	4	SPRING, pressure plate retracting
10	073927	4	NUT, retracting spring screw (self-locking, 5/16"NF)
11	073916	1	RING, plate retaining
12	073918	4	PIN, actuating lever
13	073917	4	LEVER, actuating
14	073923	4	LINK, actuating lever
15	073924	8	PIN, actuating lever link
16	073925	8	RING, pin retaining
17	083145	1	SLEEVE ASSEMBLY, shifting (Includes 2 bushings which are not serviced separately and 4 FITTINGS 914465)
	914465	4	FITTING, lubricating, straight, 1/8"NPT
18	083143	1	CARRIER ASSEMBLY, shifter bearing (Includes item 19)
19	056864	2	RACE, shifting yoke needle bearing
20	083135	1	PLATE ASSEMBLY, clutch brake (Includes item 22)
21	083149	1	SCREW, brake plate locking
	913830	1	NUT, jam, 1/2"NF
22	083134	1	FACING KIT, brake plate (Includes item 23)
23	083136	8	RIVET, brake plate facing
24	073908	1	RING, snap, bearing retaining
25	061490	1	BEARING, ball, clutch shifting
26	073907	1	PLATE, bearing retaining
27	045312	4	CAPSCREW, 5/16"NC x 3/4"
	904205	4	LOCKWASHER, 5/16"
28	073914	1	RING, adjusting
29	073915	1	PLATE, adjusting ring
30	073901	1	LOCK, adjustment
31	048375	1	SPRING, adjustment lock
32	073903	1	BRACKET, adjustment lock
33	035979	2	CAPSCREW, 3/8"NF x 5/8"
	911115	2	WASHER, plain, SAE std., 3/8"
34	073902	1	PIN, adjustment lock

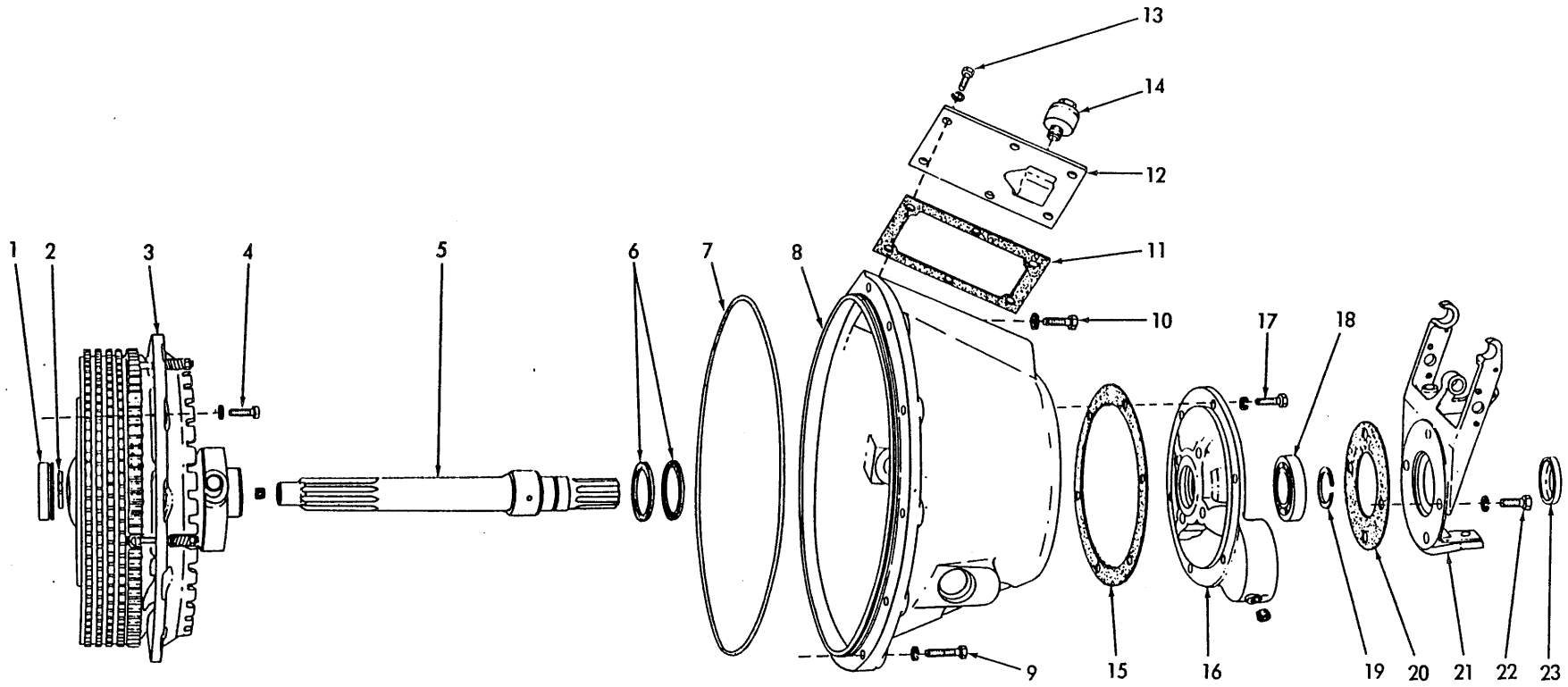

ENGINE CLUTCH AND HOUSING (Oil clutch. Model HD11B, E, ES, S, F)

T-72054

ENGINE CLUTCH AND HOUSING
(Oil Clutch)

USAGE: Models HD11B, E, ES, S, F. Standard on tractors serial No. 6911 and up

ITEM	PART NO.	QTY.	DESCRIPTION
1	097088	1	BEARING, ball, clutch shaft, front
2	642216	1	RING, snap, clutch thrust (Effective with tractor #8772)
3	645450	1	CLUTCH ASSEMBLY, engine (See page 221 for parts)
4	035439	12	CAPSCREW, 3/8"NC x 1"
	904206	12	LOCKWASHER, 3/8"
5	642218	1	SHAFT, clutch
	915739	1	PLUG, pipe, sq-socket, 3/8"NPT
6	620279	2	SEAL, oil, clutch shaft
7	620471	1	O-RING, clutch housing
8	629968	1	HOUSING, engine clutch
9	041914	9	CAPSCREW, 3/8"NC x 1-7/8"
	013059	2	CAPSCREW, 3/8"NC x 2" (Also attaches hose support)
10	040382	1	CAPSCREW, 3/8"NC x 1-3/8"
	904206	12	LOCKWASHER, 3/8"
11	629972	1	GASKET, access cover
12	629973	1	COVER, clutch access
13	035439	6	CAPSCREW, 3/8"NC x 1"
	904206	6	LOCKWASHER, 3/8"
14	050748	1	BREATHER, clutch housing
15	078814	1	GASKET, rear bearing retainer
16	634156	1	RETAINER, clutch shaft rear bearing
	915739	1	PLUG, pipe, sq-socket, 3/8"NPT
17	013058	3	CAPSCREW, 3/8"NC x 1-1/4"
	904206	3	LOCKWASHER, 3/8"
18	042847	1	BEARING, ball, clutch shaft, rear
19	050293	1	RING, snap, clutch shaft
20	050647	1	GASKET, steering control bracket
21	633046	1	BRACKET, steering control (Tractors prior to #10001)
	637987	1	BRACKET, steering control (Tractors #10001 and up)
22	035733	4	CAPSCREW, 1/2"NC x 1-3/8"
	904208	4	LOCKWASHER, 1/2"
23	096761	1	SEAL, oil clutch shaft, rear

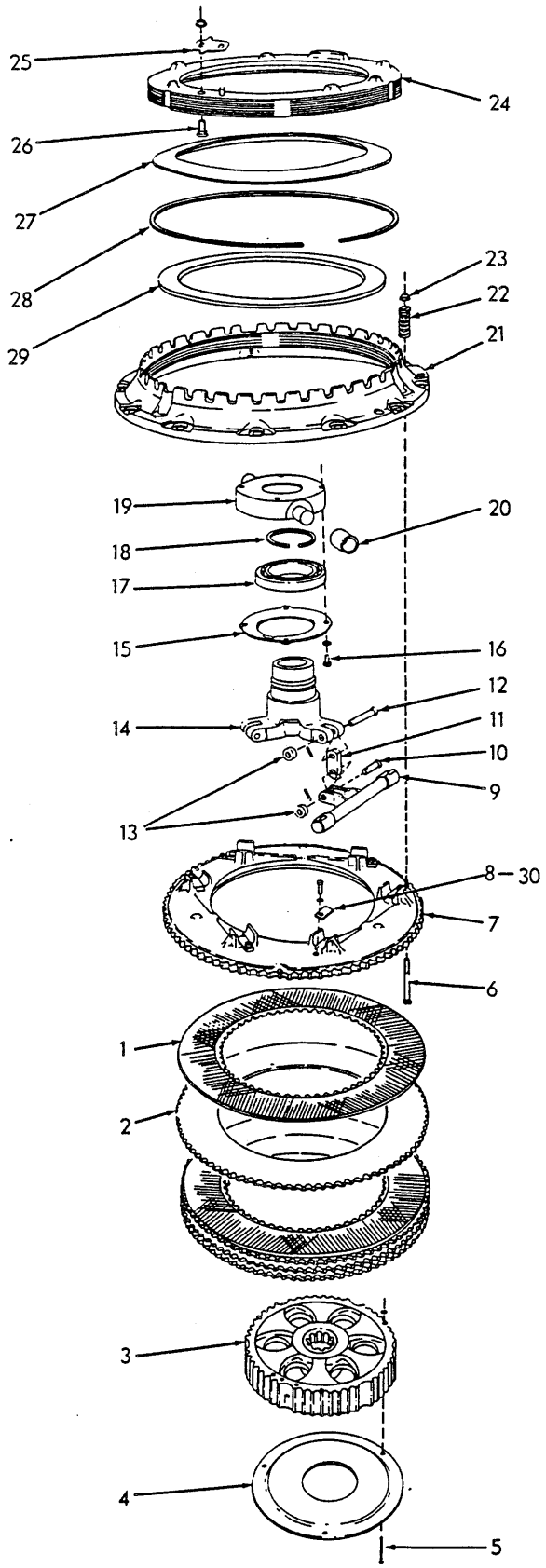

T-72028

OIL CLUTCH PARTS

OIL CLUTCH PARTS

USAGE: See page 219

ITEM	PART NO.	QTY.	DESCRIPTION
1	645451	5	DISC, friction, inner
2	642453	4	DISC, friction, outer
3	630803	1	CENTER, splined (Used prior to tractor #8772)
	642215	1	CENTER, splined (Effective with tractor #8772)
4	630809	1	COVER, splined center (Used prior to tractor #8772)
	644297	1	COVER, splined center (Effective with tractor #8772)
5	630804	3	SCREW, cover retaining (Used prior to tractor #8772)
	910243	3	WASHER, plain, SAE std., 3/16"
	623466	3	LOCKNUT, (elastic)
	642217	3	RIVET, cover retaining (Effective with tractor #8772)
	645706	3	WASHER, plain
6	623456	3	CAPSCREW, retracting spring
7	638621	1	PLATE ASSEMBLY, pressure (Includes item 8)
8	223585	6	BLOCK, cam (Recommend replacement in sets. See item 30)
	901226	6	SCREW, machine, fil-hd., 1/4"NC x 1/2"
	914593	6	LOCKWASHER, external teeth, 1/4"
9	638651	3	CAMSHAFT ASSEMBLY (Recommend replacement in sets. Includes 6 rollers which are not serviced separately and PIN indented below)
	917466	3	PIN, roll, 3/16" x 1-1/8"
10	040221	3	PIN, connecting link, short (Used prior to tractor #7780)
	901165	3	WASHER, plain, U.S. std., 5/16"
	913984	3	PIN, cotter, 1/8" x 5/8"
	638649	3	PIN, connecting link, short (Effective with tractor #7780)
	919180	3	PIN, roll, 1/8" x 5/8"
11	630808	3	LINK, connecting
12	040220	3	PIN, connecting link, long (Used prior to tractor #7780)
	901165	3	WASHER, plain, U.S. std., 5/16"
	913984	3	PIN, cotter, 1/8" x 5/8"
	638648	3	PIN, connecting link, long (Effective with tractor #7780)
	919180	3	PIN, roll, 1/8" x 5/8"
13	638650	6	COLLAR, connecting link pin (Effective with tractor #7780)
14	630805	1	SLEEVE ASSEMBLY, shifting (Includes 2 bushings which are not serviced separately)
15	630806	1	PLATE, bearing carrier
16	045312	4	CAPSCREW, 5/16"NC x 5/8"
	904205	4	LOCKWASHER, 5/16"
17	057773	1	BEARING, ball, shifting sleeve

(Continued)

OIL CLUTCH PARTS (Continued)

ITEM	PART NO.	QTY.	DESCRIPTION
18	073908	1	RING, retaining, shifting sleeve bearing
19	630807	1	CARRIER ASSEMBLY, bearing (Includes item 20)
20	056864	2	RACE, inner, shifting yoke needle bearing
21	623449	1	PLATE, back
22	078667	3	SPRING, pressure plate retracting (light type)(Used prior to December 1962)
	639751	3	SPRING, pressure plate retracting (heavy type)(Effective December 1962)
23	073927	3	NUT, retracting spring screw (self-locking)
24	624669	1	RING, adjusting
25	646825	1	LOCK, adjustment
26	042767	2	SCREW, (fl-hd., 3/8"NC x 1/2") — Used prior to December 1962
	911048	2	NUT, jam, 3/8"NF — Used prior to December 1962
	639752	2	SCREW, (fl-hd., 3/8"NF x 7/8") — Effective December 1962
	639750	2	NUT, flanged (3/8"NF) — Effective December 1962
27	624670	1	WASHER, pressure
28	623452	1	RING, washer retaining
29	623453	1	PLATE, adjusting ring
30	043397	1	BLOCK KIT, clutch camshaft (Full set of blocks and attaching parts listed under item 8 above)

TORQUE CONVERTER AND CLUTCH

USAGE: Model HD11EC, FC tractors prior to serial No. 10001

ITEM	PART NO.	QTY.	DESCRIPTION
1	621462	1	CONVERTER ASSEMBLY, torque (See page 229 for parts) (Includes engine clutch throwout mechanism)
2	035439	9	CAPSCREW, 3/8"NC x 1"
2A	013058	1	CAPSCREW, 3/8"NC x 1-1/4" (Also attaches fuel line supporting angle)
3	044249	2	CAPSCREW, 3/8"NC x 1-1/8" (Also attaches PLATE 623088)
	904206	12	LOCKWASHER, 3/8"
4	620471	1	O-RING, torque converter to flywheel housing
5	645465	1	CLUTCH ASSEMBLY, engine (See page 233 for parts)
6	056721	12	CAPSCREW, 3/8"NC x 2-1/2"
	904206	12	LOCKWASHER, 3/8"
7	620826	1	ELBOW, discharge tube
8	040013	1	CAPSCREW, 7/16"NC x 1-3/4"
9	916257	1	CAPSCREW, 7/16"NC x 2-1/2"
	904207	2	LOCKWASHER, 7/16"
10	631078	2	GASKET, oil line
11	621205	1	TUBE ASSEMBLY, oil discharge, rear (Includes nut)
	919064	1	CONNECTOR, flare type, 1" tube, 1"NPT male
12	623089	1	TUBE ASSEMBLY, oil discharge, front (Includes nut)
13	647925	1	HOSE, oil discharge (See page 6)
14	647924	1	HOSE, oil return (See page 6)
15	041250	4	CAPSCREW, hose attaching (7/16"NC x 1-1/8")
	904207	4	LOCKWASHER, 7/16"
16	631078	2	GASKET, hose
17	623090	1	TUBE ASSEMBLY, oil return, front (Includes nut)
18	621582	1	TUBE ASSEMBLY, oil return, rear (Includes flange)
19	041250	2	CAPSCREW, 7/16"NC x 1-1/4"
	904207	2	LOCKWASHER, 7/16"
20	623088	1	PLATE, tube supporting, upper
21	623084	2	BLOCK, tube clamping, upper
22	099575	1	CAPSCREW, 3/8"NF x 2-1/4"
	911115	1	WASHER, plain, SAE std., 3/8"
	904206	1	LOCKWASHER, 3/8"
	911041	1	NUT, 3/8"NF
23	620709	1	HOSE ASSEMBLY, breather (See page 6 for parts)
	919135	1	ELBOW, flare type, 90°, 3/8" tube, 1/4"NPT male
24	094422	1	CLIP, breather hose
	035167	1	CAPSCREW, 3/8"NF x 7/8"
	904206	1	LOCKWASHER, 3/8"
	911041	1	NUT, 3/8"NF

(Continued)

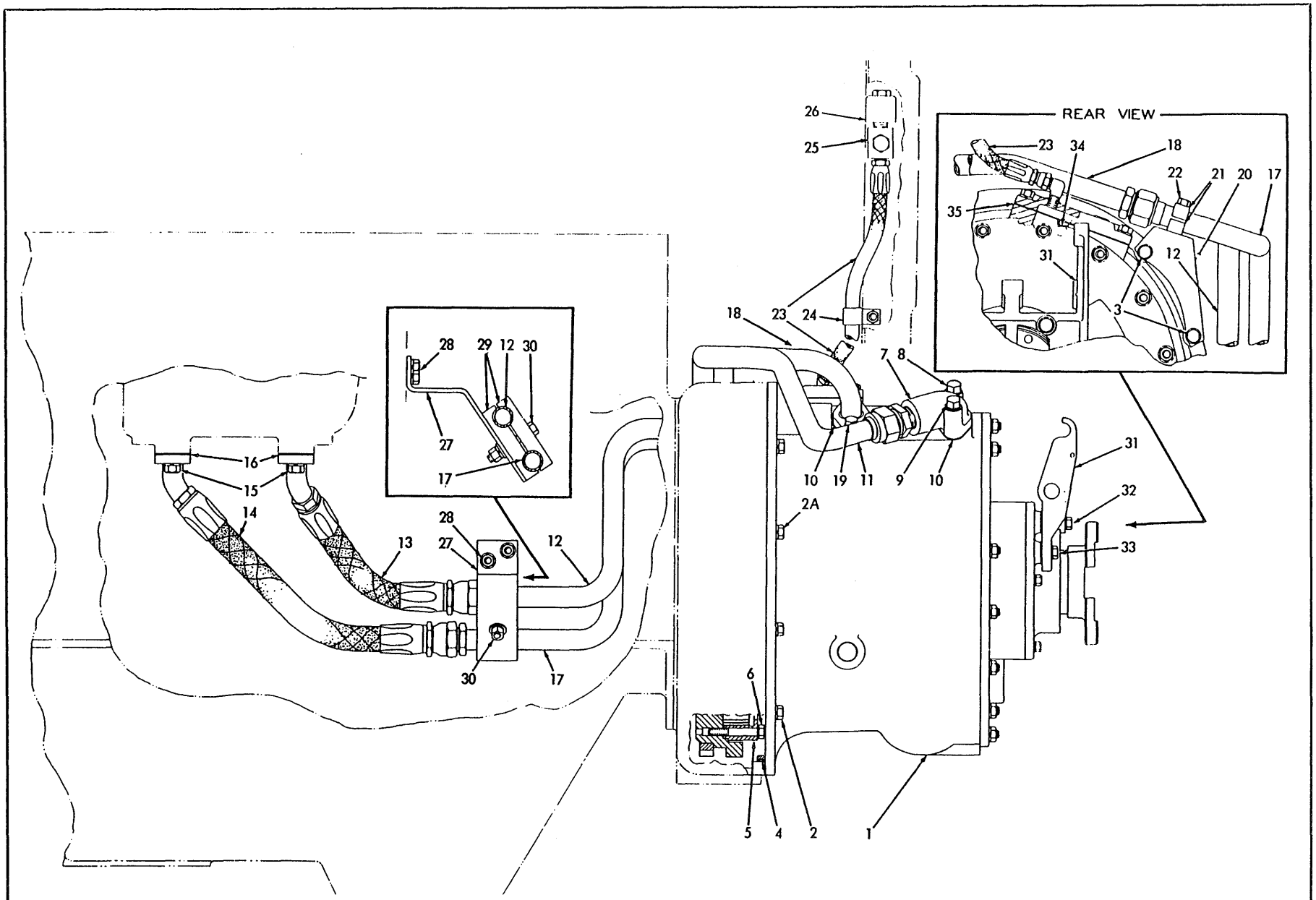

TORQUE CONVERTER AND CLUTCH (First type. Model HD11EC, FC)

ITEM	PART NUMBER	QTY.	DESCRIPTION
25	629721	1	BLOCK, torque converter breather
	------	1	CAPSCREW (See AIR CLEANER)
26	050748	1	BREATHER, torque converter
27	621198	1	BRACKET, tube supporting, lower
28	920539	2	CAPSCREW, 3/8"NC x 1" (Nylok)
	904206	2	LOCKWASHER, 3/8"
29	621196	2	BLOCK, tube clamping, lower
30	099575	1	CAPSCREW, 3/8"NF x 2-1/4"
	911115	1	WASHER, plain, SAE std., 3/8"
	904206	1	LOCKWASHER, 3/8"
	911041	1	NUT, 3/8"NF
31	620614	1	BRACKET, steering control
32	056721	2	CAPSCREW, 3/8"NC x 2-1/2"
33	044249	2	CAPSCREW, 3/8"NC x 1-1/8"
	904206	4	LOCKWASHER, 3/8"
34	630175	1	BAFFLE, oil
35	628571	1	GASKET, oil baffle

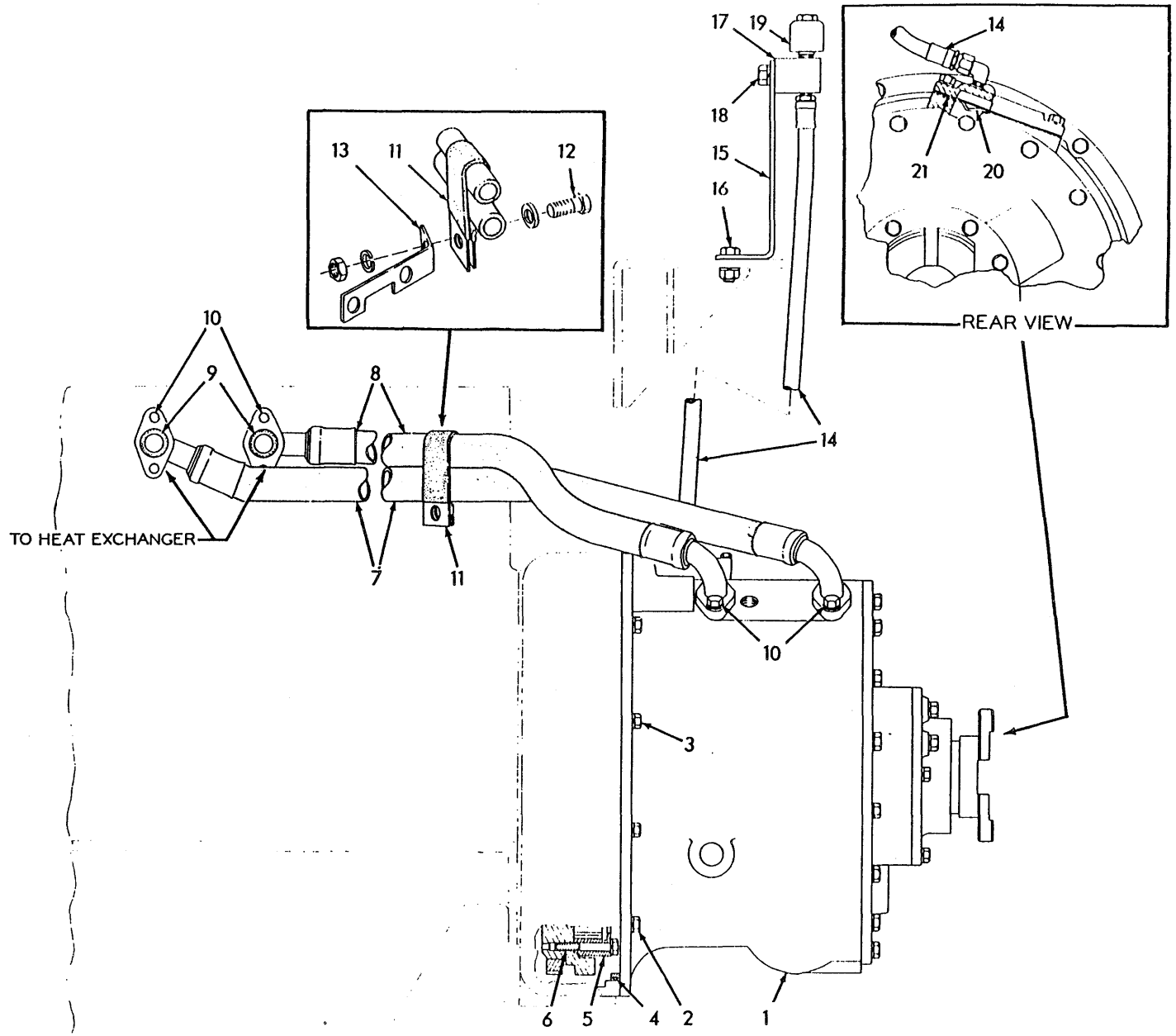

TORQUE CONVERTER AND CLUTCH (Second type. Model HD11EC)

T-41868

TORQUE CONVERTER AND CLUTCH

USAGE: Model HD11EC tractors serial No. 10001 and up

ITEM	PART NO.	QTY.	DESCRIPTION
1	621462	1	CONVERTER ASSEMBLY, torque (See page 229 for parts)(Includes engine clutch throwout mechanism)
2	035439	11	CAPSCREW, 3/8"NC x 1"
3	013058	1	CAPSCREW, 3/8"NC x 1-1/4" (Also attaches fuel line supporting angle)
	904206	12	LOCKWASHER, 3/8"
4	620471	1	O-RING, torque converter to flywheel housing
5	645465	1	CLUTCH ASSEMBLY, engine (See page 233 for parts)
6	056721	12	CAPSCREW, 3/8"NC x 2-1/2"
	904206	12	LOCKWASHER, 3/8"
7	641680	1	HOSE, converter to heat exchanger (See page 6)
8	641711	1	HOSE, heat exchanger to converter (See page 6)
9	066798	4	O-RING, hose sealing
10	041250	8	CAPSCREW, hose attaching (7/16"NC x 1-1/8")
11	631289	1	CLIP, hose supporting
12	070467	1	CAPSCREW, 1/2"NF x 1"
	910244	1	WASHER, plain, SAE std., 1/2"
	904208	1	LOCKWASHER, 1/2"
	911043	1	NUT, 1/2"NF
13	4339595	1	BRACKET, hose supporting
14	644005	1	HOSE, breather (See page 6)
	919135	1	ELBOW, flare type, 90°, 3/8" tube, 1/4"NPT male
15	643468	1	ANGLE, supporting, breather block
16	070467	1	CAPSCREW, 1/2"NF x 1"
	904208	1	LOCKWASHER, 1/2"
	911043	1	NUT, 1/2"NF
17	629721	1	BLOCK, torque converter breather
18	070467	1	CAPSCREW, 1/2"NF x 1"
	904208	1	LOCKWASHER, 1/2"
19	050748	1	BREATHER, torque converter
20	630175	1	BAFFLE, oil
21	628571	1	GASKET, oil baffle

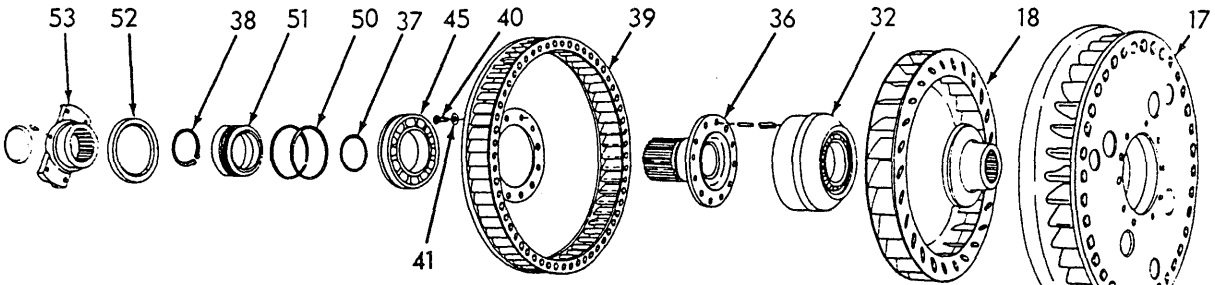

IMPELLER AND TURBINE WHEEL

T-37223

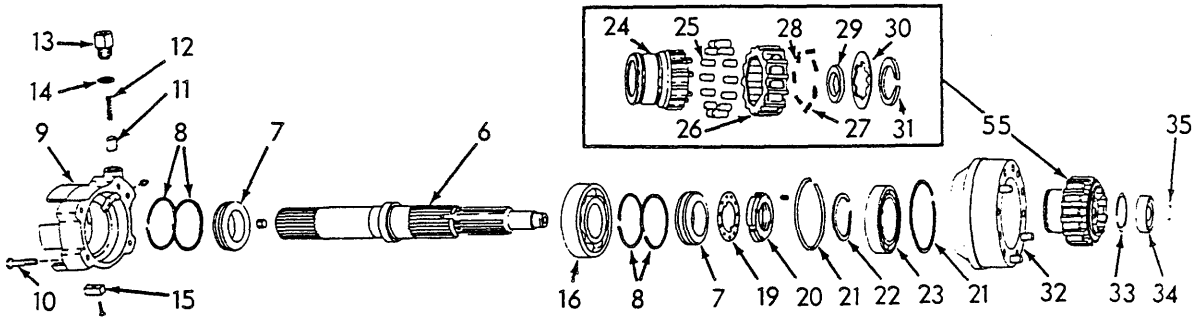

INPUT SHAFT

T-37217

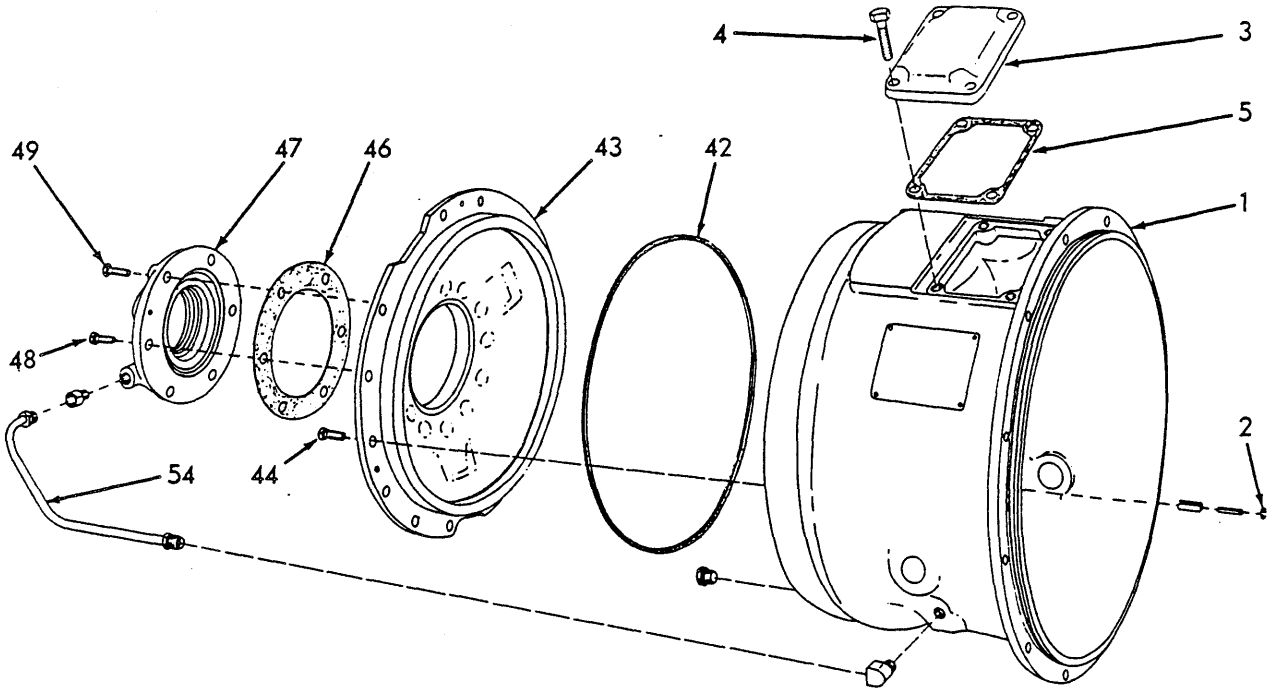

TORQUE CONVERTER ASSEMBLY 621462

T-37215

TORQUE CONVERTER ASSEMBLY 621462

USAGE: See pages 223 and 227

ITEM	PART NO.	QTY.	DESCRIPTION
1	628342	1	HOUSING
	651141	1	PLUG, pipe, hex-hd., 3/8"NPT
	919777	5	PIN, roll, 3/8" x 3/4"
	921019	5	PIN, roll, 7/32" x 3/4"
2	638767	5	PLUG, cup, roll pin holes (Effective with converter #203658)
3	628572	1	COVER, housing
4	035439	4	CAPSCREW, 3/8"NC x 1"
5	628571	1	GASKET, housing cover
6	628343	1	SHAFT, input
	907859	1	PLUG, pipe, hex-socket, 1/4"NPT
7	628344	2	CARRIER, front seal rings
8	628345	4	RING, sealing
9	628346	1	SUPPORT, input shaft front bearing
	910231	2	PLUG, pipe, hex-socket, 1/8"NPT
10	056936	4	CAPSCREW, 3/8"NC x 2-3/4"
11	628568	1	PISTON, relief valve
12	628569	1	SPRING, relief valve
13	628570	1	CAP, relief valve
14	638777	-	WASHER, relief valve cap (Use as req'd)
15	628367	1	KEY, front bearing support
	921465	1	CAPSCREW, flat-hd., hex-socket, #10-24NC x 3/4"
16	624052	1	BEARING, ball, input shaft, front
17	628348	1	WHEEL ASSEMBLY, guide (stationary)(Serviced only as a unit)
18	629533	1	WHEEL, impeller
19	628350	1	WASHER, impeller retaining
20	628351	1	NUT, impeller retaining
	921464	1	SETSCREW, hex-socket, dog-pt., 1/4"NC x 1/2"
21	628320	2	RING, snap, bearing retaining
22	628319	1	RING, snap, cam retaining
23	628318	1	BEARING, ball, turbine wheel, front
24	------	1	CAM, over-running clutch (See item 55)
25	------	14	ROLLER, over-running clutch (See item 55)

(Continued)

TORQUE CONVERTER ASSEMBLY 621462 (Continued)

ITEM	PART NO.	QTY.	DESCRIPTION	
26	------	1	CAGE ASSEMBLY, clutch roller (Includes 2 spring guiding pins)	See item 55
27	------	2	SPRING, cage return	
28	------	5	SPRING, bumper	
29	628510	1	SPACER, over-running clutch washer	
30	628511	1	WASHER, retaining, over-running clutch cage	
31	628509	1	RING, snap, over-running clutch cam	
32	628515	1	RACE, over-running clutch	
	918113	6	PIN, roll, 3/8" x 1"	
	921469	6	PIN, roll, 7/32" x 1"	
33	628363	1	RING, snap, bearing retaining	
34	628365	1	BEARING, roller, input shaft, rear	
35	628364	1	RING, snap, input shaft	
36	628354	1	FLANGE, turbine wheel	
37	628362	1	O-RING, turbine wheel flange	
38	628361	1	RING, snap, turbine wheel flange	
39	628478	1	WHEEL, turbine	
40	650399	6	SCREW, self-locking, 3/8"NF x 7/8"	
41	638768	6	WASHER, plain	
42	628516	1	GASKET, rear end plate	
43	628479	1	PLATE, rear end	
44	035439	14	CAPSCREW, 3/8"NC x 1"	
45	628355	1	BEARING, ball, turbine wheel, rear (Includes snap ring)	
46	628366	1	GASKET, rear bearing retainer	
47	628356	1	RETAINER, turbine wheel rear bearing	
48	035439	4	CAPSCREW, 3/8"NC x 1"	
49	013058	2	CAPSCREW, 3/8"NC x 1-1/4"	
50	628359	2	RING, sealing	
51	628358	1	CARRIER, rear seal rings	
52	628357	1	SEAL, oil, rear end	
53	629439	1	YOKE ASSEMBLY, drive shaft (Includes PLUG and FITTING indented below)	
	910011	1	PLUG, expansion, 2-1/2" diam.	
	914465	1	FITTING, lubricating, straight, 1/8"NPT	
54	628567	1	TUBE ASSEMBLY, drain, rear seal (Includes nuts)	
	914466	1	CONNECTOR, inverted flare, 3/8" tube, 1/4"NPT male	
	914328	1	ELBOW, inverted flare, 3/8" tube, 1/4"NPT male	
55	628503	1	CLUTCH KIT, over-running, torque converter (Consists of items 24 thru 31)	

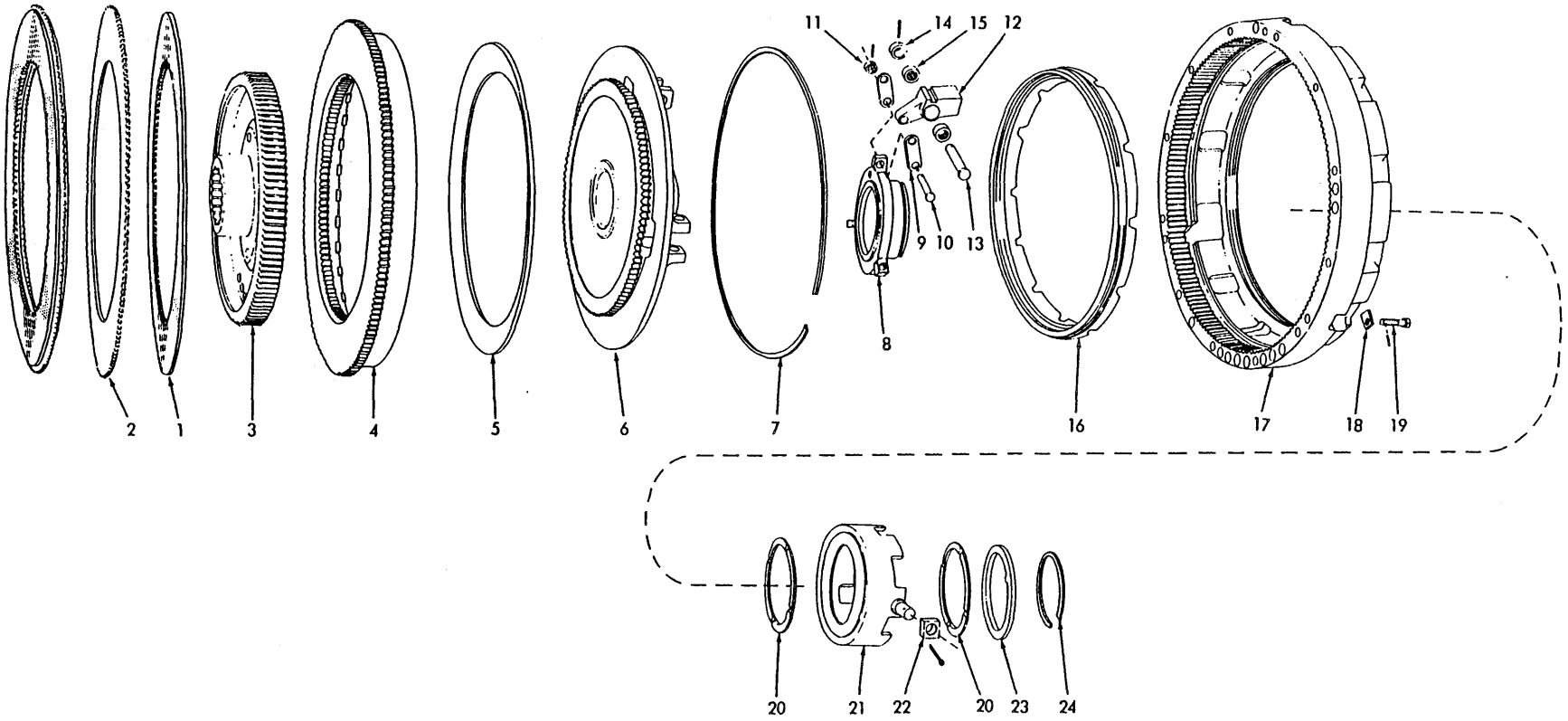

T-72063

CLUTCH ASSEMBLY 645465

CLUTCH ASSEMBLY 645465

USAGE: See pages 223 and 227

ITEM	PART NO.	QTY.	DESCRIPTION
1	628213	3	PLATE, friction (bi-metallic)
2	628214	2	PLATE, friction (steel)
3	628212	1	HUB, clutch
4	628216	1	PLATE, pressure (Used prior to tractor #8915)
	645460	1	PLATE, pressure (Effective with tractor #8915)
5	628215	1	SPRING, belleville, pressure plate
6	628223	1	CARRIER, shifting sleeve
7	628231	1	RING, snap, pressure plate
8	628222	1	SLEEVE, shifting
9	628225	6	LINK, connecting
10	628224	6	PIN, connecting link
11	094483	6	COLLAR, connecting link pin
	919180	6	PIN, roll, 1/8" x 5/8"
12	628227	3	LEVER, actuating
13	628226	3	PIN, actuating lever
14	628233	3	COLLAR, actuating lever pin
	916202	3	PIN, roll, 1/8" x 7/8"
15	628228	6	BEARING, needle, actuating lever
16	628217	1	RING, adjusting
17	628232	1	COVER ASSEMBLY, clutch (Includes items 18 and 19)
18	628230	1	LOCK, adjusting ring
19	628229	1	CAPSCREW, drilled-end, 3/8"NC x 1-1/2"
	917735	1	PIN, roll, 3/32" x 9/16"
20	628219	2	WASHER, thrust, shifting collar
21	628218	1	COLLAR, shifting
	900938	2	PIN, cotter, 3/16" x 1"
22	054459	2	BLOCK, shifting collar
23	628220	1	PLATE, thrust, shifting sleeve
24	628221	1	RING, snap, shifting sleeve

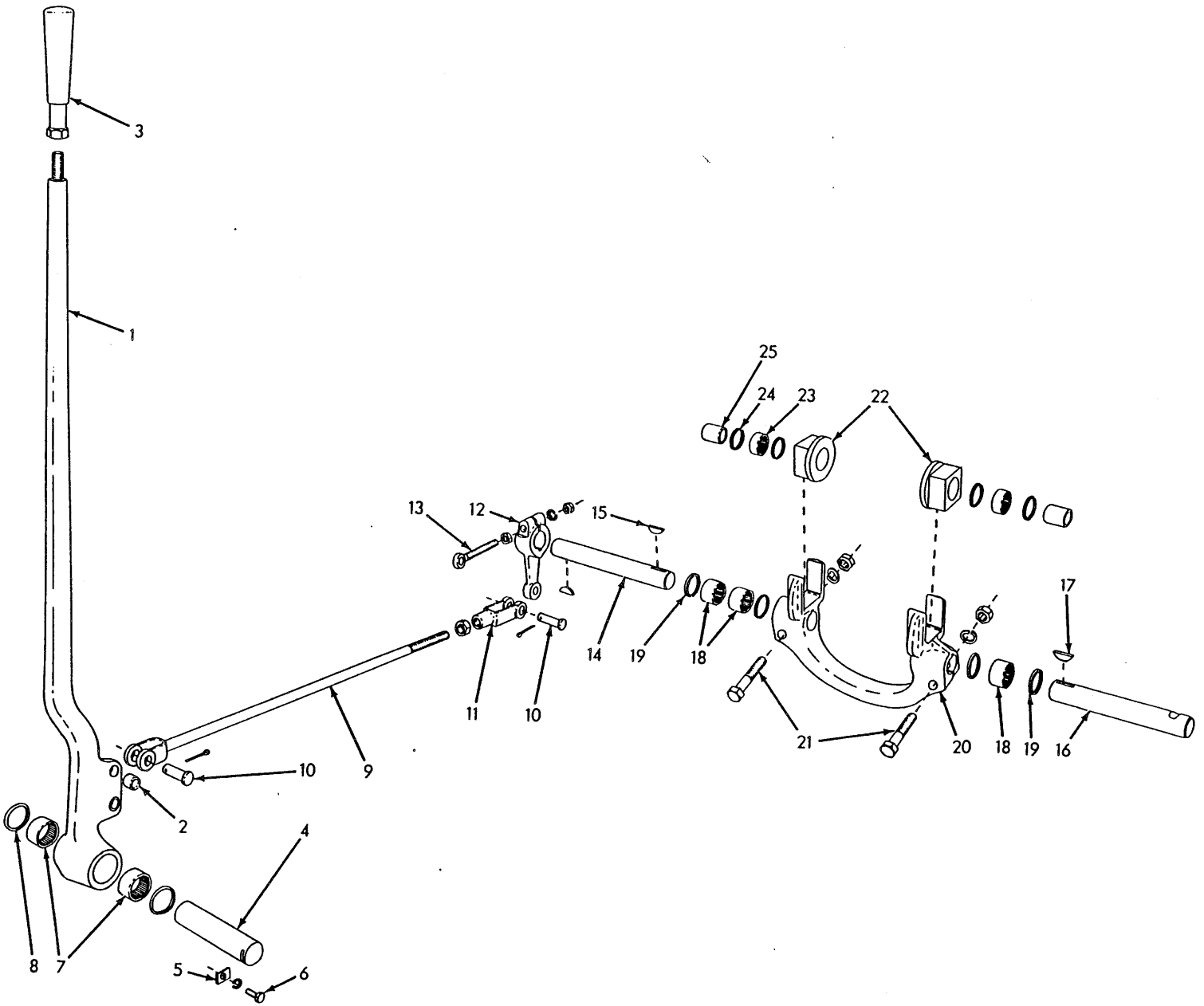

ENGINE CLUTCH CONTROL (Dry clutch. Models HD11B, E, ES, S, F)

T-4358

ENGINE CLUTCH CONTROL
(Dry Clutch)

USAGE: Model KD11B, E, ES, S, F tractors prior to serial No. 10001. Standard on units prior to serial No. 6911; optional thereafter.

ITEM	PART NO.	QTY.	DESCRIPTION
1	620862	1	LEVER ASSEMBLY, clutch operating (Includes 2 BUSHING 049988)
2	049988	1	BUSHING, clutch operating lever
3	078620	1	GRIP, operating lever
4	056945	1	SHAFT, pivot, operating lever
5	050221	1	BLOCK, shaft locking
6	047478	1	CAPSCREW, 1/4"NC x 5/8"
	904204	1	LOCKWASHER, 1/4"
7	051513	2	BEARING, needle, operating lever shaft
8	053926	2	SEAL, dust, needle bearing
9	084476	1	ROD, operating lever
	911043	1	NUT, 1/2"NF
10	049993	2	PIN, yoke
	900805	2	PIN, cotter, 1/8" x 3/4"
11	068389	1	YOKE, operating rod
12	068511	1	LEVER, shifting yoke shaft
13	080704	1	BOLT, eye
	904206	1	LOCKWASHER, 3/8"
	911041	2	NUT, 3/8"NF
14	056872	1	SHAFT, clutch shifting yoke, left
15	036997	2	KEY, #13 woodruff, 3/16" x 1", hardened
16	056871	1	SHAFT, clutch shifting yoke, right
17	036997	1	KEY, #13 woodruff, 3/16" x 1", hardened
18	051513	3	BEARING, needle, shifting yoke shaft
19	053926	4	SEAL, dust, needle bearing
20	056873	1	YOKE, clutch shifting
21	035068	2	CAPSCREW, 1/2"NFx 2-1/4"
	904208	2	LOCKWASHER, 1/2"
	911043	2	NUT, 1/2"NF
22	056865	2	BLOCK, sliding, shifting yoke (Used on all tractors except Nos. 4071 thru 4568)
22	------	2	BLOCK, sliding, shifting yoke (Used on tractors No. 4071 thru 4568. Order BLOCK 056865 and items 23 and 24)
23	050442	2	BEARING, needle, shifting yoke — Used on all tractors except Nos. 4071 thru 4568
24	053927	4	SEAL, dust, needle bearing — Used on all tractors except Nos. 4071 thru 4568
25	------	2	RACE, inner, needle bearing (See CLUTCH ASSEMBLY 083870)

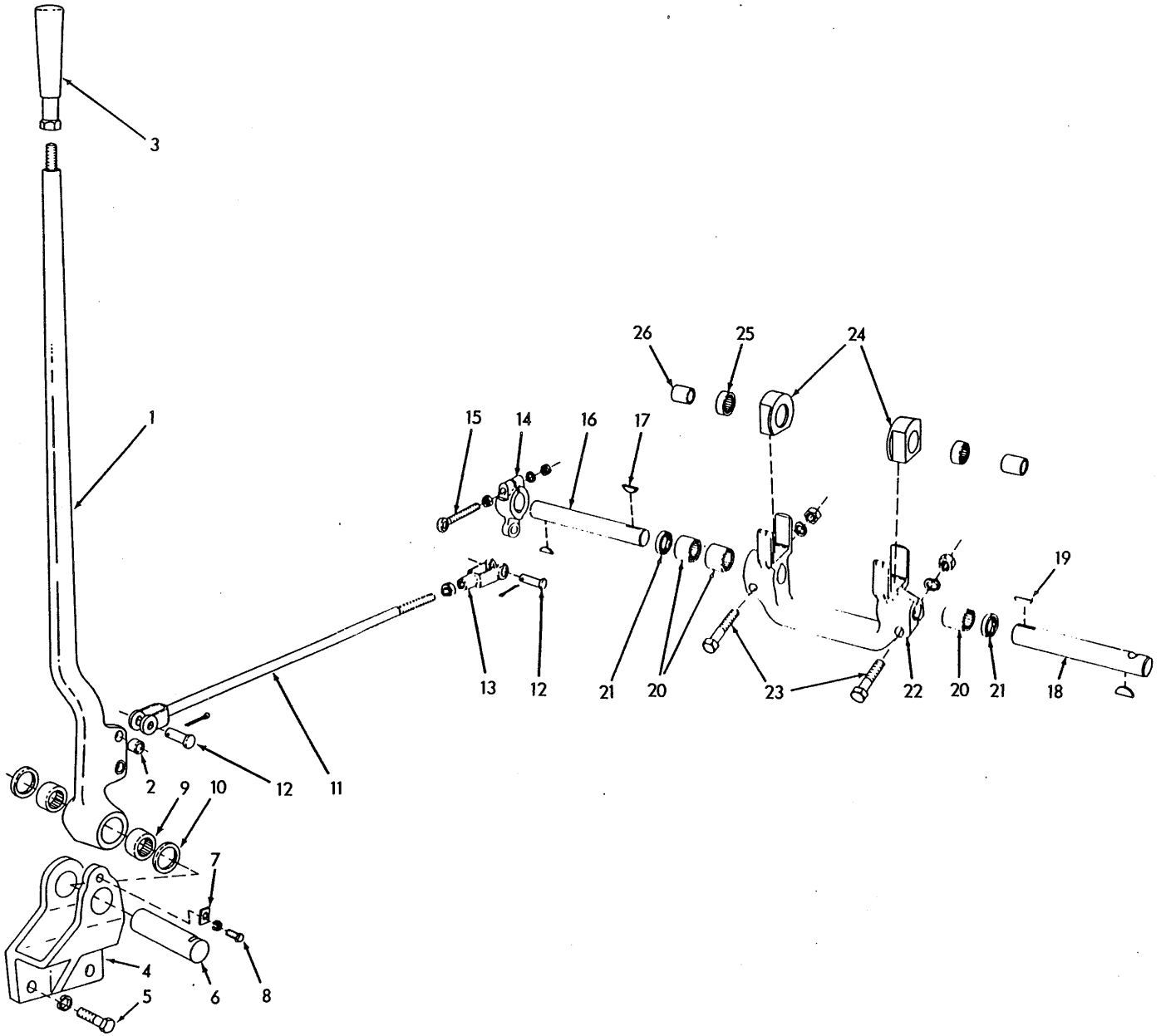

ENGINE CLUTCH CONTROL (Oil clutch. Models HD11B, E, ES, S, F)

T-41879

ENGINE CLUTCH CONTROL
(Oil Clutch)

USAGE: Models HD11B,E,ES,S,F. Standard on tractors serial No. 6911 and up.

* Tractors prior to serial No. 10001
** Tractors serial No. 10001 and up

ITEM	PART NO.	QTY. *	QTY. **	DESCRIPTION
1	620862	1	-	LEVER ASSEMBLY, clutch operating (Includes 2 BUSHING 049988)
	642690	-	1	LEVER ASSEMBLY, clutch operating (Includes 2 BUSHING 049988)
2	049988	1	1	BUSHING, clutch operating lever
3	078620	1	1	GRIP, operating lever
4	633076	-	1	BRACKET, clutch operating lever (Model HD11E only)
5	035067	-	4	CAPSCREW, 1/2"NF x 2"
	904208	-	4	LOCKWASHER, 1/2"
6	056945	1	1	SHAFT, pivot, operating lever
7	050221	1	1	BLOCK, shaft locking
8	047478	1	1	CAPSCREW, 1/4"NC x 5/8"
	904204	1	1	LOCKWASHER, 1/4"
9	051513	2	2	BEARING, needle, operating lever shaft
10	053926	2	2	SEAL, dust, needle bearing
11	630050	1	1	ROD, operating lever (Not for Model HD11E tractors #10001 and up)
	642825	-	1	ROD, operating lever (Model HD11E only)
	911043	1	1	NUT, 1/2"NF
12	049993	2	2	PIN, yoke
	900805	2	2	PIN, cotter, 1/8" x 3/4"
13	068389	1	1	YOKE, operating rod
14	097784	1	-	LEVER, shifting yoke shaft
	641728	-	1	LEVER, shifting yoke shaft
15	080704	1	1	BOLT, eye
	904206	1	1	LOCKWASHER, 3/8"
	911041	2	2	NUT, 3/8"NF
16	630508	1	1	SHAFT, clutch shifting yoke, left
17	036997	2	2	KEY, #13 woodruff, 3/16" x 1", hardened
18	632719	1	1	SHAFT, clutch shifting yoke, right
19	036997	2	2	KEY, #13 woodruff, 3/16" x 1", hardened
20	604925	3	3	BEARING, needle, shifting yoke shaft
21	603010	2	2	SEAL, oil, shifting yoke shaft
22	632082	1	1	YOKE, clutch shifting
23	035068	2	2	CAPSCREW, 1/2"NF x 2-1/4"
	904208	2	2	LOCKWASHER, 1/2"
	911043	2	2	NUT, 1/2"NF
24	053929	2	2	BLOCK, sliding, shifting yoke
25	050442	2	2	BEARING, needle, shifting yoke
26	------	2	2	RACE, inner, needle bearing (See OIL CLUTCH PARTS)

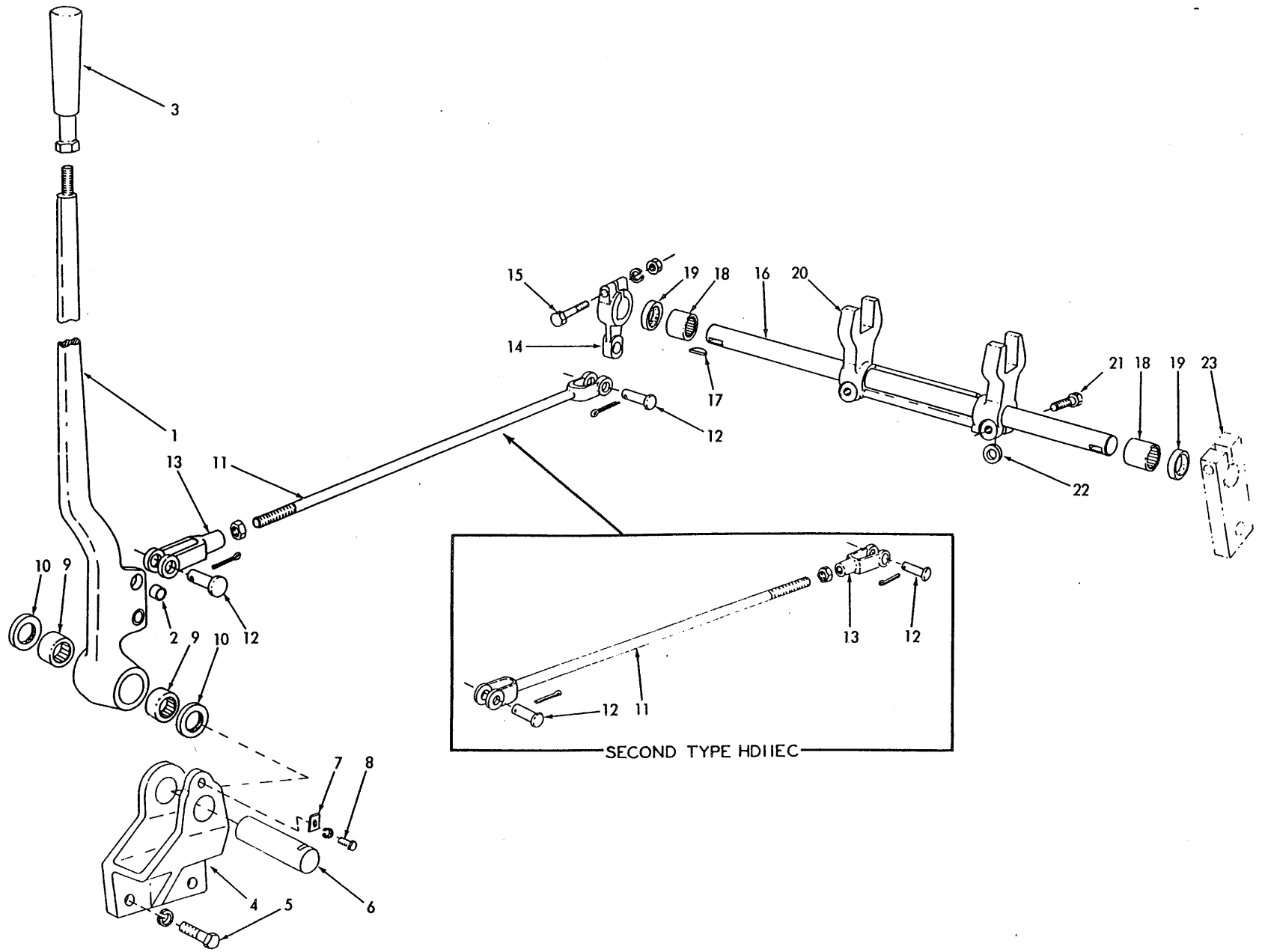

ENGINE CLUTCH CONTROL (Models HD11EC, FC)

T-72311

ENGINE CLUTCH CONTROL

USAGE: Models HD11EC,FC

* Tractors prior to serial No. 10001 (HD11EC,FC)
** Tractors serial No. 10001 and up (HD11EC)

ITEM	PART NO.	QTY. *	QTY. **	DESCRIPTION
1	620862	1	-	LEVER ASSEMBLY, clutch operating (Includes 2 BUSHING 049988)
	642690	-	1	LEVER ASSEMBLY, clutch operating (Includes 2 BUSHING 049988)
2	049988	1	1	BUSHING, clutch operating lever
3	078620	1	1	GRIP, operating lever
4	633076	-	1	BRACKET, clutch operating lever
5	035067	-	4	CAPSCREW, 1/2"NF x 2"
	904208	-	4	LOCKWASHER, 1/2"
6	056945	1	1	SHAFT, pivot, operating lever
7	050221	1	1	BLOCK, shaft retaining
8	047478	1	1	CAPSCREW, 1/4"NC x 5/8"
	904204	1	1	LOCKWASHER, 5/8"
9	051513	2	2	BEARING, needle, operating lever shaft
10	053926	2	2	SEAL, dust, needle bearing
11	084476	1	-	ROD, operating lever
	642825	-	1	ROD, operating lever
	911043	1	1	NUT, 1/2"NF
12	049993	2	2	PIN, yoke
	900805	2	2	PIN, cotter, 1/8" x 3/4"
13	068389	1	1	YOKE, operating rod
14	621021	1	1	LEVER, shifting fork shaft
15	046419	1	1	CAPSCREW, 3/8"NF x 2"
	904206	1	1	LOCKWASHER, 3/8"
	911041	1	1	NUT, 3/8"NF
16	621055	1	1	SHAFT, shifting fork
17	036997	1	1	KEY, #13 woodruff, 3/16" x 1", hardened
18	604925	2	2	BEARING, needle, shifting fork shaft
19	628125	2	2	SEAL, oil, shifting fork shaft
20	628368	1	1	FORK, clutch shifting
21	013058	2	2	CAPSCREW, 3/8"NC x 1-1/4"
22	052747	2	2	KEY, clutch shifting fork
23	------	-	-	LEVER, shifting lock (See GEAR SHIFT)

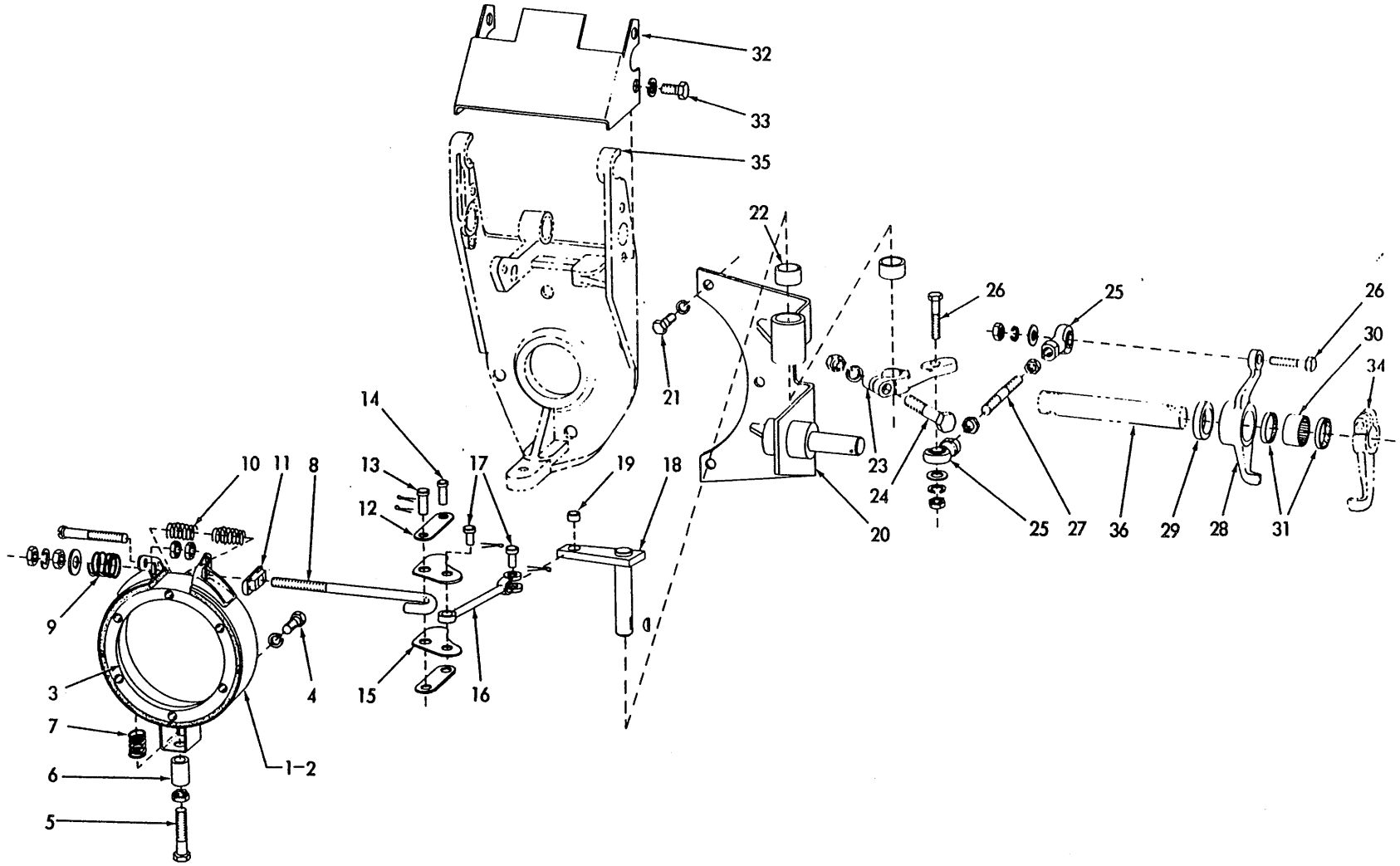

ENGINE CLUTCH BRAKE

T-72055

ENGINE CLUTCH BRAKE

USAGE: Models HD11B, E, ES, S, F with oil clutch. Standard on tractors serial No. 6911 and up

ITEM	PART NO.	QTY.	DESCRIPTION
1	630169	1	BAND ASSEMBLY, brake (Includes item 2)
	907620	1	SCREW, machine, fil-hd., 1/4"NC x 2-3/4"
	911024	2	NUT, 1/4"NC
2	------	4	LINING, brake band (Not serviced separately)
3	630040	1	DRUM, brake
4	035439	6	CAPSCREW, 3/8"NC x 1"
	904206	6	LOCKWASHER, 3/8"
5	630493	1	CAPSCREW, band supporting
	911025	1	NUT, 5/16"NC
6	630498	1	SPACER, band supporting screw
7	059981	1	SPRING, band supporting
8	630510	1	BOLT, band adjusting
	912298	1	WASHER, plain, SAE std., 7/16"
	904207	1	LOCKWASHER, 7/16"
	914879	2	NUT, jam, 7/16"NC
9	050972	1	SPRING, band adjusting bolt
10	619260	2	SPRING, band expanding
11	059973	1	SHOE, cam lever
12	059971	2	LINK, cam lever
13	049993	1	PIN, cam lever link, rear
	900805	1	PIN, cotter, 1/8" x 3/4"
14	094317	1	PIN, cam lever link, front
	900805	1	PIN, cotter, 1/8" x 3/4"
15	059969	2	LEVER, cam (Used prior to tractor #8150)
	639974	2	LEVER, cam (Effective with tractor #8150)
16	630446	1	LINK, connecting
17	078810	2	PIN, connecting link
	900802	2	PIN, cotter, 3/32" x 1"
18	------	1	LEVER, brake control, upper (Includes item 19)(Used prior to tractor #7833. Order LEVER 638788)
	638788	1	LEVER, brake control, upper (Used on tractors #7833 thru #8149)
	639954	1	LEVER, brake control, upper (Effective with tractor #8150)
19	624584	1	BUSHING, brake control lever (Used prior to tractor #7833)
20	630521	1	BRACKET ASSEMBLY, lever supporting (Includes item 22)
21	070960	3	CAPSCREW, 3/8"NC x 1-1/2"
	904206	3	LOCKWASHER, 3/8"

(Continued)

ENGINE CLUTCH BRAKE (Continued)

ITEM	PART NO.	QTY.	DESCRIPTION
22	052669	2	BUSHING, lever supporting bracket
23	055416	1	LEVER, brake control, intermediate (Used prior to tractor #8150)
	639952	1	LEVER, brake control, intermediate (Effective with tractor #8150)
24	905121	1	KEY, #5 woodruff, 1/8" x 5/8"
	037450	1	CAPSCREW, 5/16"NC x 1-1/4" — Used prior to tractor #8150
	904205	1	LOCKWASHER, 5/16" — Used prior to tractor #8150
	203188	1	CAPSCREW, 3/8"NF x 1-1/2" — Effective with tractor #8150
	904206	1	LOCKWASHER, 3/8" — Effective with tractor #8150
	911041	1	NUT, 3/8"NF — Effective with tractor #8150
25	617932	2	END, control rod
26	203188	2	CAPSCREW, 3/8"NF x 1-1/2"
	911115	2	WASHER, plain, SAE std., 3/8"
	904206	2	LOCKWASHER, 3/8"
	911041	2	NUT, 3/8"NF
27	633955	1	ROD, control
	911048	2	NUT, jam, 3/8"NF
28	630437	1	LEVER, brake control, lower
29	632072	1	SPACER, brake control lever
30	051513	1	BEARING, needle, brake control lever
31	053926	2	SEAL, dust, needle bearing
32	633047	1	COVER, dirt shielding (Effective with tractor #7561)
33	035244	4	CAPSCREW, 3/8"NC x 3/4"
	904206	4	LOCKWASHER, 3/8"
34	------	-	LEVER (See SPEED SELECTION GEAR SHIFT)
35	------	-	BRACKET (See ENGINE CLUTCH AND HOUSING)
36	------	-	SHAFT, shifting yoke (See ENGINE CLUTCH CONTROL)

ENGINE CLUTCH OILING SYSTEM

USAGE: Models HD11B,E,ES,S,F with oil clutch. Standard on tractors serial No. 6911 and up.

ITEM	PART NO.	QTY.	DESCRIPTION
1	632074	1	PUMP ASSEMBLY, oil (See page 246 for parts)
2	054130	3	CAPSCREW, 5/16"NC x 7/8"
	904205	3	LOCKWASHER, 5/16"
3	621485	1	RING, pump adapting
3A	633459	1	GASKET, pump adapting ring
4	624122	1	COUPLING, pump drive
5	099941	1	O-RING, pump sealing
6	643990	1	HOSE, tank to pump (See page 6)
	919246	1	CONNECTOR, flare type, 1" tube, 3/4"NPT male
7	630216	1	CONNECTOR, hose adapting
8	643989	1	HOSE, pump to heat exchanger (See page 6)
	919615	1	CONNECTOR, flare type, 3/4" tube, 1/2"NPT male
	044249	2	CAPSCREW, 3/8"NC x 1-1/8" (Early units)
	922051	2	CAPSCREW, 12-point, 3/8"NC x 1" (Late units)
	904206	2	LOCKWASHER, 3/8"
9	643991	1	HOSE, heat exchanger to filter (See page 6)
	919615	1	CONNECTOR, flare type, 3/4" tube, 1/2"NPT male
	044249	2	CAPSCREW, 3/8"NC x 1-1/8" (Early units)
	922051	2	CAPSCREW, 12-point, 3/8"NC x 1" (Late units)
	904206	2	LOCKWASHER, 3/8"
10	630407	2	GASKET, hose flange (Early units)
	923574	2	O-RING, hose flange (Late units)
11	620072	1	ADAPTOR, oil tank
12	035249	1	GASKET, oil tank adaptor
13	621039	1	SCREEN, oil
14	623328	1	COVER, oil tank
15	013058	4	CAPSCREW, 3/8"NC x 1-1/4"
	904206	4	LOCKWASHER, 3/8"
16	623329	1	GASKET, oil tank cover
17	630033	1	TANK, oil
18	035236	2	CAPSCREW, 1/2"NC x 1-3/4"
	904208	2	LOCKWASHER, 1/2"
19	064531	2	WASHER, plain
20	622520	2	SHIM, tank mounting (1/16" thick. Use as required)
	622521	6	SHIM, tank mounting (1/32" thick. Use as required)
21	035250	1	PLUG, oil drain
22	035249	1	GASKET, oil drain plug
23	620348	1	ELBOW, connecting, flywheel housing to tank
24	035061	4	CAPSCREW, 1/2"NC x 1-1/4"
25	035236	4	CAPSCREW, 1/2"NC x 1-3/4"
	904208	8	LOCKWASHER, 1/2"
26	923814	2	O-RING, oil return elbow
			NOTE: Items 27 thru 32 comprise the first type oil filler arrangement used prior to tractor #10001)
27	630096	1	TUBE ASSEMBLY, oil filler (Includes nut)
	919246	1	CONNECTOR, flare type, 1" tube, 3/4"NPT male
28	035733	2	CAPSCREW, 1/2"NC x 1-3/8"
	904208	2	LOCKWASHER, 1/2"
29	064531	2	WASHER, plain

(Continued)

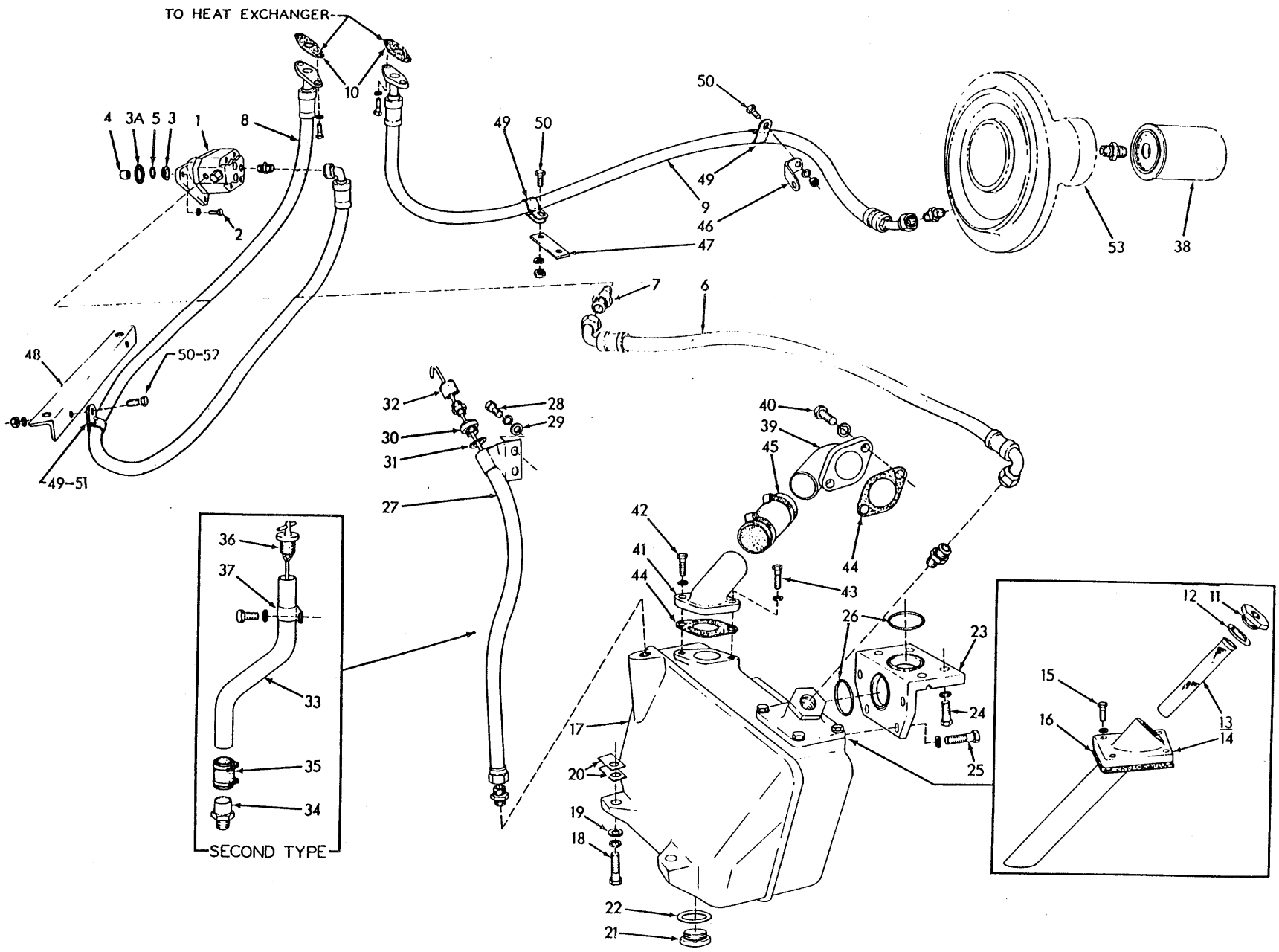

ENGINE CLUTCH OILING SYSTEM (Models HD11B, E, ES, S, F)

T-72312

ITEM	PART NO.	QTY.	DESCRIPTION	
30	621183	1	PLUG, oil filler	
31	035249	1	GASKET, oil filler plug	
32	629183	1	GAUGE, oil level	
	919063	1	CONNECTOR, flare type, 1/2" tube, 3/8"NPT male	
			NOTE: Items 33 thru 37 comprise the second type oil filler arrangement effective with tractor #10001	
33	644035	1	TUBE, oil filler	
34	643791	1	ADAPTOR, oil filler tube	
35	631285	1	HOSE, oil filler tube	
	921912	2	CLAMP, hose, 1-1/16" to 2" diam.	
36	650293	1	GAUGE, oil level	
37	053096	1	CLIP, tube supporting	
	921865	1	CAPSCREW, Nylok, 1/2"NC x 1"	
	904208	1	LOCKWASHER, 1/2"	
38	4511629	1	FILTER ASSEMBLY, oil (Serviced only as a unit)	
	919063	1	CONNECTOR, flare type, 1/2" tube, 3/8"NPT male	
39	630046	1	ELBOW, oil return, upper	
40	044249	2	CAPSCREW, 3/8"NC x 1-1/8"	
	904206	2	LOCKWASHER, 3/8"	
41	630035	1	ELBOW, oil return, lower	
42	040382	1	CAPSCREW, 3/8"NC x 1-3/8" (Also attaches hose supporting clip)	
43	013058	1	CAPSCREW, 3/8"NC x 1-1/4"	
	904206	2	LOCKWASHER, 3/8"	
44	630030	2	GASKET, oil return elbow	
45	623234	1	HOSE, oil return	
	921913	2	CLAMP, hose, 1-13/16" to 2-3/4" diam.	
46	628821	1	SUPPORT, hose	
47	098108	1	PLATE, hose supporting clip	
48	630494	1	ANGLE, hose supporting (Used prior to tractor #10001)	
49	621451	4	CLIP, hose supporting (13/32" bolt-hole)	2 less used effective with tractor #10001
50	036032	4	CAPSCREW, 3/8"NF x 3/4"	
	904206	4	LOCKWASHER, 3/8"	
	911041	4	NUT, 3/8"NF	
51	643957	2	CLIP, hose supporting (17/32" bolt-hole)	Effective with tractor #10001
52	070467	2	CAPSCREW, 1/2"NF x 1"	
	904208	2	LOCKWASHER, 1/2"	
53	------	-	RETAINER (See ENGINE CLUTCH AND HOUSING)	

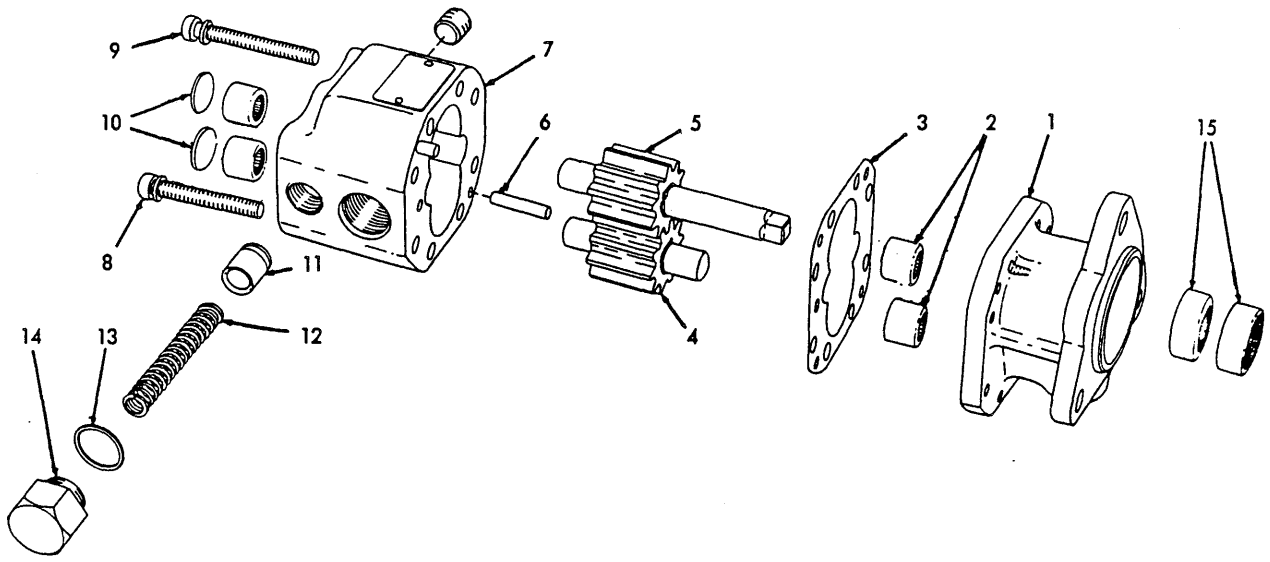

OIL PUMP ASSEMBLY 632074

USAGE: See page 243

ITEM	PART NO.	QTY.	DESCRIPTION
1	------	1	STATOR (Not serviced separately)
2	077241	4	BEARING, needle
3	621363	1	GASKET, pump housing
4	098394	1	SHAFT ASSEMBLY, idler (Includes gear. Serviced only as a unit)
5	623845	1	SHAFT ASSEMBLY, driving (Includes gear. Serviced only as a unit)
6	4048000	2	PIN, dowel, pump housing
7	-------	1	HOUSING, gear (Not serviced separately)
	910231	1	PLUG, pipe, hex-socket, 1/8"NPT
8	622083	4	SCREW ASSEMBLY, short (Includes lockwasher)
9	623834	4	SCREW ASSEMBLY, long (Includes lockwasher)
10	092107	2	PLUG, expansion, 11/16" diam.
11	623835	1	PLUNGER, pressure relief valve
12	623838	1	SPRING, pressure relief valve
13	623837	1	GASKET, pressure relief valve cap
14	623836	1	CAP, pressure relief valve
15	4047783	2	SEAL, pump shaft

TORQUE CONVERTER OIL SUPPLY

USAGE: Models HD11EC,FC

ITEM	PART NO.	QTY.	DESCRIPTION
1	620201	1	PUMP ASSEMBLY, oil (See page 251 for parts)
2	054130	3	CAPSCREW, 5/16"NC x 7/8"
	904205	3	LOCKWASHER, 5/16"
3	621485	1	RING, pump adapting
4	099941	1	O-RING, pump sealing
5	633459	1	GASKET, pump adapting ring
6	624122	1	COUPLING, pump drive
7	644003	1	HOSE, tank to pump (See page 6)
	919615	1	CONNECTOR, flare type, 3/4" tube, 1/2"NPT male
	919342	1	CONNECTOR, flare type, 3/4" tube, 3/4"NPT male
8	644004	1	HOSE, pump to filter (See page 6)
	919128	1	CONNECTOR, flare type, 1/2" tube, 1/2"NPT male
	919063	1	CONNECTOR, flare type, 1/2" tube, 3/8"NPT male
9	620072	1	ADAPTOR, oil tank
10	035249	1	GASKET, oil tank adaptor
11	621039	1	SCREEN, oil
12	------	1	TANK, oil (Used prior to tractor #6798. Order 1 TANK 630033, 1 PLATE 630059, 1 GASKET 630030, 2 CAPSCREW 044249 and 2 LOCKWASHER 904206)
	630033	1	TANK, oil (Effective with tractor #6798)
	907856	1	PLUG, pipe, hex-socket, 3/8"NPT (Used prior to tractor #6798)
13	035236	2	CAPSCREW, 1/2"NC x 1-3/4"
	904208	2	LOCKWASHER, 1/2"
14	064531	2	WASHER, plain
15	622520	2	SHIM, tank mounting (1/16" thick. Use as required)
	622521	6	SHIM, tank mounting (1/32" thick. Use as required)
16	623328	1	COVER, oil tank
17	013058	4	CAPSCREW, 3/8"NC x 1-1/4"
	904206	4	LOCKWASHER, 3/8"
	911115	1	WASHER, plain, SAE std., 3/8"
18	623329	1	GASKET, oil tank cover
19	035250	1	PLUG, oil drain
20	035249	1	GASKET, oil drain plug
			NOTE: Items 21 thru 28 comprise the first type oil filler arrangement used prior to tractor #7378.
21	------	1	TUBE ASSEMBLY, oil filler (Includes nut)(Order TUBE ASSEMBLY 630096)
	919246	1	CONNECTOR, flare type, 1" tube, 3/4"NPT male
22	621183	1	PLUG, oil filler

(Continued)

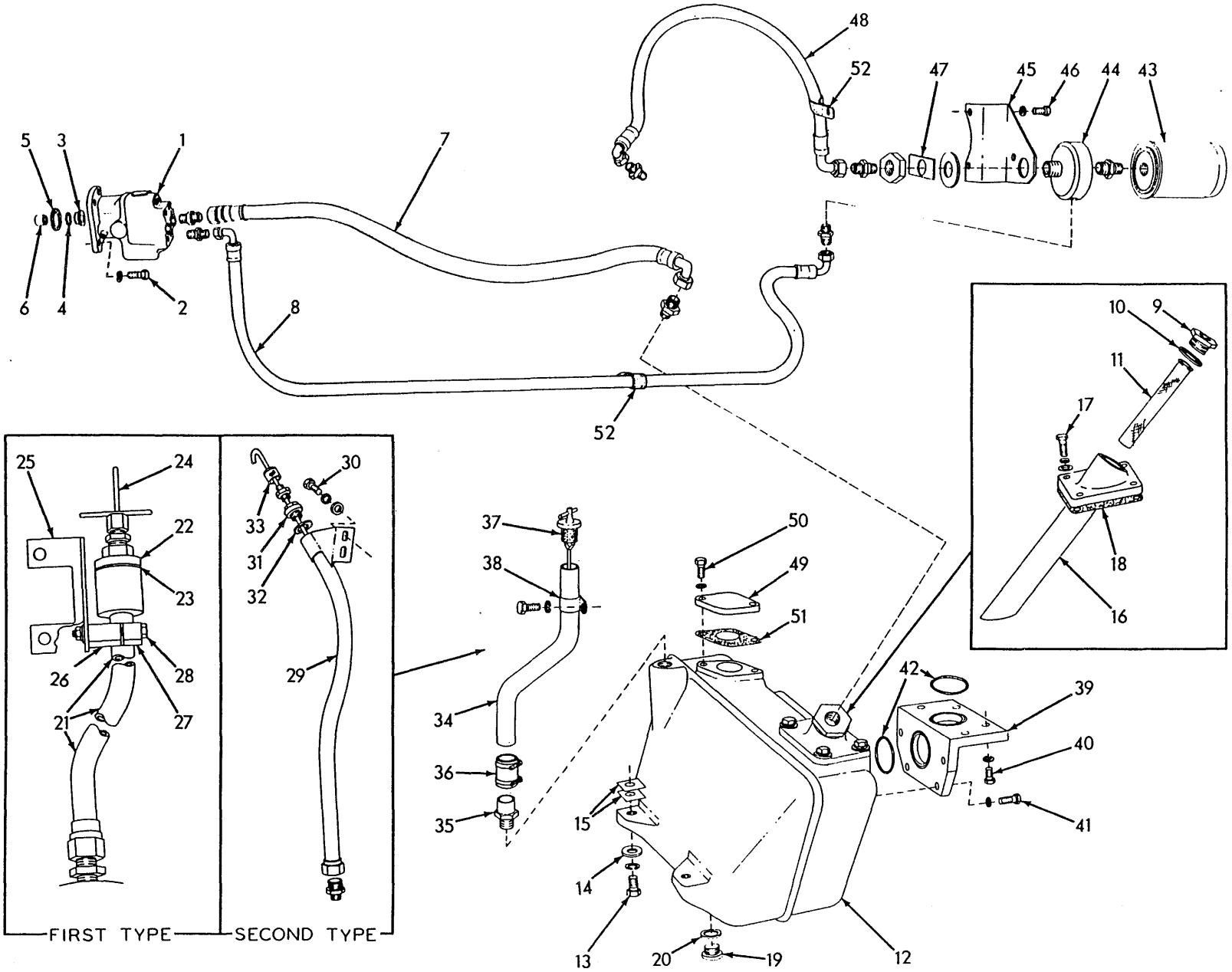

TORQUE CONVERTER OIL SUPPLY (Models HD11EC, FC)

T-72031

ITEM	PART NO.	QTY.	DESCRIPTION
23	035249	1	GASKET, oil filler plug
24	629183	1	GAUGE, oil level
	919063	1	CONNECTOR, flare type, 1/2" tube, 3/8"NPT male
25	621180	1	BRACKET, tube supporting
26	------	1	BLOCK, tube supporting, front (Order TUBE ASSEMBLY 630096)
27	621182	1	BLOCK, tube supporting, rear
28	056320	2	CAPSCREW, 3/8"NC x 3"
	044973	2	WASHER, plain
	904206	2	LOCKWASHER, 3/8"
	911026	2	NUT, 3/8"NC
			NOTE: Items 29 thru 33 comprise the second type oil filler arrangement used on tractors #7378 thru #10000.
29	630096	1	TUBE ASSEMBLY, oil filler (Includes nut)
	919246	1	CONNECTOR, flare type, 1" tube, 3/4"NPT male
30	035733	2	CAPSCREW, 1/2"NC x 1-3/8"
	904208	2	LOCKWASHER, 1/2"
	064531	2	WASHER, plain
31	621183	1	PLUG, oil filler
32	035249	1	GASKET, oil filler plug
33	629183	1	GAUGE, oil level
	919063	1	CONNECTOR, flare type, 1/2" tube, 3/8"NPT male
			NOTE: Items 34 thru 38 comprise the third type oil filler arrangement used on tractors #10001 and up.
34	644035	1	TUBE, oil filler
35	643791	1	ADAPTOR, oil filler tube
36	631285	1	HOSE, oil filler tube
	921912	2	CLAMP, hose, 1-1/16" to 2" diam.
37	650293	1	GAUGE, oil level
38	053096	1	CLIP, tube supporting
	921865	1	CAPSCREW, Nylok, 1/2"NC x 1"
	904208	1	LOCKWASHER, 1/2"
39	620348	1	ELBOW, oil return
40	035061	4	CAPSCREW, 1/2"NC x 1-1/4"
41	035236	4	CAPSCREW, 1/2"NC x 1-3/4"
	904208	8	LOCKWASHER, 1/2"
42	923814	2	O-RING, oil return elbow
43	4511629	1	FILTER ASSEMBLY, oil (Serviced only as a unit)
	919063	1	CONNECTOR, flare type, 1/2" tube, 3/8"NPT male
44	620877	1	HEAD, filter
	911159	1	WASHER, plain, SAE std., 1"
	911051	1	NUT, jam, 1"NF

(Continued)

TORQUE CONVERTER OIL SUPPLY (Continued)

ITEM	PART NO.	QTY.	DESCRIPTION
45	620857	1	BRACKET, filter mounting
46	013058	2	CAPSCREW, 3/8"NC x 1-1/4"
	904206	2	LOCKWASHER, 3/8"
47	620730	1	LOCK, filter head nut
48	647930	1	HOSE, filter to torque converter (See page 6)(Used prior to tractor #10001)
	620941	1	HOSE, filter to torque converter (See page 6)(Effective with tractor #10001)
	919063	2	CONNECTOR, flare type, 1/2" tube, 3/8"NPT male
49	630059	1	PLATE, cover, oil tank (Effective with tractor #6798)
50	044249	2	CAPSCREW, 3/8"NC x 1-1/8"
	904206	2	LOCKWASHER, 3/8"
51	630030	1	GASKET, oil tank cover plate (Effective with tractor #6798)
52	094467	2	CLIP, hose supporting (Used prior to tractor #10001)
	643932	2	CLIP, hose supporting (Effective with tractor #10001)

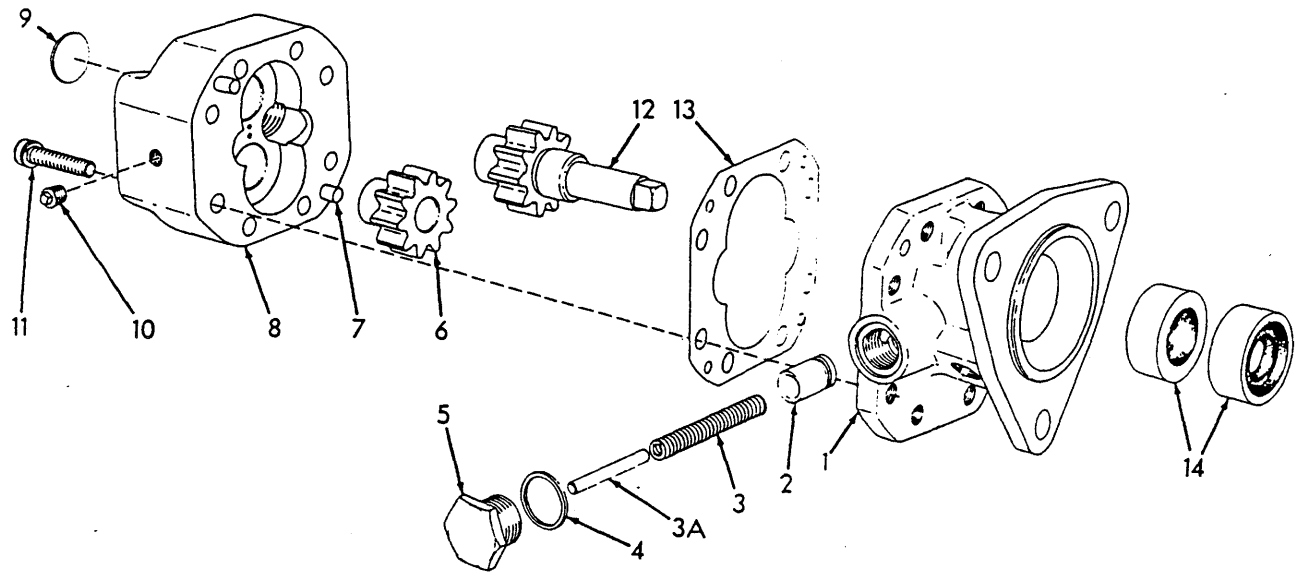

OIL PUMP ASSEMBLY 620201

T-27491

USAGE: See page 247

ITEM	PART NO.	QTY.	DESCRIPTION
1	------	1	STATOR (Not serviced separately)
2	4047994	1	PLUNGER, pressure relief
3	076259	1	SPRING, pressure relief plunger
3A	4047993	1	PIN, pressure relief plunger spring
4	4048002	1	GASKET, pressure relief spring plug
5	4048001	1	PLUG, pressure relief spring
6	621315	1	GEAR, driven
7	4048000	2	PIN, dowel, stator to housing
8	-------	1	HOUSING (Not serviced separately)
9	092107	2	PLUG, expansion, 11/16" diam.
10	628468	1	PLUG, pipe, 1/16"NPT
11	077239	8	SCREW ASSEMBLY (Includes lockwasher)
12	621316	1	SHAFT ASSEMBLY (Includes driving gear)
13	621363	1	GASKET, pump housing
14	4047783	2	SEAL, pump shaft

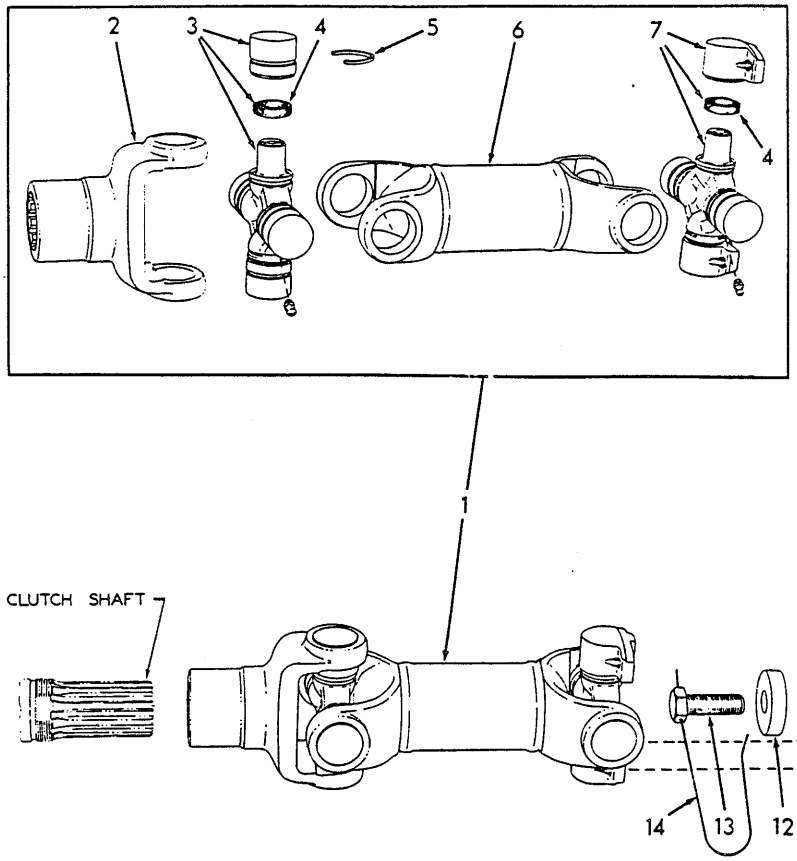

UNIVERSAL JOINT

USAGE: Models HD11B,E,ES,S,F with dry clutch. Standard on tractors prior to serial No. 6911; optional on tractors serial No. 6911 thru No. 10000

ITEM	PART NO.	QTY.	DESCRIPTION
1	084334	1	JOINT ASSEMBLY, universal (Consists of items 2 thru 7)
2	084528	1	YOKE, front
3	084537	1	SPIDER ASSEMBLY, front (Includes bearings, item 4, and FITTING indented below. Serviced only as a unit)
	914687	1	FITTING, lubricating, straight, 1/4"NF
4	076461	8	WASHER, sealing, spider bearing (cork)
5	059879	6	RING, snap, bearing retaining
6	084536	1	TUBE, connecting
7	084545	1	SPIDER ASSEMBLY, rear (Includes bearings, item 4, and FITTING indented below. Serviced only as a unit)
	914687	1	FITTING, lubricating, straight, 1/4"NF
8	084586	1	YOKE, rear
9	035167	4	CAPSCREW, 3/8"NF x 7/8"
10	059876	2	LOCK, capscrew
11	050548	1	SEAL, rear yoke (rubber)
12	050547	1	WASHER, rear yoke retaining
13	070162	1	CAPSCREW, rear yoke retaining
14	023633	1	WIRE, locking (1/16" x 12")

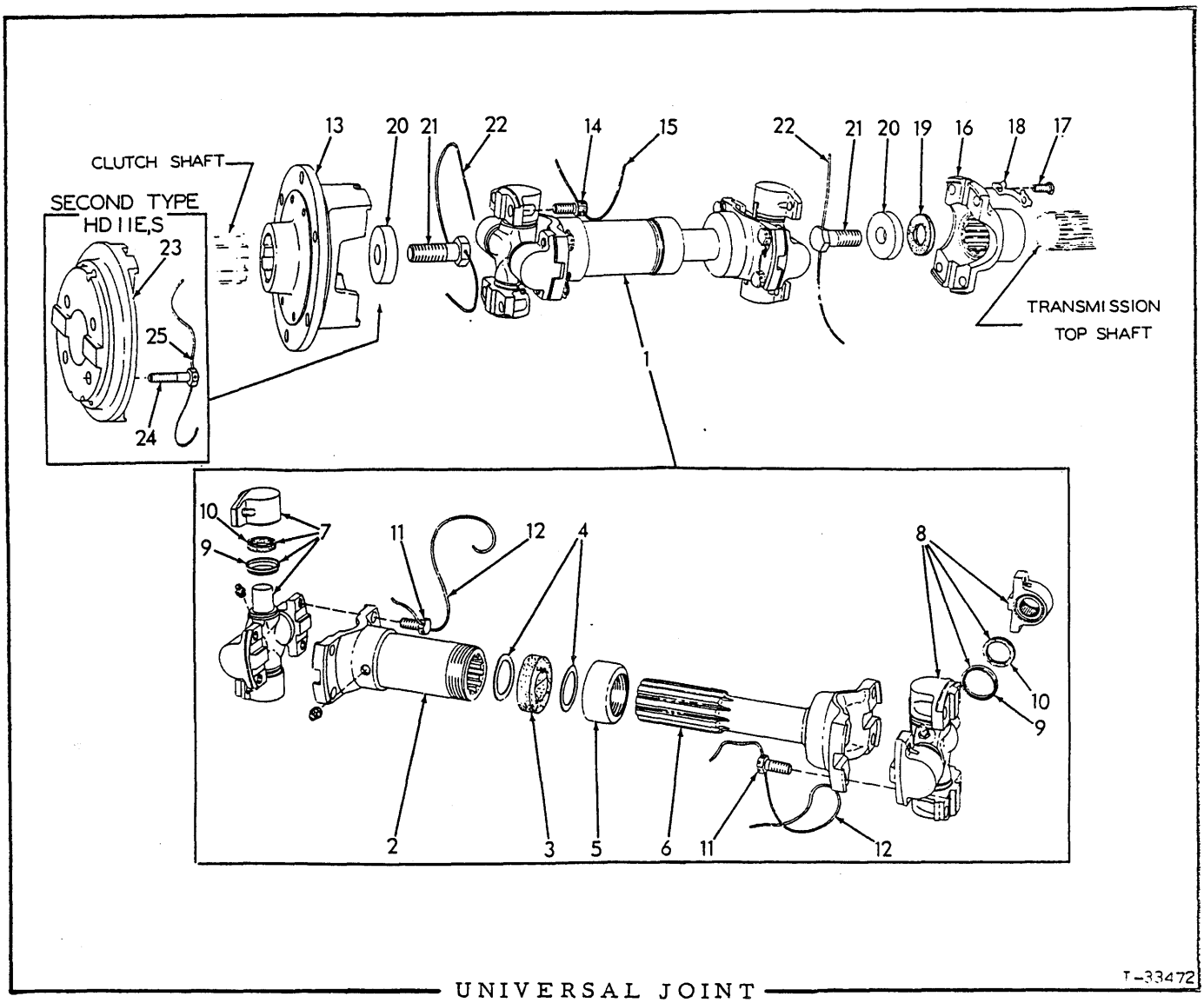

UNIVERSAL JOINT

USAGE: Models HD11B,E,ES,S,F with oil clutch. Standard on tractors serial No. 6911 and up.

* All tractors prior to serial No. 10001; also Model HD11B tractors serial No. 10001 and up

** Model HD11E,S tractors serial No. 10001 and up

ITEM	PART NO.	QTY. *	QTY. **	DESCRIPTION	
1	630029	1	-	JOINT ASSEMBLY, universal	Each consists of items 2 thru 12
	644089	-	1	JOINT ASSEMBLY, universal	
2	631359	1	-	YOKE, slip (front)	
	644411	-	1	YOKE, slip (front)	
	914465	1	1	FITTING, lubricating, straight, 1/8"NPT	
3	631355	1	-	WASHER, sealing, slip yoke (felt)	
	644408	-	1	WASHER, sealing, slip yoke (felt)	

(Continued)

ITEM	PART NO.	QTY. *	QTY. **	DESCRIPTION	
4	631356	2	-	WASHER, slip yoke seal (steel)	
5	631358	1	-	RETAINER, sealing washer	
	644410	-	1	RETAINER, sealing washer	
6	631357	1	-	YOKE, stub (rear)	
	644409	-	1	YOKE, stub (rear)	
7	086752	1	-	SPIDER ASSEMBLY, front	Each includes bearings, items 9, 10 and indented lubricating FITTING
	912808	1	-	FITTING, lubricating, straight, 1/4"NF	
	084328	-	1	SPIDER ASSEMBLY, front	
	914687	-	1	FITTING, lubricating, straight, 1/4"NF	
8	086747	1	-	SPIDER ASSEMBLY, rear	
	912808	1	-	FITTING, lubricating, straight, 1/4"NF	
	085918	-	1	SPIDER ASSEMBLY, rear	
	914687	-	1	FITTING, lubricating, straight, 1/4"NF	
9	059873	8	8	SHIELD, dust	
10	076461	8	8	WASHER, sealing (cork)	
11	074155	8	8	CAPSCREW, coupling	
12	023633	4	4	WIRE, locking (1/16" x 12")	
13	630023	1	1	YOKE, front	
14	620778	4	4	CAPSCREW, front coupling	
15	023633	2	2	WIRE, locking (1/16" x 12")	
16	084586	1	-	YOKE, rear	
	643952	-	1	YOKE, rear	
17	035167	4	4	CAPSCREW, 3/8"NF x 7/8"	
18	059876	2	2	LOCK, capscrew	
19	050548	1	1	SEAL, rear yoke (rubber)	
20	050547	2	2	WASHER, yoke retainnng	
21	070162	2	2	CAPSCREW, yoke retaining	
22	023633	2	2	WIRE, locking (1/16" x 12")	
23	643922	-	1	ADAPTER, front yoke	
24	050927	-	4	CAPSCREW, drilled-hd., 3/8"NF x 1-1/4"	
25	023633	-	1	WIRE, locking (1/16" x 12")	

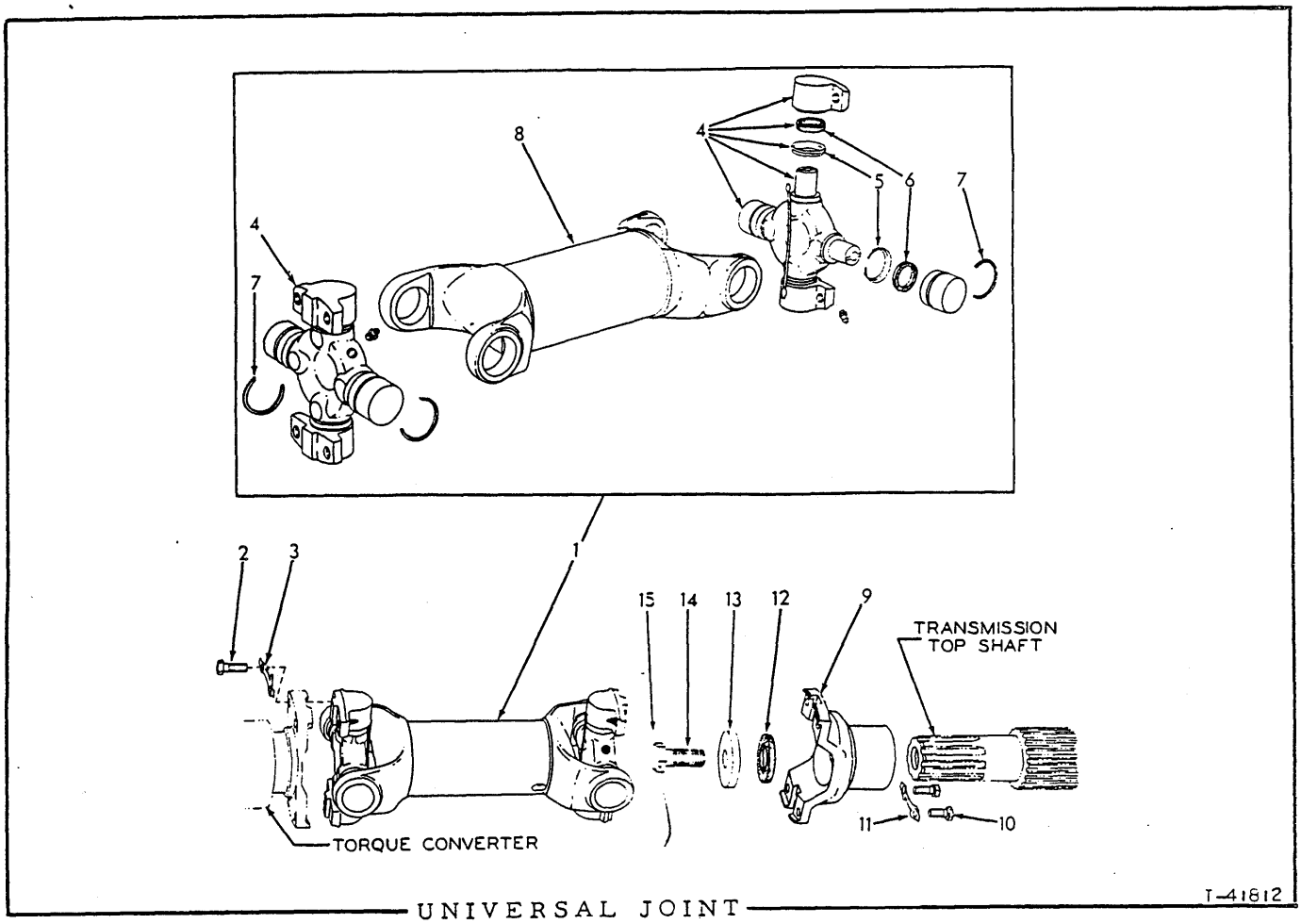

UNIVERSAL JOINT

USAGE: Models HD11EC, FC

ITEM	PART NO.	QTY.	DESCRIPTION
1	620945	1	JOINT ASSEMBLY, universal (Consists of items 4 thru 8)
2	036034	4	CAPSCREW, 3/8"NF x 1"
3	059876	2	LOCK, capscrew
4	084435	2	SPIDER ASSEMBLY, universal joint (Includes bearings, items 5 and 6) FITTING indented below. Serviced only as a unit)
	914687	2	FITTING, lubricating, straight, 1/4"NF
5	059873	8	SHIELD, dust
6	076461	8	WASHER, sealing, spider bearing (cork)
7	059879	4	RING, snap, bearing retaining
8	620942	1	TUBE, connecting
9	624528	1	YOKE, rear
10	035167	4	CAPSCREW, 3/8"NF x 7/8"
11	059876	2	LOCK, capscrew
12	059813	1	SEAL, yoke (rubber)
13	078314	1	WASHER, yoke retaining
14	075950	1	CAPSCREW, yoke retaining
15	023633	1	WIRE, locking (1/16" x 12")

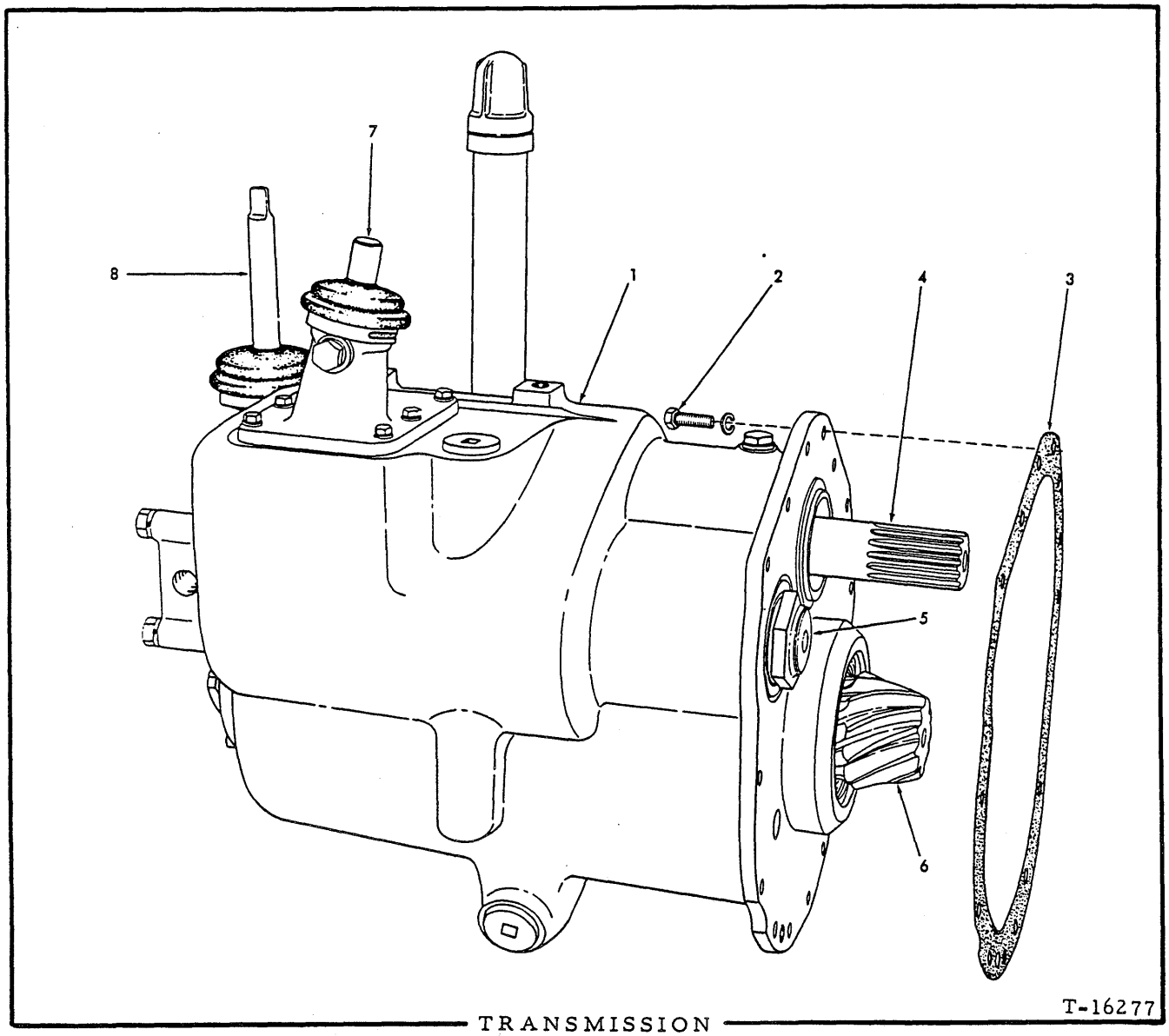

TRANSMISSION

USAGE: Model HD11B,E,ES,S,F tractors prior to serial No. 10001

ITEM	PART NO.	QTY.	DESCRIPTION
1	084530	1	TRANSMISSION ASSEMBLY (Includes Gears, Shafts and Shifting Forks)(Used prior to tractor #6473)
	098960	1	TRANSMISSION ASSEMBLY (Includes Gears, Shafts and Shifting Forks)(Used with dry master clutch only. Standard equipment on tractors #6473 thru #6910; optional thereafter)
	630591	1	TRANSMISSION ASSEMBLY (Includes Gears, Shafts and Shifting Forks)(Used with oil master clutch only. Standard equipment on tractors #6911 and up)
2	035018	14	CAPSCREW, 1/2"NF x 1-1/2"
	904208	14	LOCKWASHER, 1/2"

(Continued)

ITEM	PART NO.	QTY.	DESCRIPTION
3	623618	1	GASKET, case to steering clutch housing
	643203	1	GASKET, case to steering clutch housing (Special. For units with dry sump conversion. See page 301)
4	------	-	See TRANSMISSION TOP SHAFT
5	------	-	See TRANSMISSION INTERMEDIATE SHAFT
6	------	-	See TRANSMISSION PINION SHAFT
7	------	-	See FORWARD HIGH-LOW GEAR SHIFT
8	------	-	See SPEED SELECTION GEAR SHIFT

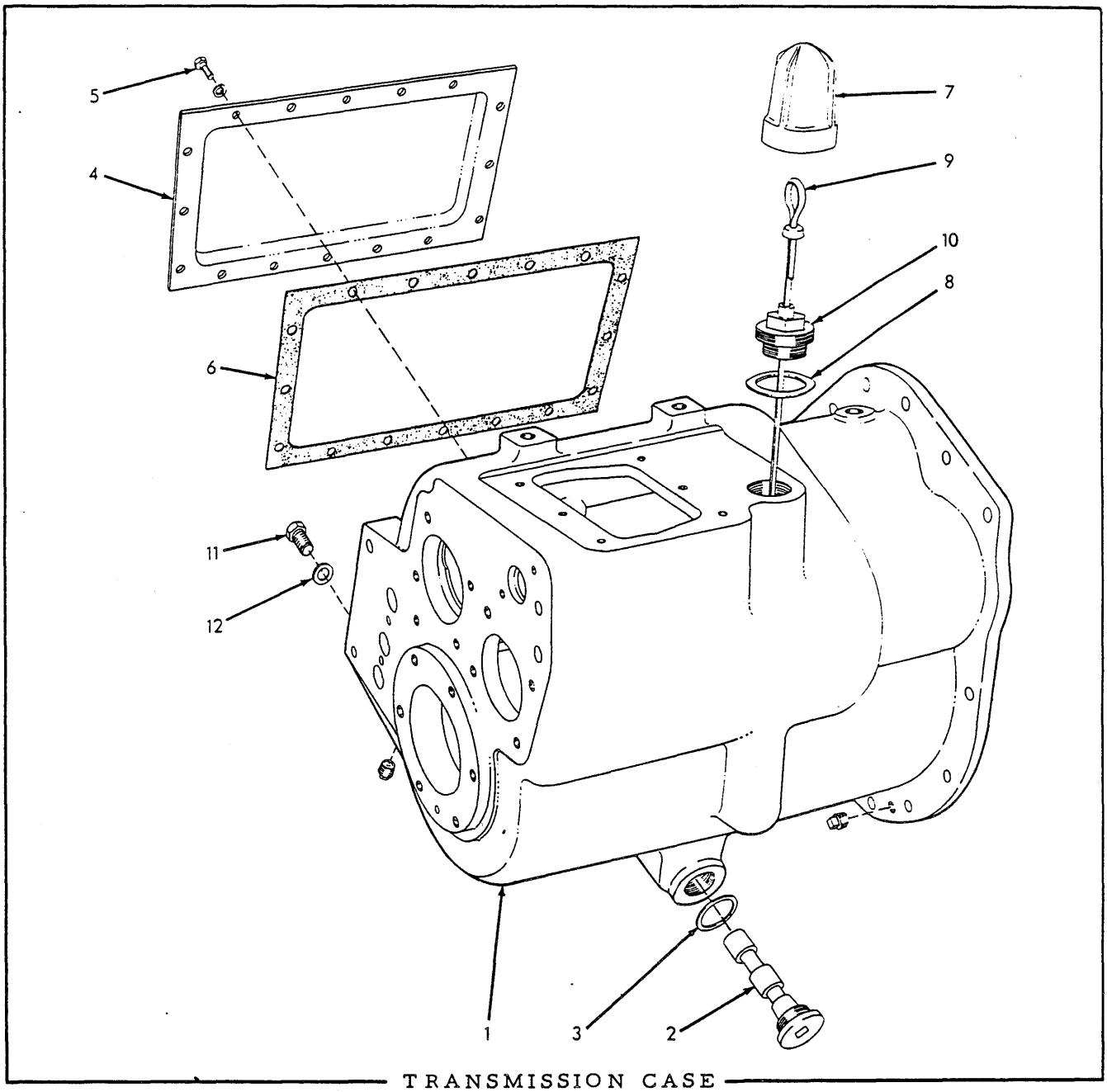

TRANSMISSION CASE

USAGE: Model HD11B, E, ES, S, F tractors prior to serial No, 838

ITEM	PART NUMBER	QTY.	DESCRIPTION
1	621360	1	CASE, transmission
	901653	2	PLUG, pipe, 3/8"NPT
2	067543	1	PLUG, drain (magnetic)
3	035249	1	GASKET, drain plug
4	078521	1	COVER, side
5	035439	16	CAPSCREW, 3/8"NC x 1"
	904206	16	LOCKWASHER, 3/8"

(Continued)

ITEM	PART NUMBER	QTY.	DESCRIPTION
6	057432	1	GASKET, cover plate
7	034265	1	CAP, oil level gauge rod
8	034269	1	GASKET, oil level gauge rod cap
9	069492	1	ROD, gauge, oil level
10	034268	1	PLUG, oil filling hole
11	035159	3	CAPSCREW, hole plugging (5/8"NF x 1")
12	049918	3	WASHER, hole plugging capscrew (copper)

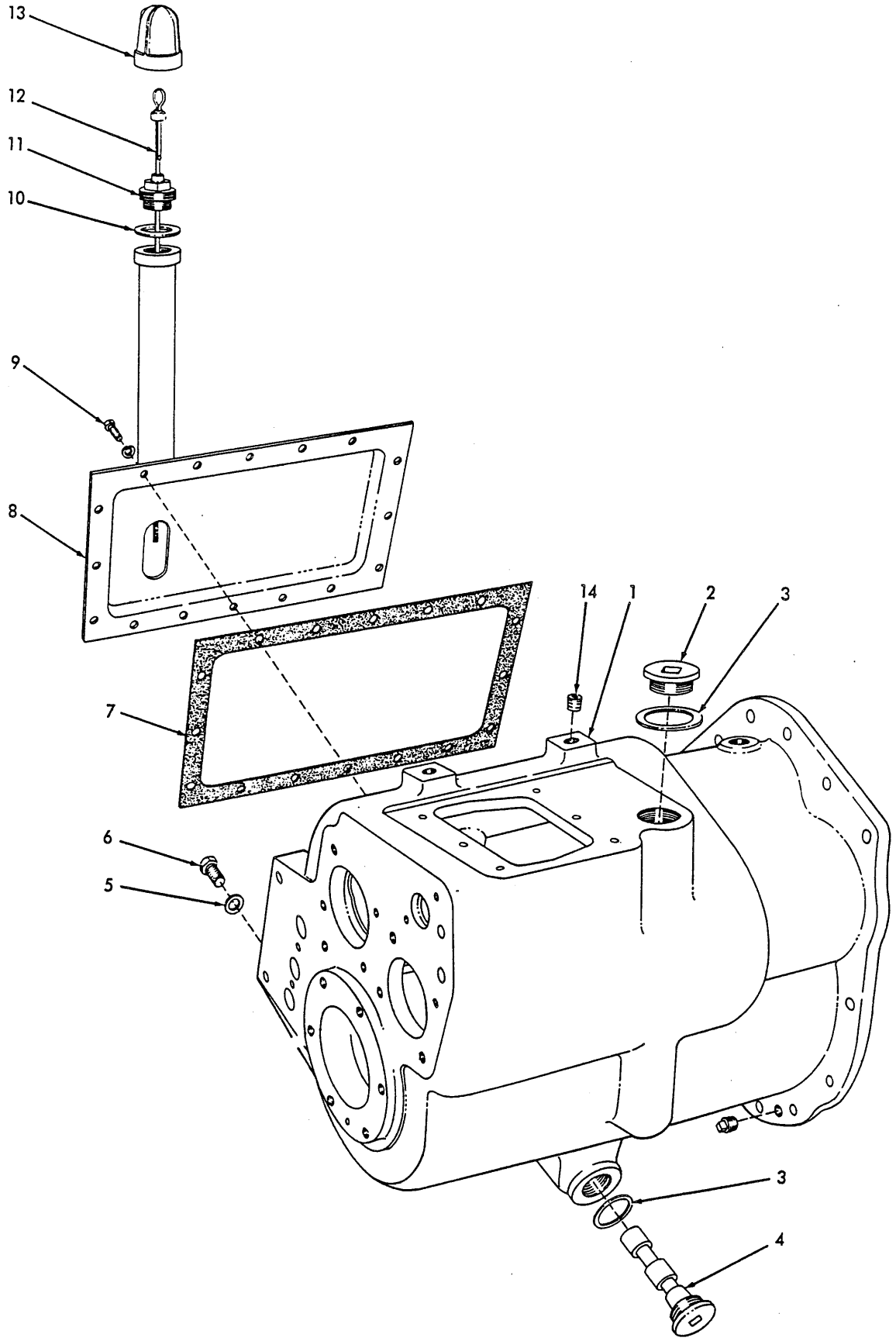

TRANSMISSION CASE (Models HD11B, E, ES, S, F Second type)

TRANSMISSION CASE

USAGE: Model HD11B, E, ES, S, F tractors serial No. 838 thru No. 10000

ITEM	PART NO.	QTY.	DESCRIPTION
1	621360	1	CASE, transmission
	901653	2	PLUG, pipe, 3/8"NPT (1 less used effective with tractor #8915)
2	035250	1	PLUG, top hole
3	035249	2	GASKET, plug
4	067543	1	PLUG, drain hole (magnetic)
5	049918	3	WASHER, hole plugging capscrew (copper)
6	035159	3	CAPSCREW, hole plugging (5/8"NF x 1")
7	057432	1	GASKET, side cover
8	088341	1	COVER, side (Includes oil filling tube)
9	035439	16	CAPSCREW, 3/8"NC x 1" } 4 less used effective
	904206	16	LOCKWASHER, 3/8" } with tractor #6473
10	034269	1	GASKET, oil level gauge rod cap
11	034268	1	PLUG, oil filling hole (Used prior to tractor #1710, excluding tractor #1675)
	089814	1	PLUG, oil filling hole (Effective with tractor #1710, including tractor #1675)
12	088383	1	ROD, gauge, oil level
13	034265	1	CAP, oil level gauge rod
14	099570	2	SETSCREW, hole plugging (Effective with tractor #6069 including #6044 and #5490)

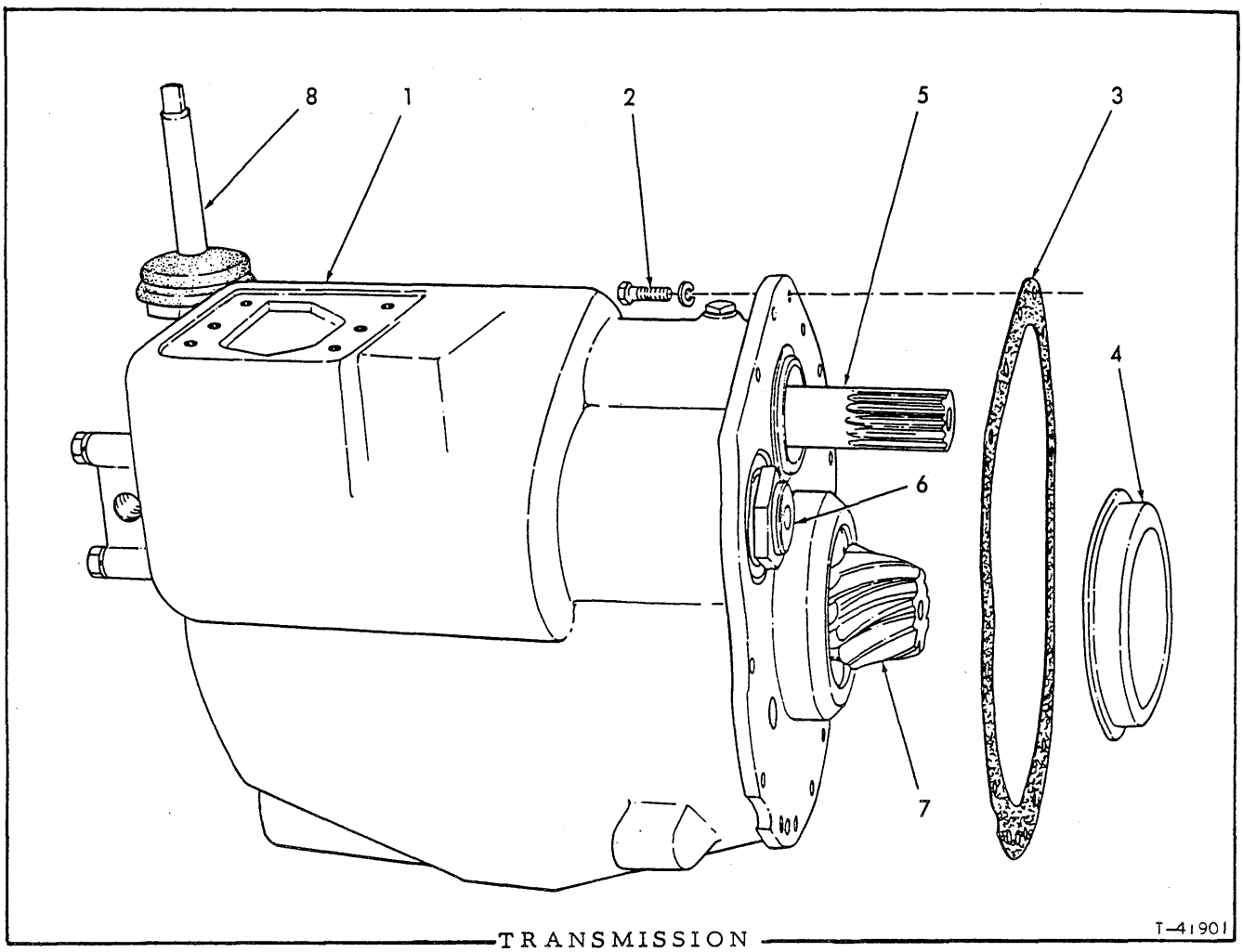

TRANSMISSION

USAGE: Model HD11B, E, S tractors serial No. 10001 and up.

ITEM	PART NO.	QTY.	DESCRIPTION
1	635029	1	TRANSMISSION ASSEMBLY (Includes Gears, Shafts and Shifting Forks)
2	035018	14	CAPSCREW, 1/2"NF x 1-1/2"
	904208	14	LOCKWASHER, 1/2"
3	623618	1	GASKET, case to steering clutch housing
4	630290	1	RING, adapting (Model HD11E only)
5	------	-	See TRANSMISSION TOP SHAFT
6	------	-	See TRANSMISSION INTERMEDIATE SHAFT
7	------	-	See TRANSMISSION PINION SHAFT
8	------	-	See SPEED SELECTION GEAR SHIFT

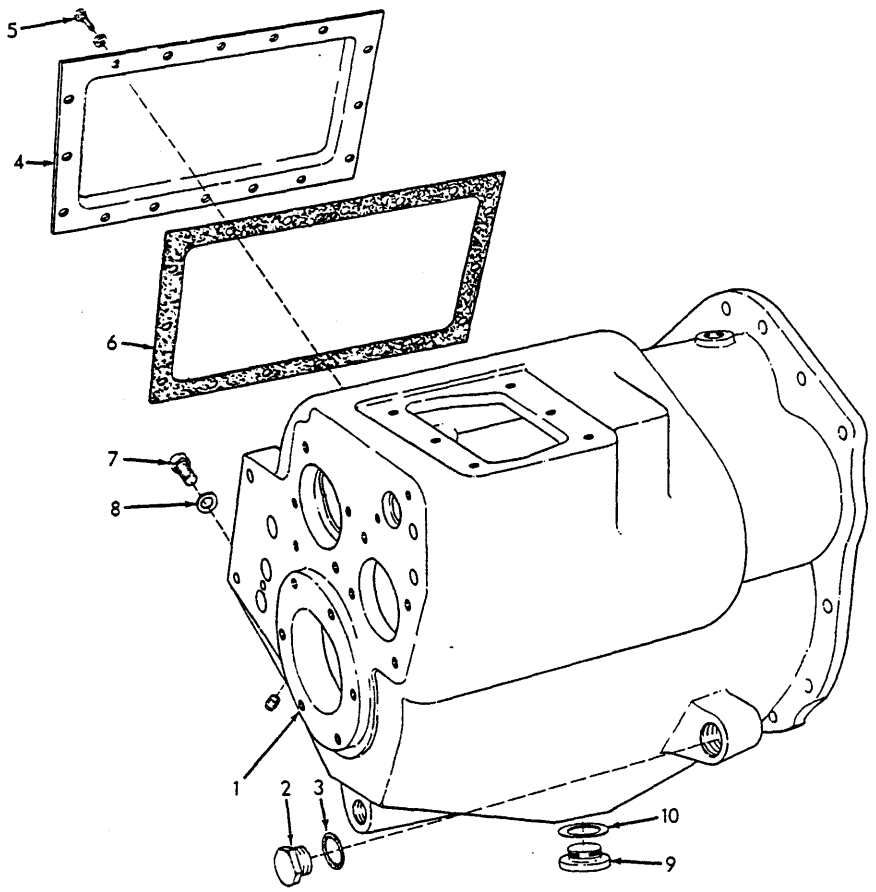

TRANSMISSION CASE

T-41697

USAGE: Model HD11B, E, S tractors serial No. 10001 and up

ITEM	PART NO.	QTY.	DESCRIPTION	
1	629049	1	CASE, transmission	
	901653	1	PLUG, pipe, 3/8"NPT	
2	923168	1	PLUG, closure (Includes item 3)	Models HD11B, S only
3	921887	1	O-RING, closure plug	
4	078521	1	COVER side	
5	035439	12	CAPSCREW, 3/8"NC x 1"	
	904206	12	LOCKWASHER, 3/8"	
6	057432	1	GASKET, cover plate	
7	035159	3	CAPSCREW, hole plugging (5/8"NF x 1")	
8	049918	3	WASHER, hole plugging capscrew (copper)	
9	035250	1	PLUG, drain	
10	035249	1	GASKET, drain plug	

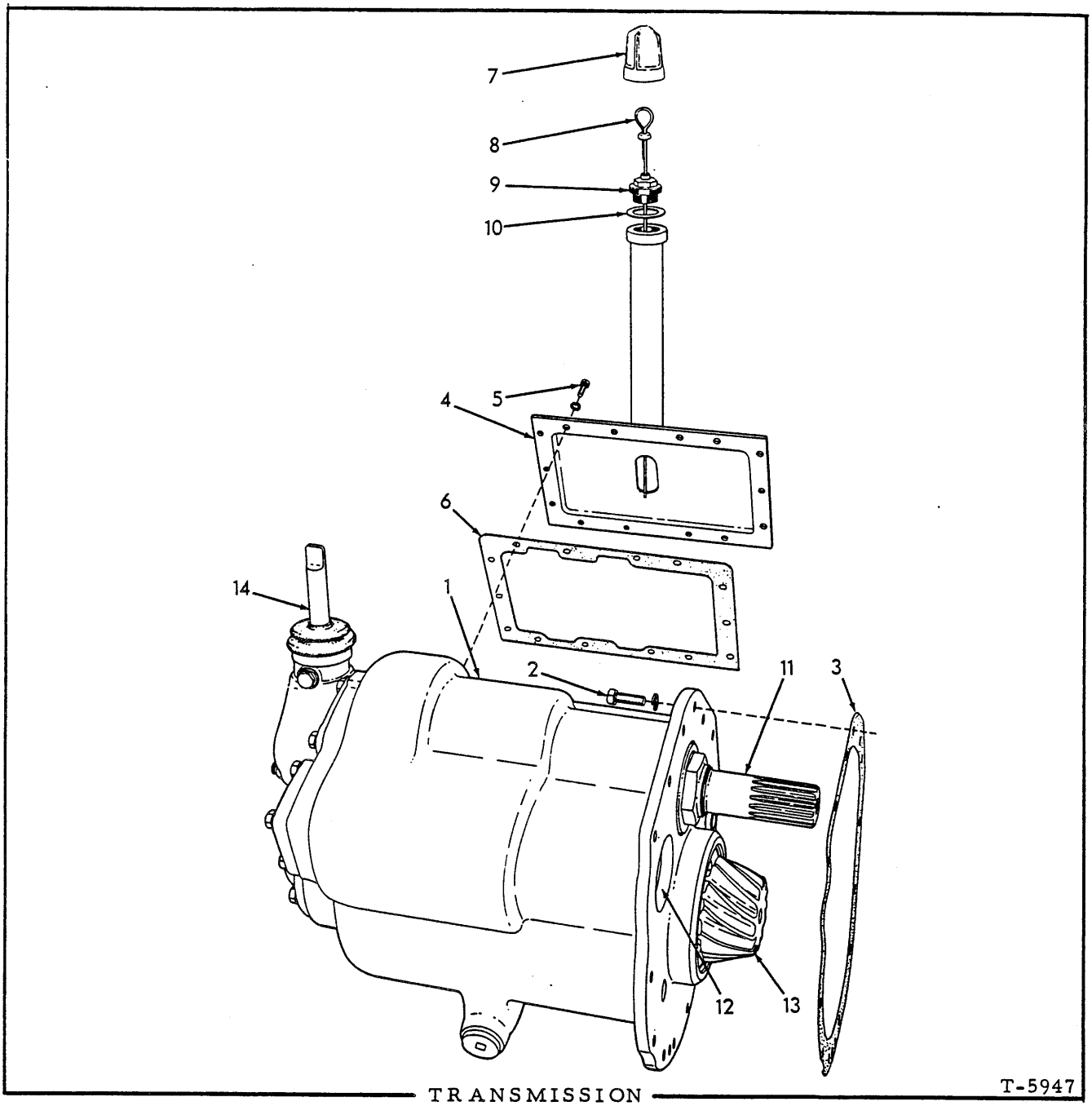

TRANSMISSION

USAGE: Model HD11EC, FC tractors prior to serial No. 10001

ITEM	PART NO.	QTY.	DESCRIPTION
1	621177	1	TRANSMISSION ASSEMBLY (Includes Gears, Shafts and Forks)
2	035018	14	CAPSCREW, 1/2"NF x 1-1/2"
	904208	14	LOCKWASHER, 1/2"
3	623618	1	GASKET, case to steering clutch housing
	643203	1	GASKET, case to steering clutch housing (Special. For units with dry sump conversion. See page)

(Continued)

ITEM	PART NO.	QTY.	DESCRIPTION
4	075390	1	COVER, side (HD11EC only)
	630061	1	COVER, side (HD11FC only)
5	035439	11	CAPSCREW, 3/8"NC x 1"
	904206	11	LOCKWASHER, 3/8"
6	075391	1	GASKET, side cover
7	034265	1	CAP, oil level gauge rod
8	034304	1	ROD, gauge, transmission oil level (HD11EC only)
	630063	1	ROD, gauge, transmission oil level (HD11FC only)
9	089814	1	PLUG, transmission oil filling hole
10	034269	1	GASKET, oil level gauge rod cap
11	------	-	See TRANSMISSION TOP SHAFT
12	------	-	See TRANSMISSION REVERSE SHAFT
13	------	-	See TRANSMISSION PINION SHAFT
14	------	-	See GEAR SHIFT

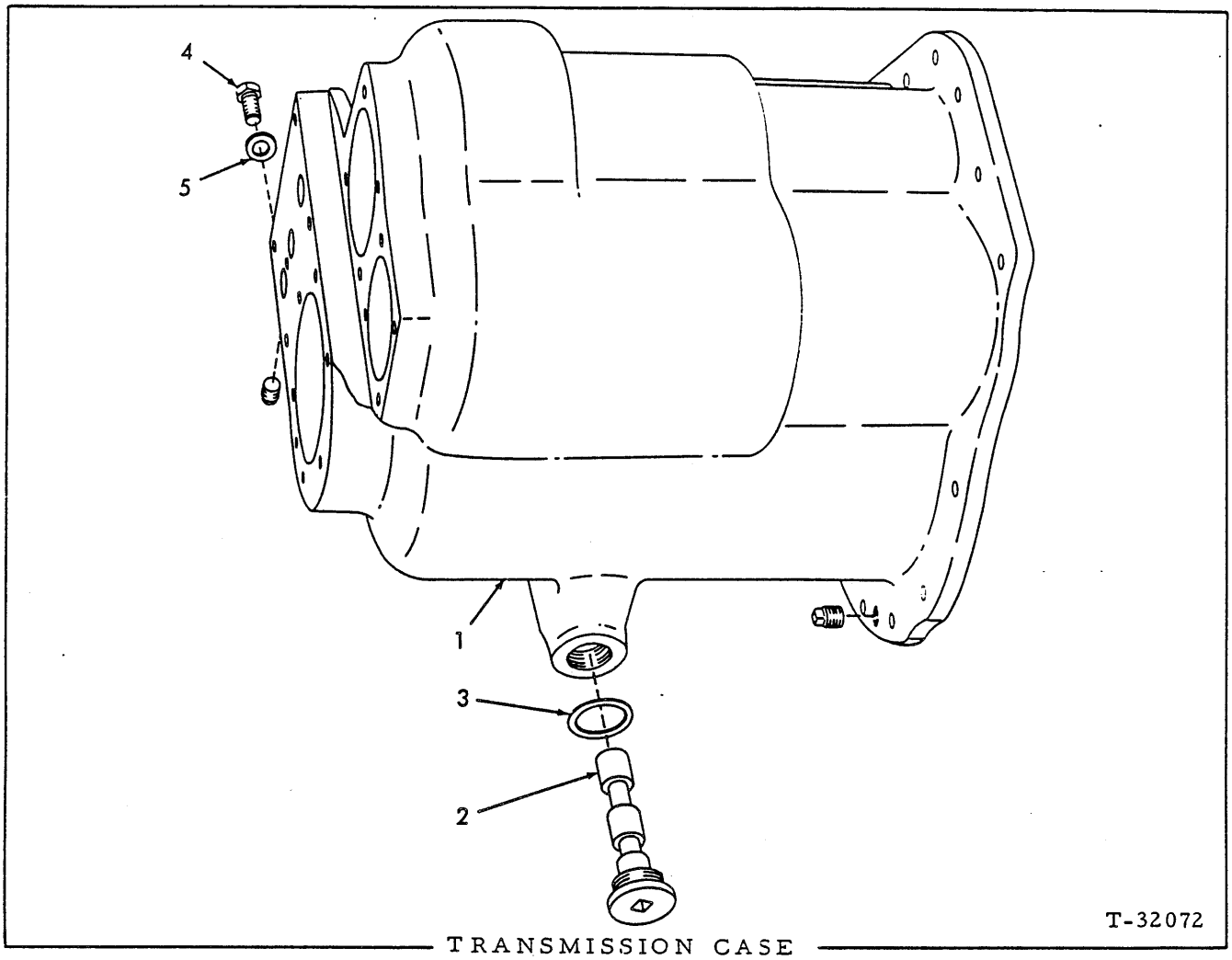

TRANSMISSION CASE

USAGE: Model HD11EC,FC tractors prior to serial No. 10001

ITEM	PART NO.	QTY.	DESCRIPTION
1	623862	1	CASE, transmission
	901653	2	PLUG, pipe, 3/8"NPT
2	067543	1	PLUG, drain
3	035249	1	GASKET, drain plug
4	035159	3	CAPSCREW, hole plugging (5/8"NF x 1")
5	049918	3	WASHER, hole plugging capscrew (copper)

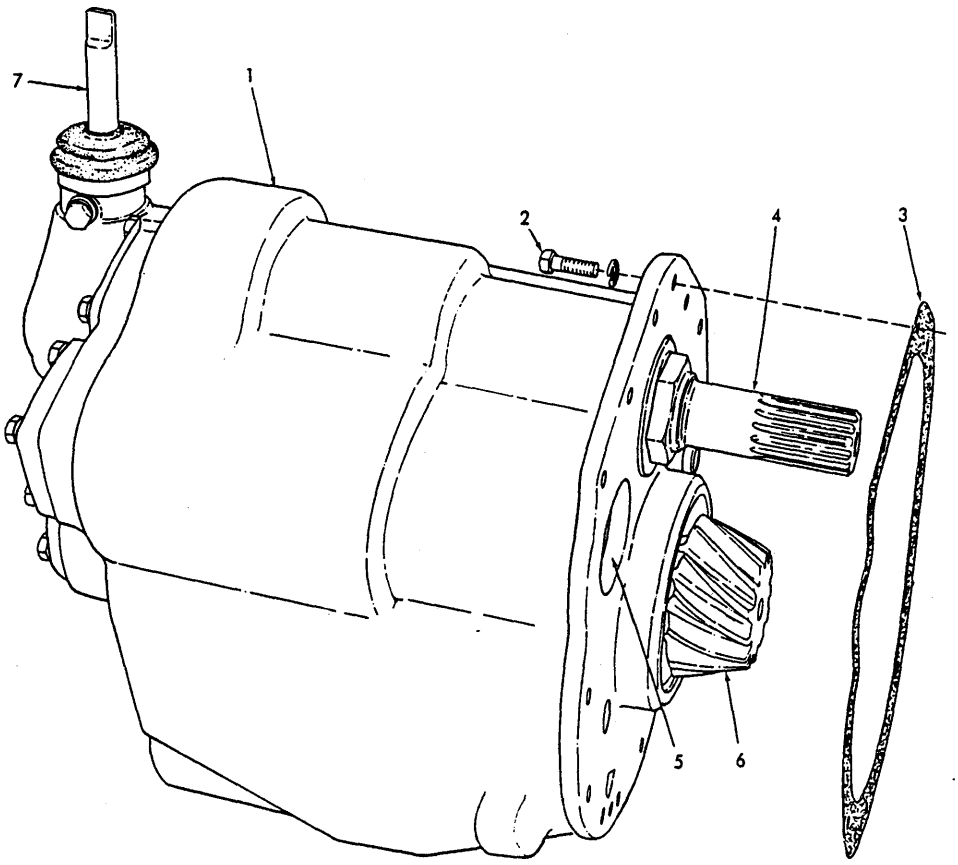

TRANSMISSION T-41904

USAGE: Model HD11EC tractors serial No. 10001 and up

ITEM	PART NO.	QTY.	DESCRIPTION
1	643593	1	TRANSMISSION ASSEMBLY (Includes Gears, Shafts and Forks)
2	035018	14	CAPSCREW, 1/2"NF x 1-1/2"
	904208	14	LOCKWASHER, 1/2"
3	623618	1	GASKET, case to steering clutch housing
4	------	-	See TRANSMISSION TOP SHAFT
5	------	-	See TRANSMISSION REVERSE SHAFT
6	------	-	See TRANSMISSION PINION SHAFT
7	------	-	See GEAR SHIFT

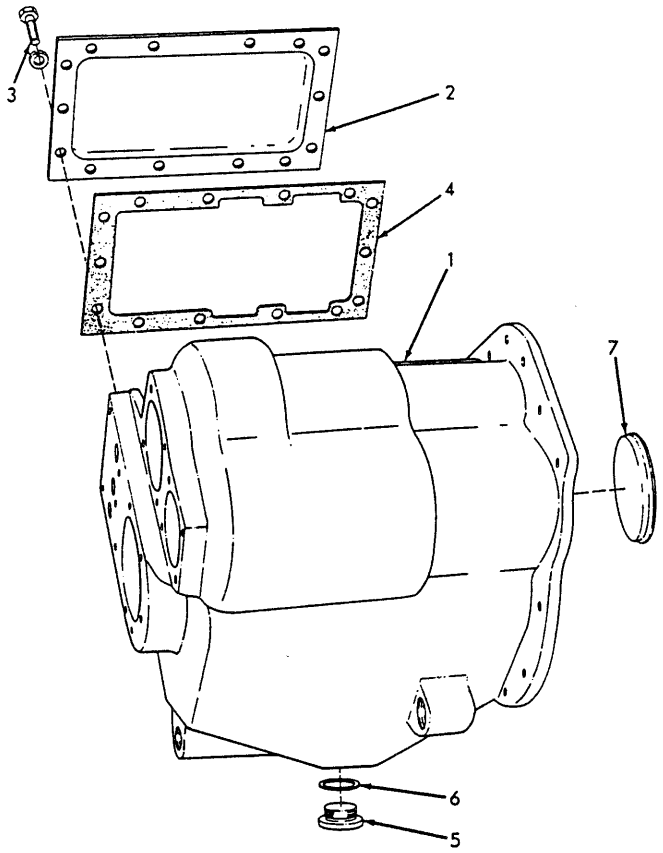

TRANSMISSION CASE

T-41903

USAGE: Model HD11EC tractors serial No. 10001 and up

ITEM	PART NO.	QTY.	DESCRIPTION
1	643591	1	CASE, transmission
2	631418	1	COVER, side
3	035439	11	CAPSCREW, 3/8"NC x 1"
	904206	11	LOCKWASHER, 3/8"
4	075391	1	GASKET, side cover
5	035250	1	PLUG, drain
6	035249	1	GASKET, drain plug
7	644868	1	PLUG, cup

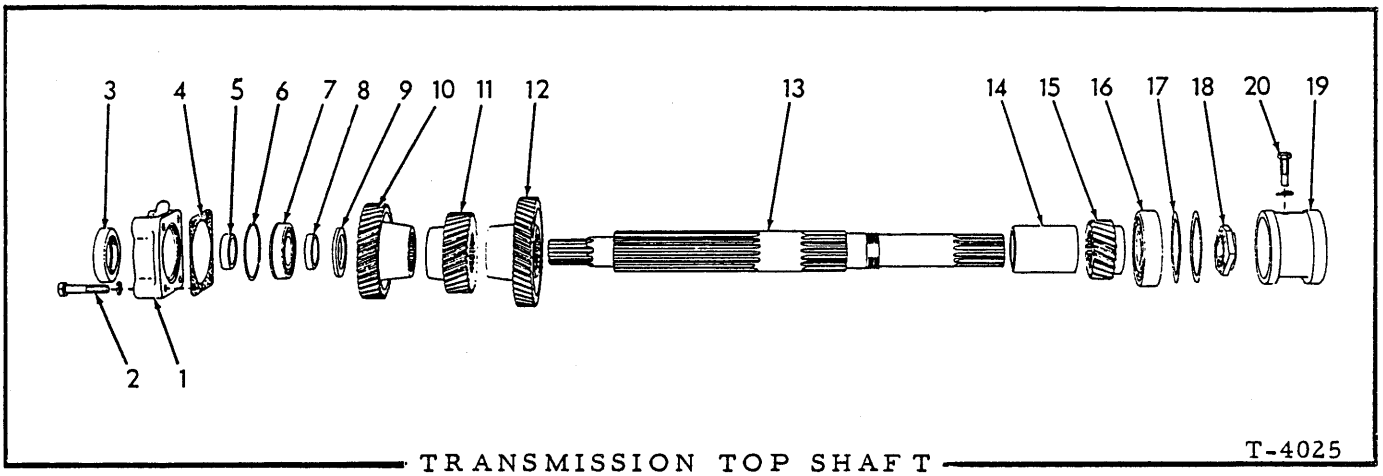

TRANSMISSION TOP SHAFT T-4025

USAGE: Models HD11B, E, ES, S, F

ITEM	PART NO.	QTY.	DESCRIPTION
1	623411	1	RETAINER, front bearing
2	028979	4	CAPSCREW, 1/2"NC x 2-1/2"
	904208	4	LOCKWASHER, 1/2"
3	628823	1	SEAL, oil, front bearing retainer
4	059261	1	GASKET, front bearing retainer
5	069463	1	SPACER, front bearing (1/2" thick)
6	057289	1	RING, snap, top shaft front bearing
7	057282	1	BEARING, roller, top shaft, front
8	069459	1	SLEEVE, spacing, front bearing
9	069461	1	SPACER, hi-range and 2nd reverse gear (3/8" thick)
10	069233	1	GEAR, hi-range and 2nd reverse (41 teeth)(Used prior to tractor #10001)
	644120	1	GEAR, hi-range and 2nd reverse (41 teeth)(Effective with tractor #10001)
11	643486	1	GEAR, lo-range (34 teeth)
12	069235	1	GEAR, 3rd reverse (46 teeth)
13	621678	1	SHAFT, top
14	069456	1	SLEEVE, spacing (3-7/8" long)
15	069240	1	GEAR, 1st reverse (21 teeth)
16	069428	1	BEARING, ball, top shaft, rear
17	069452	4	SHIM, bearing adjusting (.005" thick. Use as required)
18	078864	1	NUT, top shaft
19	069403	1	SLEEVE, rear bearing (Used prior to tractor #10001)
	641912	1	SLEEVE, rear bearing (Standard on tractors #10001 and up; also used on prior units with transmission dry sump conversion. See page 301)
20	621330	1	SCREW, sleeve locking
	904209	1	LOCKWASHER, 5/8"

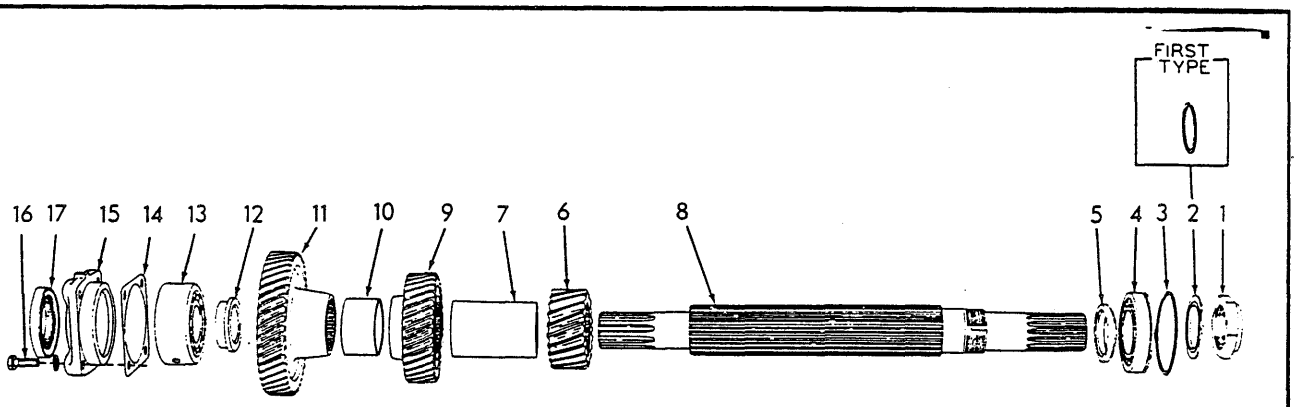

TRANSMISSION TOP SHAFT

USAGE: Models HD11EC, FC

ITEM	PART NO.	QTY.	DESCRIPTION
1	078862	1	NUT
2	065512	1	RING, snap, rear bearing (small)(Used prior to tractor #10001)
	641493	1	SPACER, rear bearing nut (Standard on tractors #10001 and up; also used on prior units with transmission dry sump conversion. See page 301)
3	040831	1	RING, snap, rear bearing (large)
4	058135	1	BEARING, roller, rear
5	074818	1	SPACER, rear bearing
6	073808	1	GEAR, 1st speed (22 teeth)
7	069444	1	SLEEVE, spacing (4-9/16" long)
8	095960	1	SHAFT
9	073733	1	GEAR, 2nd speed and reverse (36 teeth)
10	069443	1	SLEEVE, spacing (1-3/4" long)
11	074838	1	GEAR, 3rd speed (46 teeth)
12	093713	1	SPACER, front bearing
13	074822	1	BEARING, ball, front
14	074842	7	SHIM, front bearing retainer (.003" thick. Use as required)
15	------	1	RETAINER, front bearing (Used prior to tractor #6679. Order RETAINER 629041 and SEAL 629040)
	629041	1	RETAINER, front bearing (Effective with tractor #6679)
16	035236	4	CAPSCREW, 1/2"NC x 1-3/4"
	904208	4	LOCKWASHER, 1/2"
17	------	1	SEAL, oil, front bearing retainer (5/8" wide)(Used prior to tractor #6679. Order SEAL 629040)
	629040	1	SEAL, oil, front bearing retainer (1/2" wide)(Effective with tractor #6679)

TRANSMISSION INTERMEDIATE SHAFT

USAGE: Models HD11B,E,ES,S,F

* Tractors prior to serial No. 6473
** Tractors serial No. 6473 and up

ITEM	PART NO.	QTY. *	QTY. **	DESCRIPTION
1	621679	1	-	SHAFT, intermediate
	099026	-	1	SHAFT, intermediate
2	078864	1	1	NUT, intermediate shaft, rear
3	042121	1	1	RING, snap, rear bearing
4	057281	1	1	BEARING, roller, rear
5	069236	1	1	GEAR, 1st and 2nd speeds (22 teeth)
6	069457	1	1	SLEEVE, gear spacing (4-1/8" long)
7	069235	1	1	GEAR, 4th and 6th speeds (46 teeth)
8	069460	1	1	SLEEVE, gear spacing (1-5/16" long)
9	069239	1	1	GEAR, 3rd and 5th speeds (41 teeth)
10	069238	1	1	GEAR, low range (40 teeth)
11	069382	2	-	BEARING, roller, low range gear
	623667	-	1	BUSHING, low range gear
12	069254	1	1	HUB, shifting collar and low range gear
13	069243	1	-	COLLAR, shifting
	099899	-	1	COLLAR, shifting (7/16" groove)(Used prior to tractor #11382)
	647321	-	1	COLLAR, shifting (5/8" groove)(Effective with tractor #11382)
14	069458	1	1	WASHER, spacing, high-range gear
15	069389	1	1	RACE, inner, high-range gear
16	069384	2	-	BEARING, roller, high-range gear
	623666	-	1	BUSHING, high-range gear
17	069237	1	1	GEAR, high-range (32 teeth)(Used prior to tractor #10001)
	644121	-	1	GEAR, high-range (32 teeth)(Effective with tractor #10001)
18	069465	1	1	WASHER, spacing, front bearing (Used prior to tractor #10001)
	644117	-	1	WASHER, spacing, front bearing (Effective with tractor #10001)
19	054229	1	1	BEARING, ball, front (Includes snap ring)
20	078860	1	1	NUT, intermediate shaft, front
21	044741	1	-	SEAL, oil retaining

(Continued)

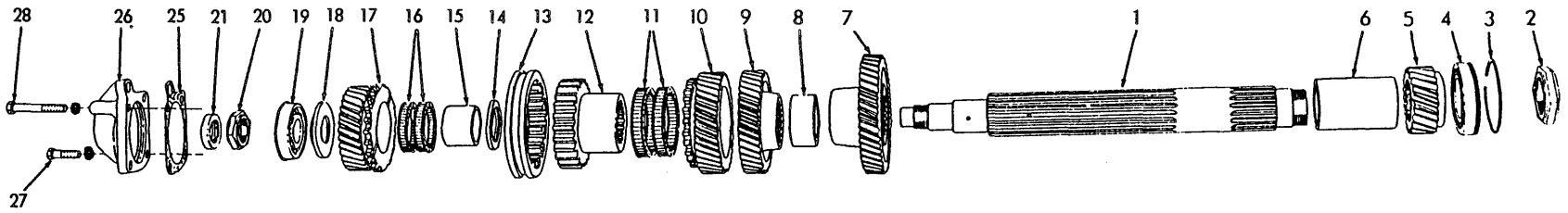

FIRST TYPE

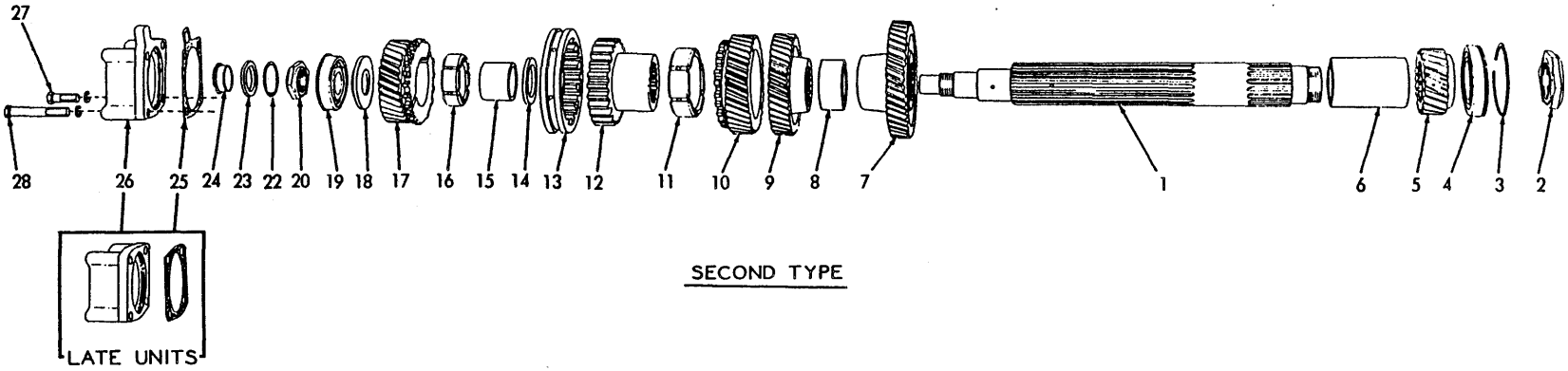

SECOND TYPE

TRANSMISSION INTERMEDIATE SHAFT (Models HD11B, E, ES, S, F) T-32075

ITEM	PART NO.	QTY. *	QTY. **	DESCRIPTION
22	621446	-	1	RING, snap
23	621332	-	1	RING, oil sealing, outer
24	621333	-	1	RING, oil sealing, inner
25	069514	1	1	GASKET, bearing retainer (Used prior to tractor #10001)
	634996	-	1	GASKET, bearing retainer (Effective with tractor #10001)
26	069401	1	-	COVER, front bearing
	099023	-	1	RETAINER, front bearing (Used prior to tractor #10001)
	644113	-	1	RETAINER, front bearing (Effective with tractor #10001)
27	035061	3	1	CAPSCREW, 1/2"NC x 1-1/4"
28	041877	1	-	CAPSCREW, 1/2"NC x 3"
	061631	-	3	CAPSCREW, 1/2"NC x 3-1/2"
	904208	4	4	LOCKWASHER, 1/2"

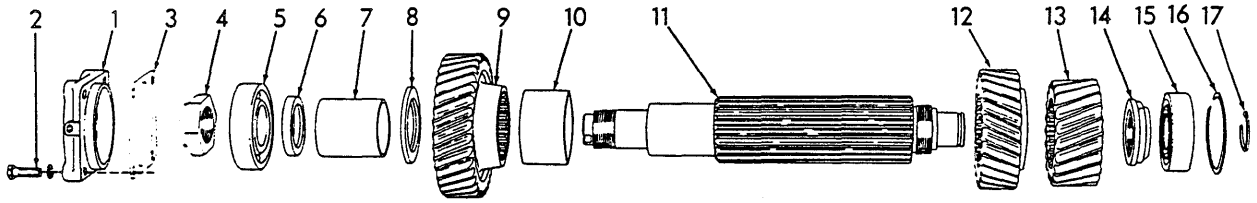

TRANSMISSION REVERSE SHAFT

USAGE: Models HD11EC, FC

ITEM	PART NUMBER	QTY.	DESCRIPTION
1	098468	1	RETAINER, front bearing
2	035712	4	CAPSCREW, 1/2"NC x 2-1/4"
	904208	4	LOCKWASHER, 1/2"
3	074841	7	SHIM, adjusting (.003" thick. Use as req'd)
4	079234	1	NUT, front
5	090645	1	BEARING, ball, front
6	074817	1	SPACER, front bearing
7	074814	1	SLEEVE, gear retaining (2-1/2" long)
8	074815	1	WASHER, gear retaining
9	073733	1	GEAR, 2nd reverse (36 teeth)
10	069443	1	SLEEVE, gear spacing (1-3/4" long)
11	098958	1	SHAFT, reverse
12	073738	1	GEAR, reverse (28 teeth)
13	073808	1	GEAR, 1st reverse (22 teeth)
14	079256	1	NUT, rear
15	052049	1	BEARING, roller, rear
16	052374	1	RING, snap, rear bearing
17	052225	1	RING, snap, reverse shaft

TRANSMISSION PINION SHAFT

USAGE: Models HD11B, E, ES, S, F

* Tractors prior to serial No. 6473
** Tractors serial No. 6473 and up

ITEM	PART NO.	QTY. *	QTY. **	DESCRIPTION
1	095725	1	-	PINION, bevel (11 teeth)(If for tractors prior to #4529, equipped with Odometer, also order 1 PLATE 095673, 1 NUT 095675, 2 SPACER 095676 and 2 CAPSCREW 011089)
	098998	-	1	PINION, bevel (11 teeth)
2	098996	-	1	PLUG, pinion oil hole } Used prior to tractor #8807
3	098997	-	1	LOCK, pinion oil hole plug } Used prior to tractor #8807
4	067627	1	1	RING, snap, rear bevel pinion bearing
5	057283	1	1	BEARING, roller, bevel pinion, rear
6	069469	1	1	SPACER, rear bevel pinion bearing (Used prior to tractor #10001)
	641909	-	1	SPACER, rear bevel pinion bearing (Standard on tractors #10001 and up; also used on prior units with transmission dry sump conversion. See page 301)
7	069454	3	3	WASHER, gear spacing
8	069385	12	-	BEARING, roller, pinion shaft gears
9	069462	4	-	SPACER, gear bearing (7/16" long)
10	623668	-	4	BUSHING, pinion shaft gears (2" long)
11	623669	-	2	BUSHING, pinion shaft gears (1-9/16" long)
12	069245	1	1	GEAR, 3rd and 5th speed (55 teeth)
13	069242	1	-	HUB, 2nd reverse and 3rd and 5th speed gears
	099003	-	1	HUB, 2nd reverse and 3rd and 5th speed gears
14	069244	3	-	COLLAR, shifting
	099897	-	3	COLLAR, shifting (7/16" groove)(Used prior to tractor #11592)
	650696	-	3	COLLAR, shifting (5/8" groove)(Effective with tractor #11592)
15	643487	1	1	GEAR, 2nd reverse (55 teeth)
16	069246	2	2	GEAR, 3rd reverse and 4th and 6th speed (48 teeth)
17	069247	1	-	HUB, 3rd reverse and 4th and 6th speed gears
	099002	-	1	HUB, 3rd reverse and 4th and 6th speed gears
18	069248	2	2	GEAR, 1st reverse and 1st and 2nd speed (62 teeth)
19	069249	1	-	HUB, 1st reverse and 1st and 2nd speed gears
	099001	-	1	HUB, 1st reverse and 1st and 2nd speed gears

(Continued)

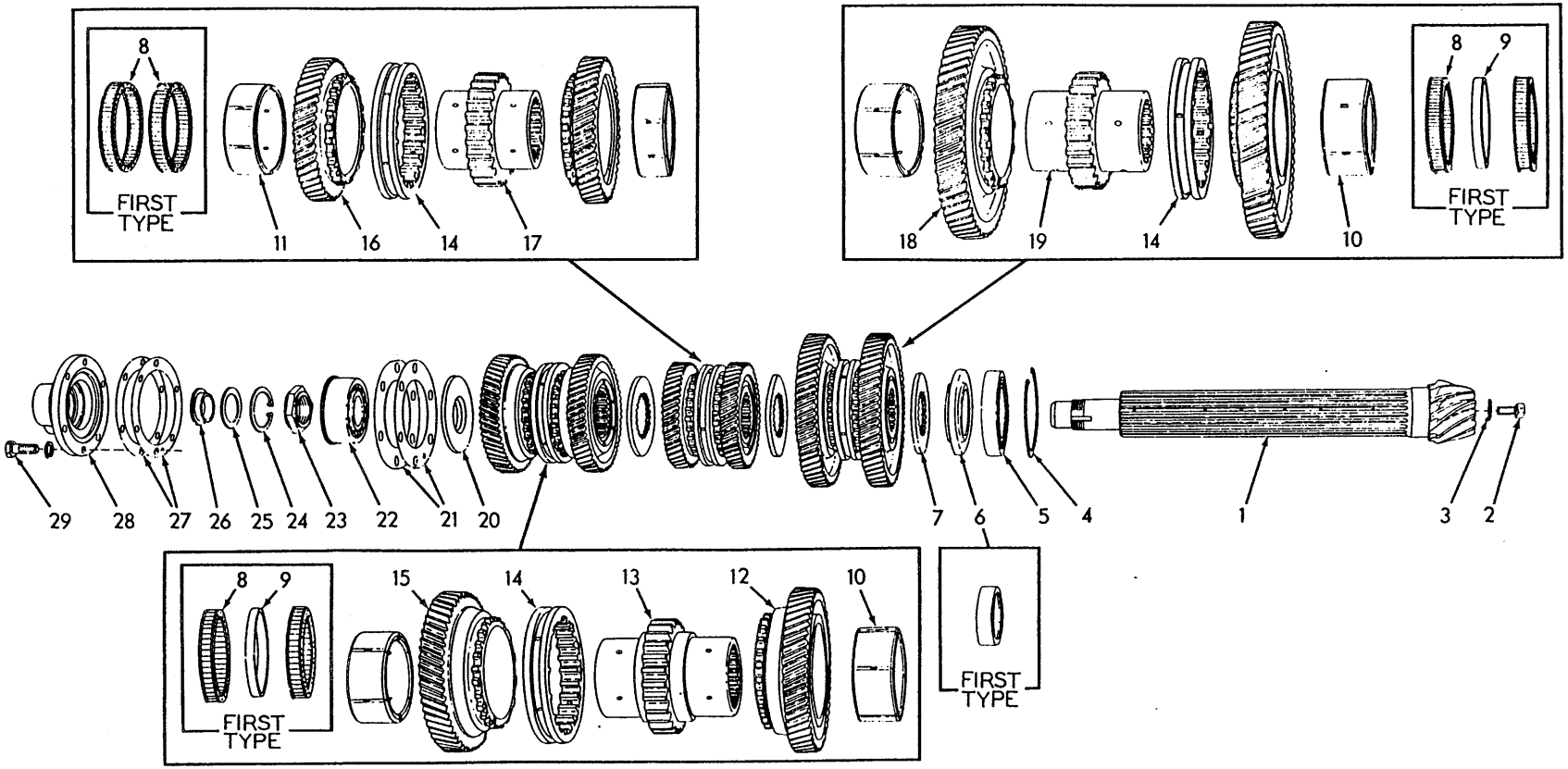

TRANSMISSION PINION SHAFT (Models HD11B, E, ES, S, F)

TRANSMISSION PINION SHAFT (Continued)

ITEM	PART NO.	QTY. *	QTY. **	DESCRIPTION	
20	069455	1	1	WASHER, spacing, pinion front bearing	
21	069511	1	1	SHIM, adjusting (.005" thick. Use as required)	
	069512	8	8	SHIM, adjusting (.010" thick. Use as required)	
22	043890	1	1	BEARING, ball, bevel pinion, front (Includes snap ring)	
23	078861	1	1	NUT, bevel pinion (Also see ODOMETER for special nut)	
24	621445	-	1	RING, snap	
25	621334	-	1	RING, oil sealing, outer	
26	621335	-	1	RING, oil sealing, inner	
27	069445	3	3	SHIM, adjusting (.007" thick. Use as required)	
	069446	3	3	SHIM, adjusting (.005" thick. Use as required)	
28	069366	1	-	COVER, front bearing	See ODOMETER for special cover
	099021	-	1	COVER, front bearing (Used prior to tractor #10001)	See ODOMETER for special cover
	643979	-	1	COVER, front bearing (Effective with tractor #10001)	
29	035190	6	6	CAPSCREW, 1/2"NC x 1-1/2"	
	904208	6	6	LOCKWASHER, 1/2"	

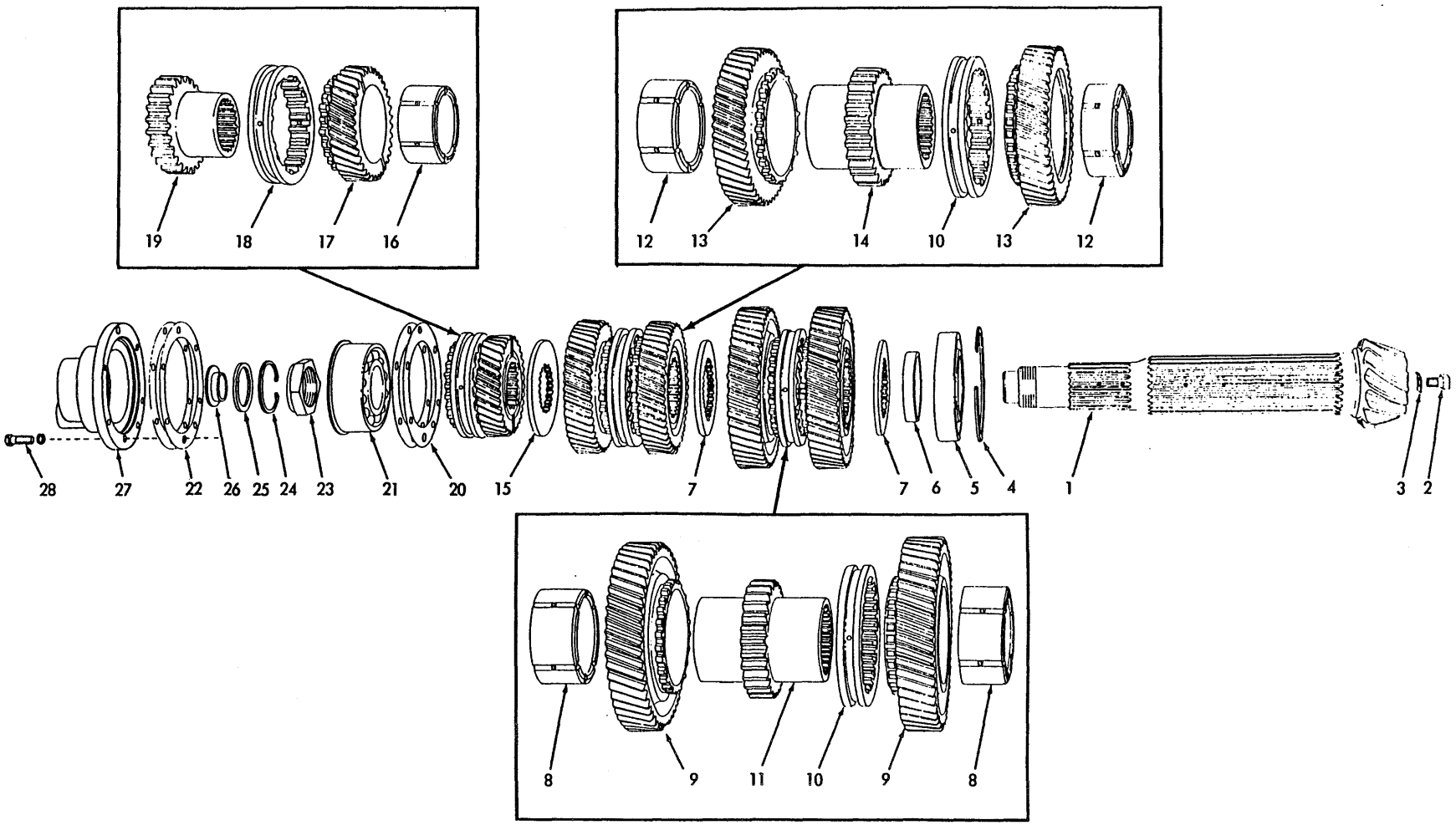

TRANSMISSION PINION SHAFT (Models HD11EC, FC)

TRANSMISSION PINION SHAFT

USAGE: Models HD11EC, FC

ITEM	PART NO.	QTY.	DESCRIPTION
1	620753	1	PINION, bevel (11 teeth)
2	098996	1	PLUG, pinion oil hole — Used prior to tractor #10001
3	098997	1	LOCK, pinion plug — Used prior to tractor #10001
4	059589	1	RING, snap, rear bearing
5	059328	1	BEARING, roller, rear
6	069427	1	SPACER, rear bearing (Used prior to tractor #10001)
	643647	1	SPACER, rear bearing (Standard on tractors #10001 and up; also used on prior units with transmission dry sump conversion. See page 301)
7	069386	2	WASHER, gear retaining
8	623334	2	BUSHING, 1st speed gear
9	081202	2	GEAR, 1st reverse and 1st speed (51 teeth)
10	099898	2	COLLAR, shifting (7/16" groove)(Original equipment)
	650745	2	COLLAR, shifting (5/8" groove)(Service replacement transmissions)
11	098957	1	HUB, 1st reverse and 1st speed gears
12	623338	2	BUSHING, 2nd speed gear
13	081200	2	GEAR, 2nd reverse and 2nd speed (48 teeth)
14	098956	1	HUB, 2nd reverse and 2nd speed gears
15	074824	1	WASHER, gear retaining
16	623667	1	BUSHING, 3rd speed gear
17	081201	1	GEAR, 3rd speed (35 teeth)
18	099899	1	COLLAR, shifting, 3rd speed (7/16" groove)(Original equipment)
	647321	1	COLLAR, shifting, 3rd speed (5/8" groove)(Service replacement transmissions)
19	098955	1	HUB, 3rd speed gear
20	069447	4	SHIM, adjusting, pinion depth (.005" thick. Use as required)
	069448	6	SHIM, adjusting, pinion depth (.010" thick. Use as required)
21	048698	1	BEARING, ball, front (Includes snap ring)
22	069445	7	SHIM, cover adjusting (.007" thick. Use as required)
	069446	7	SHIM, cover adjusting (.005" thick. Use as required)
23	078862	1	NUT, bevel pinion
24	621445	1	RING, snap
25	621334	1	RING, oil sealing, outer
26	621335	1	RING, oil sealing, inner
27	098923	1	COVER, bearing (Used prior to tractor #10001)
	643614	1	COVER, bearing (Effective with tractor #10001)
28	035190	6	CAPSCREW, 1/2"NC x 1-1/2"
	904208	6	LOCKWASHER, 1/2"

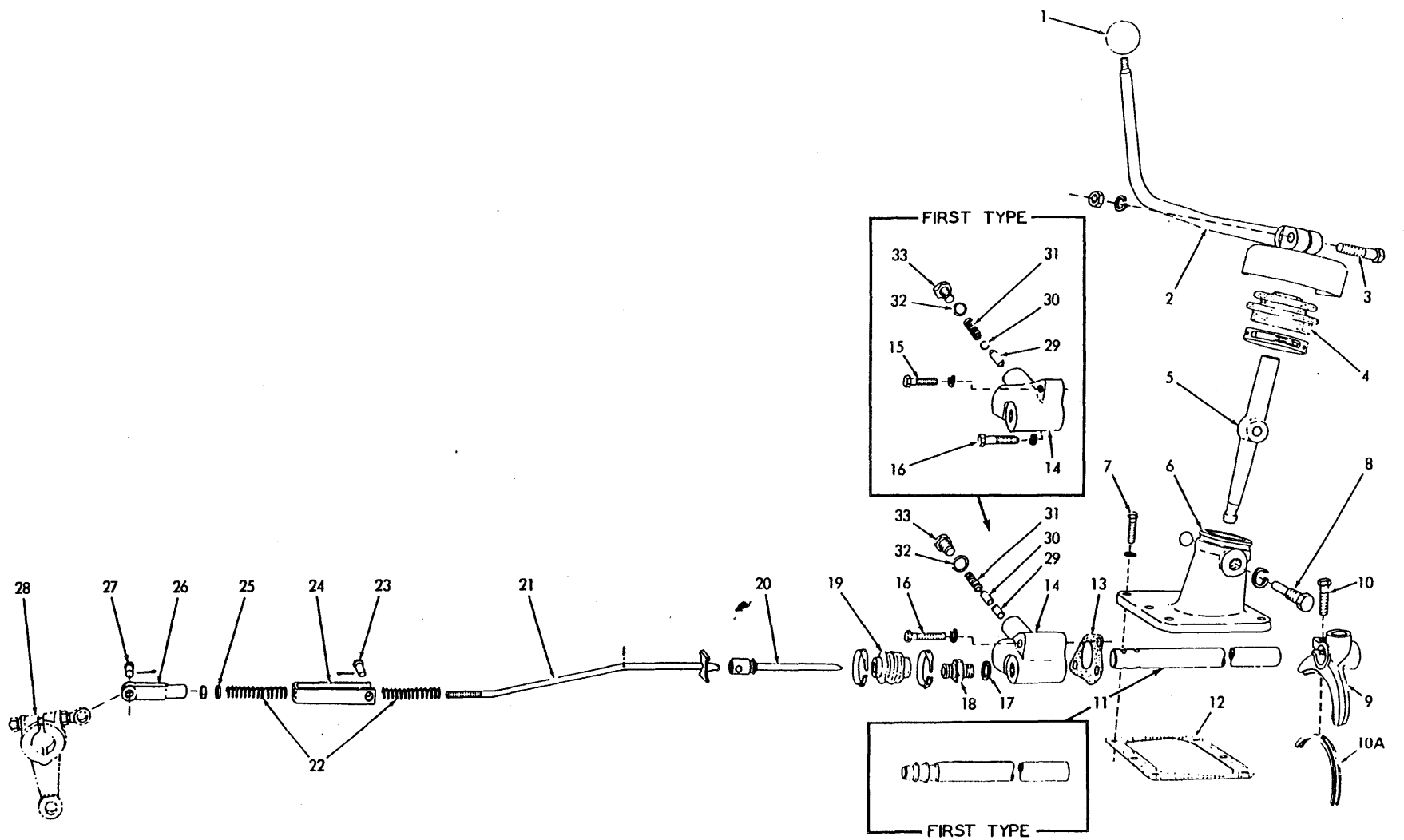

T-32077

FORWARD HIGH-LOW GEAR SHIFT (First type-Models HD11B, E, ES, S, F)

FORWARD HIGH-LOW GEAR SHIFT

USAGE: Model HD11B, E, ES, S, F tractors prior to serial No. 10001

* Tractors prior to serial No. 6473
** Tractors serial No. 6473 and up

ITEM	PART NO.	QTY. *	QTY. **	DESCRIPTION
1	091862	1	1	KNOB, extension lever
2	620406	1	1	LEVER, extension (All units except HD11F tractors prior to #6069)
	081381	1	-	LEVER, extension (HD11F tractors prior to #6069)
3	035068	1	1	CAPSCREW, 1/2"NF x 2-1/4"
	904208	1	1	LOCKWASHER, 1/2"
	911043	1	1	NUT, 1/2"NF
4	078742	1	1	BOOT, shift lever
	916995	1	1	CLAMP, hose
5	069339	1	1	LEVER, high-low shift
6	069477	1	1	HOUSING ASSEMBLY (Includes 1 PLUG 910002)
	910002	1	1	PLUG, expansion, 3/4" diam.
7	013058	6	6	CAPSCREW, 3/8"NC x 1-1/4"
	904206	6	6	LOCKWASHER, 3/8"
8	621331	1	1	SCREW, pivot, high-low shift lever
	904209	1	1	LOCKWASHER, 5/8"
9	080943	1	1	FORK, shifting (Original equipment. Can be replaced by FORK 646256, COLLAR 647908 and COLLAR 647321)
	646256	-	1	FORK, shifting (Service replacement transmissions)
10	035018	2	2	CAPSCREW, 1/2"NF x 1-1/2"
10A	647908	-	1	COLLAR, wear, shifting fork (Service replacement transmissions)
11	081270	1	-	SHAFT, shifting fork
	------	-	1	SHAFT, shifting fork (Used prior to tractor #8774. Order SHAFT 643045, GEAR 643486 and GEAR 643487)
	643045	-	1	SHAFT, shifting fork (Effective with tractor #8774)
12	057407	1	1	GASKET, housing to case
13	069468	1	1	GASKET, interlock housing
14	069404	1	-	HOUSING, gear shift interlock
	643046	-	1	HOUSING, gear shift interlock
15	013058	1	-	CAPSCREW, 3/8"NC x 1-1/4"
16	053616	1	2	CAPSCREW, 3/8"NC x 1-3/4"
	904206	2	2	LOCKWASHER, 3/8"
17	050267	1	1	WASHER, plunger sleeve (copper)
18	076846	1	-	SLEEVE, shifting lock plunger (15/32" hole)
	620975	-	1	SLEEVE, shifting lock plunger (13/32" hole)
19	080166	1	1	BOOT, locking plunger
	916897	2	2	CLAMP, hose, 1" diam.
20	------	1	1	PLUNGER, shifting lock (Used prior to tractor #8774. Order PLUNGER 643044 and PIN 643040)
	643044	-	1	PLUNGER, shifting lock (Effective with tractor #8774)

(Continued)

FORWARD HIGH-LOW GEAR SHIFT (Continued)

ITEM	PART NO.	QTY. *	QTY. **	DESCRIPTION
21	084401	1	1	ROD, shifting lock plunger (15-1/8" long)(Used prior to tractor #6911)
	630594	-	1	ROD, shifting lock plunger (15-3/4" long)(Effective with tractor #6911)
	916202	1	1	PIN, roll, 1/8" x 7/8"
	911041	1	1	NUT, 3/8"NF
22	035910	2	2	SPRING, plunger rod
23	082875	1	1	PIN, plunger rod yoke
	900942	1	1	PIN, cotter, 3/32" x 5/8"
24	078967	1	1	YOKE, plunger rod (4-1/4" long)
25	044973	1	1	WASHER, plunger rod
26	628736	1	1	YOKE, plunger rod (3/8"NF)
27	078810	1	1	PIN, yoke, 3/32" x 5/8"
	900942	1	1	PIN, cotter, 3/32" x 5/8"
28	------	1	1	LEVER ASSEMBLY (See ENGINE CLUTCH CONTROL)
29	905362	2	-	BALL, steel, 1/2" diam. (Used prior to tractor #4354. Order PIN 096809)
	096809	1	-	PIN, interlock (Used on tractors #4354 thru #6472)
	------	-	1	PIN, interlock (Used prior to tractor #8774. Order PIN 643040 and PLUNGER 643044)
	643040	-	1	PIN, interlock (Effective with tractor #8774)
30	905362	1	-	BALL, steel, 1/2" diam.
	641356	-	1	PLUNGER, shaft locating
31	096922	1	1	SPRING, shifting shaft interlock
32	049918	1	1	WASHER, interlock spring capscrew (copper)
33	035159	1	1	CAPSCREW, interlock spring (5/8"NF x 1")

FORWARD HIGH-LOW GEAR SHIFT

USAGE: Model HD11B,E,S tractors serial No. 10001 and up.

ITEM	PART NO.	QTY.	DESCRIPTION
1	090020	1	KNOB, shift lever
2	634543	1	LEVER, gear shift
3	633888	1	SHAFT, gear shift lever
	905123	2	KEY, #9 woodruff, 3/16" x 3/4"
	910255	1	WASHER, plain, SAE std., 3/4"
	900807	1	PIN, cotter, 1/8" x 1-1/4"
4	633889	1	BRACKET ASSEMBLY, gear shift lever (Includes item 6)
5	035167	3	CAPSCREW, 3/8"NF x 7/8"
	904206	3	LOCKWASHER, 3/8"
	911041	3	NUT, 3/8"NF
6	630795	2	BUSHING, gear shift lever bracket
7	632282	1	LEVER ASSEMBLY, intermediate (Includes item 9)
8	041981	1	CAPSCREW, 5/16"NF x 1-1/2"
	904205	1	LOCKWASHER, 5/16"
	913636	1	NUT, 5/16"NF
9	624584	1	BUSHING, intermediate lever
10	632175	1	SHIELD, intermediate lever
11	035979	2	CAPSCREW, 3/8"NF x 5/8"
	904206	2	LOCKWASHER, 3/8"
	911041	2	NUT, 3/8"NF
12	078810	2	PIN, control rod yoke
	900942	2	PIN, cotter, 3/32" x 5/8"
13	628736	2	YOKE, control rod
14	634790	1	ROD, control
	911041	2	NUT, 3/8"NF
15	634758	1	LEVER ASSEMBLY, lower (Includes item 17)
16	041981	1	CAPSCREW, 5/16"NF x 1-1/2"
	904205	1	LOCKWASHER, 5/16"
	913636	1	NUT, 5/16"NF
17	624584	1	BUSHING, lower lever
18	634965	1	END, rod, shaft supporting
	910847	2	NUT, jam, 3/4"NF
	900820	2	WASHER, plain, U.S. std, 3/4"
19	638842	1	BRACKET, shaft supporting, upper
20	036034	4	CAPSCREW, 3/8"NF x 1"
	904206	4	LOCKWASHER, 3/8"
	911041	4	NUT, 3/8"NF
21	638843	1	BRACKET, shaft supporting, lower
22	013059	4	CAPSCREW, 3/8"NC x 1-1/4"
	904206	4	LOCKWASHER, 3/8"

(Continued)

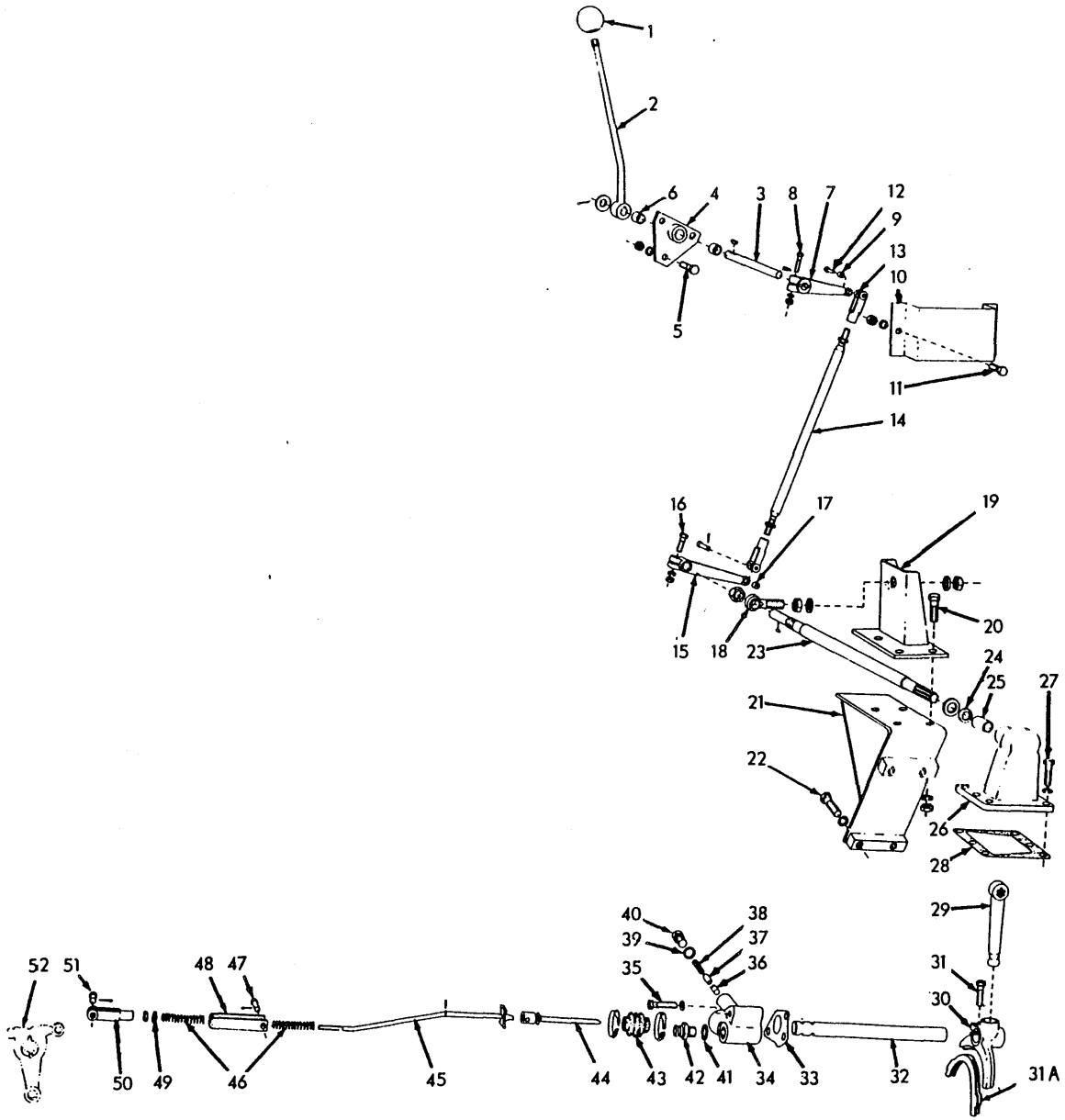

FORWARD HIGH-LOW GEAR SHIFT (Second type Models HD11B, E, S)

T-41909

FORWARD HIGH-LOW GEAR SHIFT (Continued)

ITEM	PART NO.	QTY.	DESCRIPTION
23	634852	1	SHAFT, shifting lever
	905123	1	KEY, #9 woodruff, 3/16" x 3/4"
	910255	1	WASHER, plain, SAE std., 3/4"
	910847	1	NUT, jam, 3/4"NF
24	052662	1	SEAL, oil, shifting lever shaft
25	606009	1	BUSHING, shifting lever housing
26	634980	1	HOUSING ASSEMBLY, shifting lever (Includes items 24 and 25)
27	013058	6	CAPSCREW, 3/8"NC x 1-1/4"
	904206	6	LOCKWASHER, 3/8"
28	057407	1	GASKET, shifting lever housing
29	633207	1	LEVER, shifting
30	080943	1	FORK, shifting (Used prior to tractor #11382. Can be replaced by FORK 646256, COLLAR 647908 and COLLAR 647321)
	646256	1	FORK, shifting (Effective with tractor #11382)
31	035018	2	CAPSCREW, 1/2"NF x 1-1/2"
31A	647908	1	COLLAR, wear, shifting fork (Effective with tractor #11382)
32	643045	1	SHAFT, shifting fork
33	069468	1	GASKET, interlock housing
34	643046	1	HOUSING, gear shift interlock
35	053616	2	CAPSCREW, 3/8"NC x 1-3/4"
	904206	2	LOCKWASHER, 3/8"
36	643040	1	PIN, interlock
37	641356	1	PLUNGER, shaft locating
38	096922	1	SPRING, shifting shaft interlock
39	049918	1	WASHER, interlock spring capscrew (copper)
40	035159	1	CAPSCREW, interlock spring (5/8"NF x 1")
41	050267	1	WASHER, plunger sleeve (copper)
42	620975	1	SLEEVE, shifting lock plunger (13/32" hole)
43	080166	1	BOOT, locking plunger
	916897	2	CLAMP, hose, 1" diam.
44	643044	1	PLUNGER, shifting lock
45	630594	1	ROD, shifting lock plunger
	916202	1	PIN, roll, 1/8" x 7/8"
	911041	1	NUT, 3/8"NF
46	035910	2	SPRING, plunger rod
47	082875	1	PIN, plunger rod yoke
	900942	1	PIN, cotter, 3/32" x 5/8"
48	078967	1	YOKE, plunger rod
49	044973	1	WASHER, plunger rod
50	628736	1	YOKE, plunger rod (3/8"NF)
51	078810	1	PIN, yoke, 3/32" x 5/8"
	900942	1	PIN, cotter, 3/32" x 5/8"
52	------	1	LEVER ASSEMBLY (See ENGINE CLUTCH CONTROL)

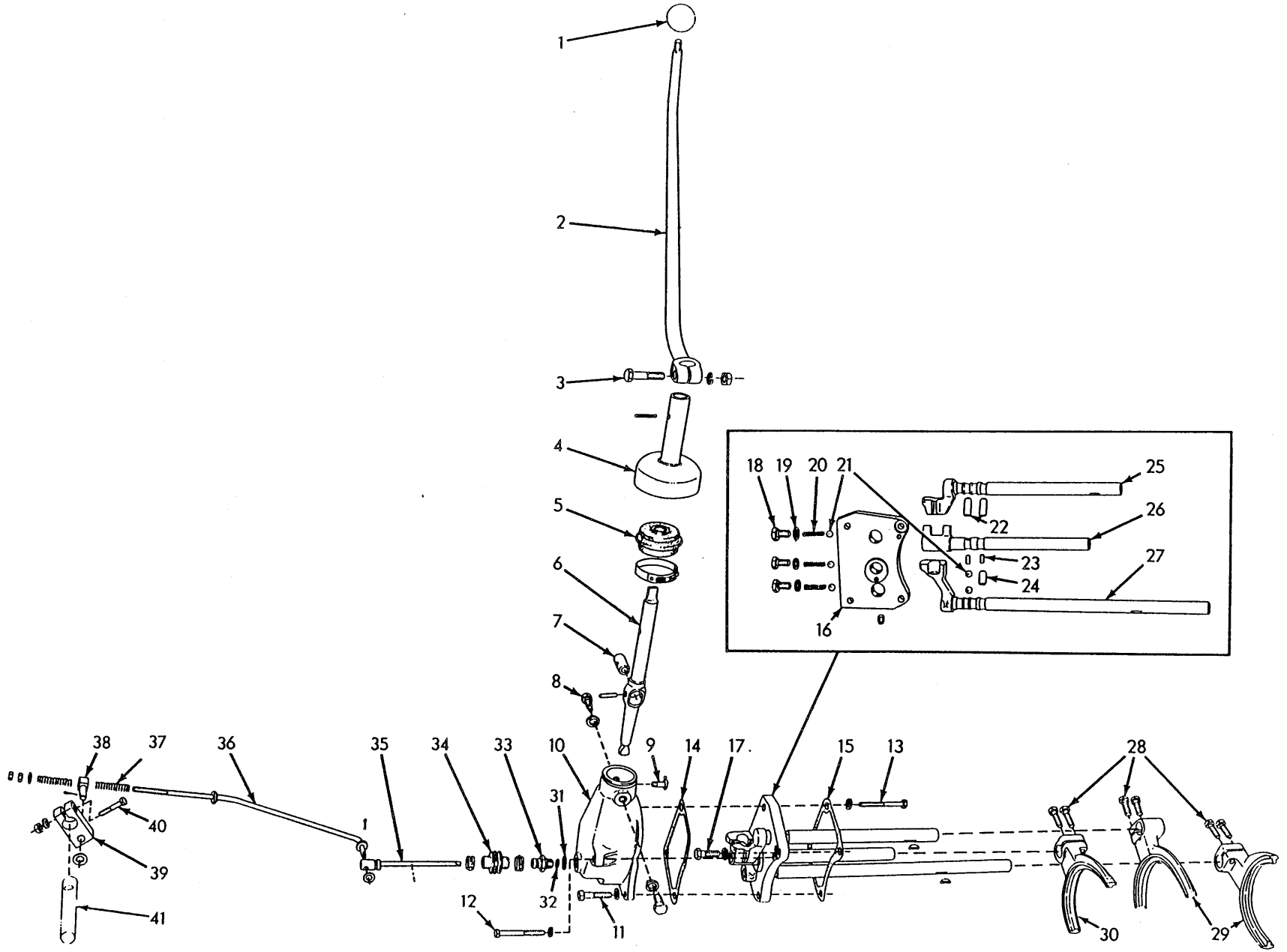

SPEED SELECTION GEAR SHIFT (First type. Models HD11B, E, ES, S, F)

T-13175

SPEED SELECTION GEAR SHIFT

USAGE: Models HD11B, E, ES, S, F, tractors prior to serial No. 6473

ITEM	PART NO.	QTY.	DESCRIPTION
1	091862	1	KNOB, extension lever
2	034285	1	LEVER, extension (Models HD11B, E, ES, S)
	038798	1	LEVER, extension (Model HD11F)
3	035068	1	CAPSCREW, 1/2"NF x 2-1/4"
	904208	1	LOCKWASHER, 1/2"
	911043	1	NUT, 1/2"NF
4	082638	1	GUARD, shift lever boot
	915989	1	PIN, roll, 3/16" x 1-3/8"
5	078742	1	BOOT, shift lever
	916995	1	CLAMP, hose
6	084525	1	LEVER, speed selection shift
	915500	1	PIN, roll, 3/8" x 1-3/4"
7	022080	1	SHAFT, shift lever pivot
8	021330	2	SCREW, set, shift lever pivot shaft
	904209	2	LOCKWASHER, 5/8"
9	051447	1	BREATHER ASSEMBLY, shift lever housing (Used on tractors #1710 thru #3997)
	901651	1	PLUG, pipe, 1/8"NPT (Effective with tractor #3998)
10	089829	1	HOUSING, shift lever (When required for tractors prior to #1710, excluding #1675, also order BREATHER ASSEMBLY 051447. If for tractors prior to #354 add 1 GASKET 085877, 1 CAPSCREW 035236, 1 CAPSCREW 053617 and 1 LOCKWASHER 904206)
11	035712	2	CAPSCREW, 1/2"NC x 2-1/4" } 3 used prior to
	904208	2	LOCKWASHER, 1/2" } tractor #354
12	053617	1	CAPSCREW, 3/8"NF x 4-3/4" } Effective with
	904206	1	LOCKWASHER, 3/8" } tractor #354
13	061631	1	CAPSCREW, 1/2"NC x 3-1/2"
	904208	1	LOCKWASHER, 1/2"
14	085878	1	GASKET, shift lever housing (Used prior to tractor #354)
	085877	1	GASKET, shift lever housing (Effective with tractor #354)
15	085878	1	GASKET, gear shift lock plate
16	033573	1	PLATE, gear shift lock
	901653	1	PLUG, pipe, 3/8"NPT
17	035236	1	CAPSCREW, 1/2"NC x 1-3/4" } Effective with
	904208	1	LOCKWASHER, 1/2" } tractor #354
18	035159	3	CAPSCREW, interlock spring (5/8"NF x 1")
19	049918	3	WASHER, interlock spring capscrew (copper)
20	096922	3	SPRING, shifting shaft interlock
21	905362	5	BALL, steel, 1/2" diam.

(Continued)

SPEED SELECTION GEAR SHIFT (Continued)

ITEM	PART NO.	QTY.	DESCRIPTION
22	905362	6	BALL, steel, 1/2" diam. (Used prior to tractor #4354. Order PIN 096808)
	096808	2	PIN, interlock (1-1/2" long) (Effective with tractor #4354)
23	055349	2	PIN, shifting shaft interlock (1 used prior to tractor #791)
24	905362	2	BALL, steel, 1/2" diam. (Used on tractors #791 thru #4354. Order PIN 096809)
	096809	1	PIN, interlock (1" long) (Effective with tractor #4354)
25	088932	1	SHAFT, shifting fork, upper
	911233	1	KEY, #11 woodruff, 3/16" x 7/8"
26	088930	1	SHAFT, shifting fork, center
27	088928	1	SHAFT, shifting fork, lower
	911233	1	KEY, #11 woodruff, 3/16" x 7/8"
28	035018	6	CAPSCREW, shifting forks (1/2"NF x 1-1/2")
29	080866	2	FORK, center and rear
30	080865	1	FORK, front
31	050267	1	WASHER, plunger sleeve (copper)
32	078402	1	WASHER, shifting lock plunger
33	076846	1	SLEEVE, shifting lock plunger
34	080166	1	BOOT, locking plunger
	916897	2	CLAMP, hose, 1" diam.
35	083598	1	PLUNGER, shifting lock
	916146	1	PIN, roll, 3/32" x 1/2"
36	084442	1	ROD, shifting lock plunger
	911115	2	WASHER, plain, SAE std., 3/8"
	900942	1	PIN, cotter, 3/32" x 5/8"
	911041	2	NUT, 3/8"NF
37	035910	2	SPRING, plunger rod
38	050265	1	SWIVEL, shifting lock plunger rod
	910244	1	WASHER, plain, SAE std., 1/2"
	910967	1	PIN, cotter, 1/8" x 7/8"
39	050566	1	LEVER, plunger rod operating
40	035068	1	CAPSCREW, 1/2"NF x 2-1/4"
	904208	1	LOCKWASHER, 1/2"
	911043	1	NUT, 1/2"NF
41	------	1	SHAFT, operating (See ENGINE CLUTCH CONTROL)

SPEED SELECTION GEAR SHIFT

USAGE: Model HD11B, E, ES, S, F tractors serial No. 6473 and up

* Used with dry master clutch only. Standard equipment on tractors prior to serial No. 6911; optional on tractors serial No. 6911 thru No. 10000

** Used with oil master clutch only. Standard equipment on tractors serial No. 6911 and up

ITEM	PART NO.	QTY. *	QTY. **	DESCRIPTION
1	091862	1	1	KNOB, extension lever
2	634285	1	1	LEVER, extension (Model HD11B, E, ES, S tractors prior to #10001)
	637769	-	1	LEVER, extension (Model HD11B, E, S tractors #10001 and up)
	638798	1	1	LEVER, extension (Model HD11F)
3	035068	1	1	CAPSCREW, 1/2"NF x 2-1/4"
	904208	1	1	LOCKWASHER, 1/2"
	911043	1	1	NUT, 1/2"NF
4	082638	1	1	GUARD, shift lever boot
	915989	1	1	PIN, roll, 3/16" x 1-3/8"
5	078742	1	1	BOOT, shift lever
	916995	1	1	CLAMP, hose
6	084525	1	1	LEVER, speed selection shift (Used prior to tractor #10001)
	634622	-	1	LEVER, speed selection shift (Effective with tractor #10001)
	915500	1	1	PIN, roll, 3/8" x 1-3/4"
7	622080	1	1	SHAFT, shift lever pivot
8	620313	1	1	SCREW, shift lever pivot, right
	904209	1	1	LOCKWASHER, 5/8"
9	621330	1	1	SCREW, shift lever pivot, left
	904209	1	1	LOCKWASHER, 5/8"
10	089829	1	1	HOUSING, shift lever
	901651	1	1	PLUG, pipe, 1/8"NPT
	919232	1	1	CAPSCREW, 1/2"NC x 4-3/4"
	904208	1	1	LOCKWASHER, 1/2"
11	035712	2	2	CAPSCREW, 1/2"NC x 2-1/4"
	904208	2	2	LOCKWASHER, 1/2"
12	621262	1	1	STUD, shift lever housing
	904206	1	1	LOCKWASHER, 3/8"
	911041	1	1	NUT, 3/8"NF
13	085877	1	1	GASKET, shift lever housing
14	620980	3	3	GASKET, shaft locking plates
15	085878	1	1	GASKET, shaft rear locking plate
16	620981	2	2	PIN, dowel, shaft locking plates
17	623902	1	1	PLATE, shaft locking, rear
18	035190	1	1	CAPSCREW, 1/2"NC x 1-1/2" (Used prior to tractor #10001)
	035236	-	1	CAPSCREW, 1/2"NC x 1-3/4" (Effective with tractor #10001)
	904208	1	1	LOCKWASHER, 1/2"
19	623903	1	1	PLATE, shifting shaft plunger
20	641356	3	3	PLUNGER, shifting shaft
21	096922	3	3	SPRING, shifting shaft interlock

(Continued)

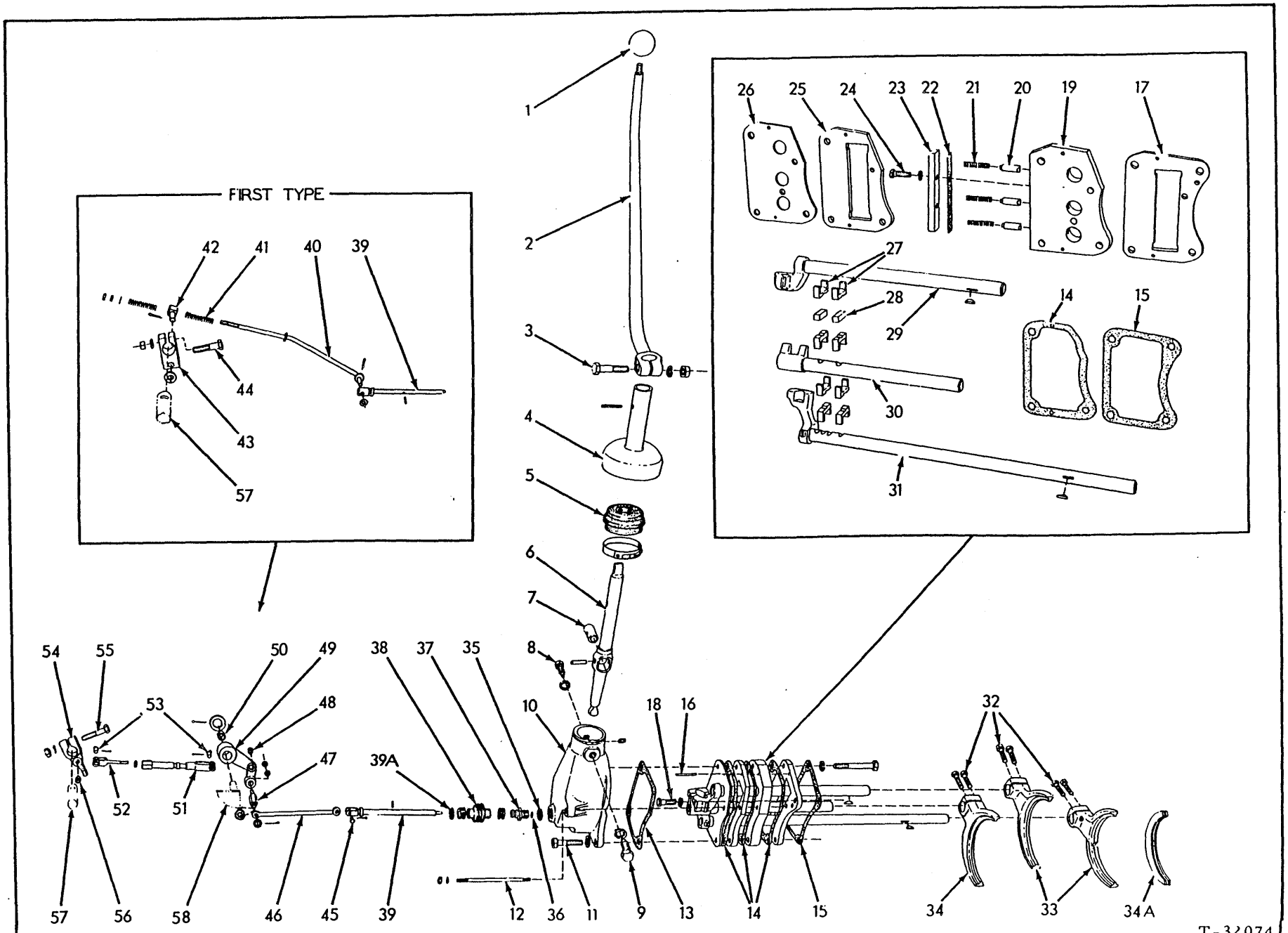

SPEED SELECTION GEAR SHIFT (Second type. Models HD11B, E, ES, S, F)

ITEM	PART NO.	QTY. *	QTY. **	DESCRIPTION
22	620974	1	1	GASKET, plunger retaining bar
23	620982	1	1	BAR, plunger retaining
24	013058	2	2	CAPSCREW, 3/8"NC x 1-1/4"
	904206	2	2	LOCKWASHER, 3/8"
25	623904	1	1	PLATE, shaft locking, front
26	623905	1	1	PLATE, shaft guiding
27	638953	8	8	DETENT, shifting shaft interlock
28	620964	2	2	BLOCK, spacing, interlock detent
29	620957	1	1	SHAFT, shifting fork, upper
	911233	1	1	KEY, #11 woodruff, 3/16" x 7/8"
30	620961	1	1	SHAFT, shifting fork, center
31	620147	1	1	SHAFT, shifting fork, lower
	911233	1	1	KEY, #11 woodruff, 3/16" x 7/8"
32	035018	6	6	CAPSCREW, shifting forks (1/2"NF x 1-1/2")
33	080866	2	2	FORK, center and rear (Used prior to tractor #11592)
	650697	-	2	FORK, center and rear (Effective with tractor #11592)
34	080865	1	1	FORK, front (Used prior to tractor #11592)
	650698	-	1	FORK, front (Effective with tractor #11592)
34A	650695	-	3	COLLAR, wear, shifting fork (Effective with tractor #11592)
35	050267	1	1	WASHER, plunger sleeve (copper)
36	078402	1	1	WASHER, shifting lock plunger
37	620975	1	1	SLEEVE, shifting lock plunger (Used prior to tractor #7689)
	635081	1	1	SLEEVE, shifting lock plunger (Used on tractors #7689 thru #11766)
	651580	-	1	SLEEVE, shifting lock plunger (Effective with tractor #11767)
38	080166	1	1	BOOT, locking plunger (Used prior to tractor #7689)
	635082	1	1	BOOT, locking plunger (Effective with tractor #7689)
	916897	2	2	CLAMP, hose, 1" diam.
39	------	1	-	PLUNGER, shifting lock (Used prior to tractor #7689. Order PLUNGER 638094, SLEEVE 651580 and SEAL 651725)
	638094	1	-	PLUNGER, shifting lock (Effective with tractor #7689)
	-----	-	1	PLUNGER, shifting lock (Used prior to tractor #7689. Order PLUNGER 644324, SLEEVE 651580 and SEAL 651725)
	644324	-	1	PLUNGER, shifting lock (Effective with tractor #7689)
	916146	1	1	PIN, roll, 3/32" x 1/2"
39A	923560	1	1	O-RING, shifting lock plunger (Used on tractors #7689 thru #11766)
	651725	-	1	SEAL, shifting lock plunger (Effective with tractor #11767)

(Continued)

ITEM	PART NO.	QTY. *	QTY. **	DESCRIPTION
40	620145	1	-	ROD, shifting lock plunger
	911115	2	-	WASHER, plain, SAE std., 3/8"
	900942	1	-	PIN, cotter, 3/32" x 5/8"
	911041	2	-	NUT, 3/8"NF
41	035910	2	-	SPRING, plunger rod
42	050265	1	-	SWIVEL, shifting lock plunger rod
	910244	1	-	WASHER, plain, SAE std., 1/2"
	910967	1	-	PIN, cotter, 1/8" x 7/8"
43	050566	1	-	LEVER, plunger rod operating
44	035068	1	-	CAPSCREW, 1/2"NF x 2-1/4"
	904208	1	-	LOCKWASHER, 1/2"
	911043	1	-	NUT, 1/2"NF
45	627451	-	1	PIN, shifting lock plunger
	900942	-	1	PIN, cotter, 3/32" x 5/8"
46	630499	-	1	ROD, shifting lock plunger
47	630485	-	1	STUD, plunger rod
	911048	-	2	NUT, jam, 3/8"NF
	911115	-	2	WASHER, plain, SAE std., 3/8"
	900942	-	1	PIN, cotter, 3/32" x 5/8"
48	624584	-	1	BUSHING, intermediate lever (small)
49	632774	-	1	LEVER ASSEMBLY, intermediate (Includes item 48) (If for tractors prior to #7119 also order 2 BEARING 052643 and 2 SEAL 052662)
	910255	-	1	WASHER, plain, SAE std., 3/4"
	910302	-	1	PIN, cotter, 5/32" x 1-1/4"
	623164	-	2	BUSHING, intermediate lever (large) (Used prior to tractor #7119)
50	052643	-	2	BEARING, needle, intermediate lever (Effective with tractor #7119)
	052662	-	2	SEAL, dirt, intermediate lever bearing (Effective with tractor #7119)
51	630486	-	1	OVER-TRAVEL ASSEMBLY (Serviced only as a unit)
52	628748	-	1	END, yoke
	911048	-	1	NUT, jam, 3/8"NF
53	078810	-	2	PIN, yoke end
	900802	-	2	PIN, cotter, 3/32" x 1"
54	632765	-	1	LEVER ASSEMBLY, plunger rod operating (Includes item 56)
55	035068	-	1	CAPSCREW, 1/2"NF x 2-1/4"
	904208	-	1	LOCKWASHER, 1/2"
	911043	-	1	NUT, 1/2"NF
56	624584	-	1	BUSHING, operating lever
57	------	1	1	SHAFT, operating (See ENGINE CLUTCH CONTROL)
58	------	-	1	BRACKET (See ENGINE CLUTCH BRAKE)

GEAR SHIFT

USAGE: Models HD11EC, FC

ITEM	PART NO.	QTY.	DESCRIPTION	
			NOTE: See FLOOR for shift lever guide plate	
1	091862	1	KNOB, extension lever	
2	634285	1	LEVER, extension (Model HD11EC)	Used prior to tractor #10001
	638798	1	LEVER, extension (Model HD11FC)	
	637769	1	LEVER, extension (Effective with tractor #10001)	
3	035892	1	CAPSCREW, 1/2"NF x 2-1/2"	
	904208	1	LOCKWASHER, 1/2"	
	911043	1	NUT, 1/2"NF	
4	082638	1	GUARD, shift lever boot	
	915989	1	PIN, roll, 3/16" x 1-3/8"	
5	078742	1	BOOT, shift lever	
	916995	1	CLAMP, hose, 3" I. D.	
6	084525	1	LEVER, shift (Used prior to tractor #10001)	
	634622	1	LEVER, shift (Effective with tractor #10001)	
7	622080	1	SHAFT, shift lever pivot	
8	915500	1	PIN, roll (3/8" x 1-3/4")	
9	620313	1	SCREW, shift lever pivot shaft, outer	
	904209	1	LOCKWASHER, 5/8"	
10	621330	1	SCREW, shift lever pivot shaft, inner	
	904209	1	LOCKWASHER, 5/8"	
11	089829	1	HOUSING, shift lever	
	901651	1	PLUG, pipe, 1/8"NPT	
	919232	1	CAPSCREW, 1/2"NC x 4-3/4"	
12	045253	2	CAPSCREW, 1/2"NC x 3-3/4"	
	904208	3	LOCKWASHER, 1/2"	
13	621262	1	STUD, shift lever housing	
	911041	1	NUT, 3/8"NF	
	904206	1	LOCKWASHER, 3/8"	
14	085877	1	GASKET, shift lever housing	
15	085878	1	GASKET, shaft rear locking plate	
16	620980	3	GASKET, shaft locking plates	
17	620981	2	PIN, dowel, shaft locking plates	
18	623902	1	PLATE, shaft locking, rear	
19	035190	1	CAPSCREW, 1/2"NC x 1-1/2"	
	904208	1	LOCKWASHER, 1/2"	
20	623903	1	PLATE, shifting shaft plunger	
21	641356	3	PLUNGER, shifting shaft interlock	
22	096922	3	SPRING, shifting shaft interlock	
23	620974	1	GASKET, plunger retaining bar	

(Continued)

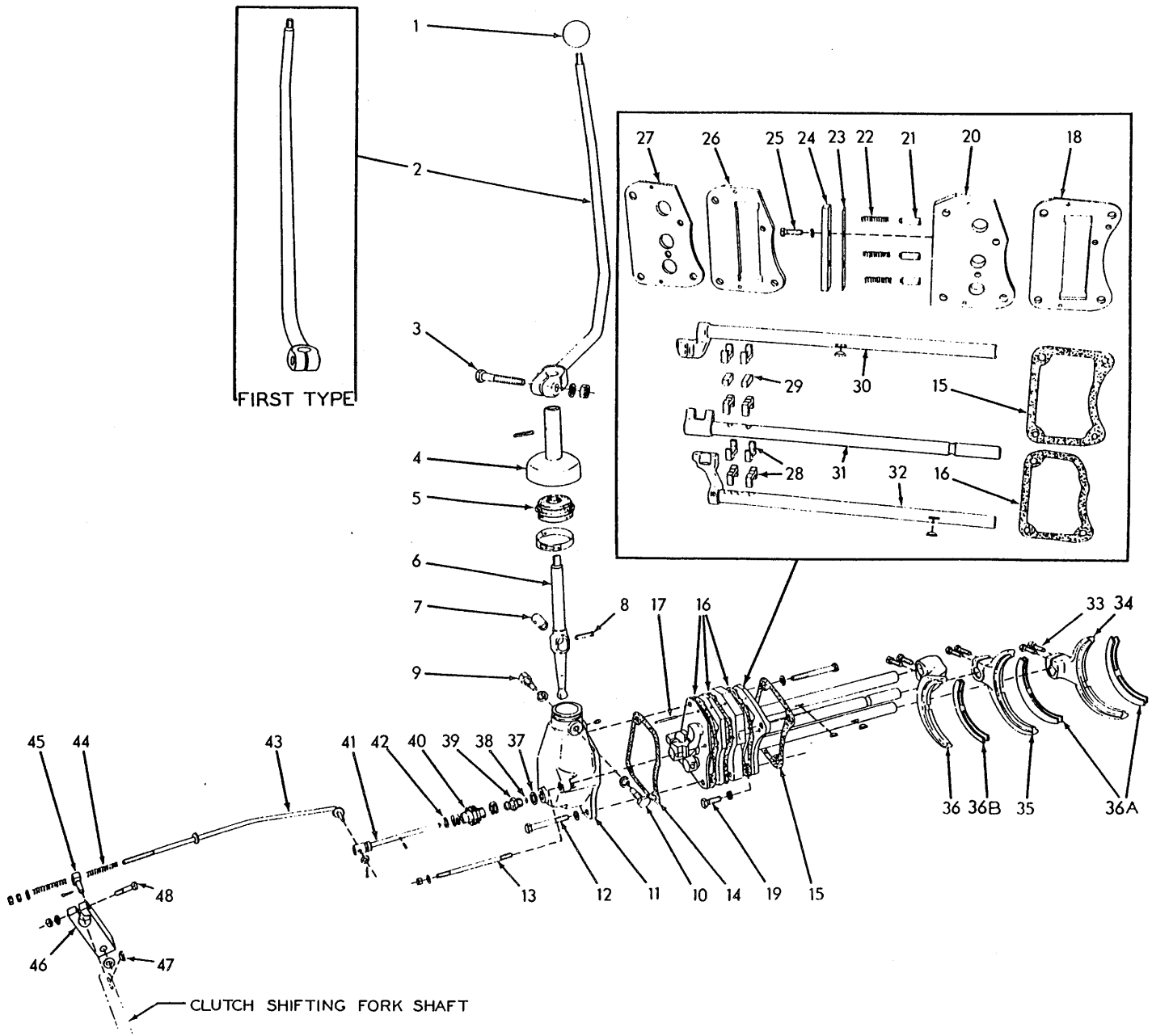

GEAR SHIFT (Models HD11EC, FC)

T-41912

ITEM	PART NO.	QTY.	DESCRIPTION
24	620982	1	BAR, plunger retaining
25	013058	2	CAPSCREW, 3/8"NC x 1-1/4"
	904206	2	LOCKWASHER, 3/8"
26	623904	1	PLATE, shaft locking, front
27	623905	1	PLATE, shaft guiding
28	638953	8	DETENT, shifting shaft interlock
29	620964	2	BLOCK, spacing, interlock detent
30	620240	1	SHAFT, shifting fork, upper
	911233	1	KEY, #11 woodruff, 3/16" x 7/8"
31	620238	1	SHAFT, shifting fork, center
32	620242	1	SHAFT, shifting fork, lower
	911233	1	KEY, #11 woodruff, 3/16" x 7/8"
33	035018	6	CAPSCREW, shifting fork (1/2"NF x 1-1/2")
34	080867	1	FORK, gear shifting, rear (Original equipment)
	650743	1	FORK, gear shifting, rear (Service replacement transmissions)
35	080882	1	FORK, gear shifting, center (Original equipment)
	650742	1	FORK, gear shifting, center (Service replacement transmissions)
36	080939	1	FORK, gear shifting, front (Original equipment)
	650741	1	FORK, gear shifting, front (Service replacement transmissions)
36A	650744	2	COLLAR, wear, rear and center shifting forks } Service replacement transmissions only
36B	647908	1	COLLAR, wear, front shifting fork } Service replacement transmissions only
37	050267	1	WASHER, plunger sleeve (copper)
38	078402	1	WASHER, shifting lock plunger
39	620975	1	SLEEVE, shifting lock plunger (Used prior to tractor #7808)
	635081	1	SLEEVE, shifting lock plunger (Effective with tractor #7808)
	651580	1	SLEEVE, shifting lock plunger (Not original equipment. Furnished in service replacement transmissions only)
40	080166	1	BOOT, locking plunger (Used prior to tractor #7808)
	635082	1	BOOT, locking plunger (Effective with tractor #7808)
	916897	2	CLAMP, hose, 1" diam.
41	------	1	PLUNGER, shifting lock (Used prior to tractor #7808. Order PLUNGER 638094, SLEEVE 651580 and SEAL 651725)
	638094	1	PLUNGER, shifting lock (Effective with tractor #7808)
	916146	1	PIN, roll, 3/32" x 1/2"
42	923560	1	O-RING, shifting lock plunger (Effective with tractor #7808)
	651725	1	SEAL, shifting lock plunger (Not original equipment. Furnished in service replacement transmissions only)
43	620939	1	ROD, shifting lock
	911115	2	WASHER, plain, SAE std., 3/8"
	900942	1	PIN, cotter, 3/32" x 5/8"
	911041	2	NUT, 3/8"NF
44	035910	2	SPRING, plunger rod
45	050265	1	SWIVEL, shifting lock plunger rod
	910244	1	WASHER, plain, SAE std., 1/2"
	900805	1	PIN, cotter, 1/8" x 3/4"
46	620937	1	LEVER, shifting lock
47	036997	1	KEY, #13 woodruff, 3/16" x 1", hardened
48	046419	1	CAPSCREW, 3/8"NF x 2"
	904206	1	LOCKWASHER, 3/8"
	911041	1	NUT, 3/8"NF

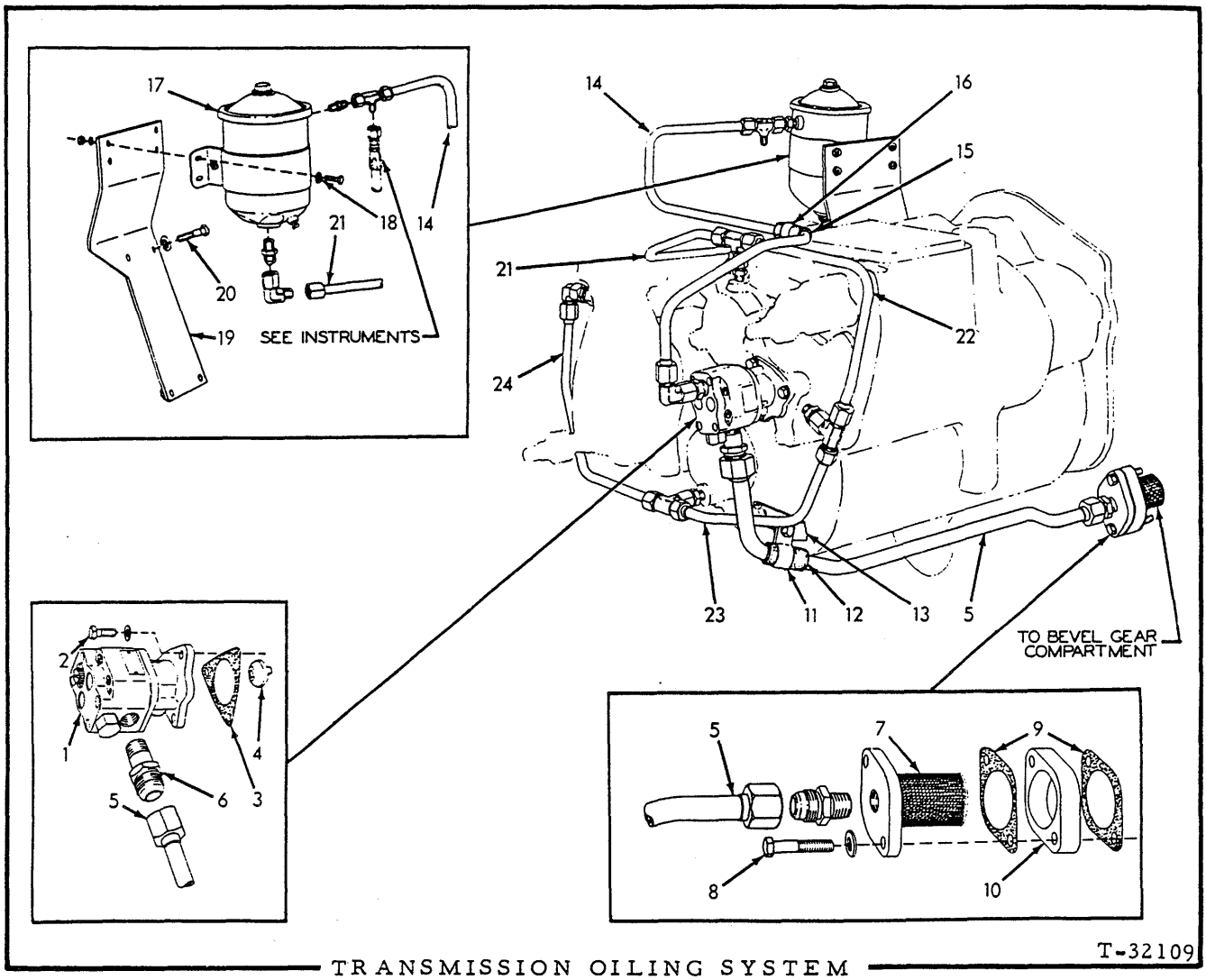

TRANSMISSION OILING SYSTEM
(Wet Sump)

USAGE: Model HD11B, E, ES, S, F tractors serial No. 6473 thru No. 10000. Also see page 301 for dry sump conversion

ITEM	PART NO.	QTY.	DESCRIPTION
1	623316	1	PUMP ASSEMBLY (See page 304 for parts)
2	054130	3	CAPSCREW, 5/16"NC x 7/8"
	917330	3	WASHER, plain, copper, 5/16"
3	4376605	1	GASKET, oil pump
4	099005	1	COUPLING, pump drive
5	623407	1	TUBE ASSEMBLY, suction (Includes nuts)
	919615	1	CONNECTOR, flare type, 3/4" tube, 1/2"NPT male
6	623310	1	CONNECTOR, suction tube
7	098940	1	SCREEN, oil
8	046419	2	CAPSCREW, 3/8"NF x 1-1/4"
	917264	2	WASHER, plain, copper, 3/8"
9	098941	2	GASKET, oil screen

(Continued)

ITEM	PART NO.	QTY.	DESCRIPTION
10	099069	1	SPACER, oil screen
11	054034	1	CLIP, suction tube
	036032	1	CAPSCREW, 3/8"NF x 3/4"
	904206	1	LOCKWASHER, 3/8"
	911041	1	NUT, 3/8"NF
12	097611	1	BOOT, suction tube (rubber)
13	623410	1	ANGLE, suction tube supporting
14	623405	1	TUBE ASSEMBLY, pump to filter (Includes nuts) (Used prior to tractor #6732)
	629647	1	TUBE ASSEMBLY, pump to filter (Includes nuts) (Effective with tractor #6732)
	919128	1	CONNECTOR, flare type, 1/2" tube, 1/2"NPT male
	921279	1	ELBOW, flare type, swivel nut, 1/2" tube
	921298	1	TEE, flare type, swivel nut, 1/2" tube
	919063	1	CONNECTOR, flare type, 1/2" tube, 3/8"NPT male
15	093752	1	BOOT, tube protecting (rubber)
16	097534	1	CLIP, tube supporting
17	623609	1	FILTER ASSEMBLY (See page 303 for parts)
	912327	4	CAPSCREW, 1/4"NC x 7/8"
18	092635	4	WASHER, plain
	904204	4	LOCKWASHER, 1/4"
	911024	4	NUT, 1/4"NC
19	621222	1	BRACKET, filter mounting (Used prior to tractor #6732)
	629645	1	BRACKET, filter mounting (Effective with tractor #6732)
20	053616	4	CAPSCREW, 3/8"NC x 1-3/4"
	904206	4	LOCKWASHER, 3/8"
21	623628	1	TUBE ASSEMBLY, filter to top shaft (Includes nuts) (Used prior to tractor #6732)
	629646	1	TUBE ASSEMBLY, filter to top shaft (Includes nuts) (Effective with tractor #6732)
	624826	1	CONNECTOR, flare type, restricted, 1/2" tube, 3/8"NPT male
	921279	1	ELBOW, flare type, swivel nut, 1/2" tube
	921276	1	TEE, flare type, swivel nut, 1/2" tube
	623188	1	CONNECTOR, flare type, restricted, 1/2" tube 1/4"NPT male
22	623625	1	TUBE ASSEMBLY, top shaft to intermediate shaft (Includes nuts)
	921276	1	TEE, flare type, swivel nut, 1/2" tube
	919205	1	CONNECTOR, flare type, 1/2" tube, 1/4"NPT male
23	623626	1	TUBE ASSEMBLY, intermediate shaft to pinion shaft (Includes nuts)
	921276	1	TEE, flare type, swivel nut, 1/2" tube
	919205	1	CONNECTOR, flare type, 1/2" tube, 1/4"NPT male
24	623605	1	TUBE ASSEMBLY, pinion shaft to shift housing (Includes nuts)
	921279	1	ELBOW, flare type, swivel nut, 1/2" tube
	623188	1	CONNECTOR, flare type, restricted, 1/2" tube, 1/4"NPT male

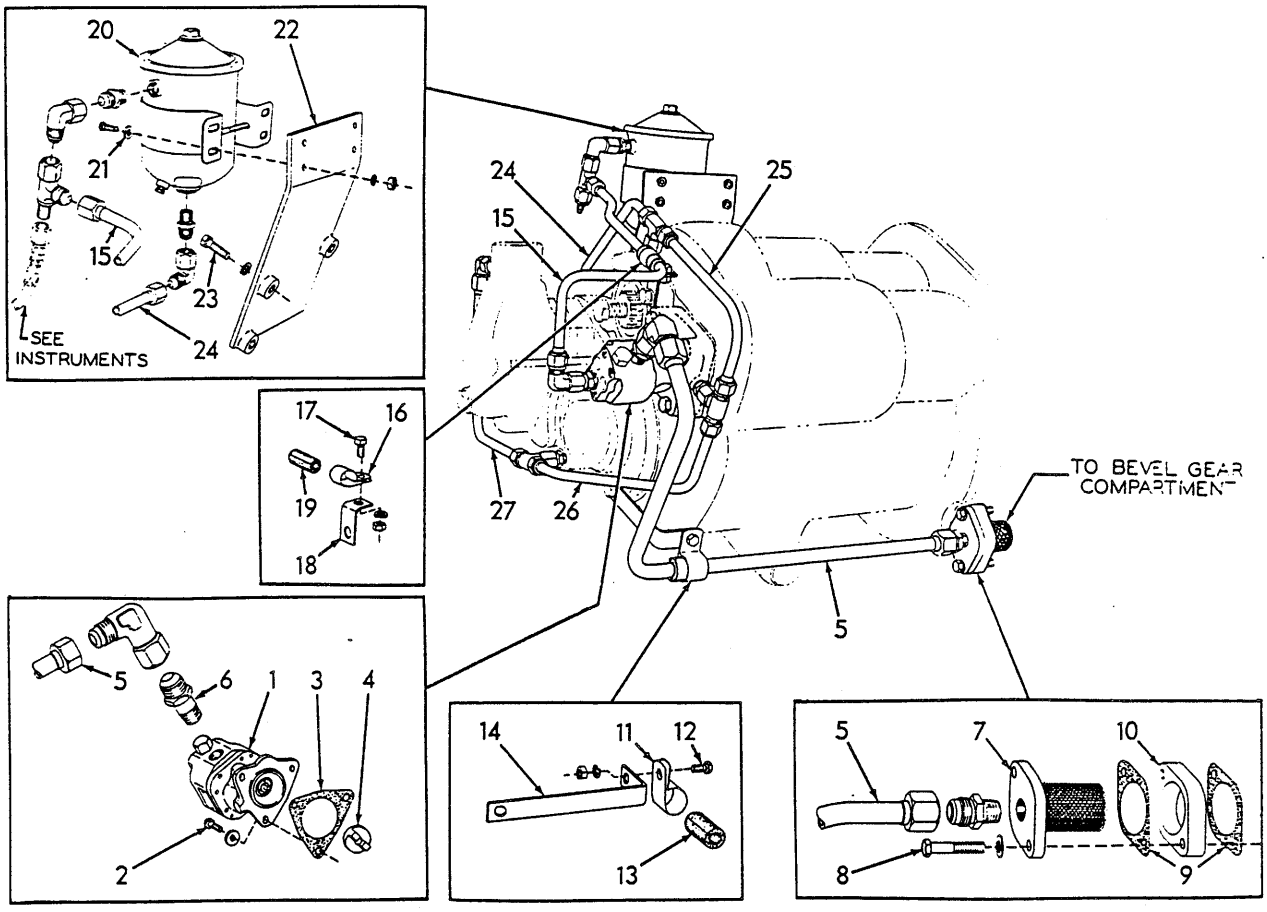

T-32110

TRANSMISSION OILING SYSTEM
(Wet Sump)

USAGE: Model HD11EC, FC tractors prior to serial No. 10001. Also see page 301 for dry sump conversion

ITEM	PART NO.	QTY.	DESCRIPTION
1	623316	1	PUMP ASSEMBLY (See page 304 for parts)
2	054130	3	CAPSCREW, 5/16"NC x 7/8"
	917330	3	WASHER, plain, copper, 5/16"
3	4376605	1	GASKET, oil pump
4	099005	1	COUPLING, pump drive
5	623884	1	TUBE ASSEMBLY, suction (Includes nuts)
	919615	1	CONNECTOR, flare type, 3/4" tube, 1/2"NPT male
	919624	1	ELBOW, flare type, swivel nut, 3/4" tube
6	623310	1	CONNECTOR, suction tube (pump end)

(Continued)

ITEM	PART NO.	QTY.	DESCRIPTION
7	098940	1	SCREEN, oil
8	046419	2	CAPSCREW, 3/8"NF x 1-1/4"
	917264	2	WASHER, plain, copper, 3/8"
9	098941	2	GASKET, oil screen
10	099069	1	SPACER, oil screen
11	054034	1	CLIP, suction tube
12	036032	1	CAPSCREW, 3/8"NF x 3/4"
	904206	1	LOCKWASHER, 3/8"
	911041	1	NUT, 3/8"NF
13	097611	1	BOOT, protecting, suction tube (rubber)
14	623883	1	ANGLE, suction tube supporting
15	630545	1	TUBE ASSEMBLY, pump to filter (Includes nuts)
	921279	2	ELBOW, flare type, swivel nut, 1/2" tube
	921298	1	TEE, flare type, swivel nut, 1/2" tube
	919128	1	CONNECTOR, flare type, 1/2" tube, 1/2"NPT male
	919063	1	CONNECTOR, flare type, 1/2" tube, 3/8"NPT male
16	097534	1	CLIP, tube supporting
17	036032	1	CAPSCREW, 3/8"NF x 3/4"
	904206	1	LOCKWASHER, 3/8"
	911041	1	NUT, 3/8"NF
18	623309	1	ANGLE, tube supporting clip
19	093752	1	BOOT, tube protecting (rubber)
20	623609	1	FILTER ASSEMBLY (See page 303 for parts)
	912327	4	CAPSCREW, 1/4"NC x 7/8"
21	092635	4	WASHER, plain
	904204	4	LOCKWASHER, 1/4"
	911024	4	NUT, 1/4"NC
22	630543	1	PLATE, filter mounting
23	053616	3	CAPSCREW, 3/8"NC x 1-3/4"
	904206	3	LOCKWASHER, 3/8"
24	630544	1	TUBE ASSEMBLY, filter to top shaft (Includes nuts)
	921279	1	ELBOW, flare type, swivel nut, 1/2" tube
	919063	1	CONNECTOR, flare type, 1/2" tube, 3/8"NPT male
	921276	1	TEE, flare type, swivel nut, 1/2" tube
	623188	1	CONNECTOR, flare type, restricted, 1/2" tube, 1/4"NPT male
25	623599	1	TUBE ASSEMBLY, top shaft to reverse shaft (Includes nuts)
	921276	1	TEE, flare type, swivel nut, 1/2" tube
	623188	1	CONNECTOR, flare type, restricted, 1/2" tube, 1/4"NPT male
26	623601	1	TUBE ASSEMBLY, reverse shaft to pinion shaft (Includes nuts)
	921276	1	TEE, flare type, swivel nut, 1/2" tube
	919205	1	CONNECTOR, flare type, 1/2" tube, 1/4"NPT male
27	623642	1	TUBE ASSEMBLY, pinion shaft to shift housing (Includes nuts)
	921279	1	ELBOW, flare type, swivel nut, 1/2" tube
	623188	1	CONNECTOR, flare type, restricted, 1/2" tube, 1/4"NPT male

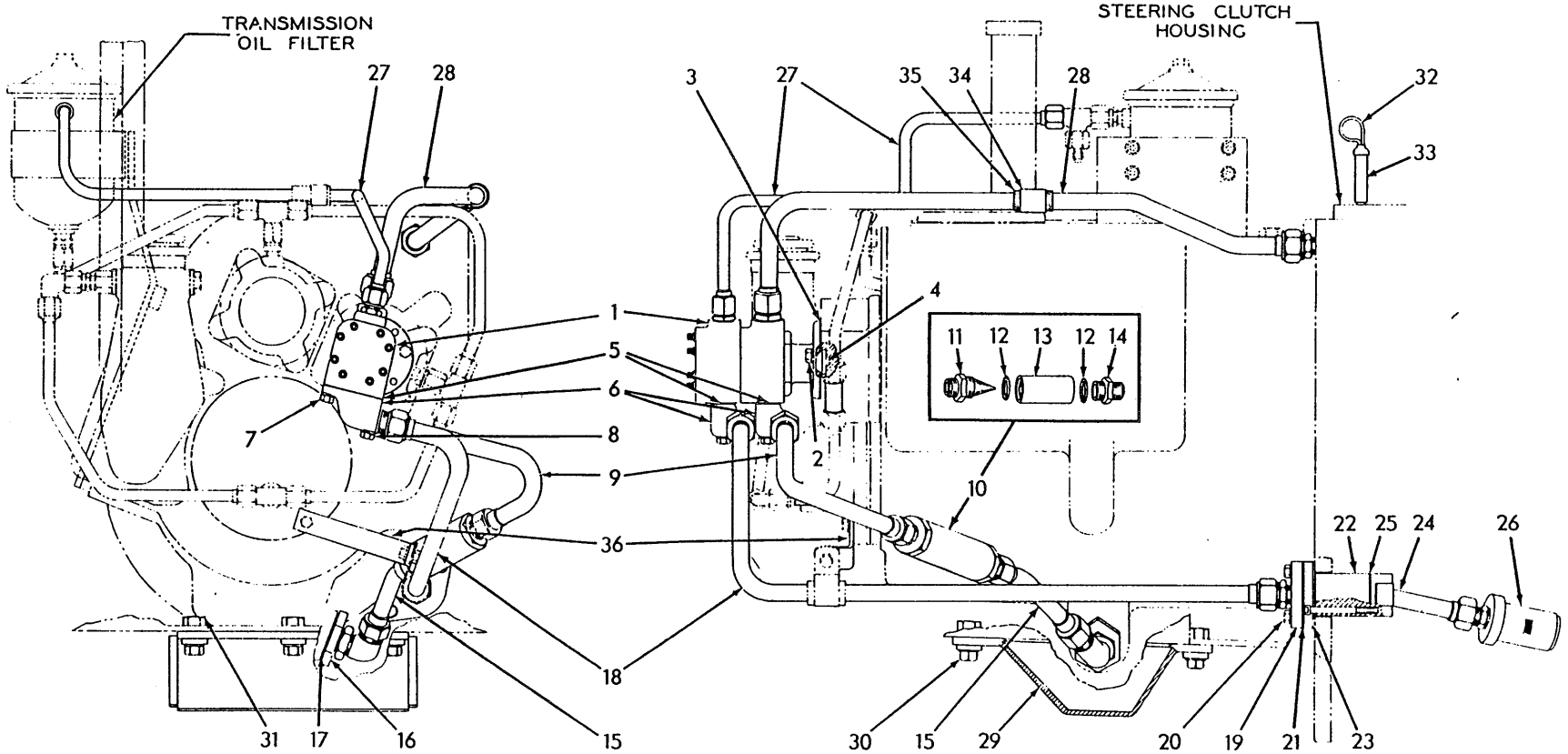

TRANSMISSION DRY SUMP CONVERSION

T-70819

TRANSMISSION DRY SUMP CONVERSION

USAGE: Tractors prior to serial No. 10001. Provides scavanged sump for transmission case using bevel gear compartment as main sump.

* Models HD11B, E, ES, S, F (Serial Nos. 6473 and up)
** Models HD11EC, FC (All units)

ITEM	PART NO.	QTY. *	QTY. **	DESCRIPTION
1	643631	1	1	PUMP ASSEMBLY (See page 305 for parts)
2	054130	3	3	CAPSCREW, 5/16"NC x 7/8"
	917330	3	3	WASHER, copper
3	4376605	1	1	GASKET, oil pump
4	099005	1	1	COUPLING, pump drive
5	642548	2	2	GASKET, suction line elbow
6	642350	2	2	ELBOW, suction line
7	045312	2	2	CAPSCREW, 5/16"NC x 3/4"
8	068320	2	2	CAPSCREW, 5/16"NC x 2"
	904205	4	4	LOCKWASHER, 5/16"
9	642469	1	-	TUBE ASSEMBLY, suction line, pump to transmission sump, upper section (Includes nuts)
	642454	-	1	TUBE ASSEMBLY, suction line, pump to transmission sump, upper section (Includes nuts)
10	642427	1	1	SCREEN ASSEMBLY, suction line (Consists of items 11 thru 14)
11	642040	1	1	SCREEN, suction line
12	921214	2	2	O-RING, suction line screen
13	642404	1	1	TUBE, suction line screen
14	922997	1	1	CONNECTOR, suction line screen (Includes O-RING 921214)
15	642388	1	1	TUBE ASSEMBLY, suction line, pump to transmission sump, lower section (Includes nuts)
	921203	1	1	ELBOW, flare type, 90°, adjustable, 3/4" tube, 1-1/16"-12 male end (Includes washer, nut and O-RING 921206)
16	642365	1	1	ADAPTER, suction line (at sump)
17	035249	1	1	GASKET, suction line adapter
18	642510	1	-	TUBE ASSEMBLY, suction line, pump to bevel gear compartment (Includes nuts)
	642511	-	1	TUBE ASSEMBLY, suction line, pump to bevel gear compartment (Includes nuts)
	919342	1	1	CONNECTOR, flare type, 3/4" tube, 3/4"NPT male
19	641967	1	1	PLATE, retaining, sump oil screen
20	035336	2	2	CAPSCREW, 3/8"NF x 1-3/4"
	917264	2	2	WASHER, copper
21	098941	1	1	GASKET, screen retaining plate

(Continued)

TRANSMISSION DRY SUMP CONVERSION (Continued)

ITEM	PART NO.	QTY. *	QTY. **	DESCRIPTION
22	642789	1	1	SLEEVE, supporting, sump oil screen
23	642790	12	12	SHIM, sump oil screen sleeve (Use as required)
24	641902	1	-	TUBE, sump oil screen
	641911	-	1	TUBE, sump oil screen
	918324	2	2	CAPSCREW, hex-socket-hd., 1/4"NC x 3"
25	643734	1	1	GASKET, oil screen tube
26	641899	1	1	SCREEN, oil, bevel gear compartment
	919342	1	1	CONNECTOR, flare type, 3/4" tube, 3/4"NPT male
27	642509	1	-	TUBE ASSEMBLY, discharge, pump to filter (Includes nuts)
	642455	-	1	TUBE ASSEMBLY, discharge, pump to filter (Includes nuts)
	921409	1	1	CONNECTOR, flare type, 1/2" tube, 3/4"NF male end (Includes O-RING 921349)
28	642507	1	-	TUBE ASSEMBLY, discharge, pump to bevel gear compartment (Includes nuts)
	642522	-	1	TUBE ASSEMBLY, discharge, pump to bevel gear compartment (Includes nuts)
	922935	1	1	CONNECTOR, flare type, 3/4" tube, 3/4"NF male end (Includes O-RING 921349)
	919342	1	1	CONNECTOR, flare type, 3/4" tube, 3/4"NPT male
29	638332	1	1	GUARD, transmission sump
30	035236	6	6	CAPSCREW, 1/2"NC x 1-3/4"
	904208	6	6	LOCKWASHER, 1/2"
	064531	6	6	WASHER, plain
31	648180	6	6	BLOCK, tapped (Requires welding to transmission bottom shield)
32	643759	1	1	ROD, oil level gauge, bevel gear compartment
33	643747	1	1	PIPE, oil level gauge rod
34	054034	1	-	CLIP, discharge tube
35	097611	1	-	BOOT, discharge tube (rubber)
36	642413	1	-	ANGLE, suction line supporting

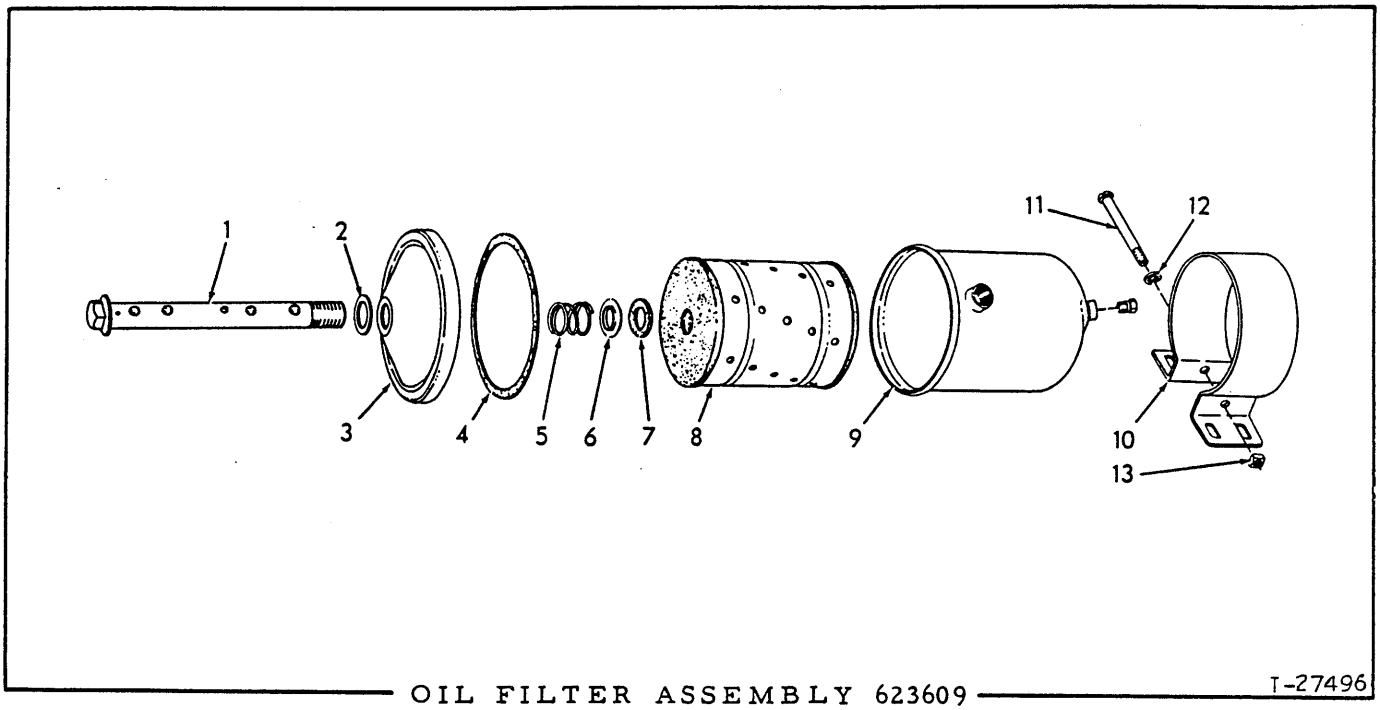

OIL FILTER ASSEMBLY 623609

USAGE: See pages 296, 298, 307 and 309

ITEM	PART NO.	QTY.	DESCRIPTION
1	623608	1	BOLT ASSEMBLY (Includes check valve. Serviced only as a unit)
2	4049469	1	GASKET, cover bolt
3	4049471	1	COVER, filter body
4	4049470	1	GASKET, filter body cover
5	4048793	1	SPRING, cartridge retaining
6	4048794	1	WASHER, cartridge gasket
7	4041209	1	GASKET, cartridge
8	4372517	1	CARTRIDGE ASSEMBLY (Includes items 2, 4 and 7)
9	4049472	1	BODY, oil filter
	917426	1	PLUG, pipe, hex-hd., 1/8"NPT
10	4506165	1	CLAMP, mounting
11	4371974	1	BOLT, mounting clamp
12	4371973	1	LOCKWASHER
13	4371795	1	NUT

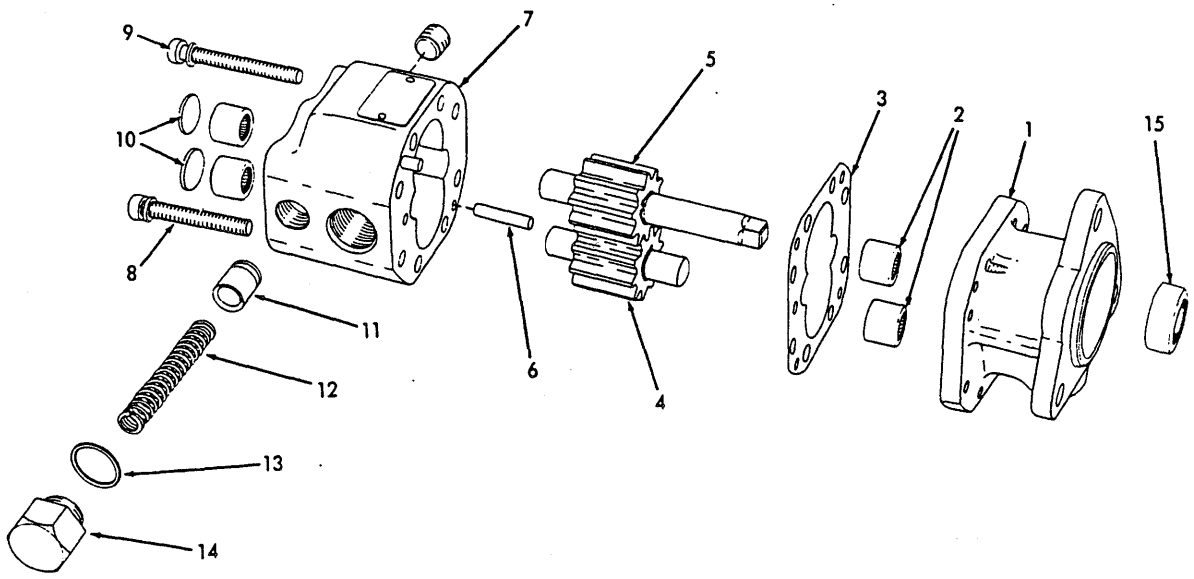

T-30900

OIL PUMP ASSEMBLY 623316

USAGE: See pages 296 and 298.

ITEM	PART NO.	QTY.	DESCRIPTION
1	------	1	STATOR (Not serviced separately)
2	077241	4	BEARING, needle
3	621363	1	GASKET, pump housing
4	098394	1	SHAFT ASSEMBLY, idler (Includes gear. Serviced only as a unit)
5	623845	1	SHAFT ASSEMBLY, driving (Includes gear. Serviced only as a unit)
6	4048000	2	PIN, dowel, pump housing
7	-------	1	HOUSING, gear (Not serviced separately)
	910231	1	PLUG, pipe, hex-socket, 1/8"NPT
8	622083	4	SCREW ASSEMBLY, short (Includes lockwasher)
9	623834	4	SCREW ASSEMBLY, long (Includes lockwasher)
10	092107	2	PLUG, expansion, 11/16" diam.
11	623835	1	PLUNGER, pressure relief valve
12	623838	1	SPRING, pressure relief valve
13	623837	1	GASKET, pressure relief valve cap
14	623836	1	CAP, pressure relief valve
15	4047783	1	SEAL, oil (Not used on early units)

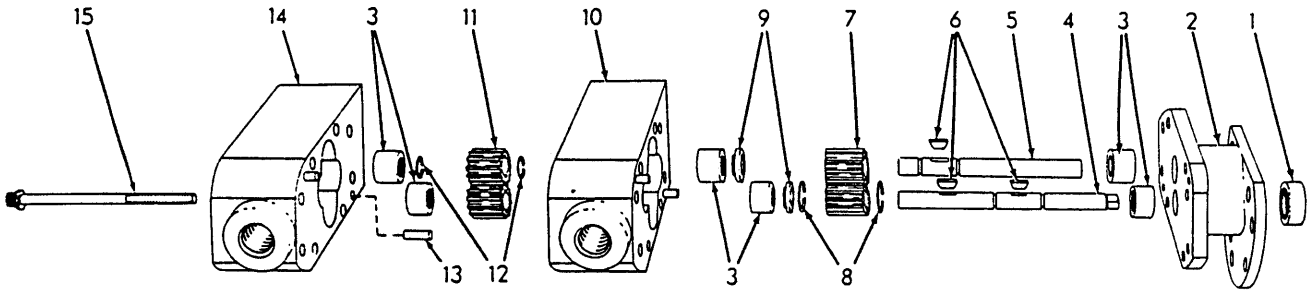

OIL PUMP ASSEMBLY 643631 T-41914

USAGE: See pages 301, 307 and 309

ITEM	PART NO.	QTY.	DESCRIPTION
1	4047783	1	SEAL, oil, drive shaft
2	------	1	STATOR (Not serviced separately)
3	077241	6	BEARING, needle
4	643705	1	SHAFT, drive
5	643704	1	SHAFT, driven
6	918699	3	KEY, woodruff #3, 1/8" x 1/2"
7	643680	2	GEAR (1-1/4" long)
8	3015050	2	RING, snap, drive shaft
9	643706	2	SEAL, gear housing
10	------	1	HOUSING, gear (Not serviced separately)
11	643679	2	GEAR (1" long)
12	099949	2	RING, snap, driven shaft
13	4048000	4	PIN, dowel
14	------	1	HOUSING, gear (Not serviced separately)
15	643742	8	SCREW ASSEMBLY (Includes lockwasher)

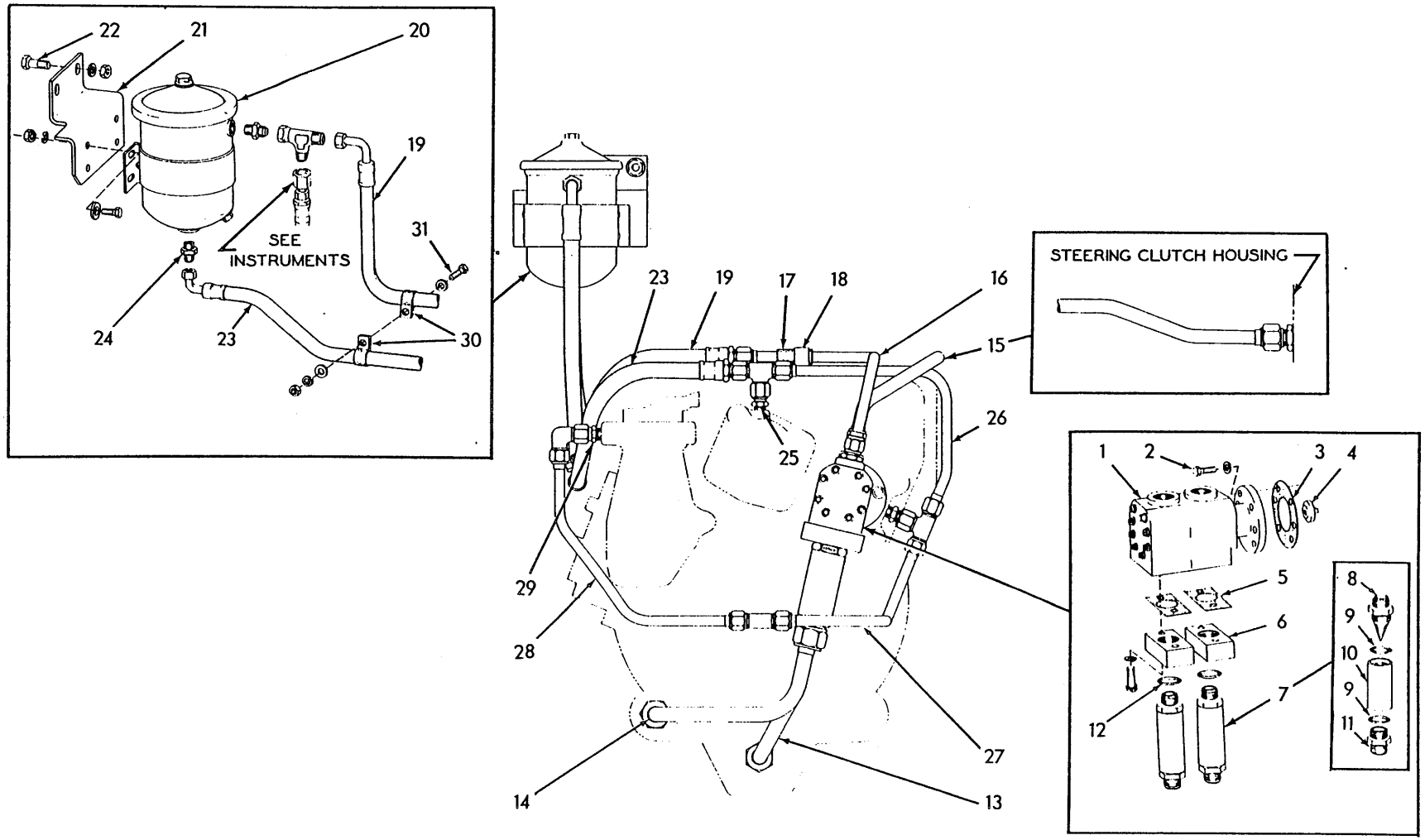

TRANSMISSION OILING SYSTEM (Second type. Models HD11B, E, S)

T-41905

TRANSMISSION OILING SYSTEM
(Dry Sump)

USAGE: Model HD11B,E,S tractors serial No. 10001 and up

ITEM	PART NO.	QTY.	DESCRIPTION
1	643631	1	PUMP ASSEMBLY (See page 305 for parts)
2	054130	3	CAPSCREW, 5/16"NC x 7/8"
	917330	3	WASHER, copper
3	099510	1	GASKET, oil pump
4	099005	1	COUPLING, pump drive
5	642943	2	GASKET, oil screen adapter
6	642942	2	ADAPTER, oil screen
	922996	4	CAPSCREW, hex-socket-head, 5/16"NC x 1"
	904205	4	LOCKWASHER, 5/16"
7	642427	2	SCREEN ASSEMBLY, oil (Consists of items 8 thru 11)
8	642040	2	SCREEN
9	921214	4	O-RING, oil screen
10	642404	2	TUBE, oil screen
11	922997	2	CONNECTOR, oil screen (Includes O-RING 921214)
12	921206	2	O-RING, oil screen to adapter
13	643642	1	TUBE ASSEMBLY, suction, short (Includes nuts)
	921217	1	CONNECTOR, flare type, 3/4" tube, 1-1/16-12 male end (Includes O-RING 921206)
14	640789	1	TUBE ASSEMBLY, suction, long (Includes nuts)
	922997	1	CONNECTOR, flare type, 3/4" tube, 1-5/16"-12 male end (Includes O-RING 921214)
15	643653	1	TUBE ASSEMBLY, pump discharge (Includes nuts)
	923080	1	CONNECTOR, flare type, 5/8" tube, 3/4"NF male end (Includes O-RING 921349)
	921326	1	CONNECTOR, flare type, 5/8" tube, 7/8"NF male end (Includes O-RING 921205)
16	643671	1	TUBE ASSEMBLY, pump to filter (Includes nuts)
	921409	1	CONNECTOR, flare type, 1/2" tube, 3/4"NF male end (Includes O-RING 921349)
17	093752	1	BOOT, tube protecting
18	097534	1	CLIP, tube supporting
19	638706	1	HOSE, pump to filter (See page 6)
	921298	1	TEE, flare type, swivel nut, 1/2" tube
	919063	1	CONNECTOR, flare type, 1/2" tube, 3/8"NPT male
20	623609	1	FILTER ASSEMBLY, oil (See page 303 for parts)
	912327	4	CAPSCREW, 1/4"NC x 7/8"
	092635	4	WASHER, plain
	904204	4	LOCKWASHER, 1/4"
	911024	4	NUT, 1/4"NC

(Continued)

TRANSMISSION OILING SYSTEM (Continued)

ITEM	PART NO.	QTY.	DESCRIPTION
21	638707	1	BRACKET, oil filter
22	070469	2	CAPSCREW, 1/2"NF x 1-1/4"
	904208	2	LOCKWASHER, 1/2"
	911043	2	NUT, 1/2"NF
23	643429	1	HOSE, filter to top shaft (See page 6)
24	624826	1	CONNECTOR, flare type, restricted, 1/2" tube, 3/8"NPT male
	921276	1	TEE, flare type, swivel nut, 1/2" tube
25	623188	1	CONNECTOR, flare type, restricted, 1/2" tube, 1/4"NPT male
26	623625	1	TUBE ASSEMBLY, top shaft to intermediate shaft (Includes nuts)
	921276	1	TEE, flare type, swivel nut, 1/2" tube
	919205	1	CONNECTOR, flare type, 1/2" tube, 1/4"NPT male
27	643652	1	TUBE ASSEMBLY, intermediate shaft to pinion shaft (Includes nuts)
	921070	1	TEE, flare type, 1/2" tube, 3/8"NPT female side
	901497	1	NIPPLE, pipe, 3/8"NPT x 5"
28	643646	1	TUBE ASSEMBLY, pinion shaft to gear shift housing (Includes nuts)
	921279	1	ELBOW, flare type, swivel nut, 1/2" tube
29	623188	1	CONNECTOR, flare type, restricted, 1/2" tube, 1/4"NPT male
30	643932	2	CLIP, hose supporting
31	012992	1	CAPSCREW, 3/8"NF x 1-1/4"
	911115	2	WASHER, plain, SAE std., 3/8"
	904206	1	LOCKWASHER, 3/8"
	911041	1	NUT, 3/8"NF

TRANSMISSION OILING SYSTEM
(Dry Sump)

USAGE: Model HD11EC tractors serial No. 10001 and up

ITEM	PART NO.	QTY.	DESCRIPTION
1	643631	1	PUMP ASSEMBLY (See page 305 for parts)
2	054130	3	CAPSCREW, 5/16"NC x 7/8"
	917330	3	WASHER, copper
3	099510	1	GASKET, oil pump
4	099005	1	COUPLING, pump drive
5	642943	2	GASKET, oil screen adapter
6	642942	2	ADAPTER, oil screen
	922996	4	CAPSCREW, hex-socket-head, 5/16"NC x 1"
	904205	4	LOCKWASHER, 5/16"
7	642427	2	SCREEN ASSEMBLY, oil (Consists of items 8 thru 11)
8	642040	2	SCREEN
9	921214	4	O-RING, oil screen
10	642404	2	TUBE, oil screen
11	922997	2	CONNECTOR, oil screen (Includes O-RING 921214)
12	921206	2	O-RING, oil screen to adapter
13	642807	1	TUBE ASSEMBLY, suction, short (Includes nuts)
	921217	1	CONNECTOR, flare type, 3/4" tube, 1-1/16"-12 male end (Includes O-RING 921206)
14	642803	1	TUBE ASSEMBLY, suction, long (Includes nuts)
	922997	1	CONNECTOR, flare type, 3/4" tube, 1-5/16"-12 male end (Includes O-RING 921214)
15	642808	1	TUBE ASSEMBLY, pump discharge (Includes nuts)
	923080	1	CONNECTOR, flare type, 5/8" tube, 3/4"NF male end (Includes O-RING 921349)
	921326	1	CONNECTOR, flare type, 5/8" tube, 7/8"NF male end (Includes O-RING 921205)
16	642804	1	TUBE ASSEMBLY, pump to filter (Includes nuts)
	921409	1	CONNECTOR, flare type, 1/2" tube, 3/4"NF male end (Includes O-RING 921349)
	921298	1	TEE, flare type, swivel nut, 1/2" tube
	921279	1	ELBOW, flare type, swivel nut, 1/2" tube
	919063	1	CONNECTOR, flare type, 1/2" tube, 3/8"NPT male
17	623609	1	FILTER ASSEMBLY, oil (See page 303 for parts)
	912327	4	CAPSCREW, 1/4"NC x 7/8"
	092635	4	WASHER, plain
	904204	4	LOCKWASHER, 1/4"
	911024	4	NUT, 1/4"NC
18	630543	1	PLATE, filter mounting
19	053616	3	CAPSCREW, 3/8"NC x 1-3/4"
	904206	3	LOCKWASHER, 3/8"

(Continued)

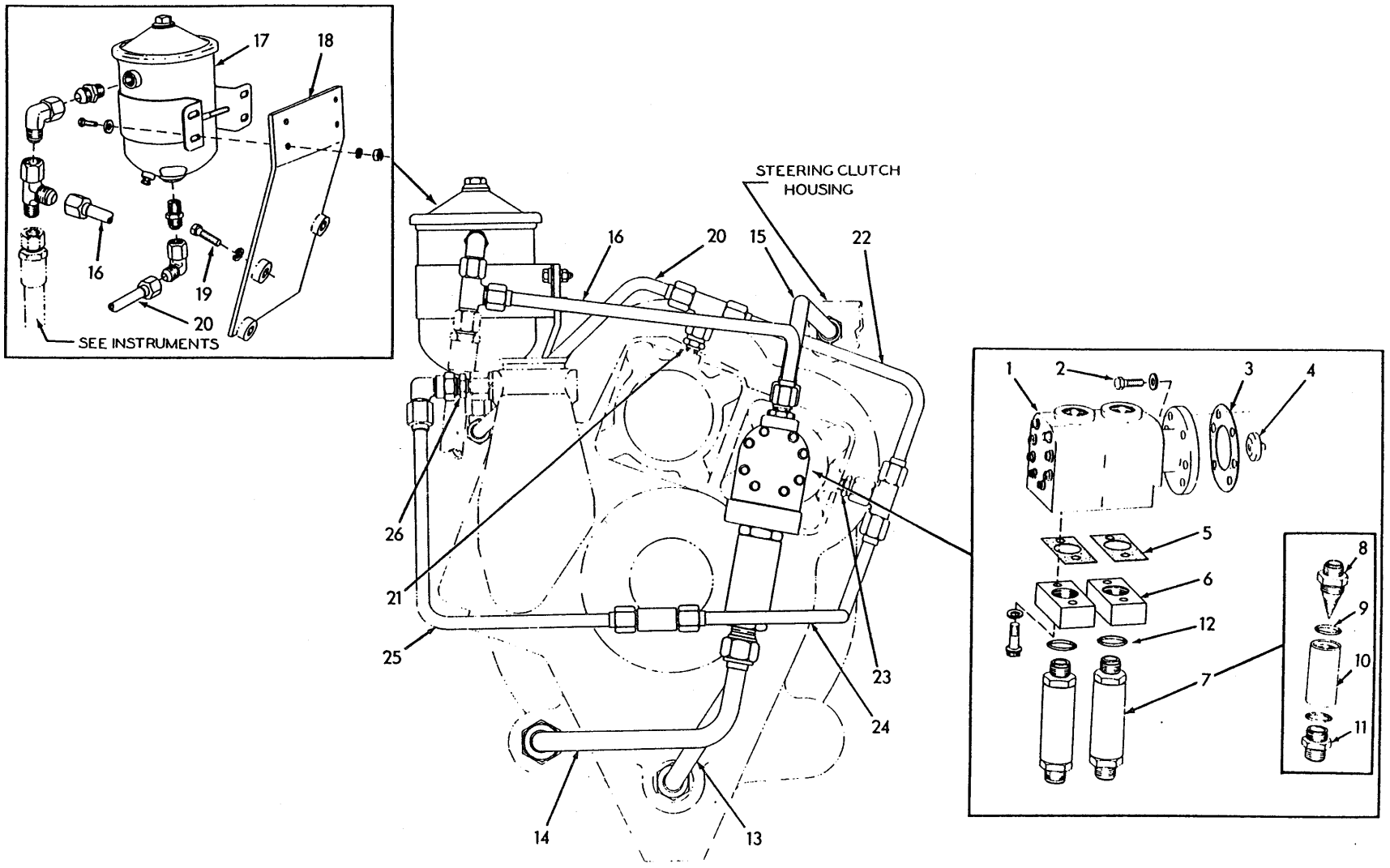

TRANSMISSION OILING SYSTEM (Second type. Model HD11EC)

T-41906

TRANSMISSION OILING SYSTEM (Continued)

ITEM	PART NO.	QTY.	DESCRIPTION
20	630544	1	TUBE ASSEMBLY, filter to top shaft (Includes nuts)
	921279	1	ELBOW, flare type, swivel nut, 1/2" tube
	919063	1	CONNECTOR, flare type, 1/2" tube, 3/8"NPT male
	921276	1	TEE, flare type, swivel nut, 1/2" tube
21	623188	1	CONNECTOR, flare type, restricted, 1/2" tube, 1/4"NPT male
22	623599	1	TUBE ASSEMBLY, top shaft to reverse (Includes nuts)
	921276	1	TEE, flare type, swivel nut, 1/2" tube
23	623188	1	CONNECTOR, flare type, 1/2" tube, 1/4"NPT male
24	642806	1	TUBE ASSEMBLY, reverse shaft to pinion shaft (Includes nuts)
	921070	1	TEE, flare type, 1/2" tube, 3/8"NPT female side
	901496	1	NIPPLE, pipe, 3/8"NPT x 4-1/2"
25	642805	1	TUBE ASSEMBLY, pinion shaft to gear shift housing, (Includes nuts)
	921279	1	ELBOW, flare type, swivel nut, 1/2" tube
26	623188	1	CONNECTOR, flare type, restricted, 1/2" tube, 1/4"NPT male

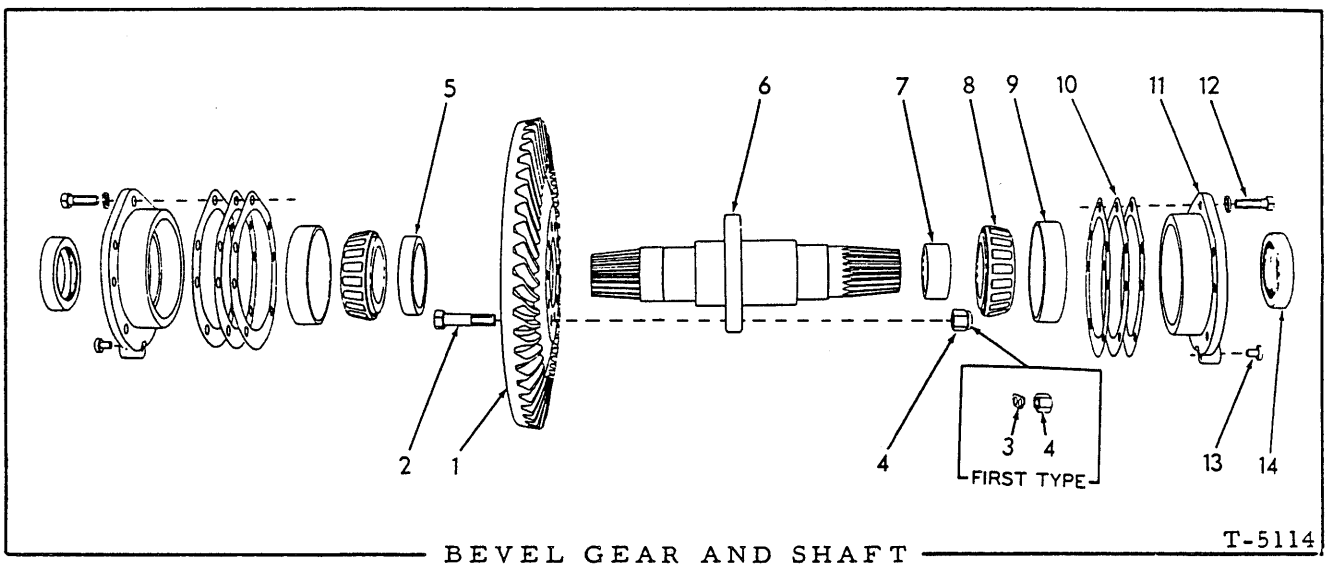

BEVEL GEAR AND SHAFT

* All Model HD11B, ES, S, F tractors ; also Model HD11E tractors prior to serial No. 10001

** Model HD11EC, FC tractors prior to serial No. 10001

ITEM	PART NO.	QTY. *	QTY. **	DESCRIPTION
1	056780	1	-	GEAR, spiral bevel (50 teeth, 15-3/4" diam.)
	620752	-	1	GEAR, spiral bevel (50 teeth, 16-3/4" diam.)
2	052270	10	-	BOLT, 5/8"NF x 2-1/2"
	067680	-	10	BOLT, 5/8"NF x 2-3/4"
3	067618	5	5	LOCK, nut } Used prior to tractor #10001
4	072366	10	10	NUT, high } Used prior to tractor #10001
	645320	10	10	NUT, elastic stop, 5/8"NF (Effective with tractor #10001)
5	067577	1	-	RING, bolt locking
	627279	-	1	RING, bolt locking
6	056778	1	1	SHAFT ASSEMBLY (Includes item 7)
7	069409	2	2	SLEEVE, shaft oil seal
8	069656	2	2	CONE ASSEMBLY, bearing
9	604406	2	2	CUP, bearing
10	056797	12	12	SHIM, bearing adjusting (.005" thick. Use as req'd)
	056798	12	12	SHIM, bearing adjusting (.007" thick. Use as req'd)
	056799	10	10	SHIM, bearing adjusting (.010" thick. Use as req'd)
11	082278	2	2	CAGE ASSEMBLY, bearing (Includes item 13)
12	633569	10	10	CAPSCREW, Nylok, 1/2"NF x 1-1/2"
	904208	10	10	LOCKWASHER, 1/2"
13	051291	2	2	PIN, wear, bearing cage
14	629040	2	2	SEAL, oil

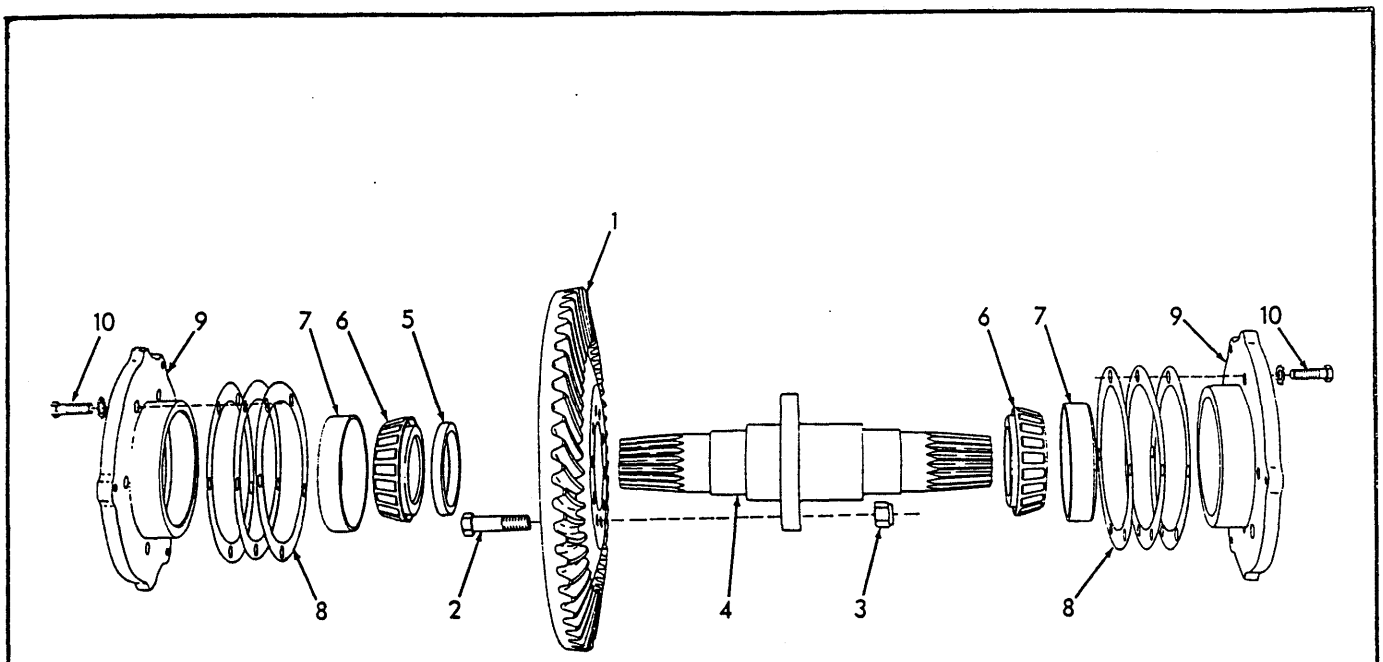

BEVEL GEAR AND SHAFT

USAGE: Model HD11E,EC tractors serial No. 10001 and up only

ITEM	PART NO.	QTY.	DESCRIPTION	
1	056780	1	GEAR, bevel (Model HD11E)	
	620752	1	GEAR, bevel (Model HD11EC)	
2	052270	10	BOLT, 5/8"NF x 2-1/2" (Model HD11E)	
	067680	10	BOLT, 5/8"NF x 2-3/4" (Model HD11EC)	
3	645320	10	NUT, elastic stop, 5/8"NF	
4	631329	1	SHAFT, bevel gear	
5	627279	1	RING, bolt locking	
6	631588	2	CONE ASSEMBLY, shaft bearing	
7	631587	2	CUP, shaft bearing	
8	634134	12	SHIM, bearing adjustment (.005" thick)	Use as required
	634135	12	SHIM, bearing adjustment (.007" thick)	
	634136	12	SHIM, bearing adjustment (.010" thick)	
9	631576	2	CAGE, bearing	
10	035073	10	CAPSCREW, 1/2"NC x1-3/4"	
	910210	10	LOCKWASHER, external teeth, 1/2"	

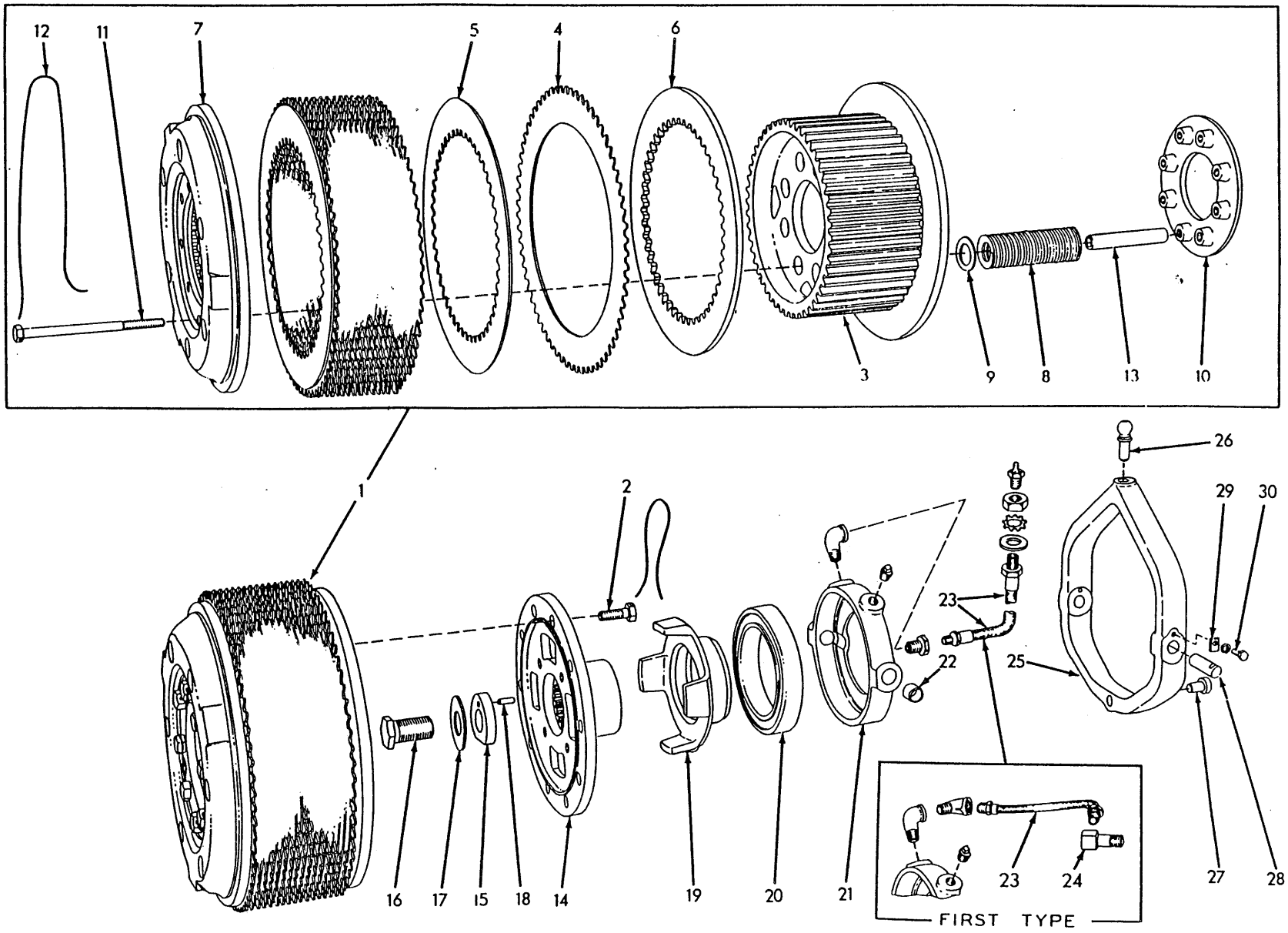

STEERING CLUTCHES (First type)

STEERING CLUTCHES

USAGE: All units except Model HD11E, EC tractors serial No. 10001 and up

ITEM	PART NO.	QTY.	DESCRIPTION
1	056790	2	CLUTCH ASSEMBLY, steering (Consists of items 3 thru 13)
2	090767	20	CAPSCREW, drilled-hd., 1/2"NC x 1-3/16"
	023633	10	WIRE, locking, 1/16" x 12"
3	056791	2	HUB, clutch
4	057375	30	DISC, friction (bi-metallic)
	093996	4	DISC, friction (bi-metallic, tapered thickness)
5	624562	34	DISC, friction (steel)(Use as req'd)
6	056792	2	PLATE, back
7	056793	2	PLATE, pressure
8	087958	16	SPRING, pressure
9	034300	16	WASHER, spring insulating
10	050214	2	PLATE, throwout
11	056817	16	CAPSCREW, throwout plate (1/2"NC x 6")
12	023756	4	WIRE, locking, 1/16" x 26"
13	056794	16	SPACER, throwout plate
14	069220	2	HUB, driving
15	637932	2	WASHER ASSEMBLY, hub retaining (Includes item 18)
16	630045	2	CAPSCREW, thin-hd., 1"NF x 1-3/4"
17	651745	2	WASHER, locking
18	035793	2	PIN, hub retaining washer
19	082262	2	SLEEVE, throwout
20	050440	2	BEARING, ball, throwout sleeve
21	050249	2	CAGE ASSEMBLY, throwout bearing (Includes item 22)
	901652	2	PLUG, pipe, 1/4"NPT
22	050227	4	BUSHING, pivot, throwout bearing (steel)
23	082785	2	HOSE, lubricating, throwout bearing (9-3/4" long)(Used prior to tractor #6821)
	901722	2	ELBOW, pipe, street, 90°, 1/4"NPT
	907058	2	ELBOW, pipe, street, 45°, 1/4"NPT
	061133	2	HOSE, lubricating, throwout bearing (16" long)(Effective with tractor #6821)
	901722	2	ELBOW, pipe, street, 90°, 1/4"NPT
	901825	2	BUSHING, pipe reducing, 1/4"NPT to 1/8"NPT
	911100	2	WASHER, plain, SAE std., 5/8"
	910543	2	LOCKWASHER, ext-tooth, 5/8"
	911049	2	NUT, jam, 5/8"NF
	914465	2	FITTING, lubricating, straight, 1/8"NPT
24	042538	2	ELBOW, throwout bearing hose (90°, 1/4"NPT male and female, long type)(Used prior to tractor #6821)
25	620712	2	YOKE ASSEMBLY, clutch throwout (Includes items 26 and 27)
26	035878	2	BALL, throwout yoke
27	050220	2	PIN, wear, throwout yoke
28	050222	4	PIN, trunnion
29	050221	4	BLOCK, trunnion pin locking
30	047478	4	CAPSCREW, 1/4"NC x 5/8"
	904204	4	LOCKWASHER, 1/4"

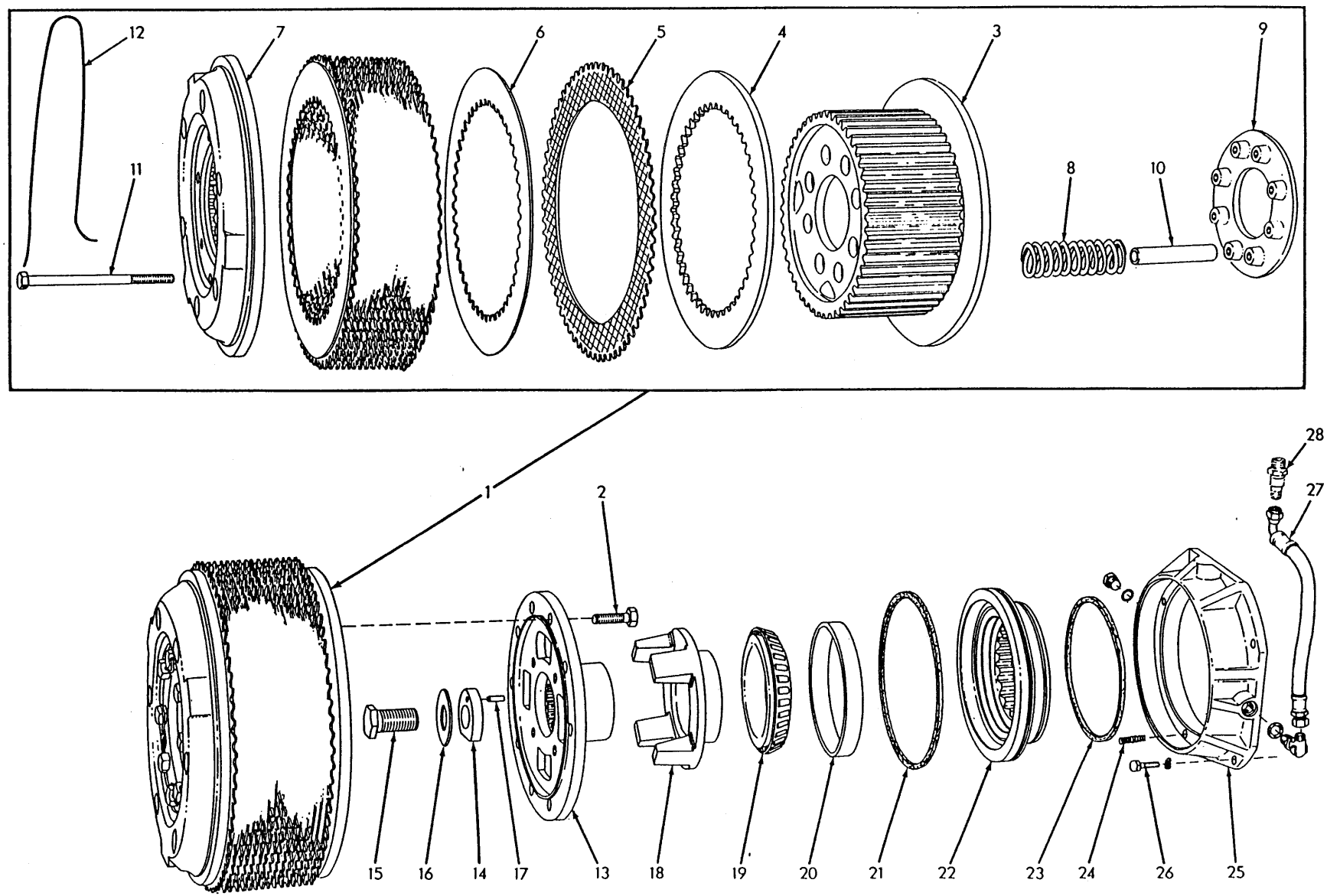

STEERING CLUTCHES (Second type Models HD11E EC)

T-41894

STEERING CLUTCHES

USAGE: Model HD11 E, EC tractors serial No. 10001 and up.

ITEM	PART NO.	QTY.	DESCRIPTION
1	633838	2	CLUTCH ASSEMBLY (Consists of items 3 thru 12)
2	650828	20	BOLT, self-locking, 1/2"NC x 1-3/8"
3	631386	2	HUB, steering clutch
4	056792	2	PLATE, back
5	624561	32	DISC, friction (bi-metallic)
6	624562	32	DISC, friction (steel)(Use as required)
7	056793	2	PLATE, pressure
8	633919	16	SPRING, pressure
9	050214	2	PLATE, throwout
10	631305	16	SPACER, throwout plate
11	631300	16	CAPSCREW, plate (drilled-hd., 1/2"NC x 5-3/4")
12	023756	4	WIRE, locking, 1/16" x 26"
13	069220	2	HUB, driving
14	637932	2	WASHER ASSEMBLY, hub retaining (Includes item 17)
15	630045	2	CAPSCREW, thin-hd., 1"NF x 1-3/4"
16	651745	2	WASHER, locking
17	035793	2	PIN, hub retaining washer
18	631545	2	SLEEVE, throwout
19	624642	2	CONE ASSEMBLY, clutch throwout bearing
20	624641	2	CUP, clutch throwout bearing
21	624673	2	RING, sealing, actuating piston, outer
22	631510	2	PISTON, actuating
23	624674	2	RING, sealing, actuating piston, inner
24	040475	6	SPRING, throwout bearing ring
25	631575	2	RING, collector
	921573	2	PLUG, hex-hd., 3/4"NF (Includes O-RING 921349)
26	013058	6	CAPSCREW, 3/8"NC x 1-1/4"
	904206	6	LOCKWASHER, 3/8"
27	641125	2	HOSE, oil pressure (See page 6)
	921402	2	ELBOW, adjustable, 90°, flare type, 1/2" tube, 3/4"NF (Includes washer, nut and O-RING 921349)
28	------	2	UNION (See CONTROL VALVE AND LINES)

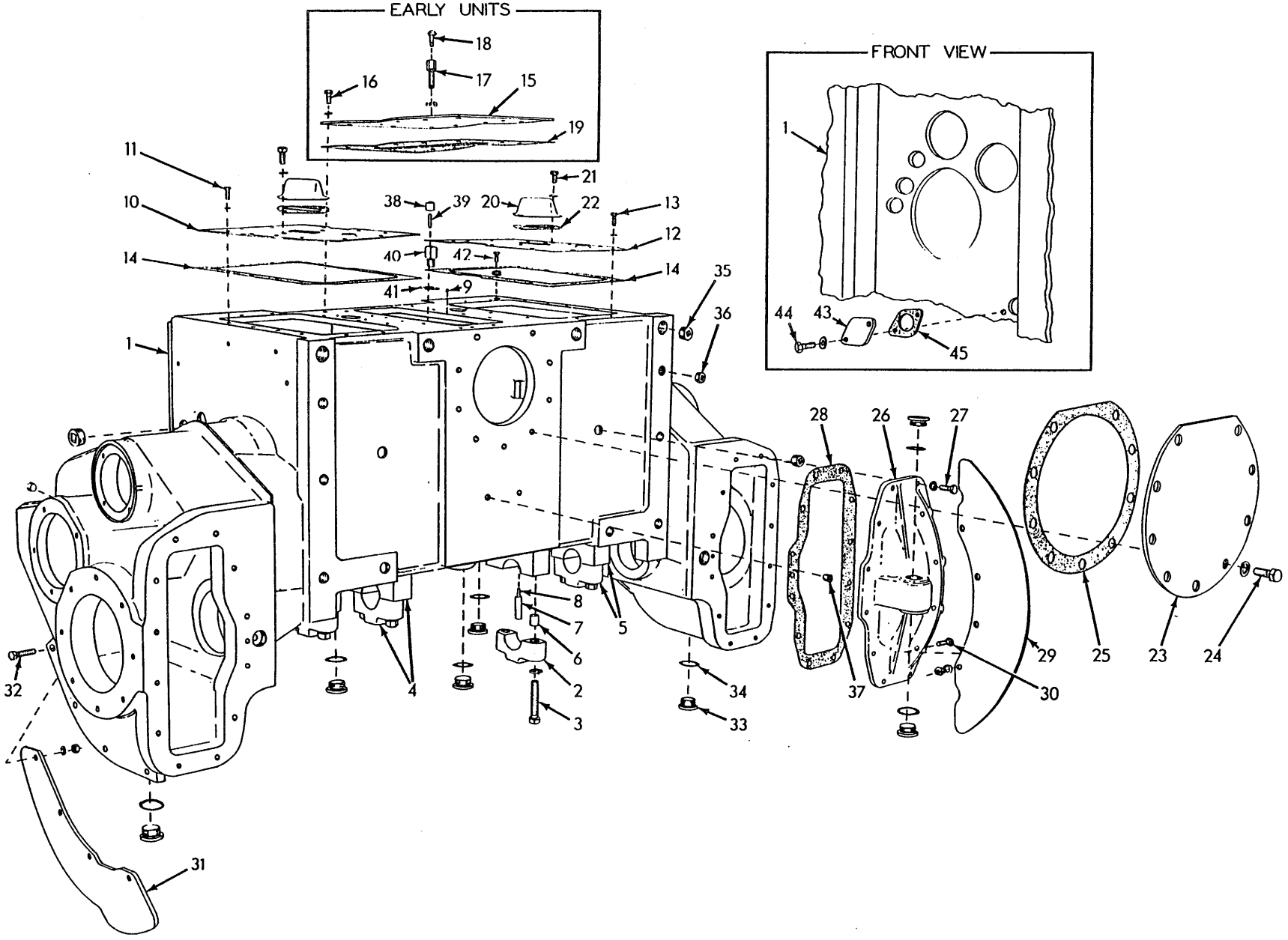

STEERING CLUTCH AND FINAL DRIVE HOUSING (First type)

T-4366

STEERING CLUTCH AND FINAL DRIVE HOUSING

USAGE: Tractors prior to serial No. 10001

ITEM	PART NO.	QTY.	DESCRIPTION	
1	--------	-	HOUSING ASSY. (Original equipment. Order HOUSING ASSY. 70643969. If for tractors prior to #6821, also order 2 each HOSE 70061133, BUSHING 70901825, LOCKWASHER 70910543, NUT 70911049 and WASHER 70911100. If for tractors #6025 thru #6195 including #6211, add 2 CAGE 70093256, 4 SHIM 70093249, 4 SHIM 70093250, 10 CAPSCREW 70023465, 10 LOCKWASHER 70904209 and 14 SHIM 70093248. If for tractors prior to #4179, include 2 PLUG 70904223. If for tractors prior to #2502, also add 2 COVER 70091571 and 2 O-RING 70923817. If for tractors prior to #1237, also include 2 PIN 70089320)	
	70643969	1	HOUSING ASSY. (Includes items 2 thru 8 and 43 thru 46)(Service replacement)	
	70907070	2	PLUG, pipe, ctsk-hd., 1/4"NPT (Used on tractors #4044 thru #4178.	
	70904223	6	PLUG, pipe, ctsk-hd., 1/2"NPT (2 less used prior to tractor #4179)	
	70904224	2	PLUG, pipe, ctsk-hd., 3/4"NPT (Used prior to tractor #4044)	
	70901667	4	PLUG, pipe, ctsk-hd., 1-1/4"NPT	
2	70060552	4	CAP, track frame pivot shaft (also see items 4 and 5)(Original equipment)	
	70666488	2	CAP ASSY., track frame pivot shaft, inner (Includes PIN 70666489)	Service replacement. Used only on units converted for pressure lubrication.
	70060552	2	CAP, track frame pivot shaft, outer	
3	70052527	8	CAPSCREW, 3/4"NF x 3-1/2"	
	70904369	8	LOCKWASHER, 3/4"	
4	70096210	2	CAP ASSY., truck frame pivot shaft, inner	
5	70096209	2	CAP ASSY., truck frame pivot shaft, outer	
			NOTE: Each Cap Assy. listed above includes items 2, 3 and 6; also upper block which requires welding to housing.	
6	70075053	8	DOWEL, hollow, pivot shaft cap	
7	70076726	2	WICK ASSY., pivot shaft lubricating (Consists of 1 PIN and 1 WICK 70050357. Also serves as dowel for pivot shaft)(Original equipment)	
	70666489	2	PIN, dowel, pivot shaft inner cap (Service replacement)	Used only on units converted to pressure - lubrication of pivot shaft.
	70665667	2	PLUG, main housing (steel, 5/16" diam. x 3/4")(Used to plug oiling wick hole)	
8	70050357	2	WICK, pivot shaft lubricating (felt)	
9	70099549	2	SETSCREW, hole plugging (1/2"NF x 3/4", Nylok)(Effective with tractor #6069 including #6044 and #5490)	
10	70630189	1	COVER, left steering clutch compartment (If for tractors prior to #6821 also order 1 PLUG 70921113)	
11	70036032	11	CAPSCREW, 3/8"NF x 3/4"	
	70904206	11	LOCKWASHER, 3/8"	
12	70630190	1	COVER, right steering clutch compartment (If for tractors prior to #6821 also order 1 PLUG 70921113)	
13	70036032	11	CAPSCREW, 3/8"NF x 3/4"	
	70904206	11	LOCKWASHER, 3/8"	
14	70638709	2	GASKET, steering clutch compartment covers	
15	70067620	1	COVER, bevel gear compartment, top (Used prior to tractor #6069, excluding #6044 and #5490)	
16	70070467	13	CAPSCREW, 1/2"NF x 1" (1 additional used prior to tractor #3998)	
17	70094543	1	CAPSCREW (drilled for breather)(Effective with tractor #3998)	
	70904208	14	LOCKWASHER, 1/2"	

(Continued)

STEERING CLUTCH AND FINAL DRIVE HOUSING (Continued)

ITEM	PART NO.	QTY.	DESCRIPTION
18	70051447	1	BREATHER ASSEMBLY (Used on tractors #3998 thru #6068, excluding #6044 and #5490)
19	70067621	1	GASKET, bevel gear compartment top cover (Used prior to tractor #6069, excluding #6044 and #5490)
20	70052922	2	COVER, brake band adjustment
21	70070467	4	CAPSCREW, 1/2"NF x 1"
	70904208	4	LOCKWASHER, 1/2"
22	70066596	2	GASKET, brake band adjustment cover
23	70052977	1	COVER, bevel gear compartment, rear (Removed when Power Take-off is installed)
24	70035392	9	CAPSCREW, 5/8"NC x 1-1/4"
	70904209	9	LOCKWASHER, 5/8"
25	70052976	1	GASKET, bevel gear compartment rear cover
26	70656989	1	COVER, left } Not original equipment. Does not
	70656990	1	COVER, right } have bottom plug
27	70035018	26	CAPSCREW, 1/2"NF x 1-1/2"
	70904208	26	LOCKWASHER, 1/2"
28	70064377	2	GASKET, final drive compartment cover
			NOTE: Guards listed below are special equipment
29	70069648	2	GUARD, track sprocket, upper (Medium-duty)
	70083085	2	GUARD, track sprocket, upper (Heavy-duty reinforced type)
30	70035073	8	CAPSCREW, 1/2"NF x 1-3/4"
	70904208	8	LOCKWASHER, 1/2"
	70911043	8	NUT, 1/2"NF
31	70064376	2	GUARD, track sprocket, lower (Medium-duty)
	70083083	1	GUARD, track sprocket, lower left } Heavy-duty reinforced type
	70083084	1	GUARD, track sprocket, lower right } Heavy-duty reinforced type
32	70035073	8	CAPSCREW, 1/2"NF x 1-3/4"
	70904208	8	LOCKWASHER, 1/2"
	70911043	8	NUT, 1/2"NF
33	70035250	9	PLUG, bevel gear and final drive compartment
34	70035249	9	GASKET, plug
35	70052979	4	PLUG, thread protecting (1-1/4"NF)
36	70053421	2	PLUG, thread protecting (3/4"NPT)
37	70051496	2	PLUG, thread protecting (5/8"NC)
38	70082726	2	WICK, oiling, steering clutch throwout bearing, upper (Used prior to tractor #6821)
39	70082727	2	WICK, oiling, steering clutch throwout bearing, lower (Used prior to tractor #6821)
40	70075434	2	HOLDER, oiling wick (Used prior to tractor #6821)
41	70075432	2	LOCK, oiling wick holder (Used prior to tractor #6821)
42	70036032	1	CAPSCREW, 3/8"NF x 3/4" (Plugs open hole in housing and grounds battery cable)
	70904206	1	LOCKWASHER, 3/8"
43	70621310	1	PLATE, cover
44	70012992	2	CAPSCREW, 3/8"NF x 1-1/4"
	70917264	2	WASHER, copper, 3/8"
45	70098941	1	GASKET, cover plate
46	70920107	1	PLUG, housing (Includes O-RING 921206 (Not illustrated)
			} Not original equipment

(Revised December 1979)

STEERING CLUTCH AND FINAL DRIVE HOUSING

USAGE: Model HD11B, S tractors serial No. 10001 and up

ITEM	PART NO.	QTY.	DESCRIPTION	
1	70643969	1	HOUSING ASSY. (Includes items 1A thru 11)	
	70904223	6	PLUG, pipe, ctsk-hd., 1/2"NPT (2 less used effective with tractor #10752)	
	70901667	5	PLUG, pipe, ctsk-hd., 1-1/4"NPT (2 additional used effective with tractor #10777)	
1A	70920107	1	PLUG, housing (Includes O-RING 70921206)	
2	70060552	4	CAP, track frame pivot shaft (Also see items 4 and 5)(Original equipment)	
	70666488	2	CAP ASSY., track frame pivot shaft, inner (Includes PIN 70666489)	Service replacement. Used only on units converted for pressure lubrication.
	70060552	2	CAP, track frame pivot shaft, outer	
3	70052527	8	CAPSCREW, 3/4"NF x 3-1/2"	
	70904369	8	LOCKWASHER, 3/4"	
4	70096210	2	CAP ASSY., truck frame pivot shaft, inner	
5	70096209	2	CAP ASSY., truck frame pivot shaft, outer	
			NOTE: Each Cap Assy. listed above includes items 2, 3 and 6; also upper block which requires welding to housing.	
6	70075053	8	DOWEL, hollow, pivot shaft cap	
7	70076726	2	WICK ASSY., pivot shaft lubricating (Consists of 1 PIN and 1 WICK 70050357. Also serves as dowel for pivot shaft)(Original equipment)	
	70666489	2	PIN, dowel, pivot shaft inner cap (Service replacement)	Used only on units converted to pressure - lubrication of pivot shaft
	70665667	2	PLUG, main housing (steel, 5/16" diam. x 3/4")(Used to plug oiling wick hole)	
8	70050357	2	WICK, pivot shaft lubricating (felt)	
9	70621310	1	PLATE, cover	
10	70012992	2	CAPSCREW, 3/8"NF x 1-1/4"	
	70917264	2	WASHER, copper, 3/8"	
11	70098941	1	GASKET, cover plate	
12	70099549	2	SETSCREW, hole plugging (1/2"NF x 3/4", Nylok)	
13	70643995	1	COVER, left steering clutch compartment	
14	70036032	11	CAPSCREW, 3/8"NF x 3/4"	
	70904206	11	LOCKWASHER, 3/8"	
15	70630190	1	COVER, right steering clutch compartment	
16	70036032	11	CAPSCREW, 3/8"NF x 3/4"	
	70904206	11	LOCKWASHER, 3/8"	
17	70638709	2	GASKET, steering clutch compartment covers	
18	70052922	2	COVER, brake band adjustment	
19	70070467	4	CAPSCREW, 1/2"NF x 1"	
	70904208	4	LOCKWASHER, 1/2"	
20	70066596	2	GASKET, brake band adjustment cover	
21	70052977	1	COVER, bevel gear compartment, rear (Removed when Power Take-off is installed)	
22	70035392	9	CAPSCREW, 5/8"NC x 1-1/4"	
	70904209	9	LOCKWASHER, 5/8"	
23	70052976	1	GASKET, bevel gear compartment rear cover	
24	70656989	1	COVER, left	Not original equipment.
	70656990	1	COVER, right	Does not have bottom plug.
25	70035018	26	CAPSCREW, 1/2"NF x 1-1/2"	
	70904208	26	LOCKWASHER, 1/2"	
26	70064377	2	GASKET, final drive compartment cover	

(Continued)

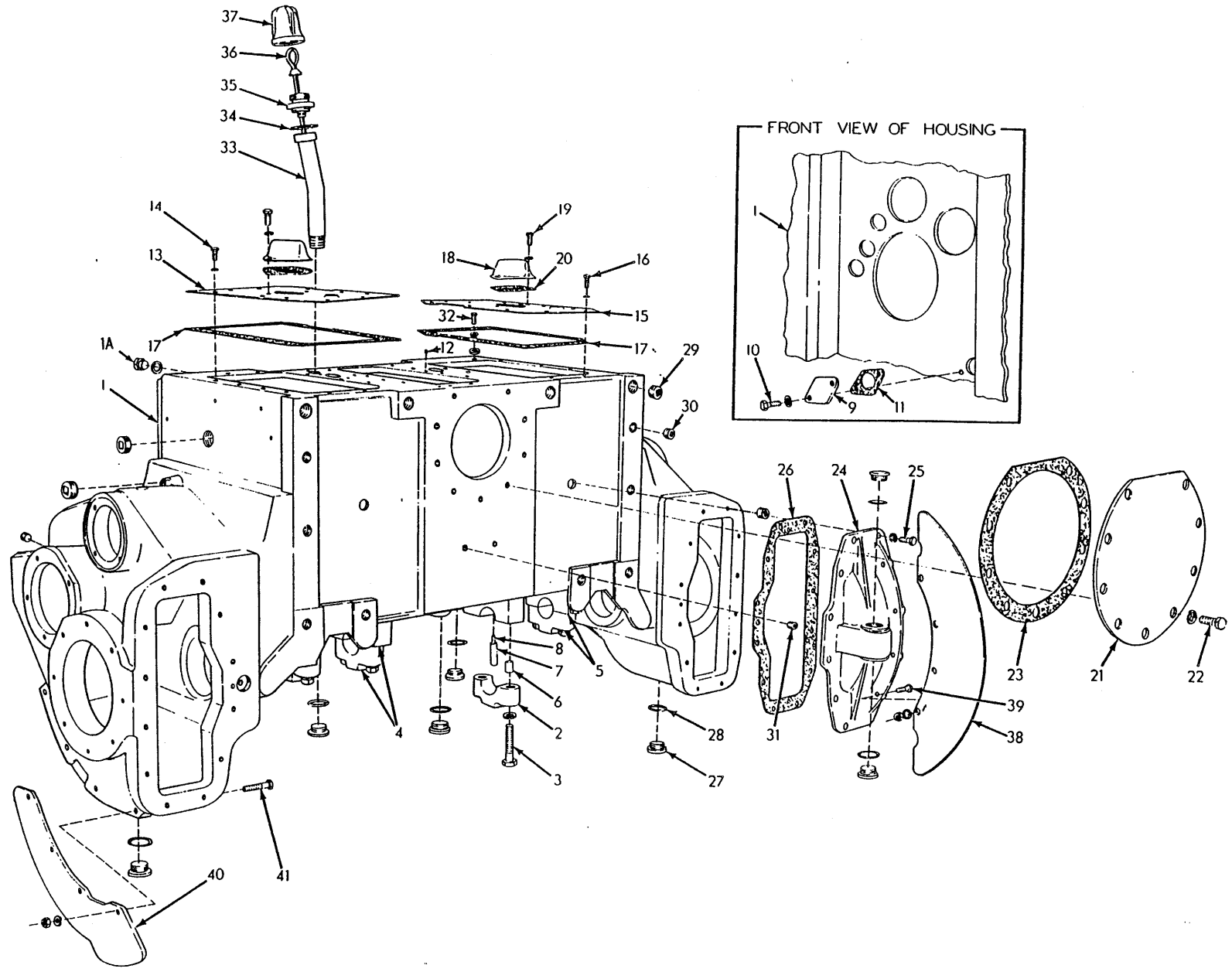

STEERING CLUTCH AND FINAL DRIVE HOUSING (Second type. Models HD11B, S)

T-41916

ITEM	PART NO.	QTY.	DESCRIPTION
27	035250	9	PLUG, bevel gear and final drive compartment
28	035249	9	GASKET, plug
29	052979	4	PLUG, thread protecting (1-1/4"NF)
30	053421	2	PLUG, thread protecting (3/4"NPT)
31	051496	2	PLUG, thread protecting (5/8"NC)
32	036032	1	CAPSCREW, 3/8"NF x 3/4" (Plugs open hole in housing and grounds battery cable)
	915898	1	LOCKWASHER, int-ext-tooth, 3/8"
	900817	1	WASHER, plain, U.S. std., 3/8"
33	630102	1	PIPE, oil filler
34	034269	1	GASKET, oil filler plug
35	034268	1	PLUG, oil filler pipe
36	633102	1	GAUGE, oil level
37	034265	1	CAP, oil filler pipe
			NOTE: Guards listed below are special equipment
38	069648	2	GUARD, track sprocket, upper (Medium-duty)
	083085	2	GUARD, track sprocket, upper (Heavy-duty reinforced type)
39	035073	8	CAPSCREW, 1/2"NF x 1-3/4"
	904208	8	LOCKWASHER, 1/2"
	911043	8	NUT, 1/2"NF
40	644294	2	GUARD, track sprocket, lower (Medium-duty)
	644419	1	GUARD, track sprocket, lower left } Heavy-duty reinforced type
	644420	1	GUARD, track sprocket, lower right
41	035073	8	CAPSCREW, 1/2"NF x 1-3/4"
	904208	8	LOCKWASHER, 1/2"
	911043	8	NUT, 1/2"NF

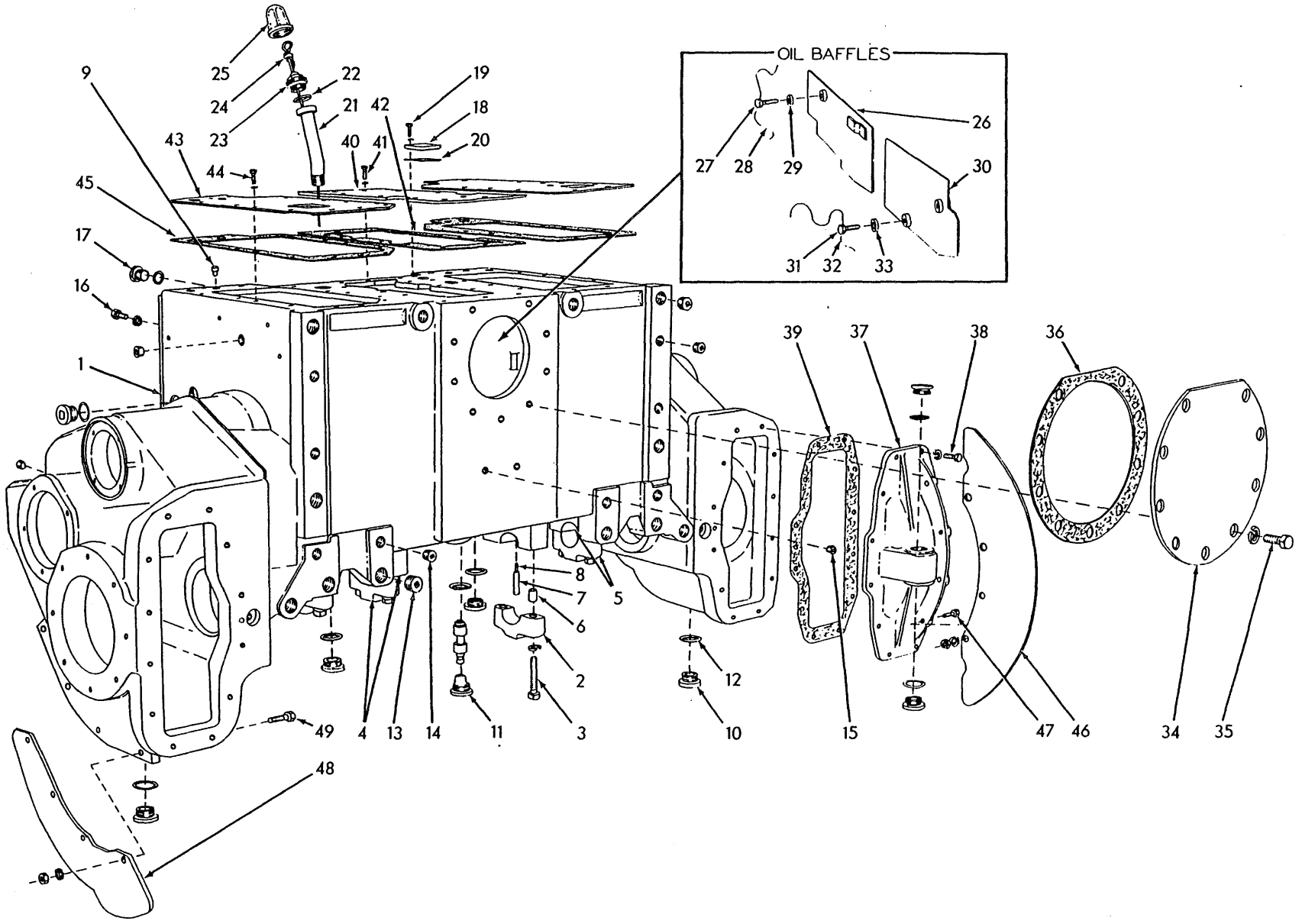

STEERING CLUTCH AND FINAL DRIVE HOUSING (Second type. Models HD11E, EC)

T-41889

STEERING CLUTCH AND FINAL DRIVE HOUSING

USAGE: Model HD11 E, EC tractors serial No. 10001 and up

ITEM	PART NO.	QTY.	DESCRIPTION	
1	70629446	1	HOUSING ASSY. (Includes items 2 thru 9)	
	70904223	4	PLUG, pipe, ctsk-hd., 1/2"NPT	
	70901667	2	PLUG, pipe, ctsk-hd., 1-1/4"NPT (Effective with tractor #10777)	
2	70060552	4	CAP, track frame pivot shaft (Also see items 4 and 5)(Original equipment)	
	70666488	2	CAP ASSY., track frame pivot shaft, inner (Includes PIN 70666489)	Service replacement. Used only on units converted for pressure lubrication.
	70060552	2	CAP, track frame pivot shaft, outer	
3	70052527	8	CAPSCREW, 3/4"NF x 3-1/2"	
	70904369	8	LOCKWASHER, 3/4"	
4	70096210	2	CAP ASSY., truck frame pivot shaft, inner	
5	70096209	2	CAP ASSY., truck frame pivot shaft, outer	
			NOTE: Each Cap Assy. listed above includes items 2, 3 and 6; also upper block which requires welding to housing.	
6	70075053	8	DOWEL, hollow, pivot shaft cap	
7	70076726	2	WICK ASSY., pivot shaft lubricating (Consists of 1 PIN and 1 WICK 70050357. Also serves as dowel for pivot shaft)(Original equipment)	
	70666489	2	PIN, dowel, pivot shaft inner cap (Service replacement)	Used only on units converted to pressure - lubrication of pivot shaft.
	70665667	2	PLUG, main housing (steel, 5/16" diam. x 3/4")(Used to plug oiling wick hole)	
8	70050357	2	WICK, pivot shaft lubricating (felt)	
9	70624485	2	PIN, dowel, clutch compartment covers	
10	70035250	8	PLUG, final drive compartment	
11	70067543	1	PLUG, drain, bevel gear compartment (magnetic)	
12	70035249	9	GASKET, plug	
13	70052979	6	PLUG, thread protecting (1-1/4"NF)	
14	70053421	4	PLUG, thread protecting (3/4"NPT)	
15	70051496	2	PLUG, thread protecting (5/8"NC)	
16	70067480	4	CAPSCREW, hole-plugging	
	70618724	4	WASHER, copper	
17	70920107	-	PLUG, housing (Includes O-RING 70921206)	
18	70630947	1	COVER, dipstick hole	
19	70035167	2	CAPSCREW, 3/8"NF x 7/8"	
	70904206	2	LOCKWASHER, 3/8"	
20	70628951	1	GASKET, cover plate	
21	70630102	1	PIPE, oil filler	
22	70034269	1	GASKET, oil filler plug	
23	70034268	1	PLUG, oil level	
24	70633102	1	GAUGE, oil level	
25	70034265	1	CAP, oil filler plug	

(Continued)

ITEM	PART NO.	QTY.	DESCRIPTION
26	70642048	1	PLATE, oil baffle, front section
27	70021527	1	CAPSCREW, drilled-hd., 3/8"NC x 1-5/8"
28	70023633	1	WIRE, locking, 1/16" x 12"
29	70044973	1	WASHER, plain
30	70642435	1	PLATE, oil baffle, rear section
31	70099963	2	CAPSCREW, drilled-hd., 3/8"NC x 2"
32	70037000	1	WIRE, locking, 1/16" x 16"
33	70044973	2	WASHER, plain
34	70052977	1	COVER, bevel gear compartment, rear (Removed when Power Take-off is installed)
35	70921731	9	CAPSCREW, Nylok, 5/8"NC x 1-1/4"
	70904209	9	LOCKWASHER, 5/8"
36	70052976	1	GASKET, bevel gear compartment rear cover
37	70656989	1	COVER, left } Not original equipment. Does
	70656990	1	COVER, right } not have bottom plug.
38	70035018	26	CAPSCREW, 1/2"NF x 1-1/2"
	70904208	26	LOCKWASHER, 1/2"
39	70064377	2	GASKET, final drive compartment cover
40	70631184	1	COVER, bevel gear compartment, top (Used prior to tractor #11637)
	70651753	1	COVER, bevel gear compartment, top (Effective with tractor #11637)
41	70035018	12	CAPSCREW, 1/2"NF x 1-1/2"
	70904208	12	LOCKWASHER, 1/2"
42	70631185	1	GASKET, bevel gear compartment top cover
43	70633520	2	PLATE, cover, steering clutch compartment
44	70035018	18	CAPSCREW, 1/2"NF x 1-1/2"
	70904208	18	LOCKWASHER, 1/2"
45	70633521	2	GASKET, steering clutch compartment cover
			NOTE: Guards listed below are special equipment
46	70069648	2	GUARD, track sprocket, upper (Medium-duty)
	70083085	2	GUARD, track sprocket, upper (Heavy-duty reinforced type)
47	70035073	8	CAPSCREW, 1/2"NF x 1-3/4"
	70904208	8	LOCKWASHER, 1/2"
	70911043	8	NUT, 1/2"NF
48	70644294	2	GUARD, track sprocket, lower (Medium-duty)
	70644419	1	GUARD, track sprocket, lower left } Heavy-duty reinforced type
	70644420	1	GUARD, track sprocket, lower right } Heavy-duty reinforced type
49	70035073	8	CAPSCREW, 1/2"NF x 1-3/4"
	70904208	8	LOCKWASHER, 1/2"
	70911043	8	NUT, 1/2"NF

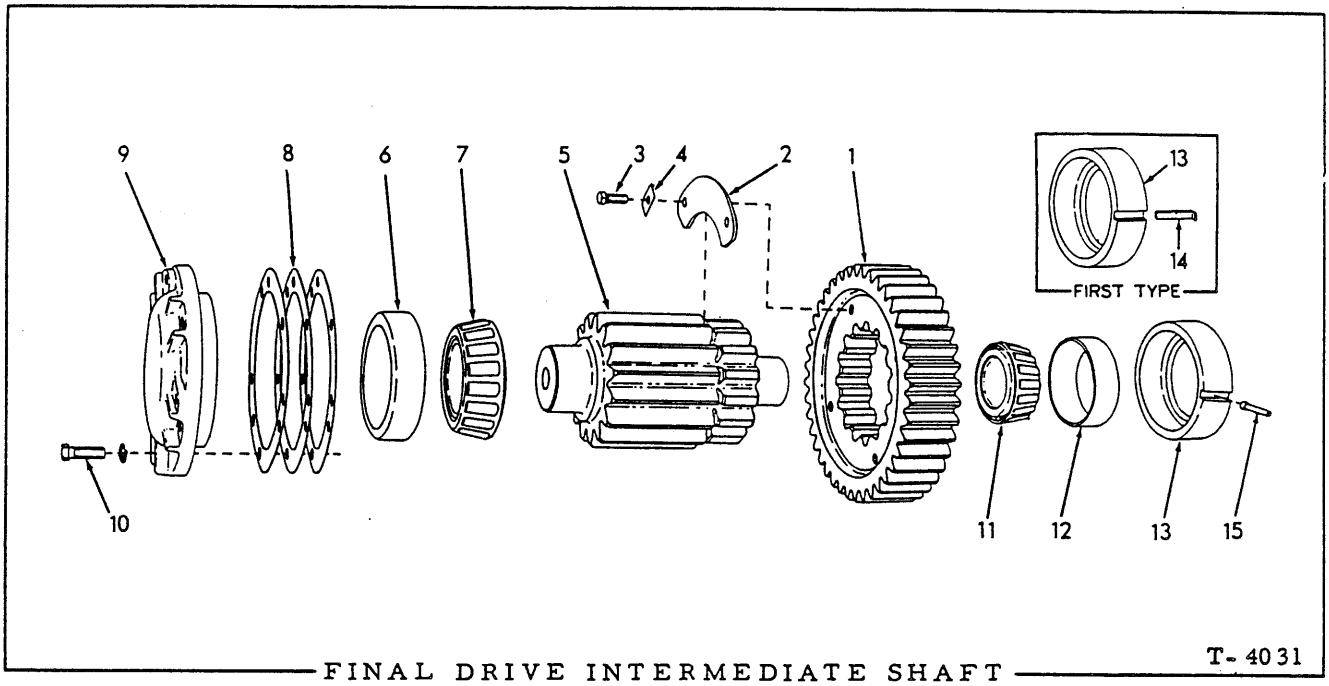

FINAL DRIVE INTERMEDIATE SHAFT — T-4031

ITEM	PART NO.	QTY.	DESCRIPTION	
1	642642	2	GEAR (40 teeth)	
2	056508	4	LOCK, gear retaining	
3	035439	8	CAPSCREW, 3/8"NC x 1"	
4	052444	8	LOCK, capscrew	
5	642640	2	PINION (15 teeth)	
6	069328	2	CUP, outer bearing	
7	069441	2	CONE ASSEMBLY, outer bearing	
8	093250	4	SHIM, bearing adjustment (.005" thick. Use as req'd)	Not used on tractors #6025 thru #6195, including #6211
	093249	4	SHIM, bearing adjustment (.007" thick. Use as req'd)	
	093248	14	SHIM, bearing adjustment (.010" thick. Use as req'd)	
	621619	4	SHIM, bearing adjustment (.005" thick. Use as req'd)	Used on tractors #6025 thru #6195 only, including #6211
	621620	4	SHIM, bearing adjustment (.007" thick. Use as req'd)	
	621621	14	SHIM, bearing adjustment (.010" thick. Use as req'd)	

(Continued)

FINAL DRIVE INTERMEDIATE SHAFT (Continued)

ITEM	PART NO.	QTY.	DESCRIPTION
9	084901	2	CAGE, outer bearing (Used prior to tractor #3998)
	621593	2	CAGE, outer bearing (Used on tractors #6025 thru #6195 only, including #6211)
	621601	8	PIN, dowel, 5/8" x 1-5/8"
	093256	2	CAGE, outer bearing (Effective with tractor #3998)(Not used on tractors #6025 thru #6195, including #6211)
	622036	2	CAGE KIT, outer bearing (Consists of 1 CAGE with 1/8" oversize O. D., 4 DOWELS 621601 and set of SHIMS. Use to salvage final drive housings with worn bore. Cage must have O. D. finish-machined for tight fit in housing bore.
10	035018	10	CAPSCREW, 1/2"NF x 1-1/2" — Used prior to tractor #3998
	904208	10	LOCKWASHER, 1/2" — Used prior to tractor #3998
	023465	10	CAPSCREW, 5/8"NF x 1-3/4" — Effective with tractor #3998
	904209	10	LOCKWASHER, 5/8" — Effective with tractor #3998
11	211582	2	CONE ASSEMBLY, inner bearing
12	211581	2	CUP, inner bearing
13	084297	2	CAGE, inner bearing
14	084335	2	KEY, locking, inner bearing cage (Used prior to tractor #1237)
15	089320	2	PIN, locking, inner bearing cage (Effective with tractor #1237)

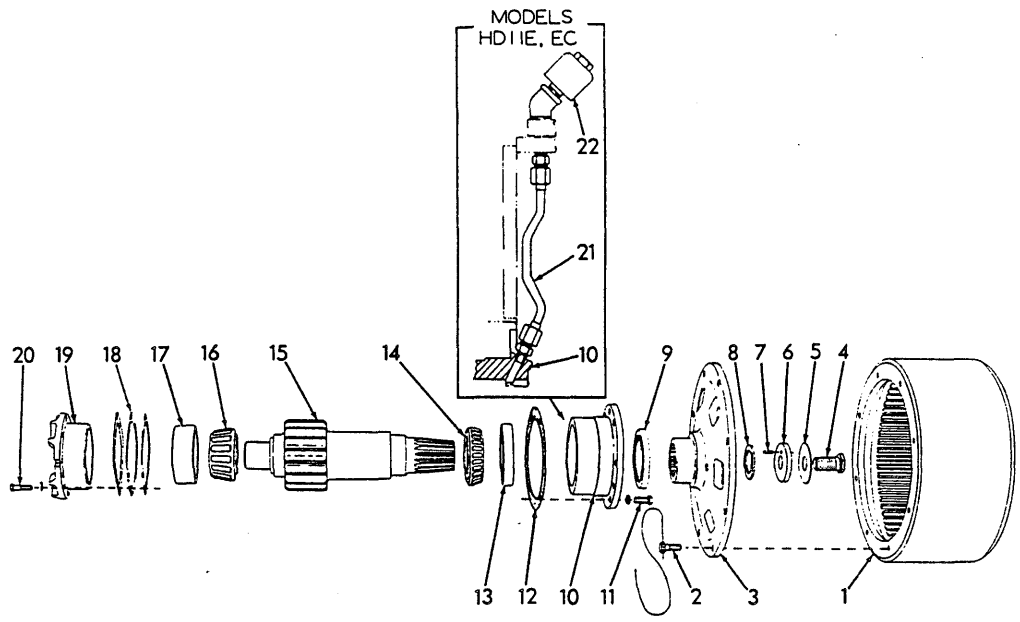

FINAL DRIVE PINION SHAFT

T-4030

* All Model HD11B, ES, S, F, FC tractors; also Model HD11E, EC tractors prior to serial No. 10001
** Model HD11E, EC tractors serial No. 10001 and up

ITEM	PART NO.	QTY. *	QTY. **	DESCRIPTION
1	056801	2	-	DRUM, brake
	631316	-	2	DRUM, brake
2	090767	16	-	CAPSCREW, drilled-hd., 1/2"NC x 1-3/16"
	023756	4	-	WIRE, locking, 1/16" x 26"
	650835	-	16	BOLT, self-locking, 1/2"NC x 1"
3	056522	2	-	HUB, brake drum
	624559	-	2	HUB, brake drum
4	630045	2	2	CAPSCREW, hub retaining (1"NF x 1-3/4")
5	630052	2	2	LOCK, hub retaining capscrew
6	623783	2	-	WASHER ASSEMBLY, hub retaining (Includes item 7)
	631584	-	2	WASHER ASSEMBLY, hub retaining (Includes item 7)
7	035793	2	2	PIN, hub retaining washer
8	056513	2	2	WASHER, sealing, brake drum hub
9	628940	2	-	SEAL, oil
	628320	-	2	SEAL, oil

(Continued)

FINAL DRIVE PINION SHAFT (Continued)

ITEM	PART NO.	QTY. *	QTY. **	DESCRIPTION	
10	056788	2	-	CAGE, inner bearing	
	631577	-	2	CAGE, inner bearing	
11	070469	12	12	CAPSCREW, 1/2"NF x 1-1/4"	
	904208	12	12	LOCKWASHER, 1/2"	
12	056512	2	-	GASKET, inner bearing cage	
	633904	-	2	GASKET, inner bearing cage	
13	057005	2	2	CUP, inner bearing	
14	057006	2	2	CONE ASSEMBLY, inner bearing	
15	642641	2	2	PINION (16 teeth)	
16	057004	2	2	CONE ASSEMBLY, outer bearing	
17	057003	2	2	CUP, outer bearing	
18	084905	4	4	SHIM, bearing adjustment (.005" thick)	Use as required
	084904	4	4	SHIM, bearing adjustment (.007" thick)	
	084903	14	14	SHIM, bearing adjustment (.010" thick)	
19	084319	2	2	CAGE, outer bearing	
20	012992	8	8	CAPSCREW, 3/8"NF x 1-1/4"	
	904206	8	8	LOCKWASHER, 3/8"	
21	------	-	2	TUBE ASSEMBLY, vent (Includes nuts)(Used prior to tractor #11245. Order TUBE ASSEMBLY 650128 and 2 CONNECTORS 919171)	
	919756	-	4	CONNECTOR, flare type, 5/16" tube, 1/8"NPT male	
	650128	-	2	TUBE ASSEMBLY, vent (Includes nuts)(Effective with tractor #11245)	
	919171	-	4	CONNECTOR, flare type, 1/4" tube, 1/8"NPT male	
22	050748	-	2	BREATHER	
	910149	-	2	ELBOW, street, 45°, 3/8"NPT	

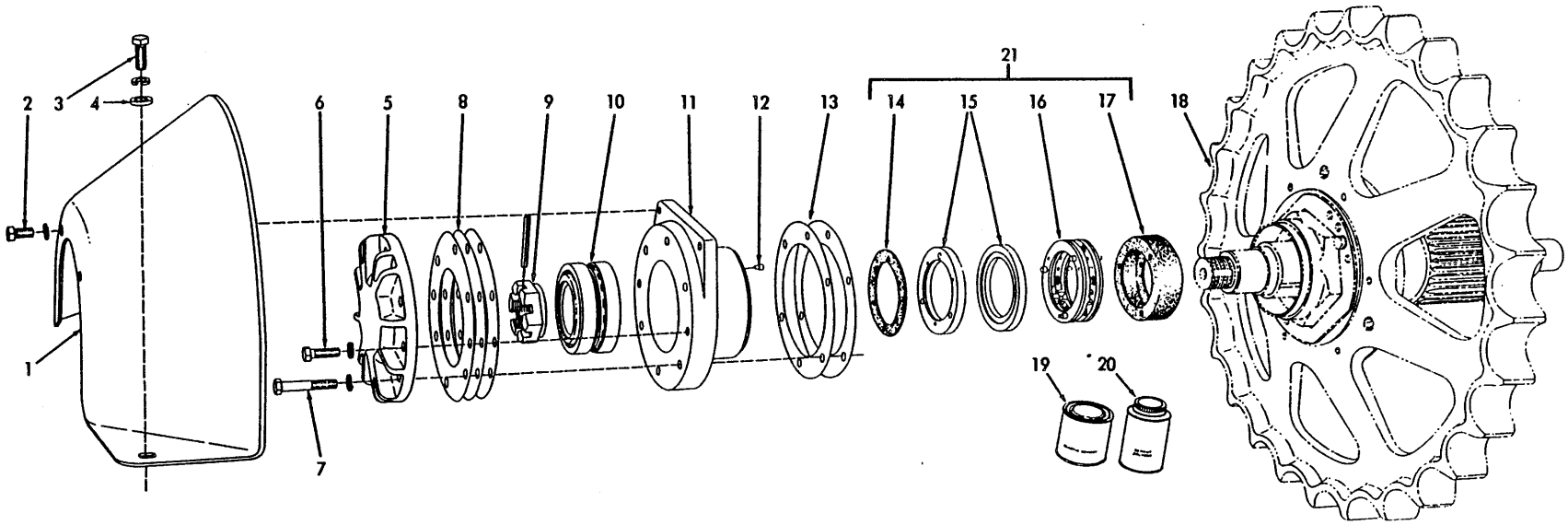

FINAL DRIVE OUTBOARD BEARING AND SEAL

I-16908

FINAL DRIVE OUTBOARD BEARING AND SEAL

ITEM	PART NO.	QTY.	DESCRIPTION
1	084326	2	GUARD, sprocket (Special equipment)
2	035221	4	CAPSCREW, 1/2"NC x 1"
3	070469	4	CAPSCREW, 1/2"NF x 1-1/4"
4	064531	4	WASHER, plain
	904208	8	LOCKWASHER, 1/2"
5	084303	2	COVER, outboard bearing
6	035018	4	CAPSCREW, 1/2"NF x 1-1/2"
7	070403	12	CAPSCREW, 1/2"NF x 3"
	904208	16	LOCKWASHER, 1/2"
8	084313	4	SHIM, outer bearing cap (.005" thick. Use as req'd)
	084312	4	SHIM, outer bearing cap (.007" thick. Use as req'd)
	084311	14	SHIM, outer bearing cap (.010" thick. Use as req'd)
9	058925	2	NUT, retaining, outer bearing
	917904	2	PIN, roll, 5/16" x 3"
10	058702	2	BEARING, roller, outboard (Each consists of 1 roller assembly and 2 cups. Serviced only as a unit)
11	084271	2	CAGE, outboard bearing
12	084432	6	PIN, outer seal ring-(See item 21)
13	069080	12	SHIM, outboard bearing cage (.015" thick. Use as req'd)
14	069106	2	GASKET, seal ring
15	081787	4	RING, outer seal
16	084337	2	FOLLOWER ASSEMBLY, outer seal (Serviced only as a unit)
17	058814	2	BOOT, outer seal
18	------	-	SPROCKET (See page 335)
19	033288	-	CEMENT, neoprene, 1/2"pint can
20	054890	-	SOLVENT, neoprene cement, 1/2 pint can
21	091972	2	SEAL KIT (Includes parts for one (1) side only; items 12 and 14 thru 17)

Items 14, 15, 16, 17: See item 21

Items 19, 20: For cementing boots and gaskets

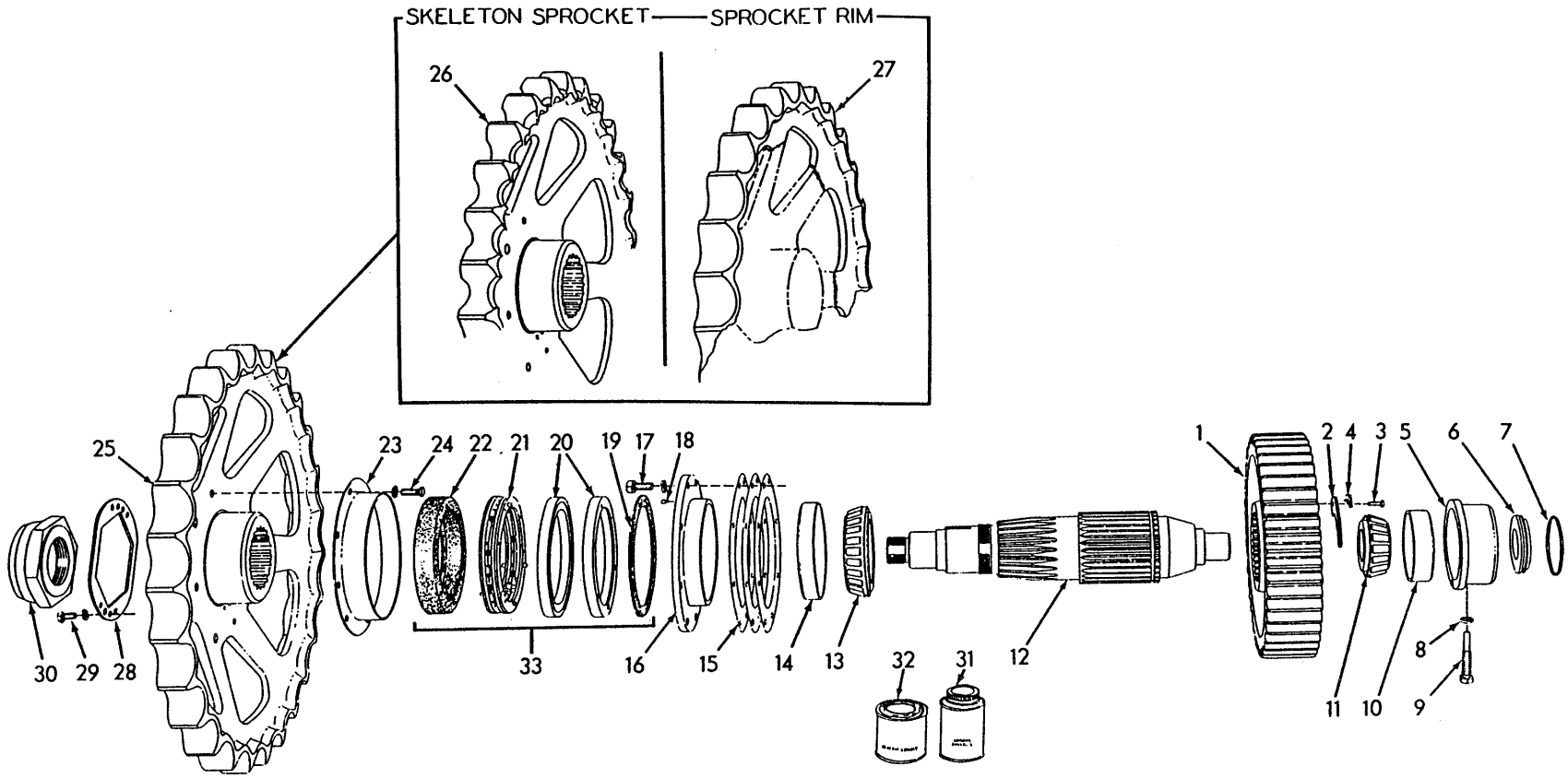

FINAL DRIVE SPROCKET, SHAFT AND GEAR

I-10297

FINAL DRIVE SPROCKET, SHAFT AND GEAR

* All Model HD11B, ES, S, F, FC tractors; also Model HD11E, EC tractors prior to serial No. 10001
** Model HD11E, EC tractors serial No. 10001 and up; also used on all prior models equipped with extreme-duty service replacement tracks

ITEM	PART NO.	QTY. *	QTY. **	DESCRIPTION
1	70642643	2	2	GEAR, driving
2	70058826	4	4	LOCK, gear retaining
3	70035439	8	8	CAPSCREW, 3/8"NC x 1"
4	70052444	8	8	LOCK, capscrew
5	70084289	2	2	CAGE, inner bearing cup
6	70057273	2	-	COVER, inner bearing (Used prior to tractor #2502)
	70091571	2	2	COVER, inner bearing (Effective with tractor #2502)
7	70923829	2	-	O-RING, inner bearing cover (Used prior to tractor #2502)
	70923817	2	2	O-RING, inner bearing cover (Effective with tractor #2502)
8	70049918	2	2	WASHER, bearing cage setscrew (copper)
9	70084278	2	2	SETSCREW, bearing cage (hex-hd., dog-pt., 5/8"NF x 3-3/8")
10	70052070	2	2	CUP, inner bearing
11	70084277	2	2	CONE ASSEMBLY, inner bearing
12	70622135	2	2	SHAFT, sprocket
13	70069615	2	2	CONE ASSEMBLY, intermediate bearing
14	70069614	2	2	CUP, intermediate bearing
15	70056971	8	8	SHIM, bearing adjustment (.005" thick. Use as required)
	70056970	4	4	SHIM, bearing adjustment (.007" thick. Use as required)
	70056969	24	24	SHIM, bearing adjustment (.010" thick. Use as required)
16	70084349	2	2	CAGE ASSEMBLY, intermediate bearing (Includes item 18)
17	70035018	16	16	CAPSCREW, 1/2"NF x 1-1/2"
	70904208	16	16	LOCKWASHER, 1/2"
18	70084432	6	6	PIN, locating, seal ring
19	70058807	2	2	GASKET, seal ring
20	70081788	4	4	□RING, inner seal (Original equipment)
	70651996	-	4	□RING, inner seal (For service SPROCKET 70654500 only)
21	70058796	2	2	□FOLLOWER ASSEMBLY, inner seal (Serviced only as a unit)
22	70058806	2	2	□BOOT, inner seal

(Continued)

(Revised December 1979)

FINAL DRIVE SPROCKET, SHAFT AND GEAR (Continued)

ITEM	PART NO.	QTY. *	QTY. **	DESCRIPTION	
23	70084333	2	-	GUARD, seal (Used prior to tractor #5351)	
	70056966	2	2	GUARD, seal (Original equipment on tractor #5351 and up)	
	70651985	-	2	GUARD, seal (For service SPROCKET 70654500 only)	
24	70035221	12	-	CAPSCREW, 1/2"NC x 1"	Used prior to tractor #5351
	70904208	12	-	LOCKWASHER, 1/2"	
	70035061	8	8	CAPSCREW, 1/2"NC x 1-1/4"	Effective with tractor #5351
	70904208	8	8	LOCKWASHER, 1/2"	
25	70629048	2	-	SPROCKET, track (If for tractors prior to #5351, also order GUARD 70056966)	Standard. Has flat tooth base
	--------	-	2	SPROCKET, track (Original equipment. Order SPROCKET 70654500, 2 RING 70651996, GUARD 70651985	
	70654500	-	2	SPROCKET, track (Service replacement only)	
26	70629267	2	-	SPROCKET, track (If for tractors prior to #5351, also order GUARD 70056966) (See NOTE below)	
	70643856	-	2	SPROCKET, track (See NOTE below)	
				NOTE: Special. Skeleton tooth-base to minimize packing track.	
27	70629270	2	-	RIM, track sprocket	Standard type. Requires welding to install.
	70644100	-	2	RIM, track sprocket	
28	70084299	2	2	LOCK, sprocket retaining nut	
29	70035221	4	4	CAPSCREW, 1/2"NC x 1"	
	70904208	4	4	LOCKWASHER, 1/2"	
30	70084236	2	2	NUT, sprocket retaining	
31	70054890	-	-	SOLVENT, neoprene cement, 1/2 pint can	For cementing boots and gaskets
32	70033288	-	-	CEMENT, neoprene, 1/2 pint can	
33	70091973	2	2	SEAL KIT (Includes parts for one (1) side only; items 19 thru 22)(For use with original sprockets only)	
	70656664	-	2	SEAL KIT (Includes parts for one (1) side only; items 19 thru 22)(For use with service replacement sprockets only)	

STEERING LEVERS AND LINKAGE

USAGE: Model HD11B, E, ES, S, F tractors prior to serial No. 6069 excluding Nos. 6044 and 5490

ITEM	PART NUMBER	QTY.	DESCRIPTION
1	084539	1	BRACKET ASSEMBLY, operating lever (Includes items 3 and 4)
2	037573	2	CAPSCREW, 5/8"NC x 2-3/4"
	904209	2	LOCKWASHER, 5/8"
3	049994	1	SHAFT, pivot, operating levers
4	069521	2	PIN, booster pivot
	900806	2	PIN, cotter, 1/8" x 1"
	911100	2	WASHER, plain, SAE std., 5/8"
5	069489	1	LEVER ASSEMBLY, operating, left (Includes item 7)(Used prior to tractor #1077)
	088963	1	LEVER ASSEMBLY, operating, left (Includes item 7)(Effective with tractor #1077)
6	069490	1	LEVER ASSEMBLY, operating, right (Includes item 7)(Used prior to tractor #1077 except on Model HD11F)
	088964	1	LEVER ASSEMBLY, operating, right (Includes item 7)(Effective with tractor #1077 except on Model HD11F)
	090756	1	LEVER ASSEMBLY, operating, right (Includes item 7)(For Model HD11F)
7	052669	4	BUSHING, operating lever
8	078620	2	GRIP, operating lever
9	031854	2	PIN, retaining, operating lever
	900942	2	PIN, cotter, 3/32" x 5/8"
10	058322	4	BEARING, needle, operating lever
11	053926	2	SEAL, dust, operating lever
12	064942	2	COVER, operating lever
13	068166	2	BOOSTER ASSEMBLY, operating lever (Consists of items 14 thru 18)
14	068169	2	TUBE ASSEMBLY, booster (Includes item 15)
15	096142	4	BUSHING, booster tube yoke
16	096019	2	SLEEVE, booster
17	087958	2	SPRING, booster
18	068173	2	RING, snap, booster
19	052671	2	PIN, booster pivot
	900806	2	PIN, cotter, 1/8" x 1"
20	068163	2	BOLT, eye, booster pivot
	911049	2	NUT, jam, 5/8"NF

(Continued)

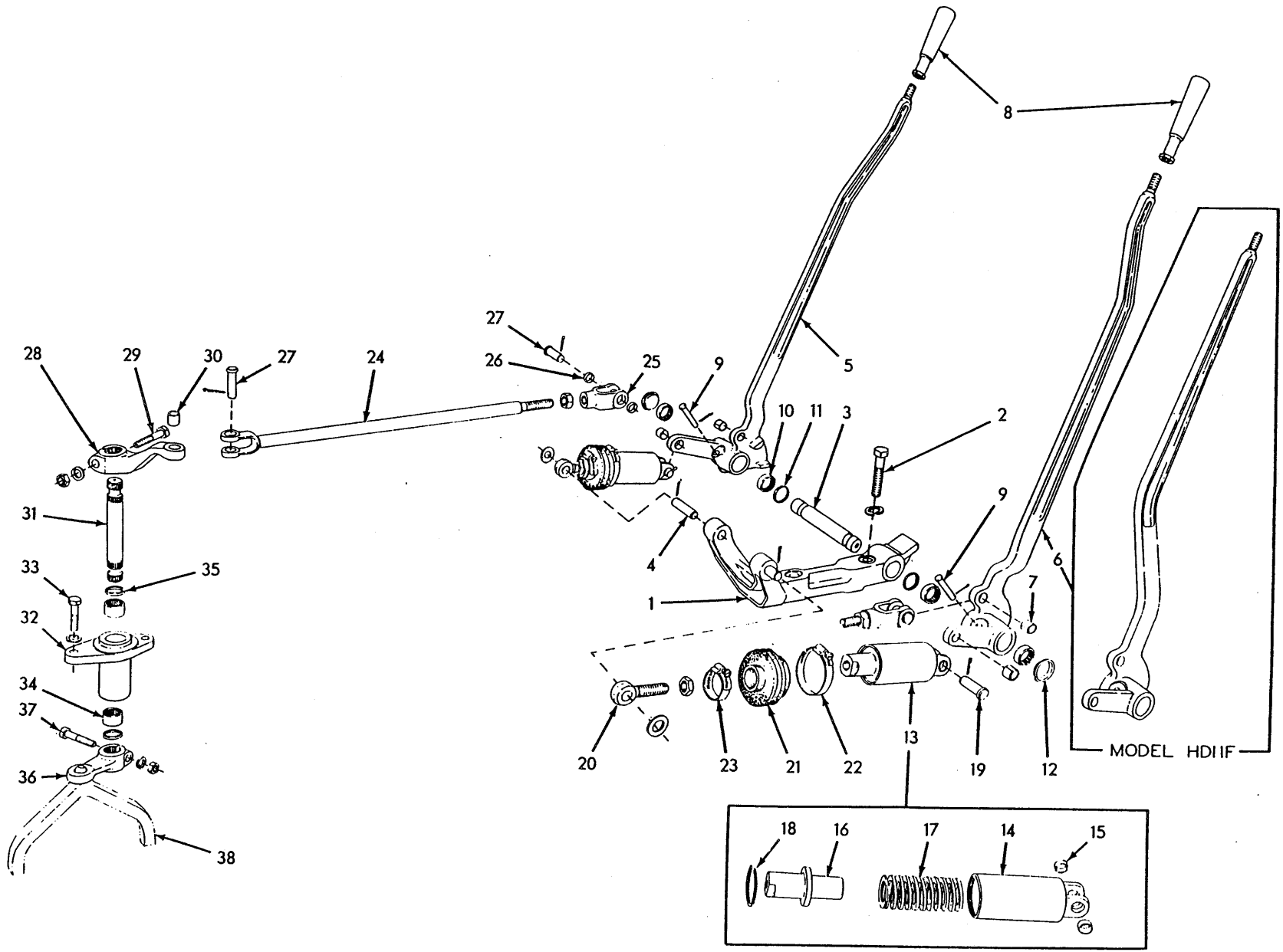

STEERING LEVERS AND LINKAGE (First type)

STEERING LEVERS AND LINKAGE (Continued)

ITEM	PART NO.	QTY.	DESCRIPTION
21	068165	2	BOOT, booster
22	921913	2	CLAMP, hose, adjustable, 1-13/16" diam. to 2-3/4" diam.
23	921912	2	CLAMP, hose, adjustable, 1-1/16" diam. to 2" diam.
24	084534	2	ROD, control
	911044	2	NUT, 5/8"NF
25	052620	2	YOKE ASSEMBLY, control rod (Includes item 26)
26	096142	4	BUSHING, yoke
27	052671	4	PIN, control rod yoke
	900806	4	PIN, cotter, 1/8" x 1"
28	067623	2	LEVER ASSEMBLY, control rod (Includes item 30)
29	035892	2	CAPSCREW, 1/2"NF x 2-1/2"
	904208	2	LOCKWASHER, 1/2"
	911043	2	NUT, 1/2"NF
30	052669	2	BUSHING, control rod lever
31	067622	2	SHAFT, lever
32	067619	2	CAGE, lever shaft bearing
33	035018	4	CAPSCREW, 1/2"NF x 1-1/2"
	904208	4	LOCKWASHER, 1/2"
34	051513	4	BEARING, needle, lever shaft
35	053926	4	SEAL, dust, lever shaft bearing
36	057842	2	LEVER, lower
37	035892	2	CAPSCREW, 1/2"NF x 2-1/2"
	904208	2	LOCKWASHER, 1/2"
	911043	2	NUT, 1/2"NF
38	------	-	YOKE ASSEMBLY (See STEERING CLUTCHES)

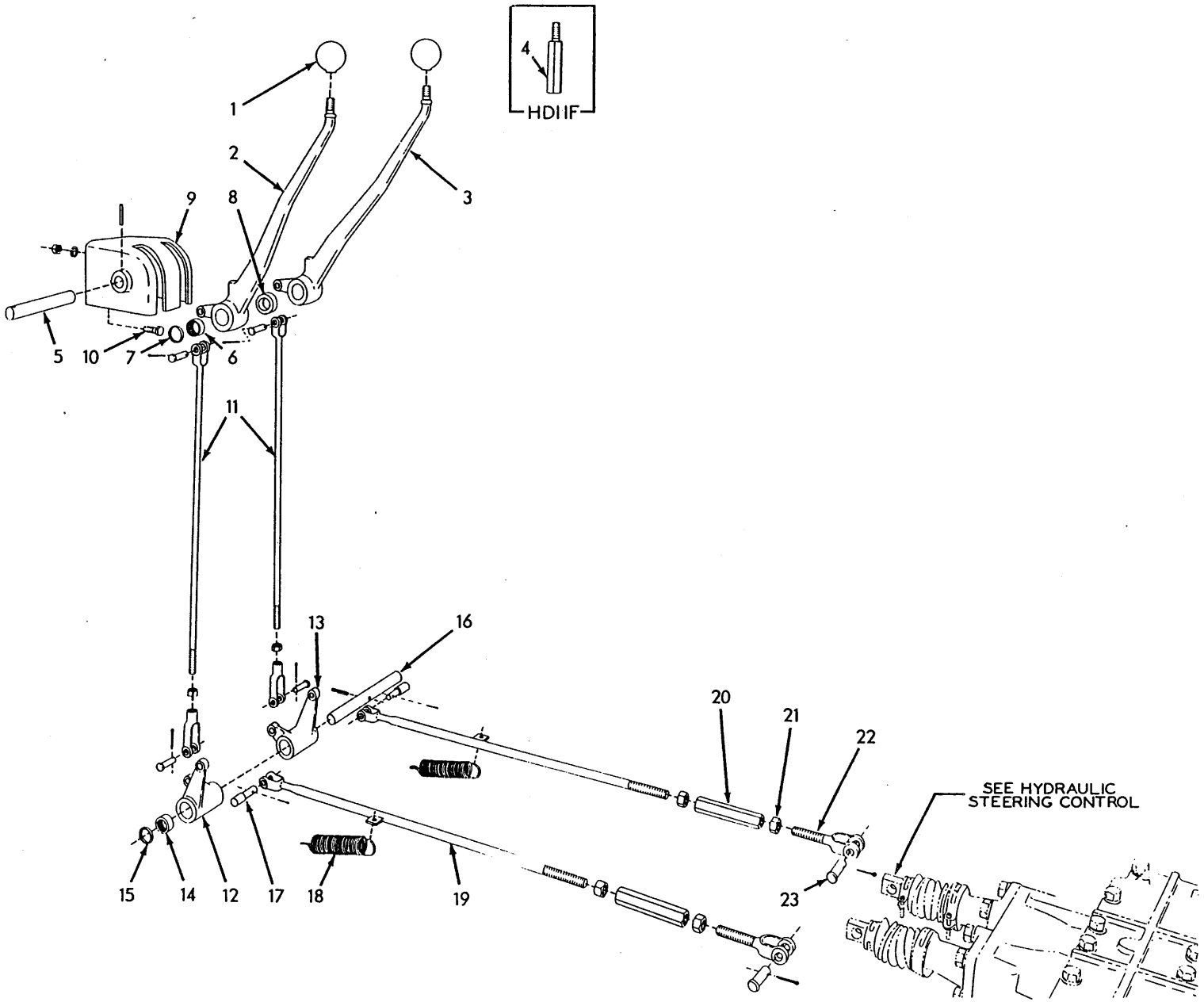

STEERING LEVERS AND LINKAGE (Second type)

STEERING LEVERS AND LINKAGE

USAGE: Tractors serial No. 6069 thru No. 10000 including Nos. 6044 and 5490

* Models HD11B, E, EC, ES, S
** Models HD11F, FC

ITEM	PART NO.	QTY. *	QTY. **	DESCRIPTION
1	091862	2	2	KNOB, steering lever
2	099529	1	-	LEVER, steering, left
	620061	-	1	LEVER, steering, left
3	099530	1	-	LEVER, steering, right
	620062	-	1	LEVER, steering, right
4	089549	-	2	EXTENSION, steering lever
5	099538	1	1	SHAFT, steering lever
	915989	1	1	PIN, roll, 3/16" x 1-3/8"
6	052643	4	4	BEARING, needle, steering lever
7	052662	4	4	SEAL, dust, steering lever bearing
8	610138	1	1	COLLAR, spacing, steering lever
9	099528	1	1	BRACKET, steering lever
10	012992	3	-	CAPSCREW, 3/8"NF x 1-1/4"
	036034	-	3	CAPSCREW, 3/8"NF x 1"
	904206	3	3	LOCKWASHER, 3/8"
	911041	3	-	NUT, 3/8"NF
11	081534	2	-	ROD, vertical (20-1/2" long)(Model HD11EC tractors; also standard equipment on Model HD11B, E, ES, S tractors with dry master clutch prior to #6911; optional thereafter)
	630574	2	-	ROD, vertical (19-1/2" long)(Used only on Model HD11B, E, ES, S tractors #6911 and up equipped with standard oil clutch. Not used with Engine Decelerator)
	632499	2	-	ROD, vertical (19-1/8" long)(Model HD11B, E, ES, S tractors equipped with Engine Decelerator)
	084474	-	2	ROD, vertical (12-1/4" long)(Model HD11FC. Also standard equipment on Model HD11F tractors prior to #6911; optional thereafter)
	630592	-	2	ROD, vertical (11-3/4" long)(Used only on Model HD11F tractors #6911 and up equipped with standard oil clutch. Not used with Engine Decelerator)
	632544	-	2	ROD, vertical (11-1/2" long)(Model HD11F tractors equipped with Engine Decelerator)
	911041	2	2	NUT, 3/8"NF
	628736	2	2	YOKE, rod end, adjustable, 3/8"NF
	078810	4	4	PIN, yoke, 3/8" diam.
	900801	4	4	PIN, cotter, 3/32" x 3/4"

(Continued)

STEERING LEVERS AND LINKAGE (Continued)

ITEM	PART NUMBER	QTY. *	QTY. **	DESCRIPTION
12	099521	1	1	LEVER, bellcrank, left
13	099522	1	1	LEVER, bellcrank, right
14	052643	4	4	BEARING, needle, bellcrank lever
15	052662	4	4	SEAL, dust, bellcrank lever bearing
16	099537	1	1	SHAFT, bellcrank lever
	915989	1	1	PIN, roll, 3/16" x 1-3/8"
17	052564	2	2	PIN, stop, horizontal rod
	900801	2	2	PIN, cotter, 3/32" x 3/4"
18	043881	2	2	SPRING, retracting
19	099526	2	2	ROD, horizontal (21-1/2" long) (Standard equipment on all Model HD11EC, FC tractors. Also standard equipment on Model HD11B, E, ES, S, F tractors with dry-master clutch prior to #6911; optional thereafter)
	630564	2	2	ROD, horizontal (24" long) (Used only on Model HD11B, E, ES, S, F tractors #6911 and up equipped with standard oil clutch)
	911043	2	2	NUT, 1/2"NF
20	052601	2	2	NUT, adjusting
21	053005	2	2	NUT, control rod yoke (1/2"NF left hand thread)
22	073034	2	2	YOKE, control rod
23	049993	2	2	PIN, control rod yoke
	900805	2	2	PIN, cotter, 1/8" x 3/4"

STEERING LEVERS AND LINKAGE

USAGE: Model HD11B, S tractors serial No. 10001 and up.

ITEM	PART NO.	QTY.	DESCRIPTION
1	70633659	1	BRACKET, steering lever
2	70614478	4	CAPSCREW, 1/2"NF x 1-3/8"
	70904208	4	LOCKWASHER, 1/2"
	70911043	4	NUT, 1/2"NF
3	70090020	2	KNOB, steering lever
4	70630847	1	LEVER ASSY., steering, left (Includes items 6 and 7)
5	70630848	1	LEVER ASSY., steering, right (Includes items 6 and 7)
6	70624584	2	BUSHING, steering lever (small)
7	70630795	4	BUSHING, steering lever (large)
8	70629716	1	SHAFT, steering levers
	70915989	1	PIN, roll, 3/16" x 1-3/8"
9	70633633	2	ROD, upper
10	--------	2	BLOCK ASSY., pillow, upper shaft (Includes item 12)(Order BEARING ASSY. 70654656 and 2 CAPSCREW 70036032)
	70654656	2	BEARING ASSY. (Includes bushing which is not serviced separately)(Service replacement)
11	70099575	4	CAPSCREW, 3/8"NF x 2-1/4" (Original equipment)
	70036032	4	CAPSCREW, 3/8"NF x 3/4" (Service replacement)
	70904206	4	LOCKWASHER, 3/8"
12	70643257	2	BUSHING, pillow block (Original equipment)
13	70633621	1	SHAFT, upper
14	70633687	2	BELLCRANK ASSY., upper shaft (Includes items 15 and 16)
15	70624584	4	BUSHING, upper shaft bellcrank (small)
16	70630795	4	BUSHING, upper shaft bellcrank (large)
17	70040099	1	WASHER, spacing, upper shaft
18	70638319	2	ROD, vertical, upper
19	70633628	1	SHAFT, intermediate
	70915751	1	PIN, roll, 3/16" x 1-1/2"
20	70633607	2	BLOCK, pillow, intermediate shaft
21	70036034	4	CAPSCREW, 3/8"NF x 1"
	70904206	4	LOCKWASHER, 3/8"
22	70061554	8	SHIM, intermediate shaft pillow block (Use as required)
23	70638316	2	ROD, vertical, lower
	70911041	2	NUT, 3/8"NF
24	70628736	2	YOKE, control rod
25	70062334	1	SPACER, intermediate shaft
26	70638317	2	LEVER ASSY., intermediate shaft (Includes items 27 and 28)
27	70624584	4	BUSHING, intermediate shaft lever (small)

(Continued)

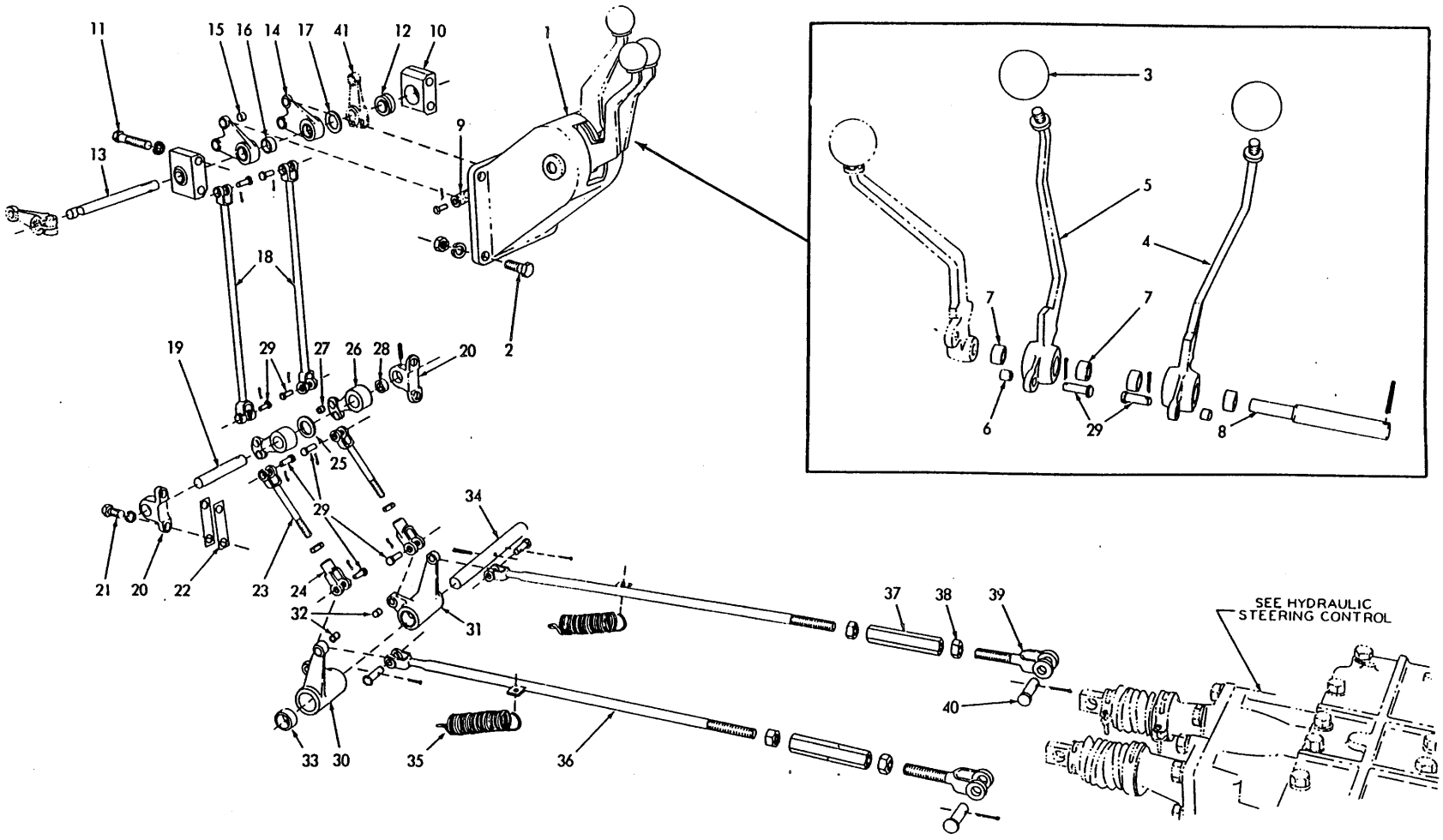

STEERING LEVERS AND LINKAGE (Third type. Models HD11B,S) T-41919

STEERING LEVERS AND LINKAGE (Continued)

ITEM	PART NO.	QTY.	DESCRIPTION	
28	630795	4	BUSHING, intermediate shaft lever (large)	
29	078810	14	PIN, control linkage yokes	
	900801	14	PIN, cotter, 3/32" x 3/4"	
30	638309	1	LEVER ASSEMBLY, lower shaft, left	Each includes items 32 and 33
31	638310	1	LEVER ASSEMBLY, lower shaft, right	
32	624584	4	BUSHING, lower shaft lever (small)	
33	630795	4	BUSHING, lower shaft lever (large)	
34	638314	1	SHAFT, lower	
	915989	1	PIN, roll, 3/16" x 1-3/8"	
35	043881	2	SPRING, retracting	
36	630564	2	ROD, horizontal	
	911043	2	NUT, 1/2"NF	
37	052601	2	NUT, adjusting	
38	053005	2	NUT, control rod yoke (1/2"NF left hand thread)	
39	073034	2	YOKE, control rod	
40	049993	2	PIN, control rod yoke	
	900805	2	PIN, cotter, 1/8" x 3/4"	
41	------	1	LEVERS (See THROTTLE CONTROL)	

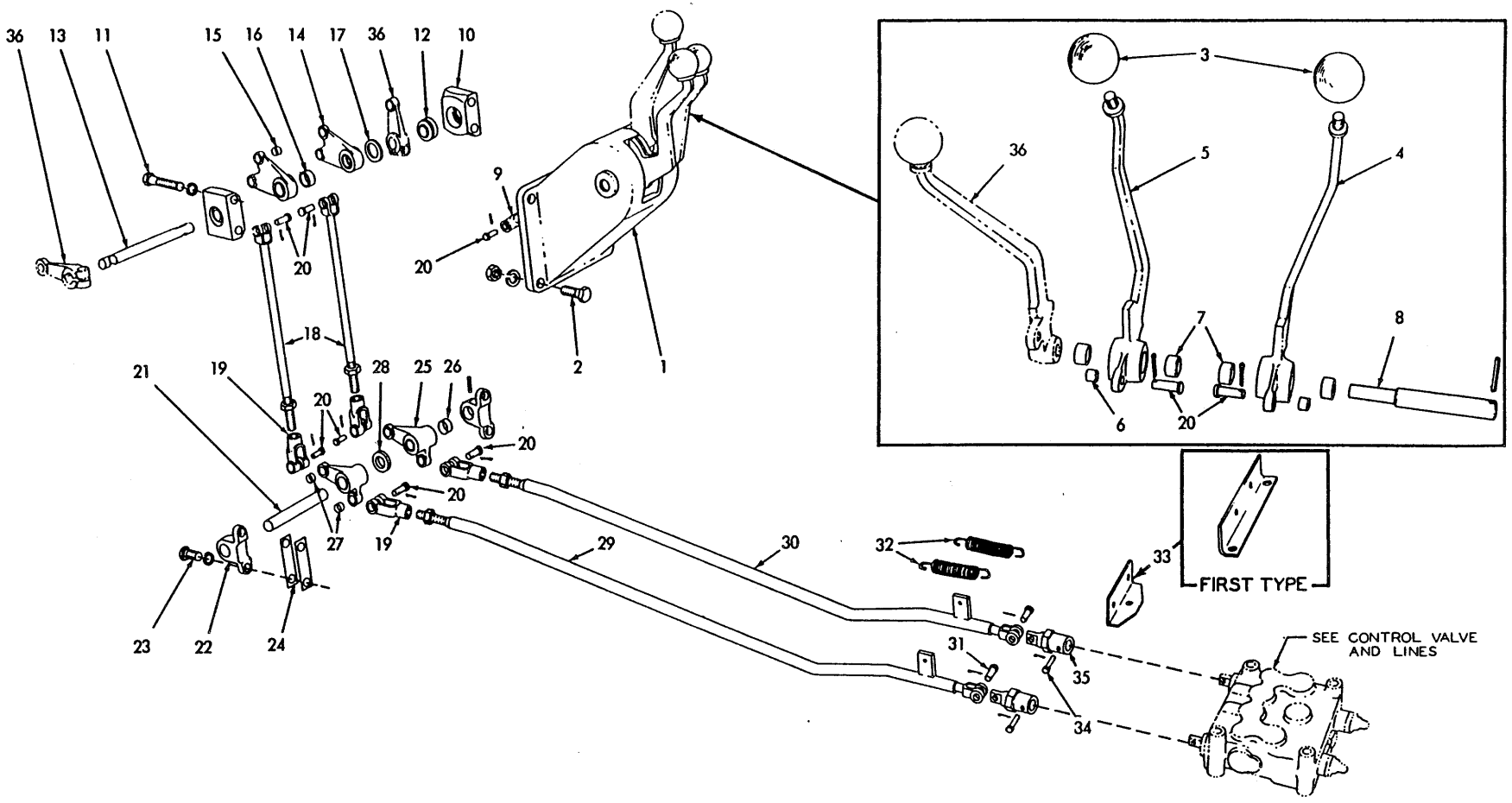

STEERING LEVERS AND LINKAGE (Third type. Models HD11E, EC)

T-41861

STEERING LEVERS AND LINKAGE

USAGE: Models HD11E, EC tractors serial No. 10001 and up.

ITEM	PART NO.	QTY.	DESCRIPTION
1	70633659	1	BRACKET, steering lever (Tractors prior to #11637)
	70651738	1	BRACKET, steering lever (Tractors #11637 and up)
2	70614478	4	CAPSCREW, 1/2"NF x 1-3/8"
	70904208	4	LOCKWASHER, 1/2"
	70911043	4	NUT, 1/2"NF
3	70090020	2	KNOB, steering lever
4	70630847	1	LEVER ASSY., steering, left (Includes items 6 and 7)
5	70630848	1	LEVER ASSY., steering, right (Includes items 6 and 7)
6	70624584	2	BUSHING, steering lever (small)
7	70630795	4	BUSHING, steering lever (large)
8	70629716	1	SHAFT, steering levers
	70915989	1	PIN, roll, 3/16" x 1-3/8"
9	70633633	2	ROD, upper
10	--------	2	BLOCK ASSY., pillow, upper shaft (Includes item 12)(Order BEARING ASSY. 70654656 and 2 CAP-SCREW 70036032)
	70654656	2	BEARING ASSY. (Includes bushing which is not serviced separately)(Service replacement)
11	70099575	4	CAPSCREW, 3/8"NF x 2-1/4" (Original equipment)
	70036032	4	CAPSCREW, 3/8"NF x 3/4" (Service replacement)
	70904206	4	LOCKWASHER, 3/8"
12	70643257	2	BUSHING, pillow block (Original equipment)
13	70633621	1	SHAFT, upper
14	70633687	2	BELLCRANK ASSY., upper shaft (Includes items 15 and 16)
15	70624584	4	BUSHING, upper shaft bellcrank (small)
16	70630795	4	BUSHING, upper shaft bellcrank (large)
17	70040099	1	WASHER, spacing, upper shaft
18	70633636	2	ROD, vertical
	70911041	2	NUT, 3/8"NF
19	70628736	4	YOKE, control rod
20	70078810	10	PIN, control linkage yokes
	70900801	10	PIN, cotter, 3/32" x 3/4"
21	70633628	1	SHAFT, lower
	70915751	1	PIN, roll, 3/16" x 1-1/2"
22	70633607	2	BLOCK, pillow, lower shaft
23	70036034	4	CAPSCREW, 3/8"NF x 1"
	70904206	4	LOCKWASHER, 3/8"
24	70061554	8	SHIM, lower shaft pillow block (Use as required)
25	70633648	2	BELLCRANK ASSY., lower shaft (Includes items 26 and 27)
26	70630795	4	BUSHING, bellcrank (large)
27	70624584	4	BUSHING, bellcrank (small)

(Continued)

ITEM	PART NO.	QTY.	DESCRIPTION
28	062334	1	SPACER, lower shaft
29	633645	1	ROD, horizontal, left
	911041	1	NUT, 3/8"NF
30	633646	1	ROD, horizontal, right
	911041	1	NUT, 3/8"NF
31	627451	2	PIN, control rod, rear
	900801	2	PIN, cotter, 3/32" x 3/4"
32	043881	2	SPRING, retracting
33	634316	1	ANGLE, retracting spring attachment (Tractors prior to #11637)
	651762	1	ANGLE, retracting spring attachment (Tractors #11637 and up)
34	630833	2	PIN, retaining, over-travel
	900801	2	PIN, cotter, 3/32" x 3/4"
35	630846	2	OVER-TRAVEL ASSEMBLY (Serviced only as a unit)
36	------	-	LEVERS (See THROTTLE CONTROL)

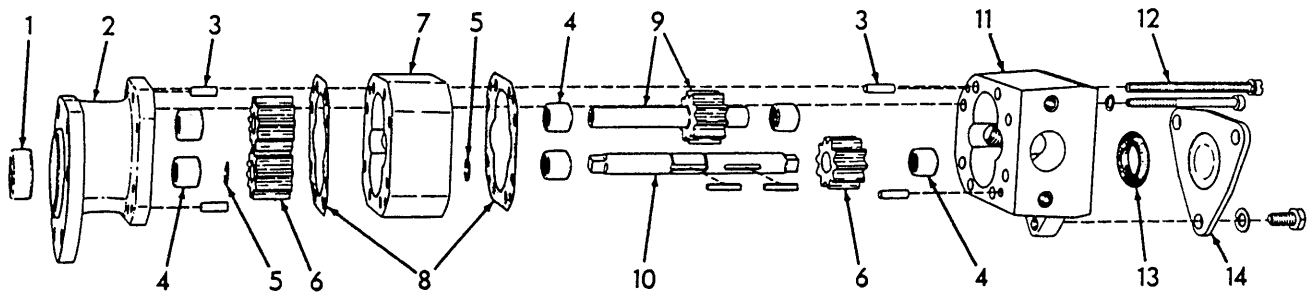

OIL PUMP ASSEMBLY 099511

USAGE: See page 351

ITEM	PART NO.	QTY.	DESCRIPTION
1	4047783	1	SEAL, pump shaft
2	------	1	STATOR (Not serviced separately)
3	4048000	4	PIN, dowel
4	077241	6	BEARING, needle
5	099949	2	RING, snap, drive shaft
6	099944	3	GEAR
7	------	1	HOUSING, front (Not serviced separately)
8	621363	2	GASKET, front housing
9	622173	1	SHAFT ASSEMBLY, driven (Includes gear and snap rings. Serviced only as a unit)
10	099945	1	SHAFT, drive
	920994	2	KEY, straight, 1/8" x 1/8" x 3/4"
11	------	1	HOUSING, rear (Not serviced separately)
	903747	6	SCREW, fil-hd., 1/4"NC x 3"
	904204	6	LOCKWASHER, 1/4"
12	081802	2	SCREW, fil-hd., 1/4"NC x 3-1/2" (Includes lockwasher)
13	099941	1	O-RING, rear cover
14	099939	1	CAP, rear (Removed when oil circulating pump is installed)
	916277	3	CAPSCREW, 5/16"NC x 5/8"
	904205	3	LOCKWASHER, 5/16"

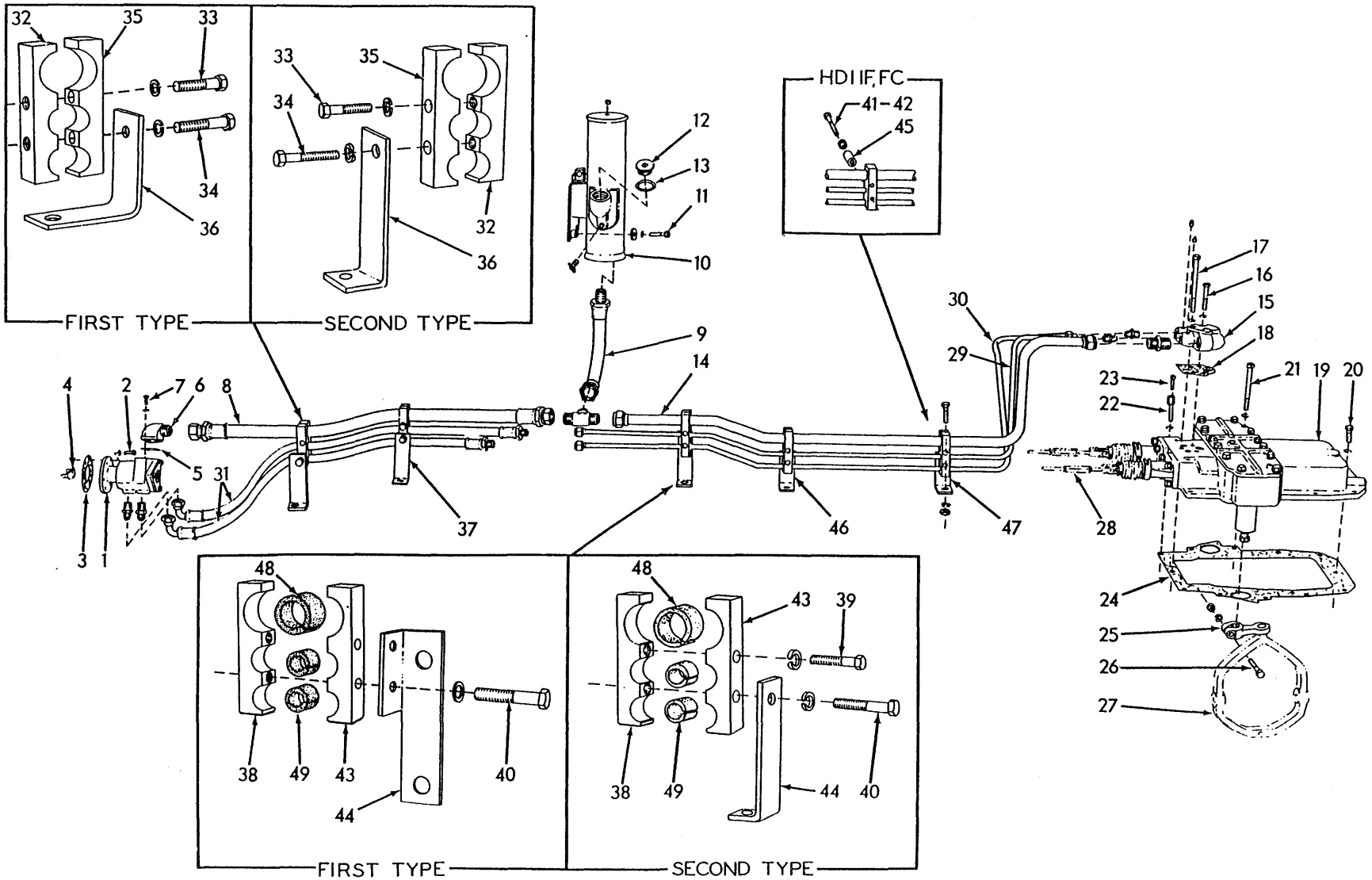

HYDRAULIC STEERING CONTROL (First type)

T-41911

* Tractors serial No. 6069 thru No. 10000, including Nos. 6044 and 5490
** Model HD11B, S tractors serial No. 10001 and up

ITEM	PART NO.	QTY. *	QTY. **	DESCRIPTION
1	099511	1	1	PUMP ASSEMBLY, oil (See page 349 for parts)
2	921194	6	6	CAPSCREW, Nylok, 5/16"NC x 7/8"
	904205	6	6	LOCKWASHER, 5/16"
3	099510	1	1	GASKET, pump mounting
4	630914	1	1	COUPLING, pump drive
5	099533	1	1	GASKET, oil return elbow
6	099534	1	1	ELBOW, oil return
7	045312	2	2	CAPSCREW, 5/16"NC x 3/4"
	904205	2	2	LOCKWASHER, 5/16"
8	644013	1	1	HOSE, oil return (See page 6)
9	099527	1	-	HOSE ASSEMBLY, oil tank (See page 6 for parts)(Used prior to tractor #6427)
	644011	1	1	HOSE ASSEMBLY, oil tank (See page 6)(Effective with tractor #6427)
	920490	1	1	TEE, union, flare type, 1" tube
10	621989	1	-	TANK, oil
	649351	-	1	TANK, oil
	912319	1	1	COCK, drain, 1/4"NPT
	907856	1	1	PLUG, pipe, hex-socket, 3/8"NPT
11	040013	-	2	CAPSCREW, 7/16"NC x 1-3/4"
	904207	-	2	LOCKWASHER, 7/16"
	074790	-	2	WASHER, plain
12	035250	1	1	PLUG, oil tank
13	035249	1	1	GASKET, oil tank plug
14	621990	1	1	TUBE ASSEMBLY, oil return (Includes nuts)(All models except HD11F, FC)
	621992	1	-	TUBE ASSEMBLY, oil return (Includes nuts)(Models HD11F, FC)
	919064	1	1	CONNECTOR, flare type, 1" tube, 1"NPT male
15	099524	1	1	MANIFOLD, oil tube connecting
	901651	2	2	PLUG, pipe, 1/8"NPT
16	028979	2	2	CAPSCREW, 1/2"NC x 2-1/2"
17	057984	1	1	CAPSCREW, 1/2"NF x 5-3/4"
	904208	3	3	LOCKWASHER, 1/2"
18	057841	1	1	GASKET, oil manifold
19	099865	1	1	VALVE ASSEMBLY, control (See page 355 for parts)
20	070469	6	6	CAPSCREW, 1/2"NF x 1-1/4"
21	037461	4	4	CAPSCREW, 1/2"NF x 4-3/4"
22	094543	1	1	CAPSCREW, 1/2"NF x 2" (Drilled for breather)
	904208	11	11	LOCKWASHER, 1/2"

(Continued)

ITEM	PART NO.	QTY. *	QTY. **	DESCRIPTION
23	051447	1	1	BREATHER
24	057836	1	1	GASKET, control valve
25	057842	2	2	LEVER, actuating
26	035892	2	2	CAPSCREW, 1/2"NF x 2-1/2"
	904208	2	2	LOCKWASHER, 1/2"
	911043	2	2	NUT, 1/2"NF
27	------	-	-	YOKE (See STEERING CLUTCHES)
28	------	-	-	ROD (See STEERING LEVERS AND LINKAGE)
29	099518	1	1	TUBE ASSEMBLY, oil supply, left (Includes nuts)(All models except HD11F,FC)
	099588	1	-	TUBE ASSEMBLY, oil supply, left (Includes nuts)(Models HD11F,FC)
	919063	1	1	CONNECTOR, flare type, 1/2" tube, 3/8"NPT male
30	099517	1	1	TUBE ASSEMBLY, oil supply, right (Includes nuts)(All models except HD11F,FC)
	099587	1	-	TUBE ASSEMBLY, oil supply, right (Includes nuts)(Models HD11F,FC)
	919063	1	1	CONNECTOR, flare type, 1/2" tube, 3/8"NPT male
31	644012	2	2	HOSE ASSEMBLY, oil supply, clutch control (See page 6)
	919128	2	2	CONNECTOR, flare type, 1/2" tube, 1/2"NPT male
32	099532	2	-	CLAMP, half, hose supporting (threaded holes)
	643999	-	2	CLAMP, half, hose supporting (threaded holes)
33	035336	2	2	CAPSCREW, 3/8"NF x 1-3/4"
34	046419	2	2	CAPSCREW, 3/8"NF x 2"
	904206	4	4	LOCKWASHER, 3/8"
35	099531	2	-	CLAMP, half, hose supporting (plain holes)
	644000	-	2	CLAMP, half, hose supporting (plain holes)
36	099515	1	-	ANGLE, hose supporting, front (Model HD11EC,FC. Also Model HD11B,E,ES,S,F tractors prior to #6911)
	099516	1	-	ANGLE, hose supporting, front (Model HD11B,E,ES,S,F tractors #6911 and up)
	035892	1	-	CAPSCREW, 1/2"NF x 2-1/2" (All models except HD11B,E,EC)
	904208	1	-	LOCKWASHER, 1/2" (All models except HD11B,E,EC)
	911043	1	-	NUT, 1/2"NF (All models except HD11B,E,EC)
	638308	-	1	ANGLE, hose supporting, front
37	099516	1	1	ANGLE, hose supporting, rear (All models except HD11F,FC)
	620252	1	-	ANGLE, hose supporting, rear (Models HD11F,FC)
	035892	1	-	CAPSCREW, 1/2"NF x 2-1/2" (All models except HD11B,E,EC)
	904208	1	-	LOCKWASHER, 1/2" (All models except HD11B,E,EC)
	911043	1	-	NUT, 1/2"NF (All models except HD11B,E,EC)

(Continued)

ITEM	PART NO.	QTY. *	QTY. **	DESCRIPTION	
38	099532	3	3	CLAMP, half, tube supporting (threaded holes)	
39	035336	1	3	CAPSCREW, 3/8"NF x 1-3/4"	1 less used on HD11F,FC
40	046419	5	3	CAPSCREW, 3/8"NF x 2"	1 less used on HD11F,FC
41	620253	1	-	CAPSCREW, 3/8"NF x 2-3/4"	Models HD11F,FC
42	053619	1	-	CAPSCREW, 3/8"NF x 3-3/4"	Models HD11F,FC
	904206	6	6	LOCKWASHER, 3/8"	
	911115	1	-	WASHER, plain, SAE std., 3/8"	
43	099531	3	3	CLAMP, half, tube supporting (plain holes)	
44	099520	1	-	ANGLE, tube supporting, front	
44	638313	-	1	ANGLE, tube supporting, front	
44	638350	-	1	ANGLE, tube supporting, front	Units with light-duty Radiator Shell
44	070469	-	3	CAPSCREW, 1/2"NF x 1-1/4"	Units with light-duty Radiator Shell
44	904208	-	3	LOCKWASHER, 1/2"	Units with light-duty Radiator Shell
45	622141	1	-	SPACER, tube supporting clamp (Models HD11F,FC)	
46	099523	1	1	ANGLE, tube supporting, intermediate	
47	099523	1	-	ANGLE, tube supporting, rear (Not for Models HD11F,FC)	
47	638315	-	1	ANGLE, tube supporting, rear	
47	035018	-	1	CAPSCREW, 1/2"NF x 1-1/2"	
47	904208	-	1	LOCKWASHER, 1/2"	
47	911043	-	1	NUT, 1/2"NF	
48	099535	3	3	BOOT, protecting, oil return tube	
49	099536	6	6	BOOT, protecting, oil supply tubes	

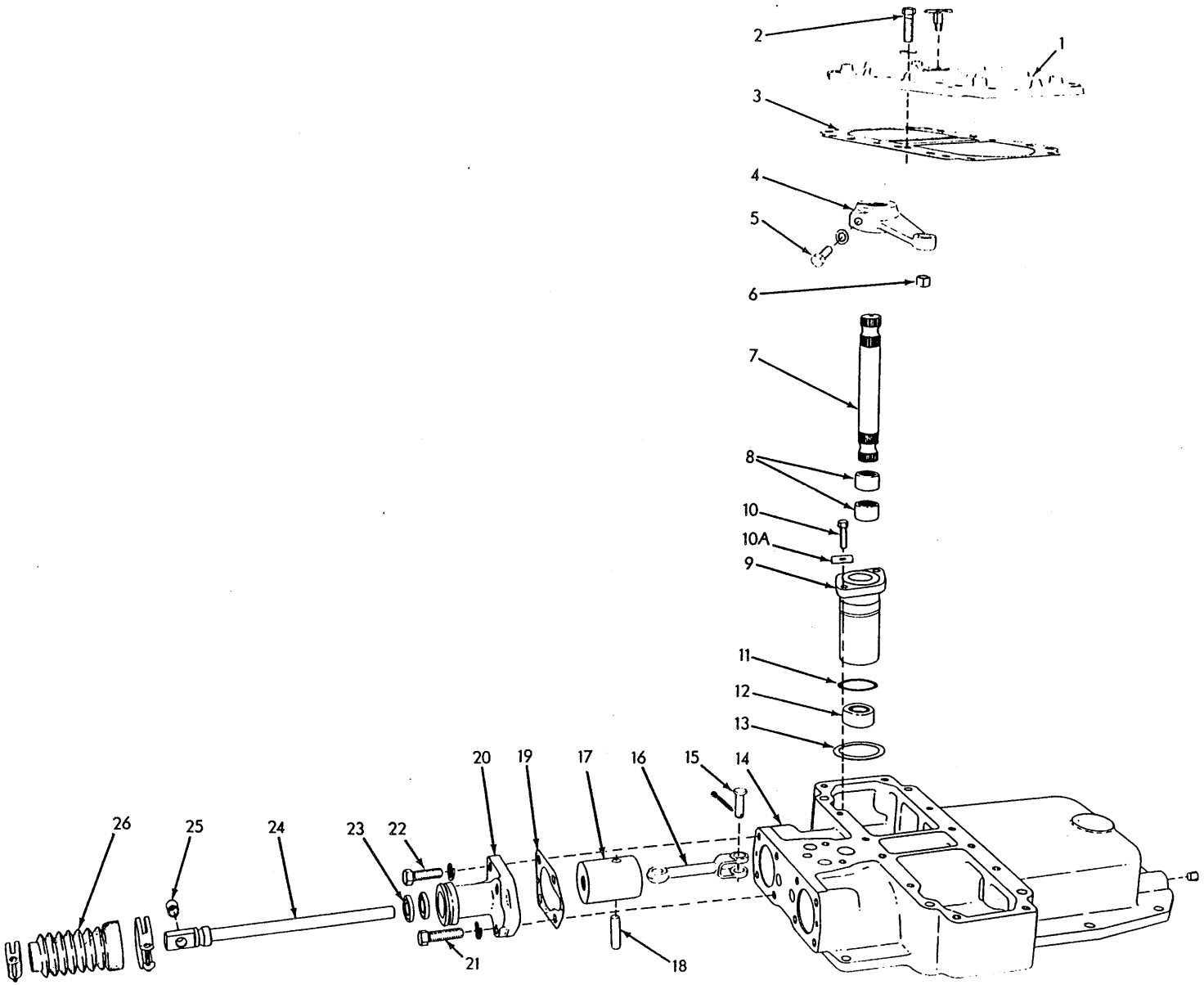

CONTROL VALVE ASSEMBLY 099865

CONTROL VALVE ASSEMBLY 099865

USAGE: See page 351

ITEM	PART NO.	QTY.	DESCRIPTION
1	057838	1	COVER, housing
	914453	1	COCK, vent, T-handle, 1/8"NPT
2	035061	12	CAPSCREW, 1/2"NC x 1-1/4"
	904208	12	LOCKWASHER, 1/2"
3	057839	1	GASKET, housing cover
4	080514	2	LEVER ASSEMBLY, actuating (Includes item 6)
5	035236	2	CAPSCREW, 1/2"NC x 1-3/4"
	906961	2	LOCKWASHER, internal teeth, 1/2"
6	049988	2	BUSHING, actuating lever
7	057843	2	SHAFT, actuating lever
8	051513	4	BEARING, needle, actuating lever shaft
9	075955	2	RETAINER, actuating lever shaft bearing
10	035439	4	CAPSCREW, 3/8"NC x 1"
10A	621453	4	LOCK, capscrew
11	923577	2	O-RING, bearing retainer
12	057848	2	SEAL, oil, actuating lever shaft
13	057846	2	GASKET, lever shaft bearing retainer
14	057852	1	HOUSING, control mechanism
	907859	1	PLUG, pipe, hex-socket, 1/4"NPT
15	049993	2	PIN, connecting rod
	910967	2	PIN, cotter, 1/8" x 7/8"
16	080513	2	ROD, connecting
17	099863	2	PISTON, control
18	052459	2	PIN, piston
19	059883	2	GASKET, valve spool bracket
20	099862	2	BRACKET, valve spool
21	036203	4	CAPSCREW, 1/2"NC x 1-3/4"
22	035190	4	CAPSCREW, 1/2"NC x 1-1/2"
	904208	8	LOCKWASHER, 1/2"
23	099856	4	SEAL, oil, valve spool
24	099864	2	SPOOL ASSEMBLY, valve (Includes item 25)
25	049988	2	BUSHING, valve spool (steel)
26	079421	2	BOOT, valve spool
	913232	2	CLAMP, hose, 1-3/8" diam. (front)
	914503	2	CLAMP, hose, 2-3/16" diam. (rear)

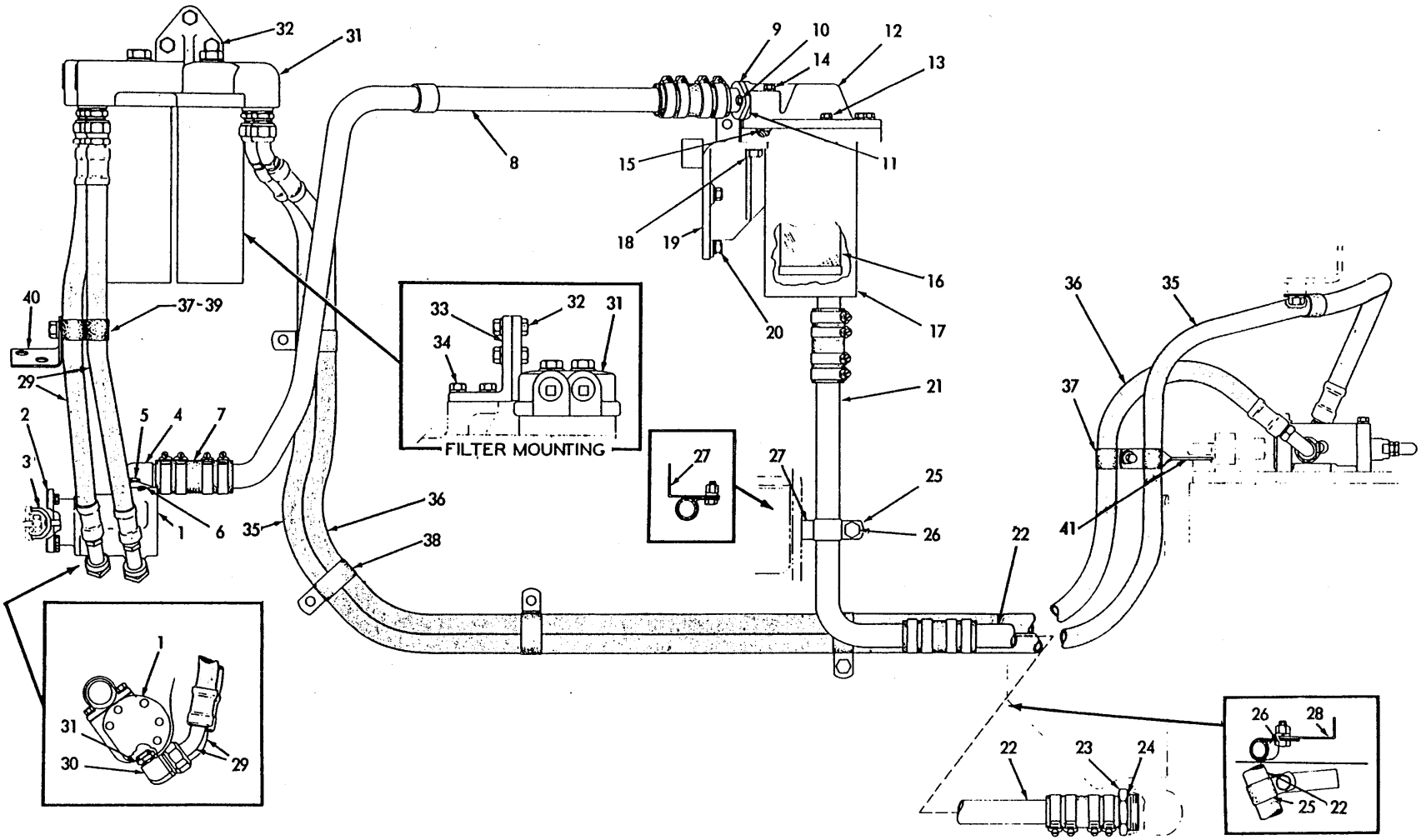

HYDRAULIC STEERING CONTROL (Second type. Models HD11E, EC)

T-41860

HYDRAULIC STEERING CONTROL

USAGE: Model HD11E,EC tractors serial No. 10001 and up

ITEM	PART NO.	QTY.	DESCRIPTION
1	643630	1	PUMP ASSEMBLY, oil (See page 359 for parts)
	921194	6	CAPSCREW, Nylok, 5/16"NC x 7/8"
	904205	6	LOCKWASHER, 5/16"
2	099510	1	GASKET, pump mounting
3	630914	1	COUPLING, pump drive
4	630301	1	ELBOW, suction line
5	045312	2	CAPSCREW, 5/16"NC x 3/4"
	904205	2	LOCKWASHER, 5/16"
6	099533	1	GASKET, suction line elbow
7	630636	5	HOSE, suction line
	921912	20	CLAMP, hose, 1-1/16" to 2" diam.
8	642382	1	TUBE, suction line, filter to pump
9	644826	1	ADAPTER, suction line filter
10	044249	2	CAPSCREW, 3/8"NC x 1-1/8"
	904206	2	LOCKWASHER, 3/8"
11	644816	1	GASKET, suction line adapter
12	644827	1	COVER, suction line filter
13	012992	4	CAPSCREW, 3/8"NF x 1-1/4"
14	914339	2	CAPSCREW, 3/8"NF x 2-3/4"
	904206	6	LOCKWASHER, 3/8"
15	923824	1	O-RING, suction line filter
16	623268	1	SCREEN, suction line filter
17	642384	1	HOUSING, suction line filter
18	035525	3	CAPSCREW, 1/2"NF x 1-3/8"
	904208	3	LOCKWASHER, 1/2"
19	642684	1	BRACKET, mounting, suction line filter
20	040013	2	CAPSCREW, 7/16"NC x 1-3/4"
	904207	2	LOCKWASHER, 7/16"
	074790	2	WASHER, plain
21	642383	1	TUBE, suction line, housing to filter, front section
22	642504	1	TUBE, suction line, housing to filter, rear section
23	642539	1	ADAPTER, rear suction line (Includes item 24)
24	921887	1	O-RING, suction line adapter
25	095869	3	CLIP, suction line
26	070467	2	CAPSCREW, 1/2"NF x 1"
	904208	2	LOCKWASHER, 1/2"
	911043	2	NUT, 1/2"NF

(Continued)

HYDRAULIC STEERING CONTROL (Continued)

ITEM	PART NO.	QTY.	DESCRIPTION
27	642534	1	ANGLE, suction line supporting, front
28	642535	1	ANGLE, suction line supporting, rear
29	642537	2	HOSE, pressure line, pump to filter (See page 6)
	921466	2	CONNECTOR, flare type, 1/2" tube, 3/4"NPT male
30	921402	2	ELBOW, adjustable, flare type, 90°, 1/2" tube, 3/4"NF male end (Includes washer, nut and O-RING 921349)
31	633797	1	FILTER ASSEMBLY, pressure line (See page 360 for parts)
32	035073	3	CAPSCREW, 1/2"NF x 1-3/4"
	904208	3	LOCKWASHER, 1/2"
	911043	3	NUT, 1/2"NF
33	645067	1	BRACKET, mounting, pressure line filter
34	035061	4	CAPSCREW, 1/2"NC x 1-1/4"
	904208	4	LOCKWASHER, 1/2"
35	642519	1	HOSE, pressure line, filter to right side of valve (See page 6)
	921466	1	CONNECTOR, flare type, 1/2" tube, 3/8"NPT male
	919128	1	CONNECTOR, flare type, 1/2" tube, 1/2"NPT male (Tractors prior to #11637)
	921409	1	CONNECTOR, flare type, 1/2" tube, 3/4"NF male end (Includes O-RING 921349)(Tractors #11637 and up)
36	642520	1	HOSE, pressure line, filter to left side of valve (See page 6)
	921466	1	CONNECTOR, flare type, 1/2" tube, 3/4"NPT male
	919128	1	CONNECTOR, flare type, 1/2" tube, 1/2"NPT male (Tractors #11637)
	921409	1	CONNECTOR, flare type, 1/2" tube, 3/4"NF male end (Includes O-RING 921349)(Tractors #11637 and up)
37	644713	5	CLIP, pressure line (29/32" diam., 17/32" bolt-hole)
	070467	2	CAPSCREW, 1/2"NF x 1"
	035067	1	CAPSCREW, 1/2"NF x 2"
	904208	3	LOCKWASHER, 1/2"
	911043	2	NUT, 1/2"NF
38	644708	6	CLIP, pressure line (For two 7/8" diam. lines, 17/32" bolt-hole)
	035221	3	CAPSCREW, 1/2"NC x 1"
	067480	1	CAPSCREW, 1/2"NF x 3/4"
	035718	2	CAPSCREW, 1/2"NC x 3/4"
	904208	6	LOCKWASHER, 1/2"
	910244	4	WASHER, plain, SAE std., 1/2"
39	614516	1	BLOCK, spacing, pressure line clip
40	634034	1	ANGLE, hose supporting (front)
41	634051	1	STRAP, hose supporting (rear)

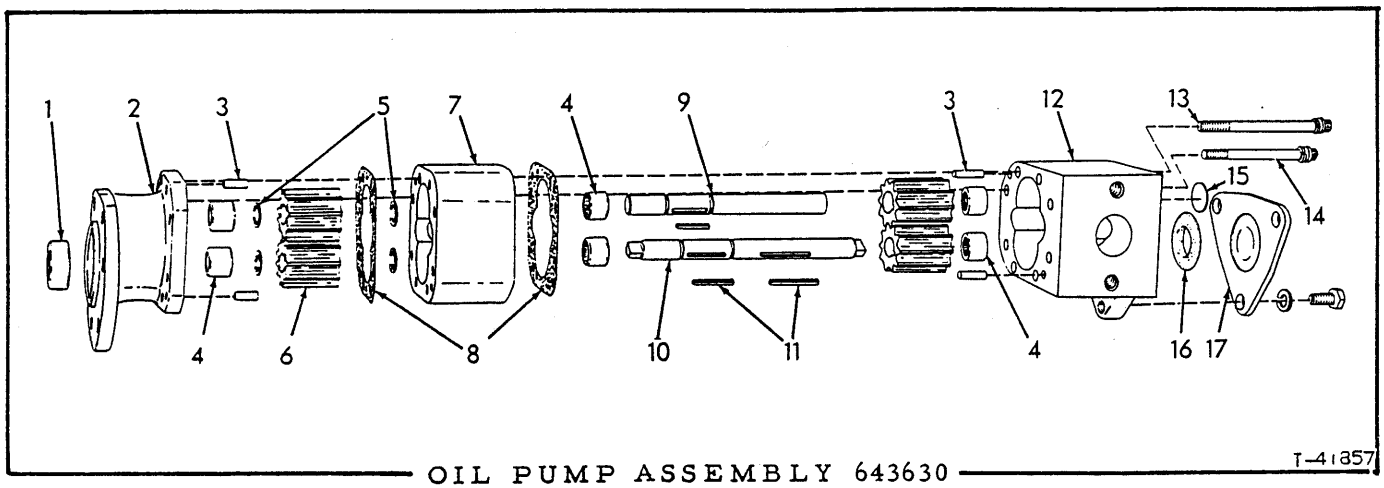

OIL PUMP ASSEMBLY 643630

USAGE: See page 357

ITEM	PART NO.	QTY.	DESCRIPTION
1	3033846	1	SEAL, pump shaft
2	-------	1	STATOR (Not serviced separately)
3	4048000	4	PIN, dowel
4	3033589	6	BEARING, needle
5	643739	4	RING, snap, gear retaining
6	643720	4	GEAR
7	------	1	HOUSING, front (Not serviced separately)
8	621363	2	GASKET, front housing
9	643717	1	SHAFT, idler
10	643716	1	SHAFT, drive
11	3010542	3	KEY, straight
12	------	1	HOUSING, rear (Not serviced separately)
13	643742	2	SCREW, 12-point, 1/4"NC x 4-1/2" (Includes lockwasher)
14	643743	6	SCREW, 12-point, 1/4"NC x 4" (Includes lockwasher)
15	092107	1	PLUG, expansion, 11/16" diam.
16	099941	1	O-RING, rear cover
17	099939	1	CAP, rear (Removed when oil circulating pump is installed)
	916277	3	CAPSCREW, 5/16"NC x 5/8"
	904205	3	LOCKWASHER, 5/16"

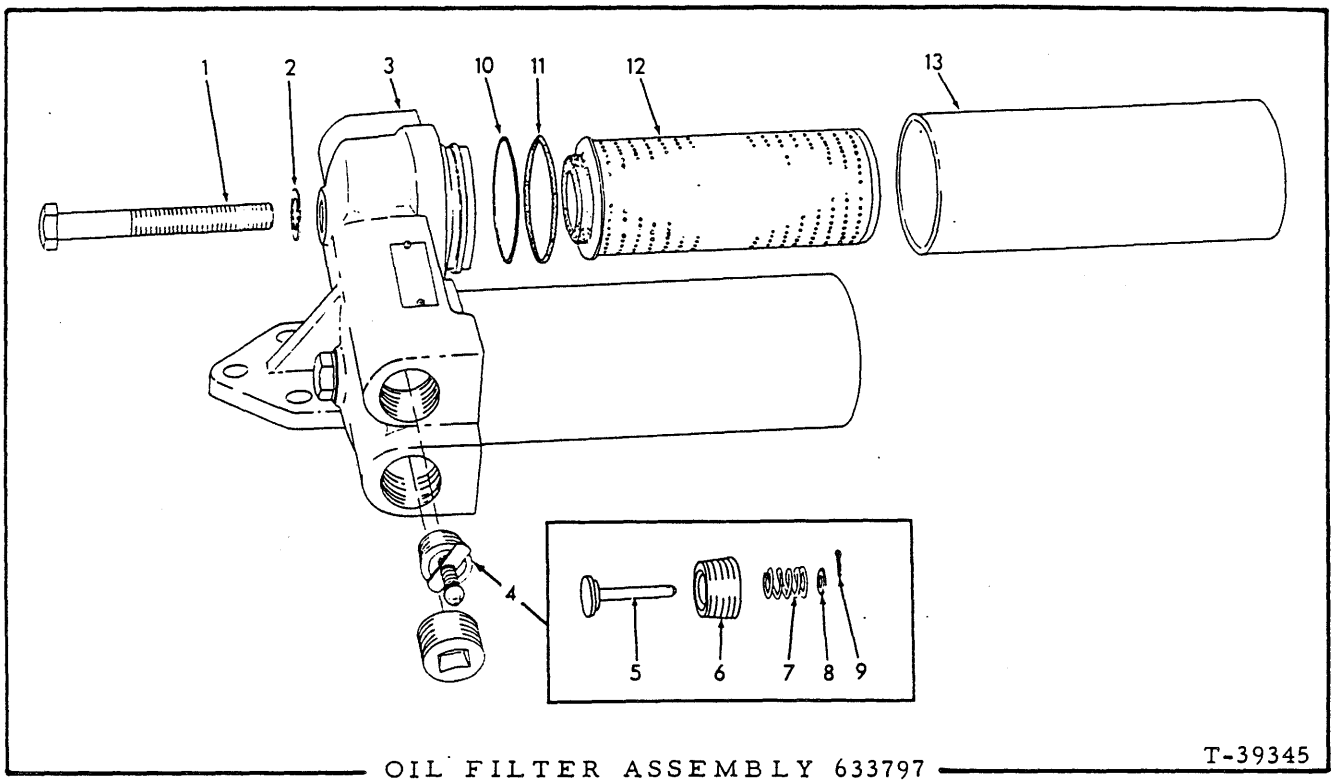

OIL FILTER ASSEMBLY 633797 T-39345

USAGE: See page 357

ITEM	PART NO.	QTY.	DESCRIPTION
1	638796	2	CAPSCREW, head retaining (5/8"NF x 5")
2	631869	2	WASHER, head retaining capscrew
3	633310	1	HEAD
	901661	2	PLUG, pipe, ctsk-hd., 1"NPT
4	633995	2	VALVE ASSEMBLY, by-pass (Consists of items 5 thru 9)
5	------	2	VALVE, by-pass (Order item 4)
6	------	2	HOUSING, by-pass valve (Order item 4)
7	631870	2	SPRING, by-pass valve
8	632060	2	WASHER, by-pass valve spring
9	632061	2	RING, snap, by-pass valve (Early units)
	900970	2	PIN, cotter, 1/16" x 2" (Late units)
10	632062	2	RING, sealing, filter head
11	632063	2	O-RING, filter head
12	631828	2	ELEMENT KIT (Includes items 2, 10 and 11)
13	631872	2	TANK

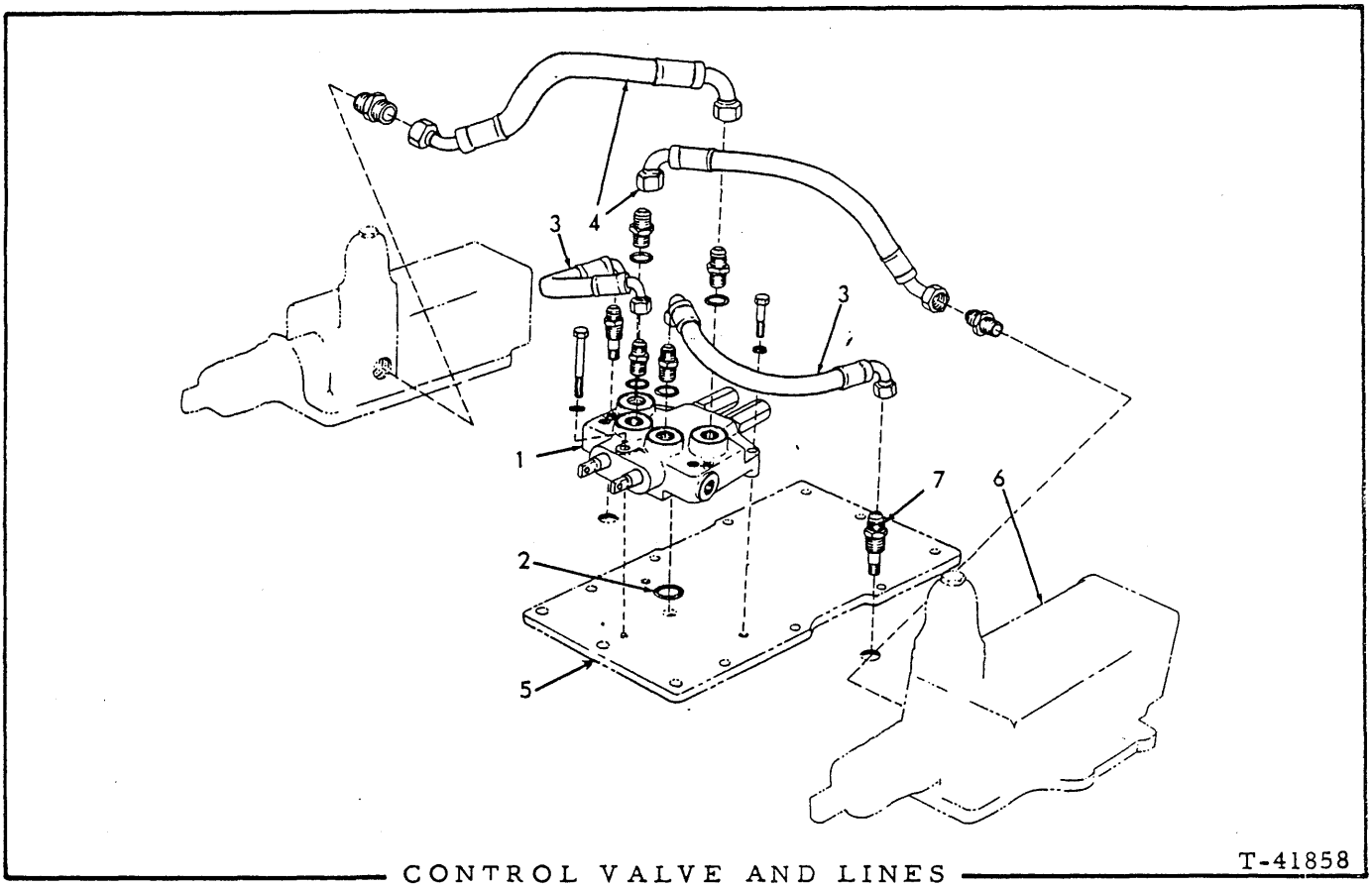

CONTROL VALVE AND LINES

USAGE: Model HD11E, EC tractors serial No. 10001 and up

* Tractors prior to serial No. 11637
** Tractors serial No. 11637 and up

ITEM	PART NO.	QTY. *	QTY. **	DESCRIPTION
1	630427	1	-	VALVE ASSEMBLY ("Hydreco". See page 362 for parts)
	042265	2	-	CAPSCREW, 3/8"NF x 3-1/4"
	041911	2	-	CAPSCREW, 3/8"NF x 3-1/2"
	904206	4	-	LOCKWASHER, 3/8"
	911115	2	-	WASHER, plain, SAE std., 3/8"
	651432	-	1	VALVE ASSEMBLY ("Cessna". See page 364 for parts)
	041913	-	1	CAPSCREW, 3/8"NF x 2-7/8"
	203188	-	2	CAPSCREW, 3/8"NF x 1-1/2"
	904206	-	3	LOCKWASHER, 3/8"
2	923575	1	-	O-RING, valve to compartment cover
	923947	-	1	O-RING, valve to compartment cover
3	646988	2	2	HOSE, clutch control (See page 6)
	919128	2	-	CONNECTOR, flare type, 1/2" tube, 1/2"NPT male
	921409	-	2	CONNECTOR, flare type, 1/2" tube, 3/4"NF male end (Includes O-RING 921349)
4	642521	2	2	HOSE, brake control (See page 6)
	919128	4	2	CONNECTOR, flare type, 1/2" tube, 1/2"NPT male
	921409	-	2	CONNECTOR, flare type, 1/2" tube, 3/4"NF male end (Includes O-RING 921349)
5	------	-	-	COVER, bevel gear compartment (See STEERING CLUTCH AND FINAL DRIVE HOUSING)
6	------	-	-	VALVE ASSEMBLY (See BRAKES)
7	628458	2	2	UNION, bulkhead

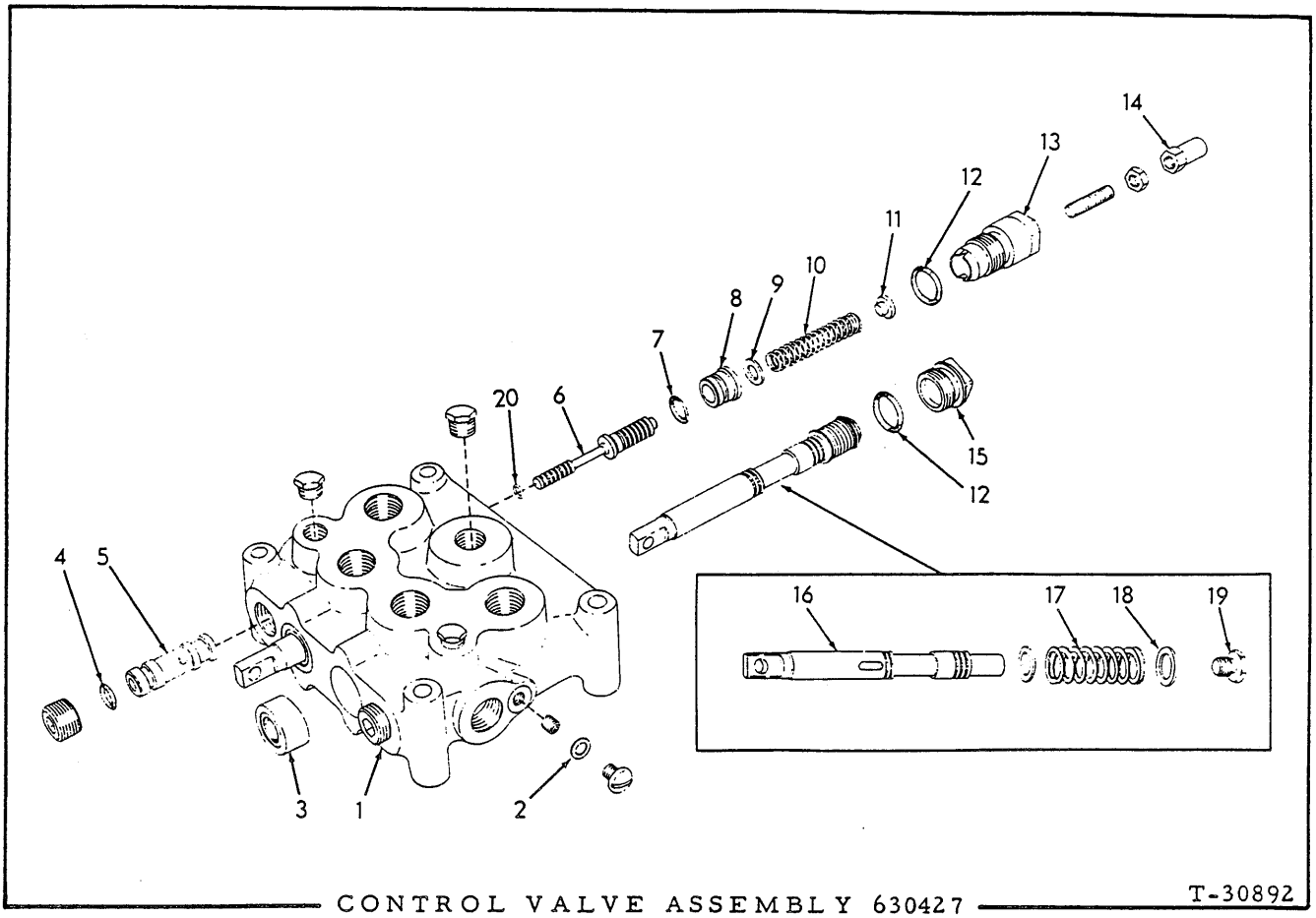

CONTROL VALVE ASSEMBLY 630427 T-30892

USAGE: See page 361

ITEM	PART NO.	QTY.	DESCRIPTION
1	------	1	HOUSING (Not serviced separately)
	919840	2	PLUG, pipe, hex-hd., 1/4"NPT
	920333	1	PLUG, pipe, hex-hd., 3/8"NPT
	908944	2	PLUG, pipe, hex-socket, 1/2"NPT
	900585	2	SCREW, machine, 5/16"NC x 5/8"
2	3001737	2	GASKET, plugging screw
3	623420	2	SEAL, oil, operating plunger
4	923548	2	O-RING, relief valve front seat
5	3014007	2	SEAT, relief valve, front
	905564	2	SETSCREW, hex-socket, cup-pt., 5/16"NC x 5/8"
6	623431	2	PLUNGER, relief valve
7	923376	2	O-RING, relief valve rear seat
8	623430	2	SEAT, relief valve, rear
9	631935	2	WASHER, relief valve plunger
10	630528	2	SPRING, relief valve

(Continued)

CONTROL VALVE ASSEMBLY 630427 (Continued)

ITEM	PART NO.	QTY.	DESCRIPTION
11	623427	2	GUIDE, relief valve spring
12	923574	4	O-RING, rear caps
13	623428	2	CAP, relief valve adjustment
	921303	2	SETSCREW, oval-pt., 3/8"NF x 1-1/2"
	911048	2	NUT, jam, 3/8"NF
14	3002757	2	NUT, acorn, relief valve
15	623429	2	CAP, operating plunger
16	------	2	PLUNGER, operating (Not serviced separately)
17	627378	2	SPRING, operating plunger
18	627377	4	WASHER, operating plunger
19	627380	2	CAP, operating plunger
20	655743	2	O-RING, relief valve plunger

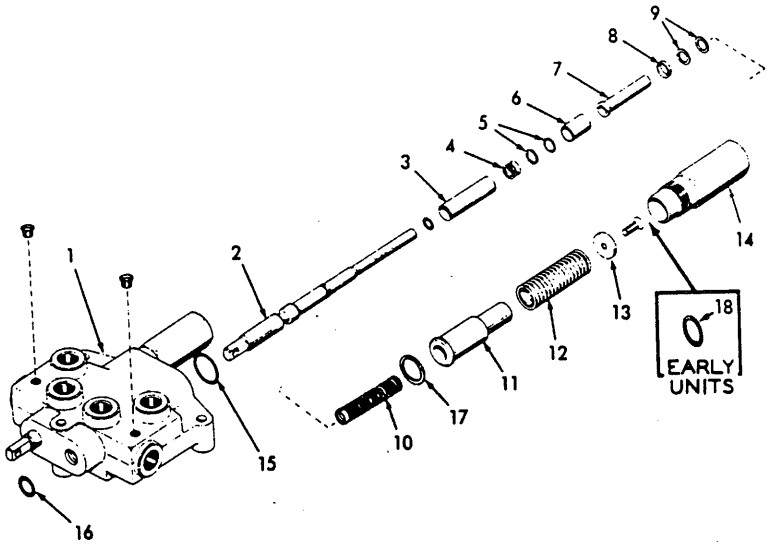

CONTROL VALVE ASSEMBLY 651432 T-72040

USAGE: See page 361

ITEM	PART NO.	QTY.	DESCRIPTION
1	------	1	BODY (Not serviced separately)
	919134	2	PLUG, pipe, hex-hd., 1/8"NPT
2	------	2	PLUNGER (Not serviced separately)
3	651564	2	PISTON, pressure regulating
4	651569	2	SPRING, pressure regulating (short)
5	651576	-	SHIM, pressure adjustment (.015" thick)
	651577	-	SHIM, pressure adjustment (.005" thick)
6	651571	2	SLEEVE, valve plunger (outer)
7	651572	2	SLEEVE, valve plunger (inner)
8	651573	2	WASHER, valve plunger
9	651574	-	SHIM, pressure adjustment (.015" thick)
	651575	-	SHIM, pressure adjustment (.005" thick)
10	661676	2	SPRING, pressure regulating (long)
11	651565	2	SLEEVE, plunger return spring
12	651570	2	SPRING, plunger return
13	651567	2	WASHER, end, valve plunger
	914122	2	SCREW, machine, flat-hd., 1/4"NF x 3/4"
14	651566	2	CAP, valve plunger
15	924416	2	O-RING, valve body (large)
16	923645	2	O-RING, valve body (small)
17	663123	2	SHIM, plunger clearance (Late units) } Use as required
18	663124	2	SHIM, plunger clearance (Early units) } Use as required

BRAKES

USAGE: All tractors prior to serial No.10001; also Model HD11B, S tractors serial No.10001 and up

ITEM	PART NO.	QTY.	DESCRIPTION
1	057381	2	BAND ASSEMBLY, top section (4" wide)(Original equipment)
	654825	2	BAND ASSEMBLY, top section (5-1/2" wide)(Optional equipment)
2	057382	2	BAND ASSEMBLY, bottom section (4" wide)(Original equipment)
	654821	2	BAND ASSEMBLY, bottom section (5-1/2" wide)(Optional equipment)
			NOTE: Each Band Assembly includes linings and rivets
3	057208	12	LINING, brake band (4" wide)(Original equipment. See item 62)
	654827	12	LINING, brake band (5-1/2" wide)(For optional replacement bands only)
	911097	60	RIVET, tubular, brass, fl-hd., 3/16" x 3/8"
	915639	12	RIVET, tubular, brass, fl-hd., 3/16" x 21/32"
4	057207	2	PIN, hinge, brake band
	910244	4	WASHER, plain, SAE std., 1/2"
	900805	4	PIN, cotter, 1/8" x 3/4"
			NOTE: Items 5 thru 8 comprise the FIRST TYPE BAND SUPPORT used prior to tractor serial No. 4304
5	060772	2	BOLT, eye, band supporting
	900817	2	WASHER, plain, U.S. std., 3/8"
	910863	2	NUT, slotted, 3/8"NF
	900802	2	PIN, cotter, 3/32" x 1"
6	078810	2	PIN, eye bolt
	900942	2	PIN, cotter, 3/32" x 5/8"
7	060668	2	SPRING, band supporting eye bolt
8	060770	2	SUPPORT, band adjustment
	913830	2	NUT, jam, 1/2"NF
			NOTE: Items 9 thru 12 comprise the SECOND TYPE BAND SUPPORT effective with tractor serial No. 4304
9	095216	2	YOKE, band support
10	085038	2	PIN, band support yoke
	900942	2	PIN, cotter, 3/32" x 5/8"
11	095214	2	SPRING, band supporting
12	095215	2	BOLT, band supporting
	910867	2	NUT, slotted, 1/2"NF
	900807	2	PIN, cotter, 1/8" x 1-1/4"
	913830	2	NUT, jam, 1/2"NF
13	060774	2	NUT, band adjustment support
14	------	2	ADJUSTER, brake band (6-7/16" long)(Used prior to tractor #2722. Order ADJUSTER 090960 and BLOCK 090958)
	090960	2	ADJUSTER, brake band (6-7/8" long)(Effective with tractor #2722)
	916227	2	PIN, roll, 1/4" x 1"

(Continued)

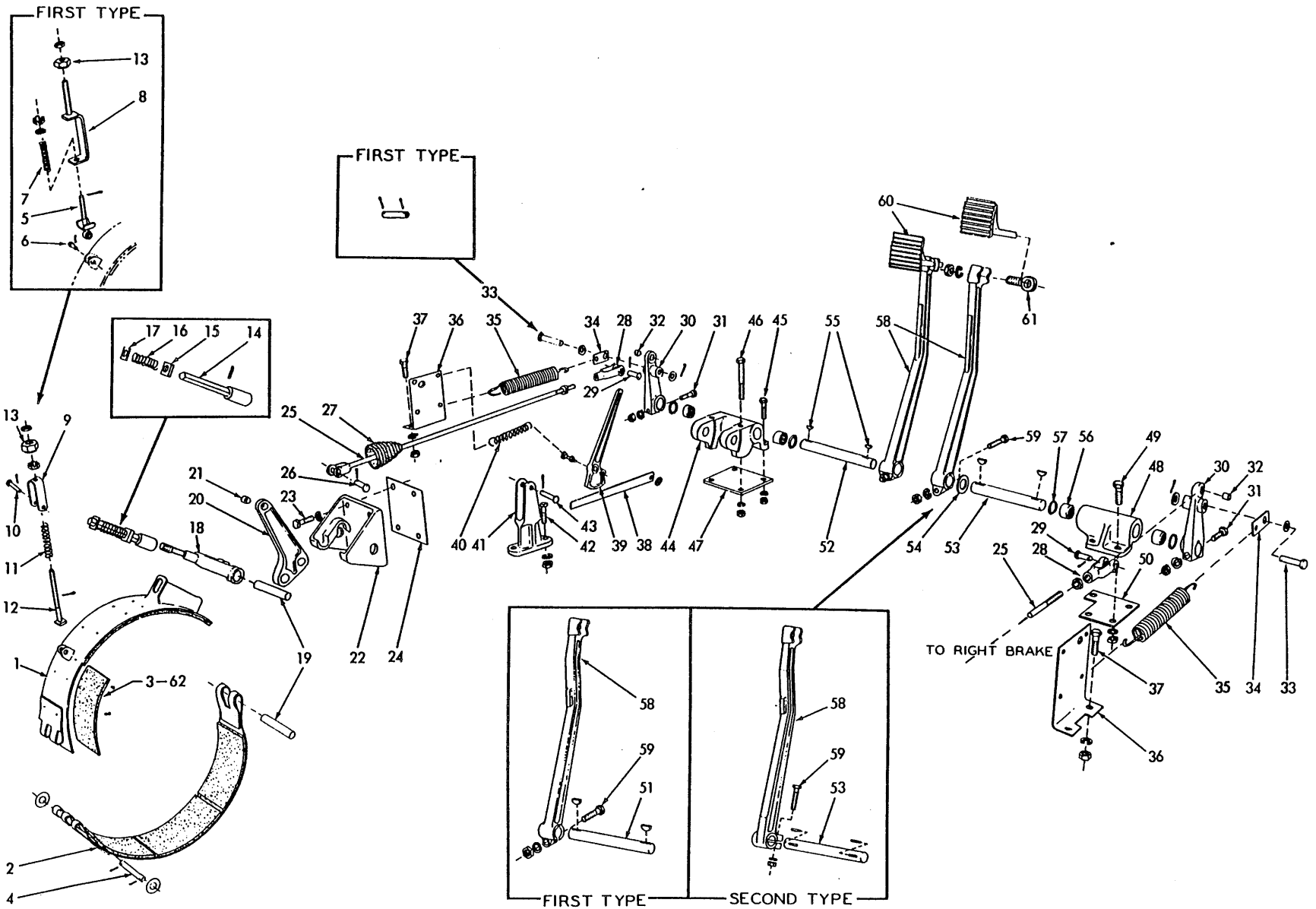

BRAKES (First type)

T-41910

ITEM	PART NO.	QTY.	DESCRIPTION
15	------	2	BLOCK, adjuster spring (17/32" thick)(Used prior to tractor #2722. Order BLOCK 090958 and ADJUSTER 090960)
	090958	2	BLOCK, adjuster spring (5/16" thick)(Effective with tractor #2722)
16	079203	2	SPRING, adjuster
17	079229	2	WASHER, adjuster spring
18	623488	2	YOKE, band adjusting
19	057200	4	PIN, band end
20	084359	2	LEVER ASSEMBLY, brake band (Includes item 21)
21	049988	2	BUSHING, band lever
22	057197	2	BRACKET, band
23	035073	8	CAPSCREW, 1/2"NF x 1-3/4"
	904208	8	LOCKWASHER, 1/2"
24	060953	2	SHIM, band bracket (Use as req'd)
25	057195	2	ROD, control
	911043	2	NUT, 1/2"NF
26	049993	2	PIN, control rod
	900805	2	PIN, cotter, 1/8" x 3/4"
27	078908	2	BOOT, control rod
28	068389	2	YOKE, control rod
29	049993	2	PIN, control rod yoke
	900805	2	PIN, cotter, 1/8" x 3/4"
30	621539	2	LEVER ASSEMBLY, brake shaft (Includes item 32)
31	035068	2	CAPSCREW, 1/2"NF x 2-1/4"
	904208	2	LOCKWASHER, 1/2"
	911043	2	NUT, 1/2"NF
32	049988	2	BUSHING, brake shaft lever
33	057191	2	PIN, brake shaft lever (press-fit)(Used prior to tractor #4911)
	900805	4	PIN, cotter, 1/8" x 3/4"
	910244	4	WASHER, plain, SAE std., 1/2"
	053077	2	PIN, brake shaft lever (loose-fit)(Effective with tractor #4911)
	900805	2	PIN, cotter, 1/8" x 3/4"
	910244	4	WASHER, plain, SAE std., 1/2"
34	079742	2	CLIP, spring attachment
35	035942	2	SPRING, pedal retracting

(Continued)

ITEM	PART NO.	QTY.	DESCRIPTION
36	621540	2	CLIP, spring attachment
37	035018	4	CAPSCREW, 1/2"NF x 1-1/2"
	904208	4	LOCKWASHER, 1/2"
	911043	4	NUT, 1/2"NF
38	057193	2	BAR, latching
39	084548	2	LOCK, parking brake (Used prior to tractor #10001)
	637955	2	LOCK, parking brake (Effective with tractor #10001)
	905666	2	CAPSCREW, 5/16"NC x 2-1/2"
	906652	2	NUT, jam, 5/16"NC
40	043881	2	SPRING, brake lock
41	057196	2	BRACKET, parking brake lock
42	035018	4	CAPSCREW, 1/2"NF x 1-1/2"
	904208	4	LOCKWASHER, 1/2"
	911043	4	NUT, 1/2"NF
43	033074	2	PIN, parking brake lock
	900805	2	PIN, cotter, 1/8" x 3/4"
44	057187	1	BRACKET, left pedal lever
45	035073	2	CAPSCREW, 1/2"NF x 1-3/4"
46	916426	2	CAPSCREW, 1/2"NF x 4-1/4"
	904208	4	LOCKWASHER, 1/2"
	911043	4	NUT, 1/2"NF
47	646484	1	PLATE, spacing, left pedal bracket (Effective with tractor #10266)
48	620148	1	BRACKET, right pedal lever
49	035073	4	CAPSCREW, 1/2"NF x 1-3/4"
	904208	4	LOCKWASHER, 1/2"
	911043	4	NUT, 1/2"NF
50	646483	1	PLATE, spacing, right pedal bracket (Effective with tractor #10266)
51	084357	2	SHAFT, pedal (Used prior to tractor #6473)
52	646485	1	SHAFT, left pedal (Effective with tractor #6473)
	642349	1	SHAFT, left pedal (Special. For Models HD11B, E, ES, S, F tractors prior to #10001 with transmission dry sump conversion. See page 301)
53	621450	1	SHAFT, right pedal (Effective with tractor #6473)
54	076710	1	WASHER, spacing, right pedal shaft (Effective with tractor #10266)
55	036997	4	KEY, #13 woodruff, 3/16" x 1"
56	051513	4	BEARING, needle, pedal bracket
57	053926	4	SEAL, dust, pedal bracket

(Continued)

ITEM	PART NO.	QTY.	DESCRIPTION
58	089899	2	LEVER, pedal (Used prior to tractor #6473)
	620149	2	LEVER, pedal (Used on tractors #6473 thru #10000)
	637954	2	LEVER, pedal (Effective with tractor #10001)
59	035068	2	CAPSCREW, 1/2"NF x 2-1/4"
	904208	2	LOCKWASHER, 1/2"
	911043	2	NUT, 1/2"NF
60	082636	2	PEDAL
61	050433	2	BOLT, eye
	904209	2	LOCKWASHER, 5/8"
	911044	2	NUT, 5/8"NF
62	076123	2	LINING KIT, brake band (Includes linings and attaching rivets for one (1) side only; see item 3)

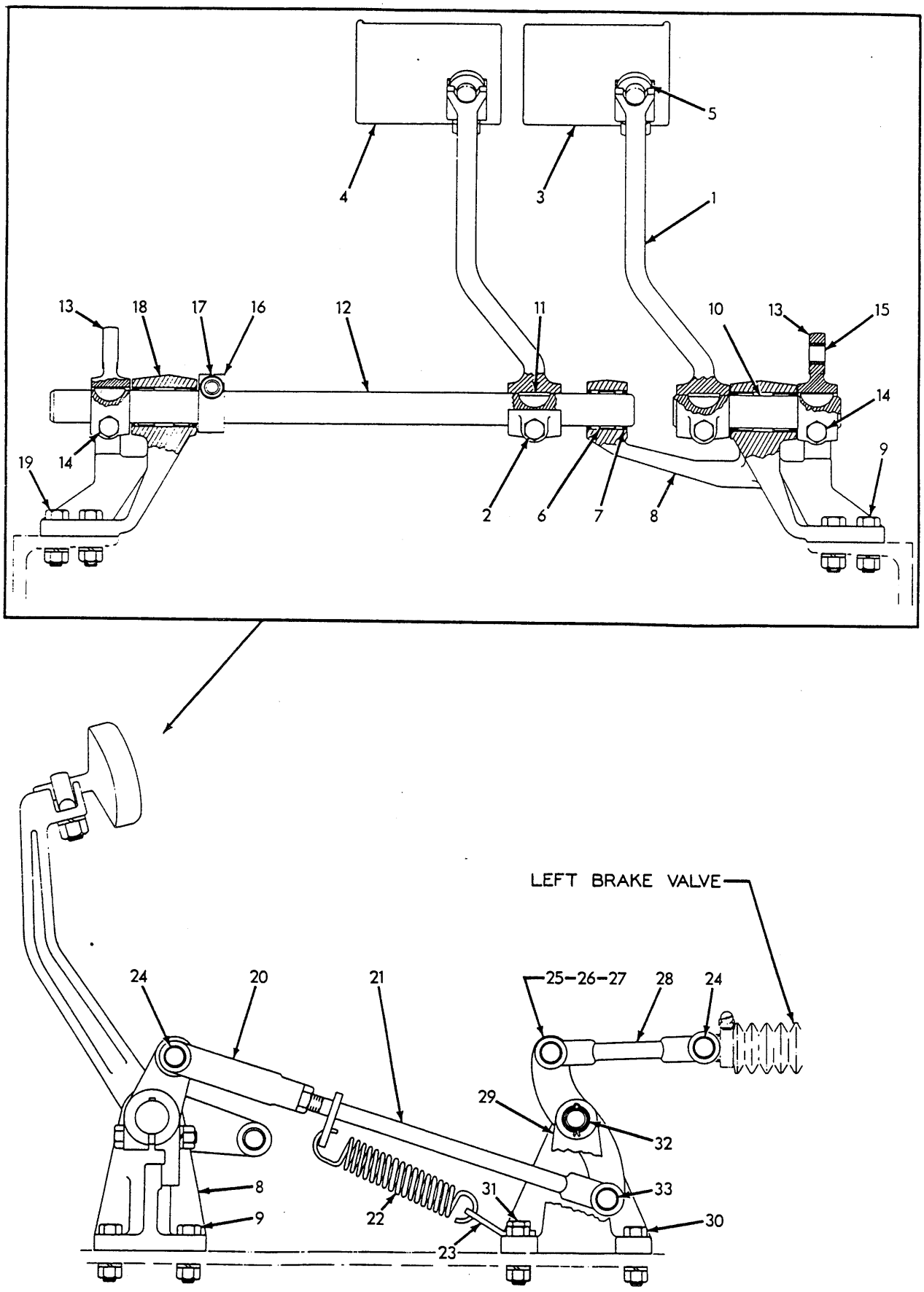

BRAKE CONTROL (Second type. Models HD11E, EC)

T-41862

BRAKE CONTROL

USAGE: Model HD11E,EC tractors serial No. 10001 and up

ITEM	PART NO.	QTY.	DESCRIPTION
1	632071	2	LEVER, pedal
2	035278	2	CAPSCREW, 1/2"NF x 2-3/4"
	904208	2	LOCKWASHER, 1/2"
	911043	2	NUT, 1/2"NF
3	623151	1	PAD, left pedal lever
4	641820	1	PAD, right pedal lever
5	050433	2	BOLT, eye, pedal lever pad
	904209	2	LOCKWASHER, 5/8"
	911044	2	NUT, 5/8"NF
6	052642	5	BEARING, needle, pedal shafts
7	053243	6	SEAL, dust, pedal shafts
8	641757	1	BRACKET, pedal shaft, left
9	035073	4	CAPSCREW, 1/2"NF x 1-3/4"
	904208	4	LOCKWASHER, 1/2"
	911043	4	NUT, 1/2"NF
10	633096	1	SHAFT, left pedal
11	631883	4	KEY, pedal shafts (1/4" x 1-1/4")
12	633079	1	SHAFT, right pedal
13	633081	2	LEVER ASSEMBLY, pedal shaft (Includes item 15)
14	035278	2	CAPSCREW, 1/2"NF x 2-3/4"
	904208	2	LOCKWASHER, 1/2"
	911043	2	NUT, 1/2"NF
15	052669	2	BUSHING, pedal shaft lever
16	052639	1	COLLAR, right pedal lever shaft
17	035278	1	CAPSCREW, 1/2"NF x 2-3/4"
	904208	1	LOCKWASHER, 1/2"
	911043	1	NUT, 1/2"NF
18	633114	1	BRACKET, pedal shaft, right
19	035073	4	CAPSCREW, 1/2"NF x 1-3/4"
	904208	4	LOCKWASHER, 1/2"
	911043	4	NUT, 1/2"NF
20	628730	2	YOKE, front rod
21	633185	2	ROD, front
	911049	2	NUT, jam, 5/8"NF
22	624766	2	SPRING, retracting
23	634359	2	CLIP, retracting spring
24	052671	8	PIN, control rods
	900806	8	PIN, cotter, 1/8" x 1"
25	633094	2	LEVER ASSEMBLY, rocker (Includes items 26 and 27)

(Continued)

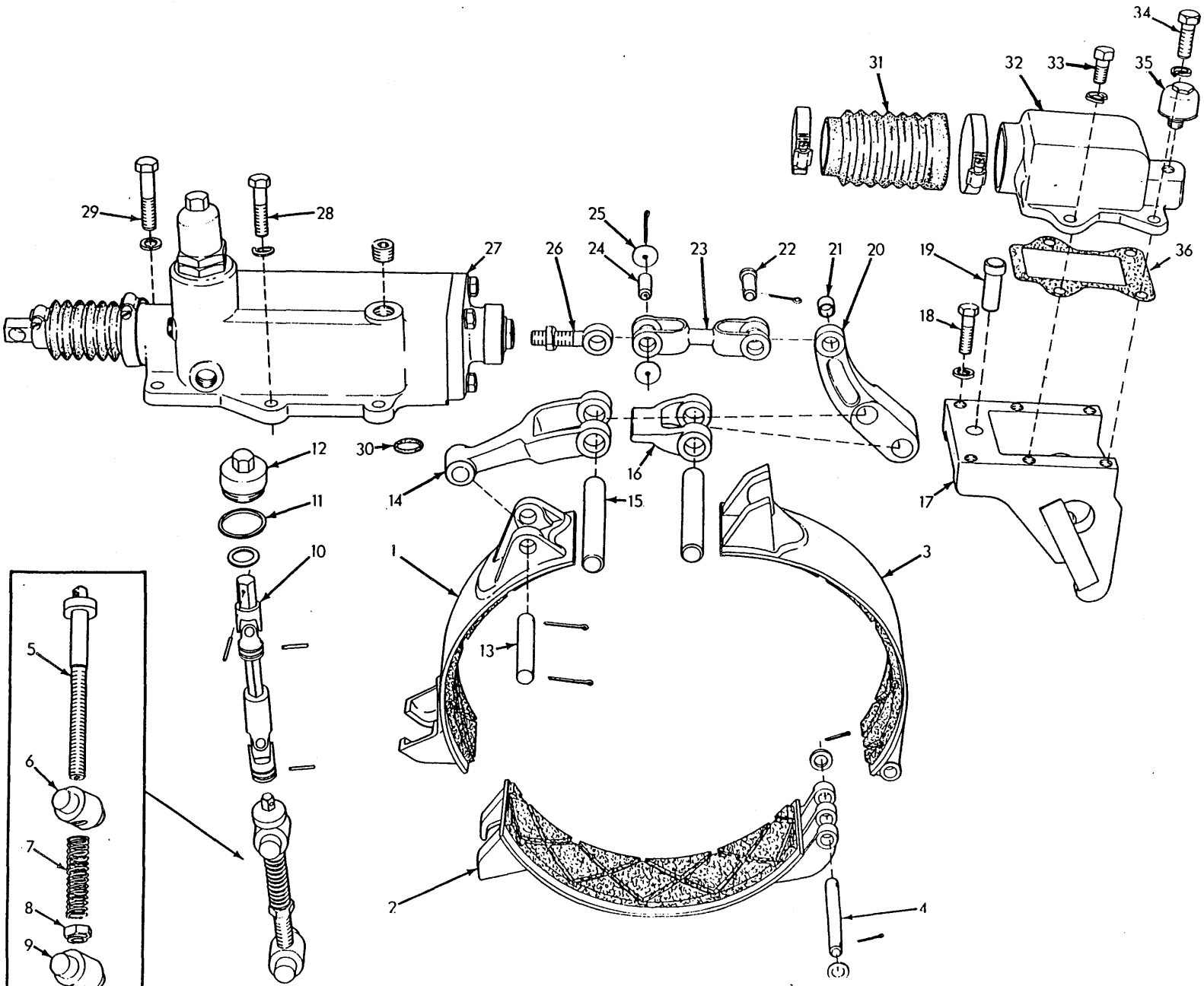

BRAKES (Second type. Models HD11E, EC)

T-41863

BRAKE CONTROL (Continued)

ITEM	PART NO.	QTY.	DESCRIPTION
26	052669	4	BUSHING, rocker lever, end
27	631235	4	BUSHING, rocker lever, center
28	627401	2	ROD, rear
29	633113	2	BRACKET ASSEMBLY, rocker lever (Includes item 32)
30	035073	6	CAPSCREW, 1/2"NF x 1-3/4"
31	035067	2	CAPSCREW, 1/2"NF x 2"
	904208	8	LOCKWASHER, 1/2"
	911043	8	NUT, 1/2"NF
32	623164	4	BUSHING, rocker lever bracket
33	634372	2	PIN, rocker lever bracket
	910302	4	PIN, cotter, 5/32" x 1-1/4"

BRAKES

USAGE: Model HD11E, EC tractors serial No. 10001 and up

1	631298	2	BAND ASSEMBLY, front section (Includes bonded lining)
2	631562	2	BAND ASSEMBLY, bottom section (Includes bonded lining)
3	631561	2	BAND ASSEMBLY, rear section (Includes bonded lining)
4	624735	2	PIN, band hinge
	912476	4	WASHER, plain, 17/32" x 1" x .077"
	900806	4	PIN, cotter, 1/8" x 1"
5	624319	2	SCREW, band adjusting
6	624359	2	PIN, adjusting screw, upper
7	098292	2	SPRING, band adjusting screw
8	624318	2	NUT, band adjusting screw
9	624720	2	PIN, adjusting screw, lower
10	631039	2	DRIVE ASSEMBLY, universal, band adjustment (Serviced only as a unit)
	921330	2	PIN, roll, 7/32" x 1-1/8" (lower)
	920335	2	PIN, roll, 5/32" x 1-1/8" (upper)
	910883	2	WASHER, plain, 29/32" x 1-1/2" x .107"
11	623144	2	GASKET, brake adjustment shaft sleeve
12	623167	2	PLUG, brake adjustment hole
13	624734	2	PIN, front band
	900808	4	PIN, cotter, 1/8" x 1-1/2"
14	624395	2	YOKE, brake band, upper
15	624767	4	PIN, band yoke
16	643546	2	YOKE, brake band, lower

(Continued)

ITEM	PART NO.	QTY.	DESCRIPTION
17	634081	2	BRACKET ASSEMBLY, band lever (Includes item 19)
18	035018	12	CAPSCREW, 1/2"NF x 1-1/2"
	904208	12	LOCKWASHER, 1/2"
19	624485	2	PIN, dowel, band lever bracket
20	631331	2	LEVER ASSEMBLY, band operating (Includes item 21)
21	052669	2	BUSHING, band operating lever
22	052671	2	PIN, connecting rod, rear
	900806	2	PIN, cotter, 1/8" x 1"
23	624357	2	ROD, connecting
24	638504	2	PIN, connecting rod, front
	904002	2	PIN, cotter, 1/8" x 2"
25	637730	4	WASHER, plain
26	638869	2	EYE, connecting
	911049	2	NUT, jam, 5/8"NF
27	645861	1	VALVE ASSEMBLY, left brake } See page 376 for parts
	645862	1	VALVE ASSEMBLY, right brake } See page 376 for parts
	908944	2	PLUG, pipe, hex-socket, 1/2"NPT
28	035018	8	CAPSCREW, 1/2"NF x 1-1/2"
29	035067	4	CAPSCREW, 1/2"NF x 2"
	904208	12	LOCKWASHER, 1/2"
30	923575	2	O-RING, valve discharge port
31	627459	2	BOOT, connecting
	921914	2	CLAMP, hose, 2-5/16" to 3-1/4" diam. (rear)
	921913	2	CLAMP, hose, 1-13/16" to 2-3/4" diam. (front)
32	624341	2	COVER, band linkage
33	070467	4	CAPSCREW, 1/2"NF x 1"
34	035067	4	CAPSCREW, 1/2"NF x 2"
	904208	8	LOCKWASHER, 1/2"
35	622207	2	BREATHER, clutch compartment
36	627395	2	GASKET, band linkage cover

MEMO

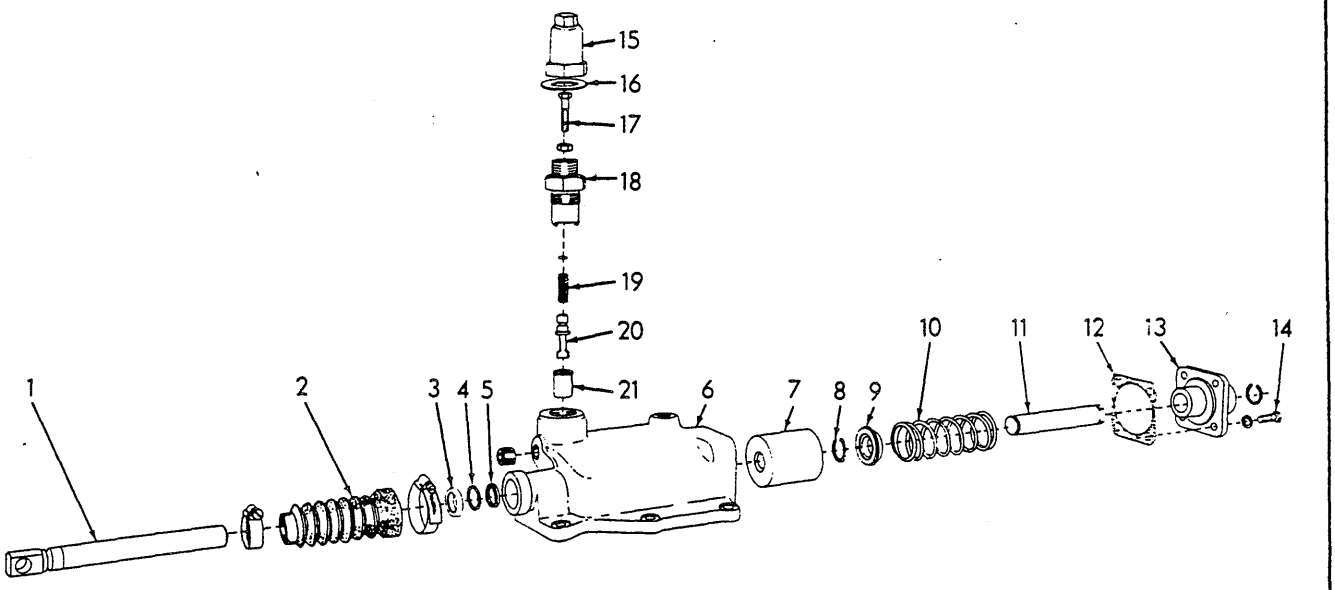

BRAKE VALVE PARTS

T-32120

USAGE: See page 373

ITEM	PART NO.	QTY.	DESCRIPTION
			NOTE: Quantities shown are for one (1) Valve Assembly only
1	624765	1	SPOOL, valve
2	079421	1	BOOT, valve spool
	921913	1	CLAMP, hose, 1-13/16" to 2-3/4" diam. (rear)
	921912	1	CLAMP, hose, 1-1/16" to 2" diam. (front)
3	052641	1	SEAL, outer
4	624812	1	WASHER, back-up, inner seal (vellumoid)
5	624801	1	SEAL, inner
6	624629	1	HOUSING, left valve
6	624630	1	HOUSING, right valve
	908944	1	PLUG, pipe, hex-socket, 1/2"NPT
7	624661	1	PISTON ASSEMBLY (Includes fulcrum pin)
8	624698	2	RING, snap, actuating rod

(Continued)

BRAKE VALVE PARTS (Continued)

ITEM	PART NO.	QTY.	DESCRIPTION
9	624769	1	RETAINER, actuating rod spring
10	624771	1	SPRING, actuating rod
11	624699	1	ROD, actuating
12	624811	1	GASKET, actuating rod retainer
13	624640	1	RETAINER, actuating rod
14	012992	4	CAPSCREW, 3/8"NF x 1-1/4"
	904206	4	LOCKWASHER, 3/8"
15	638562	1	CAP, pressure adjustment screw
16	641148	1	GASKET, cap
17	638561	1	CAPSCREW, pressure adjustment
	911048	1	NUT, jam, 3/8"NF
18	638563	1	CAP, pressure relief valve spring
19	068911	1	SPRING, relief valve
	911982	1	WASHER, plain
20	628019	1	VALVE, relief
21	623211	1	SEAT, relief valve

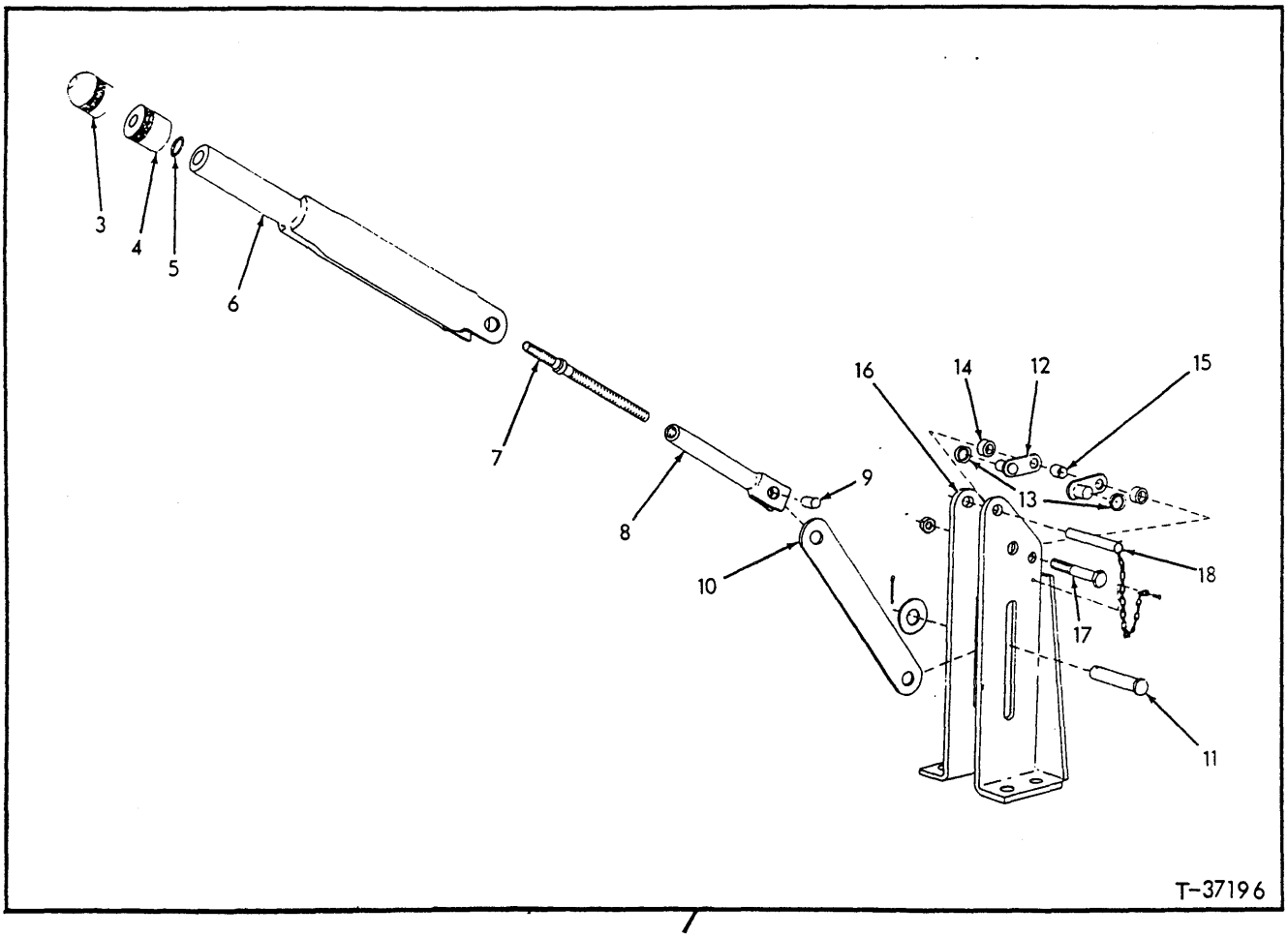

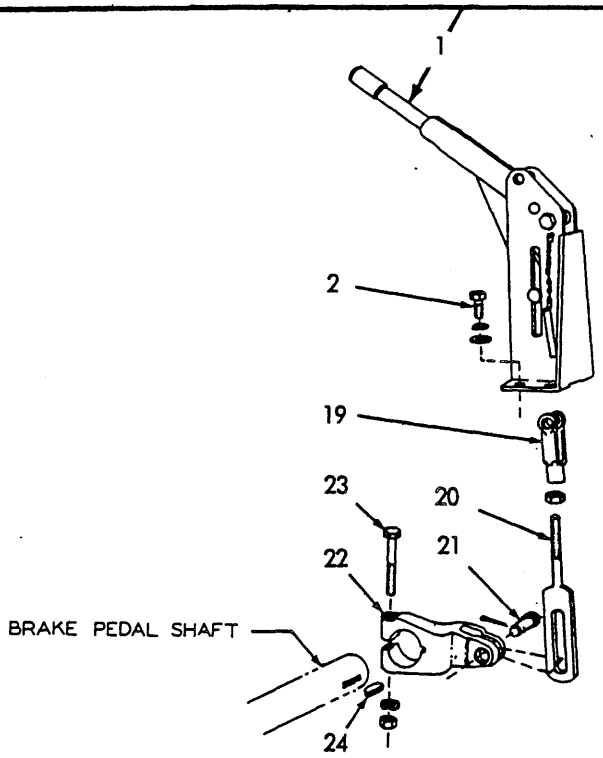

T-41859

PARKING BRAKE (Second type. Models HD11E, EC)

PARKING BRAKE

USAGE: Model HD11E,EC tractors serial No.10001 and up

ITEM	PART NO.	QTY.	DESCRIPTION
1	631981	1	LEVER ASSEMBLY, operating (Consists of items 3 thru 18)
2	035221	4	CAPSCREW, 1/2"NC x 1"
	904208	4	LOCKWASHER, 1/2"
	910244	1	WASHER, plain, SAE std., 1/2"
3	637801	1	CAP, adjusting stud
4	637802	1	NUT, cap locking
5	923548	1	O-RING, adjusting stud knob
6	637803	1	LEVER, operating
7	637818	1	STUD, lever adjusting
8	637804	1	TUBE, adjusting stud
9	637819	1	PIN, connecting link
10	637805	1	LINK, connecting
11	637811	1	PIN, clevis
	900818	1	WASHER, plain, U.S. std., 1/2"
	900806	1	PIN, cotter, 1/8" x 1"
12	637808	2	BRACKET, pivot
13	637806	2	SPACER, pivot bracket (3/4" O. D.)
14	637809	2	SPACER, pivot bracket (5/8" O. D.)
15	637810	1	SPACER, pivot bracket (1/2" O. D.)
16	------	1	BRACKET, supporting (Not serviced separately)
17	637817	1	BOLT, pivot bracket (drilled-hd.)(Tractors prior to #10851)
	099575	1	CAPSCREW, pivot bracket (Tractors #10851 and up)
	919219	1	NUT, Elastic stop, thin, 3/8"NF
18	637820	1	PIN, lever locking (Includes chain)
	913533	1	SCREW, thread-cutting, #4 x 1/4"(Tractors prior to #10851)
	628406	1	PIN, drive (Tractors #10851 and up)
19	068389	1	YOKE, parking brake rod
20	633111	1	ROD, connecting
	913830	1	NUT, jam, 1/2"NF
21	052671	1	PIN, connecting rod
	900806	1	PIN, cotter, 1/8" x 1"
22	633056	1	LEVER, parking brake
23	035278	1	CAPSCREW, 1/2"NF x 2-3/4"
	904208	1	LOCKWASHER, 1/2"
	911043	1	NUT, 1/2"NF
24	631883	1	KEY, parking brake lever

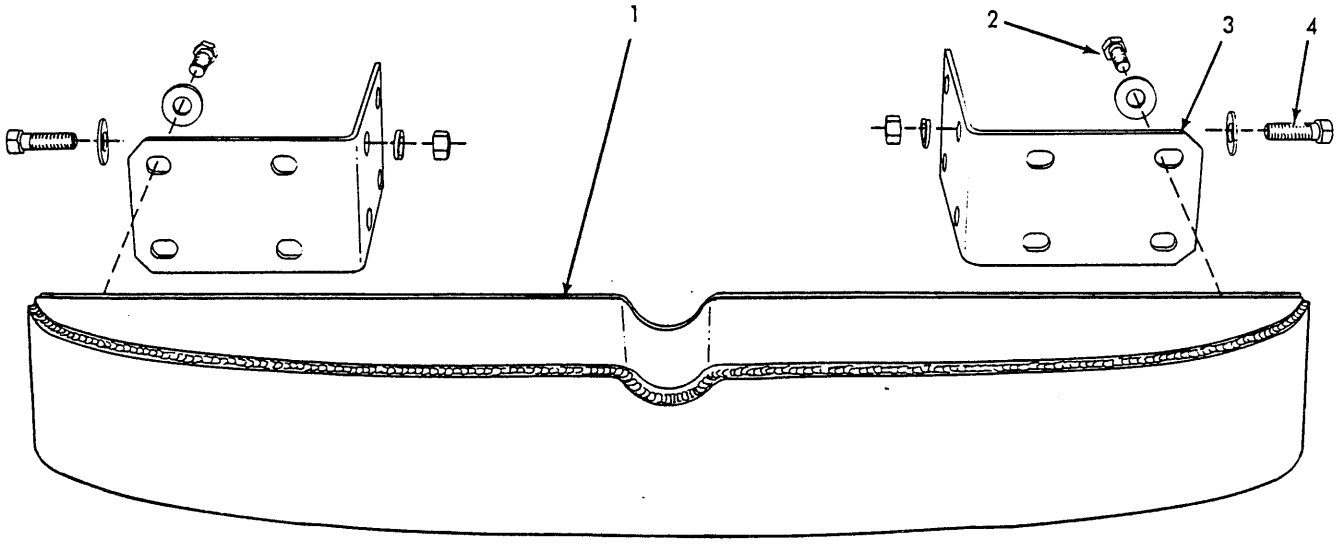

FIRST TYPE

T-4355

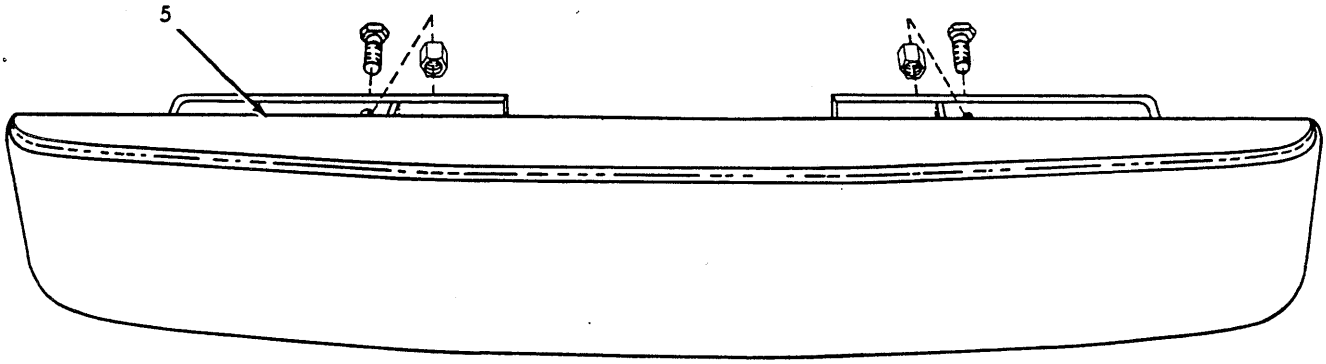

SECOND TYPE

T-16299

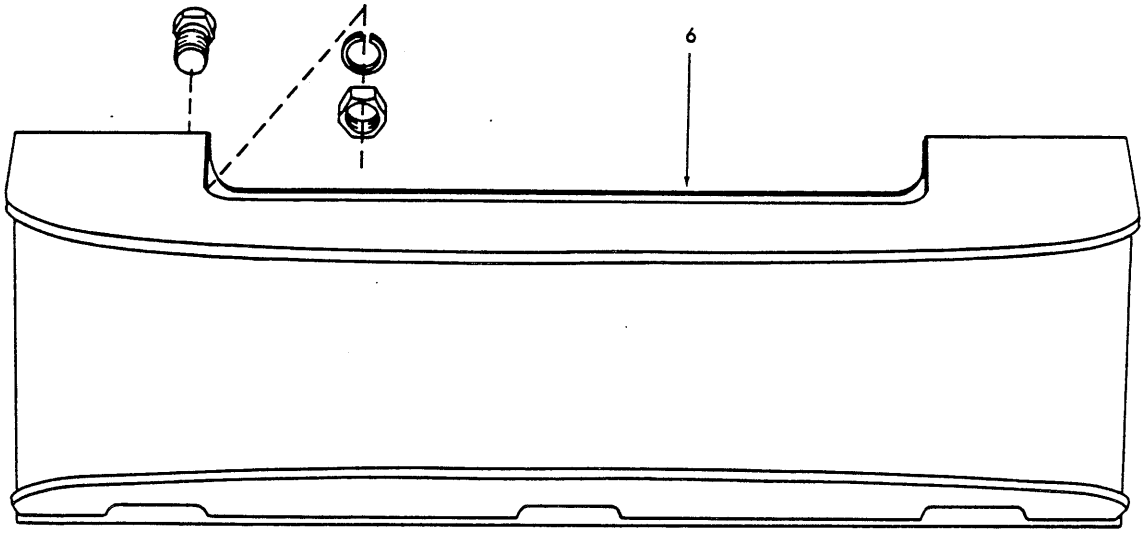

THIRD TYPE

T-72475

BUMPER

* Model HD11F, S tractors prior to serial No. 2265
** Model HD11B, E, ES, EC, FC tractors prior to serial No. 10001; also Model HD11F, S tractors serial No. 2265 thru 10000.
*** Tractors serial No. 10001 and up

ITEM	PART NO.	QUANTITY *	**	***	DESCRIPTION
1	------	1	-	-	BUMPER, front (Model HD11S. Order BUMPER 632666)
	------	1	-	-	BUMPER, front (Model HD11F. Order BUMPER 631186)
2	073468	8	-	-	CAPSCREW, 1"NF x 2-1/2"
	900822	8	-	-	WASHER, plain, U.S. std., 1"
3	084986	2	-	-	BRACKET, mounting (Model HD11S only)
4	070272	8	-	-	CAPSCREW, 1"NF x 3"
	900822	8	-	-	WASHER, plain, U.S. std., 1"
	910916	8	-	-	LOCKWASHER, 1"
	911047	8	-	-	NUT, 1"NF
5	085617	-	1	-	BUMPER, front (60" long)(Models HD11B, E, EC, ES)
	632666	-	1	-	BUMPER, front (35" long)(Model HD11S; also Model HD11E with special 44-link track; also Models HD11F, FC except when equipped with front power take-off)
	070272	-	4	-	CAPSCREW, 1"NF x 3"
	600236	-	4	-	NUT, high, 1"NF
	631186	-	1	-	BUMPER, front (53"long)(Models HD11F, FC equipped with front power take-off)
	073468	-	8	-	CAPSCREW, 1"NF x 2-1/2"
	910916	-	8	-	LOCKWASHER, 1"
	900822	-	16	-	WASHER, plain, U.S. std., 1"
6	641167	-	-	1	BUMPER, front (34" long)(Standard on Models HD11B, E, EC)
	085617	-	-	1	BUMPER, front (60" long)(Optional on Models HD11B, E, EC)
	918490	-	-	4	CAPSCREW, 1"NF x 2-1/2"
	910916	-	-	4	LOCKWASHER, 1"
	911047	-	-	4	NUT, 1"NF
	090424	-	-	1	BUMPER, front (60" long)(Model HD11S; also Model HD11B equipped with light-duty Radiator Shell)
	070272	-	-	4	CAPSCREW, 1"NF x 3"
	600236	-	-	4	NUT, high, 1"NF

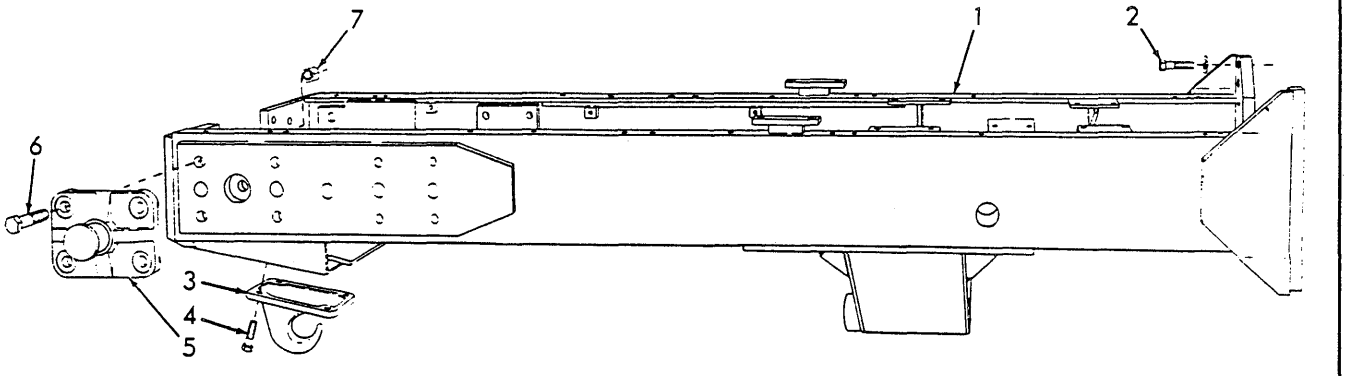

MAIN FRAME T-13179

* Tractors prior to serial No. 10001
** Tractors serial No. 10001 and up

ITEM	PART NO.	QTY. *	QTY. **	DESCRIPTION
1	084480	1	-	FRAME
	095978	1	-	FRAME (For tractors equipped with Model 11HI dozer)
	638244	-	1	FRAME (Models HD11B,S)
	634525	-	1	FRAME (Models HD11E,EC)
2	012762	8	8	CAPSCREW, 7/8"NF x 3-1/4" (2 less used on HD11E,EC tractors #10001 and up)
	070159	-	2	CAPSCREW, 7/8"NF x 3" (HD11E,EC tractors only)
	905347	8	8	LOCKWASHER, 7/8"
3	050543	1	1	HOOK, front pull (Standard on Models HD11F,FC; optional on all other models)
4	012984	4	4	CAPSCREW, 3/4"NF x 2-3/4"
	012767	4	4	NUT, high, 3/4"NF
5	085349	2	2	TRUNNION, radiator guard mounting (Used on all tractors equipped with wrap-around Radiator Guard)
6	031055	8	8	CAPSCREW, 1"NF x 4"
7	600236	8	8	NUT, high, 1"NF

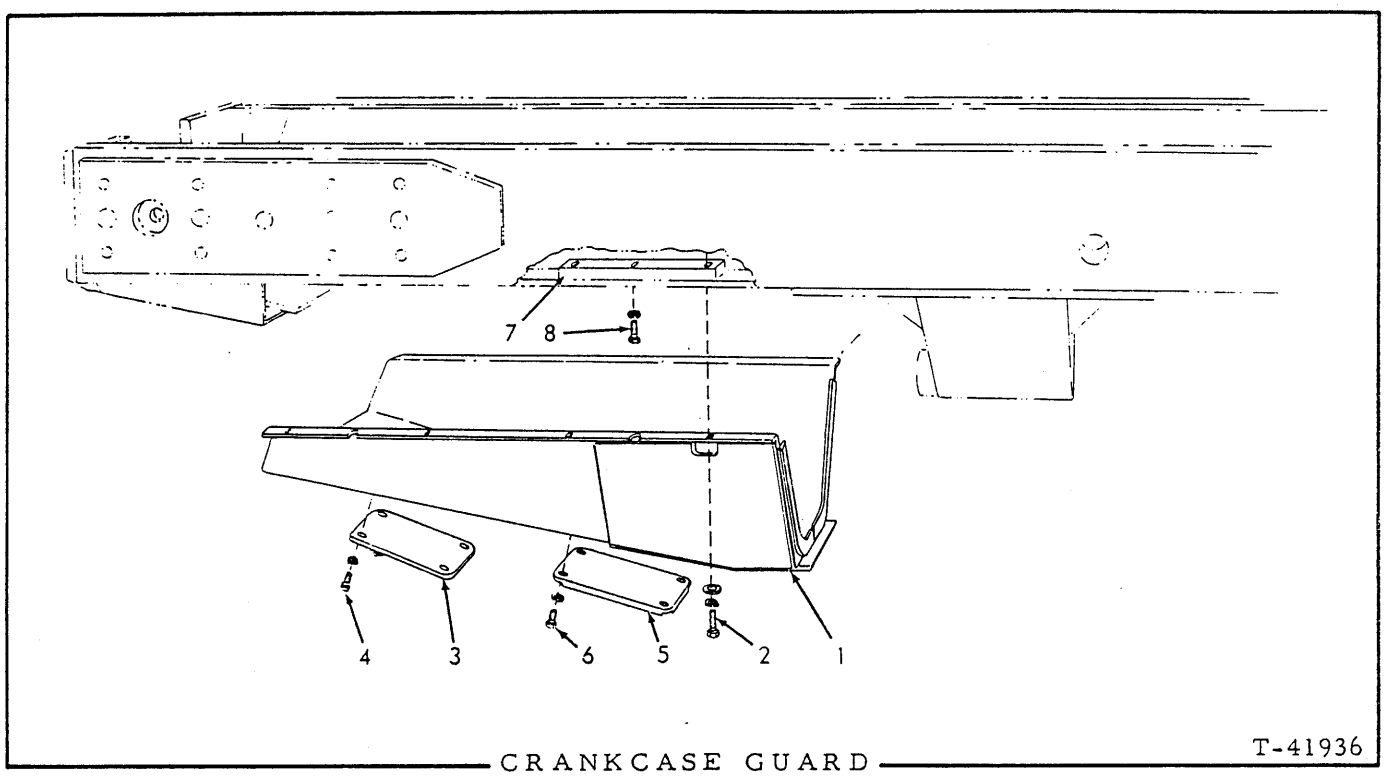

CRANKCASE GUARD T-41936

USAGE: Standard equipment on Models HD11F, FC; optional on all other models

* Tractors prior to serial No. 8930
** Tractors serial No. 8930 and up

ITEM	PART NO.	QTY. *	QTY. **	DESCRIPTION	
1	084425	1	-	GUARD ASSEMBLY, crankcase (Used prior to tractor #4060)	Each includes items 3 thru 6
	646117	1	1	GUARD ASSEMBLY, crankase (Effective with tractor #4060)	
2	035073	8	8	CAPSCREW, 1/2"NF x 1-3/4"	
	904208	8	8	LOCKWASHER, 1/2"	
	064531	8	8	WASHER, plain	
	911043	4	-	NUT, 1/2"NF (4 additional used prior to tractor #6435)	
3	073437	1	-	COVER, water drain hole (Used prior to tractor #4060)	
	057777	1	1	COVER, water drain hole (Effective with tractor #4060)	
4	070467	4	4	CAPSCREW, 1/2"NF x 1"	
	904208	4	4	LOCKWASHER, 1/2"	
5	057777	1	-	COVER, crankcase drain hole (Used prior to tractor #6473)	
	623576	1	-	COVER, crankcase drain hole (Effective with tractor #6473)	
	646501	-	1	COVER, crankcase drain hole	
6	070467	4	4	CAPSCREW, 1/2"NF x 1"	
	904208	4	4	LOCKWASHER, 1/2"	
7	621722	2	4	BLOCK, tapped, guard attaching (Effective with tractor #6435)	
8	035073	2	-	CAPSCREW, 1/2"NF x 1-3/4"	
	614478	-	4	CAPSCREW, 1/2"NF x 1-3/8"	
	904208	2	4	LOCKWASHER, 1/2"	

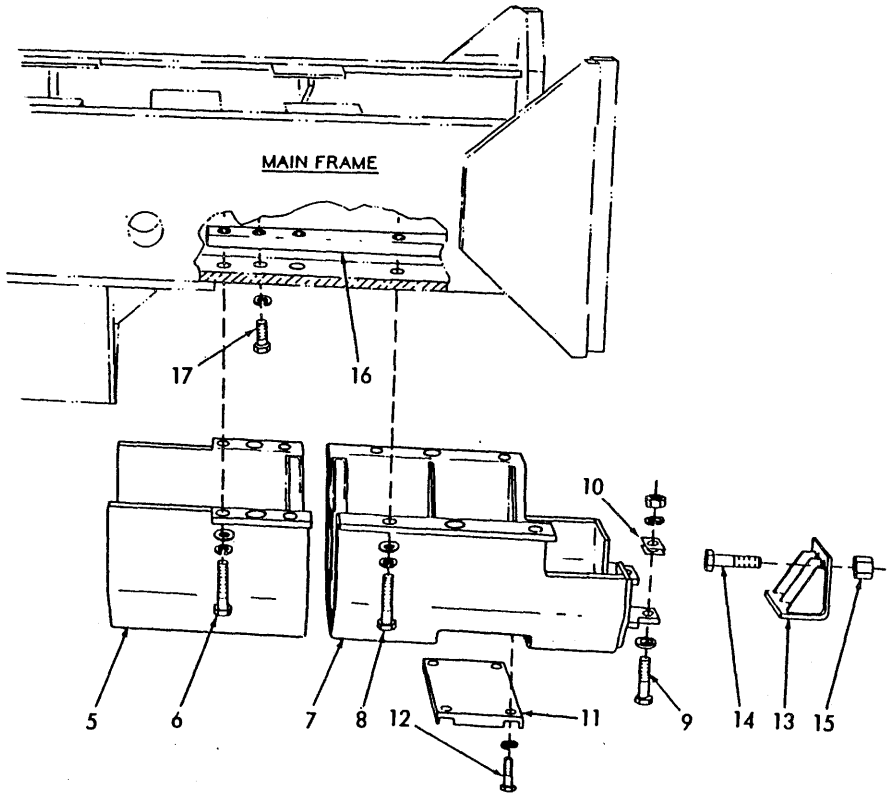

SECOND TYPE

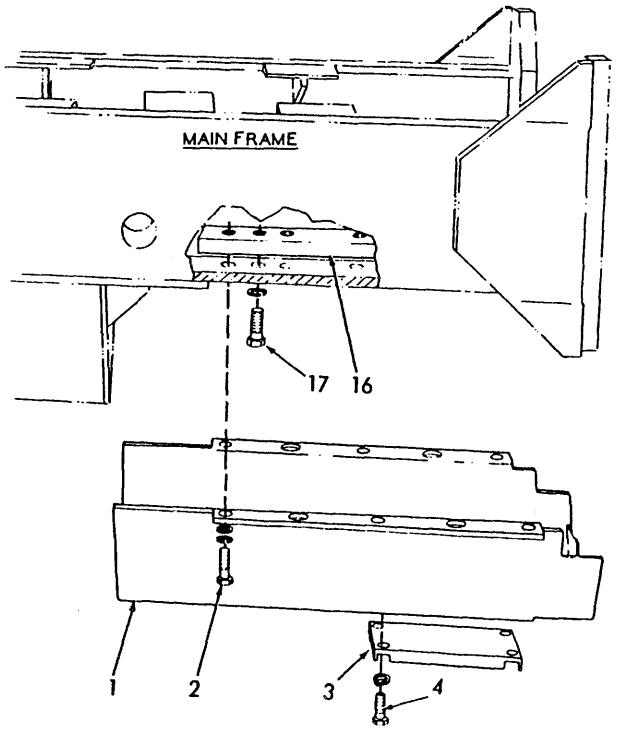

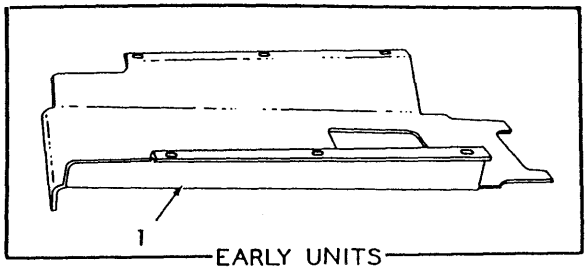

FIRST TYPE

T-41933

TRANSMISSION GUARDS

USAGE: Standard equipment on Models HD11F, FC; optional on all other models

* Tractors prior to serial No. 8930
** Tractors serial No. 8930 thru No. 10000; also Model HD11B, S tractors serial No. 10001 and up
*** Model HD11E, EC tractors serial No. 10001 and up

ITEM	PART NO.	QUANTITY *	**	***	DESCRIPTION
1	------	1	-	-	SHIELD, transmission (Order GUARD 643773, PLATE 643770, 4 CAPSCREW 035018 and 4 LOCKWASHER 904208)
	643773	-	1	-	GUARD, transmission
2	035073	6	-	-	CAPSCREW, 1/2"NF x 1-3/4"
	035067	-	6	-	CAPSCREW, 1/2"NF x 2"
	064531	6	6	-	WASHER, plain
	904208	6	6	-	LOCKWASHER, 1/2"
	911043	6	6	-	NUT, 1/2"NF (Used prior to tractor #10001)
3	643770	-	1	-	COVER, transmission drain hole
4	035018	-	4	-	CAPSCREW, 1/2"NF x 1-1/2" (Early units)
	035190	-	4	-	CAPSCREW, 1/2"NC x 1-1/2" (Late units)
	904208	-	4	-	LOCKWASHER, 1/2"
5	638442	-	-	1	GUARD, transmission, front section
6	035068	-	-	4	CAPSCREW, 1/2"NF x 2-1/4" (Not used on units with BOTTOM GUARDS)
	904208	-	-	4	LOCKWASHER, 1/2"
	064531	-	-	4	WASHER, plain
7	646490	-	-	1	GUARD, transmission, rear section
8	035068	-	-	4	CAPSCREW, 1/2"NF x 2-1/4" (2 less used on units with BOTTOM GUARDS)
	904208	-	-	4	LOCKWASHER, 1/2"
	064531	-	-	4	WASHER, plain
9	035248	-	-	2	CAPSCREW, 5/8"NF x 2-1/4"
	064810	-	-	2	WASHER, plain
	904209	-	-	2	LOCKWASHER, 5/8"
	911044	-	-	2	NUT, 5/8"NF
10	638480	-	-	4	SHIM, rear transmission guard (1/16" thick. Use as required)
	638479	-	-	4	SHIM, rear transmission guard (1/8" thick. Use as required)
11	637971	-	-	1	COVER, rear transmission guard
12	035190	-	-	4	CAPSCREW, 1/2"NF x 1-1/2"
	904208	-	-	4	LOCKWASHER, 1/2"
13	644483	-	-	1	COVER, rear (Not used on units equipped with special SWINGING DRAWBAR)
14	013465	-	-	4	CAPSCREW, 3/4"NF x 2-1/2"
15	012767	-	-	4	NUT, high, 3/4"NF
16	646591	-	2	2	BAR, tapped (Effective with tractor #10001)
17	614478	-	4	4	CAPSCREW, 1/2"NF x 1-3/8"
	904208	-	4	4	LOCKWASHER, 1/2"

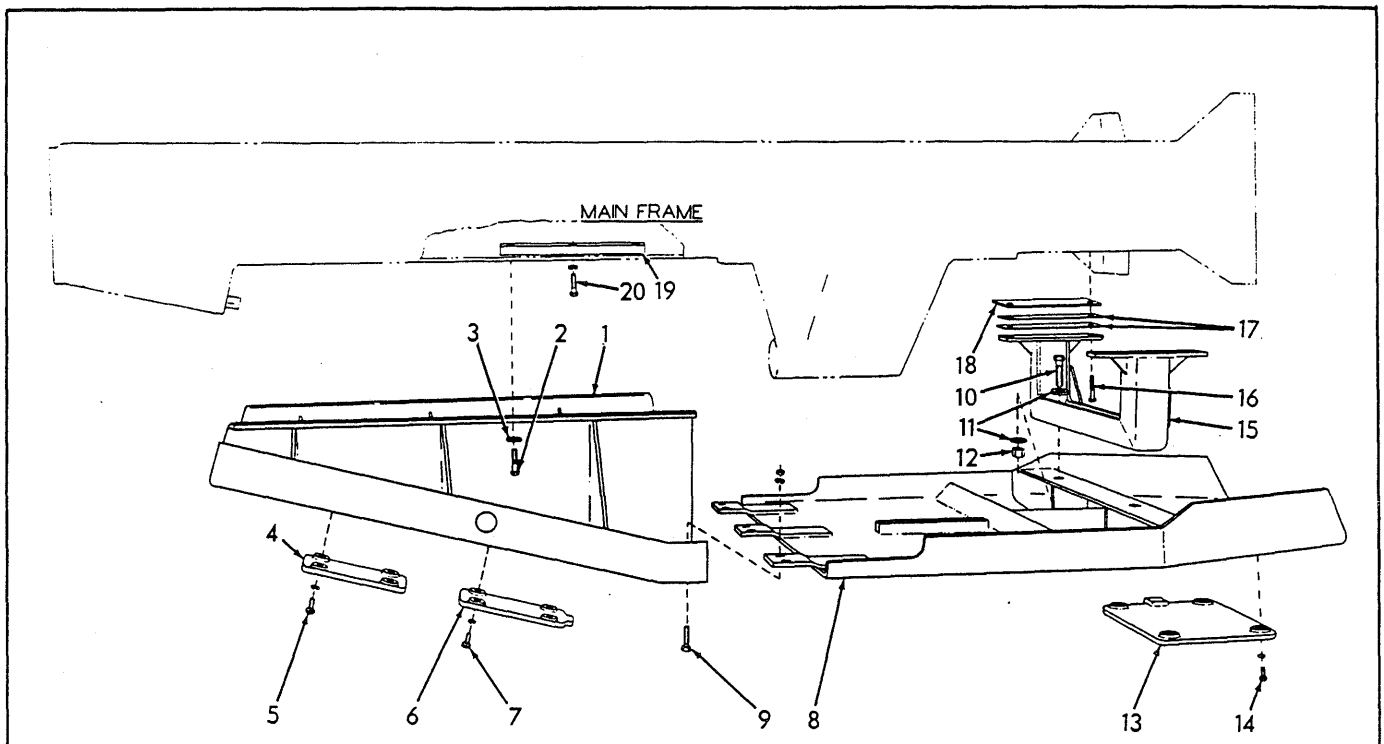

BOTTOM GUARDS T-17427

USAGE: Special equipment. For tractors engaged in logging operations. Applicable to Model HD11B,E,EC tractors prior to serial No. 10001

* Used prior to tractor serial No. 4060
** Effective with tractor serial No. 4060

ITEM	PART NO.	QTY. *	QTY. **	DESCRIPTION
1	084968	1	-	GUARD ASSEMBLY, front section (Includes items 4 thru 7)(Used in place of standard crankcase GUARD 084425)
	621207	-	1	GUARD ASSEMBLY, front section (Includes items 4 thru 7)(Used in place of standard crankcase GUARD 646117)
2	035067	8	8	CAPSCREW, 1/2"NF x 2"
3	064531	8	8	WASHER, plain
	904208	8	8	LOCKWASHER, 1/2"
	911043	4	4	NUT, 1/2"NF
4	068636	1	-	COVER, radiator drain hole
	092760	-	1	COVER, radiator drain hole
5	035221	2	4	CAPSCREW, 1/2"NC x 1"
	904208	2	4	LOCKWASHER, 1/2"
6	084963	1	-	COVER, crankcase drain hole
	092760	-	1	COVER, crankcase drain hole (Used on tractors #4060 thru #6472)
	621272	-	1	COVER, crankcase drain hole (Effective with tractor #6473)
7	035221	3	4	CAPSCREW, 1/2"NC x 1"
	904208	3	4	LOCKWASHER, 1/2"

(Continued)

BOTTOM GUARDS (Continued)

ITEM	PART NO.	QTY. *	QTY. **	DESCRIPTION
8	091219	1	1	GUARD ASSEMBLY, rear section (Includes items 13 and 14)
9	035073	6	6	CAPSCREW, 1/2"NF x 1-3/4"
	904208	6	6	LOCKWASHER, 1/2"
	911043	6	6	NUT, 1/2"NF
10	012984	2	2	CAPSCREW, 3/4"NF x 2-3/4"
11	061689	4	4	WASHER, plain
12	012767	2	2	NUT, high, 3/4"NF
13	064219	1	1	COVER, transmission drain hole
14	035221	4	4	CAPSCREW, 1/2"NC x 1"
	904208	4	4	LOCKWASHER, 1/2"
15	073648	1	1	CHANNEL, supporting, rear guard
16	035892	4	4	CAPSCREW, 1/2"NF x 2-1/2"
	904208	4	4	LOCKWASHER, 1/2"
	911043	4	4	NUT, 1/2"NF
17	073715	6	6	SHIM, channel adjusting (Use as req'd)
18	641302	2	2	BAR, guard spacing
19	621722	2	2	BLOCK, tapped, guard attaching (left side only)
20	614478	2	2	CAPSCREW, 1/2"NF x 1-3/8"
	904208	2	2	LOCKWASHER, 1/2"

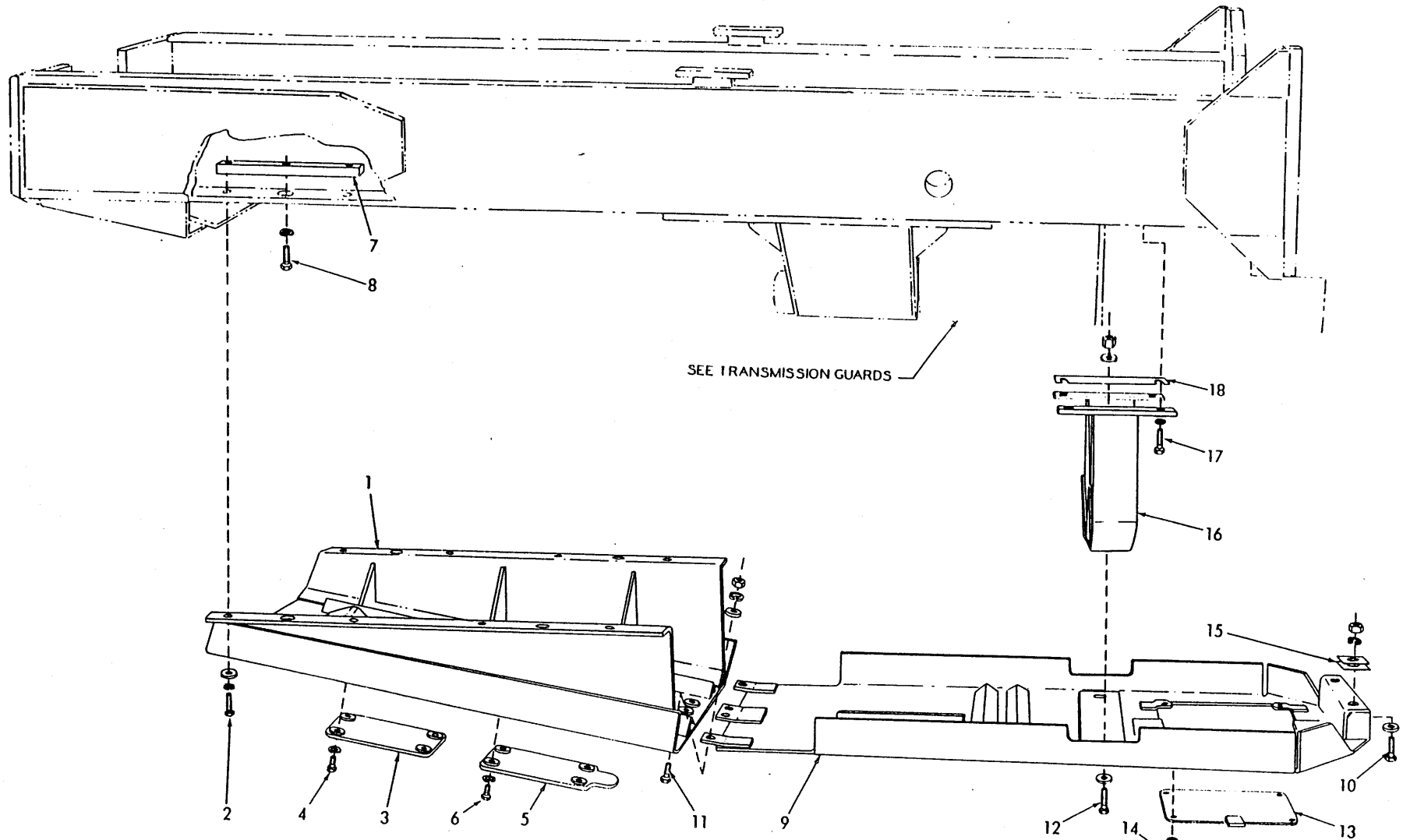

BOTTOM GUARDS (Second type)

T-41923

BOTTOM GUARDS

USAGE: Special equipment. For tractors engaged in logging operations. Applicable to tractors serial No. 10001 and up

* Models HD11B,S
** Models HD11E,EC

ITEM	PART NO.	QTY. *	QTY. **	DESCRIPTION
1	638695	1	1	GUARD ASSEMBLY, front section (Includes items 3 thru 6)
2	035067	8	8	CAPSCREW, 1/2"NF x 2"
	904208	8	8	LOCKWASHER, 1/2"
	064531	8	8	WASHER, plain
3	092760	1	1	COVER, water drain hole
4	035221	4	4	CAPSCREW, 1/2"NC x 1"
	904208	4	4	LOCKWASHER, 1/2"
5	621272	1	1	COVER, crankcase oil drain hole
6	035221	4	4	CAPSCREW, 1/2"NC x 1"
	904208	4	4	LOCKWASHER, 1/2"
7	621722	4	4	BLOCK, tapped
8	614478	4	4	CAPSCREW, 1/2"NF x 1-3/8"
	904208	4	4	LOCKWASHER, 1/2"
9	641895	1	-	GUARD ASSEMBLY, rear section (Includes items 13 and 14)
	639196	-	1	GUARD ASSEMBLY, rear section (Includes items 13 and 14)
10	013467	-	2	CAPSCREW, 5/8"NF x 3"
	064810	-	2	WASHER, plain
	904209	-	2	LOCKWASHER, 5/8"
	911044	-	2	NUT, 5/8"NF
11	035073	4	4	CAPSCREW, 1/2"NF x 1-3/4"
	064531	4	4	WASHER, plain
	904208	4	4	LOCKWASHER, 1/2"
	911043	4	4	NUT, 1/2"NF
12	035278	2	-	CAPSCREW, 1/2"NF x 2-3/4"
	035892	-	2	CAPSCREW, 1/2"NF x 2-1/2"
	064531	4	4	WASHER, plain
	038234	2	2	NUT, high 1/2"NF
13	064219	1	1	COVER, transmission oil drain
14	035221	4	4	CAPSCREW, 1/2"NC x 1"
	904208	4	4	LOCKWASHER, 1/2"
15	638480	-	4	SHIM, rear guard (1/16" thick. Use as required)
	638479	-	4	SHIM, rear guard (1/8" thick. Use as required)
16	639194	1	1	CHANNEL, supporting, rear guard
17	035278	4	-	CAPSCREW, 1/2"NF x 2-3/4"
	070403	-	4	CAPSCREW, 1/2"NF x 3"
	904208	4	4	LOCKWASHER, 1/2"
18	639188	4	4	SHIM, channel spacing (1/16" thick. Use as required)
	639187	4	4	SHIM, channel spacing (1/8" thick. Use as required)

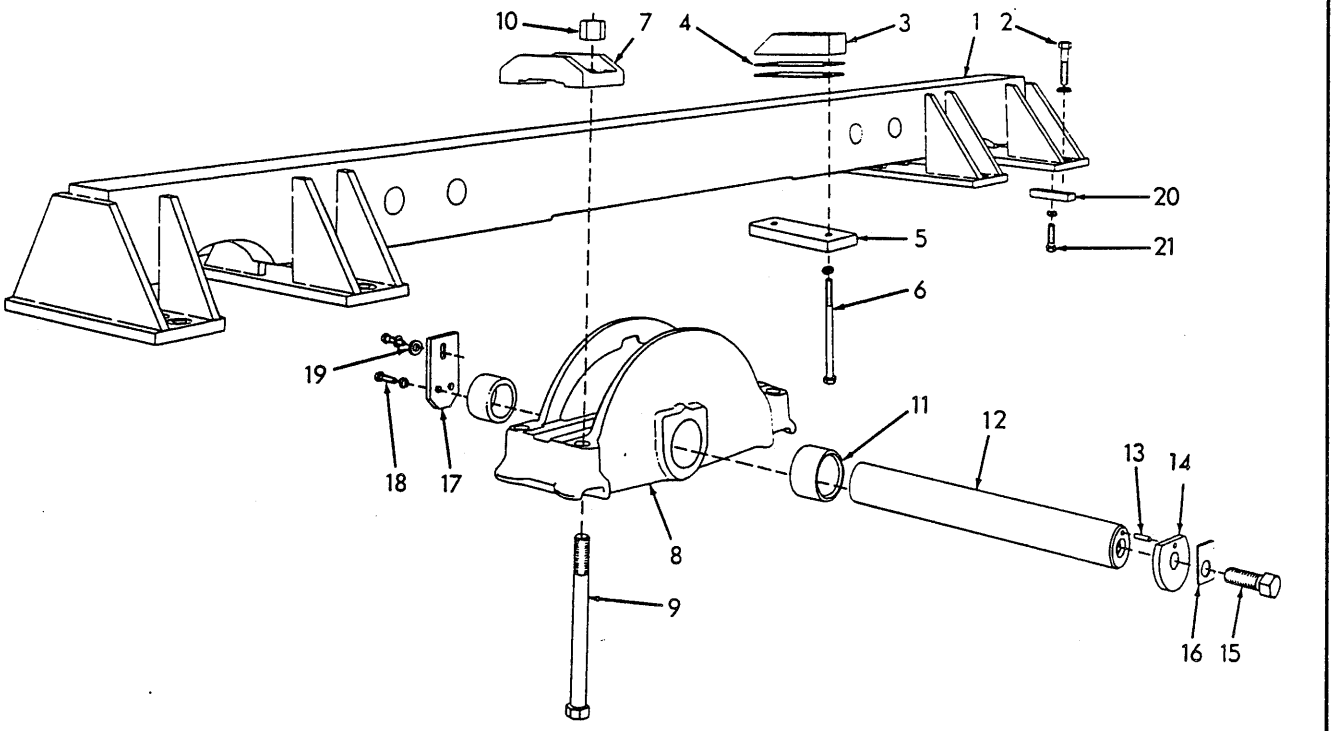

RIGID BEAM

USAGE: Model HD11F, FC tractors only prior to serial No. 10001

ITEM	PART NO.	QTY.	DESCRIPTION
1	073806	1	1 BEAM, rigid
2	012526	16	CAPSCREW, 3/4"NF x 3-1/4"
	904369	16	LOCKWASHER, 3/4"
3	087353	2	BLOCK, spacing
4	087355	6	SHIM, spacing (1/32" thick. Use as required)
	087356	6	SHIM, spacing (1/16" thick. Use as required)
5	093152	2	BLOCK, clamping
6	087357	4	CAPSCREW, 1/2"NF x 7"
	904208	4	LOCKWASHER, 1/2"
7	056421	2	SADDLE, beam capscrew
8	065872	1	SADDLE ASSEMBLY (Includes item 11)
9	070861	4	CAPSCREW, beam saddle (1"NF x 10-1/2")
10	600236	4	NUT, high, 1"NF
11	056413	2	BUSHING, saddle
12	056420	1	PIN, saddle

(Continued)

ITEM	PART NO.	QTY.	DESCRIPTION
13	056418	1	PIN, dowel, cover plate
14	056417	1	PLATE, pivot pin cover
15	049662	1	CAPSCREW, 7/8"NF x 2"
16	037693	1	LOCK, capscrew
17	056441	1	PLATE, pivot pin retaining
18	035018	3	CAPSCREW, 1/2"NF x 1-1/2"
19	064531	1	WASHER, plain
	904208	3	LOCKWASHER, 1/2"
20	054968	8	BLOCK, tapped (tapered section)(Used prior to tractor #7609)
	631666	8	BLOCK, tapped (straight section)(Effective with tractor #7609)
21	035073	8	CAPSCREW, 1/2"NF x 1-3/4"
	904208	8	LOCKWASHER, 1/2"

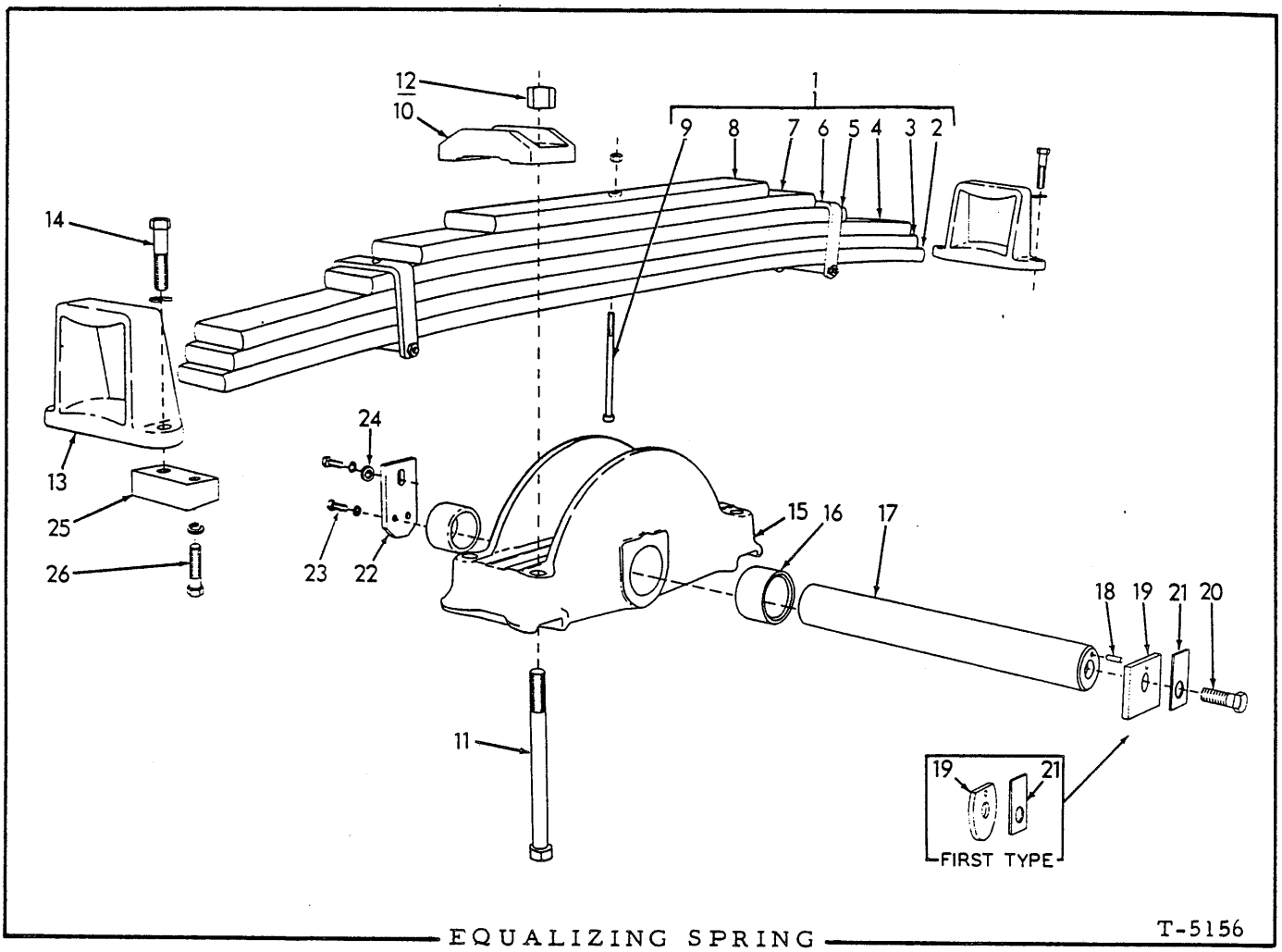

EQUALIZING SPRING T-5156

USAGE: Models HD11B, E, EC, ES, S

* Tractors prior to serial No. 11579
** Tractors serial No. 11579 and up

ITEM	PART NO.	QTY. *	QTY. **	DESCRIPTION
1	094171	1	1	SPRING ASSEMBLY (Consists of items 2 thru 9)(If for tractors prior to #4340 also order 2 SEATS 095211)
2	056428	1	1	LEAF, main (66-1/2" long)
3	096249	1	1	LEAF, second (65-1/2" long)
4	056429	1	-	LEAF, third (54-1/4" long)(Used prior to tractor #4340)
	096250	1	1	LEAF, third (64-1/2" long)(Effective with tractor #4340)
5	056430	1	1	LEAF ASSEMBLY, fourth (46-1/8" long. Includes item 6)
6	088873	2	2	CLIP KIT, spring rebound (Consists of 1 clip, 1 rivet, 1 bolt, 1 nut and 1 spacer)
7	056431	1	1	LEAF, fifth (38-1/4" long)
8	056432	1	1	LEAF, sixth (27" long)

(Continued)

ITEM	PART NO.	QTY. *	QTY. **	DESCRIPTION
9	056427	1	1	BOLT, center (1/2"NF x 6-5/8" long. Includes NUT indented below)
	911043	1	1	NUT, 1/2"NF
10	056421	2	-	SADDLE, spring capscrew
	655005	-	2	SADDLE, spring capscrew
11	065873	4	-	CAPSCREW, spring saddle (1"NF x 11")
	065878	-	4	CAPSCREW, spring saddle (1-1/4"NF x 12")
12	600236	4	-	NUT, high, 1"NF
	083390	-	4	NUT, high, 1-1/4"NF
	915709	-	12	WASHER, spacing
13	056414	2	-	SEAT, spring (5-1/8" high)(Used prior to tractor #4340)
	095211	2	2	SEAT, spring (6-1/8" high)(Effective with tractor #4340)
14	070285	4	4	CAPSCREW, 3/4"NF x 3"
	904369	4	4	LOCKWASHER, 3/4"
15	065872	1	-	SADDLE ASSEMBLY (Includes item 16)
	655004	-	1	SADDLE ASSEMBLY (Includes item 16)
16	056413	2	2	BUSHING, saddle
17	056420	1	-	PIN, saddle (Used prior to tractor #10001)
	643948	1	1	PIN, saddle (Effective with tractor #10001)
18	056418	1	1	PIN, dowel, cover plate
19	056417	1	-	PLATE, pivot pin cover (Used prior to tractor #10001)
	643942	1	1	COVER, pivot pin (Effective with tractor #10001)
20	049662	1	1	CAPSCREW, 7/8"NF x 2"
21	037693	1	-	LOCK, capscrew (Used prior to tractor #10001)
	643950	1	1	LOCK, capscrew (Effective with tractor #10001)
22	056441	1	1	PLATE, pivot pin retaining
23	035018	3	3	CAPSCREW, 1/2"NF x 1-1/2"
	904208	3	3	LOCKWASHER, 1/2"
24	064531	1	1	WASHER, plain
25	056902	4	-	BLOCK, tapped (tapered section, 3" long)(For all units except Model HD11E with special 44-link track. Used prior to tractor #7632 on Models HD11B,S and tractor #7538 on Models HD11E, EC, ES)
	054968	4	-	BLOCK, tapped (tapered section, 3-1/2" long)(For Model HD11E with special 44-link track only. Used prior to tractor #7609)
	630752	4	4	BLOCK, tapped (straight section, 3" long)(For all units except early Model HD11E with special 44-link track. Effective with tractor #7632 on Models HD11B,S and tractor #7538 on Models HD11E, EC, ES)
	631666	4	-	BLOCK, tapped (straight section, 3-1/2" long)(For Model HD11E with special 44-link track only. Used on tractors #7609 thru #10000)
26	035067	4	-	CAPSCREW, 1/2"NF x 2" (Used prior to tractor #10001)
	035068	4	4	CAPSCREW, 1/2"NF x 2-1/4" (Effective with tractor #10001)
	904208	4	4	LOCKWASHER, 1/2"

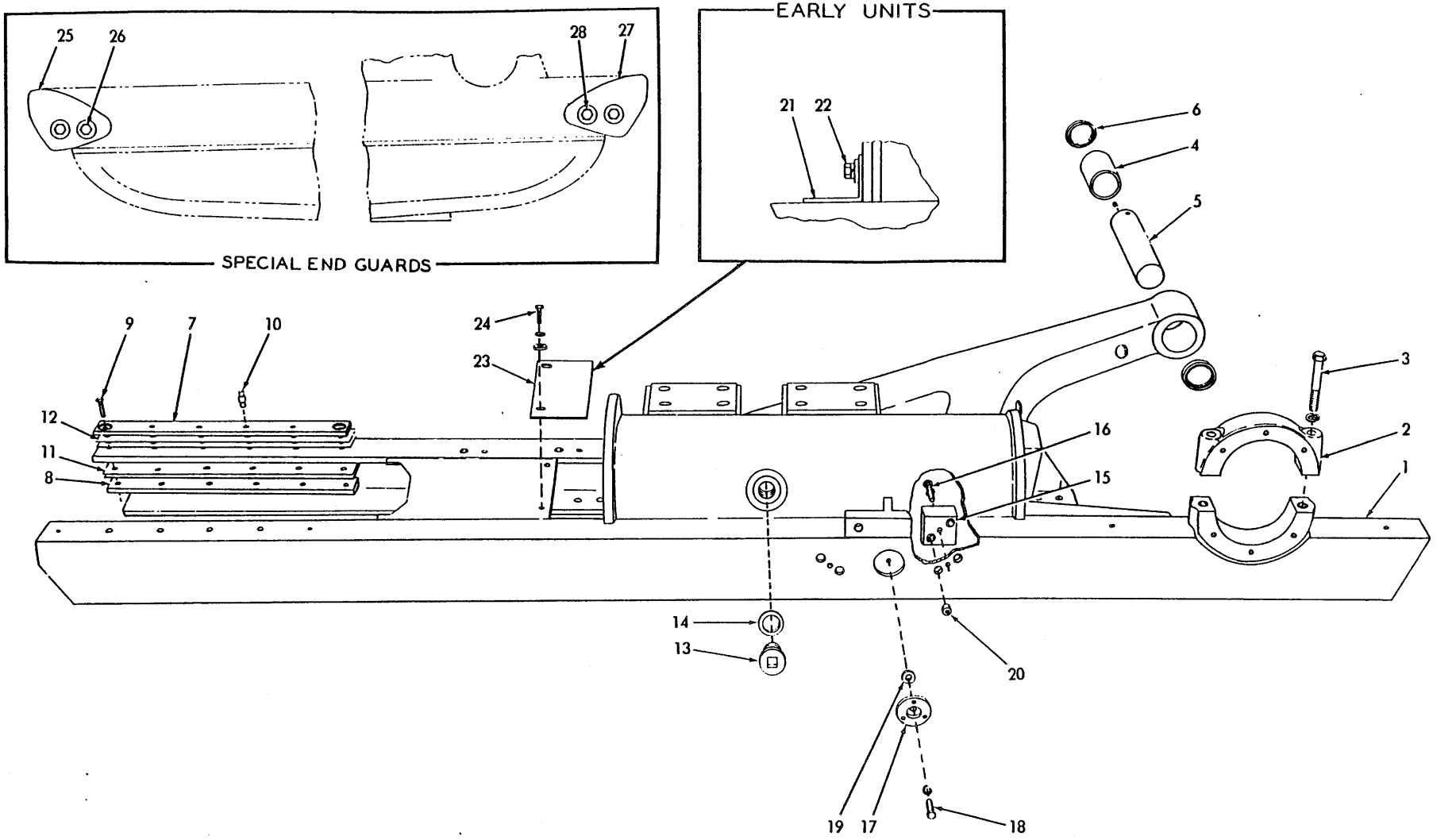

TRACK FRAME (First type)

T-4353

TRACK FRAME

USAGE: Model HD11B,S tractors prior to serial No. 7632; Model HD11E,EC,ES tractors prior to serial No. 7538; Model HD11F,FC tractors prior to serial No. 7609

* HD11B,S
** HD11E,EC,ES
*** HD11F,FC; also HD11E with special 44-link track

ITEM	PART NO.	QUANTITY *	**	***	DESCRIPTION
1	------	1	-	-	FRAME ASSEMBLY, left (Order TRACK FRAME KIT 631989. If for tractors prior to #6473 also order 1 SHAFT 622847, 2 RETAINER 622850, 2 RETAINER 622855. If for tractors prior to #5467 also add 1 CAPSCREW 035244, 1 WASHER 064531, 2 CAPSCREW 035073, 3 CAPSCREW 023618, 24 CAPSCREW 070161)
	------	-	1	-	FRAME ASSEMBLY, left (Order TRACK FRAME KIT 631993. If for tractors prior to #6473 also order 1 SHAFT 622847, 2 RETAINER 622850, 2 RETAINER 622855)
	------	-	-	1	FRAME ASSEMBLY, left (For Model HD11E with special 44-link track only. Order TRACK FRAME KIT 632115)
	------	-	-	1	FRAME ASSEMBLY, left (Model HD11F,FC tractors prior to #4629. Order TRACK FRAME KIT 634823)
	------	-	-	1	FRAME ASSEMBLY, left (Model HD11F,FC tractors #4629 and up. Order TRACK FRAME KIT 631991. If for tractors prior to #6473 also order 1 SHAFT 622847, 2 RETAINER 622850, 2 RETAINER 622855)
	------	1	-	-	FRAME ASSEMBLY, right (Order TRACK FRAME KIT 631990. If for tractors prior to #6473 also order 1 SHAFT 622847, 2 RETAINER 622850, 2 RETAINER 622855. If for tractors prior to #5467 also add 1 CAPSCREW 035244, 1 WASHER 064531, 2 CAPSCREW 035073, 3 CAPSCREW 023618, 24 CAPSCREW 070161)
	------	-	1	-	FRAME ASSEMBLY, right (Order TRACK FRAME KIT 631994. If for tractors prior to #6473 also order 1 SHAFT 622847, 2 RETAINER 622850, 2 RETAINER 622855)
	------	-	-	1	FRAME ASSEMBLY, right (For Model HD11E with special 44-link track only. Order TRACK FRAME KIT 632116)
	------	-	-	1	FRAME ASSEMBLY, right (Model HD11F,FC tractors prior to #4629. Order TRACK FRAME KIT 634824)
	------	-	-	1	FRAME ASSEMBLY, right (Model HD11F,FC tractors #4629 and up. Order TRACK FRAME KIT 631992. If for tractors prior to #6473 also order 1 SHAFT 622847, 2 RETAINER 622850, 2 RETAINER 622855)
					NOTE: Each Frame Assembly listed above includes items 2 thru 4
2	70056895	2	2	2	CAP, sprocket shaft bearing
3	70071014	4	4	4	CAPSCREW, 3/4"NF x 4-1/2"
	70904369	4	4	4	LOCKWASHER, 3/4"
4	70056261	2	2	2	BUSHING, pivot shaft (4"long)(Original equipment)
	70666459	2	2	2	BUSHING, pivot shaft (4-1/4"long)(Service replacement. Used only on units converted for pressure lubrication)
5	70056260	2	2	2	SHAFT, pivot (Original equipment)
	70666464	2	2	2	SHAFT, pivot (Service replacement. Used only on units converted for pressure lubrication)
	70907070	2	2	2	PLUG, pipe, ctsk-hd., 1/4"NPT

(Continued)

ITEM	PART NO.	QUANTITY *	**	***	DESCRIPTION
6	70629733	4	4	4	SEAL, pivot shaft (1/2" wide)(Original equipment)
	70666465	4	4	4	SEAL, pivot shaft (1/4" wide)(Service replacement. Used only on units converted for pressure lubrication)
7	70077672	4	4	4	BAR, slide, track idler, upper (1-3/4" wide)(Used prior to tractor #6473)
	70622848	4	4	4	BAR, slide, track idler, upper (2" wide)(Effective with tractor #6473)
8	70077673	4	4	4	BAR, slide, track idler, lower
9	70056590	8	-	8	CAPSCREW, 3/8"NF x 1-5/8" (Used prior to tractor #4312 on Model HD11F; also prior to tractor #5467 on Models HD11B and S)
	70046419	8	8	8	CAPSCREW, 3/8"NF x 2" (Effective with tractor #4312 on Model HD11F; also effective with tractor #5467 on Models HD11B and S)
10	70054824	16	-	16	PIN, dowel, track idler slide bar (1-1/2" long)(Used prior to tractor #4312 on Model HD11F; also prior to tractor #5467 on Models HD11B and S)
	70094952	16	16	16	PIN, dowel, track idler slide bar (1-7/8" long)(Effective with tractor #4312 on Model HD11F; also effective with tractor #5467 on Models HD11B and S)
11	70056909	16	16	16	SHIM, adjusting, track idler slide bar (1-5/8" wide. Use as required)
12	70056909	8	8	8	SHIM, adjusting, upper slide bar (1-5/8" wide. Use as required) (Used prior to tractor #6473)
	70622849	8	8	8	SHIM, adjusting, upper slide bar (2" wide. Use as required) (Effective with tractor #6473)
13	70035250	2	2	2	PLUG, release spring chamber filler
14	70035249	2	2	2	GASKET, filler plug
15	70056898	4	4	-	BLOCK, tapped (For mounting dozer equipment)
16	70035073	4	4	-	CAPSCREW, 1/2"NF x 1-3/4"
	70904208	4	4	-	LOCKWASHER, 1/2"
17	70056896	2	2	-	PLUG, protective (Not used when mounting dozer equipment)
18	70903627	2	-	-	CAPSCREW, 3/8"NC x 1/2" (Used prior to tractor #5467)
	70035244	2	2	-	CAPSCREW, 3/8"NC x 3/4" (Effective with tractor #5467)
	70904206	2	2	-	LOCKWASHER, 3/8"
19	70064531	2	2	-	WASHER, plug spacing (Effective with tractor #5467)
20	70049667	8	8	-	PLUG, thread prtoecting
21	70094693	2	2	2	PLATE, dirt closure, truck frame (Used prior to tractor #5467 on HD11B, S; tractor #4542 on HD11E, ES; tractor #4610 on HD11F)
22	70035306	4	4	4	CAPSCREW, 5/8"NF x 3-1/4"
	70904209	4	4	4	LOCKWASHER, 5/8"
	70064810	4	4	4	WASHER, plain
23	70097332	2	2	2	PLATE, dirt closure (Effective with tractor #5467 on HD11B, S; tractor #4542 on HD11E, ES; tractor #4610 on HD11F)
24	70012992	4	4	4	CAPSCREW, 3/8"NF x 1-1/4"
	70904206	4	4	4	LOCKWASHER, 3/8"
	70044973	4	4	4	WASHER, plain

(Continued)

(Revised December 1979)

ITEM	PART NO.	QUANTITY *	**	***	DESCRIPTION
					NOTE: Items listed below are Special Equipment
25	083163	3	-	3	GUARD, end, left hand (Used prior to tractor #4312 on HD11F; also tractors prior to #5467 on HD11B,S)
	094985	3	3	3	GUARD, end, left hand (Effective with tractor #4312 on HD11F; also tractor #5467 on HD11B,S)
26	035229	6	6	6	CAPSCREW, 5/8"NF x 2"
	904209	6	6	6	LOCKWASHER, 5/8"
	911044	6	6	6	NUT, 5/8"NF
27	083164	3	-	3	GUARD, end, right hand (Used prior to tractor #4312 on HD11F; also tractors prior to #5467 on HD11B,S)
	094986	3	3	3	GUARD, end, right hand (Effective with tractor #4312 on HD11F; also tractor #5467 on HD11B,S)
28	035229	6	6	6	CAPSCREW, 5/8"NF x 2"
	904209	6	6	6	LOCKWASHER, 5/8"
	911044	6	6	6	NUT, 5/8"NF

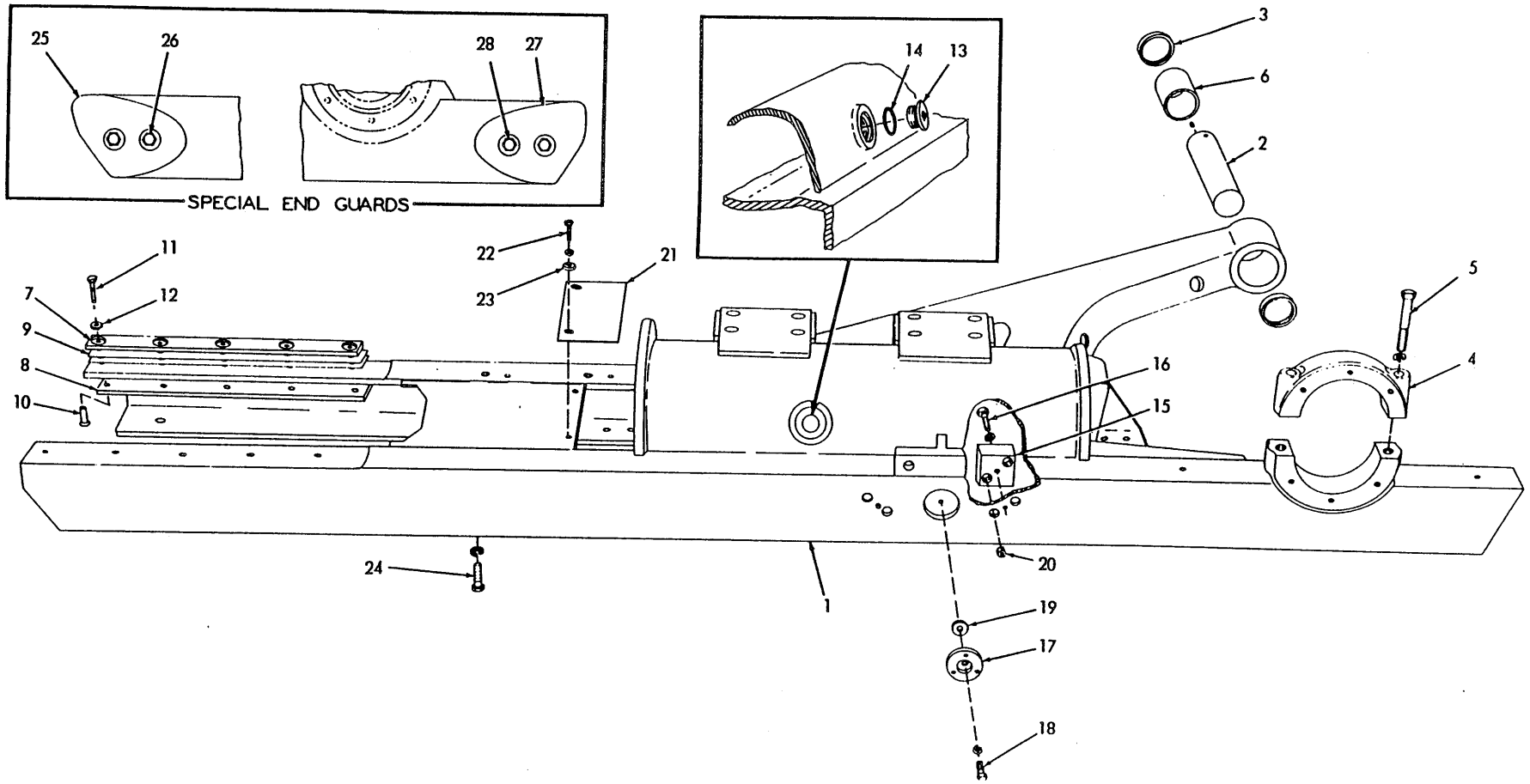

TRUCK FRAME (Second type)

T-38134

TRACK FRAME

USAGE: Effective on Models HD11B,S with serial No. 7632; effective on Models HD11E,EC,ES with serial No. 7538; effective on Models HD11F,FC with serial No. 7609.

*HD11B,S
**HD11E,EC,ES; also HD11B tractors #10001 and up with special 41-link tracks
***HD11F,FC; also HD11E,EC with special 44-link track

ITEM	PART NO.	QUANTITY *	**	***	DESCRIPTION	
1	70631861	1	-	-	FRAME ASSY., left	Standard; Each includes items 4 thru 12
	70631862	1	-	-	FRAME ASSY., right	Standard; Each includes items 4 thru 12
	70631835	-	1	-	FRAME ASSY., left	Not used on Models HD11E,EC after tractor #10000; Each includes items 4 thru 12
	70631836	-	1	-	FRAME ASSY., right	Not used on Models HD11E,EC after tractor #10000; Each includes items 4 thru 12
	70643909	-	1	-	FRAME ASSY., left (Includes items 4 thru 6)	For Model HD11E,EC tractors #10001 and up
	70643910	-	1	-	FRAME ASSY., right (Includes items 4 thru 6)	For Model HD11E,EC tractors #10001 and up
	70632075	-	-	1	FRAME ASSY., left (Includes items 4 thru 12)	For Model HD11E tractors prior to #10001 with special 44-link track
	70632076	-	-	1	FRAME ASSY., right (Includes items 4 thru 12)	For Model HD11E tractors prior to #10001 with special 44-link track
	70648493	-	-	1	FRAME ASSY., left (Includes items 4 thru 6)	For Model HD11E,EC tractors #10001 and up with special 44-link track
	70648494	-	-	1	FRAME ASSY., right (Includes items 4 thru 6)	For Model HD11E,EC tractors #10001 and up with special 44-link track
	70631863	-	-	1	FRAME ASSY., left (Includes items 4 thru 12)	For Models HD11F,FC only
	70631864	-	-	1	FRAME ASSY., right (Includes items 4 thru 12)	For Models HD11F,FC only
2	70056260	2	2	2	SHAFT, pivot (Original equipment)	
	70907070	2	2	2	PLUG, pipe, ctsk-hd., 1/4"NPT	
	70666464	2	2	2	SHAFT, pivot (Service replacement. Used only on units converted for pressure lubrication)	
3	70629733	4	4	4	SEAL, pivot shaft (1/2" wide)(Original equipment)	
	70666465	4	4	4	SEAL, pivot shaft (1/4" wide)(Service replacement. Used only on units converted for pressure lubrication)	
4	70056895	2	2	2	CAP, sprocket shaft bearing	
5	70071014	4	4	4	CAPSCREW, 3/4"NF x 4-1/2"	
	70904369	4	4	4	LOCKWASHER, 3/4"	
6	70056261	2	2	2	BUSHING, pivot shaft (4" long)(Original equipment)	
	70666459	2	2	2	BUSHING, pivot shaft (4-1/4" long)(Service replacement. Used only on units converted for pressure lubrication)	
7	70631668	4	4	4	BAR, slide, track idler, upper (Not for Model HD11E,EC tractors #10001 and up)	
	70642979	-	4	4	BAR, slide, track idler, upper (For Model HD11E,EC tractors #10001 and up only)	
8	70631680	4	4	4	BAR, slide, track idler, lower (Not for Model HD11E,EC tractors #10001 and up)	
	70643837	-	4	4	BAR, slide, track idler, lower (For Model HD11E,EC tractors #10001 and up only)	

(Continued)

TRACK FRAME (Continued)

ITEM	PART NO.	QUANTITY *	**	***	DESCRIPTION
9	637735	8	8	8	SHIM, slide bar (Use as required)
10	631687	20	20	20	DOWEL, tapped, slide bar retaining
11	646164	20	20	20	CAPSCREW, Nylok, 3/8"NF x 7/8"
12	647080	20	20	20	WASHER, plain
13	035250	2	2	2	PLUG, release spring chamber filler
14	035249	2	2	2	GASKET, filler plug
15	056898	4	4	-	BLOCK, tapped (For mounting dozer equipment)
16	035073	4	4	-	CAPSCREW, 1/2"NF x 1-3/4"
	904208	4	4	-	LOCKWASHER, 1/2"
17	056896	2	2	-	PLUG, protective (Not used when mounting dozer equipment)
18	035244	2	2	-	CAPSCREW, 3/8"NC x 3/4"
	904206	2	2	-	LOCKWASHER, 3/8"
19	064531	2	2	-	WASHER, plug spacing
20	049667	8	8	-	PLUG, thread protecting
21	097332	2	2	2	PLATE, dirt closure
22	012992	4	4	4	CAPSCREW, 3/8"NF x 1-1/4"
	904206	4	4	4	LOCKWASHER, 3/8"
23	044973	4	4	4	WASHER, plain
24	912328	48	48	42	CAPSCREW, thread protecting (5/8"NF x 2")(Removed when guards are installed)
	904209	48	48	42	LOCKWASHER, 5/8"
25	094985	3	3	3	GUARD, end, left hand
26	035229	6	6	6	CAPSCREW, 5/8"NF x 2"
	904209	6	6	6	LOCKWASHER, 5/8"
	911044	6	6	6	NUT, 5/8"NF
27	094986	3	3	3	GUARD, end, right hand
28	035229	6	6	6	CAPSCREW, 5/8"NF x 2"
	904209	6	6	6	LOCKWASHER, 5/8"
	911044	6	6	6	NUT, 5/8"NF

Special equipment

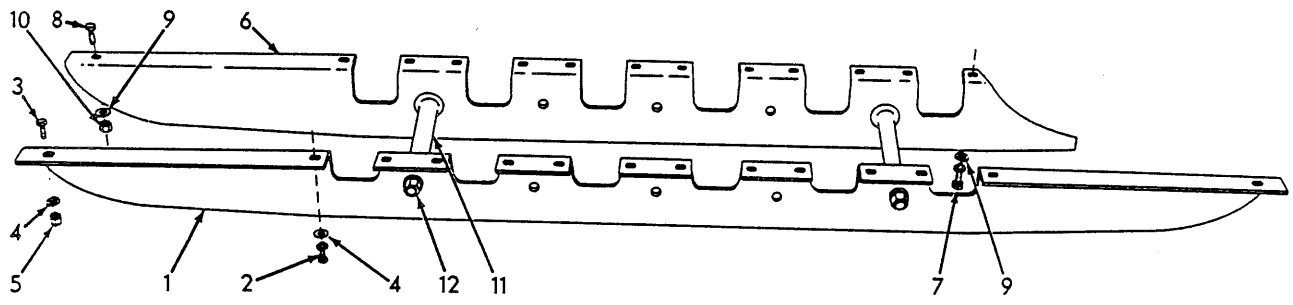

LIGHT-DUTY TRACK ROLLER GUARDS T-40584

LIGHT-DUTY TRACK WHEEL GUARDS

USAGE: Standard equipment on HD11B,S tractors prior to serial No. 7632; HD11E,EC,ES tractors prior to serial No. 7538; HD11F,FC tractors prior to serial No. 7609. Special equipment thereafter.

* HD11B,S with standard 38-link track
** HD11E,EC,ES tractors prior to serial No. 10001; also HD11B with special 41-link track
Δ HD11E,EC tractors serial No. 10001 and up with standard 40-link track
ΔΔ HD11F,FC; also HD11E,EC with special 44-link track

ITEM	PART NO.	QUANTITY *	**	Δ	ΔΔ	DESCRIPTION	
1	621688	2	-	-	-	GUARD, outer (105-1/2" long)	
	621691	-	1	-	-	GUARD, outer, left (116-1/8" long)	
	621692	-	1	-	-	GUARD, outer, right (116-1/8" long)	
	644095	-	-	2	-	GUARD, outer (112-1/2" long)	
	621697	-	-	-	-	GUARD, outer, left (126-1/2" long)	
	621698	-	-	-	1	GUARD, outer, right (126-1/2" long)	
2	070161	24	28	24	32	CAPSCREW, 5/8"NF x 2-3/4"	
	904209	24	28	24	32	LOCKWASHER, 5/8"	
3	023618	4	4	4	4	CAPSCREW, 5/8"NF x 2-1/2"	
4	064810	28	32	28	36	WASHER, plain	
5	072366	4	4	4	4	NUT, high, 5/8"NF	
6	621689	1	-	-	-	GUARD, inner, left (91" long)	
	621690	1	-	-	-	GUARD, inner, right (91" long)	
	621693	-	1	-	-	GUARD, inner, left (101-7/16" long)	
	621694	-	1	-	-	GUARD, inner, right (101-7/16" long)	
	644097	-	-	1	-	GUARD, inner, left (97-3/4" long)	
	644098	-	-	1	-	GUARD, inner, right (97-3/4" long)	
	621695	-	-	-	1	GUARD, inner, left (112" long)	
	621696	-	-	-	1	GUARD, inner, right (112" long)	
7	070161	24	28	24	32	CAPSCREW, 5/8"NF x 2-3/4"	
	904209	24	28	24	32	LOCKWASHER, 5/8"	
8	023618	2	2	2	2	CAPSCREW, 5/8"NF x 2-1/2"	
9	064810	26	30	26	34	WASHER, plain	
10	072366	2	2	2	2	NUT, high, 5/8"NF	
11	621687	4	4	-	4	SPACER, guard bracing (Effective with tractor #6423)	10 used on HD11 B,S prior to #7632; 12 used on HD11E,EC, ES prior to #7538; 14 used on HD11F, FC prior to #7609
	083150	-	-	4	-	SPACER, guard bracing	
12	621686	4	4	-	4	CAPSCREW, guard bracing (7/8"NF x 11-1/8")(Effective with tractor #6423)	
	083165	-	-	4	-	CAPSCREW, guard bracing (7/8"NF x 11-1/2")	
	905347	4	4	4	4	LOCKWASHER, 7/8"	
	922041	4	4	4	4	NUT, high, 7/8"NF	

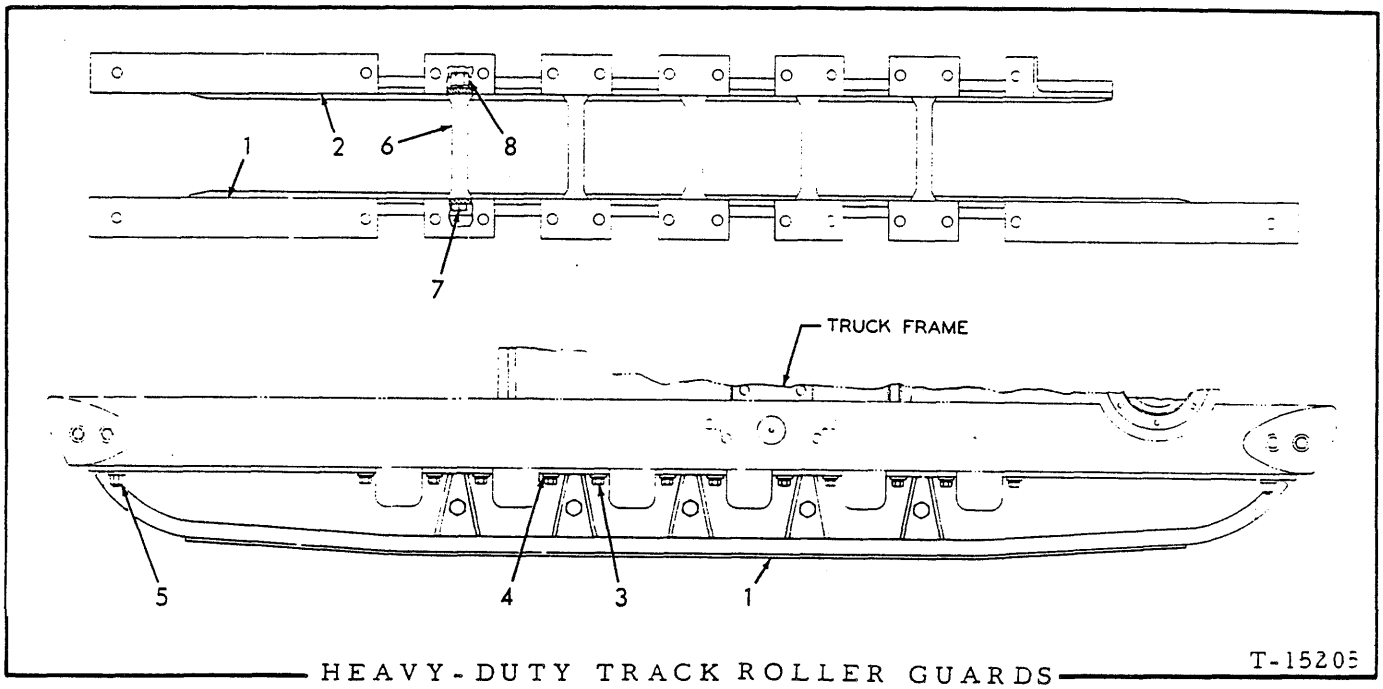

HEAVY-DUTY TRACK ROLLER GUARDS T-15205

USAGE: Special equipment. Applicable to HD11B,S tractors prior to serial No. 7632; HD11E,EC, ES tractors prior to serial No. 7538; HD11F,FC tractors prior to serial No. 7609

* HD11B,S
** HD11E,EC,ES; not for HD11E with special 44-link track
*** HD11F,FC; also HD11E with special 44-link track

ITEM	PART NO.	QUANTITY *	**	***	DESCRIPTION
	083158	2	-	-	GUARD, outer
	094349	-	1	-	GUARD, outer, left
1	092431	-	-	1	GUARD, outer, left
	094350	-	1	-	GUARD, outer, right
	092432	-	-	1	GUARD, outer, right
	083159	1	-	-	GUARD, inner, left
	094343	-	1	-	GUARD, inner, left
	092437	-	-	1	GUARD, inner, left
2	083160	1	-	-	GUARD, inner, right
	094344	-	1	-	GUARD, inner, right
	092438	-	-	1	GUARD, inner, right
3	070161	54	62	70	CAPSCREW, guard attaching (5/8"NF x 2-3/4")
4	064810	54	62	70	WASHER, plain
	904209	48	56	64	LOCKWASHER, 5/8"
5	072366	6	6	6	NUT, high, 5/8"NF
6	083150	10	12	14	SPACER, guard bracing
7	083165	10	12	14	CAPSCREW, 7/8"NF x 11-1/2"
	905347	10	12	14	LOCKWASHER, 7/8"
8	922041	10	12	14	NUT, high, 7/8"NF

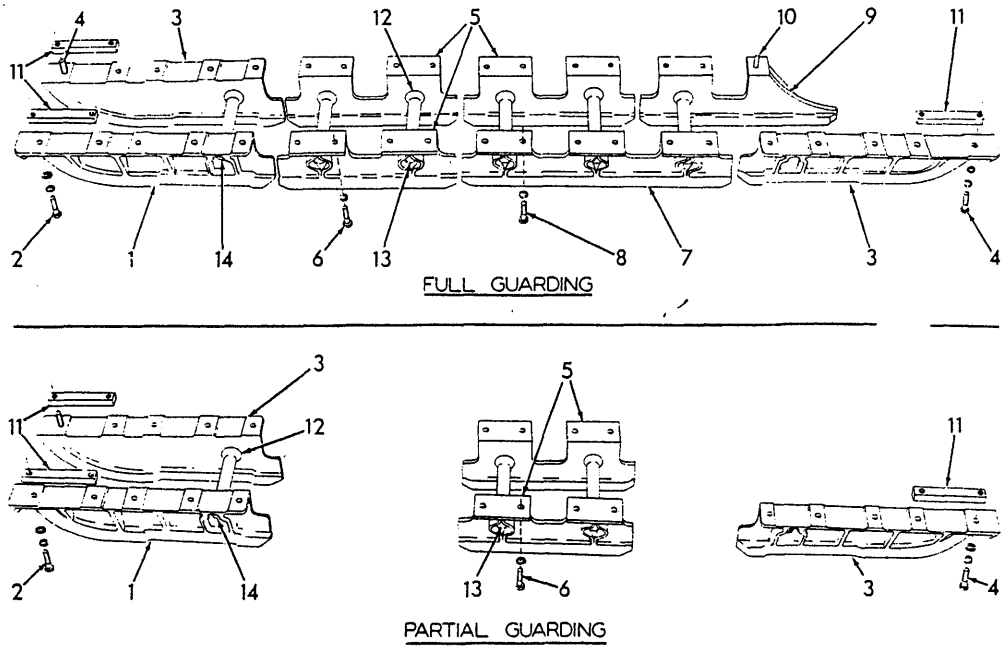

HEAVY-DUTY TRACK ROLLER GUARDS

T-38132

USAGE: Special equipment. Model HD11B,S tractors serial No. 7632 and up with standard 38-link track

* Partial guarding
** Full guarding

ITEM	PART NO.	QTY. *	QTY. **	DESCRIPTION
1	632437	3	3	GUARD, end section, left hand (Used prior to tractor #10001)
	649103	3	3	GUARD, end section, left hand (Effective with tractor #10001)
2	013467	15	15	CAPSCREW, 5/8"NF x 3"
	904209	15	15	LOCKWASHER, 5/8"
	064810	15	15	WASHER, plain
3	632438	3	3	GUARD, end section, right hand (Used prior to tractor #10001)
	649104	3	3	GUARD, end section, right hand (Effective with tractor #10001)
4	013467	15	15	CAPSCREW, 5/8"NF x 3"
	904209	15	15	LOCKWASHER, 5/8"
	064810	15	15	WASHER, plain
5	632488	4	6	GUARD, intermediate section, short
6	023618	16	24	CAPSCREW, 5/8"NF x 2-1/2"
	904209	16	24	LOCKWASHER, 5/8"
7	632691	-	2	GUARD, intermediate rear section, outer
8	023618	-	12	CAPSCREW, 5/8"NF x 2-1/2"
	904209	-	12	LOCKWASHER, 5/8"
9	632523	-	1	GUARD, rear inner section, left side
	632524	-	1	GUARD, rear inner section, right side
10	023618	-	6	CAPSCREW, 5/8"NF x 2-1/2"
	904209	-	6	LOCKWASHER, 5/8"

(Continued)

HEAVY-DUTY TRACK ROLLER GUARDS (Continued)

ITEM	PART NO.	QTY. *	QTY. **	DESCRIPTION
11	632769	12	12	BLOCK, tapped, end guard attachment
12	083150	6	12	SPACER, guard bracing
13	083165	4	10	CAPSCREW, guard bracing (7/8"NF x 11-1/2")
	905347	4	10	LOCKWASHER, 7/8"
	922041	4	10	NUT, high, 7/8"NF
14	644179	2	2	CAPSCREW, guard bracing (7/8"NF x 12-1/8")
	905347	2	2	LOCKWASHER, 7/8"
	911046	2	2	NUT, 7/8"NF
	638341	4	4	WASHER, plain

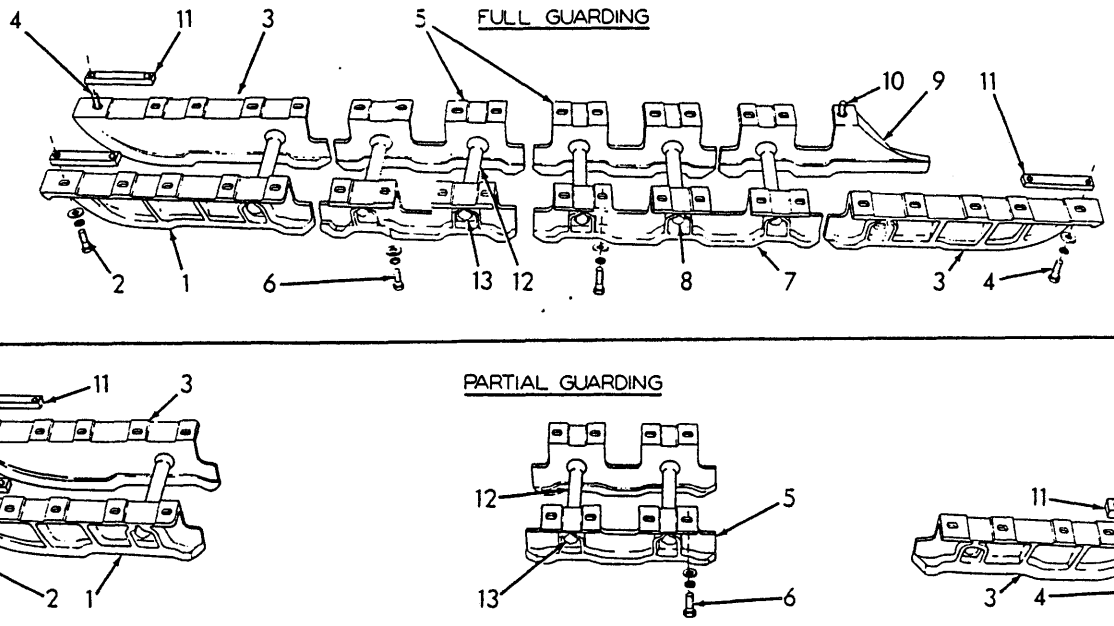

HEAVY-DUTY TRACK ROLLERGUARDS T-70409

USAGE: Special equipment. Model HD11E,EC tractors serial No. 10001 and up with standard 40-link track

* Partial guarding
** Full guarding

ITEM	PART NO.	QTY. *	QTY. **	DESCRIPTION
1	644093	3	3	GUARD, end section, left hand
2	013467	15	15	CAPSCREW, 5/8"NF x 3"
	904209	15	15	LOCKWASHER, 5/8"
	064810	15	15	WASHER, plain
3	644094	3	3	GUARD, end section, right hand
4	013467	15	15	CAPSCREW, 5/8"NF x 3"
	904209	15	15	LOCKWASHER, 5/8"
	064810	15	15	WASHER, plain
5	644154	4	6	GUARD, intermediate section
6	013467	16	24	CAPSCREW, 5/8"NF x 3"
	904209	16	24	LOCKWASHER, 5/8"
	064810	16	24	WASHER, plain
7	644200	-	2	GUARD, intermediate rear section, outer
8	013467	-	12	CAPSCREW, 5/8"NF x 3"
	904209	-	12	LOCKWASHER, 5/8"
	064810	-	12	WASHER, plain
9	644203	-	1	GUARD, rear inner section, left side
	644204	-	1	GUARD, rear inner section, right side
10	013467	-	6	CAPSCREW, 5/8"NF x 3"
	904209	-	6	LOCKWASHER, 5/8"
	064810	-	6	WASHER, plain
11	632769	12	12	BLOCK, tapped, end guard attachment
12	644112	6	12	SPACER, guard bracing
13	644179	6	12	CAPSCREW, guard bracing (7/8"NF x 12-1/8")
	905347	6	12	LOCKWASHER, 7/8"
	911046	6	12	NUT, 7/8"NF
	638341	12	24	WASHER, plain

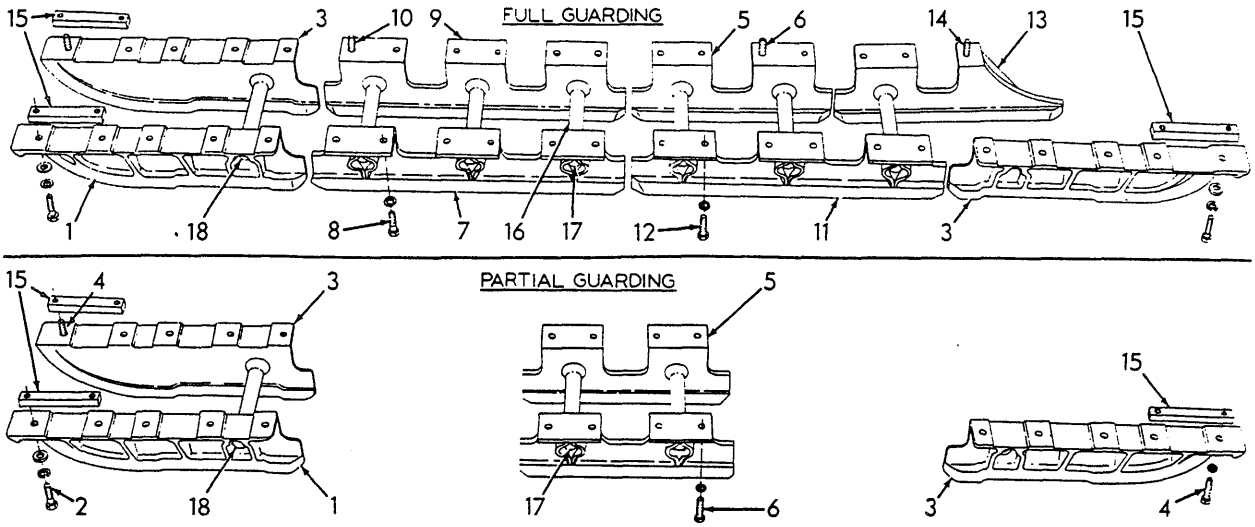

T-38133

HEAVY-DUTY TRACK ROLLER GUARDS

USAGE: Special equipment. Model HD11E, EC, ES tractors serial No. 7538 thru No. 10000; also Model HD11B tractors serial No. 10001 and up with special 41-link track

* Partial guarding
** Full guarding

ITEM	PART NO.	QTY. *	QTY. **	DESCRIPTION
1	632437	3	3	GUARD, end section, left hand (Used prior to tractor #10001)
	649103	3	3	GUARD, end section, left hand (Effective with tractor #10001)
2	013467	15	15	CAPSCREW, 5/8"NF x 3"
	904209	15	15	LOCKWASHER, 5/8"
	064810	15	15	WASHER, plain
3	632438	3	3	GUARD, end section, right hand (Used prior to tractor #10001)
	649104	3	3	GUARD, end section, right hand (Effective with tractor #10001)
4	013467	15	15	CAPSCREW, 5/8"NF x 3"
	904209	15	15	LOCKWASHER, 5/8"
	064810	15	15	WASHER, plain
5	632488	4	2	GUARD, intermediate section (short)
6	023618	16	8	CAPSCREW, 5/8"NF x 2-1/2"
	904209	16	8	LOCKWASHER, 5/8"
7	632923	-	2	GUARD, intermediate front section, left hand
8	023618	-	12	CAPSCREW, 5/8"NF x 2-1/2"
	904209	-	12	LOCKWASHER, 5/8"
9	632924	-	2	GUARD, intermediate front section, right hand
10	023618	-	12	CAPSCREW, 5/8"NF x 2-1/2"
	904209	-	12	LOCKWASHER, 5/8"
11	632691	-	2	GUARD, intermediate rear section, outer
12	023618	-	12	CAPSCREW, 5/8"NF x 2-1/2"
	904209	-	12	LOCKWASHER, 5/8"

(Continued)

ITEM	PART NO.	QTY. *	QTY. **	DESCRIPTION
13	632523	-	1	GUARD, rear inner section, left side
	632524	-	1	GUARD, rear inner section, right side
14	023618	-	6	CAPSCREW, 5/8"NF x 2-1/2"
	904209	-	6	LOCKWASHER, 5/8"
15	632769	12	12	BLOCK, tapped, guard attachment
16	083150	6	14	SPACER, guard bracing
17	083165	4	12	CAPSCREW, guard bracing (7/8"NF x 11-1/2")
	905347	4	12	LOCKWASHER, 7/8"
	922041	4	12	NUT, high, 7/8"NF
18	644179	2	2	CAPSCREW, guard bracing (7/8"NF x 12-1/8")
	905347	2	2	LOCKWASHER, 7/8"
	911046	2	2	NUT, 7/8"NF
	638341	4	4	WASHER, plain

FULL GUARDING

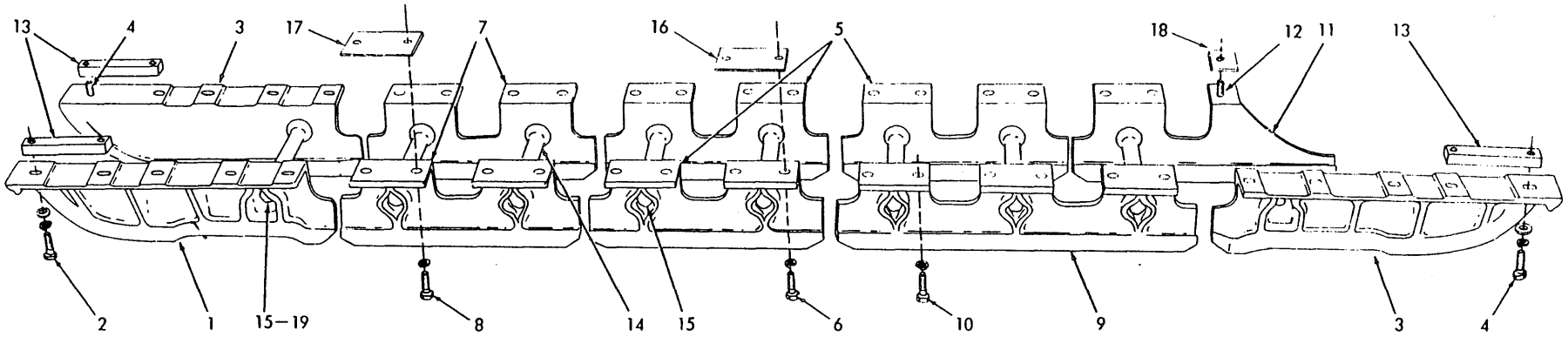

PARTIAL GUARDING

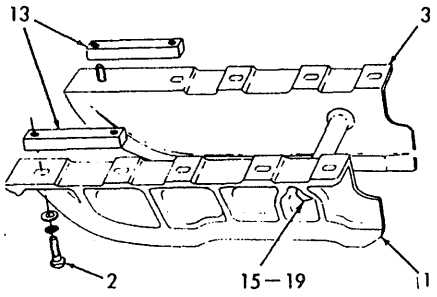

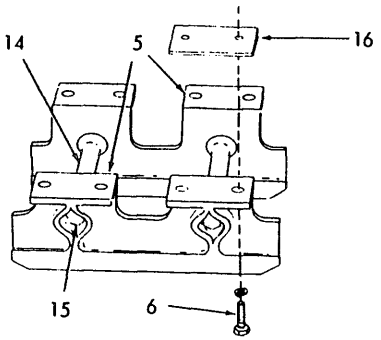

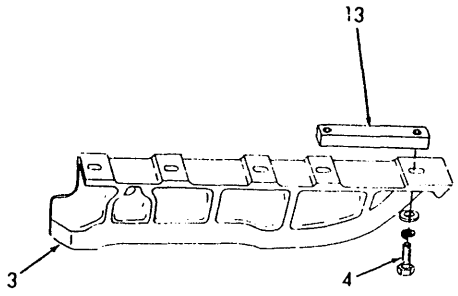

HEAVY-DUTY TRACK ROLLER GUARDS (Second type - Models HDF, FC)

T-37235

HEAVY-DUTY TRACK ROLLER GUARDS

USAGE: Model HD11F, FC tractors serial No. 7609 and up; also Model HD11E, EC tractors serial No. 7609 and up with special 44-link track

* Partial guarding. Standard equipment
** Full guarding. Special equipment
Δ Partial guarding. Special equipment
ΔΔ Full guarding. Special equipment

} Tractors prior to #10001

} Tractors #10001 and up

ITEM	PART NO.	QUANTITY *	**	Δ	ΔΔ	DESCRIPTION
1	632437	3	3	-	-	GUARD, end section, left hand
	649103	-	-	3	3	GUARD, end section, left hand
2	013467	15	15	15	15	CAPSCREW, 5/8"NF x 3"
	904209	15	15	15	15	LOCKWASHER, 5/8"
	064810	15	15	15	15	WASHER, plain
3	632438	3	3	-	-	GUARD, end section, right hand
	649104	-	-	3	3	GUARD, end section, right hand
4	013467	15	15	15	15	CAPSCREW, 5/8"NF x 3"
	904209	15	15	15	15	LOCKWASHER, 5/8"
	064810	15	15	15	15	WASHER, plain
5	632488	4	6	-	-	GUARD, intermediate section
	648438	-	-	4	6	GUARD, intermediate section
6	023618	16	24	-	-	CAPSCREW, 5/8"NF x 2-1/2"
	070161	-	-	16	24	CAPSCREW, 5/8"NF x 2-3/4"
	904209	16	24	16	24	LOCKWASHER, 5/8"
7	632787	-	4	-	-	GUARD, intermediate, front section
	648441	-	-	-	4	GUARD, intermediate, front section
8	023618	-	16	-	-	CAPSCREW, 5/8"NF x 2-1/2"
	070161	-	-	-	16	CAPSCREW, 5/8"NF x 2-3/4"
	904209	-	16	-	16	LOCKWASHER, 5/8"
9	632691	-	2	-	-	GUARD, intermediate rear section, outer
	648436	-	-	-	2	GUARD, intermediate rear section, outer
10	023618	-	12	-	-	CAPSCREW, 5/8"NF x 2-1/2"
	070161	-	-	-	12	CAPSCREW, 5/8"NF x 2-3/4"
	904209	-	12	-	12	LOCKWASHER, 5/8"
11	632523	-	1	-	-	GUARD, rear inner section, left side
	648439	-	-	-	1	GUARD, rear inner section, left side
	632524	-	1	-	-	GUARD, rear inner section, right side
	648440	-	-	-	1	GUARD, rear inner section, right side
12	023618	-	6	-	-	CAPSCREW, 5/8"NF x 2-1/2"
	070161	-	-	-	6	CAPSCREW, 5/8"NF x 2-3/4"
	904209	-	6	-	6	LOCKWASHER, 5/8"
13	632769	12	12	12	12	BLOCK, tapped, end guard attachment
14	083150	6	16	-	-	SPACER, guard bracing
	644112	-	-	6	16	SPACER, guard bracing
15	083165	6	16	-	-	CAPSCREW, guard bracing (7/8"NF x 11-1/2")
	644179	-	-	6	16	CAPSCREW, guard bracing (7/8"NF x 12-1/8")
	905357	6	16	6	16	LOCKWASHER, 7/8"
	922041	6	16	6	16	NUT, high, 7/8"NF
16	650220	-	-	8	20	PLATE, guard spacing, intermediate
17	650221	-	-	-	8	PLATE, guard spacing, front
18	650222	-	-	-	2	PLATE, guard spacing, rear
19	638341	-	-	4	4	WASHER, guard bracing capscrew

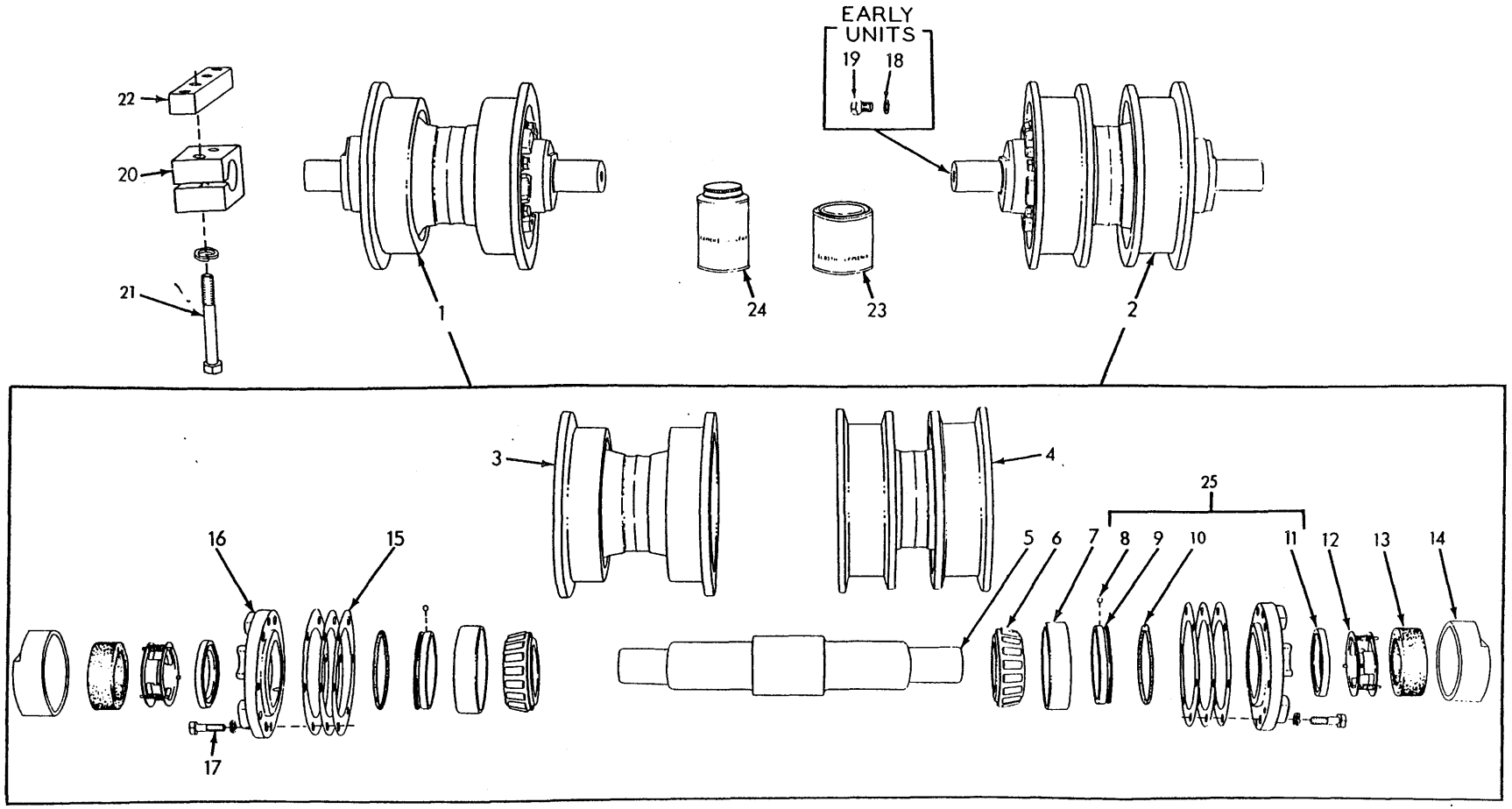

TRACK ROLLER (Standard)

T-5155

TRACK ROLLER
(Standard)

USAGE: Models HD11B, E, EC, ES, S. See page 413 for heavy-duty type.

ITEM	PART NO.	QTY.	DESCRIPTION
1	622665	1	ROLLER ASSEMBLY, single flange (Consists of items 3 and 5 thru 17) (Not used on Model HD11E, EC tractors #10001 and up)
	643078	1	ROLLER ASSEMBLY, single flange (Consists of items 3 and 5 thru 17) (Model HD11E, EC tractors #10001 and up. Also used on all prior units with extreme-duty service replacement track only)
2	622668	1	ROLLER ASSEMBLY, double flange (Consists of items 4 thru 17) (Used prior to tractor #6299)
3	069546	1	ROLLER, single flange (Not used on Model HD11E, EC tractors #10001 and up)
	643047	1	ROLLER, single flange (Model HD11E, EC tractors #10001 and up. Also used on all prior units with extreme-duty service replacement track only)
4	073022	1	ROLLER, double flange (Used prior to tractor #6299)
5	622664	1	SHAFT
6	043491	2	CONE ASSEMBLY, bearing
7	659149	2	CUP, bearing
8	905357	2	BALL, steel, 3/16" diam.
9	073027	2	RING, seal, inner
10	073029	2	O-RING, seal packing
11	621283	2	RING, seal, outer
			} See item 25
12	048666	2	SPRING ASSEMBLY, seal (Service only as a unit)
13	048665	2	BOOT, seal spring
14	073634	2	RETAINER, seal
15	655458	4	SHIM, bearing adjustment (.003" thick)
	073024	6	SHIM, bearing adjustment (.007" thick)
	073025	6	SHIM, bearing adjustment (.010" thick)
	073026	2	SHIM, bearing adjustment (.032" thick)
			} Use as required
16	073023	2	RETAINER, bearing
17	012992	12	CAPSCREW, 3/8"NF x 1-1/4"
	904206	12	LOCKWASHER, 3/8"
18	034043	1	GASKET, shaft oil hole plug (Used prior to tractor #6460)
19	034042	1	PLUG, shaft oil hole (Used prior to tractor #6460)

(Continued)

ITEM	PART NO.	QTY.	DESCRIPTION
20	056346	2	BRACKET, attaching (2-7/8" wide)(Used prior to tractor #6460)
	093805	2	BRACKET, attaching (2-7/16" wide)(Effective with tractor #6460)
21	045524	4	CAPSCREW, 5/8"NF x 4-1/2"
	904209	4	LOCKWASHER, 5/8"
22	056802	2	BLOCK, tapped, attaching capscrews (tapered section)(Used prior to tractor #7632 on HD11B,S; tractor #7609 on HD11F,FC; tractor #7538 on HD11E,EC,ES)
	631617	2	BLOCK, tapped, attaching capscrews (straight section)(Effective with tractor #7632 on HD11B,S; tractor #7609 on HD11F,FC; tractor #7538 on HD11E,EC,ES)
23	033288	-	CEMENT, neoprene, 1/2 pint can } For cementing seal boots
24	054890	-	SOLVENT, neoprene cement, 1/2 pint can } For cementing seal boots
25	078941	1	SEAL KIT (Includes parts for one (1) roller only; items 8 thru 11)

NOTE: All quantites indicated above are for one (1) roller only. The number of rollers used on the various models is listed below. Tractors prior to serial No. 6299 used four (4) double-flange rollers.

Model HD11B,S 12
Model HD11B with special 41-link track 14
Models HD11E,EC,ES (Prior to #10001) 14
Models HD11E,EC (Effective with #10001) 12
Models HD11E,EC with special 44-link track) 16

TRACK ROLLER
(Heavy-duty)

USAGE: Standard equipment on Models HD11F, FC. Special equipment on Models HD11B, E, EC, ES, S. Also see page 411 for standard type.

ITEM	PART NO.	QTY.	DESCRIPTION
1	622666	1	ROLLER ASSEMBLY, single flange (Consists of items 3 and 5. thru 17) (Not used on Model HD11E, EC tractors #10001 and up)
	645648	1	ROLLER ASSEMBLY, single flange (Consists of items 3 and 5 thru 17) (Model HD11E, EC tractors #10001 and up. Also used on all prior units with extreme-duty service replacement track only)
2	622667	1	ROLLER ASSEMBLY, double flange (Consists of items 4 thru 17) (Used prior to tractor #6299)
3	074571	1	ROLLER, single flange (Not used on Model HD11E, EC tractors #10001 and up)
	645612	1	ROLLER, single flange (Model HD11E, EC tractors #10001 and up. Also used on all prior units with extreme-duty service replacement track only)
4	074573	1	ROLLER, double flange (Used prior to tractor #6299)
5	622663	1	SHAFT
6	073112	2	CONE ASSEMBLY, bearing
7	659153	2	CUP, bearing
8	066693	2	RING, seal, inner
9	905357	2	BALL, steel, 3/16" diam. — See item 25
10	923585	2	O-RING, seal ring
11	656624	4	SHIM, bearing adjustment (.003" thick)
	074567	4	SHIM, bearing adjustment (.007" thick)
	074568	4	SHIM, bearing adjustment (.010" thick)
	074569	2	SHIM, bearing adjustment (.032" thick) — Use as required
12	074565	2	RETAINER, bearing
13	012992	12	CAPSCREW, 3/8"NF x 1-1/4"
	904206	12	LOCKWASHER, 3/8"
14	049110	2	RING, seal, outer (See item 25)
15	049111	2	SPRING ASSEMBLY, seal (Serviced only as a unit)
16	049109	2	BOOT, seal spring
17	074566	2	RETAINER, seal
18	034043	1	GASKET, shaft oil hole plug (Used prior to tractor #6460)
19	034042	1	PLUG, shaft oil hole (Used prior to tractor #6460)

(Continued)

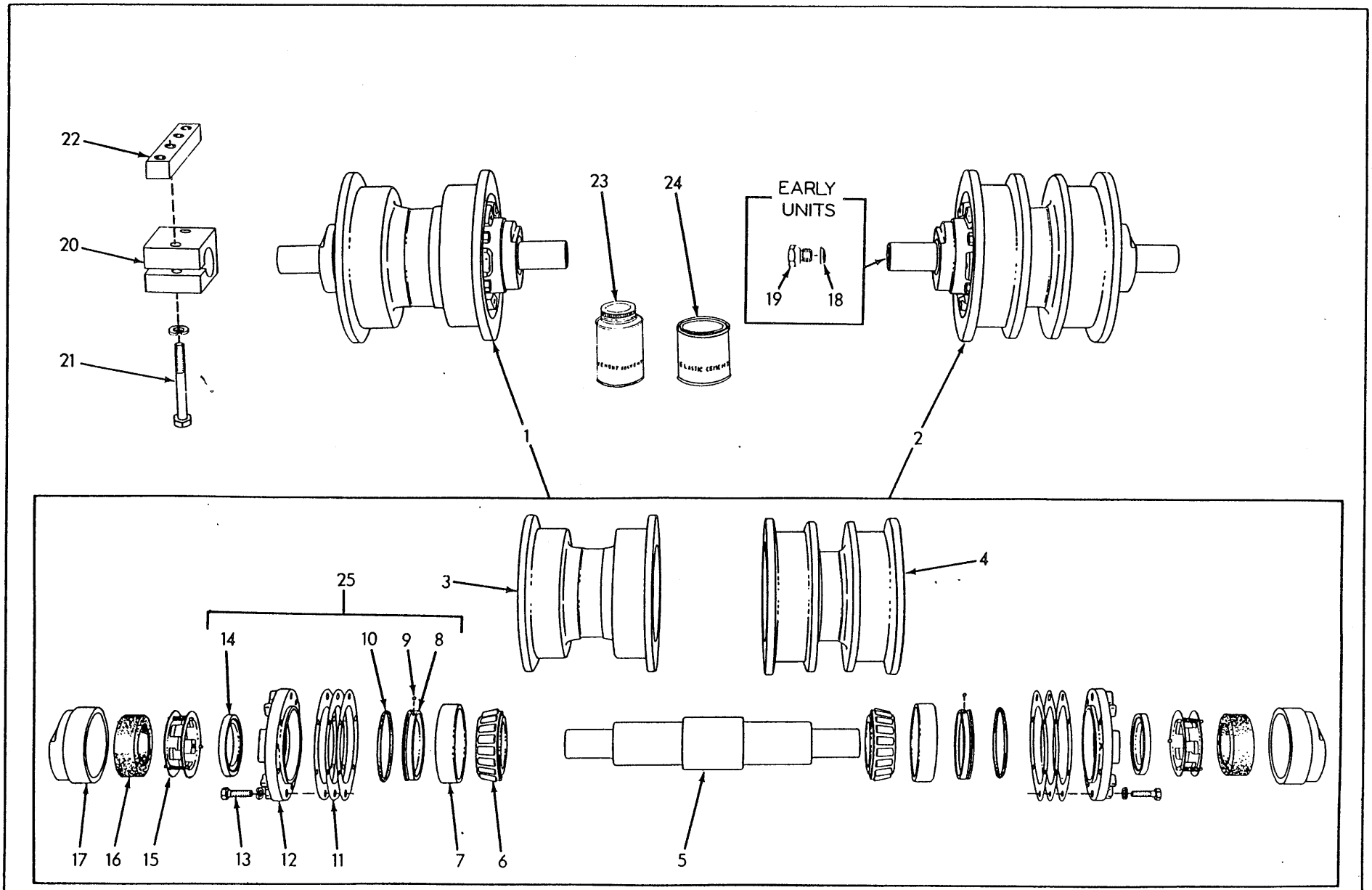

T-5925

TRACK ROLLER (Heavy-duty)

ITEM	PART NO.	QTY.	DESCRIPTION
20	056346	2	BRACKET, attaching (2-7/8" wide)(Used prior to tractor #6460)
	093805	2	BRACKET, attaching (2-7/16" wide)(Effective with tractor #6460)
21	045524	4	CAPSCREW, 5/8"NF x 4-1/2"
	904209	4	LOCKWASHER, 5/8"
22	056802	2	BLOCK, tapped, attaching capscrews (tapered section)(Used prior to tractor #7632 on HD11B,S; tractor #7609 on HD11F,FC; tractor #7538 on HD11E,EC,ES)
	631617	2	BLOCK, tapped, attaching capscrews (straight section)(Effective with tractor #7632 on HD11B,S; tractor #7609 on HD11F,FC; tractor #7538 on HD11E,EC,ES)
23	054890	-	SOLVENT, neoprene cement, 1/2 pint can } For cementing boots
24	033288	-	CEMENT, neoprene, 1/2 pint can
25	083208	1	SEAL KIT (Includes parts for one (1) roller only; items 8,9,10 and 14)

NOTE: All quantites listed above are for one (1) roller only. The number of rollers used on the various models is listed below. Tractors prior to serial No. 6299 used four (4) double-flange rollers.

Models HD11B,S 12
Model HD11B with special 41-link track 14
Models HD11E,EC,ES (Prior to #10001) 14
Models HD11E,EC (Effective with #10001) 12
Models HD11E,EC with special 44-link track 16
Models HD11F,FC 16

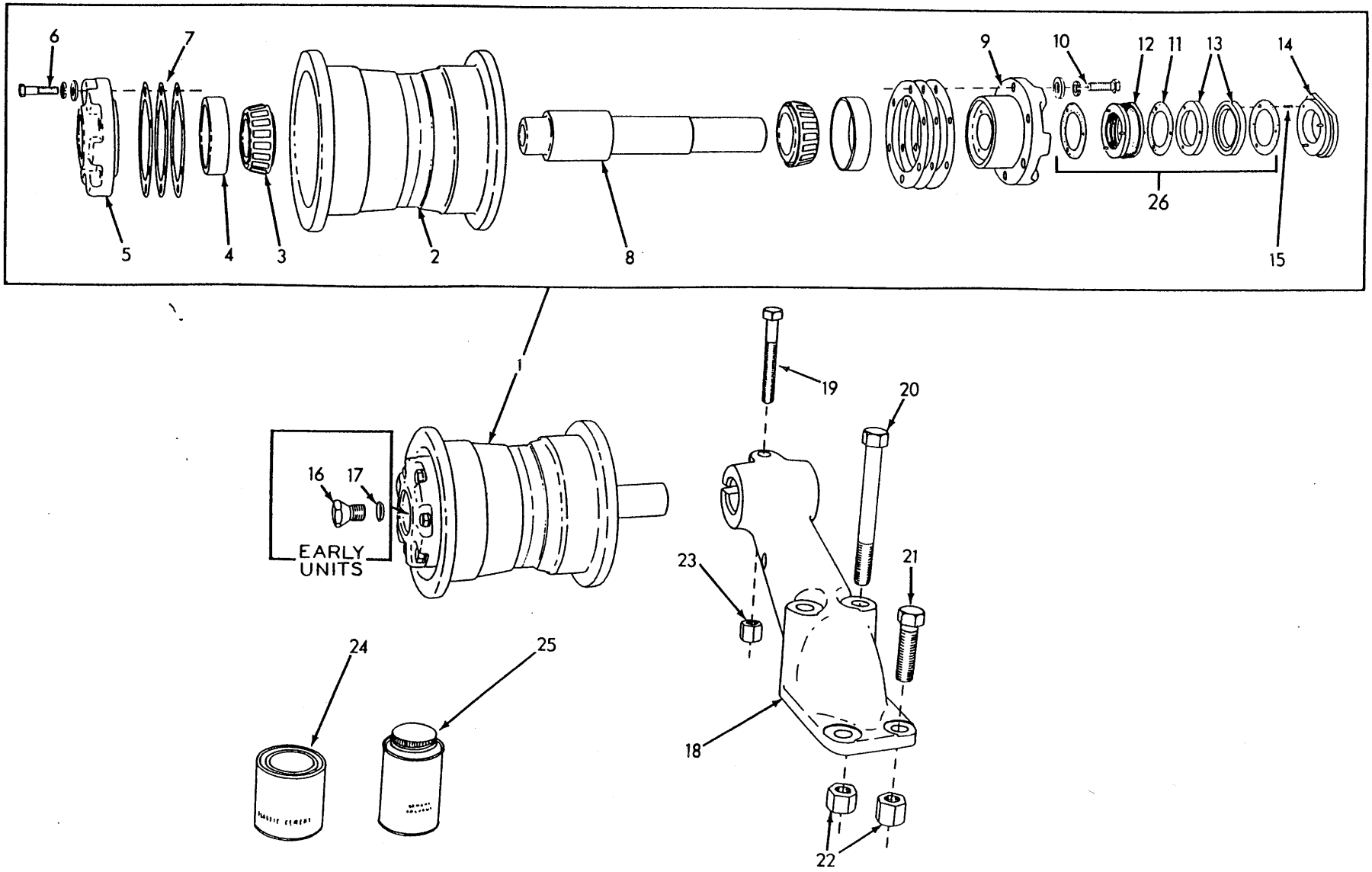

T-4357

TRACK SUPPORTING ROLLER

TRACK SUPPORTING ROLLER

ITEM	PART NO.	QTY.	DESCRIPTION
1	622662	4	ROLLER ASSEMBLY (Consists of items 2 thru 15)(Not used on Model HD11E, EC tractors #10001 and up)
	643966	4	ROLLER ASSEMBLY (Consists of items 2 thru 15)(Model HD11E, EC tractors #10001 and up. Also used on all prior units with extreme-duty service replacement track only)
2	056313	4	ROLLER,(Not used on Model HD11E, EC tractors #10001 and up)
	643959	4	ROLLER (Model HD11E, EC tractors #10001 and up. Also used on all prior units with extreme-duty service replacement track only)
3	042888	8	CONE ASSEMBLY, bearing
4	042887	8	CUP, bearing
5	622612	4	RETAINER, outer bearing
6	012992	24	CAPSCREW, 3/8"NF x 1-1/4"
	904206	24	LOCKWASHER, 3/8"
	911115	24	WASHER, plain, SAE std., 3/8"
7	655474	16	SHIM, bearing adjustment (.003" thick) — Use as required
	051484	8	SHIM, bearing adjustment (.007" thick) — Use as required
	051483	20	SHIM, bearing adjustment (.010" thick) — Use as required
	051482	12	SHIM, bearing adjustment (.032" thick) — Use as required
8	056312	4	SHAFT
9	051478	4	RETAINER, inner bearing
10	012992	24	CAPSCREW, 3/8"NF x 1-1/4"
	904206	24	LOCKWASHER, 3/8"
	911115	24	WASHER, plain, SAE std., 3/8"
11	047605	12	GASKET, seal ring (See item 26)
12	047581	4	SPRING ASSEMBLY, seal (Serviced only as a unit)(See item 26)
13	047151	8	RING, seal (See item 26)
14	051429	4	GUARD ASSEMBLY, seal (Includes item 15)
15	049877	12	PIN, seal guard
16	034042	4	PLUG, oiling hole (Used prior to tractor #6475)
17	034043	4	GASKET, oiling hole plug (Used prior to tractor #6475)
18	056881	4	BRACKET
19	070299	4	CAPSCREW, 5/8"NF x 4"
20	067559	8	CAPSCREW, 3/4"NF x 6-1/4"
21	013465	8	CAPSCREW, 3/4"NF x 2-1/2"
22	012767	16	NUT, high, 3/4"NF
23	072366	4	NUT, 5/8"NF
24	033288	-	CEMENT, neoprene, 1/2 pint can — For cementing boots and gaskets
25	054890	-	SOLVENT, neoprene cement, 1/2 pint can — For cementing boots and gaskets
26	083536	2	SEAL KIT (Includes parts for two (2) Roller Assemblies; items 11 thru 13)

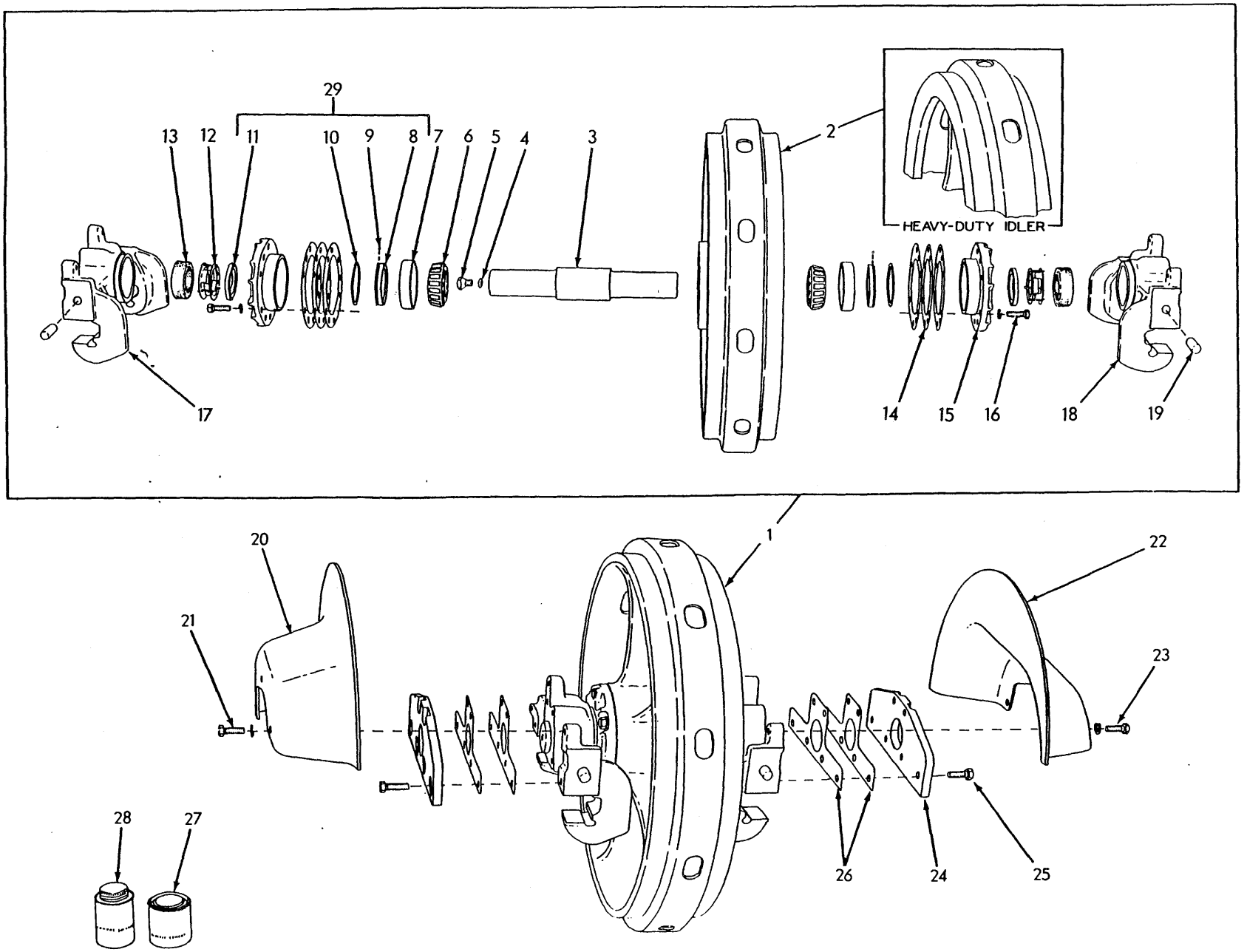

TRACK IDLER (First type)

TRACK IDLER

USAGE: Tractors prior to serial No. 6473

* Standard type. Original equipment on Models HD11B,S
** Heavy-duty type. Original equipment on Models HD11E,ES,F. Optional for Models HD11B,S

ITEM	PART NO.	QTY. *	QTY. **	DESCRIPTION	
1	077729	2	-	IDLER ASSEMBLY (Used prior to tractor #5467)	Each consists of items 2 thru 19
	622846	2	-	IDLER ASSEMBLY (Effective with tractor #5467)	
	081471	-	2	IDLER ASSEMBLY (Used prior to tractor #4312)	
	------	-	2	IDLER ASSEMBLY (Effective with tractor #4312) (Order 1 each IDLER ASSEMBLY 622851, BRACKET ASSEMBLY 637763, BRACKET ASSEMBLY 637764; 2 each slide BAR 622848, CAPSCREW 071987, LOCKWASHER 904209, NUT 911044; and 10 SHIM 622849)	
	644068	-	2	IDLER ASSEMBLY (Not original equipment. Used with extreme-duty service replacement track only)	
2	621825	2	-	IDLER	
	621812	-	2	IDLER	
	644067	-	2	IDLER (Not original equipment. Used with extreme-duty service replacement track only)	
3	622669	2	2	SHAFT	
4	034043	2	2	GASKET, shaft oil hole plug	
5	034042	2	2	PLUG, shaft oil hole	
6	073112	4	4	CONE ASSEMBLY, bearing	
7	073111	4	4	CUP, bearing	
8	066693	4	4	RING, idler seal, inner	See item 29
9	905357	4	4	BALL, steel, 3/16" diam.	
10	923585	4	4	O-RING, seal ring	
11	049110	4	4	RING, idler seal, outer	
12	049111	4	4	SPRING ASSEMBLY, seal (Serviced only as a unit)	
13	049109	4	4	BOOT, seal spring	
14	655524	8	8	SHIM, bearing adjustment (.003" thick)	Use as required
	073160	6	6	SHIM, bearing adjustment (.007" thick)	
	073161	6	6	SHIM, bearing adjustment (.010" thick)	
	073162	6	6	SHIM, bearing adjustment (.032" thick)	

(Continued)

ITEM	PART NO.	QTY. *	QTY. **	DESCRIPTION
15	073165	4	4	RETAINER, bearing
16	035018	24	24	CAPSCREW, 1/2"NF x 1-1/2"
	904208	24	24	LOCKWASHER, 1/2"
17	077727	2	2	BRACKET ASSEMBLY, left (Includes item 19)(Used on HD11B,S tractors prior to #5467; also HD11F tractors prior to #4312)
	094983	2	2	BRACKET ASSEMBLY, left (Includes item 19)(Effective on all Models HD11E,ES; Models HD11B,S after #5466; Model HD11F after #4312)
18	077728	2	2	BRACKET ASSEMBLY, right (Includes item 19)(Used on HD11B,S tractors prior to #5467; also HD11F tractors prior to #4312)
	094984	2	2	BRACKET ASSEMBLY, right (Includes item 19)(Effective on all Models HD11E,ES; Models HD11B,S after #5466; Model HD11F after #4312)
19	056585	4	4	PIN, dowel, idler bracket to release yoke
				NOTE: Guards listed below are standard equipment on all tractors except Models HD11S,ES
20	073175	2	-	GUARD, left
	081407	-	2	GUARD, left
21	070469	6	6	CAPSCREW, 1/2"NF x 1-1/4"
	904208	6	6	LOCKWASHER, 1/2"
22	073176	2	-	GUARD, right
	081408	-	2	GUARD, right
23	070469	6	6	CAPSCREW, 1/2"NF x 1-1/4"
	904208	6	6	LOCKWASHER, 1/2"
24	643840	4	4	PLATE, guide
25	035014	24	24	CAPSCREW, 5/8"NF x 1-1/2"
26	078981	20	20	SHIM, guide adjusting (Use as required)
27	033288	-	-	CEMENT, neoprene, 1/2 pint can } For cementing boots
28	054890	-	-	SOLVENT, neoprene cement, 1/2 pint can } For cementing boots
29	083208	2	2	SEAL KIT (Includes parts for one (1) idler only; items 8 thru 11)

TRACK IDLER

USAGE: Tractors serial No. 6473 and up

* Standard type. Original equipment on Models HD11B, S
** Heavy-duty type. Original equipment on Models HD11E, EC, ES, F, FC. Optional for Models HD11B, S

ITEM	PART NO.	QTY. *	QTY. **	DESCRIPTION
1	622846	2	-	IDLER ASSEMBLY
	622851	-	2	IDLER ASSEMBLY (Not used on Model HD11E, EC tractors #10001 and up)
	644068	-	2	IDLER ASSEMBLY (Model HD11E, EC tractors #10001 and up. Also used on all prior units with extreme-duty service replacement track only)
				} Each consists of items 2 thru 15
2	621825	2	-	IDLER
	621812	-	2	IDLER (Not used on Model HD11E, EC tractors #10001 and up)
	644067	-	2	IDLER (Model HD11E, EC tractors #10001 and up., Also used on all prior units with extreme-duty service replacement track only)
3	622847	2	2	SHAFT
4	073112	4	4	CONE ASSEMBLY, bearing
5	073111	4	4	CUP, bearing
6	066693	4	4	RING, idler seal, inner
7	905357	4	4	BALL, steel, 3/16" diam.
8	923585	4	4	O-RING, seal ring
9	049110	4	4	RING, idler seal, outer
				} See item 29
10	049111	4	4	SPRING ASSEMBLY, seal (Service only as a unit)
11	049109	4	4	BOOT, seal spring
12	622855	4	4	RETAINER, seal
13	655524	8	8	SHIM, bearing adjustment (.003" thick)
	073160	4	4	SHIM, bearing adjustment (.007" thick)
	073161	6	6	SHIM, bearing adjustment (.010" thick)
	073162	4	4	SHIM, bearing adjustment (.032" thick)
				} Use as required
14	622850	4	4	RETAINER, bearing
15	035018	24	24	CAPSCREW, 1/2"NF x 1-1/2"
	904208	24	24	LOCKWASHER, 1/2"
16	637763	2	2	BRACKET ASSEMBLY, left (Includes item 18)
17	637764	2	2	BRACKET ASSEMBLY, right (Includes item 18)
18	056585	4	4	PIN, dowel, idler bracket to release yoke

(Continued)

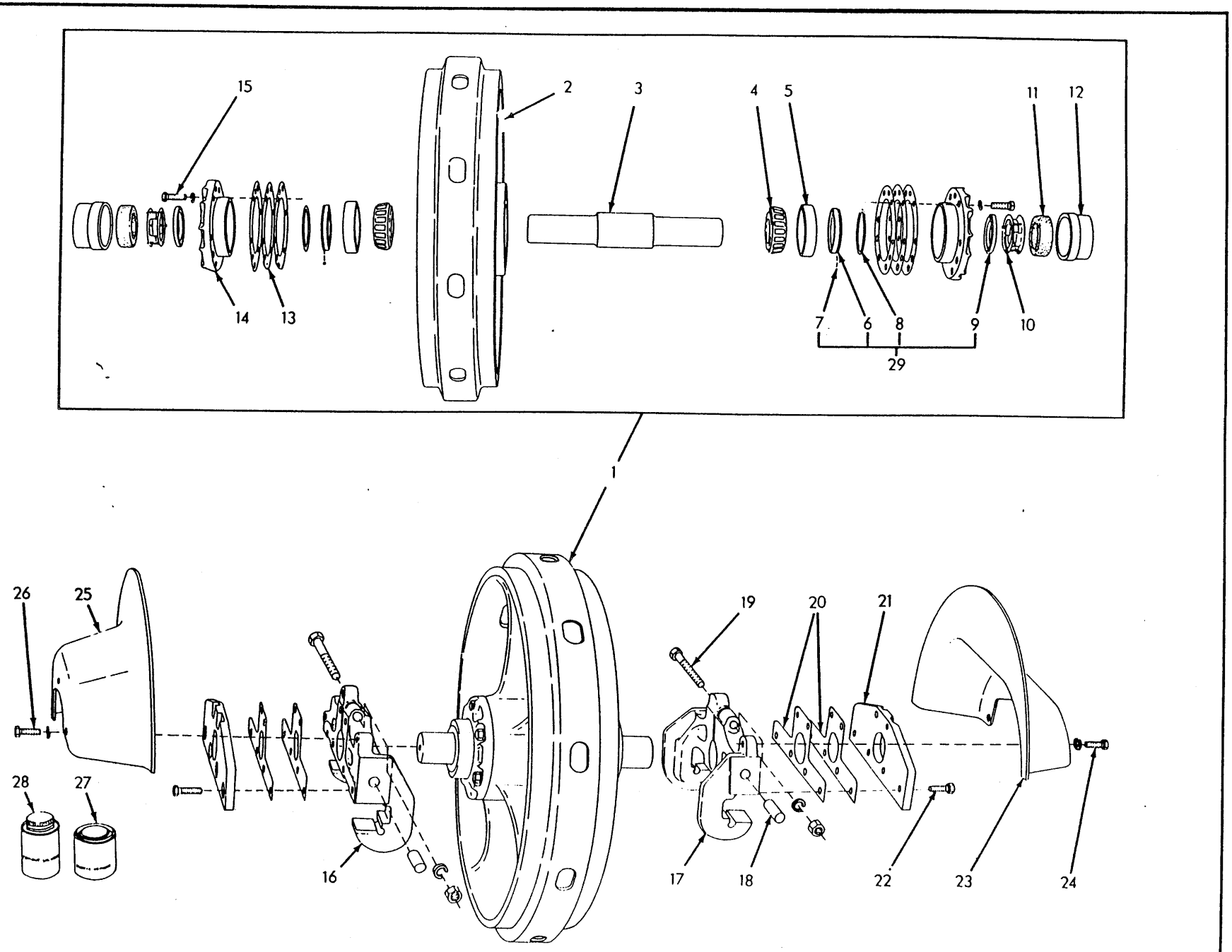

TRACK IDLER (Second type)

T-32113

ITEM	PART NO.	QTY. *	QTY. **	DESCRIPTION
19	638796	4	4	CAPSCREW, bracket clamping (5/8"NF x 5")
	904209	4	4	LOCKWASHER, 5/8"
	911044	4	4	NUT, 5/8"NF
20	078981	16	16	SHIM, guide adjusting (Use as required)
21	643840	4	4	PLATE, guide
22	035014	24	24	CAPSCREW, 5/8"NF x 1-1/2" (Used prior to tractor #7538)
	070590	24	24	CAPSCREW, 5/8"NF x 1-1/8" (Effective with tractor #7538)
				NOTE: Guards listed below are special equipment
23	073176	2	-	GUARD, right
	081408	-	2	GUARD, right
24	035525	6	6	CAPSCREW, 1/2"NF x 1-1/8"
	904208	6	6	LOCKWASHER, 1/2"
25	073175	2	-	GUARD, left
	081407	-	2	GUARD, left
26	035525	6	6	CAPSCREW, 1/2"NF x 1-1/8"
	904208	6	6	LOCKWASHER, 1/2"
27	033288	-	-	CEMENT, neoprene, 1/2 pint can
28	054890	-	-	SOLVENT, neoprene, cement, 1/2 pint can For cementing boots
29	083208	2	2	SEAL KIT (Includes parts for one (1) idler only; items 6 thru 9)

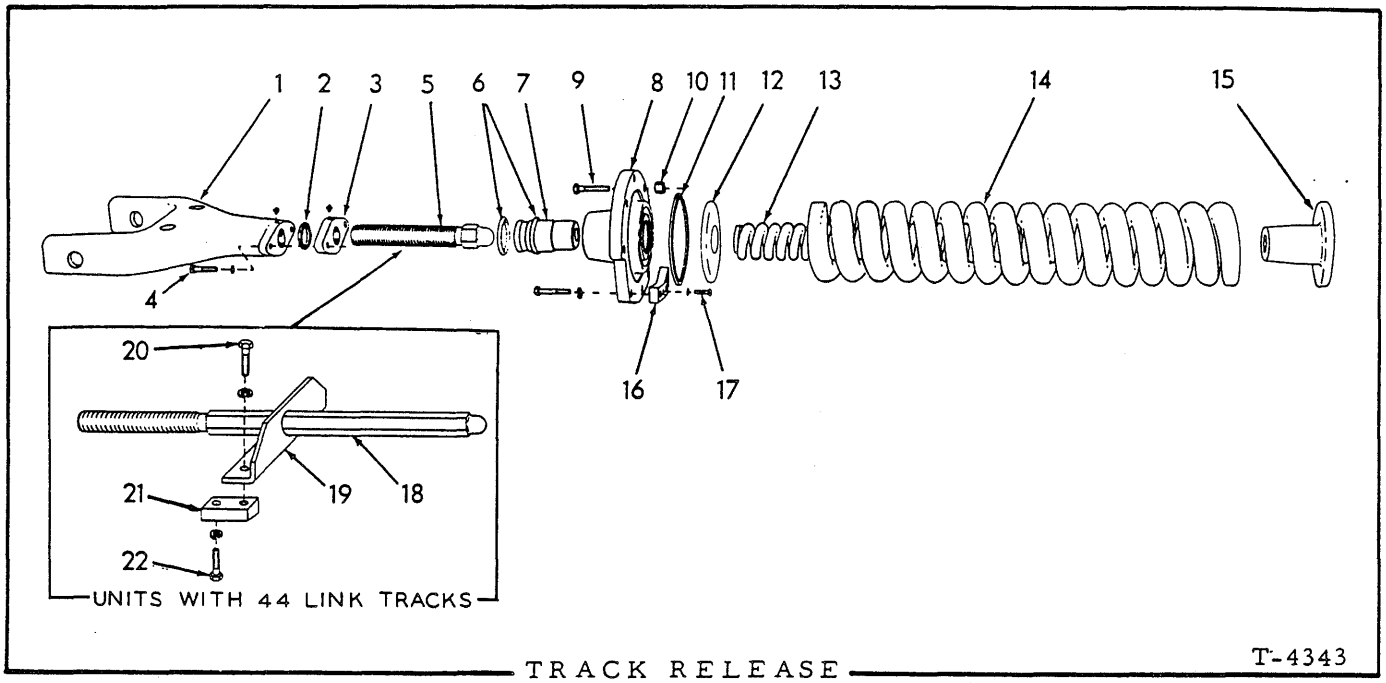

TRACK RELEASE T-4343

ITEM	PART NO.	QTY.	DESCRIPTION
			NOTE: See page 427 for optional hydraulic track adjuster
1	637800	2	YOKE
	914465	2	FITTING, lubricating, straight, 1/8"NPT
2	066068	2	SEAL, protecting, adjustment screw thread (rubber)
3	056614	2	LOCK, adjustment screw
	914465	2	FITTING, lubricating, straight, 1/8"NPT
4	035067	4	CAPSCREW, 1/2"NF x 2"
	904208	4	LOCKWASHER, 1/2"
5	059730	2	SCREW, adjustment (12-1/4" long)(Models HD11B,S)
	079660	2	SCREW, adjustment (24" long)(Model HD11E,EC,ES tractors prior to #10001; also Model HD11B tractors #10001 and up when equipped with special 41-link track)
	645432	2	SCREW, adjustment (18" long)(Model HD11E,EC tractors #10001 and up. Also see NOTE below)
6	041076	2	SEAL, cross head (square section)(Used prior to tractor #6615 including #6616 and #6626)
	923827	4	O-RING, crosshead (circular section)(Effective with tractor #6615 excluding #6616 and #6626)
7	------	2	CROSSHEAD (Used prior to tractor #6615 including #6616 and #6626. Order CROSSHEAD 621300 and 2 O-RING 923827)
	621300	2	CROSSHEAD (Effective with tractor #6615 excluding #6616 and #6626)
8	056652	2	COVER, release spring chamber
9	070161	16	CAPSCREW, 5/8"NF x 2-3/4"
	904209	6	LOCKWASHER, 5/8"
10	072366	10	NUT, high, 5/8"NF

(Continued)

ITEM	PART NO.	QTY.	DESCRIPTION
11	056645	2	SEAL, release spring chamber cover
12	098121	2	WASHER, release spring
13	098123	2	SPRING, inner (If for tractors prior to #5790 also order items 12 and 15)
14	069260	2	SPRING, outer (34-5/8" long)(Used prior to tractor #5790)
	098122	2	SPRING, outer (35-1/2" long)(Effective with tractor #5790)
15	095794	2	SEAT, release spring (Used prior to tractor #5790)
	098124	2	SEAT, release spring (Effective with tractor #5790)
16	645545	2	BLOCK, tapped
17	035190	4	CAPSCREW, 1/2"NC x 1-1/2"
	904208	4	LOCKWASHER, 1/2"
			NOTE: Items listed below are used only on Models HD11F,FC and Models HD11E,EC with special 44-link track
18	095281	2	SCREW, adjustment (34-1/2" long)
19	093389	2	BRACKET, supporting, adjustment screw (2-1/2" hole)(Used on tractors #3830 thru #4568)
	095280	2	BRACKET, supporting, adjustment screw (2-3/4" hole)(Effective with tractor #4569)
20	023618	4	CAPSCREW, 5/8"NF x 2-1/2"
	904209	4	LOCKWASHER, 5/8"
21	093982	4	BLOCK, tapped (tapered section)(Used prior to tractor #7632 on HD11B,S; #7609 on HD11F,FC; #7538 on HD11E,EC,ES)
	631665	4	BLOCK, tapped (straight section)(Effective with tractor #7632 on HD11B,S; #7609 on HD11F,FC; #7538 on HD11E,EC,ES)
22	035067	4	CAPSCREW, 1/2"NF x 2"
	904208	4	LOCKWASHER, 1/2"

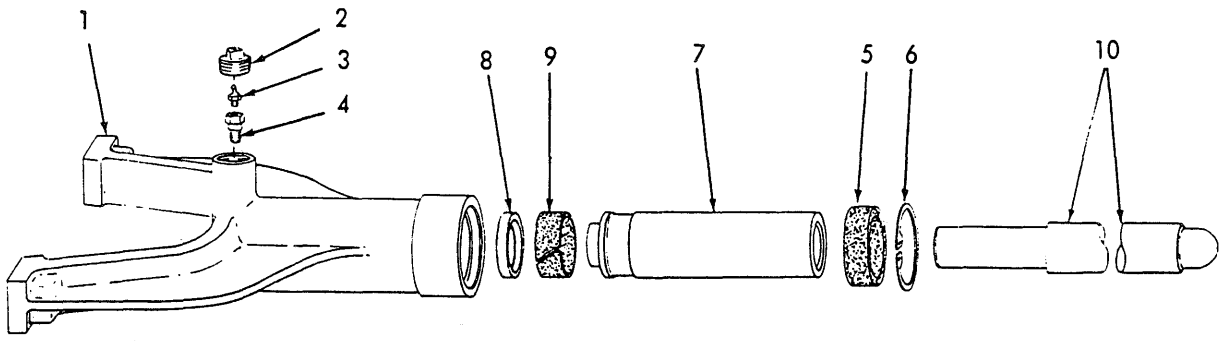

HYDRAULIC TRACK ADJUSTER (Second type) T-74998

USAGE: Special equipment. Effective September 1968.

ITEM	PART NO.	QTY.	DESCRIPTION
1	665044	2	YOKE ASSEMBLY (Includes items 2 thru 9)
2	666367	2	PLUG, yoke
3	666407	2	FITTING, pressurizing
4	628915	2	VALVE ASSEMBLY, check (Serviced only as a unit)
5	666621	2	RING, wear, release yoke
6	659058	2	RING, snap
7	665043	2	PISTON, adjusting
8	628934	2	SEAL, piston
9	666620	2	RING, wear, adjusting piston
10	668288	2	BAR, push (7-3/4" long)(Models HD11B, S)
	668289	2	BAR, push (18"long)(Model HD11B when equipped with special 41-link tracks; also model HD11E, EC, ES tractors prior to #10001)
	666652	2	BAR, push (12-1/8" long)(Model HD11E, EC tractors #10001 and up)
	666622	2	BAR, push (28-3/8" long)(Models HD11F, FC; also Models HD11E, EC with special 44-link track)

(Revised December 1968)

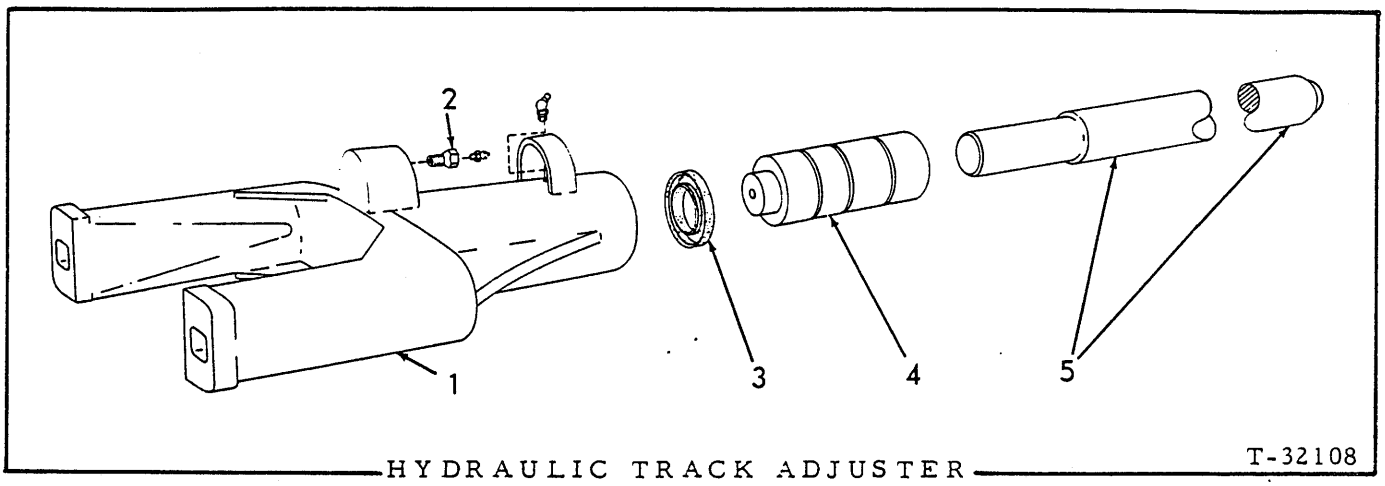

HYDRAULIC TRACK ADJUSTER T-32108

USAGE: Special equipment. Used prior to September 1968

ITEM	PART NO.	QTY.	DESCRIPTION
1	624206	2	YOKE ASSEMBLY (Includes items 2 thru 4 and FITTINGS indented below)
	915275	2	FITTING, lubricating, 65°, 1/8"NPT
2	628915	2	VALVE ASSEMBLY, relief (Serviced only as a unit)
	912808	2	FITTING, straight, 1/4"-28NF (pressurizing)
3	628934	2	SEAL, piston
4	628933	2	PISTON, adjusting
5	624563	2	BAR, push (11-5/8" long)(Models HD11B,S)
	644382	2	BAR, push (21-7/8" long)(Model HD11B when equipped with special 41-link tracks)
	624564	2	BAR, push (22-1/8" long)(Model HD11E,EC,ES tractors prior to #10001)
	644017	2	BAR, push (15-5/8" long)(Model HD11E,EC tractors #10001 and up)
	624565	2	BAR, push (32-1/2" long)(Models HD11F,FC; also Models HD11E, EC with special 44-link track)

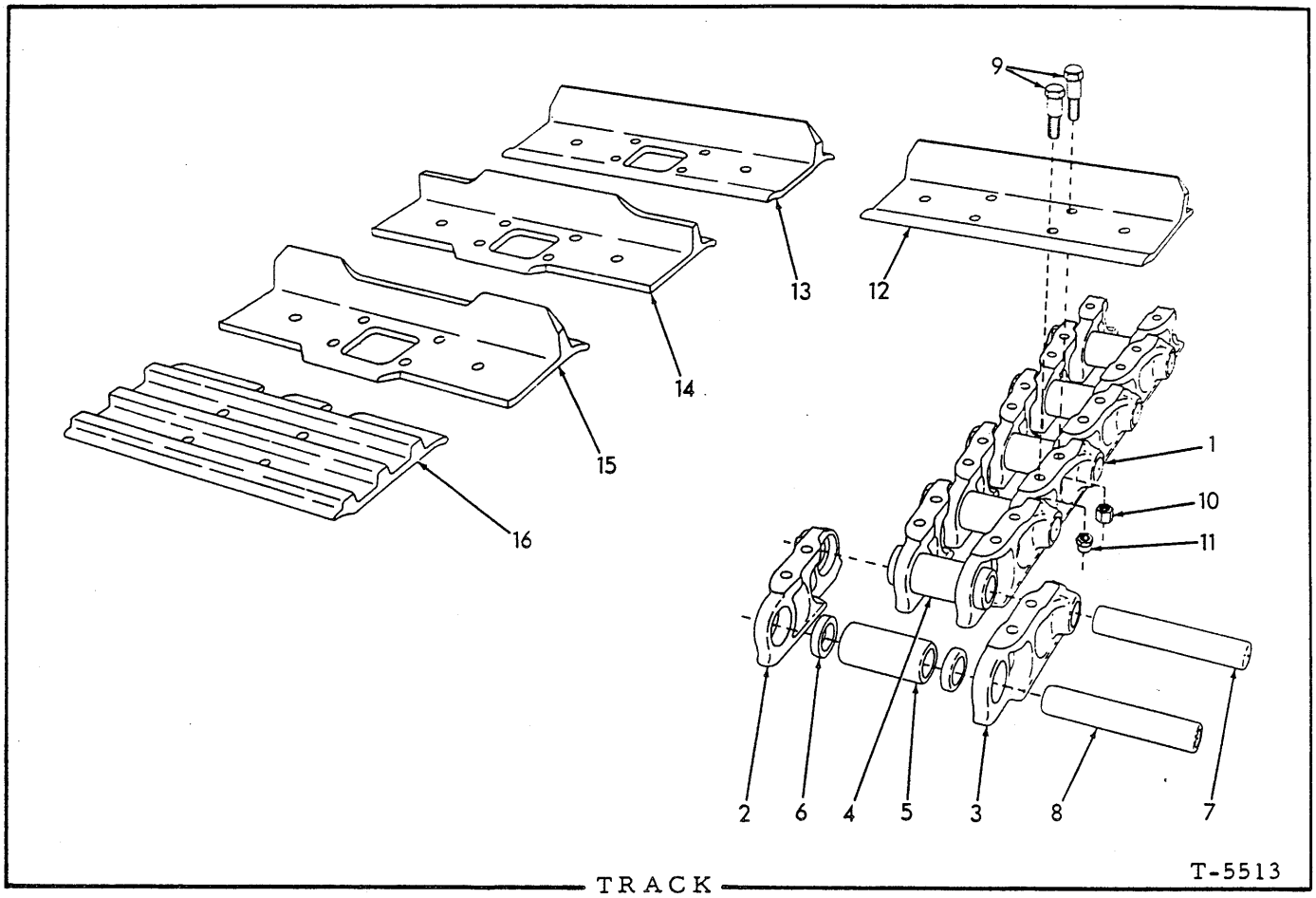

TRACK

USAGE: Tractors prior to serial No. 10001. Also see page 430 for extreme-duty service replacement tracks

* Models HD11B,S
** Models HD11E,EC,ES
*** Models HD11F,FC; also HD11E with special long track

ITEM	PART NO.	QUANTITY *	**	***	DESCRIPTION
1	------	2	-	-	RAIL ASSEMBLY (38 links)(Consists of items 2 thru 8)(Order RAIL ASSEMBLY 647121)
	------	-	2	-	RAIL ASSEMBLY (41 links)(Consists of items 2 thru 8)(Order RAIL ASSEMBLY 647279)
	------	-	-	2	RAIL ASSEMBLY (44 links)(Consists of items 2 thru 8)(Order RAIL ASSEMBLY 647251)
2	078701	76	82	88	BAR, left
3	078702	76	82	88	BAR, right
4	086495	74	80	86	BUSHING (5-3/4" long)
5	645971	2	2	2	BUSHING, master (4-5/8" long)
6	086520	4	4	4	SPACER, master bushing
7	079533	74	80	86	PIN

(Continued)

ITEM	PART NO.	QUANTITY *	**	***	DESCRIPTION
8	621312	2	2	2	PIN, master
9	097282	304	328	352	BOLT, track shoe
10	084342	152	164	176	NUT, high, 5/8"NF
11	086479	152	164	176	NUT, tapered, 5/8"NF
11A	651370	-	-	-	LUBRICANT, track pin, 1 gal. can (Not illustrated)

ITEM	PART NO.	QUANTITY *	**	***	TRACK SHOES	COMPLETE TRACK ASSEMBLIES WITH SHOES (2 Required) * (38 Links)	** (41 Links)	*** (44 Links)
12	073553	76	82	88	SHOE, grouser, 16"	647120	647286	
	073566	76	82	88	SHOE, grouser, 18"	647177	647316	
	073570	76	82	88	SHOE, grouser, 20"	647196	647311	
	073574	76	82	88	SHOE, grouser, 22"	647127	647288	
	074870	76	82	88	SHOE, grouser, 24"	650375		647263
	631342	-	-	88	SHOE, grouser, 28"			647265
	087547	76	82	88	SHOE, grouser, 30"		647282	647267
13	073592	76	82	88	SHOE, grouser, cut-out, 16"			
	073596	76	82	88	SHOE, grouser, cut-out, 18"			
	073600	76	82	88	SHOE, grouser, cut-out, 20"			
	073604	76	82	88	SHOE, grouser, cut-out, 22"			
14	099144	38	41	44	SHOE, grouser, snow and ice, single calk, cut-out, 18"	647159		
15	099143	38	41	44	SHOE, grouser, snow and ice, double calk, cut-out, 18"			
16	079815	76	82	88	SHOE, semi-grouser, 16"		647308	647250
	620095	-	-	44	SHOE, semi-grouser, offset, left side, 18"			
	620096	-	-	44	SHOE, semi-grouser, offset, right side, 18"			
	084592	76	82	88	SHOE, semi-grouser, 20"			

NOTE: TRACK ASSEMBLIES listed above are of the latest design (sealed-type) as shown on page 432. Assemblies of the early design can be made up in the field by ordering the various components.

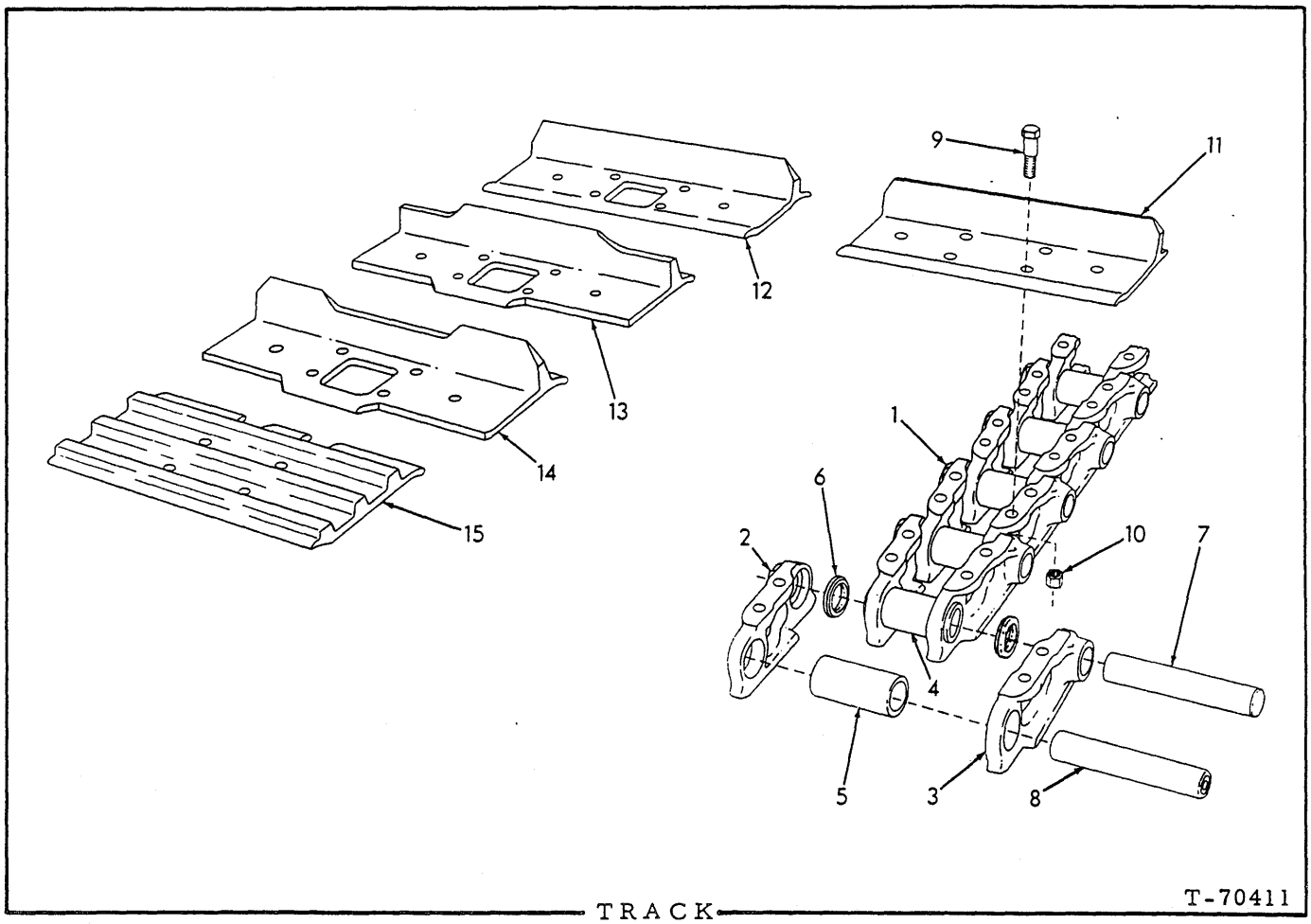

TRACK
(Extreme Duty)

USAGE: Service replacement on tractors prior to serial No. 10001 only. Requires reworking of truck frames; also installation of wider track rollers, track idlers, track supporting rollers and track sprockets.

* Models HD11B,S
** Models HD11E,EC,ES
*** Models HDF,FC; also HD11E with special long track

ITEM	PART NO.	QUANTITY *	**	***	DESCRIPTION	
1	648587	2	-	-	RAIL ASSEMBLY (38 links)	Each consists of items 2 thru 8
	648588	-	2	-	RAIL ASSEMBLY (41 links)	
	645698	-	-	2	RAIL ASSEMBLY (44 links)	
2	643841	74	80	86	BAR, left	
	645441	2	2	2	BAR, master, left	
3	643842	74	80	86	BAR, right	
	645442	2	2	2	BAR, master, right	
4	643967	74	80	86	BUSHING (5-5/16" long)	
5	643973	2	2	2	BUSHING, master (5" long)	

(Continued)

ITEM	PART NO.	QUANTITY *	**	***	DESCRIPTION
6	645148	152	164	176	SEAL
7	643924	74	80	86	PIN
8	644051	2	2	2	PIN, master
9	097282	304	328	352	BOLT, track shoe
10	086479	304	328	352	NUT, track shoe bolt
10A	651370	-	-	-	LUBRICANT, track pin, 1 gal. can (Not illustrated)

ITEM	PART NO.	QUANTITY *	**	***	TRACK SHOES	COMPLETE TRACK ASSEMBLIES WITH SHOES (2 Required) * (38 Links)	** (41 Links)	*** (44 Links)
11	643963	76	82	88	SHOE, grouser, 16"			651494
	644061	76	82	88	SHOE, grouser, 18"			
	644084	76	82	88	SHOE, grouser, 20"			
	644143	76	82	88	SHOE, grouser, 22"			650664
	644156	76	82	88	SHOE, grouser, 24"			648481
	644148	76	82	88	SHOE, grouser, 30"			651337
12	644086	76	82	88	SHOE, grouser, cut-out, 18"			
	644083	76	82	88	SHOE, grouser, cut-out, 20"			
13	644047	38	41	44	SHOE, grouser, snow and ice, single calk, cut-out, 18"			
14	644085	38	41	44	SHOE, grouser, snow and ice, double calk, cut-out, 18"			
15	644062	76	82	88	SHOE, semi-grouser, 16"			645699
	644144	76	82	88	SHOE, semi-grouser, 20"			

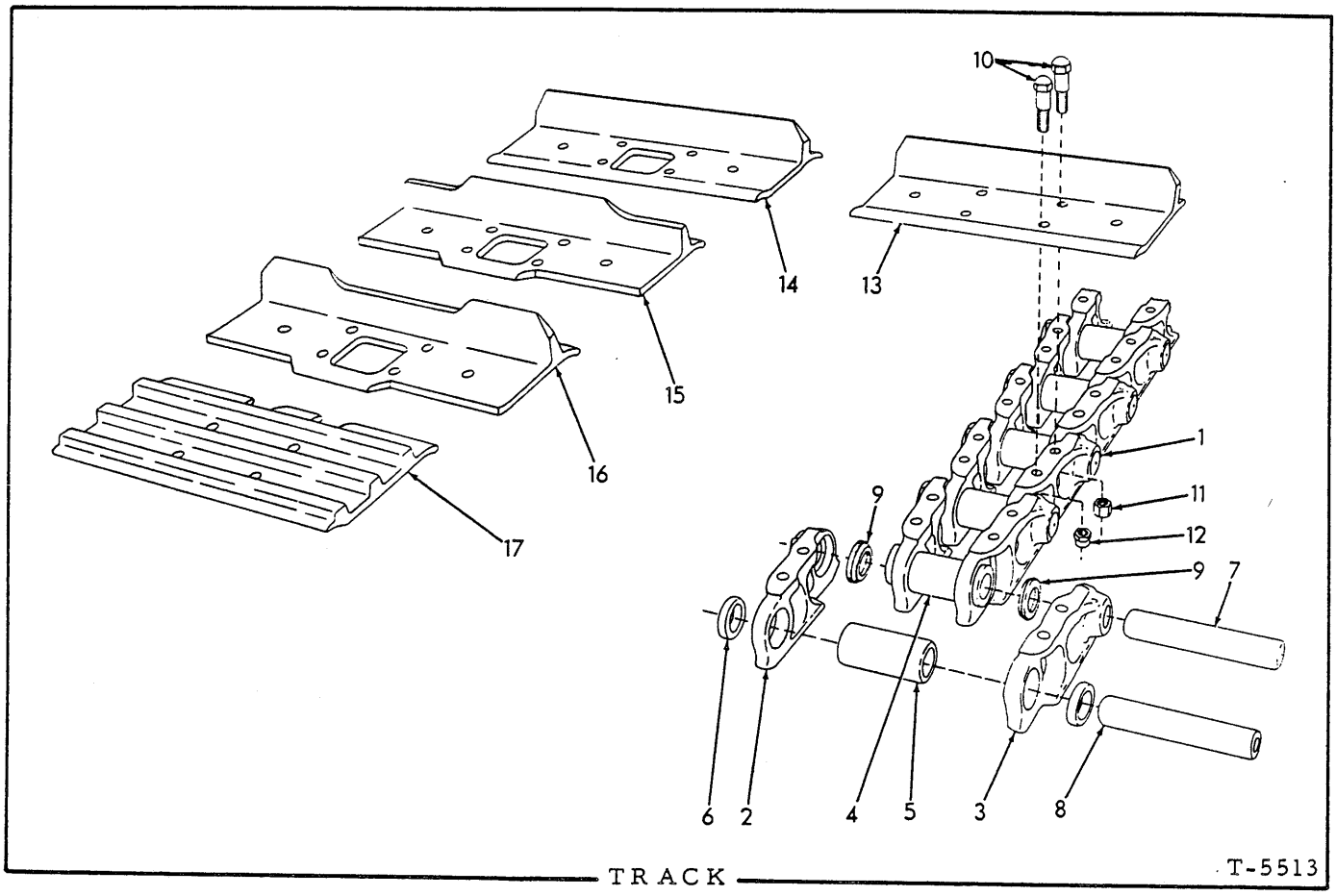

USAGE: Model HD11B,S tractors serial No. 10001 and up

* For standard track frames (6-roller) } Tractors prior to
** For special track frames (7-roller) } serial No. 11017
Δ For standard track frames (6-roller) } Trs' #11017 and
ΔΔ For special track frames (7-roller) } up (Sealed type)

ITEM	PART NO.	QUANTITY *	**	Δ	ΔΔ	DESCRIPTION	
1	------	2	-	-	-	RAIL ASSEMBLY (38 links)(Order RAIL ASSEMBLY 647121)	Each consists of items 2 thru 8
	------	-	2	-	-	RAIL ASSEMBLY (41 links)(Order RAIL ASSEMBLY 647279)	
	647121	-	-	2	-	RAIL ASSEMBLY (38 links)	Each consists of items 2 thru 5, 7 thru 9
	647279	-	-	-	2	RAIL ASSEMBLY (41 links)	
2	078701	76	82	74	80	BAR, left	
	645985	-	-	2	2	BAR, master, left	
3	078702	76	82	74	80	BAR, right	
	645986	-	-	2	2	BAR, master, right	
4	086495	74	80	-	-	BUSHING (5-3/4" long)	
	645970	-	-	74	80	BUSHING (4-15/16" long)	

(Continued)

ITEM	PART NO.	QUANTITY *	**	Δ	ΔΔ	DESCRIPTION
5	645971	2	2	2	2	BUSHING, master (4-5/8" long)
6	086520	4	4	-	-	SPACER, master bushing
7	079533	74	80	74	80	PIN
8	621312	2	2	2	2	PIN, master
9	645969	-	-	152	164	SEAL
10	097282	304	328	304	328	BOLT, track shoe
11	084342	152	164	152	164	NUT, high, 5/8"NF
12	086479	152	164	152	164	NUT, tapered, 5/8"NF
12A	651370	-	-	-	-	LUBRICANT, track pin, 1-gal. can (Not illustrated)

ITEM	PART NO.	QUANTITY *	**	Δ	ΔΔ	TRACK SHOES	COMPLETE TRACK ASSEMBLIES WITH SHOES (2 Required) (38 links)	(41 links)
13	073553	76	82	76	82	SHOE, grouser, 16"	647120	647286
	073566	76	82	76	82	SHOE, grouser, 18"	647177	647316
	073570	76	82	76	82	SHOE, grouser, 20"	647196	647311
	073574	76	82	76	82	SHOE, grouser, 22"	647127	647288
	074870	76	82	76	82	SHOE, grouser, 24"	650375	
	087547	76	82	76	82	SHOE, grouser, 30"		647282
14	073592	76	82	76	82	SHOE, grouser, cut-out, 16"		
	073596	76	82	76	82	SHOE, grouser, cut-out, 18"		
	073600	76	82	76	82	SHOE, grouser, cut-out, 20"		
	073604	76	82	76	82	SHOE, grouser, cut-out, 22"		
15	099144	38	41	38	41	SHOE, grouser, snow and ice, single calk, cut-out, 18"	647159	
16	099143	38	41	38	41	SHOE, grouser, snow and ice, double calk, cut-out, 18"		
17	079815	76	82	76	82	SHOE, semi-grouser, 16"		647308
	084592	76	82	76	82	SHOE, semi-grouser, 20"		

NOTE: TRACK ASSEMBLIES listed above are of the latest design (sealed-type). Assemblies of the early design can be made up in the field by ordering the various components.

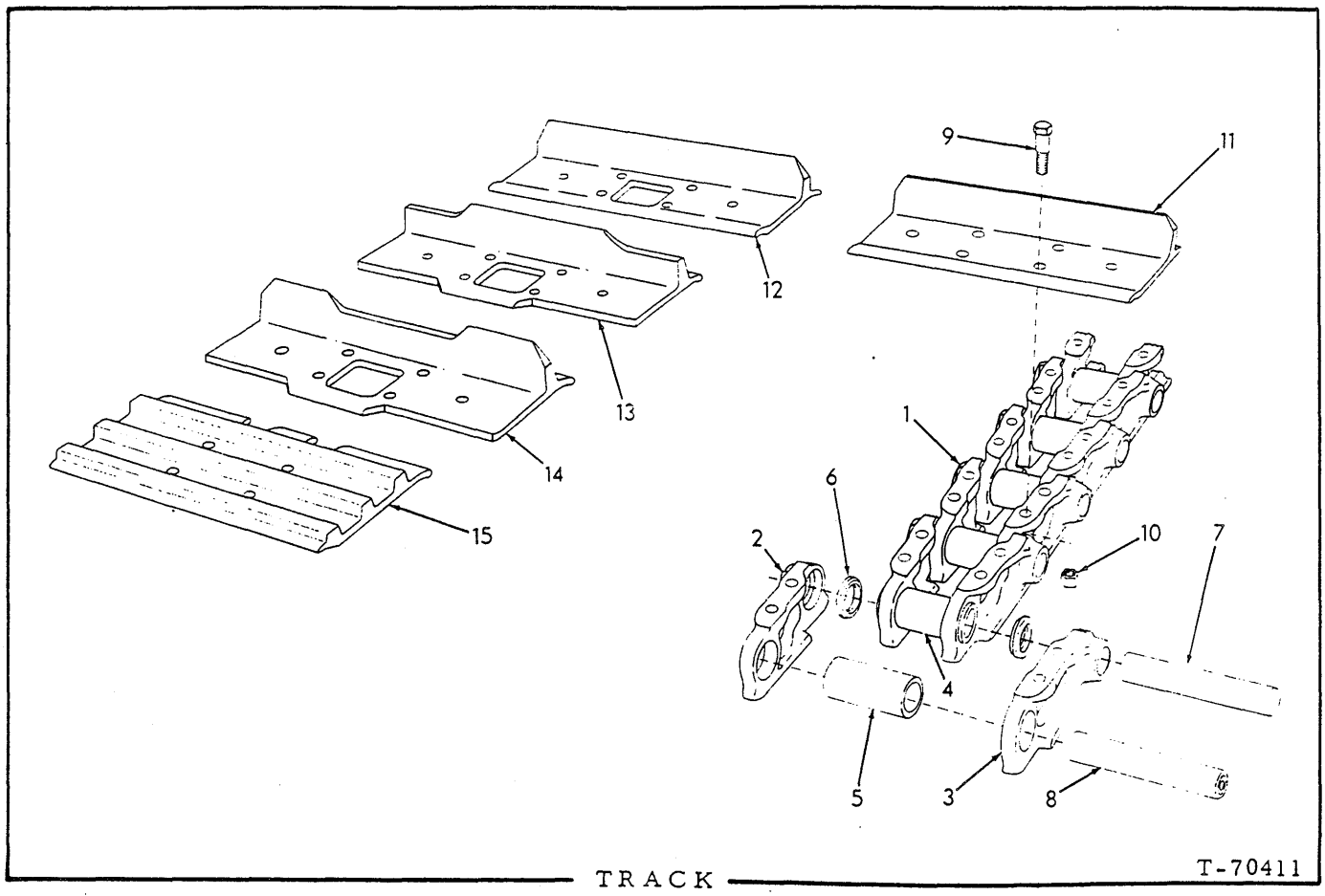

TRACK T-70411

USAGE: Model HD11 E, EC tractors serial No. 10001 and up
* Units with standard 40-link tracks
** Units with special 44-link tracks

ITEM	PART NO.	QTY. *	QTY. **	DESCRIPTION
1	643881	2	-	RAIL ASSEMBLY (40 links)(Consists of items 2 thru 8)
	645698	-	2	RAIL ASSEMBLY (44 links)(Consists of items 2 thru 8)
2	643841	78	86	BAR, left
	645441	2	2	BAR, master, left
3	643842	78	86	BAR, right
	645442	2	2	BAR, master, right
4	643967	78	86	BUSHING (5-5/16" long)
5	643973	2	2	BUSHING, master (5" long)
6	645148	160	176	SEAL
7	643924	78	86	PIN
8	644051	2	2	PIN, master
9	097282	320	352	BOLT, track shoe

(Continued)

ITEM	PART NO.	QTY. *	QTY. **	DESCRIPTION	TRACK SHOES	COMPLETE TRACK ASSEMBLIES WITH SHOES (2 Required) * (40 links)	COMPLETE TRACK ASSEMBLIES WITH SHOES (2 Required) ** (44 links)
10	084342	320	352	NUT, track shoe bolt			
10A	651370	-	-	LUBRICANT, track pin, 1-gal. can (Not illustrated)			
11	643963	80	88	SHOE, grouser, 16"	643852		
	644061	80	88	SHOE, grouser, 18"	644076		
	644084	80	88	SHOE, grouser, 20"	644150		
	644143	80	88	SHOE, grouser, 22"	644166		650664
	644156	80	88	SHOE, grouser, 24"	644193		648481
	644148	80	88	SHOE, grouser, 30"	644176		651337
12	644086	80	88	SHOE, grouser, cut-out, 18"	644171		
	644083	80	88	SHOE, grouser, cut-out, 20"	644211		
13	644047	40	44	SHOE, grouser, snow and ice, single calk, cut-out, 18"	644163		
14	644085	40	44	SHOE, grouser, snow and ice, double calk, cut-out, 18"	644163		
15	644062	80	88	SHOE, semi-grouser, 16"	644186		645699
	644144	80	88	SHOE, semi-grouser, 20"	644215		

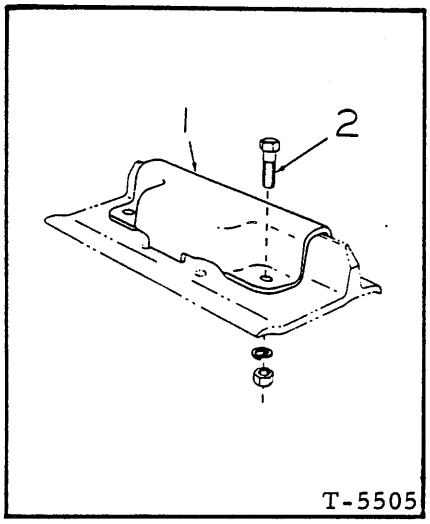

STREET PLATES

USAGE: Special equipment. For grouser shoes only.

ITEM	PART NO.	QTY.	DESCRIPTION
1	073558	1	PLATE, street
2	035014	2	CAPSCREW, 5/8"NF x 1-1/2"
	904209	2	LOCKWASHER, 5/8"
	911044	2	NUT, 5/8"NF

NOTE: Quantities indicated are for one (1) shoe only

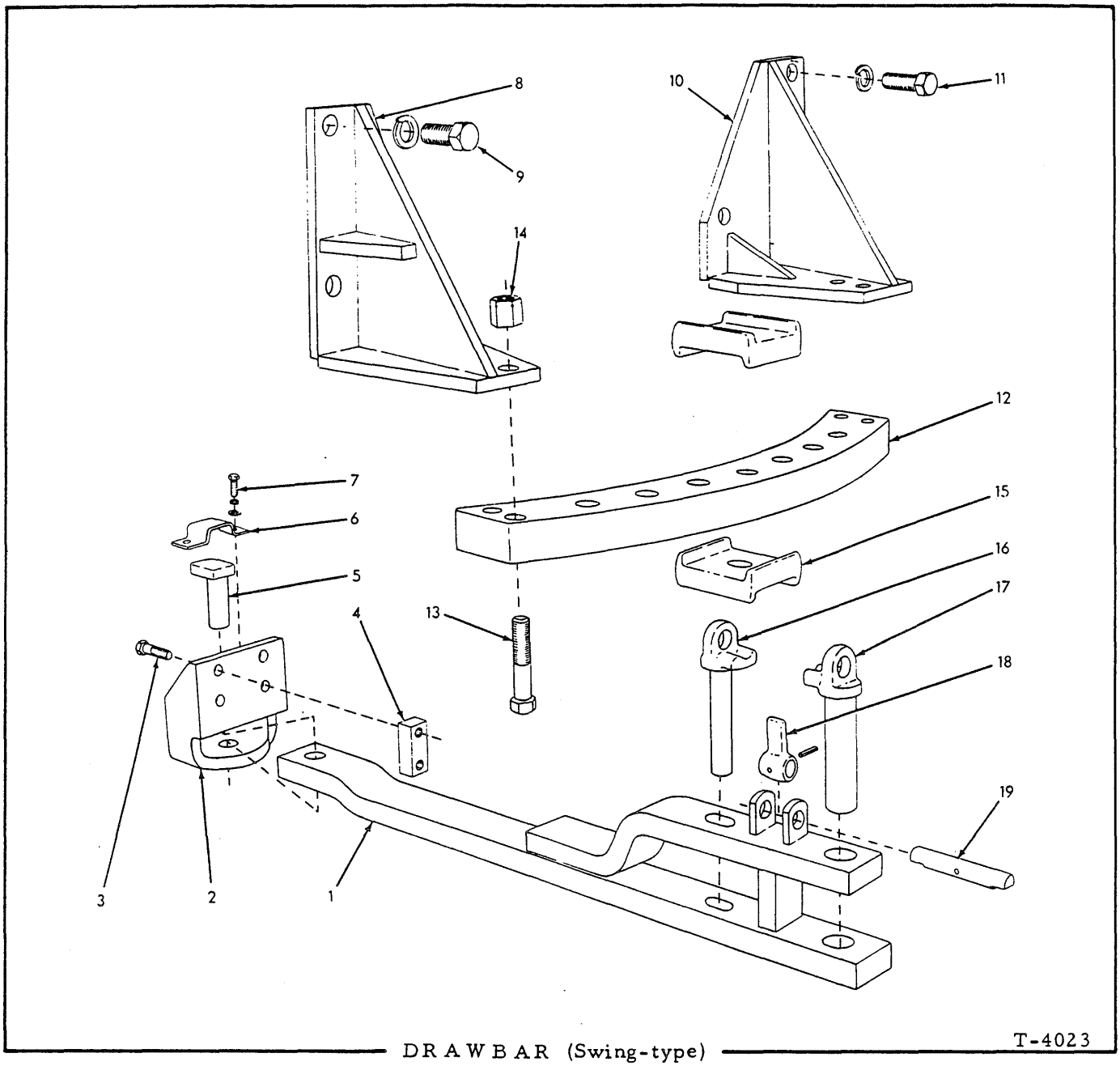

DRAWBAR (Swing-type) T-4023

USAGE: Standard on all Models except HD11E, EC tractors serial No. 10001 and up

ITEM	PART NO.	QTY.	DESCRIPTION
1	056711	1	DRAWBAR
2	647923	1	BRACKET, hinge pin
3	012984	4	CAPSCREW, 3/4"NF x 2-3/4"
4	012767	4	NUT, high, 3/4"NF (Used prior to tractor #11122)
	647922	2	BLOCK, tapped (Effective with tractor #11122)
5	080667	1	PIN, hinge
6	050447	1	PLATE, hinge pin retaining
7	070469	2	CAPSCREW, 1/2"NF x 1-1/4"
	904208	2	LOCKWASHER, 1/2"
	910244	2	WASHER, plain, SAE std., 1/2"

(Continued)

ITEM	PART NO.	QTY.	DESCRIPTION
8	064413	1	BRACKET, supporting plate, left
9	073468	3	CAPSCREW, 1"NF x 2-1/2"
	910916	3	LOCKWASHER, 1"
10	064414	1	BRACKET, supporting plate, right
11	073468	3	CAPSCREW, 1"NF x 2-1/2"
	910916	3	LOCKWASHER, 1"
12	058759	1	PLATE, supporting
13	036546	4	CAPSCREW, 1"NF x 4-1/4"
14	600236	4	NUT, high, 1"NF
15	056706	2	SHOE, wear
16	056702	1	PIN, drawbar locking
17	059007	1	PIN, drawbar coupling
18	051352	1	ARM, locking, drawbar pins
	915504	1	PIN, roll, 5/16" x 1-3/4"
19	078867	1	SHAFT, locking arm

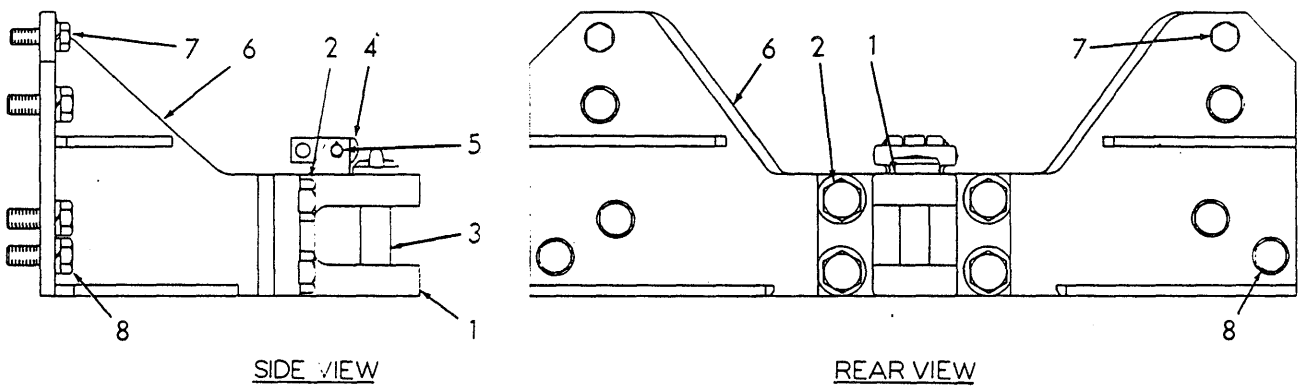

DRAWBAR (Fixed-type) T-41926

USAGE: Standard on Model HD11E, EC tractors serial No. 10001 and up

ITEM	PART NO.	QTY.	DESCRIPTION
1	633729	1	BRACKET, coupling
2	633733	4	CAPSCREW, 1-1/2"NF x 5-1/2"
	913077	4	LOCKWASHER, 1-1/2"
	916555	4	NUT, 1-1/2"NF
3	633730	1	PIN, drawbar
4	629697	1	BLOCK, retaining, drawbar pin
5	629698	1	PIN, retaining block
	900806	2	PIN, cotter, 1/8" x 1"
6	633863	1	BRACKET, supporting
7	070272	2	CAPSCREW, 1"NF x 3"
	910916	2	LOCKWASHER, 1"
8	066794	6	CAPSCREW, 1-1/4"NF x 3-1/4"
	904210	6	LOCKWASHER, 1-1/4"

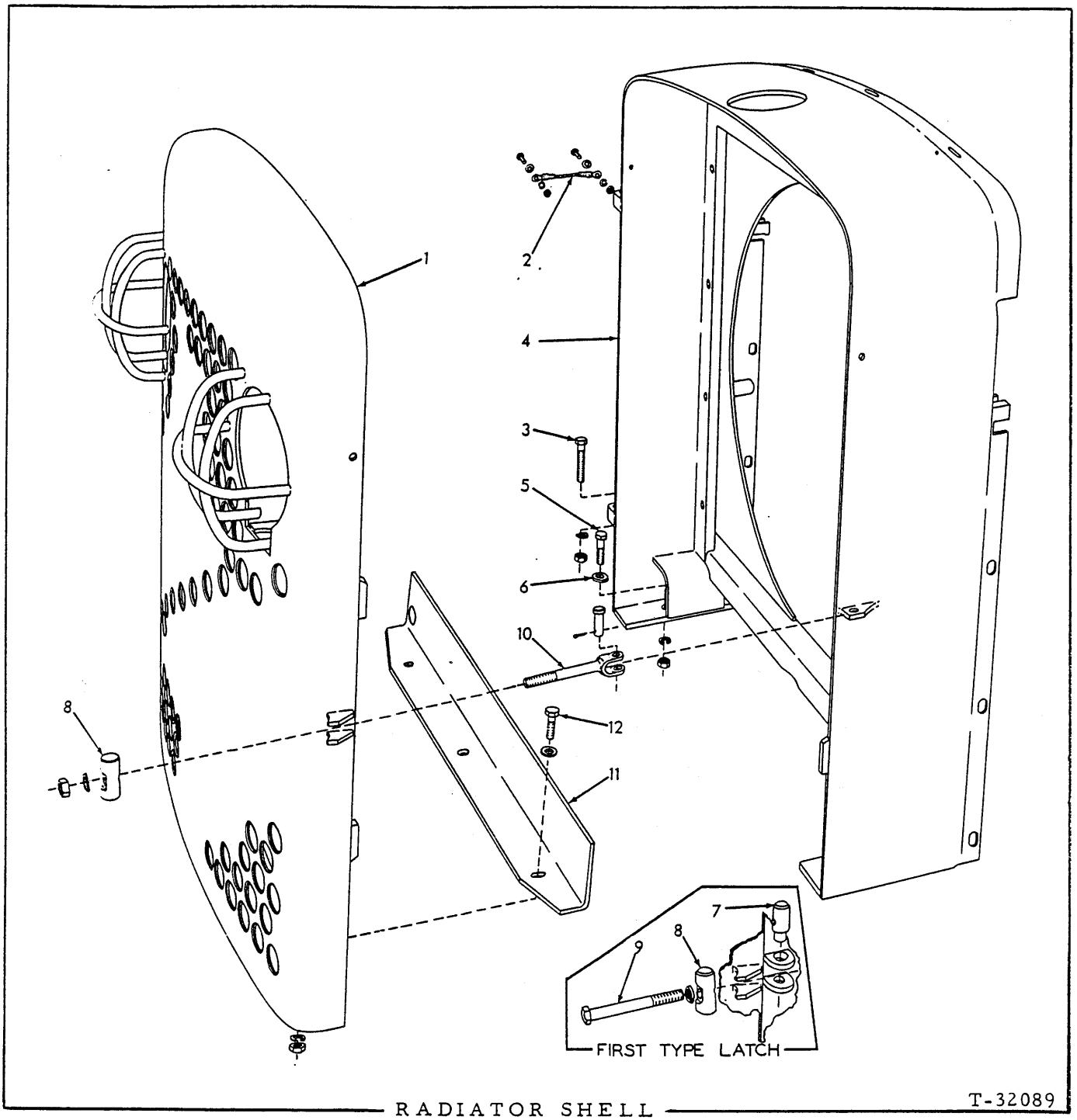

RADIATOR SHELL

USAGE: Standard on Models HD11F, FC, ES, S. Optional on Model HD11B; also Models HD11E, EC prior to serial No. 10001

* Tractors prior to serial No. 6473 excluding Nos. 6440, 6442, 6470, 6471 but including Nos. 6500, 6503, 6510

** Tractors serial No. 6473 and up excluding Nos. 6500, 6503, 6510 but including Nos. 6440, 6442, 6470, 6471

ITEM	PART NO.	QTY. *	QTY. **	DESCRIPTION
1	------	1	-	GUARD ASSEMBLY, radiator protecting (Order GUARD 624719, 1 BAFFLE 634482, 3 CAPSCREW 036034, 3 LOCKWASHER 904206 and 3 NUT 911041)
	624719	-	1	GUARD ASSEMBLY, radiator protecting

(Continued)

RADIATOR SHELL (Continued)

ITEM	PART NO.	QTY. *	QTY. **	DESCRIPTION
2	605807	1	1	CABLE, guard grounding
	912789	2	2	CAPSCREW, 1/4"NF x 3/4"
	909367	2	2	LOCKWASHER, internal teeth, 1/4"
	904204	2	2	LOCKWASHER, 1/4"
	911040	2	2	NUT, 1/4"NF
3	057605	2	2	CAPSCREW, radiator guard hinge (1/2"NF x 2-3/4")
	904208	2	2	LOCKWASHER, 1/2"
	911043	2	2	NUT, 1/2"NF
4	------	1	-	SHELL, radiator (Used prior to tractor #4379. Order SHELL 624644, 1 YOKE 096456, 1 NUT 911043, 1 PIN 917648 and 1 PIN 910967)
	624644	1	1	SHELL, radiator (Used on tractors #4379 thru #7998)
	634517	-	1	SHELL, radiator (Used on tractors #7999 thru #10000)
	639988	-	1	SHELL, radiator (Effective with tractor #10001)
5	035067	4	4	CAPSCREW, 1/2"NF x 2"
6	064531	4	4	WASHER, plain
	904208	4	4	LOCKWASHER, 1/2"
	911043	4	4	NUT, 1/2"NF
7	054897	1	-	PIN, guard latching screw (threaded-hole)(Used prior to tractor #4379)
8	054899	1	1	PIN, guard latching screw (plain hole)
9	057517	1	-	CAPSCREW, guard latching (1/2"NF x 4")(Used prior to tractor #4379)
10	096456	1	1	YOKE, guard latching (Effective with tractor #4379)
	904208	1	1	LOCKWASHER, 1/2"
	911043	1	1	NUT, 1/2"NF
	917648	1	1	PIN, yoke, 1/2" diam.
	910967	1	1	PIN, cotter, 1/8" x 7/8"
11	634482	-	1	BAFFLE, air
12	036034	-	3	CAPSCREW, 3/8"NF x 1"
	911115	-	3	WASHER, plain, SAE std., 3/8"
	904206	-	3	LOCKWASHER, 3/8"
	911041	-	3	NUT, 3/8"NF

RADIATOR GUARD (Plain. First type)

USAGE: Tractors prior to serial No. 10001. Standard on Models HD11B, E, EC; optional on Models HD11S, ES. See following pages for optional designs

* Used prior to tractor serial No. 4304
** Effective with tractor serial No. 4304

ITEM	PART NO.	QTY. *	QTY. **	DESCRIPTION
1	------	1	-	GUARD ASSEMBLY (Order GUARD ASSEMBLY 093329, items 22 thru 27 and 1 each CAP 092028, CABLE 092712; 2 each GROMMET 044810, CABLE 093176, BRACKET 093195; 3 CLIP 235794; 4 each CAPSCREW 035336, WASHER 044973; 6 LOCK-WASHER 904206; 19 each WASHER 064531, LOCKWASHER 904208)
	093329	-	1	GUARD ASSEMBLY, radiator (Includes items 2 thru 5)
2	085290	1	-	PLATE, top closure
	093446	-	1	PLATE, top closure
3	070467	4	4	CAPSCREW, 1/2"NF x 1"
	904208	4	4	LOCKWASHER, 1/2"
4	085555	2	2	CAP, guard pivot
5	075878	4	4	CAPSCREW, 7/8"NF x 4"
	905347	4	4	LOCKWASHER, 7/8"
6	088819	1	-	PLATE, guard, left headlight (Effective with tractor #1764)
7	012992	2	-	CAPSCREW, 3/8"NF x 1-1/4"
	904206	2	-	LOCKWASHER, 3/8"
	911115	2	-	WASHER, plain, SAE std., 3/8"
8	088820	1	-	PLATE, guard, right headlight (Effective with tractor #1764)
9	012992	2	-	CAPSCREW, 3/8"NF x 1-1/4"
	904206	2	-	LOCKWASHER, 3/8"
	911115	2	-	WASHER, plain, SAE std., 3/8"
10	085414	1	1	BAFFLE, air, upper (Used prior to tractor #6460)
	624758	-	1	BAFFLE, air, upper (Used on tractors #6460 thru #8122)
	641490	-	1	BAFFLE, air, upper (Effective with tractor #8123)
11	012992	5	5	CAPSCREW, 3/8"NF x 1-1/4"
	904206	5	5	LOCKWASHER, 3/8"
	044973	5	5	WASHER, plain
12	085413	2	2	BAFFLE, air, side
13	012992	10	10	CAPSCREW, 3/8"NF x 1-1/4"
	904206	10	10	LOCKWASHER, 3/8"
	044973	10	10	WASHER, plain
14	085318	1	1	BAFFLE, air, lower (Used prior to tractor #6460)
	624759	-	1	BAFFLE, air, lower (Used on tractors #6460 thru #8122)
	641491	-	1	BAFFLE, air, lower (Effective with tractor #8123)
15	012992	5	5	CAPSCREW, 3/8"NF x 1-1/4"
	044973	5	5	WASHER, plain
	904206	5	5	LOCKWASHER, 3/8"
	911041	5	5	NUT, 3/8"NF

(Continued)

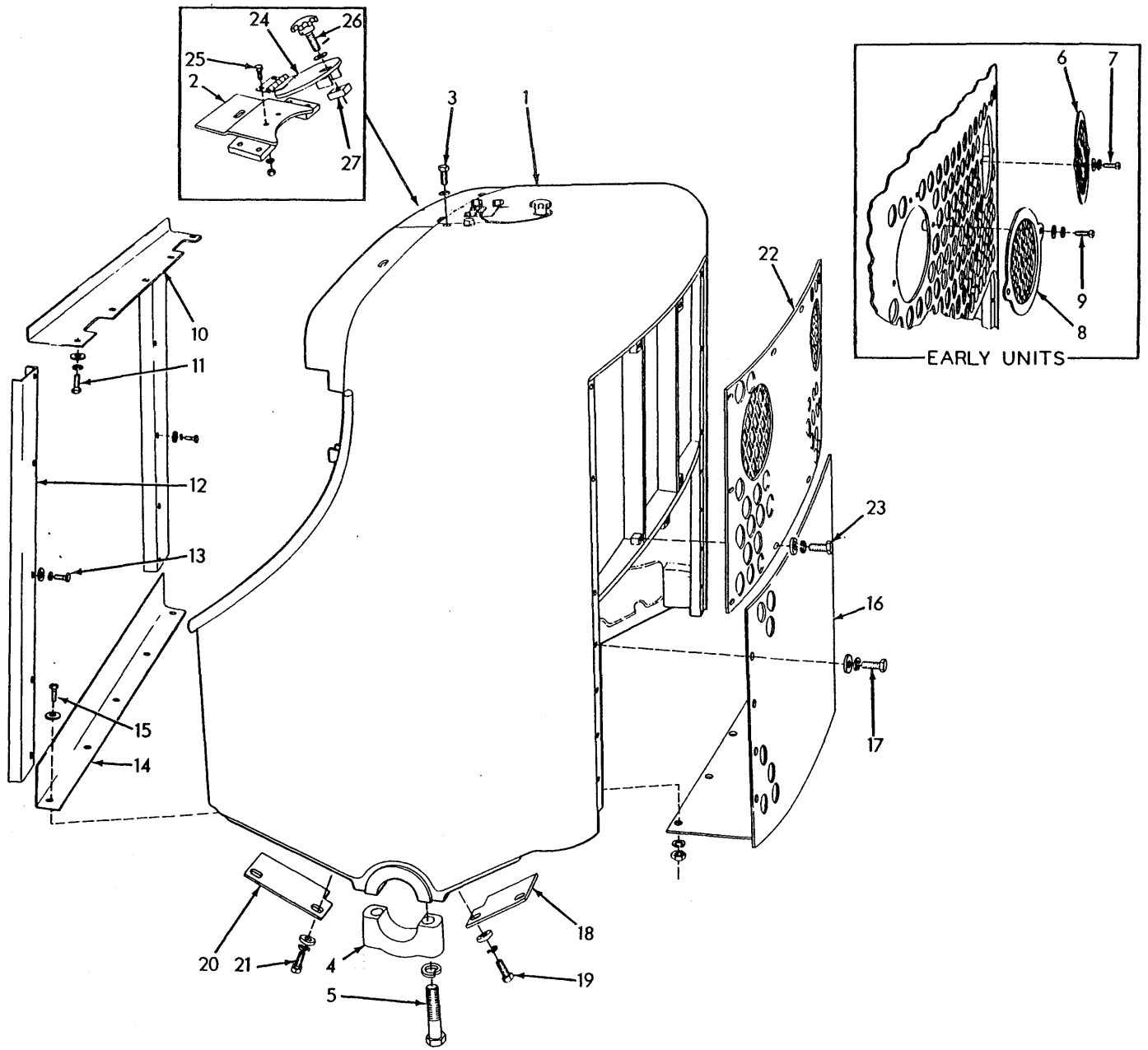

RADIATOR GUARD (Plain. First type)

T-16300

ITEM	PART NO.	QTY. *	QTY. **	DESCRIPTION
16	085335	1	-	PLATE, front closure, lower
	093338	-	1	PLATE, front closure, lower
17	614478	9	5	CAPSCREW, 1/2"NF x 1-3/8" (Early units)
	035733	-	5	CAPSCREW, 1/2"NC x 1-3/8" (Late units)
	904208	9	5	LOCKWASHER, 1/2"
	064531	9	5	WASHER, plain
18	085305	2	2	PLATE, bottom closure, front
19	035018	4	4	CAPSCREW, 1/2"NF x 1-1/2"
	904208	4	4	LOCKWASHER, 1/2"
	064531	4	4	WASHER, plain
20	085304	2	2	PLATE, bottom closure, rear
21	035018	4	4	CAPSCREW, 1/2"NF x 1-1/2"
	904208	4	4	LOCKWASHER, 1/2"
	064531	4	4	WASHER, plain
22	092924	-	1	PLATE, front closure, upper
23	614478	-	8	CAPSCREW, 1/2"NF x 1-3/8" (Early units)
	035733	-	8	CAPSCREW, 1/2"NC x 1-3/8" (Late units)
	904208	-	8	LOCKWASHER, 1/2"
	064531	-	8	WASHER, plain
24	091942	-	1	PLATE, top closure (Includes hinge)
25	035167	-	2	CAPSCREW, 3/8"NF x 7/8"
	904206	-	2	LOCKWASHER, 3/8"
	911041	-	2	NUT, 3/8"NF
26	091976	-	1	KNOB ASSEMBLY, top closure plate (Includes stud and pin)
	910244	-	1	WASHER, plain, SAE std., 1/2"
	916202	-	1	PIN, roll, 1/8" x 7/8"
27	624488	-	1	BLOCK, tapped

NOTE: See PAINTING AND MARKING for transfers

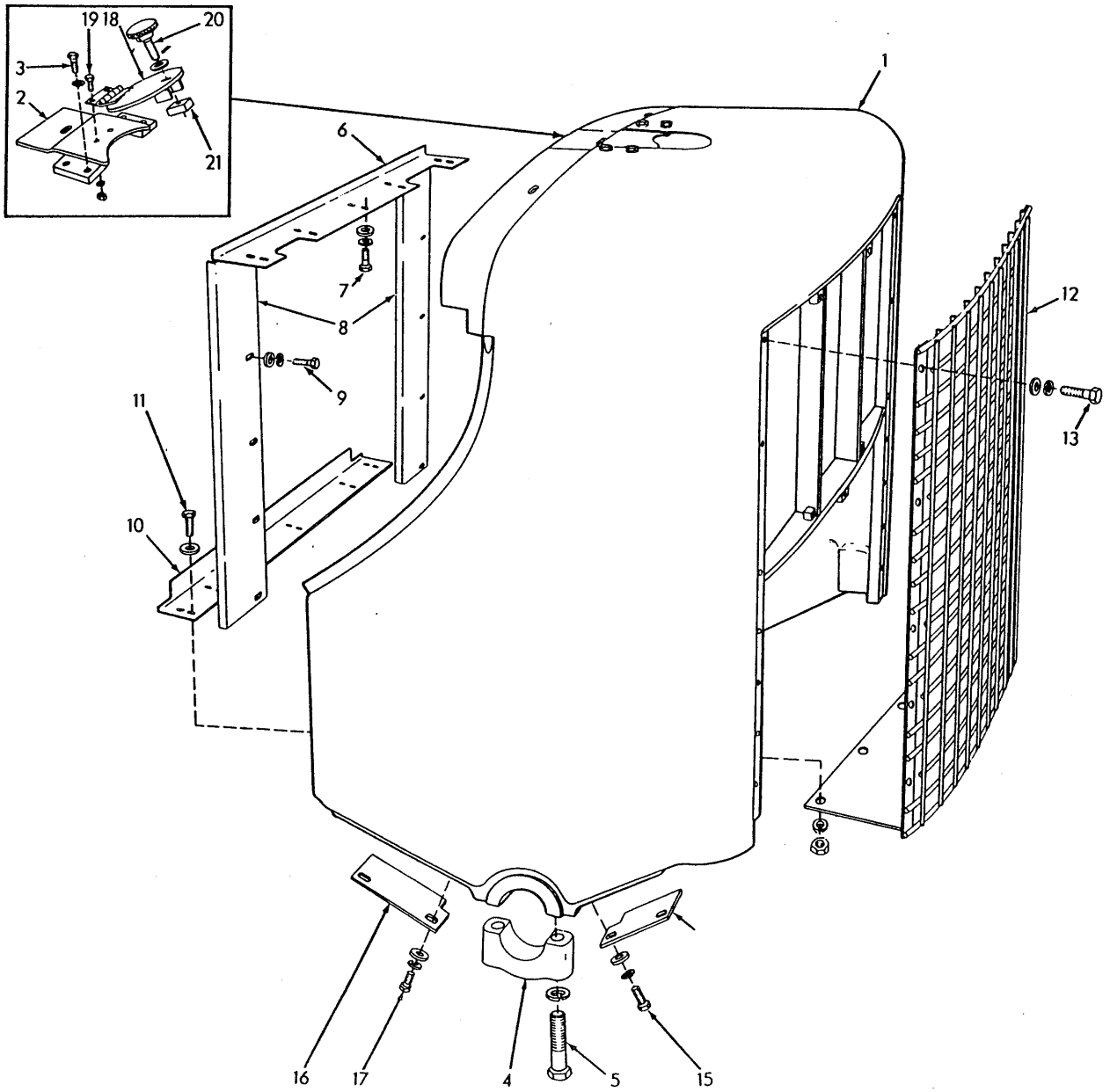

RADIATOR GUARD (Plain, Second type)

T-70427

RADIATOR GUARD (Plain. Second type)

USAGE: Tractors serial No. 10001 and up. Standard on all models except HD11S. See following pages for optional designs.

ITEM	PART NO.	QTY.	DESCRIPTION
1	645498	1	GUARD ASSEMBLY, radiator (Includes items 2 thru 5)
2	093446	1	PLATE, top closure (Tractors prior to #11609)
	651623	1	PLATE, top closure (Tractors #11609 and up)
3	070467	4	CAPSCREW, 1/2"NF x 1"
	904208	4	LOCKWASHER, 1/2"
4	085555	2	CAP, guard pivot
5	075878	4	CAPSCREW, 7/8"NF x 4"
	905347	4	LOCKWASHER, 7/8"
6	641490	1	BAFFLE, air, upper
7	036034	5	CAPSCREW, 3/8"NF x 1"
	904206	5	LOCKWASHER, 3/8"
	044973	5	WASHER, plain
8	085413	2	BAFFLE, air, side (Model HD11B, E)
	645510	2	BAFFLE, air, side (Model HD11EC)
9	036034	10	CAPSCREW, 3/8"NF x 1"
	904206	10	LOCKWASHER, 3/8"
	044973	10	WASHER, plain
10	641491	1	BAFFLE, air, lower
11	012992	5	CAPSCREW, 3/8"NF x 1-1/4"
	044973	5	WASHER, plain
	904206	5	LOCKWASHER, 3/8"
	911041	5	NUT, 3/8"NF
12	642631	1	GRILLE, front closure
13	035190	12	CAPSCREW, 1/2"NC x 1-1/2"
	904208	12	LOCKWASHER, 1/2"
	064531	12	WASHER, plain
14	085305	2	PLATE, bottom closure, front
15	035018	4	CAPSCREW, 1/2"NF x 1-1/2"
	904208	4	LOCKWASHER, 1/2"
	064531	4	WASHER, plain
16	085304	2	PLATE, bottom closure, rear
17	035018	4	CAPSCREW, 1/2"NF x 1-1/2"
	904208	4	LOCKWASHER, 1/2"
	064531	4	WASHER, plain
18	091942	1	PLATE, top closure (Includes hinge)
19	035167	2	CAPSCREW, 3/8"NF x 7/8"
	904206	2	LOCKWASHER, 3/8"
	911041	2	NUT, 3/8"NF
20	624487	1	KNOB, top closure plate
	910244	1	WASHER, plain, SAE std., 1/2"
	916202	1	PIN, roll, 1/8" x 7/8"
21	624488	1	BLOCK, tapped

Tractors prior to #11609

NOTE: See PAINTING AND MARKING for transfers

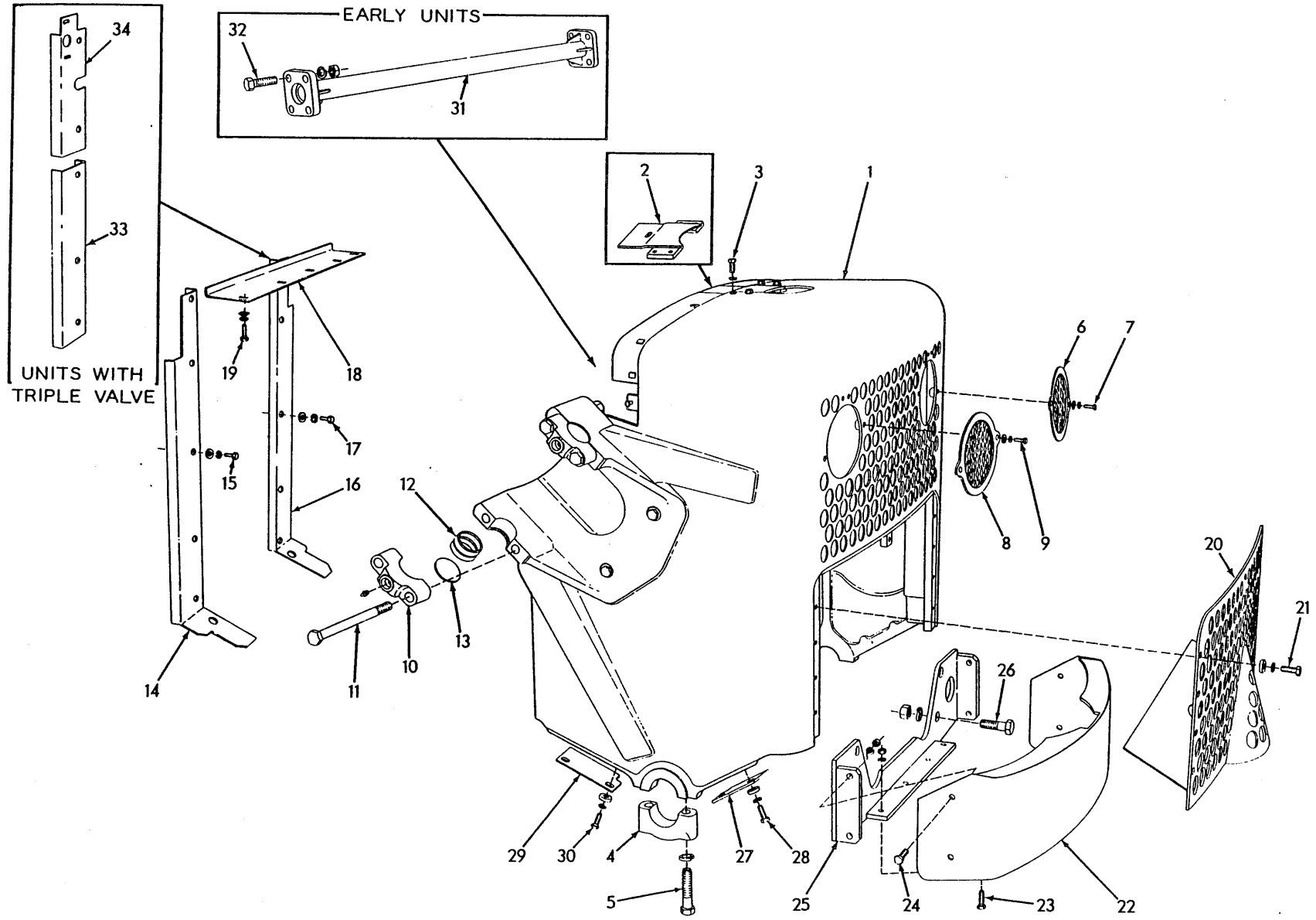

RADIATOR GUARD (Hydraulic. First type)

T-16307

RADIATOR GUARD (Hydraulic. First type)

USAGE: Special equipment. For Model HD11B,S tractors prior to approx. April 1958 equipped with hydraulic dozer

* Tractors with side-mounted hydraulic tank
** Tractors with front-mounted hydraulic tank

ITEM	PART NO.	QTY. *	QTY. **	DESCRIPTION
1	090143	1	1	GUARD ASSEMBLY, radiator (Includes items 2 thru 11 and set of swing-out headlight brackets)(If for tractors prior to #205 also order 2 STRAP 090847, 1 CAPSCREW 087159, 1 SPACER 053667, 1 PIN 050735 and 1 PIN 050734)
2	085290	1	1	PLATE, top closure
3	070467	4	4	CAPSCREW, 1/2"NF x 1"
	904208	4	4	LOCKWASHER, 1/2"
4	085555	2	2	CAP, guard pivot
5	075878	4	4	CAPSCREW, 7/8"NF x 4"
	905347	4	4	LOCKWASHER, 7/8"
6	088819	1	1	PLATE, guard, left headlight (Effective with tractor #1764)
7	012992	2	2	CAPSCREW, 3/8"NF x 1-1/4"
	904206	2	2	LOCKWASHER, 3/8"
	911115	2	2	WASHER, plain, SAE std., 3/8"
8	088820	1	1	PLATE, guard, right headlight (Effective with tractor #1764)
9	012992	2	2	CAPSCREW, 3/8"NF x 1-1/4"
	904206	2	2	LOCKWASHER, 3/8"
	911115	2	2	WASHER, plain, SAE std., 3/8"
10	085734	4	4	CAP, trunnion
	914465	4	4	FITTING, lubricating, straight, 1/8"NPT
11	085727	8	8	CAPSCREW, 3/4"NF x 9-1/2"
	012767	8	8	NUT, high, 3/4"NF
12	084965	4	4	BUSHING, trunnion
13	085456	4	4	PLATE, retaining, trunnion bushing
14	087714	1	-	BAFFLE, air, right side
	097100	-	1	BAFFLE, air, right side
15	012992	5	5	CAPSCREW, 3/8"NF x 1-1/4"
	904206	5	5	LOCKWASHER, 3/8"
	044973	5	5	WASHER, plain
16	087713	1	-	BAFFLE, air, left side
	097099	-	1	BAFFLE, air, left side
17	012992	5	5	CAPSCREW, 3/8"NF x 1-1/4"
	904206	5	5	LOCKWASHER, 3/8"
	044973	5	5	WASHER, plain
18	085414	1	1	BAFFLE, air, upper
19	012992	5	5	CAPSCREW, 3/8"NF x 1-1/4"
	904206	5	5	LOCKWASHER, 3/8"
	044973	5	5	WASHER, plain

(Continued)

RADIATOR GUARD (Hydraulic. First type)(Continued)

ITEM	PART NO.	QTY. *	QTY. **	DESCRIPTION
20	606321	1	-	PLATE, front closure
	097108	-	1	PLATE, front closure
21	614478	9	9	CAPSCREW, 1/2"NF x 1-3/8"
	904208	9	9	LOCKWASHER, 1/2"
	064531	9	9	WASHER, plain
22	607937	1	-	GUARD, pump protecting
23	035018	4	-	CAPSCREW, 1/2"NF x 1-1/2"
24	035073	4	-	CAPSCREW, 1/2"NF x 1-3/4"
	904208	8	-	LOCKWASHER, 1/2"
	911043	8	-	NUT, 1/2"NF
25	607939	1	-	BRACKET, guard mounting
26	070272	6	-	CAPSCREW, 1"NF x 3"
	910916	6	-	LOCKWASHER, 1"
	911047	6	-	NUT, 1"NF
27	085305	2	2	PLATE, bottom closure, front
28	035018	4	4	CAPSCREW, 1/2"NF x 1-1/2"
	904208	4	4	LOCKWASHER, 1/2"
	064531	4	4	WASHER, plain
29	085304	2	2	PLATE, bottom closure, rear
30	035018	4	4	CAPSCREW, 1/2"NF x 1-1/2"
	904208	4	4	LOCKWASHER, 1/2"
	064531	4	4	WASHER, plain
31	085458	1	-	TUBE, bracing (Used prior to tractor #205)
32	085743	4	-	CAPSCREW, 3/4"NF x 2-3/4"
	904369	4	-	LOCKWASHER, 3/4"
	911045	4	-	NUT, 3/4"NF

NOTE: Items listed below are used only on units equipped with triple-control hydraulic valve

ITEM	PART NO.	QTY. *	QTY. **	DESCRIPTION
33	------	-	1	BAFFLE, air, left side, lower section (Can be made from BAFFLE 097099)
	------	-	1	BAFFLE, air, right side, lower section (Can be made from BAFFLE 097100)
34	645871	-	1	BAFFLE, air, left side, upper section
	645872	-	1	BAFFLE, air, right side, upper section

NOTE: See PAINTING AND MARKING for transfers

RADIATOR GUARD (Hydraulic. Second type)

USAGE: Special equipment. For Models HD11B, E, EC, ES, S equipped with Hydraulic Dozer. Effective approx. April 1958 but later discontinued with tractor serial No. 10001

* Tractors with side-mounted hydraulic tank (Early units)
** Tractors with front-mounted hydraulic tank (Late units)

ITEM	PART NO.	QTY. *	QTY. **	DESCRIPTION
1	------	1	1	GUARD ASSEMBLY, radiator (Includes items 2 thru 5)(Order GUARD ASSEMBLY 645499)
2	093446	1	1	PLATE, top closure
3	070467	4	4	CAPSCREW, 1/2"NF x 1"
	904208	4	4	LOCKWASHER, 1/2"
4	085555	2	2	CAP, guard pivot
5	075878	4	4	CAPSCREW, 7/8"NF x 4"
	905347	4	4	LOCKWASHER, 7/8"
6	091942	1	1	PLATE, top closure (Includes hinge)
7	035167	2	2	CAPSCREW, 3/8"NF x 7/8"
	904206	2	2	LOCKWASHER, 3/8"
	911041	2	2	NUT, 3/8"NF
8	624487	1	1	KNOB ASSEMBLY, top closure plate (Includes stud and pin)
	910244	1	1	WASHER, plain, SAE std., 1/2"
	916202	1	1	PIN, roll, 1/8" x 7/8"
9	624488	1	1	BLOCK, tapped
10	093064	1	1	BAFFLE, air, right side (Used prior to tractor #6473)
	624820	-	1	BAFFLE, air, right side (Effective with tractor #6473)
11	012992	5	5	CAPSCREW, 3/8"NF x 1-1/4"
	904206	5	5	LOCKWASHER, 3/8"
	044973	5	5	WASHER, plain
12	093063	1	1	BAFFLE, air, left side (Used prior to #6473)
	624819	-	1	BAFFLE, air, left side (Effective with tractor #6473)
13	012992	5	5	CAPSCREW, 3/8"NF x 1-1/4"
	904206	5	5	LOCKWASHER, 3/8"
	044973	5	5	WASHER, plain
14	085414	1	1	BAFFLE, air, upper (Used prior to tractor #6473)
	624758	-	1	BAFFLE, air, upper (3-5/8" wide)(Effective with tractors #6473. Used prior to June 1963)
	641490	-	1	BAFFLE, air, upper (4-1/8" wide)(Effective June 1963)
15	012992	5	5	CAPSCREW, 3/8"NF x 1-1/4"
	904206	5	5	LOCKWASHER, 3/8"
	044973	5	5	WASHER, plain
16	606321	1	-	PLATE, front closure, lower
	094218	-	1	PLATE, front closure, lower (Not used on HD11EC effective with tractor #8735 including #8569 and #8727)
17	614478	9	5	CAPSCREW, 1/2"NF x 1-3/8" (Early units)
	035733	9	5	CAPSCREW, 1/2"NC x 1-3/8" (Late units)
	904208	9	5	LOCKWASHER, 1/2"
	064531	9	5	WASHER, plain

(Continued)

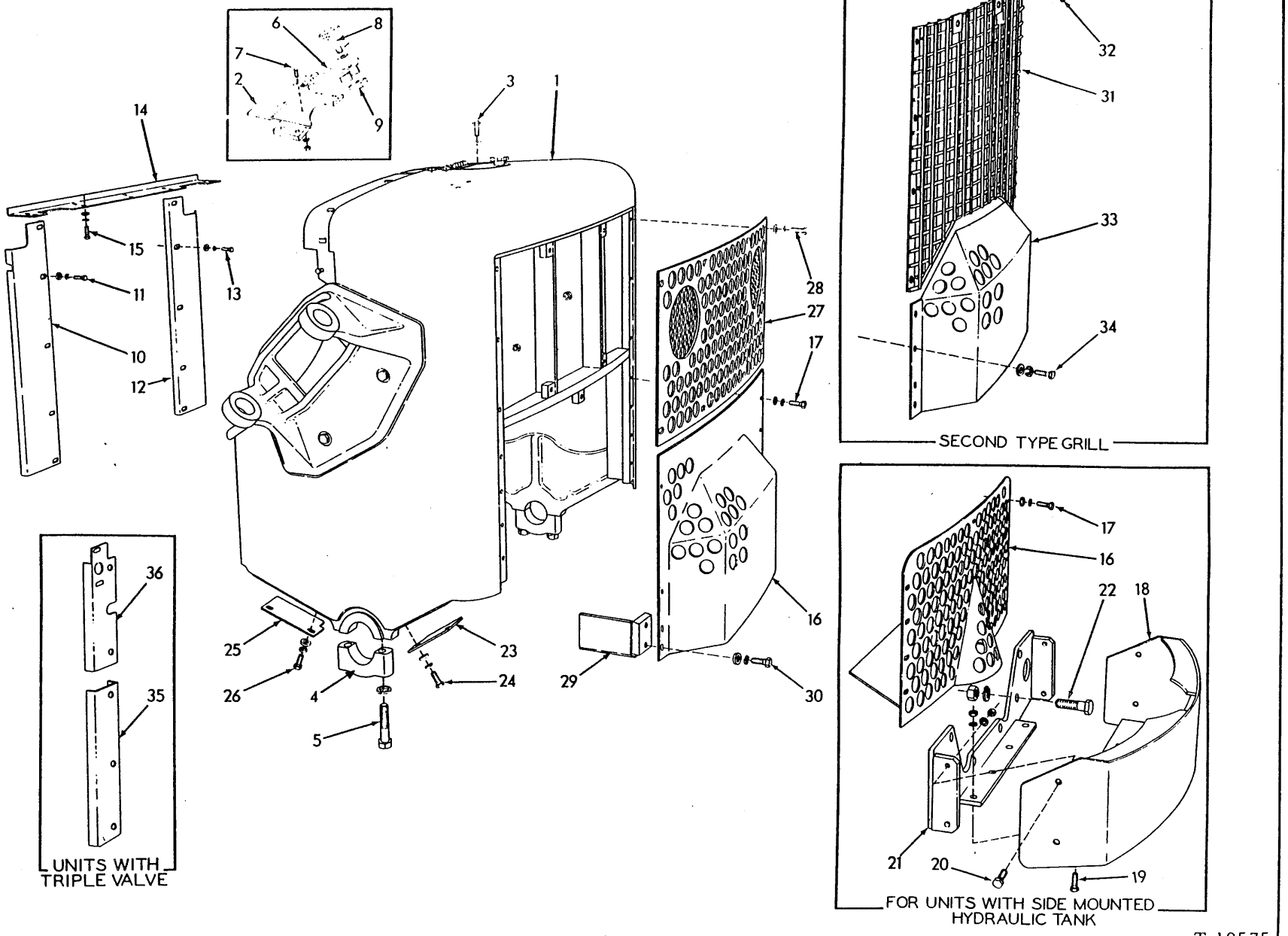

RADIATOR GUARD (Hydraulic. Second type)

T-19575

ITEM	PART NO.	QTY. *	QTY. **	DESCRIPTION
18	607937	1	-	GUARD, pump protecting
19	035018	4	-	CAPSCREW, 1/2"NF x 1-1/2"
20	035073	4	-	CAPSCREW, 1/2"NF x 1-3/4"
	904208	8	-	LOCKWASHER, 1/2"
	911043	8	-	NUT, 1/2"NF
21	607939	1	-	BRACKET, guard mounting
22	070272	6	-	CAPSCREW, 1"NF x 3"
	910916	6	-	LOCKWASHER, 1"
	911047	6	-	NUT, 1"NF
23	085305	2	2	PLATE, bottom closure, front
24	035018	4	4	CAPSCREW, 1/2"NF x 1-1/2"
	904208	4	4	LOCKWASHER, 1/2"
	064531	4	4	WASHER, plain
25	085304	2	2	PLATE, bottom closure, rear
26	035018	4	4	CAPSCREW, 1/2"NF x 1-1/2"
	904208	4	4	LOCKWASHER, 1/2"
	064531	4	4	WASHER, plain
27	092924	1	1	PLATE, front closure, upper (Not used on HD11EC effective with tractor #8735 including #8569 and #8727)
28	614478	10	8	CAPSCREW, 1/2"NF x 1-3/8" (Early units)
	035733	10	8	CAPSCREW, 1/2"NC x 1-3/8" (Late units)
	904208	10	8	LOCKWASHER, 1/2"
	064531	10	8	WASHER, plain
29	622767	-	1	COVER, side closure, left
	622768	-	1	COVER, side closure, right
30	035733	-	4	CAPSCREW, 1/2"NC x 1-3/8"
	904208	-	4	LOCKWASHER, 1/2"
	064531	-	4	WASHER, plain
31	642625	-	1	GRILL, front closure, upper (Effective with tractor #8735 including #8569 and #8727. Model HD11EC only)
32	035190	-	10	CAPSCREW, 1/2"NC x 1-1/2"
	904208	-	10	LOCKWASHER, 1/2"
	064531	-	10	WASHER, plain
33	642627	-	1	PLATE, front closure, lower (Effective with Tractor #8735 including #8569 and #8727. Model HD11EC only)
34	035190	-	8	CAPSCREW, 1/2"NC x 1-1/2"
	904208	-	8	LOCKWASHER, 1/2"
	064531	-	8	WASHER, plain
				NOTE: Items listed below are used only on units equipped with triple-control hydraulic valve
35	------	-	1	BAFFLE, air, left side, lower section (Can be made from BAFFLES 093063 or 624819)
	------	-	1	BAFFLE, air, right side, lower section (Can be made from BAFFLES 093064 or 624820)
36	645871	-	1	BAFFLE, air, left side, upper section
	645872	-	1	BAFFLE, air, right side, upper section
				NOTE: See PAINTING AND MARKING for transfers

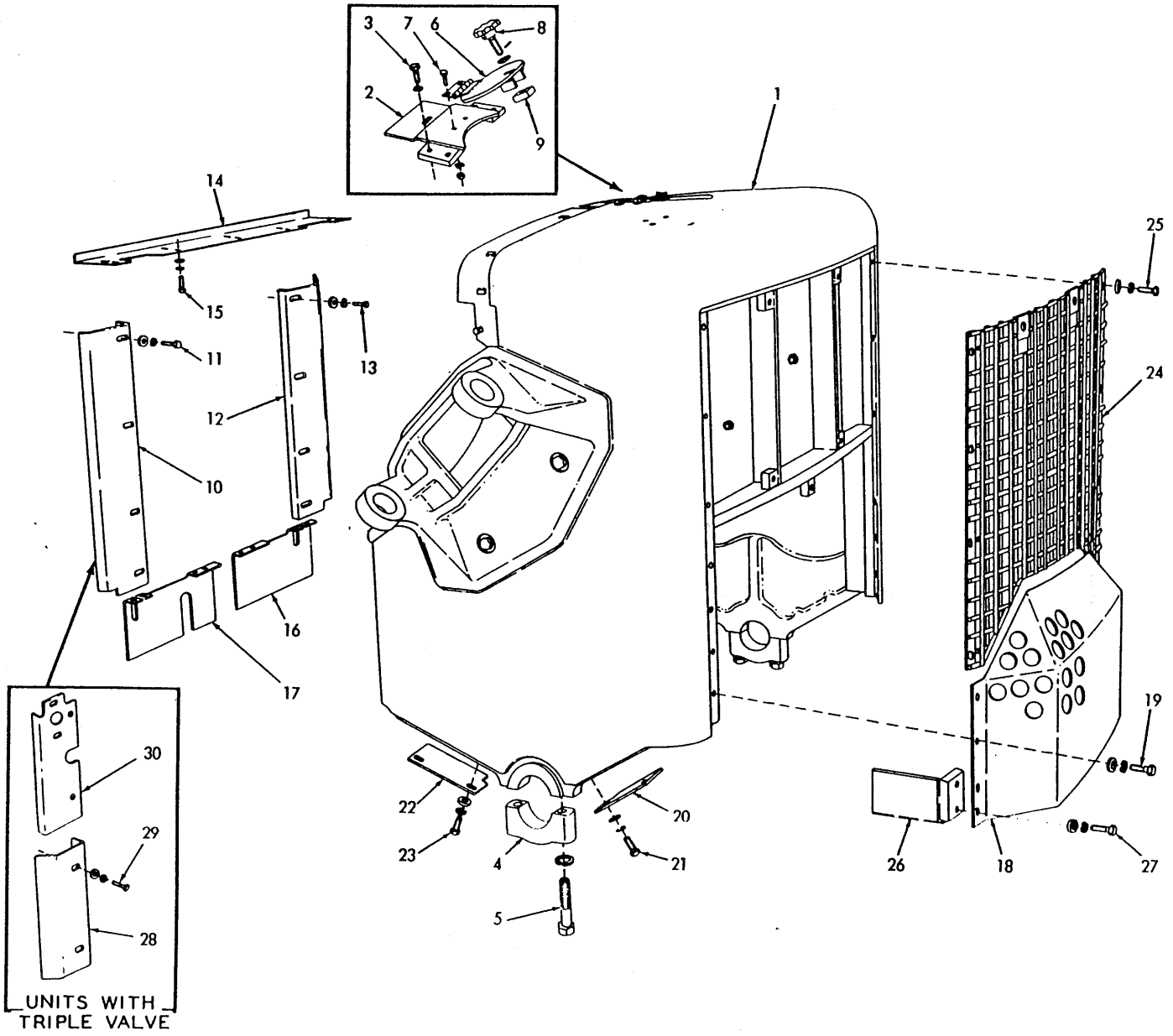

RADIATOR GUARD (Hydraulic, Third type)

T-70417

RADIATOR GUARD (Hydraulic. Third type)

USAGE: Special equipment. For tractors serial No. 10001 and up with hydraulic dozer.

ITEM	PART NO.	QTY.	DESCRIPTION	
1	645499	1	GUARD ASSEMBLY, radiator (Includes items 2 thru 5)	
2	093446	1	PLATE, top closure (Tractors prior to #11609)	
	651623	1	PLATE, top closure (Tractors #11609 and up)	
3	070467	4	CAPSCREW; 1/2"NF x 1"	
	904208	4	LOCKWASHER, 1/2"	
4	085555	2	CAP, guard pivot	
5	075878	4	CAPSCREW, 7/8"NF x 4"	
	905347	4	LOCKWASHER, 7/8"	
6	091942	1	PLATE, top closure (Includes hinge)	Tractors prior to #11609
7	035167	2	CAPSCREW, 3/8"NF x 7/8"	
	904206	2	LOCKWASHER, 3/8"	
	911041	2	NUT, 3/8"NF	
8	624487	1	KNOB, top closure plate	
	910244	1	WASHER, plain, SAE std., 1/2"	
	916202	1	PIN, roll, 1/8" x 7/8"	
9	624488	1	BLOCK, tapped	
10	645598	1	BAFFLE, air, right side (Models HD11B,E,S)	
	645512	1	BAFFLE, air, right side (Model HD11EC)	
11	036034	4	CAPSCREW, 3/8"NF x 1"	
	904206	4	LOCKWASHER, 3/8"	
	044973	4	WASHER, plain	
12	645597	1	BAFFLE, air, left side (Models HD11B,E,S)	
	645511	1	BAFFLE, air, left side (Model HD11EC)	
13	036034	4	CAPSCREW, 3/8"NF x1"	
	904206	4	LOCKWASHER, 3/8"	
	044973	4	WASHER, plain	
14	641490	1	BAFFLE, air, upper	
15	036034	5	CAPSCREW, 3/8"NF x1"	
	904206	5	LOCKWASHER, 3/8"	
	044973	5	WASHER, plain	
16	645547	1	BAFFLE, air, lower left	Model HD11EC only
	647853	1	BAFFLE, air, lower left (For units with rear piping)	
17	645548	1	BAFFLE, air, lower right	
	647854	1	BAFFLE, air, lower right (For units with rear piping)	
18	644715	1	PLATE, front closure, lower	
19	035190	4	CAPSCREW, 1/2"NC x 1-1/2"	
	904208	4	LOCKWASHER, 1/2"	
	064531	4	WASHER, plain	

(Continued)

RADIATOR GUARD (Hydraulic. Third type)(Continued)

ITEM	PART NO.	QTY.	DESCRIPTION
20	085305	2	PLATE, bottom closure, front
21	035018	4	CAPSCREW, 1/2"NF x 1-1/2"
	904208	4	LOCKWASHER, 1/2"
	064531	4	WASHER, plain
22	085304	2	PLATE, bottom closure, rear
23	035018	4	CAPSCREW, 1/2"NF x 1-1/2"
	904208	4	LOCKWASHER, 1/2"
	064531	4	WASHER, plain
24	644728	1	GRILLE, front closure, upper
25	035190	10	CAPSCREW, 1/2"NC x 1-1/2"
	904208	10	LOCKWASHER, 1/2"
	064531	10	WASHER, plain
26	622767	1	COVER, side closure, left
	622768	1	COVER, side closure, right
27	035190	4	CAPSCREW, 1/2"NC x 1-1/2"
	904208	4	LOCKWASHER, 1/2"
	064531	4	WASHER, plain
			NOTE: Items listed below are used only on units equipped with triple-control hydraulic valve.
28	645898	2	BAFFLE, air, lower section (Models HD11B,E,S)
	645896	2	BAFFLE, air, lower section (Model HD11EC)
29	012992	4	CAPSCREW, 3/8"NF x 1-1/4"
	904206	4	LOCKWASHER, 3/8"
	044973	4	WASHER, plain
30	645871	1	BAFFLE, air, left side, upper section — Models HD11B,E,S
	645872	1	BAFFLE, air, right side, upper section — Models HD11B,E,S
	645371	1	BAFFLE, air, left side, upper section — Model HD11EC
	645372	1	BAFFLE, air, right side, upper section — Model HD11EC
			NOTE: See PAINTING AND MARKING for transfers

MEMO

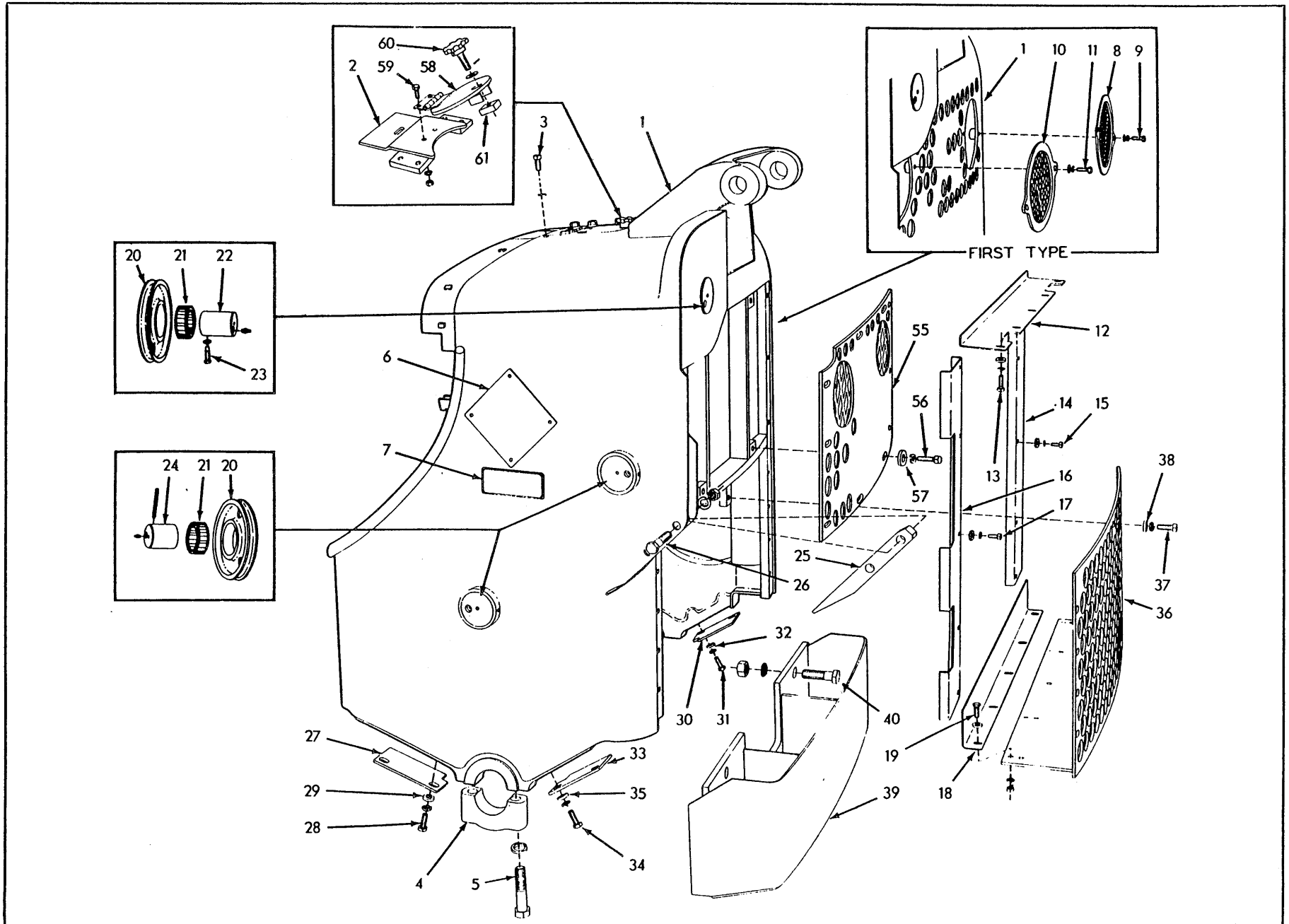

RADIATOR GUARD (Cable, First type)

T-16309

RADIATOR GUARD (Cable. First type)

USAGE: Special equipment for tractors prior to March 1961 equipped with cable dozer.

* Used with rear-mounted cable control units prior to July 1, 1959
** Used with rear-mounted cable control units effective July 1, 1959
*** Used with front-mounted "Gar Wood" cable control unit pr. to June 15, 1959
**** Used with front-mounted "Gar Wood" cable control unit eff. June 15, 1959

ITEM	PART NO.	QUANTITY *	**	***	****	DESCRIPTION
	------	1	-	-	-	GUARD ASSEMBLY, radiator (Order GUARD ASSEMBLY 093671; 1 each PLATE 091942, CAP 092028, CABLE 092712, PLATE 093862, KNOB 624487, BLOCK 624488; WASHER 910244, PIN 916202; 2 each CAPSCREW 035167, GROMMET 044810, CABLE 093176, BRACKET 093195, NUT 911041; 3 CLIP 235794; 4 each CAPSCREW 035336, WASHER 044973; 6 LOCKWASHER 904206; 19 each CAPSCREW 614478, WASHER 064531, LOCKWASHER 904208)
1	093671	-	1	-	-	GUARD ASSEMBLY, radiator (Includes items 2 thru 5)
	------	-	-	1	-	GUARD ASSEMBLY, radiator (Order GUARD ASSEMBLY 093869; 1 each PLATE 091942, CAP 092028, CABLE 092712, PLATE 093862, KNOB 624487, BLOCK 624488, WASHER 910244, PIN 916202; 2 each CAPSCREW 035167, GROMMET 044810, CABLE 093176, BRACKET 093195, CLIP 235794, NUT 911041; 4 each CAPSCREW 035336, WASHER 044973; 6 LOCKWASHER 904206; 17 each CAPSCREW 614478, WASHER 064531, LOCKWASHER 904208)
	093869	-	-	-	1	GUARD ASSEMBLY, radiator (Includes items 2 thru 5)

(Continued)

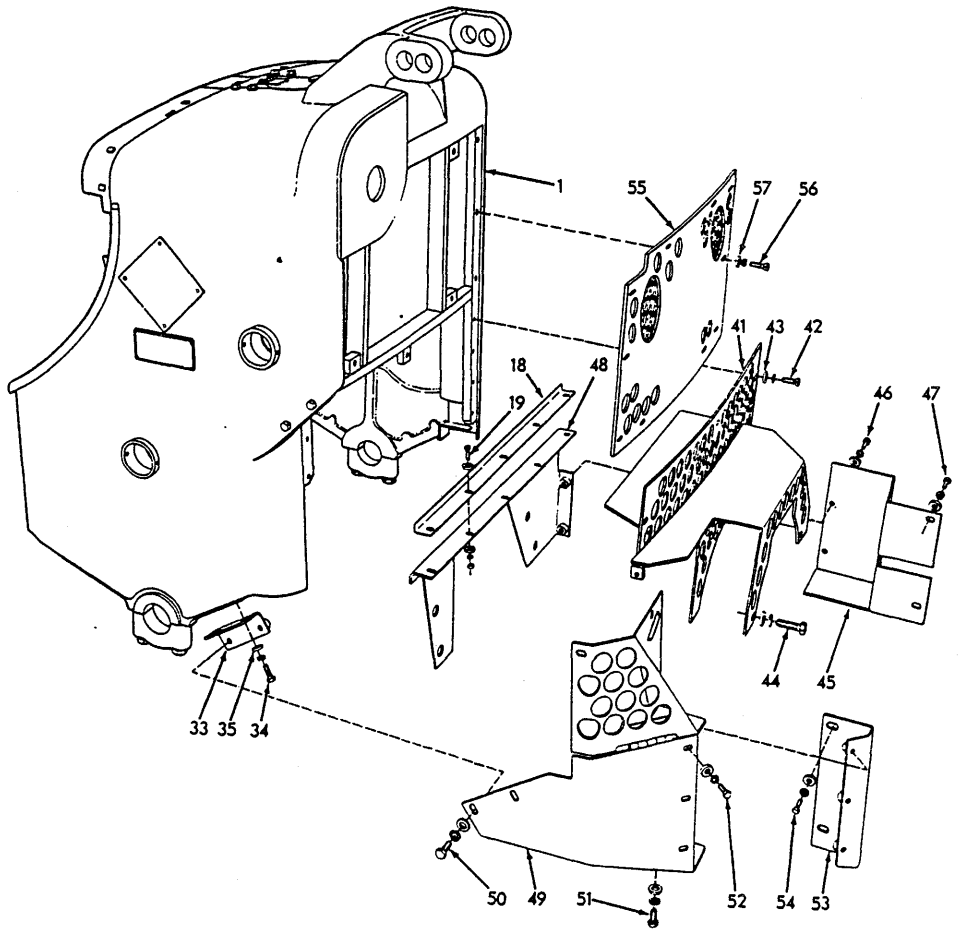

CLOSURE PARTS FOR GAR WOOD FRONT-MOUNTED C. C. U. T-16313

RADIATOR GUARD (Cable. First type)(Continued)

ITEM	PART NO.	QUANTITY *	**	***	****	DESCRIPTION
2	085290	1	-	1	-	PLATE, top closure
	093446	-	1	-	1	PLATE, top closure
3	070467	4	4	4	4	CAPSCREW, 1/2"NF x 1"
	904208	4	4	4	4	LOCKWASHER, 1/2"
4	085555	2	2	2	2	CAP, guard pivot
5	075878	4	4	4	4	CAPSCREW, 7/8"NF x 4"
	905347	4	4	4	4	LOCKWASHER, 7/8"
6	------	2	2	2	2	MONOGRAM, "A-C", side (Discontinued)
	918370	8	8	8	8	RIVET, drive, 3/16" x 9/32" (Not original equipment)
7	------	2	2	2	2	MONOGRAM, "HD11" (Discontinued)
	918370	8	8	8	8	RIVET, drive, 3/16" x 9/32" (Not original equipment)
8	088819	1	-	1	-	PLATE, guard, left headlight (Effective with tractor #1764)
9	012992	2	-	2	-	CAPSCREW, 3/8"NF x 1-1/4"
	904206	2	-	2	-	LOCKWASHER, 3/8"
	911115	2	-	2	-	WASHER, plain, SAE std., 3/8"
10	088820	1	-	1	-	PLATE, guard, right headlight (Effective with tractor #1764)
11	012992	2	-	2	-	CAPSCREW, 3/8"NF x 1-1/4"
	904206	2	-	2	-	LOCKWASHER, 3/8"
	911115	2	-	2	-	WASHER, plain, SAE std., 3/8"
12	085414	1	1	1	1	BAFFLE, air, upper
13	012992	5	5	5	5	CAPSCREW, 3/8"NF x 1-1/4"
	904206	5	5	5	5	LOCKWASHER, 3/8"
	044973	5	5	5	5	WASHER, plain
14	085413	1	1	1	1	BAFFLE, air, left side
15	012992	5	5	5	5	CAPSCREW, 3/8"NF x 1-1/4"
	904206	5	5	5	5	LOCKWASHER, 3/8"
	044973	5	5	5	5	WASHER, plain
16	085519	1	1	1	1	BAFFLE, air, right side
17	012992	5	5	5	5	CAPSCREW, 3/8"NF x 1-1/4"
	904206	5	5	5	5	LOCKWASHER, 3/8"
	044973	5	5	5	5	WASHER, plain
18	085318	1	1	-	-	BAFFLE, air, lower
	089327	-	-	1	1	BAFFLE, air, lower
19	012992	5	5	5	5	CAPSCREW, 3/8"NF x 1-1/4"
	044973	5	5	10	10	WASHER, plain
	904206	5	5	5	5	LOCKWASHER, 3/8"
	911041	5	5	5	5	NUT, 3/8"NF
20	084758	3	3	1	1	SHEAVE, control cable
21	044875	3	3	1	1	BEARING, roller, cable sheave

(Continued)

RADIATOR GUARD (Cable. First type)(Continued)

ITEM	PART NO.	QUANTITY *	**	***	****	DESCRIPTION
22	085521	1	1	-	-	SHAFT, front sheave
	088786	-	-	1	1	SHAFT, front sheave
	914465	1	1	2	2	FITTING, lubricating, straight, 1/8"NPT
23	035188	1	1	1	1	SETSCREW, shaft retaining
	911035	1	1	1	1	NUT, jam, 1/2"NC
24	084384	2	2	-	-	SHAFT, side sheaves
	917936	2	2	-	-	PIN, roll, 3/8" x 3-1/2"
	914465	2	2	-	-	FITTING, lubricating, straight, 1/8"NPT
25	085395	1	1	-	-	GUIDE, cable
	093866	-	-	1	1	GUIDE, false (Serves as sheave compartment dirt closure)
26	035306	2	2	2	2	CAPSCREW, 5/8"NF x 3-1/4"
	904209	2	2	2	2	LOCKWASHER, 5/8"
	911044	2	2	2	2	NUT, 5/8"NF
27	085304	2	2	2	2	PLATE, bottom closure, rear
28	035018	4	4	4	4	CAPSCREW, 1/2"NF x 1-1/2"
	904208	4	4	4	4	LOCKWASHER, 1/2"
29	064531	4	4	4	4	WASHER, plain
30	085305	1	1	1	1	PLATE, bottom closure, left front
31	035018	2	2	2	2	CAPSCREW, 1/2"NF x 1-1/2"
	904208	2	2	2	2	LOCKWASHER, 1/2"
32	064531	2	2	2	2	WASHER, plain
33	085305	1	1	-	-	PLATE, bottom closure, right front
	089417	-	-	1	1	ANGLE, bottom closure, right front
34	035018	2	2	2	2	CAPSCREW, 1/2"NF x 1-1/2"
	904208	2	2	2	2	LOCKWASHER, 1/2"
35	064531	2	2	2	2	WASHER, plain
36	085335	1	-	-	-	PLATE, front closure, lower
	093338	-	1	-	-	PLATE, front closure, lower
37	614478	9	9	-	-	CAPSCREW, 1/2"NF x 1-3/8"
	904208	9	9	-	-	LOCKWASHER, 1/2"
38	064531	9	9	-	-	WASHER, plain
39	607461	1	1	-	-	GUARD, front
40	070272	4	4	-	-	CAPSCREW, 1"NF x 3"
	910916	4	4	-	-	LOCKWASHER, 1"
	911047	4	4	-	-	NUT, 1"NF

(Continued)

RADIATOR GUARD (Cable. First type)(Continued)

ITEM	PART NO.	QUANTITY *	**	***	****	DESCRIPTION
41	089335	-	-	1	-	GUARD, front cable control unit
	093872	-	-	-	1	GUARD, front cable control unit
42	614478	-	-	7	7	CAPSCREW, 1/2"NF x 1-3/8"
	904208	-	-	7	7	LOCKWASHER, 1/2"
43	064531	-	-	7	7	WASHER, plain
44	071113	-	-	2	2	CAPSCREW, 5/8"NC x 2'
	904209	-	-	2	2	LOCKWASHER, 5/8"
	064810	-	-	2	2	WASHER, plain
45	089414	-	-	1	1	PLATE, closure, left side
46	035073	-	-	2	2	CAPSCREW, 1/2"NF x 1-3/4"
47	035733	-	-	2	2	CAPSCREW, 1/2"NC x 1-3/8"
	904208	-	-	4	4	LOCKWASHER, 1/2"
	064531	-	-	4	4	WASHER, plain
48	------	-	-	1	1	SPACER, power control units (Discontinued)
49	089421	-	-	1	1	COVER, access
50	035073	-	-	2	2	CAPSCREW, 1/2"NF x 1-3/4"
51	035733	-	-	2	2	CAPSCREW, 1/2"NC x 1-3/8"
	904208	-	-	4	4	LOCKWASHER, 1/2"
	064531	-	-	4	4	WASHER, plain
52	036034	-	-	5	5	CAPSCREW, 3/8"NF x 1"
	904206	-	-	5	5	LOCKWASHER, 3/8"
	044973	-	-	5	5	WASHER, plain
53	089419	-	-	1	1	ANGLE, access cover attaching
54	035733	-	-	2	2	CAPSCREW, 1/2"NC x 1-3/8"
	904208	-	-	2	2	LOCKWASHER, 1/2"
	064531	-	-	2	2	WASHER, plain
55	093862	-	1	-	1	PLATE, front closure, upper
56	614478	-	10	-	10	CAPSCREW, 1/2"NF x 1-3/8" (early units)
	035733	-	10	-	10	CAPSCREW, 1/2"NC x 1-3/8" (late units)
	904208	-	10	-	10	LOCKWASHER, 1/2"
57	064531	-	10	-	10	WASHER, plain
58	091942	-	1	-	1	PLATE, top closure (Includes hinge)
59	035167	-	2	-	2	CAPSCREW, 3/8"NF x 7/8"
	904206	-	2	-	2	LOCKWASHER, 3/8"
	911041	-	2	-	2	NUT, 3/8"NF
60	624487	-	1	-	1	KNOB, top closure plate
	910244	-	1	-	1	WASHER, plain, SAE std., 1/2"
	916202	-	1	-	1	PIN, roll, 1/8" x 7/8"
61	624488	-	1	-	1	BLOCK, tapped

NOTE: See PAINTING AND MARKING for transfers

RADIATOR GUARD (Cable. Second type)

USAGE: Special equipment. For tractors equipped with cable dozer. Effective March 1, 1961 but later discontinued with tractor serial No. 10001

* Used with rear-mounted cable control units
** Used with front-mounted Allis-Chalmers Model F-100 cable control unit

ITEM	PART NO.	QTY. *	QTY. **	DESCRIPTION
1	------	1	1	GUARD ASSEMBLY, radiator (Used prior to tractor #7751 excluding #7684)(Order GUARD ASSEMBLY 645501. If for units with rear-mounted C. C. U. also order 1 each PLATE 633575, PLATE 633577; 2 each CAPSCREW 035733, WASHER 064531, LOCK-WASHER 904208)
	645501	1	1	GUARD ASSEMBLY, radiator (Includes items 2 thru 5)(Effective with tractor #7751 including #7684)
2	093446	1	1	PLATE, top closure
3	070467	4	4	CAPSCREW, 1/2"NF x 1"
	904208	4	4	LOCKWASHER, 1/2"
4	085555	2	2	CAP, guard pivot
5	075878	4	4	CAPSCREW, 7/8"NF x 4"
	905347	4	4	LOCKWASHER, 7/8"
6	091942	1	1	PLATE, top closure (Includes hinge)
7	035167	2	2	CAPSCREW, 3/8"NF x 7/8"
	904206	2	2	LOCKWASHER, 3/8"
	911041	2	2	NUT, 3/8"NF
8	624487	1	1	KNOB, top closure plate
	910244	1	1	WASHER, plain, SAE std., 1/2"
	916202	1	1	PIN, roll, 1/8" x 7/8"
9	624488	1	1	BLOCK, tapped
10	084758	3	1	SHEAVE, control cable
11	044875	3	1	BEARING, roller, cable sheave
12	085521	1	-	SHAFT, front sheave
	088786	-	1	SHAFT, front sheave
	914465	1	2	FITTING, lubricating, straight, 1/8"NPT
13	035188	1	1	SETSCREW, shaft retaining
	911035	1	1	NUT, jam, 1/2"NC
14	084384	2	-	SHAFT, side sheaves
	914465	2	-	FITTING, lubricating, straight, 1/8"NPT
	917936	2	-	PIN, roll, 3/8" x 3-1/2"
	093043	-	2	CUP, hole closure
	917936	-	2	PIN, roll, 3/8" x 3-1/2"
15	085395	1	-	GUIDE, cable
	093866	-	1	GUIDE, false (Serves as sheave compartment dirt closure)
16	035306	2	2	CAPSCREW, 5/8"NF x 3-1/4"
	904209	2	2	LOCKWASHER, 5/8"
	911044	2	2	NUT, 5/8"NF

(Continued)

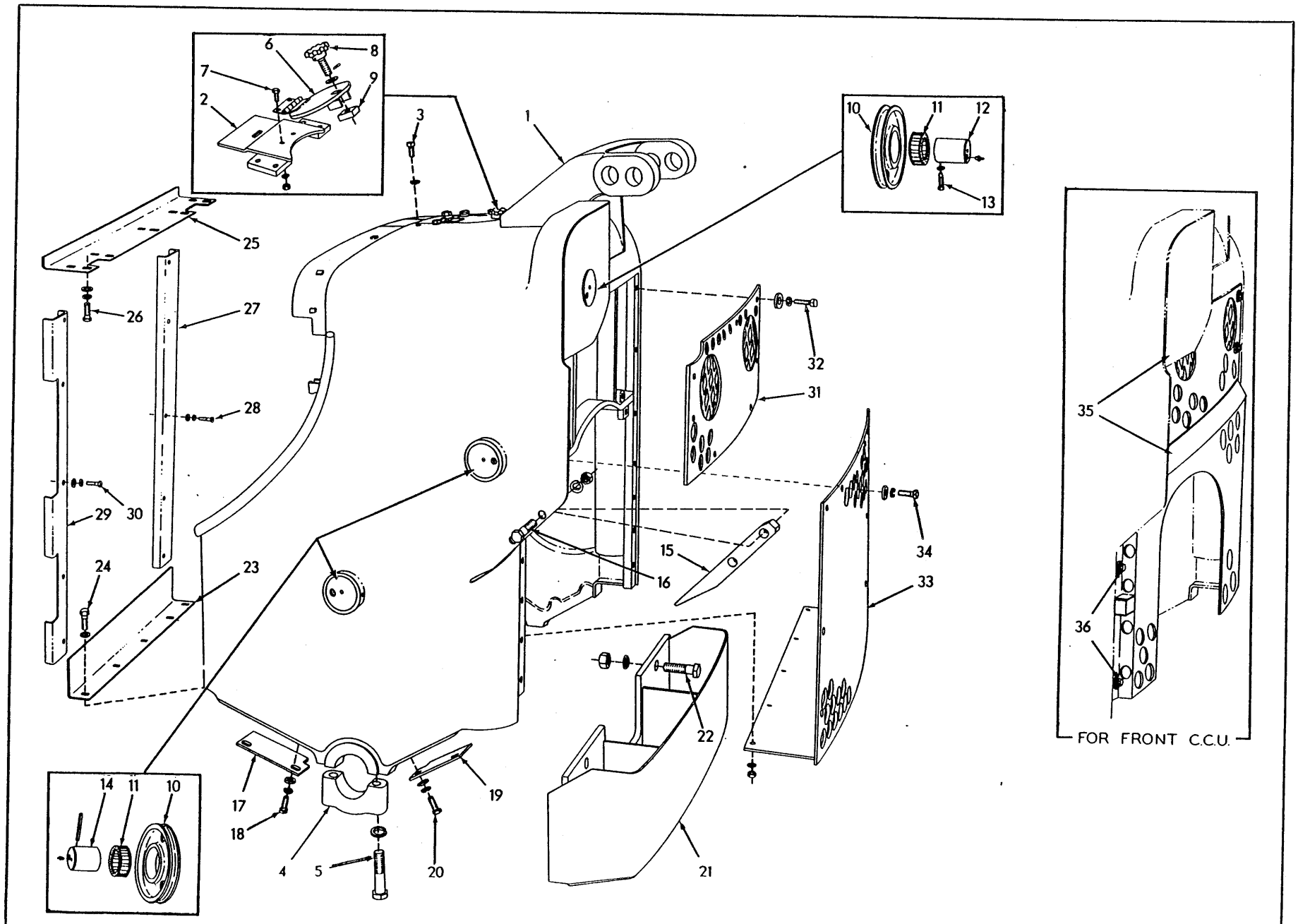

RADIATOR GUARD (Cable. Second type)

T-30943

ITEM	PART NO.	QTY. *	QTY. **	DESCRIPTION
17	085304	2	2	PLATE, bottom closure, rear
18	035018	4	4	CAPSCREW, 1/2"NF x 1-1/2"
	904208	4	4	LOCKWASHER, 1/2"
	064531	4	4	WASHER, plain
19	085305	2	2	PLATE, bottom closure, front
20	035018	4	4	CAPSCREW, 1/2"NF x 1-1/2"
	904208	4	4	LOCKWASHER, 1/2"
	064531	4	4	WASHER, plain
21	607461	1	-	GUARD, front
22	070272	4	-	CAPSCREW, 1"NF x 3"
	910916	4	-	LOCKWASHER, 1"
	911047	4	-	NUT, 1"NF
23	624759	1	-	BAFFLE, air, lower
24	012992	5	-	CAPSCREW, 3/8"NF x 1-1/4"'
	044973	5	-	WASHER, plain
	904206	5	-	LOCKWASHER, 3/8"
	911041	5	-	NUT, 3/8"NF
25	624758	1	1	BAFFLE, air, upper (3-5/8" wide)(Used prior to tractor #8123)
	641490	1	1	BAFFLE, air, upper (4-1/8" wide)(Effective with tractor #8123)
26	012992	5	5	CAPSCREW, 3/8"NF x 1-1/4"
	904206	5	5	LOCKWASHER, 3/8"
	044973	5	5	WASHER, plain
27	085413	1	1	BAFFLE, air, left side
28	012992	5	5	CAPSCREW, 3/8"NF x 1-1/4"
	904206	5	5	LOCKWASHER, 3/8"
	044973	5	5	WASHER, plain
29	085519	1	1	BAFFLE, air, right side
30	012992	5	5	CAPSCREW, 3/8"NF x 1-1/4"
	904206	5	5	LOCKWASHER, 3/8"
	044973	5	5	WASHER, plain
31	620819	1	-	PLATE, front closure, upper (Used prior to tractor #7751 excluding #7684)
	633575	1	-	PLATE, front closure, upper (Effective with tractor #7751 including #7684)
32	035733	6	-	CAPSCREW, 1/2"NC x 1-3/8" } 1 additional used with PLATE 633575
	904208	6	-	LOCKWASHER, 1/2"
	064531	6	-	WASHER, plain
33	622206	1	-	PLATE, front closure, lower (Used prior to tractor #7751 excluding #7684)
	633577	1	-	PLATE, front closure, lower (Effective with tractor #7751 including #7684)
34	035733	7	-	CAPSCREW, 1/2"NC x 1-3/8" } 1 additional used with PLATE 633577
	904208	7	-	LOCKWASHER, 1/2"
	064531	7	-	WASHER, plain

(Continued)

RADIATOR GUARD (Cable. Second type)(Continued)

ITEM	PART NO.	QTY. *	QTY. **	DESCRIPTION
35	------	-	1	PLATE, front closure (Used prior to tractor #7075)(Order PLATE 629139 and PLATE 629140)
	629139	-	1	PLATE, front closure, lower (Effective with tractor #7075)
	629140	-	1	PLATE, front closure, upper (Effective with tractor #7075)
36	035733	-	11	CAPSCREW, 1/2"NC x 1-3/8"
	904208	-	11	LOCKWASHER, 1/2"
	064531	-	11	WASHER, plain

NOTE: See PAINTING AND MARKING for transfers

RADIATOR GUARD (Cable. Third type)

USAGE: Special equipment. For tractors serial No. 10001 and up equipped with cable dozer.

* Used with rear-mounted cable control units
** Used with front-mounted cable control units

ITEM	PART NO.	QTY. *	QTY. **	DESCRIPTION	
1	645501	1	1	GUARD ASSEMBLY, radiator (Includes items 2 thru 5)	
2	093446	1	1	PLATE, top closure (Tractors prior to serial No. 11609)	
	651623	1	1	PLATE, top closure (Tractors #11609 and up)	
3	070467	4	4	CAPSCREW, 1/2"NF x 1"	
	904208	4	4	LOCKWASHER, 1/2"	
4	085555	2	2	CAP, guard pivot	
5	075878	4	4	CAPSCREW, 7/8"NF x 4"	
	905347	4	4	LOCKWASHER, 7/8"	
6	091942	1	1	PLATE, top closure (Includes hinge)	Tractors prior to #11609
7	035167	2	2	CAPSCREW, 3/8"NF x 7/8"	
	904206	2	2	LOCKWASHER, 3/8"	
	911041	2	2	NUT, 3/8"NF"	
8	624487	1	1	KNOB, top closure plate	
	910244	1	1	WASHER, plain, SAE std., 1/2"	
	916202	1	1	PIN, roll, 1/8" x 7/8"	
9	624488	1	1	BLOCK, tapped	
10	084758	3	1	SHEAVE, control cable	
11	044875	3	1	BEARING, roller, cable sheave	
12	085521	1	-	SHAFT, front sheave	
	088786	-	1	SHAFT, front sheave	
	914465	1	2	FITTING, lubricating, straight, 1/8"NPT	
13	035188	1	1	SETSCREW, shaft retaining	
	911035	1	1	NUT, jam, 1/2"NC	
14	084384	2	-	SHAFT, side sheaves	
	914465	2	-	FITTING, lubricating, straight, 1/8"NPT	
	917936	2	-	PIN, roll, 3/8" x 3-1/2"	
	093043	-	2	CUP, hole closure	
	917936	-	2	PIN, roll, 3/8" x 3-1/2"	
15	085395	1	-	GUIDE, cable	
	093866	-	1	GUIDE, false (Serves as sheave compartment dirt closure)	
16	035306	2	2	CAPSCREW, 5/8"NF x 3-1/4"	
	904209	2	2	LOCKWASHER, 5/8"	
	911044	2	2	NUT, 5/8"NF	
17	085304	2	2	PLATE, bottom closure, rear	
18	035018	4	4	CAPSCREW, 1/2"NF x 1-1/2"	
	904208	4	4	LOCKWASHER, 1/2"	
	064531	4	4	WASHER, plain	

(Continued)

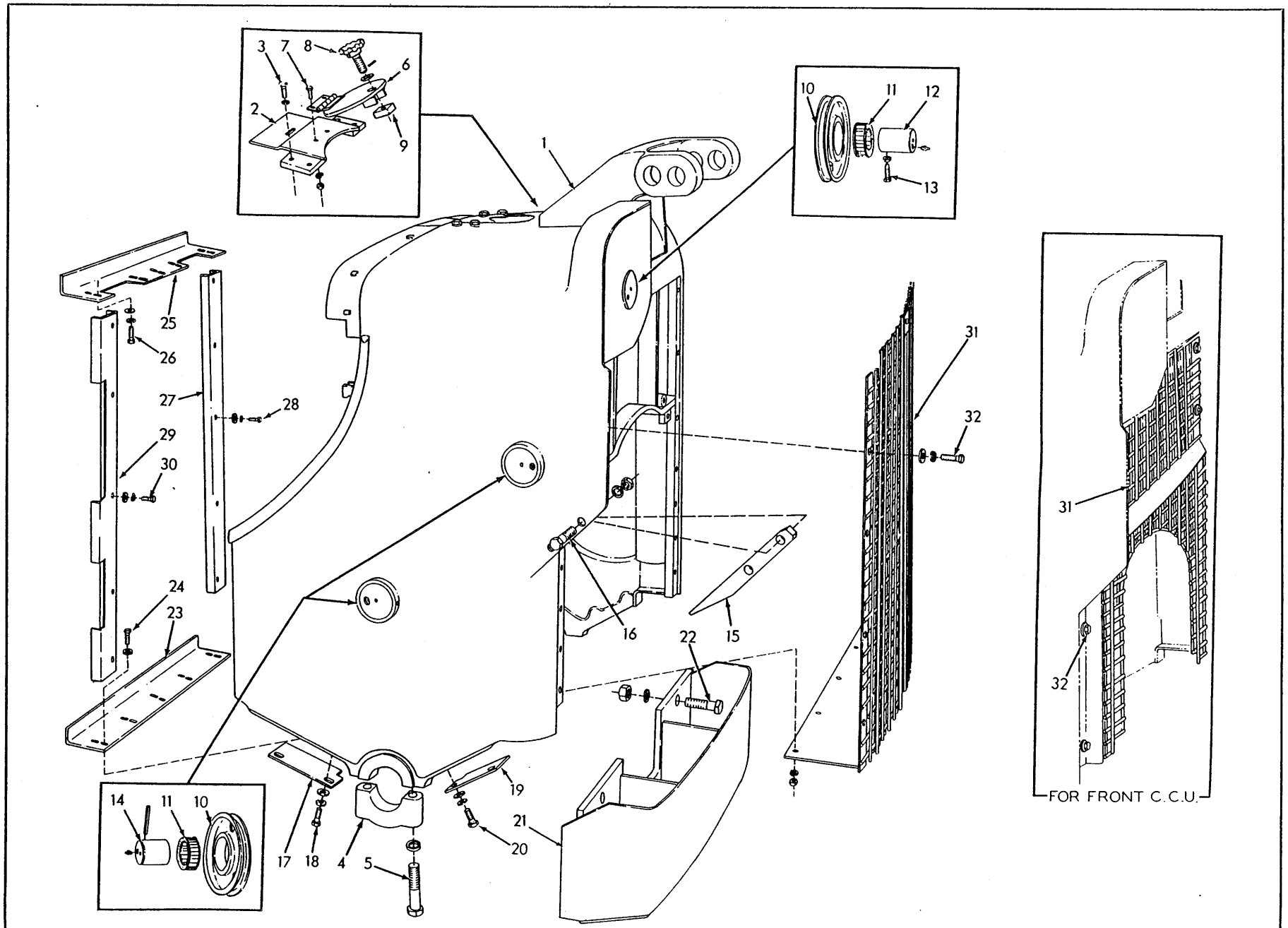

RADIATOR GUARD (Cable. Third type)

T- 70426

ITEM	PART NO.	QTY. *	QTY. **	DESCRIPTION
19	085305	2	2	PLATE, bottom closure, front
20	035018	4	4	CAPSCREW, 1/2"NF x 1-1/2"
	904208	4	4	LOCKWASHER, 1/2"
	064531	4	4	WASHER, plain
21	607461	1	-	GUARD, front
22	070272	4	-	CAPSCREW, 1"NF x 3"
	910916	4	-	LOCKWASHER, 1"
	911047	4	-	NUT, 1"NF
23	641491	1	-	BAFFLE, air, lower
24	012992	5	-	CAPSCREW, 3/8"NF x 1-1/4"
	044973	5	-	WASHER, plain
	904206	5	-	LOCKWASHER, 3/8"
	911041	5	-	NUT, 3/8"NF
25	641490	1	1	BAFFLE, air, upper
26	036034	5	5	CAPSCREW, 3/8"NF x 1"
	904206	5	5	LOCKWASHER, 3/8"
	044973	5	5	WASHER, plain
27	085413	1	1	BAFFLE, air, left side (Models HD11B,E,S)
	645510	1	1	BAFFLE, air, left side (Model HD11EC)
28	036034	5	5	CAPSCREW, 3/8"NF x 1"
	904206	5	5	LOCKWASHER, 3/8"
	044973	5	5	WASHER, plain
29	085519	1	1	BAFFLE, air, right side (Models HD11B,E,S)
	645509	1	1	BAFFLE, air, right side (Model HD11EC)
30	036034	5	5	CAPSCREW, 3/8"NF x 1"
	904206	5	5	LOCKWASHER, 3/8"
	044973	5	5	WASHER, plain
31	642814	1	-	GRILLE, front closure
	642729	-	1	GRILLE, front closure
32	035190	10	11	CAPSCREW, 1/2"NC x 1-1/2"
	904208	10	11	LOCKWASHER, 1/2"
	064531	10	11	WASHER, plain

NOTE: See PAINTING AND MARKING for transfers

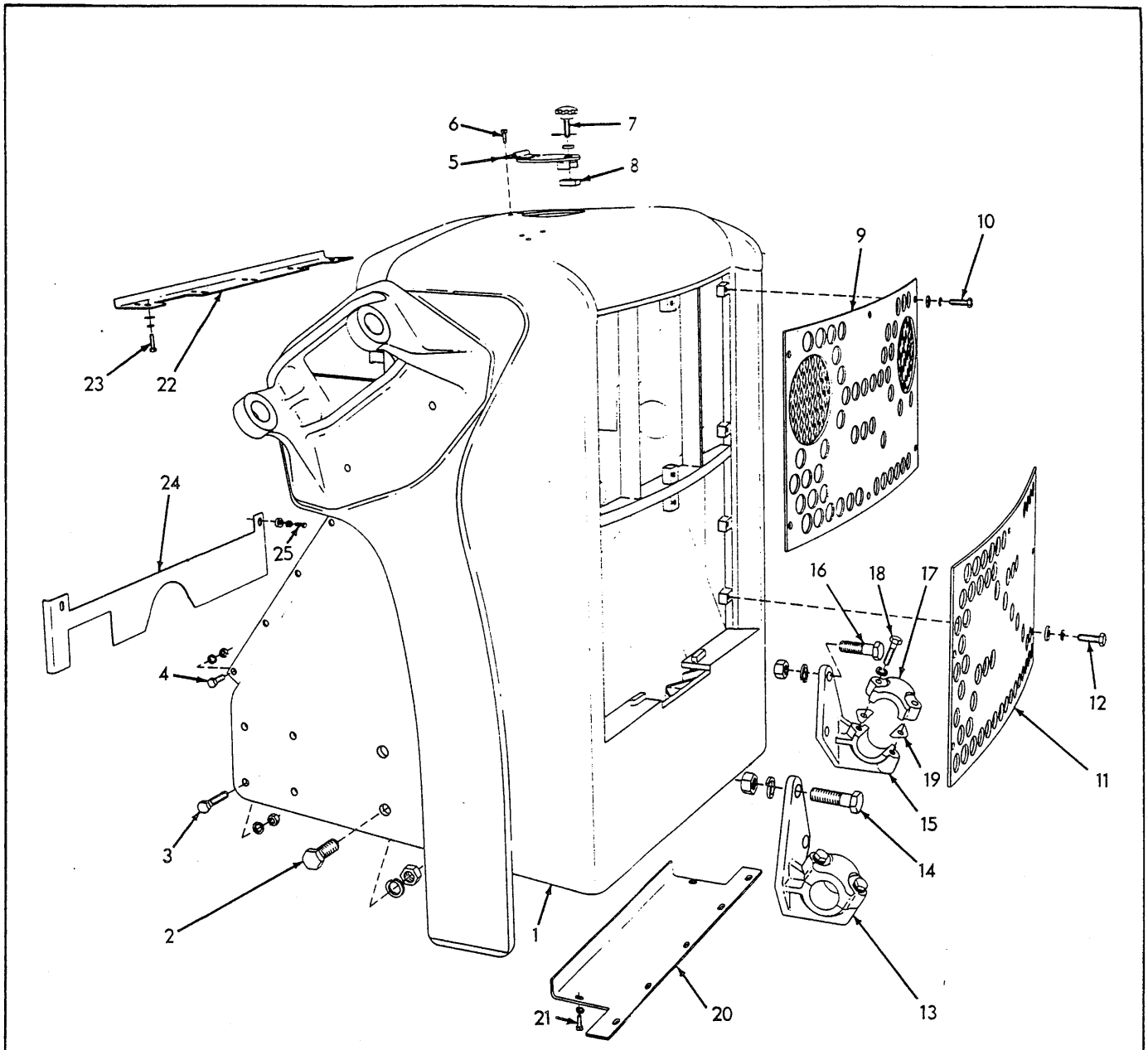

RADIATOR GUARD (11HI) T-19664

USAGE: Special equipment. For tractors prior to serial No. 10001 equipped with Model 11HI Dozer

ITEM	PART NO.	QTY.	DESCRIPTION
1	096251	1	GUARD, radiator
2	070272	4	CAPSCREW, 1"NF x 3"
	910916	4	LOCKWASHER, 1"
	911047	4	NUT, 1"NF
3	070161	8	CAPSCREW, 5/8"NF x 2-3/4"
	904209	8	LOCKWASHER, 5/8"
	911044	8	NUT, 5/8"NF
4	070469	8	CAPSCREW, 1/2"NF x 1-1/4"
	904208	8	LOCKWASHER, 1/2"
	911043	8	NUT, 1/2"NF

(Continued)

ITEM	PART NO.	QTY.	DESCRIPTION
5	091942	1	PLATE, top closure (Includes hinge)
6	035167	2	CAPSCREW, 3/8"NF x 7/8"
	904206	2	LOCKWASHER, 3/8"
	911041	2	NUT, 3/8"NF
7	624487	1	KNOB, top closure plate
	910244	1	WASHER, plain, SAE std., 1/2"
	916202	1	PIN, roll, 1/8" x 7/8"
8	624488	1	BLOCK, tapped
9	093564	1	PLATE, front closure, upper
10	035190	6	CAPSCREW, 1/2"NC x 1-1/2"
	904208	6	LOCKWASHER, 1/2"
	064531	6	WASHER, plain
11	093561	1	PLATE, front closure, lower
12	035190	5	CAPSCREW, 1/2"NC x 1-1/2"
	904208	5	LOCKWASHER, 1/2"
	064531	5	WASHER, plain
13	087106	1	BRACKET ASSEMBLY, mounting, right side (Includes items 17 thru 19)
14	035420	2	CAPSCREW, 1"NF x 3-1/4"
	910916	2	LOCKWASHER, 1"
	911047	2	NUT, 1"NF
15	087105	1	BRACKET ASSEMBLY, mounting, left side (Includes items 17 thru 19)
16	035420	2	CAPSCREW, 1"NF x 3-1/4"
	910916	2	LOCKWASHER, 1"
	911047	2	NUT, 1"NF
17	------	2	CAP, pivot, mounting bracket (Not serviced separately)
18	023618	4	CAPSCREW, 5/8"NF x 2-1/2"
	904209	4	LOCKWASHER, 5/8"
19	087104	12	SHIM, cap adjustment (Use as required)
20	096086	1	PLATE, bottom closure
21	036034	7	CAPSCREW, 3/8"NF x 1"
	904206	7	LOCKWASHER, 3/8"
22	085414	1	BAFFLE, air, upper (Used prior to tractor #6473)
	624758	1	BAFFLE, air, upper (Used on tractors #6473 thru #8122)
	641490	1	BAFFLE, air, upper (Effective with tractor #8123)
23	012992	5	CAPSCREW, 3/8"NF x 1-1/4"
	904206	5	LOCKWASHER, 3/8"
	044973	5	WASHER, plain
24	087930	1	BAFFLE, air, lower
25	036034	2	CAPSCREW, 3/8"NF x 1"
	904206	2	LOCKWASHER, 3/8"
	044973	2	WASHER, plain

NOTE: See PAINTING AND MARKING for transfers

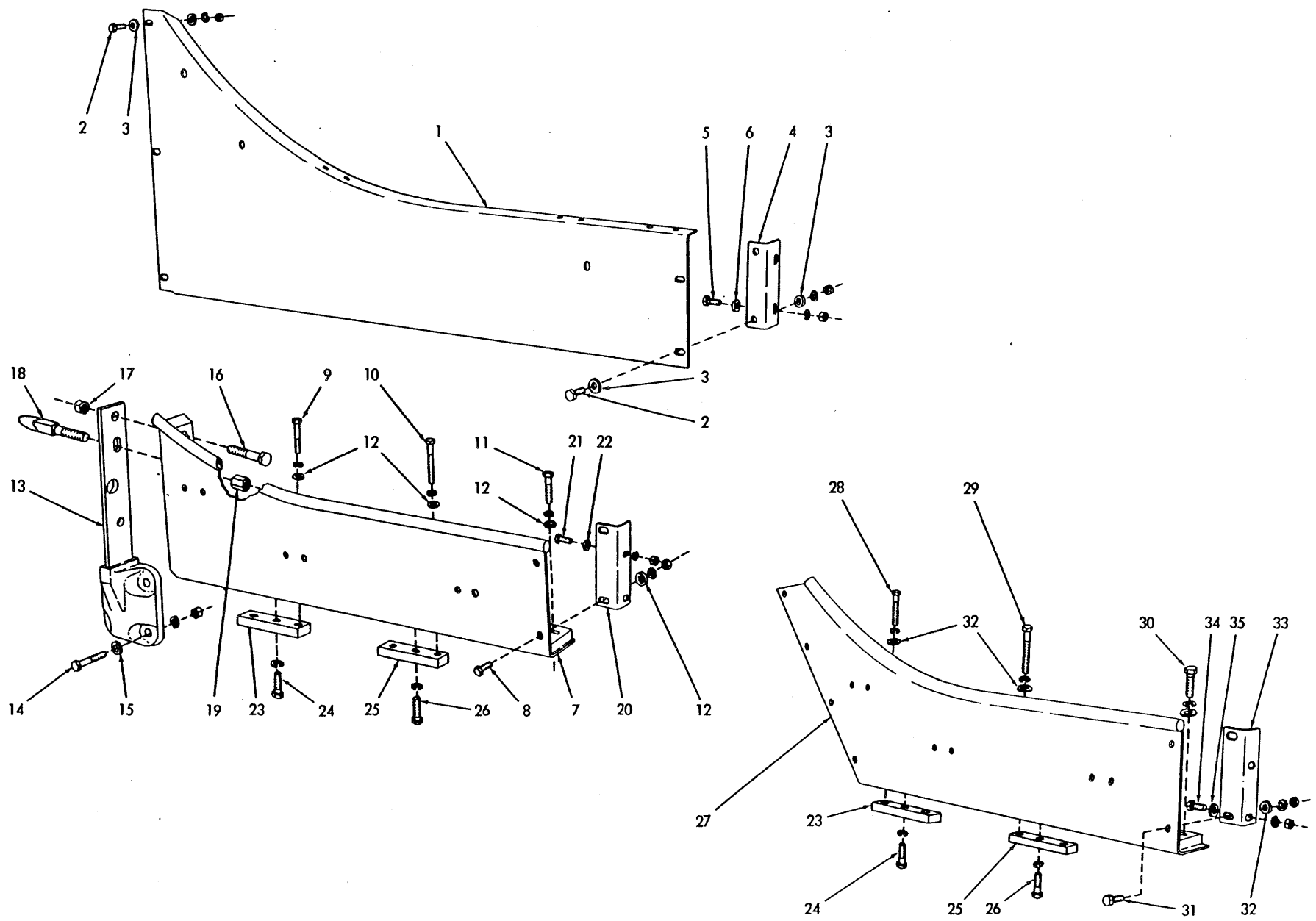

FRONT FENDERS (First type)

T-27481

FRONT FENDERS

USAGE: Tractors prior to serial No. 10001

* Models HD11ES, F, FC, S; optional on Models HD11B, E, EC
** Models HD11B, E, EC
*** Tractors with Model 11HI Dozer

ITEM	PART NO.	QUANTITY *	**	***	DESCRIPTION
1	084287	1	-	-	FENDER, left side (Models HD11ES, S)
	633881	1	-	-	FENDER, left side (Models HD11F, FC)
	084288	1	-	-	FENDER, right side
2	035018	10	-	-	CAPSCREW, 1/2"NF x 1-1/2"
3	064531	20	-	-	WASHER, plain
	904208	10	-	-	LOCKWASHER, 1/2"
	911043	10	-	-	NUT, 1/2"NF
4	084614	2	-	-	ANGLE, fender attachment
5	070469	4	-	-	CAPSCREW, 1/2"NF x 1-1/4"
6	064531	2	-	-	WASHER, plain (Used on right side only)
	904208	4	-	-	LOCKWASHER, 1/2"
	911043	4	-	-	NUT, 1/2"NF
7	630522	1	1	-	FENDER, left side
	085386	-	1	-	FENDER, right side (Standard equipment)
	085710	-	1	-	FENDER, right side (Special. For tractors equipped with cable dozer using rear-mounted power unit)
8	070469	-	4	-	CAPSCREW, 1/2"NF x 1-1/4" (2 less with FENDER 085710)
	035018	-	2	-	CAPSCREW, 1/2"NF x 1-1/2" (For FENDER 085710 only)
9	035278	-	2	-	CAPSCREW, 1/2"NF x 2-3/4" (right fender)
	070403	-	2	-	CAPSCREW, 1/2"NF x 3" (left fender)
10	065588	-	2	-	CAPSCREW, 1/2"NF x 3-1/2" (right fender)
	043576	-	2	-	CAPSCREW, 1/2"NF x 3-3/4" (left fender)
11	035068	-	4	-	CAPSCREW, 1/2"NF x 2-1/4"
12	064531	-	14	-	WASHER, plain (16 used with FENDER 085710)
	904208	-	16	-	LOCKWASHER, 1/2"
	911043	-	12	-	NUT, 1/2"NF (4 less used effective with tractor #6434)
13	085356	-	2	-	BRACKET, fender attachment
14	035306	-	8	-	CAPSCREW, 5/8"NF x 3-1/4"
15	064810	-	8	-	WASHER, plain
	904209	-	8	-	LOCKWASHER, 5/8"
	911044	-	8	-	NUT, 5/8"NF
16	035423	-	4	-	CAPSCREW, fender attachment (3/4"NF x 4-1/4") (2 additional used on tractors prior to #6940)
17	012767	-	4	-	NUT, high, 3/4"NF
18	------	-	2	-	PIN, guide, radiator guard (Discontinued. Not needed)
19	012767	-	2	-	NUT, high, 3/4"NF

(Continued)

ITEM	PART NUMBER	QUANTITY *	**	***	DESCRIPTION	PACKAGE NUMBER
20	085631	-	1	-	ANGLE, left fender attachment	
	085632	-	1	-	ANGLE, right fender attachment	
21	070469	-	4	-	CAPSCREW, 1/2"NF x 1-1/4"	
22	064531	-	2	-	WASHER, plain (Used on right side only)	
	904208	-	4	-	LOCKWASHER, 1/2"	
	911043	-	4	-	NUT, 1/2"NF	
23	621848	-	1	1	BLOCK, tapped, left fender attachment, front (Effective with tractor #6434)	
24	035067	-	1	1	CAPSCREW, 1/2"NF x 2"	
	904208	-	1	1	LOCKWASHER, 1/2"	
25	621849	-	1	1	BLOCK, tapped, left fender attachment, rear (Effective with tractor #6434)	
26	035067	-	1	1	CAPSCREW, 1/2"NF x 2"	
	904208	-	1	1	LOCKWASHER, 1/2"	
27	093577	-	-	1	FENDER, left side	
	093578	-	-	1	FENDER, right side	
28	070403	-	-	2	CAPSCREW, 1/2"NF x 3" (left fender)	
	035278	-	-	2	CAPSCREW, 1/2"NF x 2-3/4" (right fender)	
29	043576	-	-	2	CAPSCREW, 1/2"NF x 3-3/4" (left fender)	
	065588	-	-	2	CAPSCREW, 1/2"NF x 3-1/2" (right fender)	
30	035068	-	-	4	CAPSCREW, 1/2"NF x 2-1/4"	
31	070469	-	-	4	CAPSCREW, 1/2"NF x 1-1/4"	
32	064531	-	-	16	WASHER, plain (4 less used effective with tractor #6434)	
	904208	-	-	16	LOCKWASHER, 1/2"	
	911043	-	-	8	NUT, 1/2"NF (4 less used effective with tractor #6434)	
33	093411	-	-	1	ANGLE, left fender attachment	
	093412	-	-	1	ANGLE, right fender attachment	
34	070469	-	-	4	CAPSCREW, 1/2"NF x 1-1/4"	
35	064531	-	-	2	WASHER, plain (Used on right side only)	
	904208	-	-	4	LOCKWASHER, 1/2"	
	911043	-	-	4	NUT, 1/2"NF	

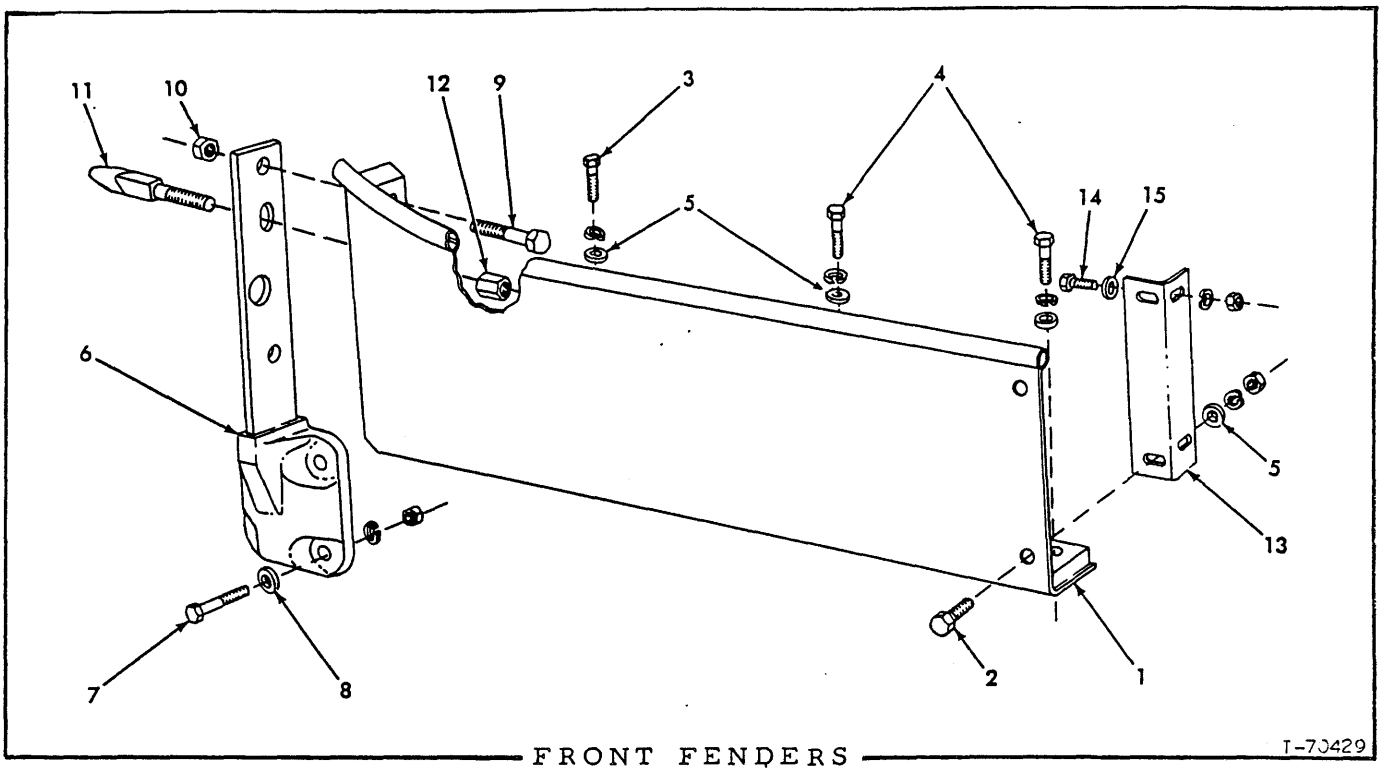

FRONT FENDERS

USAGE: Tractors serial No. 10001 and up with Wrap-around Radiator Guard. Standard on Models HD11B, E, EC; optional on Model HD11S

ITEM	PART NO.	QTY.	DESCRIPTION
	634117	1	FENDER, left side
1	634130	1	FENDER, right side (Standard)
	638764	1	FENDER, right side (Special. For tractors equipped with cable dozer using rear-mounted power unit)
2	035018	4	CAPSCREW, 1/2"NF x 1-1/2"
3	614478	4	CAPSCREW, 1/2"NF x 1-3/8"
4	035067	8	CAPSCREW, 1/2"NF x 2"
5	064531	16	WASHER, plain (18 used with FENDER 638764)
	904208	16	LOCKWASHER, 1/2"
	911043	4	NUT, 1/2"NF
6	085356	2	BRACKET, fender attachment
7	035541	8	CAPSCREW, 5/8"NF x 3-3/4"
8	064810	8	WASHER, plain
	904209	8	LOCKWASHER, 5/8"
	911044	8	NUT, 5/8"NF
9	035423	4	CAPSCREW, fender attachment (3/4"NF x 4-1/4")
10	012767	4	NUT, high, 3/4"NF
11	------	2	PIN, guide, radiator guard (Discontinued. Not needed)
12	012767	2	NUT, high, 3/4"NF
13	634118	2	ANGLE, fender attachment
14	035073	4	CAPSCREW, 1/2"NF x 1-3/4"
15	064531	4	WASHER, plain
	904208	4	LOCKWASHER, 1/2"
	911043	4	NUT, 1/2"NF

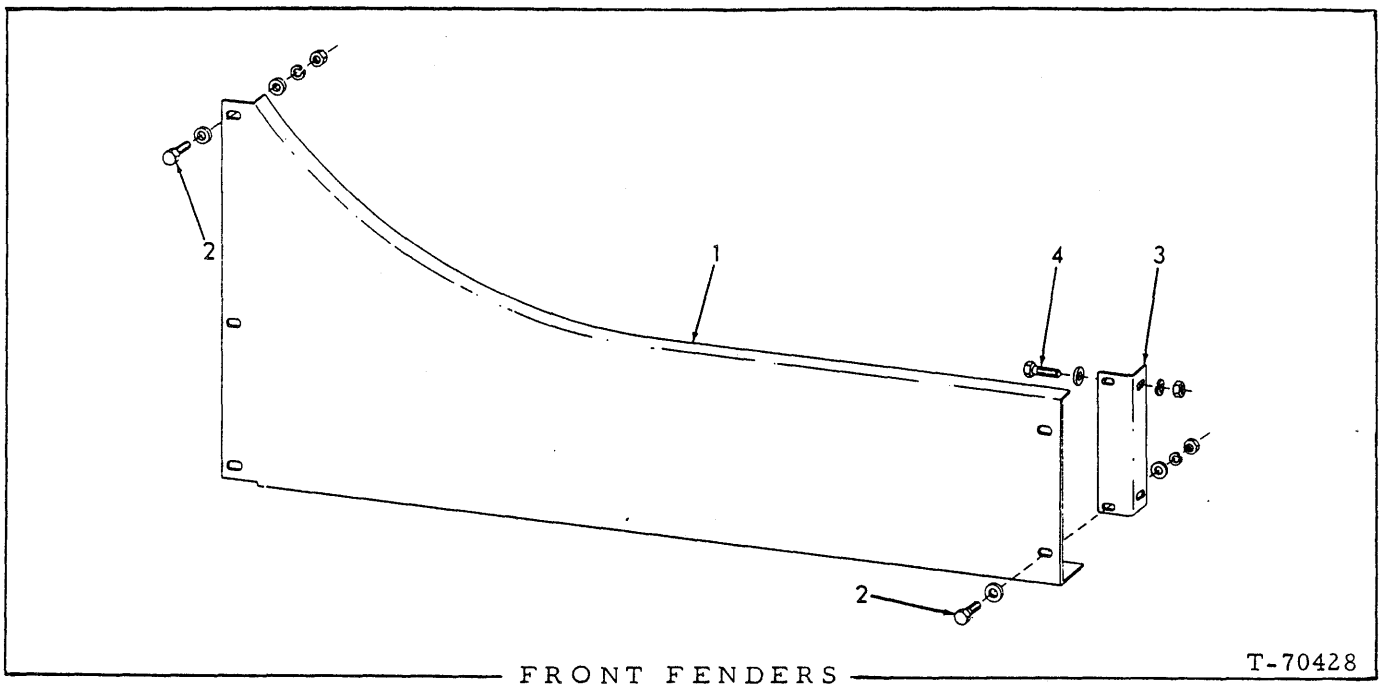

FRONT FENDERS T-70428

USAGE: Tractors serial No. 10001 and up with Light-duty Radiator Shell. Standard on Model HD11S; optional on Model HD11B

ITEM	PART NO.	QTY.	DESCRIPTION
1	638873	1	FENDER, left side
	638874	1	FENDER, right side
2	035018	10	CAPSCREW, 1/2"NF x 1-1/2"
	064531	20	WASHER, plain
	904208	10	LOCKWASHER, 1/2"
	911043	10	NUT, 1/2"NF
3	634118	2	ANGLE, fender attachment
4	035073	4	CAPSCREW, 1/2"NF x 1-3/4"
	064531	4	WASHER, plain
	904208	4	LOCKWASHER, 1/2"
	911043	4	NUT, 1/2"NF

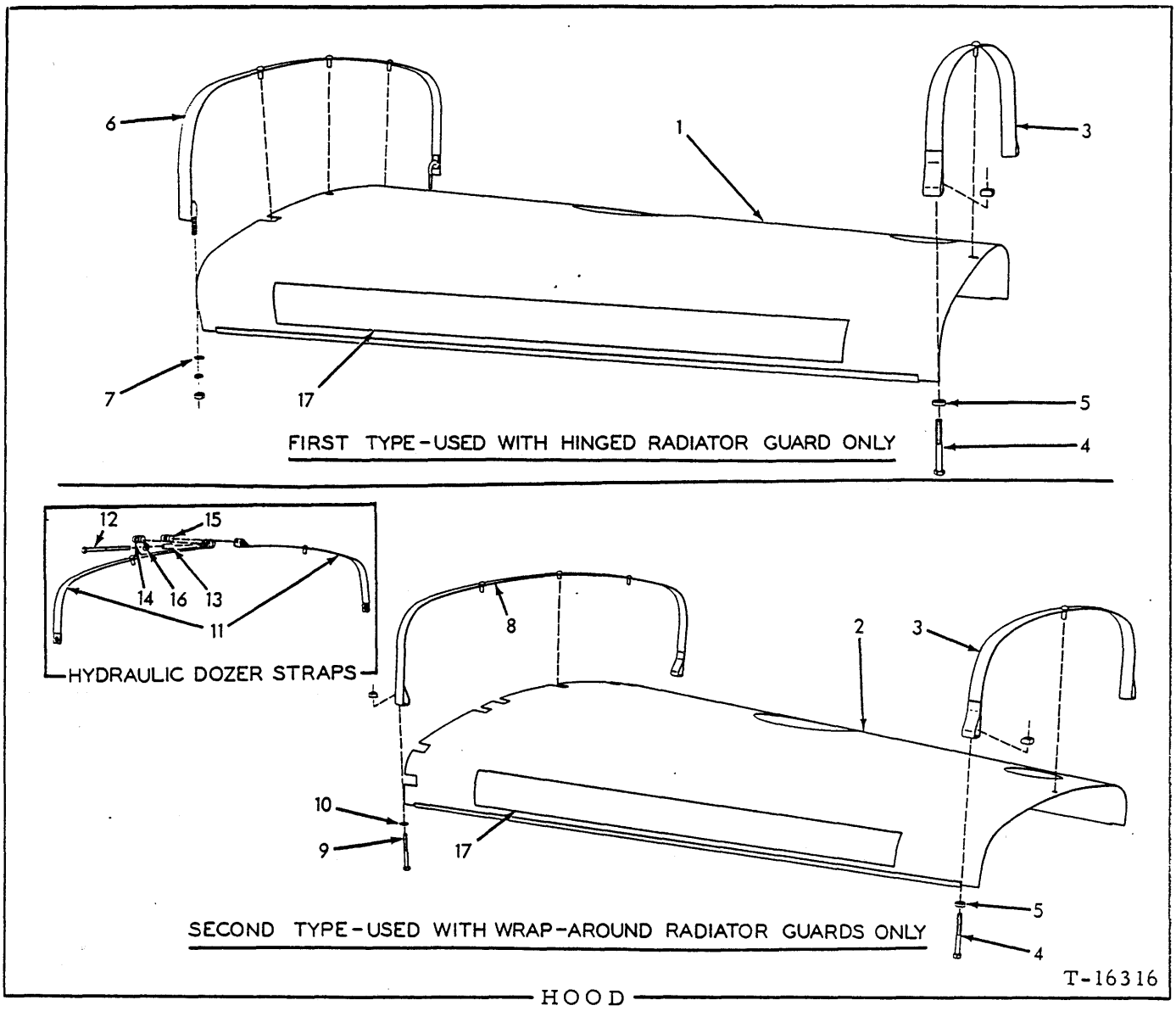

HOOD

USAGE: Tractors prior to serial No. 10001

* Models HD11ES, F, FC, S. Standard equipment.
** Models HD11B, E, EC except when equipped with hydraulic dozer. Also applicable to Models HD11ES, S, when equipped with wrap-around plain or cable radiator guard
*** Models HD11B, E, EC, ES, S when equipped with hydraulic dozer.
**** Model HD11B, E, EC when equipped with Model 11HI hydraulic dozer.

ITEM	PART NO.	QUANTITY *	**	***	****	DESCRIPTION
1	084279	1	-	-	-	HOOD, engine (Used with oil-bath air cleaner)
	623738	1	-	-	-	HOOD, engine (Used with dry-type air cleaner)
2	------	-	1	1	-	HOOD, engine (Used with oil-bath air cleaner)(Order HOOD 623737)
	623737	-	1	1	-	HOOD, engine (Used with dry-type air cleaner)
	093448	-	-	-	1	HOOD, engine (Used with oil-bath air cleaner)
	623814	-	-	-	1	HOOD, engine (Used with dry-type air cleaner)

(Continued)

ITEM	PART NO.	QUANTITY *	**	***	****	DESCRIPTION
3	084259	1	1	1	1	STRAP, hold-down, rear
4	056320	2	2	2	2	CAPSCREW, 3/8"NC x 3"
5	044973	2	2	2	2	WASHER, plain
	900405	2	2	2	2	NUT, square, 3/8"NC
6	090849	1	-	-	-	STRAP, hold-down, front
7	044973	2	-	-	-	WASHER, plain
	904206	2	-	-	-	LOCKWASHER, 3/8"
	911026	2	-	-	-	NUT, 3/8"NC
8	090850	-	1	-	-	STRAP, hold-down, front
9	056320	-	2	-	-	CAPSCREW, 3/8"NC x 3"
10	044973	-	2	-	-	WASHER, plain
	900405	-	2	-	-	NUT, square, 3/8"NC
11	090847	-	-	2	-	STRAP, hold-down, front
	090597	-	-	-	2	STRAP, hold-down, front
12	087159	-	-	1	1	CAPSCREW, front strap (3/8"NC x 5-1/2")
13	053667	-	-	1	1	SPACER, front strap capscrew
14	050735	-	-	1	1	PIN, front strap (plain hole)
15	050734	-	-	1	1	PIN, hood strap (threaded hole)
16	044973	-	-	1	1	WASHER, plain
17	------	-	-	-	-	TRANSFER (See PAINTING AND MARKING)

NOTE: See AIR PRE-CLEANER EXTENSION for listing of optional hoods and straps

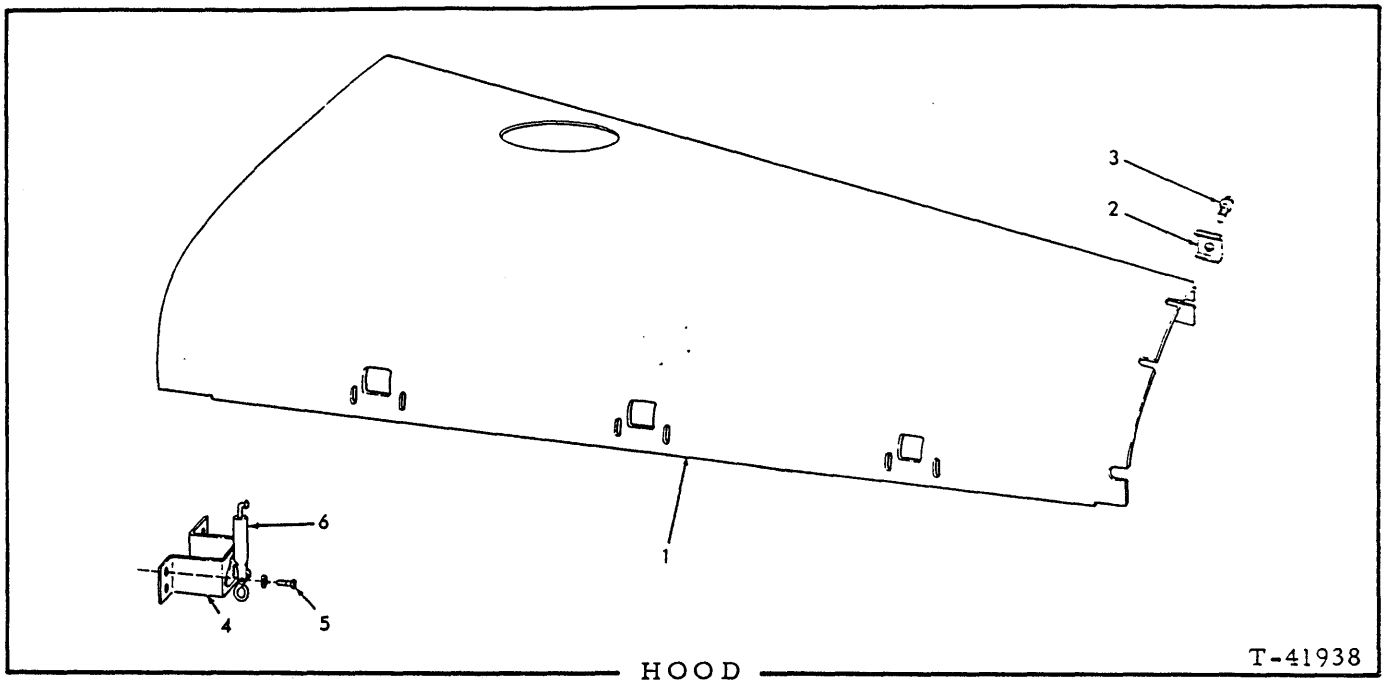

HOOD

USAGE: Tractors serial No. 10001 and up

* Units with Wrap-around Radiator Guard
** Units with Light-duty Radiator Shell

ITEM	PART NO.	QTY. *	QTY. **	DESCRIPTION
1	634365	1	-	HOOD, engine (Model HD11B. Standard)
	644020	1	-	HOOD, engine (Model HD11E, EC, S tractors prior to #11525. Standard on HD11E, EC; optional on HD11S)
	650875	1	-	HOOD, engine (Model HD11E, EC, S tractors #11525 and up. Standard on HD11E, EC; optional on HD11S)
	639713	-	1	HOOD, engine (Model HD11B)
	644485	-	1	HOOD, engine (Model HD11S. Standard on tractors prior to #11527)
	650962	-	1	HOOD, engine (Model HD11S. Standard on tractors #11527 and up)
2	624416	4	4	CLIP, hood retaining
3	623820	4	4	CAPSCREW, Nylok, 1/2"NF x 1" (Early units)
	648294	4	4	CAPSCREW, Nylok, 1/2"NC x 1" (Late units)
4	624426	2	2	FASTENER ASSEMBLY, hold-down (Includes item 6)
5	012992	8	-	CAPSCREW, 3/8"NF x 1-1/4" (Early units)
	013058	8	-	CAPSCREW, 3/8"NC x 1-1/4" (Late units)
	036032	-	8	CAPSCREW, 3/8"NF x 3/4"
	904206	8	8	LOCKWASHER, 3/8"
6	033060	2	2	FASTENER
	900764	6	6	RIVET, fl-hd., 3/16" x 12"

NOTE: See PAINTING AND MARKING for transfers

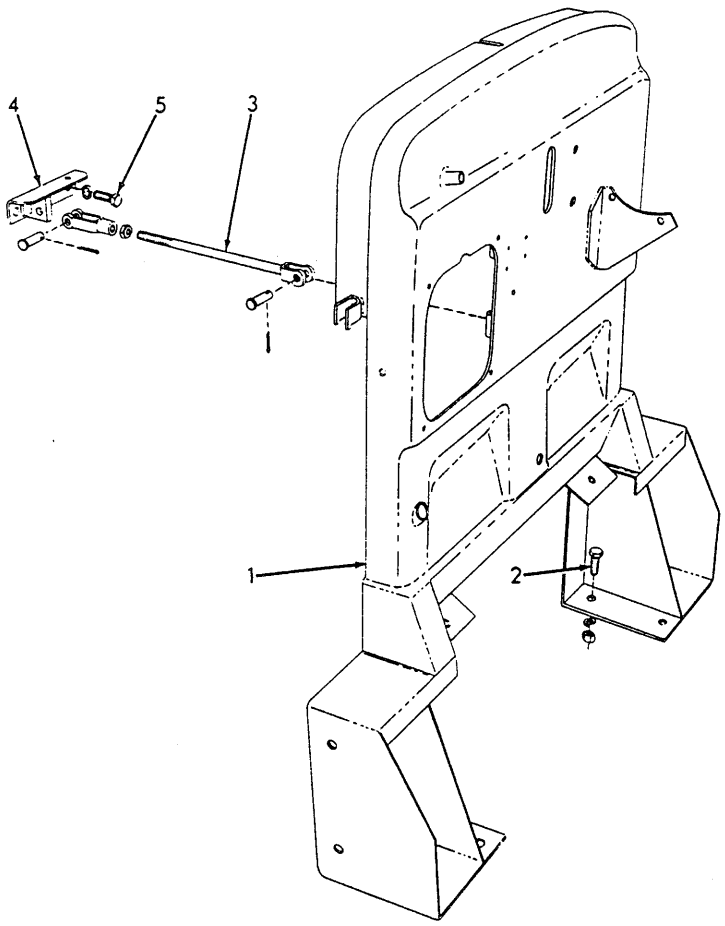

COWL

T-16254

USAGE: Tractors prior to serial No. 6427

ITEM	PART NO.	QTY.	DESCRIPTION
1	084720	1	COWL (All models except HD11F tractors #6069 and up excluding #5490 and #6044)
	620084	1	COWL (Model HD11F tractors #6069 and up including #5490 and #6044)
2	070469	4	CAPSCREW, 1/2"NF x 1-1/4"
	904208	4	LOCKWASHER, 1/2"
	911043	4	NUT, 1/2"NF
3	084680	1	ROD, cowl bracing
	913830	1	NUT, jam, 1/2"NF
	917666	1	YOKE, rod end, adjustable, 1/2"NF
	917648	2	PIN, yoke, 1/2" diam.
	900806	2	PIN, cotter, 1/8" x 1"
4	084693	1	ANGLE, cowl bracing rod (Used prior to tractor #6069 excluding #5490 and #6044)
5	------	2	CAPSCREW, cylinder head end plate (See CYLINDER HEAD)

NOTE: See PAINTING AND MARKING for instruction plates and transfers

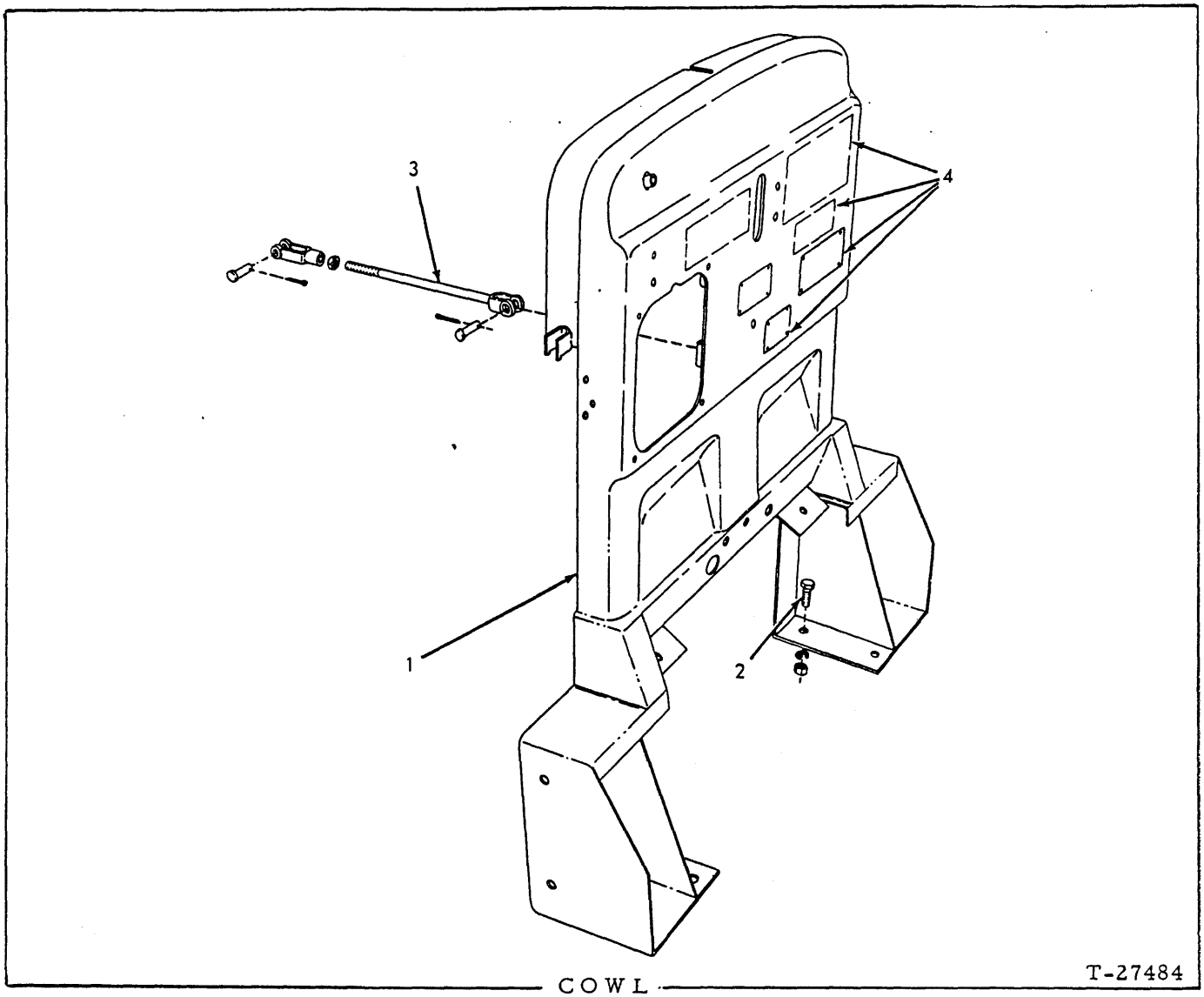

COWL

USAGE: Tractors serial No. 6427 thru No. 10000

* Used prior to tractor #6473
** Effective with tractor #6473

ITEM	PART NO.	QTY. *	QTY. **	DESCRIPTION
1	------	1	-	COWL (All Models except HD11F)(Order 1 each COWL 622891, SADDLE 622888; 2 each SPACER 053667, PIN 081795, CAPSCREW 086238, BAND 622884; 4 each CAPSCREW 070467, PIN 081796, LOCKWASHER 904208, NUT 911043)
	620407	1	-	COWL (Model HD11F only)
	622891	-	1	COWL (All models except HD11F, FC)
	622958	-	1	COWL (Model HD11F, FC)
2	070469	4	4	CAPSCREW, 1/2"NF x 1-1/4"
	904208	4	4	LOCKWASHER, 1/2"
	911043	4	4	NUT, 1/2"NF
3	644002	1	1	ROD, cowl bracing
	913830	1	1	NUT, jam, 1/2"NF
	917666	1	1	YOKE, rod end, adjustable, 1/2"NF
	917648	2	2	PIN, yoke, 1/2" diam.
	900806	2	2	PIN, cotter, 1/8" x 1"
4	------	-	-	PLATES AND TRANSFERS (See PAINTING AND MARKING)

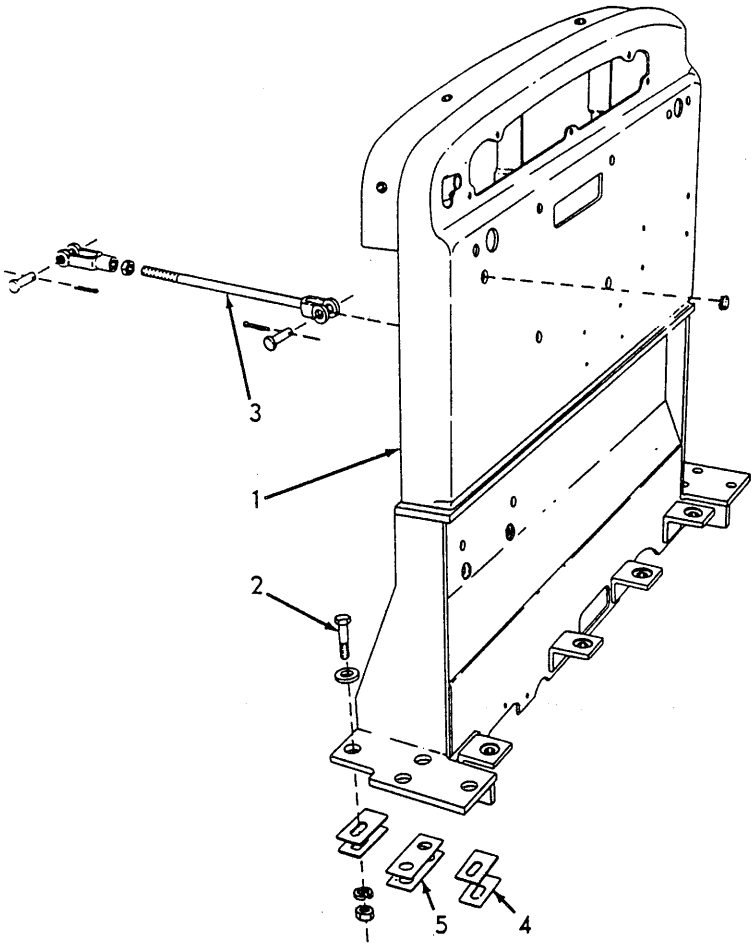

COWL T-41932

USAGE: Tractors serial No. 10001 and up

ITEM	PART NO.	QTY.	DESCRIPTION	
1	648467	1	COWL (Model HD11B; also Model HD11E,EC,S tractors prior to #11525)	
	650880	1	COWL (Model HD11E,EC,S tractors #11525 and up)	
	921113	1	PLUG, button, 11/16" hole-diam. (Not used when ENGINE PRIMER installed)	
2	035073	8	CAPSCREW, 1/2"NF x 1-3/4"	
	064531	8	WASHER, plain	
	904208	8	LOCKWASHER, 1/2"	
	911043	8	NUT, 1/2"NF	
3	644002	1	ROD, cowl bracing	
	913830	1	NUT, jam, 1/2"NF	
	917666	1	YOKE, rod end, adjustable, 1/2"NF	
	917648	2	PIN, yoke, 1/2" diam.	
	900806	2	PIN, cotter, 1/8" x 1"	
4	642070	8	SHIM, front and rear (1/32" thick)	Use as required. For units prior to October 1965 only.
	642071	4	SHIM, front and rear (1/16" thick)	
5	642072	4	SHIM, center (1/32" thick)	
	642073	2	SHIM, center (1/16" thick)	

NOTE: See PAINTING AND MARKING for instruction plates and transfers

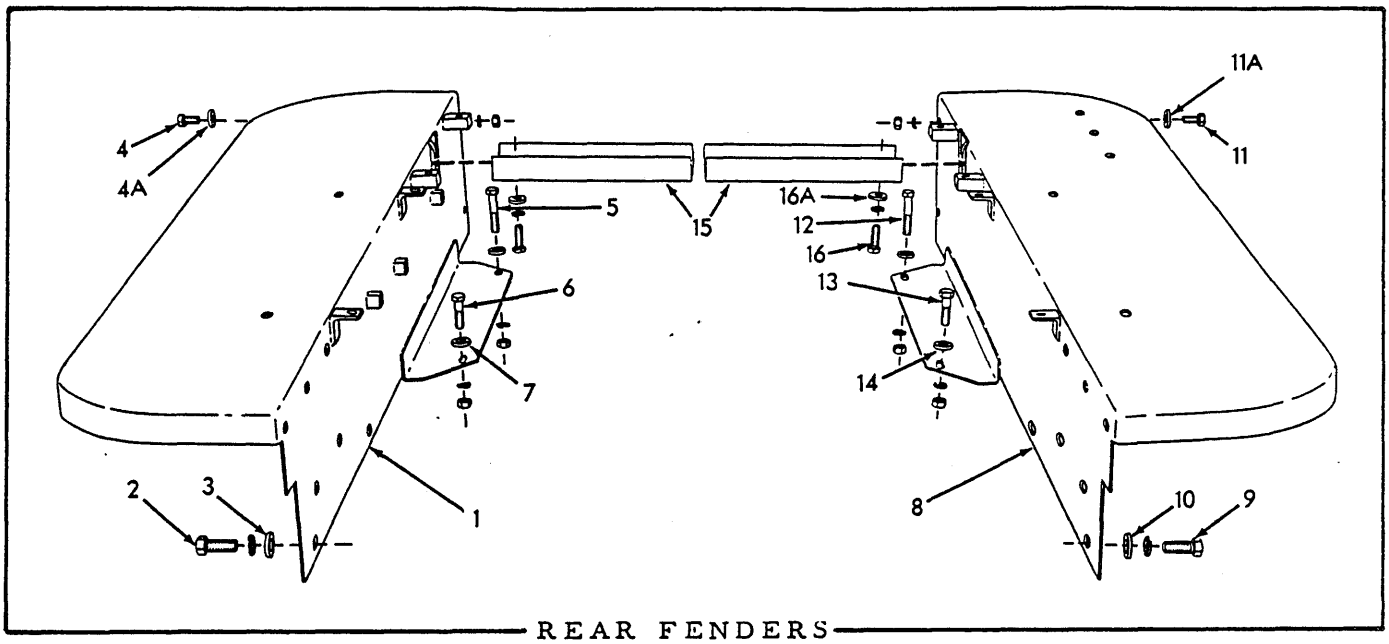

REAR FENDERS

USAGE: Standard equipment on Model HD11B, E, ES and S tractors prior to approx. serial No. 4859

ITEM	PART NUMBER	QTY.	DESCRIPTION
1	090475	1	FENDER, left
2	035014	4	CAPSCREW, 5/8" NF x 1-1/2"
3	064810	4	WASHER, plain
	904209	4	LOCKWASHER, 5/8"
4	070469	2	CAPSCREW, 1/2" NF x 1-1/4"
4A	064531	2	WASHER, plain
5	035892	1	CAPSCREW, 1/2" NF x 2-1/2"
6	035073	1	CAPSCREW, 1/2" NF x 1-3/4"
7	064531	2	WASHER, plain
	904208	4	LOCKWASHER, 1/2"
	911043	4	NUT, 1/2" NF
8	084270	1	FENDER, right (Used prior to tractor #2791)
	090476	1	FENDER, right (Effective with tractor #2791)
9	035014	4	CAPSCREW, 5/8" NF x 1-1/2"
10	064810	4	WASHER, plain
	904209	4	LOCKWASHER, 5/8"
11	070469	2	CAPSCREW, 1/2" NF x 1-1/4"
11A	064531	2	WASHER, plain
12	035892	1	CAPSCREW, 1/2" NF x 2-1/2"
13	035073	1	CAPSCREW, 1/2" NF x 1-3/4"
14	064531	2	WASHER, plain
	904208	4	LOCKWASHER, 1/2"
	911043	4	NUT, 1/2" NF
15	089898	1	CHANNEL, fender bracing (Effective with tractor #2791)
16	035073	4	CAPSCREW, 1/2" NF x 1-3/4"
	904208	4	LOCKWASHER, 1/2"
16A	064531	4	WASHER, plain

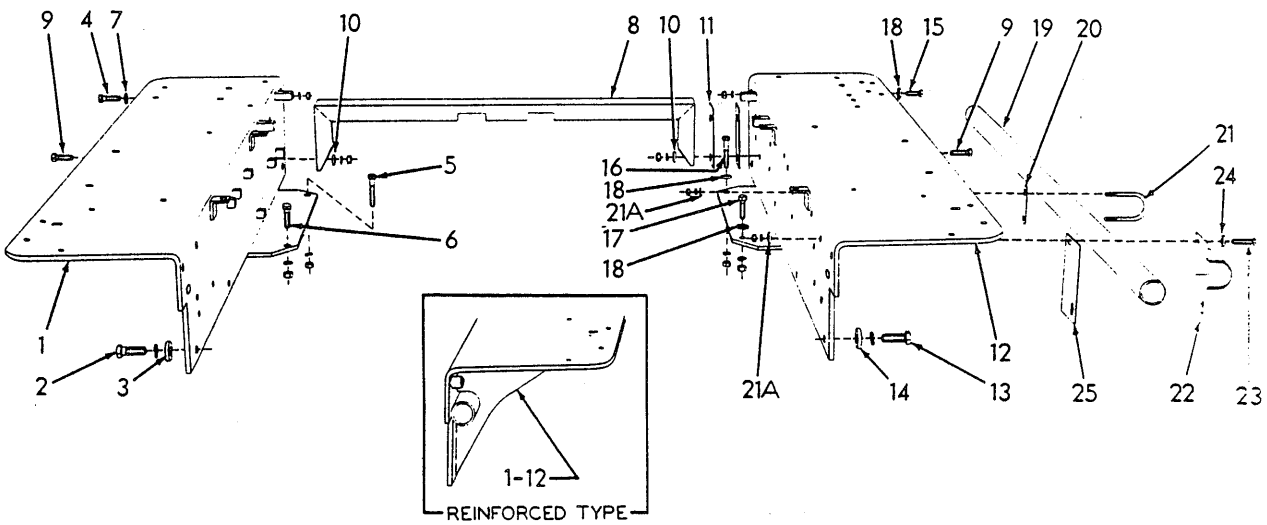

REAR FENDERS

T-19506

USAGE: Model HD11B, E, EC, ES, S tractors approx. serial No. 4859 thru No. 10000

* Standard equipment on tractors effective approx. with serial No. 4859. Used optionally on serial Nos. 4710 thru 4858

** Special equipment. Reinforced type.

ITEM	PART NO.	QTY. *	QTY. **	DESCRIPTION
1	095135	1	-	FENDER, left side
	099981	-	1	FENDER, left side
2	023465	4	4	CAPSCREW, 5/8"NF x 1-3/4"
3	064810	4	4	WASHER, plain
	904209	4	4	LOCKWASHER, 5/8"
4	614478	2	2	CAPSCREW, 1/2"NF x 1-3/8"
5	035278	1	1	CAPSCREW, 1/2"NF x 2-3/4"
6	035073	1	1	CAPSCREW, 1/2"NF x 1-3/4"
7	064531	2	2	WASHER, plain
	904208	4	4	LOCKWASHER, 1/2"
	911043	4	4	NUT, 1/2"NF
8	630231	1	1	CHANNEL, fender bracing
9	035073	4	4	CAPSCREW, 1/2"NF x 1-3/4"
10	064531	4	4	WASHER, plain
	904208	4	4	LOCKWASHER, 1/2"
	911043	4	-	NUT, 1/2"NF

(Continued)

ITEM	PART NO.	QTY. *	QTY. **	DESCRIPTION	
11	095144	1	1	SHIM, bracing channel (9/64" thick)	Use as req'd
	095148	2	2	SHIM, bracing channel (1/16" thick)	
12	095136	1	-	FENDER, right side	
	099982	-	1	FENDER, right side	
13	023465	4	4	CAPSCREW, 5/8"NF x 1-3/4"	
14	064810	4	4	WASHER, plain	
	904209	4	4	LOCKWASHER, 5/8"	
15	614478	2	2	CAPSCREW, 1/2"NF x 1-3/8"	
16	035278	1	1	CAPSCREW, 1/2"NF x 2-3/4"	
17	035073	1	1	CAPSCREW, 1/2"NF x 1-3/4"	
18	064531	4	4	WASHER, plain	
	904208	4	4	LOCKWASHER, 1/2"	
	911043	4	4	NUT, 1/2"NF	
				NOTE: Items listed below are only for tractors equipped with cable dozer using rear-mounted control unit	
19	085553	1	-	PIPE, cable conducting	
20	095190	3	-	SPACER, cable pipe, front	
21	641474	3	-	U-BOLT, cable pipe	
21A	044973	6	-	WASHER, plain, SAE std., 3/8"	
	904206	6	-	LOCKWASHER, 3/8"	
	911041	6	-	NUT, 3/8"NF	
22	095189	1	-	CLAMP, cable pipe	
23	036039	1	-	CAPSCREW, 3/8"NF x 1-3/8"	
24	044973	2	-	WASHER, plain (3/16" thick)	
	904206	1	-	LOCKWASHER, 3/8"	
	911041	1	-	NUT, 3/8"NF	
25	095192	1	-	SPACER, cable pipe, rear	

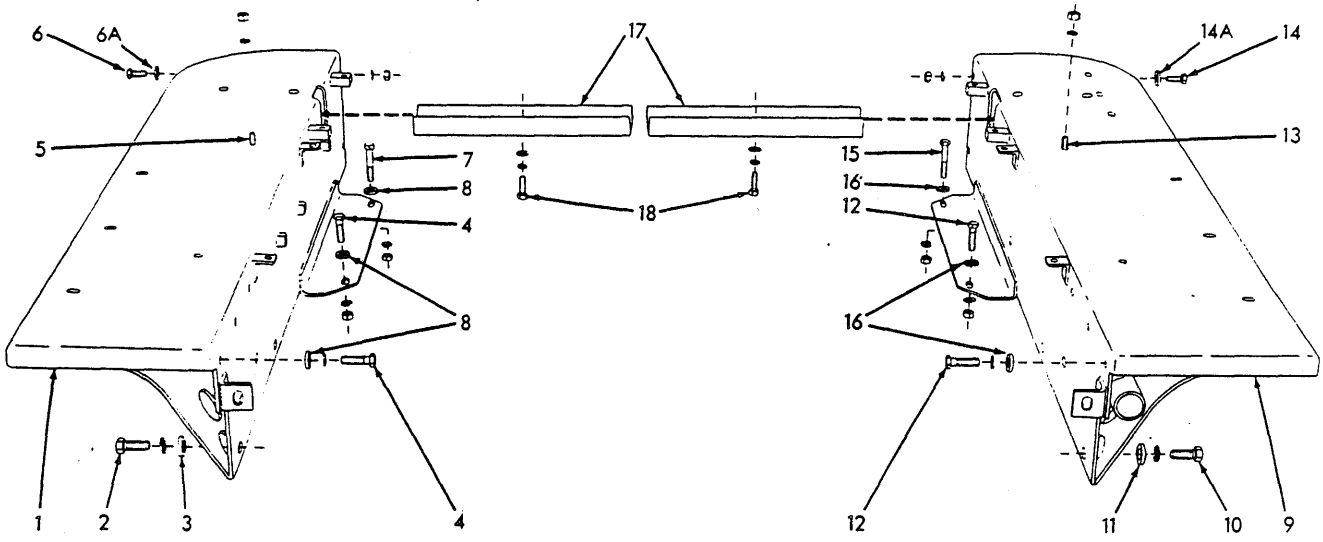

REAR FENDERS

USAGE: Special equipment for Model HD11B, E, ES and S tractors prior to serial No. 4710. Used with Fuel Tank and Seat Guard and for dozer installations in place of standard First Type Rear Fenders.

ITEM	PART NUMBER	QTY.	DESCRIPTION
1	090751	1	FENDER, left
2	035014	4	CAPSCREW, 5/8"NF x 1-1/2"
3	064810	4	WASHER, plain
	904209	4	LOCKWASHER, 5/8"
4	035073	4	CAPSCREW, 1/2"NF x 1-3/4"
5	035061	2	CAPSCREW, 1/2"NC x 1-1/4"
6	614478	2	CAPSCREW, 1/2"NF x 1-3/8"
6A	064531	2	WASHER, plain
7	035278	1	CAPSCREW, 1/2"NF x 2-3/4"
8	064531	5	WASHER, plain
	904208	9	LOCKWASHER, 1/2"
	911043	4	NUT, 1/2"NF
	911028	2	NUT, 1/2"NC
9	090752	1	FENDER, right
10	035014	4	CAPSCREW, 5/8"NF x 1-1/2"
11	064810	4	WASHER, plain
	904209	4	LOCKWASHER, 5/8"
12	035073	4	CAPSCREW, 1/2"NF x 1-3/4"
13	035061	2	CAPSCREW, 1/2"NC x 1-1/4"
14	614478	2	CAPSCREW, 1/2"NF x 1-3/8"
14A	064531	2	WASHER, plain
15	035278	1	CAPSCREW, 1/2"NF x 2-3/4"
16	064531	5	WASHER, plain
	904208	9	LOCKWASHER, 1/2"
	911043	4	NUT, 1/2"NF
	911028	2	NUT, 1/2"NC

(Continued)

ITEM	PART NUMBER	QTY.	DESCRIPTION
17	089898	1	CHANNEL, fender bracing (Effective with tractor #2601, including #2516 thru #2553)
18	035018	4	CAPSCREW, 1/2"NF x 1-1/2"
	904208	4	LOCKWASHER, 1/2"
	900818	4	WASHER, plain, U.S. std., 1/2"

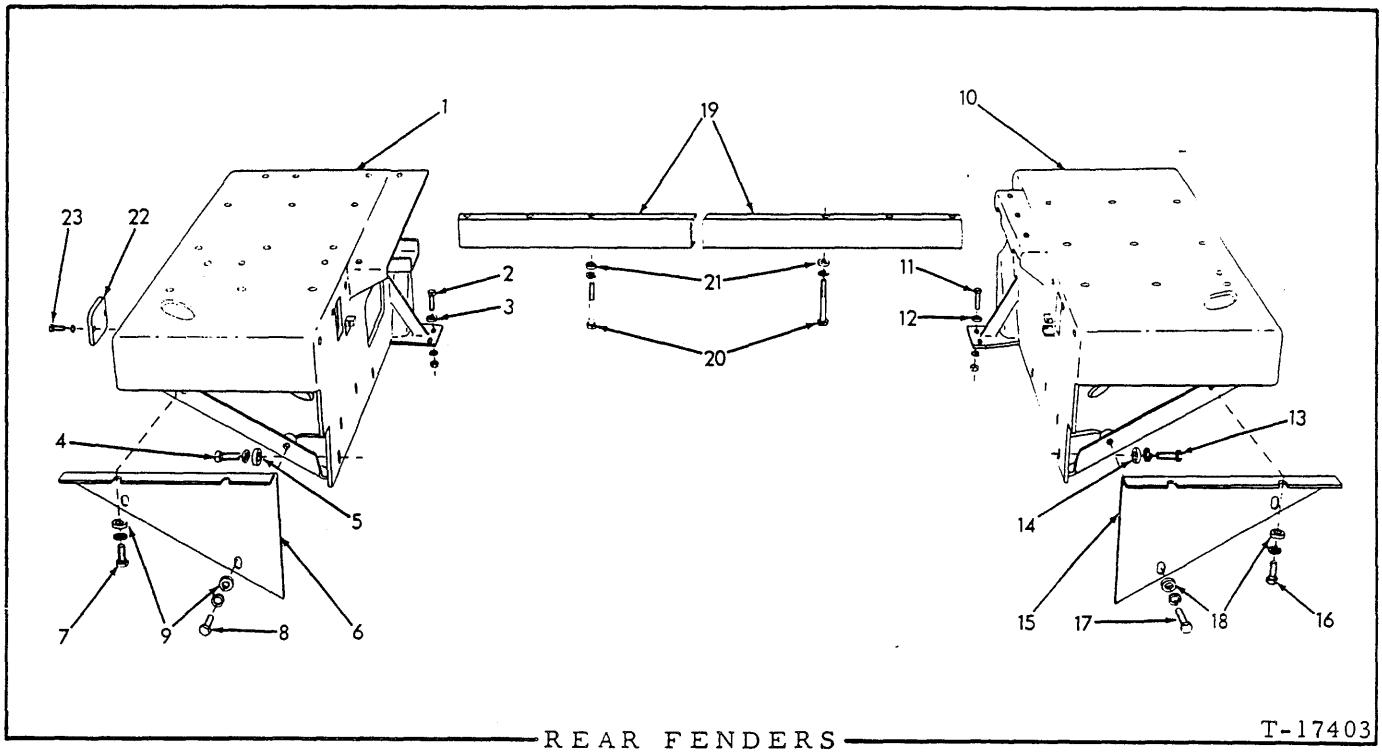

REAR FENDERS T-17403

USAGE: Models HD11F, FC

ITEM	PART NO.	QTY.	DESCRIPTION
1	649827	1	FENDER, left
	035073	2	CAPSCREW, 1/2" NF x 1-3/4" (Used prior to tractor #6069 excluding #5490 and #6044)
2	035067	2	CAPSCREW, 1/2" NF x 2" (Effective with tractor #6069 including #5490 and #6044)
3	064531	1	WASHER, plain (1 additional used prior to tractor #6069 excluding #5490 and #6044)
	904208	2	LOCKWASHER, 1/2"
	911043	2	NUT, 1/2" NF
4	035229	4	CAPSCREW, 5/8" NF x 2"
	904209	4	LOCKWASHER, 5/8"
5	064810	4	WASHER, plain
6	090279	1	PLATE, closure, left
7	070469	2	CAPSCREW, 1/2" NF x 1-1/4"
8	035073	2	CAPSCREW, 1/2" NF x 1-3/4"
	904208	4	LOCKWASHER, 1/2"
9	064531	4	WASHER, plain
10	649828	1	FENDER, right
	035073	2	CAPSCREW, 1/2" NF x 1-3/4" (Used prior to tractor #6069 excluding #5490 and #6044)
11	035067	2	CAPSCREW, 1/2" NF x 2" (Effective with tractor #6069 including #5490 and #6044)
12	064531	2	WASHER, plain
	904208	2	LOCKWASHER, 1/2"
	911043	2	NUT, 1/2" NF
13	035229	4	CAPSCREW, 5/8" NF x 2"
	904209	4	LOCKWASHER, 5/8"
14	064810	4	WASHER, plain

(Continued)

ITEM	PART NUMBER	QTY.	DESCRIPTION
15	090280	1	PLATE, closure, right
16	070469	2	CAPSCREW, 1/2"NF x 1-1/4"
17	035073	2	CAPSCREW, 1/2"NF x 1-3/4"
	904208	4	LOCKWASHER, 1/2"
18	064531	4	WASHER, plain
19	089904	3	CHANNEL, fender supporting
20	057517	18	CAPSCREW, 1/2"NF x 4"
	904208	18	LOCKWASHER, 1/2"
21	064531	18	WASHER, plain
22	087482	3	COVER, channel access
23	035439	6	CAPSCREW, 3/8"NC x 1"
	904206	6	LOCKWASHER, 3/8"

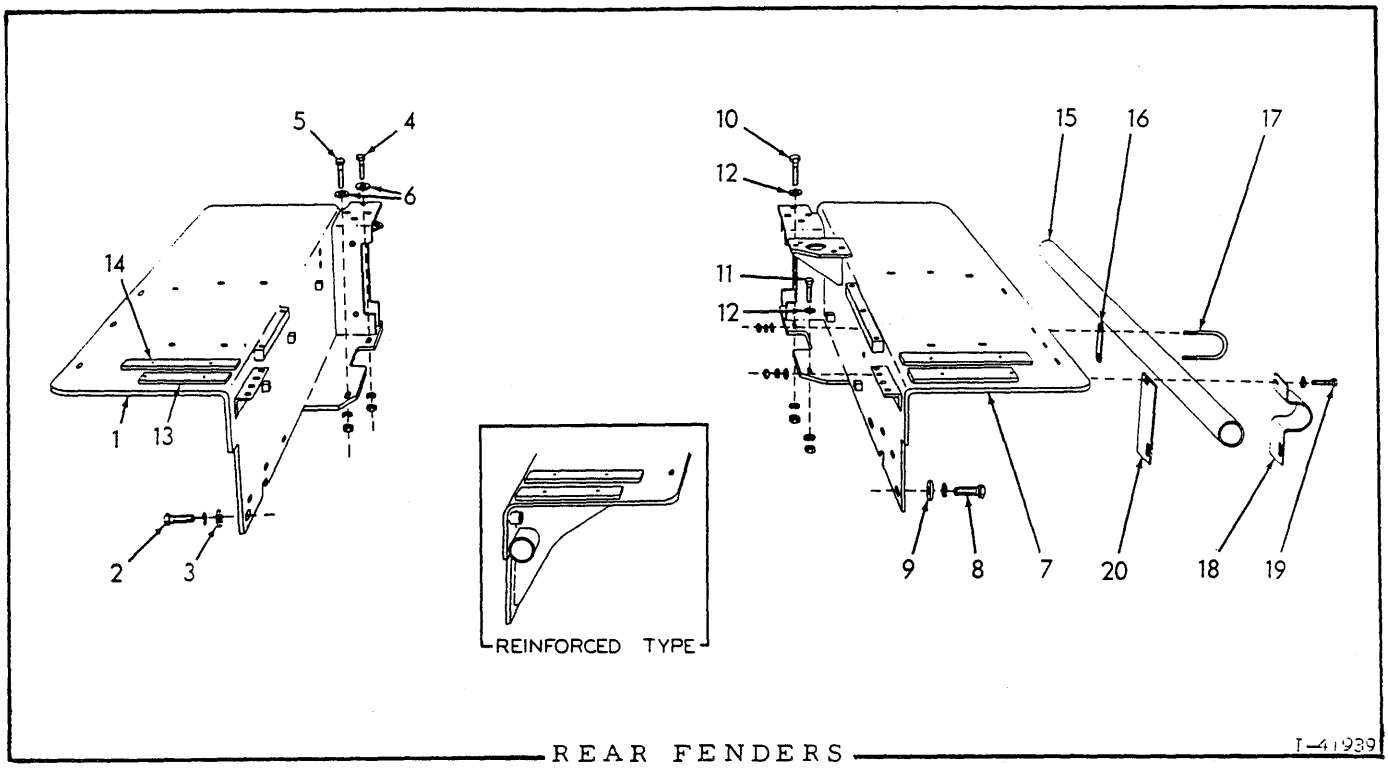

REAR FENDERS

USAGE: Tractors serial No. 10001 and up

* Standard equipment
** Special equipment. Reinforced type.

ITEM	PART NO.	QTY. *	QTY. **	DESCRIPTION	
1	649579	1	-	FENDER ASSEMBLY, left side	Each includes items 13 and 14
	649595	-	1	FENDER ASSEMBLY, left side	
2	631795	4	4	CAPSCREW, Nylok, 5/8"NF x 1-3/4"	
3	064810	4	4	WASHER, plain	
	904209	4	4	LOCKWASHER, 5/8"	
4	070403	2	2	CAPSCREW, 1/2"NF x 3"	
5	035067	1	1	CAPSCREW, 1/2"NF x 2"	
6	064531	3	2	WASHER, plain	
	904208	3	4	LOCKWASHER, 1/2"	
	911043	3	4	NUT, 1/2"NF	
7	649578	1	-	FENDER ASSEMBLY, right side	Models HD11B,S — Each includes items 13 and 14
	649594	-	1	FENDER ASSEMBLY, right side	
	649580	1	-	FENDER ASSEMBLY, right side	Models HD11E,EC — Each includes items 13 and 14
	649596	-	1	FENDER ASSEMBLY, right side	
8	631795	4	4	CAPSCREW, Nylok, 5/8"NF x 1-3/4"	
9	064810	4	4	WASHER, plain	
	904209	4	4	LOCKWASHER, 5/8"	
10	070403	2	2	CAPSCREW, 1/2"NF x 3"	
11	035067	1	1	CAPSCREW, 1/2"NF x 2"	
12	064531	3	4	WASHER, plain	
	904208	3	4	LOCKWASHER, 1/2"	
	911043	3	4	NUT, 1/2"NF	

(Continued)

ITEM	PART NO.	QTY. *	QTY. **	DESCRIPTION
13	640606	2	2	PAD, fuel tank (short)
	083915	4	4	RIVET, split, 3/16" x 3/4" (Not original equipment)
14	640603	2	2	PAD, fuel tank (long)
	083915	4	4	RIVET, split, 3/16" x 3/4" (Not original equipment)
				NOTE: Items listed below are only for tractors equipped with cable dozer using rear-mounted control unit
15	638552	1	-	PIPE, cable conducting
16	095190	3	-	SPACER, cable pipe, front
17	641474	3	-	U-BOLT, cable pipe
	044973	6	-	WASHER, plain, SAE std., 3/8"
	904206	6	-	LOCKWASHER, 3/8"
	911041	6	-	NUT, 3/8"NF
18	095189	1	-	CLAMP, cable pipe
19	036039	1	-	CAPSCREW, 3/8"NF x 1-3/8"
	044973	2	-	WASHER, plain (3/16" thick)
	904206	1	-	LOCKWASHER, 3/8"
	911041	1	-	NUT, 3/8"NF
20	095192	1	-	SPACER, cable pipe, rear

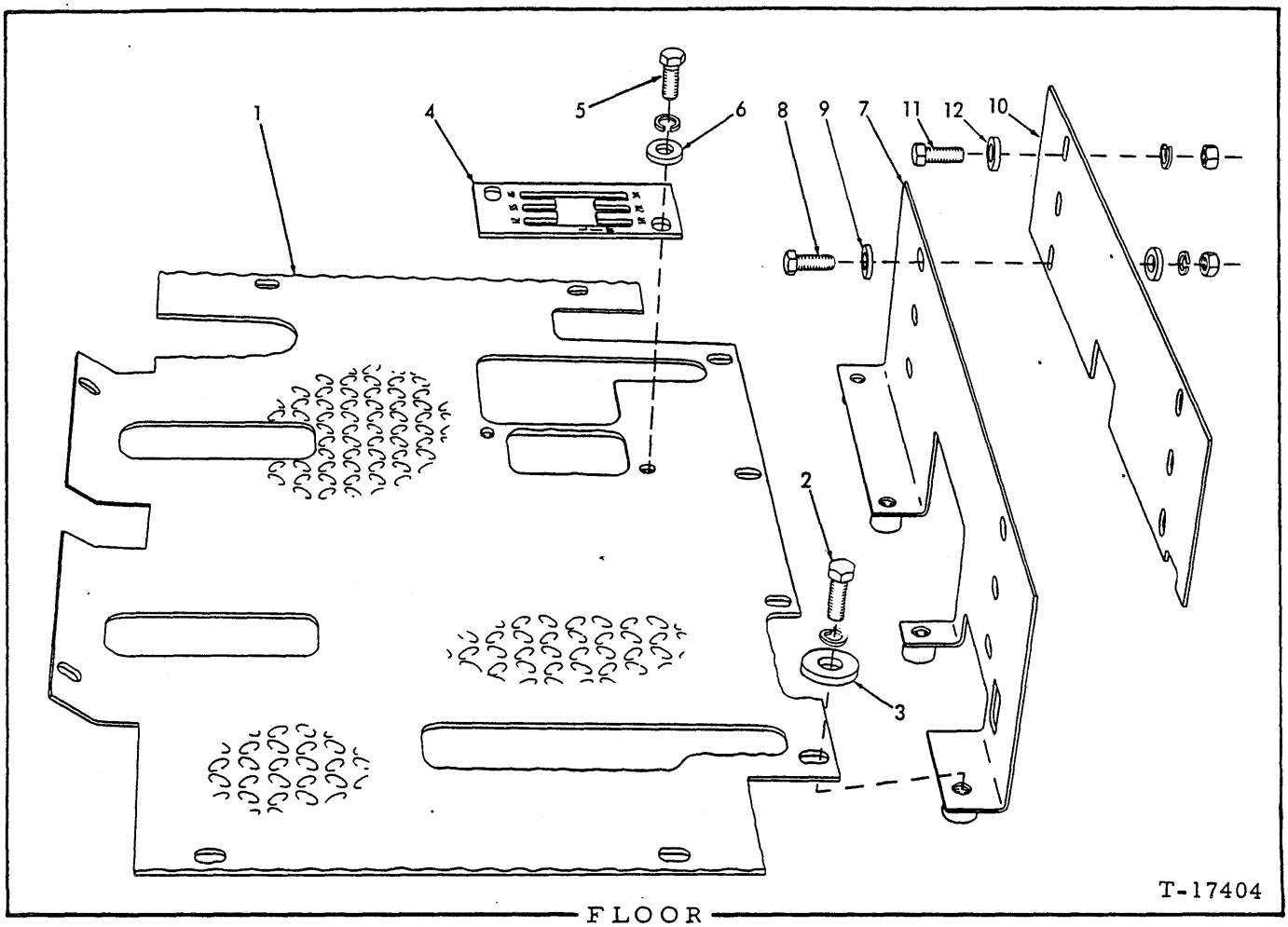

FLOOR

USAGE: Tractors prior to serial No. 10001

* Models HD11B, E, ES, S
** Model HD11EC
*** Model HD11F
**** Model HD11FC

ITEM	PART NO.	QUANTITY *	**	***	****	DESCRIPTION
1	------	1	-	1	-	PLATE, floor (Has reinforcing angle welded to underside) (Not used on Model HD11B and S tractors after approx. serial No. 2790 or on Model HD11F tractors after #6068. Order PLATE 620404)
	620402	1	-	-	-	PLATE, floor (Used on tractors #2790 thru #6472)
	620404	-	-	1	-	PLATE, floor (Used on tractors #6069 thru #6472)
	620151	1	-	-	-	PLATE, floor (Effective with tractor #6473)
	620844	-	1	-	-	PLATE, floor
	633587	-	-	1	-	PLATE, floor, right section } Effective with tractor #6473
	633422	-	-	-	1	PLATE, floor, right section } Effective with tractor #6473
	633589	-	-	1	1	PLATE, floor, left section } Effective with tractor #6473
2	035061	2	2	-	-	CAPSCREW, 1/2"NC x 1-1/4"
	035190	8	8	7	7	CAPSCREW, 1/2"NC x 1-1/2"
	904208	10	10	7	7	LOCKWASHER, 1/2"
3	064531	10	-	6	-	WASHER, plain (1-1/8"O.D) (Early units)
	092163	10	10	7	7	WASHER, plain (1-3/4"O.D.)

(Continued)

FLOOR (Continued)

ITEM	PART NO.	QUANTITY *	**	***	****	DESCRIPTION
4	083674	1	-	1	-	GUIDE, gear shift lever
	620856	-	1	-	1	GUIDE, gear shift lever
5	035190	2	2	2	2	CAPSCREW, 1/2"NC x 1-1/2"
6	064531	2	2	2	2	WASHER, plain
	904208	2	2	2	2	LOCKWASHER, 1/2"
7	084626	1	-	-	-	PLATE, floor supporting
	621524	-	1	-	-	PLATE, floor supporting
	088668	-	-	1	-	PLATE, floor supporting
	649159	-	-	-	1	PLATE, floor supporting
8	035018	2	2	-	-	CAPSCREW, 1/2"NF x 1-1/2"
	035525	-	-	3	3	CAPSCREW, 1/2"NF x 1-1/8"
9	064531	4	4	3	3	WASHER, plain
	904208	2	2	3	3	LOCKWASHER, 1/2"
	911043	2	2	3	3	NUT, 1/2"NF
10	084625	1	-	-	-	PLATE — Supports floor with seat in raised position
	621520	-	1	-	-	PLATE — Supports floor with seat in raised position
	088666	-	-	1	1	PLATE — Supports floor with seat in raised position
11	070469	2	2	-	-	CAPSCREW, 1/2"NF x 1-1/4"
	035525	-	-	3	3	CAPSCREW, 1/2"NF x 1-1/8"
12	064531	2	2	3	3	WASHER, plain
	904208	2	2	3	3	LOCKWASHER, 1/2"
	911043	2	2	3	3	NUT, 1/2"NF

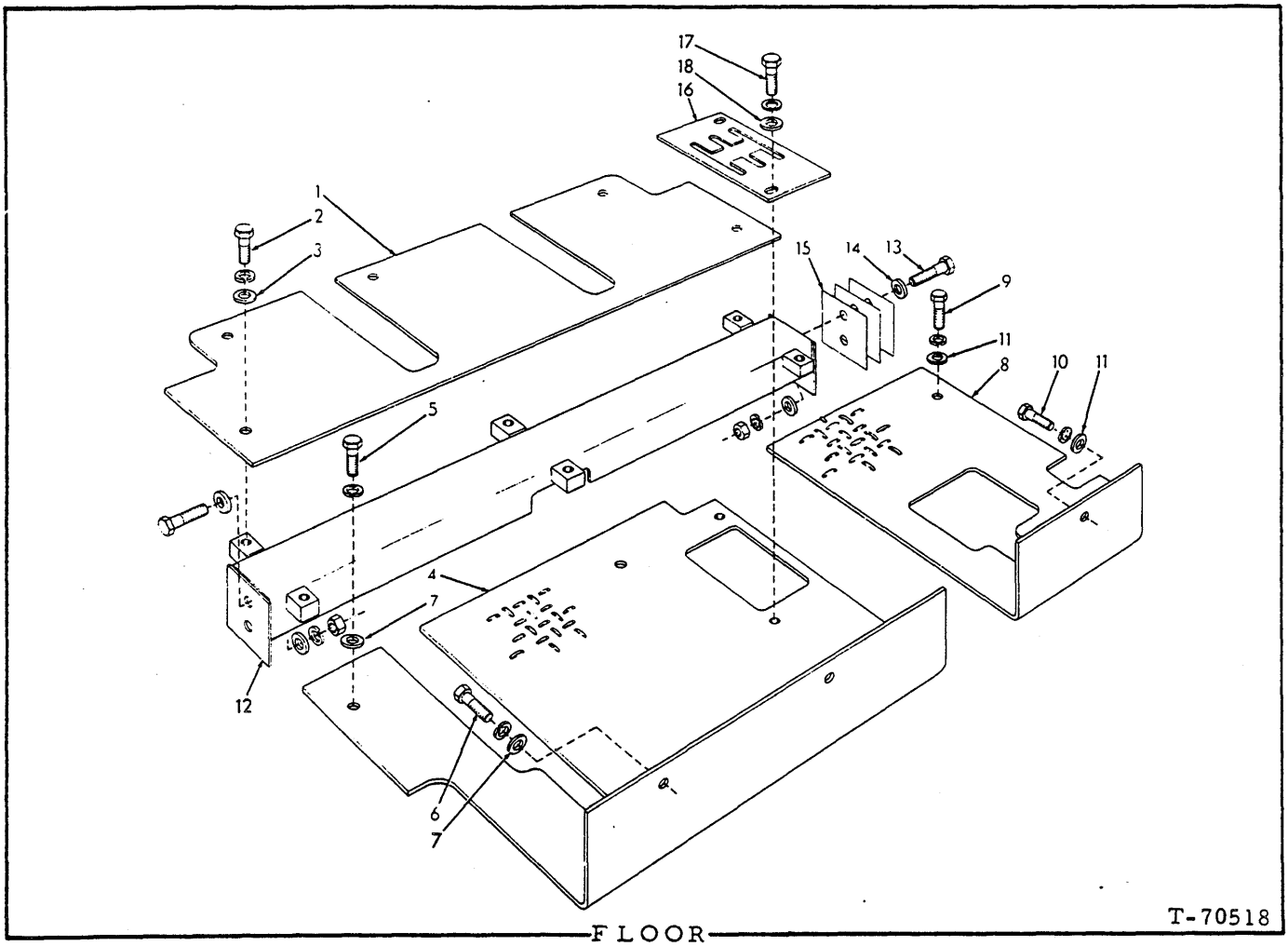

FLOOR

USAGE: Model HD11B,S tractors serial No. 10001 and up

ITEM	PART NO.	QTY.	DESCRIPTION
1	637844	1	PLATE, floor, front
	644233	1	PLATE, floor, front (For units with special engine decelerator)
2	035061	5	CAPSCREW, 1/2"NC x 1-1/4"
	904208	5	LOCKWASHER, 1/2"
3	064531	5	WASHER, plain
4	646544	1	PLATE, rear, left section
5	035061	2	CAPSCREW, 1/2"NC x 1-1/4"
6	035190	2	CAPSCREW, 1/2"NC x 1-1/2"
	904208	4	LOCKWASHER, 1/2"
7	092163	4	WASHER, plain
8	646053	1	PLATE, rear, right section
9	035061	1	CAPSCREW, 1/2"NC x 1-1/4"
10	035190	1	CAPSCREW, 1/2"NC x 1-1/2"
	904208	2	LOCKWASHER, 1/2"
11	092163	2	WASHER, plain

(Continued)

ITEM	PART NO.	QTY.	DESCRIPTION
12	637850	1	CHANNEL, supporting
	644234	1	CHANNEL, supporting (For units with special engine decelerator)
13	035067	4	CAPSCREW, 1/2"NF x 2"
	035073	4	CAPSCREW, 1/2"NF x 1-3/4" (Early units with reinforced Rear Fenders)
	035236	4	CAPSCREW, 1/2"NC x 1-3/4" (Late units with reinforced Rear Fenders)
14	064531	8	WASHER, plain
	904208	4	LOCKWASHER, 1/2"
	911043	4	NUT, 1/2"NF (Not used on units with reinforced Rear Fenders)
15	642167	1	SHIM, supporting channel (1/8" thick)
	642168	2	SHIM, supporting channel (1/16" thick)
16	646507	1	GUIDE, gear shift lever
17	035190	2	CAPSCREW, 1/2"NC x 1-1/2"
	904208	2	LOCKWASHER, 1/2"
18	064531	2	WASHER, plain

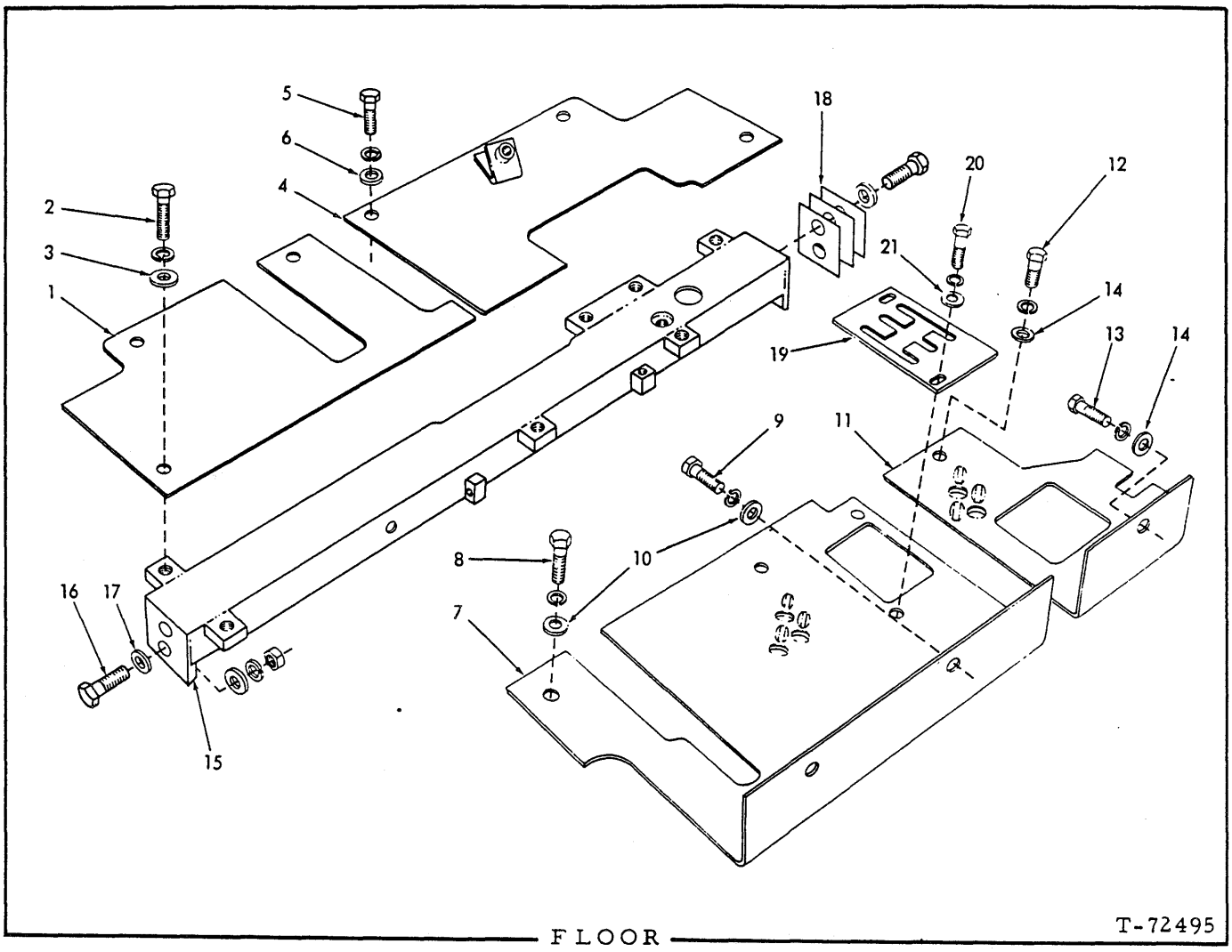

FLOOR

USAGE: Model HD11E,EC tractors serial No. 10001 and up

* Model HD11E
** Model HD11EC

ITEM	PART NO.	QTY. *	QTY. **	DESCRIPTION
1	646017	1	1	PLATE, front, left section
2	035061	3	3	CAPSCREW, 1/2"NC x 1-1/4"
	904208	3	3	LOCKWASHER, 1/2"
3	064531	3	3	WASHER, plain
4	643721	1	-	PLATE, front, right section
	649158	-	1	PLATE, front, right section (Illustrated)(Also for HD11E when equipped with special engine decelerator)
5	035061	3	3	CAPSCREW, 1/2"NC x 1-1/4"
	904208	3	3	LOCKWASHER, 1/2"
6	064531	3	3	WASHER, plain
7	646544	1	1	PLATE, rear, left section
8	035061	2	2	CAPSCREW, 1/2"NC x 1-1/4"
9	035190	2	2	CAPSCREW, 1/2"NC x 1-1/2"
	904208	4	4	LOCKWASHER, 1/2"
10	092163	4	4	WASHER, plain

(Continued)

ITEM	PART NO.	QTY. *	QTY. **	DESCRIPTION
11	646291	1	-	PLATE, rear, right section
	646152	1	-	PLATE, rear, right section (For units with special engine decelerator)
	646292	-	1	PLATE, rear, right section
12	035061	1	1	CAPSCREW, 1/2"NC x 1-1/4"
13	035190	1	1	CAPSCREW, 1/2"NC x 1-1/2"
	904208	2	2	LOCKWASHER, 1/2"
14	092163	2	2	WASHER, plain
15	644070	1	-	CHANNEL, supporting
	634617	-	1	CHANNEL, supporting (Illustrated)(Also for HD11E when equipped with special engine decelerator)
16	035067	4	4	CAPSCREW, 1/2"NF x 2"
	035073	4	4	CAPSCREW, 1/2"NF x 1-3/4" (Early units with reinforced Rear Fenders)
	035236	4	4	CAPSCREW, 1/2"NC x 1-3/4" (Late units with reinforced Rear Fenders)
17	064531	8	8	WASHER, plain
	904208	4	4	LOCKWASHER, 1/2"
	911043	4	4	NUT, 1/2"NF (Not used on units with reinforced Rear Fenders)
18	642167	1	1	SHIM, supporting channel (1/8" thick)
	642168	2	2	SHIM, supporting channel (1/16" thick)
19	646507	1	-	GUIDE, gear shift lever
	646510	-	1	GUIDE, gear shift lever (Illustrated)
20	035190	2	2	CAPSCREW, 1/2"NC x 1-1/2"
	904208	2	2	LOCKWASHER, 1/2"
21	064531	2	2	WASHER, plain

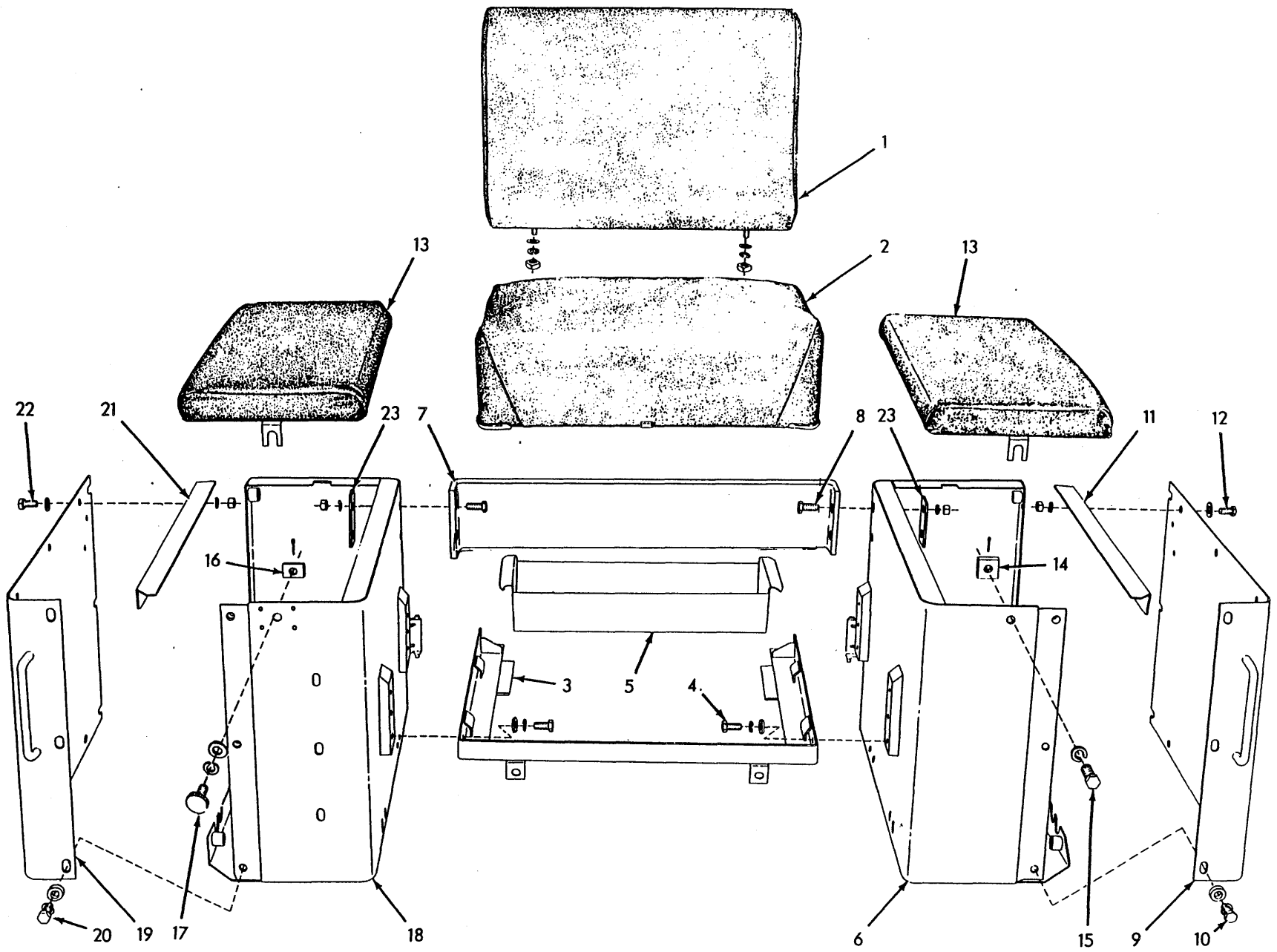

SEAT (Models HD11B, E, EC, ES, S. First type)

T-17399

SEAT

USAGE: Model HD11B,E,EC,ES,S tractors prior to serial No. 10001

ITEM	PART NO.	QTY.	DESCRIPTION
1	084315	1	CUSHION, back (Includes NUTS indented below)
	910244	2	WASHER, plain, SAE std., 1/2"
	904208	2	LOCKWASHER, 1/2"
	911028	2	NUT, 1/2"NC
2	084314	1	CUSHION, seat
3	084663	1	FRAME, seat cushion
4	614478	4	CAPSCREW, 1/2"NF x 1-3/8"
	904208	4	LOCKWASHER, 1/2"
	064531	4	WASHER, plain
5	093005	1	BOX, tool (Used prior to tractor #8346)
6	084169	1	BOX, left battery
	035073	3	CAPSCREW, 1/2"NF x 1-3/4"
	064531	6	WASHER, plain
	904208	3	LOCKWASHER 1/2"
	911043	3	NUT, 1/2"NF
			Box to fuel tank. Used prior to approx. tractor #4859.
7	096951	1	BRACE, battery box (Effective approx. with tractor #4859)
8	614478	4	CAPSCREW, 1/2"NF x 1-3/8"
	904208	4	LOCKWASHER, 1/2"
	911043	4	NUT, 1/2"NF
9	641073	1	COVER, left battery box (See page 79 for special cover used when HEAVY-DUTY filters are installed prior to tractor #4415)
10	070469	8	CAPSCREW, 1/2"NF x 1-1/4"
	904208	8	LOCKWASHER, 1/2"
	064531	8	WASHER, plain
11	083233	1	ANGLE, arm cushion supporting, left side
12	070467	3	CAPSCREW, 1/2"NF x 1"
	910244	3	WASHER, plain, SAE std., 1/2"
	904208	3	LOCKWASHER, 1/2"
	911043	3	NUT, 1/2"NF
13	083263	2	CUSHION, arm rest
14	050551	1	BLOCK, retaining, left arm cushion
15	050510	1	CAPSCREW, retaining, left arm cushion
	904208	1	LOCKWASHER, 1/2"
	900802	1	PIN, cotter, 3/32" x 1"
16	050551	1	BLOCK, retaining, right arm cushion (1/2"NF) (Used prior to tractor #6069 excluding #5490 and #6044)
	624488	1	BLOCK, retaining, right arm cushion (1/2"NC) (Effective with tractor #6069 including #5490 and #6044)
17	050510	1	CAPSCREW, retaining, right arm cushion (1/2"NF) (Used prior to tractor #6069 excluding #5490 and #6044)
	091976	1	KNOB, retaining, right arm cushion (1/2"NC) (Effective with tractor #6069 including #5490 and #6044)
	904208	1	LOCKWASHER, 1/2"
	910244	1	WASHER, plain
	900802	1	PIN, cotter, 3/32" x 1"

(Continued)

ITEM	PART NO.	QTY.	DESCRIPTION	
18	084170	1	BOX, right battery	
	035073	3	CAPSCREW, 1/2"NF x 1-3/4"	Box to fuel tank, Used prior to approx. tractor #4859.
	064531	6	WASHER, plain	
	904208	3	LOCKWASHER, 1/2"	
	911043	3	NUT, 1/2"NF	
19	641074	1	COVER, right battery box (See page 80 for special cover used when HEAVY-DUTY filters are installed effective with tractor #4415)	
20	070469	8	CAPSCREW, 1/2"NF x 1-1/4"	
	904208	8	LOCKWASHER, 1/2"	
	064531	8	WASHER, plain	
21	083234	1	ANGLE, arm cushion supporting, right side	
22	070467	3	CAPSCREW, 1/2"NF x 1"	
	910244	3	WASHER, plain, SAE std., 1/2"	
	904208	3	LOCKWASHER, 1/2"	
	911043	3	NUT, 1/2"NF	
23	096939	2	PLATE, reinforcing, battery box (Effective approx. with tractor =4859)	

NOTE: See PAINTING AND MARKING for instruction for plates and transfers

USAGE: Models HD11F,FC

ITEM	PART NO.	QTY.	DESCRIPTION
1	084315	1	CUSHION, back(Includes NUTS indented below)
	910244	2	WASHER, plain, SAE std., 1/2"
	904208	2	LOCKWASHER, 1/2"
	911028	2	NUT, 1/2"NC
2	084797	1	BOX, battery
	035018	3	CAPSCREW, 1/2"NF x 1-1/2" } To fuel tank. Used prior to tractor #4713
	064531	3	WASHER, plain
	904208	3	LOCKWASHER, 1/2"
	911043	3	NUT, 1/2"NF
3	083263	1	CUSHION, arm
4	050551	1	BLOCK, arm cushion retaining (1/2"NF)(Used prior to tractor #6069 excluding #5490 and #6044)
	624488	1	BLOCK, arm cushion retaining (1/2"NC)(Effective with tractor #6069 including #5490 and #6044)
5	050510	1	CAPSCREW, arm cushion retaining (1/2"NF x 1-1/2") (Used prior to tractor #6069 excluding #5490 and #6044)
	091976	1	KNOB, arm cushion retaining (1/2"NC) (Effective with tractor #6069 including #5490 and #6044)
	904208	1	LOCKWASHER, 1/2"
	900802	1	PIN, cotter, 3/32" x 1"
	910244	1	WASHER, plain, SAE std., 1/2"
6	089336	1	COVER, battery box top
7	070469	2	CAPSCREW, 1/2"NF x 1-1/4"
	900818	2	WASHER, plain, U.S. std., 1/2"
	904208	2	LOCKWASHER, 1/2"
8	080207	1	COVER, battery box side
9	035525	6	CAPSCREW, 1/2"NF x1-3/8"
10	035018	2	CAPSCREW, 1/2"NF x 1-1/2"
	064531	8	WASHER, plain
	904208	8	LOCKWASHER, 1/2"
11	088686	1	FRAME, seat cushion
12	614478	2	CAPSCREW, 1/2"NF x 1-3/8"
13	070469	2	CAPSCREW, 1/2"NF x 1-1/4"
14	064531	4	WASHER, plain
	904208	4	LOCKWASHER, 1/2"
	911043	2	NUT, 1/2NF"
15	088672	1	BRACKET, seat cushion frame supporting
	035018	2	CAPSCREW, 1/2"NF x1-1/2" (To fuel tank. Used prior to tractor #4713)
16	035073	2	CAPSCREW, 1/2"NF x 1-3/4"
17	064531	4	WASHER, plain } 2 additional used prior to tractor #4713
	904208	2	LOCKWASHER, 1/2"
	911043	2	NUT, 1/2"NF
18	084314	1	CUSHION, seat
19	093005	1	BOX, tool(Used prior to tractor #8346)

(Continued)

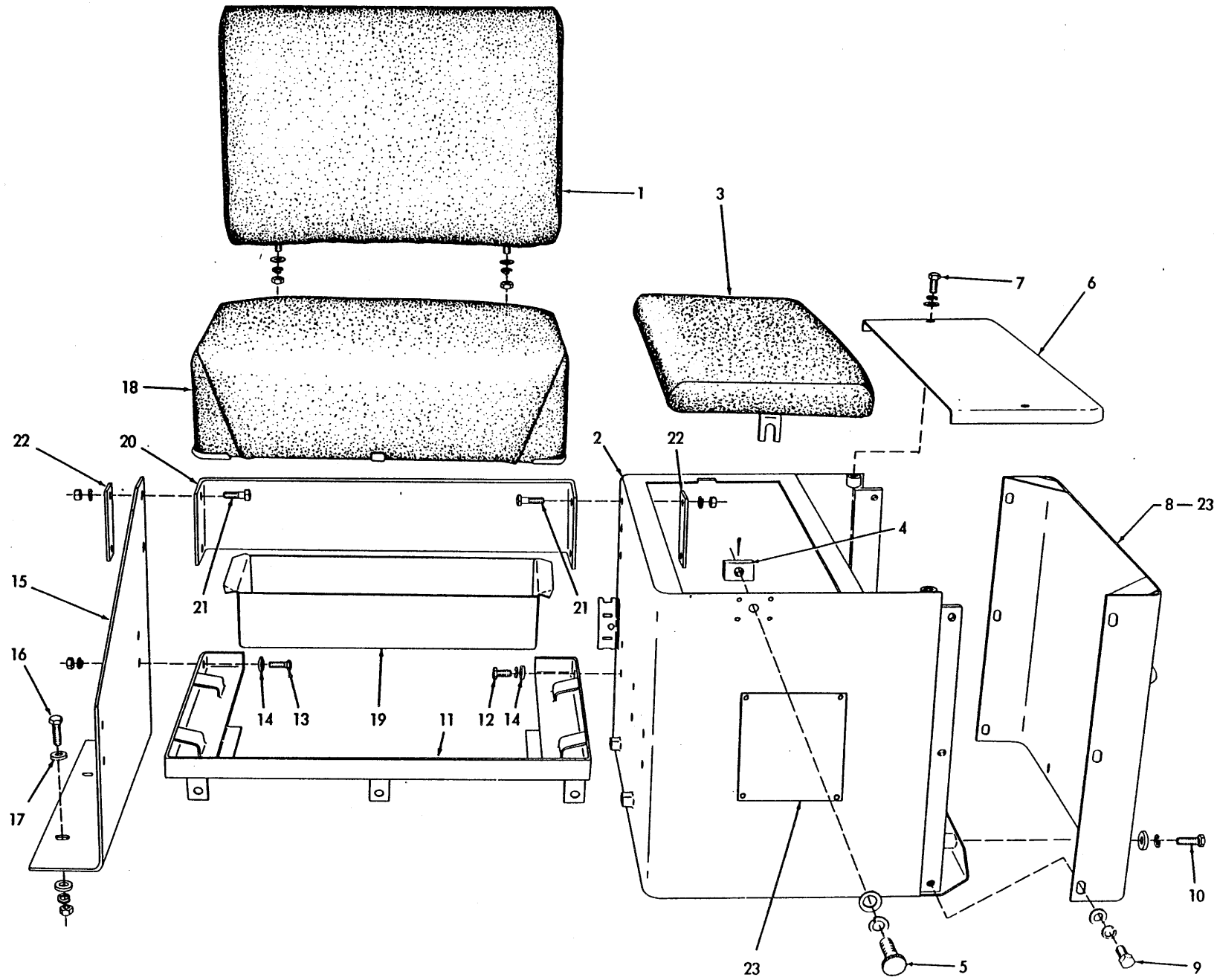

SEAT (Models HD11F, FC)

ITEM	PART NO.	QTY.	DESCRIPTION
20	096951	1	BRACE, battery box (Effective with tractor #4713)
21	614478	4	CAPSCREW, 1/2"NF x 1-3/8"
	904208	4	LOCKWASHER, 1/2"
	911043	4	NUT, 1/2"NF
22	096939	2	PLATE, reinforcing, battery box (Effective with tractor #4713)
23	------	-	PLATE and TRANSFERS (See PAINTING AND MARKING)

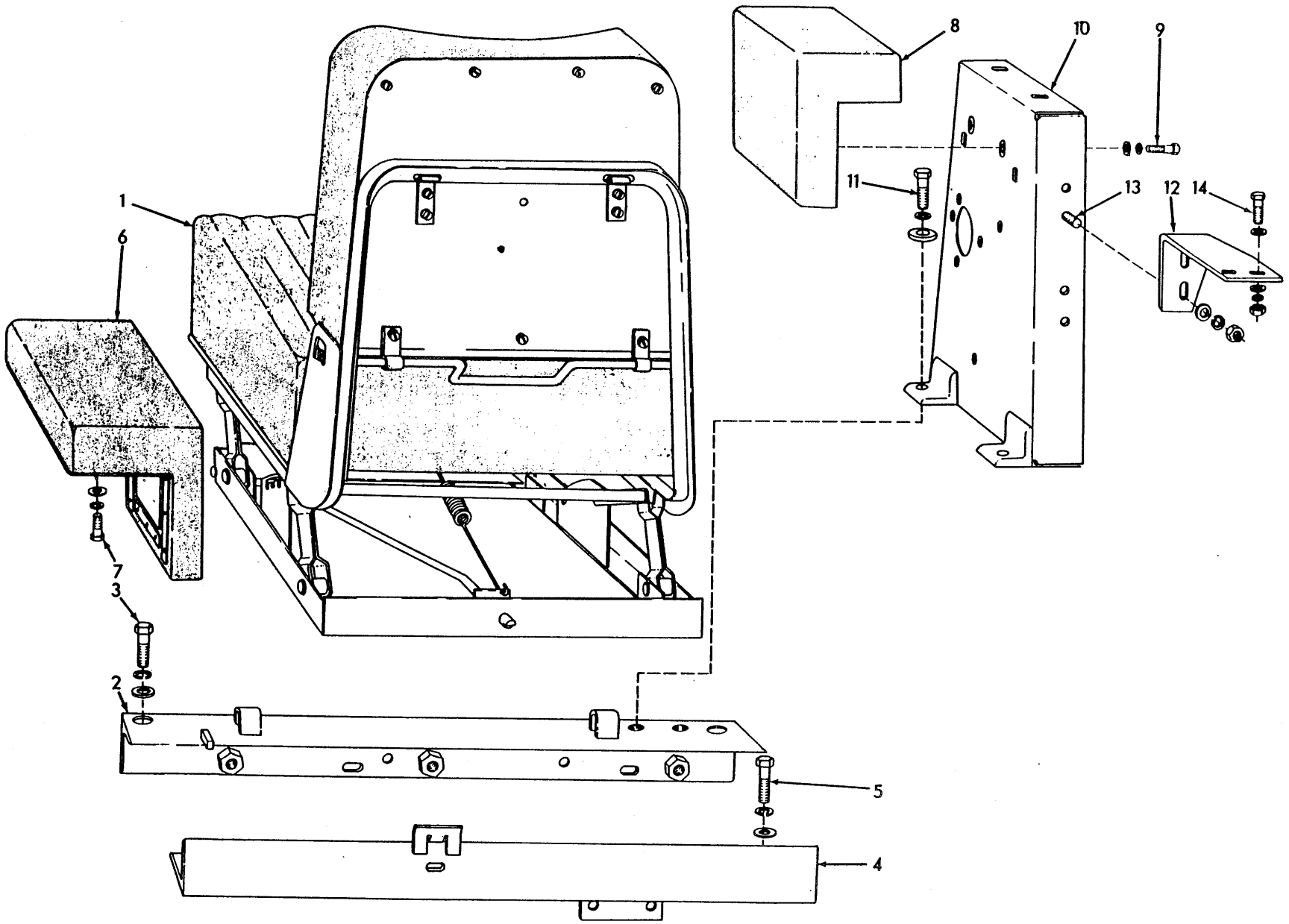

SEAT (Second type)

T-41927

SEAT

USAGE: Tractors serial No. 10001 and up

ITEM	PART NO.	QTY.	DESCRIPTION
			NOTE: See page 509 for BATTERY BOXES
1	632053	1	SEAT ASSEMBLY (See page 505 for parts)(Used prior to September 1965. Order SEAT ASSEMBLY 649859)
	649859	1	SEAT ASSEMBLY (See page 507 for parts)(Effective September 1965)
2	638776	1	ANGLE, seat supporting, front
3	035073	2	CAPSCREW, 1/2"NF x 1-3/4"
	904208	2	LOCKWASHER, 1/2"
	064531	2	WASHER, plain
4	634609	1	ANGLE, seat supporting, rear
5	035073	2	CAPSCREW, 1/2"NF x 1-3/4"
	904208	2	LOCKWASHER, 1/2"
	064531	2	WASHER, plain
6	632179	1	CUSHION, arm rest, left side
7	036034	4	CAPSCREW, 3/8"NF x 1"
	904206	4	LOCKWASHER, 3/8"
	044973	4	WASHER, plain
8	632188	1	CUSHION, arm rest, right side
9	036034	4	CAPSCREW, 3/8"NF x 1"
	904206	4	LOCKWASHER, 3/8"
	044973	4	WASHER, plain
10	632284	1	SUPPORT, right arm rest cushion
11	035190	4	CAPSCREW, 1/2"NC x 1-1/2"
	904208	4	LOCKWASHER, 1/2"
	064531	4	WASHER, plain
12	634249	1	ANGLE, bracing, right arm rest support
13	036034	2	CAPSCREW, 3/8"NF x 1"
14	035336	2	CAPSCREW, 3/8"NF x 1-1/2"
	044973	6	WASHER, plain
	904206	4	LOCKWASHER, 3/8"
	911041	4	NUT, 3/8"NF

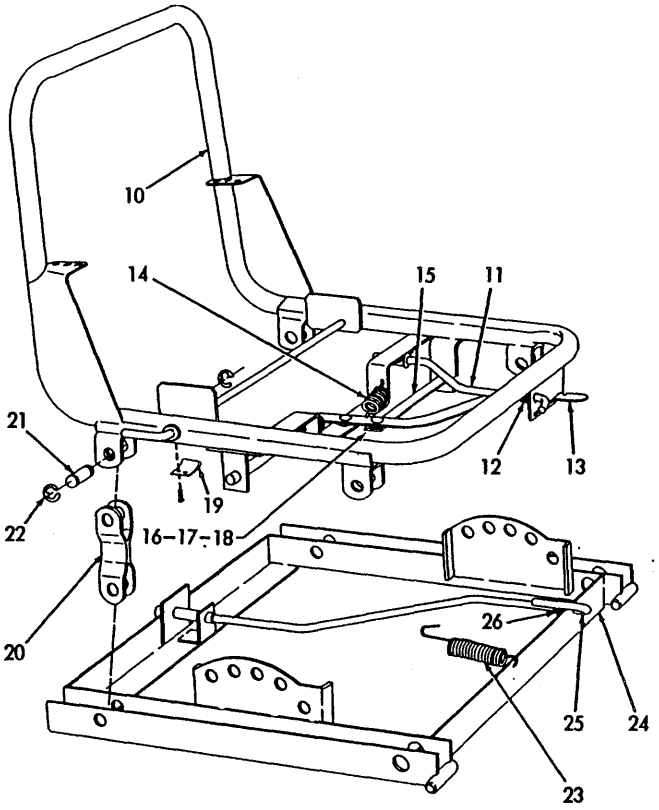

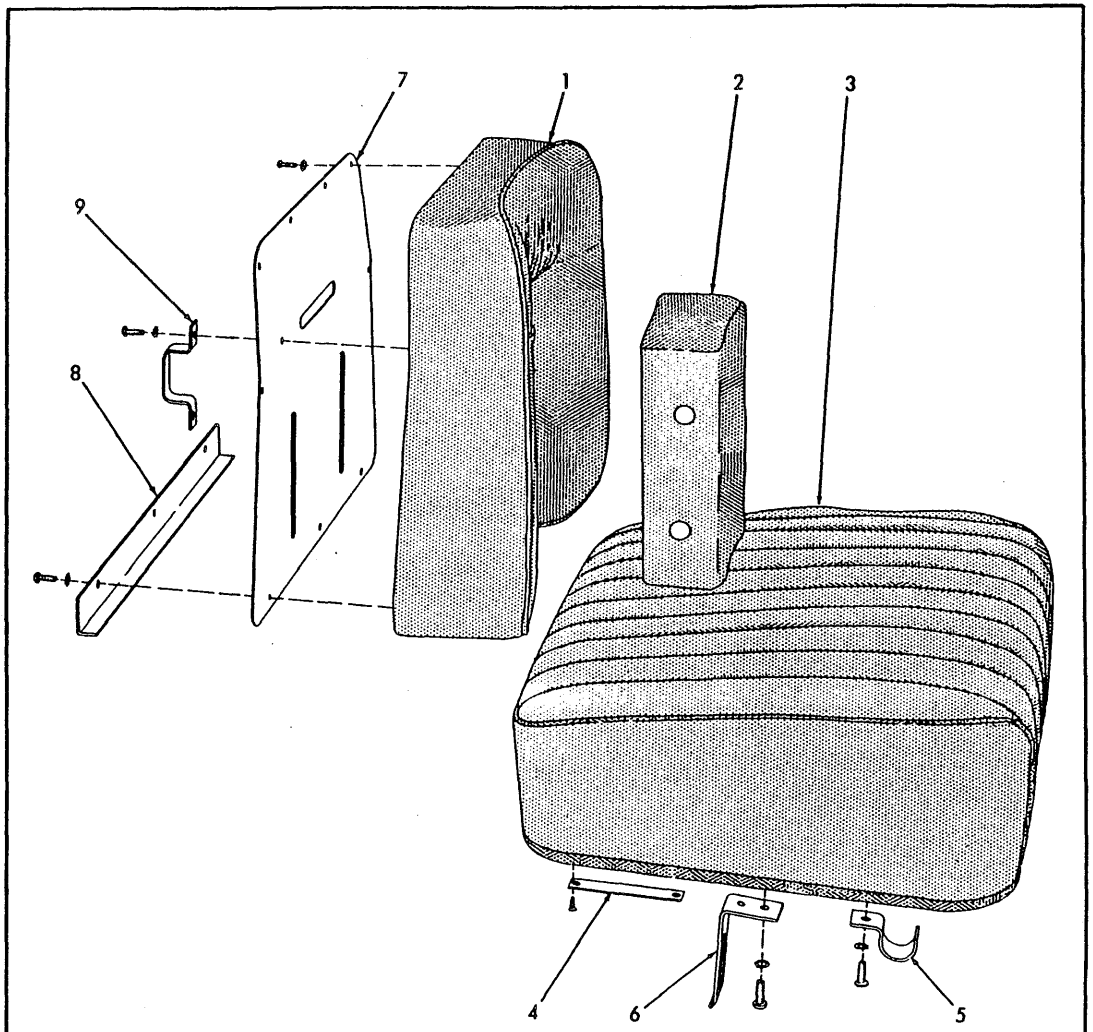

SEAT CUSHIONS

SEAT ASSEMBLY 63203

SEAT ASSEMBLY 632053

USAGE: See page 503

ITEM	PART NO.	QTY.	DESCRIPTION
1	638422	1	CUSHION, back (outside section)
	642499	1	COVER, slip, back cushion (Includes fastenings)(Not original equipment)
2	638421	1	CUSHION, back (center section)
	642498	1	COVER, slip, back cushion (Includes fastenings)(Not original equipment)
3	638420	1	CUSHION ASSEMBLY, seat (Includes item 4)
	642500	1	COVER, slip, seat cushion (Includes fastenings)(Not original equipment)
4	638431	2	PLATE, bearing, seat cushion
	------	4	SCREW, wood, fl-hd., #8 x 1/2" (Procure locally)
5	638432	2	BRACKET, pivot, seat cushion
	916532	2	SCREW, machine, rd-hd., 1/4"NC x 3/4"
	914105	2	LOCKWASHER, ext-tooth, 1/4"
6	638369	1	STOP, seat cushion locking rod
	916532	2	SCREW, machine, rd-hd., 1/4"NC x 3/4"
	914105	2	LOCKWASHER, ext-tooth, 1/4"
7	638370	1	PLATE, reinforcing, back cushion
	916532	7	SCREW, machine, rd-hd., 1/4"NC x 3/4"
	914105	7	LOCKWASHER, ext-tooth, 1/4"
8	638427	1	SUPPORT, back cushion
	916532	3	SCREW, machine, rd-hd., 1/4"NC x 3/4"
	914105	3	LOCKWASHER, ext-tooth, 1/4"
9	638435	2	BRACKET, retaining, back cushion
	916532	4	SCREW, machine, rd-hd., 1/4"NC x 3/4"
	914105	4	LOCKWASHER, ext-tooth, 1/4"
10	638468	1	FRAME ASSEMBLY, seat (Includes items 11 thru 19)
11	638425	1	ROD, locking, seat cushion
	911115	2	WASHER, plain, SAE std., 3/8"
	900801	2	PIN, cotter, 3/32" x 3/4"
12	638429	1	SPRING, seat cushion locking rod
13	638363	1	STRAP, operating, seat position
14	638428	2	SPRING, seat position operating strap
15	638426	2	ROD, locking, seat position
16	638430	3	PIN, seat position locking rod
17	628001	3	WASHER, spacing, seat position rod
18	638354	3	WASHER, retaining, seat position rod pin
19	638433	1	SPRING, cushion height adjuster
	914197	2	SCREW, thd-cutting, rd-hd., #6 x 3/8"
20	638423	4	LINK, suspension, seat frame
21	638434	8	PIN, seat frame suspension lever
22	638351	16	RING, locking, suspension lever pin
23	638424	1	SPRING, retracting, seat frame
24	638371	1	FRAME ASSEMBLY, base (Includes items 25 and 26)
25	639975	1	ROD, seat release
	910335	1	WASHER, plain, SAE std., 5/16"
	900801	2	PIN, cotter, 3/32" x 3/4"
26	638429	1	SPRING, seat release rod

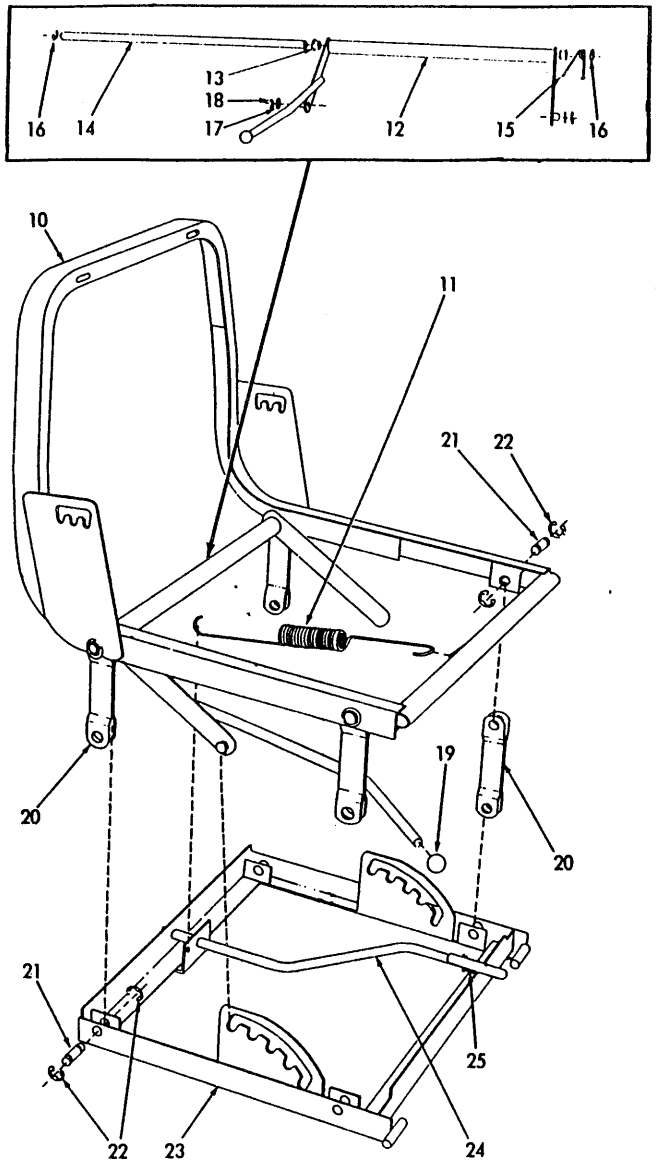

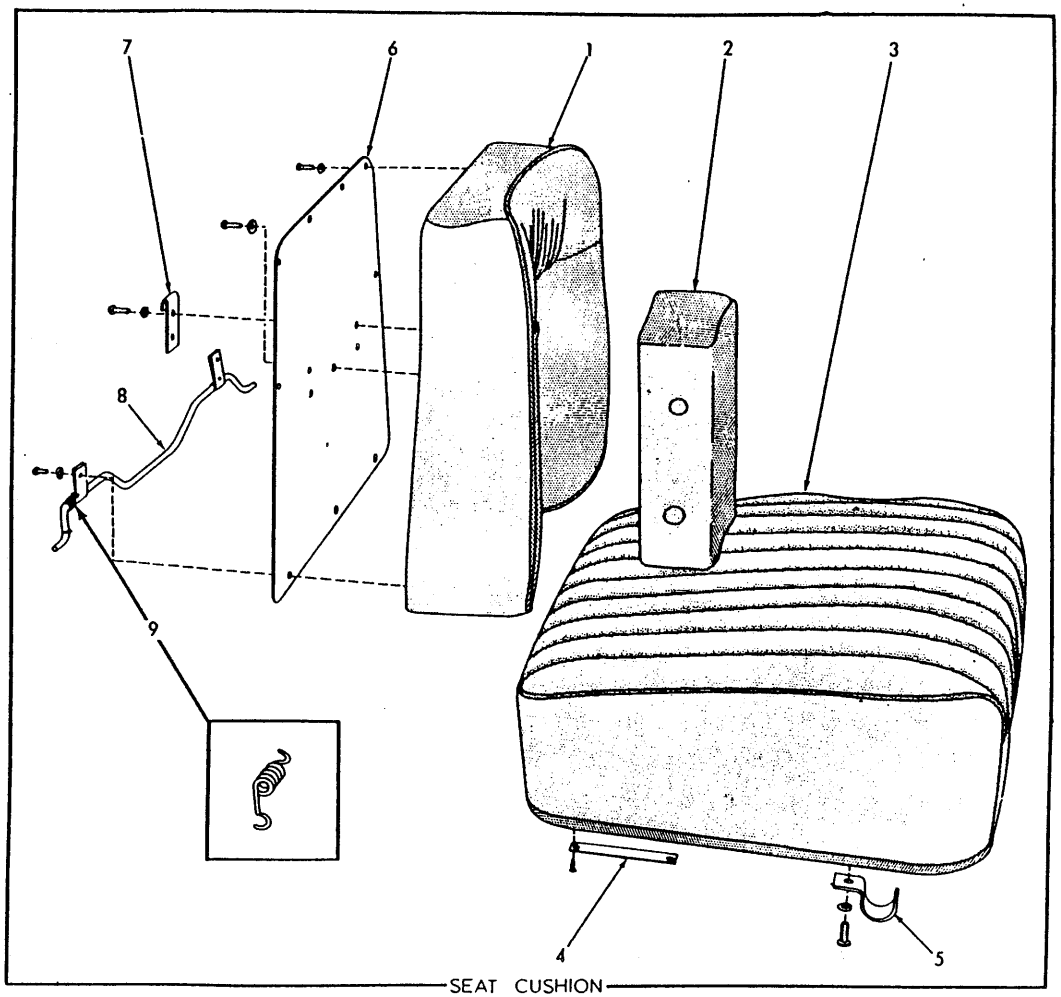

SEAT CUSHION

SEAT ASSEMBLY 649859

T-71877

SEAT ASSEMBLY 649859

USAGE: See page 503

ITEM	PART NO.	QTY.	DESCRIPTION
1	638422	1	CUSHION, back (outside section)
	642499	1	COVER, slip, back cushion (Includes fastenings)(Not original equipment)
2	638421	1	CUSHION, back (center section)
	916532	2	SCREW, machine, rd-hd., 1/4"NC x 3/4"
	914105	2	LOCKWASHER, ext-tooth, 1/4"
	642498	1	COVER, slip, back cushion (Includes fastenings)(Not original equipment)
3	638420	1	CUSHION ASSEMBLY, seat (Includes item 4)
	642500	1	COVER, slip, seat cushion (Includes fastenings)(Not original equipment)
4	638431	2	PLATE, bearing, seat cushion
	------	4	SCREW, wood, fl-hd., #8 x 1/2" (Procure locally)
5	638432	2	BRACKET, pivot, seat cushion
	916532	2	SCREW, machine, rd-hd., 1/4"NC x 3/4"
	914105	2	LOCKWASHER, ext-tooth, 1/4"
6	650143	1	PLATE, reinforcing, back cushion
	916532	8	SCREW, machine, rd-hd., 1/4"NC x 3/4"
	914105	8	LOCKWASHER, ext-tooth, 1/4"
7	650132	2	BRACKET, retaining, back cushion
	916532	4	SCREW, machine, rd-hd., 1/4"NC x 3/4"
	914105	4	LOCKWASHER, ext-tooth, 1/4"
8	650141	1	ROD ASSEMBLY, back cushion adjustment (Includes mounting clips)
	916532	2	SCREW, machine, rd-hd., 1/4"NC x 3/4"
	914105	2	LOCKWASHER, ext-tooth, 1/4"
9	650137	1	SPRING, back cushion adjustment rod
10	650144	1	FRAME, seat
11	650138	1	SPRING, retracting, seat frame
12	650142	1	LATCH, seat adjustment
13	650146	2	BEARING, seat adjustment latch
14	650136	1	SHAFT, seat adjustment latch
15	650135	1	SPRING, seat adjustment latch
16	638351	2	RING, snap, seat adjustment latch shaft
17	188436	2	WASHER, seat adjustment latch
18	650147	2	RING, snap, seat adjustment latch
19	650133	1	KNOB, seat adjustment latch
20	650139	4	LINK, suspension, seat frame
21	650131	6	PIN, seat frame suspension link
22	638351	12	RING, snap, suspension link pin
23	650145	1	FRAME ASSEMBLY, base (Includes items 24 and 25)
24	650140	1	ROD, seat release
	188436	1	WASHER, plain
	924169	2	PIN, groove, 1/8" x 1"
25	650134	1	SPRING, seat release rod

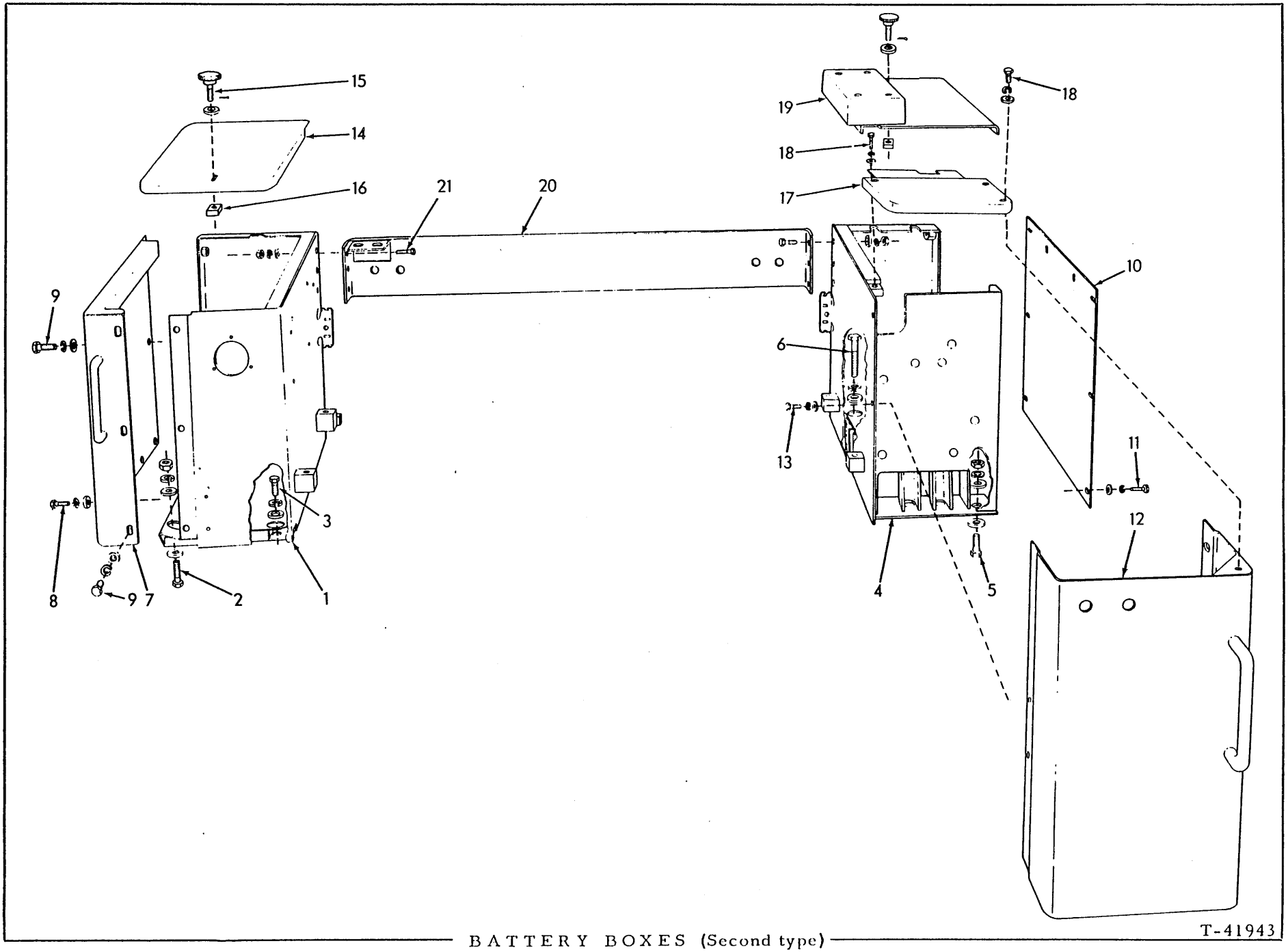

BATTERY BOXES (Second type)

BATTERY BOXES

USAGE: Tractors serial No. 10001 and up

ITEM	PART NO.	QTY.	DESCRIPTION
1	649125	1	BOX, right battery
2	035073	1	CAPSCREW, 1/2"NF x 1-3/4"
	035190	1	CAPSCREW, 1/2"NC x 1-3/4" (Units with reinforced fenders)
3	035018	3	CAPSCREW, 1/2"NF x 1-1/2"
	064531	5	WASHER, plain
	904208	4	LOCKWASHER, 1/2"
	911043	1	NUT, 1/2"NF (Not for units with reinforced fenders)
4	649126	1	BOX, left battery
5	035073	1	CAPSCREW, 1/2"NF x 1-3/4"
	035190	1	CAPSCREW, 1/2"NC x 1-3/4" (Units with reinforced fneders)
6	057517	2	CAPSCREW, 1/2"NF x 4"
	064531	4	WASHER, plain
	904208	3	LOCKWASHER, 1/2"
	911043	1	NUT, 1/2"NF (Not for units with reinforced fenders)
7	639905	1	COVER, side, right battery box (Also see HEAVY-DUTY FUEL FILTER for special cover)
8	614478	2	CAPSCREW, 1/2"NF x 1-3/8"
9	614478	6	CAPSCREW, 1/2"NF x 1-3/8" (Early units)
	035733	6	CAPSCREW, 1/2"NC x 1-3/8" (Late units)
	904208	8	LOCKWASHER, 1/2"
	064531	8	WASHER, plain
10	637532	1	COVER, side, left battery box
11	614478	8	CAPSCREW, 1/2"NF x 1-3/8" (Early units)
	035733	8	CAPSCREW, 1/2"NC x 1-3/8" (Late units)
	904208	8	LOCKWASHER, 1/2"
	064531	8	WASHER, plain
12	641617	1	COVER, end, left battery box
13	035525	2	CAPSCREW, 1/2"NF x 1-1/8" (Early units)
	035220	2	CAPSCREW, 1/2"NC x 1-1/8" (Late units)
	904208	2	LOCKWASHER, 1/2"
	064531	2	WASHER, plain
14	641499	1	COVER, top, right battery box
15	091976	2	KNOB, retaining, battery box cover
	910244	2	WASHER, plain, SAE std., 1/2"
	900802	2	PIN, cotter, 3/32" x 1"
16	624488	2	BLOCK, tapped, battery box cover knob
17	639859	1	COVER, top, left battery box, front section
18	036034	3	CAPSCREW, 3/8"NF x 1" (Early units)
	035439	3	CAPSCREW, 3/8"NC x 1" (Late units)
	904206	3	LOCKWASHER, 3/8"
	044973	3	WASHER, plain
19	634338	1	COVER, top, left battery box, rear section
20	634251	1	BRACE, cross
21	614478	6	CAPSCREW, 1/2"NF x 1-3/8"
	064531	6	WASHER, plain
	904208	6	LOCKWASHER, 1/2"
	911043	6	NUT, 1/2"NF

NOTE: See PAINTING AND MARKING for instruction plates and transfers.

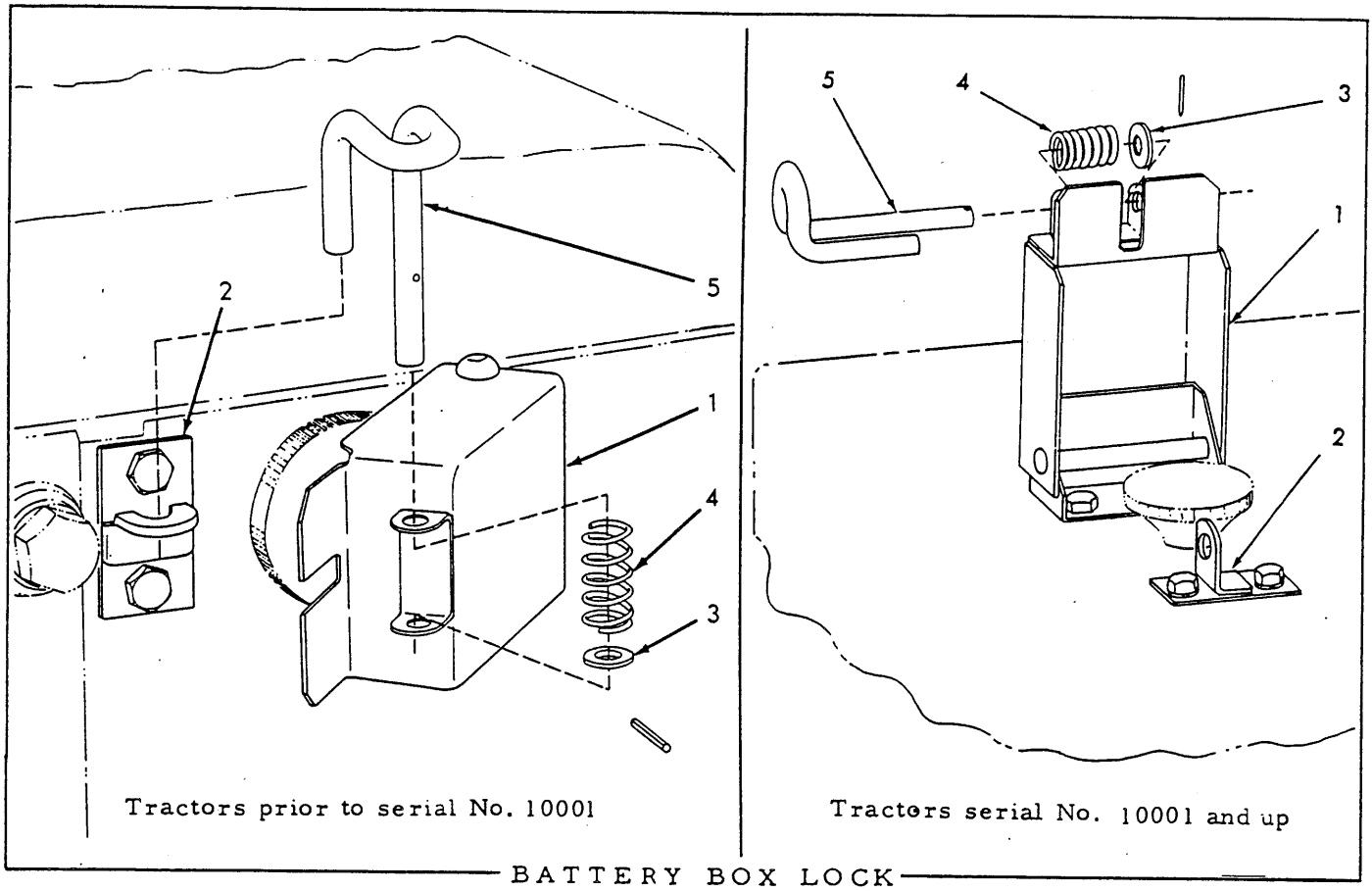

BATTERY BOX LOCK

USAGE: Special Equipment. Padlock is required to complete the installation

ITEM	PART NO.	QTY.	DESCRIPTION
1	620474	1	COVER, retaining knob
	914330	2	CAPSCREW, 1/4"NF x 5/8"
	904204	2	LOCKWASHER, 1/4"
	911040	2	NUT, 1/4"NF
2	620472	1	PLATE, latching, retaining knob cover
	914330	2	CAPSCREW, 1/4"NF x 5/8"
	904204	2	LOCKWASHER, 1/4"
	911040	2	NUT, 1/4"NF
3	607414	1	WASHER, latching spring
4	035916	1	SPRING, latching rod
5	621201	1	ROD, latching
	916146	1	PIN, roll, 3/32" x 1/2"

PAINTING AND MARKING
(Not Illustrated)

* Models HD11B, E, ES, S, F
** Models HD11EC, FC

ITEM	PART NO.	QTY. *	QTY. **	DESCRIPTION	
				NOTE: Approximately 3 gallons paint required for spraying	
1	921094	-	-	ENAMEL, persian orange, quart can	
	922983	-	-	ENAMEL, A-C yellow, quart can	
2	921093	-	-	ENAMEL, persian orange, gallon can	
	922984	-	-	ENAMEL, A-C yellow, gallon can	
3	922985	-	-	ENAMEL, A-C yellow, 5-gallon can	
4	921092	-	-	ENAMEL, persian orange, 12 oz. pressurized spray-type can	
	922982	-	-	ENAMEL, A-C yellow, 12 oz. pressurized spray-type can	
				NOTE: All plates and transfers listed below are English language printings unless otherwise indicated	
5	621746	1	-	PLATE, lubrication and service guide (7" x 10") (For units with dry clutch)	Tractors prior to #10001. Attached to left battery box.
	630686	1	-	PLATE, lubrication and service guide (7" x 10") (For units with oil clutch)	
	623241	1	-	PLATE, lubrication and service guide (multi-language, 7" x 10")(For units with dry clutch)	
	632183	1	-	PLATE, lubrication and service guide (multi-language, 8-3/4" x 12")(For units with oil clutch)	
	624339	-	1	PLATE, lubrication and service guide (7" x 10")	
	629509	-	1	PLATE, lubrication and service guide (multi-language, 8-3/4" x 12")	
	034076	4	4	SCREW, thread-cutting, cross-recessed-hd., #8 x 1/2" (2 additional required for PLATES 629509 and 632183)	
6	645018	1	-	PLATE, lubrication and service guide (7" x 10") (Models HD11B, S)	Tractors #10001 and up. Attached to right battery box
	645127	1	-	PLATE, lubrication and service guide (multi-language, 7" x 12-7/8")(Models HD11B, S)	
	640094	1	-	PLATE, lubrication and service guide (7" x 10") (Model HD11E)	
	645128	1	-	PLATE, lubrication and service guide (multi-language, 7" x 12-7/8")(Model HD11E)	
	645157	-	1	PLATE, lubrication and service guide (7" x 10") (Model HD11EC)	
	645158	-	1	PLATE, lubrication and service guide (multi-language, 7" x 12-7/8")(Model HD11EC)	
	034076	4	4	SCREW, thread-cutting, cross-recessed-hd., #8 x 1/2" (2 additional required for multi-language plates)	

(Continued)

ITEM	PART NO.	QTY. *	QTY. **	DESCRIPTION	
7	059698	1	-	PLATE, gear shift positions (2-5/8" x 3-1/2")(Attached to dash)	
	077888	-	1	PLATE, gear shift positions (2-5/8" x 3-1/2")(Attached to dash)	
	034076	4	4	SCREW, thread-cutting, cross-recessed-hd., #8 x 1/2"	
8	621357	1	1	TRANSFER, lubrication certification (3-7/8" x 6-3/4", pressure-sensitive type)(Applied to dash on early units, and to left battery box on late units)	
9	631293	1	1	TRANSFER, instruction, engine operation (2-1/4" x 4-1/2", pressure-sensitive type)(Applied to dash)	
10	634376	3	3	TRANSFER, "ALLIS-CHALMERS" (1-1/8" x 20, pressure-sensitive type)(Applied to sides of seat and front radiator guard)	Used prior to approx. January 1966
11	634284	1	1	TRANSFER, "ALLIS-CHALMERS" (1-3/8" x 30", pressure-sensitive type)(Applied to rear of fuel tank)	
12	------	2	2	TRANSFER, "ALLIS-CHALMBERS" (1-3/4" x 39", pressure-sensitive type)(Applied to engine hood) (Order TRANSFER 924552)	
13	924548	2	2	TRANSFER, "ALLIS-CHALMERS" (1-1/8" x 20") (Applied to sides of seat)	Effective approx. January 1966
14	924550	1	1	TRANSFER, "ALLIS-CHALMERS" (1-3/8" x 30") (Applied to front of radiator guards)	
15	924551	2	2	TRANSFER, "ALLIS-CHALMERS" (2" x 36") (Applied to sides of hood)	
16	924552	1	1	TRANSFER, "ALLIS-CHALMERS" (2-1/2" x 39") (Applied to rear of fuel tank)	
17	924320	1	1	TRANSFER, trademark (6-3/4", black and orange)	Applied to rear of fuel tank
	924541	1	1	TRANSFER, trademark (6-3/4", white)(Optional)	
18	924306	2	2	TRANSFER, trademark (7-3/4", black and orange)	Applied to sides of radiator guard
	924463	2	2	TRANSFER, trademark (7-3/4", white)(Optional)	
19	623498	3	3	TRANSFER, "HD11" (Elliptical)(Applied to sides of seat and to rear of fuel tank)(1 less used on Model HD11FC)	
20	644625	1	1	TRANSFER, instruction, fuel filter (1-3/4" x 2-1/4", pressure-sensitive type)(Applied to 1st stage fuel filter)	
	632389	1	1	TRANSFER, instruction, fuel filter (multi-language, 2-3/4" x 3-1/4", pressure-sensitive type)(Applied to 1st stage fuel filter on tractors prior to #10001)	
	644741	1	1	TRANSFER, instruction, fuel filter (multi-language, 2-3/4" x 3-1/4", pressure-sensitive type)(Applied to 1st stage fuel filter on tractors #10001 and up)	

(Continued)

ITEM	PART NO.	QTY. *	QTY. **	DESCRIPTION	
21	621346	1	1	TRANSFER, instruction, fuel filter (1-3/4" x 2-1/4", pressure-sensitive type)(Applied to 2nd stage fuel filter)	Used prior to tractor #10001
	632390	1	1	TRANSFER, instruction, fuel filter (1-3/4" x 5-1/2", pressure-sensitive type)(Applied to 2nd stage fuel filter)	
	644593	1	1	TRANSFER, instruction, fuel filter (1-3/4" x 2-1/4", pressure-sensitive type)(Applied to 2nd stage fuel filter)	Effective with tractor #10001
	644740	1	1	TRANSFER, instruction, fuel filter (multi-language, 1-3/4" x 5-1/2", pressure-sensitive type)(Applied to 2nd stage fuel filter)	
22	621343	1	1	TRANSFER, instruction, oil filter (2-5/16" x 3-1/4", pressure-sensitive type. Applied to engine oil filter)(1 additional required for Model HD11EC tractors #10001 and up)	
	633627	1	1	TRANSFER, instruction, oil filter (multi-language, 4" x 4-3/4", pressure-sensitive type. Applied to engine oil filter)(1 additional required for Model HD11EC tractors #10001 and up)	
23	632226	2	2	TRANSFER, instruction, oil filter (1-3/4" x 2-1/4", pressure-sensitive type. Applied to FILTER ASSEMBLY 633797)(Model HD11E, EC tractors #10001 and up only)	
24	050842	1	1	TRANSFER, instruction, oil-bath air cleaner (1-1/2" x 3-3/4")(Applied to air cleaner)	Tractors prior to #10001
	074578	1	1	ΔTRANSFER, instruction, oil-bath air cleaner (Spanish translation, 1-5/8" x 4")(Applied to air cleaner)	
25	050838	1	1	TRANSFER, instruction, air pre-cleaner (Applied to air pre-cleaner)	
	074577	1	1	ΔTRANSFER, instruction, air pre-cleaner (Spanish translation, 1-5/8" x 4")(Applied to air pre-cleaner)	
26	641127	1	-	TRANSFER, instruction, dry-type air cleaner (4" x 4", pressure-sensitive type. Applied to dash) (Model HD11B)	Tractors #10001 and up
	644537	1	1	TRANSFER, instruction, dry-type air cleaner (4" x 4", pressure-sensitive type. Applied to dash) (Models HD11E, EC, S)	
	656642	1	1	TRANSFER, instruction, oil-bath air cleaner (Applied to air cleaner)	
27	651894	1	1	TRANSFER, instruction, air cleaner cartridge replacement (1-5/16" x 2-7/16")(Applied to air restriction indicator on units with dry-type air cleaner)	
28	621342	1	1	TRANSFER, instruction, engine primer (1-3/4" x 6", pressure-sensitive type)(Applied to dash)	

ΔIndicates permanent-type transfer. See item 39.

(Continued)

ITEM	PART NO.	QTY. *	QTY. **	DESCRIPTION	
29	621338	1	1	TRANSFER, instruction, air heater operation (2" x 6", pressure-sensitive type)(Applied to dash)	Tractors prior to #10001
	074579	1	1	ΔTRANSFER, instruction, air heater operation (Spanish translation, 2" x 6")(Applied to dash)	
30	633384	1	1	TRANSFER, instruction, air heater operation (2" x 6", pressure-sensitive type)(Applied to dash)	Tractors #10001 and up
	------	1	1	ΔTRANSFER, instruction, air heater operation (Spanish translation, 2" x 6")(Applied to filter)	
31	621399	1	1	TRANSFER, warning, special heavy-duty oil filter (2" x 10", pressure-sensitive type. Includes Portuguese translation)(Applied to filter)	
	621400	1	1	TRANSFER, warning, special heavy-duty oil filter (2" x 10", pressure-sensitive type. French and Spanish translation)(Applied to filter)	
32	629967	1	-	TRANSFER, instruction, oil clutch (1-3/8" x 3-5/8", pressure-sensitive type)(Applied to dash on units equipped with oil clutch)	
33	629205	1	1	TRANSFER, warning, power steering and brakes (1-3/4" x 3-1/2", pressure-sensitive type. Applied to dash)(Model HD11E,EC tractors #10001 and up only)	
34	650587	1	1	TRANSFER, turbocharger, altitude warning (1-3/4" x 3-1/2", pressure-sensitive type. Applied to dash)(Model HD11E,EC,S tractors #10001 and up)	
35	651888	1	1	TRANSFER KIT (Consists of one each TRANSFERS 924320,924550, 924552,050838,050842,621342,621343,644593,644625; two each TRANSFERS 924306,924548,924551; three TRANSFERS 623498) (Tractors prior to serial No. 10001)	
36	651886	1	-	TRANSFER KIT (Consists of one each TRANSFERS 924320,924550, 924552,621338,621342,621343,629967,631293,641127,644593, 644625,650587; two each TRANSFERS 924306,924548,924551; three TRANSFERS 623498)(Model HD11B tractors #10001 and up)	
37	651889	1	-	TRANSFER KIT (Consists of one each TRANSFERS 924320,924550, 924552,621338,621342,621343,629205,629967,631293,644537, 644593,644625,650587; two each TRANSFERS 924306,924548, 924551; three TRANSFERS 623498)(Model HD11E tractors #10001 and up)	
38	651891	-	1	TRANSFER KIT (Consists of one each TRANSFERS 924320,924550, 924552,621338,621342,621343,629205,631293,644537,644593, 644625,650587; two each TRANSFERS 924306,924548,924551; three TRANSFERS 623498)(Model HD11EC tractors #10001 and up)	
39	067937	-	-	CEMENT, transfer application, 1/2 pint jar (Makes solution by adding 4 parts of water. Required to apply transfers indicated by triangle (Δ) above)	

ΔIndicates permanent-type transfer. See item 39.

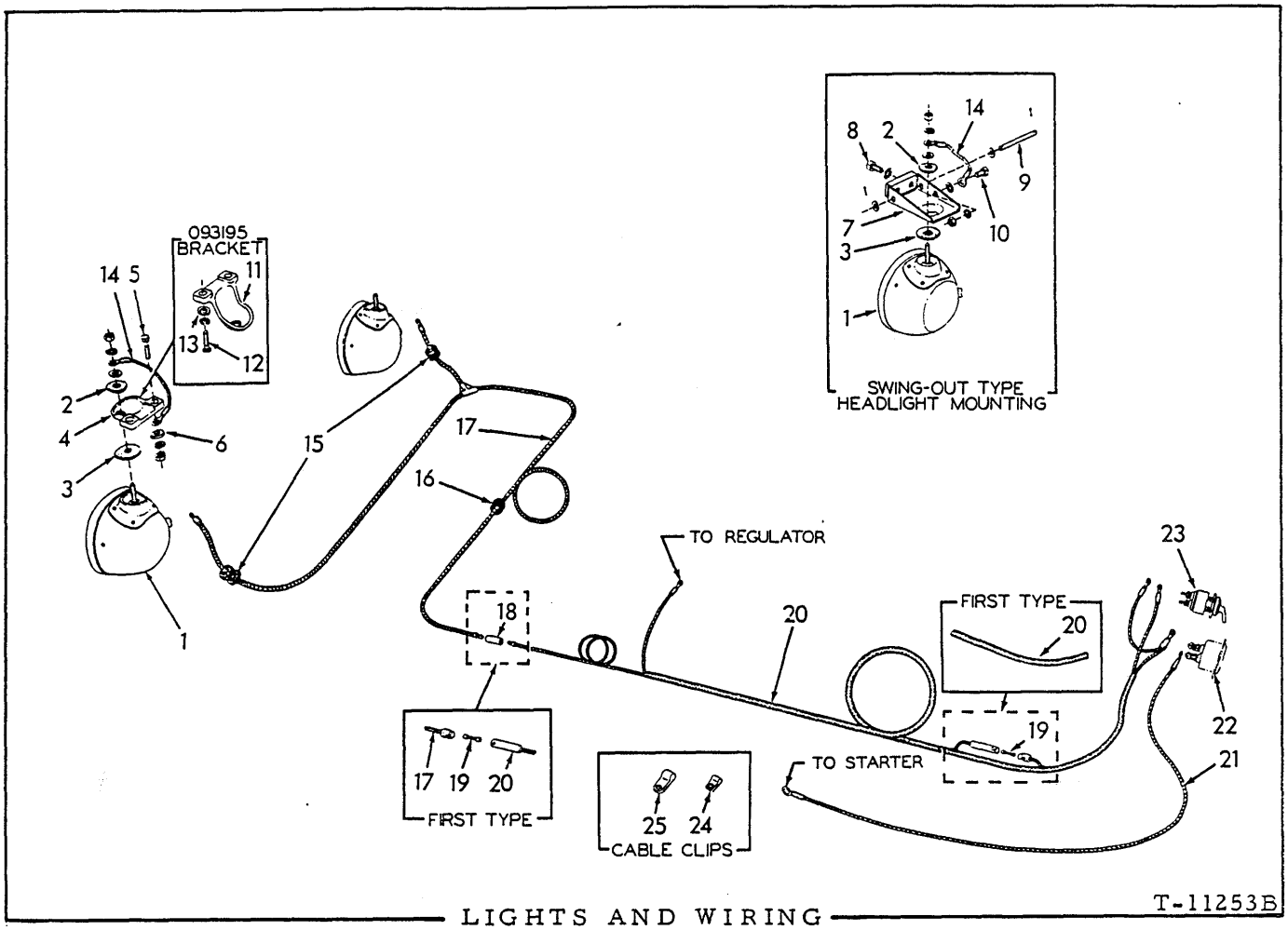

LIGHTS AND WIRING T-11253B

USAGE: Tractors prior to serial No. 6069 excluding Nos. 5490 and 6044

ITEM	PART NO.	QTY.	DESCRIPTION
1	074388	2	LIGHT ASSEMBLY (See page 517 for parts) (Order 1 each LIGHT ASSEMBLY 097030, WASHER 075535, WASHER 900818, LOCKWASHER 904208 and NUT 911043)
	900817	2	WASHER, plain, U. S. std., 3/8"
	904206	2	LOCKWASHER, 3/8"
	911026	2	NUT, 3/8"NC
2	075854	2	WASHER, head light mounting (rubber, beveled)
3	075853	2	WASHER, head light mounting (rubber, flat)
4	075429	2	BRACKET, mounting (Standard on all Model HD11ES, F and S tractors; also Model HD11B tractors prior to serial No. 1764)
5	203188	4	CAPSCREW, 3/8"NF x 1-1/2"
6	044973	4	WASHER, plain
	904206	4	LOCKWASHER, 3/8"
	911041	4	NUT, 3/8"NF (HD11F and S only)
			NOTE: Items 7 thru 10 comprise the SWING-OUT TYPE HEADLIGHT MOUNTING used as standard equipment on Model HD11B tractors serial No. 1764 thru 4303.
7	089152	2	BRACKET, mounting
8	036034	4	CAPSCREW, 3/8"NF x 1"
	906960	4	LOCKWASHER, int-tooth, 3/8"

(Continued)

ITEM	PART NO.	QTY.	DESCRIPTION
9	089147	2	PIN, hinge, mounting bracket
	910335	4	WASHER, plain, SAE std., 5/16"
	904001	4	PIN, cotter, 3/32" x 1/2"
10	035979	2	CAPSCREW, ground cable
	906960	2	LOCKWASHER, int-tooth, 3/8"
	904206	2	LOCKWASHER, 3/8"
	911041	2	NUT, 3/8"NF
11	093195	2	BRACKET, mounting (Effective on Models HD11B and S with tractor #4304; also Models HD11ES, F and S when equipped with heavy-type radiator guard)
12	035336	4	CAPSCREW, 3/8"NF x 1-3/4"
13	044973	4	WASHER, plain
	904206	4	LOCKWASHER, 3/8"
14	077279	2	CABLE, head light ground (6" long)(Used with BRACKETS 075429 and 089152 only)
	093176	2	CABLE, head light ground (10" long)(Used with BRACKET 093195 only)
15	044810	2	GROMMET, headlight cable (3/8" hole)(Used only when headlights are mounted on top of radiator shell)
16	040842	1	GROMMET, headlight cable (11/16" hole)(Used only on tractors equipped with hinged radiator guard)
17	084789	1	CABLE, headlights to main wiring harness (Used prior to tractor #3004)
	091172	1	CABLE, headlights to main wiring harness (Effective with tractor #3004. Standard on Models HD11S, ES, F)
	092712	1	CABLE, headlights to main wiring harness (For all models effective with tractor #3004 when equipped with heavy-type wrap-around radiator guard)
18	048142	1	CONNECTOR, headlight cable (Effective with tractor #3004)
19	208960	1	FUSE, 1/4" x 1-1/4", 20 amp.
20	091161	1	HARNESS, main wiring (If for tractors prior to #3004 also order 1 CABLE 091172 and 1 CONNECTOR 048142)
21	084801	1	CABLE, starter to ammeter (54" long)
22	------	1	AMMETER (See INSTRUMENTS)
23	651630	1	SWITCH (Includes mounting nuts)
24	235794	10	CLIP, cable supporting (1/4" diam., 13/32" bolt-hole)
	035979	10	CAPSCREW, 3/8"NF x 5/8"
	904206	10	LOCKWASHER, 3/8"
25	040796	5	CLIP, harness supporting (3/8" diam., 13/32" bolt-hole)
	035979	5	CAPSCREW, 3/8"NF x 5/8"
	904206	5	LOCKWASHER, 3/8"

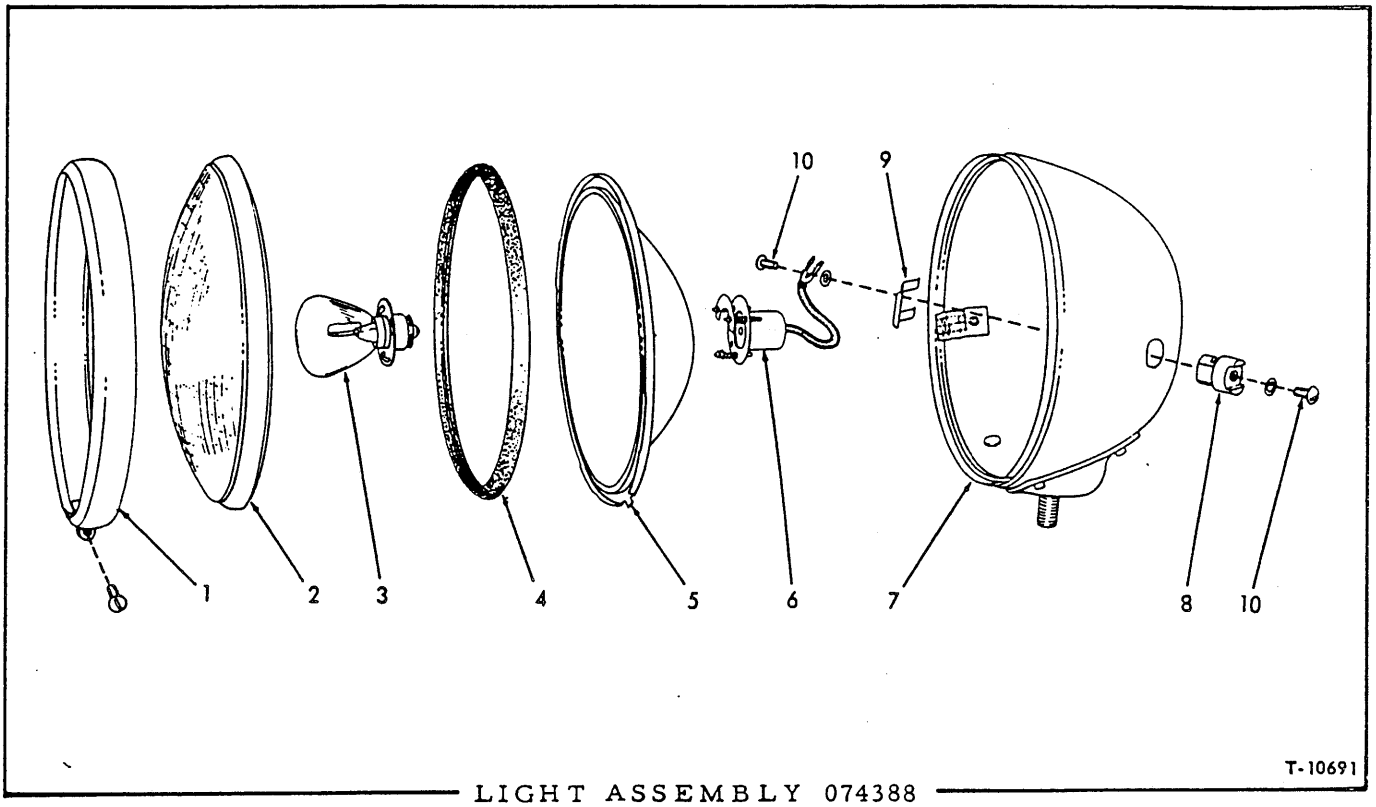

LIGHT ASSEMBLY 074388

USAGE: See pages 515 and 562

ITEM	PART NO.	QTY.	DESCRIPTION
			NOTE: Quantities indicated are for one (1) light only.
1	058827	1	MOLDING
	915872	1	SCREW, machine, brass, #8-32NC x 5/8"
2	------	1	LENS (glass)
3	074387	1	BULB (Single contact, 32 c.p., 24 volt)
4	058828	1	GASKET, lens
5	------	1	REFLECTOR ASSEMBLY (Includes item 4)
6	058831	1	WIRING ASSEMBLY (Includes socket)
7	------	1	BODY
8	055589	1	TERMINAL KIT (Includes items 9 and 10)
9	048922	1	SPRING, retaining, terminal bushing
10	034076	2	SCREW, terminal
	912739	2	LOCKWASHER, internal teeth, #8

NOTE: Items listed above without part number are no longer available. Replace entire unit with sealed-beam Light Assembly 638283.

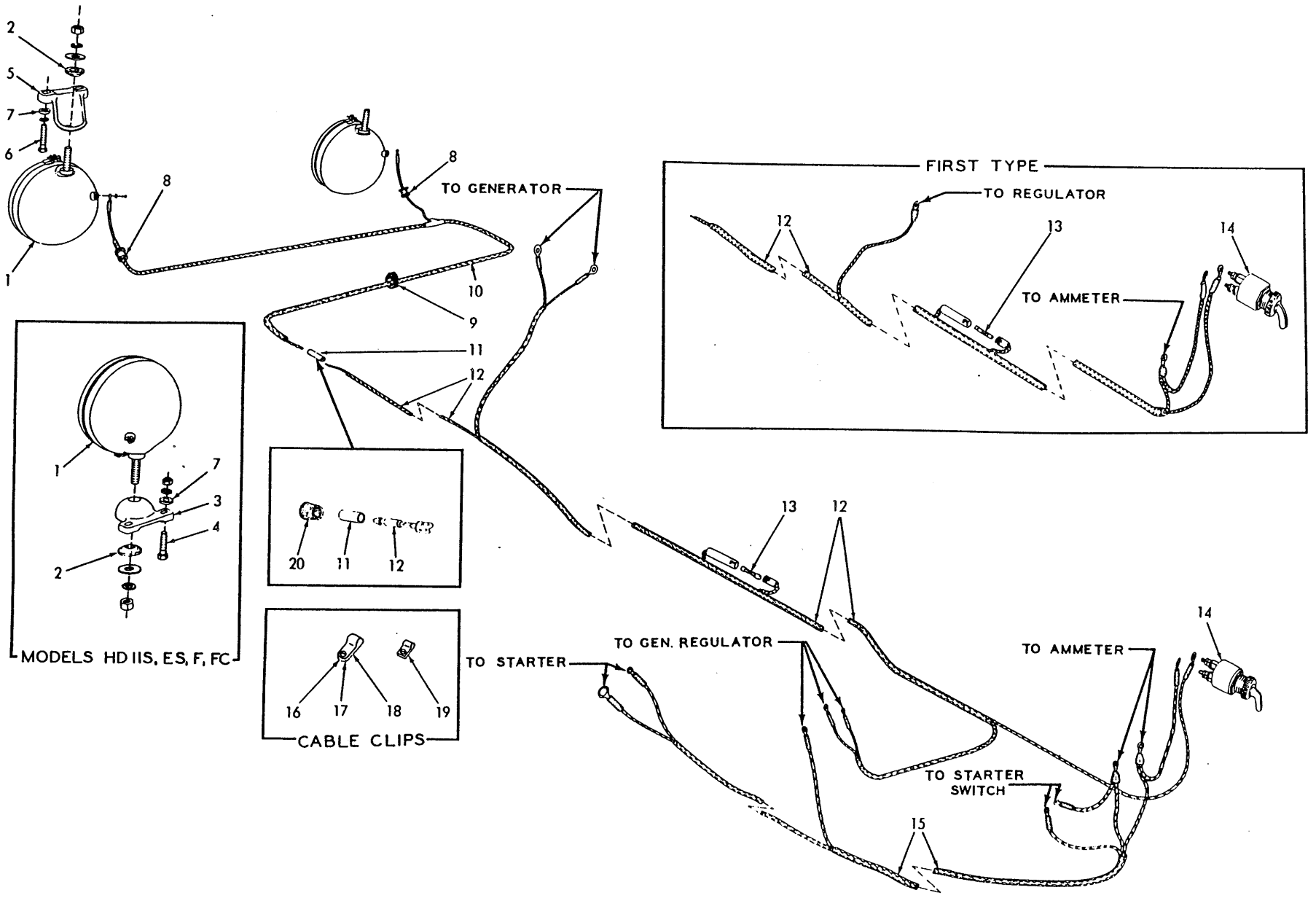

LIGHTS AND WIRING (Second Type)

LIGHTS AND WIRING (Second type)

USAGE: Tractors serial No. 6069 thru No. 10000, including Nos. 5490 and 6044

* Used prior to tractor serial No. 6427
** Effective with tractor serial No. 6427

ITEM	PART NO.	QTY. *	QTY. **	DESCRIPTION
				NOTE: Items indicated by triangle (Δ) below are optional equipment effective May 1963
1	097030	2	2	ΔLIGHT ASSEMBLY (See page 521 for parts)(Used prior to August 1963. Order LIGHT ASSEMBLY 638283)
1	638283	-	2	ΔLIGHT ASSEMBLY, head (See page 525 for parts)(Effective August 1963)
	900818	2	2	ΔWASHER, plain, U.S. std., 1/2"
	904208	2	2	ΔLOCKWASHER, 1/2"
	911043	2	2	ΔNUT, 1/2"NF
2	075535	2	2	ΔWASHER, head light mounting
3	075429	2	2	ΔBRACKET, head light mounting (For tractors with hinged radiator guard. Standard on Models HD11ES,S,F,FC)
4	203188	4	4	ΔCAPSCREW, 3/8"NF x 1-1/2"
	904206	4	4	ΔLOCKWASHER, 3/8"
	911041	4	4	ΔNUT, 3/8"NF
5	093195	2	2	ΔBRACKET, head light mounting (For tractors with heavy wrap-around radiator guard)
6	035336	4	4	ΔCAPSCREW, 3/8"NF x 1-3/4"
	904206	4	4	ΔLOCKWASHER, 3/8"
7	044973	4	4	ΔWASHER, plain, head light bracket capscrew
8	044810	2	2	ΔGROMMET, head light cable (3/8" hole)(Used only when head lights are mounted on top of radiator guard)
9	040842	1	1	GROMMET, head light cable (11/16" hole)(Used only on tractors with hinged radiator guard)(Used prior to tractor #7519)
10	092712	1	1	ΔCABLE, head lights to main wiring harness (For all models when equipped with heavy-type wrap-around radiator guard)
10	091172	1	1	ΔCABLE, head lights to main wiring harness (Standard on Models HD11ES,S,F,FC)
11	048142	1	1	CONNECTOR, head light cable
12	091161	1	-	HARNESS, main wiring
12	620323	-	1	HARNESS, wiring, lights and generator
13	208960	1	1	FUSE, 1/4" x 1-1/4", 20 amp.
14	651630	1	1	SWITCH (Includes mounting nuts)
15	620324	-	1	HARNESS, wiring, starter and instruments)
16	047381	-	2	CLIP, wiring harness (5/8" diam., 13/32" bolt-hole)
	912180	-	2	CAPSCREW, 3/8"NF x 7/8"
	904206	-	2	LOCKWASHER, 3/8"

(Continued)

ITEM	PART NO.	QTY. *	QTY. **	DESCRIPTION
17	043344	-	1	CLIP, wiring harness (3/8" diam., 17/32" bolt-hole)
	905274	-	1	CAPSCREW, 1/2"NC x 3/4"
	904208	-	1	LOCKWASHER, 1/2"
18	040796	5	5	CLIP, wiring harness (3/8" diam., 13/32" bolt-hole)
	035979	5	5	CAPSCREW, 3/8"NF x 5/8"
	904206	5	5	LOCKWASHER, 3/8"
19	640677	10	10	*CLIP, head light cable (1/4" diam., 13/32" bolt-hole)
	035979	1	1	*CAPSCREW, 3/8"NF x 5/8"
	904206	1	1	*LOCKWASHER, 3/8"
20	638243	-	1	TIP, cable socket (rubber)(Used only on units without headlights)

*Quantities indicated are for Models HD11B, E, EC. Other Models use variable quantities.

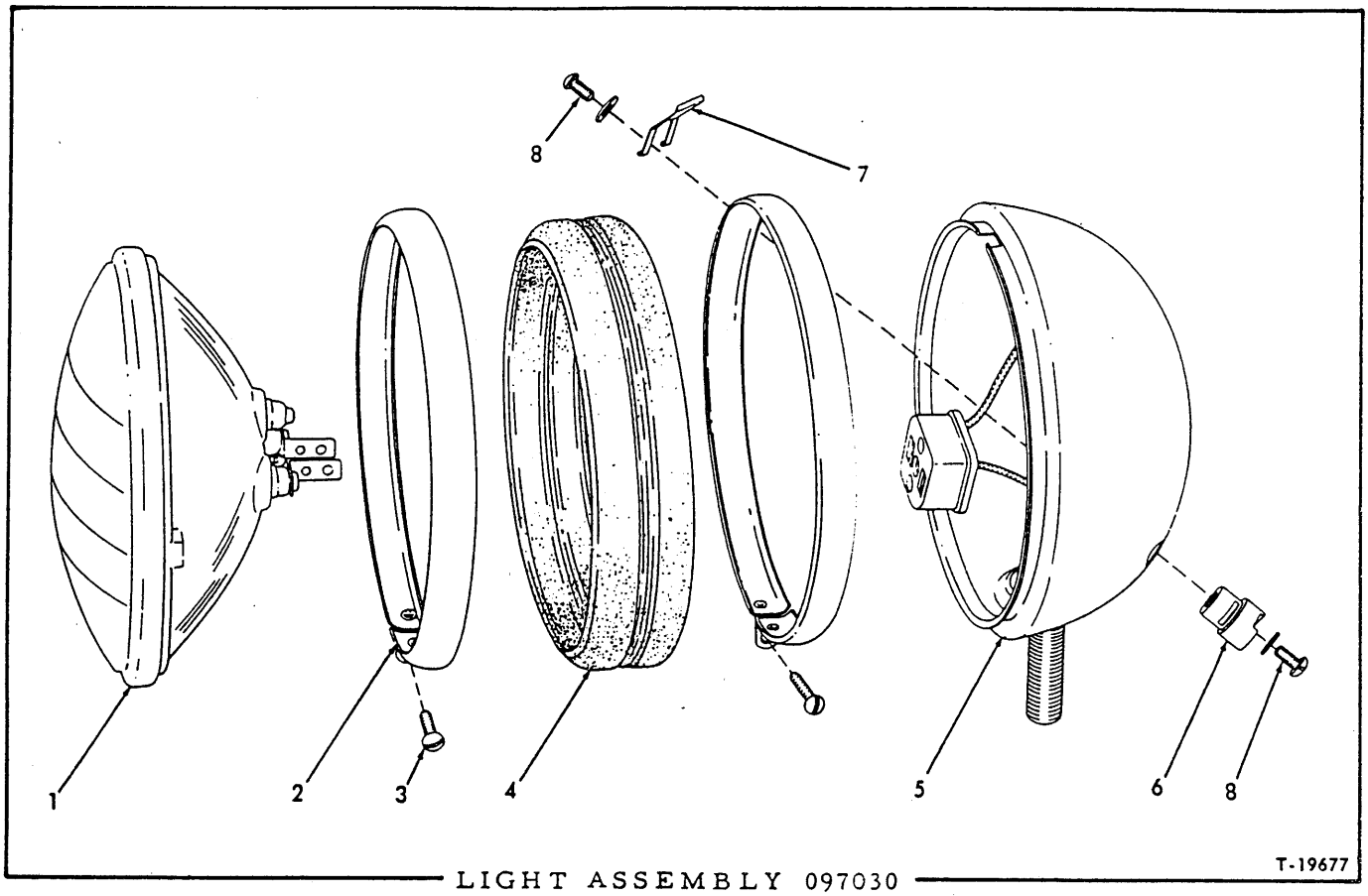

LIGHT ASSEMBLY 097030

USAGE: See pages 519 and 562

ITEM	PART NO.	QTY.	DESCRIPTION
			NOTE: Quantities indicated are for one (1) light only
1	182763	1	SEALED BEAM (24 volt)
2	097046	2	MOLDING
3	622729	2	SCREW, molding
4	097048	1	RING, cushion
5	------	1	BODY ASSEMBLY (Includes wiring. Not serviced separately)
6	055589	1	TERMINAL KIT (Includes items 7 and 8)
7	048922	1	SPRING, retaining, terminal bushing
8	034076	2	SCREW, terminal
	912739	2	LOCKWASHER, internal teeth, #8

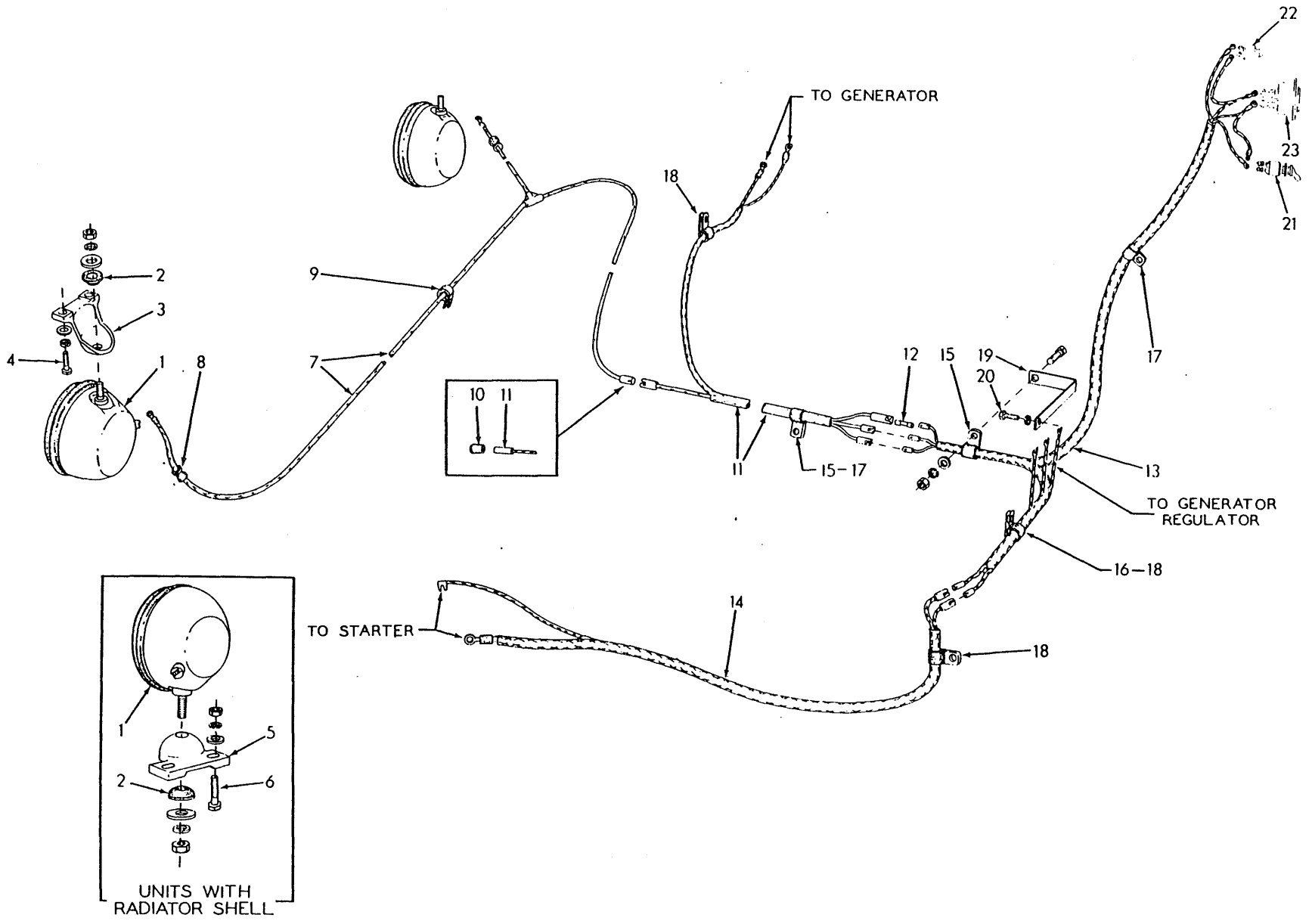

T-72488

LIGHTS AND WIRING (Third type)

LIGHTS AND WIRING (Third type)

USAGE: Tractors serial No. 10001 and up

* Tractors with standard wrap-around radiator guard
** Tractors with light-duty radiator shell

ITEM	PART NO.	QTY. *	QTY. **	DESCRIPTION
1	638283	2	2	ΔLIGHT ASSEMBLY, head (See page 525 for parts)
	900818	2	2	ΔWASHER, plain, U.S. std., 1/2"
	904208	2	2	ΔLOCKWASHER, 1/2"
	911043	2	2	ΔNUT, 1/2"NF
2	075535	2	2	ΔWASHER, head light mounting
3	093195	2	-	ΔBRACKET, head light mounting
4	035336	4	-	ΔCAPSCREW, 3/8"NF x 1-3/4" (For inside mounting)
4	053616	4	-	ΔCAPSCREW, 3/8"NC x 1-3/4" (For outside mounting)
	904206	4	-	ΔLOCKWASHER, 3/8"
	044973	4	-	ΔWASHER, plain
5	075429	-	2	ΔBRACKET, head light mounting
6	203188	-	4	ΔCAPSCREW, 3/8"NF x 1-1/2"
	044973	-	4	ΔWASHER, plain
	904206	-	4	ΔLOCKWASHER, 3/8"
	911041	-	4	ΔNUT, 3/8"NF
7	646472	1	-	ΔCABLE, head light to main wiring harness
7	646681	-	1	ΔCABLE, head light to main wiring harness
8	044810	2	-	ΔGROMMET, head light cable (Used only when lights are mounted on top of radiator guard)
9	640677	10	7	ΔCLIP, head light cable (1/4" diam., 13/32" bolt-hole)
	035979	5	3	ΔCAPSCREW, 3/8"NF x 5/8"
	916268	1	4	ΔCAPSCREW, 3/8"NC x 5/8"
	904206	6	7	ΔLOCKWASHER, 3/8"
	911115	-	7	ΔWASHER, plain, SAE std., 3/8"
10	638243	1	1	TIP, cable socket (rubber)(Used only on units without head lights)
11	633655	1	1	HARNESS, wiring, front section
12	208960	1	1	FUSE, cartridge type, 1/4" x 1-1/4", 20 amperes
13	634243	1	1	HARNESS, wiring, rear section
14	642412	1	1	HARNESS, wiring, starter control
15	640675	4	4	CLIP, wiring harness (3/8" diam., 17/32" bolt-hole)
	035718	1	1	CAPSCREW, 1/2"NC x 3/4"
	904208	1	1	LOCKWASHER, 1/2"
	036034	1	1	CAPSCREW, 3/8"NF x 1"
	911115	1	1	WASHER, plain, SAE std., 3/8"
	904206	1	1	LOCKWASHER, 3/8"
	911041	1	1	NUT, 3/8"NF
16	094527	2	2	CLIP, rear wiring harness (1/2" diam., 13/32" bolt-hole)
	035439	1	1	CAPSCREW, 3/8"NC x 1"
	904206	1	1	LOCKWASHER, 3/8"
	911115	1	1	WASHER, plain, SAE std., 3/8"

ΔSpecial equipment

(Continued)

ITEM	PART NO.	QTY. *	QTY. **	DESCRIPTION
17	639314	2	2	CLIP, wiring harness (3/8" diam., 13/32" bolt-hole)
18	640677	3	3	CLIP, wiring harness (1/4" diam., 13/32" bolt-hole)
	036032	1	1	CAPSCREW, 3/8"NF x 3/4"
	035439	1	1	CAPSCREW, 3/8"NC x 1"
	904206	2	2	LOCKWASHER, 3/8"
	911115	1	1	WASHER, plain, SAE std., 3/8"
19	649493	1	1	ANGLE, harness supporting
20	035439	1	1	CAPSCREW, 3/8"NC x 1"
	904206	1	1	LOCKWASHER, 3/8"
21	651630	1	1	SWITCH (Includes mounting nuts)
22	------	-	-	SWITCH, push-button (See STARTER)
23	------	-	-	AMMETER (See INSTRUMENTS)

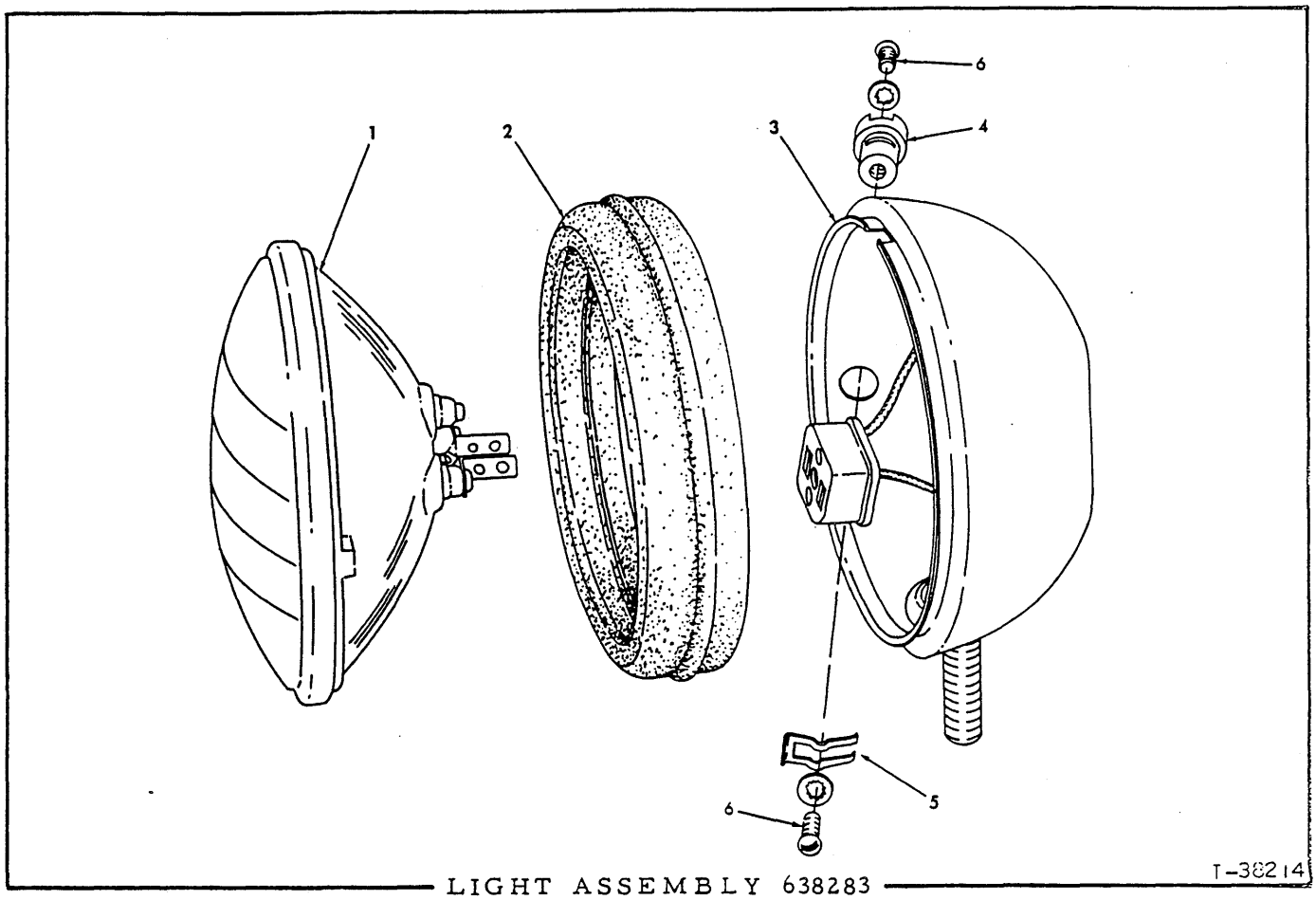

LIGHT ASSEMBLY 638283

USAGE: See pages 523 and 562

ITEM	PART NO.	QTY.	DESCRIPTION
			NOTE: Quantities indicated below are for one (1) light only
1	182763	1	SEALED BEAM (24 volt)
2	638282	1	RING, retaining (rubber)
3	------	1	BODY ASSEMBLY (Includes wiring. Not serviced separately)
4	055589	1	TERMINAL KIT (Includes items 5 and 6)
5	048922	1	SPRING, retaining, terminal bushing
6	034076	2	SCREW, terminal
	912739	2	LOCKWASHER, internal teeth, #8

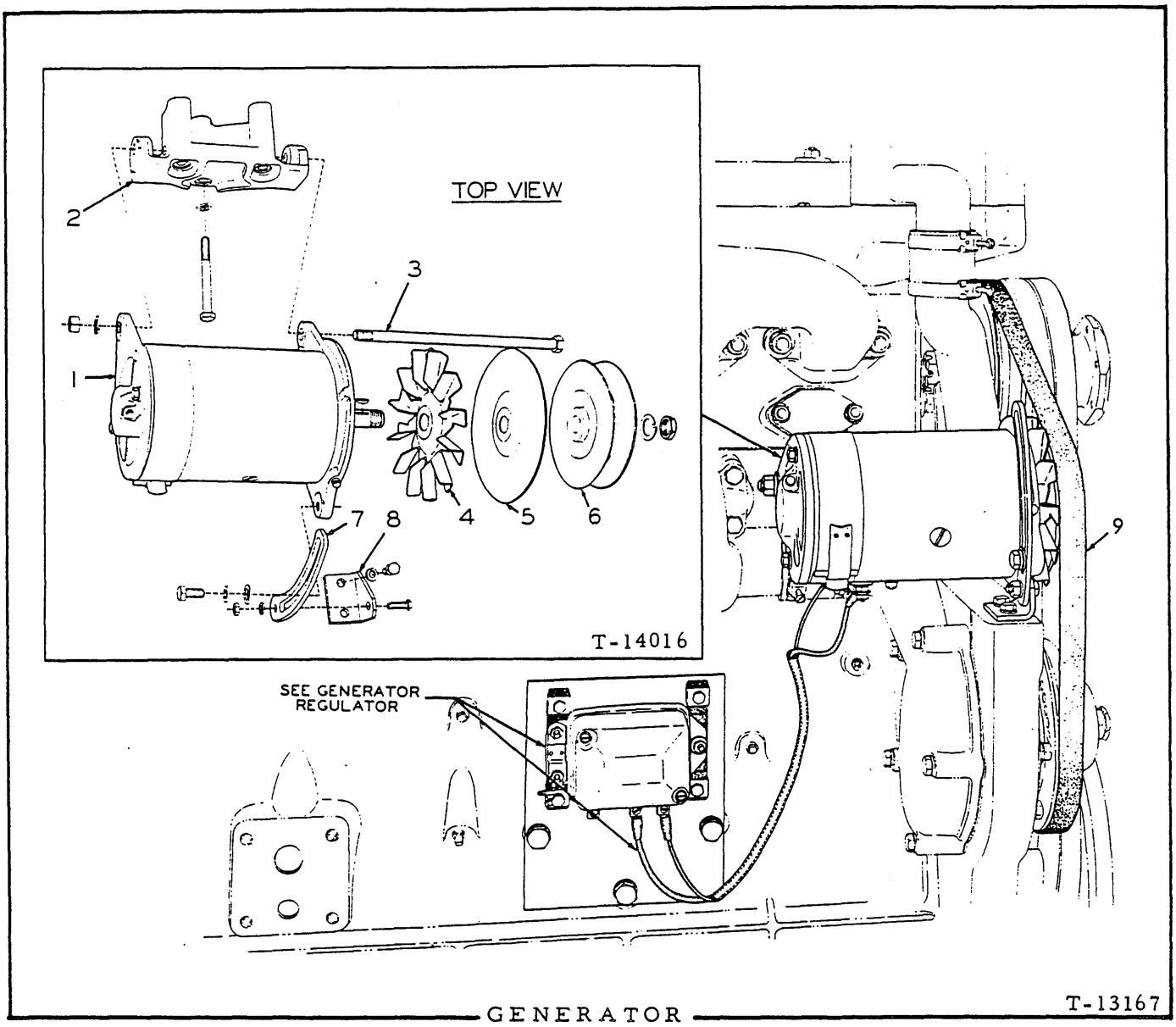

GENERATOR

USAGE: Engines prior to serial No. 89498

ITEM	PART NO.	QTY.	DESCRIPTION
1	4347982	1	GENERATOR (Includes key, nut and washer for pulley)(DELCO-REMY #1105988. Was formerly #1105976. Order parts from local United Motors Service Agency)
2	4348145	1	BRACKET, generator mounting
	919227	3	CAPSCREW, 3/8"NC x 3-1/4"
	904206	3	LOCKWASHER, 3/8"
3	4348276	1	CAPSCREW, generator hinge (7/16"NF x 8-5/8")
	904207	1	LOCKWASHER, 7/16"
	910986	1	NUT, 7/16"NF
4	4374148	1	FAN, generator cooling
5	4373121	1	BAFFLE, generator cooling fan
6	4347998	1	PULLEY

(Continued)

ITEM	PART NO.	QTY.	DESCRIPTION
7	4348163	1	LINK, belt adjustment
	915408	1	CAPSCREW, 3/8"NC x 3/4"
	904206	1	LOCKWASHER, 3/8"
	900817	1	WASHER, plain, U.S. std., 3/8"
	914392	1	CAPSCREW, 5/16"NC x 1"
	904205	1	LOCKWASHER, 5/16"
	911025	1	NUT, 5/16"NC
8	------	1	BRACKET, belt adjustment link (Used prior to tractor #994. Order BRACKET 089644)(Illustrated)
	089644	1	BRACKET, belt adjustment link (Effective with tractor #994. Also supports fan belt tightener lubricating hose)(Not illustrated)
	915813	2	CAPSCREW, 5/16"NC x 7/8"
	904205	2	LOCKWASHER, 5/16"
9	4335446	1	BELT, generator and water pump

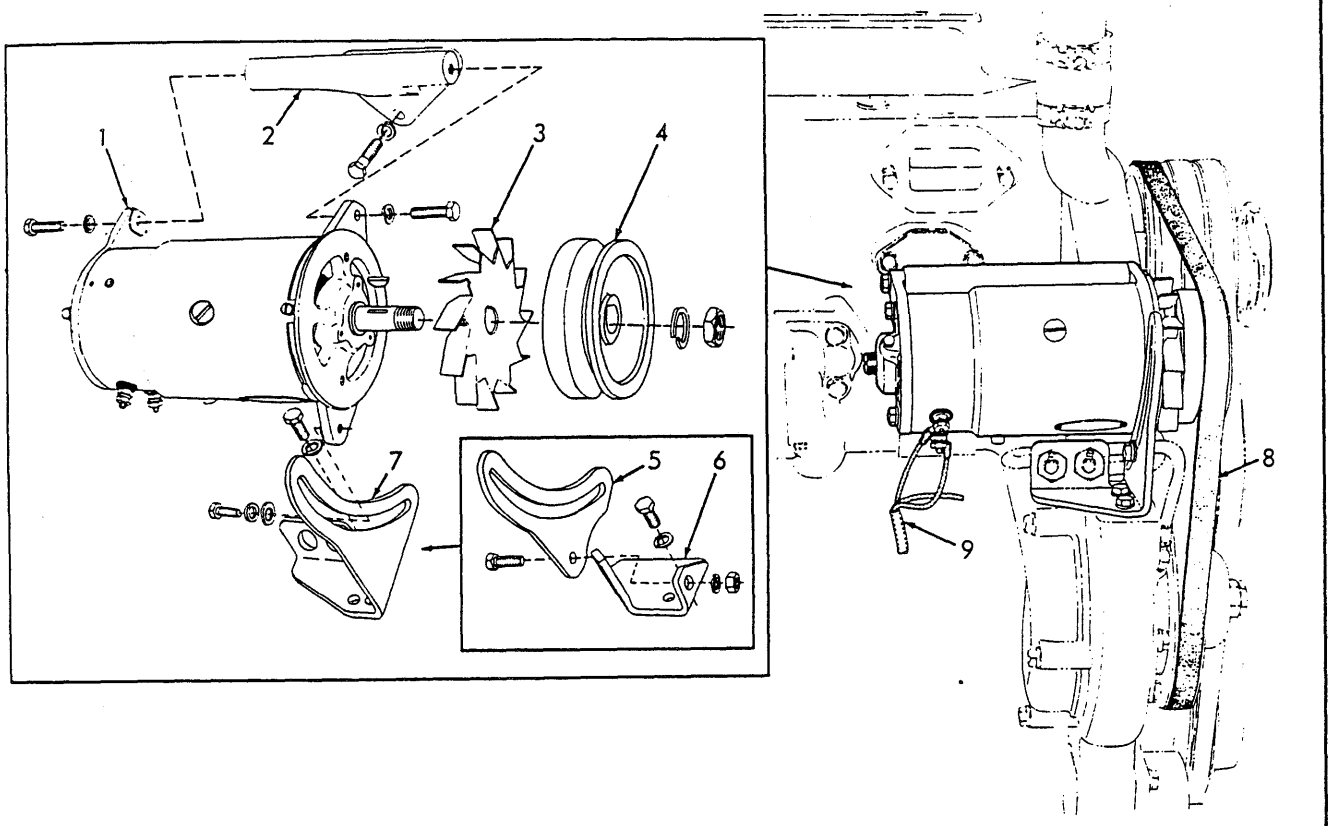

GENERATOR T-15222

USAGE: Engines serial No. 89498 thru No. 10-7013

* Model HD11B, E, ES, S, F
** Model HD11EC, FC

ITEM	PART NO.	QTY. *	QTY. **	DESCRIPTION
1	4336809	1	1	GENERATOR (10 amp.)(Includes key, nut and washer for pulley) (DELCO-REMY #1103019. Was formerly #1103014. Order parts from local United Motors Service Agency)
	914670	2	2	CAPSCREW, 5/16"NC x 1-1/8"
	904205	2	2	LOCKWASHER, 5/16"
2	4348609	1	1	BRACKET, generator mounting
	903632	3	3	CAPSCREW, 3/8"NC x 1-1/2"
	904206	3	3	LOCKWASHER, 3/8"
3	4513922	1	1	FAN, generator cooling
4	4348619	1	-	PULLEY (5" diam.)(Used prior to engine #10-4855)
4	4349676	1	1	PULLEY (4-1/8" diam.)(Effective with engine #10-4855)

(Continued)

ITEM	PART NO.	QTY. *	QTY. **	DESCRIPTION
5	------	1	-	LINK, belt adjustment (Used prior to engine #95456. Order item 7)
	915809	1	-	CAPSCREW, 5/16"NC x 3/4"
	914392	1	-	CAPSCREW, 5/16"NC x 1"
	904205	2	-	LOCKWASHER, 5/16"
	901165	1	-	WASHER, plain, U.S. std., 5/16"
	911025	1	-	NUT, 5/16"NC
6	089644	1	-	BRACKET, belt adjustment link (Also serves as support for fan belt tightener lubricating hose) (Used prior to engine #95456)
	915813	2	-	CAPSCREW, 5/16"NC x 7/8"
	904205	2	-	LOCKWASHER, 5/16"
7	4335182	1	1	LINK, belt adjustment (Also serves as support for water pump and fan belt tightener lubricating hoses)(Effective with engine #95456)
	915813	2	2	CAPSCREW, 5/16"NC x 7/8"
	915809	1	1	CAPSCREW, 5/16"NC x 3/4"
	904205	3	3	LOCKWASHER, 5/16"
	901165	1	1	WASHER, plain, U. S. std., 5/16"
8	4335446	1	-	BELT, generator and water pump (Used prior to engine #10-4855)
8	4349728	1	-	BELT, generator and water pump (Effective with engine #10-4855)
8	4337727	-	1	BELT, generator and water pump
9	-------	1	-	HARNESS, wiring (Used prior to tractor #6427. See GENERATOR REGULATOR)
9	-------	1	1	HARNESS, wiring (Effective with tractor #6427. See LIGHTS AND WIRING)

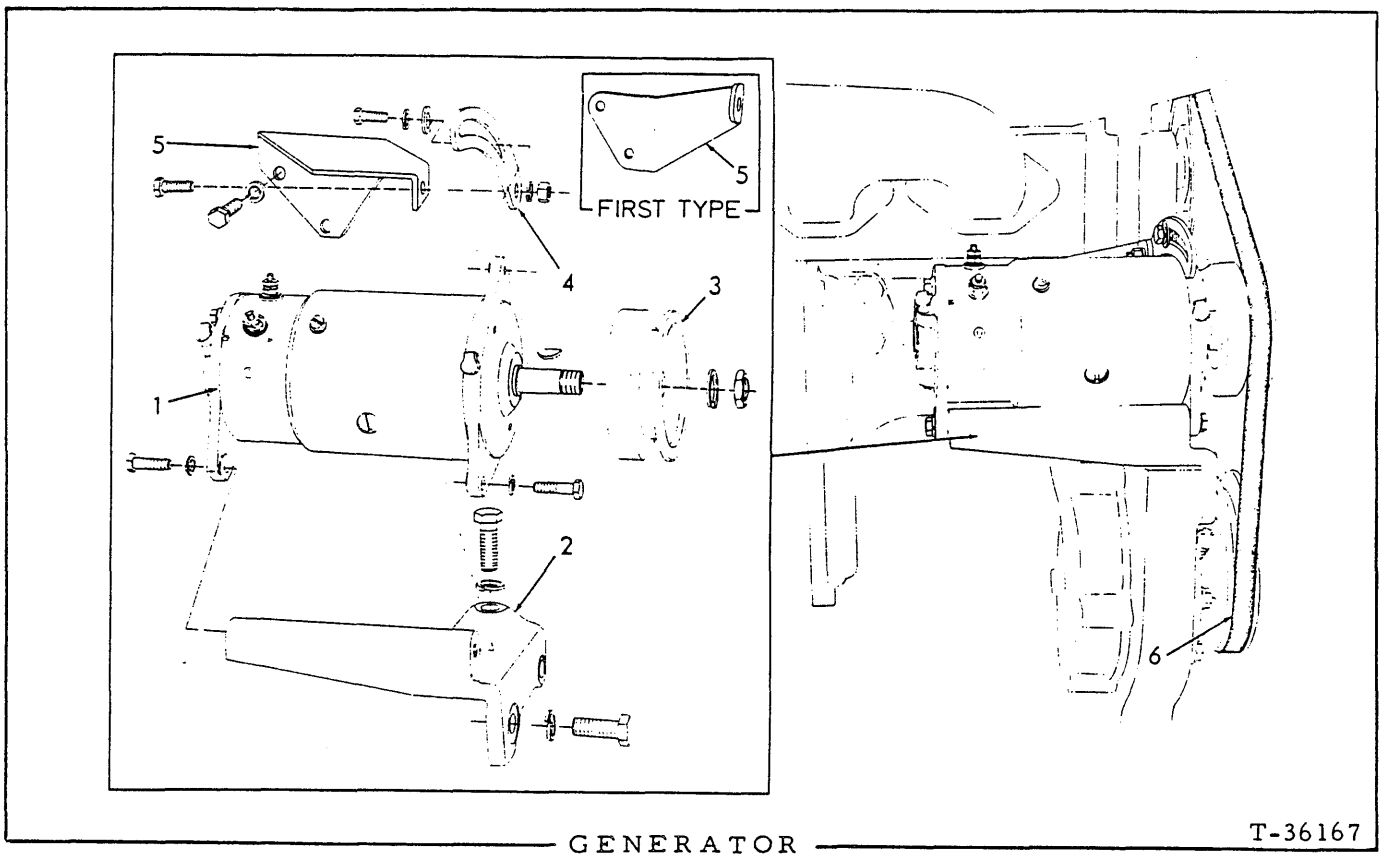

GENERATOR T-36167

USAGE: Engine serial No. 10-7014 and up

ITEM	PART NO.	QTY.	DESCRIPTION
1	-------	1	GENERATOR ASSEMBLY (Includes key, nut and washer for pulley. Delco-Remy #1103028)(Used prior to engine #10-12973 and #11-11765. Order GENERATOR 4058931)
	914392	2	CAPSCREW, 5/16"NC x 1"
	904205	2	LOCKWASHER, 5/16"
	4058931	1	GENERATOR ASSEMBLY (Includes key, nut and washer for pulley. Delco-Remy #1103032)(Effective with engine #10-12973 and #11-11765)
	916271	2	CAPSCREW, 3/8"NC x 1"
	904206	2	LOCKWASHER, 3/8"
			NOTE: Order generator parts from local United Motors Service Agency
2	4338210	1	BRACKET, generator mounting (Used prior to engine #10-12973 and #11-11765)
	4354582	1	BRACKET, generator mounting (Effective with engine #10-12973 and #11-11765)
	918683	1	CAPSCREW, 1/2"NC x 1-1/8"
	919230	2	CAPSCREW, 1/2"NC x 1-3/8"
	904208	3	LOCKWASHER, 1/2"
3	4349676	1	PULLEY

(Continued)

ITEM	PART NO.	QTY.	DESCRIPTION
4	4338269	1	BRACE, generator
	915809	2	CAPSCREW, 5/16"NC x 3/4"
	904205	2	LOCKWASHER, 5/16"
	901165	1	WASHER, plain, U.S. std., 5/16"
	910323	1	NUT, 5/16"NC
5	4336173	1	BRACKET, generator brace (Used prior to engine #10-7976)
	4338280	1	BRACKET, generator brace (Effective with engine #10-7976)
	916271	2	CAPSCREW, 3/8"NC x 1"
	904206	2	LOCKWASHER, 3/8"
6	4317530	1	BELT, generator and water pump (Model HD11B, E, ES, S, F prior to tractor #10001)
	4338212	1	BELT, generator and water pump (All Models HD11EC, FC; also Models HD11B, E, S tractor #10001 and up)

GENERATOR REGULATOR

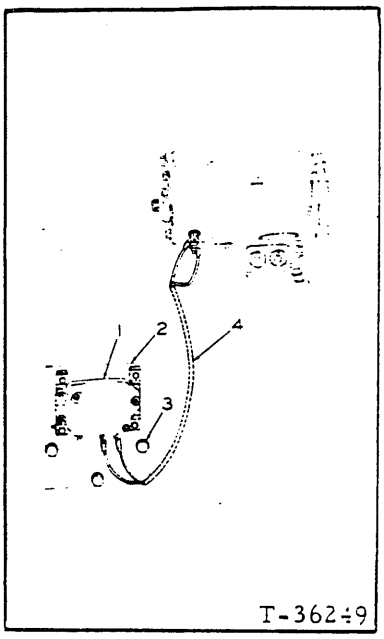

T-362+9

USAGE: Tractors prior to serial No. 6427

ITEM	PART NO.	QTY.	DESCRIPTION
	184376	1	REGULATOR, voltage and current (Used prior to engine #89498)
1	090048	1	REGULATOR, voltage and current (Delco-Remy #1119164. Order parts from local United Motors Service Agency) (Effective with engine #89498)
	912178	4	CAPSCREW, 1/4"NF x 1-1/2"
	904204	4	LOCKWASHER, 1/4"
	911040	4	NUT, 1/4"NF
2	084798	1	PLATE, mounting
3	035221	3	CAPSCREW, 1/2"NC x 1"
	904208	3	LOCKWASHER, 1/2"
4	084802	1	HARNESS, generator to regulator

GENERATOR REGULATOR

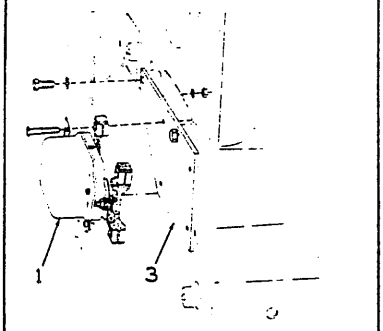

Prior to Tr. #10001
T-274+7

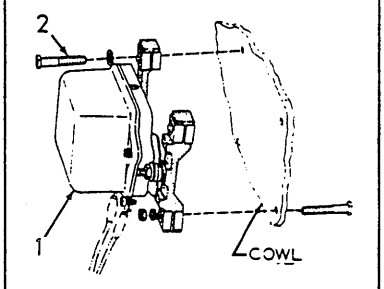

Tr. #10001 and up
T-41937

USAGE: Tractors serial No. 6427 and up

* Tractors prior to #10001
** Tractors #10001 and up

ITEM	PART NO.	QTY. *	QTY. **	DESCRIPTION
1	090048	1	1	REGULATOR, voltage and current (Delco-Remy #1119164. Order parts from local United Motors Service Agency)
	912178	4	2	CAPSCREW, 1/4"NF x 1-1/2"
2	054304	-	2	CAPSCREW, 1/4"NC x 1-1/4"
	904204	4	4	LOCKWASHER, 1/4"
	911040	4	2	NUT, 1/4"NF
3	621804	1	-	PLATE, mounting
	912180	2	-	CAPSCREW, 3/8"NF x 7/8"
	904206	2	-	LOCKWASHER, 3/8"

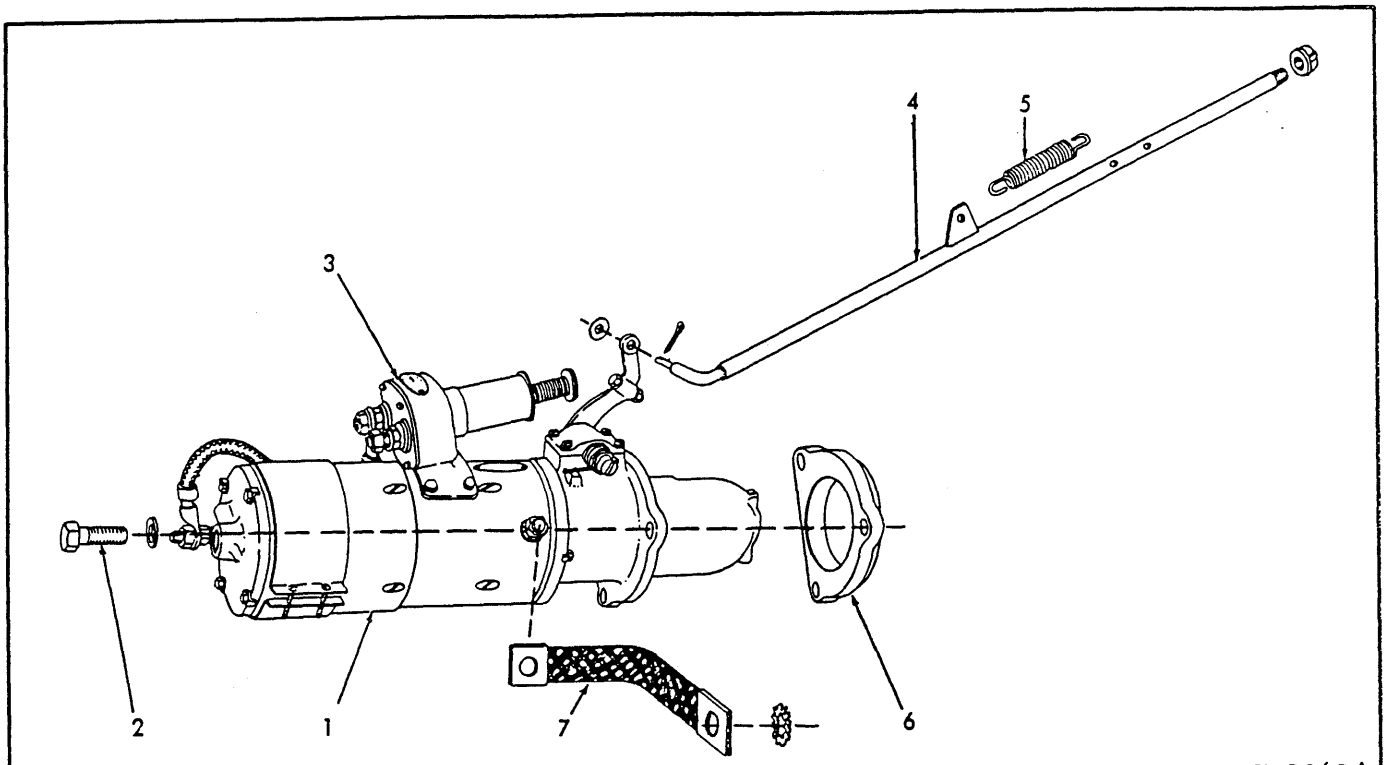

STARTER

USAGE: Tractors prior to serial No. 6069 excluding Nos. 5490 and 6044

ITEM	PART NO.	QTY.	DESCRIPTION	
1	------	1	MOTOR, starting (DELCO-REMY #1113737. Was formerly #1109881)(Used on tractors prior to #1215 and on tractors #1357 thru #1574)	Order STARTER KIT 654507
	------	1	MOTOR, starting (DELCO-REMY #1113715. Was formerly #1109862)(Used on tractors #1215 thru #1356; and 1575 and up)	
2	023755	3	CAPSCREW, 5/8"NC x 2-1/4"	
	904209	3	LOCKWASHER, 5/8"	
			NOTE: Each starting motor listed above includes item 3. Order parts from local United Motors Service Agency.	
3	034924	1	SWITCH, starting motor (DELCO-REMY #1857074. Order parts from local United Motors Service Agency)	
4	090466	1	ROD, operating	
	901752	1	CAP, pipe, 3/8"NPT	
	910335	1	WASHER, plain, SAE std., 5/16"	
	904001	1	PIN, cotter, 3/32" x 1/2"	
5	043881	1	SPRING, operating rod (Effective with tractor #1562)	
6	4346320	1	ADAPTER, starting motor	
7	082178	1	STRAP, starter to ground	
	915942	1	LOCKWASHER, int-ext-tooth, 5/8"	

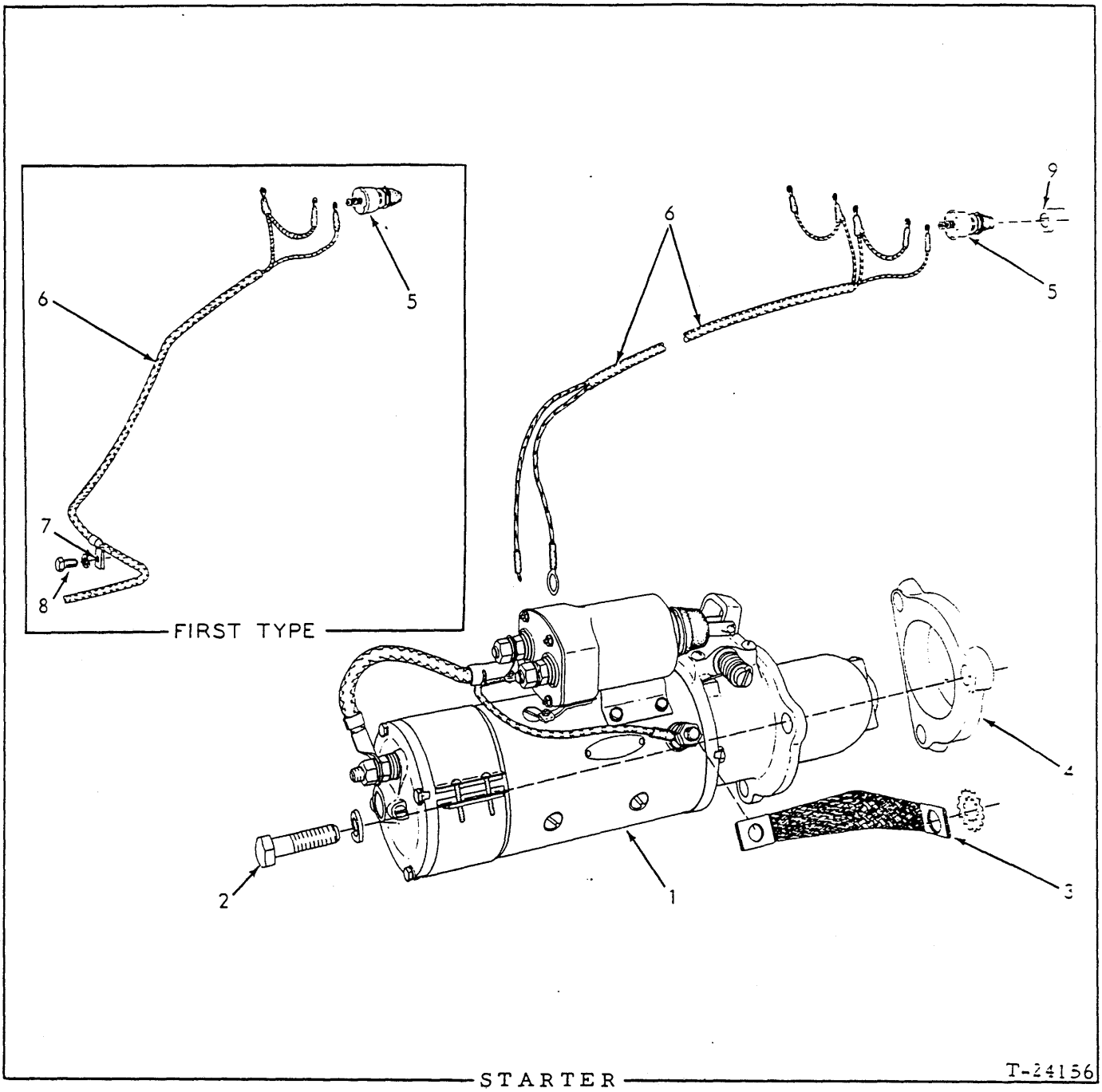

USAGE: Model HD11B, E, ES, F, S tractors serial No. 6069 thru No. 6573 including Nos. 5490 and 6044

* Used prior to tractor serial No. 6427
** Effective with tractor serial No. 6427

ITEM	PART NO.	QTY. *	QTY. **	DESCRIPTION
1	------	1	1	MOTOR, starting (Delco-Remy No. 1113834. Order parts from local United Motors Service agency) (Order MOTOR 4387529)
2	023755	3	3	CAPSCREW, 5/8"NC x 2-1/4"
	904209	3	3	LOCKWASHER, 5/8"

(Continued)

ITEM	PART NO.	QTY. *	QTY. **	DESCRIPTION
3	082178	1	1	STRAP, starter to ground (8" long) (Original equipment)
	633334	1	1	STRAP, starter to ground (16" long) (Not original equipment)
	915942	1	1	LOCKWASHER, int-ext-tooth, 5/8"
4	4346320	1	1	ADAPTER, starting motor
5	240962	1	1	SWITCH ASSEMBLY, push-button (Includes mounting nut)
6	098910	1	-	HARNESS, wiring
	------	-	1	HARNESS, wiring (See LIGHTS AND WIRING)
7	040796	3	-	CLIP, wiring harness
8	035979	3	-	CAPSCREW, 3/8"NF x 5/8"
	904206	3	-	LOCKWASHER, 3/8"
9	634677	1	1	GUARD, starter switch

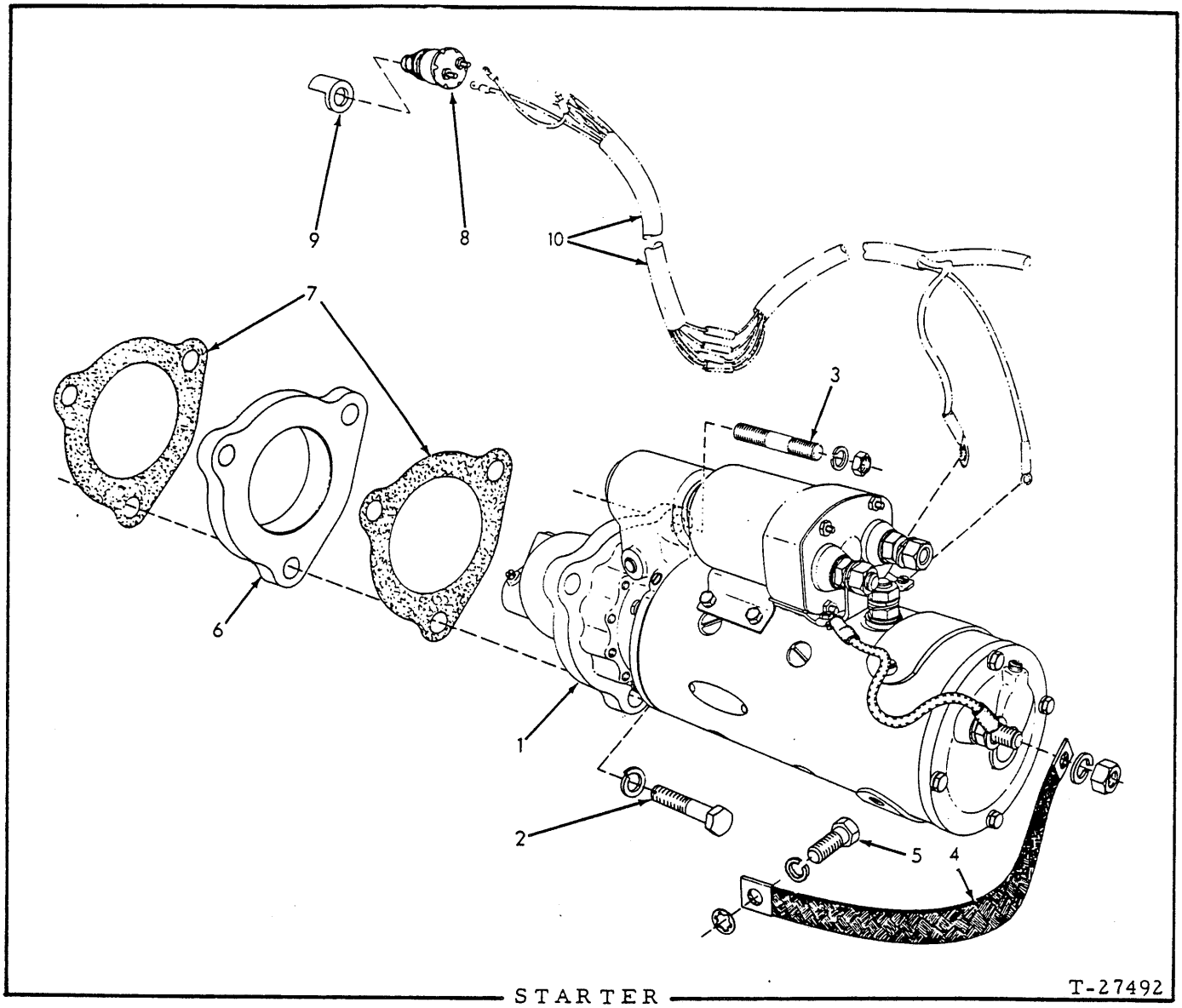

STARTER

USAGE: All Model HD11EC, FC tractors; also Model HD11B, E, ES, S, F tractors serial No. 6574 and up

ITEM	PART NO.	QTY.	DESCRIPTION
1	------	1	MOTOR, starting (Delco-Remy No. 1113900)(Original equipment. Order MOTOR 4387529)
	4387529	1	MOTOR, starting (Delco-Remy No. 1113898. Was formerly No. 1113895)(Not original equipment)
2	621456	2	CAPSCREW, Nylok, 5/8"NC x 2-1/2
3	648262	1	STUD, Nylok, 5/8"NF x 3-1/8"
	911044	1	NUT, 5/8"NF
	904209	3	LOCKWASHER, 5/8"

NOTE: Order starting motor parts from local United Motors Service agency

(Continued)

ITEM	PART NO.	QTY.	DESCRIPTION
4	623545	1	STRAP, starter to ground
5	070469	1	CAPSCREW, 1/2"NF x 1-1/4" (Used prior to tractor #10001)
	035525	1	CAPSCREW, 1/2"NF x 1-3/8" (Tractors #10001 and up)
	904208	1	LOCKWASHER, 1/2"
	906961	1	LOCKWASHER, int-tooth, 1/2"
6	621278	1	ADAPTER, starting motor
7	620420	2	GASKET, starting motor adapter
8	240962	1	SWITCH ASSEMBLY, push button (Includes mounting nut)
9	634677	1	GUARD, starter switch
10	------	1	WIRING HARNESS (See LIGHTS AND WIRING)

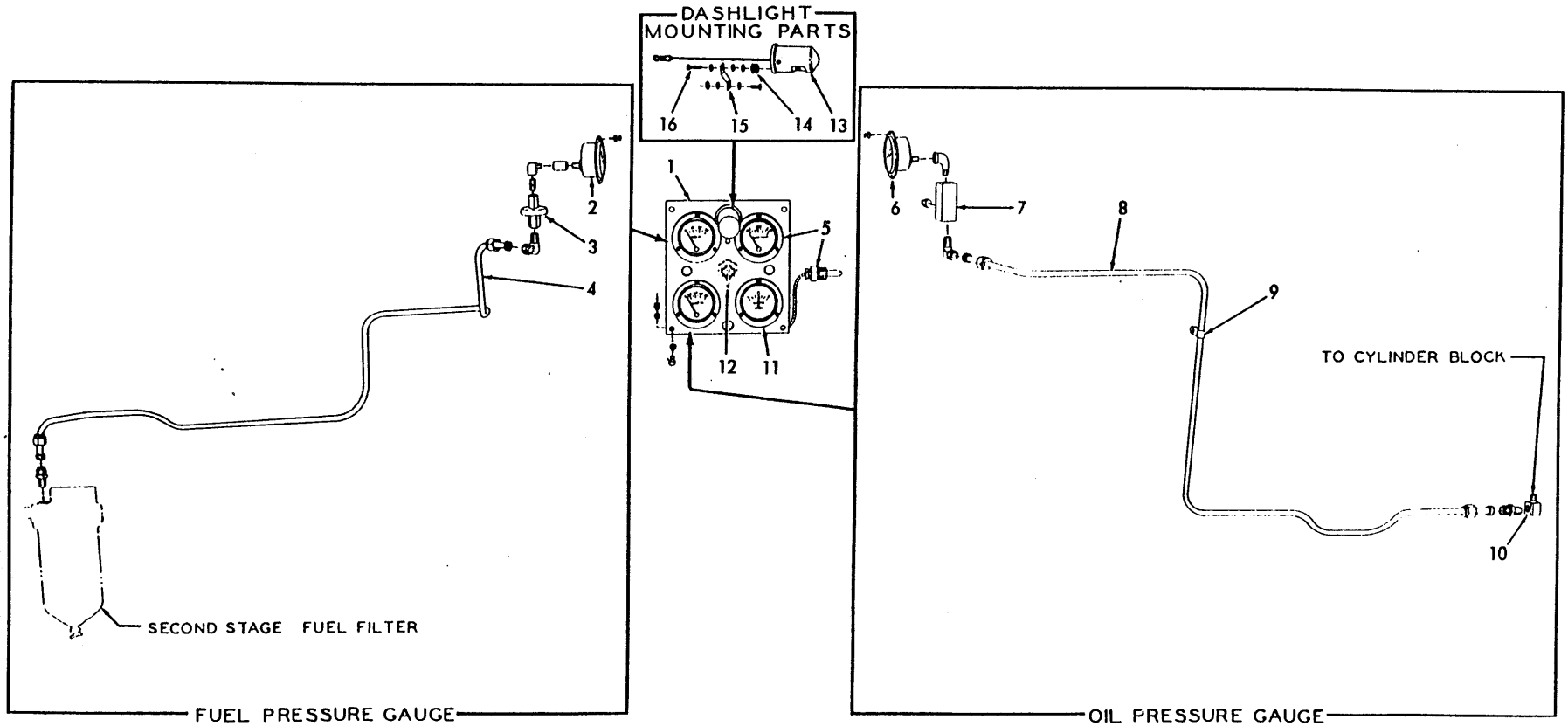

INSTRUMENTS (First type)

USAGE: Tractors prior to serial No. 4415

ITEM	PART NO.	QTY.	DESCRIPTION
1	084909	1	PLATE, instrument mounting
	912789	4	CAPSCREW, 1/4"NF x 3/4"
	906958	8	LOCKWASHER, internal teeth, 1/4"
	911040	4	NUT, 1/4"NF
	921113	1	PLUG, button, 11/16" hole-diam. (Not used when Engine Primer or Air Heater is installed)
2	------	1	GAUGE, fuel pressure (Order GAUGE 091589)
	918210	3	SCREW, thread-cutting, #6 x 1/2" (Includes lockwasher)
	901763	1	COUPLING, pipe, 1/8"NPT
	915399	1	ELBOW, street, 90°, automotive type, 1/8"NPT
	901467	1	NIPPLE, pipe, 1/8"NPT x 3/4"
3	069674	1	RESTRICTOR, fuel pressure gauge line
4	086952	1	TUBE, fuel pressure gauge (Used prior to tractor #1955) (Also see page 117 for special tube used with Engine Air Heater)
	090868	1	TUBE, fuel pressure gauge (Effective with tractor #1955) (Also see page 117 and 121 for special tube used with Engine Air Heater)
	915369	1	ELBOW, Sealastic, 90°, 3/8" tube, 1/4"NPT male
	915368	1	CONNECTOR, Sealastic, 3/8" tube, 1/4"NPT male
	918325	2	NUT, Sealastic, 3/8" tube
	915367	2	RING, Sealastic, 3/8" tube (Includes ferrule)
5	------	1	GAUGE, engine temperature (Order GAUGE 630792)
	918210	3	SCREW, thread-cutting, #6 x 1/2" (Includes lockwasher)
6	------	1	GAUGE, engine oil pressure (Order GAUGE 091585)
	918210	3	SCREW, thread-cutting, #6 x 1/2" (Includes lockwasher)
	907059	1	ELBOW, street, 90°, 1/8"NPT
7	------	1	TEE, oil pressure gauge (female, 1/4"NPT side, 1/4"NPT and 1/8"NPT ends)(Order 1 each TEE 094450, PLUG 901651 and ADAPTER 910856)
	901652	1	PLUG, pipe, 1/4"NPT (Not used on tractors equipped with Hour Meter)
8	087601	1	TUBE, oil pressure gauge (Used prior to tractor #4105)
	095640	1	TUBE, oil pressure gauge (Effective with tractor #4105)
	915369	1	ELBOW, Sealastic, 90°, 3/8" tube, 1/4"NPT male
	915368	1	CONNECTOR, Sealastic, 3/8" tube, 1/4"NPT male
	918325	2	NUT, Sealastic, 3/8" tube
	915367	2	RING, Sealastic, 3/8" tube (Includes ferrule)
9	052917	1	CLIP, oil pressure gauge tube (3/8" diam., 17/32" bolt-hole)
10	047852	1	ELBOW, oil pressure gauge tube (90°, 1/8"NPT male, 1/4"NPT female)
11	------	1	AMMETER (Order AMMETER 091588)
	918210	3	SCREW, thread cutting, #6 x 1/2" (Includes lockwasher)

(Continued)

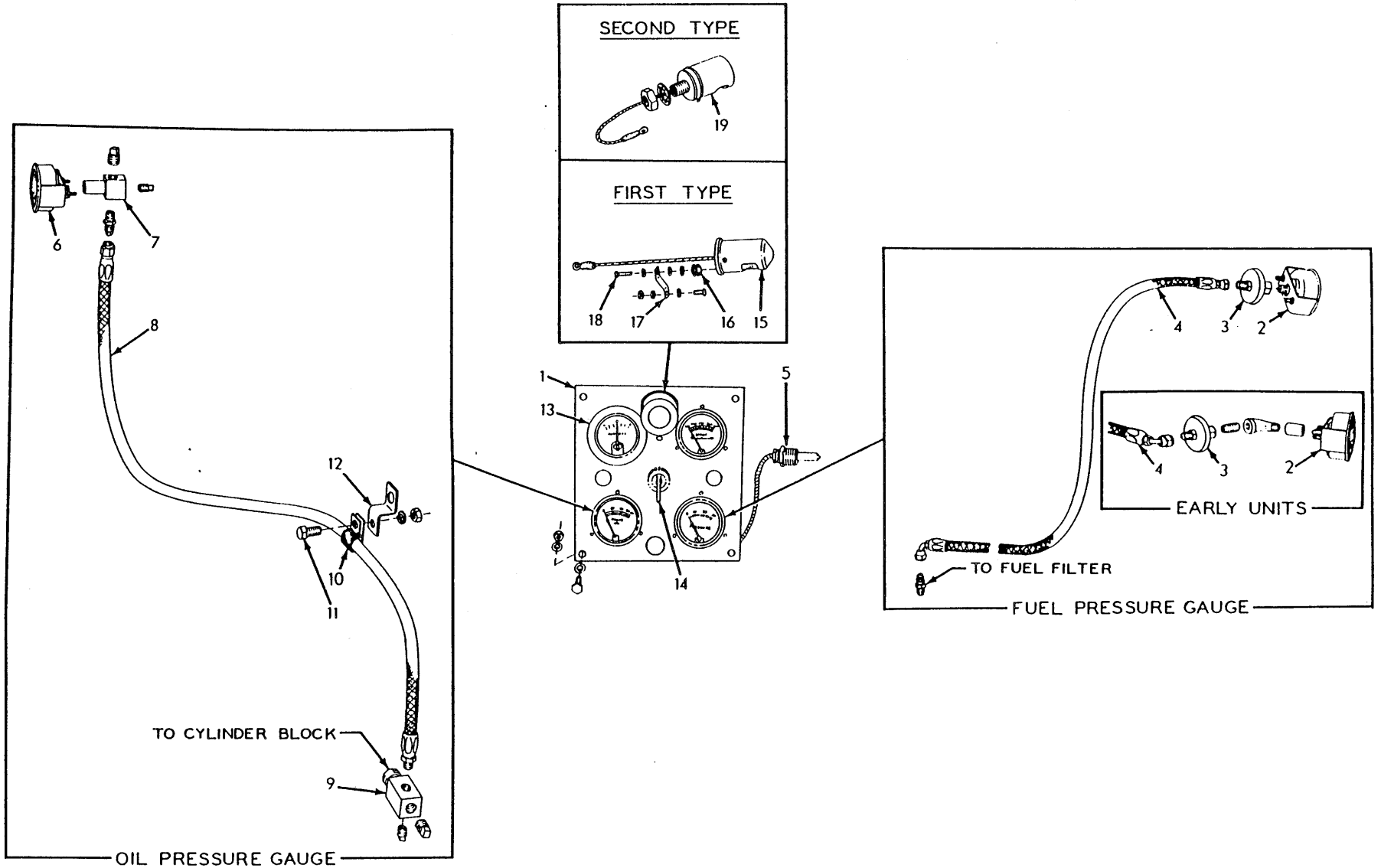

INSTRUMENTS (Second type)

ITEM	PART NO.	QTY.	DESCRIPTION
12	------	1	SWITCH (See LIGHTS AND WIRING)
13	083990	1	LIGHT ASSEMBLY, instrument panel (See page 543 for parts)(Order 1 each LIGHT ASSEMBLY 095257, LOCKWASHER 910334 and NUT 911049)
14	083987	3	GROMMET, panel light mounting (rubber)
15	083989	1	STRAP, panel light ground
	900558	1	SCREW, machine, #10-32NF x 1/2"
	906957	2	LOCKWASHER, internal teeth, #10
	910251	1	NUT, machine screw, #10-32NF
16	083988	3	SCREW, panel light mounting
	910243	3	WASHER, plain, SAE std., #10
	906957	4	LOCKWASHER, internal teeth, #10

INSTRUMENTS

USAGE: Tractors serial No. 4415 thru No. 6472

ITEM	PART NO.	QTY.	DESCRIPTION
1	084909	1	PLATE, instrument mounting
	912789	4	CAPSCREW, 1/4"NF x 3/4"
	906958	8	LOCKWASHER, internal teeth, 1/4"
	911040	4	NUT, 1/4"NF
	921113	1	PLUG, button, 11/16" hole-diam. (Not used when Engine Primer or Air Heater is installed)
2	091589	1	GAUGE, fuel pressure (Includes mounting clamp)
	901763	1	COUPLING, pipe, 1/8"NPT } Used prior to tractor #6069 excluding #5490 and #6044
	904230	1	ELBOW, street, 45°, 1/8"NPT }
	901467	1	NIPPLE, pipe, 1/8"NPT x 3/4" }
3	088534	1	RESTRICTOR, fuel pressure gauge line
4	095412	1	HOSE ASSEMBLY, fuel pressure gauge (See page 6 for parts)(Used prior to tractor #6069 excluding #5490 and #6044)
	621292	1	HOSE ASSEMBLY, fuel pressure gauge (See page 6 for parts)(Effective with tractor #6069 including #5490 and #6044)
	919171	1	CONNECTOR, flare type, 1/4" tube, 1/8"NPT male
5	630792	1	GAUGE, engine temperature (Includes mounting clamp)
6	091585	1	GAUGE, engine oil pressure (Includes mounting clamp)
7	094450	1	TEE, oil pressure gauge
	901652	1	PLUG, pipe, 1/4"NPT (Not used on tractors equipped with Hour Meter)
	901651	1	PLUG, pipe, 1/8"NPT

(Continued)

ITEM	PART NO.	QTY.	DESCRIPTION
8	647915	1	HOSE, oil pressure gauge (See page 6)
	919171	1	CONNECTOR, flare type, 1/4" tube, 1/8"NPT male
9	096067	1	TEE, oil pressure gauge hose (at cylinder block)
	901652	1	PLUG, pipe, 1/4"NPT
	901651	1	PLUG, pipe, 1/8"NPT
10	094527	1	CLIP, hose supporting
11	036032	1	CAPSCREW, 3/8"NF x 3/4"
	904206	1	LOCKWASHER, 3/8"
	911041	1	NUT, 3/8"NF
12	094692	1	BRACKET, supporting, oil pressure gauge hose
13	091588	1	AMMETER (Includes mounting clamp)
14	------	1	SWITCH (See LIGHTS AND WIRING)
			NOTE: Items 15 thru 18 comprise the FIRST TYPE PANEL LIGHT used prior to tractor serial No. 4535.
15	083990	1	LIGHT ASSEMBLY, instrument panel (See page 543 for parts)(Order 1 each LIGHT ASSEMBLY 095257, LOCKWASHER 910334 and NUT 911049)
16	083987	3	GROMMET, panel light mounting (rubber)
17	083989	1	STRAP, panel light ground
	900558	1	SCREW, machine, #10-32NF x 1/2"
	906957	2	LOCKWASHER, internal teeth, #10
	910251	1	NUT, machine screw, #10-32NF
18	083988	3	SCREW, panel light mounting
	910243	3	WASHER, plain, SAE std., #10
	906957	4	LOCKWASHER, internal teeth, #10
19	095257	1	LIGHT ASSEMBLY, instrument panel (See page 543 for parts)(Effective with tractor serial No. 4535)
	910334	1	LOCKWASHER, internal teeth, 5/8"
	911049	1	NUT, jam, 5/8"NF

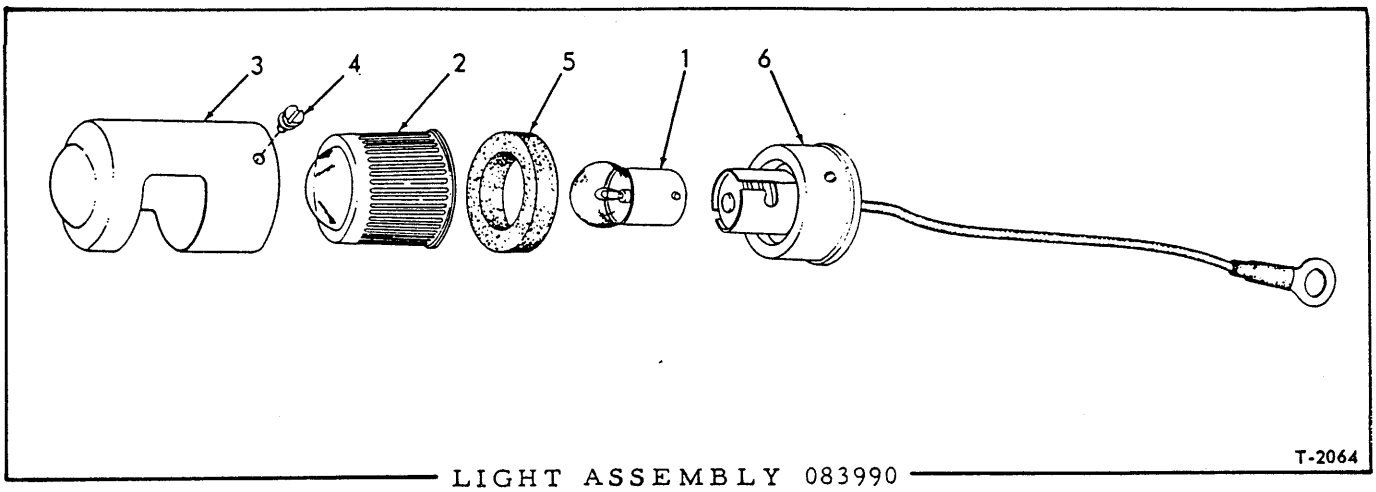

LIGHT ASSEMBLY 083990

USAGE: See page 539 and 541

ITEM	PART NO.	QTY.	DESCRIPTION
1	074452	1	BULB, incandescent, single contact, 6 c.p., 24 volts
2	040974	1	GLASS
3	040973	1	COVER, bulb
4	044211	2	SCREW
5	040969	1	GASKET, bulb cover
6	------	-	BASE ASSEMBLY (Not serviced separately)

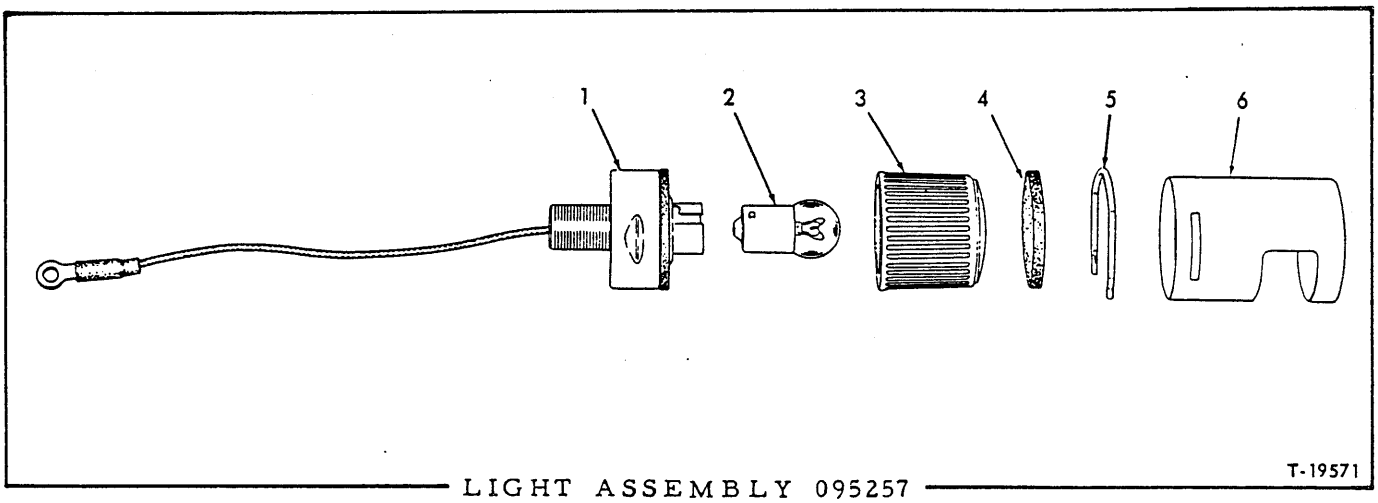

LIGHT ASSEMBLY 095257

USAGE: See pages 541 and 545

ITEM	PART NO.	QTY.	DESCRIPTION
1	------	1	BASE ASSEMBLY (Not serviced separately)
2	074452	1	BULB, incandescent, single contact, 6c. p., 24 volts
3	095267	1	LENS
4	095268	1	GASKET
5	095265	1	SPRING, cover retaining
6	095269	1	COVER

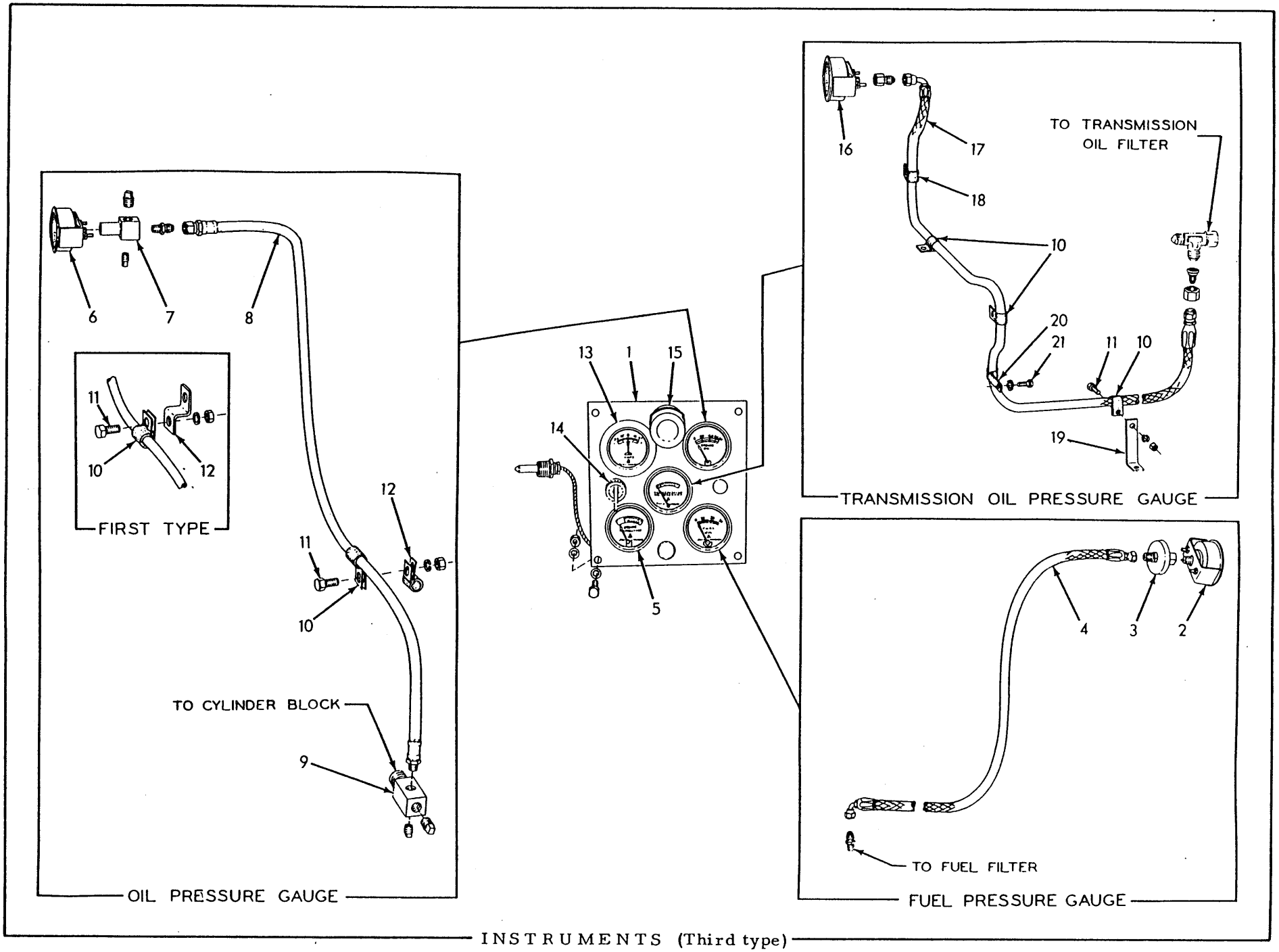

INSTRUMENTS (Third type)

INSTRUMENTS (Third type)

USAGE: Tractors serial No. 6473 thru No. 10000

ITEM	PART NO.	QTY.	DESCRIPTION
1	621976	1	PLATE, instrument mounting
	912789	4	CAPSCREW, 1/4"NF x 3/4"
	906958	8	LOCKWASHER, internal teeth, 1/4"
	911040	4	NUT, 1/4"NF
	921113	1	PLUG, button, 11/16" hole-diam. (Not used when Engine Primer or Air Heater is installed)
2	091589	1	GAUGE, fuel pressure (Includes mounting clamp)
3	088534	1	RESTRICTOR, fuel pressure gauge line
4	621292	1	HOSE ASSEMBLY, fuel pressure gauge (See page 6 for parts)
	919171	1	CONNECTOR, flare type, 1/4" tube, 1/8"NPT male
5	630792	1	GAUGE, engine temperature (Includes mounting clamp)
6	091585	1	GAUGE, engine oil pressure (Includes mounting clamp)
7	094450	1	TEE, oil pressure gauge
	901652	1	PLUG, pipe, 1/4"NPT (Not used on tractors equipped with Hour Meter)
	901651	1	PLUG, pipe, 1/8"NPT
8	647915	1	HOSE, oil pressure gauge (See page 6)
	919171	1	CONNECTOR, flare type, 1/4" tube, 1/8"NPT male
9	096067	1	TEE, oil pressure gauge hose (at cylinder block)
	901652	1	PLUG, pipe, 1/4"NPT
	901651	1	PLUG, pipe, 1/8"NPT
10	094527	4	CLIP, hose supporting (13/32" bolt-hole)
11	036032	3	CAPSCREW, 3/8"NF x 3/4"
	904206	3	LOCKWASHER, 3/8"
	911041	2	NUT, 3/8"NF
12	094692	1	BRACKET, supporting, oil pressure gauge hose (Not used on Models HD11B,E,F,FC tractors #8311 and up)
	635547	1	CLIP, hose supporting (Effective on Model HD11B,E,F,FC tractors #8311 and up)
13	091588	1	AMMETER (Includes mounting clamp)
14	------	1	SWITCH (See LIGHTS AND WIRING)
15	095257	1	LIGHT ASSEMBLY, instrument panel (See page 543 for parts)
	910334	1	LOCKWASHER, internal teeth, 5/8"
	911049	1	NUT, jam, 5/8"NF
16	641809	1	GAUGE, transmission oil pressure (Includes mounting clamp)
17	622431	1	HOSE ASSEMBLY, transmission oil pressure gauge (See page 6 for parts)
	919174	1	CONNECTOR, flare type, 1/4" tube, 1/8"NPT female
	921277	1	REDUCER, flare type, 1/2" tube to 1/4" tube
	919068	1	NUT, flare type, 1/2" tube
18	620063	1	CLIP, transmission oil gauge hose (9/16" bolt-hole)
19	621984	1	ANGLE, supporting, transmission oil gauge hose
20	622161	1	CLIP, transmission oil gauge hose (long type)
21	036032	1	CAPSCREW, 3/8"NF x 3/4"
	904206	1	LOCKWASHER, 3/8"

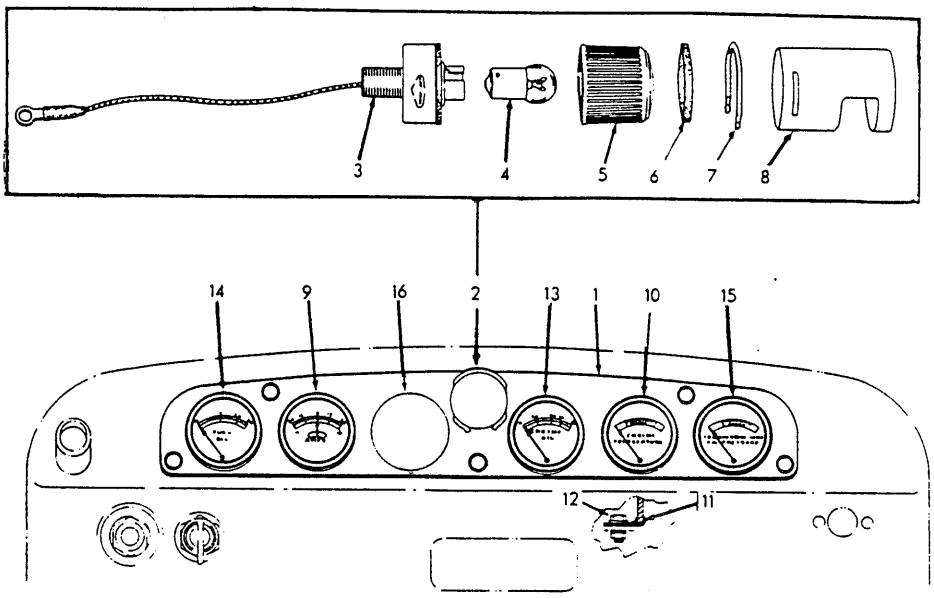

T-41929

INSTRUMENTS

USAGE: Tractors serial No. 10001 and up

ITEM	PART NO.	QTY.	DESCRIPTION
1	634219	1	PLATE, instrument mounting
	907727	5	CAPSCREW, cd-pltd., 1/4"NC x 5/8"
	909367	5	LOCKWASHER, int-tooth, 1/4"
2	634222	1	LIGHT ASSEMBLY, instrument panel (Consists of items 3 thru 8)
	911049	1	NUT, jam, 5/8"NF
	910334	1	LOCKWASHER, int-tooth, 5/8"
3	------	1	BASE ASSEMBLY (Not serviced separately)
4	074452	1	BULB, instrument light (single contact, 6 c.p., 24 volts)
5	095267	1	LENS, instrument light
6	095268	1	GASKET, instrument light
7	095265	1	SPRING, retaining, instrument light cover
8	095269	1	COVER, instrument light
9	091588	1	AMMETER (Includes mounting clamp)
10	630792	1	GAUGE, engine temperature (Includes mounting clamp)
11	639313	1	CLIP, engine temperature gauge line
12	034964	1	CAPSCREW, 1/4"NC x 3/4"
	900816	1	WASHER, plain, U.S. std., 1/4"
	904204	1	LOCKWASHER, 1/4"
	911024	1	NUT, 1/4"NC
13	------	1	GAUGE, engine oil pressure (See page 550)
14	------	1	GAUGE, fuel pressure (See page 547)
15	------	1	GAUGE, transmission lubricating oil pressure (See page 548)
16	921193	1	PLUG, button, 2-3/32" hole-diam.

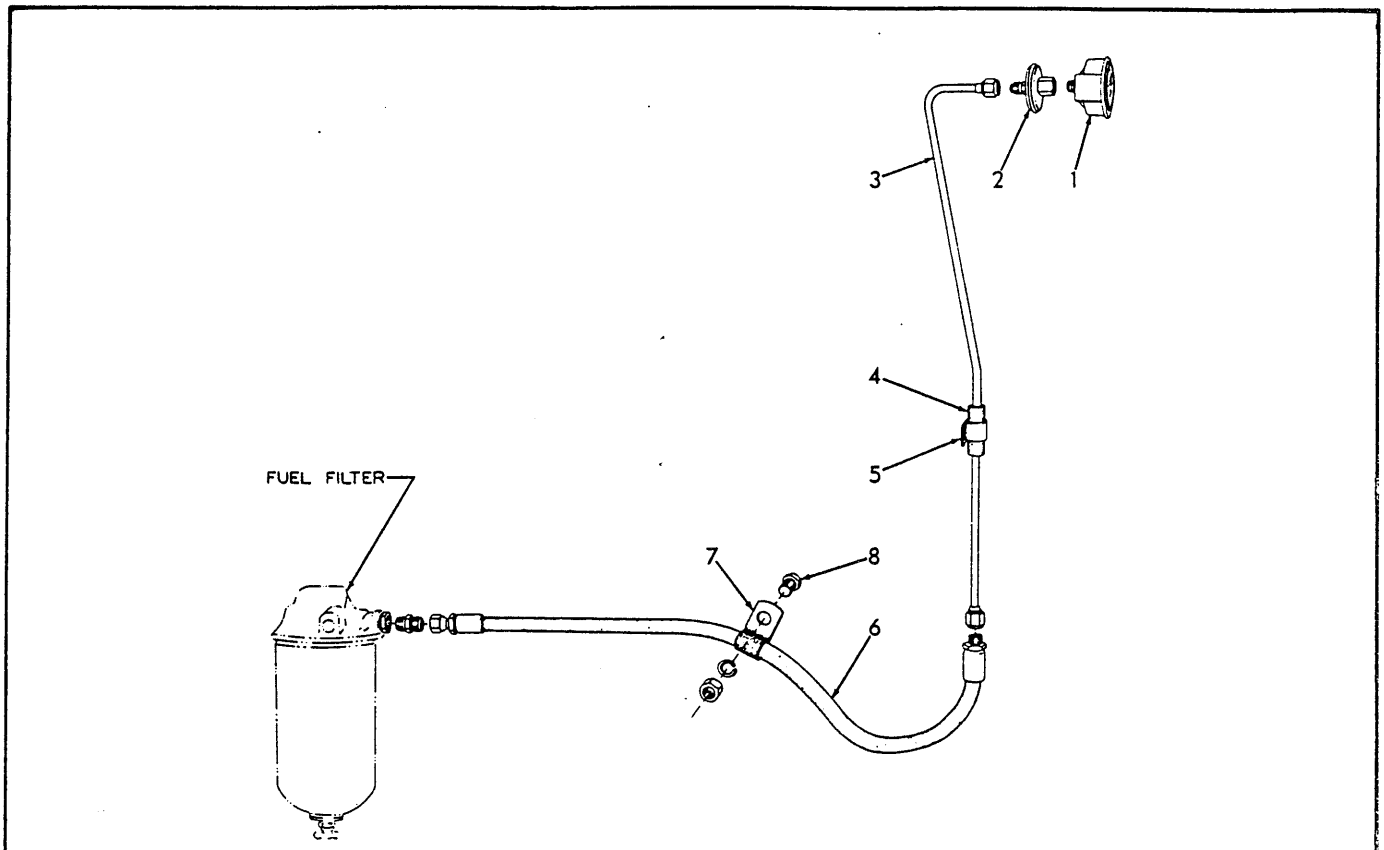

FUEL PRESSURE GAUGE T-41920

USAGE: Tractors serial No. 10001 and up

ITEM	PART NO.	QTY.	DESCRIPTION
1	091589	1	GAUGE (Includes mounting clamp)
2	088534	1	RESTRICTOR
3	641645	1	TUBE ASSEMBLY (Includes nuts)
4	093972	1	BOOT, tube protecting (rubber)
5	047381	1	CLIP, tube supporting
6	641650	1	HOSE (See page 6)
	919140	1	CONNECTOR, flare type, 1/4" tube, 1/4"NPT male
	901826	1	BUSHING, pipe reducing, 3/8"NPT to 1/4"NPT
7	644006	1	CLIP, hose supporting
8	067480	1	CAPSCREW, 1/2"NF x 3/4"
	904208	1	LOCKWASHER, 1/2"
	911043	1	NUT, 1/2"NF

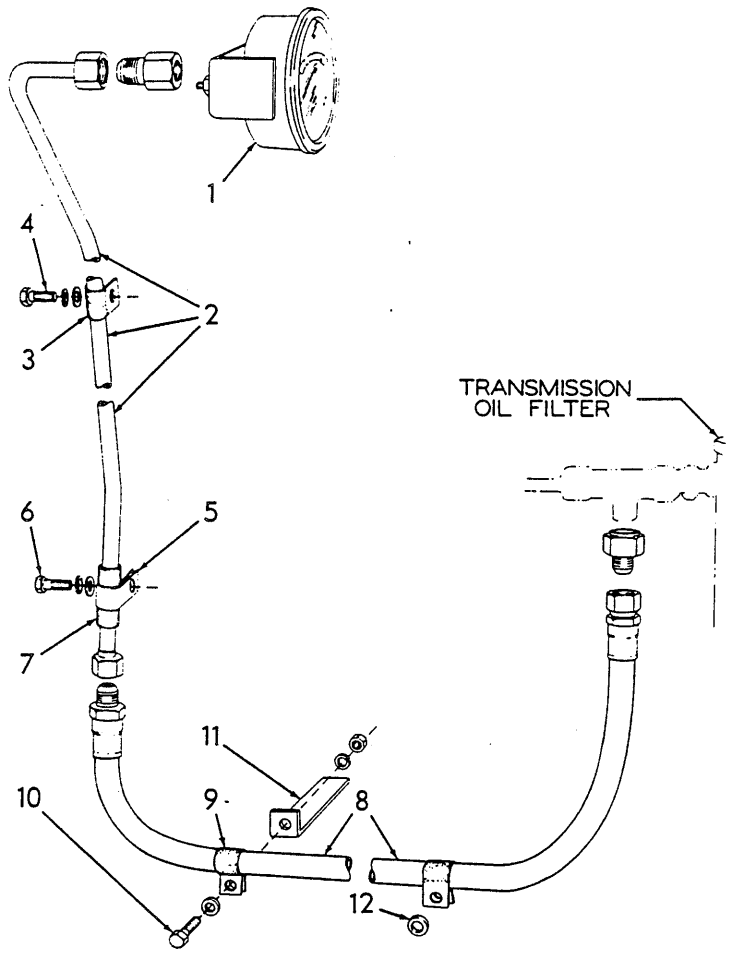

TRANSMISSION LUBRICATING OIL PRESSURE GAUGE T-72466

USAGE: Tractors serial No. 10001 and up

* Models HD11B, E, S
** Model HD11EC

ITEM	PART NO.	QTY. *	QTY. **	DESCRIPTION
1	641809	1	1	GAUGE (Includes mounting clamp)
2	641648	1	1	TUBE ASSEMBLY (Includes nuts)
	919174	1	1	CONNECTOR, flare type, 1/4" tube, 1/8"NPT female
3	640677	1	1	CLIP, tube supporting (1/4" diam.)
4	035244	1	1	CAPSCREW, 3/8"NC x 3/4"
	904206	1	1	LOCKWASHER, 3/8"
	911115	1	1	WASHER, plain, SAE std., 3/8"
5	047381	1	1	CLIP, tube supporting (5/8" diam.)
6	036032	1	1	CAPSCREW, 3/8"NF x 3/4"
	904206	1	1	LOCKWASHER, 3/8"
	911115	1	1	WASHER, plain, SAE std., 3/8"
7	093972	1	1	BOOT, tube protecting (rubber)

(Continued)

TRANSMISSION LUBRICATING OIL PRESSURE GAUGE (Continued)

ITEM	PART NO.	QTY. *	QTY. **	DESCRIPTION
8	642145	1	-	HOSE (See page 6)
	923102	1	-	REDUCER, flare type, 1/2" tube to 1/4" tube
	643971	-	1	HOSE (See page 6)
	923102	-	1	REDUCER, flare type, 1/2" tube to 1/4" tube
9	644006	2	3	CLIP, hose supporting (1/2" bolt-hole)
10	035167	1	2	CAPSCREW, 3/8"NF x 7/8"
	911115	1	2	WASHER, plain, SAE std., 3/8"
	904206	1	2	LOCKWASHER, 3/8"
	911041	1	2	NUT, 3/8"NF
11	621984	1	-	ANGLE, hose supporting (Model HD11B only)
	637658	1	1	ANGLE, hose supporting (Not for HD11B or S)(Illustrated)
12	044973	-	1	WASHER, clip spacing

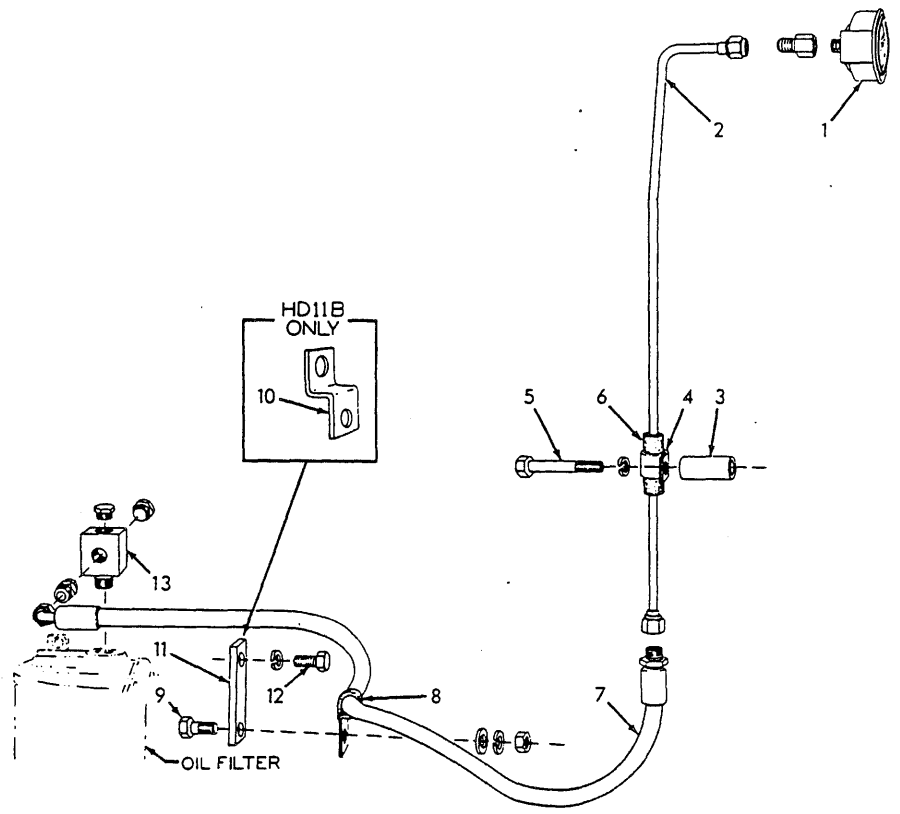

ENGINE OIL PRESSURE GAUGE

T-41924

USAGE: Tractors serial No. 10001 and up

* Model HD11B
** Models HD11E,EC

ITEM	PART NO.	QTY. *	QTY. **	DESCRIPTION
1	091585	1	1	GAUGE (Includes mounting clamp)
2	641646	1	1	TUBE ASSEMBLY (Includes nuts)
	919174	1	1	CONNECTOR, flare type, 1/4" tube, 1/8"NPT female
3	635720	1	1	SPACER, tube supporting clip
4	047381	1	1	CLIP, tube supporting
5	045174	1	1	CAPSCREW, 3/8"NF x 2-1/2" (Early units)
	056721	1	1	CAPSCREW, 3/8"NC x 2-1/2" (Late units)
	904206	1	1	LOCKWASHER, 3/8"
6	093972	1	1	BOOT, tube protecting (rubber)
7	641649	1	1	HOSE (See page 6)
	919140	1	1	CONNECTOR, flare type, 1/4" tube, 1/4"NPT male
8	644006	2	2	CLIP, hose supporting
9	035167	1	1	CAPSCREW, 3/8"NF x 7/8"
	911115	1	1	WASHER, plain, SAE std., 3/8"
	904206	1	1	LOCKWASHER, 3/8"
	911041	1	1	NUT, 3/8"NF

(Continued)

ENGINE OIL PRESSURE GAUGE (Continued)

ITEM	PART NO.	QTY. *	QTY. **	DESCRIPTION	
10	094692	1	-	BRACKET, hose supporting (Used prior to tractor #11228)	
11	046423	-	1	SUPPORT, hose	Effective on Models HD11B,S with tractor #11228
12	035244	-	1	CAPSCREW, 3/8"NC x 3/4"	
	904206	-	1	LOCKWASHER, 3/8"	
13	4339606	1	1	ADAPTOR, oil pressure gauge line	
	919840	1	1	PLUG, pipe; hex-hd., 1/4"NPT (Not used if Hour Meter installed)	
	920333	1	-	PLUG, pipe, hex-hd., 3/8"NPT	

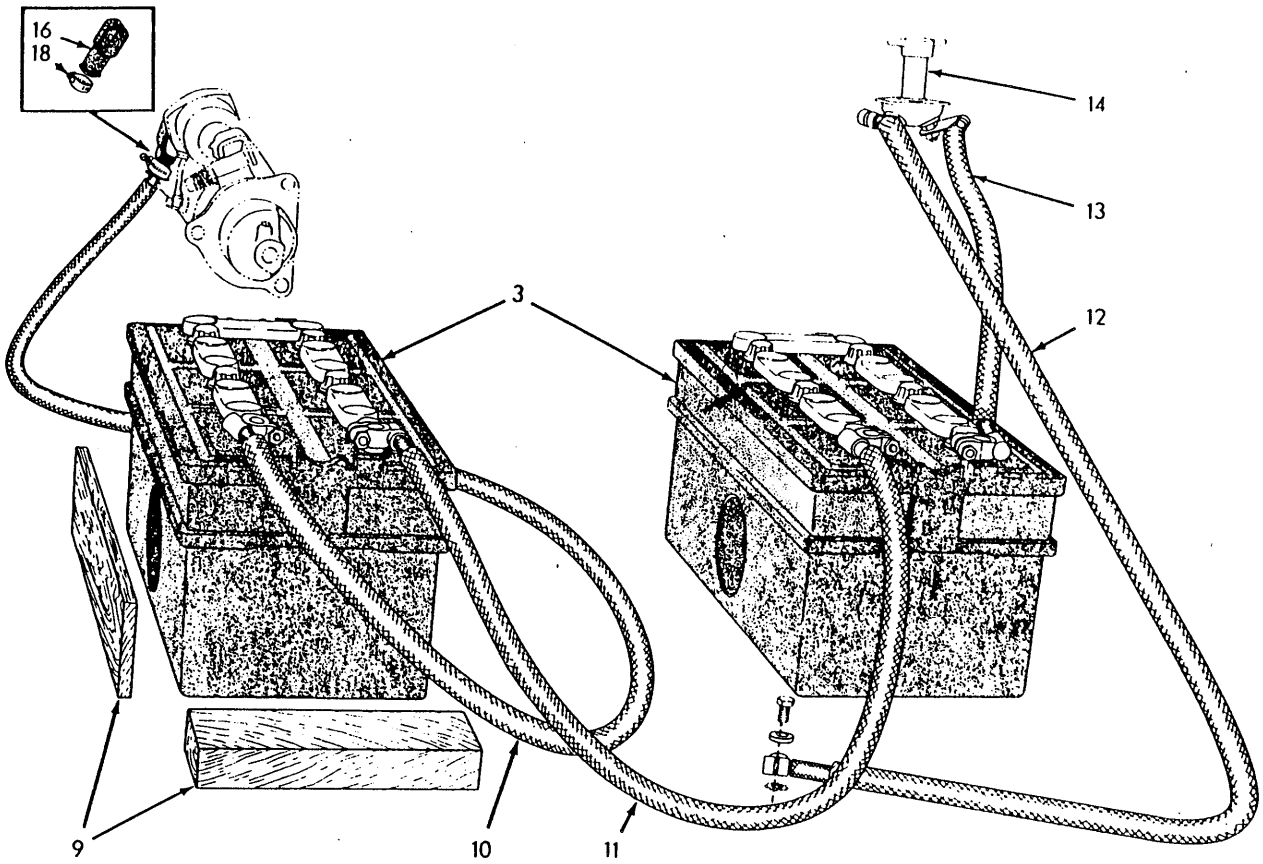

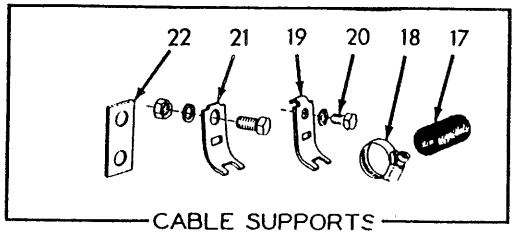

CABLE SUPPORTS

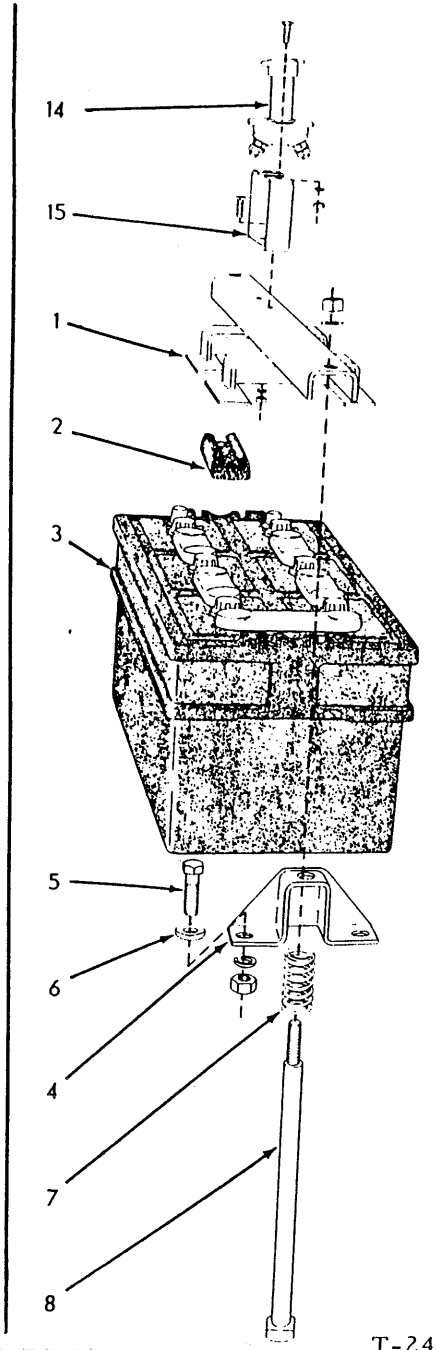

T-24158

BATTERIES AND CABLES (First type. Models HD11B, E, EC, ES, S)

BATTERIES AND CABLES

USAGE: Model HD11B,E,EC,ES,S tractors prior to serial No. 10001

ITEM	PART NO.	QTY.	DESCRIPTION
1	052782	2	HOLD-DOWN, battery
2	052791	8	BLOCK, hold-down (rubber)
3	------	2	BATTERY, storage, 12 volts, 25 plates, ("Prestolite" type D6. Order from local dealer)
4	084174	4	BRACKET, hold-down bolt
5	035236	8	CAPSCREW, 1/2"NC x 1-1/2"
	904208	8	LOCKWASHER, 1/2"
	911028	8	NUT, 1/2"NC
6	064531	8	WASHER, plain
7	081404	4	SPRING, hold-down bolt
8	075322	4	BOLT, hold-down
	904208	4	LOCKWASHER, 1/2"
	911043	4	NUT, 1/2"NF
9	------	-	BOARDS, battery spacing (Procure locally as req'd)
10	623880	1	CABLE, battery to starter (102" long)
11	089653	1	CABLE, battery connecting (41" long)
12	089641	1	CABLE, battery to ground (36" long) (Used prior to tractor #6069 excluding #5490 and #6044)
	097063	1	CABLE, master switch to ground (49" long) (Effective with tractor #6069 including #5490 and #6044)
	900817	1	WASHER, plain, U.S. std., 3/8"
	915898	1	LOCKWASHER, int-ext-tooth, 3/8"
13	096918	1	CABLE, battery to master switch (15-1/2" long) (Effective with tractor #6069 including #5490 and #6044)
14	096908	1	SWITCH ASSEMBLY, master (Serviced only as a unit) (Effective with tractor #6069 including #5490 and #6044)
	912789	2	CAPSCREW, 1/4"NF x 3/4"
	904204	2	LOCKWASHER, 1/4"
	911040	2	NUT, 1/4"NF
15	096913	1	BRACKET, master switch (Effective with tractor #6069 including #5490 and #6044)
	912789	2	CAPSCREW, 1/4"NF x 3/4"
	904204	2	LOCKWASHER, 1/4"
	911040	2	NUT, 1/4"NF
16	076572	1	BOOT, protecting, starter terminal (Used prior to tractor #6574)
17	076469	10	BOOT, cable protecting

(Continued)

ITEM	PART NO.	QTY.	DESCRIPTION	
18	921912	11	CLAMP, cable boot (adjustable, 1-1/16" to 2")	
19	076470	4	CLIP, cable supporting	1 additional used prior to tractor #6069 excluding #5490 & #6044
20	035979	3	CAPSCREW, 3/8"NF x 5/8"	
	904206	3	LOCKWASHER, 3/8"	
21	084895	2	CLIP, cable supporting (1 less used prior to tractor #6069)	
	070469	1	CAPSCREW, 1/2"NF x 1"	effective with tractor #6069 including #5490 and #6044
	904208	1	LOCKWASHER, 1/2"	
	911043	1	NUT, 1/2"NF	
22	621995	1	PLATE, cable supporting (Effective with tractor #6069 including #5490 and #6044)	

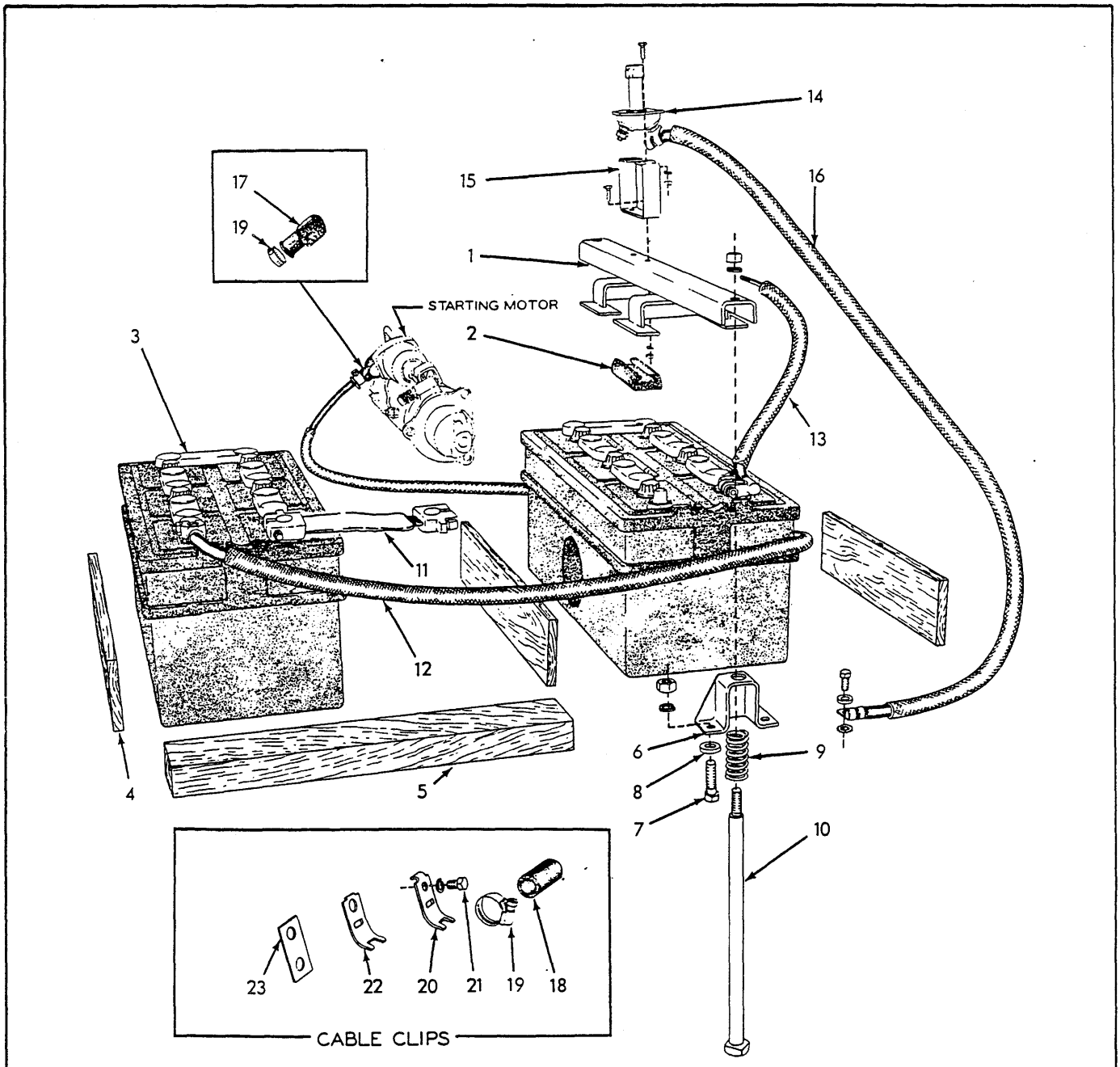

T-24159

BATTERIES AND CABLES (Model HD11F, FC)

BATTERIES AND CABLES

USAGE: Models KD11F, FC only

ITEM	PART NO.	QTY.	DESCRIPTION
1	052782	2	HOLD-DOWN, battery
2	052791	8	BLOCK, hold-down (rubber)
3	------	2	BATTERY, storage, 12 volts, 25 plates ("Prestolite" type D-6. Order from local battery dealer)
4	------	-	BOARD, side (Procure locally as required)
5	------	-	BOARD, bottom (Procure locally as required)
6	081867	4	BRACKET, hold-down bolt
7	035236	8	CAPSCREW, 1/2"NC x 1-3/4"
8	064531	8	WASHER, plain
	904208	8	LOCKWASHER, 1/2"
	911028	8	NUT, 1/2"NC
9	081404	4	SPRING, hold-down bolt
10	075322	4	BOLT, hold-down
	904208	4	LOCKWASHER, 1/2"
	911043	4	NUT, 1/2"NF
11	644648	1	STRAP, battery connecting (6-1/2" long)
12	089642	1	CABLE, battery to starter (112" long)
13	096918	1	CABLE, battery to master switch (15-1/2" long) (Effective with tractor #6069 including #5490 and #6044)
14	096908	1	SWITCH ASSEMBLY, master (Serviced only as a unit) (Effective with tractor #6069 including #5490 and #6044)
	912789	2	CAPSCREW, 1/4"NF x 3/4"
	904204	2	LOCKWASHER, 1/4"
	911040	2	NUT, 1/4"NF
15	096913	1	BRACKET, master switch (Effective with tractor #6069 including #5490 and #6044)
	912789	2	CAPSCREW, 1/4"NF x 3/4"
	904204	2	LOCKWASHER, 1/4"
	911040	2	NUT, 1/4"NF
16	089641	1	CABLE, battery to ground (36" long) (Used prior to tractor #6069 excluding #5490 and #6044)
	097063	1	CABLE, master switch to ground (49" long) (Effective with tractor #6069 including #5490 and #6044)
	900817	1	WASHER, plain, U.S. std., 3/8"
	915898	1	LOCKWASHER, int-ext-tooth, 3/8"
17	076572	1	BOOT, protecting, starter terminal
18	076469	8	BOOT, cable protecting
19	921912	9	CLAMP, cable boot (adjustable, 1-1/16" to 2")
20	076470	4	CLIP, cable supporting
21	035979	1	CAPSCREW, 3/8"NF x 5/8"
	904206	1	LOCKWASHER, 3/8"
22	084895	2	CLIP, cable supporting
	070467	1	CAPSCREW, 1/2"NF x 1"
	904208	1	LOCKWASHER, 1/2"
	911043	1	NUT, 1/2"NF
23	621995	1	PLATE, cable supporting (Effective with tractor #6069 including #5490 and #6044)

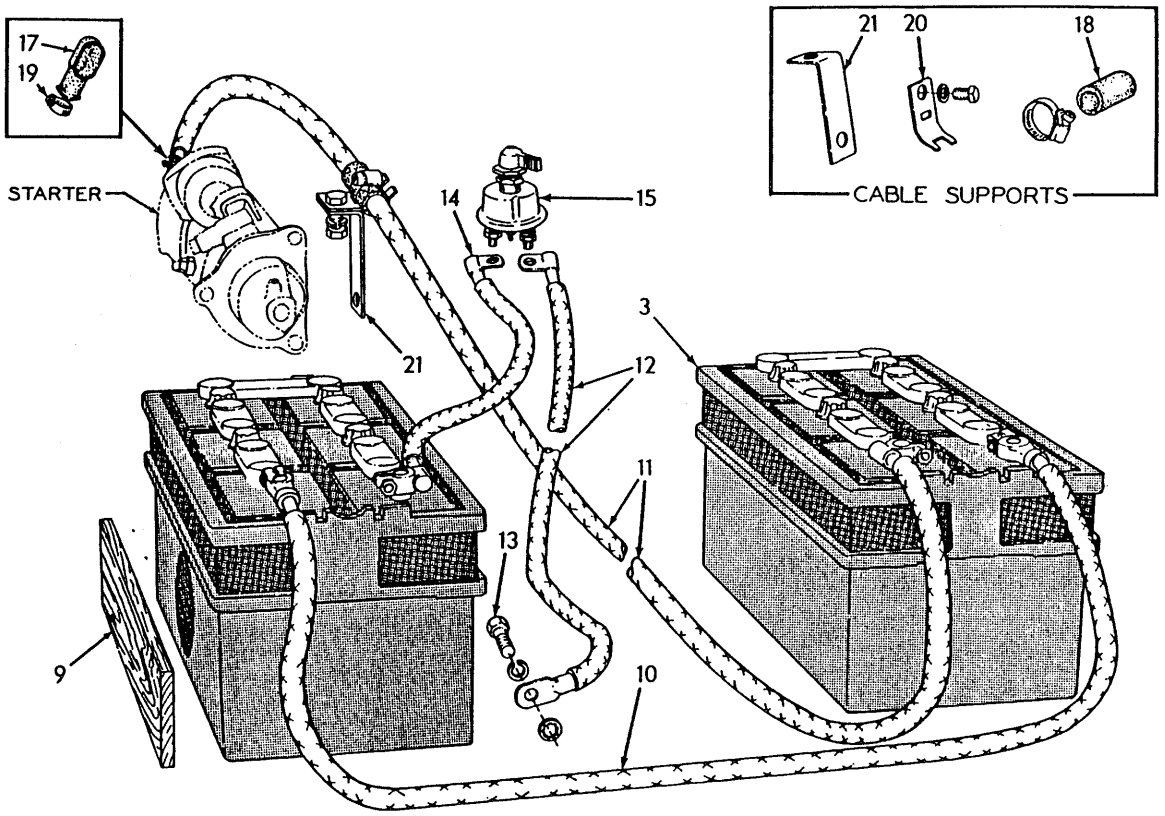

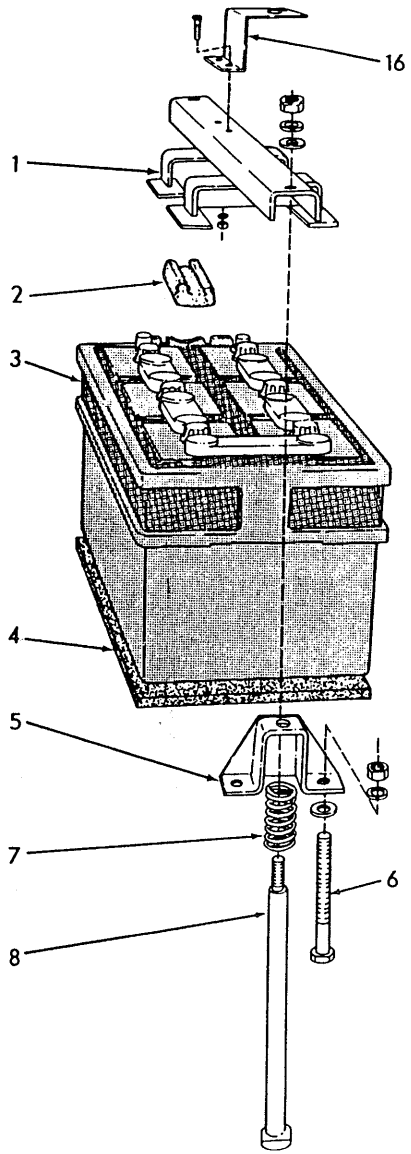

BATTERIES AND CABLES (Second type)

T-41930

BATTERIES AND CABLES

USAGE: Tractors serial No. 10001 and up

ITEM	PART NO.	QTY.	DESCRIPTION
1	052782	2	HOLD-DOWN, battery
2	052791	8	BLOCK, hold-down (rubber)
3	------	2	BATTERY, storage, 12 volts, 25 plates, ("Prestolite" type D-6. Order from local dealer)
4	085680	2	PAD, battery bottoms
5	081867	4	BRACKET, hold-down bolt
6	012871	4	CAPSCREW, 1/2"NC x 2-3/4" (right side)
	052191	4	CAPSCREW, 1/2"NC x 5-1/2" (left side)
	904208	8	LOCKWASHER, 1/2"
	911028	8	NUT, 1/2"NC } Not used with special
	064531	8	WASHER, plain } reinforced Rear Fenders
7	081404	4	SPRING, hold-down bolt
8	087313	4	BOLT, hold-down
	904208	4	LOCKWASHER, 1/2"
	911043	4	NUT, 1/2"NF
	064531	4	WASHER, plain
9	------	-	BOARDS, battery spacing (Procure locally as required)
10	069743	1	CABLE, battery connecting (58-1/2" long)
11	622064	1	CABLE, battery to starter (126-3/4" long)
12	627428	1	CABLE, master switch to ground (58" long)
13	036034	1	CAPSCREW, 3/8"NF x 1"
	904206	1	LOCKWASHER, regular, 3/8"
	906960	1	LOCKWASHER, int-tooth, 3/8"
14	096918	1	CABLE, battery to master switch (15-1/2" long)
15	643726	1	SWITCH ASSEMBLY, master (Serviced only as a unit)
16	643725	1	BRACKET, master switch
	912789	2	CAPSCREW, 1/4"NF x 3/4"
	904204	2	LOCKWASHER, 1/4"
	911040	2	NUT, 1/4"NF
17	076572	1	BOOT, protecting, starter terminal
18	076469	14	BOOT, cable protecting
19	921912	15	CLAMP, cable boot
20	633653	9	CLIP, cable supporting
	036032	3	CAPSCREW, 3/8"NF x 3/4"
	035439	4	CAPSCREW, 3/8"NC x 1"
	904206	7	LOCKWASHER, 3/8"
	911041	1	NUT, 3/8"NF
	084895	1	CLIP, supporting, ground cable
21	637658	1	ANGLE, cable supporting

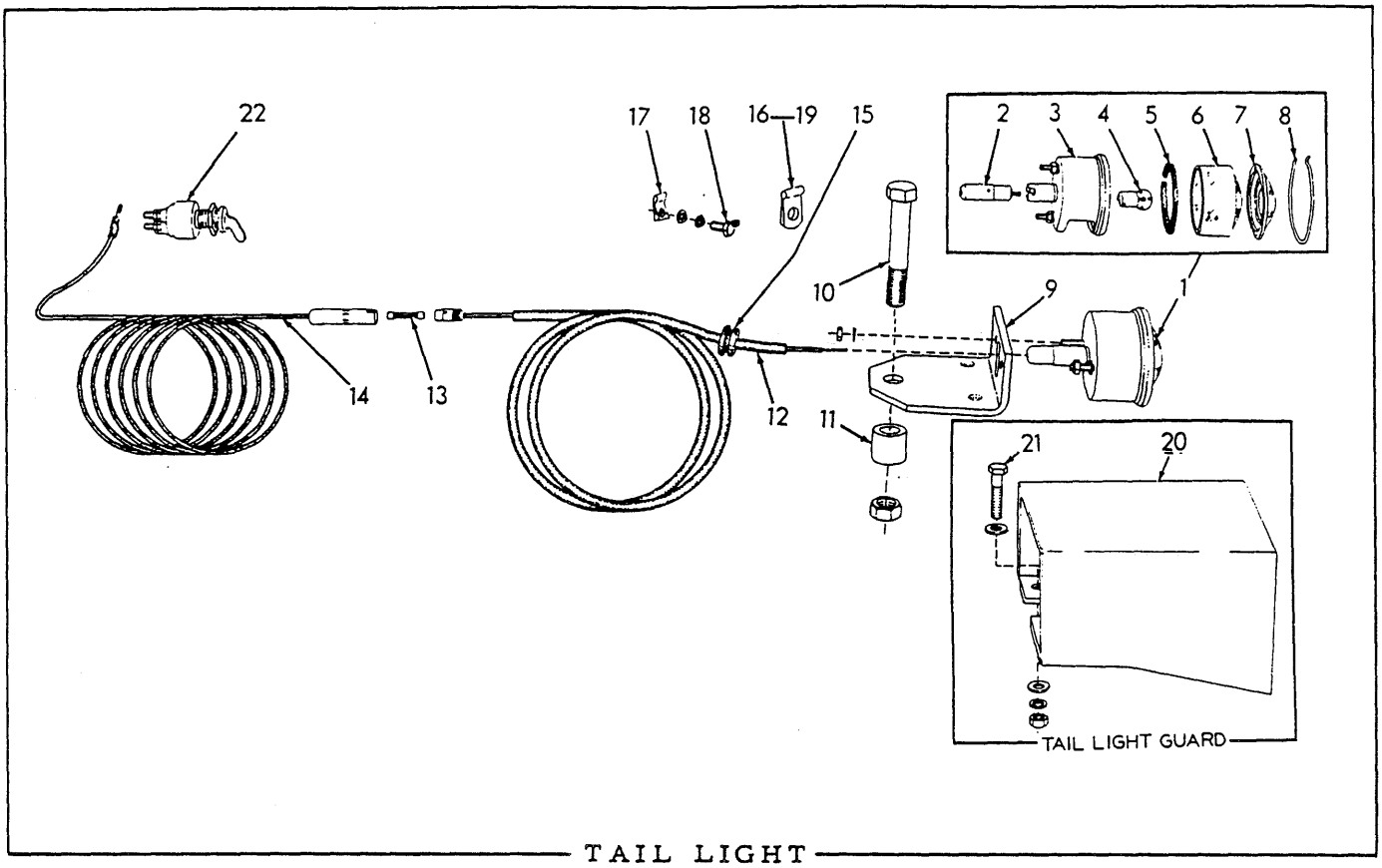

TAIL LIGHT

USAGE: Special equipment prior to June 1956. Applicable to all tractors except those equipped with Rear Flood Light

ITEM	PART NO.	QTY.	DESCRIPTION
1	------	1	LIGHT ASSEMBLY, tail (Consists of items 2 thru 8) (Order LIGHT ASSEMBLY 654652)
	904204	2	LOCKWASHER, 1/4"
	911040	2	NUT, 1/4"NF
2	047307	1	PLUG, cable connecting
3	------	1	BODY (Not serviced)
4	074452	1	BULB, incandescent, single contact, 6,c.p., 24 volt
5	043713	1	GASKET, glass cup
6	043716	1	CUP (glass)
7	034014	1	LENS (red)
8	212758	1	RING, lens retaining
9	067110	1	BRACKET, mounting
10	034440	1	CAPSCREW, 5/8"NF x 3-1/2"
	911044	1	NUT, 5/8"NF
11	067112	1	BLOCK, spacing, mounting bracket

(Continued)

ITEM	PART NO.	QTY.	DESCRIPTION
12	------	1	CABLE, rear section (50" long)(Order CABLE 089292)
13	208960	1	FUSE, cartridge type, 1/4" x 1-1/4", 20 amperes
14	085412	1	CABLE, front section (70" long)
15	------	1	GROMMET, cable protecting (For tractors with Cab)
16	200479	2	CLIP, front cable (3/16" diam., 13/32" bolt-hole)
17	235794	1	CLIP, rear cable (1/4" diam., 13/32" bolt-hole)
18	035979	1	CAPSCREW, 3/8"NF x 5/8"
	904206	1	LOCKWASHER, 3/8"
	911115	1	WASHER, plain, SAE std., 3/8"
19	044044	1	CLIP, rear cable (1/4" diam., 17/32" bolt-hole)
20	647139	1	GUARD, tail light
21	012992	2	CAPSCREW, 3/8"NF x 1-1/4"
	044973	4	WASHER, plain
	904206	2	LOCKWASHER, 3/8"
	911041	2	NUT, 3/8"NF
22	------	1	SWITCH (See LIGHTS AND WIRING)

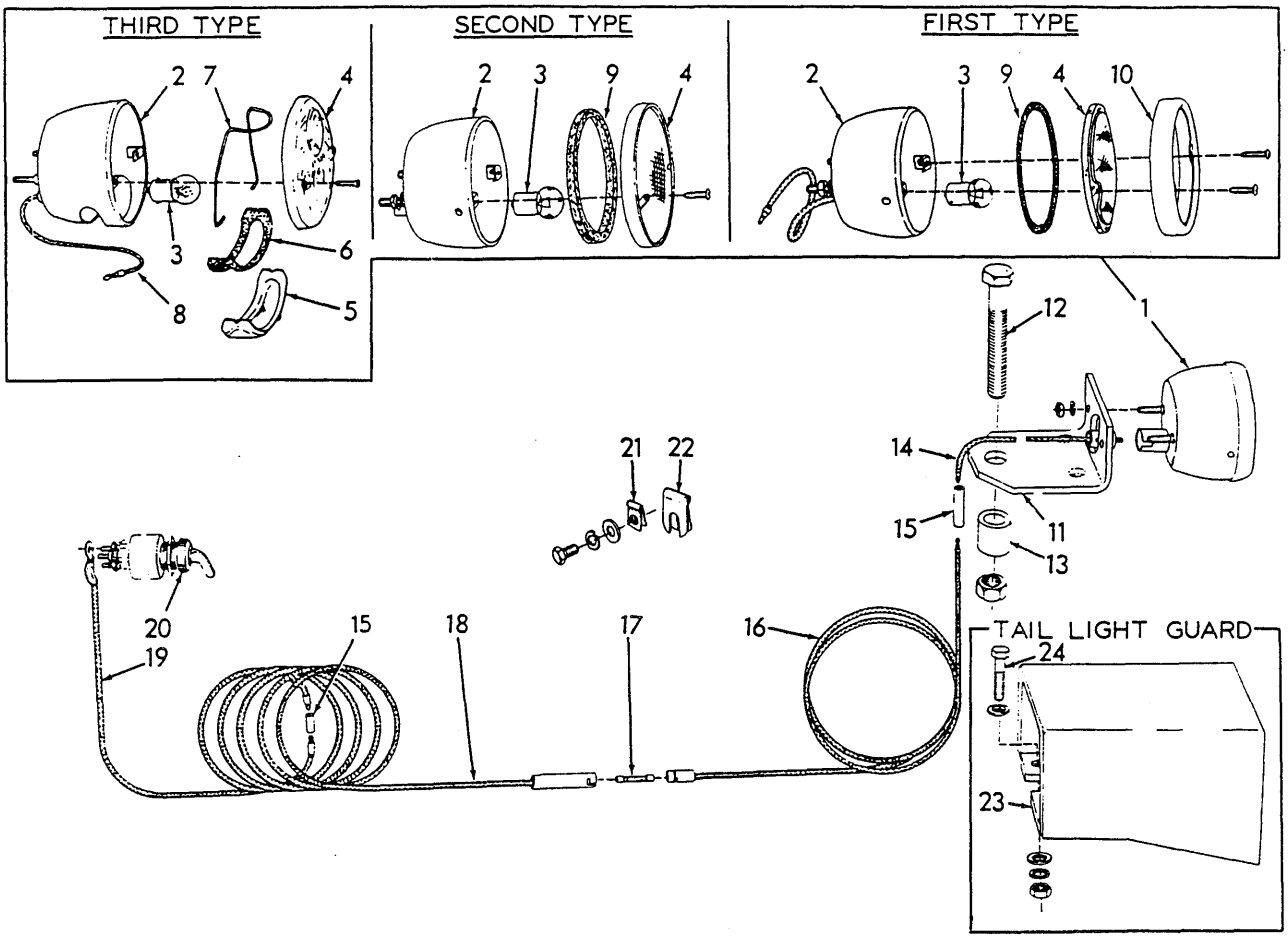

TAIL LIGHT T-15175

USAGE: Special equipment effective June 1956. Applicable to all tractors except those equipped with Rear Flood Light

* Tractors prior to serial No. 6929
** Tractors serial No. 6929 and up. Discontinued approx. January 1967
*** Effective approx. January 1967

ITEM	PART NO.	QUANTITY *	**	***	DESCRIPTION
1	------	1	-	-	LIGHT ASSEMBLY, tail (Order LIGHT ASSEMBLY 654652)
1	------	-	1	-	LIGHT ASSEMBLY, tail (Order LIGHT ASSEMBLY 654652)
1	654652	-	-	1	LIGHT ASSEMBLY, tail (Consists of items 2 thru 8)
	904204	2	2	2	LOCKWASHER, 1/4"
	911024	2	2	2	NUT, 1/4"NC
2	------	1	1	1	BODY ASSEMBLY, (Not serviced separately)
3	074452	1	1	1	BULB, incandescent, single contact, 6 c.p., 24 volt

(Continued)

ITEM	PART NO.	QUANTITY *	**	***	DESCRIPTION
4	068405	1	-	-	LENS, tail light (3-1/2" O. D.)
	629188	-	1	-	LENS, tail light (3-11/16" O. D.)
	917883	-	2	-	SCREW, thread-cutting, rd-hd., #8 x 5/8"
	654991	-	-	1	LENS, tail light (red)
	654990	-	-	2	SCREW, retaining
5	654988	-	-	1	LENS-SEGMENT, tail light (clear)
6	654989	-	-	1	GASKET, lens-segment
7	654987	-	-	1	CLIP, lens-segment retaining
8	654986	-	-	1	WIRE ASSEMBLY, tail light (Includes insulating bushing)
9	068399	1	-	-	GASKET, tail light lens (1/16" thick)
	629189	-	1	-	GASKET, tail light lens (3/16" thick)
10	068404	1	-	-	DOOR, tail light
	917883	2	-	-	SCREW, thread-cutting, rd-hd., #8 x 5/8"
11	067110	1	1	1	BRACKET, tail light mounting
12	034440	1	1	1	CAPSCREW, 5/8"NF x 3-1/2"
	911044	1	1	1	NUT, 5/8"NF
13	067112	1	1	1	BLOCK, spacing, mounting bracket
14	630148	-	1	-	CABLE ASSEMBLY, rear section (Includes plug)
15	048142	1	2	2	CONNECTOR, cable
16	089292	1	1	1	CABLE, rear intermediate section (50" long) (tr. pr. to #10001)
	638965	-	1	1	CABLE, rear intermediate section (42" long) (tr. #10001 and up)
17	208960	1	1	1	FUSE, cartridge type, 1/4" x 1-1/4", 20 amperes
18	641716	1	1	1	CABLE, front intermediate section (46" long)
19	641715	1	1	1	CABLE, front section (24" long)
20	------	1	1	1	SWITCH (See LIGHTS AND WIRING)
21	639388	3	3	3	CLIP, tail light cable (1/8" diam., 13/32" bolt-hole)
	916268	1	1	1	CAPSCREW, 3/8"NC x 5/8"
	904206	1	1	1	LOCKWASHER, 3/8"
	911115	1	1	1	WASHER, plain, SAE std., 3/8"
22	639312	1	1	1	CLIP, rear cable (3/16" diam., 9/16" bolt-slot)
23	647139	1	1	1	GUARD, tail light
24	012992	2	2	2	CAPSCREW, 3/8"NF x 1-1/4"
	044973	4	4	4	WASHER, plain
	904206	2	2	2	LOCKWASHER, 3/8"
	911041	2	2	2	NUT, 3/8"NF

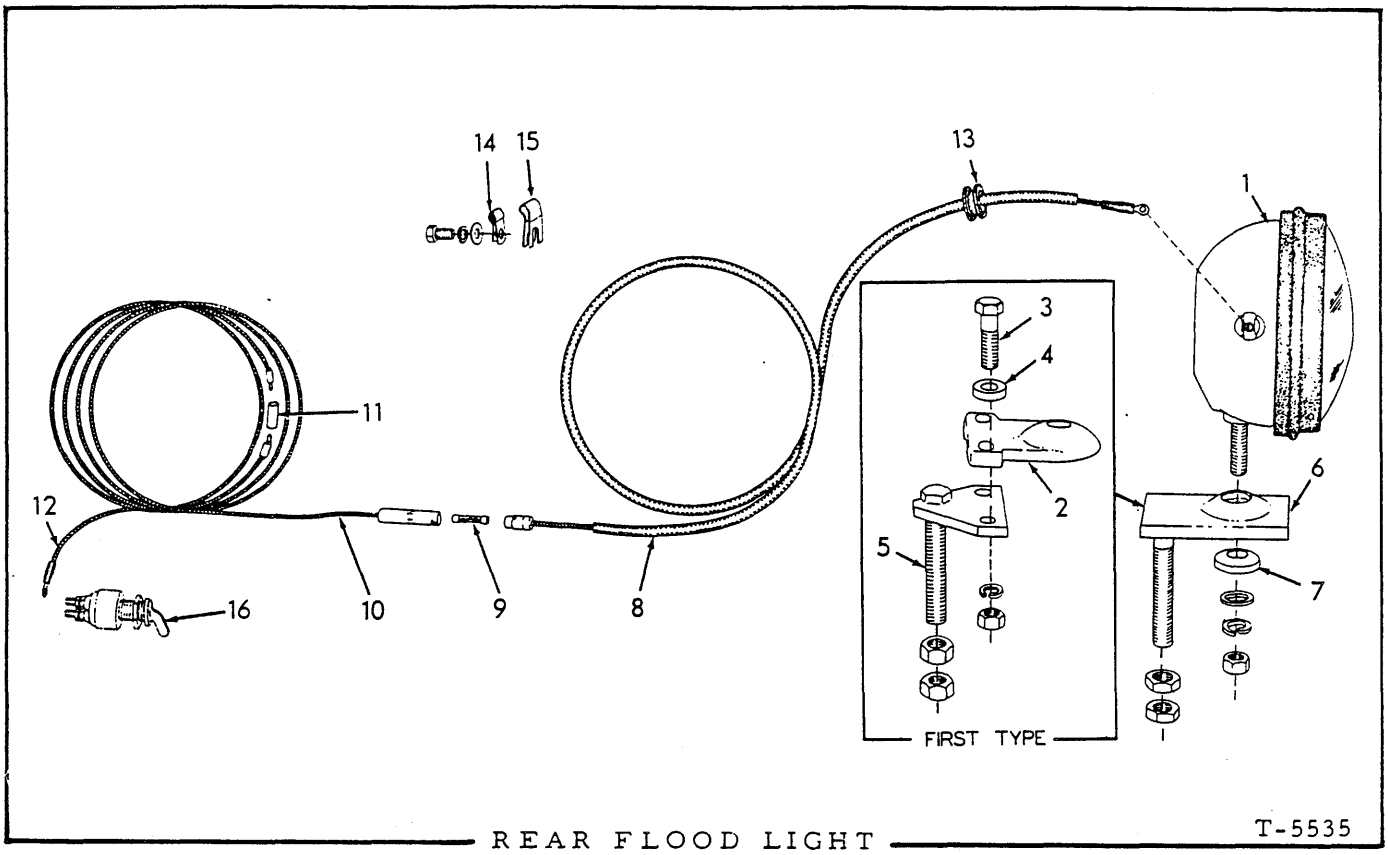

REAR FLOOD LIGHT T-5535

USAGE: Special equipment. Applicable to all tractors except those equipped with TAIL LIGHT

ITEM	PART NO.	QTY.	DESCRIPTION
	074388	1	LIGHT ASSEMBLY (See page 517 for parts)(Used prior to July 1959. Order 1 each LIGHT ASSEMBLY 638283, WASHER 075535, WASHER 900818, LOCKWASHER 904208 and NUT 911043)
	904206	1	LOCKWASHER, 3/8"
	911026	1	NUT, 3/8"NC
1	097030	1	LIGHT ASSEMBLY (See page 521 for parts)(Used July 1959 thru July 1963)(Order LIGHT ASSEMBLY 638283)
	638283	1	LIGHT ASSEMBLY (See page 525 for parts)(Effective August 1963)
	900818	1	WASHER, plain, U.S. std., 1/2"
	904208	1	LOCKWASHER, 1/2"
	911043	1	NUT, 1/2"NF
2	------	1	BRACKET, mounting (Used prior to August 1958. Order item 6)
3	035067	2	CAPSCREW, 1/2"NF x 2"
4	064531	2	WASHER, plain
	904208	2	LOCKWASHER, 1/2"
	911043	2	NUT, 1/2"NF
5	------	1	PLATE, mounting (Used prior to August 1958. Order item 6)
	911044	2	NUT, 5/8"NF
6	094630	1	BRACKET, mounting (Effective August 1958)
	911044	2	NUT, 5/8"NF
7	053277	1	WASHER, mounting (For LIGHT ASSEMBLY 074388 only)
	075535	1	WASHER, mounting (For LIGHT ASSEMBLY 097030 and 638283)

(Continued)

REAR FLOOD LIGHT (Continued)

ITEM	PART NO.	QTY.	DESCRIPTION
8	084238	1	CABLE, rear section (57" long)
9	208960	1	FUSE, cartridge type, 1/4" x 1-1/4", 20 amperes
10	641716	1	CABLE, intermediate section (46" long)
11	048142	1	CONNECTOR, cable
12	641715	1	CABLE, front section (24" long)
13	------	1	GROMMET, cable protecting (For tractors with Cab)
14	639388	3	CLIP, cable supporting (1/8" diam., 13/32" bolt-hole)
	916268	1	CAPSCREW, 3/8"NC x 5/8"
	911115	1	WASHER, plain, SAE std., 3/8"
	904206	1	LOCKWASHER, 3/8"
15	639312	1	CLIP, rear cable (3/16" diam., 9/16" bolt-slot)
16	------	1	SWITCH (See LIGHTS AND WIRING)

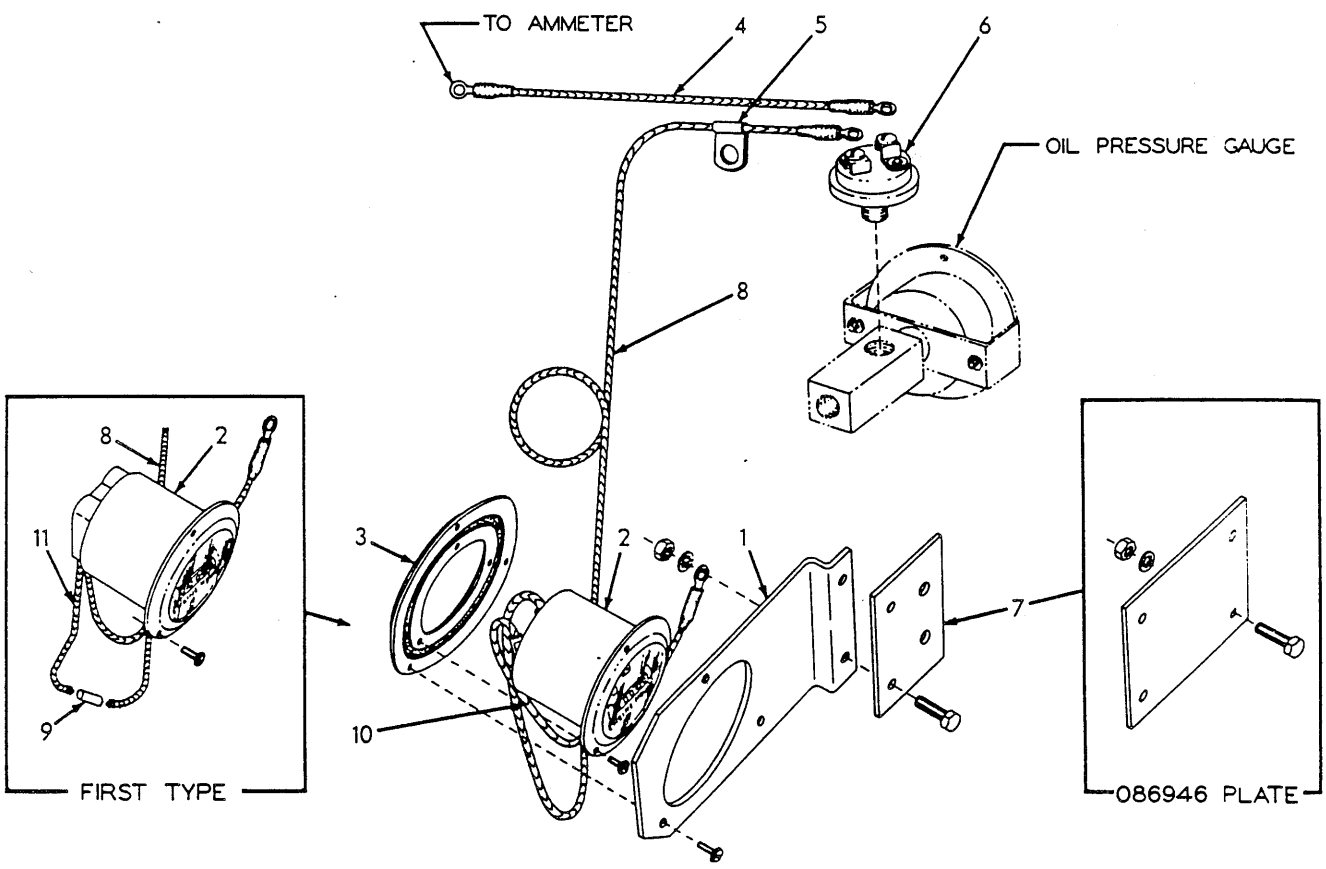

HOUR METER T-2214A

USAGE: Special equipment. Used prior to tractor serial No. 10001

ITEM	PART NO.	QTY.	DESCRIPTION
1	086947	1	BRACKET, mounting
	912789	2	CAPSCREW, 1/4"NF x 3/4"
	909367	2	LOCKWASHER, internal teeth, 1/4"
	911040	2	NUT, 1/4"NF
2	------	1	METER, hour (24 volt)(Used prior to tractor #7352. Order METER 650299)
	650299	1	METER, hour (24 volt)(Effective with tractor #7352)
	918210	3	SCREW ASSEMBLY, #6 x 1/2" (Includes lockwasher)

NOTE: Meter carries manufacturer's warranty and in case of failure should not be returned to Allis-Chalmers. Return "Hobbs" meter to nearest "Stewart-Warner" agency. Return "Hamilton" meter to Hamilton Watch Company, Industrial Products Division, Lancaster, Penna.

(Continued)

ITEM	PART NO.	QTY.	DESCRIPTION
3	066467	1	DAMPER, vibration
	918210	3	SCREW ASSEMBLY, #6 x 1/2" (Includes lockwasher)
4	605808	1	CABLE, pressure switch to ammeter (10" long)
5	238136	1	CLIP, hour meter cable (3/16" diam., 13/32" bolt-hole)
6	050288	1	SWITCH, pressure
7	086946	1	PLATE, extension (Used only with AIR HEATER on tractors prior to #4415)
	912789	2	CAPSCREW, 1/4"NF x 3/4"
	906958	2	LOCKWASHER, internal teeth, 1/4"
	911040	2	NUT, 1/4"NF
	085571	1	PLATE, extension (Used only when ENGINE SIDE SCREENS are installed)
8	099219	1	CABLE, meter to pressure switch (28" long)(Used prior to tractor #7352)
	630626	1	CABLE, meter to pressure switch (34" long)(Effective with tractor #7352)
9	048142	1	CONNECTOR, meter cable (Used prior to tractor #7352)
10	630917	1	CABLE, meter to ground (8" long)(Effective with tractor #7352)
11	631639	1	CABLE, meter connecting (7-1/2" long)(Used only with item 2 when replacing early type meter)

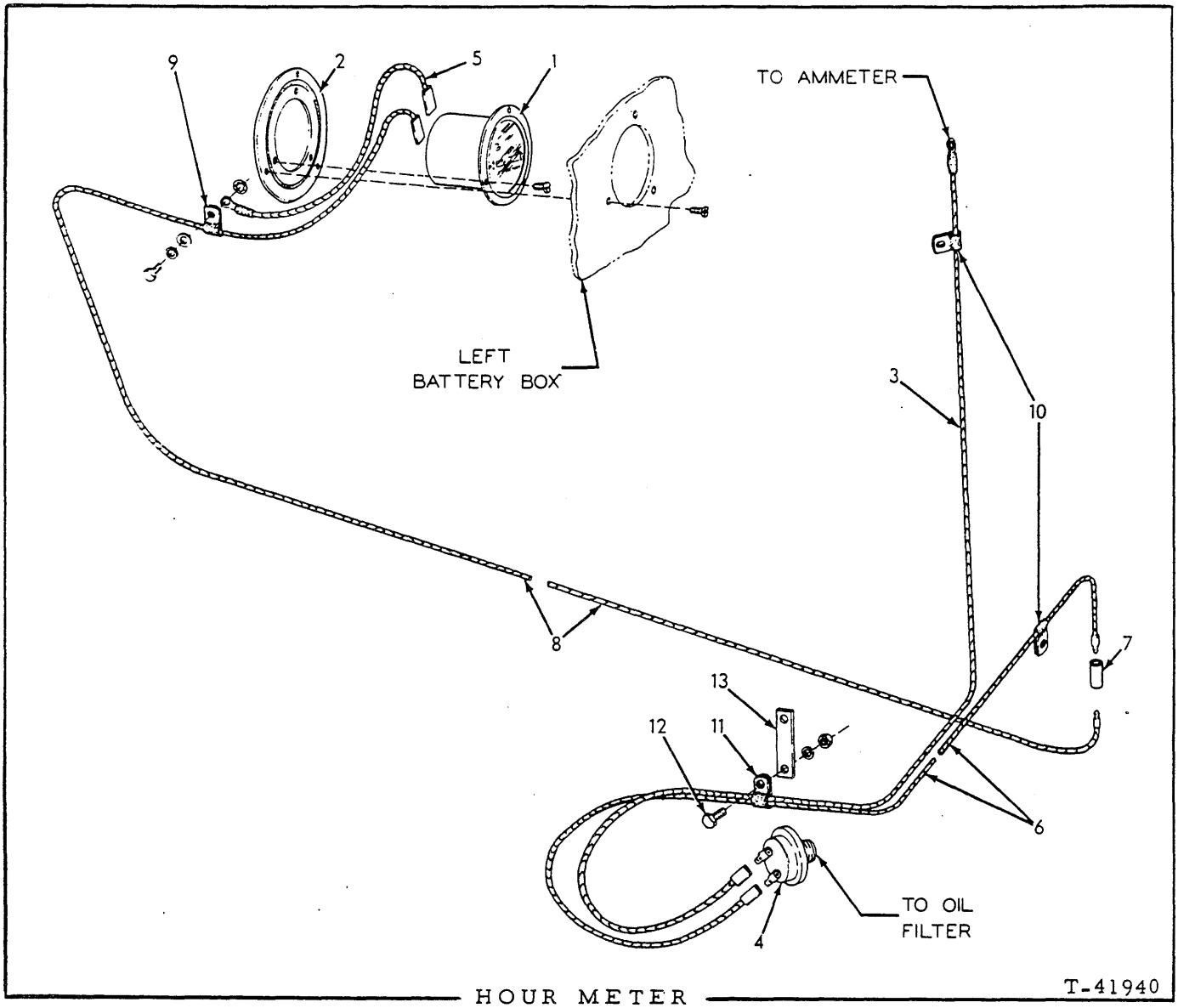

HOUR METER

USAGE: Special equipment. Tractors serial No. 10001 and up

ITEM	PART NO.	QTY.	DESCRIPTION
1	650299	1	METER, hour (24 volt)
	918210	3	SCREW ASSEMBLY, #6 x 1/2" (Includes lockwasher)
			NOTE: Meter carries manufacturer's warranty and in case of failure should not be returned to Allis-Chalmers. Return "Hobbs" meter to nearest "Stewart-Warner" agency. Return "Hamilton" meter to Hamilton Watch Company, Industrial Products Division, Lancaster, Pa.
2	066467	1	DAMPER, vibration
	918210	3	SCREW ASSEMBLY, #6 x 1/2" (Includes lockwasher)
3	638942	1	CABLE, pressure switch to ammeter (50" long)
4	640727	1	SWITCH, pressure
5	630917	1	CABLE, meter to ground (8" long)
	909367	1	LOCKWASHER, int-tooth, 1/4"

(Continued)

ITEM	PART NO.	QTY.	DESCRIPTION
6	641214	1	CABLE, pressure switch to connector (42" long)
7	048142	1	CONNECTOR, meter cable
8	640706	1	CABLE, connector to meter (115" long)
9	640707	2	CLIP, hour meter cable (1/8" diam., 9/32" bolt-hole)
	047478	2	CAPSCREW, 1/4"NC x 5/8"
	904204	2	LOCKWASHER, 1/4"
	911114	2	WASHER, plain, SAE std., 1/4"
10	639388	3	CLIP, cable (1/8" diam., 13/32" bolt-hole)
11	640676	2	CLIP, cable (5/16" diam., 13/32" bolt-hole)
12	035979	1	CAPSCREW, 3/8"NF x 5/8"
	904206	1	LOCKWASHER, 3/8"
	911041	1	NUT, 3/8"NF
13	644162	1	STRAP, clip supporting

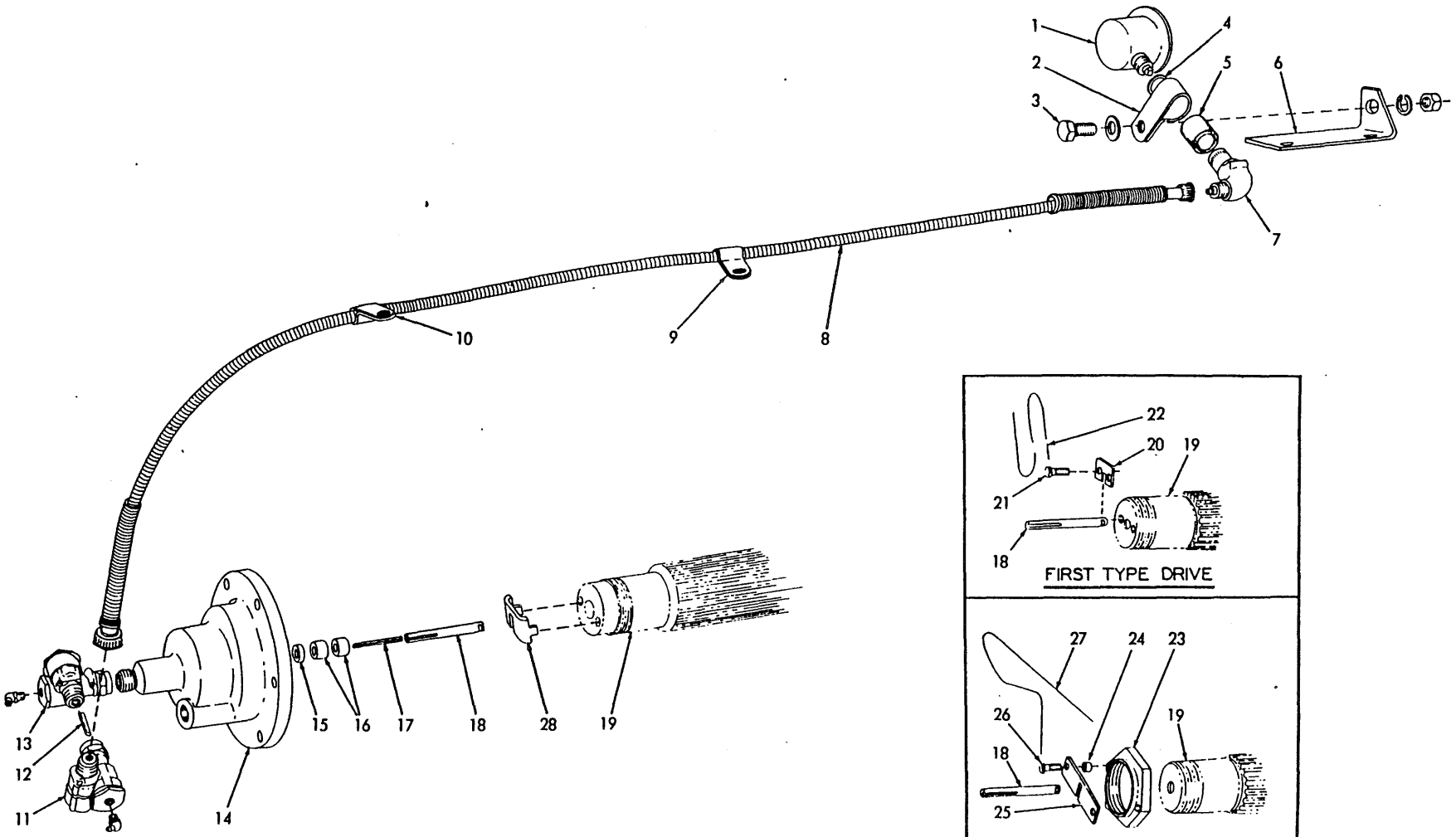
1
2
3
4
5
6
7
8
9
10
11
12
13
14
15
16
17
18
19
28
22
20
21
FIRST TYPE DRIVE
27
24
23
26
25
SECOND TYPE DRIVE

T-32 112

ODOMETER

USAGE: Special Equipment. Models HD11B, E, ES, S, F tractors prior to serial No. 10001

ITEM	PART NO.	QTY.	DESCRIPTION
1	------	1	ODOMETER (registers miles) (Discontinued)
	057784	1	ODOMETER (registers kilometers)
2	055536	1	CLIP, odometer mounting (1" diam., 17/32" bolt-hole)
3	070467	1	CAPSCREW, 1/2"NF x 1"
	910244	1	WASHER, plain, SAE std., 1/2"
	904208	1	LOCKWASHER, 1/2"
	911043	1	NUT, 1/2"NF
4	630785	1	WASHER, spacing
5	084284	1	STRIP, cushion, odometer mounting (rubber)
6	084898	1	ANGLE, odometer mounting
7	077687	1	ADAPTER ASSEMBLY (90°, elbow, direct drive) (Serviced only as a unit)
8	084891	1	SHAFT ASSEMBLY, flexible (52-1/2" long) (Serviced only as a unit)
9	033043	1	CLIP, shaft supporting (7/16" diam., 13/32" bolt-hole)
10	034152	1	CLIP, shaft supporting (7/16" diam., 17/32" bolt-hole)
11	077682	1	ADAPTER ASSEMBLY (reduction ratio 1 to .167. Includes FITTING indented below. Serviced only as a unit)
	915275	1	FITTING, lubricating, 65°, 1/8"NPT
12	078407	1	KEY, adapter drive (1-9/16" long)
13	077680	1	ADAPTER ASSEMBLY (reduction ratio 1 to .266. Includes FITTING indented below. Serviced only as a unit)
	915275	1	FITTING, lubricating, 65°, 1/8"NPT
14	079538	1	COVER ASSEMBLY, pinion shaft (Includes items 15 and 16) (Replaces standard COVER 069366 on tractors prior to #6473)
	621439	1	COVER ASSEMBLY, pinion shaft (Includes items 15 and 16) (Replaces standard COVER 099021 on tractors #6473 and up)
15	069641	1	SEAL, oil, drive shaft
16	079536	2	BUSHING, drive shaft
17	079887	1	KEY, drive shaft
18	079534	1	SHAFT, drive
19	------	1	PINION (See TRANSMISSION PINION SHAFT)

(Continued)

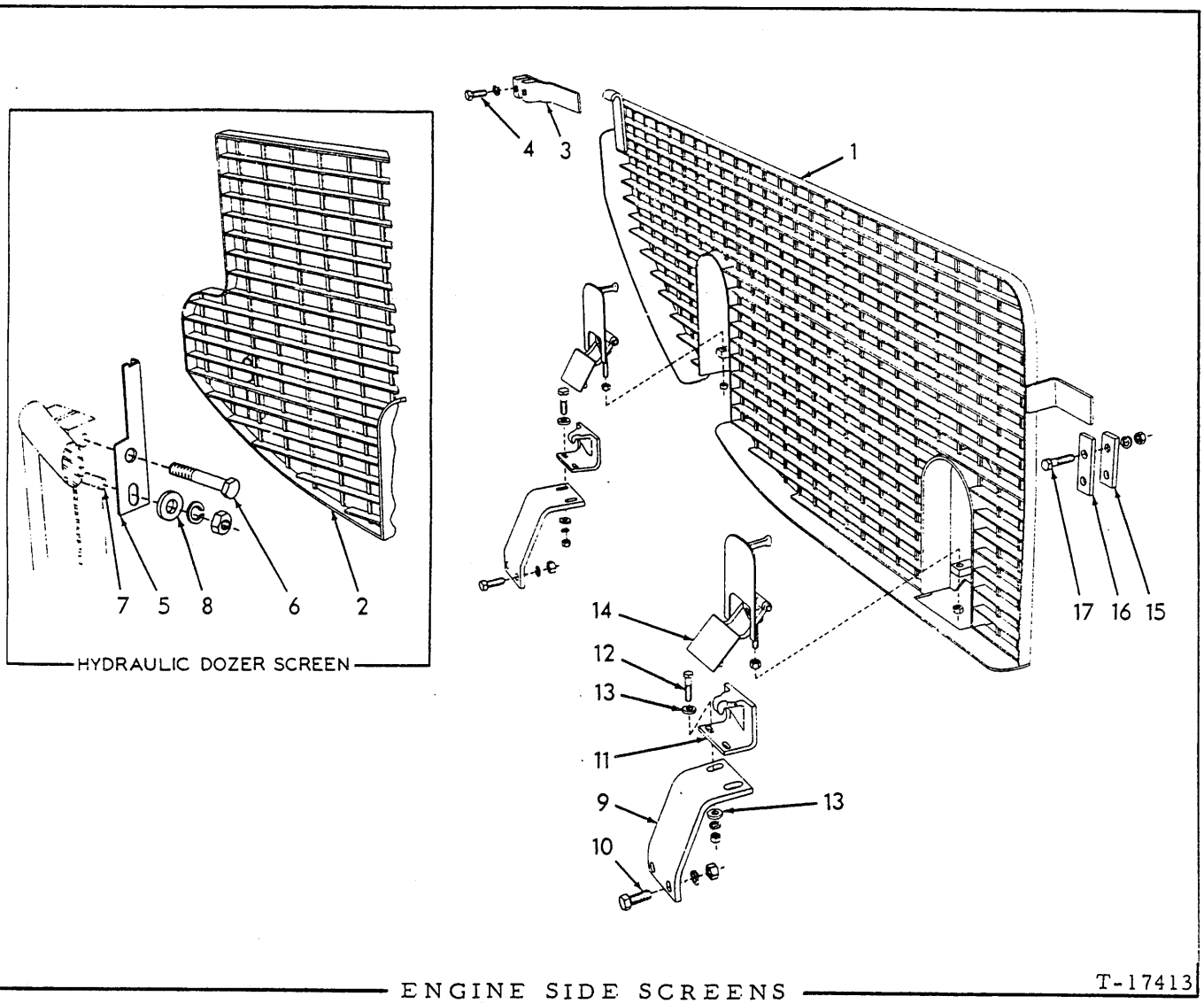

ENGINE SIDE SCREENS T-17413

USAGE: Special equipment on tractors prior to serial No. 10001, applicable to Models HD11E and E; also to Models HD11ES and S when equipped with wrap-around radiator guard.

* Tractors with cable or standard wrap-around guard
** Tractors with hydraulic wrap-around guard not having removable front upper closure plate (Early units)
*** Tractors with hydraulic wrap-around guard having removable front upper closure plate

ITEM	PART NO.	QTY. *	**	***	DESCRIPTION
1	084839	1	-	-	SCREEN, left
	084840	1	-	-	SCREEN, right
2	090191	-	1	-	SCREEN, left
	093095	-	-	1	SCREEN, left
	090192	-	1	-	SCREEN, right
	093096	-	-	1	SCREEN, right

(Continued)

ENGINE SIDE SCREENS (Continued)

ITEM	PART NUMBER	QUANTITY *	**	***	DESCRIPTION
3	091898	2	-	-	BRACKET, front suspension
4	070469	4	-	-	CAPSCREW, 1/2"NF x 1-1/4"
	904208	4	-	-	LOCKWASHER, 1/2"
5	090205	-	1	-	ANGLE, front suspension, left
	093091	-	-	1	ANGLE, front suspension, left
	090206	-	1	-	ANGLE, front suspension, right
	093092	-	-	1	ANGLE, front suspension, right
6	071014	-	2	2	CAPSCREW, angle attaching (3/4"NF x 4-1/2")
7	------	-	2	2	PIN, locating (See FRONT FENDERS)
8	061689	-	2	2	WASHER, plain
	904369	-	2	2	LOCKWASHER, 3/4"
	911045	-	2	2	NUT, 3/4"NF
9	085447	4	-	-	ANGLE, latching bracket
	090214	-	4	4	ANGLE, latching bracket
10	070469	8	8	8	CAPSCREW, 1/2"NF x 1-1/4"
	904208	8	8	8	LOCKWASHER, 1/2"
	911043	8	8	8	NUT, 1/2"NF
11	091063	4	4	4	BRACKET, latching
12	203188	8	8	8	CAPSCREW, 3/8"NF x 1-1/2"
13	044973	16	16	16	WASHER, plain
	904206	8	8	8	LOCKWASHER, 3/8"
	911041	8	8	8	NUT, 3/8"NF
14	093401	4	4	4	LATCH ASSEMBLY (Serviced only as a unit)
	911041	8	8	8	NUT, 3/8"NF
15	085189	2	2	2	BLOCK, spacing
16	085193	2	2	2	BLOCK, retaining
17	203188	4	4	4	CAPSCREW, 3/8"NF x 1-1/2"
	904206	4	4	4	LOCKWASHER, 3/8"
	911041	4	4	4	NUT, 3/8"NF

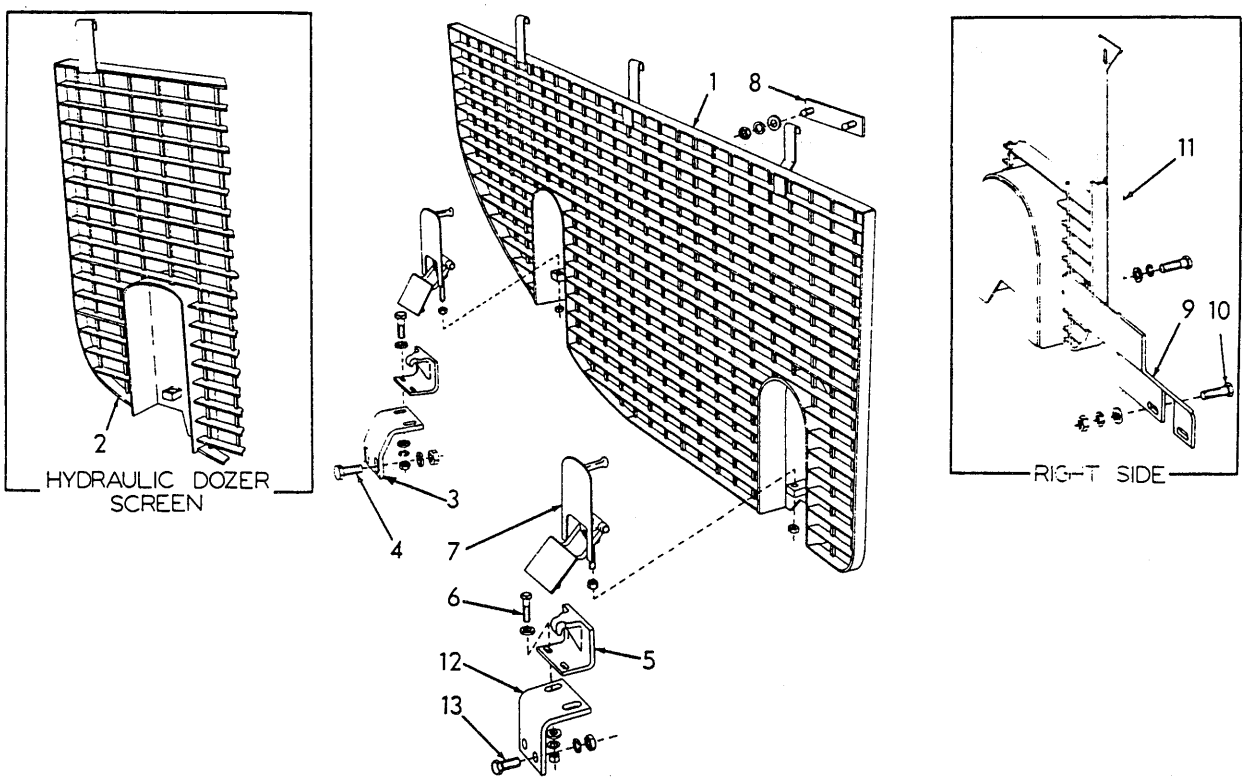

ENGINE SIDE SCREENS

T-704

USAGE: Special equipment on tractors serial No. 10001 and up. Not for units equipped with optional light-duty Radiator Shell, optional oil-bath air cleaner, dozer hydraulic tilt or ripper controls

* Tractors with cable or standard wrap-around guard
** Tractors with hydraulic wrap-around guard

ITEM	PART NO.	QTY. *	QTY. **	DESCRIPTION
1	638751	1	-	SCREEN, left
	644231	1	-	SCREEN, left (Includes fine-mesh screen)
	638752	1	-	SCREEN, right
	644222	1	-	SCREEN, right (Includes fine-mesh screen)
2	638753	-	1	SCREEN, left
	644229	-	1	SCREEN, left (Includes fine-mesh screen)
	638754	-	1	SCREEN, right
	644237	-	1	SCREEN, right (Includes fine-mesh screen)

(Continued)

ENGINE SIDE SCREENS (Continued)

ITEM	PART NO.	QTY. *	QTY. **	DESCRIPTION
3	648307	2	2	ANGLE, front latching bracket
4	070469	4	4	CAPSCREW, 1/2"NF x 1-1/4"
	904208	4	4	LOCKWASHER, 1/2"
	911043	4	4	NUT, 1/2"NF
5	091063	4	4	BRACKET, latching
6	203188	8	8	CAPSCREW, 3/8"NF x 1-1/2"
	044973	16	16	WASHER, plain
	904206	8	8	LOCKWASHER, 3/8"
	911041	8	8	NUT, 3/8"NF
7	093401	4	4	LATCH ASSEMBLY (Serviced only as a unit)
	911041	8	8	NUT, 3/8"NF
8	631426	6	6	PLATE, screen latching, top
	044973	12	12	WASHER, plain
	904206	12	12	LOCKWASHER, 3/8"
	911041	12	12	NUT, 3/8"NF
9	638678	1	1	PLATE, closure, rear, right side
10	035073	2	2	CAPSCREW, 1/2"NF x 1-3/4"
	064531	2	2	WASHER, plain
	904208	2	2	LOCKWASHER, 1/2"
	911043	2	2	NUT, 1/2"NF
11	644224	1	1	PLATE, closure, rear, right side (Model HD11B only)
	036034	3	3	CAPSCREW, 3/8"NF x 1"
	904206	3	3	LOCKWASHER, 3/8"
	044973	3	3	WASHER, plain
12	641321	2	2	ANGLE, rear latching bracket
13	070469	4	4	CAPSCREW, 1/2"NF x 1-1/4"
	904208	4	4	LOCKWASHER, 1/2"
	911043	4	4	NUT, 1/2"NF

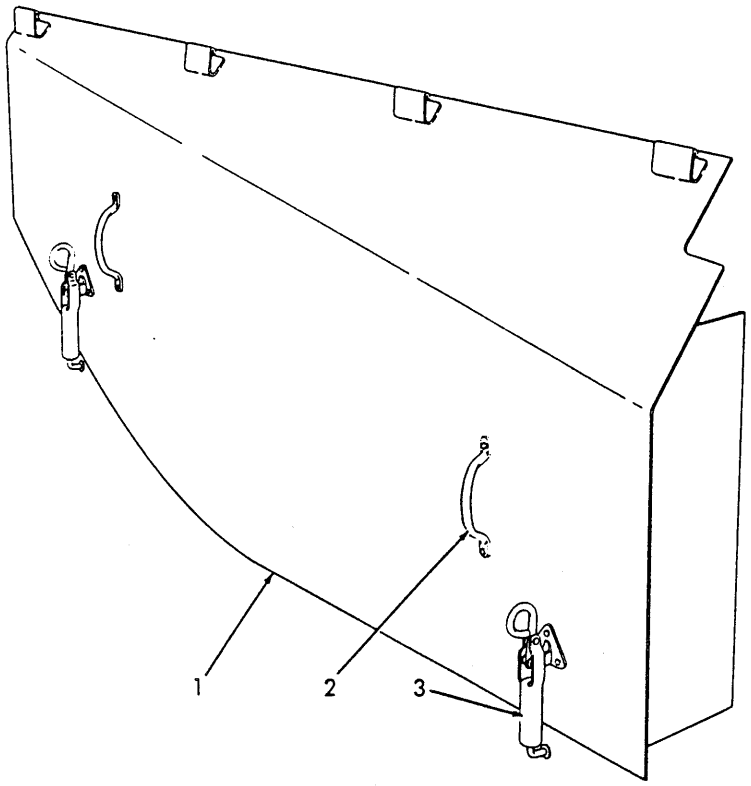

T-19569

HOOD SIDE PLATES

USAGE: Special Equipment. For Model HD11ES, S, F, FC tractors prior to serial No. 10001 when equipped with standard hinged radiator guard

ITEM	PART NO.	QTY.	DESCRIPTION
1	092129	1	PLATE ASSEMBLY, left side (Includes items 2 and 3)
	092130	1	PLATE ASSEMBLY, right side (Includes items 2 and 3)
2	032834	4	HANDLE, lifting
	900764	8	RIVET, fl-hd., 3/16" x 1/2"
3	033060	4	FASTENER
	900764	12	RIVET, fl-hd., 3/16" x 1/2"

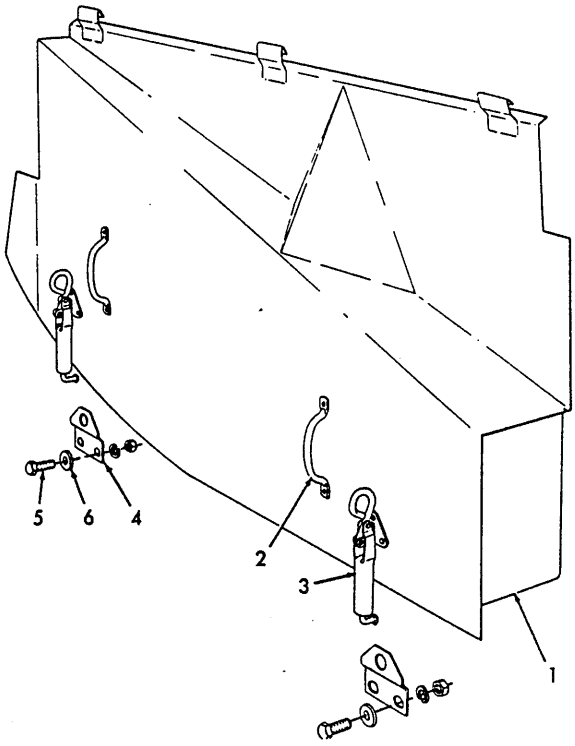

HOOD SIDE PLATES T-19600

USAGE: Special equipment. For Model HD11B, E, EC tractors prior to serial No. 10001 when equipped with hydraulic radiator guard.

ITEM	PART NO.	QTY.	DESCRIPTION	
1	093961	1	PLATE ASSEMBLY, left side	For use with radiator guard not having removable front upper closure plate.
	093962	1	PLATE ASSEMBLY, right side	
	093013	1	PLATE ASSEMBLY, left side	For use with radiator guard having removable front upper closure plate.
	093014	1	PLATE ASSEMBLY, right side	
			NOTE: Each Plate Assembly listed above includes items 2 and 3.	
2	032834	4	HANDLE, lifting	
	900764	8	RIVET, fl-hd., 3/16" x 1/2"	
3	033060	4	FASTENER	
	900764	12	RIVET, fl-hd., 3/16" x 1/2"	
4	091805	4	BRACKET, latching	
5	070469	8	CAPSCREW, 1/2"NF x 1-1/4"	
6	064531	8	WASHER, plain	
	904208	8	LOCKWASHER, 1/2"	
	911043	8	NUT, 1/2"NF	

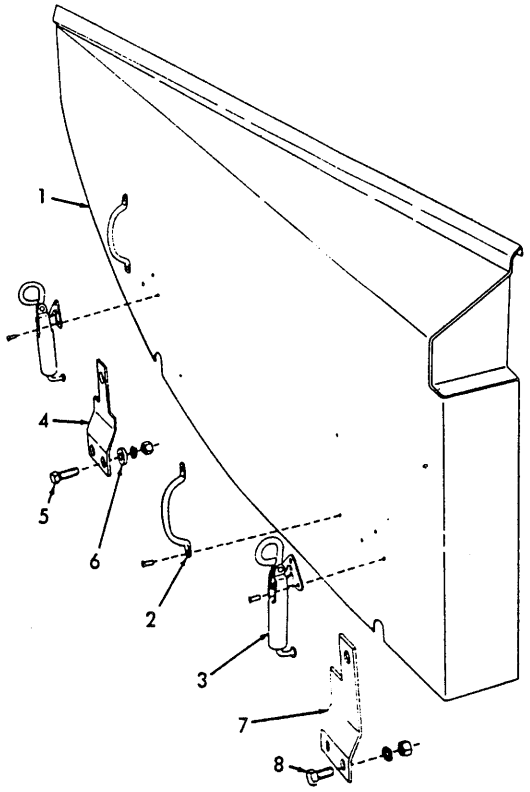

T-17418

HOOD SIDE PLATES

USAGE: Special equipment. For Model HD11B, E, EC tractors prior to serial No. 10001 when equipped with plain or cable wrap-around radiator guard.

ITEM	PART NO.	QTY.	DESCRIPTION
1	085115	1	PLATE ASSEMBLY, left side (Includes items 2 and 3)
	085116	1	PLATE ASSEMBLY, right side (Includes items 2 and 3)
2	032834	4	HANDLE, lifting
	900764	8	RIVET, fl-hd., 3/16" x 1/2"
3	033060	4	FASTENER
	900764	12	RIVET, fl-hd., 3/16" x 1/2"
4	090854	2	BRACKET, latching, front
5	070469	4	CAPSCREW, 1/2"NF x 1-1/4"
6	064531	4	WASHER, plain
	904208	4	LOCKWASHER, 1/2"
	911043	4	NUT, 1/2"NF
7	090855	1	BRACKET, latching, left rear
	090856	1	BRACKET, latching, right rear
8	070467	4	CAPSCREW, 1/2"NF x 1"
	904208	4	LOCKWASHER, 1/2"
	911043	4	NUT, 1/2"NF

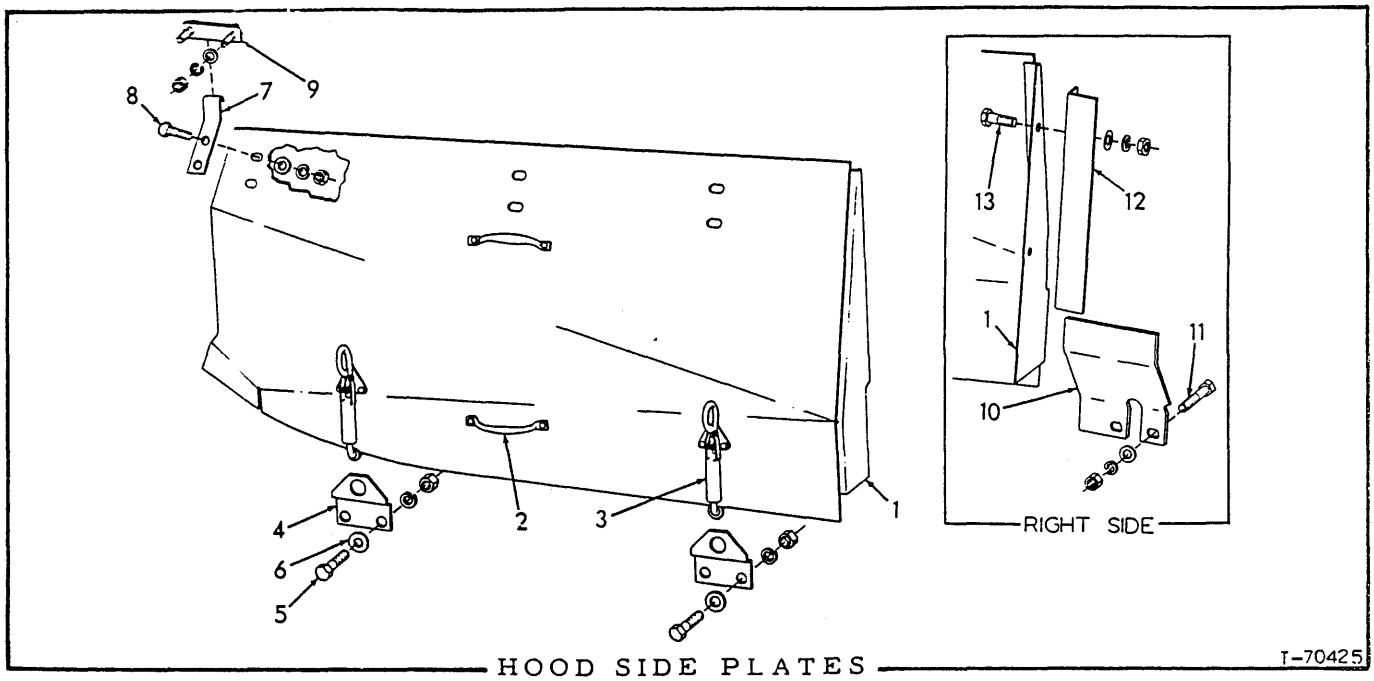

HOOD SIDE PLATES

T-70425

USAGE: Special equipment. For tractors serial No. 10001 and up when equipped with hydraulic radiator guard only. Not for units equipped with dozer hydraulic tilt or ripper controls or with optional oil-bath air cleaner.

ITEM	PART NO.	QTY.	DESCRIPTION
1	638675	1	PLATE ASSEMBLY, left side
	638676	1	PLATE ASSEMBLY, right side
			NOTE: Each Plate Assembly listed above includes items 2 and 3.
2	032834	4	HANDLE, lifting
	900764	8	RIVET, fl-hd., 3/16" x 1/2"
3	033060	4	FASTENER
	900764	12	RIVET, fl-hd., 3/16" x 1/2"
4	091805	4	BRACKET, latching
5	070469	8	CAPSCREW, 1/2"NF x 1-1/4"
6	064531	8	WASHER, plain
	904208	8	LOCKWASHER, 1/2"
	911043	8	NUT, 1/2"NF
7	638677	6	STRAP, suspension
8	035167	12	CAPSCREW, 3/8"NF x 7/8"
	044973	12	WASHER, plain
	904206	12	LOCKWASHER, 3/8"
	911041	12	NUT, 3/8"NF
9	631426	6	PLATE, suspension strap
	044973	12	WASHER, plain
	904206	12	LOCKWASHER, 3/8"
	911041	12	NUT, 3/8"NF
10	638678	1	PLATE, closure, rear (right side only)
11	035073	2	CAPSCREW, 1/2"NF x 1-3/4"
	064531	2	WASHER, plain
	904208	2	LOCKWASHER, 1/2"
	911043	2	NUT, 1/2"NF
12	644092	1	PLATE, closure, rear (right side only)(Model HD11B only)
13	036032	2	CAPSCREW, 3/8"NF x 3/4"
	044973	2	WASHER, plain
	904206	2	LOCKWASHER, 3/8"
	911041	2	NUT, 3/8"NF

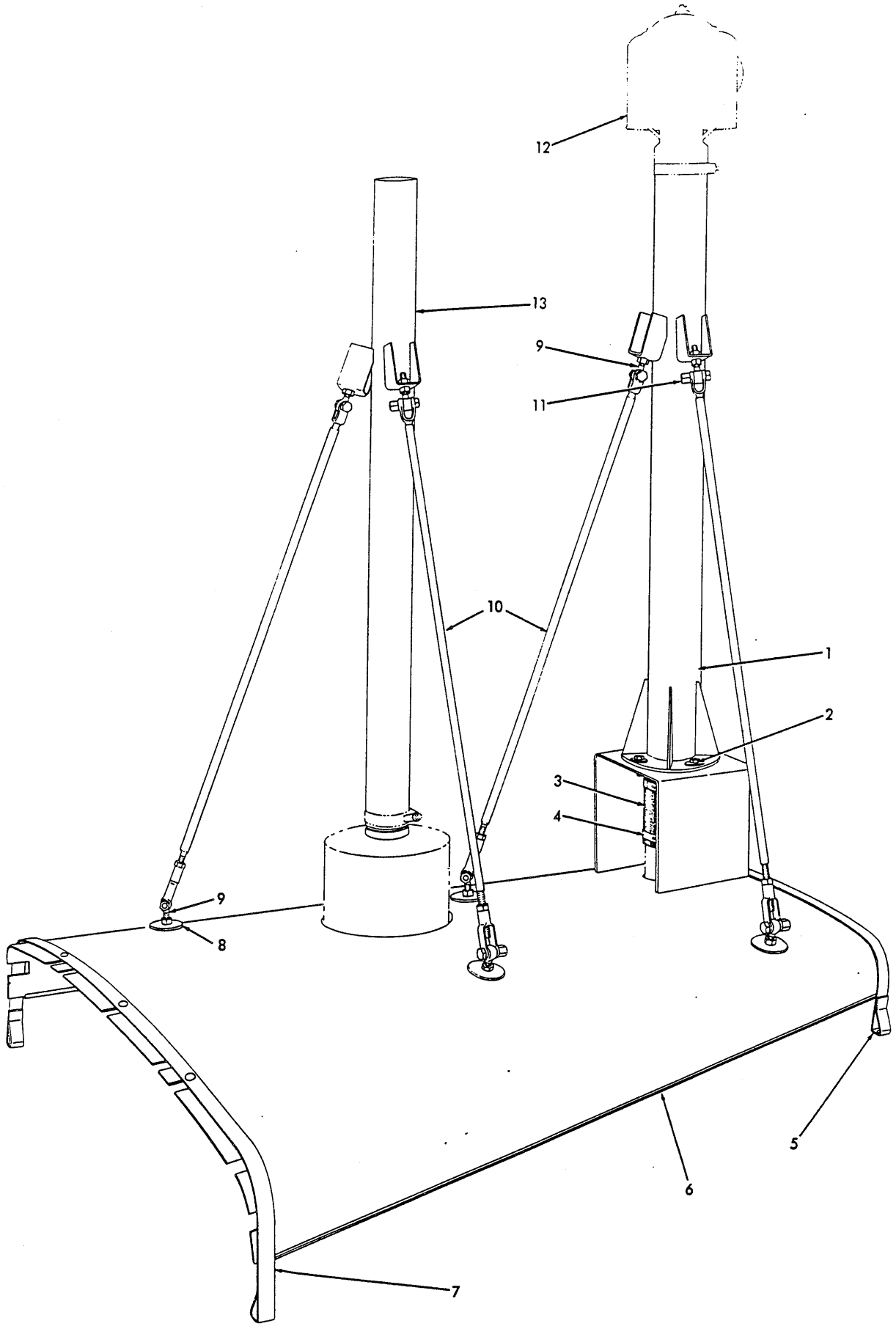

AIR PRE-CLEANER AND EXHAUST EXTENSIONS

AIR PRE-CLEANER AND EXHAUST EXTENSIONS

USAGE: Special equipment tractors prior to serial No. 10001

* Tractors with standard oil-bath air cleaner
** Tractors with optional dry-type air cleaner

ITEM	PART NO.	QTY. *	QTY. **	DESCRIPTION
1	085464	1	-	TUBE, pre-cleaner extension
	631602	-	1	TUBE, pre-cleaner extension
2	035073	4	4	CAPSCREW, 1/2"NF x 1-3/4"
	064531	8	8	WASHER, plain
	904208	4	4	LOCKWASHER, 1/2"
	911043	4	4	NUT, 1/2"NF
3	620338	1	-	HOSE, extension tube
	631601	-	1	HOSE, extension tube
4	921916	2	2	CLAMP, hose, adjustable, 3-13/16" to 4-3/4" diam.
5	085466	1	1	STRAP, hold-down, rear
6	085463	1	-	HOOD, engine (For tractors with hinged radiator guard)
	631610	-	1	HOOD, engine (For tractors with hinged radiator guard)
	088264	1	-	HOOD, engine (For tractors with wrap-around radiator guard)
7	090848	1	1	STRAP, hold-down, front (For tractors with hinged radiator guard)
	090851	1	-	STRAP, hold-down, front (For tractors equipped with cable or standard wrap-around radiator guard)
	090852	2	-	STRAP, hold-down, front (For tractors equipped with hydraulic wrap-around radiator guard)
8	085453	8	8	WASHER, hood reinforcing
9	067902	8	8	BOLT, eye
	911043	16	16	NUT, 1/2"NF
10	084227	4	4	ROD, extension tube bracing
	917666	4	4	YOKE, rod end, adjustable, 1/2"NF
	911043	4	4	NUT, 1/2"NF
	912192	8	8	CAPSCREW, 1/2"NF x 1-3/4"
11	038234	8	8	NUT, high, 1/2"NF
12	-------	-	-	PRE-CLEANER ASSEMBLY (See AIR CLEANER)
13	620275	1	1	TUBE, exhaust extension (Replaces standard exhaust pipe)

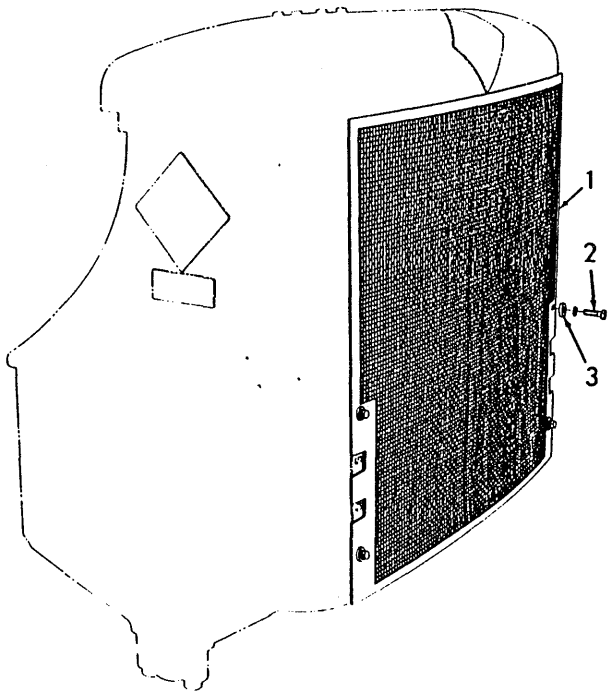

FIRST TYPE

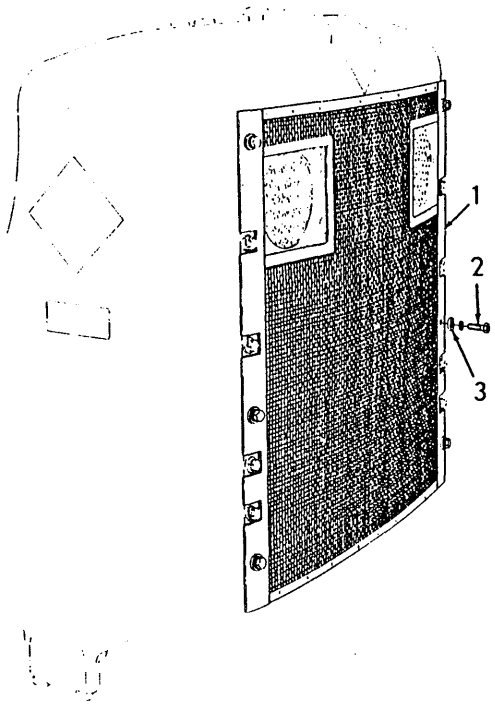

SECOND TYPE

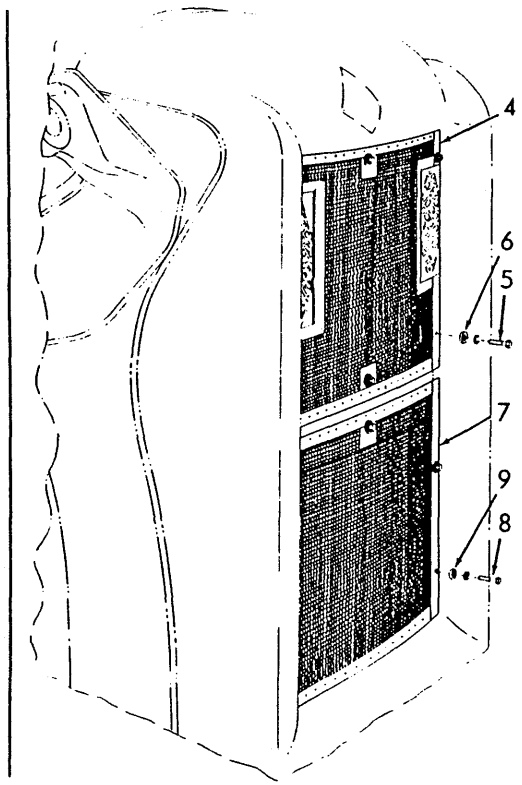

THIRD TYPE

GRILLE SCREENS

GRILLE SCREENS

USAGE: Special equipment on tractors prior to serial No. 10001 only. Applicable to Models HD11B, E, EC; also to Models HD11ES and S when equipped with heavy wrap-around radiator guard.

* Tractors prior to serial No. 4304
** Tractors serial No. 4304 and up
*** Tractors with Model 11HI Hydraulic Dozer

ITEM	PART NO.	QTY. *	**	***	DESCRIPTION
1	089953	1	-	-	SCREEN — For standard wrap-around guard
	094049	-	1	-	SCREEN — For standard wrap-around guard
	090121	1	-	-	SCREEN — For hydraulic wrap-around guard
	095077	-	1	-	SCREEN, upper — For hydraulic wrap-around guard
	095071	-	1	-	SCREEN, lower — For hydraulic wrap-around guard
	090013	1	-	-	SCREEN — For cable wrap-around guard with rear power control unit.
	094089	-	1	-	SCREEN — For cable wrap-around guard with rear power control unit.
	098076	-	1	-	SCREEN (For cable wrap-around guard with front power control unit)
2	035018	4	-	-	CAPSCREW, 1/2"NF x 1-1/2"
	035073	-	6	-	CAPSCREW, 1/2"NF x 1-3/4" (Early units. Additional 7 used with hydraulic guard)
	035236	-	6	-	CAPSCREW, 1/2"NC x 1-3/4" (Late units. Additional 7 used with hydraulic guard)
	904208	4	6	-	LOCKWASHER, 1/2"
3	064531	4	6	-	WASHER, plain
4	098138	-	-	1	SCREEN, upper
5	035236	-	-	6	CAPSCREW, 1/2"NC x 1-3/4"
	904208	-	-	6	LOCKWASHER, 1/2"
6	064531	-	-	6	WASHER, plain
7	098139	-	-	1	SCREEN, lower
8	035236	-	-	5	CAPSCREW, 1/2"NC x 1-3/4"
	904208	-	-	5	LOCKWASHER, 1/2"
9	064531	-	-	5	WASHER, plain

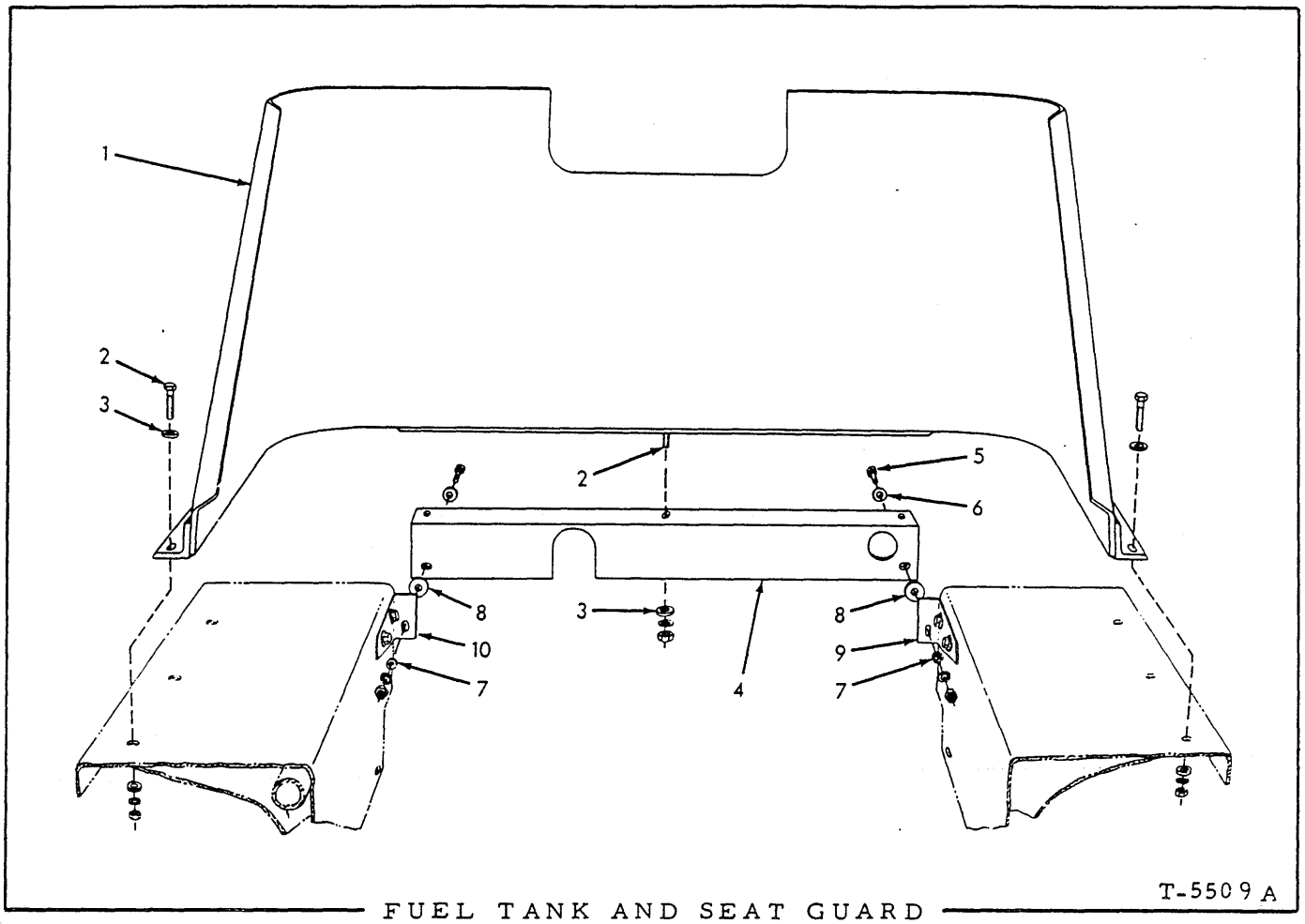

FUEL TANK AND SEAT GUARD

USAGE: Special Equipment on tractors prior to serial No. 10001. For tractors engaged in logging operations. Requires reinforced fenders for installation.

ITEM	PART NO.	QTY.	DESCRIPTION	PACKAGE NUMBER
1	068250	1	GUARD	
2	035067	9	CAPSCREW, 1/2"NF x 2"	
3	064531	18	WASHER, plain (1/4" thick)	
	904208	9	LOCKWASHER, 1/2"	
	911043	9	NUT, 1/2"NF	
4	085347	1	ANGLE, guard supporting	
5	035068	2	CAPSCREW, 1/2"NF x 2-1/4"	
6	064531	2	WASHER, plain (1/4" thick)	
7	050679	2	SPACER (5/16" thick)	
	904208	2	LOCKWASHER, 1/2"	
	911043	2	NUT, 1/2"NF	
8	075396	2	WASHER, angle spacing	
9	099985	1	ANGLE, attachment, left side	
10	099986	1	ANGLE, attachment, right side	

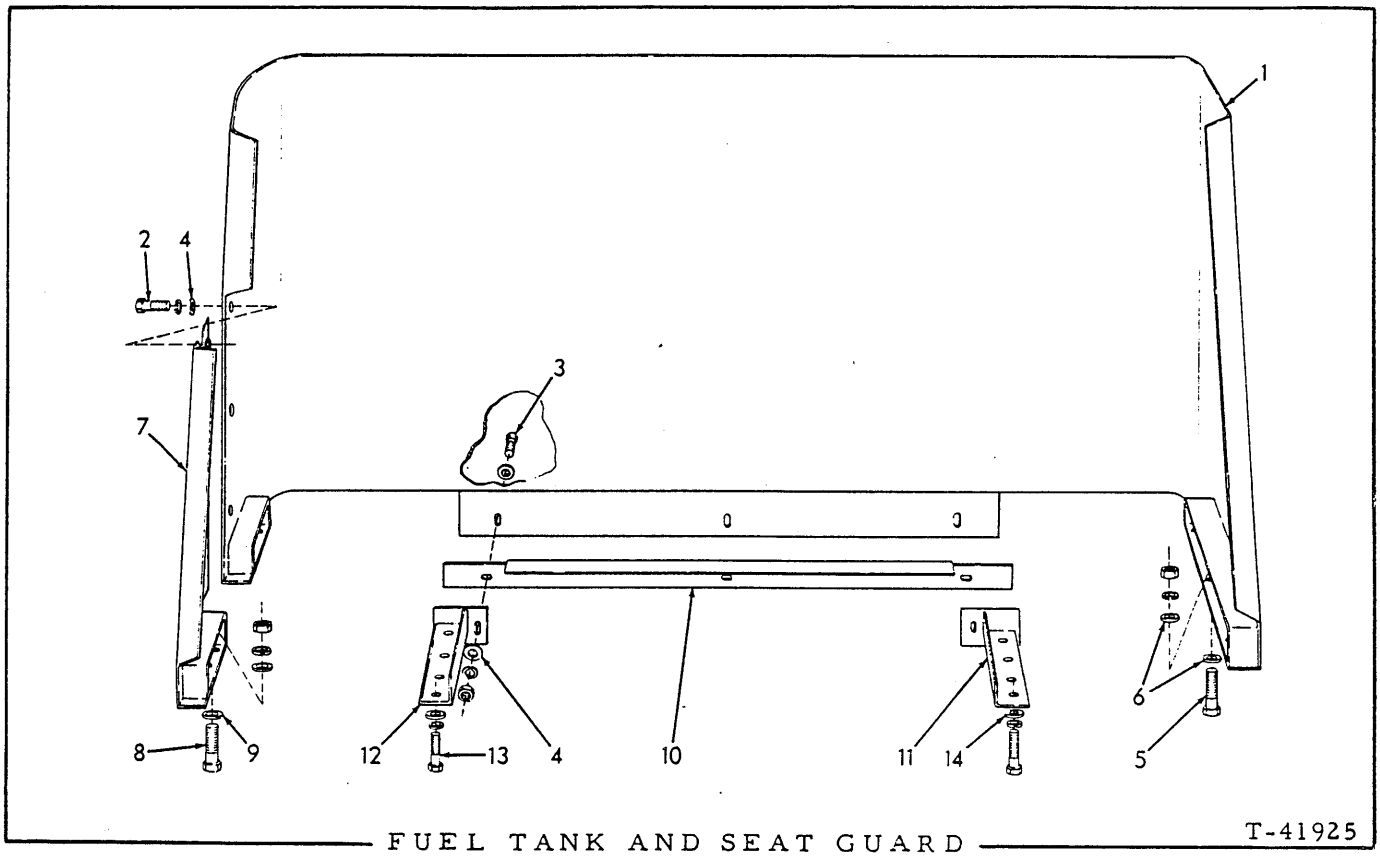

FUEL TANK AND SEAT GUARD T-41925

USAGE: Special equipment for tractors serial No. 10001 and up. For tractors engaged in logging operations. Requires reinforced fenders for installation.

ITEM	PART NO.	QTY.	DESCRIPTION
1	638521	1	GUARD (large)
2	035018	3	CAPSCREW, 1/2"NF x 1-1/2" (Early units)
	035190	3	CAPSCREW, 1/2"NC x 1-1/2" (Late units)
3	035068	3	CAPSCREW, 1/2"NF x 2-1/4"
4	064531	9	WASHER, plain
	904208	6	LOCKWASHER, 1/2"
	911043	3	NUT, 1/2"NF
5	035248	5	CAPSCREW, 5/8"NF x 2-1/4"
6	064810	10	WASHER, plain
	904209	5	LOCKWASHER, 5/8"
	911044	5	NUT, 5/8"NF
7	648278	1	GUARD (small)
8	035248	2	CAPSCREW, 5/8"NF x 2-1/4"
9	064810	4	WASHER, plain
	904209	2	LOCKWASHER, 5/8"
	911044	2	NUT, 5/8"NF
10	638514	1	ANGLE, guard supporting
11	641359	1	ANGLE, attachment, left side
12	641360	1	ANGLE, attachment, right side
13	035067	8	CAPSCREW, attachment angle (1/2"NF x 2")(Replaces standard CAPSCREW 035073. Also attach fuel tank)
	904208	8	LOCKWASHER, 1/2"
14	064531	8	WASHER, plain

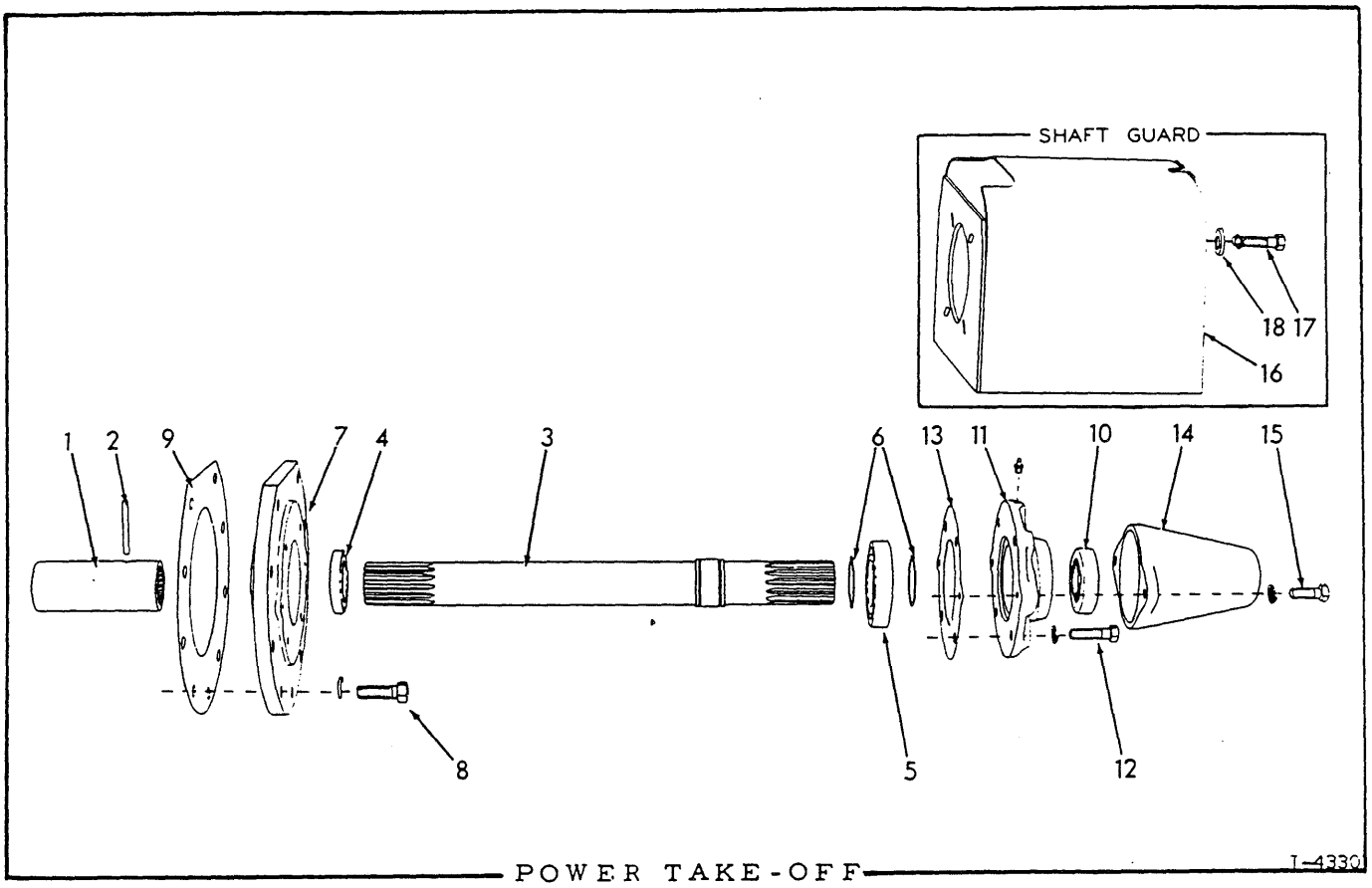

POWER TAKE-OFF

USAGE: Special equipment. Runs at engine speed

ITEM	PART NO.	QTY.	DESCRIPTION
1	068388	1	COUPLING, front
2	621171	1	PIN, rivet, coupling retaining
3	068480	1	SHAFT, coupling
4	037676	1	SEAL, oil, inner
5	067566	1	BEARING, ball
6	058274	2	RING, snap
7	068488	1	CAGE, coupling shaft bearing
8	036707	9	CAPSCREW, 5/8"NC x 1-3/4"
	904209	9	LOCKWASHER, 5/8"
9	068487	1	GASKET, coupling shaft bearing cage
10	068491	1	SEAL, oil, outer
11	068490	1	RETAINER, oil seal
	914465	1	FITTING, lubricating, straight, 1/8"NPT
12	035236	4	CAPSCREW, 1/2"NC x 1-3/4" (Replaced by 921556 CAPSCREW when coupling shaft guard is used. See item 16)
	904208	4	LOCKWASHER, 1/2"

(Continued)

ITEM	PART NO.	QTY.	DESCRIPTION
13	068489	1	GASKET, oil seal retainer
14	055529	1	COVER, shaft protecting
15	035061	2	CAPSCREW, 1/2"NC x 1-1/4"
	904208	2	LOCKWASHER, 1/2"
16	078482	1	GUARD, coupling shaft (When installed, item 14 is discarded)
17	921556	4	CAPSCREW, 1-/2"NC x 2"
	904208	4	LOCKWASHER, 1/2"
18	064531	4	WASHER, plain

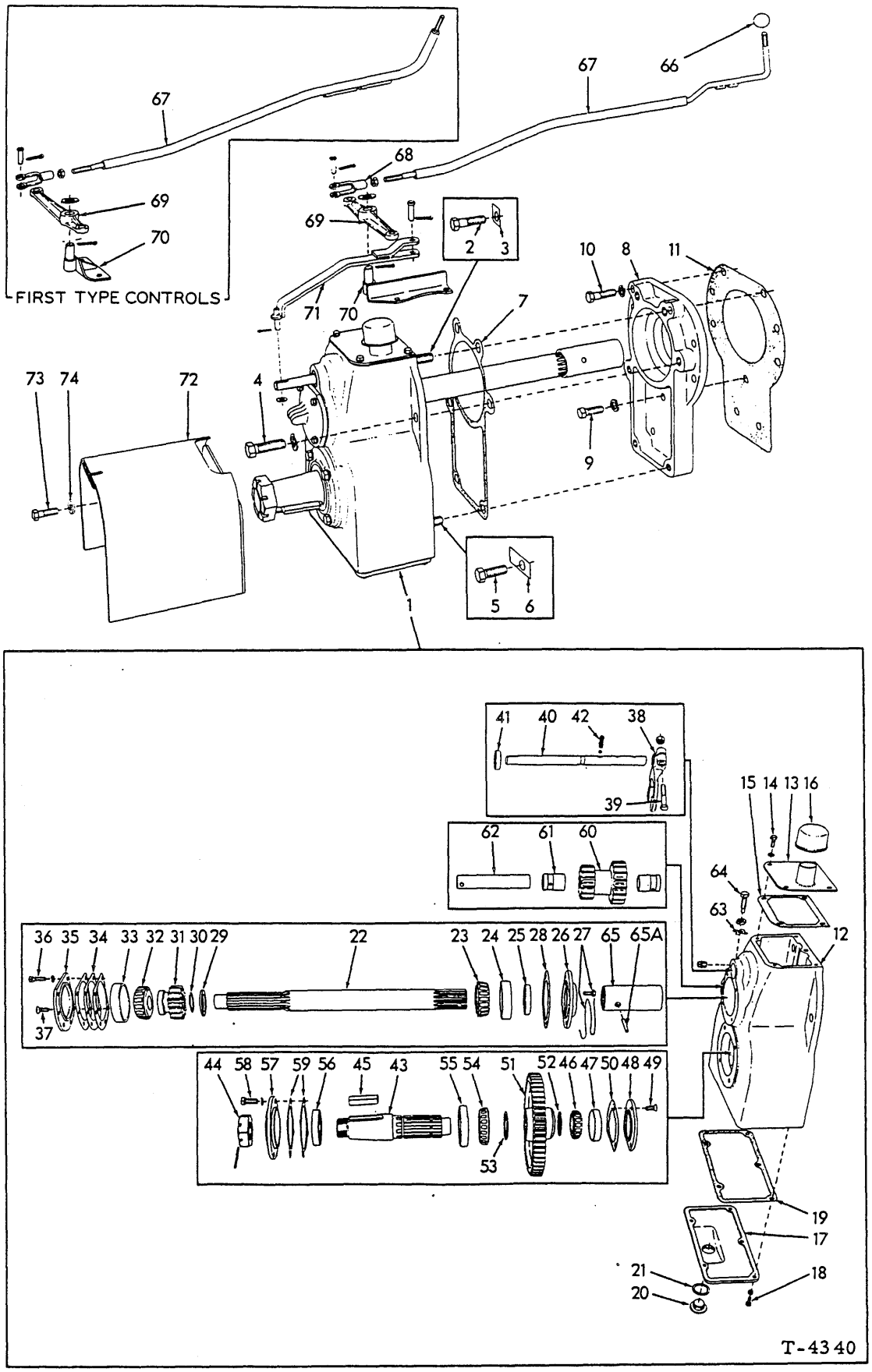

POWER TAKE-OFF (First type, Reversible)

T-10721

POWER TAKE-OFF

USAGE: Special Equipment for tractors prior to serial No. 10001. Operates at 485 rpm clockwise and 377 rpm counter-clockwise.

ITEM	PART NUMBER	QTY.	DESCRIPTION
1	059860	1	TAKE-OFF ASSEMBLY, power (Consists of items 12 thru 65A)
2	070792	2	CAPSCREW, 3/4"NC x 2-1/2"
3	011100	2	LOCK, capscrew
4	202283	2	CAPSCREW, 3/4"NC x 2-1/4"
	904369	2	LOCKWASHER, 3/4"
5	202283	2	CAPSCREW, 3/4"NC x 2-1/4"
6	012238	2	LOCK, capscrew
7	068324	1	GASKET, gear case to spacer
8	068329	1	SPACER, power take-off
9	036707	7	CAPSCREW, 5/8"NC x 1-3/4"
	904209	7	LOCKWASHER, 5/8"
10	023755	2	CAPSCREW, 5/8"NC x 2-1/4"
	904209	2	LOCKWASHER, 5/8"
11	068323	1	GASKET, spacer to steering clutch housing
12	044957	1	HOUSING, gear
	901653	1	PLUG, pipe, 3/8"NPT
13	033391	1	COVER, top
14	035244	4	CAPSCREW, 3/8"NC x 3/4"
	904206	4	LOCKWASHER, 3/8"
15	033393	1	GASKET, top cover
16	200267	1	CAP, filler
17	044968	1	COVER, bottom
18	013058	5	CAPSCREW, 3/8"NC x 1-1/4"
	904206	5	LOCKWASHER, 3/8"
19	044969	1	GASKET, bottom cover
20	035250	1	PLUG, drain
21	035249	1	GASKET, drain plug
22	059869	1	SHAFT, input
23	061087	1	CONE ASSEMBLY, input shaft front bearing
24	061088	1	CUP, input shaft front bearing
25	037676	1	SEAL, input shaft front bearing
26	068326	1	RETAINER, front bearing
27	013044	4	CAPSCREW, drilled-hd., 3/8"NC x 7/8"
	023756	1	WIRE, locking, 1/16" x 26"
28	032754	1	GASKET, front bearing retainer
29	030965	1	SPACER, front bearing
30	050293	1	RING, snap, front bearing

(Continued)

ITEM	PART NO.	QTY.	DESCRIPTION
31	044979	1	PINION, input shaft (14 teeth)
32	043006	1	CONE ASSEMBLY, input shaft rear bearing
33	211567	1	CUP, input shaft rear bearing
34	032747	3	SHIM, input shaft bearing adjustment (.005" thick. Use as req'd)
	032748	5	SHIM, input shaft bearing adjustment (.010" thick. Use as req'd)
	032749	3	SHIM, input shaft bearing adjustment (.020" thick. Use as req'd)
35	047603	1	RETAINER, input shaft rear bearing
36	013058	3	CAPSCREW, 3/8"NC x 1-1/4"
	904206	3	LOCKWASHER, 3/8"
37	070192	1	CAPSCREW, flat-hd., 3/8"NC x 7/8"
38	044967	1	FORK, shifting
39	046419	1	CAPSCREW, shifting fork
	913528	1	NUT, elastic stop, 3/8"NF
40	044980	1	SHAFT, shifting fork
	905361	1	BALL, steel, 7/16" diam.
41	030504	1	SEAL, oil, shifting fork shaft
42	021537	1	SPRING, shifting shaft locking ball
43	044976	1	SHAFT, output
44	013207	1	NUT, output shaft (slotted, 2"EF thread)
	904007	1	PIN, cotter, 3/16" x 3"
45	032764	1	KEY, output shaft (1/16" x 3")
46	043000	1	CONE ASSEMBLY, output shaft front bearing
47	211608	1	CUP, output shaft front bearing
48	032751	1	RETAINER, output shaft front bearing
49	036283	3	CAPSCREW, flat-hd., 1/2"NC x 1-1/8"
50	032753	1	GASKET, bearing retainer
51	032780	1	GEAR, output shaft (52 teeth)
52	044978	1	RING, snap, output shaft gear
53	032762	1	RING, output shaft rear bearing (2 matched halves)
54	043002	1	CONE ASSEMBLY, output shaft rear bearing
55	043001	1	CUP, output shaft rear bearing
56	629040	1	SEAL, oil, output shaft rear bearing

(Continued)

ITEM	PART NUMBER	QTY.	DESCRIPTION
57	032752	1	RETAINER, output shaft rear bearing
58	035061	4	CAPSCREW, 1/2"NC x 1-1/4" (Replaced by 035236 CAPSCREW when power shaft guard is used) (See item 72)
	904208	4	LOCKWASHER, 1/2"
59	032946	12	SHIM, rear bearing adjustment (.005" thick. Use as req'd)
	032944	3	SHIM, rear bearing adjustment (.020" thick. Use as req'd)
60	044982	1	GEAR ASSEMBLY, reverse (Includes item 61)
61	044984	2	BUSHING, reverse gear
62	044970	1	SHAFT, reverse gear
63	035196	1	LOCK, setscrew
64	035188	1	SETSCREW, hex-hd., taper pt., 1/2"NC x 1-5/8"
	911035	1	NUT, jam, 1/2"NC
65	068388	1	COUPLING, splined
65A	621171	1	PIN, rivet, coupling retaining
66	091862	1	KNOB, operating lever
67	------	1	ROD, control (Used prior to October 1958) (Discontinued)
	095659	1	ROD, control (Effective October 1958)
	911043	1	NUT, 1/2"NF
68	068389	1	YOKE, control rod
	917648	1	PIN, yoke, 1/2" diam.
	910967	1	PIN, cotter, 1/8" x 7/8"
69	085327	1	LEVER, control, intermediate (Used prior to October 1958)
	059872	1	LEVER, control, intermediate (Effective October 1958)
	917648	1	PIN, yoke, 1/2" diam.
	910967	1	PIN, cotter, 1/8" x 7/8"
70	------	1	BRACKET, pivot, intermediate control lever (Used prior to October 1958) (Discontinued)
	059857	1	BRACKET, pivot, intermediate control lever (Effective October 1958)
	910320	1	PIN, cotter, 5/32" x 1-1/2"
	910255	1	WASHER, plain, SAE std., 3/4"
71	059861	1	ARM, shifting
	911115	1	WASHER, plain, SAE std., 3/8"
	900942	1	PIN, cotter, 3/32" x 5/8"
72	078482	1	GUARD, power shaft
73	035236	4	CAPSCREW, 1/2"NC x 1-3/4"
74	064531	4	WASHER, plain

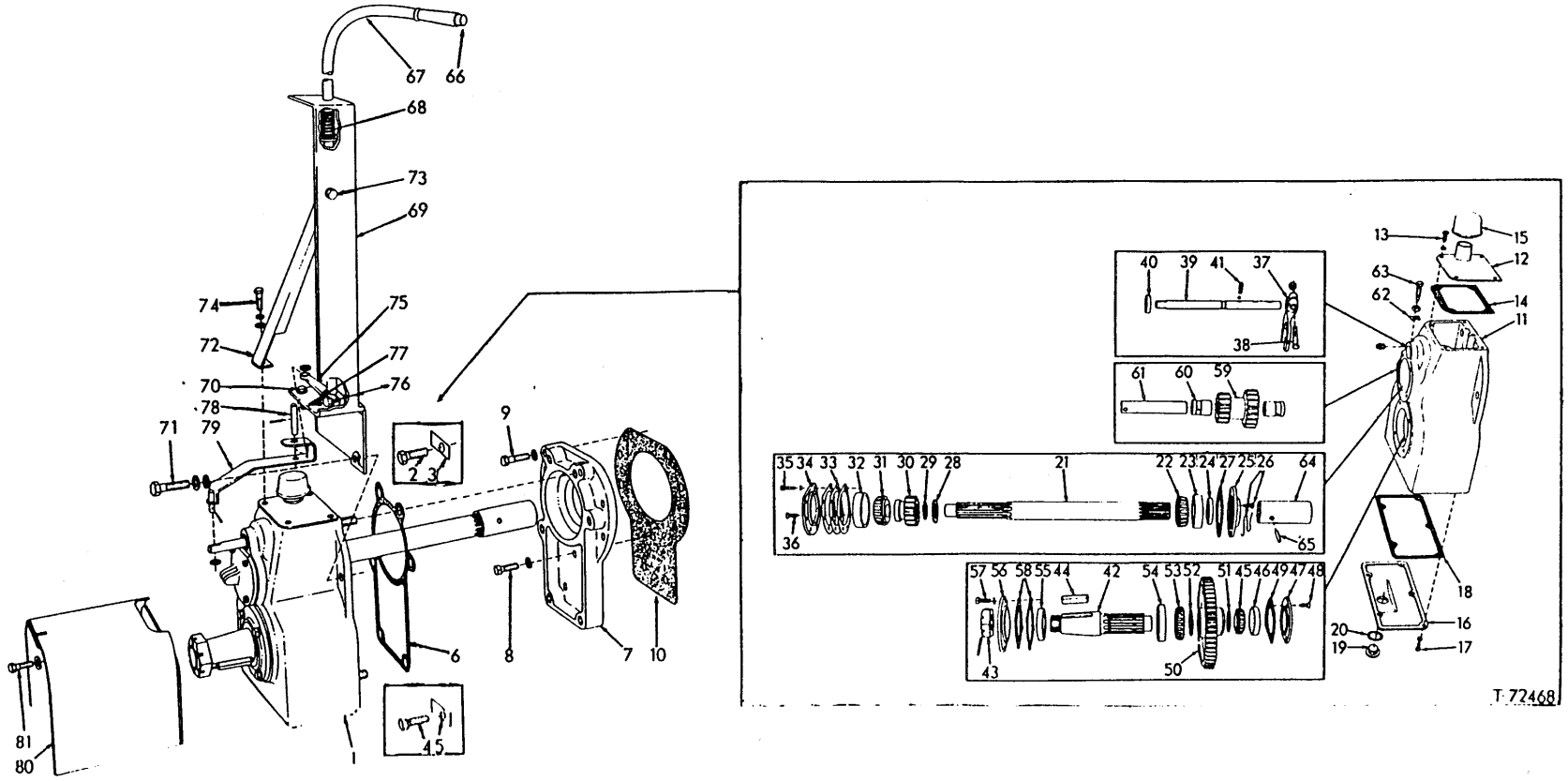

T-72467

POWER TAKE-OFF (Second type · Reversible)

POWER TAKE-OFF

USAGE: Special equipment for tractors serial No. 10001 and up. Operates at 431 rpm clockwise and 334 rpm counter-clockwise.

ITEM	PART NO.	QTY.	DESCRIPTION
1	642544	1	TAKE-OFF ASSEMBLY, power (Consists of items 11 thru 65)
2	070792	2	CAPSCREW, 3/4"NC x 2-1/2"
3	011100	2	LOCK, capscrew
4	202283	3	CAPSCREW, 3/4"NC x 2-1/4"
	904369	1	LOCKWASHER, 3/4"
5	012238	2	LOCK, capscrew
6	068324	1	GASKET, gear case to spacer
7	068329	1	SPACER, power take-off
8	036707	7	CAPSCREW, 5/8"NC x 1-3/4"
	904209	7	LOCKWASHER, 5/8"
9	023755	2	CAPSCREW, 5/8"NC x 2-1/4"
	904209	2	LOCKWASHER, 5/8"
10	068323	1	GASKET, spacer to steering clutch housing
11	044957	1	HOUSING, gear
	901653	1	PLUG, pipe, 3/8"NPT
12	638589	1	COVER, top
13	035244	1	CAPSCREW, 3/8"NC x 3/4"
	904206	1	LOCKWASHER, 3/8"
14	033393	1	GASKET, top cover
15	200267	1	CAP, filler
16	044968	1	COVER, bottom
17	013058	5	CAPSCREW, 3/8"NC x 1-1/4"
	904206	5	LOCKWASHER, 3/8"
18	044969	1	GASKET, bottom cover
19	035250	1	PLUG, drain
20	035249	1	GASKET, drain plug
21	059869	1	SHAFT, input
22	061087	1	CONE ASSEMBLY, input shaft front bearing
23	061088	1	CUP, input shaft front bearing
24	037676	1	SEAL, input shaft front bearing
25	068326	1	RETAINER, front bearing
26	013044	4	CAPSCREW, drilled-hd., 3/8"NC x 7/8"
	023756	1	WIRE, locking, 1/16" x 26"
27	032754	1	GASKET, front bearing retainer
28	030965	1	SPACER, front bearing
29	050293	1	RING, snap, front bearing
30	044979	1	PINION, input shaft (14 teeth)
31	043006	1	CONE ASSEMBLY, input shaft rear bearing

(Continued)

ITEM	PART NO.	QTY.	DESCRIPTION
32	211567	1	CUP, input shaft rear bearing
33	032747	3	SHIM, input shaft bearing adjustment (.005" thick) } Use as required
	032748	5	SHIM, input shaft bearing adjustment (.010" thick)
	032749	3	SHIM, input shaft bearing adjustment (.020" thick)
34	047603	1	RETAINER, input shaft rear bearing
35	013058	3	CAPSCREW, 3/8"NC x 1-1/4"
	904206	3	LOCKWASHER, 3/8"
36	070192	1	CAPSCREW, flat-hd., 3/8"NC x 7/8"
37	044967	1	FORK, shifting
38	046419	1	CAPSCREW, shifting fork
	913528	1	NUT, elastic stop, 3/8"NF
39	044980	1	SHAFT, shifting fork
	905361	1	BALL, steel, 7/16" diam.
40	030504	1	SEAL, oil, shifting fork shaft
41	021537	1	SPRING, shifting shaft locking ball
42	044976	1	SHAFT, output
43	013207	1	NUT, output shaft (slotted, 2"EF thread)
	904007	1	PIN, cotter, 3/16" x 3"
44	032764	1	KEY, output shaft (1/16" x 3")
45	043000	1	CONE ASSEMBLY, output shaft front bearing
46	211608	1	CUP, output shaft front bearing
47	032751	1	RETAINER, output shaft front bearing
48	036283	3	CAPSCREW, flat-hd., 1/2"NC x 1-1/8"
49	032753	1	GASKET, bearing retainer
50	032780	1	GEAR, output shaft (52 teeth)
51	044978	1	RING, snap, output shaft gear
52	032762	1	RING, output shaft rear bearing (2 matched halves)
53	043002	1	CONE ASSEMBLY, output shaft rear bearing
54	043001	1	CUP, output shaft rear bearing
55	629040	1	SEAL, oil, output shaft rear bearing
56	032752	1	RETAINER, output shaft rear bearing
57	035061	4	CAPSCREW, 1/2"NC x 1-1/4" (Replaced by 035236 CAPSCREW when power shaft guard is used)(See item 81)
	904208	4	LOCKWASHER, 1/2"
58	032946	12	SHIM, rear bearing adjustment (.005" thick) } Use as required
	032944	3	SHIM, rear bearing adjustment (.020" thick)

(Continued)

ITEM	PART NO.	QTY.	DESCRIPTION
59	044982	1	GEAR ASSEMBLY, reverse (Includes item 60)
60	044984	2	BUSHING, reverse gear
61	044970	1	SHAFT, reverse gear
62	035196	1	LOCK, setscrew
63	035188	1	SETSCREW, hex-hd., taper pt., 1/2"NC x 1-5/8"
	911035	1	NUT, jam, 1/2"NC
64	068388	1	COUPLING, splined
65	621171	1	PIN, rivet, coupling retaining
66	626984	1	GRIP, control rod
67	638597	1	ROD, control
	911179	1	PIN, cotter, 1/4" x 1-1/4"
	900820	1	WASHER, U.S. std., 3/4"
68	090487	1	SPRING, control rod
69	651011	1	BRACKET, control rod
70	013058	2	CAPSCREW, 3/8"NC x 1-1/4"
	904206	2	LOCKWASHER, 3/8"
	044973	2	WASHER, plain
71	606891	1	CAPSCREW, 3/4"NC x 2-3/4"
	904369	1	LOCKWASHER, 3/4"
	061689	1	WASHER, plain
72	642542	1	BRACE, control rod bracket
73	012992	1	CAPSCREW, 3/8"NF x 1-1/4"
	044973	2	WASHER, plain
	904206	1	LOCKWASHER, 3/8"
	911041	1	NUT, 3/8"NF
74	013058	1	CAPSCREW, 3/8"NC x 1-1/4"
	904206	1	LOCKWASHER, 3/8"
	044973	1	WASHER, plain
75	611972	1	LEVER, control
	905122	1	KEY, #7 woodruff, 1/8" x 3/4"
76	035336	1	CAPSCREW, 3/8"NF x 1-3/4"
	904206	1	LOCKWASHER, 3/8"
	911041	1	NUT, 3/8"NF
77	061689	1	WASHER, control lever
78	638576	1	PIN, control lever
	900817	1	WASHER, U.S. std., 3/8"
	900805	1	PIN, cotter, 1/8" x 3/4"
79	638583	1	ARM, shifting
	911115	1	WASHER, plain, SAE std., 3/8"
	900942	1	PIN, cotter, 3/32" x 5/8"
80	078482	1	GUARD, power shaft
81	035236	4	CAPSCREW, 1/2"NC x 1-3/4"
	064531	4	WASHER, plain

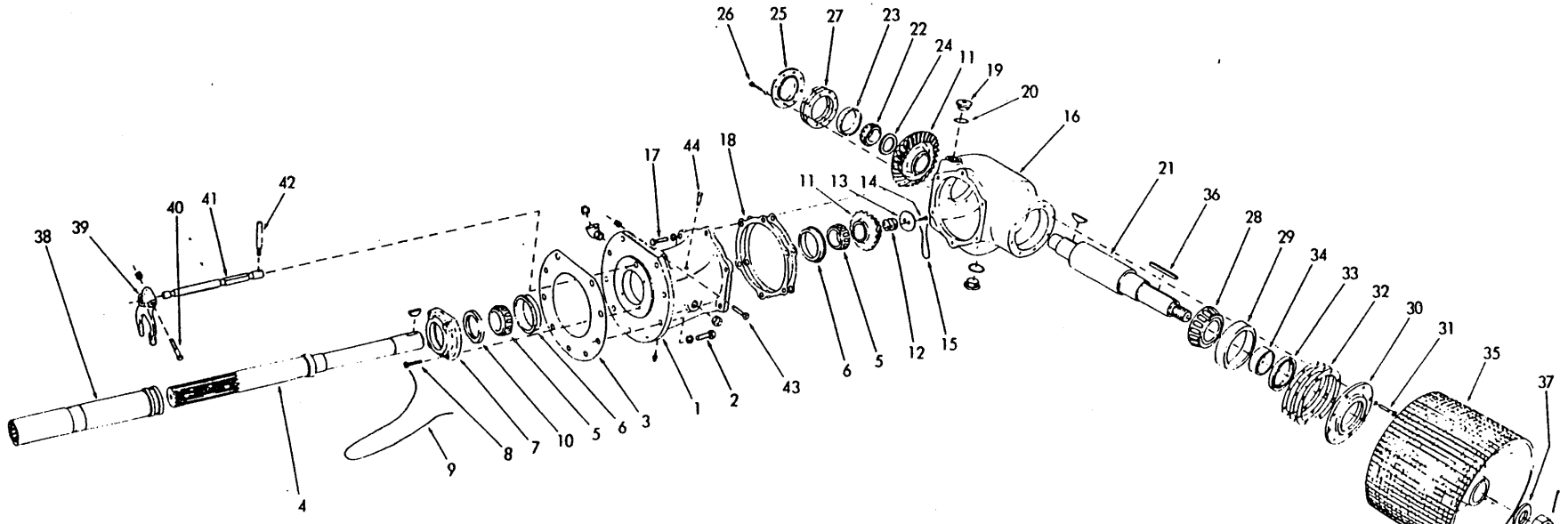

POWER PULLEY

I-10720

POWER PULLEY

USAGE: Special equipment

ITEM	PART NO.	QTY.	DESCRIPTION
1	068631	1	SPACER
	910023	1	ELBOW, street, 45°, 3/4"NPT
	912726	2	PLUG, pipe, 3/4"NPT
	901652	1	PLUG, pipe, 1/4"NPT
2	036707	9	CAPSCREW, 5/8"NC x 1-3/4"
	904209	9	LOCKWASHER, 5/8"
3	068487	1	GASKET, spacer to transmission case
4	068630	1	SHAFT, input
5	043004	2	CONE ASSEMBLY, input shaft bearing
6	043003	2	CUP, input shaft bearing
7	032325	1	RETAINER, input shaft front bearing
8	021527	4	CAPSCREW, drilled-hd., 3/8"NC x 1-5/8"
9	023756	1	WIRE, locking, 1/16" x 26"
10	032347	1	SEAL, oil, input shaft
11	042658	1	GEAR SET (Consists of 1 PINION (18 teeth) and 1 GEAR (31 teeth)
	910851	1	KEY, #G woodruff, 3/8" x 1-1/2"
	911190	1	KEY, #T woodruff, 3/8" x 2-3/8"
12	036093	3	SHIM, bearing adjustment (.005" thick. Use as required)
	036094	3	SHIM, bearing adjustment (.010" thick. Use as required)
	036095	4	SHIM, bearing adjustment (.020" thick. Use as required)
13	032358	1	WASHER, pinion retaining
14	013044	2	CAPSCREW, drilled-hd., 3/8"NC x 7/8"
15	023633	1	WIRE, locking, 1/16" x 12"
16	032335	1	CASE, output shaft
17	035236	6	CAPSCREW, 1/2"NC x 1-3/4"
	904208	6	LOCKWASHER, 1/2"
18	032939	12	SHIM, pinion adjustment (.005" thick. Use as required)
	032941	3	SHIM, pinion adjustment (.020" thick. Use as required)
19	035250	2	PLUG, filling and draining
20	035249	2	GASKET, filling and draining plug
21	042659	1	SHAFT, output
22	043004	1	CONE ASSEMBLY, output shaft bearing, inner
23	211567	1	CUP, output shaft bearing, inner
24	032336	1	SPACER, output shaft inner bearing

(Continued)

ITEM	PART NO.	QTY.	DESCRIPTION
25	032331	1	RETAINER, output shaft inner bearing
26	013058	8	CAPSCREW, 3/8"NC x 1-1/4"
	904206	8	LOCKWASHER, 3/8"
27	036140	3	SHIM, gear adjustment (.005" thick. Use as req'd)
	036142	3	SHIM, gear adjustment (.010" thick. Use as req'd)
	036141	4	SHIM, gear adjustment (.020" thick. Use as req'd)
28	042873	1	CONE ASSEMBLY, output shaft bearing, outer
29	042898	1	CUP, output shaft bearing, outer
30	032312	1	RETAINER, output shaft outer bearing
31	013058	8	CAPSCREW, 3/8"NC x 1-1/4"
	904206	8	LOCKWASHER, 3/8"
32	028113	3	SHIM, bearing adjustment (.005" thick. Use as req'd)
	028115	5	SHIM, bearing adjustment (.010" thick. Use as req'd)
	028114	4	SHIM, bearing adjustment (.020" thick. Use as req'd)
33	032341	1	SEAL, oil, output shaft
34	032345	1	SPACER, output shaft outer bearing
35	077175	1	PULLEY, driving (13-3/8" diam.)
36	032342	1	KEY, driving pulley
37	071209	1	WASHER, pulley retaining
	911058	1	NUT, castle, 1-1/2"NF
	904006	1	PIN, cotter, 3/16" x 2-3/4"
38	068629	1	SHIFTER, coupling
39	068632	1	FORK, coupling shifter
40	046419	1	CAPSCREW, 3/8"NF x 2"
	913528	1	NUT, elastic stop, 3/8"NF
41	032326	1	SHAFT, coupling shifter fork
42	038563	1	HANDLE, operating, shifter fork
43	046419	1	CAPSCREW, 3/8"NF x 2"
	913528	1	NUT, elastic stop, 3/8"NF
44	051447	1	BREATHER ASSEMBLY (Serviced only as a unit)

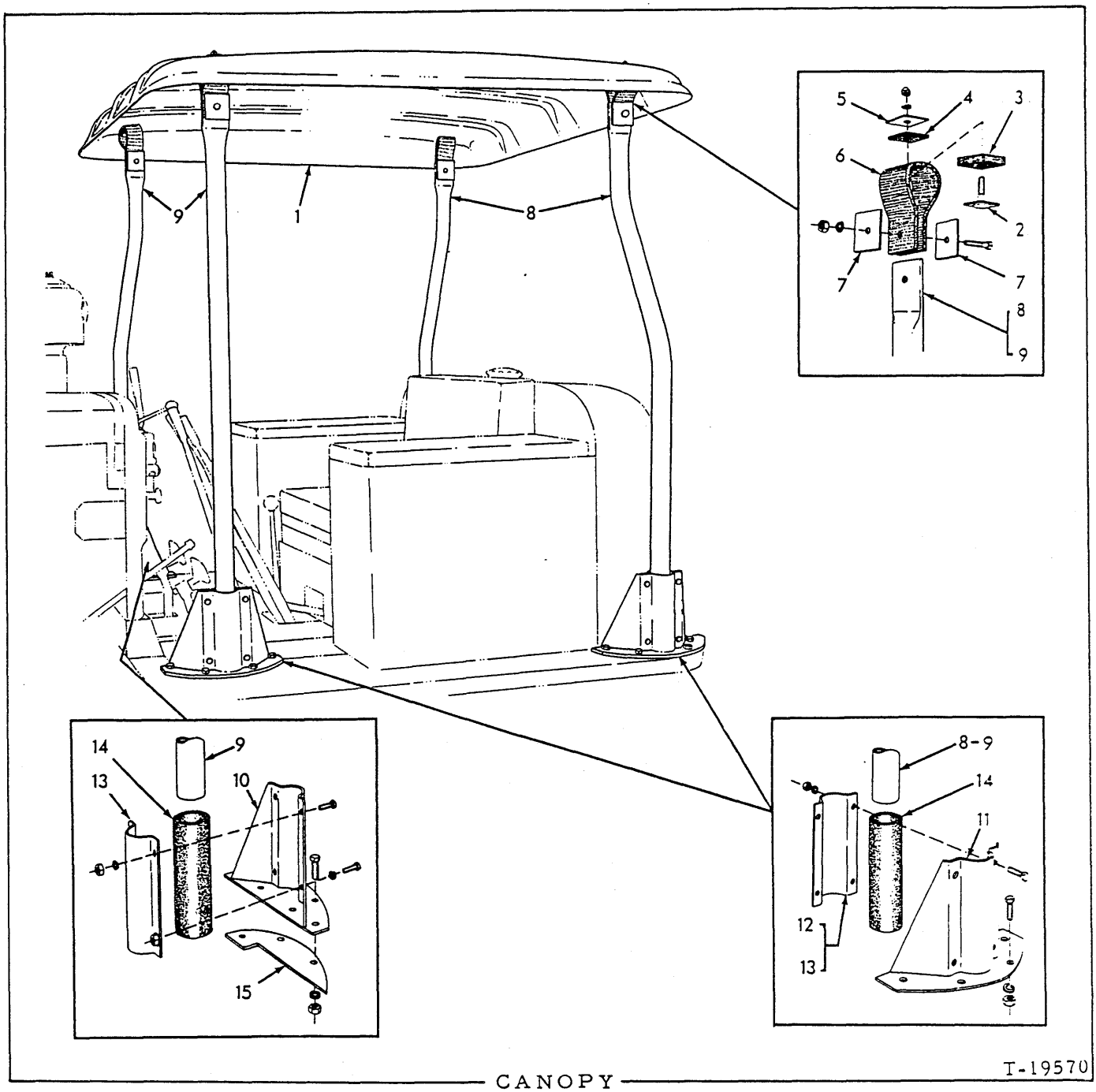

CANOPY

USAGE: Special equipment for tractors prior to serial No. 10001. Applicable to all Models except HD11F.

ITEM	PART NO.	QTY.	DESCRIPTION
1	-----	1	Δ CANOPY (Vendor part #85805)
2	-----	4	ΔBOLT, canopy (Vendor part #A52015)
	904206	4	LOCKWASHER, 3/8"
	918471	4	NUT, cap, 3/8"NC
3	-----	4	Δ PAD, canopy bolt, lower (rubber, 1/2" thick) (Vendor part #52013)
4	-----	4	Δ PAD, canopy bolt, upper (rubber, 1/8" thick) (Vendor part #52014)

(Continued)

ITEM	PART NO.	QTY.	DESCRIPTION
5	-----	4	△WASHER, canopy bolt upper pad (Vendor part #52017)
6	-----	4	△STRAP, canopy (fibre) (Vendor part #52018)
	916273	4	CAPSCREW, 3/8"NC x 1-3/4"
	904206	4	LOCKWASHER, 3/8"
	911026	4	NUT, 3/8"NC
7	-----	8	△WASHER, canopy strap (Vendor part #52017)
8	-----	2	△POST, rear (Vendor part #85816)
9	-----	1	△POST, front, left side (Vendor part #85817)
	-----	1	△POST, front, right side (Vendor part #85815)
10	-----	1	△BRACKET, mounting, right front post (Vendor part #A85820)
	919048	4	CAPSCREW, 1/2"NC x 1-5/8"
	904208	4	LOCKWASHER, 1/2"
	911028	4	NUT, 1/2"NC
	913607	2	CAPSCREW, 1/2"NF x 1-5/8" } Additional hardware req'd. when hyd. tank mounted on right fender
	904208	2	LOCKWASHER, 1/2"
	900818	1	WASHER, plain, U.S. std., 1/2"
	911043	1	NUT, 1/2"NF
11	-----	3	△BRACKET, mounting (Vendor part #A85810)
	919230	12	CAPSCREW, 1/2"NC x 1-3/8"
	904208	12	LOCKWASHER, 1/2"
	911028	12	NUT, 1/2"NC
12	-----	1	△CLAMP, mounting bracket, left front (Vendor part #52010)
	916272	4	CAPSCREW, 3/8"NC x 1-1/4"
	904206	4	LOCKWASHER, 3/8"
	911026	4	NUT, 3/8"NC
13	-----	3	△CLAMP, mounting bracket (Vendor part #A58701)
	916272	12	CAPSCREW, 3/8"NC x 1-1/4"
	904206	12	LOCKWASHER, 3/8"
	911026	6	NUT, 3/8"NC
14	-----	4	△BUSHING, mounting bracket (rubber) (Vendor part #52012)
15	-----	1	△SHIM, right front mounting bracket (Vendor part #85813)

△Parts indicated above must be procured thru Allen Industrial Products Inc., Menomonee Falls, Wisconsin. Vendor's part numbers are listed

USAGE: Special equipment for tractors prior to serial No. 10001. Applicable to all Models except HD11F

ITEM	PART NO.	QTY.	DESCRIPTION
			NOTE: All parts indicated by triangle (△) below must be procured thru Allen Industrial Products, Inc., Menomonee Falls, Wisconsin. Vendor's part numbers are listed.
1	------	1	△TOP, cab (Vendor part #A71482)
2	035439	11	CAPSCREW, 3/8"NC x 1"
	916272	2	CAPSCREW, 3/8"NC x 1-1/4"
	914814	4	SCREW, machine, fl-hd., 3/8"NC x 1"
	904206	17	LOCKWASHER, 3/8"
	911026	15	NUT, 3/8"NC
3	090871	1	PANEL, cab rear section (Stripped of all removable parts)
	916317	4	CAPSCREW, 1/2"NC x 2-3/4"
	904208	4	LOCKWASHER, 1/2"
	911028	4	NUT, 1/2"NC
4	------	1	PANEL, cab front section (Stripped of all removable parts) (Vendor part #A71406)
	916317	5	CAPSCREW, 1/2"NC x 2-3/4"
	904208	5	LOCKWASHER, 1/2"
	911028	5	NUT, 1/2"NC
5	------	1	GLASS, upper, front panel (Part No. 090571. Procure locally)
6	------	1	△SEAL, front panel upper glass (Vendor part #3400-89.5)
7	------	1	△STRIP, expanding, front panel upper glass seal (Vendor #3401-89.5)
8	------	1	GLASS, lower, front panel (Part No. 090569. Procure locally)
9	------	1	△SEAL, front panel lower glass (Vendor part #3400-48)
10	------	1	△STRIP, expanding, front panel lower glass seal (Vendor #3401-48)
11	------	2	GLASS, side panel (Part No. 089432. Procure locally)
12	089020	2	SEAL, side panel glass
13	089022	2	STRIP, expanding, side panel glass seal
14	------	2	GLASS, sliding, rear panel (Part No. 090552. Procure locally)
15	------	4	△CHANNEL, upper and lower, sliding glass (Vendor #71547)
16	------	4	△SEAL, sliding glass upper and lower channel (Vendor #3452-22-5/8)
17	------	4	△CHANNEL, side, sliding glass (Vendor part #3110-14)
18	------	4	△SEAL, sliding glass side channel (Vendor part #3452-13.75)
19	------	1	△RETAINER, sliding glass seal (Vendor part #A71537)
20	089109	2	HANDLE, sliding glass retainer
	900805	2	PIN, cotter, 1/8" x 3/4"
21	------	2	△SEAL, sliding glass (Vendor part #71542)
22	------	2	△RETAINER, sliding glass seal (Vendor part #71543)
	900574	6	SCREW, rd-hd., 1/4"NC x 1/2"
	916205	6	NUT, speed, 1/4"NC

(Continued)

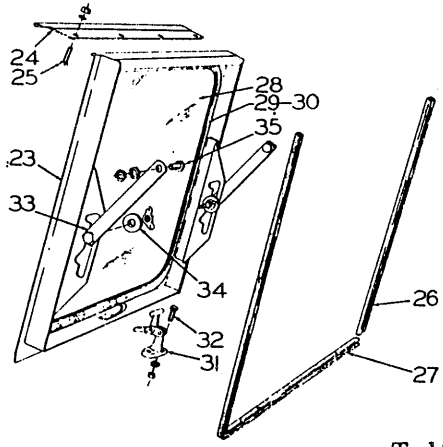

T-19577

WINDSHIELD PARTS

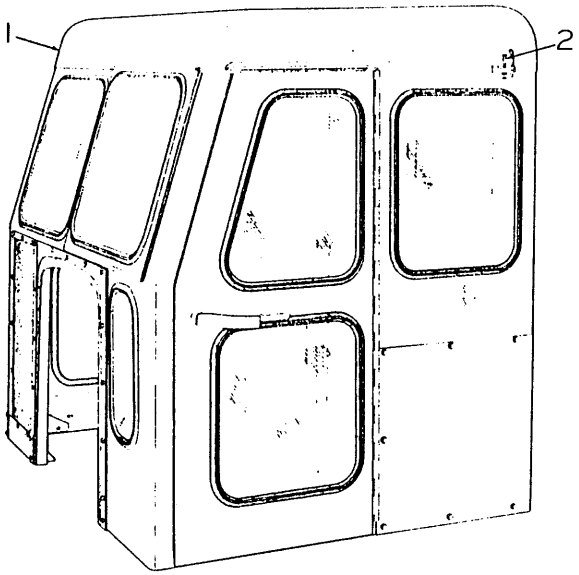

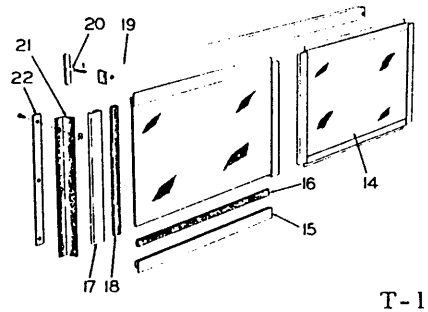

T-19578

REAR WINDOW PARTS

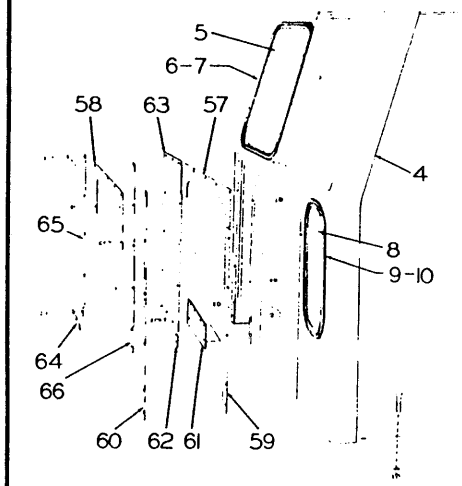

T-19579

FRONT PANEL PARTS

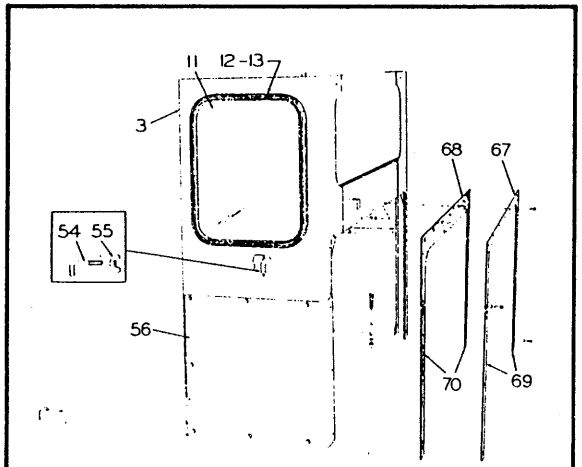

T-19580

REAR PANEL PARTS

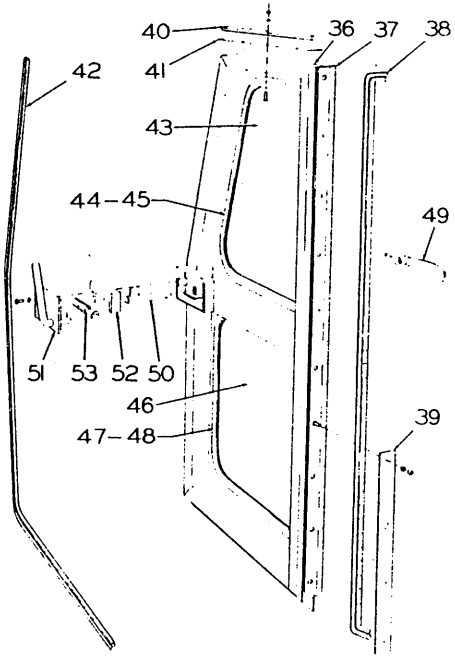

T-19581

DOOR PARTS

CAB

T-19576

ITEM	PART NO.	QTY.	DESCRIPTION
23	------	1	△FRAME, windshield (Stripped of all removable parts)(Vendor #A71494)
24	------	1	△HINGE, windshield (Vendor #A71498)
25	035439	4	CAPSCREW, 3/8"NC x 1"
	904206	4	LOCKWASHER, 3/8"
	911026	4	NUT, 3/8"NC
26	------	1	△SEAL, windshield frame (short) (Vendor #3838-22.0625)
27	------	1	△SEAL, windshield frame (long)(Vendor #3638-50.875)
28	------	1	GLASS, windshield (Part No. 090573. Procure locally)
29	------	1	△SEAL, windshield glass (Vendor #3400-91)
30	------	1	△STRIP, expanding, windshield glass seal (Vendor #3401-91)
31	057138	1	LATCH ASSEMBLY, windshield (Serviced only as a unit)
32	035439	2	CAPSCREW, 3/8"NC x 1"
	904206	2	LOCKWASHER, 3/8"
	911026	2	NUT, 3/8"NC
33	091402	2	ARM, windshield regulating
	906759	2	SCREW, drive, #4 x 1/4"
	915018	2	NUT, wing, 1/2"NC
34	091406	2	SPACER, windshield regulating arm
35	089900	2	CAPSCREW, pivot, windshield regulating arm
	913830	2	NUT, jam, 1/2"NF
	911043	2	NUT, 1/2"NF
36	------	1	△DOOR, left (Stripped of all removable parts. Includes item 37) Vendor #A71510L)
	------	1	△DOOR, right (Stripped of all removable parts. Includes item 37) Vendor #A71510R)
	914392	20	CAPSCREW, 5/16"NC x 1"
	904205	20	LOCKWASHER, 5/16"
	911025	20	NUT, 5/16"NC
37	------	1	△HINGE, left door (Requires welding to door)(Vendor #71515L)
	------	1	△HINGE, right door (Requires welding to door)(Vendor #71515R)
38	------	2	△SEAL, door back (Vendor #3530-49.75)
39	------	2	△FILLER, door hinge to rear panel (Vendor #71477)
40	------	2	△SEAL, door top (Vendor #71544)
41	------	2	△RETAINER, door top seal (Vendor #71545)
	905657	8	CAPSCREW, 1/4"NC x 1"
	904204	8	LOCKWASHER, 1/4"
	911024	8	NUT, 1/4"NC
42	------	2	△SEAL, door front (Vendor #3838-74.5)
43	------	2	GLASS, door, upper (Part No. 090812. Procure locally)
44	089020	2	SEAL, door upper glass
45	089022	2	STRIP, expanding, door upper glass seal

(Continued)

ITEM	PART NO.	QTY.	DESCRIPTION
46	------	2	GLASS, door, lower (Part No. 090551. Procure locally)
47	------	2	△SEAL, door lower glass (Vendor # 3400-70)
48	------	2	△STRIP, expanding, door lower glass seal (Vendor # 3401-70)
49	084920	2	HANDLE, door, outside
	912264	2	CAPSCREW, socket-hd., 5/16"NC x 1"
50	084877	1	SHAFT, right door outside handle
	084878	1	SHAFT, left door outside handle
51	084875	1	HANDLE ASSEMBLY, inside, right door
	084876	1	HANDLE ASSEMBLY, inside, left door
	911168	4	CAPSCREW, 5/16"NF x 7/8"
	904205	4	LOCKWASHER, 5/16"
52	084879	1	BOLT, right door latching
	084880	1	BOLT, left door latching
53	085016	2	SPRING, door latching bolt
	911115	6	WASHER, plain, SAE std., 3/8"
54	------	2	△HOOK, door hold-back (Vendor # 71541)
55	085559	2	NUT, wing, 5/8"NC
	906759	2	SCREW, drive, #4 x 1/4"
56	------	1	△PANEL, battery access, left (Vendor # 71535L)
	------	1	△PANEL, battery access, right (Vendor # 71535R)
	916272	14	CAPSCREW, 3/8"NC x 1-1/4"
	904206	14	LOCKWASHER, 3/8"
57	------	1	△SEAL, cowl top (Vendor # 71564)
58	------	1	△RETAINER, cowl top seal (Vendor # 71565)
	916272	7	CAPSCREW, 3/8"NC x 1-1/4"
	904206	7	LOCKWASHER, 3/8"
	911026	7	NUT, 3/8"NC
59	------	1	△SEAL, cowl left side (Vendor # 71567)
60	------	1	△RETAINER, cowl left side seal (Vendor # 71569)
	916272	4	CAPSCREW, 3/8"NC x 1-1/4"
	904206	4	LOCKWASHER, 3/8"
	911026	4	NUT, 3/8"NC
61	------	1	△PLATE, closure (Vendor # 71502)
	916272	2	CAPSCREW, 3/8"NC x 1-1/4"
	904206	2	LOCKWASHER, 3/8"
62	------	1	△SEAL, cowl right side (1-3/4" x 2-3/4")(Vendor # 71572)
63	------	1	△SEAL, control opening (Vendor # 71566)

(Continued)

ITEM	PART NO.	QTY.	DESCRIPTION
64	------	2	△RETAINER, upper and lower, control opening seal(Vendor #71571)
	916272	6	CAPSCREW, 3/8"NC x 1-1/4"
	904206	6	LOCKWASHER, 3/8"
	911026	6	NUT, 3/8"NC
65	------	1	△RETAINER, right side, control opening seal (Vendor #51570)
	916272	3	CAPSCREW, 3/8"NC x 1-1/4"
	904206	3	LOCKWASHER, 3/8"
66	------	1	△RETAINER, left side, control opening seal (Vendor #71568)
	916272	4	CAPSCREW, 3/8"NC x 1-1/4"
	904206	4	LOCKWASHER, 3/8"
	911026	4	NUT, 3/8"NC
67	------	1	△RETAINER, fuel tank top seal (Vendor #71561)
	915408	7	CAPSCREW, 3/8"NC x 3/4"
	916272	4	CAPSCREW, 3/8"NC x 1-1/4"
	904206	11	LOCKWASHER, 3/8"
	911026	7	NUT, 3/8"NC
68	------	1	△SEAL, fuel tank top (Vendor #71560)
69	------	2	△RETAINER, fuel tank side seal (Vendor #71563)
	916272	6	CAPSCREW, 3/8"NC x 1-1/4"
	904206	6	LOCKWASHER, 3/8"
70	------	2	△SEAL, fuel tank side (Vendor #71562)

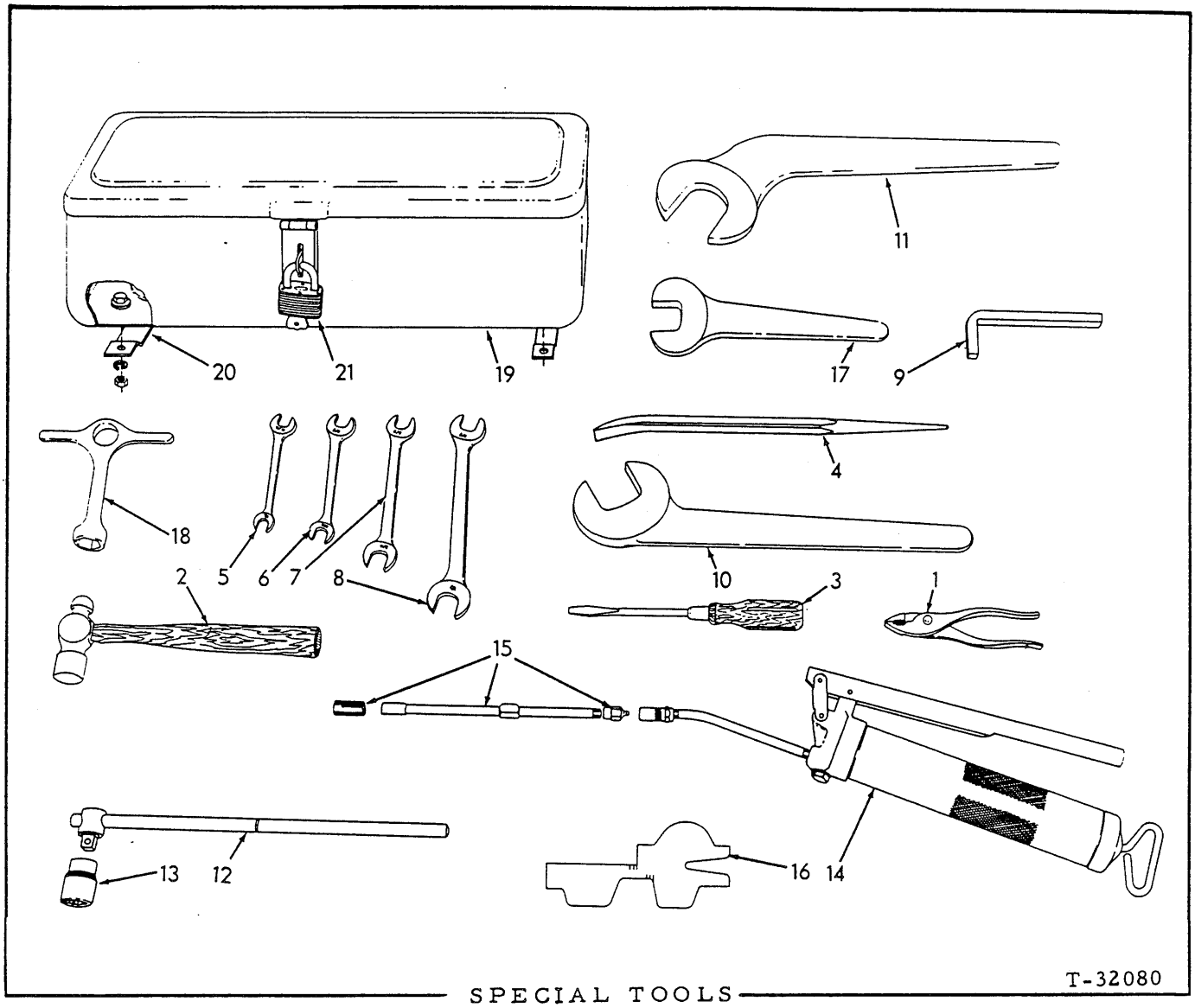

SPECIAL TOOLS

USAGE: Tractors prior to serial No.10001

ITEM	PART NO.	QTY.	DESCRIPTION
-	089709	1	TOOL SET (Consists of items 1 thru 15; also 2 PLUGS 035250 and 2 GASKETS 035249)
1	012389	1	PLIERS, slip joint, 6"
2	012387	1	HAMMER, ball peen, 1 lb.
3	036268	1	SCREWDRIVER, 9-3/4" long
4	052371	1	BAR, pinch, 16" long
5	050608	1	WRENCH, open end, double head, 15°, 1/2" and 9/16"

(Continued)

SPECIAL TOOLS (Continued)

ITEM	PART NO.	QTY.	DESCRIPTION
6	053423	1	WRENCH, open end, double head, 15°, 9/16" and 5/8"
7	050609	1	WRENCH, open end, double head, 15°, 5/8" and 3/4"
8	050610	1	WRENCH, open end, double head, 15°, 3/4" and 7/8"
9	043769	1	WRENCH, drain and filling plugs (90°, 1/2" square)
10	040736	1	WRENCH, track release adjustment (1-7/8" open end)(Early units)
11	095120	1	WRENCH, track release adjustment (2-1/8" open end)(Late units)
12	050612	1	HANDLE, socket, sliding T, 1/2" square drive, 15" long
13	914715	1	SOCKET, 1/2" square drive, 15/16" hex
14	073735	1	GUN, grease (high-pressure, lever type, 17 oz. capacity)
	907059	1	ELBOW, street, 90°, 1/8"NPT (For lubricating fan hub)
15	058937	1	NOZZLE ASSEMBLY, low pressure lubrication (Includes FITTING indented below)
	914767	1	FITTING, lubricating, straight, 1/8"NPT female
16	631352	1	GAUGE, wear (Provides maximum wear tolerances for track rails, grouser shoes, sprockets, idlers and track rollers)
17	043421	1	WRENCH, fan spindle mounting nut (1-7/16" open end)
18	040272	1	WRENCH, grease hole plugs (For early units only)
19	604943	1	BOX, tool
	012992	4	CAPSCREW, 3/8"NF x 1-1/4"
	630753	4	WASHER, plain (heavy)
	911115	4	WASHER, plain, SAE std., 3/8"
	904206	4	LOCKWASHER, 3/8"
	911041	4	NUT, 3/8"NF
20	095548	2	PLATE, box attaching(Early units only)
	012992	2	CAPSCREW, 3/8"NF x 1-1/4"
	044973	2	WASHER, plain
	904206	2	LOCKWASHER, 3/8"
	911041	2	NUT, 3/8"NF
21	912484	1	PADLOCK

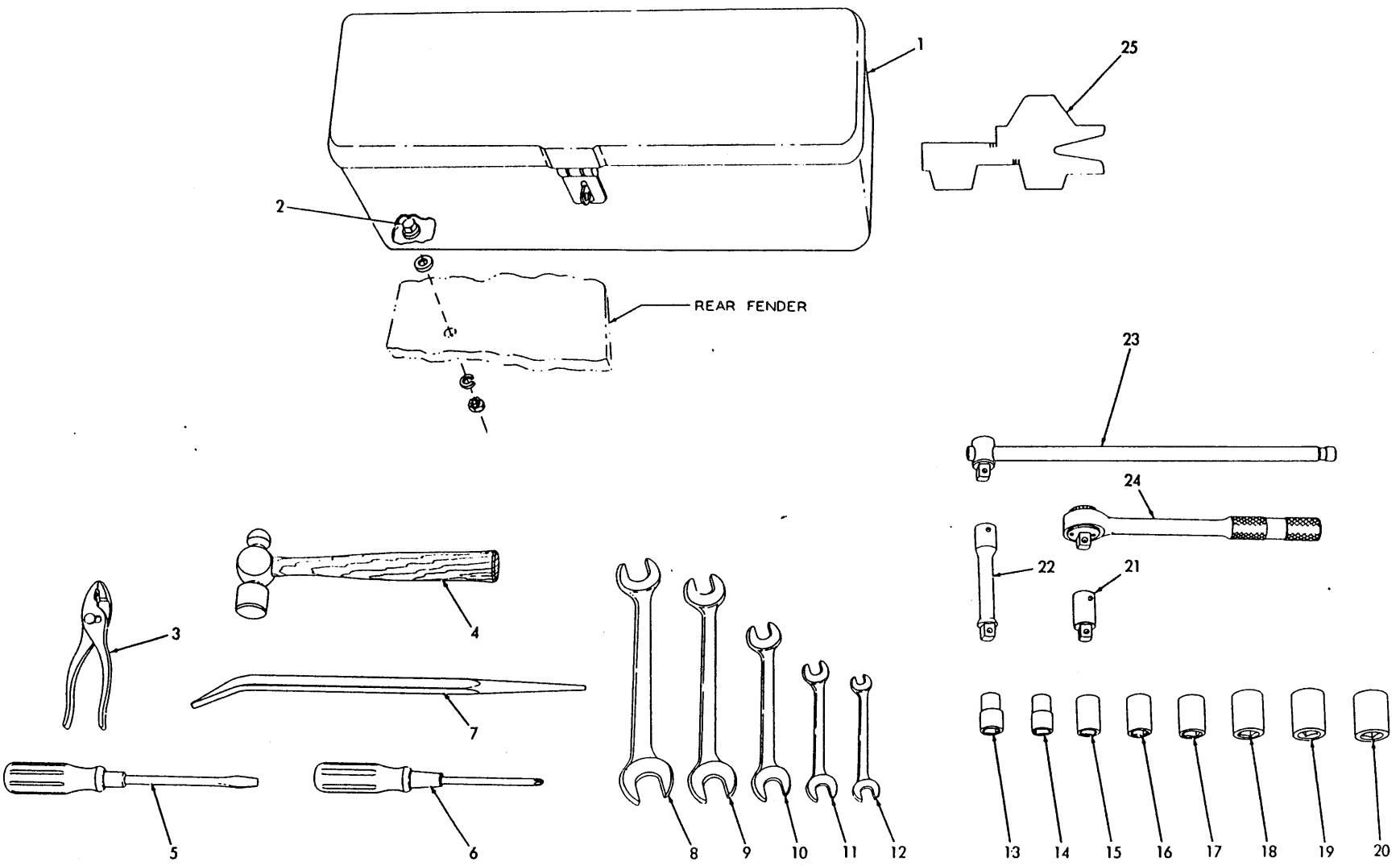

SPECIAL TOOLS (Second type)

I-17464

SPECIAL TOOLS

USAGE: Tractors serial No. 10001 and up

ITEM	PART NO.	QTY.	DESCRIPTION
1	604943	1	BOX, tool (Mounts on right track fender)
2	012992	4	CAPSCREW, 3/8"NF x 1-1/4"
	911115	4	WASHER, plain, SAE std., 3/8"
	904206	4	LOCKWASHER, 3/8"
	911041	4	NUT, 3/8"NF
	630753	4	WASHER, plain (For spacing)
3	012389	1	PLIERS, slip joint, 6"
4	012387	1	HAMMER, ball peen, 1 lb.
5	036268	1	SCREWDRIVER, 9-3/4" long
6	914732	1	SCREWDRIVER, Phillips #2
7	052371	1	BAR, pinch, 16" long
8	050611	1	WRENCH, open end, double head, 15°, 15/16" and 1-1/16"
9	050610	1	WRENCH, open end, double head, 15°, 3/4" and 7/8"
10	050609	1	WRENCH, open end, double head, 15°, 5/8" and 3/4"
11	050608	1	WRENCH, open end, double head, 15°, 1/2" and 9/16"
12	050607	1	WRENCH, open end, double head, 15°, 3/8" and 1/2"
13	914709	1	SOCKET, 1/2" square drive, 1/2" hex
14	914710	1	SOCKET, 1/2" square drive, 9/16" hex
15	914711	1	SOCKET, 1/2" square drive, 5/8" hex
16	914712	1	SOCKET, 1/2" square drive, 11/16" hex
17	914713	1	SOCKET, 1/2" square drive, 3/4" hex
18	914714	1	SOCKET, 1/2" square drive, 7/8" hex
19	914715	1	SOCKET, 1/2" square drive, 15/16" hex
20	914716	1	SOCKET, 1/2" square drive, 1" hex
21	914717	1	BAR, extension, socket, 1/2" drive, 2" long
22	914718	1	BAR, extension, socket, 1/2" drive, 5" long
23	050612	1	HANDLE, socket, sliding T, 1/2" square drive, 15" long
24	914719	1	HANDLE, socket, ratchet, 1/2" square drive
25	631352	1	GAUGE, wear (HD11B,S) — Provides maximum wear tolerances for track rails, grouser shoes, sprockets, idlers and track rollers
	644400	1	GAUGE, wear (HD11E,EC) — Provides maximum wear tolerances for track rails, grouser shoes, sprockets, idlers and track rollers

Part No. Page

3400-48...599
3400-70...602
3400-89.5...599
3400-91...601
3401-48...599
3401-70...602
3401-89.5...599
3401-91...601
51570...603
52010...598

52012...598
52013...597
52014...597
A52015...597
52017...598
52018...598
A58701...598
71544...601
71566...602
71572...602

85805...597
A85810...598
85813...598
85815...598
85816...598
85817...598
A85820...598
011100...587, 591
012238...591
012387...604, 607

012389...604, 607
012526...201, 390
012762...382
012767...382 thru 473
012871...557
012984...382, 387, 436
012992...99 thru 607
013044...587, 591, 595
013058...215 thru 596
013059...77 thru 283

013207...588, 592
013465...385, 417
013467...389 thru 409
021527...326, 595
021537...588, 592
023176...170
023465...329, 482, 483
023574...197
023618...401 thru 469
023633...252 thru 595

023755...533 thru 591
023756...315 thru 595
028113...596
028114...596
028115...596
028979...269, 351
030107...215
030123...215
030504...588, 592
030965...587, 591

031055...382
031337...170, 171, 175
031854...337
032312...596
032325...595
032326...596
032331...596
032335...595
032336...595
032341...596

032342...596
032345...596
032347...595
032358...595
032747...588, 592
032748...588, 592
032749...588, 592
032751...588, 592

Part No. Page

032752...589, 592
032753...588, 592
032754...587, 591
032762...588, 592
032764...588, 592
032780...588, 592
032834...574 thru 577
032939...595
032941...595
032944...589, 592

032946...589, 592
033043...569
033060...477 thru 577
033074...368
033288...333 thru 423
033391...587
033393...587, 591
034014...558
034042...411 thru 419
034043...411 thru 419

034076...511 thru 525
034152...170, 173, 569
034253...132
034258...127
034265...259 thru 325
034268...259 thru 325
034269...259 thru 325
034300...315
034304...265
034440...558, 561

034924...533
034964...126, 546
035014...420 thru 484
035018...73 thru 583
035061...32 thru 592
035067...67 thru 583
035068...73 thru 583
035073...67 thru 581
035159...259 thru 287
035167...67 thru 577

035188...459 thru 593
035190...19 thru 583
035196...589, 593
035220...137, 509
035221...152 thru 532
035229...397, 400, 486
035236...243 thru 595
035244...73 thru 591
035248...385, 583
035249...45 thru 595

035250...45 thru 595
035278...371 thru 484
035306...396 thru 471
035336...65 thru 593
035392...320, 321
035420...469
035423...471, 473
035439...101 thru 601
035525...83 thru 537
035541...473

035712...274, 287, 289
035718...358, 523
035733...123 thru 509
035793...315, 317, 330
035794...516
035878...315
035892...293 thru 481
035910...119 thru 295
035916...510
035942...367

035979...71 thru 567
035997...295
036032...69 thru 577
036034...73 thru 573
036039...483, 489
036093...595
036094...595
036095...595

Part No. Page

036140...596
036141...596
036142...596
036203...355
036268...604, 607
036283...588, 592
036546...437
036707...584 thru 595
036888...65, 79
036997...235 thru 368

037000...326
037450...97, 119, 242
037461...351
037573...337
037676...584, 587, 591
037693...391, 393
038234...102, 389, 579
038563...596
040013...223, 351, 357
040099...343, 347

040220...221
040221...221
040272...605
040382...219, 245
040400...169
040475...317
040736...605
040796...170 thru 535
040831...270
040842...516, 519

040969...543
040973...543
040974...543
041076...424
041250...223, 227
041877...273
041911...361
041913...141, 361
041914...219
041915...77

041981...120 thru 283
042121...271
042265...76, 361
042430...73
042538...315
042658...595
042659...595
042672...70
042767...222
042847...215, 219

042873...596
042887...417
042888...417
042898...596
042928...164
042979...180
043000...588, 592
043001...588, 592
043002...588, 592
043003...595

043004...595
043006...588, 591
043021...126, 137
043344...520
043397...222
043421...605
043491...411
043576...471, 472
043713...558
043716...558

043769...605
043852...154
043853...154
043856...154
043860...154
043881...126 thru 533
043886...198
043890...277

Part No. Page

043991...154
044044...559
044211...543
044249...185 thru 357
044255...154
044256...154
044721...65
044741...271
044810...516, 519, 523
044875...458, 461, 465

044957...587, 591
044967...588, 592
044968...587, 591
044969...587, 591
044970...589, 593
044973...98 thru 605
044976...588, 592
044978...588, 592
044979...588, 591
044980...588, 592

044982...589, 593
044984...589, 593
045174...99, 550
045253...293
045295...123, 129
045312...217 thru 357
045507...180, 204
045524...412, 415
046321...197
046419...65 thru 588

046423...551
047151...417
047307...558
047381...97 thru 550
047478...159 thru 567
047581...417
047603...588, 592
047605...417
047852...539
048142...516 thru 567

048375...217
048603...173, 176, 179
048606...173, 176, 179
048608...173, 176, 179
048658...411
048665...411
048666...411
048698...279
048922...517, 521, 525
049109...413, 419, 421

049110...413, 419, 421
049111...413, 419, 421
049662...39, 393
049667...396, 400
049877...417
049918...259 thru 335
049988...237 thru 367
049993...235 thru 367
049994...337
050214...315, 317

050220...315
050221...235 thru 315
050222...315
050227...315
050249...315
050265...288, 292, 295
050267...281 thru 295
050288...565
050293...219, 587, 591
050357...319, 321, 325

050433...369, 371
050440...315
050442...235, 237
050510...497, 499
050543...382
050547...252, 254, 436
050548...252, 254
050551...497, 499

Part No.	Page
050566	288, 292
050579	215
050594	102
050595	102
050607	607
050608	604, 607
050609	605, 607
050610	605, 607
050611	607
050612	605, 607
050647	215, 219
050679	582
050734	476
050735	476
050748	225 thru 331
050767	170
050787	102
050838	513
050842	513
050927	254
050972	241
051006	170, 171, 175
051291	312
051352	437
051429	417
051447	287 thru 596
051478	417
051482	417
051483	417
051484	417
051496	320, 323, 325
051513	235 thru 368
051597	215
051897	142 thru 153
052049	274
052070	335
052191	557
052225	274
052270	312, 313
052360	102
052371	604, 607
052374	274
052444	328, 335
052459	355
052527	201 thru 325
052564	342
052601	342, 345
052620	339
052639	371
052641	376
052642	371
052643	292, 341, 342
052662	285 thru 342
052669	242 thru 374
052671	337 thru 379
052747	239
052782	553, 555, 557
052791	553, 555, 557
052917	539
052922	320, 321
052969	151
052970	151
052976	320, 321, 326
052977	320, 321, 326
052979	320, 323, 325
053005	342, 345
053077	367
053096	245, 249
053100	103
053243	371
053277	562
053421	320, 323, 325
053423	605
053616	185 thru 523
053617	287
053619	141, 353
053667	151 thru 476
053899	215
053926	235 thru 368
053927	235
053929	237
054034	297, 299, 302
054130	98 thru 309
054229	271
054304	532
054459	233
054824	396
054890	333 thru 423
054896	69, 71
054897	440
054899	440
054968	391, 393
055232	97
055233	97
055234	71, 99, 101
055245	65, 79
055349	288
055416	242
055529	585
055536	569
055589	517, 521, 525
055676	65, 69
056260	395, 399
056261	395, 399
056312	417
056313	417
056320	249, 476
056346	412
056413	390, 393
056414	393
056417	391, 393
056418	391, 393
056420	390, 393
056421	390, 393
056427	393
056428	392
056429	392
056430	392
056431	392
056432	392
056441	391, 393
056508	328
056512	331
056513	330
056522	330
056585	420, 421
056590	396
056614	424
056645	425
056652	424
056702	437
056706	437
056711	436
056721	215 thru 550
056778	312
056780	312, 313
056788	331
056790	315
056791	315
056792	315, 317
056793	315, 317
056794	315
056797	312
056798	312
056799	312
056801	330
056802	412, 415
056817	315
056863	158, 161, 163
056864	217, 222
056865	235
056871	235
056872	235
056873	235
056881	417
056895	395, 399
056896	396, 400
056898	396, 400
056902	393
056909	396
056945	235, 237, 239
056966	336
056969	335
056970	335
056971	335
057003	331
057004	331
057005	331
057006	331
057138	601
057187	368
057191	367
057195	367
057196	368
057197	367
057200	367
057207	365
057208	365
057273	335
057281	271
057282	269
057283	275
057289	269
057375	315
057381	365
057382	365
057407	281, 285
057432	259, 261, 263
057517	440, 487, 509
057605	131, 440
057773	221
057777	383
057784	569
057836	352
057838	355
057839	355
057841	351
057842	339, 352
057843	355
057846	355
057848	355
057852	355
057984	351
058135	270
058274	584
058322	337
058702	333
058723	154
058759	437
058796	335
058806	335
058807	335
058814	333
058826	335
058828	517
058831	517
058857	517
058925	333
058936	176, 179, 229
058937	605
059007	437
059144	154
059149	154
059261	269
059294	154
059328	279
059589	279
059698	512
059730	424
059813	255
059857	589
059860	587
059861	589
059869	587, 591
059872	589
059873	254, 255
059876	252, 254, 255
059879	252, 255
059883	355
059969	241
059971	241
059973	241
059981	241
060552	319, 321, 325
060631	273
060668	365
060770	365
060772	365
060774	365
060953	367
061087	587, 591
061088	587, 591
061133	315
061490	217
061554	343, 347
061631	287
061689	387, 571, 593
062334	343, 348
063222	127, 129, 131
063889	75
063890	75
063891	75
064219	387, 389
064374	320, 321, 326
064376	320
064377	320, 321, 326
064413	437
064414	437
064531	73 thru 593
064810	215 thru 583
064942	337
065413	154
065468	197
065512	270
065577	90
065582	91, 93, 95
065588	471, 472
065613	102, 103
065872	390, 393
065873	393
065878	393
066068	424
066251	166
066252	166
066253	165
066255	166
066261	165
066467	565, 566
066517	165
066596	320, 321
066693	413, 419, 421
066794	438
066798	227
066872	167
066873	167
066874	167
066875	167
066876	167
067110	558, 561
067112	558, 561
067480	325, 358, 547
067543	258 thru 325
067559	417
067566	584
067577	312
067618	312
067619	339
067620	319

Part No. Page

067621...320
067622...339
067623...339
067627...275
067680...312,313
067902...579
067937...514
068103...337
068105...339
068106...337

068109...337
068173...337
068250...582
068320...301
068323...587,591
068324...587,591
068326...587,591
068329...587,591
068388...584,589,593
068389...235 thru 589

068399...561
068404...561
068405...561
068480...584
068487...584,595
068488...584
068489...585
068490...584
068491...584
068511...235

068629...596
068630...595
068631...595
068632...596
068636...386
068859...119,121
068861...119,121
068862...119,121
068864...119
068865...119,121

068866...119,121
068869...119,121
068875...166
068876...166
068878...166
068879...166
068881...166
068911...119,121,377
068924...99
069080...333

069106...333
069164...166
069220...315,317
069233...269
069235...269,271
069236...271
069237...271
069238...271
069239...271
069240...269

069242...275
069243...271
069244...275
069245...275
069246...275
069247...275
069248...275
069249...275
069254...271
069260...425

069328...328
069339...281
069349...119,121
069366...277
069382...271
069384...271
069385...275

Part No. Page

*069386...279
069401...273
069403...269
069404...281
069409...312
069427...279
069428...269
069441...328
069443...270,274
069444...270

069445...277,279
069446...277,279
069447...279
069448...279
069452...269
069454...275
069455...277
069456...269
069457...271
069458...271

069459...269
069460...271
069461...269
069462...275
069463...269
069465...271
069468...281,285
069469...275
069477...281
069489...337

069490...337
069492...259
069511...277
069512...277
069514...273
069521...337
069546...411
069614...335
069615...335
069641...569

069648...320,323,326
069656...312
069674...539
069743...557
069996...119,121
069998...121
070159...382
070161...401 thru 468
070162...252,254
070192...588,592

070272...381 thru 468
070285...393
070299...417
070403...333 thru 472
070467...79 thru 576
070469...73 thru 577
070590...423
070792...587,591
070861...390
070960...241

071014...395,399,571
071113...460
071209...596
071800...119,121
072366...312 thru 424
072438...127
073022...411
073023...411
073024...411
073025...411

073026...411
073027...411
073029...411
073034...342,345
073106...65
073111...413,419,421
073112...413,419,421

*073919...217

Part No. Page

073160...419,421
073161...419,421
073162...419,421
073165...420
073175...420,423
073176...420,423
073437...383
073468...381,437
073536...154
073553...429,433

073558...435
073566...429,433
073570...429,433
073574...429,433
073592...429,433
073596...429,433
073600...429,433
073604...429,433
073634...411
073648...387

073715...387
073733...270,274
073735...605
073738...274
073806...390
073808...270
073899...217
073901...217
073902...217
073903...217

073907...217
073908...217,222
073914...217
073915...217
073916...217
073917...217
*073918...217
*073920...217
073921...217
073922...217

073923...217
073924...217
073925...217
073926...217
073927...217,222
074099...150
074100...154
074155...254
074387...517
074388...515,562

074452...543 thru 560
074565...413
074566...413
074567...413
074568...413
074569...413
074571...413
074573...413
074577...513
074578...513

074579...514
074790...351,357
074814...274
074815...274
074817...274
074818...270
074822...270
074824...279
074838...270
074841...274

074842...270
074870...429,433
074887...171,175,177
075053...319,321,325
075322...553,555
075390...265
075391...265,268

Part No. Page

075396...582
075429...515,519,523
075432...320
075434...320
075535...519,523,562
075769...166
075770...166
075771...165
075853...515
075854...515

075878...441 thru 465
075950...255
075955...355
076123...369
076259...251
076461...252,254,255
076469...553,555,557
076470...554,555
076498...97
076544...119,123

076572...553,555,557
076668...75
076710...368
076726...319,321,325
076846...281,288
077175...596
077239...251
077241...246 thru 349
077279...516
077672...396

077673...396
077680...569
077687...569
077727...420
077728...420
077729...419
077888...512
078314...255
078402...288,291,295
078407...569

078482...585,589,593
078521...258,263
078620...119 thru 337
078667...217,222
078701...428,432
078702...428,432
078742...281 thru 293
078810...120 thru 365
078814...219
078860...271

078861...277
078862...270,279
078864...269,271
078867...437
078904...154
078908...367
078941...412
078967...119 thru 285
078981...420,423
079203...367

079229...367
079234...274
079256...274
079421...355,376
079533...428,433
079534...569
079536...569
079538...569
079660...424
079742...367

079751...27
079815...429,433
079887...569
080166...281 thru 295
080207...499
080513...355
080514...355

Part No.	Page
080667	436
080704	235, 237
080758	75
080865	288, 291
080866	288, 291
080867	295
080882	295
080939	295
081140	215
081200	279
081201	279
081202	279
081270	281
081381	281
081404	553, 555, 557
081407	420, 423
081408	420, 423
081471	419
081534	341
081619	120, 123
081787	333
081788	335
081795	151, 157
081796	151, 157
081802	349
081867	555, 557
082178	533, 535
082189	81, 101
082262	315
082278	312
082441	, 79, 85
082442	65, 71
082443	75
082444	75
082449	74
082487	74
082488	74
082489	74
082490	74
082491	74
082492	74
082493	74
082505	74
082636	369
082638	287, 289, 293
082716	215
082726	320
082727	320
082785	315
082875	119, 285
082910	217
082937	151
083083	320
083084	320
083085	320, 323, 326
083091	215
083121	215
083134	217
083135	217
083136	217
083143	217
083145	217
083149	217
083150	401, 409
083158	402
083159	402
083160	402
083163	397
083164	397
083165	401, 409
083208	415, 420, 423
083233	497
083234	498.
083263	497, 499
083270	215
083390	393
083536	417
083573	287
083598	288
083625	129
083674	491
083759	79, 80
083760	79, 80
083870	215
083915	489
083987	541, 542
083988	541, 542
083989	541, 542
083990	541, 542
084003	198
084010	198
084042	197
084169	497
084170	498
084174	553
084227	579
084236	336
084238	563
084259	476
084270	481
084271	333
084277	335
084278	335
084279	475
084284	569
084287	471
084288	471
084289	335
084297	329
084299	336
084303	333
084311	333
084312	333
084313	333
084314	497, 499
084315	497, 499
084319	331
084326	254, 333
084333	336
084334	252
084335	329
084337	333
084342	429, 433, 435
084349	335
084357	368
084359	367
084384	459, 461, 465
084385	151
084401	282
084421	151
084425	383
084432	333, 335
084435	255
084442	288
084453	120
084474	341
084476	235, 239
084480	382
084493	19
084501	141
084508	151
084513	120
084517	19
084520	170, 177
084524	133
084525	287, 289, 293
084526	132
084528	252
084530	256
084534	339
084536	252
084537	252
084539	337
084545	252
084548	368
084574	96
084575	96
084580	120
084584	29
084586	252, 254
084592	429, 433
084614	471
084625	491
084626	491
084659	119
084663	497
084680	478
084693	478
084720	478
084729	132
084731	120
084741	132
084758	458, 461, 465
084789	516
084797	499
084798	532
084801	516
084802	532
084839	570
084840	570
084859	151
084868	151, 177
084875	602
084876	602
084877	602
084878	602
084879	602
084880	602
084884	141
084885	141
084887	141, 142
084888	197
084890	141
084891	569
084895	554, 555, 557
084897	75
084898	569
084899	75
084901	329
084903	331
084904	331
084905	331
084909	539, 541
084915	151
084920	602
084963	386
084965	447
084968	386
084986	381
085016	602
085038	365
085039	197
085088	141
085115	576
085116	576
085135	194
085136	194
085189	571
085193	571
085280	141
085288	185, 187, 189
085290	441, 447, 458
085304	443, 465
085305	443, 467
085318	441, 458
085319	79
085327	589
085335	443, 459
085347	582
085349	382
085356	471, 473
085386	471
085395	459, 461, 465
085412	559
085413	441 thru 467
085414	441, 469
085447	571
085453	579
085456	447
085458	448
085463	579
085464	579
085466	579
085519	458, 463, 467
085521	459, 461, 465
085553	483
085555	441, 465
085559	602
085571	565
085617	381
085631	472
085632	472
085680	557
085710	471
085727	447
085734	447
085743	448
085785	65, 79
085816	79
085820	79
085825	79
085853	65
085856	65
085877	287, 289, 293
085878	287, 289, 293
085918	254
086238	151, 157
086479	429, 431, 433
086495	428, 432
086520	428, 433
086667	169
086747	254
086752	254
086890	83, 85
086946	565
086947	564
086951	97
086952	539
086953	96
086954	97
086981	83
087023	96
087031	69
087032	69
087040	200
087041	200
087042	200
087043	200
087044	200
087049	83
087050	69
087052	96
087053	83
087058	69
087082	97
087104	469
087105	469
087106	469
087159	476
087290	119
087291	119
087303	133
087313	557
087349	133
087353	390
087355	390
087356	390
087357	390

Part No.	Page
087377	199
087468	102
087482	487
087528	199
087538	200
087547	429, 433
087601	539
087605	170
087713	447
087714	447
087740	65
087748	141, 142
087871	79, 83
087930	469
087955	200
087958	315, 337
088038	171, 175, 177
088264	579
088326	198
088341	261
088349	198
088383	261
088428	135
088470	135
088471	170, 173
088526	185, 187, 189
088534	541, 545, 547
088561	185, 191
088566	127, 135
088666	491
088668	491
088672	499
088686	499
088736	198
088786	459, 461, 465
088819	441, 447, 458
088820	441, 447, 458
088873	392
088928	288
088930	288
088932	288
088952	119
088963	337
088964	337
089020	599, 601
089022	599, 601
089044	96
089083	97
089099	69, 97, 99
089107	27
089109	599
089147	516
089152	515
089195	69
089196	69
089292	561
089320	329
089327	458
089335	460
089336	499
089414	460
089417	459
089419	460
089421	460
089432	599
089549	341
089607	27
089641	553, 555
089642	555
089644	527, 529
089646	150
089653	553
089709	604
089814	261, 265
089829	287, 289, 293
089879	27
089894	27
089898	481, 485
089899	369
089900	129, 601
089904	487
089953	581
090013	581
090020	125, 347
090048	532
090121	581
090143	447
090191	570
090192	570
090205	571
090206	571
090214	571
090279	486
090280	487
090424	381
090466	533
090475	481
090476	481
090487	593
090551	602
090552	599
090569	599
090571	599
090573	601
090597	476
090645	274
090751	484
090752	484
090756	337
090767	315, 330
090812	601
090813	601
090814	601
090815	601
090816	601
090818	601
090819	602
090832	603
090834	599
090836	603
090837	603
090838	603
090839	602
090840	602
090841	602
090842	603
090844	602
090845	599
090846	601
090847	476
090848	579
090849	476
090850	476
090851	579
090852	579
090854	576
090855	576
090856	576
090868	539
090871	599
090890	599
090894	601
090902	599
090903	599
090905	599
090921	602
090922	602
090927	599
090928	599
090929	601
090958	367
090960	365
090968	170, 173
091023	599
091063	571, 573
091161	516, 519
091172	516, 519
091219	387
091402	601
091406	601
091445	601
091540	74
091571	335
091585	541, 545, 550
091588	542, 545, 546
091589	541, 545, 547
091620	602
091742	601
091743	601
091805	575, 577
091832	601
091855	132, 135, 137
091862	281, 589
091898	571
091942	443, 469
091972	333
091973	336
091976	443, 509
091984	19
091996	27
092028	199
092107	246, 359
092129	574
092130	574
092160	165, 179
092163	103, 490
092431	402
092432	402
092437	402
092438	402
092635	297, 309
092652	27
092665	197
092712	516, 519
092727	81, 101
092758	27
092760	386, 389
092793	173, 176, 179
092797	97
092881	127
092924	443, 451
093005	497, 499
093013	575
093014	575
093043	461, 465
093063	449
093064	449
093091	571
093092	571
093095	570
093096	570
093152	390
093176	516
093195	516, 519, 523
093248	328
093249	328
093250	328
093256	329
093298	98
093329	441
093338	443, 459
093339	197
093389	425
093401	571, 573
093411	472
093412	472
093446	441, 465
093448	475
093561	469
093564	469
093577	472
093578	472
093583	201
093628	198
093671	457
093682	97
093713	270
093748	73
093751	71, 99, 101
093752	99, 307
093805	412, 415
093862	460
093866	459, 461, 465
093869	457
093872	460
093961	575
093962	575
093972	547, 548, 550
093982	425
093996	315
094049	581
094089	581
094095	71
094167	75
094171	392
094218	449
094285	135
094287	123
094317	241
094343	402
094344	402
094349	402
094350	402
094379	71
094422	67, 223
094450	541, 545
094456	85
094465	71
094467	99, 250
094483	233
094527	164, 545
094543	319, 351
094581	98
094602	85
094630	526
094642	173, 175, 179
094664	97
094674	176
094674	176
094692	542, 545, 551
094693	396
094698	165
094699	165
094756	99
094863	71
094867	176, 179
094871	71
094875	176, 179
094880	71
094887	71
094889	71
094890	173, 176, 179
094952	396
094964	98
094966	99
094983	420
094984	420
094985	397, 400
094986	397, 400
094987	135
094988	123
094989	123
094990	121
094997	123
094998	123
095071	581
095077	581
095120	605
095122	80

Part No. Page

095135...482
095136...483
095144...483
095148...483
095189...483, 489
095190...483, 489
095192...483, 489
095211...393
095213...129
095214...365

095215...365
095216...365
095224...197
095257...542, 545
095265...543, 546
095267...543, 546
095268...543, 546
095269...543, 546
095280...425
095281...425

095399...123
095410...176
095412...541
095421...127, 137
095441...98
095525...127
095535...121
095536...123
095548...605
095555...129

095640...539
095659...589
095725...275
095794...425
095860...177
095869...357
095874...98
095887...97
095960...270
095978...382

096002...97
096003...98
096019...337
096034...66, 81
096067...542, 545
096070...185, 187, 189
096086...469
096095...81
096098...81
096113...81

096116...67
096117...66
096118...67
096120...67
096122...71
096142...337, 339
096164...99
096209...319, 321, 325
096210...319, 321, 325
096249...392

096250...392
096251...468
096258...129
096456...440
096761...219
096808...288
096809...282, 288
096815...75
096816...75
096821...201
096908...553, 555

096913...553, 555
096918...554, 555, 557
096921...126, 137
096922...282, 293
096939...498, 501

096951...497, 501
097026...169, 177
097030...519, 562
097046...521
097048...521
097063...553, 555
097088...219
097099...447
097100...447
097108...448

097282...429 thru 434
097332...396, 400
097534...99, 307
097611...297, 299, 302
097646...127
097663...137
097705...135
097735...102
097784...237
098038...75

098076...581
098108...245
098121...425
098122...425
098123...425
098124...425
098138...581
098139...581
098166...187, 190
098292...373

098324...185
098363...73
098364...87
098389...127
098394...246, 304
098433...76
098434...76
098435...76
098436...76
098437...76

098438...76
098439...76
098440...76
098441...76
098443...76
098444...76
098445...76
098446...76
098910...535
098923...279

098940...296, 299
098941...296, 320
098955...279
098956...279
098957...279
098958...274
098960...256
098968...274
098996...275, 279
098997...275, 279

098998...275
099001...275
099002...275
099003...275
099005...296 thru 309
099021...277
099023...273
099026...271
099069...297, 299
099133...215
099143...429, 433

099144...429, 433
099219...565
099376...142, 143
099510...307, thru 357
099511...351

099515...352
099516...352
099517...352
099518...352
099520...353
099521...342
099522...342
099523...353
099524...351
099526...342

099527...351
099528...341
099529...341
099530...341
099531...352, 353
099532...352, 353
099533...351, 357
099534...351
099535...353
099536...353

099537...342
099538...341
099546...215
099549...319, 321
099570...261
099575...223 thru 379
099587...352
099588...352
099746...76
099830...73, 87

099831...73
099832...73
099856...355
099862...355
099863...355
099864...355
099865...351
099897...275
099898...279
099899...271, 279

099939...349, 359
099941...243 thru 359
099944...349
099945...349
099949...305, 349
099963...326
099981...482
099982...483
099985...582
099986...582

182763...521, 525
184376...532
188436...507
196662...159, 161, 163
196663...158, 161, 163
200267...581, 591
200479...170 thru 559
202283...587, 591
203188...71 thru 573
208960...516 thru 563

210740...411
211567...588, 592, 595
211581...329
211582...329
211608...588, 592
212758...558
223502...170, 171, 175
223585...221
235794...559
238136...169, 565
240962...535, 537

600236...381 thru 437
603010...237
604406...312
604925...237, 239
604943...605, 607

605807...440
605808...565
606009...285
606321...448, 449
606891...593
607414...510
607461...459, 463, 467
607939...448, 451
610138...341
611972...593

614478...87 thru 509
614516...358
617932...242
617952...99
618103...73
618724...325
619260...241
620061...341
620062...341
620063...545

620066...135
620069...123
620072...243, 247
620075...135
620077...123
620080...123
620084...478
620095...429
620096...429
620099...127

620100...127
620110...135
620119...127
620145...292
620147...291
620148...368
620149...369
620151...490
620201...247
620238...295

620240...295
620242...295
620252...352
620253...353
620275...579
620279...219
620313...203, 289
620323...519
620324...519
620332...142

620333...151
620334...198
620338...579
620348...243, 249
620387...135
620391...123
620393...123
620402...490
620404...490
620406...281

620407...479
620420...537
620471...219, 223, 227
620472...510
620474...510
620543...123
620544...123
620571...127
620573...127
620614...225
620709...223

620712...315
620719...157
620730...250
620752...312, 313
620753...279
620767...127
620778...254
620819...463
620844...490

Part No.	Page
620856	491
620857	250
620862	235, 237, 239
620877	249
620937	295
620939	295
620941	250
620942	255
620945	255
620957	291
620961	291
620964	291, 295
620974	291, 293
620975	281 thru 295
620980	289, 293
620981	289, 293
620982	291, 295
621021	239
621039	243, 247
621055	239
621171	584, 589, 593
621177	264
621180	249
621182	249
621183	245, 247, 249
621196	225
621198	225
621201	519
621205	225
621207	386
621222	297
621262	289, 293
621272	386, 389
621278	537
621292	541, 545
621300	424
621304	85
621310	320, 321
621312	429, 433
621315	251
621316	251
621330	269 thru 289
621331	281
621332	273
621333	273
621334	277, 279
621335	277, 279
621338	514
621342	513
621343	513
621346	513
621357	512
621360	258, 261
621363	246 thru 359
621399	514
621400	514
621439	569
621445	277, 279
621446	273
621450	368
621451	245
621453	355
621456	536
621462	223, 227
621485	243, 247
621520	491
621524	491
621539	367
621540	368
621582	223
621593	329
621601	329
621619	328
621620	328
621621	328
621678	269
621679	271
621686	401
621687	401
621688	401
621689	401
621690	401
621691	401
621692	401
621693	401
621694	401
621695	401
621696	401
621697	401
621698	401
621722	383, 387, 389
621746	511
621775	103
621804	532
621812	419, 421
621825	419, 421
621848	472
621849	472
621976	545
621979	157
621980	157
621984	545, 549
621989	351
621990	351
621992	351
622004	125
622036	329
622064	557
622080	287, 289, 293
622083	246, 304
622135	335
622141	353
622161	545
622173	349
622206	463
622207	374
622431	545
622432	152, 157, 159
622433	175, 177
622447	164
622520	243, 247
622521	243, 247
622590	157
622612	417
622662	417
622663	413
622664	411
622665	411
622666	271, 413
622667	413
622668	411
622669	419
622685	153, 157
622729	521
622767	451, 454
622768	451, 454
622846	419, 421
622847	421
622848	396
622849	396
622850	421
622851	421
622855	421
622884	151, 153, 157
622887	157
622888	151
622891	479
622892	157
622893	157
622894	157
622895	157
622896	157
622897	157
622898	157
622958	479
622992	87
623084	223
623088	223
623089	223
623090	223
623151	371
623164	292, 373
623167	373
623188	297 thru 311
623211	377
623234	245
623241	511
623268	357
623309	299
623310	296, 298
623316	296, 298
623328	243, 247
623329	243, 247
623334	279
623338	279
623405	297
623407	206
623410	297
623411	269
623420	362
623427	363
623428	363
623429	363
623430	362
623431	362
623449	222
623452	222
623453	222
623456	221
623466	221
623488	367
623498	512
623545	537
623576	383
623599	299, 311
623601	299
623605	297
623608	303
623609	297 thru 309
623618	257 thru 267
623625	297, 308
623626	297
623628	297
623642	299
623667	271, 279
623668	275
623669	275
623737	475
623738	475
623783	330
623814	475
623820	477
623834	246, 304
623835	246, 304
623836	246, 304
623837	246, 304
623838	246, 304
623845	246, 304
623862	266
623880	553
623883	299
623884	298
623902	289, 293
623903	289, 293
623904	291, 295
623905	291, 295
624122	243, 247
624144	373
624206	427
624318	373
624319	373
624339	511
624341	374
624357	374
624359	373
624395	373
624416	477
624426	477
624438	159, 161
624485	126 thru 374
624487	449 thru 469
624488	443 thru 509
624528	255
624559	330
624562	315, 317
624563	427
624564	427
624565	427
624584	125 thru 347
624629	376
624630	376
624637	197
624640	377
624641	317
624642	317
624644	440
624652	229
624661	376
624669	222
624670	222
624673	317
624674	317
624698	376
624699	377
624719	439
624720	373
624734	373
624735	373
624758	441 thru 469
624759	441, 463
624765	376
624766	371
624767	373
624769	377
624771	377
624801	376
624811	377
624812	376
624819	449
624820	449
624826	223, 308
626984	593
627279	312, 313
627377	363
627378	363
627380	363
627395	374
627401	373
627428	557
627451	292, 348
627459	374
628001	505
628019	377
628125	239
628218	233
628221	233
628212	233
628213	233
628214	233
628215	233
628216	233
628217	233
628219	233
628220	233
628222	233
628223	233
628224	233
628225	233

Part No.	Page
628226	233
628227	233
628228	233
628229	233
628230	233
628231	233
628232	233
628233	233
628320	330
628342	229
628343	229
628344	229
628345	229
628346	229
628348	229
628350	229
628351	229
628354	230
628355	230
628356	230
628357	230
628358	230
628359	230
628361	230
628362	230
628363	230
628364	230
628365	230
628366	230
628367	229
628368	239
628406	379
628458	361
628468	251
628478	230
628479	230
628503	230
628509	230
628510	230
628511	230
628512	32
628515	230
628516	230
628518	229
628519	229
628520	229
628567	230
628568	229
628569	229
628570	229
628571	225, 227, 229
628572	229
628721	225
628730	371
628736	120 thru 347
628737	120, 126, 133
628738	120 thru 137
628748	292
628821	245
628823	269
628915	427
628933	427
628934	427
628940	330
628951	325
629040	270 thru 588
629041	270
629048	336
629049	263
629064	200
629067	200
629068	200
629069	200
629139	464
629140	464
629141	32
629183	245, 249
629188	561
629189	561
629205	514
629267	336
629270	336
629439	230
629446	325
629509	511
629533	229
629645	297
629646	297
629647	297
629697	438
629716	343, 347
629721	227
629733	396, 399
629967	514
629968	219
629972	219
629973	219
630023	254
630029	253
630030	245, 250
630033	243, 247
630035	245
630040	241
630045	317, 330
630046	245
630050	237
630052	330
630059	250
630061	265
630063	265
630076	239
630096	243, 249
630102	323, 325
630148	561
630169	241
630175	225, 227
630189	319
630190	319, 321
630216	243
630231	482
630280	87
630290	262
630301	357
630407	243
630427	361
630437	242
630446	241
630485	292
630486	292
630493	241
630494	245
630498	241
630499	292
630508	237
630510	241
630521	241
630522	471
630528	362
630540	74
630543	299, 309
630544	299, 311
630545	299
630564	342, 345
630574	341
630591	256
630592	341
630594	282, 285
630626	565
630636	357
630686	511
630713	173, 176, 179
630752	393
630753	605, 607
630785	569
630787	169 thru 177
630792	541, 545, 546
630795	283 thru 347
630803	221
630804	221
630805	221
630806	221
630807	222
630808	221
630809	221
630827	169 thru 177
630828	169 thru 177
630829	169
630830	169 thru 177
630833	348
630836	125
630846	348
630847	343, 347
630848	343, 347
630914	351, 357
630917	565, 566
630947	325
631039	373
631078	223
631110	99
631184	326
631185	326
631186	381
631198	169 thru 177
631199	169 thru 177
631224	169 thru 177
631225	169 thru 177
631226	169 thru 177
631235	373
631285	245, 249
631289	227
631293	512
631298	373
631300	317
631305	317
631316	330
631329	313
631331	374
631342	429
631352	605, 607
631355	253
631356	254
631357	254
631358	254
631359	253
631386	317
631418	268
631426	573, 577
631476	126, 129, 131
631477	137
631496	126
631498	129, 131
631510	317
631545	317
631555	137
631561	373
631562	373
631564	159 thru 164
631566	169 thru 177
631575	317
631576	313
631577	331
631584	330
631587	313
631588	313
631601	579
631602	579
631610	579
631617	412, 415
631639	565
631646	129
631651	125
631665	425
631666	391, 393
631668	399
631680	399
631687	400
631769	164
631795	488
631828	360
631835	399
631836	399
631861	399
631862	399
631863	399
631864	399
631869	360
631870	360
631872	360
631883	371, 379
631927	69, 71
631935	362
631975	125
631981	379
631989	13
631990	13
631991	14
631992	14
631993	13
631994	13
632053	503
632060	360
632061	360
632062	360
632063	360
632071	371
632072	242
632074	243
632075	399
632076	399
632082	237
632115	13
632116	14
632146	164
632147	164
632148	164
632164	197
632175	283
632179	503
632183	511
632188	503
632226	513
632282	283
632284	503
632389	512
632390	513
632437	403, 406, 409
632438	403, 406, 409
632471	200
632488	403, 406, 409
632499	341
632523	403, 407, 409
632524	403, 407, 409
632544	341
632650	157
632666	381
632691	403, 406, 409
632710	125
632716	125
632719	237
632747	125
632752	125
632756	126
632766	125, 292
632769	404 thru 409
632774	292
632787	409
632923	406
632924	406

Part No.	Page
633046	219
633047	242
633056	379
633076	237, 239
633079	371
633081	371
633094	371
633096	371
633102	323, 325
633111	379
633113	373
633114	371
633122	125
633123	126
633185	371
633207	285
633310	360
633334	535
633384	514
633422	490
633459	243, 247
633469	126
633519	73 thru 103
633520	326
633521	326
633569	312
633575	463
633577	463
633587	490
633589	490
633607	343, 347
633621	343, 347
633627	513
633628	343, 347
633633	343, 347
633636	347
633645	348
633646	348
633648	347
633653	557
633655	523
633659	343, 347
633687	343, 347
633729	438
633730	438
633733	438
633797	358
633838	317
633863	438
633881	471
633888	283
633889	283
633904	331
633919	317
633995	242, 360
634034	358
634051	358
634072	126
634074	125
634081	131
634087	125
634088	125
634091	152
634093	159
634101	201
634117	473
634118	473, 474
634130	473
634134	313
634135	313
634136	313
634156	219
634189	126
634192	137
634219	546
634222	546
634243	523
634244	198
634249	503
634251	509
634272	158
634273	143
634284	512
634285	287, 289, 293
634316	346
634338	509
634359	371
634360	201
634362	193
634365	477
634372	373
634376	512
634378	198
634468	201
634482	440
634517	440
634525	382
634543	283
634609	503
634617	495
634622	289, 293
634650	121, 126, 137
634677	535, 537
634758	283
634790	283
634823	14
634824	14
634852	285
634965	283
634980	285
634996	273
635029	262
635081	291, 295
635082	291, 295
635547	545
635720	550
637532	509
637658	549, 557
637730	374
637735	400
637763	421
637764	421
637769	289, 293
637800	424
637801	379
637802	379
637803	379
637804	379
637805	379
637806	379
637808	379
637809	379
637810	379
637811	379
637817	379
637818	379
637819	379
637820	379
637844	492
637850	493
637868	101
637869	101
637871	101
637872	101
637873	101
637890	101
637932	315, 317
637954	369
637955	368
637957	74
637971	385
637987	219
638012	129
638038	129
638094	291, 295
638243	520, 523
638244	382
638282	525
638283	519, 523, 562
638287	143
638308	352
638309	345
638310	345
638313	353
638314	346
638315	353
638316	343
638317	343
638319	343
638332	302
638341	404 thru 409
638350	353
638351	505, 507
638354	505
638363	505
638369	505
638370	505
638371	505
638420	505, 507
638421	505, 507
638422	505, 507
638423	505
638424	505
638425	505
638426	505
638427	505
638428	505
638429	505
638430	505
638431	505, 507
638432	505, 507
638433	505
638434	505
638435	505
638442	385
638468	505
638479	385, 389
638480	385, 389
638504	374
638514	583
638521	583
638552	489
638561	377
638562	377
638563	377
638576	593
638583	593
638589	591
638597	593
638621	221
638648	221
638649	221
638650	221
638651	221
638675	577
638676	577
638677	577
638678	573, 577
638695	389
638706	307
638707	308
638709	319, 321
638713	159, 161
638727	159, 161
638731	158
638732	131
638751	572
638752	572
638753	572
638754	572
638764	473
638767	229
638768	230
638776	503
638777	229
638788	241
638791	200
638792	200
638796	360, 423
638798	287, 289, 293
638834	179
638842	283
638843	283
638869	374
638873	474
638874	474
638881	19
638907	19
638922	145
638942	566
638953	291, 295
638965	561
639187	389
639188	389
639194	389
639196	389
639312	561, 563
639313	546
639314	524
639388	179 thru 567
639411	73
639412	73
639413	87
639414	87
639415	87
639416	73
639417	73
639419	73
639421	73
639713	477
639725	153
639750	222
639751	222
639752	222
639859	509
639905	509
639952	242
639954	241
639974	241
639975	505
639988	440
640094	511
640603	489
640606	489
640619	103
640625	158
640626	158
640675	523
640676	567
640677	520 thru 548
640706	567
640707	567
640727	566
640789	307
641073	497
641074	498
641091	81
641125	317
641127	513
641148	377
641167	381
641214	567
641302	387
641321	573
641356	282 thru 293
641359	583
641360	583
641474	483, 489
641490	441 thru 469
641491	441, 445, 467
641493	270

Part No.	Page
641499	509
641562	101
641617	509
641645	547
641646	550
641648	548
641649	550
641650	547
641680	227
641711	227
641715	561, 563
641716	561, 563
641728	237
641757	371
641809	545, 548
641820	371
641895	389
641899	302
641902	302
641909	275
641911	302
641912	269
641967	301
642040	301, 307, 309
642048	326
642070	480
642071	480
642072	480
642073	480
642125	131
642130	131
642145	549
642167	493, 495
642168	493, 495
642177	131
642215	221
642216	219
642217	221
642218	219
642262	131
642269	131
642270	131
642271	131
642349	368
642350	301
642365	301
642382	357
642383	357
642384	357
642388	301
642404	301, 307, 309
642412	523
642413	302
642427	301, 307, 309
642435	326
642441	103
642453	221
642454	301
642455	302
642469	301
642498	505, 507
642499	505, 507
642500	505, 507
642504	357
642507	302
642509	302
642510	301
642511	301
642519	358
642520	358
642521	361
642522	302
642534	358
642535	358
642537	358
642539	357
642542	593
642544	591
642548	301
642562	19
642563	19
642625	451
642627	451
642631	445
642640	328
642641	331
642642	328
642643	335
642684	357
642690	237, 239
642729	467
642744	102, 103
642749	103
642765	131
642789	302
642790	302
642803	309
642804	309
642805	311
642806	311
642807	309
642808	309
642814	467
642825	237, 239
642942	307, 309
642943	307, 309
642979	399
643040	282, 285
643044	281, 285
643045	281, 285
643046	281, 285
643047	411
643078	411
643203	257, 264
643257	343, 347
643429	308
643468	227
643486	269
643487	275
643546	373
643591	268
643593	267
643614	279
643630	357
643631	301, 307, 309
643642	307
643646	308
643647	279
643652	308
643653	307
643671	307
643679	305
643680	305
643704	305
643705	305
643706	305
643716	359
643717	359
643720	359
643721	494
643725	557
643726	557
643734	302
643739	359
643742	305, 359
643743	359
643747	302
643759	302
643770	385
643773	385
643791	245, 249
643837	399
643840	420, 423
643841	430, 434
643842	430, 434
643852	435
643856	336
643881	434
643897	125
643898	125
643909	399
643910	399
643911	159
643922	254
643924	431, 434
643932	101, 250, 308
643942	393
643948	393
643950	393
643952	254
643957	245
643959	417
643963	431, 435
643966	417
643967	430, 434
643969	319, 321
643970	336
643971	549
643973	430, 434
643979	277
643989	243
643990	243
643991	243
643995	321
643999	352
644000	145, 352
644002	479, 480
644003	247
644004	247
644005	227
644006	547, 549, 550
644011	351
644012	352
644013	351
644017	427
644020	477
644032	161, 163
644033	161, 163
644034	161, 163
644035	245, 249
644042	161, 163
644045	145
644046	159
644047	431, 435
644051	431, 434
644061	431, 435
644062	431, 435
644067	419, 421
644068	419, 421
644070	495
644071	161
644076	435
644079	161
644080	161, 163
644083	431, 435
644084	431, 435
644085	431, 435
644086	431, 435
644089	253
644092	577
644093	405
644094	405
644095	401
644097	401
644098	401
644100	336
644112	405, 409
644113	273
644115	73
644117	271
644120	269
644121	271
644133	171, 175, 177
644143	431, 435
644144	431, 435
644148	431, 435
644150	435
644154	405
644156	431, 435
644162	567
644163	435
644166	435
644171	435
644176	435
644179	404 thru 409
644186	435
644193	435
644200	405
644203	405
644204	405
644211	435
644213	179
644215	435
644222	572
644224	573
644225	177
644229	572
644231	572
644233	492
644234	493
644237	572
644294	323, 326
644297	221
644324	291
644382	427
644400	607
644408	253
644409	254
644410	254
644411	253
644419	323, 326
644420	323, 326
644476	177
644483	385
644485	477
644520	101
644529	101
644531	101
644537	513
644543	126
644560	137
644565	137
644568	126
644573	137
644593	513
644625	512
644648	555
644682	179
644697	179
644708	358
644713	358
644715	453
644728	454
644740	513
644741	512
644814	200
644815	197
644816	357
644826	357
644827	357
644868	268
644876	87
644883	177
645018	511
645067	358
645127	511
645128	511
645148	431, 434
645157	511

NUMERICAL INDEX

Part No.	Page
645158	511
645235	97
645244	98
645320	312, 313
645371	454
645372	454
645432	424
645441	430, 434
645442	430, 434
645450	219
645451	221
645460	233
645462	101
645463	101
645464	101
645465	223, 227
645466	201
645482	197
645498	445
645499	453
645501	461, 465
645509	467
645510	445, 467
645511	453
645512	453
645536	193
645545	425
645547	453
645548	453
645597	453
645598	453
645612	413
645648	413
645698	430, 434
645699	431, 435
645706	221
645733	197
645782	197
645833	194
645837	194
645861	374
645862	374
645871	448, 451, 454
645872	448, 451, 454
645896	454
645898	454
645913	197
645948	200
645949	200
645950	200
645951	200
645952	200
645953	200
645954	200
645969	433
645970	432
645971	428, 433
645985	432
645986	432
646017	494
646053	492
646078	143
646117	383
646152	495
646164	400
646256	281, 285
646291	495
646292	495
646390	343, 347
646472	523
646483	368
646484	368
646485	368
646490	385
646501	383
646507	493, 495
646510	495
646542	159
646544	492, 494
646591	385
646681	523
646771	159
646773	161
646781	159
646825	222
646917	87
646988	361
647080	400
647120	429, 433
647121	432
647127	429, 433
647139	559, 561
647159	429, 433
647177	429, 433
647196	429, 433
647250	429
647263	429
647265	429
647267	429
647279	432
647282	433
647286	429, 433
647288	429, 433
647308	429, 433
647311	429, 433
647316	429, 433
647321	271, 279
647432	77
647436	77
647439	77
647446	77
647448	77
647449	77
647450	77
647453	77
647455	77
647513	77
647554	77
647680	77
647853	453
647854	453
647908	281, 285, 295
647915	542, 545
647922	436
647923	436
647924	223
647925	223
647930	250
648180	302
648230	101
648262	536
648278	583
648282	429
648294	477
648307	573
648388	101
648436	409
648438	409
648439	409
648440	409
648441	409
648467	480
648477	129
648481	431, 435
648493	399
648494	399
648587	430
648588	430
648751	191
648752	191
648753	191
648754	191
649103	403, 406, 409
649104	403, 406, 409
649125	509
649126	509
649158	494
649159	491
649274	131
649298	197
649351	351
649493	524
649578	488
649579	488
649580	488
649594	488
649595	488
649596	488
649827	486
649828	486
649852	197
649859	503
649905	191
649906	191
650128	331
650131	507
650132	507
650133	507
650134	507
650135	507
650136	507
650137	507
650138	507
650139	507
650141	229, 507
650142	507
650144	507
650145	507
650146	507
650147	507
650220	409
650221	409
650222	409
650229	102
650230	103
650293	245, 249
650299	564, 566
650301	159, 161, 163
650302	159, 161, 163
650375	429, 433
650386	155
650399	230
650473	152
650552	152
650587	514
650664	431, 435
650695	291
650696	275
650697	291
650698	291
650741	295
650742	295
650743	295
650744	295
650828	317
650835	330
650875	477
650880	480
650895	159
650896	161, 163
650941	163
650948	163
650962	477
651011	593
651043	161, 507
651163	194
651164	195
651170	194
651171	195
651268	155
651337	431, 435
651354	145
651370	429 thru 435
651432	361
651494	431
651564	364
651565	364
651566	364
651567	364
651568	364
651569	364
651570	364
651571	364
651572	364
651573	364
651574	364
651575	364
651576	364
651577	364
651580	291, 295
651623	445, 453, 465
651630	516, 519, 524
651725	291, 295
651738	347
651745	279, 315, 317
651753	326
651762	348
651886	514
651888	514
651889	514
651891	514
654122	155
654507	12
654652	560
654673	87
654674	73
654717	77
654719	77
654720	77
654721	77
654821	365
654825	365
654827	365
654892	152
654938	152
654961	152
654986	561
654987	561
654988	561
654989	561
654990	561
654991	561
655004	393
655005	393
655089	161, 163
655140	159, 161, 507
655270	153, 155
655272	153
655458	411
655474	417
655524	419, 421
655743	363
656624	413
656642	513
656660	145
656663	153
656665	153
657193	368
900405	476
900558	541, 542
900574	599
900576	75
900585	362
900764	477 thru 577
900801	39 thru 505
900802	47 thru 509
900805	235 thru 599
900806	19 thru 480

Part No.	Page
900807	50 thru 365
900808	373
900816	546
900817	47 thru 593
900818	379 thru 598
900820	283, 593
900822	381
900938	233
900942	119 thru 593
900970	120 thru 360
901150	119, 121
901165	221, 529, 531
901226	221
901310	165
901467	539, 541
901475	215
901479	97
901496	311
901497	308
901651	55 thru 545
901652	55 thru 595
901653	258 thru 591
901661	360
901666	21
901667	319, 321, 325
901676	190, 193
901677	97
901678	79
901722	315
901723	96
901752	533
901763	215, 539, 541
901764	97
901765	79, 83
901781	166
901825	315
901826	65 thru 547
901839	65, 69
902071	103
903627	396
903632	528
903641	53
903747	349
903773	113, 200
903774	51
904001	516, 533
904002	374
904006	596
904007	588, 592
904020	119, 121
904029	197
904203	165
904204	31 thru 601
904205	44 thru 602
904206	26 thru 607
904207	38 thru 526
904208	19 thru 599
904209	180 thru 595
904210	438
904223	55 thru 325
904224	319
904230	541
904271	65 thru 101
904273	159, 161, 163
904369	125 thru 593
904516	23
905014	65
905119	126, 131
905121	119 thru 242
905122	47, 593
905123	125, 283, 285
905126	40, 42
905127	28
905274	520
905347	382 thru 465
905357	166 thru 421
905361	588, 592
905362	282, 287, 288
905366	77
905564	362
905657	601
905666	368
906652	368
906759	601, 602
906957	541, 542
906958	539, 565
906960	515, 516, 557
906961	355
906985	34
907058	315
907059	170 thru 605
907070	319, 395, 399
907154	169 thru 177
907620	241
907727	546
907856	247, 351
907859	229, 355
908191	27
908944	362, 374, 376
909367	440 thru 566
910002	41 thru 281
910011	230
910015	21
910017	21
910023	595
910123	34 thru 211
910141	173
910149	103, 331
910161	170
910167	65 thru 85
910175	183
910195	23 thru 115
910205	109
910210	313
910224	50
910230	180
910231	229, 246, 304
910243	221, 541, 542
910244	79 thru 569
910251	541, 542
910255	283 thru 589
910267	126
910268	170
910302	292, 373
910320	589
910323	147, 531
910324	47, 51, 90
910325	92 thru 183
910334	542, 545, 546
910335	505, 516, 533
910510	180
910543	315
910847	23 thru 285
910851	595
910856	170, 173
910863	365
910867	365
910883	373
910899	47
910916	381 thru 468
910948	211
910967	132 thru589
910986	34 thru 526
911017	41
911024	75 thru 601
911025	197 thru 601
911026	77 thru 603
911028	553 thru 599
911034	121, 126, 137
911035	129 thru 593
911040	120 thru565
911041	67 thru 607
911043	67 thru 601
911044	339 thru 583
911045	201, 448, 571
911046	201 thru 407
911047	381 thru 468
911048	125 thru 377
911049	75 thru 546
911051	249
911058	596
911064	185 thru 191
911100	215, 315, 337
911097	365
911114	135, 159, 567
911115	65 thru 607
911159	189, 191, 249
911165	529
911168	602
911174	185 thru 191
911179	593
911190	595
911233	288, 291, 295
911435	41, 105
911437	41, 105
911982	377
912069	34 thru 61
912177	132
912178	164, 532
912180	519, 532
912192	579
912226	169 thru 177
912264	602
912298	41, 43, 241
912319	351
912324	91, 97
912327	297, thru 309
912328	400
912415	21 thru 213
912476	373
912484	605
912597	47
912726	209, 595
912739	517, 521, 525
912789	159 thru 565
912808	254
912840	19, 50
913039	41, 43
913040	41
913077	438
913168	50
913189	170
913232	355
913280	19
913299	47
913432	187, 190, 191
913464	165
913470	180
913528	588, 592, 596
913533	379
913544	147
913607	71, 598
913636	65 thru 283
913676	170
913830	127 thru 601
913984	221
914122	364
914105	505, 507
914132	99
914197	505
914328	230
914330	510
914339	357
914378	101
914392	44 thru 601
914452	125
914453	355
914463	204
914465	180 thru 584
914466	230
914492	209
914503	355
914588	79 thru 108
914593	221
914626	105
914670	115, 528
914686	89, 93, 95
914687	252, 254, 255
914709	607
914710	607
914711	607
914712	607
914713	607
914714	607
914715	605, 607
914717	607
914718	607
914719	607
914732	607
914767	605
914773	47, 51
914814	599
914847	210, 211, 212
914879	241
914892	119, 121
915018	601
915274	185 thtu 193
915275	183, 427, 569
915276	180, 204, 215
915325	79
915343	32, 183
915367	65 thru 539
915368	65 thru 539
915369	65 thru 539
915370	69
915377	79, 83, 96
915378	79, 83, 96
915379	79, 83, 96
915380	79
915386	65 thru 97
915389	101
915399	175, 179, 539
915405	164, 190, 193
915408	35 thru 603
915432	90, 166
915486	165
915488	83, 165
915500	287, 289, 293
915504	437
915556	165
915557	165
915639	365
915707	119, 121
915709	393
915739	219
915751	343, 347
915809	97, thru 531
915813	51 thru 529
915852	109
915854	109
915859	170, 171
915872	517
915898	323, 553, 555
915922	169, 171, 175
915923	169, thru 177
915942	533, 535
915946	185 thru 191
915969	26 thru 191
915987	32, 61
915989	287 thru 347
916001	50, 129
916009	27
916024	125
916146	288 thru 510
916191	38
916197	197, 198
916202	120 thru 469
916205	599

NUMERICAL INDEX

Part No.	Page
916206	204
916225	183
916227	365
916255	207
916257	223
916268	523, 561, 563
916269	27, 91, 147
916271	44 thru 531
916272	61 thru 603
916273	34 thru 598
916274	26 thru 211
916275	210, 211, 212
916277	27 thru 359
916284	31, 32, 50
916308	47, 207
916311	23, 31, 62
916313	53, 206, 207
916314	185
916317	599
916319	26
916381	111
916382	109
916389	152
916426	368
916532	505, 507
916555	438
916641	91
916897	281 thru 295
916933	121, 132
916995	281 thru 293
917015	55
917016	209
917021	31
917032	111
917135	51
917260	141, 142, 143
917264	296 thru 321
917277	209
917330	27 thru 309
917426	303
917466	47, 221
917546	50
917554	50
917560	37
917648	440, thru 589
917666	478 thru 579
917673	28 thru 50
917680	204
917705	207
917724	23
917735	233
917741	56, 57
917755	183
917806	105, 107
917807	147
917809	105, 107
917810	147
917831	123, 127
917883	561
917904	333
917936	459, 461, 465
917970	21, 26
917980	109
918111	127, 129
918113	230
918210	539 thru 566
918235	109
918253	55, 56
918324	302
918325	65 thru 539
918327	56, 57
918370	458
918471	597
918490	381
918564	79, 83, 96
918598	91
918683	23, 530
918699	305
918778	52, 53, 209
918802	105
918804	105
918851	21, 32
918887	92, 94
918888	21
918951	59, 62
919040	105, 107
919048	598
919062	66 thru 101
919063	81 thru 352
919064	223, 351
919065	71, 98, 101
919066	97, 101
919068	545
919073	7
919074	8
919075	6 thru 9
919076	6 thru 9
919079	6 thru 9
919080	6 thru 9
919081	6 thru 9
919082	6, 7, 8
919093	165
919094	165
919099	165
919100	165
919115	39
919127	66, 67, 71
919128	81 thru 361
919134	21 thru 364
919135	223, 227
919136	95
919140	547, 550
919143	6 thru 9
919144	8
919155	6 thru 9
919156	6 thru 9
919158	8
919159	7
919171	109 thru 545
919172	67 thru 95
919173	39
919174	159 thru 550
919175	9
919180	221, 233
919194	6 thru 9
919196	6 thru 9
919200	7, 8
919205	297, 299, 308
919207	7, 9
919217	7
919218	7, 8
919219	379
919224	44 thru 213
919225	27, 49
919227	52 thru 526
919230	23 thru 598
919232	26, 289, 293
919242	39
919246	243, 247, 249
919249	111
919251	7
919253	7
919254	7, 8
919274	7, 8, 9
919277	8
919278	8
919281	8
919282	7, 8, 9
919287	26, 27
919288	89 thru 169
919293	61
919342	247, 301, 302
919345	111
919467	7, 8
919481	107
919615	243 thru 298
919624	298
919763	127, 137
919766	331
919773	111
919777	229
919787	44
919797	107
919798	105
919800	105, 107
919840	28 thru 551
920028	94
920030	53
920107	320, 321, 325
920131	204
920141	7
920173	7, 8
920195	7
920215	111
920221	8
920222	7, 8, 9
920242	107
920275	209
920301	6, 7, 8
920302	6 thru 9
920303	6 thru 9
920316	95
920333	21 thru 551
920335	373
920340	37
920344	8
920388	7
920416	21
920490	351
920525	210, 212
920539	44, 225
920540	61
920541	61
920548	105
920574	61
920682	62
920700	147
920806	7
920833	7, 8
920836	7
920838	8
920843	7, 8
920847	6, 7, 8,
920849	6 thru 9
920850	6 thru 9
920852	8
920855	8
920857	6 thru 9
920858	6 thru 9
920862	6 thru 9
920864	6, 7, 8
920865	6 thru 9
920867	8
920868	8
920869	7
920872	8
920877	7, 9
920879	7
920880	7, 8
920882	8
920994	349
921019	229
921033	7, 8, 9
921034	7, 8, 9
921070	308, 311
921076	61
921092	511
921093	511
921094	511
921113	480 thru 545
921143	105
921193	546
921194	351, 357
921203	301
921206	307, 309
921214	301, 307, 309
921217	307, 309
921276	297 thru 311
921277	545
921279	297 thru 311
921298	297 thru 309
921299	26
921303	363
921326	307, 309
921330	373
921402	317, 358
921409	302 thru 361
921464	229
921465	229
921466	358
921469	230
921496	9
921556	207, 215, 585
921573	317
921726	8
921731	326
921786	8
921787	8
921852	101
921865	62, 245, 249
921887	263, 357
921912	245 thru 557
921913	198 thru 376
921914	159, 198, 374
921916	151 thru 579
922041	401 thru 409
922051	243
922200	161, 163
922465	62
922935	302
922943	117
922982	511
922983	511
922984	511
922985	511
922996	307, 309
922997	301, 307, 309
923080	307, 309
923102	549
923168	263
923239	31
923376	32, 362
923548	362, 379
923560	167 thru 364
923574	211, 243, 363
923575	361, 374
923577	355
923585	413, 419, 421
923589	183
923645	364
923663	111
923814	39, 243, 249
923817	335
923824	357
923827	424
923829	335
923947	361
924169	507
924306	512
924320	512
924416	364
924463	512
924541	512
924548	512
924550	512
924551	512
924552	512
3001737	362

Part No.	Page
3002757	363
3010542	359
3014007	362
3015050	305
3033589	359
3033846	359
4003490	28
4003603	185
4004054	26
4025385	115
4025391	40, 42
4025956	152
4026447	26
4034282	32
4034292	56
4040013	89 thru 95
4040096	112
4040098	113
4040099	113
4040383	185 thru 191
4040384	185 thru 191
4040385	185 thru 191
4040386	185 thru 191
4040552	112
4041015	107
4041097	203
4041103	55, 59
4041134	203
4041209	303
4042081	185 thru 191
4044205	204
4044206	203
4044207	204
4044209	204
4044210	204
4044211	204
4044212	204
4047538	112
4047783	246 thru 349
4047993	251
4047994	251
4048000	246 thru 359
4048001	251
4048002	251
4048793	303
4048794	303
4049282	116
4049469	303
4049470	303
4049471	303
4049472	303
4050516	116
4050519	116
4050520	116
4050523	116
4050685	107
4051304	107
4051483	89, 90, 93
4051484	89 thru 95
4051485	89, 93, 95
4051839	116
4052173	91, 93, 95
4052555	115
4052556	115
4052714	95 thru 116
4052715	116
4053156	115
4053409	62
4053410	62
4055195	149
4055451	155
4055452	155
4055453	155
4055454	155
4055455	155
4055456	155
4055563	89, 93, 95
4055913	91, 93, 95
4055971	62
4056068	185
4056232	185, 187
4056285	149
4056286	149
4056287	149
4056288	149
4056289	149
4056290	149
4056291	149
4056292	149
4056293	149
4056294	149
4056295	149
4056296	149
4056297	149
4056298	149
4056300	149
4056301	149
4056302	149
4056303	149
4056305	149
4056306	149
4056314	149
4056633	91, 93, 95
4056636	155
4056637	155
4056638	155
4058931	530
4059024	149
4059029	149
4059049	149
4059050	149
4059051	149
4113897	23
4181061	149
4250898	29
4251141	47
4251849	204
4251987	22
4252137	180
4252784	207
4252796	210, 212
4252796	210, 212
4252855	209
4253106	23 thru 58
4253195	55, 59
4253270	139
4253435	108
4253453	35, 38
4253478	203
4253479	203
4253490	26
4253520	22
4253555	183
4253751	59, 61
4253765	180
4253766	55
4253825	183
4253862	185 thru 191
4253863	185 thru 191
4253914	203
4253917	203
4253922	52, 53, 207
4253924	26
4254097	79, 83, 89
4254100	183
4254173	35, 38
4254182	31
4254363	41, 43
4254608	24
4254624	23
4254670	183
4254673	183
4254891	27
4254968	147
4254991	147
4255003	145
4255012	209, 213
4255017	108
4255020	108
4255031	183
4255337	31
4255343	31
4255363	53
4255465	25
4255606	147
4255644	147
4300145	198
4304051	41
4304907	31
4304980	51
4305073	23, 55
4310257	198
4311869	47
4317530	531
4317554	213
4320227	51
4335000	47
4335004	47
4335022	22
4335043	41
4335048	49
4335050	51
4335056	204
4335057	41
4335067	27
4335096	51
4335110	49, 51
4335146	105
4335152	51
4335153	47
4335164	105
4335167	47
4335168	47
4335182	529
4335235	91
4335244	209
4335264	49
4335279	34
4335320	203
4335323	57
4335331	57
4335334	57
4335338	57, 58
4335339	59
4335352	59
4335369	23
4335371	27
4335381	41
4335382	51
4335384	51
4335399	41
4335443	183
4335444	111
4335446	527, 529
4335452	185
4335455	22
4335456	22
4335476	183
4335534	23
4335547	40, 43
4335548	40, 43
4335550	27
4335557	109
4335567	58
4335573	34, 112
4335577	58
4335578	58
4335583	39
4335623	139
4335654	39
4335655	39
4335666	59, 61
4335694	39
4335711	27
4335712	27
4335716	111
4335777	23
4335782	23
4335808	204
4335809	204
4335833	10, 11
4335897	93
4335898	93
4335913	105
4335931	111
4335932	105
4335935	93
4335937	28
4336127	37
4336128	37
4336129	37
4336130	37
4336131	37
4336142	43
4336143	43
4336145	43
4336146	38
4336148	38
4336153	37
4336156	210, 212
4336157	37
4336173	531
4336178	38
4336182	210, 212
4336190	24
4336202	138
4336209	114
4336234	43
4336249	115
4336250	115
4336257	183
4336258	183
4336259	183
4336260	211
4336261	211
4336263	211, 213
4336264	211
4336266	198
4336267	211
4336268	211
4336338	111
4336345	27
4336346	27
4336408	24
4336418	37
4336419	37
4336432	21
4336436	23, 147
4336489	32
4336491	27
4336506	210, 212
4336512	25
4336520	189
4336521	189, 191
4336522	190, 191
4336523	190, 193
4336524	27
4336526	190, 193
4336527	204
4336529	189
4336530	115
4336531	115
4336532	115
4336546	107
4336547	107
4336549	107
4336558	147
4336559	25

Part No.	Page
4336566	114
4336574	56
4336577	11
4336578	25
4336586	37
4336587	183
4336589	82
4336596	52, 53
4336601	37
4336602	37
4336609	31
4336621	31
4336634	32
4336646	43
4336676	32
4336687	107
4336758	37
4336771	32
4336809	528
4336872	45
4336897	32
4337015	108
4337019	108
4337022	108
4337023	108
4337045	42
4337046	185
4337047	49
4337059	49
4337060	28
4337062	29
4337063	29
4337064	29
4337065	29
4337066	29
4337189	183
4337215	34
4337223	107
4337224	109, 111
4337251	93, 95
4337281	26
4337288	26
4337395	25
4337466	44
4337478	43
4337479	43
4337482	18
4337521	53
4337522	53
4337523	53
4337524	53
4337532	58
4337602	209, 213
4337683	29
4337684	29
4337685	29
4337686	29
4337687	29
4337688	29
4337689	29
4337690	29
4337698	29
4337699	29
4337700	29
4337701	24, 25
4337702	24, 25
4337703	24, 25
4337704	24, 25
4337705	24, 25
4337710	29
4337711	29
4337712	29
4337713	29
4337714	29
4337715	29
4337716	29
4337723	42
4337727	529
4337728	189, 191
4337729	189
4337757	183
4337764	22
4337805	114
4337806	114
4337807	115
4337808	115
4337809	115
4337810	115
4337971	23
4337972	23
4337973	12
4337975	12
4338143	41
4338151	21
4338161	39
4338168	39
4338186	53
4338210	530
4338212	531
4338219	31
4338242	213
4338243	212
4338269	531
4338280	531
4338299	40, 43
4338308	111
4338310	38
4338428	114
4338429	114
4338430	115
4338431	115
4338432	115
4338433	115
4338440	31
4338463	107
4338498	31
4338499	31
4338511	139
4338544	31
4338648	23
4338650	12
4338662	203
4338663	204
4338674	22
4338684	138
4338771	31
4339017	25
4339021	62
4339022	61
4339036	22
4339037	21
4339038	22
4339103	203
4339111	94
4339112	107
4339113	107
4339114	61
4339115	207
4339116	206
4339118	61
4339120	207
4339121	61
4339123	61, 62
4339124	61
4339125	207
4339127	61
4339128	61
4339150	61
4339151	61
4339198	61
4339207	115
4339209	206
4339212	147
4339216	207
4339217	207
4339218	207
4339370	147
4339378	138, 142, 143
4339434	37
4339454	62
4339459	185
4339464	185
4339496	147
4339497	37
4339498	37
4339499	37
4339505	37
4339509	32
4339511	139
4339515	139
4339518	147
4339532	147
4339533	147
4339535	147
4339546	37
4339547	37
4339548	37
4339568	95
4339569	95
4339585	147
4339587	18
4339588	18
4339590	18
4339595	227
4339603	31
4339604	23
4339605	31
4339606	551
4339624	37
4339625	37
4339697	206
4339698	206, 207
4339750	39
4339826	11, 12
4339827	147
4339848	32, 37
4339880	111
4339886	111
4340081	24
4341123	34
4341292	31
4343799	34, 37
4345412	34
4345658	34
4346017	41
4346018	41
4346092	34
4346093	34
4346099	21
4346100	21
4346108	21
4346125	47
4346138	138
4346146	34
4346169	51
4346184	23
4346191	21
4346205	28
4346206	40, 41
4346208	138, 139, 141
4346209	41
4346227	112
4346246	26
4346293	203
4346296	203
4346307	40, 42
4346320	533, 535
4346322	21
4346327	47
4346330	209
4346332	209
4346441	49, 51
4346456	198
4346483	51
4346543	34
4346653	22
4346656	198
4346704	111
4346744	204
4346951	203
4346952	203
4346953	203
4346992	41
4347031	209, 211, 213
4347061	23
4347115	203
4347119	27
4347120	27
4347126	22
4347190	55
4347235	24, 25
4347270	34
4347281	24
4347413	21
4347416	21
4347419	21
4347431	203
4347458	24, 25
4347462	41
4347465	23
4347505	32
4347508	40
4347509	209
4347511	40, 43
4347514	34
4347537	209
4347543	44, 45
4347554	55
4347572	51
4347575	49
4347577	47
4347578	47
4347596	113
4347597	113
4347598	113
4347599	113
4347600	113
4347601	113
4347619	34, 38
4347649	113
4347654	55
4347655	55
4347659	50
4347661	55
4347663	56
4347751	183
4347752	183
4347786	89
4347790	89, 90
4347815	28
4347832	41, 43
4347834	111
4347836	109
4347842	180
4347866	109
4347872	198
4347893	47
4347897	29
4347905	79, 83, 89
4347907	91
4347915	105
4347923	35
4347924	35, 38
4347932	209
4347938	51
4347940	209
4347982	526
4347998	526

Part No.	Page
4348020	50
4348038	50
4348040	50
4348042	50
4348044	50
4348077	24
4348079	32
4348083	50
4348086	55
4348087	55
4348090	32
4348097	209
4348099	52
4348100	52
4348107	26
4348118	180
4348121	180
4348122	180
4348126	27
4348129	41, 43
4348130	41, 43
4348133	35, 38
4348136	27
4348145	526
4348163	527
4348184	52, 53, 61
4348185	52, 53, 207
4348205	180
4348215	51
4348218	51
4348253	32
4348268	55, 59
4348269	55, 59
4348270	55, 59
4348276	526
4348278	209
4348279	56, 57
4348285	27
4348303	50
4348310	27
4348330	204
4348352	49
4348393	204
4348410	31
4348419	180
4348420	180
4348421	180
4348423	185
4348438	109
4348440	41, 43
4348442	180
4348474	109
4348502	187, 189, 191
4348580	55
4348609	528
4348619	528
4348682	49
4348683	49
4348684	49
4348689	51
4348691	47, 50
4348692	49
4348705	105
4348757	203
4348769	50
4348825	204
4348829	21
4348856	23
4348857	23
4348858	23
4348859	23
4348883	50
4348885	50
4348886	49
4348891	50
4348894	50
4348900	23
4348991	29
4348992	29
4348993	29
4348994	29
4348995	29
4349011	27, 183
4349014	183
4349037	45
4349133	55
4349146	90
4349147	90
4349157	41, 43
4349193	147
4349257	40, 42
4349291	41
4349296	209
4349305	34, 38
4349309	41
4349375	51
4349376	105
4349378	50
4349382	49
4349383	51
4349953	204
4349629	22
4349630	21
4349631	22
4349632	21
4349644	105
4349660	183
4349662	183
4349666	183
4349667	183
4349668	187
4349669	187
4349670	187
4349671	187
4349674	183
4349675	204
4349676	528, 530
4349728	529
4349736	183
4349778	183
4349984	52, 61
4352332	94
4354175	21
4354179	24, 25
4354188	24
4354213	111
4354270	213
4354276	111
4354291	10
4354294	32, 37
4354295	32, 37
4354309	10
4354407	38
4354416	89, 93, 95
4354449	22
4354450	147
4354490	34, 38
4354537	213
4354568	50
4354573	50
4354582	530
4354635	22
4354675	95
4354698	147
4354714	145
4354748	24, 25
4354788	25
4354821	145
4357334	28
4362338	22
4362456	49
4363280	209
4364131	34
4364422	41, 43
4364864	27
4365867	49
4366244	141, 142, 143
4366461	22
4371021	55, 59, 61
4371036	55, 59
4371040	55
4371107	139
4371121	112
4371323	35, 38
4371324	35, 38
4371443	55, 59
4371503	29
4371703	185, 187
4371707	85 thru 203
4371795	303
4371973	303
4371974	303
4372113	113
4372325	55, 59, 62
4372517	303
4372724	32
4372725	32
4372864	34, 38
4373069	45
4373121	526
4373610	59, 61
4373612	59, 61
4373613	59, 61
4373614	59, 61
4373770	45
4374127	51
4374129	49, 51
4374148	526
4374390	28
4374391	28
4374735	55, 59
4375678	209
4375686	203
4375812	47
4375937	34, 38
4375938	34
4375953	147
4376294	51
4376497	37
4376598	39
4376605	27 thru 301
4376749	31, 38, 61
4376906	111
4377416	183
4378031	116, 117
4378032	117
4378033	117
4378269	211
4379141	23
4379263	61, 62
4379268	62
4379269	62
4379291	22
4379305	43
4379723	147
4379916	211
4380445	112
4380651	117
4380652	117
4380654	114
4380656	117
4380662	117
4380685	116
4385387	147
4385480	43
4385480	43
4387529	536
4388202	34, 38
4388205	34, 38
4388349	147
4389051	92, 94
4389058	23
4389113	93, 95
4389732	51
4389910	21
4502230	23
4502270	49, 51
4502300	32
4502149	113, 115
4504056	91
4504409	113, 115
4505165	303
4506607	45
4506737	52, 53, 207
4506946	41, 43
4507084	203
4507091	203
4507359	113, 115
4508035	47, 49, 51
4511204	112
4511213	117
4511217	112
4511243	117
4511629	245, 249
4512372	209
4513922	528
4514091	207
4515303	105
4515304	107
4640976	185 thru 191
4640978	185 thru 191
4660358	23
4660369	41, 43
4660407	47
4660408	47
4660409	47
4660410	47
4660412	47
4661328	41
4661329	41
4875601	50
5150020	169
5153385	169
5154066	170
5154125	169
5155071	170
5163129	169
5163222	169