SECTION 1 GENERAL

Group 1 Safety Hints ---------- 1-1
Group 2 Specifications ---------- 1-10
Group 3 Operational Checkout Record Sheet ---------- 1-25

RUTHZIL TRATOR COMERCIAL DE PEÇAS LTDA 11 97083-6812 ROLANDO

GROUP 1 SAFETY HINTS

FOLLOW SAFE PROCEDURE

Unsafe work practices are dangerous. Understand service procedure before doing work; Do not attempt shortcuts.

WEAR PROTECTIVE CLOTHING

Wear close fitting clothing and safety equipment appropriate to the job.

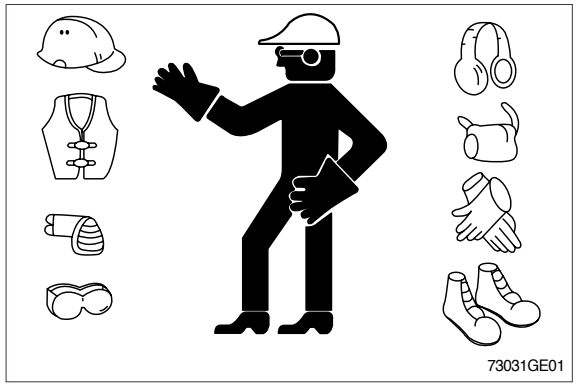

WARN OTHERS OF SERVICE WORK

Unexpected machine movement can cause serious injury.
Before performing any work on the wheel loader, attach a 「**Do Not Operate**」 tag on the right side controller lever.

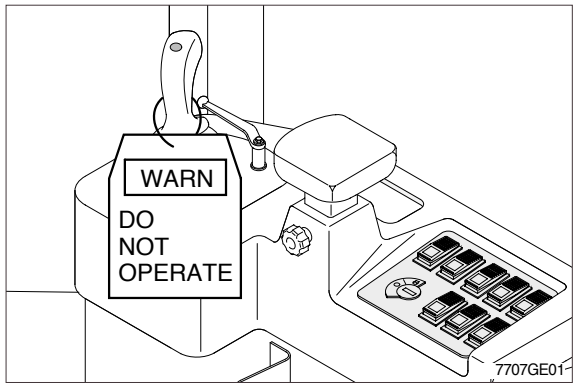

USE HANDHOLDS AND STEPS

Falling is one of the major causes of personal injury.
When you get on and off the machine, always maintain a three point contact with the steps and handrails and face the machine. Do not use any controls as handholds.
Never jump on or off the machine. Never mount or dismount a moving machine.
Be careful of slippery conditions on platforms, steps, and handrails when leaving the machine.

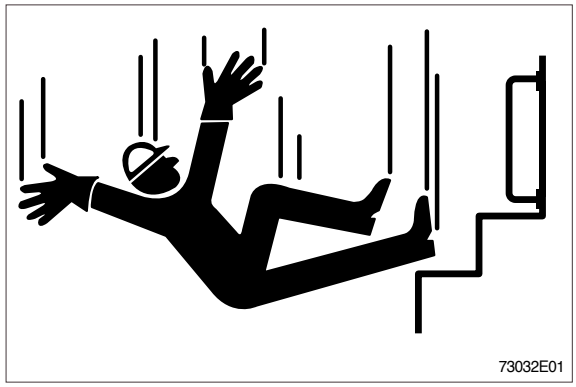

PREPARE FOR EMERGENCIES

Be prepared if a fire starts.

Keep a first aid kit and fire extinguisher handy.

Keep emergency numbers for doctors, ambulance service, hospital, and fire department near your telephone.

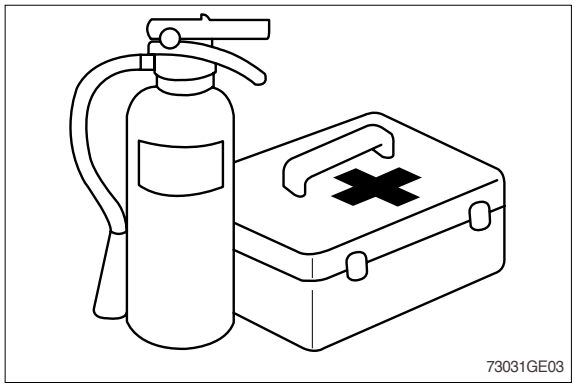

WORK IN CLEAN AREA

Before starting a job :

- Clean work area and machine.
- Make sure you have all necessary tools to do your job.
- Have the right parts on hand.
- Read all instructions thoroughly; Do not attempt shortcuts.

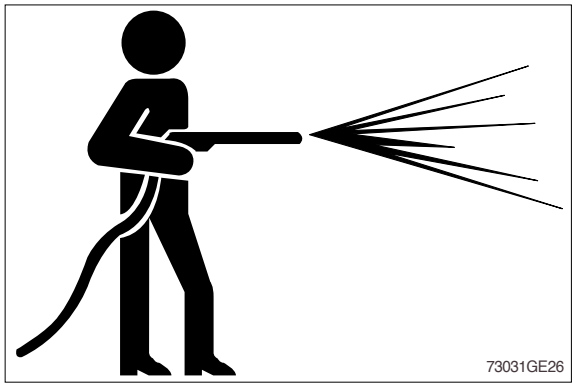

PROTECT AGAINST FLYING DEBRIS

Guard against injury from flying pieces of metal or debris; Wear goggles or safety glasses.

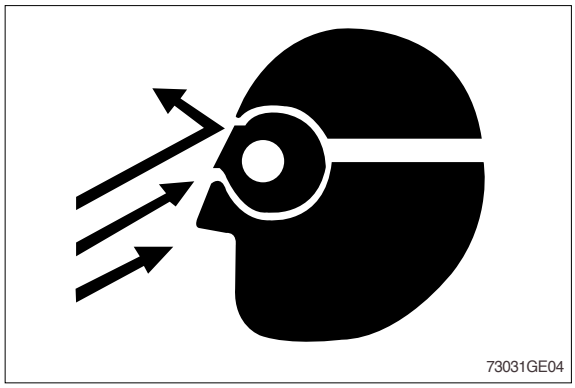

PROTECT AGAINST NOISE

Prolonged exposure to loud noise can cause impairment or loss of hearing.

Wear a suitable hearing protective device such as earmuffs or earplugs to protect against objectionable or uncomfortable loud noises.

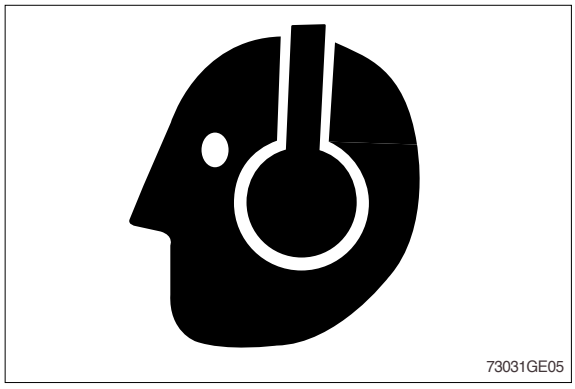

PARK MACHINE SAFELY

Before working on the machine:

- Park machine on a level surface.
- Lower bucket to the ground.
- Turn key switch to OFF to stop engine. Remove key from switch.
- Move pilot control shutoff lever to locked position.
- Allow engine to cool.

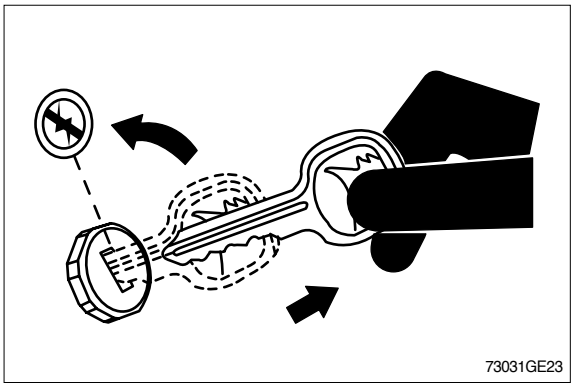

SUPPORT MACHINE PROPERLY

Always lower the attachment or implement to the ground before you work on the machine. If you must work on a lifted machine or attachment, securely support the machine or attachment.

Do not support the machine on cinder blocks, hollow tiles, or props that may crumble under continuous load.

Do not work under a machine that is supported solely by a jack. Follow recommended procedures in this manual.

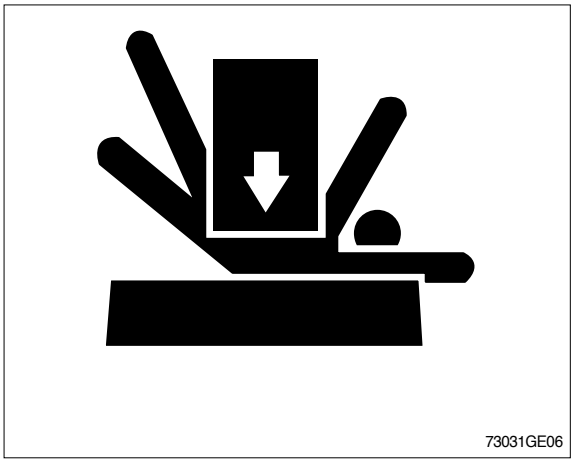

SERVICE COOLING SYSTEM SAFELY

Explosive release of fluids from pressurized cooling system can cause serious burns.

Shut off engine. Only remove filler cap when cool enough to touch with bare hands.



HANDLE FLUIDS SAFELY-AVOID FIRES

Handle fuel with care; It is highly flammable. Do not refuel the machine while smoking or when near open flame or sparks. Always stop engine before refueling machine.

Fill fuel tank outdoors.

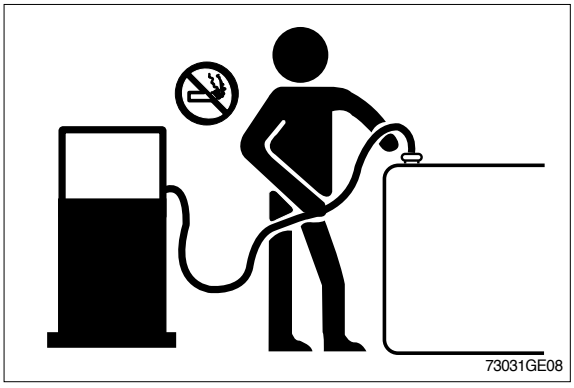

Store flammable fluids away from fire hazards. Do not incinerate or puncture pressurized containers.

Make sure machine is clean of trash, grease, and debris.

Do not store oily rags ; They can ignite and burn spontaneously.

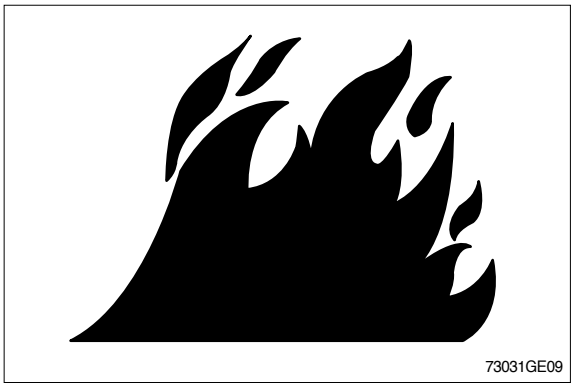

BEWARE OF EXHAUST FUMES

Prevent asphyxiation. Engine exhaust fumes can cause sickness or death.

If you must operate in a building, be positive there is adequate ventilation. Either use an exhaust pipe extension to remove the exhaust fumes or open doors and windows to bring enough outside air into the area.

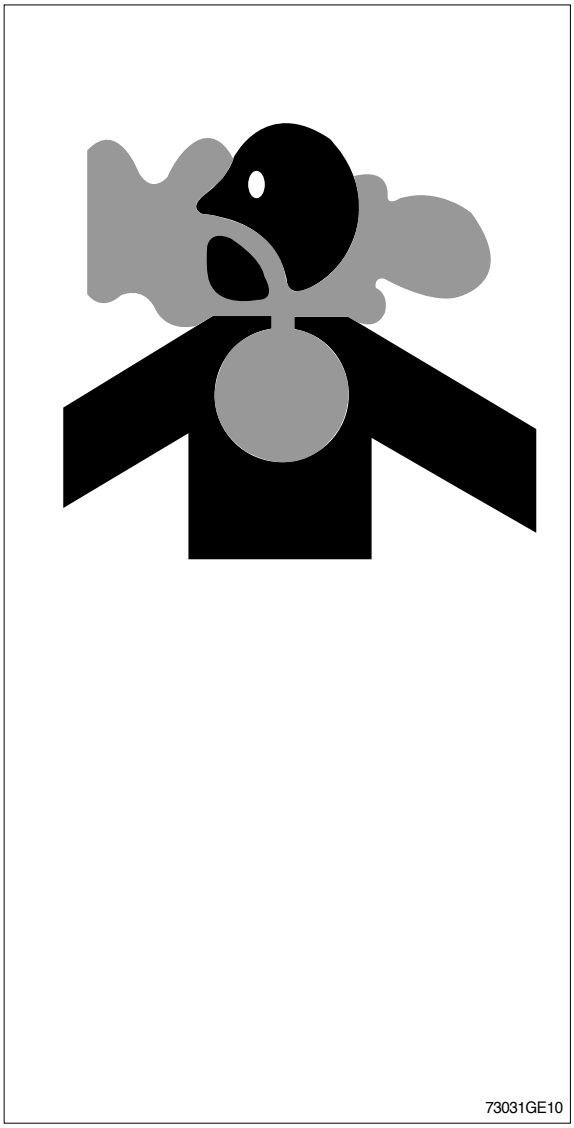

REMOVE PAINT BEFORE WELDING OR HEATING

Avoid potentially toxic fumes and dust.

Hazardous fumes can be generated when paint is heated by welding, soldering, or using a torch.

Do all work outside or in a well ventilated area. Dispose of paint and solvent properly.

Remove paint before welding or heating:

- If you sand or grind paint, avoid breathing the dust. Wear an approved respirator.
- If you use solvent or paint stripper, remove stripper with soap and water before welding. Remove solvent or paint stripper containers and other flammable material from area. Allow fumes to disperse at least 15 minutes before welding or heating.

ILLUMINATE WORK AREA SAFELY

Illuminate your work area adequately but safely. Use a portable safety light for working inside or under the machine. Make sure the bulb is enclosed by a wire cage. The hot filament of an accidentally broken bulb can ignite spilled fuel or oil.

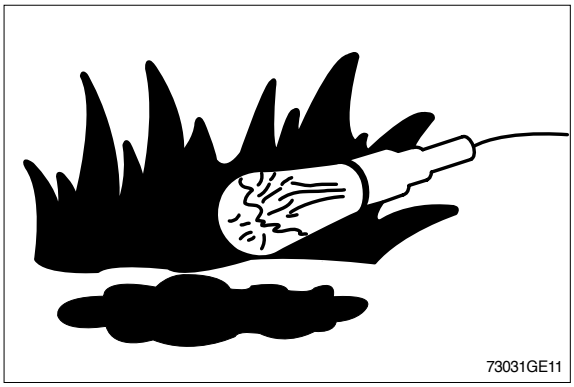

SERVICE MACHINE SAFELY

Tie long hair behind your head. Do not wear a necktie, scarf, loose clothing or necklace when you work near machine tools or moving parts. If these items were to get caught, severe injury could result.

Remove rings and other jewelry to prevent electrical shorts and entanglement in moving parts.

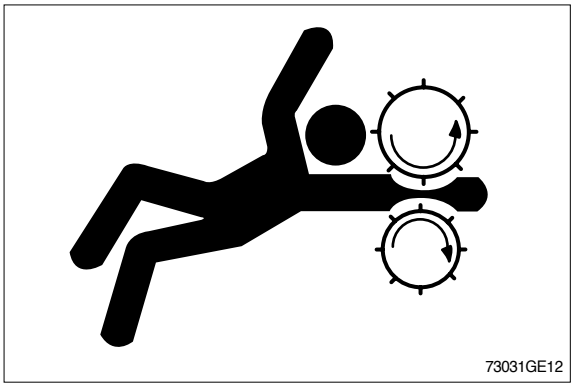

STAY CLEAR OF MOVING PARTS

Entanglements in moving parts can cause serious injury.

To prevent accidents, use care when working around rotating parts.

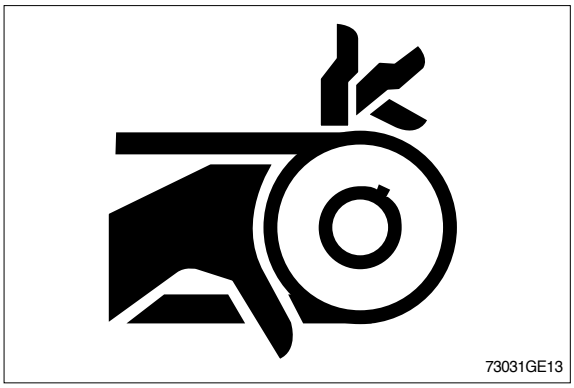

AVOID HIGH PRESSURE FLUIDS

Escaping fluid under pressure can penetrate the skin causing serious injury.

Avoid the hazard by relieving pressure before disconnecting hydraulic or other lines. Tighten all connections before applying pressure.

Search for leaks with a piece of cardboard. Protect hands and body from high pressure fluids.

If an accident occurs, see a doctor immediately. Any fluid injected into the skin must be surgically removed within a few hours or gangrene may result.


73031GE14

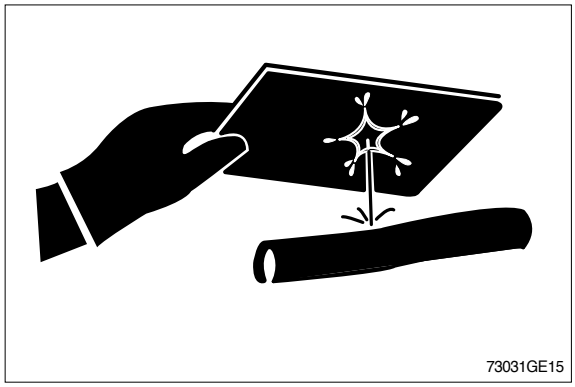
73031GE15

AVOID HEATING NEAR PRESSURIZED FLUID LINES

Flammable spray can be generated by heating near pressurized fluid lines, resulting in severe burns to yourself and bystanders. Do not heat by welding, soldering, or using a torch near pressurized fluid lines or other flammable materials.

Pressurized lines can be accidentally cut when heat goes beyond the immediate flame area. Install fire resisting guards to protect hoses or other materials.


73031GE16

PREVENT BATTERY EXPLOSIONS

Keep sparks, lighted matches, and flame away from the top of battery. Battery gas can explode.

Never check battery charge by placing a metal object across the posts. Use a volt-meter or hydrometer.

Do not charge a frozen battery; It may explode. Warm battery to 16°C(60°F).


73031GE17

PREVENT ACID BURNS

Sulfuric acid in battery electrolyte is poisonous. It is strong enough to burn skin, eat holes in clothing, and cause blindness if splashed into eyes.

Avoid the hazard by:

1. Filling batteries in a well-ventilated area.
2. Wearing eye protection and rubber gloves.
3. Avoiding breathing fumes when electrolyte is added.
4. Avoiding spilling of dripping electrolyte.
5. Use proper jump start procedure.

If you spill acid on yourself:

1. Flush your skin with water.
2. Apply baking soda or lime to help neutralize the acid.
3. Flush your eyes with water for 10-15 minutes. Get medical attention immediately.

If acid is swallowed:

1. Drink large amounts of water or milk.
2. Then drink milk of magnesia, beaten eggs, or vegetable oil.
3. Get medical attention immediately.

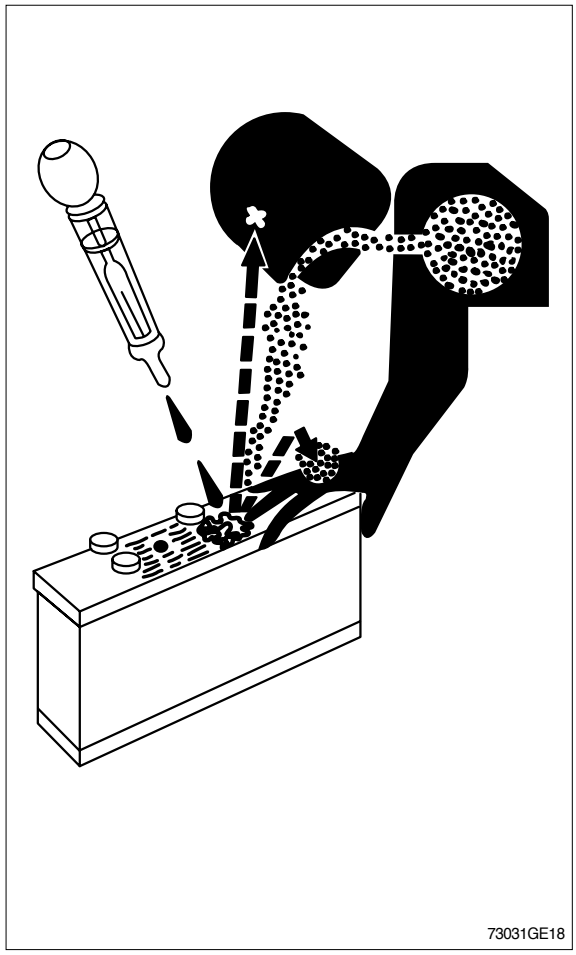

USE TOOLS PROPERLY

Use tools appropriate to the work. Makeshift tools, parts, and procedures can create safety hazards.

Use power tools only to loosen threaded tools and fasteners.

For loosening and tightening hardware, use the correct size tools. Avoid bodily injury caused by slipping wrenches.

Use only recommended replacement parts.(See Parts catalogue.)

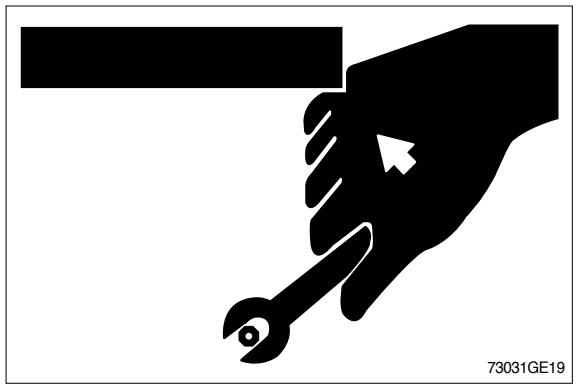

SERVICE TIRES SAFELY

Explosive separation of a tire and rim parts can cause serious injury or death.

Do not attempt to mount a tire unless you have the proper equipment and experience to perform the job.

Always maintain the correct tire pressure. Do not inflate the tires above the recommended pressure. Never weld or heat a wheel and tire assembly. The heat can cause an increase in air pressure resulting in a tire explosion.
Welding can structurally weaken or deform the wheel.

When inflating tires, use a clip-on chuck and extension hose long enough to allow you to stand to one side and not in front of or over the tire assembly. Use a safety cage if available.

Check wheels for low pressure, cuts, bubbles, damaged rims or missing lug bolts and nuts.



USE PROPER LIFTING EQUIPMENT

Lifting heavy components incorrectly can cause severe injury or machine damage.

Follow recommended procedure for removal and installation of components in the manual.

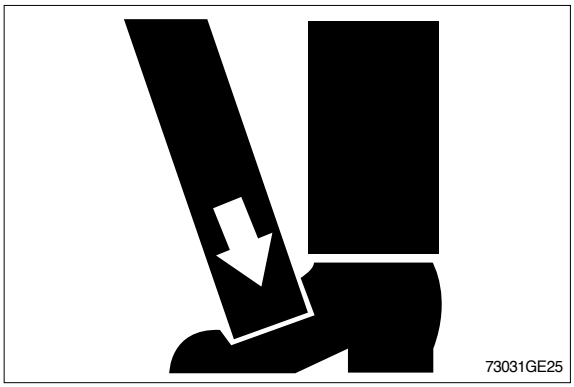

DISPOSE OF FLUIDS PROPERLY

Improperly disposing of fluids can harm the environment and ecology. Before draining any fluids, find out the proper way to dispose of waste from your local environmental agency.

Use proper containers when draining fluids. Do not use food or beverage containers that may mislead someone into drinking from them.

DO NOT pour oil into the ground, down a drain, or into a stream, pond, or lake. Observe relevant environmental protection regulations when disposing of oil, fuel, coolant, brake fluid, filters, batteries, and other harmful waste.

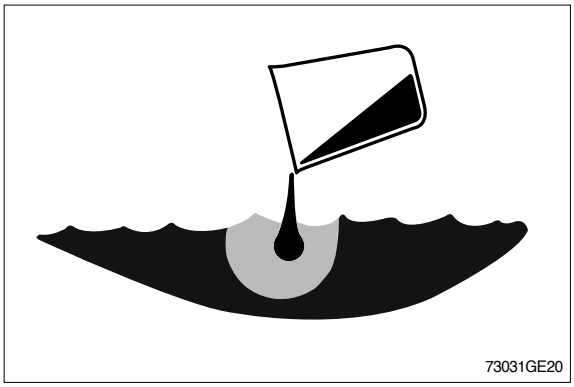

REPLACE SAFETY SIGNS

Replace missing or damaged safety signs. See the machine operator's manual for correct safety sign placement.

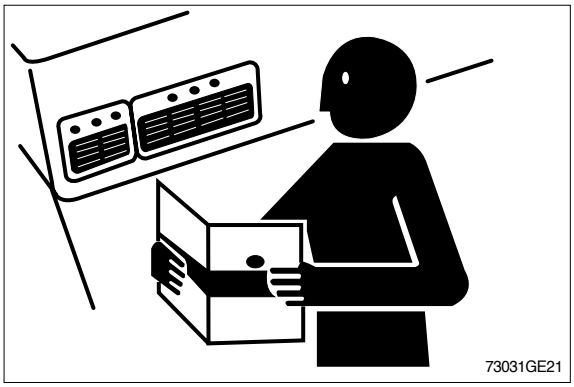

LIVE WITH SAFETY

Before returning machine to customer, make sure machine is functioning properly, especially the safety systems. Install all guards and shields.

KEEP ROPS INSTALLED PROPERLY

Make certain all parts are reinstalled correctly if the roll-over protective structure(ROPS) is loosened or removed for any reason. Tighten mounting bolts to proper torque.

The protection offered by ROPS will be impaired if ROPS is subjected to structural damage, is involved in an overturn incident, or is in any way altered by welding, bending, drilling, or cutting. A damaged ROPS should be replaced, not reused.

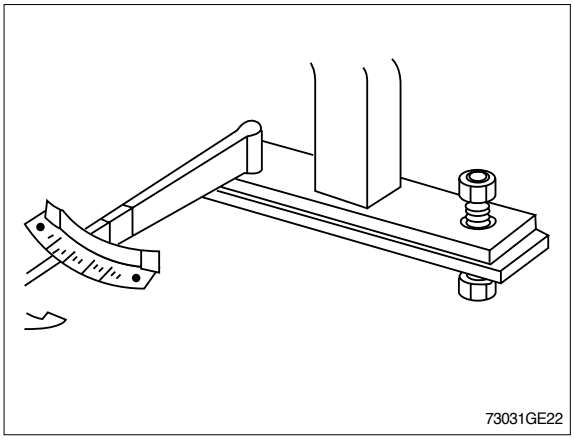

GROUP 2 SPECIFICATION

1. MAJOR COMPONENT(HL740-7)

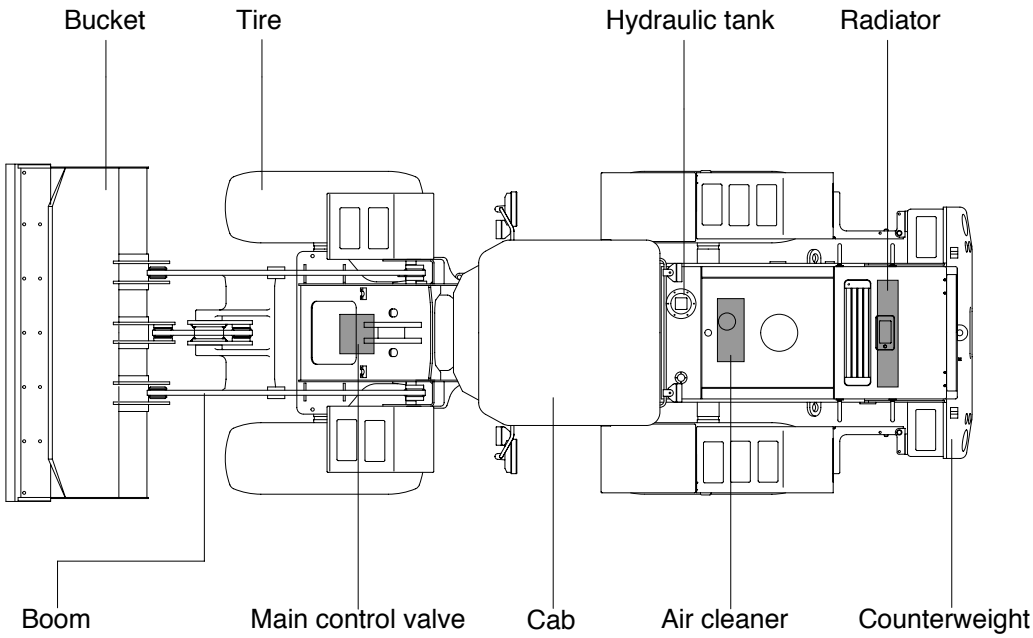

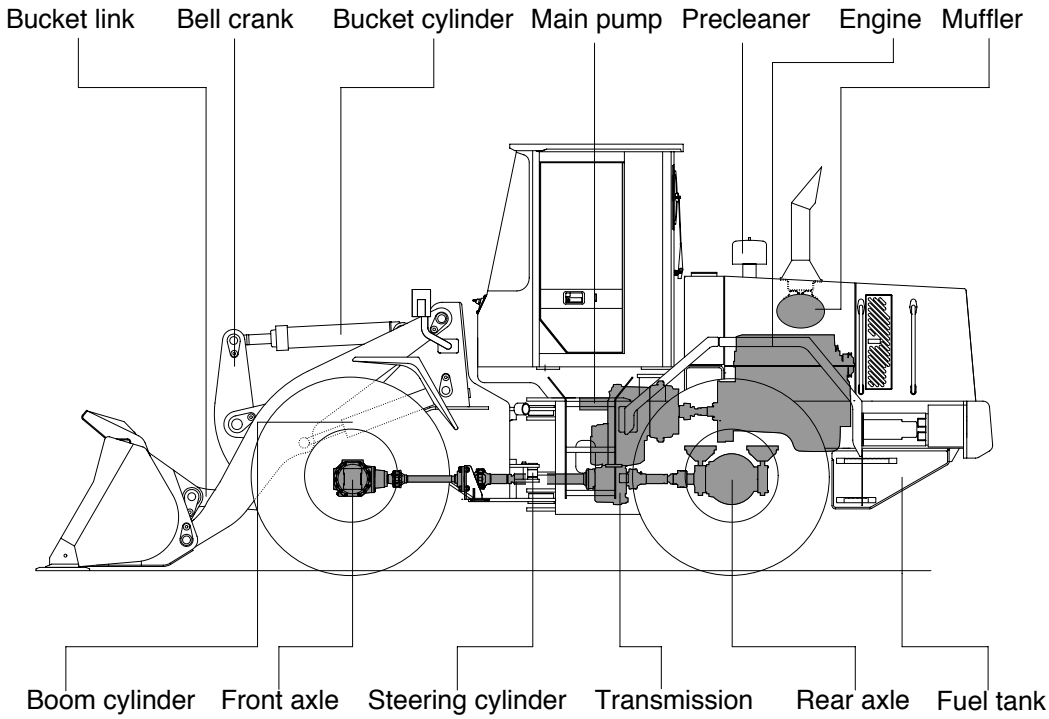

74072SP01

MAJOR COMPONENT(HL740TM-7)

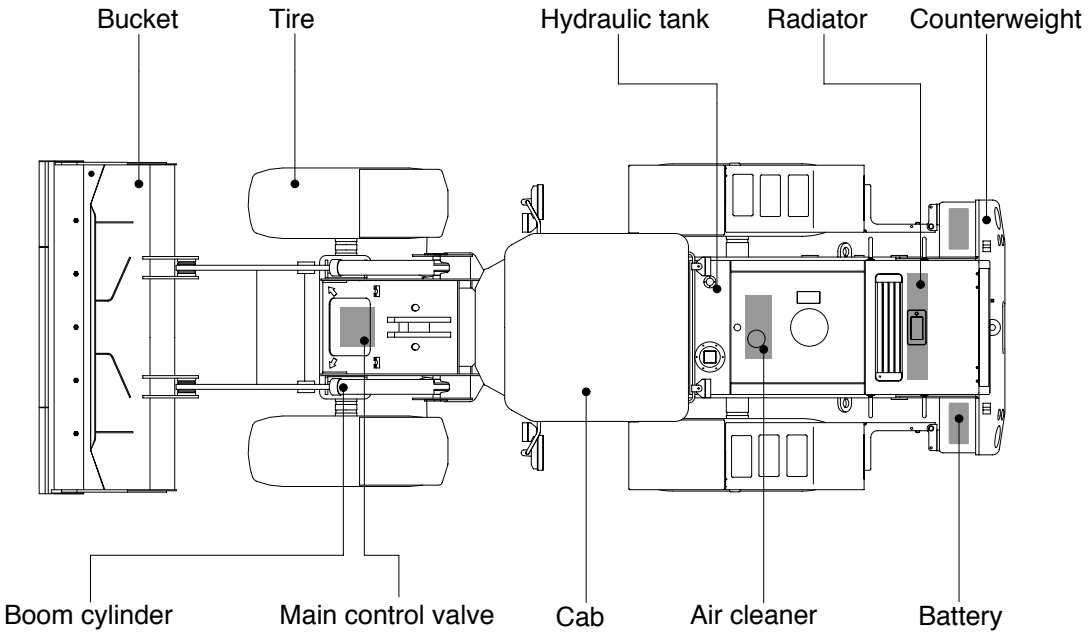

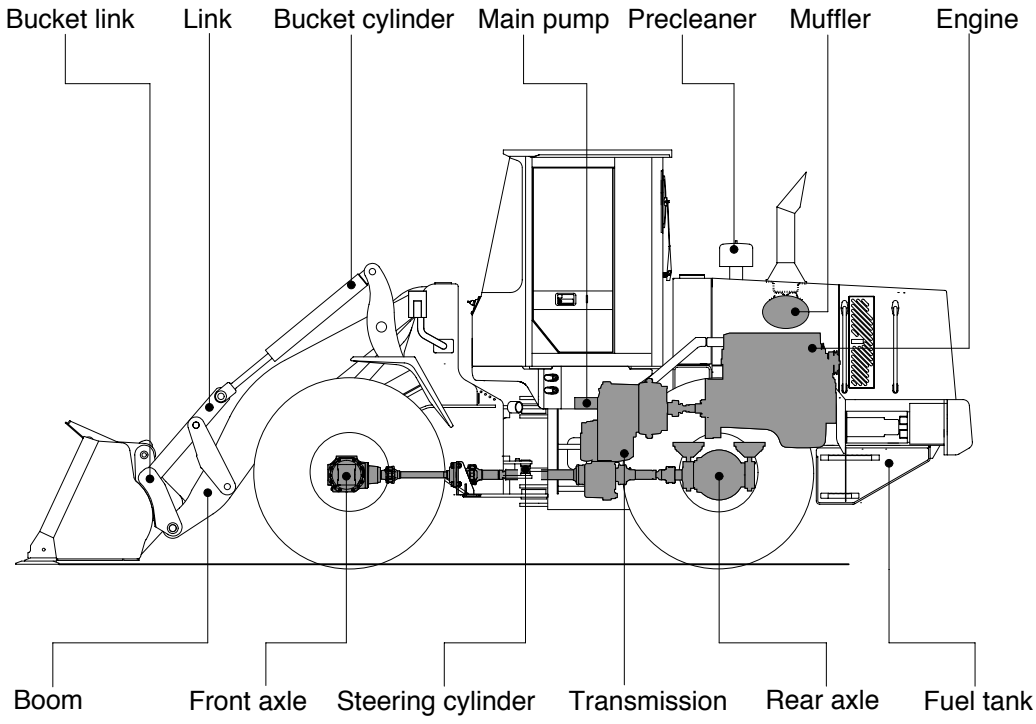

740TM72SP01

2. SPECIFICATIONS

1) WITHOUT TOOTH AND CUTTING EDGE TYPE BUCKET(HL740-7)

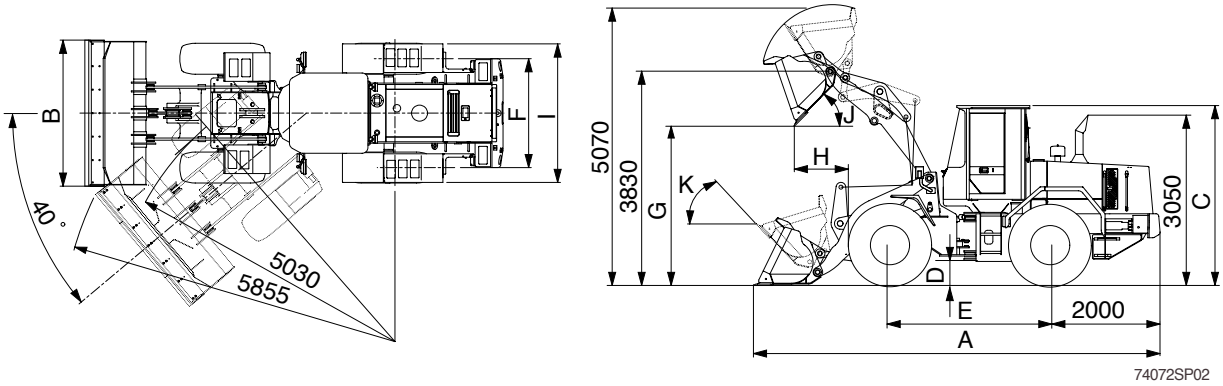

Description			Unit	Specification
Operating weight			kg(lb)	11500(25350)
Bucket capacity		Struck	$m^3(yd^3)$	1.7(2.2)
		Heaped		2.0(2.6)
Overall length		A	mm(ft-in)	7180(23' 7")
Overall width		B		2550(8' 4")
Overall height		C		3260(10' 8")
Ground clearance		D		417(1' 4")
Wheelbase		E		2900(9' 6")
Tread		F		1900(6' 3")
Dump clearance at 45°		G		2920(9' 7")
Dump reach(Full lift)		H		935(3' 1")
Width over tires		I		2430(8' 0")
Dump angle		J	Degree (°)	48
Roll back angle(Carry position)		K		47
Cycle time		Lift(With load)	sec	5.5
		Dump(With load)		1.2
		Lower(Empty)		2.8
Maximum travel speed			km/hr(mph)	38.2(23.8)
Braking distance			m(ft-in)	12(39' 4")
Minimum turning radius(Center of outside tire)				5.03(16' 6")
Gradability			Degree (°)	30
Travel speed	Forward	First gear	km/hr(mph)	6.9(4.3)
		Second gear		12.6(7.9)
		Third gear		24.0(15.0)
		Fourth gear		38.2(23.8)
	Reverse	First gear		7.3(4.5)
		Second gear		13.3(8.3)
		Third gear		25.3(15.8)

WITHOUT TOOTH AND CUTTING EDGE TYPE BUCKET(HL740TM-7)

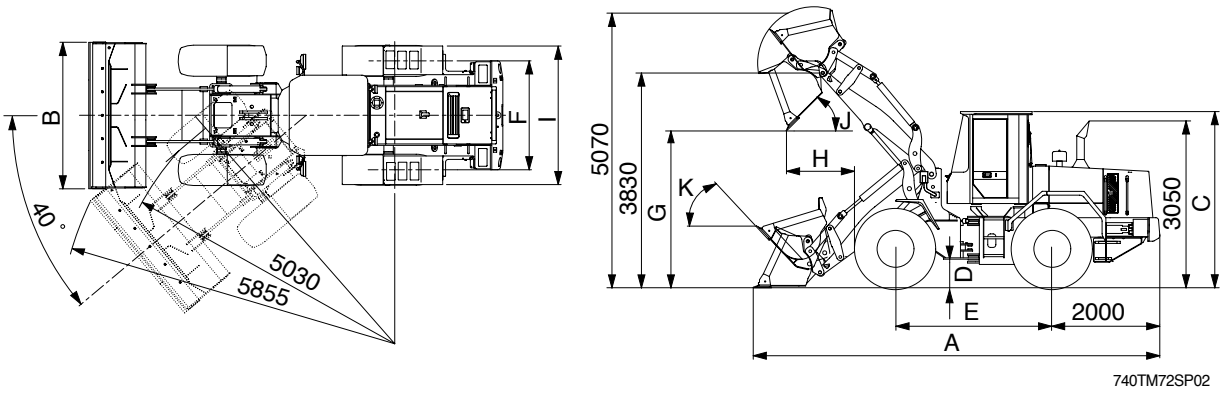

740TM72SP02

Description			Unit	Specification
Operating weight			kg(lb)	12050(26570)
Bucket capacity		Struck	$m^3(yd^3)$	1.6(2.1)
		Heaped		1.9(2.5)
Overall length		A	mm(ft-in)	7460(24' 6")
Overall width		B		2550(8' 4")
Overall height		C		3260(10' 8")
Ground clearance		D		417(1' 4")
Wheelbase		E		2900(9' 6")
Tread		F		1900(6' 3")
Dump clearance at 45°		G		2972(9' 9")
Dump reach(Full lift)		H		991(3' 3")
Width over tires		I		2430(8' 0")
Dump angle		J	Degree (°)	50
Roll back angle(Carry position)		K		54
Cycle time		Lift(With load)	sec	5.5
		Dump(With load)		1.4
		Lower(Empty)		2.7
Maximum travel speed			km/hr(mph)	38.2(23.8)
Braking distance			m(ft-in)	12(39' 4")
Minimum turning radius(Center of outside tire)				5.03(16' 6")
Gradability			Degree (°)	30
Travel speed	Forward	First gear	km/hr(mph)	6.9(4.3)
		Second gear		12.6(7.9)
		Third gear		24.0(15.0)
		Fourth gear		38.2(23.8)
	Reverse	First gear		7.3(4.5)
		Second gear		13.3(8.3)
		Third gear		25.3(15.8)

2) WITH BOLT-ON CUTTING EDGE TYPE BUCKET(HL740-7)

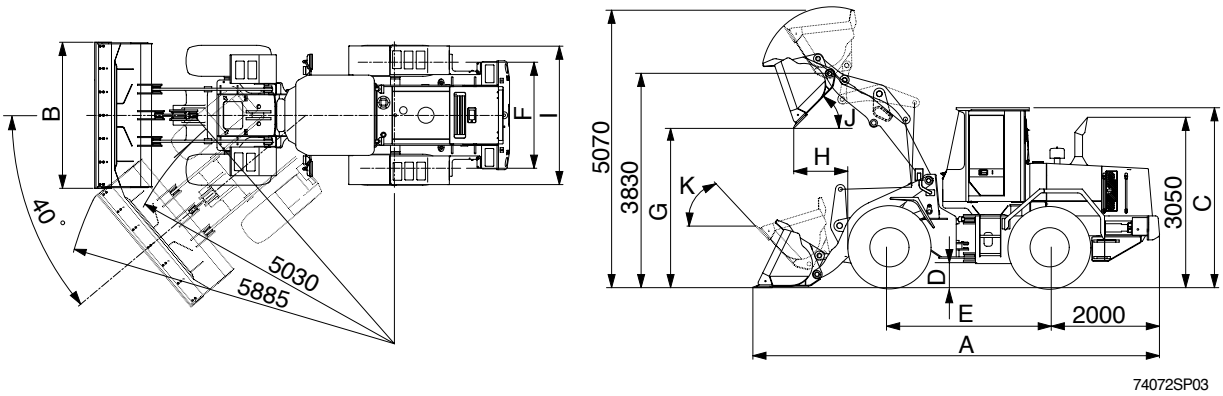

Description			Unit	Specification
Operating weight			kg(lb)	11500(25350)
Bucket capacity		Struck	$m^3(yd^3)$	1.78(2.3)
		Heaped		2.1(2.7)
Overall length		A	mm(ft-in)	7270(23'10")
Overall width		B		2550(8' 4")
Overall height		C		3260(10' 8")
Ground clearance		D		417(1' 4")
Wheelbase		E		2900(9' 6")
Tread		F		1900(6' 3")
Dump clearance at 45°		G		2850(9' 4")
Dump reach(Full lift)		H		970(3' 2")
Width over tires		I		2430(8' 0")
Dump angle		J	Degree (°)	48
Roll back angle(Carry position)		K		47
Cycle time		Lift(With load)	sec	5.5
		Dump(With load)		1.2
		Lower(Empty)		2.8
Maximum travel speed			km/hr(mph)	38.2(23.8)
Braking distance			m(ft-in)	12(39' 4")
Minimum turning radius(Center of outside tire)				5.03(16' 6")
Gradability			Degree (°)	30
Travel speed	Forward	First gear	km/hr(mph)	6.9(4.3)
		Second gear		12.6(7.9)
		Third gear		24.0(15.0)
		Fourth gear		38.2(23.8)
	Reverse	First gear		7.3(4.5)
		Second gear		13.3(8.3)
		Third gear		25.3(15.8)

WITH BOLT-ON CUTTING EDGE TYPE BUCKET(HL740TM-7)

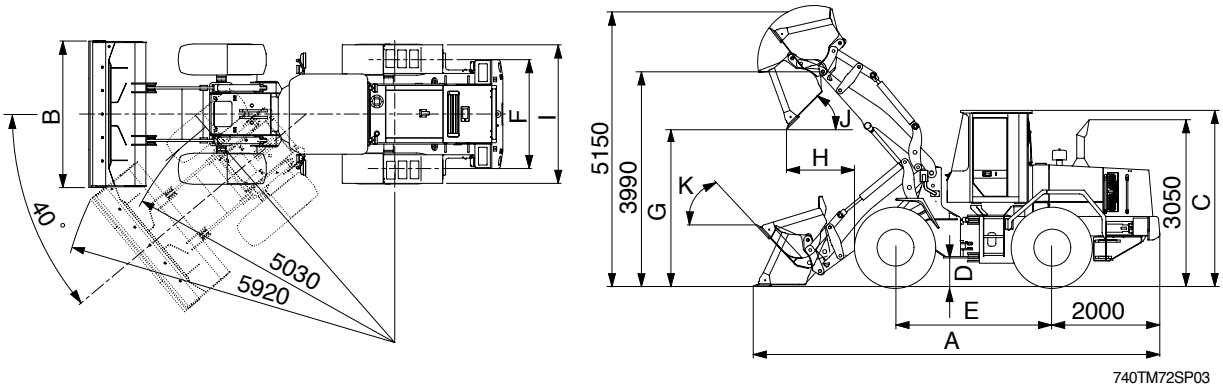

Description			Unit	Specification
Operating weight			kg(lb)	12050(26570)
Bucket capacity		Struck	$m^3(yd^3)$	1.7(2.2)
		Heaped		2.1(2.7)
Overall length		A	mm(ft-in)	7550(24' 9")
Overall width		B		2550(8' 4")
Overall height		C		3260(10' 8")
Ground clearance		D		417(1' 4")
Wheelbase		E		2900(9' 6")
Tread		F		1900(6' 3")
Dump clearance at 45°		G		2915(9' 7")
Dump reach(Full lift)		H		1275(4' 2")
Width over tires		I		2430(8' 0")
Dump angle		J	Degree (°)	50
Roll back angle(Carry position)		K		54
Cycle time		Lift(With load)	sec	5.5
		Dump(With load)		1.4
		Lower(Empty)		2.7
Maximum travel speed			km/hr(mph)	38.2(23.8)
Braking distance			m(ft-in)	12(39' 4")
Minimum turning radius(Center of outside tire)				5.03(16' 6")
Gradability			Degree (°)	30
Travel speed	Forward	First gear	km/hr(mph)	6.9(4.3)
		Second gear		12.6(7.9)
		Third gear		24.0(15.0)
		Fourth gear		38.2(23.8)
	Reverse	First gear		7.3(4.5)
		Second gear		13.3(8.3)
		Third gear		25.3(15.8)

3) WITH TOOTH TYPE BUCKET(HL740-7 ONLY)

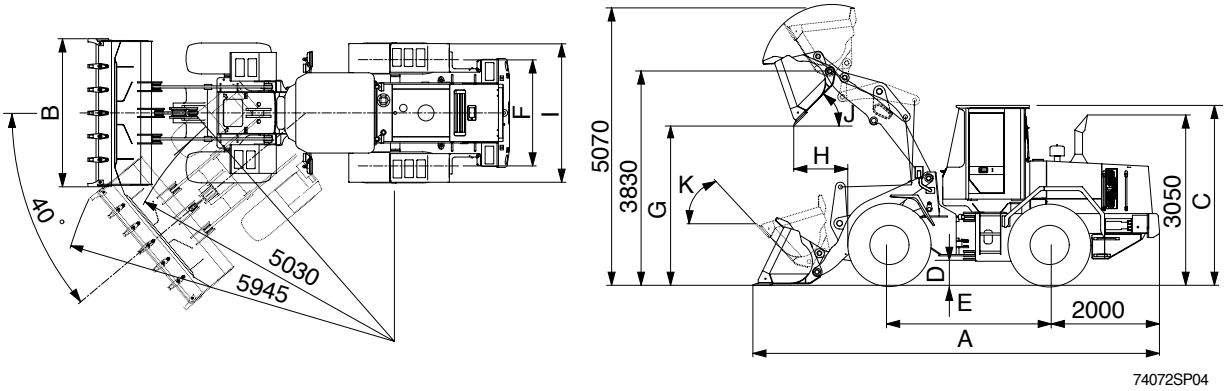

Description			Unit	Specification
Operating weight			kg(lb)	11500(25350)
Bucket capacity		Struck	$m^3(yd^3)$	1.7(2.2)
		Heaped		2.0(2.6)
Overall length		A	mm(ft-in)	7370(24' 2")
Overall width		B		2600(8' 6")
Overall height		C		3260(10' 8")
Ground clearance		D		417(1' 4")
Wheelbase		E		2900(9' 6")
Tread		F		1900(6' 3")
Dump clearance at 45°		G		2770(9'11")
Dump reach(Full lift)		H		1035(3' 5")
Width over tires		I		2430(8' 0")
Dump angle		J	Degree (°)	48
Roll back angle(Carry position)		K		47
Cycle time		Lift(With load)	sec	5.5
		Dump(With load)		1.2
		Lower(Empty)		2.8
Maximum travel speed			km/hr(mph)	38.2(23.8)
Braking distance			m(ft-in)	12(39' 4")
Minimum turning radius(Center of outside tire)				5.03(16' 6")
Gradability			Degree (°)	30
Travel speed	Forward	First gear	km/hr(mph)	6.9(4.3)
		Second gear		12.6(7.9)
		Third gear		24.0(15.0)
		Fourth gear		38.2(23.8)
	Reverse	First gear		7.3(4.5)
		Second gear		13.3(8.3)
		Third gear		25.3(15.8)

3. WEIGHT

Item	HL740-7	HL740TM-7	HL740-7	HL740TM-7
	kg		lb	
Front frame assembly	850	990	1870	2180
Rear frame assembly	1240		2710	
Front fender(LH & RH)	25		55	
Rear fender(LH & RH)	36		79	
Counterweight	520	770	1150	1700
Cab assembly	820		1810	
Engine assembly	430		950	
Transmission assembly	400		880	
Drive shaft(Upper, engine to transmission)	8.5		19	
Drive shaft(Front)	21		46	
Drive shaft(Center)	20		44	
Drive shaft(Rear)	14		31	
Front axle(Include differential)	580		1280	
Rear axle(Include differential)	580		1280	
Tire(4EA)	330		730	
Hydraulic tank	180		400	
Fuel tank	300		660	
Main pump assembly	32		71	
Main control valve	22		49	
Boom assy	730	660	1610	1460
Bell crank assy	230	-	510	-
Bucket link	37	42	82	93
Quick coupler	-	210	-	460
Bucket, with bolt on cutting edge	980	910	2160	2010
Bucket, with tooth	920	-	2030	-
Without tooth and cutting edge	830	790	1830	1740
Boom cylinder assembly(2EA)	97		210	
Bucket cylinder assembly	120	47	270	100
Steering cylinder assembly(2EA)	19		42	
Quick coupler cylinder assembly	-	5.5	-	12
Seat	40		88	
Battery	28		62	

4. SPECIFICATION FOR MAJOR COMPONENTS

1) ENGINE

Item	Specification
Model	Cummins QSB5.9-C
Type	4-cycle turbocharged diesel engine
Cooling method	Water cooling
Number of cylinders and arrangement	6 cylinders, in-line
Firing order	1-5-3-6-2-4
Combustion chamber type	Direct injection type
Cylinder bore × stroke	102×120mm(4.02"×4.72")
Piston displacement	5880cc(359cu in)
Compression ratio	18.1 : 1
Rated gross horse power	140hp at 2200rpm
Maximum gross torque at 1400rpm	60kgf · m(434lbf · ft)
Engine oil quantity	16 ℓ (4.2 U.S. gal)
Dry weight	432kg(952lb)
High idling speed	2330 ± 50rpm
Low idling speed	950 ± 50rpm
Rated fuel consumption	226g/kw · hr
Starting motor	Nippondenso 228000-7902 (24V)
Alternator	Delco Remy 22SI(24V-70Amp)
Battery	2×12V×100Ah

2) MAIN PUMP

Item	Specification
Type	Fixed displacement tandem helical gear pump
Capacity	46+36cc/rev
Maximum operating pressure	220kgf/cm^2(3129psi)
Rated operating speed	2200rpm
Rated output flow	177 ℓ /min(46.8U.S.gpm)

3) FAN AND BRAKE PUMP

Item	Specification	
	Fan	Brake
Type	Fixed displacement tandem helical gear pump	
Capacity	16.8cc/rev	8.2cc/rev
Maximum operating pressure	85kgf/cm^2(1210psi)	150kgf/cm^2(2130psi)
Rated operating speed	2200rpm	
Rated output flow	35 ℓ /min(9.2U.S.gpm)	17 ℓ /min(4.5U.S.gpm)

4) MAIN CONTROL VALVE

Item	Specification
Type	2 spool(sectional block)
Operating method	Hydraulic pilot assist
Main relief valve set pressure	220kgf/cm^2(3129psi)
Overload relief valve set pressure	240kgf/cm^2(3414psi)

5) REMOTE CONTROL VALVE

Item		Specification
Type		Joystick(or with aux lever)
Control pressure	Minimum	3.7kgf/cm^2(52.6psi)
	Maximum	30kgf/cm^2(427psi)

6) CYLINDER

Item		Specification
Boom cylinder	Bore dia × Rod dia × Stroke	ø 120 × ø 70 × 738mm
Bucket cylinder	Bore dia × Rod dia × Stroke	ø 140 × ø 75 × 505mm
Steering cylinder	Bore dia × Rod dia × Stroke	ø 65 × ø 40 × 429mm
Quick coupler cylinder	Bore dia × Rod dia × Stroke	ø 50 × ø 25 × 79mm

7) DYNAMIC POWER TRANSMISSION DEVICES

Item		Specification
Torque converter	Model	ZF 4WG160
	Type	Single-stage, single-phase
Transmission	Type	Full-automatic power shift
	Gear shift	Forward fourth gear, reverse third gear
	Adjustment	Electrical single lever type, kick-down system
Axle	Drive devices	4-wheel drive
	Front	Front fixed location
	Rear	Oscillation ±12° of center pin-loaded
Wheels	Tires	20.5-25, 16PR(L3)
Brakes	Travel	Four-wheel, wet-disc type, full hydraulic
	Parking	Spring applied, hydraulic released brake on front axle
Steering	Type	Full hydraulic, articulated
	Steering angle	40° to both right and left angle, respectively

5. TIGHTENING TORQUE OF MAJOR COMPONENT

No	Items		Size	kgf · m	lbf · ft
1	Engine	Engine mounting bolt(2EA)	M20×2.5	57.9±8.7	419±62.9
2		Engine mounting bolt(Bracket)	M12×1.75	10.7±1.6	77.4±11.6
3		Radiator mounting bolt	M16×2.0	29.7±4.5	215±32.5
4		Fuel tank mounting bolt	M16×2.0	29.7±4.5	215±32.5
5		Air cleaner mounting bolt(4EA)	M 8×1.5	2.5±0.5	18.1±3.6
6		Air cleaner mounting bolt(Bracket)	M12×1.75	12.3±2.5	89.0±18.1
7	Hydraulic system	Main pump housing mounting bolt	M12×1.75	12.8±3.0	92.6±21.7
8		Main control valve mounting bolt	M12×1.75	12.8±3.0	92.6±21.7
9		Steering unit mounting bolt	M10×1.5	6.9±1.4	49.9±10.1
10		Priority valve	M 8×1.25	2.5±0.5	18.1±3.6
11		Brake valve mounting bolt	M 8×1.25	2.5±0.5	18.1±3.6
12		Fan and brake pump mounting bolt	M10×1.5	6.9±1.4	49.9±10.1
13		Cut-off valve mounting bolt	M12×1.75	12.8±3.0	92.6±21.7
14		Remote control lever mounting bolt	M 6×1.0	1.1±0.2	8.0±1.4
15		Pilot supply unit mounting bolt	M 8×1.25	2.5±0.5	18.1±3.6
16		Safety valve	M 8×1.25	2.5±0.5	18.1±3.6
17		Hydraulic oil tank mounting bolt	M16×2.0	29.7±4.5	215±32.5
18	Power train system	Transmission mounting bolt(Bracket, front)	M20×2.5	57.9±8.7	419±62.9
19		Transmission mounting bolt(Bracket, rear)	M16×2.0	18.4±2.0	133±14.5
20		Front axle mounting bolt, nut	M24×2.0	100±15	723±109
21		Rear axle support mounting bolt, nut	M24×2.0	100±15	723±109
22		Tire mounting nut(20.5-25 16PR, L3)	M22×1.5	70±2.0	506±15
23		Drive shaft joint mounting bolt	3/8-24UNF	6.0±0.8	43.4±5.8
24	Others	Counterweight mounting bolt, nut	M30×2.0	199±29.9	1439±216
25		Operator's seat mounting bolt	M 8×1.25	3.4±0.8	24.6±5
26		ROPS Cab mounting bolt(4EA)	M24×3.0	27.5±2.5	199±18.1

6. TORQUE CHART

Use following table for unspecified torque.

1) BOLT AND NUT

(1) Coarse thread

Bolt size	8T		10T	
	kgf · m	lbf · ft	kgf · m	lbf · ft
M 6 × 1.0	0.85 ~ 1.25	6.15 ~ 9.04	1.14 ~ 1.74	8.2 ~ 12.6
M 8 × 1.25	2.0 ~ 3.0	14.5 ~ 21.7	2.73 ~ 4.12	19.7 ~ 29.8
M10 × 1.5	4.0 ~ 6.0	28.9 ~ 43.4	5.5 ~ 8.3	39.8 ~ 60
M12 × 1.75	7.4 ~ 11.2	53.5 ~ 79.5	9.8 ~ 15.8	71 ~ 114
M14 × 2.0	12.2 ~ 16.6	88.2 ~ 120	16.7 ~ 22.5	121 ~ 167
M16 × 2.0	18.6 ~ 25.2	135 ~ 182	25.2 ~ 34.2	182 ~ 247
M18 × 2.5	25.8 ~ 35.0	187 ~ 253	35.1 ~ 47.5	254 ~ 343
M20 × 2.5	36.2 ~ 49.0	262 ~ 354	49.2 ~ 66.6	356 ~ 482
M22 × 2.5	48.3 ~ 63.3	350 ~ 457	65.8 ~ 98.0	476 ~ 709
M24 × 3.0	62.5 ~ 84.5	452 ~ 611	85.0 ~ 115	615 ~ 832
M30 × 3.5	124 ~ 168	898 ~ 1214	169 ~ 229	1223 ~ 1655
M36 × 4.0	174 ~ 236	1261 ~ 1703	250 ~ 310	1808 ~ 2242

(2) Fine thread

Bolt size	8T		10T	
	kgf · m	lbf · ft	kgf · m	lbf · ft
M 8 × 1.0	2.17 ~ 3.37	15.7 ~ 24.3	3.04 ~ 4.44	22.0 ~ 32.0
M10 × 1.25	4.46 ~ 6.66	32.3 ~ 48.2	5.93 ~ 8.93	42.9 ~ 64.6
M12 × 1.25	7.78 ~ 11.6	76.3 ~ 83.7	10.6 ~ 16.0	76.6 ~ 115
M14 × 1.5	13.3 ~ 18.1	96.2 ~ 130	17.9 ~ 24.1	130 ~ 174
M16 × 1.5	19.9 ~ 26.9	144 ~ 194	26.6 ~ 36.0	193 ~ 260
M18 × 1.5	28.6 ~ 43.6	207 ~ 315	38.4 ~ 52.0	278 ~ 376
M20 × 1.5	40.0 ~ 54.0	289 ~ 390	53.4 ~ 72.2	386 ~ 522
M22 × 1.5	52.7 ~ 71.3	381 ~ 515	70.7 ~ 95.7	512 ~ 692
M24 × 2.0	67.9 ~ 91.9	491 ~ 664	90.9 ~ 123	658 ~ 890
M30 × 2.0	137 ~ 185	990 ~ 1338	182 ~ 248	1314 ~ 1795
M36 × 3.0	192 ~ 260	1389 ~ 1879	262 ~ 354	1893 ~ 2561

2) PIPE AND HOSE(FLARE TYPE)

Thread size(PF)	Width across flat(mm)	kgf · m	lbf · ft
1/4"	19	4	28.9
3/8"	22	5	36.2
1/2"	27	6	43.4
3/4"	36	12	86.8
1"	41	14	101

3) PIPE AND HOSE(ORFS TYPE)

Thread size(UNF)	Width across flat(mm)	kgf · m	lbf · ft
13/16-16"	24	4.4	32.5
1-3/16-12"	36	9.3	67.3
1-7/16-12"	41	13.2	95.5
1-11/16-12"	50	18.3	132.4
2-12"	55	22.6	163.5

4) FITTING

Thread size(PF)	Width across flat(mm)	kgf · m	lbf · ft
1/4"	19	4	28.9
3/8"	22	5	36.2
1/2"	27	6	43.4
3/4"	36	13	94.0
1"	41	15	109

7. RECOMMENDED LUBRICANTS

Use only oils listed below or equivalent.
Do not mix different brand oil.

Service point	Kind of fluid	Capacity ℓ (U.S. gal)	Ambient temperature °C(°F) -20 (-4) / -10 (14) / 0 (32) / 10 (50) / 20 (68) / 30 (86) / 40 (104)
Engine oil pan	Engine oil	16(4.2)	SAE 30 SAE 10W SAE 10W-30 SAE 15W-40
Torque converter Transmission	Oil	25(6.6)	SAE 10W-30 SAE 15W-40
Axle	Gear oil	Front : 39(10.3) Rear : 39(10.3)	SAE 80W-90LSD/API GL-5
Hydraulic tank	Hydraulic oil	Tank: 105(27.7) System: 165(44)	ISO VG 32 ISO VG 46 ISO VG 68
Fuel tank	Diesel fuel	228(60.2)	ASTM D975 NO. 1 ASTM D975 NO. 2
Fitting (Grease nipple)	Grease	As required	NLGI NO. 1 NLGI NO. 2
Radiator	Mixture of antifreeze and water 50 : 50	35(9.2)	Ethylene glycol base permanent type

GROUP 3 OPERATIONAL CHECKOUT RECORD SHEET

· Owner :
· Date :
· Hours :
· Serial No. :
· Technician :

※ **Use this sheet to record operational checkout results.**
Perform the operational check before installing any test equipment.

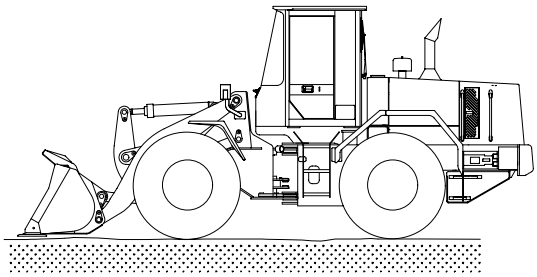

7407GE01

Item	OK	NOT OK	Comments
1. Monitor indicator and gauge checks(Engine OFF)			
· Hourmeter and gauge check	锘	锘	
· Battery check	锘	锘	
· Monitor indicator circuit check	锘	锘	
· Monitor turn signals and warning indicator check	锘	锘	
2. Transmission, axle and engine linkages, neutral start switch and reverse warning alarm switch checks			
· Transmission control lever and neutral	锘	锘	
· Neutral start and reverse warning	锘	锘	
· Alarm circuit checks	锘	锘	
· Engine speed control linkage check	锘	锘	
3. Monitor indicator and gauge checks(Engine running)			
· Monitor display and alternator output checks	锘	锘	
· Monitor bypass circuit and seat belt indicator check	锘	锘	
· Monitor primary and secondary level check	锘	锘	
· Transmission oil warm up procedure	锘	锘	
· Transmission temperature gauge check	锘	锘	

4. Brake system and clutch cut off checks

- Park brake capacity check
- Park brake transmission lockout check
- Service brake pump flow check
- Service brake capacity check
- Brake accumulator precharge check
- Brake system leakage check
- Service brake pedal check
- Service and park brake system drag check
- Clutch cut off check

5. Driving checks

- Transmission oil warm up procedure
- Transmission noise check
- Speedometer check
- Transmission kick down system check
- 1st, 2nd, 3rd and 4th speed clutch pack drag check
- Transmission pressure, pump flow and leakage check
- Transmission shift modulation check
- Torque converter check
- Engine power check

6. Hydraulic system checks

- Hydraulic system warm up procedure
- Hydraulic pump performance check
- Pilot control valve boom float check
- Boom down solenoid valve check
- Control valve lift check
- Bucket rollback circuit relief valve check
- Bucket dump circuit relief
  - Low pressure check
  - High pressure check
- Boom and bucket cylinder drift check
- Boom down solenoid valve leakage check
- Pilot controller check
- Return to dig check
- Boom height kickout check-if equipped

7. Steering system checks

- Steering valve check ㅇ ㅇ _____
- Steering system leakage check ㅇ ㅇ _____
- Priority valve
  - Low check pressure ㅇ ㅇ _____
  - High check pressure ㅇ ㅇ _____

8. Accessory checks

- Operating lights check ㅇ ㅇ _____
- Work light check ㅇ ㅇ _____
- Brake light check ㅇ ㅇ _____
- Cab light check ㅇ ㅇ _____
- Horn circuit check ㅇ ㅇ _____
- Windshield washer and wiper check ㅇ ㅇ _____
- Defroster blower check ㅇ ㅇ _____
- Heater/Air conditioner blower check ㅇ ㅇ _____
- Heater functional check ㅇ ㅇ _____
- Air conditioner functional check ㅇ ㅇ _____
- Start aid system check ㅇ ㅇ _____

9. Cab components and vandal protection checks

- Cab door latch check ㅇ ㅇ _____
- Cab door hold open latch check ㅇ ㅇ _____
- Cab door release button check ㅇ ㅇ _____
- Cab door lock check ㅇ ㅇ _____
- Cab door window check ㅇ ㅇ _____
- Cab window latch check ㅇ ㅇ _____
- Steering column adjustment check ㅇ ㅇ _____
- Seat and seat belt check ㅇ ㅇ _____
- Air intake filter door check ㅇ ㅇ _____
- Engine side panels check ㅇ ㅇ _____
- Radiator cap access door check ㅇ ㅇ _____
- Frame locking bar check ㅇ ㅇ _____
- Boom lock check ㅇ ㅇ _____
- Service decal check ㅇ ㅇ _____

SECTION 2 ENGINE

Group 1 Structure and Function 2-1
Group 2 Fan drive circuit for cooling system 2-5

GROUP 1 STRUCTURE AND FUNCTION

1. STRUCTURE

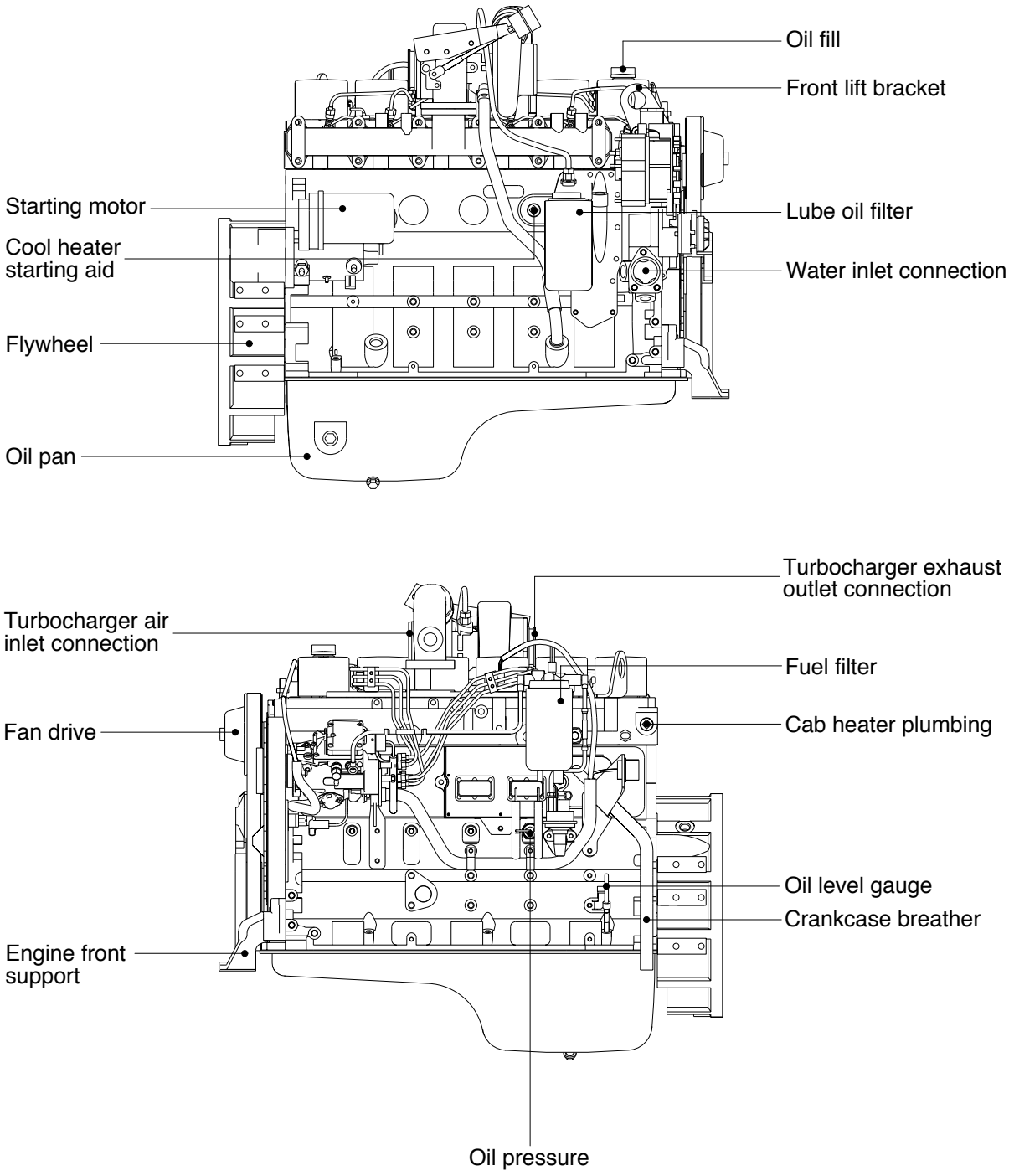

7407EG01

· Direct 4-stroke, 6-cylinders, water-cooling and charge air cooled diesel engine in installed, cylinder block and cylinder head are made of case iron and turbocharger is attached.

2. SYSTEM DIAGRAMS

The following drawings show the flow through the engine systems.

1) Fuel system

1 Fuel from supply tank
2 Electronic lift pump
3 Fuel filter and water separator
4 Low pressure supply lines
5 Injection pump
6 Fuel drain manifold
7 High pressure supply lines
8 Closed nozzle injectors
9 Fuel return to supply tank

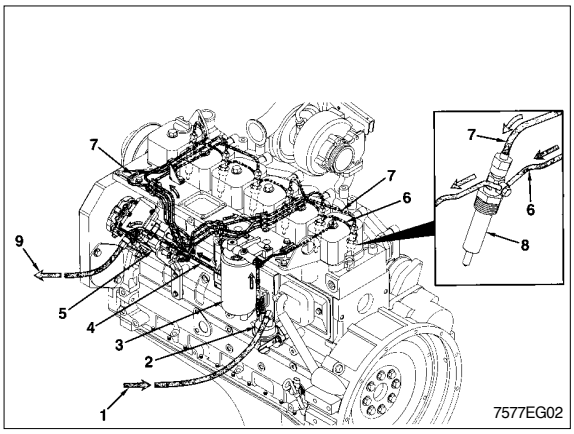

2) Lubricating oil system

1 Lubricating oil pump
2 Pressure regulating valve closed
3 Pressure regulating valve open
4 From lubricating oil pump
5 To lubricating oil cooler
6 To lubricating oil pan
7 Lubricating oil cooler
8 Filter bypass valve
9 Filter bypass valve closed
10 Filter bypass valve open
11 To lubricating oil filter
12 Lubricating oil filter
13 From lubricating oil filter
14 Main lubricating oil rifle

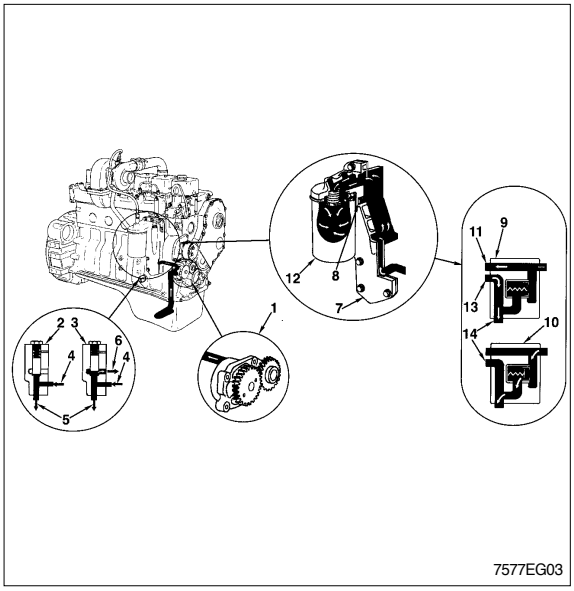

(1) Lubrication for the turbocharger

1 Lubricating oil supply
2 Lubricating oil drain

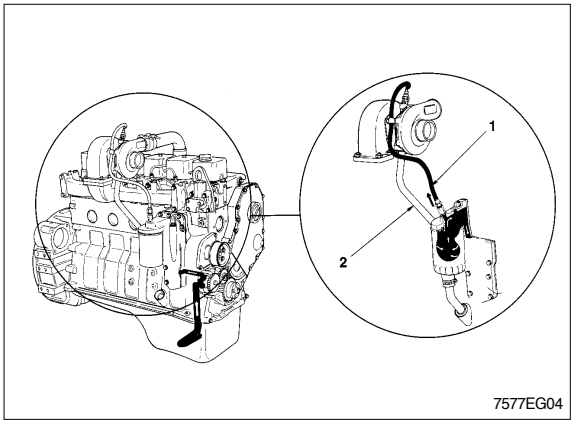

(2) Lubrication for the power components

1 To valve train
2 Main lubricating oil rifle
3 From lubricating oil cooler
4 Conneting rod journal
5 To connecting rod bearing
6 Crankshaft main journal
7 From main lubricating oil rifle
8 To camshaft
9 To piston cooling nozzle.

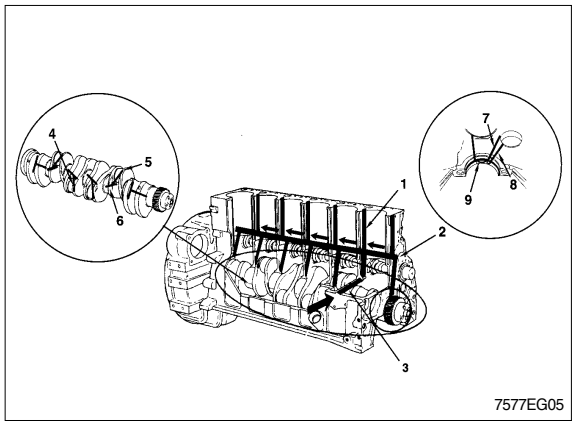

7577EG05

(3) Lubrication for the overhead

1 Main lubricating oil rifle
2 Rocker lever support
3 Transfer slot
4 Rocker lever shaft
5 Rocker lever bore
6 Rocker lever

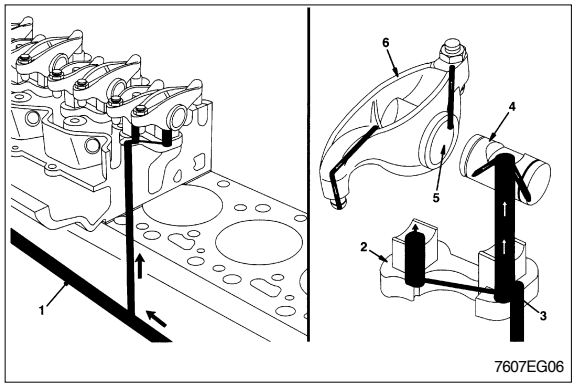

7607EG06

3) Cooling system

Views A and B

1 Coolant inlet
2 Pump Impeller
3 Coolant flows past lubricating oil cooler
4 Coolant flows past cylinders
5 Coolant flow to cylinder head

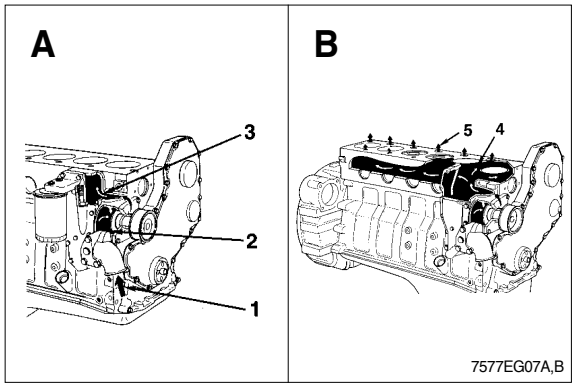

7577EG07A,B

Views C and D

1 Coolant flow from the cylinder head
2 Coolant flow to thermostat housing
3 Coolant flow past injector
4 Thermostat
5 Coolant bypass passage
6 Coolant flow to water pump inlet
7 Coolant bypass closed
8 Coolant flow back to radiator

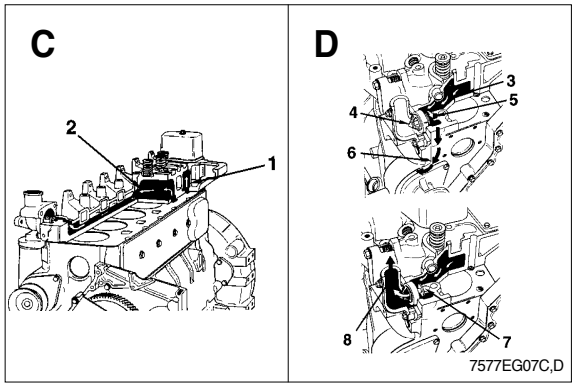

7577EG07C,D

4) Air intake system

1 Intake air inlet to turbocharger
2 Turbocharger air to charge air cooler
3 Charge air cooler
4 Intake manifold
5 Intake valve

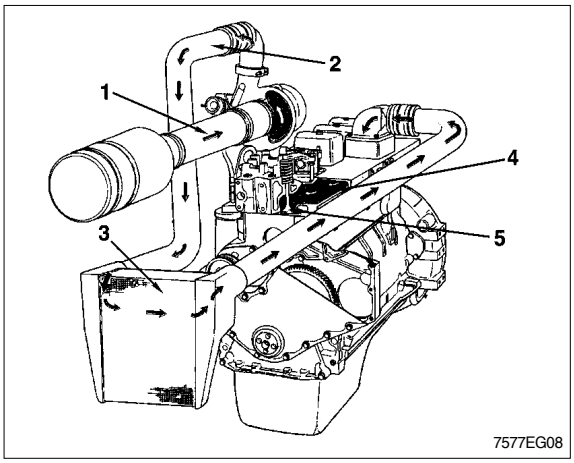

5) Exhaust system

1 Wastegate closed
2 Wastegate open
3 Exhaust valve
4 Exhaust manifold
5 Turbocharger exhaust inlet
6 Turbocharger exhaust outlet

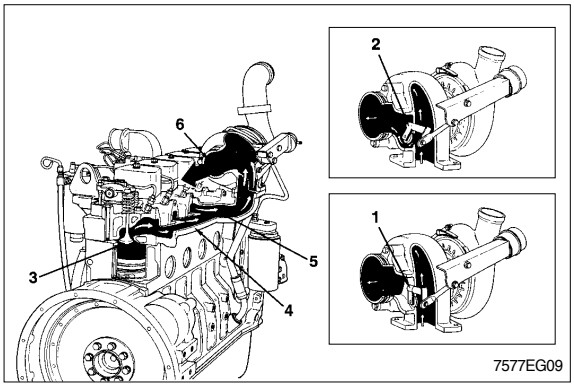

6) Compressed air system

1 Air in
2 Air out
3 Coolant in
4 Coolant out
5 Lubricating oil in
6 Lubricating oil out is internal to the gear housing

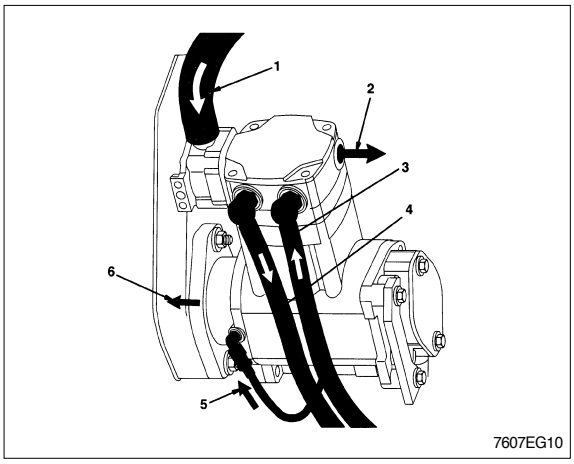

GROUP 2 FAN DRIVE CIRCUIT FOR COOLING SYSTEM

1. REQUIRED TOOL

Item		Spec
Pressure gauge		250~300kgf/cm²(3550~4270psi)
rpm gauge		200~2000rpm
Tool	Wrench	13mm
	Hex. wrench	3mm

2. PRESSURE CHECK AND ADJUSTMENT

1) Specification

Cooling fan speed(rpm)	Pressure[kgf/cm²(psi)]
1150±20	90~100(1280~1420)

2) Check point

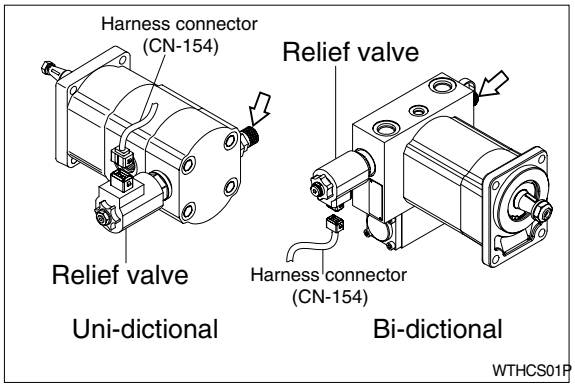

3) Pressure check

(1) Install the pressure gauge to fan drive motor. (⇨)
(2) Disconnect CN-154.
(3) Check the fan drive motor pressure at high engine rpm.
(4) Check the cooling fan speed using rpm gauge at high engine rpm.

4) Adjustment

(1) Turn the adjusting screw clockwise to increase the cooling fan rpm and relief pressure.
(2) Turn the adjusting screw counter clockwise to decrease the cooling fan rpm and relief pressure.

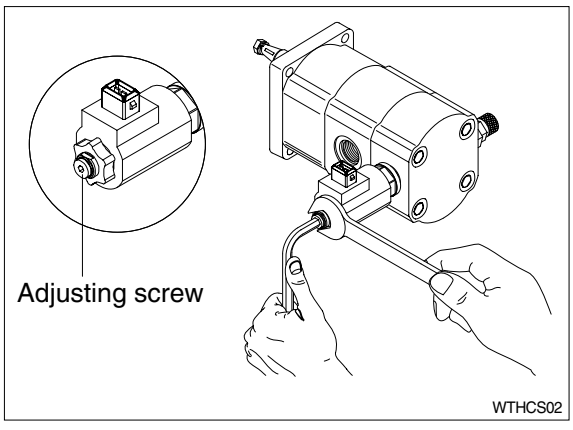

SECTION 3 POWER TRAIN SYSTEM

Group 1 Structure and Function ---------- 3-1
Group 2 Operational Checks and Troubleshooting ---------- 3-66
Group 3 Tests and Adjustments ---------- 3-77
Group 4 Disassembly and Assembly ---------- 3-80

SECTION 3 POWER TRAIN SYSTEM

GROUP 1 STRUCTURE AND FUNCTION

1. POWER TRAIN COMPONENT OVERVIEW

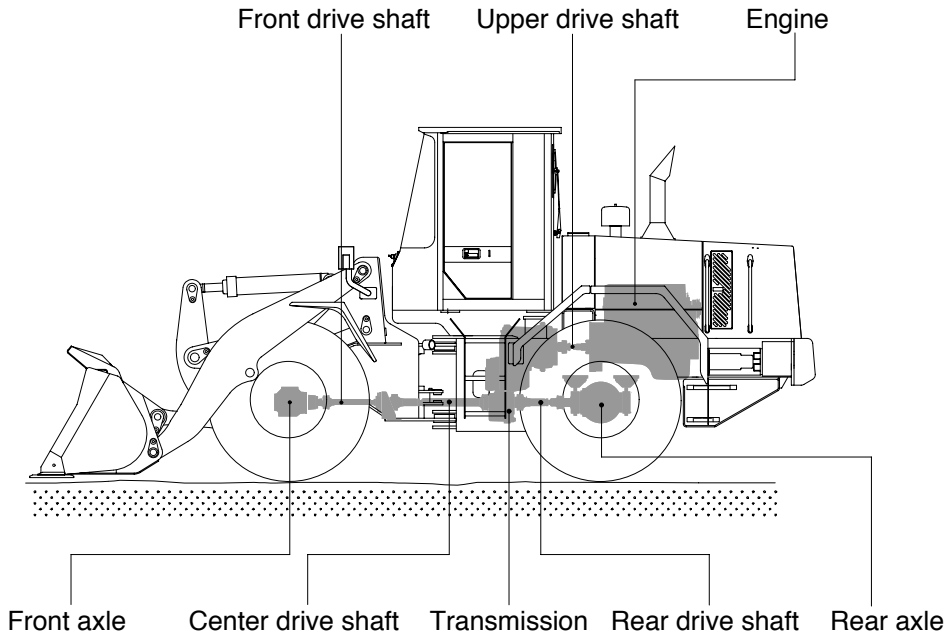

7407PT01

The power train consists of the following components :

- Transmission
- Front, upper, center and rear drive shafts
- Front and rear axles

Engine power is transmitted to the transmission through the torque converter.

The transmission is a hydraulically engaged four speed forward, three speed reverse counter shaft type power shift transmission. A disk type parking brake is located in the front axle.

The transmission outputs through universal joints to three drive shaft assemblies. The front drive shaft is a telescoping shaft which drives the front axle. The front axle is mounted directly to the loader front frame. The front axle is equipped with limited slip differential.

The rear axle is mounted on an oscillating pivot. The rear axle is equipped with conventional differential.

The power transmitted to front axle and rear axle is reduced by the pinion gear and ring gear of differential. It then passes from the differential to the sun gear shaft(Axle shaft) of final drive.

The power of the sun gear is reduced by a planetary mechanism and is transmitted through the planetary hub to the wheel.

HYDRAULIC CIRCUIT

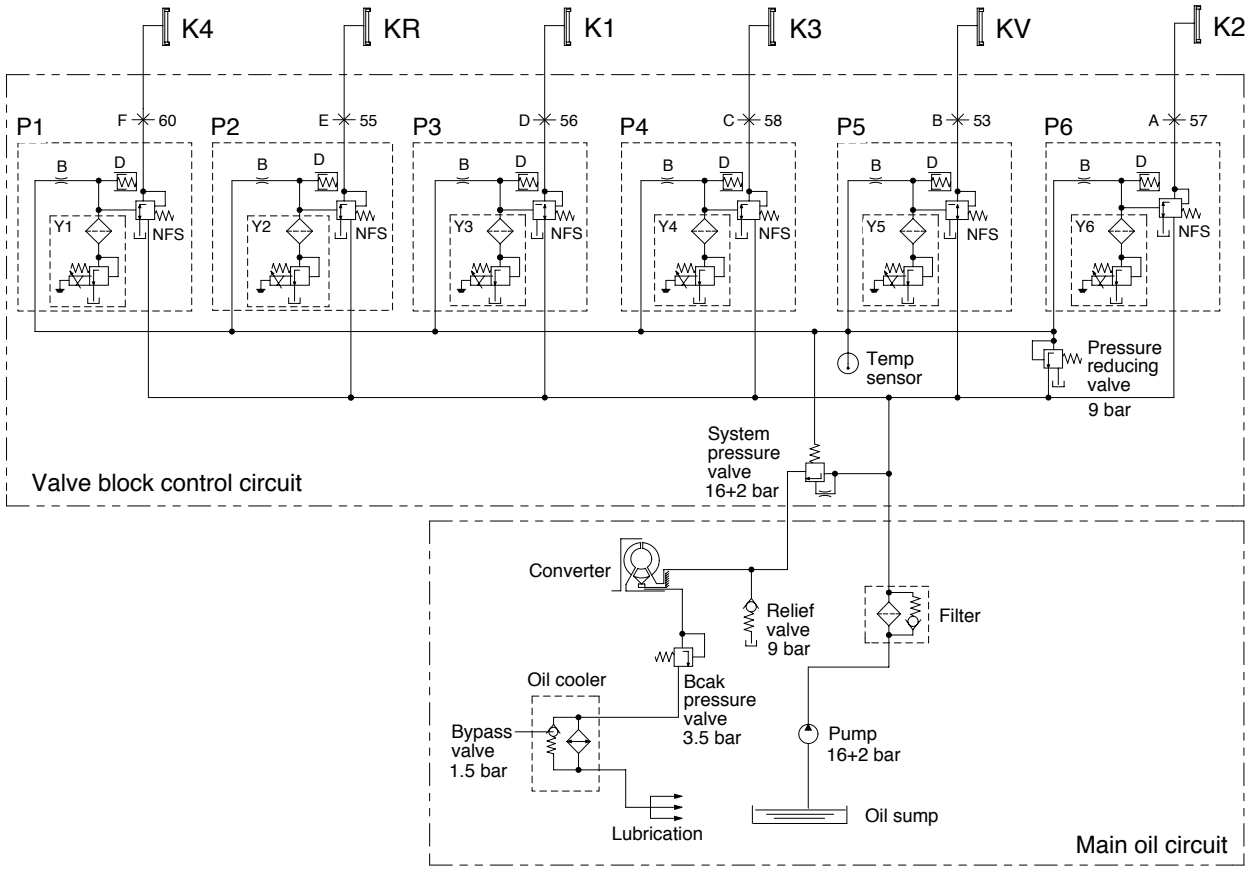

76043PT18

NFS	Follow-on slide	P3	Proportional valve clutch K1
D	Oscillation damper	P4	Proportional valve clutch K3
B	Orifice	P5	Proportional valve clutch KV
P1	Proportional valve clutch K4	P6	Proportional valve clutch K2
P2	Proportional valve clutch KR	Y1~Y6	Pressure regulator

Speed	Forward				Reverse			Neutral	Engaged clutch	Positions on the valve block	Current No. of the measuring points
	1	2	3	4	1	2	3				
Y1				X					K4	F	60
Y2					X	X	X		KR	E	55
Y3	X				X				K1	D	56
Y4			X	X			X		K3	C	58
Y5	X	X	X						KV	B	53
Y6		X				X			K2	A	57
Engaged clutch	K1,KV	KV,K2	K3,KV	K4,K3	KR,K1	KR,K2	KR, K3		-	-	-

X : Pressure regulator under voltage

2. TORQUE CONVERTER

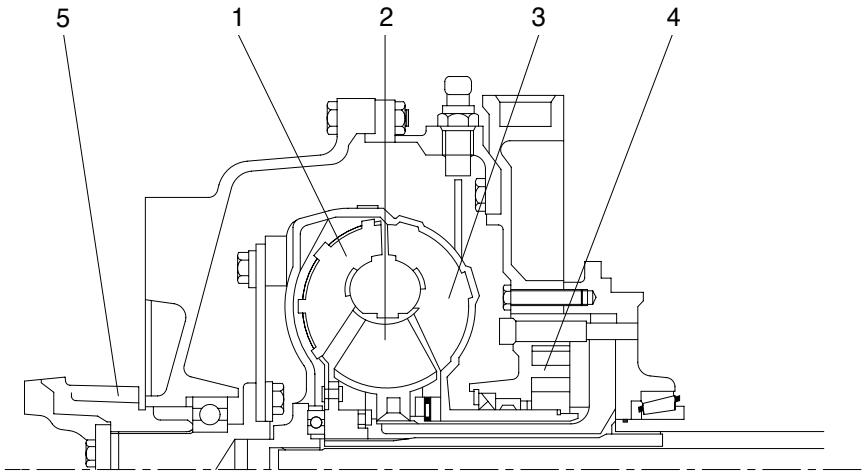

73033TM00

1	Pump	3	Turbine	5	Input flange
2	Stator	4	Transmission pump		

The converter is working according to the Trilok-system, i.e. it assumes at high turbine speed the characteristics, and with it the favorable efficiency of a fluid clutch.
The converter will be defined according to the engine power so that the most favorable operating conditions for each installation case are given.

The Torque converter is composed of 3 main components :
Pump wheel - turbine wheel - stator(Reaction member)

These 3 impeller wheels are arranged in such a ring-shape system that the fluid is streaming through the circuit components in the indicated order.

Pressure oil is constantly streaming out of the transmission pump through the converter. In this way, the converter can fulfill its task to multiply the torque of the engine, and at the same time, the heat created in the converter is dissipated through the escaping oil.
The oil, escaping out of the pump wheel, enters the turbine wheel and is there inversed in the direction of flow.

According to the rate of inversion, the turbine wheel and with it also the output shaft, receive a more or less high reaction moment. The stator(Reaction member), following the turbine, has the task to inverse again the oil which is escaping out of the turbine and to delivery it under the suitable discharge direction to the pump wheel.
Due to the inversion, the stator receives a reaction moment.
The relation turbine moment/pump moment is called torque conversion. This is the higher the greater the speed difference of pump wheel and turbine wheel will be.

Therefore, the maximum conversion is created at standing turbine wheel.
With increasing output speed, the torque conversion is decreasing. The adaption of the output speed to a certain required output moment is infinitely variable and automatically achieved by the torque converter.

If the turbine speed is reaching about 80% of the pump speed, the conversion becomes 1.0 i.e. the turbine moment becomes equal to that of the pump moment.
From this point on, the converter is working similar to a fluid clutch.

A stator freewheel serves to improve the efficiency in the upper driving range, it is backing up in the conversion range the moment upon the housing, and is released in the coupling range.
In this way, the stator can rotate freely.

Function of a hydrodynamic torque converter(Schematic view)

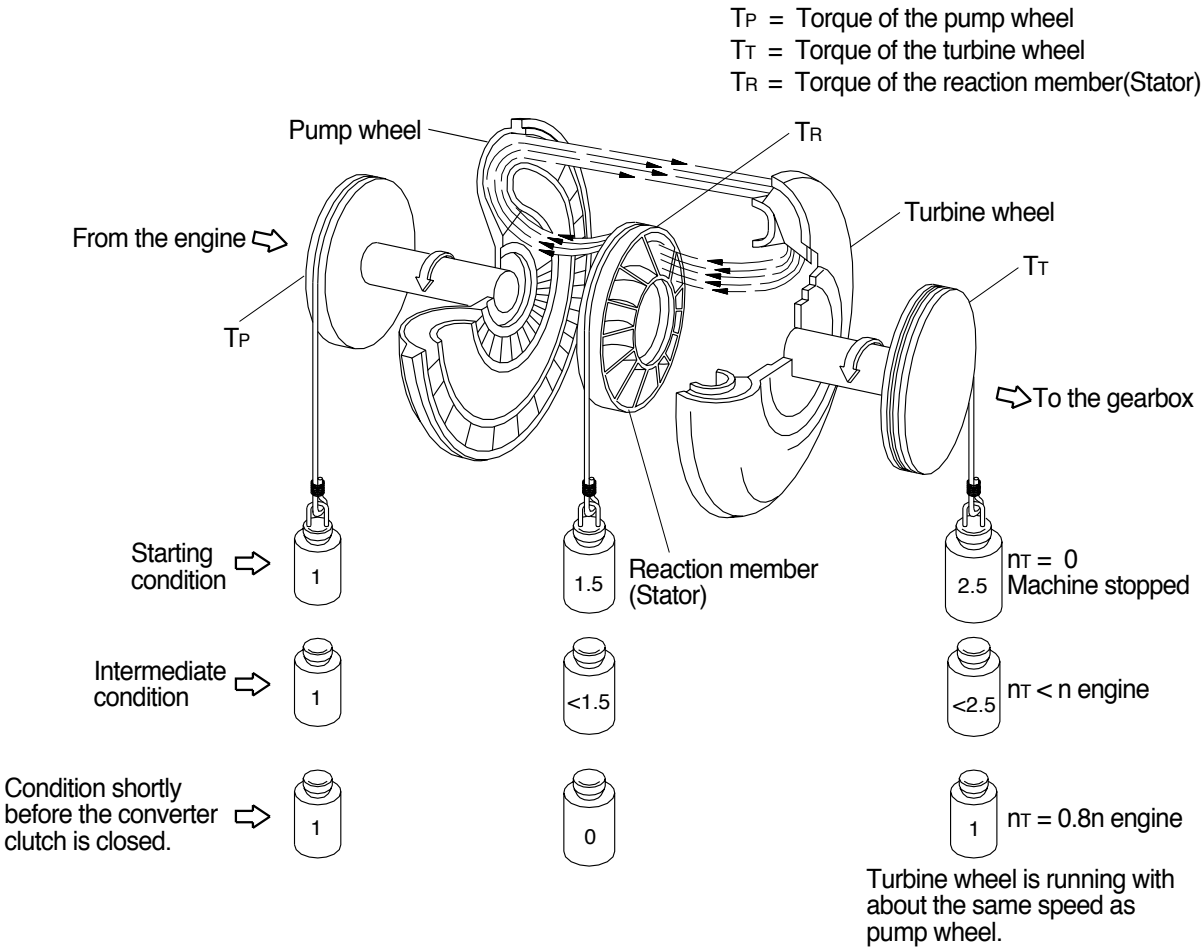

(760) 3-4

3. TRANSMISSION

1) LAYOUT

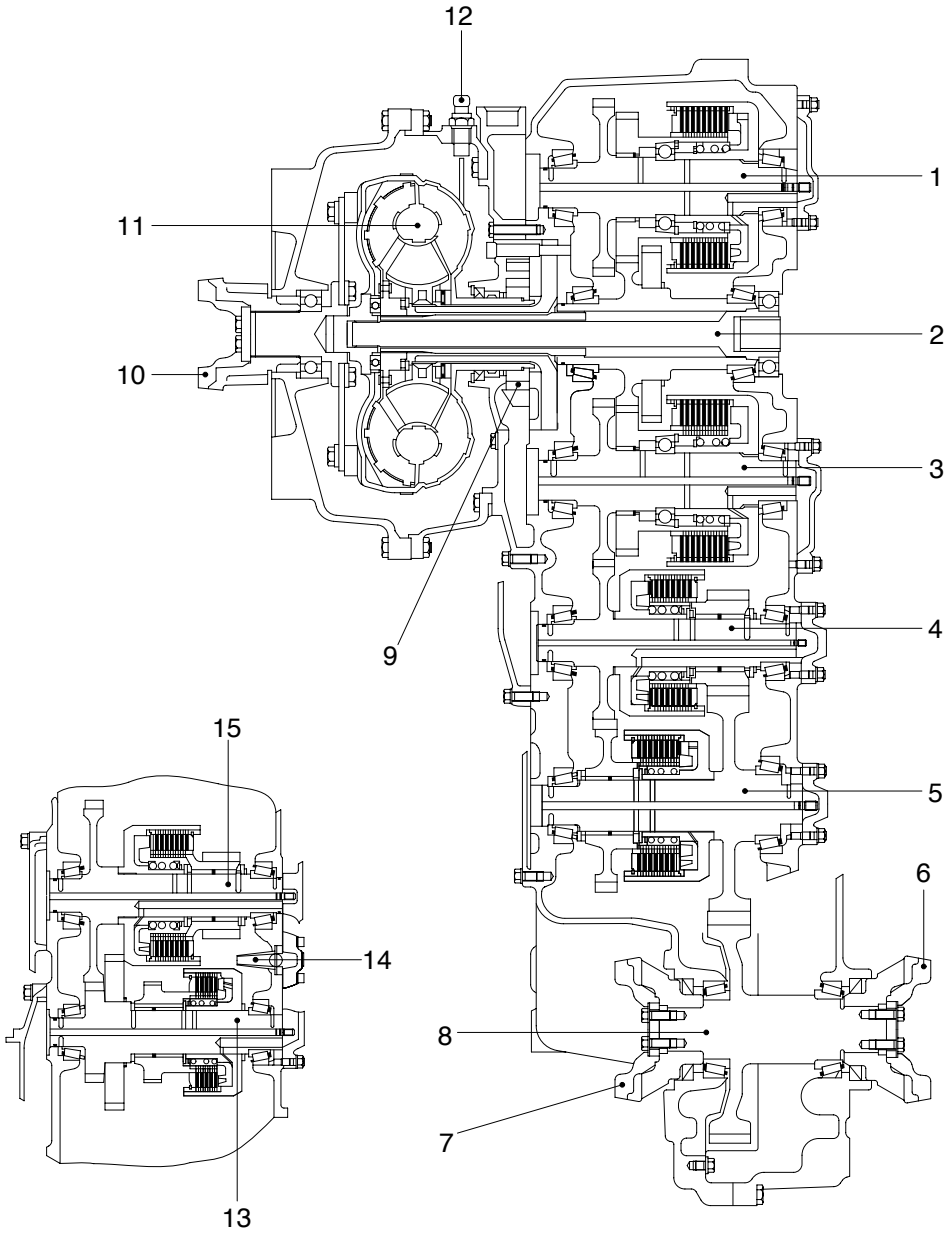

7607PT03

1	Reverse clutch(KR)	6	Rear output flange	11	Converter
2	Engine-dependent power take-off	7	Converter side output flange	12	Inductive transmitter for engine speed
3	Forward clutch(KV)	8	Output shaft	13	4th clutch(K4)
4	2nd clutch(K2)	9	Transmission pump	14	Converter relief valve
5	3rd clutch(K3)	10	Input flange	15	1st clutch(K1)

2) INSTALLATION VIEW

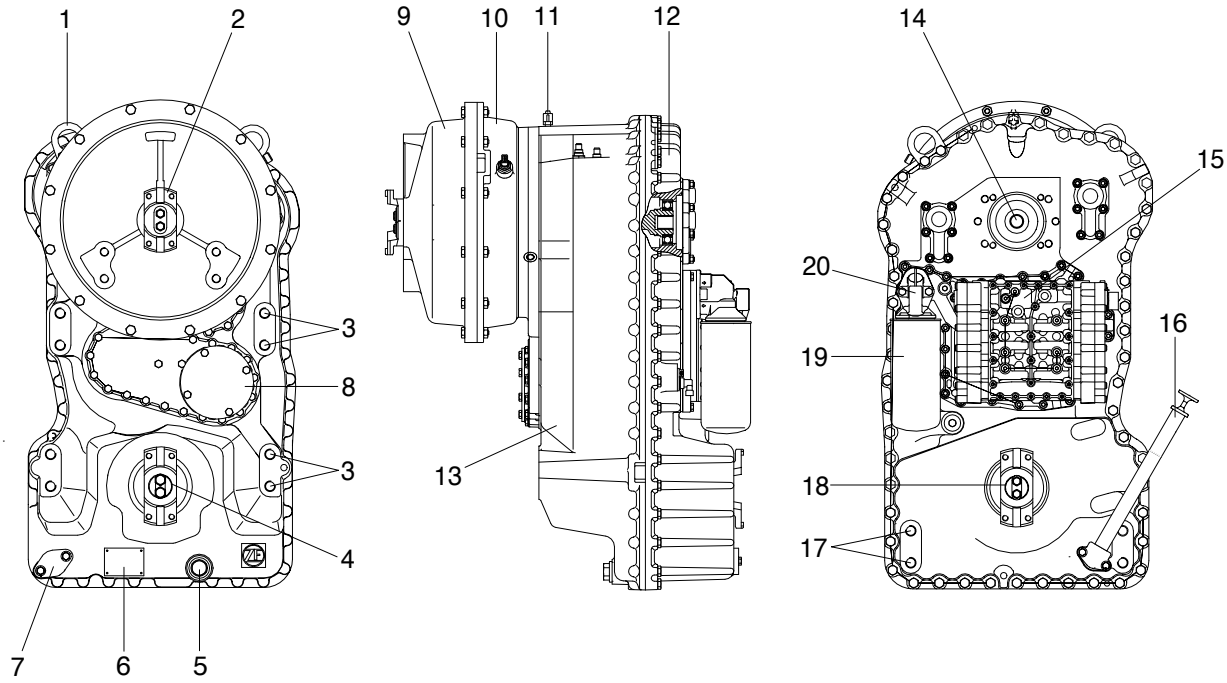

7407PT02

1 Lifting lugs
2 Input flange-input through universal shaft
3 Transmission suspension threads M20
4 Output flange-converter side
5 Oil drain plug with magnetic insert M38×1.5
6 Model identification plate
7 Attachment possibility for oil level tube with oil dipstick(Converter side)
8 Attachment possibility for emergency steering pump
9 Cover
10 Converter bell housing
11 Breather
12 Transmission-case cover
13 Transmission case
14 Power take-off; Coaxial; Engine-dependent
15 Electro-hydraulic control
16 Oil level tube with oil dipstick
17 Transmission suspension threads M20
18 Output flange-rear
19 Exchange filter(Fine filter)
20 Filter head with connection for filter restriction switch

3) OPERATION OF TRANSMISSION

(1) Forward

① Forward 1st

In 1st forward, forward clutch and 1st clutch are engaged.

Forward clutch and 1st clutch are actuated by the hydraulic pressure applied to the clutch piston.

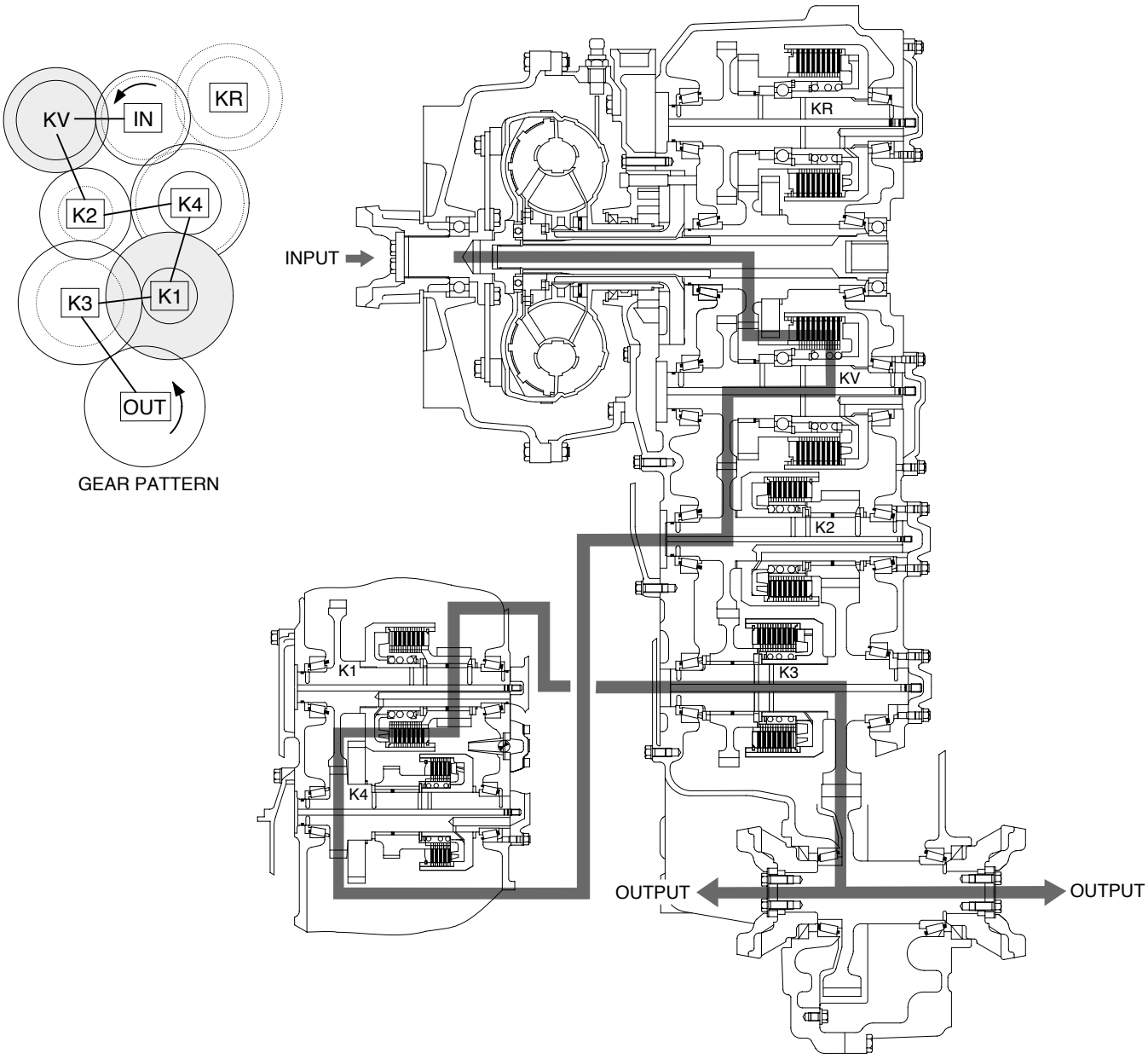

7607PT04

② **Forward 2nd**

In 2nd forward, forward clutch and 2nd clutch are engaged.

Forward clutch and 2nd clutch are actuated by the hydraulic pressure applied to the clutch piston.

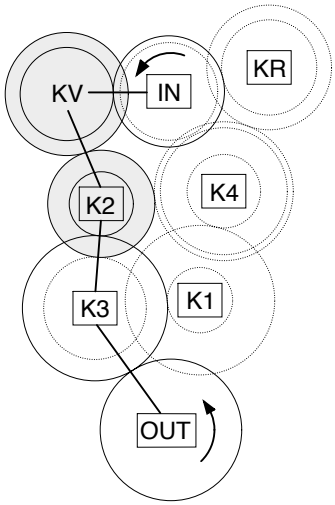

GEAR PATTERN

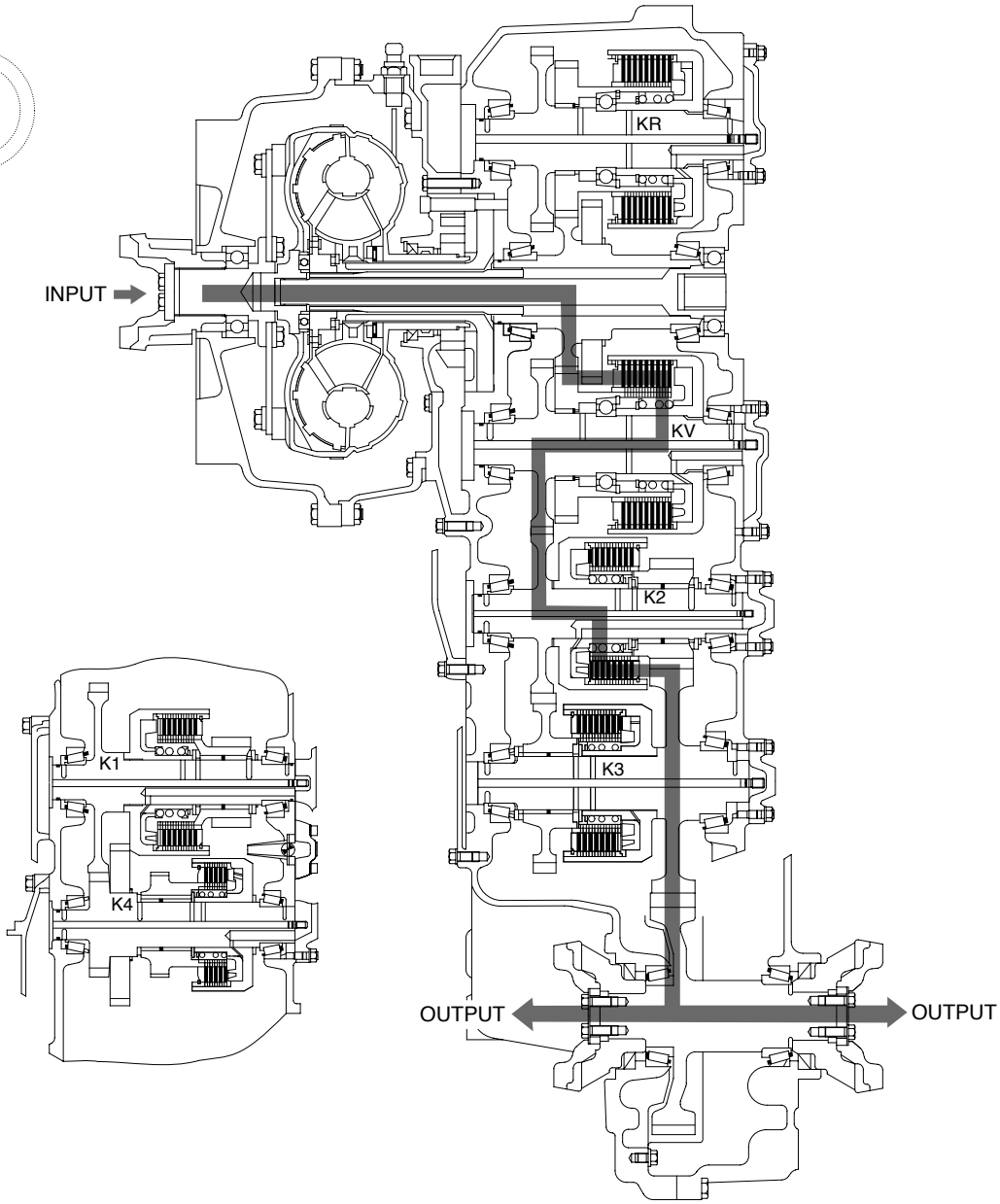

7607PT05

③ **Forward 3rd**

In 3rd forward, forward clutch and 3rd clutch are engaged.

Forward clutch and 3rd clutch are actuated by the hydraulic pressure applied to the clutch piston.

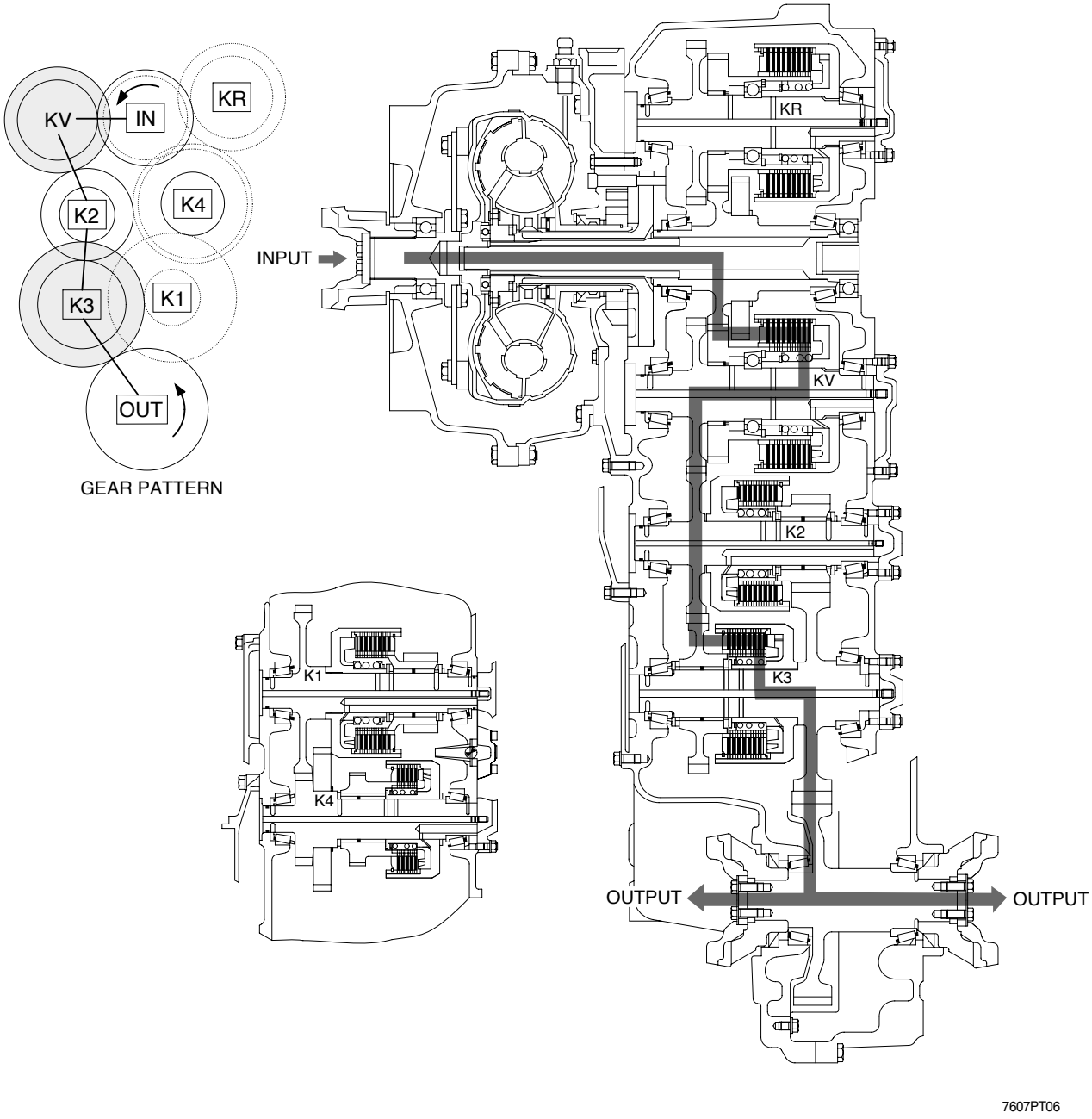

④ **Forward 4th**

In 4th forward, 4th clutch and 3rd clutch are engaged.

4th clutch and 3rd clutch are actuated by the hydraulic pressure applied to the clutch piston.

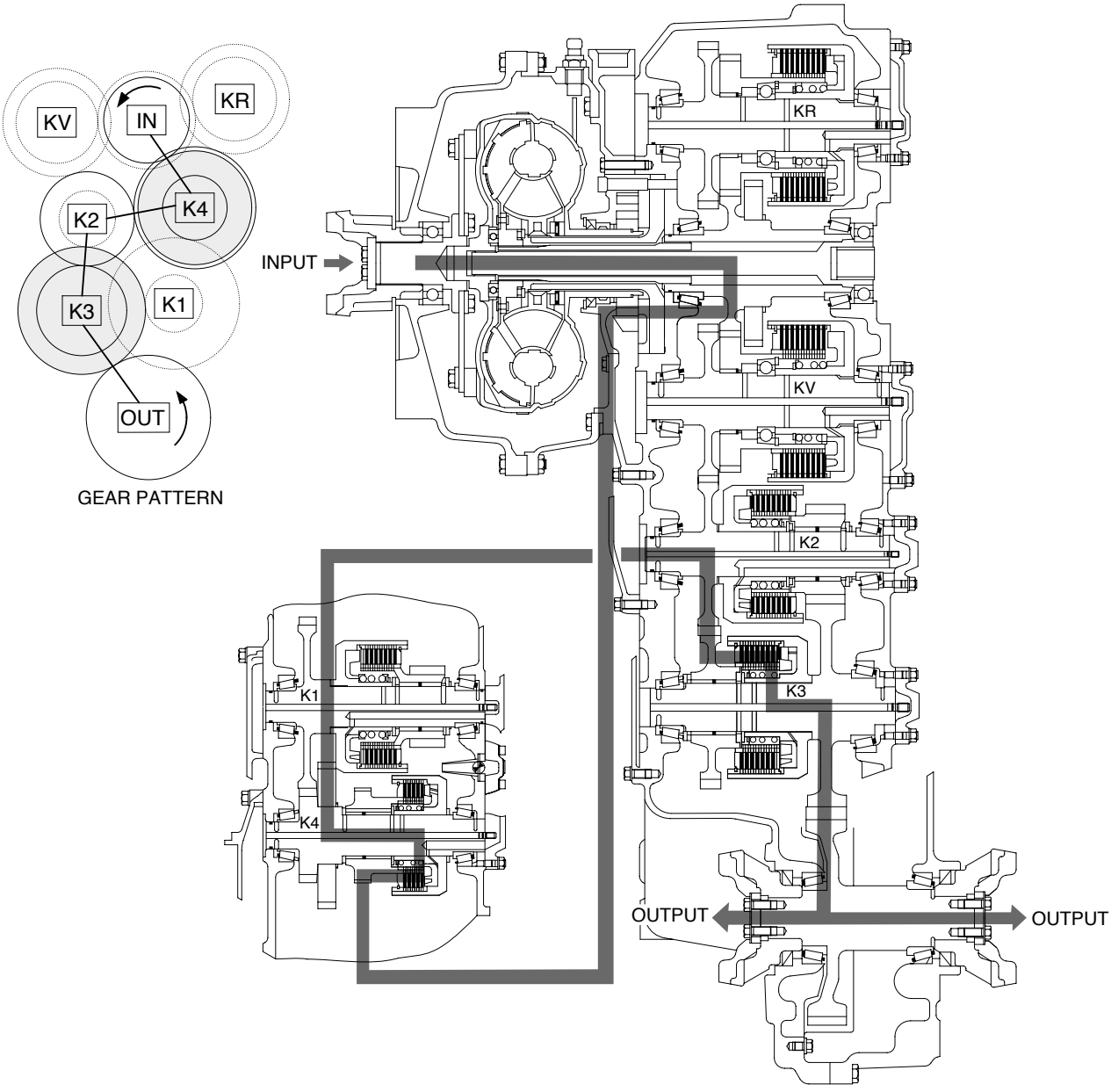

(2) Reverse

① Reverse 1st

In 1st reverse, reverse clutch and 1st clutch are engaged.

Reverse clutch and 1st clutch are actuated by the hydraulic pressure applied to the clutch piston.

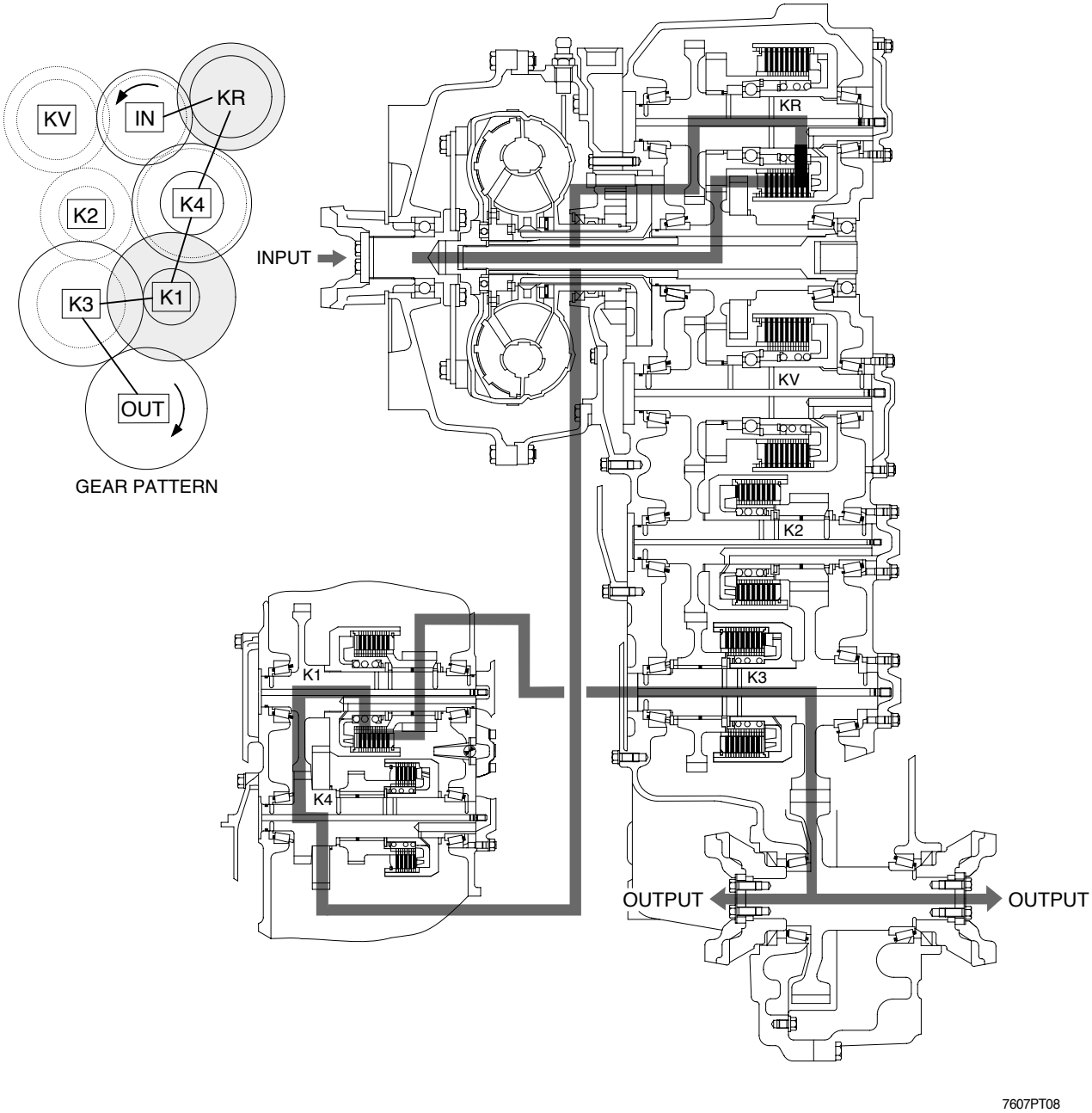

7607PT08

② **Reverse 2nd**

In 2nd reverse, reverse clutch and 2nd clutch are engaged.

Reverse clutch and 2nd clutch are actuated by the hydraulic pressure applied to the clutch piston.

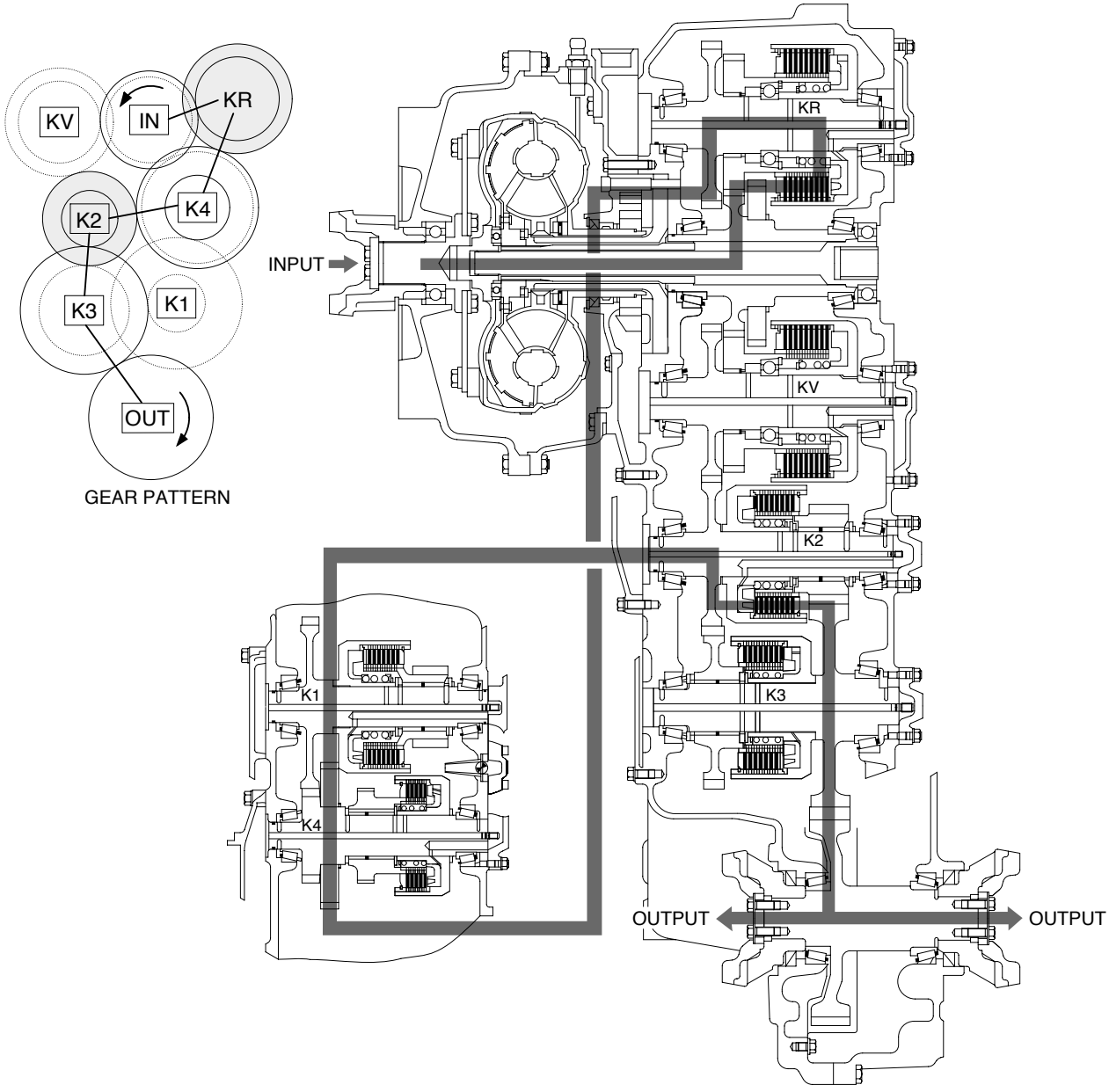

7607PT09

③ **Reverse 3rd**

In 3rd reverse, reverse clutch and 3rd clutch are engaged.

Reverse clutch and 3rd clutch are actuated by the hydraulic pressure applied to the clutch piston.

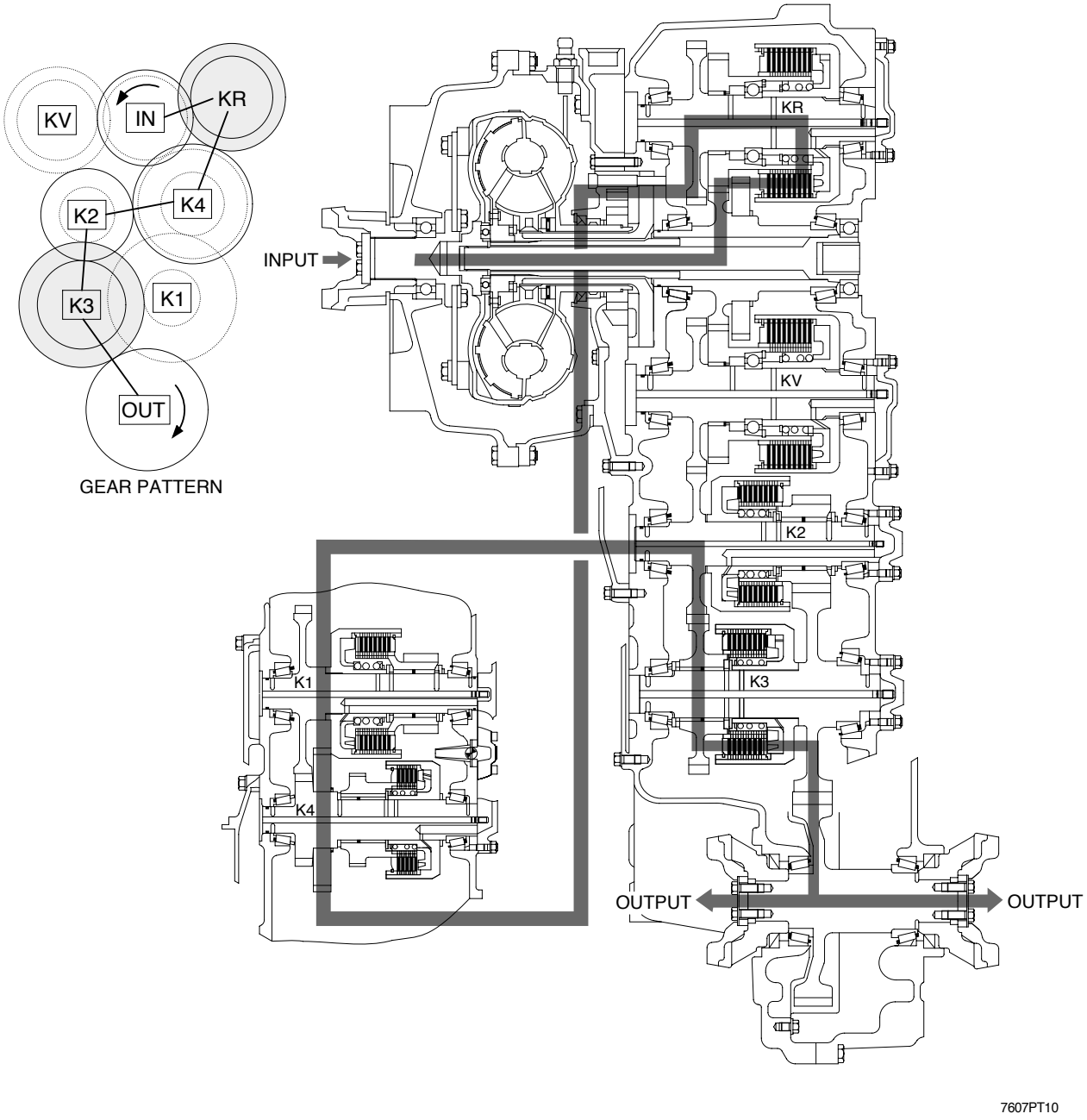

7607PT10

4) ELECTRO-HYDRAULIC SHIFT CONTROL WITH PROPORTIONAL VALVE

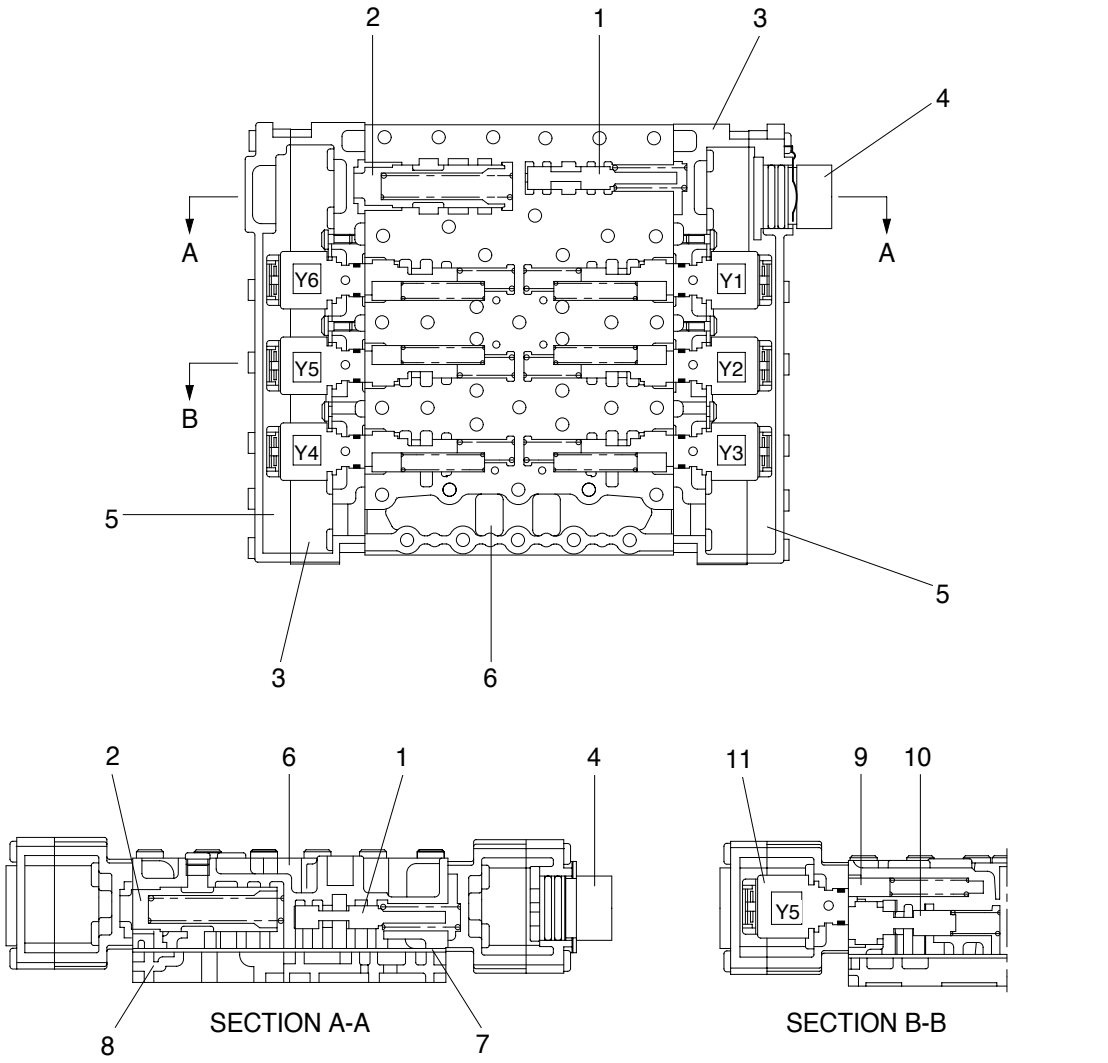

1 Pressure reducing valve(9bar)
2 System pressure valve(16+2bar)
3 Housing
4 Cable harness
5 Cover
6 Valve block
7 Intermediate sheet
8 Duct plate
9 Oscillation damper
10 Follow-on slide
11 Pressure regulator

Transmission control see schedule of measuring points, hydraulic schematic and electro-hydraulic control unit at page 3-2, 3-14 and 3-78.

The six clutches of the transmission are selected through the 6 proportional valves P1 to P6. The proportional valve(Pressure regulator-unit) consists of pressure regulator(e.g. Y1), booster valve oscillation damper.

The pilot pressure of 9 bar for the control of the follow-on slides is created by the reducing valve. The pressure oil (16+2bar) is directed through the follow-on slide to the corresponding clutch.

By the direct proportional selection with separate pressure modulation for each clutch, the pressures to the clutches, taking part in the gear change, are controlled. In this way, a hydraulic overlab of the clutches to be engaged and disengaged is achieved.

This is leading to fast shiftings without traction force interruption.

At the shifting, the following criteria are considered:
- Speed of engine, turbine, central gear train and output.
- Transmission temperature.
- Shifting mode(Up-, down-, reverse shifting and gear engaging from neutral).
- Load level(Full- and partial load, traction, coasting inclusive consideration of load cycles during the shifting).

The system pressure valve is limiting the maximum control pressure to 16+2 bar and releases the main stream to the converter and lubricating circuit.
A converter relief valve is installed in the converter inlet, which protects the converter against high internal pressures(Opening pressure 9bar).
Within the converter, the oil transfers the power transmission according to the well-known hydrodynamic principle(See torque converter, page 3-3).
In order to avoid cavitation, the converter must be always completely filled with oil.
This is achieved by a converter back pressure valve, following the converter, with an opening pressure of about 3.5bar.
The oil, escaping from the converter, is directed to a oil cooler.

The oil is directed from the oil cooler to the transmission and from there to the lubricating-oil circuit so that all lubricating points are supplied with cooled oil.

In the electro-hydraulic control unit there are 6 pressure regulators installed.

5) GEAR SELECTOR(DW-3)

The gear selector is designed for the mounting on the left side of the steering column. The positions(Speeds) 1 to 4 are selected by a rotary motion, the driving direction Forward(F)-Neutral(N)-Reverse(R) by tilting the gear selector lever.
The gear selector is also available with integrated kickdown control knob.

A neutral lock is installed as protection against inadvertent drive off.
Position **N** - Gear selector lever blocked in this position.
Position **D** - Driving.

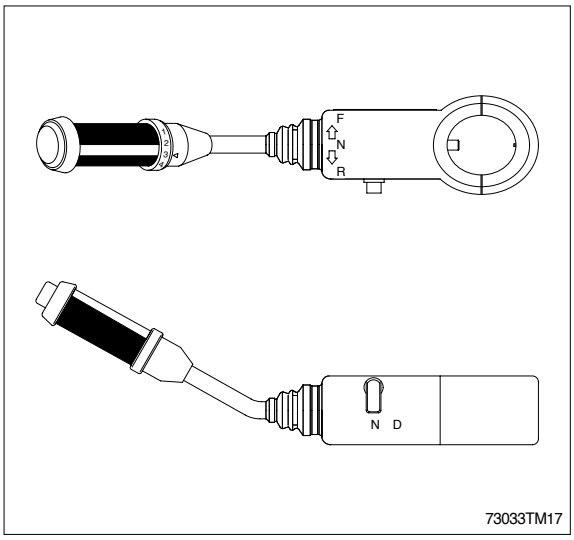

6) LCD

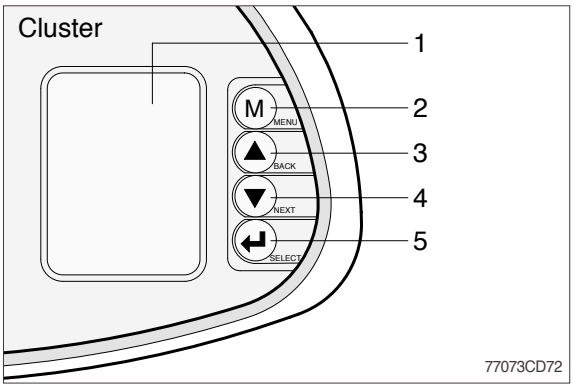

1 ( ) LCD
2 (M) MENU
- Display main menu
- Return to the normal display
3 ( ) BACK
Return to the previous menu
4 ( ) NEXT
Move to the next selection
5 ( ) SELECT
Activate the currently chosen item

(1) Normal display

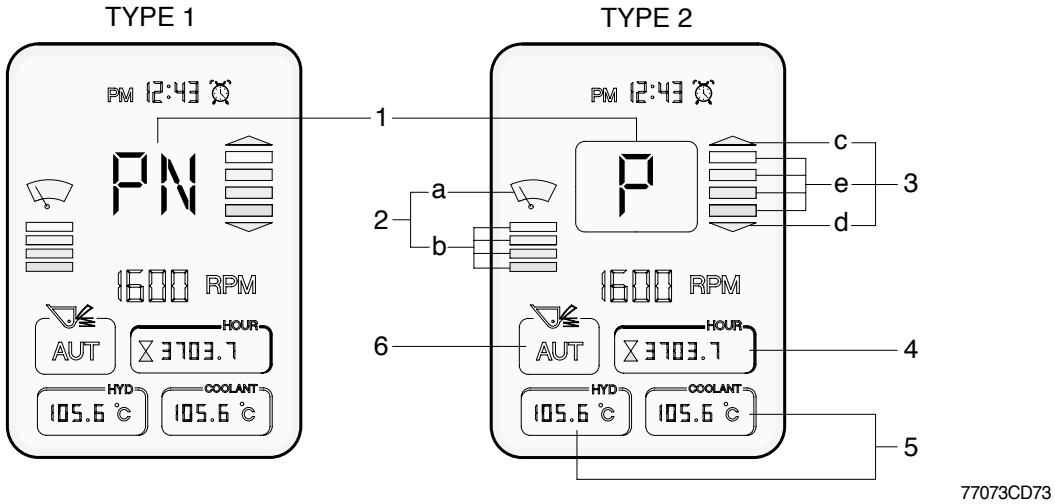

No	Symbol	Meaning	Remark	
1	△, ▽, □	Forward, reverse, neutral	LCD type 1, Display during AEB mode	
	F, R, N	Forward, reverse, neutral	LCD type 2, Display during AEB mode	
	1, 2, 3, 4	Actual gear	-	
	P	Parking brake mode active	-	
2	a	Wiper motor intermittently operating	-	
	b	When operating intermittently, it shows an operating time interval.	-	
3	c, d	Up and down shifting	c : Forward, d : Reverse	Automatic mode
	e	Pre-selected gear	-	
4	HOUR 3703.7	Hour meter	Display the total operation hours of the machine	
5	COOLANT 105.6 °C	Engine coolant temperature	Display in accordance with selected items	
6 (Option)	AUT	Ride control mode active	Ride control switch AUTO position, see page 7-35	
	ON	Ride control mode active	Ride control switch ON position, see page 7-35	
	OFF	Ride control mode turn off	Ride control switch MIDDLE position, see page 7-35	

※ Both type1 and type2 are LCD modes and they can be changed each other by operator's selection.

(2) Display map

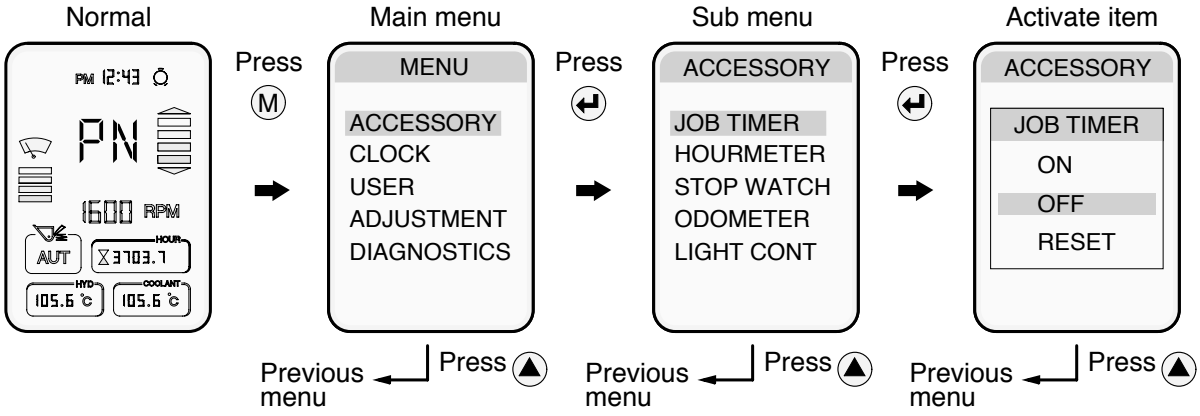

77073CD74

Main group	Sub group		Meaning	Display on LCD
Accessory	Job timer		· Measure the various job time. · Press ↵ : Display ON OFF or RESET.	JOB HOUR 37.5
	Stop watch		· Measures time in seconds. · Press ↵ : Start. Press ↵ again : Stop.	-
	Odometer	Latest	· Distance until recent times.	LATEST-DIS 30.5 Km
		Total	· Total distance.	TOTAL-DIS 20.5 Km
	Light control		· Control of LCD display luminosity. · Brightness control : ▲ , ▼ .	-
Clock	Time set		· When 12H or 24H is selected, the current hour appears. · ▲ , ▼ : input, ↵ : setting.	PM 12:43
	Clock ON/OFF		· ↵ : Clock display ON or OFF.	
	Alarm	1	· Alarm setting. It is possible to set 3 alarms. · Stop alarming : ↵ or buzzer stop switch.	
		2		
		3		
User	Alternate idle		· Raise the idle rpm to 1200rpm automatically to warm up the engine.	-
	Auto 1/2	Mode 1 (1st-4th)	· Automatic travelling speed is applied from 1st to 4th gear.	-
		Mode 2 (2nd-4th)	· Automatic travelling speed is applied from 2nd to 4th gear.	-
	Quick shift	Mode 1 (Down/Up)	· Press button once : Shift down, press button again ; shift up.	-
		Mode 2 (Down)	· Press button every time : Shift to lower gear respectively.	-
	Aux-sw	Auto Select	· ON : Transmission auto condition. · OFF : Transmission semi-auto condition.	
		Clutch Cut-off	· ON : Clutch cut-off is activated. · OFF : Clutch cut-off is cancelled.	-

Main group	Sub group		Meaning	Display on LCD display
Adjustment	Unit		· Choose between metric and inch unit display.	
	Wiper Intermittence		· When using the intermittent function of wiper motor, it regulates operation time.	
	Alternate RPM		· Regulate idle rpm. · Press ▲ , ▼ : Adjust idle rpm increments (or decrement) by 25rpm.	-
	Pulse		· Press ↵ : Modification.	-
	AEB		· It controls the disk interval of the transmission.	-
	ENG/KOR		· English : Display in English. · Korean : Display in Korean.	-
	Display 1/2		· Type 1 : Indicate with the symbol. · Type 2 : Indicate with a letter.	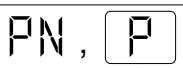
Diagnostics	Machine	Fault Code	· Error code display. · Refer to page 3-19.	-
		Monitor	· Hydraulic temperature and battery voltage display. · Press ↵ : Display ON or OFF.	
	Engine	Fault Code	· Error code display. · Refer to page 3-20~24.	-
		Monitor	· Engine coolant temperature display · Press ↵ : Display ON or OFF.	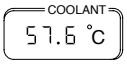
		Fault Code	· Error code display. · Refer to page 3-25~53.	-
	Transmis-sion	Monitor	Transmission oil temperature display. · Press ↵ : Display ON or OFF.	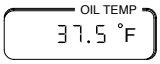

(3) Fault code

When selecting the fault code menu, it shows all of the fault codes which mean abnormal conditions of present time.

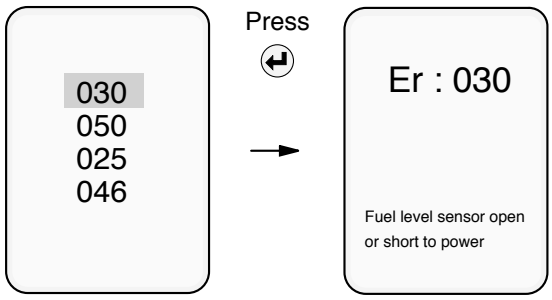

77073CD60

※ To go out from fault explanation window, press ▲ button.
(Press ↵ , M to go out to first menu.)

※ **No error** will be indicated in case that there's no fault.

Description	Code	Meaning	Remark
Electrical system	010	Power input voltage low	Below 18V
	011	Power input voltage high	Above 38V
	012	Alternator voltage low	Below 5V
	013	Alternator voltage high	Above 36V
	014	Buzzer circuit open or short to ground	
	015	Buzzer circuit short to power	
	016	Wiper relay open or short to ground	
	017	Wiper relay short to power	
Hydraulic system	020	Hydraulic oil temperature sensor open or short to power	
	021	Hydraulic oil temperature sensor short to ground	
Engine system	030	Fuel level sensor open or short to power	
	031	Fuel level sensor short to ground	
	032	Safety relay open or short to ground	Restarting prevention
	033	Safety relay short to power	Restarting prevention
	034	Cooling fan driving valve open or short to ground	
	035	Cooling fan driving valve short to power	
T/M system	050	Auto select switch supply power open or short to power	
	051	Auto select switch supply power short to ground	
	052	Clutch cutoff supply power open or short to power	
	053	Clutch cutoff supply power short to ground	
Steering system	060	Emergency steering relay open or short to ground	Option
	061	Emergency steering relay short to power	Option
Communication	070	MCU communication error	
	071	TCU communication error	
	072	ECM communication error	
Others	080	Speedometer output signal(from TCU) bad	
	081	MCU memory error	
	082	MCU clock error	
	083	MCU clock battery error	
	084	Monitor memory error	

MCU : Machine control unit TCU : Transmission control unit ECM : Engine control module

(4) Engine fault code information

Fault code No.	Reason	Effect(only when fault code is active)
111	ECM internal hardware error.	Possible no effect or engine may run rough or not start.
115	No engine speed or position signal detected at pin 17 of the engine harness.	Engine power derate. Possible white smoke.
121	No engine speed or position signal detected at pin 9 of the engine harness	No engine speed and position backup for main speed/position sensor.
122	High voltage detected at the boost pressure sensor signal pin 45 of the engine harness.	Engine will derate to no-boost fueling.
123	Low voltage detected at boost pressure sensor signal pin 45 of the engine harness.	Engine will derate to no-boost fueling.
131	High voltage detected at throttle position signal pin 30 of the machine harness.	Engine idles when idle validation switch indicates idle and ramps up to a default set speed when the idle validation switch indicates off-idle.
132	Low voltage detected at throttle position signal pin 30 of the machine harness.	Engine idles when idle validation switch indicates idle and ramps up to a default set speed when the idle validation switch indicates off-idle.
133	High voltage detected at remote throttle position signal pin 9 of the machine harness.	Engine will **not** respond to remote throttle input.
134	Low voltage detected at remote throttle position signal pin 9 of the machine harness.	Engine will **not** respond to remote throttle input.
135	High voltage detected at oil pressure signal pin 33 of the engine harness.	Default value used for oil pressure. No engine protection for oil pressure.
141	Low voltage detected at oil pressure signal pin 33 of the engine harness.	Default value used for oil pressure. No engine protection for oil pressure.
143	Oil pressure signal indicates oil pressure below the low engine protection limit.	Power and/or speed derate and possible engine shutdown if engine protection shutdown feature is enabled.
144	High voltage detected at coolant temperature signal pin 23 of the engine harness.	Default value used for coolant temperature. No engine protection for coolant temperature.
145	Low voltage detected at coolant temperature signal pin 23 of the engine harness.	Default value used for coolant temperature. No engine protection for coolant temperature.
146	Coolant temperature signal indicates coolant temperature has exceeded the minimum engine protection limit.	Power derate and possible engine shutdown feature is enabled.
151	Coolant temperature signal indicates coolant temperature has exceeded the maximum engine protection limit.	Speed derate and possible engine shutdown if engine protection shutdown feature is enabled.
153	High voltage detected at intake manifold temperature signal pin 34 of the engine harness.	Default value used for intake manifold temperature. No engine protection for intake manifold temperature.
154	Low voltage detected at intake manifold temperature signal pin 34 of the engine harness.	Default value used for intake manifold temperature. No engine protection for intake manifold temperature.
155	Intake manifold air temperature signal indicates intake manifold air temperature is above the maximum engine protection limit.	Speed derate and possible engine shutdown if engine protection shutdown feature is enabled.
191	Air conditioner clutch driver signal indicates a short to ground when commanded on.	Air conditioner clutch will **not** operate.
211	Machine specific fault code has occurred.	No effect on engine performance.
221	High voltage detected at ambient air pressure signal pin 32 of the engine harness.	Engine power derate.
234	Engine speed signal indicates engine speed has exceeded the overspeed limit.	Fuel to injectors disabled until engine speed falls below the overspeed limit.
235	Coolant level signal at pin 37 of the engine harness indicates coolant level is low.	Power and/or speed derate and possible engine shutdown if engine protection shutdown feature is enabled.

Fault code No.	Reason	Effect(only when fault code is active)
241	Vehicle speed signal on pins 8 and 18 of the machine harness has been lost.	EEngine speed limited to "Max. Engine Speed without VSS". Cruise control, gear-down protection and the road speed governor will **not** work. Trip information data that is based on mileage will be incorrect.
242	Possible tampering has been detected on the vehicle speed circuit pins 8 and 18 of the machine harness	Engine speed limited to " Max. Engine Speed without VSS". Cruise control, gear-down protection and the road speed governor will **not** work. Trip information data that is based on mileage will be incorrect.
243	Error detected in the exhaust brake relay enable circuit at pin 42 of the engine harness.	Exhaust brake will **not** work.
245	Error detected in fan clutch relay enable circuit at pin 41 of the engine harness.	Electronic control; module(ECM) can **not** control the engine cooling fan. Fan will remain on or off.
263	High voltage detected at the fuel temperature sensor signal pin 35 of the engine harness.	Default value used for fuel temperature. Possible low power.
261	Fuel pump control module indicates the fuel temperature has exceeded the pump protection limit.	Power derate.
264	High or low voltage detected at the fuel temperature sensor signal circuit inside the pump controller.	Default value used for fuel temperature. Possible low power.
283	High voltage detected at main engine speed/position sensor voltage supply pin 8 of the engine harness.	ECM will use the engine position signal as a backup. Possible white smoke and power loss.
284	Low voltage detected at main engine speed/ position sensor voltage supply pin 8 of the engine harness.	ECM will use the engine position signal as a backup. Possible white smoke and power loss.
285	The ECM expected information from a multiplexed device but did not receive it soon enough or did not receive it at all.	At least one multiplexed device will not operate properly.
286	The ECM expected info from a multiplexed device but only received a portion of the necessary information	At least on multiplexed device will not operate properly.
287	The machine vehicle electronic control unit (VECU) detected a fault with its throttle pedal.	The engine will only idle.
288	The machine vehicle electronic control unit (VECU) detected a fault with its remote throttle.	The engine will not respond to the remote throttle.
297	High voltage detected at machine pressure signal pin 48 of the machine harness.	Default value used for machine pressure. Lose ability to control machine pressure.
298	Low voltage detected at machine pressure signal pin 48 of the machine harness.	Default value used for machine pressure. Lose ability to control machine pressure.
299	Engine shutdown by device other than key switch before proper engine cool down resulting in filtered load factor above maximum shutdown threshold.	No action taken by the ECM.
319	Power to the real time clock has been interrupted and its setting is no longer valid	Time stamp in ECM powerdown data will be incorrect.
349	Auxiliary speed signal frequency indicates the frequency is above a calibrated threshold value.	Engine will go to idle and lose ability to control speed of the auxiliary device.
352	Low voltage detected at engine position sensor +5 VDC supply, pin 10 of the engine harness.	Default value used for sensors connected to this +5 VDC supply. Engine will derate to no-boost fueling and loss of engine protection for oil pressure, intake manifold pressure, and ambient air pressure.

Fault code No.	Reason	Effect(only when fault code is active)
361	High current detected at the fuel pump control valve.	Fueling to the injectors disabled and engine is shut down.
362	Low or no voltage detected at the fuel pump control valve.	Engine will lose power and may shut down.
363	No fuel control valve movement detected by the fuel pump controller.	Engine power loss.
364	No communications or invalid data transfer rate detected on data link between ECM and fuel pump controller at pins 4 and 13 of the engine harness.	Engine will run at a backup mode set speed when throttle is off-idle.
365	Low voltage detected at fuel pump controller supply voltage circuit.	Engine may lose power and may shut down.
366	Fuel pump controller battery voltage measurement is outside the range between 6 and 24 VDC.	Engine will lose power and may shut down.
367	Fuel pump speed/position sensor signal lost.	Fueling to injectors disabled and engine will shut down.
368	The fuel pump controller can not achieve the timing value being commanded by the engine ECM.	Significant engine power loss.
369	Fuel pump controller does not detect engine position pulse at pin 7 of the engine harness.	Significant engine power loss. Possible white smoke.
372	Fuel pump controller detects continuous voltage at idle select pin 16 of the engine harness or fuel pump controller detects and open circuit or short circuit to ground at idle select pin 16 of the engine harness.	If communication is lost between the ECM and fuel pump controller, engine will only operate at a speed slightly higher than idle, regardless of throttle position.
373	High voltage detected at fuel shut off signal pin 6 of the engine harness.	Fueling to injectors is disabled and engine will shut down.
374	Fuel pump controller has detected an internal error.	Response will vary from some power loss to the engine shutting down.
375	Engine ECM is commanding a fueling or timing value that the pump can not achieve.	Possible no effect or engine may exhibit some power loss.
376	No calibration in the fuel pump controller.	Fueling to injectors disabled and engine will shut down.
377	Fuel pump controller is not powering down when key switch power is removed from the ECM.	Equipment batteries may be drained low during long shutdown periods.
381	Error detected in cold start aid relay 1 enable circuit at pin 41 of the machine harness.	Intake air heater can not be fully energized by the ECM. Possible white smoke and/or hard starting.
382	Error detected in cold start aid relay 2 enable circuit at pin 31 of the machine harness.	Intake air heater can **not** be fully energized by the ECM. Possible white smoke and/or hard starting.
385	High voltage detected at machine harness sensor +5 VDC supply pin 10 of the machine harness.	Sensors connected to this +5 VDC supply(i.e. remote throttle position sensor) will **not** function.
386	High voltage detected at the engine harness sensor +5 VDC supply pin 10 of the engine harness.	Default value used for sensors connected to this +5 volts supply. Engine will derate to no-boost fueling and loss of engine protection for oil pressure, intake manifold temperature, and coolant temperature.
387	High voltage detected at the throttle position sensor +5 VDC supply pin 29 of the machine harness.	Engine idles when idle validation switch indicates idle and ramps up to a default set speed when idle validation switch indicates off-idle.
391	Error detected in power supply relay enable circuit at pin 43 of the engine harness.	Possible no effect on performance or engine may not run.

Fault code No.	Reason	Effect(only when fault code is active)
415	Oil pressure signal indicates oil pressure elow the very low engine protection limit.	Speed derate and possible engine shutdown if engine protection shutdown feature is enagled.
418	Water-in-fuel signal indicates the water in the fuel filter needs to be drained.	Excessive water in the fuel can lead to severe fuel sysm damage.
422	Voltage detected simultaneously on both the coolant level high and low signal pins 27 and 37 of the engine harness or no voltage detected on either pin.(Fault is active for switch type coolant level sensors only)	No engine protection for coolant level.
429	Low voltage detected at water-in-fuel signal pin 40 of the machine harness.	No water-in-fuel protection.
431	Idle validation signals on pins 25 and 26 of the machine harness indicate voltage detected simultaneously on both pins or no voltage detected on either pin.	No effect on performance, but loss of idle validation.
432	Idle validation signal at pin 26 of the machine harness indicates the throttle is at the idle position when the throttle position signal at pin 30 of the machine harness indicates the throttle is **not** at the idle position...OR...idle validation signal at pin 26 of the machine harness indicates the throttle is **not** at the idle position when the throttle position signal at pin 30 of the machine harness indicates the throttle is at the idle position.	Engine will only idle.
433	Boost pressure signal indicates boost pressure is high when other engine parameters(i.e. speed and load) indicate boost pressure should be low...OR...boost pressure is low when other engine parameters indicate it should be high.	Possible overfueling during acceleration. Increase in black smoke.
434	All data gathered by the ECM since the last key on(i.e.faults, trip information data. etc.)was **not** stored to permanent memory at the last key off.	None on performance. Fault code table, trip information data, maintenance monitor data, trending data and user activated datalogger data may be inaccurate.
441	Voltage detected at ECM power supply pins 38, 39, 40 and 50 of the engine harness indicates the ECM supply voltage fell below 6 VDC.	Engine will die or run rough.
442	Voltage detected at ECM power supply pins 38, 39, 40 and 50 of the engine harness indicates the ECM supply voltage is above the maximum system voltage level.	None on performance.
443	Low voltage detected at throttle position sensor +5 VDC supply pin 29 of the machine harness.	Engine idles when idle validation switch indicates idle and ramps up to a default set speed when idle validation switch indicates off-idle.
444	Low voltage detected at machine harness sensor +5 VDC supply pin 10 of the machine harness.	Sensors connected to this +5 VDC supply (i.e. remote throttle position sensor) will **not** function.
488	Intake manifold temperature signal indicates intake manifold temperature is above the minm-um engine protection limit.	Power derate and possible engine shutdown if engine protection shutdown feature is enabled.
489	Auxiliary device speed signal on pins 8 and 18 of the OEM harness is out of range of the ECM threshold.	Lose ability to control the speed of the auxiliary device.
515	High voltage detected at the auxiliary +5 VDC sensor supply voltage pin 49 of the engine harness.	Auxiliary device will **not** function.
516	Low voltage detected at the auxiliary +5 VDC sensor supply voltage pin 49 of the engine harness.	Auxiliary device will not function.

Fault code No.	Reason	Effect(only when fault code is active)
517	A mechanically stuck fuel control valve has been detected by the fuel pump controller.	Engine may shut down.
524	Error detected on the high speed governor droop selection switch in put pin 24 of the engine harness.	Operator can not select alternate high speed governor droop. Normal droop is used.
527	Error detected in the dual output driver "A" circuit pin 5 of the machine harness.	The device being controlled by the dual output driver "A"signal will **not** function properly.
528	Error detected on the torque curve selection switch input pin 39 of the machine harness.	Operator can not select alternate torque curves. Normal torque curve is used.
529	Error detected in the dual output driver "B" circuit pin 1 of the engine harness.	The device being controlled by the dual output driver "B" signal will **not** function properly.
551	Idle validation signals on pins 25 and 26 of the machine harness indicate voltage detected simultaneously on both pins.	Engine will only idle.
599	Software has initiated an engine shutdown based on machine sensor inputs	Engine will shutdown.
611	ECM detected the engine has initiated a protection shutdown or has been keyed off while above a specified load limit.	No effect.
768	Error detected in the output device driver(VGT or transmission shift modulation signal) signal pin 21 of the machine harness.	Can not control the VGT or transmission, depending on application.

※ Some fault codes are not applied to this machine.

(5) Display during AEB mode

Symbol	Meaning	Remarks
K1~K4, KV, KR	Calibrating clutch K1~K4, KV or KR respectively	
- And Kx	Wait for start, initialization of clutch Kx, x : 1, 2, 3, 4, V, R	
And Kx	Fast fill time determination of clutch Kx	
= And Kx	Compensating pressure determination of clutch Kx	
OK	Calibration for all clutches finished	Transmission stays in neutral, you have to restart the TCU(Ignition off/on) after removing AEB-Starter
STOP	AEB cancled(Activation stopped)	Transmission stays in neutral, you have to restart the TCU(Ignition off/on)
STOP and Kx	AEB stopped, clutch Kx can't be calibrated	Transmission stays in neutral, you have to restart the TCU(Ignition off/on)
Spanner and Kx	Kx couldn't be calibrated, AEB finished	Transmission stays in neutral, you have to restart the TCU(Ignition off/on)
△E	Engine speed too low, - Raise engine speed	
▽E	Engine speed too high, - Lower engine speed	
△T	Transmission oil temperature too low, - Heat up transmission	
▽T	Transmission oil temperature too high, - Cool down transmission	
FT	Transmission temperature not in defined range during calibration	Transmission stays in neutral, you have to restart the TCU(Ignition off/on)
FB	Operating mode not NORMAL or transmission temperature sensor defective or storing of calibrated values to EEPROM has failed	Transmission stays in neutral, you have to restart the TCU(Ignition off/on)
FO	Output speed not zero	Transmission stays in neutral, you have to restart the TCU(Ignition off/on)
FN	Shift lever not in neutral position	Transmission stays in neutral, you have to restart the TCU(Ignition off/on)
FP	Park brake not applied	Transmission stays in neutral, you have to restart the TCU(Ignition off/on)
STOP	AEB-Starter was used incorrect or is defective. Wrong device or wrong cable used	Transmission stays in neutral, you have to restart the TCU(Ignition off/on)

※ **AEB mode :** It controls the disk internal of the transmission, automatically.
Refer to page 7-28, 29.

(6) Definition of operating modes

① **Normal**

There's no failure detected in the transmission system or the failure has no or slight effects on transmission control. TCU will work without or in special cases with little limitations.(See following table)

② **Substitute clutch control**

TCU can't change the gears or the direction under the control of the normal clutch modulation.

TCU uses the substitute strategy for clutch control. All modulations are only time controlled. (Comparable with EST 25)

③ **Limp-home**

The detected failure in the system has strong limitations to transmission control. TCU can engage only one gear in each direction. In some cases only one direction will be possible.

TCU will shift the transmission into neutral at the first occurrence of the failure. First, the operator must shift the gear selector into neutral position.

If output speed is less than a threshold for neutral to gear and the operator shifts the gear selector into forward or reverse, the TCU will select the limp-home gear.

If output speed is less than a threshold for reversal speed and TCU has changed into the limp-home gear and the operator selects a shuttle shift, TCU will shift immediately into the limp-home gear of the selected direction.

If output speed is greater than the threshold, TCU will shift the transmission into neutral. The operator has to slow down the vehicle and must shift the gear selector into neutral position.

④ **Transmission-shutdown**

TCU has detected a severe failure that disables control of the transmission.

TCU will shut off the solenoid valves for the clutches and also the common power supply(VPS1).

Transmission shifts to neutral. The park brake will operate normally, also the other functions which use ADM1 to ADM8.

The operator has to slow down the vehicle. The transmission will stay in neutral.

⑤ **TCU-shutdown**

TCU has detected a severe failure that disables control of system.

TCU will shut off all solenoid valves and also both common power supplies(VPS1, VPS2). The park brake will engage, also functions are disabled which use ADM 1 to ADM 8.

The transmission will stay in neutral.

(7) Abbreviations

OC	: Open circuit
SC	: Short circuit
OP mode	: Operating mode
TCU	: Transmission control unit
EEC	: Electronic engine controller
PTO	: Power take off

(8) Table of fault codes

Fault code (Hex)	Int. code (Dec)	Meaning of the fault code possible reason for fault detection	Reaction of the TCU	Possible steps to repair	Remarks
11	48	**Logical error at gear range signal** TCU detected a wrong signal combination for the gear range • Cable from shift lever to TCU is broken • Cable is defective and is contacted to battery voltage or vehicle ground • Shift lever is defective	TCU shifts transmission to neutral OP-mode : Transmission shutdown	• Check the cables from TCU to shift lever • Check signal combinations of shift lever positions for gear range	Failure cannot be detected in systems with DW2/DW3 shift lever Fault is taken back if TCU detects a valid signal for the position
12	46	**Logical error at direction select signal** TCU detected a wrong signal combination for the direction • Cable from shift lever to TCU is broken • Cable is defective and is contacted to battery voltage or vehicle ground • Shift lever is defective	TCU shifts transmission to neutral OP-Mode : Transmission shutdown	• Check the cables from TCU to shift lever • Check signal combinations of shift lever positions F-N-R	Fault is taken back if TCU detects a valid signal for the direction at the shift lever
13	95	**Logical error at engine derating device** TCU detected no reaction of engine while derating device active	After selecting neutral, TCU change to OP mode limp home	• Check engine derating device	This fault is reset after power up of TCU
15	176	Logical error at direction select signal 2 shift lever TCU detected a wrong signal combination for the direction • Cable from shift lever 2 to TCU is broken • Cable is defective and is contacted to battery voltage or vehicle ground • Shift lever is defective	TCU shifts transmission to neutral if selector active OP mode : Transmission shutdown if selector active	• Check the cables from TCU to shift lever 2 • Check signal combinations of shift lever positions F-N-R	Fault is taken back if TCU detects a valid neutral signal for the direction at the shift lever
16	178	**Logical error at axle connection** Feedback axle connection measured by TCU and output signal axle connection don't fit • Axle can't be connected or disconnected due to mechanical problem • One of the cables from feedback axle connection switch to TCU is broken	OP mode : Normal	• Check the cables from TCU to feedback axle connection switch • Check signals of the feedback axle connection switch	

Fault code (Hex)	Int. code (Dec)	Meaning of the fault code possible reason for fault detection	Reaction of the TCU	Possible steps to repair	Remarks
21	32	**S.C. to battery voltage at clutch cut off input** The measured voltage is too high: • Cable is defective and is contacted to battery voltage • Clutch cut off sensor has an internal defect • Connector pin is contacted to battery voltage	Clutch cut off function is disabled OP mode : Normal	• Check the cable from TCU to the sensor • Check the connectors • Check the clutch cut off sensor	
22	29	**S.C. to ground or O.C. at clutch cut off input** The measured voltage is too low: • Cable is defective and is contacted to vehicle ground • Cable has no connection to TCU • Clutch cut off sensor has an internal defect • Connector pin is contacted to vehicle ground or is broken	Clutch cut off function is disabled OP mode : Normal	• Check the cable from TCU to the sensor • Check the connectors • Check the clutch cut off sensor	
23		**S.C. to battery voltage at load sensor input** The measured voltage is too high: • Cable is defective and is contacted to battery voltage • Load sensor has an internal defect • Connector pin is contacted to battery voltage	Retarder function is affected TCU uses default load OP mode : Normal	• Check the cable from TCU to the sensor • Check the connectors • Check the load sensor • Check the assembly tolerances of load sensor	Availability of retarder depends on default load
24		**S.C. to ground or O.C. at load sensor input** The measured voltage is too low: • Cable is defective and is contacted to vehicle ground • Cable has no connection to TCU • Load sensor has as internal defect • Connector pin is contacted to vehicle ground or is broken	Retarder function is affected TCU use default load OP mode : Normal	• Check the cable from TCU to the sensor • Check the connectors • Check the load sensor • Check the assembly tolerances of load sensor	Availability of retarder depends on default load

Fault code (Hex)	Int. code (Dec)	Meaning of the fault code possible reason for fault detection	Reaction of the TCU	Possible steps to repair	Remarks
25	33	**S.C. to battery voltage or O.C. at transmission sump temperature sensor input** The measured voltage is too high: • Cable is defective and is contacted to battery voltage • Cable has no connection to TCU • Temperature sensor has an internal defect • Connector pin is contacted to battery voltage or is broken	No reaction, TCU use default temperature OP mode : Normal	• Check the cable from TCU to the sensor • Check the connectors • Check the temperature sensor	
26	30	**S.C. to battery voltage or O.C. at transmission sump temperature sensor input** The measured voltage is too low: • Cable is defective and is contacted to vehicle ground • Temperature sensor has an internal defect • Connector pin is contacted to vehicle ground	No reaction, TCU uses default temperature OP mode : Normal	• Check the cable from TCU to the sensor • Check the connectors • Check the temperature sensor	
27	76	**S.C. to battery voltage or O.C. at retarder temperature sensor input** The measured voltage is too high: • Cable is defective and is contacted to battery voltage • Cable has no connection to TCU • Temperature sensor has an internal defect • Connector pin is contacted to battery voltage or is broken	No reaction, TCU uses default temperature OP mode : Normal	• Check the cable from TCU to the sensor • Check the connectors • Check the temperature sensor	
28	74	**S.C. to ground at retarder temperature sensor input** The measured voltage is too low: • Cable is defective and is contacted to vehicle ground • Temperature sensor has an internal defect • Connector pin is contacted to vehicle ground	No reaction, TCU uses default temperature OP mode : Normal	• Check the cable from TCU to the sensor • Check the connectors • Check the temperature sensor	

Fault code (Hex)	Int. code (Dec)	Meaning of the fault code possible reason for fault detection	Reaction of the TCU	Possible steps to repair	Remarks
27	76	**S.C. to battery voltage or O.C. at converter output temperature sensor input** The measured voltage is too high: • Cable is defective and is contacted to battery voltage • Cable has no connection to TCU • Temperature sensor has an internal defect • Connector pin is contacted to battery voltage or is broken	No reaction, TCU uses default temperature OP mode : Normal	• Check the cable from TCU to the sensor • Check the connectors • Check the temperature sensor	
28	74	**S.C. to ground at converter output temperature sensor input** The measured voltage is too low: • Cable is defective and is contacted to vehicle ground • Temperature sensor has an internal defect • Connector pin is contacted to vehicle ground	No reaction, TCU uses default temperature OP mode : Normal	• Check the cable from TCU to the sensor • Check the connectors • Check the temperature sensor	
31	38	**S.C. to battery voltage or O.C. at engine speed input** TCU measures a voltage higher than 7.00V at speed input pin • Cable is defective and is contacted to battery voltage • Cable has no connection to TCU • Speed sensor has an internal defect • Connector pin is contacted to battery voltage or has no contact	OP mode : Substitute clutch control	• Check the cable from TCU to the sensor • Check the connectors • Check the speed sensor	
32	34	**S.C. to ground at engine speed input** TCU measures a voltage less than 0.45V at speed input pin • Cable/connector is defective and is contacted to vehicle ground • Speed sensor has an internal defect	OP mode : Substitute clutch control	• Check the cable from TCU to the sensor • Check the connectors • Check the speed sensor	

Fault code (Hex)	Int. code (Dec)	Meaning of the fault code possible reason for fault detection	Reaction of the TCU	Possible steps to repair	Remarks
33	42	**Logical error at engine speed input** TCU measures a engine speed over a threshold and the next moment the measured speed is zero • Cable/connector is defective and has bad contact • Speed sensor has an internal defect • Sensor gap has the wrong size	OP mode : Substitute clutch control	• Check the cable from TCU to the sensor • Check the connectors • Check the speed sensor • Check the sensor gap	This fault is reset after power up of TCU
34	39	**S.C. to battery voltage or O.C. at turbine speed input** TCU measures a voltage higher than 7.00V at speed input pin • Cable is defective and is contacted to vehicle battery voltage • Cable has no connection to TCU • Speed sensor has an internal defect • Connector pin is contacted to battery voltage or has no contact	OP mode : Substitute clutch control If a failure is existing at output speed, TCU shifts to neutral OP mode : Limp home	• Check the cable from TCU to the sensor • Check the connectors • Check the speed sensor	
35	35	**S.C. to ground at turbine speed input** TCU measures a voltage less than 0.45V at speed input pin • Cable/connector is defective and is contacted to vehicle ground • Speed sensor has an internal defect	OP mode : Substitute clutch control If a failure is existing at output speed, TCU shifts to neutral OP mode : Limp home	• Check the cable from TCU to the sensor • Check the connectors • Check the speed sensor	This fault is reset after power up of TCU
36	43	**Logical error at turbine speed input** TCU measures a turbine speed over a threshold and at the next moment the measured speed is zero • Cable/connector is defective and has bad contact • Speed sensor has an internal defect • Sensor gap has the wrong size	OP mode : Substitute clutch control If a failure is existing at output speed, TCU shifts to neutral OP mode : Limp home	• Check the cable from TCU to the sensor • Check the connectors • Check the speed sensor • Check the sensor gap	

Fault code (Hex)	Int. code (Dec)	Meaning of the fault code possible reason for fault detection	Reaction of the TCU	Possible steps to repair	Remarks
37	40	**S.C. to battery voltage or O.C. at internal speed input** TCU measures a voltage higher than 7.00V at speed input pin • Cable is defective and is contacted to vehicle battery voltage • Cable has no connection to TCU • Speed sensor has an internal defect • Connector pin is contacted to battery voltage or has no contact	OP mode : Substitute clutch control	• Check the cable from TCU to the sensor • Check the connectors • Check the speed sensor	
38	36	**S.C. to ground at turbine speed input** TCU measures a voltage less than 0.45V at speed input pin • Cable/connector is defective and is contacted to vehicle ground • Speed sensor has an internal defect	OP mode : Substitute clutch control	• Check the cable from TCU to the sensor • Check the connectors • Check the speed sensor	
39	44	**Logical error at internal speed input** TCU measures a internal speed over a threshold and at the next moment the measured speed is zero • Cable/connector is defective and has bad contact • Speed sensor has an internal defect • Sensor gap has the wrong size	OP mode : Substitute clutch control	• Check the cable from TCU to the sensor • Check the connectors • Check the speed sensor • Check the sensor gap	This fault is reset after power up of TCU
3A	41	**S.C. to battery voltage or O.C. at output speed input** TCU measures a voltage higher than 12.5V at speed input pin • Cable is defective and is contacted to battery voltage • Cable has no connection to TCU • Speed sensor has an internal defect • Connector pin is contacted to battery voltage or has no contact	Special mode for gear selection OP mode : Substitute clutch control If a failure is existing at turbine speed, TCU shifts to neutral OP mode : lamp home	• Check the cable from TCU to the sensor • Check the connectors • Check the speed sensor	

Fault code (Hex)	Int. code (Dec)	Meaning of the fault code possible reason for fault detection	Reaction of the TCU	Possible steps to repair	Remarks
3B	37	**S.C. to ground at output speed input** TCU measures a voltage less than 1.00V at speed input pin • Cable/connector is defective and is contacted to vehicle ground • Speed sensor has an internal defect	Special mode for gear selection OP mode : Substitute clutch control If a failure is existing at turbine speed, TCU shifts to neutral OP mode : lamp home	• Check the cable from TCU to the sensor • Check the connectors • Check the speed sensor	
3C	45	**Logical error at output speed input** TCU measures a turbine speed over a threshold and at the next moment the measured speed is zero • Cable/connector is defective and has bad contact • Speed sensor has an internal defect • Sensor gap has the wrong size	Special mode for gear selection OP mode : Substitute clutch control If a failure is existing at turbine speed, TCU shifts to neutral OP mode : lamp home	• Check the cable from TCU to the sensor • Check the connectors • Check the speed sensor • Check the sensor gap	This fault is reset after power up of TCU
3D	71	**Turbine speed zero doesn't fit to other speed signals**	-	-	Not used
3E	72	**Output speed zero doesn't fit to other speed signals** If transmission is not neutral and the shifting has finished, TCU measures output speed zero and turbine speed or internal speed not equal to zero. • Speed sensor has an internal defect • Sensor gap has the wrong size	Special mode for gear selection OP mode : Substitute clutch control If a failure is existing at turbine speed, TCU shifts to neutral OP mode : lamp home	• Check the sensor signal of output speed sensor • Check the sensor gap of output speed sensor • Check the cable from TCU to the sensor	This fault is reset after power up of TCU

Fault code (Hex)	Int. code (Dec)	Meaning of the fault code possible reason for fault detection	Reaction of the TCU	Possible steps to repair	Remarks
71	22	**S.C. to battery voltage at clutch K1** The measured resistance value of the valve is out of limit, the voltage at K1 valve is too high • Cable/connector is defective and has contact to battery voltage • Cable/connector is defective and has contact to another regulator output of the TCU • Regulator has an internal defect	TCU shifts to neutral OP mode : Limp home If failure at another clutch is pending TCU shifts to neutral OP mode : TCU shutdown	• Check the cable from TCU to the gearbox • Check the connectors from TCU to the gearbox • Check the regulator resistance* • Check internal wire harness of the gearbox	* See Chapter (9)
72	10	**S.C. to ground at clutch K1** The measured resistance value of the valve is out of limit, the voltage at K1 valve is too low • Cable/connector is defective and has contact to vehicle ground • Regulator has an internal defect	TCU shifts to neutral OP mode : Limp home If failure at another clutch is pending TCU shifts to neutral OP mode : TCU shutdown	• Check the cable from TCU to the gearbox • Check the connectors from gearbox to TCU • Check the regulator resistance* • Check internal wire harness of the gearbox	* See Chapter (9)
73	16	**O.C. at clutch K1** The measured resistance value of the valve is out of limit • Cable/connector is defective and has no contact to TCU • Regulator has an internal defect	TCU shifts to neutral OP mode : Limp home If failure at another clutch is pending TCU shifts to neutral OP mode : TCU shutdown	• Check the cable from TCU to the gearbox • Check the connectors from gearbox to TCU • Check the regulator resistance* • Check internal wire harness of the gearbox	* See Chapter (9)
74	23	**S.C. to battery voltage at clutch K2** The measured resistance value of the valve is out of limit, the voltage at K2 valve is too high • Cable/connector is defective and has contact to battery voltage • Cable/connector is defective and has contact to another regulator output of the TCU • Regulator has an internal defect	TCU shifts to neutral OP mode : Limp home If failure at another clutch is pending TCU shifts to neutral OP mode : TCU shutdown	• Check the cable from TCU to the gearbox • Check the connectors from gearbox to TCU • Check the regulator resistance* • Check internal wire harness of the gearbox	* See Chapter (9)

Fault code (Hex)	Int. code (Dec)	Meaning of the fault code possible reason for fault detection	Reaction of the TCU	Possible steps to repair	Remarks
75	11	**S.C. to ground at clutch K2** The measured resistance value of the valve is out of limit, the voltage at K2 valve is too low • Cable/connector is defective and has contact to vehicle ground • Regulator has an internal defect	TCU shifts to neutral OP mode : Limp home If failure at another clutch is pending TCU shifts to neutral OP mode : TCU shutdown	• Check the cable from TCU to the gearbox • Check the connectors from gearbox to TCU • Check the regulator resistance* • Check internal wire harness of the gearbox	* See Chapter (9)
76	17	**O.C. at clutch K2** The measured resistance value of the valve is out of limit • Cable/connector is defective and has no contact to TCU • Regulator has an internal defect	TCU shifts to neutral OP mode : Limp home If failure at another clutch is pending TCU shifts to neutral OP mode : TCU shutdown	• Check the cable from TCU to the gearbox • Check the connectors from gearbox to TCU • Check the regulator resistance* • Check internal wire harness of the gearbox	* See Chapter (9)
77	24	**S.C. to battery voltage at clutch K3** The measured resistance value of the valve is out of limit, the voltage at K3 valve is too high • Cable/connector is defective and has contact to battery voltage • Cable/connector is defective and has contact to another regulator output of the TCU • Regulator has an internal defect	TCU shifts to neutral OP mode : Limp home If failure at another clutch is pending TCU shifts to neutral OP mode : TCU shutdown	• Check the cable from TCU to the gearbox • Check the connectors from gearbox to TCU • Check the regulator resistance* • Check internal wire harness of the gearbox	* See Chapter (9)
78	12	**S.C. to ground at clutch K3** The measured resistance value of the valve is out of limit, the voltage at K3 valve is too low • Cable/connector is defective and has contact to vehicle ground • Regulator has an internal defect	TCU shifts to neutral OP mode : Limp home If failure at another clutch is pending TCU shifts to neutral OP mode : TCU shutdown	• Check the cable from TCU to the gearbox • Check the connectors from gearbox to TCU • Check the regulator resistance* • Check internal wire harness of the gearbox	* See Chapter (9)

Fault code (Hex)	Int. code (Dec)	Meaning of the fault code possible reason for fault detection	Reaction of the TCU	Possible steps to repair	Remarks
79	18	**O.C. at clutch K2** The measured resistance value of the valve is out of limit • Cable/connector is defective and has no contact to TCU • Regulator has an internal defect	TCU shifts to neutral OP mode : Limp home If failure at another clutch is pending TCU shifts to neutral OP mode : TCU shutdown	• Check the cable from TCU to the gearbox • Check the connectors from gearbox to TCU • Check the regulator resistance* • Check internal wire harness of the gearbox	* See Chapter (9)
7A	78	**S.C. to battery voltage at converter clutch**	-	-	
7B	79	**S.C. to ground at converter clutch**	-	-	
7C	80	**O.C. at converter clutch**	-	-	Not used
7D	166	**S.C. ground at engine derating device** • Cable is defective and is contacted to vehicle ground • Engine derating device has an internal defect • Connector pin is contacted to vehicle ground	Engine derating will be on until TCU power down even if fault vanishes(Loose connection) OP mode : Normal	• Check the cable from TCU to the engine derating device • Check the connectors from engine derating device to TCU • Check the resistance* of engine derating device	Not used Not used * See Chapter (9)
7E	168	**S.C. battery voltage at engine derating device** • Cable/connector is defective and is contacted to battery voltage • Engine derating device has an internal defect	No reaction OP mode : Normal	• Check the cable from TCU to the engine derating device • Check the connectors from backup alarm device to TCU • Check the resistance* of backup alarm device	* See Chapter (9)
7F	167	**O.C. at engine derating device** TCU detected a wrong voltage at the output pin, that looks like a O.C. for this output pin • Cable is defective and has no connection to TCU • Engine derating device has an internal defect • Connector has no connection to TCU	No reaction OP mode : Normal	• Check the cable from TCU to the engine derating device • Check the connectors from engine derating device to TCU • Check the resistance* of engine derating device	* See Chapter (9)

Fault code (Hex)	Int. code (Dec)	Meaning of the fault code possible reason for fault detection	Reaction of the TCU	Possible steps to repair	Remarks
81	25	**S.C. to battery voltage at clutch K4** The measured resistance value of the valve is out of limit, the voltage at K4 valve is too high • Cable/connector is defective and has contact to battery voltage • Cable/connector is defective and has contact to another regulator output of the TCU • Regulator has an internal defect	TCU shifts to neutral OP mode : Limp home If failure at another clutch is pending TCU shifts to neutral OP mode : TCU shutdown	• Check the cable from TCU to the gearbox • Check the connectors from gearbox to TCU • Check the regulator resistance* • Check internal wire harness of the gearbox	* See Chapter (9)
82	13	**S.C. to ground at clutch K4** The measured resistance value of the valve is out of limit, the voltage at K4 valve is too low • Cable/connector is defective and has contact to vehicle ground • Regulator has an internal defect	TCU shifts to neutral OP mode : Limp home If failure at another clutch is pending TCU shifts to neutral OP mode : TCU shutdown	• Check the cable from TCU to the engine derating device • Check the connectors from gearbox to TCU • Check the regulator resistance* • Check internal wire harness of the gearbox	* See Chapter (9)
83	19	**O.C. at clutch K4** The measured resistance value of the valve is out of limit • Cable/connector is defective and has contact to TCU • Regulator has an internal defect	TCU shifts to neutral OP mode : Limp home If failure at another clutch is pending TCU shifts to neutral OP mode : TCU shutdown	• Check the cable from TCU to the gearbox • Check the connectors from gearbox to TCU • Check the regulator resistance* • Check internal wire harness of the gearbox	* See Chapter (9)
84	26	**S.C. to battery voltage at clutch K4** The measured resistance value of the valve is out of limit, the voltage at K4 valve is too high • Cable/connector is defective and has contact to battery voltage • Cable/connector is defective and has contact to another regulator output of the TCU • Regulator has an internal defect	TCU shifts to neutral OP mode : Limp home If failure at another clutch is pending TCU shifts to neutral OP mode : TCU shutdown	• Check the cable from TCU to the gearbox • Check the connectors from gearbox to TCU • Check the regulator resistance* • Check internal wire harness of the gearbox	* See Chapter (9)

Fault code (Hex)	Int. code (Dec)	Meaning of the fault code possible reason for fault detection	Reaction of the TCU	Possible steps to repair	Remarks
85	14	**S.C. to ground at clutch KV** The measured resistance value of the valve is out of limit, the voltage at K4 valve is too low • Cable/connector is defective and has contact to vehicle ground • Regulator has an internal defect	TCU shifts to neutral OP mode : Limp home If failure at another clutch is pending TCU shifts to neutral OP mode : TCU shutdown	• Check the cable from TCU to the gearbox • Check the connectors from gearbox to TCU • Check the regulator resistance* • Check internal wire harness of the gearbox	* See Chapter (9)
86	20	**O.C. at clutch KV** The measured resistance value of the valve is out of limit • Cable/connector is defective and has contact to TCU • Regulator has an internal defect	TCU shifts to neutral OP mode : Limp home If failure at another clutch is pending TCU shifts to neutral OP mode : TCU shutdown	• Check the cable from TCU to the gearbox • Check the connectors from gearbox to TCU • Check the regulator resistance* • Check internal wire harness of the gearbox	* See Chapter (9)
87	27	**S.C. to battery voltage at clutch KR** The measured resistance value of the valve is out of limit, the voltage at KR valve is too high • Cable/connector is defective and has contact to battery voltage • Cable/connector is defective and has contact to another regulator output of the TCU • Regulator has an internal defect	TCU shifts to neutral OP mode : Limp home If failure at another clutch is pending TCU shifts to neutral OP mode : TCU shutdown	• Check the cable from TCU to the gearbox • Check the connectors from gearbox to TCU • Check the regulator resistance* • Check internal wire harness of the gearbox	* See Chapter (9)
88	15	**S.C. to ground at clutch KR** The measured resistance value of the valve is out of limit, the voltage at KR valve is too low • Cable/connector is defective and has contact to vehicle ground • Regulator has an internal defect	TCU shifts to neutral OP mode : Limp home If failure at another clutch is pending TCU shifts to neutral OP mode : TCU shutdown	• Check the cable from TCU to the gearbox • Check the connectors from gearbox to TCU • Check the regulator resistance* • Check internal wire harness of the gearbox	* See Chapter (9)
89	21	**O.C. at clutch KR** The measured resistance value of the valve is out of limit • Cable/connector is defective and has no contact to TCU • Regulator has an internal defect	TCU shifts to neutral OP mode : Limp home If failure at another clutch is pending TCU shifts to neutral OP mode : TCU shutdown	• Check the cable from TCU to the gearbox • Check the connectors from gearbox to TCU • Check the regulator resistance* • Check internal wire harness of the gearbox	* See Chapter (9)

Fault code (Hex)	Int. code (Dec)	Meaning of the fault code possible reason for fault detection	Reaction of the TCU	Possible steps to repair	Remarks
91	1	**S.C. to ground at relay reverse warning alarm** TCU detected a wrong voltage at the output pin, that looks like a S.C. to vehicle ground • Cable is defective and is contact to vehicle ground • Backup alarm device has an internal defect • Connector pin is contacted to vehicle ground	Backup alarm will be on until TCU power down even if fault vanishes(Loose connection) OP mode : Normal	• Check the cable from TCU to the backup alarm device • Check the connectors from backup alarm device to TCU • Check the resistance* of backup alarm device	* See Chapter (9)
92	3	**S.C. to battery voltage at relay reverse warning alarm** TCU detected a wrong voltage at the output pin, that looks like a S.C. to battery voltage • Cable is defective and is contacted to battery voltage • Backup alarm device has an internal defect • Connector pin is contacted to battery voltage	No reaction OP mode : Normal	• Check the cable from TCU to the backup alarm device • Check the connectors from backup alarm device to TCU • Check the resistance* of backup alarm device	* See Chapter (9)
93	2	O.C. at relay reverse warning alarm TCU detected a wrong voltage at the output pin, that looks like a O.C. for this output pin • Cable is defective and has no connection to TCU • Backup alarm device has an internal defect • Connector has no connection to TCU	No reaction OP mode : Normal	• Check the cable from TCU to the backup alarm device • Check the connectors from backup alarm device to TCU • Check the resistance* of backup alarm device	* See Chapter (9)
94	4	S.C. to ground at relay starter interlock TCU detected a wrong voltage at the output pin, that looks like a S.C. to vehicle ground • Cable is defective and is connection to vehicle ground • Starter interlock relay has an internal defect • Connector pin is contacted to vehicle ground	No reaction OP mode : Normal	• Check the cable from TCU to the stater interlock relay • Check the connectors from starter interlock relay to TCU • Check the resistance* of starter interlock relay	* See Chapter (9)

Fault code (Hex)	Int. code (Dec)	Meaning of the fault code possible reason for fault detection	Reaction of the TCU	Possible steps to repair	Remarks
95	6	**S.C. to battery voltage at relay starter interlock** TCU detected a wrong voltage at the output pin, that looks like a S.C. to battery voltage • Cable is defective and has no connection to battery voltage • Starter interlock relay has an internal defect • Connector pin is contacted to battery voltage	No reaction OP mode : Normal	• Check the cable from TCU to the starter interlock relay • Check the connectors from starter interlock relay to TCU • Check the resistance* of starter interlock relay	* See Chapter (9)
96	5	**O.C. at relay starter interlock** TCU detected a wrong voltage at the output pin, that looks like a O.C. for this output pin • Cable is defective and has no connection to TCU • Starter interlock relay has an internal defect • Connector has no connection to TCU	No reaction OP mode : Normal	• Check the cable from TCU to the starter interlock relay • Check the connectors from starter interlock relay to TCU • Check the resistance* of starter interlock relay	* See Chapter (9)
97	7	**S.C. to ground at park brake solenoid** TCU detected a wrong voltage at the output pin, that looks like a S.C. to vehicle ground • Cable is defective and is connection to vehicle ground • Park brake solenoid has an internal defect • Connector pin is contacted to vehicle ground	No reaction OP mode : Normal	• Check the cable from TCU to the park brake solenoid • Check the connectors from park brake solenoid to TCU • Check the resistance* of park brake solenoid	* See Chapter (9)
98	9	**S.C. to battery voltage at park brake solenoid** TCU detected a wrong voltage at the output pin, that looks like a S.C. to battery voltage • Cable is defective and is connection to battery voltage • Park brake solenoid has an internal defect • Connector pin is contacted to battery voltage	No reaction Optional : (Some customers) TCU shifts to neutral caused by park brake feed back OP mode : Normal	• Check the cable from TCU to the park brake solenoid • Check the connectors from park brake solenoid to TCU • Check the resistance* of park brake solenoid	* See Chapter (9)

Fault code (Hex)	Int. code (Dec)	Meaning of the fault code possible reason for fault detection	Reaction of the TCU	Possible steps to repair	Remarks
99	8	**O.C. at park brake solenoid** TCU detected a wrong voltage at the output pin, that looks like a O.C. for this output pin • Cable is defective and has no connection to TCU • Park brake solenoid has an internal defect • Connector has no connection to TCU	No reaction Optional : Some customers TCU shifts to neutral caused by park brake feed back OP mode : Normal	• Check the cable from TCU to the park brake solenoid • Check the connectors from park brake solenoid to TCU • Check the resistance* of park brake solenoid	* See Chapter (9)
9A	66	**S.C. to ground at converter lock up clutch solenoid** TCU detected a wrong voltage at the output pin, that looks like a S.C. to vehicle ground • Cable is defective and is contacted to vehicle ground • Converter clutch solenoid has an internal defect • Connector pin is contacted to vehicle ground	No reaction OP mode : Normal	• Check the cable from TCU to the converter clutch solenoid • Check the connectors from converter clutch solenoid to TCU • Check the resistance* of park brake solenoid	* See Chapter (9)
9B	67	**O.C. at converter lock up clutch solenoid** TCU detected a wrong voltage at the output pin, that looks like a O.C. for this output pin • Cable is defective and has no connection to TCU • Converter clutch solenoid has an internal defect • Connector has no connection to TCU	Converter clutch always open, retarder not available OP mode : Normal	• Check the cable from TCU to the converter clutch solenoid • Check the connectors from converter clutch solenoid to TCU • Check the resistance* of park brake solenoid	* See Chapter (9)
9C	68	**S.C. to battery voltage at converter lock up clutch solenoid** TCU detected a wrong voltage at the output pin, that looks like a S.C. to battery voltage • Cable is defective and has no contacted to battery voltage • Converter clutch solenoid has an internal defect • Connector pin is contacted to battery voltage	No reaction OP mode : Normal	• Check the cable from TCU to the converter clutch solenoid • Check the connectors from converter clutch solenoid to TCU • Check the resistance* of converter clutch solenoid	* See Chapter (9)

Fault code (Hex)	Int. code (Dec)	Meaning of the fault code possible reason for fault detection	Reaction of the TCU	Possible steps to repair	Remarks
9D	81	**S.C. to ground at retarder solenoid** TCU detected a wrong voltage at the output pin, that looks like a S.C. to vehicle ground • Cable is defective and is contacted to vehicle ground • Retarder solenoid has an internal defect • Connector pin is contacted to vehicle ground	No reaction OP mode : Normal	• Check the cable from TCU to the retarder solenoid • Check the connectors from retarder solenoid to TCU • Check the resistance* of retarder solenoid	* See Chapter (9)
9E	82	**O.C. at retarder solenoid** TCU detected a wrong voltage at the output pin, that looks like a O.C. for this output pin • Cable is defective and has no connection to TCU • Retarder solenoid has an internal defect • Connector has no connection to TCU	No reaction OP mode : Normal	• Check the cable from TCU to the retarder solenoid • Check the connectors from retarder solenoid to TCU • Check the resistance* of retarder solenoid	* See Chapter (9)
9F	83	**S.C. to battery voltage at retarder solenoid** TCU detected a wrong voltage at the output pin, that looks like a S.C. to battery voltage • Cable is defective and has no connection to battery voltage • Retarder solenoid has an internal defect • Connector pin is contacted to battery voltage	No reaction OP mode : Normal	• Check the cable from TCU to the retarder solenoid • Check the connectors from retarder solenoid to TCU • Check the resistance* of retarder solenoid	* See Chapter (9)

Fault code (Hex)	Int. code (Dec)	Meaning of the fault code possible reason for fault detection	Reaction of the TCU	Possible steps to repair	Remarks
A1	84	**S.C. to ground at difflock or axle connection solenoid** TCU detected a wrong voltage at the output pin, that looks like a S.C. to vehicle ground • Cable is defective and is contacted to vehicle ground • Difflock solenoid has an internal defect • Connector pin is contacted to vehicle ground	No reaction OP mode : Normal	• Check the cable from TCU to the difflock solenoid • Check the connectors from difflock solenoid to TCU • Check the resistance* of difflock solenoid	* See Chapter (9)
A2	85	**S.C. to battery voltage at difflock or axle connection solenoid** TCU detected a wrong voltage at the output pin, that looks like a S.C. to battery voltage • Cable is defective and has no connection to battery voltage • Difflock solenoid has an internal defect • Connector pin is contacted to battery voltage	No reaction OP mode : Normal	• Check the cable from TCU to the difflock solenoid • Check the connectors from difflock solenoid to TCU • Check the resistance* of difflock solenoid	* See Chapter (9)
A3	86	**O.C. at difflock or axle connection solenoid** TCU detected a wrong voltage at the output pin, that looks like a O.C. for this output pin • Cable is defective and has no connection to TCU • Difflock solenoid has an internal defect • Connector has no connection to TCU	No reaction OP mode : Normal	• Check the cable from TCU to the difflock solenoid • Check the connectors from difflock solenoid to TCU • Check the resistance* of difflock solenoid	* See Chapter (9)
A4	96	**S.C. to ground at warning signal output** TCU detected a wrong voltage at the output pin, that looks like a S.C. to vehicle ground • Cable is defective and is contacted to vehicle ground • Warning device has an internal defect • Connector pin is contacted to vehicle ground	No reaction OP mode : Normal	• Check the cable from TCU to the warning device • Check the connectors from warning device to TCU • Check the resistance* of warning device	* See Chapter (9)

Fault code (Hex)	Int. code (Dec)	Meaning of the fault code possible reason for fault detection	Reaction of the TCU	Possible steps to repair	Remarks
A5	97	**O.C. voltage at warning signal output** TCU detected a wrong voltage at the output pin, that looks like a O.C. for this output pin • Cable is defective and has no connection to TCU • Warning device has an internal defect • Connector has no connection to TCU	No reaction OP mode : Normal	• Check the cable from TCU to the warning device • Check the connectors from warning device to TCU • Check the resistance* of warning device	* See Chapter (9)
A6	98	**S.C. to battery voltage at warning signal output** TCU detected a wrong voltage at the output pin, that looks like a S.C. to battery voltage • Cable is defective and has is contacted to battery voltage • Warning device has an internal defect • Connector pin is contacted to battery voltage	No reaction OP mode : Normal	• Check the cable from TCU to the warning device • Check the connectors from warning device to TCU • Check the resistance* of warning device	* See Chapter (9)

Fault code (Hex)	Int. code (Dec)	Meaning of the fault code possible reason for fault detection	Reaction of the TCU	Possible steps to repair	Remarks
B1	60	**Slippage at clutch K1** TCU calculates a differential speed at closed clutch K1. If this calculated value is out of range, TCU interprets this as slipping clutch • Low pressure at clutch K1 • Low main pressure • Wrong signal at internal speed sensor • Wrong signal at output speed sensor • Wrong size of the sensor gap • Clutch is defective	TCU shifts to neutral OP mode : Limp home If failure at another clutch is pending TCU shifts to neutral OP mode : TCU shutdown	• Check pressure at clutch K1 • Check main pressure in the system • Check sensor gap at internal speed sensor • Check sensor gap at output speed sensor • Check signal at internal speed sensor • Check signal at output speed sensor • Replace clutch	
B2	61	**Slippage at clutch K2** TCU calculates a differential speed at closed clutch K2. If this calculated value is out of range, TCU interprets this as slipping clutch • Low pressure at clutch K2 • Low main pressure • Wrong signal at internal speed sensor • Wrong signal at output speed sensor • Wrong size of the sensor gap • Clutch is defective	TCU shifts to neutral OP mode : Limp home If failure at another clutch is pending TCU shifts to neutral OP mode : TCU shutdown	• Check pressure at clutch K2 • Check main pressure in the system • Check sensor gap at internal speed sensor • Check sensor gap at output speed sensor • Check signal at internal speed sensor • Check signal at output speed sensor • Replace clutch	
B3	62	**Slippage at clutch K3** TCU calculates a differential speed at closed clutch K3. If this calculated value is out of range, TCU interprets this as slipping clutch • Low pressure at clutch K3 • Low main pressure • Wrong signal at internal speed sensor • Wrong signal at output speed sensor • Wrong size of the sensor gap • Clutch is defective	TCU shifts to neutral OP mode : Limp home If failure at another clutch is pending TCU shifts to neutral OP mode : TCU shutdown	• Check pressure at clutch K3 • Check main pressure in the system • Check sensor gap at internal speed sensor • Check sensor gap at output speed sensor • Check signal at internal speed sensor • Check signal at output speed sensor • Replace clutch	

Fault code (Hex)	Int. code (Dec)	Meaning of the fault code possible reason for fault detection	Reaction of the TCU	Possible steps to repair	Remarks
B4	63	**Slippage at clutch K4** TCU calculates a differential speed at closed clutch K4. If this calculated value is out of range, TCU interprets this as slipping clutch • Low pressure at clutch K4 • Low main pressure • Wrong signal at internal speed sensor • Wrong signal at turbine speed sensor • Wrong size of the sensor gap • Clutch is defective	TCU shifts to neutral OP mode : Limp home If failure at another clutch is pending TCU shifts to neutral OP mode : TCU shutdown	• Check pressure at clutch K4 • Check main pressure in the system • Check sensor gap at internal speed sensor • Check sensor gap at turbine speed sensor • Check signal at internal speed sensor • Check signal at turbine speed sensor • Replace clutch	
B5	64	**Slippage at clutch KV** TCU calculates a differential speed at closed clutch KV. If this calculated value is out of range, TCU interprets this as slipping clutch • Low pressure at clutch KV • Low main pressure • Wrong signal at internal speed sensor • Wrong signal at turbine speed sensor • Wrong size of the sensor gap • Clutch is defective	TCU shifts to neutral OP mode : Limp home If failure at another clutch is pending TCU shifts to neutral OP mode : TCU shutdown	• Check pressure at clutch KV • Check main pressure in the system • Check sensor gap at internal speed sensor • Check sensor gap at turbine speed sensor • Check signal at internal speed sensor • Check signal at turbine speed sensor • Replace clutch	
B6	65	**Slippage at clutch KR** TCU calculates a differential speed at closed clutch KR. If this calculated value is out of range, TCU interprets this as slipping clutch • Low pressure at clutch KR • Low main pressure • Wrong signal at internal speed sensor • Wrong signal at turbine speed sensor • Wrong size of the sensor gap • Clutch is defective	TCU shifts to neutral OP mode : Limp home If failure at another clutch is pending TCU shifts to neutral OP mode : TCU shutdown	• Check pressure at clutch KR • Check main pressure in the system • Check sensor gap at internal speed sensor • Check sensor gap at turbine speed sensor • Check signal at internal speed sensor • Check signal at turbine speed sensor • Replace clutch	

Fault code (Hex)	Int. code (Dec)	Meaning of the fault code possible reason for fault detection	Reaction of the TCU	Possible steps to repair	Remarks
B7	87	**Overtemp sump** TCU measured a temperature in the oil sump that is over the allowed threshold.	No reaction OP mode : Normal	• Cool down machine • Check oil level • Check temperature sensor	
B8	88	**Overtemp retarder** TCU measured a temperature in the retarder oil that is over the allowed threshold	TCU disables retarder OP mode : Normal	• Cool down machine • Check oil level • Check temperature sensor	
B9	89	**Overspend engine**	Retarder applies OP mode : Normal	-	
BA	90	**Differential pressure oil filter** TCU measured a voltage at differential pressure switch out of the allowed range • Oil filter is polluted • Cable/connector is broken or cable/ connector is contacted to battery voltage or vehicle ground • Differential pressure switch is defective	No reaction OP mode : Normal	• Check oil filter • Check wiring from TCU to differential pressure switch • Check differential pressure switch(Measure resistance)	
BB	172	**Slippage at converter lockup clutch** TCU calculates a differential speed at closed converter lockup clutch. If this calculated value is out of range, TCU interprets this as slipping clutch • Low pressure at converter lockup clutch • Low main pressure • Wrong signal at engine speed sensor • Wrong signal at turbine speed sensor • Wrong size of the sensor gap • Clutch is defective		• Check pressure at converter lockup clutch • Check main pressure in the system • Check sensor gap at engine speed sensor • Check sensor gap at turbine speed sensor • Check signal at engine speed sensor • Check signal at turbine speed sensor • Replace clutch	

Fault code (Hex)	Int. code (Dec)	Meaning of the fault code possible reason for fault detection	Reaction of the TCU	Possible steps to repair	Remarks
BD	169	**S.C. to ground at engine brake solenoid** TCU detected a wrong voltage at the output pin, that looks like a S.C. to vehicle ground • Cable is defective and is contacted to vehicle ground • Engine brake solenoid has an internal defect • Connector pin is contacted to vehicle ground	No reaction OP mode : Normal	• Check the cable from TCU to engine brake solenoid • Check the connectors from engine brake solenoid to TCU • Check the resistance* of engine brake solenoid	* See Chapter (7)
BE	171	**S.C. to battery voltage at engine brake** TCU detected a wrong voltage at the output pin, that looks like a S.C. to battery voltage • Cable is defective and is contacted to battery voltage • Engine brake solenoid has an internal defect • Connector pin is contacted to battery voltage	No reaction OP mode : Normal	• Check the cable from TCU to the engine brake solenoid • Check the connectors from engine brake solenoid to TCU • Check the resistance* of engine brake solenoid	* See Chapter (7)
BF	170	**O.C. at engine brake** TCU detected a wrong voltage at the output pin, that looks like a O.C. for this output pin • Cable is defective and has no connection to TCU • Engine brake solenoid has an internal defect • Connector has no connection to TCU	No reaction OP mode : Normal	• Check the cable from TCU to the engine brake solenoid • Check the connectors from engine brake solenoid to TCU • Check the resistance* of engine brake solenoid	* See Chapter (7)

Fault code (Hex)	Int. code (Dec)	Meaning of the fault code possible reason for fault detection	Reaction of the TCU	Possible steps to repair	Remarks
C3	91	**Overtemp converter output** TCU measured a oil temperature at the converter output that is the allowed threshold	No reaction OP mode : Normal	• Cool down machine • Check oil level • Check temperature sensor	
C4	129	**S.C. to ground at joystick status indicator** TCU detected a wrong voltage at the output pin, that looks like a S.C. to vehicle ground • Cable is defective and is contacted to vehicle ground • Joystick status indicator has an internal defect • Connector pin is contacted to vehicle ground	No reaction OP mode : Normal	• Check the cable from TCU to joystick status indicator • Check the connectors from joystick status indicator to TCU • Check the resistance* of joystick status indicator	*See chapter (9)
C5	131	**S.C. to battery voltage at joystick status indicator** TCU detected a wrong voltage at the output pin, that looks like a S.C. to battery voltage • Cable is defective and is contacted to battery voltage • Joystick status indicator has an internal defect • Connector pin is contacted to battery voltage	No reaction OP mode : Normal	• Check the cable from TCU to joystick status indicator • Check the connectors from joystick status indicator to TCU • Check the resistance* of joystick status indicator	*See chapter (9)
C6	130	**O.C. at joystick status indicator** TCU detected a wrong voltage at the output pin, that looks like a O.C. for this output pin • Cable is defective and has no connection to TCU • Joystick status indicator has an internal defect • Connector pin has no connection to TCU	No reaction OP mode : Normal	• Check the cable from TCU to joystick status indicator • Check the connectors from joystick status indicator to TCU • Check the resistance* of joystick status indicator	*See chapter (9)

Fault code (Hex)	Int. code (Dec)	Meaning of the fault code possible reason for fault detection	Reaction of the TCU	Possible steps to repair	Remarks
D1	54	**S.C. to battery voltage at power supply for sensors** TCU measures more than 6V at the pin AU1 (5V sensor supply)	See fault codes No.21 to 2C	• Check cables and connectors to sensors, which are supplied from AU1 • Check the power supply at the pin AU1(Should be appx. 5V)	Fault codes No.21 to No.2C may be reaction of this fault
D2	55	**S.C. to ground at power supply for sensors** TCU measures less than 4V at the pin AU1 (5V sensor supply)	See fault codes No.21 to 2C	• Check cables and connectors to sensors, which are supplied from AU1 • Check the power supply at the pin AU1(Should be appx. 5V)	Fault codes No.21 to No.2C may be reaction of this fault
D3	53	**Low voltage at battery** Measured voltage at power supply is lower than 18V(24V device)	Shift to neutral OP mode : TCU shutdown	• Check power supply battery • Check cables from batteries to TCU • Check connectors from batteries to TCU	
D4	52	**High voltage at battery** Measured voltage at power supply is higher than 32.5V(24V device)	Shift to neutral OP mode : TCU shutdown	• Check power supply battery • Check cables from batteries to TCU • Check connectors from batteries to TCU	
D5	57	**Error at valve power supply VPS1** TCU switched on VPS1 and measured VPS1 is off or TCU switched off VPS1 and measured VPS1 is still on • Cable or connectors are defect and are contacted to battery voltage • Cable or connectors are defect and are contacted to vehicle ground • Permanent power supply KL30 missing • TCU has an internal defect	Shift to neutral OP mode : TCU shutdown	• Check fuse • Check cables from gearbox to TCU • Check connectors from gearbox to TCU • Replace TCU	

Fault code (Hex)	Int. code (Dec)	Meaning of the fault code possible reason for fault detection	Reaction of the TCU	Possible steps to repair	Remarks
D6	58	**Error at valve power supply VPS2** TCU switched on VPS2 and measured VPS2 is off or TCU switched off VPS2 and measured VPS2 is still on • Cable or connectors are defect and are contacted to battery voltage • Cable or connectors are defect and are contacted to vehicle ground • Permanent power supply KL30 missing • TCU has an internal defect	Shift to neutral OP mode : TCU shutdown	• Check fuse • Check cables from gearbox to TCU • Check connectors from gearbox to TCU • Replace TCU	

Fault code (Hex)	Int. code (Dec)	Meaning of the fault code possible reason for fault detection	Reaction of the TCU	Possible steps to repair	Remarks
E1	91	**S.C. battery voltage at speedometer output**	-	-	Not used
E2	92	**S.C. to ground or O.C at speedometer output**	-	-	Not used
E3		**S.C. to battery voltage at display output** TCU sends data to the display and measures always a high voltage level on the connector • Cable or connectors are defective and are contacted to battery voltage • Display has an internal defect	No reaction OP mode : Normal	• Check the cable from TCU to the display • Check the connectors at the display • Change display	
E4		**S.C. to ground at display output** TCU sends data to the display and measures always a high voltage level on the connector • Cable or connectors are defective and are contacted to battery voltage • Display has an internal defect	No reaction OP mode : Normal	• Check the cable from TCU to the display • Check the connectors at the display • Change display	
E5	93, 104	**Communication failure on DeviceNet**	Shift to neutral OP mode : TCU shutdown	• Check Omron master • Check wire of DeviceNet-Bus • Check cable to Omron master	
E5	104	**DISPID1 timeout** Timeout of CAN-massage DISPID1 from display controller • Interference on CAN-Bus • CAN wire/connector is defective • Can wire/connector is defective and has contact to vehicle ground or battery voltage	TCU select parameter set with ID0 OP mode : Limp home	• Check display controller • Check wire of CAN-Bus • Check cable display controller	

Fault code (Hex)	Int. code (Dec)	Meaning of the fault code possible reason for fault detection	Reaction of the TCU	Possible steps to repair	Remarks
F1	51	**General EEPROM fault** TCU can't read non volatile memory • TCU is defective	No reaction OP mode : Normal	• Replace TCU	Often shown together with fault code F2
F2	56	**Configuration lost** TCU has lost the correct configuration and can't control the transmission • Interference during saving data on non volatile memory • TCU is brand new or from another vehicle	Transmission stay neutral OP mode : TCU shutdown	• Reprogram the correct configuration for the vehicle (e.g. with cluster controller,...)	
F3	59	**Application error** Something of this application is wrong	Transmission stay neutral OP mode : TCU shutdown	• Replace TCU	This fault occurs only if an test engineer did something wrong in the application of the vehicle
F5	173	**Clutch failure** AEB was not able to adjust clutch filling parameters • One of the AEB-Values is out of limit	Transmission stay neutral OP mode : TCU shutdown	• Check clutch	TCU shows also the affected clutch on the display
F6	174	**Clutch adjustment data lost** TCU was not able to read correct clutch adjustment parameters • Interference during saving data on non volatile memory • TCU is brand new	No reaction, Default values : 0 for AEB Offsets used OP mode : Normal	• Execute AEB	

(9) Measuring of resistance at actuator/sensor and cable

① Actuator

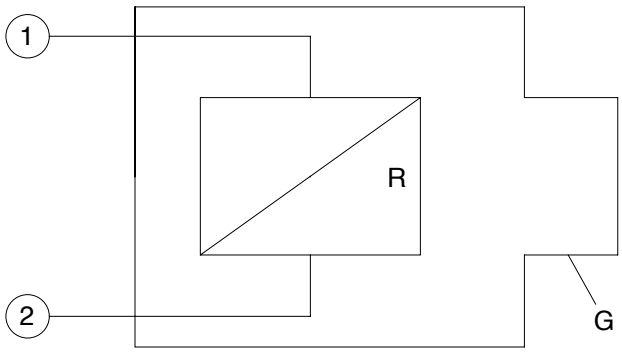

76043PT19

Open circuit	$R_{12} = R_{1G} = R_{2G} = \infty$
Short cut to ground	$R_{12} = R$; $R_{1G} = 0$, $R_{2G} = R$ or $R_{1G} = R$, $R_{2G} = 0$
	(For S.C. to ground, G is connected to vehicle ground)
Short cut to battery	$R_{12} = R$; $R_{1G} = 0$, $R_{2G} = R$ or $R_{1G} = R$, $R_{2G} = 0$
	(For S.C. to battery, G is connected to battery voltage)

② Cable

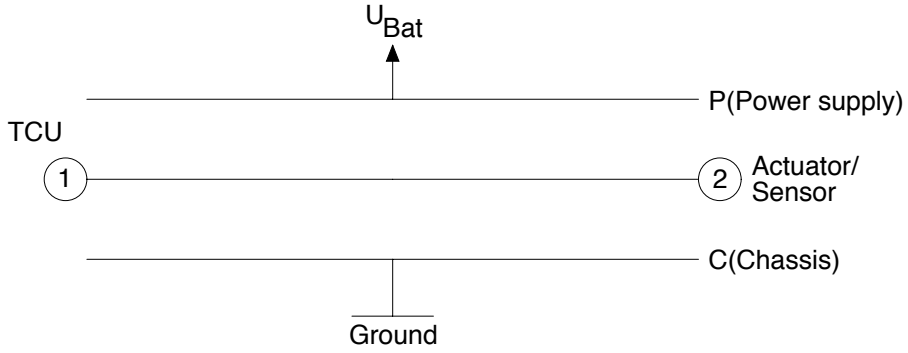

76043PT20

Open circuit	$R_{12} = R_{1P} = R_{1C} = R_{2P} = R_{2C} = \infty$
Short cut to ground	$R_{12} = 0$; $R_{1C} = R_{2C} = 0$, $R_{1P} = R_{2P} = \infty$
Short cut to battery	$R_{12} = 0$; $R_{1C} = R_{2C} = 0$, $R_{1P} = R_{2P} = 0$

7) ELECTRIC CONTROL UNIT

(1) Complete system

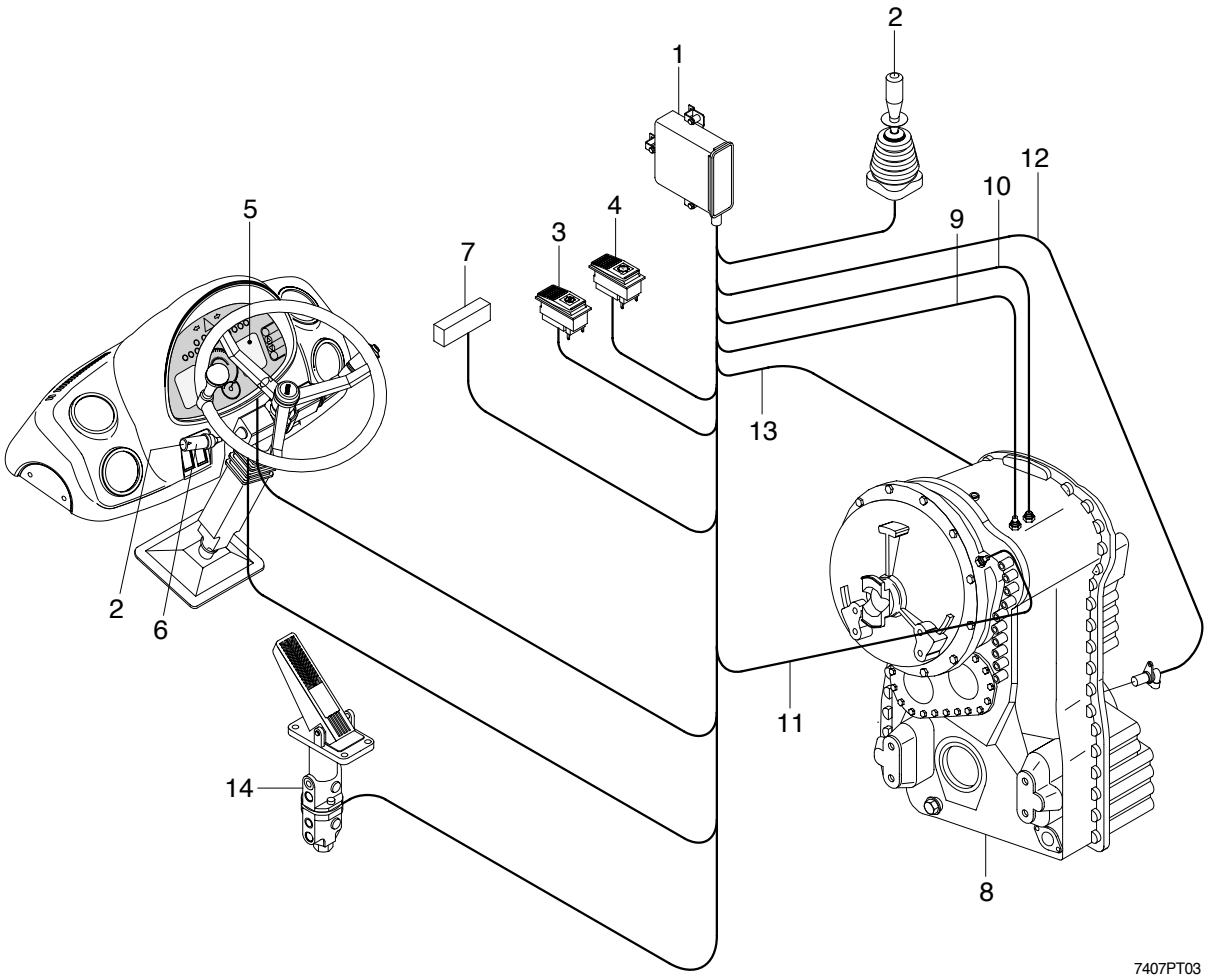

1 Control unit(EST-37A)
2 Kickdown switch
3 Clutch cut off switch
4 Auto select switch
5 LCD
6 Gear selector(DW-3) with integrated kickdown switch
7 Supply-system connection
8 Transmission
9 Cable to inductive transmitter - speed central gear train
10 Cable to inductive transmitter - speed turbine
11 Cable to inductive transmitter - speed engine
12 Cable to speed sensor output and speedometer
13 Cable to plug connection on the electro - hydraulic control unit
14 Brake pressure sensor/load sensor

(2) Description of the basic functions

The powershift-reversing transmissions will be equipped with the electronic transmission control unit(EST-37A), developed for them.

The system is processing the wishes of the driver according to the following criteria.

· Speed definition as a function of gear selector position, driving speed and load level.

· Protection against operating errors, as far as possible and practical.
· Protection against overspeeds(On the basis of engine and turbine speed).
· Reversing-automatic system(Driving speed-dependent).
· Pressure cut off(Disconnecting of the drive train for maximum power on the power take-off).
· Switch for manual or automatic operation.
· Reversing function button, respectively kickdown function.

(3) Gearshifts

The control unit(EST-37A) is shifts the required speeds fully-automatically under consideration of the following criteria.

· Gear selector position
· Driving speed
· Load level

At the same time, the following speeds are picked up by the control unit(EST-37A).

· n Engine
· n Turbine
· n Central gear train
· n Output

- Neutral position

Neutral position is selected through the gear selector.
After the ignition is turned on, the electronics remains in the waiting state; By the position **neutral** of the gear selector, respectively by pressing on the key **neutral**, the control unit(EST-37A) becomes ready for operation.
Now, a speed can be engaged.

- Speed engagement

In principle, the speed, adapted to the driving speed(At standing, or rolling machine), will be engaged. The engagement is realized in dependence on load and rotational speed.

- Upshifting under load

Upshifting under load will be then realized if the machine can still accelerate by it.

- Downshifting under load

Downshifting under load will be realized if more traction force is needed.

- Upshifting in coasting condition

In the coasting condition, the upshifting will be suppressed if the speed of the machine on a slope shall not be further increased.

- Downshifting in coasting condition

Downshiftings in the coasting condition will be realized if the machine shall be retarded.

- Reversing

At speeds below the reversing limit, direct reversing can be carried out at any time in the speeds 1F⇔1R and 2F⇔2R(As a rule, this is the maximum driving speed of the 2nd speed).

Reversings in the speeds 3 and 4 are realized dependent on the driving speed.

- Above the programmed reversing limit, the machine is braked down by downshifts of the electronic control unit(EST-37A) to the permitted driving speed, and only then, the reversing into the correspondingly preselected speed will be carried out.
- Below the permitted driving speed, the reversing is carried out immediately.

(4) Specific kickdown function

By means of the kickdown-button, integrated in the gear selector, it is at any time possible to select in the speeds 2F and 2R(i.e. position 2 of the gear selector, at automatic mode also in the 2nd speed of the automatic range) the 1st speed by a short touch. This kickdown state can be cancelled by :

1. Pressing the kickdown-button again
2. Realization of a reversal operation
3. Change of the gear selector position by the following modification
   Gear selector(DW-3) - (Rotation) of the driving position 1···4.

The kickdown function will be always terminated by shifting to neutral.

(5) Clutch cut off

Especially at wheel loaders, the clutch cut off can be activated through a switch signal. It is interrupting the power flow in the transmission as long as this signal is active. Besides, this function can be used for the transmission-neutral shifting at applied hand brake or as **emergency-stop**(In this case, a restarting is only possible through the gear selector-neutral position).

5. AXLE

1) OPERATION

- The power from the engine passes through torque converter, transmission and drive shafts, and is then sent to the front and rear axles.
- Inside the axles, the power passes from the bevel pinion to the bevel gear and is sent at right angles. At the same time, the speed is reduced and passes through the both differentials to the axle shafts. The power of the axle shafts is further reduced by planetary-gear-type final drives and is sent to the wheels.

(1) Front axle

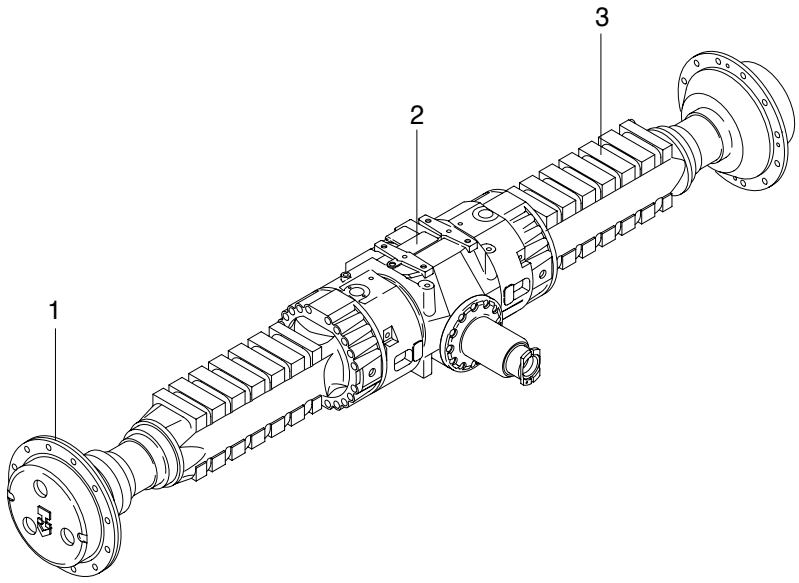

73033AX01A

1 Final drive 2 Differential 3 Axle

(2) Rear axle

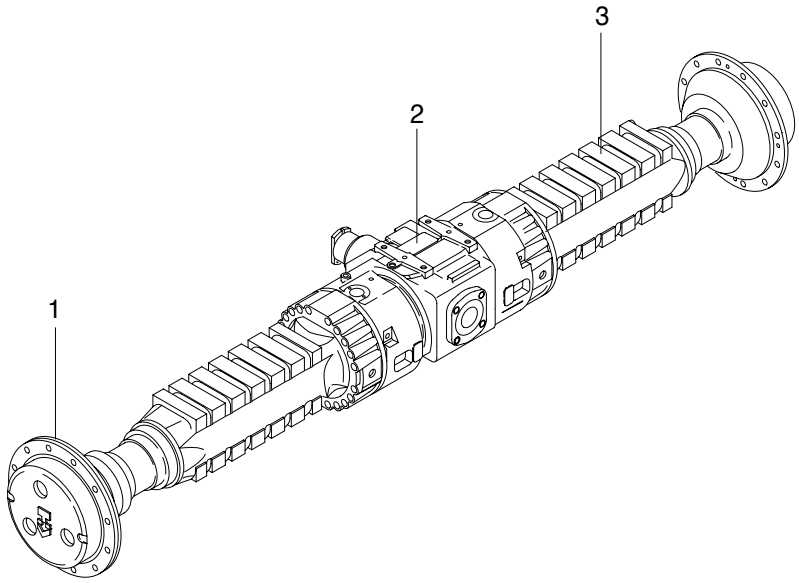

73033AX01B

1 Final drive 2 Differential 3 Axle

2) SECTION OF FRONT AXLE DIFFERENTIAL(LIMITED SLIP)

(1) Structure

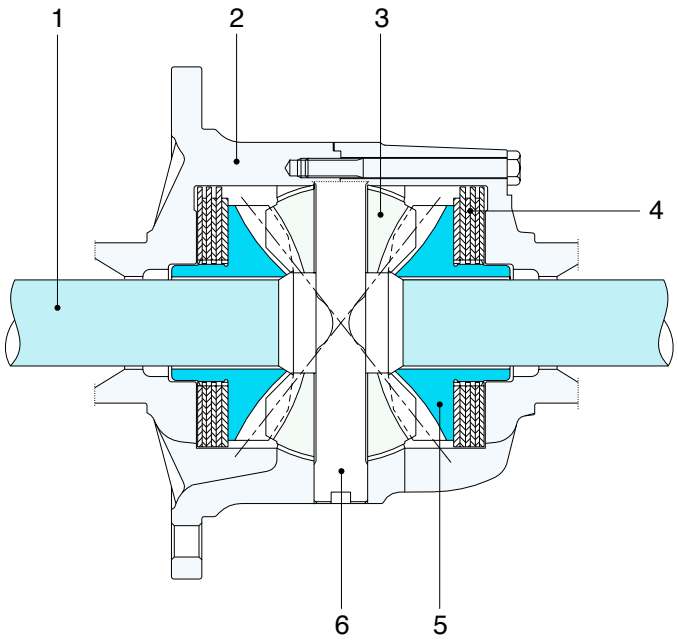

7803ASPT15

1	Axle shaft	4	Clutch
2	Case	5	Side gear
3	Pinion gear	6	Pinion shaft

2) Operation

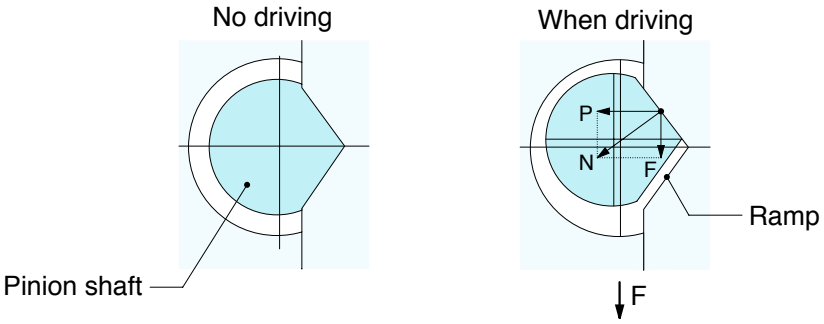

7803ASPT16

When the differential case is rotated, pinion shaft is moved up on the ramp by the resistance force of tires as the figure, and then force P is generated. This force P becomes the engaging force of clutch.

① When travelling straight(equal resistance from road surface to left and right tires). Under this condition, both clutch are engaged and the left and right side gears are driveb wutg tge sane firce.

② When travelling on soft ground(Resistance from road surface to right tire is smaller). At rotating speed of right tire becomes faster than left due to the smaller resistance of right tive, right clutch is engaged and torque of faster rotating right axle shaft is added to left axle shaft through diffenenting gear case.

3) SECTION OF REAR AXLE DIFFERENTIAL(CONVENTIONAL)

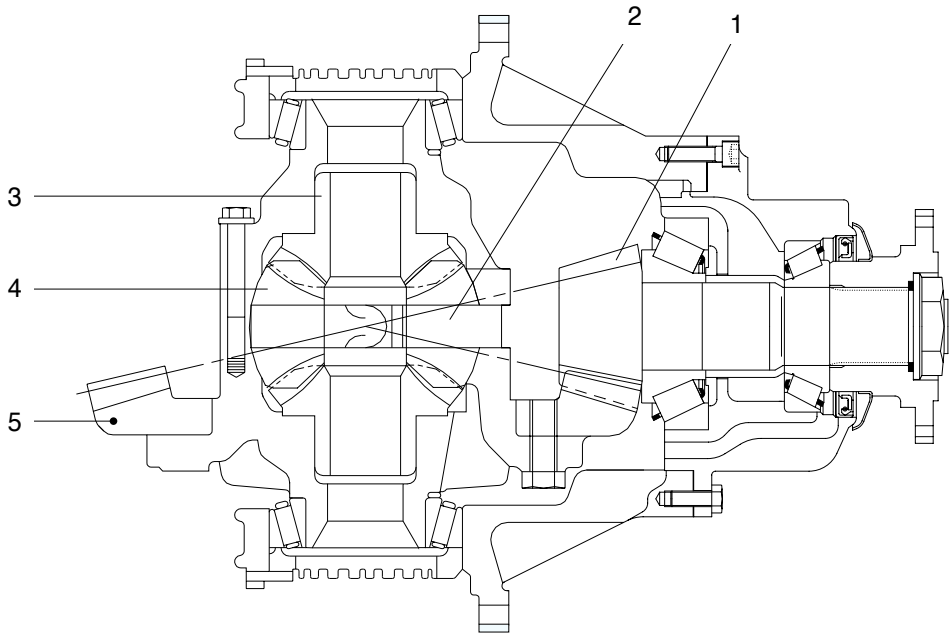

76043PT19

1	Bevel pinion	3	Side gear(Differential)	5	Bevel gear
2	Shaft	4	Sun gear		

4) DIFFERENTIAL

(1) Description

When the machine makes a turn, the outside wheel must rotate faster than the inside wheel. A differential is a device which continuously transmits power to the right and left wheels while allowing them to turn a different speeds, during a turn.

The power from the drive shaft passes through bevel pinion(1) and is transmitted to the bevel gear(2). The bevel gear changes the direction of the motive force by 90 degree, and at the same time reduces the speed.

It then transmits the motive force through the differential(3) to the axle gear shaft(4).

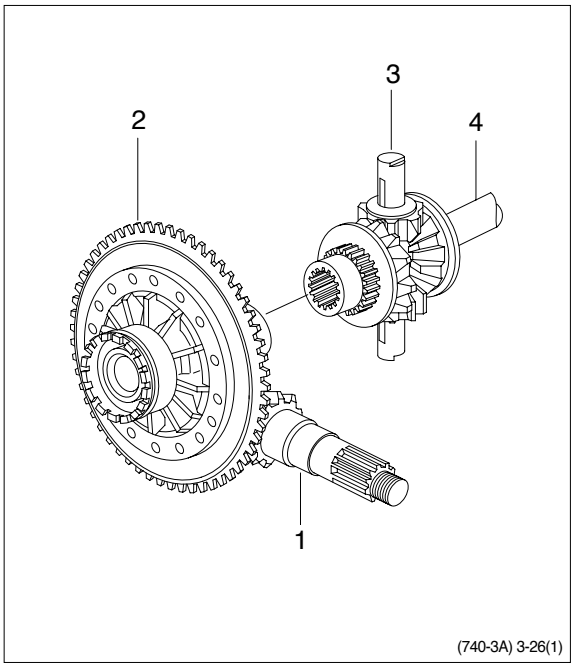

(740-3A) 3-26(1)

(2) When driving straight forward

When the machine is being driven straight forward and the right and left wheels are rotating at the same speed, so the pinion gear inside the differential assembly do not rotate. The motive force of the carrier is send through the pinion gear and the side gear, therefore the power is equally transmitted to the left and right axle gear shaft.

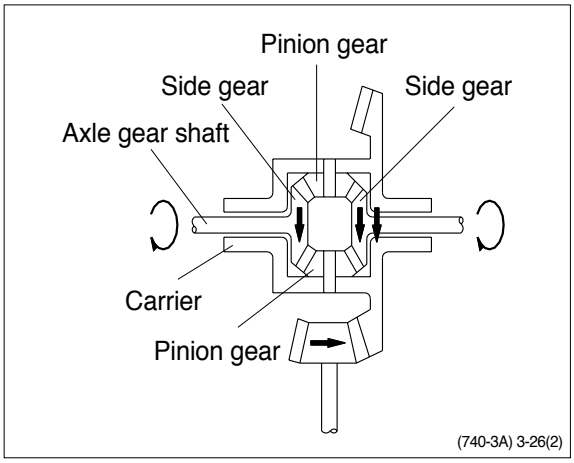

(740-3A) 3-26(2)

(3) When turning

When turning, the rotating speed of the left and right wheels is different, so the pinion gear and side gear inside the differential assembly rotate in accordance with the difference between the rotating speed of the left and right wheels.

The power of the carrier is then transmitted to the axle gear shafts.

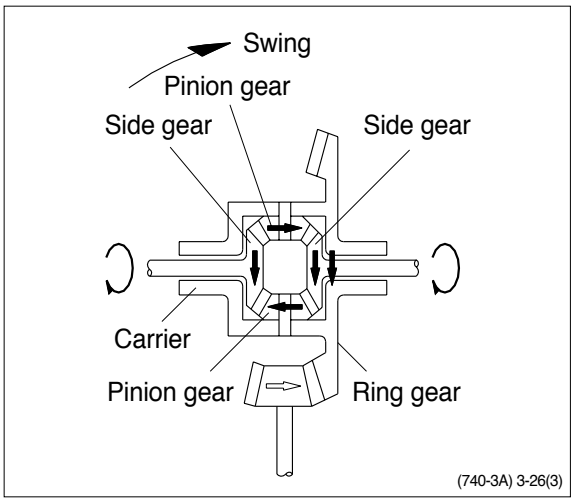

(740-3A) 3-26(3)

5) TORQUE PROPORTIONING DIFFERENTIAL

(1) Function

① Because of the nature of their work, 4-wheel-drive loaders have to work in places where the road surface is bad.
In such places, if the tires slip, the ability to work as a loader is reduced, and also the life of the tire is reduced.
The torque proportioning differential is installed to overcome this problem.
In structure it resembles the differential of an automobile, but the differential pinion gear has an odd number of teeth.
Because of the difference in the resistance from the road surface, the position of meshing of the pinion gear and side gear changes, and this changes the traction of the left and right tires.

(2) Operation

① **When traveling straight**(Equal resistance from road surface to left and right tires)
Under this condition, the distances involving the engaging points between right and left side gears and pinion-a and b-are equal and the pinion is balanced as FL×a=FR×b. Thus, FL=FR, and the right and left side gears are driven with the same force.

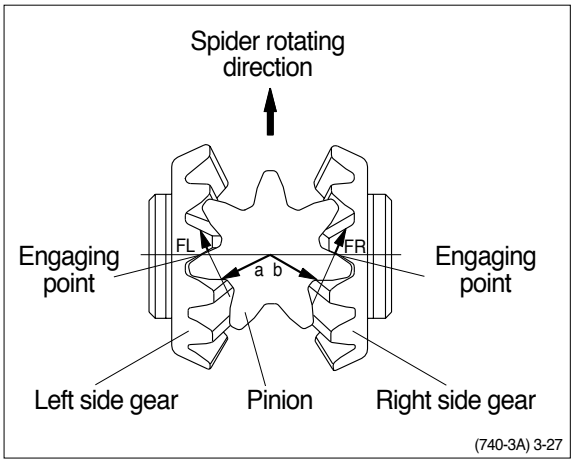

② **When traveling on soft ground**
(Resistance from road surface to left and right tires is different)

If the road resistance to the left wheel is smaller, the left side gear tends to rotate forward, and this rotation changes the engaging points between the side gears and pinion. As a result, the distances involving the engaging points becomes a>b. The pinion now is balanced as FL $\times$a=FR$\times$b, where FL>FR. The right side gear is driven with a greater force than the left side gear. The torque can be increased by up to about 30% for either side gear.

The pinion therefore does not run idle and driving power is transmitted to both side gears until the difference between road resistance to the right and left wheels reaches about 30%.

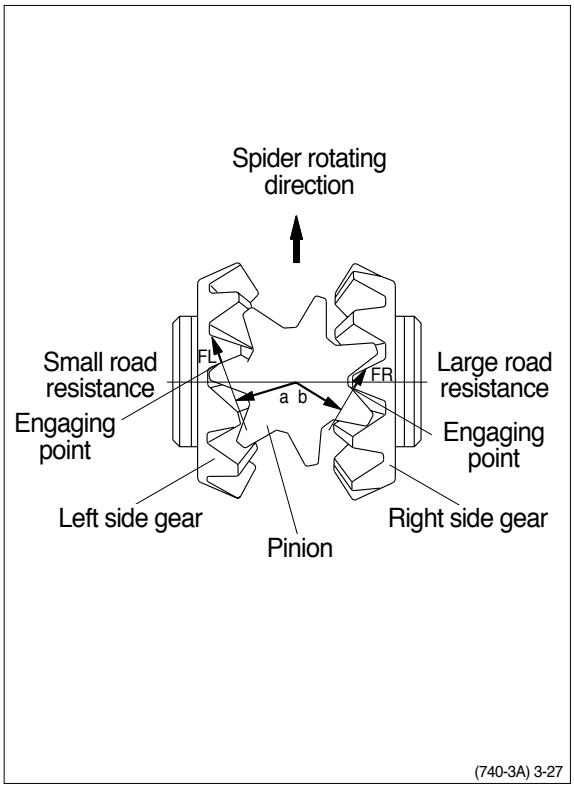

6) FINAL DRIVE(Front & rear)

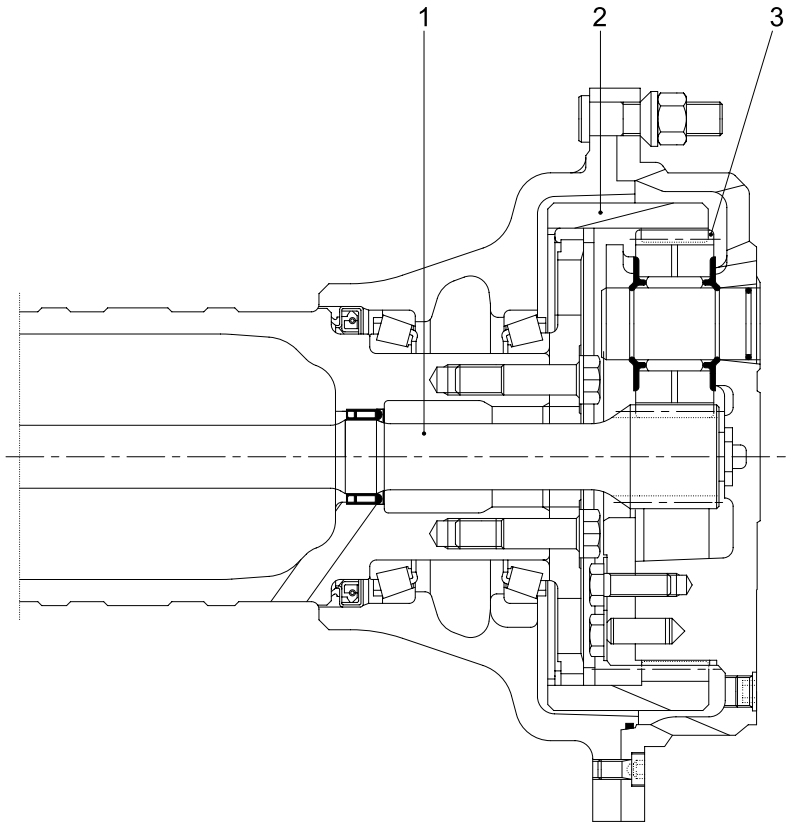

7403APT03

1 Axle shaft
2 Ring gear
3 Planetary gear

(1) To gain a large drive force, the final drive uses a planetary gear system to reduce the speed and send drive force to the tires.

(2) The power transmitted from the differential through axle shaft(1) is transmitted to planetary gear(2). The planetary gear rotates around the inside of a fixed ring gear(3) and in this way transmits rotation at a reduced speed to the planetary carrier.
This power is then sent to the wheels which are installed to the planetary carriers.

6. TIRE AND WHEEL

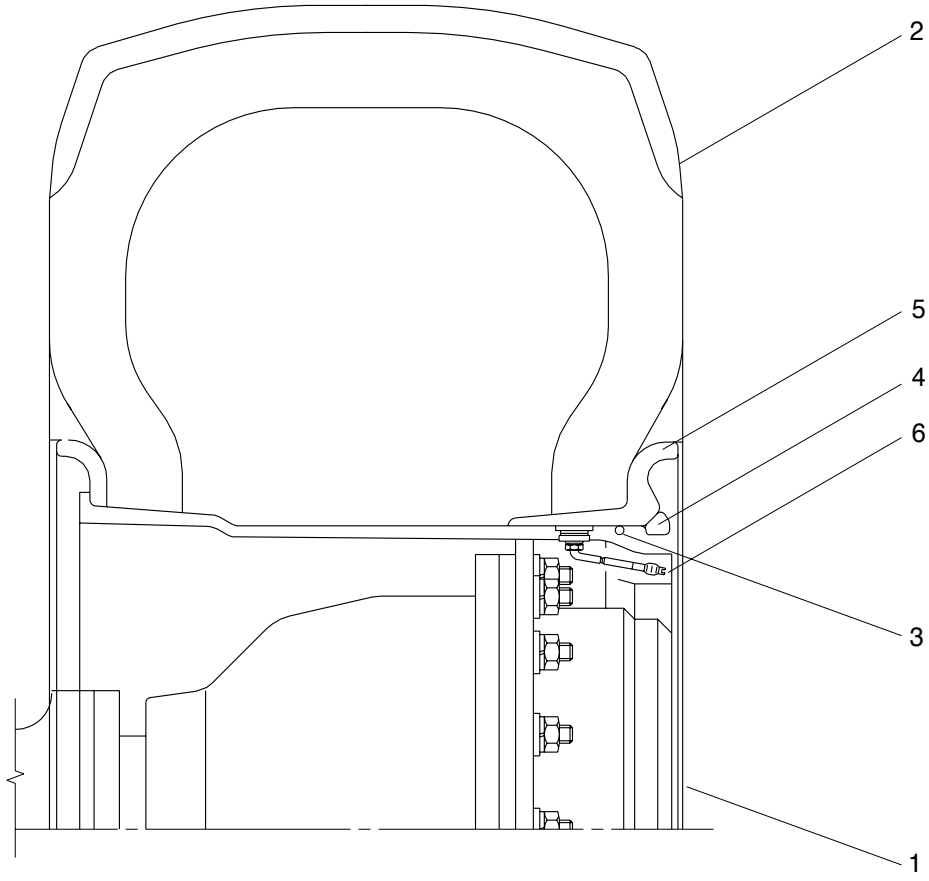

(740-3A) 3-30

1	Wheel rim	3	O-ring	5	Side ring
2	Tire	4	Lock ring	6	Valve assembly

1) The tire acts to absorb the shock from the ground surface to the machine, and at the same time they must rotate in contact with the ground to gain the power which drives the machine.

2) Various types of tires are available to suit the purpose. Therefore it is very important to select the correct tires for the type of work and bucket capacity.

GROUP 2 OPERATIONAL CHECKS AND TROUBLESHOOTING

1. POWER TRAIN OPERATIONAL CHECKS

This procedure is designed so that the mechanic can make a quick check of the system using a minimum amount of diagnostic equipment. If you need additional information, read **Structure and function**, Group 1.

A location will be required which is level and has adequate space to complete the checks.

The engine and all other major components must be at operating temperature for some checks.

Locate system check in the left column and read completely, following the sequence from left to right. Read each check completely before performing.

At the end of each check, if no problem is found(OK), that check is complete or an additional check is needed. If problem is indicated(NOT OK), you will be given repair required and group location.
If verification is needed, you will be given next best source of information :

Chapter 2 : Troubleshooting
Group 3 : Tests and adjustments

※ **Transmission oil must be at operating temperature for these checks.**

Item	Description	Service action
Transmission oil warm-up procedure	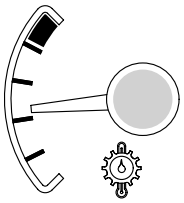 Start engine. Apply service brakes and release parking brake. Select full automatic switch to manual mode①. Move gear selector lever to 3rd speed. Move gear selector lever to forward "F" position. 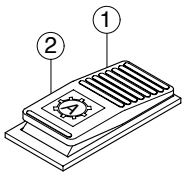 Increase engine speed to high idle for 30 seconds. Move gear selector lever to neutral "N" position and run for 15 seconds.  Repeat procedure until transmission temperature gauge arrow points to bar above dial.	**OK** Check completed.
Gear selector lever and neutral lock latch checks Engine OFF.	 Move gear selector lever to each position. **NOTE** : Gear selector lever position changes slightly as steering column is tilted. 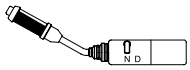 **FEEL** : Lever must move freely through all positions. Engage neutral lock. Apply slight effort to move lever into forward(F) and reverse(R). **LOOK** : Neutral lock must stay engaged.	**OK** Check completed. **NOT OK** Repair lock or replace switch.
Automatic shifting check	 Start engine. Move gear selector lever to 4th speed. Turn full automatic switch ON. 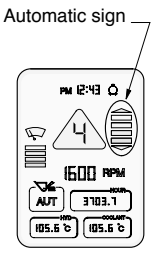 **LOOK** : Automatic sign on display. Move gear selector lever to forward or reverse position. Increase engine rpm. **LOOK** : Speed(2nd~4th) on display must vary with machine speed.	**OK** Check completed. **NOT OK** Go to transmission error code group at page 3-25~ 3-53. Repair or replace the display or harness.

Item	Description	Service action
Transmission noise check Engine running.	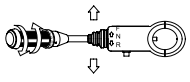 Run engine at approximately 1600rpm. Drive unit with transmission in each forward and reverse speed. **LISTEN** : Transmission must not make excessive noise in any range. Engine rpm must not "lug down" as unit is shifted between gears.	**OK** Check completed. **NOT OK** Go to transmission makes excessive noise group 3.
Transmission "quick shift" check Engine running.	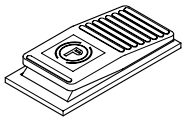 Release parking brake and select full automatic switch to manual mode①. Shift to 2nd forward. 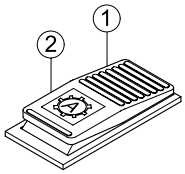 Drive machine at approximately 5km/h and press gear selector lever kick down switch or RCV lever switch once. **LOOK/FEEL** : Transmission must shift to and remain in 1st gear. Press gear selector lever kick down switch once.  **LOOK/FEEL** : Transmission must shift back to 2nd gear. Shift to (3rd or 4th) gear and press gear selector lever kick down switch once. **LOOK/FEEL** : Transmission must not shift down. Select full automatic switch to automatic mode②. Drive machine at approximately 90% speed of max speed in each gear(2nd or 3rd or 4th). Shift to(2nd or 3rd or 4th) gear in each forward and reverse speed and press gear selector kick down lever switch or RCV lever switch once. **LOOK/FEEL** : Transmission must shift to lower(1st or 2nd or 3rd) gear respectively. Press gear selector lever kick down switch or RCV lever switch once again.	**OK** Check completed. **NOT OK** Check connector at base of control valve. **IF OK** Go to transmission controller circuit in group 1.

Item	Description		Service action
		LOOK/FEEL : Transmission must shift to former(2nd or 3rd or 4th) gear. **NOTE** : If gear selector lever kick down switch or RCV lever switch is pressed twice, transmission will shift down the immediately back to former gear.	
Forward, reverse and 4th speed clutch pack drag check ※ **Transmission must be warmed up for this check.** Engine running.	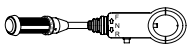 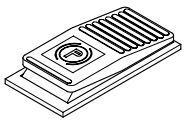 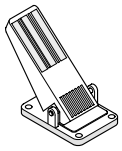	Park unit on level surface. Apply service brakes. Move gear selector lever to neutral. Move gear selector lever to 1st. Release parking brake and service brakes. Run engine at low idle. **LOOK** : Unit must not move in either direction. **NOTE** : If unit moves forward, either the forward pack or the 4th speed pack is dragging.	**OK** Check completed. **NOT OK** If unit moves, repair transmission.
Transmission shift modulation check Engine running.	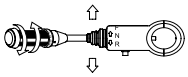	Run engine at approximately 1300rpm. Put transmission in 1st forward, shift several times from forward to reverse and reverse to forward. Repeat check in 2nd gear. **LOOK** : Unit must slow down and change direction smoothly.	**OK** Check completed. **NOT OK** Go to unit shifts too fast, chapter 2 in this group.
Torque converter check	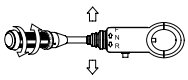	Start engine. Apply service brakes and release parking brake. Move gear selector lever to 3rd speed. Move gear selector control lever to forward "F" position. Increase engine speed to high idle. **LOOK** : Torque converter stall rpm must be within the following range. Stall rpm : 2240±70rpm Move gear selector control lever to neutral "N" position and run for 15 seconds.	**OK** Check completed. **NOT OK** If stall rpm are too low or too high, problem may be engine power or torque converter. **IF OK** Replace transmission torque converter.

2. TROUBLESHOOTING

1) TRANSMISSION

※ **Diagnose malfunction charts are arranged from most probable and simplest to verify, to least likely, more difficult to verify. Remember the following steps when troubleshooting a problem :**

Step 1. Operational check out procedure(See group 3 in section 1.)
Step 2. Operational checks(In this group.)
Step 3. Troubleshooting
Step 4. Tests and/or adjustments(See group 3.)

Problem	Cause	Remedy
Transmission slippage	Low oil level.	Add oil.
	Wrong oil grade.	Change oil.
	Restricted transmission pump suction screen.	Remove and clean screen.
	Leak in transmission control valve or gasket.	Remove valve and inspect gaskets.
	Low transmission pump flow due to worn pump.	Do transmission pump flow test.
	Weak or broken pressure regulating valve spring.	Do transmission system pressure test.
Error code on display	Something wrong in transmission.	Go to transmission error code group at page 3-25~3-53.

Problem	Cause	Remedy
Machine will not move	Low oil level.	Add oil.
	Applied park brake.	Check parking brake fuse. Check continuity to parking brake switch.
	No power to transmission controller.	Check transmission controller fuse.
	Malfunctioning parking brake solenoid valve.	Remove and inspect parking brake solenoid valve. Check for power to solenoid valve.
	Restricted orifice of PPC valve.	Remove orifice and check for contamination and/or plugging. (Do not remove valve housing for this purpose.)
	Excessive leakage in transmission element.	Do transmission element leakage test using system pressure.
	Worn clutch disks.	Repair transmission.
	Low or no transmission pressure.	See transmission pressure is low in this group.
	Service brake will not release.	Do brake pedal operational check. Do service and park system drag checks.
	Failed torque converter.	Do torque converter stall test. If engine pulldown in normal, torque converter is good.
	Broken shafts or gears.	Drain transmission to determine if large pieces of metal contamination are present.
	Broken drive shafts.	Inspect drive shafts and universal joints for external damage. Repair.
	Broken ring or pinion gear.	If drive shaft rotate with transmission in gear but machine does not move, a differential failure is indicated. Repair.
Machine does not engage in low gear	Malfunctioning transmission control solenoid valve.	Check solenoid valve.
	Stuck spool in transmission control valve.	Remove and inspect transmission control valve spools.
	Stuck PPC valve.	Remove end cover to inspect PPC valve. Replace if necessary.
	Malfunctioning transmission speed sensor.	Check speed sensor.

Problem	Cause	Remedy
Transmission pressure is low(All gears)	Low oil level.	Check transmission oil level and refill if necessary.
	Failed transmission pressure switch.	Verify transmission system pressure. Do transmission system pressure test.
	Plugged suction strainer.	Transmission pump may be noisy if transmission suction screen is clogged. Drain transmission. Remove and clean suction screen. Also, check condition of transmission filter.
	Stuck transmission pressure regulating valve or broken spring.	Remove transmission pressure regulating valve. Inspect for damage(See transmission control valve).
	Failed control valve gasket.	Inspect transmission control valve for external leakage. Remove control valve. Inspect or replace gasket.
	Stuck PPC valve.	Remove end cover to inspect modulation spool and check torque on cap screws retaining control valve to transmission.
Transmission system pressure is low (One or two gears)	Failed transmission pump.	Do pump flow test.
	Failed transmission control valve gasket.	Inspect transmission control valve for external leakage. Remove control valve. Inspect or replace gasket.
	Leakage in clutch piston or seal ring.	Disassemble and repair.
Transmission shifts too low	Low oil level(Aeration of oil).	Add oil.
	Low transmission pressure.	Do transmission system pressure test.
	Restricted transmission pump suction screen.	Remove and clean screen.
	Low transmission pump flow.	Do transmission pump flow test.
	Excessive transmission element leakage.	Do transmission element leakage test using system pressure.
	Stuck PPC valve.	Remove end cover to inspect modulation spool. Replace if necessary.
	Restricted PPC valve orifice.	Remove orifice and inspect for contamination and /or plugging.
	Restricted oil passages between control valve and transmission elements.	Remove control valve and inspect oil passage.
	Incorrect transmission oil.	Change oil(SAE 10W-30/15W-40)

Problem	Cause	Remedy
Transmission shifts too fast	Wrong transmission controller.	Check if transmission controller has been changed
	System pressure too high.	Do transmission system pressure test.
	Stuck PPC valve.	Remove and inspect PPC valve. Replace if necessary. Also remove end cover to inspect PPC valve and control valve housing. Replace if necessary.
	Stuck or missing check valves.	Inspect transmission control valve.
	Missing O-ring from end of modulation orifice.	Remove orifice and inspect port for O-ring.
	Broken piston return spring.	Disassemble and inspect clutch.
	Incorrect transmission oil.	Change oil(SAE 10W-30/15W-40)
Machine "creeps" in neutral	Warped disks and plates in transmission.	Check transmission.
Transmission hydraulic system overheats	High oil level.	Transmission overfilled or hydraulic pump seal leaking.
	Low oil level.	Add oil.
	Wrong oil grade.	Change oil.
	Park brake dragging.	Check for heat in park brake area.
	Pinched, restricted or leaking lube lines.	Check cooler lines.
	Machine operated in too high gear range.	Operate machine in correct gear range.
	Malfunction in temperature gauge or sensor.	Install temperature sensor the verify temperature. Do tachometer/temperature reader installation procedure.
	Restricted air flow through oil cooler or radiator.	Do radiator air flow test.
	Failed oil cooler bypass valve(In thermal bypass valve).	Disassemble and inspect.
	Failed thermal bypass valve.	Remove thermal bypass valve and check to see if machine still overheats. Do transmission oil cooler thermal bypass valve test.
	Internally restricted oil cooler.	Do oil cooler restriction test.
	Leakage in transmission hydraulic system.	Do transmission system pressure, element leakage test.
	Malfunction in converter relief valve.	Do converter out pressure test.
	Low transmission pump output.	Do transmission pump flow test.

Problem	Cause	Remedy
Excessive transmission noise(Under load or no load)	Too low engine low idle.	Check engine low idle speed.
	Worn parts or damaged in transmission.	Remove transmission suction screen. Inspect for metal particles. Repair as necessary.
	Warped drive line between engine and torque converter.	Inspect drive line.
	Low or no lube.	Do converter-out and lube pressure test. Do transmission pump flow test.
Foaming oil	Incorrect type of oil.	Change oil.
	High oil level.	Transmission overfilled or hydraulic pump seal leaking.
	Low oil level.	Add oil.
	Air leak on suction side of pump.	Check oil pickup tube on side of transmission.
Oil ejected from dipstick	Plugged breather.	Inspect breather on top of transmission. Replace.
Machine vibrates	Aerated oil.	Add oil.
	Low engine speed.	Check engine speed.
	Failed universal joints on transmission drive shaft or differential drive shafts.	Check universal joints.
Machine lacks power and acceleration	Engine high idle speed set too low.	Check high idle adjustment.
	Incorrect transmission oil.	Change oil.
	Aerated oil.	Add oil.
	Low transmission pressure.	Do transmission system pressure test.
	Warped transmission clutch.	Do transmission clutch drag checks.
	Torn transmission control valve gasket.	Inspect gasket.
	Brake drag.	Do brake drag check.
	Failed torque converter.	Do torque converter stall speed test.
	Low engine power.	Do engine power test.
Torque converter stall RPM too high	Aerated oil.	Put clear hose on thermal bypass outlet port. Run machine to check for bubbles in oil.
	Stuck open converter relief valve.	Do converter-out pressure test.
	Leakage in torque converter seal.	Do converter-out pressure test.
	Torque converter not transferring power(Bent fins, broken starter).	Replace torque converter.

Problem	Cause	Remedy
Torque converter stall RPM too low	Low engine power.	Do engine power test.
	Mechanical malfunction.	Remove and inspect torque converter.
Transmission pressure light comes ON when shifting from forward to reverse(All other gears OK)	Low oil level.	Add oil.
	Cold oil.	Warm oil to specification.
	Leak in reverse pack.	Do transmission pressure, pump flow, and leakage check.
Transmission pressure light comes ON for each shift	Cold oil.	Warm oil to specification.
	No time delay in monitor.	Do monitor check.
	Restriction in modulation orifice.	Remove orifice and inspect for restriction and/or plugging.
	Stuck PPC valve.	Remove and inspect.
	Low transmission pressure circuit.	Do transmission system pressure test.
	Leak in transmission pressure circuit.	Do converter out pressure test.
	Failed transmission pump.	Do transmission pump flow test.
	Clogged filter.	Inspect filter. Replace.

2) DIFFERENTIAL / AXLE

Problem	Cause	Remedy
Differential low on oil	External leakage.	Inspect axle and differential for leaks.
Excessive differential and/or axle noise	Low oil level in differential.	Check oil. Remove drain plug and inspect for metal particles in differential case. Disassemble and determine cause.
	Incorrect type of oil.	Change oil
	Dragging brakes.	Do brake check.
	Failed pinion bearing.	Remove and inspect pinion. Check to ensure pinion housing was indexed.
	Incorrect gear mesh pattern between ring and pinion gear.	Remove pinion gear housing and inspect ring and pinion gear.
	Failed differential pinion gears and/or cross shafts.	Remove differential housing drain plug and inspect for metal particles. Disassemble and inspect.
	Failed axle bearing.	Do axle bearing adjustment check.
	Mechanical failure in axle planetary.	Remove differential. Inspect, repair.
Oil seeping from outer axle seal	Excessive end play in axle.	Do axle bearing adjustment check.
	Worn outer bearing and/or cup.	Disassemble and inspect outer axle bearing, cup, spacer, and seal. Replace, if necessary.
	Overfilled differential.	Check differential oil return system for excessive internal restriction.
Axle overheats	Low differential oil.	Add oil.
	Overfilled differential.	See differential overfills with oil in this group.
	Brake drag.	See brakes drag in this group.

3) DRIVE LINE

Problem	Cause	Remedy
Excessive drive line vibration or noise	Yokes not in line on drive shafts.	Inspect. Align drive shaft yokes.
	Worn front drive line support bearing.	Inspect, repair.
	Bent drive shaft.	Inspect all drive shafts. Replace.
	Loose yoke retaining nuts(Drive shafts wobble at high speed).	Inspect. Replace.
	Rear axle oscillating support.	Inspect, repair.
	Lack of lubrication.	Lubricate with proper grade of grease.

1. CLUTCH CUT-OFF PRESSURE SWITCH TEST

The setting pressure of the clutch cut-off pressure switch should be suited with the specification. The rated pressure is 25kgf/cm^2.
For the detailed method for pressure adjusting, refer to page 4-22.

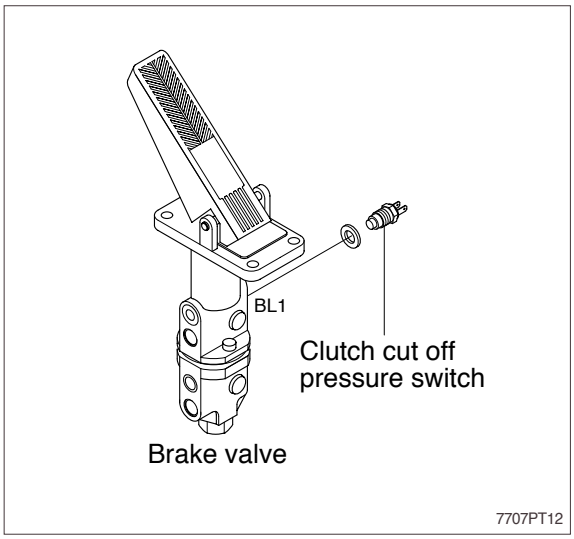

2. TRANSMISSION MEASURING POINTS AND CONNECTIONS

The measurements have to be carried out at hot transmission(About 80~95°C).

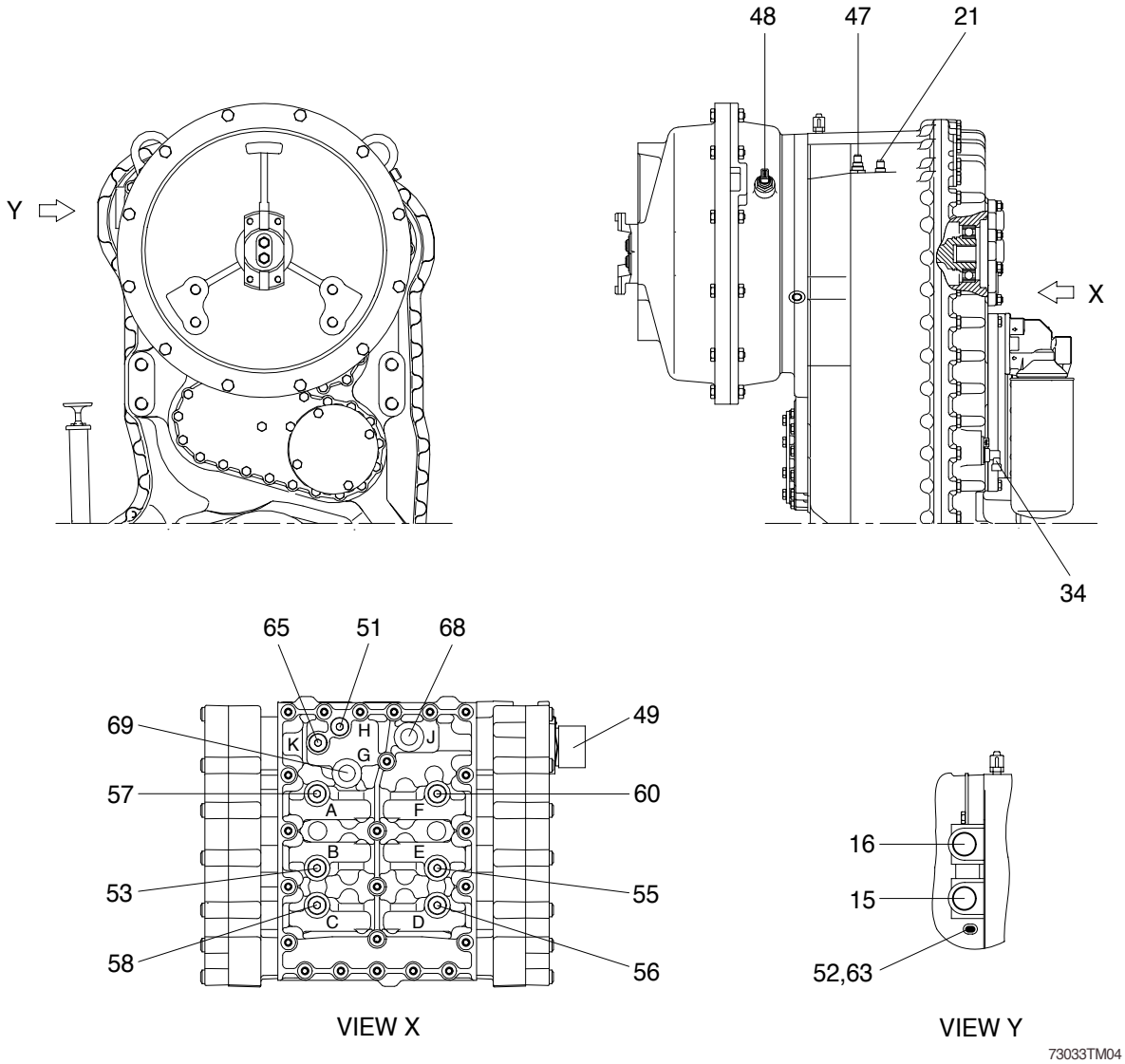

1) OIL PRESSURE AND TEMPERATURE

Port	Description		Size
51	Converter inlet-opening pressure(9bar)	H	M10×1
52	Converter outlet-opening pressure(3.5bar)		M14×1.5
53	Forward clutch(16+2bar)	B	M10×1
55	Reverse clutch(16+2bar)	E	M10×1
56	1st clutch(16+2bar)	D	M10×1
57	2nd clutch(16+2bar)	A	M10×1
58	3rd clutch(16+2bar)	C	M10×1
60	4th clutch(16+2bar)	F	M10×1
63	Converter outlet temperature 100°C , short-time 120°C		M14×1.5
65	System pressure(16+2bar)	K	M10×1

2) DELIVERY RATES

Port	Description	Size
15	Connection to oil cooler	1 5/16"-12UNF-2B
16	Connection from the oil cooler	1 5/16"-12UNF-2B

3) INDUCTIVE TRANSMITTER AND SPEED SENSOR

Port	Description	Size
21	Inductive transmitter n turbine	M18×1.5
34	Speed sensor n output and speedometer	-
47	Inductive transmitter n central gear train	M18×1.5
48	Inductive transmitter n engine	M18×1.5

4) CONNECTIONS

Port	Description		Size
49	Plug connection on the hydraulic control unit		-
68	Pilot pressure(Option)	J	M16×1.5
69	System pressure(Option)	G	M16×1.5

1. CONTROL VALVE

1) DISASSEMBLY

(1) Illustration on the right shows the complete control unit.

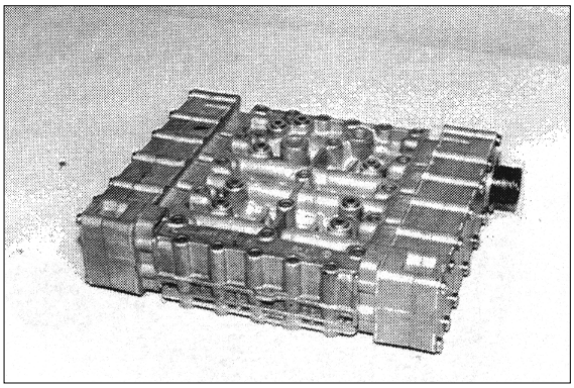

(2) Mark the installation position of the different covers, the housing and cable harness with the valve housing.

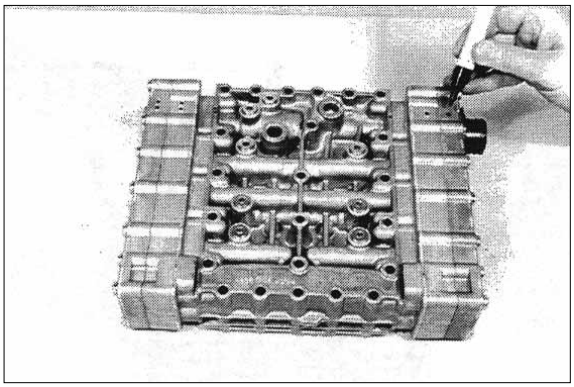

(3) Loosen socket head screws.
Separate duct plate, 1st gasket, intermediate plate and 2nd gasket from the valve housing.

¡ Special tool
Box spanner 5873 042 002

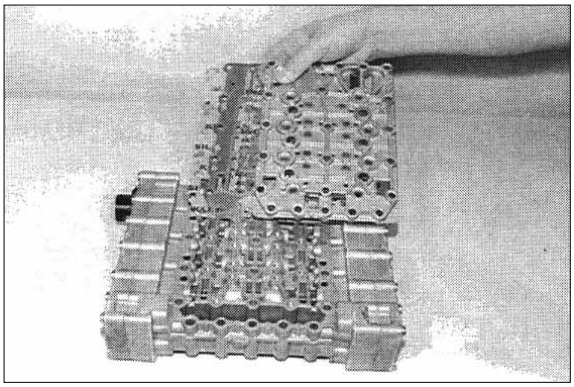

(4) Remove retaining clip.

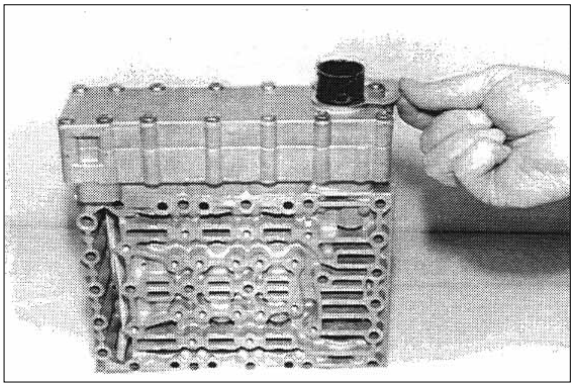

(5) Loosen socket head screws.
Separate cover from housing and cable harness.

¡ Special tool

Box spanner	5873 042 002

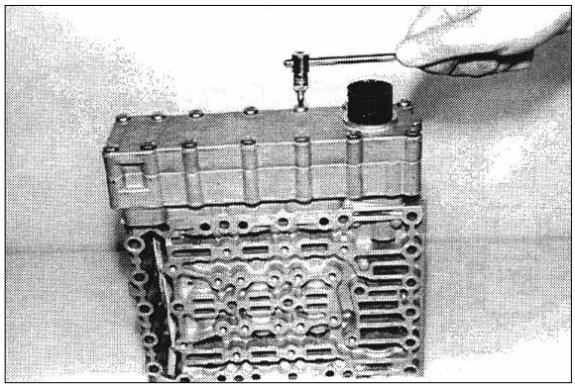

(6) Disassemble opposite cover.
Disconnect pressure regulator and remove cable harness.

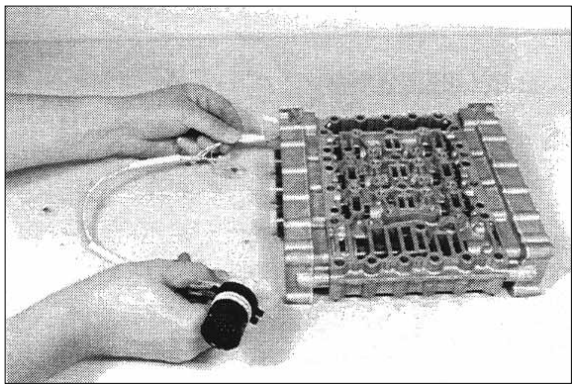

(7) Loosen socket head screws, remove fixing plate and pressure regulators(3EA).

¡ Special tool

Box spanner	5873 042 002

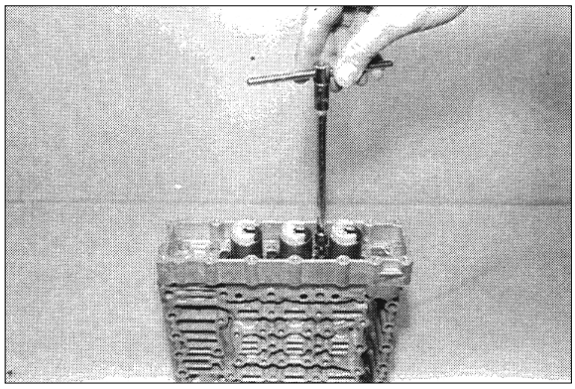

(8) Loosen two socket head screws and locate housing provisionally, using adjusting screws(Housing is under spring preload).
Now, loosen remaining socket head screws.

¡ Special tool

Box spanner	5873 042 002
Adjusting screws	5870 204 036

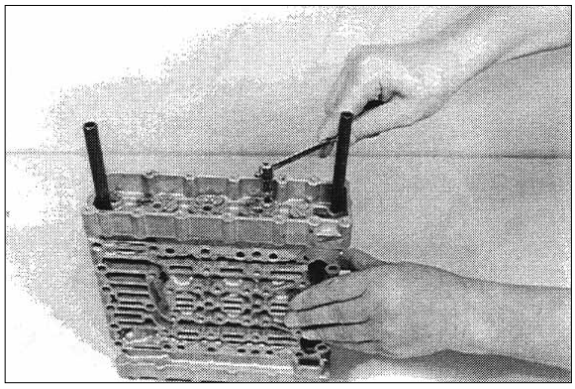

(9) Separate housing from valve housing by loosening the adjusting screws uniformly.

¡ Special tool
Adjusting screws 5870 204 036

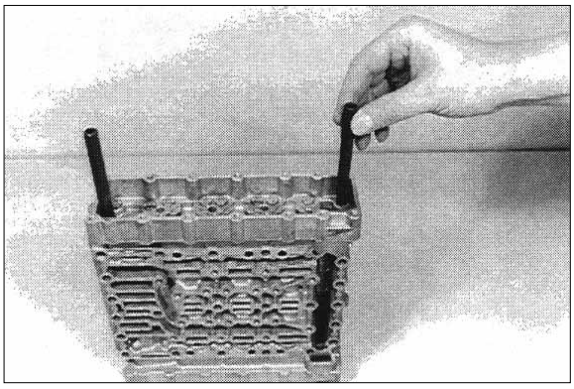

(10) Remove components.

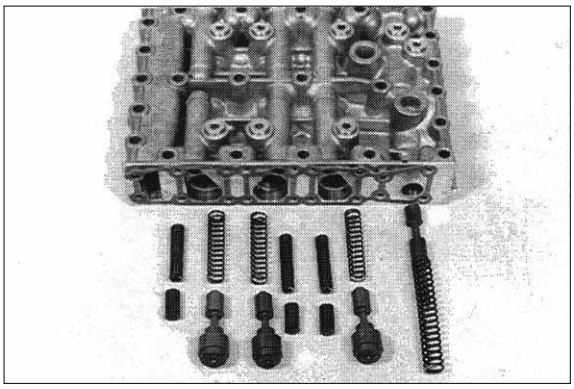

(11) Remove opposite pressure regulators, housing as well as components accordingly.

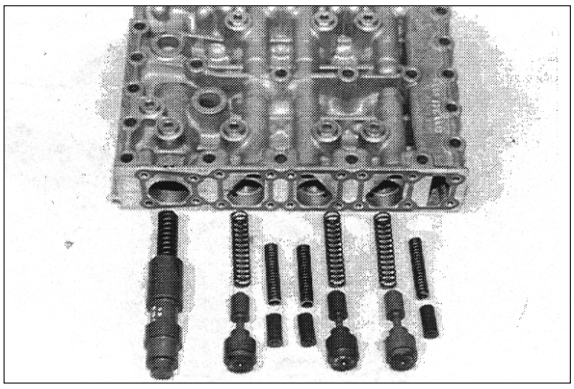

2) ASSEMBLY

¡ Check all components for damage and renew if necessary.
Prior to the installation, check free travel of all moving parts in the housing.
Spools can be exchanged individually.
Oil the components prior to the assembly.
Insert diaphragms with the concave side showing upward until contact is obtained.

¡ Installation position, see arrows.

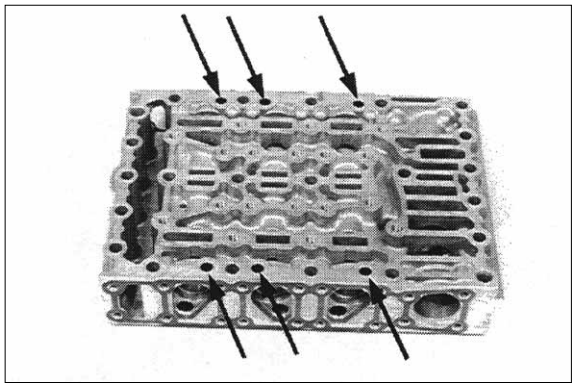

(1) Illustration on the right shows the following components.
1 Vibration damper
2 Follow-on slide
3 Pressure reducing valve

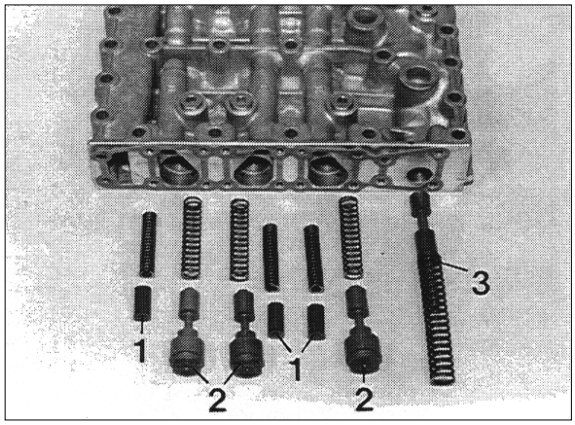

(2) Install components according to figure (1).

¡ Preload compression spring of the follow-on slides and locate spool provisionally by means of cylindrical pins ¤"5.0mm (Assembly aid), see arrows.

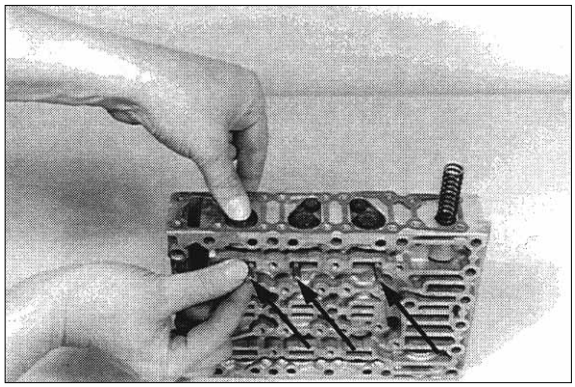

(3) Install two adjusting screws.
Assemble gasket(Arrow 1) and housing cover. Now, position the housing cover uniformly, using adjusting screws, until contact is obtained and remove cylindrical pins(Assembly aid) again(See the next figure).

¡ Pay attention to the different housing covers.
Install recess ¤"15mm (Arrow 2), facing the spring of the pressure reducing valve.
Adjusting screws 5870 204 036

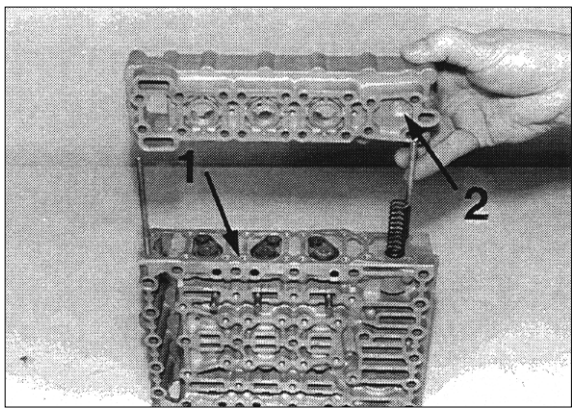

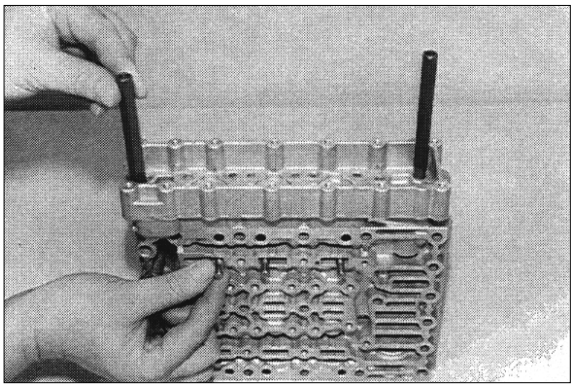

(4) Fasten housing cover by means of socket head screws.
¡ /Torque limit : 0.56kgf¡ /m(4.06lbf¡ /ft)
¡ Special tool
Box spanner 5873 042 002

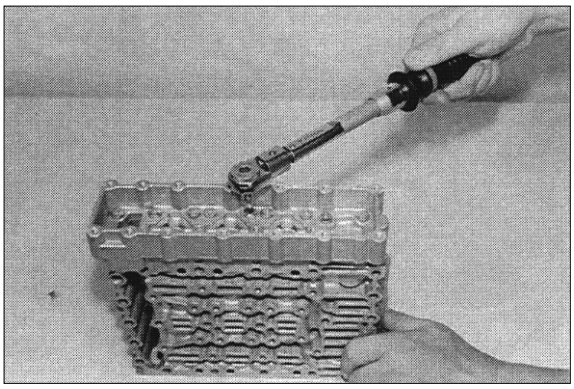

(5) Introduce pressure regulators and fix by means of fixing plates and socket head screws.
¡ Install fixing plate, with the claw showing downward.
Pay attention to the radial installation position of the pressure regulators, see figure.
¡ /Torque limit : 0.56kgf¡ /m(4.06lbf¡ /ft)
¡ Special tool
Box spanner 5873 042 002

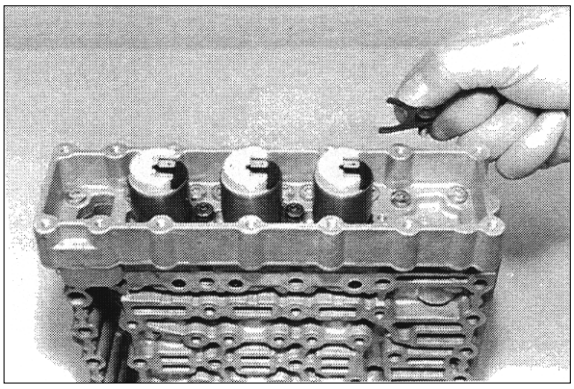

Pre assemble opposite side

(6) Illustration on the right shows the following components.
1 Main pressure valve
2 Follow on slide
3 Vibration damper

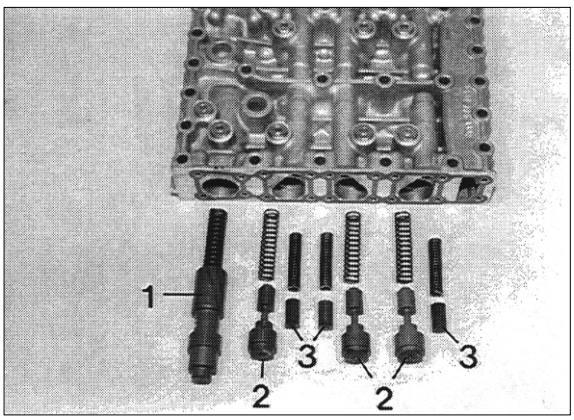

(7) Install components according to figure (6).
Preload compression springs of the follow-on slides and locate spool provisionally by means of cylindrical pins ¤"5.0mm (Assembly aid), see arrows.
Install two adjusting screws.
Assemble gasket(Arrow 1) and housing cover, and position them uniformly against shoulder, using adjusting screws.

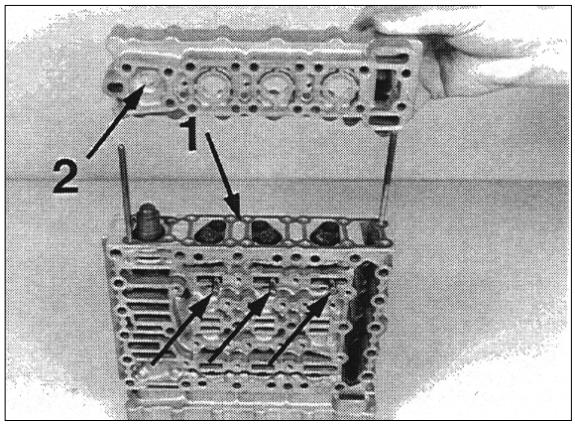

¡ Pay attention to the different housing covers-install the recess ¤"19mm(Arrow 2), facing the main pressure valve.
Now, fasten housing cover by means of socket head screws.
¡/Torque limit : 0.56kgf¡/m(4.06lbf¡/ft)
Remove cylindrical pins(Assembly aid) again.

¡ Special tool

Adjusting screws	5870 204 036
Box spanner	5873 042 002

(8) Introduce pressure regulators and fix by means of fixing plates and socket head screws.

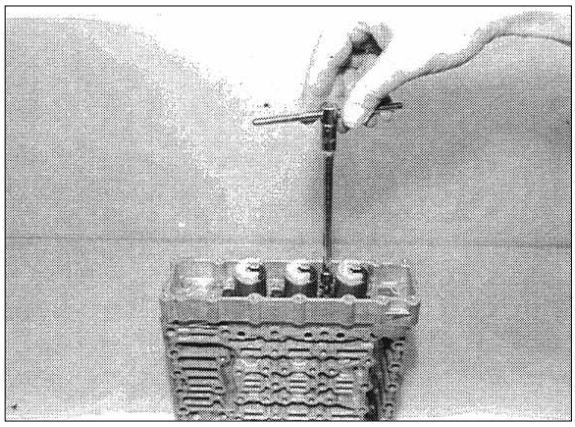

¡ Install fixing plates, with the claw showing downward.
Pay attention to the radial installation position of the pressure regulators, see figure.

¡ Special tool
¡/Torque limit : 0.56kgf¡/m(4.06lbf¡/ft)

Box spanner	5873 042 002

(9) Introduce cable harness and connect pressure regulators(6EA).

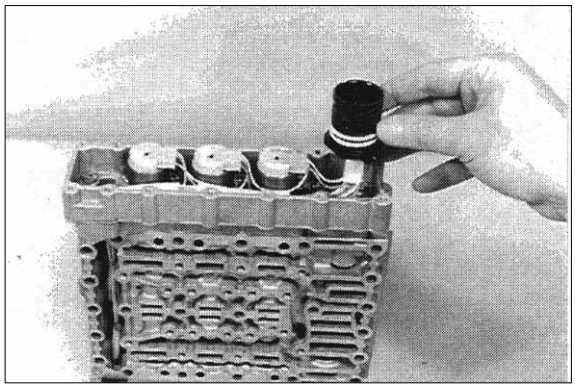

¡ Pay attention to the installation position of the cable harness, ass also markings (See figure(2), page 3-74).

(10) Introduce female connector against shoulder, with the groove facing the guide nose of the cover.
Install gasket(Arrow) and fasten cover by means of socket head screws.
¡ /Torque limit : 0.56kgf¡ /m(4.06lbf¡ /ft)

¡ Special tool
Box spanner 5873 042 002

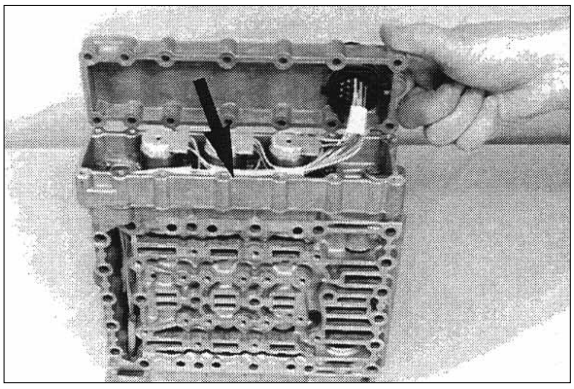

(11) Fix female connector by means of retaining clamp, see figure.
Install opposite cover.

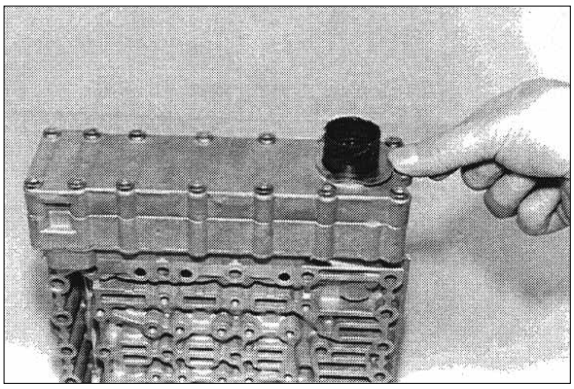

(12) Install two adjusting screws and mount gasket ¥ .

¡ Pay attention to the different gaskets, see on the right figure and (15).

¡ Special tool
Adjusting screws 5870 204 063

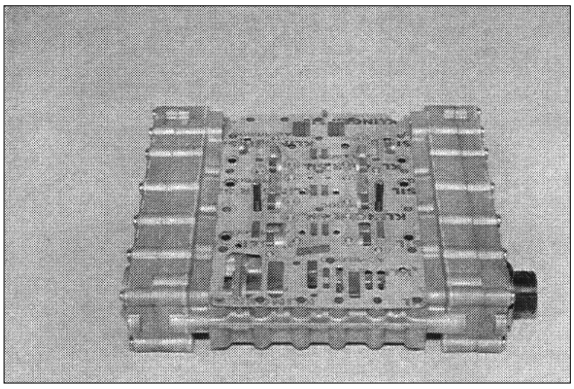

Intermediate plate-Version with screens

(13) Insert screws(6EA) flush mounted into the bore of the intermediate plate, see arrow.

¡ Pay attention to the installation position-screws are showing upward(Facing the duct plate).

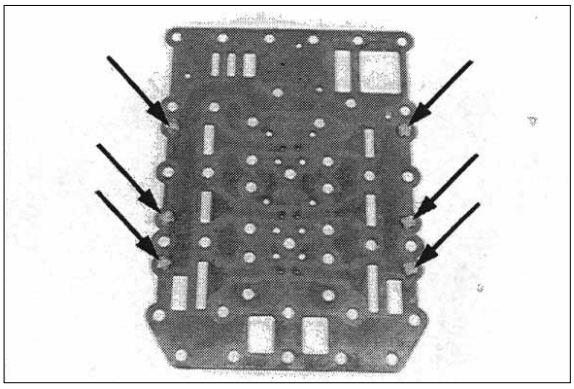

(14) Mount intermediate plate, with the screens showing upward.

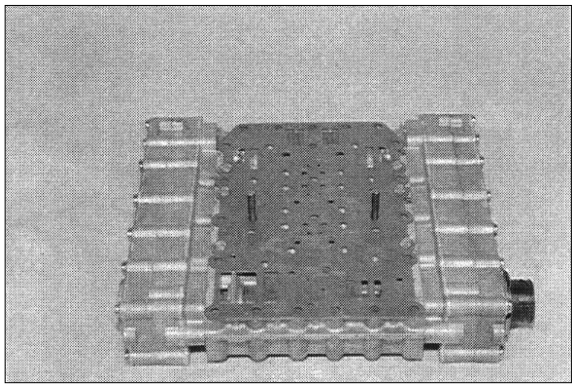

(15) Mount gasket ¥-.

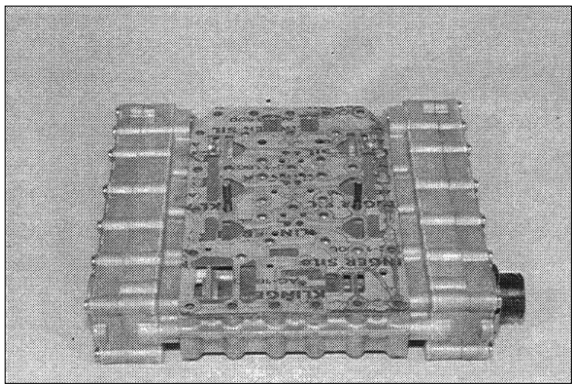

(16) Mount duct plate and fasten it uniformly by means of socket head screws.

¡/Torque limit : 0.97kgf¡/m(7.0lbf¡/ft)

¡ Special tool

Box spanner 5873 042 002

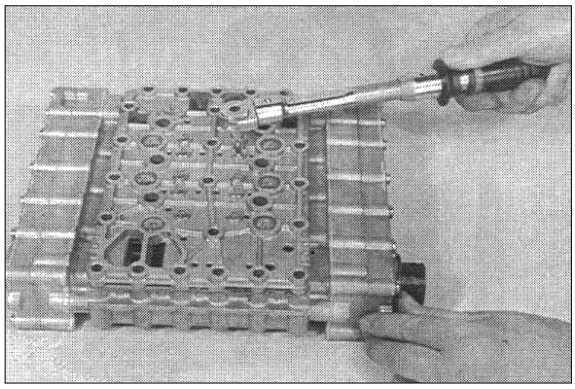

(17) Equip screw plug(8EA) with new O-rings and install them.

¡/Torque limit : 0.61kgf¡/m(4.43lbf¡/ft)

¡ The installation of the hydraulic control unit is described, starting from page 3-135.

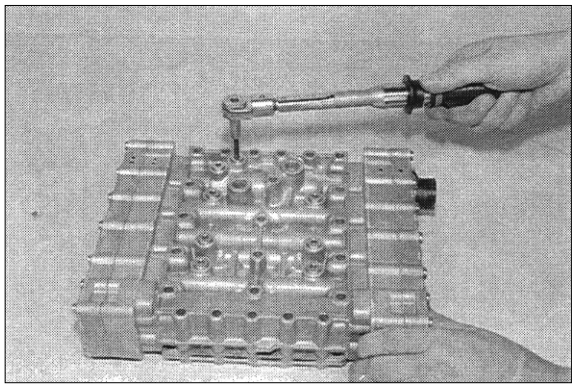

2. TRANSMISSION

1) DISASSEMBLY

(1) Remove filter unit

¤ Demount warning switch(Arrow) from filter head.

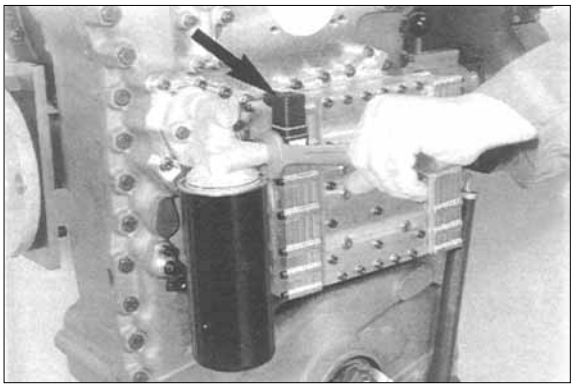

¤Ł Separate oil filter from filter head.

¡ Special tool

Belt spanner 5870 105 005

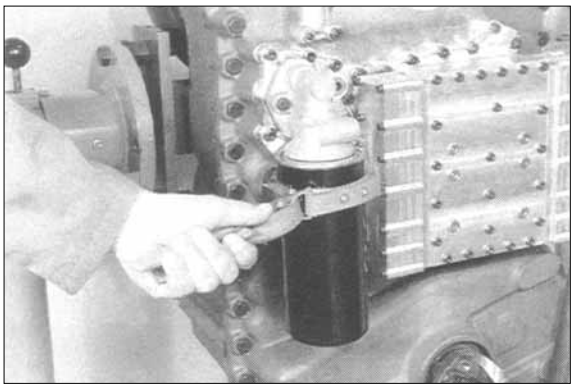

¤Ø Loosen hexagon head screws and separate filter head from duct plate.

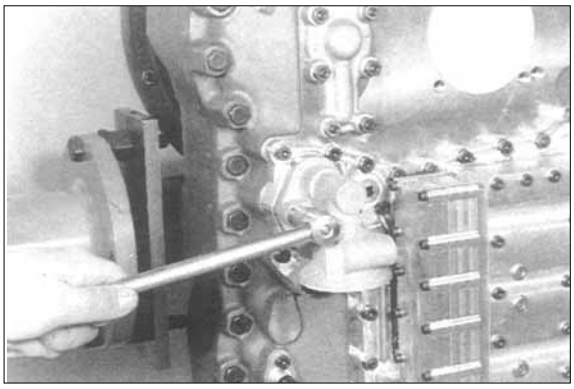

(2) Separate hydraulic control unit and duct plate from gearbox housing

¤ Loosen socket head screws, install two adjusting screws and separate control unit from duct plate.

¡ Special tool

Adjusting screw 5870 204 031

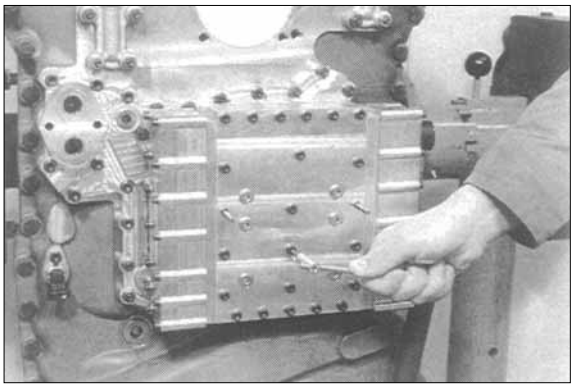

¤Ł Remove both gaskets as well as intermediate plate.

¡ Special tool
Adjusting screws 5870 204 031

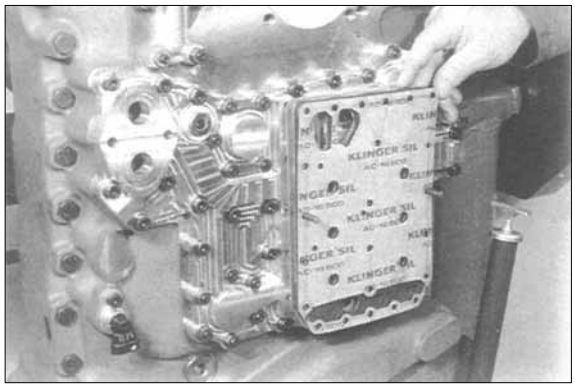

¤Ø Loosen socket head screws and hexagon nuts and separate duct plate from gearbox housing.
Now, remove flat gasket.

¡ Special tool
Adjusting screws 5870 204 031

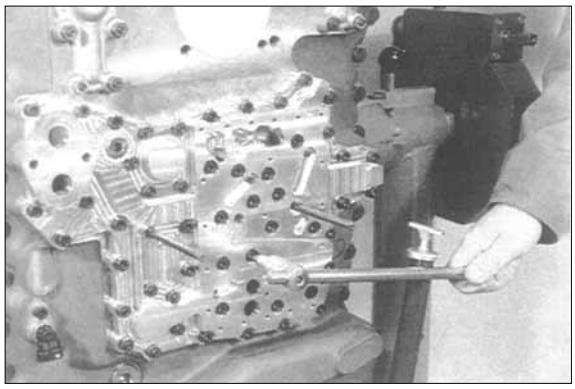

(3) Remove and disassemble converter safety valve

¤ Pull converter safety valve out of the housing bore.

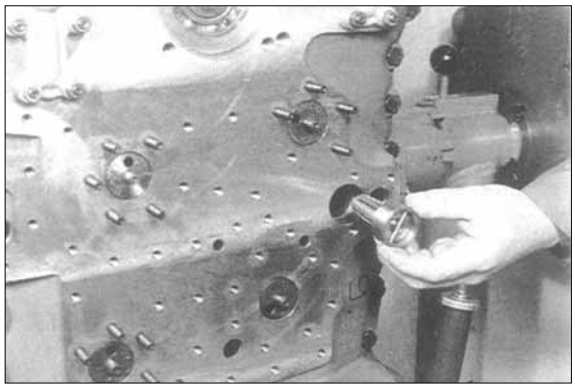

¤Ł Illustration on the right shows the required special tool for the disassembling of the converter safety valve.

1 Converter safety valve

¡ Special tool
Assembly aid 5870 345 084

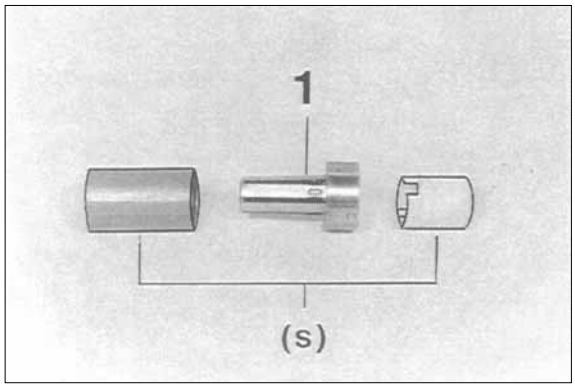

¤øPreload compression spring carefully, remove cylindrical pin(See on the right figure) and demount components(See on the below figure).

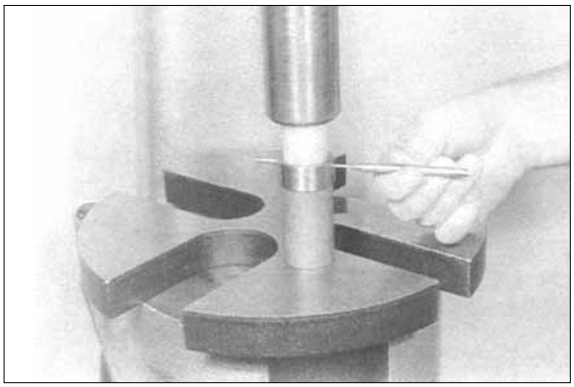

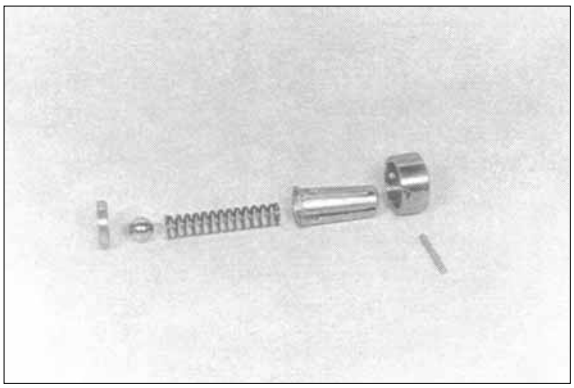

(4) Engine connection-Converter

¤ Remove lock plate and loosen hexagon head screws.
Remove disk and pry input flange from the shaft.

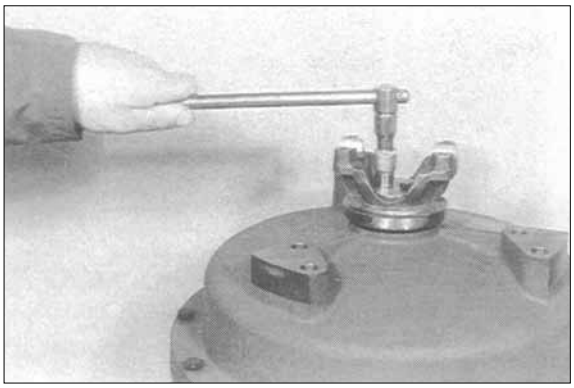

¤£Loosen screw connection.

¡ Mark radial installation position of the housing cover.

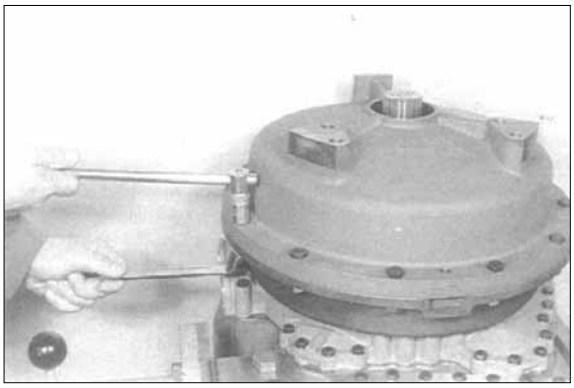

¤Ø Separate cover along with converter from the transmission, using lifting device.

¡ Special tool

Set of eye bolts 5870 204 002



¤Œ Press input shaft, respectively converter out of the cover(Ball bearing).

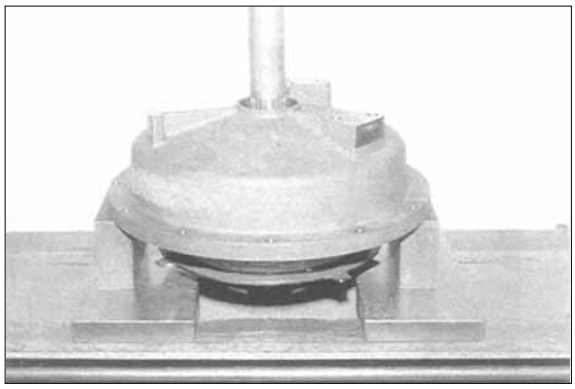

¤° Squeeze circlip out and remove ball bearing.

¡ Special tool

Set of internal pliers 5870 900 013

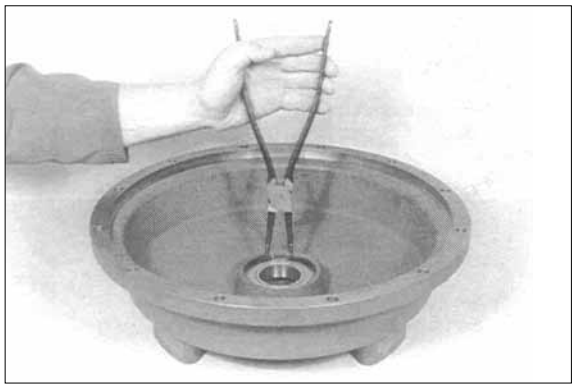

¤ Loosen hexagon head screws and separate membrane from converter.

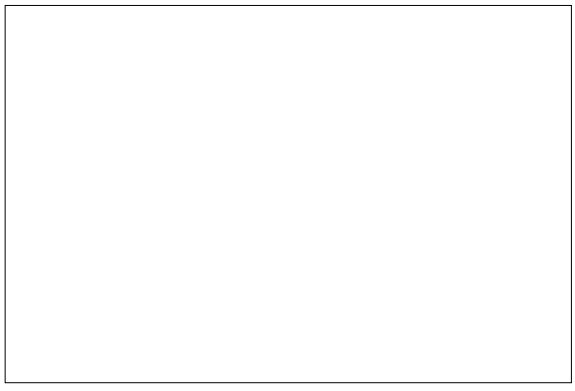

¤ Loosen hexagon head screws and separate input shaft from the membrane.

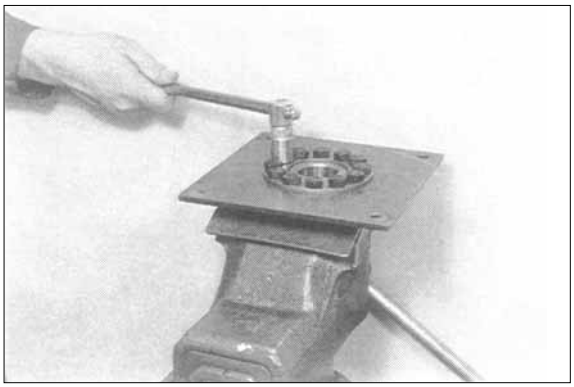

¤ Remove inductive transmitter(n Enging).

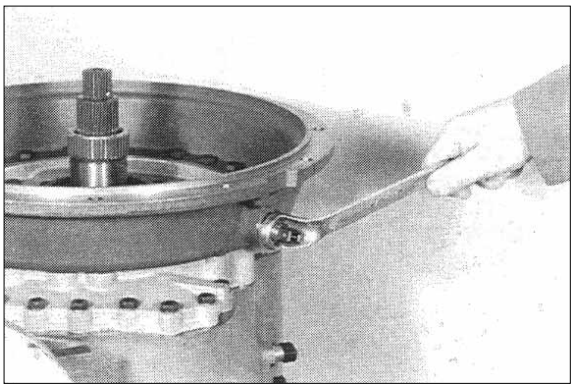

¤ Loosen hexagon head screws and remove converter housing.

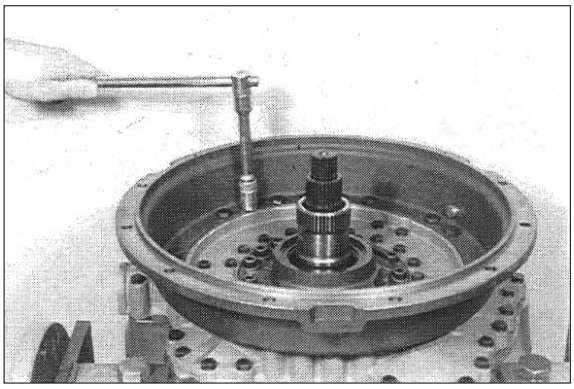

(5) Remove transmission pump

¤ Loosen socket head screws.

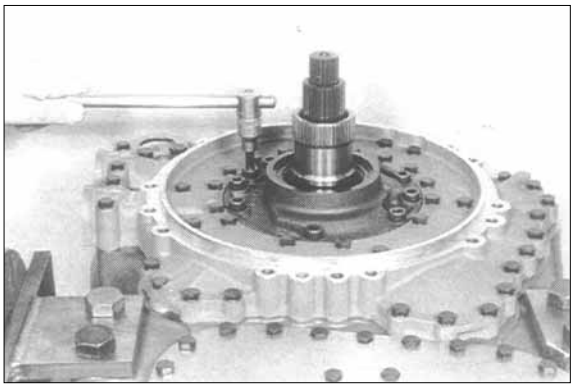

¤Ł Apply separating device on the splines runout of the stator shaft and pull pump out of the housing bores, using two-leg puller.

¡ Special tool

Separating device	5870 300 024
Two-leg puller	5870 970 004

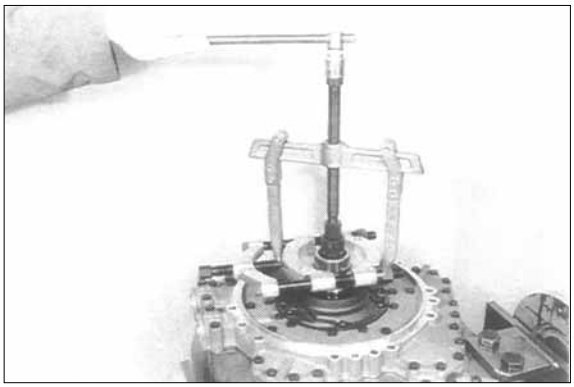

¤Ø Separate transmission pump from stator.
Separate cam plate from pump.

¡ If traces of wear should be encountered in the pump housing or the cam disk, the complete pump has to be renewed.
Now, fit cam disk again and fix it by means of grooved pins(2EA).

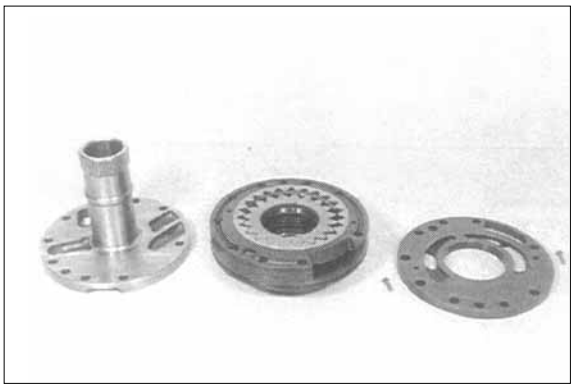

¤Œ Loosen hexagon head screws and remove oil feed housing.
Now, remove flat gasket.

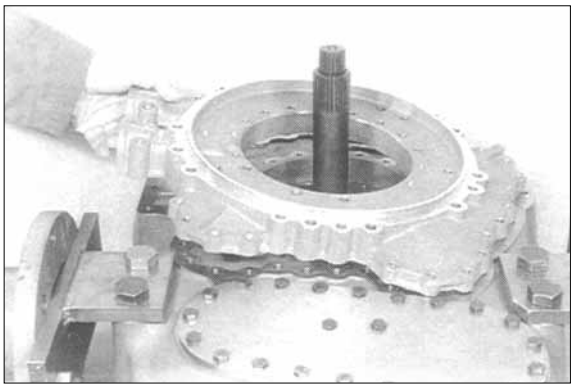

(6) Converter pressure valve

¤ Pull converter pressure valve out of the housing bore.

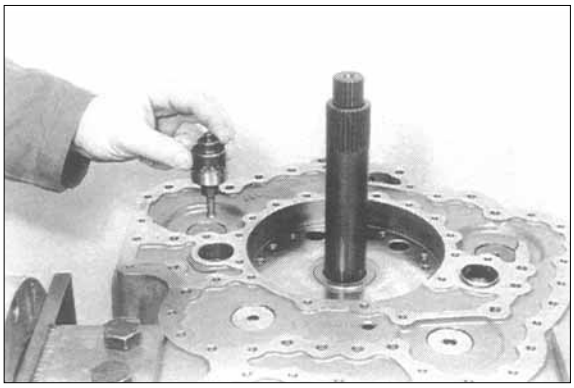

¤Ł Illustration on the right shows the special tool required for the disassembling of the converter pressure valve.

1 Converter pressure valve

¡ Special tool

Assembly aid 5870 345 084

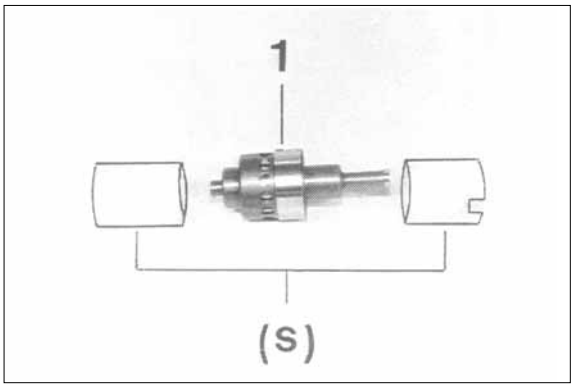

¤Ø Preload compression spring carefully, drive roll pin out and remove components.

¡ Special tool

Assembly aid 5870 345 084

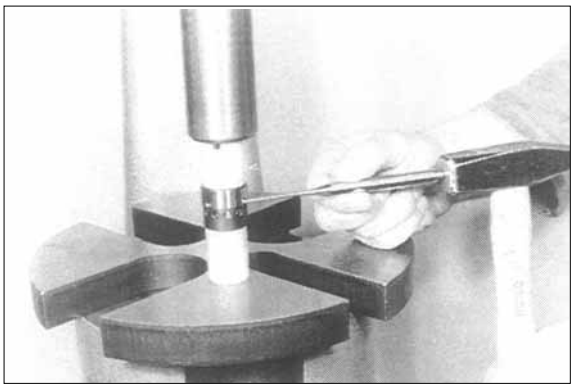

¤Œ Loosen hexagon head screws, demount cover and remove flat gasket.

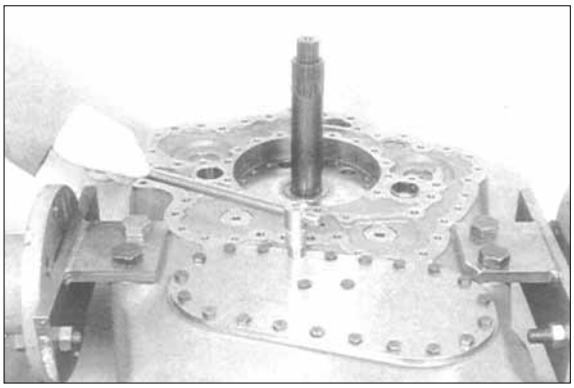

(7) Demount output, input and clutches

¤ Remove lock plate, loosen hexagon head screws, and pry the converter-side output flange from the shaft.

Now, pry shaft seal out of the housing bore.

Tilt gearbox 180¡ and remove rear output flange accordingly.

¡ Special tool

Pry bar 5870 345 065

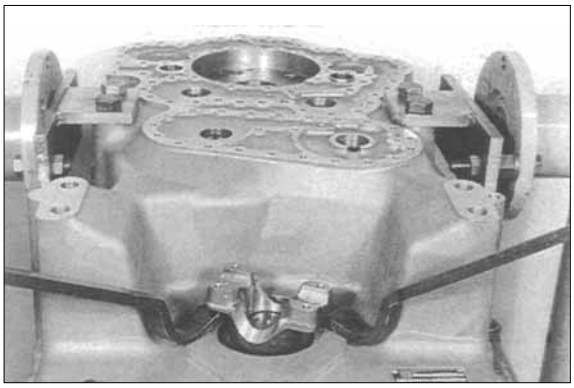

¤Ł Demount speed sensor as well as both inductive transmitters(Arrows).

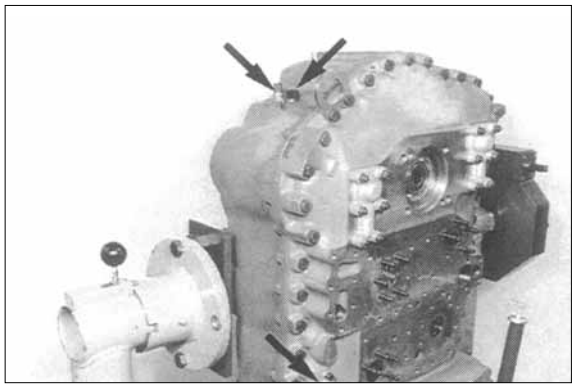

¤Ø Loosen hexagon nuts and remove the two covers(Arrows).
Loosen screw connection.

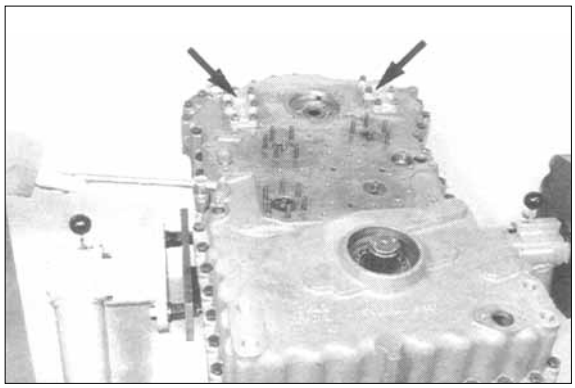

¤Œ Drive both cylindrical pins(Arrows) out.

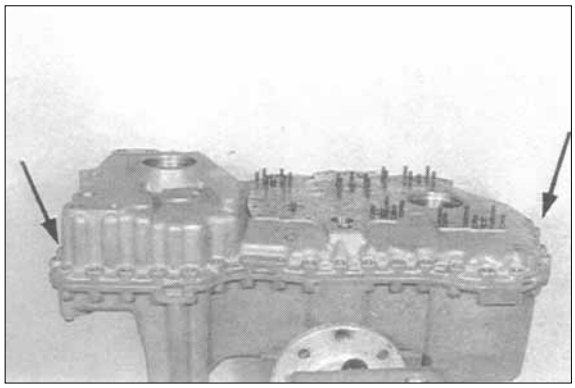

¤° Separate housing cover carefully from gearbox housing, using lifting device.

¡ Special tool

Lifting chain	5870 281 047

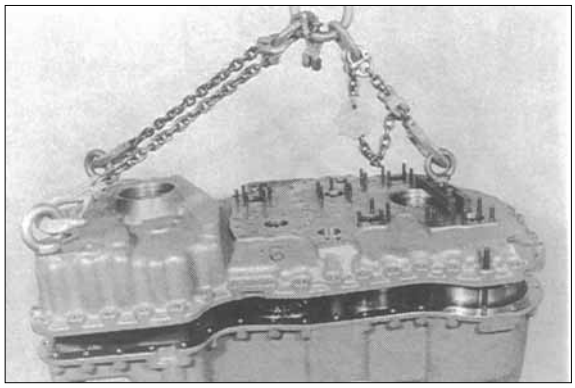

¤ On the right figure shows the installation position of the single clutches as well as of the input and output.

KV Forward clutch
KR Reverse clutch
K1 1st speed clutch
K2 2nd speed clutch
K3 3rd speed clutch
K4 4th speed clutch
AN Input
AB Output

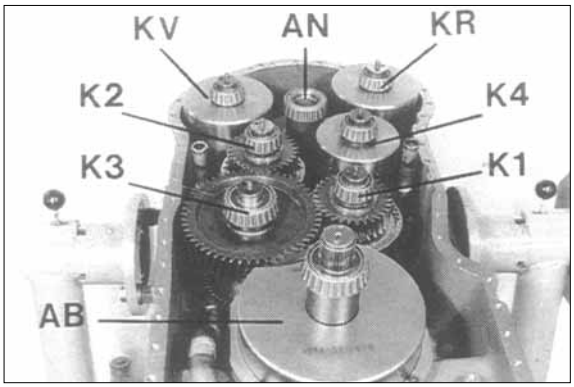

¡ The following figures describe the common removal of all clutches.
For this purpose, the housing cover, combined with special tool is necessary.
The removal of single clutches without help of the housing cover and the handles is extremely difficult because of the installation condition.
Besides, there is the danger of injuries.

¡ Prior to the common removal of the clutches, the output shaft must be removed, see the below figure.

¤ Loosen socket head screws and remove output shaft as well as both oil baffle plates.

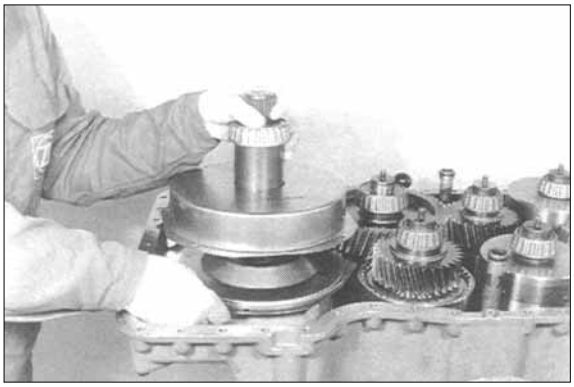

¤ Assemble housing cover carefully until contact is obtained.
Fix all clutches in the housing cover, using handles.

¡ Special tool
Handle(6EA needed) 5870 260 010

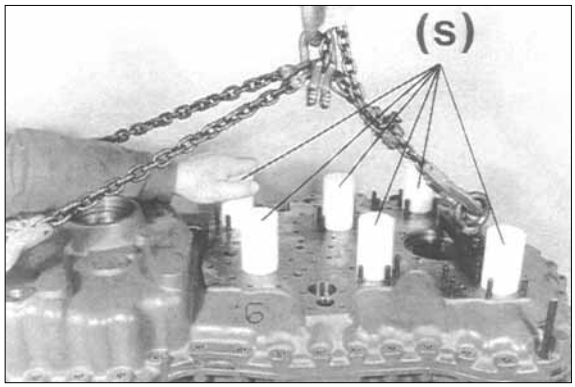

¤ Separate housing cover along with clutches from gearbox housing, using lifting device.

¡ Special tool
Handle(6EA needed) 5870 260 010



¤ Fasten housing cover on assembly car.

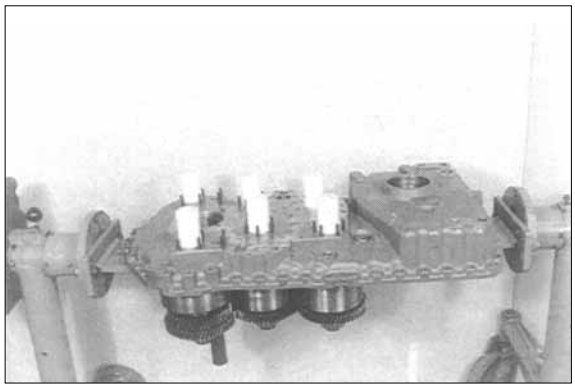

¤æ Tilt housing cover 180¡.£
Remove handles.

¡ Special tool
Handle(6EA needed) 5870 260 010

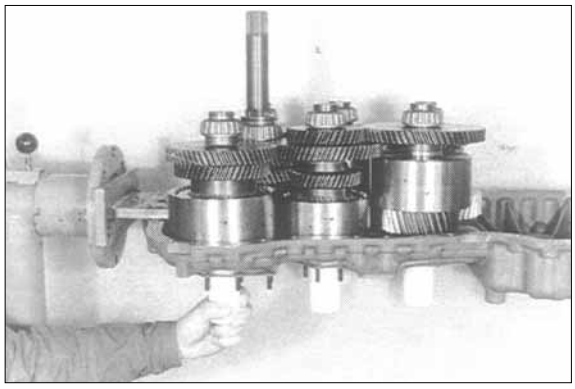

¤ Remove K2 clutch.

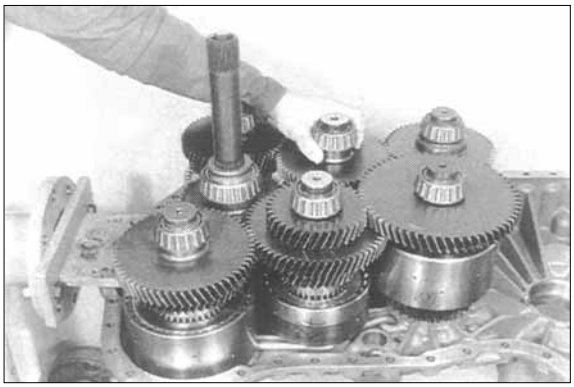

¤ Remove K1 clutch, at the same time, lift K4 clutch.

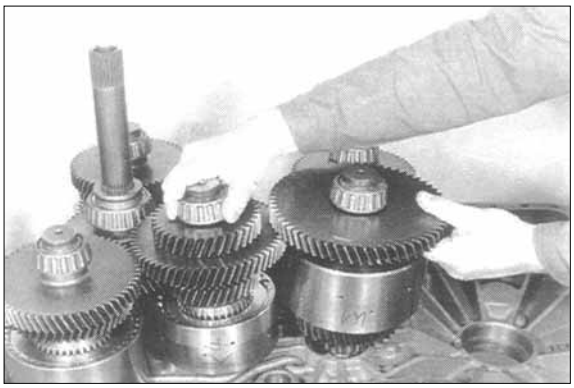

¤ Lift K3 clutch out of the housing cover.

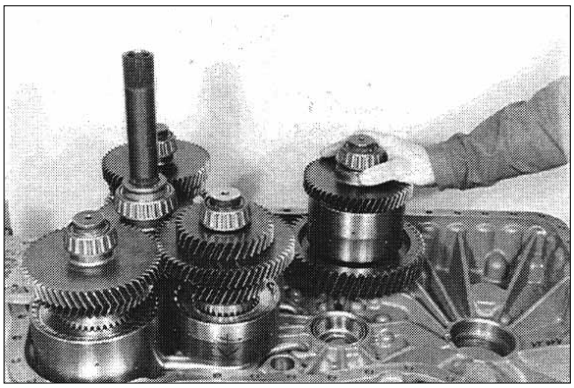

¤1 Remove K4 clutch, at the same time lift input slightly.

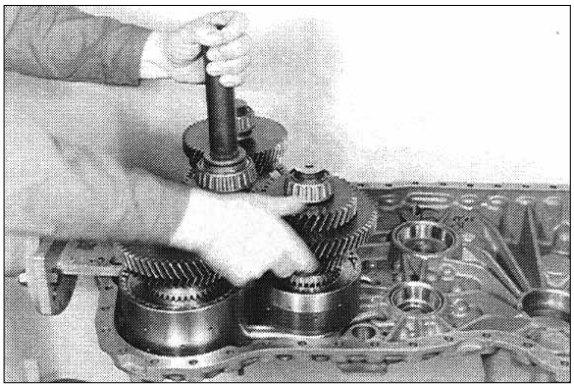

§ Separate KV and KR clutches together with input from the housing cover.



§æ Remove bearing outer race and pull output shaft(Power take-off) out of the housing bore.

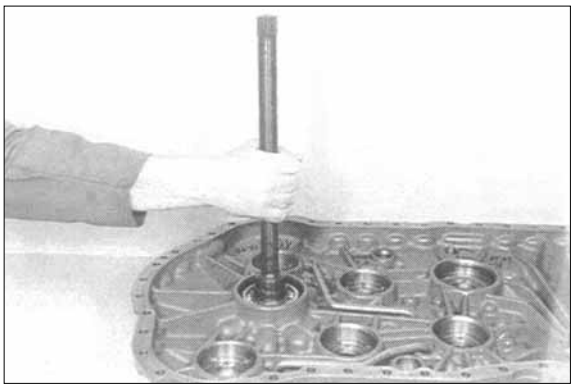

§ Squeeze rectangular ring(Arrow) out and separate ball bearing from shaft.

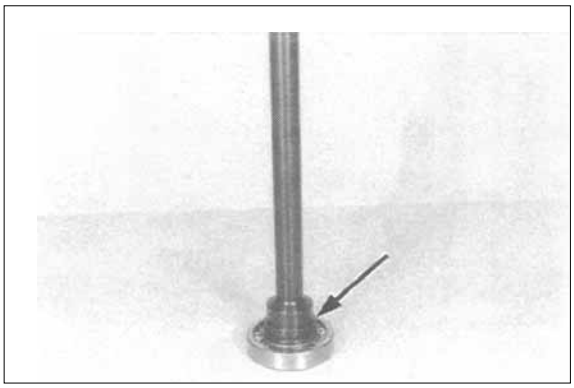

¡ If contrary to the recommendation, the tapered roller bearings of the clutches as well as of the input and output would not be renewed, the allocation of the inner and outer races to the single assemblies must at least be maintained.

¡ Mark bearing inner and outer races accordingly.

(8) Disassemble KV and KR clutch

¡ The following figures show the disassembly of the KV clutch.
The disassembly of the KR clutch is analogous.

¤ Squeeze rectangular ring(Arrow) out.

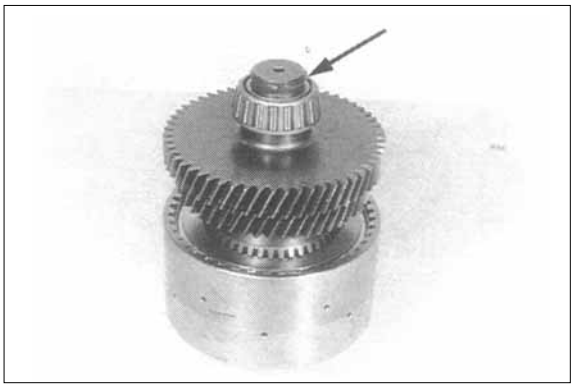

¤Ł Pull tapered roller bearing from the shaft.
Demount opposite tapered roller bearing accordingly.

¡ Special tool

Grab sleeve	5873 001 057
Basic set	5873 001 000

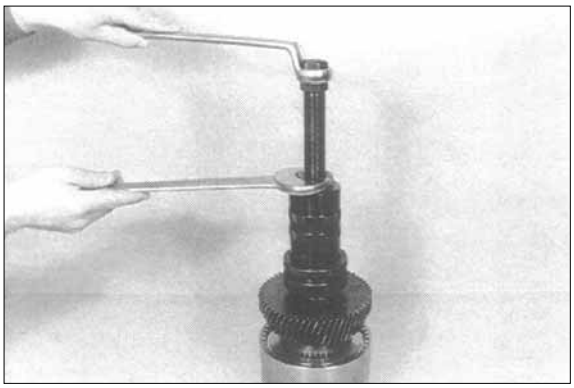

¤Ø Separate plate carrier from shaft.

¡ Special tool

Hammer	5870 280 004

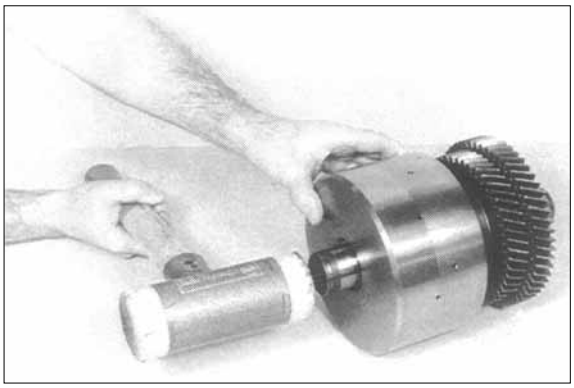

¤Œ Squeeze snap ring out and remove plate pack.

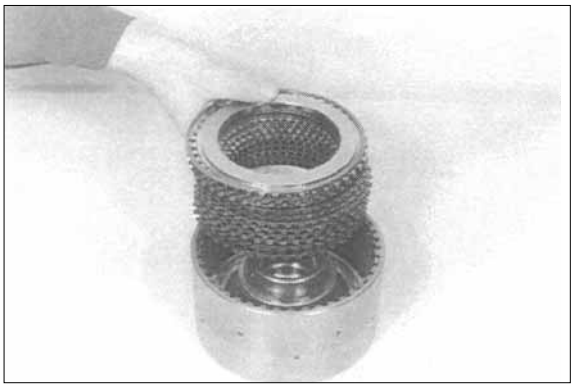

¤° Preload compression spring, squeeze circlip out and remove components.

¡ Special tool

Assembly aid	5870 345 086
Set of external pliers	5870 900 015

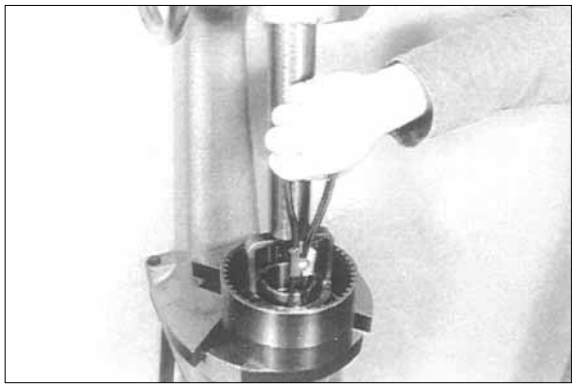

¤ Lift piston by means of compressed air out of the cylinder bore and remove it.

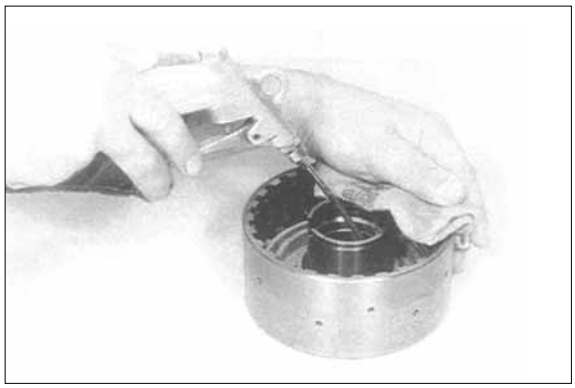

¤ Remove both O-rings.

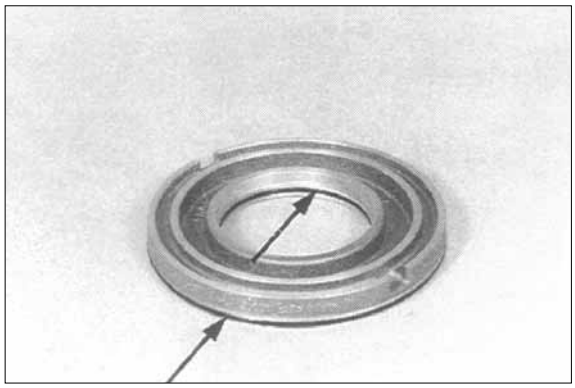

¤ Squeeze inner circlip(Shaft) out.

¡ Special tool

Set of external pliers	5870 900 015

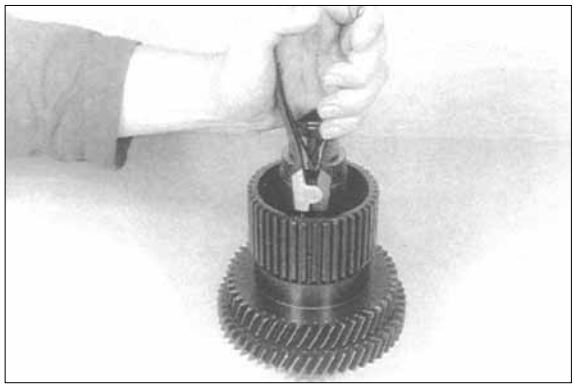

¤ Locate idler gear by means of separating device(See on the right figure) and press it from the shaft(See on the below figure). Remove released needle bearing.

¡ Special tool
Separating device 5870 300 028

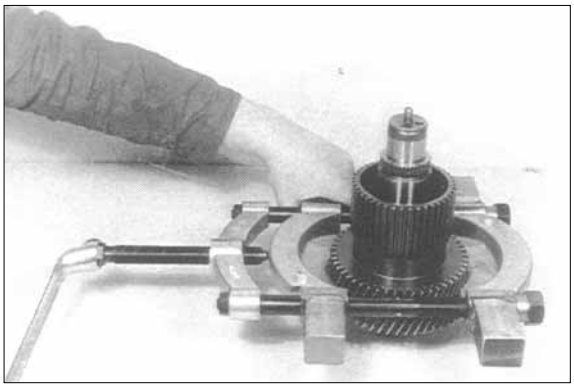

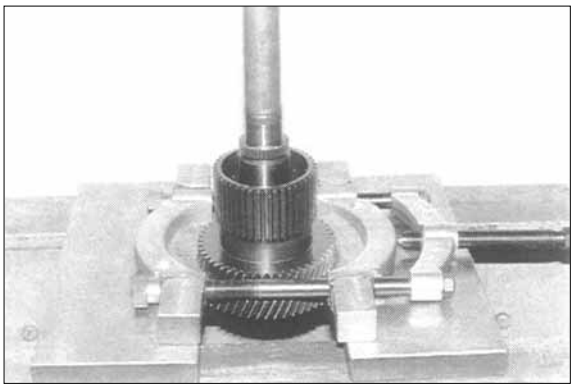

¤ Squeeze circlip out and remove ball bearing.

¡ The disassembly of the KR clutch has to be carried out accordingly.

¡ Special tool
Set of internal pliers 5870 900 013

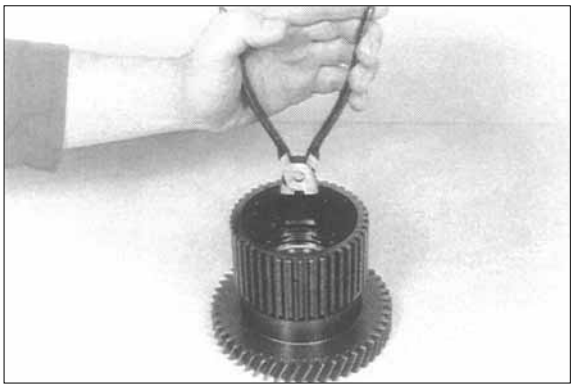

(9) Disassemble K1, K2 and K3 clutch

¡ The following Figures show the disassembly of the K3 clutch.
The disassembly of the K1 and K2 clutches is analogous.

¤ Squeeze rectangular ring(Arrow) out.

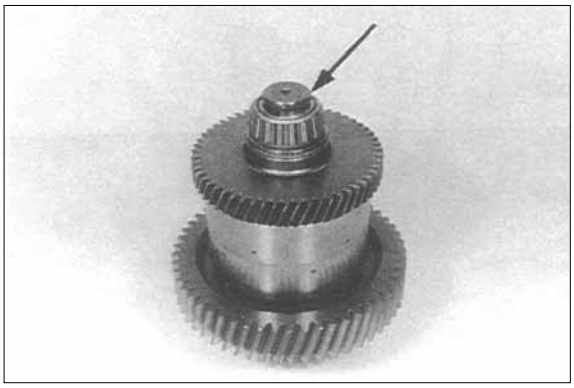

¤Ł Pull tapered roller bearing from the shaft. Remove opposite tapered roller bearing accordingly, see Figure ¤ , ¤Ł

¡ Special tool

Grab sleeve	5873 001 057
Grab sleeve (K3 on output side)	5873 001 058
Basic set	5873 001 000

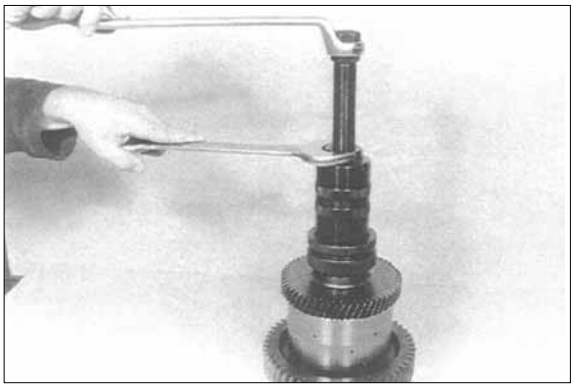

¤Ø Remove running disk, axial needle cage and axial washer.

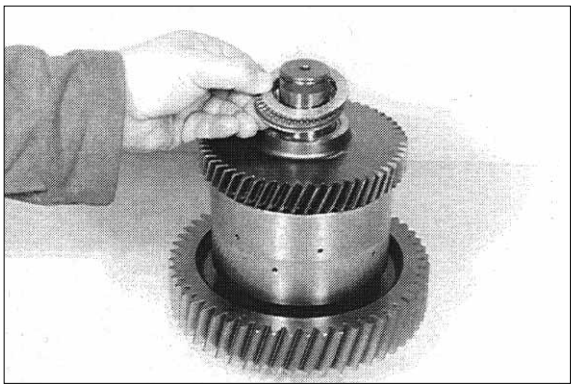

¤Œ Remove idler gear.

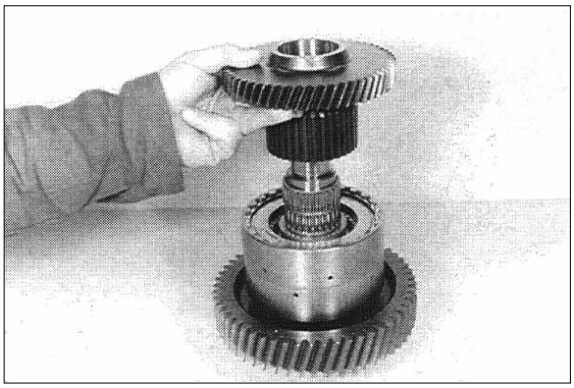

¤° Remove both needle bearings as well as axial bearing.

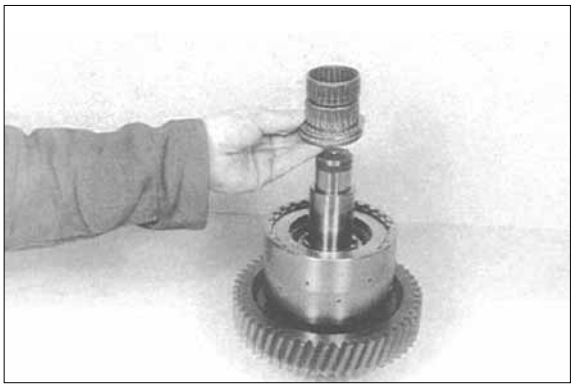

¤ Squeeze snap ring out and remove plate pack.

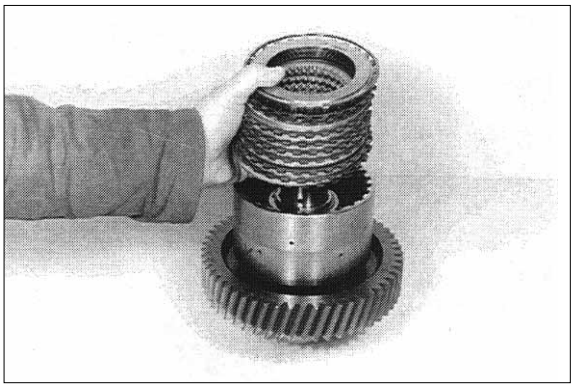

¤ Preload compression spring, squeeze circlip out and remove components.

¡ Special tool

Assembly aid(K2 and K3)	5870 345 085
Assembly aid(K1)	5870 345 086
Set of external pliers	5870 900 015

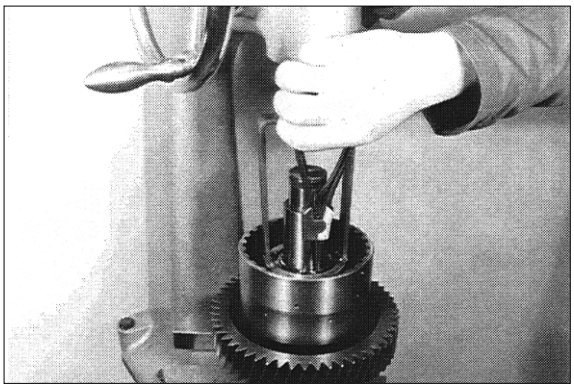

¤ Press piston out of the plate carrier, using compressed air.

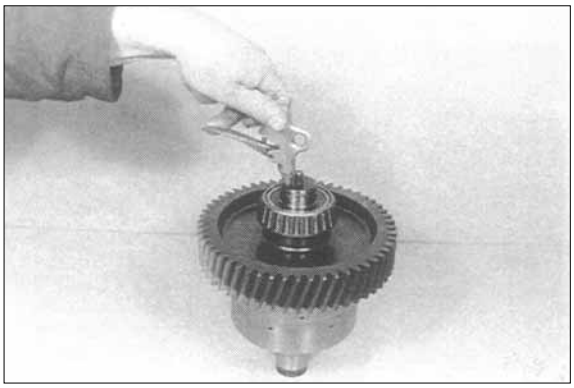

¤ Pry plate carrier from the shaft.

¡ Special tool

Pry bar	5870 345 065



(10) Disassemble K4 clutch

¤ Squeeze rectangular ring out and pull tapered roller bearing from the shaft.
Remove opposite tapered roller bearing accordingly.

¡ Special tool

Grab sleeve	5873 001 057
Basic set	5873 001 000

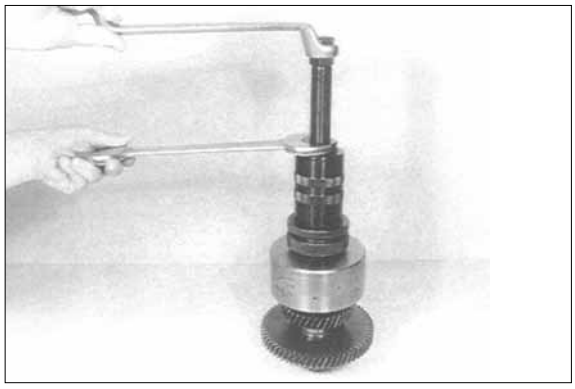

¤Ł Squeeze circlip out and separate plate carrier from the shaft.

¡ Special tool

Assembly aid	5870 345 085
Set of external pliers	5870 900 015

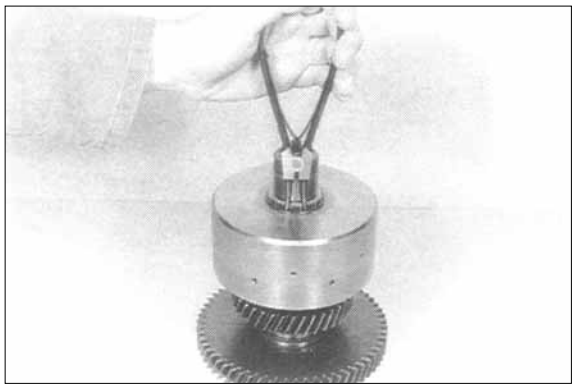

¤Ø Squeeze snap ring out and demount plate pack.

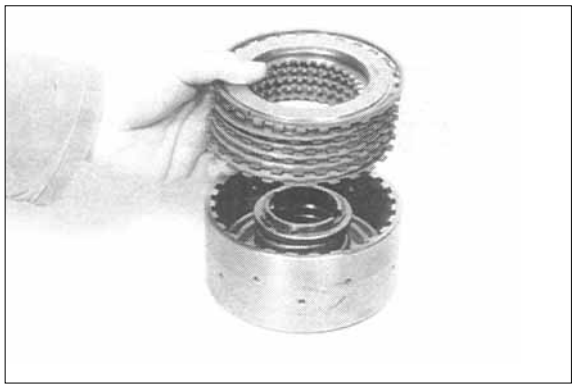

¤Œ Preload compression spring, squeeze circlip out and remove components.
Demount piston.

¡ The separation of shaft and gear is not possible(Shrink fit).

¡ Special tool

Assembly aid	5870 345 085



(11) Disassemble input shaft

¤ If necessary, press turbine shaft out of the input shaft.

¡ The turbine shaft is axially fixed by means of a snap ring which will be destroyed at the pressing out.

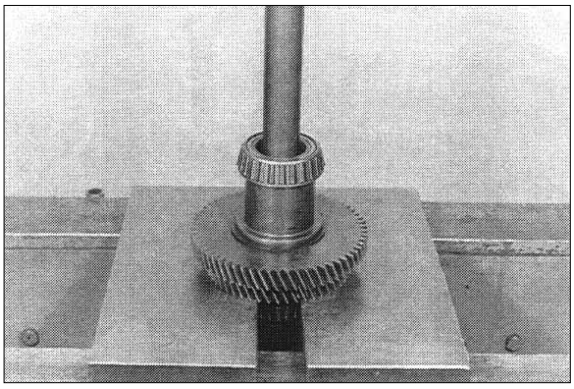

¤Ł Squeeze rectangular ring out and pull off the tapered roller bearing.
Pull off the opposite tapered roller bearing.

¡ The separation of input shaft 1 and gear 2 is not possible(Shrink fit).

¡ Special tool

Grab sleeve	5873 001 058
Basic set	5873 001 000

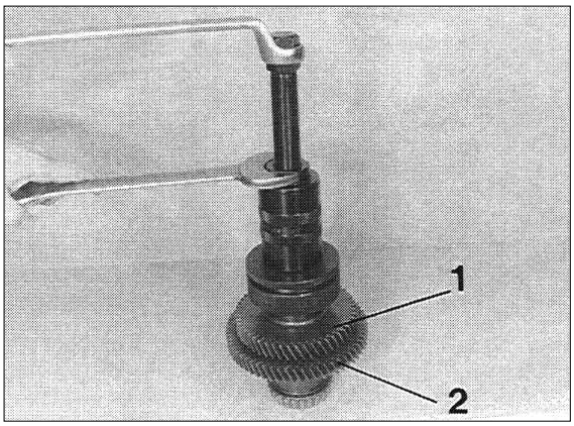

2) ASSEMBLY

¡ If contrary to the recommendation, the tapered roller bearings of the clutches as well as of the input and output would not be renewed, the allocation of the inner and outer races to the single assemblies must at least be maintained.

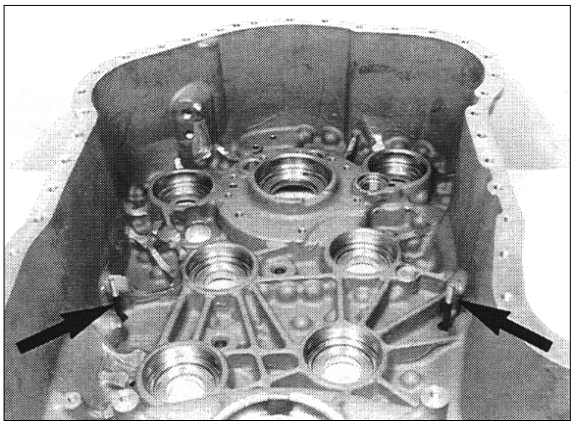

(1) Mount oil pipes

¡ To ensure the correct assembly of the oil pipes, the use of the specified special tool is imperative.

¤ Install studs(Arrows).

¡ ⁄Torque limit : 0.92kgf¡ ⁄m(6.64lbf¡ ⁄ft)

¡ Insert studs with Loctite.

¤Ł Place distance tubes over the studs.



¤Ø Insert suction tube 1, pressure pipe 2 and pressure pipe lubrication 3 into the housing bores.

Fasten suction tube 1 and pressure pipes 2 provisionally by means of socket head screw and hexagon nuts.

¡ ⁄Torque limit : 2.35kgf¡ ⁄m(17.0lbf¡ ⁄ft)

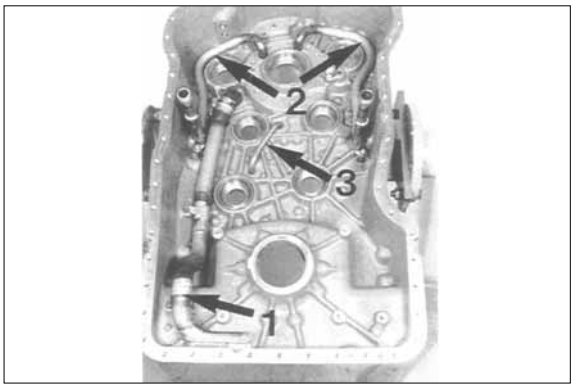

¤¨ Locate both pressure pipes by means of special device.

¡ Special tool

Tension bar	5870 654 030

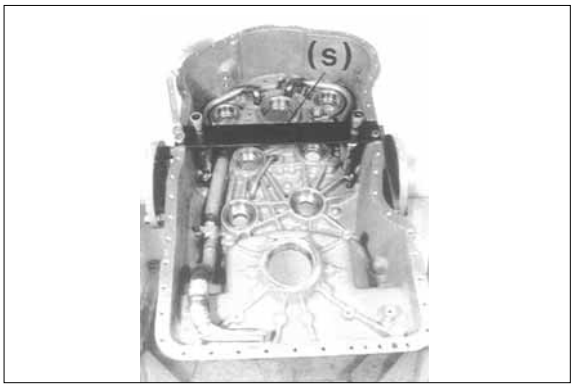

¤° Tilt housing 180¡£

Roll in suction tubes as well as pressure pipes(Arrows) into the housing bores, using special tool.

¡ Pipe end of pressure pipes(Arrows) must be slightly below the housing plane face, if necessary equalize.

¡ Special tool

Rolling tool	5870 600 003
Rolling tool	5870 600 004
Rolling tool	5870 600 005
Rolling tool	5870 600 006

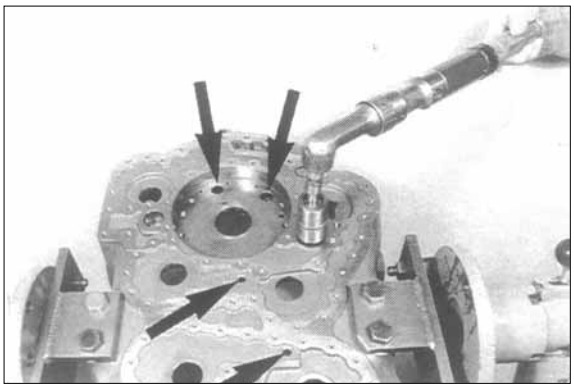

¤° Tilt housing 180¡£

Check installation position of the two pressure pipes and correct if necessary.

¡ Pipes must be located in the special device without play and pressure.

Now, remove special device.

¡ Special tool

Tension bar	5870 654 030

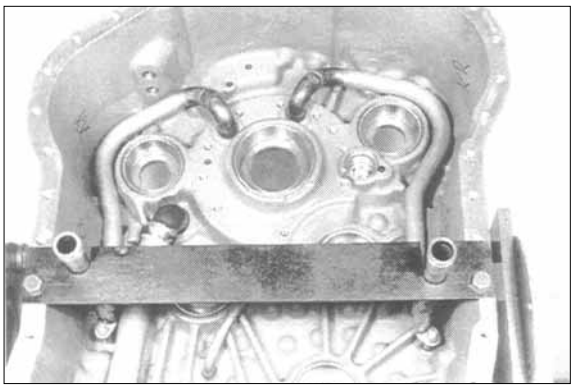

¤ Equip screw plug with new O-ring and install it.

¡/Torque limit : 5.2kgf¡/m(37.6lbf¡/ft)

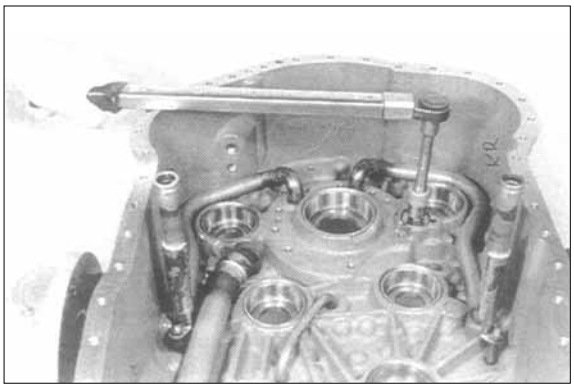

¤ Insert all bearing outer races into the housing bore.

¡ In the case that already run bearings are reused, pay attention to the allocation of the bearing outer races, see also Note, page 3-101.

¡ Pay attention to the corresponding markings.

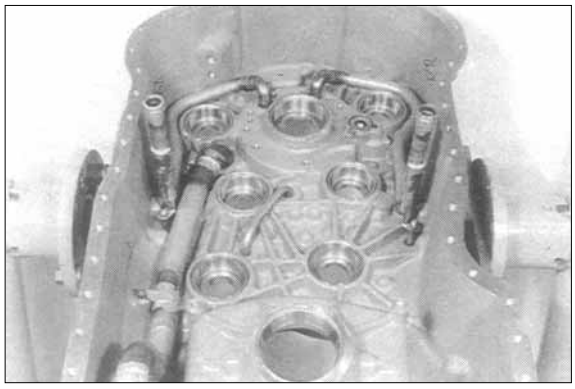

¤ Insert both oil pipes(Arrows) into the housing cover, tilt housing cover 180¡£ and roll in oil pipes into the housing bores.

¡ The pipe end must be situated slightly below the housing plane face.

¡ Special tool

Rolling tool 5870 600 005

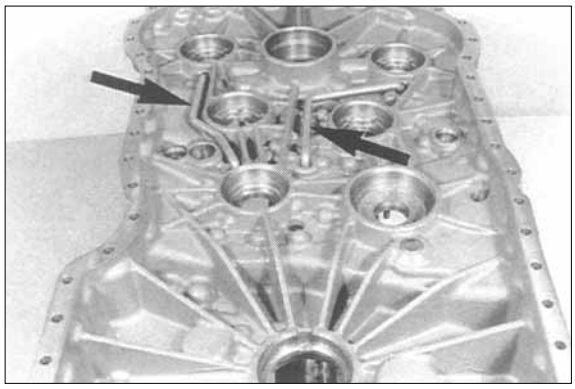

¤ Install studs (M8¡¿25, 27EA) according to the figure on the right.

¡/Torque limit : 0.92kgf¡/m(6.64lbf¡/ft)

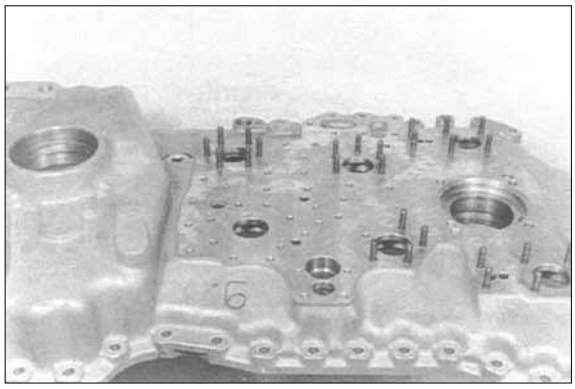

¤ Insert set screws(2EA) into the housing bores(Arrows).

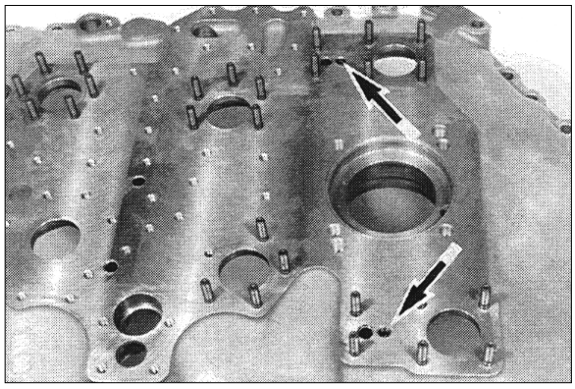

Assemble KV and KR clutch

The following figures describe the assembly of the KV clutch.

Pre-assemble plate carrier(Figure ¤æ~¤)

¤æCheck function of the drain valve.

¡ Ball may not seize, if necessary clean by means if compressed air.

Insert both O-rings(Arrows) scroll free into the recesses of the piston and oil them.

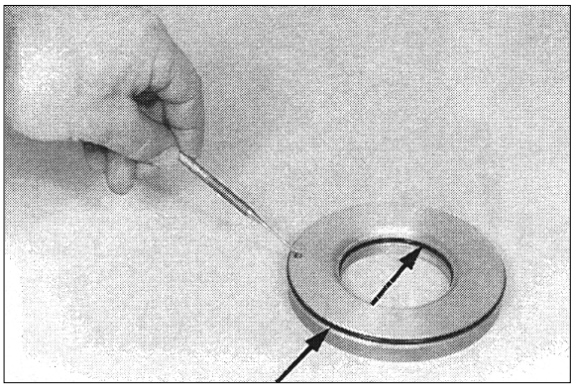

¤ Assemble piston until contact is obtained.

¡ Pay attention to the installation position, see on the right figure.

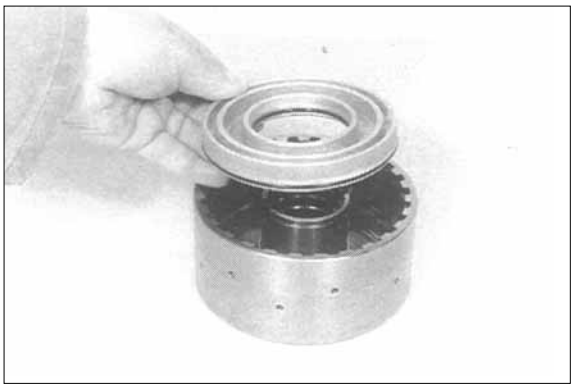

¤ Introduce compression spring along with spring cup(2EA).

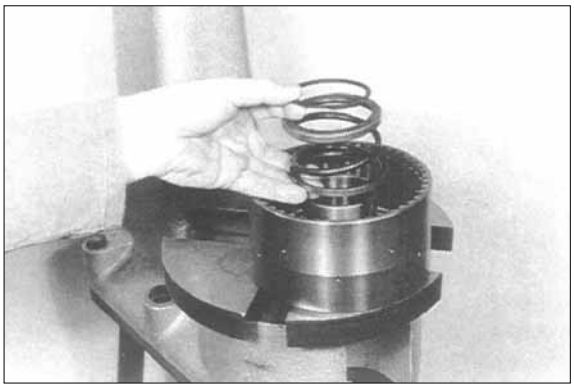

¤ Preload compression spring and fix it by means of circlip.

¡ Special tool

Assembly aid 5870 345 086



KV, KR plate pack

¡ The plate equipment, respectively stacking of KV and KR clutch is identical. The following draft shows the installation position of the components.

1 Plate carrier
2 Piston
3 Outer plate-one-sided coated
4 Inner plates
5 Outer plates-coated on both sides
6 Snap ring(Optional s = 2.1~4.2㎜)
7 End shim

¡ Install outer plate 3 with the uncoated side facing the piston, respectively the end shim.
Install on the end shim side **two** outer and inner plates each.
¡ ⁄Effective number of friction surfaces =18.

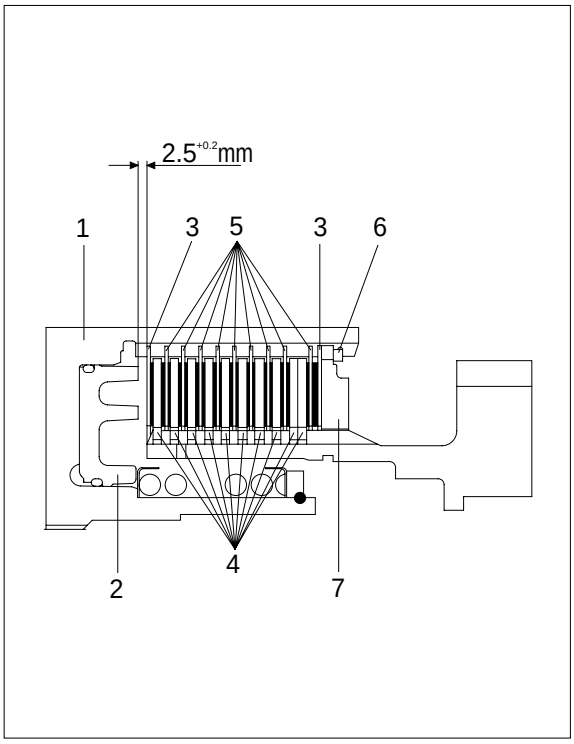

¤Œ Adjust plate clearance = $2.5^{+0.2}$㎜.

¡ For the adjustment of the plate clearance there are snap rings of different thickness available.
To ensure a faultless measuring result, install plates for the moment without oil.

¡ Introduce plate pack according to the upper draft.

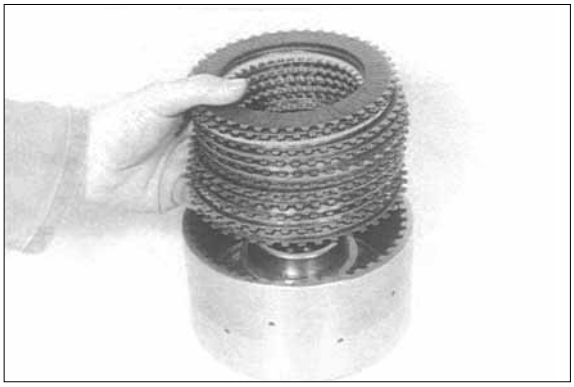

§ Mount end shim and squeeze snap ring(e.g. s = 3.0㎜) in.



§æPress end shim on with about 10㎏ and measure Dimension¥ from the end face/plate carrier to the end shim.
Dimension ¥ e.g. 7.25㎜

¡ Special tool
Digital-Depth gauge 5870 200 072

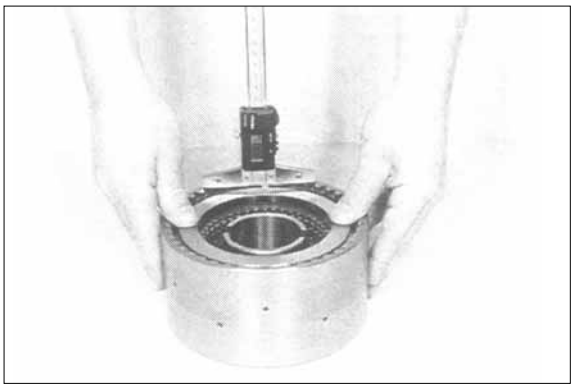

§ Press end shim against snap ring (Upward) until contact is obtained and determine Dimension ¥ –.
Dimension ¥– e.g. 4.75㎜

¡ Special tool
Digital-Depth gauge 5870 200 072

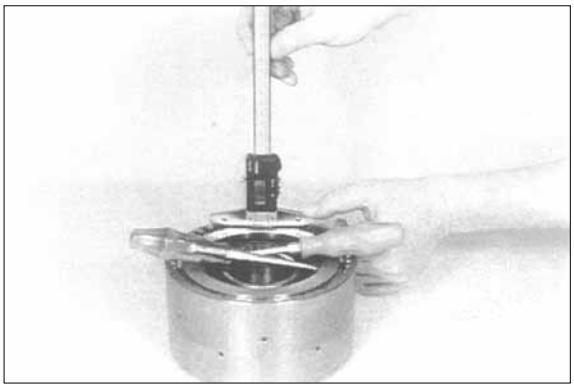

EXAMPLE

Dimension ¥	7.25㎜
Dimension ¥–	- 4.75㎜
Difference = Plate clearance	= 2.50㎜

¡ In case of deviations from the required plate clearance, correct by means of corresponding snap ring(s = 2.1~4.2㎜). Now, remove plate pack, oil and install it again.

§ Introduce idler gear until all inner plates are accommodated.

¡ This step makes the later assembling of the idler gear easier.
Now, remove idler gear again.

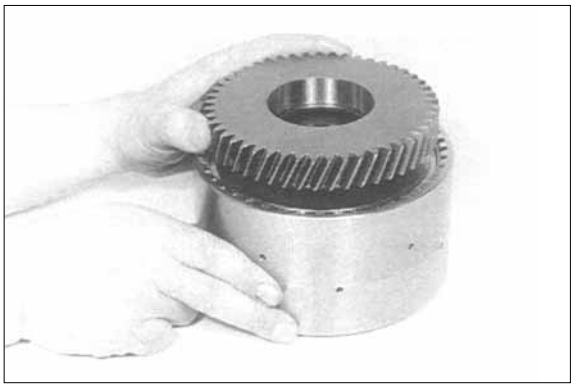

§ Install stud(Arrow).
Use Loctite.

¡ ¡/Torque limit : 1.73kgf¡/m(12.5lbf¡/ft)

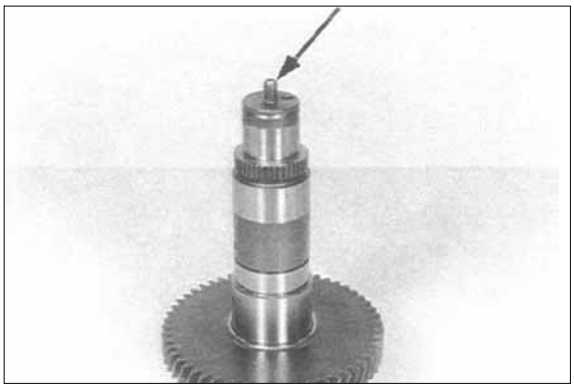

§ Insert ball bearing until contact is obtained and fix it by means of circlip.

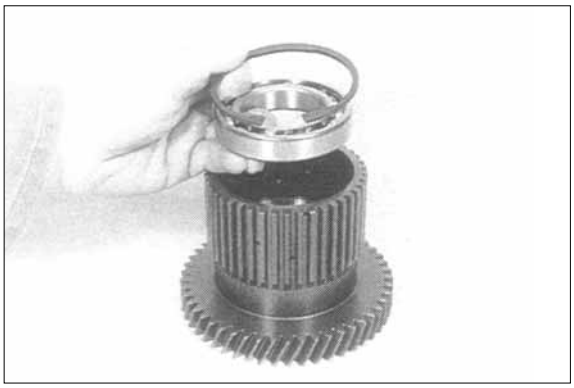

§ Assemble needle bearing.

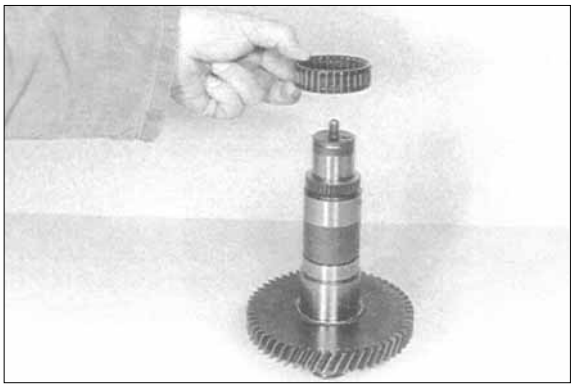

§ Press idler gear against shoulder.

¡ Support it on the bearing inner race.

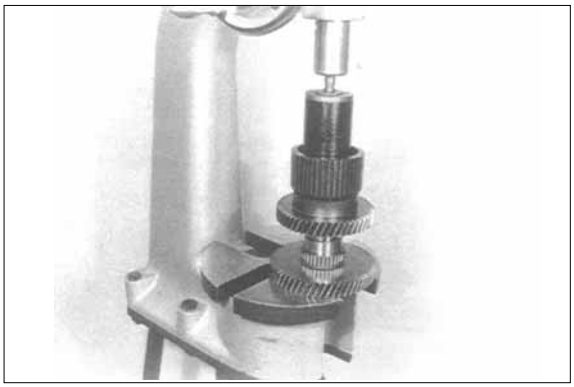

§± Fix idler gear axially by means of circlip.

¡ At KR clutch there is no recess in the shaft-assemble circlip until contact on the bearing inner race is obtained.

¡ Special tool

Set of internal pliers 5870 900 013

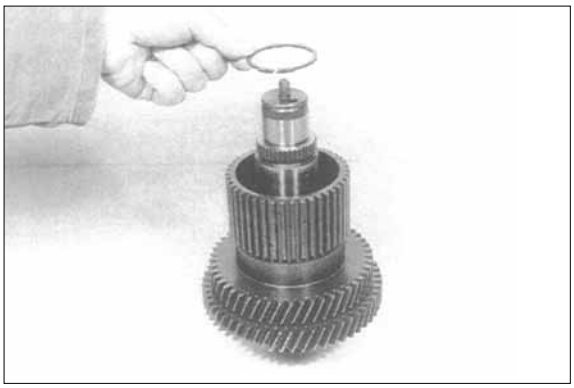

§ø Assemble pre-assembled plate carrier until contact is obtained.

¡ Only if the plate carrier plane face is overlapping with the shaft collar, the accommodation of all inner plates is ensured, see on the below figure.

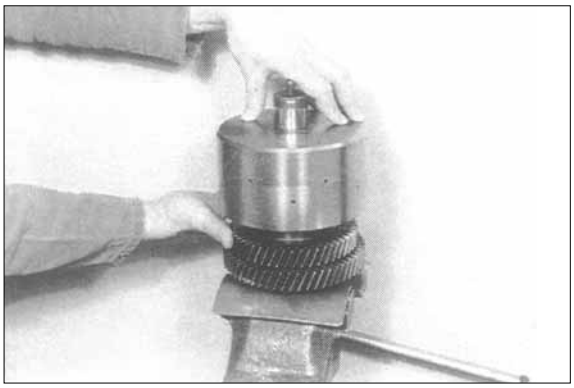

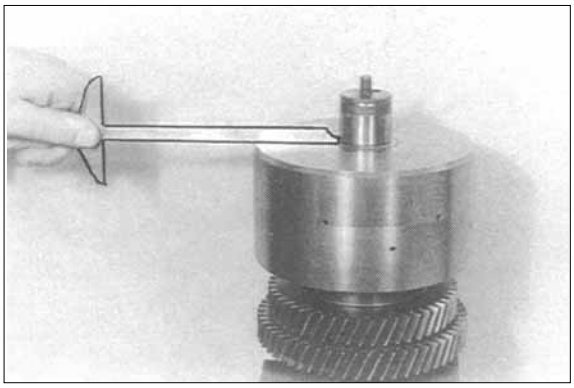

§œ Press tapered roller bearing against shoulder.
Install opposite tapered roller bearing.

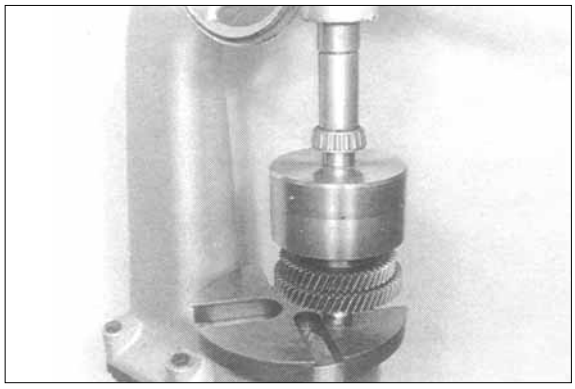

§ß Check function of clutch by means of compressed air.

¡ At correctly installed components, the closing, respectively opening of the clutch is clearly audible.

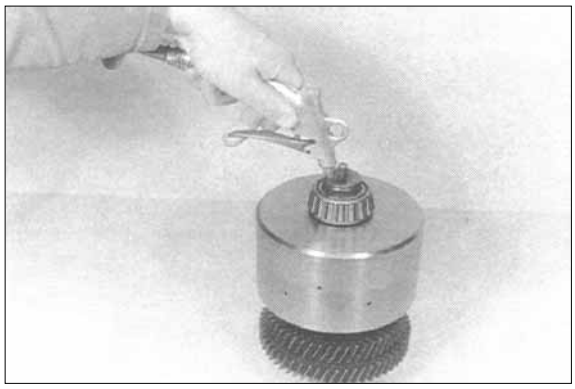

(2) Assemble K1, K2 and K3 clutch

¡ The following figures describe the assemble of the K3 clutch.
The assembly of the K1 and K2 clutches has to be carried out accordingly.

¤ Install stud(Arrow).

¡ Use Loctite.
¡/Torque limit : 1.73kgf¡/m(12.5lbf¡/ft)

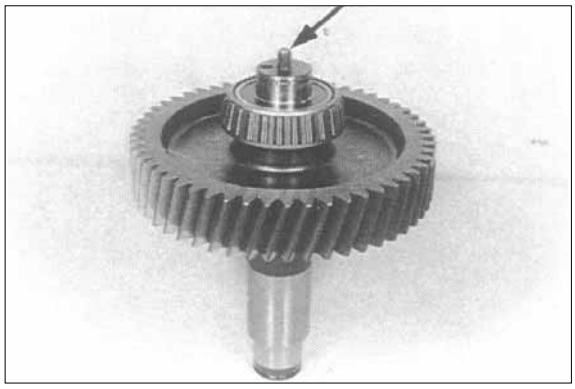

¤Ł Assemble plate carrier until contact is obtained.

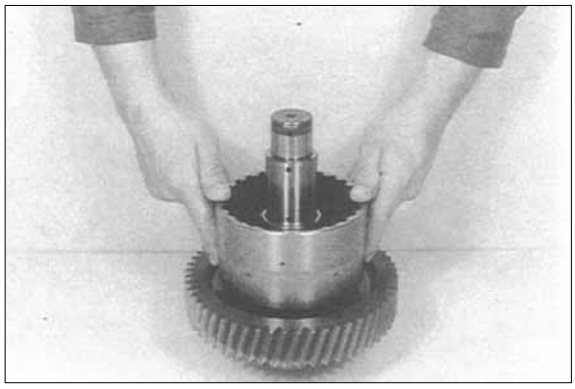

¤ØCheck function of the drain valve.

¡ Ball may not seize, if necessary clean by means of compressed air.
Insert both O-rings(Arrows) scroll free into the piston recesses and oil them.

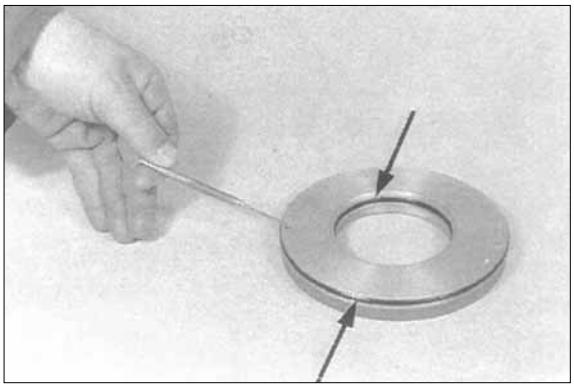

¤ŒIntroduce piston until contact is obtained.

¡ Pay attention to the installation position, see on the right figure.

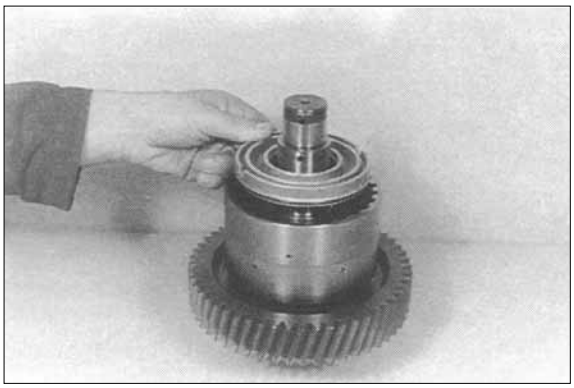

¤°Introduce compression spring along with spring cup(2EA).

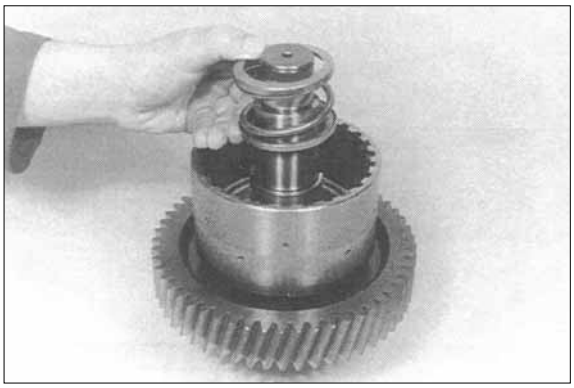

¤ Preload compression spring and fix it by means of circlip.

¡ Special tool
Assembly aid(K2 and K3) 5870 345 085
Assembly aid(K1) 5870 345 086

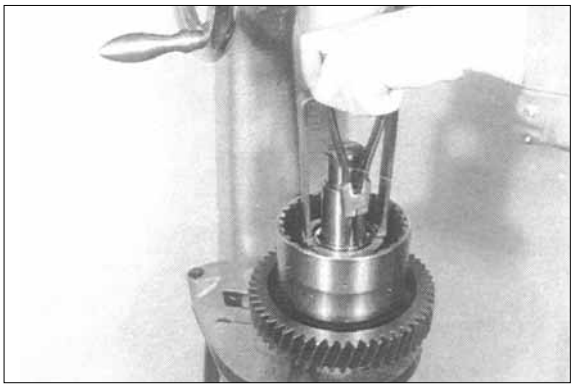

K1, K2 and K3 plate pack

¡ The K1, K2 and K3 plate stacking of clutches are identical.
The following draft shows the installation position of the components.

1 Plate carrier
2 Piston
3 Outer plate-one-sided coated
4 Inner plates
5 Outer plates-coated on both sides
6 Snap ring(Optional s = 2.1~4.2㎜)
7 End shim

¡ Install outer plate 3 with the uncoated side facing the piston.
¡/Effective number of the friction surfaces = 16.

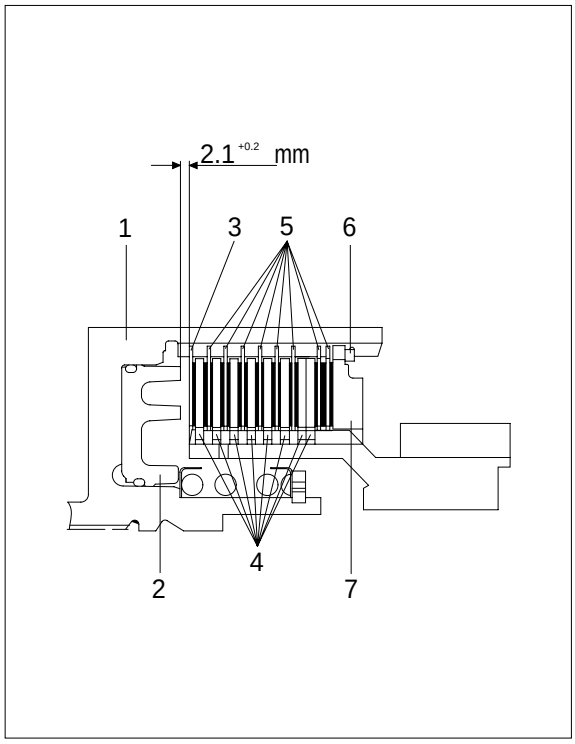

¤ Adjust plate clearance = $2.1^{+0.2}$㎜ :

¡ For the plate clearance adjustment there are snap rings of different thickness available.
To ensure a faultless measuring result, install the plates for the moment without oil.

¡ Introduce plate pack according to the upper draft.

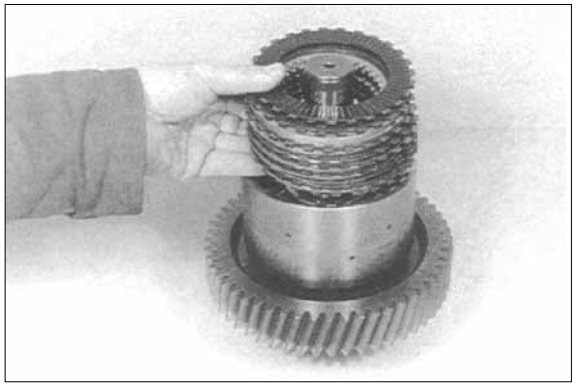

¤ Fit end shim and squeeze snap ring(e.g. 3.0㎜) in.

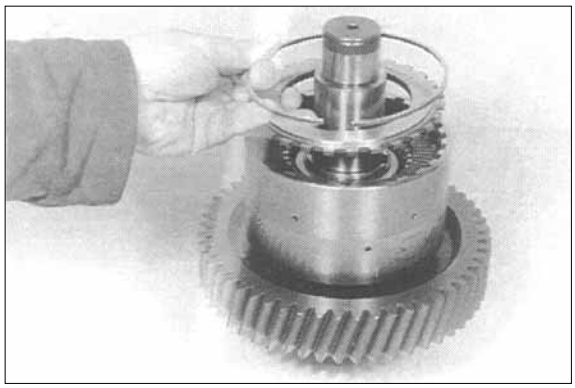

¤ Press end shim on with about 10kg, and measure Dimension¥ from the end face/plate carrier to the end shim.
Dimension¥ e.g. 8.20mm

¡ Special tool
Digital-Depth gauge 5870 200 072

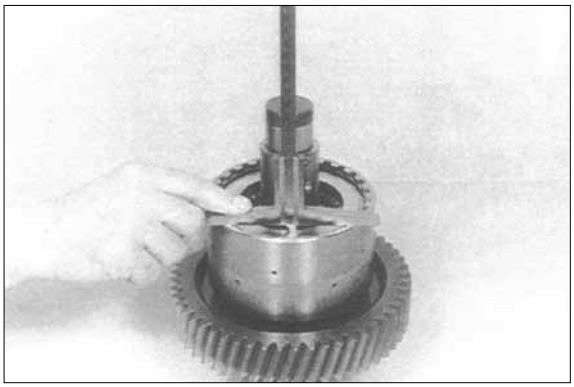

¤ Press end shim against snap ring(Upward) until contact is obtained, and determine Dimension¥-.
Dimension¥- e.g. 6.00mm

¡ Special tool
Digital-Depth gauge 5870 200 072

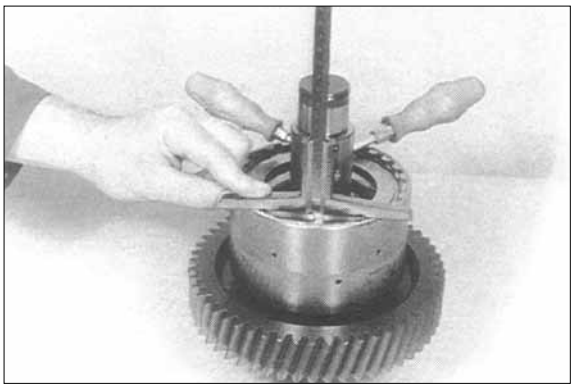

EXAMPLE :

Dimension¥ e.g. 8.20mm
Dimension¥- e.g. - 6.00mm
Difference = Plate clearance = 2.20mm

¡ In case of deviations from the required plate clearance, correct by means of corresponding snap ring(S =2.1~4.2mm).

¡ Now, demount plate pack, oil and install it again.

¤æAssemble running disk 1(50¡¿70¡¿4), axial needle cage 2 and axial washer 3 (50¡¿70¡¿1).

¡ Install running disk 1 with the chamfer facing the axial needle cage.

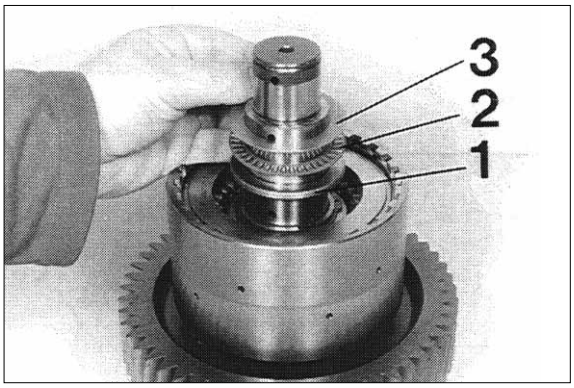

¤ Assemble both needle bearings.

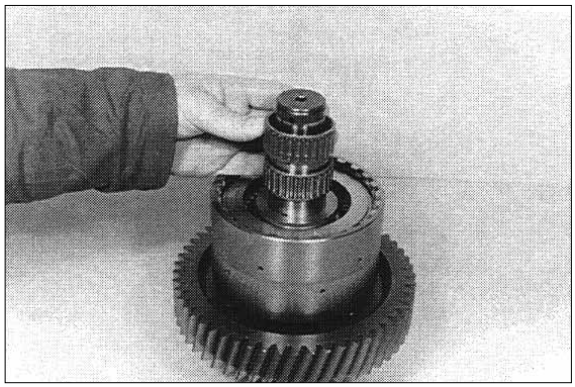

¤ Introduce idler gear until all inner plates are accommodated.

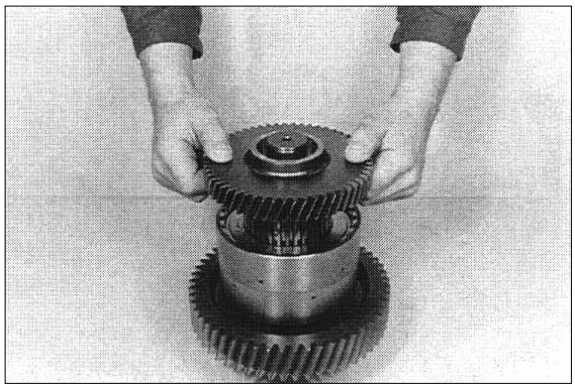

¤ Assemble axial washer 3(50¡¿70¡¿1), axial needle cage 2 and running disk 1 (50¡¿70¡¿4).

¡ Install running disk 1 with the chamfer facing the axial needle cage.

¡ Only if the running disk is overlapping with the shaft collar, the accommodation of all inner plates is ensured.

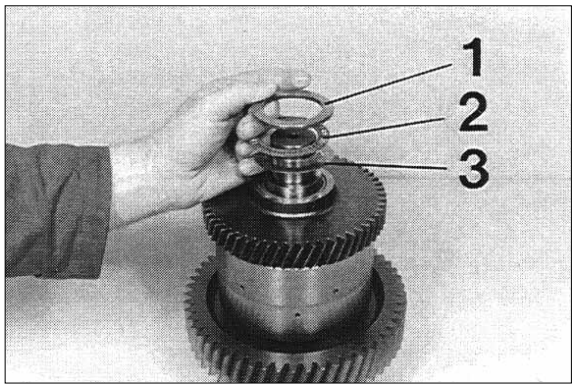

¤1 Press tapered roller bearing against shoulder.

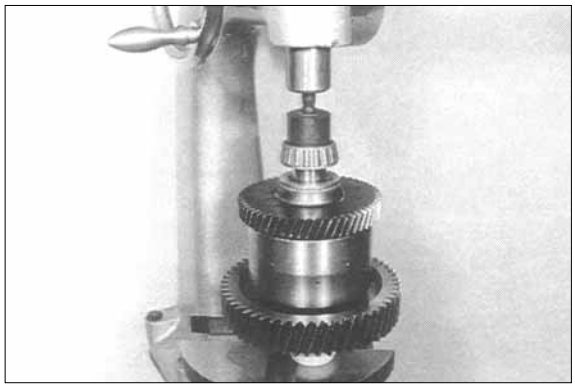

§ Press tapered roller bearing against shoulder.

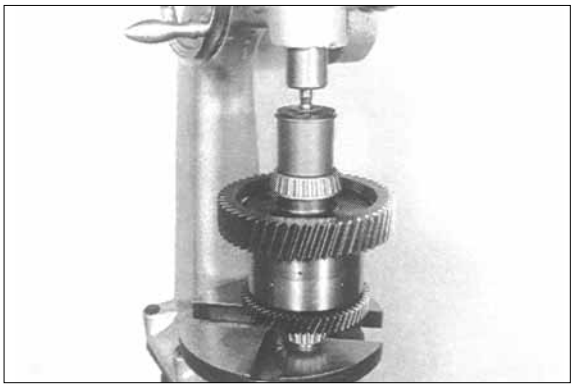

§æ Check function of the clutch by means of compressed air.

¡ At correctly installed components, the closing, respectively opening of the clutch is clearly audible.

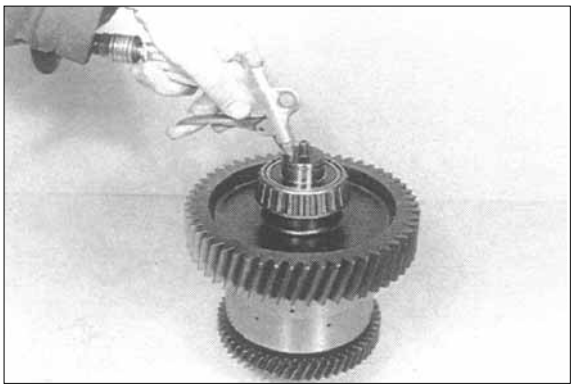

(3) Assemble K4 clutch

¤ Undercool shaft(About -80¡Æ), heat gear(About +120¡Æ) and assemble it until contact is obtained.

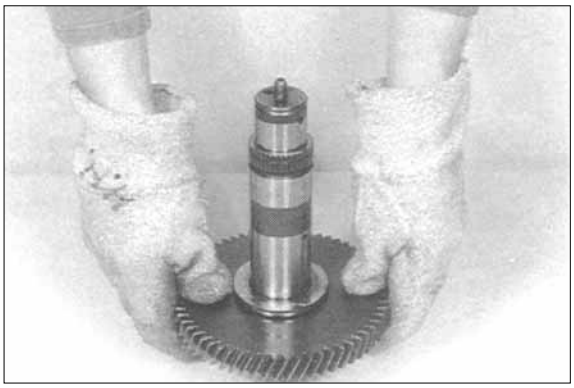

¤Ł Locate gear axially by means of circlip.

¡ Special tool

Set of external pliers 5870 900 015

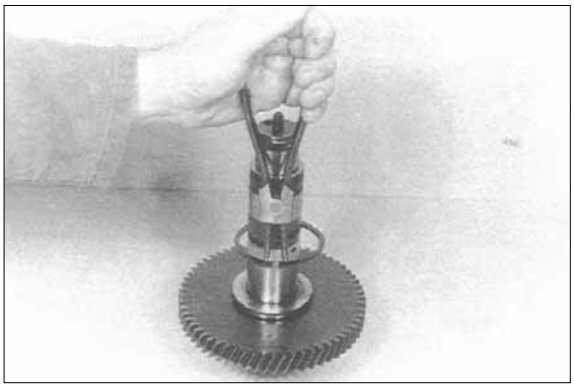

¤Ø Install stud(Arrow).

¡ Use Loctite.

¡/Torque limit : 1.73kgf¡/m(12.5lbf¡/ft)

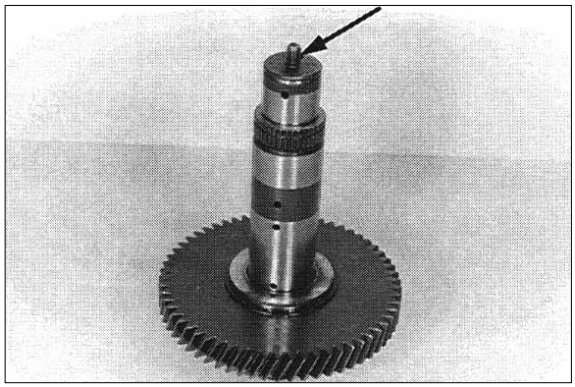

¤Œ Check function of the drain valve.

¡ Ball may not seize, if necessary clean by means of compressed air.

Insert both O-rings(Arrows) scroll free into the piston recesses and oil them.

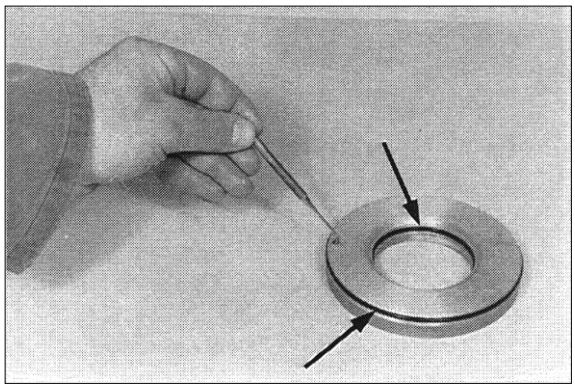

¤° Introduce piston until contact is obtained.

¡ Pay attention to the installation position, see on the right figure.



¤ Install compression spring and spring cup(2EA), preload and fix by means of circlip.

¡ Special tool

Assembly aid 5870 345 085

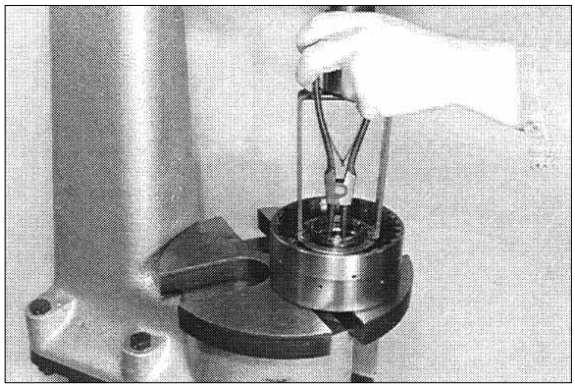

K4 plate pack

The following draft shows the installation position of the components.

1 Plate carrier
2 Piston
3 Outer plate-one-sided coated
4 Inner plates
5 Outer plates-coated on both sides
6 Snap ring(Optional s = 2.1~4.2㎜)
7 End shim

¡ Install outer plate 3 with the uncoated side facing the piston.

¡ ⁄Effective number of friction surfaces = 10.

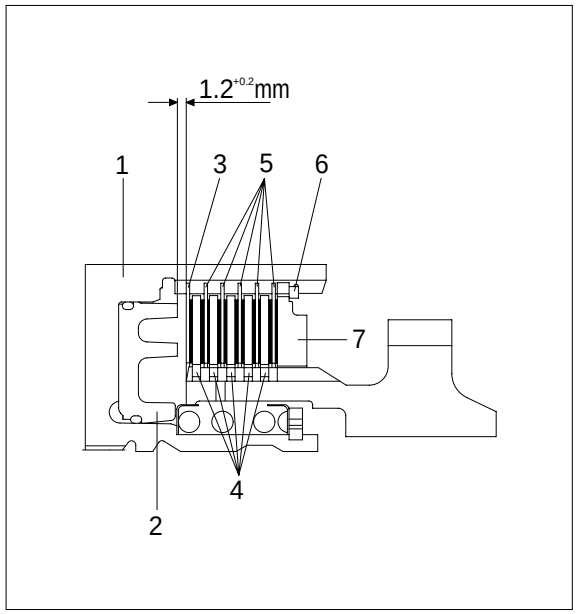

¤ Adjust plate clearance = $1.2^{+0.2}$㎜ :

¡ For the plate clearance adjustment there are snap rings of different thickness available.

To ensure a faultless measuring result, install the plates for the moment without oil.

Introduce plate pack according to the draft(See the preceding page).

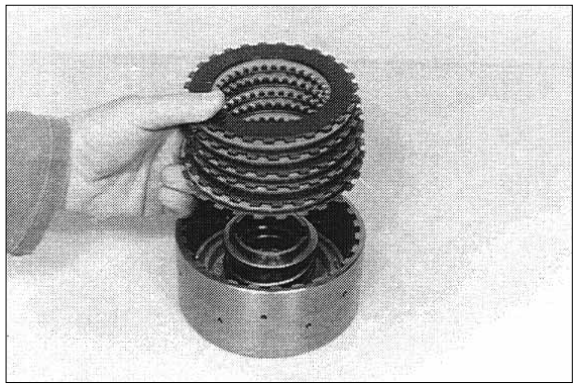

¤ Fit end shim and squeeze circlip(e.g. s = 3.0㎜) in.

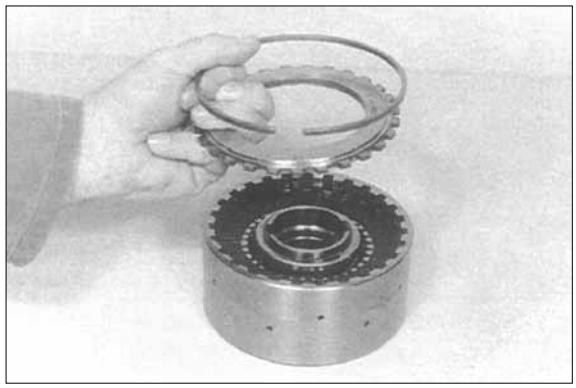

¤ Press end shim on with about 10kg and measure Dimension¥ from the end face/plate carrier to the end shim.
Dimension¥ e.g. 7.20mm

¡ Special tool
Digital-Depth gauge 5870 200 072

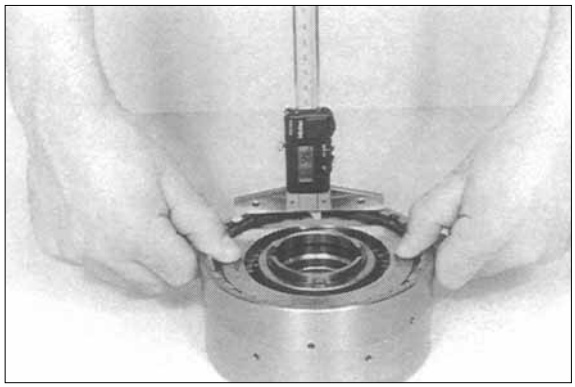

¤ Press end shim against snap ring (Upward) until contact is obtained and determine Dimension ¥–.
Dimension ¥– e.g. 6.00mm

¡ Special tool
Digital-Depth gauge 5870 200 072

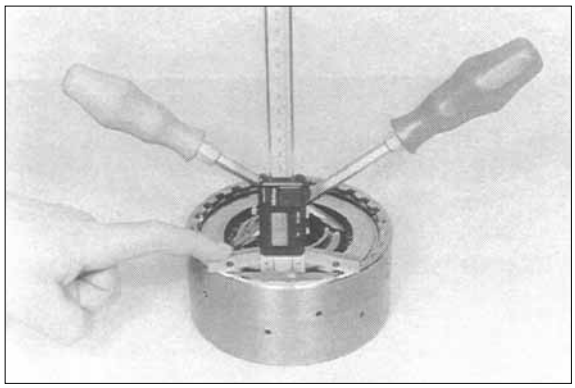

EXAMPLE

Dimension¥ e.g. 7.20mm
Dimension¥– e.g. - 6.00mm
Difference = Plate clearance =1.20mm

¡ In case of deviations from the required plate clearance, correct by means of corresponding snap ring(S = 2.1~4.2mm).

¤æ Introduce idler gear until all inner plates are accommodated.

¡ This step makes the later assembling of the idler gear easier.
Now, remove idler gear again.

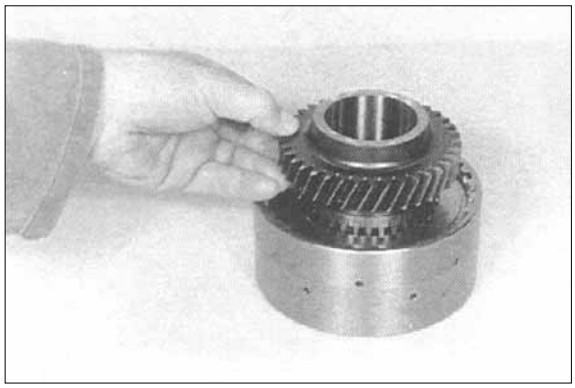

¤ Assemble both axial washers as well as needle cage.

¡ Upper and lower axial washer have the same thickness(50¡¿70¡¿1).

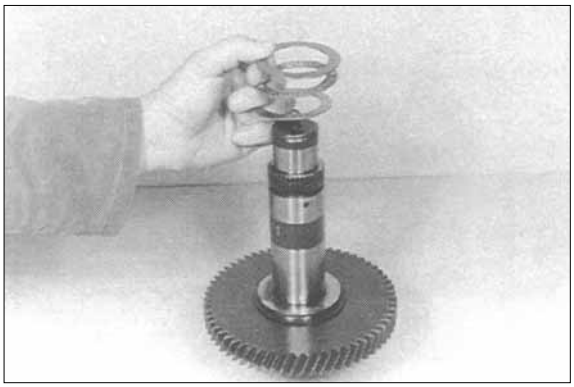

¤ Assemble both needle bearings.

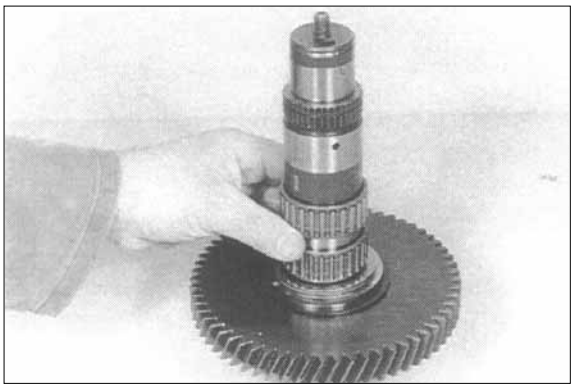

¤ Assemble idler gear.

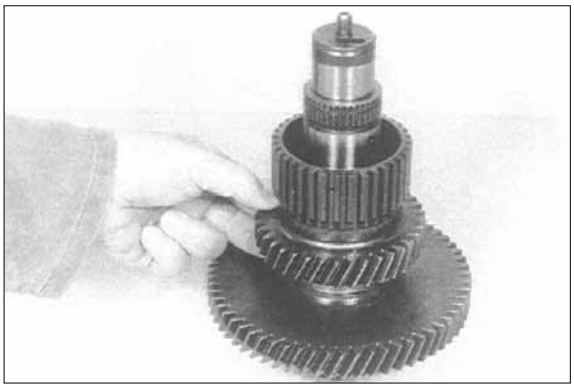

¤1 Assemble axial washer 3(50¡¿70¡¿1) needle cage 2 and running disk 1(50¡¿70¡¿4).

¡ Install running disk 1 with the chamfer facing the needle cage.

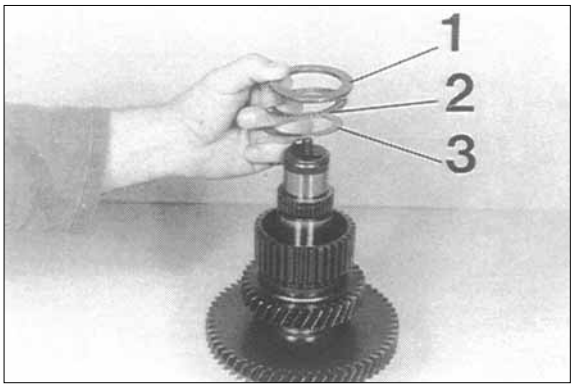

§ Assemble pre-assembled plate carrier until all inner plates are accommodated.

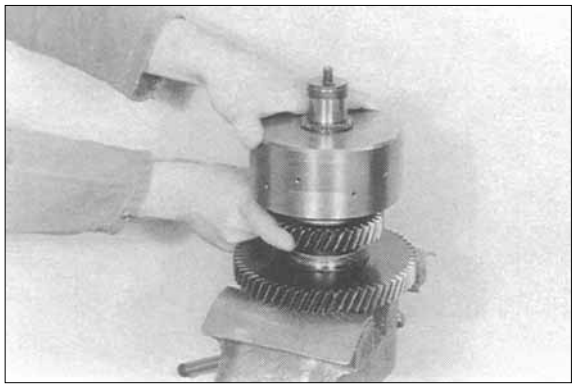

§æ Fix plate carrier axially by means of circlip.

¡ Special tool

Set of external pliers	5870 900 015
Handle	5870 260 010

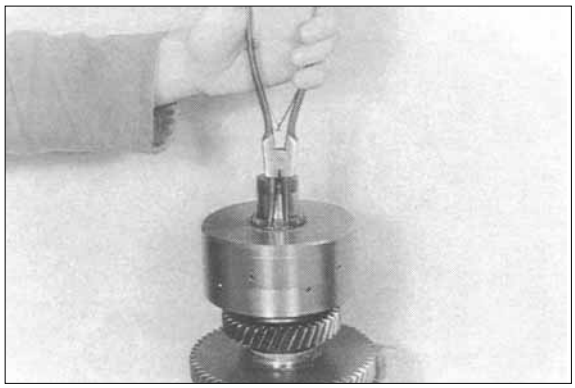

§ Press tapered roller bearing against shoulder.
Install opposite tapered roller bearing.

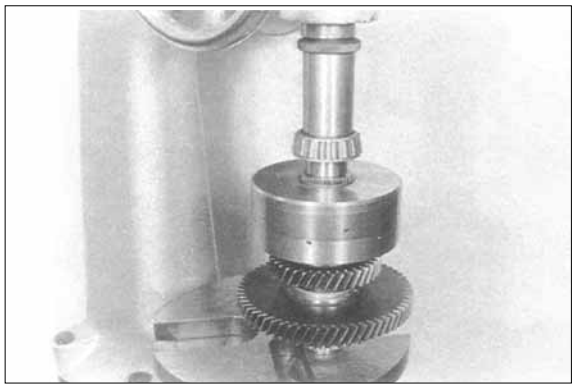

§ Check function of the clutch by means of compressed air.

¡ At correctly installed components, the closing, respectively opening of the clutch is clearly audible.

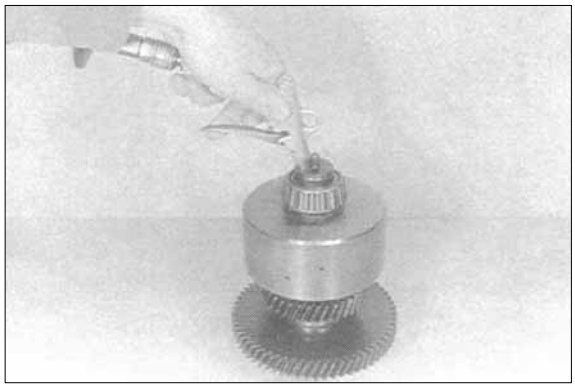

(4) Pre-assemble input shaft

¤ Undercool the input shaft(About -80¡Æ), heat gear(About +120¡Æ) and assemble it until contact is obtained.

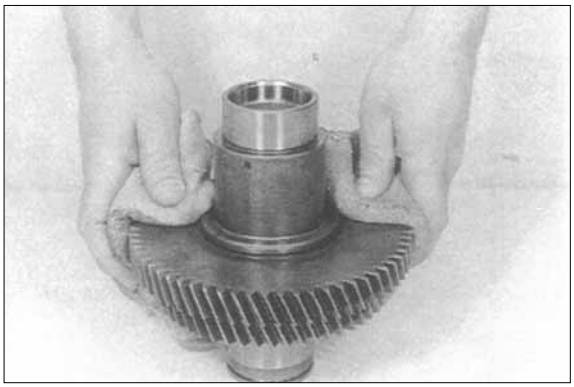

¤Ł Fix gear axially by means of circlip.

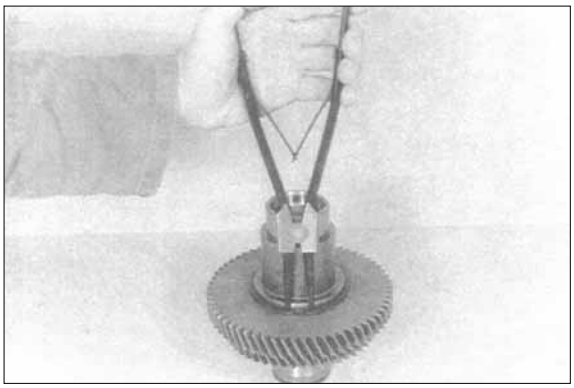

¤Ø Squeeze snap ring into the recess of the turbine shaft.

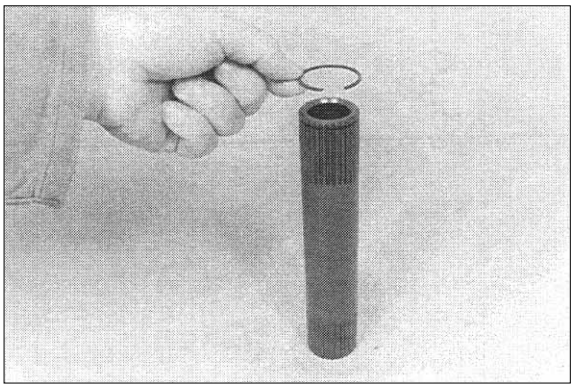

¤Œ Introduce turbine shaft until the snap ring snaps into the recess of the input shaft-turbine shaft is axially fixed.

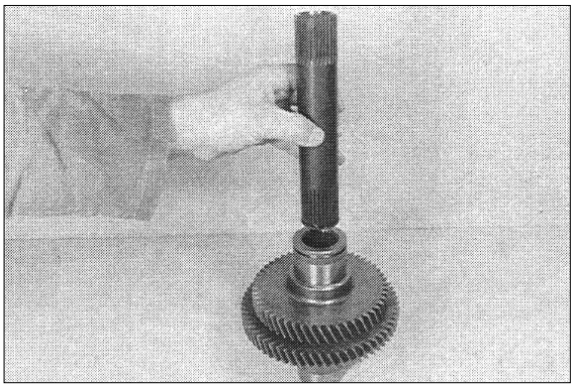

¤° Press both bearing inner races against shoulder.

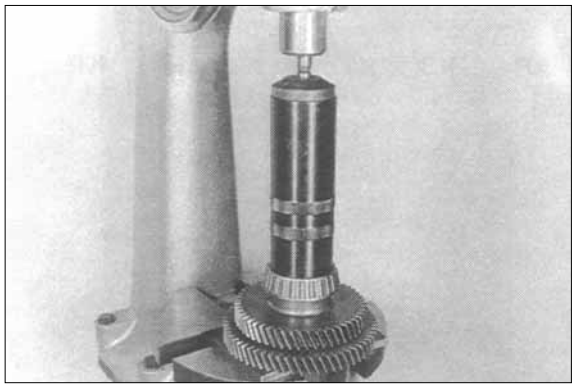

¤ Install ball bearing.
Squeeze rectangular ring(Arrow) in and hook it in.

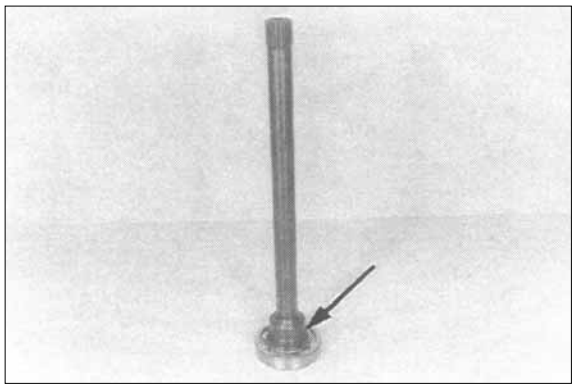

¤ Insert output shaft into the housing bore until contact is obtained.

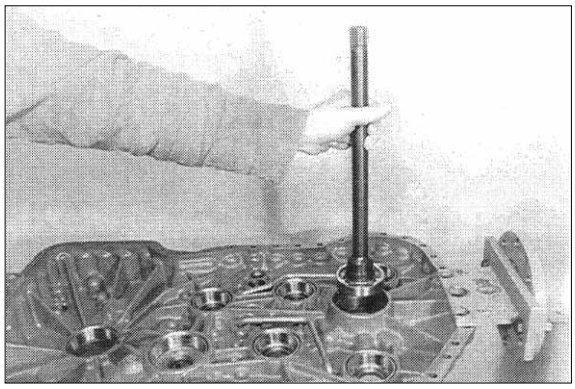

(5) Install pre-assembled output shaft and clutches

¡ The following figures describe the **common** installation of all clutches.
For it, the housing cover, combined with special tool is needed.
The assembly of single clutches without housing cover and handles is extremely difficult because of the installation conditions.

⚠ Besides, there is the danger of injury.

¤ Insert all bearing outer races into the housing cover until contact is obtained.

¡ In the case that already run bearings are reused, pay attention to the allocation of the bearing outer races, see also Note, page 3-101.

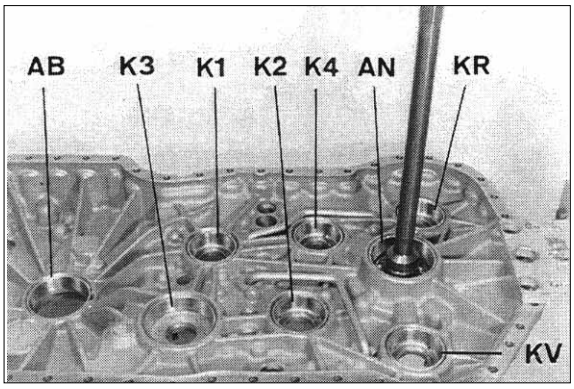

¤Ł Insert KR clutch, input shaft and KV clutch together into the housing cover.

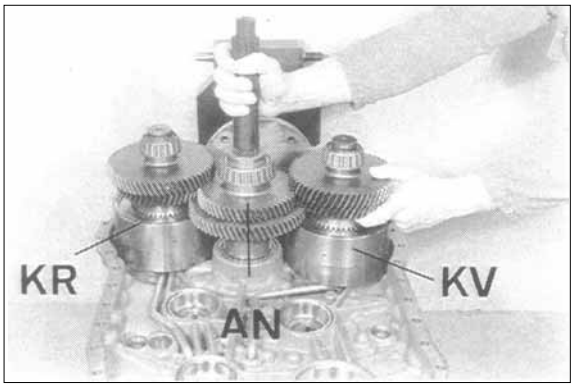

¤Ø Install K4 clutch.

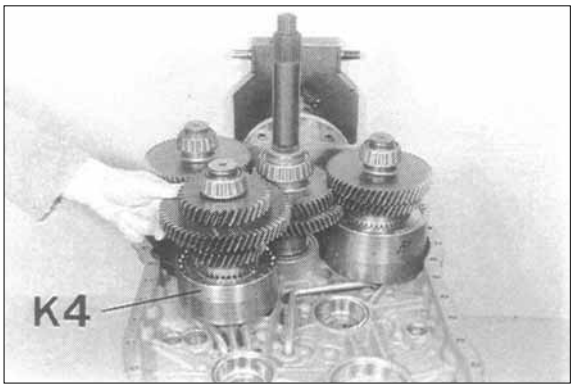

¤¢ Install K3 clutch.

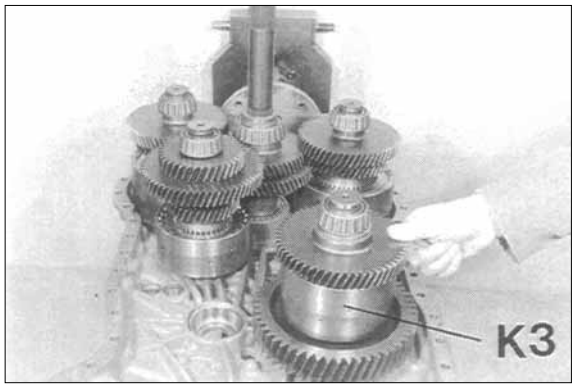

¤° Position K1 clutch.

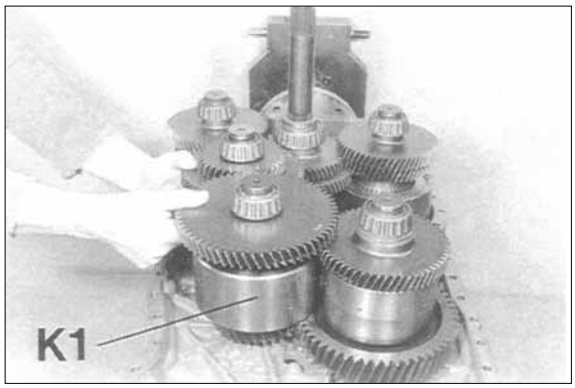

¤ Insert K2 clutch.

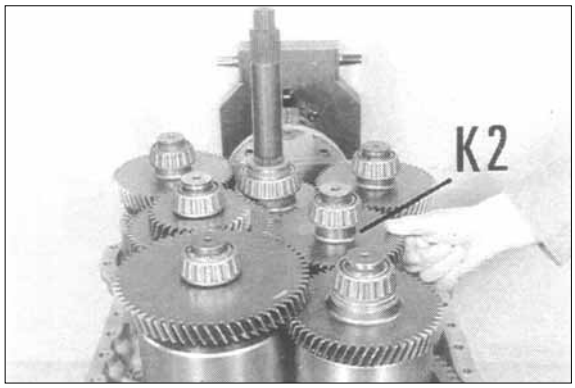

¤ Figure on the right shows the installation position of the single clutches in the housing cover.

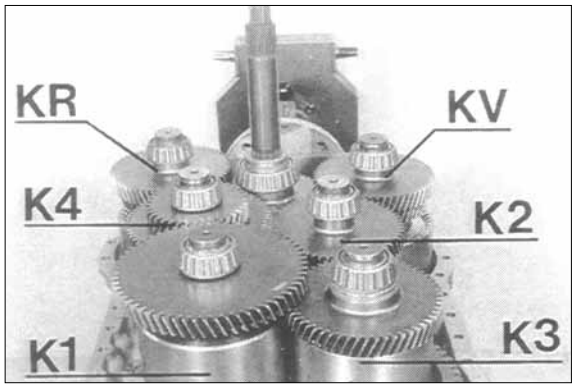

¤ Locate all clutches by means of handles.

¡ Special tool

Handle(6EA needed)	5870 260 010

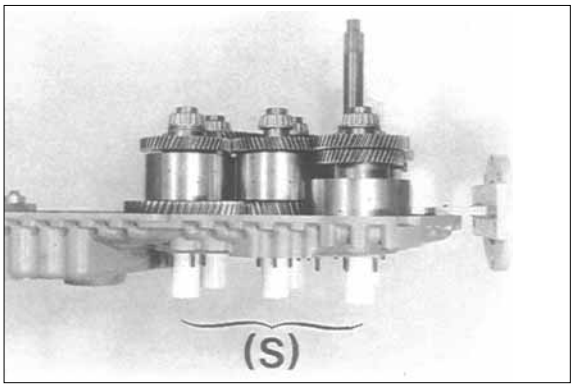

¤ Squeeze rectangular rings(7 pieces, see Arrows) in and hook them in.
Now, grease rectangular rings and align them centrically.

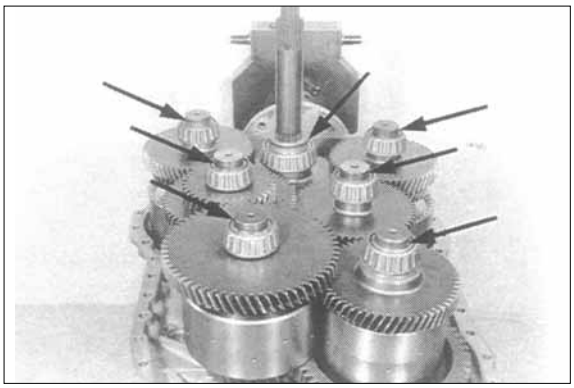

¤ Tilt housing cover 180¡£
Mount eye bolts, see Arrows.

¡ Special tool

Eye bolt M20(2EA)	0636 804 003
Eye bolt M16(1EA)	0636 804 001
Puller device	5870 000 017

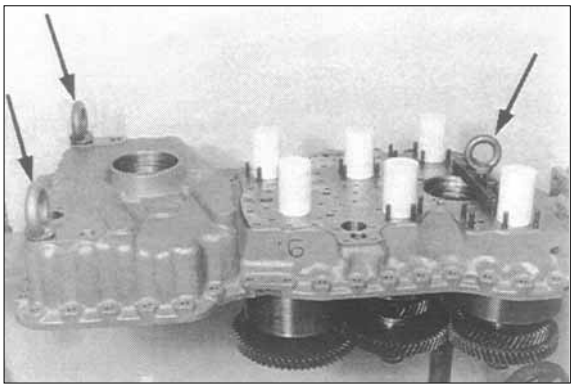

¤æInstall adjusting screws.
Position housing cover by means of lifting device carefully on the gearbox housing until contact is obtained, respectively position the clutches in the gearbox housing.

¡ Pay attention to the overlapping of the oil pipes with the bores in the housing cover.

¡ Special tool

Lifting chain	5870 281 047
Adjusting screws	5870 204 007

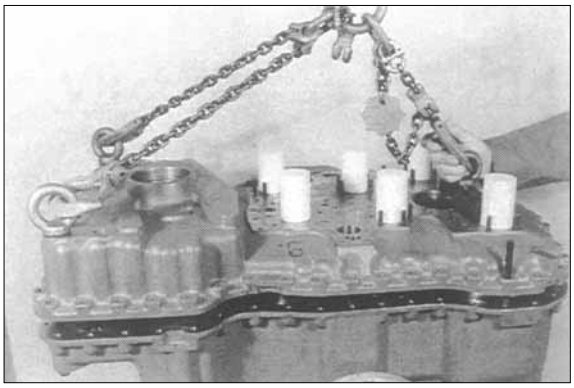

¤ Remove handles again.

¡ Special tool
Lifting chain 5870 281 047



¤ Separate housing cover from gearbox housing, using lifting device.

¡ Special tool
Lifting chain 5870 281 047

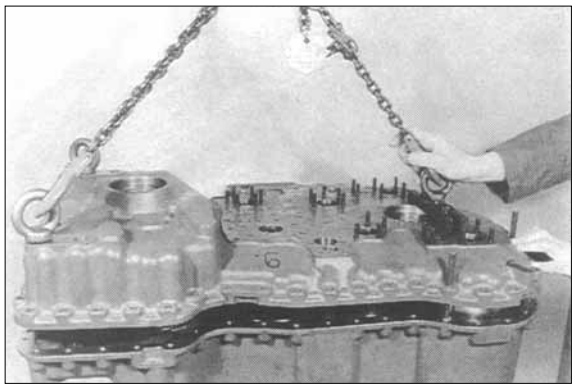

(6) Output

¤ Assemble sheet and press both bearing inner races against shoulder until contact is obtained.

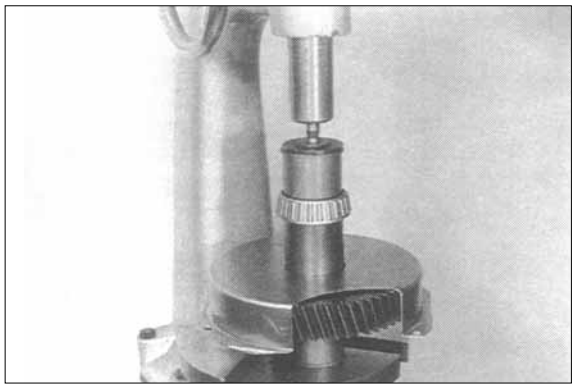

¤Ł Insert bearing outer race(Arrow) into the housing bore until contact is obtained.

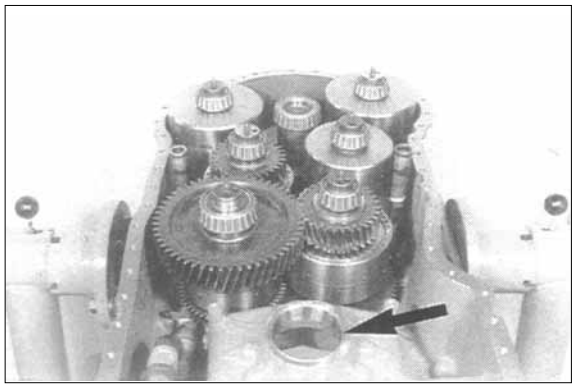

¤ø Position screening plate.

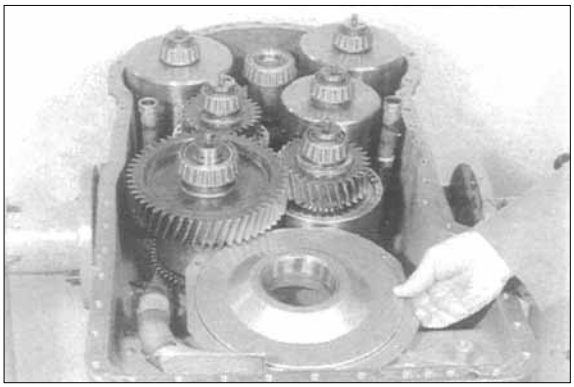

¤Œ Insert output shaft.

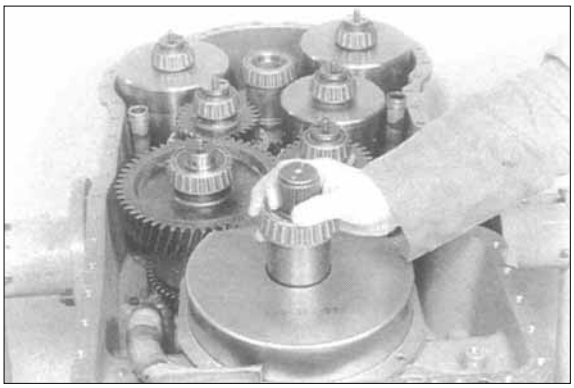

¤° Fasten both sheets by means of socket head screws(4EA).

¡ Insert socket head screws with Loctite.
¡/Torque limit : 2.35kgf¡/m(17.0lbf¡/ft)

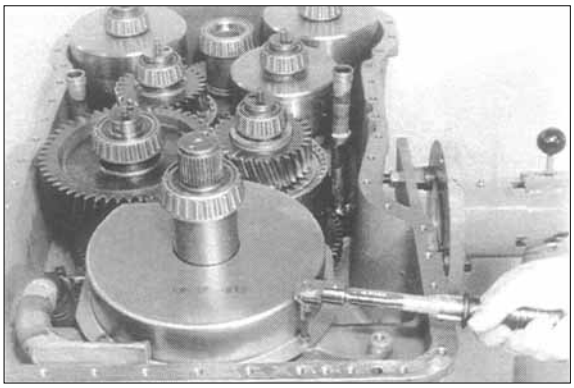

¤ Squeeze rectangular rings(6EA) into the recesses of the clutch shafts and hook them in.
Now, grease rectangular rings and align them centrically.

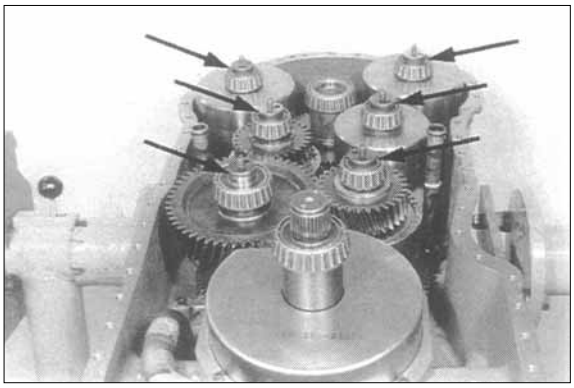

¤ Insert both O-rings(Arrows) into the annular groove of the oil pipes and grease them.

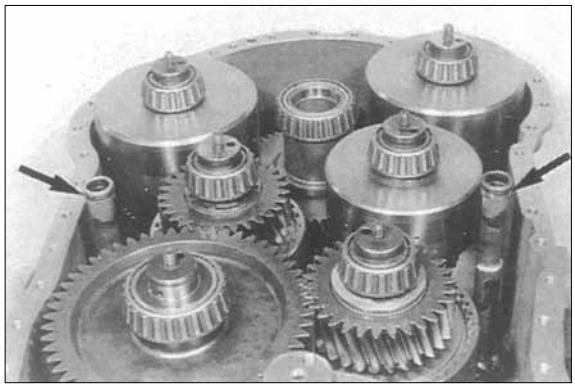

¤ Cover mounting face with sealing compound Loctite.
Install adjusting screws(S) and position housing cover carefully against gearbox housing until contact is obtained, using lifting device.

¡ Pay attention to the overlapping of the oil pipe with the bores in the housing cover.

¡ Special tool

Adjusting screws	5870 204 007
Lifting chain	5870 281 047

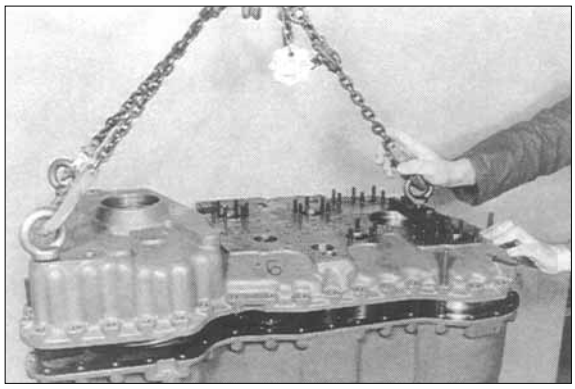

¤ Install both cylindrical pins.

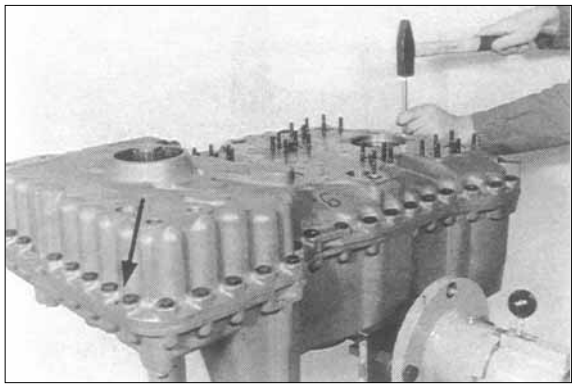

¤ Fasten housing cover by means of hexagon head screws.
¡/Torque limit : 4.69kgf¡/m(33.9lbf¡/ft)

¡ Pay attention to the position of the fixing plate, see Arrow.

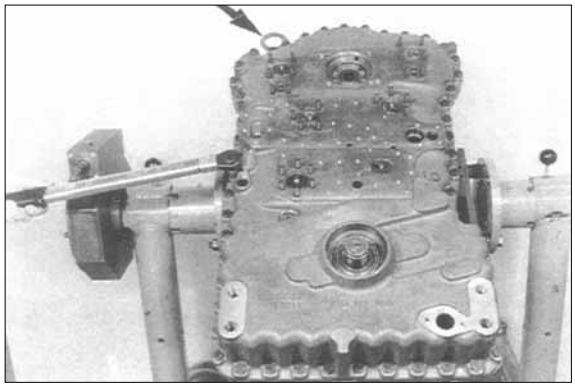

¤æInstall shaft seal, with the sealing lip facing the oil chamber.

¡ By application of the prescribed driver, the exact installation position is obtained.
Wet rubber-coated outer diameter with spirit.
Grease sealing lip.

¡ Special tool

Driver	5870 048 057

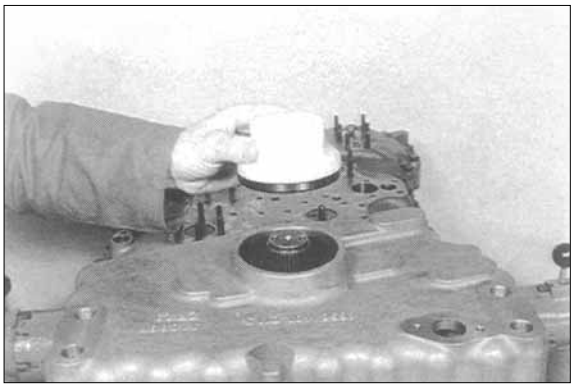

¤ Heat the output flange(Maximum 90¡Æ), assemble it and fix it by means of washer and hexagon head screws.

¡ Wet contact area of washer with sealing compound Loctite.
¡/Torque limit : 3.47kgf¡/m(25.1lbf¡/ft)

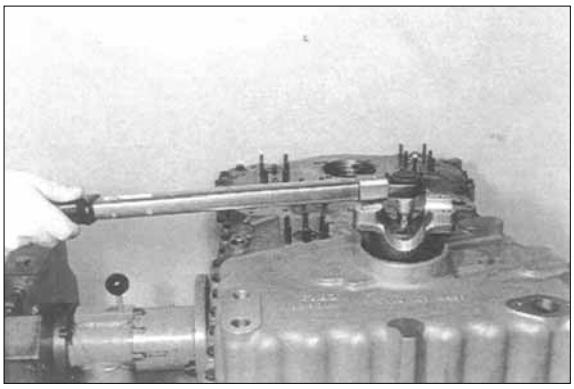

¤ Fix hexagon head screws by means of lock plate.
Install output flange on the converter side accordingly(Figure ¤æ~¤).

¡ Special tool

Driver	5870 057 011
Handle	5870 260 002

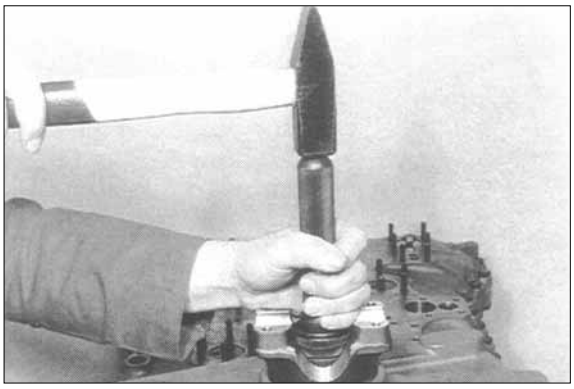

(7) Converter pressure valve

¤ The illustration on the right shows the components of the converter pressure valve.

1 Piston
2 Compression spring
3 Valve insert
4 Roll pin

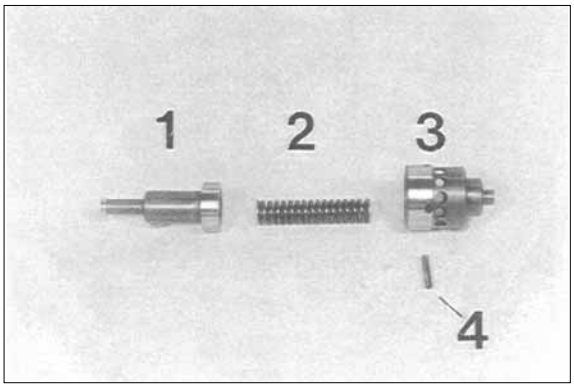

¤Ł Introduce compression spring and piston, preload and fix them by means of roll pin.

¡ Special tool
Assembly aid 5870 345 084

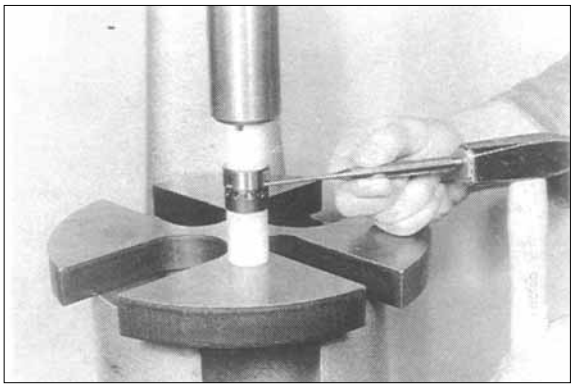

¤Ø Insert pre-assembled converter pressure valve into the housing bore.

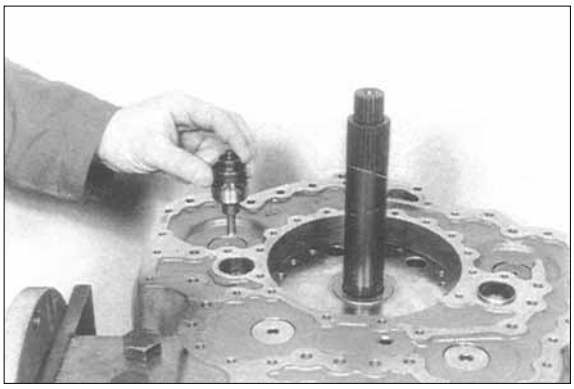

(8) Oil feed housing-Transmission pump

¤ Install two adjusting screws(Arrows) and mount flat gasket.

¡ Special tool
Adjusting screws 5870 204 011

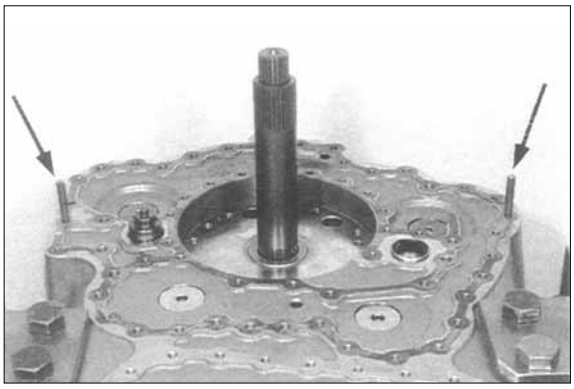

¤Ł Mount oil feed housing and fix it provisionally by means of washers and hexagon head screws.

¡ Screw the hexagon head screws in only until contact is obtained-**do not tighten**.

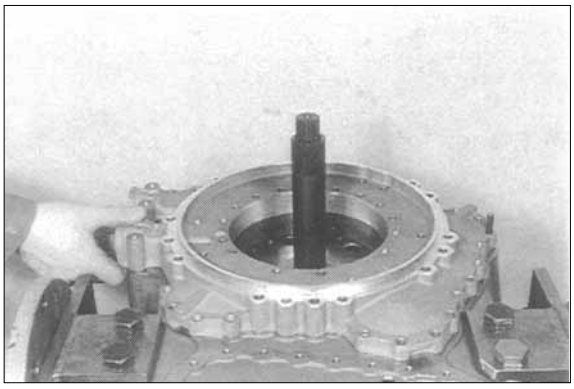

¤ø Install two adjusting screws and introduce stator shaft until contact is obtained.

¡ Pay attention to the overlapping of the bores.

¡ Special tool

Adjusting screws 5870 204 007

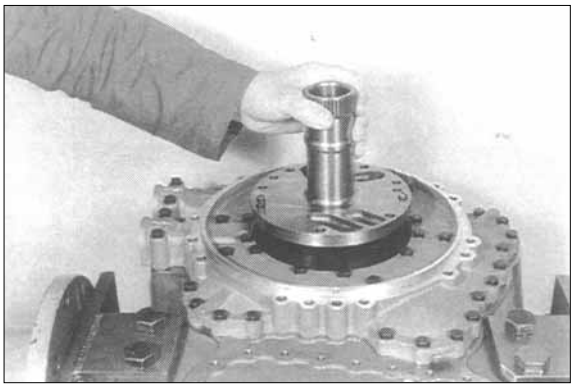

¤Œ Install O-ring(Arrow) and oil it.

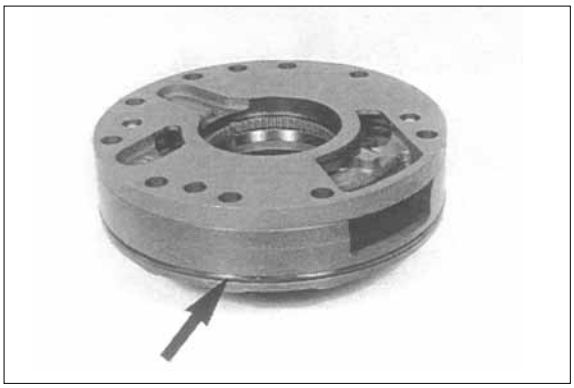

¤ ° Introduce transmission pump until contact is obtained.

¡ Pay attention to the overlapping of the bores.

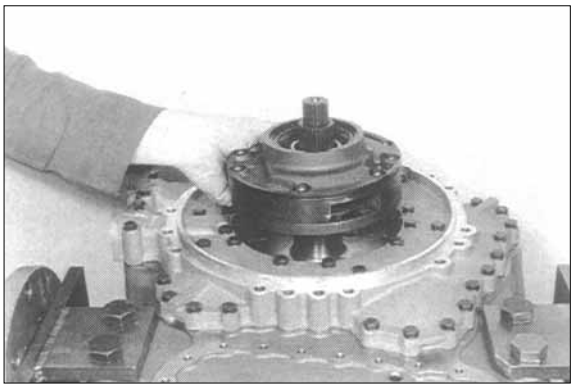

¤ Equip socket head screws with new O-rings(Arrow).

¡ Grease O-rings.

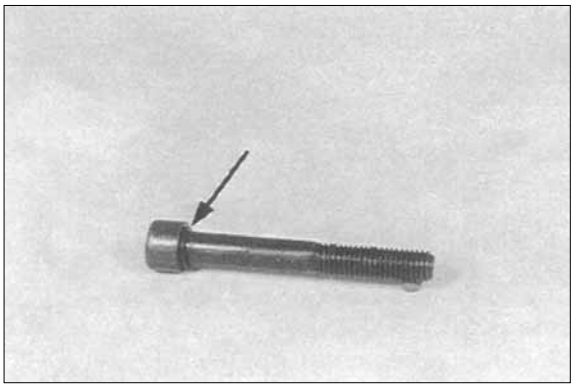

¤ Fasten transmission pump by means of socket head screws.
¡ ⁄Torque limit : 4.69kgf¡ ⁄m(33.9lbf¡ ⁄ft)

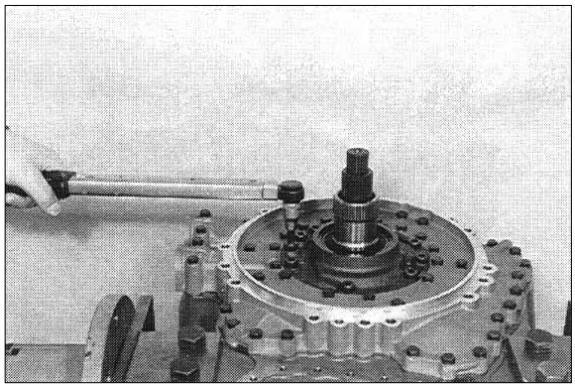

¤ Fix oil feed housing finally by means of hexagon head screws(Mount flat washers).
¡ ⁄Torque limit : 2.55kgf¡ ⁄m(18.4lbf¡ ⁄ft)
¡ Pay attention to the installation position of the fixing plate(Arrow), see the next figure.

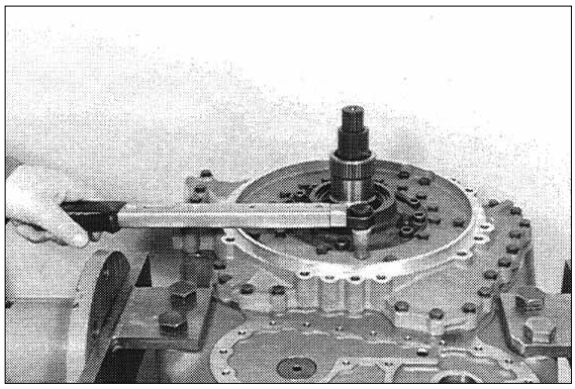

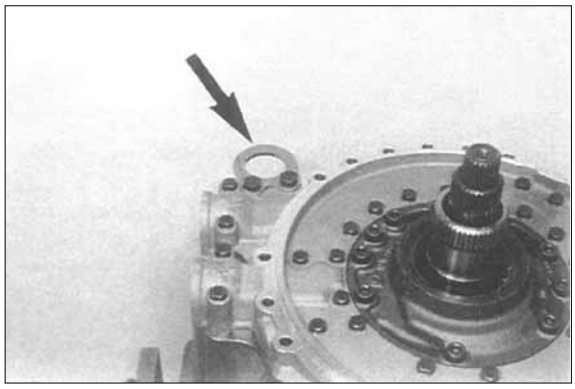

¤ Fit flat gasket and fasten cover by means of hexagon head screws.
¡ ⁄Torque limit : 2.35kgf¡ ⁄m(17.0lbf¡ ⁄ft)

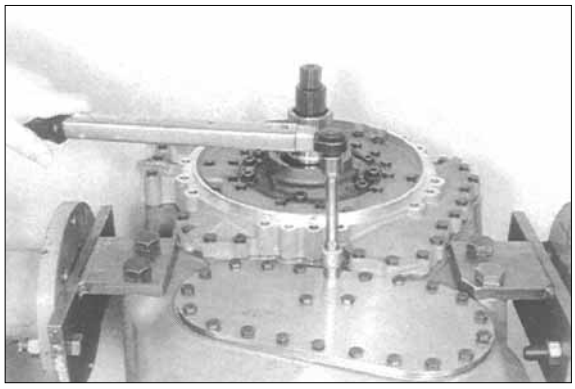

(9) Engine connection-Converter

¤ Fasten converter housing by means of hexagon head screws.

¡ ⁄Torque limit : 6.93kgf¡ ⁄m(50.2lbf¡ ⁄ft)

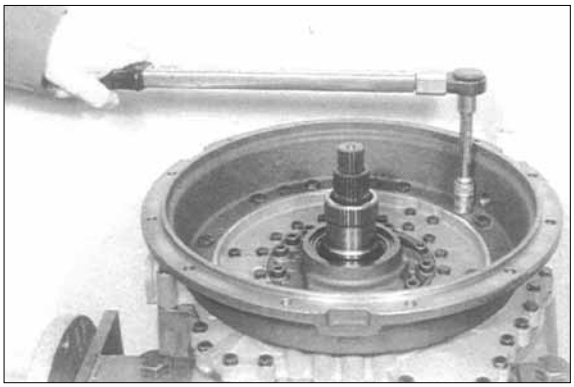

¤Ł Fasten input shaft, membrane and disk by means of hexagon head screws.

¡ ⁄Torque limit : 11.7kgf¡ ⁄m(84.8lbf¡ ⁄ft)

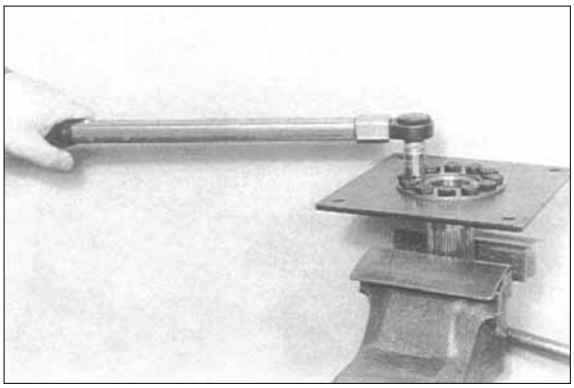

¤Ø Fasten membrane on the converter, using hexagon head screws(Mount flat washers).

¡ ⁄Torque limit : 11.7kgf¡ ⁄m(84.8lbf¡ ⁄ft)

¡ Insert hexagon head screws with Loctite.

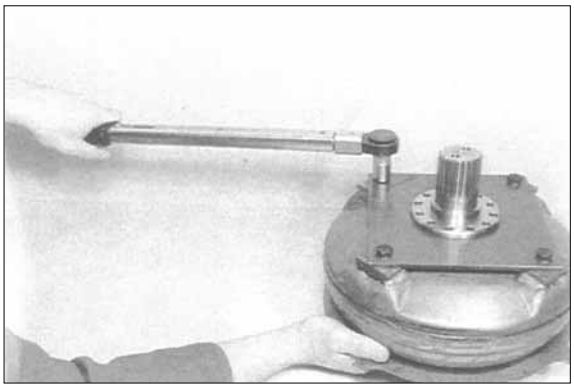

¤Œ Introduce converter until contact is obtained.

¡ Impulse disk of the converter must be centrally to the bore of the inductive transmitter, see on the below figure.

Only in this way it is ensured that the converter has been completely introduced.

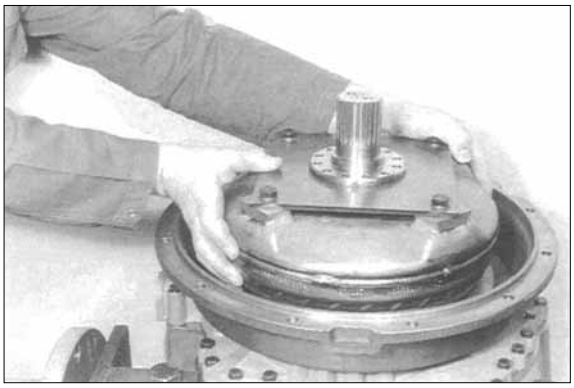

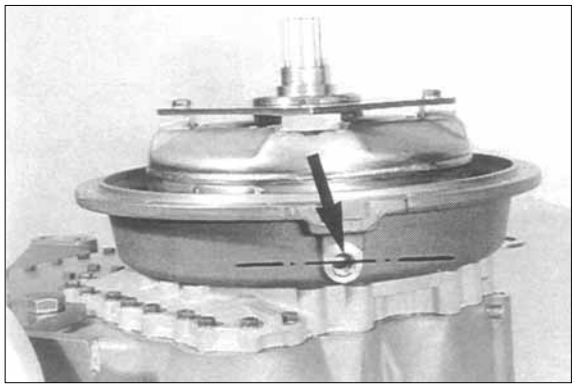

¤° Insert ball bearing until contact is obtained and fix it by means of circlip.

¡ Special tool

Set of internal pliers 5870 900 013



¤ Assemble housing cover.

Install input flange, fit disk and pull cover by means of hexagon head screws evenly against shoulder.

¡ Pay attention to the radial installation position of the cover.

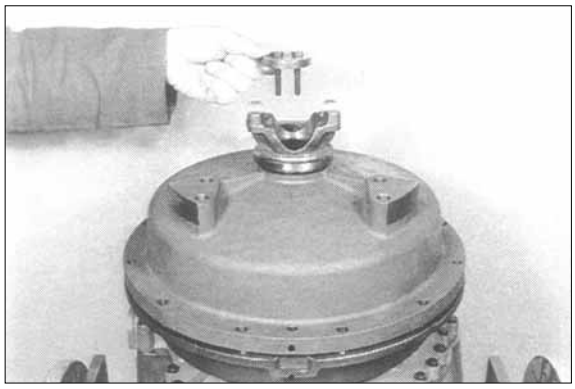

¤ Fasten cover by means of hexagon head screws and nuts on the converter housing.

¡/Torque limit : 4.69kgf¡/m(33.9lbf¡/ft)

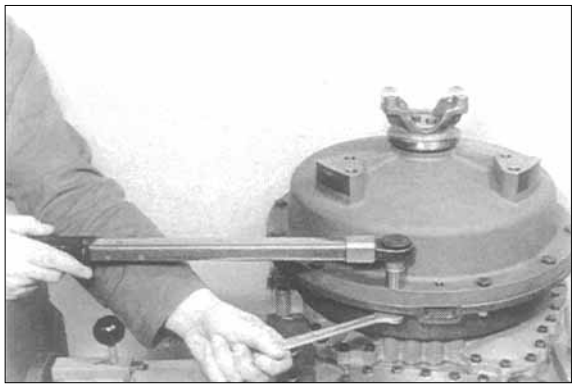

¤ Fasten input flange finally and fix hexagon head screws by means of lock plate.

¡ Torque limit : 3.47kgf¡m(25.1lbf¡ft)

¡ Special tool

Driver	5870 057 010
Handle	5870 260 002

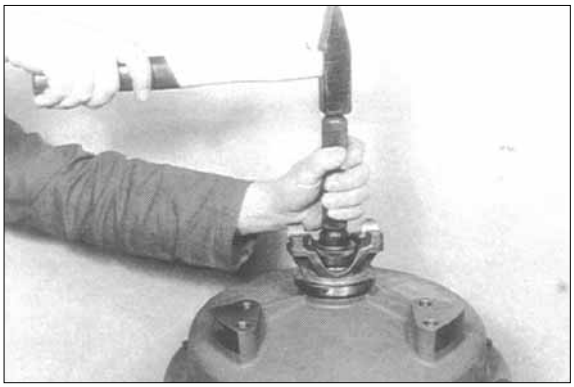

(10) Converter safety valve

¤ The illustration on the right shows the components of the converter safety valve.

1 Plate
2 Ball
3 Compression spring
4 Valve insert
5 Valve sleeve
6 Cylindrical pin

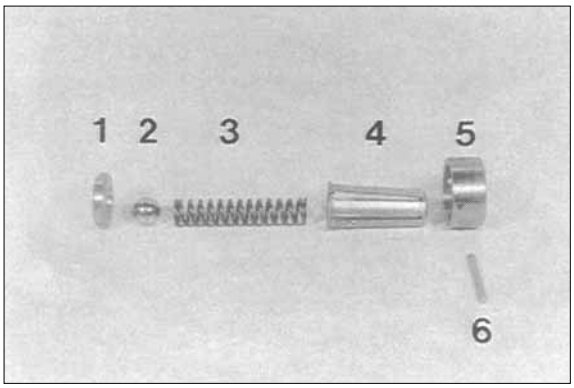

¤Ł Assemble components according to figure ¤ , preload and fix by means of cylindrical pin.

¡ Special tool

Assembly aid	5870 345 084

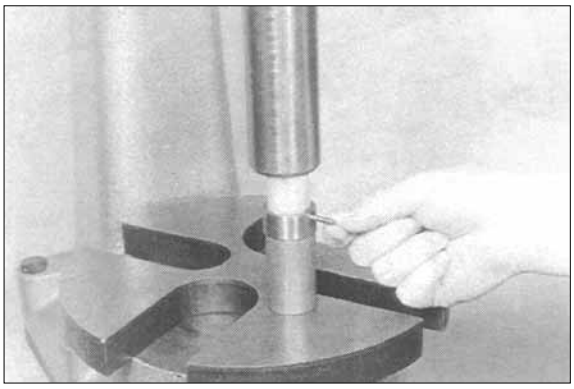

¤Ø Insert converter safety valve into the housing bore until contact is obtained.

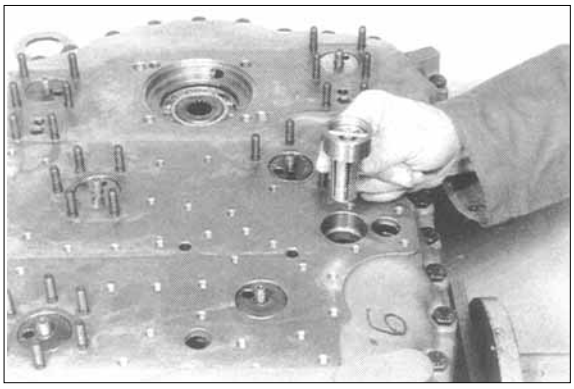

(11) Fit duct plate

¤ Install both screw plugs(Arrows),

¡ Install new sealing rings.

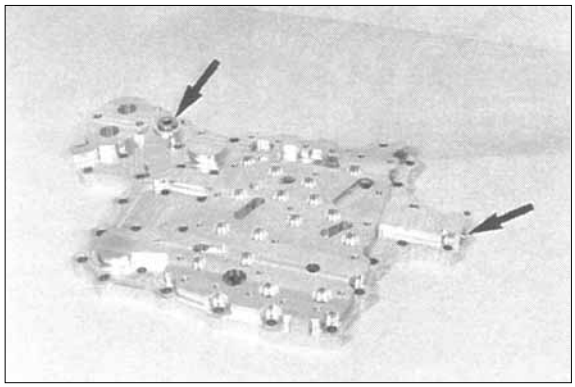

¤ Install gasket, place duct plate against shoulder and fasten it by means of socket head screws and hexagon nuts(Mount flat washers).

¡ Torque limit : 2.55kgf¡m(18.4lbf¡ft)

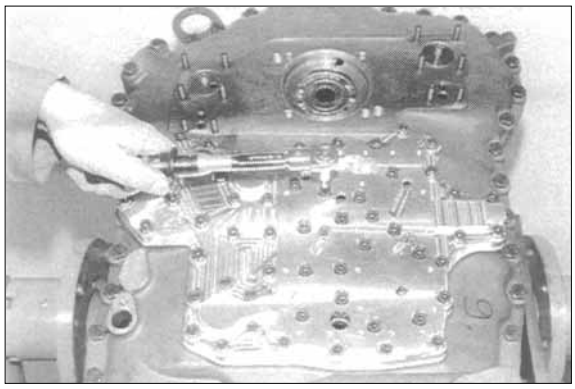

(12) Fit hydraulic control unit

¤ Install two adjusting screws.
Mount gasket 1, intermediate plate 2 and gasket 3.

¡ Pay attention to the installation position of the different gaskets, see also the following draft.

¡ Special tool
Adjusting screws 5870 204 031

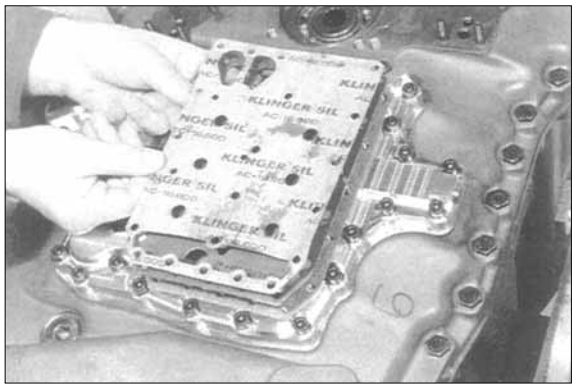

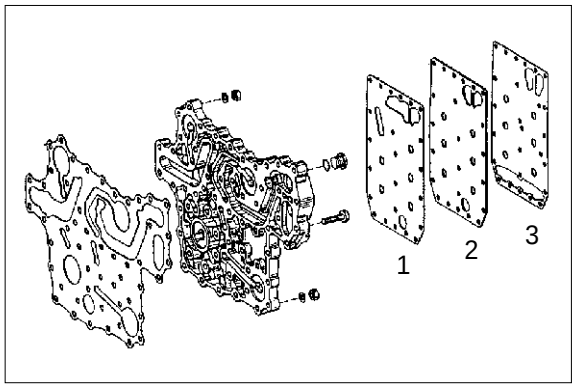

¤Ł Fasten complete control unit on the duct plate, using socket head screws.
¡/ Torque limit : 0.97kgf¡/m(7.01lbf¡/ft)

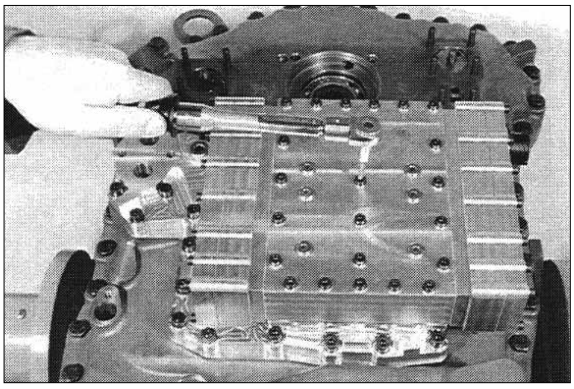

(13) Filter

¤ The illustration on the right shows the components of the filter unit.

¡ Install new O-rings(Arrows)

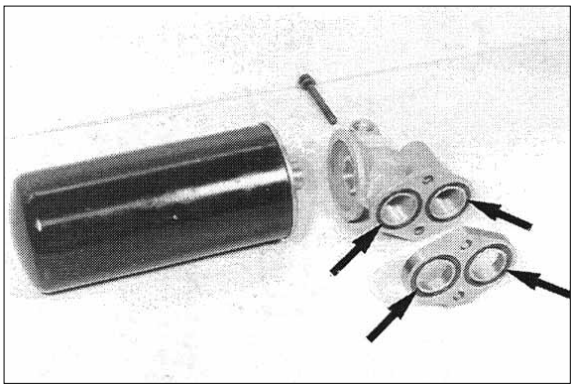

¤Ł Fasten intermediate plate and filter head by means of hexagon head screws (Mount flat washers).
¡/ Torque limit : 2.55kgf¡/m(18.4lbf¡/ft)

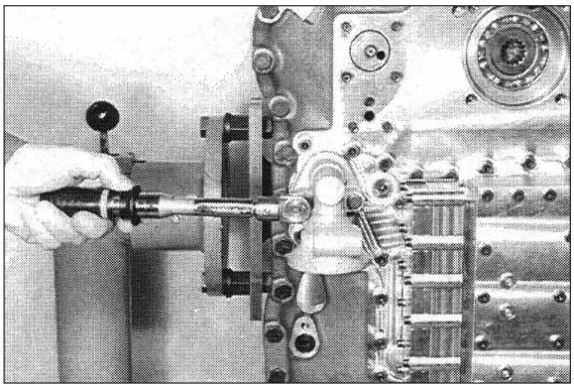

¤Ø Oil gasket and tighten exchange filter hand-tight.

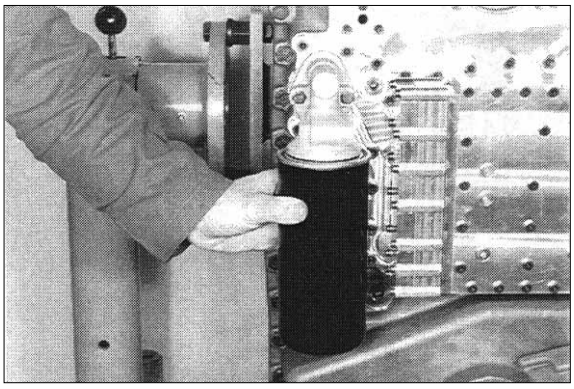

¤¢ If necessary, install warning switch (According to the version).

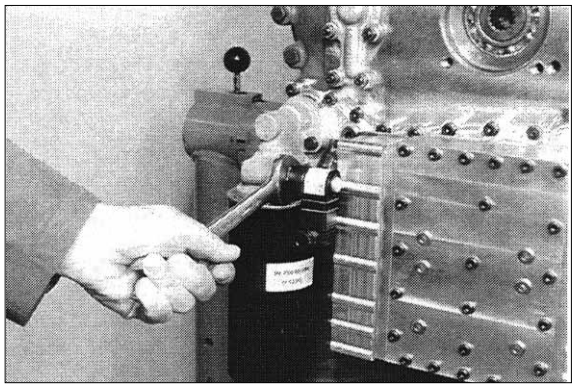

¤° Insert O-ring(Arrow) into the annular groove of the oil feed covers.

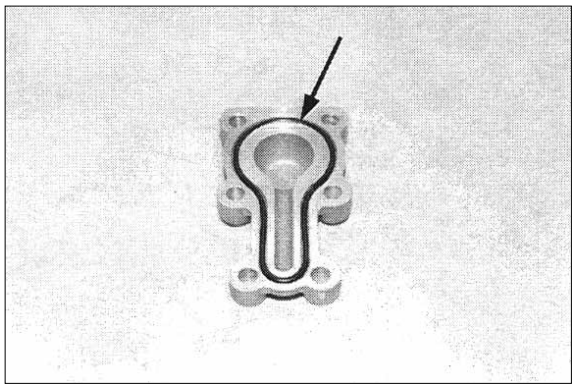

¤ Fasten the two covers(Arrows) by means of hexagon nuts(Mount flat washers) on the housing.
¡Ø Torque limit : 2.55kgf¡Øm(18.4lbf¡Øft)

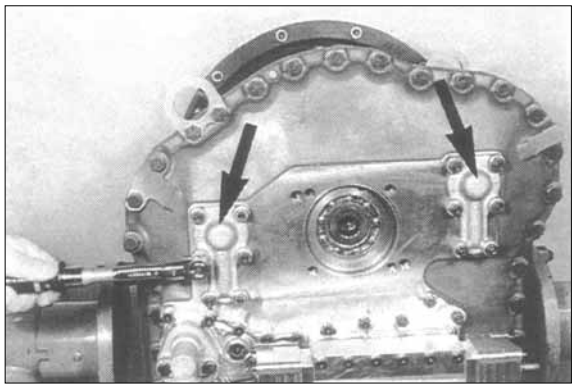

¤ Mount oil level tube.
Install screw plug(Arrow).
¡ Install new gaskets.
¡Ø Torque limit : 2.35kgf¡Øm(17.0lbf¡Øft)
¡Ø Torque limit(Screw plug M26¡¿1.5) :
8.16kgf¡Øm(59.0lbf¡Øft)

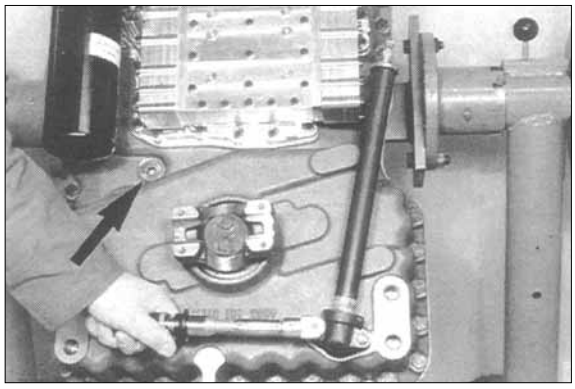

(14) Speed sensor and inductive transmitter

¤ Grease O-ring, introduce speed sensor(Arrow) and fasten it by means of socket head screw.

¡ /Torque limit : 2.35kgf¡ /m(17.0lbf¡ /ft)

34 Speed-output and -speedometer

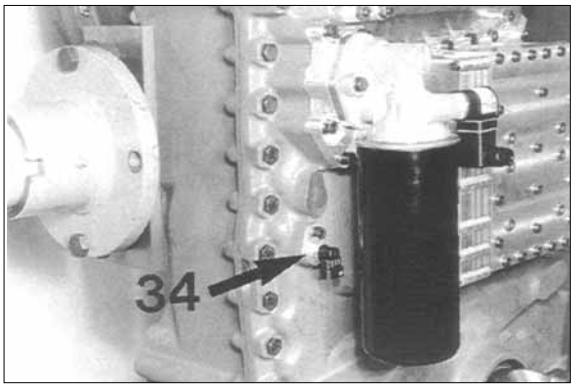

¤Ł Equip the inductive transmitters with new O-rings and install them.

¡ /Torque limit : 3.06kgf¡ /m(22.1lbf¡ /ft)

48 Speed-engine

47 Speed-central gear train

21 Speed-turbine

Install breather(Arrow).

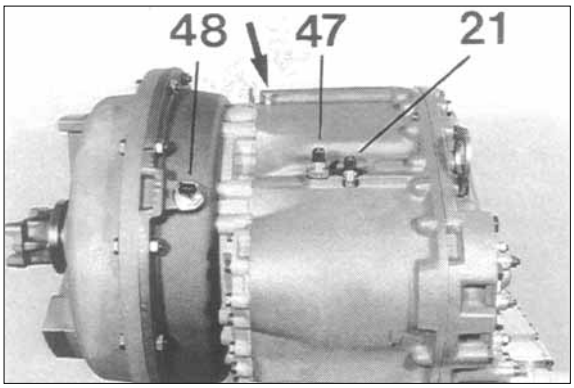

¤Ø Install gasket and cover plate, arrow 1.

¡ /Torque limit : 2.35kgf¡ /m(17.0lbf¡ /ft)

Equip screw plug(Arrow 2) with new O-ring and install it.

¡ /Torque limit : 14.3kgf¡ /m(103.3lbf¡ /ft)

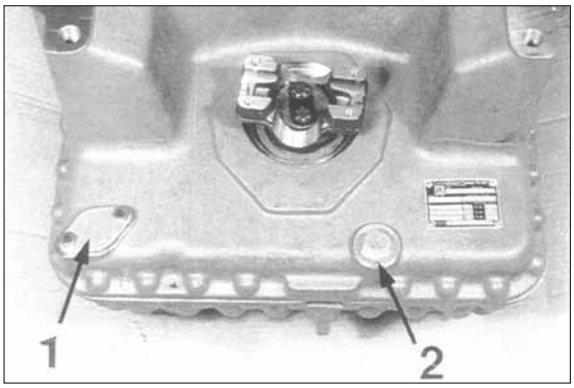

3. AXLE

1) BRAKES

WEAR CHECK AND REPLACEMENT OF BRAKE DISCS

(1) Use till minimum thickness of s = 4.5mm.

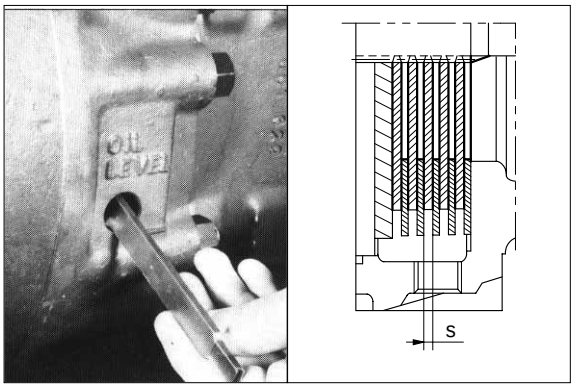

(2) Loose fixing nuts and remove horizontally the axle housing.

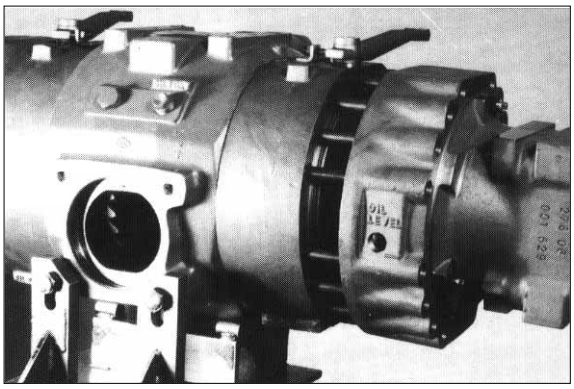

(3) Remove brake discs.

¡ If the brake discs must not been replaced, remove the complete pack without changing the position of the discs.

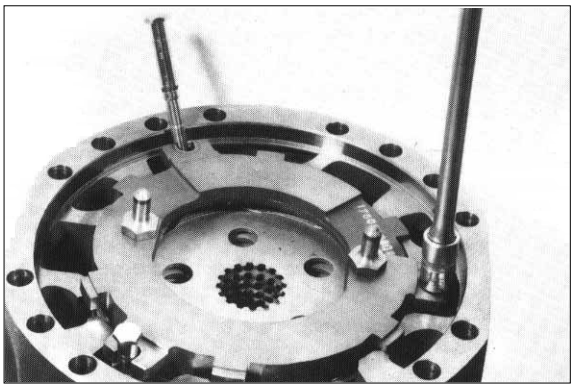

(4) For assembling proceed in opposite sense, align lubrification holes.

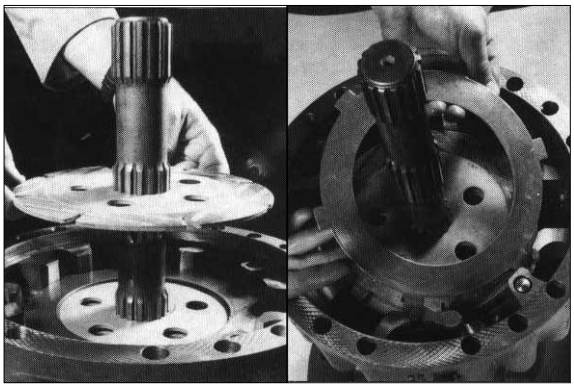

(5) Adjustment of brake disc gap. Adjusting bolts counterclockwise and turn them a 3/4 revolution clockwise ; This corresponds to a gap of 0.75mm between the brake discs.

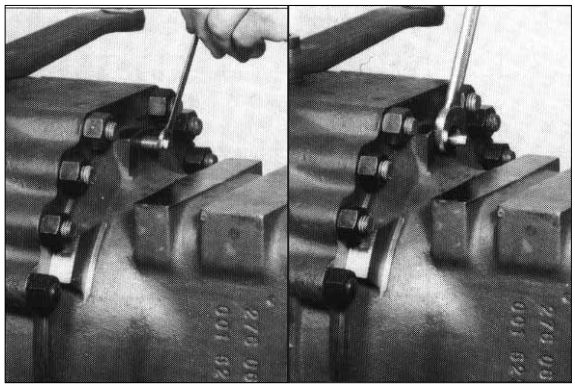

(6) Remove brake pistons.

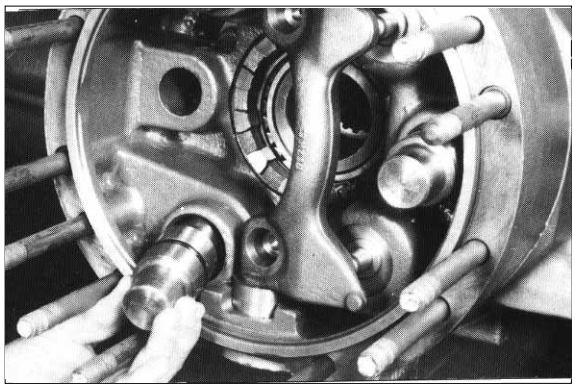

(7) Install O-rings and brake pistons.

¡ Observe that neither the pistons nor the cylinders have gratches or incrostations.



(8) Tight checking with compressed air at 0.5~1bar for 10 minutes each side.

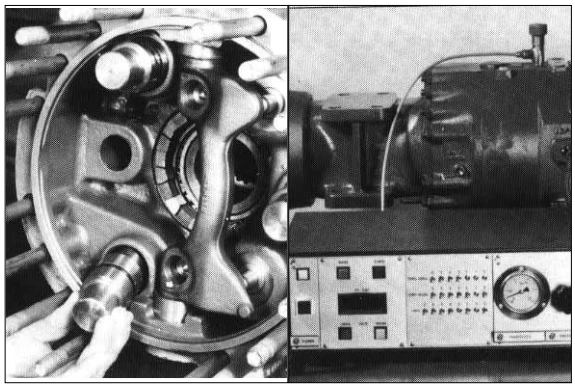

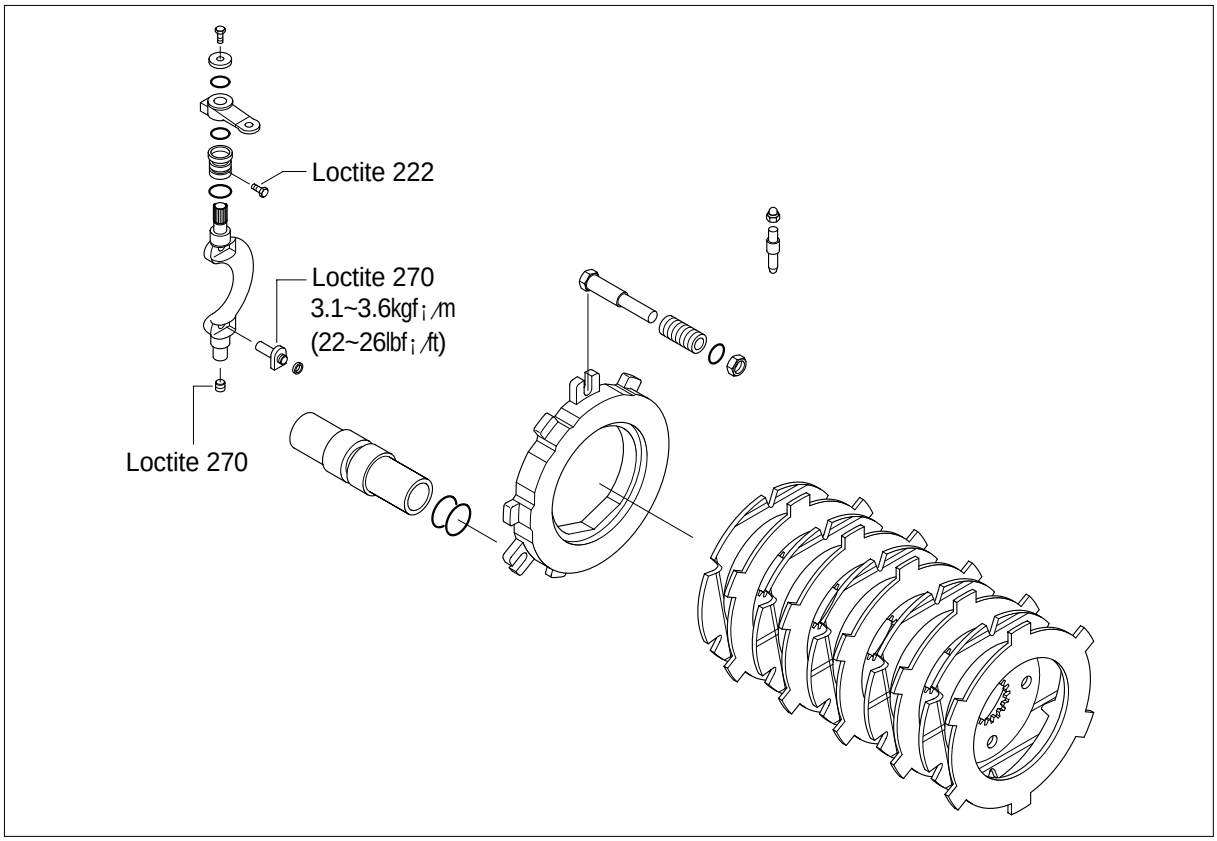
Loctite 222
Loctite 270
3.1~3.6kgf¡/m
(22~26lbf¡/ft)
Loctite 270

2) SAFETY BRAKE

(1) Introduce in the hydraulic circuit 25~35 bar pressure, then remove the axle housing.

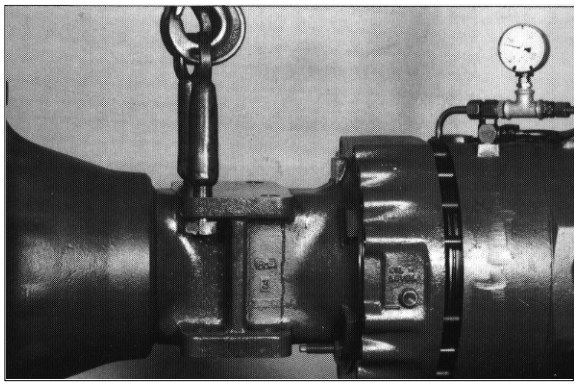

(2) Loose the 4 assembling stud bolts and disassemble the intermediate covers.

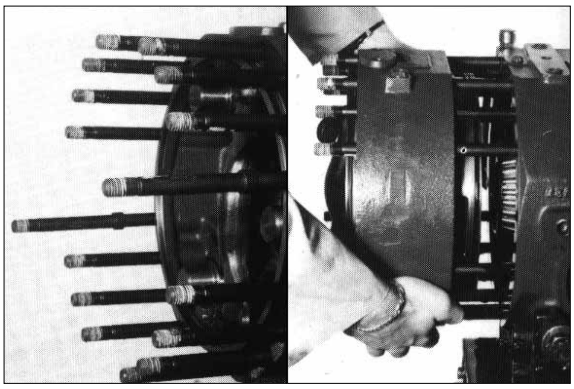

(3) Disassembling of spring applied safety brake pistons. Reassemble the components in opposite sense.

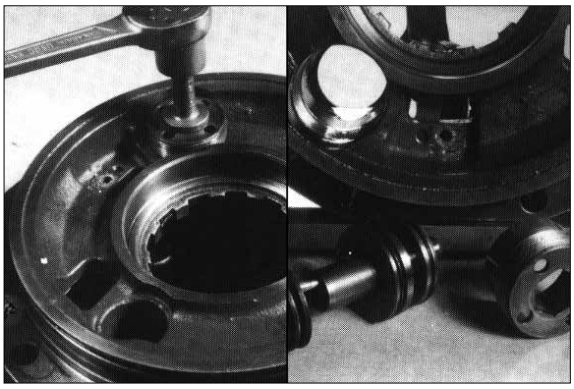

(4) Check quote of cover.

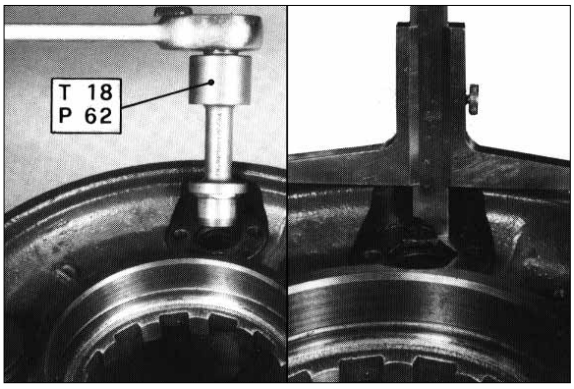

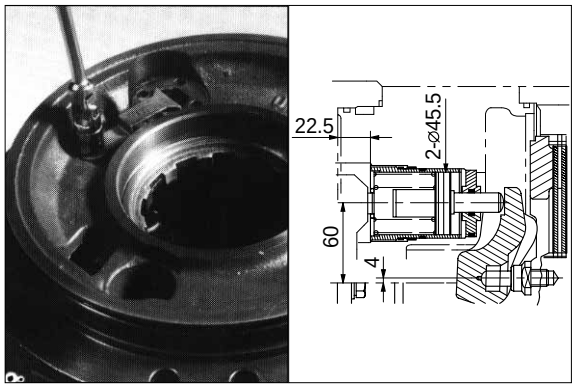

(5) Remove brake discs.

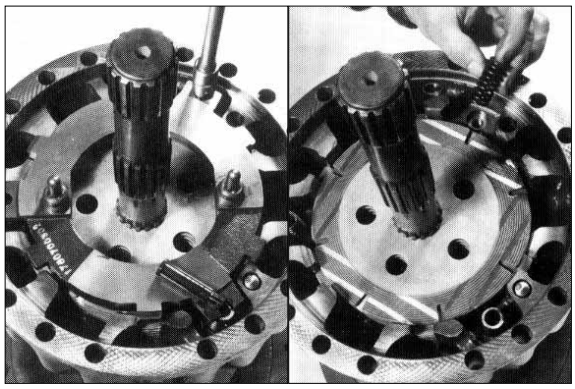

(6) For assembling align lubrification holes of brake discs.

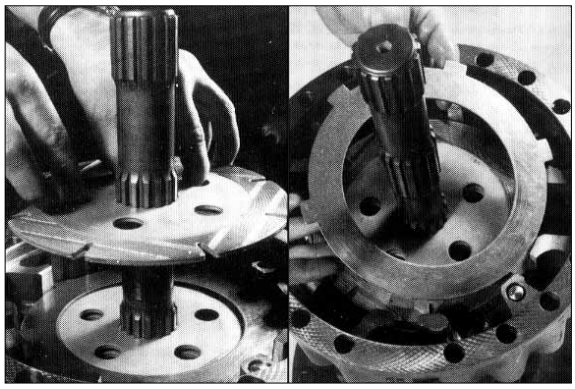

(7) Remove pinion and ring gear.

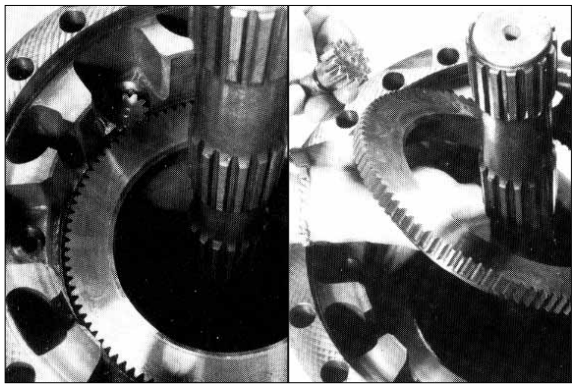

(8) Assemble of internal leverism.

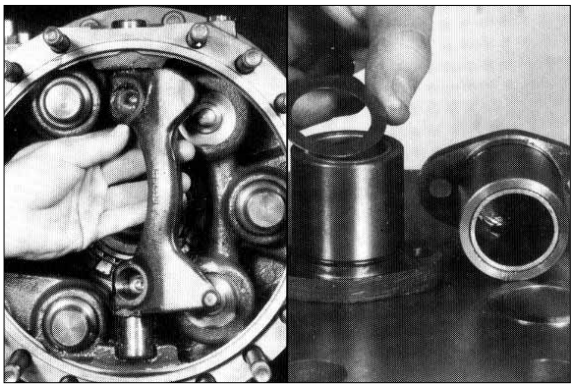

(9) Introduce in the hydraulic circuit 25~35 bar pressure and assemble the axen.

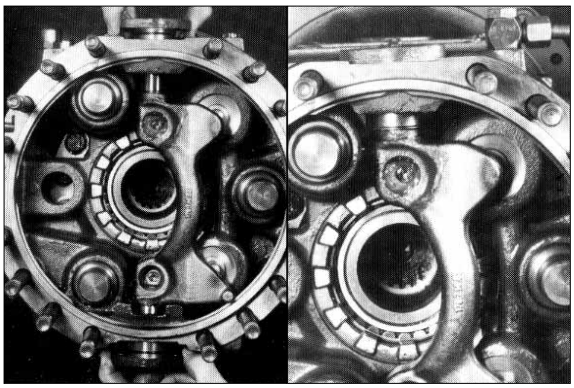

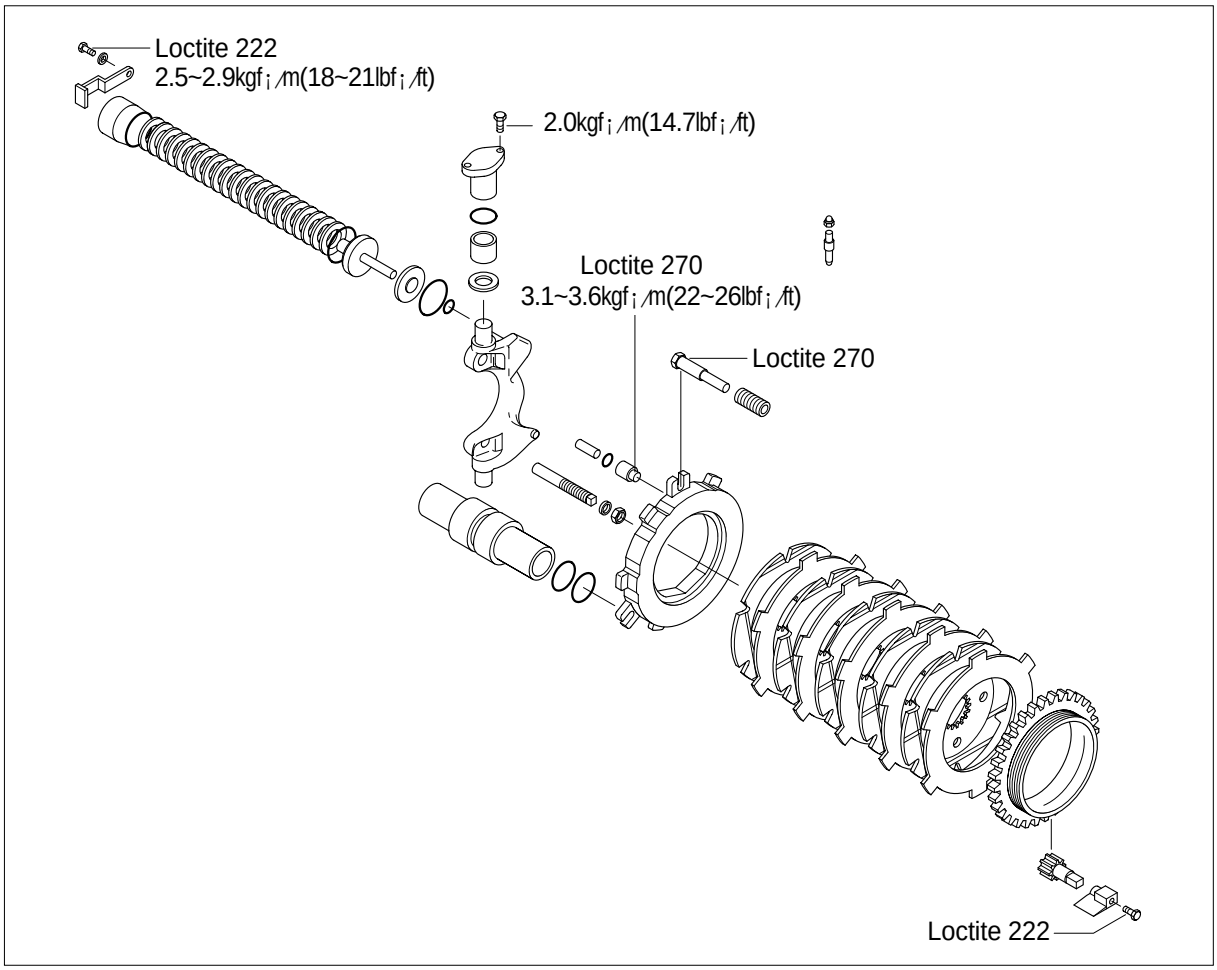

ADJUSTMENT

(1) Introduce pressure in the hydraulic circuit with 25~35 bar.
Remove bolt and locking plate.

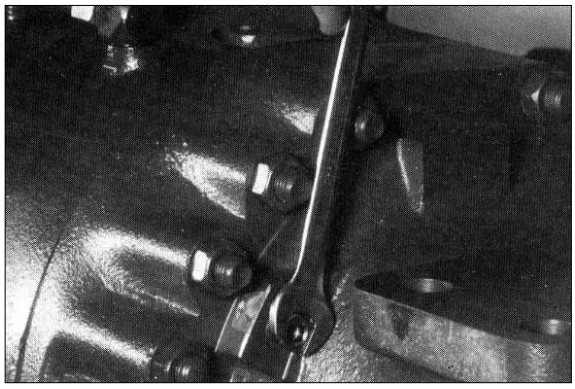

(2) Turn the pinion with 0.82kgf¡/m(5.9lbf¡/ft) torque counterclockwise till it stops. Adjust the gap between the brake discs by turning 3 complete revolutions clockwise.

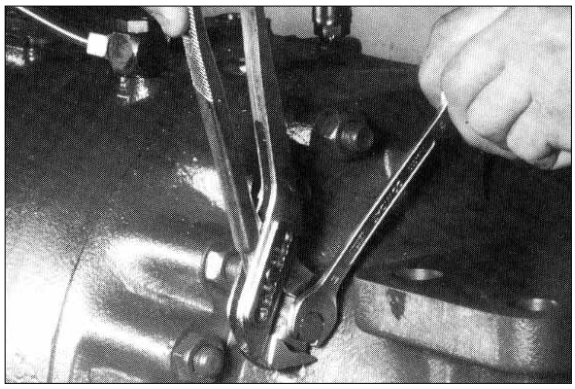

(3) Adjust the bolts to unlock the safety brake at 47mm and lock the counter nut.

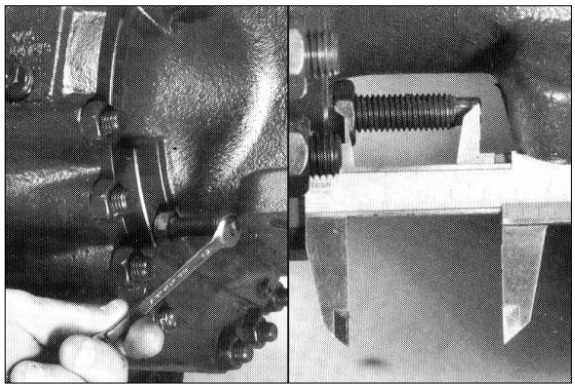

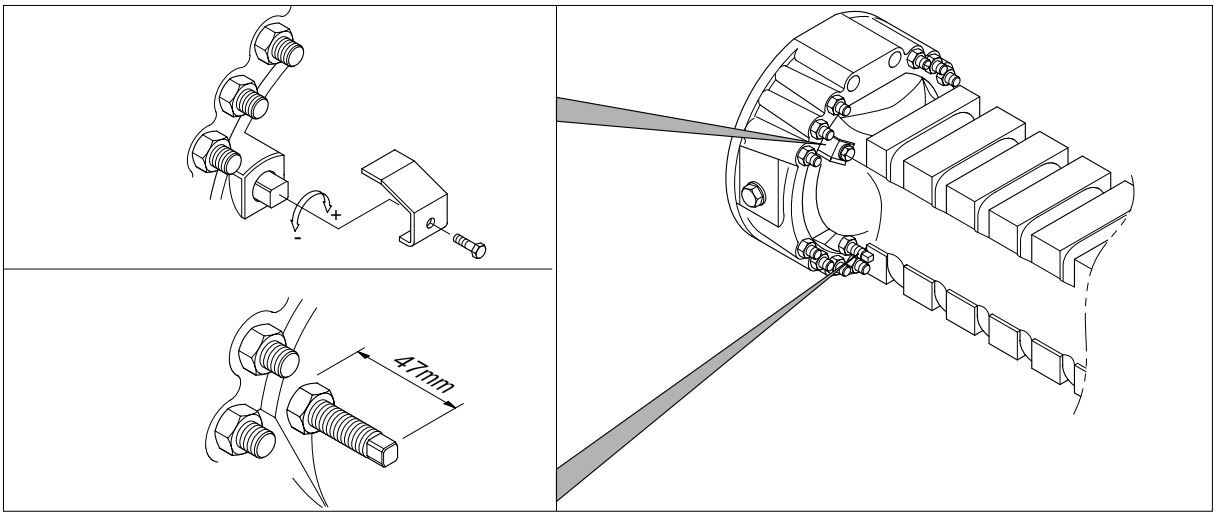

DISASSEMBLY

(1) Actuate the hydraulic circuit with ƒSbar.
See following page.

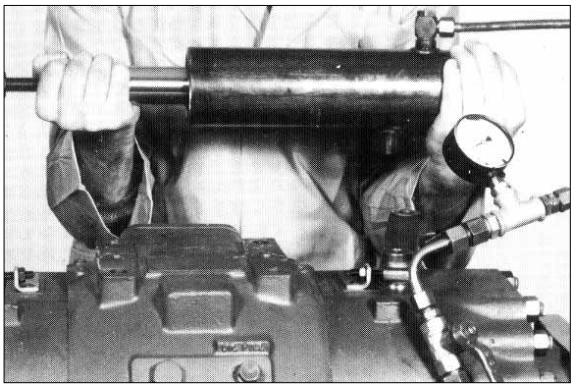

ADJUSTMENT

(1) See brake disk play adjustment on page 3-146. Near the adjuster screw to the level until the idle stroke has been eliminated (Internal spring action).

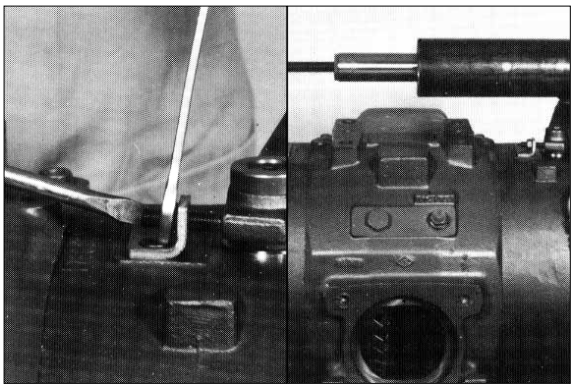

(2) Mount the brake cylinder after pressurizing and adjust the screw so that the two levers rest on the end of travel screws.
Now tighten the lock nut using loctite 242.

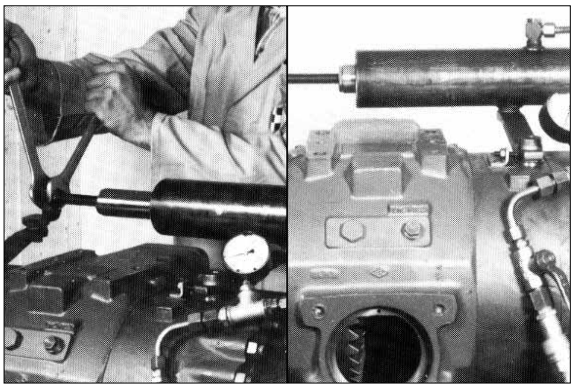

(3) Pressure according to the type of cylinder and spring load curve.

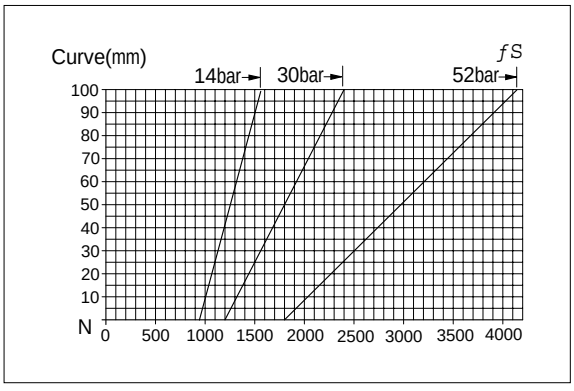

PARKING BRAKE ADJUSTMENT OF CAT 3 AXLES WITH ADJUSTABLE MECHANICAL STOPS.

1. Free both transmission levers from the control wire and from further connections.
2. Apply an 0.8~1.0kgf load to the levers so that the lever rests on the thruster disk without deforming the lever mechanisms.
3. Once in this position, set the adjuster screws of the stops in contact with the levers without deforming the lever mechanisms.
4. Reconnect the control wires to the levers once this position has been obtained.
5. Check that both transmission levers rest against the stop screws during the brake disengagement phase.

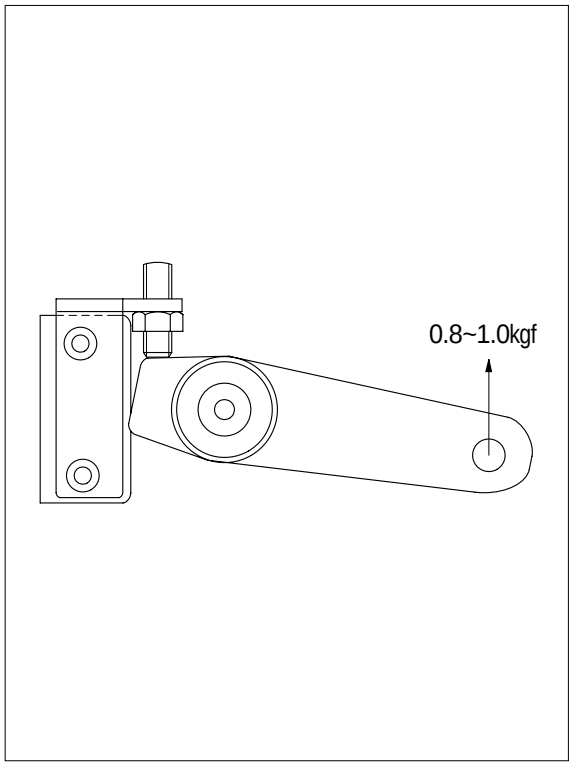

3) WHEEL HUB
DISASSEMBLING AND ASSEMBLING

(1) Disassembling of wheel hub.



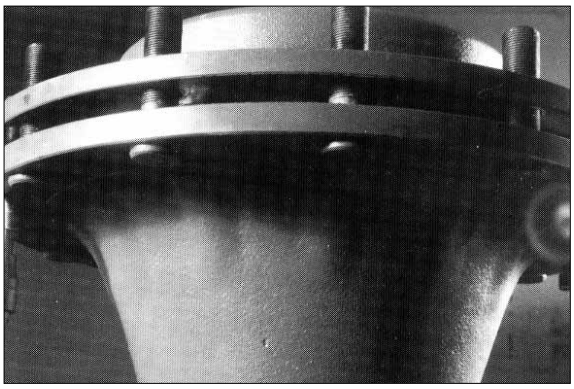

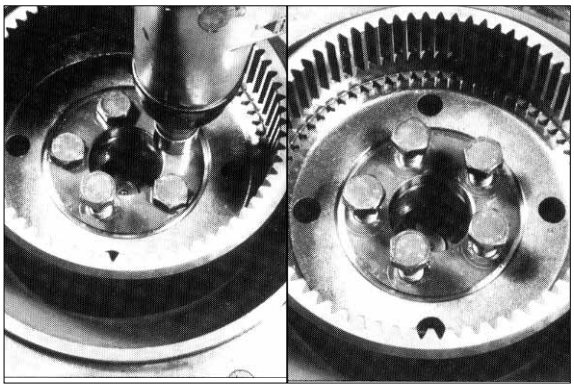

(2) Disassembling the crown wheel

¤ Use partially threaded M18¡¿1.5 screws to support the puller.

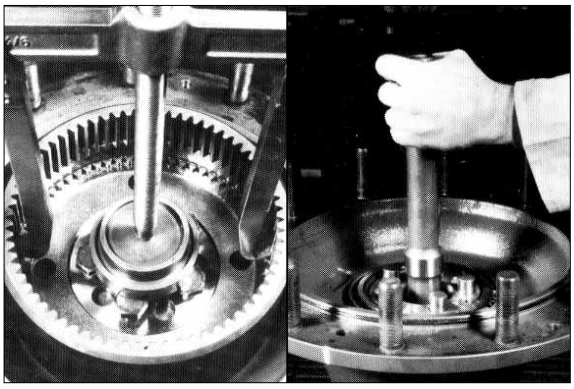

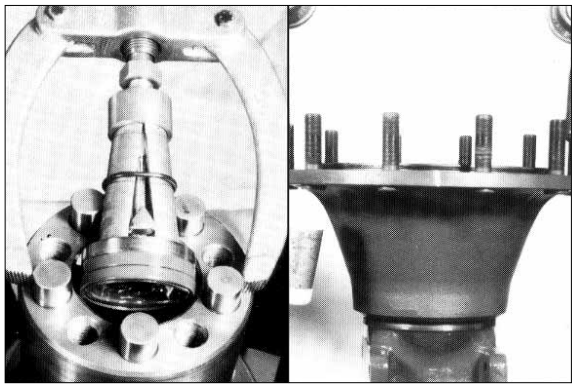

¤L Assembling of wheel hub

a. Installation of outer races of taper roller bearings.
b. Assembling of bearing.

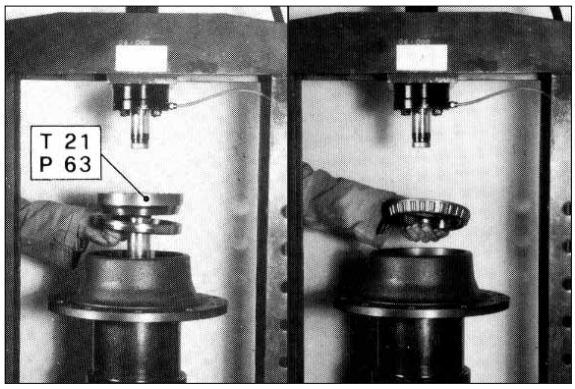

c. Fitting of seal.
d. Fitting of wheel studs.

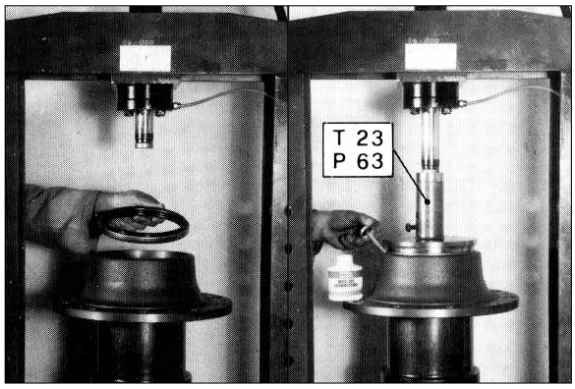

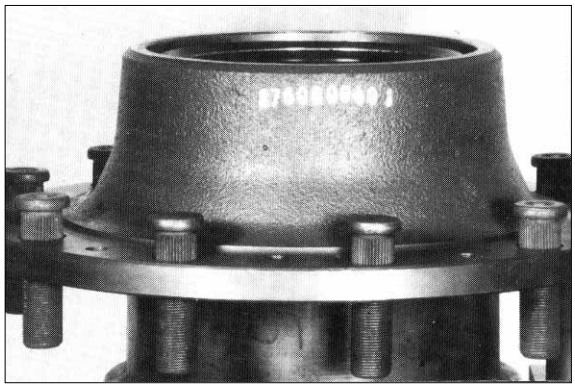

¤øAssembling of wheel hub, seal and center rings.

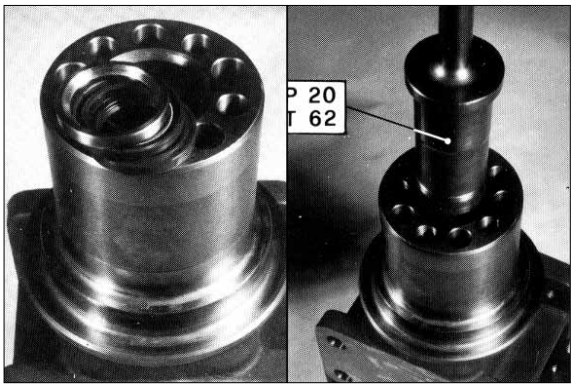

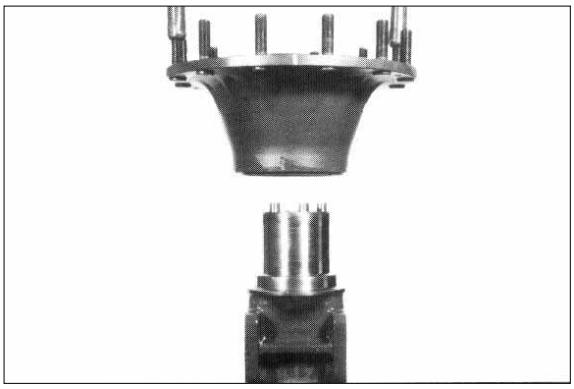

4) WHEEL HUB ONTO AXLE HOUSING

(1) Fitting the gear rim on the wheel center.

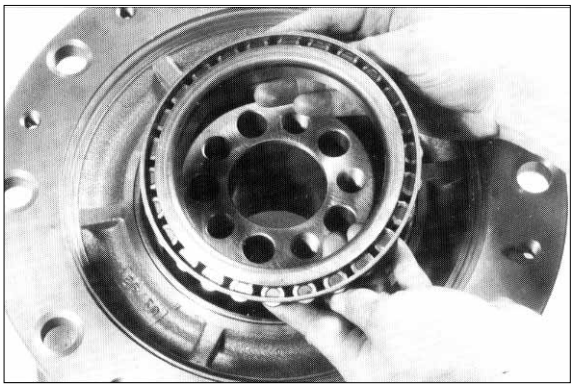

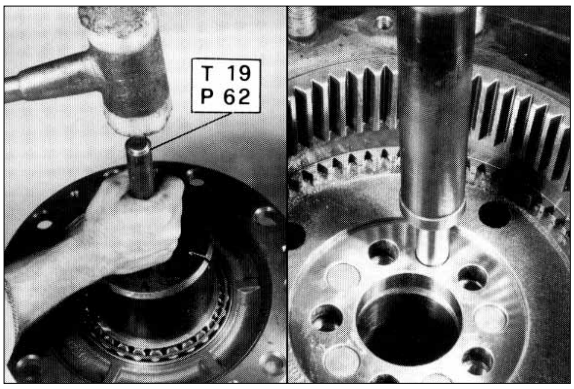

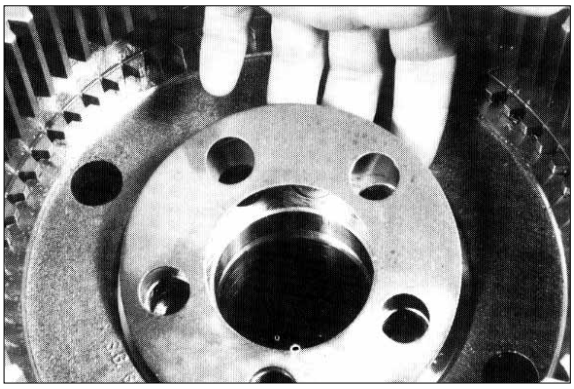

(2) M18¡¿1.5, 10K screws. Mount with loctite 270.
Clamping torque 46.9~47.4kgf¡/m (339~343lbf¡/ft).

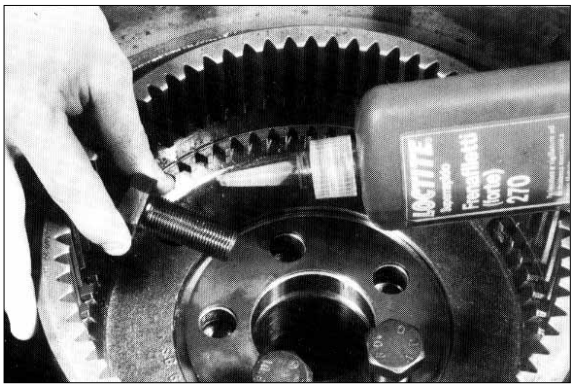

(3) Torque of new bearings with seal : From 3.1~4.1kgf¡·m(22~30lbf¡·ft).

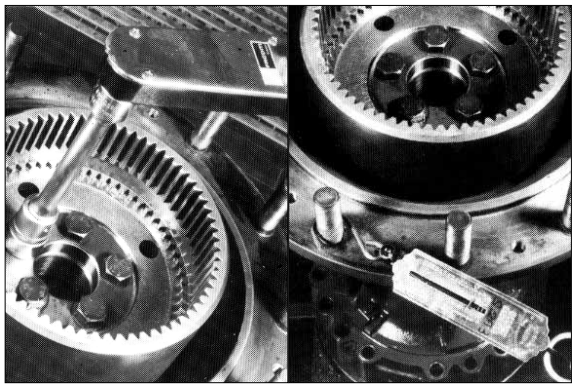

5) WHEEL CENTER VERSION WITH 10 PILOT BOLTS

(1) Demounting the wheel center version with 10 pilot bolts.

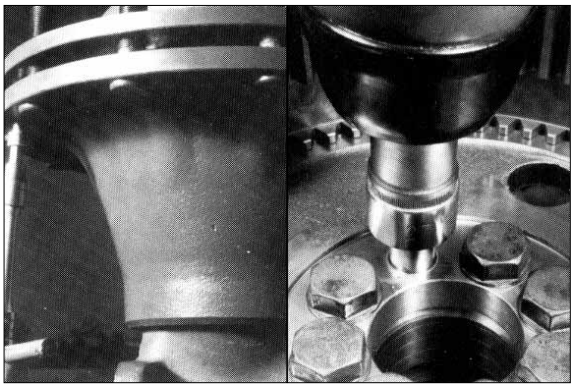

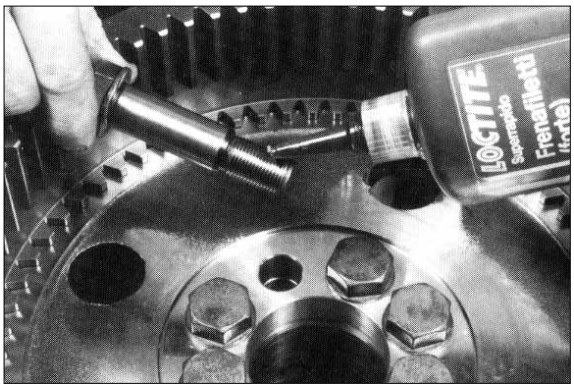

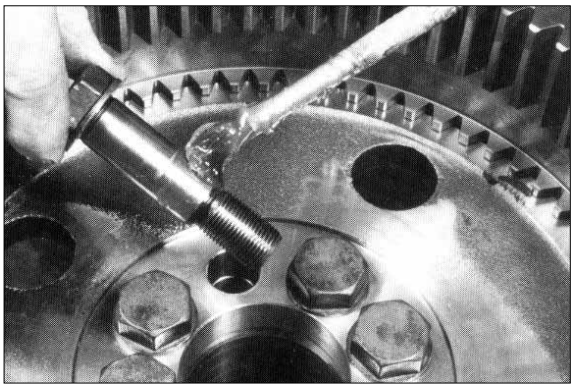

(2) Clamping torque for bolts M18¡¿1.5, 10K 46.9~47.4kgf¡·m(339~343lbf¡·ft).
Torque of new bearings with seal : From 3.1~4.1kgf¡·m(22~30lbf¡·ft).

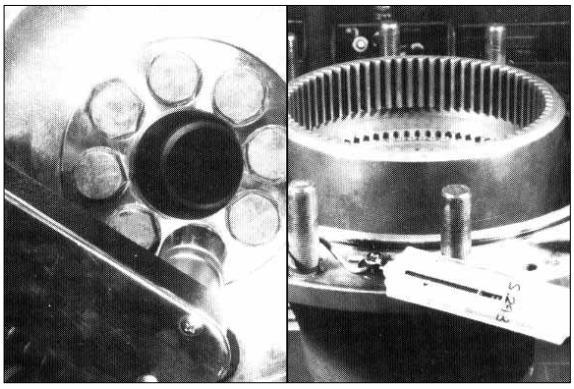

6) PLANETARY REDUCTION 6.23

(1) Disassembly

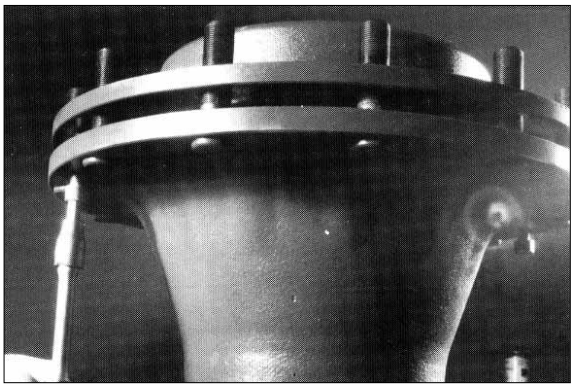

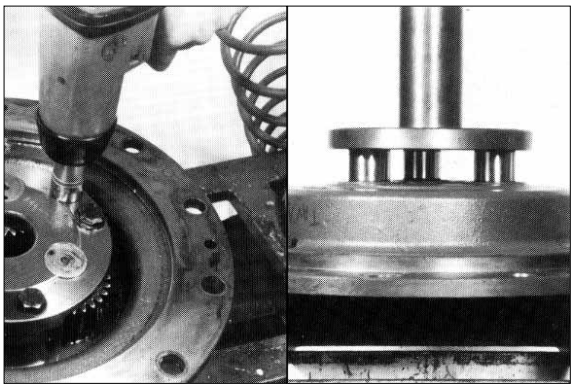

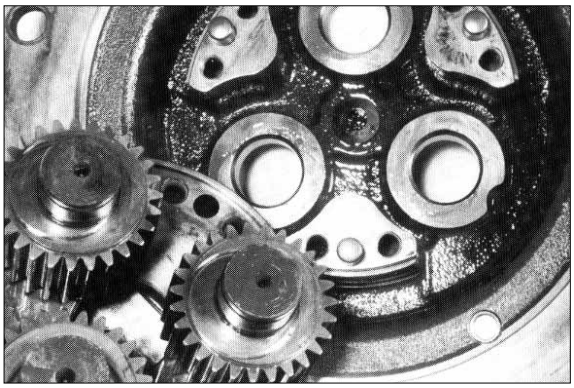

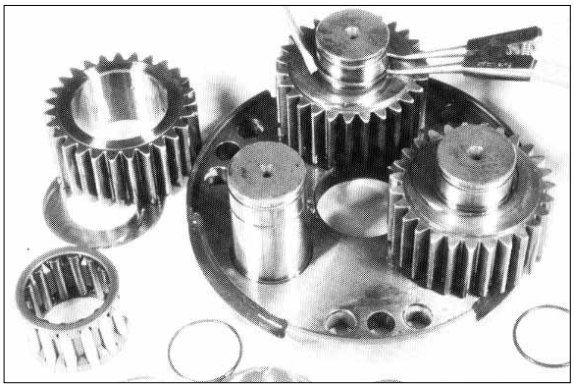

(2) Reassembly

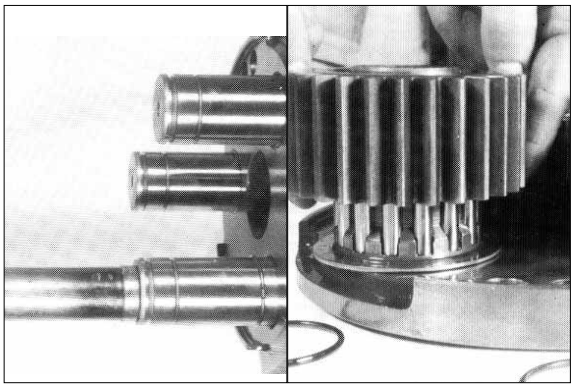

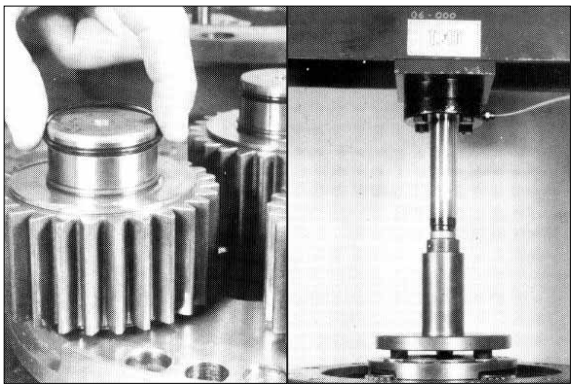

(3) Check the reference numbers.
Torque the screws at 32.1~32.6kgf¡¿m (232~236lbf¡¿ft).

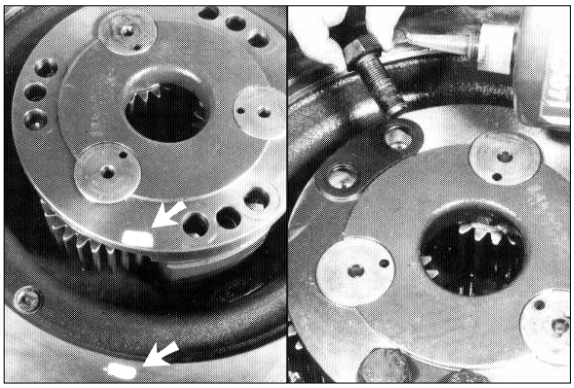

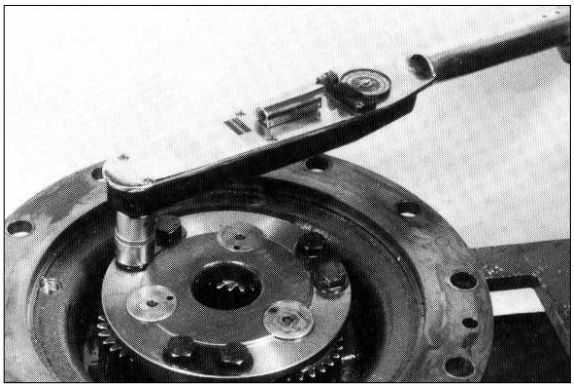

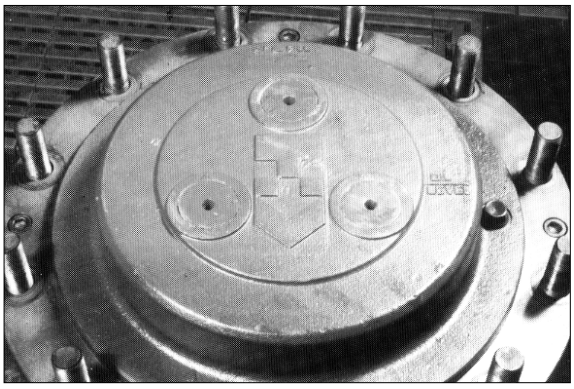



7) FINAL DRIVE 244-143

DEMOUNTING

(1) Use partially tightened screws as pullers.

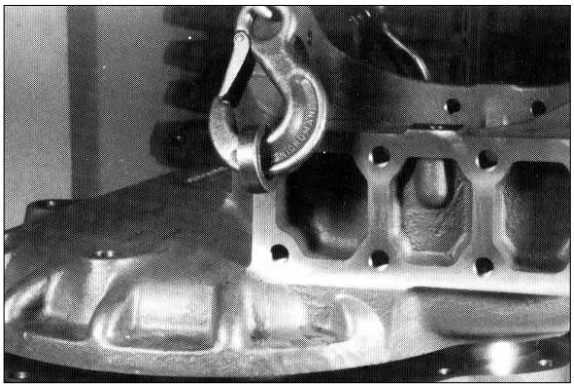

(2) Lock the ring nut then remove the hub gear.

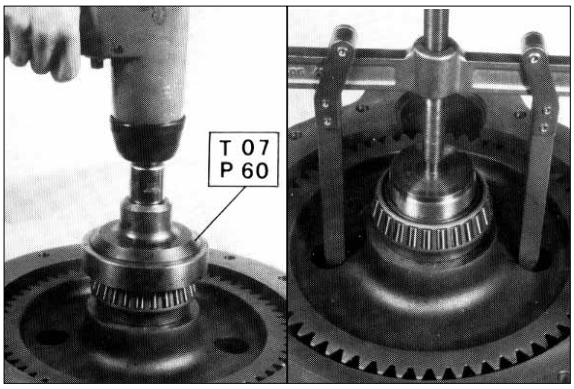

(3) Disassembly the hub cover.
Replace the retaining ring.

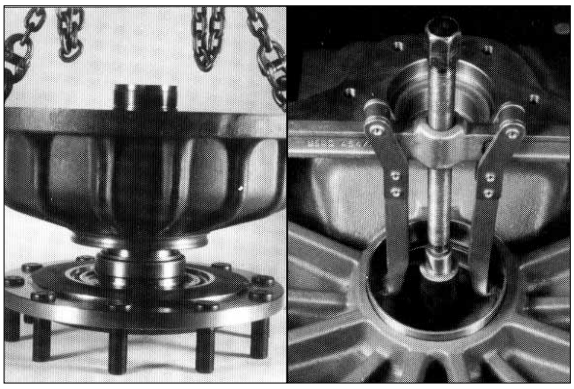

ASSEMBLY

(1) Assembling the stud bolts.

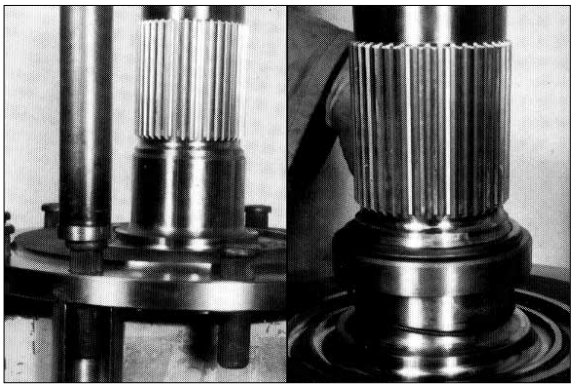

(2) Dust excluder and oil ring.

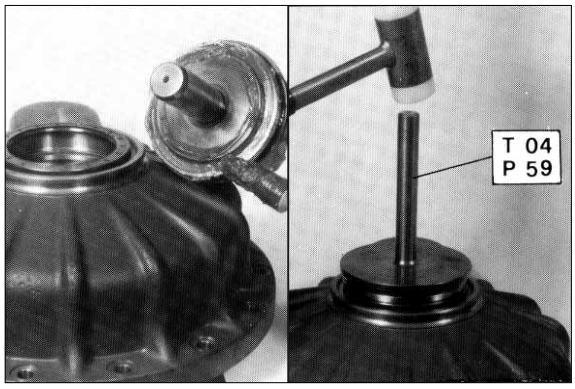

(3) Mounting the bearings.

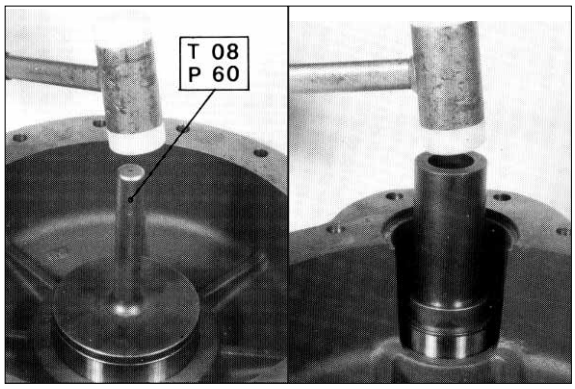

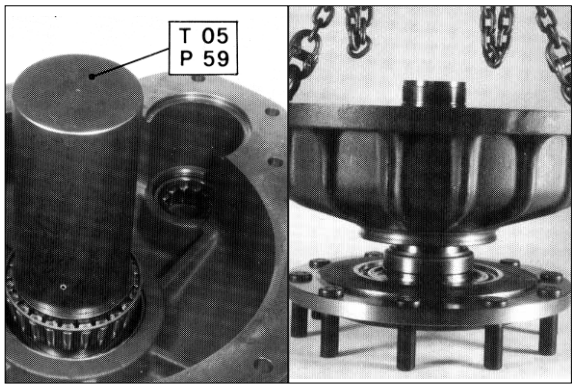

(4) Heat the gear to 140 ¡Ć for assembly.

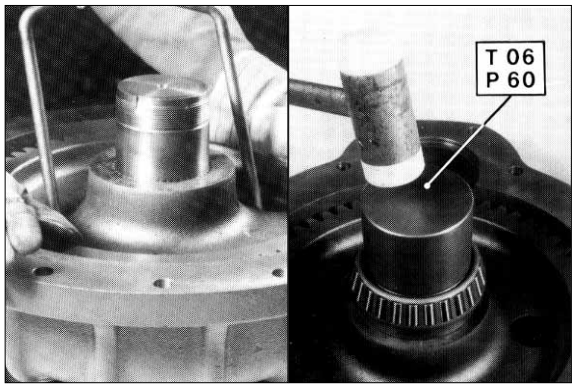

(5) Tighten the ring nut at 81.6~91.8kgf¡/m (590~664lbf¡/ft) using loctite 270.

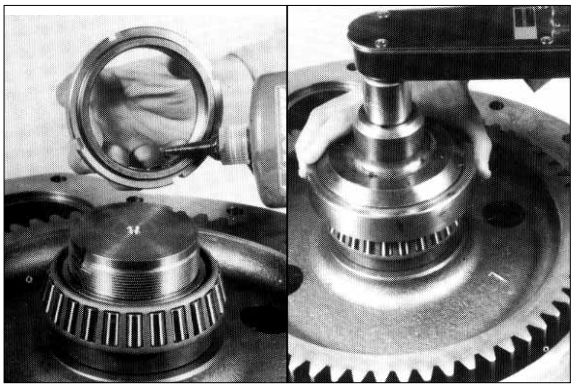

(6) Chamfer the ring nut.

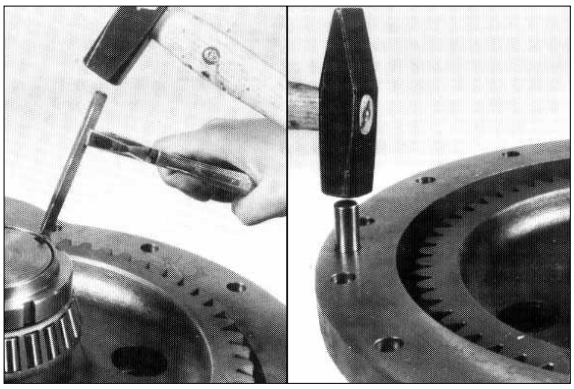

(7) Pinion assembly.

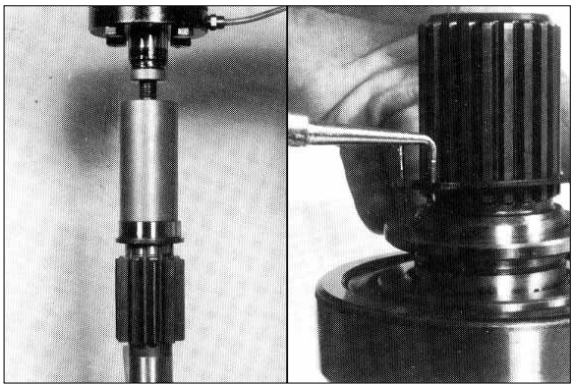

(8) Assembly with loctite 275 on the surfaces. Take great care to clean the surfaces.

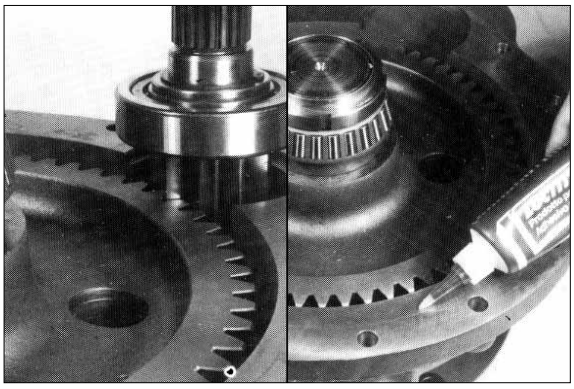

ASSEMBLY AND ADJUSTMENT

(1) Preassembly with the same shims as those removed during disassembly, or with 1.00mm shims.

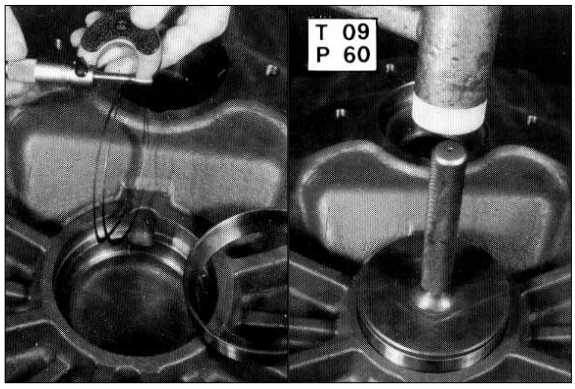

(2) Axle shaft oil seal assembly.

¤ Check the rotation torque applied tangentially to the wheel studs, which must be max 14.3~20.4kgf(With ring).
To correct, add or remove shims considering that a 0.05mm variation cause a variation of ~2.0kgf.

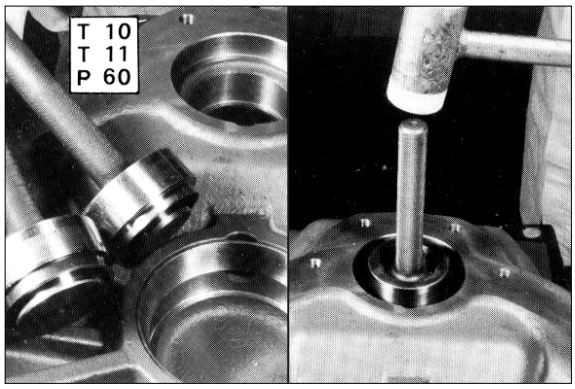

¤Ł Assembly using loctite 275.
Tighten the screws with a torque wrench 23.4~23.8kgf¡/m(170~172lbf¡/ft).

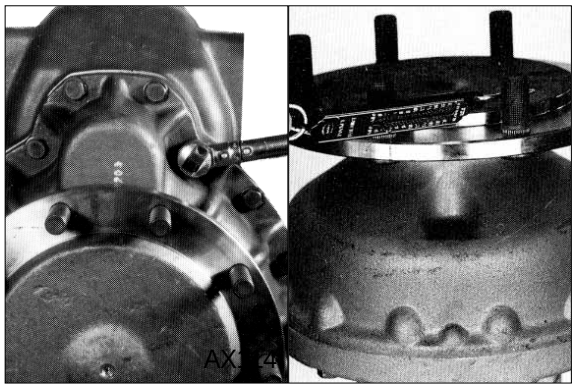

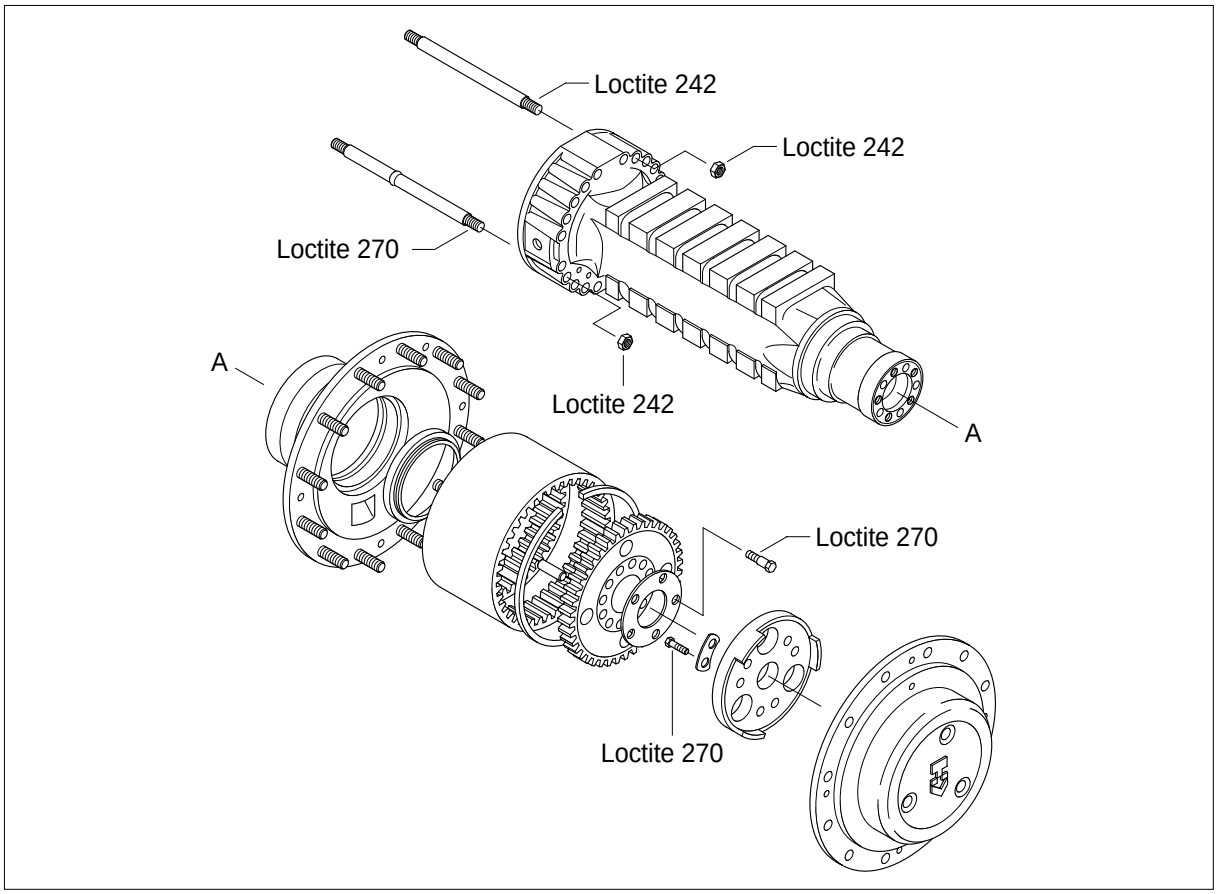
Loctite 242
Loctite 242
Loctite 270
A
Loctite 242
A
Loctite 270
Loctite 270

8) REAR AXLE BEVEL PINION SUPPORT

(1) Removal of bevel pinion support.

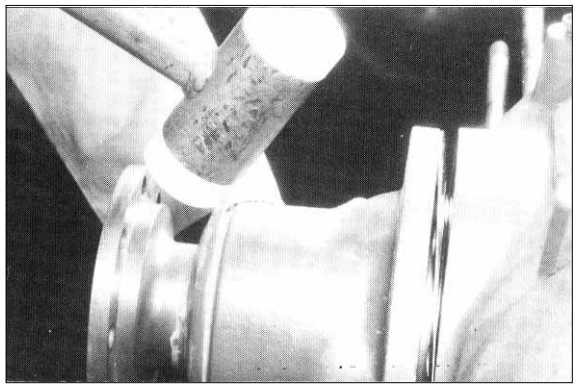

(2) Flange input.

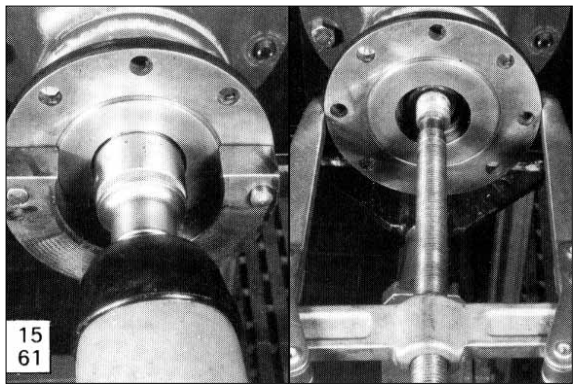

(3) Flanged to the reduction gear.

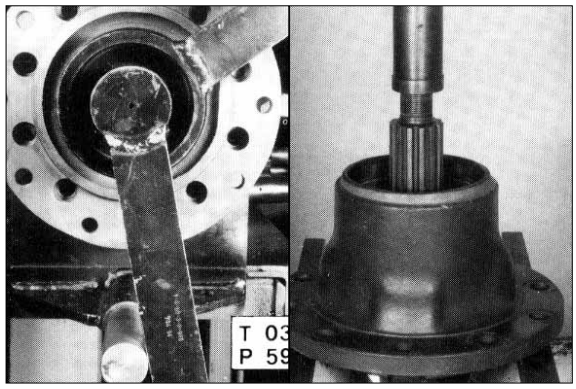

(4) Demounting the bearing plus thrust plates.

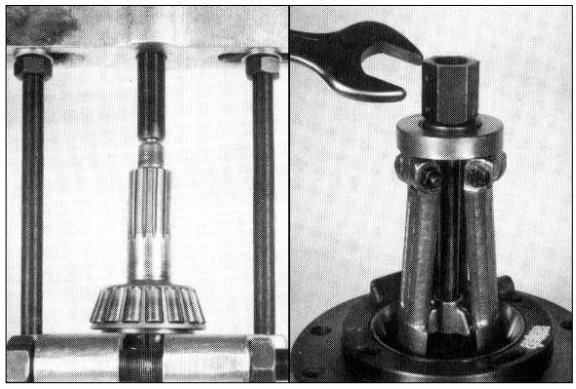

(5) Assemble the external races.
Taper roller bearings.
Check cover measurement A.

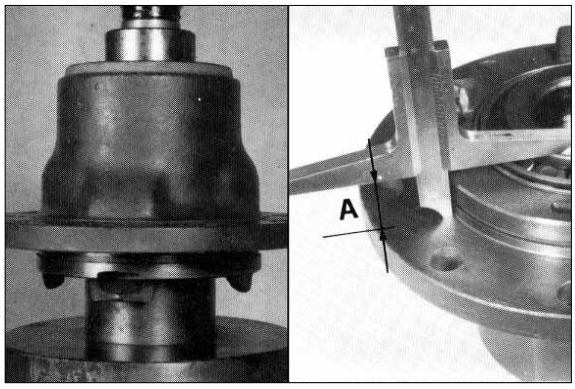

(6) Determination of shim pack S1 for the preload of the taper roller bearings S1 = B - C + X.
X = Value to add in order to obtain the correct preload of the taper roller bearings.

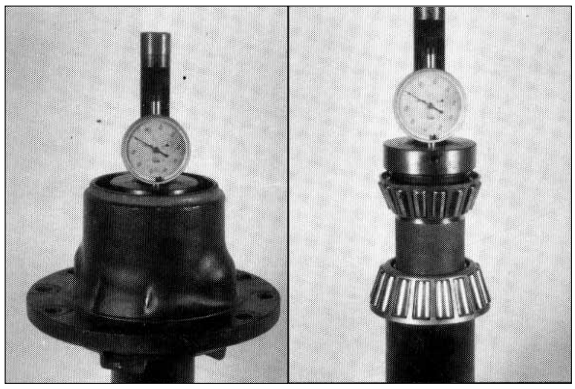

ƒS T26/P65 Flange input.

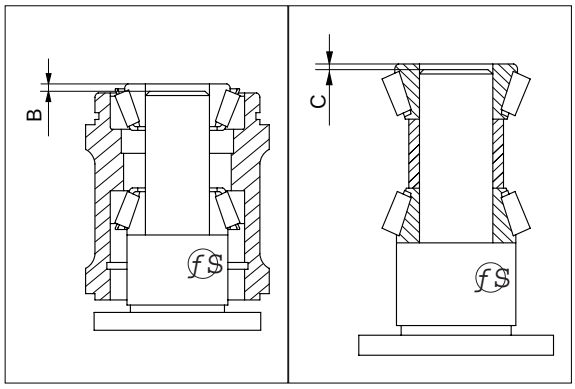

Value X = See figure.

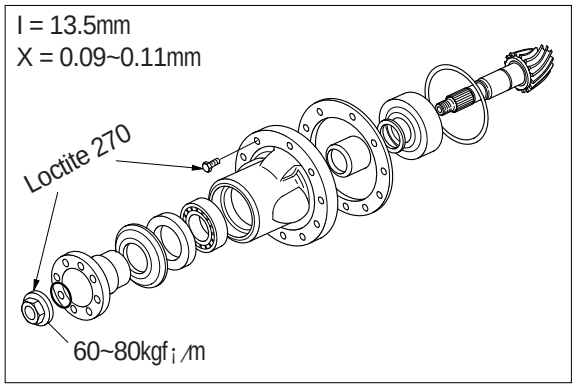

(7) Assembly of bevel pinion support and seal.

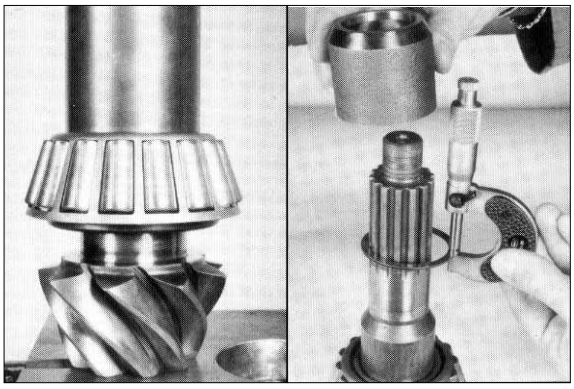

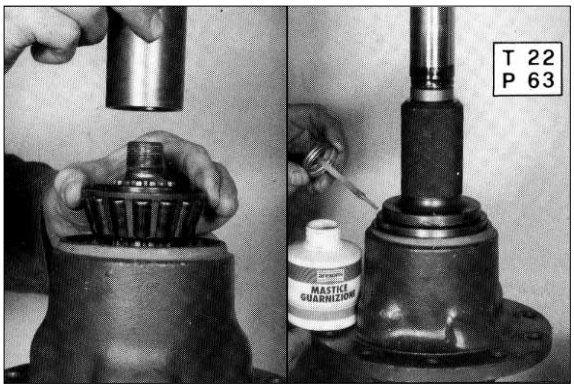

(8) Fitting the dust guard on the flange.

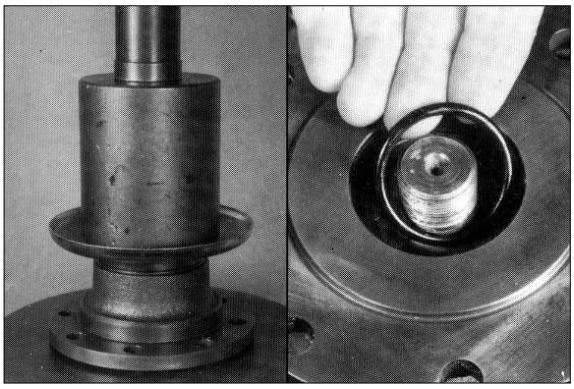

(9) Assembly with loctite 242.

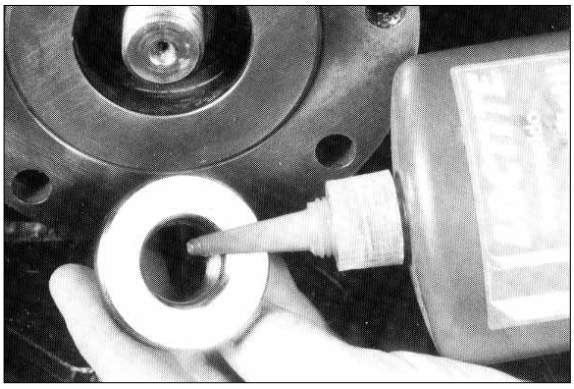

FLANGE INPUT VERSION

(1) Tighten the nut with a torque wrench.

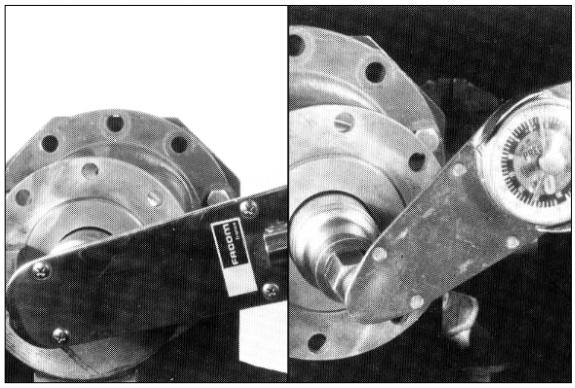

(2) Check rotation torque : See figure

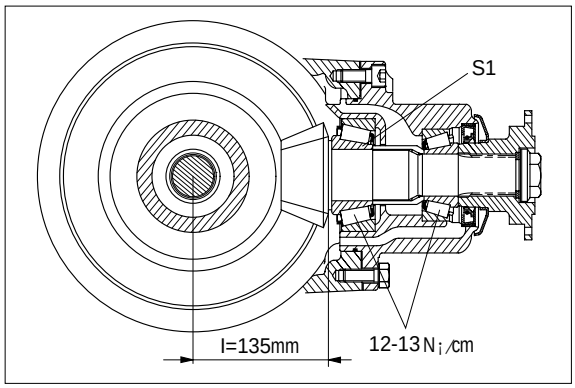

9) FRONT AXLE PINION SUPPORT

(1) Demounting the pinions and bearing plates.

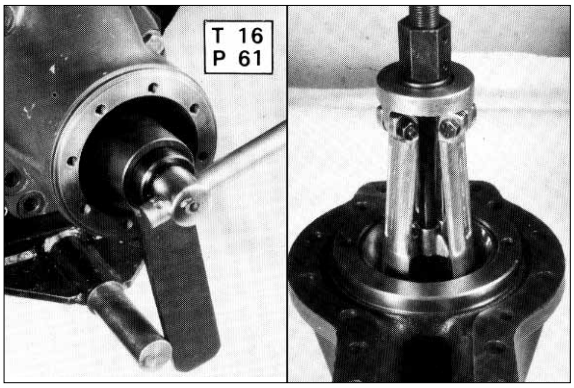

(2) How to establish shims S2 to position the bevel pinion. Insert the dummy bearing and check the difference(Photo ¤Ð) after having zeroed the instrument on a surface plate with a 20mm shim(Photo ¤Ø). Measured difference corresponds to S2. Add or remove the differential shims when the center distances differ from 150mm(Dimension stamped on the pinion).

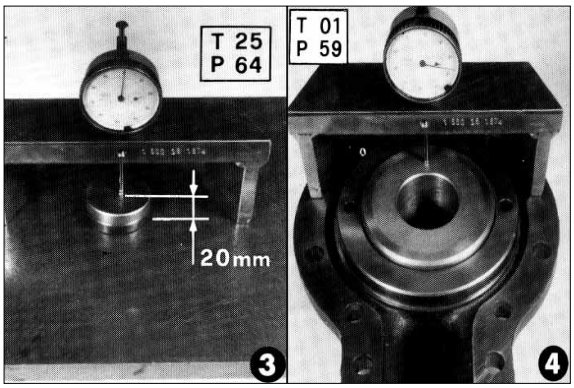

Example

Center distance : 149.8

Shims = (150 -149.8) + S2



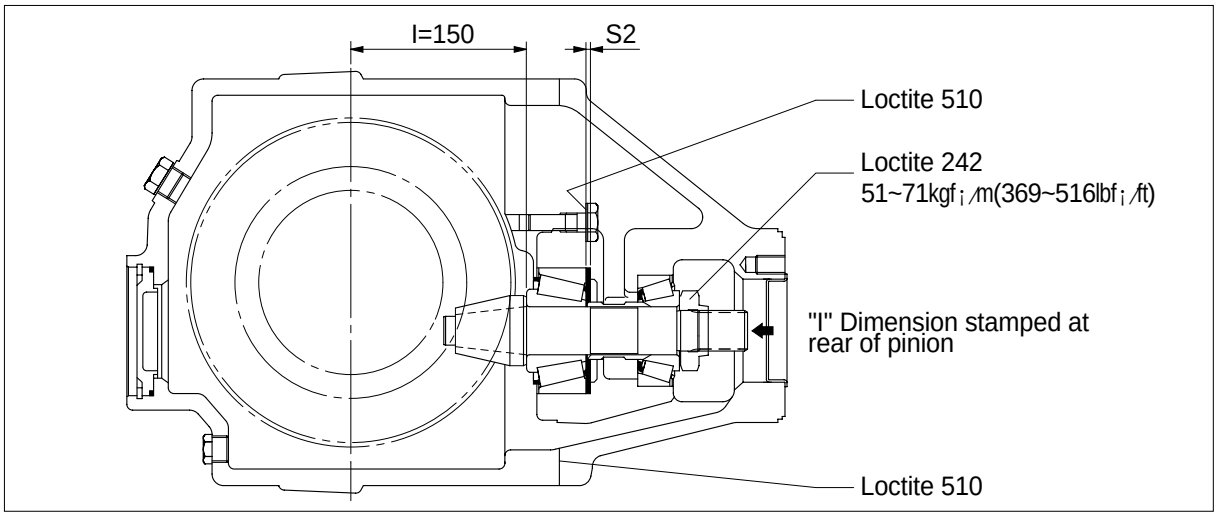

(3) Establishing the pinion bearing preload shims. See page 3-118 and figure.

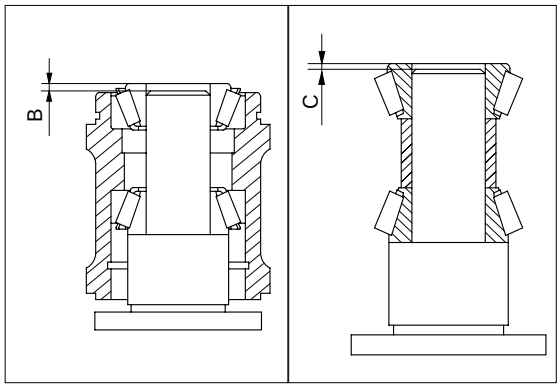

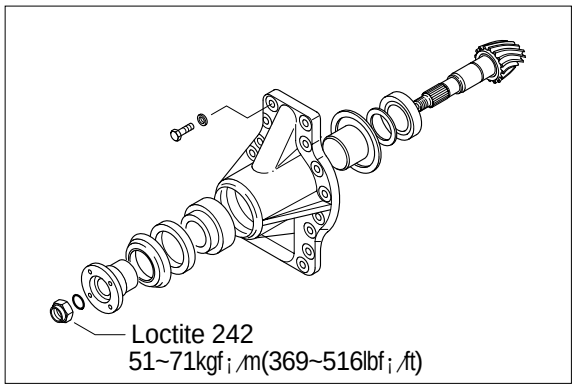

(4) Check the measurement(Photo ¤) after having mounted the shims and thrust plate. It must be 0.10㎜~0.15㎜ less than zero. This difference is annulled by the effect of bearing interference in the definitive assembly.

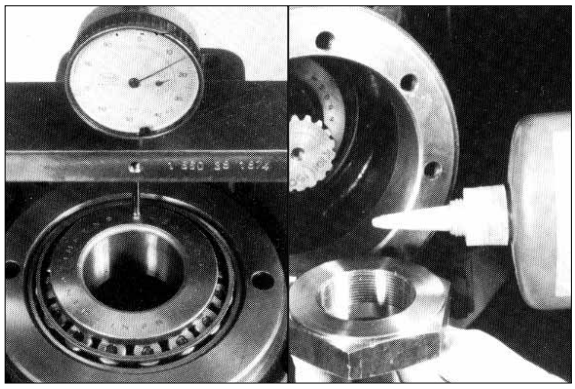

(5) Chamfer.

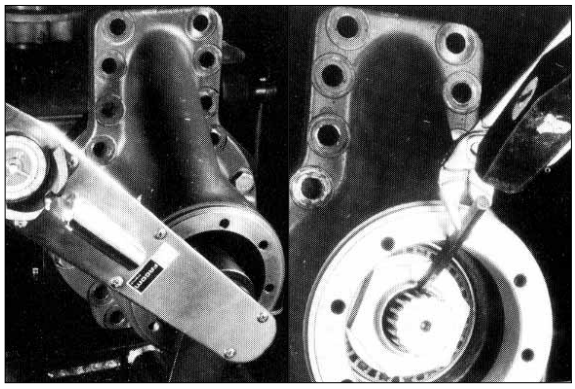

(6) Check the final center distance and stamp it on the cover.

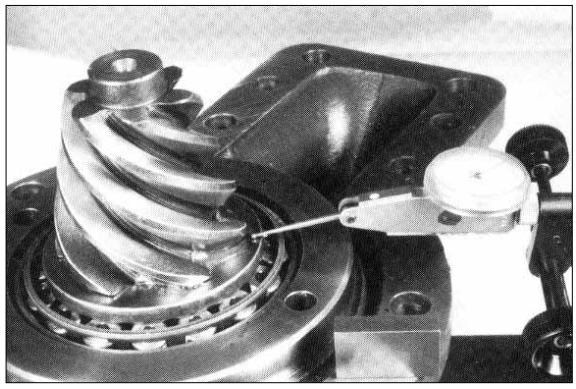

10) 276 -176 -143 AXLE ADJUSTMENT OF BEVEL GEAR SET

(1) Determination of shim pack S2 for adjustment of bevel pinion position : S2 = (I + A) - (D + r).

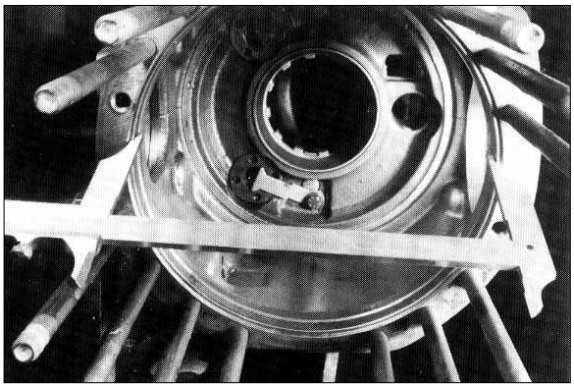

Photo ¤Ł= D, Photo ¤ = ¤ŋ2 = r
Photo ¤Ø = I (Dimension stamped on the pinion).

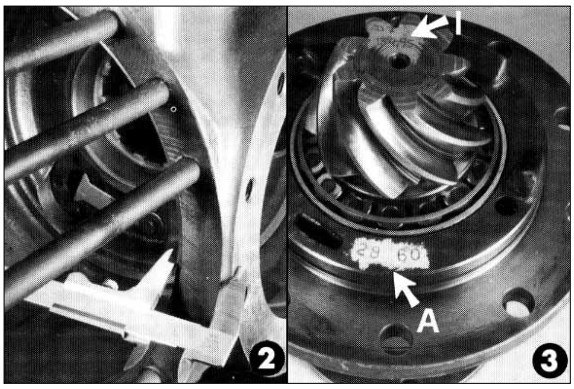

Photo ¤Œ = A (Dimension stamped on the cover pinion).

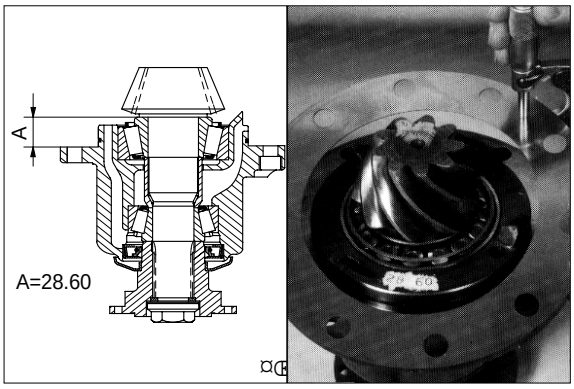

(2) Assembly of bevel pinion support with shim pack S2.

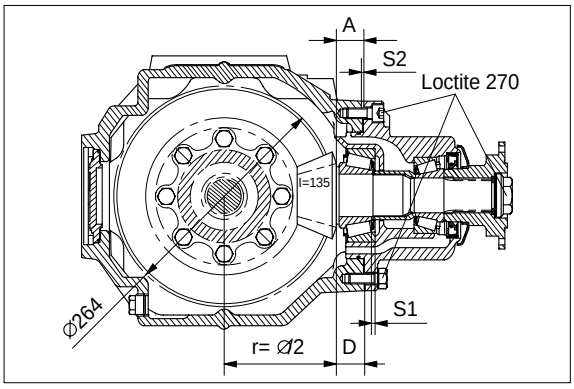

(3) Assembling central axle housing.

¡ Be careful not to damage the tight surfaces of the O-rings while inserting the differential case into the central axle housing.
Play : 0.18~0.25

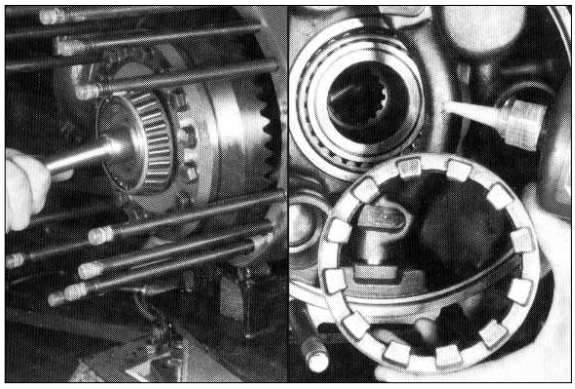

(4) Screw in the adjusting nuts to obtain approximate 0.20~0.27㎜ backlash between the teeth of the bevel gear set, without preloading the taper roller bearings. Check the rotating torque of pinion and differential. Tighten nut on opposite site to the crown wheel to obtain a 0.05~0.07kgf¡㎝(0.37~0.52lbf¡ft) higher rotating torque on the pinion.

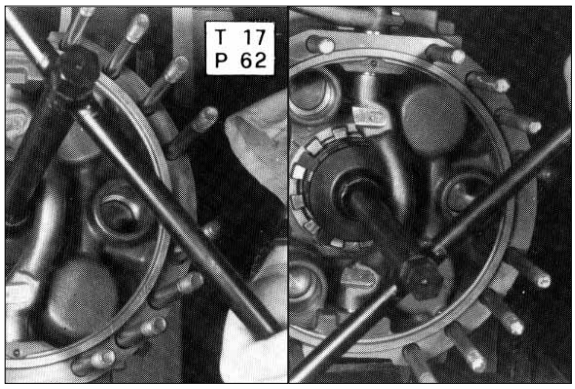

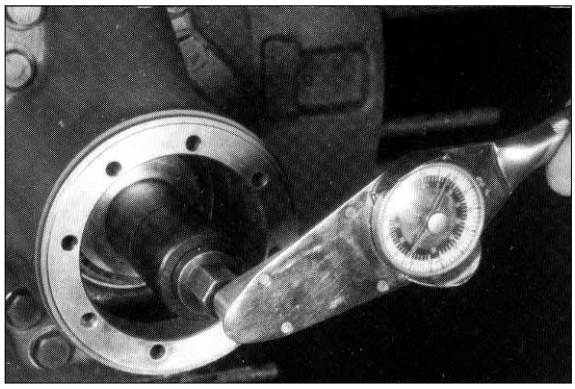

(5) Mark both ring nuts. To adjust the backlash move ring nuts only. Loosen the one on bevel crown wheel side and tighten the opposite one for the equal measure if the backlash is too low ; Viceversa if the backlash is too high.

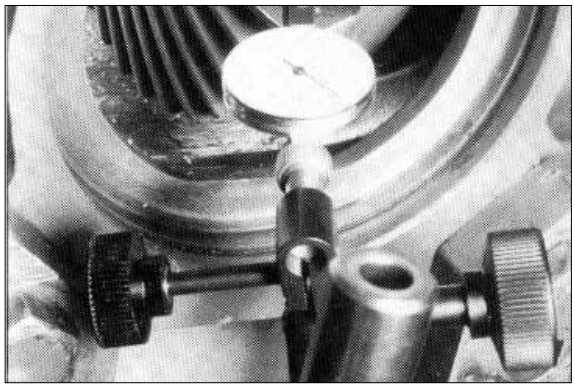

(6) Mount locking tabs in the best position and punch in place.

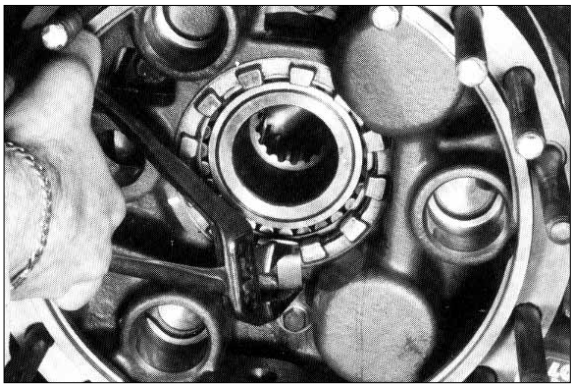

11) DIFFERENTIAL HOUSING

(1) Removal of the differential from the axle.

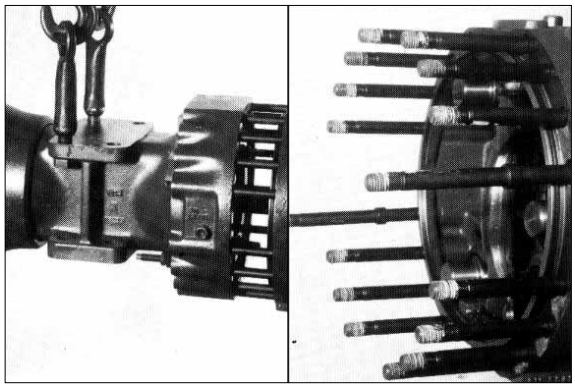

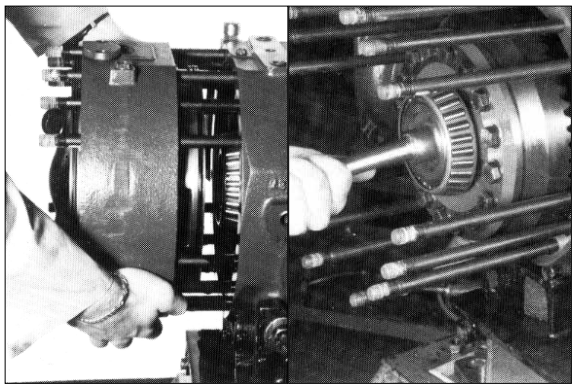

¡ Replace the fitting bolts of the crown wheel every time that they have to be removed.

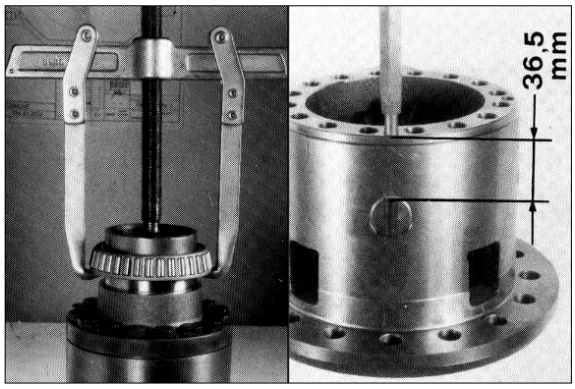

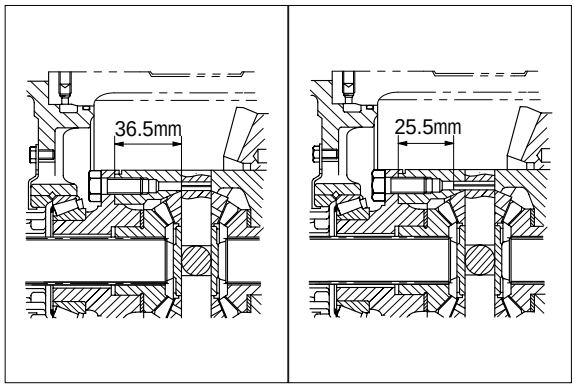

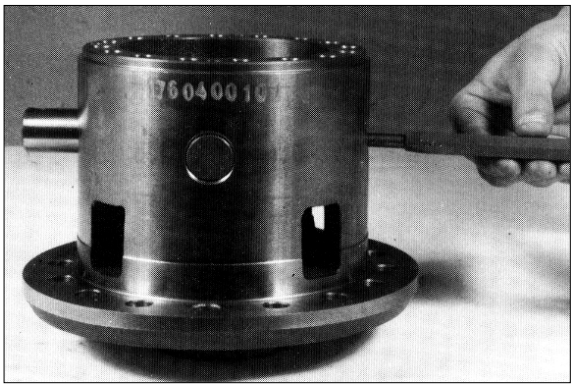

(2) Mounting sun wheels and planet gears.

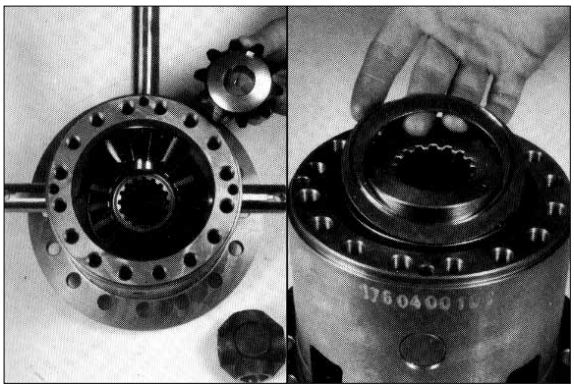

(3) Insert the spring pins half way up the pin.

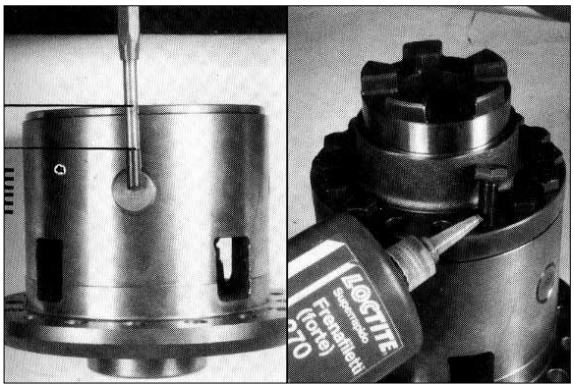

(4) Torque all bolts M12¡¿35¡¿1.25-10K and M12¡¿30¡¿1.25-10K with a torque wrench bolts clamping torque 13.8~14.1kgf¡/m(100~102lbf¡/ft).
Use loctite 270.

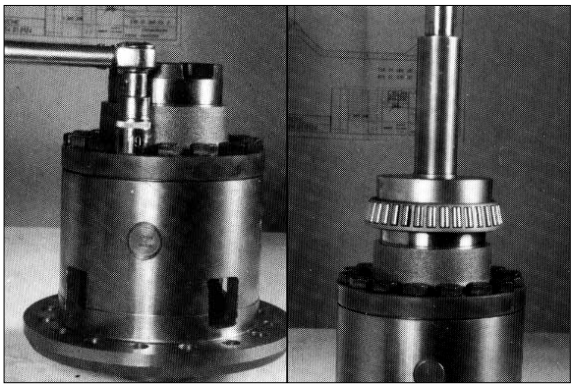

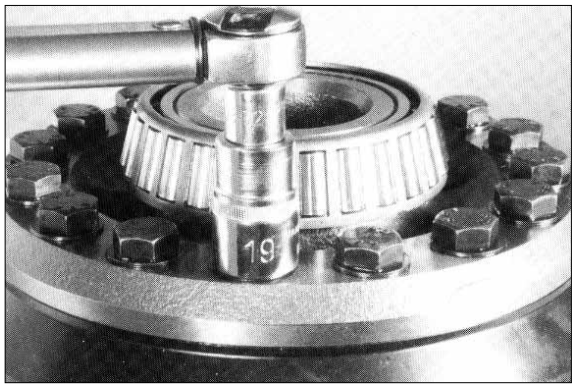
19

REAR

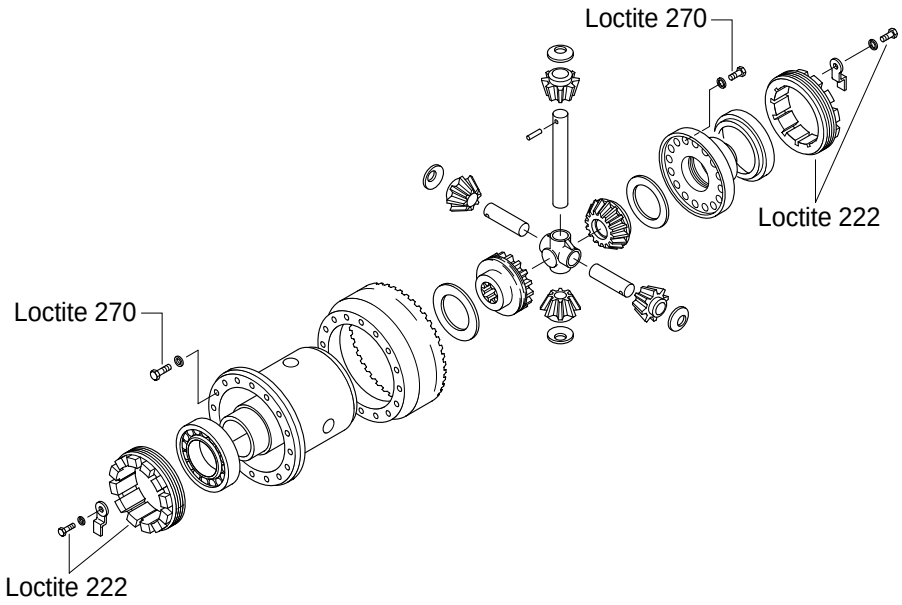
Loctite 270
Loctite 222
Loctite 270
Loctite 222

FRONT

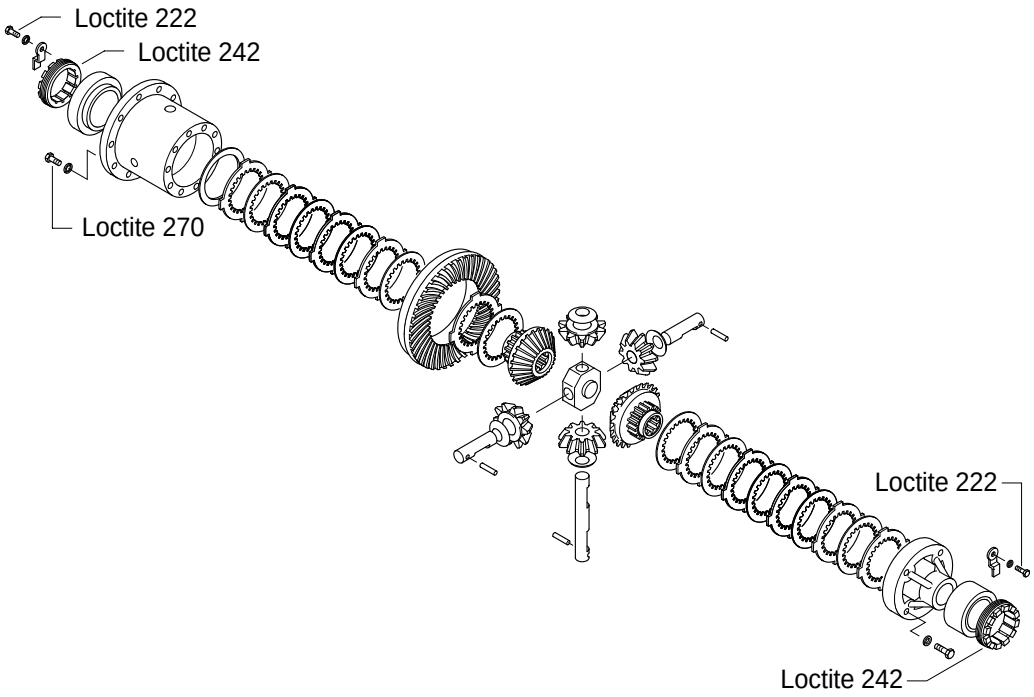
Loctite 222
Loctite 242
Loctite 270
Loctite 222
Loctite 242

12) CENTRAL PART OF FRONT AXLE

DISASSEMBLY

(1) Demount the intermediate cover on the opposite side to the gear rim and insert tool.

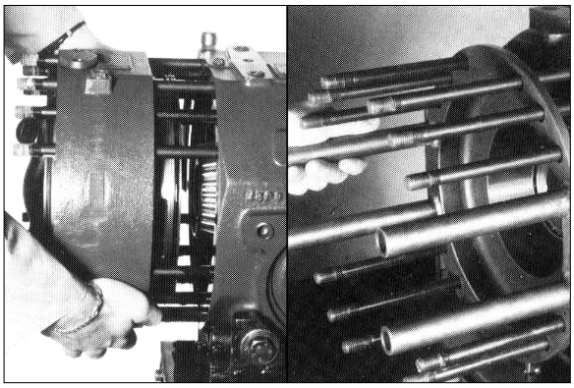

(2) Slacken the screws. Insert tool and pull out the differential housing. Remove the gear rim from the pinion bearing side.

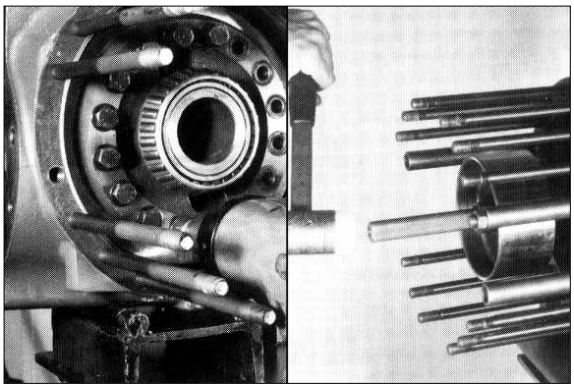

T24
P64

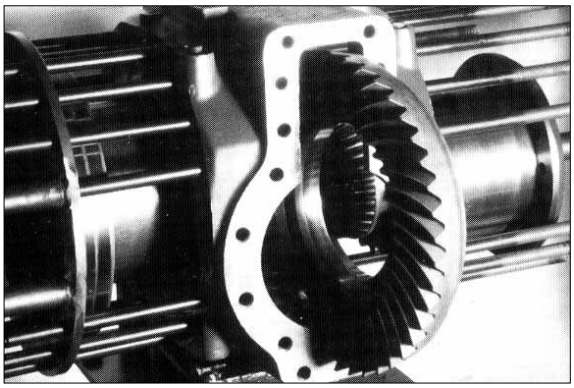

ASSEMBLY

(1) Center the gear rim on tool.

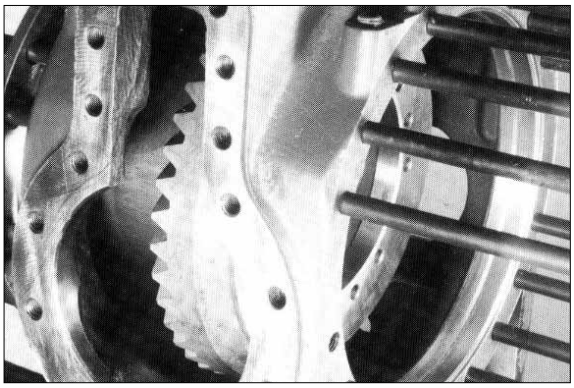

(2) Insert the differential housing with tool and torque the screws.



(3) Take care to prevent damage to the brake retention zones when assembling the parts.

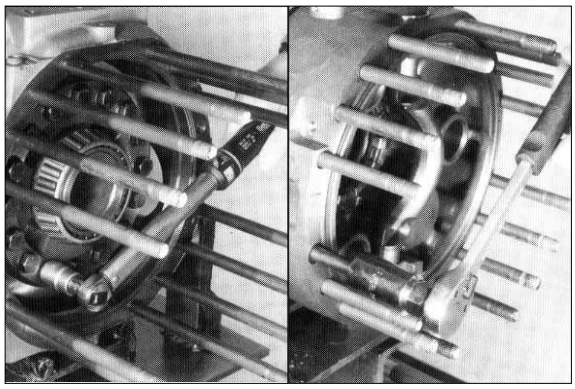

(4) Mount the intermediate cover on the gear rim side using tools. Fit on the other intermediate cover.

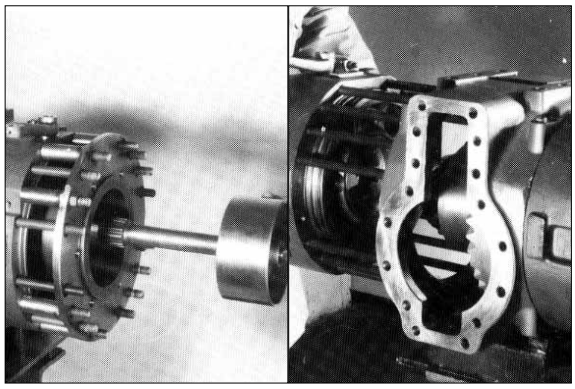

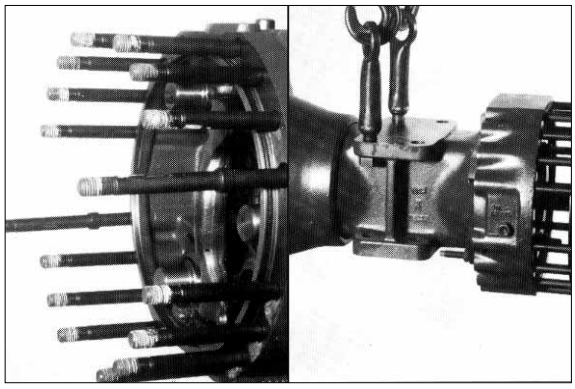

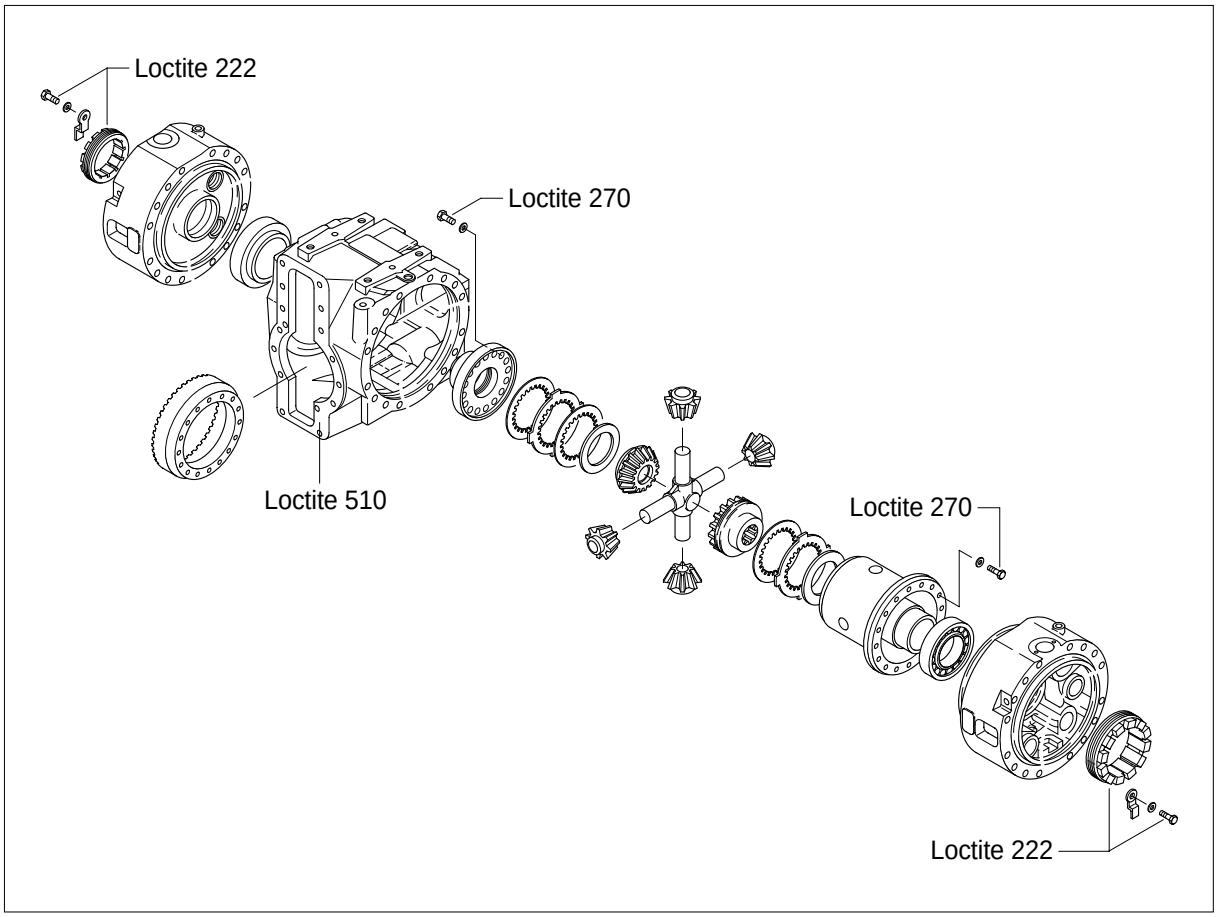
Loctite 222
Loctite 270
Loctite 510
Loctite 270
Loctite 222

SECTION 4 BRAKE SYSTEM

Group 1 Structure and Function ---------- 4-1
Group 2 Operational Checks and Troubleshooting ---------- 4-23
Group 3 Tests and Adjustments ---------- 4-31
Group 4 Disassembly and assembly ---------- 4-33

SECTION 4 BRAKE SYSTEM

GROUP 1 STRUCTURE AND FUNCTION

1. OUTLINE

※ **The brakes are operated by a pressure compensated, closed center hydraulic system. Flow is supplied by a fixed displacement, gear type brake pump.**

BRAKE SYSTEM

The fixed displacement brake pump supplies flow to the cut-off valve for service brake circuit and park brake circuits. It flows to three accumulator. The accumulator has a gas precharge and an inlet check valve to maintain a pressurized volume of oil for reserve brake applications.

Oil through the accumulator flows to the brake valves. The brake valve is a closed center design, dual circuit operated by a pedal.

The front and rear brakes will operate simultaneously with only one brake pedal depressed.

The differential contains annular brake piston and double sided disk.

Brake pump flow also goes to the parking brake solenoid valve in cut off valve.

The brake system contains the following components:

- Brake pump
- Parking brake solenoid valve in cut off valve.
- Cut-off valve
- Brake valve
- Accumulators
- Pressure switches

FULL POWER HYDRAULIC BRAKE SYSTEM

ADVANTAGES - The full power hydraulic brake system has several advantages over traditional brake actuation systems. These systems are capable of supplying fluid to a range of very small and large volume service brakes with actuation that is faster than air brake systems. Figure represents a time comparison between a typical air/hydraulic and full power hydraulic brake actuation system.

Full power systems can supply significantly higher brake pressures with relatively low reactive pedal forces. The reactive pedal force felt by the operator will be proportional to the brake line pressure being generated. This is referred to as brake pressure modulation.

Another key design feature of full power systems is the ability to control maximum brake line pressure. In addition, because these systems operate with hydraulic oil, filtration can be utilized to provide long component life and low maintenance operation.

Because these systems are closed center, by using a properly sized accumulator, emergency power-off braking that is identical to power-on braking can be achieved. These systems can be either dedicated, where the brake system pump supplies only the demands of the brake system or non-dedicated, where the pump supplies the demands of the brake system as well as some secondary down stream hydraulic devise.

Another important note is that all seals within these system must be compatible with the fluid medium being used.

Response time
Full power brake actuation VS
Air/Hydraulic brake actuation

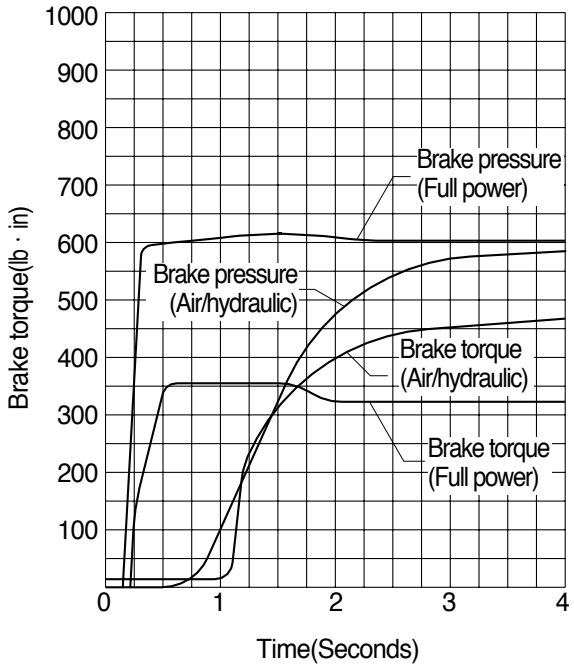

2. HYDRAULIC CIRCUIT

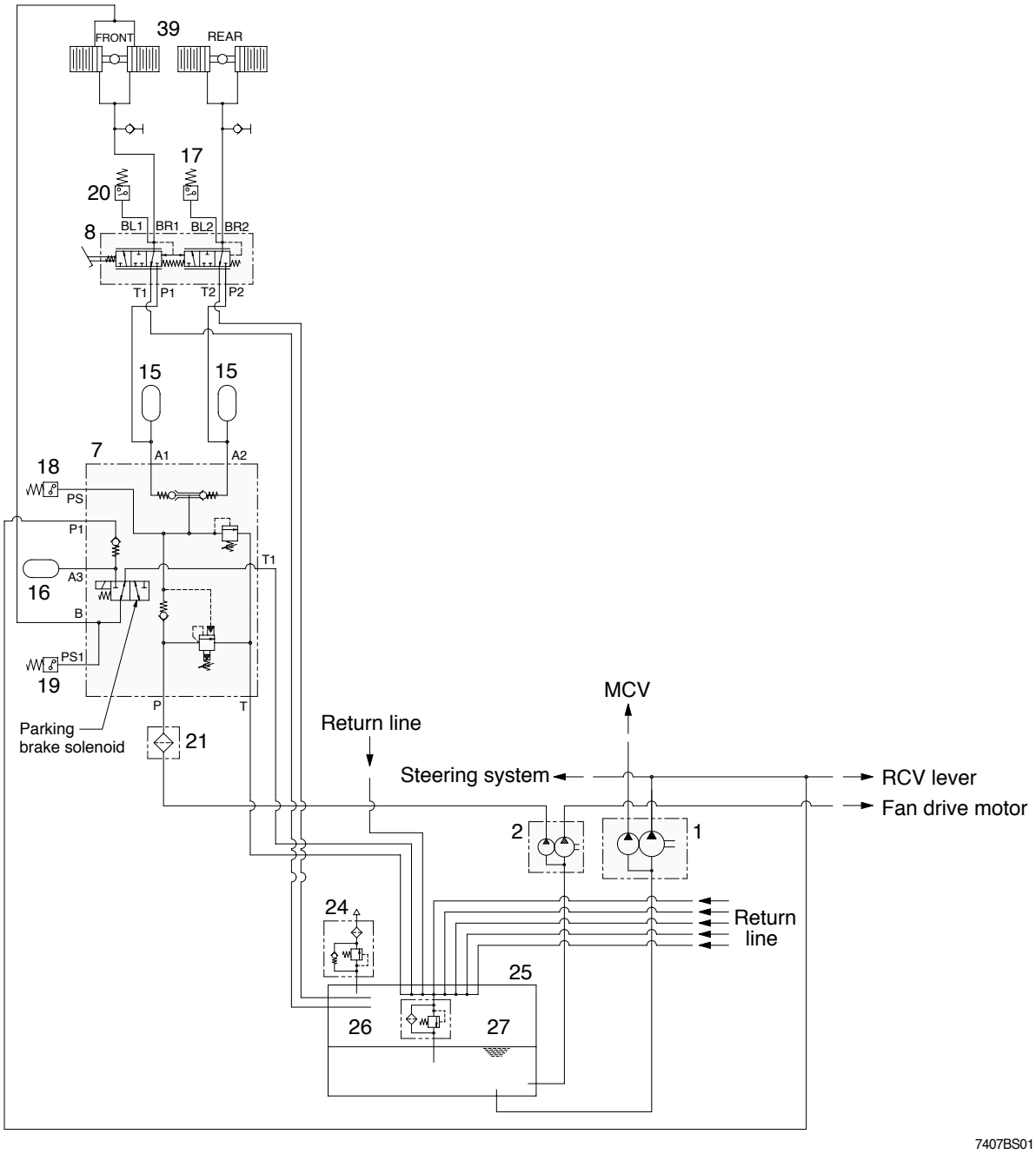

1	Main pump	17	Pressure switch	24	Air breather
2	Brake & fan pump	18	Pressure switch	25	Hydraulic tank
7	Cut off valve	19	Pressure switch	26	Return filter
8	Brake valve	20	Pressure switch	27	Bypass valve
15	Accumulator	21	Line filter	39	Axle
16	Accumulator				

1) SERVICE BRAKE RELEASED

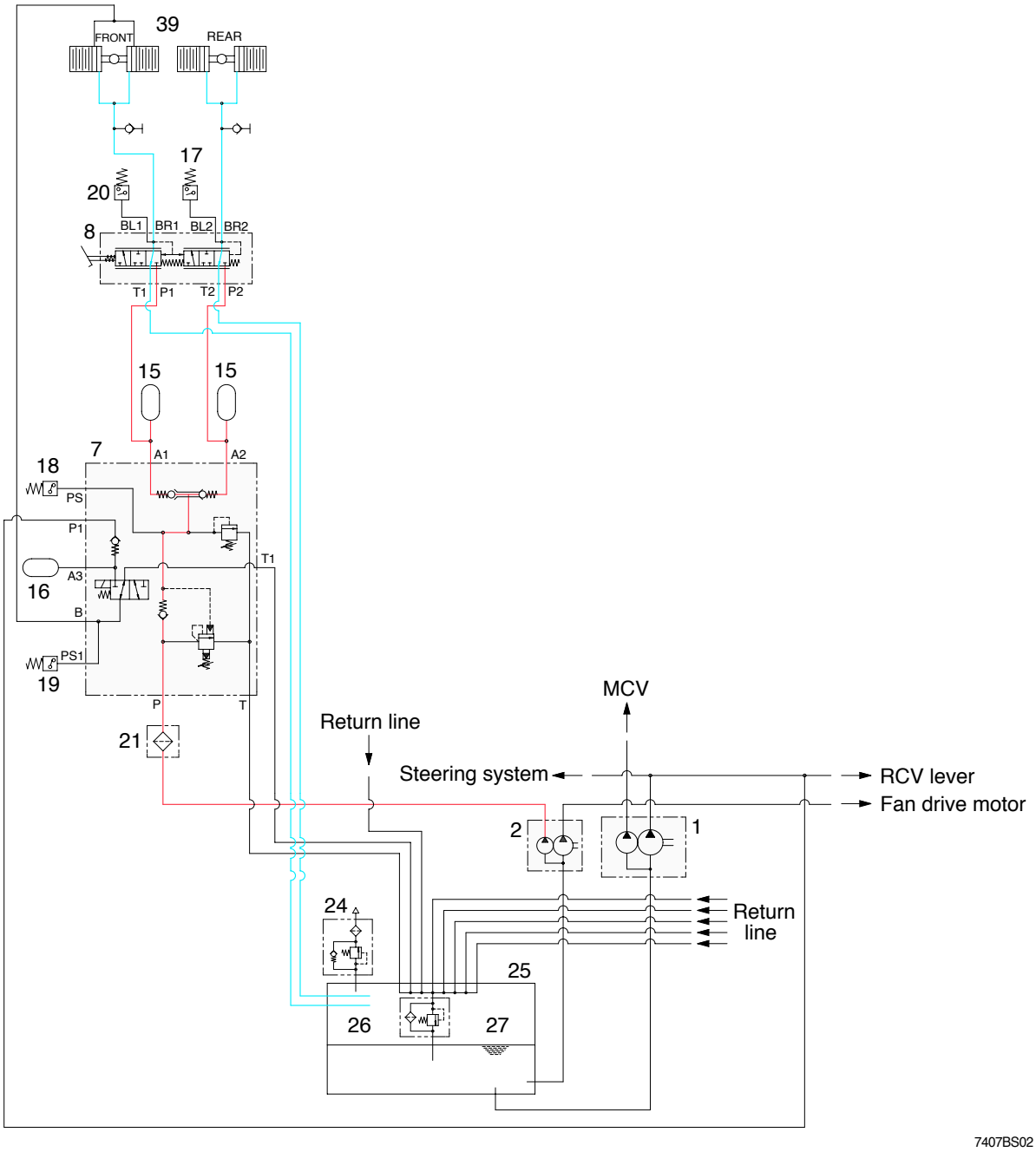

When the pedal of brake valve(8) is released, the operating force is eliminated by the force of the spring, and the spool is returned.

When the spool removes up, the drain port is opened and the hydraulic oil in the piston of axles return to the tank(25).

Therefore, the service brake is kept released.

2) SERVICE BRAKE OPERATED

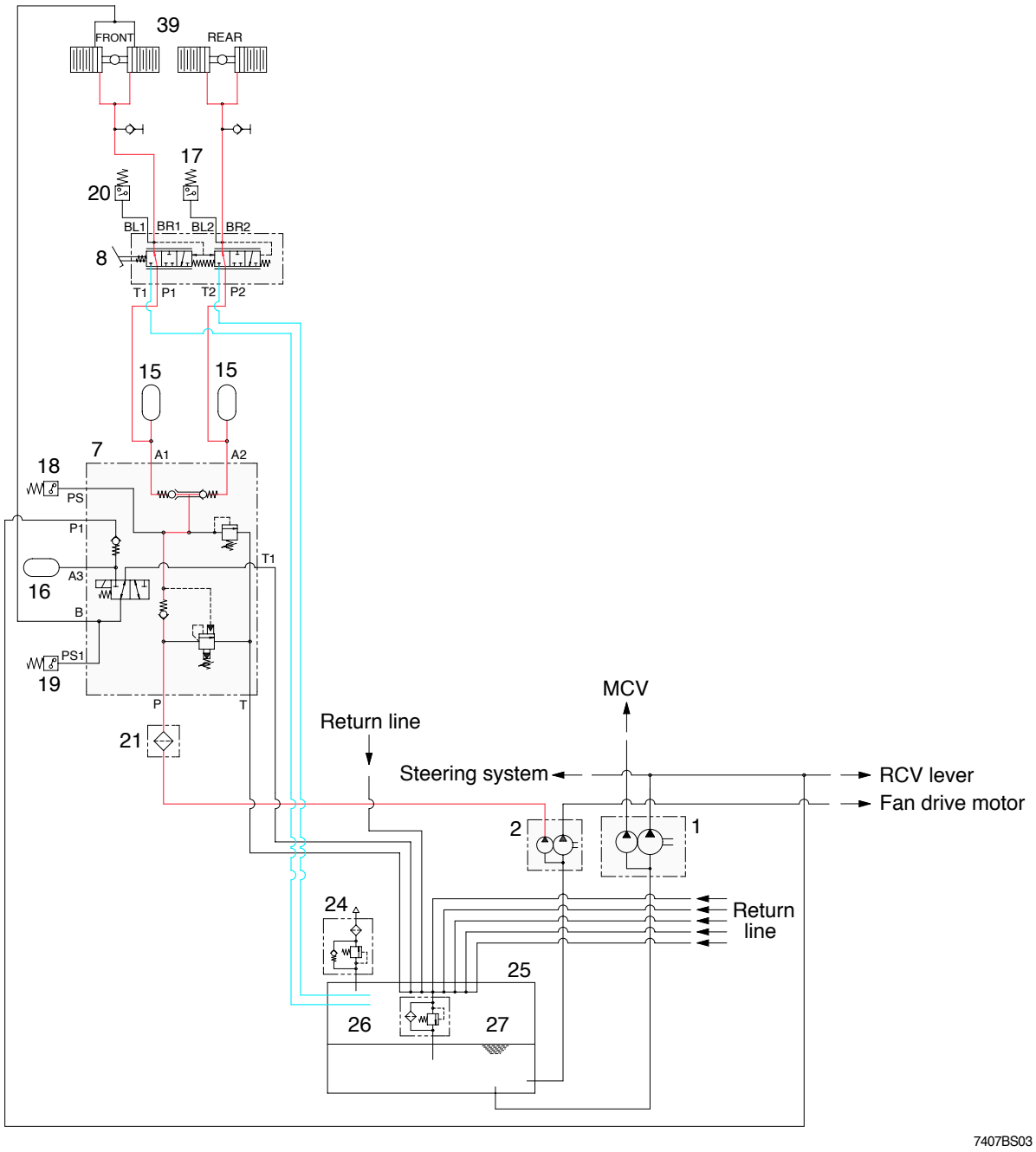

When the pedal of brake valve(8) is depressed, the operating force overcomes the force of the spring, and is transmitted to the spool. When the spool moves down, the inlet port is opened, and at the same time the hydraulic oil controlled the pressure level by the cut-off valve(7) enters the piston in the front and rear axles. Therefore, the service brake is applied.

3) PARKING BRAKE RELEASED

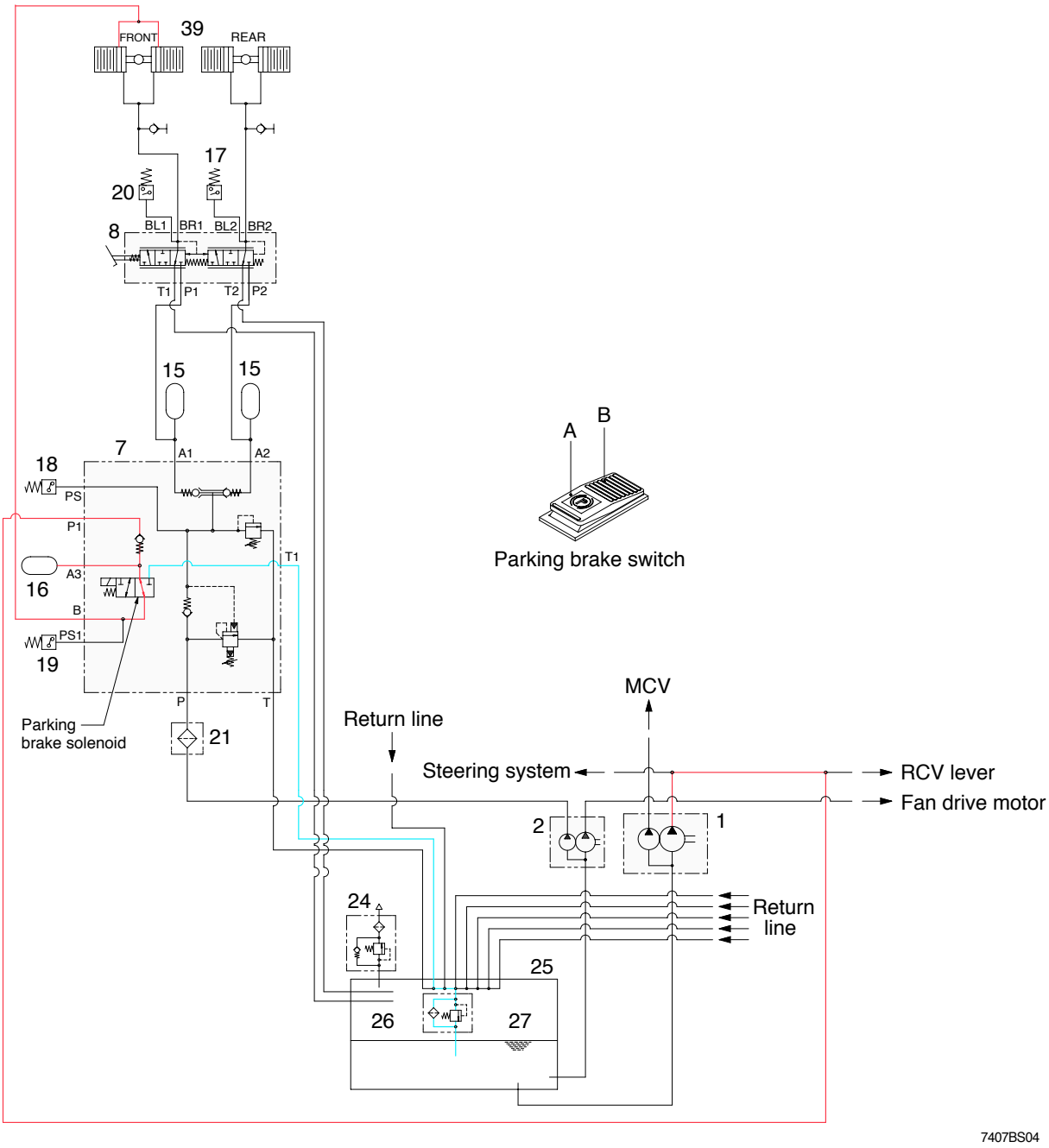

When the parking brake switch is pressed B position, the solenoid valve is energized and the hydraulic oil enters the front axle. It overcomes the force of the spring and pushes the piston rod. This releases the brake.

Therefore, the hydraulic oil pressure is applied to the parking brake piston in front axle through the solenoid valve and the parking brake is kept released.

4) PARKING BRAKE OPERATED

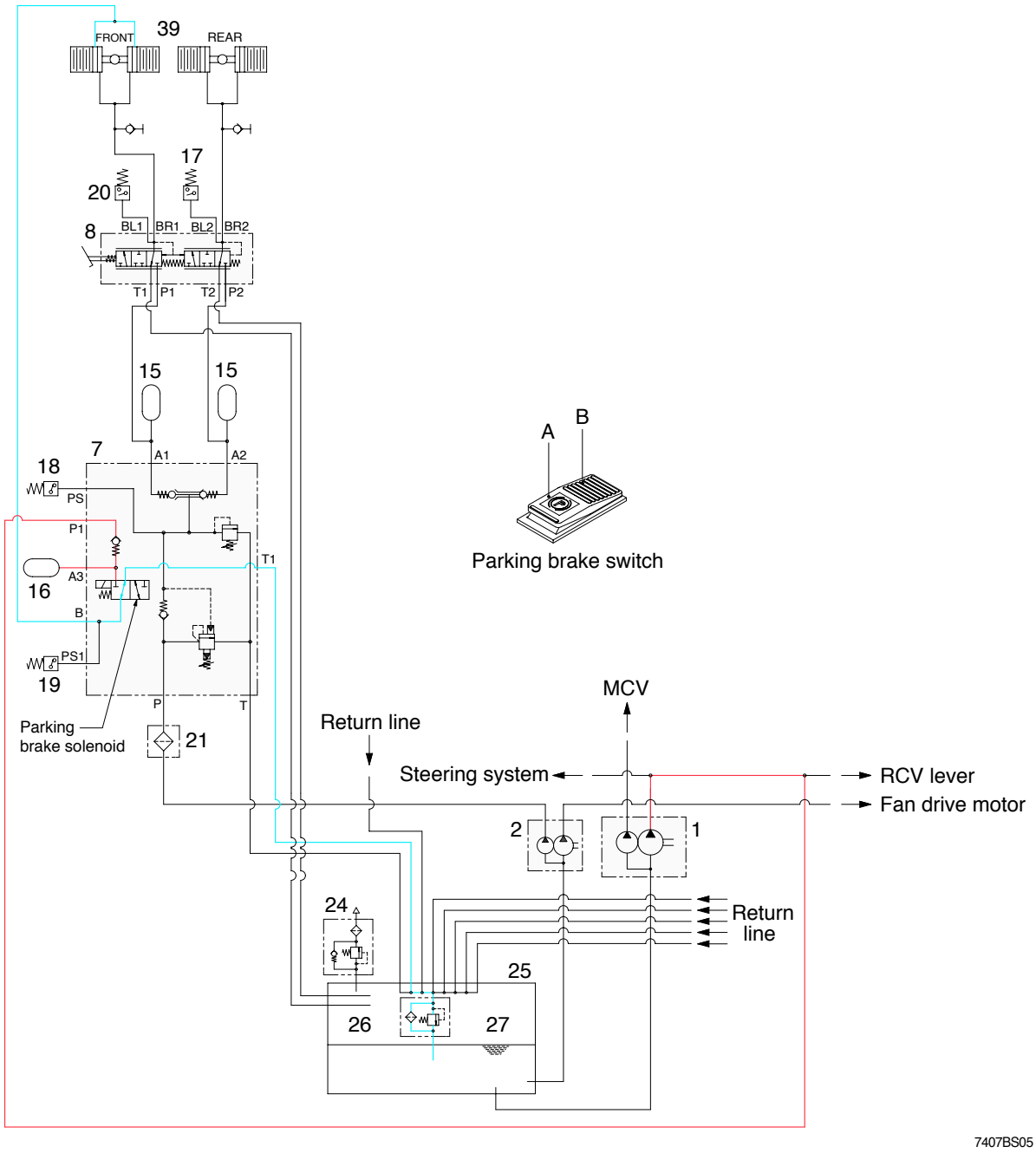

When the parking brake switch is pressed A position, the solenoid valve is deenergized and the valve open the drain port.

At the same time, the hydraulic oil return to the tank through the solenoid valve. When the piston rod is returned by the force of the spring, the parking brake is applied.

3. BRAKE PUMP(+FAN PUMP)

1) STRUCTURE

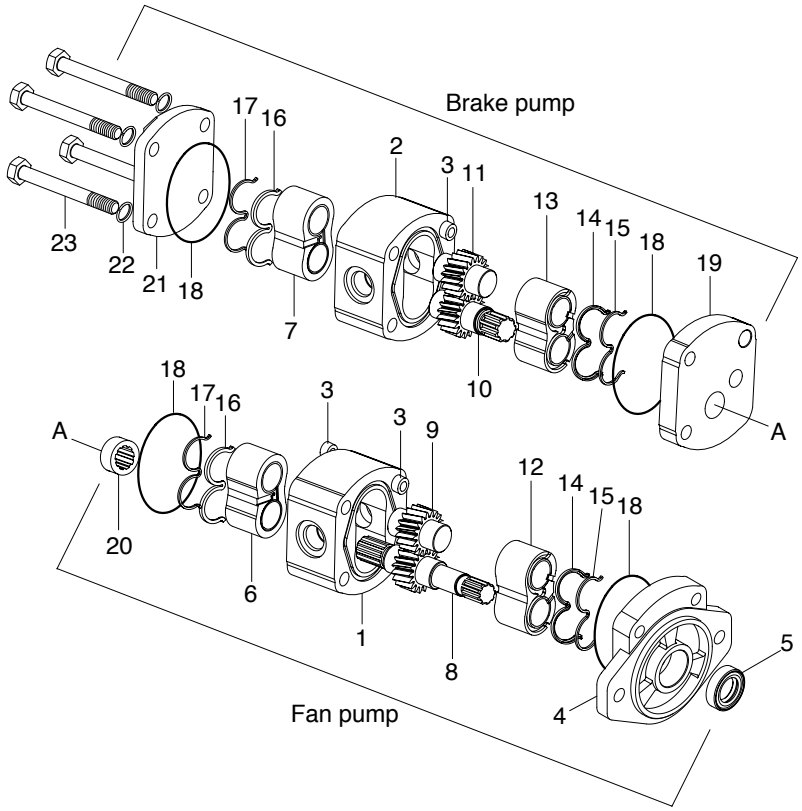

7707BS19

1	Body	9	Driven gear	17	Backing ring
2	Body	10	Driver gear	18	Body O-ring
3	Dowel pin	11	Driven gear	19	Intermediate plate
4	Front cover	12	Bushing	20	Coupling
5	Shaft seal	13	Bushing	21	Rear cover
6	Bushing	14	Bushing seal	22	Spring washer
7	Bushing	15	Backing ring	23	Screw
8	Driver gear	16	Bushing seal		

This gear pump have a maximum delivery pressure of 150kgf/cm^2.
The pressure loaded type gear pump is designed so that the clearance between the gear and the bushing can be automatically adjusted according to the delivery pressure. Therefore, the oil leakage from the bushing is less than that in the case of the fixed bushing type under a high discharge pressure. Consequently, no significant reduction of the pump delivery occurs, even when the pump is operated under pressure.

2) PRINCIPLE OF OPERATION

(1) Mechanism for delivering oil

The drawing at right shows the operational principle of an external gear pump in which two gears are rotating in mesh.

The oil entering through the suction port is trapped in the space between two gear teeth, and is delivered to the discharge port as the gear rotates.

Except for the oil at the bottom of the gear teeth, the oil trapped between the gear teeth, is prevented from returning to the suction side with the gears in mesh.

Since the gears are constantly delivering oil, the oil delivered to the discharge port is forced out of the port.

The amount of discharge increases with the speed of rotation of the gear.

If there is no resistance in the oil passage into which the discharged oil flows, the oil merely flows through the passage, producing no increase in pressure.

If however, the oil passage is blocked with something like a hydraulic cylinder, there will be no other place for the oil to flow, so the oil pressure will rise. But the pressure which rises in this way will never go higher, once the hydraulic cylinder piston starts moving because of the oil pressure.

As described earlier, the pump produces the oil flow, but not the oil pressure. We can therefore conclude that pressure is a consequence of load.

In other words, the pressure depends on a counterpart.

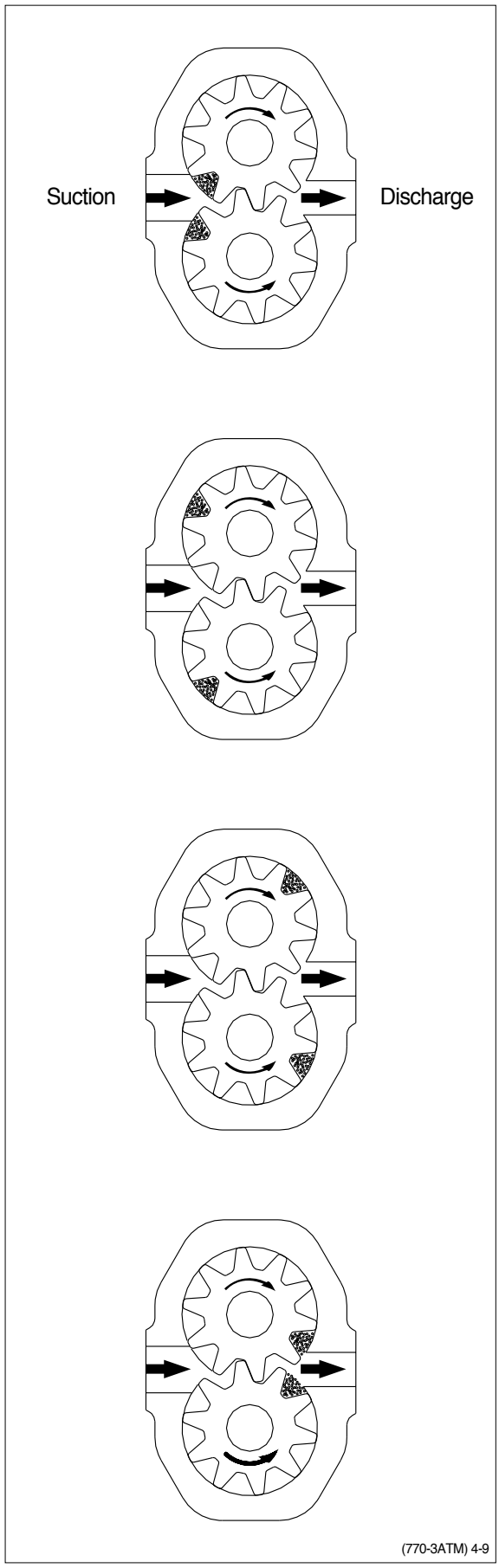

(770-3ATM) 4-9

(2) Internal oil leakage

Oil leaks from a place under higher pressure to a place under lower pressure, provided that a gap or a clearance exists in between.

In the gear pump, small clearances are provided between the gear and the case and between the gear and the side plate to allow the oil to leak out and to serve as a lubricant so that the pump will be protected from seizure and binding.

The drawing at right shows how the leaked oil flows in the pump. As such, there is always oil leakage in the pump from the discharge side(under higher pressure) to the suction side. The delivery of the pump is reduced by an amount equal to the pump discharge.

In addition, the delivery of the pump will also decrease as the amount of oil leakage increases because of expanded radial clearance resulting from the wear of pump parts, the lower oil viscosity resulting from increases in the oil temperature, and the initial use of low viscosity oil.

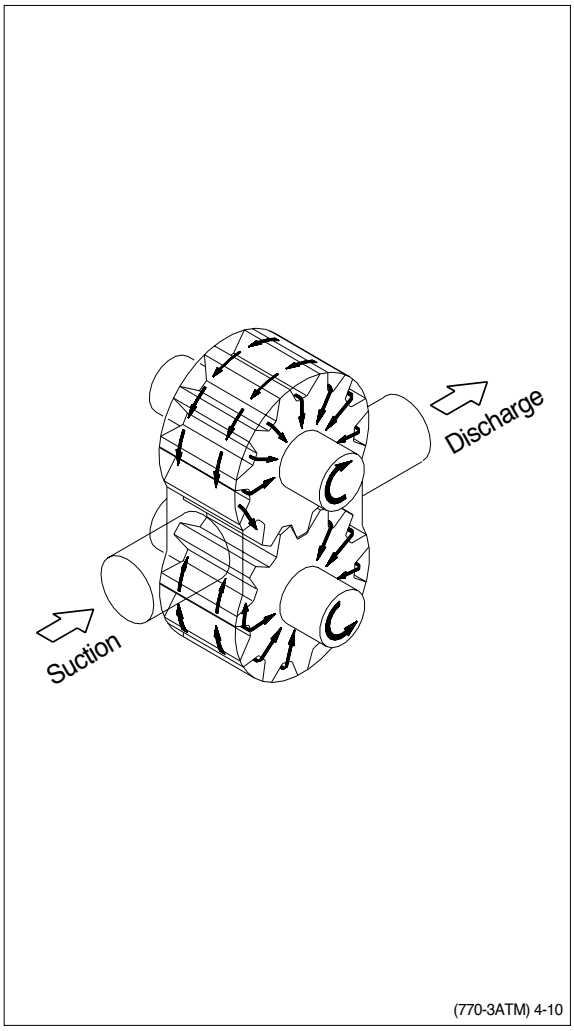

(770-3ATM) 4-10

(3) Forces acting on the gear

The gear, whose outer surface is subjected to oil pressure, receives forces jointing towards its center.

Due to the action of the delivery pressure, the oil pressure in higher on the delivery side of the pump, and due to suction pressure, is lower on the suction side. In the intermediate section, the pressure will gradually lower as the position moves from the delivery side to the suction side.

This phenomenon is shown in the drawing at right.

In addition, the gears in mesh will receive interacting forces.

These forces pushing the gears toward the suction side are received by the bearings. Since the gears are pressed toward the suction side by these forces, the radial clearance becomes smaller on the suction side in the case. In some pumps, the clearance may become zero, thus allowing the gear teeth and the case to come into light contact.

For this reason, an excessive increase in the delivery pressure must be avoided, since it will produce a large force which will act on the gears, placing an overload on the bearings, and resulting in a shortened service life of the bearing or interference of the gear with the case.

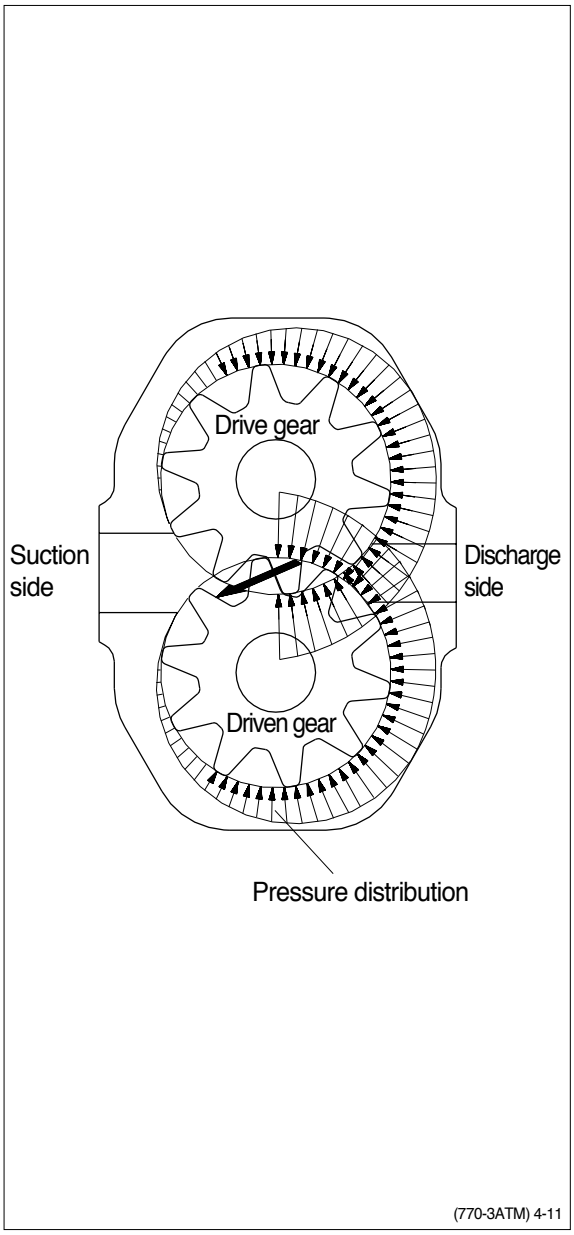

4. BRAKE VALVE

1) STRUCTURE

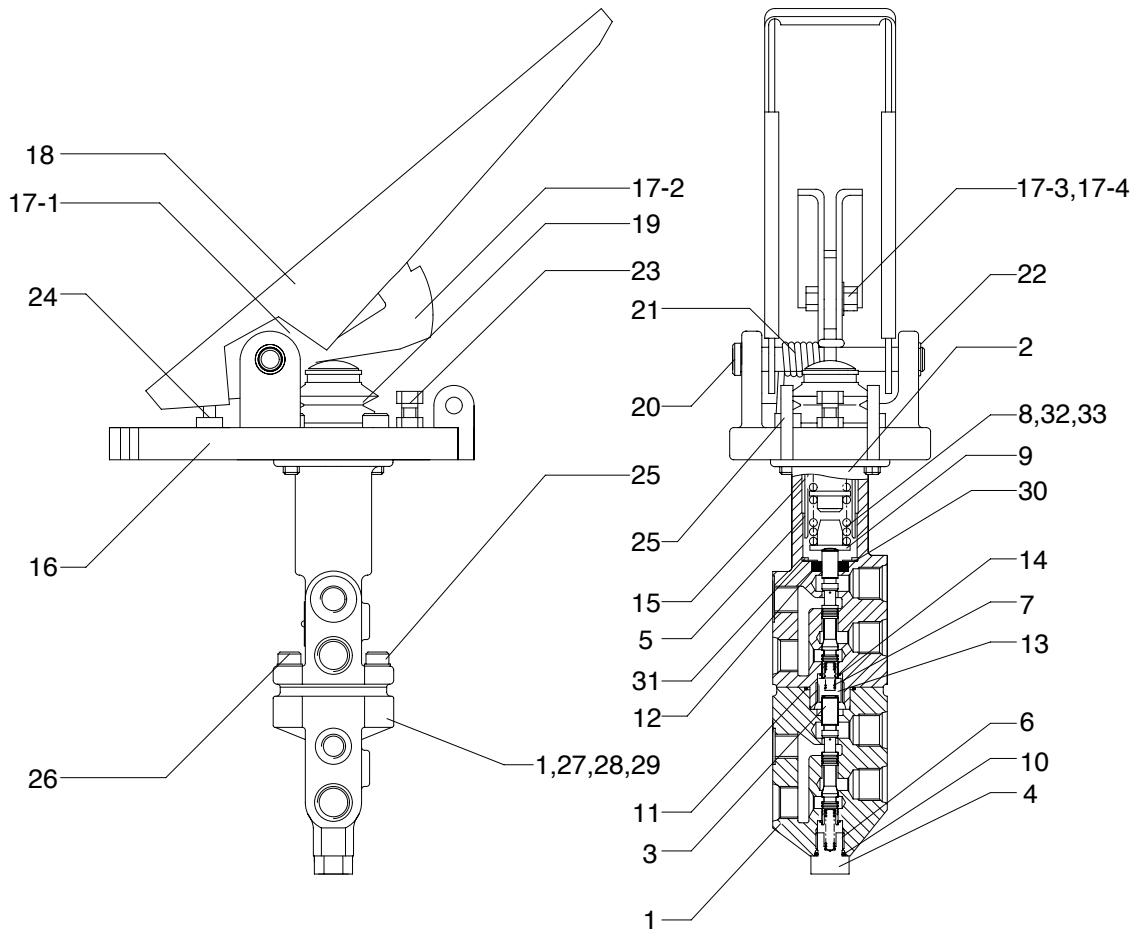

7707BS21

1	Lower body	13	Spring guide	22	Stop ring
2	Upper body	14	Stop ring	23	Hexagon bolt
3	Spool	15	Bushing	24	Hexagon nut
4	Plug	16	Pedal plate	25	Bolt
5	Holder	17-1	Pedal	26	Spring washer
6	Lower spring	17-2	Lock plate	27	Plastic plug
7	Upper spring	17-3	Hexagon bolt	28	Name plate
8	Main spring 1	17-4	Plain washer	29	Screw
9	Spring retainer 1	18	Rubber	30	Plain washer
10	O-ring	19	Cover	31	Stop ring
11	O-ring	20	Lock pin 1	32	Spring retainer 2
12	Oil seal	21	Torsion spring 1	33	Main spring 2

2) OPERATION

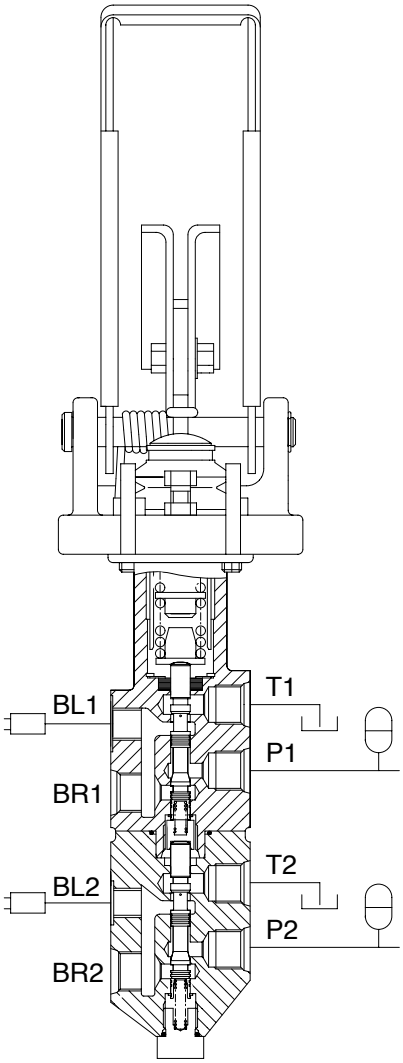

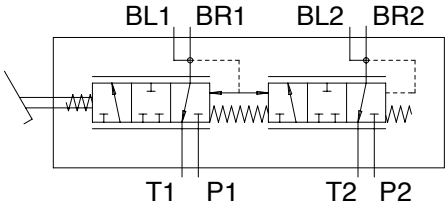

Hydraulic circuit

Porte	Port name	Port size
P1, P2	Port	PF3/8
T1, T2	Drain port	PF3/8
BR1, BR2	Brake cylinder port	PF3/8
BL1	Pressure switch port	PF1/4
BL2	Pressure switch port	M12×1.5

7707BS22

(1) Purpose

The purpose of the brake valve is to sensitively increase and decrease the braking pressure when the brake pedal is actuated.

(2) Ready position

When the braking system is ready for operation, its accumulator pressure acts directly on ports (P1, P2) of the brake valve. A connection is established between ports(BR1, BR2) and ports(T1, T2) so that the wheel brakes ports(BR1, BR2) are pressureless via the returns ports(T1, T2).

(3) Partial braking

When the brake valve is actuated, an amount of hydraulic pressure is output as a ratio of the foot force applied.

The spring assembly(8) beneath base plate(16) is designed in such a way that the braking pressure changes depending on the angle. In the lower braking pressure range, the machine can be slowed sensitively.

When the braking process is commenced, the upper spool is mechanically actuated via spring assembly(8), and the lower spool is actuated hydraulically by spool. As spools(3) move downward, they will first close returns(T1, T2) via the control edges, thus establishing a connection between accumulator ports(P1, P2) and ports(BR1, BA2) for the wheel brake cylinders. The foot force applied now determines the output braking pressure. The control spools(3) are held in the control position by the force applied(Spring assembly above the spools and the hydraulic pressure below the spool(Balance of forces).
After output of the braking pressure, spools(3) are in a partial braking position, causing ports(P1, P2) and ports(T1, T2) to close and holding the pressure in ports(BR1, BR2).

(4) Full braking position

When pedal is fully actuated, end position of the brakes is reached and a connection established between accumulator ports(P1, P2) and brake cylinder ports(BR1, BR2). Returns(T1, T2) are closed at this point.

When the braking process is ended, a connection is once again established between brake cylinder ports(BR1, BR2) and return ports(T1, T2), closing accumulator ports(P1, P2).

The arrangement of spools in the valve ensures that even if one braking circuit fails the other remains fully operational. This is achieved by means of the mechanical actuation of both spools and requires slightly more pedal travel.

(5) Limiting the braking pressure

Pedal restriction bolt(23) on base plate below pedal is used to limit the braking pressure.

(6) Failure of a circuit

In the event of the lower circuit failing, the upper circuit will remain operational. Spring assembly (8) will mechanically actuate spool(28). In the event of the upper circuit failing, the lower circuit will remain operational since the lower spool(31) is mechanically actuated by spring assembly(21) and spool(28).

(7) Installation requirements

Return lines(T1, T2) must be connected directly to the tank.
The connecting lines must be installed is such a way as to permit proper bleeding.

(8) Maintenance of the brake valve

No special maintenance beyond the legal requirements is necessary.

When using high-pressure cleaners on the machine, please make sure that the water jet is not aimed directly at the brake valve(To prevent damaging the bellows).

△ **For safety reasons the whole of the brake valve must be replaced if parts other than those listed above are damaged.**

(9) Repair work

△ **When working on the braking system, always make sure that there is absolutely no pressure in the system. Even when the engine is switched off there will be some residual pressure in the system.**

※ **When doing repair work, make sure your environment is very clean.**
Immediately close all open ports on the components and on pipes using plugs.

(10) Replacing the pedal cover

Pedal cover(18) is simply pulled of by hand. The new pedal cover is pushed over pedal(17) and tightened manually. Fasten the bellows with the strap retainers.

(11) Replacing the complete actuating mechanism

Carefully clamp the unit vertically in a fixture. The actuating mechanism can be removed by taking out the four bolts. Make sure that spring assembly(8) does not fall out. When installing the new actuating mechanism, make sure that spring assembly(8) is fitted in the right order. Tighten the four bolts(25).

(12) Replacing the bellows

To change bellows(19) it is advisable to remove pedal(17). For this purpose, loosen retaining ring (22) and knock out pin(20) using a mandrill. When knocking out the bolt, make sure that the mandrill is applied to the side of the bolt without a knurl. Remove pedal(17) and bellows(19).
Now fit the new bellows and proceed in reverse order as described above. The upper portion of bellows is fastened to piston(5), its lower portion to base plate(1) secure the bellows using clamps.

5. CUT-OFF VALVE

1) STRUCTURE

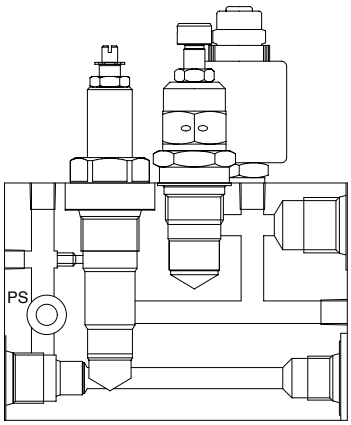

SECTION A - A

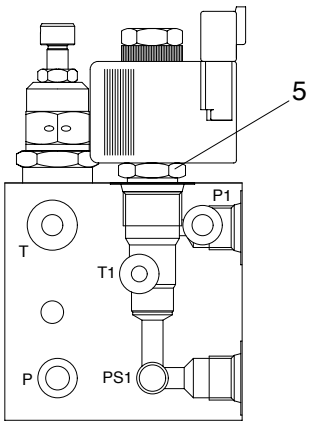

SECTION B - B

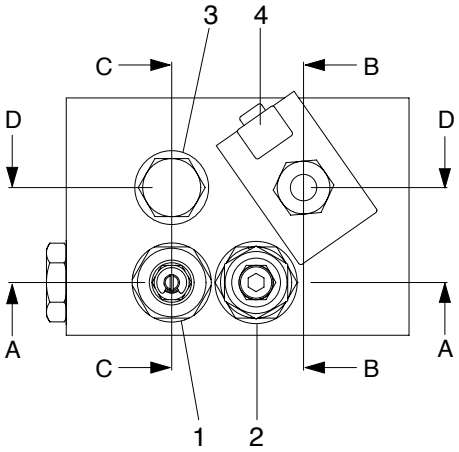

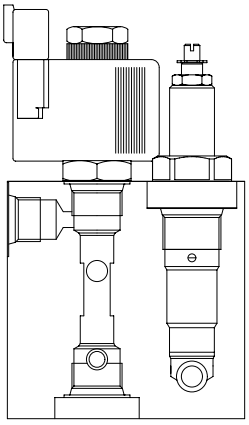

SECTION C - C

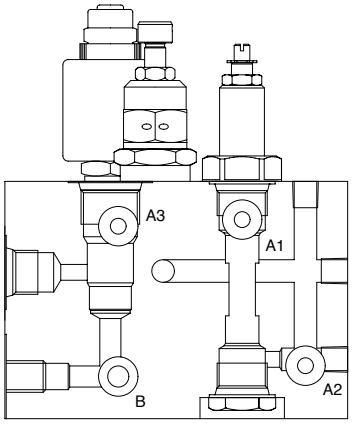

SECTION D - D

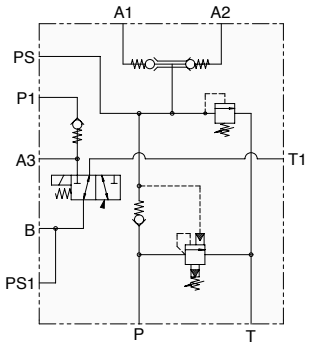

HYDRAULIC CIRCUIT

7407BS11

1 Cut-off valve
2 Relief valve
3 Check valve
4 Coil
5 Solenoid valve

2) OPERATION

When the pump works, the oil under the pressure flows into P port.
The oil in P port is stored in the accumulator on A1 or A2 port.
As the pressure on P line rises to 150bar, the cut off valve(1) starts cut-offing and the oil in the P port is unloaded. The pressure on P line goes down 120bar by the minute leakage from valve and other factors.
At this pressure, the cut-off valve starts cut-ining.
This process is repeated in the regular period of 30~40 seconds.

6. BRAKE ACCUMULATOR

1) STRUCTURE

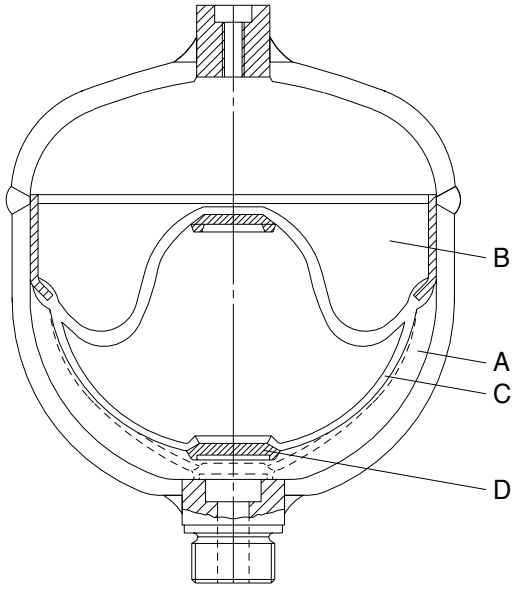

(770-3ATM) 4-22

Item	81L1-0004 (Item15)	31EC-02190 (Item16)
Diameter	121mm	136mm
Mounting height	146mm	160mm
Norminal volume	0.75 ℓ	1.0 ℓ
Priming pressure	50kgf/cm^2	50kgf/cm^2
Operating medium	Oil	Oil
Operating pressure	Max 210kgf/cm^2	Max 200kgf/cm^2
Thread	M18×1.5	M18×1.5
Priming gas	Nitrogen	Nitrogen

A Fluid portion
B Gas portion
C Diaphragm
D Valve disk

2) OPERATION

(1) Purpose

Fluids are practically incompressible and are thus incapable of accumulating pressure energy. In hydropneumatic accumulators, the compressibility of a gas is utilized to accumulate fluid. The compressible medium used in the accumulators is nitrogen.

In braking systems, the purpose of the accumulators is to store the energy supplied by the hydraulic pump. They are also used as an energy reserve when the pump is not working, as a compensator for any losses through leakage, and as oscillation dampers.

(2) Operation

The accumulator consists of a fluid portion (A) and a gas portion (B) with a diaphragm (C) as a gas-tight dividing element. The fluid portion (A) is connected to the hydraulic circuit, causing the diaphragm accumulator to be filled and the gas volume to be compressed as the pressure rises.

When the pressure falls, the compressed gas volume will expand, thus displacing the accumulated pressure fluid into the circuit.

The diaphragm bottom contains a valve disk (D) which, if the diaphragm accumulator is completely empty, closes the hydraulic outlet, thus preventing damage to the diaphragm.

(3) Installation requirements

The accumulators can be fitted in the hydraulic circuit, directly on a component or in blocks on suitable consoles.

They should be fitted in as cool a location as possible.

Installation can be in any position.

(4) Maintenance of the accumulator

No special maintenance beyond the legal requirements is necessary.

The accumulator should be checked annually. It should be replaced if the initial gas pressure has fallen by more than 30%(Please refer to **Performance testing and checking of the accumulator).**

(5) Disposal of the accumulator

Before the accumulator is scrapped, its gas filling pressure must be reduced. For this purpose, drill a hole through gas chamber(B) using a drill approx. 3mm in diameter. The gas chamber is located on the side opposite the threaded port above the welding seam around the center of the accumulator.

※ **Wear safety goggles when doing this job.**

(6) Performance testing and checking of the accumulator

The accumulator is gradually pressurized via the test pump; until the initial gas pressure is reached, the hydraulic pressure in the accumulator will rise abruptly. This is apparent from gauge **M**. If the initial gas pressure is more than 30% below the prescribed value, the accumulator needs to be replaced. If the measuring process needs to be repeated, wait for intervals of 3 minutes between the individual tests. Any accumulator whose initial gas pressure is insufficient must be scrapped following the instructions under **Disposal of the accumulator.**

The amount of initial gas pressure can also be checked from the vehicle. Start the vehicle's engine. The pump will now supply oil to the accumulators. Until the initial gas pressure is reached, the hydraulic pressure in the accumulator will rise abruptly. This is apparent from the gauge in the cab. If the initial gas pressure is more than 30% below the prescribed value, that initial pressure lies outside the permissible range for **at least one** of the accumulators fitted in the vehicle. This accumulator can be traced only by using the method described above, i.e. all accumulators have to be individually tested. The accumulator whose initial gas pressure is insufficient must be replaced and scrapped following the instruction under **Disposal of the accumulator.**

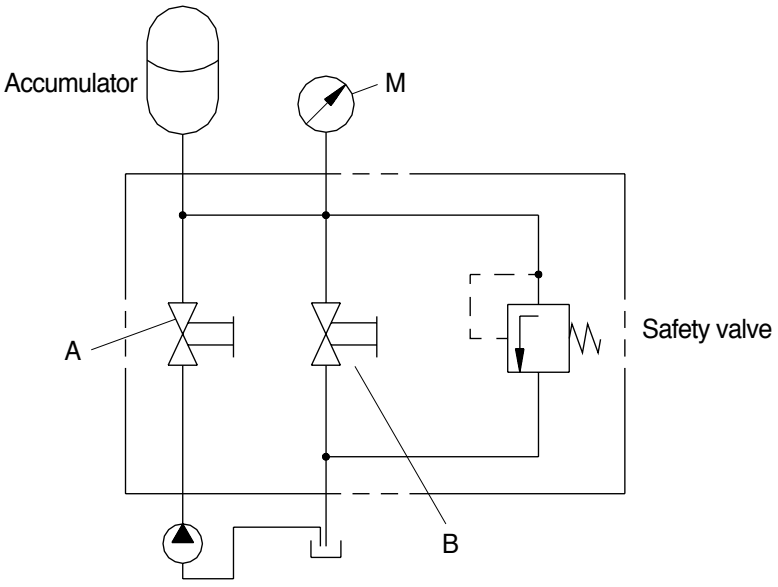

(770-3ATM) 4-23

(7) Repair work

△ When working on the braking system, always make sure that there is absolutely no pressure in the system. Even when the engine in switched off there will be some residual pressure in the system.

※ When doing repair work, make sure your environment is very clean.
Immediately close all open ports on the components and on pipes using plugs.

△ For safety reasons the accumulators need to be replaced as a whole if damaged.

7. PRESSURE SWITCHES

1) STRUCTURE

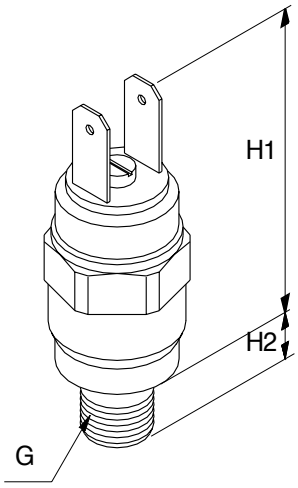

· Normally closed

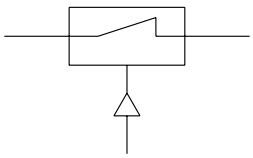

· Normally open

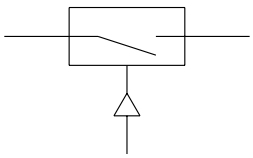

(770-3ATM) 4-25

· **Technical data**

Item	Type	Medium	G	H1 mm	H2 mm	Adjusting range kgf/cm²	Adjusting pressure kgf/cm²	Voltage V
Parking	NC	Oil	M12×1.5	55	9	10 ~ 20	13 ± 1	Max 42
Charging	NC	Oil	M12×1.5	55	9	50 ~ 150	100 ± 10	Max 42
Brake stop	NO	Oil	M12×1.5	55	9	1 ~ 10	5 ± 1	Max 42
Clutch cut-off	NO	Oil	PF 1/4"	55	9	20 ~ 50	24 ± 2	Max 42

NC : Normally closed NO : Normally open

2) OPERATION

(1) Purpose

The pressure switches are used to visually or audibly warn the driver of the pressure within the system.

(2) Make contact / circuit closer

The pressure switch can be fitted in the braking system or directly on one of its components.
The system pressure acts on an absorption area within the switch, making an electrical contact as the pressure on that area is increased. The resulting current is used to activate a warning facility, for instance.

(3) Break contact / circuit breaker

The pressure switch can be fitted in the braking system or directly on one of its components.
The system pressure acts on a absorption area within the switch, breaking an electrical contact as the pressure on that area is increased. The current is now broken, e.g. to deactivate a warning facility.

(4) Installation requirements

No special measures need to be taken.

(5) Maintenance of the pressure switch

No special maintenance beyond the legal requirements is necessary.
When using high-pressure cleaners on the vehicle, please make sure that the water jet is not directed at the pressure switch(Corrosion of contacts).

(6) Repair work

△ **When working on the braking system, always make sure that there is absolutely no pressure in the system. Even when the engine is switched off there will be some residual pressure in the system.**

※ **When doing repair work, make sure your environment is very clean.**
Immediately close all open ports on the components and on pipes using plugs.

※ **For safety reasons the pressure switch needs to be replaced as a whole if damaged.**

(7) Adjusting and testing pressure switch

The adjusting screw located between the two contact plugs can be set to the desired value within a certain range. For adjusting range, please refer to the table **Technical data** on the previous page.

After making the adjustment, the adjusting screw should be secured using wax or a similar material.

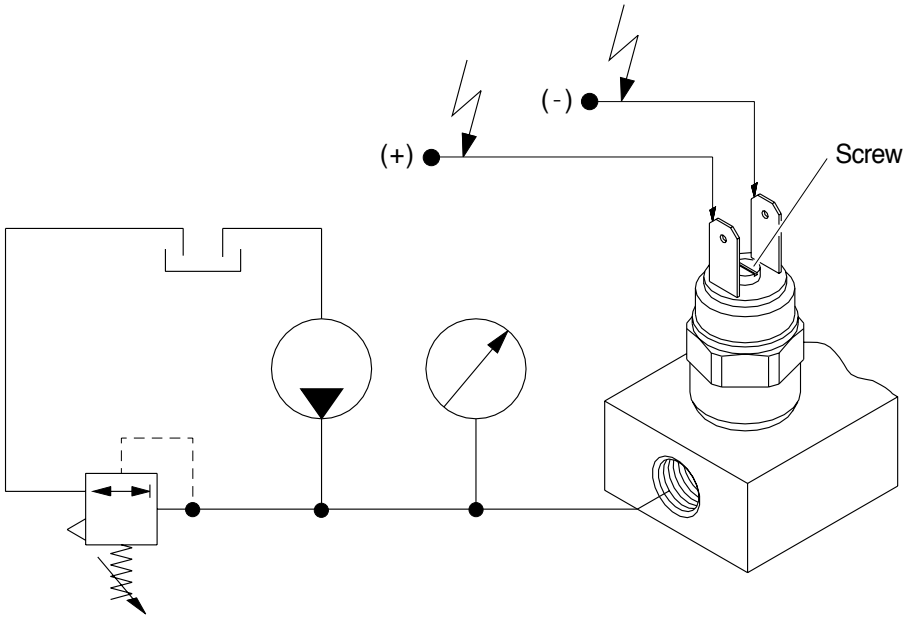

(770-3ATM) 4-25

GROUP 2 OPERATIONAL CHECKS AND TROUBLESHOOTING

1. OPERATIONAL CHECKS

This procedure is designed so the mechanic can make a quick check of the system using a minimum amount of diagnostic equipment. If you need additional information, read **structure and function**, Group 1.
A location will be required which is level and has adequate space to complete the checks.

The engine and all other major components must be at operating temperature for some checks.

Locate system check in the left column and read completely, following the sequence from left to right. Read each check completely before performing.

At the end of each check, if no problem is found(OK), that check is complete or an additional check is needed. If problem is indicated(NOT OK), you will be given repair required and group location.
If verification is needed, you will be given next best source of information:

Chapter 2 : Troubleshooting
Group 3 : Tests and adjustments

※Hydraulic oil must be at operating temperature for these checks(Refer to page 6-50).

Item	Description	Service action
Parking brake capacity check Seat belt must be worn while doing this check to prevent possible injury when machine stops suddenly.	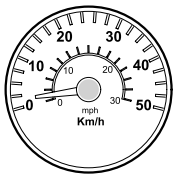 Start engine. Fasten seat belt. Release parking brake and put transmission in 2nd gear forward. Drive machine at 8 km/hr and switch parking brake ON. 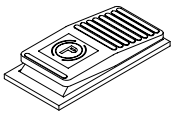 **LOOK/FEEL** : Machine must come to a stop within 2 meters(6 feet) when parking brake is engaged at 8 km/hr. Transmission must shift to neutral.	**OK** Check completed. **NOT OK** Inspect parking brake. Go to group 3.
Parking brake transmission lockout check Engine running.	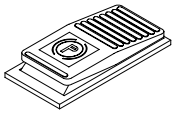 Turn parking brake to ON. Place transmission in 1st forward. Slowly increase engine speed to high idle. 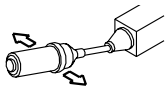 **LOOK** : Machine must not move.	**OK** Check completed. **NOT OK** Go to transmission control circuit in section 3.

Item	Description	Service action
Service brake pump flow check ※ Hydraulic oil must be at operating temperature for the check. Engine OFF.	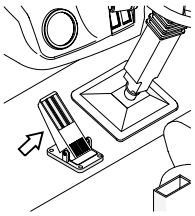 Stop engine. Operate brake pedal approximately 20 times. Start engine and run at low idle. Record number of seconds required for low brake pressure indicator lamp to go out.  **LOOK** : Indicator lamp must go out in less than 4 seconds from time engine starts. **NOTE** : Indicator will not come on approximately 1 second after starting engine.	**OK** Check completed. **NOT OK** Check for brake circuit leakage. Go to next page. **IF OK** Install a cap on line connected to inlet of brake valve and repeat pump flow check. If time does not decrease, check for worn brake pump. Go to brake pump flow test, in section 3.
Service brake capacity check Engine running.	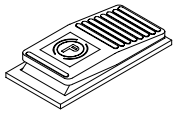 Turn clutch cut-off switch OFF. Apply service brakes, release park brake and put transmission in 2nd forward. Increase engine speed to high idle. 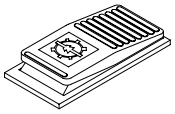 **LOOK** : Machine may not move or move at a very slow speed. Repeat check three times to ensure accurate results.	**OK** Check completed. **NOT OK** Check brake pressure in group 3. **IF OK** Inspect brake disk, see group 3.

Item	Description	Service action
Brake accumulator precharge check ※ The axles and hydraulic oil must be at operating temperature for this check.	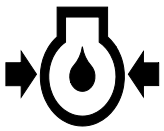 Start and run engine for 30 seconds. Stop engine and turn start switch to ON and wait 5 seconds. **NOTE** : Engine oil pressure lamp will be on due to no engine oil pressure.  Count the number of times the brake pedal can be fully depressed before the low brake pressure warning lamp comes ON. **LOOK** : Warning lamp must come on in 1-5 applications. Start engine and operate at low idle. Observe cluster while applying brake pedal with maximum force. **LOOK/LISTEN** : Brake pressure indicator must not come ON.	**OK** Check completed. **NOT OK** Make sure brake pedal is not binding and keeping brakes partially engaged. Bleed brakes in group 3. Check brake system pressure in group 3. **NOT OK** If light comes on with engine running, accumulator has lost it's charge. Inspect and recharge accumulator, group 3.
Brake system leakage check	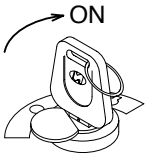 Start engine and wait 30 seconds. Stop engine. Wait 2 minutes. Turn start switch to ON and wait 5 seconds.  **LOOK** : Brake oil pressure warning lamp must not come on within 2 minutes after stopping engine.	**OK** Check completed. **NOT OK** If brake leakage is indicated with brakes released, check leakage at accumulator inlet check valve and brake valve. If brake leakage is indicated with brakes applied, check for leakage at brake valve and brake pistons. Check individual component leakage.

Item	Description	Service action
Service brake pedal check	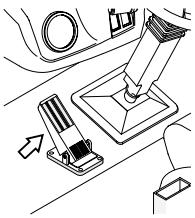 Slowly depress brake pedal. Listen for a hissing noise that indicates oil is flowing to brake pistons. **LISTEN/FEEL** : A hissing noise must be heard when pedal is depressed.	**OK** Check completed. **NOT OK** Inspect for debris under brake pedal. Inspect clutch cut-off linkage.
Service and parking brake system drag checks Engine running	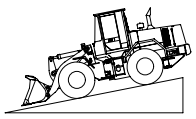 Position machine on gradual slope. Lower bucket approximately 50mm(2 in) from ground. Release parking and service brakes. 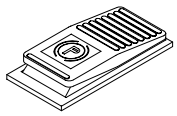 **LOOK** : Machine must move or coast. **NOTE** : If machine does not move, check brake pedals to be sure they fully release when feet are removed from pedals. Drive machine at high speed for about 5 minutes. Brake drag is indicated if brake areas in differential case are hot. **NOTE** : Observe parking brake. If disk is hot, parking brake drag is indicated.	**OK** Check completed. **NOT OK** Adjust park brake, go to group 3. **NOT OK** Check floor mat interference to pedal or debris build-up. **IF OK** Check for brake pressure when brake is released. Go to brake pressure test on group 3.
Clutch cut-off check	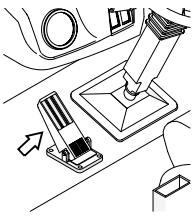 Place clutch cut-off switch in ON position. Release parking brake. Run engine at half speed in 1st forward. Firmly depress brake pedal. 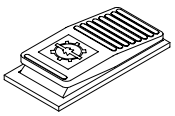 **FEEL** : Transmission must disengage when brake pedal is depressed at 30% of pedal stroke. **NOTE** : Clutch cut-off pressure switch can be adjusted to operator preference to match your loading needs.	**OK** Check completed. **NOT OK** Adjust clutch cut-off switch, see group 3.

2. TROUBLESHOOTING

1) SERVICE BRAKE

Diagnose malfunction charts are arranged from most probable and simplest to verify, to least likely, more difficult to verify. Remember the following steps when troubleshooting a problem :

Step 1. Operational check out procedure(See section 1)
Step 2. Operational checks(In this group)
Step 3. Troubleshooting
Step 4. Tests and adjustments(See group 3)

Problem	Cause	Remedy
Poor or no brakes	Brake accumulator charge low	Do brake accumulator check.
	Brake pump standby pressure low	Do brake pump standby pressure test.
	Brake pressure low	Do brake valve pressure test.
	Air in system	Bleed brakes.
	Worn brake surface material	Inspect brake surface material.
	Leakage in brake valve	Do brake valve leakage test.
	Leakage in brake piston seal	Check for an over filled differential. Apply brakes and check for leakage from check plug. ※**It is normal for the oil level to be slightly above the check plug.**
Aggressive brakes	Internal restriction in circuit	Remove lines and components.
	Clutch cut-off switch out of adjustment	Adjust switch.
	Brake valve malfunction	Disassemble and inspect.
	Low oil level	Check oil level.
Brakes drag	Brake pedal not returning properly	Inspect floor mat and pedal.
	Debris holding valve partially open in brake valve	Do brake valve pressure test.
	Warped brake disk	Inspect brake disk.
	Stuck brake piston	Repair.
Brakes lock up	Brake valve malfunction	Clean or replace brake valve.

Problem	Cause	Remedy
Brakes chatter	Air in brake system	Do brake bleed procedure.
	Worn brake surface material	Inspect brake surface material.
	Wrong oil in differential	Drain. Refill.
Hissing noise when brake pedal is held with engine stopped	Leakage in brake valve, or brake piston	Do brake system leakage test.
Brake pressure warning light will not go out or stays on excessively long after start-up	Malfunction in brake low pressure warning switch	Replace switch.
	Brake accumulator pressure too low	Recharge accumulator.
	Low brake pump standby pressure setting.	Do brake pump standby pressure test.
	Leakage in pressure reducing manifold block	Do pressure reducing valve manifold leakage test.
	Leakage in brake system	Do brake system components leakage tests.
	Worn brake pump	Do brake pump flow test.
	Leakage in parking brake solenoid	Do parking brake pressure test.

2) PARKING BRAKE MALFUNCTIONS

Problem	Cause	Remedy
Brake will not hold	Pads not adjusted correctly	Adjust parking brake.
	Malfunctioning parking brake solenoid	Inspect and replace.
	Worn brake disk and / or brake pads	Disassemble, inspect, repair.
	Brake piston hangs up in bore	Remove and inspect. Repair.
Brake disk overheats	Pads out of adjustment	Adjust parking brake.
	Brake not released	Release parking brake. Disassemble, inspect brake. Repair if necessary. Inspect for loosen or broken lines between brake pressure switch and indicator on dash.
Parking brake indicator in monitor does not come on when brake applied	Faulty wiring or switch	Inspect for loose or broken lines between brake pressure switch and indicator on dash. Inspect for a faulty indicator on dash. Replace if necessary.
Brake will not apply	Pads out of adjustment	Adjust parking brake.
	Malfunctioning wiring, switch, or solenoid	Check electric circuit.
	Restriction between brake valve and brake	Remove hose and inspect. Replace.

GROUP 3 TESTS AND ADJUSTMENTS

1. PARKING BRAKE PERFORMANCE

1) MEASUREMENT CONDITION

(1) Tire inflation pressure : Specified pressure

(2) Road surface : Flat, dry, paved surface with 1/5(11°20') gradient.

(3) Machine : In operating condition

Item	Standard valve
Parking brake performance	Keep machine on 20% (11°20') gradient

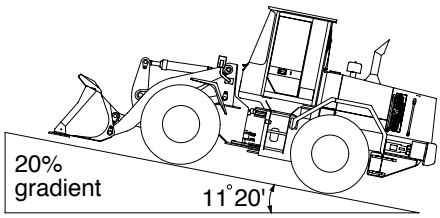

7407BS06

2) MEASURING PROCEDURE

(1) Start the engine and drive the machine straight up a 1/5 gradient with the bucket unloaded.

(2) Depress the service brake, place the gear selector lever in neutral, then stop the engine.

(3) Turn the parking brake switch ON, then slowly release the service brake pedal and the machine must be kept stopped.

※ The measurement must be made with the machine facing either up or down the slope.

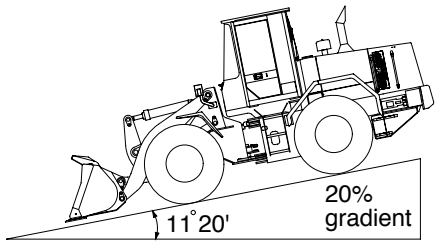

7407BS07

2. EXTERNAL BRAKE INSPECTION

Remove axle housing and inspect for wear of brake disks.

Replace brake disks if oil grooves of facing material are no longer visible.

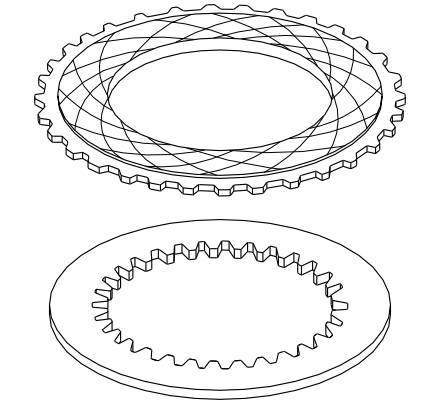
7407BS08

3. HYDRAULIC BRAKE BLEEDING PROCEDURE

⚠ **Escaping fluid under pressure can penetrate the skin causing serious injury. Avoid the hazard by relieving pressure before disconnecting hydraulic or other lines. Tighten all connections before applying pressure.**
Search for leaks with a piece of cardboard. Protect hands and body from high pressure fluids.

※ **If an accident occurs, see a doctor immediately. Any fluid injected into the skin must be surgically removed within a few hours or gangrene may result.**
Doctors unfamiliar with this type of injury should reference a knowledgeable medical source.
Two people are required to bleed brake system oil, one to operate brake valve and other to open and close bleed screws.

1) Install frame locking bar. Engage parking brake.
2) Put a clear plastic tube on bleed screw(B) to route low to hydraulic reservoir filler tube or container(A).
3) Start engine and run at low idle.
4) Push and hold brake pedal down until brake bleeding procedure is complete.
※ **If bubbles continue for more than 2 minutes, stop bleeding procedure.**
Check for and correct problem, then continue.
5) Open on bleed screw on differential and axle assembly until hydraulic oil starts to flow. Close bleed screw when oil is free of air. Release brake pedal.
6) Repeat steps 1-5 for each bleed screw.
7) Push either brake pedal and hold down.
8) Check hydraulic oil level.

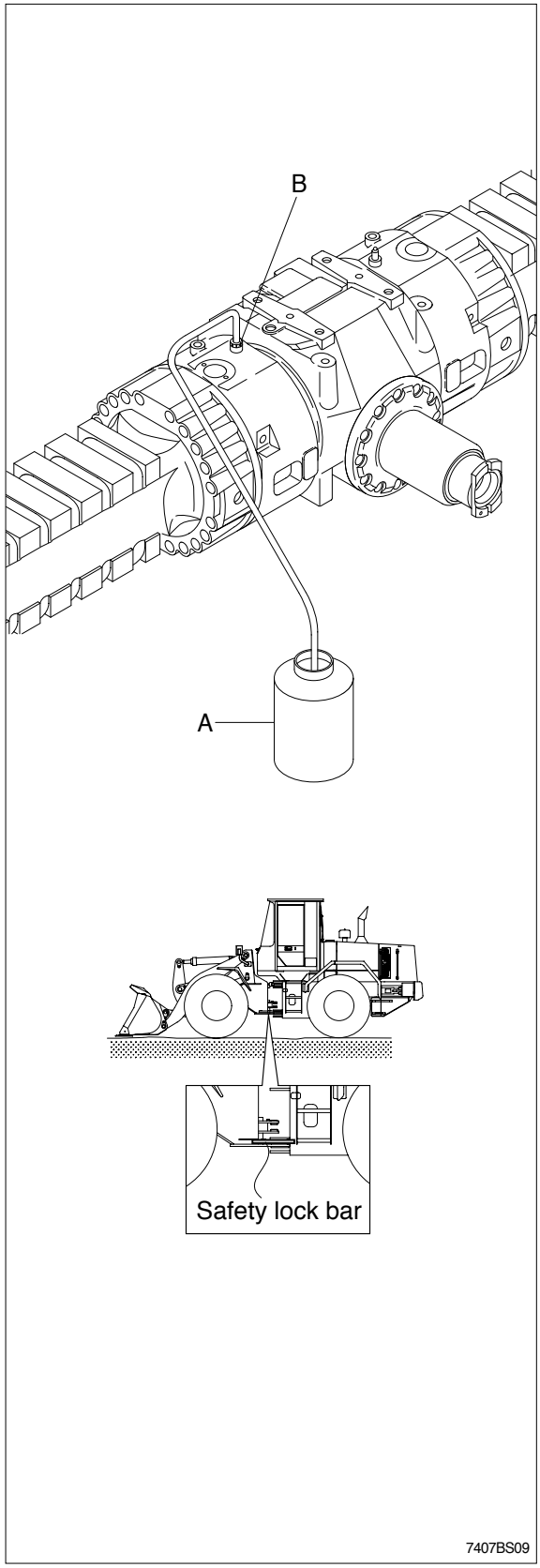

1. BRAKE PUMP

1) STRUCTURE

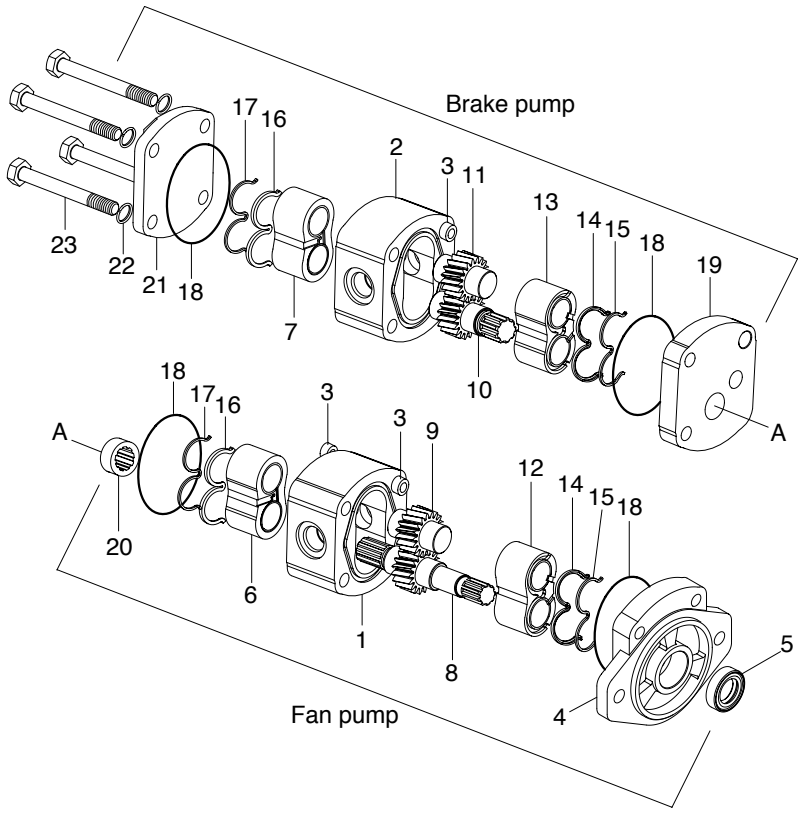

7707BS19

1	Body	9	Driven gear	17	Backing ring
2	Body	10	Driver gear	18	Body O-ring
3	Dowel pin	11	Driven gear	19	Intermediate plate
4	Front cover	12	Bushing	20	Coupling
5	Shaft seal	13	Bushing	21	Rear cover
6	Bushing	14	Bushing seal	22	Spring washer
7	Bushing	15	Backing ring	23	Screw
8	Driver gear	16	Bushing seal		

2) DISASSEMBLY

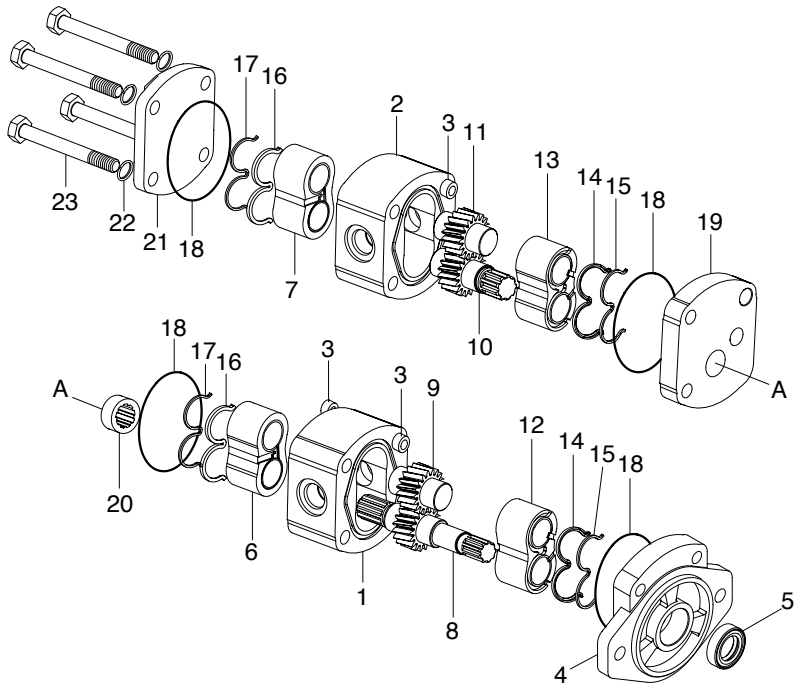

7707BS25

※ Before disassembling ensure that the unit itself, bench and tools are thoroughly clean.

(1) Lightly mark the rear cover(21), body(2) and plate(19) to ensure reassembly in the correct position.

(2) Remove the bolts(23) and separate the brake pump unit from the fan pump using a soft faced hammer.

(3) Remove splined coupling(20).

(4) Remove the plate(19) from the body(2), free from plate using a soft faced hammer.

(5) Remove the backing ring(15), the seal element(14) and the body O-ring(18).

(6) Remove the rear cover(21) from the body(2).

(7) Remove the backing ring(17), the seal element(16) and the body O-ring(18).

※ Before removing the internal components each bushing(7, 13) must be marked to denote its location within the body. On the plain area of the bush away from the seal location, lightly mark.

(8) With the unit laying on its side grasp hold of the drive shaft(10) and pull it squarely out of the body(2) bringing the bushing(13) with it.

(9) Remove the driven gear(11) and the remaining bushing(7).

3) INSPECTION AND REPAIR

(1) Assessment

Each components should be thoroughly cleaned, carefully examined and assessed for suitability re-use. Below is a guide for inspecting the various components.

(2) Body

① Inspect the body bore cut-in where both gears wipe into the body.

② The body can only be re-used if the **cut-in** is bright and polished in appearance and the depth does not exceed 0.15㎜(0.006").

③ The body should be replaced if the surface is scored, has a matt appearance or shows signs that the tip of the gears have dug in and torn away the surface material.

④ The body should be inspected to ensure that there is no superficial damage which may adversely effect performance or sealing. Pay particular attention to the port threads and body O-ring seal recesses.

(3) Plate and cover

① The inner surfaces should be inspected to ensure that there is no unusual wear or scoring in the regions where the body O-rings and backing rings contact, which result in external leakage.

② Check the shaft seal recess for scoring or damage that could result in oil leakage around the outer diameter of the shaft seal. Replacement shaft seals can be refitted with Loctite hydraulic sealant to overcome slight damage in this area.

(4) Bushes

① The side faces which abut the gears should be perfectly flat showing no sign of scoring. Characteristically there are bright polished areas on this surface caused by loading against the gear side faces, which is often more pronounced on the low pressure side. The bush should be replaced if there is any general scoring or fine scoring with a matt appearance or tearing of the surface material. Often there is a witness where the tips of the opposing gears have wiped an overlap reassembling a half moon shape. There must be no noticeable wear step as it is critical that the bush side face is completely flat to the gear side face.

② The bearing liners are acceptable providing that they are not scored or show other damage. The general outside area of the bush should not show any prominent signs of wear.

(5) Gears

① The gear side faces should be examined for bruising or scoring. Often operation on contaminated fluid shows scoring between the root of the gear and the journal undercut, which leaves a wear step. If a wear step can be felt, coincidental with the root diameter, by drawing a sharp pointed tool across the surface from the undercut outwards towards the tip of the gear, then the gear is unserviceable.

② The gear teeth should then be carefully examined to ensure that there are no signs of bruising or pitting.

③ The journal bearing surfaces should be completely free from scoring or bruising. The surface should appear highly polished and smooth to touch.

④ Examine the area where the shaft seal lips run on the drive shaft, this shows up as a polished ring or rings. If a noticeable groove can be felt or there is scoring the shaft should be replaced.

⑤ Provided the drive shaft is not damaged from the drive-coupling and the gears have not been harmed as described above, then the gears can be re-used. If, however, the gears are damaged they must be replaced as a matched pair.

⑥ As a matter of good practice, when pumps have been disassembled, all the seals should be replaced. It is most important that only the genuine seals are used.

4) ASSEMBLY

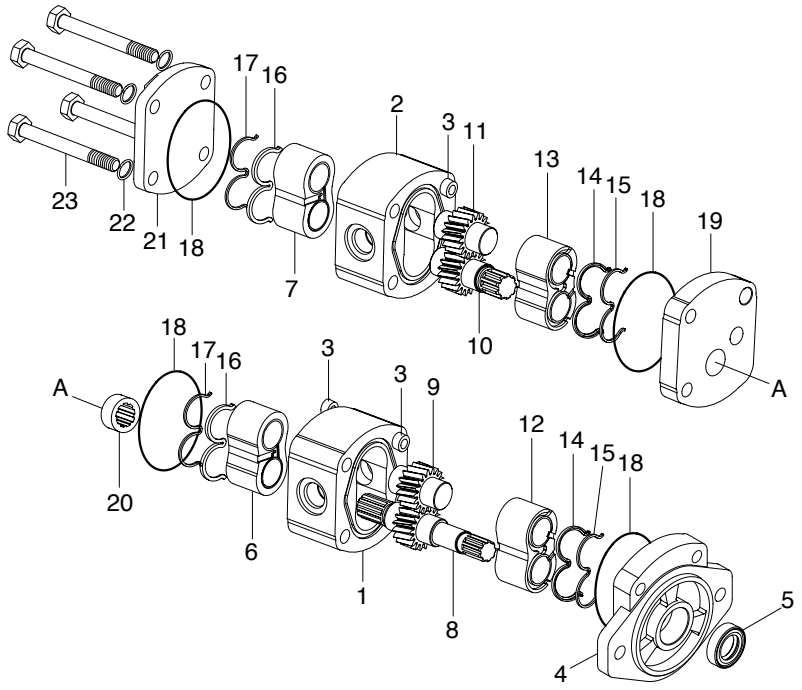

7707BS25

※ Ensure that all parts are perfectly clean and lightly lubricate the bushes and gears with hydraulic oil(Ensure body O-ring recess and end faces remain free from oil). This will assist with their assembly when they are later fitted into the body.

(1) Refit the bushing(7) into the undowelled end of the body(2) from where they were removed.

(2) Place the rear cover(21) against the body(2) and then stand the assembly on the cover so that the hollow dowels are uppermost, i.e. the bushing should be at the bottom with the bushings against the cover.

(3) Fit the drive shaft(10) and driven gear(11) back into their original positions in the body(2).

(4) Refit the plate bushing(13) into their original bores.

(5) Fit the new body O-ring(18).

(6) Fit the new seal element(14) and backing ring(15) to the bushing.

(7) Carefully refit the plate(19) to the body(2). If the plate(19) is not fitted squarely the backup seal(14) may become misplaced and trapped, resulting in internal damage if the unit is run in this condition.

ASSEMBLY

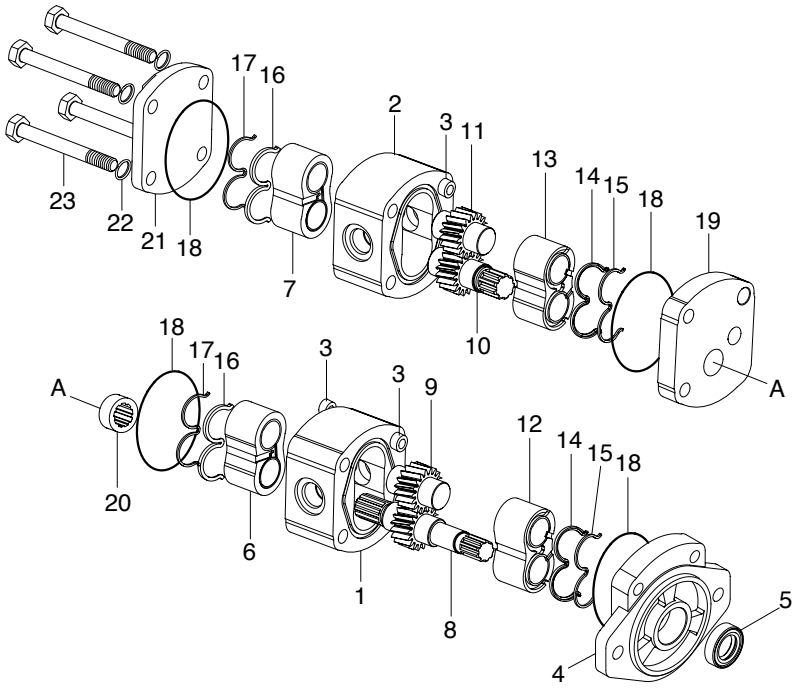

7707BS25

(8) Fit coupling(20) to the plate(19).

(9) Holding the whole unit together carefully turn it over, making sure it is supported on the spacer plate(19) not the shaft.

(10) Slide off the rear over and fit seals as in(5) and (6) above.

(11) Fit the rear cover(21), taking care not to dislodge the backup seal(16) and bolt(23) the unit together.

· Tightening torque : 4.8kgf · m(35lbf · ft)

※ Pour a small amount of oil into a port and check that the shaft can be rotated without undue force using a smooth jawed hand wrench hooked around the shaft or a suitable half coupling locked against the key.

5) RUNNING-IN

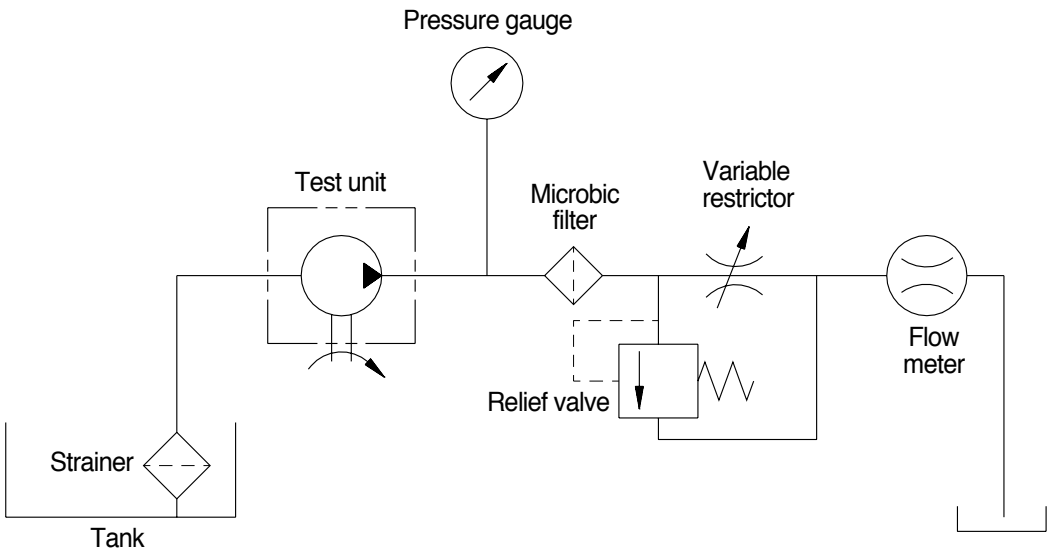

(730TM-3C) 4-48

(1) A unit which has been re-assembled with either new gears, bushes or body, must be carefully run-in before it is subjected to full working conditions.

(2) Ideally this should be done on a test rig(See figure) where pressure can be gradually applied and any wipings from the body cut-in arrested by filters.

(3) It is recommended that the unit is run-in at 1500rpm, initially, at zero pressure for one minute then in stages with the pressure increased by 500psi every minute, until maximum rated pressure has been attained. Frequently check the system temperature, ensuring that it does not exceed the maximum permissible figure of 80 ℃. If the temperature exceeds the system or unit specification the test must be delayed and operated off-load until acceptable temperatures are obtained.

SECTION 5 STEERING SYSTEM

Group 1 Structure and Function ---------- 5-1
Group 2 Operational Checks and Troubleshooting ---------- 5-13
Group 3 Tests and Adjustments ---------- 5-20
Group 4 Disassembly and Assembly ---------- 5-27

SECTION 5 STEERING SYSTEM

GROUP 1 STRUCTURE AND FUNCTION

1. OUTLINE

The steering system of this machine consists of a fixed-displacement pump supplying a load sensing steering system and an open center loader system.

The components of the steering system are :

- Steering pump(1st pump)
- Steering unit
- Overload valve block
- Priority valve
- Steering cylinders

The steering pump, the first pump of main pump, draws hydraulic oil from the hydraulic tank.
Outlet flow from the pump flows to the priority valve. The priority valve preferentially supplies flow, on demand, to the steering unit. When the machine is steered, the steering unit routes flow to the steering cylinders to articulate the machine.

When the machine is not being steered, or if pump flow is greater than steering flow, the priority valve supplies flow to the loader system.

That is, output flow from the steering pump enters into the first pump of main pump for the operation of the attachment.

2. HYDRAULIC CIRCUIT

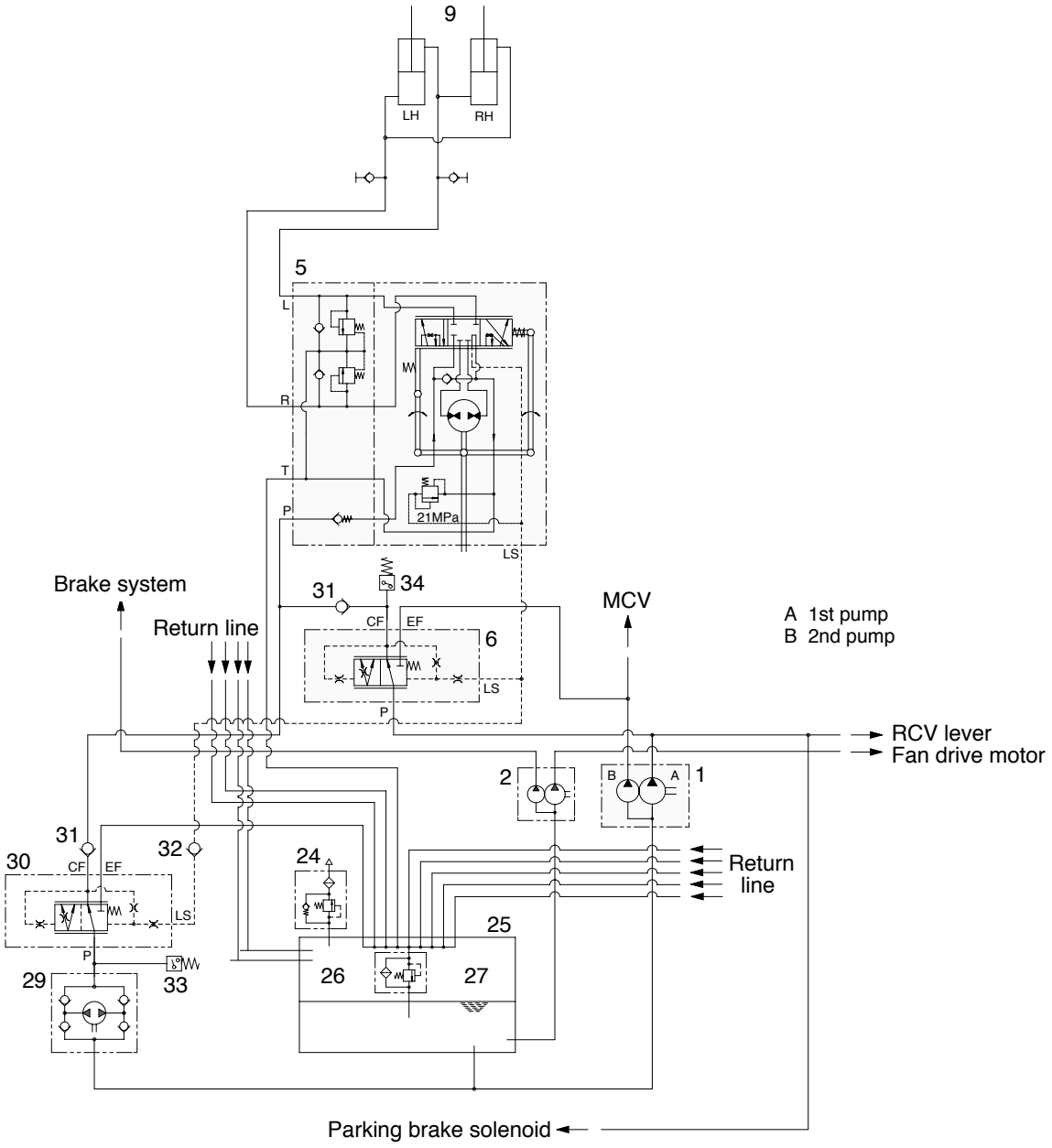

7407SE01

1	Main pump	24	Air breather	30	Priority valve(option)
2	Brake & fan pump	25	Hydraulic tank	31	Check valve(option)
5	Steering unit	26	Return filter	32	Check valve(option)
6	Priority valve	27	By pass valve	33	Pressure switch(option)
9	Steering cylinder	29	Emergency pump kit(option)	34	Pressure switch(option)

1) NEUTRAL

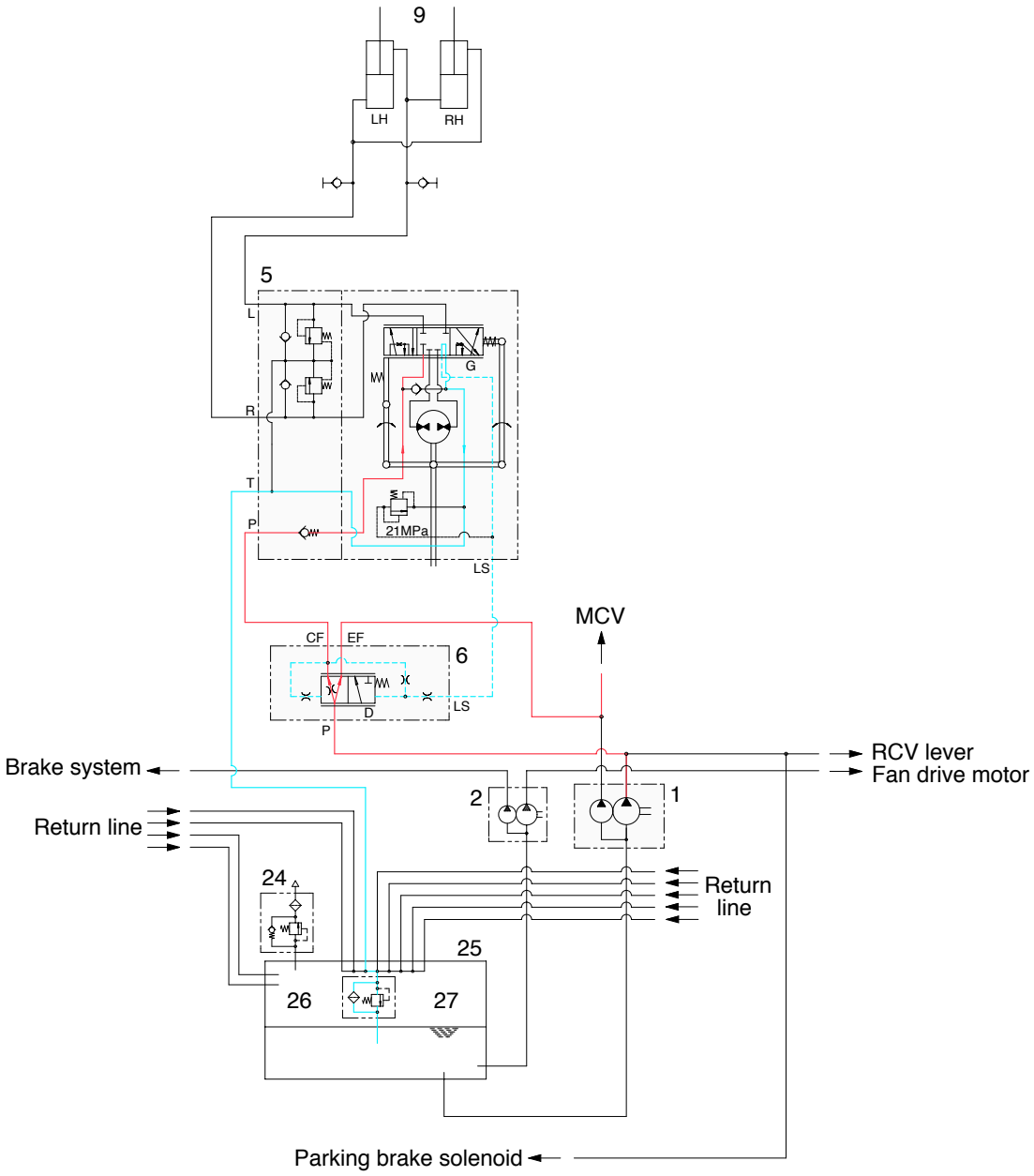

The steering wheel is not being operated so control spool(G) does not move.
The oil from the steering pump enters port P of the priority valve and the inlet pressure oil moves the spool(D) to the right.
Oil flow into LS port to the hydraulic tank(25) through orifice and return filter.
So, the pump flow is routed to the loader system(Main control valve) through the EF port.

2) LEFT TURN

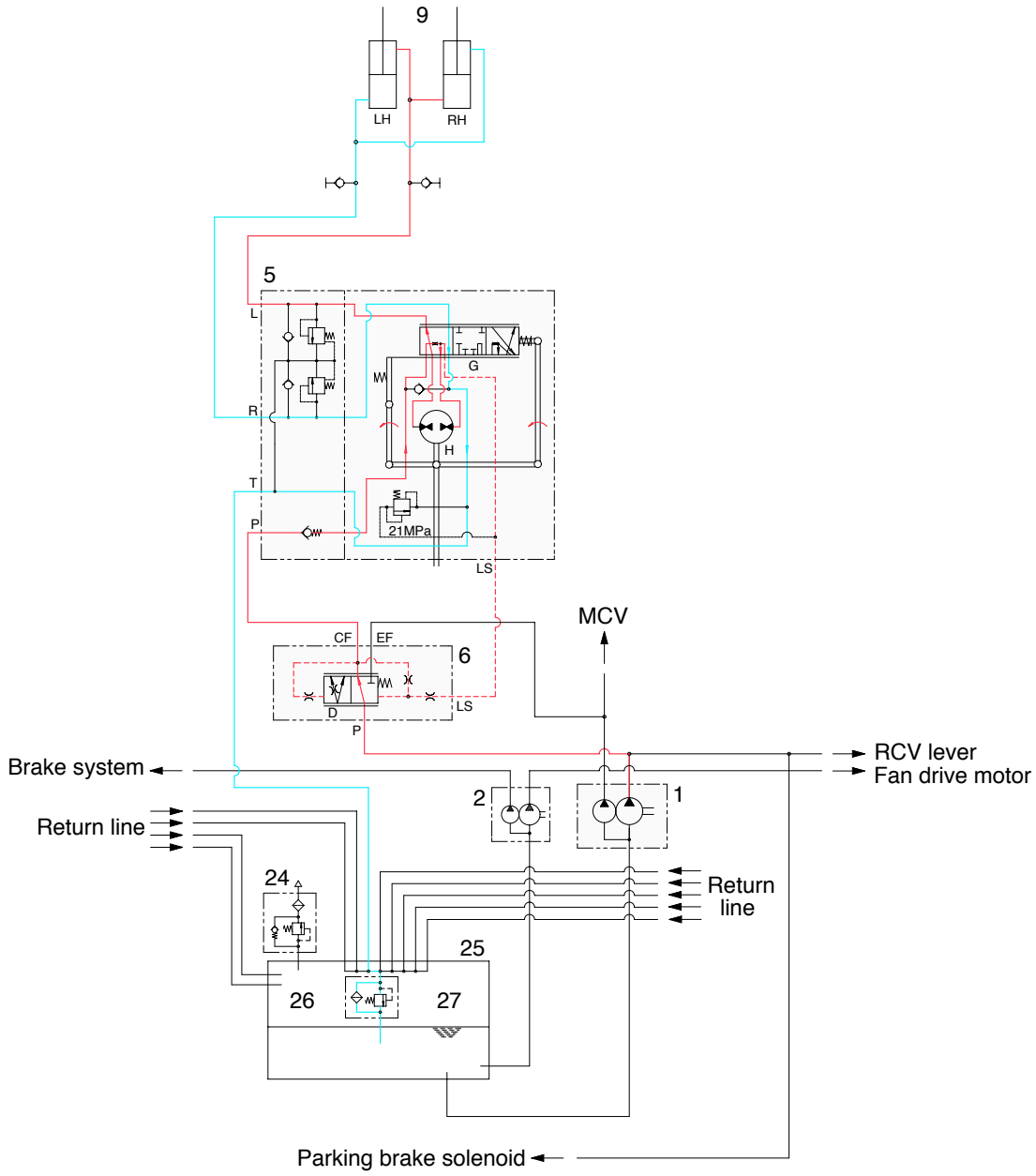

When the steering wheel(E) is turned to the left, the spool(G) within the steering unit(5) connected with steering column turns in left hand direction.
At this time, the oil discharged from the steering pump flows into the spool(G) of the steering unit(5) through the spool(D) of priority valve(6) and flows into the gerotor(H).
Oil flow from the gerotor flows back into the spool(G) where it is directed out the left work port(L) to the respective chamber of the steering cylinders(9).
Oil returned from left and right cylinder returns to hydraulic tank through the spool of the steering unit.
When the above operation is completed, the machine turns to the left.

3) RIGHT TURN

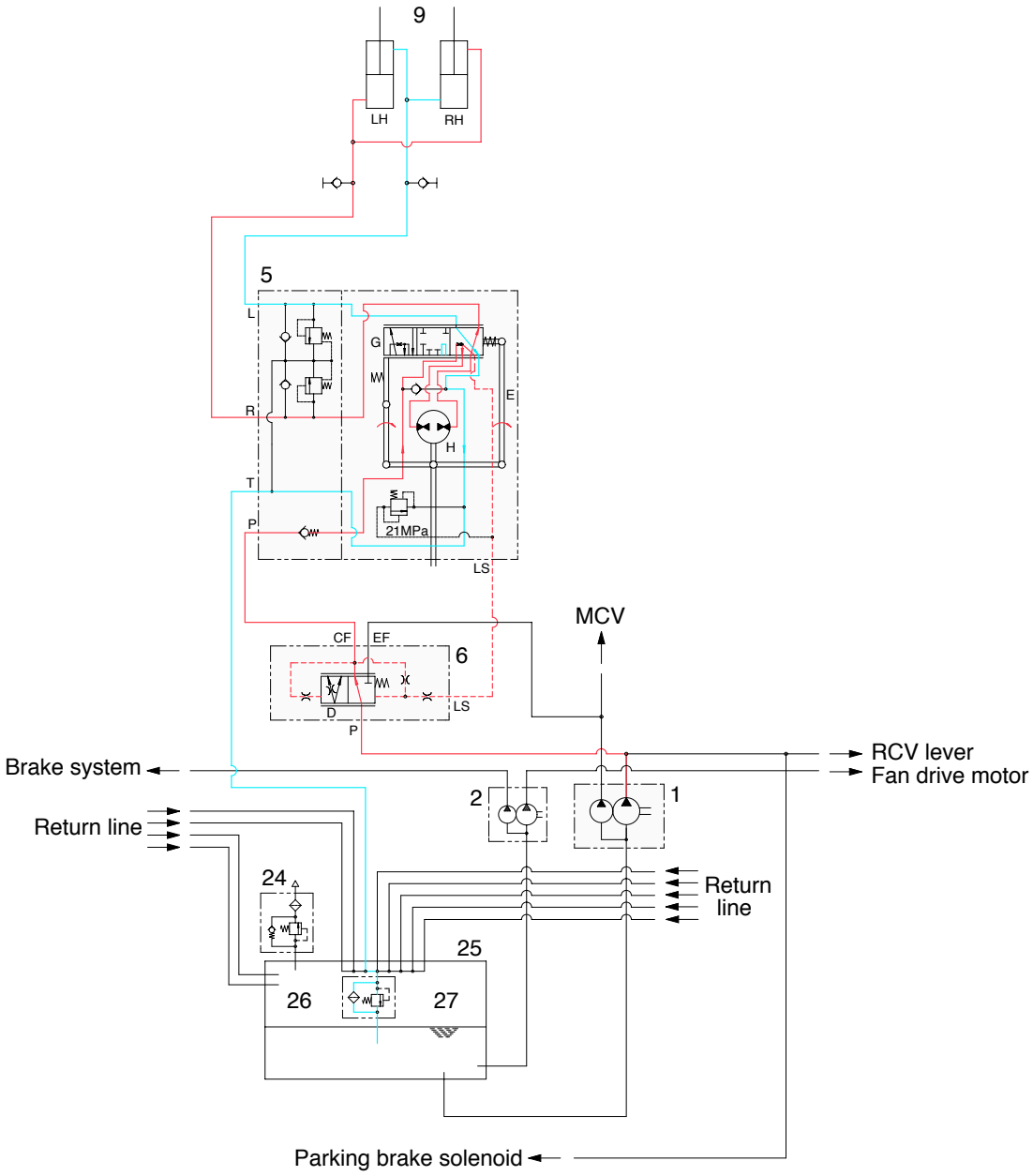

7407SE04

When the steering wheel(E) is turned to the right, the spool(G) within the steering unit(5) connected with steering column turns in right hand direction.
At this time, the oil discharged from the steering pump flows into the spool(G) of the steering unit(5) through the spool(D) of priority valve(6) and flows into the gerotor(H).
Oil flow from the gerotor flows back into the spool(G) where it is directed out the right workport to the respective chamber of the steering cylinders(9).
Oil returned from left and right cylinder returns to hydraulic tank through the spool of the steering unit.
When the above operation is completed, the machine turns to the right.

3. STEERING UNIT

1) STRUCTURE

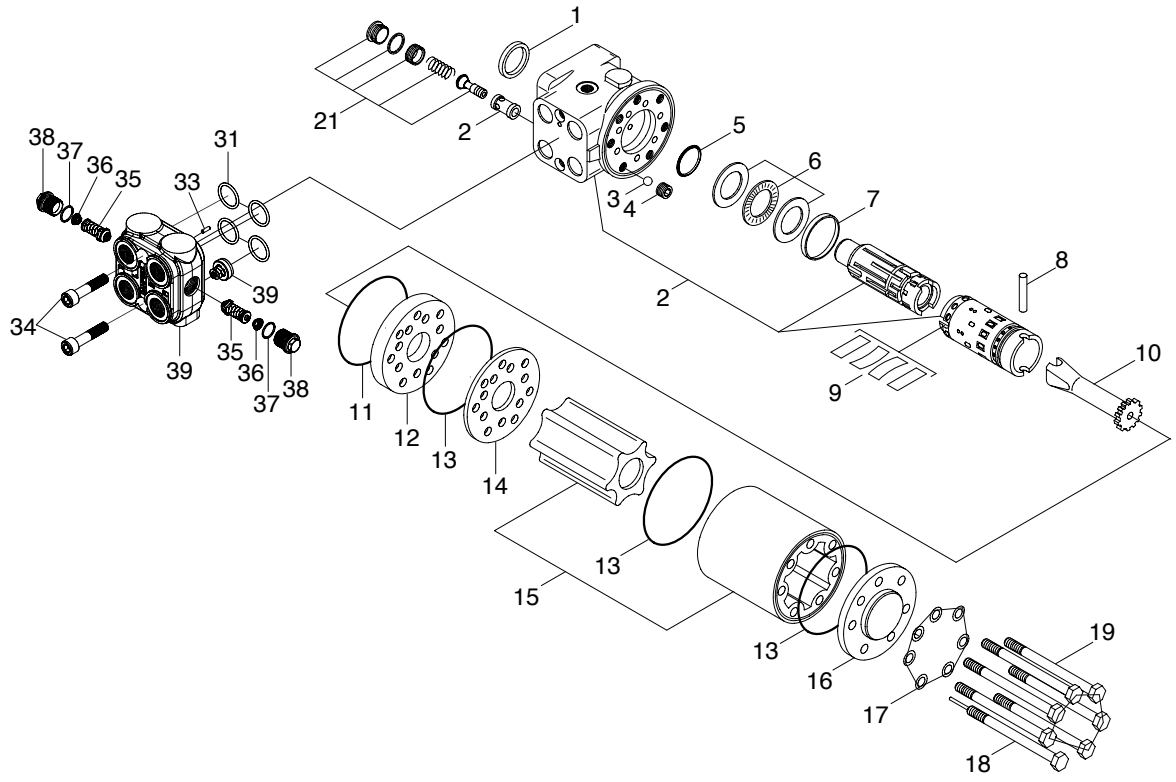

7407SE05

1	Dust seal ring	11	O-ring	21	Complete relief valve without seat
2	Housing, spool, sleeve	12	Intermediate plate	31	Set of o-rings
3	Ball	13	O-ring	33	Rolled pin
4	Thread bushing	14	Distributor plate	34	Screw
5	Roto glyd ring	15	Gearwheel set	35	Shock valve
6	Bearing assembly	16	End cover	36	Spring
7	Ring	17	Washer	37	O-ring
8	Cross pin	18	Screw with pin	38	Plug
9	Set of spring	19	Screw	39	Housing, check valve
10	Cardan shaft				

2) OPERATION

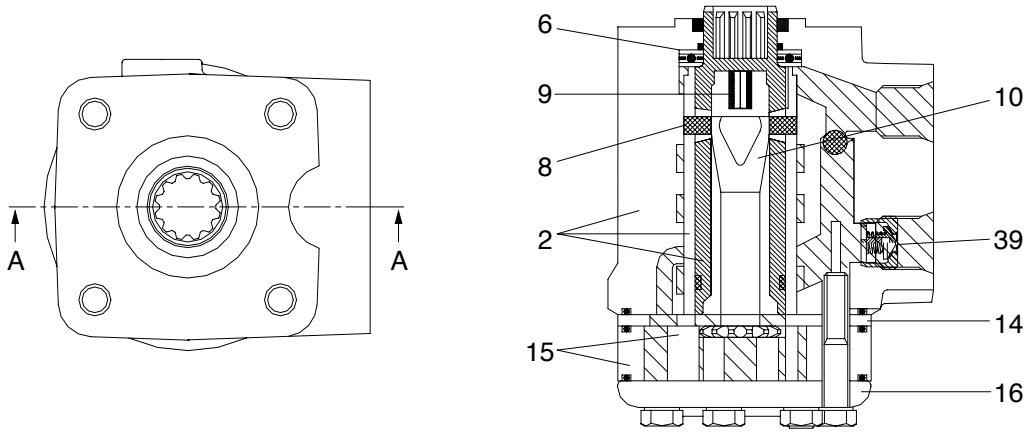

SECTION A - A

7407SE06

The steering unit consists of a rotary valve and a rotary meter.
Via a steering column the steering unit is connected to the steering wheel of the machine.
When the steering wheel is turned, oil is directed from the steering system pump via the rotary valve (spool and sleeve) and rotary meter(gear wheel set) to the cylinder ports L or R, depending on the direction of turn. The rotary meter meters the oil flow to the steering cylinder in proportion to the angular rotation of the steering wheel.
Spool is connected directly to the drive shaft(10) of steering wheel. It is connected to sleeve by cross pin(8) (not in contact with the spool when the steering wheel is at neutral) and neutral position spring(9).
Cardan shaft(10) is meshed at the top with cross pin(8) and forms one unit with sleeve.
At the same time, it is meshed with gear rim of the gerotor set by spline.
There are four ports in valve body. They are connected to the pump circuit, tank circuit, and the head, and left and right steering cylinder. In addition, the pump port and tank port are connected inside the body by the check valve. Therefore, if there is any failure in the pump of engine, oil can be sucked in directly from the tank through the check valve.

4. PRIORITY VALVE

1) STRUCTURE

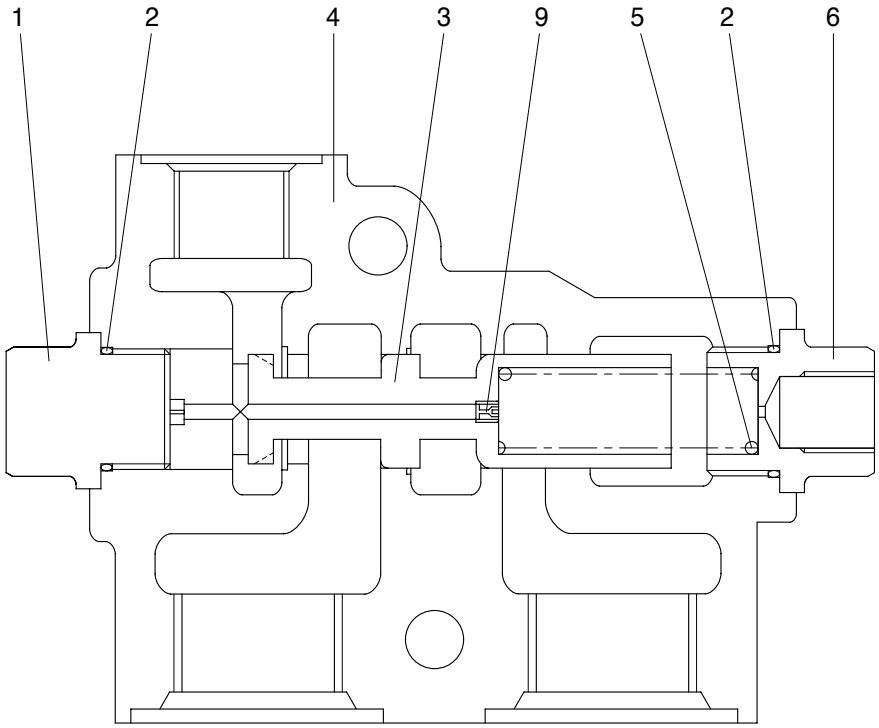

7405S 5-6

1	Plug	4	Housing	8	Drive screw
2	O-ring	5	Spring	9	Orifice
3	Spool	6	Plug		

2) OPERATION

(1) Neutral

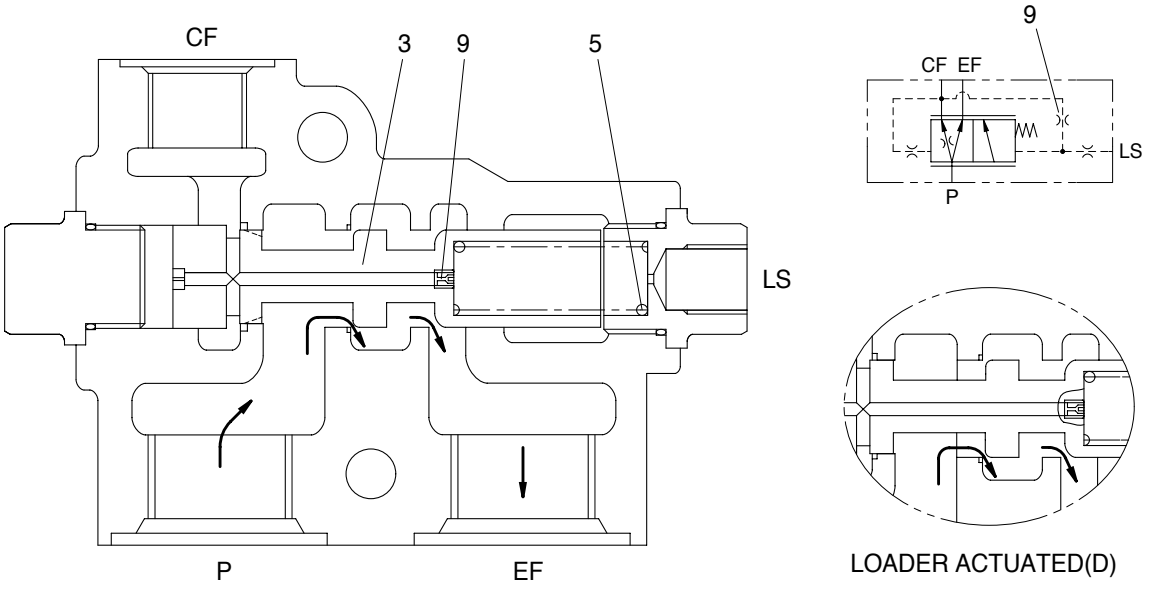

7405S 5-7

The priority valve is a pressure control valve that maintains priority pressure to the closed center steering valve. With the steering valve in neutral, flow through is blocked and all flow through the priority valve is directed out the EF port to the main control valve.

With the engine off, the spool(3) is pushed to the left(Viewed from sectional drawing at previous page) by the spring(5). The passage to the EF port is blocked while the passage to the CF port is open.

When the machine is first started, all pump flow is routed to the steering valve which blocks the flow. With the flow blocked, the pressure increases.
Steering inlet pressure is supplied through the pilot orifice to the left end of the spool. This causes the priority valve spool(3) to shift to the right against the spring and open the EF port.
As long as the steering valve is in neutral, just enough pressure is maintained at the steering valve to keep the priority valve spool shifted to the right.

The operating pressure in the loader system has no effect on the operation of the priority valve. With the loader actuated in relief(D) the priority valve will not shift until the machine is steered.

Flow through the priority valve spool passes from the CF port through the orifice(9) and into the LS port. It flows through the steering valve LS passage which is routed to return when the steering valve is in neutral. This provides a warm-up circuit for the steering valve to prevent binding of the steering valve due to oil temperature extremes.

(2) Midturn

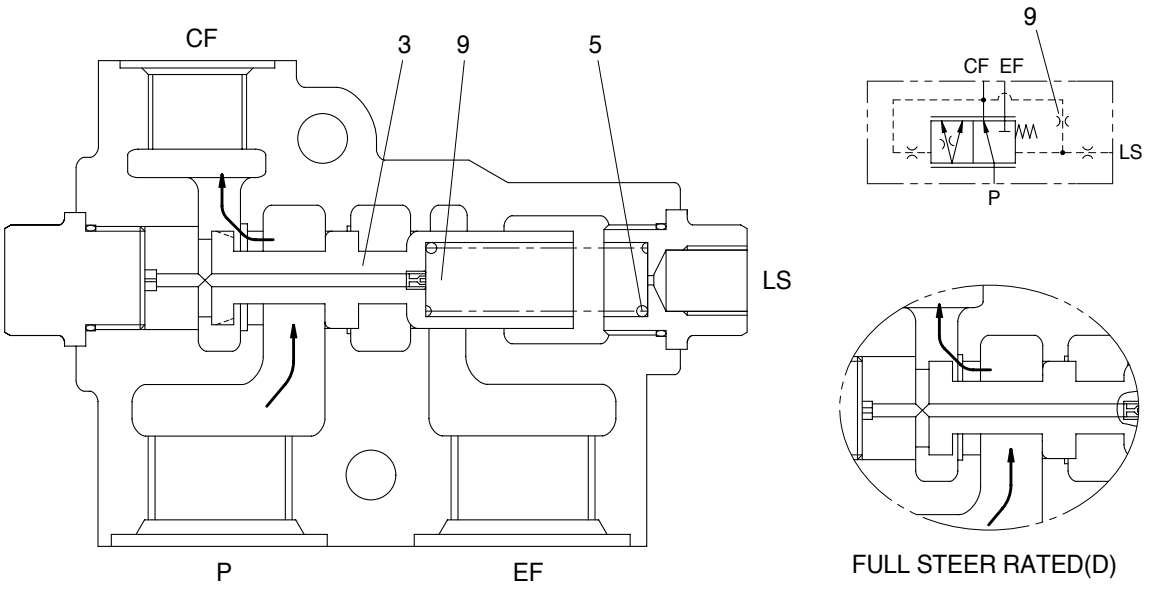

7405S 5-8

When the machine is steered, load sensing pressure from the steering valve flows through the orifices LS port in the priority valve. Load sensing pressure plus spring(5) force move the spool(3) to the against the pilot pressure on the left end of the spool. This restricts flow to the loader through the EF port while the CF port is opened to the steering valve.

The load sensing circuit is control circuit that routes steering workport pressure to the spring side of the priority valve spool. It allows the priority valve spool to sense the pressure that is required to steer the unit under varying conditions.

During normal steering conditions, oil is entered into the load sensing circuit through an orifice in the steering valve. When steering at the full steer rate(D), the orifice opens to an unrestricted passage. At low engine speed, the spool will shift to the full left position, directing all flow to the steering valve. At high idle, the steering system can use about one-half of the pump flow. Therefore, the excess oil flows to the main control valve.

The load-sensing circuit receives the majority of its flow from the load sensing orifice in the steering valve. Some flow is also supplied from the CF port through orifice(9) in the priority valve spool.

(3) Full turn

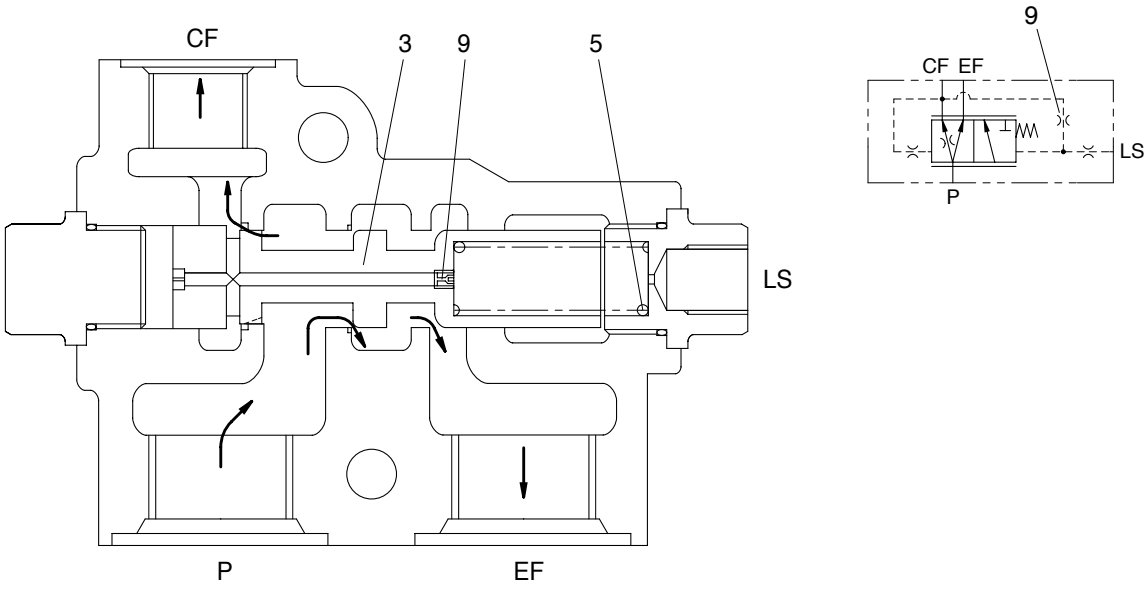

7405S 5-9

When the machine is steered to a full turn, the frames bottom against the steering stops.

Pressure to the steering valve(Pilot pressure), which is sensed at the left end of the priority valve spool(3), continues to increase until it can move the spool to the right against the load sensing pressure plus spring force. At this time, all oil flows out of the EF port to the loader control valve.

If the loader attachment is being operated while steering, the loader function will slow until the machine reaches the steering stops. At that time, the loader cycle speed will increase until the machine is steered again.

5. STEERING CYLINDER

1) STRUCTURE

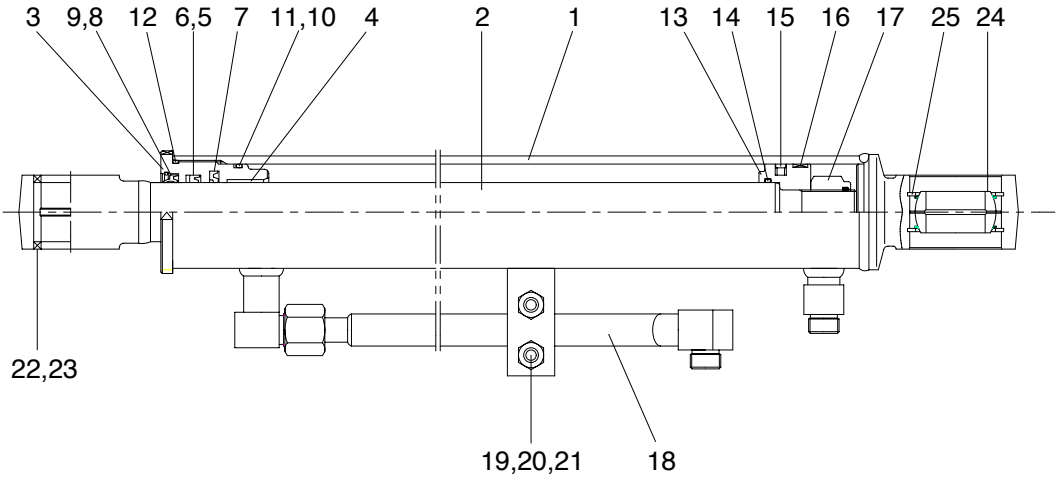

7407SE07

1	Tube assy	10	O-ring	18	Pipe assy
2	Rod assy	11	Back up ring	19	U-bolt
3	Gland	12	O-ring	20	Hexagon nut
4	Du bushing	13	Piston	21	Spring washer
5	Rod seal	14	O-ring	22	Bushing
6	Back up ring	15	Piston seal	23	Dust seal
7	Buffer ring	16	Wear ring	24	Spherical bearing
8	Dust wiper	17	Nylon nut	25	Retaining ring
9	Snap ring				

2) OPERATION

This machine use to cross connected cylinder for steering operation.

The steering cylinder use a gland(3) to remove piston and sealed seals. Dust wiper(8) located on the in side of the gland protects cylinder inner parts from dust. The piston(13) is fastened to the rod(2) by a nut(17).

The piston uses a single wear ring(16) with a piston seal(15) to seal between the piston and tube. The gland seals against the tube with two O-rings. The rod is sealed against the gland with a rod seal(5).

GROUP 2 OPERATIONAL CHECKS AND TROUBLESHOOTING

1. OPERATIONAL CHECKS

This procedure is designed so the service man can make a quick check of the steering system using a minimum amount of diagnostic equipment. If you need additional information, prefer to structure and function in group 1.

A location will be required which is level and has adequate space to complete the checks.

The engine and all other major components must be at operating temperature for some checks.

Locate system check in the left column and read completely, following this sequence from left to right. Read each check completely before performing.

At the end of each check, if no problem is found(OK), that check is complete or an additional check is needed. If problem is indicated(NOT OK), you will be given repair required and group location.

If verification is needed, you will be given next best source of information :

Chapter 2 : Troubleshooting
Group 3 : Tests and adjustments

※**Hydraulic oil must be at operating temperature for these checks**(Refer to page 6-55).

Item	Description		Service action
Steering unit check	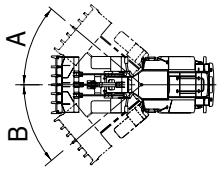	Run engine at low idle. Turn steering wheel until frames are at maximum right(A) and then left(B) positions. **LOOK** : Frames must move smoothly in both directions. When steering wheel is stopped, frames must stop. **FEEL** : Excessive effort must not be required to turn steering wheel. **NOTE** : It is normal for steering to drift from stops when steering wheel is released.	**OK** Check completed. **NOT OK** Go to next check.
Steering system leakage check Heat hydraulic oil to operating temperature. Run engine at high idle.	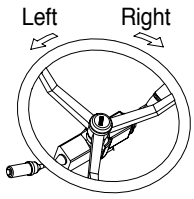	Turn steering wheel rapidly until frames are against stops. Hold approximately 2kgf on steering wheel. Count steering wheel revolutions for 1 minute. Repeat test in opposite direction. **LOOK** : Steering wheel should rotate less than 5rpm. **NOTE** : Use good judgment; Excessive steering wheel rpm does not mean steering will be affected.	**OK** Check completed. **NOT OK** Do steering system leakage test in group 3 to isolate the leakage.
Priority valve low pressure check		Park machine on a hard surface. Hold brake pedal down. Run engine at high idle. Steer machine to the right and left as far as possible. **LOOK** : Machine must turn at least half way to the right and left stops.	**OK** Check completed. **NOT OK** Do priority valve pressure test in group 3.

Item	Description	Service action
Priority valve high pressure check Run engine at high idle.	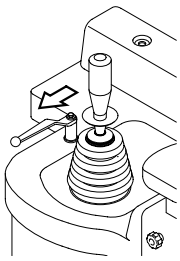 Steer to steering stop and release wheel. Roll bucket back and hold over relief and observe engine rpm. Turn wheel to steering stop and hold, observe engine rpm. **LOOK** : Steering stall engine rpm must be higher than hydraulic stall rpm.	**OK** Check completed. **NOT OK** Priority pressure is set too high. Do priority valve pressure test in group 3.

2. TROUBLESHOOTING

※**Diagnose malfunction charts are arranged from most probable and simplest to verify, to least likely, more difficult to verify. Remember the following steps when troubleshooting a problem :**

Step 1. Operational check out procedure(See group 3 in section 1)

Step 2. Operational checks(In this group)

Step 3. Troubleshooting

Step 4. Tests and adjustments(See group 3)

Problem	Cause	Remedy
No steering	Low oil level.	Add recommended oil.
	Restricted suction line.	Check.
	Failed hydraulic pump.	Remove and inspect return filter for metal pump particles.
	Failed main hydraulic pump drive.	Remove main hydraulic pump and inspect drive gear.
	Stuck priority valve spool.	Remove and inspect priority valve spool.
	Broken priority valve spring.	Remove and inspect spring.
	Relief valve in steering unit stuck open.	Do relief cartridge leakage test in group 3.
	Failed hydraulic lines.	Check.
Slow or hard steering	Too much friction in the mechanical parts of the machine.	Lubricate bearings and joints of frame or cylinders or repair if necessary. Check steering column installation.
	Cold oil.	Warm the hydraulic oil.
	Low priority valve pressure setting.	Do priority valve pressure test in group 3.
	Worn hydraulic pump.	Do hydraulic pump performance check.
	Sticking priority valve spool.	Remove and inspect.
	Broken priority valve spring.	Remove and inspect.
	Pinched or restricted LS line.	Inspect line. Do priority valve LS port flow test in group 3.
	Low system relief valve setting.	Test and adjust if necessary.
	Low overload relief valves setting.	Test and adjust if necessary.

Problem	Cause	Remedy
Constant steering to maintain straight travel	Air in system.	Check for foamy oil.
	Leakage in steering system.	Do steering system leakage check.
	Worn steering unit.	Do steering unit neutral leakage test in group 3.
	Leaf spring without spring force or broken.	Replace leaf springs.
	Spring in overload relief valve broken.	Replace overload relief valve.
	Gear wheel set worn.	Replace gear wheel set.
	Cylinder seized or piston seals worn.	Replace defects parts.
Slow steering wheel movement will not cause any frame movement	Leakage in steering system.	Do steering system leakage check.
	Worn steering unit gerotor.	Do steering unit leakage check.
Steering wheel can be turned with frames against steering stop	Leakage in steering system.	Do steering system leakage check.
Steering wheel turns with no resistance and causes no frame movement	Broken steering column or splined of steering unit.	Remove and inspect.
	Lack of oil in steering unit.	Start engine and check steering operation.
	Leakage in steering system.	Do steering system leakage test in group 3.
Erratic steering	Air in oil.	Check for foamy oil.
	Low oil level.	Add recommended oil.
	Sticking priority valve spool.	Remove and inspect spool.
	Loose cylinder piston.	Remove rod to inspect piston.
	Damaged steering unit.	Remove and inspect.
Spongy or soft steering	Air in oil.	Check for foamy oil.
	Low oil level.	Add recommended oil.
Free play at steering wheel	Loose steering wheel nut.	Tighten.
	Worn or damaged splines on steering column or valve.	Inspect.
Steering unit binding or steering wheel does not immediately return to neutral when released	Binding in steering column or misalignment of column.	Inspect.
	High return pressure.	Check for a pinched or damaged return line.
	Contamination in steering unit.	Inspect hydraulic filter for contamination. Repair cause of contamination. Flush hydraulic system.

Problem	Cause	Remedy
Steering unit locks up	Large particles of contamination in steering unit.	Inspect hydraulic filter for contamination. Repair cause of contamination. Flush hydraulic system.
	★ Thermal shock	Do priority valve LS port flow test in group 5. This oil flow provides a warm-up flow to steering unit when not using the steering.
	Worn or damaged steering unit.	Repair or replace steering unit.
Abrupt steering wheel oscillation	Improperly timed gerotor gear in steering unit.	Time gerotor gear.
Steering wheel turns by itself	Lines connected to wrong port.	Reconnect lines.
	Worn or damaged steering unit.	Repair or replace steering unit.
Vibration in steering system or hoses jump	High priority valve setting.	Do priority valve pressure test in group 3.
Neutral position of steering wheel cannot be obtained, i.e. there is a tendency towards "motoring"	Steering column and steering unit out of line.	Align the steering column with steering unit.
	Too little or no play between steering column and steering unit input shaft.	Adjust the play and, if necessary, shorten the splines journal.
	Pinching between inner and outer spools.	Contact the nearest service shop.
"Motoring" effect. The steering wheel can turn on its own	Leaf springs are stuck or broken and have therefore reduced spring force.	Replace leaf springs.
	Inner and outer spools pinch, possibly due to dirt.	Clean steering unit or contact the nearest service shop.
	Return pressure in connection with the reaction between differential cylinder and steering unit too high.	Reduce return pressure.
Backlash	Cardan shaft fork worn or broken.	Replace cardan shaft.
	Leaf springs without spring force or broken.	Replace leaf springs.
	Worn splines on the steering column.	Replace steering column.
Jerky steering	LS port orifice missing.	Inspect orifice.
	Orifice in top end of priority valve spool missing.	Disassemble and inspect.

★ Thermal shock is caused by a large temperature differential(Approx 30°C, 50°F) between the steering unit and hydraulic oil. If the steering is not operated for a long period of time and the orifice in the bottom of the priority valve spool is plugged, the steering unit may bind up when the steering is operated if the hydraulic oil is hot enough.

Problem	Cause	Remedy
"Shimmy" effect **The steered wheels vibrate** (Rough tread on tires gives vibrations.)	Air in the steering cylinder.	Bleed cylinder. Find and remove the reason for air collection.
	Mechanical connections or wheel bearings worn.	Replace worn parts.
	High priority valve setting pressure.	Set pressure as regular value.
Steering wheel can be turned the whole time without the steered wheels moving	Oil is needed in the tank.	Fill with clean oil and bleed the system.
	Steering cylinder worn.	Replace or repair cylinder.
	Gear wheel set worn.	Replace gear wheel set.
	Spacer across cardan shaft forgotten.	Install spacer.
Steering wheel can be turned slowly in one or both directions without the steered wheels turning	One or both anticavitation valves are leaky or are missing in overload relief valves.	Clean or replace defect or missing valves.
	One or both overload relief valves are leaky.	Clean or replace.
Steering is too slow and heavy when trying to turn quickly	Insufficient oil supply to steering unit, pump defective or number of revolutions too low.	Replace pump or increase number of revolutions.
	Relief valve setting too low.	Adjust valve to correct setting.
	Relief valve sticking owing to dirt.	Clean the valve.
	Spool in priority valve sticking owing to dirt.	Clean the valve, check that spool moves easily without spring.
	Too weak spring in priority valve.	Replace spring by a stronger.
"Kick back" in steering wheel from system **Kicks from wheels**	Fault in the system.	Contact authorized man or shop.
Heavy kick-back in steering wheel in both directions	Wrong setting of cardan shaft and gear-wheel set.	Correct setting as shown in group 4.
Turning the steering wheel activates the steered wheels opposite	Hydraulic hoses for the steering cylinders have been switched around.	Connect lines to correct ports.
Hard point when starting to turn the steering wheel	Spring force in priority valve too weak.	Replace spring by a stronger.
	Air in LS and / or PP line.	Bleed LS and PP line.
	Clogged orifices in LS or PP side in priority valve.	Clean orifices in spool and in connecting plugs for LS and PP.
	Oil is too thick(Cold).	Let machine run until oil is warm.
Too little steering force	Pump pressure too low.	Correct pump pressure.

GROUP 3 TESTS AND ADJUSTMENTS

1. HYDRAULIC OIL CLEAN UP PROCEDURE USING PORTABLE FILTER CADDY

※ **Service equipment and tool**
- · Portable filter caddy
- · Two 4000mm × 1" 100R1 Hoses
- · Quick disconnect fittings
- · Discharge wand
- · Connectors

※ **Steering system use oil from hydraulic oil tank. Flush all lines in the steering system.**

※ **Disassemble and clean major components for steering system.**
Steering components may fail if steering system is not cleaned after hydraulic oil tank contamination.

1) If hydraulic system is contaminated due to a major component failure, remove and disassemble steering cylinders to clean debris from cylinders.

2) Install a new return filter element. Inspect filter before installing new element.

※ **For a failure that creates a lot of debris, remove access cover from hydraulic oil tank. Drain and clean hydraulic oil tank of fill the specified oil to hydraulic oil tank through upper cover.**

3) To minimize oil loss, pull a vacuum in hydraulic oil tank using a vacuum pump. Connect filter caddy suction line to drain port at bottom of hydraulic oil tank using connector. Check to be sure debris has not closed drain port.

4) Put filter caddy discharge line into hydraulic oil tank filler hole so end is as far away from drain port as possible to obtain a thorough cleaning of oil.

5) Start the filter caddy. Check to be sure oil is flowing through the filters.
Operate filter caddy approximately 10 minutes so oil in hydraulic oil tank is circulated through filter a minimum of four times.

※ **Hydraulic tank capacity : 105ℓ (27.7U.S. gal)**
Leave filter caddy operating for the next steps.

6) Start the engine and run it at high idle.

※ **For the most effective results, cleaning procedure must start with the smallest capacity circuit then proceed to the next largest capacity circuit.**

7) Operate all functions, one at a time, through a complete cycle in the following order: Clam, steering, bucket, and boom. Also include all auxiliary hydraulic functions.

Repeat procedure until the total system capacity has circulated through filter caddy seven times, approximately 30 minutes.
Each function must go through a minimum of three complete cycles for a through cleaning for oil.

※ **Filtering time for machines with auxiliary hydraulic functions must be increased because system capacity is larger.**

8) Stop the engine. Remove the filter caddy.

9) Install a new return filter element.

10) Check oil level in hydraulic oil tank ; Add oil if necessary.

2. TEST TOOLS

1) CLAMP-ON ELECTRONIC TACHOMETER INSTALLATION

- Service equipment and tools
  Tachometer
  A : Clamp on tachometer
  Remove paint using emery cloth and connect to a straight section of injection line within 100㎜(4in) of pump. Finger tighten only-do not over tighten.
  B : Black clip(-). Connect to main frame.
  C : Red clip(+). Connect to transducer.
  D : Tachometer readout. Install cable.

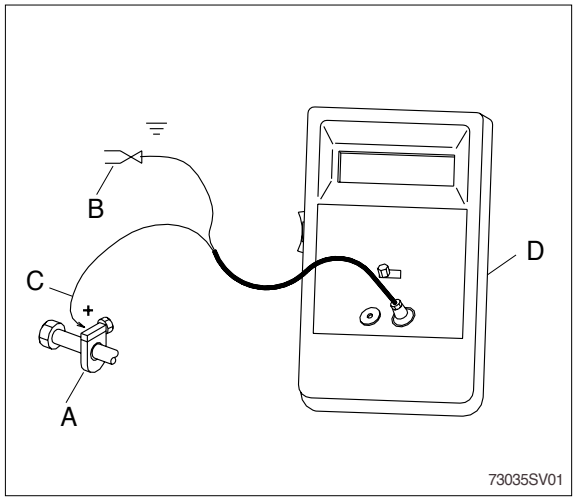

2) DIGITAL THERMOMETER INSTALLATION

- Service equipment and tools
  Digital thermometer
  A : Temperature probe
  Fasten to a bare metal line using a tie band. Wrap with shop towel.
  B : Cable
  C : Digital thermometer

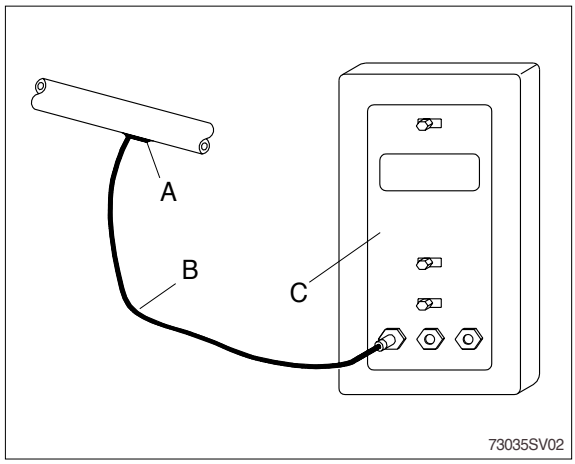

3) DISPLAY MONITOR TACHOMETER

The display monitor tachometer is accurate enough for test work.

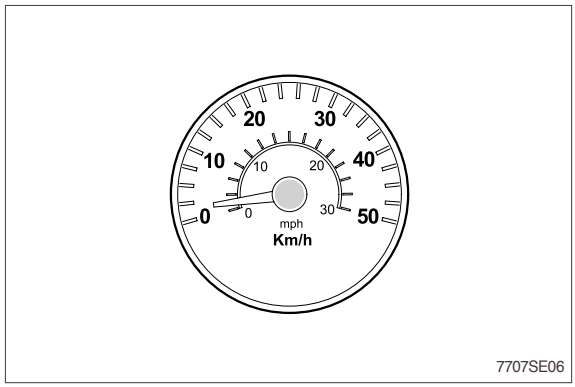

3. STEERING SYSTEM RESTRICTION TEST

· **SPECIFICATION**

Oil temperature	45±5°C(113±9°F)
Engine speed	High idle
Maximum pressure at steering unit	20Mpa(20bar, 285psi)

· **GAUGE AND TOOL**

Gauge 0~7.0Mpa(0~70bar, 0~1000psi) 1EA

· This test will check for restrictions in the steering system which can cause overheating of hydraulic oil.

1) Install temperature reader.(See temperature reader installation procedure in this group.)

2) Heat hydraulic oil to specifications.(See hydraulic oil warm up procedure at page 6-55.)

3) Connect fitting(A) and gauge to steering unit.

⚠ **Do not operate steering or loader functions or test gauge may be damaged.**

4) Run engine at specification and read pressure gauges.

If pressure is more than specification at the steering unit, inspect priority valve for a stuck spool. Make sure orifice plugs are installed in ends of priority valve spool.
Check for plugged orifice in priority valve LS port.

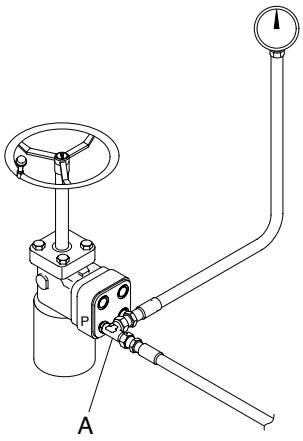

7303ASE16

4. STEERING UNIT LEAKAGE TEST

· **SPECIFICATION**

Oil temperature	45±5°C (113±9°F)
Engine speed	High idle
Maximum leakage	10 ℓ /min

· **GAUGE AND TOOL**

Temperature reader
Measuring container(Approx 20 ℓ)
Stop watch

1) Install frame locking bar to prevent machine from turning.
2) Install temperature reader.
   (See temperature reader installation procedure in this group.)
3) Heat hydraulic oil to specifications.(See hydraulic oil warm up procedure at page 6-55.)
4) Disconnect return hose from fitting.
   Install cap fitting.
5) Run engine at specifications. Rotate steering wheel against locking bar using approximately 1.2kg · m of force.
   Measure oil flow from return hose for 1 minute.
6) Leakage is greater than specifications, repair or replace steering unit.

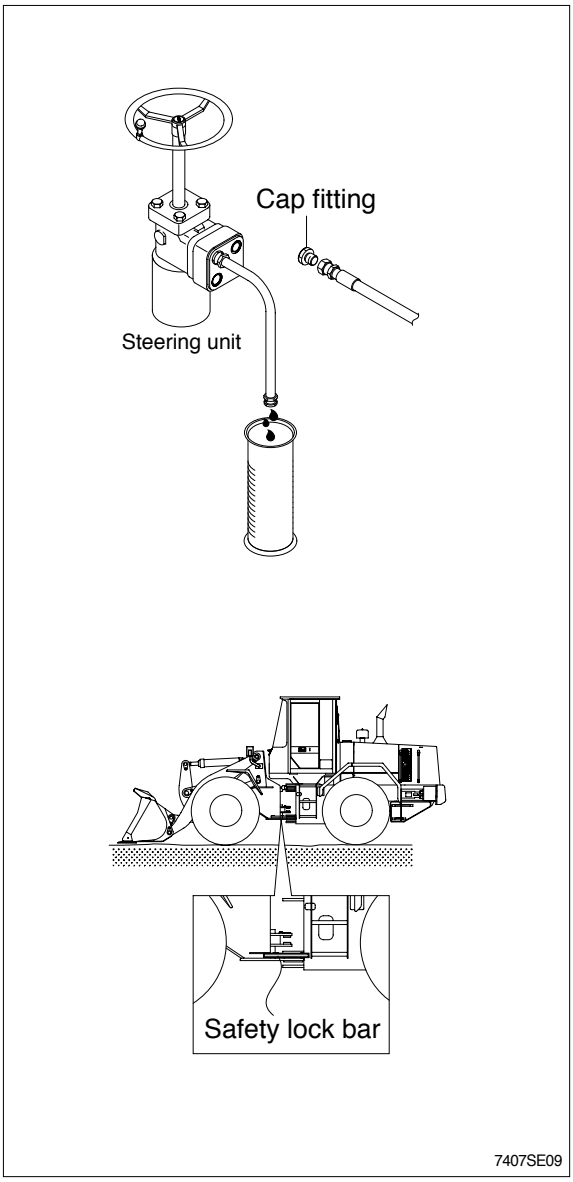

5. STEERING UNIT PRESSURE TEST

· **SPECIFICATION**

Oil temperature	45±5°C (113±9°F)
Engine speed	High idle
Relief pressure	20.5~21.5Mpa
	(205~215bar, 3200~3300psi)

· **GAUGE AND TOOL**

Gauge 0~35.0Mpa(0~350bar, 0~5000psi)
Temperature reader

1) Connect test fitting and gauge to P port on steering unit.

2) Install temperature reader.(See temperature installation procedure in this group.)

3) Install frame locking bar.

4) Heat hydraulic oil to specifications.(See hydraulic oil warm up procedure at page 6-55.)

5) Run engine at specifications and turn steering wheel rapidly hold approximately 22N(5lb force) pressure on wheel with frames locked.

※**If steering wheel is turned slowly, it will continue to with the frames locked. This will give an incorrect pressure reading.**

If steering wheel continues to turn rapidly with the frames locked, steering system leakage is indicated.

6) Read pressure gauge. This is the steering unit relief pressure.

7) If pressure in not to specification, remove the plug(A) from steering unit. Turn adjusting screw in relief cartridge using a hex head wrench to adjust pressure.

If pressure cannot be adjusted to specification, disassemble and inspect steering unit.

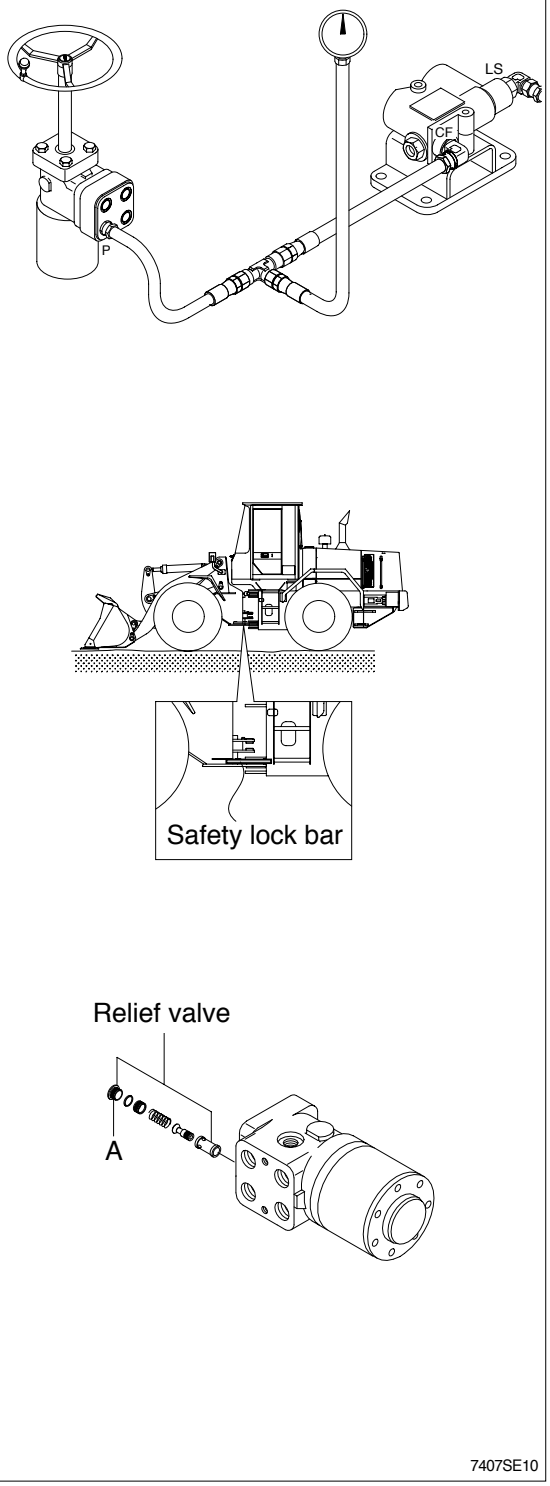

6. PRIORITY VALVE "LS" PORT FLOW TEST

- **SPECIFICATION**

Oil temperature	45±5°C (113±9°F)
Engine speed	Low idle
LS port flow(Approx)	0.5ℓ/min(0.13gpm)

- **GAUGE AND TOOL**

Temperature reader
Measuring container
Stop watch

Priority valve LS port flow test will check for a plugged or missing orifice in the priority valve spool. A plugged orifice will block warm up flow to the steering unit which can cause thermal shock.(See for an explanation of thermal shock, page 5-18).

A missing orifice can cause the pump to be loaded to high pressure at all times causing overheating.

1) Install temperature reader.(See temperature reader installation procedure in this group.)
2) Heat hydraulic oil to specifications.(See hydraulic oil warm up procedure at page 6-55.)
3) Disconnect line from LS port and install plug(A).
4) Connect line(B) to priority valve.
5) Start engine and run at specification.
6) Measure flow from LS port for 1 minute.

   If flow is low, low steering system neutral pressure or a plugged orifice in priority valve spool is indicated.

   If flow is high, remove priority valve spool and inspect for a missing orifice.

   Do hydraulic system restriction test in this group.

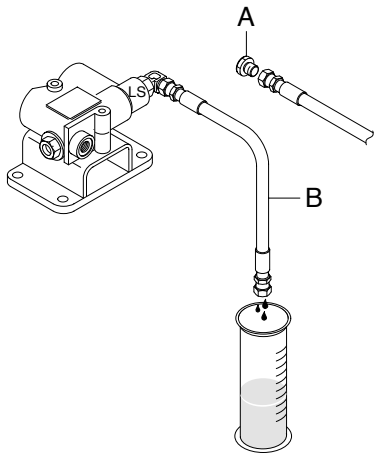

7303ASE09

GROUP 4 DISASSEMBLY AND ASSEMBLY

1. PRIORITY VALVE

1) STRUCTURE

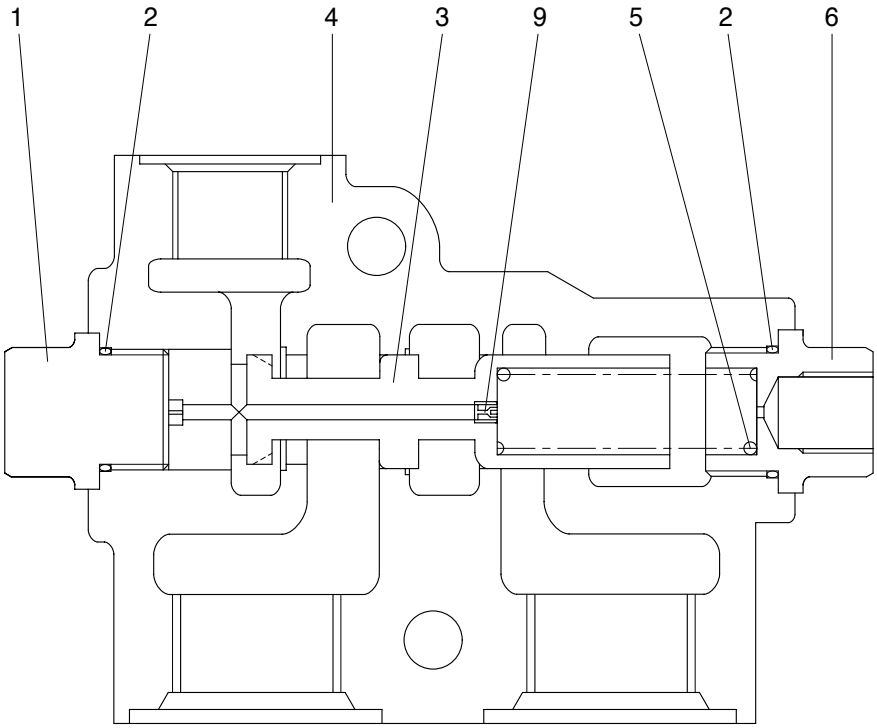

7405S 5-6

1	Plug	4	Housing	8	Drive screw
2	O-ring	5	Spring	9	Orifice
3	Spool	6	Plug		

2) TOOLS

- Torque wrench(5kgf · m)
- Hex socket wrench(1")
- Hex socket wrench(7/8")
- Hex wrench (7/32")
- Pincette
- Grease

3) DISASSEMBLY

※ Cleanliness is the primary means of assuring satisfactory the priority valve life.
Select clean place.
Before removing the piping, clean the surrounding area of valve ports.

(1) Fix the housing(4) in a vise with copper or lead sheets.
Do not over tighten jaws.

(2) Loosen plug(6) for LS port.

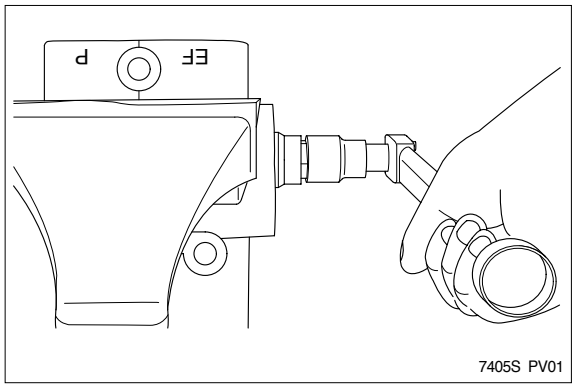

(3) Remove spring (5).

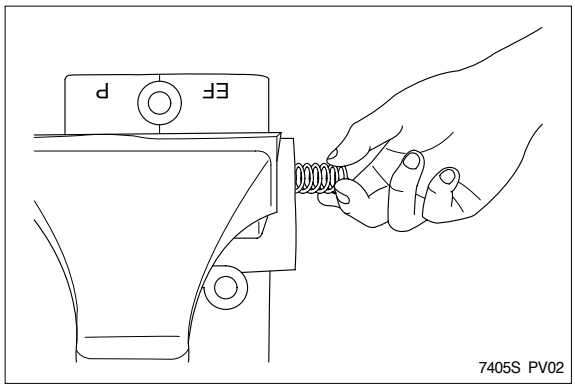

(4) Remove Plug(1) and separate O-ring(2) individually.

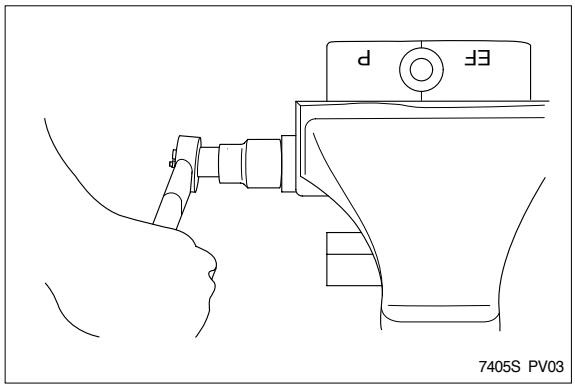

(5) Remove the spool(3).

※ Can't remove the orifice(9) from spool(3), because the orifice was locked at the spool.

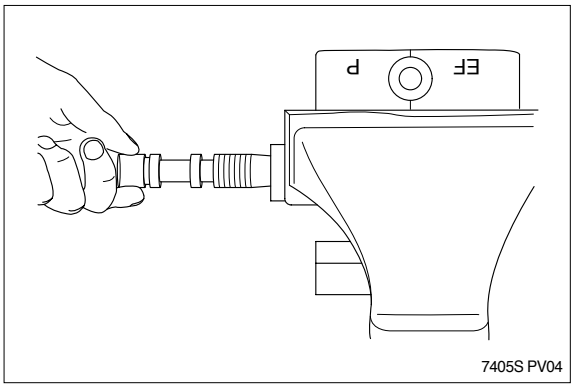

7405S PV04

(6) The priority valve is now dismantled.

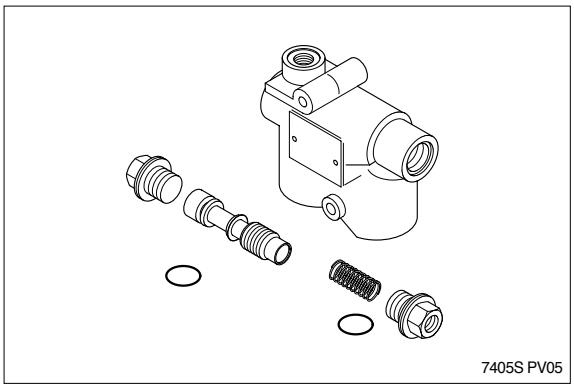
7405S PV05

4) ASSEMBLY

※ Clean all metal parts in clean solvent and blow dry with air and correct any damage, burrs and rust.

※ Do not wipe dry with cloth or paper towel.

※ Replace seals such as O-ring with new ones as a rule and coat with grease.

(1) Fix the housing(4) in a vise.

※ Do not over tighten jaws.

(2) Insert the spool(3) in the housing(4).

※ Secure the spool(3) remain in their correct direction as the illustration.

※ Secure the spool(3) to move smoothly by finger.

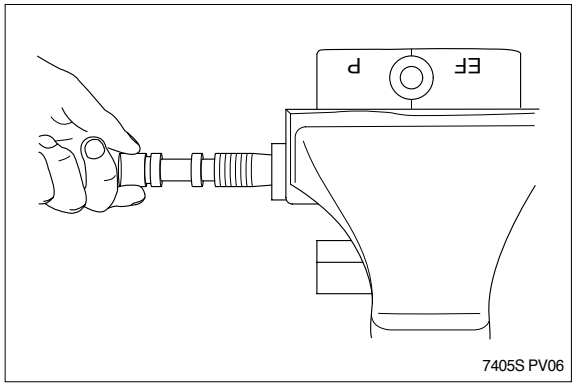

7405S PV06

(3) Install the O-ring(2) onto plug(1) and istall the plug(1) into the housing(4).

· Tighten torque : 6.1kgf · m(44.3lb · ft)

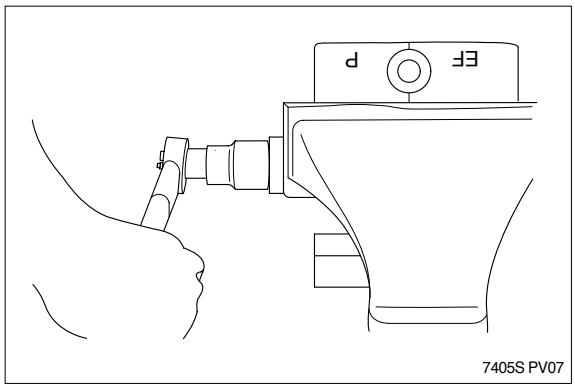

7405S PV07

(4) Insert the spring(5) into the housing(4).

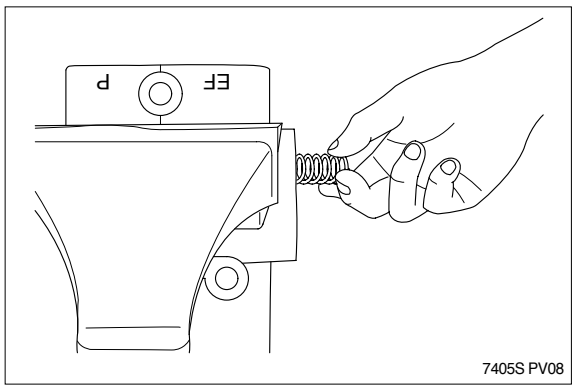

7405S PV08

(5) Install the O-ring(2) on plug(6) and install the plug(6) into the housing(4).
· Tighten torque : 6.1kgf · m(44.3lb · ft)

This completes assembly.

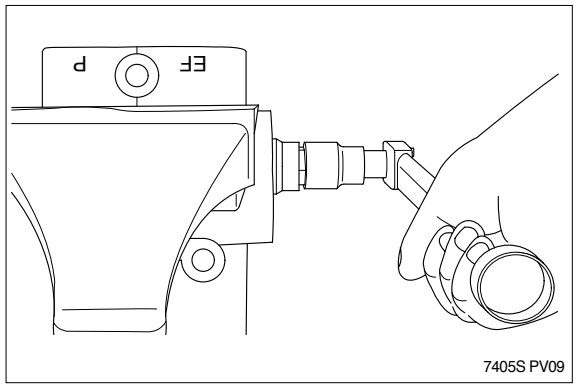

5) TROUBLESHOOTING

Problem	Cause	Remedy
Steering wheel is heavy	1. Relief valve of steering unit is clogged with dirt.	Disassembly, clean and reassembly.
	2. Spool is stuck.	Disassembly, clean and reassembly or replace.
	3. Orifice of plug and spool is clogged.	Disassembly, clean and reassembly.
(Steering wheel is heavy at engine low idle)	a. Pump is faulty.	Check pump.
(Steering speed is not high at engine high idle)	b. Control pressure is low.	Reset control pressure.
	c. Piping is faulty.	Replace piping.
	d. Pump is faulty.	Check pump.
Abnormal noise	1. Relief valve of steering unit is clogged with dirt.	Disassembly, clean and reassembly.
	2. Spool is stuck.	Disassembly, clean and reassembly or replace.
Leakage	1. Loosen the plug.	Retighten the specified torque.
	2. O-ring is damaged.	Replace.

2. STEERING UNIT

1) STRUCTURE

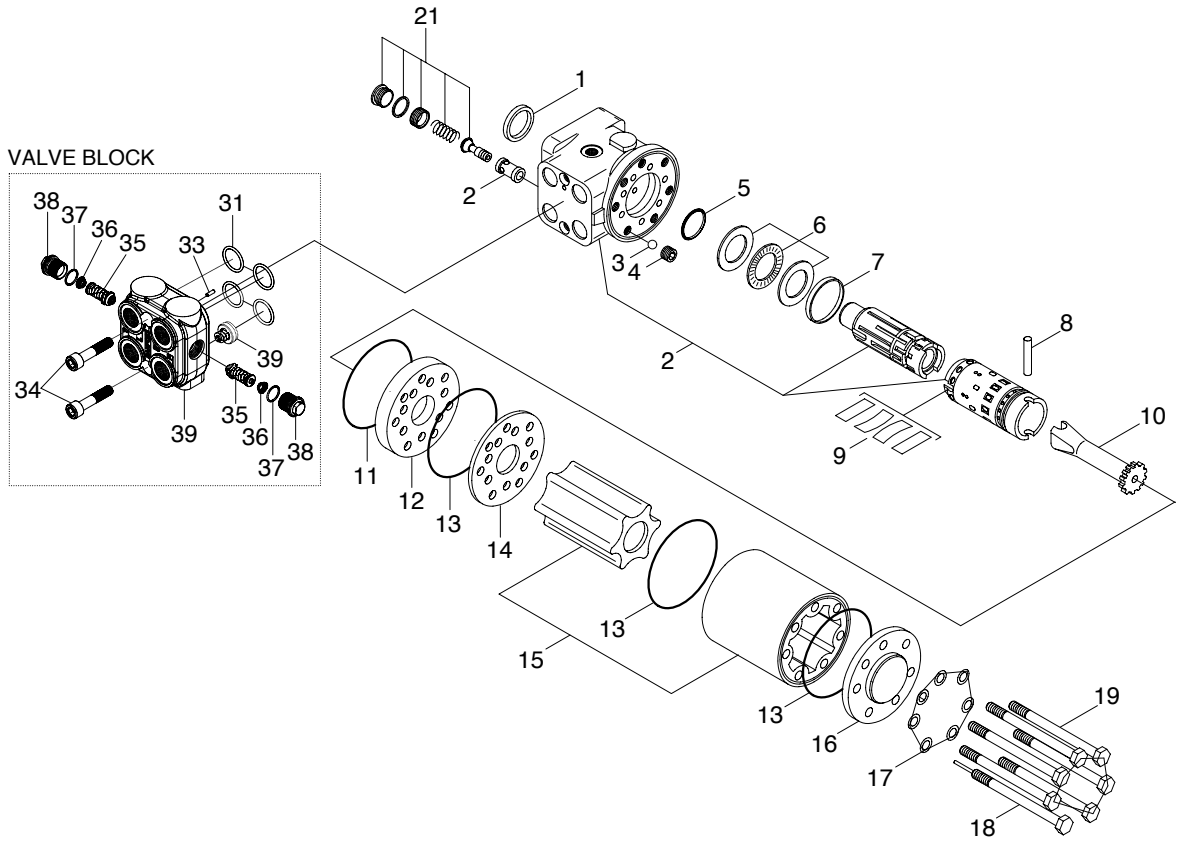

7407SE11

1	Dust seal ring	11	O-ring	21	Complete relief valve without seat
2	Housing, spool, sleeve	12	Intermediate plate	31	Set of o-rings
3	Ball	13	O-ring	33	Rolled pin
4	Thread bushing	14	Distributor plate	34	Screw
5	Roto glyd ring	15	Gearwheel set	35	Shock valve
6	Bearing assembly	16	End cover	36	Spring
7	Ring	17	Washer	37	O-ring
8	Cross pin	18	Screw with pin	38	Plug
9	Set of spring	19	Screw	39	Housing, check valve
10	Cardan shaft				

2) TOOLS

(1) Holding tool.

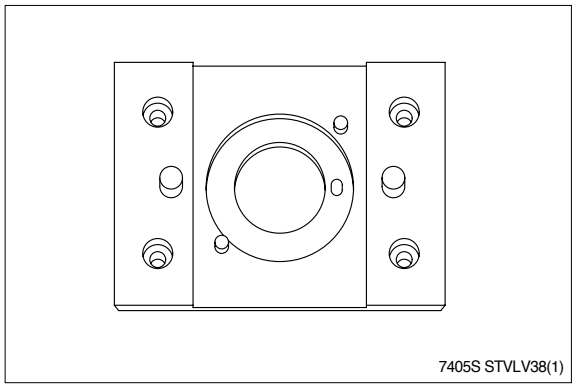

7405S STVLV38(1)

(2) Assembly tool for O-ring and kin-ring.

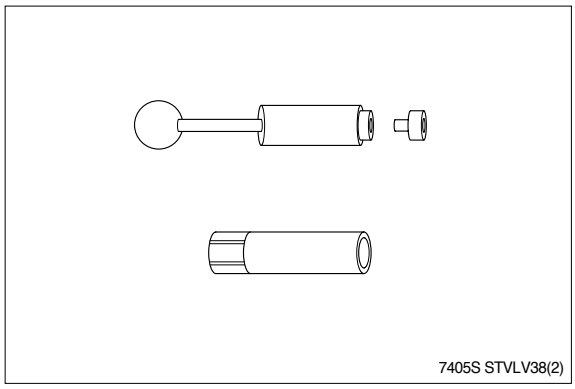

7405S STVLV38(2)

(3) Assembly tool for dust seal.

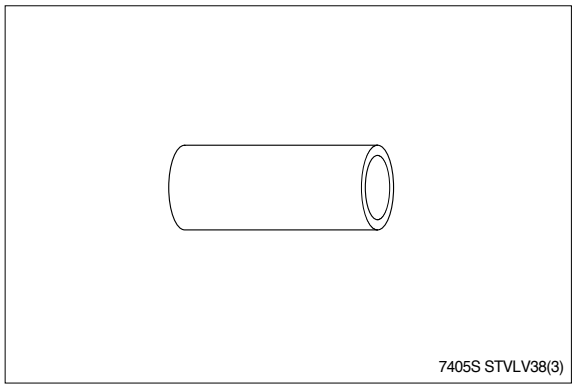

7405S STVLV38(3)

(4) Torque wrench 0-7.1kgf · m(0-51.6lb · ft).
13mm socket spanner
12mm screwdriver
6mm screwdriver
2mm screwdriver
Plastic hammer
Ratchet spanner

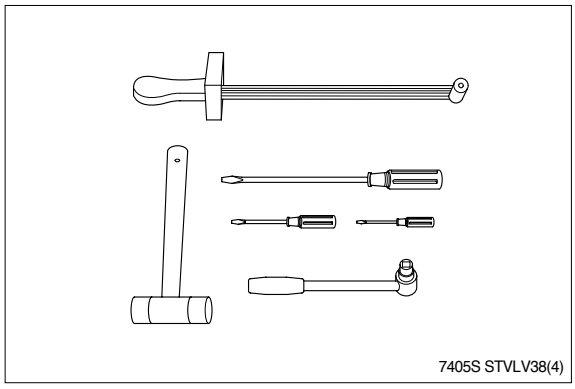

7405S STVLV38(4)

3) DISASSEMBLY

(1) Disassemble steering column from steering unit and place the steering unit in the holding tool. Screw out the screws in the end cover(7-off-one rolled pin).

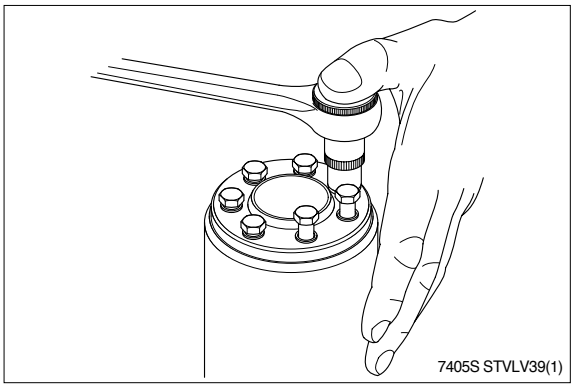

(2) Remove the end cover, sideways.

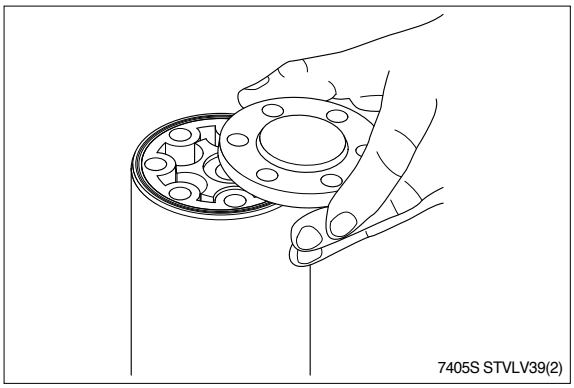

(3) Lift the gearwheel set with spacer bushing(and spacer if fitted) off the unit. Take out the two O-rings.

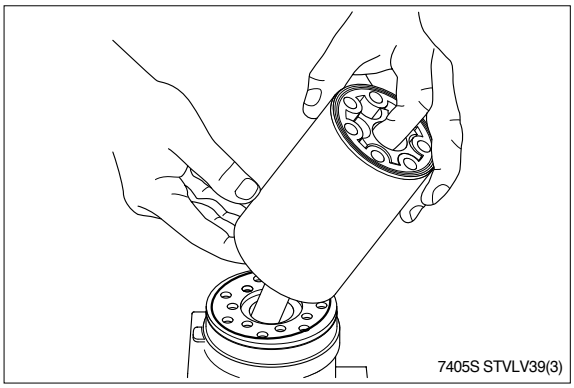

(4) Remove spacer bushing and spacer(if fitted) from the gearwheel.

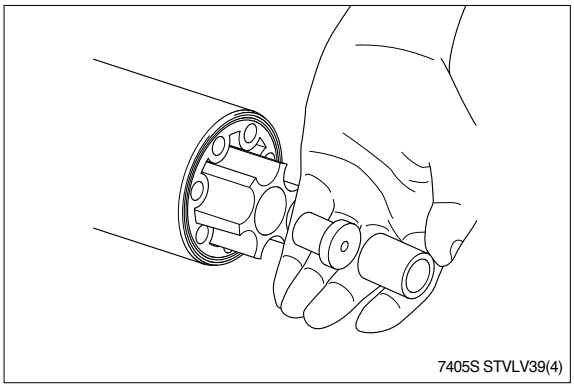

(5) Remove cardan shaft.

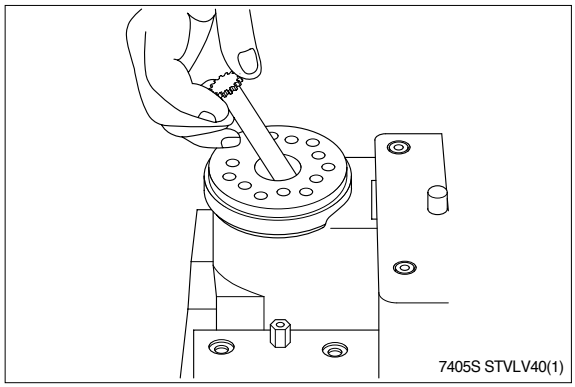

(6) Remove distributor plate.

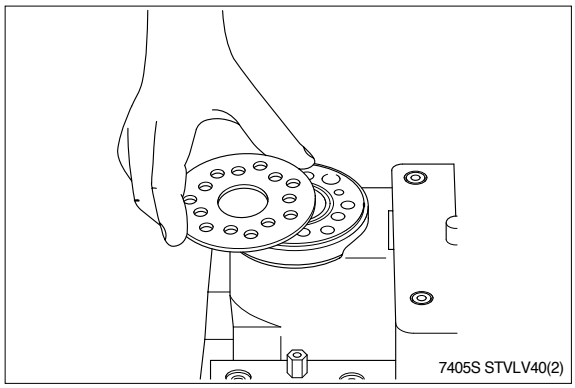

(7) Remove O-ring.

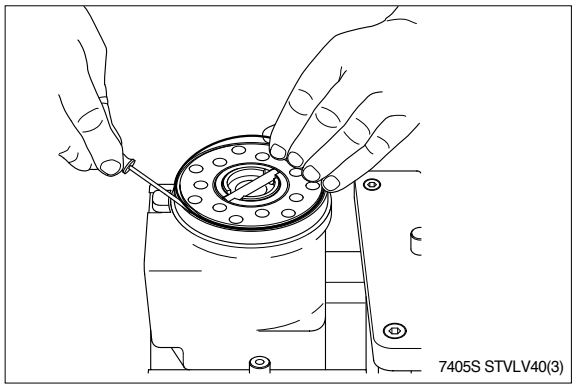

(8) Lift off intermediate plate.

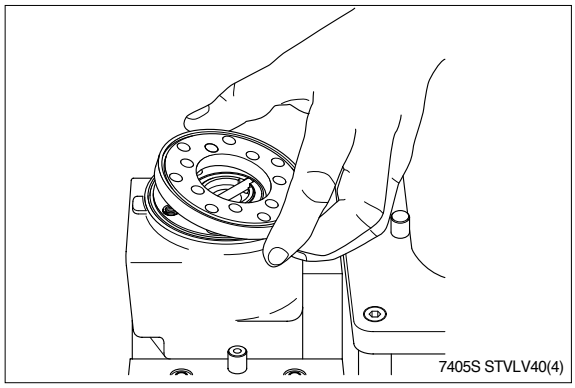

(9) Remove O-ring.

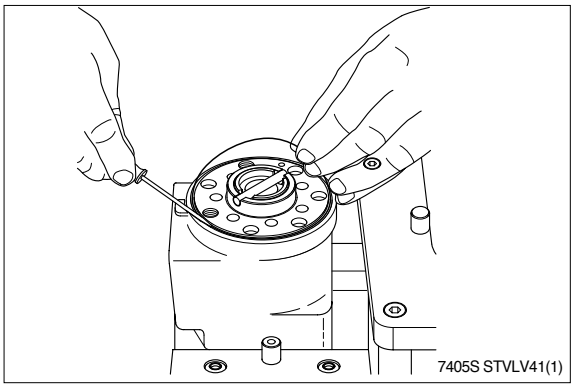

(10) Screw out the threaded bushing.

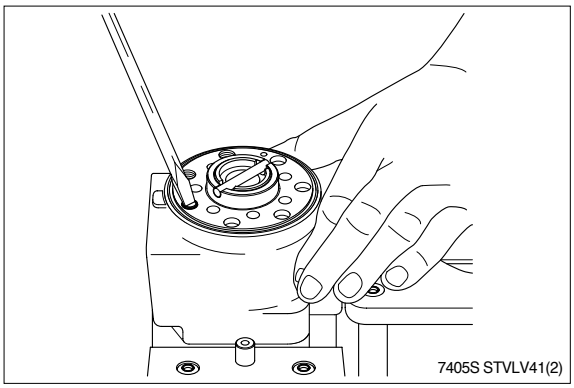

(11) Remove cross pin.

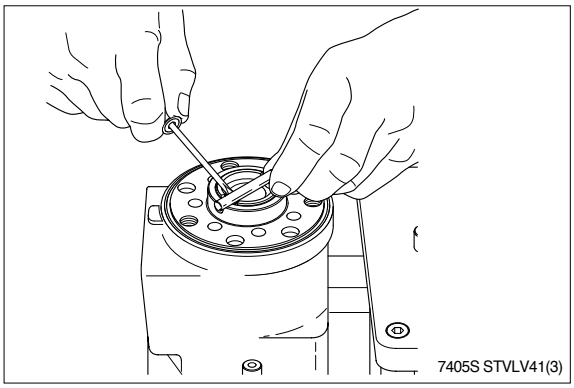

(12) Shake out the ball(Ø8.5mm).

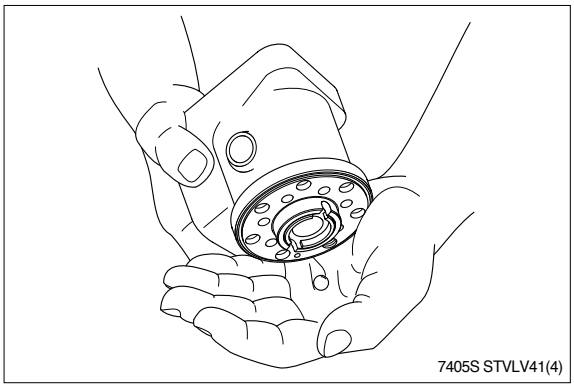

(13) Pull sleeve and spool out of the housing.

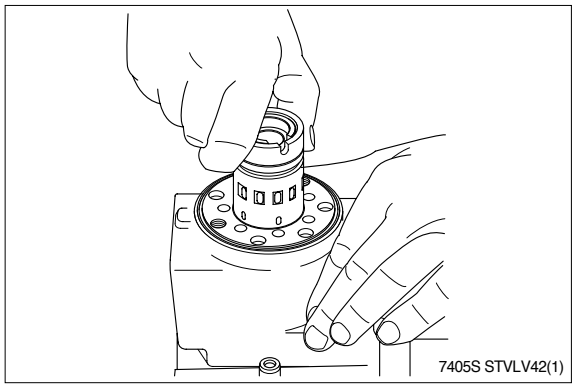
7405S STVLV42(1)

(14) Take ring, bearing races and needle bearing from sleeve and spool. The outer(thin) bearing race can sometimes "stick" in the housing, therefore check that it has come out.

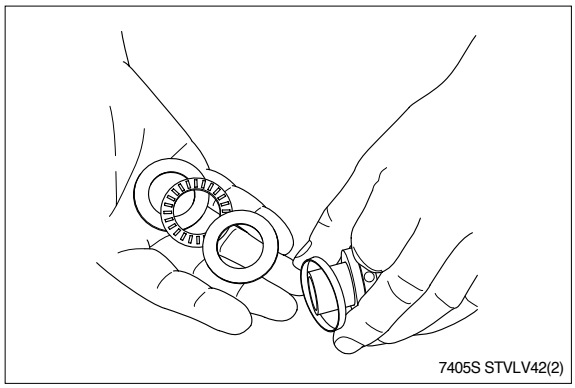
7405S STVLV42(2)

(15) Carefully pull the spool out of the sleeve.

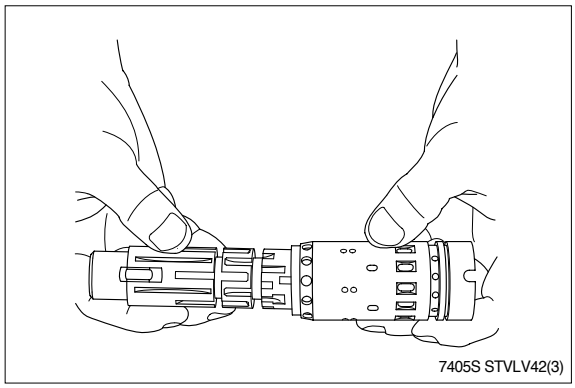
7405S STVLV42(3)

(16) Press the neutral position springs out of their slots in the spool.

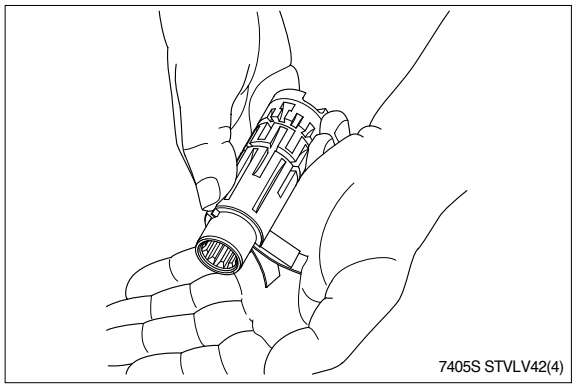
7405S STVLV42(4)

(17) Remove dust seal and O-ring.

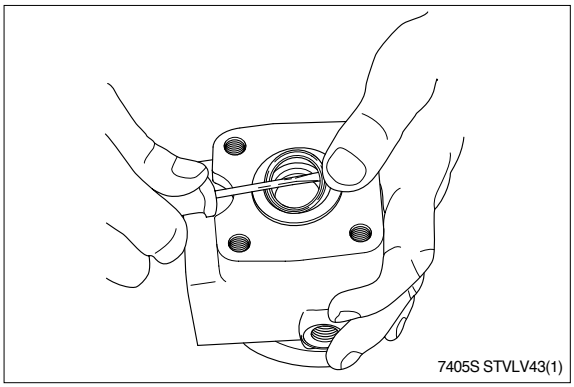

(18) The steering unit is now completely disassembled.

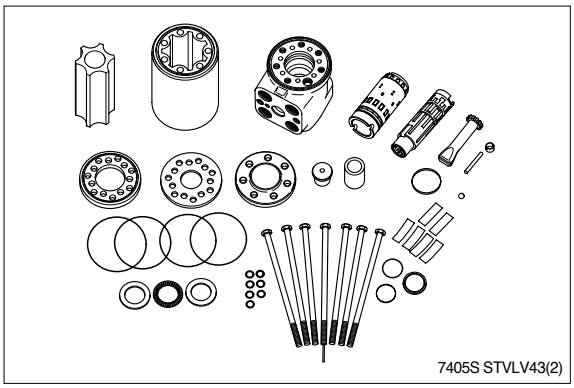

Cleaning

Clamp all parts carefully in Shellsol K or the like.

Inspection an replacement

Replace all seals and washer. Check all parts carefully and make any replacements necessary.

Lubrication

Before assembly, lubricate all parts with hydraulic oil.

4) ASSEMBLY

(1) Assemble spool and sleeve.

※ The sleeve and spool are correctly assembled when

① The slots-in sleeve and spool-for the neutral position springs are opposite each other and

② One of the 3 T-shaped grooves(A) in the spool is opposite one of the sets(B) of small holes in the sleeve.

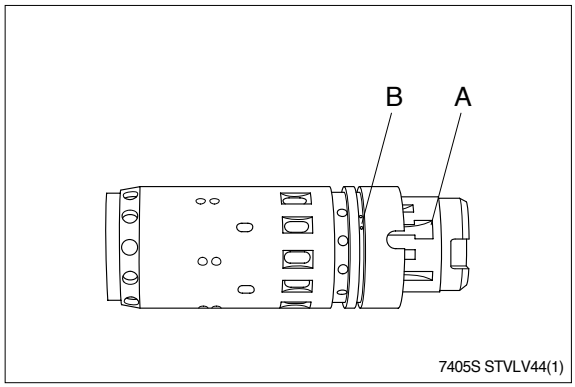

7405S STVLV44(1)

(2) Place the two flat neutral position springs in the slot.

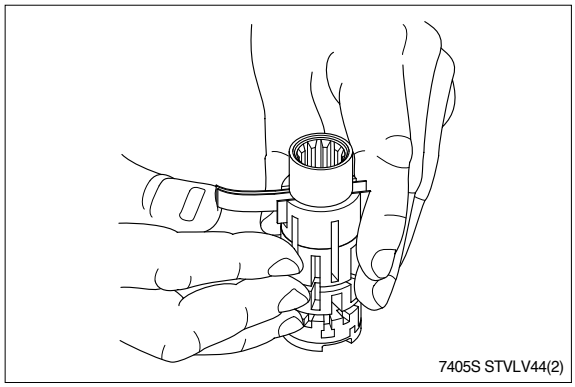
7405S STVLV44(2)

(3) Place the curved springs between the flat ones and press them into place.

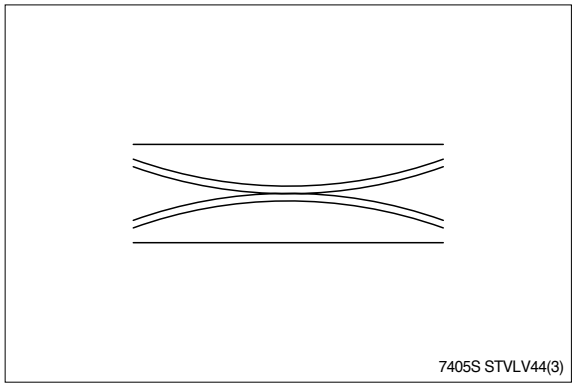
7405S STVLV44(3)

(4) Line up the spring set.

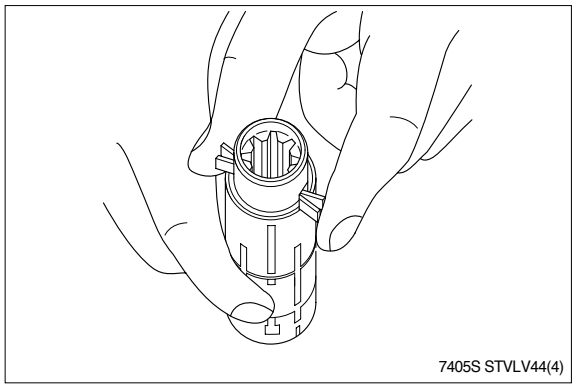
7405S STVLV44(4)

(5) Guide the spool into the sleeve.

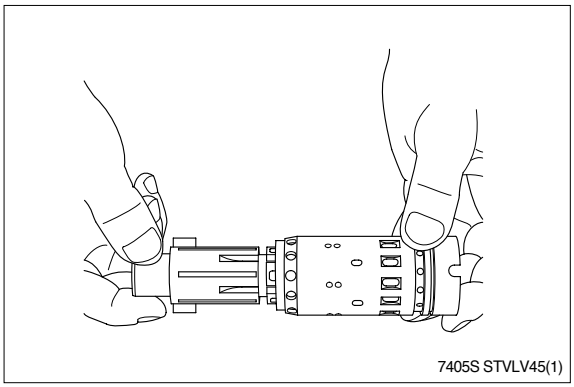

7405S STVLV45(1)

(6) Press the springs together and push the neutral position springs into place in the sleeve.

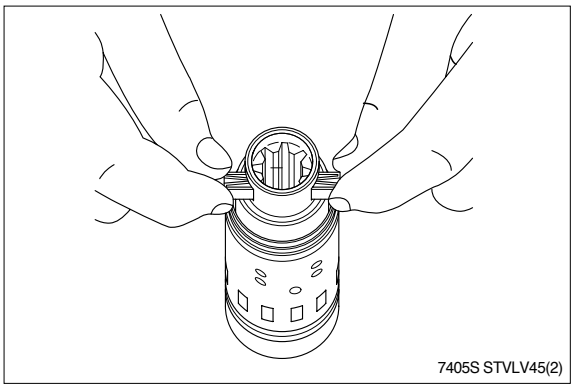

7405S STVLV45(2)

(7) Line up the springs and center them.

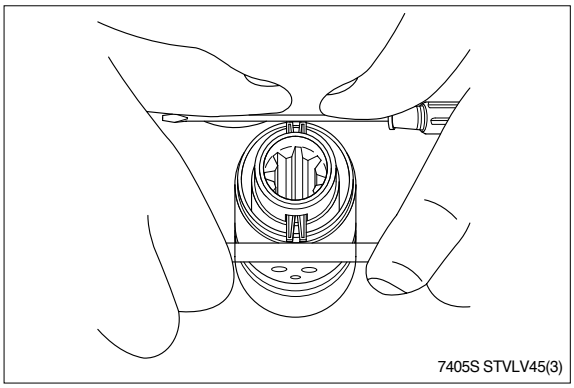

7405S STVLV45(3)

(8) Guide the ring down over the sleeve.

※ The ring should be able to rotate-free of the springs.

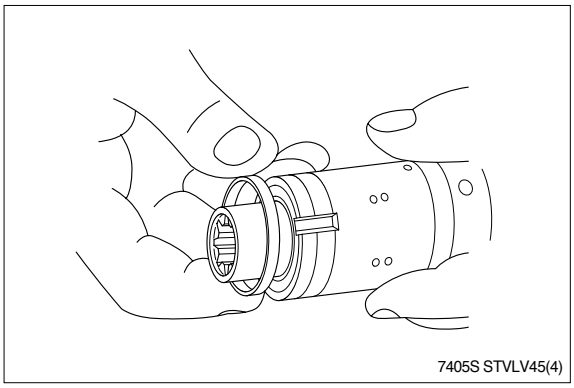

7405S STVLV45(4)

(9) Fit the cross pin into the spool/sleeve.

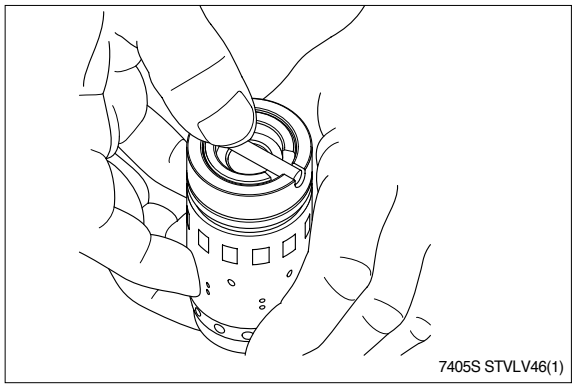

(10) Fit bearing races and needle bearing as shown on below drawing.

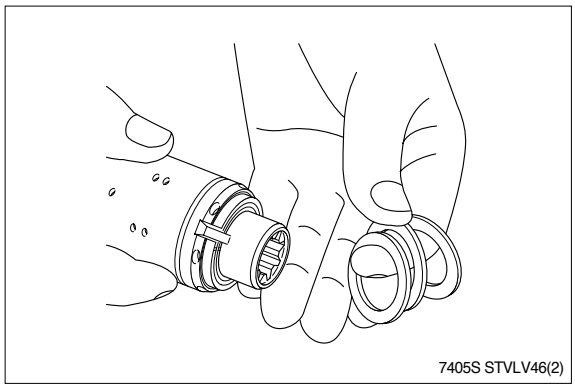

1 Outer bearing race
2 Needle bearing
3 Inner bearing race
4 Spool
5 Sleeve
* Inside chamfer on inner bearing race must face inner spool.

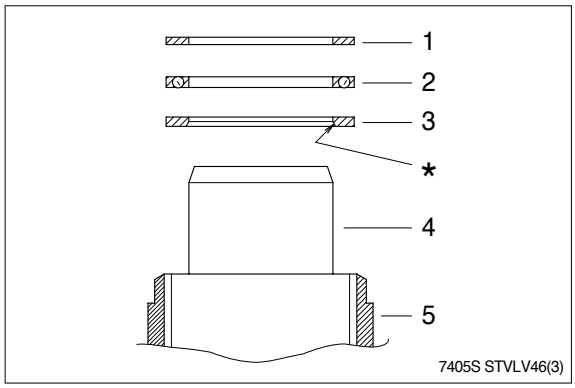

(11) Grease O-ring and kin-ring with hydraulic oil and place them on the tool. See next page.

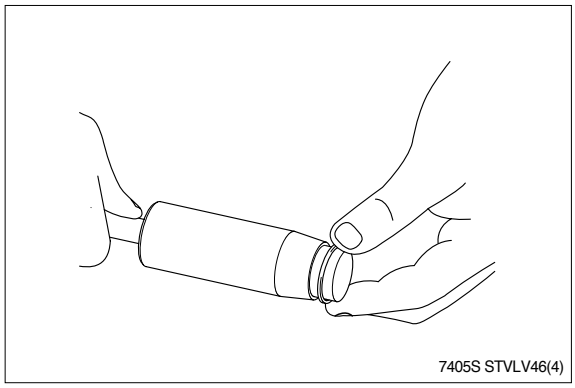

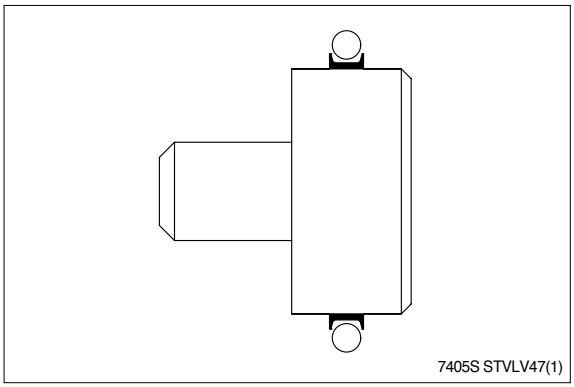
7405S STVLV47(1)

(12) Put the steering unit in the holding tool keeping the bore vertical. Guide the outer part of the assembly tool into the bore. Guide the inner part of the tool right to the bottom.

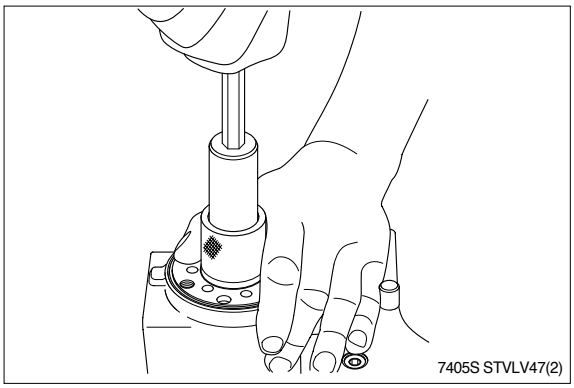
7405S STVLV47(2)

(13) Press and turn the O-ring into position in the housing. Draw the inner and outer parts of the assembly tool out of the steering unit bore, leaving the guide in the bore.

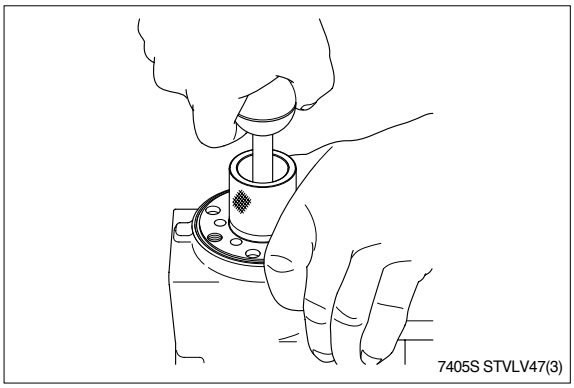
7405S STVLV47(3)

(14) Take the steering unit out of the holding tool and place it horizontally. With a light turning movement, guide the spool and sleeve into the bore.

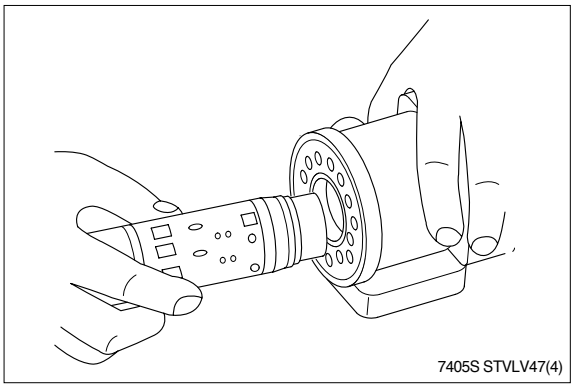
7405S STVLV47(4)

(15) The spool set will push out the assembly tool guide. The O-ring is now in position.

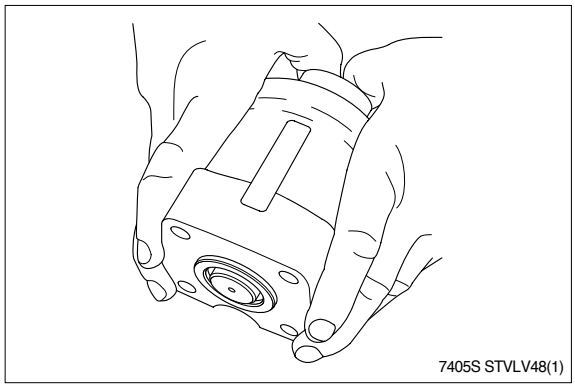
7405S STVLV48(1)

(16) Put the steering unit back into the holding tool keeping the bore vertical. Place the cross pin in the spool/sleeve so that it is parallel to the port flange.

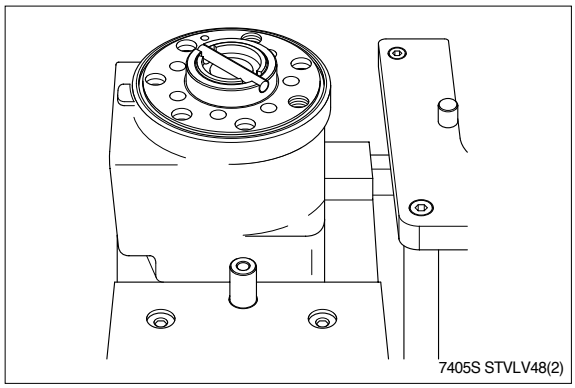
7405S STVLV48(2)

(17) Put the ball into the hole indicated by the arrow.

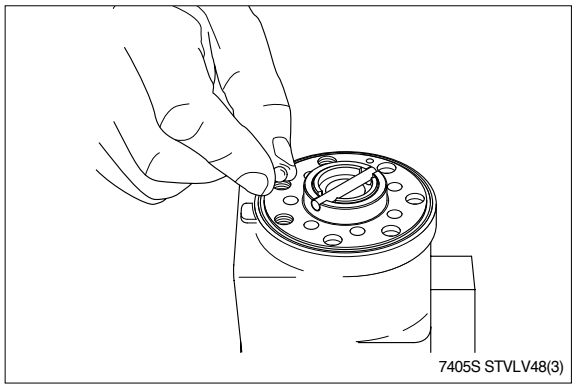
7405S STVLV48(3)

(18) Screw the threaded bushing lightly into the bore. The top of the bushing must lie just below the surface of the housing.

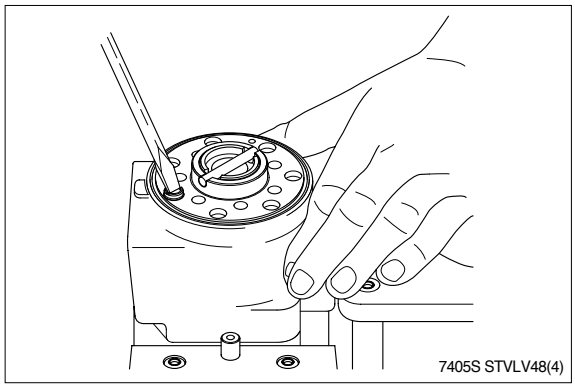
7405S STVLV48(4)

(19) Grease the O-ring with mineral oil approximate viscosity 500 cSt at 20°C and place it in the groove.

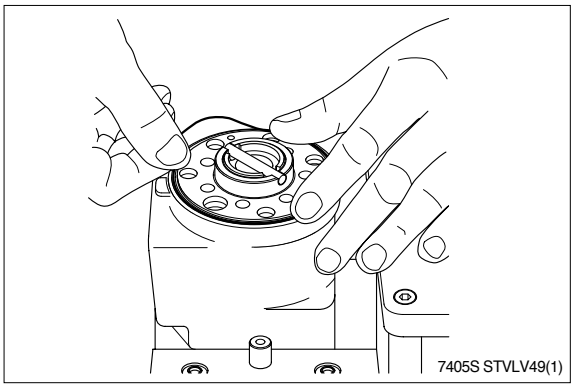

(20) Place the intermediate plate so that the channel holes match the holes in the housing.

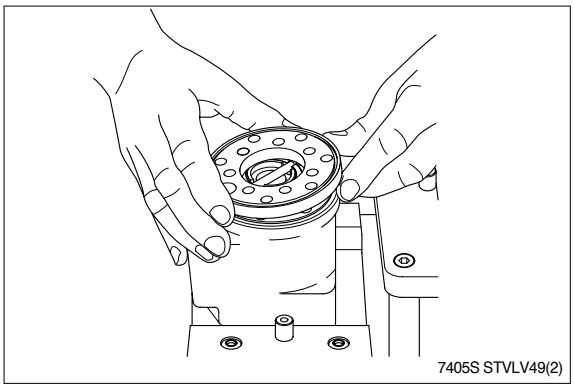

(21) Grease the O-ring with mineral oil approximate viscosity 500 cSt at 20°C and place it in the groove.

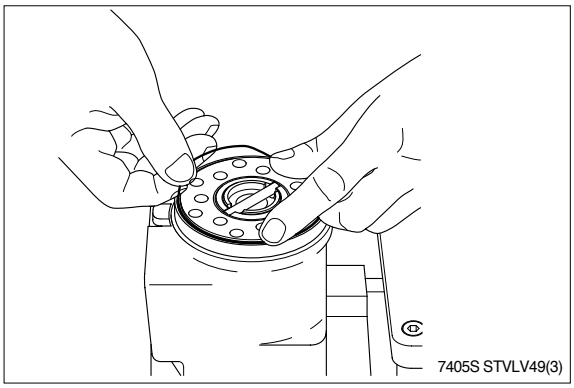

(22) Place the distributor plate so that the channel holes match the holes in the intermediate plate and the housing.

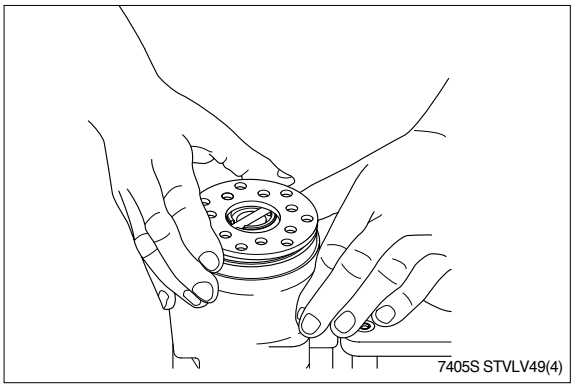

(23) Guide the cardan shaft down into the bore so that the slot is parallel with the connection flange.

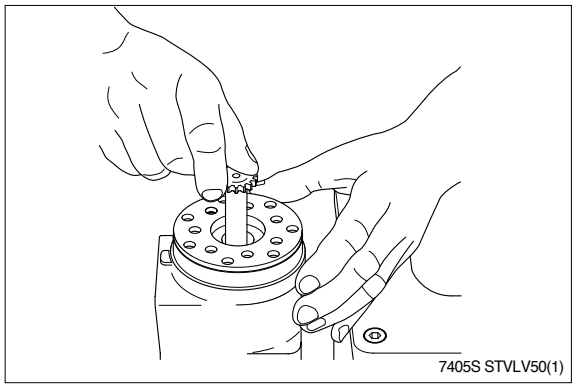
7405S STVLV50(1)

(24) Place the gear wheel(Rotor) so that the cross pin from item 33 is positioned in relation to two tooth bases - as the screw driver indicates.

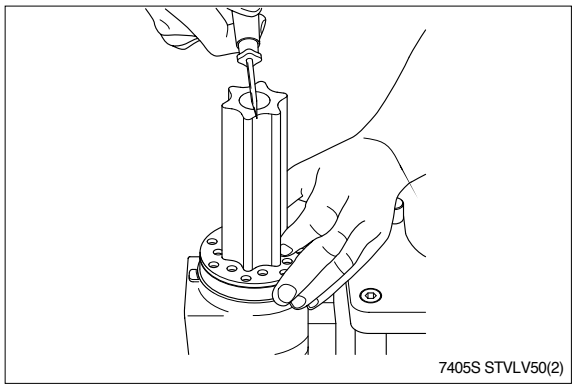
7405S STVLV50(2)

(25) Grease the two O-rings with mineral oil approximate viscosity 500 cSt at 20。C and place them in the two grooves in the gear rim. Fit the gear rim so that the seven through holes match the holes in the distributor plate.

※ Turn the gear rim so that the smaller diameter of the holes face the distributor plate.

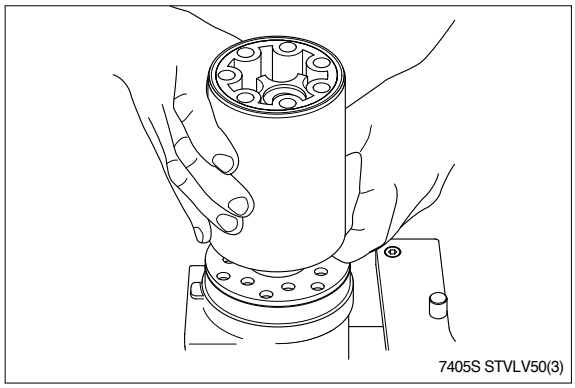
7405S STVLV50(3)

(26) Orientate the holes with a single screw.

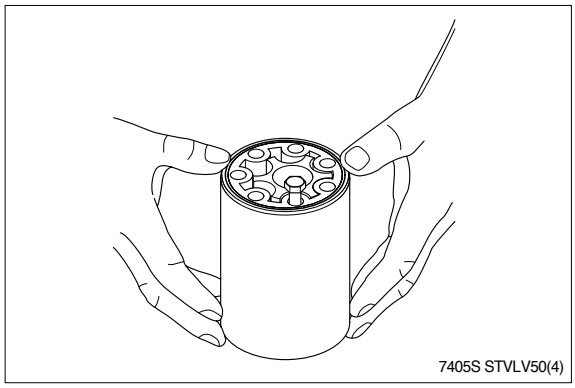
7405S STVLV50(4)

(27) Place the end cover in position.

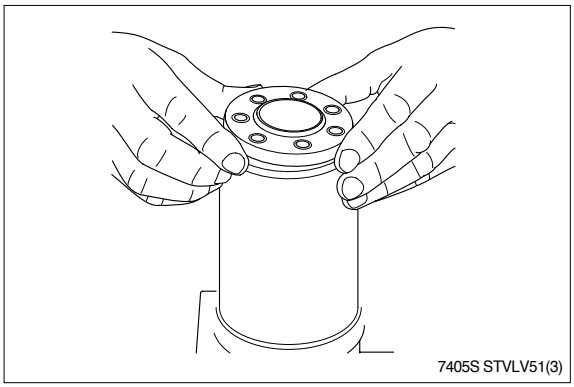
7405S STVLV51(3)

(28) Place the washers over the holes and the rolled pin in the hole shown.

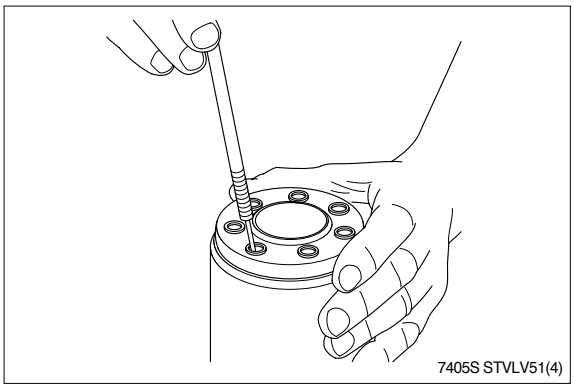
7405S STVLV51(4)

(29) Fit the other six screws. Cross - tighten all the screws and the rolled pin with a torque of $3^{\pm 0.6}$kgf · m($22^{\pm 4.4}$lb · ft). Steering unit can now be function tested.

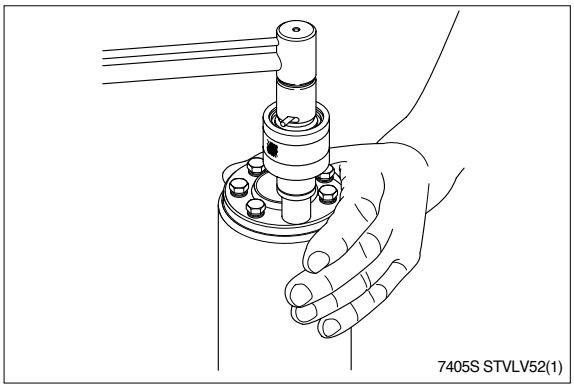
7405S STVLV52(1)

(30) Turn the steering unit 180° and place the dust seal ring in the housing.

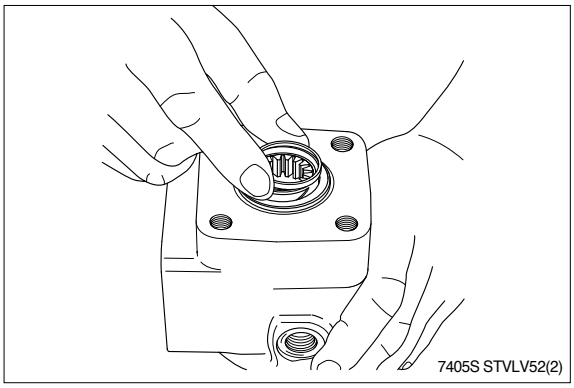
7405S STVLV52(2)

(31) Fit the dust seal ring in the housing using special tool and a plastic hammer.

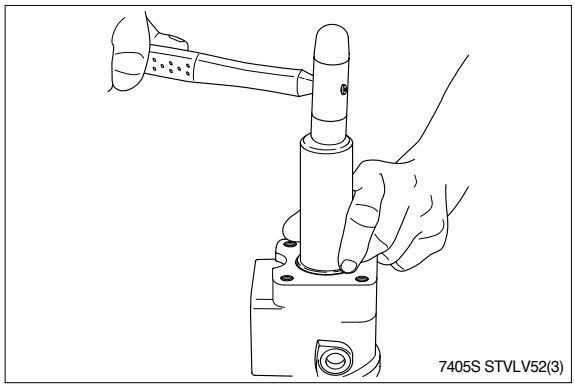

(32) Press the plastic plugs into the connection ports. Do not use a hammer.

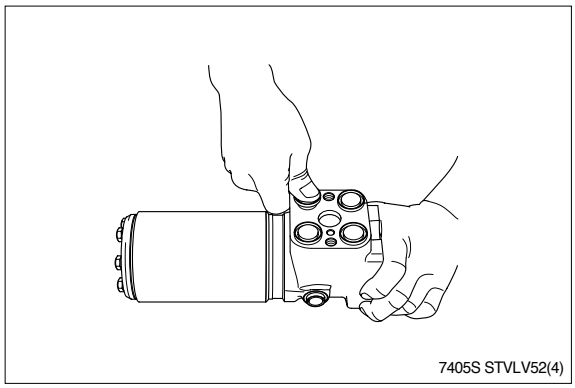

3. VALVE BLOCK

1) STRUCTURE

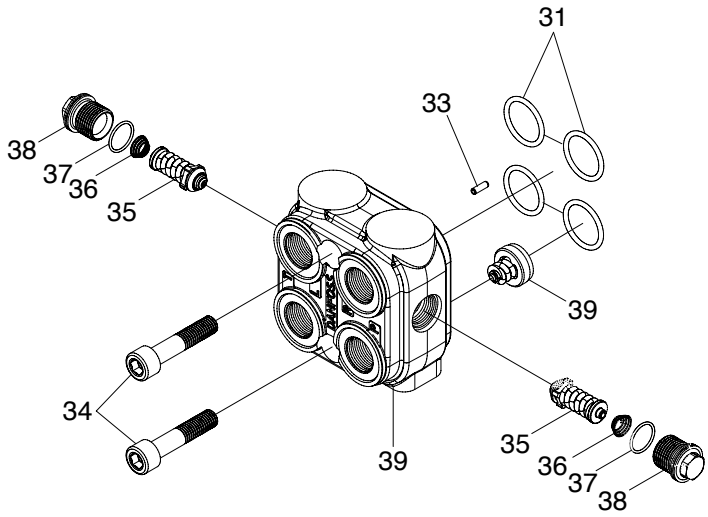

P,T,L,R port	PF 1/2
Shock valves	270-290 bar

7407SE12

31 Set of springs
33 Rolled pin
34 Screw
35 Shock valve
36 Spring
37 O-ring
38 Plug
39 Housing and check valve

2) TOOLS

(1) Hexagon socket spanner, 8㎜.

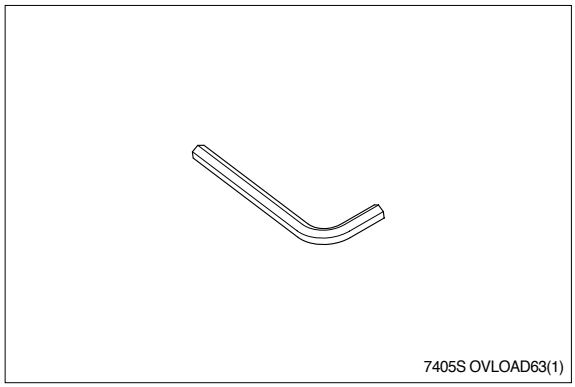

7405S OVLOAD63(1)

(2) Torque wrench, 0~7.1㎏f · m(0~51㏑ · ft) with 8㎜ hexagon socket spanner.

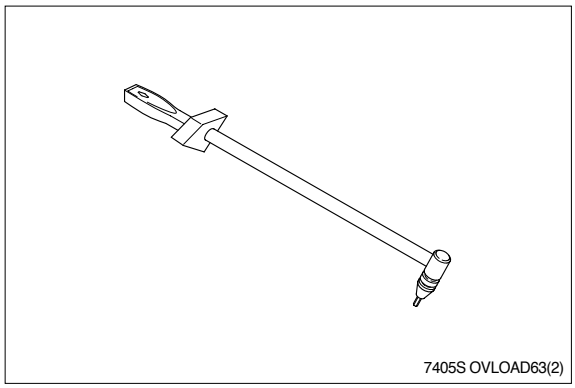

7405S OVLOAD63(2)

(3) Adjustable wrench.

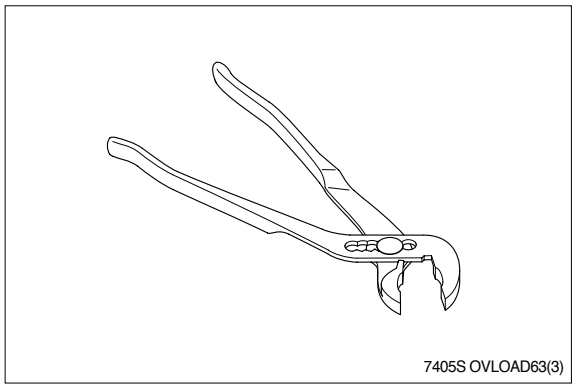

7405S OVLOAD63(3)

3) DISASSEMBLY

(1) Remove the rolled pin.

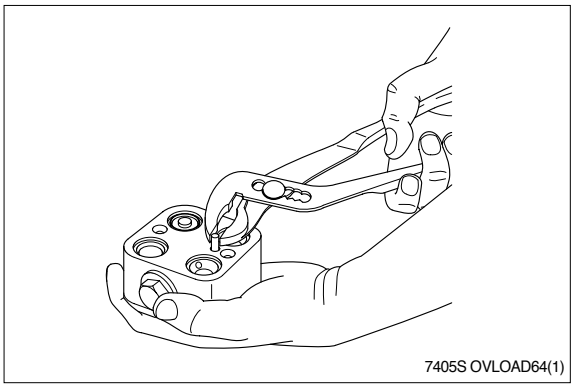

7405S OVLOAD64(1)

(2) Remove the plug(38) and O-ring(37).

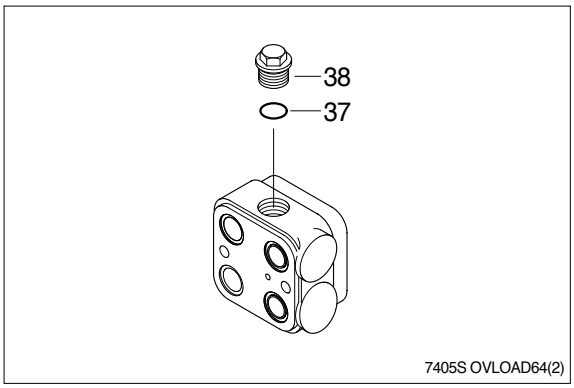

7405S OVLOAD64(2)

(3) Remove the spring(36) and shock valve(35).

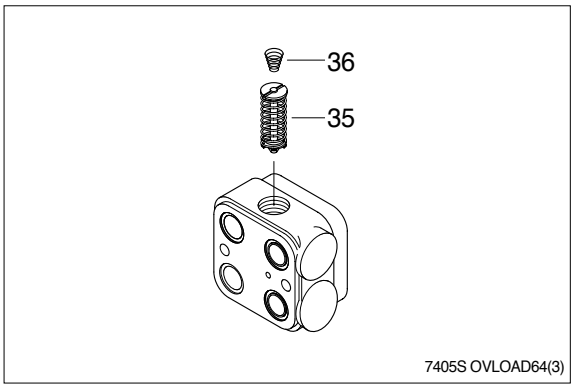

7405S OVLOAD64(3)

(4) Remove the O-ring set(31).

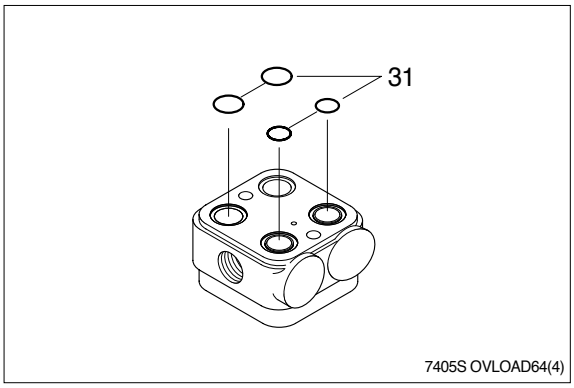

7405S OVLOAD64(4)

(5) Remove the check valve(39).

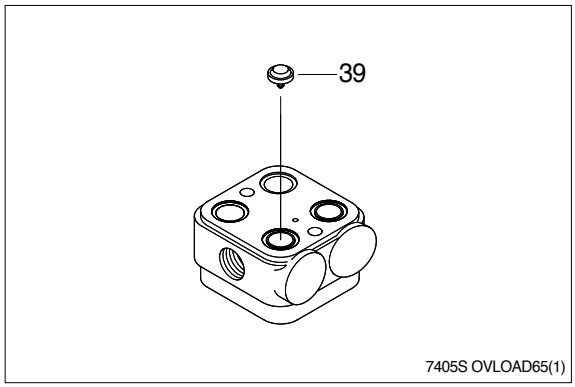

(6) The overload valve is now disassembled.

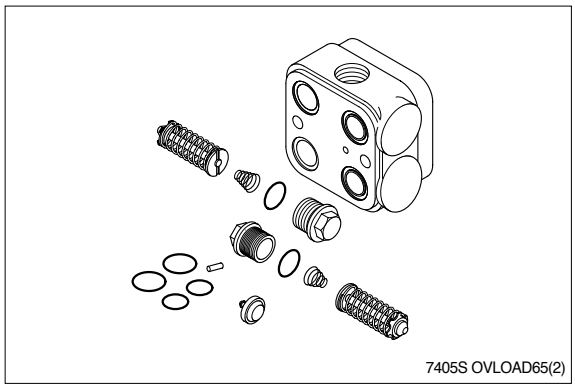

4) ASSEMBLY

Cleaning

Clean all parts carefully in Shellsol K or the like.

Inspection an replacement

Replace all seals and washers. Check all parts carefully and make any replacements necessary.

Lubrication

Before assembly, lubricate all parts with hydraulic oil.

(1) Fit check valve(39).

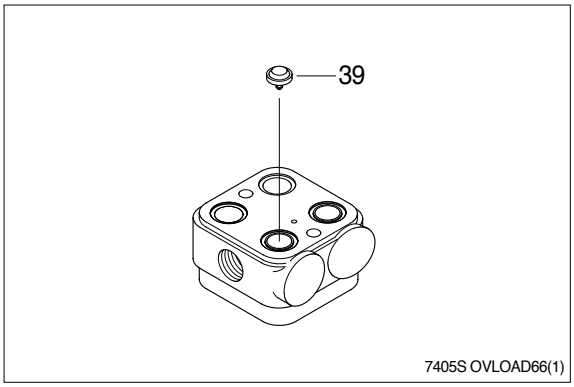

(2) Fit the shock valve(35) and spring(36).

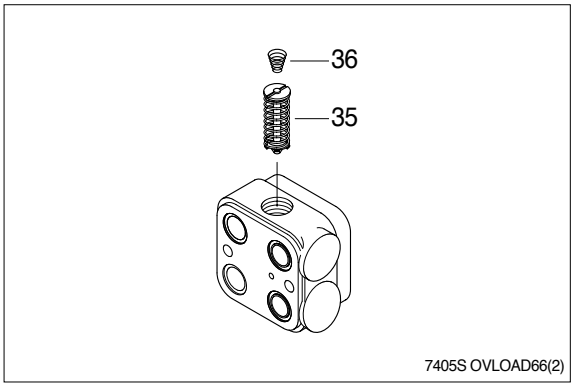

(3) Fit the O-ring(37) and screw the plug(38).

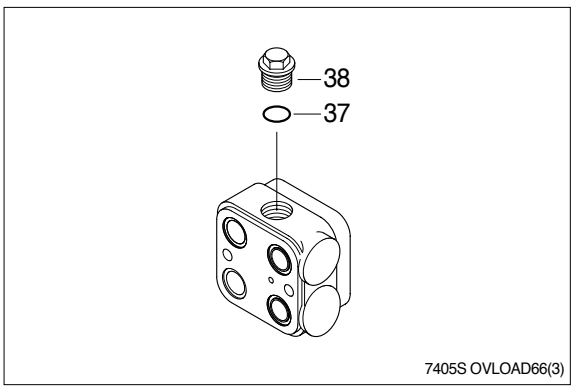

(4) Fit the rolled pin.

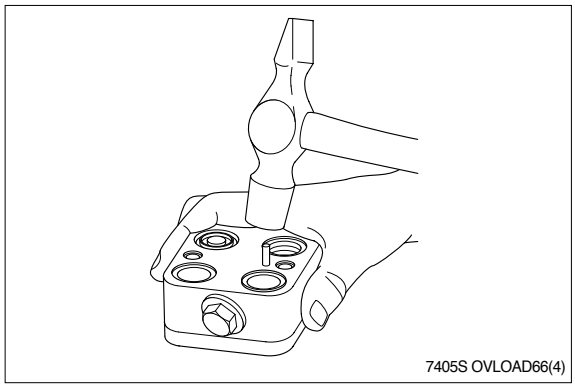
7405S OVLOAD66(4)

(5) The overload valve is now assembled. It can be checked for leakage separately or when mounted on a steering unit.

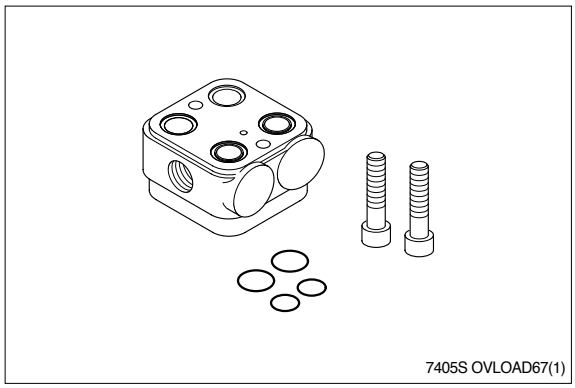
7405S OVLOAD67(1)

(6) Locate the four O-rings between overload valve and steering unit and fit these components together.

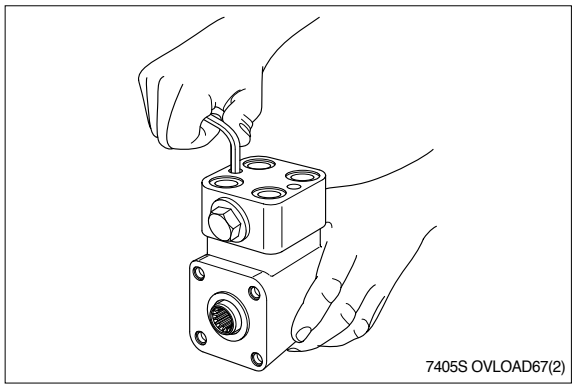
7405S OVLOAD67(2)

(7) Tighten the hexagon socket screws with a torque of $6.6^{+0.5}_{0}$ kgf · m($47.7^{+3.6}_{0}$ lb · ft).

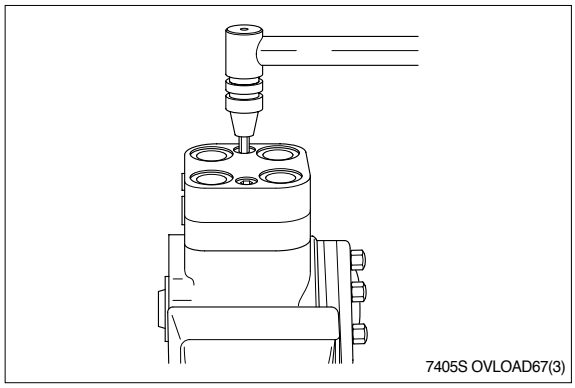
7405S OVLOAD67(3)

(8) Press the plastic plugs into the connection ports. The overload valve is now assembled.

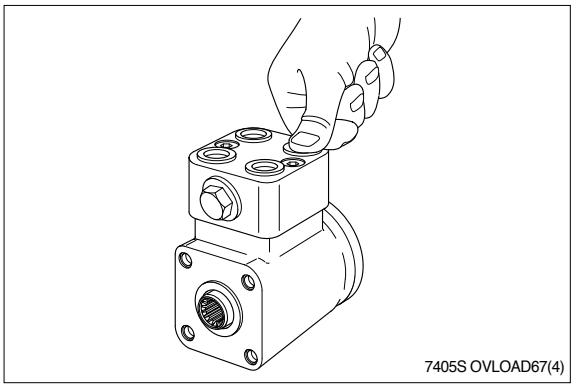

5) TROUBLESHOOTING

Problem	Cause	Remedy
Steering wheel is heavy	1. Over tighten mounting torque.	Retighten as specified torque.
	2. Over load valve seat side is clogged with dirt.	Disassembly, clean, reassembly.
Steering cylinder reaction is bad	1. Overload valve seat side is clogged with dirt.	Disassembly, clean, reassembly.
	2. Anti cavitation check valve seat is clogged with dirt.	Disassembly, clean, reassembly.
	3. Damage of O-ring for adjusting.	Replace.
Abnormal noise	1. Overload valve seat side clogged with dirt.	Disassembly, clean, reassembly.
Leakage	1. Loosen 2 mounting bolt.	Retighten as specified torque.
	2. Damage of O-ring.	Replace.
	3. Leakage through plug.	Apply seal tape to thread and retighten as specified torque.

4. STEERING CYLINDER

1) STRUCTURE

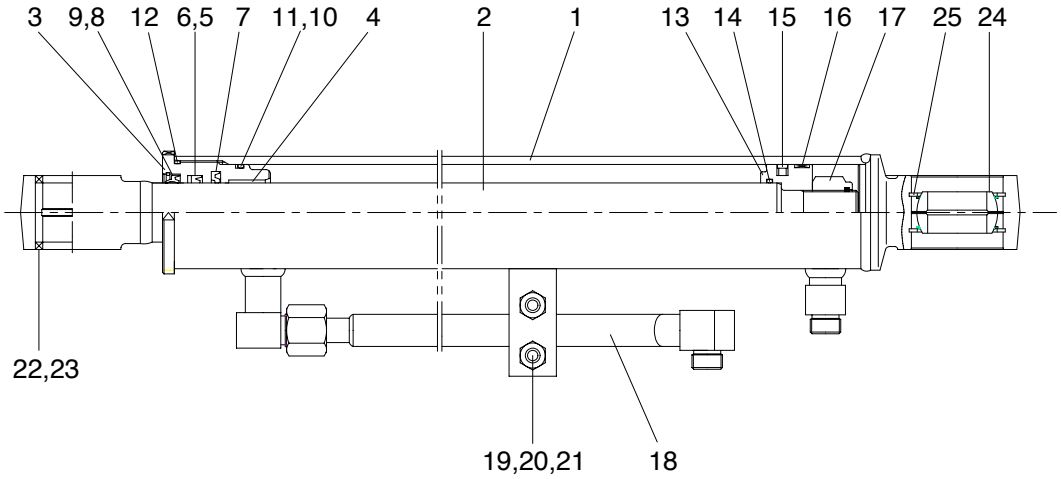

7407SE07

1	Tube assy	10	O-ring	18	Pipe assy
2	Rod assy	11	Back up ring	19	U-bolt
3	Gland	12	O-ring	20	Hexagon nut
4	Du bushing	13	Piston	21	Washer spring
5	Rod seal	14	O-ring	22	Bushing
6	Back up ring	15	Piston seal	23	Dust seal
7	Buffer ring	16	Wear ring	24	Spherical bearing
8	Dust wiper	17	Nylon nut	25	Retaining ring
9	Snap ring				

2) TOOLS AND TIGHTENING TORQUE

(1) Tools

Tool name	Remark	
Spanner	17	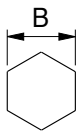
	32	
	41	
Steel bar	For gland	
(-) Driver	Small and large sizes	
Torque wrench	Capable of tightening with the specified torques	

(2) Tightening torque

Part name	Item	Size	Torque	
			kgf · m	lbf · ft
Gland	3	M70 × 2.0	70 ± 7	506 ± 51
Nylon nut	17	M27 × 2.0	75 ± 8	542 ± 58
Nut(Pipe assy)	18	M22 × 1.5	30 ± 3	217 ±21.7
Nut	20	M10 × 1.5	3.2 ± 0.3	23.1± 2.2

3) DISASSEMBLY

(1) Remove cylinder head and piston rod

① Hold the clevis section of the tube in a vise.

※ Use mouth pieces so as not to damage the machined surface of the cylinder tube. Do not make use of the outside piping as a locking means.

② Pull out piston rod(2) about 200mm (7.1in). Because the piston rod is rather heavy, finish extending it with air pressure after the oil draining operation.

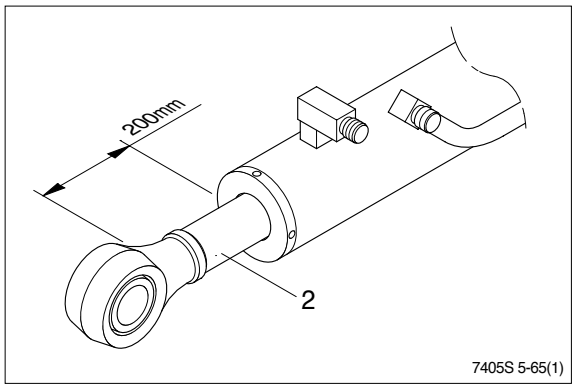

7405S 5-65(1)

③ Loosen and remove the gland(3).

※ Cover the extracted piston rod(2) with rag to prevent it from being accidentally damaged during operation.

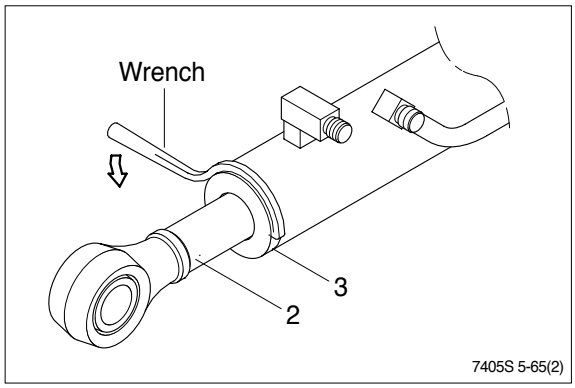

7405S 5-65(2)

④ Draw out gland(3) and piston rod (2) assembly together from cylinder tube(1).

※ Since the piston rod assembly is heavy in this case, lift the tip of the piston rod(2) with a crane or some means and draw it out. However, when piston rod(2) has been drawn out to approximately two thirds of its length, lift it in its center to draw it completely.

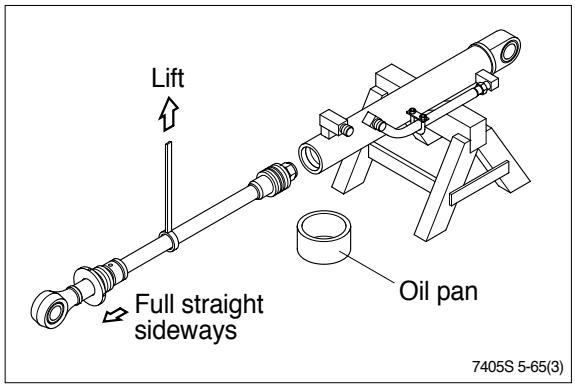

7405S 5-65(3)

※ Note that the plated surface of piston rod(2) is to be lifted. For this reason, do not use a wire sling and others that may damage it, but use a strong cloth belt or a rope.

⑤ Place the removed piston rod assembly on a wooden V-block that is set level.
※ Cover a V-block with soft rag.

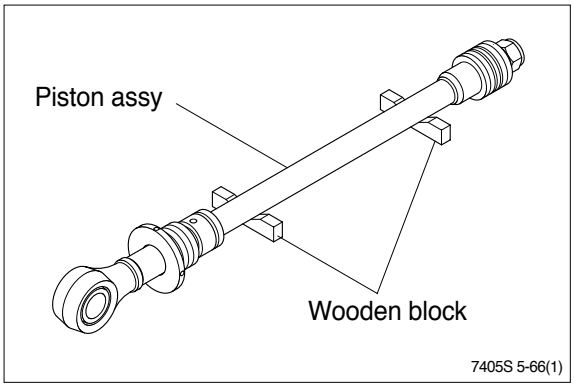

(2) Remove piston and gland assembly

① Remove the nylon nut(17).
② Remove piston assembly(13), and O-ring(14).

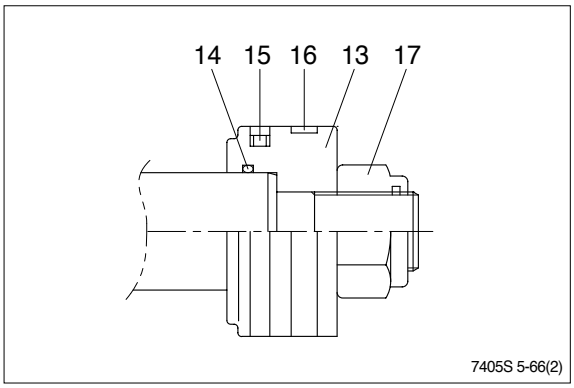

④ Remove the gland(3) assembly from piston rod(2).
※ If it is too heavy to move, move it by striking the flanged part of gland(3) with a plastic hammer.
※ Pull it straight with cylinder head assembly lifted with a crane.
Exercise care so as not to damage the lip of rod bushing(4) and packing (5,6,7,8,9) by the threads of piston rod(2).

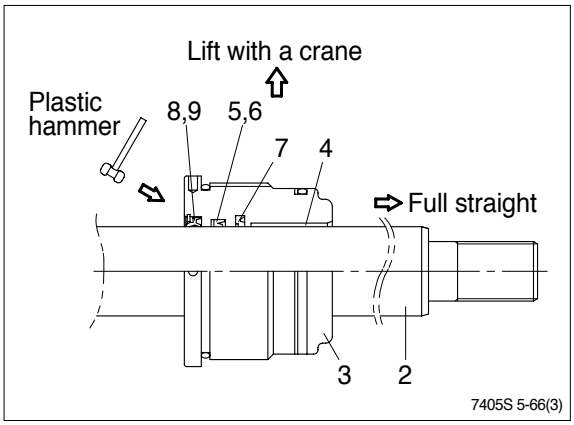

(3) Disassemble the piston assembly

① Remove wear ring(16) and piston seal (15).

※ Exercise care in this operation not to damage the grooves.

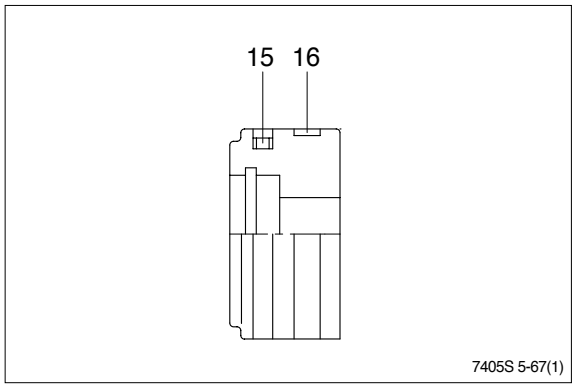

(4) Disassemble gland assembly

① Remove back up ring(11), and O-ring (10).

② Remove O-ring(12).

③ Remove snap ring(9) and dust wiper(8).

④ Remove back up ring(6), rod seal(5).

⑤ Remove buffer ring(7).

※ Exercise care in this operation not to damage the grooves.

※ Do not remove seal and ring, if does not damaged.

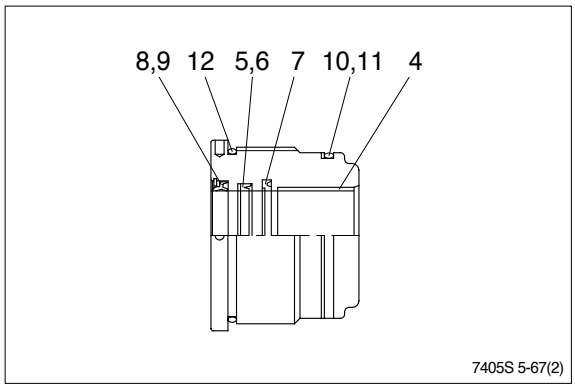

4) ASSEMBLY

(1) Assemble gland assembly

※ Check for scratches or rough surfaces if found smooth with an oil stone.

① Coat the inner face of gland(3) with hydraulic oil.

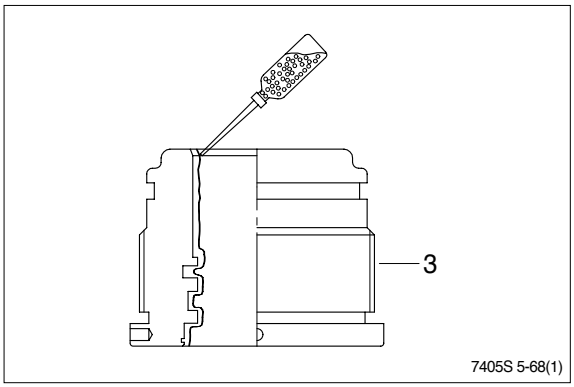

② Coat dust wiper(8) with grease and fit dust wiper(8) to the bottom of the hole of dust wiper.
At this time, press a pad metal to the metal ring of dust seal.

③ Fit snap ring(9) to the stop face.

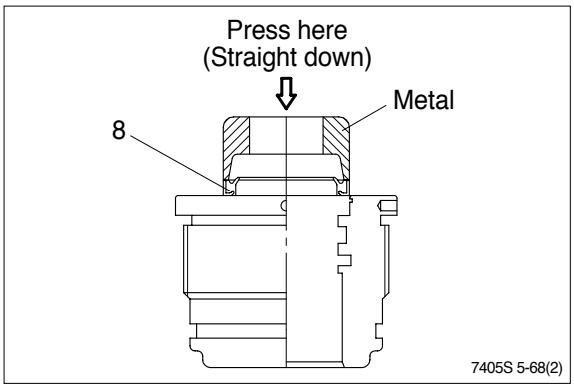

④ Fit back up ring(6) and rod seal(5) to corresponding grooves, in that order.

⑤ Fit buffer ring(7).

※ Coat each packing with hydraulic oil before fitting it.

※ Insert the backup ring until onside of it is inserted into groove.

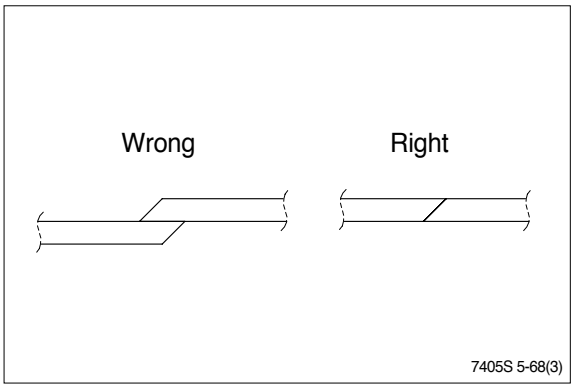

※ Rod seal(5) has its own fitting direction. Therefore, confirm it before fitting them.

※ Fitting rod seal(5) and buffer ring(7) up side down may damage its lip. Therefore check the correct direction that is shown in fig.

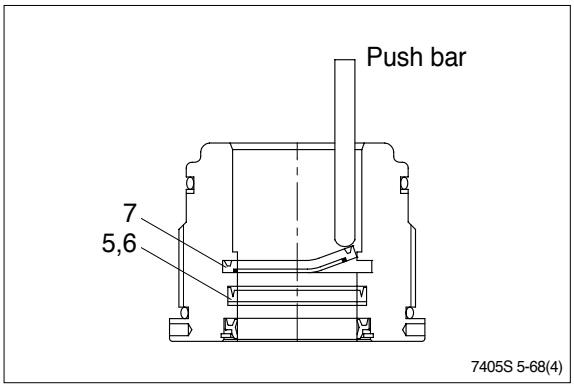

⑥ Fit back up ring(11) to gland (3).

※ Put the backup ring in the warm water of 30~50。C .

⑦ Fit O-ring(10) to gland(3).

⑧ Fit O-ring(12) to gland(3).

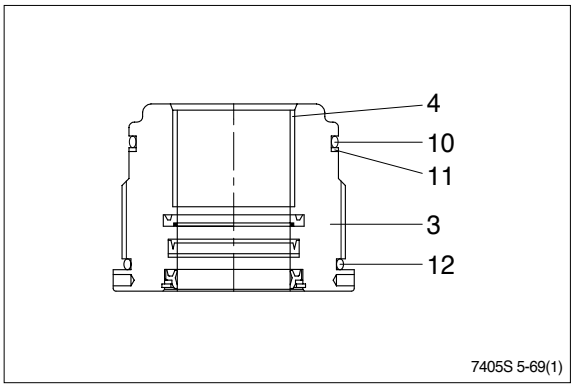

7405S 5-69(1)

(2) Assemble piston assembly

※ Check for scratches or rough surfaces. If found smooth with an oil stone.

① Coat the outer face of piston(13) with hydraulic oil.

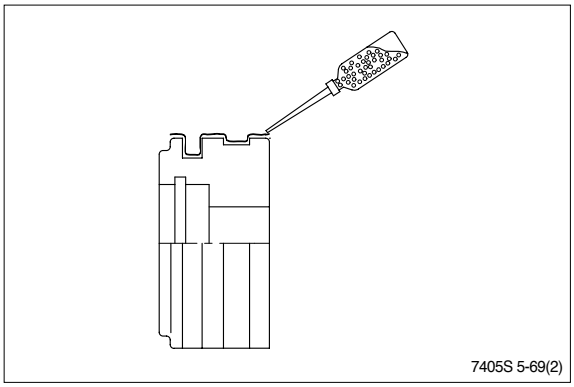
7405S 5-69(2)

② Fit piston seal(15) to piston

※ Put the piston seal in the warm water of 60~100。C for more than 5 minutes.

※ After assembling the piston seal, press its outer diameter to fit in.

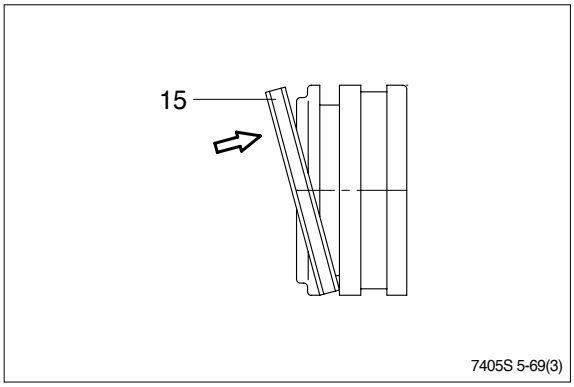

7405S 5-69(3)

③ Fit wear ring(16) to piston(13).

④ Fit O-ring(14) to piston(13).

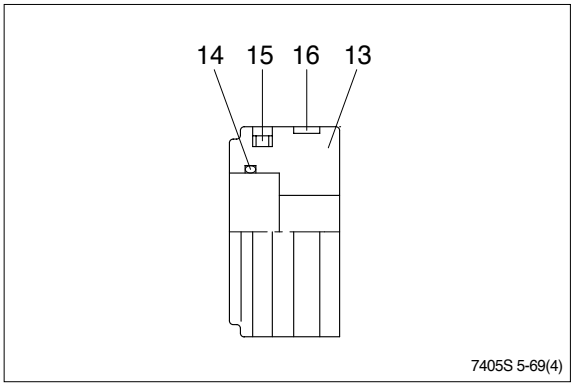

7405S 5-69(4)

(3) Install piston and gland assembly

① Fix the piston rod assembly to the work bench.

② Apply hydraulic oil to the outer surface of piston rod(2), the inner surface of piston and gland.

③ Insert gland assembly to piston rod(2).

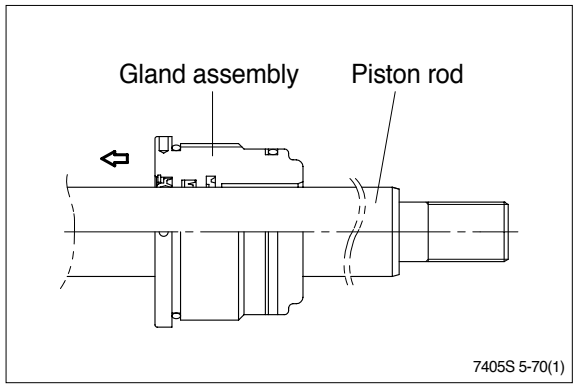

④ Fit piston assembly to piston rod.

· Tightening torque : 50±5kgf · m
(362±36lbf · ft)

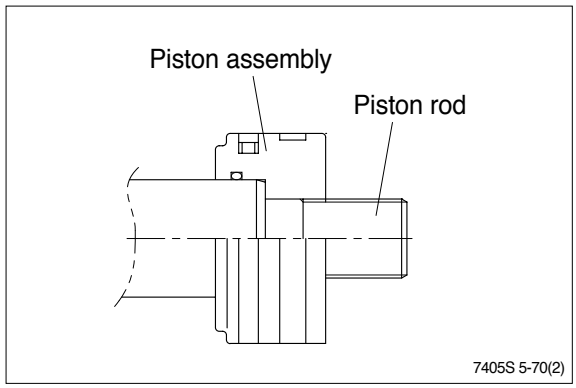

⑤ Tighten nylon nut(17) to piston rod(2).

· Tightening torque : 75±8kgf · m
(542±58lbf · ft)

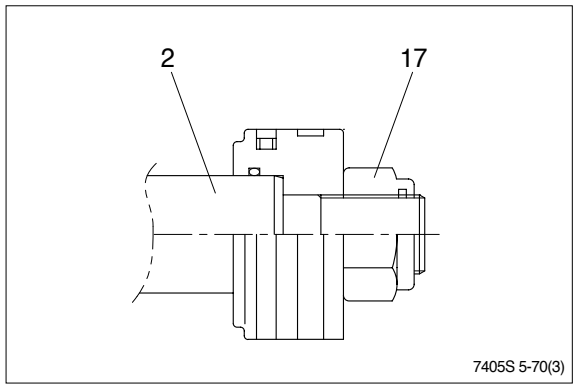

(4) Overall assemble

① Place a V-block on a rigid work bench. Mount the cylinder tube assembly(1) on it and fix the assembly by passing a bar through the clevis pin hole to lock the assembly.

② Insert the piston rod assembly in to the cylinder tube assembly, while lifting and moving the piston rod assembly with a crane.

※ Be careful not to damage piston seal by thread of cylinder tube.

③ Match the bolts holes in the cylinder head flange to the tapped holes in the cylinder tube assembly and tighten socket bolts to a specified torque.

※ Refer to the table of tightening torque.

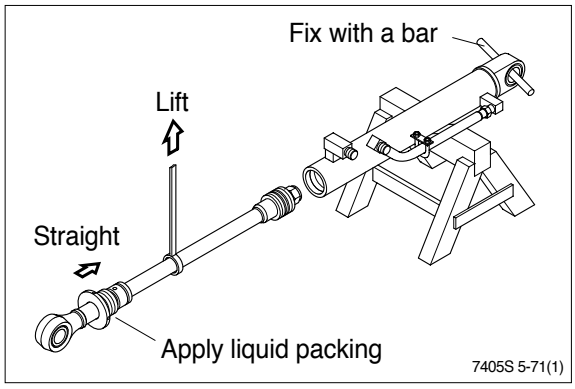

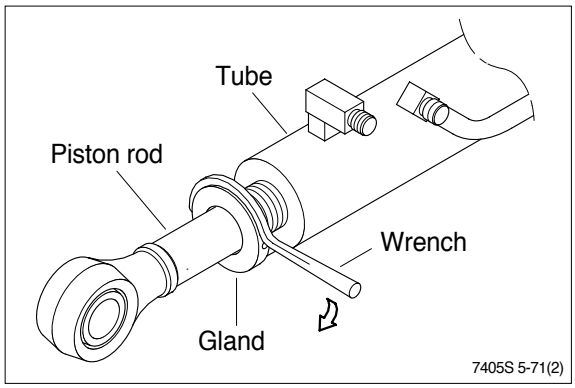

5. CENTER PIVOT PIN

1) CONSTRUCTION

Figure shows the construction of the center pivot pin assembly. This assembly serves to connect the front frame with the rear frame; two sets of assemblies are provided, one each for the upper and lower parts. The numbers in parentheses following the parts name denote the item numbers shown in the figure in the disassembly and assembly procedures.

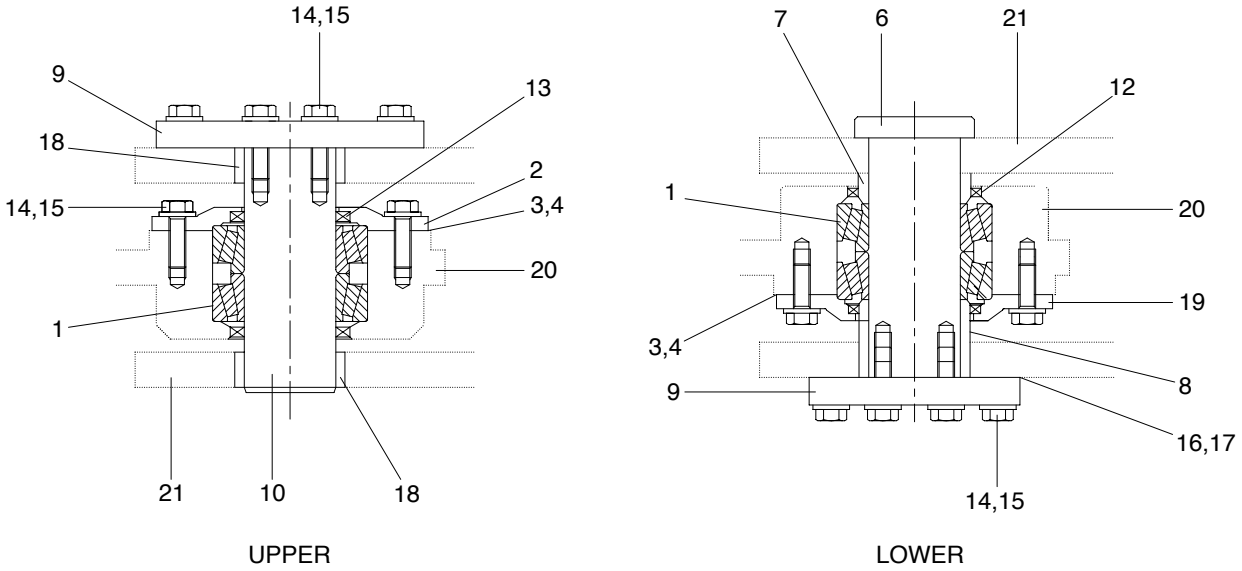

1	Bearing	9	Plate	16	Shim(0.1T)
2	Retainer	10	Pin	17	Shim(0.5T)
3	Shim(0.1T)	12	Seal	18	Bushing
4	Shim(0.5T)	13	Seal	19	Retainer
6	Pin	14	Hexagon bolt	20	Front frame
7	Collar	15	Hardened washer	21	Rear frame
8	Collar				

2) DISASSEMBLY

After supporting the front frame and the rear frame as horizontally as possible using wood blocks and jacks, disassemble as follows: In order to facilitate the disassembly/assembly of the center pivot pins, remove the drive shaft, hydraulic line and steering cylinder first.

(1) Maintain the horizontal level of front frame(20) and rear frame(21), and then remove hexagon bolt(14) and plate(9).

(2) Take out upper pin(10) to the downside using a metal punch.

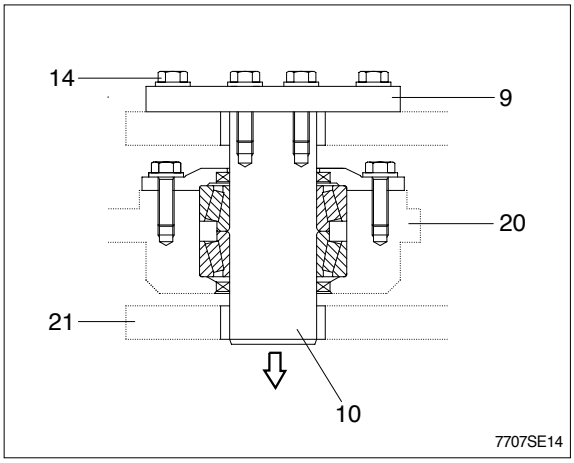

(3) Maintain the front frame horizontal level, remove hexagon bolts(14) and then remove the plate(9) and shims(16,17).

(4) Take out lower pin(6) to the upside using a metal punch carefully.

(5) Jack up or lifting the front frame(20) slightly, the collar(8) protrudes over the rear frame.
Remove the collar(8).

(6) Lift the frame by passing the slinging wire rope at four positions of front frame, in order to separate it from the rear frame.

(7) Support the front frame safely.

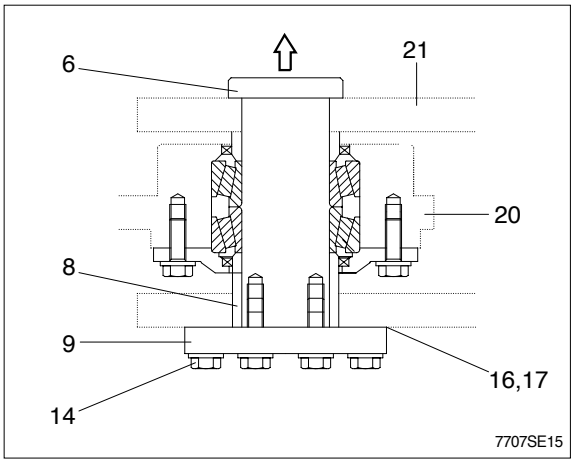

(8) Remove bolt(14) and then take out retainer(2) and shims(3,4).

(9) Take out dust seal(13) from the retainer (2).

(10) Remove the bearing(1), and dust seal(13).

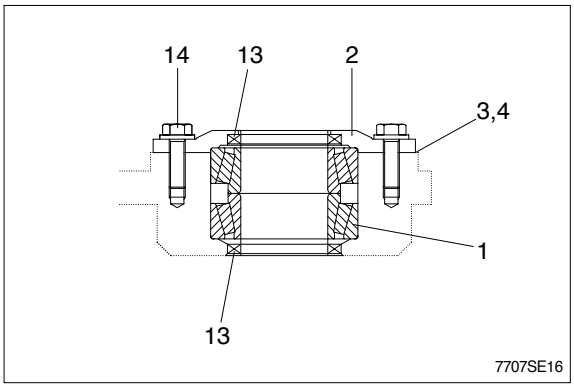

(11) Remove bolt(14) and then take out retainer(19) and shims(3,4).

(12) Take out the dust seal(12) from the retainer(19).

(13) Remove the bearing(1), collar(7) and dust seal(12).

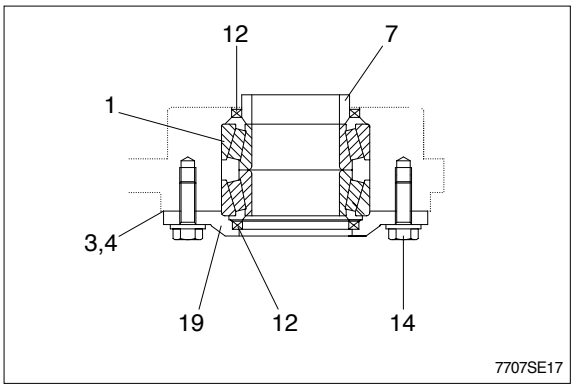

3) INSPECTION

(1) Check the bearing sliding surface for excessive wear, scorching or scratches; replace if necessary.

(2) Replace all dust seals(12,13) with new ones.

(3) Grind any pins(6, 10) dented with an oilstone or replace any pins abrasive excessively.

(4) Check inside retainer(2, 19) and collar(7, 8) for dents or scratches; if any damage is found, correct with a grinder or replace.

(5) The serviceable limit of pins and bushings is shown in the table below.

Unit : mm

Item No.	Name	Std dimension	Serviceable limit			Remedy
			Outer dia	Inner dia	Clearance	
6, 10	Pin	65	64.5	-	0.8	Replace
1	Tapered roller bearing		-	65.5		
7, 8	Collar		-	65.5		
12, 13	Dust seal	When removed				Replace

4) ASSEMBLY

Assemble the center pivot group by reversing the order of disassembly while paying close attention to the following.

(1) Put the dust seal(12,13) into retainer(2, 19) and front frame(20).

※ Apply grease to the lip of the dust seal. Insert the dust seal so that the dust seal lip faces out and punch four places on the outer circumference of the seal to lock it.

(2) Lower the temperature of the lower bearing cup to -75±5°C (-103±9°F) and install it to front frame until it contacts the bottom of the frame.

(3) Coat lightly with oil and install lower bearing in bore in front frame. Coat lightly with oil and install upper bearing in bore in upper front frame.

(4) Position the upper retainer(2) and hold in place with bolt(14). At this time, adjust shims(3,4) to press the shoulder of bearing(1) against retainer.
- Shim thickness : 0.1mm, 0.5mm

(5) Apply grease to lower collar(8) and insert it to the lower of roller bearing.

(6) After setting the bearing so that its upper surface is horizontal, tighten the bolt.
After tightening, confirm that tapered roller bearing moves lightly ; if does not move smoothly, add shims(3,4).
- Tightening Torque : 9.8~15.8kgf · m(70.9~114lbf · ft)

(7) Move the front frame and join it to the rear frame so that match the pin hole at the center.

(8) Apply grease to pin(10), bushing(18) and insert it into tapered roller bearing(1).

(9) Apply grease to lower collar(8) and insert it to the lower of roller bearing through rear frame(21).

(10) Apply grease to pin(6) and insert it into tapered roller bearing(1).

(11) Position the plate(9) and hold in place with bolt(14).
- Tightening Torque : 9.8~15.8kgf · m(70.9~114lbf · ft)
- Apply locktite #243.

(12) Before tightening bolt(14), adjust shims(16,17) in order to control the clearance between the plate(9) and rear frame(21).
- Shim thickness : 0.1mm, 0.5mm
- Tightening Torque : 9.8~15.8kgf · m(70.9~114lbf · ft)
- Apply Locktite #243.

5) TROUBLESHOOTING

Trouble	Probable cause	Remedy
Shock is felt when steering	Capscrew for fixing steering valve is loose	Retighten
	Faulty center pivot pin mounting bolts	Retighten
	Center pivot pins have worn out	Readjust or replace
	Faulty hydraulic system	See hydraulic system
Shock is felt when moving backward or forward	Fault fixing of connecting capscrews	Retighten
	Center pins have worn out	Readjust or replace
	Bearings of support unit have worn out	Retighten
	Drive shaft damaged	See drive system
	Faulty transmission	See transmission system

SECTION 6 WORK EQUIPMENT

Group 1 Structure and Function ---------- 6-1
Group 2 Operational Checks and Troubleshooting ---------- 6-40
Group 3 Tests and Adjustments ---------- 6-51
Group 4 Disassembly and Assembly ---------- 6-67

GROUP 1 STRUCTURE AND FUNCTION

1. HYDRAULIC SYSTEM OUTLINE

The loader hydraulic system is a pilot operated, open center system which is supplied with flow from the fixed displacement main hydraulic pump.
The pilot control system is a low pressure, closed center hydraulic system which is supplied with flow from the first(Steering) pump.

The loader system components are :

- Main pump
- Main control valve
- Bucket cylinder
- Boom cylinders
- Pilot supply unit
- Remote control valve(Pilot control valve)
- Safety valve

The pilot supply unit consists of the pressure reducing valve, relief valve and accumulator.

Flow from the main hydraulic pump not used by the steering system leaves the priority valve EF port. It flows to the inlet port plate of four blocks type main control valve.

The main control valve is a tandem version spool type, open center valve which routes flow to the boom, bucket or auxiliary cylinders(Not shown) when the respective spools are shifted.

Flow from the steering pump(The first pump) is routed to the pilot supply unit where the steering pump outlet pressure is reduced to pilot circuit pressure. The pilot supply unit flow to the remote control valve.
The remote control valve routed flow to either end of each spool valve section in the main control valve to control spool stroke.

A accumulator mounted on pilot supply unit supplies a secondary pressure source to operated remote control valve so the boom can be lowered if the engine is off.

The return circuit for the main hydraulic system have return filter inside the hydraulic tank. The return filter uses a filter element and a bypass valve. The bypass valve is located in the upside of filter.

2. HYDRAULIC CIRCUIT(HL740-7)

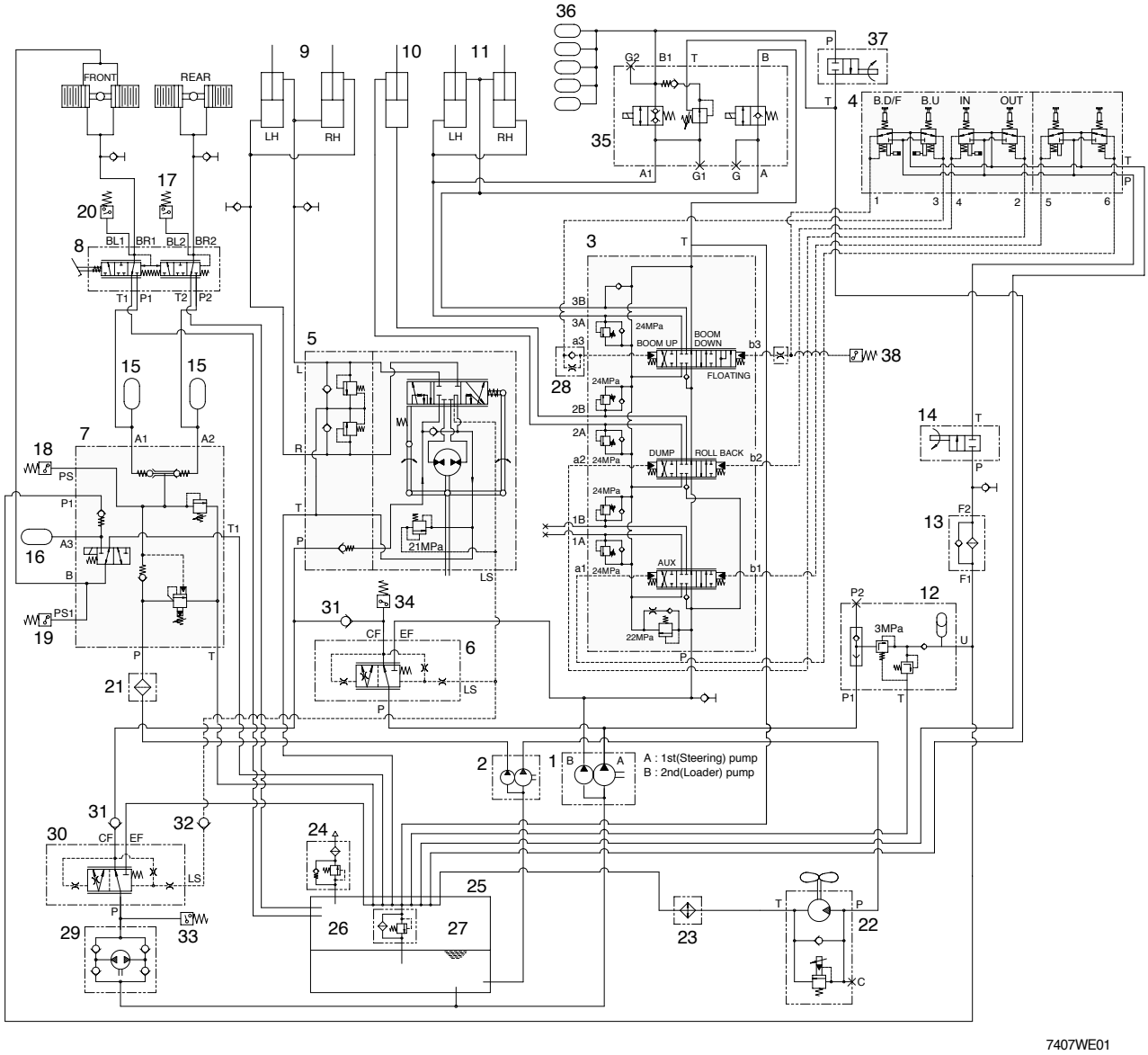

1	Main pump	14	Safety valve	27	By pass valve
2	Fan+Brake pump	15	Accumulator	28	Shockless valve
3	Main control valve	16	Accumulator	29	Emergency pump kit(Option)
4	Remote control valve	17	Pressure switch	30	Priority valve(Option)
5	Steering unit	18	Pressure switch	31	Check valve(Option)
6	Priority valve	19	Pressure switch	32	Check valve(Option)
7	Cut off valve	20	Pressure switch	33	Pressure switch(Option)
8	Brake valve	21	Line filter	34	Pressure switch(Option)
9	Steering cylinder	22	Fan drive motor	35	Ride control valve(Option)
10	Bucket cylinder	23	Oil cooler	36	Accumulator(Option)
11	Boom cylinder	24	Air breather	37	Safety valve(Option)
12	Pilot supply unit	25	Hydraulic tank	38	Pressure switch(Option)
13	Line filter	26	Return filter		

HYDRAULIC CIRCUIT(HL740TM-7)

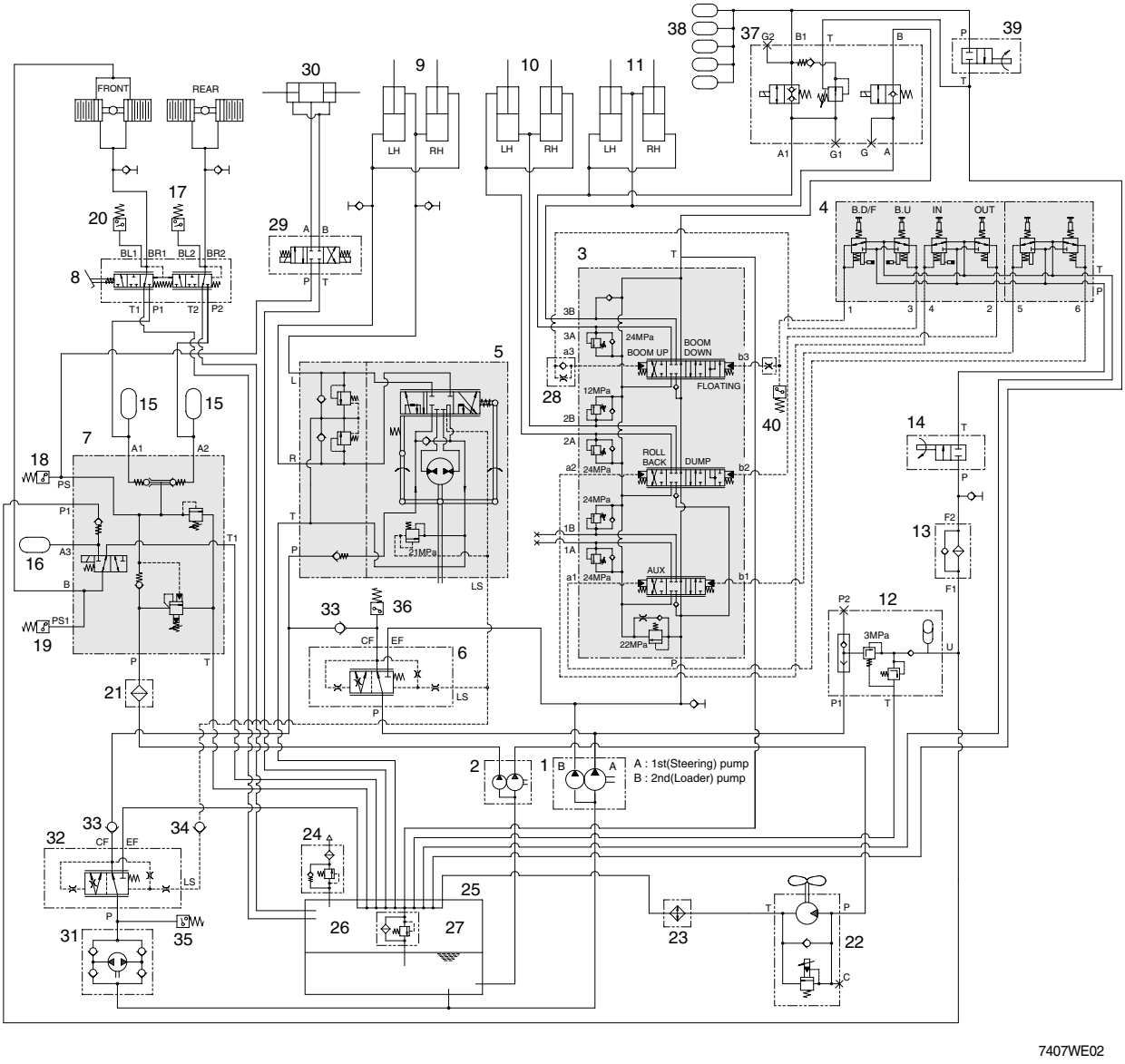

1	Main pump	15	Accumulator	28	Shockless valve
2	Fan+Brake pump	16	Accumulator	29	Solenoid valve
3	Main control valve	17	Pressure switch	30	Quick coupler cylinder
4	Remote control valve	18	Pressure switch	31	Emergency pump kit(Option)
5	Steering unit	19	Pressure switch	32	Priority valve(Option)
6	Priority valve	20	Pressure switch	33	Check valve(Option)
7	Cut off valve	21	Line filter	34	Check valve(Option)
8	Brake valve	22	Fan motor	35	Pressure switch(Option)
9	Steering cylinder	23	Oil cooler	36	Pressure switch(Option)
10	Bucket cylinder	24	Air breather	37	Ride control valve(Option)
11	Boom cylinder	25	Hydraulic tank	38	Accumulator(Option)
12	Pilot supply unit	26	Return filter	39	Safety valve(Option)
13	Line filter	27	By pass valve	40	Pressure switch(Option)
14	Safety valve				

3. WORK EQUIPMENT HYDRAULIC CIRCUIT

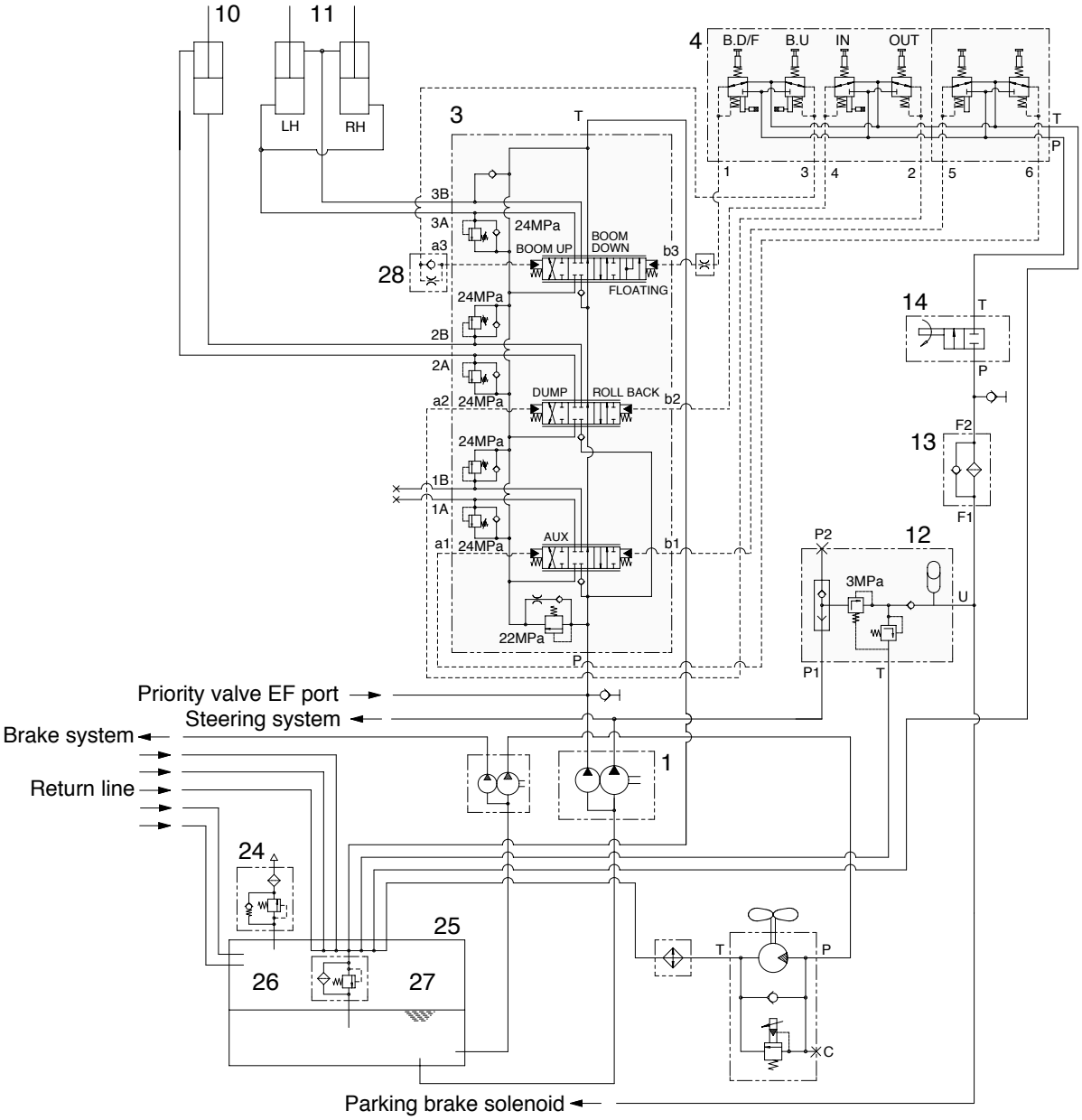

7407WE03

1	Main pump	12	Pilot supply unit	25	Hydraulic tank
3	Main control valve	13	Line filter	26	Return filter
4	Remote control valve	14	Safety valve	27	Bypass valve
10	Bucket cylinder	24	Air breather	28	Shockless valve
11	Boom cylinder				

1) WHEN THE RCV LEVER IS IN THE RAISE POSITION

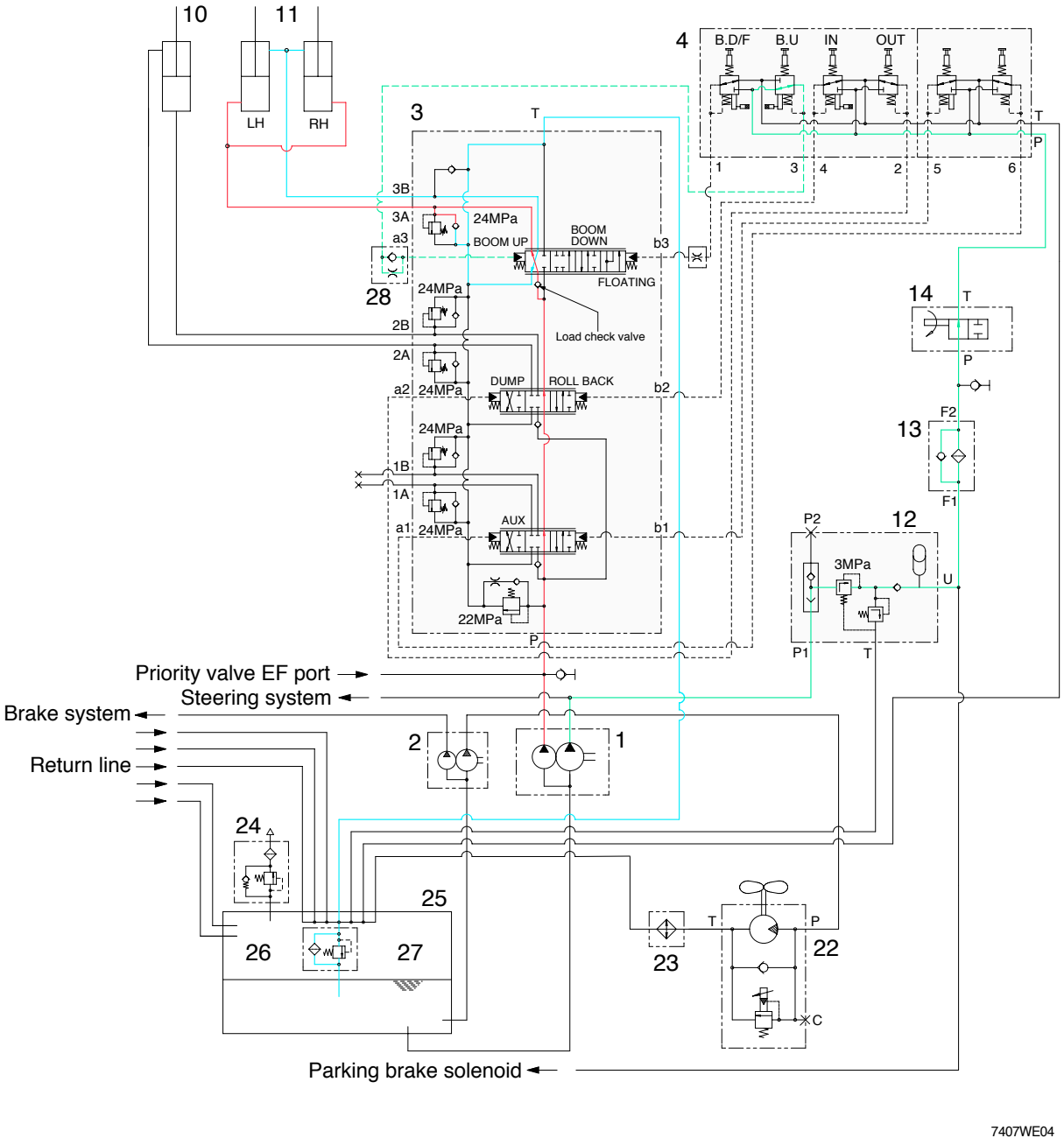

When the RCV lever(4) is pulled back, the boom spool is moved to raise position by pilot oil pressure from port 3 of RCV through shockless valve(28).

The oil from main pump(1) flows into main control valve(3) and then goes to the large chamber of boom cylinder (11) by pushing the load check valve of the boom spool through center bypass circuit of the bucket spool.

The oil from the small chamber of boom cylinder(11) returns to hydraulic oil tank(25) through the boom spool at the same time.

When this happens, the boom goes up.

2) WHEN THE RCV LEVER IS IN THE LOWER POSITION

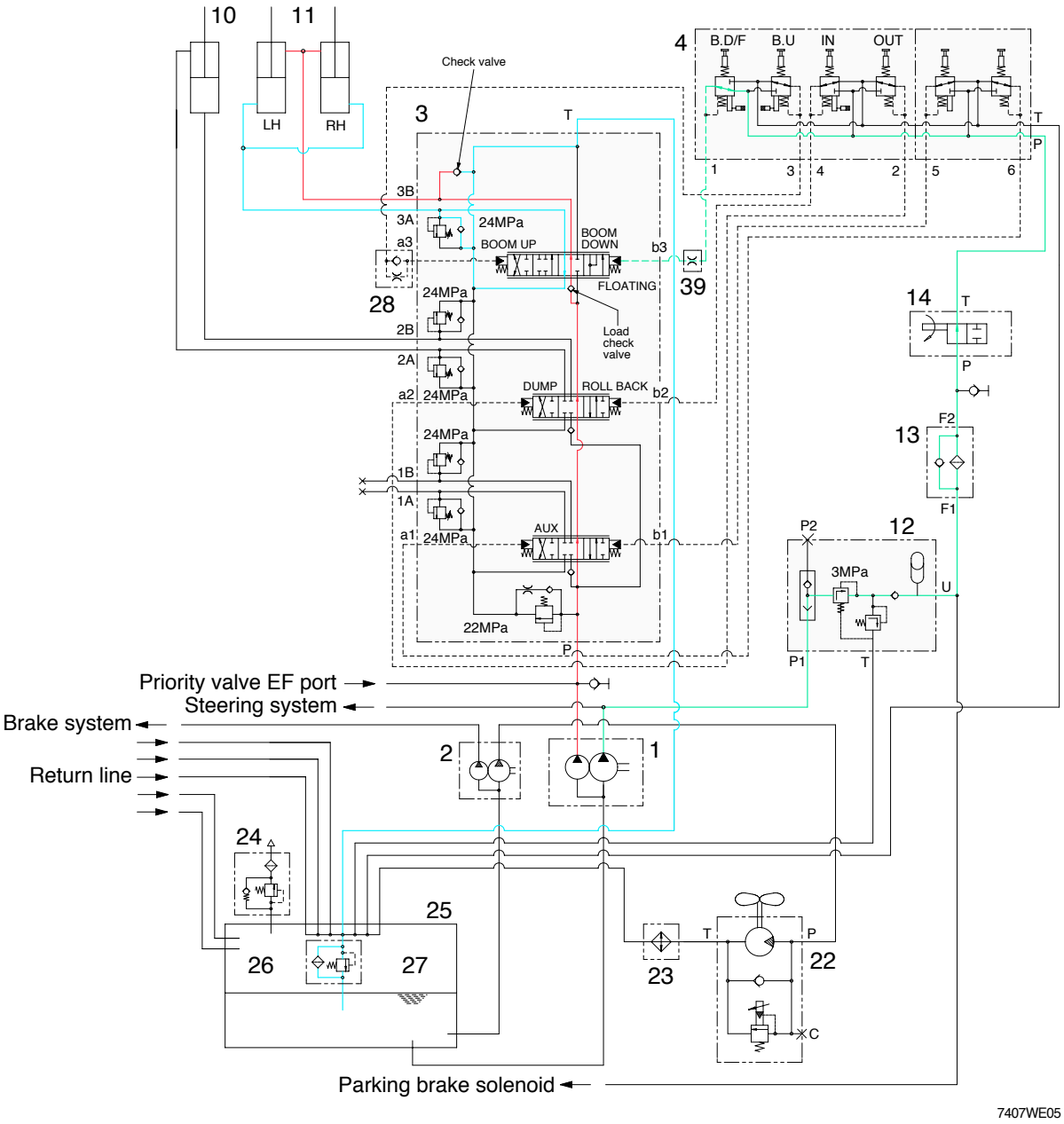

When the RCV lever(3) is pushed forward, the boom spool is moved to lower position by pilot pressure from port 1 of RCV through orifice connector(39).

The oil from main pump(1) flows into main control valve and then goes to small chamber of boom cylinder(11) by pushing the load check valve of the boom spool through center bypass circuit of the bucket spool.

The oil returned from large chamber of boom cylinder(11) returns to hydraulic tank(25) through the boom spool at the same time.

When the lowering speed of boom is faster, the return oil from the large chamber of boom cylinder combines with the oil from the pump through the check valve, and flows into the small chamber of the cylinder.

This prevents cylinder cavitation by the negative pressure when the pump flow cannot match the boom down speed.

3) WHEN THE RCV LEVER IS IN THE FLOAT POSITION

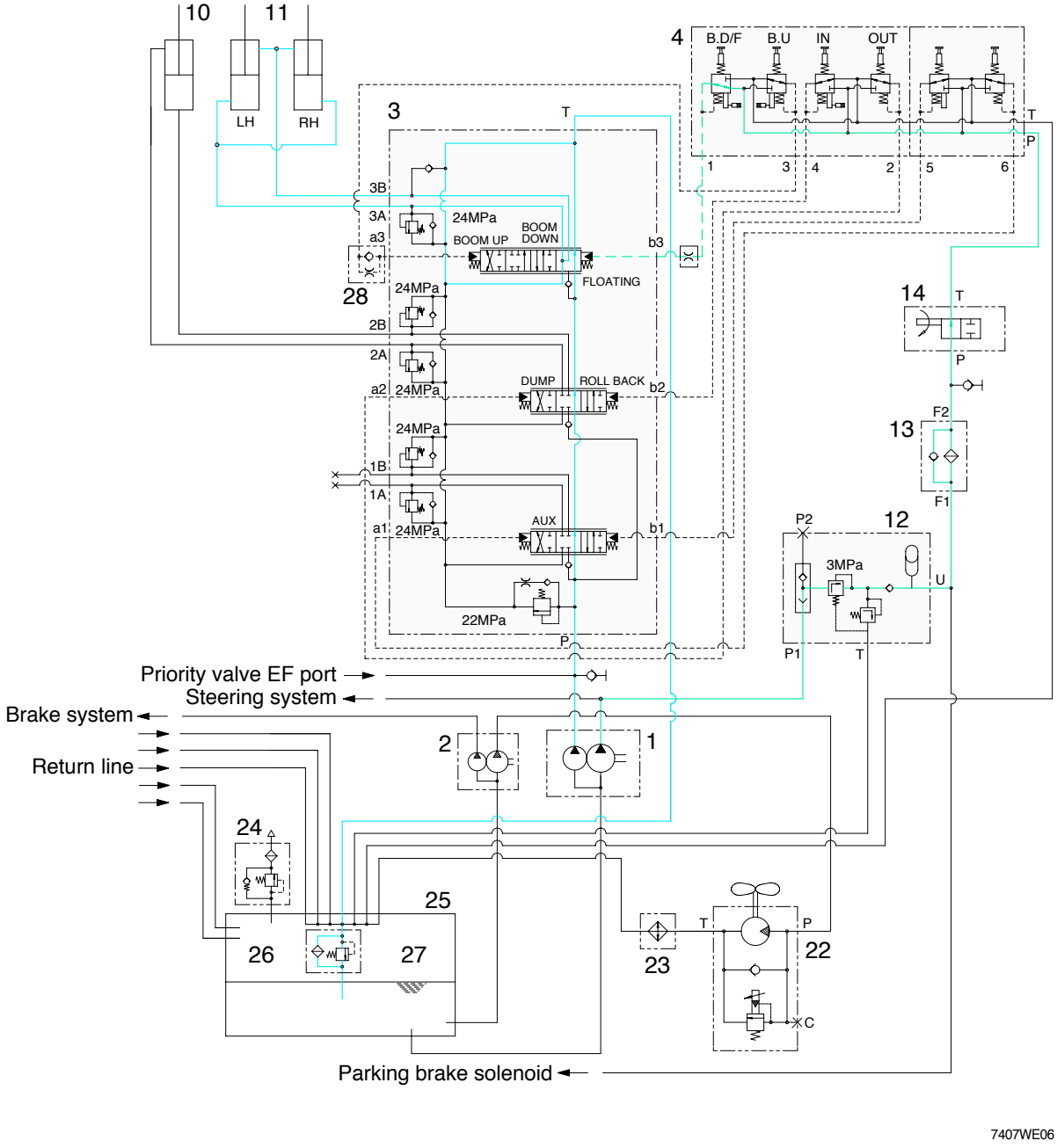

7407WE06

When the RCV lever(4) is pushed further forward from the lower position, the pilot pressure reaches to 13-15 bar, then the boom spool is moved to floating position.

The work ports(3A), (3B) and the small chamber and the large chamber are connected to the return passage, so the boom will be lowered due to it's own weight.

In this condition, when the bucket is in contact with the ground, it can be move up and down in accordance with the shape of the ground.

4) WHEN THE RCV LEVER IS IN THE DUMP POSITION

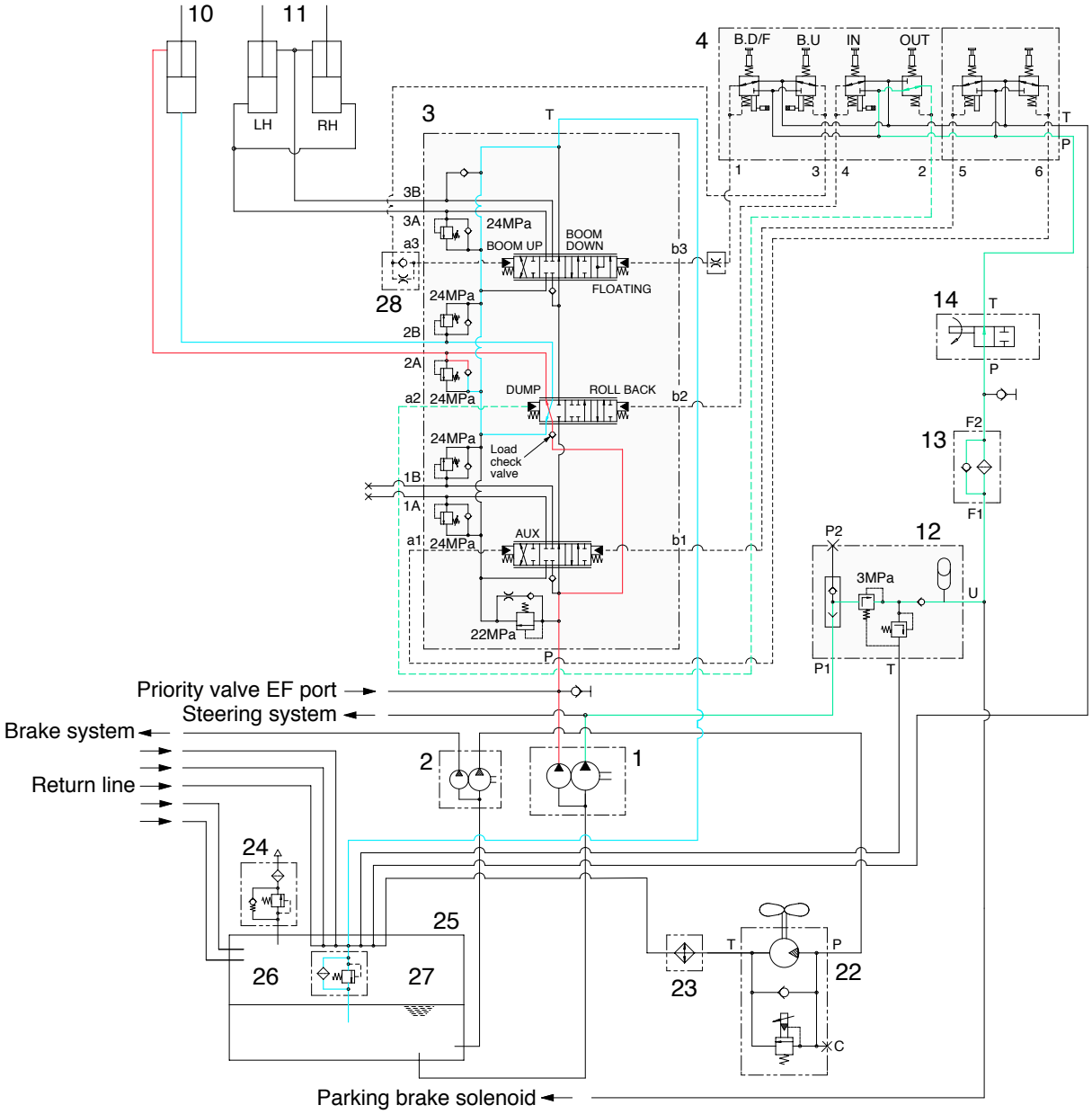

7407WE07

If the RCV lever(4) is pushed right, the bucket spool is moved to dump position by pilot oil pressure from port 2 of RCV.

The oil from main pump(1) flows into main control valve(3) and then goes to the small chamber of bucket cylinder(10) by pushing the load check valve of the bucket spool.

The oil at the large chamber of bucket cylinder(10) returns to hydraulic tank(25) through the bucket spool.

When this happens, the bucket is dumped.

When the dumping speed of bucket is faster, the oil returned from the large chamber of bucket cylinder combines with the oil from the pump, and flows into the small chamber of the cylinder.

This prevents cylinder cavitation by the negative pressure when the pump flow cannot match the bucket dump speed.

5) WHEN THE RCV LEVER IS IN THE ROLL BACK(retract) POSITION

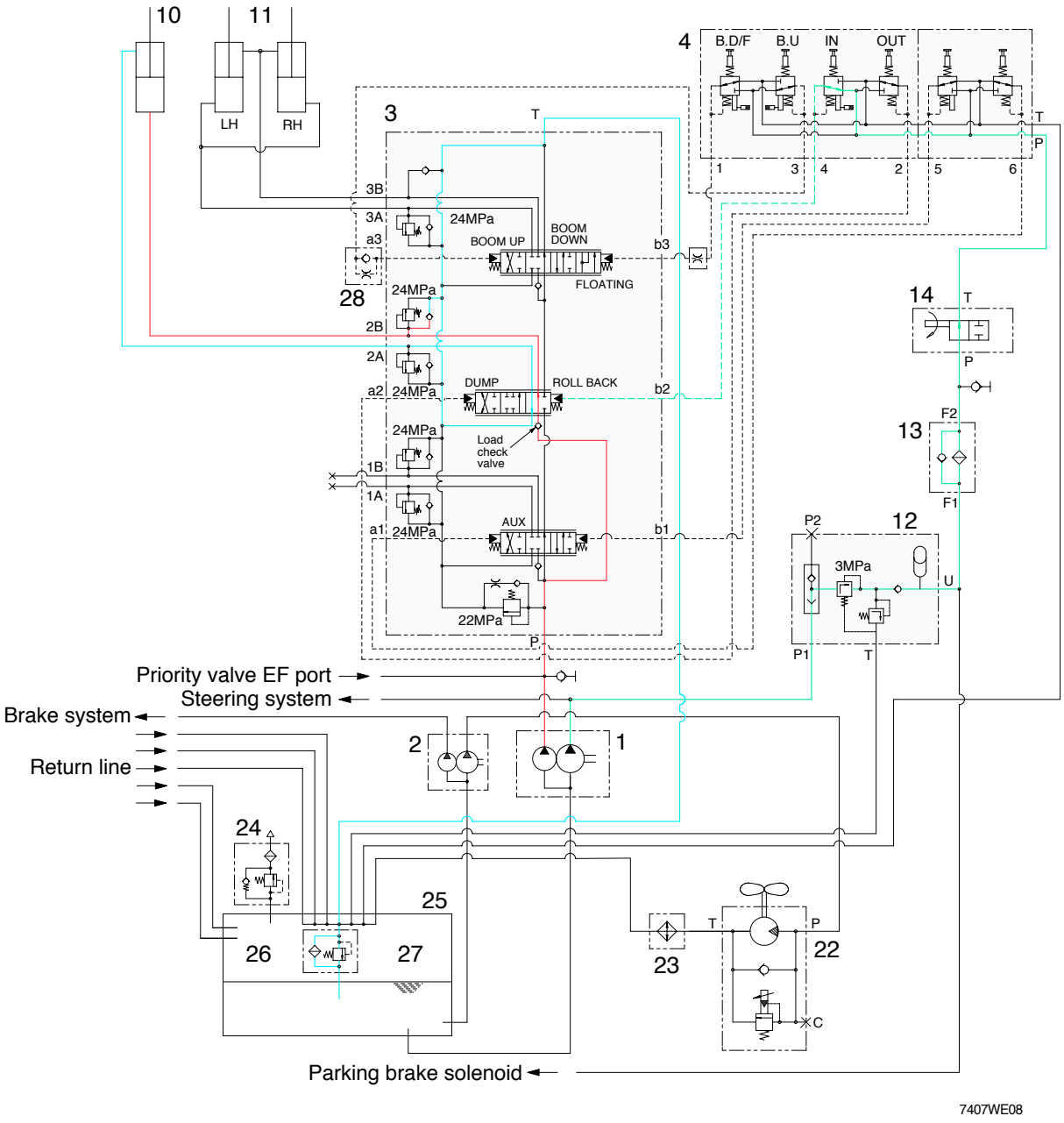

If the RCV lever(4) is pulled left, the bucket spool is moved to roll back position by pilot oil pressure from port 4 of RCV.

The oil from main pump(1) flows into main control valve(3) and then goes to the large chamber of bucket cylinder by pushing the load check valve of the bucket spool.

The oil at the chamber of bucket cylinder(10) returns to hydraulic tank(25) through the bucket spool. When this happens, the bucket roll back.

When the rolling speed of bucket is faster, the return oil from the small chamber of bucket cylinder combines with the oil from the pump, and flows into the large chamber of the cylinder.

This prevents cylinder cavitation by the negative pressure when the pump flow cannot match the bucket rolling speed.

6) WHEN THE RCV LEVER IS IN THE HOLD POSITION

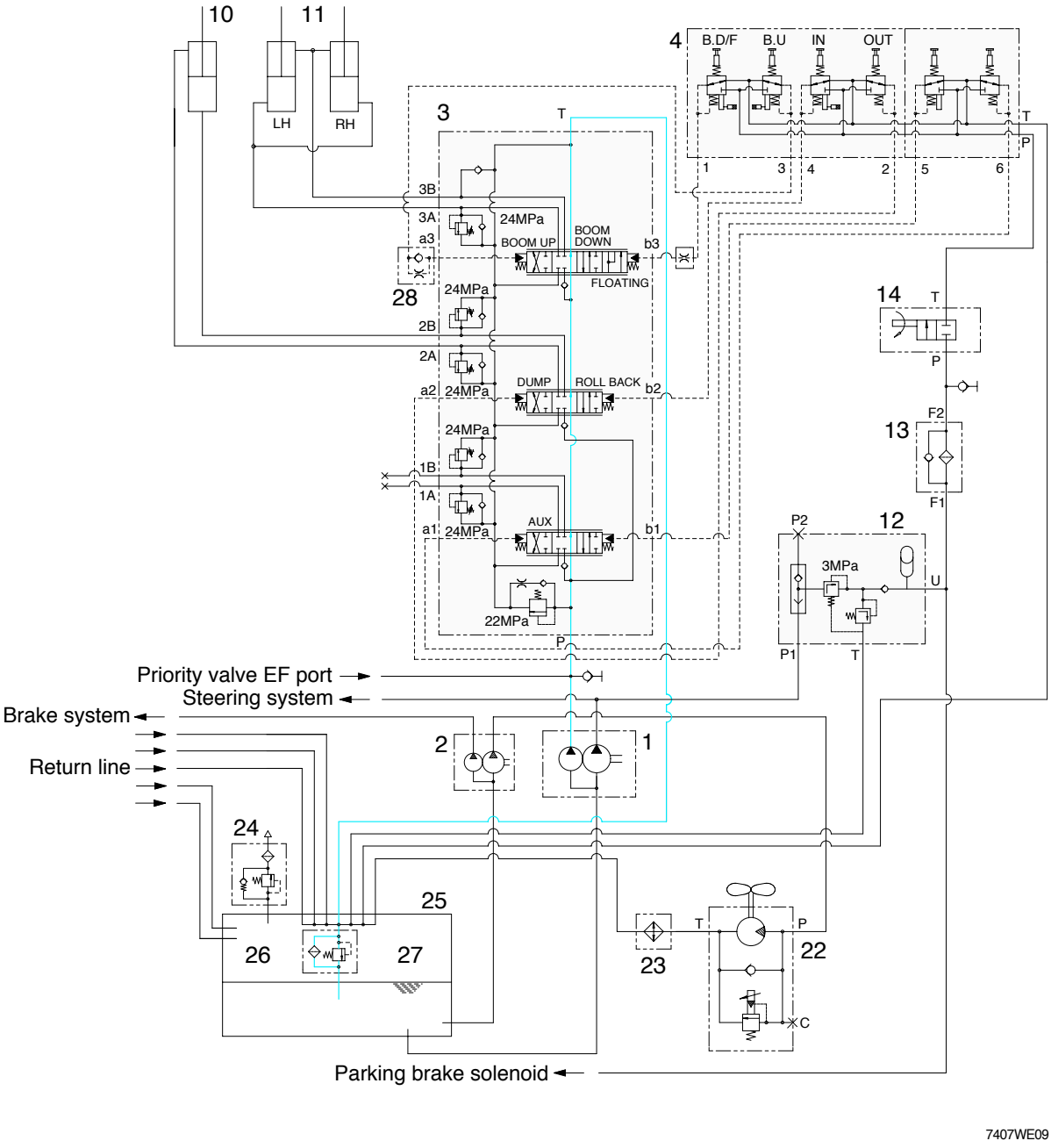

The oil from main pump(1) flows into main control valve(3).
In this time, the bucket spool and the boom spool are in neutral position, then the oil supplied to main control valve(3) returns into hydraulic tank(25) through center bypass circuit of each spool.
In this condition, each cylinder keeps the neutral position, so the boom and the bucket is holded.

4. MAIN PUMP OPERATION

1) STRUCTURE

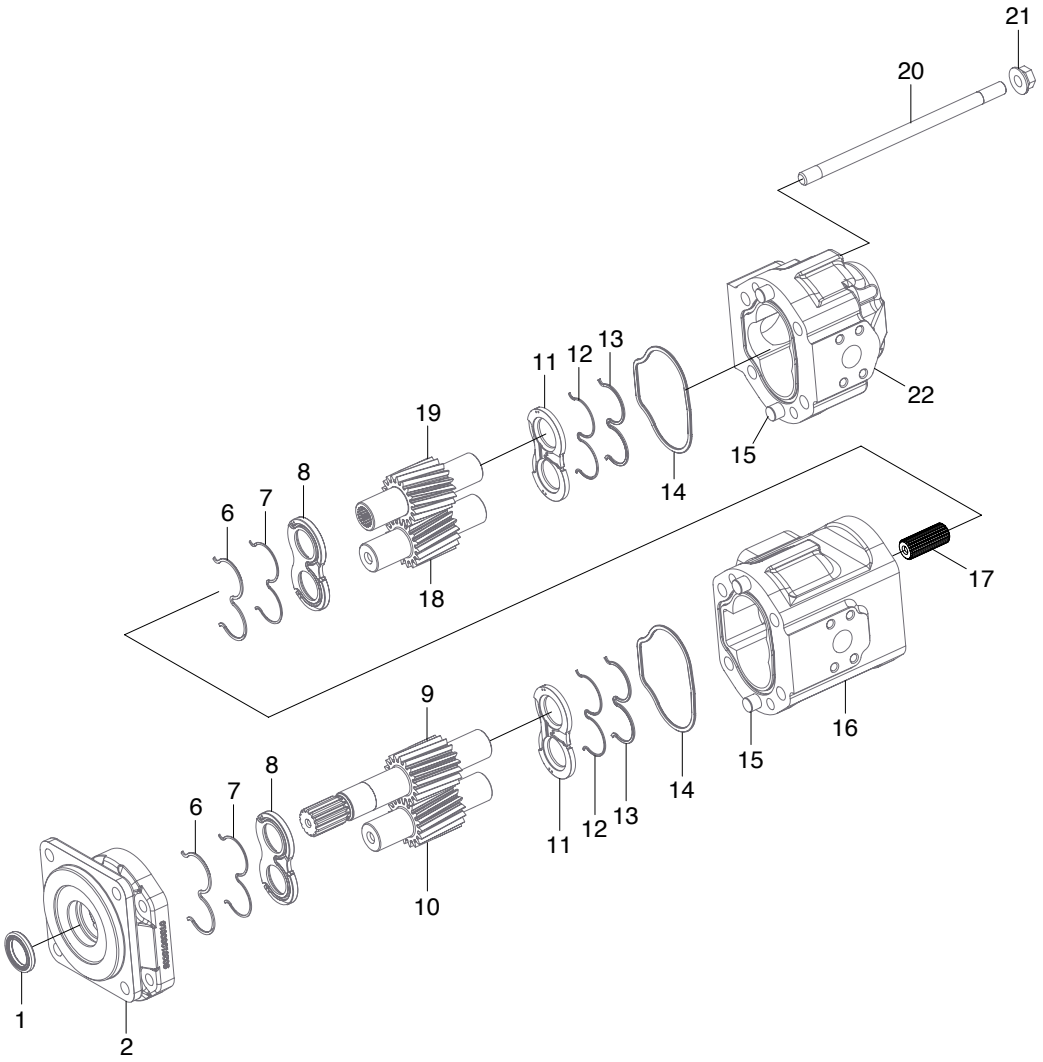

7407WE12

1	Shaft seal	11	Wearplate	17	Spline coupling
2	Adapter	12	O-ring seal	18	Rear driven gear
6	Back up seal	13	Back up seal	19	Rear drive gear
7	O-ring seal	14	Interface seal	20	Stud
8	Wearplate	15	Dowel	21	Flanged nut
9	Front drive gear	16	Front body	22	Rear body
10	Front driven gear				

2) OPERATION

The main hydraulic pump is a fixed displacement helical gear type pump. The pump is drive at engine speed by the transmission. The pump shafts are supported by shaft seal(1) adapter(2), front body(16) and rear body(22). The wearplate(8, 11) are located between the gear surface and adapter(1), rear body(22) and front body(16).

As the drive gear(9) and (19) turns the idler gears(10, 18), the gear teeth come out of mesh. Oil flows from the hydraulic tank through the inlet into the cavity between the gear teeth. As the gears continue to rotate, the oil becomes trapped between the gear teeth and front body(16).
The trapped oil is the oil is then carried to the pump outlet. Oil is forced out the outlet to supply the hydraulic function. As the gears re-mesh, they form a seal to prevent oil from flowing between the gears and back to the inlet.

The pump uses outlet pressure oil to load the wearplate(8, 11) against the gear faces. This controls intemal leakage to maintain pump displacement.
Outlet pressure fills the area bounded by the pressure balance moulded seals(6, 7) to force the wearplate against the high pressure area or the gear faces.

5. REMOTE CONTROL VALVE

1) STRUCTURE

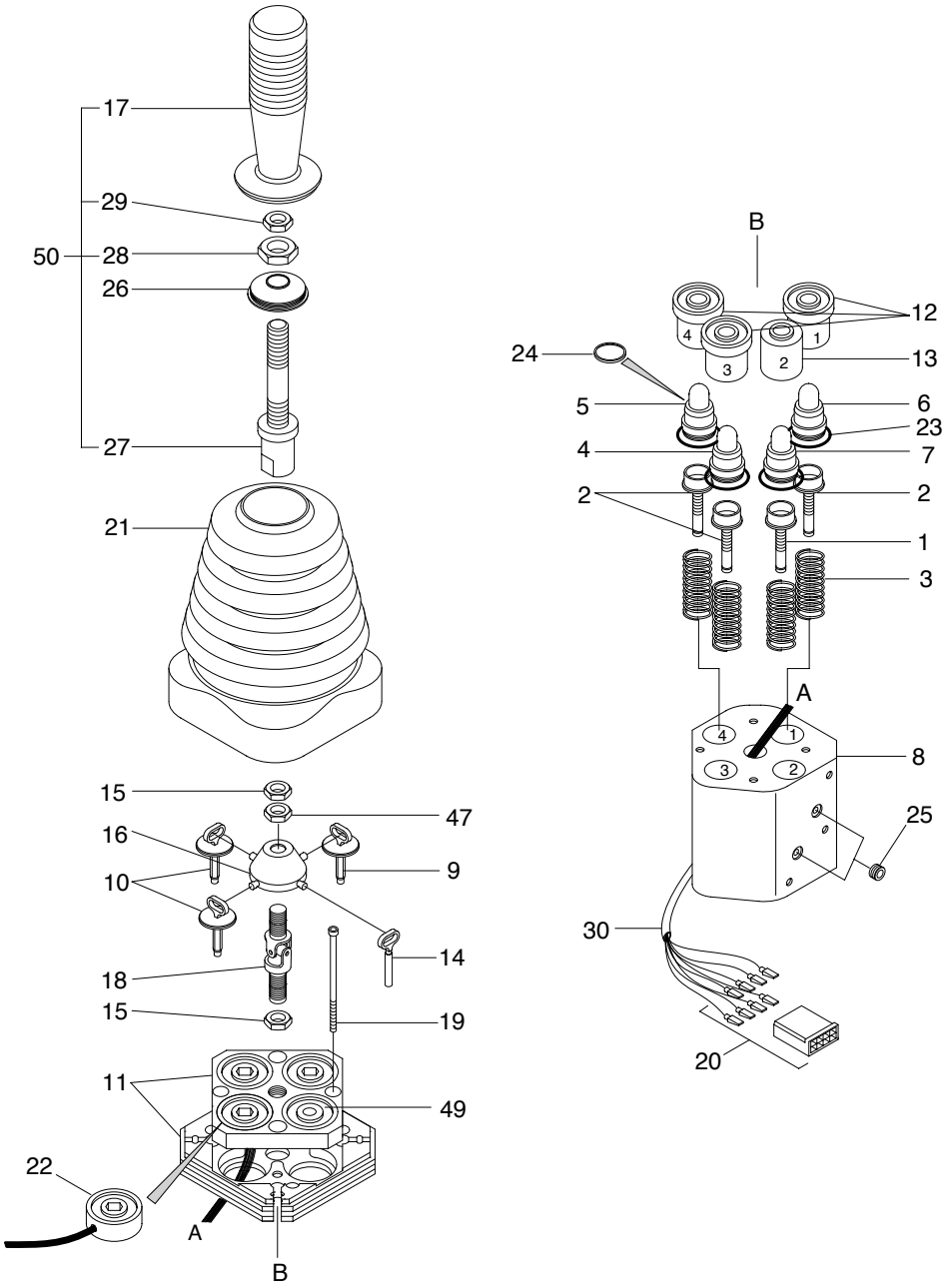

1	Spring pack	12	Prefeel cage assy	23	O-ring
2	Spring pack	13	Spindle retainer	24	Wiper seal
3	Spring	14	Spindle	25	Plug
4	Plunger assy	15	Nut	26	Collar
5	Plunger assy	16	Lever assy	27	Handle adapter
6	Plunger assy	17	Handle	28	Nut
7	Plunger assy	18	Universal joint assy	29	Nut
8	Body	19	Screw	30	Insulation tube
9	Prefeel kit	20	Connector assy	47	Nut
10	Prefeel kit	21	Rubber boot	49	Spacer
11	Prefeel kit	22	Solenoid	50	Handle assy

2) OPERATION

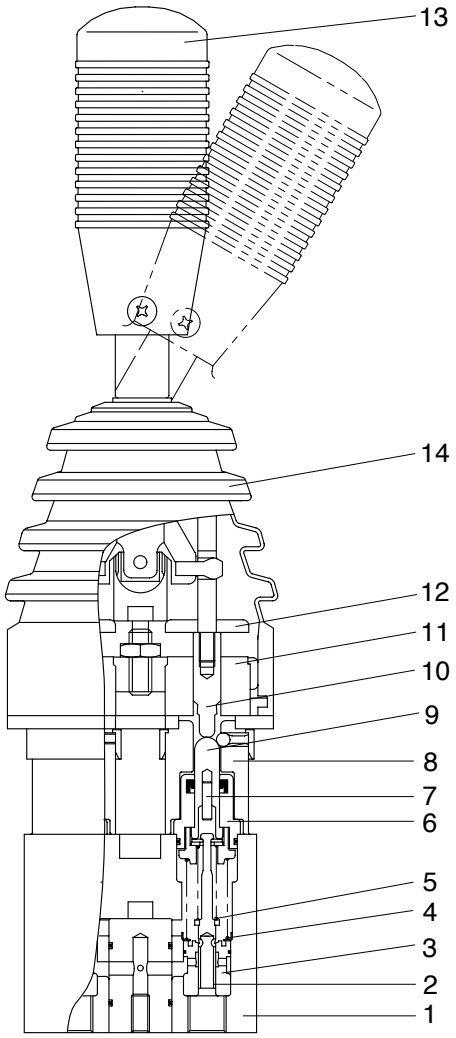

7406S 6-14A

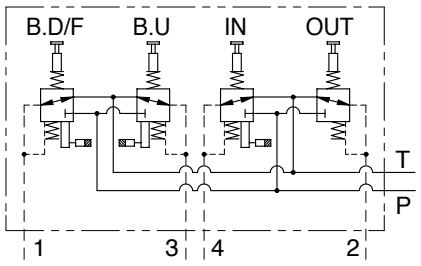

HYDRAULIC CIRCUIT

Port	Port name	Port size
1	Boom down	1/4 BSPP
2	Bucket dump	1/4 BSPP
3	Boom raise	1/4 BSPP
4	Bucket crowd	1/4 BSPP
P	Supply pressure	1/4 BSPP
T	Tank	1/4 BSPP

1 Aluminum body
2 Pressure reducing spool
3 Pressure reducing body
4 Return spring
5 Metering spring
6 Plunger guide
7 Roll pin
8 Prefeel ball carrier
9 Plunger
10 Prefeel spindle
11 Hold coil
12 Armature plate
13 Control lever
14 Rubber boot

(1) Neutral position

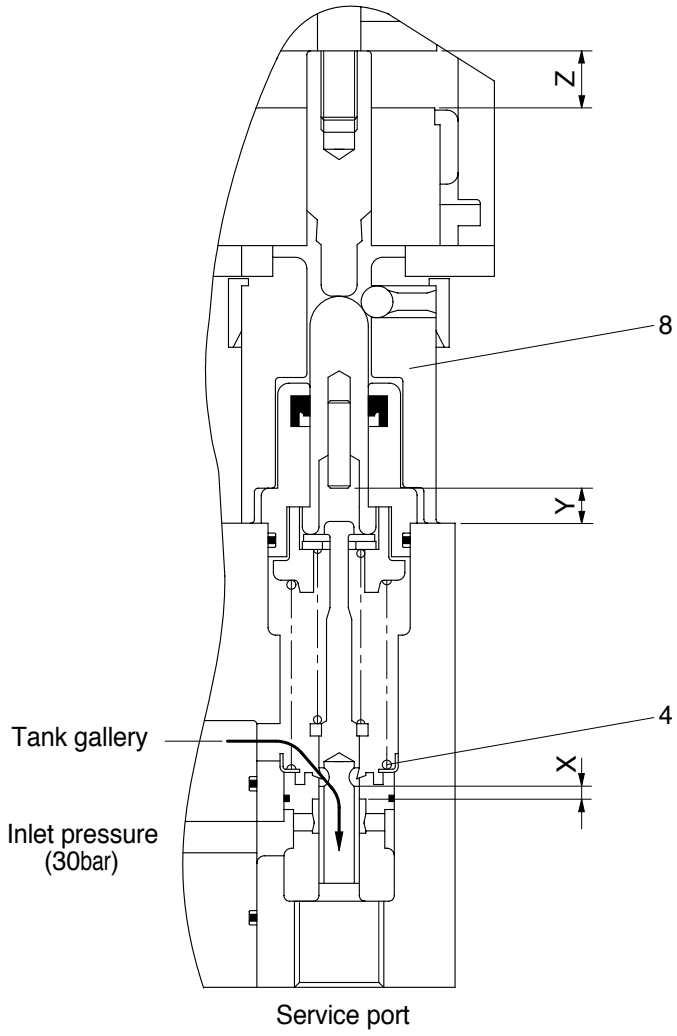

(740-3A) RCV01

The rubber boot(14) fitted between the control lever(13) and the valve protects the working parts from external contamination. The return spring(4) holds the plunger(8) in its most upwardly position keeping the lever vertical. In this position all four service ports are connected to the tank gallery and hence to the tank port.

(2) Metering position

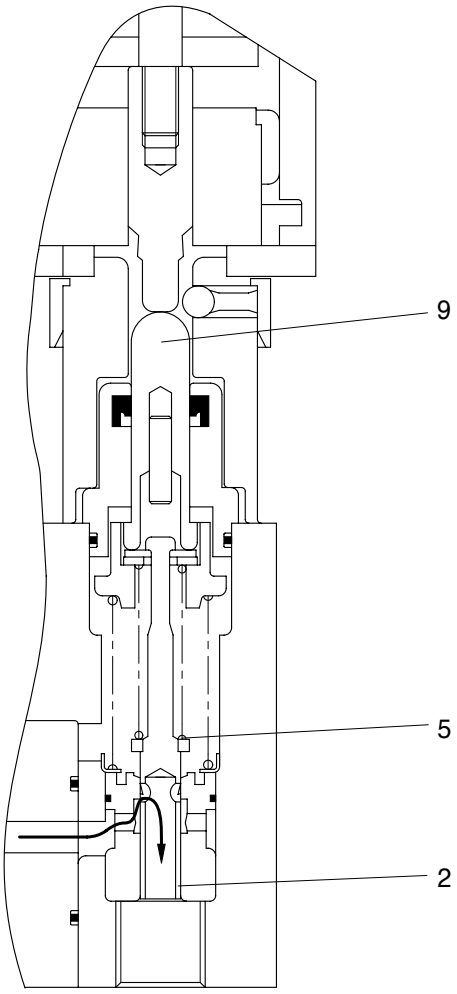

(740-3A) RCV03

By selecting the control lever(13) the plunger(9) is progressively selected until the spool(2) dead band X is taken up. During this interval the service port is still connected to the tank gallery. Any further selection of the control lever(13) will ;

① Cause the four metering holes in the spool(2) to open slightly, allowing pressure to be raised at the service port. This increase in pressure then counteracts the load produced by the metering spring(5) closing off the opening until an equilibrium is maintained. The pressure raised at the service port is proportional to the rate of the metering spring. The initial jump in pressure is caused by the preload in the metering spring(5) and can be altered as required simply by adjusting the shimming.

② Cause the service port to shut off to the rank gallery.

(3) End of metering

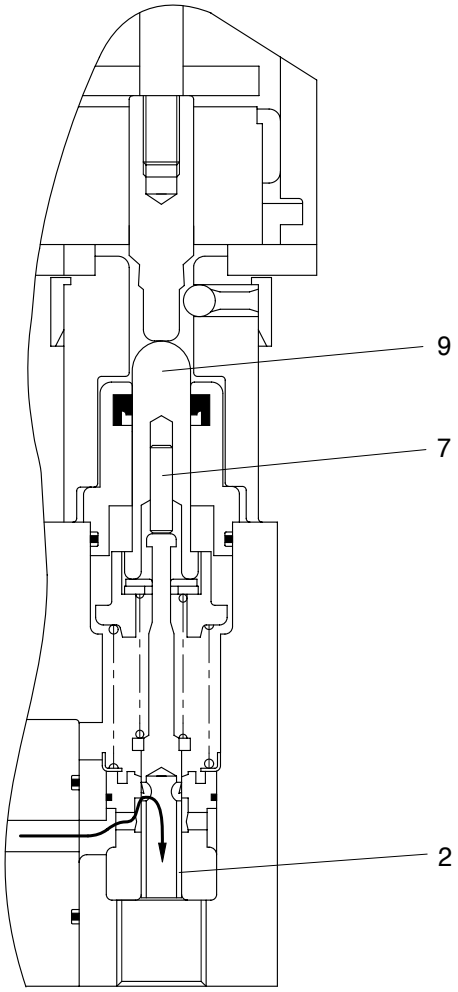

(740-3A) RCV04

After the plunger(9) has been displaced a distance of X+Y, the plunger roll pin(7) is just contacting the top of the spool(2). Any further selection of the control lever(13) will cause the four metering holes in the spool(2) to open independently of the pressure.

Thus any selection of the control lever(13) past X+Y will cause the service pressure to increase immediately to inlet pressure.

(4) Fully selected

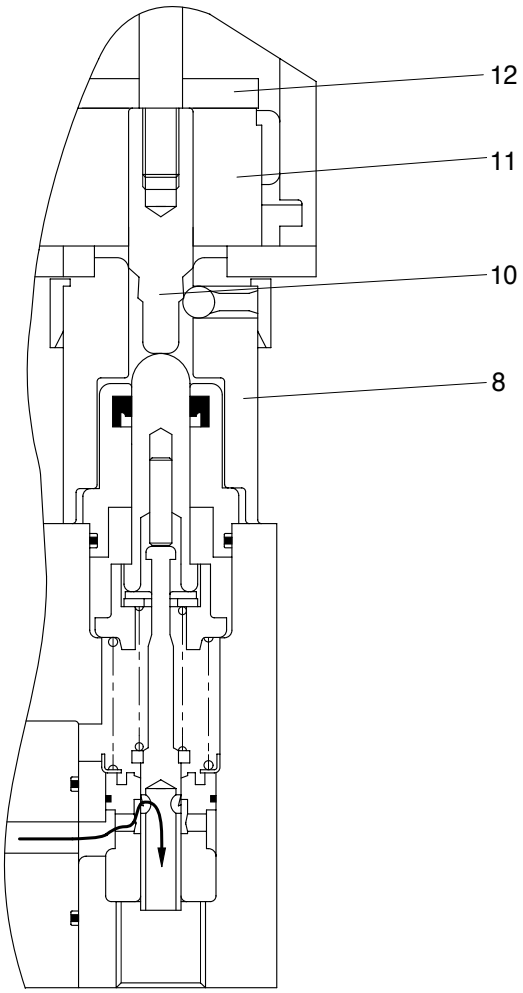

(740-3A) RCV05

Selecting the control lever(13) now will maintain the service port pressure at inlet until the armature plate(12) contacts on the hold coil(11). However, just prior to this, the ramp on the prefeel spindle(10) reacts against the three springs in the prefeel ball carrier(8).
This produces a sharp increase in operator load(Prefeel), ensuring that the service is not accidentally selected through to detent.

6. MAIN CONTROL VALVE

1) STRUCTURE

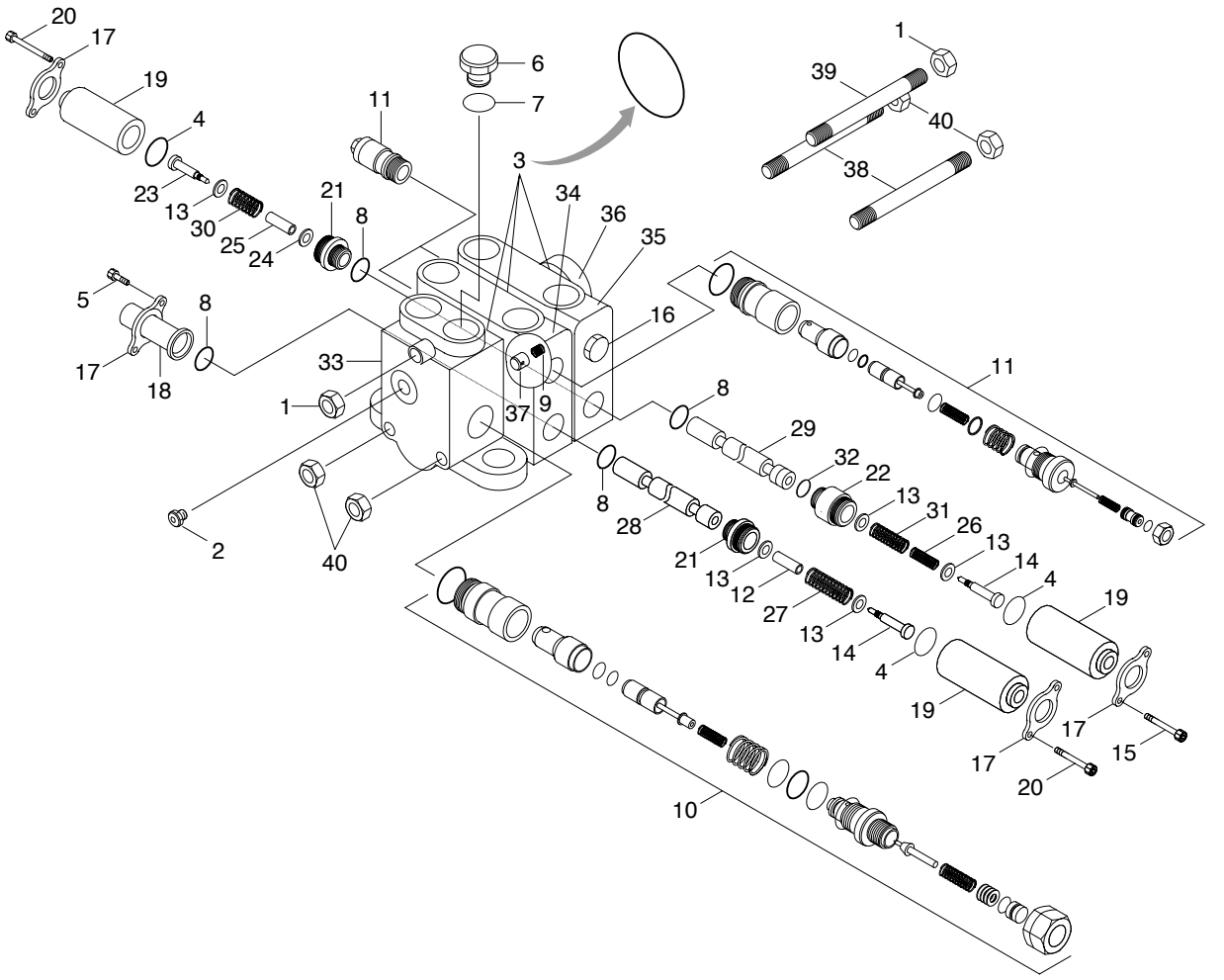

7403AWE12

1	Special nut	15	Cap screw	29	Spool
2	Plug	16	Anti void assy	30	Spring
3	O-ring	17	Retainer	31	Spring
4	O-ring	18	Spool cap	32	Back up ring
5	Cap screw	19	Spool cap	33	Inlet housing
6	Plug	20	Cap screw	34	Housing
7	O-ring	21	Retainer	35	Housing
8	O-ring	22	Retainer	36	Outlet housing
9	Spring	23	Shoulder screw	37	Poppet
10	Main relief valve	24	Flat washer	38	Tie rod
11	Port relief valve	25	Spacer	39	Tie rod
12	Spacer	26	Spring	40	Special nut
13	Flat washer	27	Spring		
14	Shoulder screw	28	Spool		

STRUCTURE

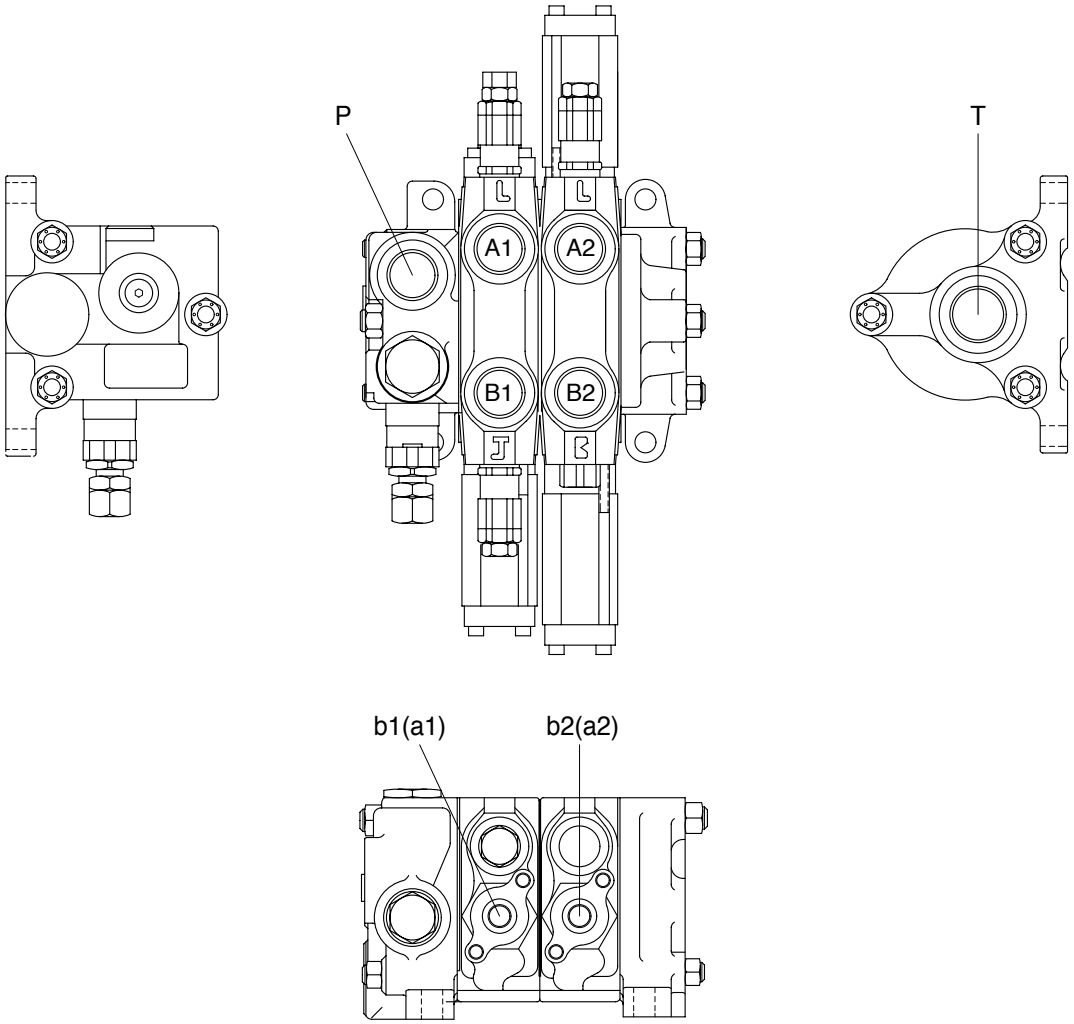

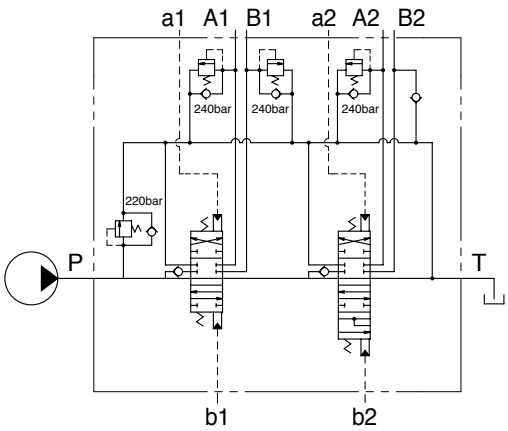

HYDRAULIC CIRCUIT

Port	Port name	Port size
P	From main pump	1 3/16-12UN
T	To hydraulic tank	1 5/16-12UN
A_1, B_1	To bucket cylinder port	1 3/16-12UN
A_2, B_2	To boom cylinder port	1 3/16-12UN
a_1, b_1	Bucket pilot port	9/16-18UNF
a_2, b_2	Boom pilot port	9/16-18UNF

2) BOOM SECTION OPERATION

(1) Spool in neutral

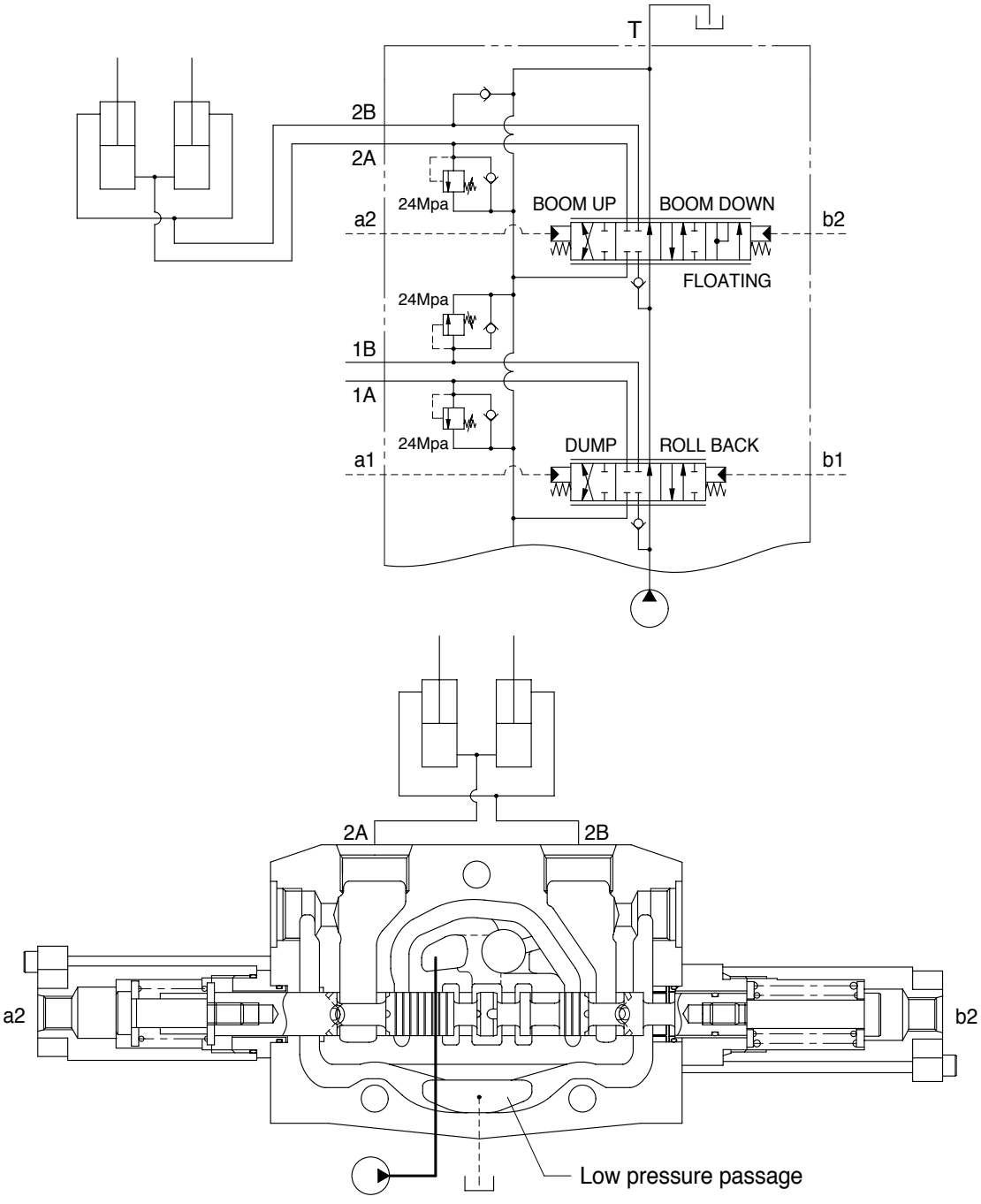

7406S6-18 21

If the remote control valve is not operated, the oil supplied from the pump port passes through the neutral passage to the low pressure passage at the outlet section, and then returns to the tank port.

(2) Boom raise position

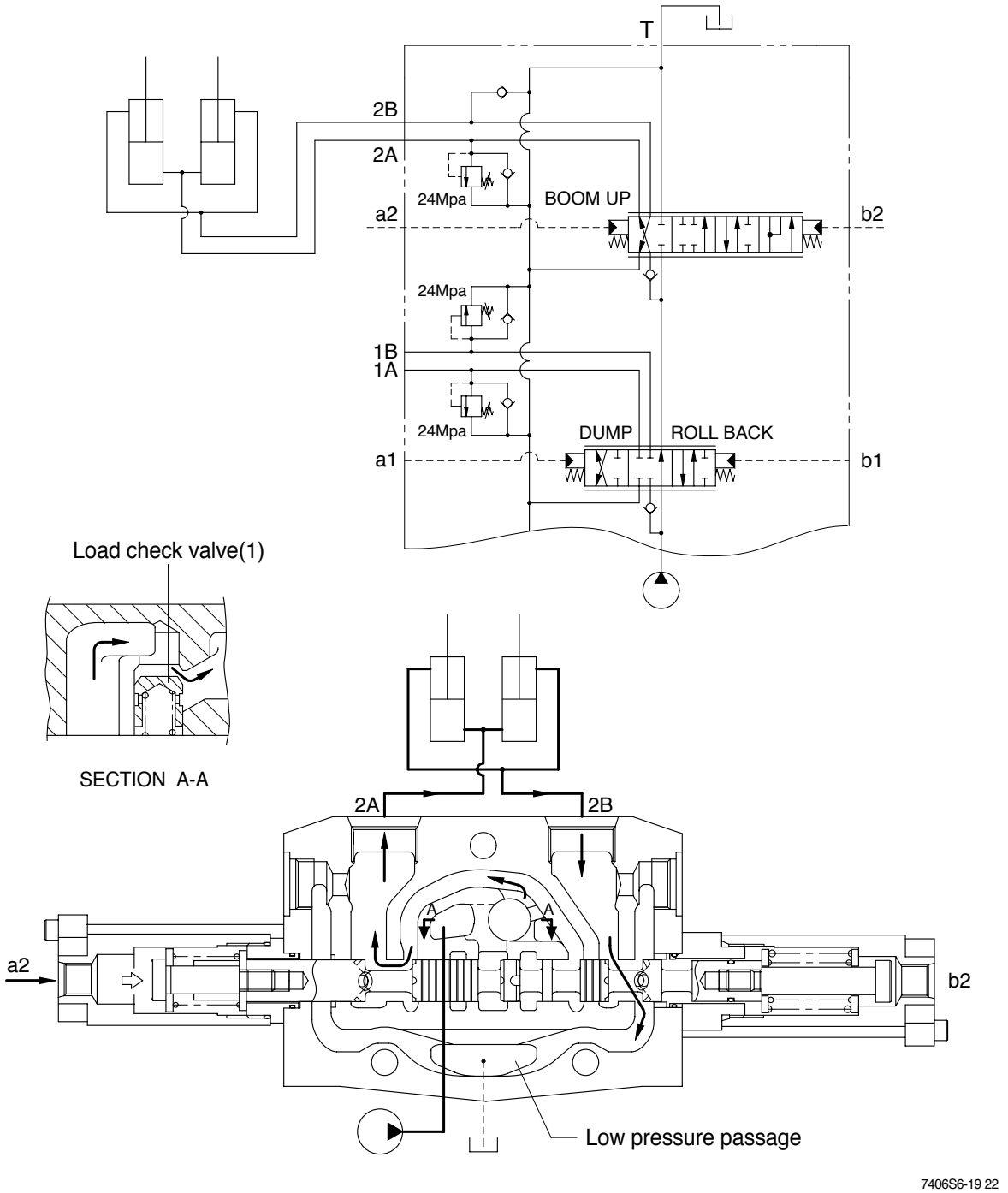

When the pilot pressure from remote control valve is supplied to the pilot port(a2), the spool moves to the right and the neutral passage is closed.
The oil supplied from the pump pushes up the load check valve(1) and flow into boom cylinder port(2A).
The pump pressure reaches proportionally the load of cylinder and fine control finished by shut off of the neutral passage.
The return oil from cylinder port(2B) flows into the tank via the low pressure passage.

(3) Boom lower position

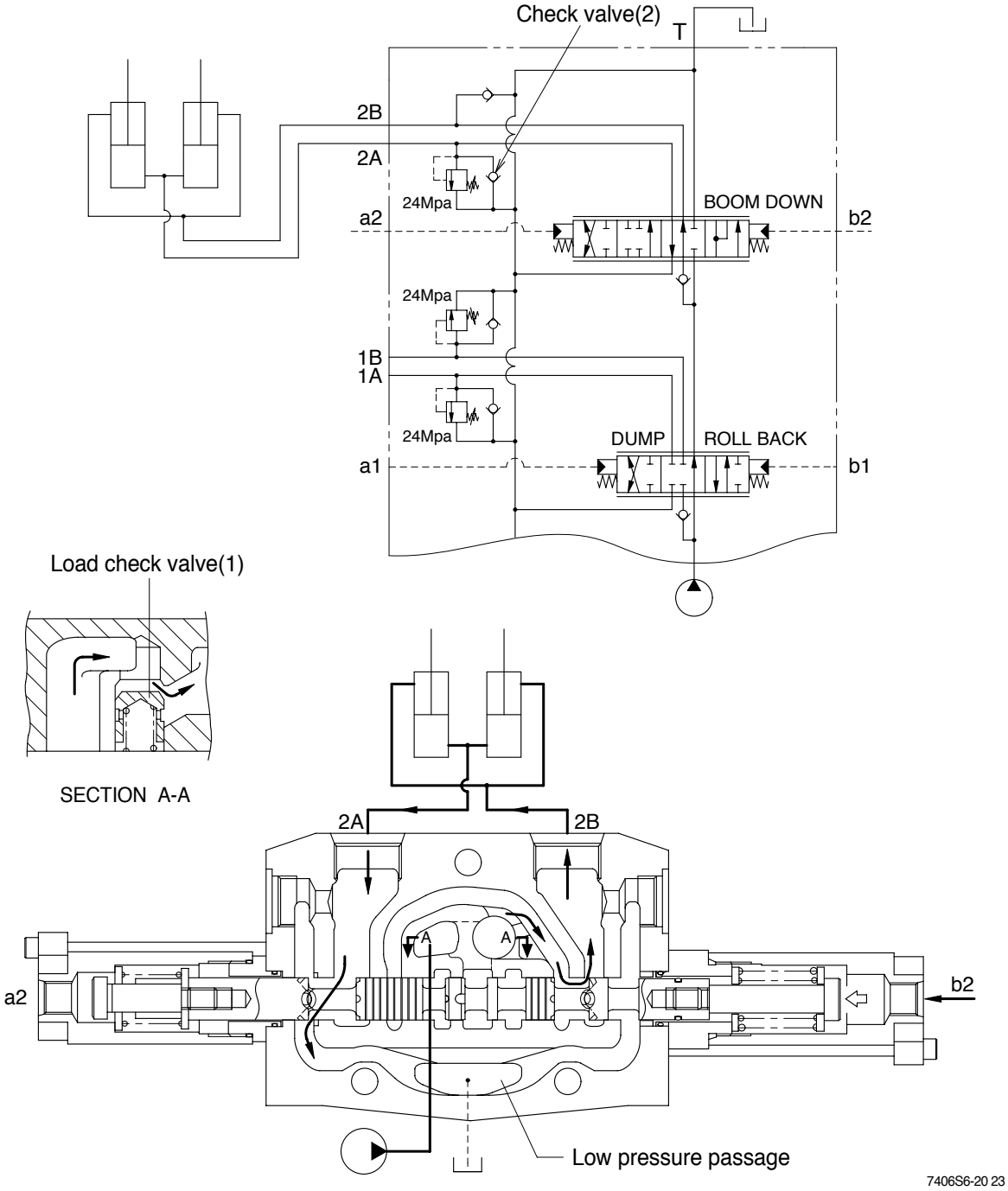

When the pilot pressure from remote control valve is supplied to the pilot port(b2), the spool moves to the left and the neutral passage is closed.

The oil supplied from the pump pushes up the load check valve(1) and flow into boom cylinder port(2B).

The pump pressure reaches proportionally the load of cylinder and fine control finished by shut off of the neutral passage.

The return oil from cylinder port(2A) flows into the tank via the low pressure passage.

When the lowering speed of boom is faster, the return oil from the large chamber of boom cylinder combines with the oil from the pump through the check valve(2), and flows into the small chamber of cylinder. This prevents cylinder cavitation by the negative pressure when the pump flow cannot match the boom lowering speed.

(4) Boom float position

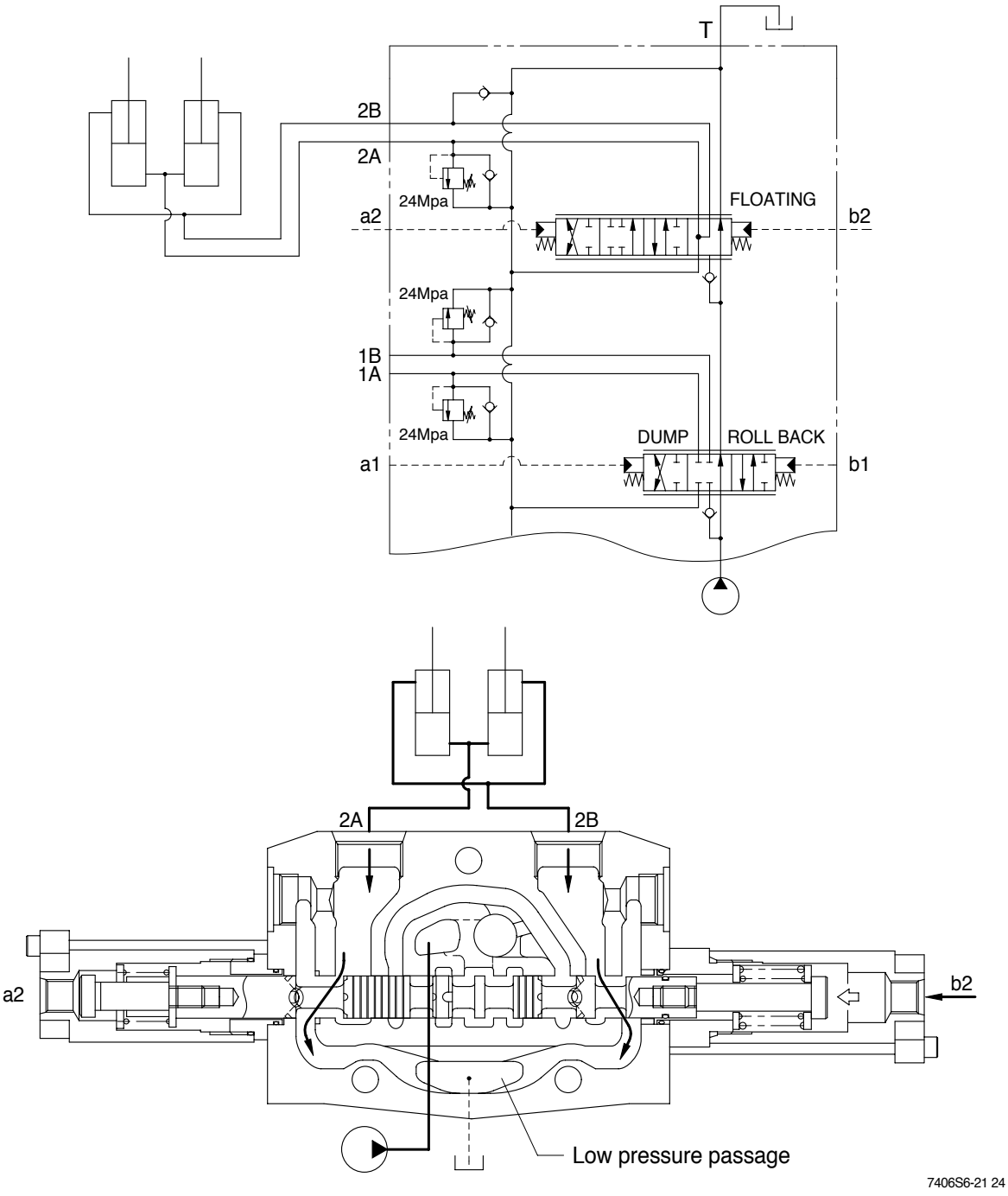

If the remote control lever pushes further more, the pilot pressure from remote control valve rises over 13-15bar and then the boom lowering spool is pushed to the boom floating position, opening up the neutral passage to tank and simultaneously(2A), (2B) 隊 T.

In float position the boom drops quickly due to its own weight.

When the bucket touches the ground and the wheeled loader is moving, the bucket raised or lowered following the unevenness of the ground due to the (2A), (2B) 隊 T connecting.

3) BUCKET SECTION OPERATION

(1) Spool in neutral

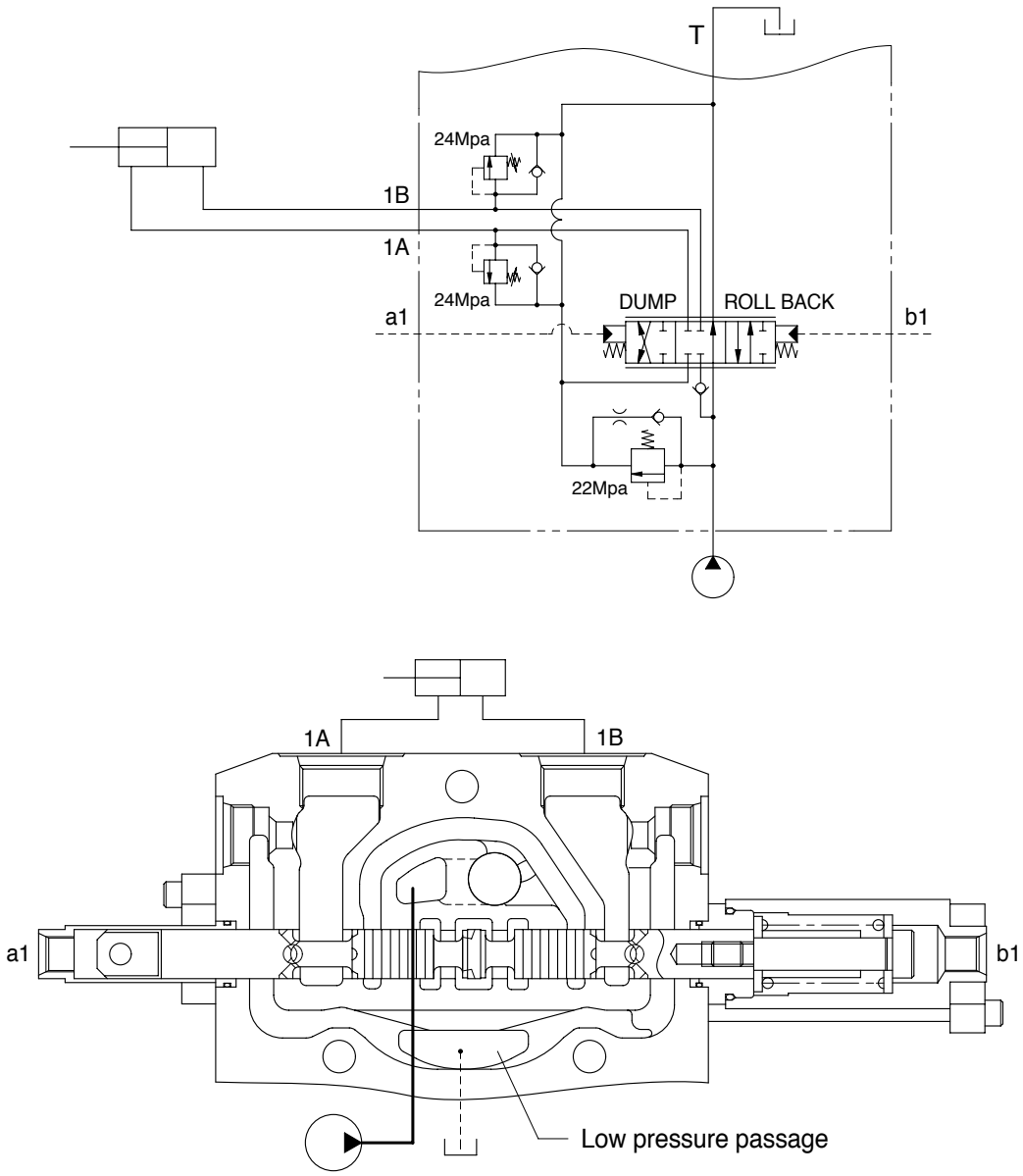

7406S 6-22 25

If the remote control valve is not operated, the oil supplied from the pump port passage through the neutral passage to the low pressure passage at the outlet section, and then return to the tank port.

(2) Retract(Roll back) position

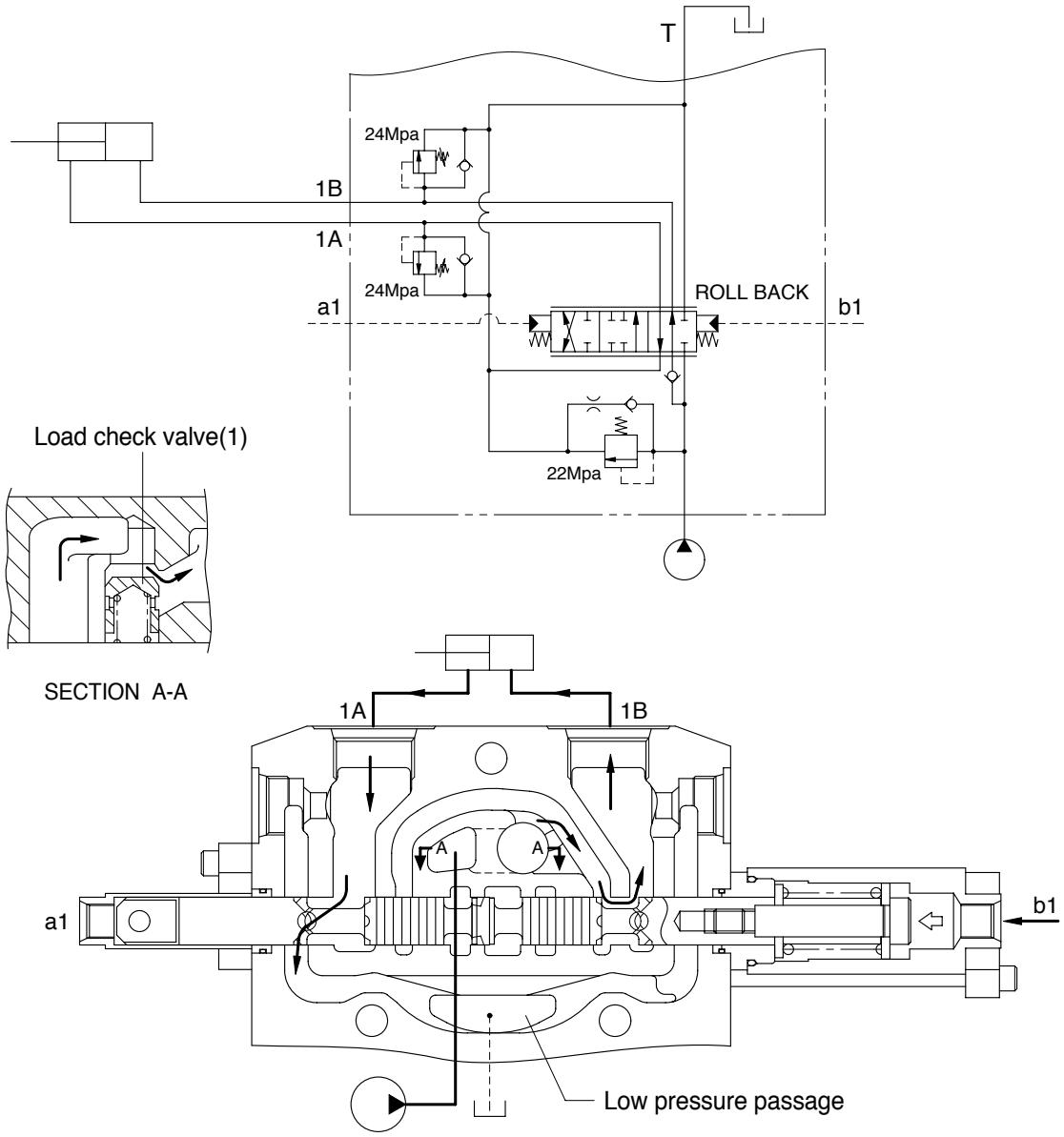

7406S6-23 26

When the pilot pressure from remote control valve is supplied to the pilot port(b1), the spool moves to the left and the neutral passage is closed.

The oil supplied from the pump pushes up the load check valve(1) and flow into bucket cylinder port(1B).

The pump pressure reaches proportionally the load of cylinder and fine control finished by shut off of the neutral passage.

The return oil from cylinder port(1A) flows into the tank via the low pressure passage.

(3) Dump position

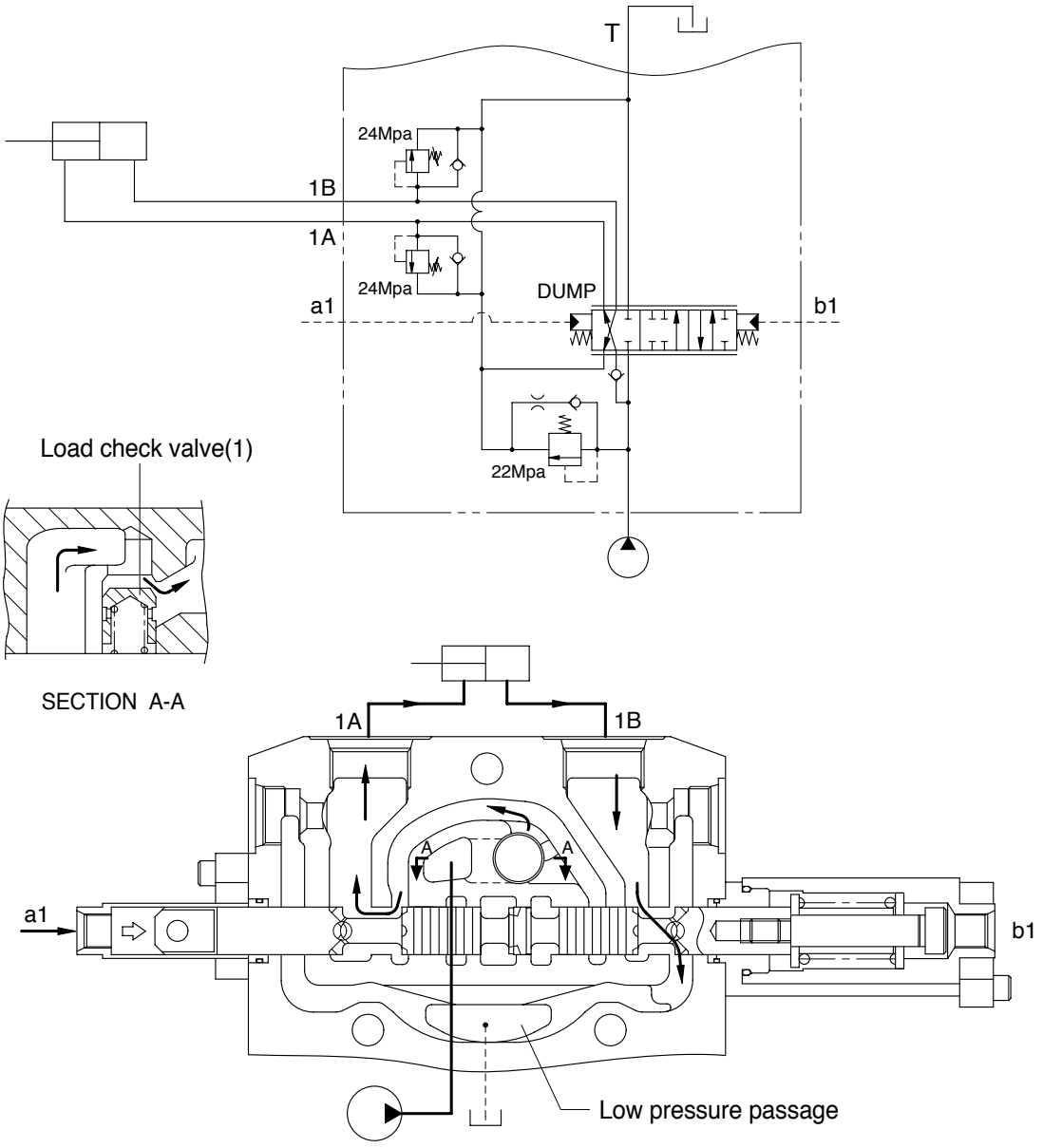

7406S 6-24

When the pilot pressure from remote control valve is supplied to the pilot port(a1), the spool moves to the right and the neutral passage is closed.

The oil supplied from the pump pushes up the load check valve(1) and flow into bucket cylinder port(1A).

The pump pressure reaches proportionally the load of cylinder and fine control finished by shut off of the neutral passage.

The return oil from cylinder port(1B) flows into the tank via the low pressure passage.

4) PRESSURE SETTING

A good pressure gage must be installed in the line which is in communication with the work port relief. A load must be applied in a manner to reach the set pressure of the relief unit.

(1) Main relief valve

① Loosen lock nut.
② Set adjusting nut to desired pressure setting.
③ If desired pressure setting cannot be achieved, add or remove shims as required.
④ Tighten lock nut.
⑤ Retest in similar manner as above.

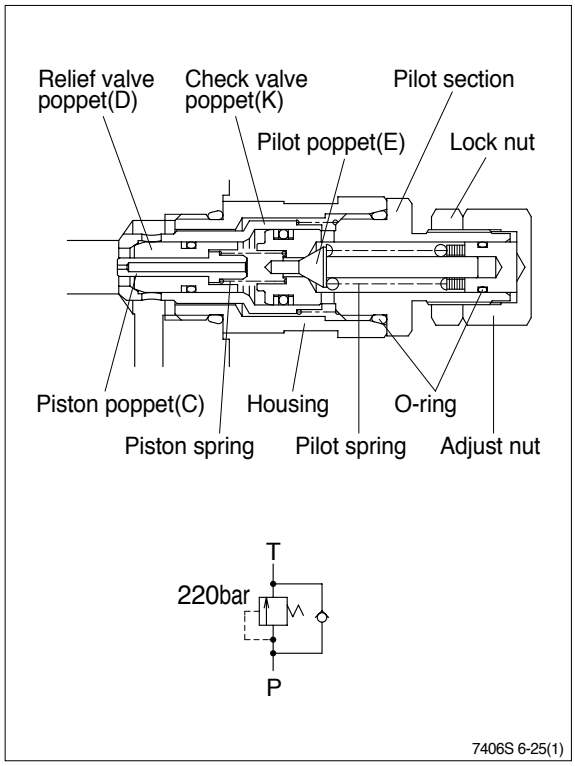

(2) Port relief valve

① Loosen lock nut.
② Set adjusting screw to desired pressure setting.
③ Tighten lock nut.
④ Retest in similar manner as above.

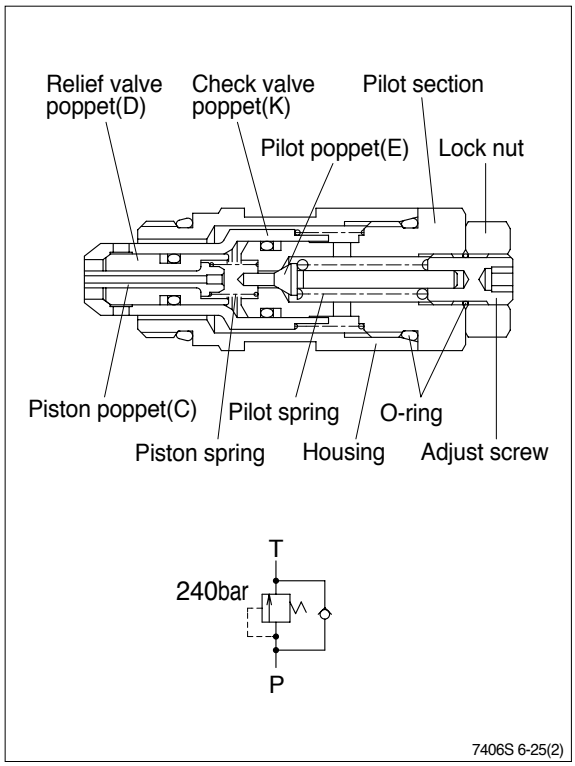

5) MAIN RELIEF VALVE

(1) As relief

The relief valve is in communication between the high pressure port HP and low pressure LP. Oil is admitted through the hole in poppet C and because of the differential area between diameters A and B relief valve poppet D and check valve poppet K are tightly seated as shown in the first step.

The oil pressure in the high pressure port HP has reached the setting of the pilot poppet spring force and unseats the pilot poppet E and oil flows around the poppet through the cross drilled holes and to the low pressure area LP.

The loss of oil behind poppet C, effected by the opening of pilot poppet E, causes poppet C to move back and seat against pilot poppet E. This shuts off the oil flow to the area behind relief valve poppet D, and causes a low pressure area internally.

The imbalance of pressure on the inside as compared to that of the high pressure port HP, forces the relief valve poppet D to open and relieve the oil directly to the low pressure chamber LP in the valve.

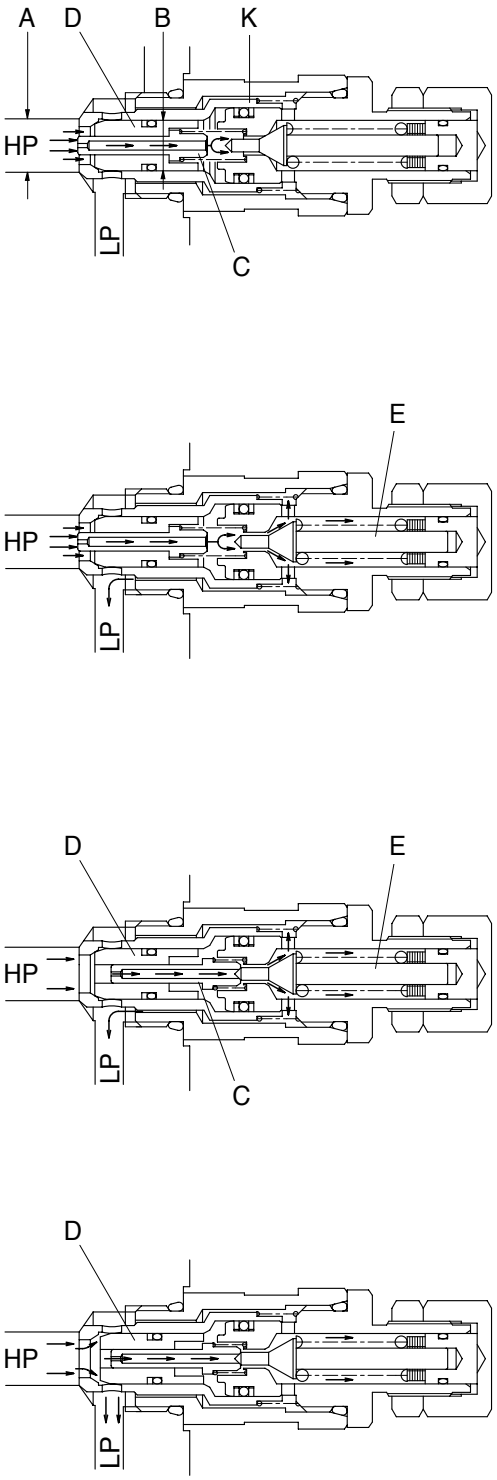

7406S 6-27

(2) As anti void

The anti-void unit supplies oil to the high pressure port HP when cavitation has occurred. A lower pressure exists in the port HP compared to the low pressure chamber LP. The difference between the effective area of diameter A and G causes imbalance of the check valve poppet K which unseats, thus allowing oil from the low pressure chamber LP to enter the port HP and fill the void.

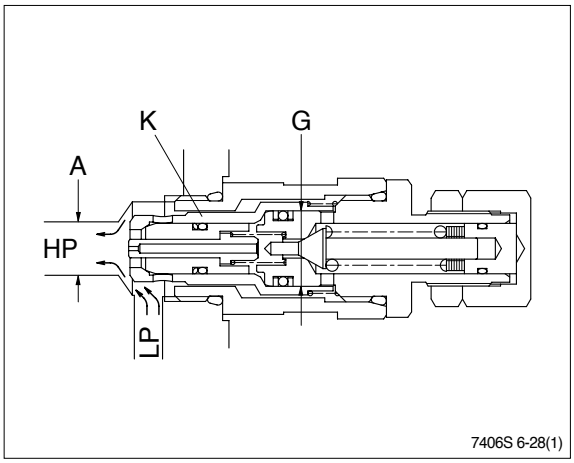

(3) As separate anti void

The anti-void check valve opens when cavitation occurs in the high pressure port HP and supplies oil from the reservoir LP to help fill this void. The poppet M is held on its seat by the port pressure HP, acting on the larger area behind the O-ring. When pressure HP drops below atmosphere, the tank pressure LP operating on the annular area A1-A2 will overcome the port pressure HP and the spring force to open the poppet. When the void is eliminated the spring will return the poppet which will then be tightly seated by the port pressure HP.

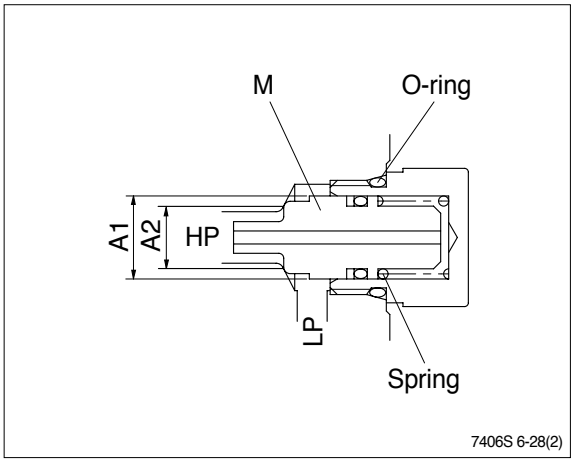

6) PORT RELIEF VALVE

(1) As relief

The relief valve is in communication between the high pressure port HP and low pressure LP. Oil is admitted through the hole in poppet C and because of the differential area between diameters A and B relief valve poppet D and check valve poppet K are tightly seated as shown in the first step.

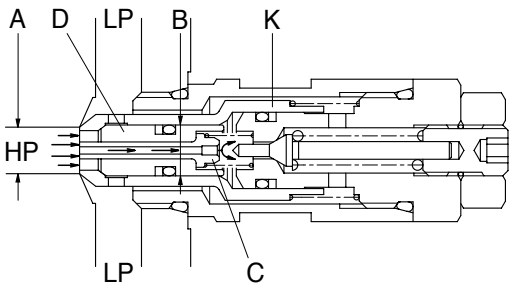

The oil pressure in the high pressure port HP has reached the setting of the pilot poppet spring force and unseats the pilot poppet E and oil flows around the poppet through the cross drilled holes and to the low pressure area LP.

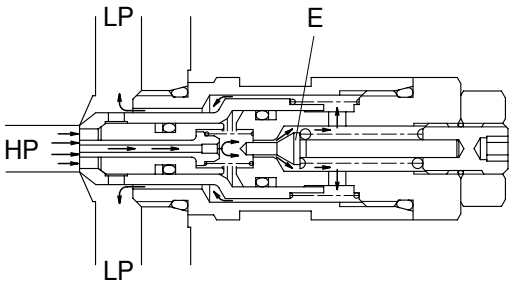

The loss of oil behind poppet C, effected by the opening of pilot poppet E, causes poppet C to move back and seat against pilot poppet E. This shuts off the oil flow to the area behind relief valve poppet D, and causes a low pressure area internally.

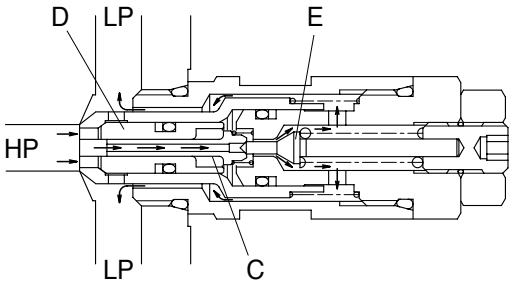

The imbalance of pressure on the inside as compared to that of the high pressure port HP, forces the relief valve poppet D to open and relieve the oil directly to the low pressure chamber LP in the valve.

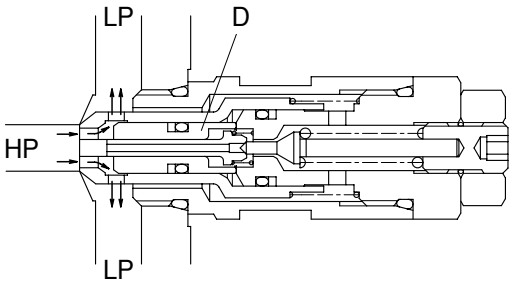

7406S 6-30

(2) As anti void

The anti-void unit supplies oil to the high pressure port HP when cavitation has occurred. A lower pressure exists in the port HP compared to the low pressure chamber LP. The difference between the effective area of diameter A and G causes imbalance of the check valve poppet K which unseats, thus allowing oil from the low pressure chamber LP to enter the port HP and fill the void.

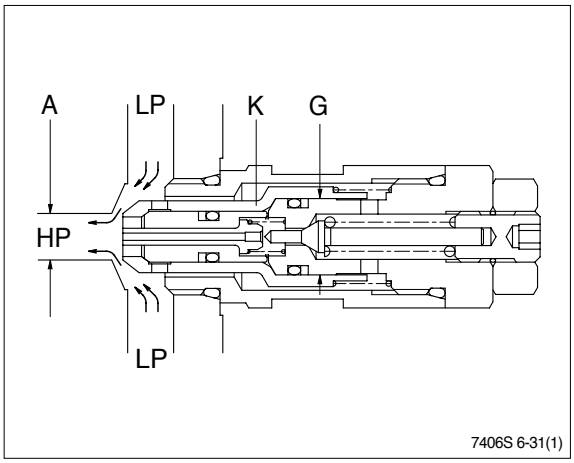

(3) As separate anti void

The anti-void check valve opens when cavitation occurs in the high pressure port HP and supplies oil from the reservoir LP to help fill this void. The poppet M is held on its seat by the port pressure HP, acting on the larger area behind the O-ring. When pressure HP drops below atmosphere, the tank pressure LP operating on the annular area A1-A2 will overcome the port pressure HP and the spring force to open the poppet. When the void is eliminated the spring will return the poppet which will then be tightly seated by the port pressure HP.

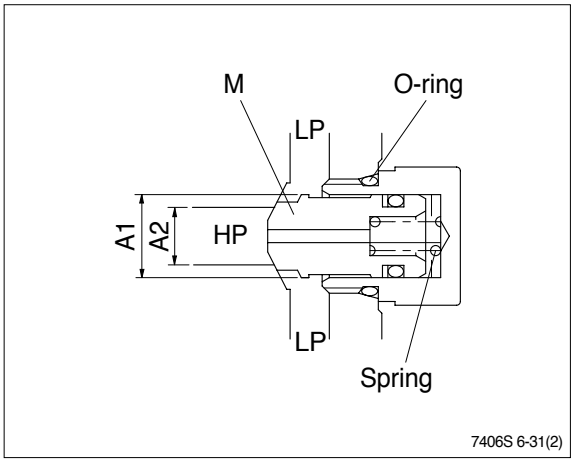

7. PILOT OIL SUPPLY UNIT

1) STRUCTURE

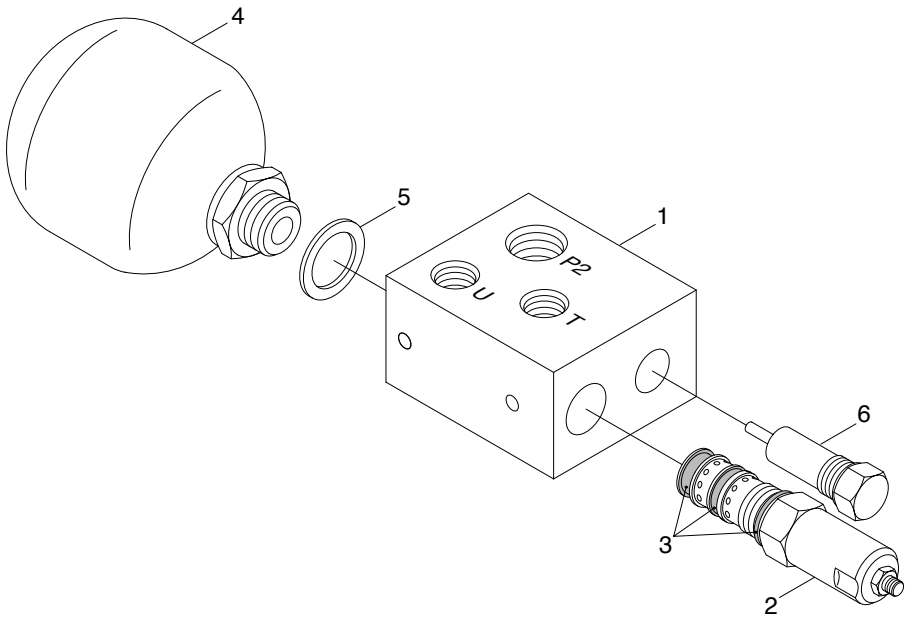

(740-3A 기타) PILOT SUPPLY UNIT

1	Manifold complete	4	Accumulator
2	Reducing valve	5	Gasket
3	Seal kit	6	Relife valve

2) OPERATION

The pilot supply manifold reduces the pressure from the high pressure circuit to a low pressure circuit in order to supply the remote control valve.

The accumulator satisfies short term peak power demands and is a source of emergency power in case of main circuit pressure failures.

The unit consists of the housing, the accumulator(4), the relief valve(6), the check valve and the reducing valve(2).

The flow path is from the high pressure circuit through port P2 to the pressure reducing valve(2). The pressure is reduced in the reducing valve(2) and oil passes the check valve into the accumulator(4) and to the port U, which is connected with the remote control valve.

The pressure relief valve(6) protects the pilot circuit in case of the reducing valve(2) failures or external increase of pressure.

8. BOOM AND BUCKET CYLINDER

The boom cylinders are two unit and the bucket cylinder is one unit. They use a bolt on rod guide.
The piston(12) threads on to the rod(2) and is retained by a nylon nut(18).
The piston seals against the tube(1) with piston seal(15). Two wear rings(16) are located on each side of the piston seal.
The gland(3, the rod guide) seals against the tube with an O-ring(10). The cylinder thread seals against the rod with a lip type buffer ring(7) and a rod seal(5). A dust wiper(8) cleans the rod when it is retracted.

1) BOOM CYLINDER

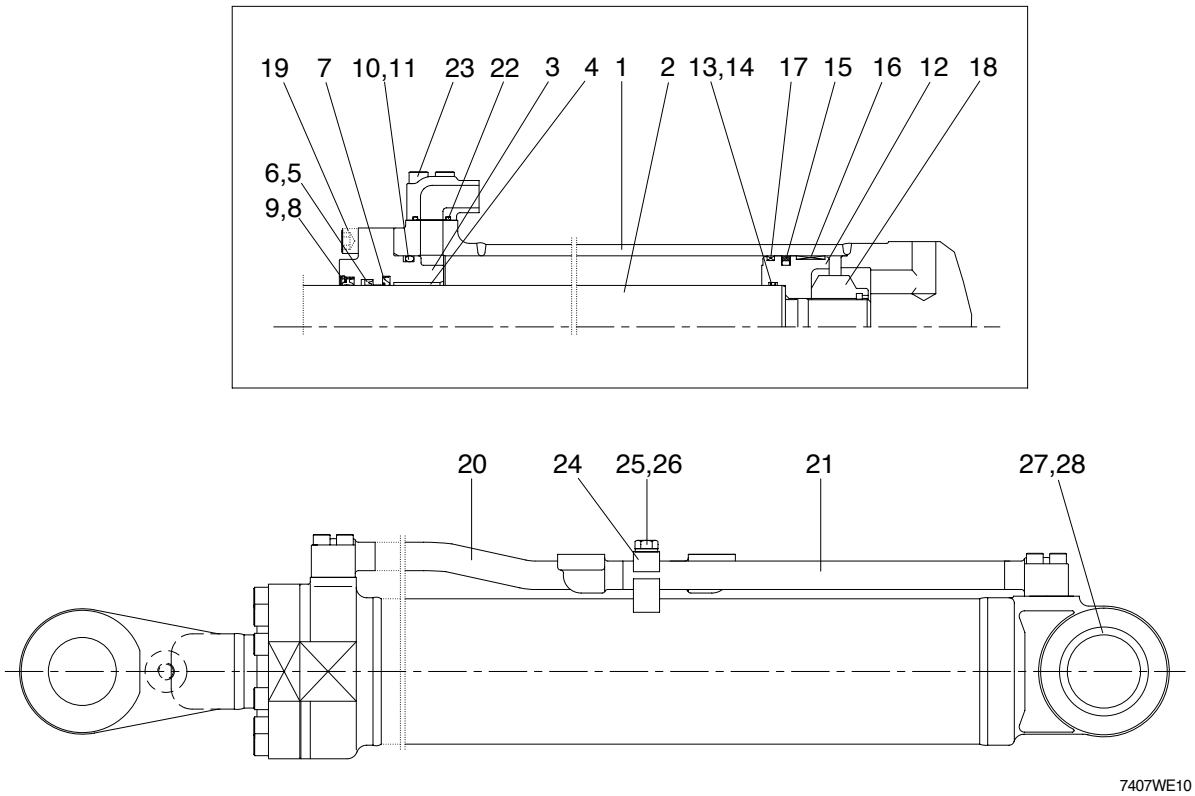

1	Tube assy	11	Back up ring	21	Pipe assy
2	Rod assy	12	Piston	22	O-ring
3	Gland	13	O-ring	23	Socket bolt
4	Bushing	14	Back up ring	24	Pipe clamp
5	Rod seal	15	Piston seal	25	Hexagon bolt
6	Back up ring	16	Wear ring	26	Spring washer
7	Buffer ring	17	Dust ring	27	Bushing
8	Dust wiper	18	Nylon nut	28	Dust seal
9	Snap ring	19	Socket bolt		
10	O-ring	20	Pipe assy		

2) BUCKET CYLINDER

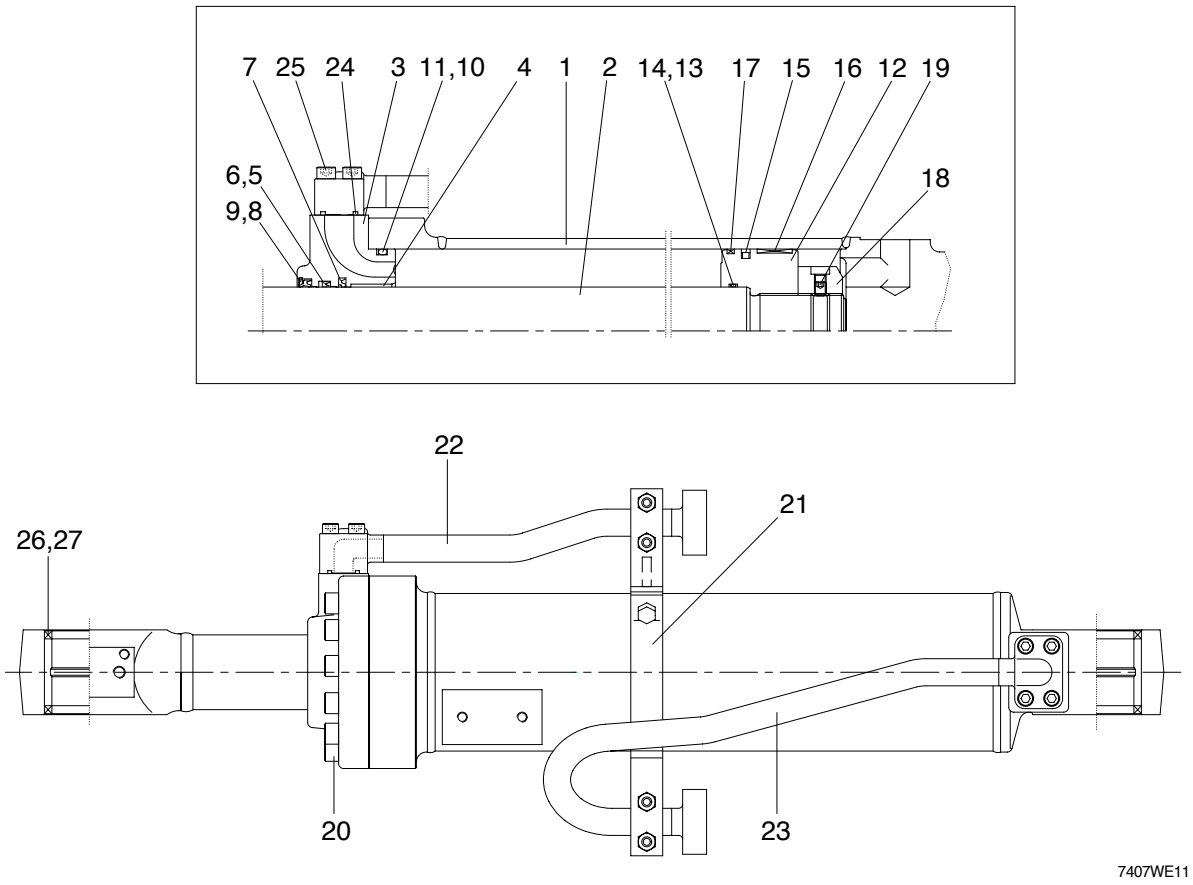

1	Tube assy	10	O-ring	19	Set screw
2	Rod assy	11	Back up ring	20	Socket bolt
3	Gland	12	Piston	21	Band assy
4	Bushing	13	O-ring	22	Pipe assy
5	Rod seal	14	Back up ring	23	Pipe assy
6	Back up ring	15	Piston seal	24	O-ring
7	Buffer ring	16	Wear ring	25	Socket bolt
8	Dust wiper	17	Dust ring	26	Bushing
9	Snap ring	18	Nylon nut	27	Dust seal

9. HYDRAULIC OIL TANK

1) STRUCTURE

- The oil from the hydraulic tank is sent from the pump through main control valve to the cylinders. In the return circuit, the oil from various parts merges.
- A part of oil is cooled in the oil cooler(If equipped), passes through the hydraulic filter and returns to the hydraulic tank(1).
- If the hydraulic return oil filter becomes clogged, return filter bypass valve(6) acts to allow the oil to return directly to the hydraulic tank(1). This prevents damage to the hydraulic filter(5). The bypass valve(6) is also actuated when negative pressure is generated in the circuit.

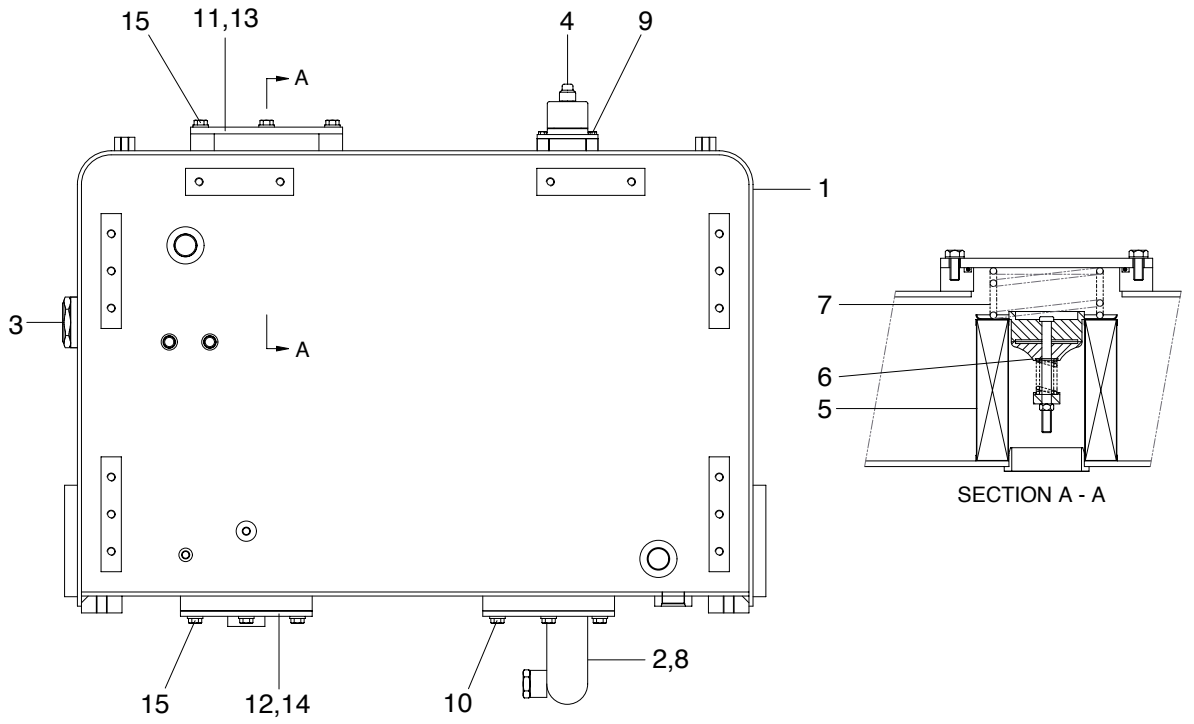

1	Hydraulic tank	6	By pass valve	11	Cover
2	Pipe assy	7	Spring	12	Cover
3	Sight gauge	8	O-ring	13	O-ring
4	Air breather	9	Socket bolt	14	O-ring
5	Element assy	10	Bolt	15	Bolt

2) RETURN OIL FILTER BYPASS VALVE

(1) When the filter is clogged

Bypass valve(1) is opened and the oil returns directly to the tank without passing through the filter.

Bypass valve set pressure : 1.36kg/cm^2 (19.3psi)

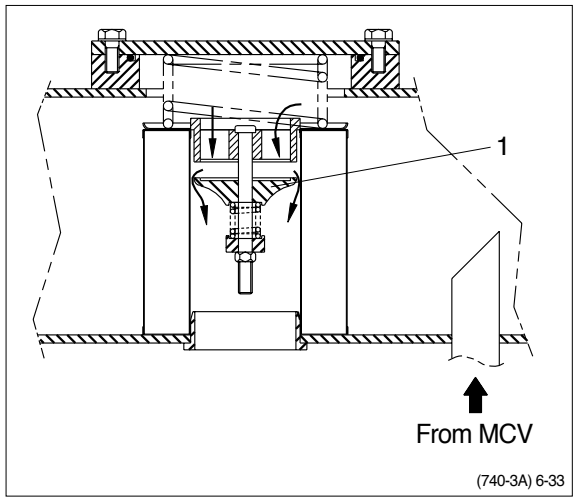

3) AIR BREATHER

The air breather is equipped with the capacity to perform three functions simultaneously-as an air filter, breathing valve, and as a lubrication opening.

(1) Preventing negative pressure inside the tank

The tank is a pressurized sealed type, so negative pressure is formed inside the hydraulic tank when the oil level drops during operations. When this happens, the difference in pressure between the tank and the outside atmospheric pressure opens the poppet in the breather, and air from the outside is let into the tank or prevent negative pressure.

(2) Preventing excessive pressure inside the tank

When the hydraulic cylinder is being used, the oil level in the hydraulic system increases and as temperature rises. If the hydraulic pressure rises above the set pressure, breather is actuated to release the hydraulic pressure inside the tank.

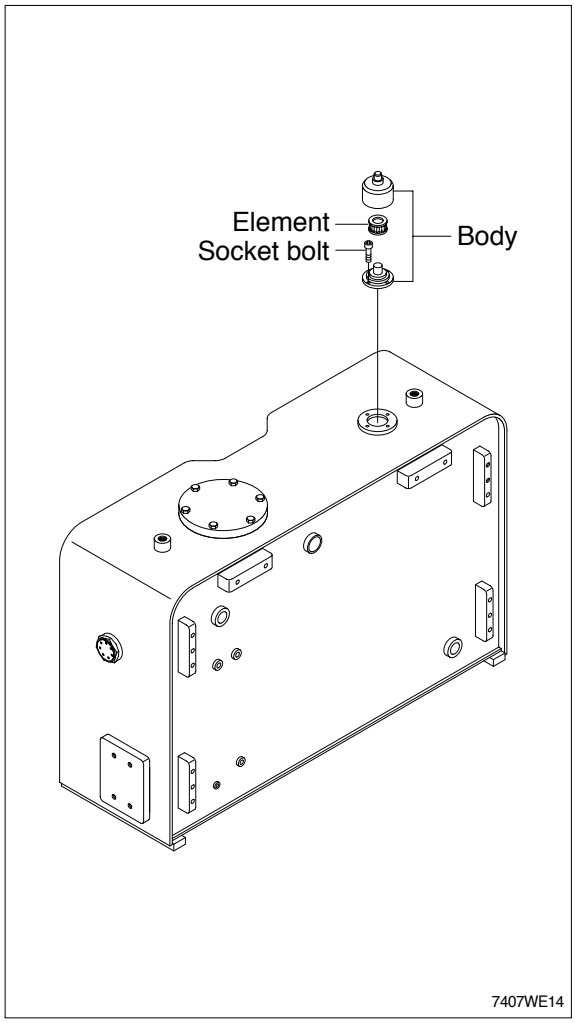

10. ACCUMULATOR

The accumulator is installed at the pilot oil supply unit. When the boom is left the raised position, and the control levers are operated with the engine stopped the pressure of the compressed nitrogen gas inside the accumulator sends pilot pressure to the control valve to actuate it and allow the boom and bucket to come down under their own weight.

Type of gas	Nitrogen gas(N_2)
Volume of gas	0.75 ℓ (0.2 U.S.gal)
Charging pressure of gas	16kg/cm²(228psi)
Max actuating pressure	30kg/cm²(427psi)

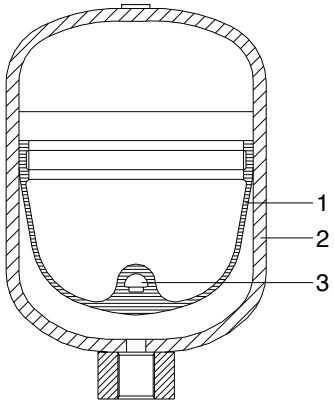

1 Diaphragm
2 Closure button
3 Steel pressure vessel

7803AWE56

GROUP 2 OPERATIONAL CHECKS AND TROUBLESHOOTING

1. OPERATIONAL CHECKS

This procedure is designed so the mechanic can make a quick check of the system using a minimum amount of diagnostic equipment. If you need additional information, read **Structure and function**, Group 1.
A location will be required which is level and has adequate space to complete the checks.

The engine and all other major components must be at operating temperature for some checks.

Locate system check in the left column and read completely, following the sequence from left to right. Read each check completely before performing.

At the end of each check, if no problem is found(OK), that check is complete or an additional check is needed. If problem is indicated(NOT OK), you will be given repair required and group location.

If verification is needed, you will be given next best source of information:

Chapter 2 : Troubleshooting
Group 3 : Tests and adjustments

※ **Hydraulic oil must be at operating temperature for these checks**(Refer to page 6-55).

Item		Description	Service action
Hydraulic system warm-up procedure Run engine at high idle. Refer to page 6-55.		Hold a hydraulic function over relief to heat oil.(Don't keep relief condition over 5 seconds at a time) Periodically cycle all hydraulic functions to distribute warm oil. Repeat procedure until oil is at operating temperature. **FEEL :** Hydraulic tank must be uncomfortable to hold your hand against. (Approximately 45~55°C)	**OK** Check completed.
Hydraulic pump performance check Heat hydraulic oil to operating temperature. Run engine at high idle.		With bucket flat on ground, actuate boom raise. Time how long it takes to raise boom to full height. **LOOK :** Boom must raise to full height in less than 6.5 seconds.	**OK** Check completed. **NOT OK** Go to steering unit high pressure check at page 5-26. **IF OK** Do steering unit leakage check at page 5-25. **IF OK** Do main hydraulic pump flow test at page 6-56.
Control valve lift check Run machine at low idle.	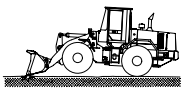	With bucket partially dumped, lower boom to raise front of machine. Slowly move boom control lever(RCV lever) to boom lower position. Slowly move bucket control lever to bucket dump position. **LOOK :** Boom must not raise before moving down. Bucket must not rollback before dumping.	**OK** Check complete. **NOT OK** Repair lift checks in main control valve.

Item	Description	Service action
Bucket rollback circuit relief valve check	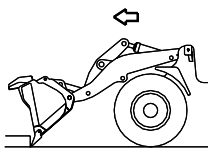 Position bucket at a 45。 angle against an immovable object. Engage transmission in 3rd speed forward. **LOOK :** Bucket angle must not change.	**OK** Check complete. **NOT OK** Replace boom lower check valve.
Bucket dump circuit relief valve low pressure check	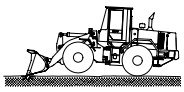 Raise front of machine which bucket at 45。 angle. Backdrag with bucket while observing bucket angle. **LOOK :** Bucket must not rollback	**OK** Go to next check. **NOT OK** Do loader system and circuit relief valve test at page 6-57.
Pilot control valve float check Run engine at low idle.	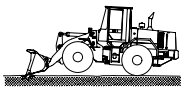 With the bucket partially dumped, lower boom to raise front of machine. 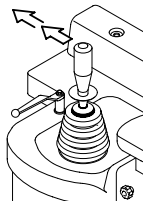 Push control lever to the float detent position and release lever. **LOOK** : Front of machine lower to the ground and valve must remain in float position when lever is released.	**OK** Check complete. **NOT OK** Do pilot control valve pressure test in group 3.
Boom cylinder and bucket cylinder drift check Heat hydraulic oil to operating temperature.	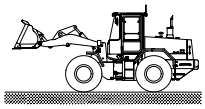 Set the boom and bucket horizontal, then stop the engine. Stop the engine, wait for 5 minutes, then start measuring. 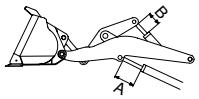 Measure the amount the lift and dump cylinder rods retract during 15 minutes.(Unloaded bucket) 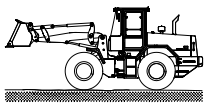 A : Retraction of boom cylinder rod B : Retraction of bucket cylinder rod 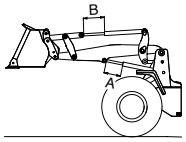 Boom cylinder must drift less than 30mm(HL740-7); 40mm(HL740TM-7) Bucket cylinder must drift less than 30mm.	**OK** Check complete. **NOT OK** Go to next check.

Item	Description	Service action
Boom cylinder leakage check Heat hydraulic oil to operating temperature.	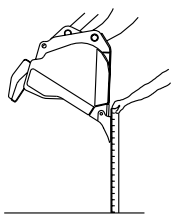 Dump bucket until teeth or cutting edge is perpendicular to the ground. Raise boom until cutting edge is about 1m(3ft) above ground. Stop engine. Measure drift from tooth or cutting edge to ground for 1 minute. Wait 10 minutes. Measure drift from tooth or cutting edge to ground for 1 minute. **LOOK :** Compare the drift rate between the first measurement and the second measurement.	**OK** Drift is approximately the same between first and second measurement. Repair main control valve or circuit relief valve. **NOT OK** If drift is considerably less on second measurement, repair cylinder.
Bucket cylinder leakage check Heat hydraulic oil to operating temperature.	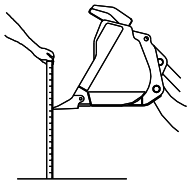 Raise bucket about 1m(3ft) off ground with bucket level. Stop engine. Place a support under boom. Measure drift from tooth or cutting edge to ground for 1 minute. Wait 10 minutes. Measure drift from tooth or cutting edge to ground for 1 minute. **LOOK :** Compare the drift rates between the first measurement and the second measurement.	**OK** Drift is approximately the same between first and second measurement. Repair main control valve or circuit relief valve at page 6-57. **NOT OK** Drift is considerably less on second measurement. Repair cylinder.
Check valve of safety valve leakage check Heat hydraulic oil to operating temperature.	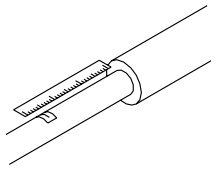 Put bucket level and position about 1.2m(4ft) above ground. Place a piece of tape on cylinder rod at least 51mm(2in) from rod guide. Run engine at low idle in safety-release position. **LOOK :** Bucket must not drift up.	**OK** Check complete. **NOT OK** Check or replace safety valve.
Pilot control valve (RCV lever) **check**	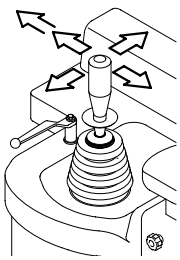 Stop engine. Turn key switch to OFF position. Move control lever to all positions and then release. **LOOK :** Lever must return to neutral when released from all positions.	**OK** Check completed. **NOT OK** Repair pilot control valve.

<table>
<tr><th>Item</th><th>Description</th><th>Service action</th></tr>
<tr>
<td>Bucket leveler
(Positioner) check
Run engine at low idle.</td>
<td>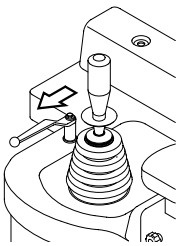
Position bucket fully dumped just above ground level.
Move control lever to bucket leveler detent position and release.
LOOK : Bucket must rollback to the level position and control lever must return to neutral.
If bucket is in a rolled back position when key is turned ON, control lever must be returned to neutral manually if placed in the bucket leveler detent position.
After bucket is dumped once, bucket leveler will work normally.</td>
<td>OK
Check complete.
NOT OK
Do bucket leveler checks in group 3.</td>
</tr>
<tr>
<td>Boom height kickout check
Run engine at low idle.</td>
<td>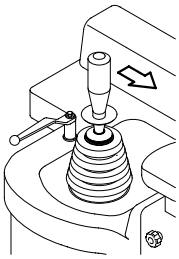
Position bucket flat on ground.
Move control lever to boom raise detent position and release.
LOOK : Boom must raise to the set height and stop.
Control lever must return to neutral.</td>
<td>OK
Check complete.
NOT OK
Do boom height kickout check in group 3.</td>
</tr>
<tr>
<td>Cycle time check
Heat hydraulic oil to operating temperature.
Run engine at high idle.</td>
<td>
<table>
<tr><th>Function</th><th>Operating condition.</th></tr>
<tr><td>Boom raise</td><td>Bucket flat on ground to full height.</td></tr>
<tr><td>Boom lower (Float)</td><td>Full height to level ground.</td></tr>
<tr><td>Bucket dump</td><td>Boom at full height.</td></tr>
<tr><td>Bucket rollback</td><td>Boom at full height.</td></tr>
<tr><td>Steering(No. of turns)</td><td>Frame stop to frame stop.</td></tr>
</table>
</td>
<td>Maximum cycle time
<table>
<tr><th>HL740-7</th><th>HL740TM-7</th></tr>
<tr><td>6.5sec</td><td>6.5sec</td></tr>
<tr><td>3.2sec</td><td>3.2sec</td></tr>
<tr><td>1.5sec</td><td>1.7sec</td></tr>
<tr><td>2.0sec</td><td>2.5sec</td></tr>
</table>
2.5sec(4.5 turns)
OK
Check complete.
NOT OK
Go to slow hydraulic functions in group 3.</td>
</tr>
</table>

※ MEASURING BOOM AND BUCKET CYCLE TIME

1. MEASUREMENT CONDITION

- Coolant temperature : Inside operating range
- Steering position : Neutral
- Hydraulic temperature : 45~55℃
- Bucket : Unloaded
- Engine speed : High idling

2. MEASURING TOOL

- Stop watch(1 EA)

3. MEASURING PROCEDURE

1) LIFTING TIME OF BOOM

Set the bucket near the maximum tilt back position and at the lowest position on the ground. Raise the bucket and measure the time taken for bucket to reach the maximum height of the boom.

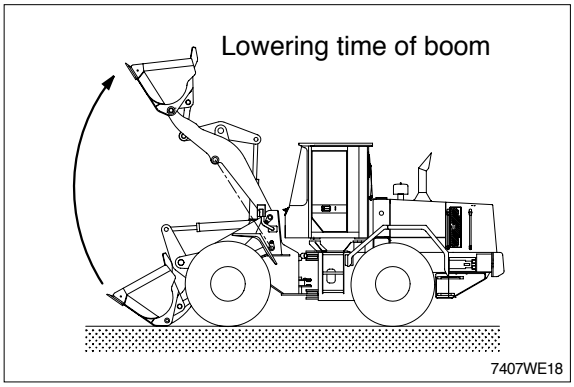

2) LOWERING TIME OF BOOM

Set the bucket horizontal with the boom at the maximum height, lower the bucket and measure the time taken for the bucket to reach the lowest position on the ground.

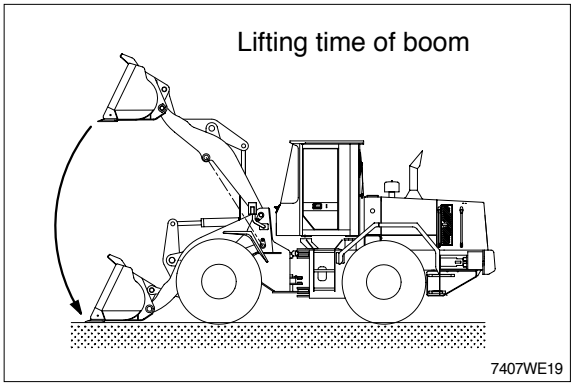

3) DUMPING TIME OF BUCKET

Raise the boom to the maximum height and measure the time taken for the bucket to move from the maximum tilt back position to the maximum dump position

4) ROLL BACK TIME OF BUCKET

Raise the boom to the maximum height and measure the time taken for the bucket to reach the maximum tilt back position.

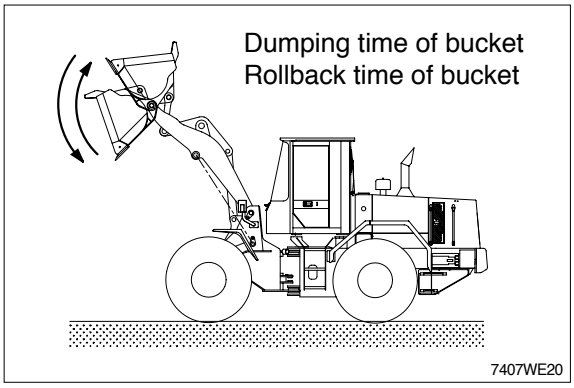

2. TROUBLESHOOTING

※ **Diagnose malfunction charts are arranged from most probable and simplest to verify, to least likely, more difficult to verify. Remember the following steps when troubleshooting a problem :**

Step 1. Operational check out procedure(See section 1)
Step 2. Operational checks(In this group)
Step 3. Troubleshooting
Step 4. Tests and adjustments(See group 3)

Problem	Cause	Remedy
Noisy hydraulic pump	Low oil supply or wrong viscosity.	Fill reservoir with recommended oil.
	Plugged or pinched suction line.	Clean or replace line.
	Air in oil.	Check for foamy oil. Tighten connections.
		Replace O-rings and or lines.
	Loose or missing hydraulic line clamps.	Tighten or replace clamps.
	Hydraulic lines in contract with frame.	Inspect and repair.
	Worn or damaged pump.	Do hydraulic pump performance check in group 2. Do hydraulic pump flow test in group 3.
No or Slow hydraulic functions	Failed or worn hydrualic pump.	Do performance check.
	Cold oil.	Warm oil up.
	Slow engine speed.	Adjust engine speed control linkage. Check high idle speed.
	Suction line air leak.	Check for foamy oil.
	Low oil supply.	Add recommended oil.
	Wrong oil viscosity.	Use recommended oil.
	Oil leaking past cylinders or control valve.	Check cylinder drift in group 2.
	Blocked or damaged line.	Inspect lines.
	Faulty or misadjusted pilot oil supply unit.	Do pilot oil supply unit pressure test in group 3.
	Faulty pilot control valve(RCV).	Do pilot control valve(RCV) pressure test in group 3.
	Binding main control valve spool.	Inspect valve.
	Faulty priority valve.	Check priority valve specification.

Problem	Cause	Remedy
No steering or hydraulic function	Low oil level.	Add recommended oil.
	Failed hydraulic pump.	Remove and inspect return filter for metal pump particles.
	Failed main hydraulic pump drive.	Remove main hydraulic pump and inspect drive gear.
No hydraulic functions steering normal	Failed hydraulic pump.	Remove and inspect return filter for metal pump particles, or replace the pump.
	Failed pilot line filter.	Remove and inspect line filter for RCV.
	Faulty safety valve.	Safety valve leakage test or ON, OFF function test.
	Stuck open system and port relief valve.	Replace relief valve.
	Faulty or misadjusted pilot supply unit.	Do pilot supply unit pressure test in group 3.
Boom float function does not work	Low pilot control pressure.	Do pilot supply unit pressure test in group 3.
	Faulty pilot control valve(RCV).	Do pilot control valve pressure test.
	Main control valve spool binding in bore.	Do pressure reducing valve pressure test in group 3.
One hydraulic function does not work	Faulty pilot control valve(RCV).	Do pilot control valve pressure test.
	Stuck open port relief valve.	Replace relief valve.
	Oil leaking past cylinder packings.	Do boom and bucket cylinder leakage test in group 3.
	Blockage in oil lines or valve.	Inspect lines for damage. Disconnect and inspect lines for internal blockage.
	Main control valve spool stuck in bore.	Inspect and repair valve.
Low hydraulic power	Leakage within work circuit.	Do cylinder drift check in group 2.
	Low system relief valve(Main relief valve) setting.	Do loader system and port relief valve pressure test in group 3.
	Low port relief valve setting.	Do loader system and port relief valve pressure test in group 3.
	Faulty or misadjusted pilot oil supply unit .	Do pilot oil supply unit pressure test in group 3.
	Leaking system relief valve.	Remove and inspect valve.
	Worn hydraulic pump.	Do hydraulic pump performance check in group 2.
	Faulty pilot control valve(RCV).	Do pilot control valve(RCV) pressure test in group 3.

Problem	Cause	Remedy
Function drifts down	Leaking cylinders.	Do cylinder leakage checks in group 2.
	Leaking seals in circuit relief valve(Port relief valve) or valve stuck open.	Inspect seals. Replace relief valve.
	Leaking loader control valve.	Repair or replace valve section.
Boom drifts up	Leakage in boom down spool.	Remove and inspect boom down spool.
Boom down does not work Engine off.	Safety valve not operated.	Operate valve.
	Stuck pilot control valve.	Inspect.
	Faulty line filter.	Remove and inspect filter.
	Accumulation not operated.	Inspect.
	Main control valve spool stuck.	Inspect and repair valve.
Oil overheats	Low oil viscosity in hot weather.	Use recommended oil.
	Excessive load.	Reduce load.
	Holding hydraulic system over relief.	Reduce load.
	Leakage in work circuit.	Do boom and bucket cylinder leakage test in group 3.
	Plugged fins in oil cooler.	Inspect and clean oil cooler.
	Internally plugged oil cooler.	Do hydraulic oil cooler restriction test.
	Incorrect system or circuit relief valve setting.	Do loader system and circuit relief valve pressure test in group 3.
	Restriction in oil lines or main control valve.	Inspect for dented or kinked lines. Do hydraulic system restriction test in group 3.
	Pinched or restricted priority valve LS line.	Run engine at low idle. Steer machine back and forth. If engine load decreases while steering, a restricted LS line or priority valve malfunction is indicated. Do priority valve LS port flow test in group 3.
	Malfunctioning priority valve.	Do hydraulic system restriction test in group 3.
	Leaking system main relief valve.	Remove and inspect valve and seals.
	Worn hydraulic pump(Internal leakage).	Do hydraulic pump performance check in group 2.
Function drops before raising when valve is activated	Stuck open lift check valve.	Do control valve lift check in group 2.

Problem	Cause	Remedy
Hydraulic oil foams	Low oil level. Wrong oil. Water in oil. Loose or faulty suction lines(Air leak in system).	Add recommended oil. Change to recommended oil. Change oil. Tighten or install new lines.
Remote control valve (RCV) **leaking**	Leaking plunger seals.	Remove, inspect and replace plunger seals.

※ **Followings are general precautions for the hydraulic system and equipment.**

1) Every structure has its limit of strength and durability. The relief valve is installed to limit the pressure on the hydraulic equipment and protect various parts of the wheel loader from possible damage. Therefore, never change the preset pressure of the relief valve unless absolutely necessary.

2) Since the hydraulic equipment is built with precision, the presence of only the slightest amount of dust and/or other particles in the hydraulic circuit might cause wear and/or damage, resulting in unstable functions and/or damage, resulting in unstable functions and/or unexpected accidents. Therefore, always keep hydraulic oil clean. Periodically, check the filter in the return circuit and replace the element as necessary.

3) Extract about 200cc of hydraulic oil from the tank as a sample every 6 months. If possible, have it analyzed by a specialist to confirm that the oil can still be used. Never extract the oil for sampling until the oil temperature has become the normal operating temperature. Since the replacement period varies depending on operating conditions, refer to **Operator's manual** and change oil.

4) Should the equipment get damaged due to the presence of metal particles and/or foreign matter in the circuit drain out the hydraulic oil and carry out flushing. Also, replace the filter element and clean the hydraulic tank. Change the hydraulic oil entirely.

5) When checking the filter, if found metal particles in the element, drain out the hydraulic oil entirely, flush the whole circuit, and then fill with new oil. The presence of metal particles may indicate internal damage to the equipment. In such a case, check carefully before flushing, and repair or replace as required.

6) To add and/or change the hydraulic oil, always use recommended oil.(Refer to the list of recommended oils and lubricants at page 1-24, **Recommended lubricants**.) Never mix oil of different makes of kinds.

7) To change the hydraulic oil, use a clean vessel and funnel for pouring it into the tank. Never use cloth because it might cause the presence of lint in the circuit.

8) When removing the hydraulic equipment, be sure to put plugs or caps on hoses, tube lines and ports. Also, enter mating marks for later identification.

9) Disassemble and/or assemble the hydraulic equipment only in a clean place free of dust. When disassembling, be careful about the interchangeability of parts, and clean the disassembled parts with pure and clean mineral cleansing oil. Clean the internal passages as well. After the parts have dried, wipe them off with a clean lint-free cloth.

10) When overhauling the hydraulic equipment replace all O-rings, backup rings, etc. with new ones. Assemble O-rings with grease or vaseline applied.

11) After installing the equipment, add more hydraulic oil to make up for that lost during disassembly.

12) Tighten joints correctly. Loose joints will cause the hydraulic oil to leak. If the oil leaks, the tank oil level drops and air gets sucked in, so the pump will break down. Also loose joints in suction lines will take air in and might cause abnormal noise, malfunction or damage to pumps.

GROUP 3 TESTS AND ADJUSTMENTS

1. HYDRAULIC OIL CLEAN UP PROCEDURE USING PORTABLE FILTER CADDY

※ **Service equipment and tool**

- Portable filter caddy
- Two 4000mm × 1in 100R1 Hoses
- Quick disconnect fittings.
- Discharge wand
- Various size fittings.

※ **Loader system uses oil from hydraulic oil tank. Flush all lines in the loader, pilot system. Disassemble and clean major components for hydraulic system.**

1) If hydraulic system is contaminated due to a major component failure, remove and disassemble steering cylinders to clean debris from cylinders.

2) Install a new return filter element. Clean filter housing before installing new element.

※ **For a failure that creates a lot of debris, remove access cover from hydraulic oil tank. Drain and clean hydraulic oil tank of fill the specified oil to hydraulic oil tank through upper cover.**

3) To minimize oil loss, pull a vacuum in hydraulic oil tank using a vacuum pump. Connect filter caddy suction line to drain port at bottom of hydraulic oil tank using connector. Check to be sure debris has not closed drain port.

4) Put filter caddy discharge line into hydraulic oil tank filler hole so end is as far away from drain port as possible to obtain a thorough cleaning of oil.

5) Start the filter caddy. Check to be sure oil is flowing through the filters.
Operate filter caddy approximately 10 minutes so oil in hydraulic oil tank is circulated through filter a minimum of four times.

※ **Hydraulic tank capacity : 105 ℓ (27.7U.S. gal)**
Leave filter caddy operation for the next steps.

6) Start the engine and run it at high idle.

※ **For the most effective results, cleaning procedure must start with the smallest capacity circuit then proceed to the next largest capacity circuit.**

7) Operate all functions, one at a time, through a complete cycle in the following order: Clam, steering, bucket, and boom. Also include all auxiliary hydraulic functions.
Repeat procedure until the total system capacity has circulated through filter caddy seven times, approximately 30 minutes.
Each function must go through a minimum of three complete cycles for a through cleaning for oil.

※ **Filtering time for machines with auxiliary hydraulic functions must be increased because system capacity is larger.**

8) Stop the engine. Remove the filter caddy.

9) Install a new return filter element.

10) Check oil level in hydraulic oil tank ; Add oil if necessary.

2. BOOM HEIGHT KICKOUT ADJUSTMENT

1) Start the engine. Lift the boom up to a desired height, set the boom control lever at hold, then stop the engine.

⚠ **Be careful lest work equipment fall down.**

⚠ **With the attachment raised, proper support must be provided for the attachment and/or linkage.**

Put the hydraulic safety lock lever in the LOCK position.

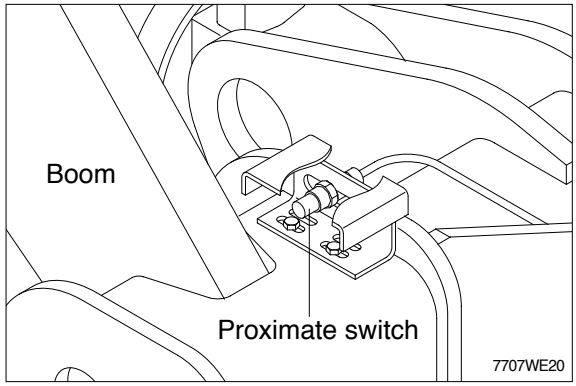

2) Loosen the bolts(or nuts). Move the plate (or proximity switch) so that the boom is in line with the center of the sensing surface of proximity switch.
Then tighten the bolts(or nuts).

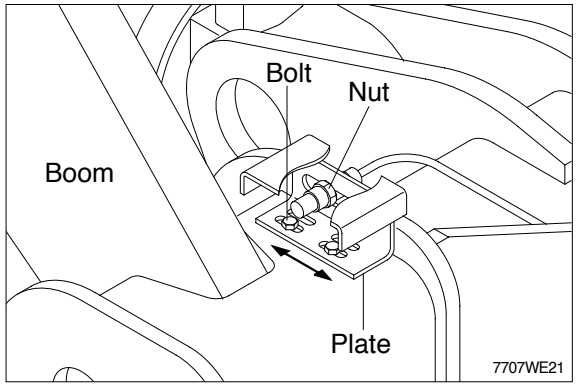

3) Loosen the nuts so that a clearance between the plate and the probe of the proximity switch are maximum 6㎜.

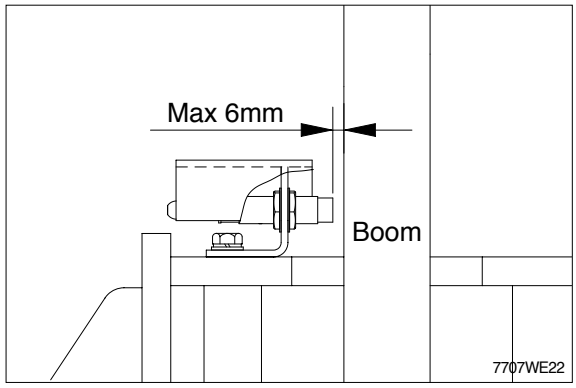

4) To check the adjustment, start the engine. Position the bucket on the ground. Then lift the bucket to a desired height by using the control lever and release the hand. Confirm the lever automatically returns to the neutral position and the boom(the bucket) stop at the adjusted position.

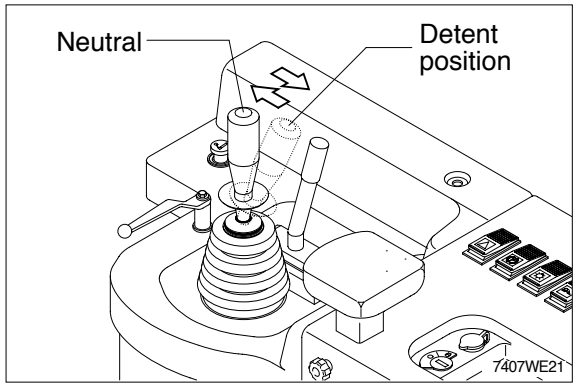

3. TEST TOOLS

1) CLAMP-ON ELECTRONIC TACHOMETER INSTALLATION

· Service equipment and tools
Tachometer

A : Clamp on tachometer.
Remove paint using emery cloth and connect to a straight section of injection line within 100㎜(4in) of pump. Finger tighten only-do not over tighten.

B : Black clip(-). Connect to main frame.

C : Red clip(+). Connect to transducer.

D : Tachometer readout. Install cable.

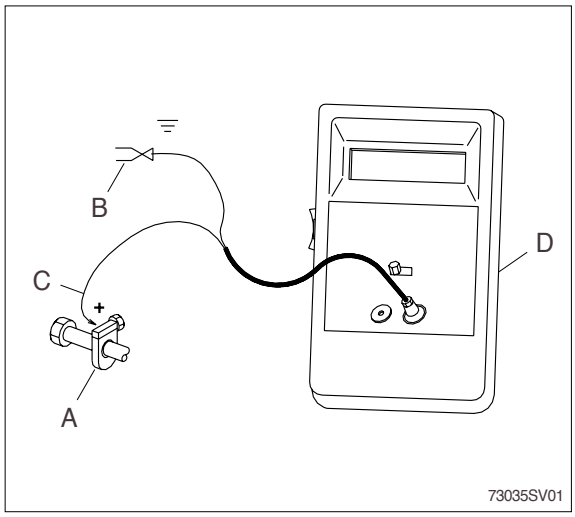

2) DIGITAL THERMOMETER INSTALLATION

· Service equipment and tools
Digital thermometer

A : Temperature probe.
Fasten to a bare metal line using a tie band. Wrap with shop towel.

B : Cable.

C : Digital thermometer.

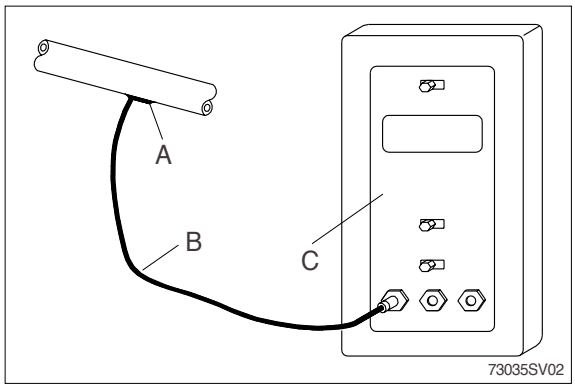

3) DISPLAY MONITOR TACHOMETER

The display monitor tachometer is accurate enough for test work.

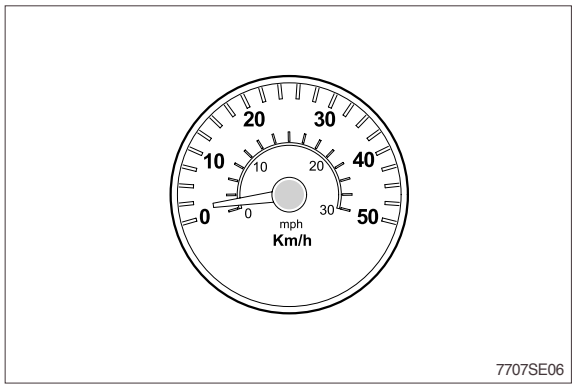

4. HYDRAULIC OIL WARM UP PROCEDURE

1) Install temperature reader(See temperature reader installation procedure in this group).
2) Run engine at high idle.
3) Hold a hydraulic function over relief to heat the oil.
4) Periodically cycle all hydraulic functions to distribute warm oil.
5) Heat oil to test specification(45±5 ℃).

5. MAIN HYDRAULIC PUMP FLOW TEST

· **SPECIFICATION**

Oil temperature 45±5 ℃ (113±41 ℉)
Engine speed 2330±50rpm
Test pressure 220±10bar(3190psi)
Maximum pump flow 170 ℓ/min(44.9gpm)

· **FLOW METER GAUGE AND TOOL**

Gauge 0~35MPa(0~350bar, 0~5000psi)
Temperature reader

1) Make test connections.
2) Install temperature reader.
   (See temperature reader installation procedure in this group.)
3) Heat hydraulic oil to specifications.
   (See hydraulic oil warm up procedure in this group.)
4) Run engine at test specifications.
5) Close flow meter loading valve to increase pressure to test specifications.
6) Read flow meter.
7) If flow is below specifications, check suction line and suction pressure for abnormality before removing pump.

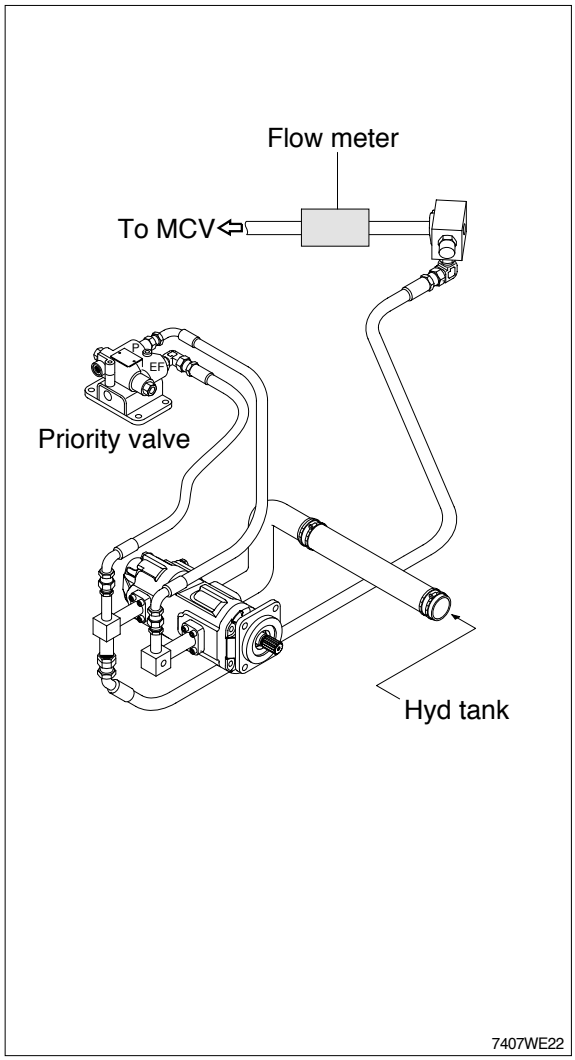

6. LOADER SYSTEM AND PORT RELIEF VALVE PRESSURE TEST

· **SPECIFICATION**

Oil temperature(40~50°C)

Relief valve	Engine speed	Relief pressure
System(M)	High	220±5kgf/cm² (3130±70psi)
Boom raise(U)	Low	240±5kgf/cm² (3410±70psi)
Bucket rollback(R)	Low	240±5kgf/cm² (3410±70psi)
Bucket dump(D)	Low	HL740-7 : 240±5kgf/cm² (3410±70psi) HL740TM-7 : 120±5kgf/cm² (1710±70psi)

· **Gauge and tool**

Gauge 0~35MPa(0~350bar, 0~5000psi)

D : Bucket dump relief valve

M : System(Main) relief valve

R : Bucket rollback relief valve

U : Boom raise relief valve

1) Install pressure gauge to plate in pump delivery line.

2) Install temperature reader.
(See temperature reader installation procedure in this group.)

3) Heat hydraulic oil to specifications.
(See hydraulic oil warm up procedure in this group.)

4) To check the system relief valve(M), run engine at high idle. Lower boom to bottomed position.
Slowly activate boom down function while watching pressure gauge. If pressure is not to specification, loosen lock nut on system relief valve(M) and adjust to specification.

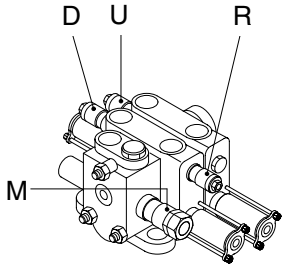

Main control valve

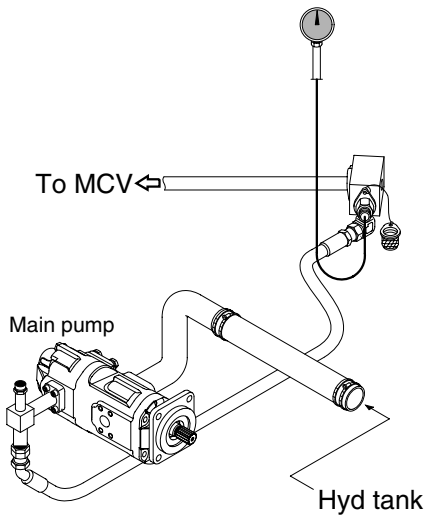

7407WE23

※ **Do not adjust the system relief valve above 250kgf/cm²(3560psi). Damage to the pump will result from excessive pressure settings.**

5) To check the bucket dump, bucket rollback, and boom raise, adjust the system relief valve to 250kgf/cm²(3560psi).

   Run engine to maintain 800~850rpm when hydraulic function is activated over relief.
   Activate the function to be checked with the cylinder bottomed. Read the pressure gauge.

   If pressure is not to specification cycle relief valve over relief 10 times to flush.
   Read pressure gauge again. Turn screw to adjust valve to specification.

※ **Do not work machine with system relief adjusted above specification or structural damage may occur.**

6) Adjust system relief valve to specification.

7. HYDRAULIC SYSTEM RESTRICTION TEST

· **SPECIFICATION**

Oil temperature 45±5 ℃(113±9 ℉)
Engine speed High idle
Maximum pressure at steering unit
2MPa(20bar, 285psi)
Maximum pressure at main control valve
1MPa(10bar, 145psi)

· **GAUGE AND TOOL**

Gauge 0~7MPa(0~70bar, 0~1000psi) 2EA

This test will check for restrictions in the hydraulic system which can cause overheating of hydraulic oil.

1) Install temperature reader.(See temperature reader installation procedure in this group.)
2) Heat hydraulic oil to specifications.(See hydraulic oil warm up procedure in this group.)
3) Connect gauge to steering unit.
4) Connect fitting and gauge to main control valve.

⚠ **Do not operate steering or loader functions or test gauge may be damaged.**

5) Run engine at specification and read pressure gauges.

If pressure is more than specification at the main control valve, check for a kinked, dented or obstructed hydraulic line. Check main control valve for a binding spool.

If pressure is more than specification at the block, inspect neutral condition of the steering valve and priority valve for a stuck spool. Make sure orifice plugs are installed in ends of priority valve spool.
Check for plugged orifice in priority valve LS port and dynamic signal orifice on the spool of priority valve.

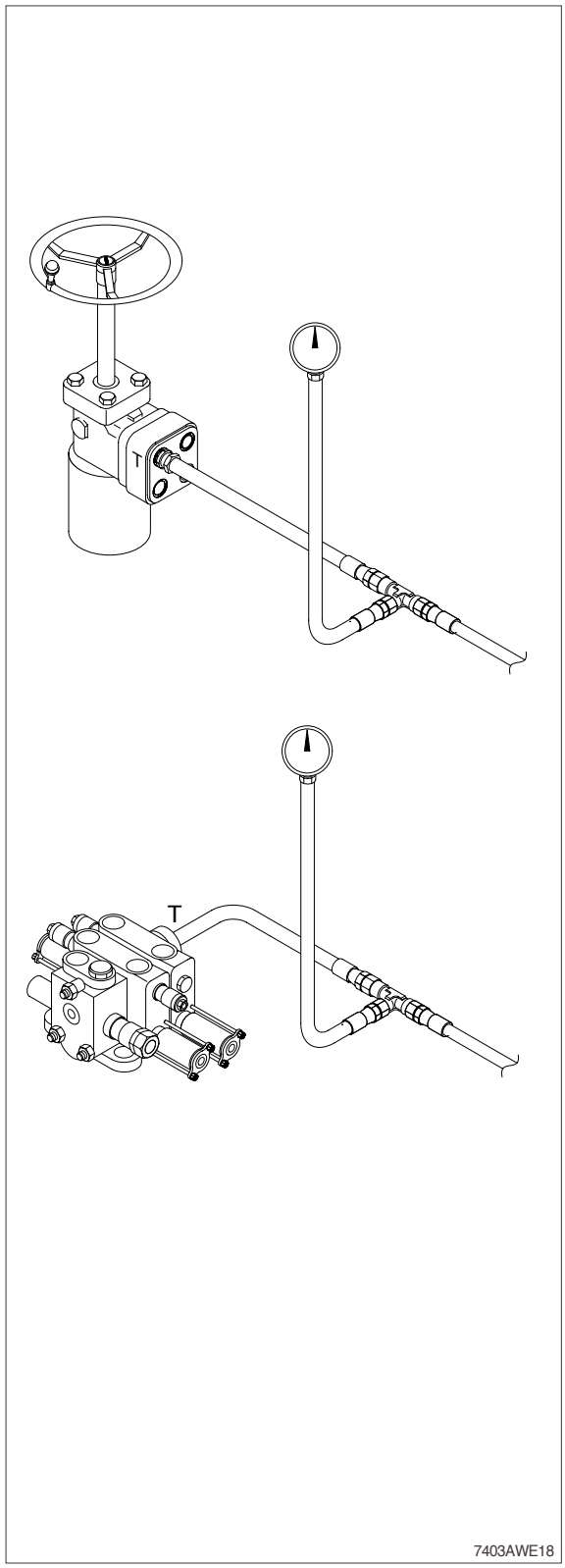

8. LOADER CYLINDER DRIFT TEST

· **SPECIFICATION**

Oil temperature 45±5 ℃ (113±9 ℉)
Boom horizontal
Bucket horizontal
Bucket unloaded

Item	Standard value
Retraction of boom cylinder rod	HL740-7 : 30mm HL740TM-7 : 40mm
Retraction of bucket cylinder rod	30mm

· **GAUGE AND TOOL**

Stop watch
Temperature reader

⚠ **Put the safety lock lever in the lock position.**

⚠ **Do not go under the work equipment.**

1) Set the boom and bucket horizontal.
2) Stop the engine, then start measuring.
3) Measure the amount the boom and bucket cylinder rods retract during 15 minutes.

HL740-7

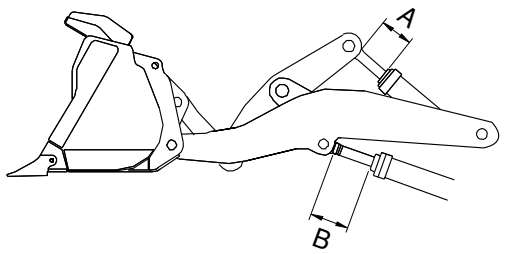

HL740TM-7

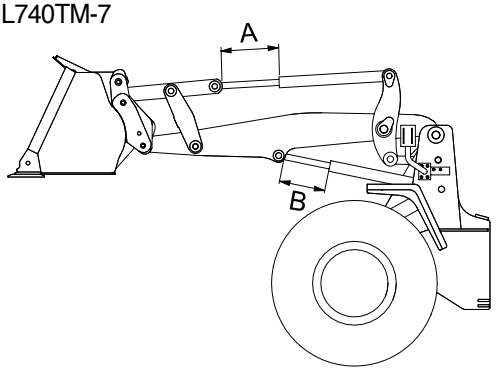

A : Retraction of bucket cylinder rod
B : Retraction of boom cylinder rod

(740-3A) 6-56, 7430AWE21

9. BOOM AND BUCKET CYLINDER LEAKAGE TEST

· **SPECIFICATION**

Oil temperature	45±5 ℃(113±9 ℉)
Engine speed	Low idle
Maximum leakage	12cc/10min

· **GAUGE AND TOOL**

Temperature reader
Stop watch
Measuring container

1) Fasten temperature sensor to head end port of cylinder to be tested. Cover sensor with a shop towel.

2) Heat hydraulic oil to specifications.(See hydraulic oil warm up procedure in this group.)

⚠ **Never work under raised equipment unless it is supported with a hoist or support stands.**

3) Full extend the cylinder to be tested. If testing the boom cylinders, restrain boom in the fully raised position using a hoist or a stand.

※ **Check cylinders for leakage in the fully extended position only. In the retracted position contacts the end of the cylinder and seals off piston seal leakage.**

4) Remove and plug cylinder rod end hose or line.

5) Run engine at low idle. Activate control lever to extend cylinder for 1 minute over relief while measuring leakage for open port.

If leakage is within specification, excessive cylinder drift is caused by leakage in the main control valve or circuit relief valve.

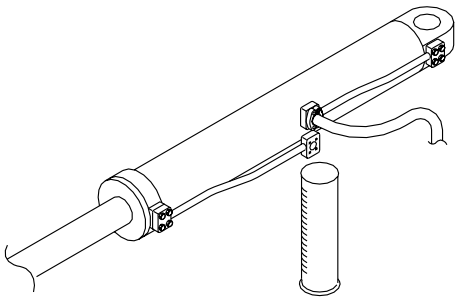

(740-3A) 6-57

10. PILOT CONTROL VALVE PRESSURE TEST

· **SPECIFICATION**

Oil temperature	45±5 ℃ (113±9 ℉)
Engine speed	Low idle
Begin metering	1/5 of lever travel
Boom float detent pressure	17~30bar
Pressure at feel position★:	
Boom power down	13~17bar
Boom raise	13~18bar
Bucket rollback	13~18bar
Boom power down pressure	~17bar
Boom raise pressure	~18bar
Bucket roll back pressure	~18bar
Bucket dump pressure	~18bar

· **GAUGE AND TOOL**

Gauge 0~7MPa(0~70bar, 0~1000psi)

★ As the control lever is moved from neutral, the pilot pressure will suddenly jump up to approximately 3.7bar at 1/5 travel. The pressure should then increase smoothly to the specification at the FEEL position(Or 4/5 lever travel).

This test will determine if adequate pilot pressure is available to move the loader control valve spools.

※ **The FEEL position is when lever is moved to feel the ramp of the detent before lever passes into detent position.**

1) Lower boom to ground.
2) Connect gauge to the pilot pressure port of function to be checked.
3) Install temperature reader.
   (See temperature reader installation procedure in this group.)
4) Heat hydraulic oil to specification.
   (See hydraulic oil warm up procedure in this group.)

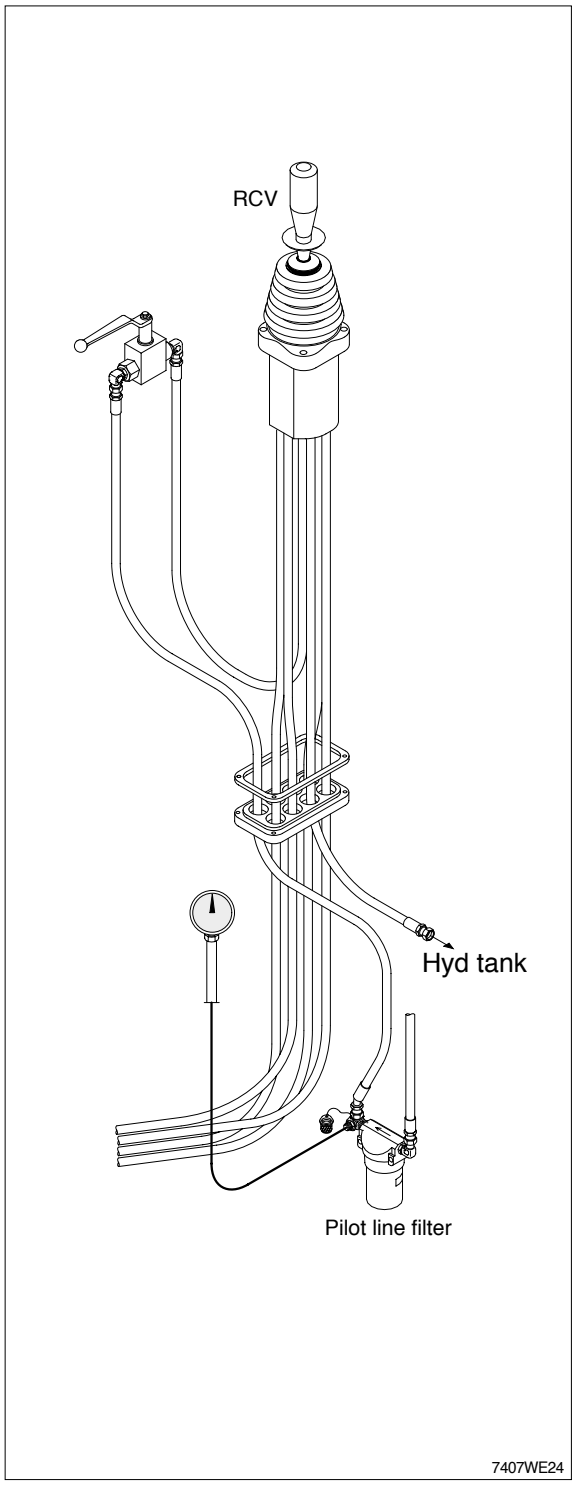

5) Run engine at specification. Activate function to be checked and record pressure reading.

※ **If boom raise or bucket rollback FEEL positions are not operation due to boom or bucket position, plug boom float detent wires into bucket leveler solenoid or boom height kickout solenoid. This will provide a feel position on the control lever.**

11. PILOT OIL SUPPLY UNIT PRESSURE TEST

· **SPECIFICATION**

Oil temperature	45±5 ℃ (113±9 ℉)
Engine speed	Low idle and stop
Pilot pressure setting	30~35bar(430~500psi)
Relief valve setting pressure	45bar
Accumulator precharging pressure	16bar

· **GAUGE AND TOOL**

Gauge 0~7MPa(0~70bar, 0~1000psi)

The pilot supply unit consist of the pressure reducing valve, the relief valve and an accumulator. This regulates pressure to the pilot control circuit.

1) Connect gauge to test port on the block.
2) Install temperature reader. (See temperature reader installation procedure in this group.)
3) Heat hydraulic oil to specification.(See hydraulic oil warm up procedure in this group.)
4) Run engine at low idle for 1 minute and stop engine, wait for 5 minutes. Then start measuring.
5) If pressure in not within specifications, replace valve. The valve is staked and should not be adjusted.

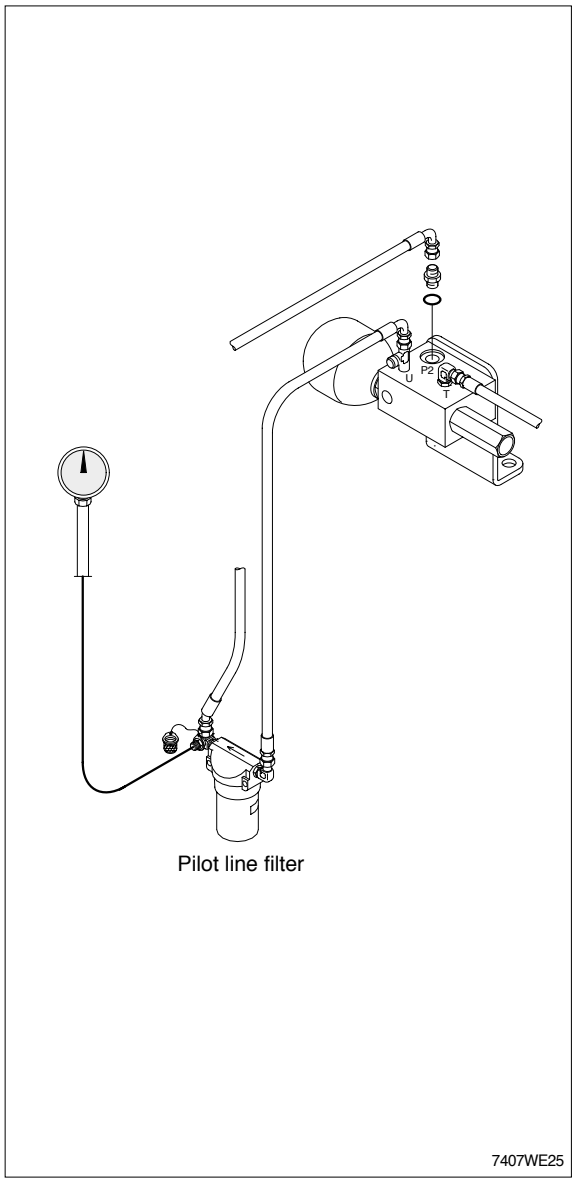

12. CYCLE TIME TEST

· **SPECIFICATION**

Oil temperature - - - - 45±5 ℃(113±9 ℉)

Engine speed - - - - - - High idle

Function	Operating conditions	Maximum cycle time(Seconds)	
		HL740-7	HL740TM-7
Boom raise	Bucket flat on ground to full height	6.5	
Boom lower(Float)	Full height to ground level	3.2	3.2
Bucket dump	Boom at full height	1.5	1.7
Bucket rollback	Boom at full height	2.0	2.5
Steering(Number of turns)	Frame stop to stop	2.5(4.5 turns)	

Hydraulic pump performance cycle time.

Function	Operating conditions	Maximum cycle time(Seconds)
Boom raise	Bucket flat on ground to full height while holding steering over relief	7.0

13. HYDRAULIC OIL FILTER INSPECTION PROCEDURE

1) Lower the bucket to the ground, stop the engine, move the control lever back and forth several times, and clean all over the upper surface of the hydraulic oil tank.

2) Remove the bolts(1) and take out the filter case cover(2) and O-ring(3).

3) Remove the spring(4) and bypass valve(5).

4) Remove the filter element(6) from the tank.

5) Check the element and the filter case bottom for debris. Excessive amounts of brass and steel particles can indicate a failed hydraulic pump or a pump failure in process. A rubber type of material can indicated cylinder packing or other packing failure.

※ **The hydraulic oil filter in the filter case of the hydraulic oil tank should be replaced every 250 operating hours(For the first replacement, at 50 hours) or more often. When the filter element is replaced, please keep as follows.**

(1) Clean the inside of the filter case.

(2) Place new element in the proper positions inside the filter case.

(3) Install the bypass valve and spring. Make sure the element stand upright, and check for complete contact of the element bottom with the filter case bottom.

(4) Install the O-ring and filter case covers. Tighten them with bolt. Replace the O-ring with new one if damaged.

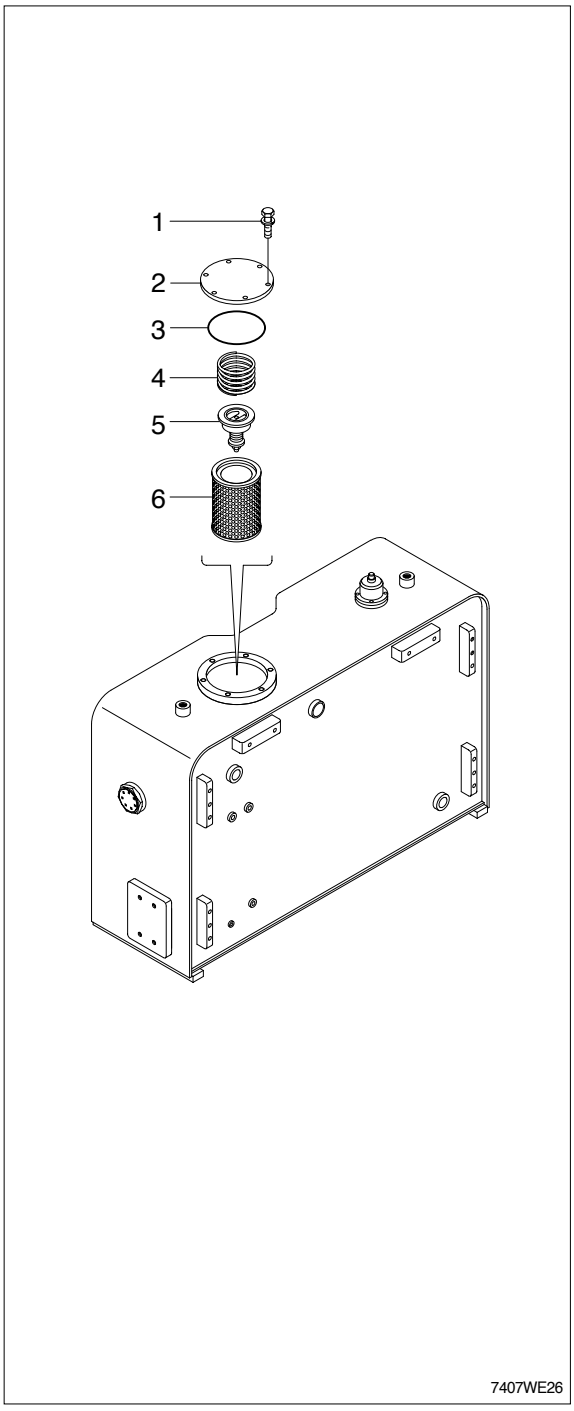

GROUP 4 DISASSEMBLY AND ASSEMBLY

1. MAIN PUMP

1) STRUCTURE

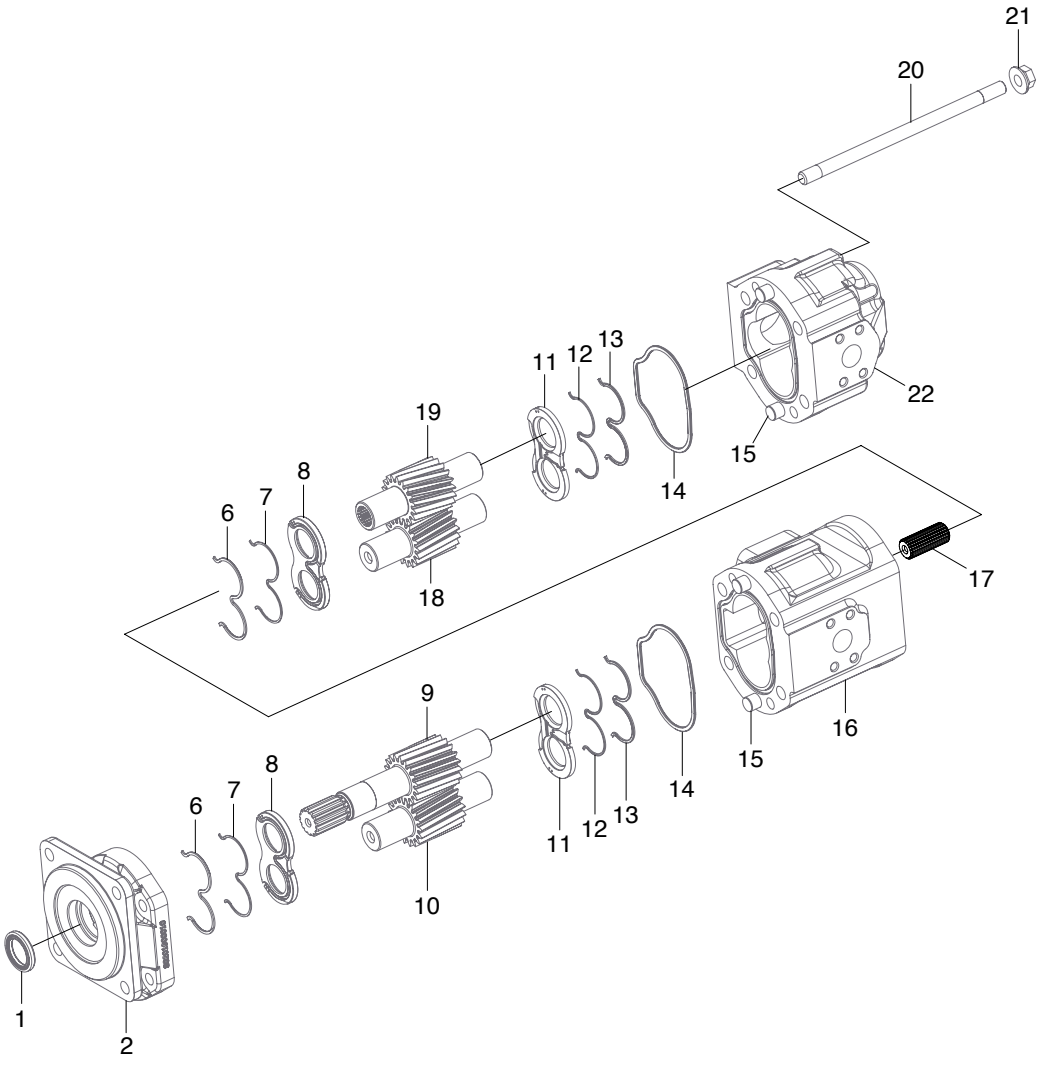

7407WE12

1	Shaft seal	11	Wearplate	17	Spline coupling
2	Adapter	12	O-ring seal	18	Rear driven gear
6	Back up seal	13	Back up seal	19	Rear drive gear
7	O-ring seal	14	Interface seal	20	Stud
8	Wearplate	15	Dowel	21	Flanged nut
9	Front drive gear	16	Front body	22	Rear body
10	Front driven gear				

2) DISASSEMBLY

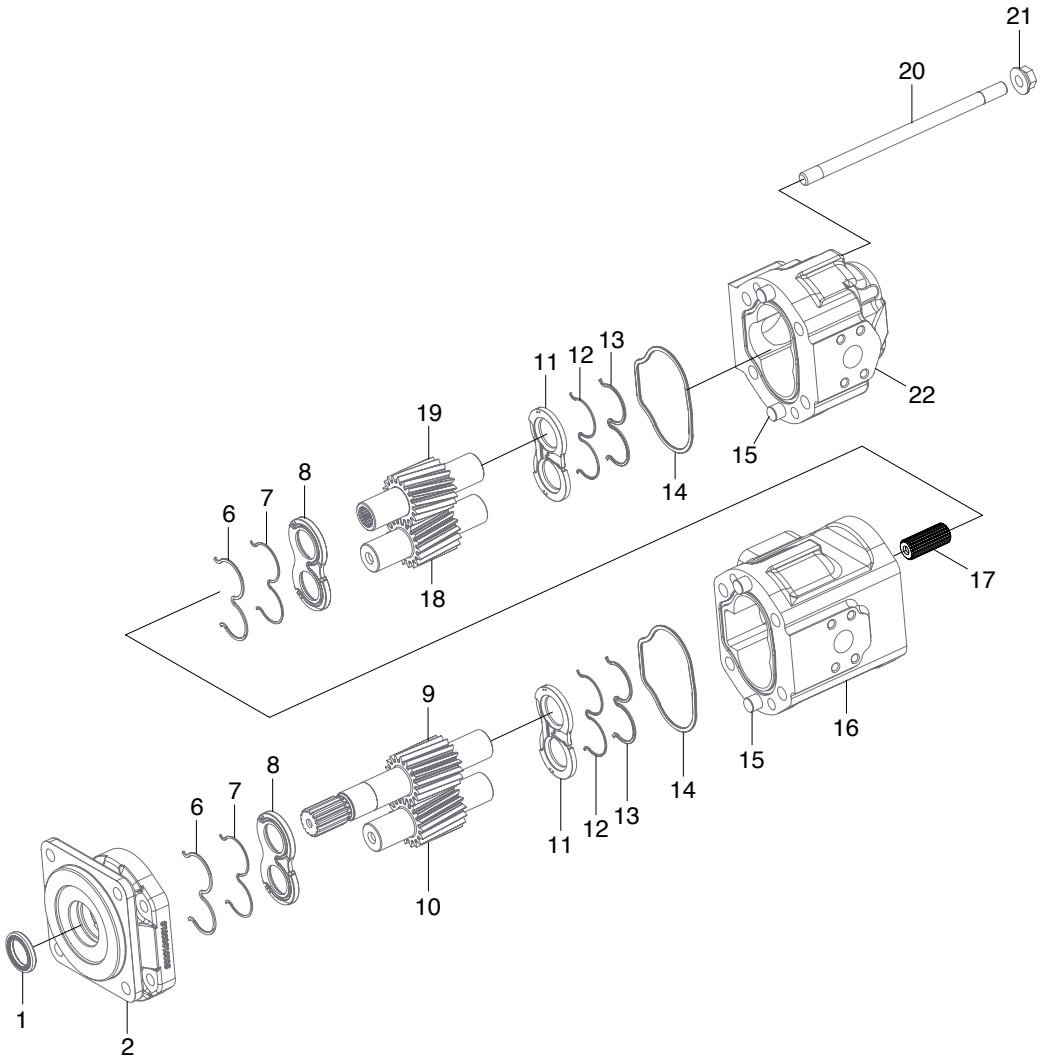

※ Plug all ports prior to cleaning and disassembling pump to prevent ingress of debris or contamination.

※ Clean the pump thoroughly with a solvent, ensuring no loose debris or contamination remains on the unit.

※ Mark each interface and then separate into individual pump sections.

(1) Securely clamp pump horizontally on one port face, ensuring that no damage is sustained to the port face and remove the stud(20) and nut(21).

(2) Remove the front adaptor(2) from the body(16) using a pulling tool centred on the drive shaft(9).

※ Under **NO** circumstances attempt to prise or chisel cover from body as such action could damage the machined sealing faces.

(3) Remove and discard the shaft seal(1) from adaptor making sure that no damage is sustained to the surface of the seal bore.

(4) Unclamp pump and place it vertically with drive shaft up.

(5) Before removing wearplate from the body mark it using a soft pencil or a felt-tip pen to ensure correct reassembly. Remove wearplate(8) complete with O-ring seal(7) and back up seal(6).

DISASSEMBLY

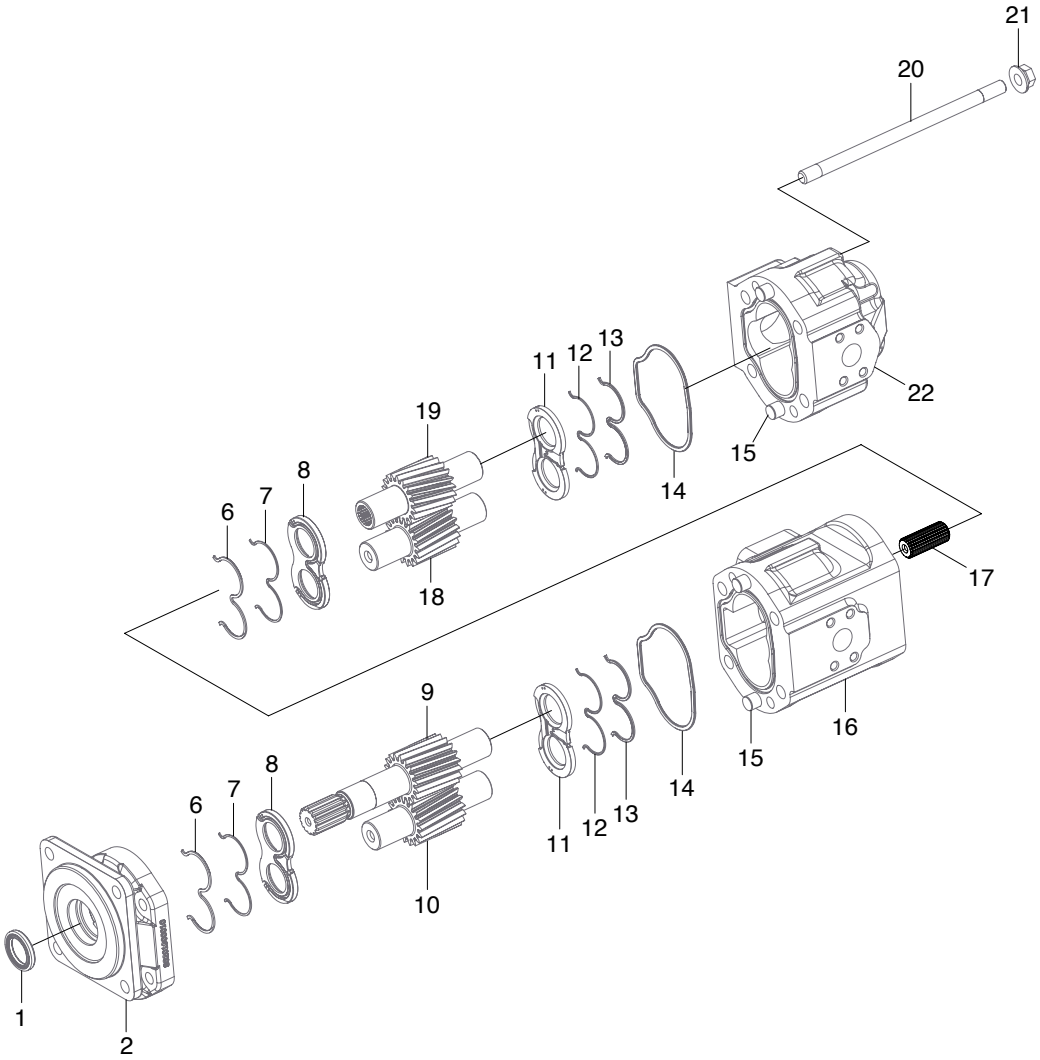

7407WE12

(6) Mark the gears using a soft pencil or felt-tip pen to ensure assembly in the same relative position, see figure on the right, then withdraw the drive shaft/gear(9) and driven gear(10) separately to prevent jamming.

(7) Again, to ensure correct assembly, mark remaining wearplate(11) using a soft pencil or a felt-tip pen. Remove wearplate from body complete with O-ring seal(12) and back up seal(13).

(8) Discard interface seal(14).

(9) Having separated into individual pumps, proceed as per paragraph (1)~(7).

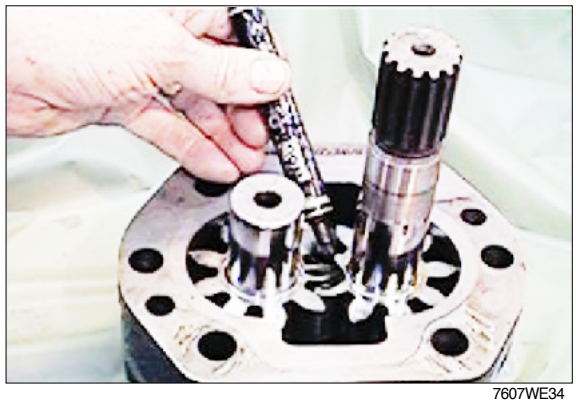

7607WE34

3) MANDATORY REPLACEMENT PARTS

Discard all seals including interface seals, shaft seals, wear plate seals and back up seals. Fit new seals on reassembly. Wearplates should also be replaced with new items from seal kit.

4) HANDLING/STORAGE

While disassembling pump, ensure no surfaces are scored or marked in any way. A rubber surfaced table will be beneficial. All components must be placed in a clean, dry and safe area. Leakage will be created by scratches on components. If parts are to be left for any period ensure they are not exposed to dirt, dust and corrosion. Keep gears separate from each other in protective boxes.

5) INSPECTION OF PARTS

Wash all parts in a solvent and dry.

(1) Adaptor housing and cover

The pump must be replaced if the damage listed is present.

Feature	Damage
Surfaces	Corrosion, nicks or burrs(slight burrs can be removed using and india stone)
Machined sealing Interfaces	Scores, cracks or corrosion
Bearing	Loose

(2) Gears

The pump must be replaced if the damage listed is present.

Feature	Damage
Surfaces	Corrosion, nicks or burrs(slight burrs can be removed using an India stone). Wear due to seal(s)
Journals	Pitting, wear, sufficient wear to change outside diameter
Tooth	Cracks or heavy scoring or chipped
Splines/keyways	Distortion of wear
End faces	Wear, cracks

(3) Floating wear plates

The pump must be replaced if the damage listed is present.

Feature	Damage
Surfaces	Corrosion, nicks or burrs, amounts of scoring,erosion or any cracks, discoloration caused by overheating
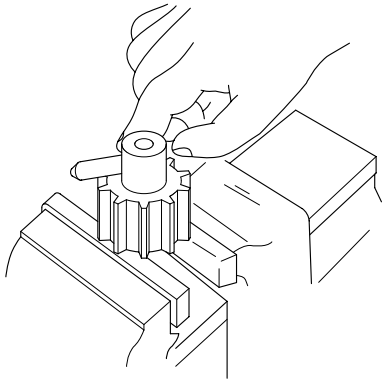 Removing burrs or minor scoring from end faces and teeth of the gears.	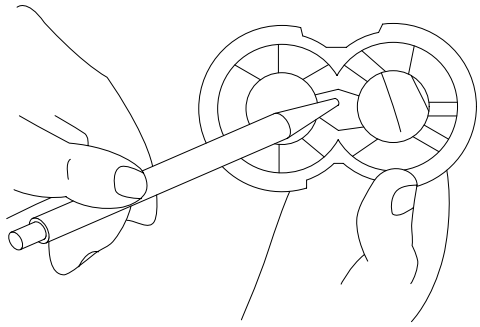 Scoring of wear plate.

(4) Bolts/Studs

The pump should be replaced if the damage listed is present.

Feature	Damage
Surfaces	Corrosion, nicks or burrs(slight burrs can be removed using an India stone), cracks or scoring, distortion or damage to thread form

(5) Plain bearings

The pump must be replaced if the damage listed is present.

Feature	Damage
Surfaces	Cracks or socring
PTEF Coating	Worn-bronze, sub-layer showing
Bearing	Loose in housing/cover

(6) Coupling

This must be replaced if damage listed is present.

Feature	Damage
Surfaces	Corrosion, nicks or burrs, erosion, cracks or pitting
Splines	Distorted or badly worn

6) ASSEMBLY

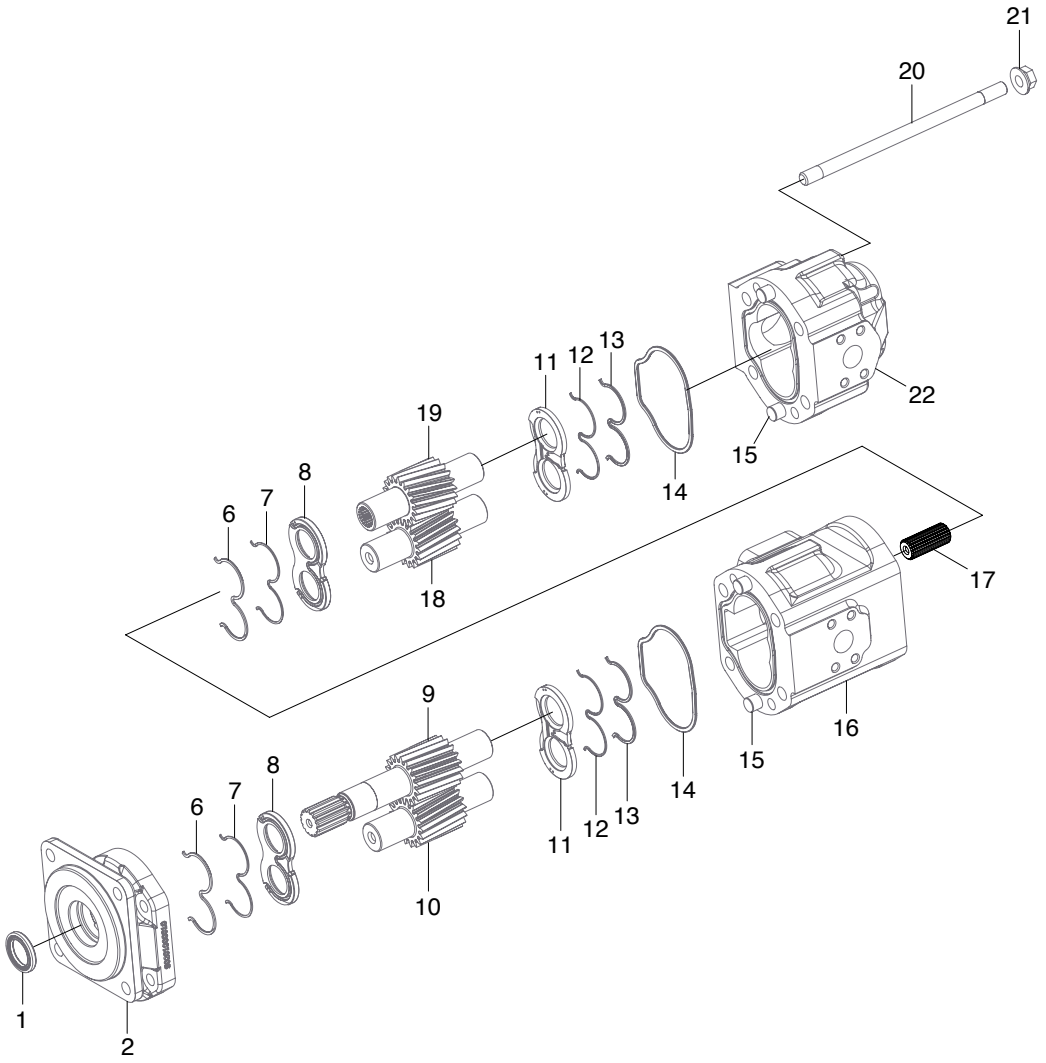

7407WE12

※ It is critical that the wearplates are assembled into the pump with regard to the following:
-The seal side of the wearplate must be adjacent to the adaptor or body.
-The high pressure side of the wearplate must be adjacent to the outlet port.

※ This must take place in a clean dry area, ensuring that all parts are clean and free from contamination or loose particles. Lightly oil all surfaces.

(1) Place body vertically with gear pockets upper most.

(2) Slide wearplate(11) complete with O-ring seal(12) and back up seal(13) down through the housing to the bottom of the gear pockets.

※ Be sure to refit the wearplate the same as that marked from this position during disassembly.

(3) Fit the gears(18,19) within the housing taking care to replace as marked, with the teeth reassembled to their original related position.

(4) Fit the wearplate(8) complete with O-ring seal(7) and back up seal(6).

※ Be sure to refit the wearplate the same as that marked from this position during disassembly.

ASSEMBLY

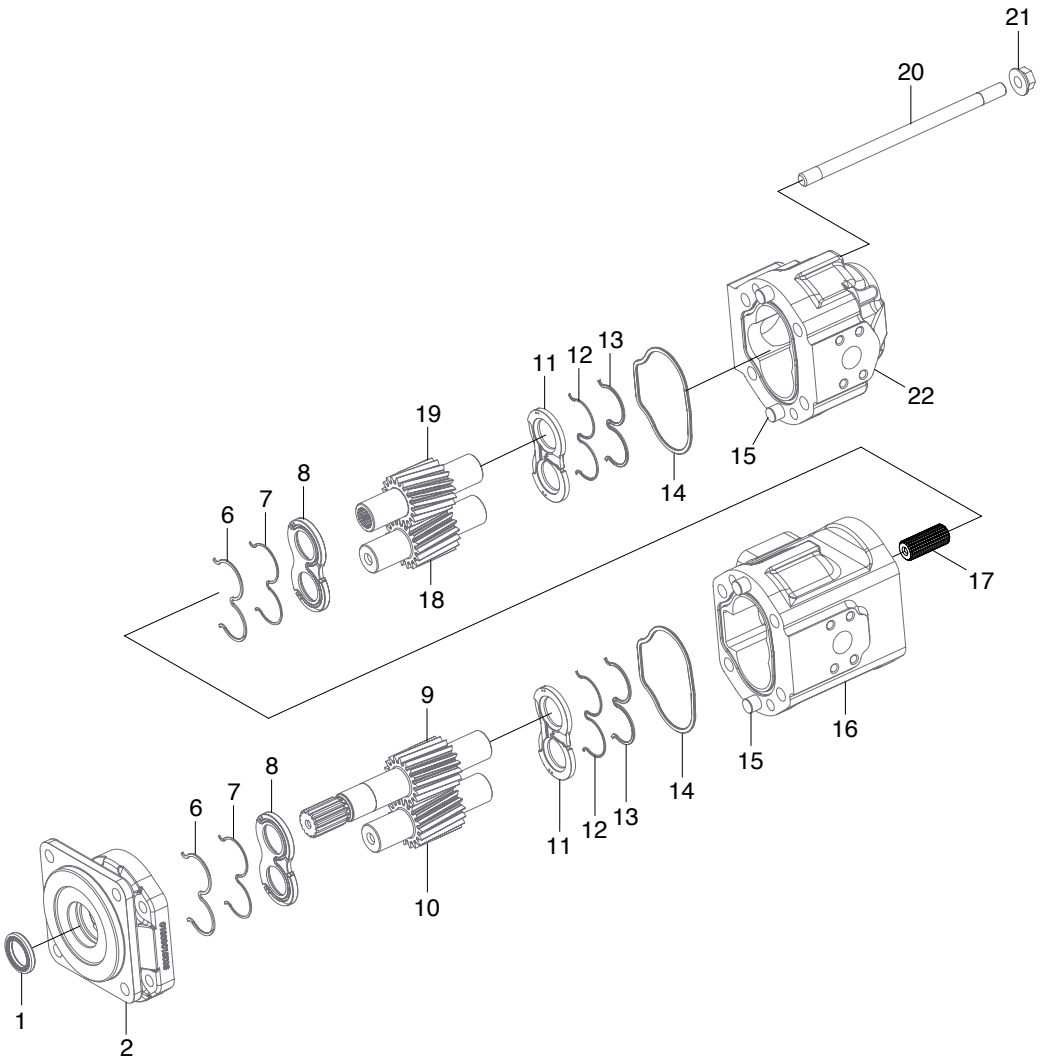

7407WE12

(5) Fit new interface seal(14) into groove in body.

(6) Proceed as per paragraph(1)~(5).

(7) Fit adaptor(2) over the drive gear(9) and fit stud(22).

(8) Securely clamp unit and tighten nut(21) to half torque and then full torque.
· Tightening torque : 23.2kgf · m(168lbf · ft)

(9) Fit shaft seal(1) using appropriate tooling, in correct position and orientation.

(10) Pour a little clean hydraulic oil into the ports.

2. RCV LEVER

1) STRUCTURE

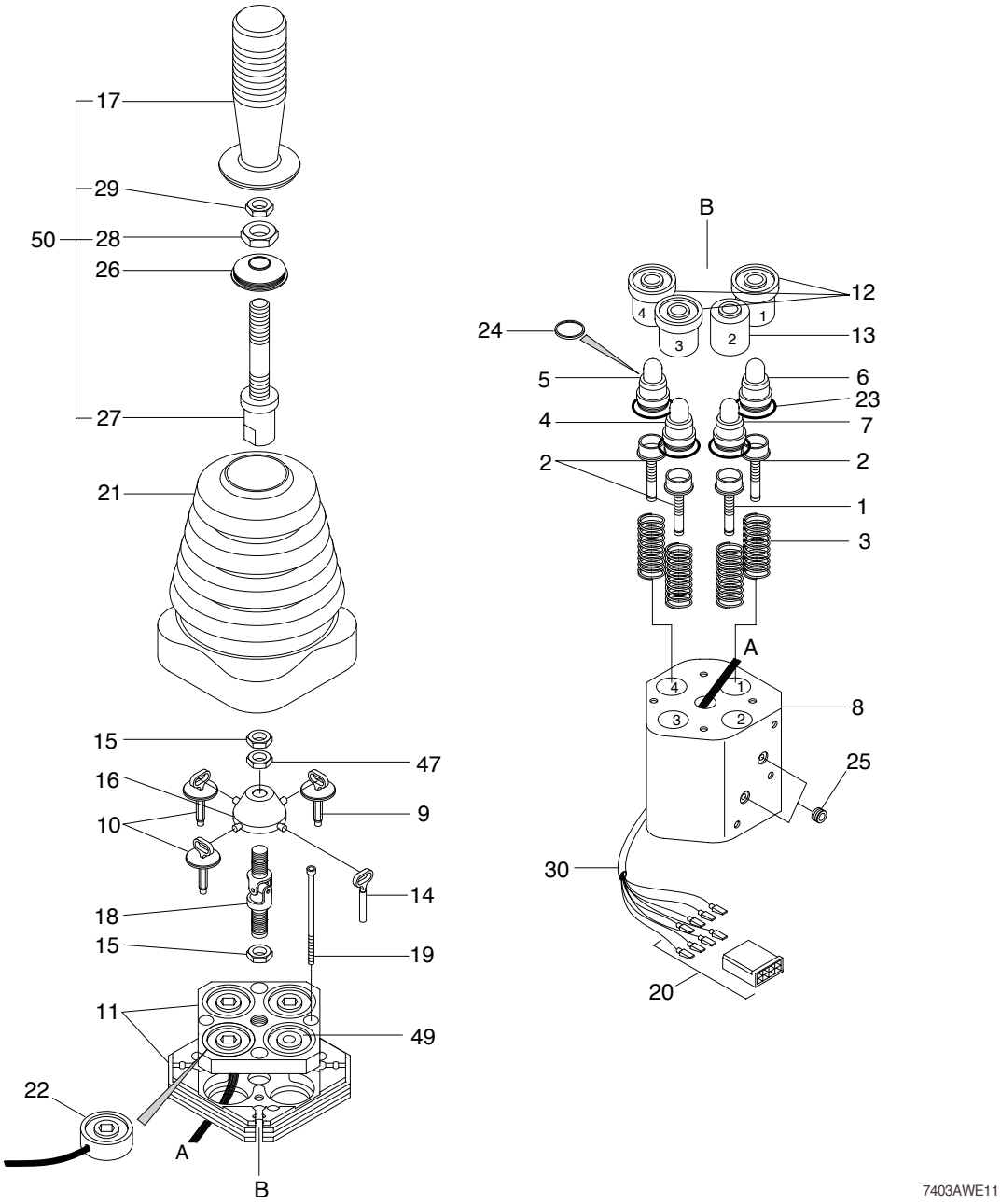

1	Spring	12	Prefeel cage assy	23	O-ring
2	Spring	13	Spindle retainer	24	Wiper seal
3	Spring	14	Spindle	25	Plug
4	Plunger assy	15	Nut	26	Collar
5	Plunger assy	16	Lever assy	27	Handle adapter
6	Plunger assy	17	Handle	28	Nut
7	Plunger assy	18	Universal joint assy	29	Nut
8	Body	19	Screw	30	Insulation tube
9	Prefeel kit	20	Connector assy	47	Nut
10	Prefeel kit	21	Rubber boot	49	Spacer
11	Prefeel kit	22	Solenoid	50	Handle assy

2) DISASSEMBLY AND ASSEMBLY

(1) Detach the rubber boot(21) from the retainer collar and lift the boot clear from the selector assembly.
The capscrew(19) can now be easily accessed.

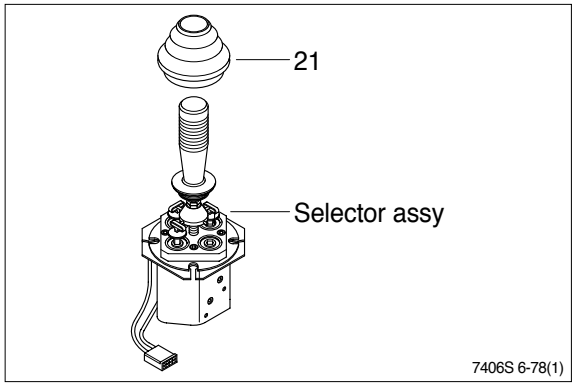

(2) Loosen and remove all four M6 capscrews(19).
· Tightening torque : 1.0kgf · m(7.2lbf · ft)

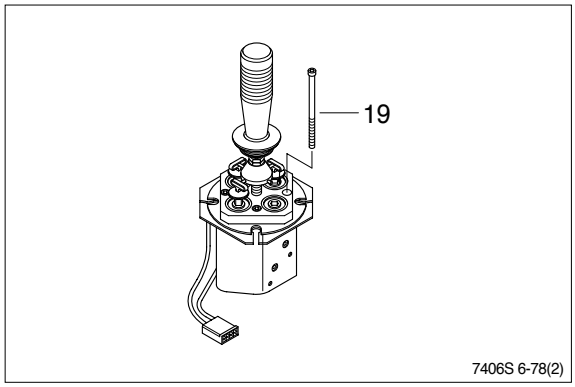

(3) The upper portion of the valve, from the mounting plate upwards, can now be detached and placed to one side.
※ The magnets will still be connected to the connector.

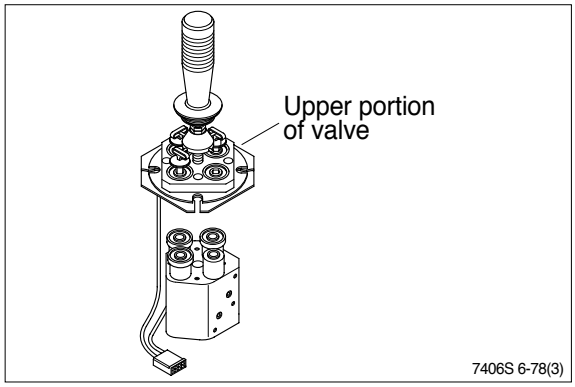

(4) Remove the ball carriers off of the spindle guide - carefully detach the spindle guides, being careful to ensure that no contamination enters the valve.
※ The spindle guide are retained by interference between the body and the guide O-ring.

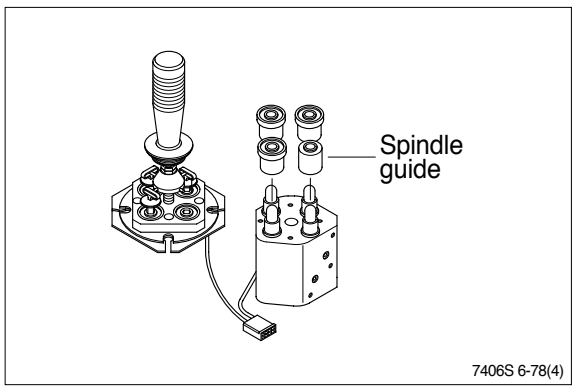

(5) The spindle guides can now be replaced. The O-rings on the spindle guide must be replaced before the valve is reassembled.

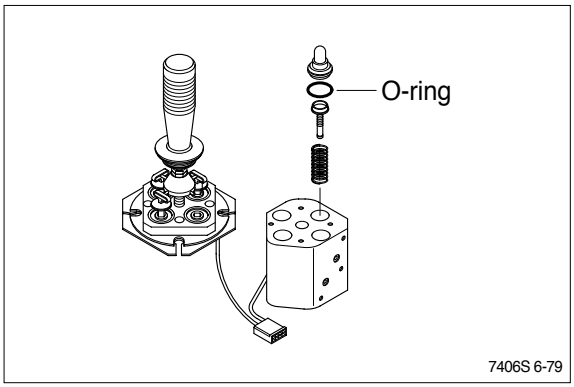

Reassembly is the opposite of disasembly.

3. MAIN CONTROL VALVE

1) Lay out valve components on a clean, flat working surface. The inlet assembly will include an O-ring, and the spool section(s) include an O-ring, a load check poppet and a load check spring. Tools required for basic valve assembly include 3/4 and 11/16 open or box end wrenches and a torque wrench with thin wall sockets.

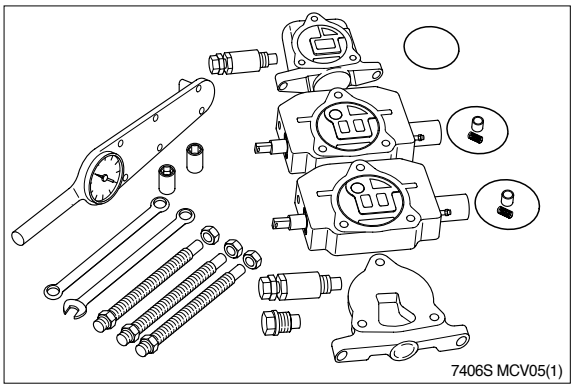

7406S MCV05(1)

2) Assemble tie rod nuts to one end of each tie rod with one or two threads showing. Insert tie rods through tie rod holes of inlet(Large tie rod at top). Lay inlet on end with tie rods up, place O-ring into position.

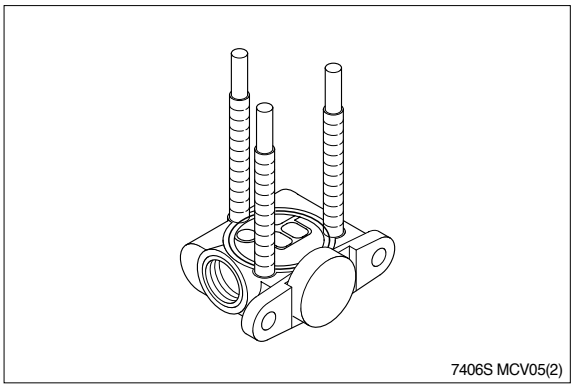

7406S MCV05(2)

3) Place first spool section(O-ring side up) on inlet section, position O-ring and insert load check poppet(Nose down) and spring(Behind poppet) into load check cavity as shown. Repeat this procedure for each spool section ; The load check springs are compressed by the following sections during assembly.

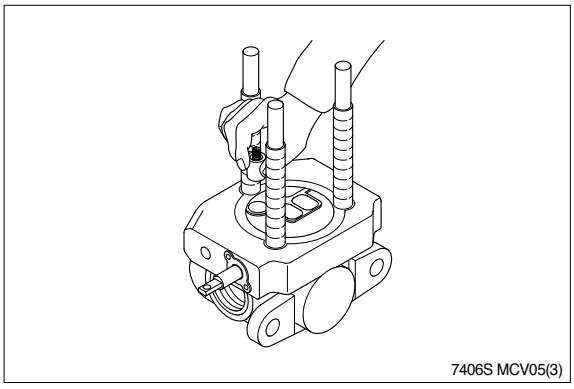

7406S MCV05(3)

4) Position end section on last spool section as shown and hand tighten tie rod nuts. The end section on picture is a "turn around" section without ports. Universal outlet/power beyond section and power beyond and closed center sections are also used as end sections. These end sections do not have O-ring grooves.

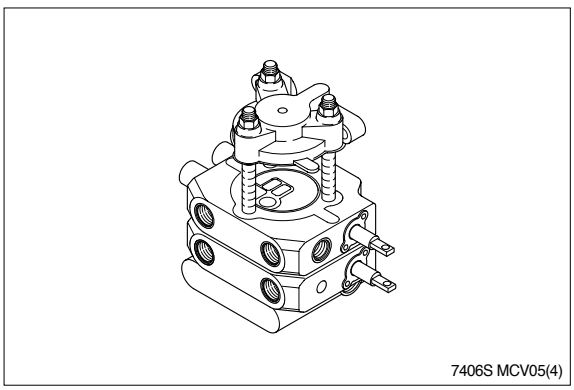

7406S MCV05(4)

5) Position valve assembly with the mounting pads of the end sections on a flat surface. To obtain proper alignment of end sections relative to the spool sections apply downward pressure to the end sections ; Snug tie rod nuts to about 10lbf · ft.
Final torque the two 11/16 nuts to 48± 5lbf · ft ; Final torque the 3/4 nut to 74± 8lbf · ft. Check for proper spool movement.

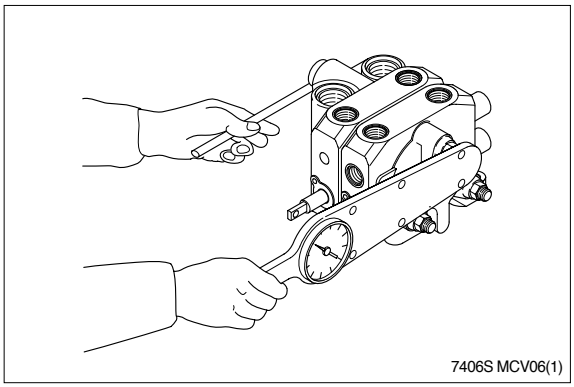
7406S MCV06(1)

6) Install auxilliary valves and plugs and torque to proper specifications.

※ **General assembly notes**:

A. Lever assemblies can be installed on section before or after complete valve assembly.

B. The load check and spring may be omitter from assembly in certain circuit conditions(i.e., motor spools).

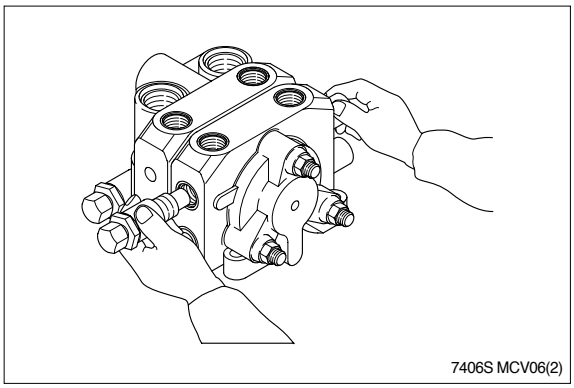
7406S MCV06(2)

4. BOOM AND BUCKET CYLINDER

1) BOOM CYLINDER

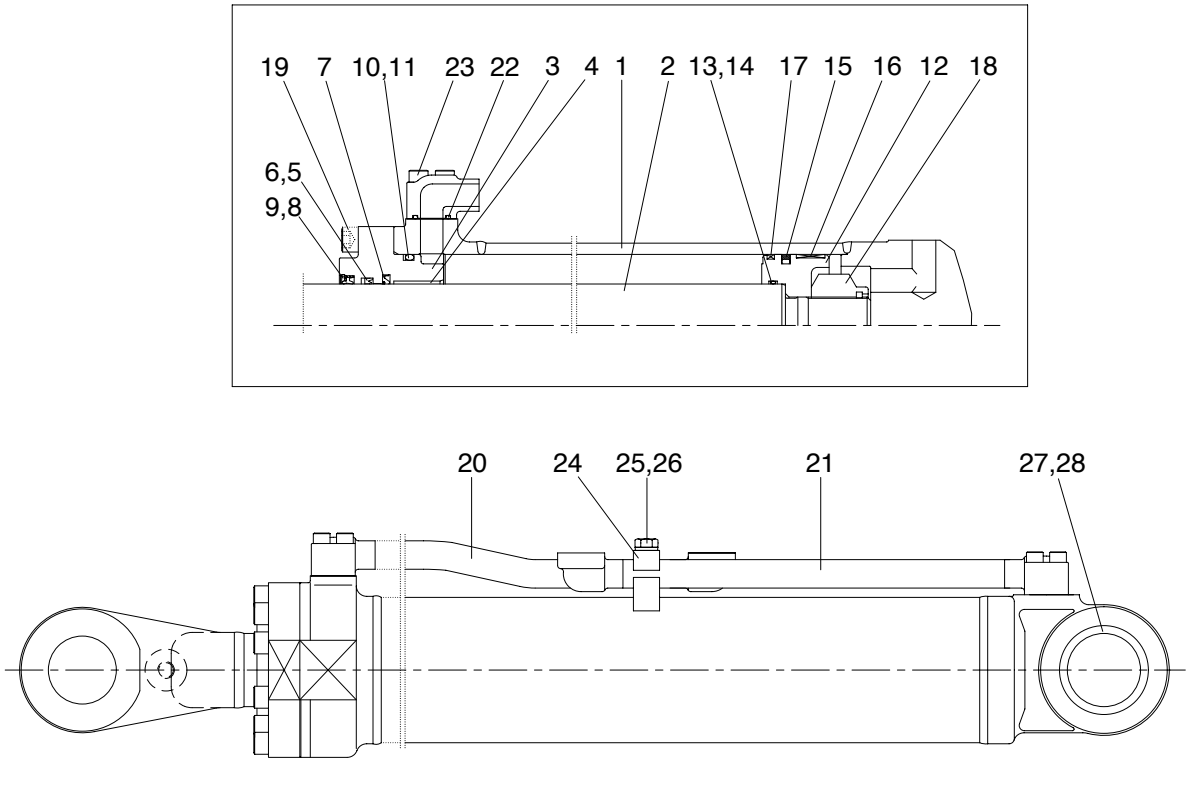

1	Tube assy	11	Back up ring	21	Pipe assy
2	Rod assy	12	Piston	22	O-ring
3	Gland	13	O-ring	23	Socket bolt
4	Bushing	14	Back up ring	24	Pipe clamp
5	Rod seal	15	Piston seal	25	Hexagon bolt
6	Back up ring	16	Wear ring	26	Spring washer
7	Buffer ring	17	Dust ring	27	Bushing
8	Dust wiper	18	Nylon nut	28	Dust seal
9	Snap ring	19	Socket bolt		
10	O-ring	20	Pipe assy		

2) BUCKET CYLINDER

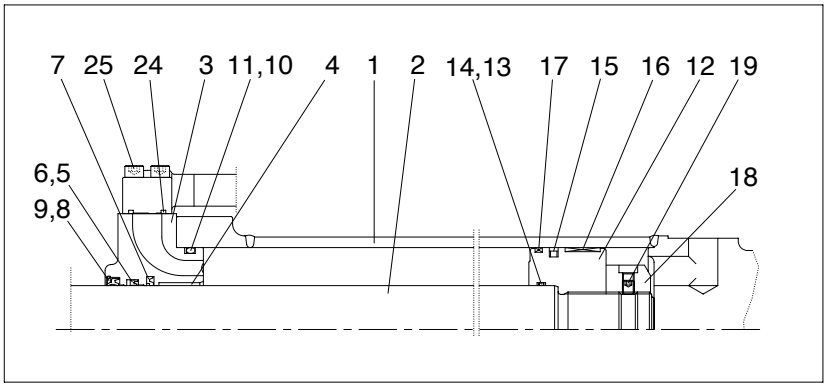

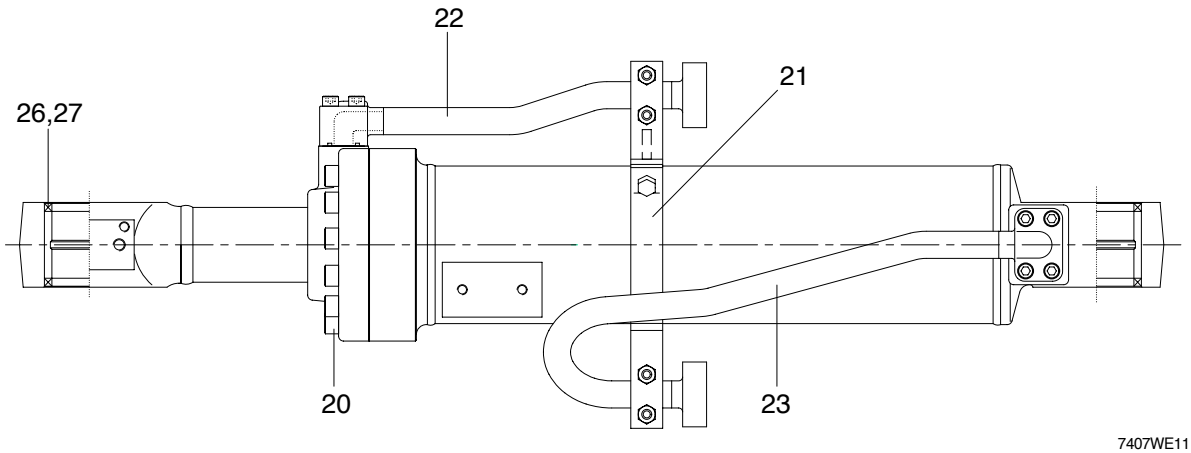

1	Tube assy	10	O-ring	19	Set screw
2	Rod assy	11	Back up ring	20	Socket bolt
3	Gland	12	Piston	21	Band assy
4	Bushing	13	O-ring	22	Pipe assy
5	Rod seal	14	Back up ring	23	Pipe assy
6	Back up ring	15	Piston seal	24	O-ring
7	Buffer ring	16	Wear ring	25	Socket bolt
8	Dust wiper	17	Dust ring	26	Bushing
9	Snap ring	18	Nylon nut	27	Dust seal

3) TOOLS AND TIGHTENING TORQUE

(1) Tools

Tool name	Remark	
Allen wrench	8	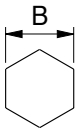
	12	
Spanner	19	
(-) Driver	Small and large sizes	
Torque wrench	Capable of tightening with the specified torques	

(2) Tightening torque

Part name		Item	Size	Torque	
				kgf · m	lbf · ft
Socket head bolt	Bucket cylinder	20	M14×2.0×55	15±2	108±14.5
	Boom cylinder	19			
	Bucket cylinder	25	M10×1.5×45	5.4±0.5	39±3.6
	Boom cylinder	23			
Nylon nut	Bucket cylinder	18	M64×3.0	150±15	1085±108
	Boom cylinder		M48×2.0	250±25	1808±181
Hex head bolt	Boom cylinder	25	M12×1.75×40	5.5±0.6	40±4.3

4) DISASSEMBLY

(1) **Remove gland and piston rod**

① Hold the clevis section of the tube in a vise. Use mouth pieces so as not to damage the machined surface of the cylinder tube. Do not make use of the outside piping as a locking means.

② Pull out piston rod(2) about 200mm (7.8 in). Because the piston rod is rather heavy, finish extending it with air pressure after the oil draining operation.

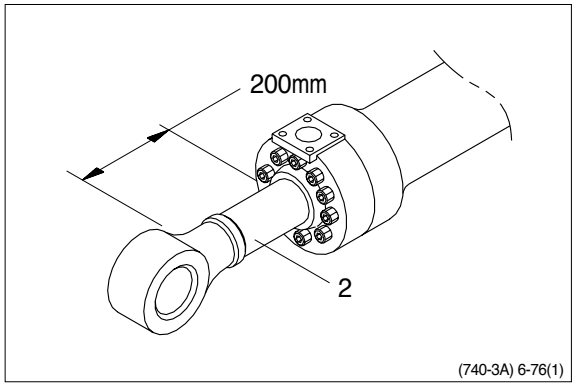

③ Loosen and remove socket bolts(19) of the gland(3) in sequence.

※ Cover the extracted piston rod(2) with rag to prevent it from being accidentally damaged during operation.

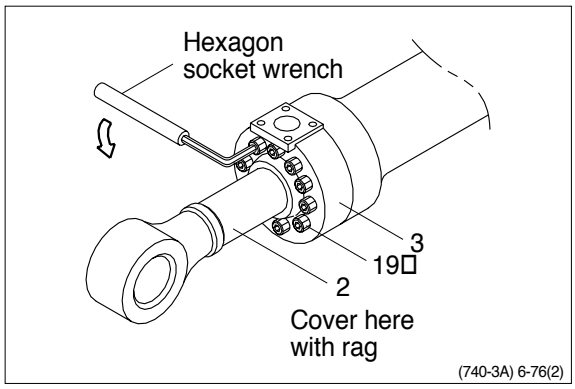

④ Draw out gland(3) and piston rod (2) assembly together from cylinder tube(1).

※ Since the piston rod assembly is heavy in this case, lift the tip of the piston rod(2) with a crane or some means and draw it out. However, when piston rod(2) has been drawn out to approximately two thirds of its length, lift it in its center to draw it completely.

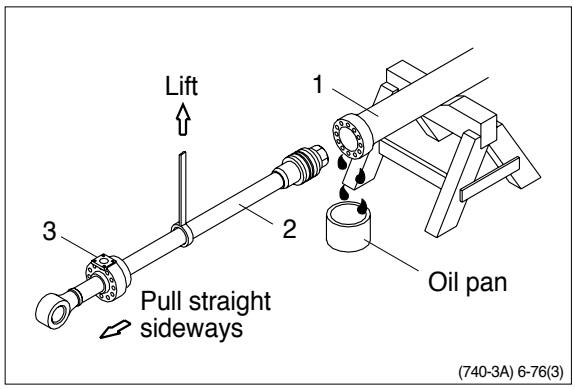

※ Note that the plated surface of piston rod(2) is to be lifted. For this reason, do not use a wire sling and others that may damage it, but use a strong cloth belt or a rope.

⑤ Place the removed piston rod assembly on a wooden V-block that is set level.
※ Cover a V-block with soft rag.

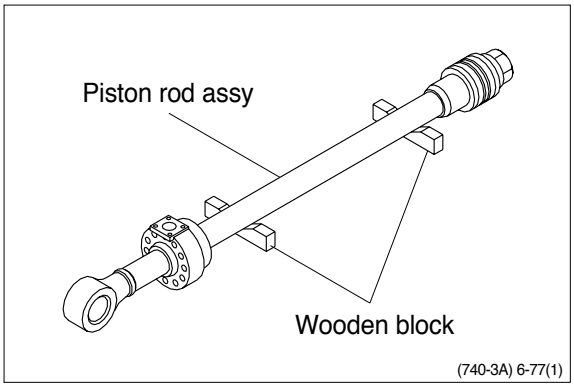

(2) Remove piston and gland assembly

① Remove the nylon nut(18).
② Remove piston assembly(12) and O-ring (13), back up ring(14).

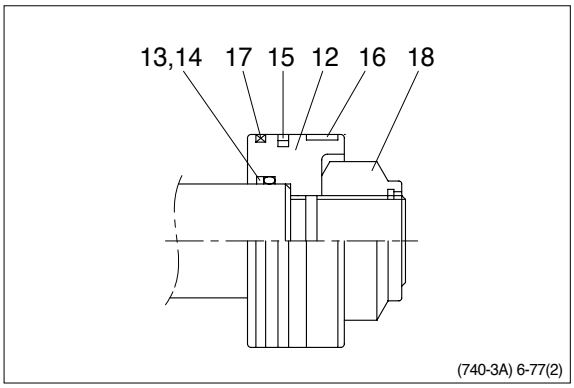

③ Remove the gland assembly from piston rod(2).
※ If is too heavy to move, move it by striking the flanged part of gland(3) with a plastic hammer.
※ Pull it straight with gland assembly lifted with a crane.
Exercise care so as not to damage the lip of rod bushing(4) and packing(5, 6, 7, 8, 9) by the threads of piston rod(2).

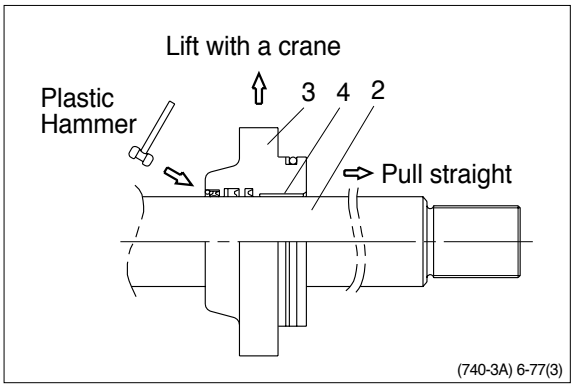

(3) Disassemble the piston assembly

① Remove wear ring(16), dusting(17), and piston seal (15).

※ Exercise care in this operation not to damage the grooves.

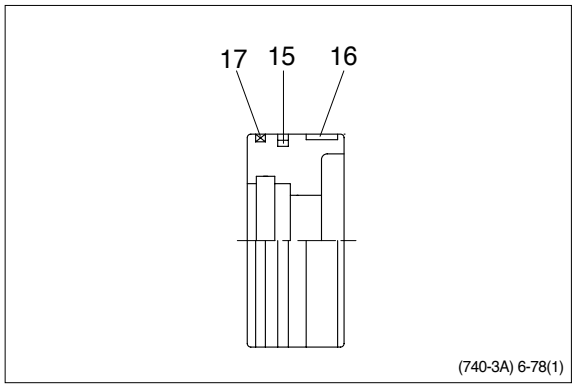

(740-3A) 6-78(1)

(4) Disassemble gland assembly

① Remove back up ring(11) and O-ring (10).

② Remove snap ring(9) and dust wiper(8).

③ Remove back up ring(6), rod seal(5) and buffer ring(7).

※ Exercise care in this operation not to damage the grooves.

※ Do not remove seal and ring, if does not damaged.

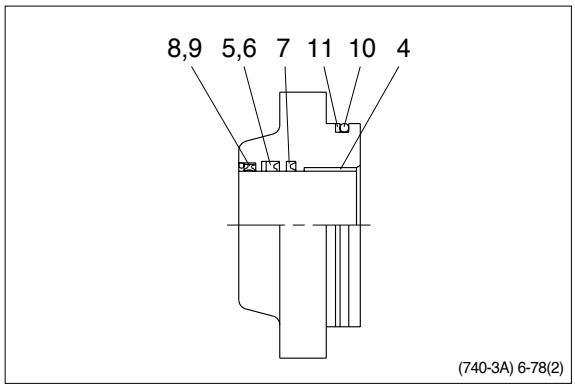

(740-3A) 6-78(2)

5) ASSEMBLY

(1) Assemble gland assembly

※ Check for scratches or rough surfaces if found smooth with an oil stone.

① Coat the inner face of gland(3) with hydraulic oil.

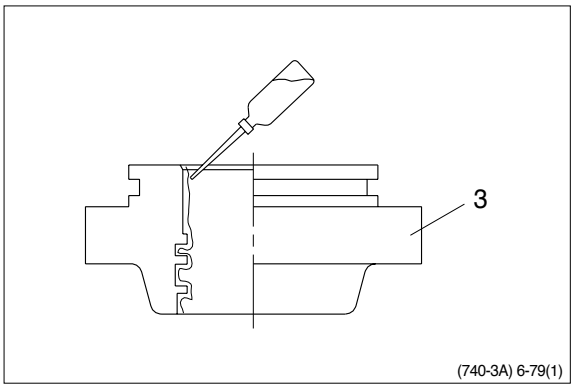

② Coat dust wiper(8) with grease and fit dust wiper(8) to the bottom of the hole of dust wiper.

③ At this time, press a pad metal to the metal ring of dust seal.
Fit snap ring(9) to the stop face.

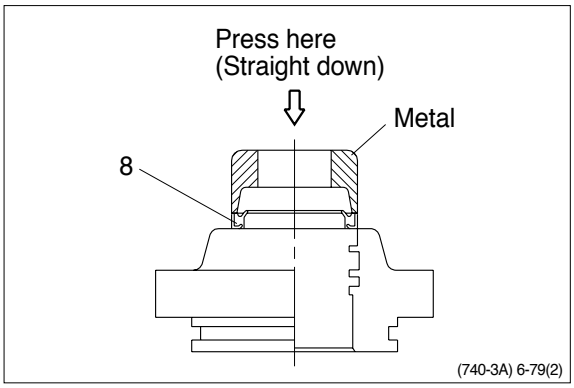

④ Fit back up ring(6), rod seal(5) and buffer ring(7) to corresponding grooves, in that order.

※ Coat each packing with hydraulic oil before fitting it.

※ Insert the backup ring until onside of it is inserted into groove.

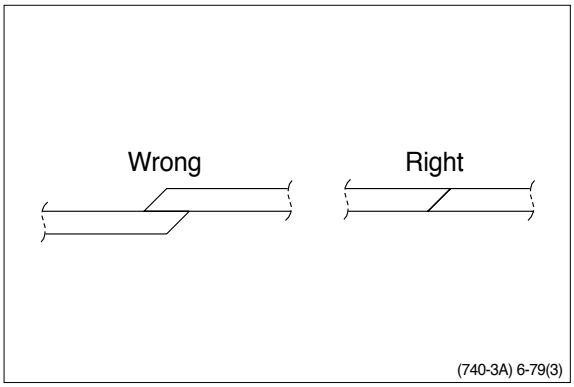

※ Rod seal(5) has its own fitting direction. Therefore, confirm it before fitting them.

※ Fitting rod seal(5) up side down may damage its lip. Therefore check the correct direction that is shown in fig.

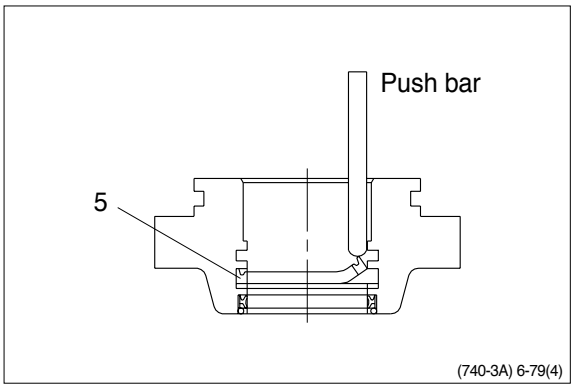

⑤ Fit back up ring(11) to gland(3).

※ Put the backup ring in the warm water of 30 ~ 50℃.

⑥ Fit O-ring(9) to gland(3).

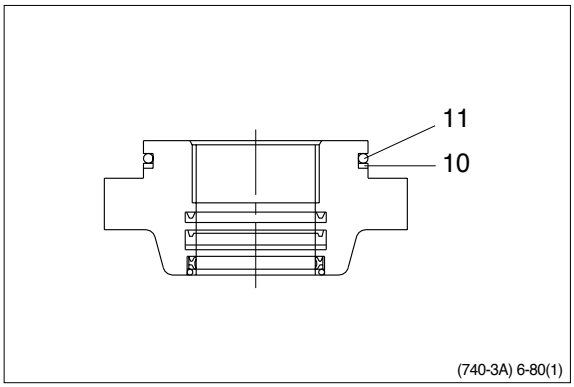

(740-3A) 6-80(1)

(2) Assemble piston assembly

※ Check for scratches or rough surfaces if found smooth with an oil stone.

① Coat the outer face of piston(12) with hydraulic oil.

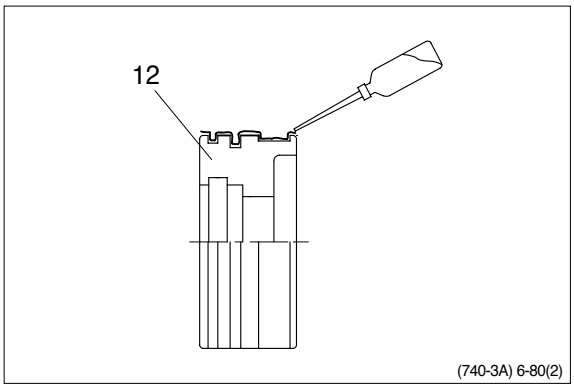

(740-3A) 6-80(2)

② Fit piston seal(15) to piston

※ Put the piston seal in the warm water of 60 ~ 100℃ for more than 5 minutes.

※ After assembling the piston seal, press its outer diameter to fit in.

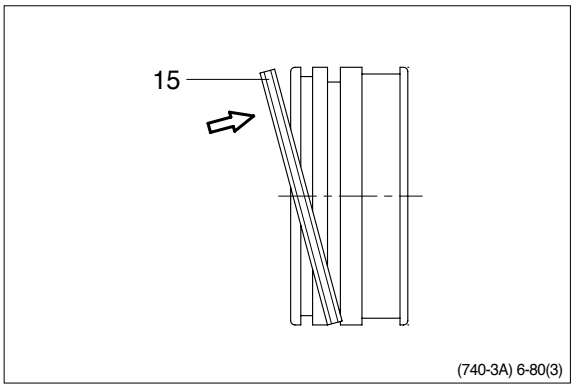

(740-3A) 6-80(3)

③ Fit wear ring(16), dust ring(17) to piston(12).

④ Fit O-ring(13) and backup ring(14) to piston(12).

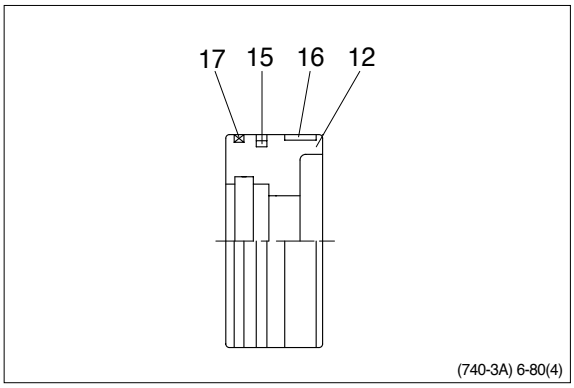

(740-3A) 6-80(4)

(3) Install piston and gland assembly

① Fix the piston rod assembly to the work bench.

② Apply hydraulic oil to the outer surface of piston rod(2), the inner surface of piston and gland.

③ Insert gland assembly to piston rod(2).

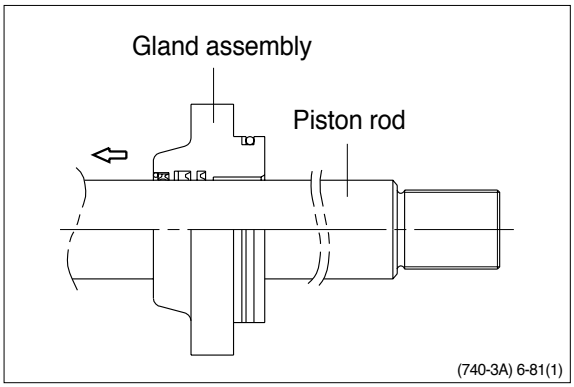

④ Fit piston assembly to piston rod.

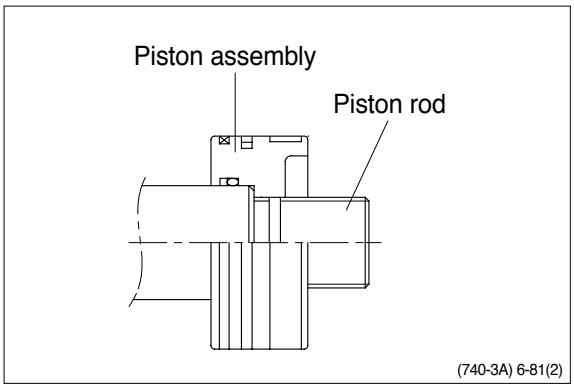

⑤ Tighten nylon nut(18) to piston rod(2)

· Tightening torque:250±25kgf · m
(1808±181lbf · ft)

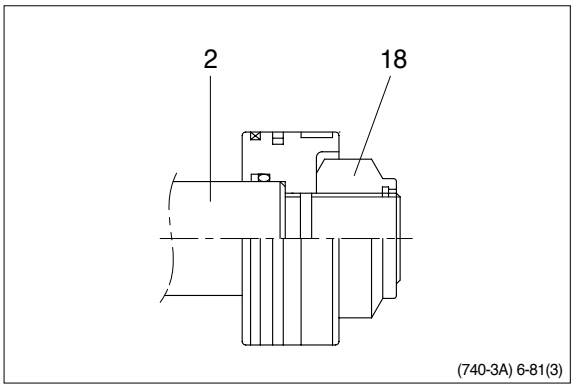

(4) Overall assemble

① Place a V-block on a rigid work bench. Mount the cylinder tube assembly(1) on it and fix the assembly by passing a bar through the clevis hole to lock the assembly.

② Insert the piston rod assembly in to the cylinder tube assembly, while lifting and moving the piston rod assembly with a crane.

※ Be careful not to damage piston seal by thread of cylinder tube.

③ Match the bolts holes in the cylinder head flange to the tapped holes in the cylinder tube assembly and tighten socket bolts to a specified torque.

※ Refer to the table of tightening torque.

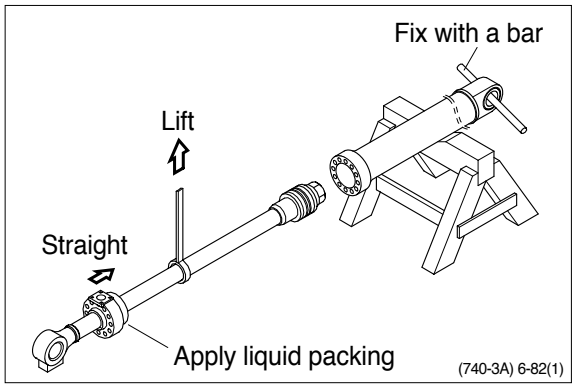

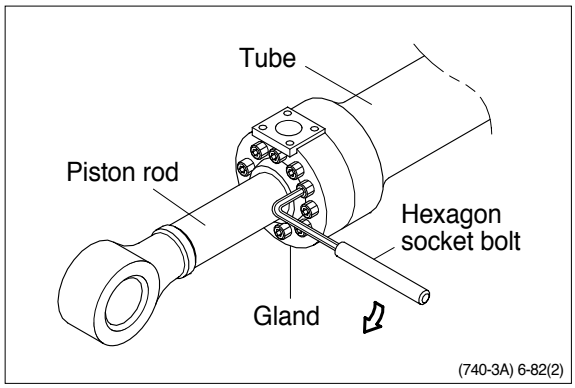

SECTION 7 ELECTRICAL SYSTEM

Group 1 Component Location ---------- 7-1
Group 2 Electrical Circuit ---------- 7-3
Group 3 Monitoring System ---------- 7-21
Group 4 Electrical Component Specification ---------- 7-37
Group 5 Connectors ---------- 7-44
Group 6 Troubleshooting ---------- 7-61

SECTION 7 ELECTRICAL SYSTEM

GROUP 1 COMPONENT LOCATION

1. LOCATION 1

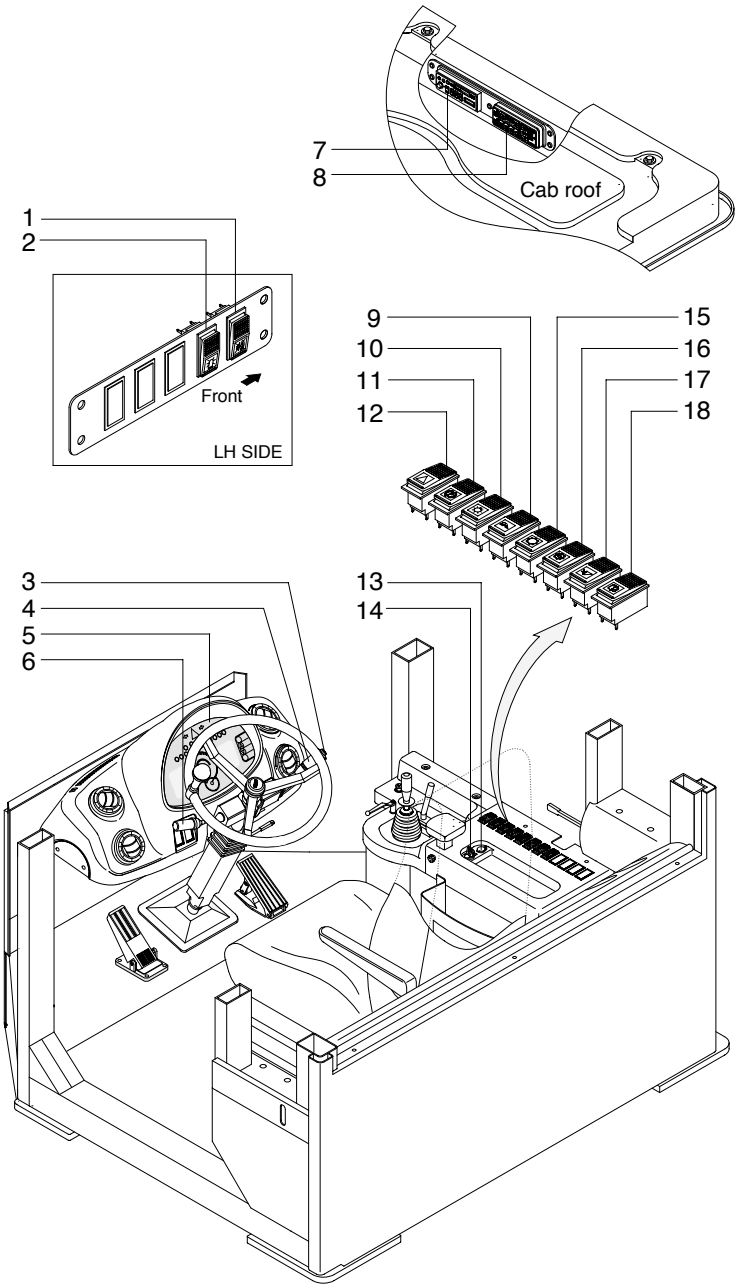

7407EL02

1	Buzzer stop switch	7	Radio & cassette	13	12V socket
2	Beacon switch(option)	8	Aircon & heater switch	14	Starting switch
3	Horn button	9	Work lamp switch	15	Auto select switch
4	Multi function switch	10	Main light switch	16	Clutch cut off switch
5	Cluster	11	Parking brake switch	17	Ride control switch(option)
6	Gear selector lever	12	Hazard switch	18	Rear wiper/washer switch

2. LOCATION 2

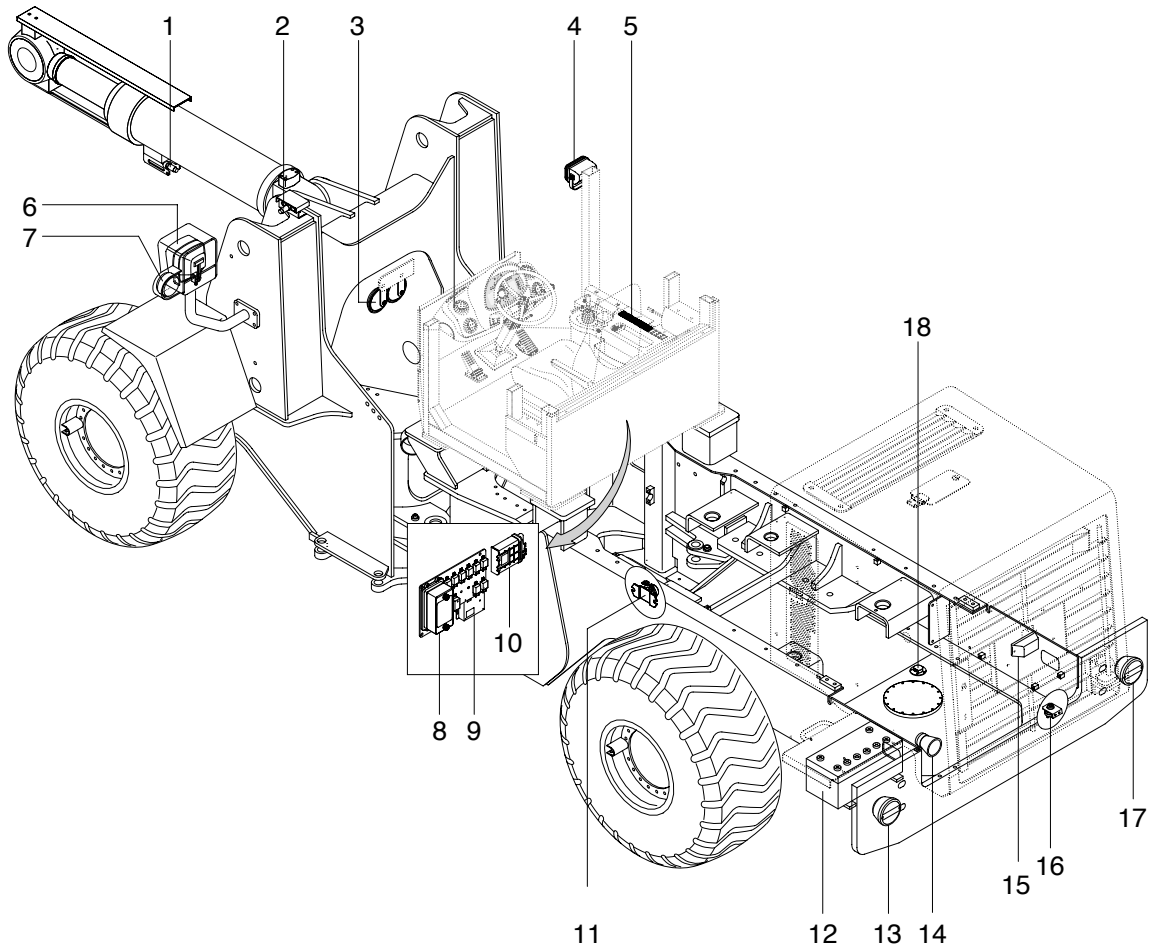

7407EL02-1

1	Proximity switch	7	Front turn lamp	13	Rear combi lamp
2	Proximity switch	8	Fuse box	14	Back up buzzer
3	Horn	9	Machine control unit(MCU)	15	Number plate lamp
4	Work lamp	10	Transmission coutrol unit(TCU)	16	Master switch
5	Switchs	11	Start relay	17	Rear combi lamp
6	Head lamp	12	Battery	18	Fuel sender

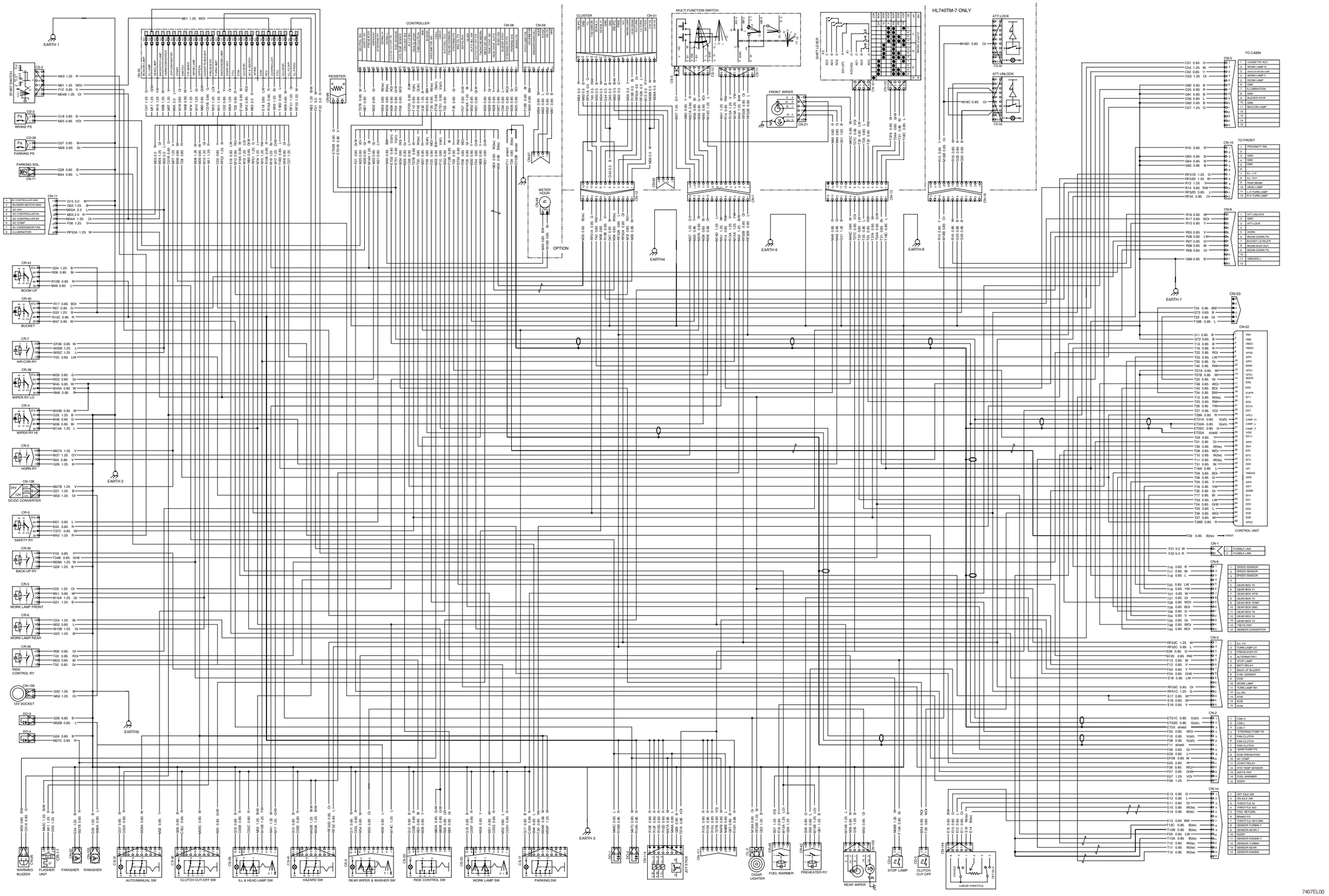
HL740TM-7 ONLY
CONTROLLER
CLUSTER
MULTI FUNCTION SWITCH
FRONT WIPER
ATT LOCK
ATT UNLOCK
TO CABIN
TO FRONT
CONTROL UNIT
LINEAR THROTTLE
OPTION
BRAKE PS
PARKING PS
PARKING SOL
DC/DC CONVERTER
12V SOCKET
WARNING BUZZER
FLASHER UNIT
F/WASHER
R/WASHER
AUTO/MANUAL SW
CLUTCH CUT-OFF SW
ILL & HEAD LAMP SW
HAZARD SW
REAR WIPER & WASHER SW
RIDE CONTROL SW
WORK LAMP SW
PARKING SW
CIGAR LIGHTER
FUEL WARMER
PREHEATER RY
REAR WIPER
STOP LAMP
CLUTCH CUT-OFF
BOOM UP
BUCKET
AIR-CON RY
WIPER RY LO
WIPER RY HI
HORN RY
BACK-UP RY
WORK LAMP FRONT
WORK LAMP REAR
RIDE CONTROL RY
SAFETY RY
EARTH 1
EARTH 2
EARTH 3
EARTH4
EARTH 6
EARTH 7
EARTH 8
EARTH5
7407EL00

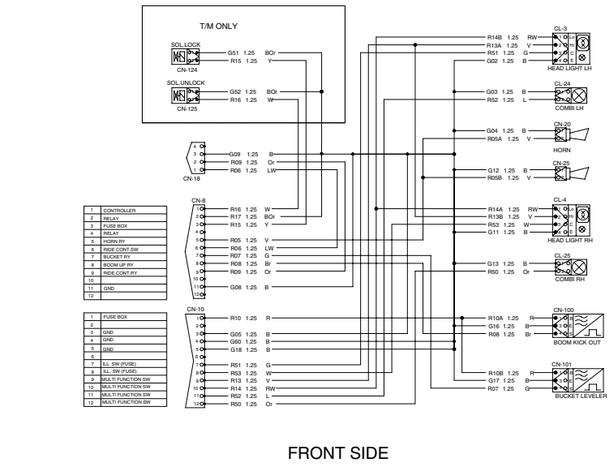

FRONT SIDE

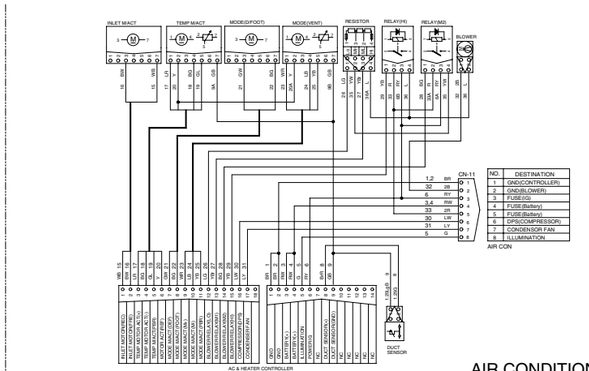

AIR CONDITIONER

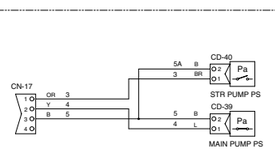

EMERGENCY STEERING

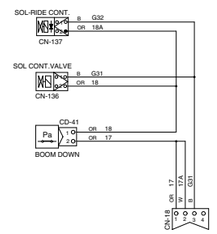

RIDE CONTROL

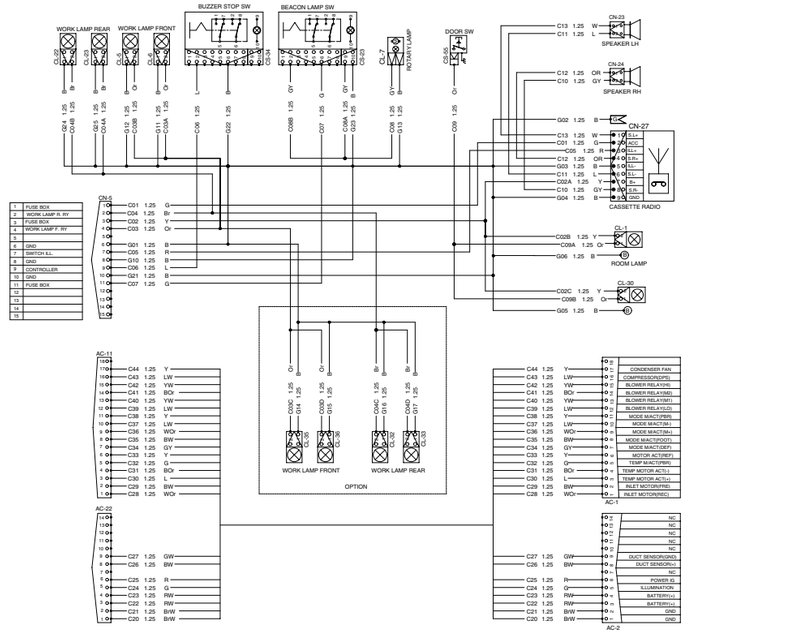

CAB SIDE

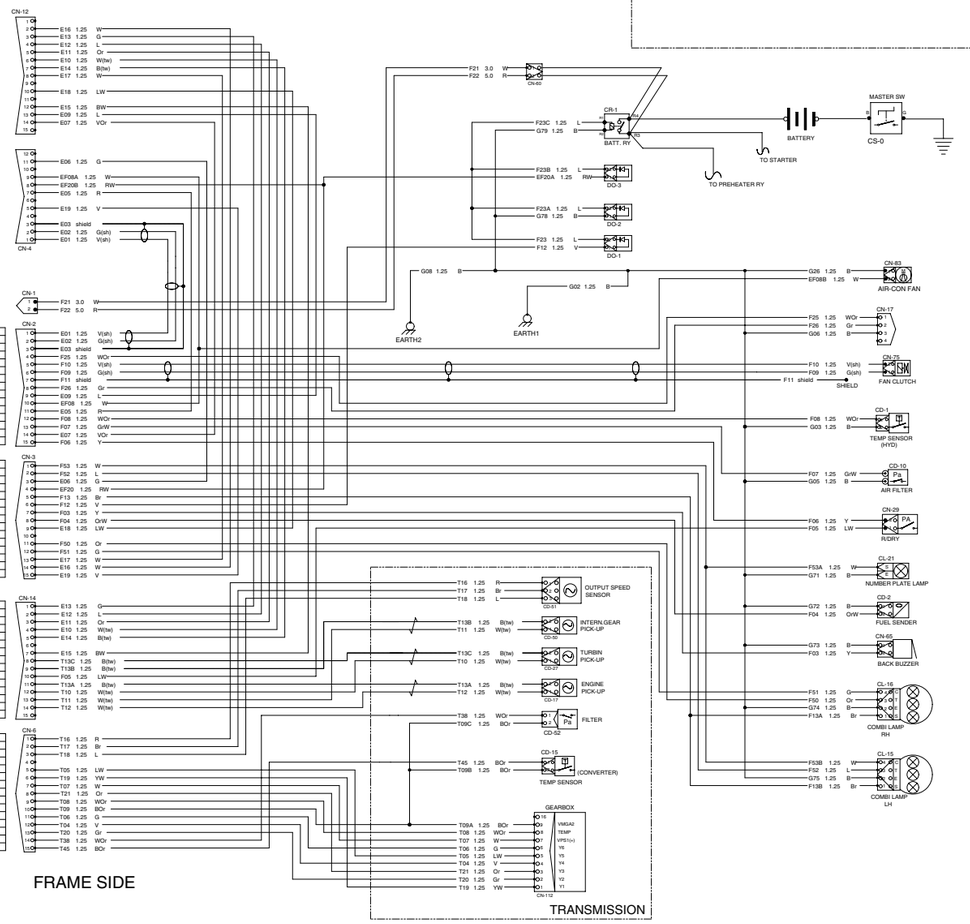

FRAME SIDE

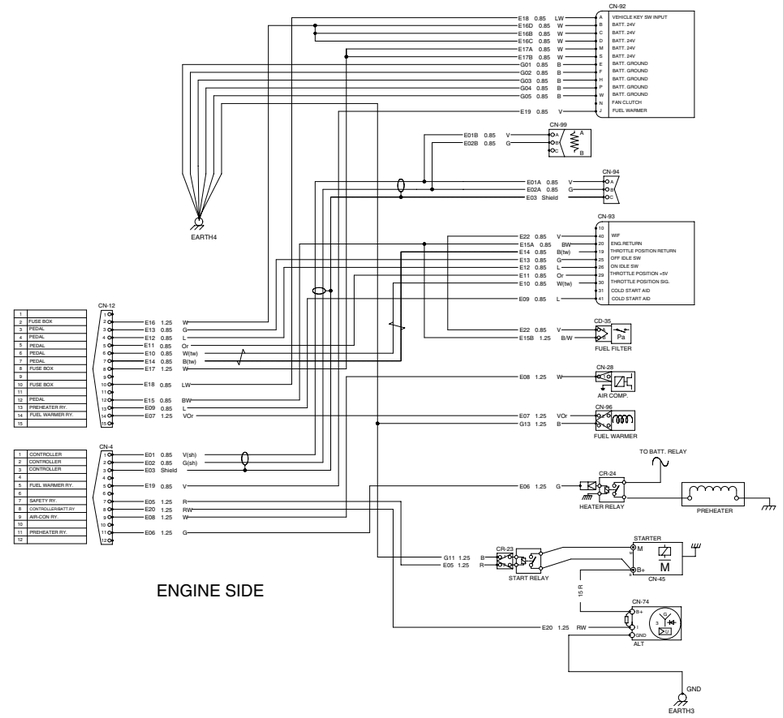

ENGINE SIDE

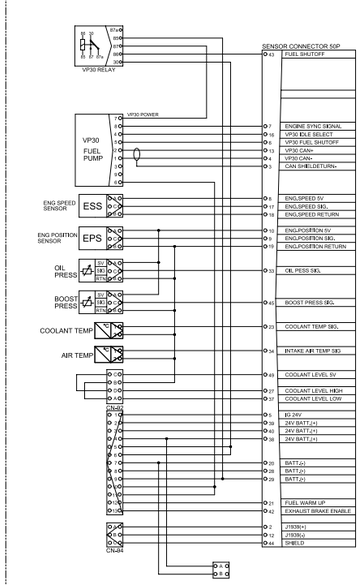

ENGINE(CUMMINS) SIDE

7407EL01

1. ILLUMINATION CIRCUIT

1) OPERATING FLOW

Fuse box (No.2) → Illumination switch [CS-39(1)] → Switch ON, 1st step

- I/conn [CS-39(7)] → All switch indicator lamp ON
- I/conn [CS-39(5)] → Fuse box(27)
  - I/conn [CN-3(12)] → RH Combi clearance lamp ON [CL-16(4)]
  - I/conn [CN-10(7)] → LH Head lamp ON [CL-3(3)]
  - I/conn [CN-12(10)] → Cluster [CN-51(17)] → All cluster gauge and LCD lamp ON
- Fuse box(28)
  - I/conn [CN-3(1)
    - Number plate lamp ON [CL-21(S)]
    - LH Combi clearance lamp ON [CL-15(4)]
  - I/conn [CN-10(8)] → RH Head lamp ON [CL-4(3)]

2) CHECK POINT

Engine	Key switch	Check point	Voltage
OFF	ON	① - GND (Switch input) ② - GND (Switch output) ③ - GND (To light) ④ - GND (To cluster)	20~25V

※ GND : Ground

ILLUMINATION CIRCUIT

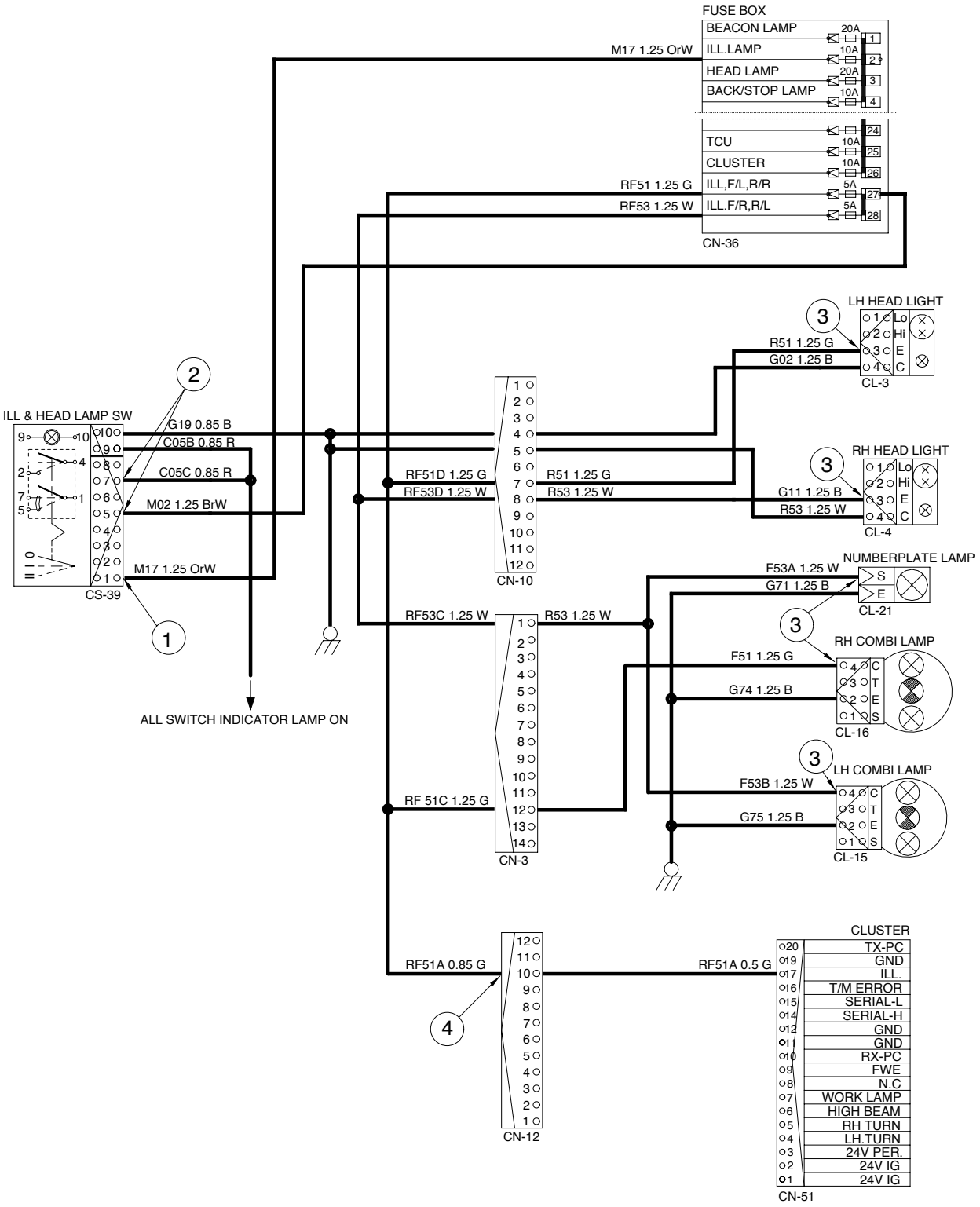

7407EL03

2. HEAD LIGHT CIRCUIT

1) OPERATING FLOW

Fuse box(No.3) → Head light switch [CS-39(4)] → Light switch ON, 2nd step [CS-39(2)]
→ I/conn [CN-7(7)] → Multi function switch [CS-11(8)]
- → Multi function switch MIDDLE [CS-11(7)] → I/conn [CN-7(6)] → I/conn [CN-10(10)]
  - → LH Head light low beam ON [CL-3(1)]
  - → RH Head light low beam ON [CL-4(1)]
- → Multi function switch DOWN [CS-11(6)] → I/conn[CN-7(5)]
  - → I/conn[CN-10(9)]
    - → LH Head light high beam ON[CL-3(2)]
    - → RH Head light high beam ON[CL-4(2)]
  - → I/conn[CN-12(7)] → Cluster high beam pilot lamp ON[CN-51(6)]

2) CHECK POINT

Engine	Key switch	Check point	Voltage
OFF	ON	① - GND (Switch input) ② - GND (Switch output) ③ - GND (Multi function input) ④ - GND (Multi function output) ⑤ - GND (Multi function output) ⑥ - GND (Low beam) ⑦ - GND (High beam) ⑧ - GND (Passing B^+)	20~25V

※ GND : Ground

HEAD LIGHT CIRCUIT

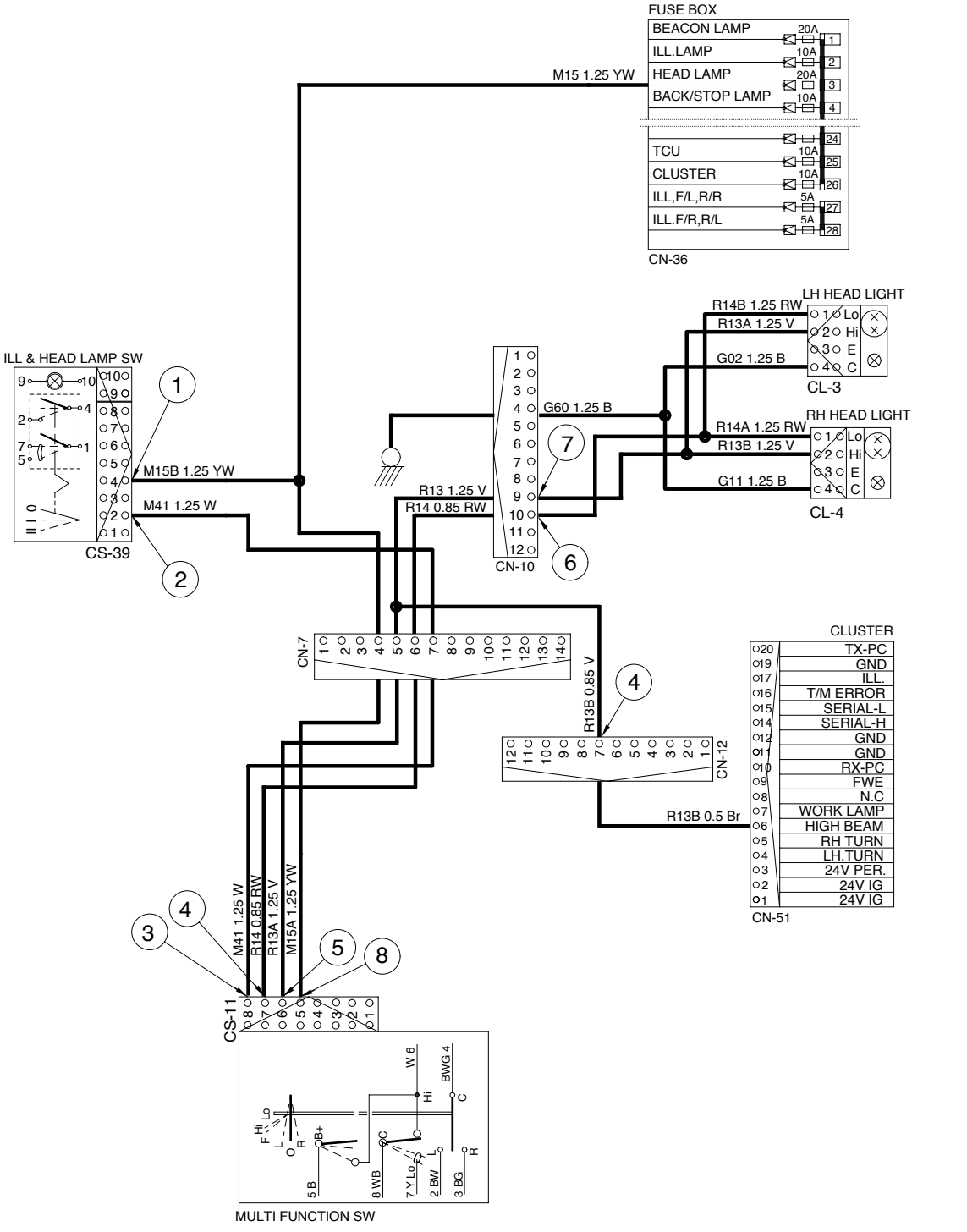

7407EL04

3. WORK LIGHT CIRCUIT

1) OPERATING FLOW

※ Illumination switch : ON position

(1) Work lamp switch ON (1st step)

ILL & head lamp switch [CS-39(7)] →

→ Work lamp switch[CS-20(1)] → (5) → Front work lamp relay[CR-3(2)→(4)] → I/conn[CN-5(4)] →
- → LH Front work lamp ON[CL-6(2)]
- → RH Front work lamp ON[CL-5(2)]

(7) → I/conn[CN-12(8)] → Cluster[CN-51(7)] → Work light pilot lamp ON

→ Work lamp switch[CS-20(9)] → Work lamp switch indicator lamp ON

(2) Work lamp switch (2nd step)

Work lamp switch [CS-20(4)→(2)] → Rear work lamp relay [CR-6(2)→(4)] →

I/conn [CN-5(2)]
- → LH Rear work lamp ON [CL-22(2)]
- → RH Rear work lamp ON [CL-23(2)]

2) CHECK POINT

Engine	Key switch	Check point	Voltage
OFF	ON	① - GND (Work lamp power input) ② - GND (Work lamp power output) ③ - GND (Front work lamp) ④ - GND (Rear work lamp)	20~25V

※ GND : Ground

WORK LIGHT CIRCUIT

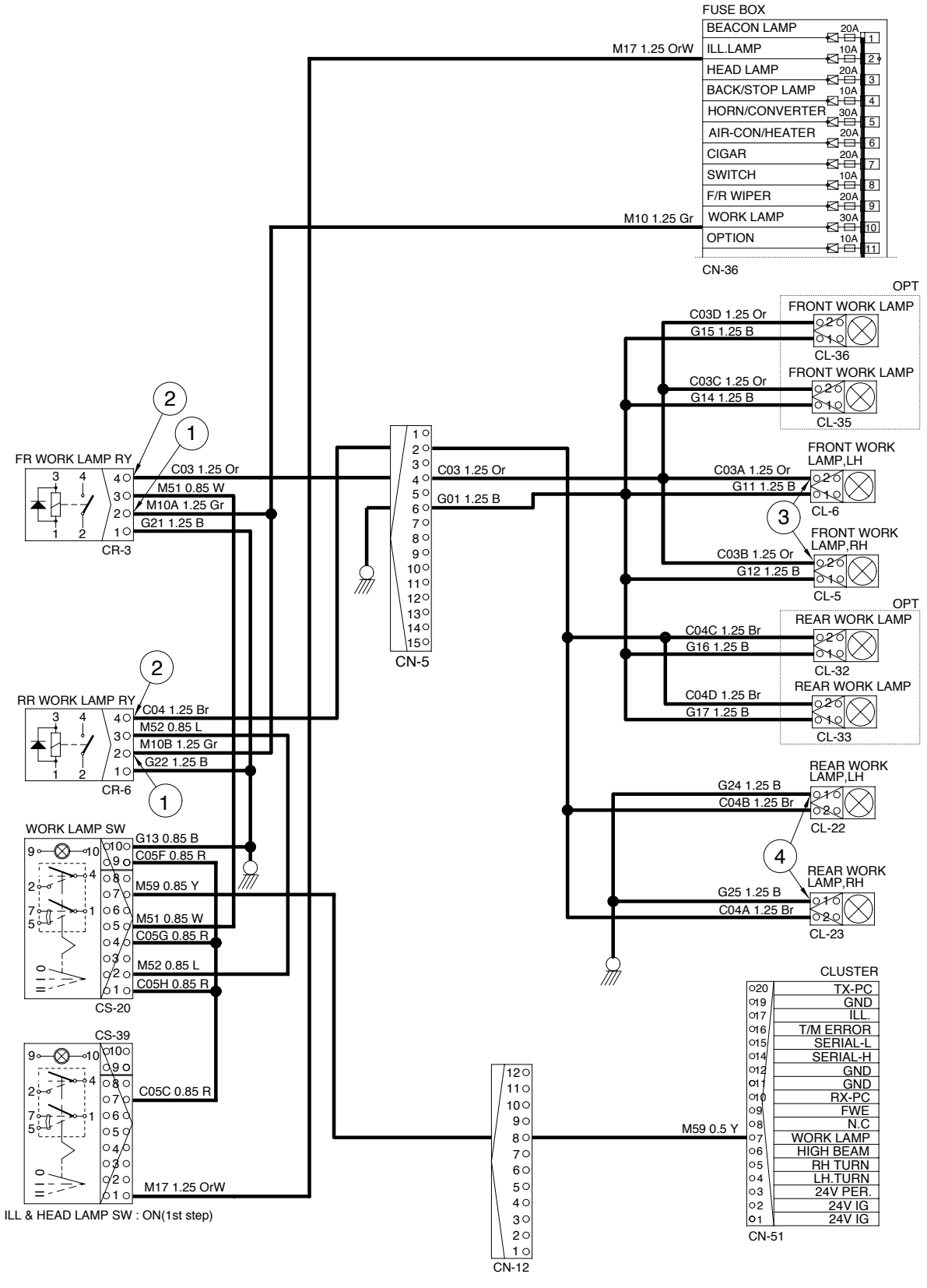

4. CHARGING CIRCUIT

When the starter is activated and the engine is started, the operator releases the key switch to the ON position.

Charging current generated by operating alternator flows into the battery through the battery relay(CR-1).

The current also flows from alternator to each electrical component and controller through the fuse box.

1) OPERATING FLOW

(1) Warning flow

Altermator [CN-74(I)] → I/conn [CN-4(8)] → I/conn [CN-3(4)] → Controller [CN-58(25)] → Cluster charge warning lamp ON

(2) Charging flow

Alternator → Starter [CN-45(B^+)] → Battery relay [CR-1]

→ Battery(+) terminal → Charging

→ I/conn [CN-60(1),(2)] → I/conn [CN-1(1),(2)] → Fuse box

2) CHECK POINT

Engine	Key switch	Check point	Voltage
Running	ON	① - GND (Battery) ② - GND (Battery relay) ③ - GND (ALT B^+) ④ - GND (ALT I) ⑤ - GND (Controller) ⑥ - GND (Fuse box)	20~28V

※ GND : Ground

CHARGING CIRCUIT

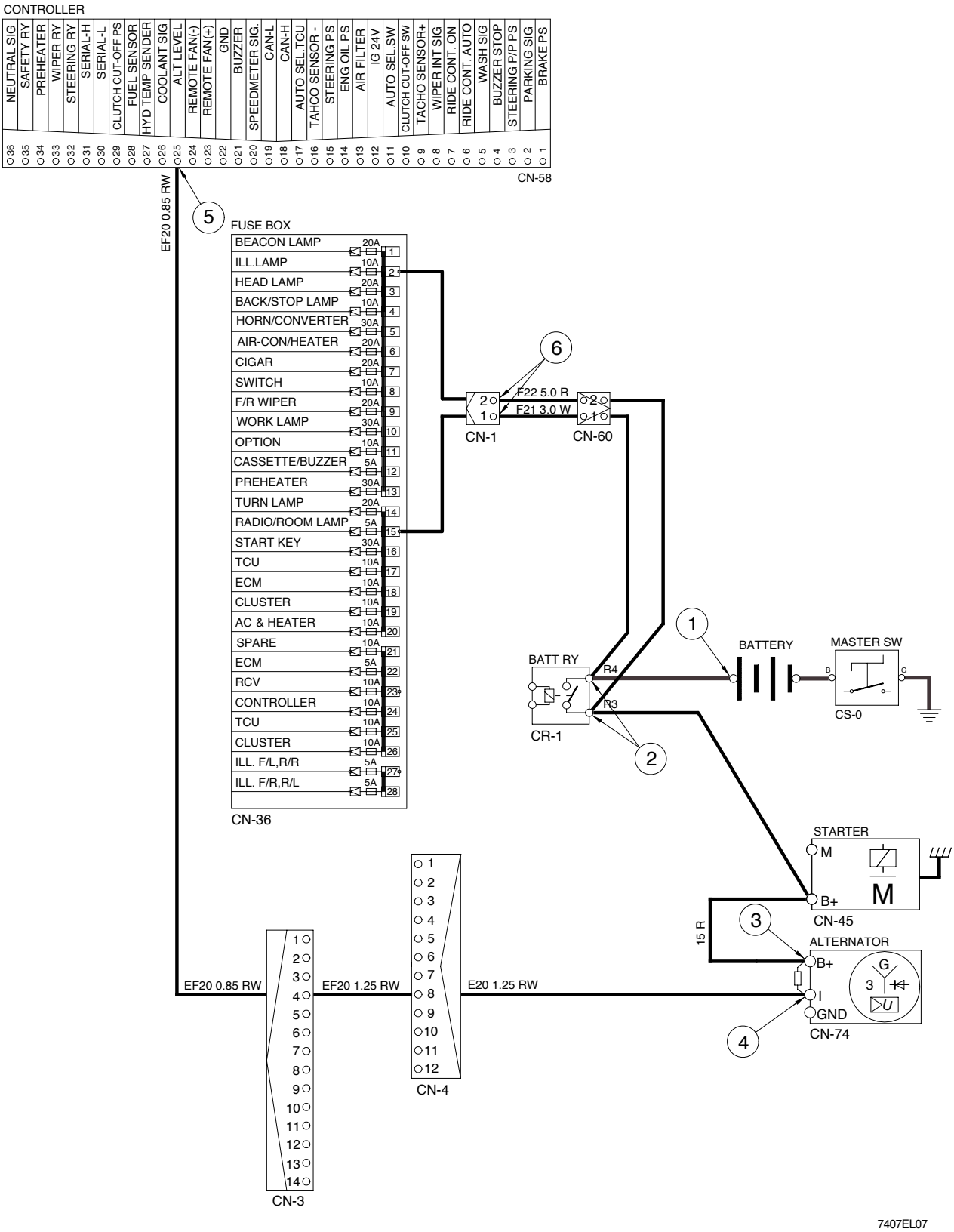

5. STARTING CIRCUIT

1) OPERATING FLOW

Battery(+) terminal → Battery relay(R4 terminal) → Fusible link [CN-60(1)]
→ I/conn [CN-1(1)] → Fuse box (No.15) → Start switch [CS-2(1)]

※ The gear selector lever is neutral position. It is necessary condition before the starting.
The gear selector has an output signal which is activated whenever the shift lever is in the neutral position. This signal can be used to control a relay and prevent engine from starting whenever the shift lever is not in the neutral position.

(1) When start key switch is in ON position

Start switch ON → Start switch [CS-2(2)] → I/conn [CN-3(6)] → Battery relay [CR-1]
→ Battery relay operating(All power is supplied with the electric component)
→ Start switch [CS-2(3)] → Fuse box [No.23] → Fuse box (No.22) →
I/conn [CN-3(9)] → I/conn [CN-12(10)] → ECM[CN-92(A)]

(2) When start key switch is in START position

Start switch START [CS-2(5)] → Start safety relay [CR-5(30)] → Start safety relay [CR-5(87)]
→ I/conn [CN-2(11)] → [CN-4(7)] → Start relay [CR-23(2)] →
Starter(Terminal B^+ and M connector of start motor)

2) CHECK POINT

Engine	Key switch	Check point	Voltage
Running	ON	① - GND (Battery B^+) ② - GND (Fusible link) ③ - GND (Start key B terminal) ④ - GND (Start key BR terminal) ⑤ - GND (I/conn CN-3(6)) ⑥ - GND (Start key ST terminal) ⑦ - GND (Start safety relay output) ⑧ - GND (Controller) ⑨ - GND (Start key ACC terminal)	20~25V

※ GND : Ground

※ ECM : Electronic control module

STARTING CIRCUIT

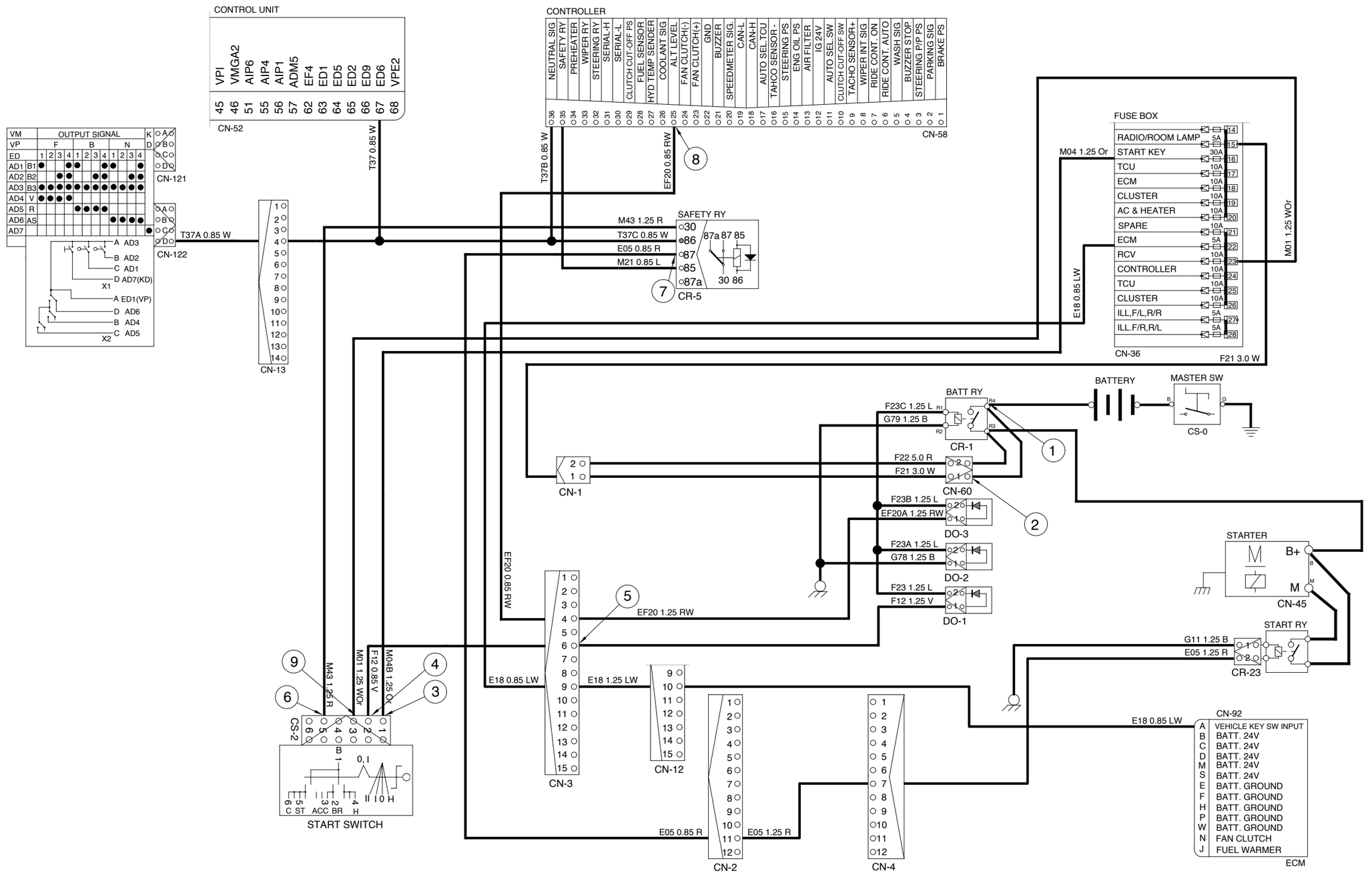

7607EL06

6. ELECTRIC PARKING, DECLUTCH CIRCUIT

1) OPERATING FLOW

(1) Parking OFF

Fuse box (No.8) → Parking switch OFF [CS-17(6)隊(8)] → Parking solenoid ON (Activated) → Parking brake released (By hydraulic pressure)

(2) Parking ON

Fuse box (No.8) → Parking switch ON → Parking solenoid [CN-71] OFF → Parking brake applied [By spring force]

Parking switch ON → [CS-17(5)隊(7)] → T/M control unit [CN-52(21)] → T/M declutch

(3) Declutch ON

Fuse box (No.8) → Clutch cut-off switch ON → Clutch cut-off switch [CS-42(5) 隊(1)] → → Controller [CN-58(10)隊(29)] → Service brake applied → Service brake pressure switch ON [CD-5] → T/M control unit [CN-52(66)] → Declutch

2) CHECK POINT

Engine	Key switch	Check point	Voltage
Running	ON	① - GND (Parking switch input) ② - GND (Parking switch output) ③ - GND (Parking switch input) ④ - GND (Parking switch output) ⑤ - GND (Parking solenoid) ⑥ - GND (Pressure switch clutch cut-off)	20~25V

※ GND : Ground

ELECTRIC PARKING, DECLUTCH CIRCUIT

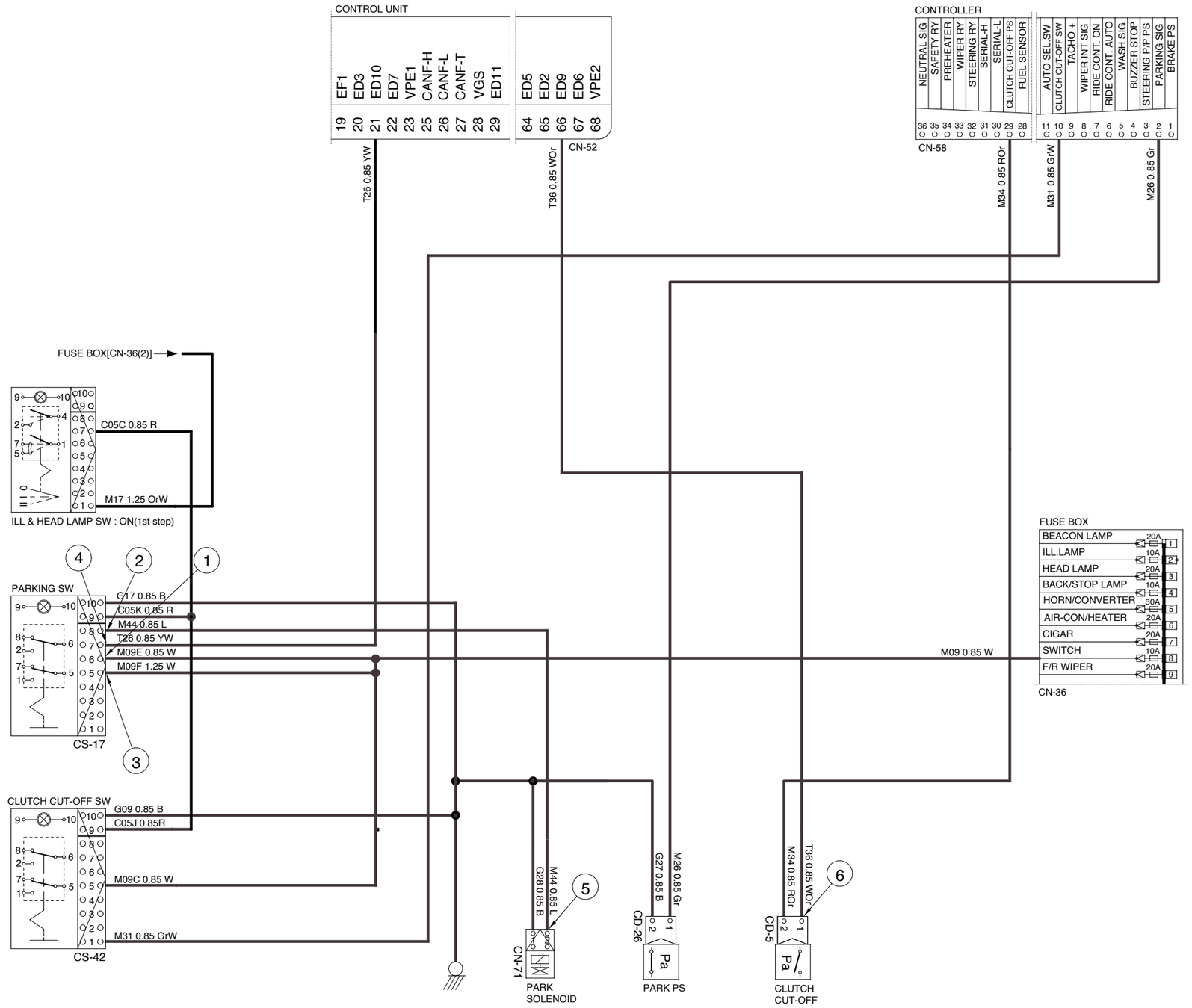

7407EL08

7. WIPER AND WASHER CIRCUIT

1) OPERATING FLOW

Fuse box (No.9) → Wiper relay [CR-4(30)隊(87a)] → I/conn [CN-13(9)] → Front wiper motor [CN-21(1)]
Wiper relay [CR-4(30)隊(87a)] → Wiper relay Lo [CR-26(86), (87)]
Fuse box (No.9) → I/conn [CN-7(8)] → Multi function switch [CS-12(6)]
Fuse box (No.9) → Rear wiper & washer switch [CS-3(1)]
Fuse box (No.9) → Rear wiper motor [CN-102(1)]

(1) Front washer switch ON

① Washer switch ON [CS-12(6)隊(2)] → Washer tank [CN-22(2)] → Washer operating
Washer switch ON [CS-12(6)隊(2)] → Controller [CN-58(5)隊(33)] → Front wiper relay Lo [CR-26(87)隊(30)] → I/conn [CN-13(13)] → Front wiper motor [CN-21(5)] → Wiper motor operating(Low)

(2) Front wiper switch ON

① **INT position**

Wiper switch ON [CS-12(6)隊(1)] → I/conn [CN-7(13)] → Controller [CN-58(8)隊(33)] → Wiper relay Lo [CR-26(87)隊(30)] → I/conn [CN-13(13)] → Front wiper motor [CN-21(5)] → Front wiper motor intermittently operating

② **Lo position**

Wiper switch ON [CS-12(6)隊(4)] → Wiper relay Lo [CR-26(87a)隊(30)] → I/conn [CN-13(13)] → Front wiper motor [CN-21(5)] → Front wiper motor operating (Low)

③ **Hi position**

Wiper switch ON [CS-12(6)隊(3)] → Wiper relay Hi [CR-4(30)隊(87)] → I/conn [CN-13(12)] → Front wiper motor [CN-21(4)] → Front wiper motor operating(High)

(3) Auto-parking(When switch OFF)

Switch OFF → Fuse box (No.9) → Wiper relay Hi [CR-4(30)隊(87a)] → I/conn [CN-13(9)] → Front wiper motor [CN-21(1)隊(2)] → Multi function switch [CS-12(5)隊(4)] → Wiper relay Lo [CR-26(87a)隊(30)] → I/conn [CN-13(13)] → Front wiper motor [CN-21(5)] → Wiper motor stop

(4) Rear wiper and washer switch

① **Wiper switch ON**(1st step)

Wiper switch ON [CS-3(1)隊(6)] → Rear wiper motor [CN-102(5)] → Rear wiper motor operating

② **Washer switch ON**(2nd step)

Washer switch ON [CS-3(1)隊(3)] → Rear washer tank [CN-103(2)] → Washer operating

2) CHECK POINT

Engine	Key switch	Check point	Voltage
Stop	ON	① - GND (Front wiper switch power input) ② - GND (Rear wiper switch power input) ③ - GND (Wiper relay power input) ④ - GND (Front wiper motor Lo power input) ⑤ - GND (Front wiper motor High power input) ⑥ - GND (Wiper relay power input) ⑦ - GND (Front washer power output) ⑧ - GND (Rear washer power output) ⑨ - GND (Front wiper motor power output) ⑩ - GND (Rear wiper motor power output)	20~25V

※ GND : Ground

WIPER AND WASHER CIRCUIT

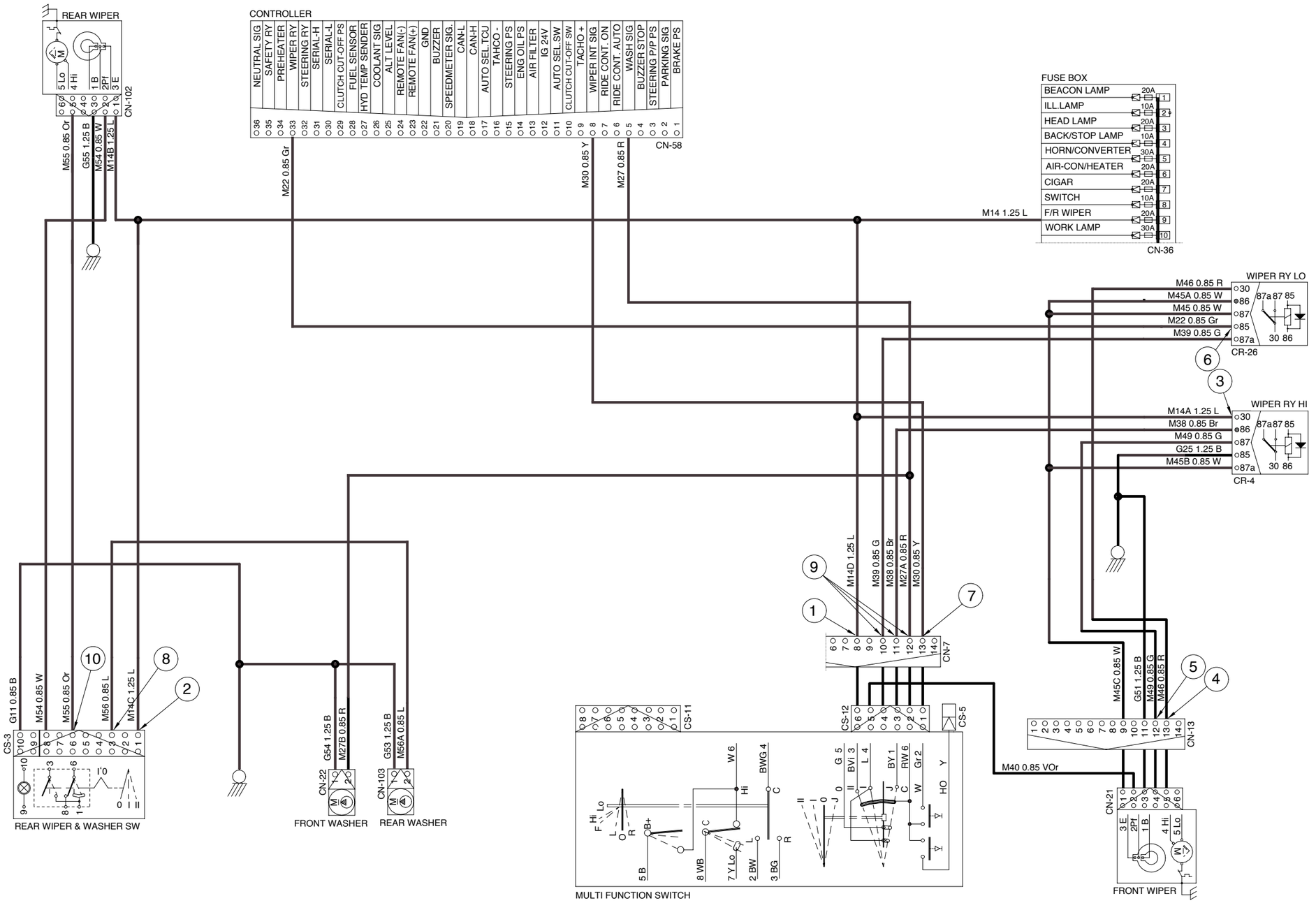

7607EL09

HAZARD, TURN AND ROTARY CIRCUIT

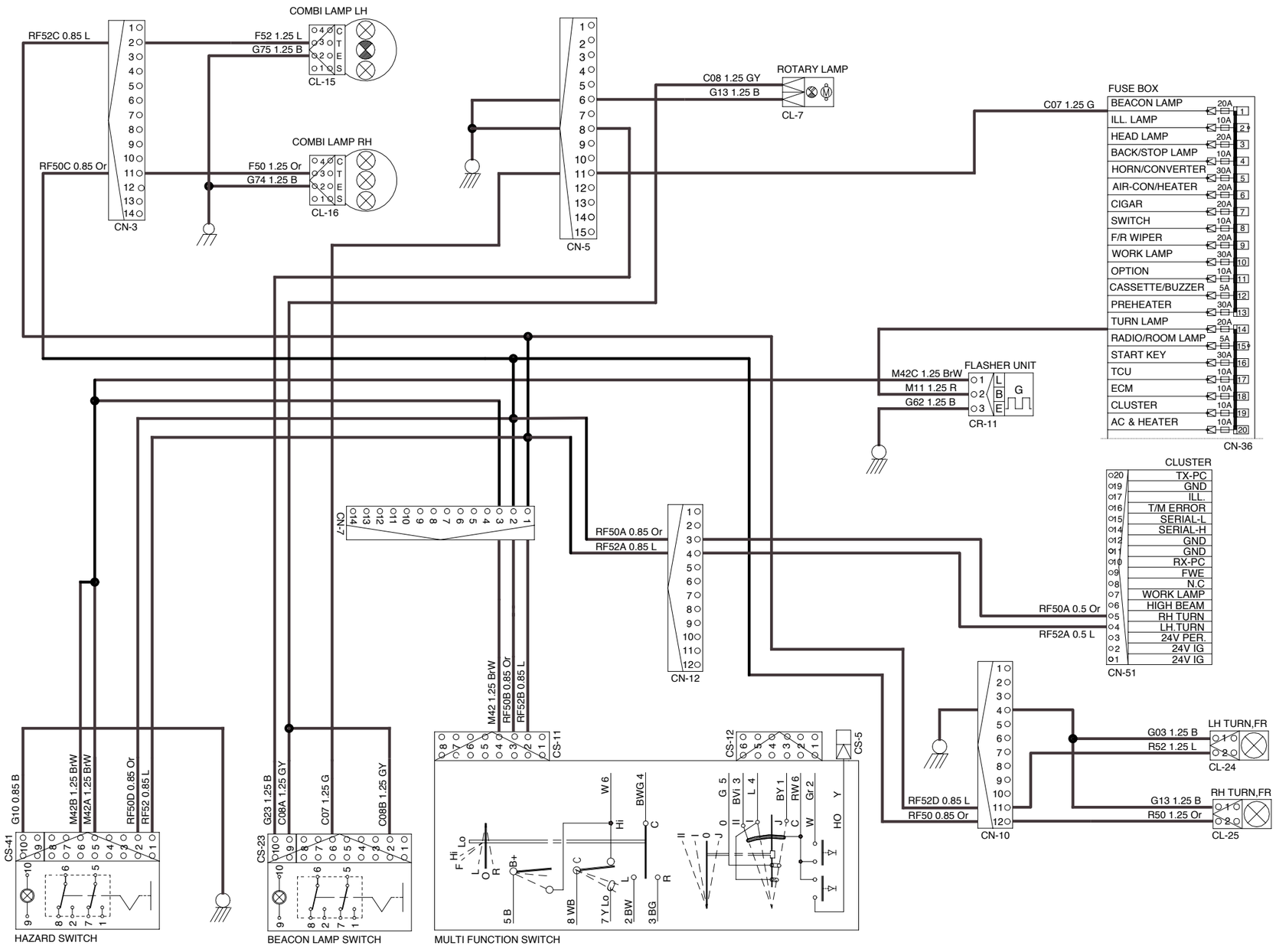

7407EL11

3. MONITORING SYSTEM

1. CLUSTER

The gauges panel consists of gauges and monitors as shown below, to warn the operator in case of abnormal machine operation or conditions for the appropriate operation and inspection.

- Gauges : Indicate operating status of the machine.
- Warning lamp : Indicate abnormality of the machine.
- Pilot lamp : Indicate operating status of the machine.

※ **The monitor installed on this machine does not entirely guarantee the condition of the machine. Daily inspection should be performed according to chapter 6, MAINTENANCE.**

※ **When the monitor provides a warning immediately check the problem, and perform the required action.**

■ **Cluster [Machine serial no. ; HL740-7(-#0974),HL740TM-7(-#0348)]**

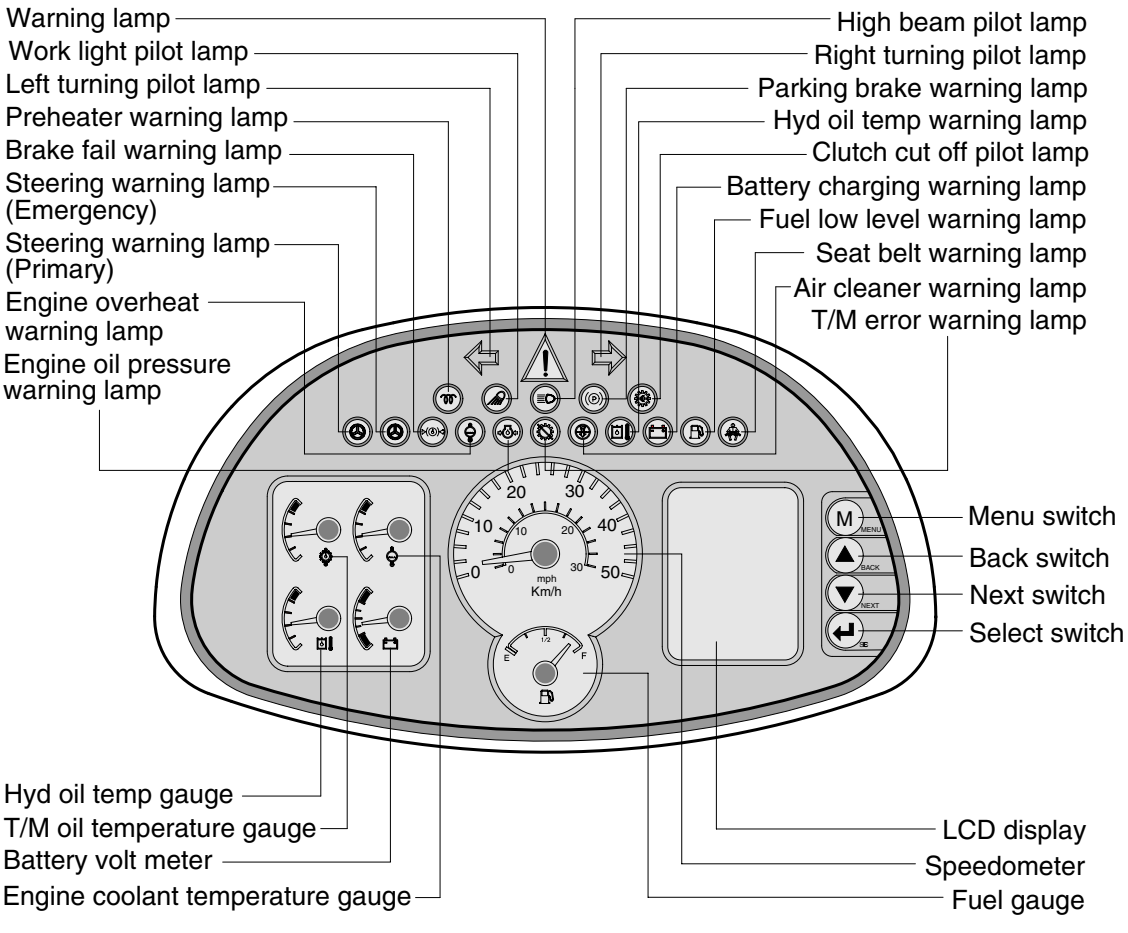

77073CD02

■ Cluster [Machine serial no. ; HL740-7(#0975-),HL740TM-7(#0349-)]

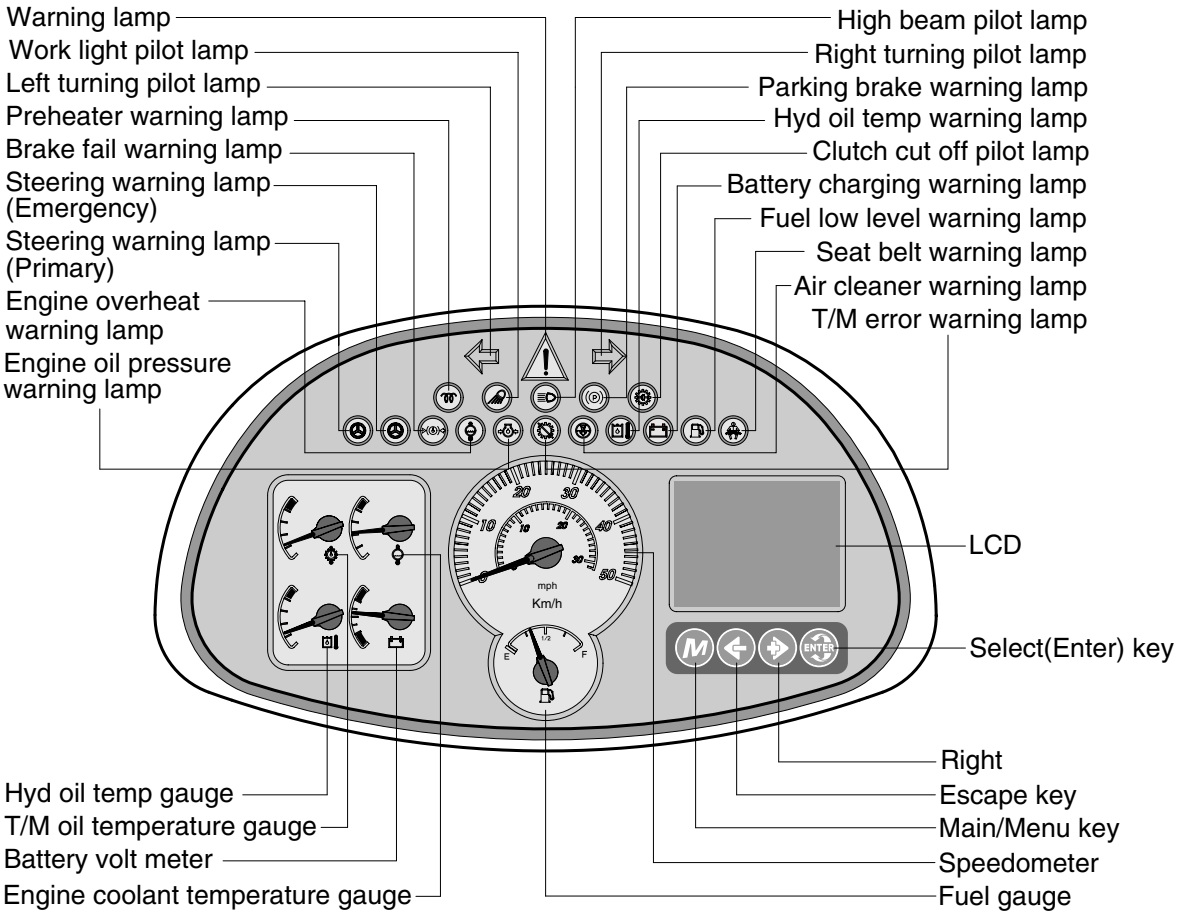

77073CD02-1

1) SPEEDOMETER

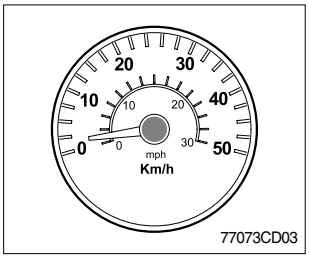

(1) The speedometer displays the speed of machine in mph and km/h.

2) FUEL GAUGE

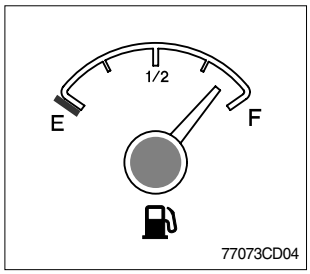

(1) This gauge indicates the amount of fuel in the fuel tank.

(2) Fill the fuel when the indicator moves **E** point, refuel as soon as possible to avoid running out of fuel.

※ **If the gauge indicates below E point even though the machine is on the normal condition, check the electric device as that can be caused by the poor connection of electricity or sensor.**

3) ENGINE COOLANT TEMPERATURE GAUGE

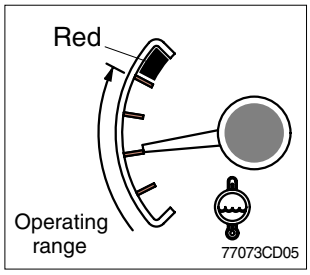

(1) This indicates the temperature of coolant.
- Red range : Above 104° C (219° F)

(2) Keep idling engine at low speed until the indicator is in the operating range.

(3) If the indicator is in the red range, turn OFF the engine, check the radiator and engine.

4) TRANSMISSION OIL TEMPERATURE GAUGE

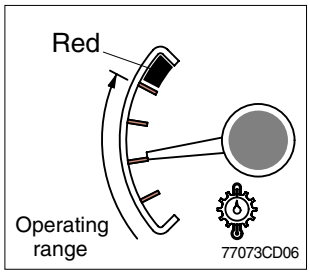

(1) This range indicates the temperature of transmission oil.
- Red range : Above 107° C (225° F)

(2) Keep idling engine at low speed until the indicator is in the operating range.

(3) If the indicator is in the red range, it means the transmission is overheated. Be careful that the indicator does not move into the red range.

5) BATTERY VOLT METER

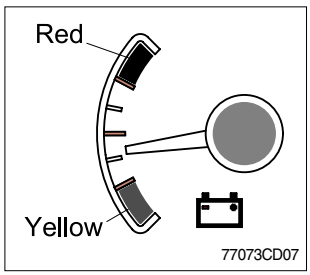

(1) This gauge indicates the voltage in the charging system when the engine is running.

(2) If the indicator is below 24V(Yellow range), it means that the electricity is being discharged. If the indicator is above 30V(Red range), an unusually high voltage may damage the alternator. Check the charging system in both cases.

6) HYD OIL TEMPERATURE GAUGE

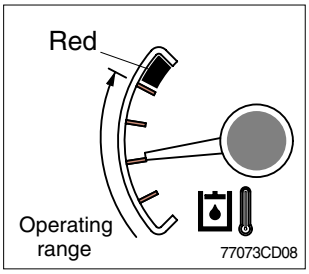

(1) This range indicates the temperature of hydraulic oil.
 · Red range : Above 105° C (221° F)

(2) Keep idling engine at low speed until the indicator is in the operating range.

(3) If the indicator is in the red range, reduce the load on the system. If the gauge stays in the red range, stop the machine and check the cause of the problem.

7) WARNING LAMP

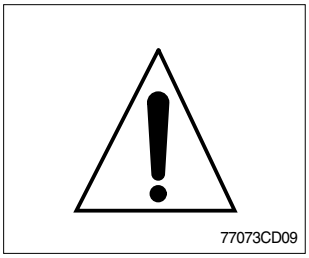

(1) When all warning lamp or fault codes are being displayed, this warning lamp will flash.

(2) When this warning lamp flashes, machine must be checked or serviced as soon as possible.

8) DIRECTION PILOT LAMP

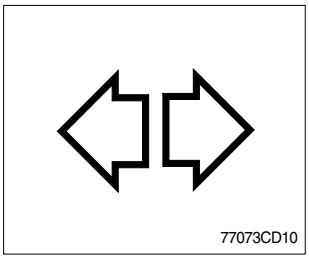

(1) This lamp flashes when the signal indicator lever is moved.

9) WORK LIGHT PILOT LAMP

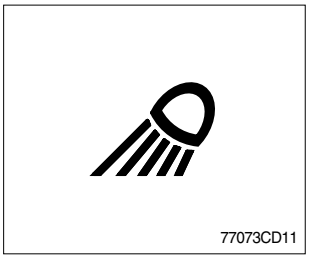

(1) This lamp lights ON when work lamp switch is pressed.

10) HIGH BEAM PILOT LAMP

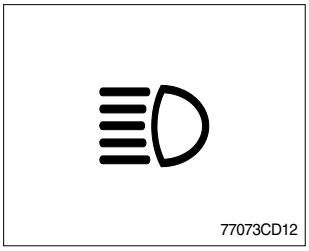

(1) This lamp works when the illuminating direction is upward.

(2) This lamp comes ON when the dimmer switch is operated, e.g., when passing another vehicle.

11) PARKING BRAKE WARNING LAMP

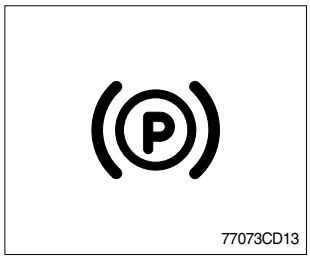

(1) When the parking brake is actuated, the lamp lights ON.

※ **Check the lamp is OFF before driving.**

12) PREHEATER WARNING LAMP

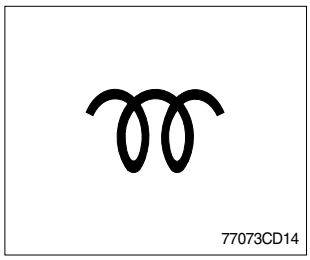

(1) This lamp lights ON when start switch is turned clockwise to the ON position. Light will turn off after approximately 15~45 seconds, depending on engine temperature, indicating that preheating is completed.

(2) When the lamp goes out the operator should start cranking the engine.

13) CLUTCH CUT OFF PILOT LAMP

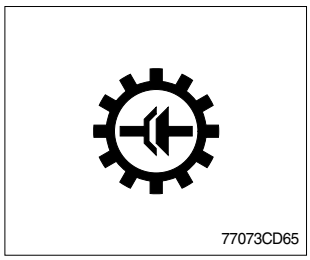

(1) When the clutch cut off switch is pressed, the lamp lights ON.

14) BRAKE FAIL WARNING LAMP

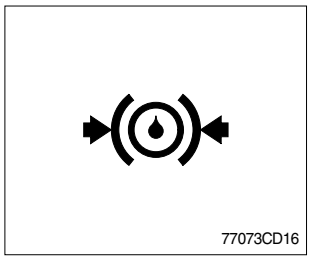

(1) The lamp lights ON when the oil pressure of service brake drops below the normal range.

(2) When the lamp is ON, stop the engine and check for its cause.

※ **Do not operate until any problems are corrected.**

15) ENGINE OVERHEAT WARNING LAMP

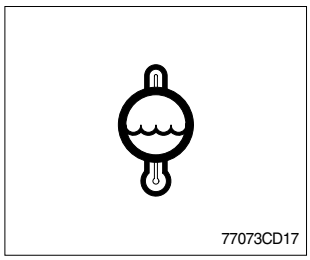

(1) This lamp is turned ON when the temperature of cooling water is over the normal temperature(104° C, 219° F)

(2) Check the cooling system when the lamp is ON.

16) ENGINE OIL PRESSURE WARNING LAMP

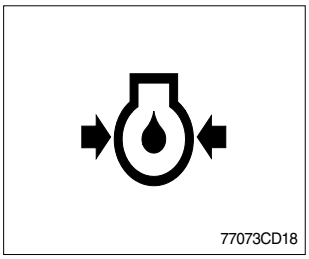

(1) This lamp is comes ON after starting the engine because of the low oil pressure.

(2) If the lamp comes ON during engine operation, shut OFF engine immediately. Check oil level.

17) TRANSMISSION ERROR WARNING LAMP

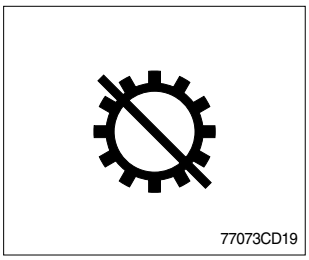

(1) This lamp lights ON and the LCD display show the error codes when an error occurs in the transmission.

(2) Immediately pull the machine to a convenient stop. Stop the engine. Investigate the cause.

※ **Consult a HYUNDAI dealer to investigate the cause.**

※ **Do not operate until the cause has been corrected.**

18) AIR CLEANER WARNING LAMP

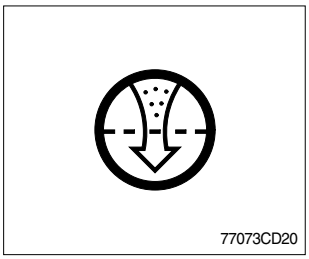

(1) This lamp operates by the vacuum caused inside when the filter of air cleaner is clogged.

(2) Check the filter and clean or replace it when the lamp is ON.

19) HYD OIL TEMPERATURE WARNING LAMP

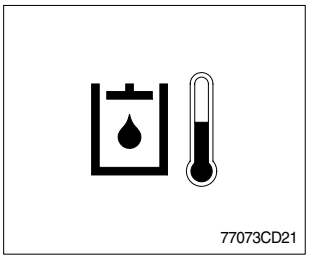

(1) This warning lamp operates and the buzzer sounds when the temperature of hydraulic oil is over 105° C(221° F).

(2) Check the hydraulic oil level when the lamp is turned ON.

(3) Check for debris between oil cooler and radiator.

20) BATTERY CHARGING WARNING LAMP

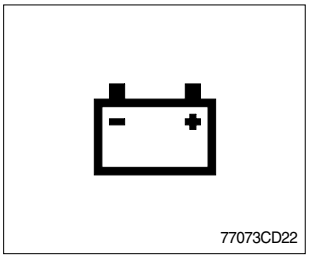

(1) This lamp is ON when key ON, it is turned OFF after starting the engine.

(2) Check the battery charging circuit when this lamp comes ON, during engine operation.

21) FUEL LOW LEVEL WARNING LAMP

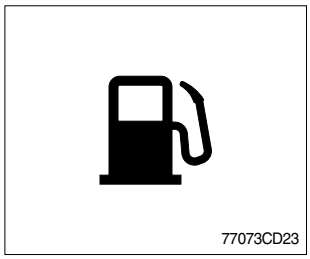

(1) Fill the fuel immediately when the lamp is turned ON.

22) SEAT BELT WARNING LAMP

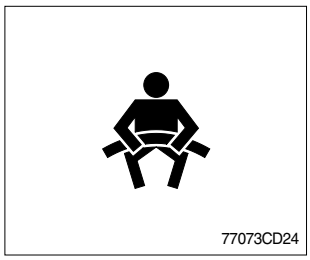

(1) This lamp lights ON for the first five seconds after starting the machine.

23) STEERING WARNING LAMP(Option)

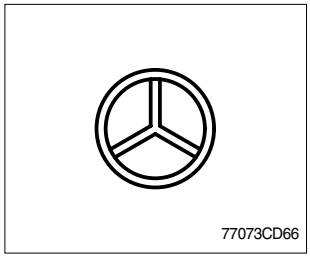

(1) Primary

If the oil pressure in the steering pump drops, the lamp will light up. If this lamp flashes during operation, the action alarm should sound.

※ **If the lamp lights up, immediately pull the machine to a safe place and stop the machine.**

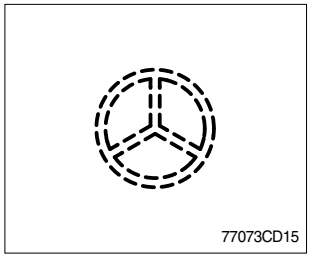

(2) Emergency

This lamp will flash if the oil pressure in the emergency steering pump drops. The lamp notifies the operator that if the steering system also failed at this time, there is no emergency steering system for backup.

※ **Immediately pull the machine to a convenient stop and stop the engine.**

※ **This machine is equipped with ground driven emergency steering pump. It is normal for the lamp to flash after 5 seconds when the machine is stopped.**

24) LCD [Machine serial no. ; HL740-7(-#0974),HL740TM-7(-#0348)]

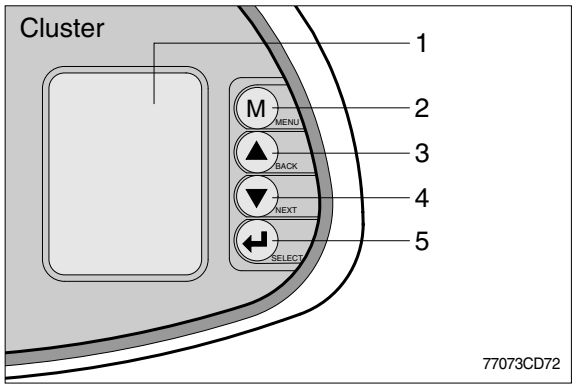

1 ( ) LCD
2 (M) MENU
- Display main menu
- Return to the normal display
3 (▲) BACK
Return to the previous menu
4 (▼) NEXT
Move to the next selection
5 (↵) SELECT
Activate the currently chosen item

(1) Normal display

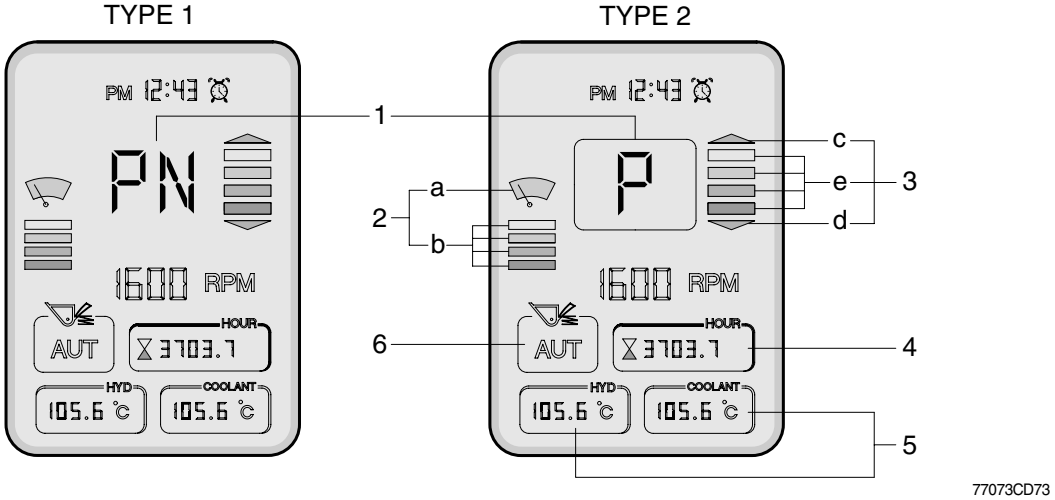

No	Symbol	Meaning	Remark	
1	△, ▽, □	Forward, reverse, neutral	LCD type 1, Display during AEB mode	
	F, R, N	Forward, reverse, neutral	LCD type 2, Display during AEB mode	
	1, 2, 3, 4	Actual gear	-	
	P	Parking brake mode active	-	
2	a	Wiper motor intermittently operating	-	
	b	When operating intermittently, it shows an operating time interval.	-	
3	c, d	Up and down shifting	c : Forward, d : Reverse	Automatic mode
	e	Pre-selected gear	-	
4	HOUR 3703.7	Hour meter	Display the total operation hours of the machine	
5	COOLANT 105.6 ℃	Engine coolant temperature	Display in accordance with selected items	
6 (Option)	AUT	Ride control mode active	Ride control switch AUTO position,see page7-36-4	
	ON	Ride control mode active	Ride control switch ON position, see page7-36-4	
	OFF	Ride control mode turn off	Ride control switch MIDDLE position,see page7-36-4	

※ Both type1 and type2 are LCD modes and they can be changed each other by operator's selection.

(2) Display map

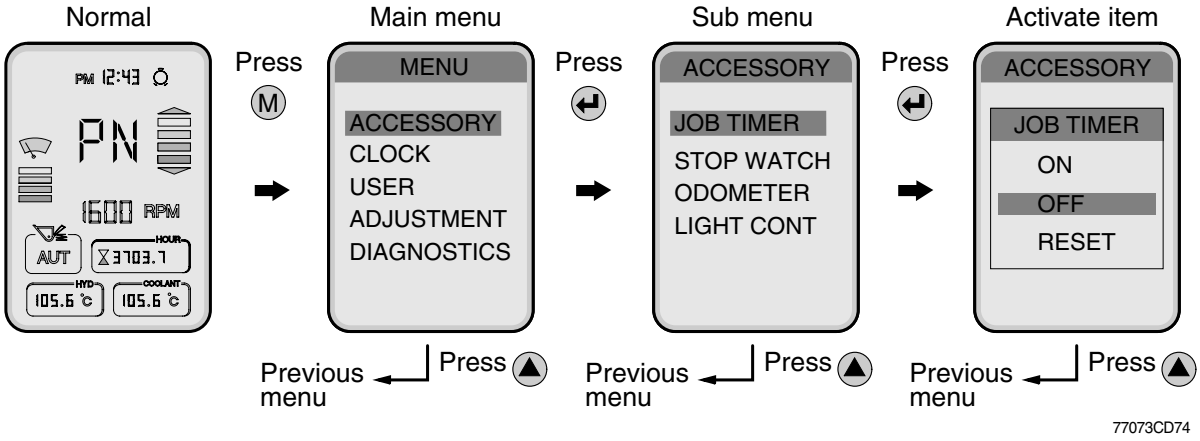

Main group	Sub group		Meaning	Display on LCD
Accessory	Job timer		· Measure the various job time. · Press ↵ : Display ON, OFF or RESET	JOB HOUR 37.5
	Stop watch		· Measures time in seconds. · Press ↵ : Start. Press ↵ again : Stop.	-
	Odometer	Latest	· Distance until recent times.	LATEST-DIS 30.5 Km
		Total	· Total distance.	TOTAL-DIS 20.5 Km
	Light control		· Control of LCD display luminosity. · Brightness control : ▲ , ▼ .	-
Clock	Time set		· When 12H or 24H is selected, the current hour appears. · ▲ , ▼ : input, ↵ : setting.	PM 12:43
	Clock ON/OFF		· ↵ : Clock display ON or OFF.	
	Alarm	1	· Alarm setting. It is possible to set 3 alarms. · Stop alarming : ↵ or buzzer stop switch.	
		2		
		3		
User	Alternate idle		· Raise the idle rpm to 1200rpm automatically to warm up the engine.	-
	Auto 1/2	Mode 1 (1st-4th)	· Automatic travelling speed is applied from 1st to 4th gear.	-
		Mode 2 (2nd-4th)	· Automatic travelling speed is applied from 2nd to 4th gear.	-
	Quick shift	Mode 1 (Down/Up)	· Press button once : Shift down, press button again ; shift up.	-
		Mode 2 (Down)	· Press button every time : Shift to lower gear respectively.	-
	Aux-sw	Auto Select	· ON : Transmission auto condition. · OFF : Transmission semi-auto condition.	
		Clutch Cut-off	· ON : Clutch cut-off is activated. · OFF : Clutch cut-off is cancelled.	-

Main group	Sub group		Meaning	Display on LCD display
Adjustment	Unit		· Choose between metric and inch unit display.	TOTAL-DIS 20.5 Km / TOTAL-DIS 12.7 Mile
	Wiper Intermittence		· When using the intermittent function of wiper motor, it regulates operation time.	
	Alternate RPM		· Regulate idle rpm. · Press ▲ , ▼ : Adjust idle rpm increments (or decrement) by 25rpm.	-
	Pulse		· Press ↵ : Modification.	-
	AEB		· It controls the disk interval of the transmission, automatically.	-
	ENG/KOR		· English : Display in English. · Korean : Display in Korean.	-
	Display 1/2		· Type 1 : Indicate with the symbol. · Type 2 : Indicate with a letter.	PN , P
Diagnostics	Machine	Fault Code	· Error code display. · Refer to page 7-31.	-
		Monitor	· Hydraulic temperature and battery voltage display. · Press ↵ : Display ON or OFF.	HYD 100.6 ℃ / BATT-VOLT 27.5 v
	Engine	Fault Code	· Error code display. · Consult a Hyundai dealer to error code.	-
		Monitor	· Engine coolant temperature display. · Press ↵ : Display ON or OFF.	COOLANT 57.6 ℃
	Transmis-sion	Fault Code	· Error code display. · Consult a Hyundai dealer to error code.	-
		Monitor	Transmission oil temperature display. · Press ↵ : Display ON or OFF.	OIL TEMP 37.5 °F

(3) Machine fault code

When selecting the fault code menu, it shows all of the fault codes which mean abnormal conditions of present time.

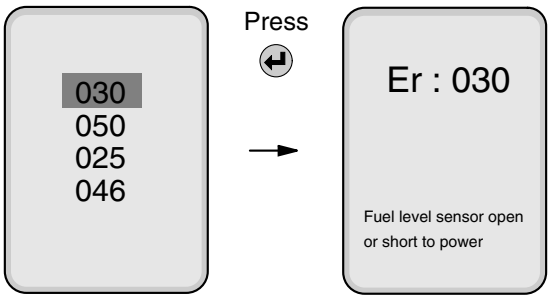

77073CD60

※ To go out from fault explanation window, press ▲ button.
(Press ↵ , M to go out to first menu.)

※ **No error** will be indicated in case that there's no fault.

Description	Code	Meaning	Remark
Electrical system	010	Power input voltage low	Below 18V
	011	Power input voltage high	Above 38V
	012	Alternator voltage low	Below 5V
	013	Alternator voltage high	Above 36V
	014	Buzzer circuit open or short to ground	
	015	Buzzer circuit short to power	
Hydraulic system	020	Hydraulic oil temperature sensor open or short to power	
	021	Hydraulic oil temperature sensor short to ground	
Engine system	030	Fuel level sensor open or short to power	
	031	Fuel level sensor short to ground	
	034	Cooling fan driving valve open or short to ground	
	035	Cooling fan driving valve short to power	
T/M system	050	Auto select switch supply power open or short to power	
	051	Auto select switch supply power short to ground	
	052	Clutch cutoff supply power open or short to power	
	053	Clutch cutoff supply power short to ground	
Steering system	060	Emergency steering relay open or short to ground	Option
	061	Emergency steering relay short to power	Option
Communication	070	MCU communication error	
	071	TCU communication error	
	072	ECM communication error	

MCU : Machine control unit TCU : Transmission control unit ECM : Engine control module

LCD [Machine serial no. ; HL740-7(#0975-),HL740TM-7(#0349-)]

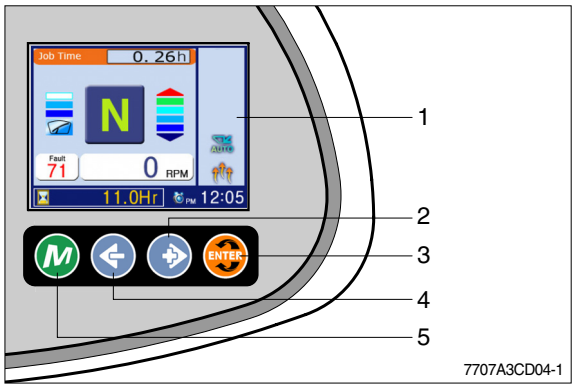

1 LCD
2 ( ) Right
Move to the next selection
3 ( ) Select(Enter)
Activate the currently chosen item
4 ( ) Escape
Return to the previous menu
5 ( ) Main, Menu
- Display menu
- Return to the main display

(1) Main display

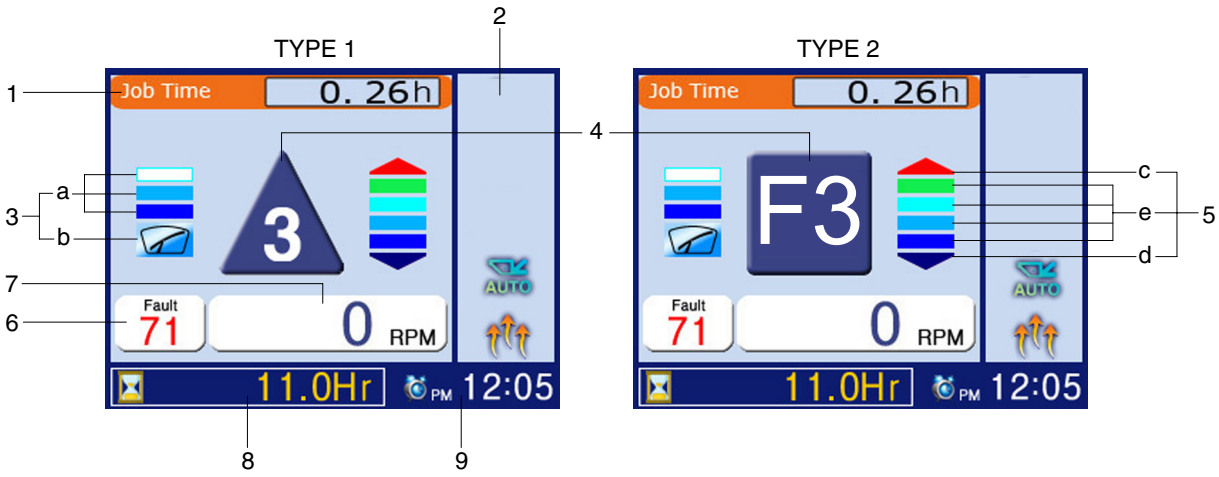

7707A3CD10-1

No	Symbol	Meaning	Remark		
1	Job Time 1.26h	Monitoring information	Job timer, Odometer, Hydraulic temperature, Battery voltage, Coolant temperature, T/M oil temperature.		
2	AUTO	State information	Ride state(option), Warming up		
3	a	Wiper display	When operating intermittently, it shows an operating time interval		
	b		Wiper motor intermittently operating		
4	△, ▽, □	Actual gear display	Forward, reverse, neutral	LCD type 1	
	F, R, N		Forward, reverse, neutral	LCD type 2	
	1, 2, 3, 4		Actual gear		
	P		Parking brake mode active		
5	c, d	Select gear display	Up and down shifting	c: Forward, d: Reverse	Automatic mode
	e		Pre-selected gear		
6	Fault 71	Fault code display	Fault code state display		
7	0 RPM	Engine rpm display	Now engine rpm state display		
8	11.0Hr	Hour meter display	Hour meter state display		
9	PM 12:05	Timer & alarm display	Now time & alarm state display		

※ Both type1 and type2 are LCD modes and they can be changed each other by operator's selection. (Adjustment/Display, see page 7-34)

(2) Display map

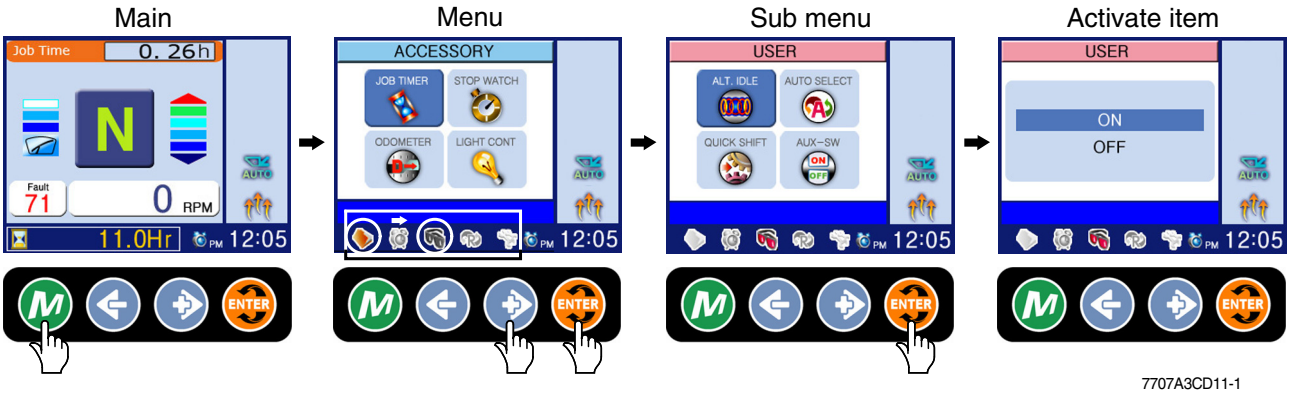

7707A3CD11-1

Main group	Sub group		Meaning	Display on LCD
Accessory	Job timer		· Measure the various job time. · Press ENTER : Display ON, OFF or RESET	Job Time 1.26h
	Stop watch		· Measures time in seconds. · Press ENTER : Start. Press ENTER again : Stop.	-
	Odometer	Latest	· Distance until recent times.	Latest 20.5 Km
		Total	· Total distance.	Total 30.5 Km
	Light control		· Control of LCD display luminosity. · Brightness control : ◀ ▶ .	-
Clock	Time set		· When 12H or 24H is selected, the current hour appears. · ▶ : input, ENTER : setting.	PM 22:05
	Clock ON/OFF		· ENTER : Clock display ON or OFF.	
	Alarm	1	· Alarm setting. It is possible to set 3 alarms. · Stop alarming : ▶	
		2		
		3		
User	Alternate idle	ON	· Raise the idle rpm to 1200rpm automatically to warm up the engine.	-
		OFF		
	Auto select	Mode 1 (1st-4th)	· Automatic travelling speed is applied from 1st to 4th gear.	-
		Mode 2 (2nd-4th)	· Automatic travelling speed is applied from 2nd to 4th gear.	-
	Quick shift	Mode 1 (Down/Up)	· Press button once : Shift down, press button again ; shift up.	-
		Mode 2 (Down only)	· Press button every time : Shift to lower gear respectively.	-
	Aux-sw	Auto select	· ON : Transmission auto condition. · OFF : Transmission semi-auto condition.	
		Clutch cut-off	· ON : Clutch cut-off is activated. · OFF : Clutch cut-off is cancelled.	-

Main group	Sub group		Meaning	Display on LCD
Adjustment	Unit	MKS ENG	· Choose between metric and inch unit display.	Total 50.7 Km Total 31.5 Mile
	Wiper Intermittence		· When using the intermittent function of wiper motor, it regulates operation time.	
	Alternate RPM		· Regulate idle rpm. · Press : Adjust idle rpm increments (or decrement) by 25rpm.	-
	Pulse		· Press : Modification.	-
	AEB		· It controls the disk interval of the transmission, automatically.	ST
	Model		· It is set at the factory, so there's no need to change.	-
	ENG/KOR		· English : Display in English. · Korean : Display in Korean.	-
	Display 1/2		· Type 1 : Indicate with the symbol. · Type 2 : Indicate with a letter.	3, F3
Diagnostics	Machine	Fault code	· Error code display. · Refer to page 7-35.	-
		Monitor	· Hydraulic temperature and battery voltage display. · Press : Display ON or OFF.	HYD temp 100.6℃ Bat Volt 27.5 V
	Engine	Fault code	· Error code display. · Consult a Hyundai dealer to error code.	-
		Monitor	· Engine coolant temperature display. · Press : Display ON or OFF.	Coolant Temp 57.6℃
	Transmis-sion	Fault code	· Error code display. · Consult a Hyundai dealer to error code.	-
		Monitor	Transmission oil temperature display. · Press : Display ON or OFF.	Oil Temp 37.6℃
	Version		· Display the controller(MCU) and cluster version.	-

(3) Machine fault code

When selecting the fault code menu, it shows all of the fault codes which mean abnormal conditions of present time.

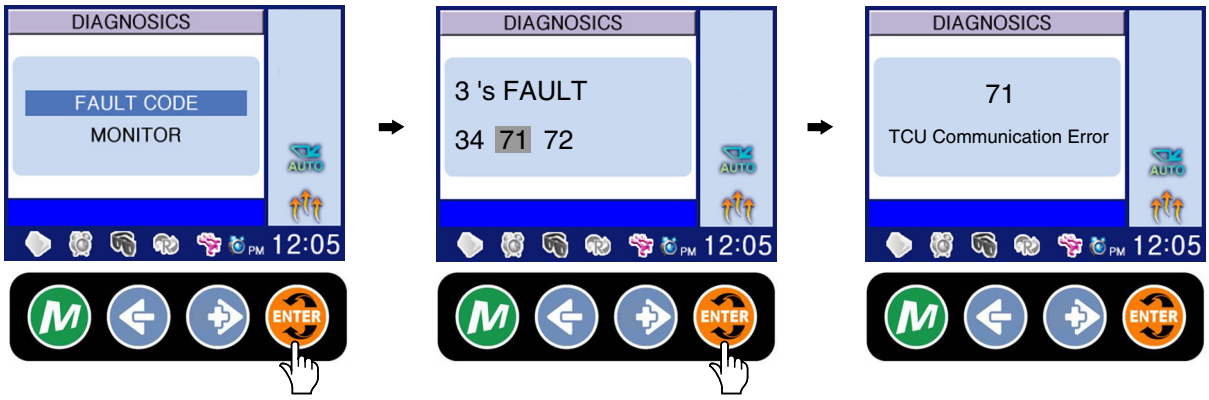

7707A3CD36-1

※ To go out from fault explanation window, press ← button.
(Press ENTER , M to go out to main.)

※ **No error** will be indicated in case that there's no fault.

Description	Code	Meaning	Remark
Electrical system	010	Power input voltage low	Below 18V
	011	Power input voltage high	Above 38V
	012	Alternator voltage low	Below 5V
	013	Alternator voltage high	Above 36V
	014	Buzzer circuit open or short to ground	
	015	Buzzer circuit short to power	
Hydraulic system	020	Hydraulic oil temperature sensor open or short to power	
	021	Hydraulic oil temperature sensor short to ground	
Engine system	030	Fuel level sensor open or short to power	
	031	Fuel level sensor short to ground	
	034	Cooling fan driving valve open or short to ground	
	035	Cooling fan driving valve short to power	
T/M system	050	Auto select switch supply power open or short to power	
	051	Auto select switch supply power short to ground	
	052	Clutch cutoff supply power open or short to power	
	053	Clutch cutoff supply power short to ground	
Steering system	060	Emergency steering relay open or short to ground	Option
	061	Emergency steering relay short to power	Option
Communication	070	MCU communication error	
	071	TCU communication error	
	072	ECM communication error	

MCU : Machine control unit TCU : Transmission control unit ECM : Engine control module

(4) Transmission warning

Symbol	Meaning	Remarks
LF, LR	Limp home gear	-
F/R/△/▽ flashing	Direction F or R selected while turbine speed is too high, CAUTION gear will engage if turbine speed drops	-
	Oil temperature too low, no gear available	Warm up engine / transmission
WS	Warning sump temperature	Changes between actual gear/direction while driving, in neutral only displayed if no fault is detected
WT	Warning torque converter temperature	Changes between actual gear/direction while driving, in neutral only displayed if no fault is detected
WE	Warning high engine speed	Changes between actual gear/direction while driving, in neutral only displayed if no fault is detected

2. SWITCHES

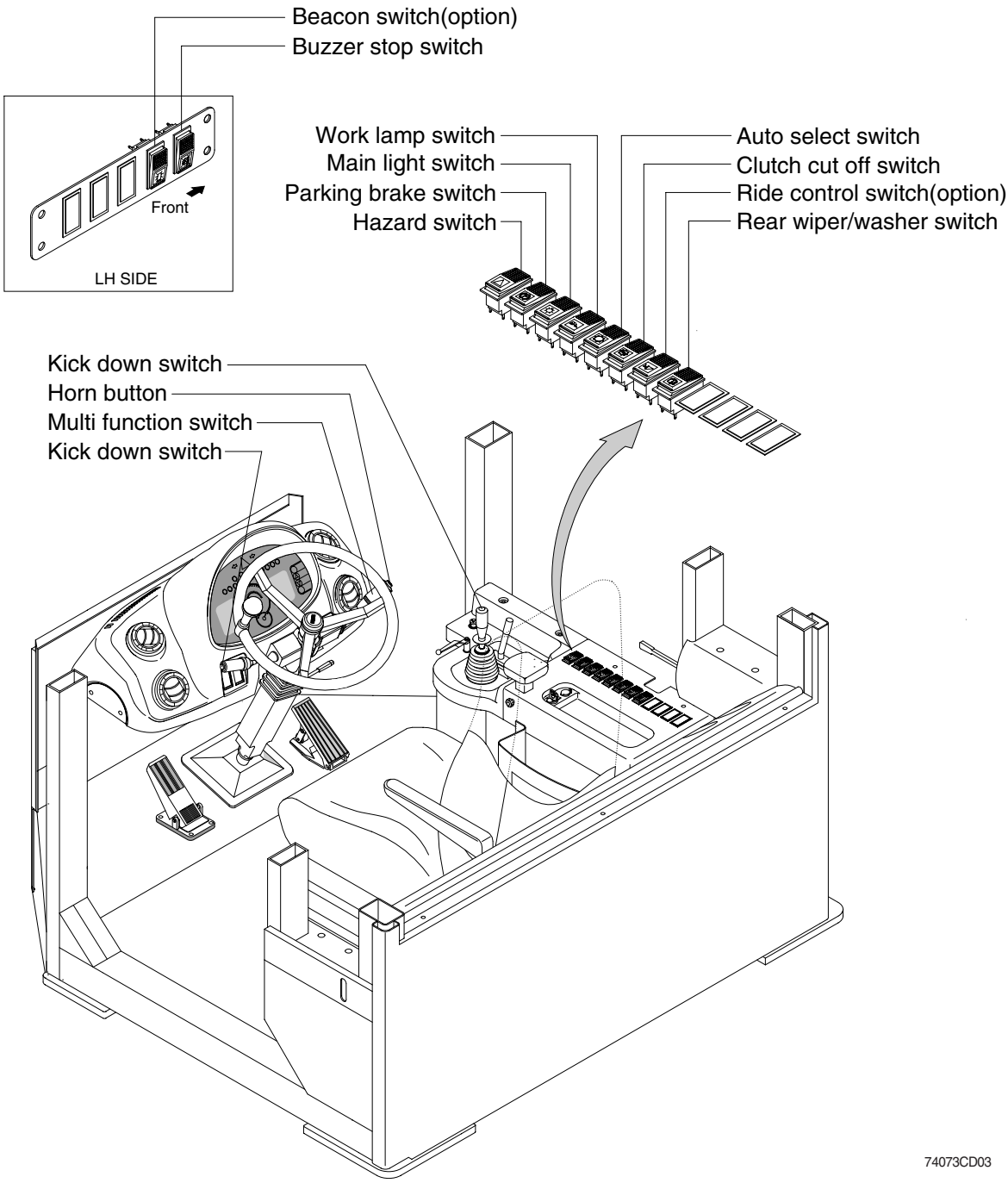

1) STARTING SWITCH

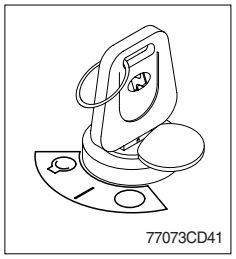

(1) There are three positions, OFF, ON and START.

- ◯ (OFF) : None of electrical circuits activate.
- | (ON) : All the systems of machine operate.
- ◯ (START) : Use when starting the engine.
  Release key immediately after starting.

※ **Key must be in the ON position with engine running maintain electrical and hydraulic function and prevent serious machine damage.**

2) HAZARD SWITCH

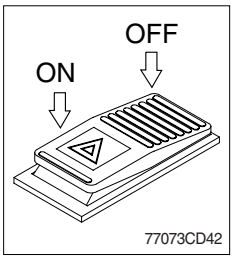

(1) Use for parking, or roading machine.

※ **If the switch is left ON for a long time, the battery may be discharged.**

3) CLUTCH CUT OFF SWITCH

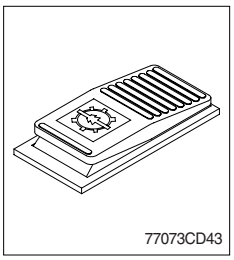

(1) This switch is pressed, it will cut off the clutch when brake operates.

※ **Be careful not to use this switch when driving on a slope.**

(2) When the switch failure occurs, it will be able to operate a clutch off function from LCD.

※ **Refer to page 7-33.**

4) PARKING BRAKE SWITCH

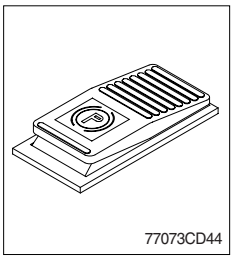

(1) This switch is pressed, the parking brake will start to operate and the gauge panel warning lamp will comes ON.

※ **When operating the gear selector lever, be sure to release the parking brake. If the machine is operated with the parking brake engaged, the brake will overheat and may cause the brake system to go out of order.**

5) MAIN LIGHT SWITCH

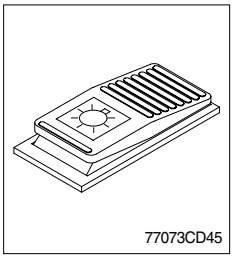

(1) This switch use to operates the clearance lamp and head light by two step.

- First step : Clearance lamp and cluster illumination lamp comes ON. Also, all indicator lamp of switches come ON.
- Second step : Head light comes ON.

6) WORK LAMP SWITCH

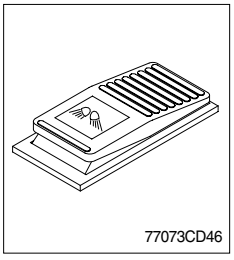

(1) This switch use to operates the front and rear work lamps by two step.

- First step : Front work lamp located on the cab comes ON.
- Second step : Rear work lamp located on the cab comes ON.

7) REAR WIPER AND WASHER SWITCH

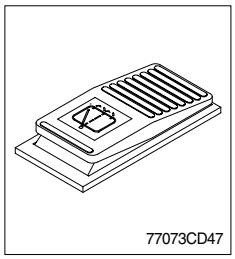

(1) The switch use to operates the rear wiper and washer by two step.
- First step : The rear wiper operates.
- Second step : The washer liquid is sprayed and the rear wiper is operated only while pressing. If release the switch, return to the first step position.

8) BUZZER STOP SWITCH

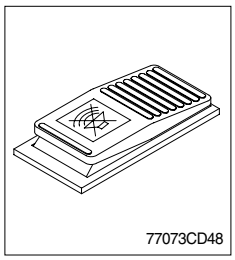

(1) The red lamp on the cluster lights ON and the buzzer sounds when the machine has a problem.
In this case, if the switch is pressed, the buzzer will be stopped. Be sure to check machine for problems.

(2) Wait until the lamp is turned OFF, if the red lamp lights ON after the buzzer stopped.
If not, stop engine and check the system which the lamp is ON.

9) AUTO SELECT SWITCH

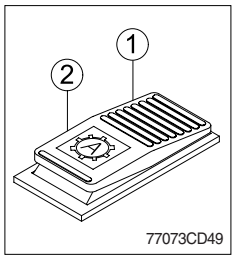

(1) Manual mode(①)

Press the top of the switch for the manual mode of the autoshift function. The operator selects the desired speed and the desired direction in the manual mode with the gear selector lever.

(2) Automatic mode(②)

Press the bottom of the switch for the autoshift function in the automatic mode. Press the bottom of the switch prior to shifting the transmission into forward or reverse in order to activate the autoshift function.

※ **The operator can select two kinds of auto matic modes.**
(1st ↔ 4th, 2nd ↔ 4th)

※ **When the switch failure occurs, it will be able to operate a auto select function from LCD.**

※ **Refer to page 7-33.**

10) BEACON SWITCH (Option)

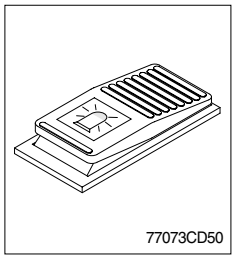

(1) This switch turns ON the rotary light on the cab.

11) RIDE CONTROL SWITCH (Option)

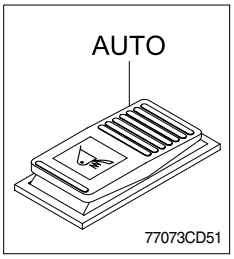

(1) AUTO position

Push in the top of the ride control switch in order to turn on the automatic ride control. The automatic ride control automatically turns on when the travel speed exceeds a preset speed of approximately 9.5km/h. The automatic ride control automatically shuts off during low speed 8km/h travel mode.

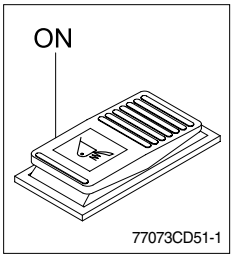

(2) ON position

Push in the bottom of the ride control switch in order to turn on the system for ride control regardless speed. The ride control will smooth the ride of the machine during travel.

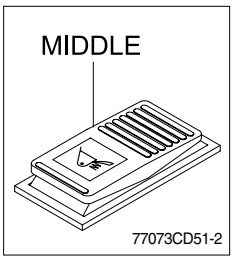

(3) MIDDLE position

Push the ride control switch to the middle position in order to turn off the system for the ride control.

12) HORN BUTTON

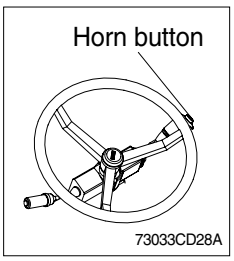

(1) If you press the button on the top of the multifunction switch, the horn will sound.

13) CAB LAMP SWITCH

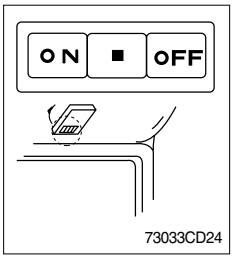

(1) This switch turns ON the cab room lamp.

14) KICK DOWN SWITCH

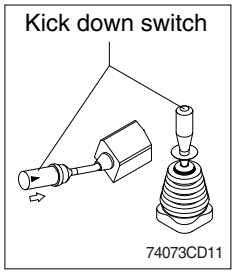

(1) Manual mode

It is effective 2nd speed to 1st speed only and recover to 2nd speed quickly when push the switch one more time.

(2) Automatic mode

① Mode 1(Down/Up)
It shifts down quickly from current gear to one step lower speed by pushing the switch and recover to original speed quickly when push the switch one more time.

② Mode 2(Down)
It shifts down from current gear to one step lower speed when push the switch everytime.

※ **Refer to page 7-29,33**.

15) MULTI FUNCTION SWITCH

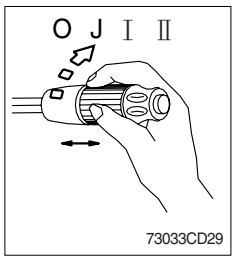

(1) Front wiper and washer switch

① When the switch is in **J** position, the wiper moves intermittently.
② When placed in Ⅰ or Ⅱ position, the wiper moves continuously.
③ If you push the grip of the lever, washer liquid will be sprayed and the wiper will be activated 2-3 times.

※ **Check the quantity of washer liquid in the tank. If the level of the washer liquid is LOW, add the washer liquid (In cold, winter days) or water. The capacity of the tank is 1 liter.**

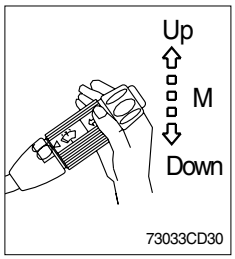

(2) Dimmer switch

① This switch is used to turn the head lights direction.
② Switch positions
- Up : To flash for passing
- Middle : Head lights low beam ON
- Down : Head lights high beam ON

③ If you release the switch when it's in up position, the switch will return to middle.

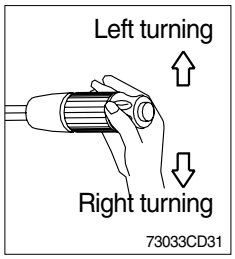

(3) Turning switch

① This switch is used to warn or signal the turning direction of the machine to other vehicles or equipment.
② Push the lever up for turning left, pull the lever down for turning right.

GROUP 4 ELECTRICAL COMPONENT SPECIFICATION

Part name	Symbol	Specifications	Check
Battery		12V × 100Ah (2EA)	※ Check specific gravity 1.280 over : Over charged 1.280 ~ 1.250 : Normal 1.250 below : Recharging
Battery relay	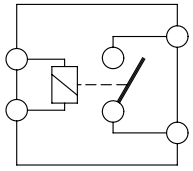 CR-1	Rated load : 24V 100A(Continuity) 1000A(30seconds)	※ Check coil resistance Normal : About 50Ω ※ Check contact Normal : ∞Ω
Fusible link	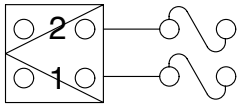 CN-60	24V 60A	※ Check disconnection Normal : 0Ω (Connect ring terminal and check resistance between terminal 1 and 2)
Start key	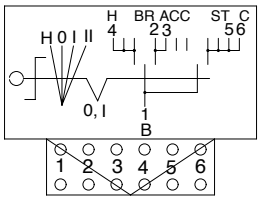 CS-2	-	※ Check contact OFF : ∞Ω(For each terminal) ON : 0Ω(For terminal 1-3) ∞Ω(For terminal 1-5) START : 0Ω(For terminal 1-3 and 1-5)
Pressure switch	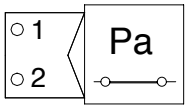 CD-3 CD-26 CD-39 CD-41	N.C TYPE	※ Check contact Normal : 0Ω(CLOSE)
Pressure switch	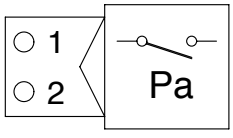 CD-4 CD-40 CD-5 CD-52	N.O TYPE	※ Check contact Normal : ∞Ω(OPEN)

Part name	Symbol	Specifications	Check
Solenoid valve	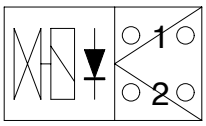 CN-137	24V 1A	※ Check resistance Normal : 15~25Ω (For terminal 1-2)
Air cleaner pressure switch	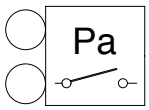 CD-10	Pressure : 635㎜H_2O (N.O TYPE)	※ Check contact Normal : ∞Ω
Parking solenoid	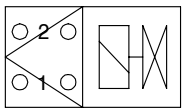 CN-71 CN-136	24V 1.2A	※ Check LED lamp ※ Check Resistance About 24Ω
Fuel sender	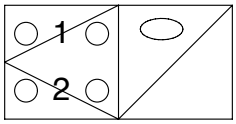 CD-2	Reed switch : Magnetic type	※ Check resistance Full : About 30Ω Low level : About 300Ω
Relay (4pin)	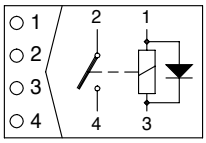 AC RY(H1) AC RY(M2) CR-35 CR-42 CR-3 CR-6 CR-7 CR-46 CR-2 CR-30	24V 20A	※ Check resistance Normal : About 200Ω (For terminal 1-3) : ∞Ω (For terminal 2-4)
Relay (5pin)	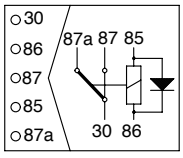 CR-4 CR-5 CR-26 CR-40 CR-41	24V 20A	※ Check resistance Normal : About 160Ω (For terminal 2-6) : 0Ω (For terminal 1-3) : ∞Ω (For terminal 1-3)

Part name	Symbol	Specifications	Check
Proximate switch	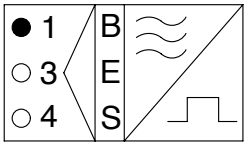 CN-100 CN-101	24V 400mA	
Hydraulic temperature	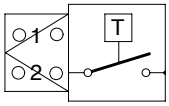 CD-1		※ Check resistance Normal : ∞Ω 105。C over : 0Ω
Aircon resistor	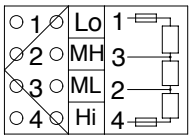		※ Check contact Normal 1.12Ω : (For terminal 2-4) 2.07Ω : (For terminal 3-4) 3.17Ω : (For terminal 4-1)
Speaker	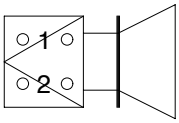 CN-23(LH) CN-24(RH)	4Ω 20W	※ Check resistance Normal : 50Ω
Switch (Locking type)	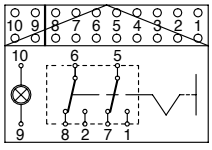 CS-17 CS-23 CS-34 CS-41 CS-42 CS-51 CS-50	24V 8A	※ Check contact OFF : ∞Ω (for terminal 1-5, 2-6) : 0Ω (for terminal 5-7, 6-8)
Switch (Non-locking type)	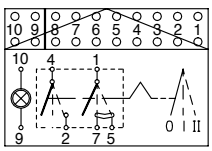 CS-3 CS-20 CS-39	24V 8A	※ Check contact OFF : ∞Ω (for terminal 2-4, 1-7)

Part name	Symbol	Specifications	Check
Work lamp, Room lamp, Number plate lamp	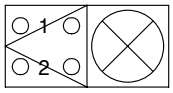 CL-1 CL-6 CL-22 CL-5 CL-21 CL-23 CL-24 CL-25 CL-30 CL-32 CL-33 CL-35 CL-36	Work lamp 24V 70W Number plate lamp Room lamp 24V 10W	※ Check disconnection Normal : A few Ω
Beacon lamp	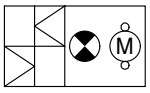 CL-7	24V 70W (H1 TYPE)	※ Check disconnection Normal : A few Ω
DC/DC Converter	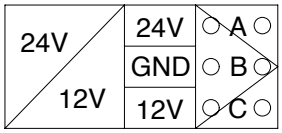 CN-138	12V 3A	※24V (A-B) 12V (B-C)
Horn	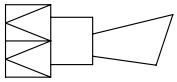 CN-20 CN-25	22-28V 2A 110dB	※ Check operation Supply power(24V) to each terminal and connect ground
Receiver dryer	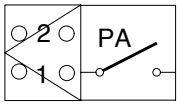 CN-29	24V 2.5A	※ Check contact Normal : ∞Ω
Cassette radio	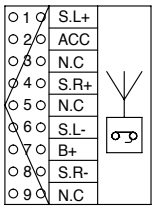 CN-27	24V 20W+20W	※ Check resistance Power ON : 4Ω+4Ω (for terminal 1-6, 4-8)

Part name	Symbol	Specifications	Check
Back up buzzer	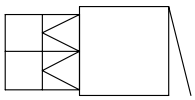 CN-65	24V 0.5A 110dB	-
Washer pump	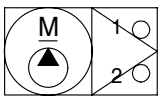 CN-103 CN-22	24V 2.5A	※ Check contact Normal : 26.4 Ω (for terminal 1-2)
Wiper motor	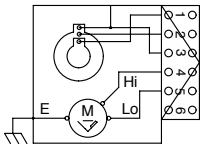 CN-102 CN-21	24V 1.5A 2-speed Auto parking	-
Cigar lighter	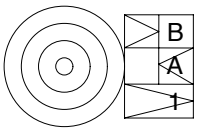 CL-2	24V 5A	-
Alternator	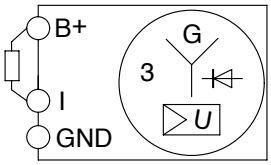 CN-74	24V 70A	※ Check voltage Normal : 24~28V
Starter	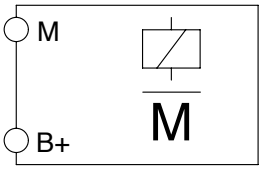 CN-45	Nippandenso 228000-7902 24V	※ Operating or not

Part name	Symbol	Specifications	Check
Aircon compressor	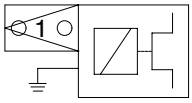 CN-28	24V 79W	※ Check contact Normal : 13.4Ω
Start relay	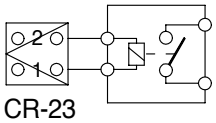 CR-23	24V 200A	※ Check contact Normal : 11.3Ω
Blower	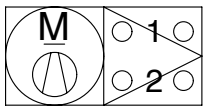	24V 9A 2900±150rpm	-
Duct sensor	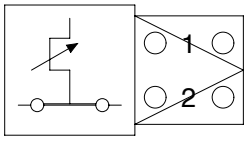	1。C OFF 4。C ON	※ Check resistance Normal : 0 Ω (for terminal 1-2), the atmosphere temp: over 4。C
Door switch	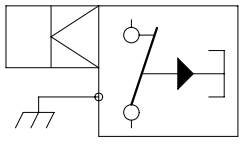 CS-1 CS-55	24V 2W	※ Check resistance Normal : About 5MΩ
Flasher unit	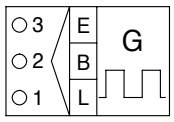 CR-11	24V 85 ~ 190 C/M 50dB	-

Part name	Symbol	Specifications	Check
Head lamp	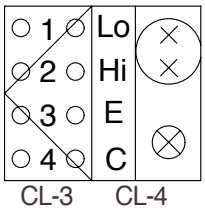	24V 75W/70W (H4 TYPE) 24V 4W (T4W)	※ Check disconnection Normal : A few Ω
Combi lamp	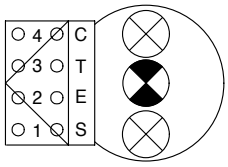	24V 5W (R5W) 2×24V 21W (P21W)	-
Turn lamp	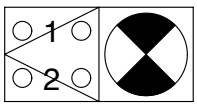	24V 21W (P21W)	-
Master switch	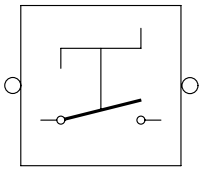	Continuous capacity : 180Amp Push in capacity : 1000Amp	-
Warning buzzer	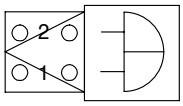	24V 200mA 90±5dB(ℓm)	-
Joy stick lever	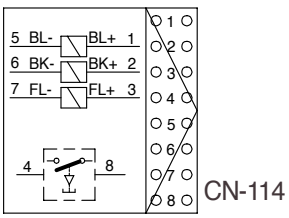	-	※ Check contact Normal : 80~90Ω (For terminal 1-5, 2-6 3-7,) : ∞Ω (For terminal 4-8)

GROUP 5 CONNECTORS

1. CONNECTOR DESTINATION

Connector number	Type	No. of pin	Destination	Connector part No.	
				Female	Male
CN-1	58	2	I/conn(Main harness-Frame harness)	S813-030200	S813-130200
CN-2	AMP	15	I/conn(Frame harness-Main harness)	2-85262-1	368301-1
CN-3	AMP	15	I/conn(Main harness-Frame harness)	2-85262-1	368301-1
CN-4	SWP	12	I/conn(Frame harness-Engine harness)	S816-012002	S816-112002
CN-5	AMP	15	I/conn(Main harness-Cab harness)	2-85262-1	368301-1
CN-6	AMP	15	I/conn(Main harness-Frame harness)	2-85262-1	368301-1
CN-7	AMP	14	I/conn(Cab front harness-main harness)	S814-014000	S814-114000
CN-8	SWP	12	I/conn(Main harness-Front harness)	S816-012002	S816-112002
CN-10	SWP	12	I/conn(Front harness-Main harness)	S816-012002	S816-112002
CN-11	DEUTSCH	8	I/conn(Main harness-Aircon harness)	DT06-8S	-
CN-12	AMP	15	I/conn(Frame harness-Engine harness)	2-85262-1	368301-1
CN-14	AMP	15	I/conn(Frame harness-Main harness)	2-85262-1	368301-1
CN-19	AMP	12	I/conn(Cab front harness-main harness)	S814-012000	S814-112000
CN-20	Molex	2	Horn	36825-0211	-
CN-21	HW090 sealed	6	Front wiper motor	6189-01330	-
CN-22	SWP	2	Front washer tank	S814-002000	-
CN-23	YAZAK1	2	Speaker(LH)	7123-1520	-
CN-24	YAZAK1	2	Speaker(RH)	7123-1520	-
CN-25	Molex	2	Horn	36825-0211	-
CN-26	250	2	Warning buzzer	S810-002202	-
CN-27	PA	9	Cassette and radio	S811-009003	-
CN-28	-	1	Comp(Air-con)	NMWP01F-B	-
CN-29	KET	2	Receiver drier	MG640795	-
CN-45	Ring term	-	Starter	S820-414000	-
CN-51	AMP	20	Cluster	174047-2	-
CN-52	AMP	68	T/M Control unit	962175	-
CN-53	-	6	Diagnostic	-	1-408705-0
CN-58	Econo seal III	36	Controller	344111-1	-
CN-60	58	2	Fusible link	-	S813-130200
CN-65	J	2	Back up buzzer	DT06-2S	-
CN-71	J	2	Parking solenoid	DT06-2S	-
CN-74	Ring term	-	Alternator	S820-105000	-
CN-75	AMP	2	Fan clutch	85202-1	-
CN-83	KET	2	Aircon fan	MG651092	-

Connector number	Type	No. of pin	Destination	Connector part No.	
				Female	Male
CN-93	-	50	ECM	DRC26-50S-05	-
CN-96	PACKARD	2	Fuel heater	1530-0027	-
CN-100	Autonics	-	Boom kick out	21L6-20020	-
CN-101	Autonics	-	Bucket leveler	21L6-20020	-
CN-102	HW090 sealed	6	Rear wiper motor	6189-01330	-
CN-103	SWP	2	Rear washer tank	S814-002000	-
CN-110	-	2	Joystick	1-480698-0	-
CN-111	-	8	Joystick	S814-002000	-
CN-112	-	16	Gear box	21L7-60290	1201-0974
CN-114	-	6	Joystick	1-480704-0	-
CN-121	PACKARD	4	Gear shift lever	1201-0974	-
CN-122	PACKARD	4	Gear shift lever	-	1201-5797
CN-136	-	2	Ride control valve	DT06-2S-P012	-
CN-137	-	2	Ride control solenoid	DT06-2S-P012	DT04-2P
CN-138	DEUTSCH	3	DC/DC Converter	DT06-3S	-
CN-139	DEUTSCH	2	12V socket	-	DT04-2P
CN-144	J	6	Pedal	S816-006002	-
Relay					-
CR-1	Ring term	-	Battery relay	S820-104000	-
CR-2	250	4	Horn relay	S810-004202	-
CR-3	250	4	Front work lamp relay	S810-004202	-
CR-4	250	6	Wiper relay	S810-006202	-
CR-5	250	2	Safety relay	S810-006202	-
CR-6	250	4	Rear work lamp relay	S810-004202	-
CR-7	250	4	Aircon relay	S810-004202	-
CR-11	250	3	Flasher unit	S810-003702	-
CR-23	J	2	Start relay	-	S814-102001
CR-24	-	1	Preheater relay	S822-014000	
CR-30	250	4	Back-up relay	S810-004202	-
CR-35	250	4	Ride control relay	S810-004202	-
CR-42	250	4	Preheater relay	S810-004202	-
CR-46	250	4	Fuel warmer relay	S810-004202	-
Switch					-
CS-1	-	1	Door switch	S822-014004	-
CS-2	SWP	6	Start key switch	S814-006000	-
CS-3	SWF	10	Rear wiper switch	593757	-
CS-5	Shur	1	Horn switch	S822-014000	-

Connector number	Type	No. of pin	Destination	Connector part No.	
				Female	Male
CS-11	SWP	8	Multi function switch	S814-008000	-
CS-12	SWP	6	Multi function switch	S814-006000	-
CS-17	SWF	10	Parking switch	593757	-
CS-20	SWF	10	Work lamp switch	593757	-
CS-22	SWF	10	Beacon lamp switch	593757	-
CS-23	SWF	10	Beacon switch	593757	-
CS-34	SWF	10	Buzzer stop switch	593757	-
CS-39	SWF	10	Main light switch	593757	-
CS-41	SWF	10	Hazard switch	593757	-
CS-42	SWF	10	Clutch cut off switch	593757	-
CS-50	SWF	10	Ride control switch	593757	-
CS-51	SWF	10	Auto/manual switch	593757	-
CS-52	SWF	10	Attachment lock switch	593757	-
CS-53	SWF	10	Attachment unlock switch	593757	-
CS-55	-	1	Door switch	S822-014004	-
Light					
CL-1	-	2	Room lamp	MG610392	-
CL-2	250	3	Cigar lighter	S810-001202	-
CL-3	SWP	4	Head light(LH)	S814-004000	-
CL-4	SWP	4	Head light(RH)	S814-004000	-
CL-5	DEUTSCH	2	Work light(LH)	-	DT06-2S
CL-6	DEUTSCH	2	Work light(RH)	-	DT06-2S
CL-7	250	1	Beacon lamp	S810-001202	-
CL-15	SWP	4	Combi lamp(RR, LH)	S814-004000	-
CL-16	SWP	4	Combi lamp(RR, RH)	S814-004000	-
CL-21	-	1	Numberplate lamp	170183-2	-
CL-22	DEUTSCH	2	Work light(LH)	-	DT06-2S
CL-23	DEUTSCH	2	Work light(RH)	-	DT06-2S
CL-24	SWP	2	Turn lamp(LH)	S814-002000	-
CL-25	SWP	2	Turn lamp(RH)	S814-002000	-
Sensor, sender					
CD-1	AMP	2	Hydraulic oil temp sendor	85202-1	-
CD-2	SWP	2	Fuel sendor	S814-002000	-
CD-3	Rubber cap	-	Brake fail pressure switch	21EA-003100	-
CD-4	Rubber cap	-	Stop lamp pressure switch	21EA-003100	-
CD-5	Rubber cap	-	Clutch cut off pressure switch	21EA-003100	-
CD-10	Ring term	2	Air cleaner switch	S820-105000	-

Connector number	Type	No. of pin	Destination	Connector part No.	
				Female	Male
CD-15	AMP	2	Converter sensor	85202-1	-
CD-17	AMP	2	Engine pick-up sensor	85202-1	-
CD-26	Rubber cap	-	Parking pressure switch	21EA-003100	-
CD-27	AMP	2	Turbine pick up sensor	85202-1	-
CD-35	PACKARD	2	Fuel filter sensor	1204-0753	-
CD-39	Rubber cap	-	Steering pressure switch	21EA-00310	-
CD-40	Rubber cap	2	Steering pump pressure switch	21EA-00310	-
CD-50	AMP	2	Gear chain sensor	85202-1	-
CD-51	-	3	Output speed sensor	282087	-
CD-52	AMP	2	Oil filter	282080	-

2. CONNECTION TABLE FOR CONNECTORS

1) 58-L TYPE CONNECTOR

No. of pin	Receptacle connector(Female)	Plug connector(Male)
1	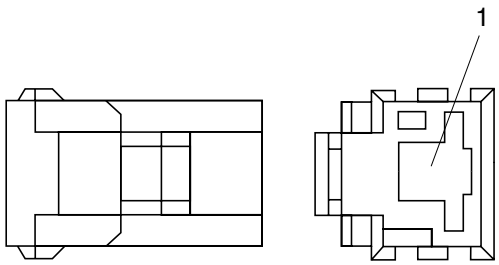 S813-030100	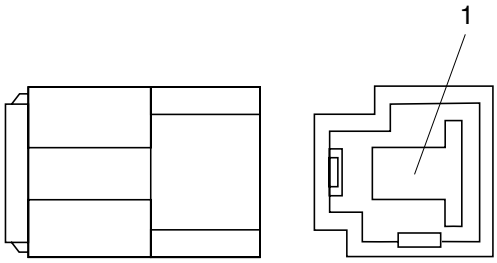 S813-130100
2	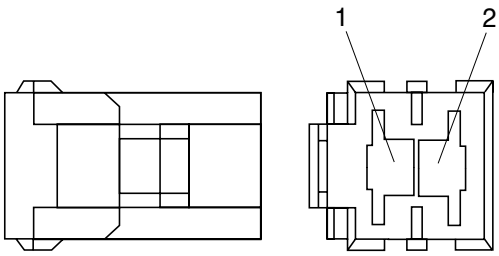 S813-030200	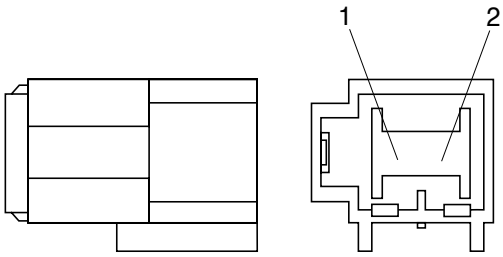 S813-130200

2) PA TYPE CONNECTOR

No. of pin	Receptacle connector(Female)	Plug connector(Male)
5	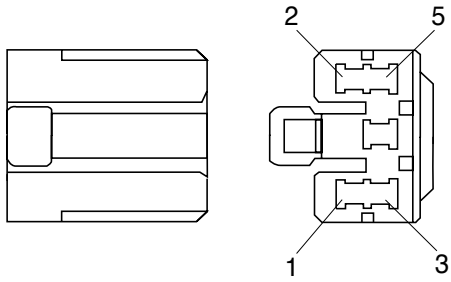 S811-005002	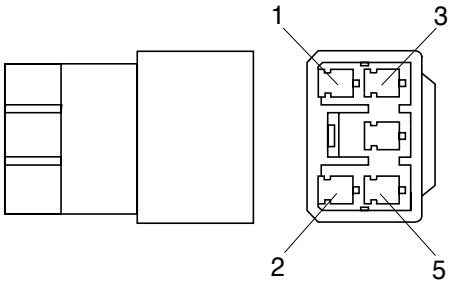 S811-105002
7	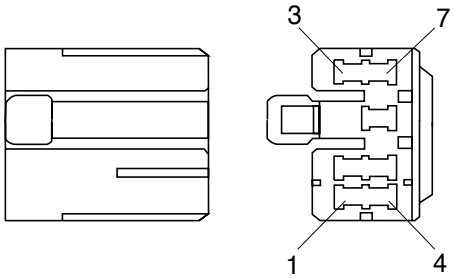 S811-007002	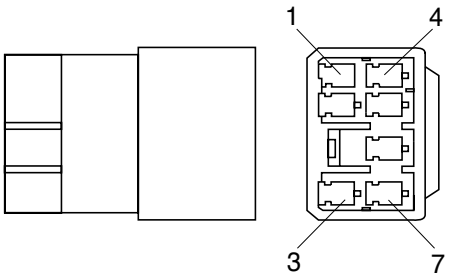 S811-107002
9	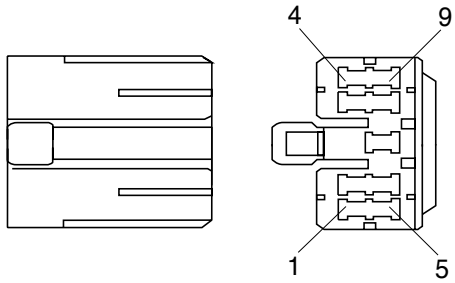 S811-009002	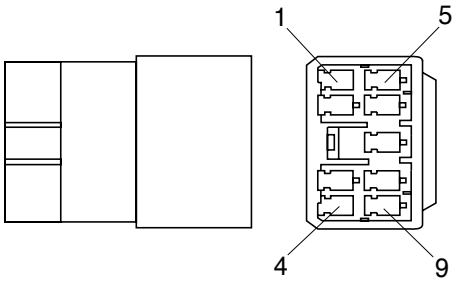 S811-109002
11	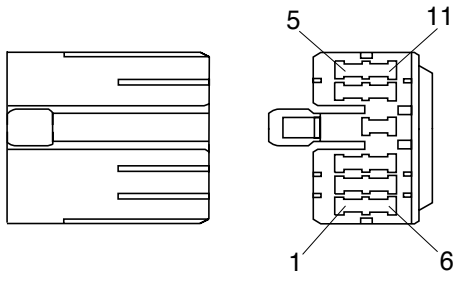 S811-011002	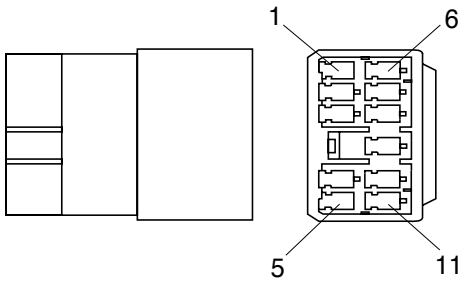 S811-111002

No. of pin	Receptacle connector(Female)	Plug connector(Male)
13	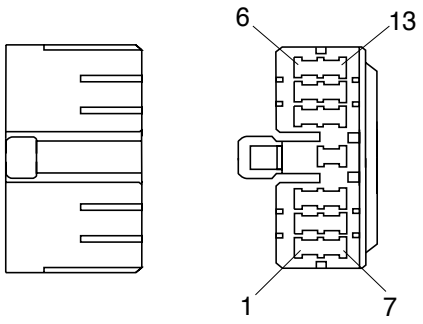 S811-013002	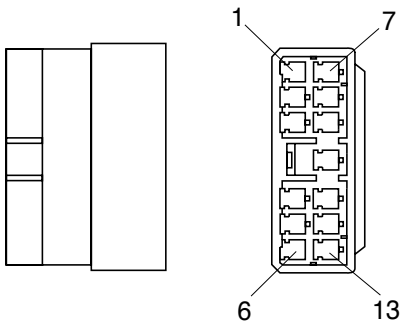 S811-113002
17	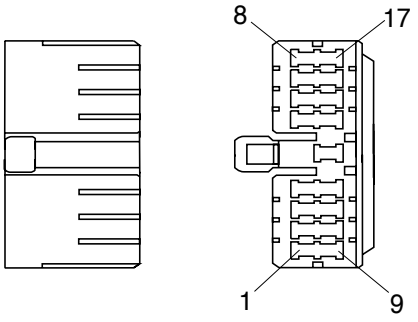 S811-017002	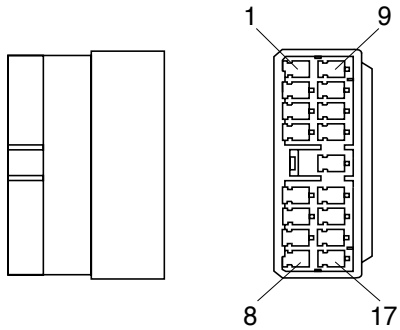 S811-117002
21	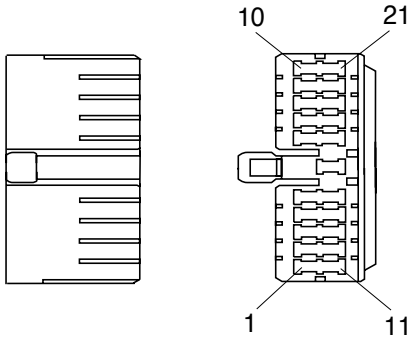 S811-021002	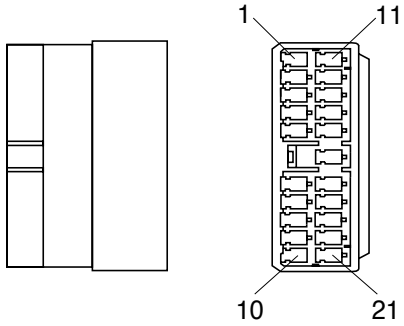 S811-121002

3) J TYPE CONNECTOR

No. of pin	Receptacle connector(Female)	Plug connector(Male)
2	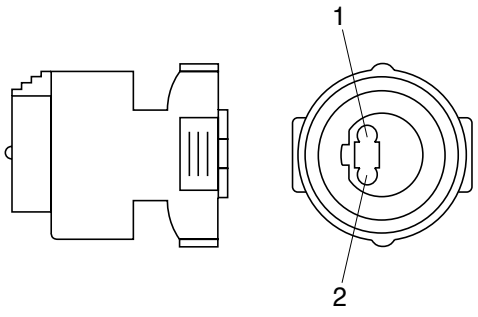 S816-002001	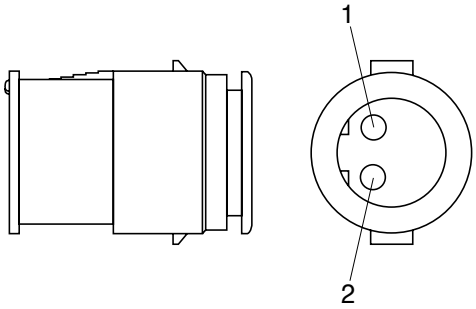 S816-102001
3	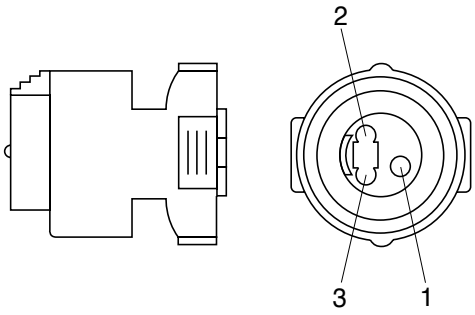 S816-003001	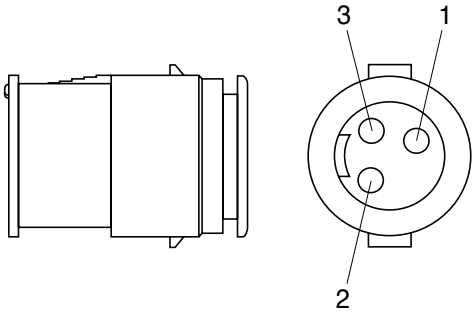 S816-103001
4	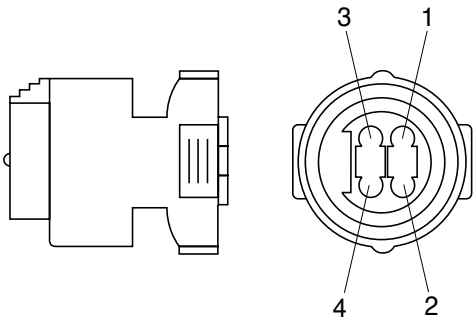 S816-004001	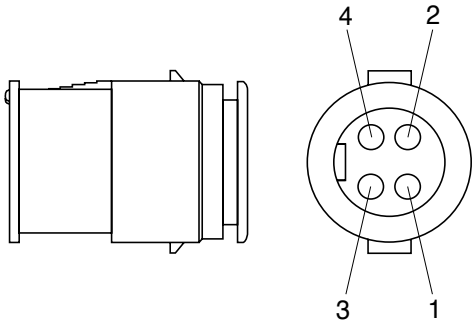 S816-104001
8	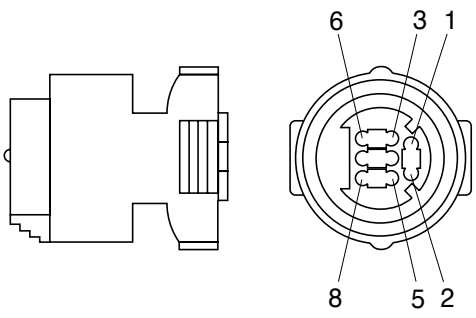 S816-008001	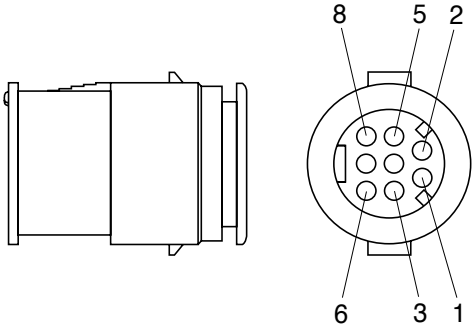 S816-108001

4) SWP TYPE CONNECTOR

No. of pin	Receptacle connector(Female)	Plug connector(Male)
1	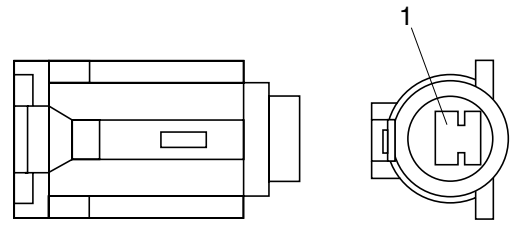 S814-001000	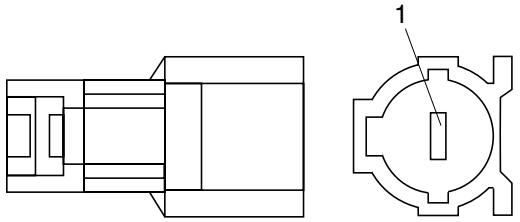 S814-101000
2	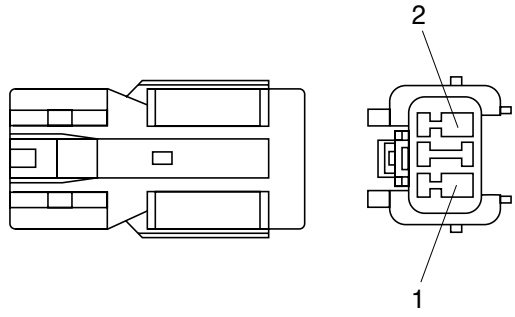 S814-002000	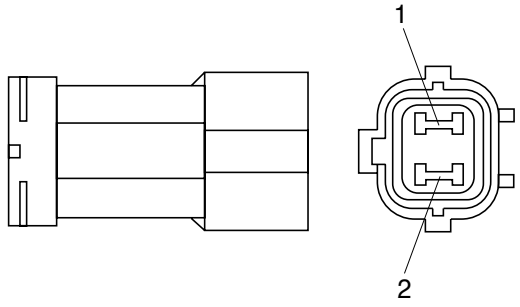 S814-102000
3	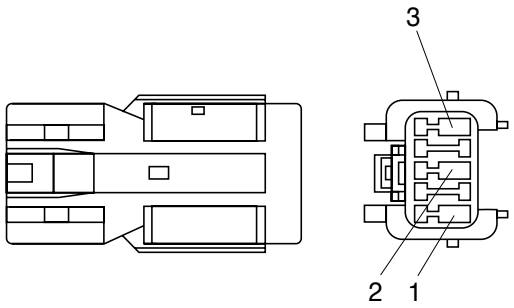 S814-003000	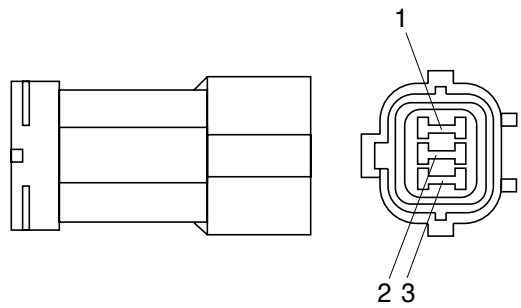 S814-103000
4	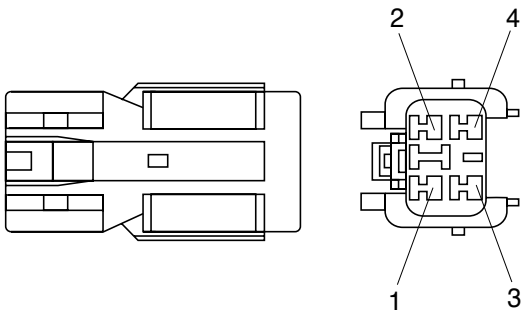 S814-004000	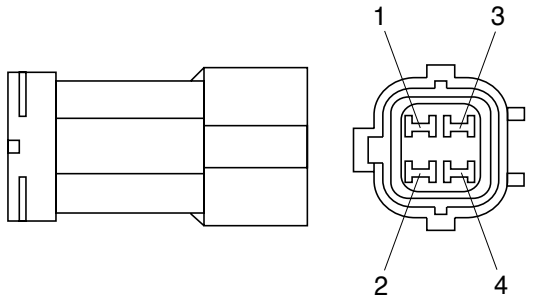 S814-104000

No. of pin	Receptacle connector(Female)	Plug connector(Male)
6	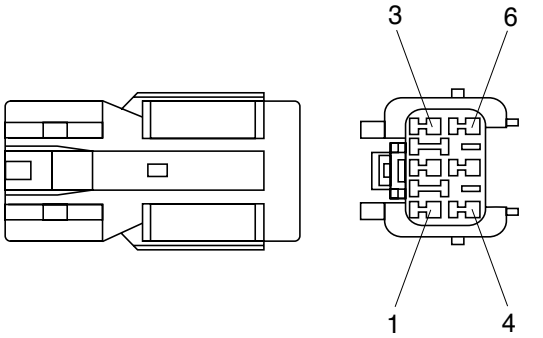 S814-006000	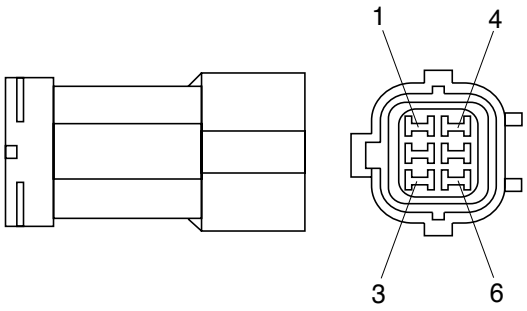 S814-106000
8	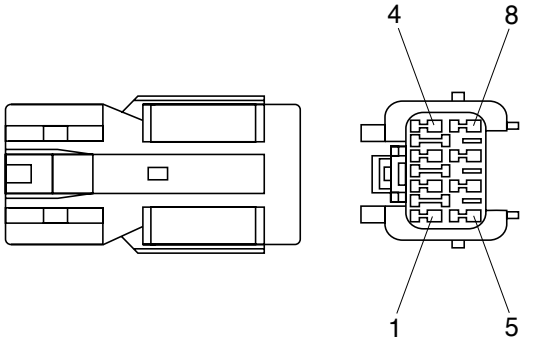 S814-008000	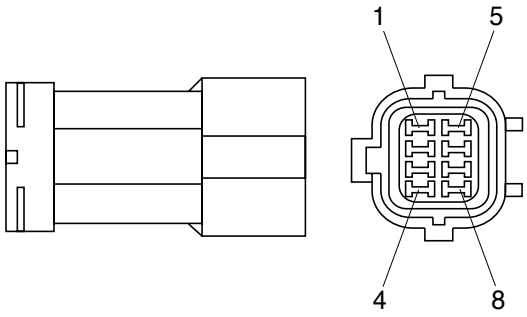 S814-108000
12	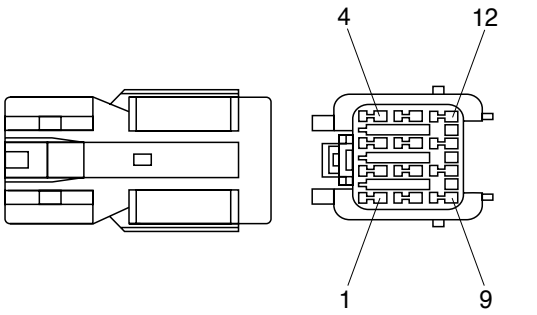 S814-012000	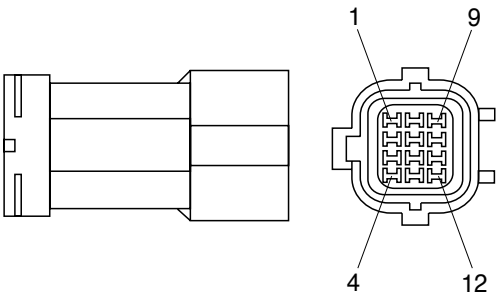 S814-112000
14	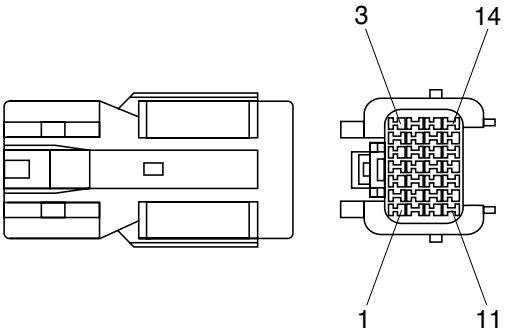 S814-014000	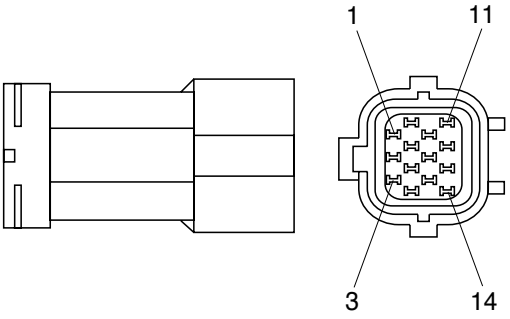 S814-114000

5) CN TYPE CONNECTOR

No. of pin	Receptacle connector(Female)	Plug connector(Male)
1	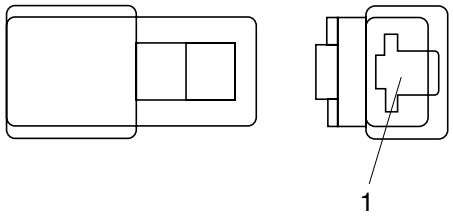 S810-001202	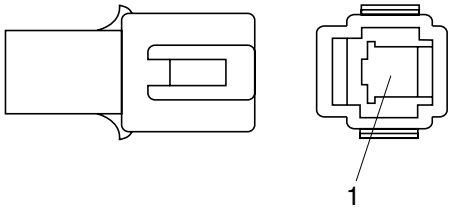 S810-101202
2	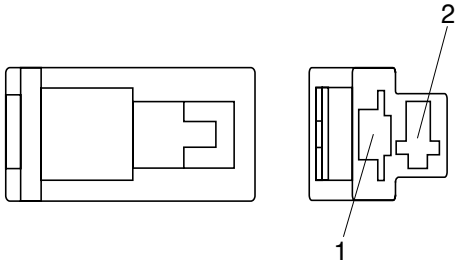 S810-002202	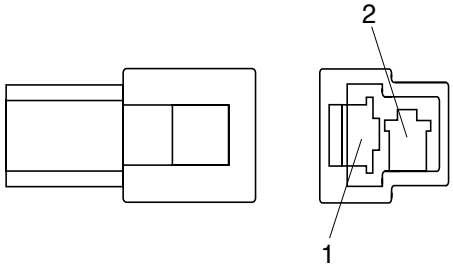 S810-102202
3	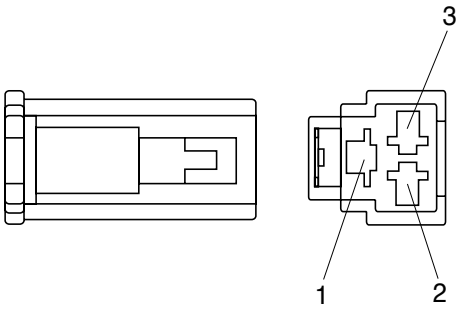 S810-003202	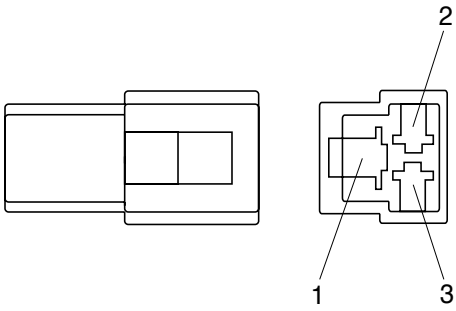 S810-103202
4	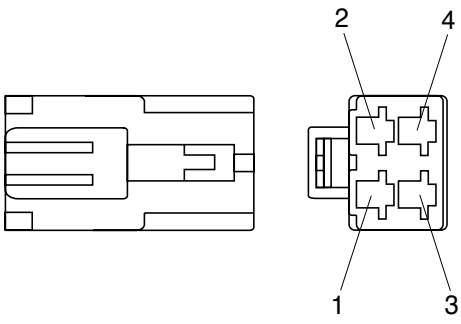 S810-004202	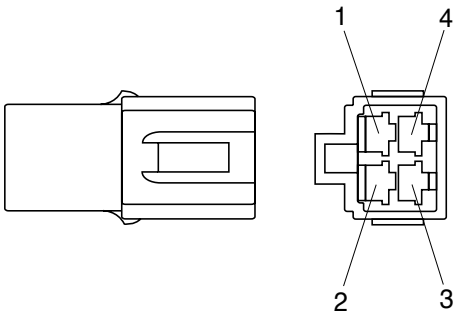 S810-104202

No. of pin	Receptacle connector(Female)	Plug connector(Male)
6	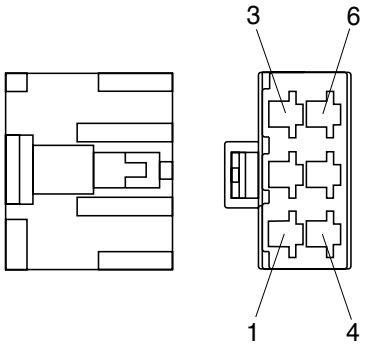 S810-006202	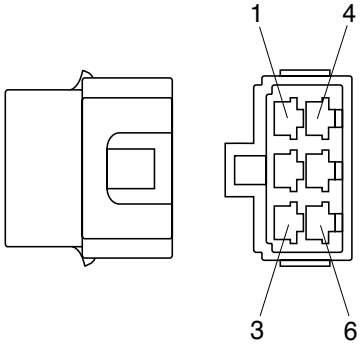 S810-106202
8	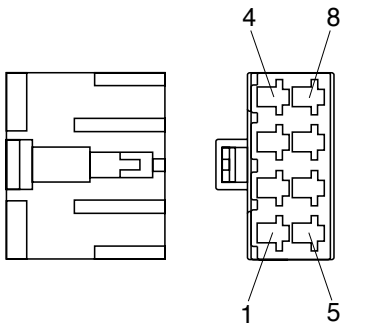 S810-008202	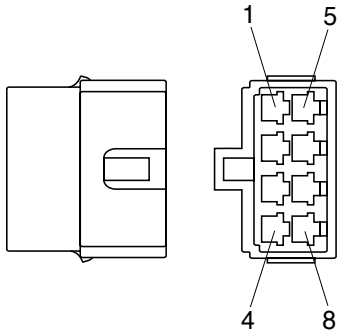 S810-108202

6) ITT SWF CONNECTOR

No. of pin	Receptacle connector(Female)	Plug connector(Male)
10	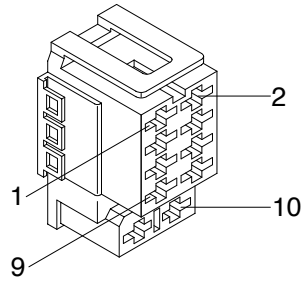 SWF593757	

7) HW090 SEALED CONNECTOR

No. of pin	Receptacle connector(Female)	Plug connector(Male)
6	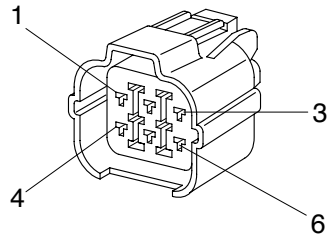 6189-0133	

8) MWP02F-B CONNECTOR

No. of pin	Receptacle connector(Female)	Plug connector(Male)
2	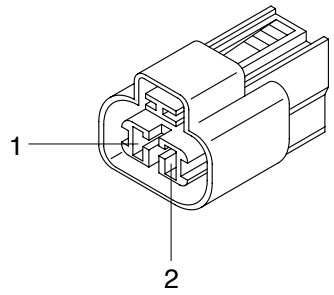 PH805-02028	

9) AMP ECONOSEAL CONNECTOR

No. of pin	Receptacle connector(Female)	Plug connector(Male)
36	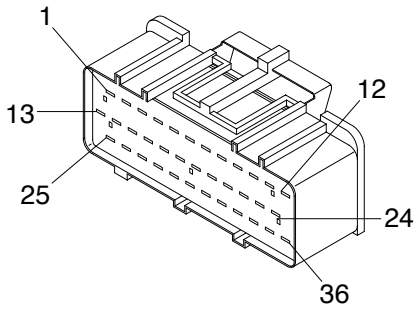 344111-1	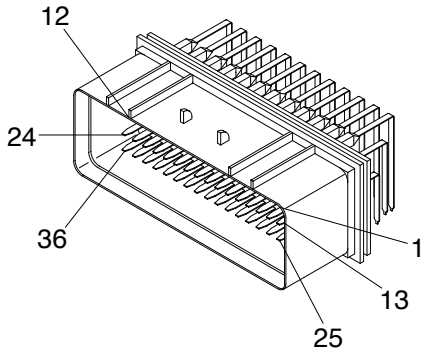 344108-1

10) AMP TIMER CONNECTOR

No. of pin	Receptacle connector(Female)	Plug connector(Male)
2	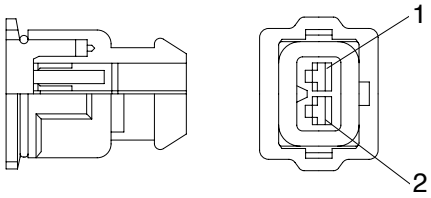 85202-1	

11) AMP 040 MULTILOCK CONNECTOR

No. of pin	Receptacle connector(Female)	Plug connector(Male)
12	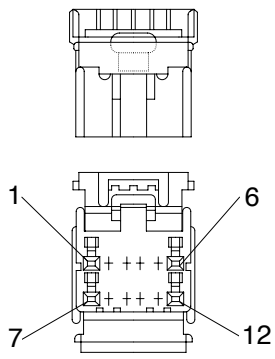 174045-2	

12) KET 090 WP CONNECTORS

No. of pin	Receptacle connector(Female)	Plug connector(Male)
2	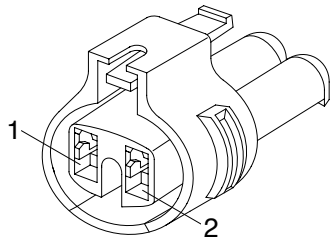 MG640795	

13) ITT SWF CONNECTOR

No. of pin	Receptacle connector(Female)	Plug connector(Male)
10	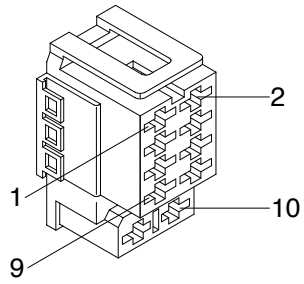 SWF593757	

14) MWP NMWP CONNECTOR

No. of pin	Receptacle connector(Female)	Plug connector(Male)
1	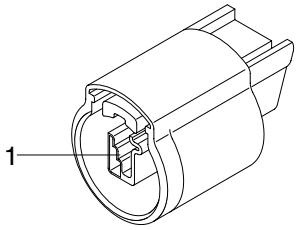 NMWP01F-B	

15) DEUTSCH DT CONNECTORS

No. of pin	Receptacle connector(Female)	Plug connector(Male)
2	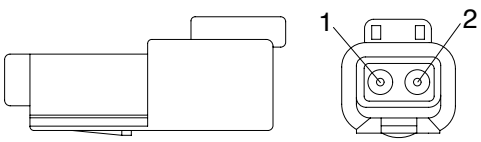 DT06-2S	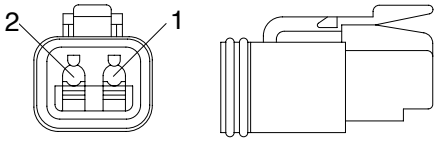 DT04-2P
3	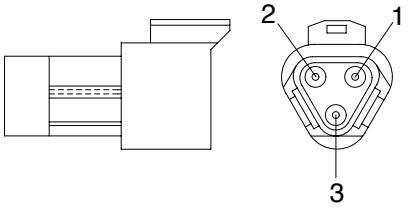 DT06-3S	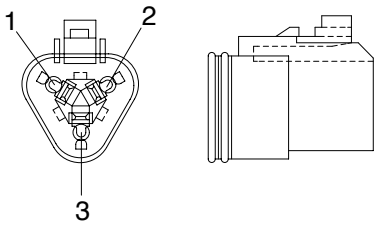 DT04-3P
4	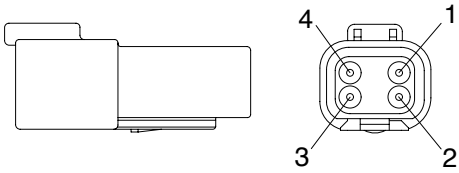 DT06-4S	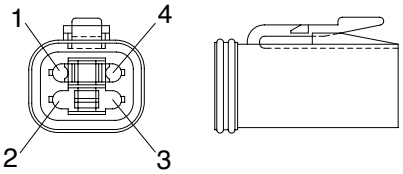 DT04-4P
6	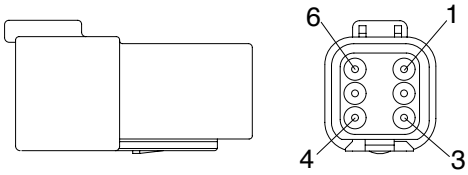 DT06-6S	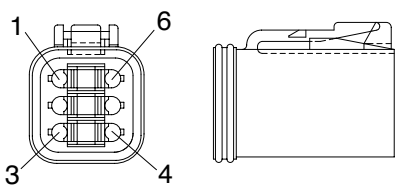 DT04-6P

No. of pin	Receptacle connector(Female)	Plug connector(Male)
8	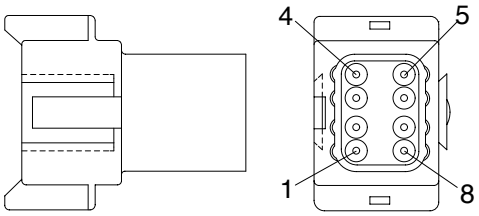 DT06-8S	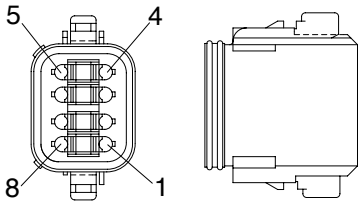 DT04-8P
12	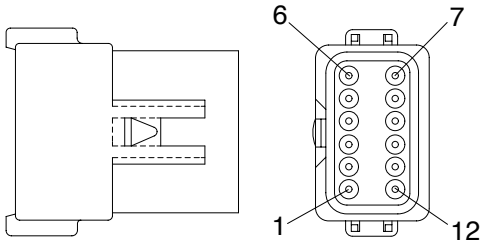 DT06-12S	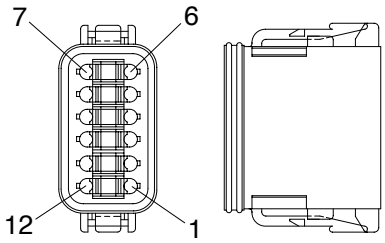 DT04-12P

1. WHEN STARTING SWITCH IS TURNED ON, CLUSTER LAMP DOES NOT LIGHT UP

· Before carrying out below procedure, check all the related connectors are properly inserted and the fuse No.26 is not blown out and ON/OFF of bulb.
· After checking, connect the disconnected connectors again immediately unless otherwise specified.

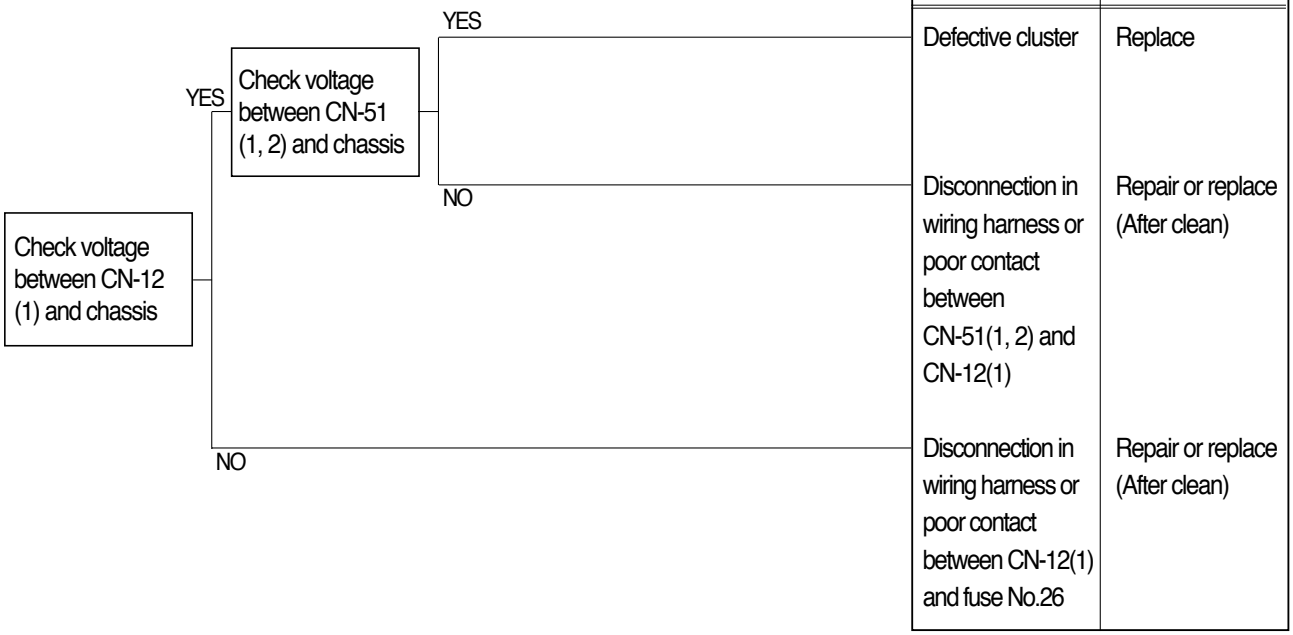

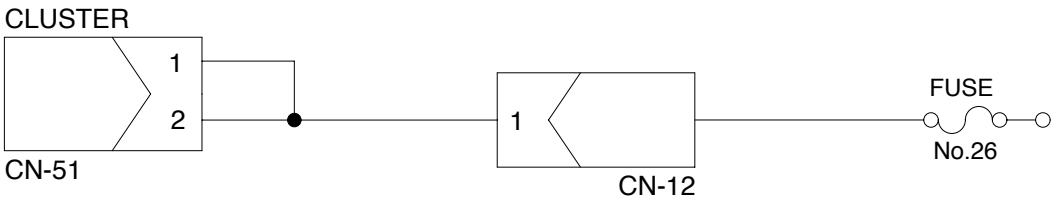

Check voltage

YES	20 ~ 30V
NO	0V

7607EL14

2. **WHEN BATTERY LAMP LIGHTS UP**(Engine is started)

· Before carrying out below procedure, check all the related connectors are properly inserted.
· After checking, connect the disconnected connectors again immediately unless otherwise specified.

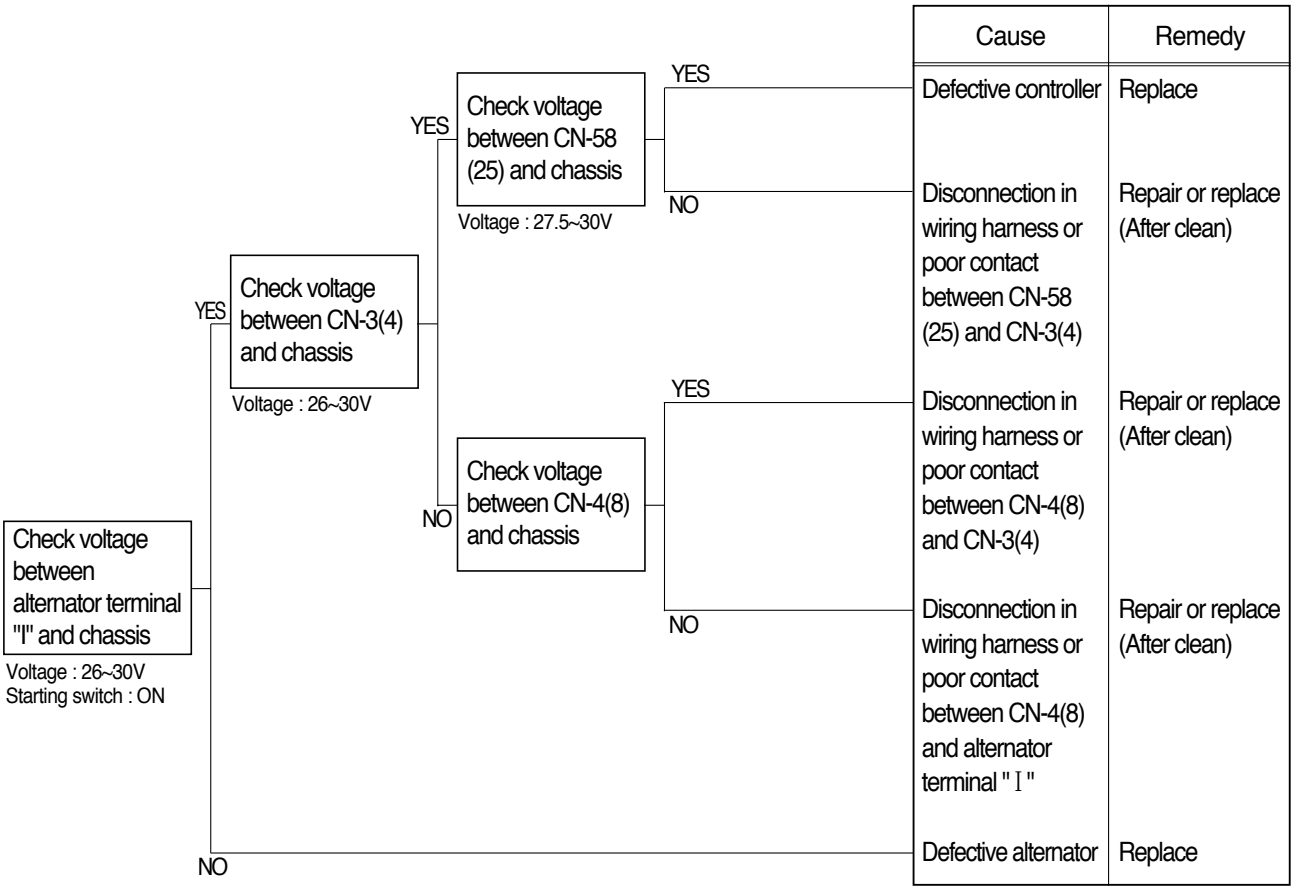

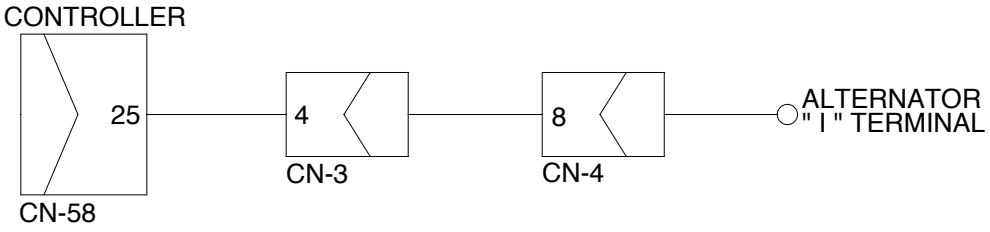

Check valtage

YES	20 ~ 30V
NO	0V

7707EL23

3. WHEN PARKING SOLENOID DOES NOT WORK

· Before carrying out below procedure, check all the related connectors are properly inserted and the fuse No.8 is not blown out.
· After checking, connect the disconnected connectors again immediately unless otherwise specified.

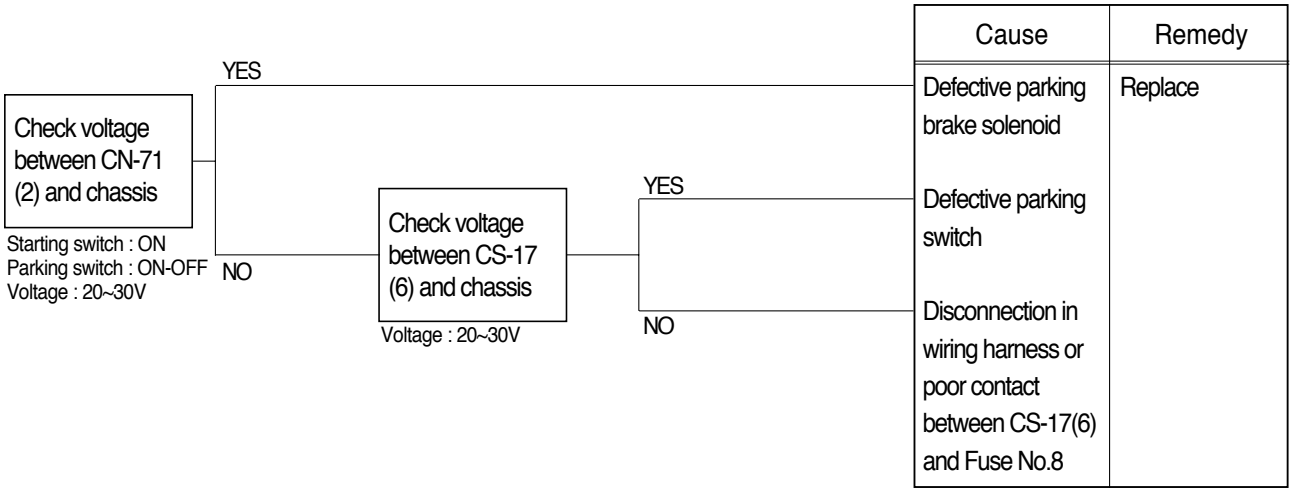

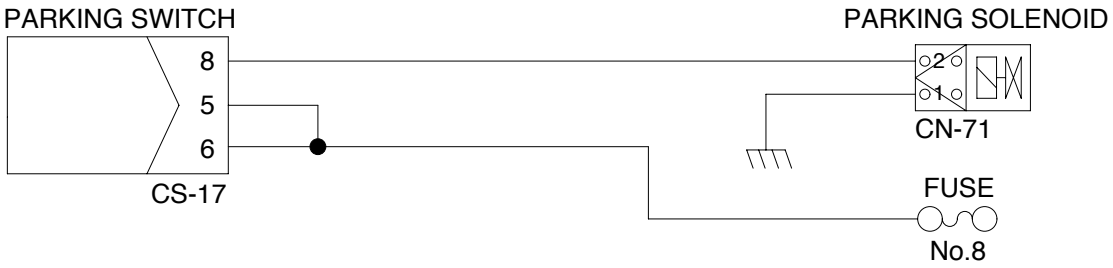

7407EL24

4. TRANSMISSION IS NOT RETURNED TO NEUTRAL WHEN PARKING BRAKE IS APPLIED

· Before carrying out below procedure, check all the related connectors are properly inserted and the fuse No.17(T/M controller) and No.8 are not blown out.
· After checking, connect the disconnected connectors again immediately unless otherwise specified.

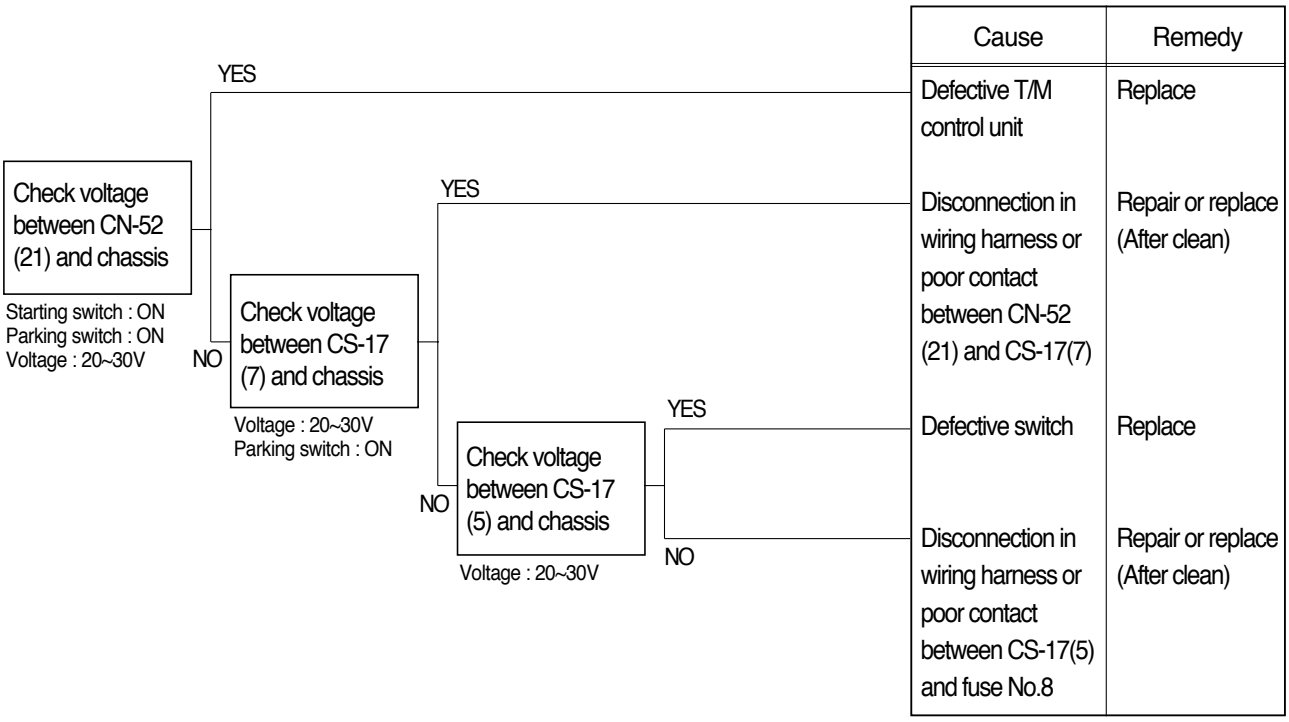

Cause	Remedy
Defective T/M control unit	Replace
Disconnection in wiring harness or poor contact between CN-52 (21) and CS-17(7)	Repair or replace (After clean)
Defective switch	Replace
Disconnection in wiring harness or poor contact between CS-17(5) and fuse No.8	Repair or replace (After clean)

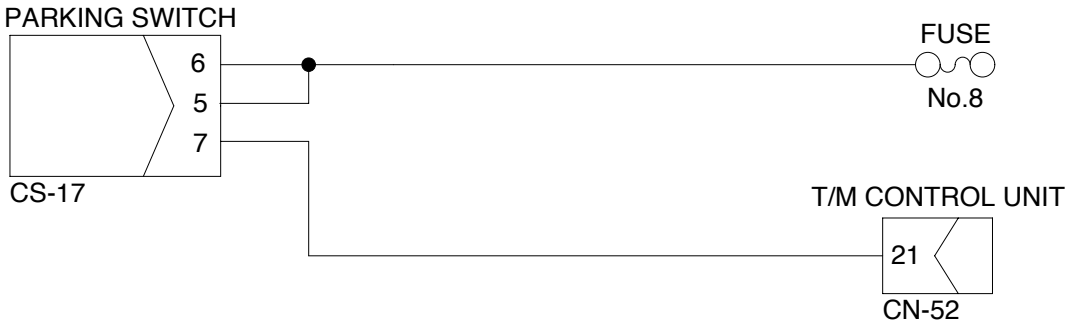

Check resistance

YES	MAX 1Ω
NO	MIN 1MΩ

7407EL25

5. MACHINE DOES NOT TRAVEL

· Before carrying out below procedure, check all the related connectors are properly inserted and the fuse No.17(Transmission control unit) is not blown out.
· After checking, connect the disconnected connectors again immediately unless otherwise specified.
· Wiring diagram : **See page 7-16.**

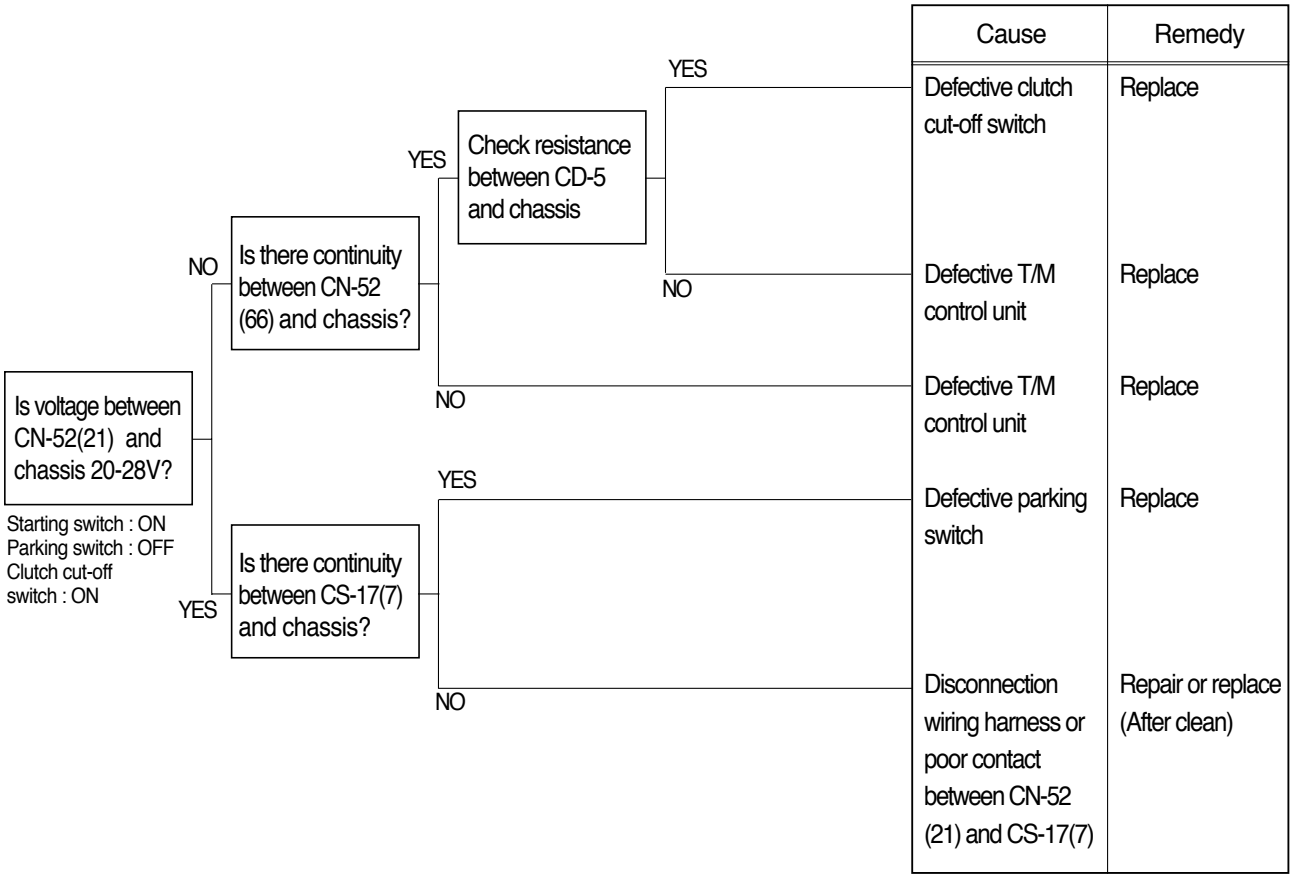

Check resistance

YES	MAX 1Ω
NO	MIN 1MΩ

6. WHEN STARTING SWITCH IS TURNED ON, WIPER MOTOR DOES NOT OPERATE

· Before carrying out below procedure, check all the related connectors are properly inserted and the fuse No.9 is not blown out.

· After checking, connect the disconnected connectors again immediately unless otherwise specified.

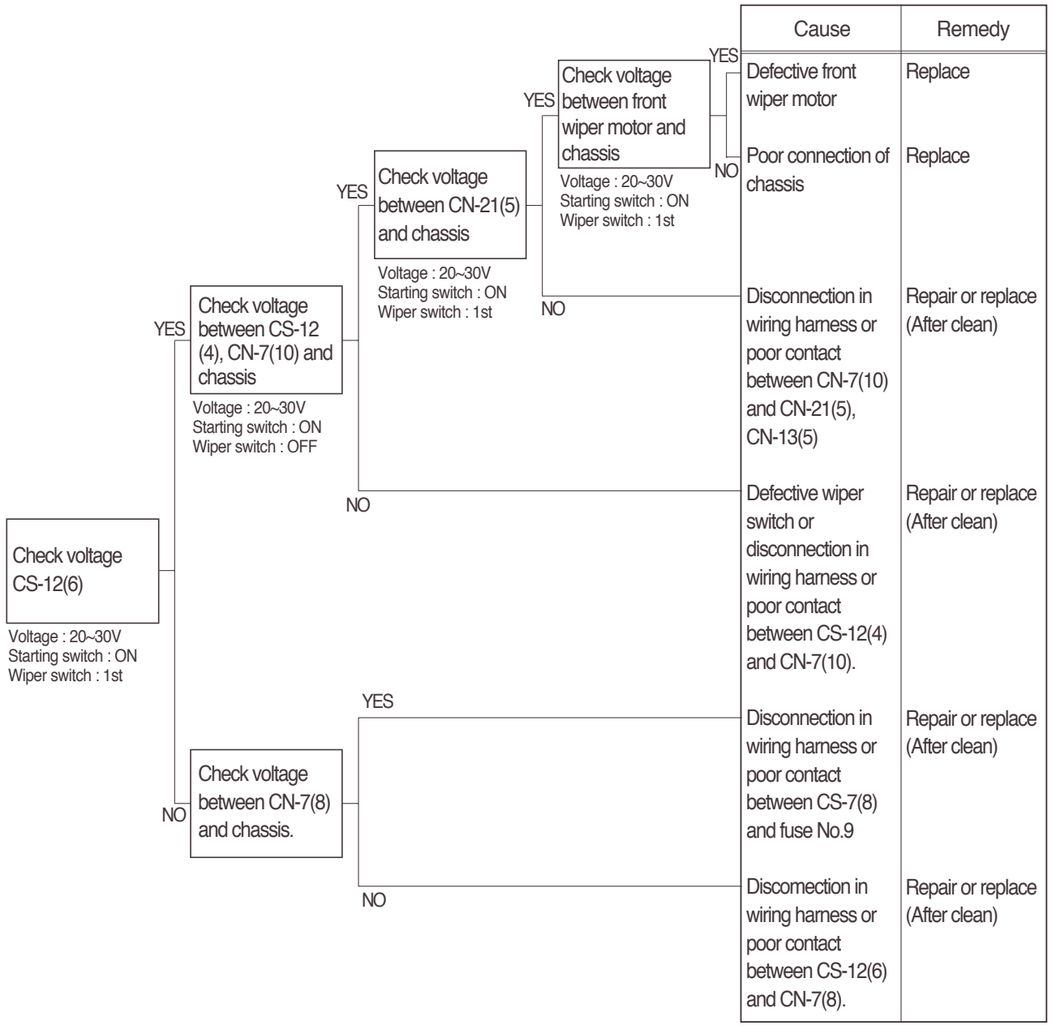

Cause	Remedy
Defective front wiper motor	Replace
Poor connection of chassis	Replace
Disconnection in wiring harness or poor contact between CN-7(10) and CN-21(5), CN-13(5)	Repair or replace (After clean)
Defective wiper switch or disconnection in wiring harness or poor contact between CS-12(4) and CN-7(10).	Repair or replace (After clean)
Disconnection in wiring harness or poor contact between CS-7(8) and fuse No.9	Repair or replace (After clean)
Discomection in wiring harness or poor contact between CS-12(6) and CN-7(8).	Repair or replace (After clean)

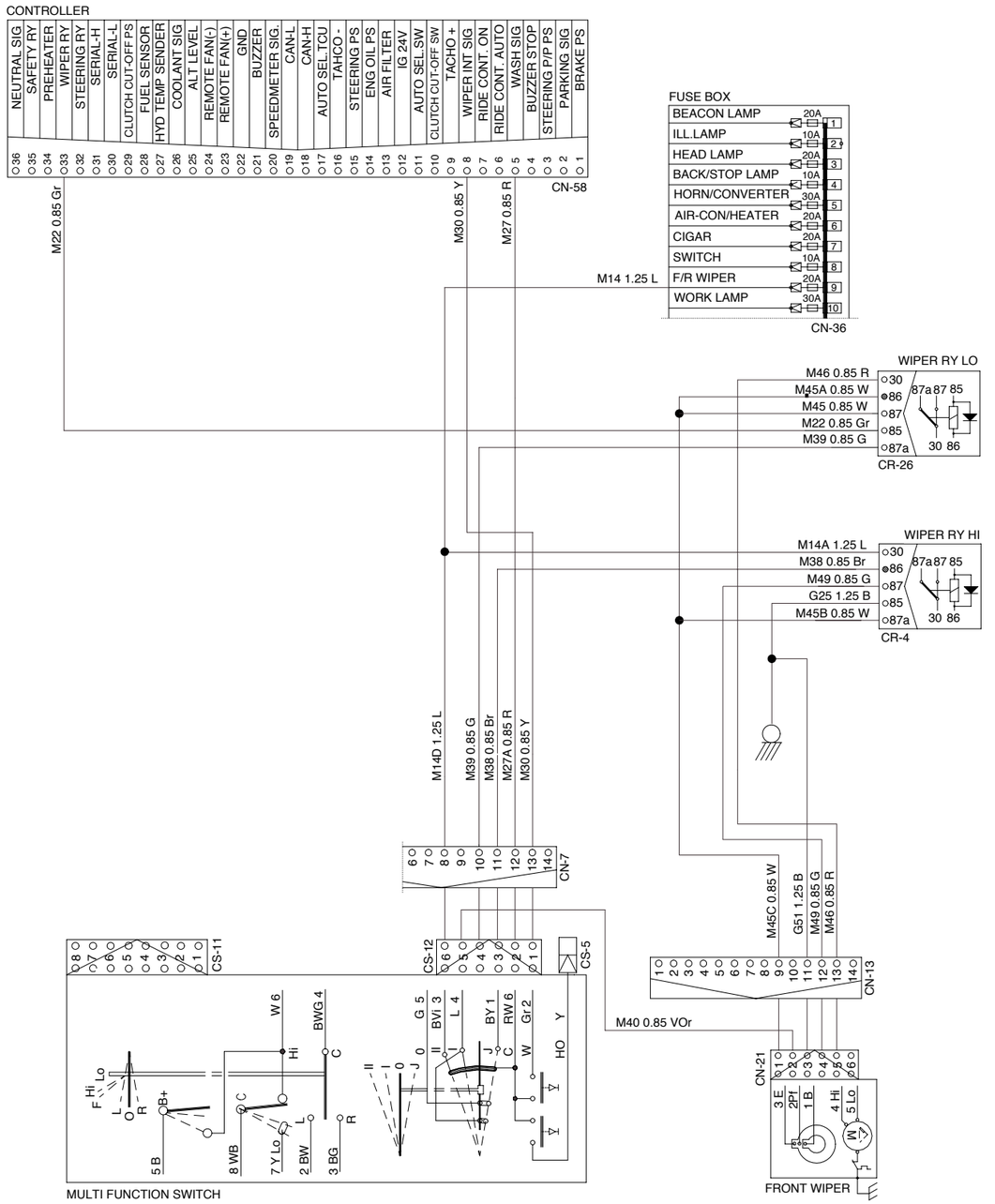

7607EL12

7. WHEN STARTING SWITCH "ON" DOES NOT OPERATE

· Before carrying out below procedure, check all the related connectors are properly inserted and and the fuse No.16 is not blown out.
· After checking, connect the disconnected connectors again immediately unless otherwise specified.

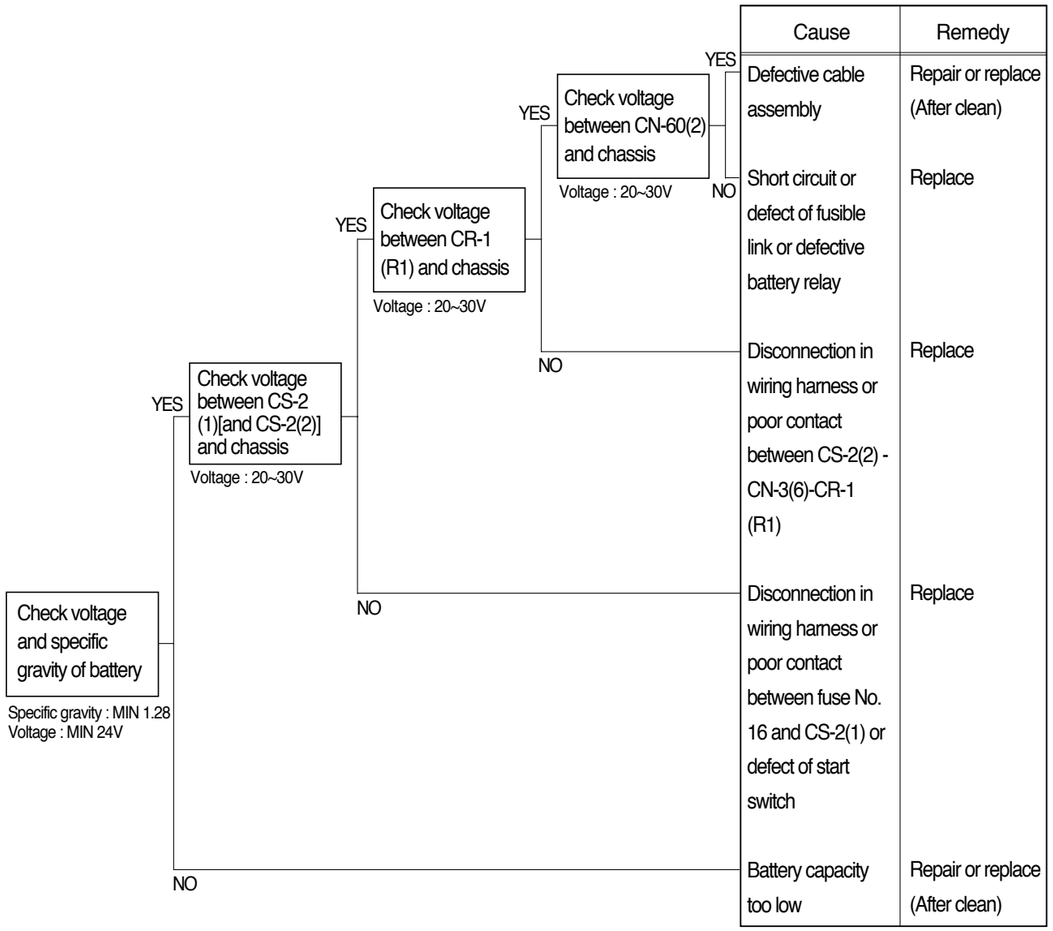

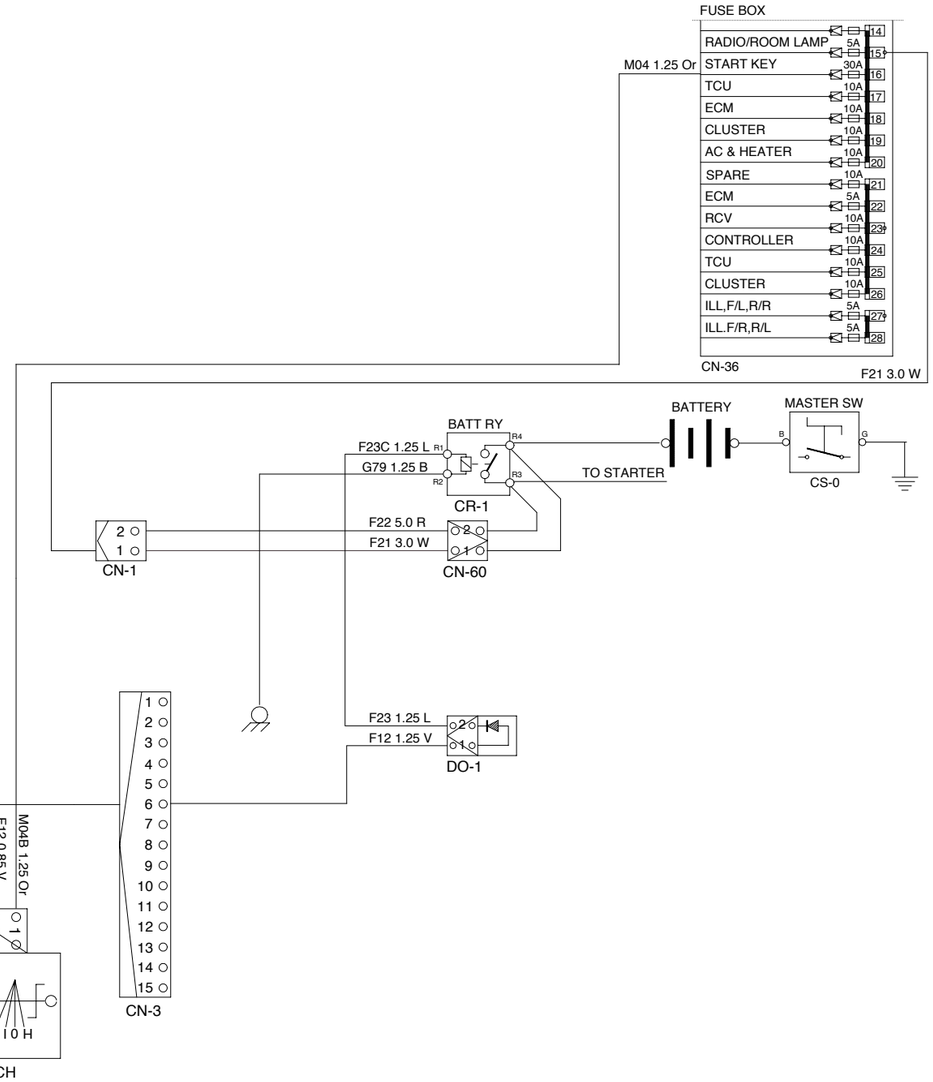

7707EL27

8. WHEN STARTING SWITCH IS TURNED ON, WORK LAMP DOES NOT LIGHTS UP

· Before carrying out below procedure, check all the related connectors are properly inserted, and the fuse No.10 is not blown out.

· After checking, connect the disconnected connectors again immediately unless otherwise specified.

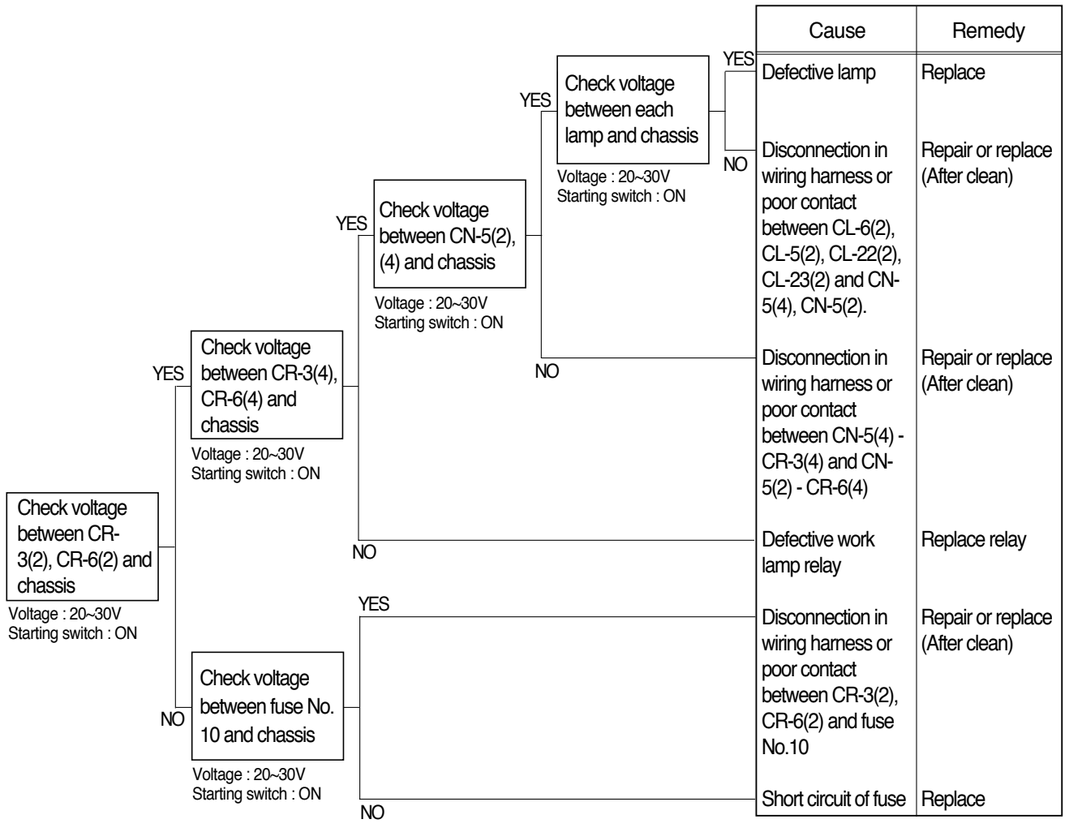

Cause	Remedy
Defective lamp	Replace
Disconnection in wiring harness or poor contact between CL-6(2), CL-5(2), CL-22(2), CL-23(2) and CN-5(4), CN-5(2).	Repair or replace (After clean)
Disconnection in wiring harness or poor contact between CN-5(4) - CR-3(4) and CN-5(2) - CR-6(4)	Repair or replace (After clean)
Defective work lamp relay	Replace relay
Disconnection in wiring harness or poor contact between CR-3(2), CR-6(2) and fuse No.10	Repair or replace (After clean)
Short circuit of fuse	Replace

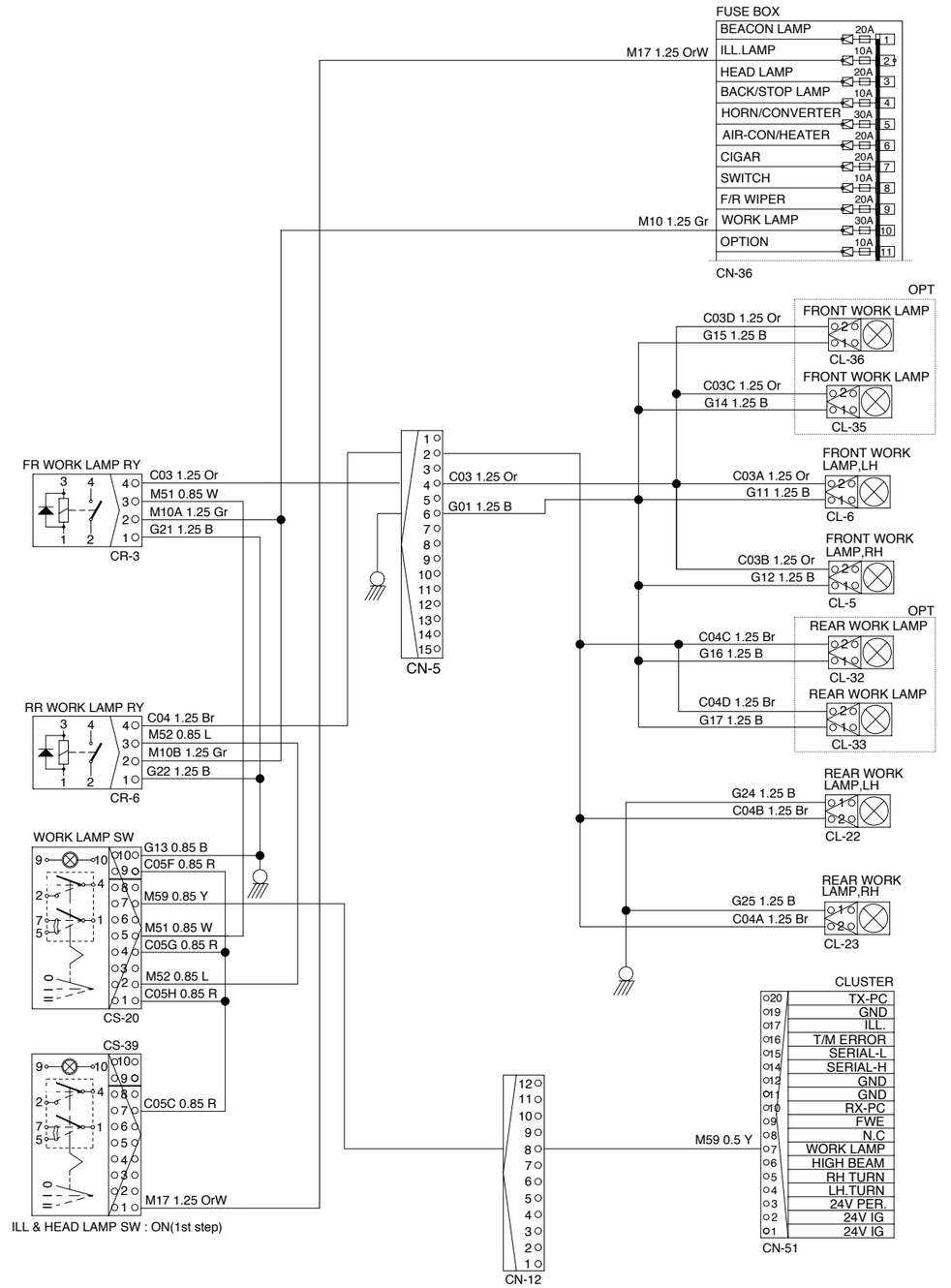

7407EL28

9. WHEN ENGINE DOES NOT START

- Check supply of the power at engine stop solenoid while starting switch is ON.
- Before carrying out below procedure, check all the related connectors are properly inserted.
- After checking, connect the disconnected connectors again immediately unless other wise specified.
- Check forward reverse switch at neutral position.

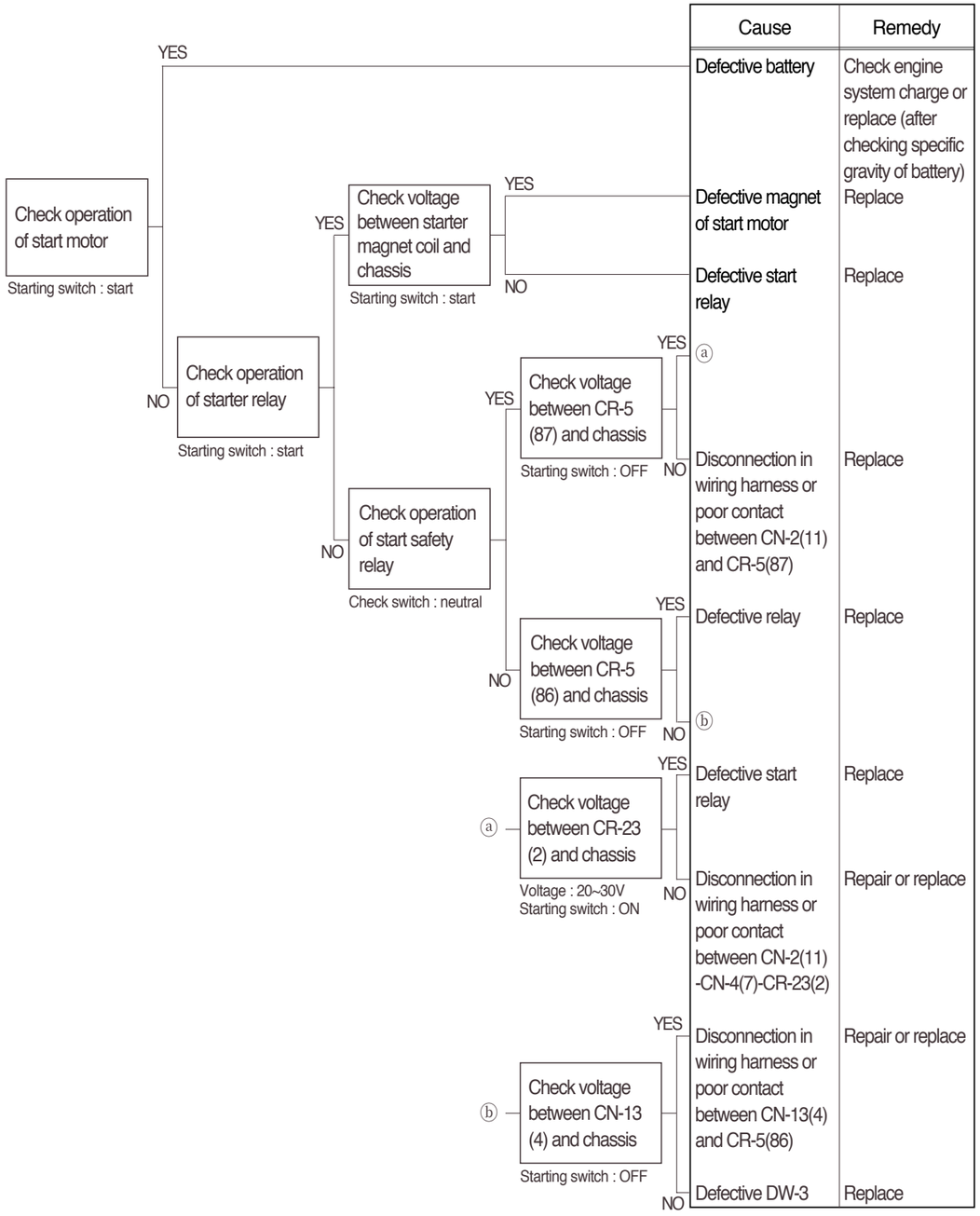

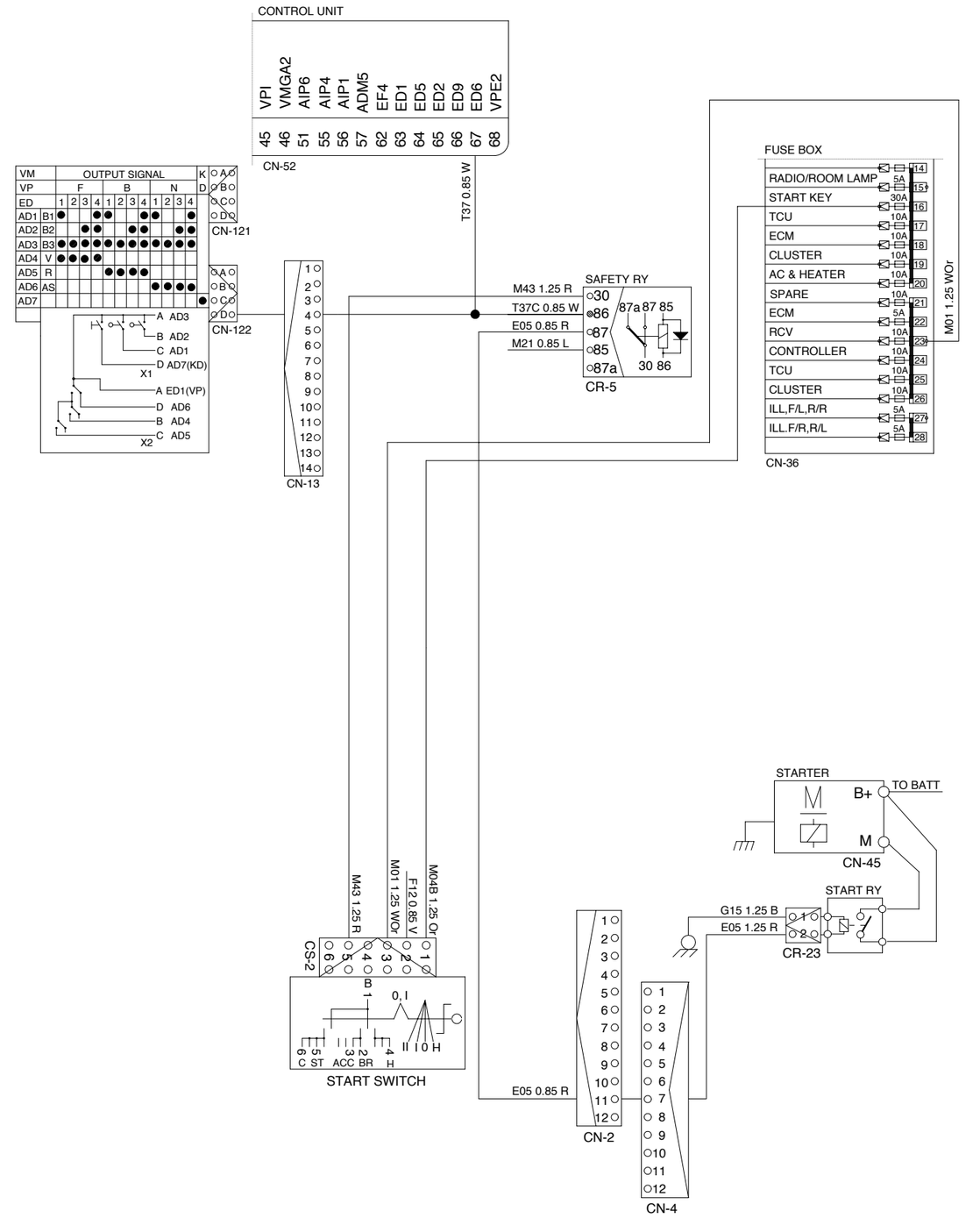

7707EL29