ENGINE MOUNTING

RUTHZIL TRATOR COMERCIAL DE PEÇAS LTDA 11 97083-6812 ROLANDO CITRANGULO

HL740-7A HYUNDAI

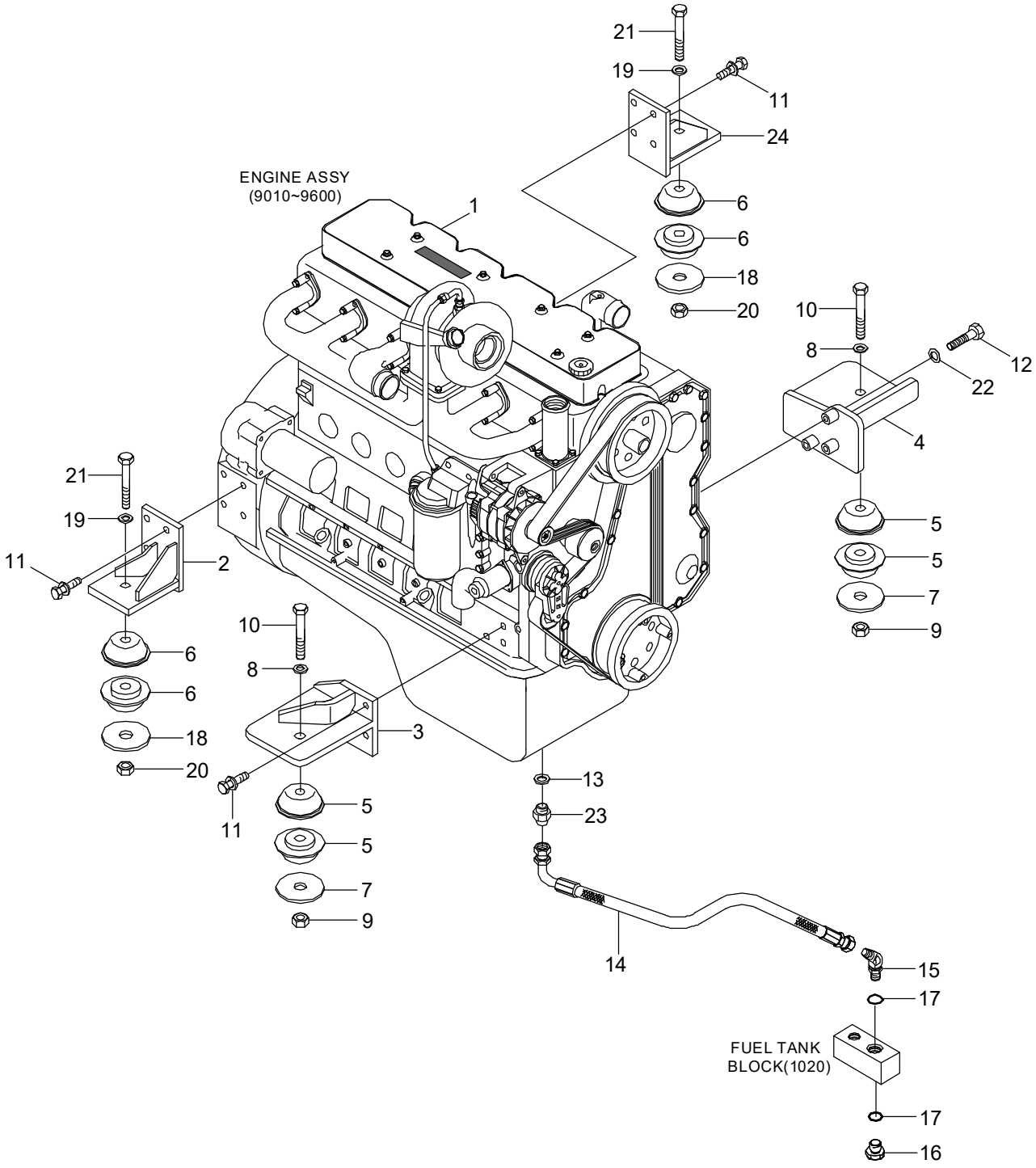

Item	Part_No	IS	Ord	T	Description	Qty	Serial_No	ITC	Remark
1	11LF-01000				ENGINE ASSY	1			
2	11LF-00030				BRACKET WA	1			
3	11LC-00090				BRACKET WA-LH	1			
4	11LC-00081				BRACKET WA-RH	1			
5	11N6-10450				RUBBER-MOUNT	4			
6	11N6-08255				RUBBER-MOUNT	4			
7	11L7-00170				WASHER-MOUNT	2			
8	S441-200006				WASHER-HARDENED	2			
9	S205-201006				NUT-HEX	2			
10	S017-20130D				BOLT-HEX	2			
11	S037-123556				BOLT-W/WASHER	11			
12	S017-120606				BOLT-HEX	3			
13	P392-180000				WASHER-COPPER	1			
14	P620-082011				HOSE ASSY-THD 0X90	1			
15	P030-110003				ELBOW-45	1			
16	P220-110104				PLUG-HEX	1			
17	S631-018001				O-RING	2			
18	11L8-00260				WASHER-REBOUND	2			
19	S441-160006				WASHER-HARDENED	2			
20	S205-161006				NUT-HEX	2			
21	S017-16130D				BOLT-HEX	2			
22	S441-120006				WASHER-HARDENED	3			
23	P010-220008				CONNECTOR	1			
24	11LF-00040				BRACKET WA	1			

FUEL TANK

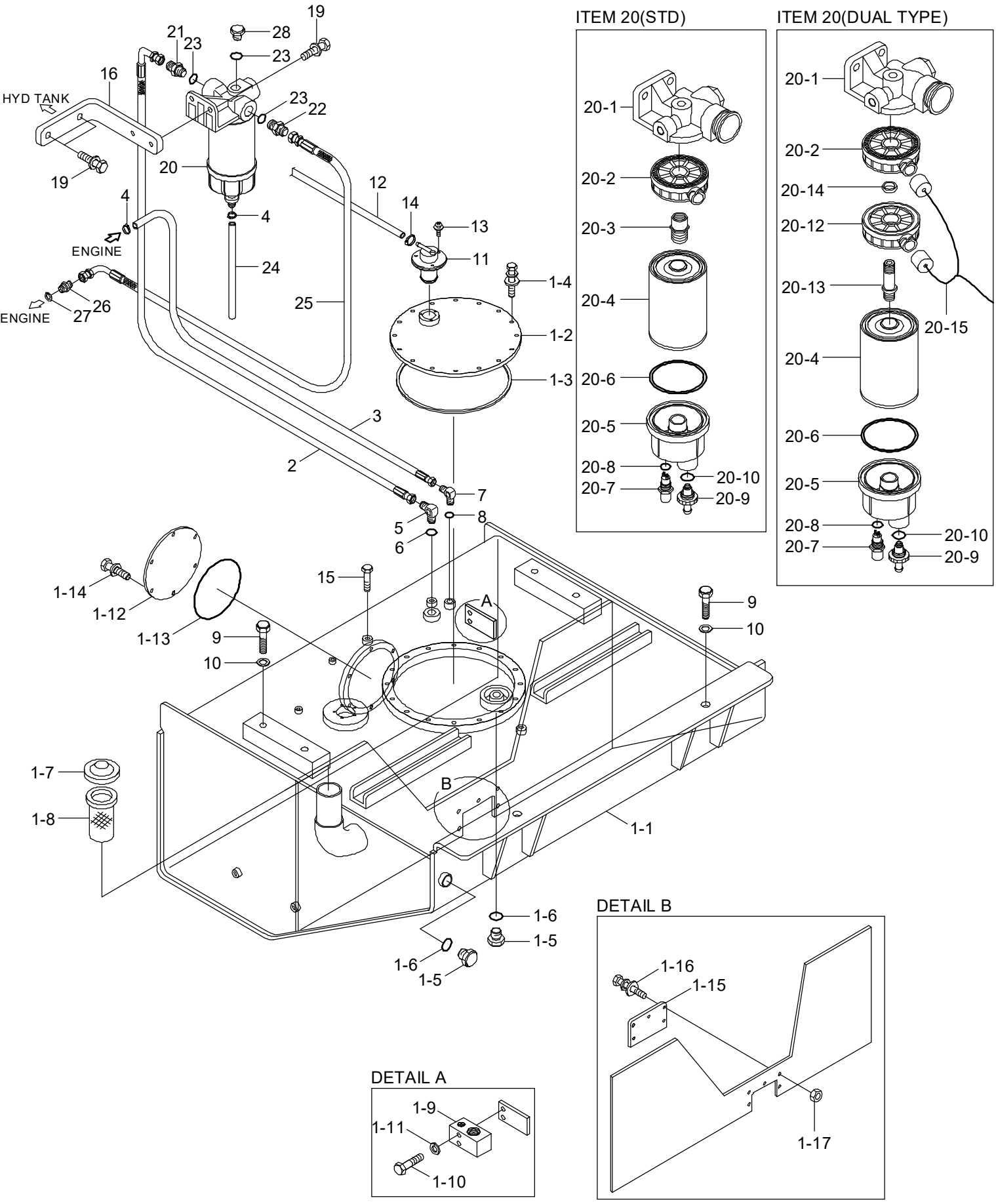
ITEM 20(STD)
ITEM 20(DUAL TYPE)
HYD TANK
ENGINE
ENGINE
DETAIL A
DETAIL B
19
21
23
28
23
16
23
22
20
19
4
4
12
14
13
11
24
25
1-4
1-2
1-3
3
2
7
8
5
6
15
A
9
10
1-14
1-12
1-13
9
10
1-7
1-8
B
1-1
1-6
1-5
1-6
1-5
20-1
20-2
20-3
20-4
20-6
20-5
20-8
20-7
20-10
20-9
20-1
20-2
20-14
20-12
20-13
20-15
20-4
20-6
20-5
20-8
20-7
20-10
20-9
1-9
1-11
1-10
1-16
1-15
1-17

Item	Part_No	IS	Ord	T	Description	Qty	Serial_No	ITC	Remark
1	11LF-20170				FUEL TANK ASSY	1			
1-1	11LF-20181				.FUEL TANK WA	1			
1-2	11LB-20040				.COVER WA	1			
1-3	14L1-02180				.RUBBER	1			
1-4	S035-082026				.BOLT-W/WASHER	16			
1-5	P220-110104				.PLUG-HEX	2			
1-6	S631-018001				.O-RING	2			
1-7	11LB-20050				.FUEL CAP ASSY	1			
1-8	31E1-10300				.STRAINER	1			
1-9	11LB-20232				.BLOCK-DRAIN	1			
1-10	S017-100756				.BOLT-HEX	2			
1-11	S441-100006				.WASHER-HARDENED	2			
1-12	31E3-4526				.COVER	1			
1-13	S632-165001				.O-RING	1			
1-14	S037-102556				.BOLT-W/WASHER	6			
1-15	11LB-20280				.PLATE	1			
1-16	S035-062026				.BOLT-W/WASHER	5			
1-17	S205-061006				.NUT-HEX	5			
2	11LF-20331				HOSE ASSY	1			
3	11LF-20320				HOSE ASSY	1			
4	S520-015000				CLAMP-HOSE	2			
5	P020-110003				ELBOW-90	1			
6	S631-018001				O-RING	1			
7	P020-110002				ELBOW-90	1			
8	S631-014001				O-RING	1			
9	S017-16050D				BOLT-HEX	6			

Item	Part_No	IS	Ord	T	Description	Qty	Serial_No	ITC	Remark
10	S441-160006				WASHER-HARDENED	6			
11	11FA-50300				FUEL CUT VALVE	1			
12	11S4-00561				HOSE	1			
13	S131-051546				SCREW-W/WASHER	3			
14	S571-140002				CLAMP-HOSE,WIRE TYPE	1			
15	S017-16020D				BOLT-HEX	2			
16	11LF-20350				BRACKET	1			
19	S037-103556				BOLT-W/WASHER	4			
20	11NA-71000				FUEL FILTER W/S ASSY	1	- #0385		
	11NA-71001				FUEL FILTER ASSY	1	#0386 -	B	
	11NA-73000				FUEL FILTER ASSY	1	#0386 -		DUAL F/WARMER
20-1	11NA-71010				.HEAD-FILTER	1			
20-2	11NA-71020				.HEATER-FUEL	1			
20-3	11NA-71030				.CONNECTOR	1			
20-4	11NA-71040				.ELEMENT ASSY	1	- #0385		
	11NA-71041				.ELEMENT ASSY	1	#0386 -	B	
20-5	11NA-71050				.BOWL-CLEAR	1			
20-6	11NA-71060				.O-RING	1			
20-7	11NA-71070				.SENSOR	1			
20-8	11NA-71080				.O-RING	1			
20-9	11NA-71090				.VALVE-SCREW	1			
20-10	11NA-71100				.O-RING	1			
20-12	11NA-71020				.HEATER-FUEL	1	#0386 -		DUAL F/WARMER
20-13	11Q6-50100				.CONNECTOR	1	#0386 -		DUAL F/WARMER
20-14	11Q6-50110				.SPACER	1	#0386 -		DUAL F/WARMER
20-15	21Q8-23200				.HARNESS-FUEL WARMER	1	#0386 -		DUAL F/WARMER

Item	Part_No	IS	Ord	T	Description	Qty	Serial_No	ITC	Remark
21	11LD-20320				CONNECTOR	1			
22	11LD-20330				CONNECTOR	1			
23	S631-011001				O-RING	3			
24	11N1-50020				HOSE ASSY	1			
25	11LD-20360				HOSE ASSY	1			
26	11LD-20340				CONNECTOR	1			
27	P392-120000				WASHER-COPPER	1			
28	P210-101400				PLUG-HEX	1			

COOLING SYSTEM (FAN, FORWARD ONLY)

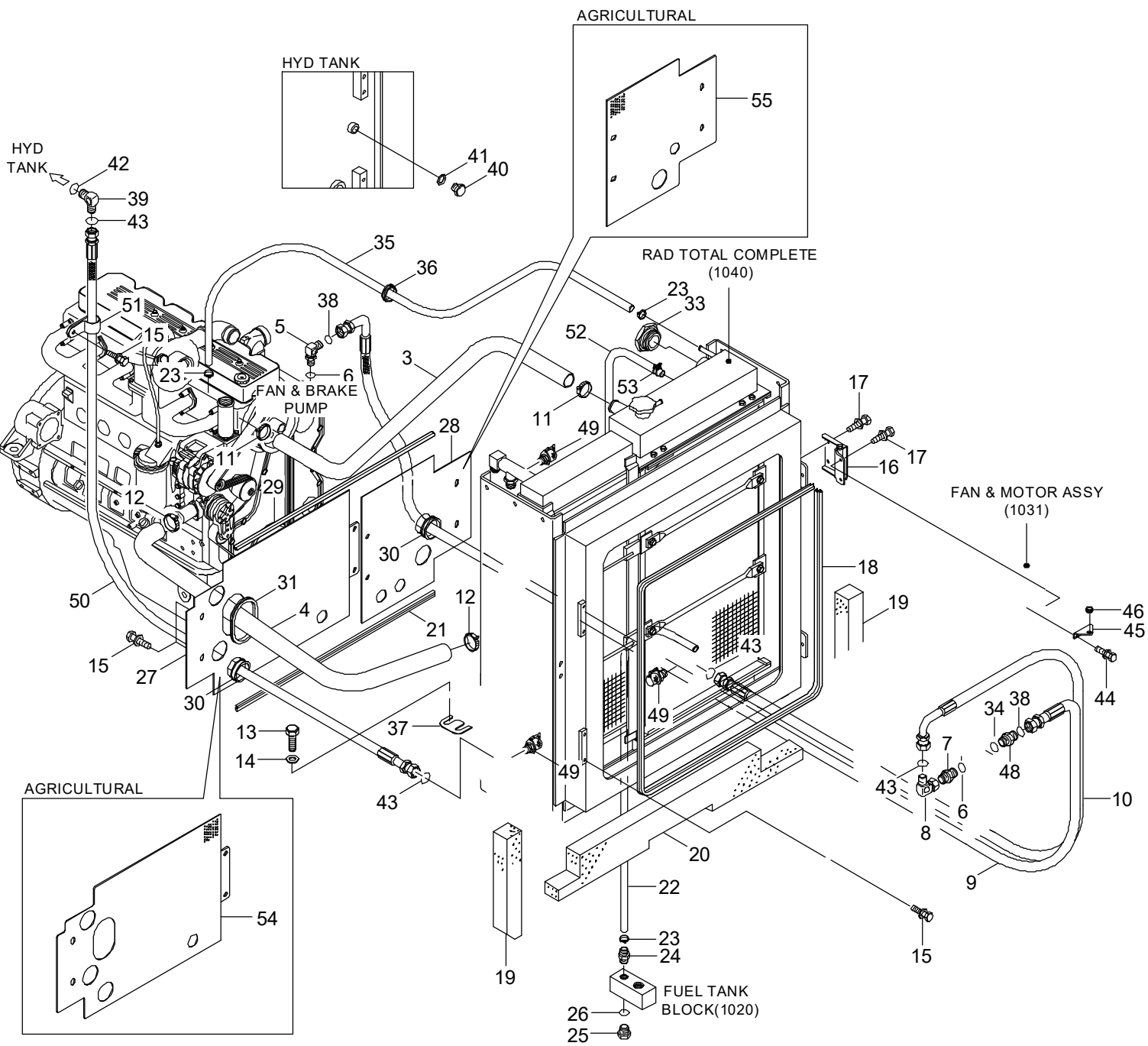

Item	Part_No	IS	Ord	T	Description	Qty	Serial_No	ITC	Remark
3	11LF-30710				HOSE-RUBBER	1			
4	11LF-30720				HOSE-RUBBER	1			
5	11LF-30730				ELBOW-90	1			
6	S611-023001				O-RING	2			
7	31S7-00390				CONNECTOR	1			
8	X850-545400				ELBOW-90,SWIVEL,ORFS	1			
9	P910-084050				HOSE ASSY-ORFS 0X0	1			
10	P930-122027				HOSE ASSY-ORFS 0X90	1			
11	S572-600006				CLAMP-HOSE,WIRE TYPE	2			
12	S572-650006				CLAMP-HOSE,WIRE TYPE	2			
13	S017-16035D				BOLT-HEX	8			
14	S441-160006				WASHER-HARDENED	8			
15	S037-101556				BOLT-W/WASHER	11			
16	11LF-30222				HINGE ASSY	2			
17	S037-102556				BOLT-W/WASHER	10			
18	S771-034700				WEATHER STRIP	1			
19	11LF-30741				SPONGE	2			
20	11LF-30750				SPONGE	1			
21	S772-008000				WEATHER STRIP	1	- #0294		
	S771-008000				WEATHER STRIP	1	#0295 -	B	
22	P760-021088				HOSE-RUBBER	1			
23	S520-020000				CLAMP-HOSE	4			
24	P090-100808				CONNECTOR-HOSE	1			
25	P220-110104				PLUG-HEX	1			
26	S631-018001				O-RING	1			
27	11LF-30761				PLATE-SCREEN,LH	1	- #0294	-	

Item	Part_No	IS	Ord	T	Description	Qty	Serial_No	ITC	Remark
28	11LF-30770				PLATE-SCREEN,RH	1	- #0294	-	
29	S771-007300				WEATHER STRIP	1			
30	S681-460400				GROMMET	2			
31	S791-020034				GROMMET-PLATE	1			
33	14E7-01070				SIGHT GAUGE ASSY	1			
34	S611-019001				O-RING	1			
35	P760-011100				HOSE-RUBBER	1			
36	S681-290400				GROMMET	2			
37	11LB-30220				SHIM(1.0T)	8			
38	S621-014001				O-RING	2			
39	X520-110018				ELBOW-90,ORFS	1	- #0391		
					ELBOW-90,ORFS	2	#0392 -	E	
40	P220-110103				PLUG-HEX	1			
41	S631-014001				O-RING	1			
42	S631-029004				O-RING	1	- #0391		
					O-RING	3	#0392 -	E	
43	S621-018001				O-RING	5			
44	S035-082026				BOLT-W/WASHER	2			
45	11LB-30440				PLATE	1			
46	S681-130800				GROMMET	1			
48	31S8-20160				CONNECTOR	1			
49	31EK-11130				COUPLING-SCREW	4	- #0345	-	
50	P910-122038				HOSE ASSY-ORFS 0X0	1			
51	31L7-10260				CLAMP-TUBE	1			
52	P760-033120				HOSE-RUBBER	1			
53	S572-320002				CLAMP-HOSE,WIRE TYPE	2			

Item	Part_No	IS	Ord	T	Description	Qty	Serial_No	ITC	Remark
54	11LF-30780				PLATE-SCREEN,LH	1	#0004 - #0294	-	AGRICULTURAL
	11LF-30781				PLATE-SCREEN,LH	1	#0295 -	B	AGRICULTURAL
55	11LF-30790				PLATE-SCREEN,RH	1	#0004 - #0294	-	AGRICULTURAL
	11LF-30791				PLATE-SCREEN,RH	1	#0295 -	B	AGRICULTURAL
56	X500-110019				CONNECTOR-ORFS	1	#0392 -	E	AGRICULTURAL

COOLING SYSTEM (FAN, FORWARD & REVERSE)

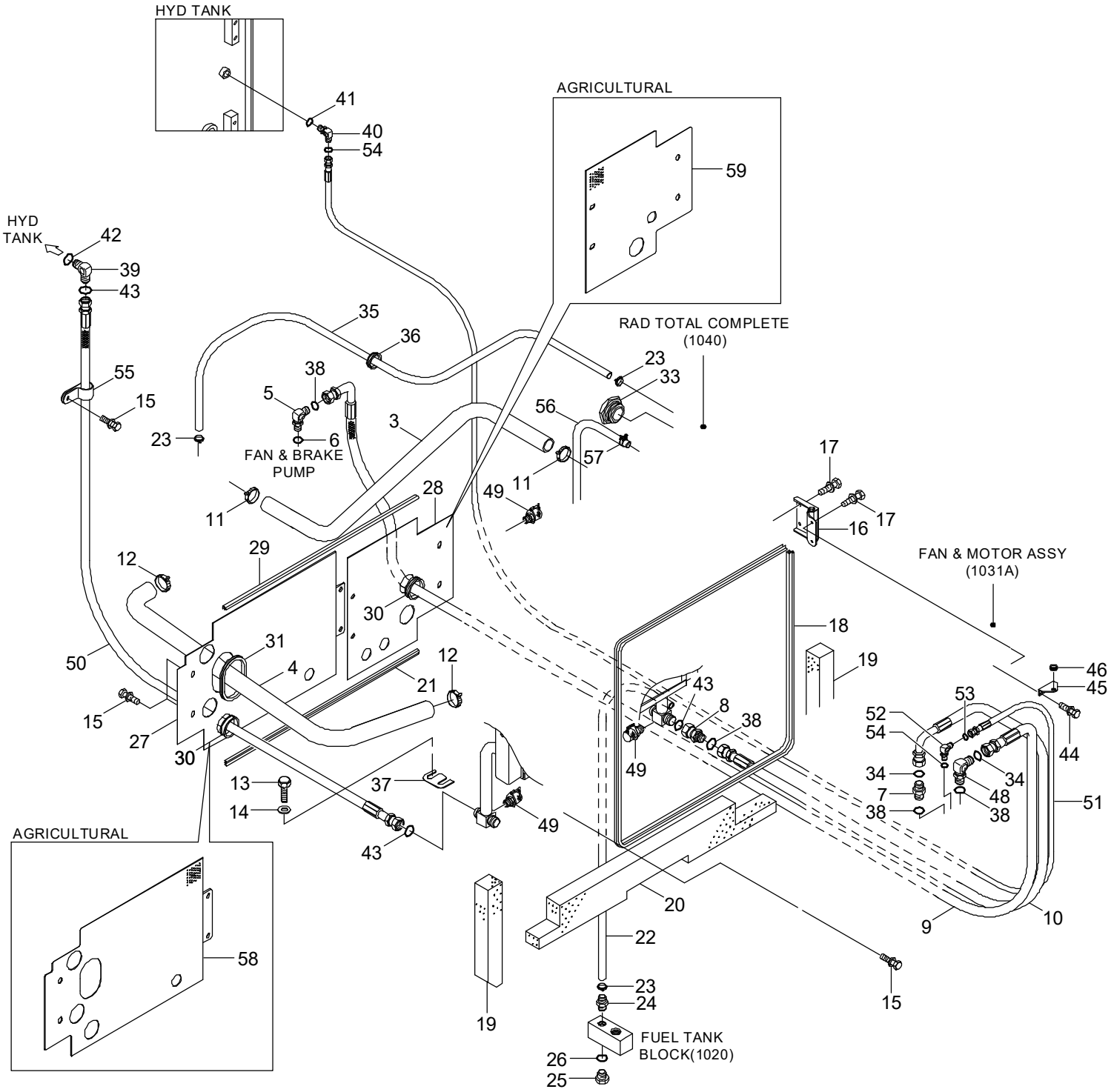

Item	Part_No	IS	Ord	T	Description	Qty	Serial_No	ITC	Remark
3	11LF-30710				HOSE-RUBBER	1			
4	11LF-30720				HOSE-RUBBER	1			
5	11LF-30730				ELBOW-90	1			
6	S611-023001				O-RING	1			
7	11LC-30470				CONNECTOR-ORFS	1			
9	P910-084050				HOSE ASSY-ORFS 0X0	1			
10	P930-122026				HOSE ASSY-ORFS 0X90	1			
11	S572-600006				CLAMP-HOSE,WIRE TYPE	2			
12	S572-650006				CLAMP-HOSE,WIRE TYPE	2			
13	S017-16035D				BOLT-HEX	8			
14	S441-160006				WASHER-HARDENED	8			
15	S037-101556				BOLT-W/WASHER	11			
16	11LF-30222				HINGE ASSY	2			
17	S037-102556				BOLT-W/WASHER	10			
18	S771-034700				WEATHER STRIP	1			
19	11LF-30741				SPONGE	2			
20	11LF-30750				SPONGE	1			
21	S772-008000				WEATHER STRIP	1	- #0294		
	S771-008000				WEATHER STRIP	1	#0295 -	B	
22	P760-021088				HOSE-RUBBER	1			
23	S520-020000				CLAMP-HOSE	4			
24	P090-100808				CONNECTOR-HOSE	1			
25	P220-110104				PLUG-HEX	1			
26	S631-018001				O-RING	1			
27	11LF-30761				PLATE-SCREEN,LH	1	- #0294	-	
28	11LF-30770				PLATE-SCREEN,RH	1	- #0294	-	

Item	Part_No	IS	Ord	T	Description	Qty	Serial_No	ITC	Remark
29	S771-007300				WEATHER STRIP	1			
30	S681-460400				GROMMET	2			
31	S791-020034				GROMMET-PLATE	1			
33	14E7-01070				SIGHT GAUGE ASSY	1			
34	S611-016001				O-RING	2			
35	P760-011100				HOSE-RUBBER	1			
36	S681-290400				GROMMET	2			
37	11LB-30220				SHIM(1.0T)	8			
38	S621-014001				O-RING	2			
39	X520-110018				ELBOW-90,ORFS	1	- #0391		
					ELBOW-90,ORFS	2	#0392 -	E	
40	X520-110012				ELBOW-90,ORFS	1			
41	S631-014001				O-RING	1			
42	S631-029004				O-RING	1	- #0391		
					O-RING	3	#0392 -	E	
43	S621-018001				O-RING	4			
44	S035-082026				BOLT-W/WASHER	2			
45	11LB-30440				PLATE	1			
46	S681-130800				GROMMET	1			
48	31FQ-10050				ELBOW-90	1			
49	31EK-11130				COUPLING-SCREW	4	- #0345	-	
50	P910-122038				HOSE ASSY-ORFS 0X0	1			
51	P910-042062				HOSE ASSY-ORFS 0X0	1			
52	31FG-10020				ELBOW-90	1			
53	S611-009001				O-RING	1			
54	S621-011001				O-RING	2			

Item	Part_No	IS	Ord	T	Description	Qty	Serial_No	ITC	Remark
55	31L7-10260				CLAMP-TUBE	1			
56	P760-033120				HOSE-RUBBER	1			
57	S572-320002				CLAMP-HOSE,WIRE TYPE	2			
58	11LF-30780				PLATE-SCREEN,LH	1	#0004 - #0294	-	AGRICULTURAL
	11LF-30781				PLATE-SCREEN,LH	1	#0295 -	B	AGRICULTURAL
59	11LF-30790				PLATE-SCREEN,RH	1	#0004 - #0294	-	AGRICULTURAL
	11LF-30791				PLATE-SCREEN,RH	1	#0295 -	B	AGRICULTURAL
60	X500-110019				CONNECTOR-ORFS	1	#0392 -	E	AGRICULTURAL

FAN & MOTOR ASSY

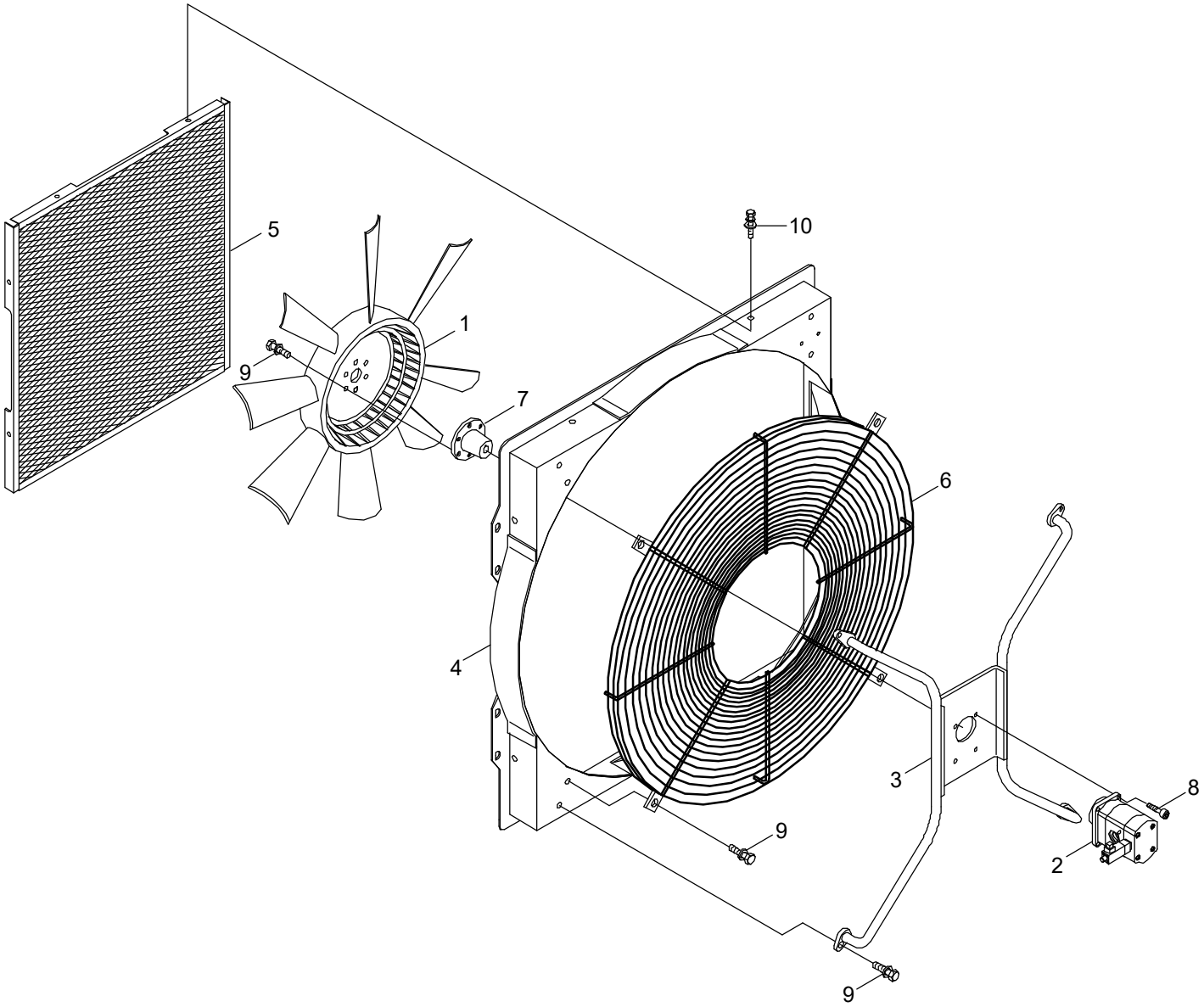

Item	Part_No	IS	Ord	T	Description	Qty	Serial_No	ITC	Remark
*	@				FAN & MOTOR ASSY	1			NOT
1	11LD-30281				.FAN-COOLING	1			
2	@				.MOTOR-FAN	1			NOT
3	11LD-30221				.BRACKET WA	1			
4	11LF-30291				.SHROUD WA	1			
5	11LF-30310				.FAN GUARD WA-FRONT	1			
6	11LD-30251				.FAN GUARD WA-REAR	1	- #0380		
	11LD-30252				.FAN GUARD WA-REAR	1	#0381 -	B	
7	11LB-30180				.ADAPTER	1			
8	S109-080256				.BOLT-SOCKET	4			
9	S037-102056				.BOLT-W/WASHER	14			
10	S035-081526				.BOLT-W/WASHER	8			

FAN MOTOR(FAN, FORWARD ONLY)

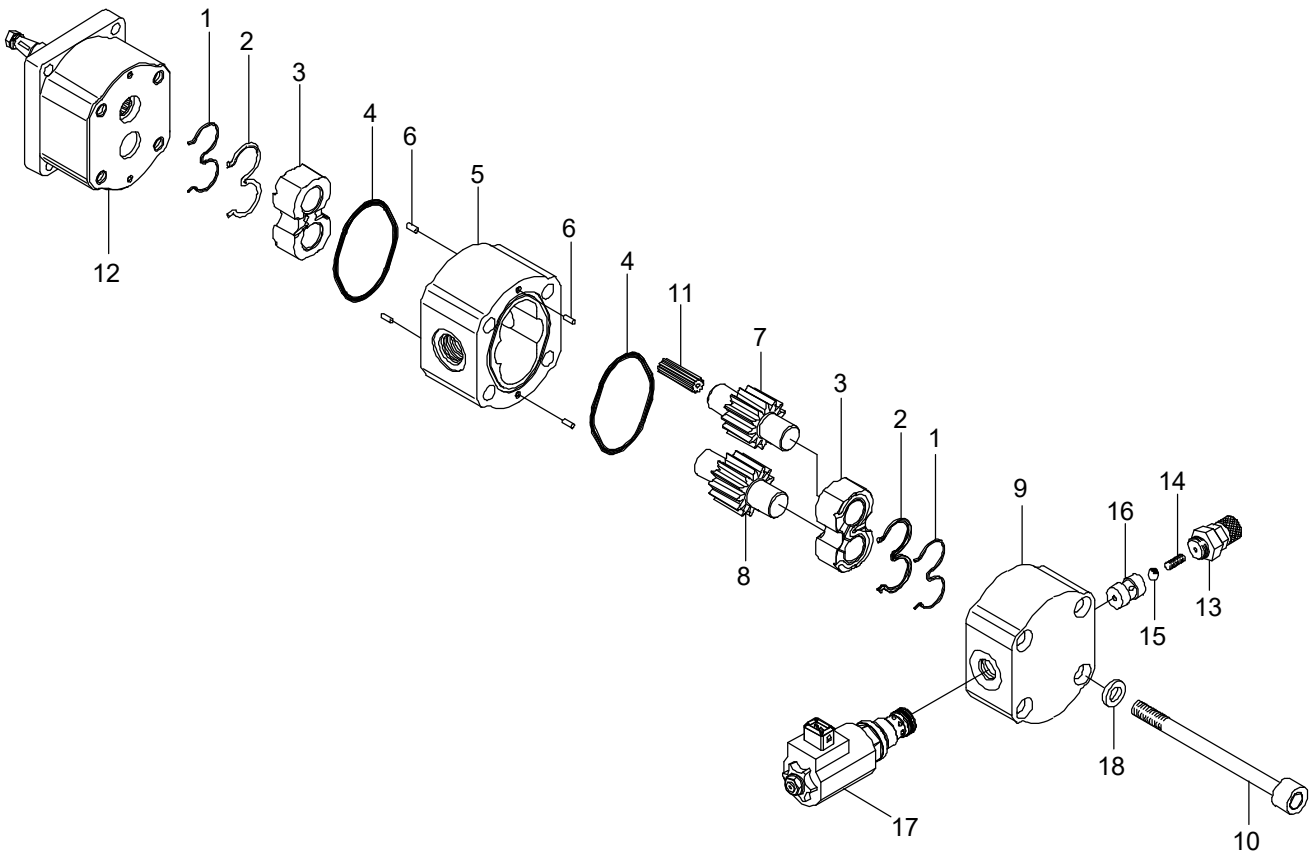

DESCRIPTION	PARTS NO	INCLUDED ITEM
SEAL KIT	5060053	1, 2, 4,12-1, 12-2, 17-1

Item	Part_No	IS	Ord	T	Description	Qty	Serial_No	ITC	Remark
*	11LG-30010				FAN MOTOR-ONE DIRECTION	1	- #0383		
	11LG-30011				FAN MOTOR-ONE DIRECTION	1	#0384 -	B	
NK1	5060003				.RING-BACK UP	2			NOT
NK2	5060002				.SEAL	2			NOT
3	@				.BEARING BLOCK	2			NOT
NK4	2120305				.O-RING	2			NOT
5	@				.GEAR HOUSING	1			NOT
6	@				.DOWEL PIN	4			NOT
7	@				.DRIVE GEAR	1			NOT
8	@				.IDLER GEAR	1			NOT
9	@				.COVER	1			NOT
10	@				.BOLT	4			NOT
11	@				.COUPLING	1			NOT
12	@				.FRONT BEARING	1			NOT
K12-1	20-103838				..SHAFT SEAL I	1			NOT SHOWN
K12-2	758403				..SHAFT SEAL II	1			NOT SHOWN
13	@				.COUPLING-MEASURING	1			NOT
14	@				.SPRING	1			NOT
15	@				.BALL	1			NOT
16	@				.VALVE SEAT	1			NOT
17	5030338				.RELIEF VALVE CARTRIDGE	1			
K17-1	20-103836				..SEAL KIT	1			NOT SHOWN
K	5060053				SEAL KIT	1			SEE ILLUST

FAN MOTOR(FAN, FORWARD & REVERSE)

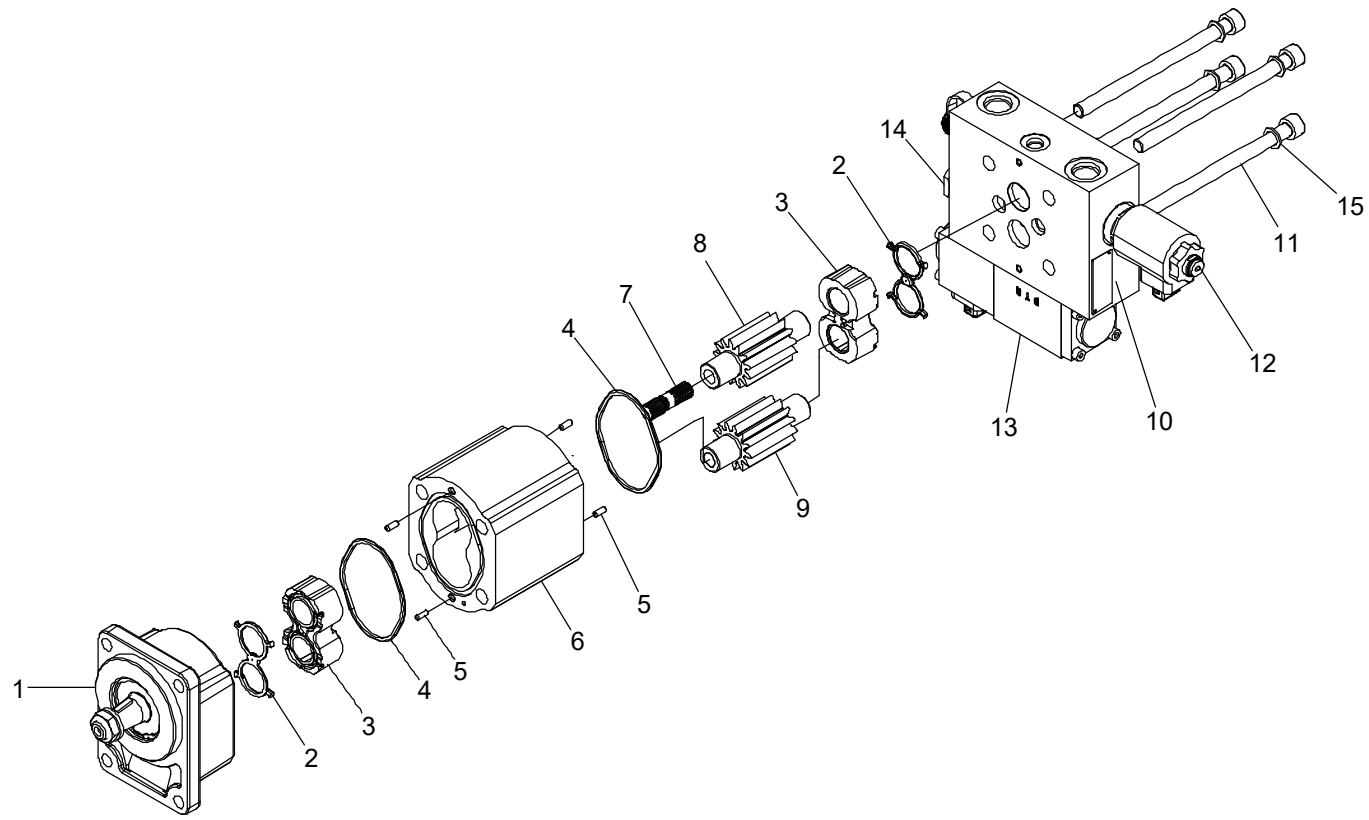

DESCRIPTION	PARTS NO	INCLUDED ITEM
SEAL KIT	5060026	1-1, 1-2, 2, 4, 12-1

Item	Part_No	IS	Ord	T	Description	Qty	Serial_No	ITC	Remark
*	11LG-30700				MOTOR-FAN	1			
1	@				.FRONT BEARING	1			NOT
K1-1	20-103838				..SHAFT SEAL I	1			NOT SHOWN
K1-2	758403				..SHAFT SEAL II	1			NOT SHOWN
K2	5060017				.SEAL	2			
3	@				.BEARING BLOCK	2			NOT
K4	2120305				.O-RING	2			
5	@				.DOWEL PIN	4			NOT
6	@				.GEAR HOUSING	1			NOT
7	@				.COUPLING	1			NOT
8	@				.DRIVE GEAR	1			NOT
9	@				.IDLER GEAR	1			NOT
10	@				.VALVE COVER	1			NOT
11	@				.BOLT	4			NOT
12	5030338				.RELIEF VALVE CARTRIDGE	1			
K12-1	857981				.O-RING	1			ONLY(12+13ASSY)
13	20-104301				.SOLENOID VALVE	1			
14	20-104302				.CHECK VLV CARTRIDGE	1			
15	@				.WASHER	4			NOT
K	5060026				SEAL KIT	1			SEE ILLUST

RADIATOR TOTAL ASSY

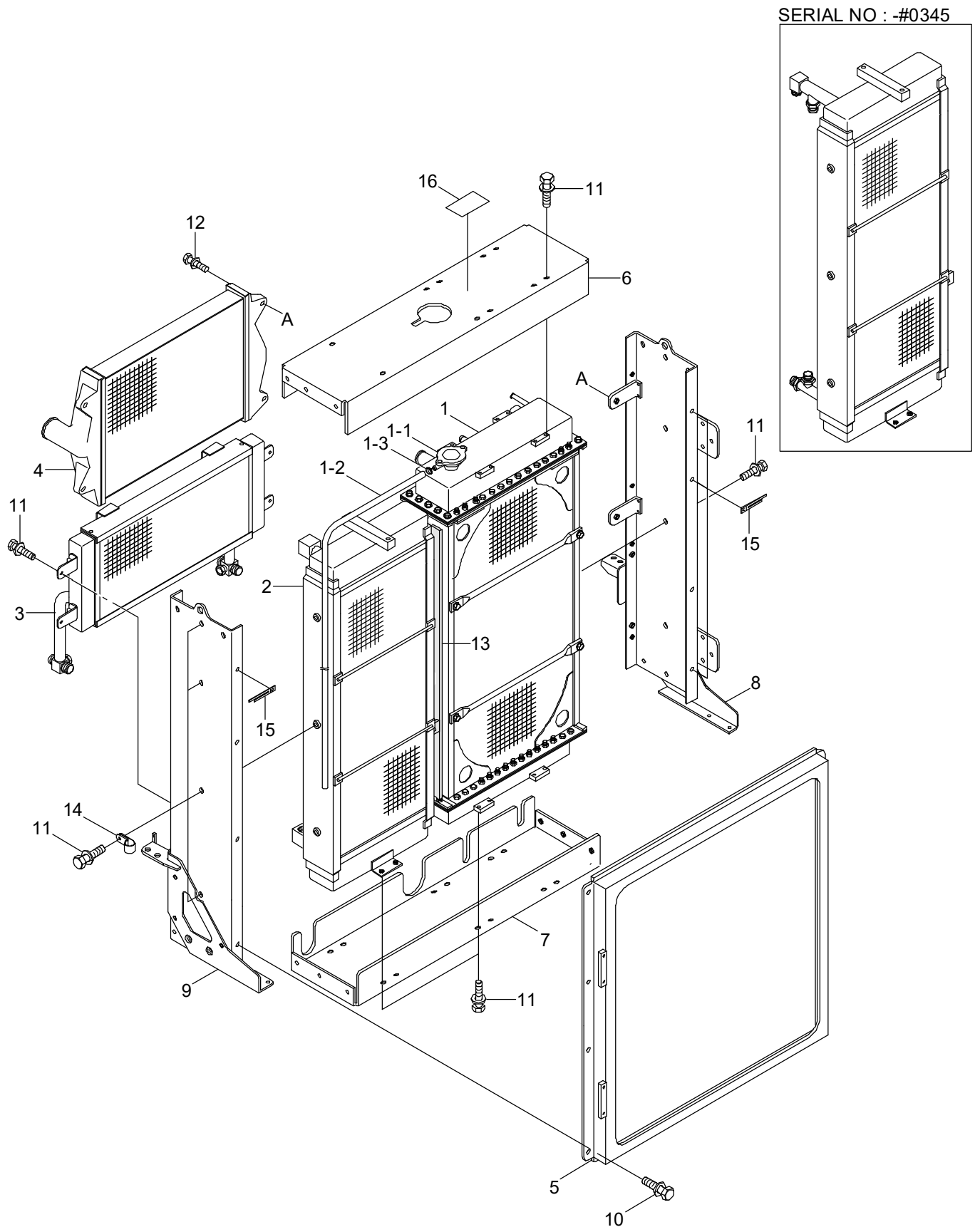

Item	Part_No	IS	Ord	T	Description	Qty	Serial_No	ITC	Remark
*	11LF-30510				RAD TOTAL COMPLETE	1	- #0003		
	11LF-30511				RAD TOTAL COMPLETE	1	#0004 - #0345	D	
	11LF-30512				RAD TOTAL COMPLETE	1	#0346 - #0391	D	
1	11LF-30521				.RADIATOR COMPLETE	1			
1-1	12101831				..CAP-RADIATOR	1			
1-2	96302500				..OVERFLOW HOSE	1			
1-3	45602160				..HOSE CLAMP	1			
2	11LF-30540				.T/M OIL COOLER ASSY	1	- #0003		
	11LF-30541				.T/M OIL COOLER ASSY	1	#0004 - #0345	D	
	11LF-30542				.T/M OIL COOLER ASSY	1	#0346 -	D	
3	11LF-30530				.HYD OIL COOLER ASSY	1	- #0003		
	11LF-30531				.HYD OIL COOLER	1	#0004 -	D	
4	11LF-30550				.CAC ASSY	1			
5	11LF-30600				.SHROUD COMPL	1			
6	11LF-30560				.SUPPORT-UPPER	1			
7	11LF-30570				.SUPPORT-LOWER	1			
8	11LF-30590				.SUPPORT ASSY-RH	1	- #0003		
	11LF-30591				.SUPPORT ASSY-RH	1	#0004 -	D	
9	11LF-30580				.SUPPORT ASSY-LH	1			
10	91008160				.BOLT-ASM	8			
11	91010251				BOLT-ASM	44			
12	91010451				BOLT-ASM	4			
13	45507160				PACKING	1			
14	45601710				CLIP-HOSE	4			
15	45603670				CLIP-HARNESS	6			
16	45151300				NAME PLATE	1			

AIR INTAKE SYSTEM

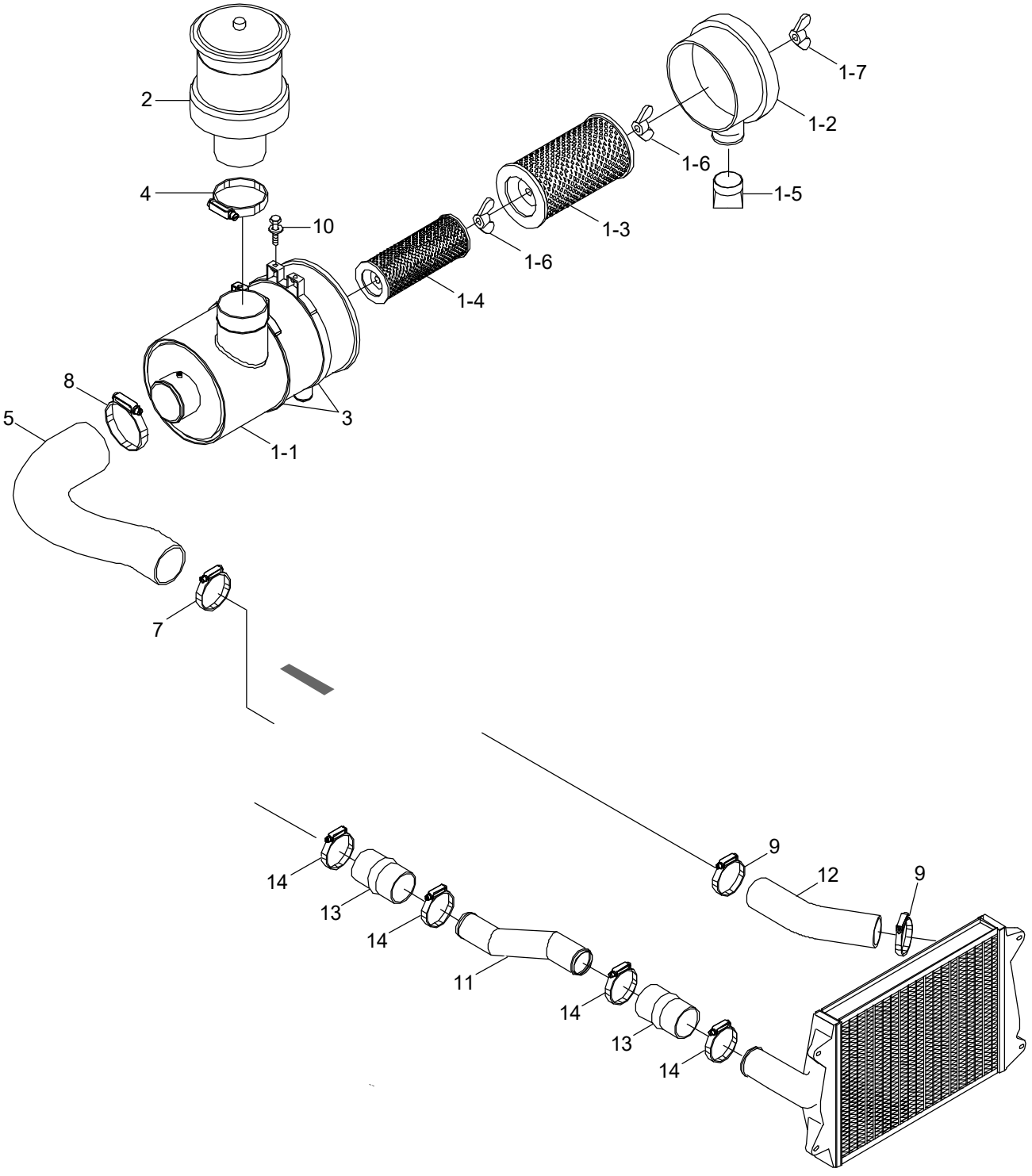

ENGINE ASSY
(1010)

CHARGED AIR COOLER
(1040)

Item	Part_No	IS	Ord	T	Description	Qty	Serial_No	ITC	Remark
1	11LD-40200				AIR CLEANER ASSY	1			
1-1	11LD-40210				.HOUSING-AIR CLEANER	1			
1-2	11LD-40220				.CAP WA	1			
1-3	11N8-22140				.ELEMENT-OUTER	1			
1-4	11N8-22150				.ELEMENT-INNER	1			
1-5	E211-2105				.VALVE-VACUUM	1			
1-6	11EM-21060				.NUT-WING	2			
1-7	11EM-21070				.NUT-WING	1			
2	11N8-20181				PRECLEANER	1			
3	11L1-20050				CLAMP ASSY	2			
4	11LB-40180				CLAMP-HOSE	1			
5	11LF-40082				HOSE-AIRCLEANER	1			
7	11LB-40310				CLAMP-T/BOLT	1			
8	11LB-40190				CLAMP-HOSE	1			
9	11LF-40110				CLAMP-T/RETENSION	2			
10	S037-104056				BOLT-W/WASHER	4			
11	11LF-40050				PIPE WA	1			
12	11LF-40090				HOSE-CHARGED AIR	1			
13	11LD-40080				HOSE-CHARGED AIR	3			
14	11LD-40090				CLAMP-T/RETENTION	4			

EXHAUST SYSTEM

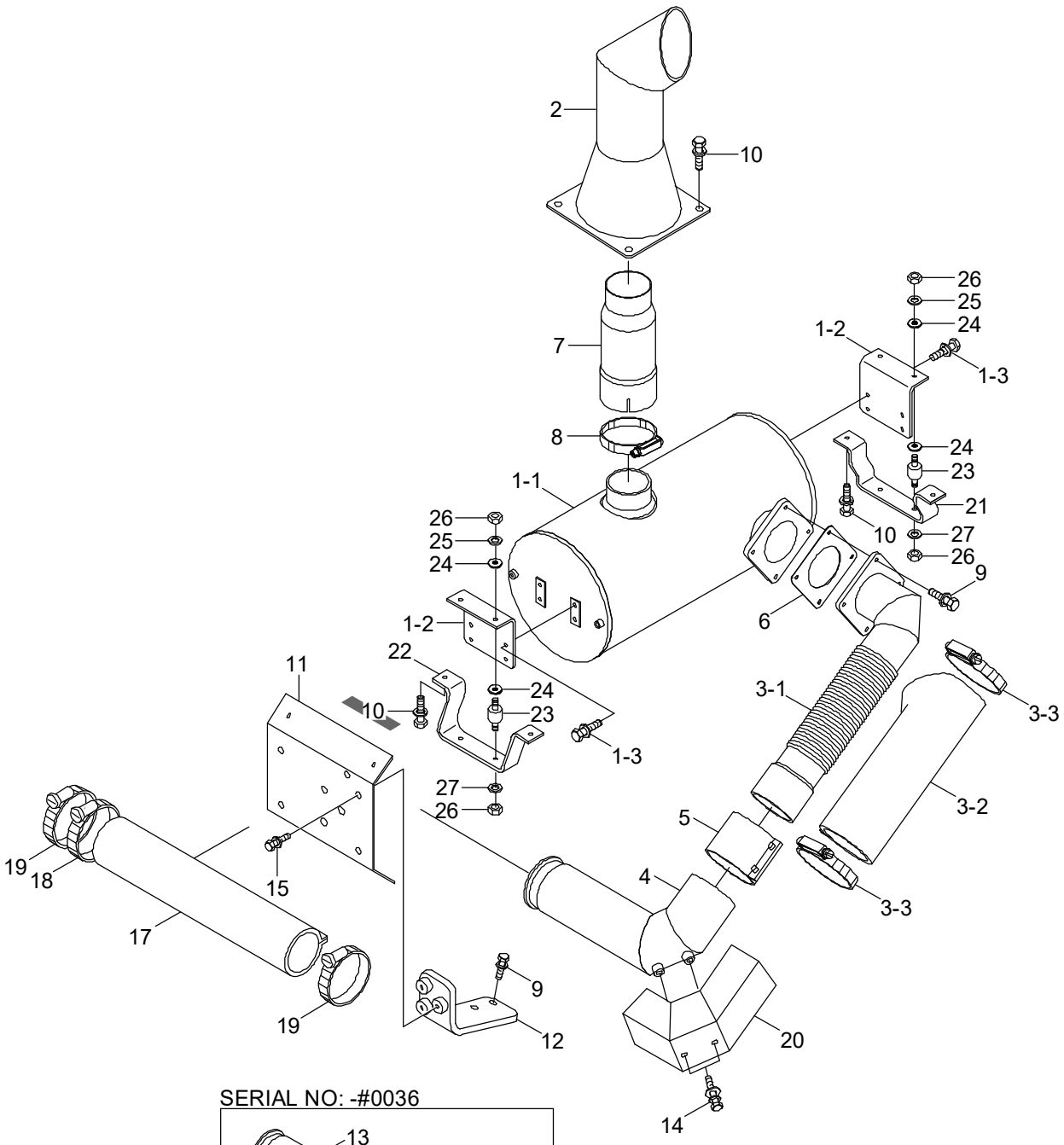

SERIAL NO: -#0036

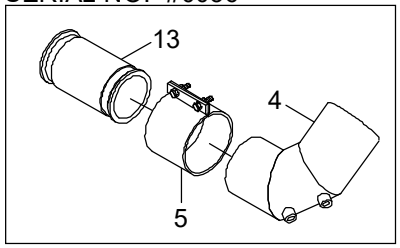

Item	Part_No	IS	Ord	T	Description	Qty	Serial_No	ITC	Remark
1	11LF-50441				MUFFLER ASSY	1			
1-1	11LF-50451				.MUFFLER SUB ASSY	1			
1-2	11LB-50860				.BRACKET	2			
1-3	S037-122556				.BOLT-W/WASHER	8			
2	11LB-50090				PIPE WA-TAIL	1			
3	11LF-50510				BELLOWS PIPE ASSY	1			
3-1	11LF-50520				.PIPE WA	1			
3-2	11LF-50530				.INSULATOR	1			
3-3	S520-090000				.CLAMP-HOSE	1			
4	11LF-50540				PIPE WA	1	- #0036		
	11LF-50541				PIPE WA	1	#0037 -	B	
5	11N6-30040				CLAMP-SEAL	2	- #0036		
					CLAMP-SEAL	1	#0037 -	A	
6	14L3-00220				GASKET	1			
7	11LC-50410				PIPE-REDUCER	1			
8	11EH-32080				CLAMP-EXHAUST PIPE	1			
9	S037-103056				BOLT-W/WASHER	6			
10	S037-123056				BOLT-W/WASHER	8			
11	11LG-50250				SCREEN-T/CHARGER	1			
12	11LF-50610				BRACKET WA	1			
13	11LF-50590				PIPE WA	1	- #0036	-	
14	S035-081526				BOLT-W/WASHER	2			
15	S037-102056				BOLT-W/WASHER	3			
17	11LF-50420				INSULATOR	1			
18	S520-070000				CLAMP-HOSE	1			
19	S520-065000				CLAMP-HOSE	2			

Item	Part_No	IS	Ord	T	Description	Qty	Serial_No	ITC	Remark
20	11LF-50570				SCREEN	1			
21	11LH-50100				BRACKET WA-LH	1			
22	11LH-50110				BRACKET WA-RH	1			
23	11LB-88600				MOUNT	4			
					MOUNT	4	- #0360		
	11LB-88601				MOUNT	4	#0361 -	B	
24	11LB-50870				INSULATOR	8			
					INSULATOR	8	- #0360		
	11LB-50940				INSULATOR	8	#0361 -	B	
25	11L7-30070				WASHER	4			
26	S205-121006				NUT-HEX	8			
27	S441-120006				WASHER-HARDENED	4			

AIRCON & HEATER MOUNTING

SERIAL NO: -#0087

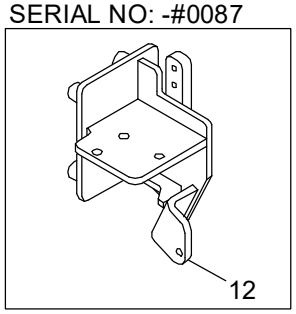

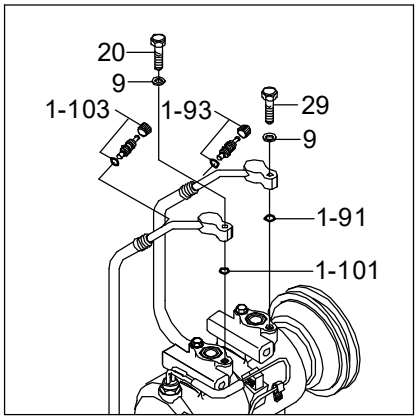

DETAIL B

DETAIL A

Item	Part_No	IS	Ord	T	Description	Qty	Serial_No	ITC	Remark
1	11LF-91021				AIRCON & HEATER ASSY	1	- #0003		
	11LF-91022				AIRCON & HEATER ASSY	1	#0004 -	D	
1-1	@				.AIRCON & HEATER UNIT	1			NOT
1-2	11LH-90090				.COND & FAN ASSY	1			
1-21	A2W01133				..CONDENSER	1			
1-22	A2W01178				..FAN & MOTOR ASSY	1	#0001 -	-	
122.1	AC100287				...BLOWER ASSY	1	#0001 -	-	NOT SHOWN
122.11	AC100180				....FAN ASSY	1			NOT SHOWN
122.12	AC110288				....MOTOR ASSY	1			NOT SHOWN
1-23	AA000004				..BOLT-W/WASHER	4			
1-3	11N6-90060				.DRIER-RECEIVER	1			
1-4	11N6-90120				.BRACKET-R/DRIER	1			
1-5	11LF-90122				.CONTROL ASSY	1			
1-6	11N6-90040				.COMPRESSOR ASSY	1			
1-61	11LF-90230				..THERMAL SW-COMP	1			
1-62	A5W00153				..CLUTCH	1			
1-7	11N6-90110				.PULLEY-IDLE	1			
1-71	A4760-508-00-2				..BRACKET-PULLEY	1			
1-72	A4700-511-01-2				..PULLEY-IDLE	1			INCL 1-73
1-73	A8900-518-03-3				...BOLT-TENSION	1			
1-8	11N4-92130				.V-BELT	1			
1-9	11LF-90271				.HOSE-SUCTION	1			
1-91	A305000216-2				..O-RING	1			
1-92	A305000203-2				..O-RING	1			
1-93	A304000601-4				..CHARGE VALVE ASSY-L	1			
1-10	11LF-90280				.DISCHARGE HOSE	1			

Item	Part_No	IS	Ord	T	Description	Qty	Serial_No	ITC	Remark
1-101	A305000217-2				..O-RING	1			
1-102	A305000205-2				..O-RING	1			
1-103	A304000301-4				..CHARGE VALVE ASSY	1			
1-11	11LF-90291				.LIQUID HOSE(A)	1	- #0003		
	11LF-90292				.LIQUID HOSE(A)	1	#0004 -	B	
1-111	A305000207-2				..O-RING	1			
1-112	A305000209-2				..O-RING	1			
1-12	11LF-90301				.LIQUID HOSE(B)	1	- #0003		
	11LF-90302				.LIQUID HOSE(B)	1	#0004 -	D	
1-121	A305000209-2				..O-RING	2			
2	11LC-90100				HOSE-HEATER	1			
3	11LC-90090				HOSE-HEATER RETURN	1			
4	11L7-90150				VALVE-HEATER	1			
5	S520-027000				CLAMP-HOSE,SCREW TYPE	4			
6	S542-240002				CLAMP-TUBE	2			
7	S681-460400				GROMMET	1			
8	S542-240002				CLAMP-TUBE	2			
9	S403-08200B				WASHER-PLAIN	8			
10	S403-06200B				WASHER-PLAIN	4			
11	S035-081526				BOLT-W/WASHER	4			
12	11LF-90313				BRACKET WA	1	- #0313		
	11LF-90314				BRACKET WA	1	#0314 -	B	
13	S037-102556				BOLT-W/WASHER	2			
14	S109-080956				BOLT-SOCKET	4			
15	S035-082526				BOLT-W/WASHER	5			
16	14L3-00741				RESILIENT	4			

Item	Part_No	IS	Ord	T	Description	Qty	Serial_No	ITC	Remark
17	S151-040126				SCREW-TAPPING	4			
18	S520-020000				CLAMP-HOSE	1			
19	11LC-90150				BLOCK	1			
20	S015-080306				BOLT-HEX	1			
21	S037-122056				BOLT-W/WASHER	4			
22	S203-061006				NUT-HEX	4			
23	S203-081006				NUT-HEX	2			
24	S035-062026				BOLT-W/WASHER	2			
25	14L1-01350				VALVE-HEATER	1			
26	11EK-92130				HOSE-DRAIN	1			
27	S161-050166				SCREW-CROSS R/ROUND	4			
28	S403-05200B				WASHER-PLAIN	4			
29	S015-080356				BOLT-HEX	1			
30	S037-103056				BOLT-W/WASHER	3			
31	S037-102056				BOLT-W/WASHER	1			

AIRCON & HEATER MOUNTING(AGRICULTURAL)

SERIAL NO: -#0087

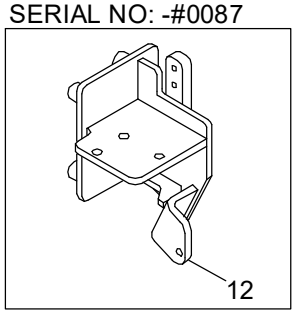

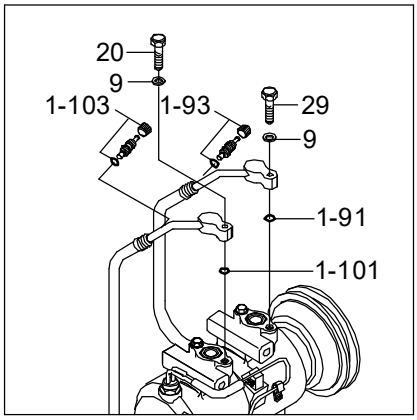

DETAIL B

DETAIL A

Item	Part_No	IS	Ord	T	Description	Qty	Serial_No	ITC	Remark
*	@				AIRCON & HEATER MTG	1	#0004 -	-	NOT
1	11LF-91070				AIRCON & HEATER ASSY	1	- #0381		
	11LF-91072				AIRCON & HEATER ASSY	1	#0382 -	D	
1-1	@				.AIRCON & HEATER UNIT	1			NOT
1-2	11LF-91040				.CONDENSER-AGRICULTURAL	1			
1-3	11N6-90060				.DRIER-RECEIVER	1			
1-4	11N6-90120				.BRACKET-R/DRIER	1			
1-5	11LF-90122				.CONTROL ASSY	1			
1-6	11N6-90040				.COMPRESSOR ASSY	1	- #0381		
	11Q6-90040				.COMPRESSOR ASSY	1	#0382 -	D	
1-61	11LF-90230				..THERMAL SW-COMP	1	- #0381	-	
1-62	A5W00153				..CLUTCH	1	- #0381	-	
1-7	11N6-90110				.PULLEY-IDLE	1			
1-71	A4760-508-00-2				..BRACKET-PULLEY	1			
1-72	A4700-511-01-2				..PULLEY-IDLE	1			INCL 1-73
1-73	A8900-518-03-3				...BOLT-TENSION	1			
1-8	11N4-92130				.V-BELT	1			
1-9	11LF-90271				.HOSE-SUCTION	1	- #0381		
	11LF-90272				.HOSE-SUCTION	1	#0382 -	D	
1-91	A305000216-2				..O-RING	1	- #0381	-	
1-92	A305000203-2				..O-RING	1			
1-93	A304000601-4				..CHARGE VALVE ASSY-L	1			
1-10	11LF-91051				.DISCHARGE HOSE	1	- #0381		
	11LF-91052				.DISCHARGE HOSE	1	#0382 -	D	
1-101	A305000217-2				..O-RING	1	- #0381	-	
1-102	A305000205-2				..O-RING	1			

Item	Part_No	IS	Ord	T	Description	Qty	Serial_No	ITC	Remark
1-103	A304000301-4				..CHARGE VALVE ASSY	1			
1-11	11LF-91060				.LIQUID HOSE(A)	1			
1-111	A305000207-2				..O-RING	1			
1-112	A305000209-2				..O-RING	1			
1-12	11LF-90302				.LIQUID HOSE(B)	1			
1-121	A305000209-2				..O-RING	2			
2	11LC-90100				HOSE-HEATER	1			
3	11LC-90090				HOSE-HEATER RETURN	1			
4	11L7-90150				VALVE-HEATER	1			
5	S520-027000				CLAMP-HOSE,SCREW TYPE	4			
6	S542-240002				CLAMP-TUBE	2			
7	S681-460400				GROMMET	1			
8	S542-240002				CLAMP-TUBE	2			
9	S403-08200B				WASHER-PLAIN	8	- #0381		
					WASHER-PLAIN	6	#0382 -	A	
10	S403-06200B				WASHER-PLAIN	4			
11	S035-081526				BOLT-W/WASHER	4			
12	11LF-90313				BRACKET WA	1	- #0313		
	11LF-90314				BRACKET WA	1	#0314 - #0381	B	
	11LL-90100				BRACKET WA	1	#0382 -	D	
13	S037-102556				BOLT-W/WASHER	2			
14	S109-080956				BOLT-SOCKET	4	- #0381		
	S109-080906				BOLT-SOCKET	4	#0382 -	D	
15	S035-082526				BOLT-W/WASHER	5			
16	14L3-00741				RESILIENT	4			
17	S151-040126				SCREW-TAPPING	4			

Item	Part_No	IS	Ord	T	Description	Qty	Serial_No	ITC	Remark
18	S520-020000				CLAMP-HOSE	1			
19	11LC-90150				BLOCK	1			
20	S015-080306				BOLT-HEX	1	- #0381	-	
21	S037-122056				BOLT-W/WASHER	4			
22	S203-061006				NUT-HEX	4			
23	S203-081006				NUT-HEX	2			
24	S035-062026				BOLT-W/WASHER	2			
25	14L1-01350				VALVE-HEATER	1			
26	11EK-92130				HOSE-DRAIN	1			
27	S161-050166				SCREW-CROSS R/ROUND	4			
28	S403-05200B				WASHER-PLAIN	4			
29	S015-080356				BOLT-HEX	1	- #0381	-	
30	S037-103056				BOLT-W/WASHER	3			
31	S037-102056				BOLT-W/WASHER	1			
					BOLT-W/WASHER	1			
32	S018-100356				BOLT-HEX	1	#0382 -	-	
33	S441-100006				WASHER-HARDENED	1	#0382 -	-	
34	S403-10200B				WASHER-PLAIN	1	#0382 -	-	

AIRCON & HEATER UNIT

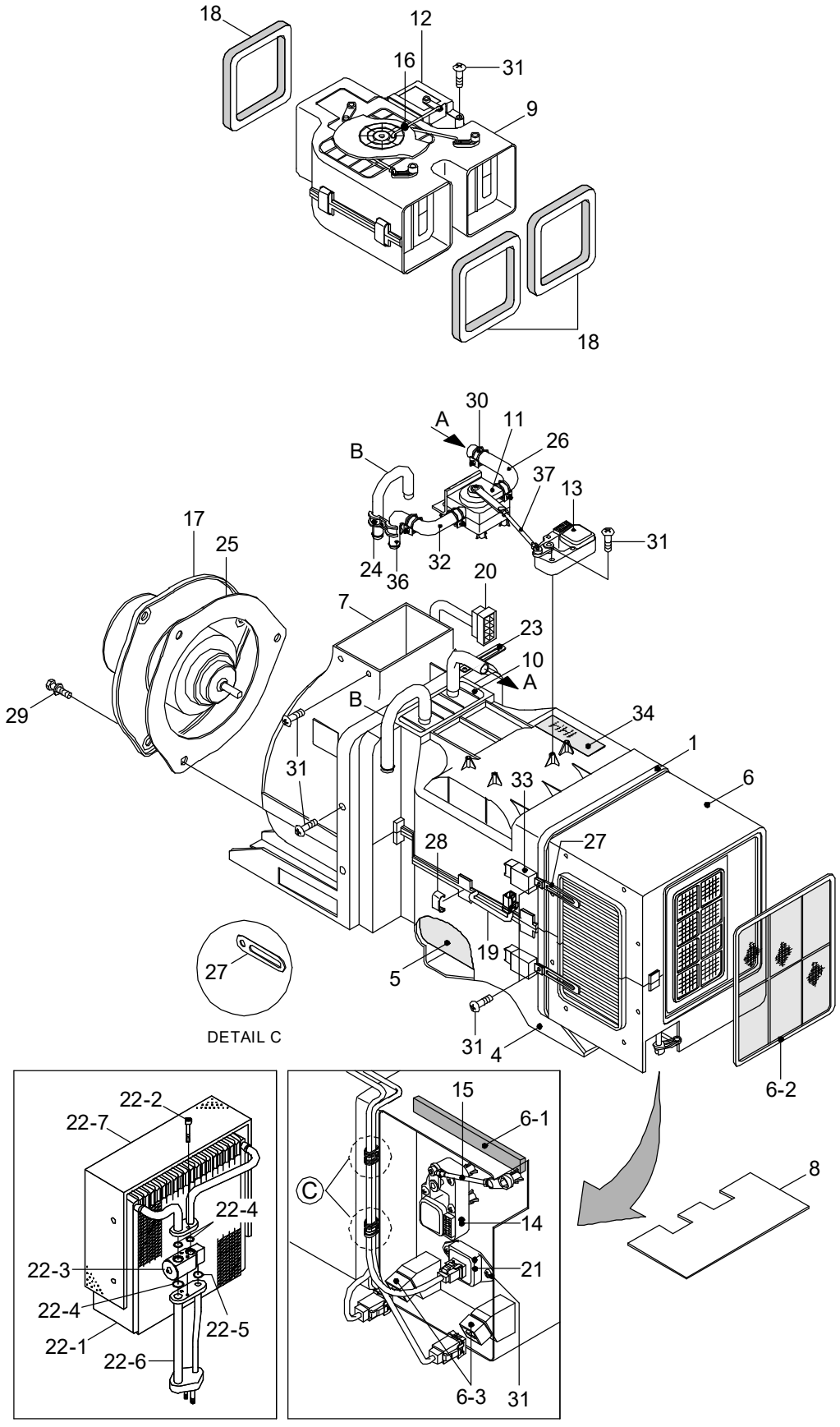

Item	Part_No	IS	Ord	T	Description	Qty	Serial_No	ITC	Remark
*	11LF-90240				AIRCON & HEATER UNIT	1	- #0381		
	11LF-90241				AIRCON & HEATER UNIT	1	#0382 -	D	
1	AH000089				.HVAC CASE-UPP	1			
4	AM12101400-0				.HVAC CASE-LOW	1			
5	AM75001000-2				.EVAC INSULATION-LOW	1			
6	AH000054				.INTAKE CASE ASSY	1			
6-1	AM70003600-3				..SEAL-FILTER,FRESH	1			
6-2	11N6-90770				..AIR FILTER-REFRESH	1			
6-3	11N6-90820				..RELAY	2			
7	AM13100100-0				.CASE-BLOWER	1			
8	A120150700-3				.PLATE-SIDE	1			
9	AM14000700-2				.DAMPER CASE ASSY	1			
10	11N6-90780				.HEATER CORE	1			
11	AH001160				.VLAVE-WATER	1			
12	AM50200200-1				.MOTOR ACT-MODE	1			
13	AH100311				.MOTOR ACT-TEMP	1			
14	11N6-90740				.MOTOR ACT-INTAKE	1			
15	AM52300100-4				.ROD-INTAKE	1			
16	AM53300200-4				.ROD-CAM	1			
17	AM60001700-2				.FAN & MOTOR ASSY	1			
18	AM70003800-4				.SPONGE-SEALING	3			
19	A165400100-2				.SENSOR-DUCT	1			
20	AH100135				.LAMP WIRE HARNESS	1			
21	11N6-90750				.RESISTOR ASSY	1			
22	11N6-90790				.EVAP CORE ASSY	1	- #0381		
	11N6-90791				.EVAP CORE ASSY	1	#0382 -	D	

Item	Part_No	IS	Ord	T	Description	Qty	Serial_No	ITC	Remark
22-1	A111056400-1				..CORE ASSY-LAMI	1			
22-2	A111750100-4				..BOLT-WRENCH,HEX	2			
22-3	11N6-90800				..VALVE-EXPANSION	1	- #0381		
	11N6-90801				..EXPANSION VALVE ASSY	1	#0382 -	D	
22-4	A305000212-2				..O-RING	3			
22-5	A305000211-2				..O-RING	1			
22-6	A112059600-2				..PIPE ASSY	1			
22-7	A115004900-2				..INSULATION-CORE	1			
23	3AH-0756				.WIRE HOLDER	4			
24	AH000314				.CLAMP-H/RAD PIPE	1			
25	3AH-0774				.PACKING-MOTOR	1			
26	AH001287				.HOSE-INLET,WATER	1			
27	4AH-0643				.HOLDER-WIRE	2			
28	4AH-0688				.CLIP-CASE	9			
29	4AH-0886				.SCREW	3			
30	AH001853				.CLAMP-WATER HOSE	4			
31	K500531				.SCREW	22			
32	AH001288				.HOSE-OUTLET,WATER	1			
33	11N6-90820				.RELAY	2			
34	AH001696				.NAME PLATE	2			
35	AH000984				.PACKING ASSY	1			27-2EA, 31-4EA
36	AH001852				.HEATER PIPE-INLET	1			
37	AH000856				.ROD-TEMP	1			

AIR CONDITIONER MOUNTING

SERIAL NO: -#0087

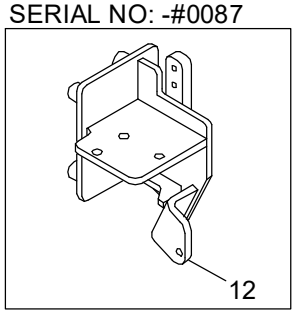

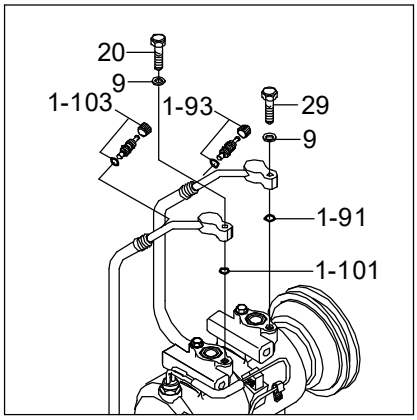

DETAIL B

DETAIL A

Item	Part_No	IS	Ord	T	Description	Qty	Serial_No	ITC	Remark
1	11LF-91011				AIRCON ASSY	1	- #0003		
	11LF-91012				AIRCON ASSY	1	#0004 -	D	
1-1	@				.AIRCON UNIT	1			NOT
1-2	11LH-90090				.COND & FAN ASSY	1			
1-21	A2W01133				..CONDENSER	1			
1-22	A2W01178				..FAN & MOTOR ASSY	1			
122.1	AC100287				...BLOWER ASSY	1			NOT SHOWN
122.11	AC100180				....FAN ASSY	1			NOT SHOWN
122.12	AC110288				....MOTOR ASSY	1			NOT SHOWN
1-23	AA000004				..BOLT-W/WASHER	4			
1-3	11N6-90060				.DRIER-RECEIVER	1			
1-4	11N6-90120				.BRACKET-R/DRIER	1			
1-5	11LF-90122				.CONTROL ASSY	1			
1-6	11N6-90040				.COMPRESSOR ASSY	1			
1-61	11LF-90230				..THERMAL SW-COMP	1			
1-62	A5W00153				..CLUTCH	1			
1-7	11N6-90110				.PULLEY-IDLE	1			
1-71	A4760-508-00-2				..BRACKET-PULLEY	1			
1-72	A4700-511-01-2				..PULLEY-IDLE	1			INCL 1-73
1-73	A8900-518-03-3				...BOLT-TENSION	1			
1-8	11N4-92130				.V-BELT	1			
1-9	11LF-90271				.HOSE-SUCTION	1			
1-91	A305000216-2				..O-RING	1			
1-92	A305000203-2				..O-RING	1			
1-93	A304000601-4				..CHARGE VALVE ASSY-L	1			
1-10	11LF-90280				.DISCHARGE HOSE	1			

Item	Part_No	IS	Ord	T	Description	Qty	Serial_No	ITC	Remark
1-101	A305000217-2				..O-RING	1			
1-102	A305000205-2				..O-RING	1			
1-103	A304000301-4				..CHARGE VALVE ASSY	1			
1-11	11LF-90291				.LIQUID HOSE(A)	1	- #0003		
	11LF-90292				.LIQUID HOSE(A)	1	#0004 -	B	
1-111	A305000207-2				..O-RING	1			
1-112	A305000209-2				..O-RING	1			
1-12	11LF-90301				.LIQUID HOSE(B)	1	- #0003		
	11LF-90302				.LIQUID HOSE(B)	1	#0004 -	D	
1-121	A305000209-2				..O-RING	2			
7	S681-460400				GROMMET	1			
8	S542-240002				CLAMP-TUBE	2			
9	S403-08200B				WASHER-PLAIN	8			
10	S403-06200B				WASHER-PLAIN	4			
11	S035-081526				BOLT-W/WASHER	1			
12	11LF-90313				BRACKET WA	1	- #0313		
	11LF-90314				BRACKET WA	1	#0314 -	B	
13	S037-102556				BOLT-W/WASHER	2			
14	S109-080956				BOLT-SOCKET	4			
15	S035-082526				BOLT-W/WASHER	5			
16	14L3-00741				RESILIENT	4			
17	S151-040126				SCREW-TAPPING	4			
18	S520-020000				CLAMP-HOSE	1			
20	S015-080306				BOLT-HEX	1			
21	S037-122056				BOLT-W/WASHER	4			
22	S203-061006				NUT-HEX	4			

Item	Part_No	IS	Ord	T	Description	Qty	Serial_No	ITC	Remark
23	S203-081006				NUT-HEX	2			
24	S035-062026				BOLT-W/WASHER	2			
26	11EK-92130				HOSE-DRAIN	1			
27	S161-050166				SCREW-CROSS R/ROUND	4			
28	S403-05200B				WASHER-PLAIN	4			
29	S015-080356				BOLT-HEX	1			
30	S037-103056				BOLT-W/WASHER	3			
31	S037-102056				BOLT-W/WASHER	1			

AIR CONDITIONER UNIT

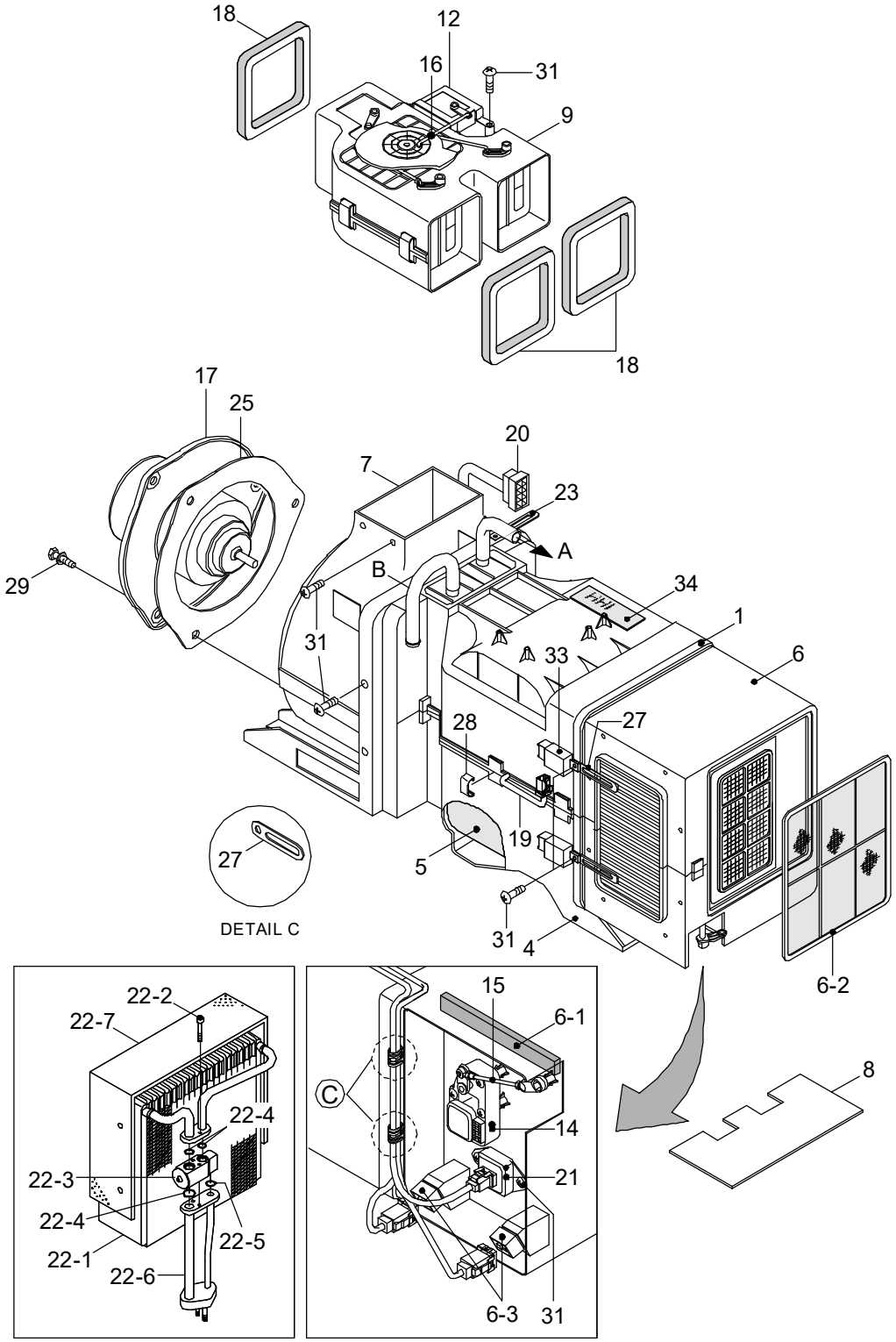

Item	Part_No	IS	Ord	T	Description	Qty	Serial_No	ITC	Remark
*	11LF-90250				AIRCON UNIT	1			
1	AH000090				.HVAC CASE UPP ASSY	1			
4	AM12101400-0				.HVAC CASE-LOW	1			
5	AM750001002				.EVAP INSULATION LOW	1			
6	AH000055				.INTAKE CASE ASSY	1			
6-1	AM70003600-3				..SEAL-FILTER,FRESH	1			
6-2	11N6-90770				..AIR FILTER-REFRESH	1			
6-3	11N6-90820				..RELAY	2			
7	AM13100100-0				.CASE-BLOWER	1			
8	A120150700-3				.PLATE-SIDE	1			
9	AM14000700-2				.DAMPER CASE ASSY	1			
12	AM50200200-1				.MOTOR ACT-MODE	1			
14	11N6-90740				.MOTOR ACT-INTAKE	1			
15	AM52300100-4				.ROD-INTAKE	1			
16	AM53300200-4				.ROD-CAM	1			
17	AM60001700-2				.FAN & MOTOR ASSY	1			
18	AM70003800-4				.SPONGE-SEALING	3			
19	A165400100-2				.SENSOR-DUCT	1			
20	AH100135				.LAMP WIRE HARNESS	1			
21	11N6-90750				.RESISTOR ASSY	1			
22	11N6-90790				.EVAP CORE ASSY	1			
22-1	A111056400-1				..CORE ASSY-LAMI	1			
22-2	A111750100-4				..BOLT-WRENCH,HEX	2			
22-3	11N6-90800				..VALVE-EXPANSION	1			
22-4	A305000212-2				..O-RING	3			
22-5	A305000211-2				..O-RING	1			

Item	Part_No	IS	Ord	T	Description	Qty	Serial_No	ITC	Remark
22-6	A112059600-2				..PIPE ASSY	1			
22-7	A115004900-2				..INSULATION-CORE	1			
23	3AH-0756				.WIRE HOLDER	4			
25	3AH-0774				.PACKING-MOTOR	1			
27	4AH-0643				.HOLDER-WIRE	2			
28	4AH-0688				.CLIP-CASE	9			
29	4AH-0886				.SCREW	3			
31	K500531				.SCREW	16			
33	11N6-90820				.RELAY	2			
34	AH001696				.NAME PLATE	1			
35	AH000984				.PACKING ASSY	1			

HEATER MOUNTING

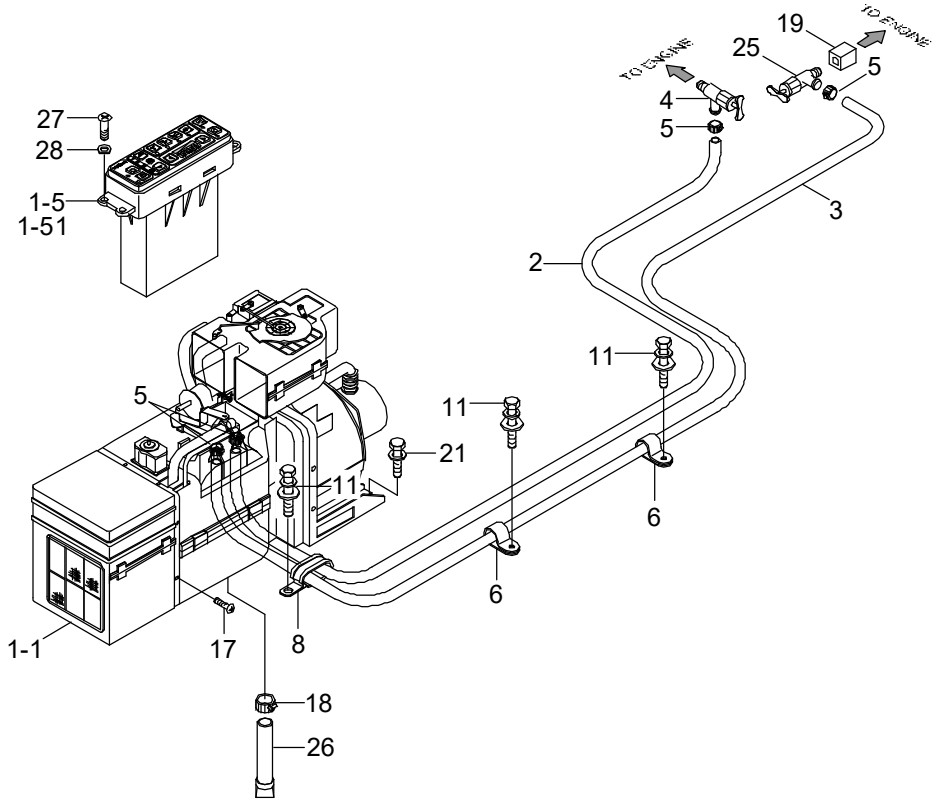

Item	Part_No	IS	Ord	T	Description	Qty	Serial_No	ITC	Remark
1	11LF-91031				HEATER ASSY	1			
1-1	@				.HEATER UNIT	1			NOT
1-5	11LF-90112				.CONTROL ASSY	1			
2	11LC-90100				HOSE-HEATER	1			
3	11LC-90090				HOSE-HEATER RETURN	1			
4	11L7-90150				VALVE-HEATER	1			
5	S520-027000				CLAMP-HOSE	4			
6	S542-240002				CLAMP-TUBE	2			
11	S035-081526				BOLT-W/WASHER	3			
17	S151-040126				SCREW-TAPPING	4			
18	S520-020000				CLAMP-HOSE	1			
19	11LC-90150				BLOCK	1			
21	S037-122056				BOLT-W/WASHER	4			
25	14L1-01350				VALVE-HEATER	1			
26	11EK-92130				HOSE-DRAIN	1			
27	S161-050166				SCREW-CROSS R/ROUND	4			
28	S403-05200B				WASHER-PLAIN	4			

HEATER UNIT

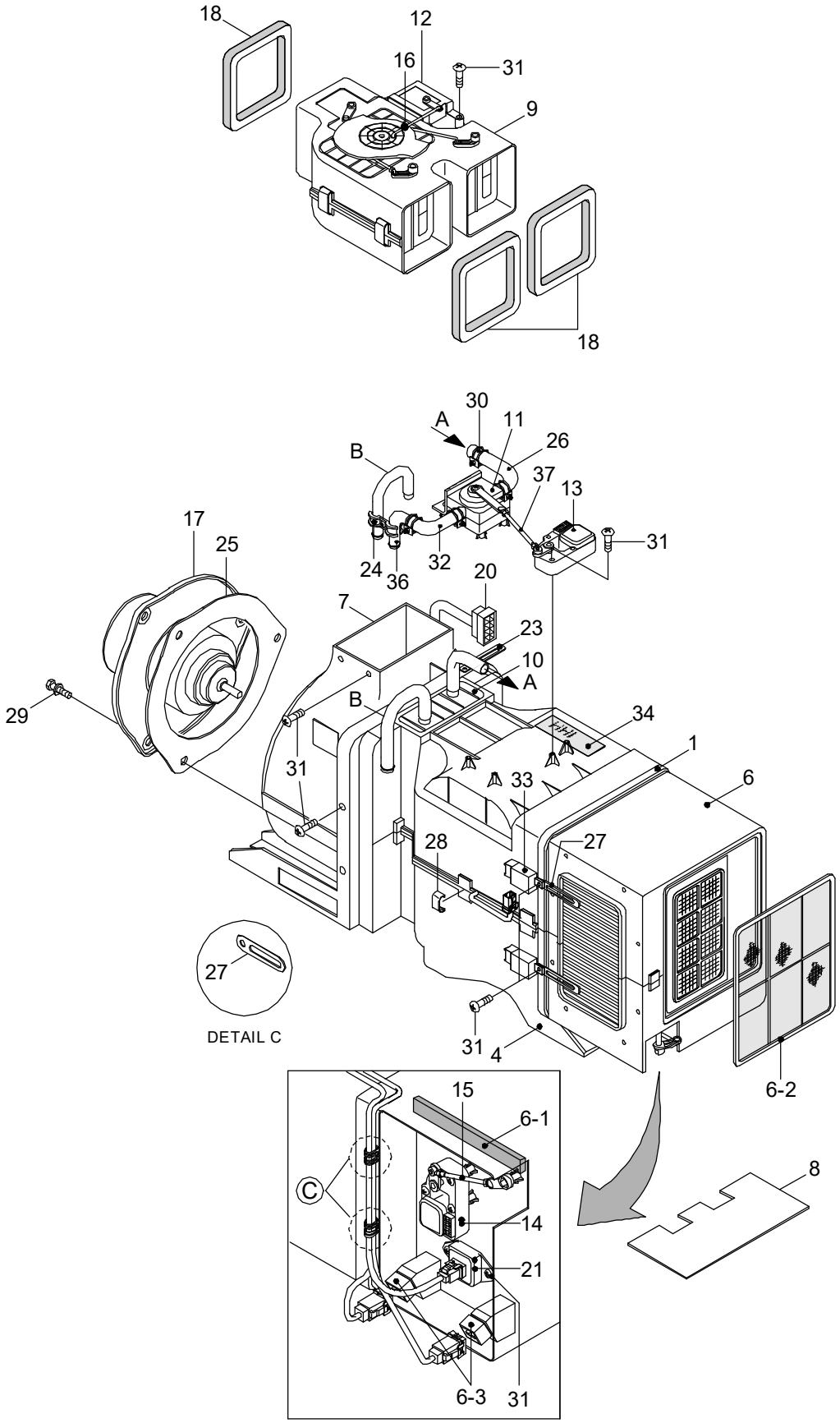
18
12
16
31
9
18
30
A
11
26
B
37
13
17
25
31
24
36
32
20
7
23
10
A
29
B
34
1
31
33
6
28
27
27
DETAIL C
31
4
6-2
15
6-1
8
C
14
21
6-3
31

Item	Part_No	IS	Ord	T	Description	Qty	Serial_No	ITC	Remark
*	11LF-90260				HEATER UNIT	1			
1	AH000086				.HVAC CASE UPP ASSY	1			
4	AM12101400-0				.HVAC CASE-LOW	1			
6	AH000054				.INTAKE CASE ASSY	1			
6-1	AM70003600-3				..SEAL-FILTER,FRESH	1			
6-2	11N6-90770				..AIR FILTER-REFRESH	1			
6-3	11N6-90820				..RELAY	2			
7	AM13100100-0				.CASE-BLOWER	1			
8	A120150700-3				.PLATE-SIDE	1			
9	AM14000700-2				.DAMPER CASE ASSY	1			
10	11N6-90780				.HEATER CORE	1			
11	AH001160				.WATER VLAVE	1			
12	AM50200200-1				.MOTOR ACT-MODE	1			
13	AH100311				.MOTOR ACT-TEMP	1			
14	11N6-90740				.MOTOR ACT-INTAKE	1			
15	AM52300100-4				.ROD-INTAKE	1			
16	AM53300200-4				.ROD-CAM	1			
17	AM60001700-2				.FAN & MOTOR ASSY	1			
18	AM70003800-4				.SPONGE-SEALING	3			
20	AH100135				.LAMP WIRE HARNESS	1			
21	11N6-90750				.RESISTOR ASSY	1			
23	3AH-0756				.WIRE HOLDER	4			
24	AH000314				.CLAMP-H/RAD PIPE	1			
25	3AH-0774				.PACKING-MOTOR	1			
26	AH001287				.HOSE-INLET,WATER	1			
27	4AH-0643				.HOLDER-WIRE	2			

Item	Part_No	IS	Ord	T	Description	Qty	Serial_No	ITC	Remark
28	4AH-0688				.CLIP-CASE	9			
29	4AH-0886				.SCREW	3			
30	AH001853				.CLAMP-WATER HOSE	4			
31	K500531				.SCREW	21			
32	AH001287				.HOSE-INLET,WATER	1			
33	11N6-90820				.RELAY	2			
34	AH001696				.NAME PLATE	2			
35	AH000984				.PACKING ASSY	1			
36	AH001852				.HEATER PIPE-INLET	1			
37	AH000856				.ROD-TEMP	1			

CAB ELECTRIC 1

CASSETTE RADIO

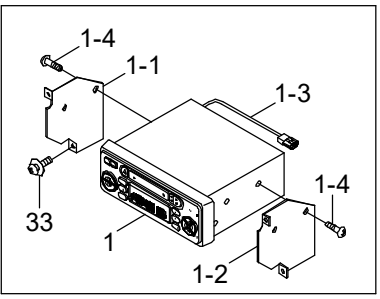

CD PLAYER

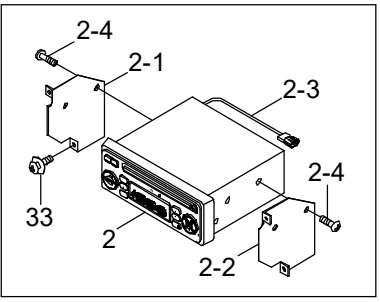

SERIAL NO.:-#0364

HIGHWAY(#0134-) STD

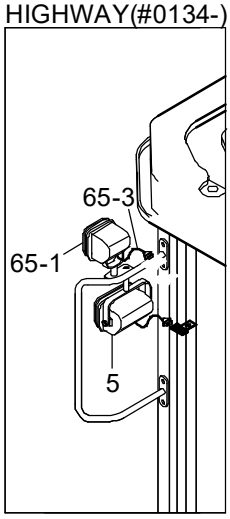

LH & RH SIDE

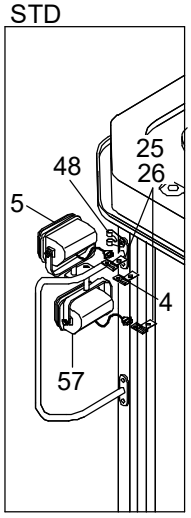

LH & RH SIDE

HIGHWAY(#0134-) STD

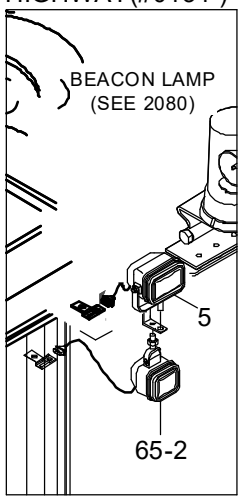

LH & RH SIDE

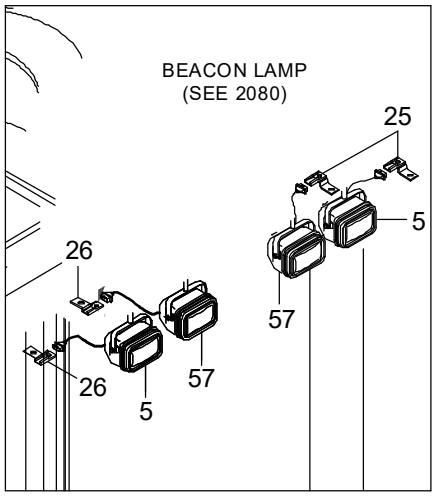

LH & RH SIDE

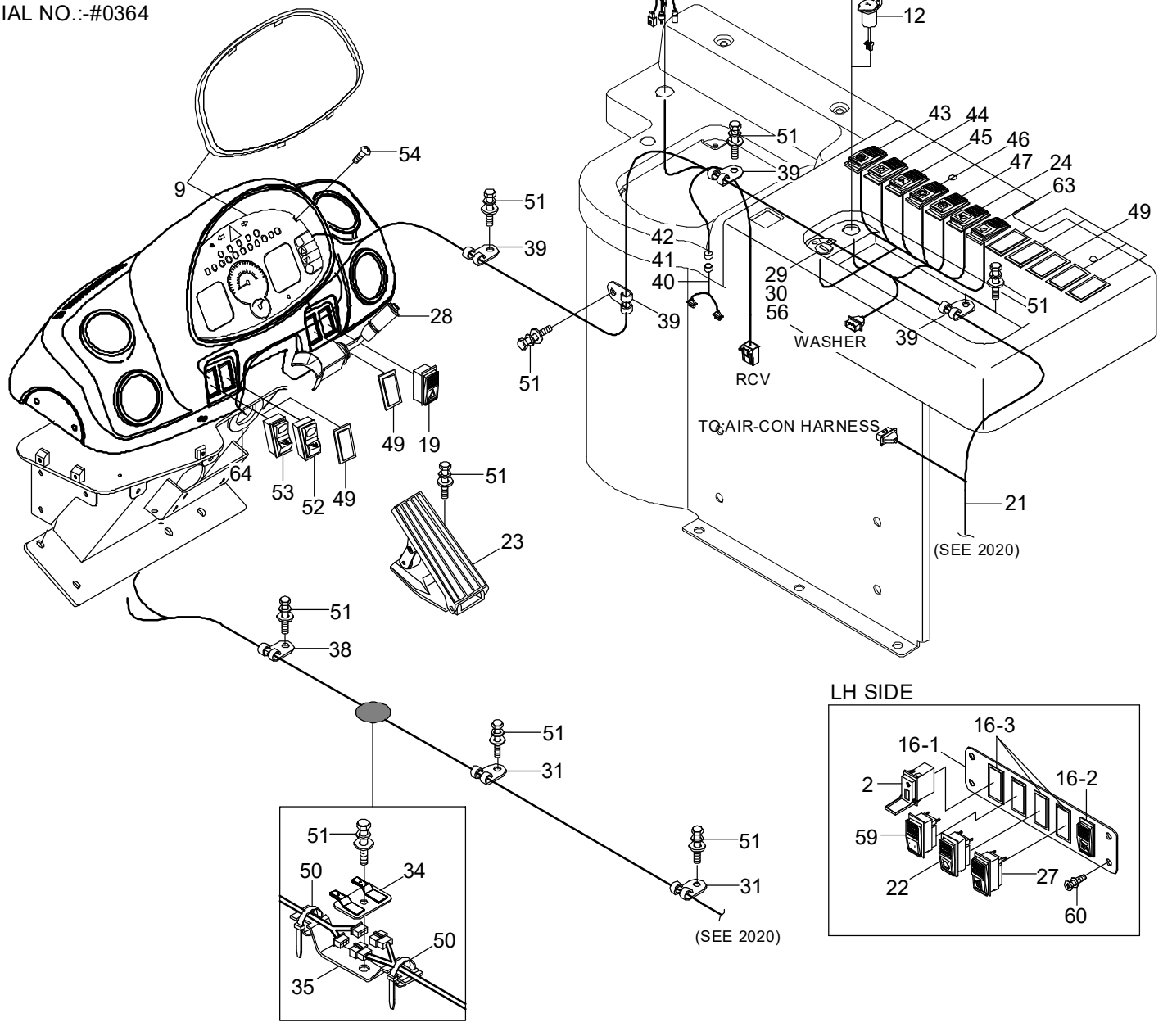

LH SIDE

Item	Part_No	IS	Ord	T	Description	Qty	Serial_No	ITC	Remark
1	21N8-50020				CASSETTE RADIO ASSY	1	- #0203		STD
	21N8-50060				CASSETTE RADIO ASSY	1	#0204 - #0364	A	STD
	21N8-51000				RADIO/USB PLAYER ASSY	1	#0365 -	D	STD
1-1	21N6-10470				.BRACKET-LH	1			
1-2	21N6-10460				.BRACKET-RH	1			
1-3	21N8-01600				.HARNESS-EXT WIRE	1			
1-4	S141-050106				.SCREW-FLAT HD	4			
2	21N8-40600				CD PLAYER ASSY	1	- #0364		OPT
	21LM-31200				USB & SOCKET ASSY	1	#0365 -	D	
2-1	21N6-10470				.BRACKET-LH	1	- #0364		
2-2	21N6-10460				.BRACKET-RH	1	- #0364		
2-3	21N8-01600				.HARNESS-EXT WIRE	1	- #0364		
2-4	S141-050106				.SCREW-FLAT HD	4	- #0364		
4	21N4-01130				PLATE-CLIP	2			MIRROR DEFROST
5	21N6-20211				WORK LAMP ASSY	4			
5-1	S866-240650				.BULB	1			NOT SHOWN
9	21LB-50501				CLUSTER ASSY	1			
12	21N8-20010				SOCKET-12V	1			OPT
13	S661-260300				CAP-RUBBER	1			STD
15	21E4-0008				LIGHTER-CIGAR	1	- #0250		
	21LM-07110				LIGHTER-CIGAR	1	#0251 -	B	
16	21LF-34020				SWITCH ASSY	1			
16-1	21LB-40090				.COVER-PLATE	1			
16-2	21LB-40280				.SW-RR WIPER/WASHER	1			
16-3	21E6-10460				.COVER	3			
19	21LB-40140				SWITCH-HAZARD	1			

Item	Part_No	IS	Ord	T	Description	Qty	Serial_No	ITC	Remark
21	21LG-30011				HARNESS-MAIN	1	- #0003		
	21LG-30012				HARNESS-MAIN	1	#0004 - #0193	B	
	21LG-30013				HARNESS-MAIN	1	#0194 -	D	
21-2	21EA-50550				.DIODE	4	#0001 -	-	NOT SHOWN
22	21LB-40300				SWITCH-BEACON	1			OPT
23	21L6-03600				PEDAL-ELECTRONIC	1	- #0351		
	21FT-15190				ACCELERATOR PEDAL	1	#0352 -	B	
R24	21LB-40210				SWITCH-RIDE CONTROL	1			SEE 3150
25	25D1-10650				CLIP ASSY	4			
26	25D1-10640				CLIP ASSY	4			
27	21LB-34060				SWITCH-MIRROR DEFROST	1			MIRROR DEFROST
28	24L3-00340				SWITCH-MULTIFUNCTION	1			
29	21N4-10430				SWITCH ASSY-INCL KEY	1	- #0276		KOREA, CHINA
	21N3-00020				SWITCH ASSY-INCL KEY	1	#0277 -	B	KOREA, CHINA
29-1	21N4-10430K100				.KEY-START	1			NOT SHOWN
30	21LB-40151				DECAL-START KEY	1			
31	S593-000902				CLIP-HARNESS	6			
33	S131-051546				SCREW-W/WASHER	6			
34	21LB-10110				PLATE-CONNECTOR	1			
35	21L7-20350				PLATE	1			
38	S593-000652				CLIP-HARNESS	3			
39	21E9-00170				CLIP-HARNESS	5			
40	21LH-30140				HARNESS-EXT	1			FNR RCV
41	21LH-30111				HARNESS-EXT	1			MONO, 2-LEVER
42	21LH-30121				HARNESS-EXT	1	- #0176		2,3-LEVER
	21LH-30122				HARNESS-EXT	1	#0177 -	D	2,3-LEVER

Item	Part_No	IS	Ord	T	Description	Qty	Serial_No	ITC	Remark
43	21LB-40230				SWITCH-PARKING	1			
44	21LB-40240				SWITCH-MAIN LIGHT	1			
45	21LB-40250				SWITCH-WORK LAMP	1			
46	21LB-40260				SWITCH-AUTO SELECT	1			
47	21LB-40270				SWITCH-CLUTCH CUT-OFF	1			STD
	21E6-10460				COVER	1	- #0276	-	OPT, DUAL PAEDL
48	S593-001302				CLIP-HARNESS	2			
49	21E6-10460				COVER	10			STD
50	S552-050203				CLAMP-BAND	8			
51	S035-081526				BOLT-W/WASHER	12			
52	21L7-03160				SWITCH-ATTACH LOCK	1			QUICK COUPLER
53	21L7-03170				SWITCH-ATTACH UNLOCK	1			QUICK COUPLER
54	S151-050206				SCREW-TAPPING	4			
56	21N4-10400				SWITCH ASSY-INCL KEY	1			EXPORT
56-1	21N4-10400K				.KEY-START	1			NOT SHOWN
57	21N6-20211				WORK LAMP ASSY	4			OPT
57-1	S866-240650				.BULB	1			NOT SHWON
59	21LD-34210				SWITCH-ECONO	1			
60	S151-060256				SCREW-TAPPING	4			
63	21LF-34040				SWITCH-HEATED SEAT	1			HEATED SEAT
64	S681-290400				GROMMET	1			
65	20LF-30801				HIGHWAY WORK LAMP	1	#0134 -	-	HIGHWAY LAMP
65-1	21LM-01110				.WORK LIGHT	2	#0134 -	-	HIGHWAY LAMP
65-2	21N6-20211				.WORK LAMP ASSY	2	#0134 -	-	HIGHWAY LAMP
65-2-2	S866-240650				..BULB	1	#0134 -	-	NOT SHWON
65-3	21LF-20250				.HARNESS-LAMP,EXT	2	#0134 -	-	HIGHWAY LAMP

CAB ELECTRIC 2

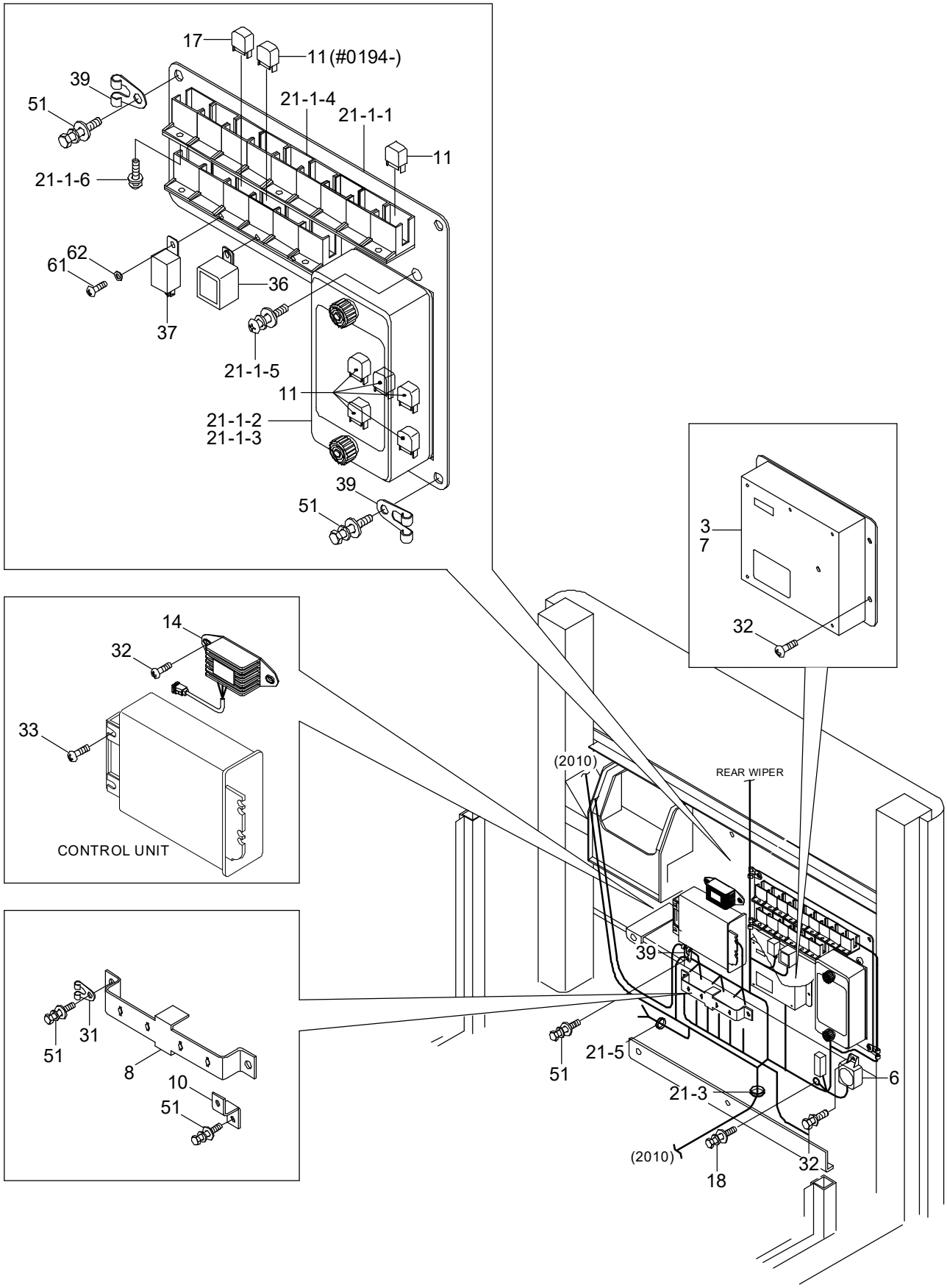

Item	Part_No	IS	Ord	T	Description	Qty	Serial_No	ITC	Remark
3	21LB-33101				MCU	1	- #0042		
	21LB-33102				MCU	1	#0043 - #0313	A	
	21LB-33103				MCU	1	#0314 -	B	
6	21E4-2025				BUZZER-WARNING	1			
7	21LB-33200				MCU	1	#0004 - #0313	-	AGRICULTURAL
8	21LF-34050				PLATE	1			
10	21E7-0612				PLATE-CONNECTOR	1			
11	24L1-05100				RELAY	16	- #0193		
					RELAY	17	#0194 -	B	
14	21N8-20201				DC-DC CONVERTER ASSY	1			
R17	24L1-05100				RELAY	1			RIDE CONTROL
18	S037-102056				BOLT-W/WASHER	1			
21	@				HARNESS-MAIN	1			NOT
21-1	21LF-34001				.RELAY BOARD ASSY	1	- #0193		
	21LF-34002				.RELAY BOARD ASSY	1	#0194 -	B	
21-1-1	21LF-34011				..PLATE-RELAY BOARD	1			
21-1-2	@				..BODY-FUSE BOX	1			NOT
21-1-3	@				..COVER ASSY(FUSE BOX)	1			NOT
21-1-4	8JA003526-001				..RELAY SOCKET	15			
21-1-5	S132-081526				..SCREW-W/WASHER	4			
21-1-6	S131-051046				..SCREW-W/WASHER	5			
21-3	21LB-34020				.GROMMET-HARNESS	1			
21-5	21LG-10150				.HARNESS-PLUG	1	#0004 -	-	STD
31	S593-000902				CLIP-HARNESS	1			
32	S132-061546				SCREW-W/WASHER	7			
33	S131-051546				SCREW-W/WASHER	2			

Item	Part_No	IS	Ord	T	Description	Qty	Serial_No	ITC	Remark
36	21LB-34140				TIMER-DEFROST	1			MIRROR DEFROST
37	21ER-60702				FLASHER UNIT ASSY	1	- #0250		
	21ER-60703				FLASHER UNIT	1	#0251 -	B	
39	21E9-00170				CLIP-HARNESS	3			
51	S035-081526				BOLT-W/WASHER	9			
61	S151-050106				SCREW-TAPPING	1			
62	S411-050006				WASHER-SPRING	1			
65	21LG-10160				HARNESS-PLUG	1	#0004 - #0276	-	DUAL PEADL

CAB ELECTRIC 3

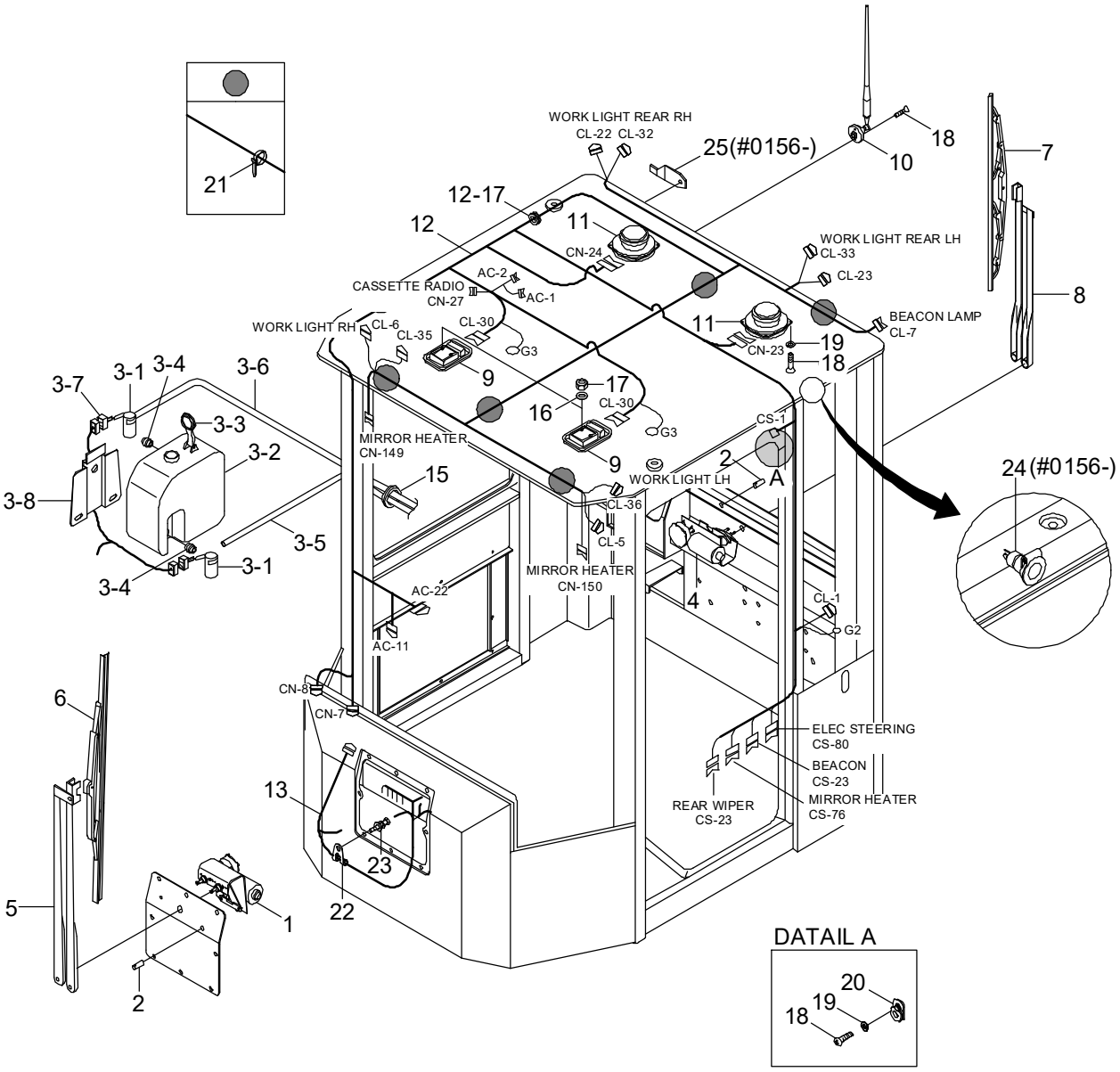

Item	Part_No	IS	Ord	T	Description	Qty	Serial_No	ITC	Remark
*	@				CAB ASSY	1			NOT
*-2	@				.ELECTRIC CAB ASSY	1			NOT
1	24L3-41060				..WIPER MOTOR-FRONT	1	- #0109		
	24L3-41110				..WIPER MOTOR ASSY	1	#0110 -	A	
2	24L3-41080				..VALVE-WIPER	2	- #0109		
	24L3-41500				..VALVE-WIPER	2	#0110 -	A	
3	24L3-30631				..RESERVOIR-WASH ASSY	1	- #0290		
	21LD-35210				..RESERVOIR-WASH ASSY	1	#0291 -	B	
3-1	21EM-00170				...MOTOR & PUMP ASSY	2			
3-2	24L3-30650				...TANK	1	- #0290		
	24L3-30860				...TANK	1	#0291 -	B	
3-3	24L3-30660				...CAP	1			
3-4	24L3-30670				...RUBBER-BUSHING	2			
3-5	24L3-30680				...HOSE-VINYL	1			
3-6	24L3-30690				...HOSE-VINYL	1			
3-7	S814-102000				...PLUG-2P	2			
3-8	24L3-30710				...PLATE	1			
4	21L6-31000				..WIPER MOTOR-REAR	1	- #0109		
	24L3-41120				..WIPER MOTOR-REAR	1	#0110 -	A	
5	24L3-41010				..WIPER ARM-FRONT	1	- #0109		
	24L3-41210				..WIPER ARM-FRONT	1	#0110 -	A	
6	24L3-41020				..WIPER BLADE-FRONT	1	- #0109		
	24L3-41300				..WIPER BLADE-FRONT	1	#0110 -	A	
7	21L6-31020				..WIPER BLADE-REAR	1	- #0109		
	21M8-50300				..WIPER BLADE-REAR	1	#0110 -	A	
8	21L6-31010				..WIPER ARM-REAR	1	- #0109		

Item	Part_No	IS	Ord	T	Description	Qty	Serial_No	ITC	Remark
8	24L3-41200				..WIPER ARM-REAR	1	#0110 -	A	
9	21EH-0011				..LAMP-ROOM	1			
9-1	21E1-49690				...BULB-ROOM LAMP	1			NOT SHOWN
10	21N6-10410				..ANTENNA	1			
11	21LB-20401				..SPEAKER ASSY	2			
12	21LF-30151				..HARNESS-CAB	1	- #0003		
	21LF-30152				..HARNESS-CAB	1	#0004 - #0364	B	
	21LF-30153				..HARNESS-CAB	1	#0365 -	D	
	21LF-30140				..HARNESS-CAB	1	#0156 - #0364	-	INTERIOR
	21LF-30141				..HARNESS-CAB	1	#0365 -	D	INTERIOR
13	21LF-30051				..HARNESS-CAB,FRONT	1			
15	S880-125020				..GROMMET-HARNESS	1			
16	S403-06200B				..WASHER-PLAIN	4			
17	S275-060006				..NUT-SELF LOCKING	4			
18	S151-040106				..SCREW-TAPPING	9			
19	S411-040006				..WASHER-SPRING	9			
20	E123-3022				..SWITCH-DOOR	1			
21	S553-035140				..CLAMP-BAND	5			
22	S593-000902				..CLIP-HARNESS	2			
23	S035-081526				..BOLT-W/WASHER	2			
24	21LM-01420				..SOCKET-POWER	1	#0156 -	-	INTERIOR
25	21N5-40340				..CLIP-METAL	4	#0156 -	-	INTERIOR

FRONT ELECTRIC

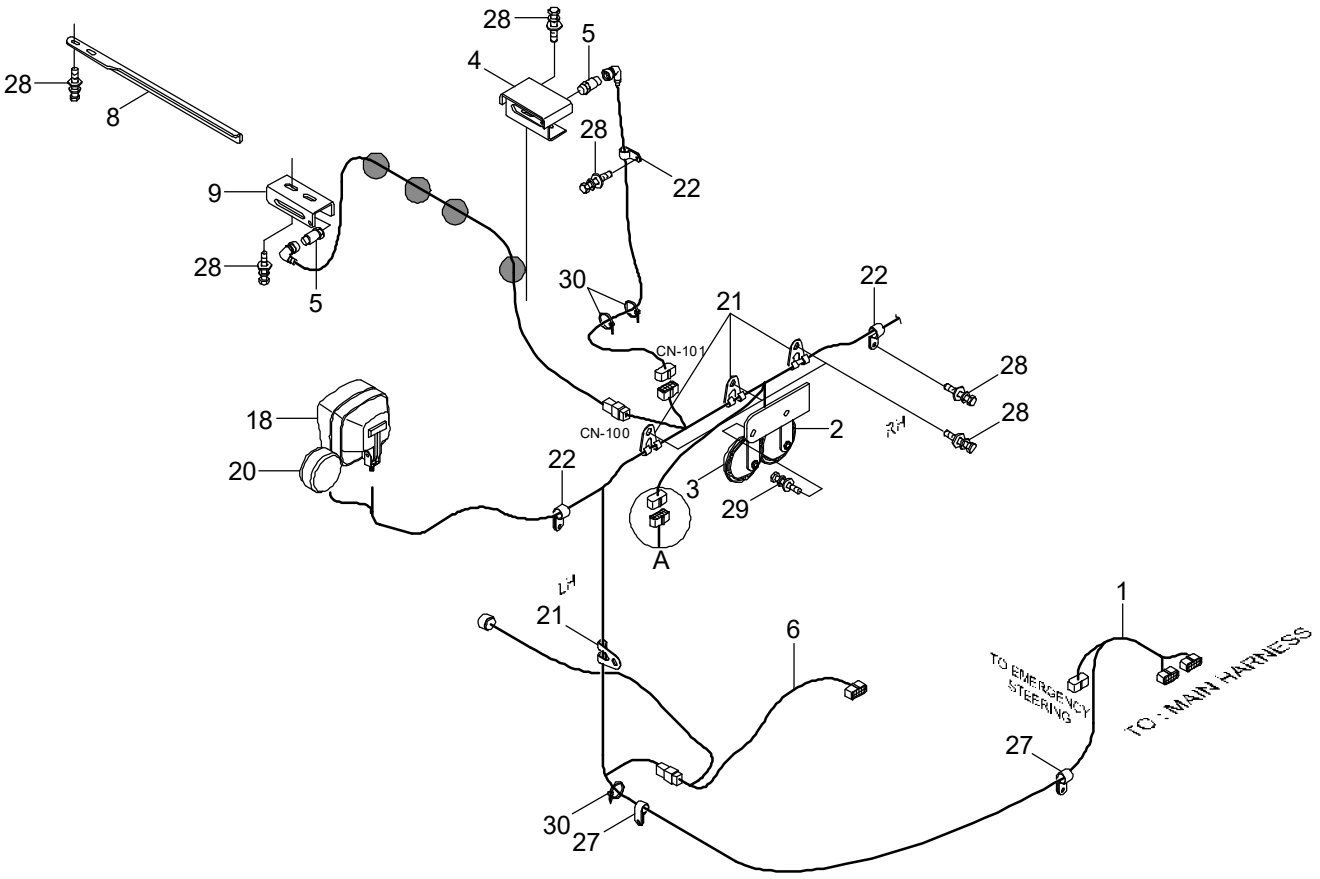

HL740XTD-7A

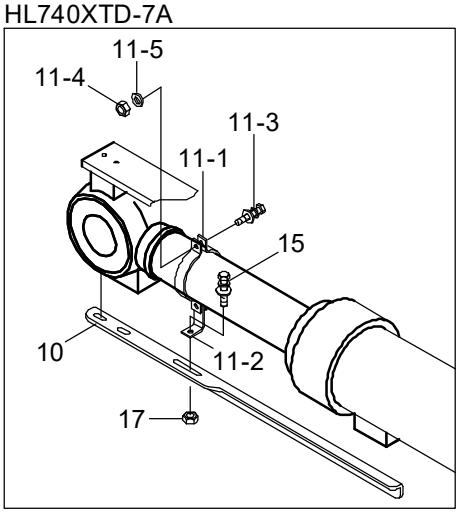

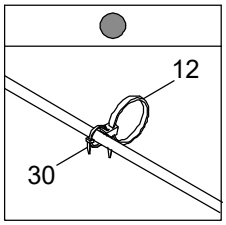

DATAIL A

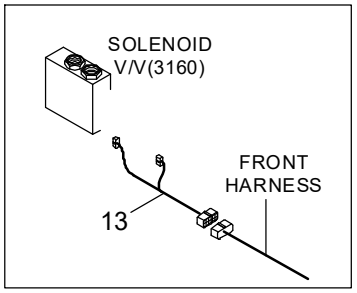

Item	Part_No	IS	Ord	T	Description	Qty	Serial_No	ITC	Remark
1	21LF-30041				HARNESS-FRONT	1	- #0098		
	21LF-30042				HARNESS-FRONT	1	#0099 - #0193	B	
	21LF-30043				HARNESS-FRONT	1	#0194 - #0383	B	
	21LF-30044				HARNESS-FRONT	1	#0384 -	D	
2	21N5-10060				HORN-HIGH	1	- #0383		
	21Q8-10060				HORN-HIGH	1	#0384 -	D	
3	21N5-10050				HORN-LOW	1	- #0383		
	21Q8-10050				HORN-LOW	1	#0384 -	D	
4	21LD-20012				PLATE-BOOM KICKOUT	1			
5	21L6-20010				SWITCH-PROXIMITY	2			
R6	21LD-30080				HARNESS-RIDE CONTROL	1			SEE 3150
8	21LF-20021				ANGLE	1			HL740-7A
9	21LF-20031				PLATE	1			
10	21LF-20040				ANGLE HIGH-LIFT	1			HL740XTD-7A
11	21LF-20210				CLAMP ASSY	1			HL740XTD-7A
11-1	21LF-20050				.CLAMP	2			HL740XTD-7A
11-2	21LF-20060				.PLATE	1			HL740XTD-7A
11-3	S037-102526				.BOLT-W/WASHER	2			HL740XTD-7A
11-4	S205-101006				.NUT-HEX	2			HL740XTD-7A
11-5	S411-100006				.WASHER-SPRING	2			HL740XTD-7A
12	S554-054300				CLAMP-BAND	4			
13	21LB-34320				EXT-HARNESS(Q/COUPLER)	1			QUICK COUPLER
15	S037-102556				BOLT-W/WASHER	1			HL740XTD-7A
17	S275-10000B				NUT-SELF LOCKING	1			HL740XTD-7A
18	21LB-20110				HEAD LAMP(ABL)	2			
18-1	21EK-10131				.BULB	1			NOT SHOWN

Item	Part_No	IS	Ord	T	Description	Qty	Serial_No	ITC	Remark
18-2	21EK-10270				.BULB-5W	1			NOT SHOWN
20	21EK-10380				LAMP-FRONT TURN	2			
20-1	21EK-10290				.BULB-21W	1			NOT SHOWN
21	S593-000902				CLIP-HARNESS	4			
22	31L7-10190				CLAMP-TUBE	3			
27	31E7-0314				CLAMP-HOSE	2			
28	S037-102056				BOLT-W/WASHER	12			
29	S035-081526				BOLT-W/WASHER	2	- #0383		
	S037-101526				BOLT-W/WASHER	2	#0384 -	D	
30	S552-035146				CLAMP-BAND	8			

REAR ELECTRIC

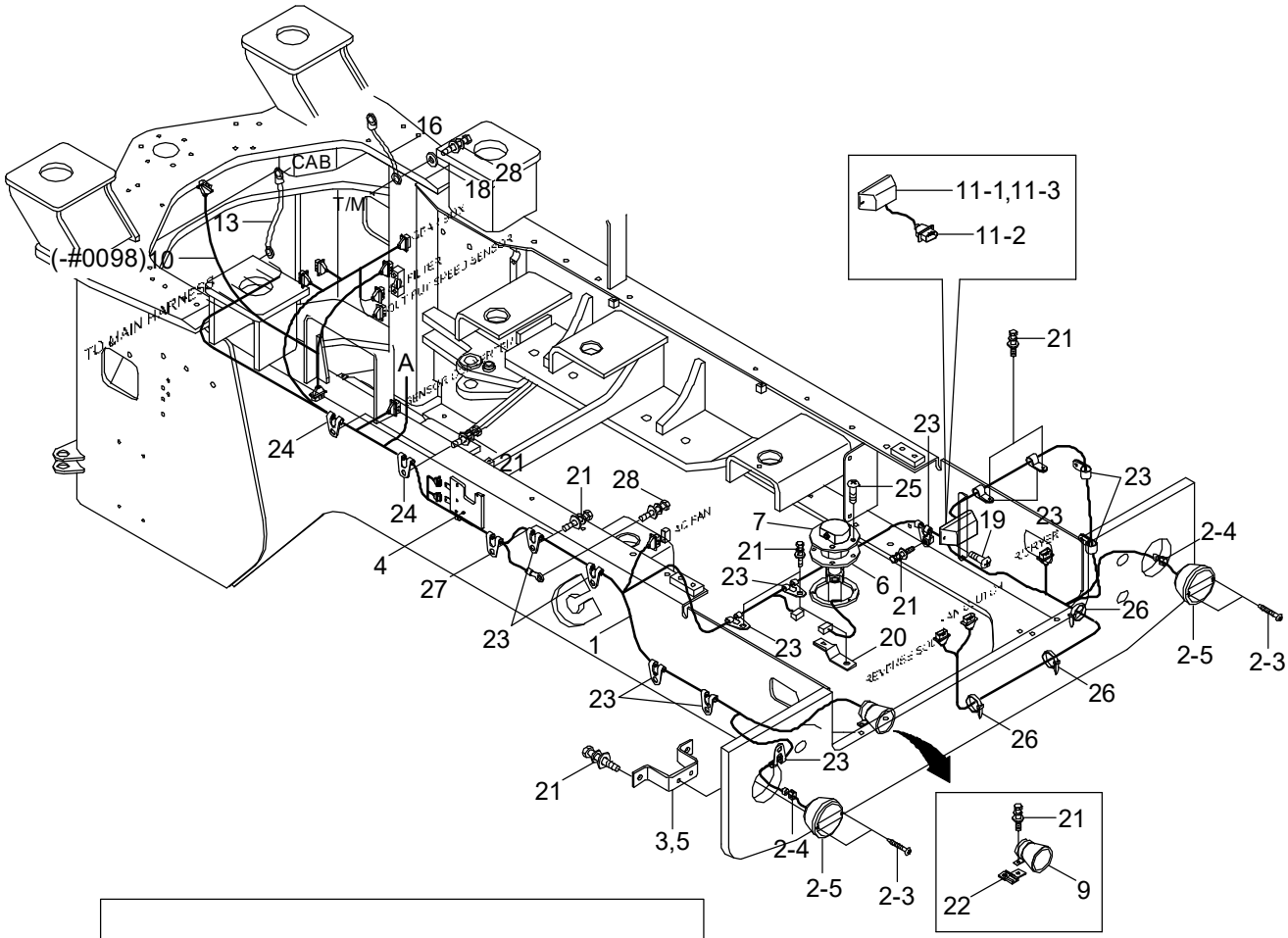

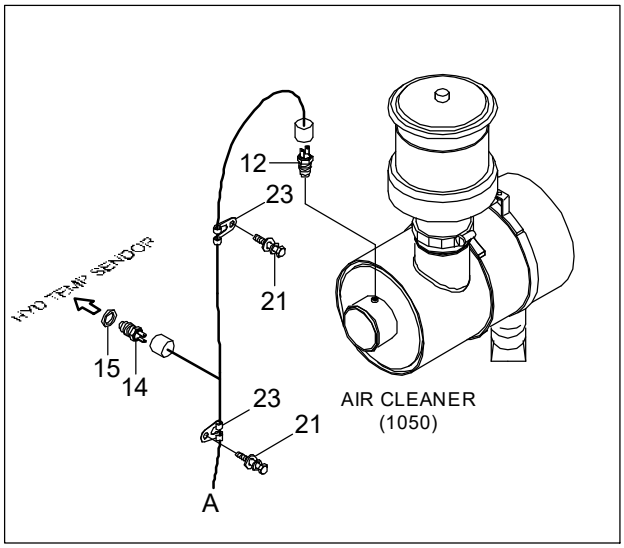

Item	Part_No	IS	Ord	T	Description	Qty	Serial_No	ITC	Remark
1	21LF-30031				HARNESS-FRAME	1			
2	21EK-10410				LAMP-T/STOP FLASHER	2	- #0055		
	21EK-10411				LAMP-TAIL STOP FLASHER	2	#0056 -	A	
2-1	21EK-10290				.BULB	2			NOT SHOWN
2-2	21EK-10270				.BULB(5W)	1			NOT SHOWN
2-3	21LB-51550				.SCREW	2	#0056 -	-	
2-4	21EK-20200				.HARNESS-REAR COMBI	1	#0001 -	-	
2-5	21EK-10180				.LAMP-TAIL STOP FLASHER	1	#0001 -	-	
3	21LF-20181				PLATE-LAMP	2			HL740XTD-7A
4	21LF-20070				PLATE	1			
5	21LF-20081				PLATE-LAMP	2			HL740-7A
6	E128-1053				GASKET	1			
7	21LF-00180				FUEL SENDOR	1			
9	21N6-20322				BUZZER-TRAVEL ALARM	1			
E10	21LF-30090				HARNESS-E/STEERING	1	- #0098	-	SEE 3140
11	21LB-34250				LAMP SUB ASSY(N/PLATE)	1			
11-1	21EK-10160				.LAMP-NUMBER PLATE	1			
11-2	21LB-34260				.HARNESS-EXT(N/LAMP)	1			
11-3	21EK-10260				.BULB	1			
12	21L7-20100				SWITCH-AIR CLEANER	1			
13	21EH-30720				STRAP-EARTH	1			
14	21EN-40100				SENDER-TEMP	1			
15	21EA-50260				PACKING-TEMP SW	1			
16	21L8-30720				STRAP-EARTH	1			
18	S431-100002				WASHER-INTERNAL T/LOCK	3			
19	S151-040156				SCREW-TAPPING	2			

Item	Part_No	IS	Ord	T	Description	Qty	Serial_No	ITC	Remark
20	21E7-0606				PLATE-CONNECTOR	1			
21	S037-102056				BOLT-W/WASHER	22			
22	25D1-10640				CLIP ASSY	1			
23	S593-000902				CLIP-HARNESS	17			
24	31L7-10200				CLAMP	2			
25	S151-050106				SCREW-TAPPING	5			
26	S552-035146				CLAMP-BAND	3			
27	31L7-10190				CLAMP-TUBE	1			
28	S037-102022				BOLT-W/WASHER	4			

ENGINE ELECTRIC

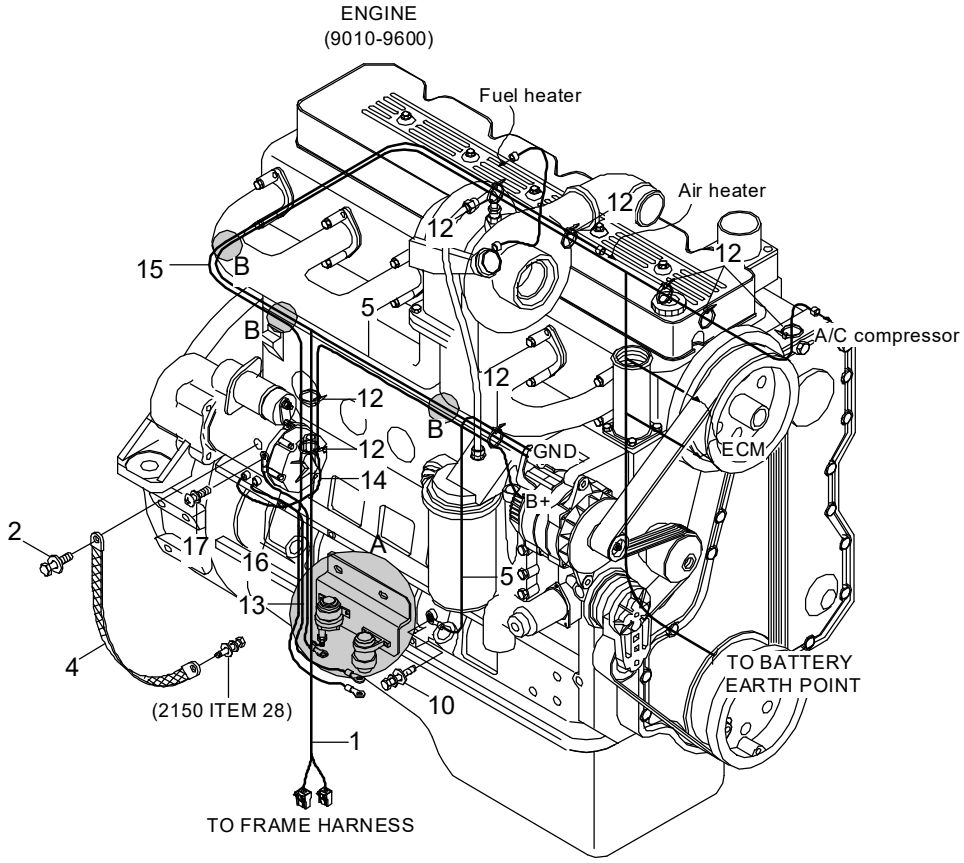

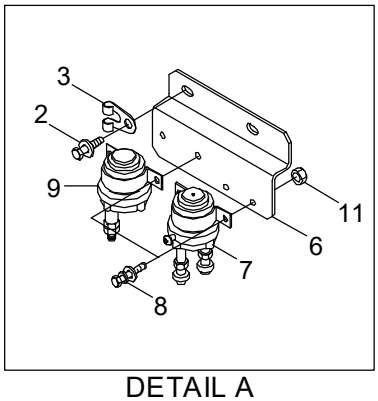

DETAIL A

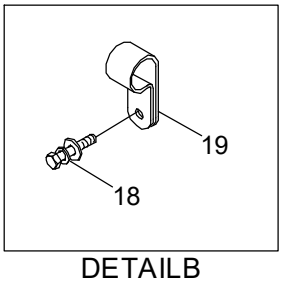

DETAILB

Item	Part_No	IS	Ord	T	Description	Qty	Serial_No	ITC	Remark
1	21LF-30021				HARNESS-ENGINE	1	- #0381		
	21LF-30022				HARNESS-ENGINE	1	#0382 -	B	
2	S037-122056				BOLT-W/WASHER	4			
3	21E9-00170				CLIP-HARNESS	2			
4	21LB-34720				EARTH STRAP	1			
5	21LC-40090				CABLE(ALT-EARTH)	1			
6	21N8-40180				BRACKET	1			
7	21N8-42050				RELAY-HEATER	1			
8	S035-061526				BOLT-W/WASHER	4			
9	21N6-30120				RELAY-START	1			
10	S037-102022				BOLT-W/WASHER	1			
11	S285-061006				NUT-FLANGED	4			
12	S552-050203				CLAMP-BAND	14			
13	21LC-40061				CABLE(STARTER-HEAT RY)	1			
14	21LB-34200				CABLE(ALT-STARTER)	1			
15	21LF-20141				CABLE(HEAT RY-AIR HEAT)	1			
16	21LC-31051				HARNESS-EXT(START RY)	1			
17	S131-041026				SCREW-W/WASHER	2			
18	S035-081526				BOLT-W/WASHER	2			
19	31L7-10190				CLAMP-TUBE	2			
20	21N4-01130				PLATE-CLIP	1	#0382 -	-	

BATTERY CABLE ELECTRIC

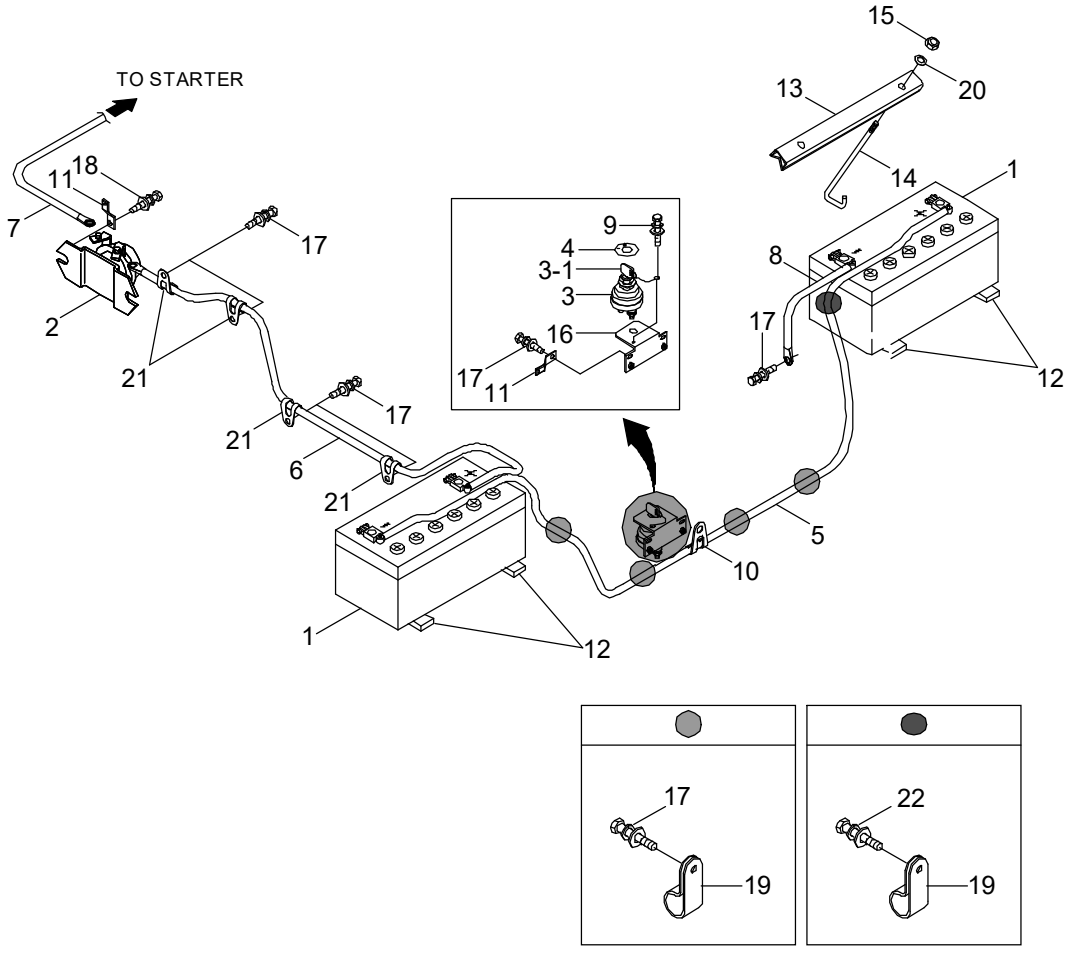

Item	Part_No	IS	Ord	T	Description	Qty	Serial_No	ITC	Remark
1	21E6-20270				BATTERY	2			
2	21E5-0003				RELAY-BATTERY	1			
3	21N4-10441				SWITCH-MASTER	1	- #0193		
	21L7-10500				SWITCH-MASTER	1	#0194 -	B	
3-1	21N4-10441K				.KEY-MASTER SWITCH	1	- #0193	-	
4	21N4-10451				DECAL-MASTER SW	1	- #0193		
	21LD-34180				DECAL-MASTER SW	1	#0194 -	D	
5	21LF-34110				CABLE(BATT-BATT)	1			
6	21LF-34120				CABLE(BATT-BATT RY)	1			
6-1	21N4-01320				.LINK-FUSIBLE	1			NOT SHOWN
7	21LF-34130				CABLE(BATT RY-STARTER)	1			
8	21LF-34140				CABLE(BATT-EARTH)	1			
9	S035-062026				BOLT-W/WASHER	1			
10	S593-000902				CLIP-HARNESS	1			
11	21E7-0612				PLATE-CONNECTOR	2			
12	21L8-10170				PAD-RUBBER	4			
13	21L8-10142				ANGLE	2			
14	21L8-10160				BAR	4			
15	S205-081006				NUT-HEX	6			
16	21LF-34150				PLATE-MASTER SWITCH	1			
17	S037-102056				BOLT-W/WASHER	11			
18	S035-082546				BOLT-W/WASHER	2			
19	31L7-10200				CLAMP	7			
20	S411-080006				WASHER-SPRING	4			
21	31L7-10200				CLAMP	4			
22	S037-102022				BOLT-W/WASHER	1			

EMERGENCY STEERING ELECTRIC(#0099-)

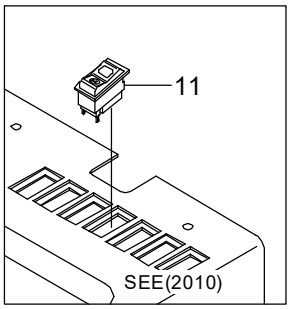

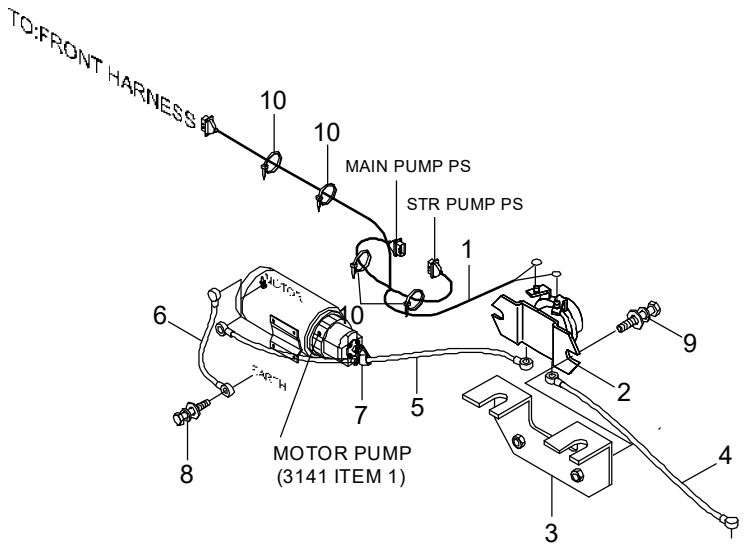

BATTERY RELAY
(2070)

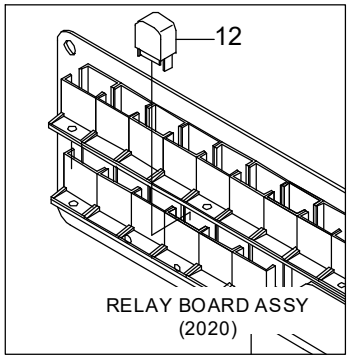

Item	Part_No	IS	Ord	T	Description	Qty	Serial_No	ITC	Remark
*	@				EMER STEER ELECT	1	#0099 -	-	NOT
1	21LF-30091				.HARNESS,E-STEERING	1			
2	21E5-0003				.RELAY-BATTERY	1			
3	21LF-40051				.PLATE	1			
4	21LF-34180				.CABLE(RELAY-RELAY)	1			
5	21LF-34170				.CABLE(ERLAY-MOTOR)	1			
6	21LH-20270				.CABLE(MOTOR-EARTH)	1			
7	31L7-10210				.CLAMP-TUBE	1			
8	S037-102022				.BOLT-W/WASHER	1			
9	S035-083026				.BOLT-W/WASHER	2			
10	S551-050203				.CLAMP-BAND	4			
11	21L6-02260				.SWITCH-PUMP MOTOR	1			
12	24L1-05100				.RELAY	1			

BEACON LAMP

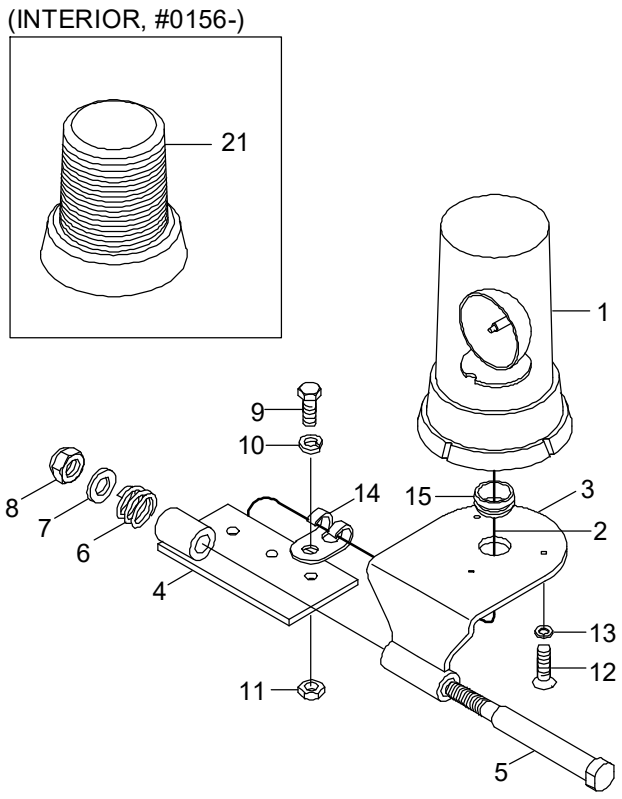

Item	Part_No	IS	Ord	T	Description	Qty	Serial_No	ITC	Remark
*N	21L7-10401				BEACON LAMP ASSY	1			NOT
1	21EK-10140				.LAMP-BEACON	1			
1-1	21EK-10330				..BULB	1			NOT SHOWN
2	21EK-20240				.HARNESS-BEACON LAMP	1			
3	21L7-10420				.PLATE WA	1	- #0194		
	21L7-10421				.PLATE WA	1	#0195 -	D	
4	21L7-10410				.PLATE WA	1			
5	21L7-10430				.BOLT	1			
6	21L7-10440				.SPRING	1			
7	S403-162006				.WASHER-PLAIN	1			
8	S275-16000B				.NUT-SELF LOCKING	1			
9	S017-100206				.BOLT-HEX	3			
10	S411-100006				.WASHER-SPRING	3			
11	S205-10100B				.NUT-HEX	3			
12	S151-050156				.SCREW-TAPPING	3	- #0194		
	S035-052026				.BOLT-W/WASHER	3	#0195 -	D	
13	S411-050006				.WASHER-SPRING	3	- #0194	-	
14	S593-000902				.CLIP-HARNESS	1			
15	S880-132060				.GROMMET	1			
21	21LM-01400				BEACON LAMP-MAGNETIC ASSY	1	#0156 -	-	INTERIOR
N	@				NOT INDIVIDUALLY SUPPLIED	AR			NOT

FUSE BOX

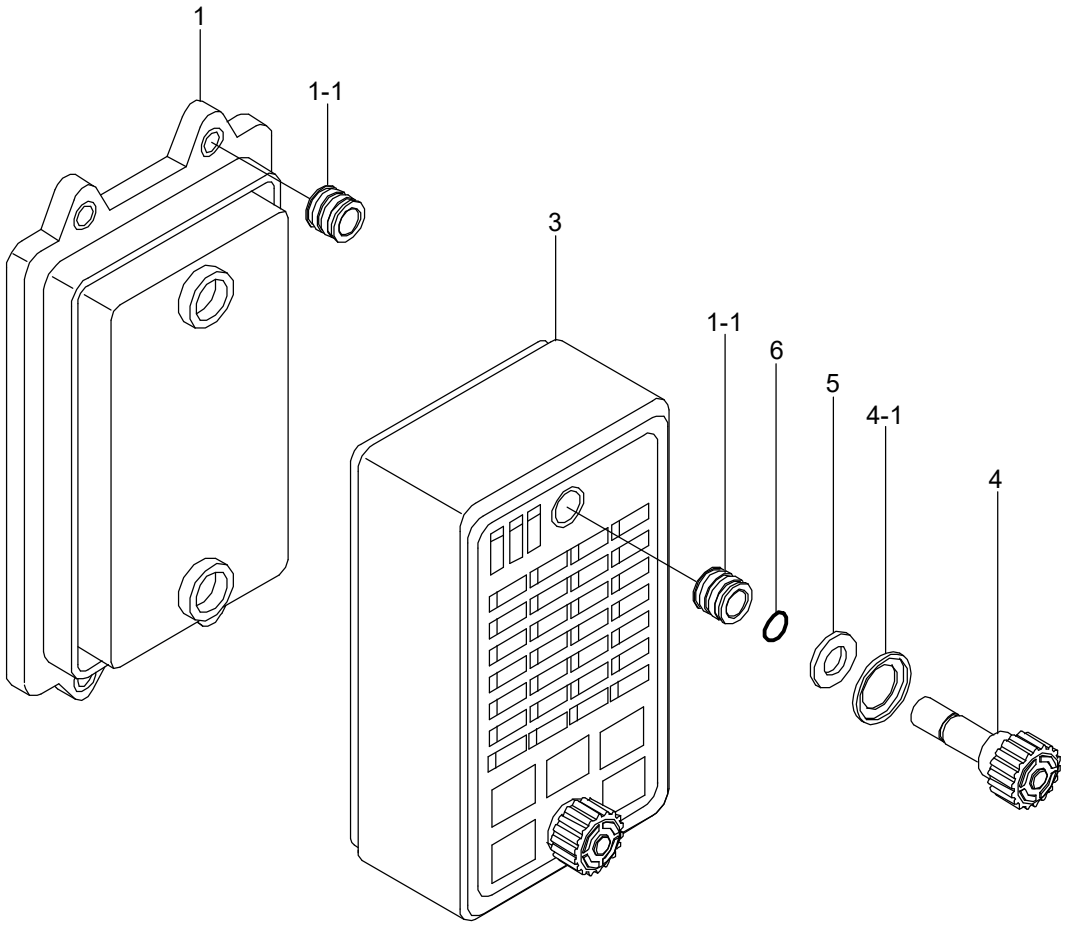

Item	Part_No	IS	Ord	T	Description	Qty	Serial_No	ITC	Remark
1	21N8-20041				BODY-FUSE BOX	1			
1-1	21N8-20110				.NUT-INSERT	6			
*	21LB-30162				COVER ASSY-FUSE BOX	1			
3	21N8-20061				.COVER-FUSE BOX	1			
4	21N8-20070				.KNOB ASSY	2			
4-1	21N8-20140				..INSERT	2			
5	21N8-20080				.PAD-RUBBER	2			
6	21N8-20150				.O-RING	2			

MAIN HYDRAULIC PIPING

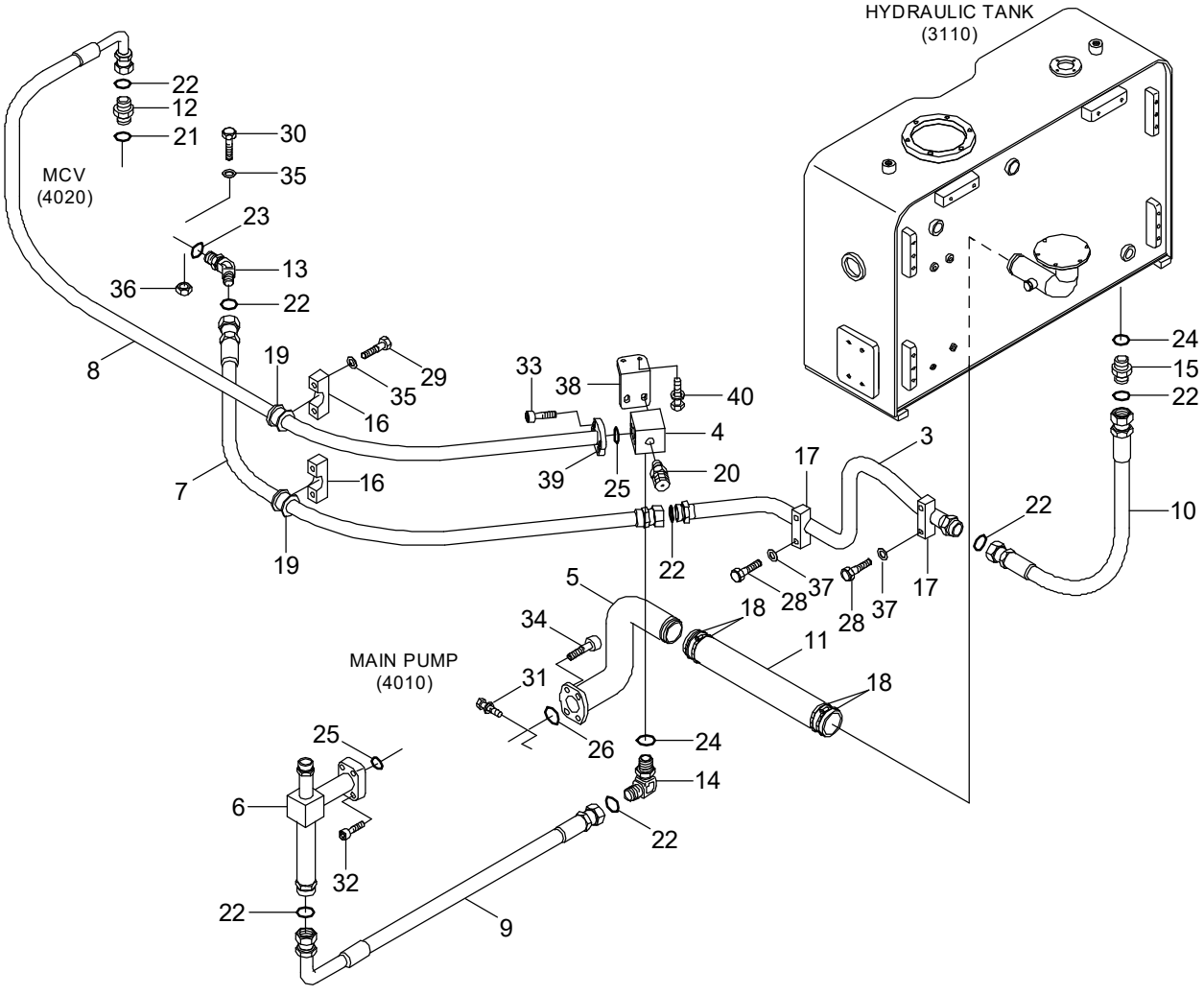

Item	Part_No	IS	Ord	T	Description	Qty	Serial_No	ITC	Remark
3	31LF-00022				PIPE WA	1			
4	31LF-00120				BLOCK	1			
5	31LF-00041				PIPE WA	1			
6	31LF-00111				PIPE WA	1			
7	P910-162030				HOSE ASSY-ORFS 0X0	1			
8	P990-165336				HOSE ASSY-ORFSXFLG 0X90	1			
9	P930-165010				HOSE ASSY-ORFS 0X90	1			
10	P910-162011				HOSE ASSY-ORFS 0X0	1			
11	P760-082056				HOSE-RUBBER LOW	1			
12	31LF-00071				CONNECTOR	1			
13	31LF-00080				ELBOW-45	1			
14	X520-110005				ELBOW-90,ORFS	1			
15	X500-110005				CONNECTOR-ORFS	1			
16	34L4-01120				CLAMP	3			
17	31L7-40260				CLAMP	2			
18	S572-780006				CLAMP-HOSE	4			
19	S690-039100				GROMMET	3			
20	31EK-11130				COUPLING-SCREW	1			
21	S611-027001				O-RING	1			
22	S621-021001				O-RING,ORFS	7			
23	S611-030001				O-RING	1			
24	S631-029004				O-RING	2			
25	Y171-024004				O-RING	2			
26	Y172-006004				O-RING	1			
28	S017-100406				BOLT-HEX	4			
29	S017-120506				BOLT-HEX	4			

Item	Part_No	IS	Ord	T	Description	Qty	Serial_No	ITC	Remark
30	S017-120606				BOLT-HEX	3			
31	S037-123556				BOLT-W/WASHER	4			
32	S109-100406				BOLT-SOCKET	4			
33	S109-100306				BOLT-SOCKET	4			
34	S109-120306				BOLT-SOCKET	4			
35	S441-120006				WASHER-HARDENED	9			
36	S205-121006				NUT-HEX	3			
37	S441-100006				WASHER-HARDENED	4			
38	31LF-00100				PLATE WA	1			
39	P173-160104				FLANGE-SPLIT	2			
40	S037-122556				BOLT-W/WASHER	4			

PILOT HYDRAULIC PIPING 1

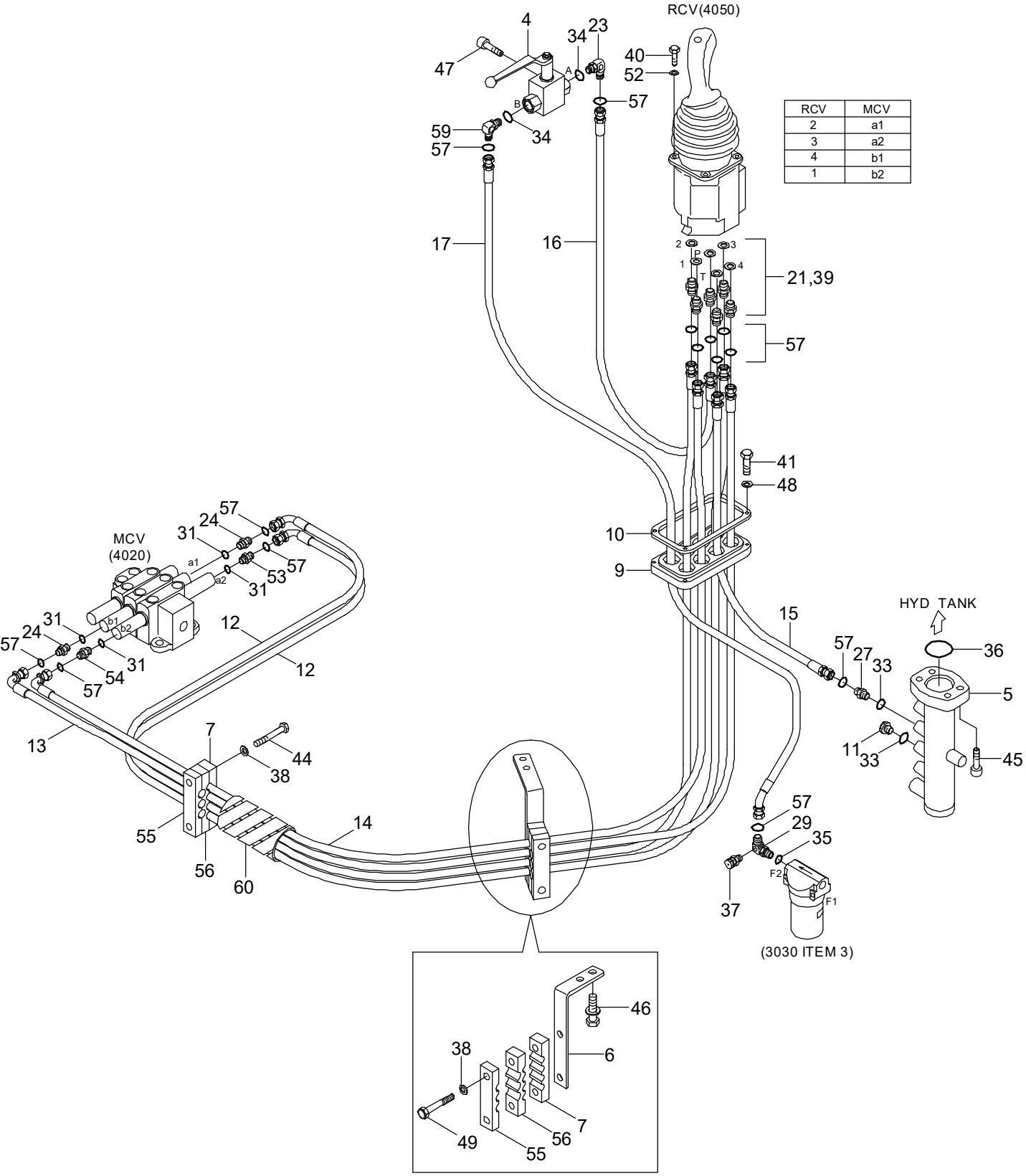

Item	Part_No	IS	Ord	T	Description	Qty	Serial_No	ITC	Remark
4	31LB-10010				SAFETY VALVE	1			
5	31LF-10011				PIPE WA	1			
6	31LF-10020				PLATE	1			
7	31LB-10050				CLAMP	2			
9	31L7-10040				PLATE	1			
10	31L7-10030				RUBBER	1			
11	P220-110102				PLUG-HEX	1			
12	P930-042056				HOSE ASSY-ORFS 0X90	2			
13	P930-042052				HOSE ASSY-ORFS 0X90	1			
14	P930-042051				HOSE ASSY-ORFS 0X90	1			
15	P910-042029				HOSE ASSY-ORFS 0X0	1			
16	P910-042011				HOSE ASSY-ORFS 0X0	1			
17	P910-062025				HOSE ASSY-ORFS 0X0	1			
21	X500-120001				CONNECTOR-ORFS	6			
23	X520-110012				ELBOW-90,ORFS	1			
24	31S7-00750				CONNECTOR	2			
27	X500-110001				CONNECTOR-ORFS	1			
29	31LD-10080				ELBOW-90	1			
31	S611-012001				O-RING	4			
33	S631-011004				O-RING	2			
34	S631-014004				O-RING	2			
35	S631-018004				O-RING	1			
36	Y172-003004				O-RING	1			
37	31EK-11130				COUPLING-SCREW	1			
38	S441-120006				WASHER-HARDENED	4			
39	P391-040000				WASHER-COPPER	6			

Item	Part_No	IS	Ord	T	Description	Qty	Serial_No	ITC	Remark
40	S015-060206				BOLT-HEX	4			
41	S015-060306				BOLT-HEX	4			
44	S017-121056				BOLT-HEX	2			
45	S109-120306				BOLT-SOCKET	4			
46	S037-122556				BOLT-W/WASHER	2			
47	S175-080206				SCREW-SOCKET RD HD	2			
48	S441-060006				WASHER-HARDENED	4			
49	S017-120706				BOLT-HEX	2			
52	S403-06100B				WASHER-PLAIN	4			
53	31LF-10090				VALVE-SHOCKLESS	1			
54	31LF-10100				CONNECTOR-ORIFICE	1			
55	31LB-40130				CLAMP	2			
56	31LF-10070				CLAMP	2			
57	S621-011001				O-RING	14			
59	X520-110002				ELBOW-90,ORFS	1			
60	P753-080020				PROTECT COVER-HOSE	2			

PILOT HYDRAULIC PIPING 2

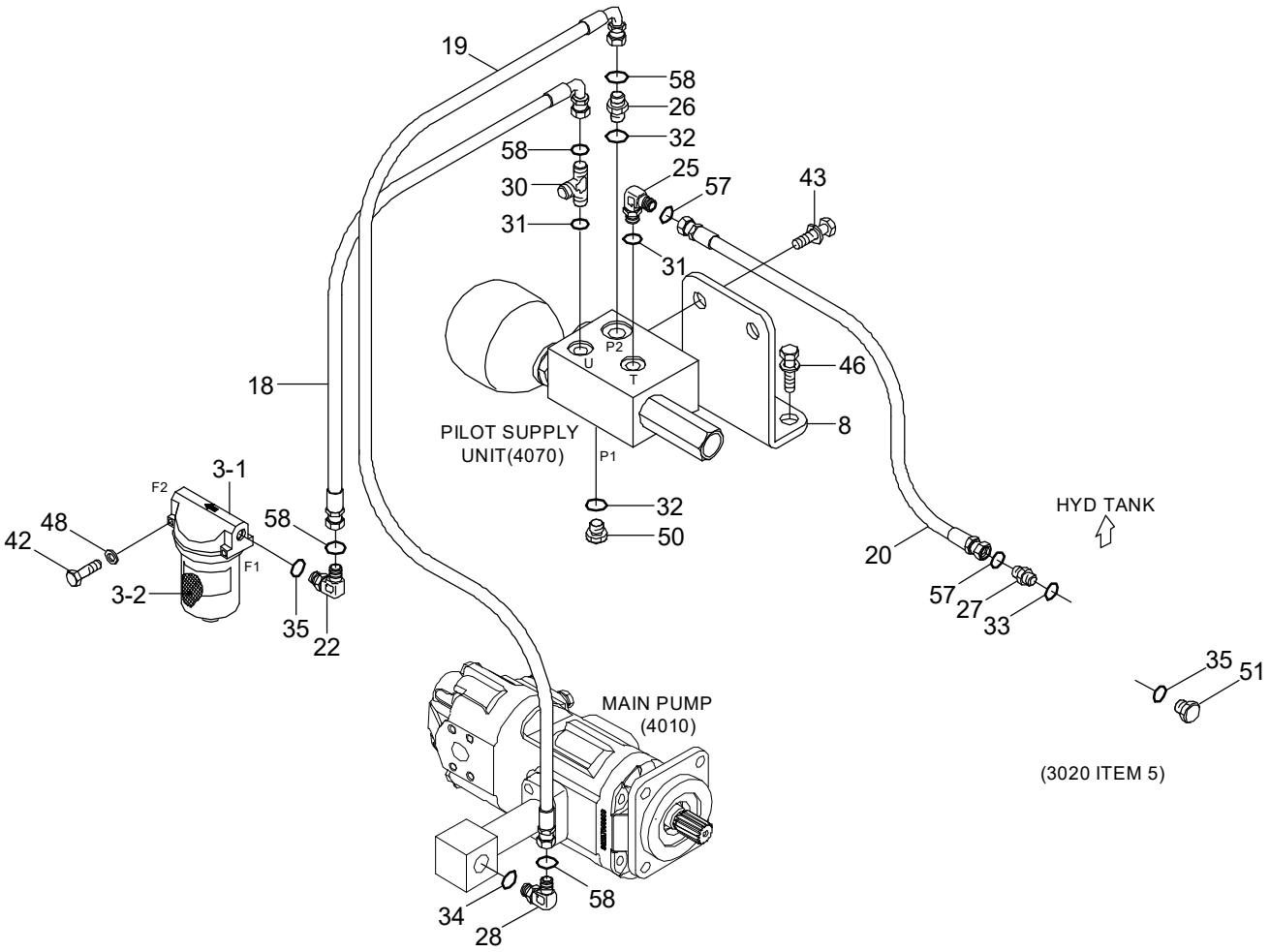

Item	Part_No	IS	Ord	T	Description	Qty	Serial_No	ITC	Remark
3	31MH-20310				FILTER-LINE	1			
3-1	31E3-0044				.BODY	1			
3-2	31MH-20320				.ELEMENT-LINE FILTER	1			
8	31LF-10030				PLATE	1			
18	P930-062009				HOSE ASSY-ORFS 0X90	1			
19	P930-064016				HOSE ASSY-ORFS 0X90	1			
20	P910-042014				HOSE ASSY-ORFS 0X0	1			
22	X520-110014				ELBOW-90,ORFS	1			
25	X520-310001				ELBOW-90,ORFS	1			
26	31S8-20180				CONNECTOR	1			
27	X500-110001				CONNECTOR-ORFS	1			
28	X520-110002				ELBOW-90,ORFS	1			
30	31LF-10080				TEE-R/TYPE,ORFS	1			
31	S611-012001				O-RING	2			
32	S611-016001				O-RING	2			
33	S631-011004				O-RING	1			
34	S631-014004				O-RING	1			
35	S631-018004				O-RING	2			
42	S015-060556				BOLT-HEX	2			
43	S035-082026				BOLT-W/WASHER	2			
46	S037-122556				BOLT-W/WASHER	2			
48	S441-060006				WASHER-HARDENED	2			
50	P220-310103				PLUG-HEX	1			
51	P220-110104				PLUG-HEX	1			
57	S621-011001				O-RING	2			
58	S621-012001				O-RING	4			

ATTACHMENT HYDRAULIC PIPING

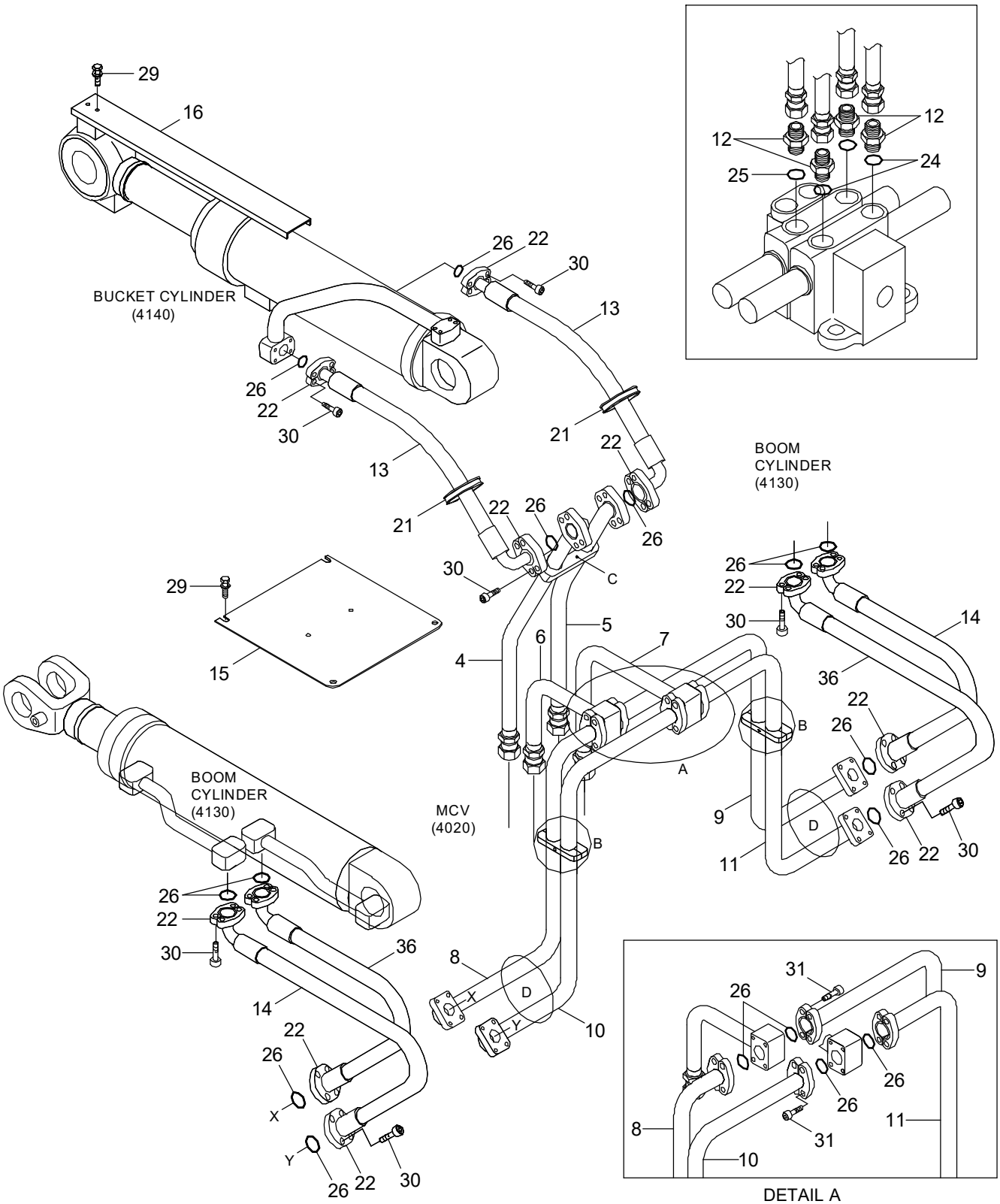

DETAIL A

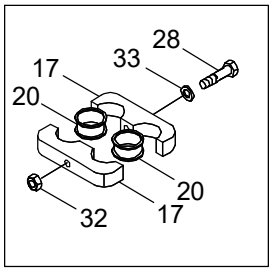

DETAIL B

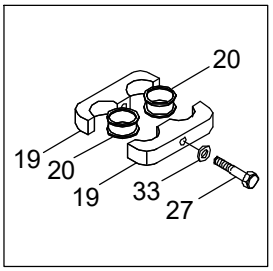

DETAIL C

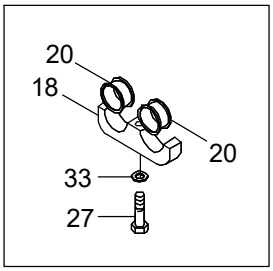

DETAIL D

Item	Part_No	IS	Ord	T	Description	Qty	Serial_No	ITC	Remark
4	31LF-20041				PIPE WA-LH	1			
5	31LF-20051				PIPE WA-RH	1			
6	31LF-20061				PIPE WA	1			
7	31LF-20071				PIPE WA	1			
8	31LF-20081				PIPE WA-LH	1			
9	31LF-20091				PIPE WA-RH	1			
10	31LF-20101				PIPE WA-LH	1			
11	31LF-20111				PIPE WA-RH	1			
12	31LF-20120				CONNECTOR	4			
13	31LF-20143				HOSE ASSY	2			
14	P703-125321				HOSE ASSY-FLG 0X90	2			
15	31LF-20130				COVER WA	1			
16	31LB-20420				COVER	1			HL740-7A
	31LB-20440				COVER	1			HL740XTD-7A
17	31L7-20120				CLAMP	4			
18	31L7-20130				CLAMP	2			
19	31L7-20141				CLAMP	1			
20	S690-027100				GROMMET(FOR ONE LINE)	10			
21	S760-061006				GROMMET	2			
22	P173-120102				FLANGE-HYD,SPLIT	32			
24	S611-023001				O-RING	4	#0001 -	-	
25	S621-018001				O-RING	4	#0001 -	-	
26	Y171-019004				O-RING	16			
27	S017-120506				BOLT-HEX	3			
28	S017-120706				BOLT-HEX	2			
29	S037-122556				BOLT-W/WASHER	6			

Item	Part_No	IS	Ord	T	Description	Qty	Serial_No	ITC	Remark
30	S109-100356				BOLT-SOCKET	64			
32	S205-121006				NUT-HEX	2			
33	S441-120006				WASHER-HARDENED	5			
36	P703-125324				HOSE ASSY-FLG 0X90	2	- #0091		
	P703-125323				HOSE ASSY-FLG 0X90	2	#0092 -	B	

STEERING HYDRAULIC PIPING 1

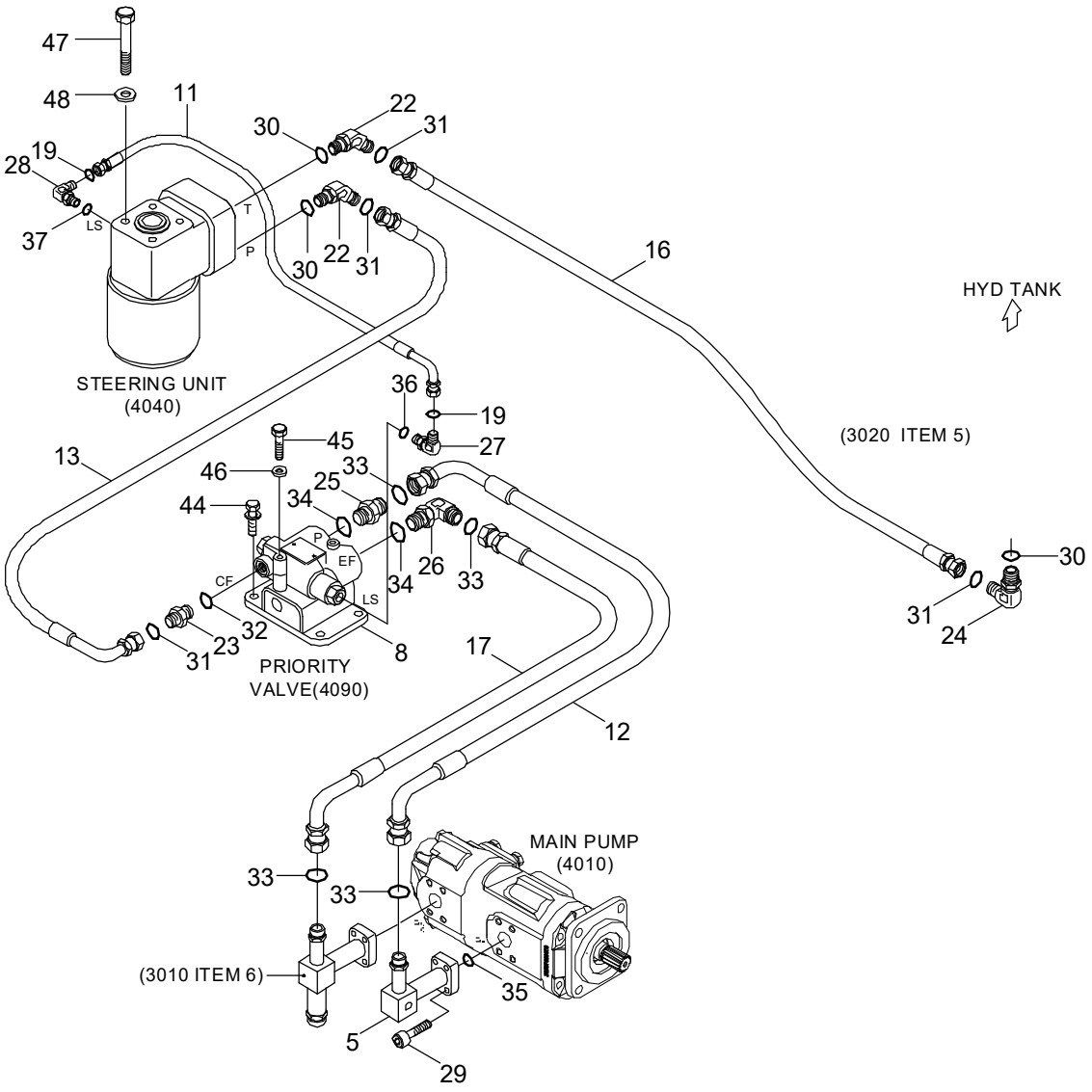

Item	Part_No	IS	Ord	T	Description	Qty	Serial_No	ITC	Remark
5	31LF-30110				PIPE WA	1			
8	31L7-30010				PLATE WA	1			
11	P930-044015				HOSE ASSY-ORFS 0X90	1			
12	31LF-30070				HOSE ASSY	1			
13	P920-084008				HOSE ASSY-ORFS 0X45	1			
16	P910-082031				HOSE ASSY-ORFS 0X0	1			
17	P930-125010				HOSE ASSY-ORFS 0X90	1			
19	S621-011001				O-RING,ORFS	2			
22	X530-110003				ELBOW-45,ORFS	2			
23	31LG-30080				ELBOW-45	1			
24	X520-110003				ELBOW-90,ORFS	1			
25	31LF-30120				CONNECTOR	1			
26	31LF-30080				ELBOW-90	1			
27	31FG-10020				ELBOW-90	1			
28	X520-110001				ELBOW-90,ORFS	1			
29	S109-100406				BOLT-SOCKET	4			
30	S631-018004				O-RING	3			
31	S621-014001				O-RING,ORFS	4			
32	S611-016001				O-RING	1			
33	S621-018001				O-RING,ORFS	4			
34	S611-023001				O-RING	2			
35	Y171-024004				O-RING	1			
36	S611-009001				O-RING	1			
37	S631-011004				O-RING	1			
44	S037-122556				BOLT-W/WASHER	4			
45	S015-080706				BOLT-HEX	2			

Item	Part_No	IS	Ord	T	Description	Qty	Serial_No	ITC	Remark
46	S441-080006				WASHER-HARDENED	2			
47	S017-100856				BOLT-HEX	4			
48	S441-100006				WASHER-HARDENED	4			

STEERING HYDRAULIC PIPING 1(DUAL PEDAL)

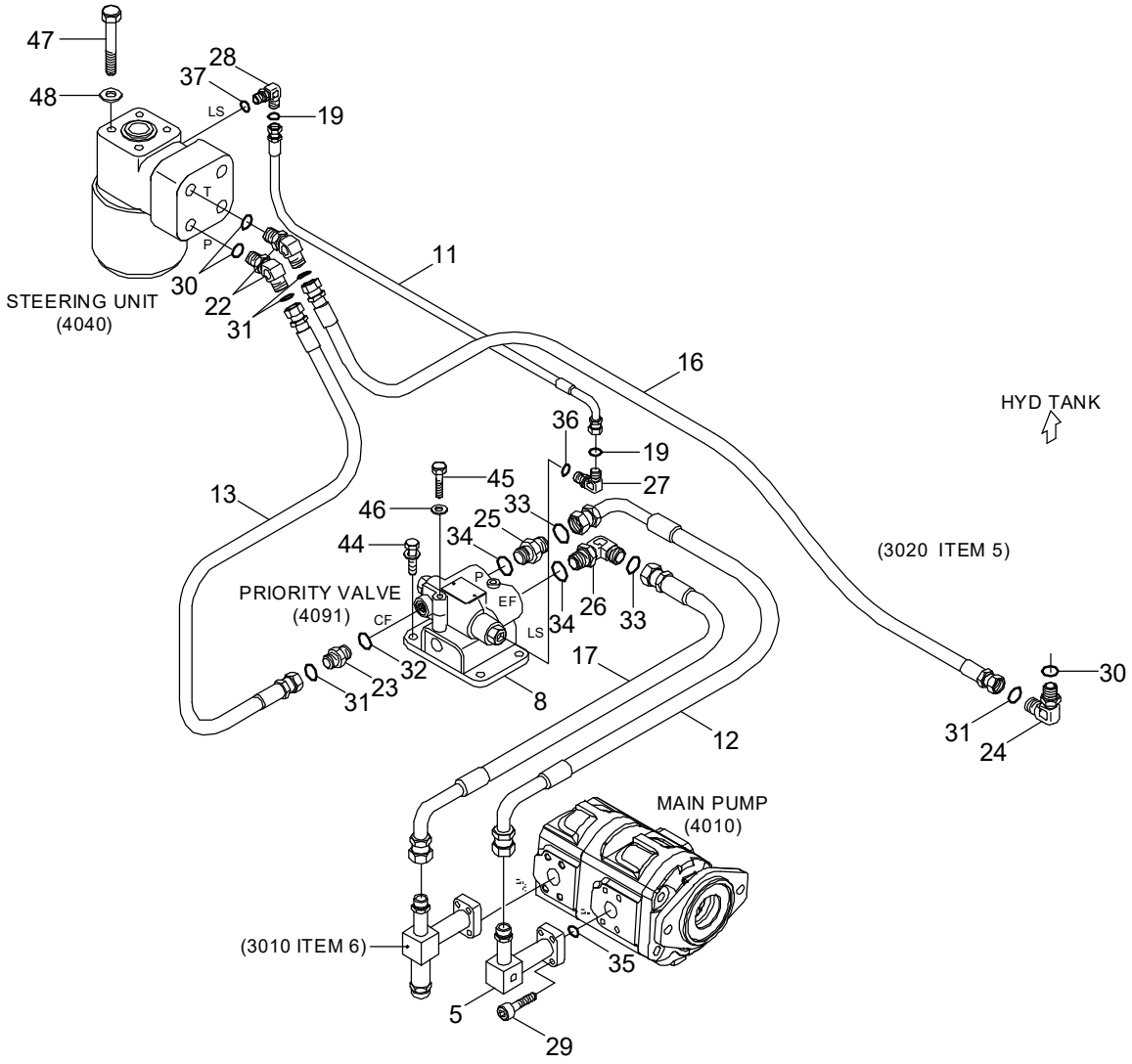

Item	Part_No	IS	Ord	T	Description	Qty	Serial_No	ITC	Remark
*	@				STEERING HYD PIPING	1	#0001 -	-	NOT
5	31LF-30110				PIPE WA	1			
8	31L7-30010				PLATE WA	1			
11	P930-044011				HOSE ASSY-ORFS 0X90	1			
12	31LF-30070				HOSE ASSY	1			
13	P910-084008				HOSE ASSY-ORFS 0X0	1			
16	P910-082029				HOSE ASSY	1			
17	P930-125010				HOSE ASSY-ORFS 0X90	1			
19	S621-011001				O-RING	2			
22	X530-110003				ELBOW-45,ORFS	2			
23	X500-310003				CONNECTOR-ORFS	1			
24	X520-110003				ELBOW-90,ORFS	1			
25	31LF-30120				CONNECTOR	1			
26	31LF-30080				ELBOW-90	1			
27	31FG-10020				ELBOW-90	1			
28	X520-110001				ELBOW-90,ORFS	1			
29	S109-100406				BOLT-SOCKET	4			
30	S631-018004				O-RING	3			
31	S621-014001				O-RING	4			
32	S611-016001				O-RING	1			
33	S621-018001				O-RING	4			
34	S611-023001				O-RING	2			
35	Y171-024004				O-RING	1			
36	S611-009001				O-RING	1			
37	S631-011004				O-RING	1			
44	S037-122556				BOLT-W/WASHER	4			

Item	Part_No	IS	Ord	T	Description	Qty	Serial_No	ITC	Remark
45	S015-080706				BOLT-HEX	2			
46	S441-080006				WASHER-HARDENED	2			
47	S017-100856				BOLT-HEX	4			
48	S441-100006				WASHER-HARDENED	4			

STEERING HYDRAULIC PIPING 2

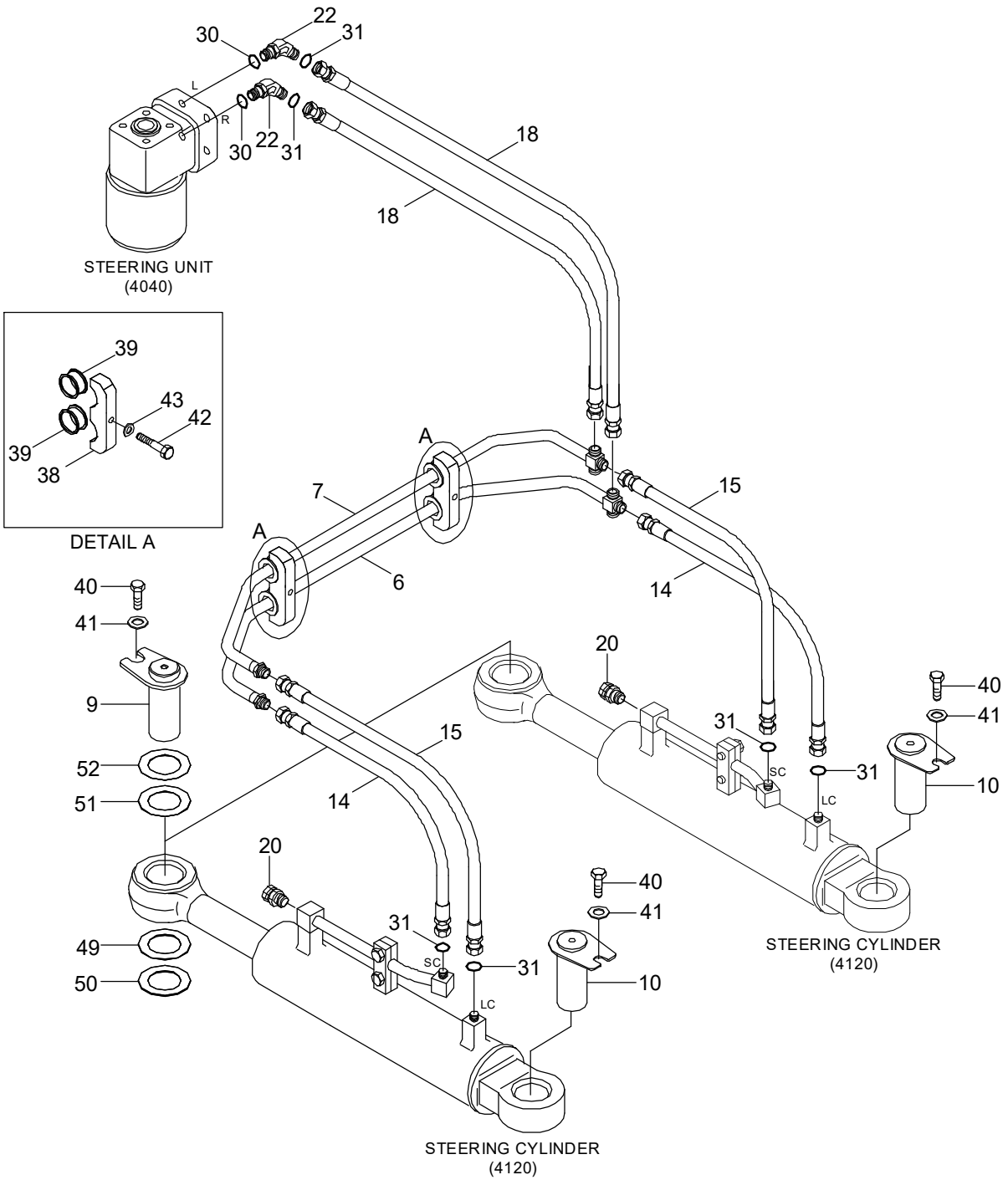

Item	Part_No	IS	Ord	T	Description	Qty	Serial_No	ITC	Remark
6	31LF-30050				PIPE WA	1			
7	31LF-30060				PIPE WA	1			
9	31LF-30310				PIN W.A	2	#0001 -	-	
10	31LF-30320				PIN W.A	2	#0001 -	-	
14	P910-084013				HOSE ASSY-ORFS 0X0	2			
15	P910-084014				HOSE ASSY-ORFS 0X0	2			
18	P910-084017				HOSE ASSY-ORFS 0X0	2			
20	31EK-11130				COUPLING-SCREW	2			
22	X530-110003				ELBOW-45,ORFS	2			
30	S631-018004				O-RING	2			
31	S621-014001				O-RING	6			
38	31L7-30060				CLAMP	2			
39	S690-022100				GROMMET	4			
40	S017-16035D				BOLT-HEX	4			
41	64L3-01120				WASHER-HARDENED	4			
42	S017-120506				BOLT-HEX	2			
43	S441-120006				WASHER-HARDENED	2			
49	31L9-30130				SHIM(0.5T)	2	#0001 -	-	
50	31L9-30140				SHIM(1.0T)	2	#0001 -	-	
51	31LB-30580				SHIM	2	#0001 -	-	
52	31LB-30590				SHIM	2	#0001 -	-	

STEERING HYDRAULIC PIPING 2(DUAL PEDAL)

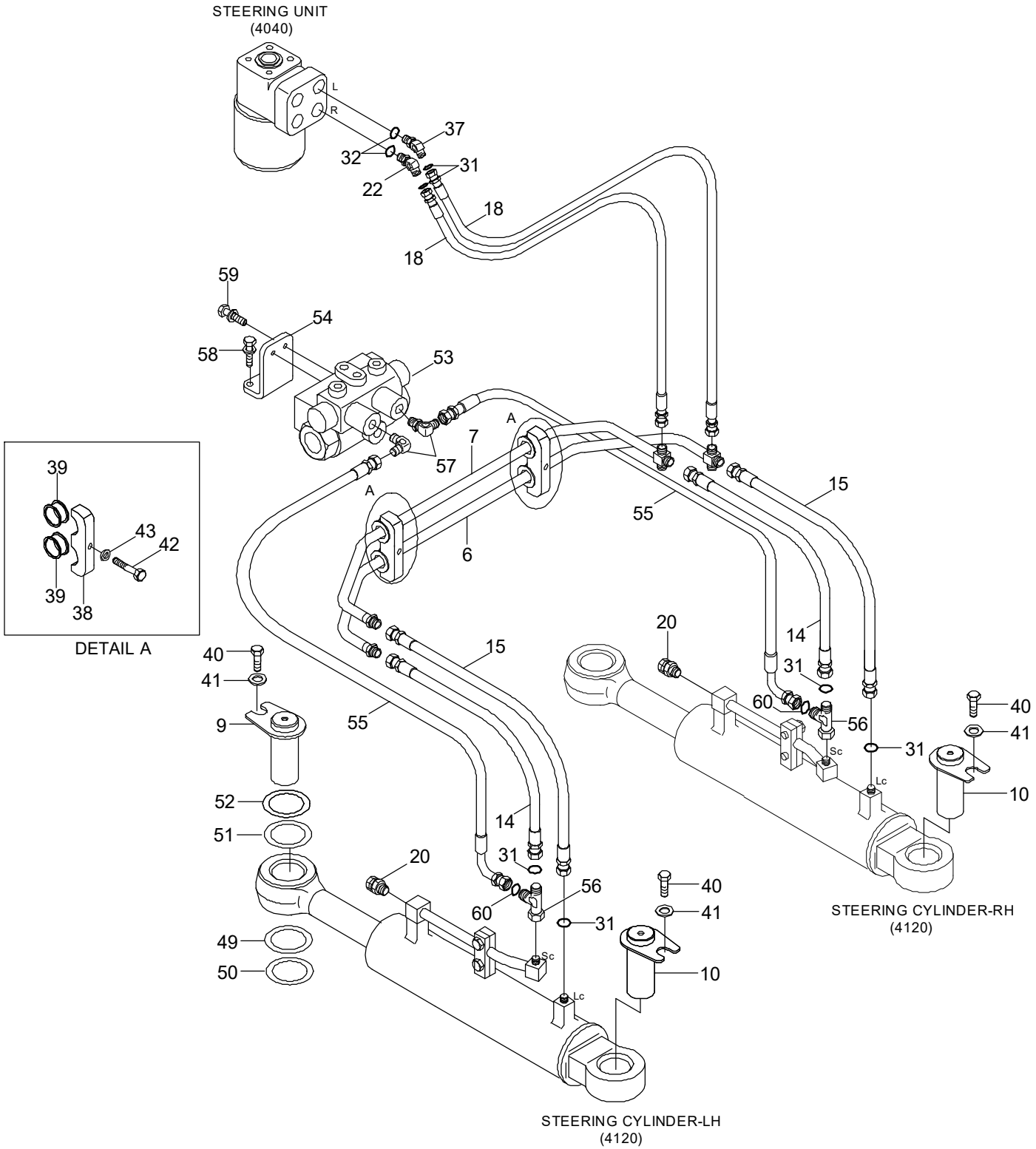

Item	Part_No	IS	Ord	T	Description	Qty	Serial_No	ITC	Remark
*	@				STEERING HYD PIPING	1	#0001 -	-	NOT
6	31LF-30050				PIPE WA	1			
7	31LF-30060				PIPE WA	1			
9	31LF-30310				PIN WA	2			
10	31LF-30320				PIN WA	2			
14	P910-084013				HOSE ASSY-ORFS 0X0	2	- #0344		
	P910-084012				HOSE ASSY-ORFS 0X0	2	#0345 -	D	
15	P910-084014				HOSE ASSY-ORFS 0X0	2			
18	P910-084017				HOSE ASSY-ORFS 0X0	2			
20	31EK-11130				COUPLING-SCREW	2			
22	X530-110003				ELBOW-45,ORFS	2			
30	S631-018004				O-RING	2			
31	S621-014001				O-RING	6			
38	31L7-30060				CLAMP	2			
39	S690-022100				GROMMET(FOR ONE LINE)	4			
40	S017-16035D				BOLT-HEX	4			
41	64L3-01120-DA				WASHER-HARDENED	4			
42	S017-120506				BOLT-HEX	2			
43	S441-120006				WASHER-HARDENED	2			
49	31L9-30130				SHIM(0.5T)	2			
50	31L9-30140				SHIM(1.0T)	2			
51	31LB-30580				SHIM(0.5T)	2			
52	31LB-30590				SHIM(1.0T)	2			
53	31L2-3004				CUSHION VALVE	1	#0345 -		
54	31LC-30090				PLATE	1	#0345 -		
55	P930-044025				HOSE ASSY-ORFS 0X90	2	#0345 -		

Item	Part_No	IS	Ord	T	Description	Qty	Serial_No	ITC	Remark
56	X840-535153				TEE-R/TYPE,SWIVEL,ORFS	2	#0345 -		
57	31FG-10020				ELBOW-90	2	#0345 -		
58	S037-122556				BOLT-W/WASHER	2	#0345 -		
59	S035-082056				BOLT-W/WASHER	2	#0345 -		
60	S621-011001				O-RING	2	#0345 -		

BRAKE HYDRAULIC PIPING 1

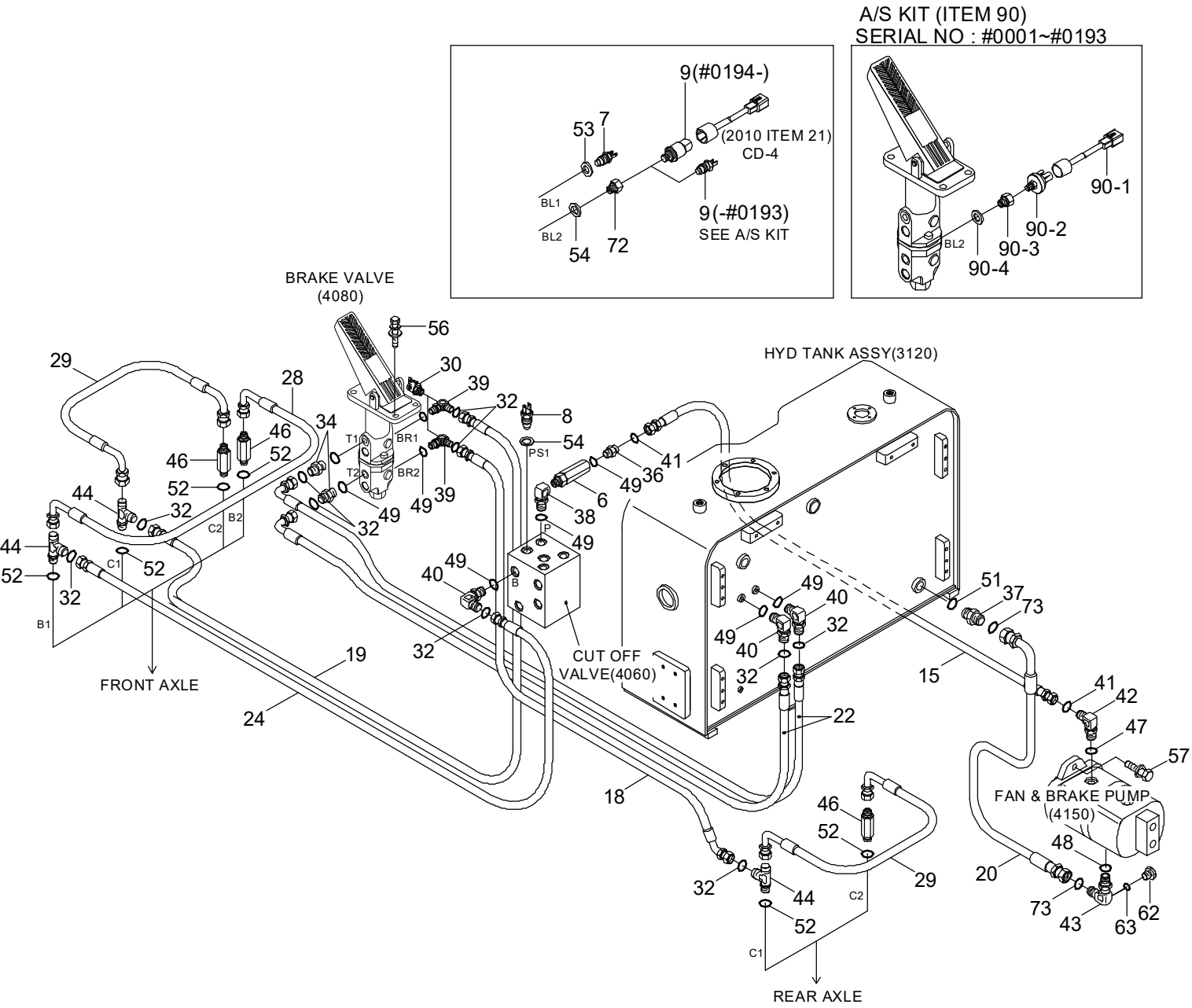

Item	Part_No	IS	Ord	T	Description	Qty	Serial_No	ITC	Remark
6	31L1-0139				FILTER-LINE	1			
7	31LB-40170				SWITCH-PRESSURE	1			CLUTCH CUT OFF
8	21E3-0015	10			SWITCH-PRESSURE	1			PARKING
N9	@				SWITCH-PRESSURE	1	- #0193		NOT
9	31Q4-40560				PRESSURE SWITCH	1	#0194 -	D	SERVICE BRAKE
15	P910-084038				HOSE ASSY-ORFS 0X0	1			
18	P923-063036				HOSE ASSY-ORFS 0X45	1			
19	P910-063061				HOSE ASSY-ORFS 0X0	1			
20	P930-162012				HOSE ASSY-ORFS 0X90	1			
22	P930-062045				HOSE ASSY-ORFS 0X90	2			
24	P910-062056				HOSE ASSY-ORFS 0X0	1			
28	31LF-40130				HOSE ASSY	1			
29	31LF-40140				HOSE ASSY	2			
30	31EK-11130				COUPLING-SCREW	2			
32	S621-012001				O-RING(SEAL LOCK TYPE)	10			
34	X500-110002				CONNECTOR-ORFS	2			
36	X500-110012				CONNECTOR-ORFS	1			
37	X500-110005				CONNECTOR-ORFS	1			
38	31LF-40060				ELBOW-90	1			
39	31LB-40340				TEE	2			STD ONLY
40	X520-110002				ELBOW-90,ORFS	3			
41	S621-014001				O-RING(SEAL LOCK TYPE)	2			
42	31LB-40360				CONNECTOR-ORFS	1			
43	31LF-40150				ELBOW 90	1			
44	31LF-40160				TEE	3			
46	X512-114524				CONNECTOR-LONG,ORFS	3			

Item	Part_No	IS	Ord	T	Description	Qty	Serial_No	ITC	Remark
47	S611-019001				O-RING(INCH)	1			
48	S611-030001				O-RING	1			
49	S631-014004				O-RING	9			
51	S631-029004				O-RING	1			
52	Y161-014001				O-RING(METRIC)	6			
53	P391-040000				WASHER-COPPER	1			
54	P392-120000				WASHER-COPPER	2			
56	S035-082546				BOLT-W/WASHER	4			
57	S109-100356				BOLT-SOCKET	2			
58	S037-122556				BOLT-W/WASHER	4			
62	P220-110102				PLUG	1			
63	S631-011004				O-RING	1			
72	31LG-40050				ADAPTER	1			
73	S621-021001				O-RING	2			
90	21LB-51700				KIT-STOP LAMP PRESSURE	1	#0001 - #0193	-	FOR A/S
90-1	21LB-51600				.EXT-HARNESS	1			
90-2	81FH-47120				.PRESSURE SWITCH ASS'Y	1			
90-3	31LG-40070				.ADAPTER	1			
90-4	P392-120000				.WASHER-COPPER	1			
N	@				NOT INDIVIDUALLY SUPPLIED	AR			NOT

BRAKE HYDRAULIC PIPING 2

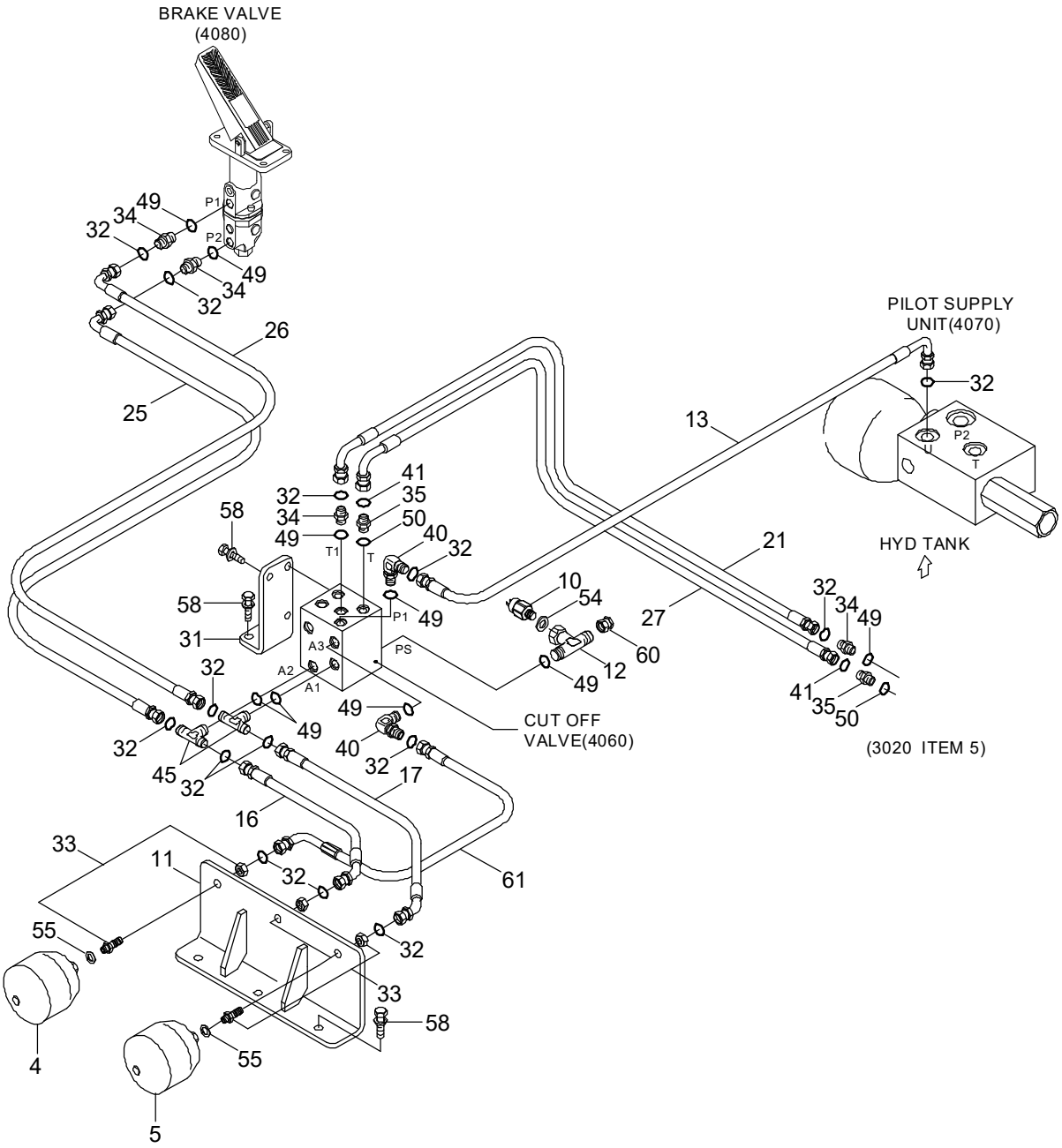

Item	Part_No	IS	Ord	T	Description	Qty	Serial_No	ITC	Remark
4	31EC-02190				ACCUMULATOR	1			
5	81L1-0004				ACCUMULATOR	2			
10	31L1-0095				SWITCH-PRESSURE	1			CHARGING
11	31LF-40110				PLATE WA	1	- #0344		
	31LF-40111				PLATE WA	1	#0345 -	B	
12	31LF-40120				TEE	1	- #0344		
	31LG-40190				TEE	1	#0345 -	D	
13	P930-062015				HOSE ASSY-ORFS 0X90	1			
16	P920-064008				HOSE ASSY-ORFS 0X45	1			
17	P920-064010				HOSE ASSY-ORFS 0X45	1			
21	P930-062026				HOSE ASSY-ORFS 0X90	1			
25	P930-063008				HOSE ASSY-ORFS 0X90	1			
26	P930-063009				HOSE ASSY-ORFS 0X90	1			
27	P930-082026				HOSE ASSY-ORFS 0X90	1			
31	31LF-40051				PLATE	1			
32	S621-012001				O-RING	14			
33	31LB-40410				CONNECTOR	3			
34	X500-110002				CONNECTOR-ORFS	4			
35	X500-110003				CONNECTOR-ORFS	2			
40	X520-110002				ELBOW-90,ORFS	1			
41	S621-014001				O-RING	2			
45	X810-065252				TEE-B/TYPE,ORFS	2			
49	S631-014004				O-RING	9			
50	S631-018004				O-RING	2			
54	P392-120000				WASHER-COPPER	1			
55	P392-180000				WASHER-COPPER	3			

Item	Part_No	IS	Ord	T	Description	Qty	Serial_No	ITC	Remark
56	S035-082546				BOLT-W/WASHER	2			
58	S037-122556				BOLT-W/WASHER	8			
60	X710-100103				CAP-HYD,ORFS	1			
61	P930-064010				HOSE ASSY-ORFS 0X90	1			

BRAKE HYDRAULIC PIPING(DUAL PEDAL)

A/S KIT (ITEM 30)
SERIAL NO : #0001~#0193

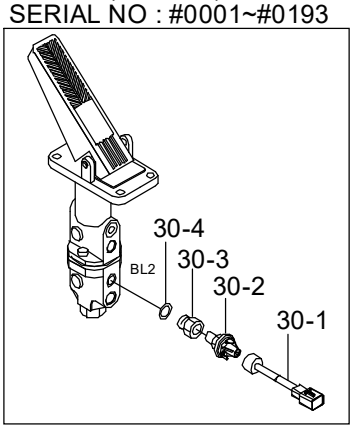

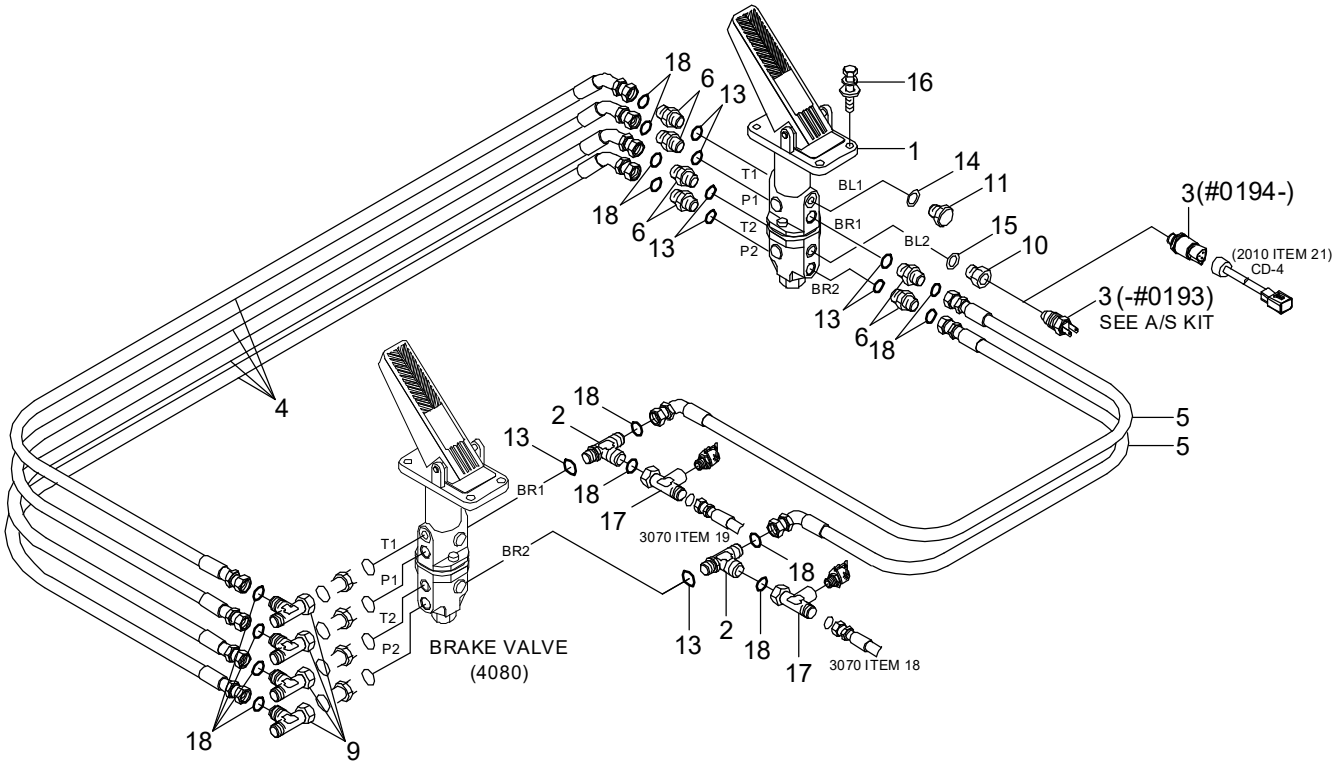

Item	Part_No	IS	Ord	T	Description	Qty	Serial_No	ITC	Remark
*	@				BRAKE HYD PIPING	1	#0001 -	-	NOT
	90LF-97000				DUAL BRAKE PEDAL KIT	1	#0004 -	-	
1	31LF-40300				.BRAKE VALVE-DUAL(RH)	1			
2	31LF-40310				.TEE-SHUTTLE	2			
N3	@				.SWITCH-PRESSURE	1	- #0193		NOT
3	31Q4-40560				.SWITCH-PRESSURE	1	#0194 -	D	SERVICE BRAKE
4	P920-063014				.HOSE ASSY-ORFS 0X45	4			
5	P930-063013				.HOSE ASSY-ORFS 0X90	2			
6	X500-110002				.CONNECTOR-ORFS	6			
9	X840-525252				.TEE-R/TYPE,S/NUT	4			
10	31LG-40050				.ADAPTER	1			
11	P220-110102				.PLUG	1			
12	S631-011004				.O-RING	1			
13	S631-014004				.O-RING	6			
14	P391-040000				.WASHER-COPPER	1			
15	P392-120000				.WASHER-COPPER	1			
16	S035-082552				.BOLT-W/WASHER	2			
17	31N6-66090				.TEE-TEST	2			
18	S621-012001				.O-RING	12			
20	@				.MAT-FLOOR	1	#0004 -	-	NOT
21	@				.COVER	1	#0004 -	-	NOT
22	@				.HARNESS-PLUG	1	#0004 -	-	NOT
30	21LB-51700				KIT-STOP LAMP PRESSURE	1	#0001 - #0193	-	FOR A/S
30-1	21LB-51600				.HARNESS-EXT	1			
30-2	81FH-47120				.SWITCH-PRESSURE	1			
30-3	31LG-40070				.ADAPTER	1			

Item	Part_No	IS	Ord	T	Description	Qty	Serial_No	ITC	Remark
30-4	P392-120000				.WASHER-COPPER	1			
N	@					AR			NOT

GREASE PIPING(FRONT)

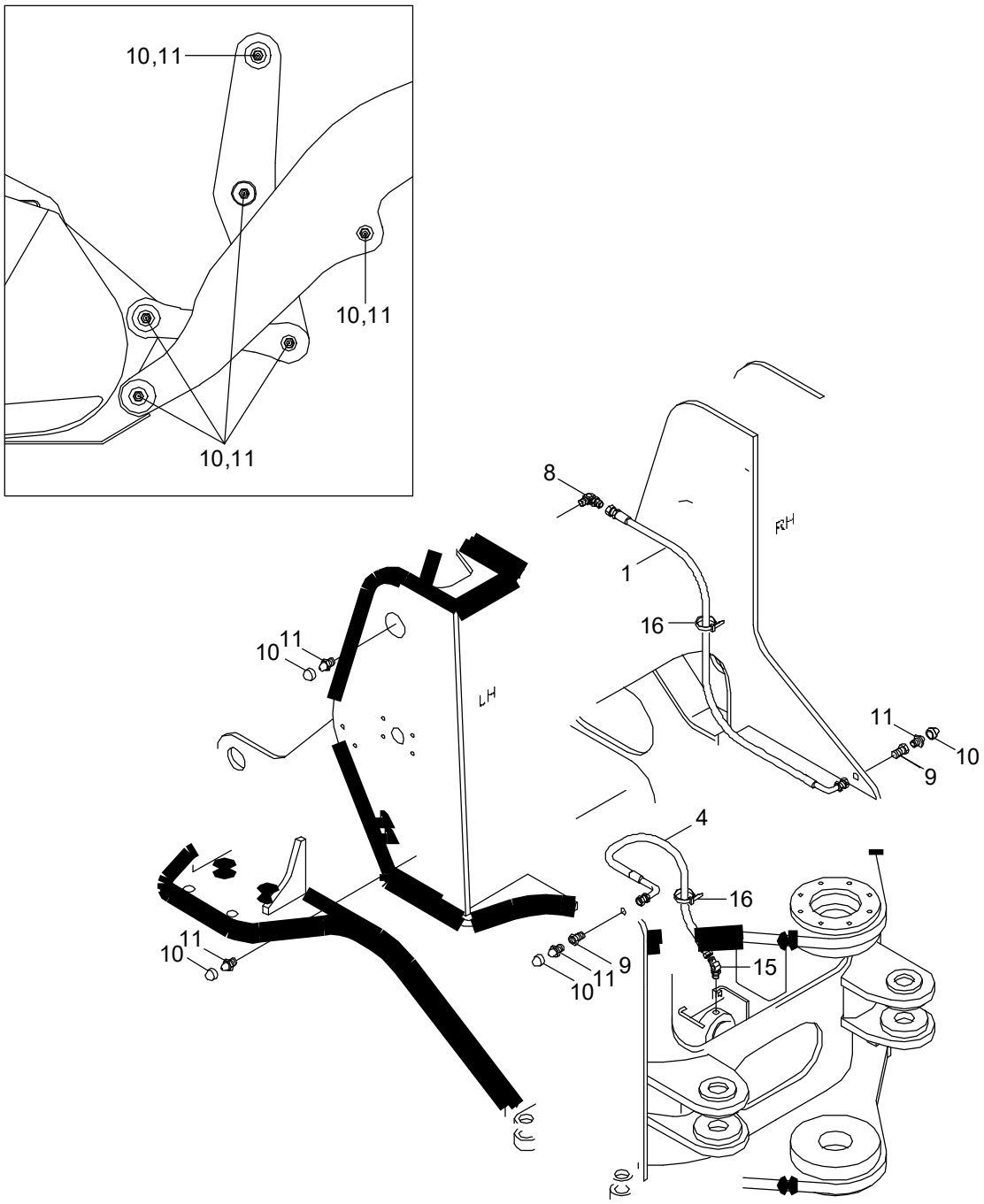

Item	Part_No	IS	Ord	T	Description	Qty	Serial_No	ITC	Remark
1	P420-042020				HOSE ASSY-COMP 0X90	1	- #0390		
	P860-042020				HOSE ASSY-SYN 0X90	1	#0391 -	A	
4	P420-042019				HOSE ASSY-COMP 0X90	1	- #0390		
	P860-042019				HOSE ASSY-SYN 0X90	1	#0391 -	A	
8	61L1-3909				ELBOW-90	1			
9	31LB-50020				CONNECTOR	2			
10	S654-000000				CAP-GREASE NIPPLE	14			
11	S651-810002				NIPPLE-GREASE	12			
15	E231-0207	10			ELBOW-45	1			
16	S552-050203				CLAMP-BAND	10			

GREASE PIPING(REAR)

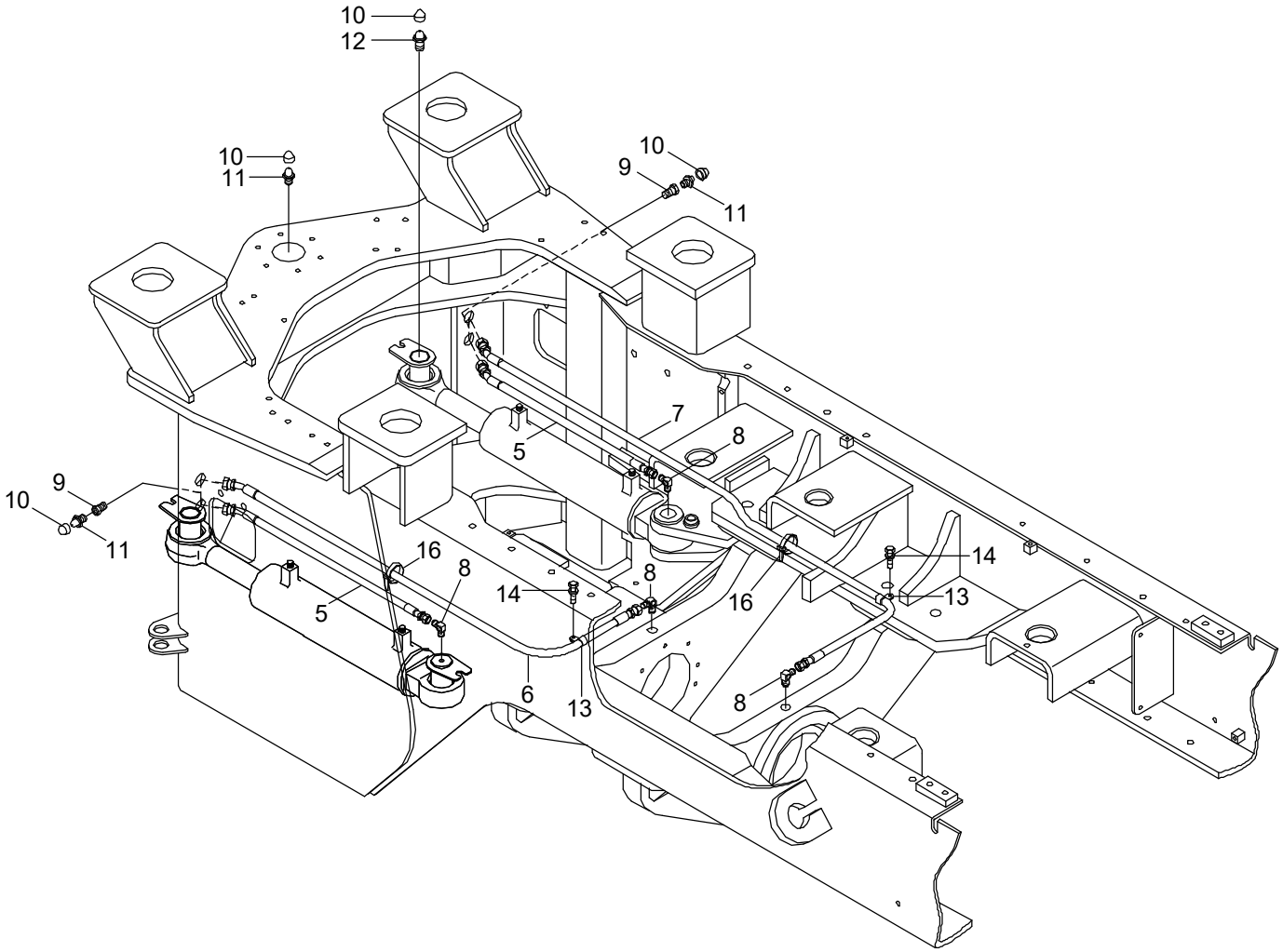

Item	Part_No	IS	Ord	T	Description	Qty	Serial_No	ITC	Remark
5	P410-042014				HOSE ASSY-COMP 0X45	2	- #0390		
	P850-042014				HOSE ASSY-SYN 0X45	2	#0391 -	A	
6	P410-042028				HOSE ASSY-COMP 0X45	1	- #0390		
	P850-042028				HOSE ASSY-SYN 0X45	1	#0391 -	A	
7	P410-042038				HOSE ASSY-COMP 0X45	1	- #0390		
	P850-042038				HOSE ASSY-SYN 0X45	1	#0391 -	A	
8	61L1-3909				ELBOW-90	4			
9	31LB-50020				CONNECTOR	4			
10	S654-000000				CAP-GREASE NIPPLE	8			
11	S651-810002				NIPPLE-GREASE	8			
12	S653-810002				NIPPLE-GREASE	2			
13	S543-140002				CLAMP-TUBE	3			
14	S037-101556				BOLT-W/WASHER	3			
16	S552-050203				CLAMP-BAND	10			

HYDRAULIC TANK

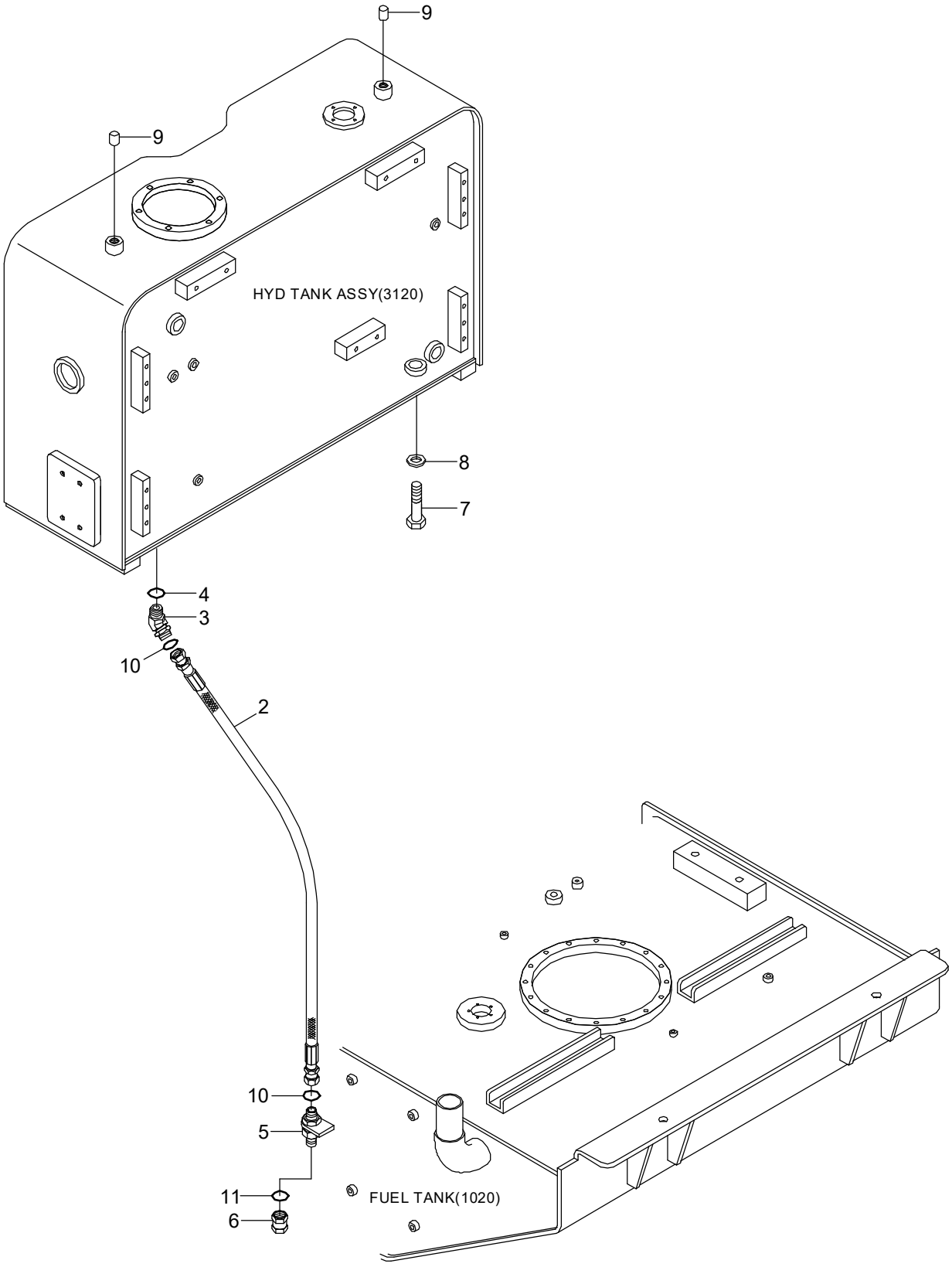

Item	Part_No	IS	Ord	T	Description	Qty	Serial_No	ITC	Remark
2	P910-162028				HOSE ASSY-ORFS 0X0	1			
3	X530-110005				ELBOW-45,ORFS	1			
4	S631-029004				O-RING	1			
5	31LB-60160				CONNECTOR ASSY	1			
6	X710-100105				CAP-ORFS	1			
7	S017-16040D				BOLT-HEX	6			
8	S441-160006				WASHER-HARDENED	6			
9	S981-121500				PLUG-RUBBER	2			
10	S621-021001				O-RING,ORFS	2			
11	S621-018001				O-RING,ORFS	1			

HYDRAULIC TANK ASSY

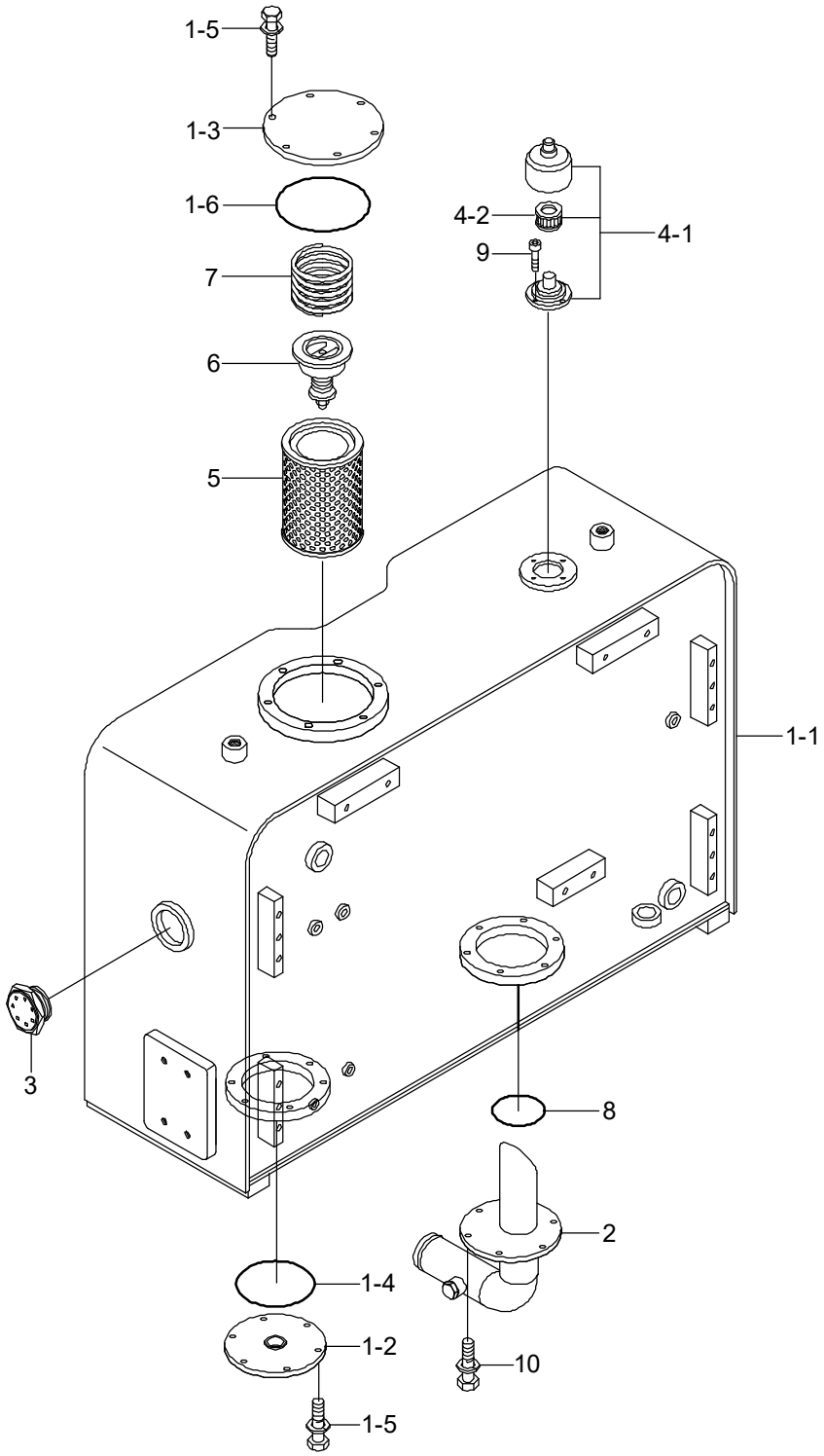

Item	Part_No	IS	Ord	T	Description	Qty	Serial_No	ITC	Remark
*	@				HYD TANK ASSY	1			NOT
1	31LF-60262				.HYD TANK SUB ASSY	1			
1-1	31LF-60272				..HYD TANK WA	1			
1-2	31LD-60050				..COVER WA	1			
1-3	31E3-4526				..COVER	1			
1-4	S632-140001				..O-RING	1			
1-5	S037-102556				..BOLT-W/WASHER	12			
1-6	S632-165001				..O-RING	1			
2	31LF-60090				.PIPE ASSY	1	- #0387		
	31LF-60500				.PIPE ASSY	1	#0386 -	A	
3	31M6-52140				.SIGHT GAUGE ASSY	1			
4	31EE-02100				.AIR BREATHER	1			
4-1	PM102-0001R				..BODY	1			
4-2	31EE-02110				..ELEMENT	1			
5	31LH-60070				.ELEMENT ASSY	1			
6	E131-0256	20			.VALVE-BYPASS	1			
7	E131-0220	20			.SPRING	1			
8	S632-140001				.O-RING	1			
9	S109-060156				.BOLT-SOCKET	4			
10	S037-102556				.BOLT-W/WASHER	6			

PILOT HYDRAULIC PIPING(3-SPOOL)

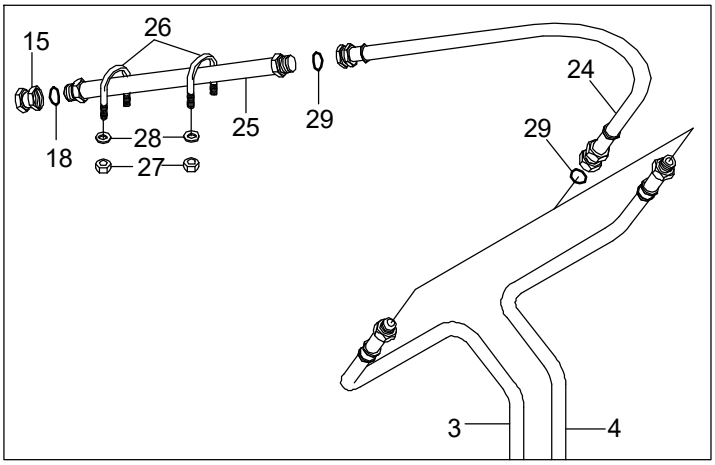

EXTRA PIPING

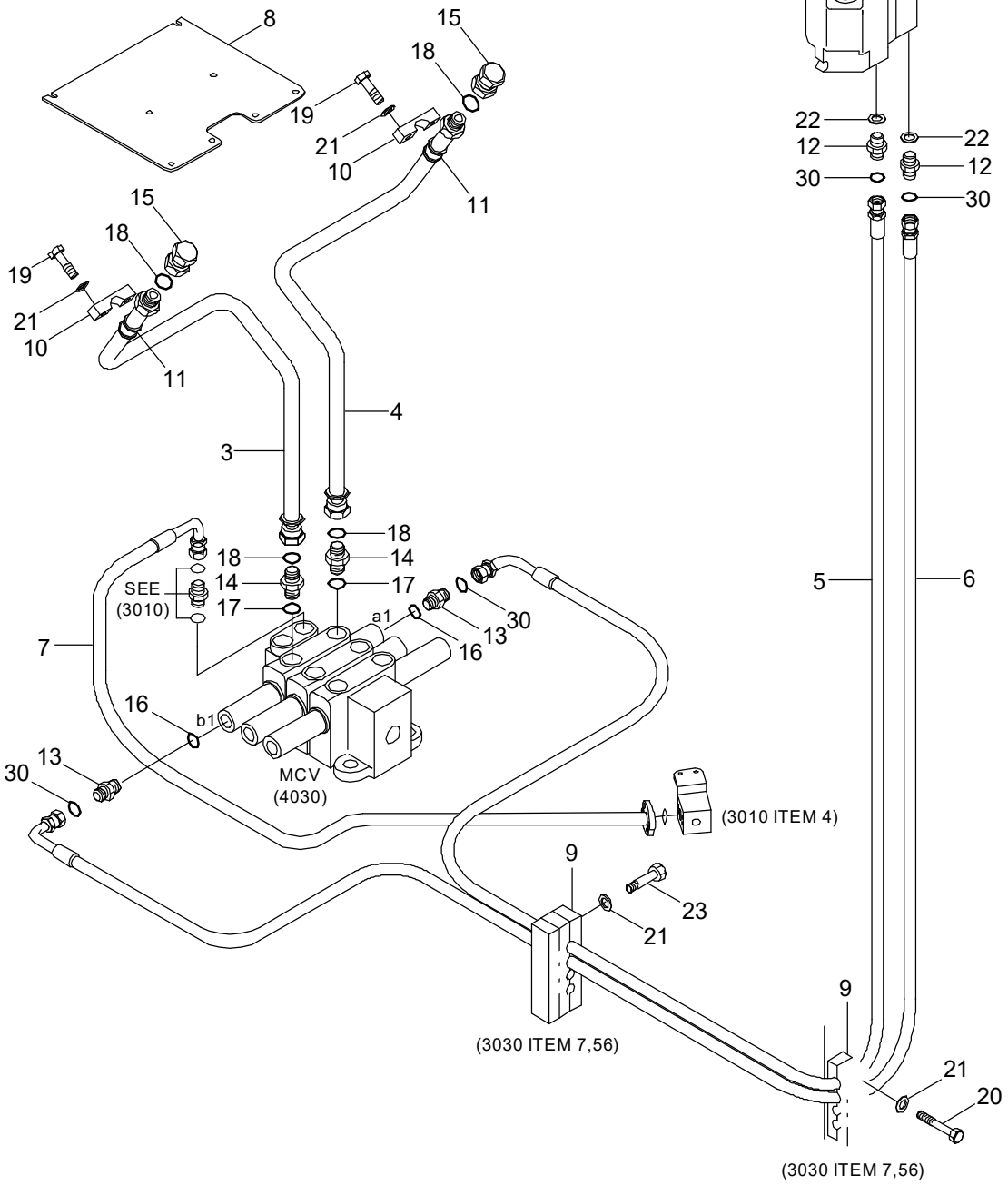

Item	Part_No	IS	Ord	T	Description	Qty	Serial_No	ITC	Remark
3	31LF-90021				PIPE WA-LH	1			
4	31LF-90031				PIPE WA-RH	1			
5	P930-042057				HOSE ASSY-ORFS 0X90	1	- #0390		
	X420-042057				HOSE ASSY-ORFS 0X90	1	#0391 -	A	
6	P930-042053				HOSE ASSY-ORFS 0X90	1	- #0390		
	X420-042053				HOSE ASSY-ORFS 0X90	1	#0391 -	A	
7	P990-165337				HOSE ASSY-ORFS,FLG 0X90	1			
8	31LF-90040				COVER WA	1			
9	31LF-10060				CLAMP	2			
10	31L7-00370				CLAMP	2			
11	S690-027100				GROMMET(FOR ONE LINE)	2			
12	X500-120001				CONNECTOR-ORFS	2			
13	31S7-00750				CONNECTOR	2			
14	31LF-20120				CONNECTOR	2			
15	X710-100105				CAP-HYD,ORFS	2			
16	S611-012001				O-RING	2			
17	S611-023001				O-RING	2			
18	S621-018001				O-RING	4			
19	S017-120506				BOLT-HEX	4			
20	S017-120856				BOLT-HEX	2			
21	S441-120006				WASHER-HARDENED	8			
22	P391-040000				WASHER-COPPER	2			
23	S017-121206				BOLT-HEX	2			
24	P910-125032				HOSE ASSY-ORFS 0X0	2			EXTRA PIPING
25	31LF-90210				PIPE WA	2			EXTRA PIPING
26	S071-022730				U-BOLT	6			EXTRA PIPING

Item	Part_No	IS	Ord	T	Description	Qty	Serial_No	ITC	Remark
27	S275-100006				NUT-SELF LOCKING	12			EXTRA PIPING
28	S441-100006				WASHER-HARDENED	12			EXTRA PIPING
29	S621-018001				O-RING	4			EXTRA PIPING
30	S621-011001				O-RING	4			

EMERGENCY STEERING HYD PIPING(-#0098)

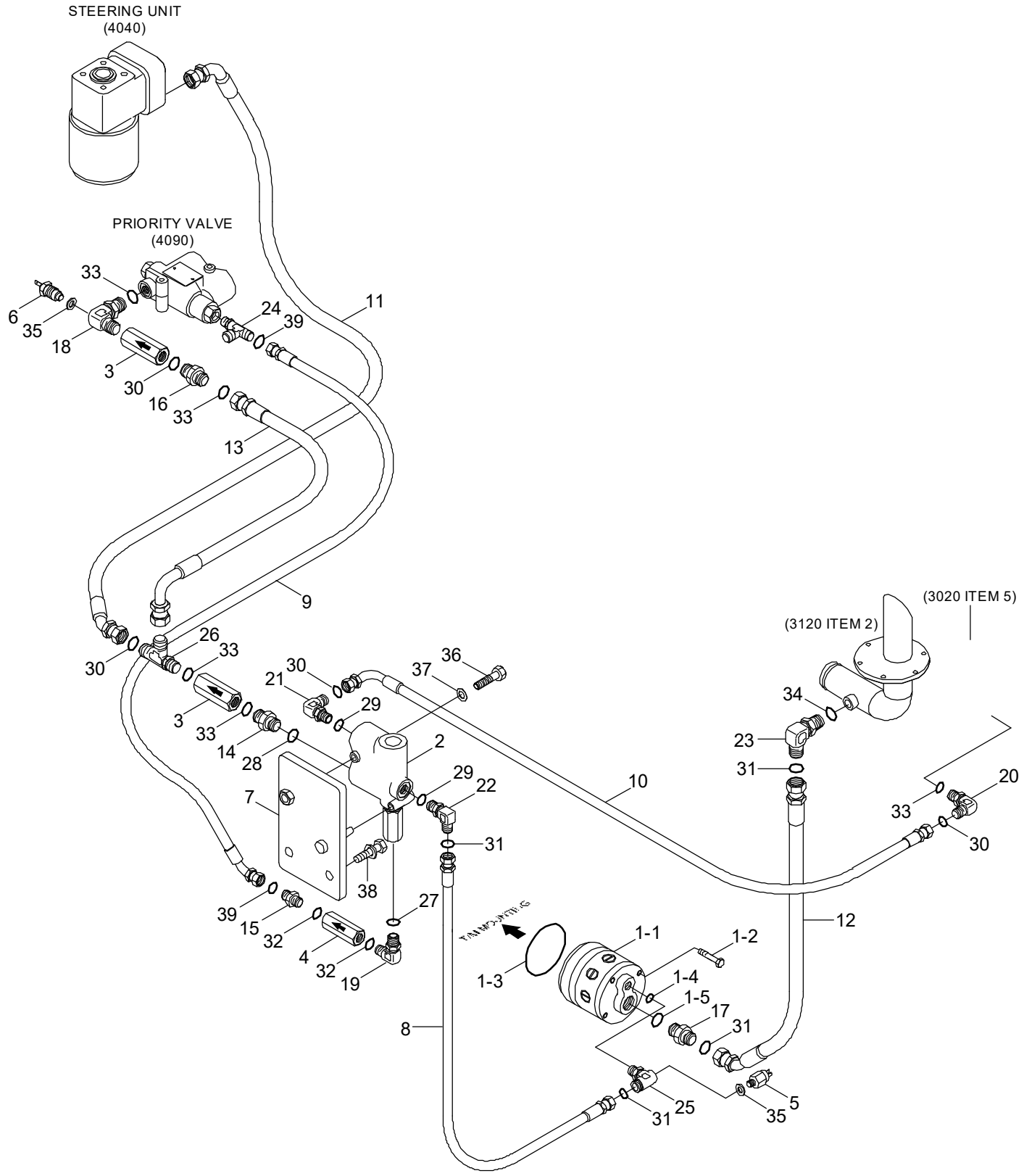

Item	Part_No	IS	Ord	T	Description	Qty	Serial_No	ITC	Remark
*	90LF-92000				EMERGENCY STEER KIT	1	- #0098	-	
1	34L4-01780				.EMER STEER PUMP KIT	1			
1-1	31L9-90090				..PUMP-PISTON	1			
1-2	31L8-90260				..SCREW-HEX	1			
1-3	31L9-90130				..O-RING	1			
1-4	31LC-90240				..O-RING	1			
1-5	31LC-90250				..O-RING	1			
2	@				.PRIORITY VALVE	1			NOT
3	34L3-01311				.CHECK VALVE	2			
4	34L3-01320				.CHECK VALVE	1			
5	31L7-40030				.SWITCH-PRESSURE	1			
6	34L3-01600				.SWITCH-PRESSURE	1			
7	31LF-90080				.PLATE	1			
8	P933-124016				.HOSE ASSY-ORFS 0X90	1			
9	P920-044016				.HOSE ASSY-ORFS 0X45	1			
10	P930-082019				.HOSE ASSY-ORFS 0X90	1			
11	P920-084024				.HOSE ASSY-ORFS 0X45	1			
12	P920-122013				.HOSE ASSY-ORFS 0X45	1			
13	P930-084014				.HOSE ASSY-ORFS 0X90	1			
14	31LF-90090				.CONNECTOR	1			
15	X500-110001				.CONNECTOR-ORFS	1			
16	X500-110003				.CONNECTOR-ORFS	1			
17	X500-210015				.CONNECTOR-ORFS	1			
18	31L7-30150				.ELBOW-90	1			
19	31L8-90220				.ELBOW-90	1			
20	X520-110003				.ELBOW-90,ORFS	1			

Item	Part_No	IS	Ord	T	Description	Qty	Serial_No	ITC	Remark
21	31LB-40360				.ELBOW-90	1			
22	31LG-30100				.ELBOW-90	1			
23	X520-110004				.ELBOW-90,ORFS	1			
24	31LF-90240				.TEE	1			
25	31LF-90251				.ELBOW-90	1			
26	X820-085353				.TEE-R/TYPE,ORFS	1			
27	S611-009001				.O-RING	2			
28	S611-016001				.O-RING	1			
29	S611-019001				.O-RING	2			
30	S621-014001				.O-RING	3			
31	S621-018001				.O-RING(SEAL LOCK TYPE)	4			
32	S631-011004				.O-RING	2			
33	S631-018004				.O-RING	5			
34	S631-024004				.O-RING	1			
35	P392-120000				.WASHER-COPPER	2			
36	S015-080606				.BOLT-HEX	1			
37	S441-080006				.WASHER-HARDENED	1			
38	S037-122556				.BOLT-W/WASHER	2			
39	S621-011001				.O-RING	2			
E10	@				.EMER STEER ELECT	1			NOT

EMERGENCY STEERING HYD PIPING(#0099-)

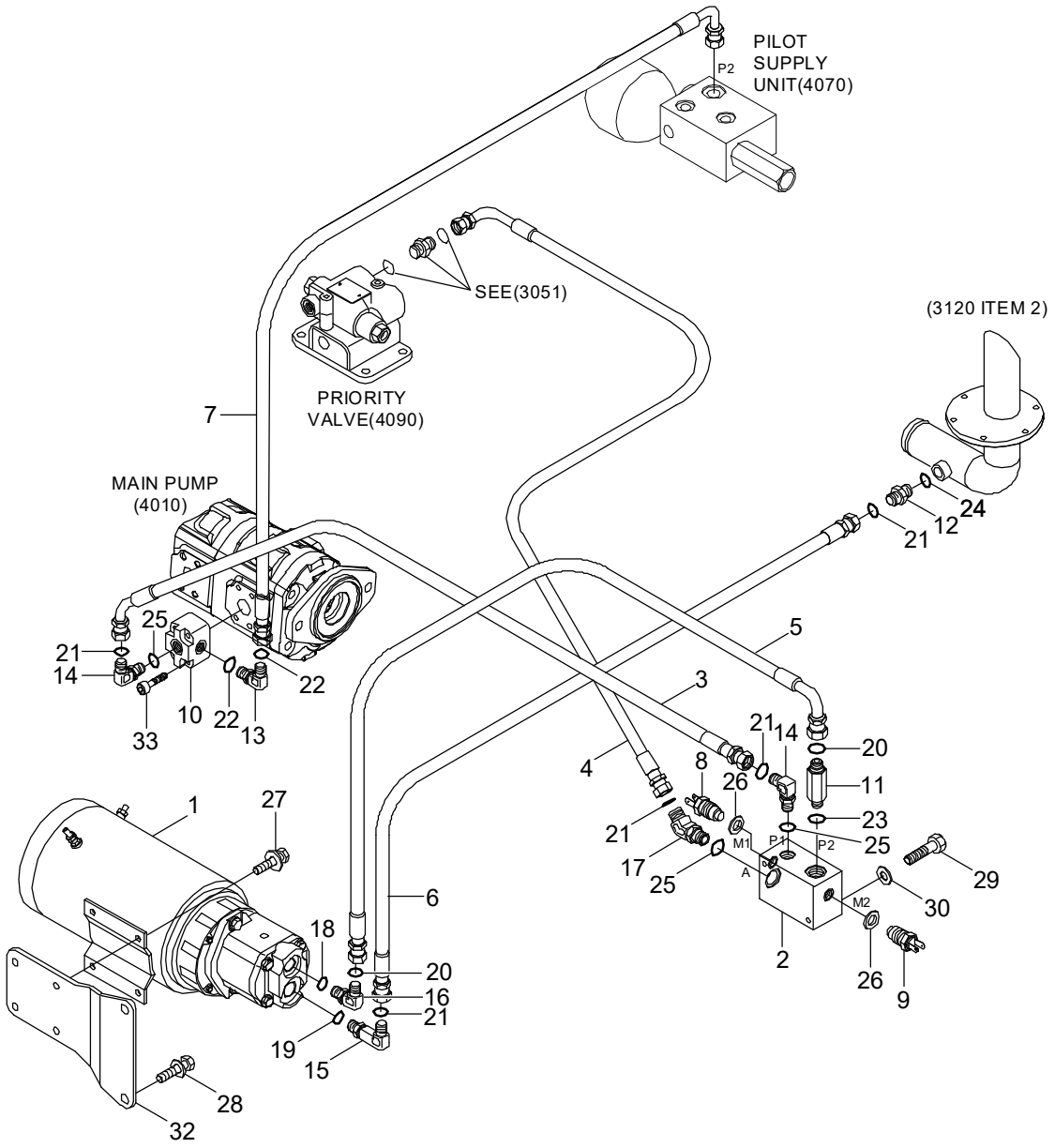

Item	Part_No	IS	Ord	T	Description	Qty	Serial_No	ITC	Remark
*	90LF-92010				EMERGENCY STEER KIT	1	#0099 -	D	
1	31LF-30400				.MOTOR PUMP ASSY	1			
2	31L6-02201				.CHECK VALVE	1			
3	P930-124012				.HOSE ASSY-ORFS 0X90	1			
4	P930-124019				.HOSE ASSY-ORFS 0X90	1			
5	P930-084015				.HOSE ASSY-ORFS 0X90	1			
6	P920-122020				.HOSE ASSY-ORFS 0X45	1			
7	P930-064015				.HOSE ASSY-ORFS 0X90	1			
8	34L3-01600				.SWITCH-PRESSURE	1			MAIN PUMP
9	31L7-41030				.SWITCH-PRESSURE	1			EMERGENCY PUMP
10	34L3-02510				.BLOCK	1			
11	31N8-40180				.CONN-LONG,ORFS	1			
12	X520-110004				.ELBOW-90,ORFS	1			
13	X520-110011				.ELBOW-90,ORFS	1			
14	X520-110018				.ELBOW-90,ORFS	2			
15	31S7-00470				.ELBOW-90	1			
16	31S7-90100				.ELBOW-90	1			
17	X530-110018				.ELBOW-45,ORFS	1			
18	S611-019001				.O-RING	1			
19	S611-023001				.O-RING(INCH)	1			
20	S621-014001				.O-RING	2			
21	S621-018001				.O-RING(SEAL LOCK TYPE)	6			
22	S631-011004				.O-RING	2			
23	S631-018004				.O-RING	1			
24	S631-024004				.O-RING	1			
25	S631-029004				.O-RING	3			

Item	Part_No	IS	Ord	T	Description	Qty	Serial_No	ITC	Remark
26	P392-120000				.WASHER-COPPER	2			
27	S037-101556				.BOLT-W/WASHER	4			
28	S037-123056				.BOLT-W/WASHER	2			
29	S017-100756				.BOLT-HEX	2			
30	S441-100006				.WASHER-HARDENED	2			
32	31LF-90300				.PLATE	1			
33	S109-100506				.BOLT-SOCKET	4			
	@				.EMER STEER ELECT	1			NOT

RIDE CONTROL HYDRAULIC PIPING

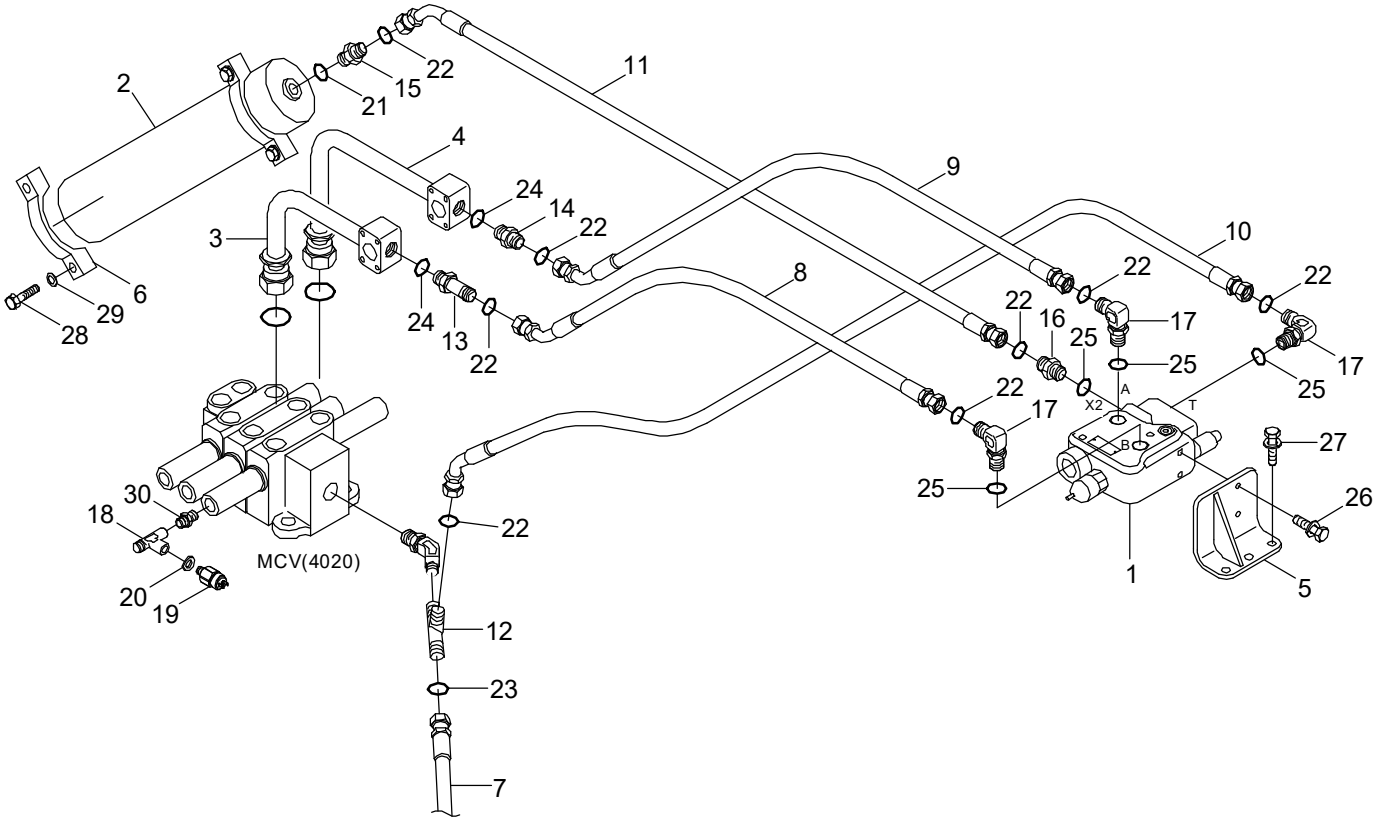

Item	Part_No	IS	Ord	T	Description	Qty	Serial_No	ITC	Remark
*	90LF-90100				RIDE CONTROL KIT	1			
1	@				.RIDE CONTROL VALVE	1			NOT
2	31LB-94000				.ACCUMULATOR	1			
3	31LF-90070				.PIPE WA	1			
4	31LF-90130				.PIPE WA	1			
5	31LD-90190				.PLATE WA	1			
6	31LB-90340				.CLAMP-UPPER	2			
7	P910-162028				.HOSE ASSY-ORFS 0X0	1			
8	P910-124014				.HOSE ASSY-ORFS 0X0	1			
9	P920-124010				.HOSE ASSY-ORFS 0X45	1			
10	P920-122015				.HOSE ASSY-ORFS 0X45	1			
11	P920-124015				.HOSE ASSY-ORFS 0X45	1			
12	X840-555455				.S/NUT TEE-R/TYPE,ORFS	1			
13	31N8-40250				.CONNECTOR-ORFS.LONG	1			
14	X500-110004				.CONNECTOR-ORFS	1			
15	X500-210015				.CONNECTOR-ORFS	1			
16	X500-310004				.CONNECTOR-ORFS	1			
17	31LD-90200				.ELBOW-90	3			
18	31LC-90220				.TEE	1			
19	31L7-90030				.SWITCH-PRESSURE	1			
20	P392-120000				.WASHER-COPPER	1			
21	S611-023001				.O-RING	1			
22	S621-018001				.O-RING,ORFS	8			
23	S621-021001				.O-RING,ORFS	1			
24	S631-024004				.O-RING	2			
25	Y161-033001				.O-RING	4			

Item	Part_No	IS	Ord	T	Description	Qty	Serial_No	ITC	Remark
26	S037-102556				.BOLT-W/WASHER	2			
27	S037-123056				.BOLT-W/WASHER	3			
28	S017-120656				.BOLT-HEX	4			
29	S441-120006				.WASHER-HARDENED	4			
30	31L7-10110				.CONNECTOR	1			
R6	@				.HARNESS-RIDE CONTROL	1			NOT
R17	@				.RELAY-4P	1			NOT
R24	@				.SWITCH-RIDE CONTROL	1			NOT

QUICK COUPLER PIPING(VOLVO TYPE)

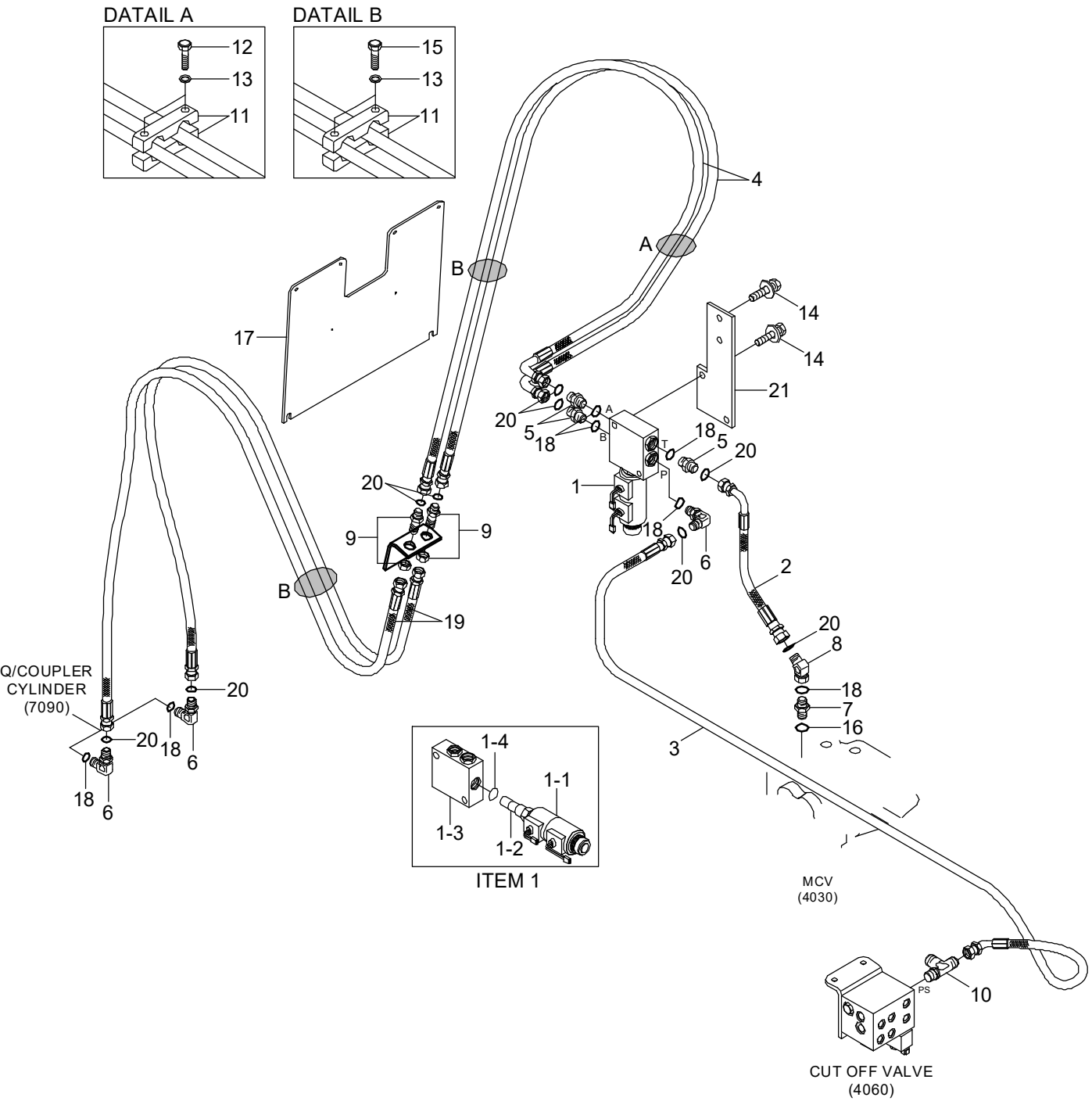

Item	Part_No	IS	Ord	T	Description	Qty	Serial_No	ITC	Remark
1	31L7-20210				SOLENOID VALVE	1			
1-1	XKAL-00071				.COIL	2			
1-2	XKAL-00072				.CARTRIDGE VALVE	1			
1-3	@				.MANIFOLD	1			NOT
1-4	XKAL-00004				.SEAL	1			
2	P930-062007				HOSE ASSY-ORFS 0X90	1			
3	P920-064058				HOSE ASSY-ORFS 0X45	1			
4	P930-064048				HOSE ASSY-ORFS 0X90	2			
5	X500-110002				CONNECTOR-ORFS	3			
6	X520-110002				ELBOW-90,ORFS	2			
7	31LF-20320				CONNECTOR	1			
8	X530-110002				ELBOW-45,ORFS	1			
9	X540-120002				CONNECTOR-BH TYPE	2			
10	31LF-40120				TEE	1			
11	31LF-90270				CLAMP	6			
12	S017-120806				BOLT-HEX	2			
13	S441-120006				WASHER-HARDENED	6			
14	S037-102556				BOLT-W/WASHER	2			
15	S017-120506				BOLT-HEX	4			
16	S611-027001				O-RING	1			
17	31LF-90170				COVER WA	1			
18	S631-014004				O-RING	5			
19	31LF-90260				HOSE ASSY	2			
20	S621-012001				O-RING,ORFS	8			
21	31LF-90280				PLATE	1			

MAIN PUMP

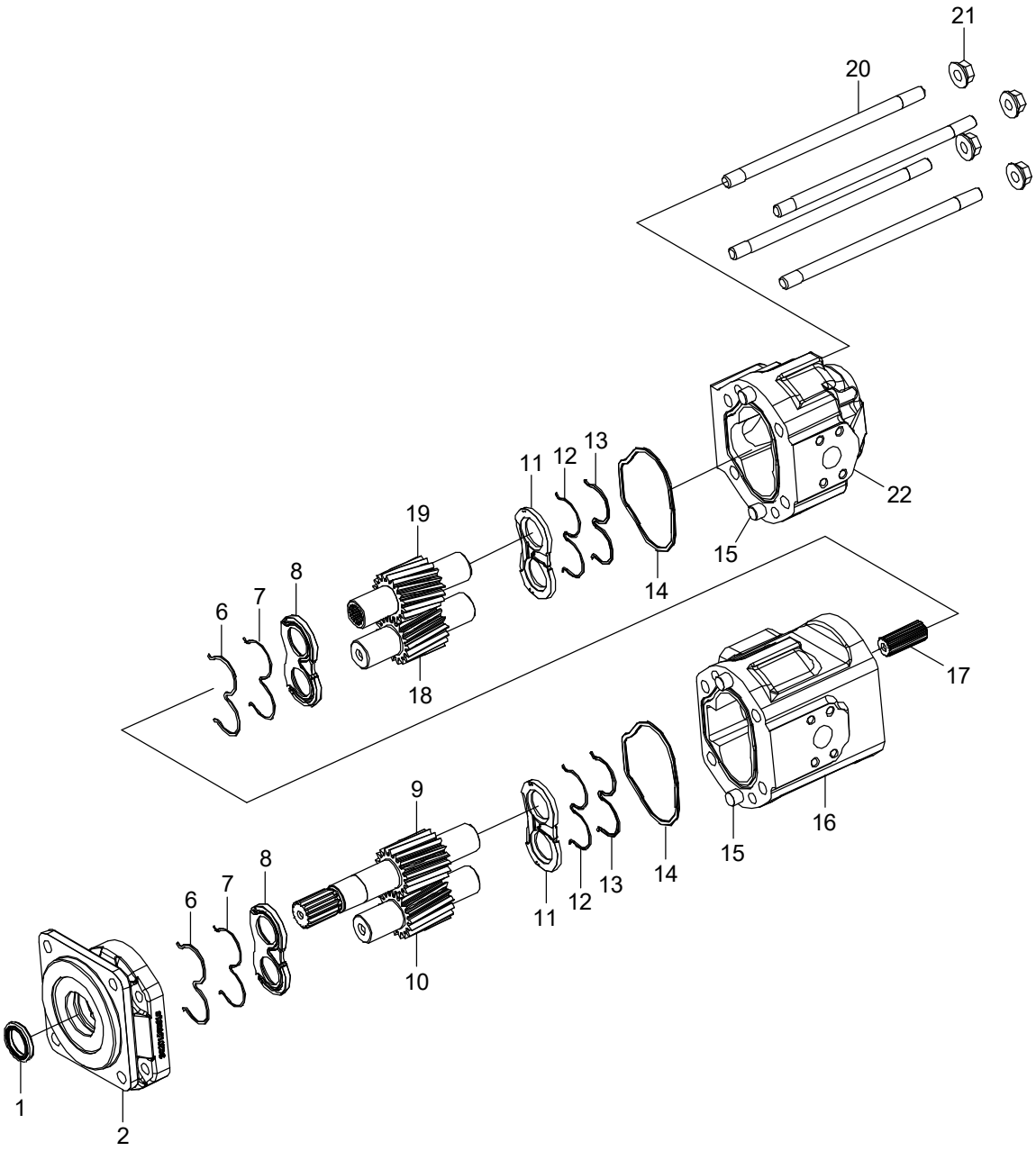

Item	Part_No	IS	Ord	T	Description	Qty	Serial_No	ITC	Remark
*	31LF-00400				MAIN PUMP	1			
K1	@				.SHAFT SEAL-VITON	1			NOT
2	@				.ADAPTER	1			NOT
K6	@				.SEAL-BACK UP	2			NOT
K7	@				.SEAL/O-RING	2			NOT
K8	@				.WEARPLATE	2			NOT
9	@				.DRIVE GEAR-FRONT	1			NOT
10	@				.DRIVEN GEAR-FRONT	1			NOT
K11	@				.WEARPLATE	2			NOT
K12	@				.SEAL/O-RING	2			NOT
K13	@				.SEAL-BACK UP	2			NOT
K14	@				.SEAL-INTERFACE	2			NOT
15	@				.DOWEL	4			NOT
16	@				.BODY-FRONT	1			NOT
17	@				.COUPLING-SPLINE	1			NOT
18	@				.DRIVEN GEAR-REAR	1			NOT
19	@				.DRIVE GEAR-REAR	1			NOT
20	@				.STUD	4			NOT
21	@				.NUT-FLANGED	4			NOT
22	@				.BODY-REAR	1			NOT
K	ZUAH-00060				SEAL KIT(1,6-8,11-14)	1			

MAIN CONTROL VALVE(2-SPOOL)

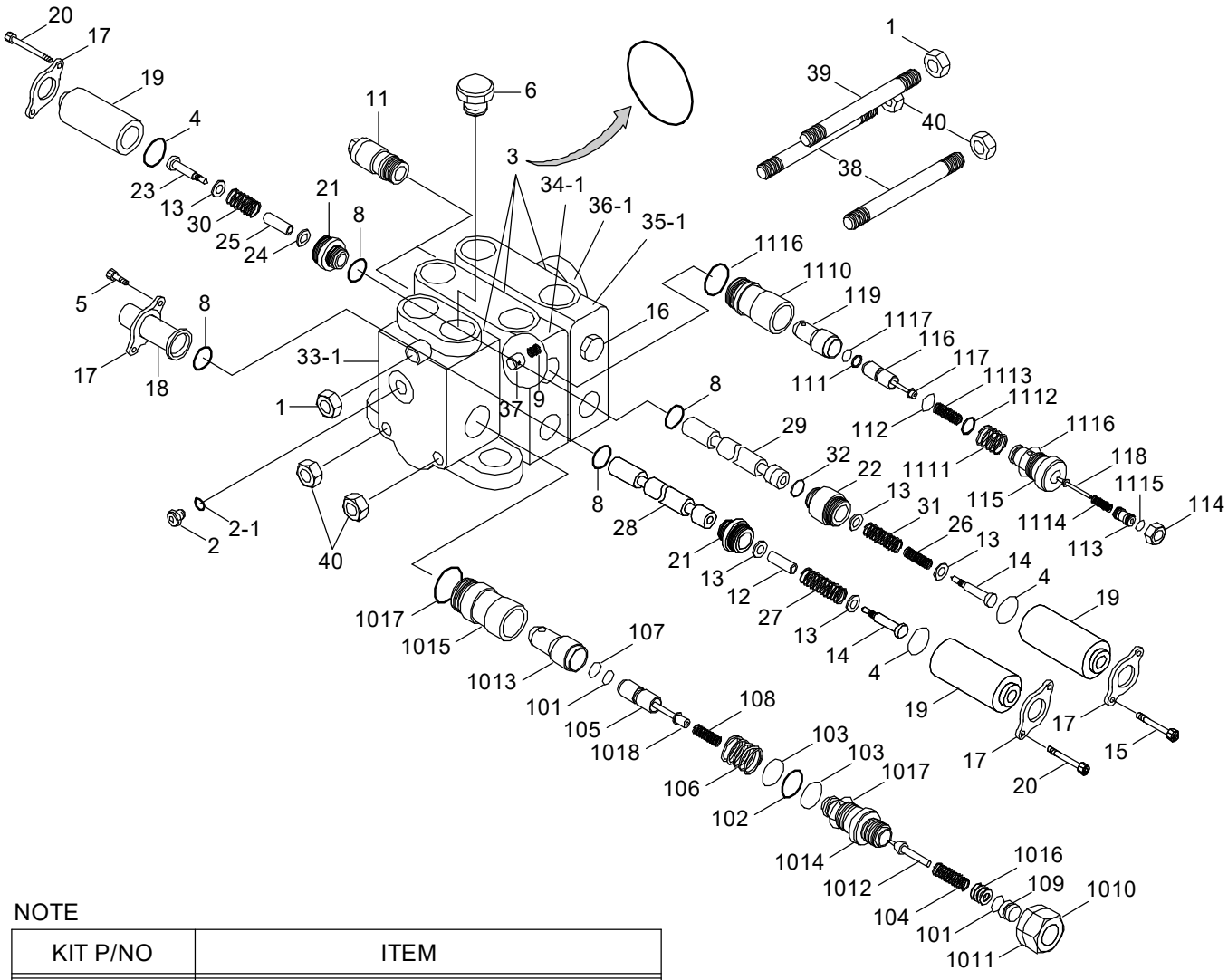

NOTE

KIT P/NO	ITEM
YUCE-00030	101-103,107,108,1017
YUCE-00049	111,112,1112,1113,1115-1117
YUCE-00071	3,33-1
YUCE-00073	3-5,8,9,12-14,17-21,27,28,34-1,37
YUCE-00075	3,4,8,9,13-15,17,19-26,29-32,35-1,37
YUCE-00077	36-1
SEAL KIT	2-1,3,4,8,32

Item	Part_No	IS	Ord	T	Description	Qty	Serial_No	ITC	Remark
*	31L7-00022				MAIN CONTROL VALVE	1			
1	1058				.NUT-SPECIAL	2			
2	11120				.PLUG	1			
K2-1	3183				.O-RING	1			
K3	1343				.O-RING	3			
K4	3285				.O-RING	3			
5	5217				.SCREW-CAP	2			
N6	11240				.PLUG	1			NOT
K6-1	3394				.O-RING	4			
K8	41-020				.O-RING	4			
9	4628				.SPRING	2			
10	51055-16				.MAIN RELIEF VALVE	1			
N101	40-012				..O-RING	2			NOT
N102	43-113				..O-RING	1			NOT
N103	4574-B				..RING-BACK UP	2			NOT
N104	50141				..SPRING	1			NOT
N105	50424-1				..POPPET	1			NOT
N106	50617				..SPRING	1			NOT
N107	5067-B				..RING-BACK UP	1			NOT
N108	50823				..SPRING	1			NOT
N109	51064				..PLUG-ADJUST	1			NOT
N1010	51065				..NUT-SPECIAL	1			NOT
N1011	51066				..NUT-LOCK	1			NOT
N1012	51068				..POPPET	1			NOT
N1013	51069				..POPPET	1			NOT
N1014	51070				..PLUG	1			NOT

Item	Part_No	IS	Ord	T	Description	Qty	Serial_No	ITC	Remark
N1015	51071				..BODY	1			NOT
N1016	52713-10				..SHIM	1			NOT
N1017	53-912				..O-RING	2			NOT
N1018	53711				..PISTON	1			NOT
1019	51799-1				.SEAL & SPRING KIT	1			SEE NOTE
11	51650-4				.RELIEF VALVE-PORT	3			
N111	43-010				..O-RING	1			NOT
N112	43-013				..O-RING	1			NOT
N113	5056-5				..SCREW-ADJUST	1			NOT
N114	51539-1				..NUT-SPECIAL	1			NOT
N115	52050-1				..PLUG	1			NOT
N116	52051-1				..POPPET	1			NOT
N117	52052-1				..PISTON	1			NOT
N118	52053				..POPPET	1			NOT
N119	52055-1				..POPPET	1			NOT
N1110	52056-1				..BODY	1			NOT
N1111	52059				..SPRING	1			NOT
N1112	52060-B				..RING-BACK UP	1			NOT
N1113	52061				..SPRING	1			NOT
N1114	52062				..SPRING	1			NOT
N1115	53-903				..O-RING	1			NOT
N1116	53-910				..O-RING	2			NOT
N1117	5331-B				..RING-BACK UP	1			NOT
1118	5321-2				.KIT-SEAL & SPRING	1			SEE NOTE
12	60245				.SPRING SEAT	2			
13	53347				.WASHER-FLAT	2			

Item	Part_No	IS	Ord	T	Description	Qty	Serial_No	ITC	Remark
14	53351				.SCREW-SHOULDER	2			
15	53243				.CAP SCREW-SOC,HD	2			
16	5475				.ANTI VOID ASSY	1			
18	400494				.CAP-SPOOL	1			
19	59936-4				.CAP-SPOOL	3			
20	51098				.CAP SCREW-SOC.HD	4			
N21	440317				.RETAINER-CAP,SPOOL	2			NOT
K21-1	55490-B				..RING-BACK UP	4			
22	400499				.RETAINER-CAP,SPOOL	1			
23	55361				.SCREW-SHOULDER	1			
24	55449				.WASHER-FLAT	1			
25	55450-1				.SPACER	1			
26	55452				.SPRING	1			
27	55453				.SPRING	1			
N28	55458				.SPOOL	1			NOT
N29	55459				.SPOOL	1			NOT
30	55461				.SPRING	1			
31	55462				.SPRING	1			
K32	60437				.RING-BACK UP	1			
33	6001-D108				.INLET SECTION ASSY	1			SEE NOTE,INLET
N33-1	6004-D82				..HOUSING-INLET	1			NOT
34	6002-V119				.SPOOL SECTION ASSY	1			SEE NOTE,BUCKET
N34-1	6005-V30				..HOUSING-SPOOL	1			NOT
35	6002-W36				.SPOOL SECTION ASSY	1			SEE NOTE,BOOM
N35-1	6005-W23				..HOUSING-SPOOL	1			NOT
36	6003-E2				.OUTLET SECTION ASSY	1			SEE NOTE,OUTLET

Item	Part_No	IS	Ord	T	Description	Qty	Serial_No	ITC	Remark
N36-1	6006-E2				..HOUSING-OUTLET	1			NOT
37	6023				.POPPET	2			
38	6024-43				.ROD-TIE	2			
39	6027-43				.ROD-TIE	1			
40	6028				.NUT-SPECIAL	4			
K	60264				SEAL KIT	1			SEE NOTE
N	@				NOT INDIVIDUALLY SUPPLIED	AR			NOT

MAIN CONTROL VALVE(3-SPOOL)

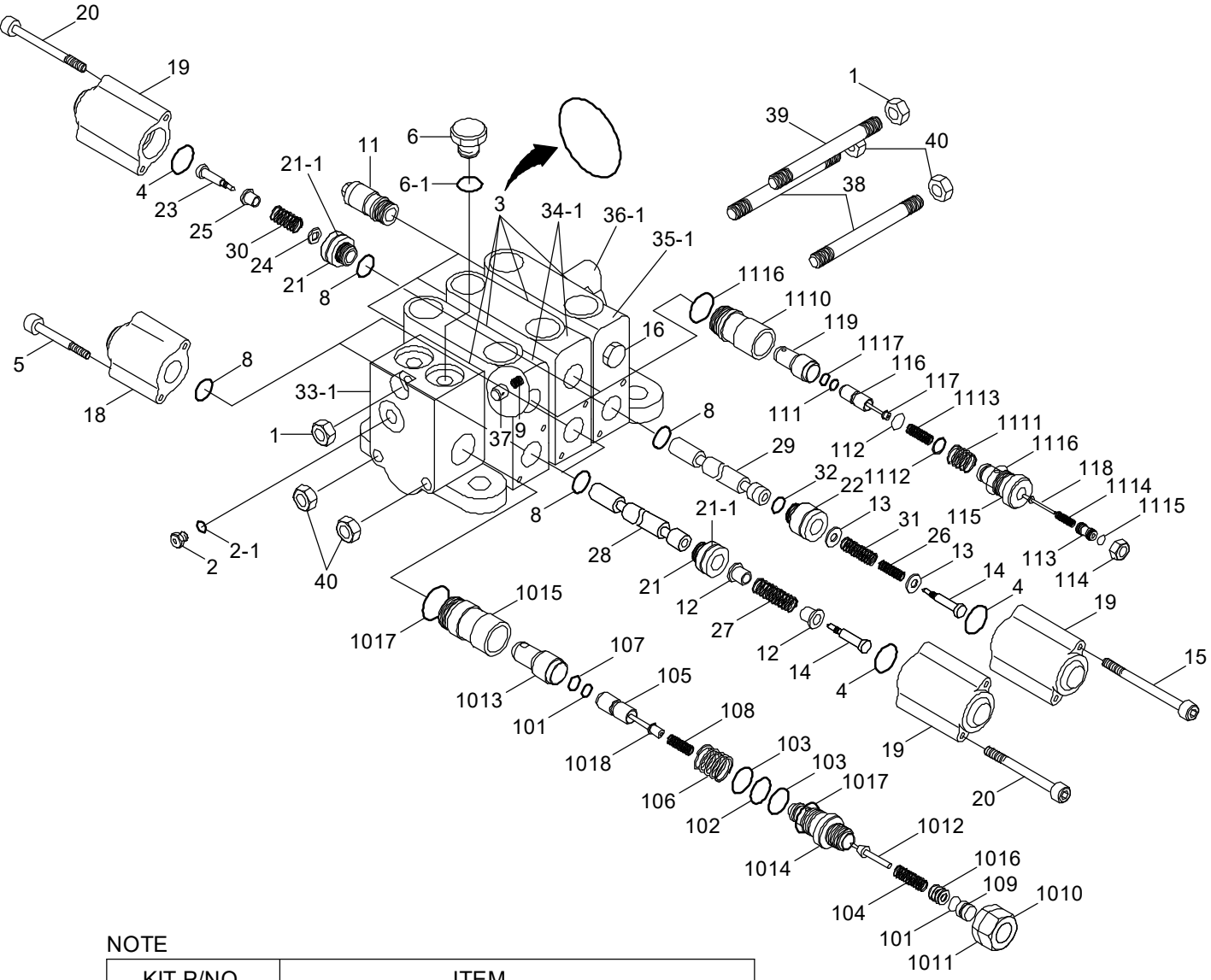

NOTE

KIT P/NO	ITEM
YUCE-00030	101-103,107,108,1017
YUCE-00049	111,112,1112,1113,1115-1117
YUCE-00071	2-1,6-1,10,33-1
YUCE-00073	3-5,8,9,11,12,14,18-21,21-1,27,28,34-1,37
YUCE-00075	3,4,8,9,11,13-16,19-26,29-32,35-1,37
YUCE-00077	36-1
SEAL KIT	2-1,3,4,6-1,8,21-1,32

Item	Part_No	IS	Ord	T	Description	Qty	Serial_No	ITC	Remark
*	31L7-00321				MAIN CONTROL VALVE	1			
1	YUCE-00001				.NUT-SPECIAL	2			
2	YUCE-00002				.PLUG	1			
K2-1	YUCE-00003				.O-RING	1			
K3	YUCE-00004				.O-RING	3			
K4	YUCE-00005				.O-RING	3			
5	YUCE-00173				.SCREW-CAP	4			
N6	YUCE-00107				.PLUG	1			NOT
K6-1	YUCE-00008				.O-RING	4			
K8	YUCE-00009				.O-RING	6			
9	YUCE-00010				.SPRING	3			
10	YUCE-00011				.MAIN RELIEF VALVE	1			
N101	YUCE-00012				..O-RING	2			NOT
N102	YUCE-00013				..O-RING	1			NOT
N103	YUCE-00014				..RING-BACK UP	2			NOT
N104	YUCE-00015				..SPRING	1			NOT
N105	YUCE-00016				..POPPET	1			NOT
N106	YUCE-00017				..SPRING	1			NOT
N107	YUCE-00018				..RING-BACK UP	1			NOT
N108	YUCE-00019				..SPRING	1			NOT
N109	YUCE-00020				..PLUG-ADJUST	1			NOT
N1010	YUCE-00021				..NUT-SPECIAL	1			NOT
N1011	YUCE-00022				..NUT-LOCK	1			NOT
N1012	YUCE-00023				..POPPET	1			NOT
N1013	YUCE-00024				..POPPET	1			NOT
N1014	YUCE-00025				..PLUG	1			NOT

Item	Part_No	IS	Ord	T	Description	Qty	Serial_No	ITC	Remark
N1015	YUCE-00026				..BODY	1			NOT
N1016	YUCE-00027				..SHIM	1			NOT
N1017	YUCE-00028				..O-RING	2			NOT
N1018	YUCE-00029				..PISTON	1			NOT
1019	YUCE-00030				.SEAL & SPRING KIT	1			SEE NOTE
11	YUCE-00031				.RELIEF VALVE-PORT	5			
N111	YUCE-00032				..O-RING	1			NOT
N112	YUCE-00033				..O-RING	1			NOT
N113	YUCE-00034				..SCREW-ADJUST	1			NOT
N114	YUCE-00035				..NUT-SPECIAL	1			NOT
N115	YUCE-00036				..PLUG	1			NOT
N116	YUCE-00037				..POPPET	1			NOT
N117	YUCE-00038				..PISTON	1			NOT
N118	YUCE-00039				..POPPET	1			NOT
N119	YUCE-00040				..POPPET	1			NOT
N1110	YUCE-00041				..BODY	1			NOT
N1111	YUCE-00042				..SPRING	1			NOT
N1112	YUCE-00043				..RING-BACK UP	1			NOT
N1113	YUCE-00044				..SPRING	1			NOT
N1114	YUCE-00045				..SPRING	1			NOT
N1115	YUCE-00046				..O-RING	1			NOT
N1116	YUCE-00047				..O-RING	2			NOT
N1117	YUCE-00048				..RING-BACK UP	1			NOT
1118	YUCE-00049				.KIT-SEAL & SPRING	1			SEE NOTE
12	YUCE-00174				.SPRING SEAT	4			
13	YUCE-00051				.WASHER-FLAT	2			

Item	Part_No	IS	Ord	T	Description	Qty	Serial_No	ITC	Remark
14	YUCE-00052				.SCREW-SHOULDER	3			
15	YUCE-00163				.CAP SCREW-SOC,HD	2			
16	YUCE-00054				.ANTI VOID ASSY	1			
18	YUCE-00166				.CAP-SPOOL	2			
19	YUCE-00167				.CAP-SPOOL	4			
20	YUCE-00168				.CAP-SCREW-SOC.HD	6			
N21	YUCE-00176				.RETAINER-CAP,SPOOL	3			NOT
K21-1	YUCE-00070				..RING-BACK UP	4			
22	YUCE-00170				.RETAINER-CAP,SPOOL	1			
23	YUCE-00061				.SCREW-SHOULDER	1			
24	YUCE-00062				.WASHER-FLAT	1			
25	YUCE-00171				.SPACER	1			
26	YUCE-00064				.SPRING	1			
27	YUCE-00065				.SPRING	2			
N28	YUCE-00066				.SPOOL	2			NOT
N29	YUCE-00067				.SPOOL	1			NOT
30	YUCE-00068				.SPRING	1			
31	YUCE-00069				.SPRING	1			
K32	YUCE-00177				.RING-BACK UP	1			
33	YUCE-00071				.INLET SECTION ASSY	1			SEE NOTE,INLET
N33-1	YUCE-00072				..HOUSING-INLET	1			NOT
34	YUCE-00175				.SPOOL SECTION ASSY	2			SEE NOTE,BUCKET
N34-1	YUCE-00074				..HOUSING-SPOOL	2			NOT
35	YUCE-00075				.SPOOL SECTION ASSY	1			SEE NOTE,BOOM
N35-1	YUCE-00076				..HOUSING-SPOOL	1			NOT
36	YUCE-00077				.OUTLET SECTION ASSY	1			SEE NOTE,OUTLET

Item	Part_No	IS	Ord	T	Description	Qty	Serial_No	ITC	Remark
N36-1	YUCE-00078				..HOUSING-OUTLET	1			NOT
37	YUCE-00079				.POPPET	3			
38	YUCE-00084				.ROD-TIE	2			
39	YUCE-00085				.ROD-TIE	1			
40	YUCE-00082				.NUT-SPECIAL	4			
K	YUCE-00083				SEAL KIT	1			SEE NOTE
N	@				NOT INDIVIDUALLY SUPPLIED	AR			NOT

STEERING UNIT

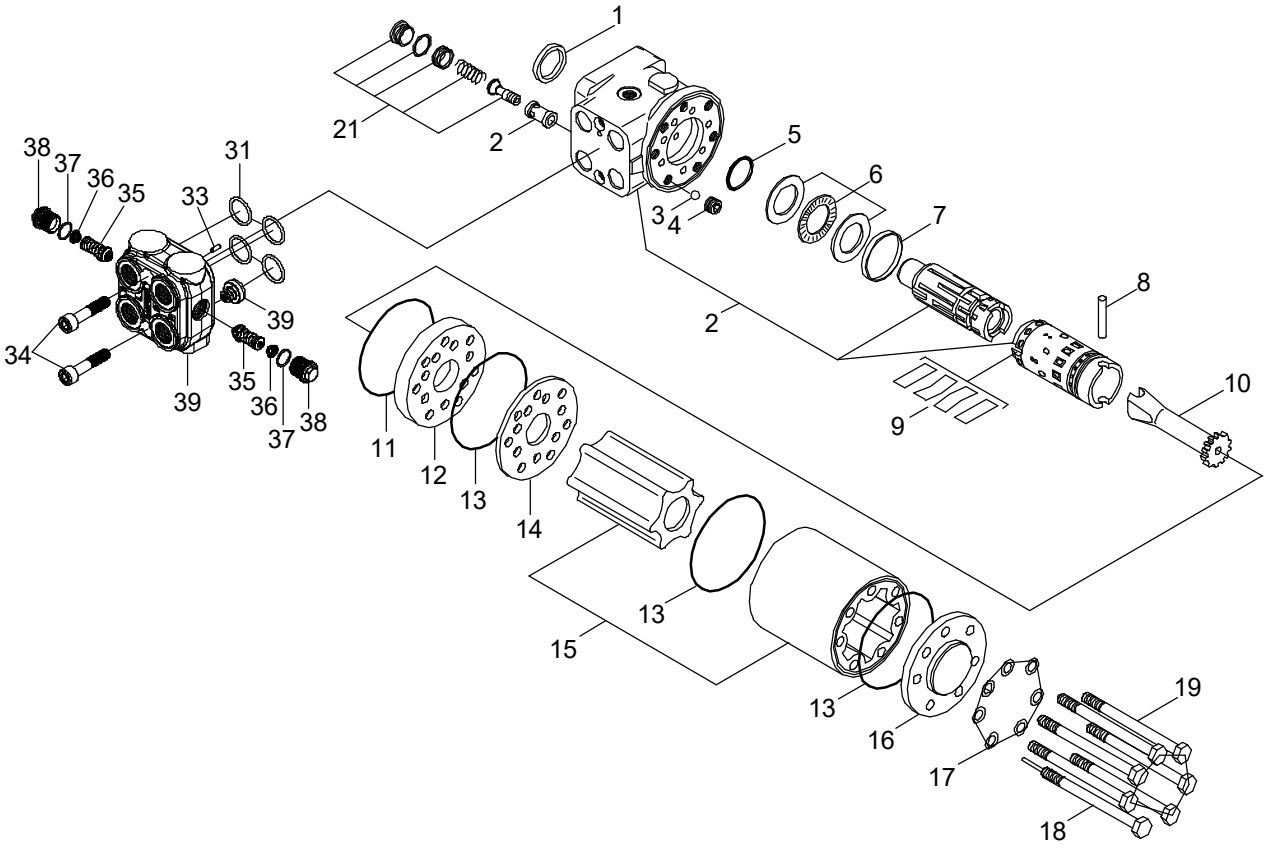

Item	Part_No	IS	Ord	T	Description	Qty	Serial_No	ITC	Remark
*	31LF-30010				STEERING UNIT	1			
1	YUBS-00001				.SEAL-DUST	1			
N2	@				.HOUSING,SPOOL,SLEEVE	1			NOT
3	YUBS-00002				.BALL	1			
4	YUBS-00003				.BUSHING-THREAD	1			
5	YUBS-00004				.O-RING	1			
6	YUBS-00005				.BEARING ASSY	1			
7	YUBS-00006				.RING	1			
8	YUBS-00007				.PIN-CROSS	1			
9	YUBS-00112				.SET OF SPRINGS	1			
10	YUBS-00008				.SHAFT-CARDAN	1			
11	YUBS-00010				.O-RING	1			
12	YUBS-00011				.PLATE-DISTRIBUTOR	1			
13	YUBS-00013				.O-RING	3			
14	YUBS-00011				.PLATE-DISTRIBUTOR	1			
15	YUBS-00113				.GEARWHEEL SET	1			
16	YUBS-00014				.COVER-END	1			
17	YUBS-00015				.WASHER	7			
18	YUBS-00114				.SCREW-PIN	1			
19	YUBS-00115				.SCREW	6			
21	YUBS-00116				.RELIEF VALVE-PILOT	1			
31	YUBS-00117				.O-RING SET	1			
33	YUBS-00118				.PIN-ROLLED	1			
34	YUBS-00119				.SCREW	2			
35	YUBS-00120				.VALVE-SHOCK	2			
36	YUBS-00121				.SPRING	2			

Item	Part_No	IS	Ord	T	Description	Qty	Serial_No	ITC	Remark
37	YUBS-00122				.O-RING	2			
38	YUBS-00123				.PLUG	2			
N39	@				.HOUSING,CHECK VALVE	1			NOT
N	@				NOT INDIVIDUALLY SUPPLIED	AR			NOT

REMOTE CONTROL LEVER(2-SPOOL)

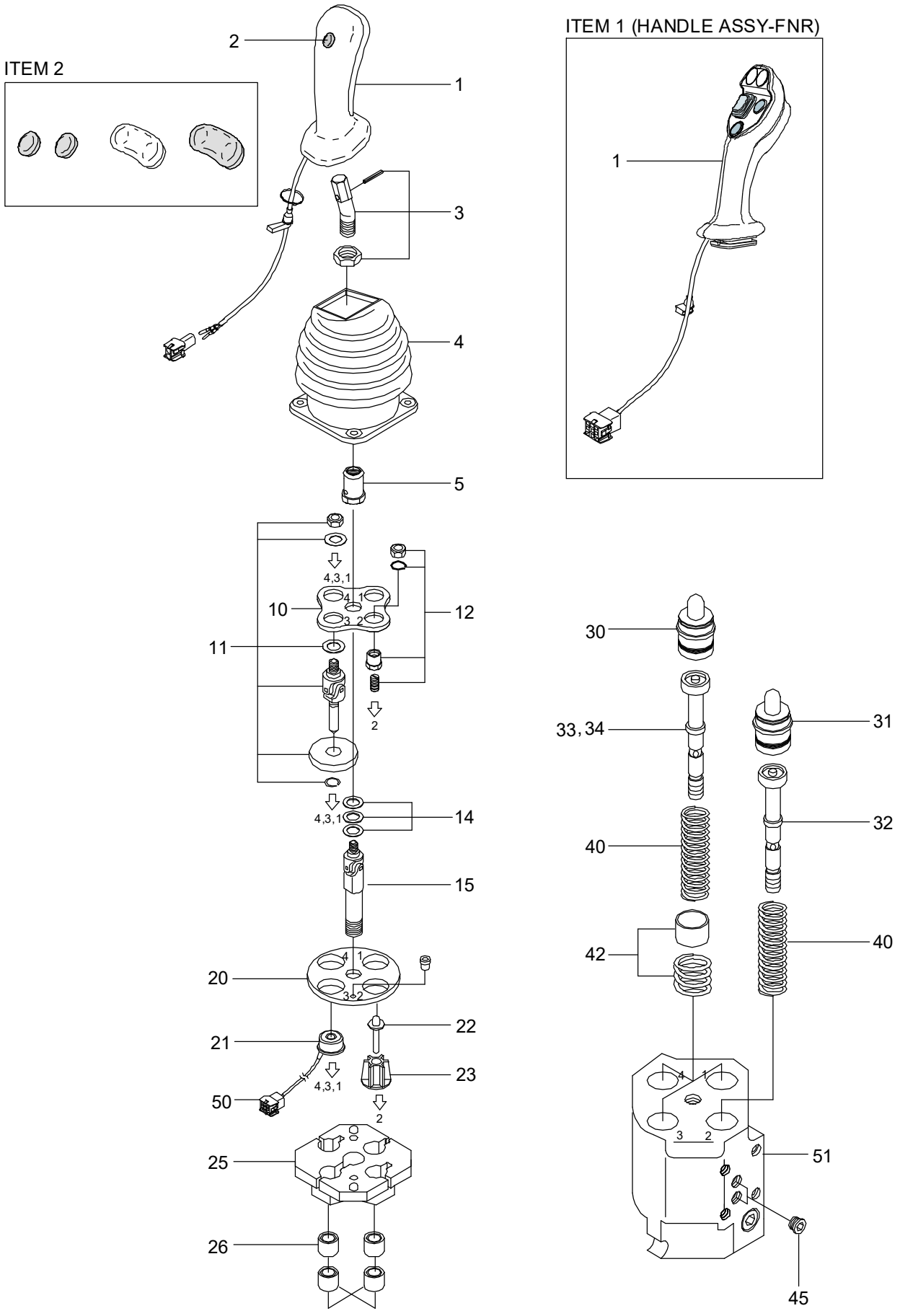

Item	Part_No	IS	Ord	T	Description	Qty	Serial_No	ITC	Remark
*	31LF-00420				RCV-2SPOOL	1			
	31LF-00440				RCV-2SPOOL	1			FNR RCV
1	ZFAB-00070				.HANDLE KIT(EC2000)	1			
	ZFAB-00071				.HANDLE (EC4000)	1			FNR RCV
2	ZFAB-00038				.PUSH BUTTON KIT	1			STD ONLY
3	ZFAB-00039				.LEVER KIT	1			
4	ZFAB-00040				.RUBBER BOOT	1			
5	ZFAB-00041				.NUT-LOCKING	1			
10	ZFAB-00042				.BRACKET	1			
11	ZFAB-00043				.DETENT KIT	3			
12	ZFAB-00044				.PLUNGER KIT	1			
14	ZFAB-00045				.SHIM SET(0.1,0.2,0.5)	1			
15	ZFAB-00046				.CARDAN	1			
20	ZFAB-00047				.FLANGE	1			
21	ZFAB-00048				.SOLENOID COMPLETE	3			
22	ZFAB-00049				.PLUNGER KIT	1			
23	ZFAB-00050				.PLUNGER GUIDE	1			
25	ZFAB-00051				.BRACKET-ELECTRIC	1			
26	ZFAB-00052				.BUSHING SET	4			
30	ZFAB-00082				.HOLLOW FLUNGER	3			
31	ZFAB-00081				.FULL PLUNGER	1			
32	ZFAB-00083				.REGULATING UNIT	1			
33	ZFAB-00084				.REGULATING UNIT-PREFEEL	1			
34	ZFAB-00085				.REGULATING UNIT-PREFEEL	2			
40	ZFAB-00056				.SPRING SET-RETURN	4			
42	ZFAB-00086				.PREFEELING POINT KIT SPECIAL	3			

Item	Part_No	IS	Ord	T	Description	Qty	Serial_No	ITC	Remark
45	ZFAB-00058				.PLUG SET	2			2-SPOOL ONLY
50	ZFAB-00087				.AMP CONNECTOR	1			
N51	@				.BODY	1			NOT
N	@				NOT INDIVIDUALLY SUPPLIED	AR			NOT

REMOTE CONTROL LEVER(3-SPOOL)

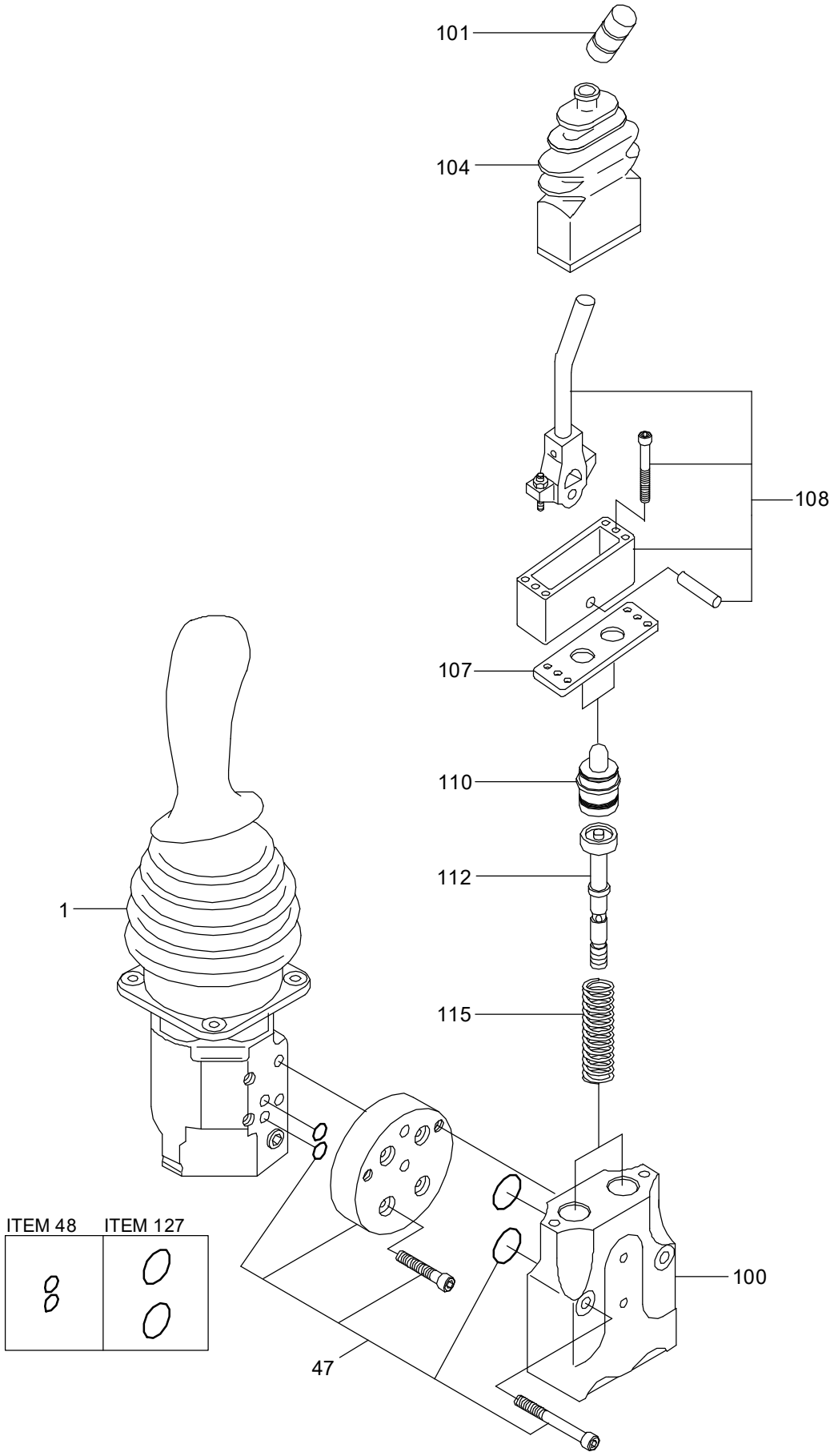

Item	Part_No	IS	Ord	T	Description	Qty	Serial_No	ITC	Remark
*	31LF-00430				RCV LEVER-3 SPOOL	1			
	31LF-00450				RCV LEVER-3 SPOOL	1			FNR RCV
1	@				.RCV LEVER(2 SPOOL)	1			NOT
2	ZFAB-00091				.RCV-LEVER(AUXILIRY)	1			
N100	@				..BODY	1			NOT
101	ZFAB-00060				..GRIP	1			
104	ZFAB-00061				..RUBBER BOOT	1			
107	ZFAB-00062				..RETAINING PLATE	1			
108	ZFAB-00063				..OPERATION KIT	1			
110	ZFAB-00089				..HOLLOW PLUNGER	2			
112	ZFAB-00090				..REGULATING UNIT	2			
115	ZFAB-00066				..SPRING SET-RETURN	2			
47	ZFAB-00067				.ASSEMBLY KIT	1			
48	ZFAB-00068				.O-RING SET	1			
127	ZFAB-00069				.O-RING SET	1			
N	@				NOT INDIVIDUALLY SUPPLIED	AR			NOT

RCV(FINGERTIP, 2-LEVER, #0177-)

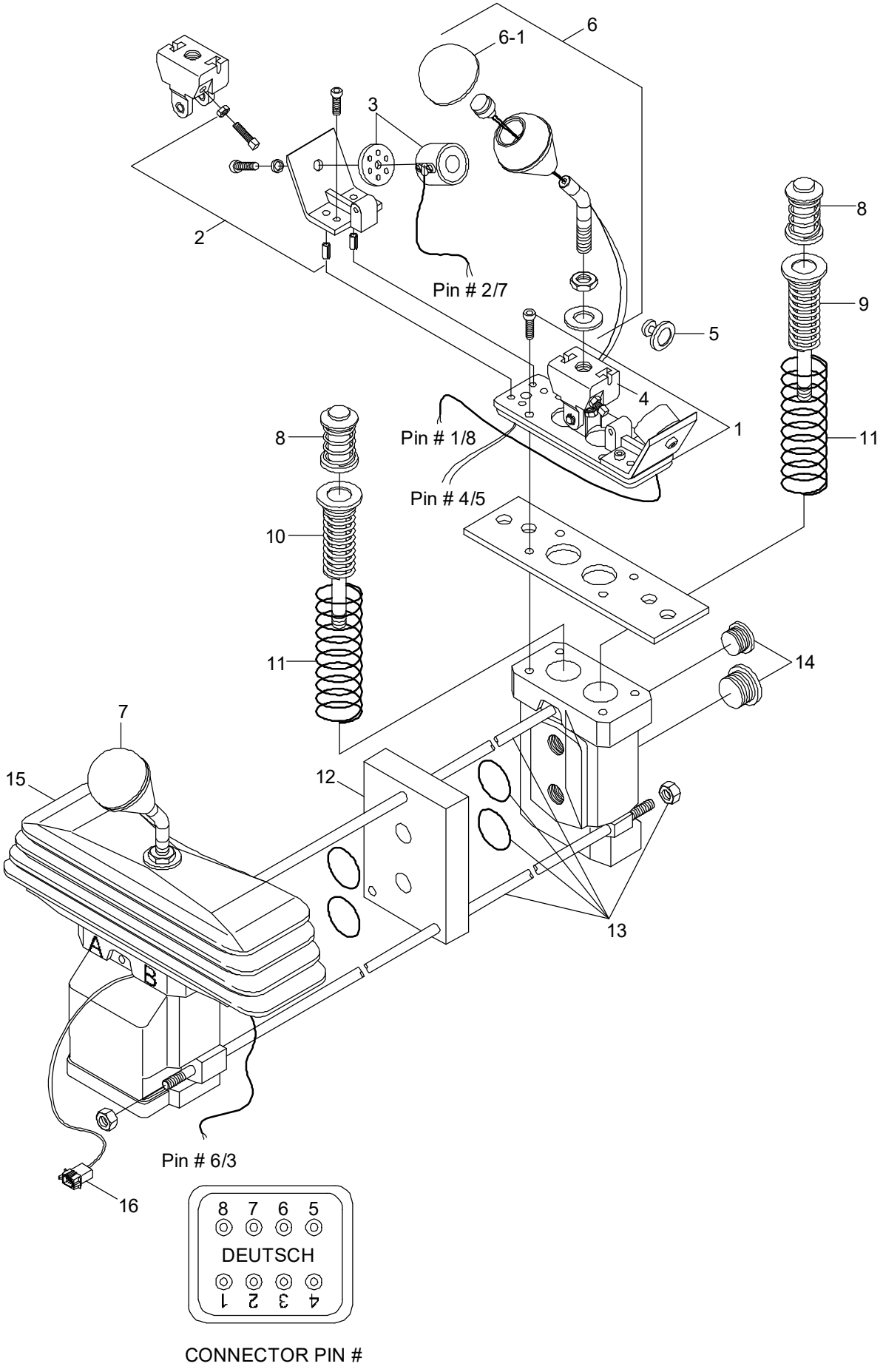

CONNECTOR PIN #

Item	Part_No	IS	Ord	T	Description	Qty	Serial_No	ITC	Remark
*	31LF-10200				RCV-2LEVER	1	#0177 -	-	
N1	YUCT-00002				.PLATE-MOUNTING	2			NOT
2	YUCT-00003				.BRACKET KIT-MAGNET	3			
3	YUCT-00005				.MAGNET	3			
4	YUCT-00004				.BEARING PLATE	2			
5	YUCT-00006				.ANCHOR PLATE(I/HOLE 8)	3			STD DETENT
	YUCT-00038				.ANCHOR PLATE(I/HOLE 10)	3			LIGHT DETENT
6	YUCT-00008				.HANDLE B5	1	#0177 -	-	
6-1	YUCT-00046				..COVER-BOOT	1	#0177 -	-	
7	YUCT-00007				.HANDLE KIT	1	#0177 -	-	
8	YUCT-00009				.PUSH PIN	4			
9	YUCT-00013				.SPRING PACK	3			
10	YUCT-00014				.SPRING PACK	1			
11	YUCT-00015				.RETURN SPRING	4			
12	YUCT-00016				.SPACEBLOCK	1			
13	YUCT-00017				.ROD KIT-TIE	1			
14	YUCT-00018				.PLUG KIT	1			
N15	YUCT-00019				.BOOT KIT	1			NOT
N16	YUCT-00020				.CONNECTOR KIT	1			NOT

RCV(FINGERTIP, 3-LEVER, #0177-)

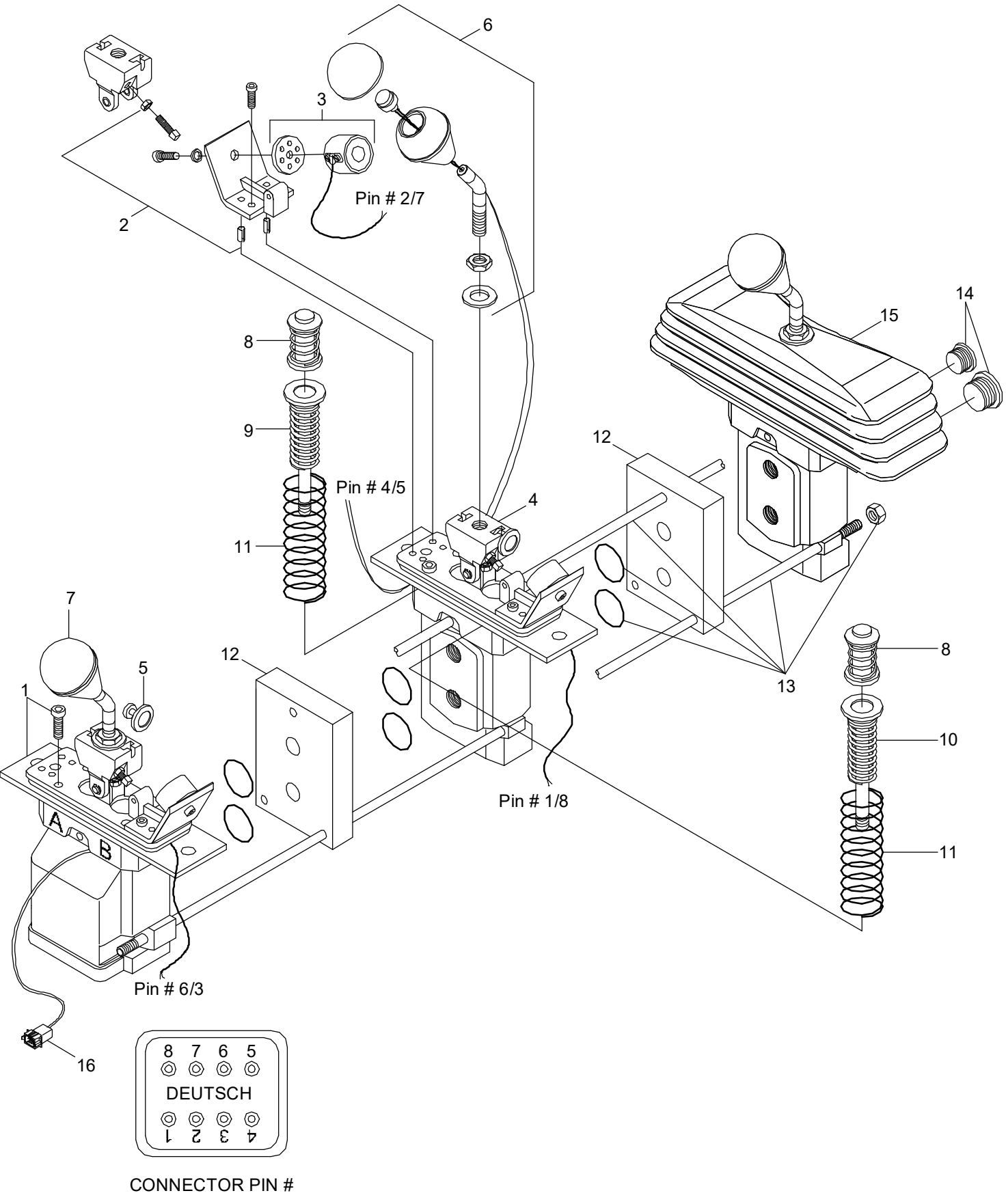

CONNECTOR PIN #

Item	Part_No	IS	Ord	T	Description	Qty	Serial_No	ITC	Remark
*	31LF-10300				RCV-3LEVER	1	#0177 -	-	
N1	YUCT-00002				.PLATE-MOUNTING	3			NOT
2	YUCT-00003				.BRACKET KIT-MAGNET	3			
3	YUCT-00005				.MAGNET	3			
4	YUCT-00004				.BEARING PLATE	2			
5	YUCT-00006				.ANCHOR PLATE(I/HOLE 8)	3			STD DETENT
	YUCT-00038				.ANCHOR PLATE(I/HOLE 10)	3			LIGHT DETENT
6	YUCT-00008				.HANDLE B5	2	#0177 -	-	
6-1	YUCT-00046				..COVER-BOOT	1	#0177 -	-	
7	YUCT-00007				.HANDLE KIT	1	#0177 -	-	
8	YUCT-00009				.PUSH PIN	6			
9	YUCT-00013				.SPRING PACK	5			
10	YUCT-00014				.SPRING PACK	1			
11	YUCT-00015				.RETURN SPRING	6			
12	YUCT-00016				.SPACEBLOCK	2			
13	YUCT-00021				.ROD KIT-TIE	1			
14	YUCT-00018				.PLUG KIT	1			
N15	YUCT-00019				.BOOT KIT	1			NOT
N16	YUCT-00020				.CONNECTOR KIT	1			NOT

CUT OFF VALVE

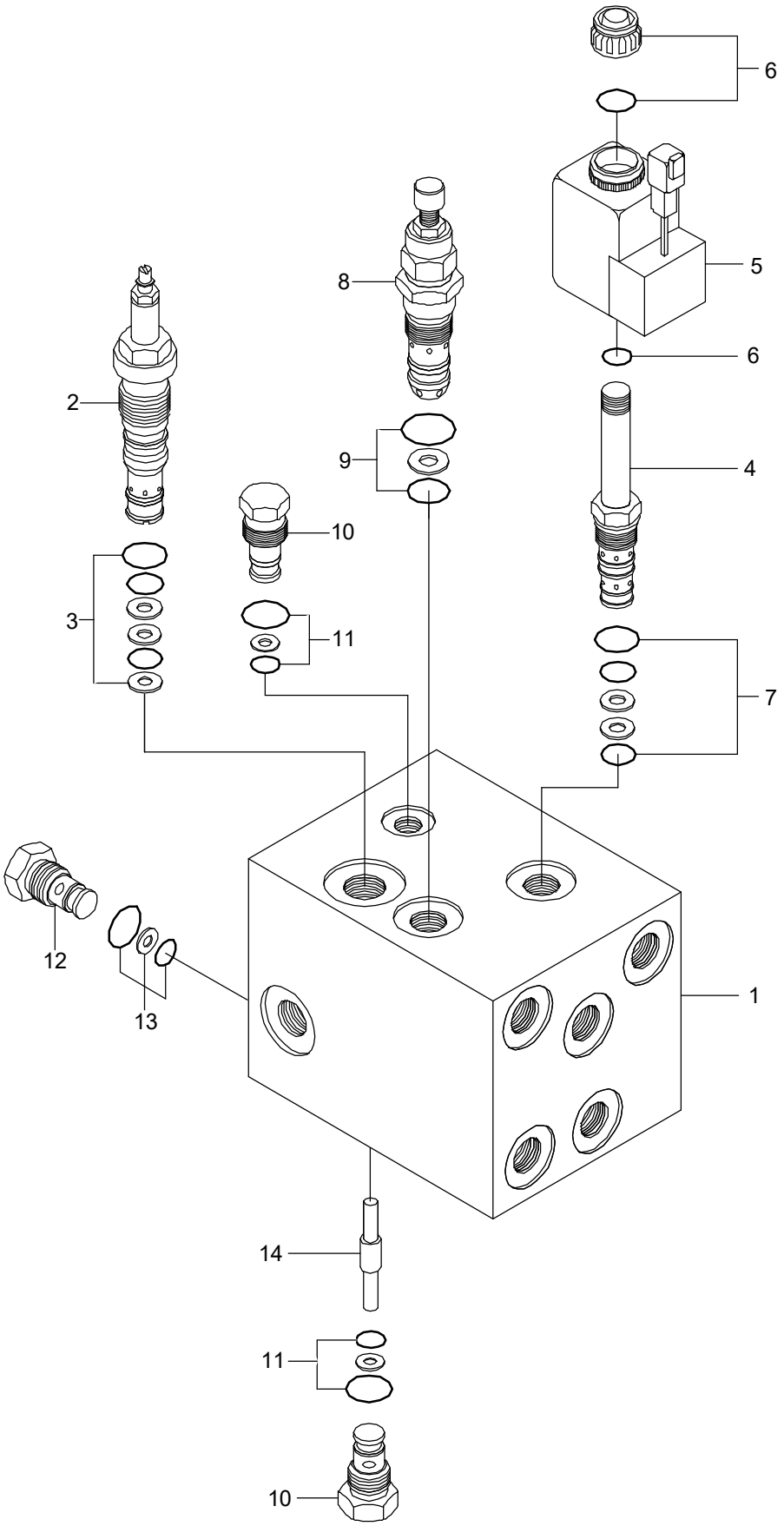

Item	Part_No	IS	Ord	T	Description	Qty	Serial_No	ITC	Remark
*	31LF-40101				CUT OFF VALVE	1			
1	31LF-40101-B				MANIFOLD	1			
2	XKAL-00077				CUT-OFF VALVE	1			
3	XKAL-00064				SEAL KIT	1			
4	XKAL-00029				SOLENOID VALVE	1			
5	XKAL-00065				COIL	1			
6	@				COIL CAP KIT	1			NOT
7	XKAL-00030				SEAL KIT	1			
8	XKAL-00078				RELIEF VALVE	1			
9	XKAL-00013				SEAL KIT	1			
10	XKAL-00014				CHECK VALVE	2			
11	XKAL-00015				SEAL KIT	2			
12	XKAL-00018				CHECK VALVE	1			
13	XKAL-00019				SEAL KIT	1			
14	@				SPOOL BAR	1			NOT

PILOT SUPPLY UNIT

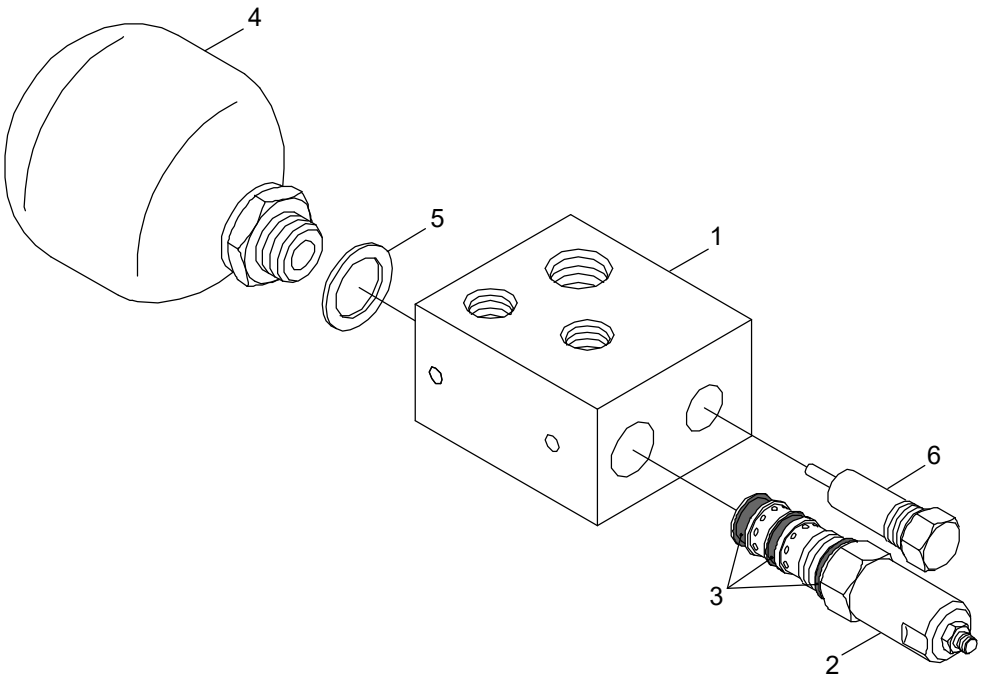

Item	Part_No	IS	Ord	T	Description	Qty	Serial_No	ITC	Remark
*	31L7-10280				PILOT SUPPLY UNIT	1			
1	ZGAW-00001				.MANIFOLD COMPLETE	1			3037077
2	ZGAW-00002				.REDUCING VALVE	1			3026818
3	ZGAW-00003				.SEAL KIT	1			3049443
4	ZGAW-00004				.ACCUMULATOR	1			3037081
5	ZGAW-00005				.GASKET	1			608548
N6	@				.RELIEF VALVE	1			NOT
N	@				NOT INDIVIDUALLY SUPPLIED	AR			NOT

BRAKE VALVE

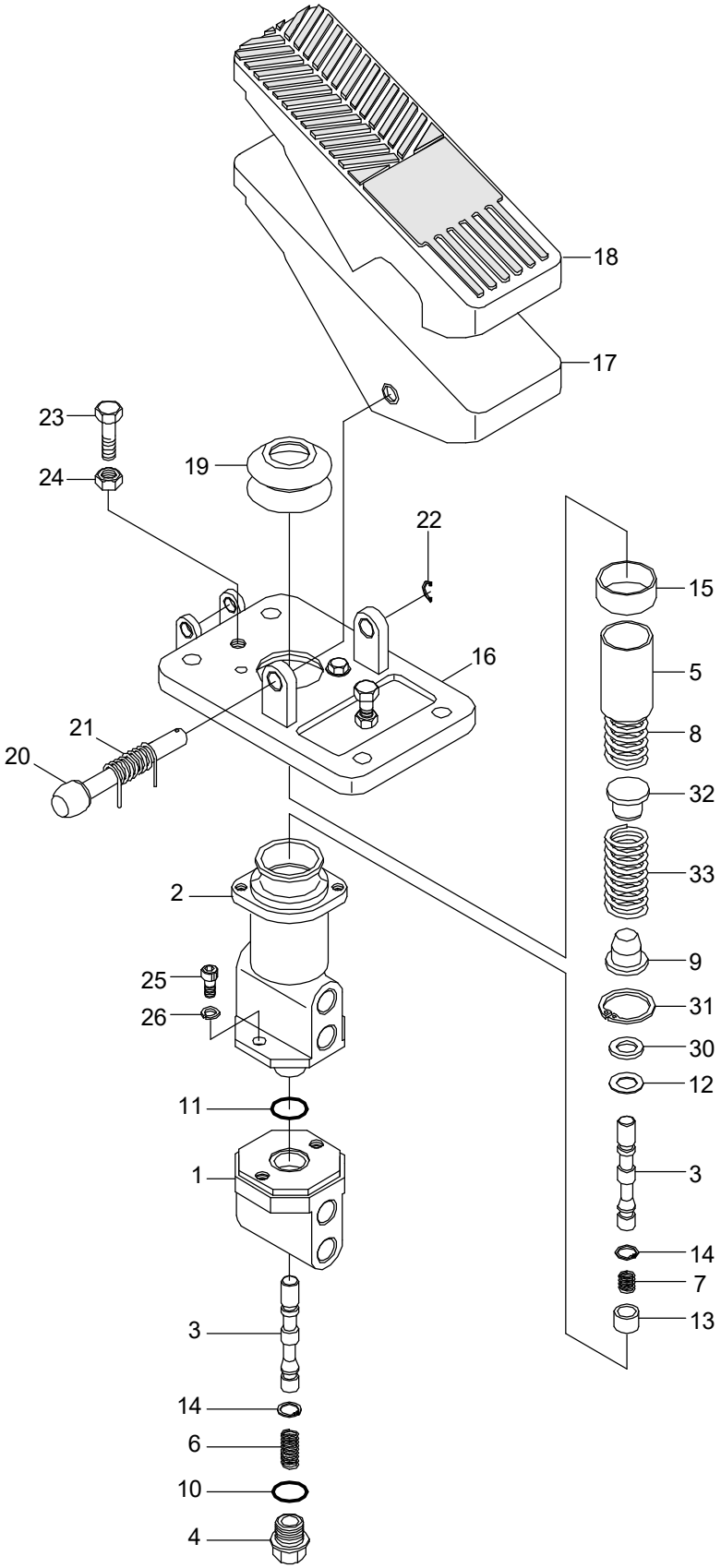
18
17
23
24
19
22
15
16
5
8
21
20
32
33
2
9
25
31
26
30
12
11
3
1
14
7
13
3
14
6
10
4

Item	Part_No	IS	Ord	T	Description	Qty	Serial_No	ITC	Remark
*	31LH-40041				BRAKE VALVE	1			
1	XKAK-00043				.BODY-LOWER	1			
2	XKAK-00044				.BODY-UPPER	1			
3	XKAK-00045				.SPOOL	2			
4	XKAK-00004				.PLUG	1			
5	XKAK-00053				.HOLDER	1			
6	XKAK-00006				.SPRING-LOWER	1			
7	XKAK-00007				.SPRING-UPPER	1			
8	XKAK-00008				.SPRING 1-MAIN	1			
9	XKAK-00009				.RETAINER 1-SPRING	1			
N10	@				.O-RING	1			NOT
N11	@				.O-RING	1			NOT
N12	@				.GUIDE-SPRING	1			NOT
13	XKAK-00010				.GUIDE	1			
14	XKAK-00059				.RING-SNAP	2			
N15	@				.DU BUSHING	1			NOT
16	XKAK-00047				.PLATE-PEDAL	1			
17	XKAK-00012				.PEDAL ASSY	1			
18	XKAK-00071				.COVER-PEDAL	1			
19	XKAK-00048				.BELLOWS	1			
20	XKAK-00049				.PIN 1-LOCK	1			
21	XKAK-00050				.SPRING-TORSION	1			
N22	@				.STOP RING C-TYPE	1			NOT
N23	@				.BOLT-HEX	2			NOT
N24	@				.NUT-HEX	2			NOT
N25	@				.BOLT-SOCKET	2			NOT

Item	Part_No	IS	Ord	T	Description	Qty	Serial_No	ITC	Remark
N26	@				.WASHER-SPRING	4			NOT
N30	@				.WASHER-PLAIN	1			NOT
32	XKAK-00019				.RETAINER 2-SPRING	1			
33	XKAK-00020				.SPRING 2-MAIN	1			
N	@				NOT INDIVIDUALLY SUPPLIED	AR			NOT

PRIORITY VALVE(-#0392)

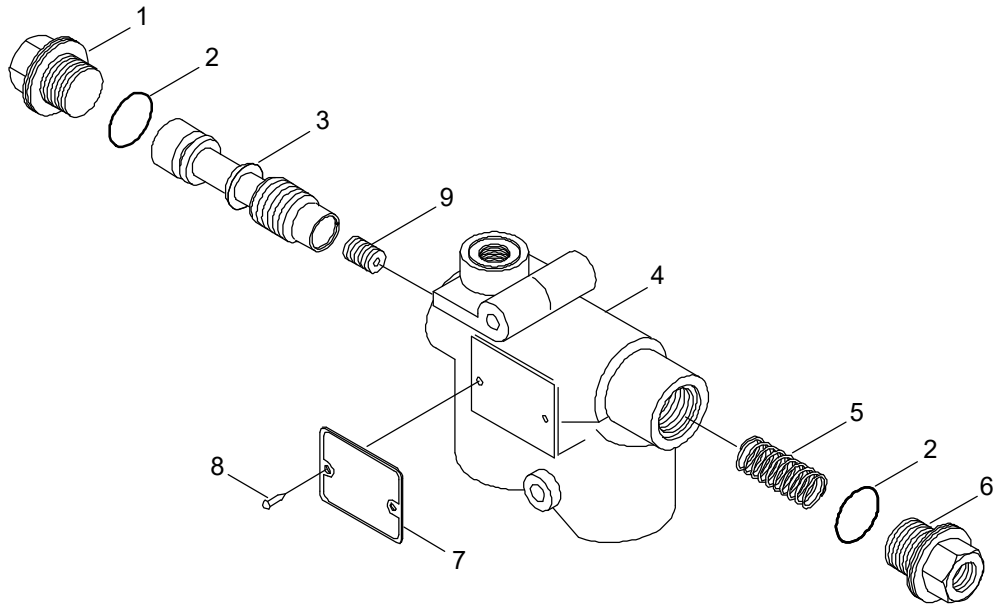

Item	Part_No	IS	Ord	T	Description	Qty	Serial_No	ITC	Remark
*	31L7-00051				PRIORITY VALVE	1	- #0392		
1	152B0859				.PLUG	1			
2	633B1438				.O-RING	2			
N3	@				.SPOOL	1			NOT
N4	@				.HOUSING	1			NOT
5	663X6156				.SPRING	1			
6	152B0851				.PLUG	1			
N7	152A0000				.PLATE-NAME	1			NOT
8	681Z1011				.SCREW-DRIVE	2			
9	155B8316				.ORIFICE	1			
10	152B4013				.O-RING SET	1			NOT SHOWN
N	@				NOT INDIVIDUALLY SUPPLIED	AR			NOT

PRIORITY VALVE(#0393-)

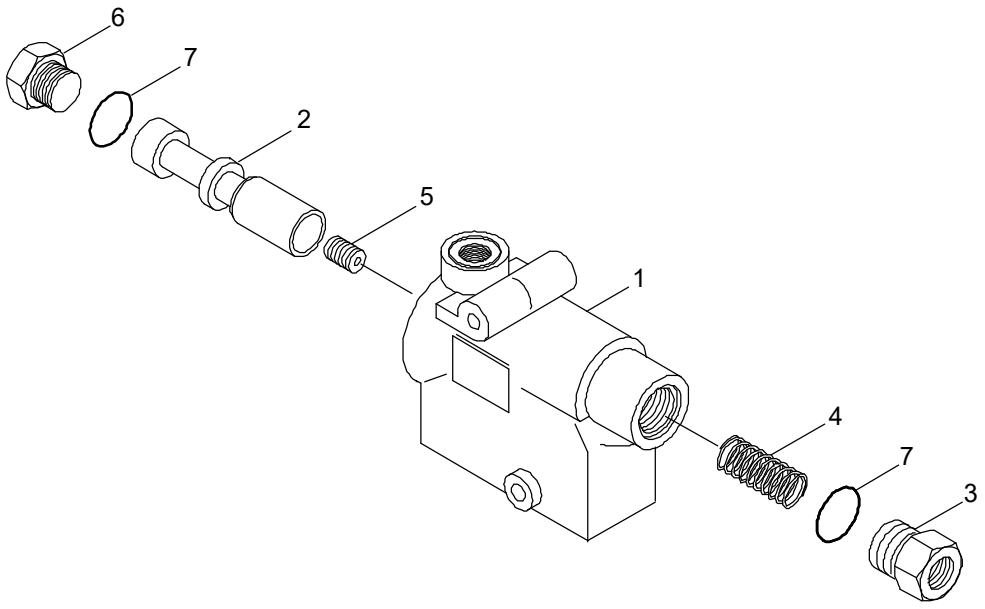

Item	Part_No	IS	Ord	T	Description	Qty	Serial_No	ITC	Remark
*	31LF-30210				PRIORITY VALVE	1	#0393 -	A	
1	XKAU-00357				.BODY	1			
2	XKAU-00358				.SPOOL	1			
3	XKAU-00359				.PLUG	1			
4	XKAU-00360				.SPRING	1			
5	XKAU-00361				.ORIFICE	1			
6	XKAU-00362				.PLUG	1			
7	XKAU-00363				.O-RING	2			

PRIORITY VALVE(EMERGENCY STEERING, -#0098)

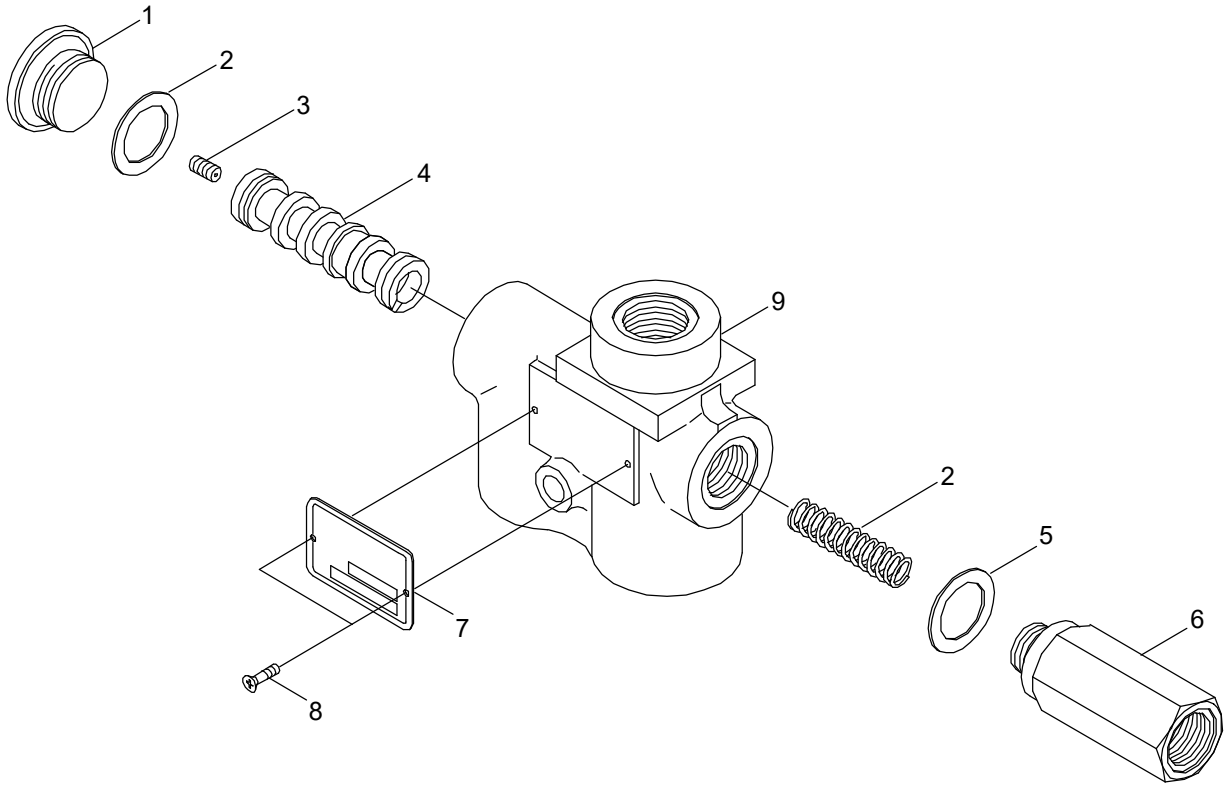

Item	Part_No	IS	Ord	T	Description	Qty	Serial_No	ITC	Remark
*	31L8-00051				PRIORITY VALVE	1	- #0098	-	
1	YUBS-00127				.PLUG	1			
2	YUBS-00128				.SEAL	2			
3	YUBS-00129				.ORIFICE	1			
N4	@				.SPOOL	1			NOT
5	YUBS-00130				.SPRING	1			
6	YUBS-00106				.PLUG	1			
7	YUBS-00131				.PLATE-NAME	1			
8	YUBS-00037				.SCREW-DRIVE	2			
N9	@				.HOUSING	1			NOT
N	@				NOT INDIVIDUALLY SUPPLIED	1			NOT

RIDE CONTROL VALVE

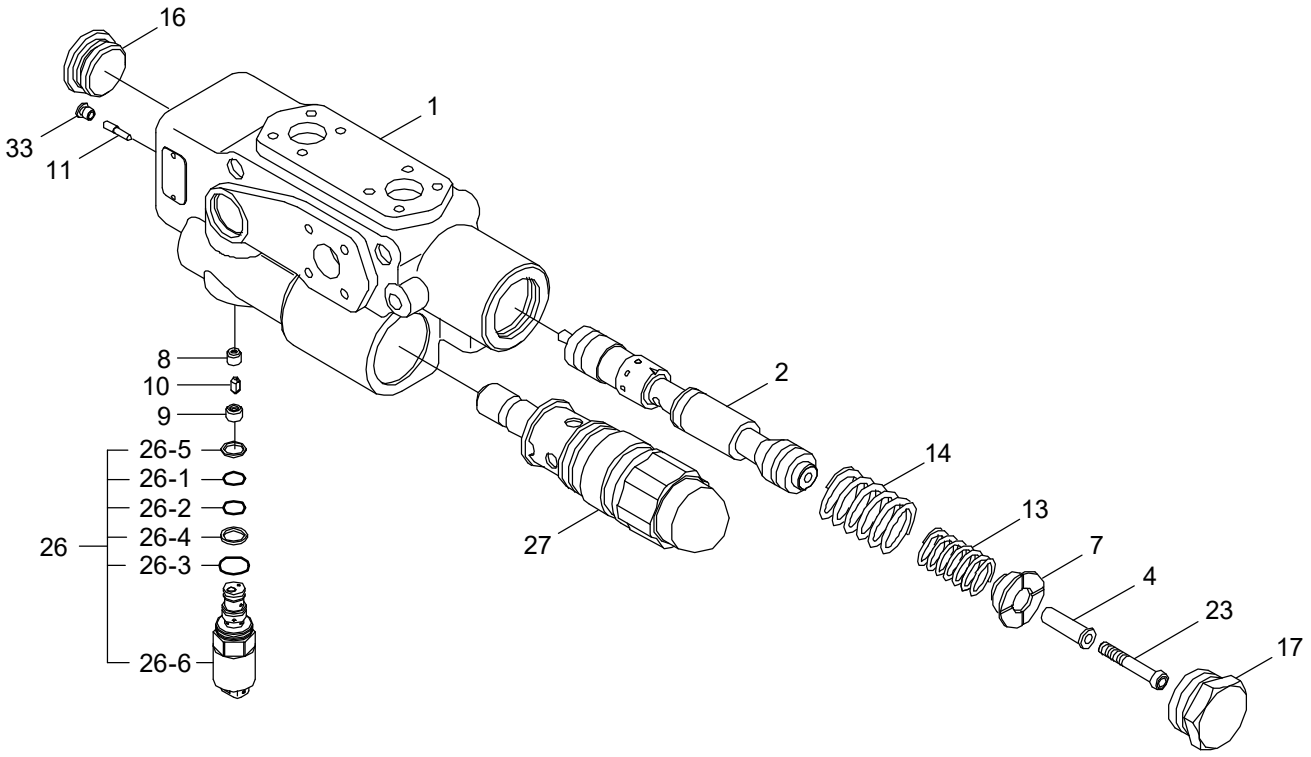

DESCRIPTION	PARTS NO	INCLUDED ITEM
SEAL KIT	ZGAR-00577	26-1~26-5

Item	Part_No	IS	Ord	T	Description	Qty	Serial_No	ITC	Remark
*	31LC-80000				RIDE CONTROL VAVLE	1			
N1	@				.BODY	1			NOT
2	ZGAR-00578				.SPOOL	1			
4	ZGAR-00579				.SLEEVE	1			
7	ZGAR-00580				.RETAINER-SPRING	1			
8	ZGAR-00566				.SEAT-VALVE	1			
9	ZGAR-00565				.SEAT-VALVE	1			
10	ZGAR-00581				.SCREW-THROTTLE	1			
11	ZGAR-00582				.SCREW-GRUB	1			
13	ZGAR-00583				.SPRING-PRESSURE	1			
14	ZGAR-00584				.SPRING-PRESSURE	1			
16	ZGAR-00585				.PLUG	1			
17	ZGAR-00586				.PLUG	1			
23	ZGAR-00588				.SCREW-SOCKET HEAD	1			
26	ZGAR-00574				.SOLENOID VALVE(FTWE)	1			
NK26-1	@				..O-RING	1			NOT
NK26-2	@				..O-RING	1			NOT
NK26-3	@				..O-RING	1			NOT
NK26-4	@				..THRUST RING	1			NOT
NK26-5	@				..THRUST RING	1			NOT
26-6	@				..SOLENOID VALVE	1			NOT
27	ZGAR-00589				.RELIEF VALVE(DBDS 20)	1			
33	ZGAR-00576				.PLUG	1			
K	ZGAR-00577				SEAL KIT	1			SEE ILLUST
N	@				NOT INDIVIDUALLY SUPPLIED	AR			NOT

STEERING CYLINDER

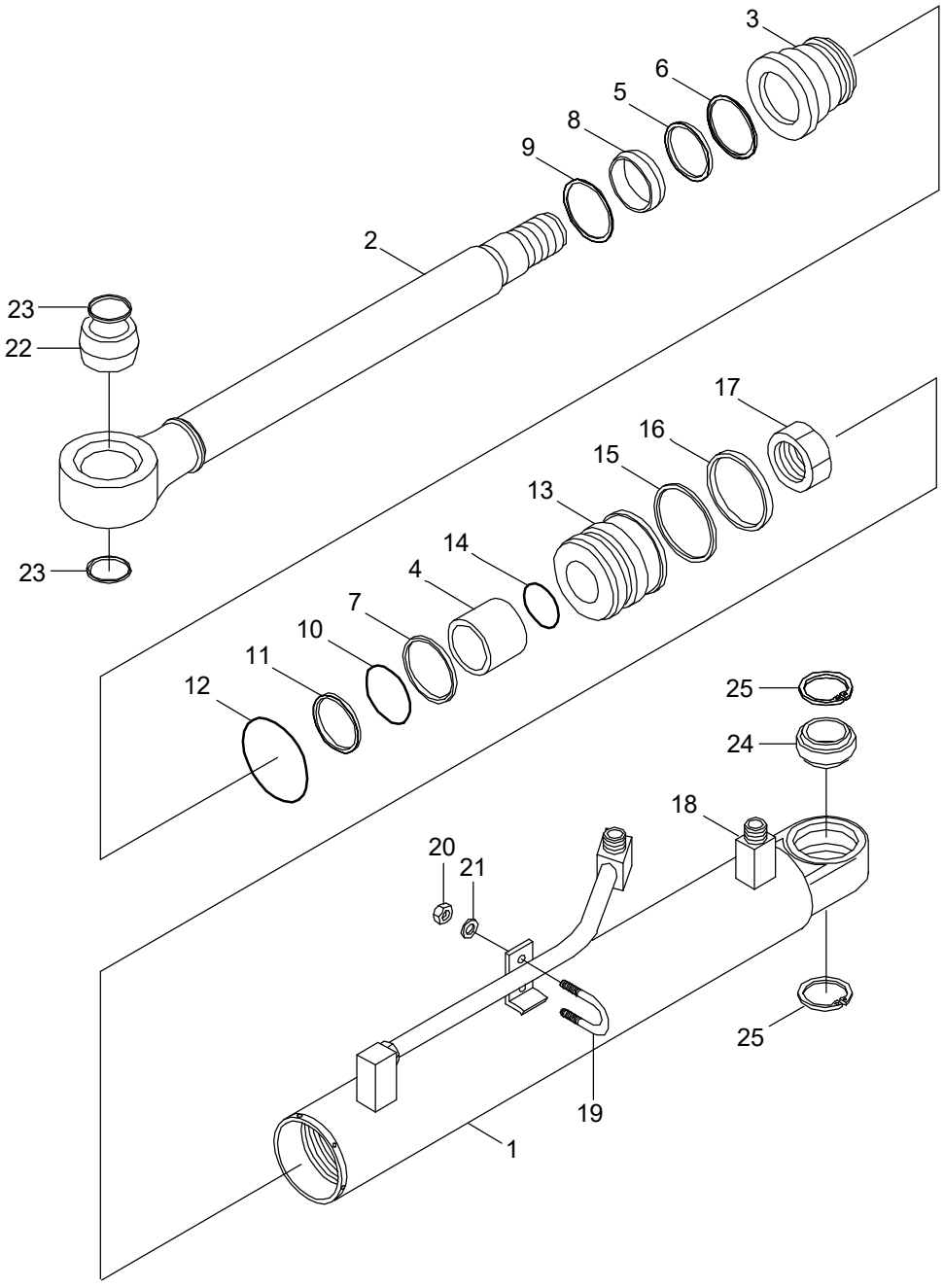

DESCRIPTION	PARTS NO	INCLUDED ITEM
SEAL KIT	31Y2-04062	5~8, 10~12, 14~16, 23

Item	Part_No	IS	Ord	T	Description	Qty	Serial_No	ITC	Remark
*	31LF-30020				STEERING CYL-LH	1			
	31LF-30030				STEERING CYL-RH	1			
1	31Y2-08090				.TUBE ASSY-LH	1			
	31Y2-08100				.TUBE ASSY-RH	1			
2	31Y2-04011				.ROD ASSY	1			
3	31Y2-08210				.GLAND	1			
4	S731-040030				.BUSHING-DU	1			
K5	Y220-040011				.SEAL-ROD	1			
K6	Y180-040020				.RING-BACK UP	1			
K7	Y240-040011				.RING-BUFFER	1			
K8	Y110-040011				.WIPER-DUST	1			
9	Y190-052000				.RING-SNAP	1			
K10	S632-060004				.O-RING	1			
K11	S642-060003				.RING-BACK UP	1			
K12	S632-065001				.O-RING	1			
13	31Y2-04051				.PISTON	1			
K14	S632-040004				.O-RING	1			
K15	Y410-065000				.SEAL-PISTON	1			
K16	Y310-065000				.RING-WEAR	1			
17	31YC-65200				.NUT	1			
18	31Y2-08180				.PIPE ASSY-LH	1			
	31Y2-08190				.PIPE ASSY-RH	1			
19	S071-022230				.U-BOLT	1			
20	S201-101002				.NUT-HEX	2			
21	S411-100002				.WASHER-SPRING	2			
22	31YC-13150				.BUSH-PIN	1			

Item	Part_No	IS	Ord	T	Description	Qty	Serial_No	ITC	Remark
K23	Y010-040050				.SEAL-DUST	2			
24	Y820-040001				.BEARING-SPHERICAL	1			
25	S602-062004				.RING-RETAINING	2			
K	31Y2-04062				SEAL KIT	1			SEE ILLUST

BOOM CYLINDER

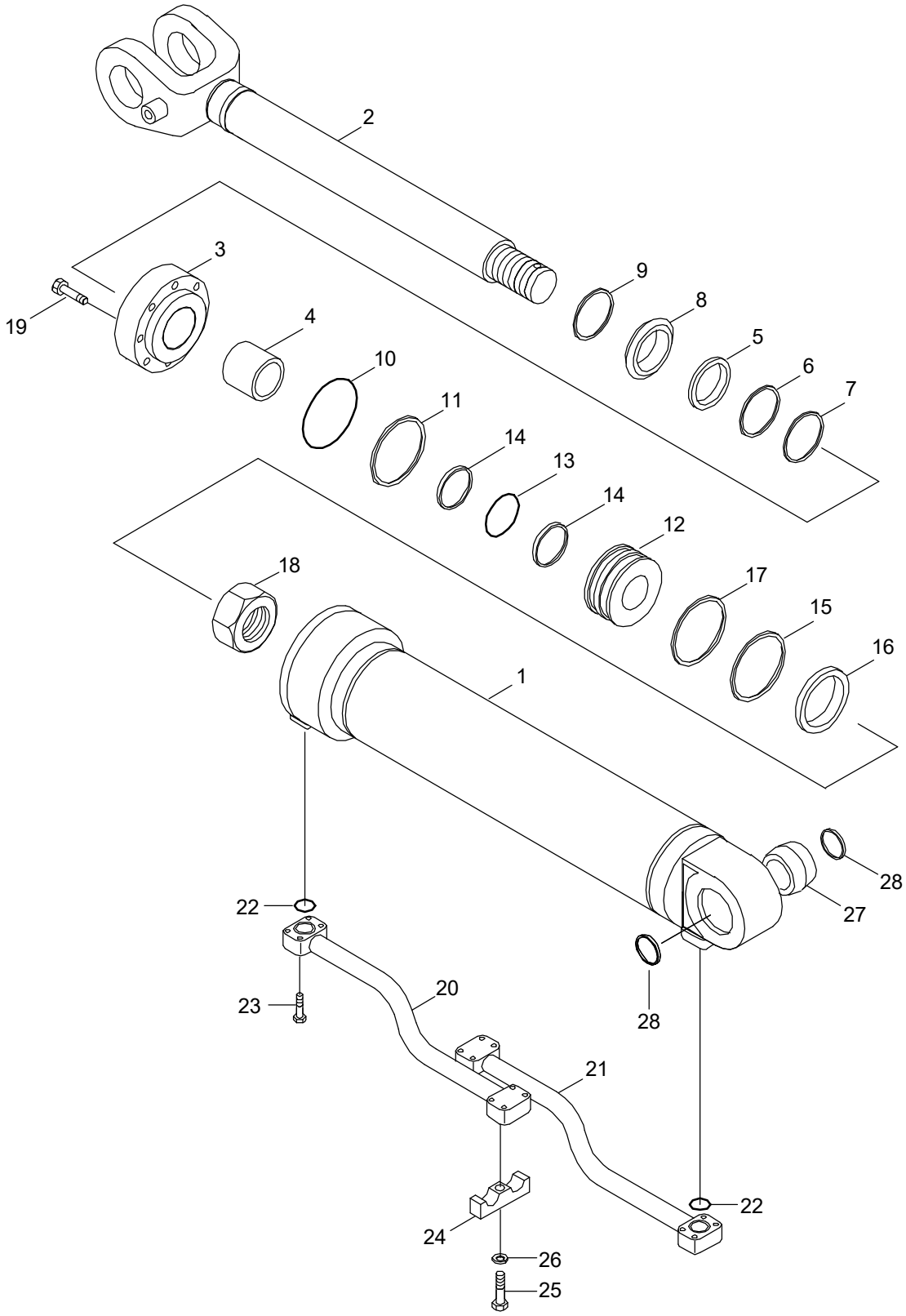

DESCRIPTION	PARTS NO	INCLUDED ITEM
SEAL KIT	31Y2-03751	5~8, 10, 11,13~17, 22, 28

Item	Part_No	IS	Ord	T	Description	Qty	Serial_No	ITC	Remark
*	31LF-20410				BOOM CYLINDER-LH	1			
	31LF-20420				BOOM CYLINDER-RH	1			
1	31Y2-09560				.TUBE ASSY-LH	1			
	31Y2-09570				.TUBE ASSY-RH	1			
2	31Y2-09130				.ROD ASSY	1			
3	31Y2-09620				.GLAND	1			
4	S731-070040				.BUSHING-DU	1			
K5	Y220-070011				.SEAL-ROD	1			
K6	Y180-070020				.RING-BACK UP	1			
K7	Y240-070011				.RING-BUFFER	1			
K8	Y110-070011				.WIPER-DUST	1			
9	Y190-084000				.RING-SNAP	1			
K10	S631-110004				.O-RING	1			
K11	S641-110003				.RING-BACK UP	1			
12	31Y2-03701				.PISTON	1			
K13	S632-070004				.O-RING	1			
K14	S642-070003				.RING-BACK UP	2			
K15	Y410-120000				.SEAL-PISTON	1			
K16	Y310-120100				.RING-WEAR	1			
K17	Y440-120000				.RING-DUST	1			
18	31YC-65370				.NUT-NYLON	1			
19	S109-160604				.BOLT-SOCKET	8			
20	31Y2-09151				.PIPE ASSY-R,LH	1			
	31Y2-09161				.PIPE ASSY-R,RH	1			
21	31Y2-09170				.PIPE ASSY-B,LH	1			
	31Y2-09180				.PIPE ASSY-B,RH	1			

Item	Part_No	IS	Ord	T	Description	Qty	Serial_No	ITC	Remark
K22	Y171-019004				.O-RING	2			
23	S107-100454				.BOLT-SOCKET HEAD	8			
24	31Y2-05450				.CLAMP-PIPE	1			
25	S017-120402				.BOLT-HEX	1			
26	S411-120002				.WASHER-SPRING	1			
27	31YC-13160				.BUSHING-PIN	1			
K28	Y101-070085				.SEAL-DUST	2			
K	31Y2-03751				SEAL KIT	1			SEE ILLUST

BUCKET CYLINDER

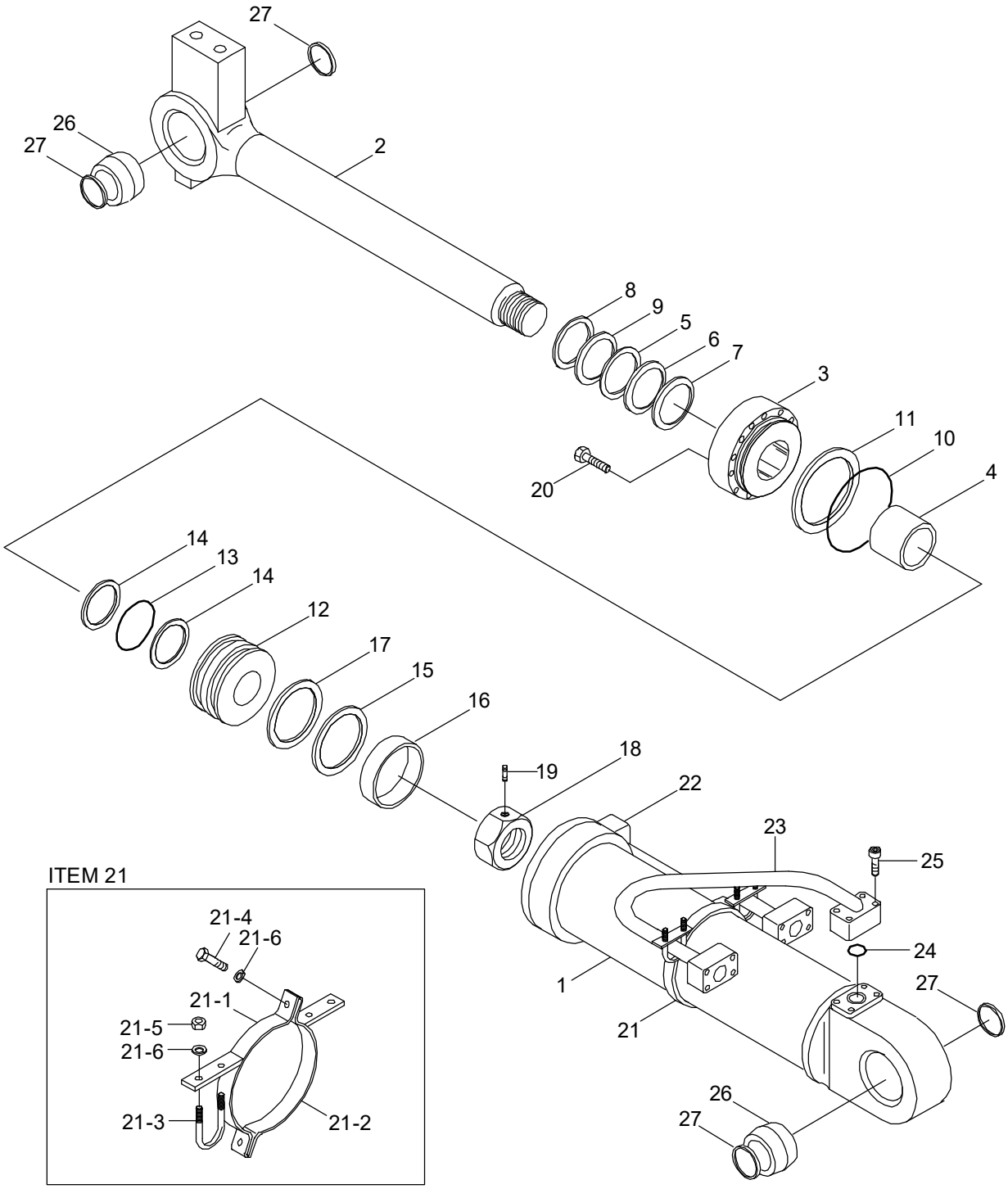

DESCRIPTION	PARTS NO	INCLUDED ITEM
SEAL KIT	31Y2-08080	5~8, 10, 11,13~17, 24, 27

Item	Part_No	IS	Ord	T	Description	Qty	Serial_No	ITC	Remark
*	31LF-20031				BUCKET CYLINDER	1			HL740-7A
	31LF-20390				BUCKET CYLINDER	1			HL740XTD-7A
1	31Y2-07961				.TUBE ASSY	1			
2	31Y2-08000				.ROD ASSY	1			HL740-7A
	31Y2-09540				.ROD ASSY	1			HL740XTD-7A
3	31Y2-07610				.GLAND	1			
4	S731-075035				.BUSHING-DU	1			
K5	Y220-075011				.SEAL-ROD	1			
K6	Y180-075020				.RING-BACK UP	1			
K7	Y240-075011				.RING-BUFFER	1			
K8	Y110-075011				.WIPER-DUST	1			
9	Y190-089000				.RING-SNAP	1			
K10	S631-130004				.O-RING	1			
K11	S641-130003				.RING-BACK UP	1			
12	31Y2-06060				.PISTON	1			
K13	S631-075004				.O-RING	1			
K14	S642-075003				.RING-BACK UP	2			
K15	Y410-140000				.SEAL-PISTON	1			
K16	Y300-140100				.RING-WEAR	1			
K17	Y440-140000				.RING-DUST	1			
18	31YC-62160				.NUT-LOCK	1			
19	S114-100124				.SCREW-SET	1			
20	S109-140554				.BOLT-SOCKET	12			
21	31Y2-08030				.BAND ASSY	1			
21-1	31Y2-08040				..BAND SUB ASSY	1			
21-2	31Y2-08050				..BAND SUB ASSY	1			

Item	Part_No	IS	Ord	T	Description	Qty	Serial_No	ITC	Remark
21-3	S071-022730				..U-BOLT	2			
21-4	S011-100352				..BOLT-HEX	2			
21-5	S201-101002				..NUT-HEX	4			
21-6	S411-100002				..WASHER-SPRING	6			
22	31Y2-08061				.PIPE ASSY-R	1			
23	31Y2-08070				.PIPE ASSY-B	1			
K24	Y171-024004				.O-RING	2			
25	S017-100554				.BOLT-HEX	8			
26	31YC-13050				.BUSHING-PIN	2			
K27	Y000-075300				.SEAL-DUST	4			
K	31Y2-08080				SEAL KIT	1			SEE ILLUST

FAN & BRAKE PUMP

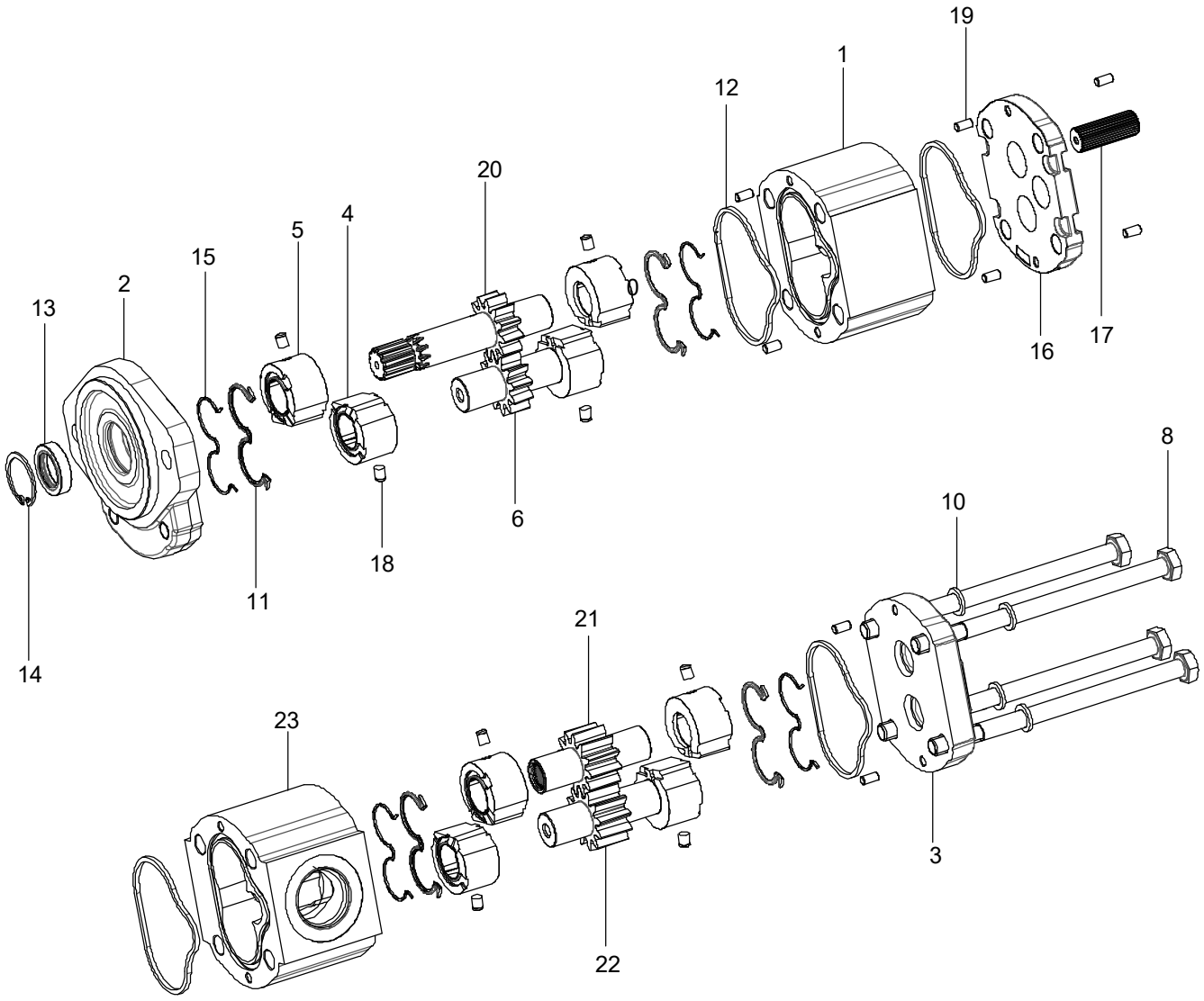

DESCRIPTION	PARTS NO	INCLUDED ITEM
SEAL KIT	ZTAW-00130	11~13, 15, 18

Item	Part_No	IS	Ord	T	Description	Qty	Serial_No	ITC	Remark
*	31LG-40100				BRAKE & FAN PUMP	1			
1	ZTAW-00095				.BODY	1			
2	ZTAW-00096				.FRONT COVER	1			
3	ZTAW-00097				.REAR COVER	1			
4	ZTAW-00098				.PLATE-HALF THRUST	4			
5	ZTAW-00099				.PLATE-HALF THRUST	4			
6	ZTAW-00100				.DRIVEN GEAR	1			
8	ZTAW-00102				.SCREW BOLT	2			
10	ZTAW-00104				.WASHER	6			
K11	ZTAW-00016				.SEAL	4			
K12	ZTAW-00019				.SEAL	4			
K13	ZTAW-00105				.SHAFT SEAL	1			
14	ZTAW-00106				.RING	1			
K15	ZTAW-00022				.RING-BACK UP	4			
16	ZTAW-00107				.FLANGE	1			
17	ZTAW-00108				.SHAFT-SPLINED CONN	1			
K18	ZTAW-00109				.SPRING	8			
19	ZTAW-00027				.PIN-DOWEL	8			
20	ZTAW-00110				.DRIVE SHAFT	1			
21	ZTAW-00111				.DRIVE GEAR	1			
22	ZTAW-00112				.DRIVEN GEAR	1			
23	ZTAW-00113				.BODY	1			
K	ZTAW-00130				SEAL KIT	1			

QUICK COUPLER CYLINDER(VOLVO TYPE)

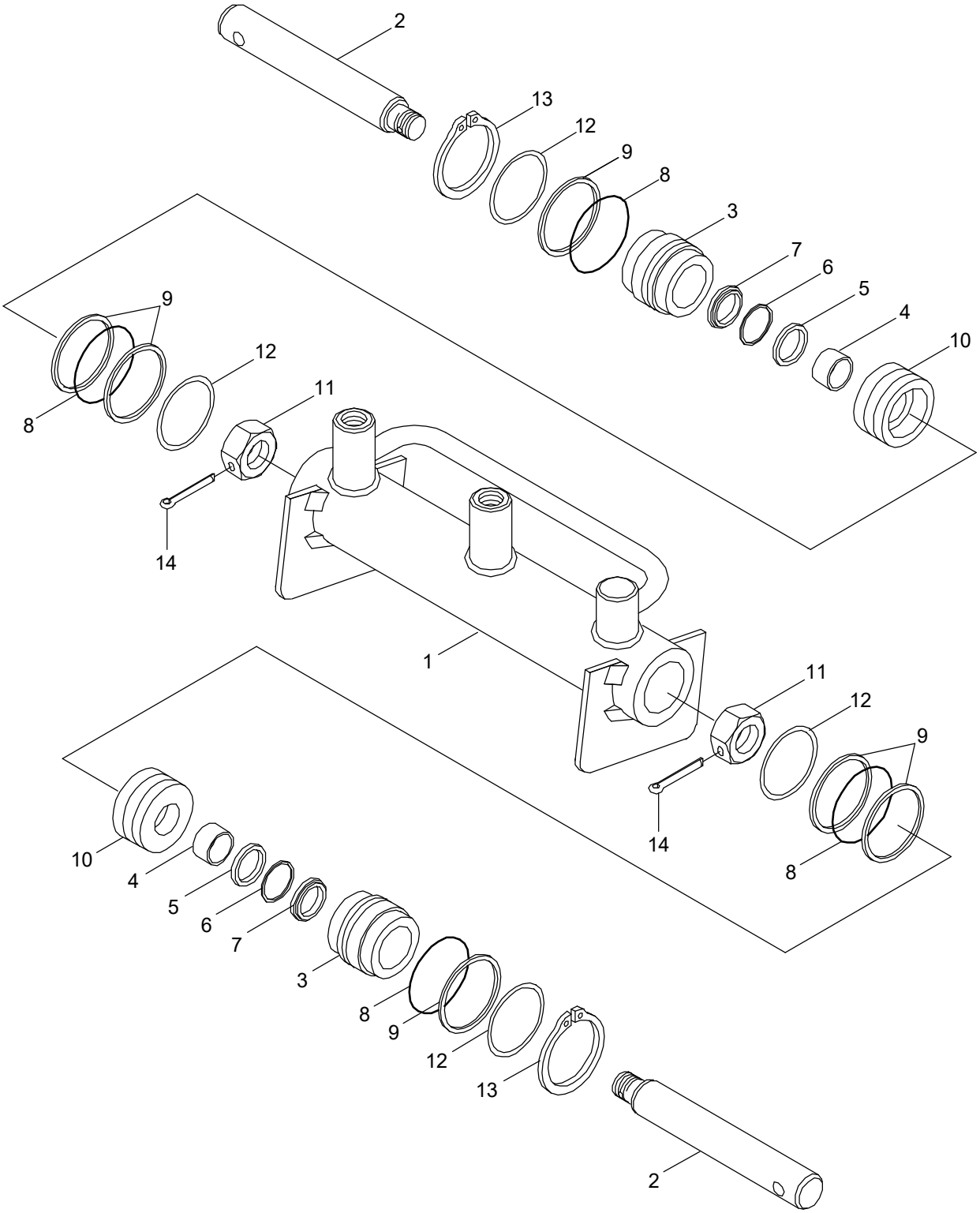

DESCRIPTION	PARTS NO	INCLUDED ITEM
SEAL KIT	31Y2-05920	5~9

Item	Part_No	IS	Ord	T	Description	Qty	Serial_No	ITC	Remark
*	31LF-21500				CYLINDER ASSY	1	- #0019		
	31LF-21501				CYLINDER ASSY	1	#0020 -	B	
1	31Y2-10240				.TUBE ASSY	1			
2	31Y2-10270				.ROD	2	- #0019		
	31Y2-10271				.ROD	2	#0020 -	D	
3	31Y2-05880				.GLAND	2			
4	S731-025015				.DU BUSH	2			
K5	Y200-025011				.SEAL-ROD	2			
K6	Y180-025020				.RING-BACK UP	2			
K7	Y120-025011				.WIPER-DUST	2			
K8	S631-044004				.O-RING	4			
K9	S641-044003				.RING-BACK UP	6			
10	31Y2-05890				.PISTON	2			
11	31YC-65120				.NUT-NYLON	2	- #0019		
	S227-180002				.NUT-HEX HEAD	2	#0020 -	D	
12	31Y2-05900				.RING-STOP	4			
13	S601-045004				.RING-RETAINING,C-TYPE	2			
14	S461-400326				.PIN-SPLIT	2	#0020 -	-	
K	31Y2-05920				SEAL KIT	1			SEE ILLUST

FRONT FRAME

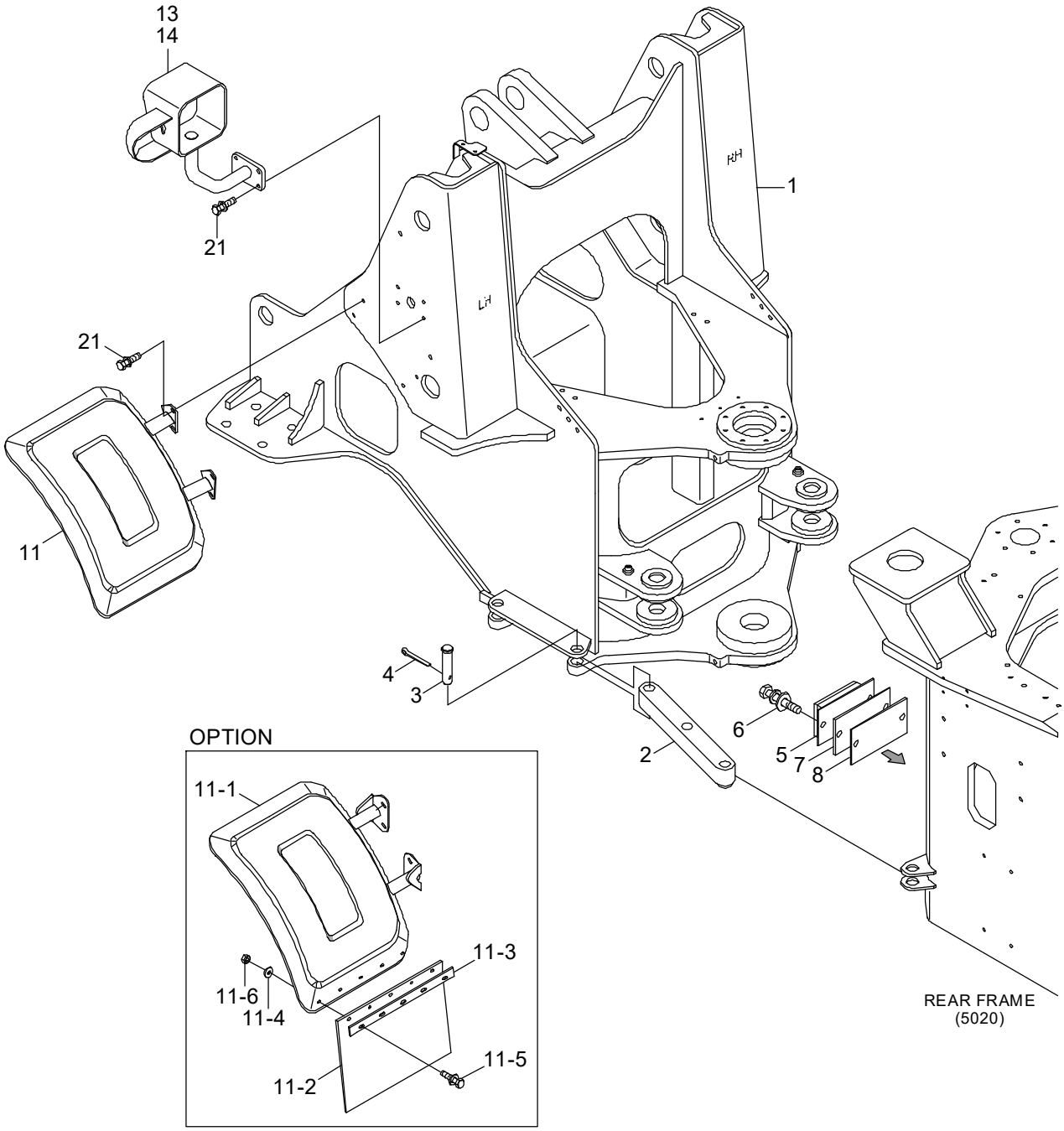
13
14
21
1
RH
LH
21
11
4
3
6
5
7
8
2
OPTION
11-1
11-3
11-6
11-4
11-5
11-2
REAR FRAME
(5020)

Item	Part_No	IS	Ord	T	Description	Qty	Serial_No	ITC	Remark
1	41LF-20011				FRONT FRAME WA	1			
2	41LF-09010				BAR	1			
3	51L7-00430				PIN-CLEVIS	2			
4	41L1-1074				PIN	2			
5	41LB-29080				STOPPER	2			
6	S037-123026				BOLT-W/WASHER	4			
7	41LB-29060				SHIM(10T)	2			
8	41LB-29070				SHIM(3.0T)	2			
11	71LF-72010				FENDER WA-FRONT	2	- #0267		
	71LF-72011				FENDER WA-FRONT	2	#0268 -	B	
	71LD-72051				FENDER ASSY-LH	1	#0268 -		OPT
	71LD-72061				FENDER ASSY-RH	1	#0268 -		OPT
11-1	71LD-72071				.FENDER WA-LH	1	#0268 -		OPT
	71LD-72081				.FENDER WA-RH	1	#0268 -		OPT
11-2	71LD-72090				.RUBBER-FENDER	1	#0268 -		OPT
11-3	71LD-72100				.PLATE	1	#0268 -		OPT
11-4	71LB-72130				.WASHER-WIDE	5	#0268 -		OPT
11-5	S037-122556				.BOLT-W/WASHER	5	#0268 -		OPT
11-6	S205-121006				.NUT-HEX	5	#0268 -		OPT
11	71LF-72010				FENDER WA-FRONT	2			
13	71LF-72031				LAMP BOX WA-LH	1			
14	71LF-72041				LAMP BOX WA-RH	1			
21	S037-122556				BOLT-W/WASHER	16			

REAR FRAME

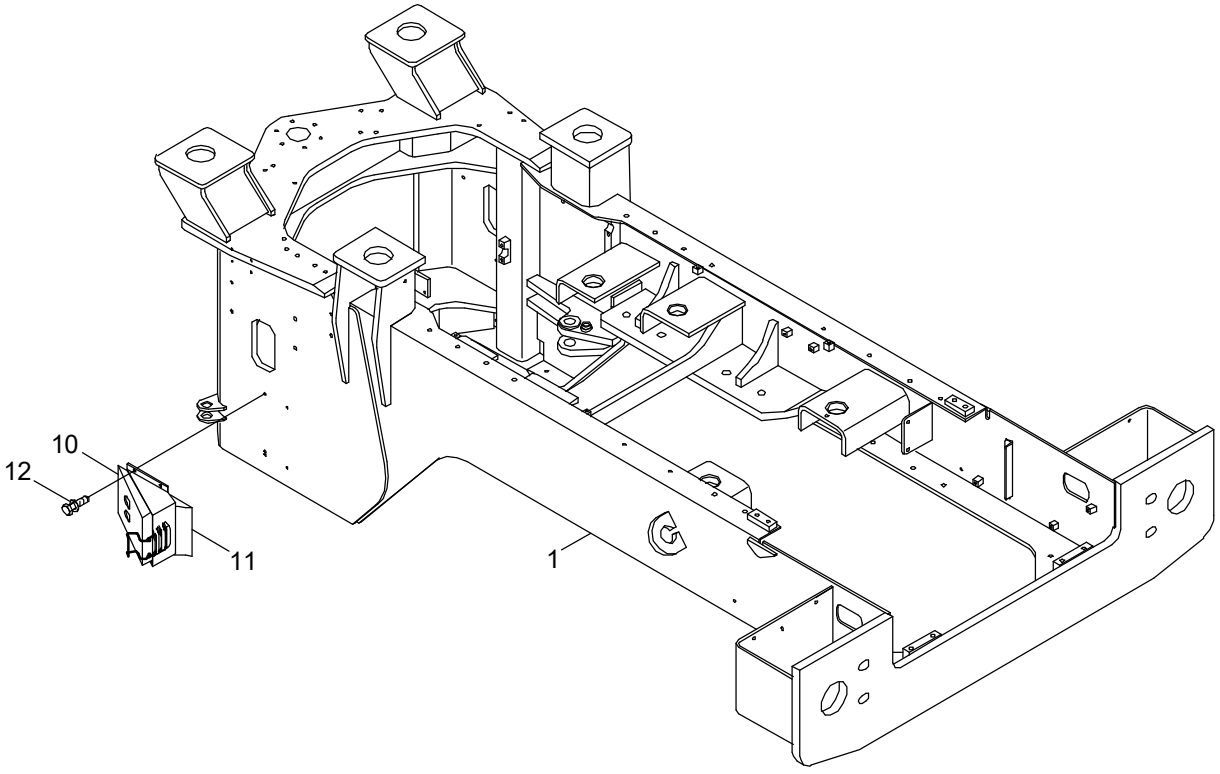

Item	Part_No	IS	Ord	T	Description	Qty	Serial_No	ITC	Remark
1	51LF-20012				REAR FRAME WA	1	- #0098		
	51LF-20013				REAR FRAME WA	1	#0099 -	D	
10	74L3-00012				CHOCK-WHEEL	2			
11	71L7-90070				BRACKET ASSY	2			
12	S035-082546				BOLT-W/WASHER	8			

CENTER PIVOT PIN(UPPER)

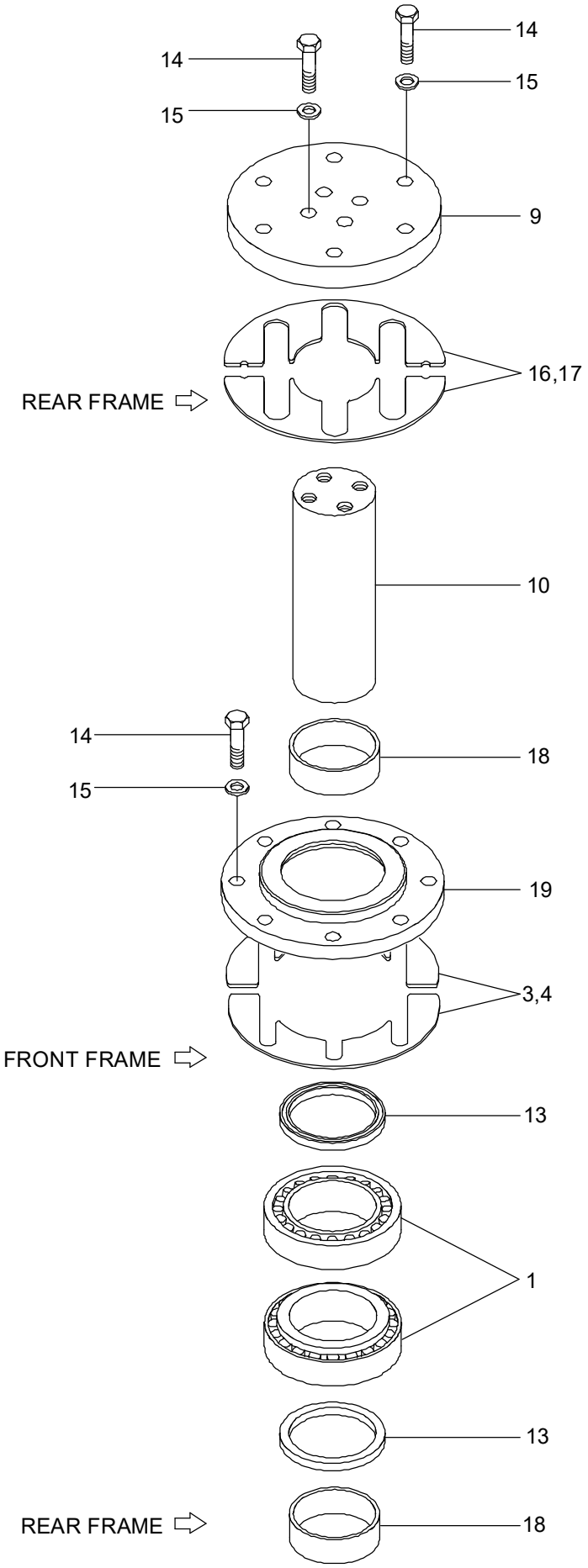

Item	Part_No	IS	Ord	T	Description	Qty	Serial_No	ITC	Remark
1	41L7-10010				BEARING	2			
3	41L7-10120				SHIM(0.1T)	2			
4	41L7-10130				SHIM(0.5T)	2			
9	41L7-10060				PLATE	1			
10	41LF-10111				PIN	1	- #0364		
	41LF-10112				PIN	1	#0365 -	A	
13	S700-065306				DUST SEAL-DKIY TYPE	2			
14	S017-120456				BOLT-HEX	18			
15	S441-120006				WASHER-HARDENED	18			
16	41L7-10100				SHIM(0.1T)	1			
17	41L7-10110				SHIM(0.5T)	1			
18	41LF-10160				BUSHING	2			
19	41LF-10080				RETAINER	2			

CENTER PIVOT PIN(LOWER)

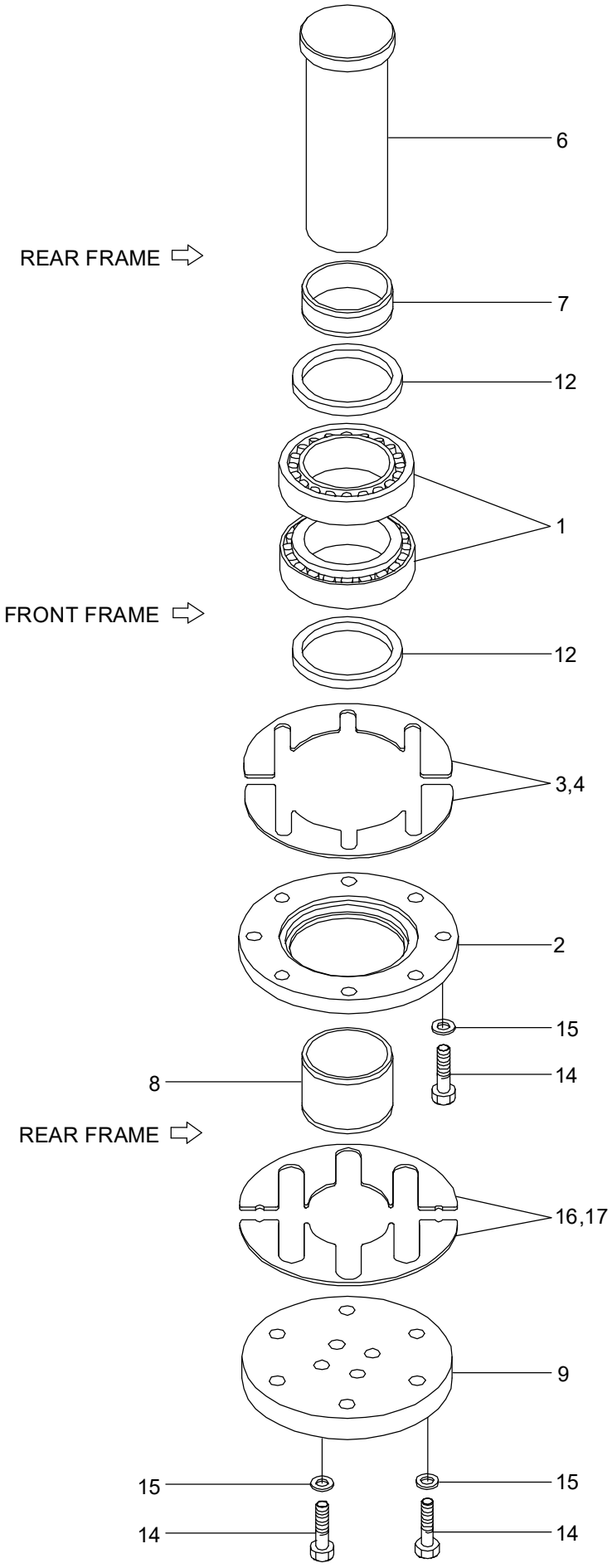

Item	Part_No	IS	Ord	T	Description	Qty	Serial_No	ITC	Remark
1	41L7-10010				BEARING	2			
2	41L7-10080				RETAINER	1			
3	41L7-10120				SHIM(0.1T)	2			
4	41L7-10130				SHIM(0.5T)	2			
6	41L7-10020				PIN WA	1			
7	41L7-10050				COLLAR	1			
8	41L7-10040				COLLAR	1			
9	41L7-10060				PLATE	1			
12	S700-075307				DUST SEAL-DKIY TYPE	2			
14	S017-120456				BOLT-HEX	18			
15	S441-120006				WASHER-HARDENED	18			
16	41L7-10100				SHIM(0.1T)	1			
17	41L7-10110				SHIM(0.5T)	1			

COUNTERWEIGHT

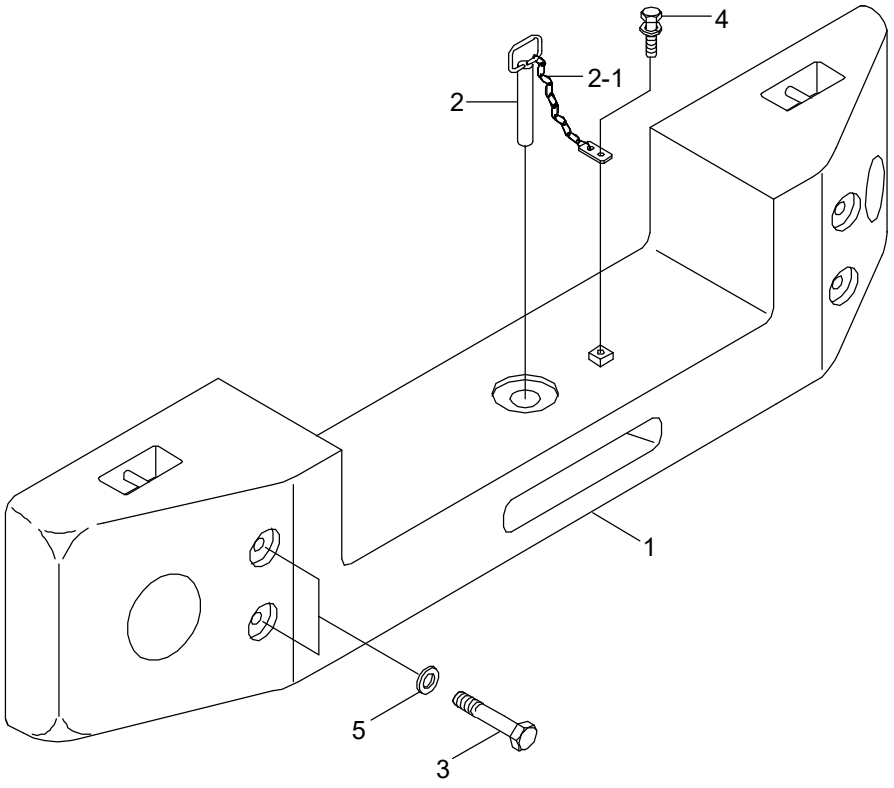

Item	Part_No	IS	Ord	T	Description	Qty	Serial_No	ITC	Remark
1	51LF-10100				COUNTERWEIGHT	1			HL740-7A
	51LF-11100				COUNTERWEIGHT	1			HL740XTD-7A
2	51LD-10021				PIN ASSY	1			
2-1	54L3-00940				.CHAIN ASSY	1			
3	S017-30200D				BOLT-HEX	4			HL740-7A
	S017-30265D				BOLT-HEX	4			HL740XTD-7A
4	S037-102056				BOLT-W/WASHER	1			
5	S441-300006				WASHER-HARDENED	4			

UNDER GUARD

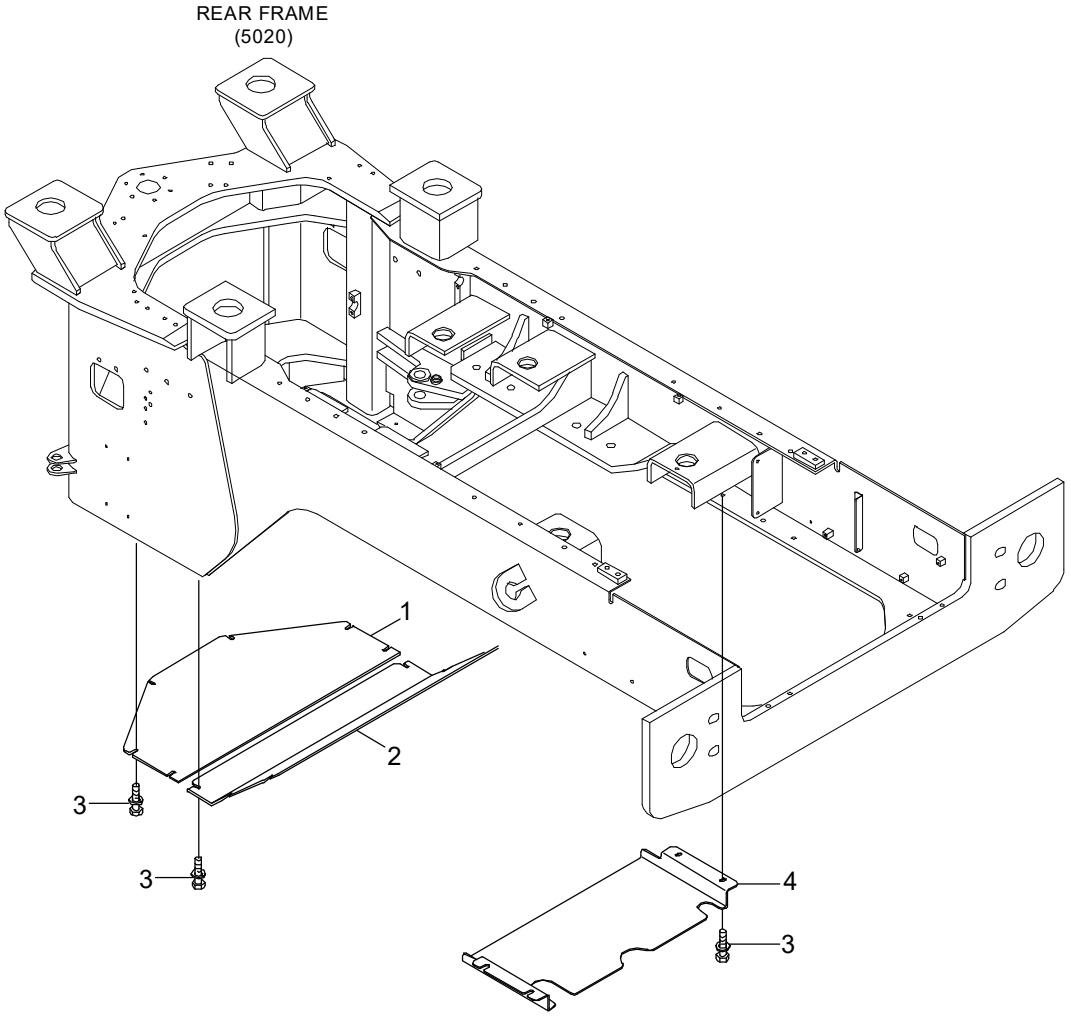

Item	Part_No	IS	Ord	T	Description	Qty	Serial_No	ITC	Remark
1	51LF-90010				PLATE	1			
2	51LF-90020				PLATE	1			
3	S037-123056				BOLT-W/WASHER	16			
4	51LF-92030				UNDERCOVER	1			

CAB MOUNTING

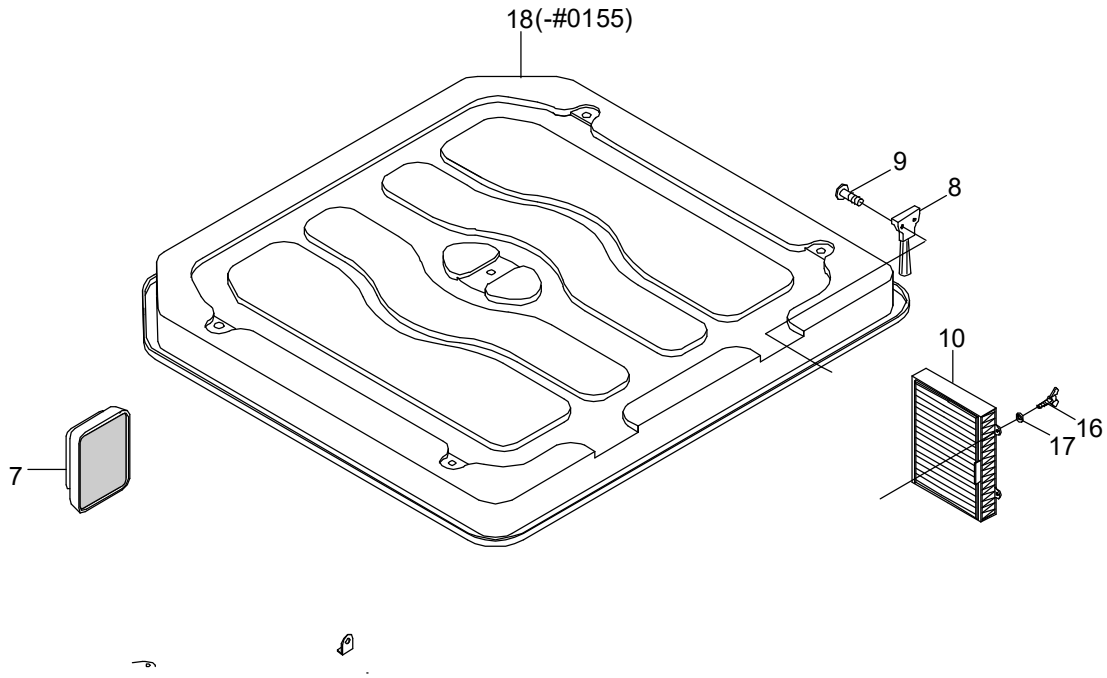

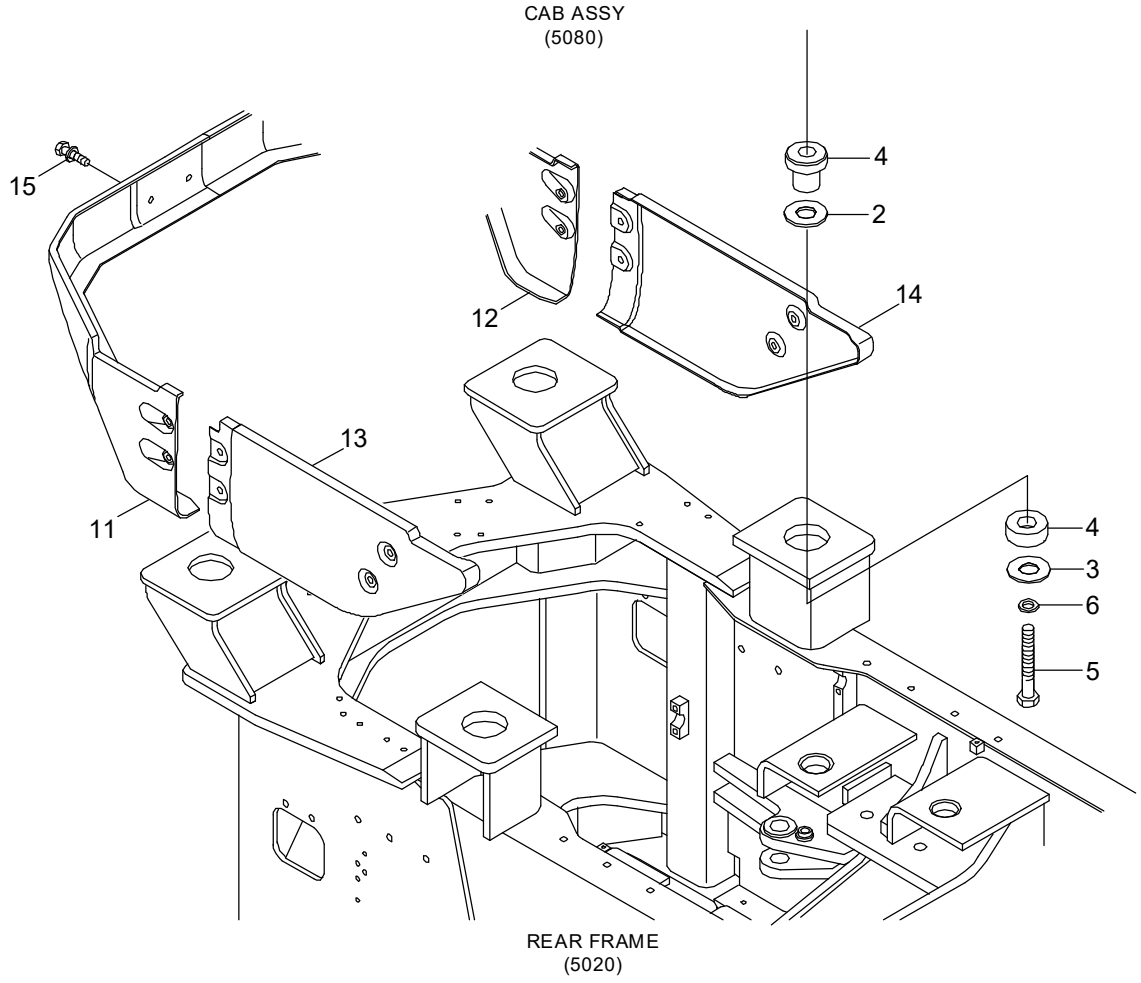

Item	Part_No	IS	Ord	T	Description	Qty	Serial_No	ITC	Remark
1	71LF-11041				CAB ASSY-S/WIN,L/NOISE	1			SLIDE,LOW NOISE
2	74L1-10061				SPACER	4			
3	71LB-00240				WASHER-SNUBBING	4			
4	71LF-00230				ISOLATION MOUNT-CAB	4			
5	S018-27150D				BOLT-HEX	4			
6	S441-270006				WASHER-HARDENED	4			
7	71LB-00111				MIRROR ASSY-EXT	2			STD
	71LB-00311				MIRROR ASSY-EXT/HEATED	2			OPT
8	71E1-60340				HAMMER-SAFETY	1			
9	S141-040106				SCREW-FLAT HD	2			
10	71LB-00290				FILTER ASSY	1			
11	71LF-00121				FRONT COVER-LH	1			
12	71LF-00131				FRONT COVER-RH	1			
13	71LF-00141				SIDE COVER-LH	1			
14	71LF-00151				SIDE COVER-RH	1			
15	S037-122556				BOLT-W/WASHER	10			
16	S091-050156				BOLT-WING	2			
17	S403-05200B				WASHER-PLAIN	2			
18	71LF-01151				COVER-ROOF	1	- #0155	-	SEE 5080

CAB(1/7)

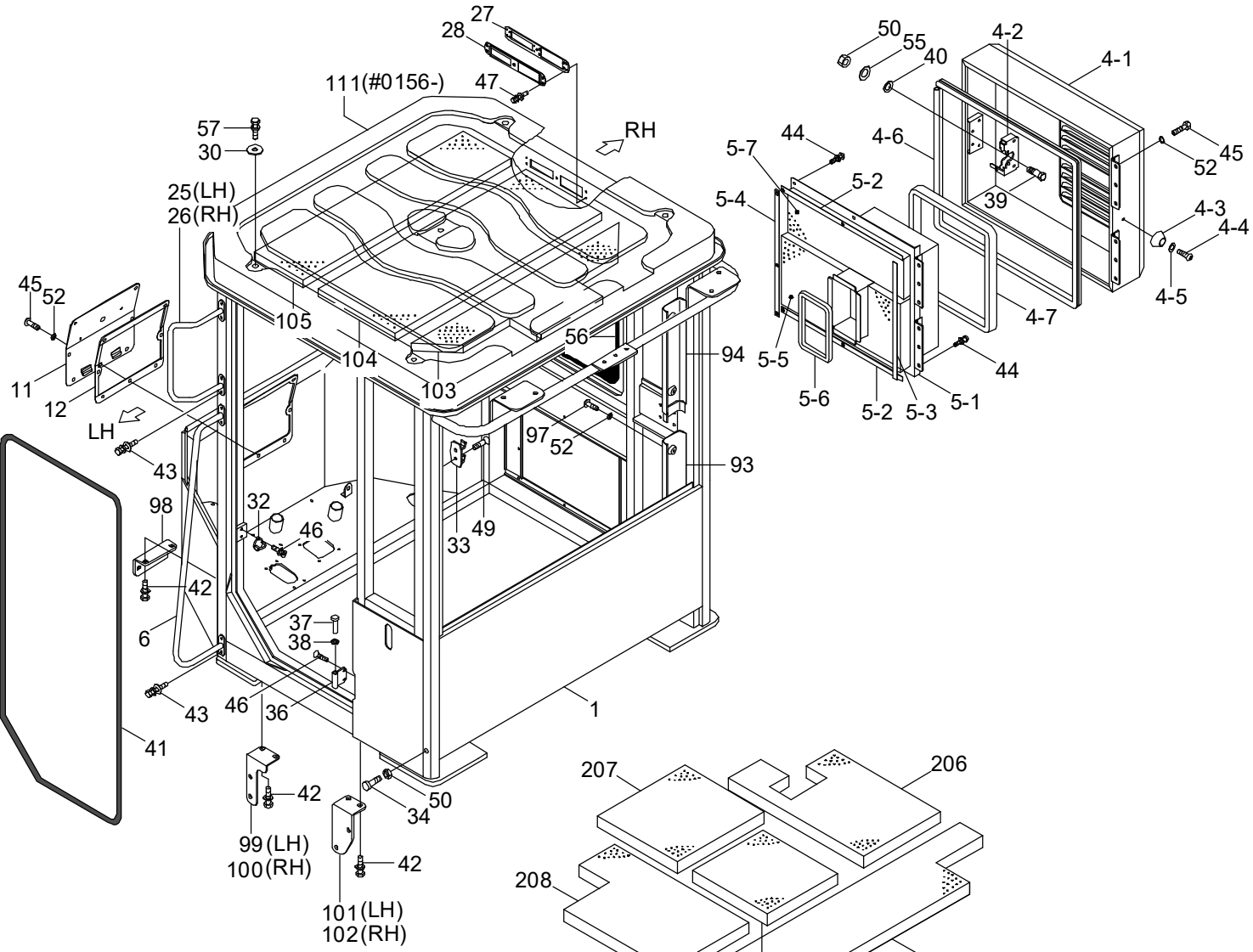
27
28
111(#0156-)
47
57
30
25(LH)
26(RH)
RH
105
104
103
56
94
93
45
52
11
12
LH
43
98
32
46
33
49
42
6
37
38
43
46
36
1
41
42
99(LH)
100(RH)
50
34
42
101(LH)
102(RH)
97
52
50
55
40
4-2
4-1
44
4-6
5-7
5-2
5-4
39
45
52
4-3
4-4
4-5
4-7
5-5
5-6
5-2
5-3
5-1
44

207
206
208
209
210

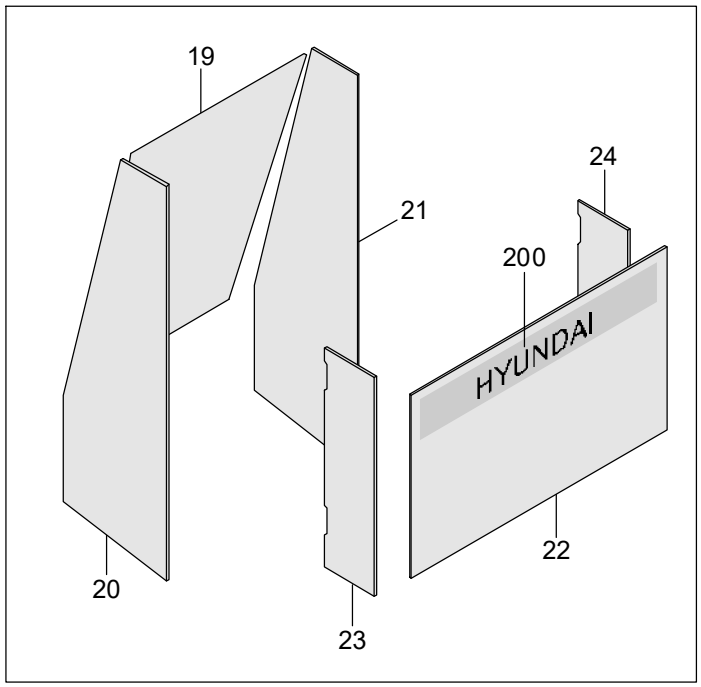
19
24
21
200
HYUNDAI
20
22
23

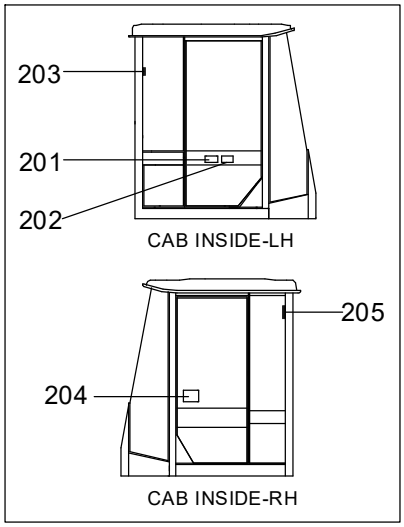
203
201
202
CAB INSIDE-LH
205
204
CAB INSIDE-RH

Item	Part_No	IS	Ord	T	Description	Qty	Serial_No	ITC	Remark
*	71LF-11011				CAB ASSY-FIXED WINDOW	1	- #0003		FIXED WINDOW
	71LF-11012				CAB ASSY-FIXED WINDOW	1	#0004 - #0155	D	FIXED WINDOW
	71LF-11013				CAB ASSY-FIXED WINDOW	1	#0156 -	B	FIXED WINDOW
	71LF-11021				CAB ASSY-SLIDING WINDOW	1	- #0003		SLIDING WINDOW
	71LF-11022				CAB ASSY-SLIDING WIN	1	#0004 - #0155	D	SLIDING WINDOW
	71LF-11023				CAB ASSY-SLIDING WIN	1	#0156 -	B	SLIDING WINDOW
	71LF-11031				CAB ASSY-F/WIN,L/NOISE	1	- #0003		FIXED, LOW NOSE
	71LF-11032				CAB ASSY-F/WIN,L/NOISE	1	#0004 - #0155	D	FIXED, LOW NOSE
	71LF-11033				CAB ASSY-F/WIN,L/NOISE	1	#0156 -	B	FIXED, LOW NOSE
	71LF-11041				CAB ASSY-S/WIN,L/NOISE	1	- #0003		SLIDE, LOW NOSE
	71LF-11042				CAB ASSY-S/WIN,L/NOISE	1	#0004 - #0155	D	SLIDE, LOW NOSE
	71LF-11043				CAB ASSY-S/WIN,L/NOISE	1	#0156 -	B	SLIDE, LOW NOSE
*-1	71LF-11111				.CAB SUB ASSY	1	- #0003		
	71LF-11112				.CAB SUB ASSY	1	#0004 -	D	
1	71LF-11121				..CAB WA	1	- #0003		
	71LF-11122				..CAB WA	1	#0004 -	D	
4	71LF-01041				..MAIN DOOR ASSY	1			
4-1	71LF-06010				...MAIN DOOR WA	1			
4-2	71L7-01293				...LATCH ASSY	1			
4-3	74L3-04460				...CUSHION-RUBBER	1			
4-4	S151-060256				...SCREW-TAPPING	1			
4-5	S403-06200B				...WASHER-PLAIN	1			
4-6	S771-021500				...WEATHER STRIP	1			
4-7	71LF-06070				...PAD-RUBBER	1			
5	71LF-01051				..COVER ASSY-FILTER	1			
5-1	71LF-06270				...COVER WA-FILTER	1			

Item	Part_No	IS	Ord	T	Description	Qty	Serial_No	ITC	Remark
5-2	71LF-06280				...PAD-RUBBER	2			
5-3	71LF-06290				...PAD-RUBBER	1			
5-4	71LF-06300				...PAD-RUBBER	1			
5-5	71LF-06310				...SPONGE	1			
5-6	71LF-06320				...SPONGE	2			
5-7	71LF-06400				...SPONGE	1			
6	71LF-01061				..HANDRAIL WA	1			
11	71LF-01111				..COVER WA-WIPER	1			
12	71LF-01121				..PAD-RUBBER	1			
19	71LF-01191				..GLASS-FRONT	1			
20	71LF-01201				..GLASS-FRONT/LH	1			
21	71LF-01211				..GLASS-FRONT/RH	1			
22	71LF-01531				..GLASS-REAR	1			
23	71LF-01541				..GLASS-SIDE/LH	1			
24	71LF-01551				..GLASS-SIDE/RH	1			
25	71LB-01692				..HANDRAIL WA-LH	1			
26	71LB-01702				..HANDRAIL WA-RH	1			
27	71LB-01151				..PLATE WA-CASSETTE	1			
28	71LB-01162				..COVER-CASSETTE	1			
30	71LB-01110				..WASHER-ROOF COVER	5			
32	71N6-02770				..STRIKER	1			
33	71N6-02920				..HOOK	1			
34	71EH-13150				..RUBBER-BUMPER	4			
36	71LB-01600				..HINGE	5			
37	74L3-05330				..PIN-HINGE	5			
38	74L3-04450				..WASHER-COPPER	5			

Item	Part_No	IS	Ord	T	Description	Qty	Serial_No	ITC	Remark
39	74L3-04380				..STRIKER-DOOR	1			
40	74L3-00710				..WASHER-STRIKER	1			
41	S771-039500				..WEATHER STRIP	1			
42	S037-122556				..BOLT-W/WASHER	12			
43	S037-102026				..BOLT-W/WASHER	12			
44	S035-082026				..BOLT-W/WASHER	30			
45	S179-080206				..SCREW-SOCKET RD HD	12			
46	S141-080166				..SCREW-FLAT HD	12			
47	S132-062056				..SCREW-W/WASHER	5			
49	S141-040206				..SCREW-FLAT HD	2			
50	S203-101006				..NUT-HEX	2			
52	S403-08200B				..WASHER-PLAIN	10			
55	S441-100006				..WASHER-HARDENED	1			
56	S771-025000				..WEATHER STRIP	1			
57	S017-20020D				..BOLT-HEX	5			
93	71LF-20170				..COVER-HARNESS(LOW)	1			
94	71LB-20151				..COVER-HARNESS(UP)	1			
97	S132-082026				..SCREW-W/WASHER	4			
98	71LF-01870				..PLATE WA-FRONT	1			
99	71LF-01880				..PLATE WA-LH/FR	1			
100	71LF-01890				..PLATE WA-RH/FR	1			
101	71LF-01900				..PLATE WA-LH/RR	1			
102	71LF-01910				..PLATE WA-RH/RR	1			
103	71LF-01920				..FOAM-ROOF(1)	1			
104	71LF-01930				..FOAM-ROOF(2)	1			
105	71LF-01940				..FOAM-ROOF(3)	1			

Item	Part_No	IS	Ord	T	Description	Qty	Serial_No	ITC	Remark
111	71LF-01151				.COVER-ROOF	1	#0156 -	A	
200	91LF-21000				.ADHESIVE SUN SCREEN	1	- #0155		
	91LF-21010				.ADHESIVE SUN SCREEN	1	#0156 -	B	
201	91LB-01230				.DECAL-MAX H/REACH	1			
202	91LB-01240				.DECAL-ROLL OVER	1			
203	91LB-01340				.DECAL-HAMMER	1			
204	91N6-07261				.ALTERNATE EXIT	1			
205	91N6-07290				.DECAL-FIRE EXTINGUISHER	1			
206	71LF-11210				.SPONGE-BOTTOM/LOW(1)	1			LOW NOISE
207	71LF-11221				.SPONGE-BOTTOM/LOW(2)	1			LOW NOISE
208	71LF-11230				.SPONGE-BOTTOM/LOW(3)	1			LOW NOISE
209	71LF-11240				.SPONGE-BOTTOM/LOW(4)	1			LOW NOISE
210	71LF-11250				.SPONGE-BOTTOM/LOW(5)	1			LOW NOISE
*-2	@				.ELECTRIC CAB ASSY				NOT

CAB(1/7, INTERIOR, #0156-)

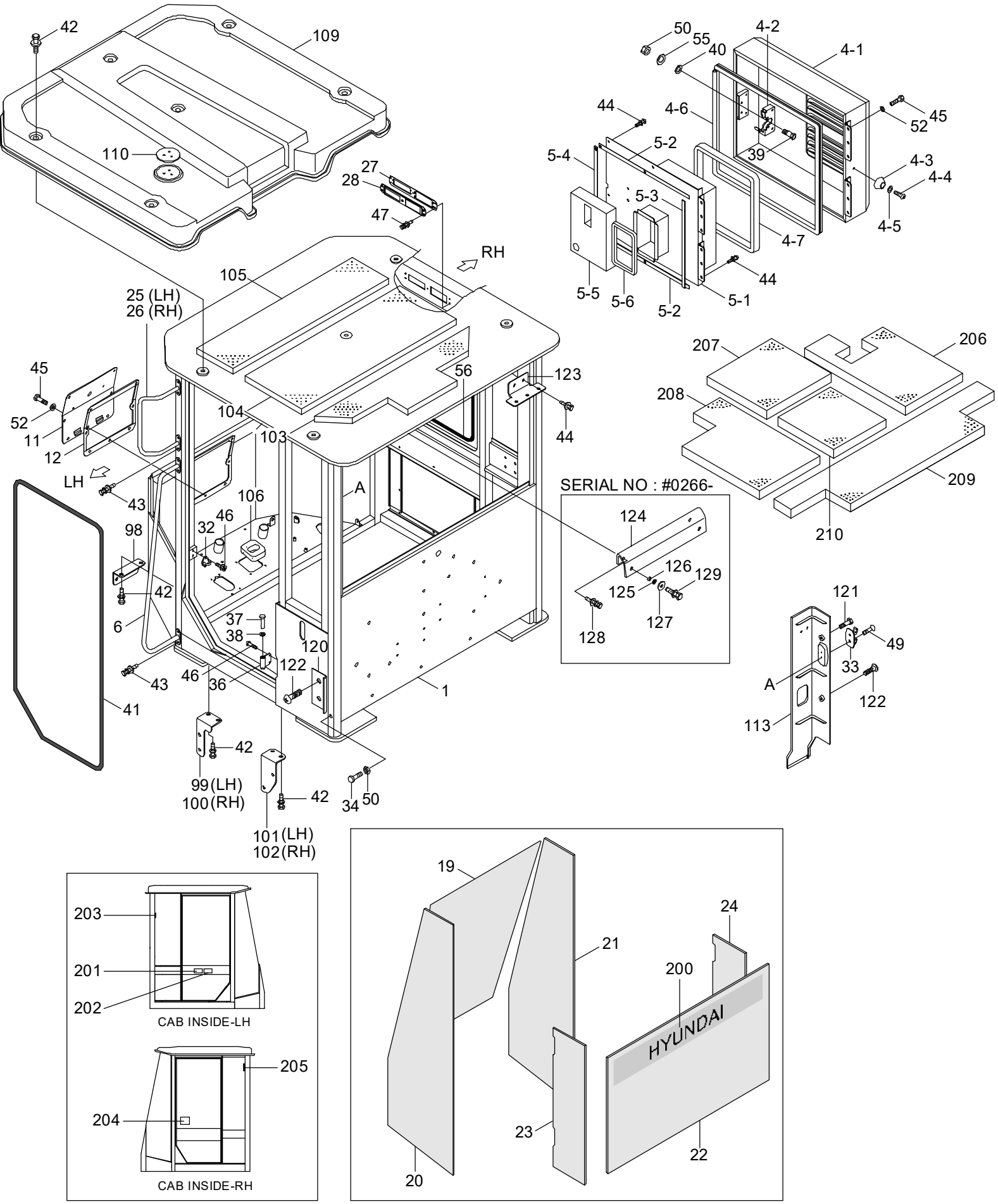

Item	Part_No	IS	Ord	T	Description	Qty	Serial_No	ITC	Remark
*	71LF-23010				CAB ASSY-FIXED WINDOW	1	- #0265		FIXED WINDOW
	71LF-23011				CAB ASSY-FIXED WINDOW	1	#0266 -	B	FIXED WINDOW
	71LF-23020				CAB ASSY-SLIDING WIN	1	- #0265		SLIDING WINDOW
	71LF-23021				CAB ASSY-SLIDING WIN	1	#0266 -	B	SLIDING WINDOW
	71LF-23030				CAB ASSY-F/WIN,L/NOISE	1	- #0265		FIXED,LOW NOSE
	71LF-23031				CAB ASSY-F/WIN,L/NOISE	1	#0266 -	B	FIXED,LOW NOSE
	71LF-23040				CAB ASSY-S/WIN,L/NOISE	1	- #0265		SLIDE,LOW NOSE
	71LF-23041				CAB ASSY-S/WIN,L/NOISE	1	#0266 -	B	SLIDE,LOW NOSE
*-1	71LF-23050				.CAB SUB ASSY	1	- #0265		
	71LF-23051				.CAB SUB ASSY	1	#0266 -	B	
1	71LF-23060				..CAB WA	1	- #0265		
	71LF-23061				..CAB WA	1	#0266 -	D	
4	71LF-01041				..MAIN DOOR ASSY	1			
4-1	71LF-06010				...MAIN DOOR WA	1			
4-2	71L7-01293				...LATCH ASSY	1			
4-3	74L3-04460				...CUSHION-RUBBER	1			
4-4	S151-060256				...SCREW-TAPPING	1			
4-5	S403-06200B				...WASHER-PLAIN	1			
4-6	S771-021500				...WEATHER STRIP	1			
4-7	71LF-06070				...PAD-RUBBER	1			
5	71LF-01051				..COVER ASSY-FILTER	1			
5-1	71LF-06270				...COVER WA-FILTER	1			
5-2	71LF-06280				...PAD-RUBBER	2			
5-3	71LF-06290				...PAD-RUBBER	1			
5-4	71LF-06300				...PAD-RUBBER	1			
5-5	71LF-06310				...SPONGE	1			

Item	Part_No	IS	Ord	T	Description	Qty	Serial_No	ITC	Remark
5-6	71LF-06320				...SPONGE	2			
5-7	71LF-06400				...SPONGE	1			
6	71LF-01061				..HANDRAIL WA	1			
11	71LF-01111				..COVER WA-WIPER	1			
12	71LF-01121				..PAD-RUBBER	1			
19	71LF-01191				..GLASS-FRONT	1			
20	71LF-01201				..GLASS-FRONT/LH	1			
21	71LF-01211				..GLASS-FRONT/RH	1			
22	71LF-01531				..GLASS-REAR	1			
23	71LF-01542				..Deleted...	1	#0156 -	-	
24	71LF-01552				..Deleted...	1	#0156 -	-	
25	71LB-01692				..HANDRAIL WA-LH	1			
26	71LB-01702				..HANDRAIL WA-RH	1			
27	71LB-01151				..PLATE WA-CASSETTE	1			
28	71LB-01162				..COVER-CASSETTE	1			
32	71N6-02770				..STRIKER	1			
33	71N6-02920				..HOOK-COAT	1			
34	71EH-13150				..RUBBER-BUMPER	4			
36	71LB-01600				..HINGE	5			
37	74L3-05330				..PIN-HINGE	5			
38	74L3-04450				..WASHER-COPPER	5			
39	74L3-04380				..STRIKER-DOOR	1			
40	74L3-00710				..WASHER-STRIKER	1			
41	S771-039500				..WEATHER STRIP	1			
42	S037-122556				..BOLT-W/WASHER	9			
43	S037-102026				..BOLT-W/WASHER	12			

Item	Part_No	IS	Ord	T	Description	Qty	Serial_No	ITC	Remark
44	S035-082026				..BOLT-W/WASHER	18			
45	S179-080206				..SCREW-SOCKET RD HD	12			
46	S141-080166				..SCREW-FLAT HD	2			
47	S132-062056				..SCREW-W/WASHER C/RD	5			
49	S141-040206				..SCREW-FLAT HD	2			
50	S205-101006				..NUT-HEX	1			
52	S403-08200B				..WASHER-PLAIN	7			
55	S441-100006				..WASHER-HARDENED	1			
56	S771-025000				..WEATHER STRIP	1			
57	S037-122556				..BOLT-W/WASHER	5			
98	71LF-01870				..PLATE WA-FRONT	1			
99	71LF-01880				..PLATE WA-LH/FR	1			
100	71LF-01890				..PLATE WA-RH/FR	1			
101	71LF-01900				..PLATE WA-LH/RR	1			
102	71LF-01910				..PLATE WA-RH/RR	1			
103	71LF-01920				..FOAM-ROOF(1)	1			
104	71LF-01930				..FOAM-ROOF(2)	1			
105	71LF-01940				..FOAM-ROOF(3)	1			
106	71LF-01950				..FOAM-BOTTOM/FRONT	1			
109	71LF-22010				..COVER-ROOF	1	- #0265		
	71LF-22011				..COVER-ROOF	1	#0266 -	D	
110	71LB-23090				..PLATE-BEACON LAMP	1			
111	71LF-01151				..COVER-ROOF	1			
113	71LF-22040				..PILLAR COVER-LH/C	1			
120	71LF-22110				..BRACKET-LH/B-LWR	1			
121	71LB-22100				..CAP-BOLT	8			

Item	Part_No	IS	Ord	T	Description	Qty	Serial_No	ITC	Remark
122	S002-060166				..SCREW-TRUSHEAD	8			
123	71LF-23100				..BRACKET-WORK LAMP	2			
124	71LF-09210				..BRACKET	1	#0266 -	-	
125	71LB-09220				..GROMMET	8	#0266 -	-	
126	71LB-09230				..WASHER-WIDE	8	#0266 -	-	
127	71LB-09240				..WASHER-WIDE	8	#0266 -	-	
128	S037-082026				..BOLT-W/WASHER	2	#0266 -	-	
129	S017-120256				..BOLT-HEX	8	#0266 -	-	
200	91LF-21010				.ADHESIVE SUN SCREEN	1			
201	91LB-01230				.DECAL-MAX H/REACH	1			
202	91LB-01240				.DECAL-ROLL OVER	1			
203	91LB-01340				.DECAL-HAMMER	1			
204	91N6-07261				.ALTERNATE EXIT	1			
205	91N6-07290				.FIRE	1			
206	71LF-11210				.SPONGE-BOTTOM/LOW(1)	1			LOW NOISE
207	71LF-11221				.SPONGE-BOTTOM/LOW(2)	1			LOW NOISE
208	71LF-11230				.SPONGE-BOTTOM/LOW(3)	1			LOW NOISE
209	71LF-11240				.SPONGE-BOTTOM/LOW(4)	1			LOW NOISE
210	71LF-11250				.SPONGE-BOTTOM/LOW(5)	1			LOW NOISE
*-2	@				.ELECTRIC CAB ASSY	1			NOT

CAB(2/7)

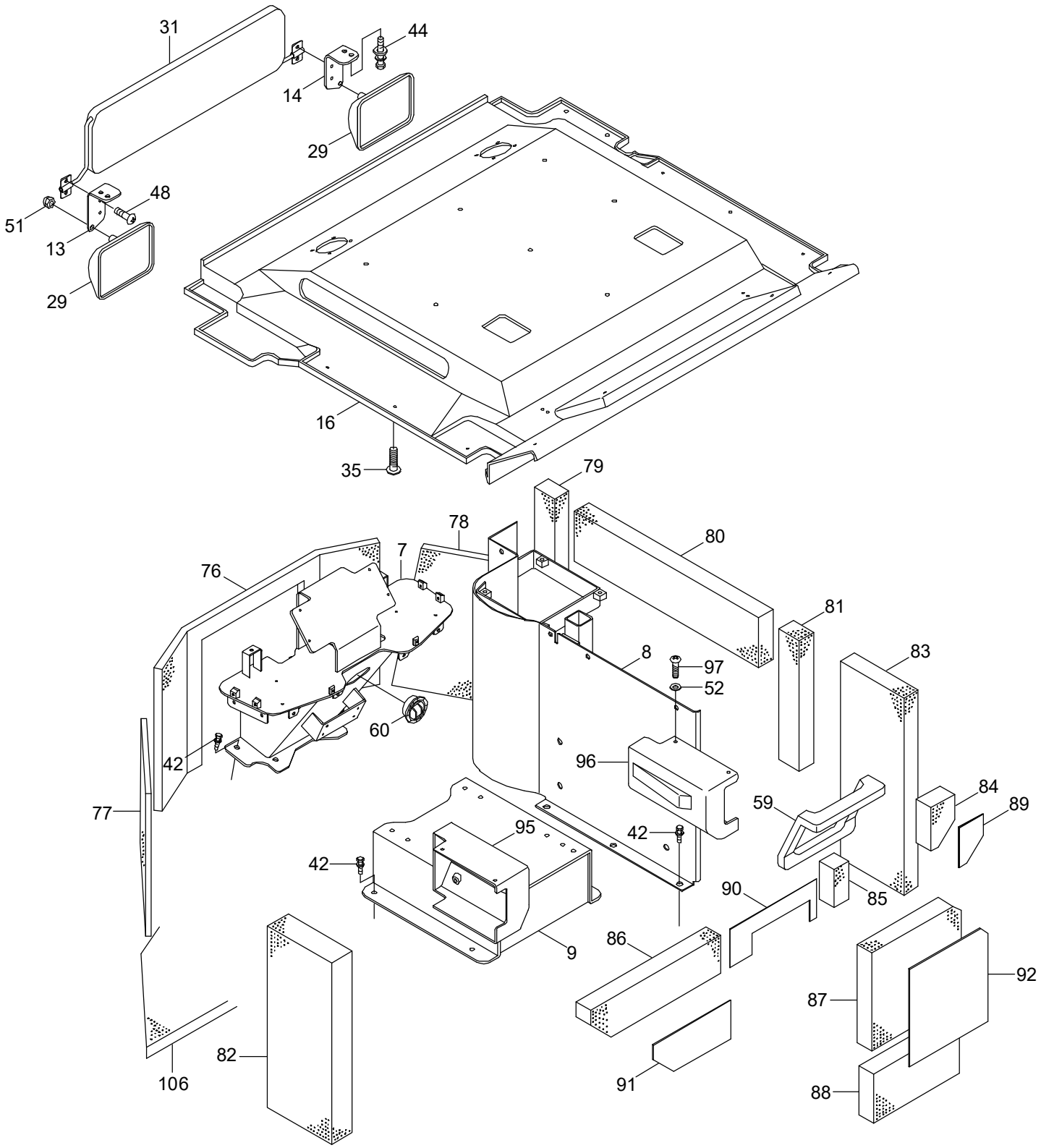
31
44
14
29
48
51
13
29
16
35
79
78
80
7
76
81
8
97
52
83
60
42
96
84
59
89
77
95
42
42
90
85
9
86
92
87
82
106
91
88

Item	Part_No	IS	Ord	T	Description	Qty	Serial_No	ITC	Remark
*	@				CAB ASSY	1			NOT
*-1	@				.CAB SUB ASSY	1			NOT
7	71LF-11130				..SUPPORT WA-D/BOARD	1			
8	71LF-01081				..SUPPORT WA-CONSOLE	1			
9	71LF-01091				..SEAT BASE WA	1			
13	71LF-01130				..PLATE-R/MIRROR,LH	1			
14	71LF-01140				..PLATE-R/MIRROR,RH	1			
16	71LF-01161				..HEADLINING	1			
29	71LB-01170				..MIRROR-ROOM	2			
31	74L3-04642				..SUN VISOR ASSY	1			
35	E171-1310	10			..PLUG	14			
42	S037-122556				..BOLT-W/WASHER	15			
44	S035-082026				..BOLT-W/WASHER	4			
48	S141-060156				..SCREW-CROSS R/FLAT	4			
51	S275-060006				..NUT-SELF LOCKING	2			
52	S403-08200B				..WASHER-PLAIN	4			
59	71LF-01580				..SPONGE-DUCT	1			
60	71N6-03300				..AIR VENT	1			
76	71LF-01700				..FOAM-FR/MID	1			
77	71LF-01710				..FOAM-FR/LH	1			
78	71LF-01720				..FOAM-FR/RH	1			
79	71LF-01730				..FOAM-RH/FR	1			
80	71LF-01740				..FOAM-RH/UP	1			
81	71LF-01750				..FOAM-RH/MID	1			
82	71LF-01760				..FOAM-LH	1			
83	71LF-01770				..FOAM-RH/REAR	1			

Item	Part_No	IS	Ord	T	Description	Qty	Serial_No	ITC	Remark
84	71LF-01780				..FOAM-RR/UP/RH	1			
85	71LF-01790				..FOAM-RR/UP/MID	1			
86	71LF-01800				..FOAM-RR/UP/LH	1			
87	71LF-01810				..FOAM-RR/MID	1			
88	71LF-01820				..FOAM-RR/LO	1			
89	71LF-01830				..EVA SHEET	1			
90	71LF-01840				..EVA SHEET	1			
91	71LF-01850				..EVA SHEET	1			
92	71LF-01860				..EVA SHEET	1			
95	71LF-20150				..COVER-CATCH(LH)	1			
96	71LF-20160				..COVER-CATCH(RH)	1			
97	S132-082026				..SCREW-W/WASHER	4			
106	71LF-01950				..FOAM-BOTTOM/FRONT	1			

CAB(2/7, INTERIOR, #0156-)

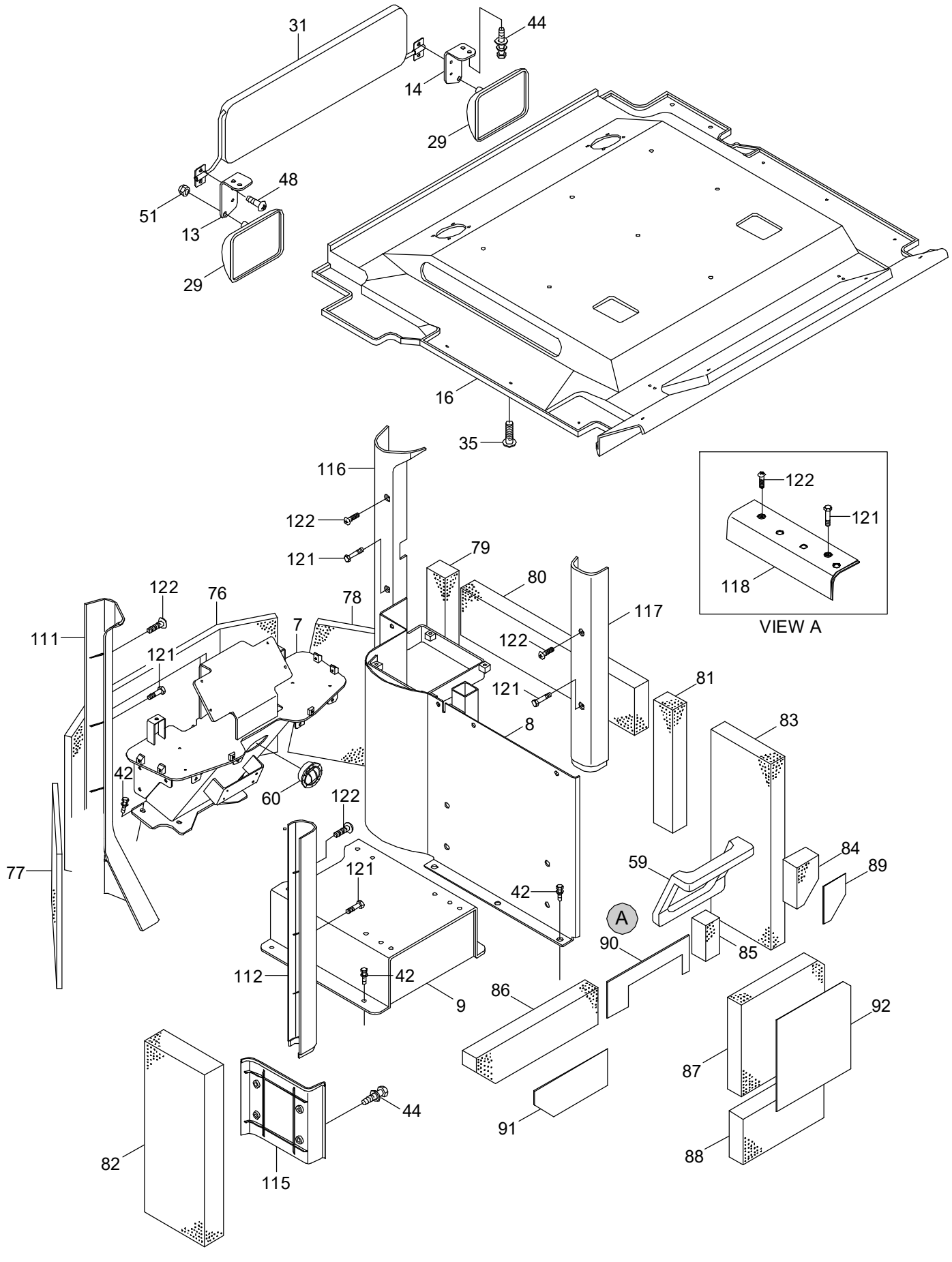

Item	Part_No	IS	Ord	T	Description	Qty	Serial_No	ITC	Remark
*	@				CAB ASSY	1			NOT
*-1	@				.CAB SUB ASSY	1			NOT
7	71LF-11130				..SUPPORT WA-D/BOARD	1			
8	71LF-01081				..SUPPORT WA-CONSOLE	1			
9	71LF-01091				..SEAT BASE WA	1			
13	71LF-01130				..PLATE-R/MIRROR,LH	1			
14	71LF-01140				..PLATE-R/MIRROR,RH	1			
16	71LF-01161				..HEADLINING	1			
29	71LB-01170				..MIRROR-ROOM	2			
31	74L3-04642				..SUN VISOR ASSY	1			
35	E171-1310				..PLUG-HEADLINER	14			
42	S037-122556				..BOLT-W/WASHER	16			
44	S035-082026				..BOLT-W/WASHER	42			
48	S141-060156				..SCREW-FLAT HD	2			
51	S275-060006				..NUT-SELF LOCKING	2			
59	71LF-01580				..SPONGE-DUCT	1			
60	71N6-03300				..AIR VENT	1			
76	71LF-01700				..FOAM-FR/MID	1			
77	71LF-01710				..FOAM-FR/LH	1			
78	71LF-01720				..FOAM-FR/RH	1			
79	71LF-01730				..FOAM-RH/FR	1			
80	71LF-01740				..FOAM-RH/UP	1			
81	71LF-01750				..FOAM-RH/MID	1			
82	71LF-01760				..FOAM-LH	1			
83	71LF-01770				..FOAM-RH/REAR	1			
84	71LF-01780				..FOAM-RR/UP/RH	1			

Item	Part_No	IS	Ord	T	Description	Qty	Serial_No	ITC	Remark
85	71LF-01790				..FOAM-RR/UP/MID	1			
86	71LF-01800				..FOAM-RR/UP/LH	1			
87	71LF-01810				..FOAM-RR/MID	1			
88	71LF-01820				..FOAM-RR/LO	1			
89	71LF-01830				..EVA SHEET	1			
90	71LF-01840				..EVA SHEET	1			
91	71LF-01850				..EVA SHEET	1			
92	71LF-01860				..EVA SHEET	1			
111	71LF-22020				..PILLAR-COVER,LH/A	1			
112	71LF-22030				..PILLAR-COVER,LH/B	1			
115	71LF-22100				..PILLAR COVER-LH/B-LOW	1			
116	71LF-22060				..PILLAR-COVER,RH/A	1			
117	71LF-22070				..PILLAR-COVER,RH/B	1			
118	71LF-22080				..PILLAR COVER-RH/C	1			
121	71LB-22100				..CAP-BOLT	7			
122	S002-060166				..SCREW-TRUSHEAD	4			
123	71LF-23100				..BRACKET-WORK LAMP	2			

CAB(3/7, DUCT)

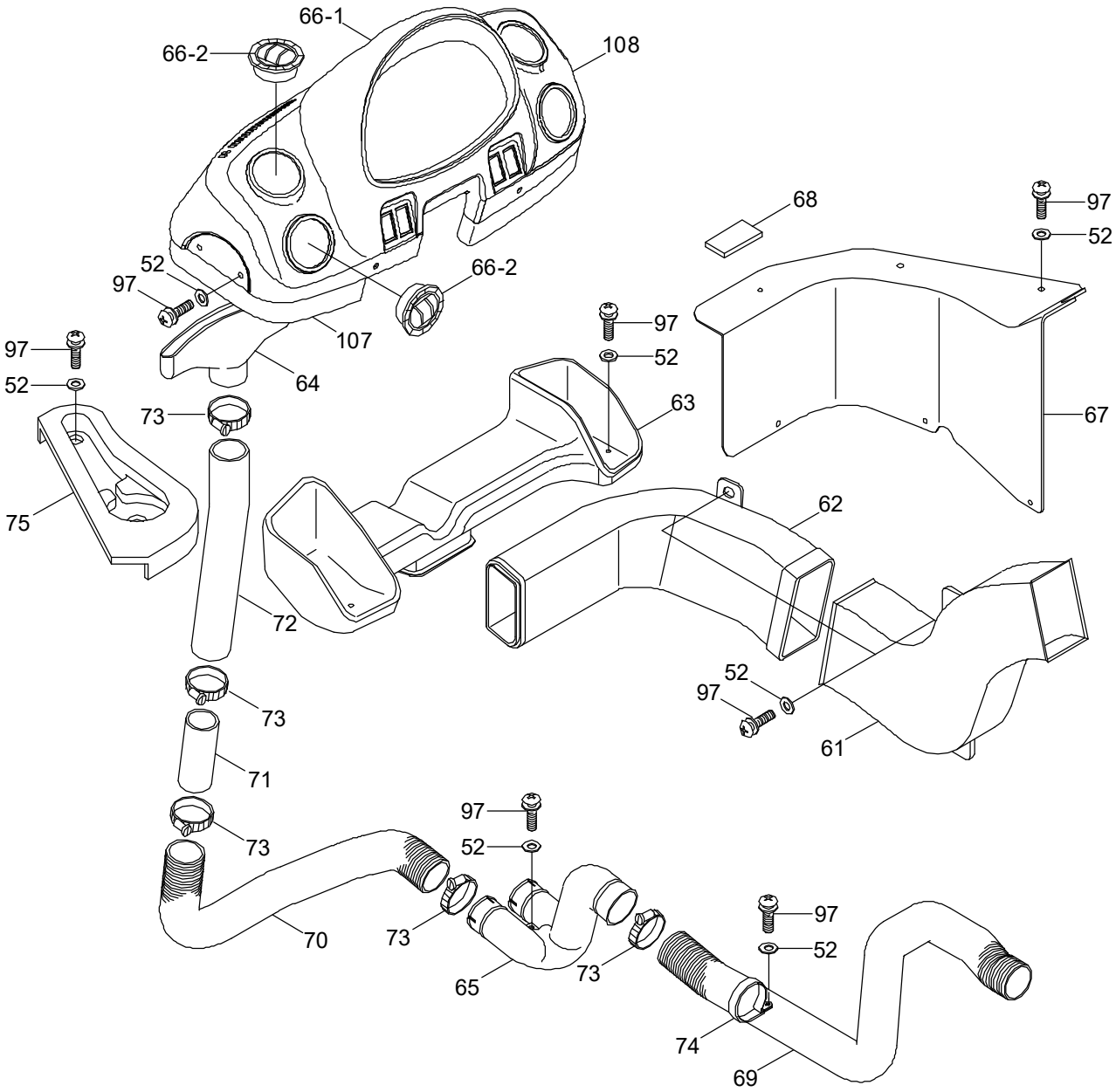
66-1
66-2
108
68
97
52
67
97
52
66-2
107
64
97
52
63
97
52
73
75
72
62
52
97
61
73
71
73
97
52
70
73
65
73
97
52
74
69

Item	Part_No	IS	Ord	T	Description	Qty	Serial_No	ITC	Remark
*	@				CAB ASSY	1			NOT
*-1	@				.CAB SUB ASSY	1			NOT
52	S403-082006				..WASHER-PLAIN	8			
61	71LF-10021				..DUCT-FRONT(2)	1			
62	71LF-10032				..DUCT-FRONT(3)	1			
63	71LB-10041				..DUCT-FRONT(4)	1			
64	71LB-10081				..DUCT-DEFROSTER	1			
65	71LF-10070				..DUCT-DEFROSTER	1			
66	71LB-20320				..DASHBOARD ASSY	1			
66-1	71LB-30021				...DASHBOARD	1			
66-2	71N6-03300				...AIR VENT	4			
67	71LF-20061				..DUCT-COVER	1			
68	71LF-20130				..RUBBER PAD	1			
69	71LF-10080				..HOSE-DEFROSTER	1			
70	71LF-10090				..HOSE-DEFROSTER	1			
71	71LF-10100				..HOSE-DEFROSTER	1			
72	71LB-10100				..HOSE-DEFROSTER(2)	2			
73	S520-055000				..CLAMP-HOSE	9			
74	71N6-20230				..CLAMP-HOSE	1			
75	71LF-20081				..HOLDER-CUP	1			
97	S132-082026				..SCREW-W/WASHER	10			
107	71LB-20161				..COVER-DASHBOARD,LH	1			
108	71LB-20171				..COVER-DASHBOARD,RH	1			

CAB(4/7, SIDE DOOR-LH)

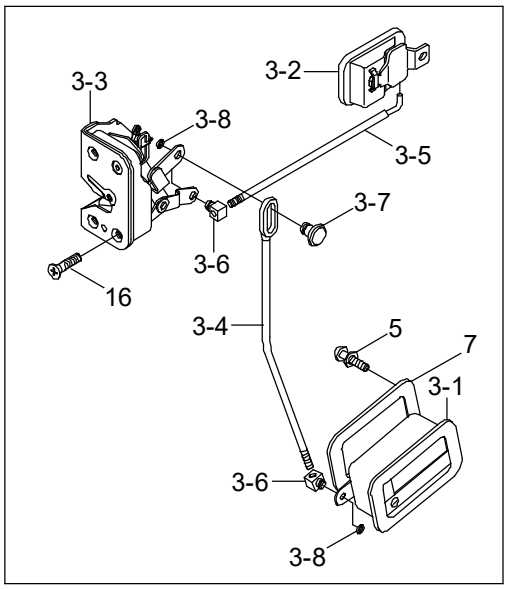

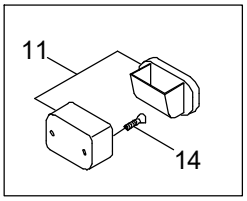

ITEM 11,14

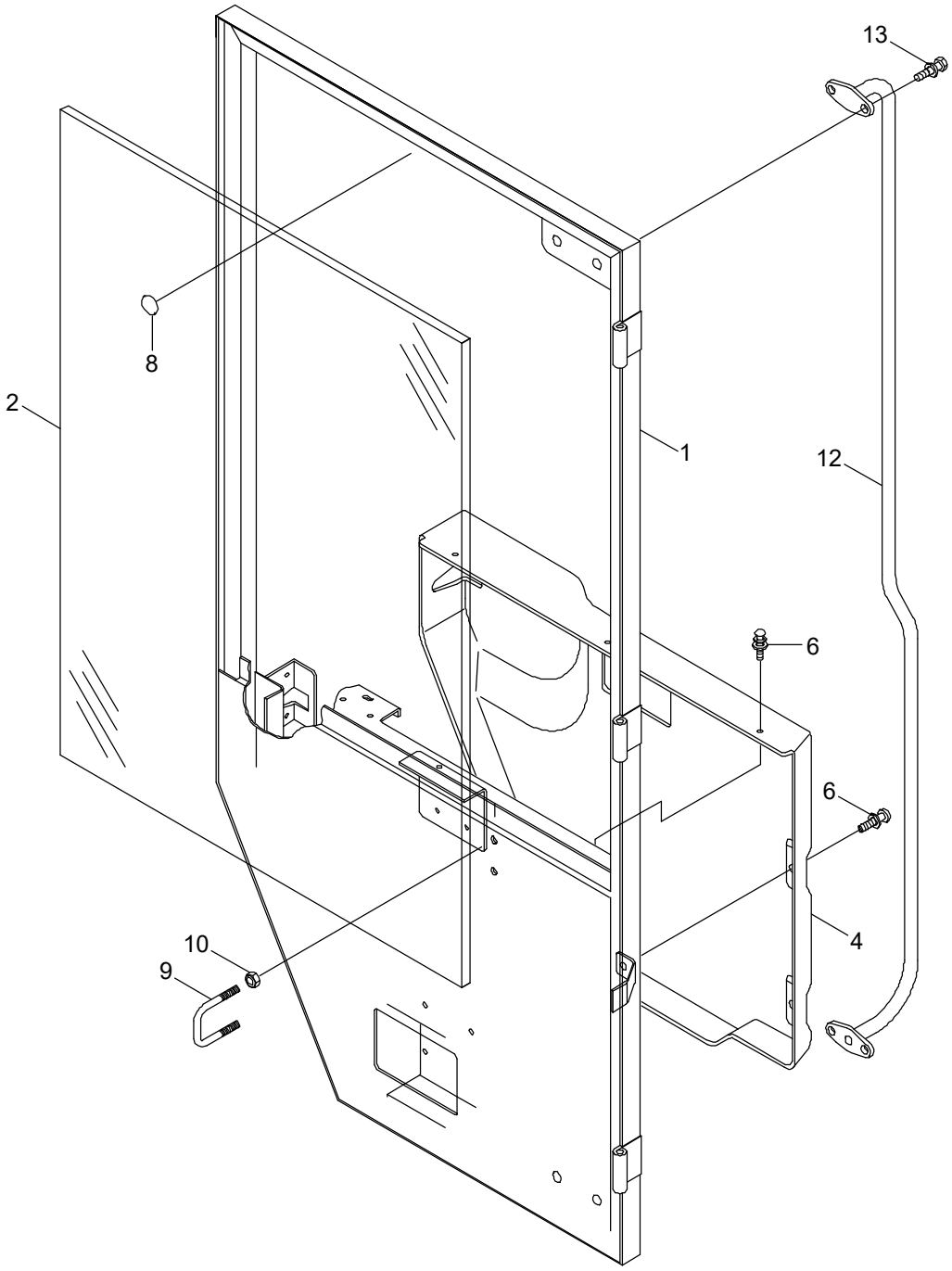

Item	Part_No	IS	Ord	T	Description	Qty	Serial_No	ITC	Remark
*	@				CAB SUB ASSY	1			NOT
	71LF-01021				.SIDE DOOR ASSY-LH	1			FIXED WINDOW
	71LF-07020				.SIDE DOOR ASSY-LH	1			SLIDING WINDOW
1	71LF-01231				..SIDE DOOR WA-LH	1			FIXED WINDOW
	71LF-07040				..SIDE DOOR WA-LH	1			SLIDING WINDOW
2	71LF-01241				..GLASS-SIDE DOOR/LH	1			FIXED WINDOW
	@				..SLIDING WINDOW ASSY	1			NOT
3	71LF-01250				..LATCH ASSY-LH	1			
3-1	71LB-01651				...HANDLE	1	#0001 -	-	
3-2	71N6-03400				...HANDLE-INNER	1			
3-3	71N6-03410				...LATCH	1			
3-4	71LB-01370				...ROD	1			
3-5	71LB-01380				...ROD	1			
3-6	71N6-03440				...PIN-1	2			
3-7	71N6-03450				...PIN	1			
3-8	S560-050006				...E-RING	3			
4	71LF-01261				..COVER-SIDE DOOR/LH	1			FIXED WINDOW
	71LF-07080				..COVER-SIDE DOOR/LH	1			SLIDING WINDOW
5	S131-051546				..SCREW-W/WASHER	4			FIXED WINDOW
					..SCREW-W/WASHER	6			SLIDING WINDOW
6	S131-061646				..SCREW-W/WASHER	8			
7	71LB-01271				..PAD-RUBBER	1			
8	17E1-5146				..BUMPER-DOOR	2			
9	71N6-03650				..STRIKER	1			
10	S203-101006				..NUT-HEX	4			
11	E171-1176				..ASHTRAY	1			

Item	Part_No	IS	Ord	T	Description	Qty	Serial_No	ITC	Remark
12	71LF-01291				..HANDRAIL WA	1			FIXED WINDOW
	71LF-07110				..HANDRAIL WA	4			SLIDING WINDOW
13	S035-082026				..BOLT-W/WASHER	4			FIXED WINDOW
					..BOLT-W/WASHER	6			SLIDING WINDOW
14	S141-040162				..SCREW-FLAT HD	2			
15	@				..SCREW	10			NOT
16	S141-060156				..SCREW-FLAT HD	4			

CAB(5/7, SIDE DOOR-RH)

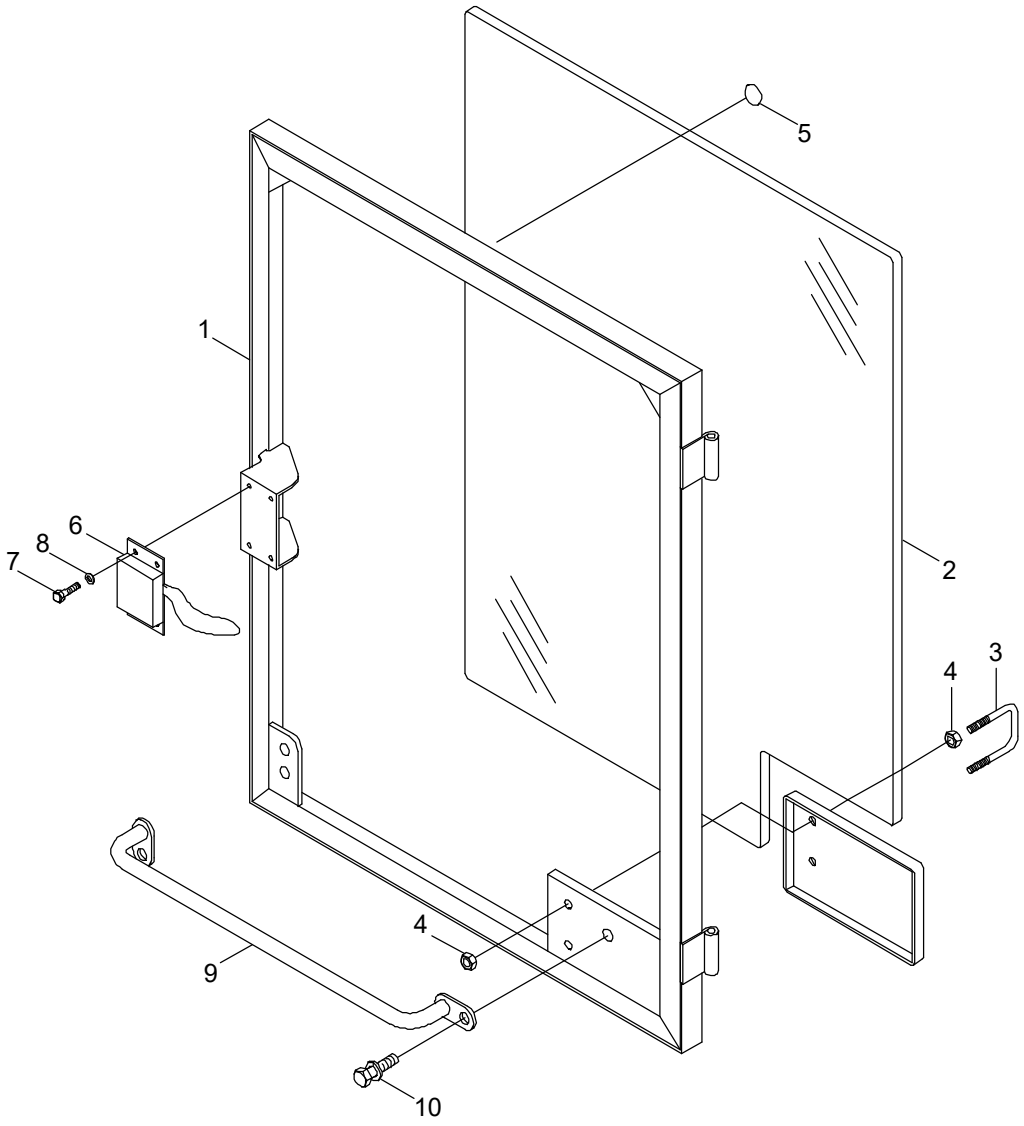

Item	Part_No	IS	Ord	T	Description	Qty	Serial_No	ITC	Remark
*	@				.CAB SUB ASSY	1			NOT
	71LF-01031				..SIDE DOOR ASSY-RH	1			FIXED WINDOW
	71LF-07030				..SIDE DOOR ASSY-RH	1			SLIDING WINDOW
1	71LF-01281				...SIDE DOOR WA-RH	1			FIXED WINDOW
	71LF-07050				...SIDE DOOR WA-RH	1			SLIDING WINDOW
2	71LF-01301				...GLASS-SIDE DOOR/RH	1			FIXED WINDOW
	@				...SLIDING WINDOW ASSY-RH	1			NOT
3	71N6-03650				...STRIKER	1			
4	S203-101006				...NUT-HEX	4			
5	17E1-5146				...BUMPER-DOOR	2			
6	71L7-02670				...CATCH ASSY	1			
7	S175-050206				...SCREW-SOCKET RD HD	6			
8	S401-052006				...WASHER-PLAIN	6			
9	71LF-06260				...HANDLE WA	1			
10	S035-082026				...BOLT-W/WASHER	2			
15	@				...SCREW	10			NOT

CAB(6/7, SLIDING WINDOW)

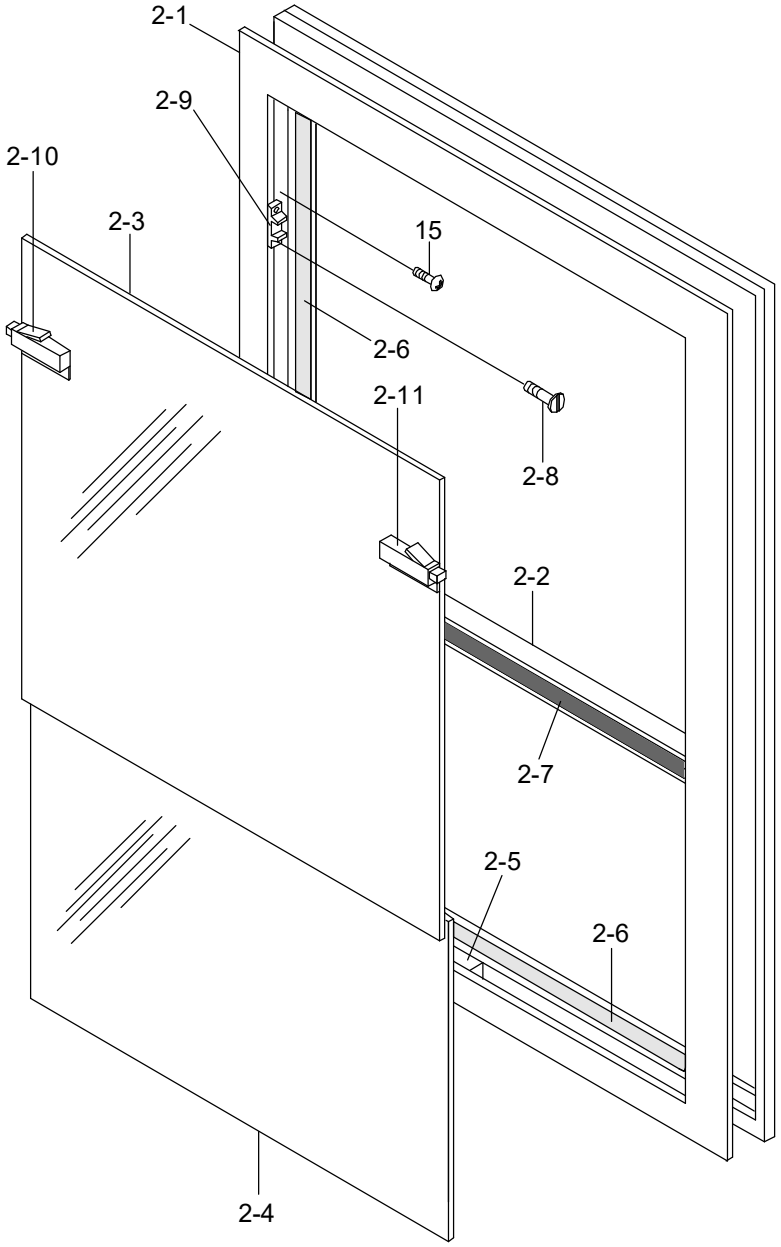

Item	Part_No	IS	Ord	T	Description	Qty	Serial_No	ITC	Remark
*	@				SIDE DOOR ASSY	1			NOT
2	71LF-07060				.SLIDING WINDOW ASSY	1			LH
	71LF-07070				.SLIDING WINDOW ASSY	1			RH
2-1	71LF-07310				..AL. SASH-A TYPE/LH	1			
	71LF-07360				..AL. SASH-A TYPE/RH	1			
2-2	71LF-07320				..AL. SASH-B TYPE	1			
2-3	71LF-07330				..GLASS-OUT/LH	1			
	71LF-07370				..GLASS-OUT/RH	1			
2-4	71LF-07340				..GLASS-IN/LH	1			
	71LF-07380				..GLASS-IN/RH	1			
2-5	71LF-07350				..STOPPER-GLASS	1			
2-6	E171-1163				..SEAL	2			
2-7	E171-1164				..SEAL	1			
2-8	S141-030082				..SCREW-FLAT HD	12			LH
					..SCREW-FLAT HD	8			RH
2-9	71L1-3328				..BLOCK	6			
2-10	71L1-3332				..LOCK-LH	1			
2-11	71L1-3353				..LOCK-RH	1			
15	S151-040162				.SCREW-TAPPING	20			

CAB(7/7, DOOR LATCH ASSY)

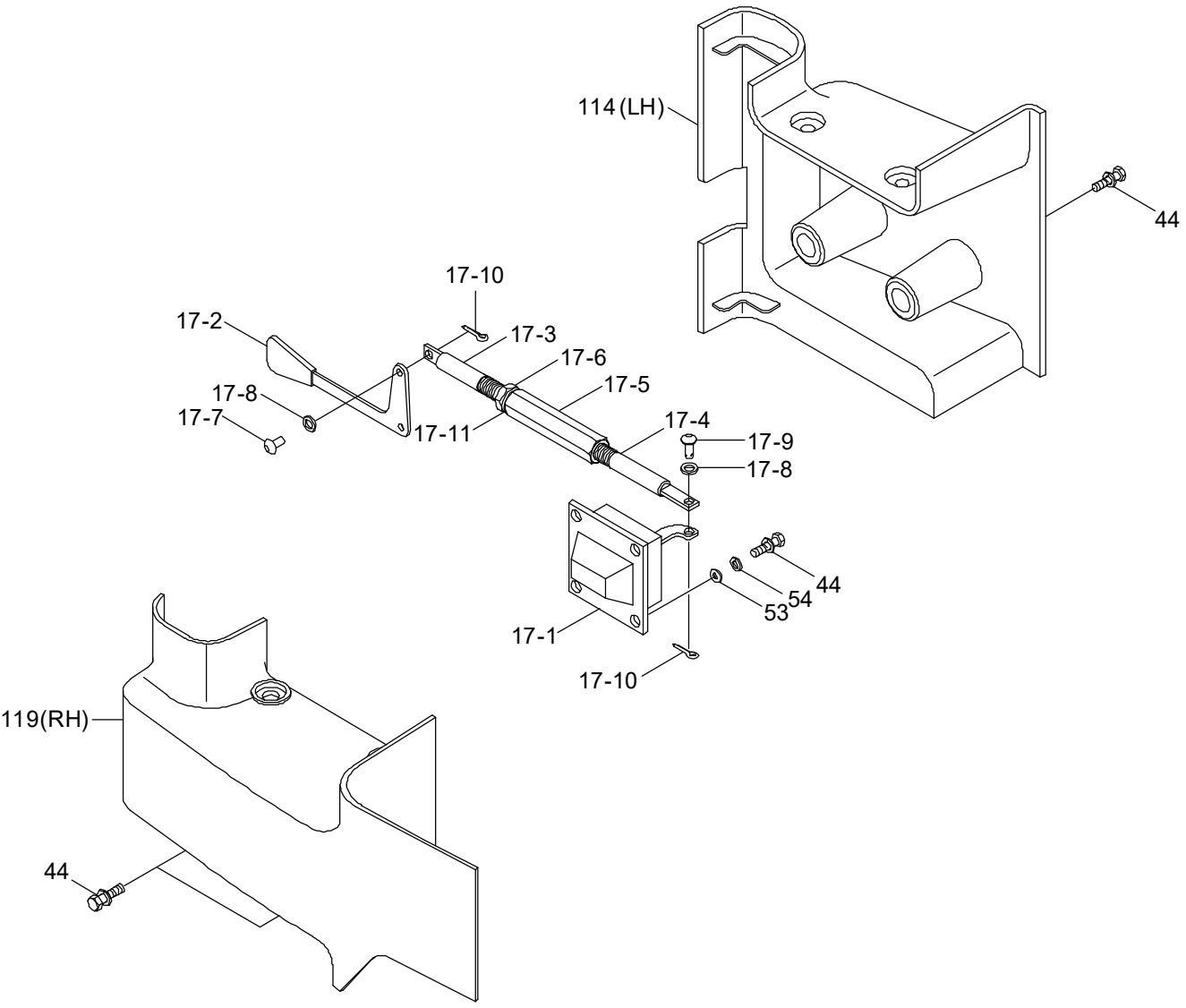

2010. 3.31 REV.10C

Item	Part_No	IS	Ord	T	Description	Qty	Serial_No	ITC	Remark
*-1	@				CAB SUB ASSY	1			NOT
17	71LF-01170				.LATCH ASSY-BACK/LH	1			
	71LF-01180				.LATCH ASSY-BACK/RH	1			
17-1	71EH-11260				..LOCK ASSY-LH	1			
17-2	71LF-01510				..LATCH ASSY-LH	1			
	71LF-01520				..LATCH ASSY-RH	1			
17-3	71LF-01320				..ROD-LH	1			
	71LF-01310				..ROD-RH	1			
17-4	71LB-01330				..ROD	1			
17-5	71EH-11210				..NUT	1			
17-6	S205-081002				..NUT-HEX	1			
17-7	71EH-11250				..PIN-ROUND	1			
17-8	S403-05200B				..WASHER-PLAIN	2	#0001 -	-	
17-9	71EH-11240				..PIN-ROUND	1			
17-10	S051-050002				..PIN-SELF LOCK	2	#0001 -	-	
17-11	S441-080006				..WASHER-HARDENED	1			
44	S035-082026				.BOLT-W/WASHER	4	- #0155		
					.BOLT-W/WASHER	8	#0156 -	A	
53	S403-062006				.WASHER-PLAIN	2			
54	S411-060006				.WASHER-SPRING	4			
114	71LF-22050				.LATCH COVER-LH	1	#0156 -	-	INTERIOR
119	71LF-22090				.LATCH COVER-RH	1	#0156 -	-	INTERIOR

CONSOLE BOX

FINGERTIP CONTROL
SERIAL NO : #0177-

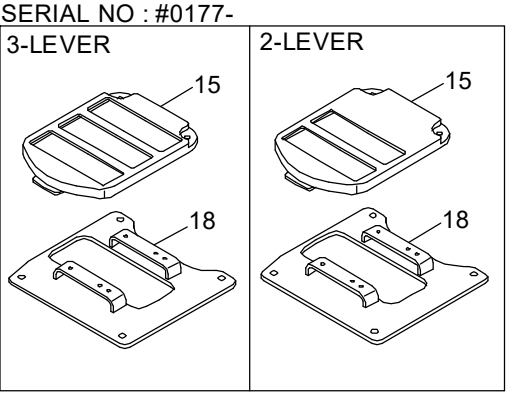

Item	Part_No	IS	Ord	T	Description	Qty	Serial_No	ITC	Remark
1	71LF-20011				CONSOLE BOX-RH/FR	1			
2	71LF-20021				CONSOLE BOX-RH/RR	1			
3	71LF-20032				COVER-REAR ASSY	1			
3-1	71LF-20041				.COVER-REAR	1			
3-2	71LF-20051				.COVER-REAR/COVER	1			
3-3	71EM-20150				.LATCH ASSY	2			
3-4	71LF-20110				.RUBBER PAD	4			
3-5	71LF-20130				.RUBBER PAD	1			
3-6	71LF-20140				.SPONGE	1			
3-7	71N6-03300				.AIR VENT	1			
4	71LF-10012				DUCT-FRONT(1)	1			
5	71LF-21011				MAT-FLOOR	1	- #0003		
	71LF-21012				MAT-FLOOR	1	#0004 -	D	STD
	71LF-21070				MAT-FLOOR	1	#0004 -	-	DUAL PEDAL
6	71LF-10041				DUCT-REAR	1			
7	71LF-10051				DUCT-DEF(1)	1			
9	S520-055000				CLAMP-HOSE	1			
10	71LF-20120				WRIST REST ASSY	1			
11	61S1-1037				HANDLE	1			
12	S132-081526				SCREW-W/WASHER	21			
14	S131-051546				SCREW-W/WASHER	2			
15	71LF-20091				COVER-J/LEVER/3S/2L	1			3-SP,2-L,FNR SW
	71LF-20200				COVER-J/LEVER/2S/1L	1			2-SP,1-L,FNR SW
	71LF-20210				COVER-J/LEVER/2S/2L	1	- #0176		2-SPOOL,2-LEVER
	71LF-21041				COVER-J/LEVER/2S/2L	1	#0177 -	D	2-SPOOL,2-LEVER
	71LF-20220				COVER-J/LEVER/3S/3L	1	- #0176		3-SPOOL,3-LEVER

Item	Part_No	IS	Ord	T	Description	Qty	Serial_No	ITC	Remark
15	71LF-21051				COVER-J/LEVER/3S/3L	1	#0177 -	D	3-SPOOL,3-LEVER
	71LF-20091				COVER-J/LEVER/3S/2L	1			3-SPOOL,2-LEVER
	71LF-20200				COVER-J/LEVER/2S/1L	1			2-SPOOL,1-LEVER
16	71LB-20190				SPRING	1			
17	S015-080356				BOLT-HEX	1			
18	71LF-20230				PLATE-RCV/2S/1L	1			2-SP,1-L,FNR SW
	71LF-20240				PLATE-RCV/3S/2L	1			3-SP,2-L,FNR SW
	71LF-20250				PLATE-RCV/2S/2L	1	- #0176		2-SPOOL,2-LEVER
	71LF-21031				PLATE-RCV	1	#0177 -	D	2-SPOOL,2-LEVER
	71LF-20260				PLATE-RCV/3S/3L	1	- #0176		3-SPOOL,3-LEVER
	71LF-21031				PLATE-RCV	1	#0177 -	D	3-SPOOL,3-LEVER
	71LF-20230				PLATE-RCV/2S/1L	1			2-SPOOL,1-LEVER
	71LF-20240				PLATE-RCV/3S/2L	1			3-SPOOL,2-LEVER
19	S035-082056				BOLT-W/WASHER	4			
20	71LF-20180				MAT-RH	1			
21	71LF-20190				BOOK BOX	1			

SEAT MOUNTING

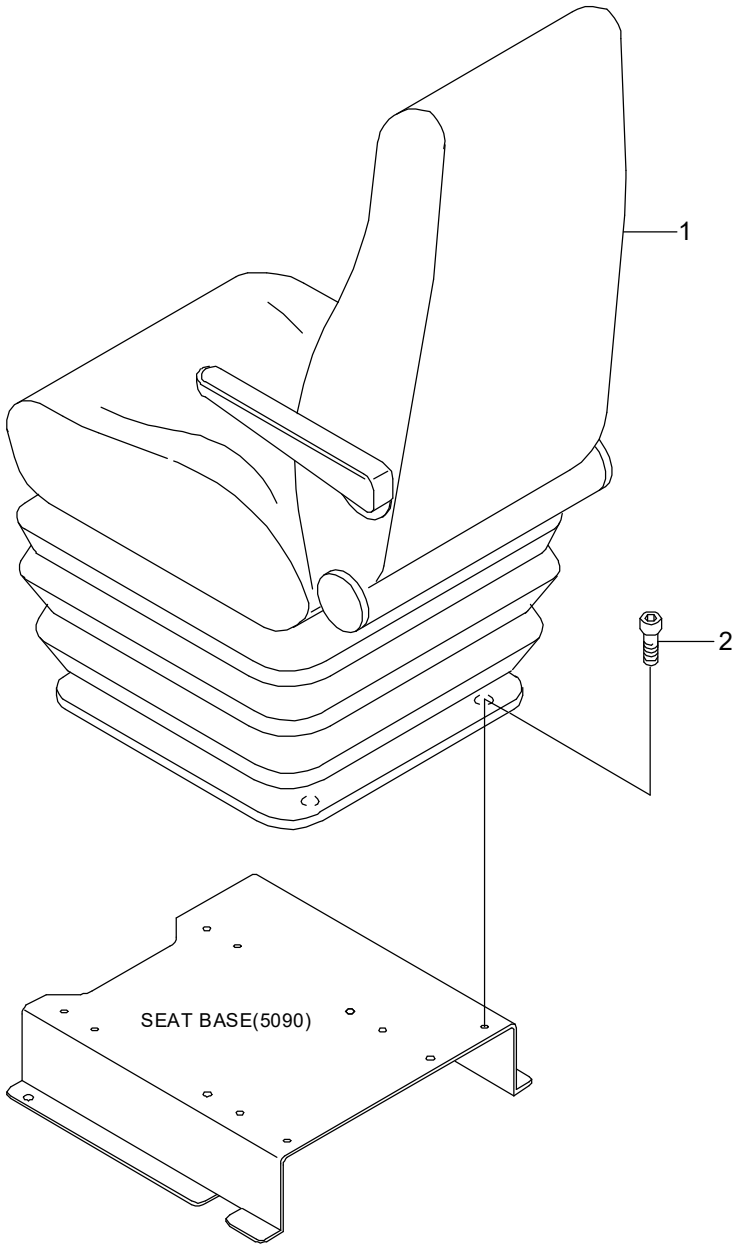

Item	Part_No	IS	Ord	T	Description	Qty	Serial_No	ITC	Remark
	74L4-00010				SEAT ASSY-2",VINYL	1			SEE 5150
	71LB-32010				SEAT ASSY-2",MECHENICAL	1			SEE 5151,5152
	71LB-32020				SEAT ASSY-3",MECHENICAL	1			SEE 5151,5152
	71LB-32040				SEAT ASSY-3",AIR RIDE	1			SEE 5154,5155
	71LB-33110				SEAT ASSY-HEATED	1	- #0187		SEE 5153
1	71LB-33111				SEAT ASSY-HEATED	1	#0188 -	A	SEE 5153
	71LB-32060				SEAT ASSY-LONG/AIR/HEATED	1			
	71LB-32070				SEAT ASSY-HEATED/MECHANICAL	1			
	71LB-32080				SEAT ASSY-HEATED/AIR RIDE	1			
	71LB-33020				SEAT ASSY-MECH,2",WOO	1	- #0187		
	71LB-33021				SEAT ASSY-MECH,2",WOO	1	#0188 -	A	
2	S109-080256				BOLT-SOCKET	4			

SEAT(VINYL, 2", KAB)

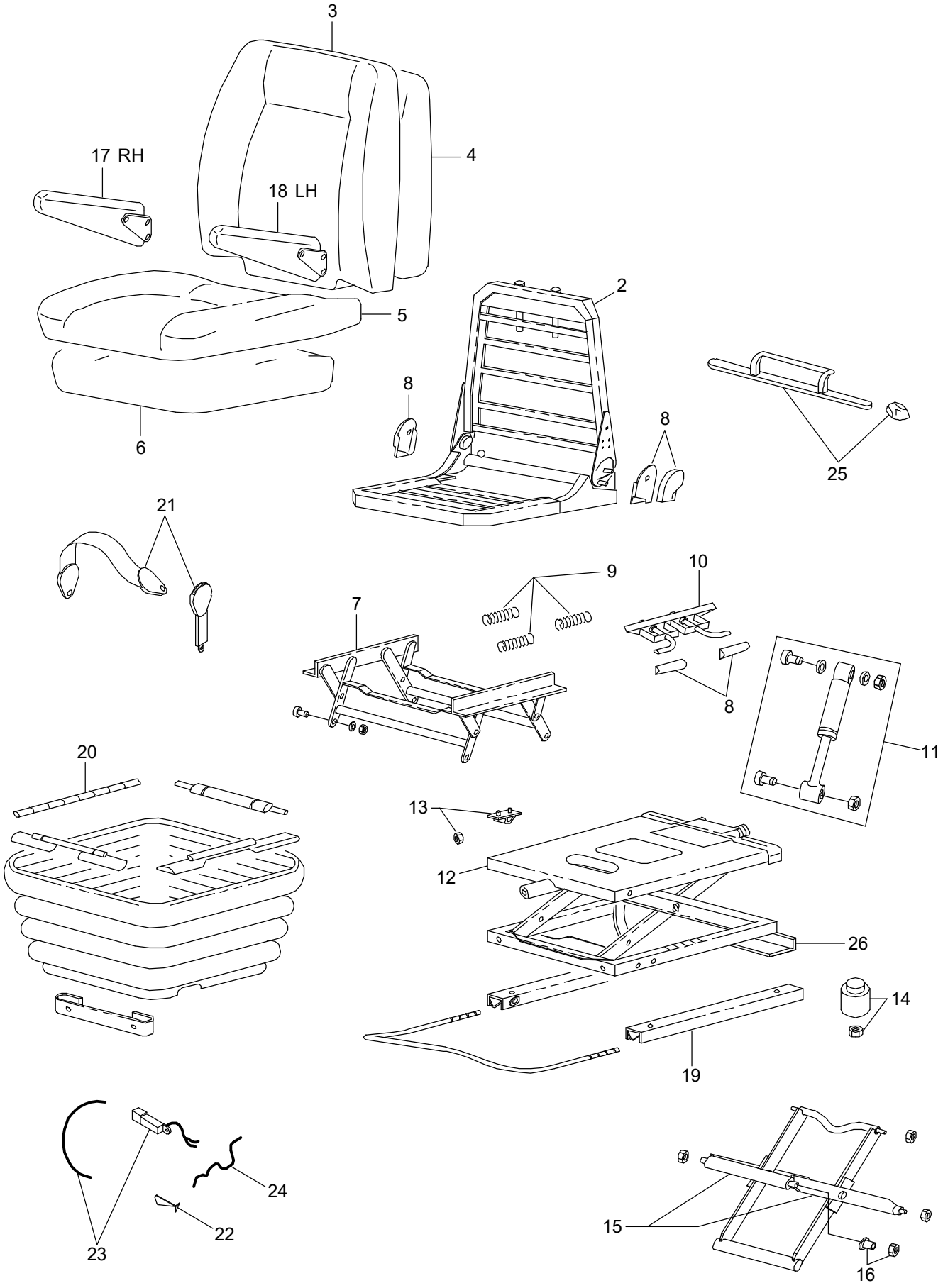

Item	Part_No	IS	Ord	T	Description	Qty	Serial_No	ITC	Remark
*	74L4-00010				SEAT ASSY-2",VINYL	1			
1	ZUAQ-00001				.UPPER ASSY KIT	1			
2	ZUAQ-00002				.FRAME ASSY KIT	1			
3	ZUAQ-00004				.BACK COVER ASSY KIT	1			GRAY PVC
4	ZUAQ-00005				.BACK FOAM KIT	1			
5	ZUAQ-00007				.SEAT COVER ASSY KIT	1			GRAY PVC
6	ZUAQ-00008				.SEAT FOAM KIT	1			
7	ZUAQ-00009				.HEIGHT RISER KIT	1			
8	ZUAQ-00010				.HANDLE KIT	1			GREY
9	ZUAQ-00012				.HEIGHT RISER SPRING KIT	1			
10	ZUAQ-00013				.HEIGHT RISER LATCH KIT	1			
11	ZUAQ-00014				.DAMPER KIT	1			
12	ZUAQ-00015				.SUSPENSION ASSY KIT	1			
13	ZUAQ-00016				.UP STOP/BUMP STOP KIT	1			
14	ZUAQ-00017				.AIR SPRING KIT	1			
15	ZUAQ-00018				.LEVER/CENTER PIVOT KIT	1			
16	ZUAQ-00019				.BEARING KIT	1			
17	ZUAQ-00020				.ARMREST KIT-RH	1			
18	ZUAQ-00021				.ARMREST KIT-LH	1			
19	ZUAQ-00022				.FORE & AFT ADJUST KIT	1			
20	ZUAQ-00023				.SUSPENSION COVER KIT	1			
21	ZUAQ-00024				.T BELT KIT-2" STATIC	1			
22	ZUAQ-00026				.COMBINATION VALVE KIT	1			
23	ZUAQ-00027				.COMPRESSOR KIT-24V	1			
24	ZUAQ-00028				.FLY LEAD KIT	1			
25	ZUAQ-00029				.LUMBAR KIT-GREY	1			

Item	Part_No	IS	Ord	T	Description	Qty	Serial_No	ITC	Remark
26	ZUAQ-00031				.TETHER KIT	1			

SEAT(MECHANICAL, GRAMMER, 1/2)

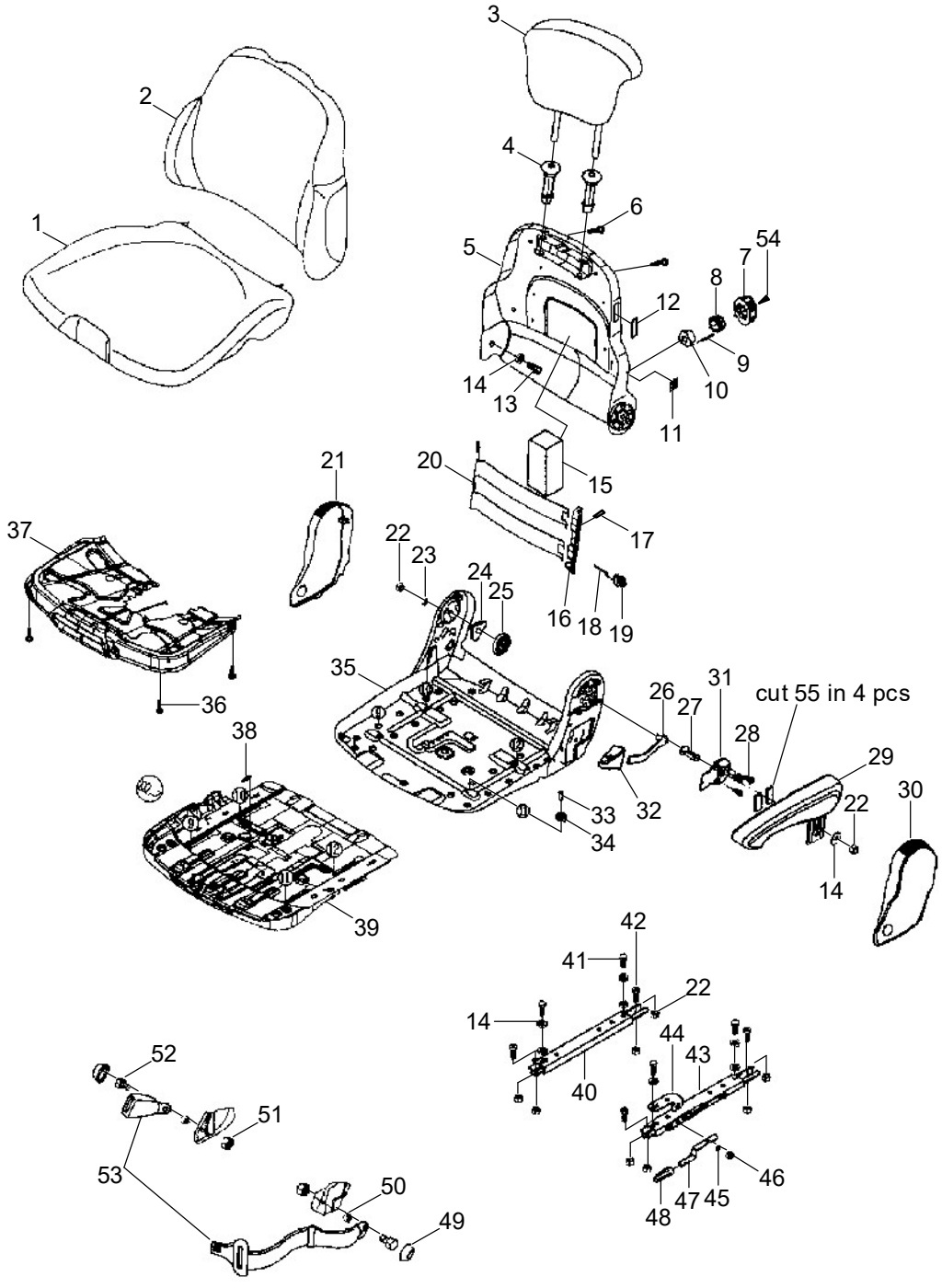

Item	Part_No	IS	Ord	T	Description	Qty	Serial_No	ITC	Remark
*	71LB-32010				SEAT ASSY-2",MECHENICAL	1			STD
	71LB-32020				SEAT ASSY-3",MECHENICAL	1			OPT
1	ZGBH-00001				.SEAT CUSHION	1			
2	ZGBH-00002				.BACKREST CUSHION	1			
3	ZGBH-00009				.HEADREST	1			
4	ZGBH-00004				.BUSH	2			
5	ZGBH-00005				.BACKREST PLATE	1			
6	ZGBH-00103				.SCREW-SELF TAPPING	4			
7	ZGBH-00007				.HANDLE	1			
8	ZGBH-00008				.WHEEL-TOOLHEAD	1			
9	ZGBH-00010				.RIVET-BLIND	3			
10	ZGBH-00011				.BRAKE-SLING SPRING	1			
11	ZGBH-00012				.STICKER	1			
12	ZGBH-00013				.COVER-PLASTIC	1			
13	ZGBH-00014				.SCREW-HEX HEAD	1			
14	ZGBH-00015				.WASHER	13			
15	ZGBH-00016				.SPONGE	1			
16	ZGBH-00017				.WINKEL	1			
17	ZGBH-00018				.RIVET	3			
18	ZGBH-00019				.RODS	1			
19	ZGBH-00020				.CARRIER	1			
20	ZGBH-00021				.PLATE	2			
21	ZGBH-00022				.COVER-RH	1			
22	ZGBH-00023				.HEX NUT-BLACK	10			
23	ZGBH-00024				.WASHER-BLACK	1			
24	ZGBH-00025				.SPRING HOLDER	1			

Item	Part_No	IS	Ord	T	Description	Qty	Serial_No	ITC	Remark
25	ZGBH-00026				.SPRING-LEG	1			
26	ZGBH-00027				.LEVER	1			
27	ZGBH-00028				.SCREW	1			
28	ZGBH-00029				.SCREW	3			
29	ZGBH-00030				.ARMREST-LH	1			
30	ZGBH-00031				.COVER-LH	1			
31	ZGBH-00032				.PLATE	1			
32	ZGBH-00033				.HANDLE	1			
33	ZGBH-00034				.RIVET	4			
34	ZGBH-00035				.PROFILE-GLIDING	4			
35	ZGBH-00036				.SEAT PLATE	1			
36	ZGBH-00037				.SCREW-SELF TAPPING	4			
37	ZGBH-00038				.ADJUSTMENT-TILTING	1			
38	ZGBH-00039				.SPRING	1			
39	ZGBH-00040				.ADJUSTMENT-SEAT DEPTH	1			
40	ZGBH-00041				.SLIDE RAIL-RH	1			
41	ZGBH-00042				.SCREW-HEX HEAD	4			
42	ZGBH-00043				.SCREW-CYLINDRIC HEAD	4			
43	ZGBH-00044				.ROLLING RAIL-LH	1			
44	ZGBH-00045				.BRACKET	1			
45	ZGBH-00046				.WASHER	1			
46	ZGBH-00047				.NUT	1			
47	ZGBH-00048				.HANDLE	1			
48	ZGBH-00049				.KNOB-PLASTIC	1			
49	ZGBH-00050				.COVER	2			
50	ZGBH-00051				.BUSH	2			

Item	Part_No	IS	Ord	T	Description	Qty	Serial_No	ITC	Remark
51	ZGBH-00052				.NUT	2			
52	ZGBH-00053				.SCREW	2			
53	ZGBH-00054				.SEAT BELT	2			STD
	ZGBH-00102				.SEAT BELT	2			OPT
54	ZGBH-00055				.SCREW	1			
55	ZGBH-00056				.PLATE-RUBBER	1			

SEAT(MECHANICAL, GRAMMER, 2/2)

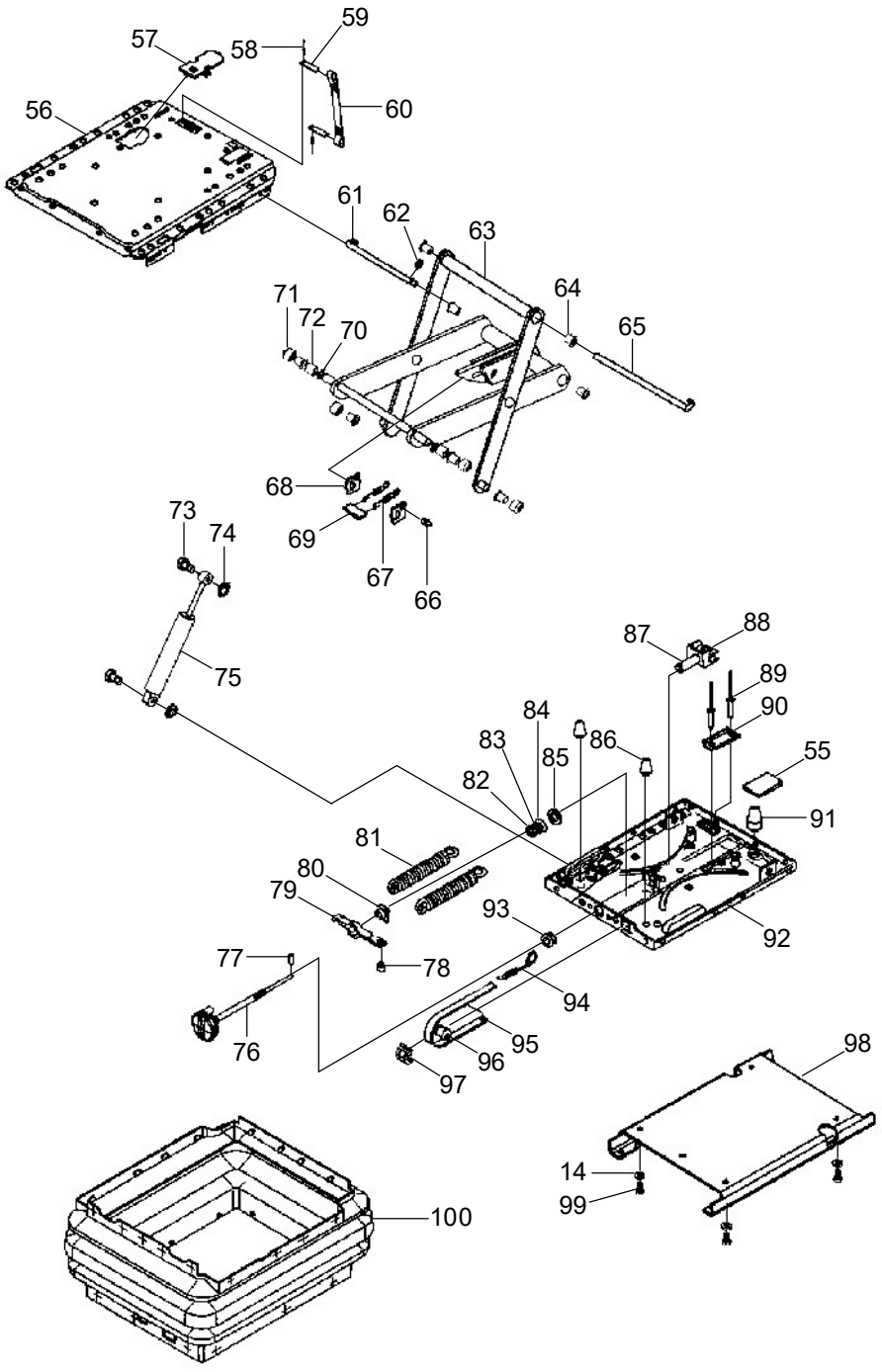

Item	Part_No	IS	Ord	T	Description	Qty	Serial_No	ITC	Remark
*	@				SEAT ASSY-2",MECHANICAL	1			NOT
					SEAT ASSY-3",MECHENICAL	1			NOT
56	ZGBH-00057				.UPPER PLATE-SUSPENSION	1			
57	ZGBH-00058				.PANEL-TRIM	1			
58	ZGBH-00059				.POP RIVET	2			
59	ZGBH-00060				.PLATE	2			
60	ZGBH-00061				.BELT-TETHER	1			
61	ZGBH-00062				.BOLT	1			
62	ZGBH-00063				.LOCK WASHER	1			
63	ZGBH-00064				.SWING ARM	1			
64	ZGBH-00065				.BUSH-PLASTIC	8			
65	ZGBH-00066				.PIN	1			
66	ZGBH-00067				.BOLT	1			
67	ZGBH-00068				.SPRING-TENSION	2			
68	ZGBH-00069				.PLATE	2			
69	ZGBH-00070				.STRIP-COVER	1			
70	ZGBH-00071				.WASHER	2			
71	ZGBH-00072				.ROLLER	4			
72	ZGBH-00073				.BUSH	2			
73	ZGBH-00074				.BOLT	2			
74	ZGBH-00075				.LOCK WASHER	2			
75	ZGBH-00076				.ABSORBER-SHOCK	1			
76	ZGBH-00077				.HANDLE	1			
77	ZGBH-00078				.PIN	1			
78	ZGBH-00079				.INSERT	1			
79	ZGBH-00080				.SPRING BRACKET	1			

Item	Part_No	IS	Ord	T	Description	Qty	Serial_No	ITC	Remark
80	ZGBH-00081				.FLANGE NUT	1			
81	ZGBH-00082				.SPRING	2			
82	ZGBH-00083				.WASHER	1			
83	ZGBH-00084				.BEARING	1			
84	ZGBH-00085				.WASHER	1			
85	ZGBH-00086				.WASHER-PLASTIC	1			
86	ZGBH-00087				.RUBBER	2			
87	ZGBH-00088				.GABEL	1			
88	ZGBH-00089				.BEARING-TRIPLE	1			
89	ZGBH-00090				.POP RIVET	2			
90	ZGBH-00091				.U-PROFILE	1			
91	ZGBH-00092				.RUBBER	1			
92	ZGBH-00093				.PLATE-BOTTOM	1			
93	ZGBH-00094				.BUSH	1			
94	ZGBH-00095				.SPRING-TENSION	1			
95	ZGBH-00096				.INDICATOR	1			
96	ZGBH-00097				.ROLLER	1			
97	ZGBH-00098				.DEVICE-GUIDING	1			
98	ZGBH-00099				.PLATE-BOTTOM	1			
99	ZGBH-00104				.SCREW-HEX HEAD	4			
100	ZGBH-00101				.BELLOWS	1			

SEAT(HEATED)

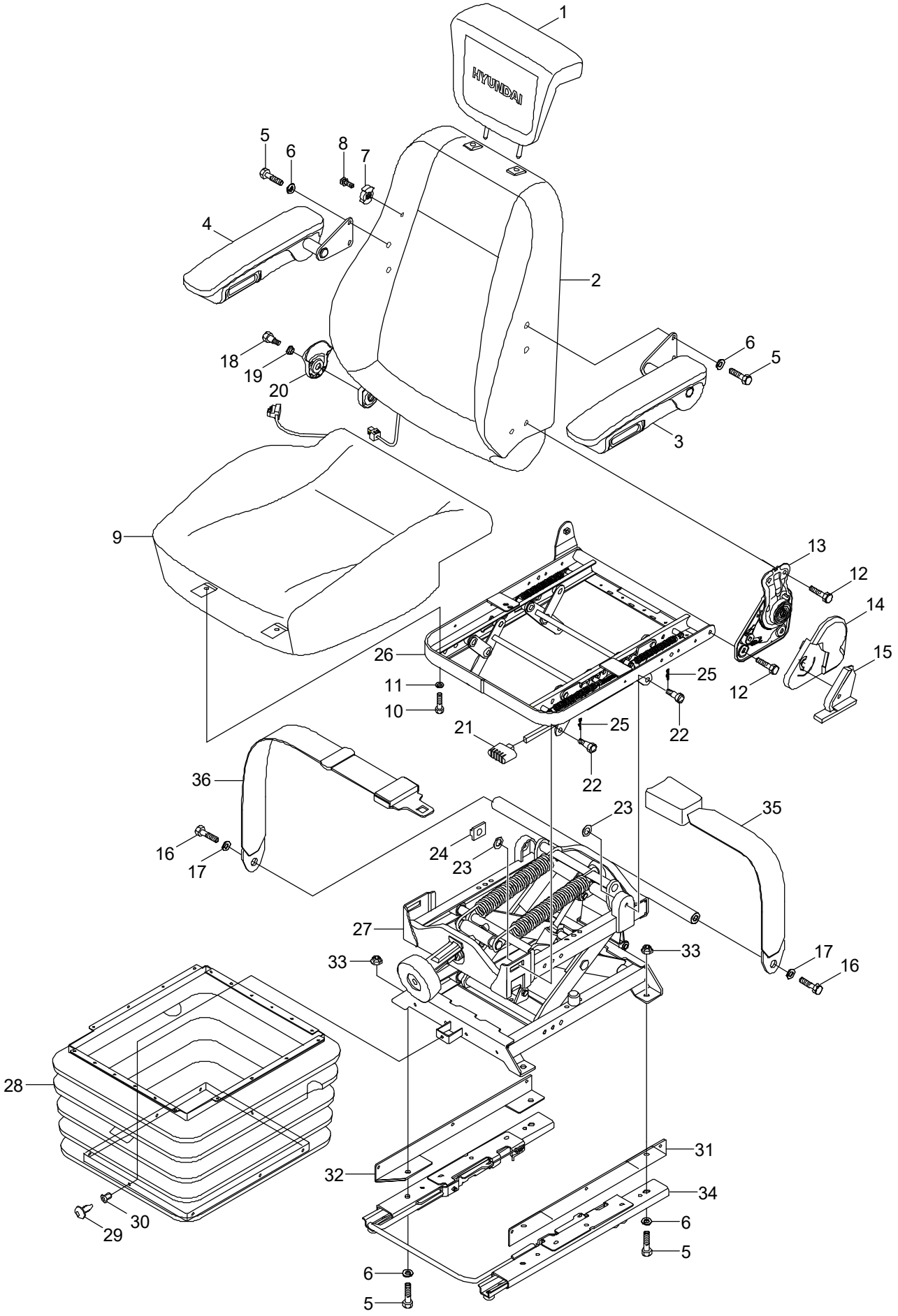
HYUNDAI
1
2
3
4
5
6
7
8
9
10
11
12
13
14
15
16
17
18
19
20
21
22
23
24
25
26
27
28
29
30
31
32
33
34
35
36

Item	Part_No	IS	Ord	T	Description	Qty	Serial_No	ITC	Remark
*	71LB-33110				SEAT ASSY-HEATED	1	- #0187		
	71LB-33111				SEAT ASSY-HEATED	1	#0188 -	A	
1	XKCB-00001				.SHOULDER REST ASSY	1			
2	XKCB-00002				.BACKREST ASSY	1			
3	XKCB-00003				.ARMREST ASSY-LH	1			
4	XKCB-00004				.ARMREST ASSY-RH	1			
5	XKCB-00005				.BOLT	8			
6	XKCB-00006				.WASHER-SPRING	8			
7	XKCB-00007				.KNOB ASSY-L/SUPT	1			
8	XKCB-00008				.SCREW-M WITH WASHER	1			
9	XKCB-00009				.CUSHION ASSY	1			
10	XKCB-00010				.BOLT	2			
11	XKCB-00011				.WASHER-SPRING	2			
12	XKCB-00012				.BOLT-W/WASHER	4			
13	XKCB-00013				.RECLINER ASSY	1			
14	XKCB-00014				.COVER-RECLINER	1			
15	XKCB-00015				.KNOB-RECLINER	1			
16	XKCB-00016				.BOLT	2			
17	XKCB-00017				.WASHER-SPRING	2			
18	XKCB-00018				.HINGE BOLT	1			
19	XKCB-00019				.BUSH	1			
20	XKCB-00020				.SIDE COVER	1			
21	XKCB-00021				.KNOB	1			
22	XKCB-00022				.FLANGE BOLT	4			
23	XKCB-00023				.WASHER-PLAIN	4			
24	XKCB-00024				.NUT-SQUARE	2			

Item	Part_No	IS	Ord	T	Description	Qty	Serial_No	ITC	Remark
25	XKCB-00025				.PIN-R	4			
26	XKCB-00026				.ADJUSTER ASSY-HEIGHT	1			
27	XKCB-00027				.SUSPENSION ASSY	1			
28	XKCB-00028				.DUST COVER	1			
29	XKCB-00029				.FASTENER	11			
30	XKCB-00030				.FASTENER	11			
31	XKCB-00031				.BRACKET-SIDE FIX,LH	1			
32	XKCB-00032				.BRACKET-SIDE FIX,RH	1			
33	XKCB-00033				.NUT-FLANGE	4			
34	XKCB-00034				.SLIDER ASSY	1			
35	XKCB-00035				.BELT-BUCKLE	1			
36	XKCB-00036				.BELT-TONGUE	1			

SEAT(AIR RIDE, 3", 1/2)

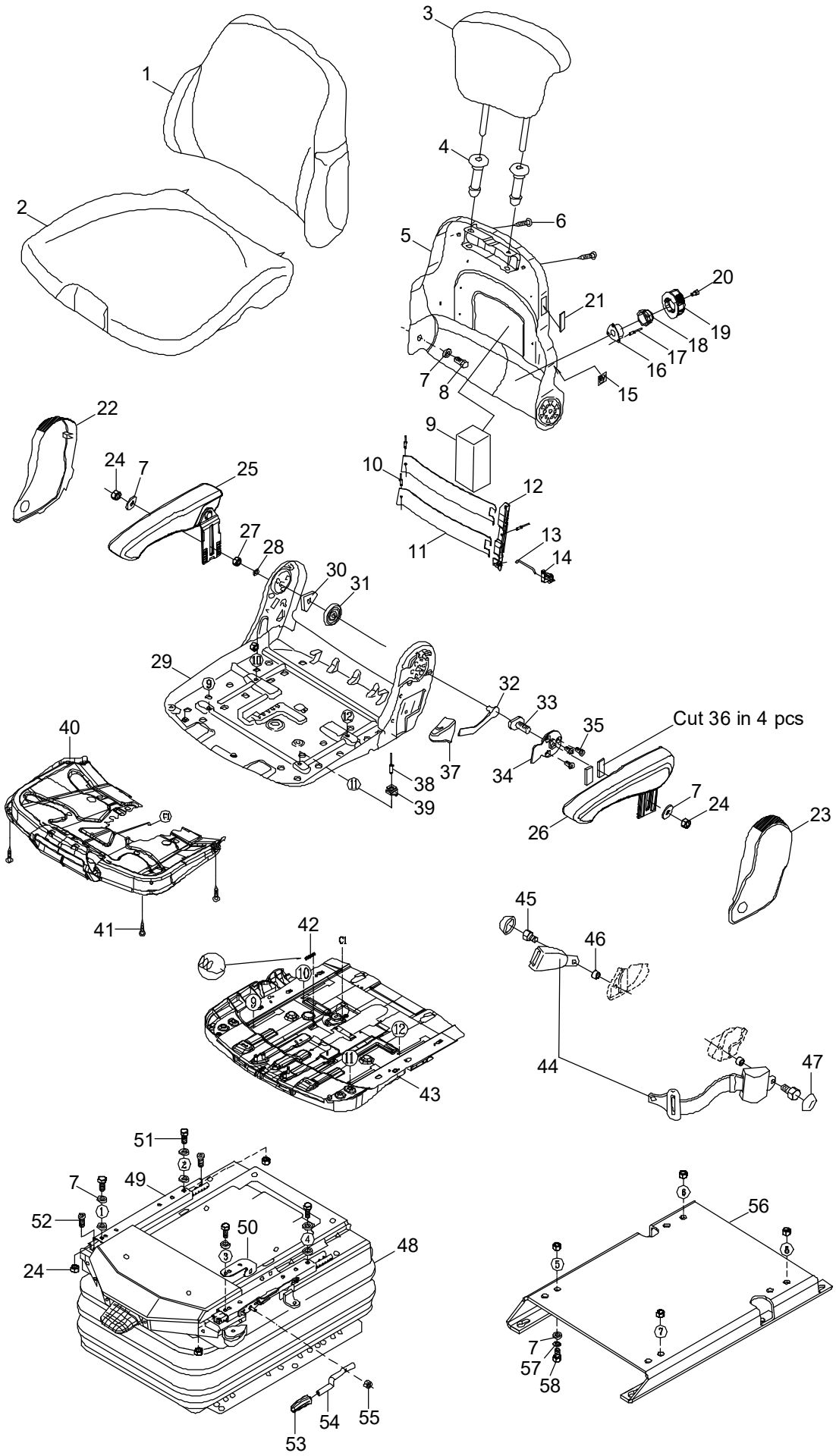

Item	Part_No	IS	Ord	T	Description	Qty	Serial_No	ITC	Remark
*	71LB-32040				SEAT ASSY-3",AIR RIDE	1			
1	ZGBH-00002				.BACKREST CUSHION	1			
2	ZGBH-00001				.SEAT CUSHION	1			
3	ZGBH-00009				.HEADREST	1			
4	ZGBH-00004				.BUSH	2			
5	ZGBH-00005				.BACKREST PLATE	1			
6	ZGBH-00103				.SCREW-SELF TAPPING	4			
7	ZGBH-00015				.WASHER	14			
8	ZGBH-00014				.SCREW-HEX HEAD	1			
9	ZGBH-00016				.SPONGE	1			
10	ZGBH-00107				.RIVET	3			
11	ZGBH-00021				.PLATE	2			
12	ZGBH-00017				.WINKEL	1			
13	ZGBH-00019				.RODS	1			
14	ZGBH-00020				.CARRIER	1			
15	ZGBH-00012				.STICKER	1			
16	ZGBH-00011				.BRAKE-SLING SPRING	1			
17	ZGBH-00010				.RIVET-BLIND	3			
18	ZGBH-00008				.WHEEL-TOOLHEAD	1			
19	ZGBH-00007				.HANDLE	1			
20	ZGBH-00055				.SCREW	1			
21	ZGBH-00013				.COVER-PLASTIC	1			
22	ZGBH-00022				.COVER-RH	1			
23	ZGBH-00031				.COVER-LH	1			
24	ZGBH-00023				.HEX NUT-BLACK	9			
25	ZGBH-00108				.ARM REST-RH	1			

Item	Part_No	IS	Ord	T	Description	Qty	Serial_No	ITC	Remark
26	ZGBH-00030				.ARMREST-LH	1			
27	ZGBH-00109				.SELF LOCK NUT	1			
28	ZGBH-00024				.WASHER-BLACK	1			
29	ZGBH-00110				.SEAT PLATE GS.LA.	1			
30	ZGBH-00025				.SPRING HOLDER	1			
31	ZGBH-00026				.SPRING-LEG	1			
32	ZGBH-00027				.LEVER	1			
33	ZGBH-00112				.SCREW	1			
34	ZGBH-00113				.PLATE	1			
35	ZGBH-00029				.SCREW	3			
36	ZGBH-00056				.PLATE-RUBBER	4			
37	ZGBH-00033				.HANDLE	1			
38	ZGBH-00034				.RIVET	4			
39	ZGBH-00035				.PROFILE-GLIDING	4			
40	ZGBH-00038				.ADJUSTMENT-TILTING	1			
41	ZGBH-00037				.SCREW-SELF TAPPING	4			
42	ZGBH-00039				.SPRING	1			
43	ZGBH-00114				.ADJUSTMENT-SEAT DEPTH	1			
44	ZGBH-00102				.SEAT BELT	1			
45	ZGBH-00053				.SCREW	2			
46	ZGBH-00051				.BUSH	2			
47	ZGBH-00050				.COVER	2			
48	@				.SUSPENSION SYSTEM	1			NOT
49	ZGBH-00041				.SLIDE RAIL-RH	1			
50	ZGBH-00045				.BRACKET	1			
51	ZGBH-00042				.SCREW-HEX HEAD	4			

Item	Part_No	IS	Ord	T	Description	Qty	Serial_No	ITC	Remark
52	ZGBH-00115				.CYLINDRIC HEAD SCREW	2			
53	ZGBH-00049				.KNOB-PLASTIC	1			
54	ZGBH-00048				.HANDLE	1			
55	ZGBH-00116				.SELF LOCK NUT	1			
56	ZGBH-00117				.BOTTOM PLATE LA.	1			
57	ZGBH-00118				.SPRING WASHER	4			
58	ZGBH-00104				.SCREW-HEX HEAD	4			

SEAT(AIR RIDE, 3", 2/2)

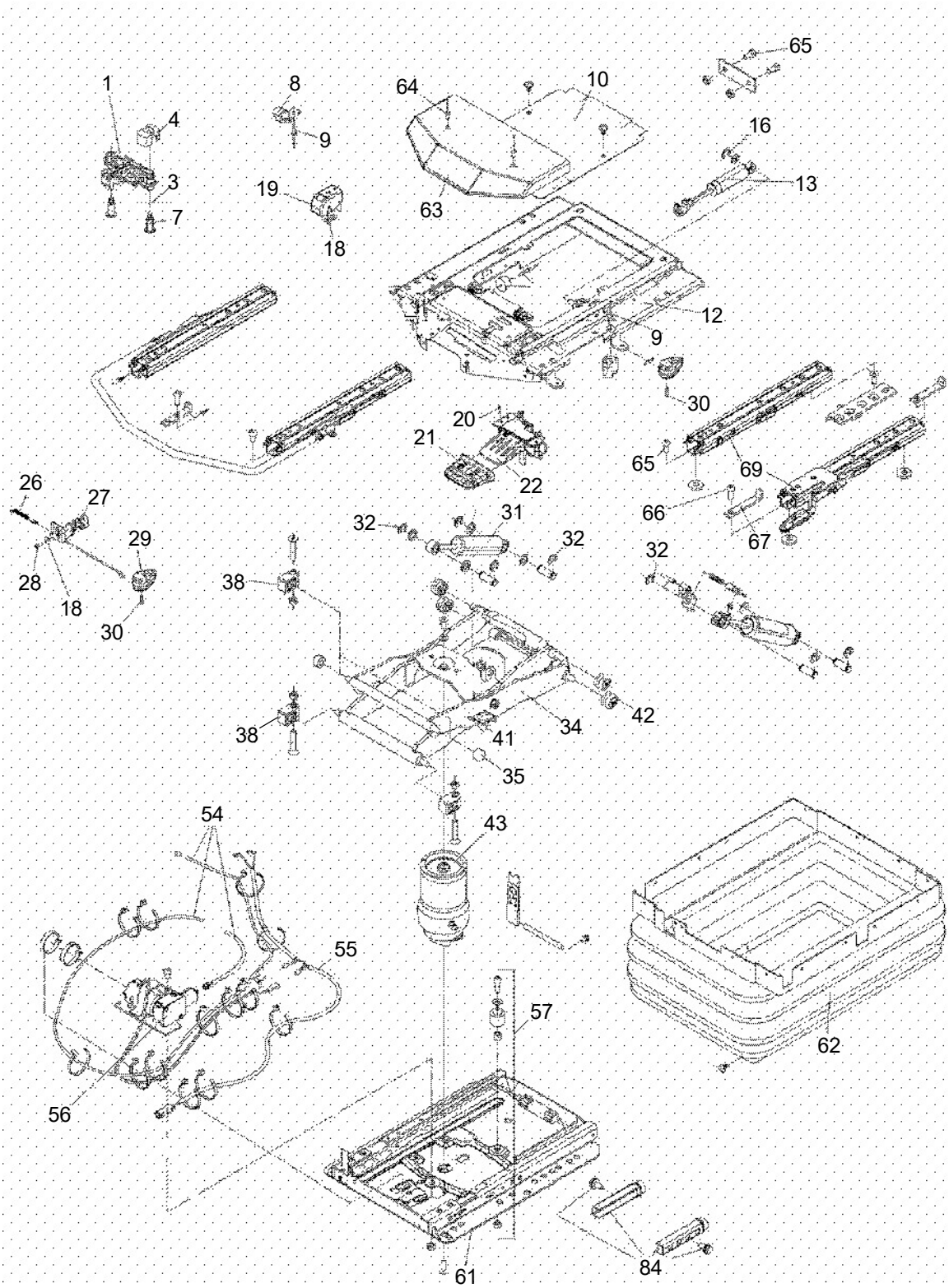

Item	Part_No	IS	Ord	T	Description	Qty	Serial_No	ITC	Remark
*	ZGBH-00105				SUSPENSION SYSTEM	1			
1	ZGBH-00120				.FORE-AFT ISOLATOR KI	1			
3	ZGBH-00121				.BUSHING	2			
4	ZGBH-00122				.BUMPER	1			
7	ZGBH-00123				.BOLT-SHOULDER	2			
8	ZGBH-00124				.ENDSTOP	2			
9	ZGBH-00125				.RIVET	2			
10	ZGBH-00126				.COVER KIT,MSG95	1			
12	ZGBH-00127				.SUSPENSION UPPER PAR	1			
13	ZGBH-00128				.SHOCK ABSORBER KIT	1			
14	ZGBH-00129				.BUMPER KIT	1			
16	ZGBH-00131				.LOCK WASHER	1			
17	ZGBH-00132				.RIVET	2			
18	ZGBH-00133				.WASHER-FLAT,M4	3			
19	ZGBH-00134				.LEVEL CONTROL KIT	1			
20	ZGBH-00135				.SCREW	3			
21	ZGBH-00136				.HANDLE FOR HA,GREY	1			
22	ZGBH-00137				.VALVE AIR CONTROL,MS	1			
26	ZGBH-00138				.TENSION SPRING	2			
27	ZGBH-00139				.LOCKING LEVER KIT,MS	1			
28	ZGBH-00140				.EJOT SCREW DELTA PT	1			
29	ZGBH-00141				.HANDLE F.FAI.CPL.	1			
30	ZGBH-00142				.SCREW	1			
31	ZGBH-00143				.SHOCK ABSORBER KIT	1			
32	ZGBH-00144				.LOCK WASHER PHR. 10.	2			
34	ZGBH-00145				.SWING ARM KIT	1			

Item	Part_No	IS	Ord	T	Description	Qty	Serial_No	ITC	Remark
35	ZGBH-00146				.ROLLER KIT	2			
38	ZGBH-00147				.THRUST BEARING,PLAST	2			
41	ZGBH-00148				.DAMPING BUMPER BLACK	2			
42	ZGBH-00149				.ROLLER	4			
43	ZGBH-00150				.AIR SPRING KIT	1			
54	ZGBH-00151				.AIR TUBE	1			
55	ZGBH-00152				.CONNECTING CABLE	1			
56	ZGBH-00153				.COMPRESSOR,24V	1			
57	ZGBH-00154				.BUMPER KIT	1			
36	ZGBH-00155				.SUSPENSION LOWER PAR	1			
62	ZGBH-00156				.BELLOWS KIT,BLK,MSG9	1			
63	ZGBH-00157				.COVER CPL.	1			
64	ZGBH-00158				.RIVET	2			
65	ZGBH-00043				.SCREW-CYLINDRIC HEAD	3			
66	ZGBH-00159				.SCREW	1			
67	ZGBH-00160				.STOP,SLIDE RAIL,BLKC	1			
69	ZGBH-00161				.ADJUSTMENT RAIL SET	1			
84	ZGBH-00162				.ENDSTOP KIT	1			

STEERING COLUMN

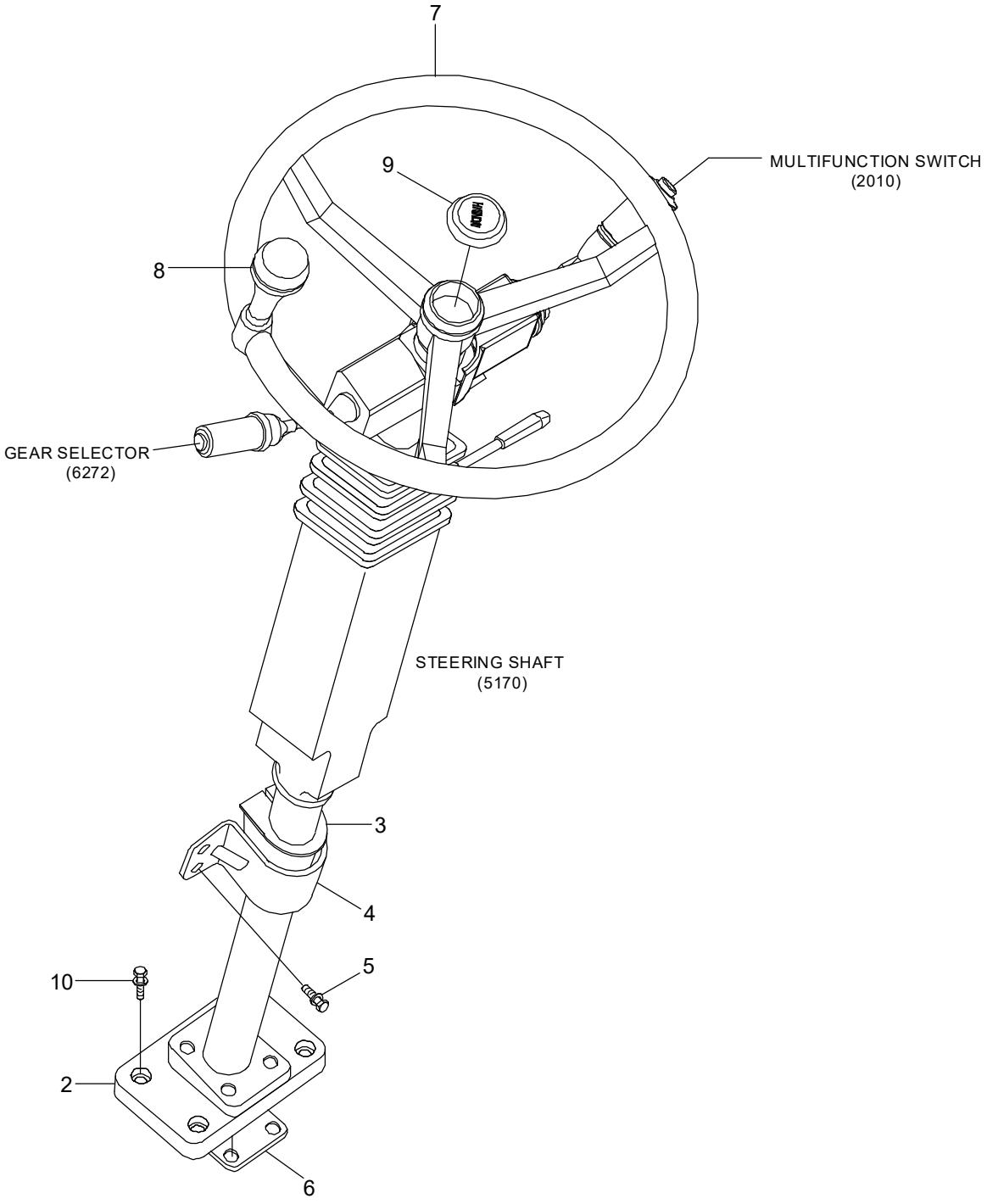

Item	Part_No	IS	Ord	T	Description	Qty	Serial_No	ITC	Remark
2	71LB-21071				ANCHORAGE ASSY	1			
3	71LB-30040				ANCHORAGE	1			
4	71L7-20261				CLAMP	1			
5	S037-102556				BOLT-W/WASHER	4			
6	71L6-10320				SHIM(4.0T)	1			
7	71L7-20310				STEERING WHEEL	1			
8	71L7-20320				KNOB-WHEEL	1			
9	71L7-20330				CAP-CENTER	1			
10	S037-104056				BOLT-W/WASHER	4			

STEERING SHAFT

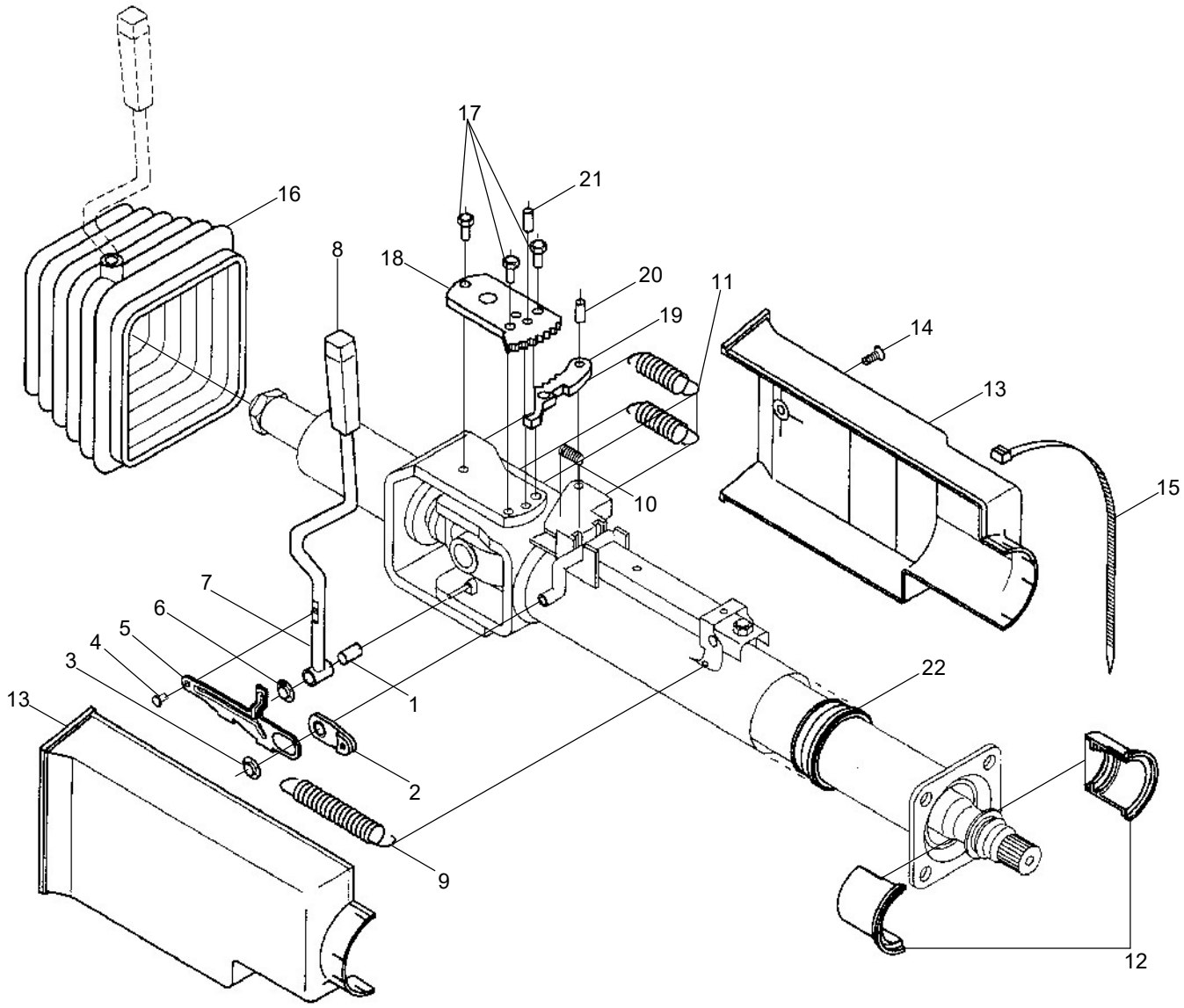

Item	Part_No	IS	Ord	T	Description	Qty	Serial_No	ITC	Remark
*	71LB-30010				STEERING COLUMN ASSY	1			
*-1	150Z4000				.HANDLE-COMPLETE	1			
1	@				..BEARING-LEVER	1			NOT
2	@				..BUSHING-LINK ARM	1			NOT
3	@				..WASHER-LOCK	1			NOT
4	@				..RIVET	1			NOT
5	@				..ARM-LINK	1			NOT
6	@				..WASHER-LOCK	1			NOT
7	@				..LEVER	1			NOT
8	@				..KNOB	1			NOT
*-2	150Z4001				.SPRINGS	1			
9	@				..SPRING-TELESCOPE	1			NOT
10	@				..SPRING-CATCH	1			NOT
11	@				..SPRING-TILT RETURN	2			NOT
*-3	150Z4002				.BEARING-AXIAL	1			
12	@				..BEARING-AXIAL	1			NOT
*-4	150Z4003				.COVER	1			
13	@				..COVER	1			NOT
14	@				..SCREW	1			NOT
15	@				..TIE-CABLE	1			NOT
*-5	150Z4004				.BELLOWS-BUBBER	1			
16	@				..BELLOWS-RUBBER	1			NOT
*-6	150Z4005				.TIE-CABLE	1			
15	@				..TIE-CABLE	1			NOT
*-7	150Z4006				.DEVICE-TILT LOCK	1			
17	@				..SCREW	1			NOT

Item	Part_No	IS	Ord	T	Description	Qty	Serial_No	ITC	Remark
18	@				..SEGMENT-TOOTH	1			NOT
19	@				..CATCH	1			NOT
20	@				..PIN	1			NOT
21	@				..PIN	1			NOT
*-8	150Z4007				.BEARING-TELESCOPE	1			
22	@				..BEARING-TELESCOPE	1			NOT

MUD GUARD

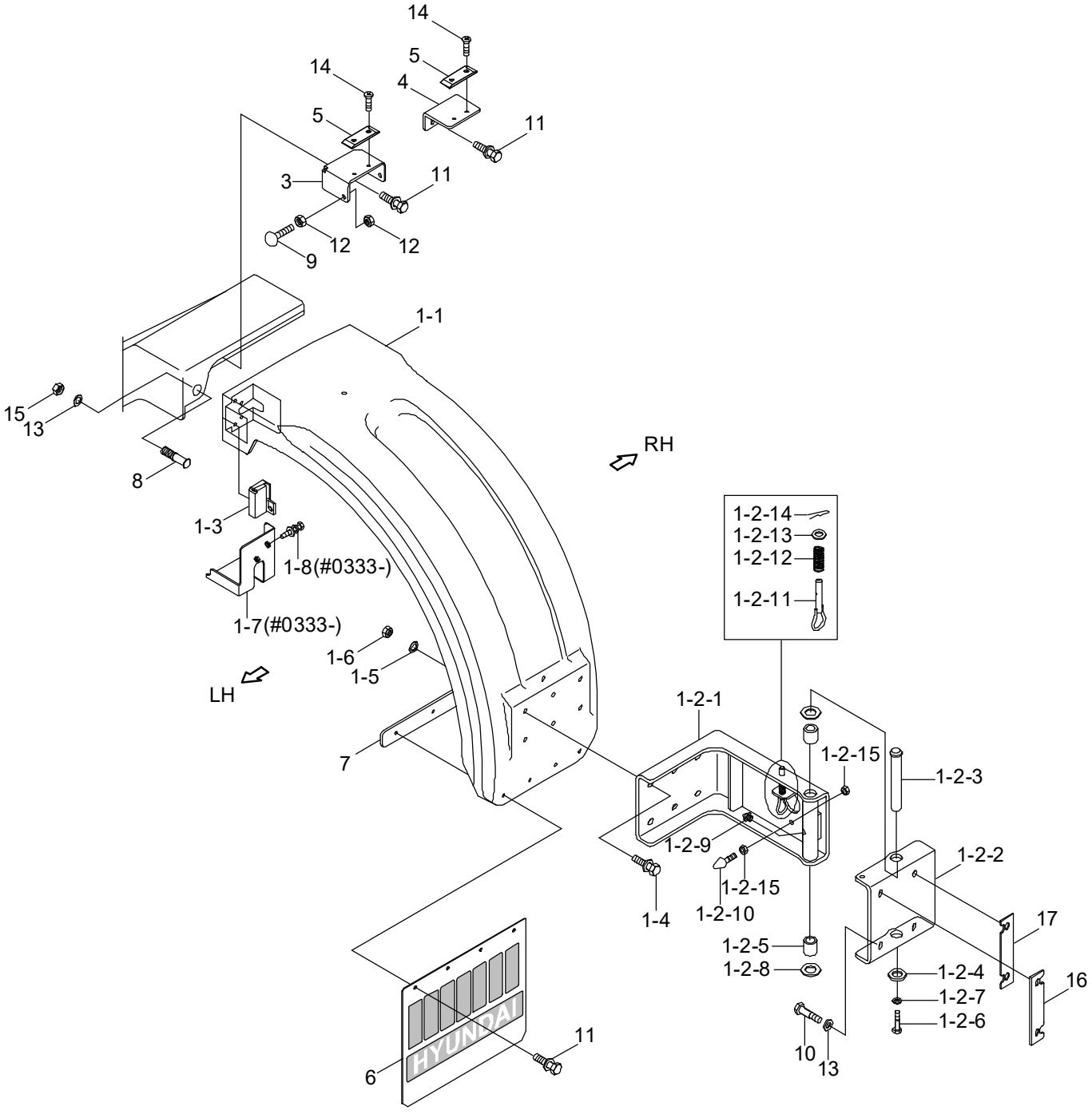
14
5
4
11
14
5
3
11
12
12
9
1-1
15
13
8
RH
1-3
1-8(#0333-)
1-7(#0333-)
1-6
1-5
LH
7
1-2-14
1-2-13
1-2-12
1-2-11
1-2-1
1-2-15
1-2-3
1-2-9
1-2-2
1-2-15
1-2-10
1-4
17
1-2-5
1-2-8
1-2-4
16
1-2-7
1-2-6
10
13
HYUNDAI
6
11

Item	Part_No	IS	Ord	T	Description	Qty	Serial_No	ITC	Remark
1	71LF-82011				MUD GUARD ASSY-LH	1	- #0332		
	71LF-82012				MUD GUARD ASSY-LH	1	#0333 -	B	
	71LF-82021				MUD GUARD ASSY-RH	1	- #0332		
	71LF-82022				MUD GUARD ASSY-RH	1	#0333 -	B	
1-1	71LF-82051				.MUD GUARD WA-LH	1			
	71LF-82061				.MUD GUARD WA-RH	1			
1-2	71LF-82090				.HINGE ASSY-LH	1			
	71LF-82100				.HINGE ASSY-RH	1			
1-2-1	71LF-82111				..HINGE WA-FRONT	1			
1-2-2	71LF-82120				..HINGE WA-REAR	1			
1-2-3	71LD-80270				..PIN-HINGE	1			
1-2-4	71LD-80280				..PLATE-STOPPER	1			
1-2-5	71LD-80290				..BUSHING	2			
1-2-6	S017-120302				..BOLT-HEX	1			
1-2-7	S441-120002				..WASHER-HARDENED	1			
1-2-8	S403-301002				..WASHER-PLAIN	2			
1-2-9	S651-810002				..NIPPLE-GREASE	1			
1-2-10	E171-1178				..RUBBER-BUMPER	1			
1-2-11	FBC0900600				..LOCK PIN	1			
1-2-12	FBC0900610-01				..SPRING	1			
1-2-13	S403-122002				..WASHER-PLAIN	1			
1-2-14	S461-250252				..PIN-SPLIT	1			
1-2-15	S285-101002				..NUT-FLANGED	2			
1-3	71LF-80290				.LATCH ASSY	1			
	71LF-80300				.LATCH ASSY	1			
1-4	S037-123556				.BOLT-W/WASHER	6			

Item	Part_No	IS	Ord	T	Description	Qty	Serial_No	ITC	Remark
1-5	S205-121006				.NUT-HEX	6			
1-6	S441-120006				.WASHER-HARDENED	6			
1-7	71LB-82170				.COVER WA-LH	1	#0333 -		
	71LB-82180				.COVER WA-RH	1	#0333 -		
1-8	S033-062026				.BOLT-W/WASHER	2	#0333 -		
3	71LB-80220				PLATE	2			
4	71LB-80230				PLATE	2			
5	71LB-80240				PLATE	4			
6	71LG-82160				RUBBER-MUDGUARD	2			
7	71LF-82150				PLATE	2			
8	71LD-80180				STRIKER	2			
9	71EH-13150				BUMPER-RUBBER	2			
10	S017-16040D				BOLT-HEX	8			
11	S037-122556				BOLT-W/WASHER	16			
12	S285-101006				NUT-FLANGED	4			
13	S441-160006				WASHER-HARDENED	10			
14	S141-060156				SCREW-FLAT HD	8			
15	S275-160006				NUT-SELF LOCKING	2			
16	71LB-82070				SHIM(3.0T)	4			
17	71LB-82080				SHIM(1.6T)	8			

LADDER & REAR FENDER

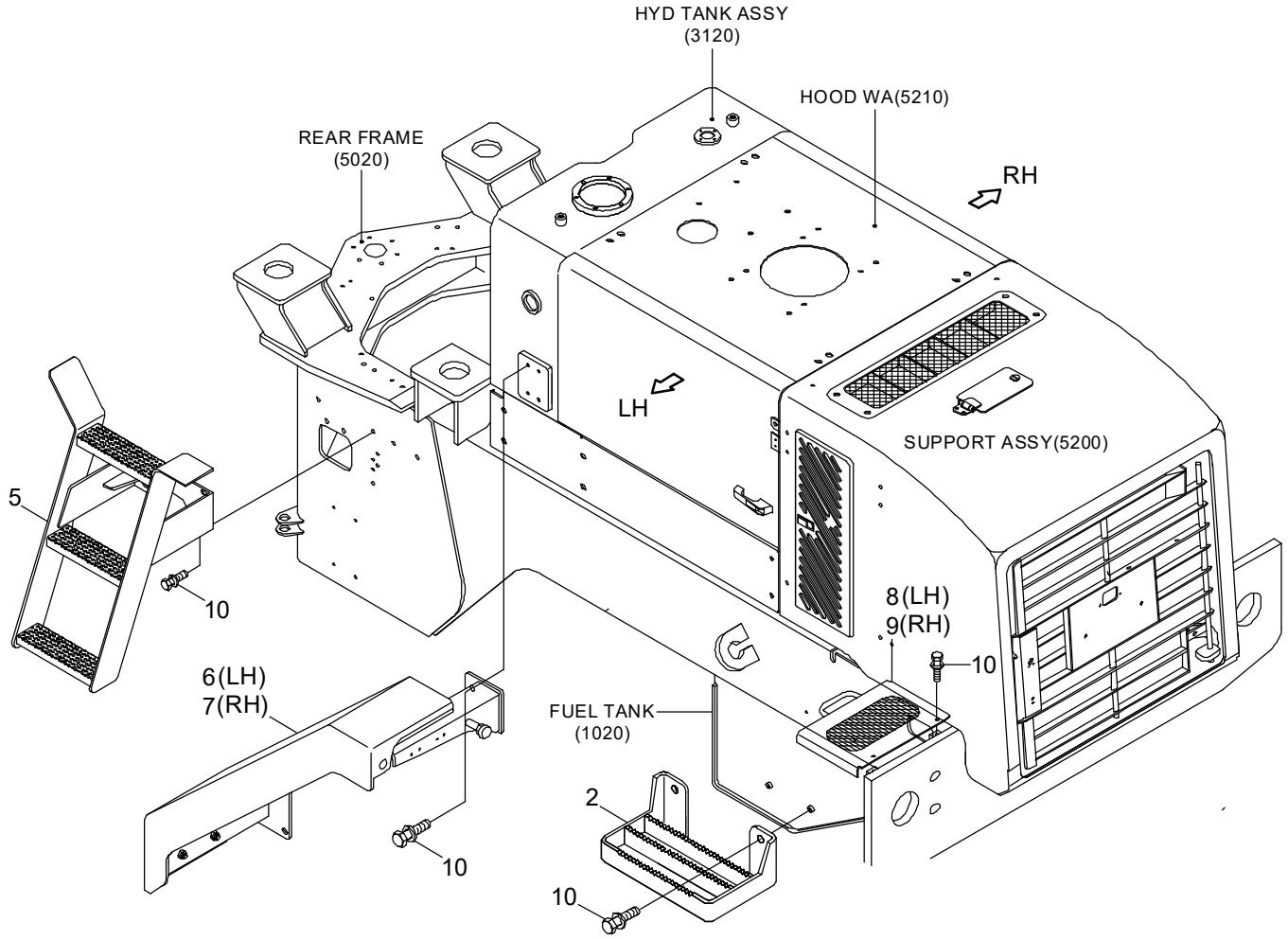

REAR FENDER

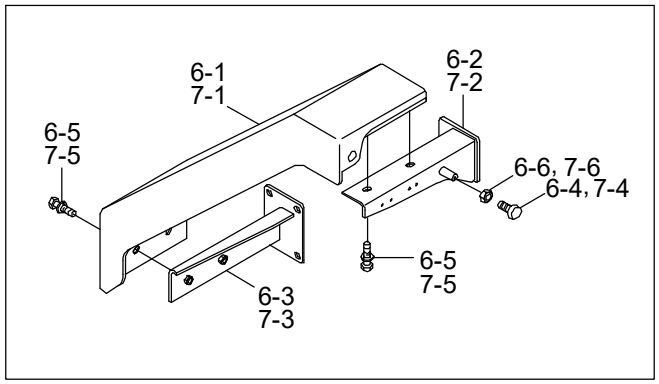

SERIAL NO.:-#0256

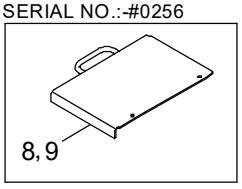

Item	Part_No	IS	Ord	T	Description	Qty	Serial_No	ITC	Remark
2	71LF-60240				FOOT BOARD WA	2			
5	71LF-60011				LADDER WA	1			
6	71LF-73010				REAR FENDER ASSY-LH	1			
6-1	71LF-73030				.REAR FENDER WA-LH	1			
6-2	71LF-73050				.SUPPORT WA-LH	1			
6-3	71LF-73110				.SUPPORT WA-LH	1			
6-4	71EH-13150				.RUBBER-BUMPER	1			
6-5	S037-123056				.BOLT-W/WASHER	4			
6-6	S285-101006				.NUT-FLANGED	1			
7	71LF-73020				REAR FENDER ASSY-RH	1			
7-1	71LF-73040				.REAR FENDER WA-RH	1			
7-2	71LF-73060				.SUPPORT WA-RH	1			
7-3	71LF-73120				.SUPPORT WA-RH	1			
7-4	71EH-13150				.RUBBER-BUMPER	1			
7-5	S037-123056				.BOLT-W/WASHER	4			
7-6	S285-101006				.NUT-FLANGED	1			
8	71LF-70070				COVER WA-BATT(LH)	1	- #0256		
	71LF-70071				COVER WA-BATT(LH)	1	#0257 -	B	
8-1	71LF-70070				.COVER WA-BATT(LH)	1	#0257 -	-	
8-2	91E1-26300				.STEP TREAD	1	#0257 -	-	
9	71LF-70080				COVER WA-BATT(RH)	1	- #0256		
	71LF-70081				COVER WA-BATT(RH)	1	#0257 -	B	
9-1	71LF-70080				.COVER WA-BATT(RH)	1	#0257 -	-	
9-2	91E1-26300				.STEP TREAD	1	#0257 -	-	
10	S037-123056				BOLT-W/WASHER	28			

COWL 1

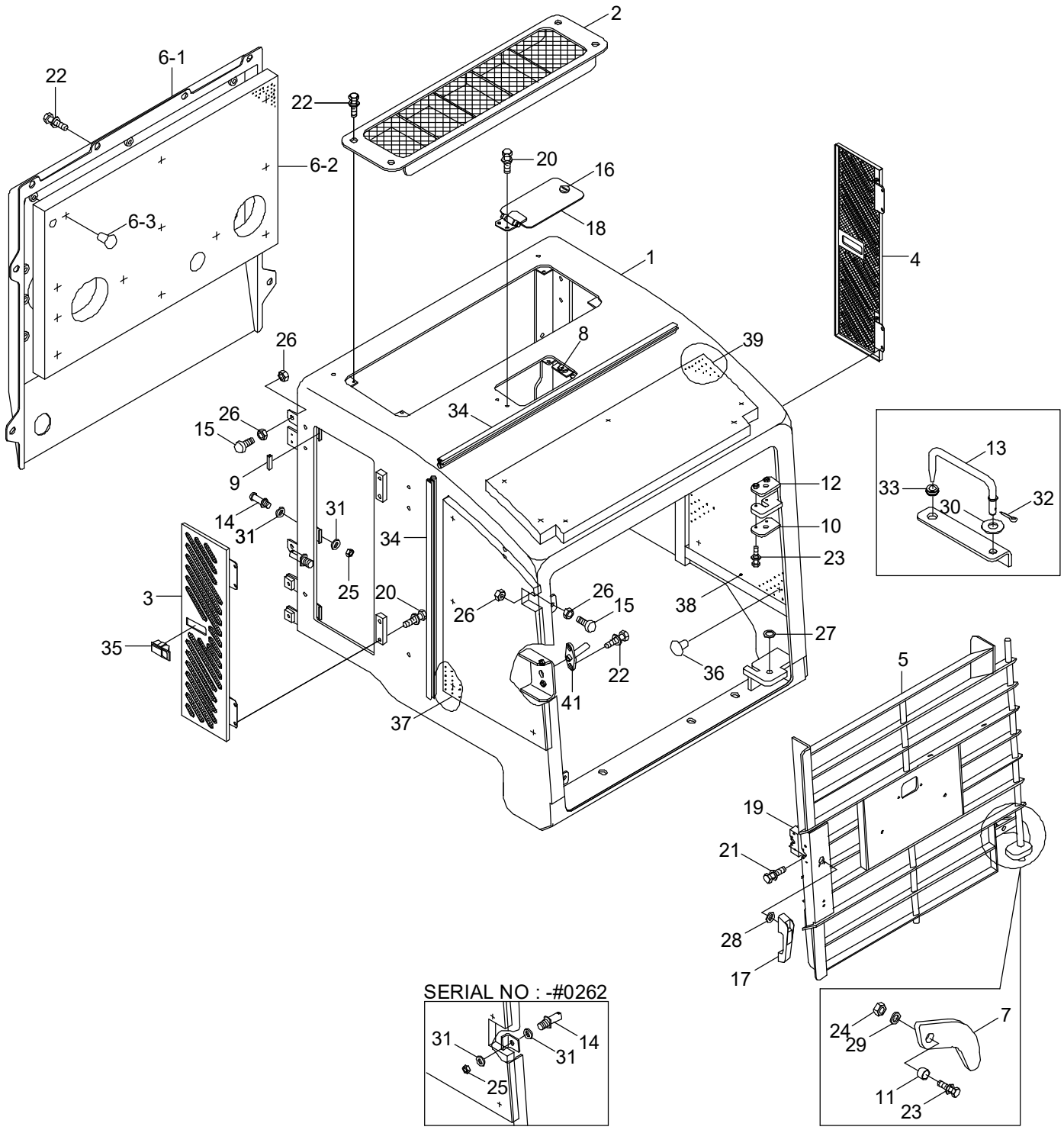
2
6-1
22
22
6-2
20
16
18
6-3
1
4
26
8
39
34
26
15
9
14
31
31
34
3
25
20
35
26
26
15
38
27
22
36
41
37
12
10
23
13
33
30
32
5
19
21
28
17
SERIAL NO : -#0262
31
14
31
25
24
29
7
11
23

Item	Part_No	IS	Ord	T	Description	Qty	Serial_No	ITC	Remark
*	71LF-44010				SUPPORT ASSY	1			
1	71LF-44100				.SUPPORT WA	1	- #0262		
	71LF-44101				.SUPPORT WA	1	#0263 -	D	
2	71LF-44291				.GRILL WA	1			
3	71LF-44271				.COVER WA-LH	1			
4	71LF-44281				.COVER WA-RH	1			
5	71LF-44300				.GRILL WA	1			
6	71LF-44210				.SCREEN ASSY	1			
6-1	71LF-44220				..PLATE-SCREEN	1			
6-2	71LF-44230				..SPONGE-SCREEN	1			
6-3	71EM-51580				..CAP-STUD BOLT	12			
7	71LG-40200				.PLATE-HOLDING	1			
8	74L3-11290				.BUMPER-RUBBER	2			
9	S791-030005				.GROMMET-PLATE	6			
10	71LB-40200				.PLATE	1			
11	71LB-40290				.COLLAR	1			
12	71LB-40300				.PLATE	1			
13	71LD-41060				.STAY WA	1			
14	71LD-80180				.STRIKER	3	- #0262		
					.STRIKER	2	#0263 -	A	
15	71EH-13150				.RUBBER-BUMPER	6			
16	71LB-41220				.LOCK ASSY	1			
17	74L3-11380				.HANDLE ASSY	1			
18	74L3-10891				.DOOR-RADIATOR CAP	1			
19	74L3-10900				.LATCH ASSY	1			
20	S035-061526				.BOLT-W/WASHER	10			

Item	Part_No	IS	Ord	T	Description	Qty	Serial_No	ITC	Remark
21	S033-062516				.BOLT-W/WASHER	4			
22	S037-122556				.BOLT-W/WASHER	10	- #0262		
					.BOLT-W/WASHER	12	#0263 -	A	
23	S037-124556				.BOLT-W/WASHER	3			
24	S205-121006				.NUT-HEX	1			
25	S205-161006				.NUT-HEX	3	- #0262		
					.NUT-HEX	2	#0263 -	A	
26	S285-101006				.NUT-FLANGED	12			
27	S392-020030				.SHIM-ROUND(2.0T)	1			
28	S403-06200B				.WASHER-PLAIN	4			
29	S403-12200B				.WASHER-PLAIN	1			
30	S403-142006				.WASHER-PLAIN	1			
31	S441-160006				.WASHER-HARDENED	6	- #0262		
					.WASHER-HARDENED	4	#0263 -	A	
32	S461-250202				.PIN-SPLIT	1			
33	S681-130800				.GROMMET	1			
34	S771-026400				.WEATHER STRIP	1			
35	71LB-01220				.LATCH ASSY	2			
36	71EM-51580				.CAP-STUD BOLT	20			
37	71LF-42410				.SPONGE	1			
38	71LF-44421				.SPONGE-RH(SIDE)	1			
39	71LF-42430				.SPONGE-TOP	1			
40	91N6-01121				.RADIATOR CAP	1			
41	71LD-80190				.STRIKER	1	#0263 -	-	

COWL 2

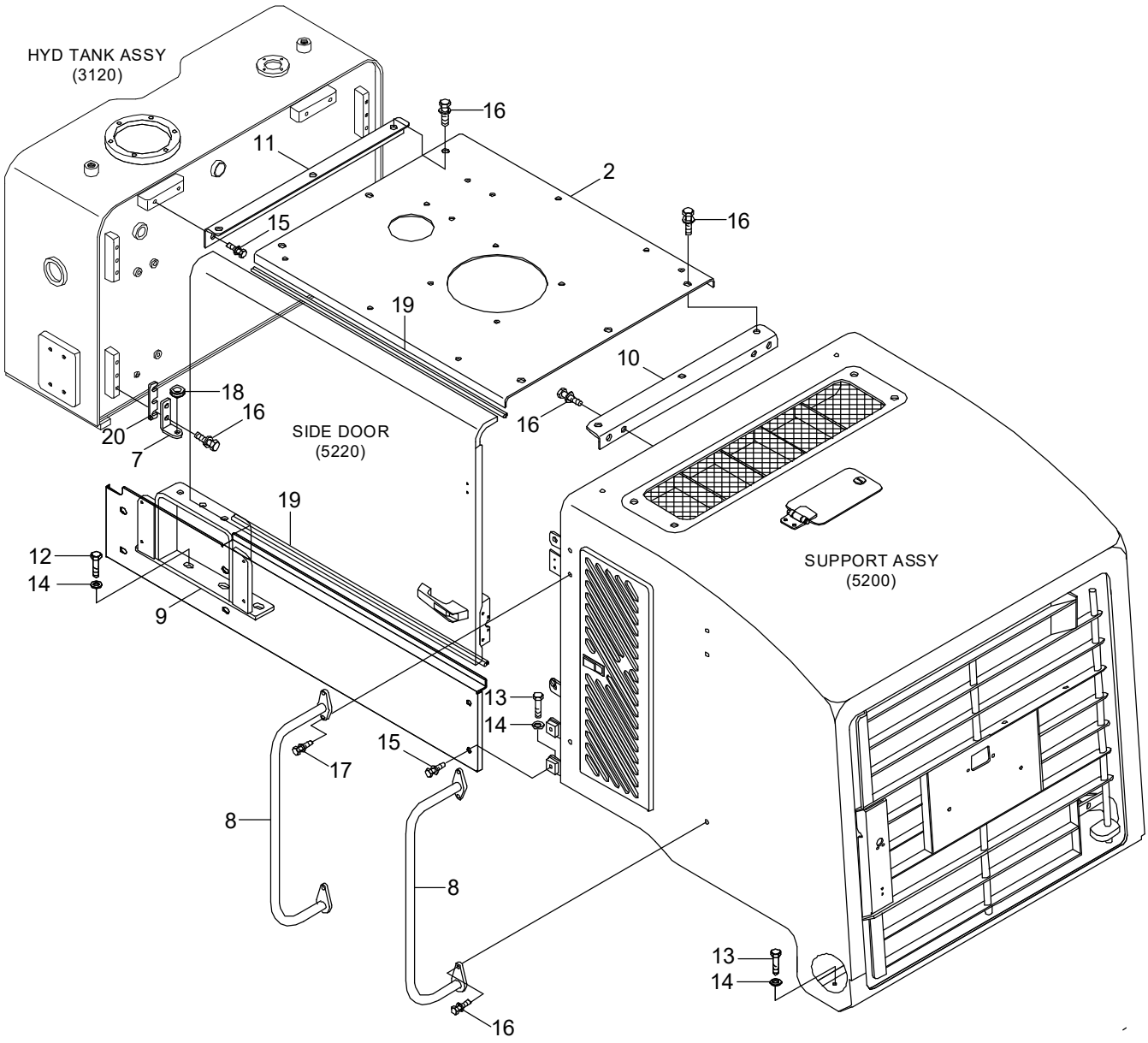
HYD TANK ASSY
(3120)
16
11
2
15
16
19
10
18
16
20
16
SIDE DOOR
(5220)
7
19
12
14
SUPPORT ASSY
(5200)
9
13
14
15
17
8
8
13
14
16

Item	Part_No	IS	Ord	T	Description	Qty	Serial_No	ITC	Remark
2	71LF-44021				HOOD WA	1			
7	71LD-41030				PLATE	2			
8	71LD-60350				HANDRAIL WA	4			
9	71LF-42050				BRACKET	2			
10	71LF-40110				BRACKET	1			
11	71LF-40120				BRACKET	1			
12	S017-16060D				BOLT-HEX	12			
13	S017-16030D				BOLT-HEX	4			
14	S441-160006				WASHER-HARDENED	16			
15	S037-122056				BOLT-W/WASHER	15			
16	S037-123056				BOLT-W/WASHER	29			
17	S037-123556				BOLT-W/WASHER	6			
18	S681-130800				GROMMET	2			
19	S771-009400				WEATHER STRIP	4			
20	71LD-41070				SHIM	4			

COWL 3(SIDE DOOR)

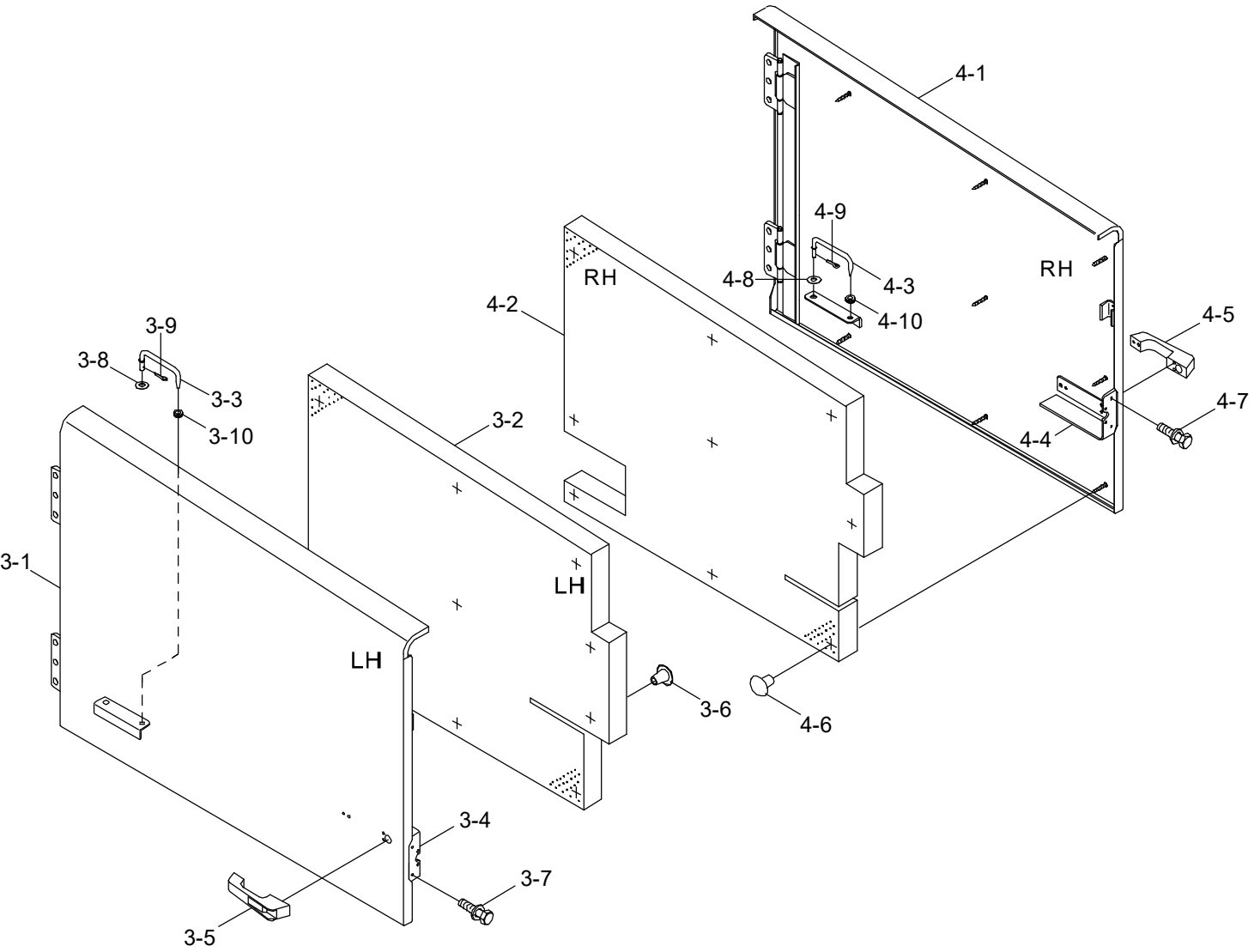

Item	Part_No	IS	Ord	T	Description	Qty	Serial_No	ITC	Remark
3	71LF-43030				SIDE DOOR ASSY-LH	1			
3-1	71LF-43310				.SIDE DOOR WA-LH	1			
3-2	71LF-40951				.SPONGE-DOOR/LH	1			
3-3	71LD-41050				.STAY WA	1			
3-4	74L3-10900				.LATCH ASSY	1			
3-5	74L3-11380				.HANDLE ASSY	1			
3-6	71EM-51580				.CAP-STUD BOLT	11			
3-7	S033-062516				.BOLT-W/WASHER	4			
3-8	S403-142006				.WASHER-PLAIN	1			
3-9	S461-250202				.PIN-SPLIT	1			
3-10	S681-130800				.GROMMET	1			
3-15	91N6-07112				.DECAL-STAY FIX	1			SEE 8020
3-16	91E1-27110				.DECAL-L/EMISSION ENG	1			SEE 8020
4	71LF-43040				SIDE DOOR ASSY-RH	1			
4-1	71LF-43320				.SIDE DOOR WA-RH	1			
4-2	71LF-40961				.SPONGE-DOOR/RH	1			
4-3	71LD-41050				.STAY WA	1			
4-4	74L3-10900				.LATCH ASSY	1			
4-5	74L3-11380				.HANDLE ASSY	1			
4-6	71EM-51580				.CAP-STUD BOLT	10			
4-7	S033-062516				.BOLT-W/WASHER	4			
4-8	S403-142006				.WASHER-PLAIN	1			
4-9	S461-250202				.PIN-SPLIT	1			
4-10	S681-130800				.GROMMET	1			
4-15	91N6-07112				.DECAL-STAY FIX	2			SEE 8020
4-16	91E1-27110				.DECAL-L/EMISSION ENG	1			SEE 8020

COWL 4(SIDE COVER)

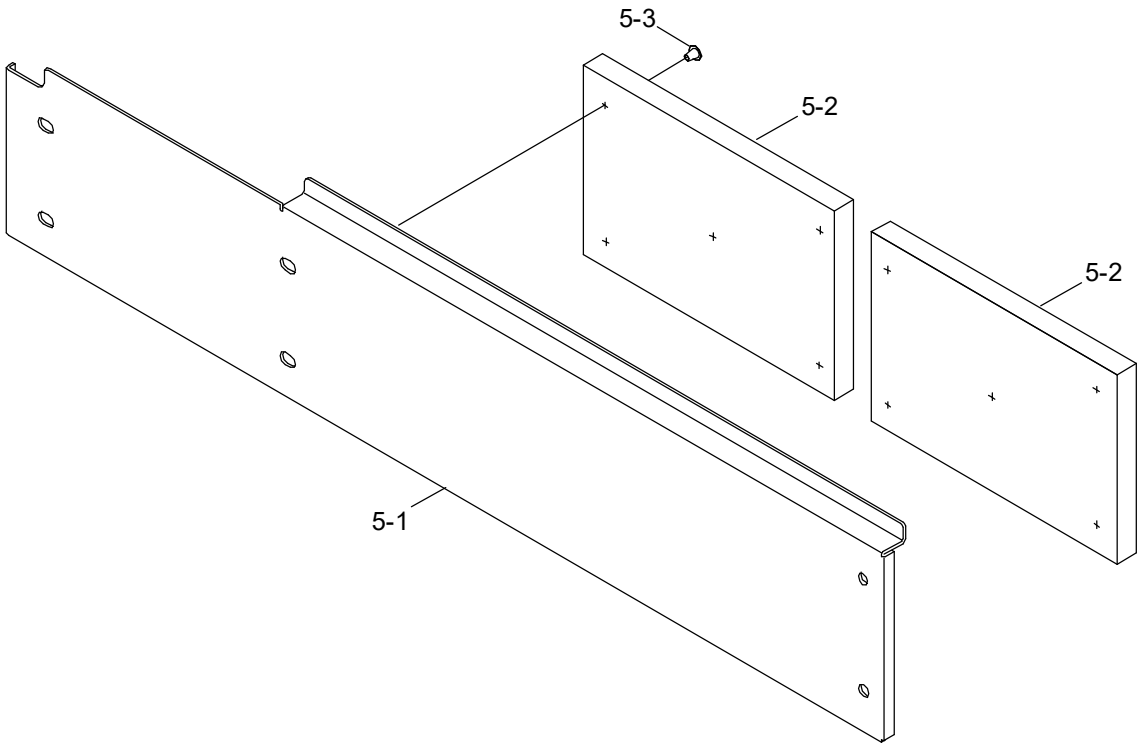

Item	Part_No	IS	Ord	T	Description	Qty	Serial_No	ITC	Remark
5	71LF-40811				COVER ASSY-LH	1			
	71LF-40821				COVER ASSY-RH	1			
5-1	71LF-40831				.COVER WA-LH	1			
	71LF-40841				.COVER WA-RH	1			
5-2	71LF-40970				.SPONGE-FRONT	2			
5-3	71EM-51580				.CAP-STUD BOLT	10			

WHEEL RIM & TIRE

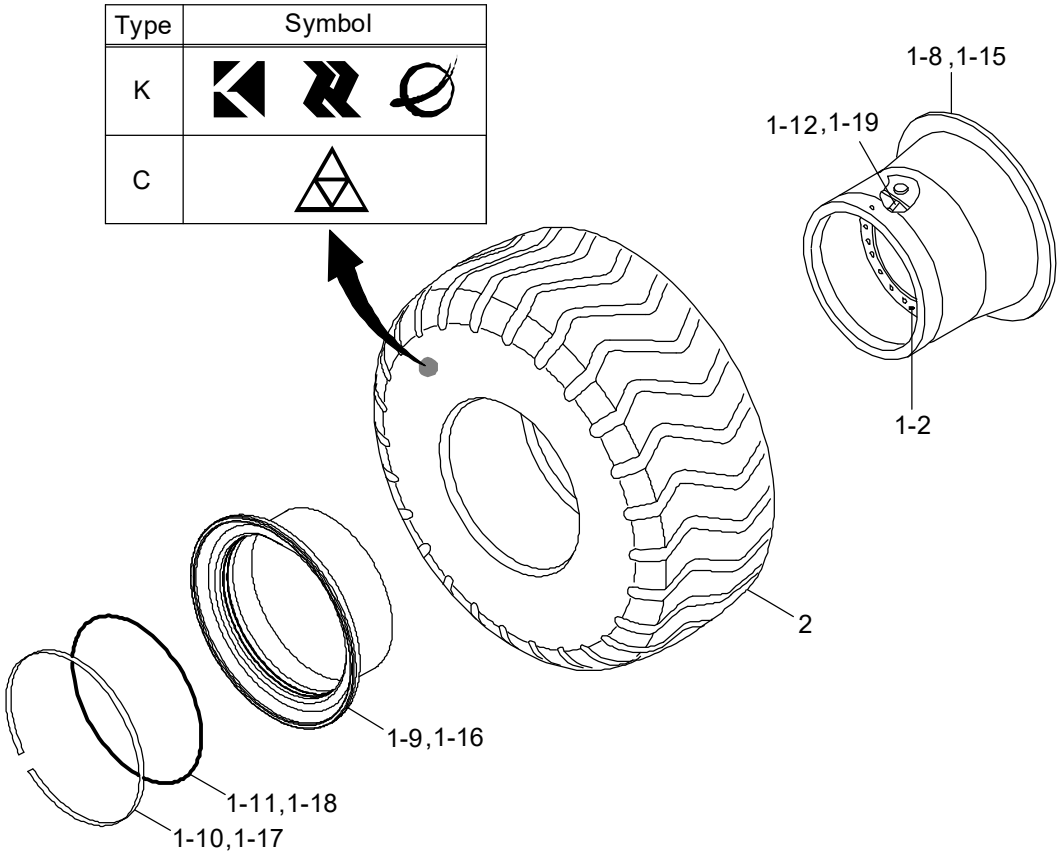

Item	Part_No	IS	Ord	T	Description	Qty	Serial_No	ITC	Remark
*	81LF-40010				WHEEL RIM & TIRE	4			K TYPE
	81LF-41000				WHEEL RIM & TIRE	4			C TYPE
1	81LF-40110				.WHEEL RIM ASSY	1			
1-8	XIAA-00004				..RIM BASE	1			
1-9	XIAA-00005				..FLANGE-DETACHABLE	1			
1-10	XIAA-00002				..RING-LOCK	1			
1-11	XIAA-00020				..O-RING	1			
1-12	XIAA-00022				..VALVE-AIR	1			
2	81L2-3104	01			.TIRE(20.5-25 16PR,L3)	1			K TYPE
	81L2-3104C				.TIRE(20.5-25 16PR,L3)	1			C TYPE
*	81LF-40031				WHEEL RIM & TIRE	4			OPT
1	81LF-40110				.WHEEL RIM ASSY	1			
1-8	XIAA-00004				..RIM BASE	1			
1-9	XIAA-00005				..FLANGE-DETACHABLE	1			
1-10	XIAA-00002				..RING-LOCK	1			
1-11	XIAA-00020				..O-RING	1			
1-12	XIAA-00022				..VALVE-AIR	1			
2	82L1-1017				.TIRE(20.5 R 25XHA*)	1			MICHELIN
*	81LF-40040				WHEEL RIM & TIRE	4			OPT
1	81LF-40100				.WHEEL RIM ASSY	1			
1-1	81LG-40110				..WHEEL RIM	1			
1-15	XIAA-00001				...RIM BASE	1			
1-16	XIAA-00003				...DETACHABLE FLANGE	1			
1-17	XIAA-00002				...RING-LOCK	1			
1-18	XIAA-00020				...O-RING	1			
1-19	XIAA-00022				...VALVE-AIR	1			

Item	Part_No	IS	Ord	T	Description	Qty	Serial_No	ITC	Remark
1-2	81L7-00140				..DISK	1			
2	81L3-01030				.TIRE(17.5-25 12PR,L3)	1			
*	81LF-40050				WHEEL RIM & TIRE	1			OPT
1	81LF-40100				.WHEEL RIM ASSY	1			
1-1	81LG-40110				..WHEEL RIM	1			
1-15	XIAA-00001				...RIM BASE	1			
1-16	XIAA-00003				...DETACHABLE FLANGE	1			
1-17	XIAA-00002				...RING-LOCK	1			
1-18	XIAA-00020				...O-RING	1			
1-19	XIAA-00022				...VALVE-AIR	1			
1-2	81L7-00140				..DISK	1			
2	81L8-00190				.TIRE(17.5 R25 XHA*)	1			MICHELIN
*	81LF-40020				WHEEL RIM & TIRE	4			OPT
1	81LF-40110				.WHEEL RIM ASSY	1			
1-8	XIAA-00004				..RIM BASE	1			
1-9	XIAA-00005				..FLANGE-DETACHABLE	1			
1-10	XIAA-00002				..RING-LOCK	1			
1-11	XIAA-00020				..O-RING	1			
1-12	XIAA-00022				..VALVE-AIR	1			
2	81L7-01030				.TIRE(20.5-25 16PR,L2)	1			
*	81LF-40060				WHEEL RIM & TIRE	4			OPT
1	81LF-40100				.WHEEL RIM ASSY	1			
1-1	81LG-40110				..WHEEL RIM	1			
1-15	XIAA-00001				...RIM BASE	1			
1-16	XIAA-00003				...DETACHABLE FLANGE	1			
1-17	XIAA-00002				...RING-LOCK	1			

Item	Part_No	IS	Ord	T	Description	Qty	Serial_No	ITC	Remark
1-18	XIAA-00020				...O-RING	1			
1-19	XIAA-00022				...VALVE-AIR	1			
1-2	81L7-00140				..DISK	1			
2	81L8-00210				.TIRE(17.5-25 12PR,L2)	1			
*	81LF-41010				WHEEL & TIRE ASSY	1			OPT,C TYPE
1	81LF-40100				.WHEEL RIM ASSY	1			
1-1	81LG-40110				..WHEEL RIM	1			
1-15	XIAA-00001				...RIM BASE	1			
1-16	XIAA-00003				...DETACHABLE FLANGE	1			
1-17	XIAA-00002				...RING-LOCK	1			
1-18	XIAA-00020				...O-RING	1			
1-19	XIAA-00022				...VALVE-AIR	1			
1-2	81L7-00140				..DISK	1			
2	81L3-01030C				.TIRE(17.5-25 12PR,L3)	1			C TYPE
*	81LF-40070				WHEEL RIM & TIRE	1	#0200 -	-	OPT,C TYPE
1	81LF-40110				.WHEEL RIM ASSY	1			
2	82L1-1017C				.TIRE(20.5 R 25XHA*)	1			

FRONT & REAR AXLE MOUNTING

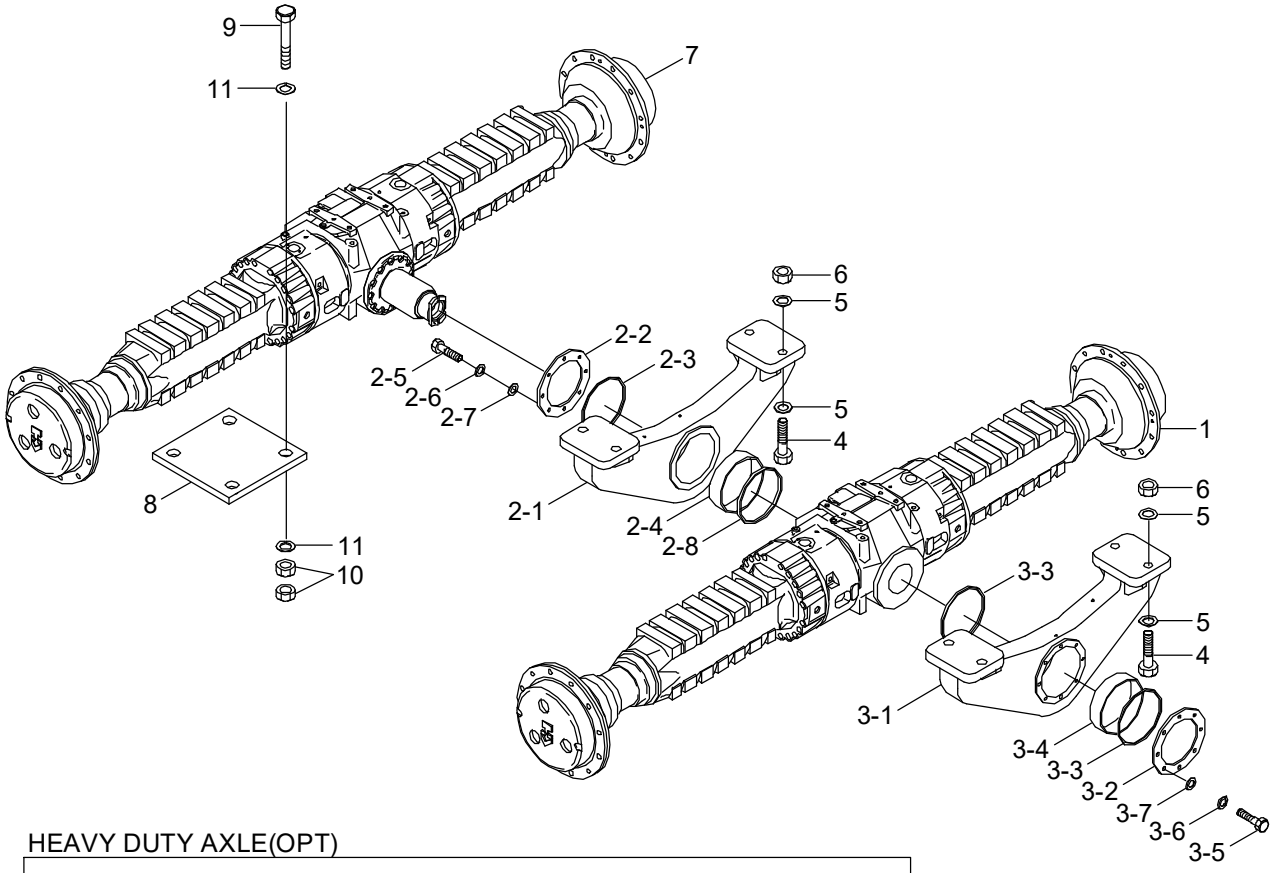

HEAVY DUTY AXLE(OPT)

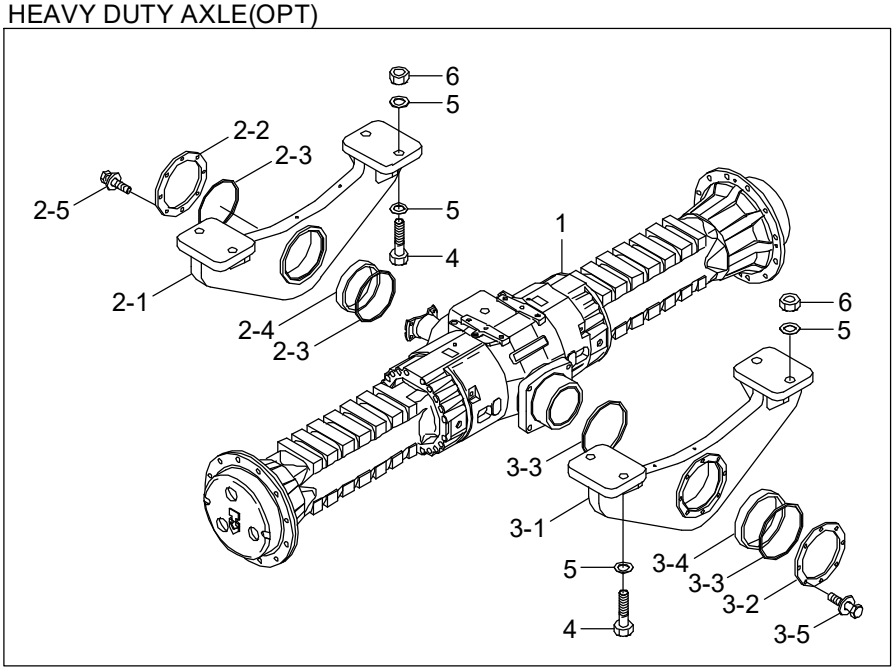

Item	Part_No	IS	Ord	T	Description	Qty	Serial_No	ITC	Remark
1	81LF-20010				REAR AXLE ASSY	1			CONVENTIONAL
	81LF-20020				REAR AXLE ASSY	1			LIMITED SLIP
	81LF-20120				REAR AXLE ASSY	1	#0390 -		HEAVY DUTY AXLE
2	81LG-20010				SUPPORT ASSY-FRONT	1			
	81LF-20410				SUPPORT ASSY-FRONT	1	#0390 -		HEAVY DUTY AXLE
2-1	81LG-20030				.SUPPORT WA-FRONT	1			
	81LF-20430				.SUPPORT WA-FRONT	1	#0390 -		HEAVY DUTY AXLE
2-2	81L7-20031				.COVER	1			
	81LN-20060				.COVER	1	#0390 -		HEAVY DUTY AXLE
2-3	81L7-20130				.SEAL-DUST	1			
	81LN-20040				.SEAL-DUST	1	#0390 -		HEAVY DUTY AXLE
2-4	81L7-20090				.BUSHING	1			
	81LF-20460				.BUSHING	1	#0390 -		HEAVY DUTY AXLE
2-5	S015-080206				.BOLT-HEX	8			
	S035-082056				.BOLT-W/WASHER	8	#0390 -		HEAVY DUTY AXLE
2-6	S411-080006				.WASHER-SPRING	8			
2-7	S403-08200B				.WASHER-PLAIN	8			
2-8	81L7-20060				.SEAL-DUST	1			
3	81LG-20020				SUPPORT ASSY-REAR	1			
	81LF-20420				SUPPORT ASSY-REAR	1	#0390 -		HEAVY DUTY AXLE
3-1	81LG-20040				.SUPPORT WA-REAR	1			
	81LF-20440				.SUPPORT WA-REAR	1	#0390 -		HEAVY DUTY AXLE
3-2	81L7-20031				.COVER	1			
	81LN-20060				.COVER	1	#0390 -		HEAVY DUTY AXLE
3-3	81L7-20060				.SEAL-DUST	2			
	81LN-20040				.SEAL-DUST	2	#0390 -		HEAVY DUTY AXLE

Item	Part_No	IS	Ord	T	Description	Qty	Serial_No	ITC	Remark
3-4	81L7-20100				.BUSHING	1			
	81LF-20460				.BUSHING	1	#0390 -		HEAVY DUTY AXLE
3-5	S015-080206				.BOLT-HEX	8			
	S035-082056				.BOLT-W/WASHER	8	#0390 -		HEAVY DUTY AXLE
3-6	S411-080006				.WASHER-SPRING	8			
3-7	S403-08200B				.WASHER-PLAIN	8			
4	S018-24095D				BOLT-HEX	8			
5	S441-240006				WASHER-HARDENED	16			
6	S206-241006				NUT-HEX	8			
7	81L7-10030				FRONT AXLE ASSY	1			LIMITED SLIP
	81L7-10040				FRONT AXLE ASSY	1			NO SPIN
8	81L7-10012				PLATE	2			
9	S018-24280D				BOLT-HEX	8			
10	S206-241006				NUT-HEX	16			
11	S441-240006				WASHER-HARDENED	16			

DRIVE LINES

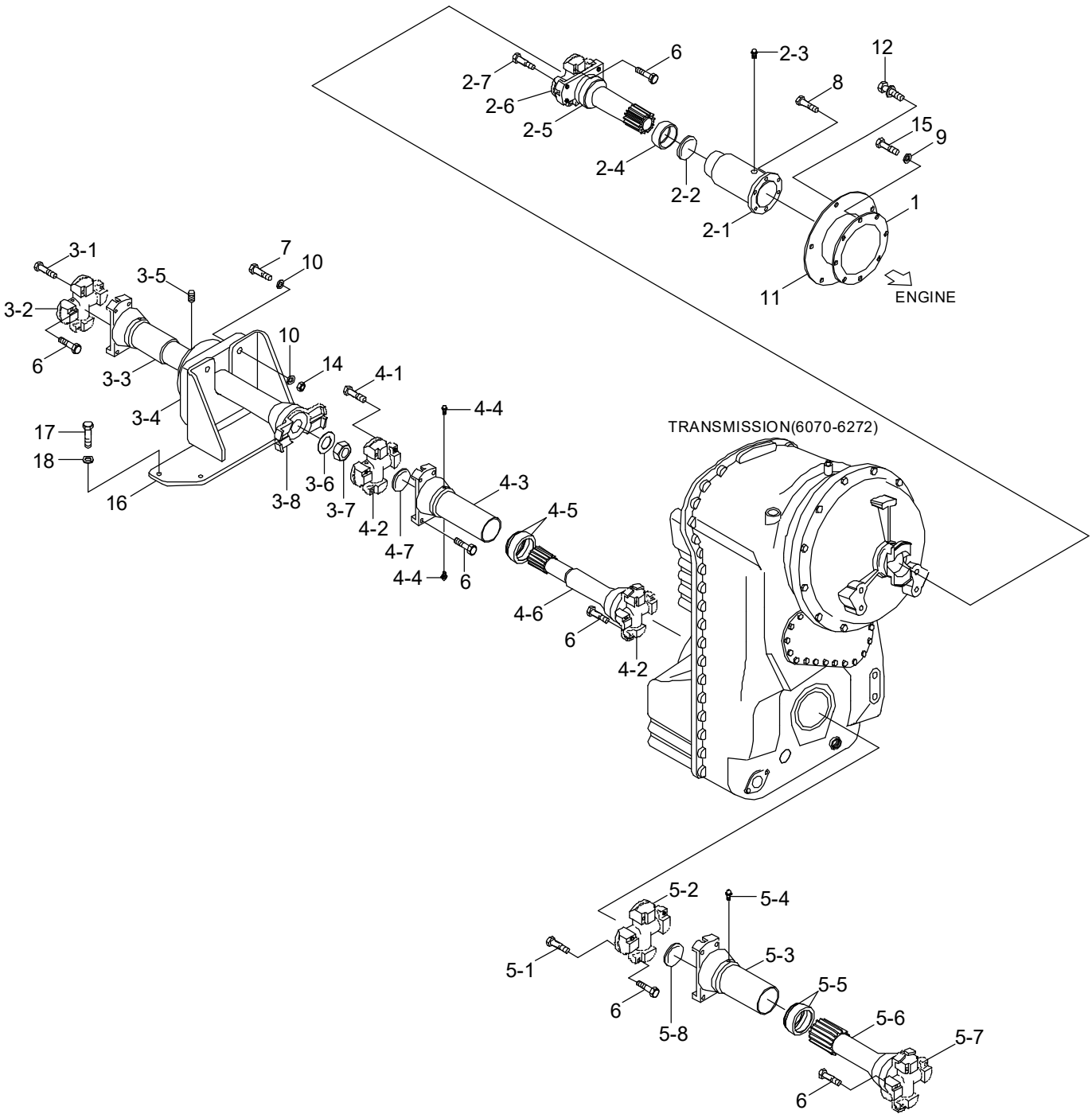
2-7
6
2-3
12
2-6
8
2-5
15
9
2-4
2-2
1
2-1
11
ENGINE
3-1
7
10
3-5
3-2
10
14
4-1
6
3-3
4-4
3-4
17
TRANSMISSION(6070-6272)
18
4-3
3-6
4-5
16
3-8
3-7
4-2
4-7
4-4
6
4-6
6
4-2
5-2
5-4
5-1
5-3
5-5
6
5-8
5-6
5-7
6

Item	Part_No	IS	Ord	T	Description	Qty	Serial_No	ITC	Remark
1	11L7-00031				DAMPER	1			CHANGE WITH 8
2	81LF-30040				D/SHAFT-UPPER	1			
2-1	247-5C126L				.FLANGE-OUTER	1			
2-2	910-56				.PLUG	1			
2-3	710-PT81				.SCREW-PLUG	1			
2-4	810-415JK				.SEAL-JOINT	1			
2-5	300-5C145L				.YOKE SHAFT	1			
2-6	100-5C-1				.J/BEARING ASSY	1			
2-7	103-83UNF				.BOLT	4			
3	81LF-30010				D/SHAFT-FRONT	1			
3-1	103-83UNF				.BOLT	4			
3-2	100-6C-1				.J/BEARING ASSY	1			
3-3	40AF-6C639L				.SHAFT ASSY-SLIP	1			
3-4	700-UCF311				.BEARING-FLANGE	1			
3-5	710-M1215				.SCREW-SET	1			
3-6	120-M27				.WASHER	1			
3-7	110-M27				.NUT-LOCK	1			
3-8	210-6C100L				.FLANGE COMPLETE	1			
4	81LF-30020				D/SHAFT-CENTER	1			
4-1	103-83UNF				.BOLT	8			
4-2	100-6C-1				.J/BEARING ASSY	2			
4-3	200-6C200L				.YOKE ASSY-SLIP	1			CHANGE WITH 4-5
4-4	101-PT81				.NIPPLE-GREASE	2			
4-5	810-415JK				.SEAL-JOINT	1			
4-6	40AF-6C693L				.SHAFT ASSY-SLIP	1			
4-7	910-56				.PLUG	1			

Item	Part_No	IS	Ord	T	Description	Qty	Serial_No	ITC	Remark
5	81LF-30030				D/SHAFT-REAR	1			
	81LF-30430				D/SHAFT-REAR	1	#0390 -		HEAVY DUTY AXLE
5-1	103-83UNF				.BOLT	8			
5-2	100-6C-1				.J/BEARING ASSY	1			
5-3	200-6C200L				.YOKE ASSY-SLIP	1			
5-4	710-PT81				.SCREW-PLUG	1			
	101-PT81				.NIPPLE-GREASE	1	#0390 -		HEAVY DUTY AXLE
5-5	810-415JK				.SEAL-JOINT	1			
5-6	40AF-5C288L				.SHAFT ASSY-SLIP	1			
5-7	100-5C-1				.J/BEARING ASSY	1			
5-8	910-56				.PLUG	1			
6	S088-060286				BOLT-HEX,UNIFIED	24			
7	S017-20060D				BOLT-HEX	4			
8	S017-100306				BOLT-HEX	6			
9	S411-100006				WASHER-SPRING	8			
10	S441-200006				WASHER-HARDENED	8			
11	81L7-30060				COVER-F/HOUSING	1			
12	S037-102056				BOLT-W/WASHER	6			
14	S205-201006				NUT-HEX	4			
15	S129-060126				BOLT-SOCKET,UNIFIED	8			
16	81LF-30050				BRACKET WA	1			
17	S017-16040D				BOLT-HEX	4			
18	S441-160006				WASHER-HARDENED	4			

TRANSMISSION MOUNTING

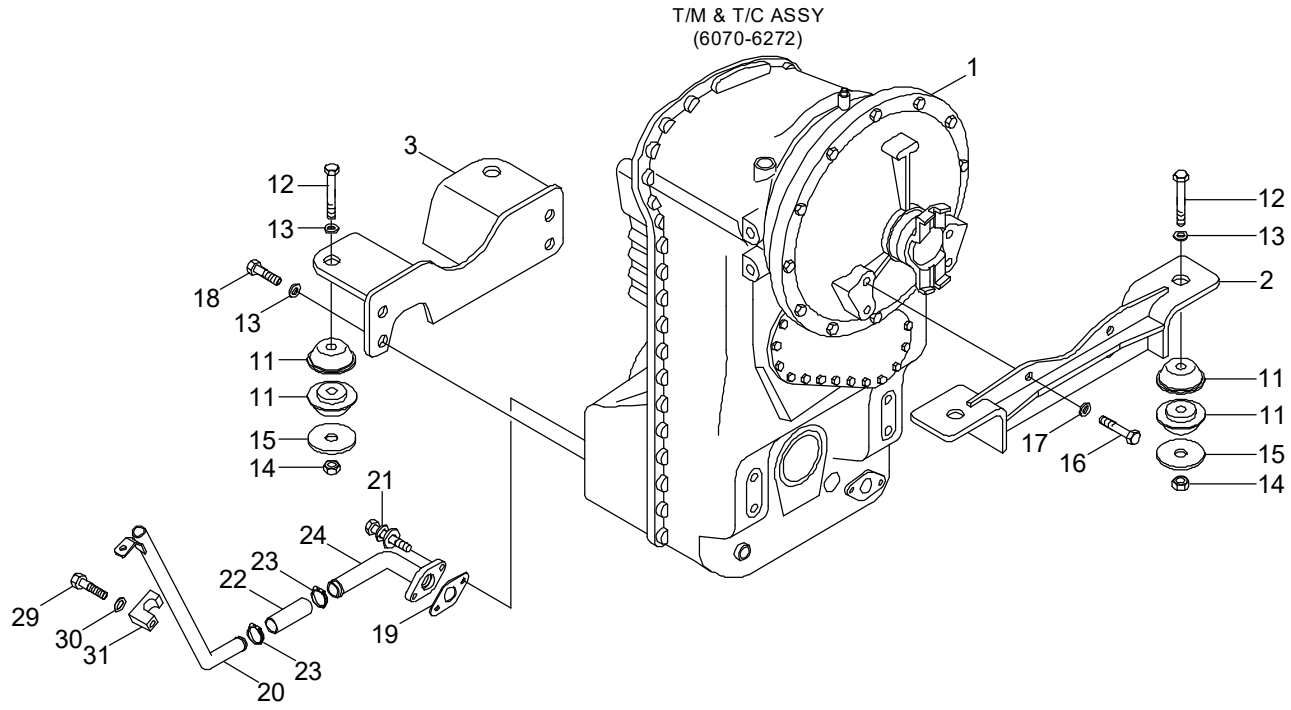

Item	Part_No	IS	Ord	T	Description	Qty	Serial_No	ITC	Remark
1	81LF-01100				T/M & T/C ASSY	1	- #0256		
	81LF-01101				T/M & T/C ASSY	1	#0257 -	B	
2	81LF-60010				BRACKET WA	1			
3	81LF-60020				BRACKET WA	1			
11	11N6-10450				RUBBER-MOUNT	8			
12	S017-20130D				BOLT-HEX	4			
13	S441-200006				WASHER-HARDENED	8			
14	S205-201006				NUT-HEX	4			
15	11L7-00170				WASHER-MOUNT	4			
16	S017-16035D				BOLT-HEX	4			
17	S441-160006				WASHER-HARDENED	4			
18	S017-20040D				BOLT-HEX	4			
19	12L2-0013				GASKET	1			
20	81LF-60041				PIPE WA	1			
21	S035-082546				BOLT-W/WASHER	2			
22	P760-042010				HOSE-RUBBER LOW	1			
23	S572-430006				CLAMP-HOSE,WIRE TYPE	2			
24	81LF-60050				PIPE WA	1			
29	S017-100506				BOLT-HEX	1			
30	S441-100006				WASHER-HARDENED	1			
31	81LF-60060				CLAMP-PIPE	1			

TRANSMISSION COOLING PIPING

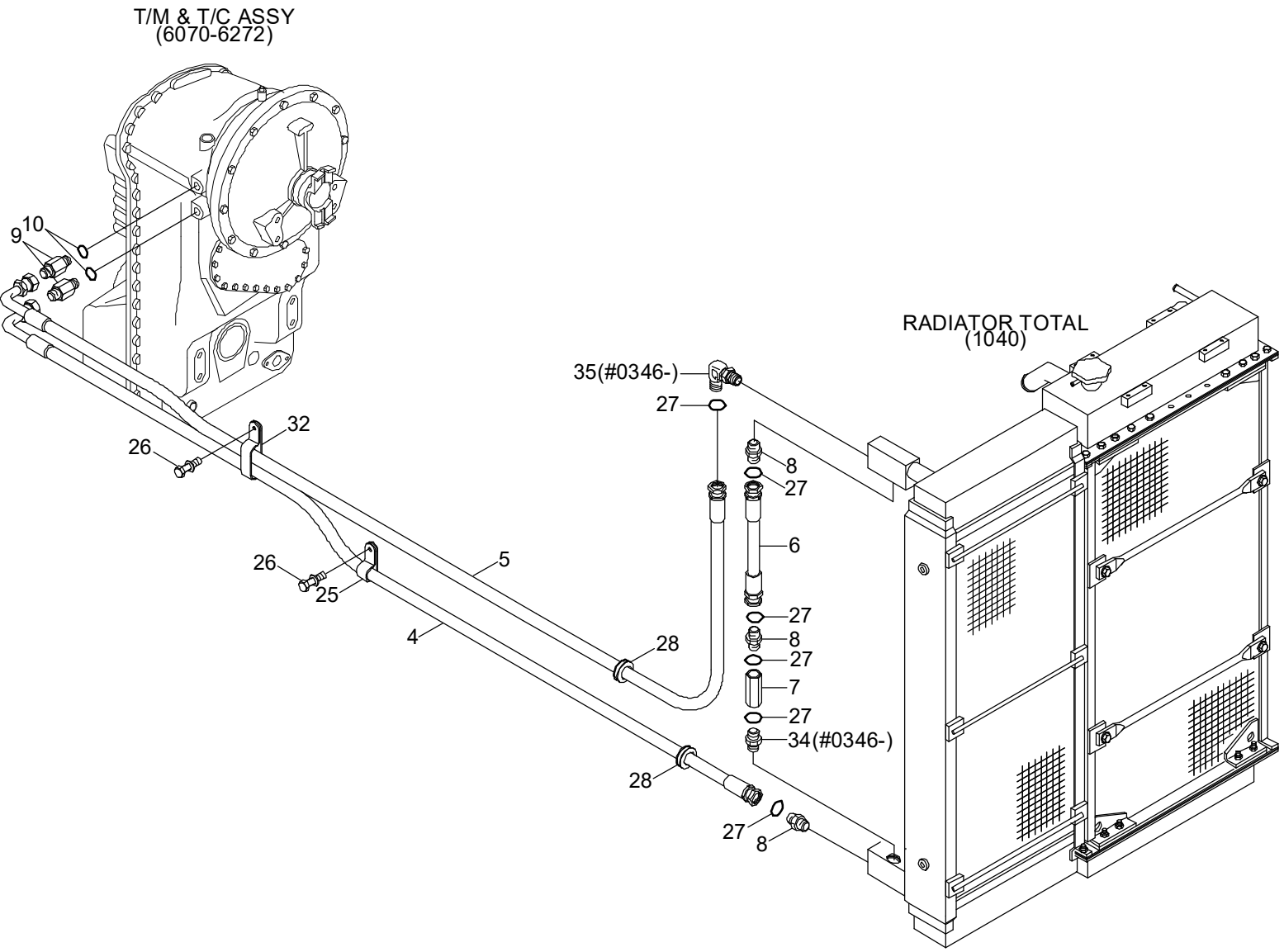

Item	Part_No	IS	Ord	T	Description	Qty	Serial_No	ITC	Remark
4	P620-161036				HOSE ASSY-THD 0X90	1			
5	P620-161049				HOSE ASSY-THD 0X90	1			
6	81LF-60080				HOSE ASSY	1	- #0345		
	P600-162015				HOSE ASSY-THD 0X0	1	#0346 -	D	
7	81L6-01260				CHECK VALVE	1			
8	P010-110006				CONNECTOR	1	- #0345		
					CONNECTOR	3	#0346 -	A	
9	P105-117163				CONNECTOR-LONG	2			
10	S611-030001				O-RING	2			
25	31L7-10230				CLAMP	1			
26	S037-102056				BOLT-W/WASHER	2			
27	S631-030001				O-RING	2	- #0345		
	S631-029004				O-RING	6	#0346 -	A	
28	S681-460400				GROMMET	2	- #0035		
					GROMMET	1	#0036 -	A	
32	34L4-01010				CLAMP	1			
33	S760-031200				GROMMET	1	#0036 -	D	
34	P000-110016				CONNECTOR	1	#0346 -	-	
35	P020-110005				ELBOW-90	1	#0346 -	-	

ENGINE CONNECTION GROUP

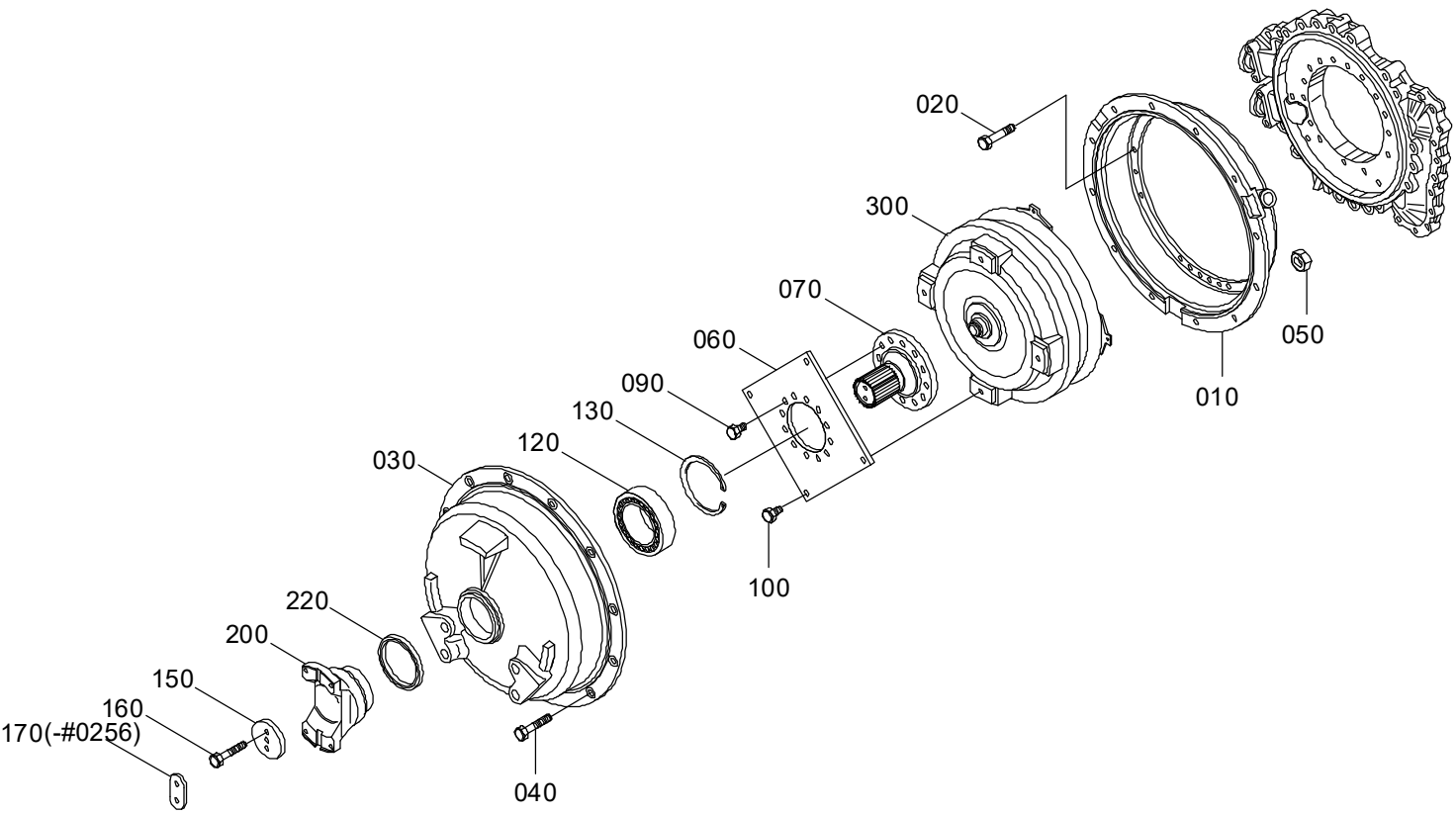

Item	Part_No	IS	Ord	T	Description	Qty	Serial_No	ITC	Remark
*	ZGAQ-01380				ENGINE CONNECTION GROUP	1	- #0256		
	ZGAQ-03138				ENGINE CONNECTION GROUP	1	#0257 -	D	
010	ZGAQ-00757				BELL-CONVERTER	1			
020	ZGAQ-00758				SCREW	18			
030	ZGAQ-01381				COVER	1			
040	ZGAQ-00783				SCREW-CAP	12			
050	ZGAQ-01382				NUT-HEX	12			
060	ZGAQ-01383				DIAPHRAGM	1			
070	ZGAQ-01384				SHAFT-INPUT	1	- #0256		
	ZGAQ-02819				SHAFT-INPUT	1	#0257 -	D	
090	ZGAQ-00761				SCREW	12			
100	ZGAQ-00761				SCREW	4			
120	ZGAQ-00192				BEARING-BALL	1			
130	ZGAQ-00193				V-RING	1			
150	ZGAQ-01385				WASHER	1			
160	ZGAQ-01386				SCREW	2			
170	ZGAQ-01387				WASHER-TAB	1	- #0256	-	
*	ZGAQ-01388				ENGINE CONN GROUP	1			
200	ZGAQ-01389				FLANGE-INPUT	1			
220	ZGAQ-01390				SHEET-SCREEN	1			
*	ZGAQ-01927				CONVERTER	1	- #0256		
	ZGAQ-03146				CONVERTER	1	#0257 -	D	
300	ZGAQ-01928				CONVERTER	1	- #0256		
	ZGAQ-02840				CONVERTER	1	#0257 -	D	

INPUT GROUP

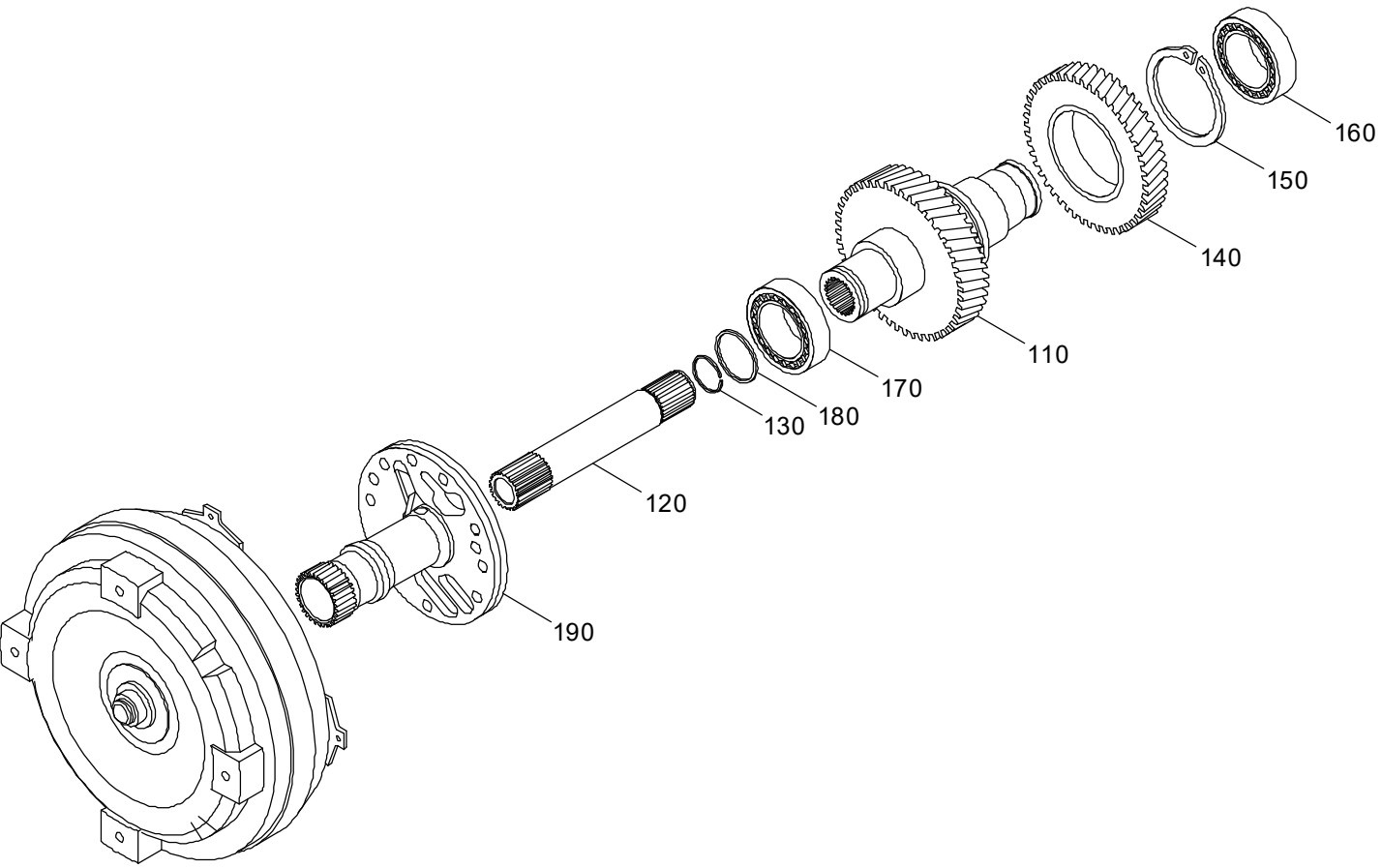

Item	Part_No	IS	Ord	T	Description	Qty	Serial_No	ITC	Remark
*	ZGAQ-01393				INPUT GROUP	1	- #0256		
	ZGAQ-03133				INPUT GROUP	1	#0257 -	D	
110	ZGAQ-01394				SHAFT-INPUT	1			
120	ZGAQ-00767				SHAFT-TURBINE	1			
130	ZGAQ-00768				RING-SNAP	1			
140	ZGAQ-01395				GEAR-INPUT	1			
150	ZGAQ-01396				RING-RETAINING	1			
160	ZGAQ-00769				BEARING-ROLLER	1			
170	ZGAQ-00769				BEARING-ROLLER	1			
180	ZGAQ-01397				RING-PISTON	1			
190	ZGAQ-00771				SHAFT-STATOR	1	- #0256		
	ZGAQ-02821				SHAFT-STATOR	1	#0257 -	D	

GEARBOX HOUSING GROUP(1/2)

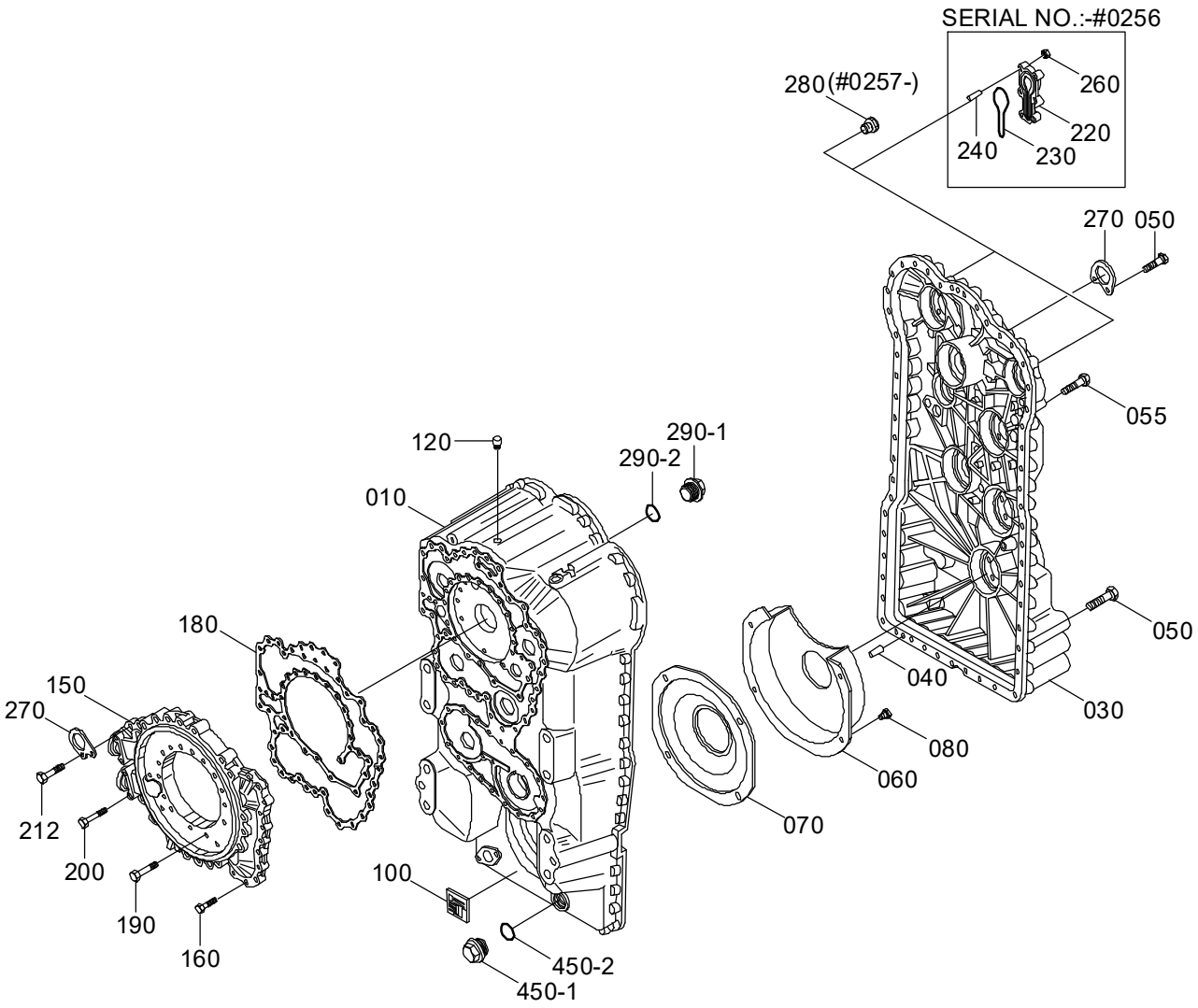

Item	Part_No	IS	Ord	T	Description	Qty	Serial_No	ITC	Remark
*	ZGAQ-01398				GEARBOX HOUSING	1	- #0256		
	ZGAQ-03139				GEARBOX HOUSING	1	#0257 -	D	
010	ZGAQ-01399				HOUSING-FRONT	1	- #0256		
	ZGAQ-02822				SECT.-HOUS.FRONT	1	#0257 -	D	
030	ZGAQ-01400				HOUSING-REAR	1	- #0256		
	ZGAQ-02823				SECT.-HOUS.REAR	1	#0257 -	D	
040	ZGAQ-01401				PIN-CYLINDRICAL	2			
050	ZGAQ-00794				SCREW-CAP	44	- #0256		
					SCREW-CAP	32	#0257 -	A	
055	ZGAQ-01402				SCREW-CAP	7	- #0256		
					SCREW-CAP	2	#0257 -	A	
060	ZGAQ-01403				SHEET-SCREEN	1			
070	ZGAQ-01404				SHEET-SCREEN	1			
080	ZGAQ-00787				SCREW-CAP	4			
100	ZGAQ-00788				PLATE-TYPE	1			
120	ZGAQ-00258				BREATHER	1			
150	ZGAQ-01706				HOUSING-OIL FEED	1			
160	ZGAQ-00792				SCREW-CAP	15			
180	ZGAQ-00790				GASKET	1			
190	ZGAQ-00791				SCREW-CAP	21			
200	ZGAQ-00793				SCREW-CAP	4			
212	ZGAQ-00794				SCREW-CAP	2			
220	ZGAQ-00795				COVER	2	- #0256	-	
230	ZGAQ-00796				O-RING	2	- #0256	-	
240	ZGAQ-01405				STUD	12	- #0256	-	
260	ZGAQ-00799				NUT-HEX	12	- #0256	-	

Item	Part_No	IS	Ord	T	Description	Qty	Serial_No	ITC	Remark
270	ZGAQ-00784				PLATE-FIXING	2			
280	ZGAQ-02824				PLUG	2	#0257 -	-	
290-1	ZGAQ-00800				PLUG-SCREW	1			
290-2	ZGAQ-00253				O-RING	1			
450-1	ZGAQ-00252				PLUG-SCREW	1			
450-2	ZGAQ-00253				O-RING	1			

GEARBOX HOUSING GROUP(2/2)

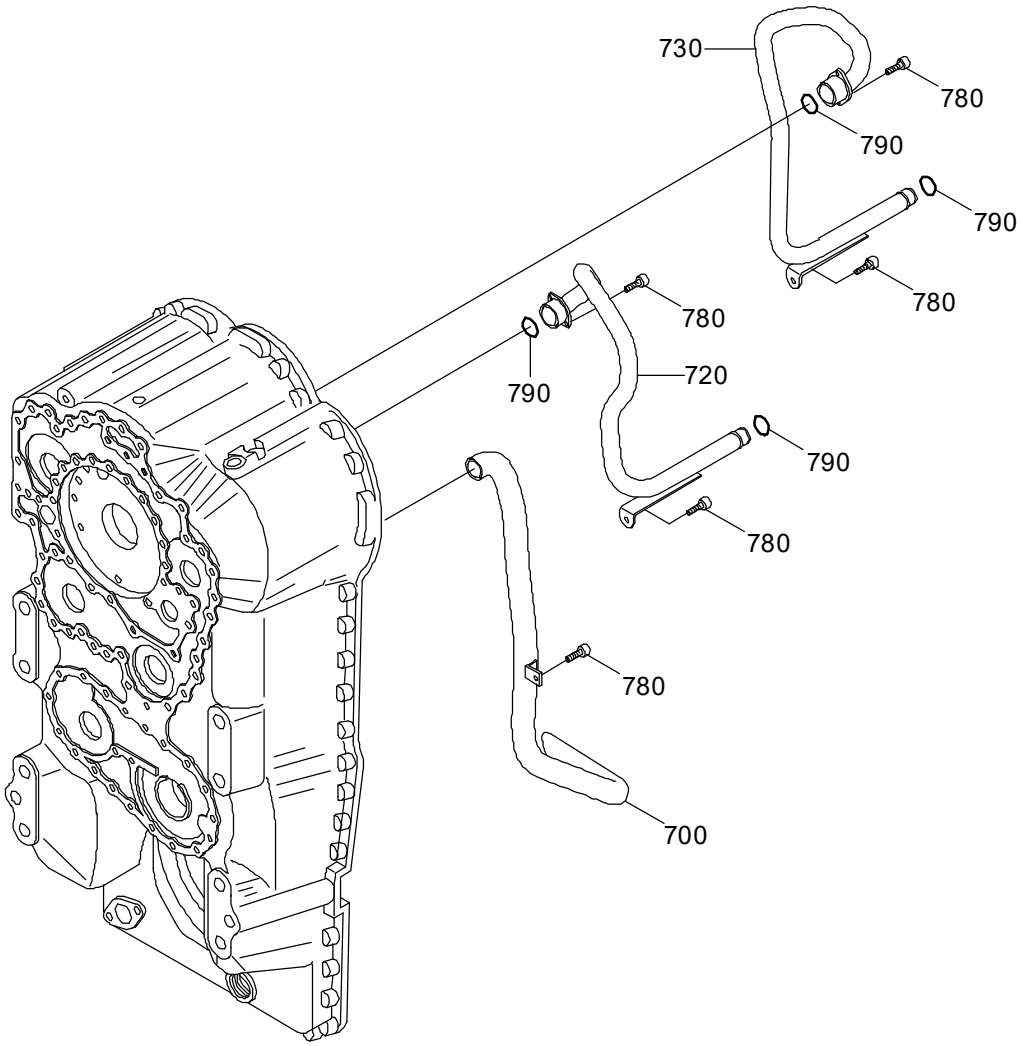

Item	Part_No	IS	Ord	T	Description	Qty	Serial_No	ITC	Remark
*	@				GEARBOX HOUSING	1			NOT
700	ZGAQ-01406				TUBE-SUCTION	1	- #0256		
	ZGAQ-02825				TUBE-SUCTION	1	#0257 -	D	
720	ZGAQ-01407				OIL TUBE	1			
730	ZGAQ-01408				OIL TUBE	1			
780	ZGAQ-00787				SCREW-CAP	7			
790	ZGAQ-00804				O-RING	4	- #0256		
					O-RING	4	#0257 -	D	

COUPLING GROUP(K1)

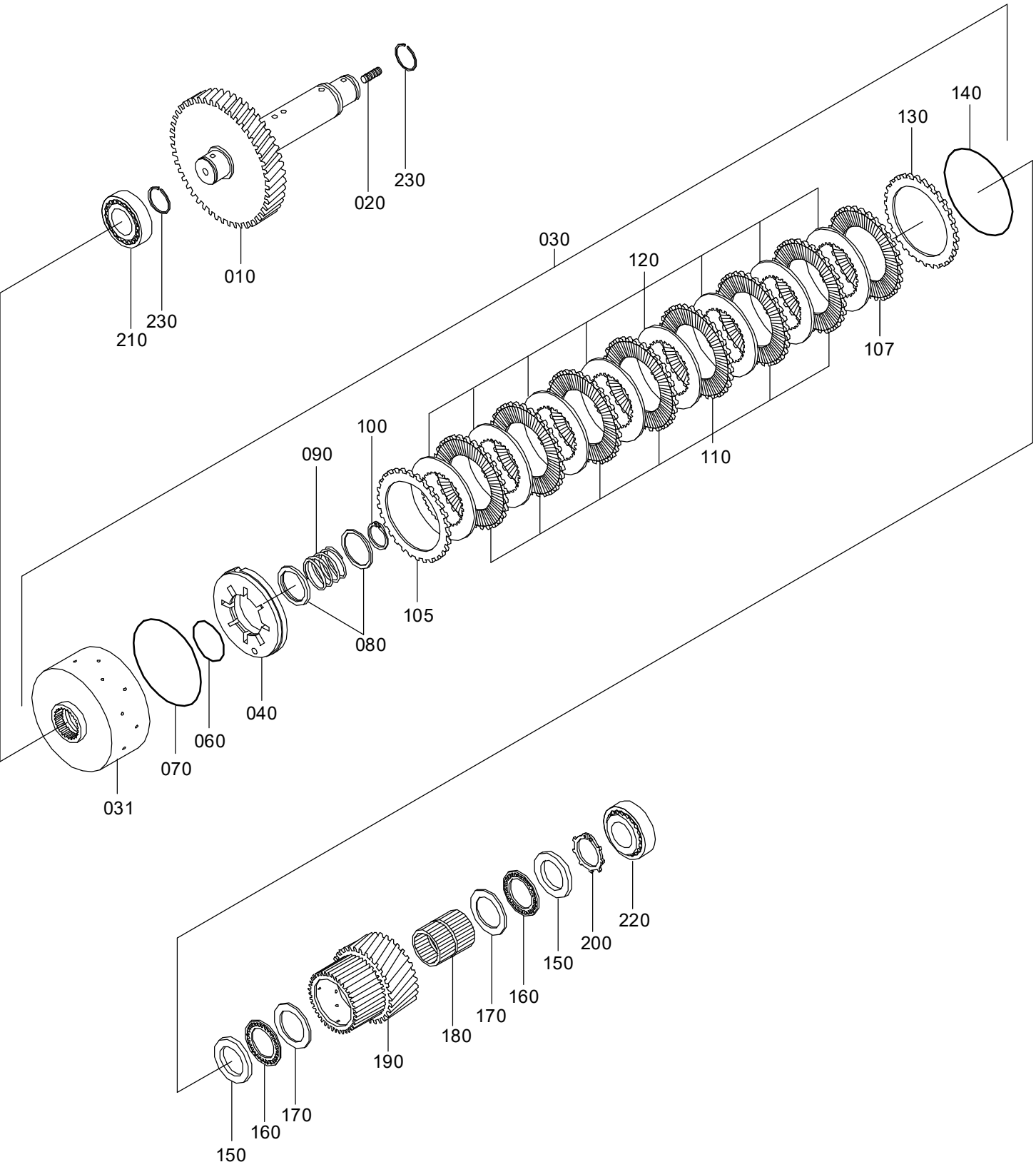

Item	Part_No	IS	Ord	T	Description	Qty	Serial_No	ITC	Remark
*	ZGAQ-02392				COUPLING GROUP-K1	1			
010	ZGAQ-01410				SHAFT	1			
020	ZGAQ-00811				STUD	1			
030	ZGAQ-02393				COUPLING	1			
031	ZGAQ-01931				.DISC CARRIER	1			
040	ZGAQ-00849				.PISTON	1			
060	ZGAQ-00814				.O-RING	1			
070	ZGAQ-00850				.O-RING	1			
080	ZGAQ-01932				.GUIDE RING	2			
090	ZGAQ-01933				.SPRING	1			
100	ZGAQ-01934				.RING-RETAINING	1			
105	ZGAQ-01508				.DISK-CLUTCH OUTER	1			
107	ZGAQ-01508				.DISK-CLUTCH OUTER	1			
110	ZGAQ-01509				.DISC	7			
120	ZGAQ-00853				.DISC-CLUTCH,INNER	8			
130	ZGAQ-00854				.SHIM-END	1			
140	ZGAQ-00855				.RING-SNAP(2.1)	1			
	ZGAQ-00856				.RING-SNAP(2.25)	1			
	ZGAQ-00857				.RING-SNAP(2.4)	1			
	ZGAQ-00858				.RING-SNAP(2.55)	1			
	ZGAQ-00859				.RING-SNAP(2.7)	1			
	ZGAQ-00860				.RING-SNAP(2.85)	1			
	ZGAQ-00861				.RING-SNAP(3.00)	1			
	ZGAQ-00862				.RING-SNAP(3.15)	1			
	ZGAQ-00863				.RING-SNAP(3.30)	1			
	ZGAQ-00864				.RING-SNAP(3.45)	1			

Item	Part_No	IS	Ord	T	Description	Qty	Serial_No	ITC	Remark
140	ZGAQ-00865				.RING-SNAP(3.60)	1			
	ZGAQ-00866				.RING-SNAP(3.75)	1			
	ZGAQ-00867				.RING-SNAP(3.90)	1			
	ZGAQ-00868				.RING-SNAP(4.05)	1			
	ZGAQ-00869				.RING-SNAP(4.20)	1			
150	ZGAQ-00824				DISC-RUNNING	2			
160	ZGAQ-00825				CAGE-AXIAL NEEDLE	2			
170	ZGAQ-00826				WASHER-AXIAL	2			
180	ZGAQ-01412				CAGE-NEEDLE	1			
190	ZGAQ-01413				IDLER	1			
200	ZGAQ-00828				RING-RETAINING	1			
210	ZGAQ-00880				BEARING-ROLLER	1			
220	ZGAQ-00880				BEARING-ROLLER	1			
230	ZGAQ-00831				RING-PISTON	2			

COUPLING GROUP(K2)

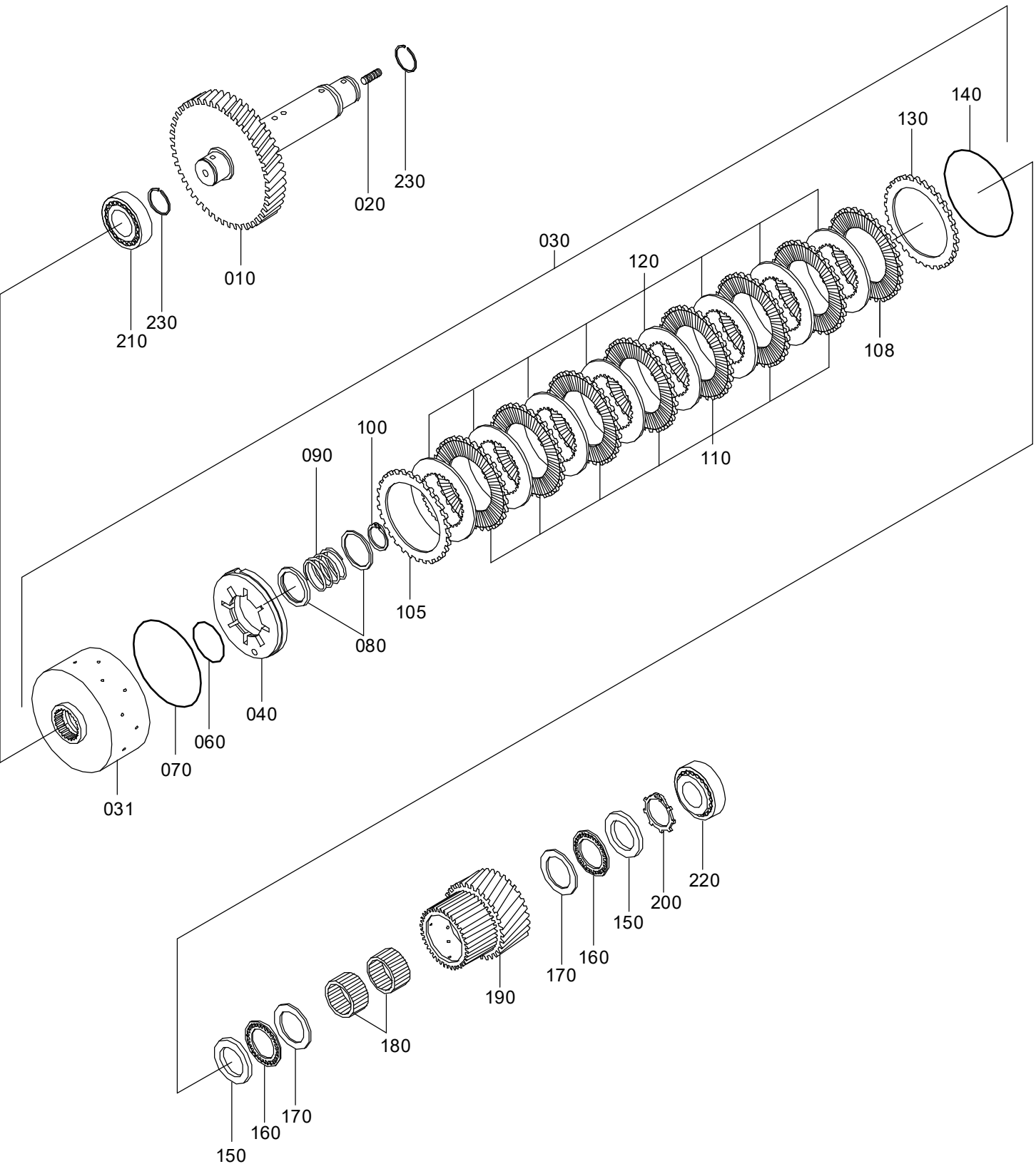

Item	Part_No	IS	Ord	T	Description	Qty	Serial_No	ITC	Remark
*	ZGAQ-02394				COUPLING	1			
010	ZGAQ-01415				SHAFT	1			
020	ZGAQ-00811				STUD	1			
030	ZGAQ-02395				COUPLING	1			
031	ZGAQ-01937				.DISC CARRIER	1			
040	ZGAQ-01938				.PISTON	1			
060	ZGAQ-01939				.O-RING	1			
070	ZGAQ-01940				.O-RING	1			
080	ZGAQ-01941				.RING-GUIDE	2			
090	ZGAQ-01942				.SPRING	1			
100	ZGAQ-01943				.RING-RETAINING	1			
105	ZGAQ-01944				.DISC-CLUTCH OUTER	1			
108	ZGAQ-01944				.DISC-CLUTCH OUTER	1			
110	ZGAQ-01945				.DISC	7			
120	ZGAQ-01946				.DISC-CLUTCH INNER	8			
130	ZGAQ-01947				.SHIM-END	1			
140	ZGAQ-01948				.RING-SNAP (2.10)	1			
	ZGAQ-01949				.RING-SNAP (2.25)	1			
	ZGAQ-01950				.RING-SNAP (2.40)	1			
	ZGAQ-01951				.RING-SNAP (2.55)	1			
	ZGAQ-01952				.RING-SNAP (2.70)	1			
	ZGAQ-01953				.RING-SNAP (2.85)	1			
	ZGAQ-01954				.RING-SNAP (3.00)	1			
	ZGAQ-01955				.RING-SNAP (3.15)	1			
	ZGAQ-01956				.RING-SNAP (3.30)	1			
	ZGAQ-01957				.RING-SNAP (3.45)	1			

Item	Part_No	IS	Ord	T	Description	Qty	Serial_No	ITC	Remark
140	ZGAQ-01958				.RING-SNAP (3.60)	1			
	ZGAQ-01959				.RING-SNAP (3.75)	1			
	ZGAQ-01960				.RING-SNAP (3.90)	1			
	ZGAQ-01961				.RING-SNAP (4.05)	1			
	ZGAQ-01962				.RING-SNAP (4.20)	1			
150	ZGAQ-01417				DISC-RUNNING	2			
160	ZGAQ-01418				CAGE-AXIAL NEEDLE	2			
170	ZGAQ-01419				WASHER-AXIAL	2			
180	ZGAQ-01420				CAGE-NEEDLE	2			
190	ZGAQ-01421				IDLER	1			
200	ZGAQ-01422				RING-RETAINING	1			
210	ZGAQ-00880				BEARING-ROLLER	1			
220	ZGAQ-00880				BEARING-ROLLER	1			
230	ZGAQ-00831				RING-PISTON	2			

COUPLING GROUP(K3)

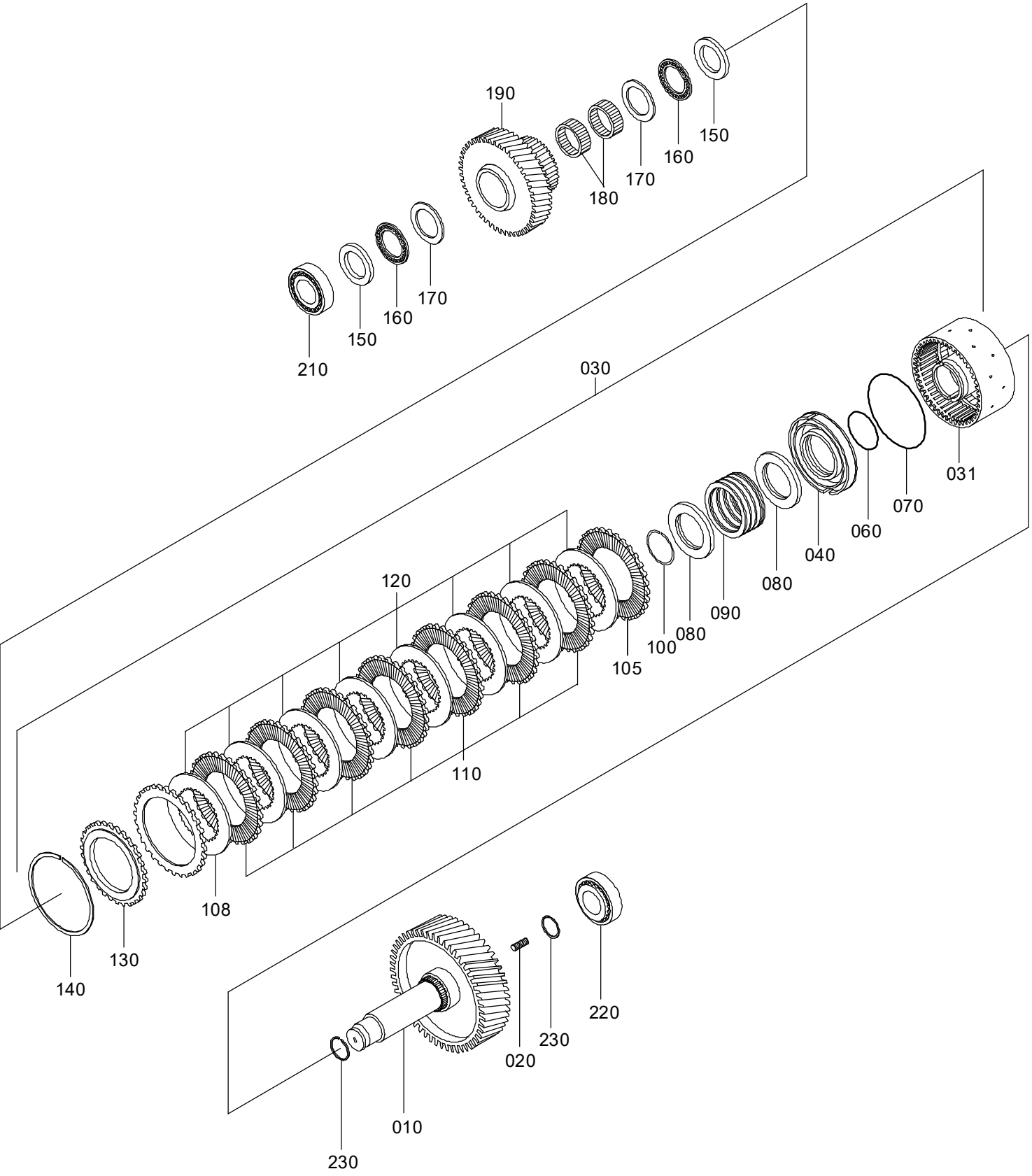

ITEM	PART NO.	DESCRIPTION	T/M SERIAL NO.
010	ZGAQ-01424	SHAFT	-#1673484
	ZGAQ-03132	SHAFT	#1673485-

Item	Part_No	IS	Ord	T	Description	Qty	Serial_No	ITC	Remark
*	ZGAQ-02396				COUPLING	1	- #0256		
	ZGAQ-03130				COUPLING	1	#0257 -	D	
010	ZGAQ-01424				SHAFT	1	- #0256		SEE ILLUST
	ZGAQ-03132				SHAFT	1	#0257 -	D	SEE ILLUST
020	ZGAQ-00811				STUD	1			
030	ZGAQ-02395				COUPLING	1			
031	ZGAQ-01937				.DISC CARRIER	1			
040	ZGAQ-01938				.PISTON	1			
060	ZGAQ-01939				.O-RING	1			
070	ZGAQ-01940				.O-RING	1			
080	ZGAQ-01941				.RING-GUIDE	2			
090	ZGAQ-01942				.SPRING	1			
100	ZGAQ-01943				.RING-RETAINING	1			
105	ZGAQ-01944				.DISC-CLUTCH OUTER	1			
108	ZGAQ-01944				.DISC-CLUTCH OUTER	1			
110	ZGAQ-01945				.DISC	7			
120	ZGAQ-01946				.DISC-CLUTCH INNER	8			
130	ZGAQ-01947				.SHIM-END	1			
140	ZGAQ-01948				.RING-SNAP (2.10)	1			
	ZGAQ-01949				.RING-SNAP (2.25)	1			
	ZGAQ-01950				.RING-SNAP (2.40)	1			
	ZGAQ-01951				.RING-SNAP (2.55)	1			
	ZGAQ-01952				.RING-SNAP (2.70)	1			
	ZGAQ-01953				.RING-SNAP (2.85)	1			
	ZGAQ-01954				.RING-SNAP (3.00)	1			
	ZGAQ-01955				.RING-SNAP (3.15)	1			

Item	Part_No	IS	Ord	T	Description	Qty	Serial_No	ITC	Remark
140	ZGAQ-01956				.RING-SNAP (3.30)	1			
	ZGAQ-01957				.RING-SNAP (3.45)	1			
	ZGAQ-01958				.RING-SNAP (3.60)	1			
	ZGAQ-01959				.RING-SNAP (3.75)	1			
	ZGAQ-01960				.RING-SNAP (3.90)	1			
	ZGAQ-01961				.RING-SNAP (4.05)	1			
	ZGAQ-01962				.RING-SNAP (4.20)	1			
150	ZGAQ-01417				DISC-RUNNING	2			
160	ZGAQ-01418				CAGE-AXIAL NEEDLE	2			
170	ZGAQ-01419				WASHER-AXIAL	2			
180	ZGAQ-01420				CAGE-NEEDLE	2			
190	ZGAQ-01425				IDLER	1			
210	ZGAQ-00880				BEARING-ROLLER	1			
220	ZGAQ-00769				BEARING-ROLLER	1			
230	ZGAQ-00831				RING-PISTON	2			

COUPLING GROUP(K4)

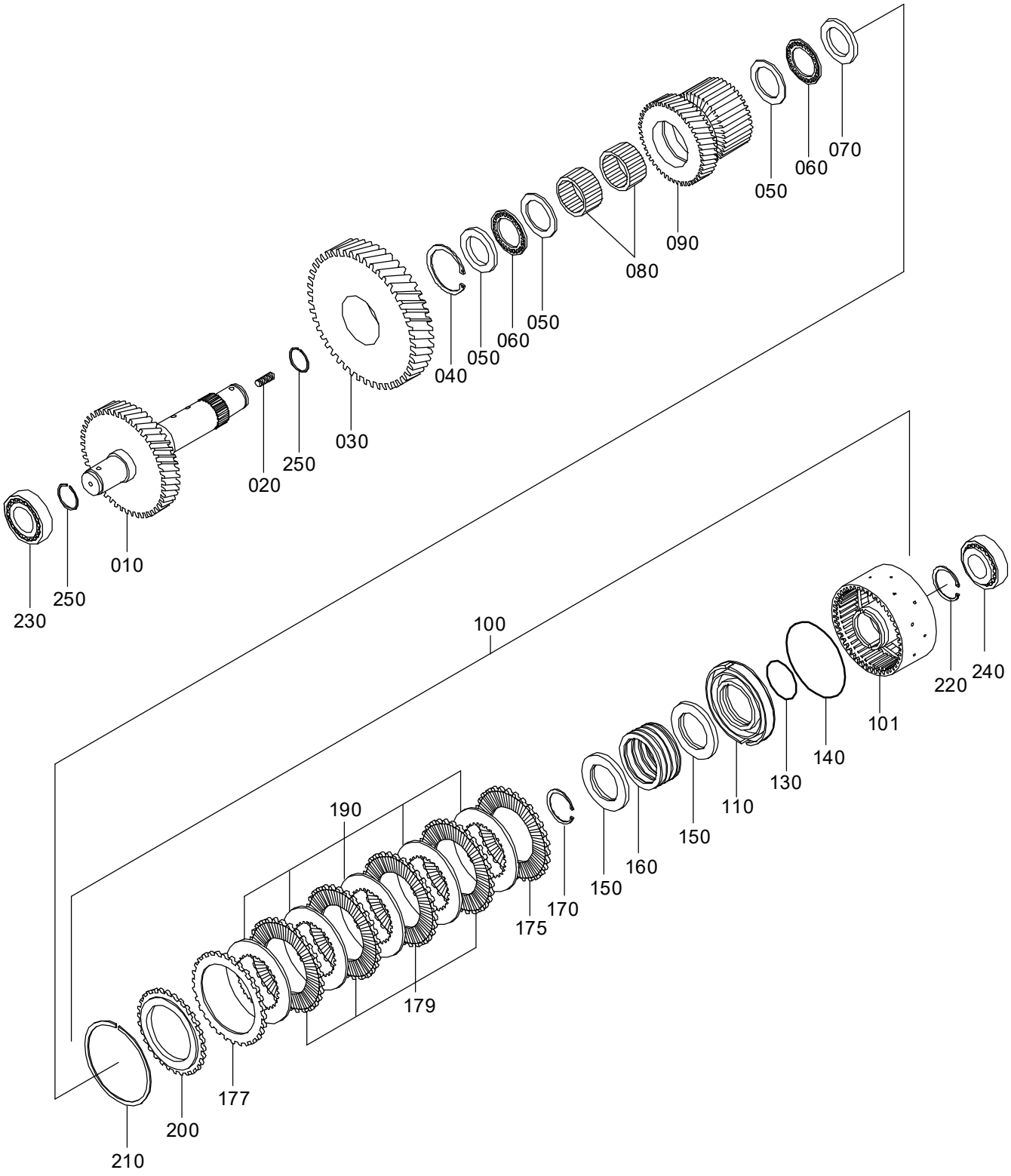

Item	Part_No	IS	Ord	T	Description	Qty	Serial_No	ITC	Remark
*	ZGAQ-01964				COUPLING	1			
010	ZGAQ-01427				SHAFT	1			
020	ZGAQ-00811				STUD	1			
030	ZGAQ-01428				GEAR	1			
040	ZGAQ-00876				RING-RETAINING	1			
050	ZGAQ-01419				WASHER-AXIAL	3			
060	ZGAQ-01418				CAGE-AXIAL NEEDLE	2			
070	ZGAQ-01417				DISC-RUNNING	1			
080	ZGAQ-01420				CAGE-NEEDLE	2			
090	ZGAQ-01429				IDLER	1			
100	ZGAQ-01965				COUPLING	1			
101	ZGAQ-01966				.DISC CARRIER	1			
110	ZGAQ-01938				.PISTON	1			
130	ZGAQ-01939				.O-RING	1			
140	ZGAQ-01940				.O-RING	1			
150	ZGAQ-01941				.RING-GUIDE	2			
160	ZGAQ-01942				.SPRING	1			
170	ZGAQ-01943				.RING-RETAINING	1			
175	ZGAQ-01944				.DISC-CLUTCH OUTER	1			
177	ZGAQ-01944				.DISC-CLUTCH OUTER	1			
179	ZGAQ-01945				.DISC	4			
190	ZGAQ-01946				.DISC-CLUTCH INNER	5			
200	ZGAQ-01947				.SHIM-END	1			
210	ZGAQ-01948				.RING-SNAP (2.10)	1			
	ZGAQ-01949				.RING-SNAP (2.25)	1			
	ZGAQ-01950				.RING-SNAP (2.40)	1			

Item	Part_No	IS	Ord	T	Description	Qty	Serial_No	ITC	Remark
210	ZGAQ-01951				.RING-SNAP (2.55)	1			
	ZGAQ-01952				.RING-SNAP (2.70)	1			
	ZGAQ-01953				.RING-SNAP (2.85)	1			
	ZGAQ-01954				.RING-SNAP (3.00)	1			
	ZGAQ-01955				.RING-SNAP (3.15)	1			
	ZGAQ-01956				.RING-SNAP (3.30)	1			
	ZGAQ-01957				.RING-SNAP (3.45)	1			
	ZGAQ-01958				.RING-SNAP (3.60)	1			
	ZGAQ-01959				.RING-SNAP (3.75)	1			
	ZGAQ-01960				.RING-SNAP (3.90)	1			
	ZGAQ-01961				.RING-SNAP (4.05)	1			
	ZGAQ-01962				.RING-SNAP (4.20)	1			
220	ZGAQ-01310				RING-RETAINING	1			
230	ZGAQ-00880				BEARING-ROLLER	1			
240	ZGAQ-00880				BEARING-ROLLER	1			
250	ZGAQ-00831				RING-PISTON	2			

COUPLING GROUP(KV)

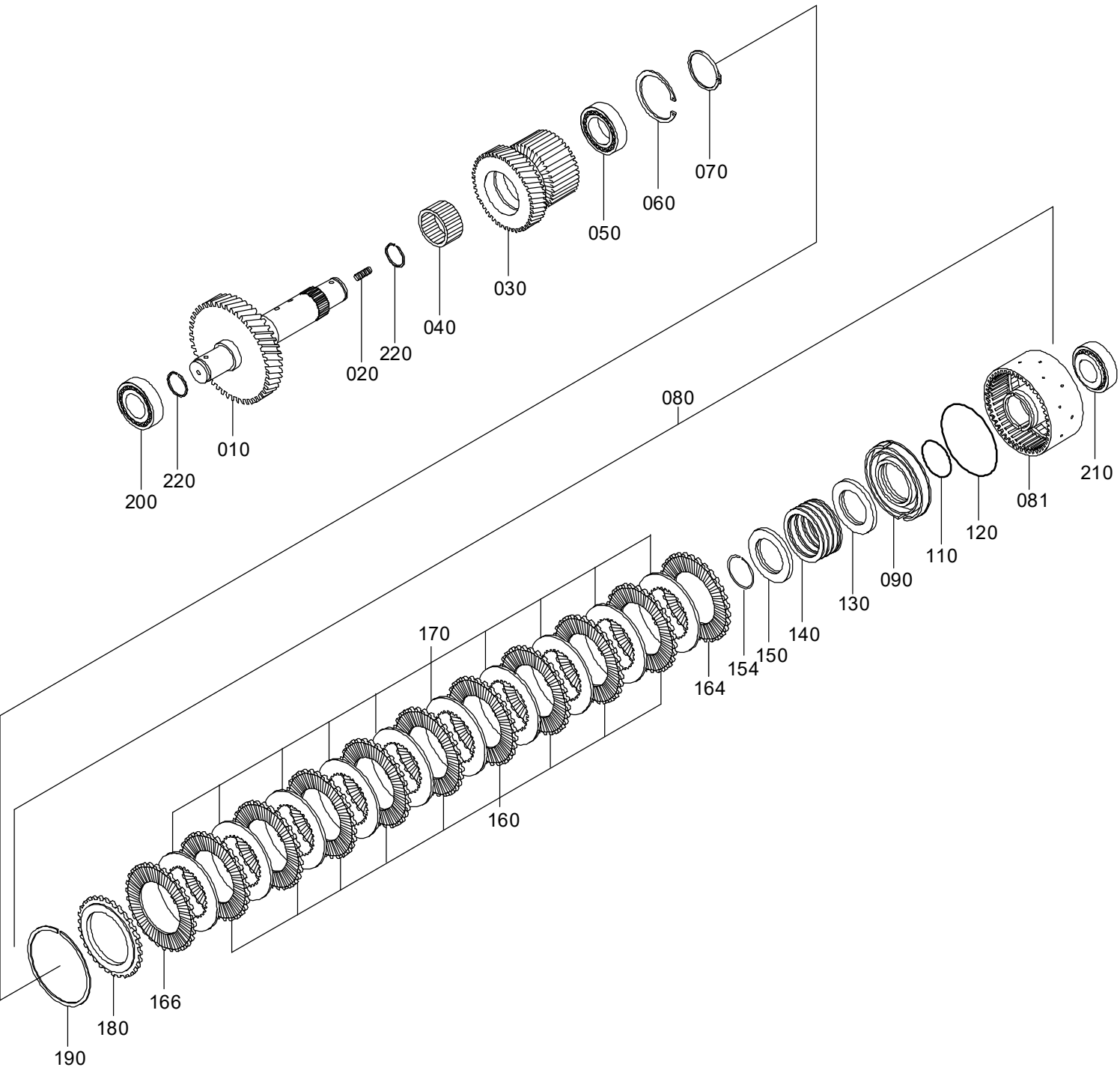

Item	Part_No	IS	Ord	T	Description	Qty	Serial_No	ITC	Remark
*	ZGAQ-02397				COUPLING	1	- #0256		
	ZGAQ-03147				COUPLING	1	#0257 -	B	
010	ZGAQ-01432				SHAFT	1			
020	ZGAQ-00811				STUD	1			
030	ZGAQ-01433				IDLER	1			
040	ZGAQ-00886				CAGE-NEEDLE	1			
050	ZGAQ-01434				BEARING-BALL	1			
060	ZGAQ-00592				RING-RETAINING	1			
070	ZGAQ-00879				RING-RETAINER	1			
080	ZGAQ-02398				COUPLING	1	- #0256		
	ZGAQ-02837				COUPLING	1	#0257 -	D	
081	ZGAQ-01969				.DISC CARRIER	1	- #0256		
	ZGAQ-02827				.DISC CARRIER	1	#0257 -	D	
090	ZGAQ-00849				.PISTON	1			
110	ZGAQ-00814				.O-RING	1			
120	ZGAQ-00850				.O-RING	1			
130	ZGAQ-00883				.WASHER	1			
140	ZGAQ-00884				.SPRING	1			
150	ZGAQ-00817				.RING-RETAINING	1	- #0256		
	ZGAQ-02828				.SHIM-SUPPORT	1	#0257 -	D	
154	ZGAQ-00818				.RING-SNAP	1	- #0256		
	ZGAQ-02829				.L-RING	1	#0257 -	D	
160	ZGAQ-01509				.DISC	9			
164	ZGAQ-01508				.DISC-CLUTCH OUTER	1			
166	ZGAQ-01508				.DISC-CLUTCH OUTER	1			
170	ZGAQ-00853				.DISC-CLUTCH,INNER	10			

Item	Part_No	IS	Ord	T	Description	Qty	Serial_No	ITC	Remark
180	ZGAQ-00854				.SHIM-END	1			
	ZGAQ-00855				.RING-SNAP(2.1)	1			
	ZGAQ-00856				.RING-SNAP(2.25)	1			
	ZGAQ-00857				.RING-SNAP(2.4)	1			
	ZGAQ-00858				.RING-SNAP(2.55)	1			
	ZGAQ-00859				.RING-SNAP(2.7)	1			
	ZGAQ-00860				.RING-SNAP(2.85)	1			
	ZGAQ-00861				.RING-SNAP(3.00)	1			
190	ZGAQ-00862				.RING-SNAP(3.15)	1			
	ZGAQ-00863				.RING-SNAP(3.30)	1			
	ZGAQ-00864				.RING-SNAP(3.45)	1			
	ZGAQ-00865				.RING-SNAP(3.60)	1			
	ZGAQ-00866				.RING-SNAP(3.75)	1			
	ZGAQ-00867				.RING-SNAP(3.90)	1			
	ZGAQ-00868				.RING-SNAP(4.05)	1			
	ZGAQ-00869				.RING-SNAP(4.20)	1			
200	ZGAQ-00880				BEARING-ROLLER	1			
210	ZGAQ-00880				BEARING-ROLLER	1			
220	ZGAQ-00831				RING-PISTON	2			

COUPLING GROUP(KR)

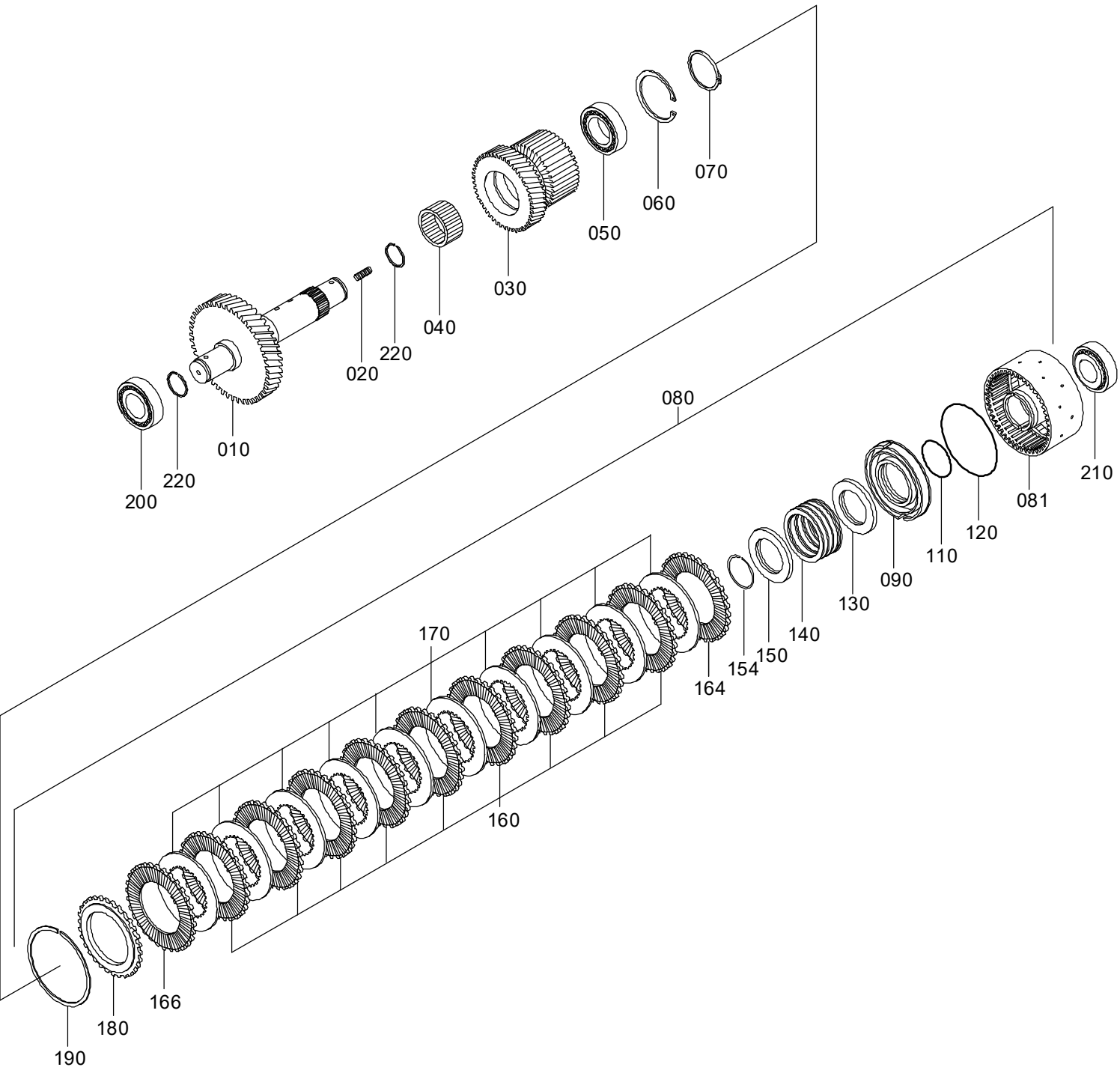

Item	Part_No	IS	Ord	T	Description	Qty	Serial_No	ITC	Remark
*	ZGAQ-02399				COUPLING	1	- #0256		
	ZGAQ-03148				COUPLING	1	#0257 -	B	
010	ZGAQ-01437				SHAFT	1			
020	ZGAQ-00811				STUD	1			
030	ZGAQ-01433				IDLER	1			
040	ZGAQ-00886				CAGE-NEEDLE	1			
050	ZGAQ-01434				BEARING-BALL	1			
060	ZGAQ-00592				RING-RETAINING	1			
070	ZGAQ-00879				RING-RETAINER	1			
080	ZGAQ-02398				COUPLING	1	- #0256		
	ZGAQ-02837				COUPLING	1	#0257 -	D	
081	ZGAQ-01969				.DISC CARRIER	1	- #0256		
	ZGAQ-02827				.DISC CARRIER	1	#0257 -	D	
090	ZGAQ-00849				.PISTON	1			
110	ZGAQ-00814				.O-RING	1			
120	ZGAQ-00850				.O-RING	1			
130	ZGAQ-00883				.WASHER	1			
140	ZGAQ-00884				.SPRING	1			
150	ZGAQ-00817				.RING-RETAINING	1	- #0256		
	ZGAQ-02828				.SHIM-SUPPORT	1	#0257 -	D	
154	ZGAQ-00818				.RING-SNAP	1	- #0256		
	ZGAQ-02829				.L-RING	1	#0257 -	D	
160	ZGAQ-01509				.DISC	9			
164	ZGAQ-01508				.DISC-CLUTCH OUTER	1			
166	ZGAQ-01508				.DISC-CLUTCH OUTER	1			
170	ZGAQ-00853				.DISC-CLUTCH,INNER	10			

Item	Part_No	IS	Ord	T	Description	Qty	Serial_No	ITC	Remark
180	ZGAQ-00854				.SHIM-END	1			
	ZGAQ-00855				.RING-SNAP(2.1)	1			
	ZGAQ-00856				.RING-SNAP(2.25)	1			
	ZGAQ-00857				.RING-SNAP(2.4)	1			
	ZGAQ-00858				.RING-SNAP(2.55)	1			
	ZGAQ-00859				.RING-SNAP(2.7)	1			
	ZGAQ-00860				.RING-SNAP(2.85)	1			
	ZGAQ-00861				.RING-SNAP(3.00)	1			
190	ZGAQ-00862				.RING-SNAP(3.15)	1			
	ZGAQ-00863				.RING-SNAP(3.30)	1			
	ZGAQ-00864				.RING-SNAP(3.45)	1			
	ZGAQ-00865				.RING-SNAP(3.60)	1			
	ZGAQ-00866				.RING-SNAP(3.75)	1			
	ZGAQ-00867				.RING-SNAP(3.90)	1			
	ZGAQ-00868				.RING-SNAP(4.05)	1			
	ZGAQ-00869				.RING-SNAP(4.20)	1			
200	ZGAQ-00880				BEARING-ROLLER	1			
210	ZGAQ-00880				BEARING-ROLLER	1			
220	ZGAQ-00831				RING-PISTON	2			

OUTPUT GROUP

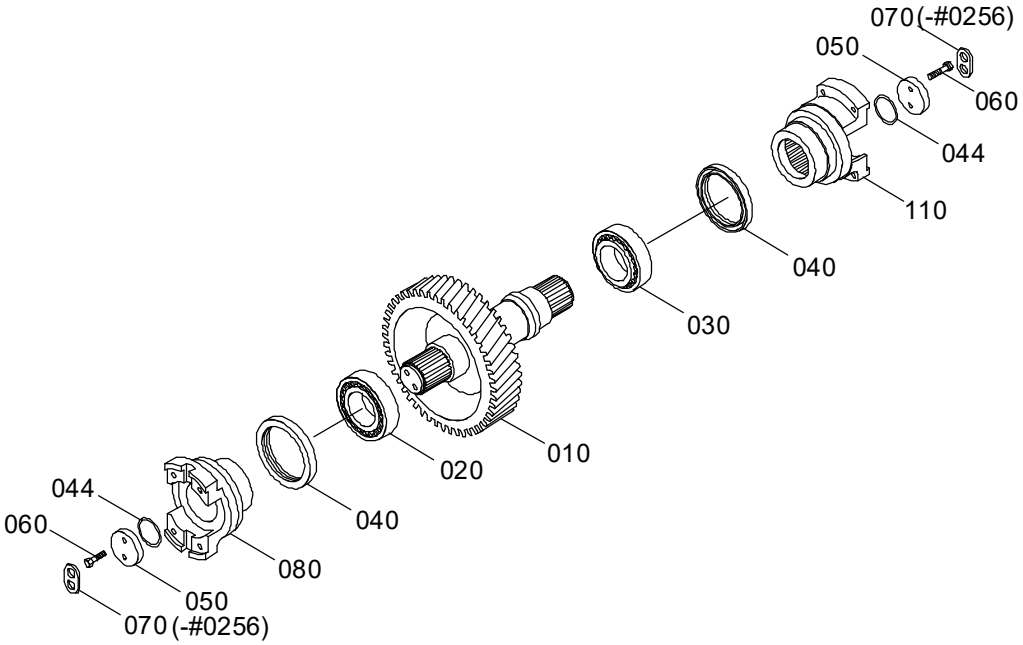

Item	Part_No	IS	Ord	T	Description	Qty	Serial_No	ITC	Remark
*	ZGAQ-01438				OUTPUT GROUP	1			
010	ZGAQ-01439				SHAFT-OUTPUT	1	- #0256		
	ZGAQ-02842				SHAFT-OUTPUT	1	#0257 -	B	
020	ZGAQ-00769				BEARING-ROLLER	1			
030	ZGAQ-00769				BEARING-ROLLER	1			
040	ZGAQ-01440				SEAL-SHAFT	2			
044	ZGAQ-01441				O-RING	2			
050	ZGAQ-01442				WASHER	2			
060	ZGAQ-01443				SCREW	4			
070	ZGAQ-01444				WASHER-TAB	2	- #0256	-	
080	ZGAQ-01445				FLANGE-OUTPUT	1			
110	ZGAQ-01445				FLANGE-OUTPUT	1			

POWER TAKE OFF GROUP

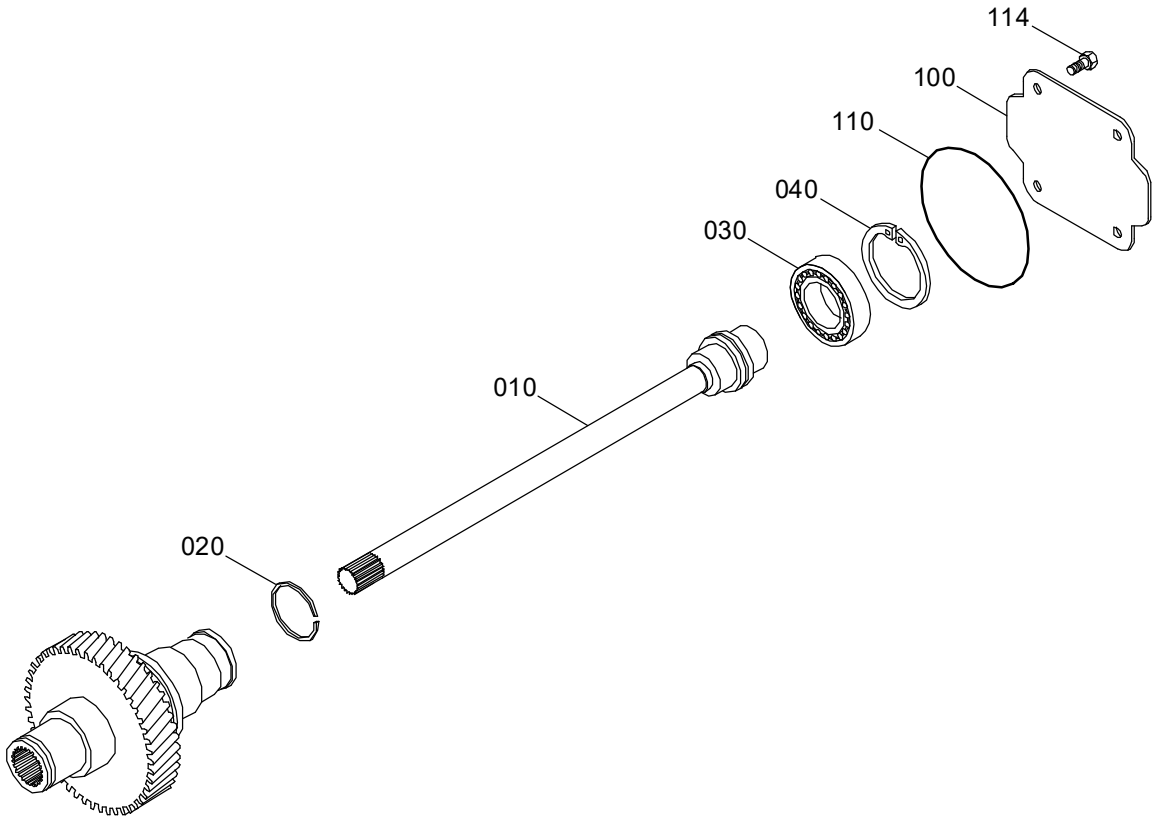

Item	Part_No	IS	Ord	T	Description	Qty	Serial_No	ITC	Remark
*	ZGAQ-01446				POWER TAKE OFF	1			
010	ZGAQ-01447				SHAFT-PUMP	1			
020	ZGAQ-01448				RING-PISTON	1			
030	ZGAQ-00895				BEARING-BALL	1			
040	ZGAQ-00896				RING-RETAINING	1			
100	ZGAQ-01449				PLATE-COVER	1			
110	ZGAQ-01450				O-RING	1			
114	ZGAQ-00761				SCREW	4			

GEARSHIFT SYSTEM(1/3)

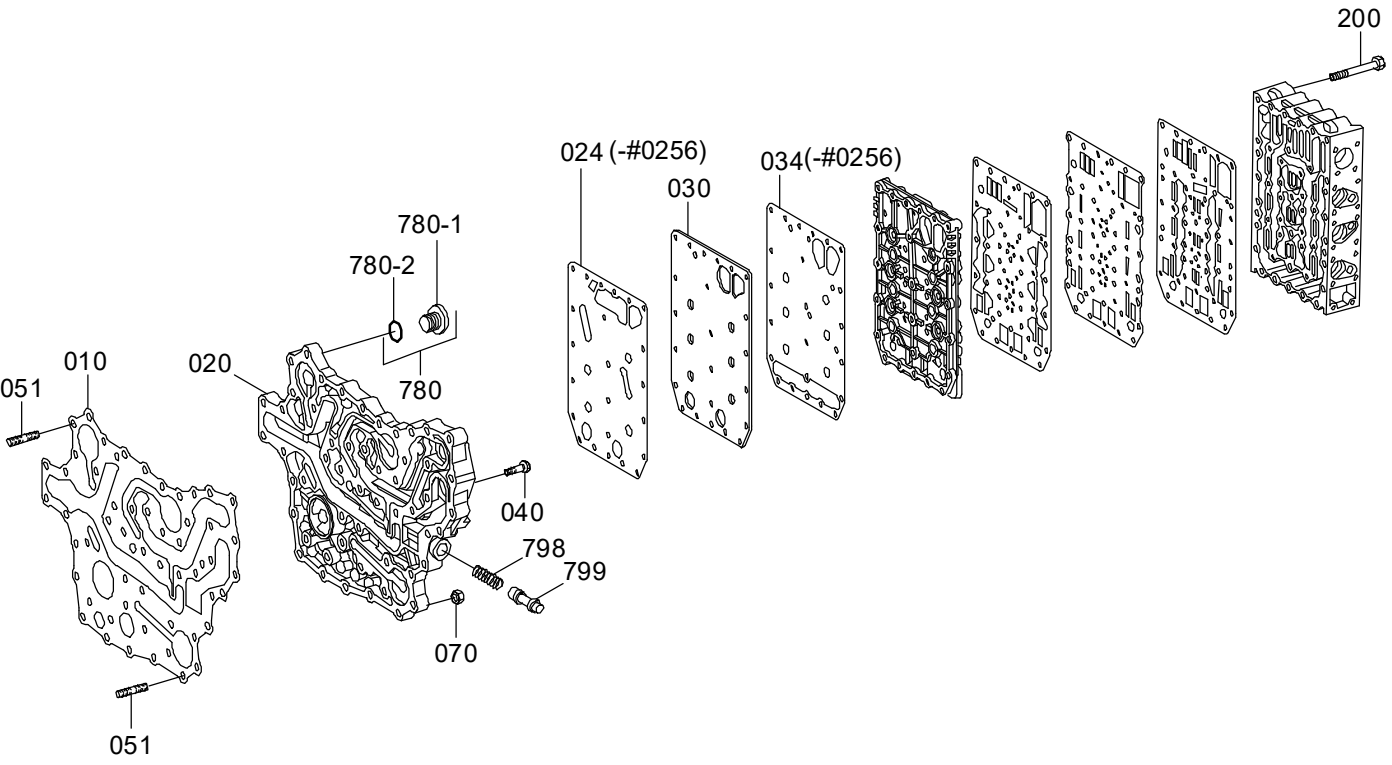

Item	Part_No	IS	Ord	T	Description	Qty	Serial_No	ITC	Remark
*	ZGAQ-01973				GEARSHIFT SYSTEM	1	- #0256		
	ZGAQ-03142				GEARSHIFT SYSTEM	1	#0257 -	B	
010	ZGAQ-01452				GASKET	1			
020	ZGAQ-01974				PLATE-DUCT	1			
030	ZGAQ-01702				SHEET-INTERMEDIATE	1	- #0256		
	ZGAQ-02808				PLATE-SEALING	1	#0257 -	D	
024	ZGAQ-01701				SEALING	1	- #0256	-	
034	ZGAQ-01703				GASKET	1	- #0256	-	
040	ZGAQ-00792				SCREW-CAP	37			
051	ZGAQ-01405				STUD	14			
070	ZGAQ-00799				NUT-HEX	14			
200	ZGAQ-00607				SCREW-TORX	23	- #0256		
	ZGAQ-00608				SCREW-TORX	23	#0257 -	D	
780-1	ZGAQ-00613				SCREW-PLUG	1			
780-2	ZGAQ-00614				O-RING	1			
798	ZGAQ-00903				SPRING-COMPRESSURE	1			
799	ZGAQ-01454				PISTON	1			
770	ZGAQ-00697				SWITCH	1			

GEARSHIFT SYSTEM(2/3)

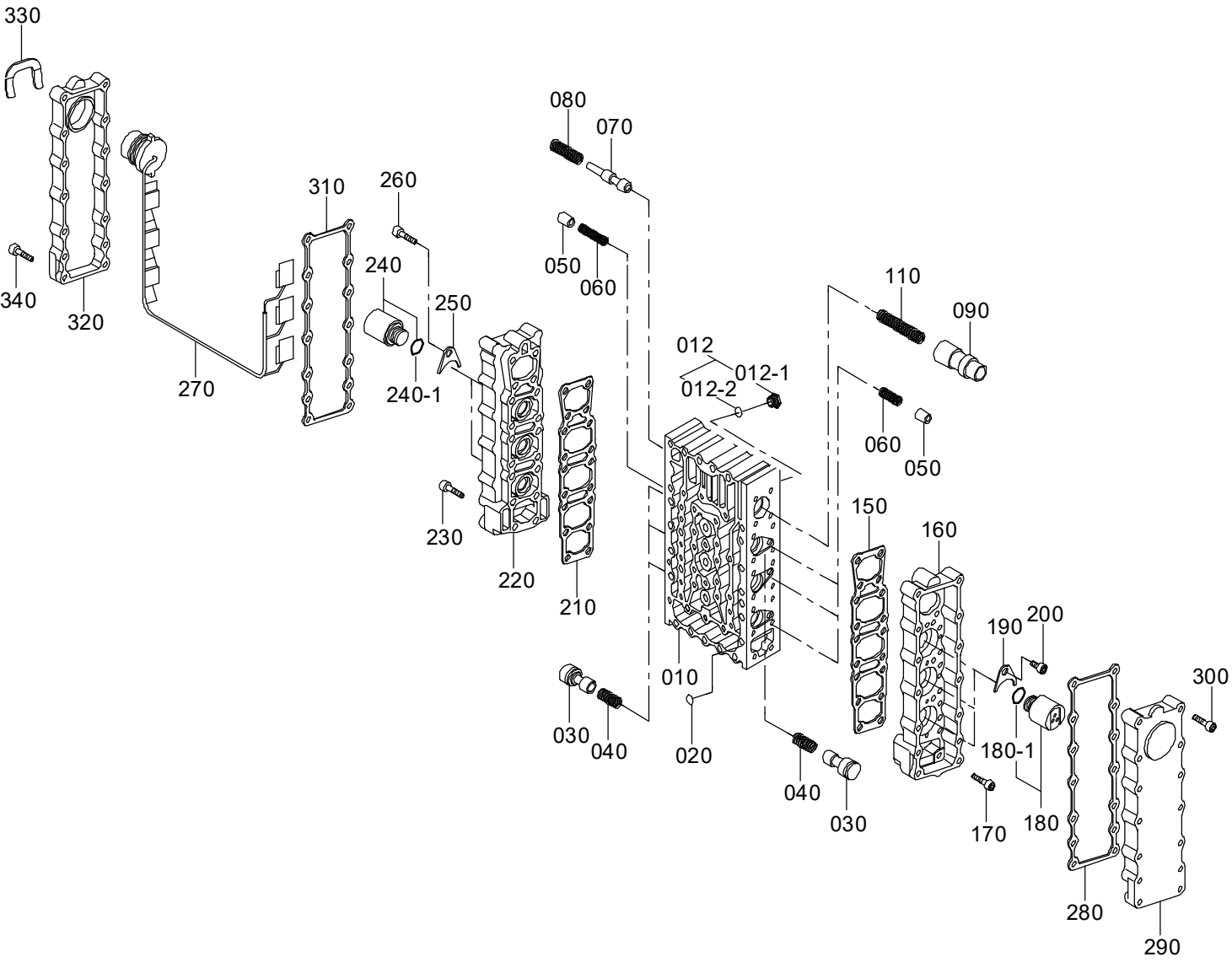

Item	Part_No	IS	Ord	T	Description	Qty	Serial_No	ITC	Remark
*	ZGAQ-01975				GEARSHIFT SYSTEM	1	- #0256		
	ZGAQ-03143				GEARSHIFT SYSTEM	1	#0257 -	D	
010	ZGAQ-00616				BLOCK-VALVE	1	- #0256		
	ZGAQ-02802				BLOCK-VALVE	1	#0257 -	D	
012-1	ZGAQ-00230				PLUG-SCREW	8			
012-2	ZGAQ-00231				O-RING	8			
020	ZGAQ-00617				ORIFICE	6			
030	ZGAQ-00618				PISTON	6			
040	ZGAQ-00619				SPRING-COMPRESSION	6			
050	ZGAQ-00620				PISTON	6			
060	ZGAQ-00621				SPRING-COMPRESSION	6			
070	ZGAQ-00622				PISTON	1			
080	ZGAQ-00623				SPRING-COMPRESSION	1			
090	ZGAQ-01455				PISTON-CONTROL	1			
110	ZGAQ-00625				SPRING-COMPRESSION	1			
150	ZGAQ-01578				GASKET	1			
160	ZGAQ-00627				HOUSING	1			
170	ZGAQ-00628				SCREW-CAP	18			
180	ZGAQ-00629				REGULATOR-PRESSURE	3			
180-1	ZGAQ-00630				.O-RING	3			
190	ZGAQ-00631				PLATE-FIXING	3			
200	ZGAQ-00632				SCREW-CAP	3			
210	ZGAQ-01578				GASKET	1			
220	ZGAQ-00627				HOUSING	1			
230	ZGAQ-00628				SCREW-CAP	18			
240	ZGAQ-00629				REGULATOR-PRESSURE	3			

Item	Part_No	IS	Ord	T	Description	Qty	Serial_No	ITC	Remark
240-1	ZGAQ-00630				.O-RING	3			
250	ZGAQ-00631				PLATE-FIXING	3			
260	ZGAQ-00632				SCREW-CAP	3			
270	ZGAQ-00633				HARNESS-WIRING	1			
280	ZGAQ-01579				GASKET	1			
290	ZGAQ-00635				COVER	1			
300	ZGAQ-00628				SCREW-CAP	14			
310	ZGAQ-01579				GASKET	1			
320	ZGAQ-00636				COVER	1			
330	ZGAQ-00637				CLAMP-RETAINING	1			
340	ZGAQ-00628				SCREW-CAP	14			

GEARSHIFT SYSTEM(3/3)

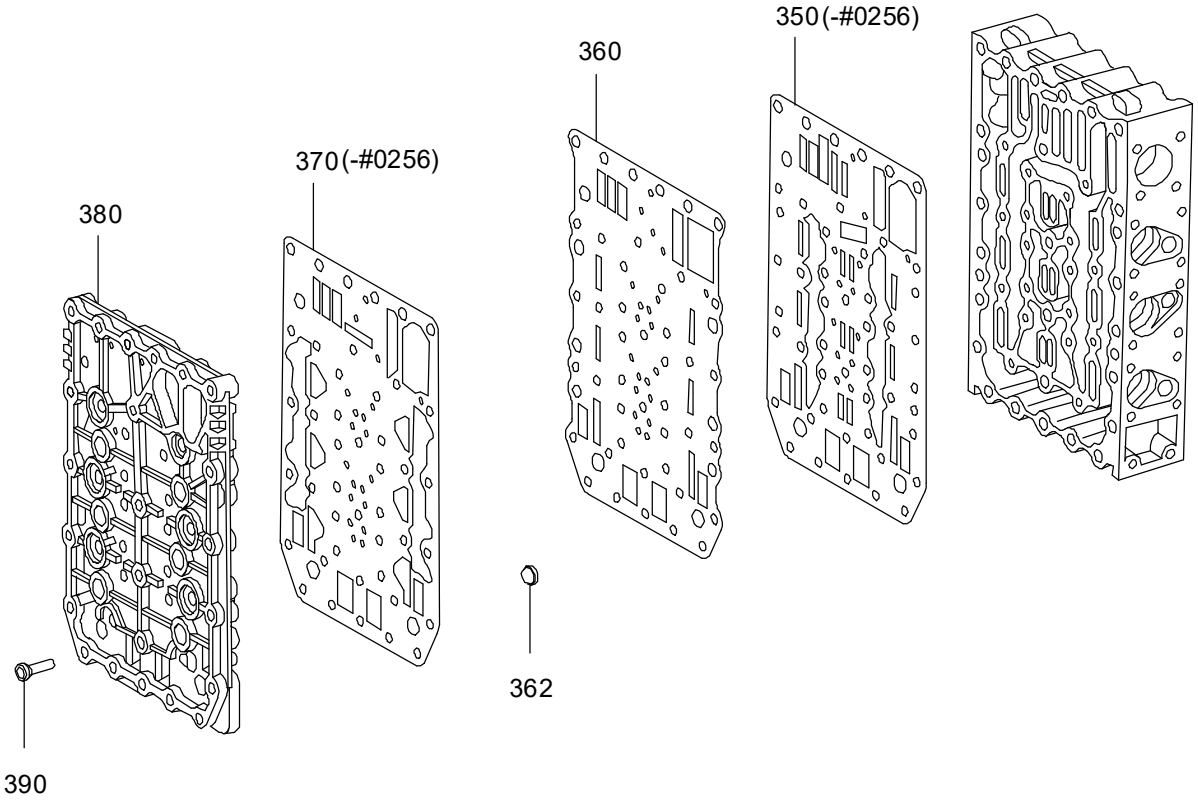

Item	Part_No	IS	Ord	T	Description	Qty	Serial_No	ITC	Remark
*	@				GEARSHIFT SYSTEM	1			NOT
360	ZGAQ-01687				SHEET-INTERMITTER	1	- #0256		
	ZGAQ-02803				PLATE-SEALING	1	#0257 -	D	
370	ZGAQ-01688				GASKET	1	- #0256	-	
350	ZGAQ-01686				GASKET	1	- #0256	-	
362	ZGAQ-00639				SCREEN	6			
380	ZGAQ-01456				PLATE-DUCT	1			
390	ZGAQ-01689				SCREW-TORX	18	- #0256		
	ZGAQ-00641				SCREW-TORX	18	#0257 -	D	

PRESSURE REGULATOR

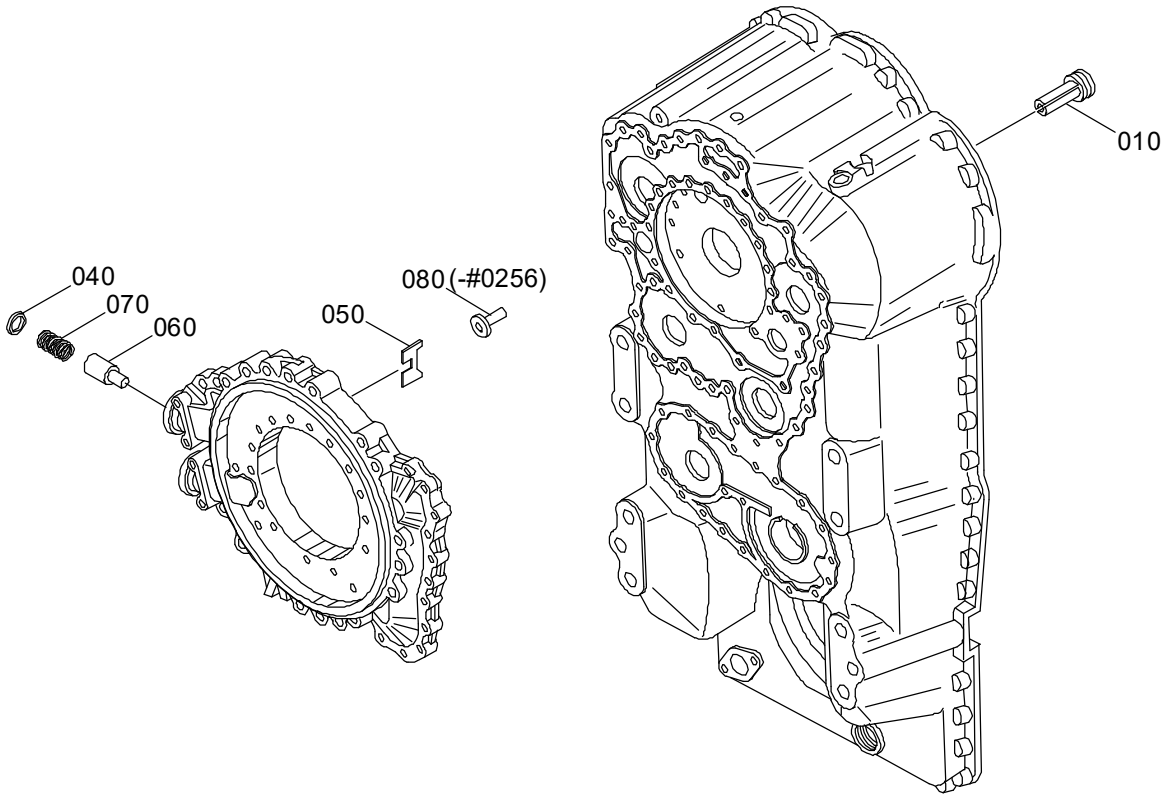

Item	Part_No	IS	Ord	T	Description	Qty	Serial_No	ITC	Remark
*	ZGAQ-01457				PRESSURE REGULATOR	1	- #0256		
	ZGAQ-03144				PRESSURE REGULATOR	1	#0257 -	D	
010	ZGAQ-00910				VALVE	1			
040	ZGAQ-00913				PLATE-PRESSUREE	1			
050	ZGAQ-00914				WASHER-TAB	1			
060	ZGAQ-00911				PISTON	1			
070	ZGAQ-00912				SPRING-PRESSURE	1			
080	ZGAQ-00915				VALVE-PRESSURE	1	- #0256	-	

PRESSURE OIL PUMP

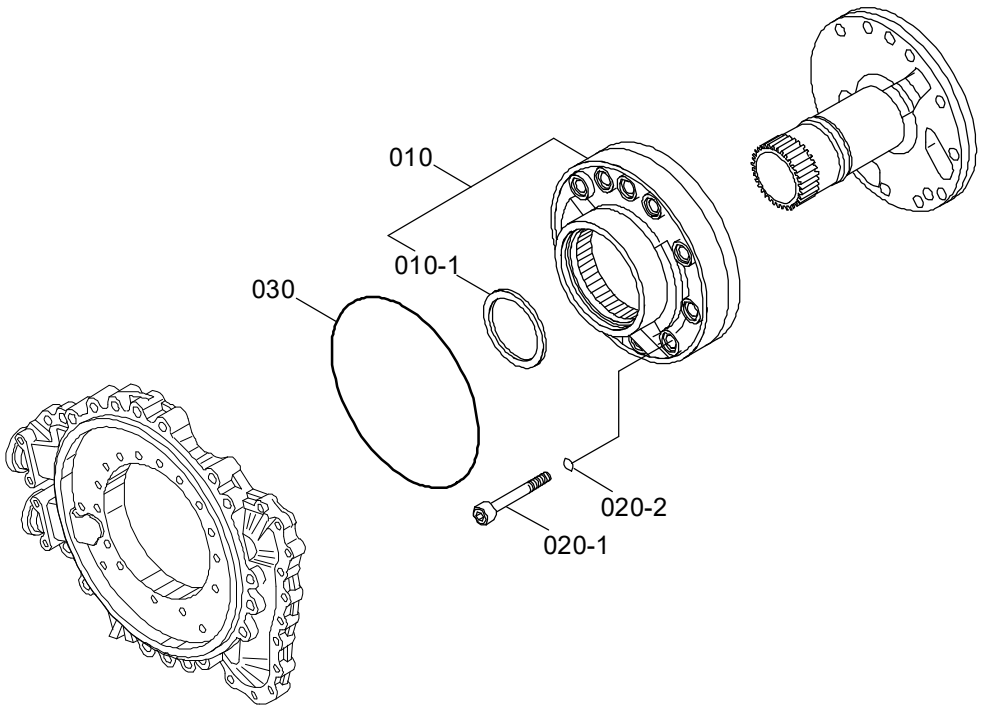

Item	Part_No	IS	Ord	T	Description	Qty	Serial_No	ITC	Remark
*	ZGAQ-01976				PRESSURE OIL PUMP	1	- #0256		
	ZGAQ-03145				PRESSURE OIL PUMP	1	#0257 -	B	
010	ZGAQ-01977				PUMP-GEAR	1	- #0256		
	ZGAQ-02830				PUMP-GEAR	1	#0257 -	B	
010-1	ZGAQ-02830				.PUMP-GEAR	1	#0257 -	-	
020-1	ZGAQ-01460				SCREW-CAP	10			
020-2	ZGAQ-01461				O-RING	10			
030	ZGAQ-01462				O-RING	1	- #0256		
	ZGAQ-02809				O-RING	1	#0257 -	B	

EMERGENCY STEERING PUMP GROUP

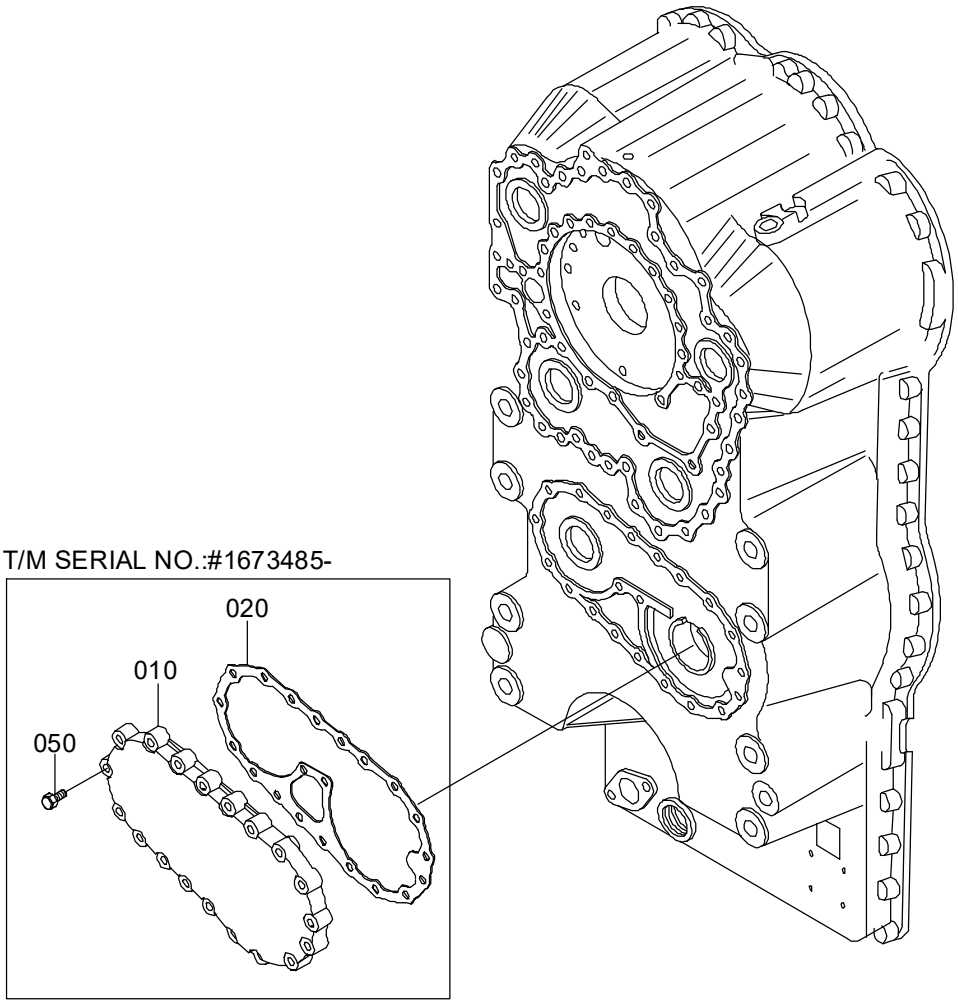

ITEM	PART NO.	DESCRIPTION	T/M SERIAL NO.
010	ZGAQ-00916	COVER	-#1673484
	ZGAQ-03129	COVER	#1673485-

Item	Part_No	IS	Ord	T	Description	Qty	Serial_No	ITC	Remark
*	ZGAQ-01463				EMERGENCY PUMP	1	- #0256		SEE ILLUST
	ZGAQ-03128				EMERGENCY PUMP	1	#0257 -	D	
010	ZGAQ-00916				COVER	1	- #0256		
	ZGAQ-03129				COVER	1	#0257 -	D	
012	ZGAQ-00917				COVER	1	- #0256	-	
020	ZGAQ-01464				GASKET	1			
022	ZGAQ-00919				GASKET	1	- #0256	-	
040	ZGAQ-00792				SCREW-CAP	23	- #0256	-	
050	ZGAQ-00920				SCREW	8	- #0256		
					SCREW	23	#0257 -	A	
060	ZGAQ-00921				BEARING-PLAIN	1	- #0256		

INDICATOR TRANSMITTER GROUP

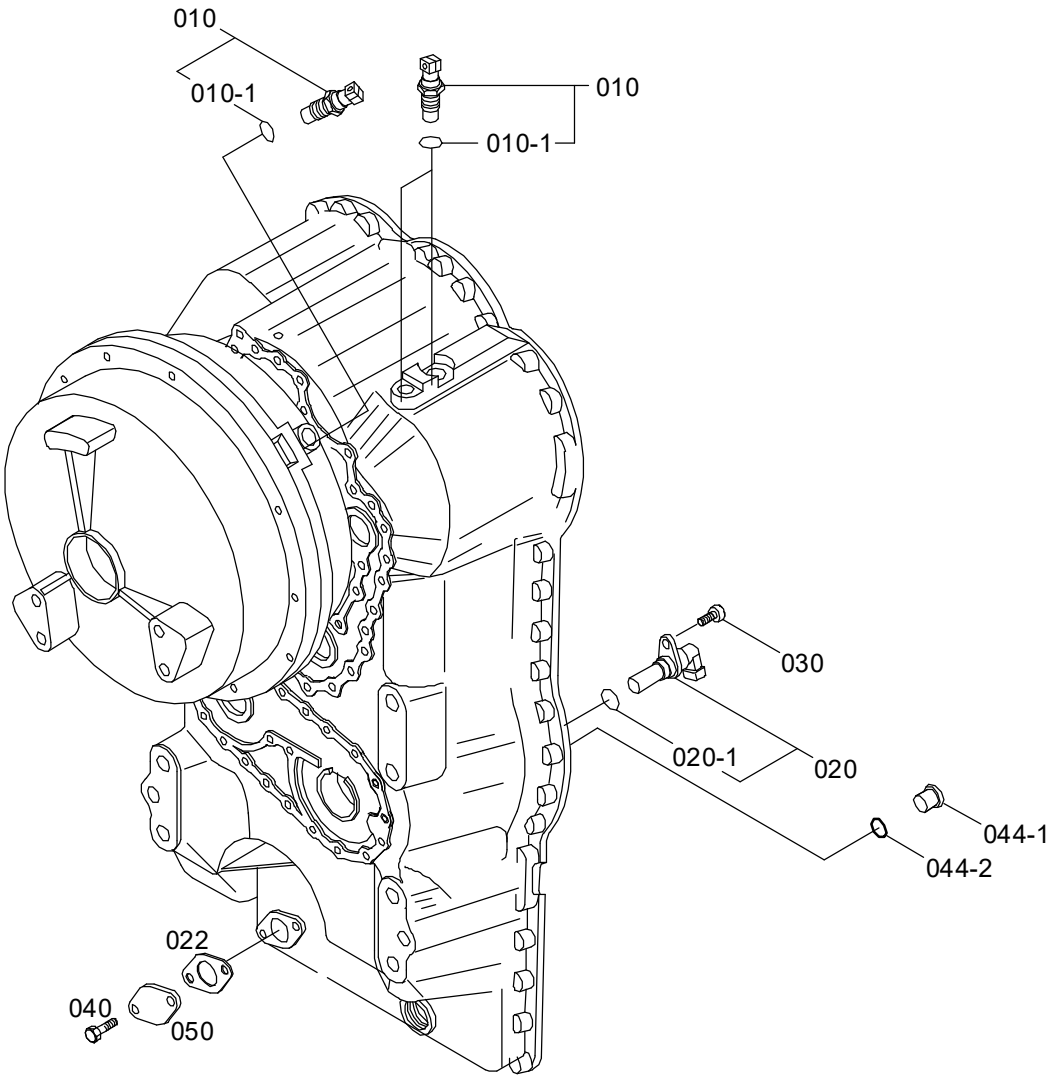

Item	Part_No	IS	Ord	T	Description	Qty	Serial_No	ITC	Remark
*	ZGAQ-01465				IND TRANSMITTER	1			
010	ZGAQ-00651				TRANSMITTER-IND	3			
010-1	ZGAQ-01466				.O-RING	3			
020	ZGAQ-00653				TRANSMITTER-SPEED	1			
020-1	ZGAQ-00654				.O-RING	1			
030	ZGAQ-00922				SCREW-CAP	1			
044-1	ZGAQ-00908				PLUG-SCREW	1			
044-2	ZGAQ-00909				O-RING	1			

TEMPERATURE SENSOR

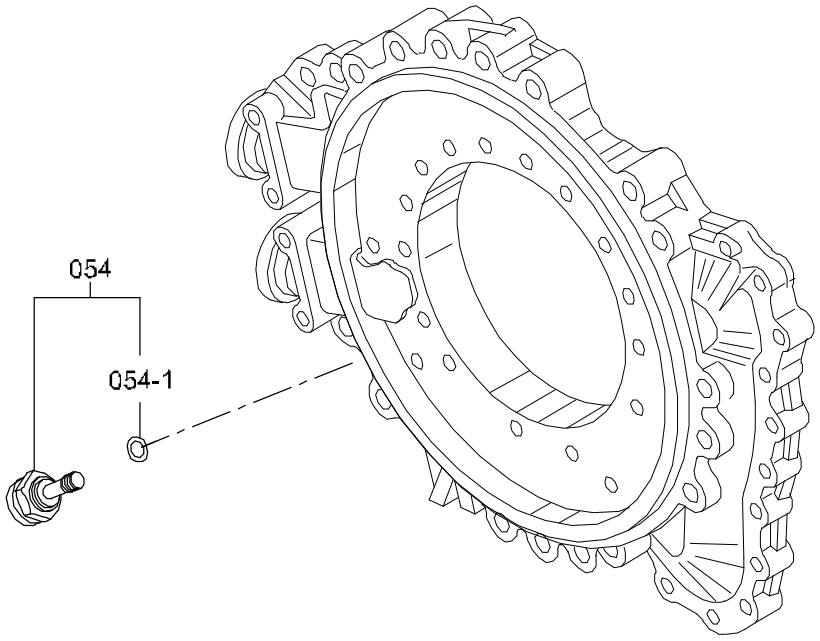

Item	Part_No	IS	Ord	T	Description	Qty	Serial_No	ITC	Remark
*	ZGAQ-01467				TEMP SENSOR	1			
054	ZGAQ-01924				SENSOR-TEMP	1			
054-1	ZGAQ-00923				.O-RING	1			

FILTER

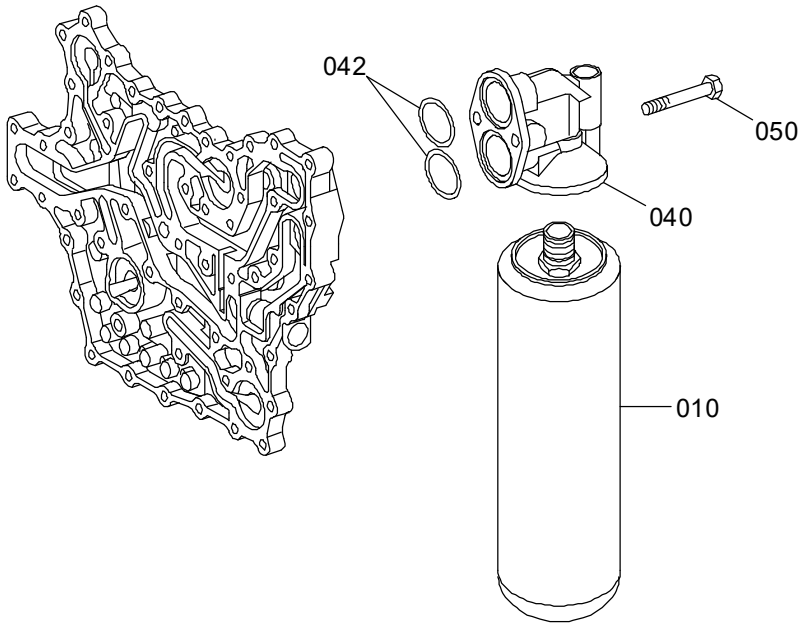

Item	Part_No	IS	Ord	T	Description	Qty	Serial_No	ITC	Remark
*	ZGAQ-01469				FILTER GROUP	1	- #0256		
	ZGAQ-03149				FILTER GROUP	1	#0257 -	B	
010	ZGAQ-02400				FILTER-T/M OIL(AUTO)	1	#0001 -	-	0501-323-154
040	ZGAQ-00925				HEAD-FILTER	1			
042	ZGAQ-00926				O-RING	2	- #0256		
	ZGAQ-02401				O-RING	2	#0257 -	B	
050	ZGAQ-00793				SCREW-CAP	2			

FILLER NECK & OIL DIPSTICK

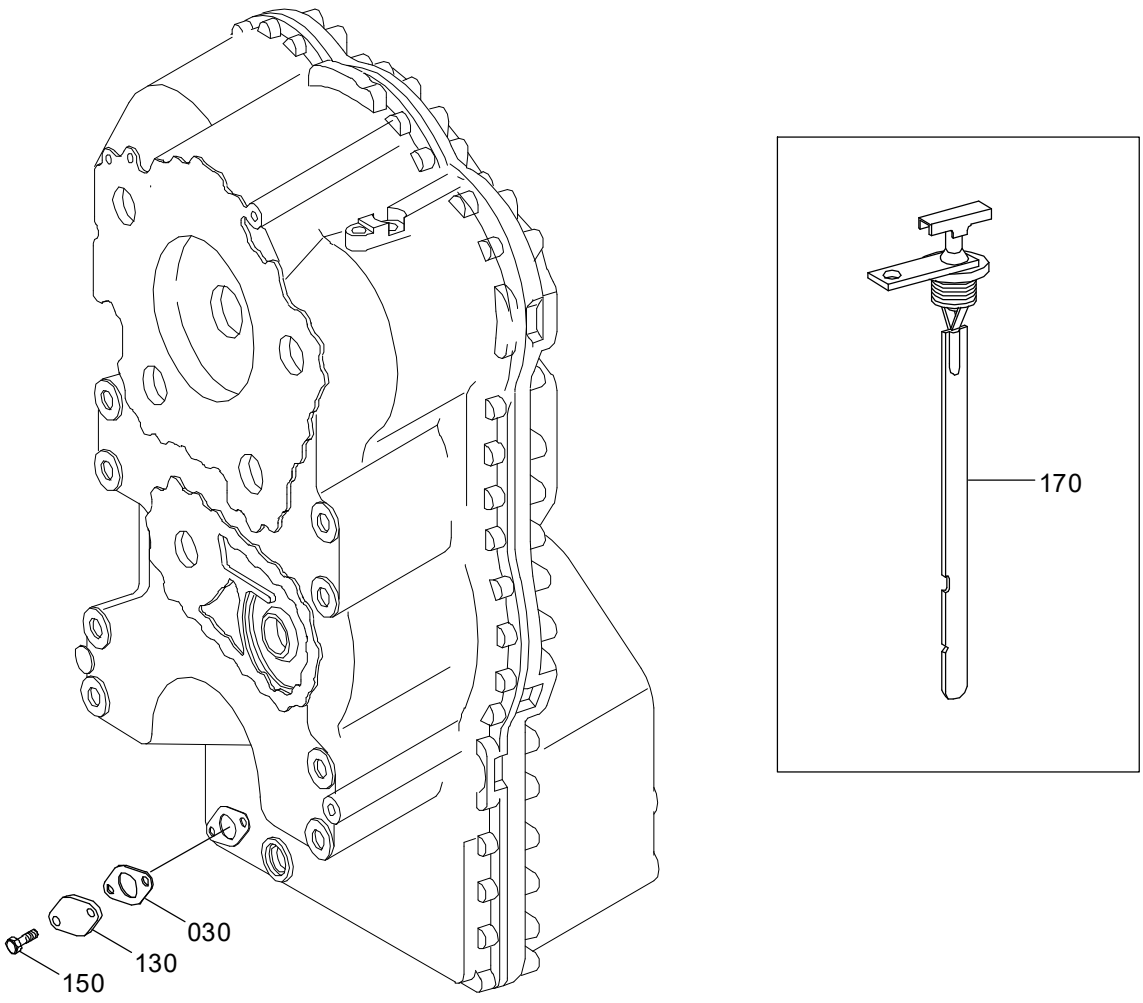

Item	Part_No	IS	Ord	T	Description	Qty	Serial_No	ITC	Remark
030	ZGAQ-00673				GASKET	1			
150	ZGAQ-00920				SCREW	2			
130	ZGAQ-00674				PLATE-COVER	1			
170	ZGAQ-01470				DIPSTICK-OIL	1			

LOOSE PARTS

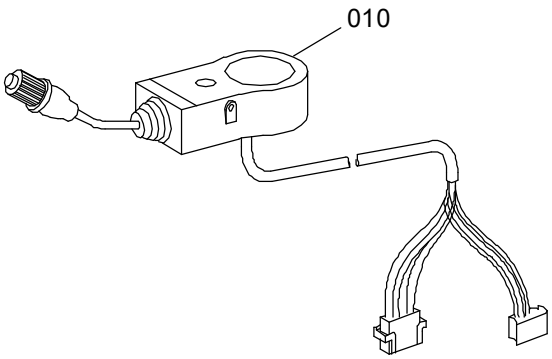

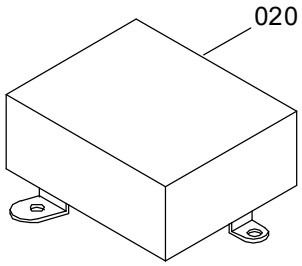

Item	Part_No	IS	Ord	T	Description	Qty	Serial_No	ITC	Remark
010	ZGAQ-00693				GEAR SELECTOR	1	- #0256		
	ZGAQ-03788				GEAR SELECTOR	1	#0257 -	B	
020	ZGAQ-01978				CONTROL UNIT	1			

FRONT DIFF GEAR(1/2)

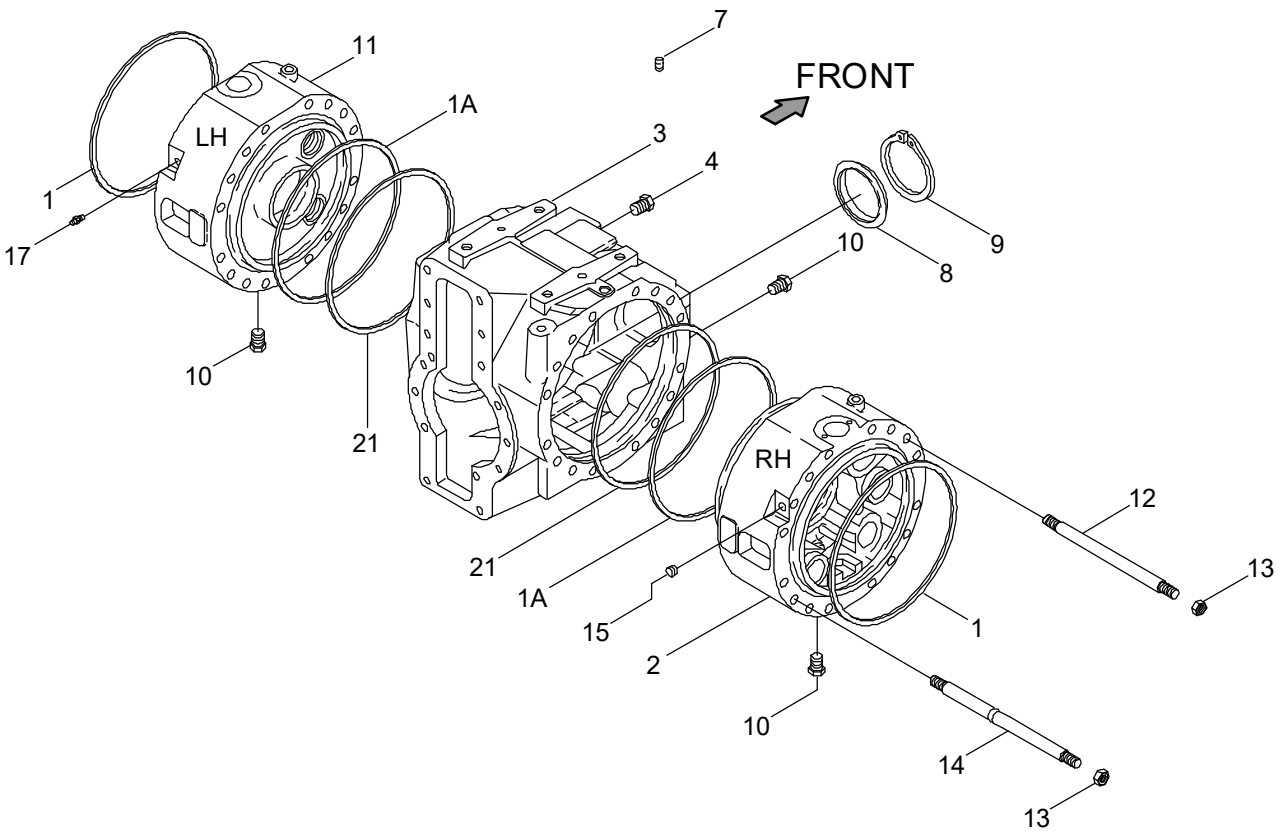

Item	Part_No	IS	Ord	T	Description	Qty	Serial_No	ITC	Remark
1	ZTAM-00068				O-RING	2			
1A	ZTAM-00068				O-RING	2	#0001 -	-	
2	ZTAM-00119				COVER-INTERMEDIATE	1			RH
3	ZTAM-00120				HOUSING	1			
4	ZTAM-00121				PLUG	4			
7	ZTAM-00122				BOLT	2			
8	ZTAM-00123				PLUG	1			
9	ZTAM-00265				RING-SNAP	1			
10	ZTAM-00125				PLUG-MAGNET	3			
11	ZTAM-00126				COVER-INTERMEDIATE	1			LH
12	ZTAM-00127				BOLT	28			
13	ZTAM-00128				NUT	32			
14	ZTAM-00129				STUD	4			
15	ZTAM-00237				PLUG	1			
17	ZTAM-00131				VENT	1			
21	ZTAM-00132				O-RING	2			

FRONT DIFF GEAR(2/2, LIMITED SLIP)

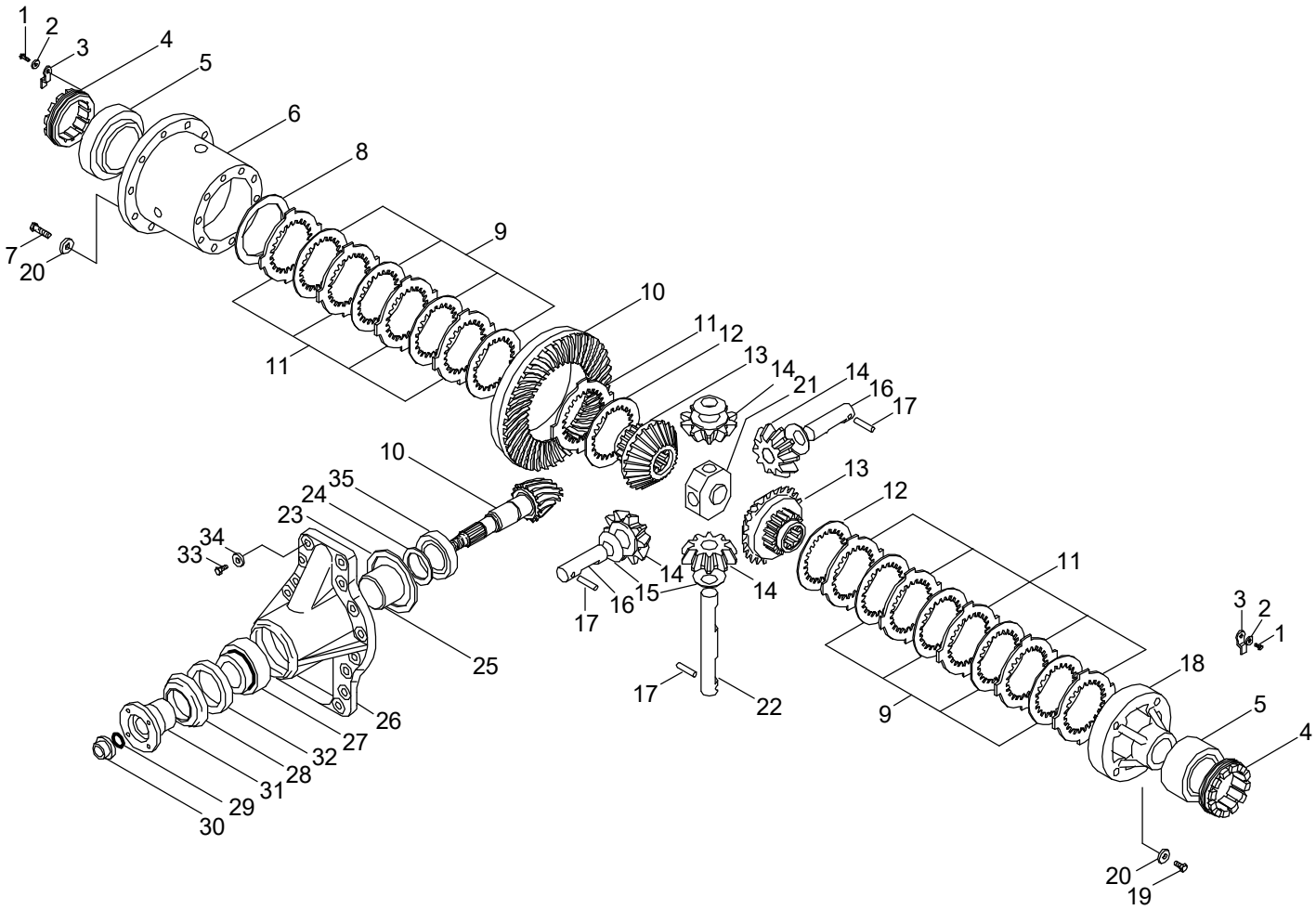

Item	Part_No	IS	Ord	T	Description	Qty	Serial_No	ITC	Remark
1	ZTAM-00133				BOLT	2			
2	ZTAM-00134				WASHER-LOCK	2			
3	ZTAM-00135				PLATE-LOCKING	2			
4	ZTAM-00136				NUT-RING	2			
5	ZTAM-00137				BEARING	1			
6	ZTAM-00138				CARRIER	1			
7	ZTAM-00139				BOLT-HEX	16			
8	ZTAM-00140				SHIM(0.30T)	1			
	ZTAM-00141				SHIM(0.40T)	1			
	ZTAM-00142				SHIM(0.10T)	1			
9	ZTAM-00143				DISC	8			
10	ZTAM-00144				BEVEL GEAR SET	1			
11	ZTAM-00145				DISC	10			
12	ZTAM-00146				DISC	2			
13	ZTAM-00147				GEAR-DIFF. SIDE	2			
14	ZTAM-00148				PINION-DIFF	4			
15	ZTAM-00149				WASHER-FRICTION	4			
16	ZTAM-00150				PIN	2			
17	ZTAM-00151				PIN-ROLL	3			
18	ZTAM-00152				COVER	1			
19	ZTAM-00153				BOLT	8			
20	ZTAM-00154				WASHER-SPRING	8			
21	ZTAM-00155				RETAINER-SHAFT	1			
22	ZTAM-00156				PIN	1			
23	ZTAM-00157				SHIM(0.10T)	1			
	ZTAM-00158				SHIM(0.20T)	1			

Item	Part_No	IS	Ord	T	Description	Qty	Serial_No	ITC	Remark
23	ZTAM-00159				SHIM(0.50T)	1			
	ZTAM-00160				SHIM(0.15T)	1			
24	ZTAM-00161				SHIM(0.15T)	5			
	ZTAM-00162				SHIM(0.20T)	3			
	ZTAM-00163				SHIM(0.30T)	1			
	ZTAM-00164				SHIM(0.40T)	1			
	ZTAM-00165				SHIM(0.50T)	1			
25	ZTAM-00166				SPACER	1			
26	ZTAM-00167				COVER	1			
27	ZTAM-00168				BEARING	1			
28	ZTAM-00169				COVER PLATE	1			
29	ZTAM-00170				O-RING	1			
30	ZTAM-00171				NUT	1			
31	ZTAM-00172				FLANGE	1			
32	ZTAM-00173				SEAL	1			
33	ZTAM-00174				BOLT-HEX	16			
34	ZTAM-00175				WASHER-SPRING	16			
35	ZTAM-00176				BEARING	1			

FRONT DIFF GEAR(2/2, NO SPIN)

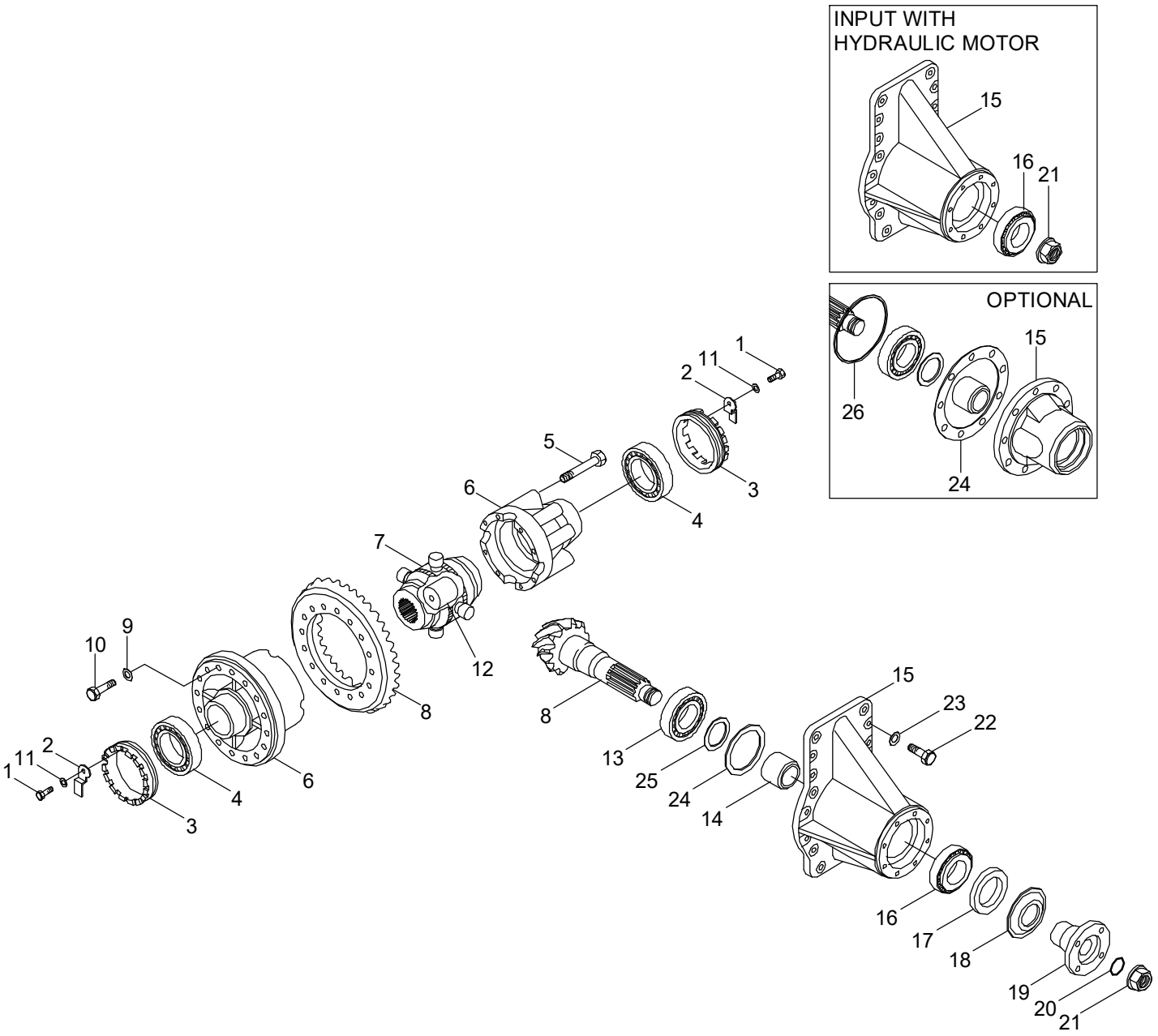

Item	Part_No	IS	Ord	T	Description	Qty	Serial_No	ITC	Remark
1	ZTAM-00133				BOLT	2			
2	ZTAM-00135				PLATE-LOCKING	2			
3	ZTAM-00242				NUT-RING	2			
4	ZTAM-00137				BEARING	1			
5	ZTAM-00275				BOLT-HEX	8			
6	ZTAM-00278				CARRIER-DIFFERENTIAL	1			
7	ZTAM-00276				DIFFERENTIAL-NO SPIN	1			
8	ZTAM-00144				BEVEL GEAR SET	1			
9	ZTAM-00154				WASHER-SPRING	16			
10	ZTAM-00139				BOLT-HEX	16			
11	ZTAM-00134				WASHER-LOCK	2			
12	ZTAM-00279				SPACER	1			
13	ZTAM-00176				BEARING	1			
14	ZTAM-00166				SPACER	1			
15	ZTAM-00167				COVER	1			
16	ZTAM-00168				BEARING	1			
17	ZTAM-00173				SEAL	1			
18	ZTAM-00169				COVER PLATE	1			
19	ZTAM-00172				FLANGE	1			
20	ZTAM-00170				O-RING	1			
21	ZTAM-00171				NUT	1			
22	ZTAM-00174				BOLT-HEX	16			
23	ZTAM-00175				WASHER-SPRING	16			
24	ZTAM-00157				SHIM(0.10T)	1			
	ZTAM-00158				SHIM(0.20T)	1			
	ZTAM-00159				SHIM(0.50T)	1			

Item	Part_No	IS	Ord	T	Description	Qty	Serial_No	ITC	Remark
24	ZTAM-00160				SHIM(0.15T)	1			
25	ZTAM-00161				SHIM(0.15T)	1			
	ZTAM-00162				SHIM(0.20T)	1			
	ZTAM-00163				SHIM(0.30T)	1			
	ZTAM-00164				SHIM(0.40T)	1			
	ZTAM-00165				SHIM(0.50T)	1			

FRONT PLANETARY GEAR(1/2)

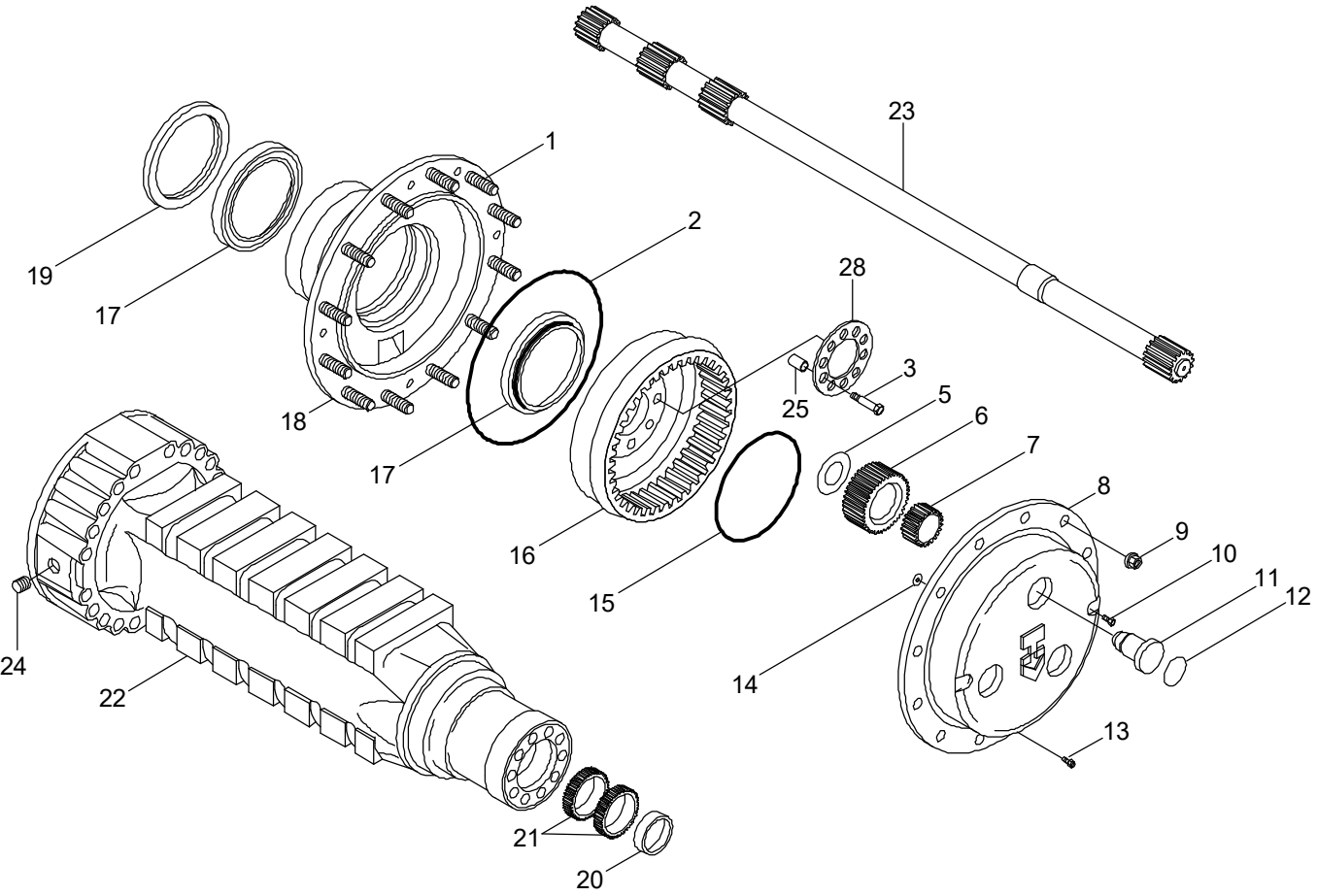

Item	Part_No	IS	Ord	T	Description	Qty	Serial_No	ITC	Remark
1	ZTAM-00066				STUD-WHEEL	24			
2	ZTAM-00177				O-RING	2			
3	ZTAM-00602				BOLT	20			
5	ZTAM-00179				WASHER-FRICTION	6			
6	ZTAM-00180				GEAR-PLANETARY	6			
7	ZTAM-00181				BEARING-NEEDLE	6			
8	ZTAM-00182				CARRIER	2			
9	ZTAM-00074				NUT	24			
10	ZTAM-00125				PLUG-MAGNET	2			
11	ZTAM-00183				PIN	6			
12	ZTAM-00184				O-RING	6			
13	ZTAM-00185				BOLT-CYLINDER	4			
14	ZTAM-00186				WASHER-FRICTION	2			
15	ZTAM-00187				CIRCLIP	2			
16	ZTAM-00188				GEAR-RING	2			
17	ZTAM-00189				BEARING	4			
18	ZTAM-00190				HUB-WHEEL	2			
19	ZTAM-00191				SEAL	2			
20	ZTAM-00192				RING-CENTERING	2			
21	ZTAM-00193				SEAL	2			
22	ZTAM-00194				CASE-AXLE	2			
23	ZTAM-00195				SHAFT	2			
24	ZTAM-00121				PLUG	4	#0001 -	-	
25	ZTAM-00196				BUSHING-REDUCTION	20			
28	ZTAM-00197				PLATE-LOCKING	2			

FRONT PLANETARY GEAR(2/2)

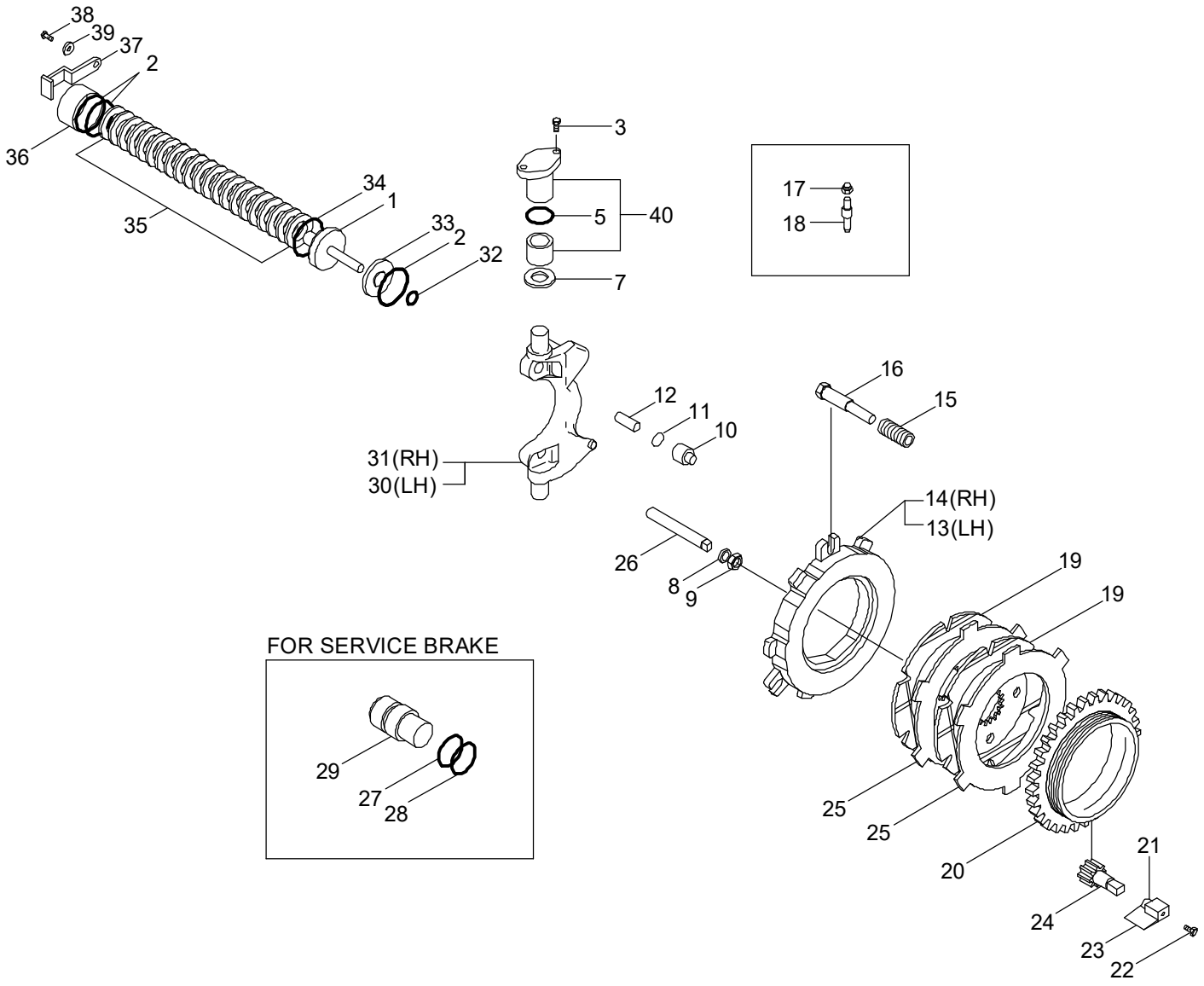

Item	Part No.	Description	Axle serial No.
27	ZTAM-00221	O-ring	~#M720885
	ZTAM-00967		#M720886~
19	ZTAM-00090	Disc-Brake	~#M720900
	ZTAM-00968		#M720901~

Item	Part_No	IS	Ord	T	Description	Qty	Serial_No	ITC	Remark
1	ZTAM-00198				PISTON	4			
2	ZTAM-00199				O-RING	12	#0001 -	-	
3	ZTAM-00200				BOLT-CYLINDER	8			
5	ZTAM-00202				O-RING	4			
7	ZTAM-00204				WASHER-FRICTION	4			
8	ZTAM-00205				WASHER-LOCK	2			
9	ZTAM-00206				NUT	2			
10	ZTAM-00207				PLUG	4			
11	ZTAM-00208				O-RING	4			
12	ZTAM-00209				PUSHER	4			
13	ZTAM-00210				DISC	1			
14	ZTAM-00211				DISC	1			
15	ZTAM-00212				SPRING	6			
16	ZTAM-00213				BOLT-ADJUST	6			
17	ZTAM-00100				BOLT-BLEEDING	2			
18	ZTAM-00101				PLUG	2			
19	ZTAM-00090				DISC-BRAKE	10			SEE ILLUST
	ZTAM-00968				DISC-BRAKE	10		B	SEE ILLUST
20	ZTAM-00214				RING	2			
21	ZTAM-00215				O-RING	2			
22	ZTAM-00216				BOLT-HEX	2			
23	ZTAM-00217				PLATE-LOCKING	2			
24	ZTAM-00218				PINION	2			
25	ZTAM-00219				DISC-BRAKE	10			
26	ZTAM-00220				BOLT-ADJUSTING	2			
27	ZTAM-00221				O-RING	6			SEE ILLUST

Item	Part_No	IS	Ord	T	Description	Qty	Serial_No	ITC	Remark
27	ZTAM-00967				O-RING	6		B	SEE ILLUST
28	ZTAM-00222				RING-BACK UP	6			
29	ZTAM-00223				PISTON	6			
30	ZTAM-00224				LEVER	1			
31	ZTAM-00225				LEVER	1			
32	ZTAM-00226				O-RING	4			
33	ZTAM-00227				PLUG	4			
34	ZTAM-00228				O-RING	4			
35	ZTAM-00229				SPRING	76			
36	ZTAM-00230				WHEEL CYLINDER	4			
37	ZTAM-00231				PLATE-LOCKING	4			
38	ZTAM-00133				BOLT	2			
39	ZTAM-00134				WASHER-LOCK	2			
40	ZTAM-00603				BUSHING	4			

REAR DIFFERENTIAL GEAR(1/2)

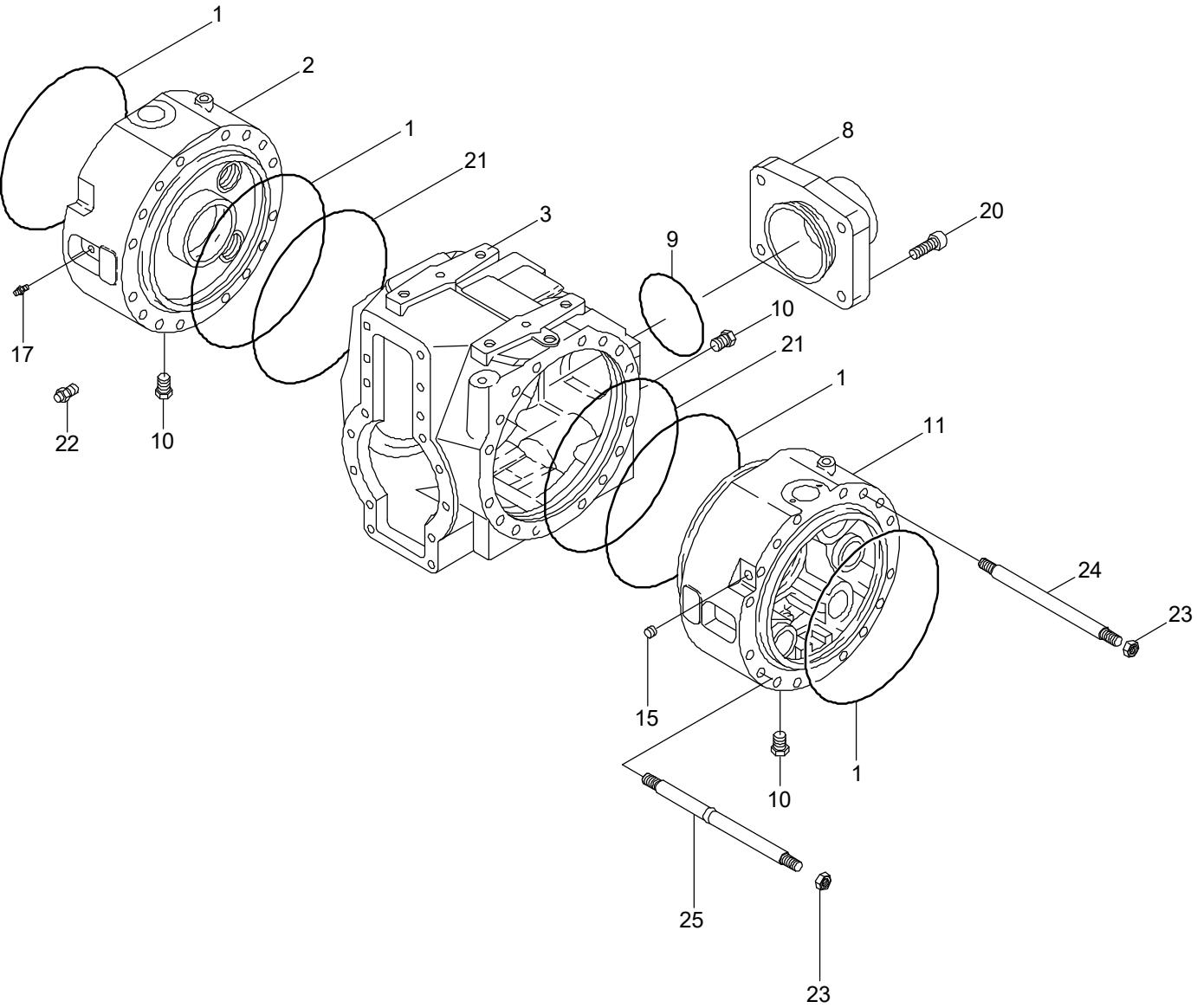

Item	Part_No	IS	Ord	T	Description	Qty	Serial_No	ITC	Remark
1	ZTAM-00068				O-RING	4	#0001 -	-	
2	ZTAM-00232				COVER-INTERMEDIATE	1			
3	ZTAM-00233				HOUSING	1			
8	ZTAM-00234				SUPPORT	1			
9	ZTAM-00235				O-RING	1			
10	ZTAM-00125				PLUG-MAGNET	3			
11	ZTAM-00236				COVER-INTERMEDIATE	1			
15	ZTAM-00237				PLUG	1			
17	ZTAM-00131				VENT	1			
20	ZTAM-00238				BOLT-CYLINDER	4			
21	ZTAM-00132				O-RING	2			
22	ZTAM-00121				PLUG	4			
23	ZTAM-00128				NUT	4			
24	ZTAM-00127				BOLT	28			
25	ZTAM-00129				STUD	4			

REAR DIFF GEAR(2/2, CONVENTIONAL)

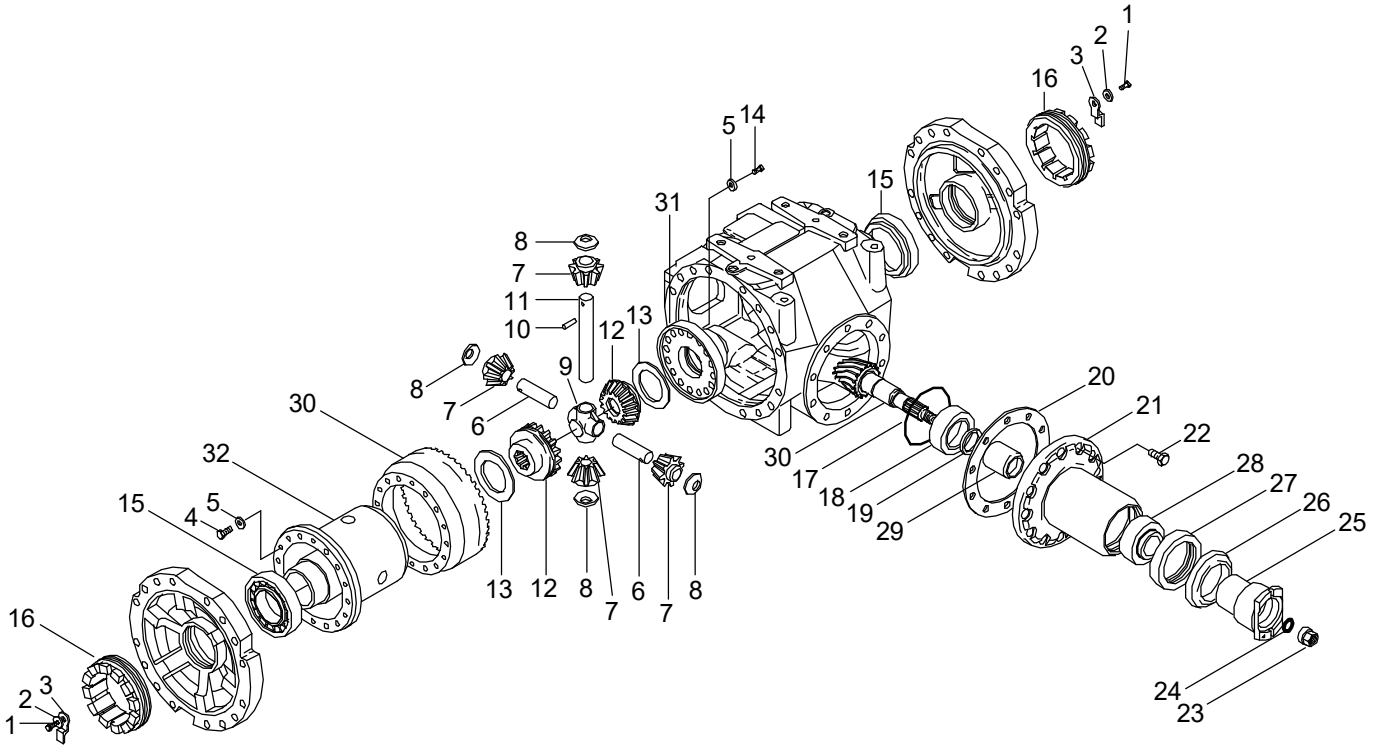

Item	Part_No	IS	Ord	T	Description	Qty	Serial_No	ITC	Remark
1	ZTAM-00133				BOLT	2			
2	ZTAM-00134				WASHER-LOCK	2			
3	ZTAM-00135				PLATE-LOCKING	2			
4	ZTAM-00139				BOLT-HEX	16			
5	ZTAM-00154				WASHER-SPRING	24			
6	ZTAM-00150				PIN	2			
7	ZTAM-00148				PINION-DIFF	4			
8	ZTAM-00149				WASHER-FRICTION	4			
9	ZTAM-00155				RETAINER-SHAFT	1			
10	ZTAM-00151				PIN-ROLL	3			
11	ZTAM-00156				PIN	1			
12	ZTAM-00239				GEAR-DIFF SIDE	2			
13	ZTAM-00240				WASHER-FRICTION	2			
14	ZTAM-00241				BOLT-HEX	8			
15	ZTAM-00137				BEARING	2			
16	ZTAM-00242				NUT-RING	2			
17	ZTAM-00243				O-RING	1			
18	ZTAM-00176				BEARING	1			
19	ZTAM-00161				SHIM(0.15T)	5			
	ZTAM-00162				SHIM(0.20T)	3			
	ZTAM-00163				SHIM(0.30T)	1			
	ZTAM-00164				SHIM(0.40T)	1			
	ZTAM-00165				SHIM(0.50T)	1			
20	ZTAM-00244				SHIM(0.10T)	1			
	ZTAM-00245				SHIM(0.15T)	1			
	ZTAM-00246				SHIM(0.25T)	1			

Item	Part_No	IS	Ord	T	Description	Qty	Serial_No	ITC	Remark
20	ZTAM-00247				SHIM(0.50T)	1			
21	ZTAM-00248				COVER	1			
22	ZTAM-00249				BOLT-CYLINDER	10			
23	ZTAM-00171				NUT	1			
24	ZTAM-00170				O-RING	1			
25	ZTAM-00250				FLANGE	1			
26	ZTAM-00169				COVER PLATE	1			
27	ZTAM-00173				SEAL	1			
28	ZTAM-00168				BEARING	1			
29	ZTAM-00166				SPACER	1			
30	ZTAM-00252				BEVEL GEAR SET	1			
31	ZTAM-00253				COVER	1			
32	ZTAM-00254				CARRIER-DIFF	1			

REAR DIFF GEAR(2/2, LIMITED SLIP)

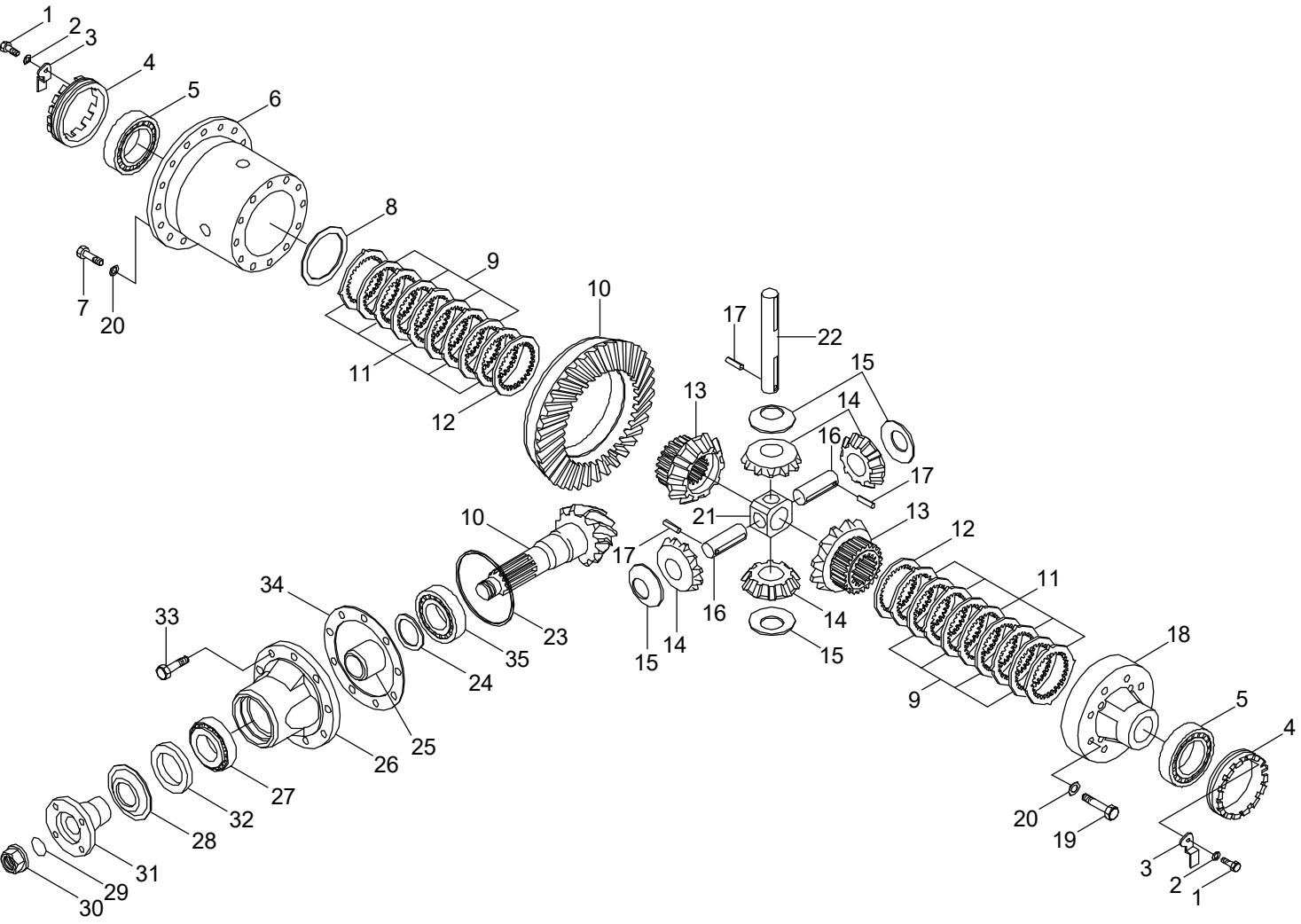

Item	Part_No	IS	Ord	T	Description	Qty	Serial_No	ITC	Remark
1	ZTAM-00133				BOLT	2			
2	ZTAM-00134				WASHER-LOCK	2			
3	ZTAM-00135				PLATE-LOCKING	2			
4	ZTAM-00242				NUT-RING	2			
5	ZTAM-00137				BEARING	2			
6	ZTAM-00138				CARRIER	1			
7	ZTAM-00139				BOLT-HEX	16			
8	ZTAM-00140				SHIM(0.30T)	1			
	ZTAM-00141				SHIM(0.40T)	1			
	ZTAM-00142				SHIM(0.10T)	1			
9	ZTAM-00143				DISC	8			
10	ZTAM-00252				BEVEL GEAR SET	1			
11	ZTAM-00145				DISC	10			
12	ZTAM-00146				DISC	2			
13	ZTAM-00147				GEAR-DIFF. SIDE	2			
14	ZTAM-00148				PINION-DIFF	4			
15	ZTAM-00149				WASHER-FRICTION	4			
16	ZTAM-00150				PIN	2			
17	ZTAM-00151				PIN-ROLL	3			
18	ZTAM-00152				COVER	1			
19	ZTAM-00153				BOLT	8			
20	ZTAM-00154				WASHER-SPRING	24			
21	ZTAM-00155				RETAINER-SHAFT	1			
22	ZTAM-00156				PIN	1			
23	ZTAM-00243				O-RING	1			
24	ZTAM-00161				SHIM(0.15T)	5			

Item	Part_No	IS	Ord	T	Description	Qty	Serial_No	ITC	Remark
24	ZTAM-00162				SHIM(0.20T)	3			
	ZTAM-00163				SHIM(0.30T)	1			
	ZTAM-00164				SHIM(0.40T)	1			
	ZTAM-00165				SHIM(0.50T)	1			
25	ZTAM-00166				SPACER	1			
26	ZTAM-00248				COVER	1			
27	ZTAM-00176				BEARING	1			
28	ZTAM-00169				COVER PLATE	1			
29	ZTAM-00170				O-RING	1			
30	ZTAM-00171				NUT	1			
31	ZTAM-00250				FLANGE	1			
32	ZTAM-00173				SEAL	1			
33	ZTAM-00249				BOLT-CYLINDER	10			
34	ZTAM-00244				SHIM(0.10T)	1			
	ZTAM-00245				SHIM(0.15T)	1			
	ZTAM-00246				SHIM(0.25T)	1			
	ZTAM-00247				SHIM(0.50T)	1			
35	ZTAM-00168				BEARING	1			

REAR PLANETARY GEAR(1/2)

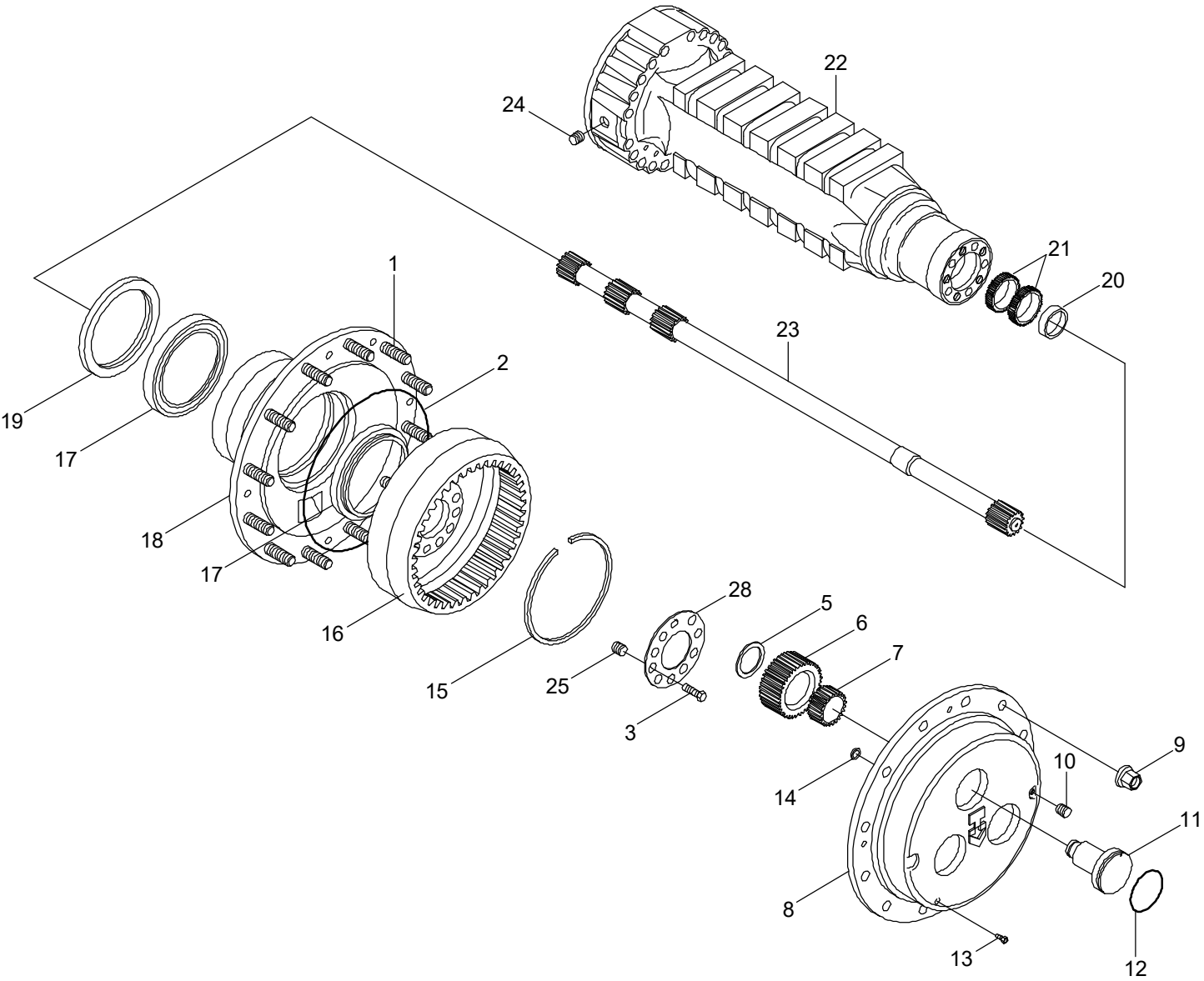

Item	Part_No	IS	Ord	T	Description	Qty	Serial_No	ITC	Remark
1	ZTAM-00066				STUD-WHEEL	24			
2	ZTAM-00177				O-RING	2			
3	ZTAM-00602				BOLT	20			
5	ZTAM-00255				WASHER-FRICTION	6			
6	ZTAM-00180				GEAR-PLANETARY	6			
7	ZTAM-00181				BEARING-NEEDLE	6			
8	ZTAM-00256				CARRIER	2			
9	ZTAM-00074				NUT	24			
10	ZTAM-00125				PLUG-MAGNET	2			
11	ZTAM-00183				PIN	6			
12	ZTAM-00184				O-RING	6			
13	ZTAM-00075				BOLT-COUNTERSUNK	4			
14	ZTAM-00186				WASHER-FRICTION	2			
15	ZTAM-00187				CIRCLIP	2			
16	ZTAM-00188				GEAR-RING	2			
17	ZTAM-00189				BEARING	4			
18	ZTAM-00190				HUB-WHEEL	2			
19	ZTAM-00191				SEAL	2			
20	ZTAM-00192				RING-CENTERING	2			
21	ZTAM-00257				SEAL	2			
22	ZTAM-00258				CASE-AXLE	2			
23	ZTAM-00195				SHAFT	2			
24	ZTAM-00121				PLUG	4	#0001 -	-	
25	ZTAM-00196				BUSHING-REDUCTION	20			
28	ZTAM-00197				PLATE-LOCKING	2			

REAR PLANETARY GEAR(2/2)

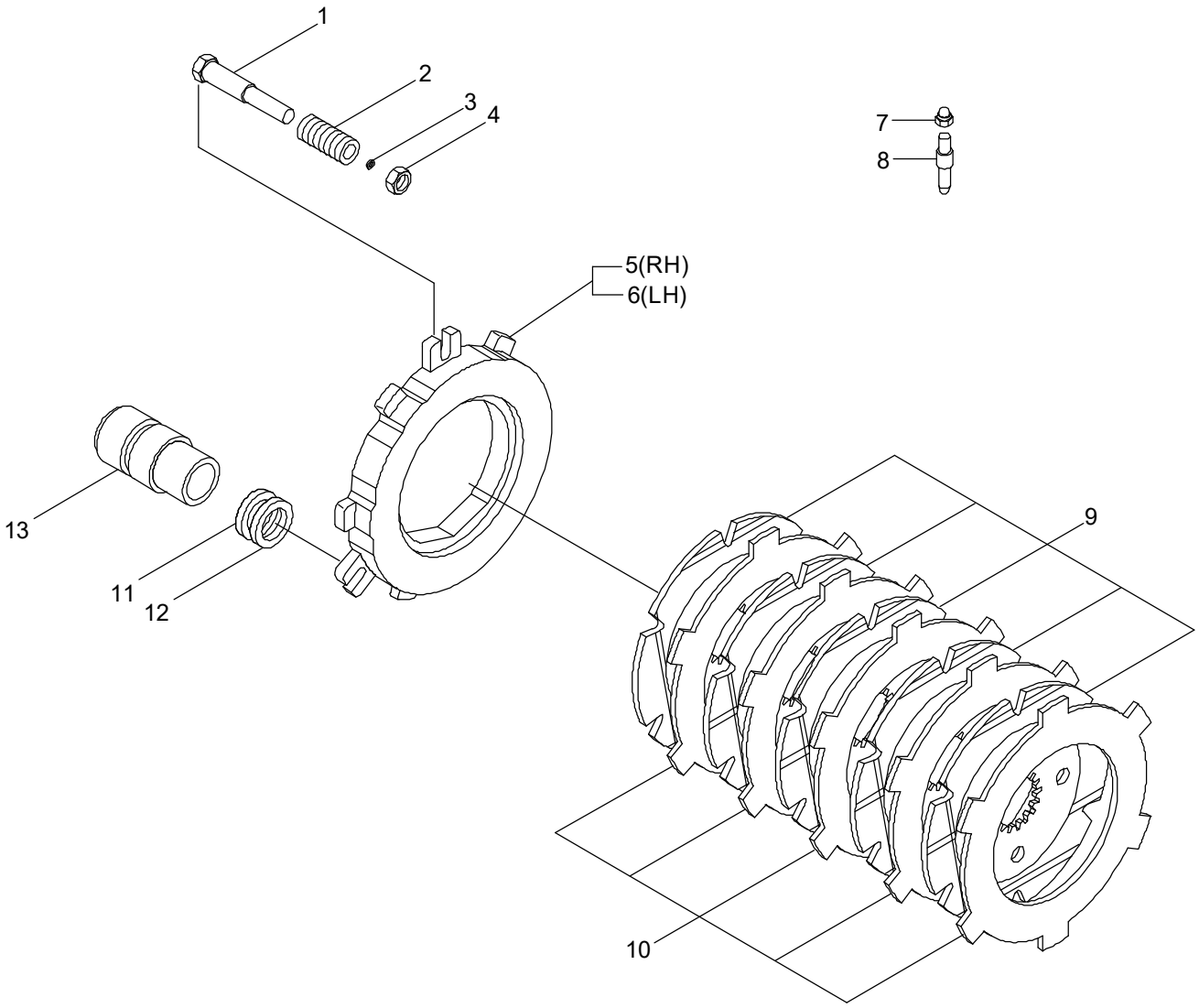

Item	Part No.	Description	Axle serial No.
11	ZTAM-00221	O-ring	~#M726394
	ZTAM-00967		#M726395~
9	ZTAM-00090	Disc-Brake	~#M726955
	ZTAM-00968		#M726956~

Item	Part_No	IS	Ord	T	Description	Qty	Serial_No	ITC	Remark
1	ZTAM-00259				BOLT-ADJUSTING	6			
2	ZTAM-00212				SPRING	6			
3	ZTAM-00260				O-RING	6			
4	ZTAM-00261				NUT	6			
5	ZTAM-00262				DISC	1			
6	ZTAM-00263				DISC	1			
7	ZTAM-00101				PLUG	2			
8	ZTAM-00100				BOLT-BLEEDING	2			
9	ZTAM-00090				DISC-BRAKE	10			SEE ILLUST
	ZTAM-00968				DISC-BRAKE	10		B	SEE ILLUST
10	ZTAM-00219				DISC-BRAKE	10			
11	ZTAM-00221				O-RING	6			SEE ILLUST
	ZTAM-00967				O-RING	6		B	SEE ILLUST
12	ZTAM-00222				RING-BACK UP	6			
13	ZTAM-00223				PISTON	6			

BELL CRANK & LINK

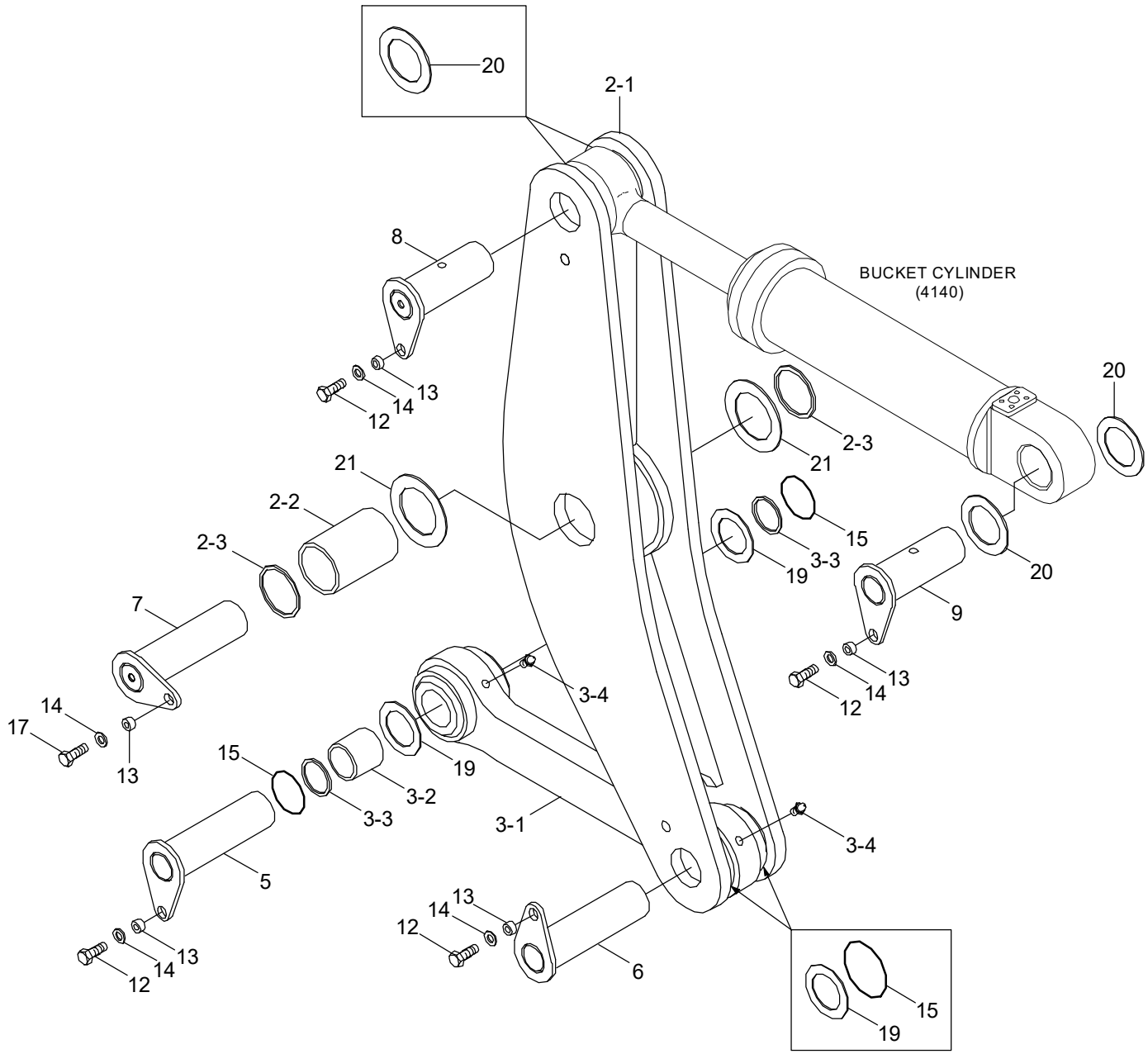

Item	Part_No	IS	Ord	T	Description	Qty	Serial_No	ITC	Remark
2	61LF-10141				BELL CRANK ASSY	1			
2-1	61LF-10151				.BELL CRANK WA	1			
2-2	61LF-10121				.BUSHING	1			
2-3	S700-100308				.DUST SEAL-DKIY TYPE	2			
3	61LF-10161				LINK ASSY	1			
3-1	61LF-10171				.LINK WA	1			
3-2	X112-702063				.BUSHING	2			
3-3	S700-070206				.SEAL-DUST	4			
3-4	S651-810002				.NIPPLE-GREASE	2			
5	61LB-15210				PIN WA	1			
6	61LB-15030				PIN WA	1			
7	61LF-15230				PIN WA	1			
8	61LB-15040				PIN WA	1			
9	61LB-15050				PIN WA	1			
12	S017-16035D				BOLT-HEX	4			
13	61LF-10280				SPACER	5			
14	64L3-01120				WASHER-HARDENED	5			
15	61L7-10301				O-RING	4			
17	S017-16045D				BOLT-HEX	1			
19	S391-070120				SHIM-ROUND(1.0T)	4			
20	S391-075135				SHIM-ROUND(1.0T)	4			
21	S391-100200				SHIM-ROUND(1.0T)	2			

BOOM

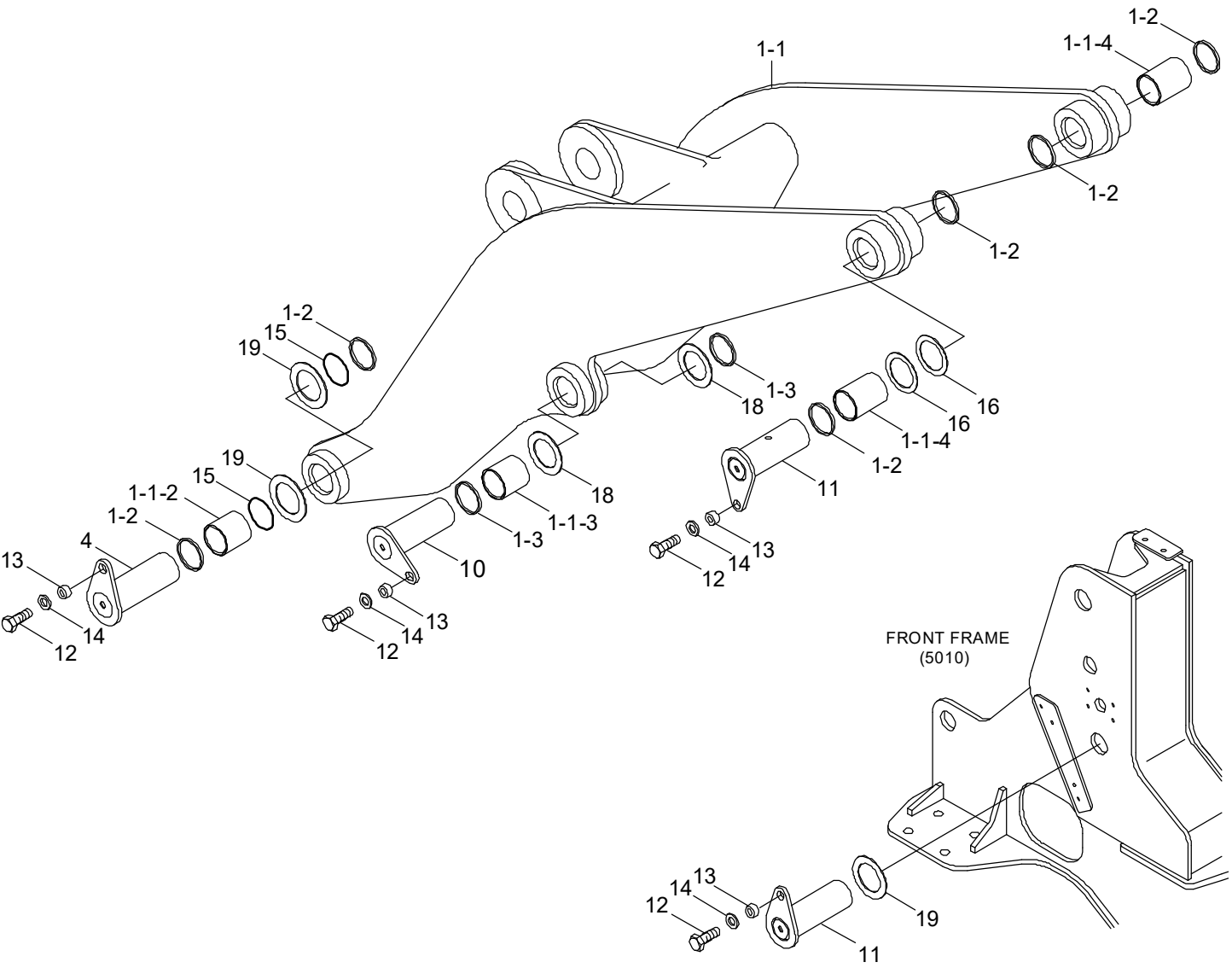
1-2
1-1-4
1-1
1-2
1-2
1-2
19
15
1-3
18
16
16
1-1-4
1-2
11
19
15
1-1-2
1-2
4
18
1-1-3
1-3
10
13
14
12
13
14
12
13
14
12
FRONT FRAME
(5010)
19
11

Item	Part_No	IS	Ord	T	Description	Qty	Serial_No	ITC	Remark
1	61LF-10011				BOOM ASSY	1			HL740-7A
	61LF-12010				BOOM ASSY	1			HL740XTD-7A
	61LF-10510				BOOM ASSY(EXTRA PIP)	1			HL740-7A
	61LF-12510				BOOM ASSY(EXTRA PIP)	1			HL740XTD-7A
	61LF-10410				BOOM ASSY(Q/COUPLER)	1			VOLVO TYPE
	61LF-12410				BOOM ASSY(Q/COUPLER)	1	#0265 -	-	VOLVO, XTD
1-1	61LF-10031				.BOOM WA	1			HL740-7A
	61LF-12030				.BOOM WA	1			HL740XTD-7A
	61LF-10530				.BOOM WA(EXTRA PIP)	1			HL740-7A
	61LF-12530				.BOOM WA(EXTRA PIP)	1			HL740XTD-7A
	61LF-10430				.BOOM WA(Q/COUPLER)	1			VOLVO TYPE
	61LF-12430				.BOOM WA	1	#0265 -	-	VOLVO, XTD
1-1-2	61LF-10090				..BUSHING	2			
1-1-3	61LF-10100				..BUSHING	2			
1-1-4	61LF-10110				..BUSHING	2			
1-2	S700-070206				.DUST SEAL-DKIY TYPE	8			
1-3	S700-065206				.DUST SEAL-DKIY TYPE	4			
4	61LB-15200				PIN WA	2			STD
	61LB-15220				PIN WA	2			VOLVO TYPE
10	61LB-15060				PIN WA	2			
11	61LB-15070				PIN WA	4			
12	S017-16035D				BOLT-HEX	8			
13	61LF-10280				SPACER	8			
14	64L3-01120				WASHER-HARDENED	8			
15	61L7-10301				O-RING	4			
16	S391-070130				SHIM-ROUND(1.0T)	4			

Item	Part_No	IS	Ord	T	Description	Qty	Serial_No	ITC	Remark
18	S391-065120				SHIM-ROUND(1.0T)	4			
19	S391-070120				SHIM-ROUND(1.0T)	8			

BUCKET(2.1m^3, CUTTING EDGE)

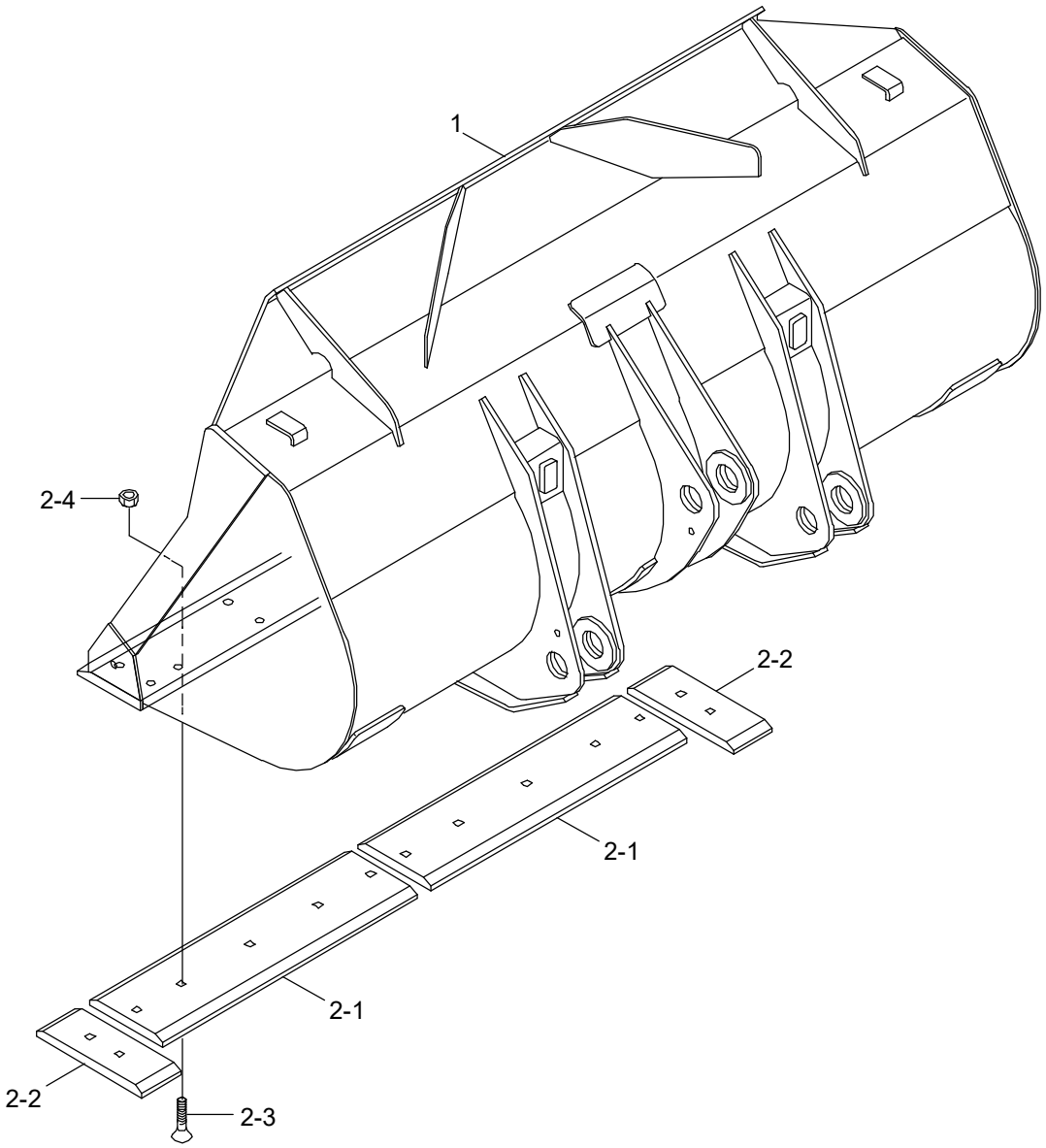

Description	Parts no	Included item
Cutting edge kit	61LF-00910BG	2-1~2-4

Item	Part_No	IS	Ord	T	Description	Qty	Serial_No	ITC	Remark
*	61LF-00010BG				BUCKET ASSY	1			
1	61LF-00030BG				.BUCKET WA	1			
2	61LF-00910BG				.CUTTING EDGE KIT	1			SEE ILLUST
2-1	61LF-00330BG				..CUTTING EDGE-CENTER	2			
2-2	61LD-00370BG				..CUTTING EDGE-SIDE	2			
2-3	61L3-0198				..BOLT-TOOTH	12			
2-4	S206-20100B				..NUT-HEX	12			

BUCKET(2.4m^3, CUTTING EDGE)

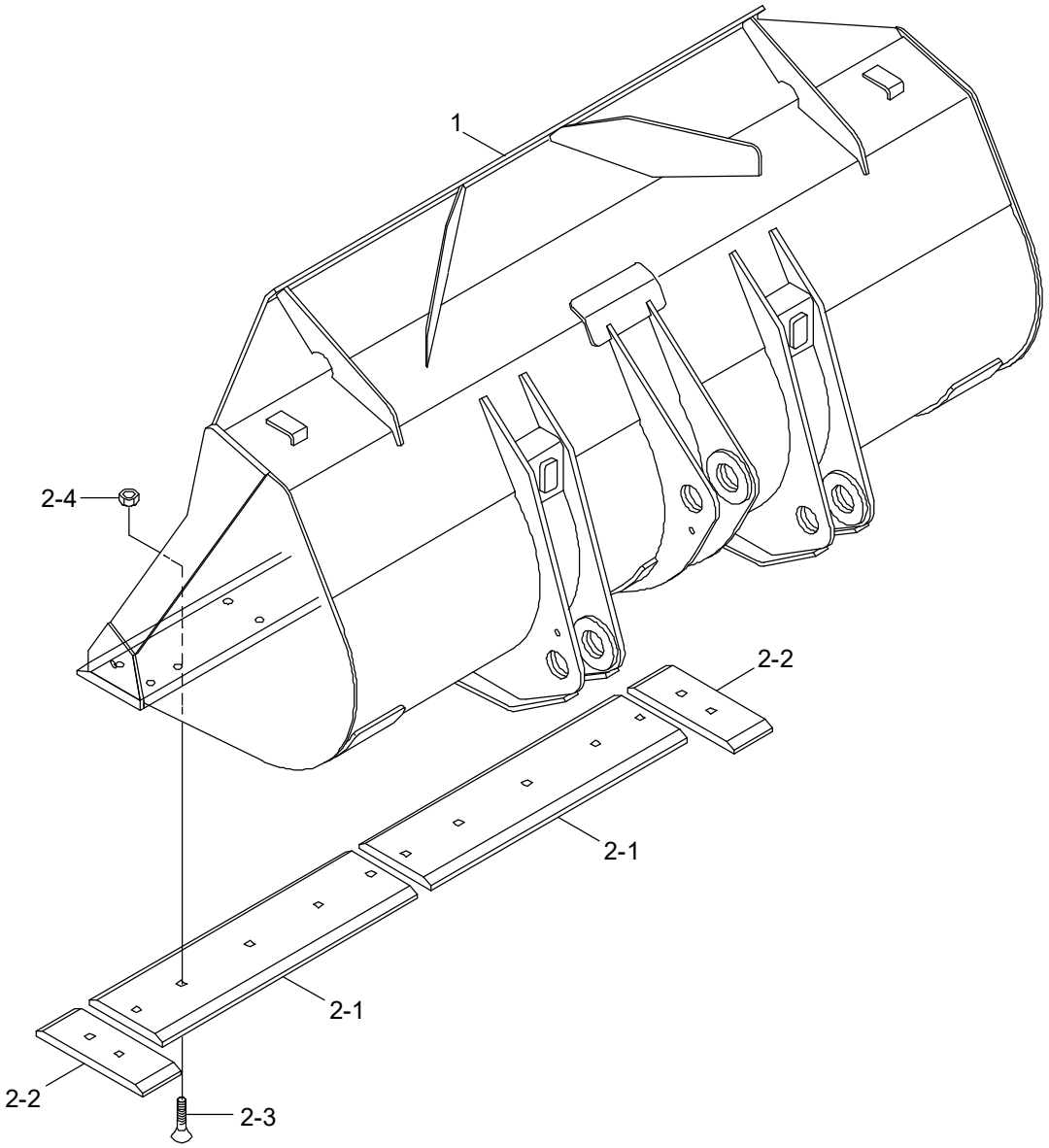

Description	Parts no	Included item
Cutting edge kit	61LF-00910BG	2-1~2-4

Item	Part_No	IS	Ord	T	Description	Qty	Serial_No	ITC	Remark
*	61LF-03000				BUCKET ASSY	1	#0364 -		
1	61LF-03010				.BUCKET WA	1			
2	61LF-00910BG				.CUTTING EDGE KIT	1			SEE ILLUST
2-1	61LF-00330BG				..CUTTING EDGE-CENTER	2			
2-2	61LD-00370BG				..CUTTING EDGE-SIDE	2			
2-3	61L3-0198				..BOLT-TOOTH	12			
2-4	S206-20100B				..NUT-HEX	12			

BUCKET(2.0m³, TOOTH)

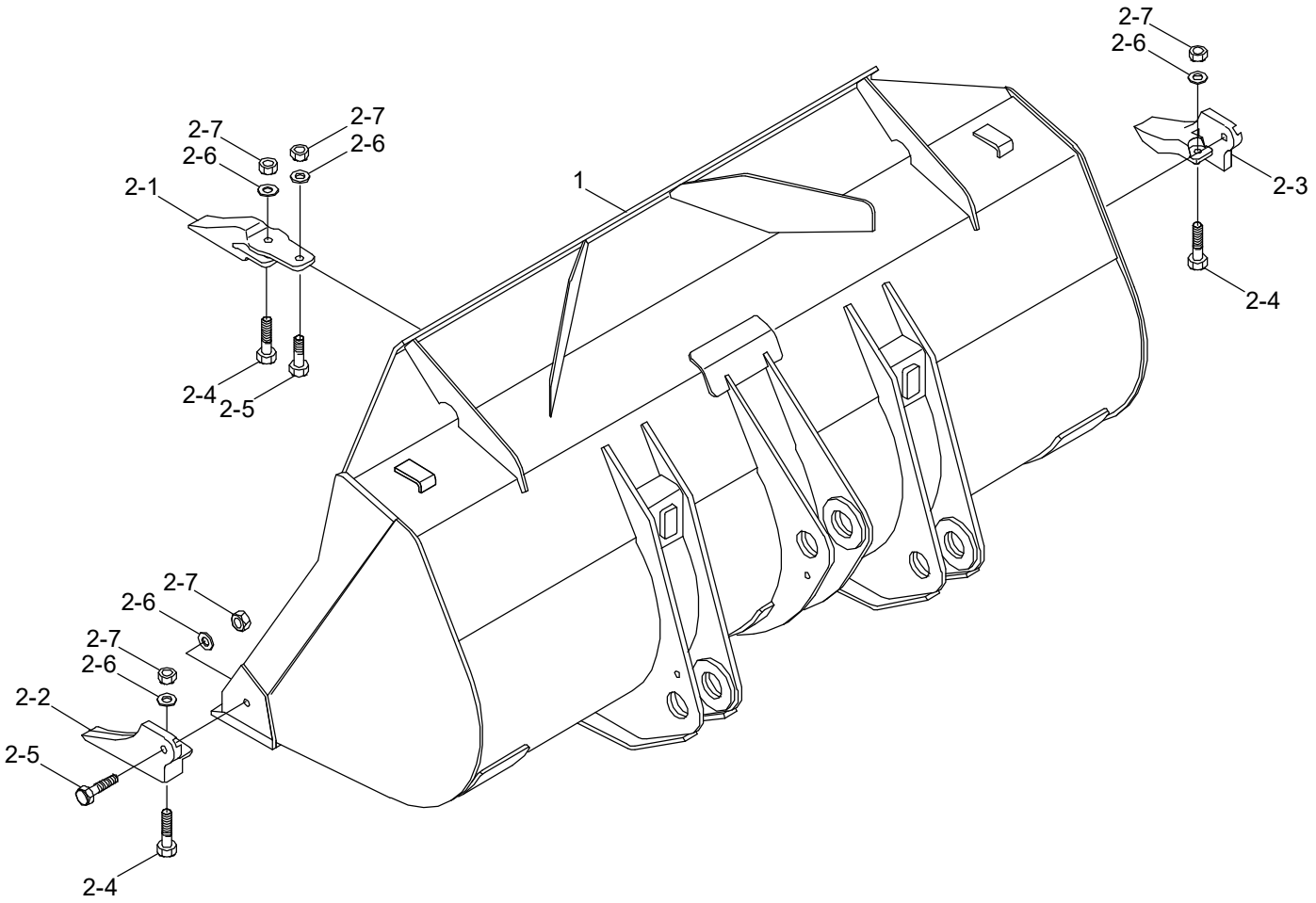

Description	Parts no	Included item
Tooth kit	61LF-00950BG	2-1~2-7

Item	Part_No	IS	Ord	T	Description	Qty	Serial_No	ITC	Remark
*	61LF-00020BG				BUCKET ASSY	1			
1	61LF-00030BG				.BUCKET WA	1			
2	61LF-00950BG				.TOOTH KIT(1-PIECE)	1			SEE ILLUST
2-1	61L3-0169BG				..TOOTH-CENTER	5			
2-2	61L3-0170BG				..TOOTH-LH	1			
2-3	61L3-0171BG				..TOOTH-RH	1			
2-4	S018-20075D				..BOLT-HEX	7			
2-5	S018-20065D				..BOLT-HEX	7			
2-6	S441-200006				..WASHER-HARDENED	14			
2-7	S206-20100B				..NUT-HEX	14			

BUCKET(2.3m³, TOOTH)

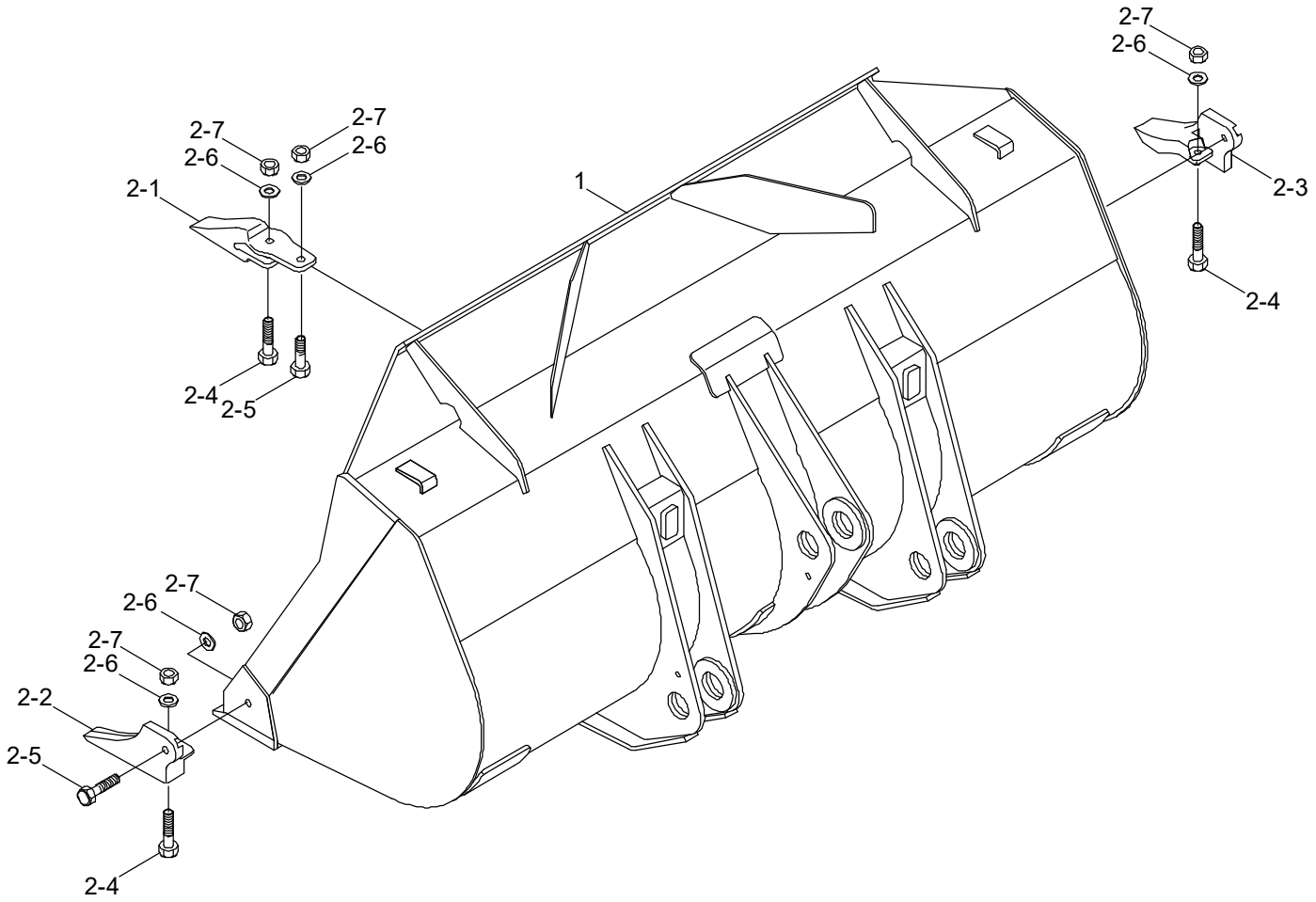

Description	Parts no	Included item
Tooth kit	61LF-00950BG	2-1~2-7

Item	Part_No	IS	Ord	T	Description	Qty	Serial_No	ITC	Remark
*	61LF-03500				BUCKET ASSY	1	#0364 -		
1	61LF-03010				.BUCKET WA	1			
2	61LF-00950BG				.TOOTH KIT(1-PIECE)	1			SEE ILLUST
2-1	61L3-0169BG				..TOOTH-CENTER	5			
2-2	61L3-0170BG				..TOOTH-LH	1			
2-3	61L3-0171BG				..TOOTH-RH	1			
2-4	S018-20075D				..BOLT-HEX	7			
2-5	S018-20065D				..BOLT-HEX	7			
2-6	S441-200006				..WASHER-HARDENED	14			
2-7	S206-20100B				..NUT-HEX	14			

BUCKET(2.0m^3, 2-PCS TOOTH)

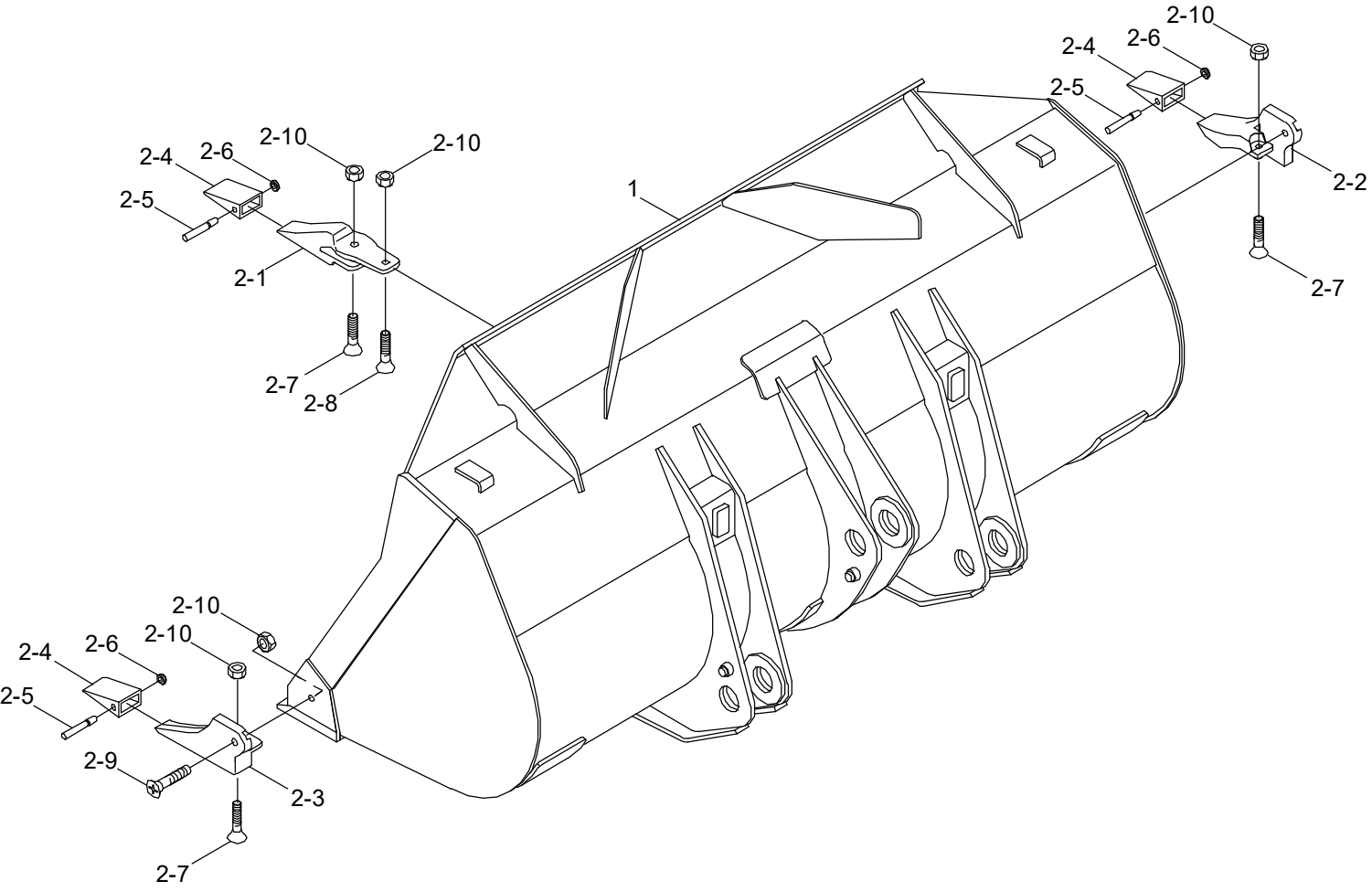

Description	Parts no	Included item
tooth kit	61LF-00960BG	2-1~2-10

Item	Part_No	IS	Ord	T	Description	Qty	Serial_No	ITC	Remark
*	61LF-00390BG				BUCKET ASSY	1			
1	61LF-00030BG				.BUCKET WA	1			
2	61LF-00960BG				.TOOTH KIT(2-PIECE)	1			SEE ILLUST
2-1	64L3-01260BG				..ADAPTER-TOOTH,CENTER	5			
2-2	64L3-01270BG				..ADAPTER-TOOTH,LH	1			
2-3	64L3-01280BG				..ADAPTER-TOOTH,RH	1			
2-4	64L3-01290BG				..POINT-TOOTH	7			
2-5	64L3-01300				..PIN-TOOTH	7			
2-6	64L3-01310				..WASHER-LOCK	7			
2-7	64L3-01320				..BOLT-TOOTH	7			
2-8	64L3-01330				..BOLT-TOOTH	5			
2-9	64L3-01340				..BOLT-TOOTH	2			
2-10	S206-20100B				..NUT-HEX	14			

BUCKET(2.3m^3, 2-PCS TOOTH)

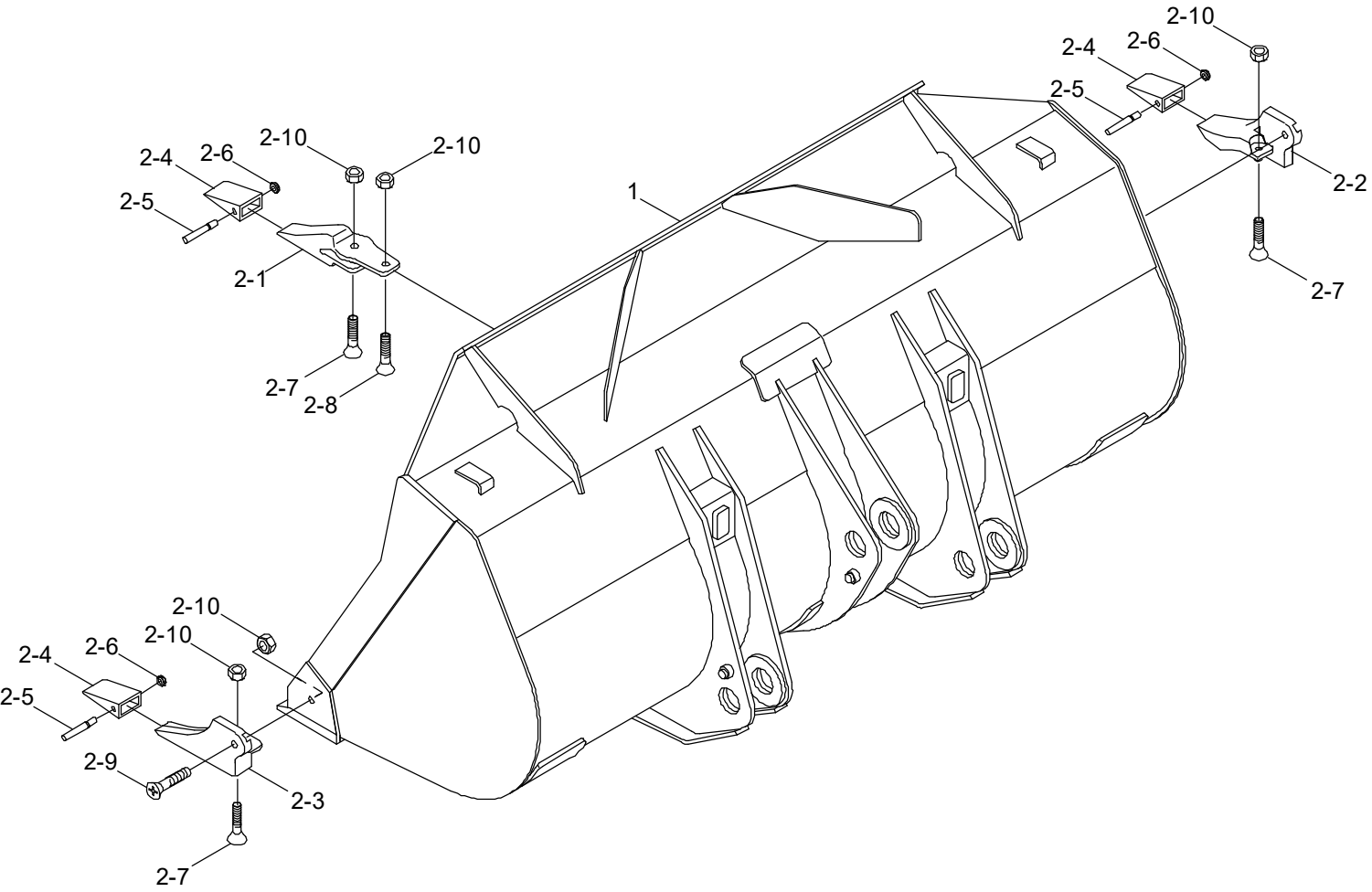

Description	Parts no	Included item
tooth kit	61LF-00960BG	2-1~2-10

Item	Part_No	IS	Ord	T	Description	Qty	Serial_No	ITC	Remark
*	61LF-03700				BUCKET ASSY	1	#0364 -		
1	61LF-03010				.BUCKET WA	1			
2	61LF-00960BG				.TOOTH KIT(2-PIECE)	1			SEE ILLUST
2-1	64L3-01260BG				..ADAPTER-TOOTH,CENTER	5			
2-2	64L3-01270BG				..ADAPTER-TOOTH,LH	1			
2-3	64L3-01280BG				..ADAPTER-TOOTH,RH	1			
2-4	64L3-01290BG				..POINT-TOOTH	7			
2-5	64L3-01300				..PIN-TOOTH	7			
2-6	64L3-01310				..WASHER-LOCK	7			
2-7	64L3-01320				..BOLT-TOOTH	7			
2-8	64L3-01330				..BOLT-TOOTH	5			
2-9	64L3-01340				..BOLT-TOOTH	2			
2-10	S206-20100B				..NUT-HEX	14			

BUCKET(2.8m^3, CUTTING EDGE)

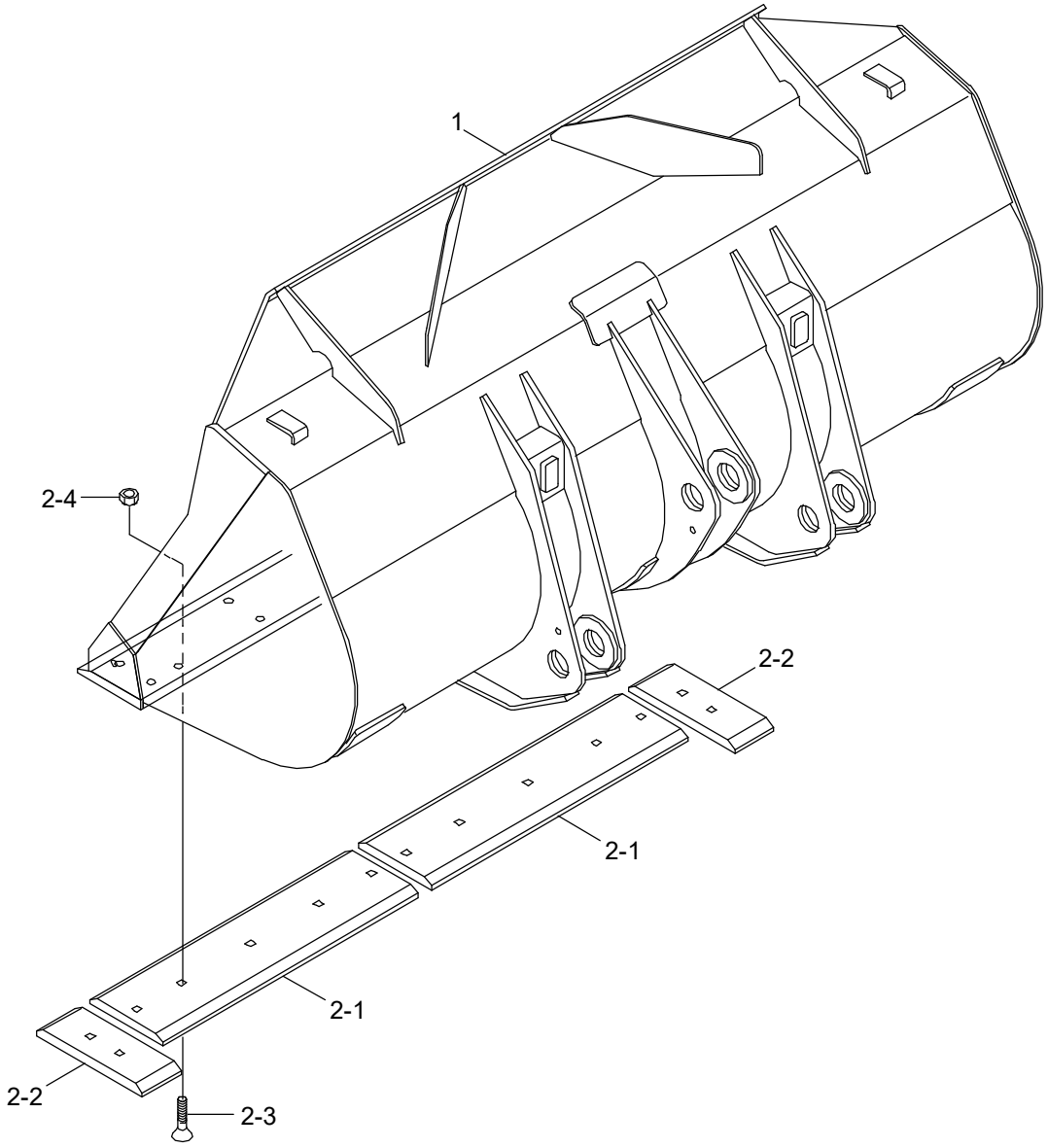

Description	Parts no	Included item
Cutting edge kit	61LD-00910BG	2-1~2-4

Item	Part_No	IS	Ord	T	Description	Qty	Serial_No	ITC	Remark
*	61LF-02000BG				BUCKET ASSY	1			
1	61LF-02010BG				.BUCKET WA	1			
2	61LD-00910BG				.CUTTING EDGE KIT	1			SEE ILLUST
2-1	61LD-00360BG				..CUTTING EDGE-CENTER	2			
2-2	61LD-00370BG				..CUTTING EDGE-SIDE	2			
2-3	61L3-0198				..BOLT-TOOTH	14			
2-4	S206-20100B				..NUT-HEX	14			

BUCKET(2.7m^3, TOOTH)

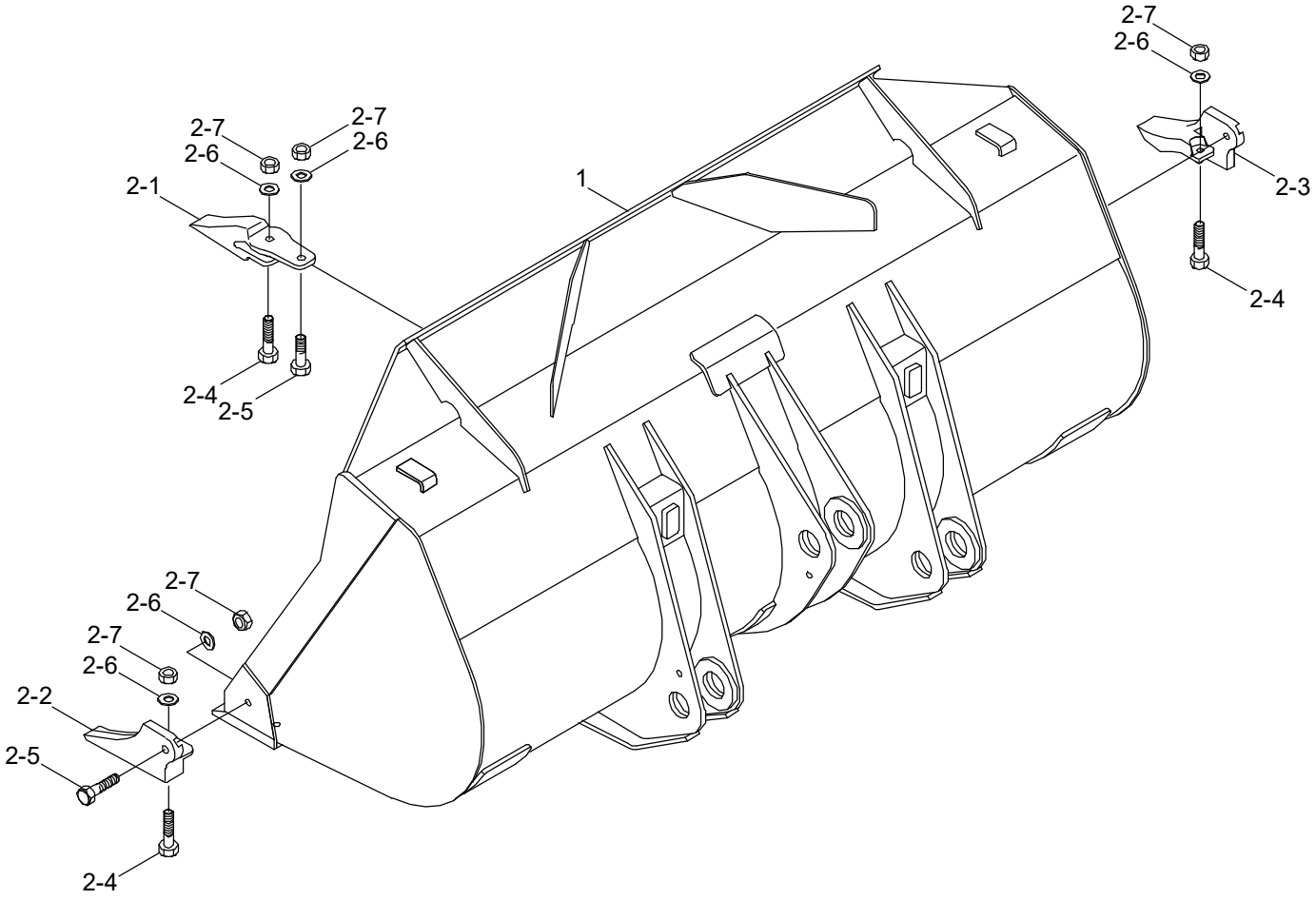

Description	Parts no	Included item
Tooth kit	61LD-00950BG	2-1~2-7

Item	Part_No	IS	Ord	T	Description	Qty	Serial_No	ITC	Remark
*	61LF-02500BG				BUCKET ASSY	1			
1	61LF-02010BG				.BUCKET WA	1			
2	61LD-00950BG				.TOOTH KIT(1-PIECE)	1			SEE ILLUST
2-1	61L3-0169BG				..TOOTH-CENTER	6			
2-2	61L3-0170BG				..TOOTH-LH	1			
2-3	61L3-0171BG				..TOOTH-RH	1			
2-4	S018-20075D				..BOLT-HEX	8			
2-5	S018-20065D				..BOLT-HEX	8			
2-6	S441-200006				..WASHER-HARDENED	16			
2-7	S206-20100B				..NUT-HEX	16			

BUCKET(2.7m³, 2-PCS TOOTH)

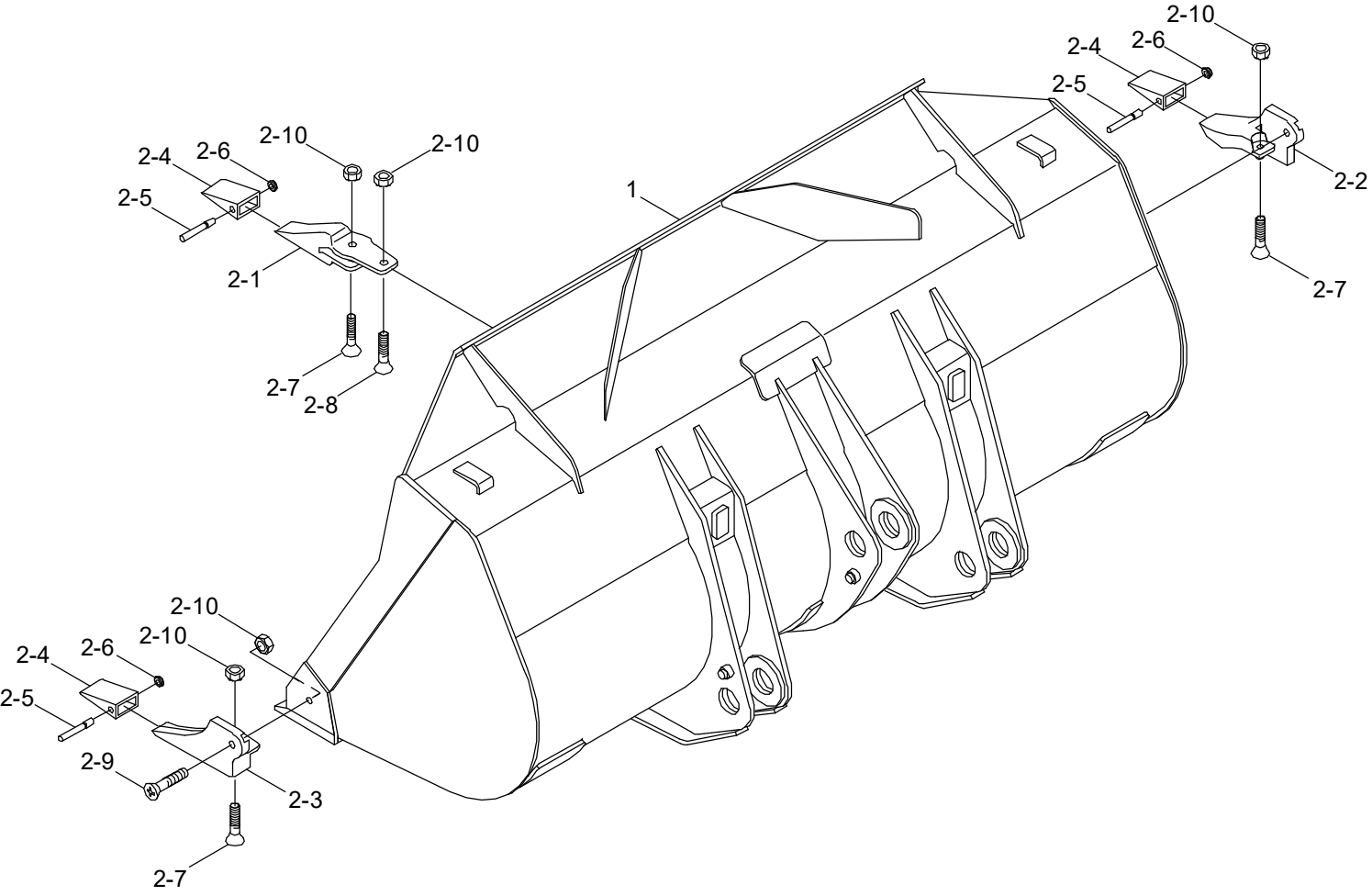

Description	Parts no	Included item
Tooth kit	61LD-00960BG	2-1~2-10

Item	Part_No	IS	Ord	T	Description	Qty	Serial_No	ITC	Remark
*	61LF-02700BG				BUCKET ASSY	1			
1	61LF-02010BG				.BUCKET WA	1			
2	61LD-00960BG				.TOOTH KIT(2-PIECE)	1			SEE ILLUST
2-1	64L3-01260BG				..ADAPTER-TOOTH,CENTER	6			
2-2	64L3-01270BG				..ADAPTER-TOOTH,LH	1			
2-3	64L3-01280BG				..ADAPTER-TOOTH,RH	1			
2-4	64L3-01290BG				..POINT-TOOTH	8			
2-5	64L3-01300				..PIN-TOOTH	8			
2-6	64L3-01310				..WASHER-LOCK	8			
2-7	64L3-01320				..BOLT-TOOTH	8			
2-8	64L3-01330				..BOLT-TOOTH	6			
2-9	64L3-01340				..BOLT-TOOTH	2			
2-10	S206-20100B				..NUT-HEX	16			

QUICK COUPLER(VOLVO TYPE)

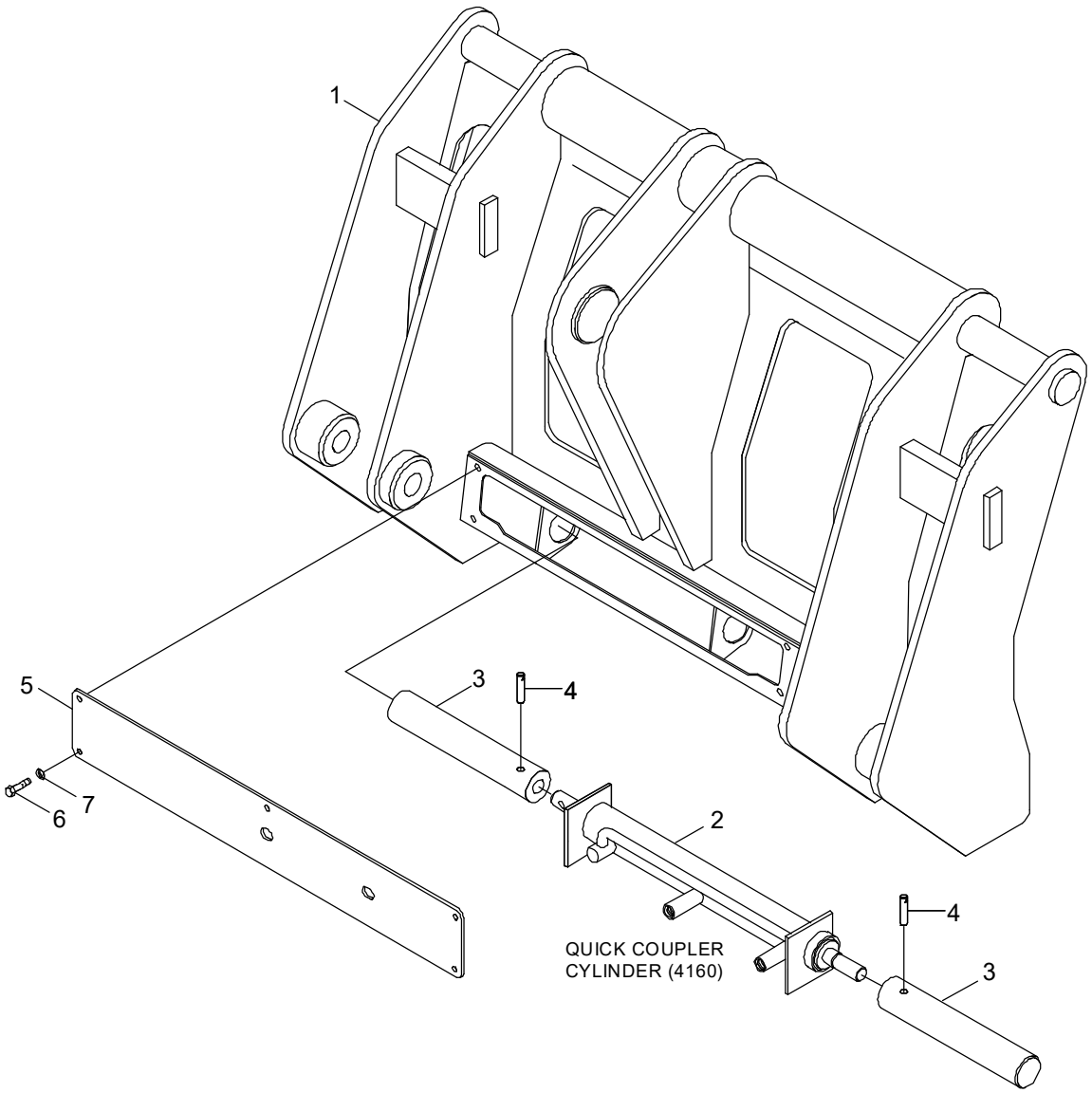

Item	Part_No	IS	Ord	T	Description	Qty	Serial_No	ITC	Remark
*	61LF-91500				QUICK COUPLER ASSY	1	- #0019		
	61LF-91501				QUICK COUPLER ASSY	1	#0020 -	B	
1	61LF-91510				.QUICK COUPLER WA	1			
2	@				.COUPLER CYLINDER	1			NOT
3	61LF-91240				.PIN-COUPLER	2	- #0293		
	61LF-91241				.PIN-COUPLER	2	#0294 -	B	
4	S471-910452				.PIN-SPRING	2			
5	61LF-91520				.COVER	1			
6	S015-080256				.BOLT-HEX	5			
7	S403-08200B				.WASHER-PLAIN	5			

PALLET FORK

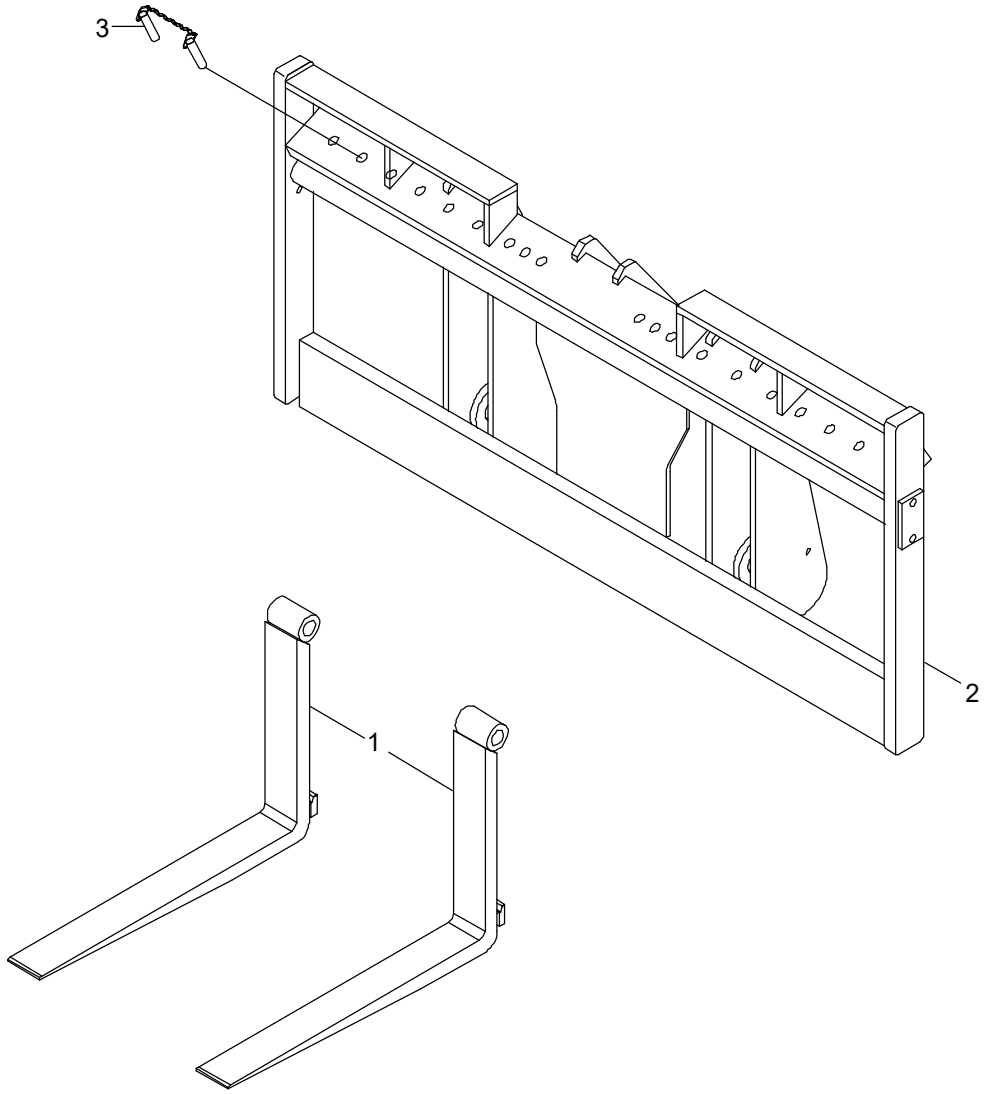

Item	Part_No	IS	Ord	T	Description	Qty	Serial_No	ITC	Remark
*	61LF-81000				PALLET FORK ASSY	1	#0345 -		7TON, 1800MM
1	61F8-70130				.FORK ASSY(1800)	2			
2	61LF-81010				.CARRIAGE ASSY	1			
3	61FC-28051				.FORK RETAINING ASSY	2			

TOOLS

1

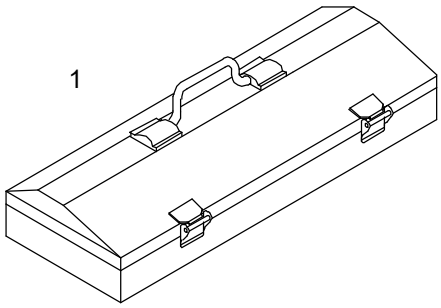

12,13,14,15,16,17,18,19

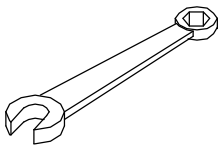

20,21

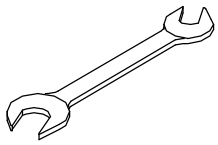

2, 3, 4 ,5 ,6, 7, 8, 9,10,11,42,43



28,29

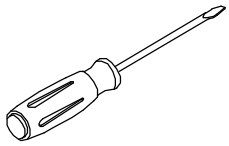

30

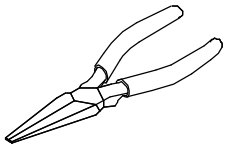

22,23,24,25,26,27

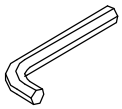

32

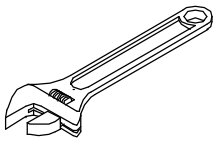

33

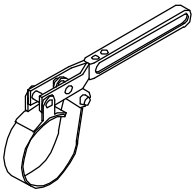

31

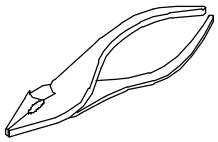

35

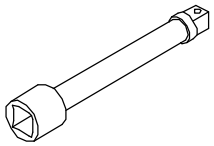

36,38

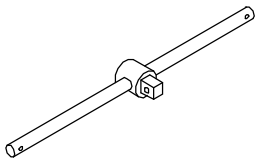

34

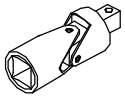

39

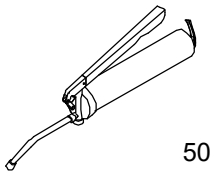

40

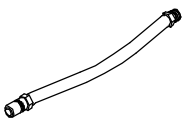

50

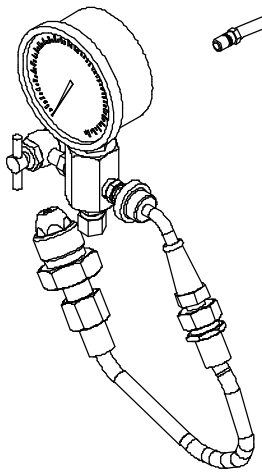

For ride control system
(Accumulator charging & gauging kit)

37

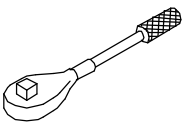

Item	Part_No	IS	Ord	T	Description	Qty	Serial_No	ITC	Remark
*	94L1-20002				TOOL KIT ASSY	1			
1	E191-2000	10			.TOOL BOX	1			
2	S953-127100				.SOCKET-1/2"X10MM	1			
3	S953-127130				.SOCKET-1/2"X13MM	1			
4	S953-127140				.SOCKET-1/2"X14MM	1			
5	S953-127170				.SOCKET-1/2"X17MM	1			
6	S953-127190				.SOCKET-1/2"X19MM	1			
7	S953-127220				.SOCKET-1/2"X22MM	1			
8	S953-127240				.SOCKET-1/2"X24MM	1			
9	S953-127300				.SOCKET-1/2"X30MM	1			
10	S953-190320				.SOCKET-3/4"X32MM	1			
11	S953-190360				.SOCKET-3/4"X36MM	1			
12	S962-100003				.WRENCH-COMBINATION	1			10
13	S962-120003				.WRENCH-COMBINATION	1			12
14	S962-130003				.WRENCH-COMBINATION	1			13
15	S962-170003				.WRENCH-COMBINATION	1			17
16	S962-190003				.WRENCH-COMBINATION	1			19
17	S962-220003				.WRENCH-COMBINATION	1			22
18	S962-240003				.WRENCH-COMBINATION	1			24
19	S962-270003				.WRENCH-COMBINATION	1			27
20	S962-303202				.WRENCH-DOUBLE,30X32	1			
21	S962-364102				.WRENCH-DOUBLE,36X41	1			
22	S967-040025				.L-WRENCH,4MM	1			
23	S967-050028				.L-WRENCH,5MM	1			
24	S967-060032				.L-WRENCH,6MM	1			
25	S967-080036				.L-WRENCH,8MM	1			

Item	Part_No	IS	Ord	T	Description	Qty	Serial_No	ITC	Remark
26	S967-100040				.L-WRENCH,10MM	1			
27	S967-120045				.L-WRENCH,12MM	1			
28	S959-081512				.DRIVER(-)	1			
29	S959-081522				.DRIVER(+)	1			
30	S961-150016				.PLIER-LONG NOSE	1			6"
31	S960-150020				.PLIER-SLIP JOINTS	1			150
32	S963-200024				.WRENCH-ADJ ANGLE,8"	1			
33	E191-2043				.WRENCH-FILTER,300MM	1			
34	S954-127080				.UNIVERSAL JOINT-1/2"	1			
35	S955-127075				.EXTENSION BAR-1/2"X5"	1			
36	E191-2048				.HANDLE-SLIDING,1/2"X10"	1			
37	S958-127250				.HANDLE-RATCHET 1/2"	1			
38	E191-2049				.HANDLE-SLIDING,3/4"X20"	1			
39	E191-2053				.GUN-GREASE,500CC	1			
40	E191-2054				.TIP-HOSE,RUBBER	1			
41	94L1-20012				.TOOL LIST	1			
42	S968-190240				.SOCKET-3/4"X1 1/2"	1			
43	S968-190300				.SOCKET-3/4'X1 7/8"	1			
50	31LM-90100				CHARGE & GAUGE KIT	1			RIDE CONTROL

DECALS (ENGLISH)

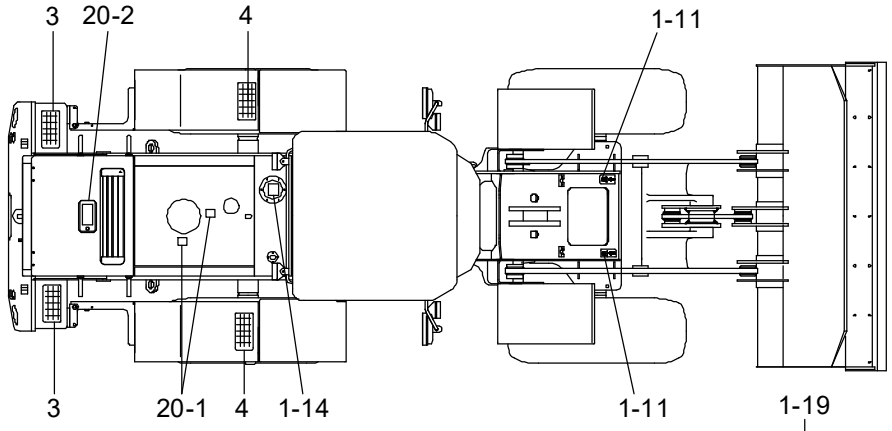

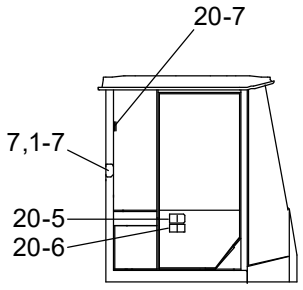

CAB INSIDE - LH

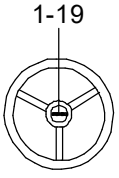

STEERING WHEEL

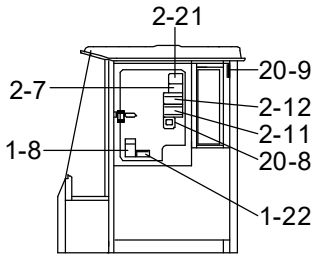

CAB INSIDE - RH

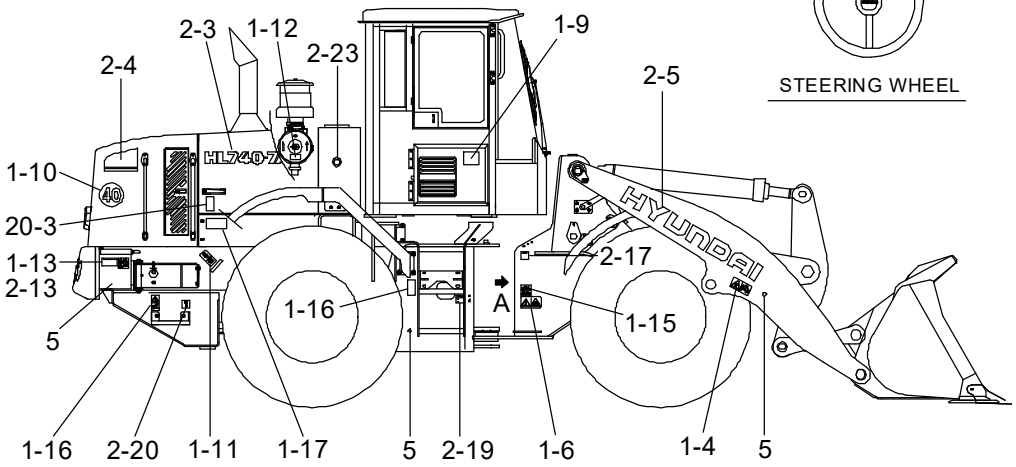

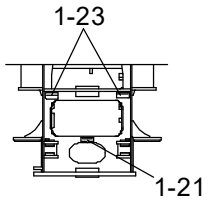

VIEW A

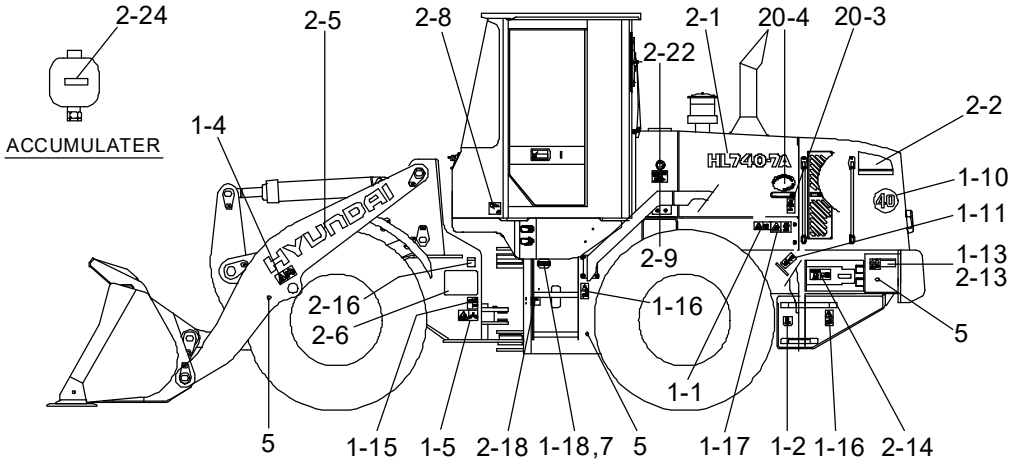

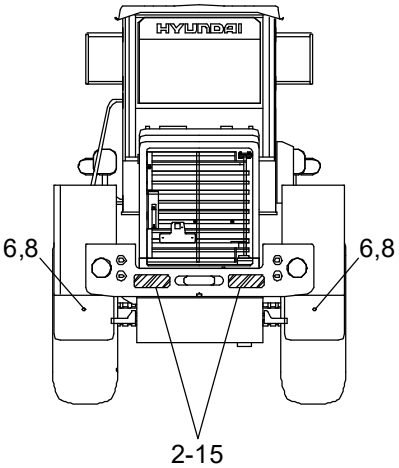

Item	Part_No	IS	Ord	T	Description	Qty	Serial_No	ITC	Remark
1	92LF-00010				DECAL KIT(A)	1	- #0293		
	92LF-00011				DECAL KIT(A)	1	#0294 -	B	
1-1	91LB-01110				.DECAL-START MOTOR	1			
1-2	91LB-01190				.DECAL-DRAIN/REMOTE	1			HYDRAULIC OIL
1-4	91LB-01210				.DECAL-BUCKET STOPPER	1			
1-5	91LB-01260				.DECAL-STEER WARN/LH	1			
1-6	91LB-01270				.DECAL-STEER WARN/RH	1			
1-7	91LB-01280				.ROPS PLATE	1			
1-8	91LF-02300				.DECAL-C/IDEOGRAM	1			1-LEVER RCV
	91LF-02310				.DECAL-C/IDEOGRAM	1			2-LEVER RCV
1-9	91LF-01320				.DECAL-AIRCON FILTER	1			
1-10	91L7-00360				.DECAL-SPEED LIMIT	2			EUROPE ONLY
1-11	94L3-00420				.SLINGING IDEOGRAM	4	- #0293		
	92LB-14000				.DECAL-LIFT & TIE	4	#0294 -	B	
1-12	91N6-01102				.AIR CLEANER FILTER	1			
1-13	91N6-02120				.DECAL-BATT ACCIDENT	2			
1-14	91N6-03111				.HYD OIL LUBR	1			
1-15	91N6-03130				.DECAL-H/PRESSURE HOSE	2			
1-16	91N6-03140				.FALLING	4			
1-17	91N6-07121				.SHEARING	2			
1-18	91E1-14110				.NAME PLATE	1			
	91E1-14130				.NAME PLATE	1			EUROPE ONLY
1-19	91LB-08110				.DECAL-STEERING WHEEL	1			
1-21	91LH-01220				.DECAL-GREASE CENTER	1			
1-22	91N6-07390				.TURBOCHARGER	1			
R1-23	91LB-01360				.DECAL-RIDE CONTROL	2			RIDE CONTROL

Item	Part_No	IS	Ord	T	Description	Qty	Serial_No	ITC	Remark
2	92LF-01101				DECAL KIT(B)	1	- #0146		HL740-7A
	92LF-01102				DECAL KIT(B)	1	#0147 - #0293	B	HL740-7A
	92LF-01103				DECAL KIT(B)	1	#0294 -	D	HL740-7A
	92LF-01201				DECAL KIT(B)	1	- #0146		HL740XTD-7A
	92LF-01202				DECAL KIT(B)	1	#0147 - #0293	B	HL740XTD-7A
	92LF-01203				DECAL KIT(B)	1	#0294 -	D	HL740XTD-7A
2-1	92LF-15112				.MODEL NAME-LH/FR	1			HL740-7A
	92LF-15132				.DECAL-MODEL NAME-LH/FR	1			HL740XTD-7A
2-2	92LF-15170				.MODEL NAME-LH/RR	1			
2-3	92LF-15122				.MODEL NAME-RH/FR	1			HL740-7A
	92LF-15142				.DECAL-MODEL NAME-RH/FR	1			HL740XTD-7A
2-4	92LF-15180				.MODEL NAME-RH/RR	1			
2-5	91N6-23100				.DECAL-TRADE MARK	2			
2-6	92LF-10710				.DECAL-S/INSTRUCTON	1	- #0293		
	92LF-10711				.DECAL-S/INSTRUCTON	1	#0294 -	D	
2-7	92LF-10510				.DECAL-SPEC SHEET	1			HL740-7A
	92LF-10520				.DECAL-SPEC SHEET	1			HL740XTD-7A
2-8	91N6-22140				.DECAL-NOISE LWA/104DB	1			EUROPE ONLY
2-9	91LB-01130				.DECAL-HYD OIL LEVEL	1			
2-11	91LB-01250				.DECAL-ROPS CAB	1			
2-12	91LB-01290				.DECAL-REF MANUAL	1			
2-13	91LB-01350				.ECM CONNECTOR	2			
2-14	91N6-01131				.FUELING	1			
2-15	91LB-01400				.DECAL-K/CLEAR/REFLECT	2			
2-16	91LB-02150				.DECAL-GREASE(A)	1			
2-17	91LB-03160				.DECAL-GREASE(B)	1			

Item	Part_No	IS	Ord	T	Description	Qty	Serial_No	ITC	Remark
2-18	91LB-01170				.DECAL-GREASE(C)	1			
2-19	91LB-01180				.DECAL-GREASE(D)	1			
2-20	91LB-01370				.DECAL-DRAIN/ENGINE	1			
2-21	91LC-11180				.DECAL-START PROCEDURE	1			
2-22	92LF-15190				.M/NAME-LH/HYD TANK	1			
2-23	92LF-15200				.M/NAME-RH/HYD TANK	1			
2-24	91N6-03200				.DECAL-ACCUMULATER	4	#0147 -	-	
R2-24	91N6-03200				.DECAL-ACCUMULATER	5	#0147 -	-	RIDE CONTROL
3	91E1-26300				STEP TREAD	2			A/S ITEM
4	91E1-26300				STEP TREAD	2	- #0256	-	FULL MUD GUARD
5	21EK-10150				REFLECTOR-SIDE	6			
6	51EK-52990				REFLECTOR-REAR	2			
7	E171-1246				RIVET	8			
8	S403-05200B				WASHER-PLAIN	2			
20	92LB-00080				DECAL KIT-A/S	1			
20-1	91N6-01111				.TURBO COVER	2			
20-2	91N6-01121				.DECAL-RADIATOR CAP	1			
20-3	91N6-07112				.STAY FIX	2			
20-4	91E1-27110				.LOW EMISSION ENG	1			
20-5	91LB-01230				.DECAL-MAX H/REACH	1			
20-6	91LB-01240				.DECAL-ROLL OVER	1			
20-7	91LB-01340				.DECAL-HAMMER	1			
20-8	91N6-07261				.ALTERNATE EXIT	1			
20-9	91N6-07290				.DECAL-FIRE	1			

DECALS(KOREAN, #0195-)

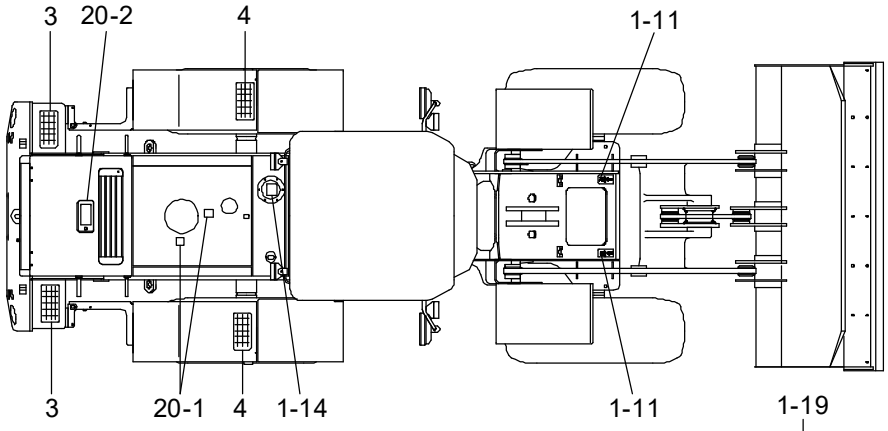

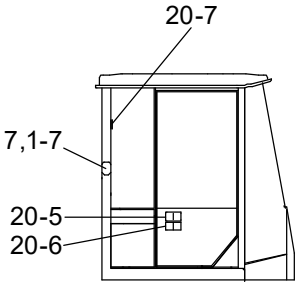

CAB INSIDE - LH

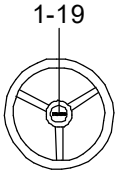

STEERING WHEEL

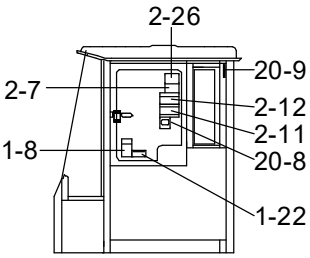

CAB INSIDE - RH

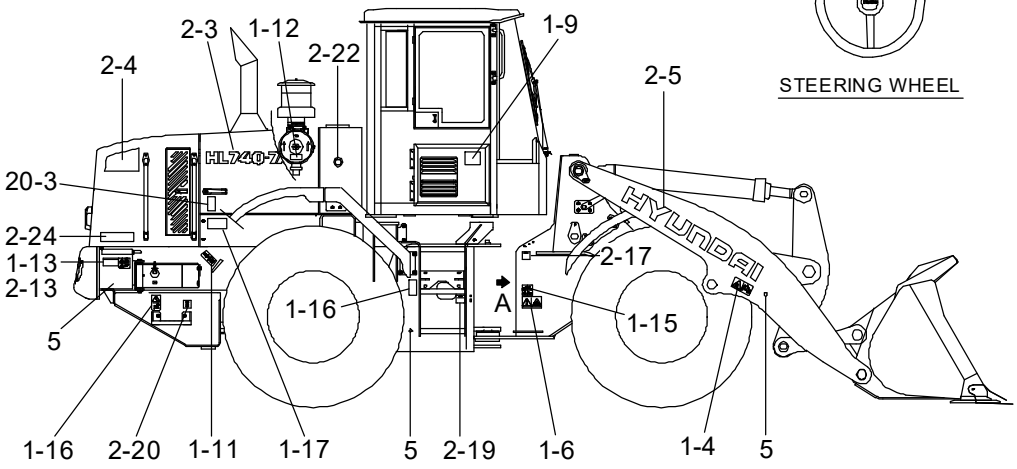

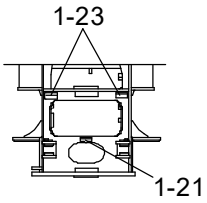

VIEW A

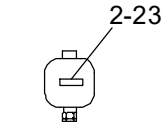

ACCUMULATER

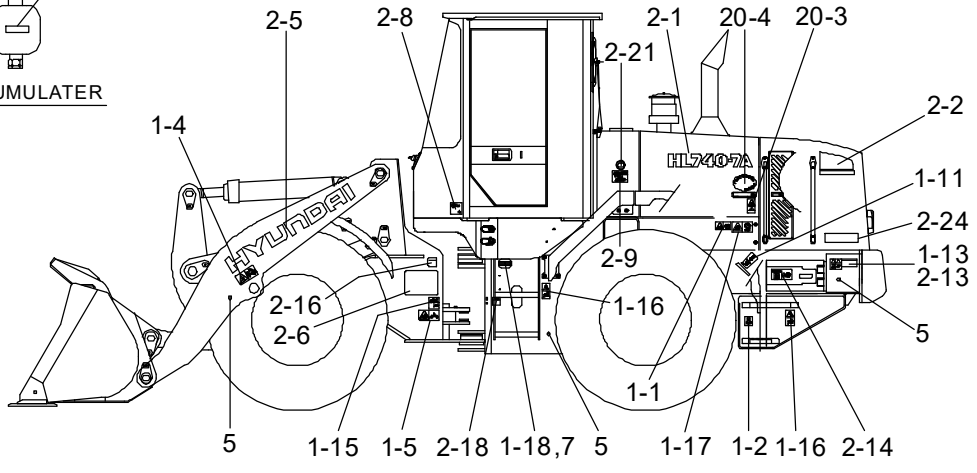

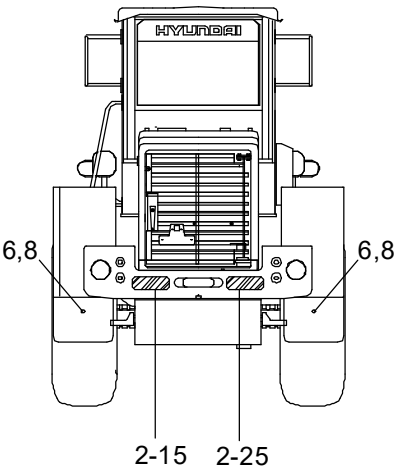

Item	Part_No	IS	Ord	T	Description	Qty	Serial_No	ITC	Remark
1	92LF-00020				DECAL KIT(A)	1	#0195 - #0293	-	
	92LF-00021				DECAL KIT(A)	1	#0294 -	B	
1-1	91LB-01110				.DECAL-START MOTOR	1			
1-2	91LB-01190				.DECAL-DRAIN/REMOTE	1			HYDRAULIC OIL
1-4	91LB-01210				.DECAL-BUCKET STOPPER	2			
1-5	91LB-01260				.DECAL-STEER WARN/LH	1			
1-6	91LB-01270				.DECAL-STEER WARN/RH	1			
1-7	91LB-01280				.ROPS PLATE	1			
1-8	91LF-02300				.DECAL-C/IDEOGRAM	1			1-LEVER RCV
	91LF-02310				.DECAL-C/IDEOGRAM	1			2-LEVER RCV
1-9	91LF-01320				.DECAL-AIRCON FILTER	1			
1-10	91E1-18080				.DECAL-PUBLIC PERMIT	1			
1-11	94L3-00420				.SLINGING IDEOGRAM	4	- #0293		
	92LB-14000				.DECAL-LIFT & TIE	4	#0294 -	B	
1-12	91N6-01102				.AIR CLEANER FILTER	1			
1-13	91N6-02120				.DECAL-BATT ACCIDENT	2			
1-14	91N6-03111				.HYD OIL LUBR	1			
1-15	91N6-03130				.DECAL-H/PRESSURE HOSE	2			
1-16	91N6-03140				.FALLING	4			
1-17	91N6-07121				.SHEARING	2			
1-18	91E1-14110				.NAME PLATE	1			
1-19	91LB-08110				.DECAL-STEERING WHEEL	1			
1-21	91LH-01220				.DECAL-GREASE CENTER	1			
1-22	91N8-07390				.DECAL-TURBOCHARGER	1			
R1-23	91LB-01360				.DECAL-RIDE CONTROL	2			RIDE CONTROL
2	92LF-06100				DECAL KIT(B)	1	- #0293		

Item	Part_No	IS	Ord	T	Description	Qty	Serial_No	ITC	Remark
2	92LF-06101				DECAL KIT(B)	1	#0294 -	D	
2-1	92LF-15112				.MODEL NAME-LH/FR	1			
2-2	92LF-15170				.MODEL NAME-LH/RR	1			
2-3	92LF-15122				.MODEL NAME-RH/FR	1			
2-4	92LF-15180				.MODEL NAME-RH/RR	1			
2-5	91N6-23100				.DECAL-TRADE MARK	2			
2-6	92LF-60710				.DECAL-S/INSTRUCTION	1	- #0293		
	92LF-60711				.DECAL-S/INSTRUCTION	1	#0294 -	D	
2-7	92LF-60510				.DECAL-SPECIFICATIONS	1			
2-8	91LF-67010				.DECAL NOISE LEVEL-LWA	1			
2-9	91LB-06130				.DECAL-HYD OIL LEVEL	1			
2-11	91LB-06250				.DECAL-ROPS CABIN	1			
2-12	91LB-06290				.DECAL-REFER MANUAL	1			
2-13	91LB-06350				.DECAL-MCU CONNECT	2			
2-14	91N8-01130				.DECAL-FUELING	1			
2-15	91LB-06430				.DECAL-KEEPCLEAR	1			
2-16	91LB-06190				.GREASE(A)	1			
2-17	91LB-06200				.GREASE(B)	1			
2-18	91LB-06170				.GREASE(C)	1			
2-19	91LB-06180				.GREASE(D)	1			
2-20	91LB-01370				.DECAL-DRAIN/ENGINE	1			
2-21	92LF-15190				.M/NAME-LH/HYD TANK	1			
2-22	92LF-15200				.M/NAME-RH/HYD TANK	1			
R2-23	91N6-03200				.DECAL-ACCUMULATER	5			RIDE CONTROL
2-23	91N6-03200				.DECAL-ACCUMULATER	4			
2-24	92LF-16150				.DECAL-OVERALL WIDTH	2			

Item	Part_No	IS	Ord	T	Description	Qty	Serial_No	ITC	Remark
2-25	91LB-06440				.DECAL-KEEPCLEAR	1			
2-26	91LC-16170				.DECAL-START PROCEDURE	1			
3	91E1-26300				STEP TREAD	2			A/S ITEM
4	91E1-26300				STEP TREAD	2	- #0256	-	FULL MUD GUARD
5	21EK-10150				REFLECTOR-SIDE	6			
6	51EK-52990				REFLECTOR-REAR	2			
7	E171-1246				RIVET	8			
8	S403-05200B				WASHER-PLAIN	2			
18	91N6-06410				NAME PLATE-BUCKET	1			
19	91N6-06420				METAL TACK	4			
20	92LB-00080				DECAL KIT-A/S	1			
20-1	91N6-01111				.TURBO COVER	2			
20-2	91N6-01121				.DECAL-RADIATOR CAP	1			
20-3	91N6-07112				.STAY FIX	2			
20-4	91E1-27110				.LOW EMISSION ENG	1			
20-5	91LB-01230				.DECAL-MAX H/REACH	1			
20-6	91LB-01240				.DECAL-ROLL OVER	1			
20-7	91LB-01340				.DECAL-HAMMER	1			
20-8	91N6-07261				.ALTERNATE EXIT	1			
20-9	91N6-07290				.DECAL-FIRE	1			

MANUALS

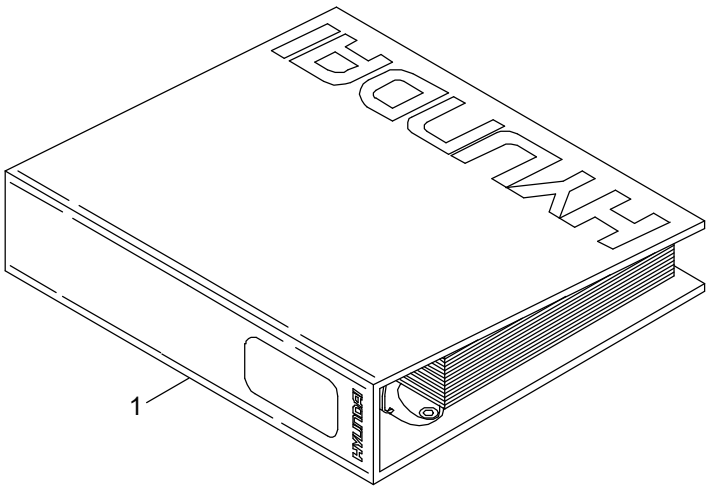

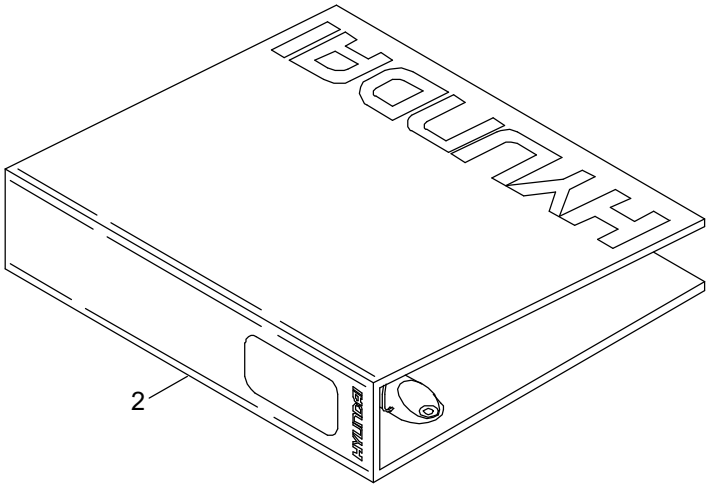

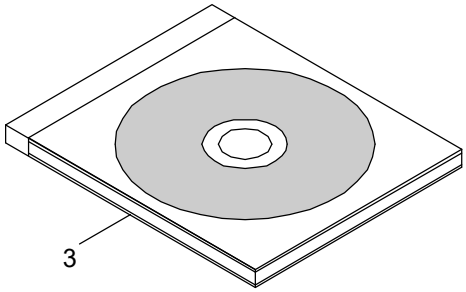

Item	Part_No	IS	Ord	T	Description	Qty	Serial_No	ITC	Remark
1	91LF-31000				PARTS MANUAL	1			KOREAN
	91LF-31010				OPERATOR'S MANUAL	1			KOREAN
	91LF-31020				SERVICE MANUAL	1			KOREAN
	91LF-31030				PARTS MANUAL	1			ENGLISH
	91LF-31040				OPERATOR'S MANUAL	1			ENGLISH
	91LF-31050				SERVICE MANUAL	1			ENGLISH
2	91LF-31940				BINDER & STICKER	1			P/M, O/M
	91LF-31950				BINDER & STICKER	1			S/M
3	91CD-30000				CD-P/MANUAL,CONST	1			7 SERIES & UP
	HLCD-30000				CD-PARTS MANUAL	1			LOADER/CRANE
	HACD-30000				CD-PARTS MANUAL	1			ALL MODEL
	HLDV-30000				DVD-PARTS MANUAL	1			LOADER/CRANE
	HADV-30000				DVD-PARTS MANUAL	1			ALL MODEL

AIR HEATER STARTING AID

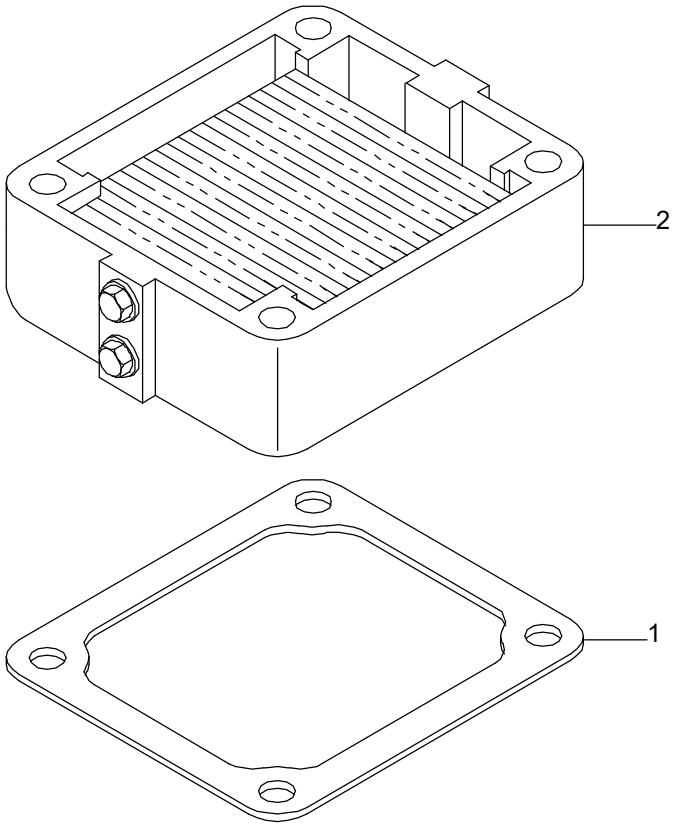

Item	Part_No	IS	Ord	T	Description	Qty	Serial_No	ITC	Remark
1	3969988				GASKET-CONNECTION	1			AH9147-01
2	3970001				HEATER-AIR INTAKE	1			

CYLINDER BLOCK

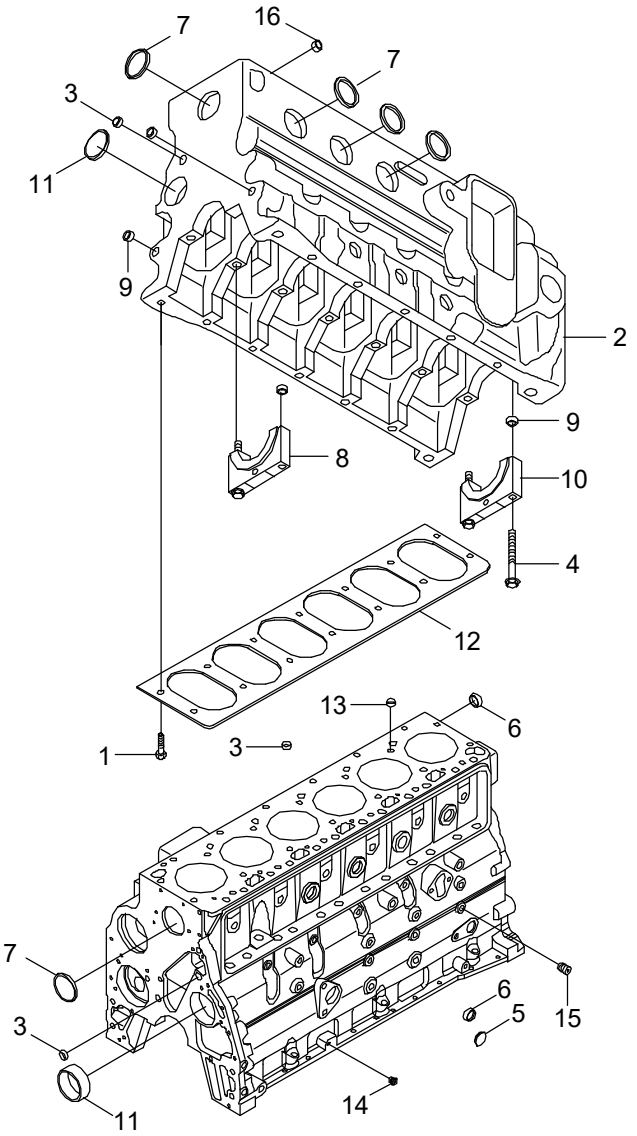

Item	Part_No	IS	Ord	T	Description	Qty	Serial_No	ITC	Remark
1	3902460				SCREW-HEX F/HEAD CAP	14			BB9206
*N	4929972				CYLINDER BLOCK	1			NOT
N2	3999925				.CYLINDER BLOCK	1			NOT
3	3900956				.PLUG-EXPANSION	3			
4	3927948				.SCREW	14			
5	3905401				.PLUG-EXPANSION	2			
6	3007635				.PLUG-EXPANSION	3			
7	3975796				.PLUG-EXPANSION	4			
*	3974159				.CAP-MAIN BEARING	1			
N8	3974158				..CAP-MAIN BEARING	1			NOT
9	3900068				..DOWEL-RING	2			
*	3974157				.CAP-MAIN BEARING	6			
9	3900068				..DOWEL-RING	2			
N10	3974156				..CAP-MAIN BEARING	1			NOT
11	3940059				.BUSHING	2			
12	3965764				PLATE-CYL BLOCK	1			
13	3902343				DOWEL-RING	2			
14	3977851				PLUG-THREADED	1			
15	3977853				PLUG-THREADED	1			
16	3977855				PLUG-THREADED	2			
N	@				NOT INDIVIDUALLY SUPPLIED	AR			NOT

CRANKSHAFT & BEARINGS

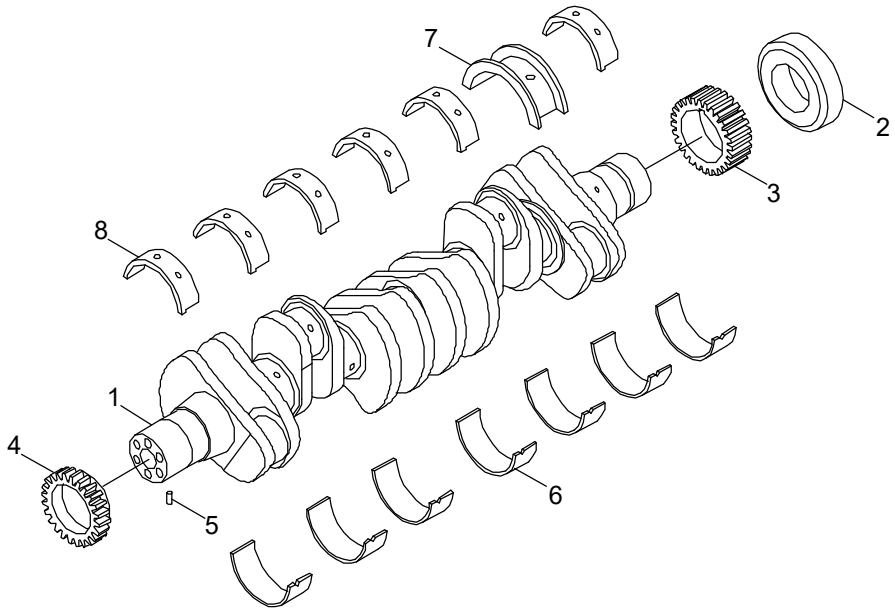

Item	Part_No	IS	Ord	T	Description	Qty	Serial_No	ITC	Remark
*	3974635				CRANKSHAFT-ENGINE	1			BB9206
	3974538				.CRANKSHAFT-ENGINE	1			
1	3968164				..CRANKSHAFT-ENGINE	1			
N2	2831066				..COLLAR-SHAFT	1			NOT
3	3955150				..GEAR-CRANKSHAFT	1			
4	3955151				..GEAR-CRANKSHAFT	1			
5	3904483				.DOWEL-PIN	1			
*	3357480				MAIN BEARING SET	1			
6	3929021				.BEARING-MAIN	7			
7	3927772				.BEARING-C/THRUST	1			
8	3929016				.BEARING-MAIN	6			
N	@				NOT INDIVIDUALLY SUPPLIED	AR			NOT

VALVE TAPPET

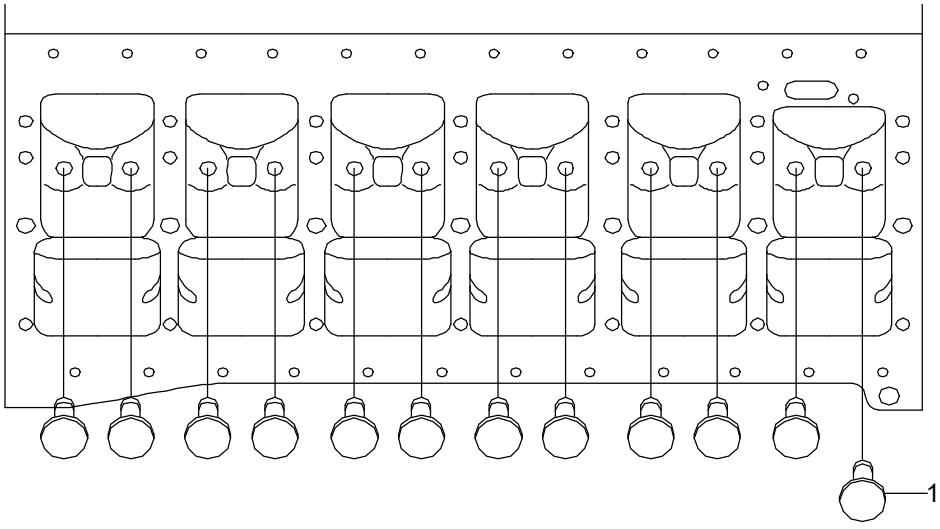

Item	Part_No	IS	Ord	T	Description	Qty	Serial_No	ITC	Remark
1	3947759				TAPPET-VALVE	12			BB9206

REAR GEAR HOUSING

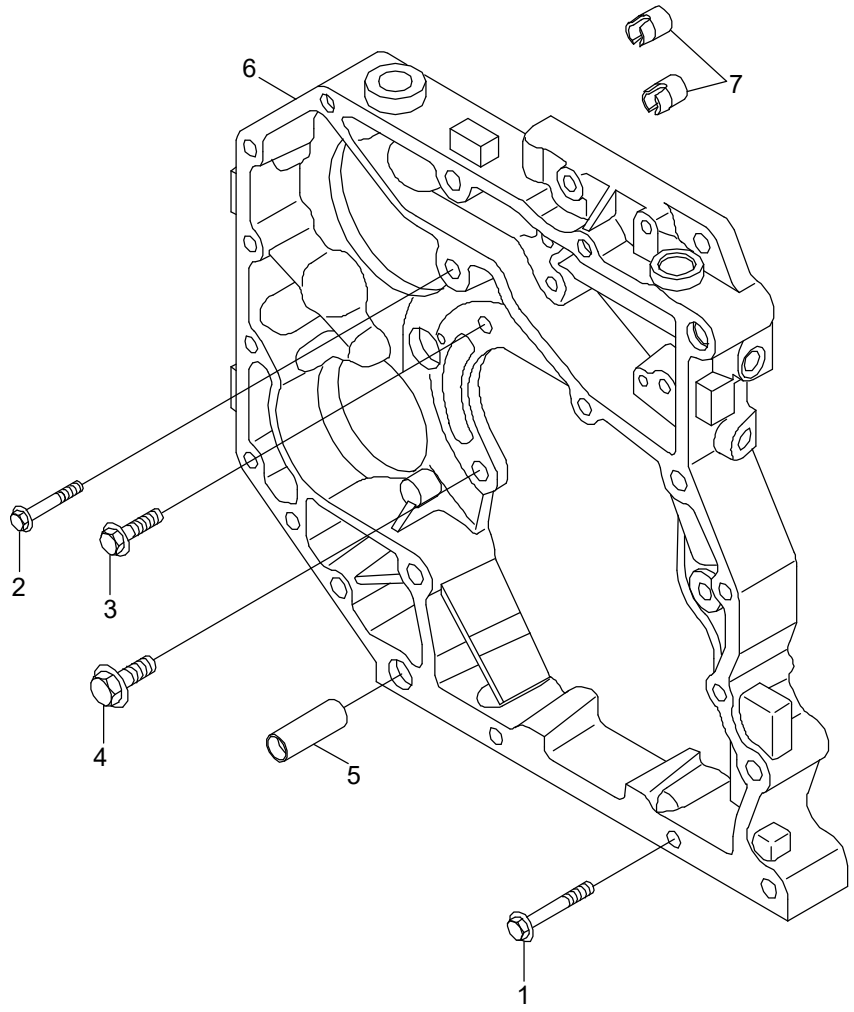

Item	Part_No	IS	Ord	T	Description	Qty	Serial_No	ITC	Remark
1	3918153				SCREW-HEX F/HEAD CAP	3			BB9132-01
2	3901445				SCREW-HEX F/HEAD CAP	4			
3	3903112				SCREW-HEX F/HEAD CAP	2			
4	3910495				SCREW-HEX F/HEAD CAP	1			
*	3971016				HOUSING-GEAR	1			
5	3954616				.DOWEL-RING	2			
6	3971013				.HOUSING-GEAR	1			
7	4929128				.INSERT-THREADED	2			

CRANKCASE BREATHER

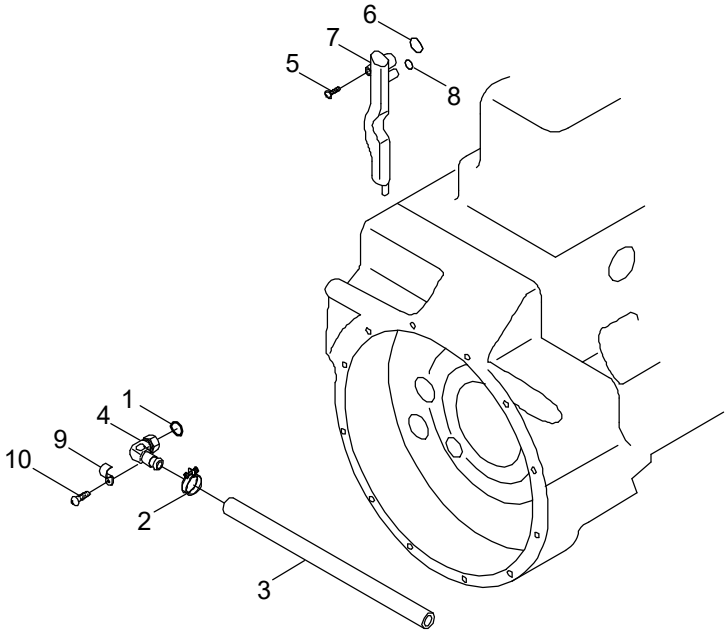

Item	Part_No	IS	Ord	T	Description	Qty	Serial_No	ITC	Remark
1	145530				SEAL/O-RING	1			BR9191-01
2	3917995				CLAMP-SPRING HOSE	1			
3	3918614				HOSE-PLAIN	1			
4	3966164				BREATHER-CRANKCASE	1			
5	4936493				SCREW-ROUND HEAD CAP	2			
*	3971371				TUBE-BREATHER	1			
6	3958414				.SEAL/O-RING	2			
N7	3968786				.TUBE-BREATHER	1			NOT
8	3052587				.SEAL/O-RING	1			
9	4899498				PLATE-CLAMPING	1			
10	4899706				SCREW-ROUND HEAD CAP	1			
N	@				NOT INDIVIDUALLY SUPPLIED	AR			NOT

COOLANT HEATER STARTING AID

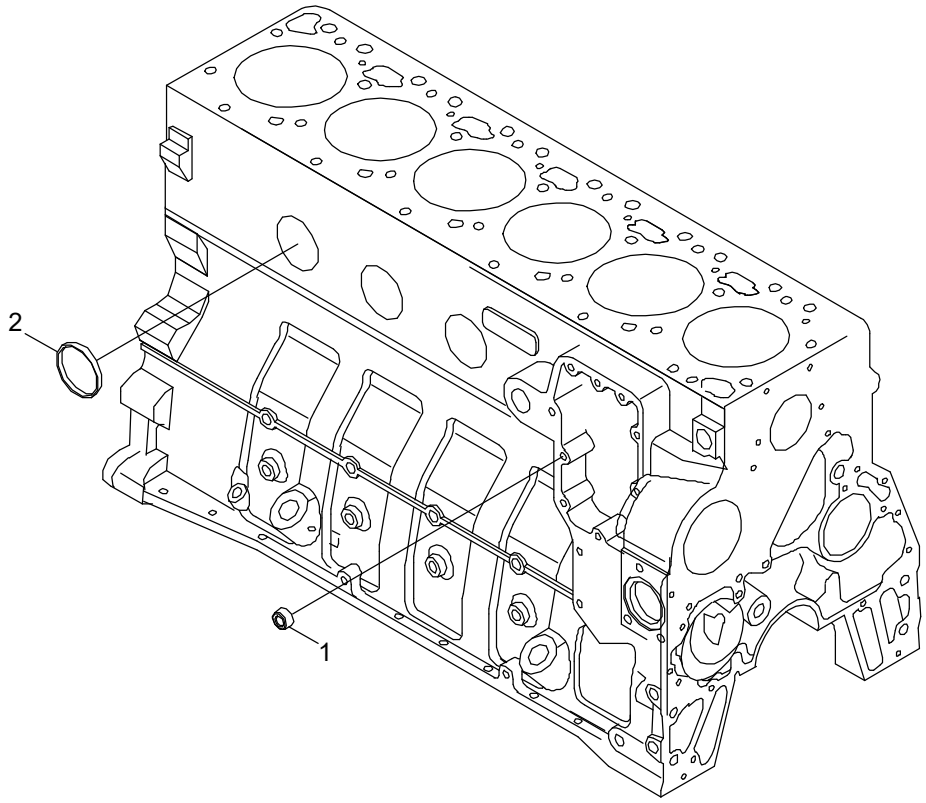

Item	Part_No	IS	Ord	T	Description	Qty	Serial_No	ITC	Remark
1	3008469				PLUG-PIPE	1			CH9070-03
2	3922072				PLUG-EXPANSION	1			

VIBRATION DAMPER

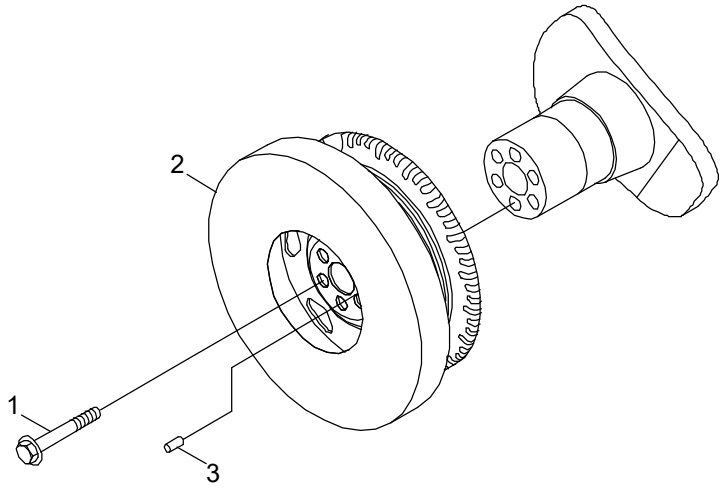

Item	Part_No	IS	Ord	T	Description	Qty	Serial_No	ITC	Remark
1	3968075				SCREW-CAPTIVE W/CAP	6			DA9168-01
2	3977785				DAMPER-VIBRATION	1			
3	3955030				DOWEL-PIN	1			

DRAIN LOCATION

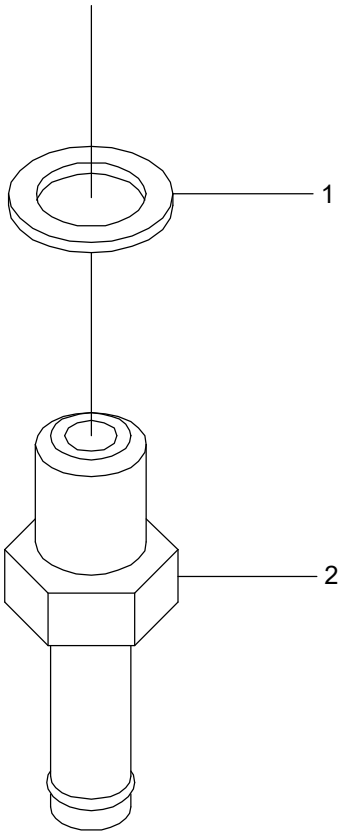

Item	Part_No	IS	Ord	T	Description	Qty	Serial_No	ITC	Remark
1	3963983				WASHER-SEALING	1			DL9208
2	3974812				COUPLING-PLAIN HOSE	1			

REAR GEAR TRAIN

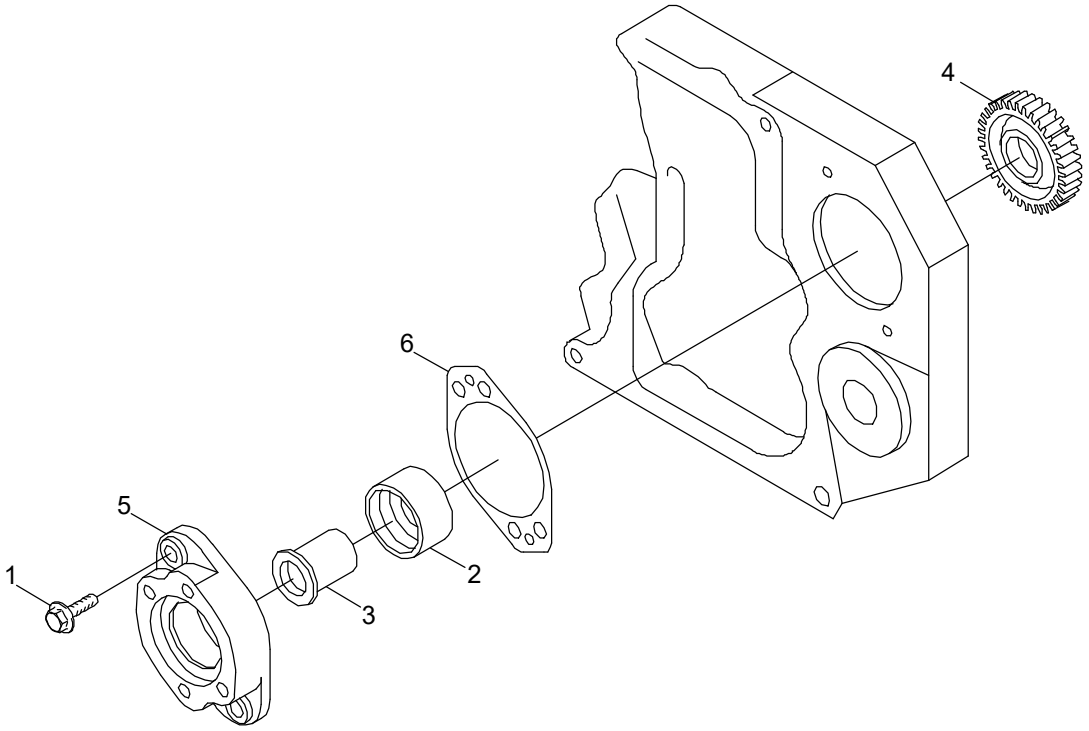

Item	Part_No	IS	Ord	T	Description	Qty	Serial_No	ITC	Remark
1	3900637				SCREW-HEX F/HEAD CAP	2			DR9028
*	3974850				ADAPTER-HYD PUMP	1			
2	3935644				.BEARING-ROLLER	1			
3	3935646				.SHAFT-ACCESSORY DRIVE	1			
4	3974847				.GEAR-ACCESSORY DRIVE	1			
N5	3975311				.ADAPTER-HYD PUMP	1			NOT
6	4896897				GASKET-ACC DRIVE COV	1			
N	@				NOT INDIVIDUALLY SUPPLIED	AR			NOT

THERMOSTAT

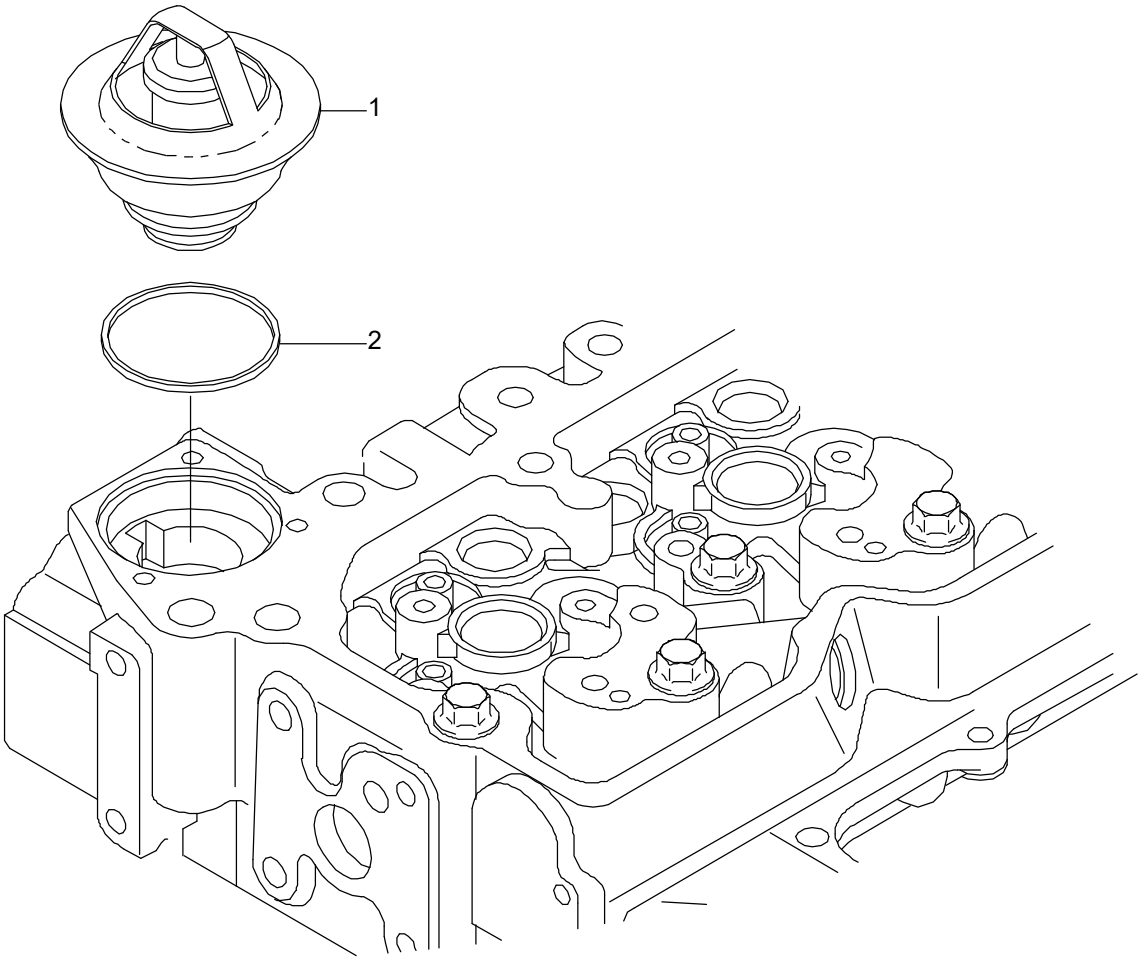

Item	Part_No	IS	Ord	T	Description	Qty	Serial_No	ITC	Remark
*	4929642				THERMOSTAT	1			EC9045-01
N1	4929641				.THERMOSTAT	1			NOT
2	3954829				.SEAL-THERMOSTAT	1			
N	@				NOT INDIVIDUALLY SUPPLIED	AR			NOT

ALTERNATOR

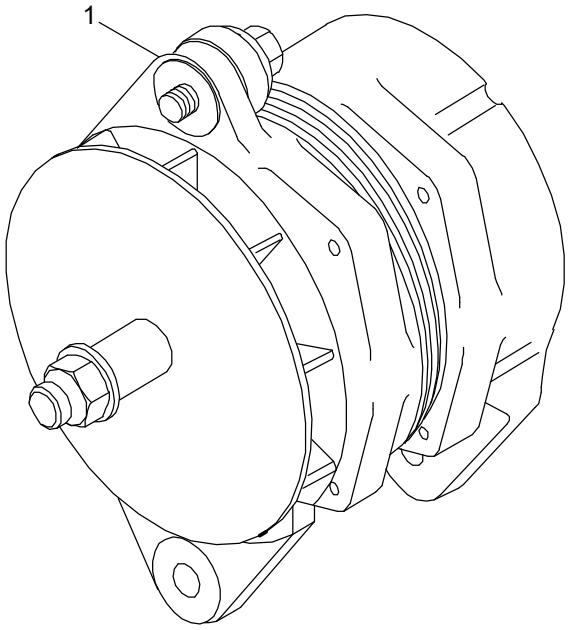

Item	Part_No	IS	Ord	T	Description	Qty	Serial_No	ITC	Remark
1	3972735				ALTERNATOR	1			EE9247

ALTERNATOR MOUNTING

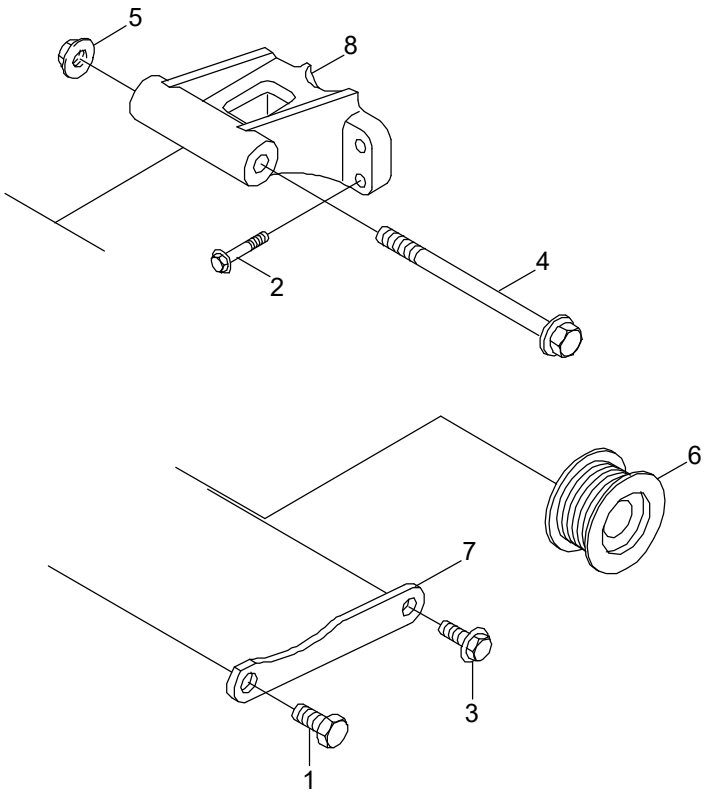

Item	Part_No	IS	Ord	T	Description	Qty	Serial_No	ITC	Remark
1	3052061				SCREW-HEX H/CAP	1			EH9469-01
2	3900632				SCREW-HEX F/HEAD CAP	4			
3	3902460				SCREW-HEX F/HEAD CAP	1			
4	3903105				SCREW-HEX F/HEAD CAP	1			
5	3903210				NUT-HEX FLANGE	1			
6	3925852				PULLEY-ALTERNATOR	1			
7	3942821				BRACE-ALTERNATOR	1			
8	3955179				SUPPORT-ALTERNATOR	1			

FAN DRIVE AND MOUNTING

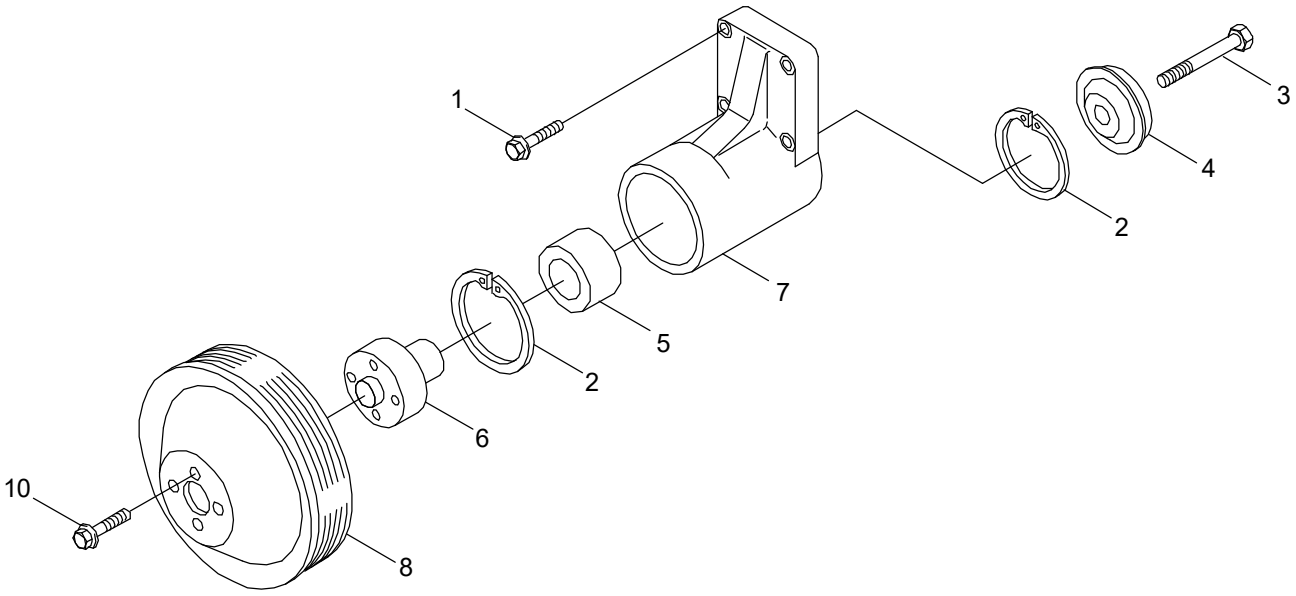

Item	Part_No	IS	Ord	T	Description	Qty	Serial_No	ITC	Remark
1	3928873				SCREW-HEX HD CAP	4			FA9345
*	3913433				SUPPORT-FAN	1			
2	3035960				.RING-RETAINING	2			
3	3907769				.SCREW	1			
4	3923044				.RETAINER-FAN HUB	1			
5	3910739				.BEARING-BALL	1			
6	3911924				.HUB-FAN	1			
N7	3913434				.SUPPORT-FAN	1			NOT
8	3914461				PULLEY-FAN	1			
10	3903990				SCREW-HEX F/HEAD CAP	4			FA9739-01
N	@				NOT INDIVIDUALLY SUPPLIED	AR			NOT

FUEL FILTER PLUMBING

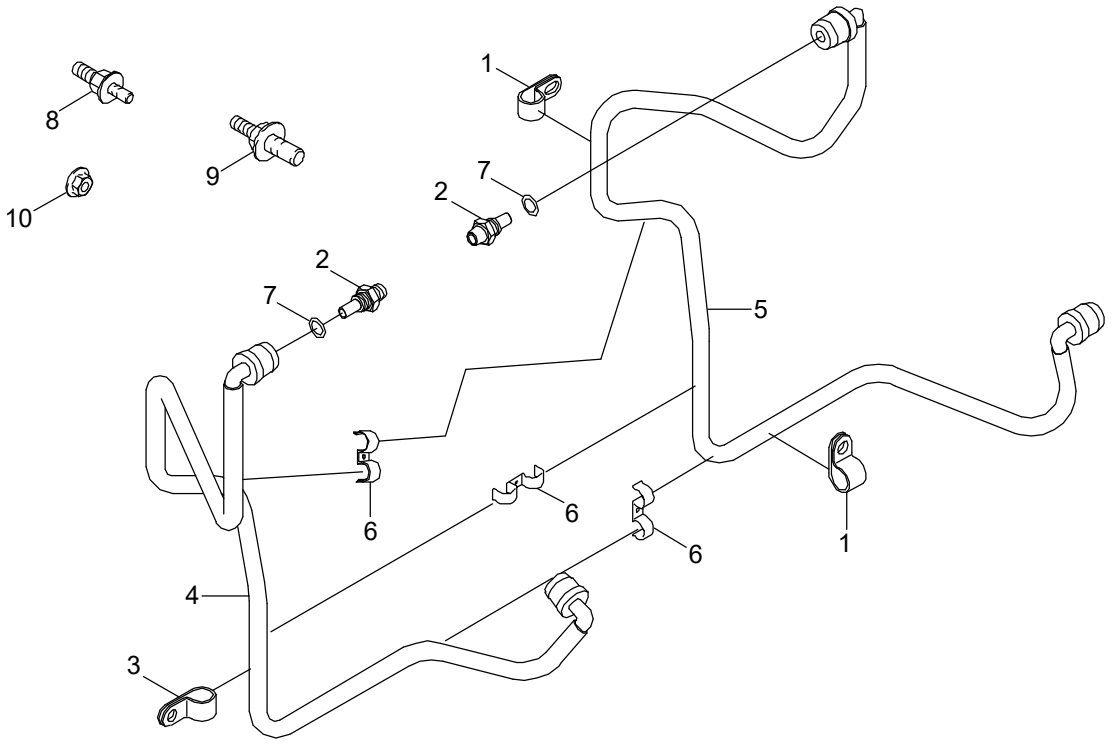

Item	Part_No	IS	Ord	T	Description	Qty	Serial_No	ITC	Remark
1	3609967				CLIP	2			FF9573-02
2	3964337				CONNECTOR	2			
3	68152				CLIP	1			
*	4928865				TUBE-FUEL SUPPLY	1			
4	4928863				.TUBE-FUEL SUPPLY	1			
5	4928864				.TUBE-FUEL SUPPLY	1			
6	4899288				.CLIP	3			
7	4891385				WASHER-SEALING	2			
8	4929065				SCREW-HEX F/HD CAP	1			
9	3944061				SCREW-HEX F/HD CAP	2			
10	3900589				NUT-HEX FLANGE	3			

FUEL FILTER

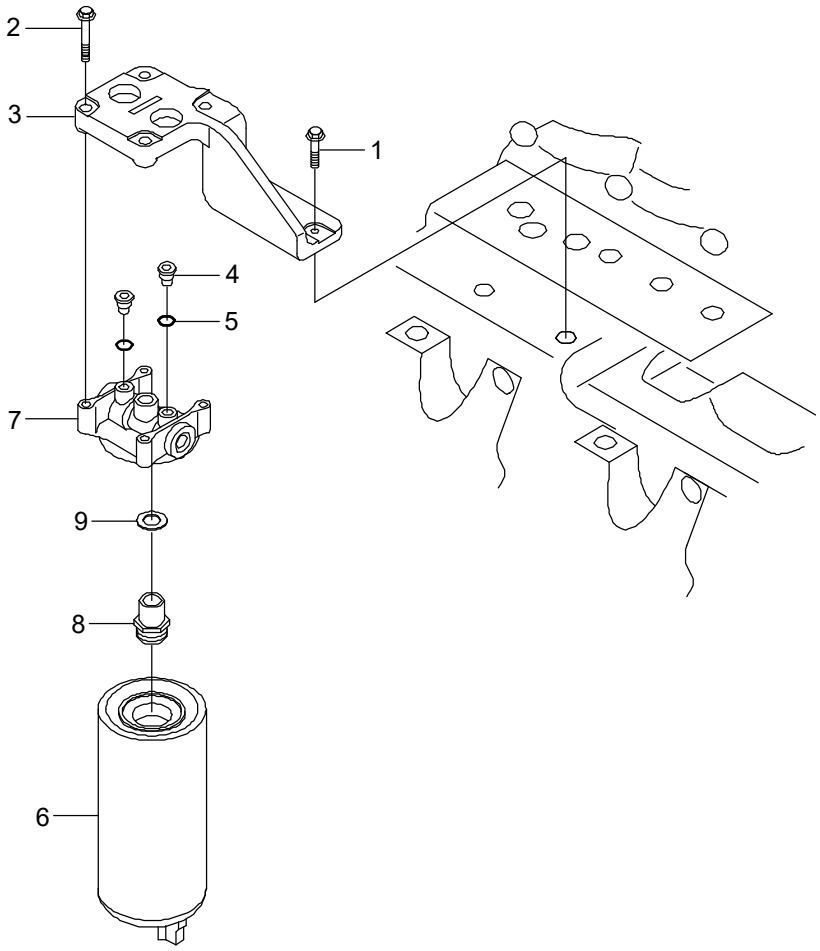

Item	Part_No	IS	Ord	T	Description	Qty	Serial_No	ITC	Remark
1	3900632				SCREW-HEX F/HEAD CAP	3			FF9541-02
2	3901445				SCREW-CAPTIVE WASHER	4			
3	4931860				SUPPORT-FILTER	1			
N*	4990856				FILTER-FUEL	1	#0001 -	-	NOT
*-1	YUBP-00525				.PLUG-THREADED	2			
N4	3678924				..PLUG-THREADED	1			NOT
5	3678925				..O-RING	1			
6	11LG-70010				FILTER-FUEL	1	#0001 -	-	
7	4990848				HEAD-FUEL FILTER	1	#0001 -	-	
8	3975396				ADAPTER-FILTER HEAD	1			
9	4937285				GASKET-FILTER	1	#0001 -	-	
N	@				NOT SUPPLIED PARTS	AR			NOT

FLYWHEEL HOUSING

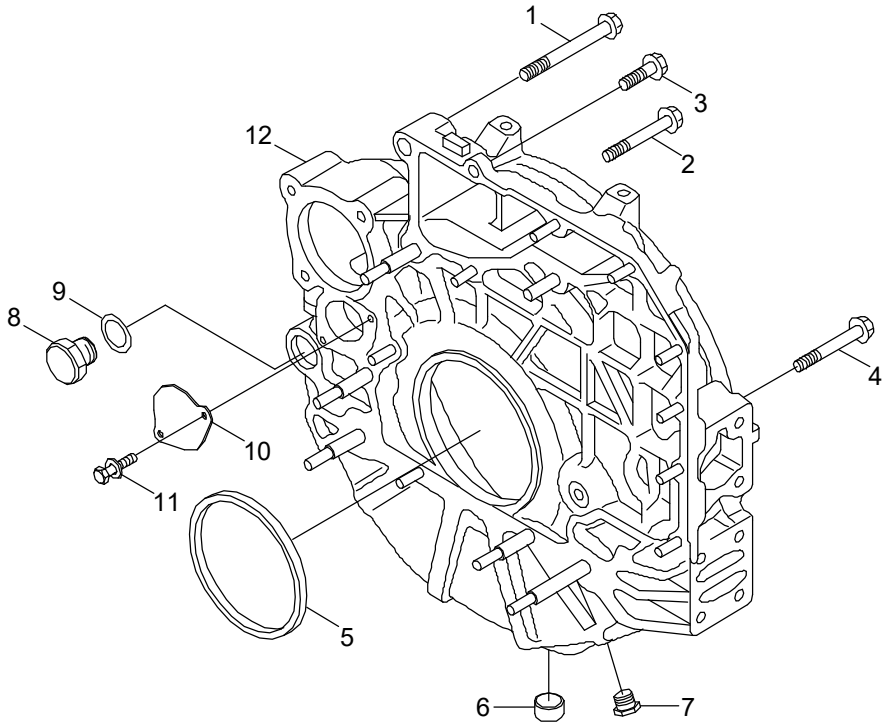

Item	Part_No	IS	Ord	T	Description	Qty	Serial_No	ITC	Remark
1	3089188				SCREW-HEX F/HEAD CAP	2			FH9482
2	3900679				SCREW-HEX F/HEAD CAP	2			
3	3903464				SCREW-HEX F/HEAD CAP	10			
4	3914177				SCREW-HEX F/HEAD CAP	6			
N5	3970548				SEAL-OIL	1			NOT
*N	3976901				HOUSING-FLYWHEEL	1			NOT
6	3008469				.PLUG-PIPE	1			
7	3904181				.PLUG-THREADED	1			
8	3910248				.PLUG/O-RING	1			
9	3910260				.SEAL/O-RING	1			
10	3925234				.PLATE-COVER	1			
11	3925883				.SCREW-HEX F/HEAD CAP	2			
12	3976899				.HOUSING-FLYWHEEL	1			
*	4089342				CRANKSHAFT SEAL KIT				SERVICE PARTS
N5	3970548				.SEAL-OIL	1			NOT
*	3909409				.SERVICE SEAL KIT	1			SERVICE PARTS
*N	4089425				.TOOL-SEAL INSTALLATION	1			NOT
N	@				NOT INDIVIDUALLY SUPPLIED	AR			NOT

FUEL PUMP

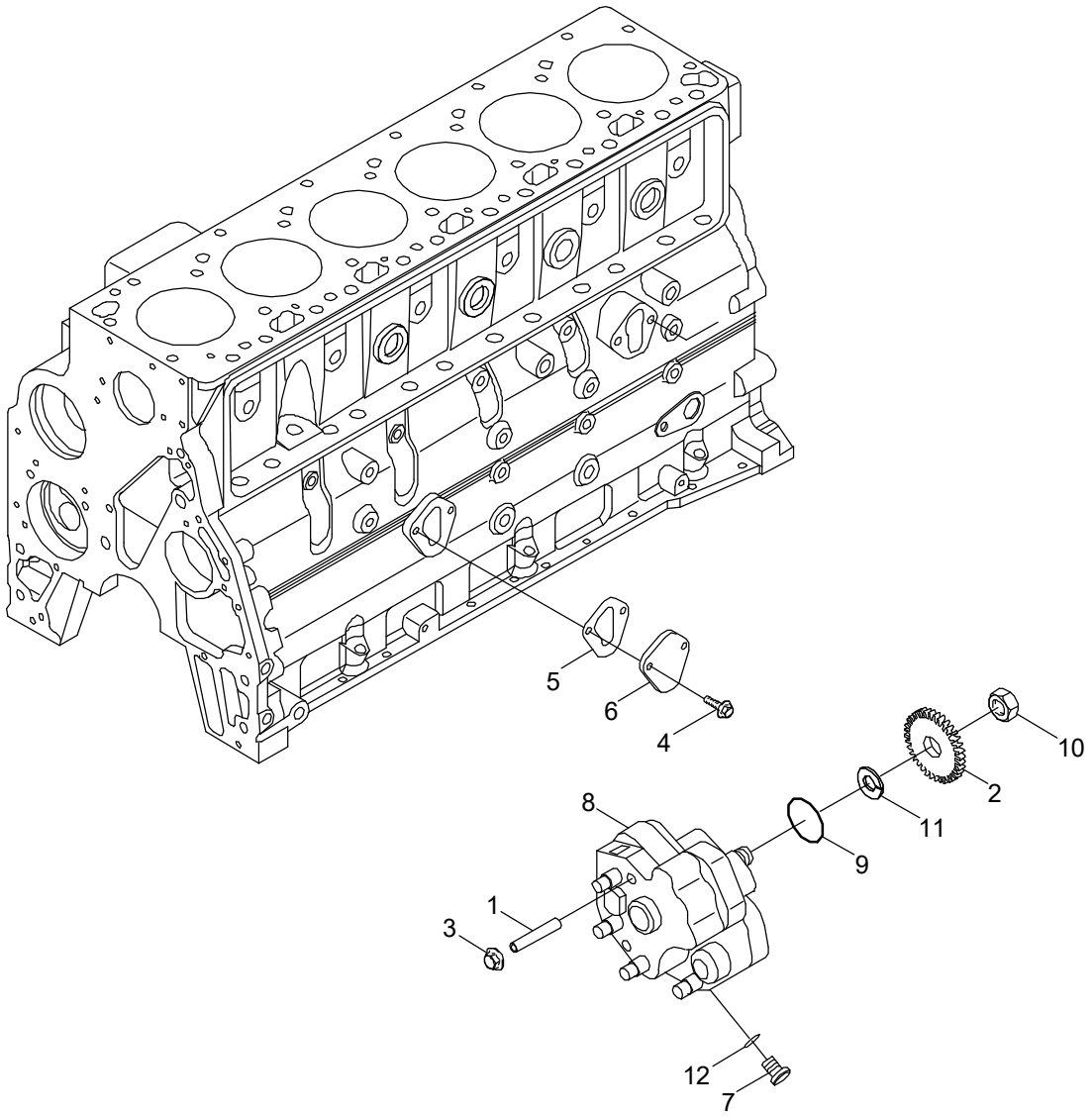

Item	Part_No	IS	Ord	T	Description	Qty	Serial_No	ITC	Remark
1	3954498				STUD	3			FP90312-01
2	3955153				GEAR-FUEL PUMP	1			
3	3900589				NUT-HEX FLANGE	3			
4	3900630				SCREW-HEX F/HEAD CAP	2			
5	3939258				GASKET-COVER PLATE	1			
6	3948083				PLATE-COVER	1			
*	3975701				PUMP-FUEL INJECTION	1			
7	3974765				.CONNECTOR	1			
N8	3975700				.PUMP-FUEL INJECTION	1			NOT
9	2830977				.SEAL/O-RING	1			
10	4890634				.NUT-REGULAR HEX	1			
11	4890635				.WASHER-PLAIN	1			
12	4891385				.WASHER-SEALING	1			
N	@				NOT INDIVIDUALLY SUPPLIED	AR			NOT

FUEL PLUMBING

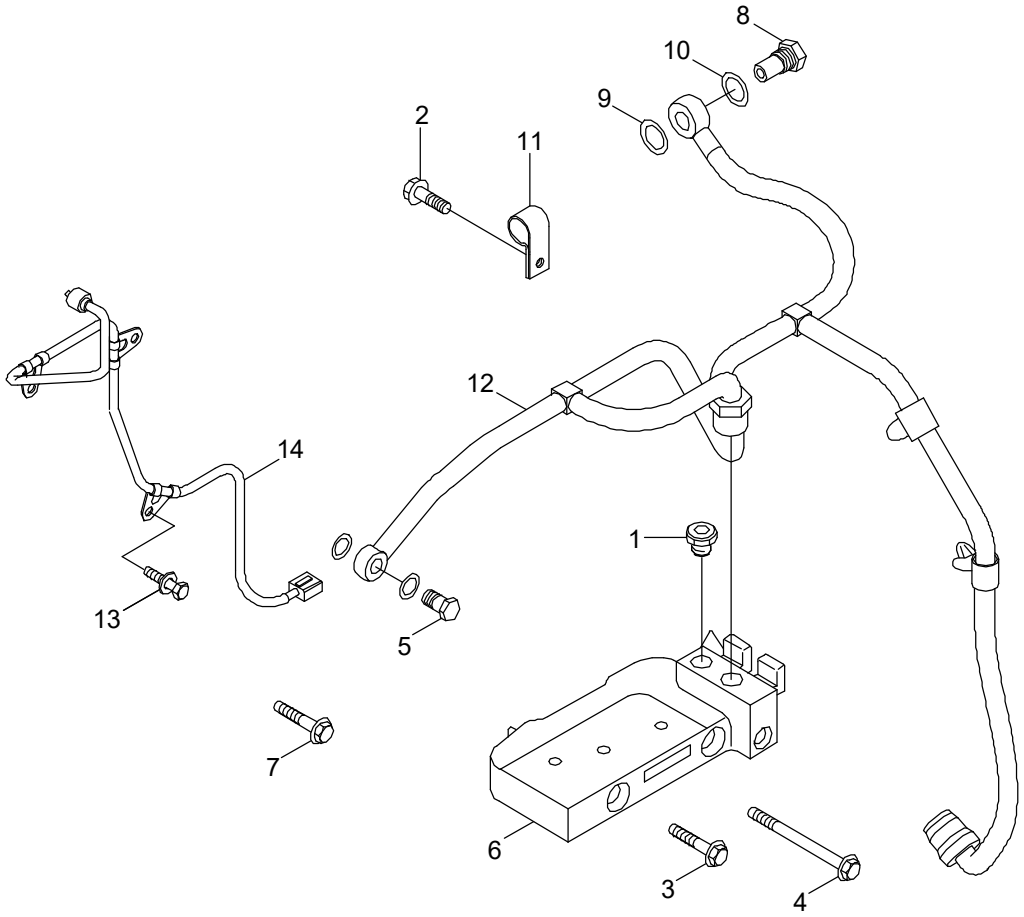

Item	Part_No	IS	Ord	T	Description	Qty	Serial_No	ITC	Remark
1	4929619				PLUG-THREADED	1			FT9113-02
3	3900632				SCREW-HEX F/HEAD CAP	1			
4	3902112				SCREW-HEX F/HEAD CAP	2			
5	3903035				SCREW-BANJO CONN	2			
2	3913638				SCREW-HEX F/HEAD CAP	2			
6	3955080				CONNECTION-FUEL BLOCK	1			
7	3925883				SCREW-HEX F/HEAD CAP	1			
8	3957290				VALVE-CHECK	1			
9	3963990				WASHER-SEALING	6			
10	3963988				WASHER-SEALING	1			
11	68152				CLIP	2			
12	3978505				TUBE-FUEL DRAIN	1			
13	4929065				SCREW-HEX F/HD CAP	2			
14	4933414				TUBE-FUEL SUPPLY	1			

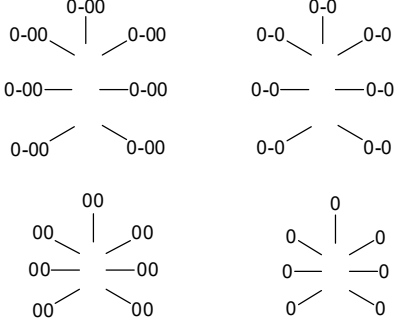
0-00
0-00
0-00
0-00
0-00
0-00
0-0
0-0
0-0
0-0
0-0
0-0
00
00
00
00
00
00
0
0
0
0
0
0

FLYWHEEL

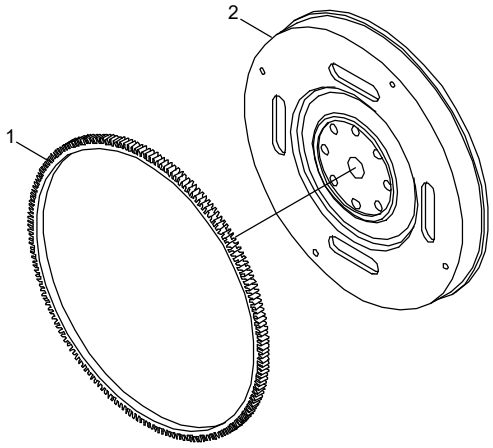
1
2

Item	Part_No	IS	Ord	T	Description	Qty	Serial_No	ITC	Remark
*	3972705				FLYWHEEL	1			FW9857
1	3905427				.GEAR-FLYWHEEL RING	1			
2	3972704				.FLYWHEEL	1			

FLYWHEEL MOUNTING

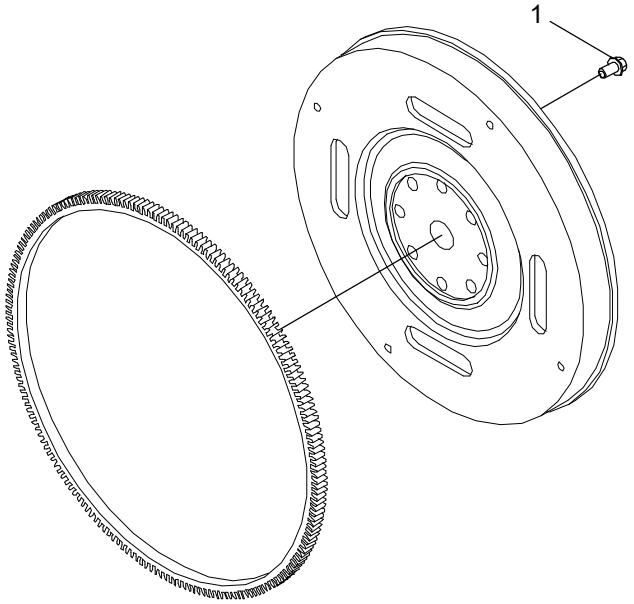

Item	Part_No	IS	Ord	T	Description	Qty	Serial_No	ITC	Remark
1	4894641				SCREW-CAPTIVE WASHER	8			FW9934

FRONT GEAR COVER

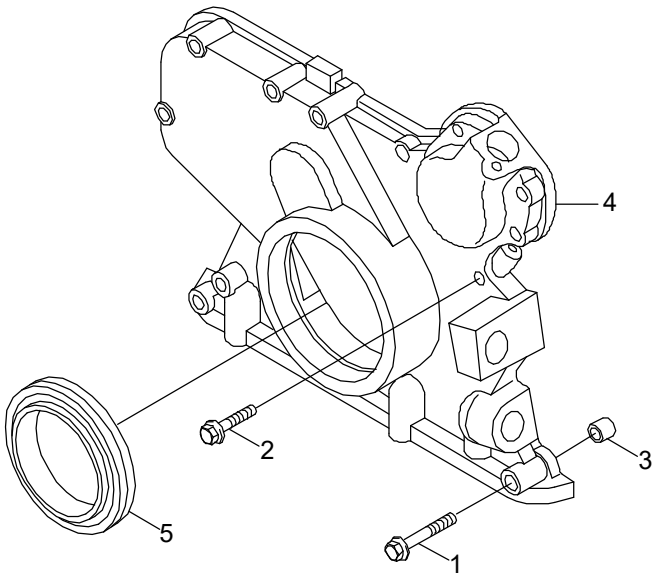

Item	Part_No	IS	Ord	T	Description	Qty	Serial_No	ITC	Remark
1	3901445				SCREW-HEX F/HEAD CAP	7			GG9835
2	3902114				SCREW-HEX F/HEAD CAP	6			
3	3949326				DOWEL-RING	2			
4	4930846				COVER-FRONT	1			
5	4890832				SEAL-OIL	1			

CAB HEATER PLUMBING

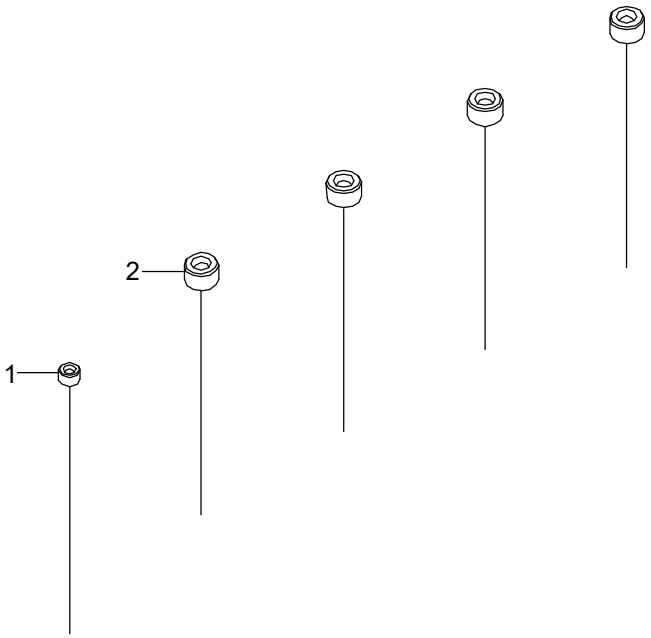

Item	Part_No	IS	Ord	T	Description	Qty	Serial_No	ITC	Remark
1	3008466				PLUG-PIPE	1			HC9026-02
2	3008468				PLUG-PIPE	4			

AUXILIARY PUMP MOUNTING

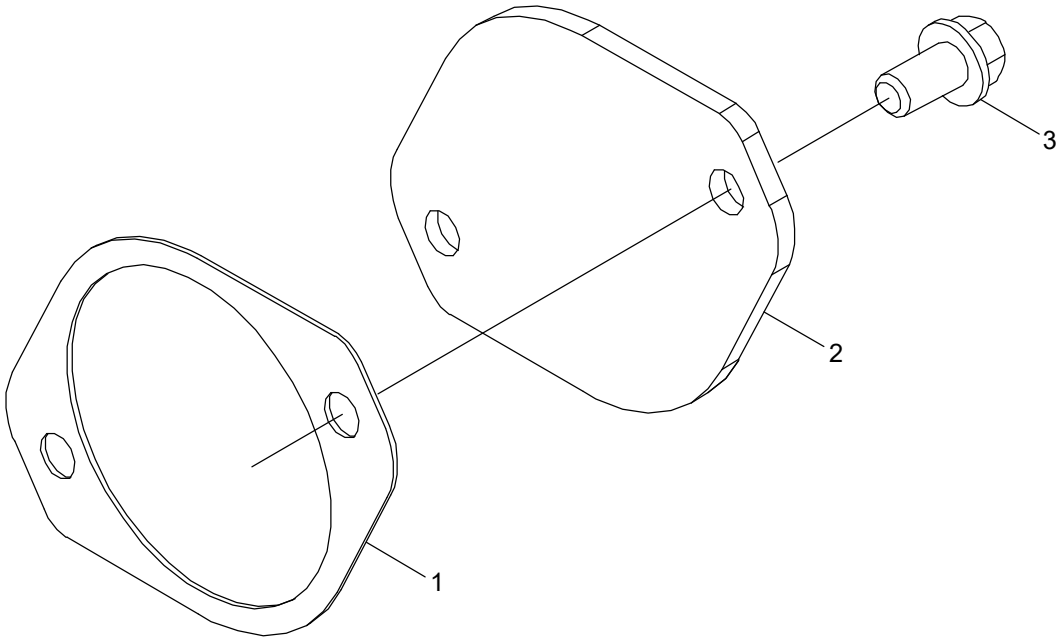

Item	Part_No	IS	Ord	T	Description	Qty	Serial_No	ITC	Remark
1	154916				GASKET-GEAR PUMP	1			HD9716-01
2	204048				PLATE-COVER	1			
3	3903990				SCREW-HEX F/HEAD CAP	2			

AIR INTAKE CONNECTION 1

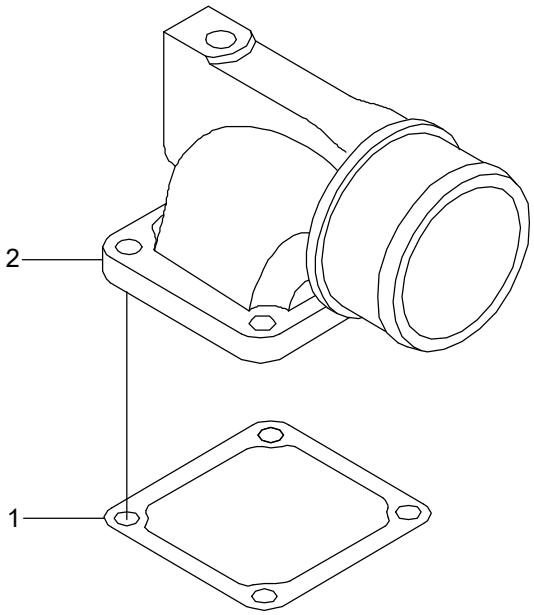

Item	Part_No	IS	Ord	T	Description	Qty	Serial_No	ITC	Remark
1	3969988				GASKET-CONNECTION	1			IC9368-01
2	3921836				CONNECTION	1			

AIR INTAKE CONNECTION 2

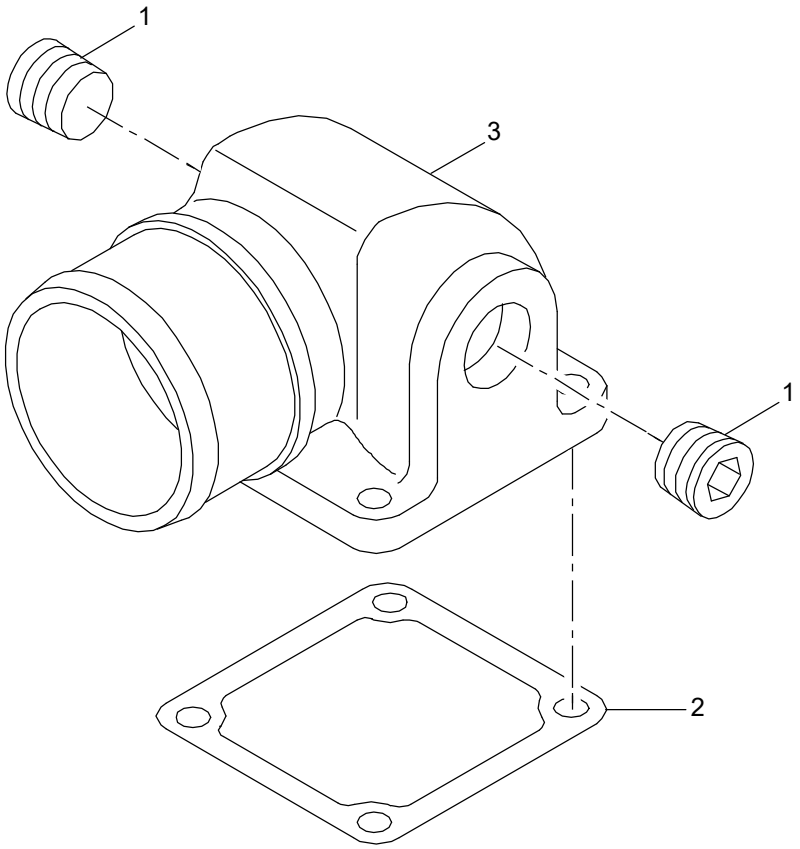

Item	Part_No	IS	Ord	T	Description	Qty	Serial_No	ITC	Remark
1	3008469				PLUG-PIPE	2			IC9455
2	3969988				GASKET-CONNECTION	1			
3	3924990				CONNECTION-AIR INTAKE	1			

AIR INTAKE COVER

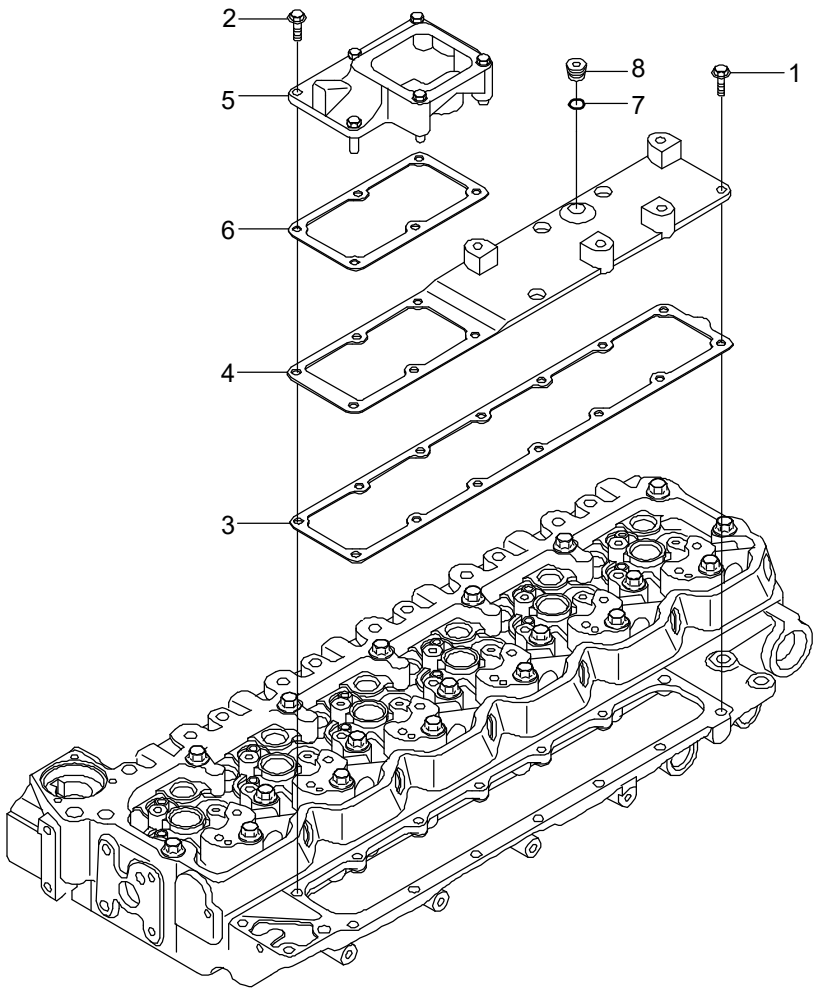

Item	Part_No	IS	Ord	T	Description	Qty	Serial_No	ITC	Remark
1	3918109				SCREW-HEX F/HEAD CAP	4			IM9061-04
2	3938036				SCREW-HEX F/HEAD CAP	5			
3	3947530				GASKET-INT MANIFOLD	1			
4	3973157				COVER-INTAKE MANIFOLD	1	#0001 -	-	CHANGE ILLUST
5	3975535				CONNECTION-ADAPTOR	1	#0001 -	-	CHANGE ILLUST
6	3978072				GASKET-CONNECTION	1	#0001 -	-	CHANGE ILLUST
*	3678921				PLUG-THREADED	1			
7	3678912				.SEAL/O-RING	1			
N8	3678922				.PLUG-THREADED	1			NOT
N	@				NOT INDIVIDUALLY SUPPLIED	AR			NOT

AIR TRANSFER CONNECTION

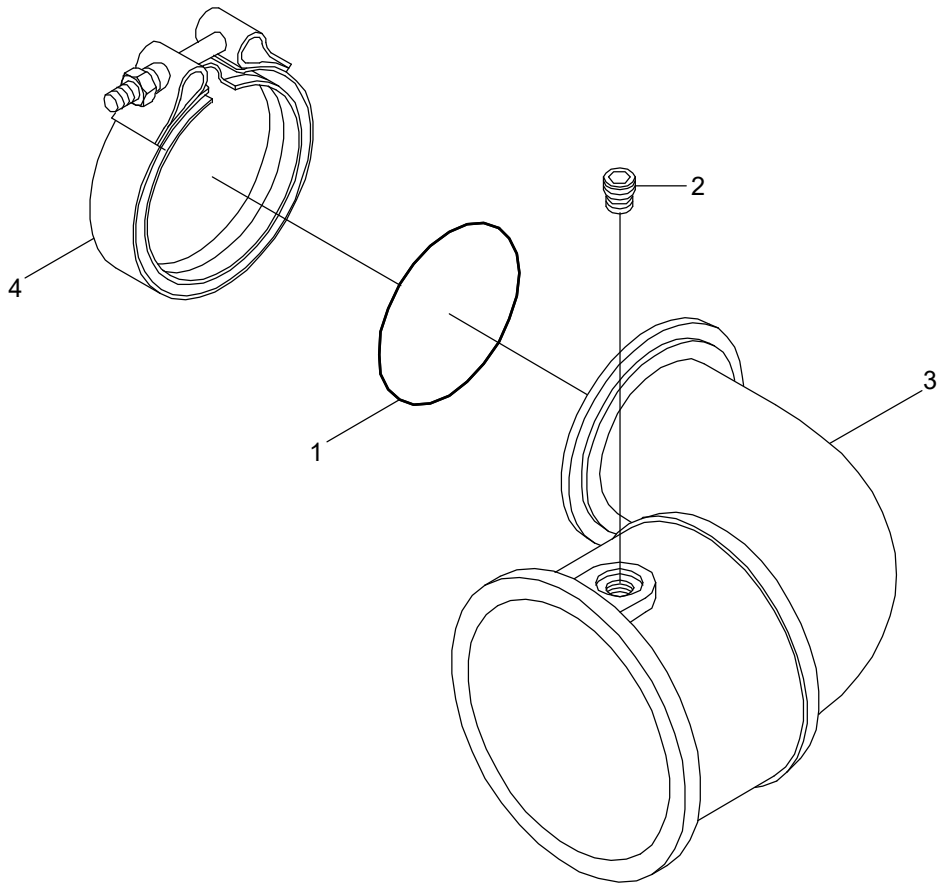

Item	Part_No	IS	Ord	T	Description	Qty	Serial_No	ITC	Remark
1	3883284				SEAL/O-RING	1			IT9039-04
2	3008465				PLUG-PIPE	1			
3	3918685				PIPE-AIR TRANSFER	1			
4	3972681				CLAMP-V BAND	1			

LIFTING BRACKET

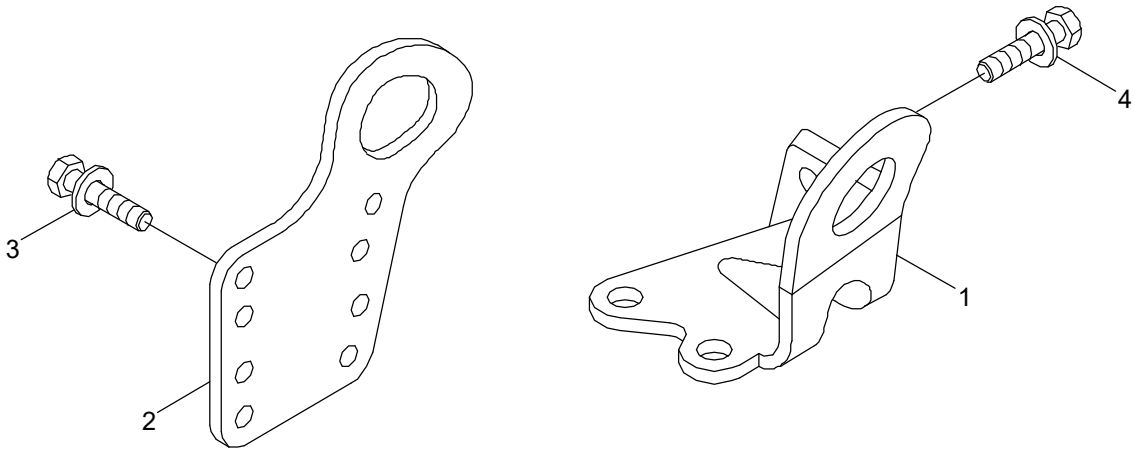

Item	Part_No	IS	Ord	T	Description	Qty	Serial_No	ITC	Remark
1	4933232				BRACKET-LIFTING	1			LA9145
2	4894100				BRACKET-LIFTING	1			
3	3902460				SCREW-HEX F/HEAD CAP	4			LA9147
4	3903990				SCREW-HEX F/HEAD CAP	2			

OIL LEVEL GAUGE

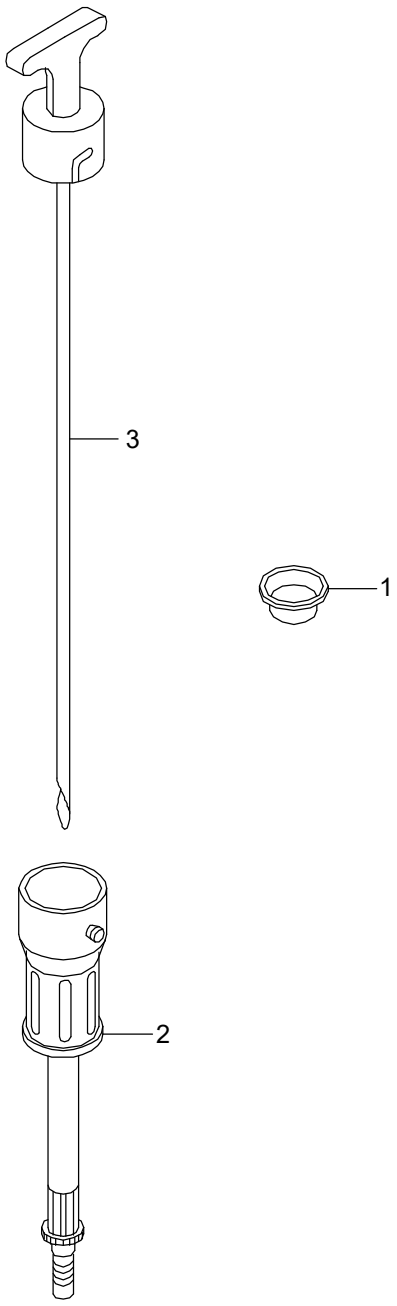

Item	Part_No	IS	Ord	T	Description	Qty	Serial_No	ITC	Remark
1	3900955				PLUG-EXPANSION	4			LG90116
*N	3976995				DIPSTICK	1			NOT
2	3974252				.TUBE-OIL GAUGE	1			
3	3976996				.DIPSTICK	1			
N	@				NOT INDIVIDUALLY SUPPLIED	AR			NOT

ENGINE OIL COOLER

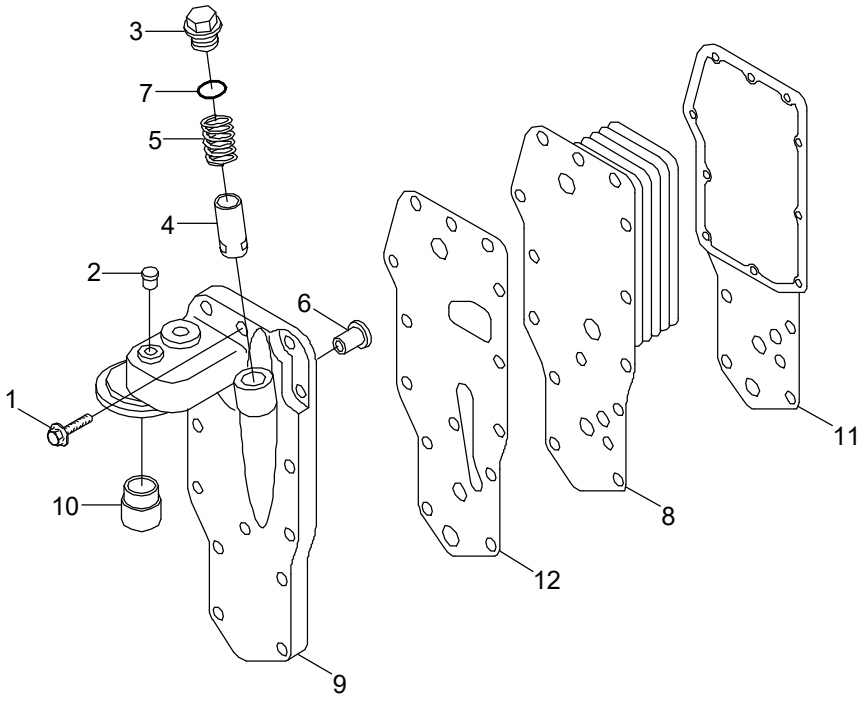

Item	Part_No	IS	Ord	T	Description	Qty	Serial_No	ITC	Remark
1	3901445				SCREW-HEX F/HEAD CAP	15			LC9244-02
2	3906619				PLUG-PIPE	2			
3	3946947				PLUG-THREADED	1			
4	3947287				PLUNGER-PRS REGULATOR	1			
5	3925009				SPRING-COMPRESSION	1			
6	3936365				VALVE-PRESS RELIEF	1			
7	3929457				SEAL/O-RING	1			
8	3975818				COOLER-OIL	1			
*	3955034				HEAD-LUB OIL FILTER	1			
N9	3965153				.HEAD-LUB OIL FILTER	1			NOT
N10	3942367				.ADAPTER	1			NOT
11	2830559				GASKET-O/COOLER CORE	1			
12	3974127				GASKET-FILTER HEAD	1			
N	@					AR			NOT

ENGINE OIL FILTER

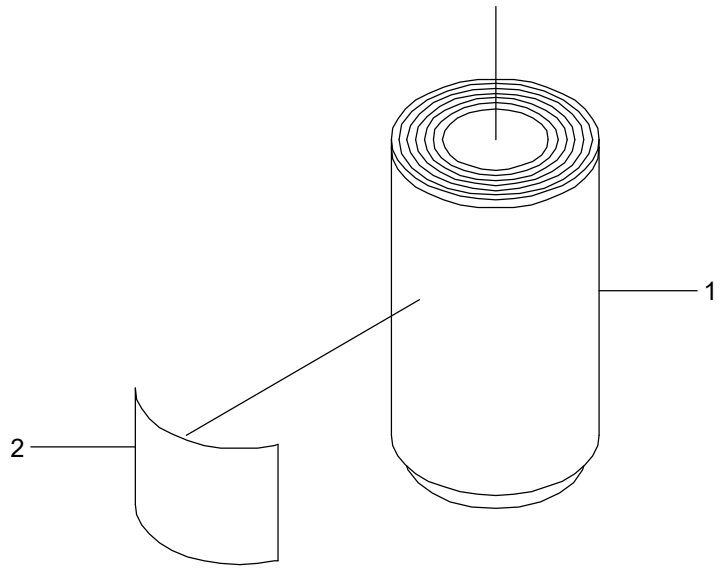

Item	Part_No	IS	Ord	T	Description	Qty	Serial_No	ITC	Remark
1	11N8-70110				FILTER-ENGINE OIL	1	#0001 -	-	LF9136
2	3937745				DECAL	1			

LUBRICATION OIL PUMP

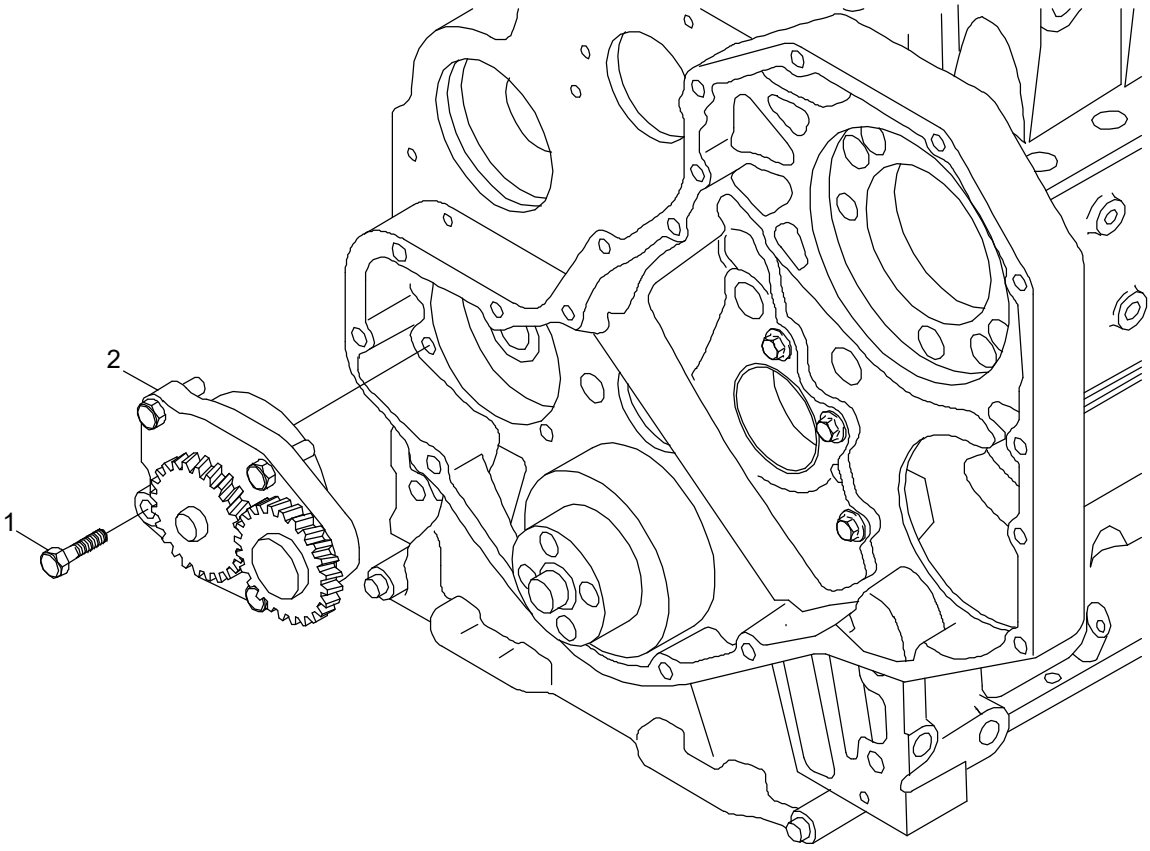

Item	Part_No	IS	Ord	T	Description	Qty	Serial_No	ITC	Remark
1	3900677				SCREW-HEX HEAD CAP	4			LP9065
2	3976089				PUMP-LUBRICATING OIL	1			

OIL FILL ARRANGEMENT

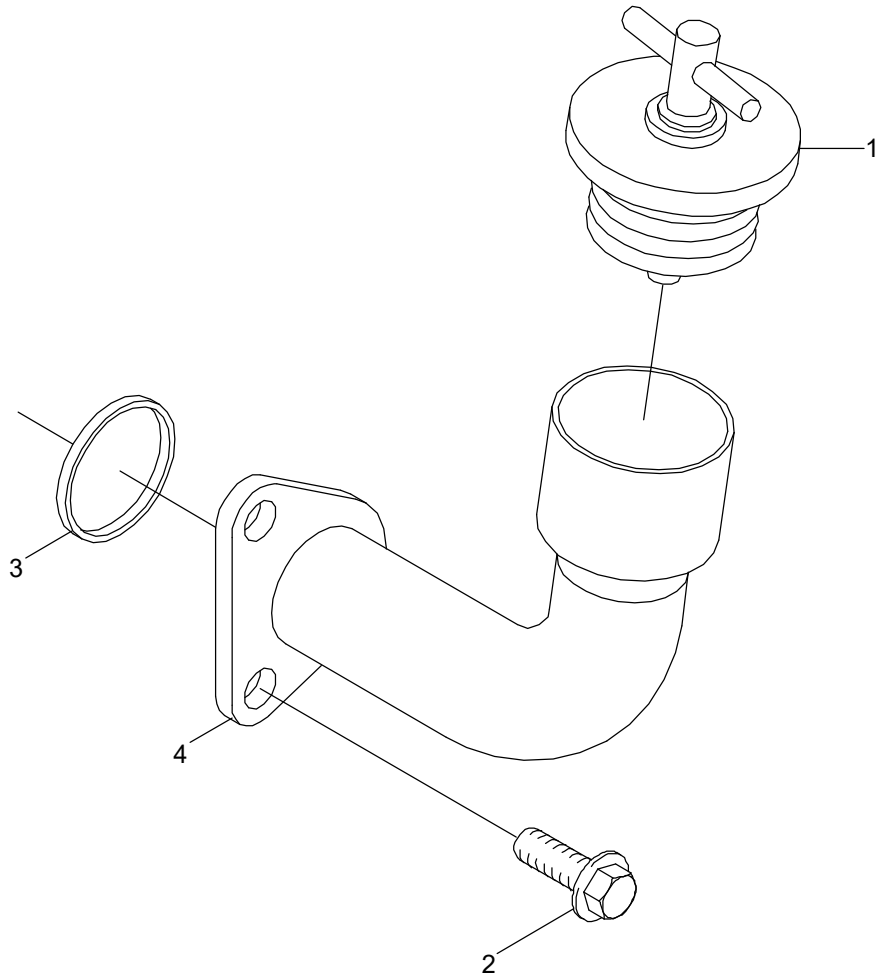

Item	Part_No	IS	Ord	T	Description	Qty	Serial_No	ITC	Remark
1	101322				CAP-FILLER	1			OB9322
2	3901249				SCREW-HEX F/HEAD CAP	2			
3	3906696				SEAL-RECT RING	1			
4	3933493				TUBE-OIL FILLER	1			

OIL PAN

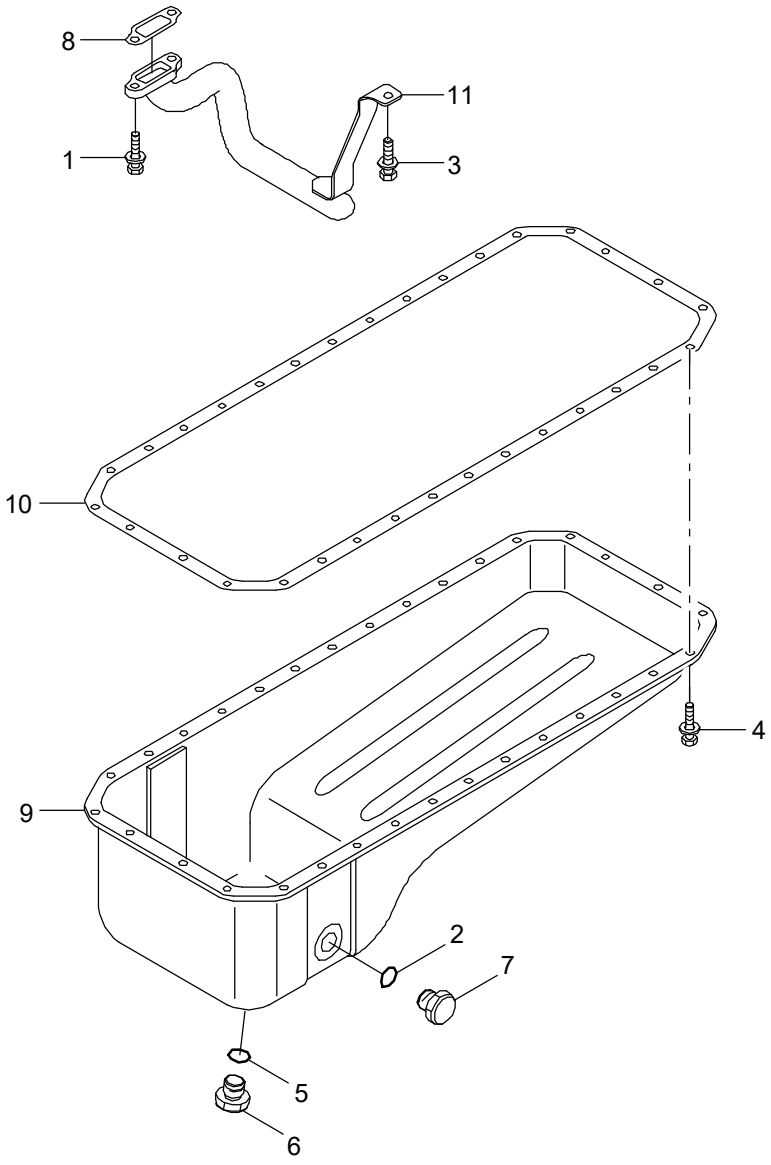

Item	Part_No	IS	Ord	T	Description	Qty	Serial_No	ITC	Remark
1	3900631				SCREW-HEX F/HEAD CAP	2			OP9315-05
2	3902425				WASHER-SEALING	1			
3	3902460				SCREW-HEX F/HEAD CAP	2			
4	3920400				SCREW-HEA F/HEAD CAP	32			
5	3920773				WASHER-SEALING	1			
6	3924147				PLUG-THREADED	1			
7	3924148				PLUG-THREADED	1			
8	3949562				GASKET-FLANGE	1			
9	3958209				OIL PAN	1			
10	3959797				GASKET-OIL PAN	1			
11	3977666				TUBE-LUB OIL SUCTION	1			

ACCESSORY DRIVE PULLEY

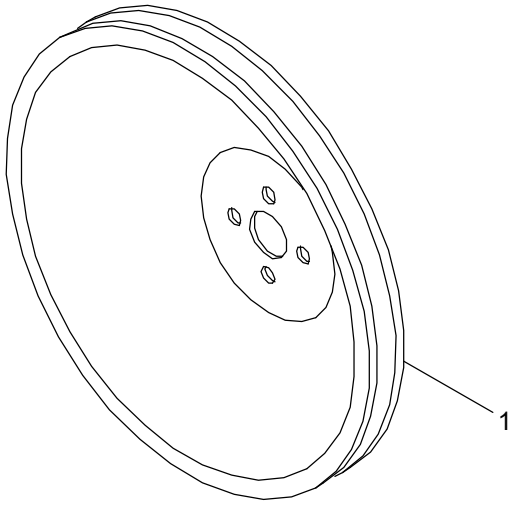

Item	Part_No	IS	Ord	T	Description	Qty	Serial_No	ITC	Remark
1	3919624				PULLEY	1			PA9001

ENGINE CONTROL MODULE(ECM)

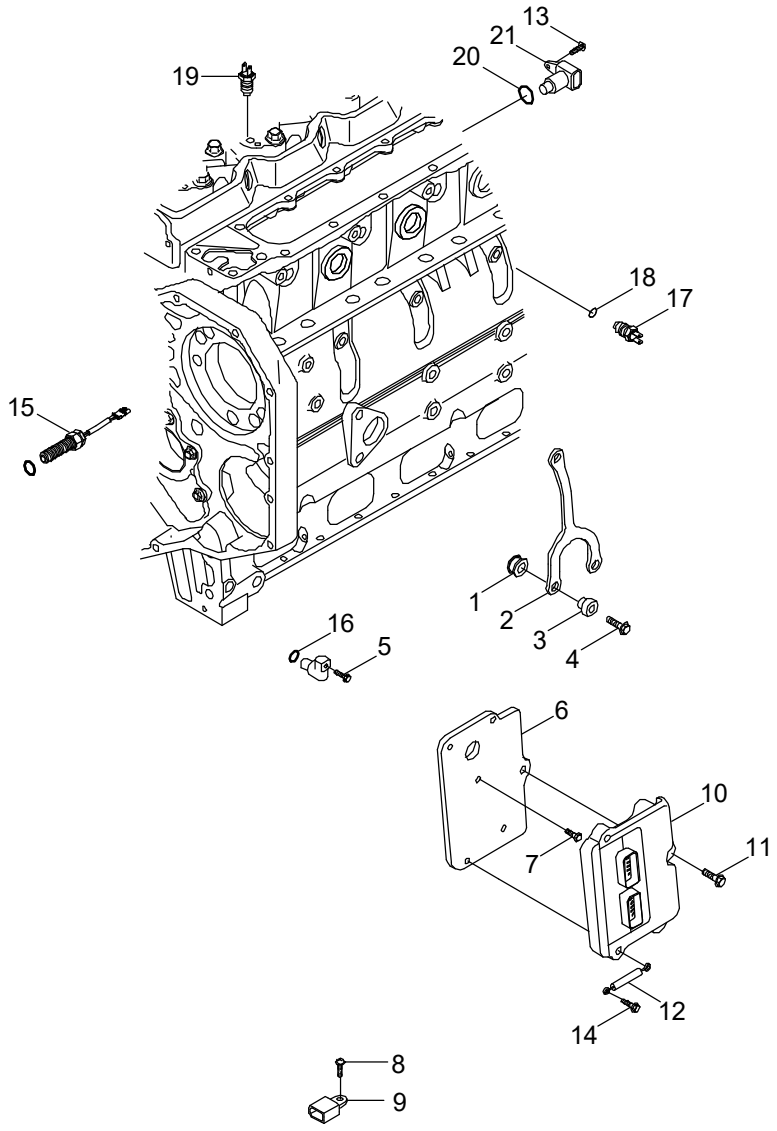

Item	Part_No	IS	Ord	T	Description	Qty	Serial_No	ITC	Remark
1	3955219				ISOLATOR-VIBRATION	3			PH9075-07
2	3977324				BRACKET-CNTL MODULE	1			
3	3955220				ISOLATOR-VIBRATION	3			
4	3901445				SCREW-HEX F/HEAD CAP	2			
5	3906391				SCREW-SOCKET HEAD CAP	3			
6	3977325				SUPPORT-CON MODULE	1			
7	3284216				SCREW-FLAT HEAD CAP	3			
8	3920854				SCREW-CAPTIVE WASHER	2			
9	4076493				SENSOR-PRESSURE	1			AMBIENT AIR
10	4921776				MODULE-ELE CONTROL	1			
11	3947206				SCREW-HEX F/HEAD CAP	1			
12	3977357				WIRE-GROUND	1			
13	3957849				SCREW-SOCKET HEAD CAP	3			
14	3093956				SCREW-HEX F/HEAD CAP	1			
*	3408529				SENSOR-POSITION	2			CAM,CRANK
N15	3408530				.SENSOR-POSITION	1			NOT
16	4010643				.SEAL/O-RING	1			
*	4076930				SWITCH-PRESSURE	1			OIL PRESSURE
17	4076931				.SWITCH-PRESSURE	1			
18	4921574				.SEAL/O-RING	1			
*	4088750				SENSOR-TEMPERATURE	1			COOLANT
18	4921574				.SEAL/O-RING	1			
N19	4088751				.SENSOR-TEMPERATURE	1			NOT
*	4903286				SENSOR-PRS TEMP	1			INTAKE AIR
20	4903482				.SEAL/O-RING	1			
N21	4903285				.SENSOR-PRS TEMP	1			NOT

Item	Part_No	IS	Ord	T	Description	Qty	Serial_No	ITC	Remark
N	@				NOT INDIVIDUALLY SUPPLIED	AR			NOT

CAMSHAFT

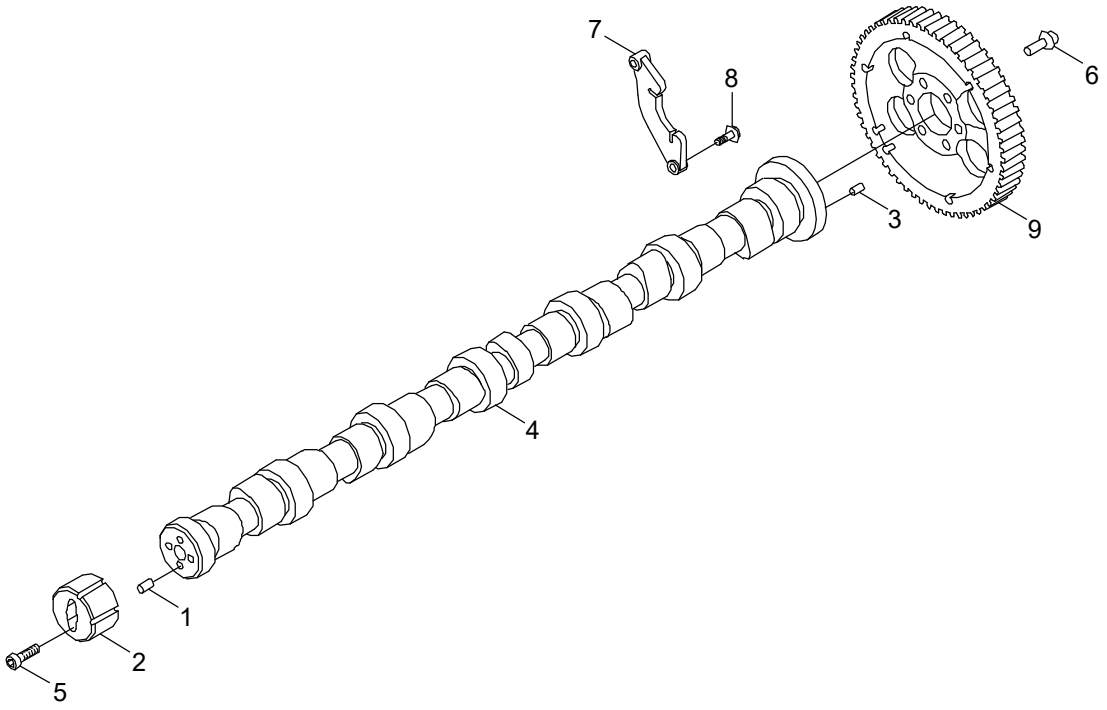

Item	Part_No	IS	Ord	T	Description	Qty	Serial_No	ITC	Remark
*	3954100				CAMSHAFT	1			PP8733-02
1	3954111				.DOWEL-RING	1			
2	3955069				.RING-SPEED INDICATOR	1			
*-1	3979506				.CAMSHAFT	1			
3	3904483				..DOWEL-PIN	1			
4	3954099				..CAMSHAFT	1			
5	4895877				.SCREW-S/HEAD CAP	2			
6	3093730				SCREW-HEX F/HEAD CAP	6			
7	4897457				SUPPORT-C/SHAFT THRUST	1			
8	3925883				SCREW-HEX F/HEAD CAP	2			
9	3955152				GEAR-CAMSHAFT	1			

CONNECTING ROD AND PISTON

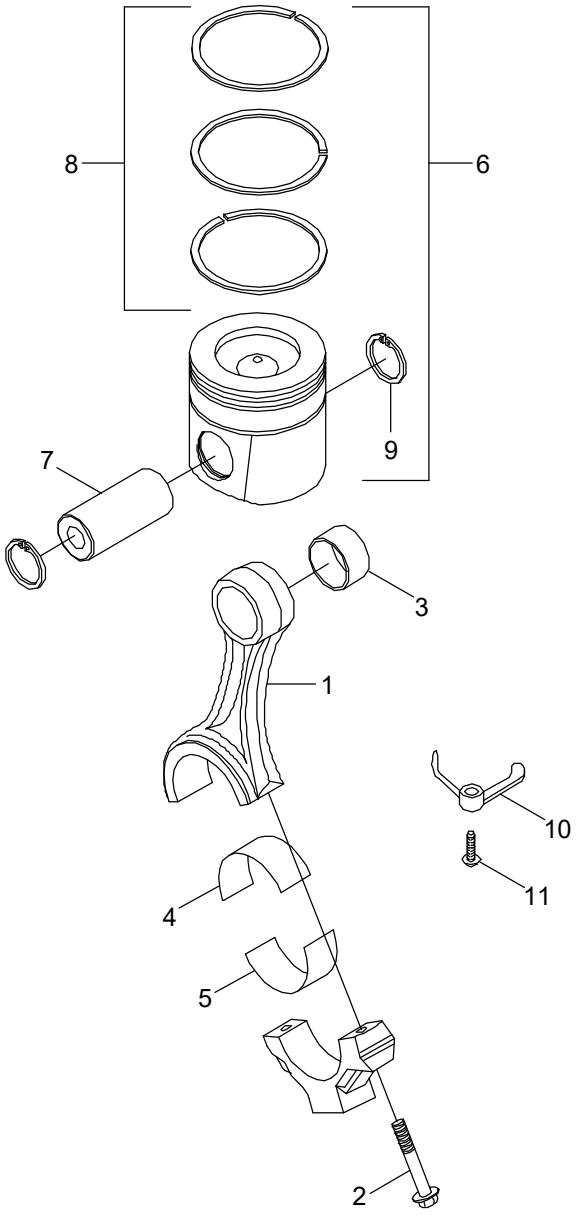

Item	Part_No	IS	Ord	T	Description	Qty	Serial_No	ITC	Remark
*	4891176				ROAD-ENGINE CONN	6			PP8733-01
N1	4891177				.ROD-ENG CONNECTING	1			NOT
2	4891179				.SCREW-CONN ROD CAP	2			
3	4891178				.BUSHING	1			
4	3969562				BEARING-C/ROD(STD)	6			
5	4893693				BEARING-C/ROD(STD)	6			LOWER
6	4955160				ENGINE PISTON KIT	6			
	4931888				.PISTON-ENGINE	1			
7	4931041				.PIN-PISTON	1			
8	4955251				.PISTON RING SET	1			
9	3920691				RING-RETAINING	12			
10	3968877				NOZZLE-PISTON COOLING	6			
11	3964817				SCREW-BANJO CONN	6			
N	@				NOT INDIVIDUALLY SUPPLIED	AR			NOT

FUEL INJECTOR

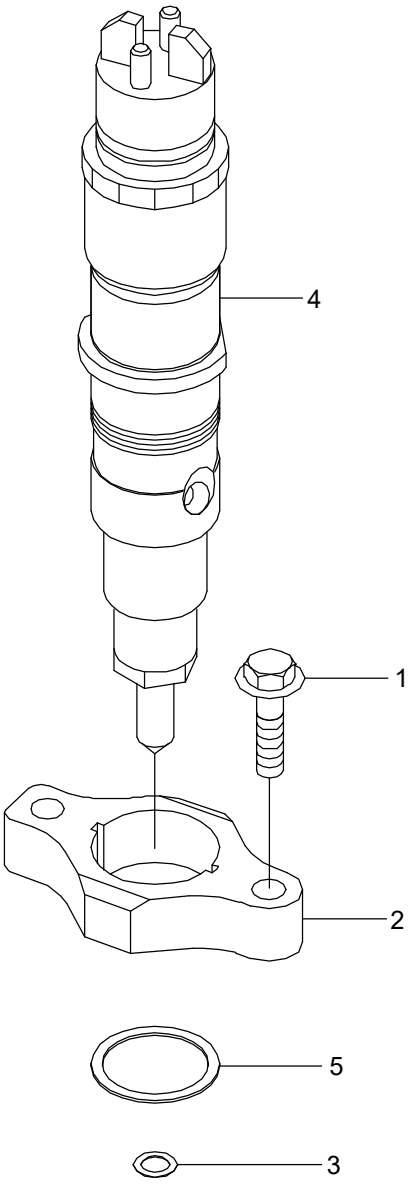

Item	Part_No	IS	Ord	T	Description	Qty	Serial_No	ITC	Remark
1	3900628				SCREW-HEX F/HEAD CAP	12			PP8733-01
2	3976370				CLAMP-INJECTOR	6			
*	3968927				INJECTOR	6			
3	3937142				.SEAL-INJECTOR	1			
N4	3968926				.INJECTOR	1			NOT
5	4890926				.SEAL, O-RING	1			
N	@				NOT INDIVIDUALLY SUPPLIED	AR			NOT

CYLINDER HEAD

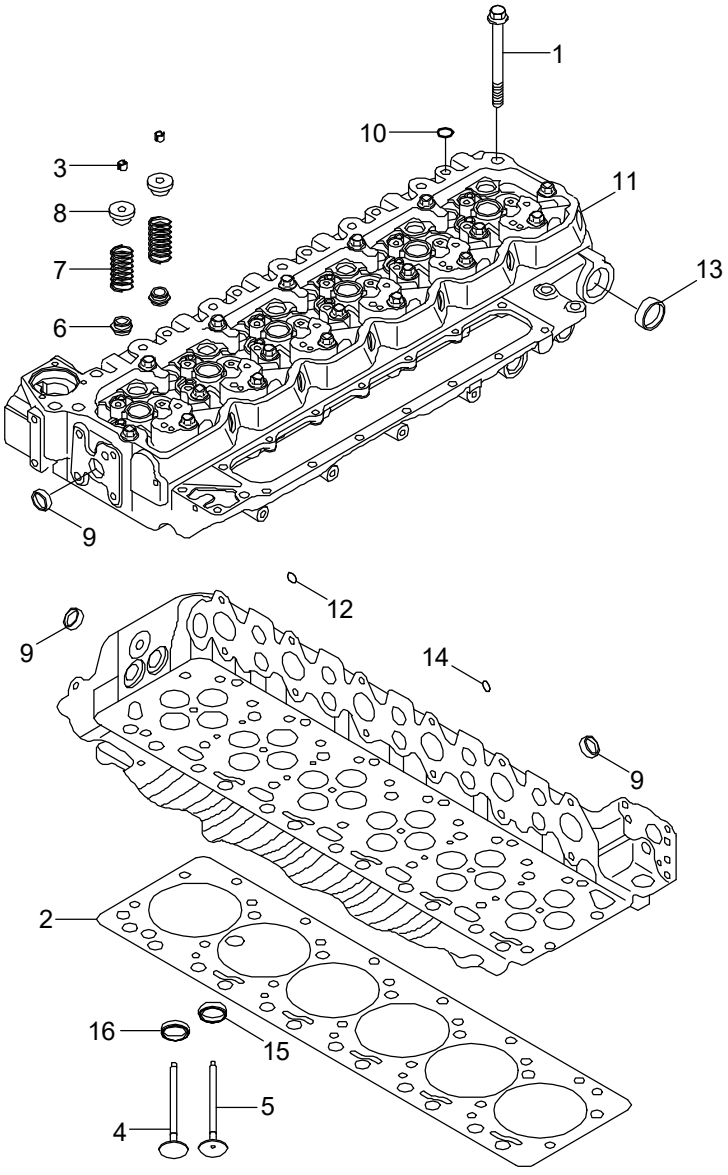

Item	Part_No	IS	Ord	T	Description	Qty	Serial_No	ITC	Remark
1	3927063				SCREW-HEX F/HEAD CAP	26			PP8733-01
2	4932210				GASKET-CYLINDER HEAD	1			
*	3977226				HEAD-CYLINDER	1			
	3802967				.KIT-EXHAUST VALVE	12			
3	3940123				..COLLET-VALVE	2			
N4	3940734				..VALVE-EXHAUST	1			NOT
*	3802924				.KIT-INTAKE VALVE	12			
3	3940123				..COLLET-VALVE	2			
N5	3940735				..VALVE-INTAKE	1			NOT
6	3955393				..SEAL-VALVE STEM	1			
					.SEAL-VALVE STEM	12			
7	3943161				.SPRING-VALVE	24			
8	3943198				.RETAINER-VALVE SPRING	24			
*	3977225				.HEAD-CYLINDER	1			
9	3007635				..PLUG-EXPANSION	13			
10	3920706				..PLUG-EXPANSION	11			
N11	3977222				..HEAD-CYLINDER	1			NOT
12	3007632				..PLUG-EXPANSION	7			
13	3945094				..PLUG-EXPANSION	2			
14	3945095				..PLUG-EXPANSION	2			
15	3943449				..INSERT-VALVE	12			
16	3943450				..INSERT-VALVE	12			
N	@				NOT INDIVIDUALLY SUPPLIED	AR			NOT

INJECTOR PLUMBING

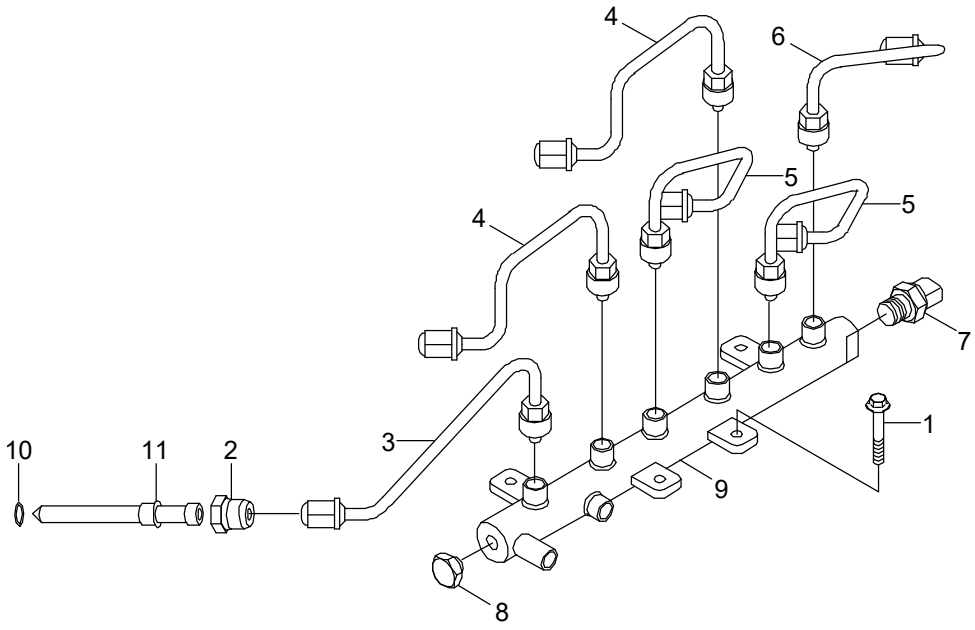

Item	Part_No	IS	Ord	T	Description	Qty	Serial_No	ITC	Remark
1	3930837				SCREW	4			PP8733-02
2	3946625				RETAINER-INJ FUEL SUP	6			
3	3978031				TUBE-INJECTOR F/SUPPLY	1			
4	3978032				TUBE-INJECTOR F/SUPPLY	2			
5	3978034				TUBE-INJECTOR F/SUPPLY	2			
6	3978036				TUBE-INJECTOR F/SUPPLY	1			
*	3977530				MANIFOLD-FUEL	1			
7	3974092				.SENSOR-PRESSURE	1			
8	3974093				.RELIEF VALVE-PRESSURE	1			
N9	3978448				.MANIFOLD-FUEL	1			NOT
*	3975703				CONNECTOR-INJ F/SUPPLY	6			
10	4062328				.SEAL/O-RING	1			
N11	3975702				.CONNECTOR-INJ F/SUP	1			NOT
N	@				NOT INDIVIDUALLY SUPPLIED	AR			NOT

TURBOCHARGER

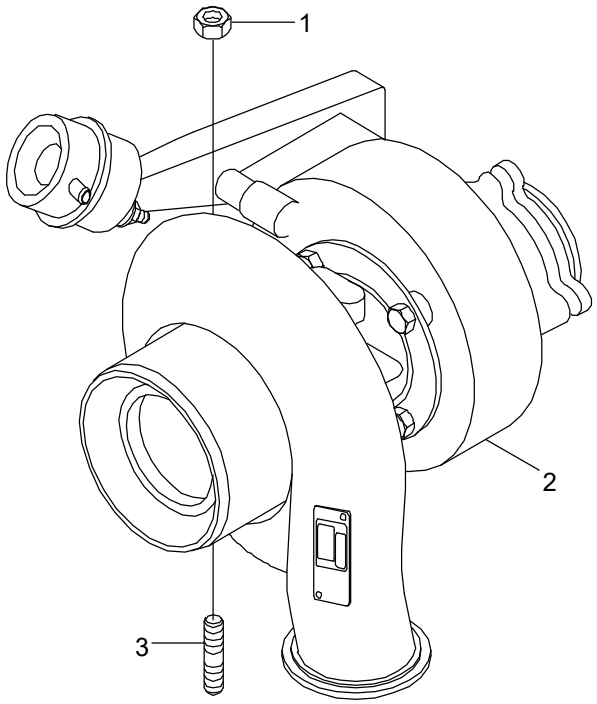

Item	Part_No	IS	Ord	T	Description	Qty	Serial_No	ITC	Remark
1	3818824				NUT-HEXAGON FLANGE	4			PP98812
N2	4037469				TURBOCHARGER	1			NOT
3	3818823				STUD	4			
N	@				NOT INDIVIDUALLY SUPPLIED	AR			NOT

ROCKER LEVER

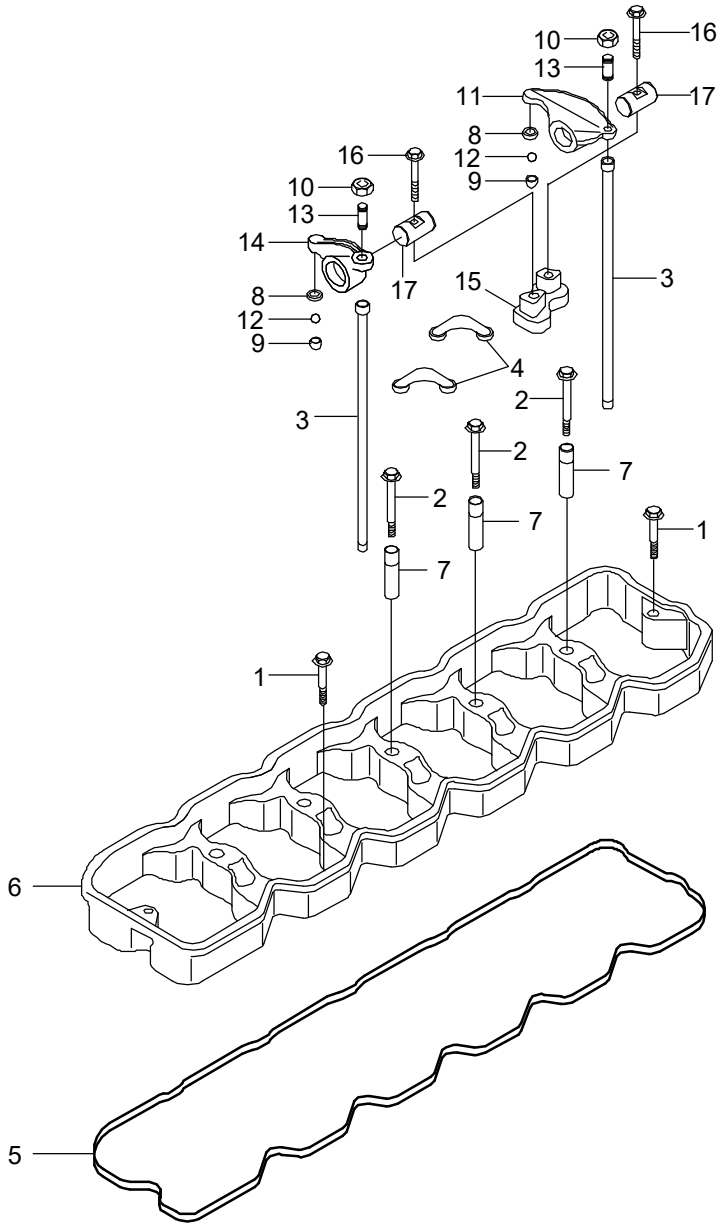

Item	Part_No	IS	Ord	T	Description	Qty	Serial_No	ITC	Remark
1	3900633				SCREW-HEX F/HEAD CAP	2			RL9765
2	3903096				SCREW-HEX F/HEAD CAP	5			
3	3941253				ROD-PUSH	12			
4	3943626				CROSSHEAD-VALVE	12			
5	4899231				GASKET-R/LEVER HOUSING	1			
*	4899257				HOUSING-ROCKER LEVER	1			
N6	4899235				.HOUSING-ROCKER LEVER	1			NOT
N7	4899245				.SLEEVE	5			NOT
*	4928698				ROCKER LEVER ASSY	6			
	3937219				.LEVER-ROCKER	1			
N8	3935945				..RETAINER-SOCKET	1			NOT
N9	3935946				..SOCKET-ROCKER LEVER	1			NOT
N*	3942735				..LEVER-ROCKER	1			NOT
10	3927692				...NUT-HEAVY HEX	1			
N11	3941928				...LEVER-ROCKER	1			NOT
N12	3942730				...BALL-ROCKER LEVERS	1			NOT
13	3959128				...SCREW-R/LEVER ADJUSTING	1			
*	3937220				.LEVER-ROCKER	1			
N8	3935945				..RETAINER-SOCKET	1			NOT
N9	3935946				..SOCKET-ROCKER LEVER	1			NOT
N*	3942734				..LEVER-ROCKER	1			NOT
10	3927692				...NUT-HEAVY HEX	1			
N12	3942730				...BALL-ROCKER LEVERS	1			NOT
13	3959128				...SCREW-R/LEVER ADJUSTING	1			
N14	3941927				...LEVER-ROCKER	1			NOT
15	3964908				.SUPPORT-ROCKER LEVER	1			

Item	Part_No	IS	Ord	T	Description	Qty	Serial_No	ITC	Remark
16	3990127				.SCREW-HEX F/HEAD CAP	2			
17	4928699				.SHAFT-ROCKER LEVER	2			
N	@				NOT INDIVIDUALLY SUPPLIED	AR			NOT

ENGINE COOLANT VENT

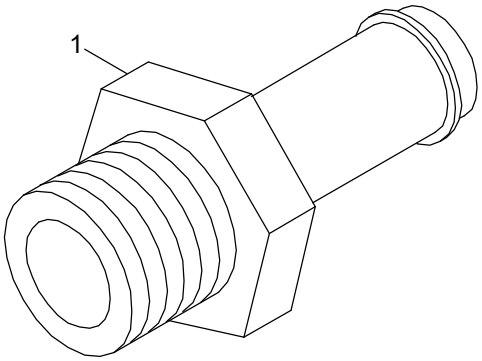

Item	Part_No	IS	Ord	T	Description	Qty	Serial_No	ITC	Remark
1	3943670				FITTING-ORIFICE	1			RP9046

HEAT SHIELD

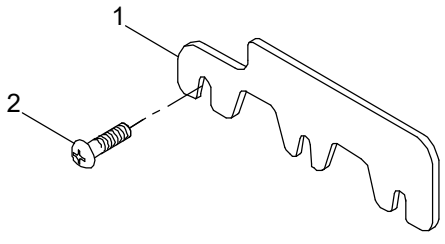

Item	Part_No	IS	Ord	T	Description	Qty	Serial_No	ITC	Remark
1	4941238				SHIELD-HEAT	1			SH9059
2	3926846				SCREW-HEX F/HEAD CAP	3			

FAN PILOT SPACER

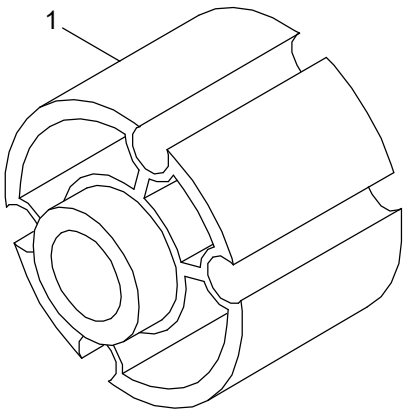

Item	Part_No	IS	Ord	T	Description	Qty	Serial_No	ITC	Remark
1	3910132				SPACER-FAN PILOT	1			SP9085

STARTING MOTOR

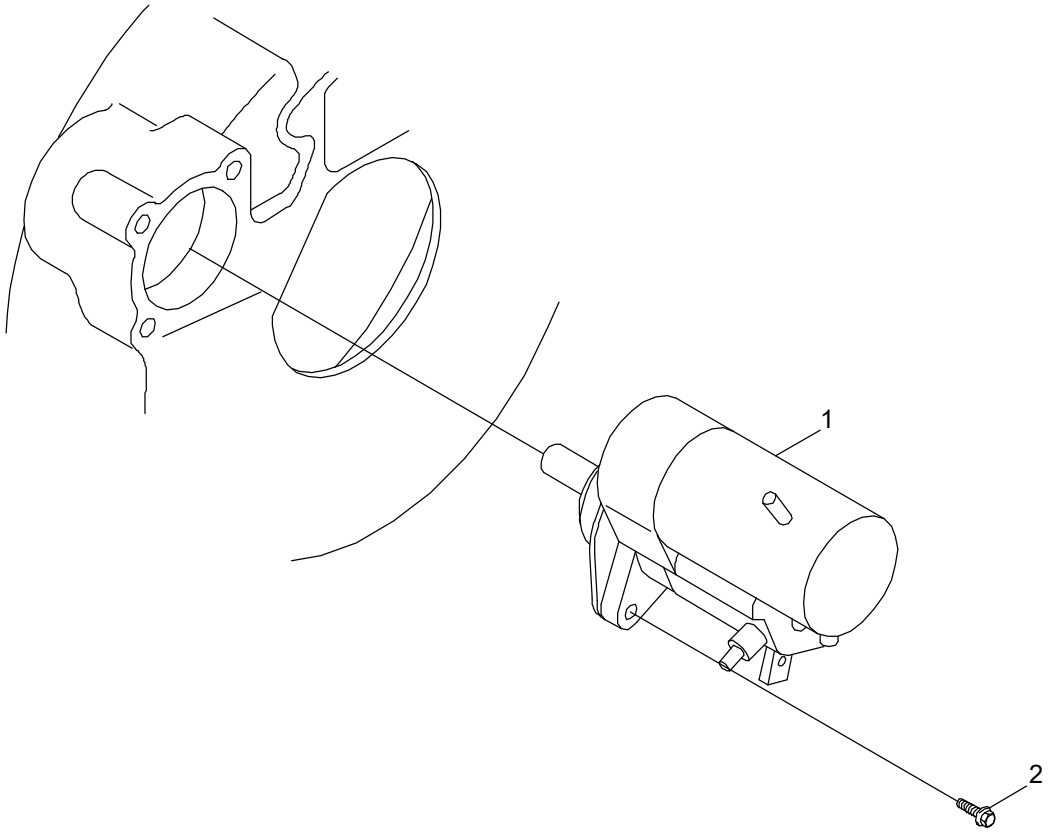

Item	Part_No	IS	Ord	T	Description	Qty	Serial_No	ITC	Remark
1	3957593				MOTOR-STARTING	1			ST9265
2	3968470				SCREW-TWELVE P/CAP	2			SM9790-03

TURBOCHARGER ARRANGEMENT

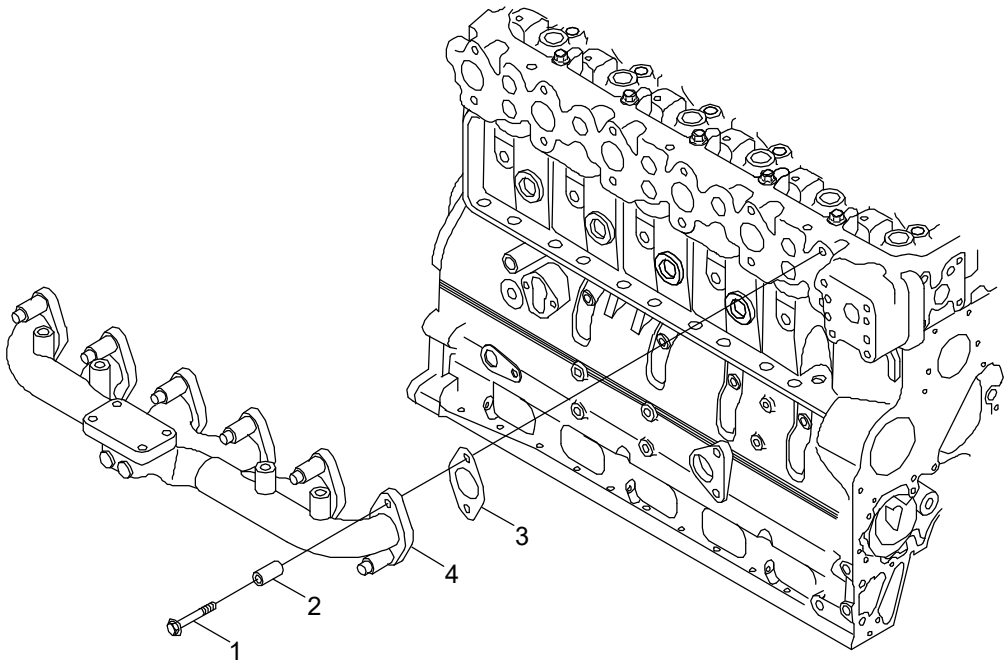

Item	Part_No	IS	Ord	T	Description	Qty	Serial_No	ITC	Remark
1	3944593				SCREW-HEX F/HEAD CAP	12			TB91174
2	3945252				SPACER-MOUNTING	12			
3	3955339				GASKET	6			
4	3976789				MANIFOLD-EXHAUST	1			

TORQUE CONVERTER OIL COOLER

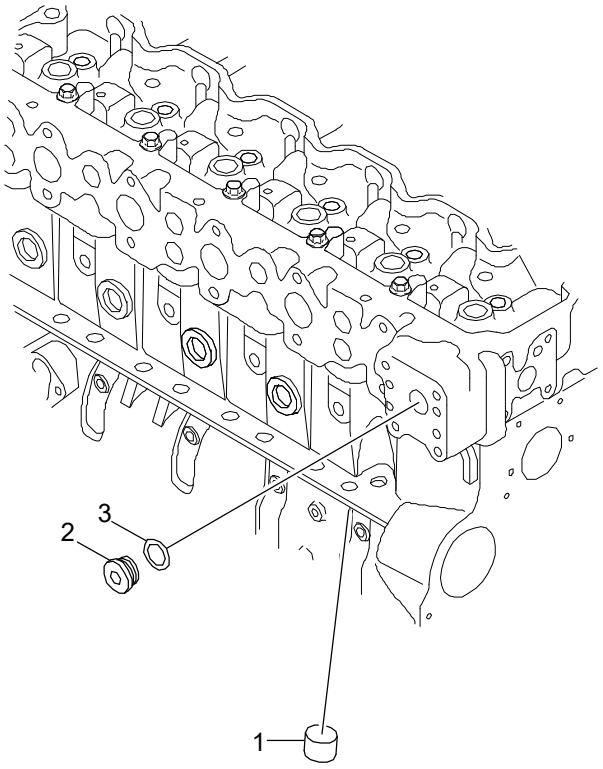

Item	Part_No	IS	Ord	T	Description	Qty	Serial_No	ITC	Remark
1	3008469				PLUG-PIPE	1			TK9036
*	3089238				PLUG-THREADED	1			
N2	3089239				.PLUG-THREADER	1			NOT
3	3089240				.SEAL/O-RING	1			
N	@				NOT INDIVIDUALLY SUPPLIED	AR			NOT

TUBOCHARGER PLUMBING

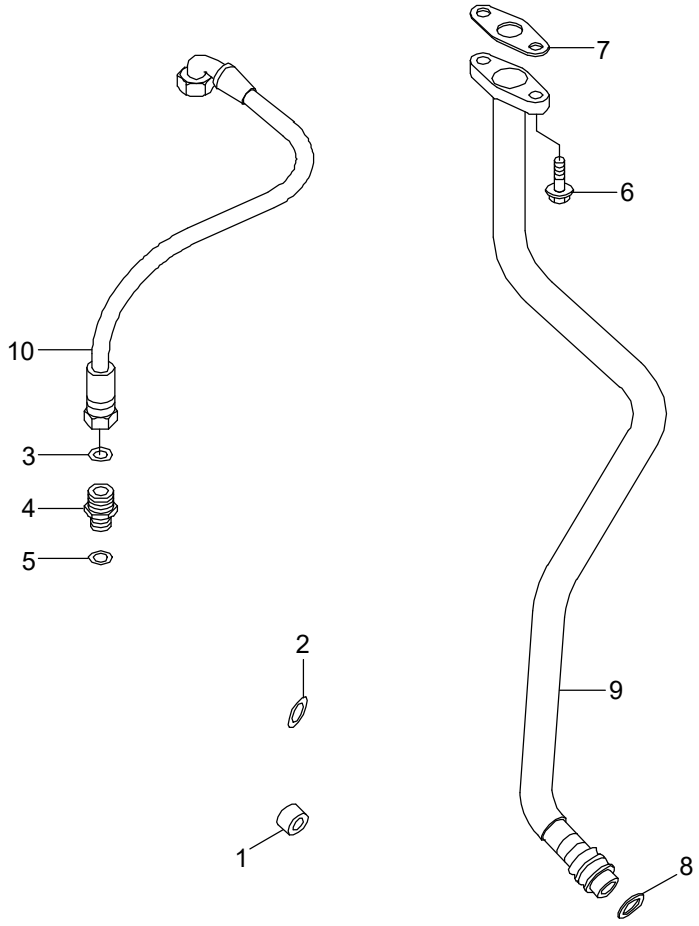

Item	Part_No	IS	Ord	T	Description	Qty	Serial_No	ITC	Remark
1	3008469				PLUG-PIPE	1			TP97325
2	3920706				PLUG-EXPANSION	1			
*	3922789				CONNECTOR-MALE	2			
3	3678603				.SEAL/O-RING	1			
N4	3922790				.CONNECTOR-MALE	1			NOT
5	3922794				.SEAL/O-RING	1			
6	3941981				SCREW	2			
7	3949499				GASKET-OIL DRAIN	1			
*	3977158				CONNECTION	1			
8	3928624				.SEAL/O-RING	2			
N9	3978945				.CONNECTION	1			NOT
10	3942223				HOSE-FLEXIBLE	1			
N	@				NOT INDIVIDUALLY SUPPLIED	AR			NOT

VALVE COVER

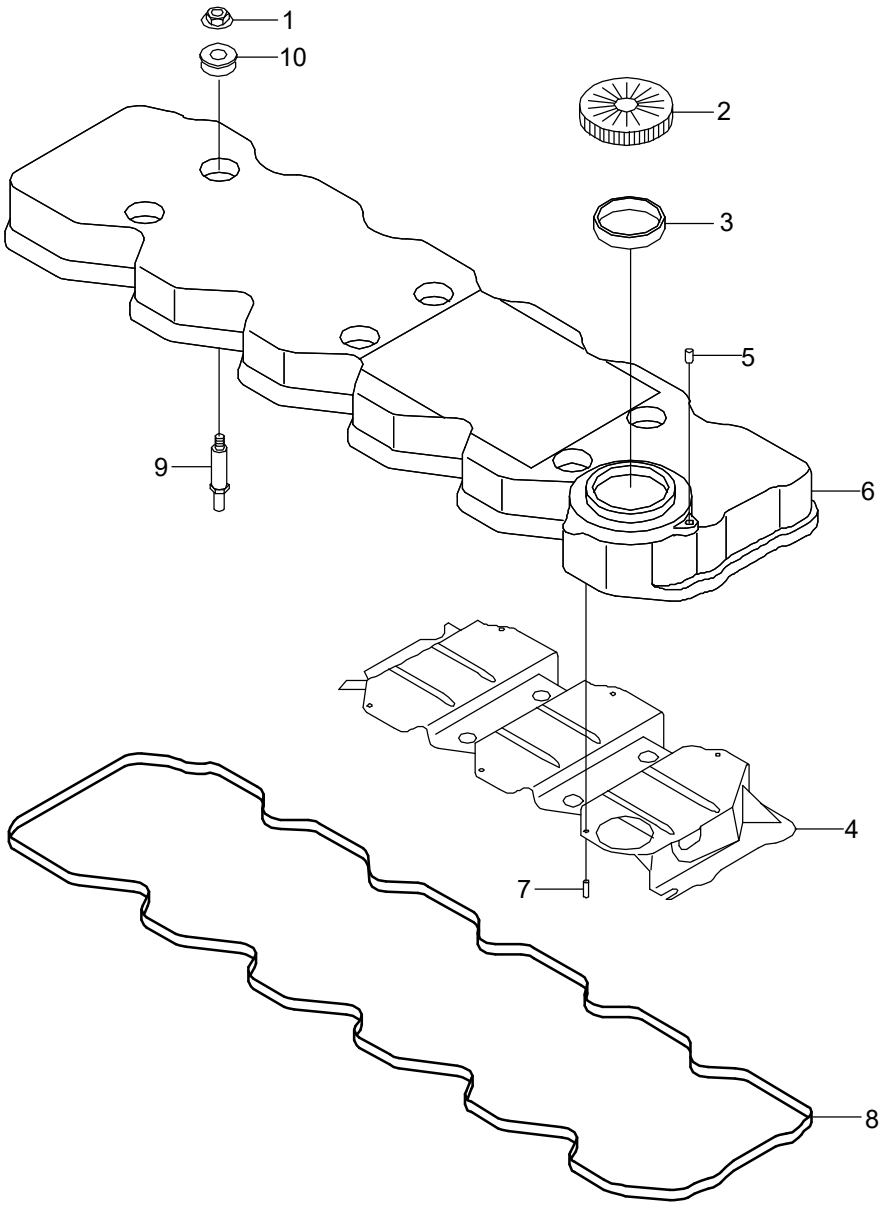

Item	Part_No	IS	Ord	T	Description	Qty	Serial_No	ITC	Remark
1	4893936				NUT-HEXAGON FLANGE	6			VC9304
*	3976167				COVER-VALVE	1			
	4895459				.CAP-FILLER	1			
2	4895460				..CAP-FILLER	1			
3	4895461				..GASKET-FILLER CAP	1			
*	3968862				.COVER-VALVE	1			
4	4898648				..BAFFLE-BREATHER	1			
*	2831347				..COVER-VALVE	1			
5	3945095				...PLUG-EXPANSION	1			
N6	2831325				...COVER-VALVE	1			NOT
7	4899188				..RIVET	8			
8	4899226				.GASKET-VALVE COVER	1			
9	4896991				STUD	6			
10	4899239				ISOLATOR-NOISE	6			
N	@				NOT INDIVIDUALLY SUPPLIED	AR			NOT

WATER INLET CONNECTION

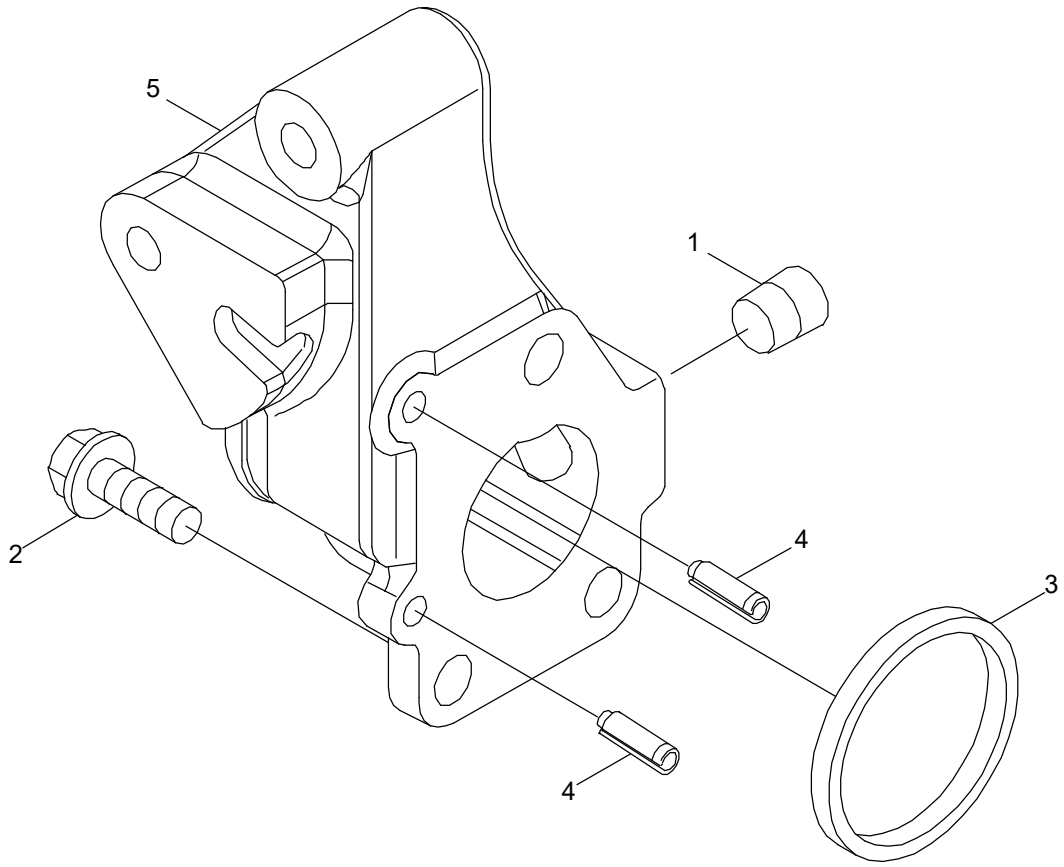

Item	Part_No	IS	Ord	T	Description	Qty	Serial_No	ITC	Remark
1	3008468				PLUG-PIPE	1			WI9178
2	3902460				SCREW-HEX F/HEAD CAP	3			
3	3906697				SEAL-RECT RING	1			
*	3943990				CONN-WATER INLET	1			
4	131584				.PIN-ROLL	2			
N5	3943991				.CONN-WATER INLET	1			NOT
N	@				NOT INDIVIDUALLY SUPPLIED	AR			NOT

WATER OUTLET CONNECTION

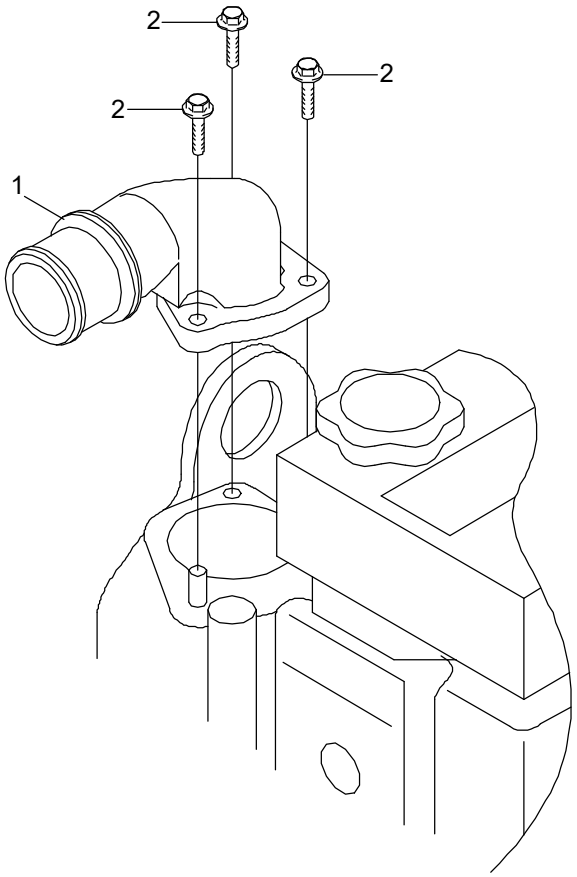

Item	Part_No	IS	Ord	T	Description	Qty	Serial_No	ITC	Remark
1	3943133				CONN-WATER OUTLET	1			WO9068-02
2	3901865				SCREW-HEX F/HEAD CAP	3			

WATER PUMP

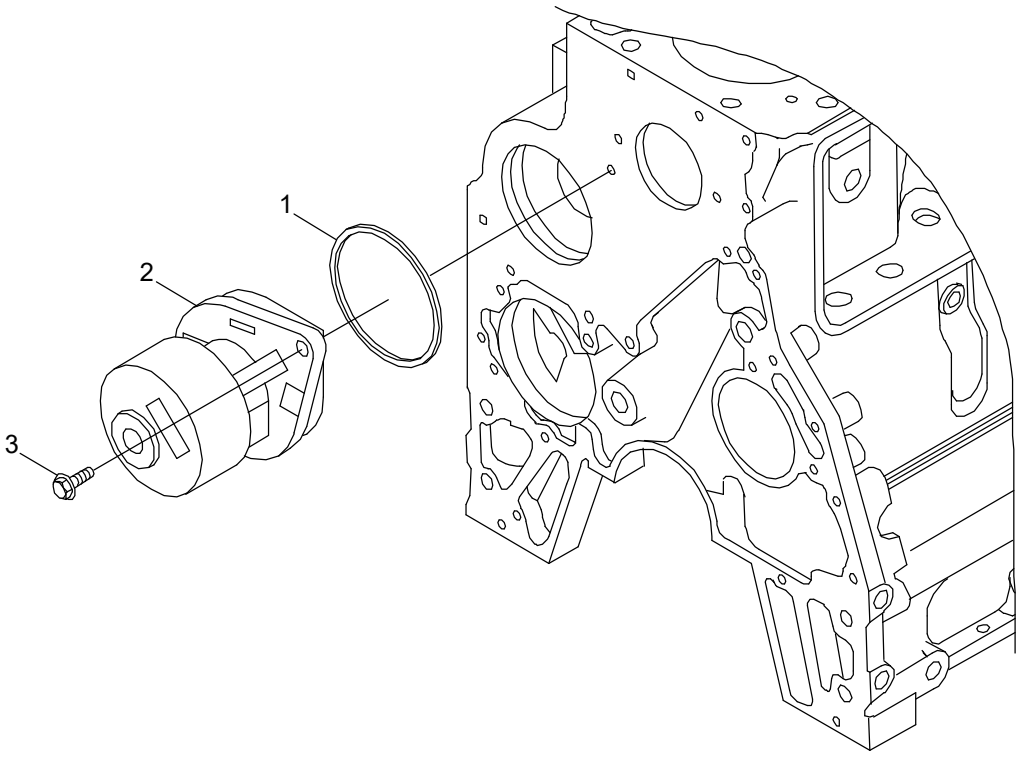

Item	Part_No	IS	Ord	T	Description	Qty	Serial_No	ITC	Remark
*	3800984				PUMP-WATER	1			WP9757-03
1	3906698				.SEAL-RECT RING	1			
N2	4891252				.PUMP-WATER	1			NOT
3	3093730				SCREW-HEX F/HEAD CAP	2			
N	@				NOT INDIVIDUALLY SUPPLIED	AR			NOT

WATER PUMP DRIVE

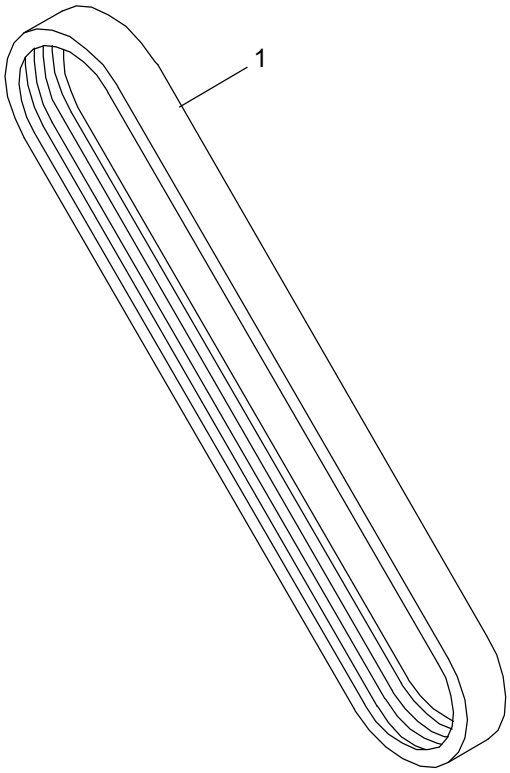

Item	Part_No	IS	Ord	T	Description	Qty	Serial_No	ITC	Remark
1	3290051				BELT/V-RIBBED	1			WP97017-03

BELT TENSIONER

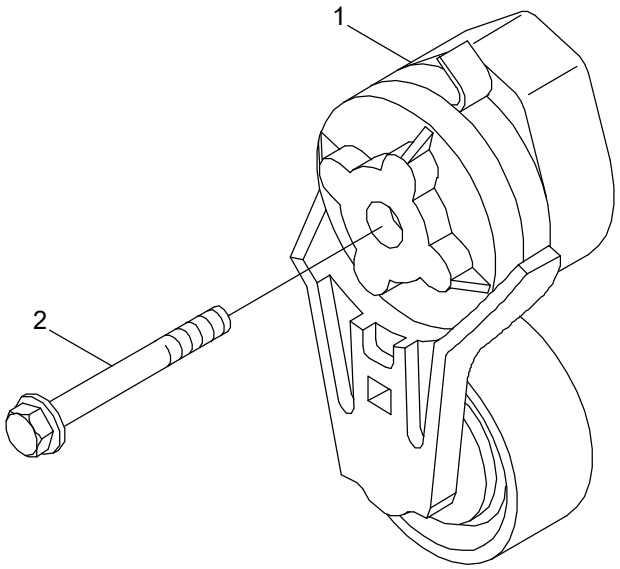

Item	Part_No	IS	Ord	T	Description	Qty	Serial_No	ITC	Remark
1	3976834				TENSIONER-BELT	1			WP97056-02
2	3900679				SCREW-HEX F/HEAD CAP	1			

ENG CONTROL MODULE HARNESS

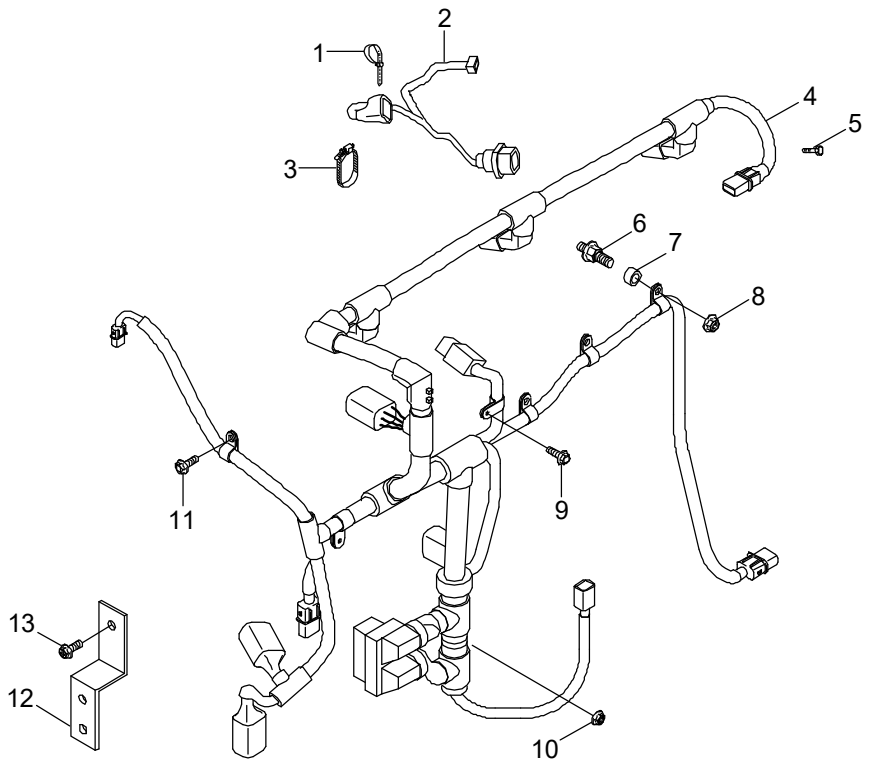

Item	Part_No	IS	Ord	T	Description	Qty	Serial_No	ITC	Remark
1	3963736				CLIP-WIRE RETAINING	6			WR9392
2	3287699				HARNESS-WIRING	3			
3	4890404				CLIP-WIRE RETAINING	3			
4	4939039				HARNESS-ECM WIRING	1			
5	3913638				SCREW-HEX F/HEAD CAP	3			
6	4929065				SCREW-HEX F/HD CAP	1			
7	3918363				SPACER-MOUNTING	2			
8	3900589				NUT-HEX FLANGE	2			
9	3093956				SCREW-HEX F/HEAD CAP	1			
10	3906216				NUT-HEX FLANGE	3			
11	3900626				SCREW-HEX F/HEAD CAP	1			
12	4933023				BRACE-WIRING	1			
13	3900627				SCREW-HEX F/HEAD CAP	2			

EXHAUST OUTLET CONNECTION

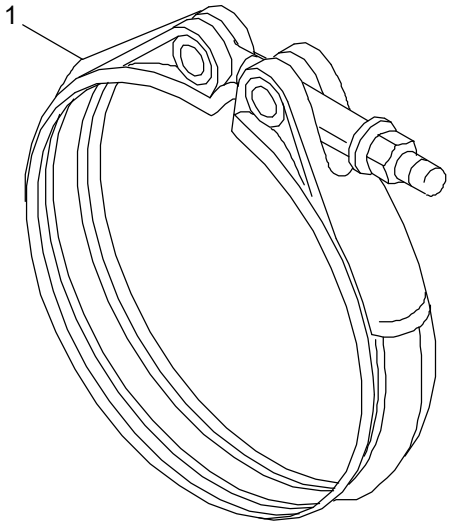

Item	Part_No	IS	Ord	T	Description	Qty	Serial_No	ITC	Remark
1	3903652				CLAMP-V BAND	1			XS9254