ENGINE MOUNTING

RUTHZIL TRATOR COMERCIAL DE PEÇAS LTDA 11 97083-6812 ROLANDO

MAIS CATALOGOS ACESSE NOSSA LOJA WWW.CATALOGOESERVICO.COM.BR

HL740-9S HYUNDAI

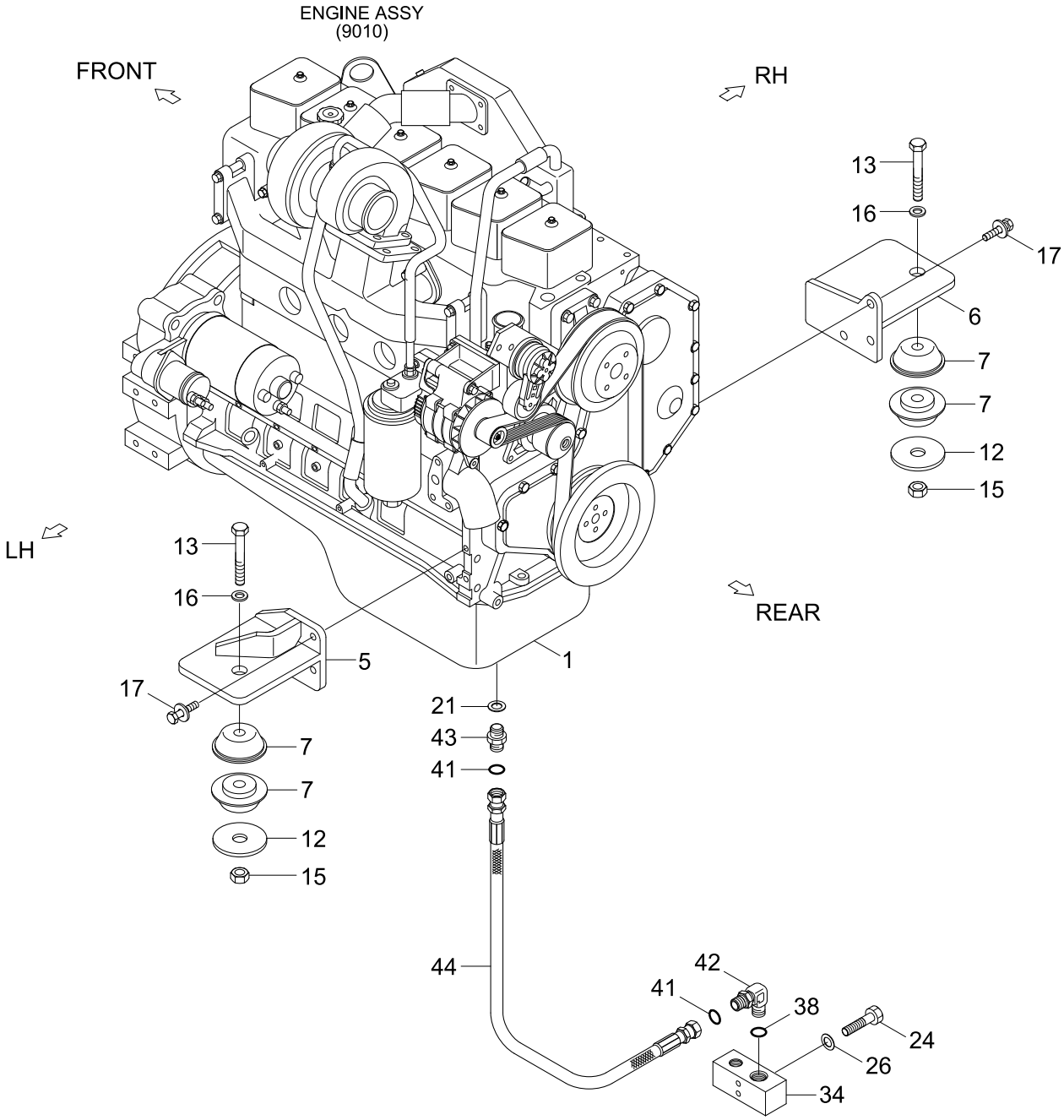

Item	Part_No	IS	Ord	T	Description	Qty	Serial_No	ITC	Remark
1	11LN-01100				ENGINE ASSY	1			
5	11LF-00740				BRACKET WA-LH	1			
6	11LF-00750				BRACKET WA-RH	1			
7	11N6-10445				RUBBER-MOUNT	4			
12	11L7-00170				WASHER-MOUNT	2			
13	S017-201306				BOLT-HEX	2			
15	S205-201006				NUT-HEX	2			
16	S441-200006				WASHER-HARDENED	2			
17	S037-123556				BOLT-W/WASHER	6			
21	P392-180000				WASHER-COPPER	1			
24	S017-100756				BOLT-HEX	2			
26	S441-100006				WASHER-HARDENED	2			
34	11LM-00200				DRAIN VALVE	1			
38	S631-018004				O-RING	1			
41	S621-014001				O-RING	2			
42	X520-110003				ELBOW-90,ORFS	1			
43	X500-220007				CONNECTOR-ORFS	1			
44	P910-082009				HOSE ASSY-ORFS 0X0	1			

ENGINE CONTROL SYSTEM

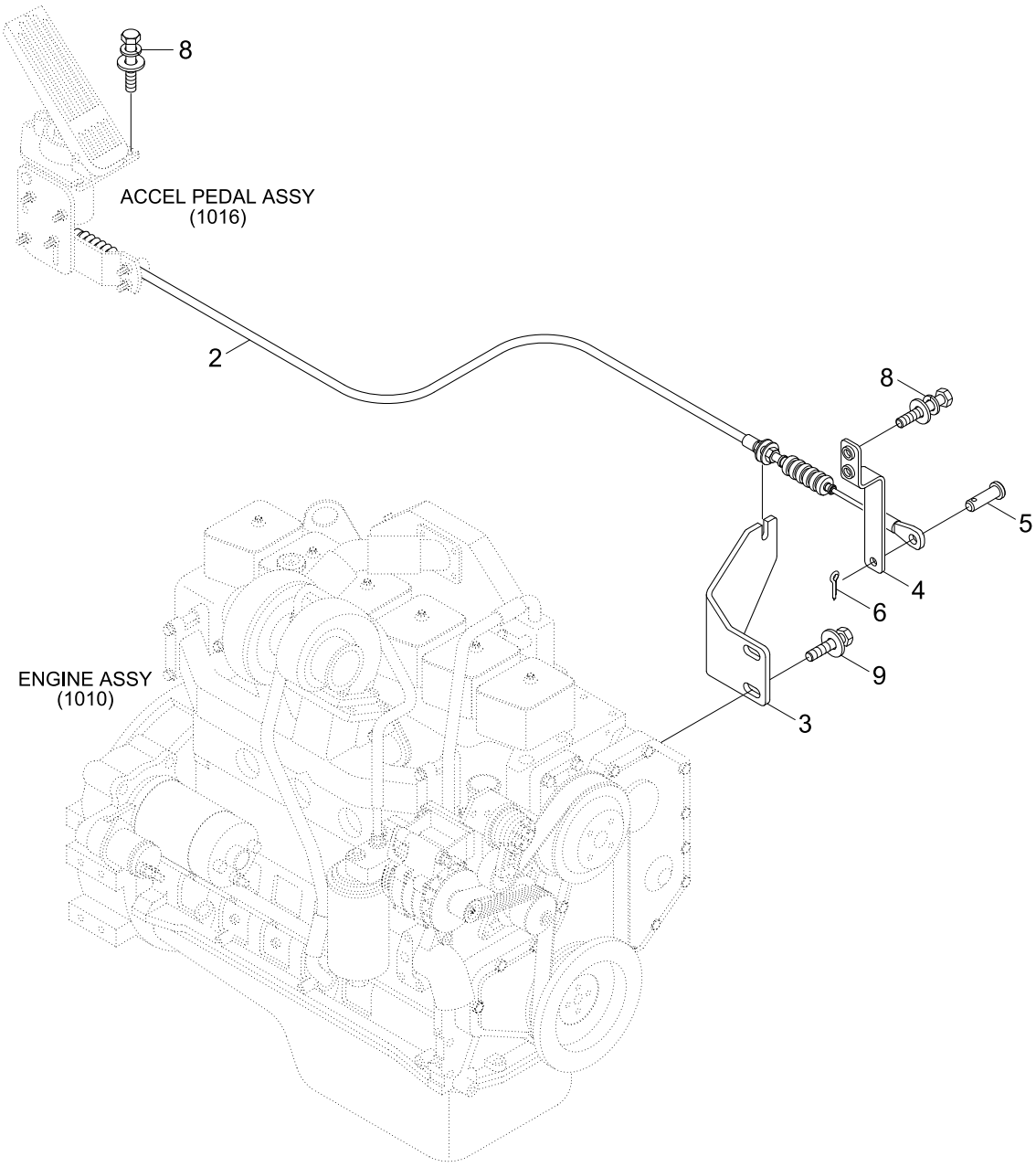

Item	Part_No	IS	Ord	T	Description	Qty	Serial_No	ITC	Remark
2	11LF-11710				PULL CABLE ASSY	1			
3	11LN-11740				BRACKET WA	1			
4	11LN-11720				LEVER	1			
5	S491-080182				PIN-CLEVIS	1			
6	S461-200152				PIN-SPLIT	1			
8	S035-062026				BOLT-W/WASHER	5			
9	S037-122556				BOLT-W/WASHER	2			

ACCEL PEDAL ASSY

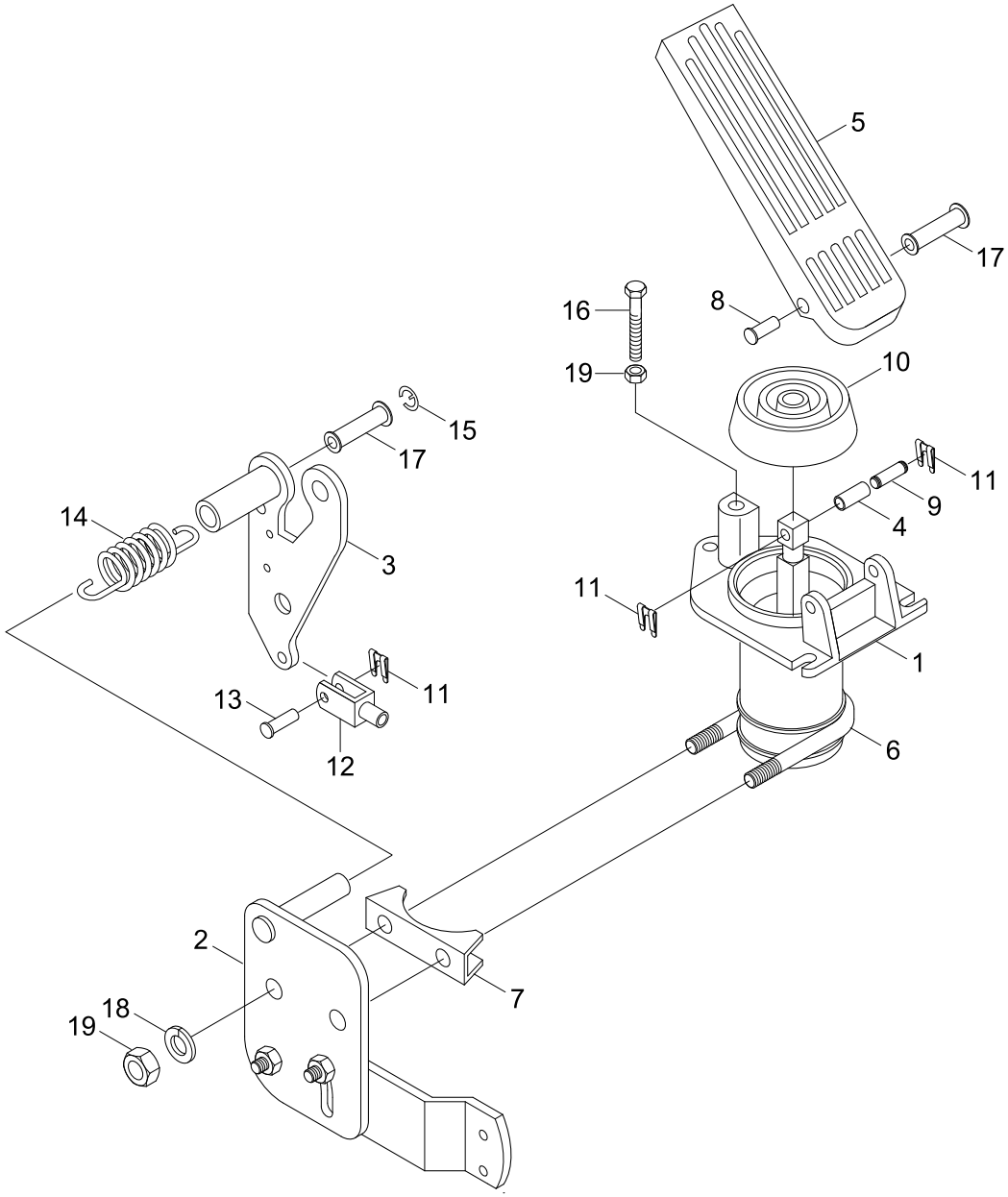

Item	Part_No	IS	Ord	T	Description	Qty	Serial_No	ITC	Remark
*	14L1-02070				PEDAL ASSY-ACCEL	1			
1	211022				.BASE-CASTING	1			
N2	205723				.BRACKET ASSY-HANGER	1			NOT
3	205722				.LEVER ASSY	1			
N4	205736				.PUSH ROD & BUSH ASSY	1			NOT
5	211622				.TREADLE	1			
6	203907				.U-BOLT	1			
7	206104				.CRADLE-U-BOLT	1			
8	208123				.PIN-PIVOT	1			
N9	205709				.PIN-BEARING	1			NOT
10	208468				.BELLOWS	1			
11	203070				.CLIP-SPRINGFIX	3			
12	205844				.FORK END	1			
13	203066				.PIN-CLEVIS	1			
14	206008				.SPRING-RETURN	1			
15	297179				.CIRCLIP	1			
16	295405				.SCREW	1			
17	297773				.BEARING-NYLINER	4			
18	50803/085				.LOCKWASHER	2			
19	50904/035				.NUT-HEX	3			
K	216581				KIT-FITTING	1			
N	@				NOT SUPPLIED PARTS	AR			NOT

FUEL TANK

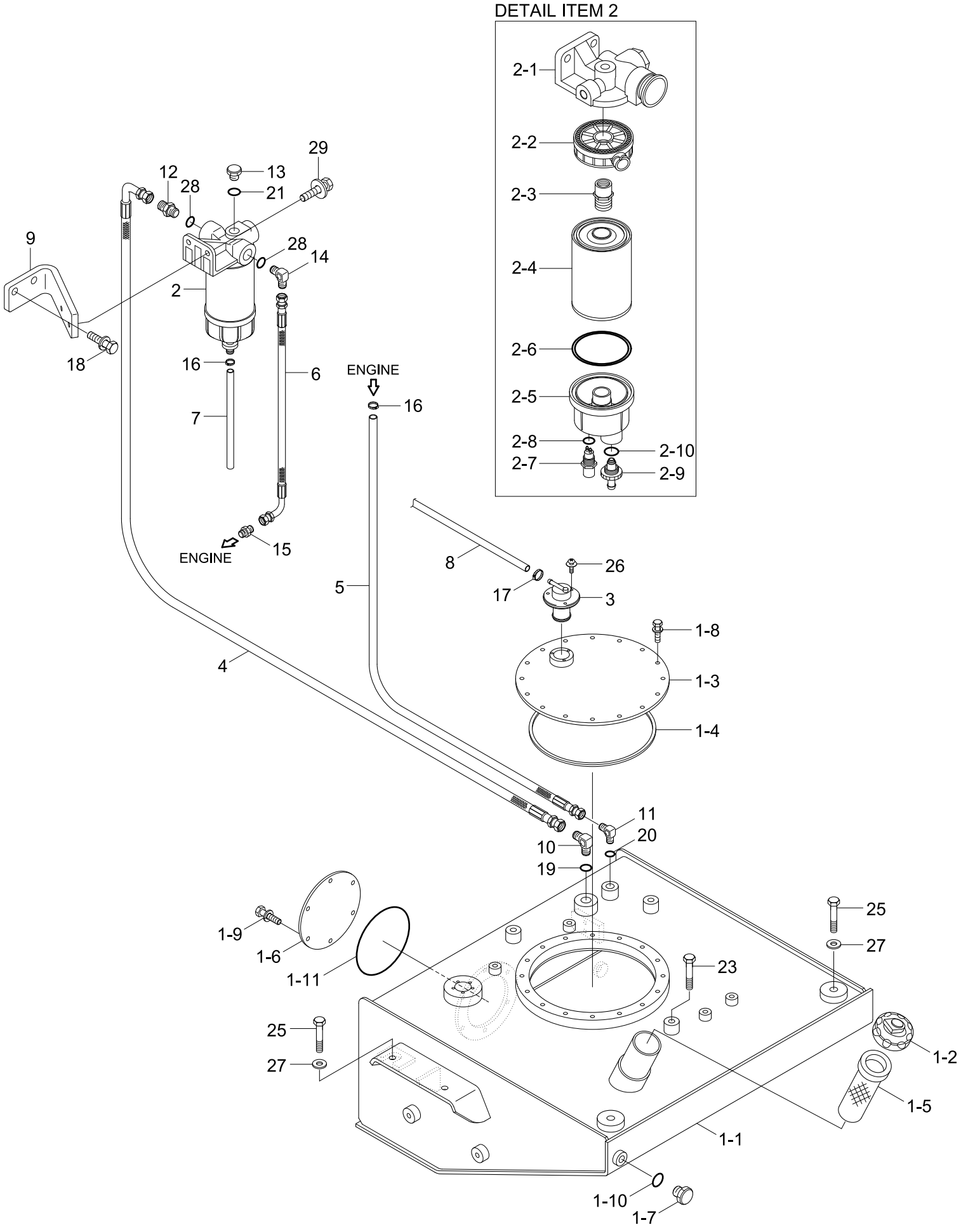
DETAIL ITEM 2
2-1
2-2
2-3
2-4
2-6
2-5
2-8
2-7
2-10
2-9
29
12
28
13
21
9
28
14
2
18
16
6
7
ENGINE
15
ENGINE
16
5
8
17
26
3
1-8
1-3
1-4
4
11
10
20
19
1-9
1-6
1-11
25
27
23
25
27
1-2
1-5
1-1
1-10
1-7

Item	Part_No	IS	Ord	T	Description	Qty	Serial_No	ITC	Remark
1	11LN-20100				FUEL TANK ASSY	1			
1-1	11LN-20110				.FUEL TANK WA	1			
1-2	11LB-20050				.FUEL CAP ASSY	1			
1-3	11LM-26230				.BOSS	1			
1-4	14L1-02180				.RUBBER	1			
1-5	31QA-02080				.STRAINER	1			
1-6	11LM-26240				.COVER	1			
1-7	P220-110104				.PLUG-HEX	2			
1-8	S035-082026				.BOLT-W/WASHER	16			
1-9	S037-102556				.BOLT-W/WASHER	6			
1-10	S631-018001				.O-RING	2			
1-11	S632-165001				.O-RING	1			
2	11LN-20920				PRE FUEL FILTER ASSY	1			
	11LF-20990				FILTER ASSY	1			FUEL WARMER
2-1	11NA-71010				.HEAD-FILTER	1			
2-2	11NA-71020				.HEATER-FUEL	1			FUEL WARMER
2-3	11NA-71030				.CONNECTOR	1			FUEL WARMER
2-4	11LF-20920				.ELEMENT	1			
2-5	11NA-71050				.BOWL-CLEAR	1			
2-6	11NA-71060				.O-RING	1			
2-7	11NA-71210				.PLUG-SCREW	1			
2-8	11NA-71080				.O-RING	1			
2-9	11NA-71090				.VALVE-SCREW	1			
2-10	11NA-71100				.O-RING	2			
3	11FA-50300				FUEL CUT VALVE	1			

Item	Part_No	IS	Ord	T	Description	Qty	Serial_No	ITC	Remark
4	11LN-20720				HOSE	1			
5	11LM-20720				HOSE	1			
6	11LC-20775				HOSE ASSY	1			
7	P760-011070				HOSE-RUBBER	1			
8	11FA-52080				HOSE ASSY	1			
9	11LL-20910				BRACKET WA	1			
10	P020-110003				ELBOW-90	1			
11	P020-110002				ELBOW-90	1			
12	P010-210008				CONNECTOR	1			
13	P210-101400				PLUG-HEX	1			
14	P020-210007				ELBOW-90	1			
15	11LC-20840				CONNECTOR	1			
16	S520-017000				CLAMP-HOSE	2			
17	S571-140002				CLAMP-HOSE,WIRE TYPE	1			
18	S037-103556				BOLT-W/WASHER	2			
19	S631-018001				O-RING	1			
20	S631-014001				O-RING	1			
21	Y161-014001				O-RING	1			
23	S017-16020D				BOLT-HEX	2			
25	S017-16040D				BOLT-HEX	6			
26	S131-051546				SCREW-W/WASHER	3			
27	S441-160006				WASHER-HARDENED	6			
28	Y161-018001				O-RING	2			
29	S037-103056				BOLT-W/WASHER	2			

COOLING SYSTEM(FAN, FORWARD ONLY)

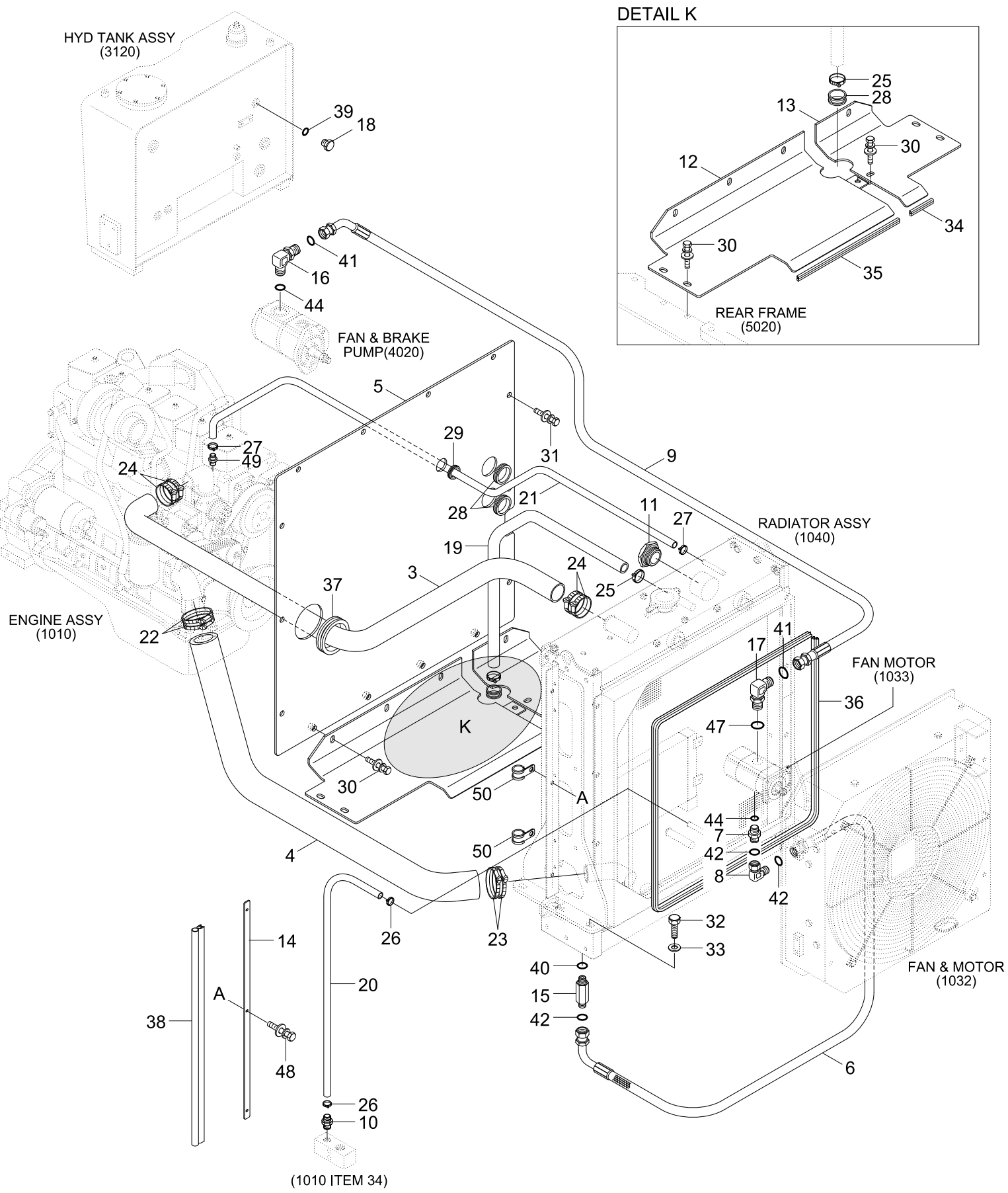

Item	Part_No	IS	Ord	T	Description	Qty	Serial_No	ITC	Remark
3	11LN-31010				HOSE-RUBBER LOW	1			
4	11LN-31020				HOSE-RUBBER LOW	1			
5	11LN-31030				SCREEN	1			
6	P930-122024				HOSE ASSY-ORFS 0X90	1			
7	31S7-00390				CONNECTOR	1			
8	X850-545400				ELBOW-90,SWIVEL,ORFS	1			
9	P920-084052				HOSE ASSY-ORFS 0X45	1			
10	P090-100808				CONNECTOR-HOSE	1			
11	14E7-01070				SIGHT GAUGE ASSY	1			
12	11LN-31310				SCREEN PLATE-LH	1			
13	11LN-31320				SCREEN PLATE-RH	1			
14	11LP-30430				SCREEN PLATE-LH	2			
15	X511-112546				CONNECTOR-LONG,ORFS	1			
16	11LF-30730				ELBOW-90	1			
17	31LB-40360				ELBOW-90	1			
18	P220-110104				PLUG-HEX	1			
19	P760-033130				HOSE-RUBBER LOW	1			
20	P760-021090				HOSE-RUBBER LOW	1			
21	P760-011103				HOSE-RUBBER LOW	1			
22	S572-750006				CLAMP-HOSE,WIRE TYPE	2			
23	S572-650006				CLAMP-HOSE,WIRE TYPE	2			
24	S572-600006				CLAMP-HOSE,WIRE TYPE	4			
25	S572-320006				CLAMP-HOSE,WIRE TYPE	2			
26	S572-220006				CLAMP-HOSE,WIRE TYPE	2			
27	S520-017000				CLAMP-HOSE	2			

Item	Part_No	IS	Ord	T	Description	Qty	Serial_No	ITC	Remark
28	S681-460400				GROMMET	3			
29	S681-290400				GROMMET	1			
30	S037-102056				BOLT-W/WASHER	9			
31	S037-122056				BOLT-W/WASHER	10			
32	S017-16035D				BOLT-HEX	6			
33	S441-160006				WASHER-HARDENED	6			
34	S772-000870				WEATHER STRIP	1			
35	S772-003800				WEATHER STRIP	1			
36	S771-030000				WEATHER STRIP	1			
37	S791-020032				GROMMET-PLATE	1			
38	S772-009000				WEATHER STRIP	2			
39	S631-018004				O-RING	1			
40	S631-024004				O-RING	1			
41	S621-014001				O-RING	2			
42	S621-018001				O-RING	2			
44	S611-023001				O-RING	2			
47	S611-019001				O-RING	1			
48	S035-082056				BOLT-W/WASHER	6			
49	P090-100808				CONNECTOR-HOSE	1			
	11N6-40230				CONNECTOR	1	#0001 -	-	
50	S543-140002				CLAMP-TUBE	2			

COOLING SYSTEM(FAN, FORWARD & REVERSE)

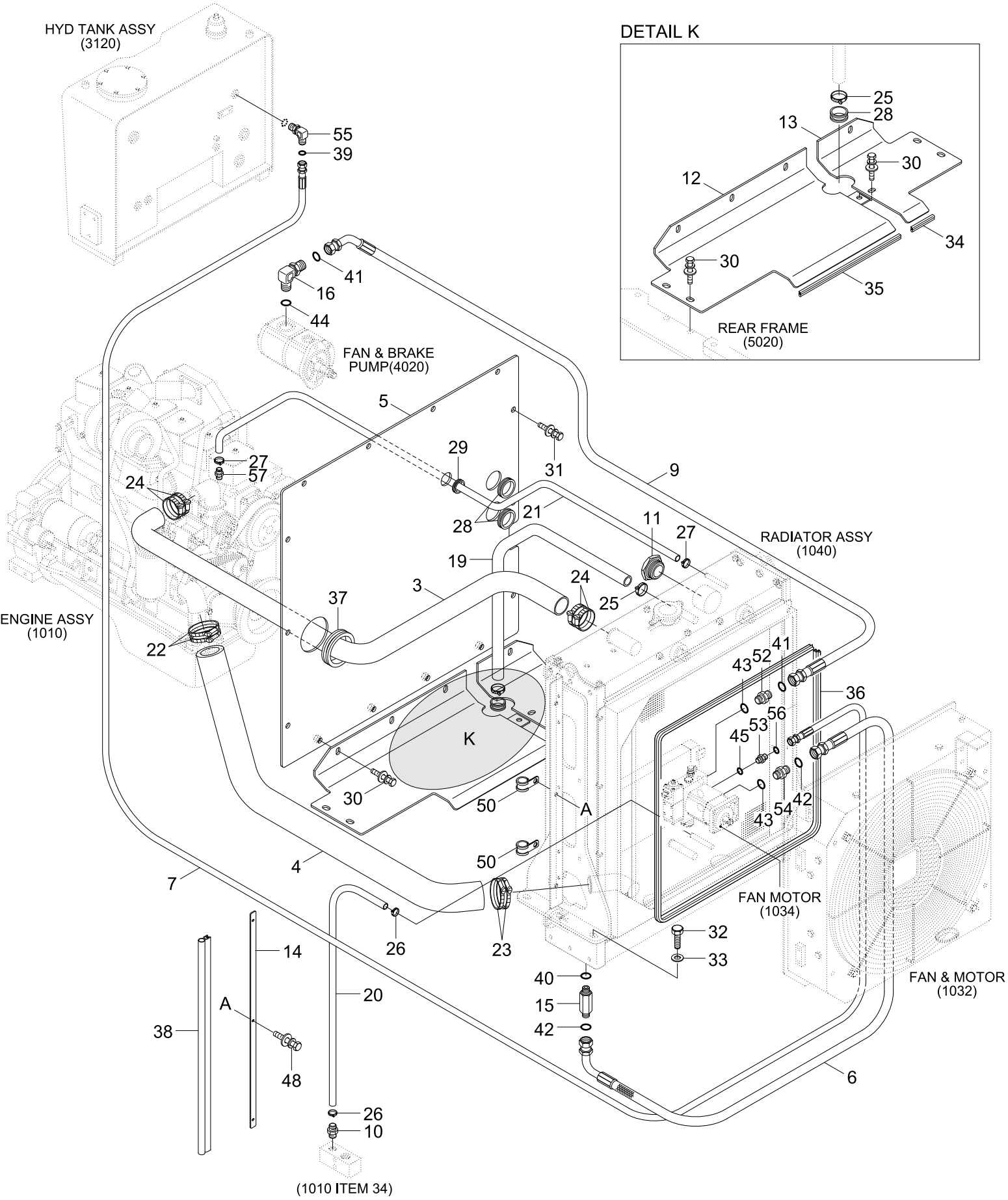

Item	Part_No	IS	Ord	T	Description	Qty	Serial_No	ITC	Remark
3	11LN-31010				HOSE-RUBBER LOW	1			
4	11LN-31020				HOSE-RUBBER LOW	1			
5	11LN-31030				SCREEN	1	- #0027		
	11LN-31031				SCREEN	1	#0028 -	D	
6	P930-122024				HOSE ASSY-ORFS 0X90	1			
7	P910-062063				HOSE ASSY-ORFS 0X0	1			
9	P920-084052				HOSE ASSY-ORFS 0X45	1			
10	P090-100808				CONNECTOR-HOSE	1			
11	14E7-01070				SIGHT GAUGE ASSY	1			
12	11LN-31310				SCREEN PLATE-LH	1			
13	11LN-31320				SCREEN PLATE-RH	1			
14	11LP-30430				SCREEN PLATE-LH	2			
15	X511-112546				CONNECTOR-LONG,ORFS	1			
16	11LF-30730				ELBOW-90	1			
19	P760-033130				HOSE-RUBBER LOW	1			
20	P760-021090				HOSE-RUBBER LOW	1			
21	P760-011103				HOSE-RUBBER LOW	1			
22	S572-750006				CLAMP-HOSE,WIRE TYPE	2			
23	S572-650006				CLAMP-HOSE,WIRE TYPE	2			
24	S572-600006				CLAMP-HOSE,WIRE TYPE	4			
25	S572-320006				CLAMP-HOSE,WIRE TYPE	2			
26	S572-220006				CLAMP-HOSE,WIRE TYPE	2			
27	S520-017000				CLAMP-HOSE	2			
28	S681-460400				GROMMET	3			
29	S681-290400				GROMMET	1			

Item	Part_No	IS	Ord	T	Description	Qty	Serial_No	ITC	Remark
30	S037-102056				BOLT-W/WASHER	9			
31	S037-122056				BOLT-W/WASHER	10			
32	S017-16035D				BOLT-HEX	6			
33	S441-160006				WASHER-HARDENED	6			
34	S772-000870				WEATHER STRIP	1			
35	S772-003800				WEATHER STRIP	1			
36	S771-030000				WEATHER STRIP	1			
37	S791-020032				GROMMET-PLATE	1			
38	S772-009000				WEATHER STRIP	2			
39	S631-018004				O-RING	1			
40	S631-024004				O-RING	1			
41	S621-014001				O-RING	2			
42	S621-018001				O-RING	2			
43	S611-016001				O-RING	2			
44	S611-023001				O-RING	2			
45	S611-009001				O-RING	1			
48	S035-082056				BOLT-W/WASHER	6			
49	P090-100808				CONNECTOR-HOSE	1			
50	S543-140002				CLAMP-TUBE	2			
52	X500-310003				CONNECTOR-ORFS	1			
53	11LM-30300				CONNECTOR	1			
54	11LC-30470				CONNECTOR-ORFS	1			
55	X520-110014				ELBOW-90,ORFS	1			
56	S621-012001				O-RING	2			
57	11N6-40230				CONNECTOR	1	#0001 -	-	

FAN & MOTOR ASSY

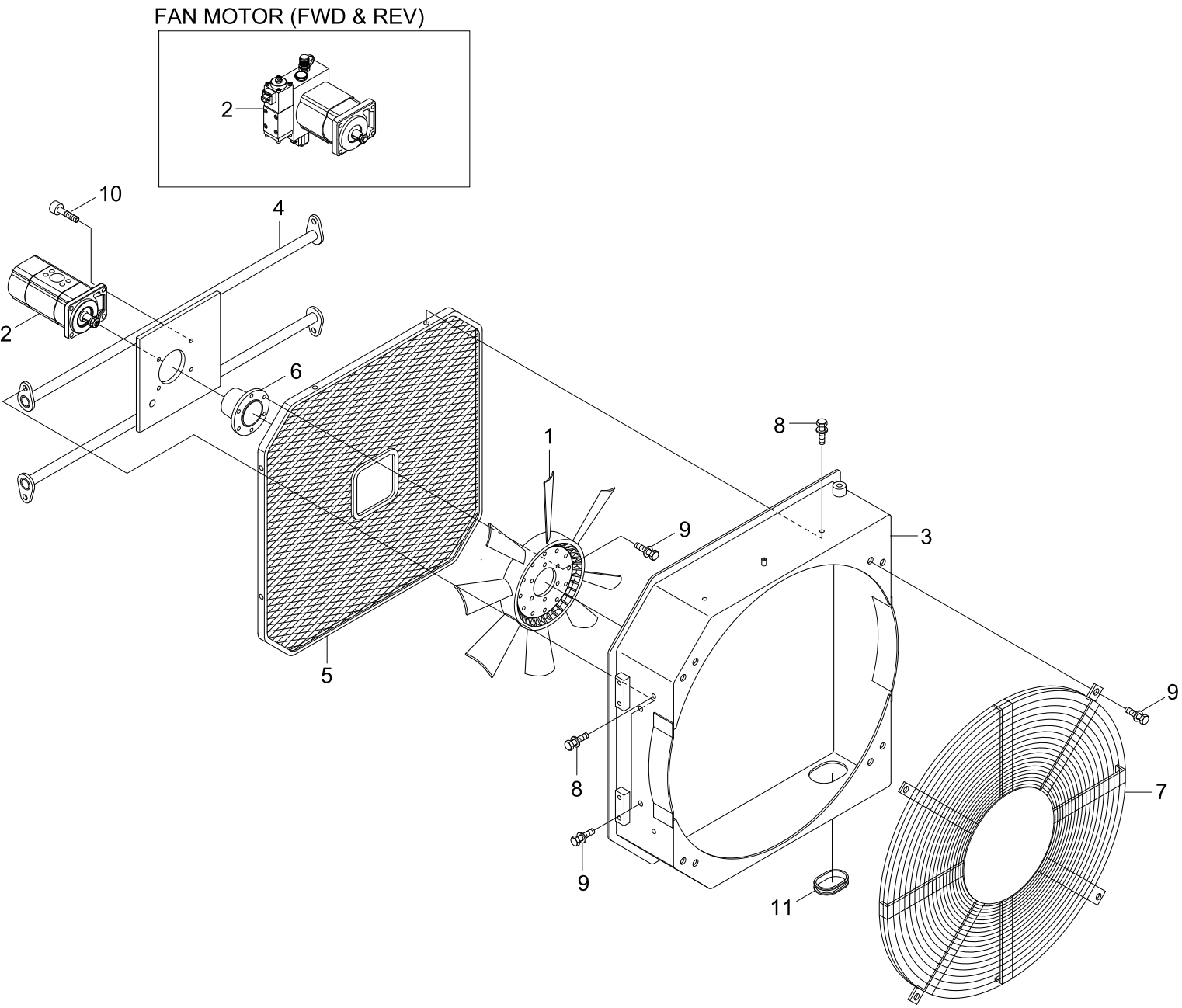

Item	Part_No	IS	Ord	T	Description	Qty	Serial_No	ITC	Remark
N*	11LP-30500				FAN & MOTOR ASSY	1			NOT
	11LP-30101				FAN & MOTOR ASSY	1			NOT
1	11LP-30950				.FAN-COOLING	1			
2	@				.MOTOR-FAN	1			NOT
3	11LP-30111				.SHROUD WA	1			
4	11LP-30120				.BRACKET WA	1			
5	11LP-30131				.FAN GUARD WA	1			
6	11LB-30180				.ADAPTER	1			
7	11LP-30353				.FAN GUARD WA-REAR	1			
8	S035-082026				.BOLT-W/WASHER	8			
9	S037-102056				.BOLT-W/WASHER	14			
10	S109-080256				.BOLT-SOCKET	4			
11	S760-021206				.GROMMET	1			
N	@				NOT SUPPLIED PARTS	AR			NOT

FAN MOTOR(FAN, FORWARD ONLY)

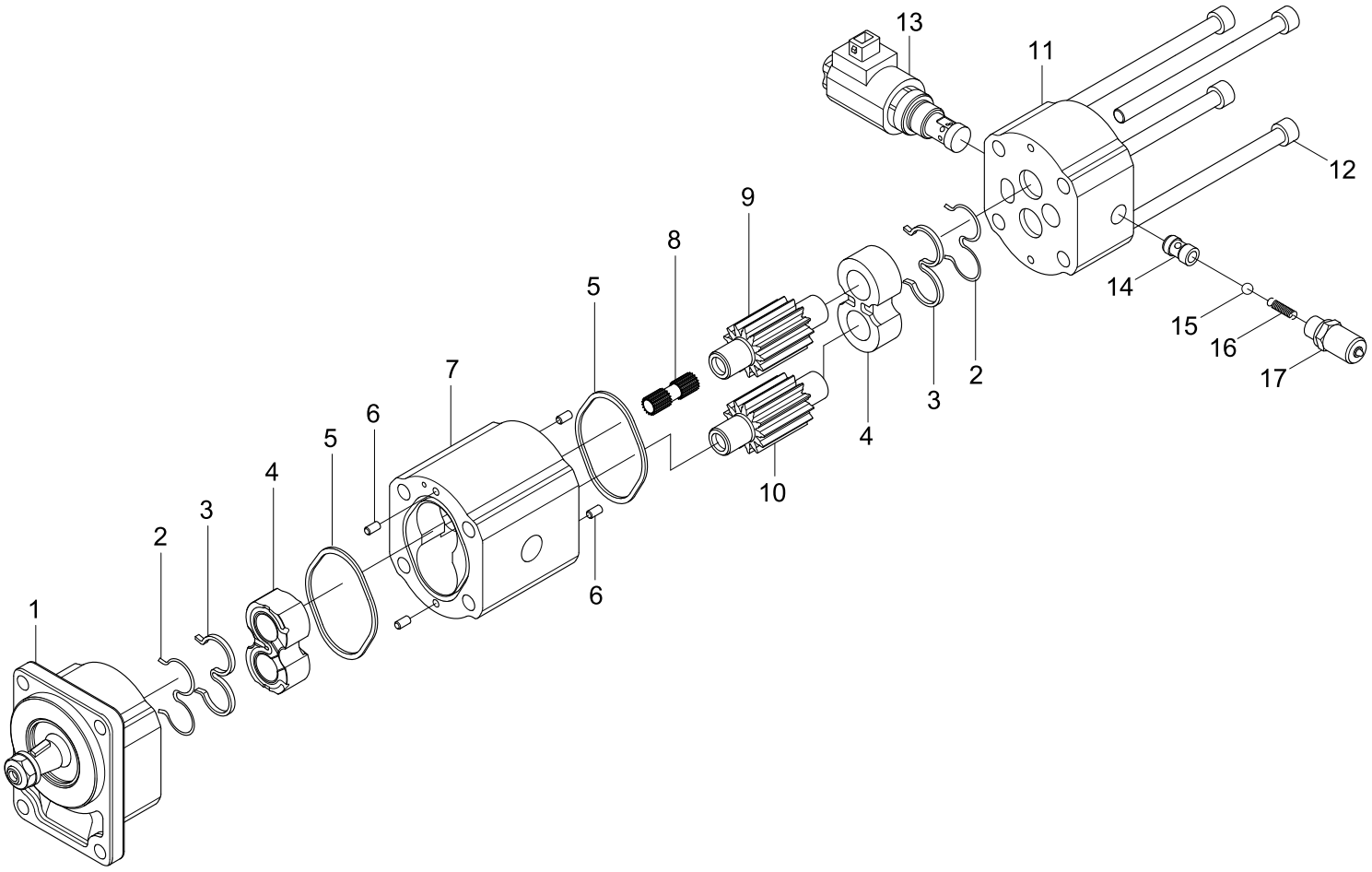

DESCRIPTION	PARTS NO	INCLUDED ITEM
SEAL KIT	ZGBL-00001	2, 3, 5

Item	Part_No	IS	Ord	T	Description	Qty	Serial_No	ITC	Remark
*	11LN-30060				FAN MOTOR-ONE DIR	1			
1	@				.FRONT BEARING	1			NOT
K2	@				.BACK UP RING	2			NOT
K3	@				.SEAL	2			NOT
4	@				.BEARING BLOCK	2			NOT
K5	@				.O-RING	2			NOT
6	@				.DOWEL PIN	4			NOT
7	@				.GEAR HOUSING	1			NOT
8	ZGBL-00008				.COUPLING	1			
9	@				.GEAR-DRIVE	1			NOT
10	@				.IDLER GEAR	1			NOT
11	@				.COVER	1			NOT
12	@				.BOLT	4			NOT
13	ZGBL-00003				.CARTRIDGE-RELIEF VALVE	1			
14	@				.VALVE SEAT	1			NOT
15	@				.BALL	1			NOT
16	@				.SPRING	1			NOT
17	@				.COUPLING-MEASURING	1			NOT
K	ZGBL-00001				SEAL KIT	1			SEE ILLUST

FAN MOTOR(FAN, FORWARD & REVERSE)

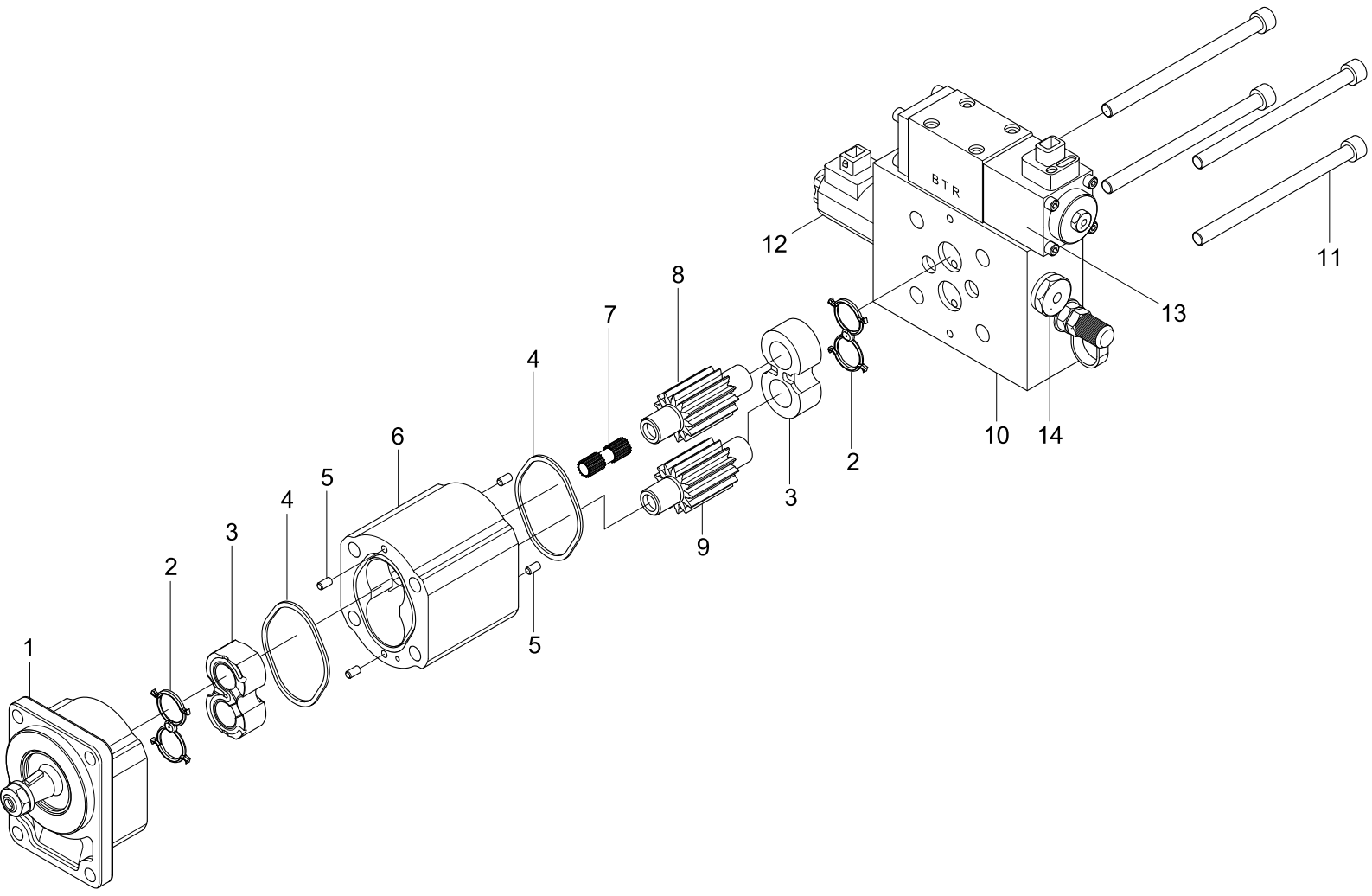

DESCRIPTION	PARTS NO	INCLUDED ITEM
SEAL KIT	ZGBL-00006	2, 4

Item	Part_No	IS	Ord	T	Description	Qty	Serial_No	ITC	Remark
*	11LN-30070				FAN MOTOR-BI DIR	1			
1	@				.FRONT BEARING	1			NOT
K2	@				.SEAL	2			NOT
3	@				.BEARING BLOCK	2			NOT
K4	@				.O-RING	2			NOT
5	@				.DOWEL PIN	4			NOT
6	@				.GEAR HOUSING	1			NOT
7	ZGBL-00008				.COUPLING	1			
8	@				.GEAR-DRIVE	1			NOT
9	@				.IDLER GEAR	1			NOT
10	@				.COVER	1			NOT
11	@				.BOLT	4			NOT
12	ZGBL-00003				.CARTRIDGE-RELIEF VALVE	1			
13	ZGBL-00004				.SOLENOID VALVE	1			
14	ZGBL-00005				.CARTRIDGE-CHECK VALVE	1			
K	ZGBL-00006				SEAL KIT	1			SEE ILLUST

RADIATOR TOTAL ASSY

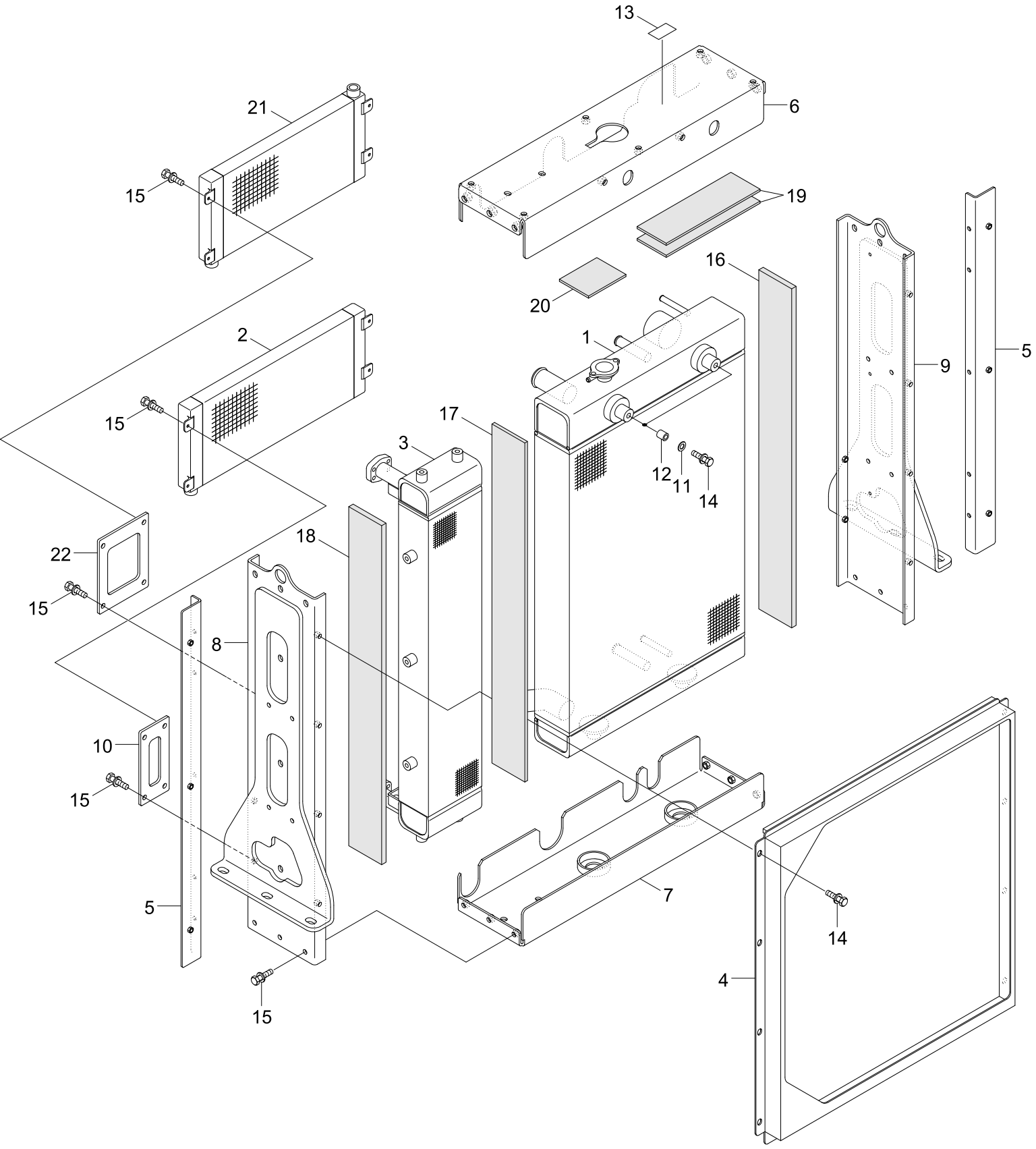

Item	Part_No	IS	Ord	T	Description	Qty	Serial_No	ITC	Remark
*	11LN-31201				RADIATOR TOTAL ASSY	1	- #0027		
	11LN-32200				RADIATOR TOTAL ASSY	1	#0028 -	D	
1	11LN-31210				.RADIATOR	1			
1-1	12101662				..CAP-RADIATOR	1			
2	11LN-30231				.HYD OIL COOLER ASSY	1	#0001 -	-	
3	11LF-31831				.T/M OIL COOLER ASSY	1			
4	11LN-31291				.SHROUD	1			
5	11LP-30431				.SCREEN PLATE-LH	2			
6	11LN-31260				.UPPER SUPPORT ASSY	1			
7	11LN-31250				.LOWER SUPPORT ASSY	1			
8	11LN-31280				.SUPPORT ASSY-RH,SIDE	1	- #0027		
	11LN-32260				.SUPPORT ASSY-RH,SIDE	1	#0028 -	D	
9	11LN-31270				.SUPPORT ASSY-LH,SIDE	1			
10	32303110				.BRACKET ASSY-HOC	1			
11	XKAP-00010				.WASHER	2			
12	XKAP-00035				.MOUNTING RUBBER	4			
13	45156121				.NAME PLATE	1			
14	XKAP-00036				.BOLT-ASM	14			
15	XKAP-00037				.BOLT-ASM	18	- #0027		
					.BOLT-ASM	28	#0028 -	A	
16	45510030				.AIR SEAL(45)	1			
17	45510040				.AIR SEAL	1			
18	45509040				.TOC SIDE SEAL	2			
19	XKAP-00023				.RAD CUSHION	2			
20	XKAP-00022				.RAD CUSHION	1			

Item	Part_No	IS	Ord	T	Description	Qty	Serial_No	ITC	Remark
21	11LN-32220				.T/M OIL COOLER ASSY	1	#0028 -	-	
22	11LN-32310				.PLATE-LH	1	#0028 -	-	

AIR INTAKE SYSTEM

PRECLEANER (OPTION)

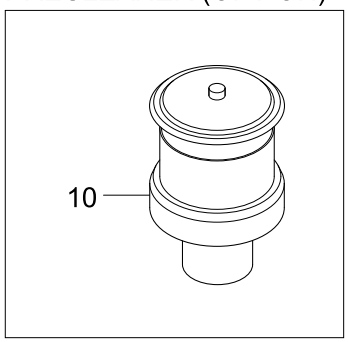

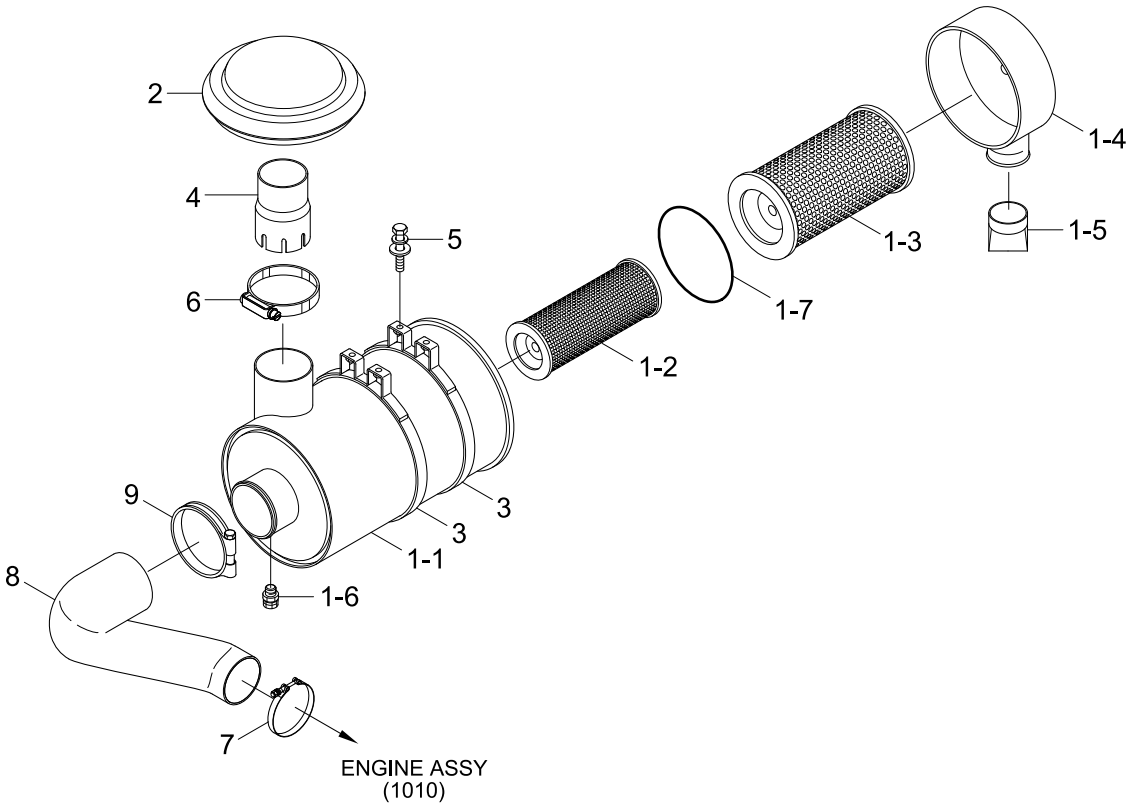

Item	Part_No	IS	Ord	T	Description	Qty	Serial_No	ITC	Remark
1	11LP-41000				AIR CLEANER ASSY	1			
N1-1	11N6-27020				.BODY ASSY	1			NOT
1-2	11N6-27030				.ELEMENT-SAFETY	1			
1-3	11N6-27040				.ELEMENT-PRIMARY	1			
1-4	11N6-27050				.COVER ASSY	1			
1-5	11N6-27060				.VALVE-VACUATOR	1			
1-6	11N6-27070				.NIPPLE-SENSOR	1			
1-7	P836767				.O-RING	1			
2	11LP-40020				CAP-AIR CLEANER	1			STD
3	11N6-27100				BAND-CLAMP WA	2			
4	11LP-40031				PIPE	1			
5	S035-084026				BOLT-W/WASHER	4			
6	11LB-40320				CLAMP-HOSE	1			
7	11U2-40190				CLAMP-T-RETENTION	1			
8	11LN-40200				HOSE-AIR CLEANER	1			
9	11LB-40220				CLAMP-T BOLT	1			
10	11N8-20181				PRECLEANER	1			PRECLEANER

EXHAUST SYSTEM

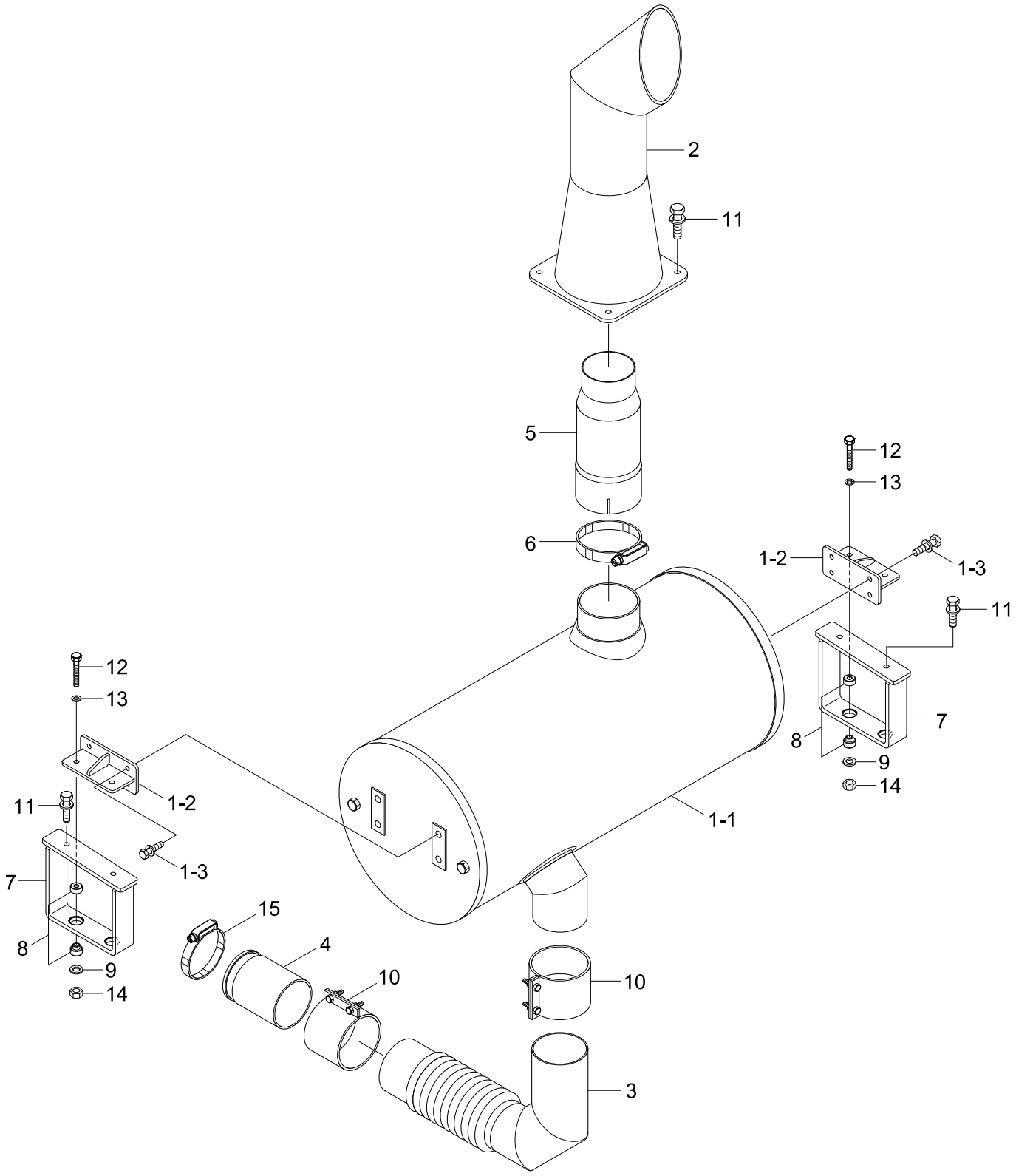

Item	Part_No	IS	Ord	T	Description	Qty	Serial_No	ITC	Remark
1	11LM-50100				MUFFLER ASSY	1			
1-1	11LM-50110				.MUFFLER SUB ASSY	1			
1-2	11LM-50300				.BRACKET	2			
1-3	S037-122556				.BOLT-W/WASHER	8			
2	11LB-50090				PIPE WA-TAIL	1			
3	11LM-50041				PIPE WA	1			
4	11LN-50290				PIPE WA-EXHAUST	1			
5	11LM-50050				PIPE-REDUCER	1			
6	11LB-40180				CLAMP-HOSE	1			
7	11LN-50160				BRACKET WA	2			
8	11LK-88500				MOUNT-RUBBER	4			
9	11L7-30070				WASHER	4			
10	11LM-50090				CLAMP ASSY-SEAL	2			
11	S037-123056				BOLT-W/WASHER	8			
12	S017-120856				BOLT-HEX	4			
13	S441-12000B				WASHER-HARDENED	4			
14	S205-12100B				NUT-HEX	4			
15	XS9254				CLAMP	1			

AIRCON & HEATER MOUNTING

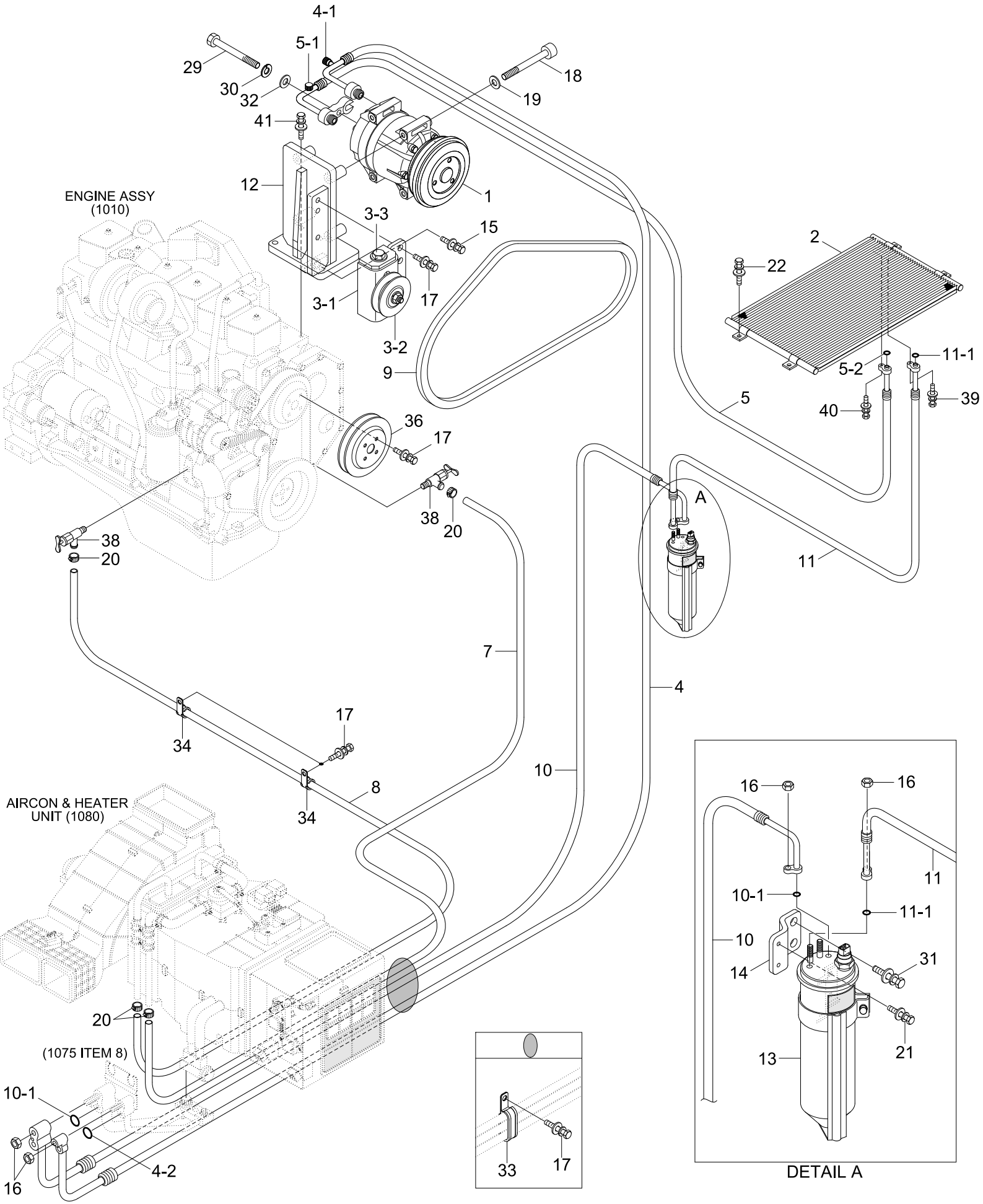

Item	Part_No	IS	Ord	T	Description	Qty	Serial_No	ITC	Remark
1	11Q6-90040				COMPRESSOR ASSY	1			
2	11LM-90200				CONDENSER ASSY	1			
3	11N6-90110				PULLEY-IDLE	1			
3-1	A4760-508-00-2				.BRACKET-PULLEY	1			
3-2	A4700-511-01-2				.PULLEY-IDLE	1			INCL 3-3
3-3	A8900-518-03-3				..BOLT-TENSION	1			
4	11LN-90341				HOSE-SUCTION	1			
4-1	A304300401Z4				.CAP-CHARGE VALVE L	1			
4-2	A305000203-2				.O-RING	1			
5	11LM-90410				HOSE-DISCHARGE	1			
5-1	A304300301Z4				.CAP-CHARGE VALVE H	1			
5-2	A305000205-2				.O-RING	1			
7	11LN-90331				HOSE-HEATER	1			
8	11LN-90320				HOSE-HEATER	1			
9	11N4-94010				V-BELT	1			
10	11LN-90311				HOSE-LIQUID(B)	1			
10-1	A305000209-2				.O-RING	2			
11	11LM-90311				HOSE-LIQUID(A)	1			
11-1	A305000209-2				.O-RING	2			
12	11LM-90401				BRACKET WA	1			
13	11LM-90350				RECEIVER DRIER ASSY	1			
14	11LN-90300				BRACKET WA	1			
15	S037-104056				BOLT-W/WASHER	1			
16	S285-06100B				NUT-FLANGED	4			
17	S037-102556				BOLT-W/WASHER	10			

Item	Part_No	IS	Ord	T	Description	Qty	Serial_No	ITC	Remark
18	S109-080956				BOLT-SOCKET	4			
19	S403-08200B				WASHER-PLAIN	4			
20	S520-027000				CLAMP-HOSE	4			
21	S035-061526				BOLT-W/WASHER	2			
22	S035-082556				BOLT-W/WASHER	4			
29	S018-100356				BOLT-HEX	1			
30	S411-100006				WASHER-SPRING	1			
31	S037-122556				BOLT-W/WASHER	2			
32	S403-10200B				WASHER-PLAIN	1			
33	31L7-10270				CLAMP-TUBE	1			
34	31L7-10200				CLAMP-TUBE	2			
36	3919624				PULLEY-ACCESSORY DRV	1			
38	14L1-01350				VALVE-HEATER	2			
39	S035-063026				BOLT-W/WASHER	1			
40	S035-083026				BOLT-W/WASHER	1			
41	S037-103056				BOLT-W/WASHER	3			

AIRCON & HEATER CAB SUB

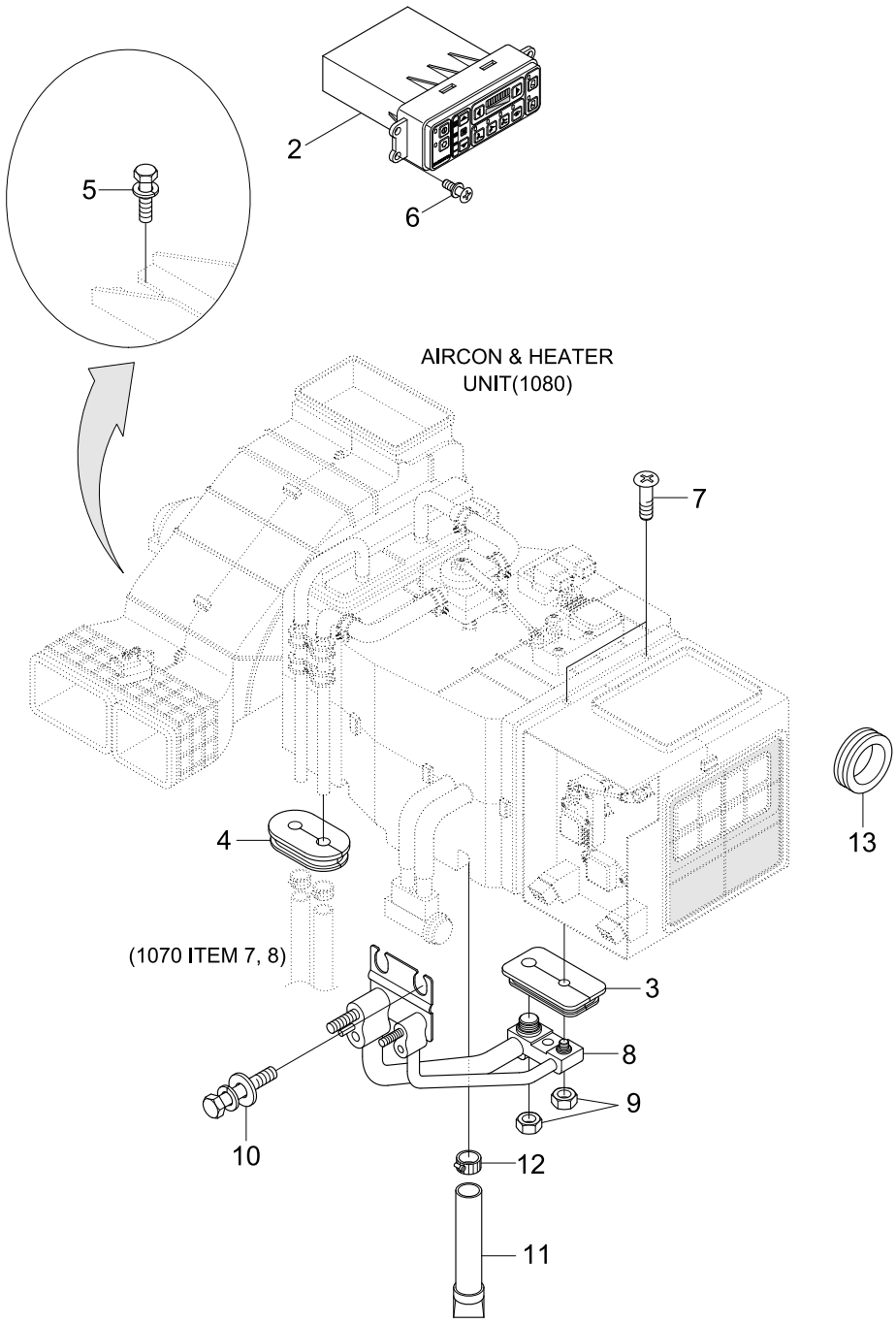

Item	Part_No	IS	Ord	T	Description	Qty	Serial_No	ITC	Remark
2	11LM-90070				CONTROL ASSY(FATC)	1			
3	11Q6-90430				GROMMET	1			
4	11Q6-90440				GROMMET	1			
5	S037-122056				BOLT-W/WASHER	4			
6	S131-052046				SCREW-W/WASHER	4			
7	S151-040126				SCREW-TAPPING	4			
8	11LM-96050				PIPE ASSY-AIRCON	1			
9	S285-08100B				NUT-FLANGED	1			
10	S037-102056				BOLT-W/WASHER	2			
11	11EK-92130				HOSE-DRAIN	1			
12	S520-020000				CLAMP-HOSE	1			
13	S681-190400				GROMMET	1			

AIRCON & HEATER UNIT

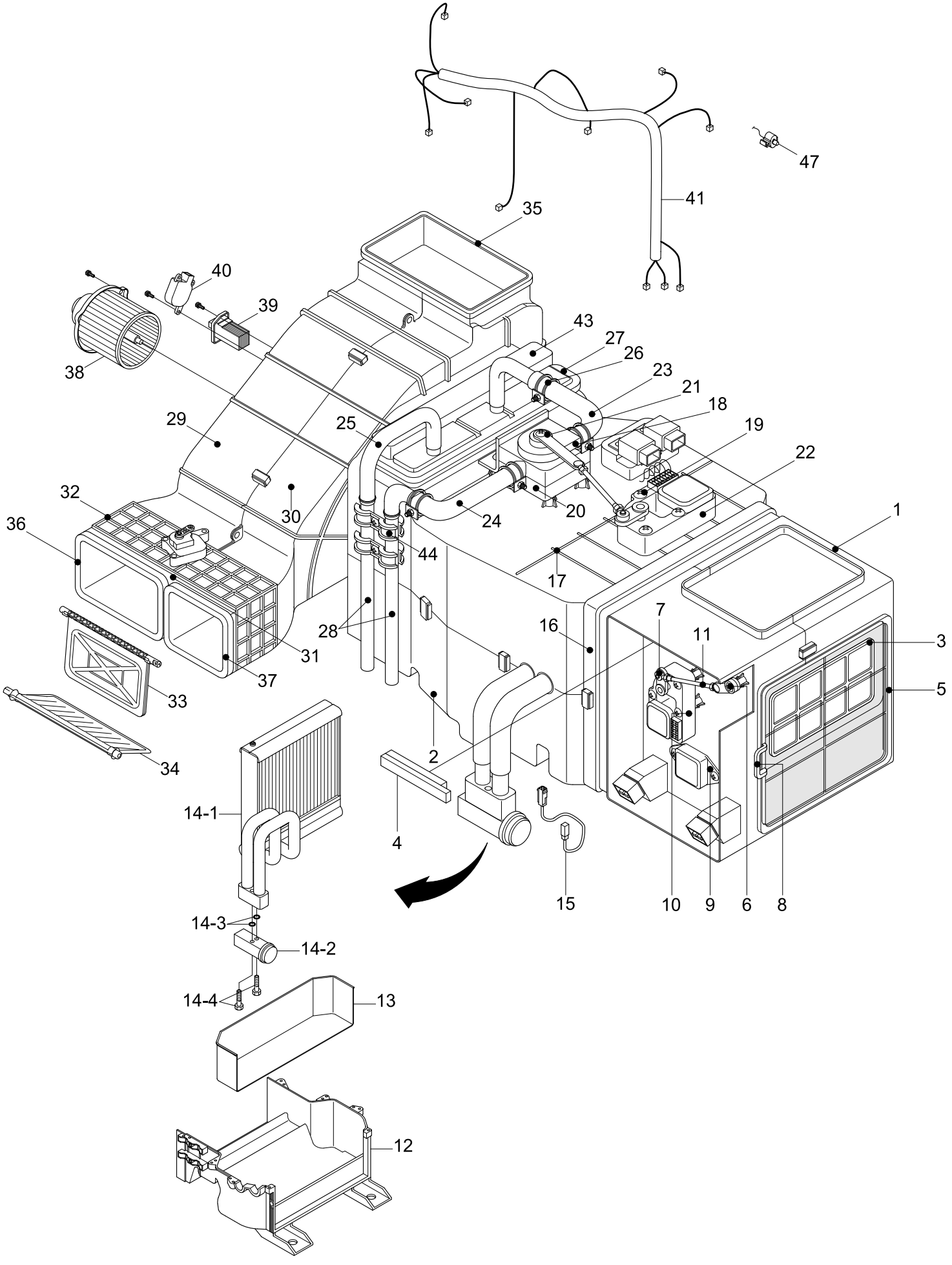

Item	Part_No	IS	Ord	T	Description	Qty	Serial_No	ITC	Remark
*	11LM-90042				FATC UNIT	1			FATC
	11LM-96031				FATC UNIT-W/APTC	1			APTC
1	AH002686				.CASE-UPPER,INTAKE	1			
N2	AM13200100-0				.CASE-LOWER,INTAKE	1			NOT
N3	AM47000200-2				.DAMPER ASSY-INTAKE	1			NOT
4	AM70003600-3				.SEAL-FILTER,FRESH	1			
5	11N6-90770				.AIR FILTER-REFRESH	1			
N6	AH54100100-3				.LEVER-DEF	1			NOT
7	3AH0705				.ROD-CLAMP	1			
8	4AH0688				.CLIP-CASE	4			
9	AH001617				.SEAL-SPONGE	1			
10	11Q6-90570				.MOTOR ACT-INTAKE	1			
11	AM52300100-4				.ROD-INTAKE	1			
12	AH002402				.HVAC CASE-LOW	1			
13	AH002463				.HVAC INSULATION-LOW	1			
14	11Q6-90560				.CORE ASSY-EVAP	1			
14-1	A1W00864				..CORE-EVAP	1			
14-2	11Q6-90551				..VALVE-EXPANSION	1			
14-3	A305000214-2				..O-RING	2			
14-4	A1W00837				..BOLT-TXV	2			
15	AH100730				.THERMISTOR	1			
N16	AH002401				.HVAC CASE-UPP	1			NOT
16	AH002680				.HVAC CASE-UPP	1			APTC
17	4AH0643				.HOLDER-WIRE	5			
18	11N6-90820				.RELAY	1			

Item	Part_No	IS	Ord	T	Description	Qty	Serial_No	ITC	Remark
19	AH000865				.SCREW	70			
20	AH001160				.VLAVE-WATER	1			
21	AH000559				.ROD-TEMP	1			
22	AH100656				.MOTOR ACT ASSY-TEMP	1			
23	AH001287				.HOSE-INLET,WATER	1			
24	AH002411				.HOSE-INLET,WATER	1			
25	AH002412				.HOSE-OUTLET,WATER	1			
26	AH001853				.CLAMP-WATER HOSE	6			
27	11Q6-90540				.HEATER SET-RAD	1			
28	AH002410				.PIPE-INLET/OUTLET	2			
29	AH002892				.CASE-BLOWER,LH	1			
30	AH002406				.CASE-BLOWER,RH	1			
31	AH002512				.CASE-BLOWER,LOW	1			
32	AH002513				.CASE-BLOWER,UPP	1			
N33	AH002407				.DOOR ASSY-VENT	1			NOT
34	AH002514				.DOOR ASSY-F/D	1			
35	AW80000303-3				.SEAL-SPONGE A	2			
36	AW80000305-3				.SEAL-SPONGE B	1			
37	AW80000306-3				.SEAL-SPONGE C	1			
38	11N6-90700				.FAN & MOTOR	1			
39	11Q6-90530				.FET	1			
40	11Q6-90520				.MOTOR ACT ASSY-VENT DF	2			
41	11LM-90240				.WIRING ASSY-FATC	1			
43	AH100774				.APTC ASSY	1			APTC ONLY
44	AH000314				.CLAMP-H/RAD PIPE	2			

Item	Part_No	IS	Ord	T	Description	Qty	Serial_No	ITC	Remark
47	11N6-90890				.SENSOR-TEMP	2			
N	@				NOT SUPPLIED PARTS	AR			NOT

AIR CONDITIONER MOUNTING

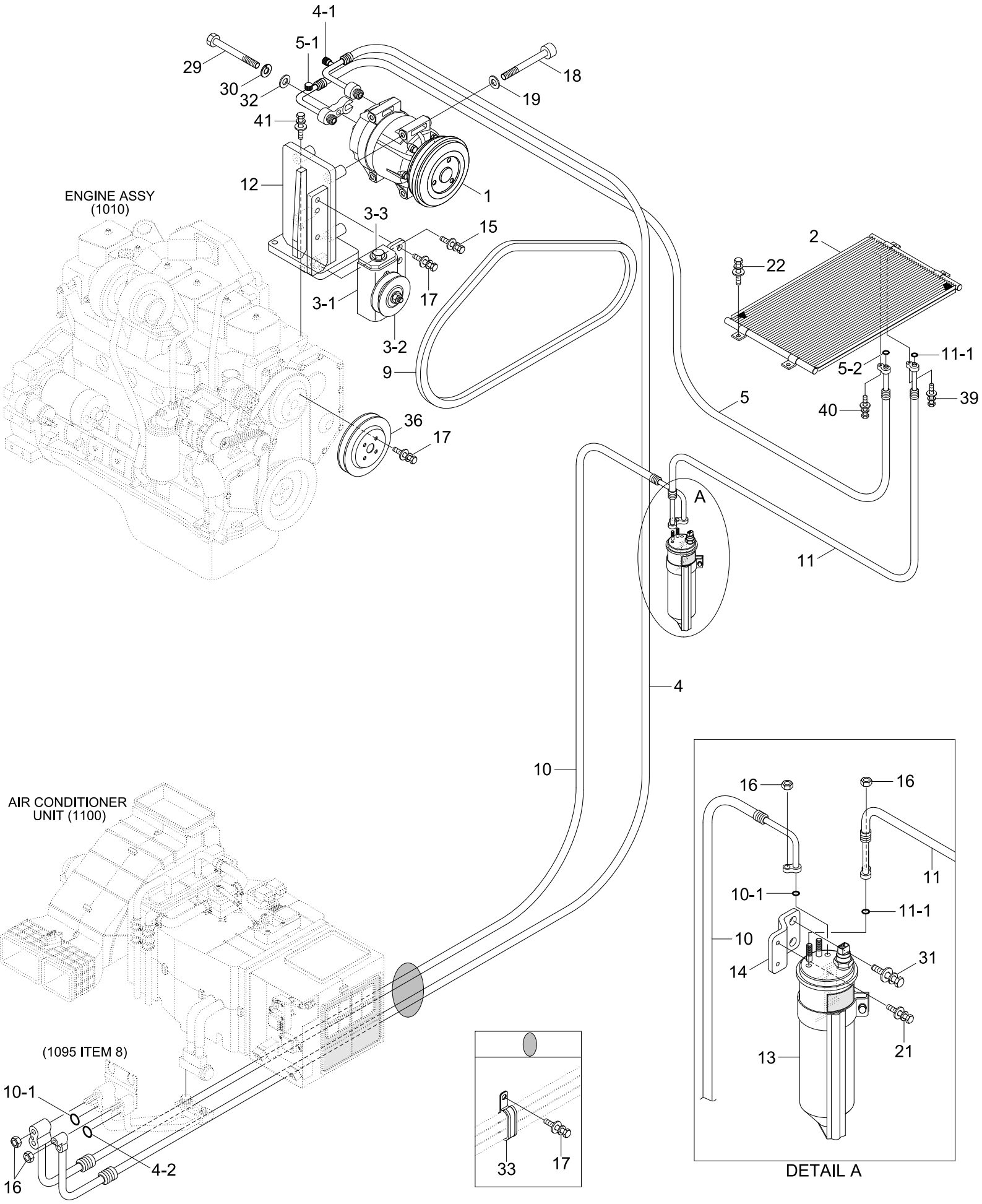

Item	Part_No	IS	Ord	T	Description	Qty	Serial_No	ITC	Remark
1	11Q6-90040				COMPRESSOR ASSY	1			
2	11LM-90200				CONDENSER ASSY	1			
3	11N6-90110				PULLEY-IDLE	1			
3-1	A4760-508-00-2				.BRACKET-PULLEY	1			
3-2	A4700-511-01-2				.PULLEY-IDLE	1			INCL 3-3
3-3	A8900-518-03-3				..BOLT-TENSION	1			
4	11LN-90341				HOSE-SUCTION	1			
4-1	A304300401Z4				.CAP-CHARGE VALVE L	1			
4-2	A305000203-2				.O-RING	1			
5	11LM-90410				HOSE-DISCHARGE	1			
5-1	A304300301Z4				.CAP-CHARGE VALVE H	1			
5-2	A305000205-2				.O-RING	1			
9	11N4-94010				V-BELT	1			
10	11LN-90311				HOSE-LIQUID(B)	1			
10-1	A305000209-2				.O-RING	1			
11	11LM-90311				HOSE-LIQUID(A)	1			
11-1	A305000209-2				.O-RING	1			
12	11LM-90401				BRACKET WA	1			
13	11LM-90350				RECEIVER DRIER ASSY	1			
14	11LN-90300				BRACKET WA	1			
15	S037-104056				BOLT-W/WASHER	1			
16	S285-06100B				NUT-FLANGED	4			
17	S037-102556				BOLT-W/WASHER	8			
18	S109-080956				BOLT-SOCKET	4			
19	S403-08200B				WASHER-PLAIN	4			

Item	Part_No	IS	Ord	T	Description	Qty	Serial_No	ITC	Remark
21	S035-061526				BOLT-W/WASHER	2			
22	S035-082556				BOLT-W/WASHER	4			
29	S018-100356				BOLT-HEX	1			
30	S411-100006				WASHER-SPRING	1			
31	S037-122556				BOLT-W/WASHER	2			
32	S403-10200B				WASHER-PLAIN	1			
33	31L7-10270				CLAMP-TUBE	1			
36	3919624				PULLEY-ACCESSORY DRV	1			
39	S035-063026				BOLT-W/WASHER	1			
40	S035-083026				BOLT-W/WASHER	1			
41	S037-103056				BOLT-W/WASHER	3			

AIR CONDITIONER CAB SUB

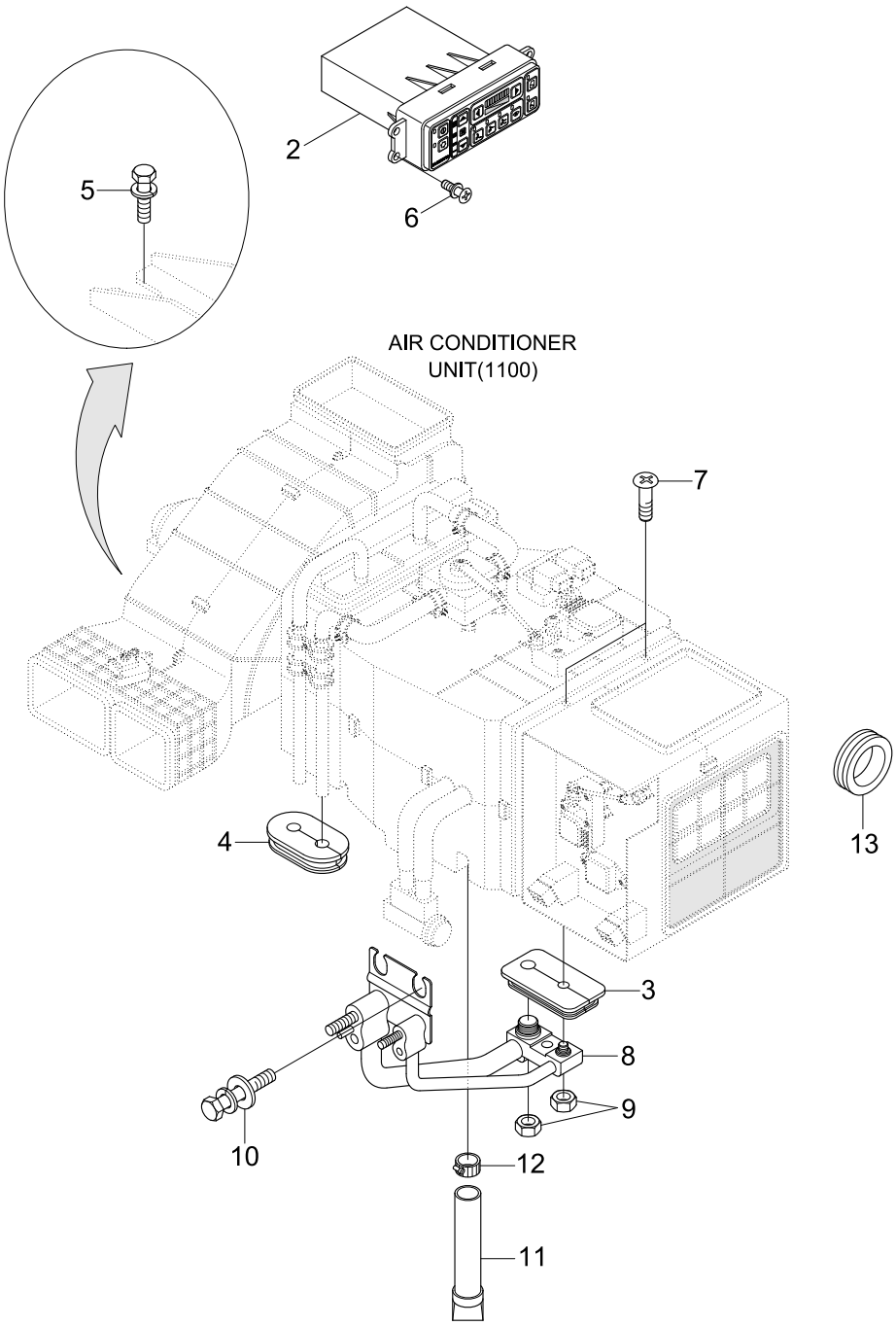

Item	Part_No	IS	Ord	T	Description	Qty	Serial_No	ITC	Remark
2	11LM-90080				CONTROL ASSY	1			
3	11Q6-90430				GROMMET	1			
4	11Q6-90440				GROMMET	1			
5	S037-122056				BOLT-W/WASHER	4			
6	S131-052046				SCREW-W/WASHER	4			
7	S151-040126				SCREW-TAPPING	4			
8	11LM-96050				PIPE ASSY-AIRCON	1			
9	S285-08100B				NUT-FLANGED	1			
10	S037-102056				BOLT-W/WASHER	2			
11	11EK-92130				HOSE-DRAIN	1			
12	S520-020000				CLAMP-HOSE	1			
13	S681-190400				GROMMET	1			

AIR CONDITIONER UNIT

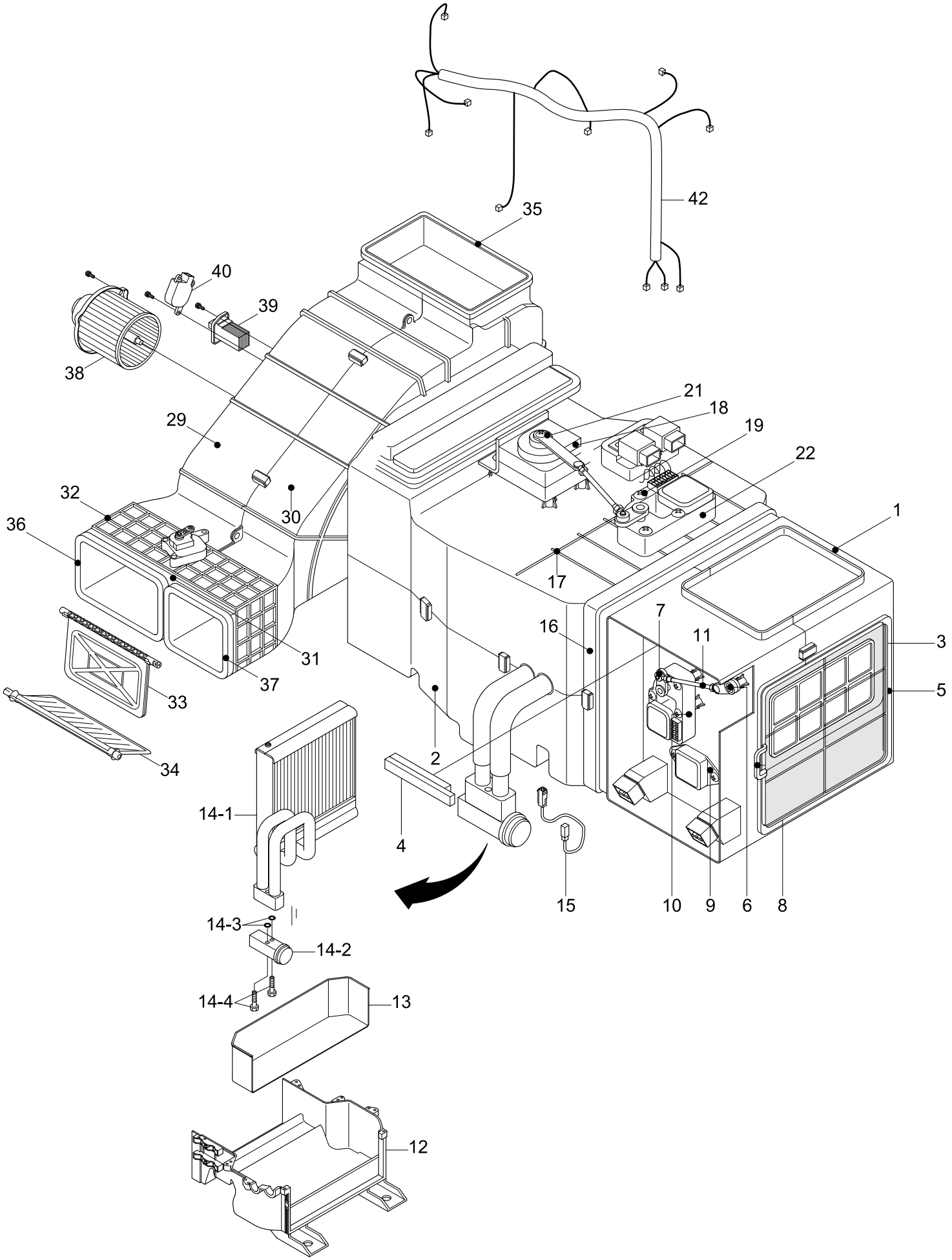

Item	Part_No	IS	Ord	T	Description	Qty	Serial_No	ITC	Remark
*	11LM-90052				AIRCON UNIT	1			
1	AH002686				.CASE-UPPER,INTAKE	1			
N2	AM13200100-0				.CASE-LOWER,INTAKE	1			NOT
N3	AM47000200-2				.DAMPER ASSY-INTAKE	1			NOT
4	AM70003600-3				.SEAL-FILTER,FRESH	1			
5	11N6-90770				.AIR FILTER-REFRESH	1			
N6	AH54100100-3				.LEVER-DEF	1			NOT
7	3AH0705				.ROD-CLAMP	1			
8	4AH0688				.CLIP-CASE	4			
9	AH001617				.SEAL-SPONGE	1			
10	11Q6-90570				.MOTOR ACT-INTAKE	1			
11	AM52300100-4				.ROD-INTAKE	1			
12	AH002402				.HVAC CASE-LOW	1			
13	AH002463				.HVAC INSULATION-LOW	1			
14	11Q6-90560				.CORE ASSY-EVAP	1			
14-1	A1W00864				..CORE-EVAP	1			
14-2	11Q6-90551				..VALVE-EXPANSION	1			
14-3	A305000214-2				..O-RING	2			
14-4	A1W00837				..BOLT-TXV	2			
15	AH100730				.THERMISTOR	1			
16	AH002565				.HVAC CASE-UPP	1			
17	4AH0643				.HOLDER-WIRE	5			
18	11N6-90820				.RELAY	1			
19	AH000865				.SCREW	54			
29	AH002892				.CASE-BLOWER,LH	1			

Item	Part_No	IS	Ord	T	Description	Qty	Serial_No	ITC	Remark
30	AH002406				.CASE-BLOWER,RH	1			
31	AH002512				.CASE-BLOWER,LOW	1			
32	AH002513				.CASE-BLOWER,UPP	1			
N33	AH002407				.DOOR ASSY-VENT	1			NOT
34	AH002514				.DOOR ASSY-F/D	1			
35	AW80000303-3				.SEAL-SPONGE A	2			
36	AW80000305-3				.SEAL-SPONGE B	1			
37	AW80000306-3				.SEAL-SPONGE C	1			
38	11N6-90700				.FAN & MOTOR	1			
39	11Q6-90530				.FET	1			
40	11Q6-90520				.MOTOR ACT ASSY-VENT DF	2			
42	11LM-90250				.WIRING ASSY-SATC	1			
N	@				NOT SUPPLIED PARTS	AR			NOT

HEATER MOUNTING

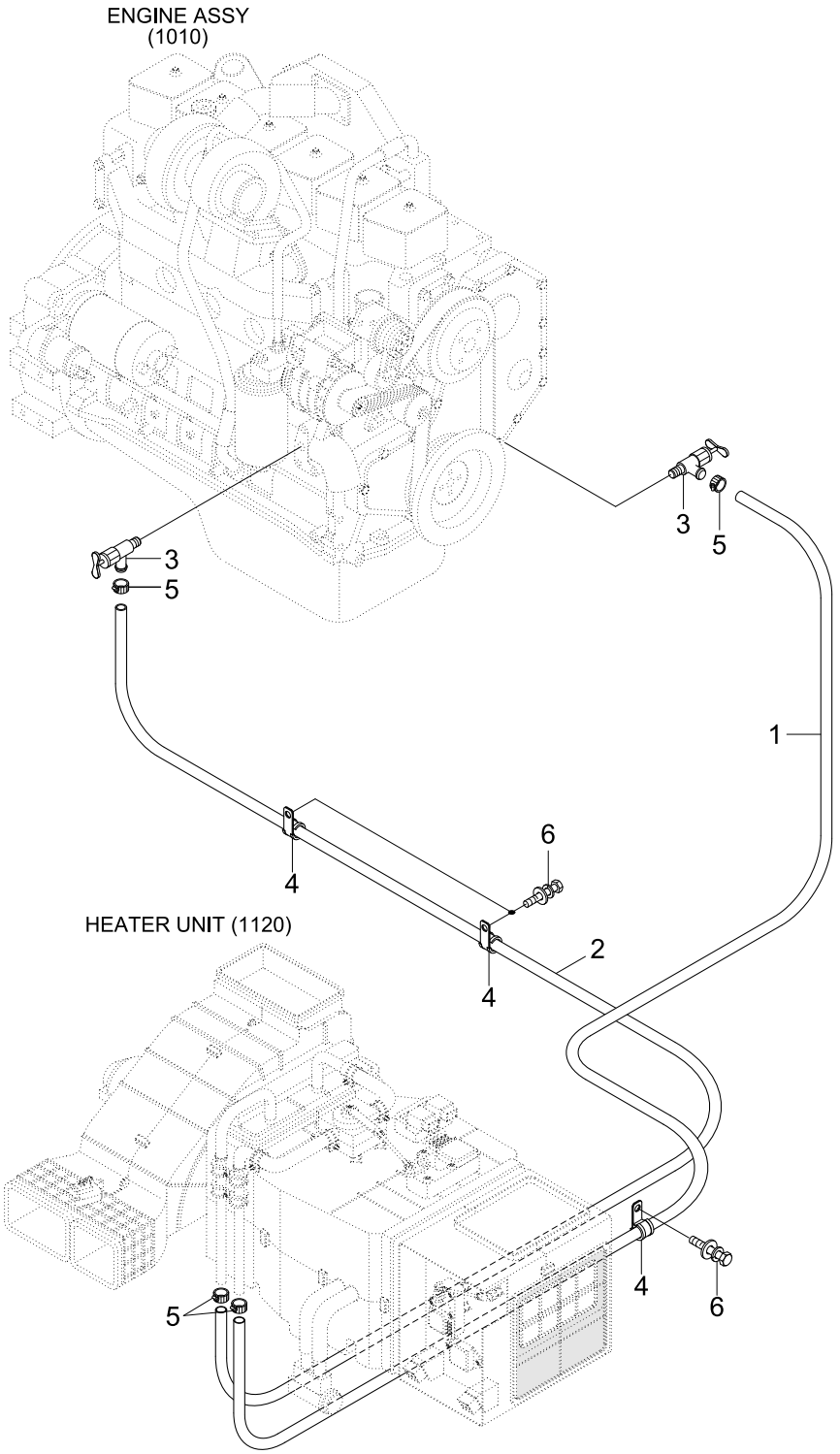

Item	Part_No	IS	Ord	T	Description	Qty	Serial_No	ITC	Remark
1	11LN-90331				HOSE-HEATER	1			
2	11LN-90320				HOSE-HEATER	1			
3	14L1-01350				VALVE-HEATER	2			
4	31L7-10200				CLAMP-TUBE	3			
5	S520-027000				CLAMP-HOSE	4			
6	S037-102556				BOLT-W/WASHER	3			

HEATER CAB SUB

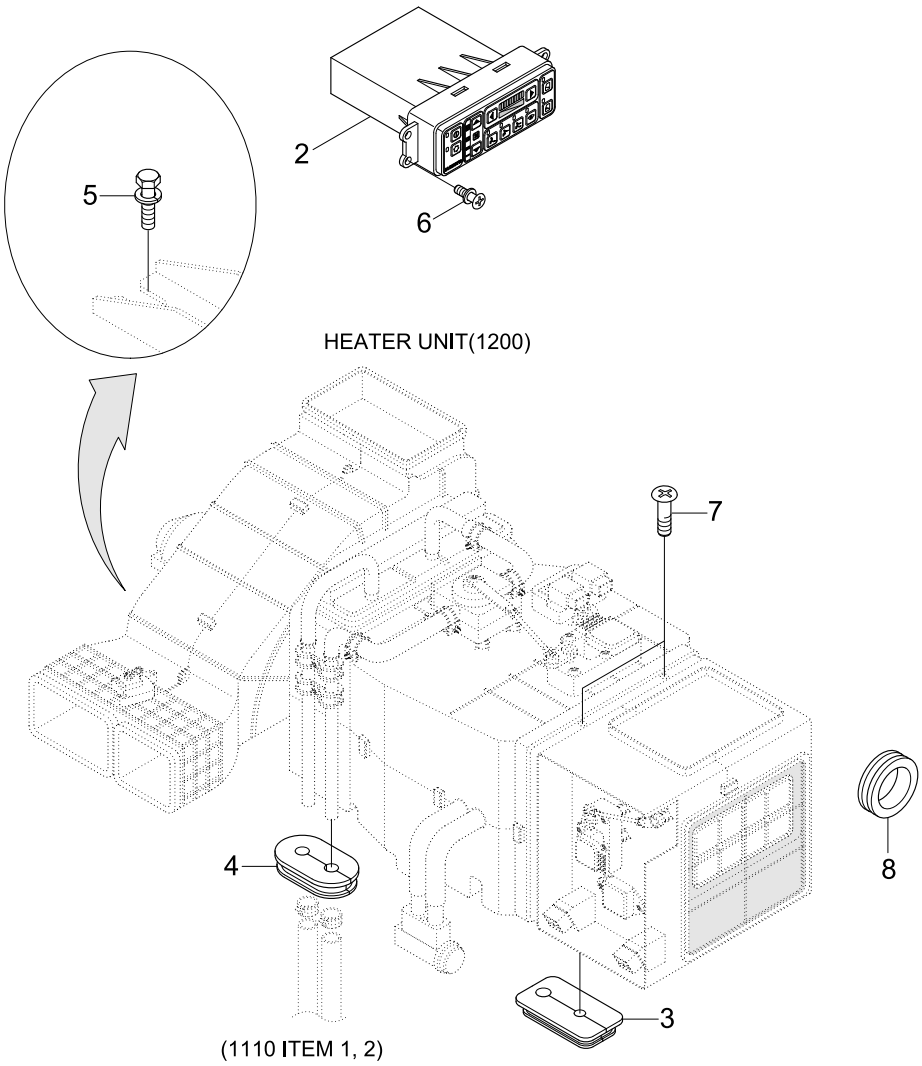

Item	Part_No	IS	Ord	T	Description	Qty	Serial_No	ITC	Remark
2	11LM-90090				CONTROL ASSY(H/T ONLY)	1			
3	11Q6-90430				GROMMET	1			
4	11Q6-90440				GROMMET	1			
5	S037-122056				BOLT-W/WASHER	4			
6	S131-052046				SCREW-W/WASHER	4			
7	S151-040126				SCREW-TAPPING	4			
8	S661-250400				CAP-RUBBER	1			

HEATER UNIT

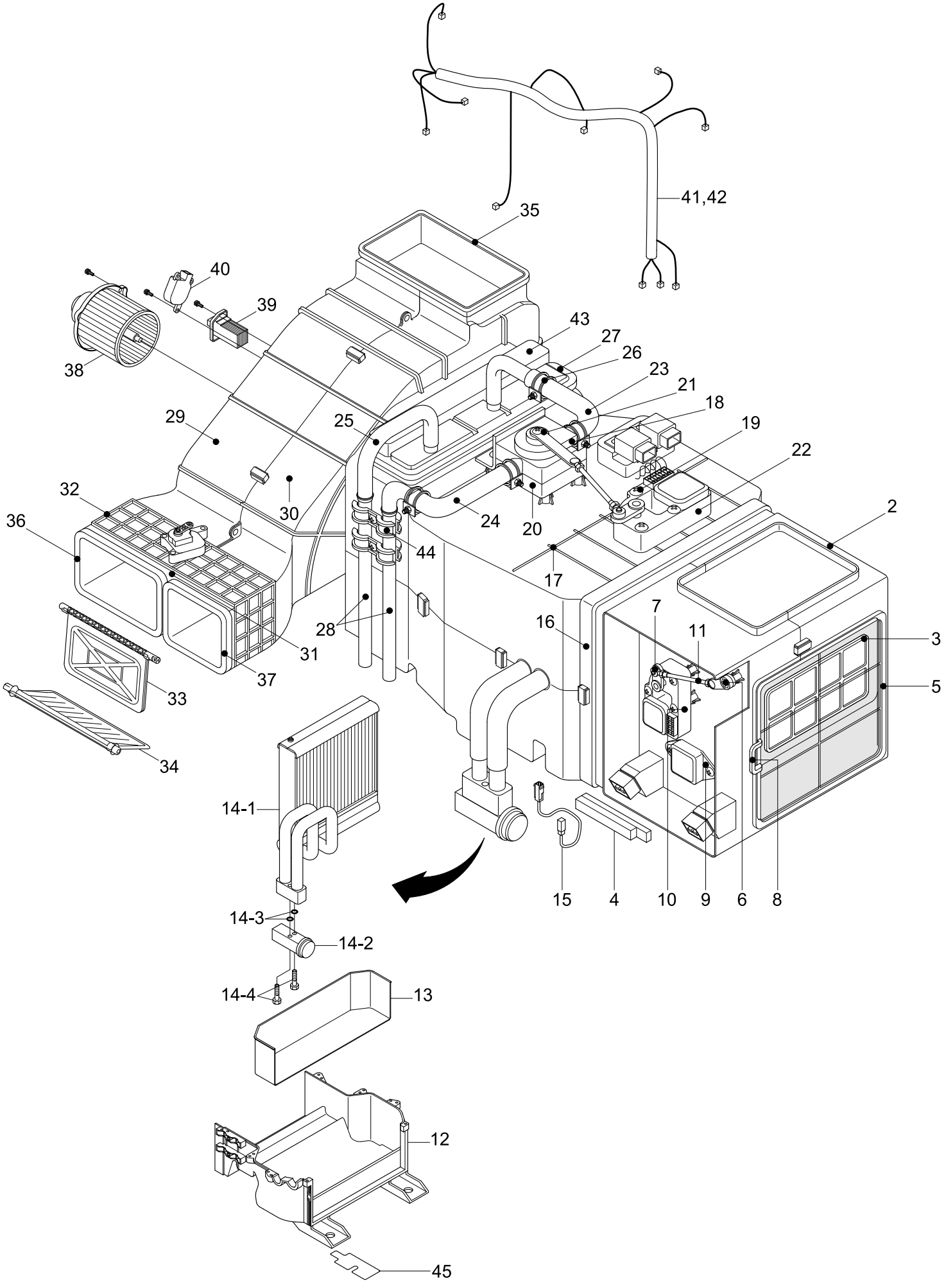
41,42
35
40
39
38
43
27
26
23
21
18
19
22
29
25
32
30
24
20
2
36
44
17
28
16
7
11
3
31
37
33
5
34
14-1
15
4
10
9
6
8
14-3
14-2
14-4
13
12
45

Item	Part_No	IS	Ord	T	Description	Qty	Serial_No	ITC	Remark
*	11LM-90062				HEATER UNIT	1			FATC
	11LM-96041				HEATER UNIT-W/APTC	1			APTC
1	AH002686				.CASE-UPPER,INTAKE	1			
N2	AM13200100-0				.CASE-LOWER,INTAKE	1			NOT
N3	AM47000200-2				.DAMPER ASSY-INTAKE	1			NOT
4	AM70003600-3				.SEAL-FILTER,FRESH	1			
5	11N6-90770				.AIR FILTER-REFRESH	1			
N6	AH54100100-3				.LEVER-DEF	1			NOT
7	3AH0705				.ROD-CLAMP	1			
8	4AH0688				.CLIP-CASE	4			
9	AH001617				.SEAL-SPONGE	1			
10	11Q6-90570				.MOTOR ACT-INTAKE	1			
11	AM52300100-4				.ROD-INTAKE	1			
12	AH002402				.HVAC CASE-LOW	1			
N16	AH002401				.HVAC CASE-UPP	1			NOT
16	AH002680				.HVAC CASE-UPP	1			APTC
17	4AH0643				.HOLDER-WIRE	5			
18	11N6-90820				.RELAY	1			
19	AH000865				.SCREW	61			
20	AH001160				.VLAVE-WATER	1			
21	AH000559				.ROD-TEMP	1			
22	AH100656				.MOTOR ACT ASSY-TEMP	1			
23	AH001287				.HOSE-INLET,WATER	1			
24	AH002411				.HOSE-INLET,WATER	1			
25	AH002412				.HOSE-OUTLET,WATER	1			

Item	Part_No	IS	Ord	T	Description	Qty	Serial_No	ITC	Remark
26	AH001853				.CLAMP-WATER HOSE	6			
27	11Q6-90540				.HEATER SET-RAD	1			
28	AH002410				.PIPE-INLET/OUTLET	2			
29	AH002892				.CASE-BLOWER,LH	1			
30	AH002406				.CASE-BLOWER,RH	1			
31	AH002512				.CASE-BLOWER,LOW	1			
32	AH002513				.CASE-BLOWER,UPP	1			
N33	AH002407				.DOOR ASSY-VENT	1			NOT
34	AH002514				.DOOR ASSY-F/D	1			
35	AW80000303-3				.SEAL-SPONGE A	2			
36	AW80000305-3				.SEAL-SPONGE B	1			
37	AW80000306-3				.SEAL-SPONGE C	1			
38	11N6-90700				.FAN & MOTOR	1			
39	11Q6-90530				.FET	1			
40	11Q6-90520				.MOTOR ACT ASSY-VENT DF	2			
41	11LM-90240				.WIRING ASSY-FATC	1			
42	11LM-90250				.WIRING ASSY-SATC	1			
43	AH100774				.APTC ASSY	1			APTC ONLY
44	AH000314				.CLAMP-H/RAD PIPE	2			
N	@				NOT SUPPLIED PARTS	AR			NOT

CAB ELECTRIC 1

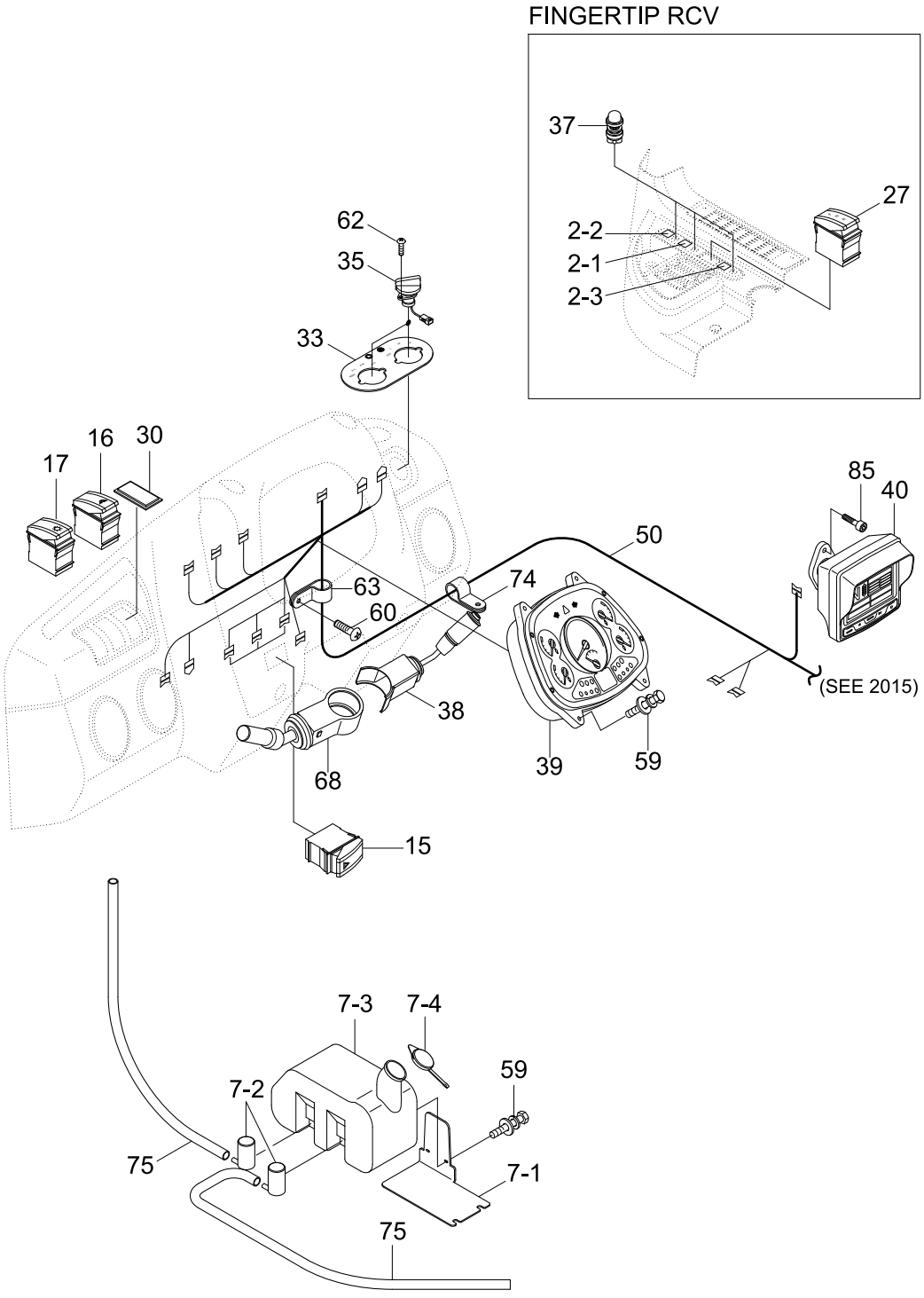

Item	Part_No	IS	Ord	T	Description	Qty	Serial_No	ITC	Remark
2	21LM-10280				DECAL KIT	1	#0004 -	-	
2-1	21LM-10260				DECAL-KICK DOWN	1	#0004 -	-	
2-2	21LM-10240				DECAL-HORN	1	#0004 -	-	
2-3	21LM-10250				DECAL-FNR	1	#0004 -	-	
7	21LN-30631				WASHER TANK ASSY	1			
7-1	MH305310				.PLATE	1			
7-2	21EG-10310				.MOTOR-WIPER	2			
7-3	@				.TANK	1			NOT
7-4	@				.CAP	1			NOT
15	21LM-01940				SWITCH-HAZARD	1			
16	21LM-01921				SWITCH-WORK LIGHT	1			
17	21LM-01910				SWITCH-MAIN LIGHT	1			
27	21LM-02020				SWITCH-FNR	1	#0004 -	-	
30	21E6-10460				COVER	1			
33	21LM-10210				DECAL-T/M MODE	1			
35	21LM-03260				ROTARY SWITCH-4POSI	2			
37	21LM-01700				SWITCH-BUTTON	3	#0004 -	-	
38	24L3-00341				SWITCH-MULTIFUNCTION	1			
39	21LM-35001				CLUSTER	1			
40	21LM-36301				MONITOR	1			
50	@				HARNESS-MAIN	1			NOT
59	S035-082026				BOLT-W/WASHER	6			
62	S141-040142				SCREW-FLAT HD	4			
63	31L7-10190				CLAMP-TUBE	1			
68	11LK-00070				GEAR SELECTOR	1			

Item	Part_No	IS	Ord	T	Description	Qty	Serial_No	ITC	Remark
74	31L7-10210				CLAMP-TUBE INS	1			
75	21EM-30581				HOSE-RUBBER	2			
85	S109-080256				BOLT-SOCKET	2			

CAB ELECTRIC 2

LH & RH SIDE (STD)

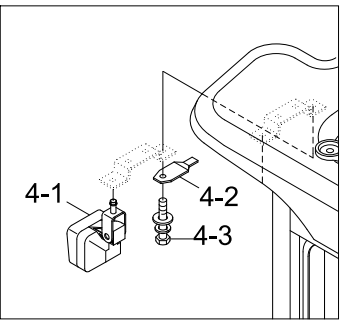

LH & RH SIDE (OPT)

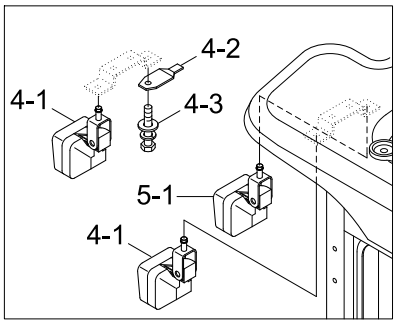

LH&RH SIDE(OPT, HIGHWAY)

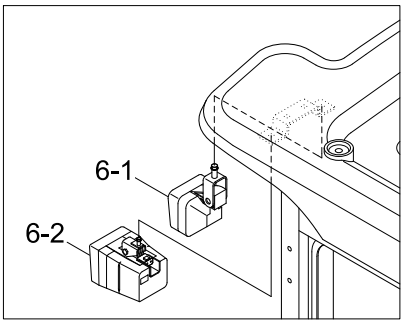

REAR SIDE(OPT)

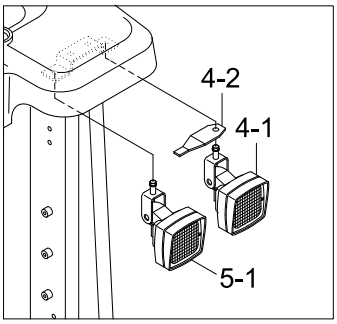

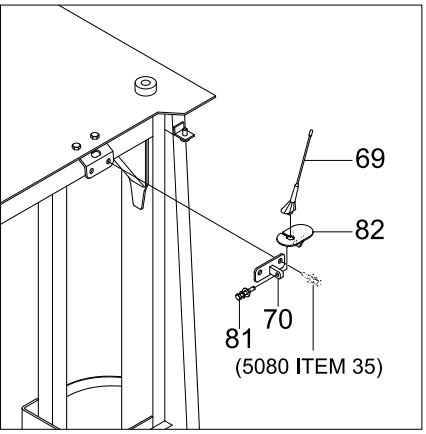

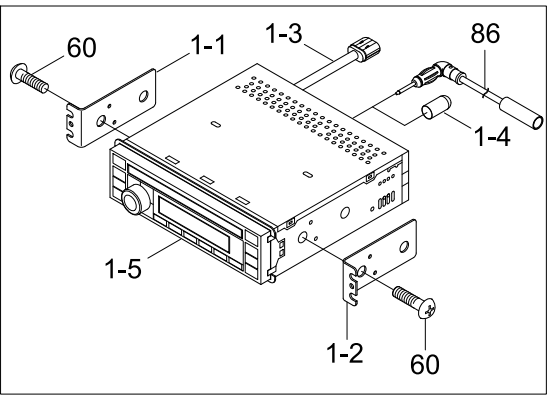

CAB INSIDE - LH

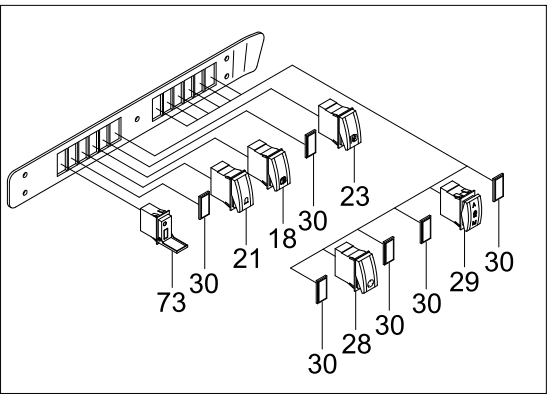

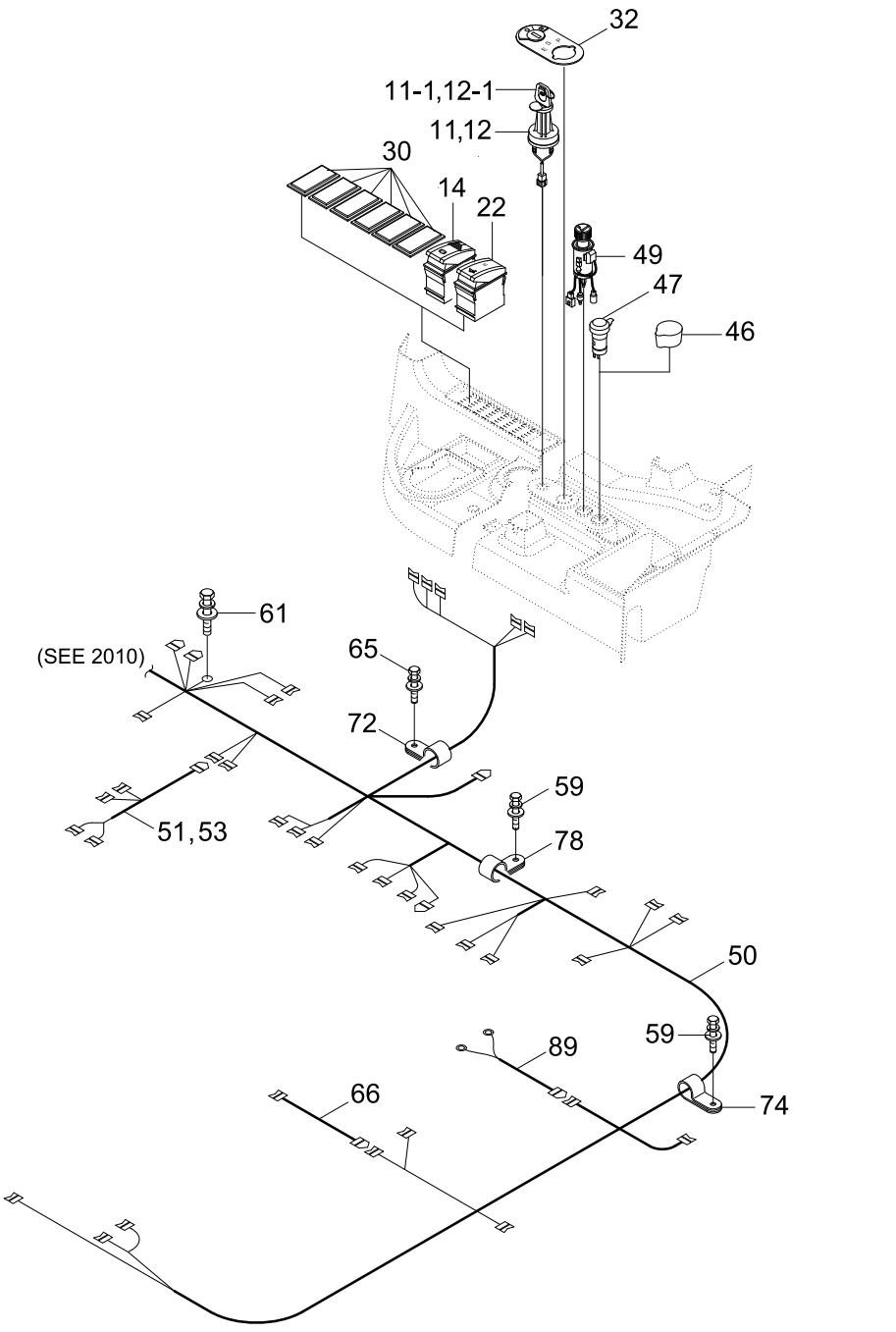

Item	Part_No	IS	Ord	T	Description	Qty	Serial_No	ITC	Remark
1	21LM-31100				RADIO & USB PLAYER	1			
1-1	21LM-31010				.BRACKET L	1			
1-2	21LM-31020				.BRACKET R	1			
1-3	21LM-31030				.CABLE-MP3	1			
1-4	21LM-31040				.CAP	1			
1-5	21LM-31050				.BODY-RADIO/USB	1			
N4	21LN-01900				LAMP KIT	1			NOT
4-1	21LH-51200				.WORK LAMP-CAB	4			
4-2	21N5-40340				.CLIP-METAL	4			
4-3	S037-102026				.BOLT-W/WASHER	2			
N5	21LN-01910				LAMP KIT	1			NOT
5-1	21LH-51200				.WORK LAMP-CAB	8			
N6	21LN-01920				LAMP KIT	1			NOT
6-1	21LH-51200				.WORK LAMP-CAB	6			
6-2	21LM-01120				.WORK LAMP-XENON	2			
11	21Q4-00070				START KEY ASSY	1			STD, SAME
11-1	21N4-10400K				.KEY-START	1			STD, SAME
12	21Q4-00060				START KEY ASSY	1			OPT, VARIANT
12-1	21N3-00030				.KEY-START	1			OPT, VARIANT
14	21LM-01931				SWITCH -PARKING	1			PARKING
18	21LM-02050				SWITCH-REAR WIPER	1			REAR WIPER
21	21Q4-22140				SWITCH-BEACON	1			BEACON
R22	21LM-01980				SWITCH-RIDE CONTROL	1			RIDE CONTROL
23	21LM-01991				SWITCH-MIRROR HEAT	1			MIRROR HEAT
E28	21LM-02041				SWITCH-EM STEER TEST	1			EMER STEER

Item	Part_No	IS	Ord	T	Description	Qty	Serial_No	ITC	Remark
29	21Q9-20220				SWITCH-REVERSE FAN	1			AUTO REVERSE
30	21E6-10460				COVER	12			
32	21LL-11141				DECAL	1			
46	S661-260300				CAP-RUBBER	1			
47	21M8-01420				SOCKET ASSY	1			DC12V, OPT
49	21LM-07110				LIGHTER-CIGAR	1			
50	21LM-11114				HARNESS-MAIN	1	- #0003		
	21LM-11115				HARNESS-MAIN	1	#0004 -	B	
51	21LL-11120				HARNESS-LEVER	1			STD RCV
53	21LM-01040				HARNESS-LEVER	1	#0004 -	-	FINGERTIP
59	S035-082026				BOLT-W/WASHER	2			
61	S037-102022				BOLT-W/WASHER	1			
65	S035-082026				BOLT-W/WASHER	1			
66	21LM-01241				EXT-HARNESS	1			APTC HEATER,OPT
69	21Q8-32211				ANTENNA-SATELLITE	1			RMS
70	21LM-01640				PLATE	1			RMS
72	31L7-10200				CLAMP-TUBE	1			
73	21LM-31200				USB & SOCKET ASSY	1			
74	31L7-10210				CLAMP-TUBE INS	1			
78	31L7-10230				CLAMP-TUBE	1			
81	S037-102026				BOLT-W/WASHER	1			RMS
82	21LM-01845				PLATE	1			RMS
86	21LM-01570				EXTENSION-PLUG	1			OPT
89	21LM-01191				HARNESS-PTC	1			APTC HEATER,OPT

CAB ELECTRIC 3

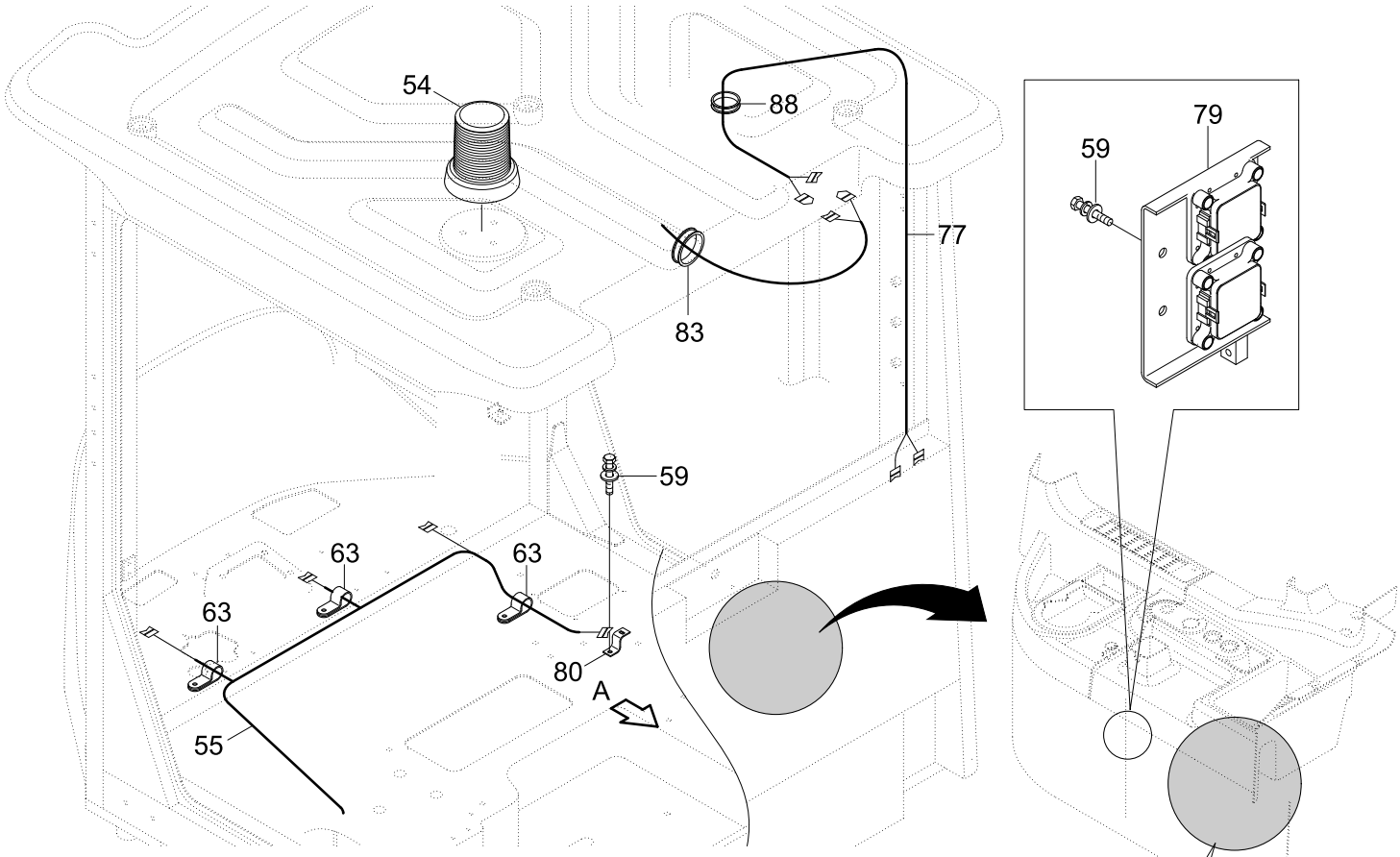

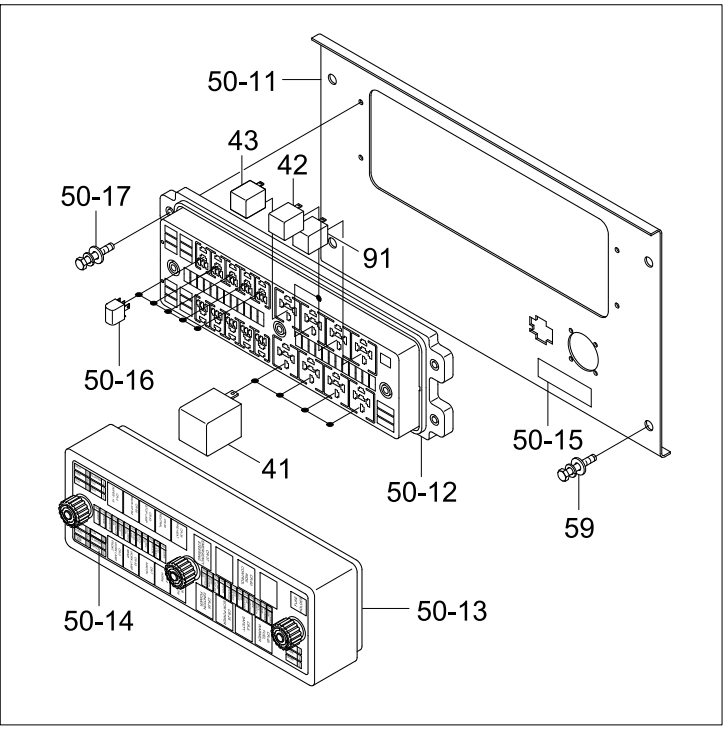

VIEW A

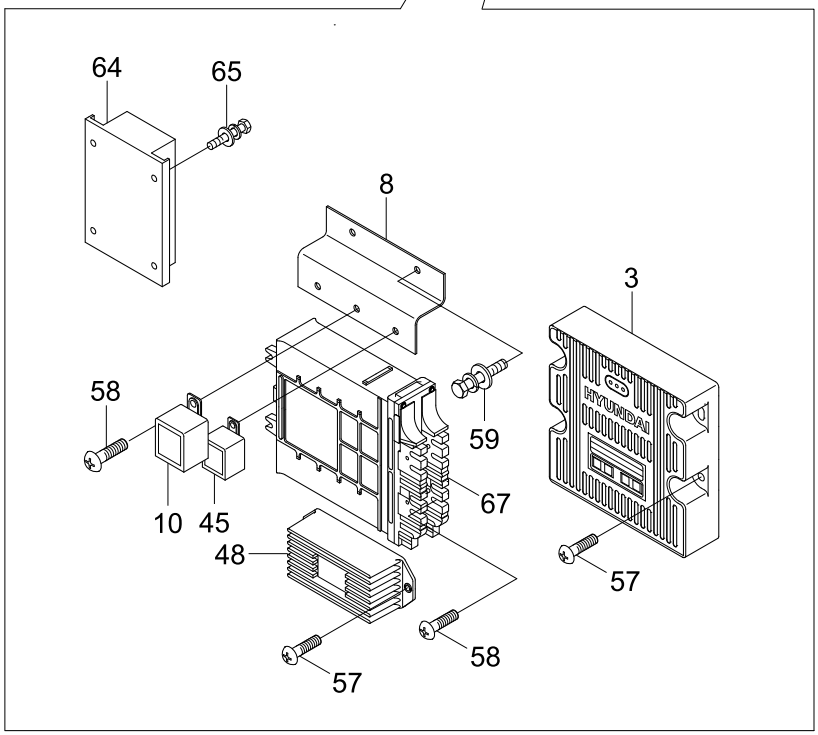

Item	Part_No	IS	Ord	T	Description	Qty	Serial_No	ITC	Remark
3	21LN-32200				MCU(MACHINE C/UNIT)	1			
8	21LM-01812				PLATE	1			
10	21LB-34140				TIMER-DEFROST	1			HEATED MIRROR
41	24L1-05100				RELAY-5P	4			
R42	24L1-05100				RELAY-5P	2			RIDE CONTROL
E43	24L1-05100				RELAY-5P	1			EMER STEER
45	21LM-01600				FLASHER UNIT	1			
48	21Q6-20410				CONVERTER-DC DC	1			
50	@				HARNESS-MAIN	1			NOT
50-1	21LM-11122				.FUSE BOX ASSY	1			
50-11	21LN-01630				..PLATE	1			
50-12	21Q7-10910				..BODY-FUSE BOX	1			
50-13	@				..COVER-FUSE BOX	1			NOT
50-14	21LM-11140				..DECAL	1			
50-15	21LN-01690				..DECAL	1			
50-16	V23074A1002A403				..RELAY-5P	10			
50-17	S035-062026				..BOLT-W/WASHER	4			
54	21LM-01400				BEACON LAMP-MAGNETIC	1			
55	21LM-11130				HARNESS-BOTTOM	1			
57	S132-061546				SCREW-W/WASHER	10			
58	S131-051546				SCREW-W/WASHER	10			
59	S035-082026				BOLT-W/WASHER	9			
63	31L7-10190				CLAMP-TUBE	3			
64	21Q8-32202				CONTROL UNIT-REMOTE	1			RMS
65	S035-082026				BOLT-W/WASHER	3			RMS

Item	Part_No	IS	Ord	T	Description	Qty	Serial_No	ITC	Remark
67	81LN-60490				CONTROL UNIT-TM	1			
77	21LM-01560				HARNESS-RMS ANTENNA	1			RMS
79	21LN-01501				FLANGE ASSY	1			
80	21N4-01130				PLATE-CLIP	1			
83	S681-190400				GROMMET	1			RMS
88	S880-125030				GROMMET	1			RMS
91	21L1-05100				RELAY	1			FUEL WARMER
N	@				NOT SUPPLIED PARTS	AR			NOT

CAB ELECTRIC 4

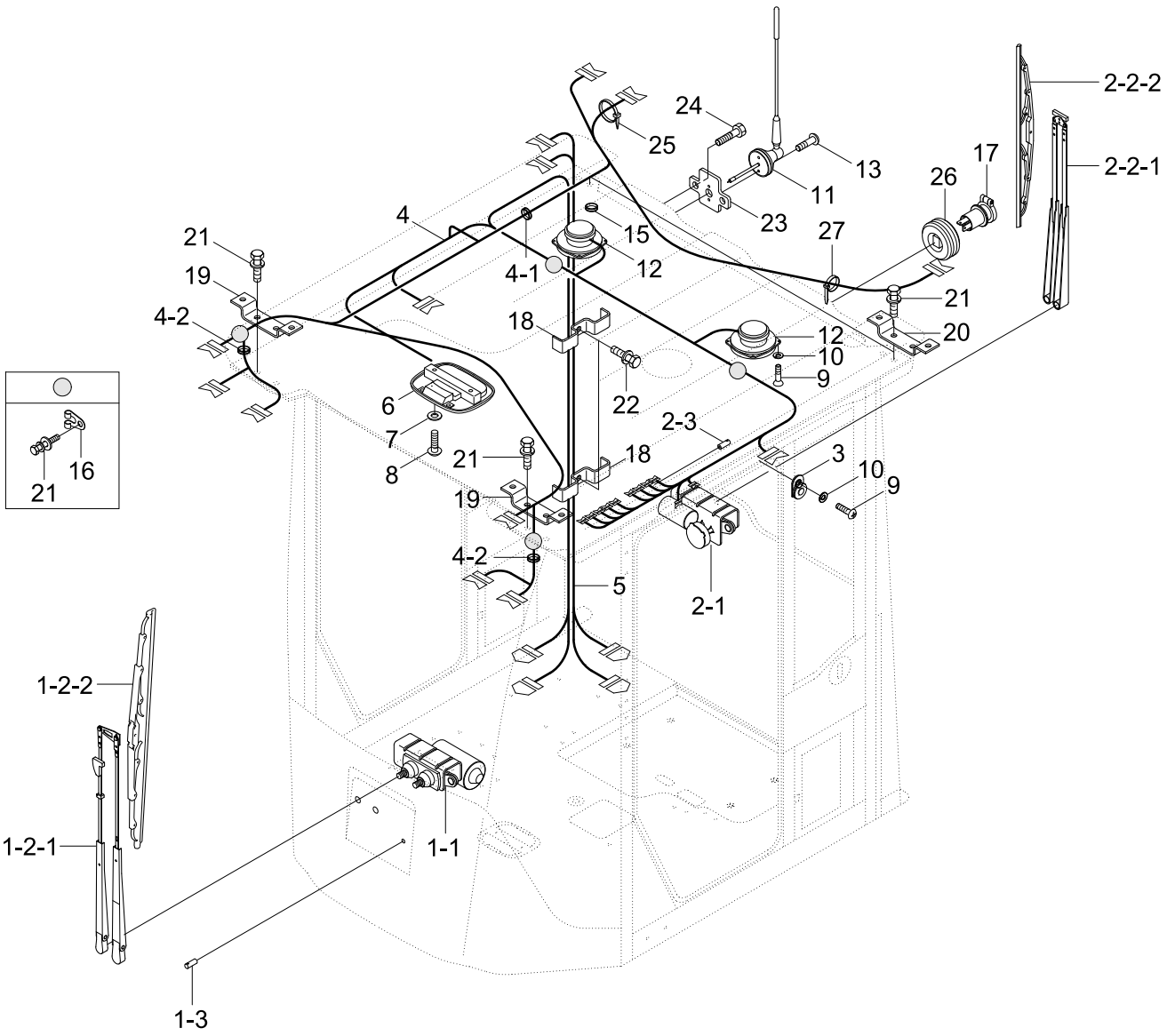

Item	Part_No	IS	Ord	T	Description	Qty	Serial_No	ITC	Remark
1	21LN-37000				FRONT WIPER KIT ASSY	1			
1-1	21LN-37010				.WIPER MOTOR ASSY	1			
1-2	21LM-37020				.WIPER ARM&BLADE ASSY	1			
1-2-1	21LM-37050				..WIPER ARM ASSY	1			
1-2-2	21LM-37060				..WIPER BLADE ASSY	1			
1-3	24L3-41500				.VALVE-WIPER	1			
2	21LM-37100				RR WIPER MOTOR KIT ASSY	1			
2-1	21LM-37110				.MOTOR-WIPER	1			
2-2	21LM-37120				.WIPER ARM&BLADE ASSY	1			
2-2-1	24L3-41200				..WIPER ARM-REAR	1			
2-2-2	21M8-50300				..WIPER BLADE-REAR	1			
2-3	24L3-41500				.VALVE-WIPER	1			
3	E123-3022				SWITCH-DOOR	1			
4	21LN-71010				HARNESS-CAB	1			
4-1	S880-132060				.GROMMET	1			
4-2	S880-132040				.GROMMET	2			
5	21LM-01091				HARNESS-AIRCON,HEATER	1			
6	21Q4-50101				LAMP-ROOM	1			
6-1	21E1-49690				.BULB-ROOM LAMP	1			NOT SHOWN
7	S411-050006				WASHER-SPRING	2			
8	S161-050166				SCREW-CROSS R/ROUND	2			
9	S161-040106				SCREW-CROSS R/ROUND	10			
10	S411-040006				WASHER-SPRING	10			
11	21N6-10410				ANTENA	1			
12	21LB-20401				SPEAKER ASSY	2			

Item	Part_No	IS	Ord	T	Description	Qty	Serial_No	ITC	Remark
13	S151-040156				SCREW-TAPPING	2			
15	S880-125040				GROMMET	1			
16	S593-000902				CLIP-HARNESS	4			
17	21LM-01420				SOCKET-POWER	1			BEACON LAMP
18	21LN-06240				PLATE	2			
19	21LN-06222				PLATE	2			
20	21LN-06231				PLATE	2			
21	S037-102056				BOLT-W/WASHER	5			
22	S035-061526				BOLT-W/WASHER	2			
23	21N6-10100				PLATE-ANTENNA	1			
24	S017-120256				BOLT-HEX	1			
25	S552-035146				CLAMP-BAND	1			
26	21U6-07330				CAP-BEACON	1			STD
27	S552-035146				CLAMP-BAND	2			STD

FRONT ELECTRIC

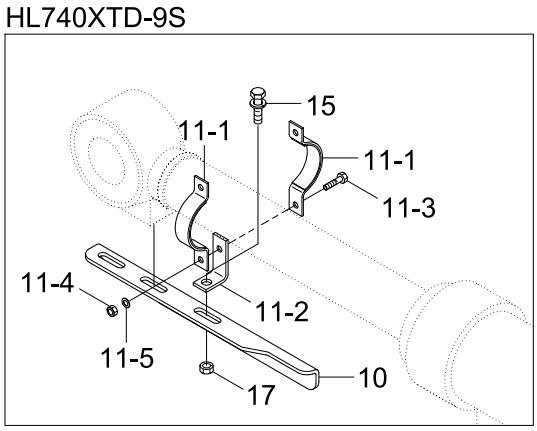

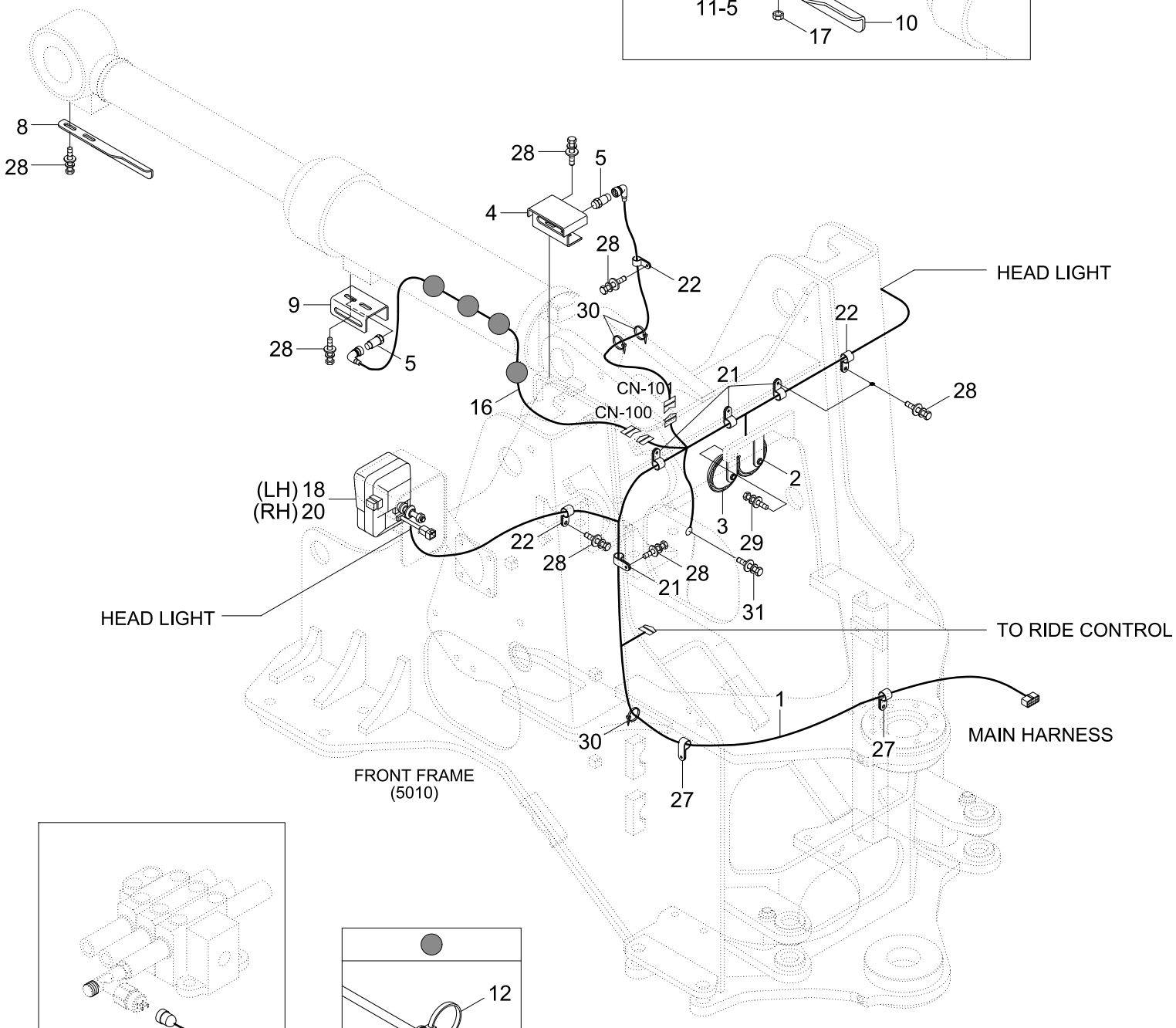

Item	Part_No	IS	Ord	T	Description	Qty	Serial_No	ITC	Remark
1	21LN-21112				HARNESS-FRONT	1			
2	21N5-10051				HORN-LOW	1			LOW
3	21N5-10061				HORN-HIGH	1			HIGH
4	21LL-21110				BRACKET	1			
5	21L6-20010				SWITCH-PROXIMITY	2			
R6	21LL-21021				HARNESS-RIDE CONTROL	1			RIDE CONTROL
8	21LN-20020				ANGLE	1			
9	21LN-20030				PLATE	1			
10	21LN-20040				ANGLE	1			HL740XTD-9S
11	21LN-20210				CLAMP ASSY	1			HL740XTD-9S
11-1	21LN-20050				.CLAMP	2			HL740XTD-9S
11-2	21LN-20060				.PLATE	1			HL740XTD-9S
11-3	S037-102522				.BOLT-W/WASHER	2			HL740XTD-9S
11-4	S205-101002				.NUT-HEX	2			HL740XTD-9S
11-5	S411-100002				.WASHER-SPRING	2			HL740XTD-9S
12	S554-054300				CLAMP-BAND	4			
15	S037-102556				BOLT-W/WASHER	1			HL740XTD-9S
16	21LH-50340				HARNESS-EXTENSION	1			
17	S275-10000B				NUT-SELF LOCKING	1			HL740XTD-9S
18	21LM-02220				HEAD LAMP-LH	1			
18-1	21EK-10250				.BULB-HEAD LAMP	2			NOT SHOWN
18-2	21EK-10131				.BULB	1			NOT SHOWN
18-3	21EK-10290				.BULB-21W	1			NOT SHOWN
20	21LM-02230				HEAD LAMP-RH	1			
20-1	21EK-10290				.BULB-21W	1			NOT SHOWN

Item	Part_No	IS	Ord	T	Description	Qty	Serial_No	ITC	Remark
20-2	21EK-10131				.BULB	1			NOT SHOWN
20-3	21EK-10250				.BULB-HEAD LAMP	2			NOT SHOWN
21	S593-000902				CLIP-HARNESS	4			
22	31L7-10190				CLAMP-TUBE	3			
27	31L7-10340				CLAMP-TUBE INS	2			
28	S037-102056				BOLT-W/WASHER	12			
29	S037-082026				BOLT-W/WASHER	2			
30	S552-035146				CLAMP-BAND	8			
31	S037-102022				BOLT-W/WASHER	1			

REAR ELECTRIC

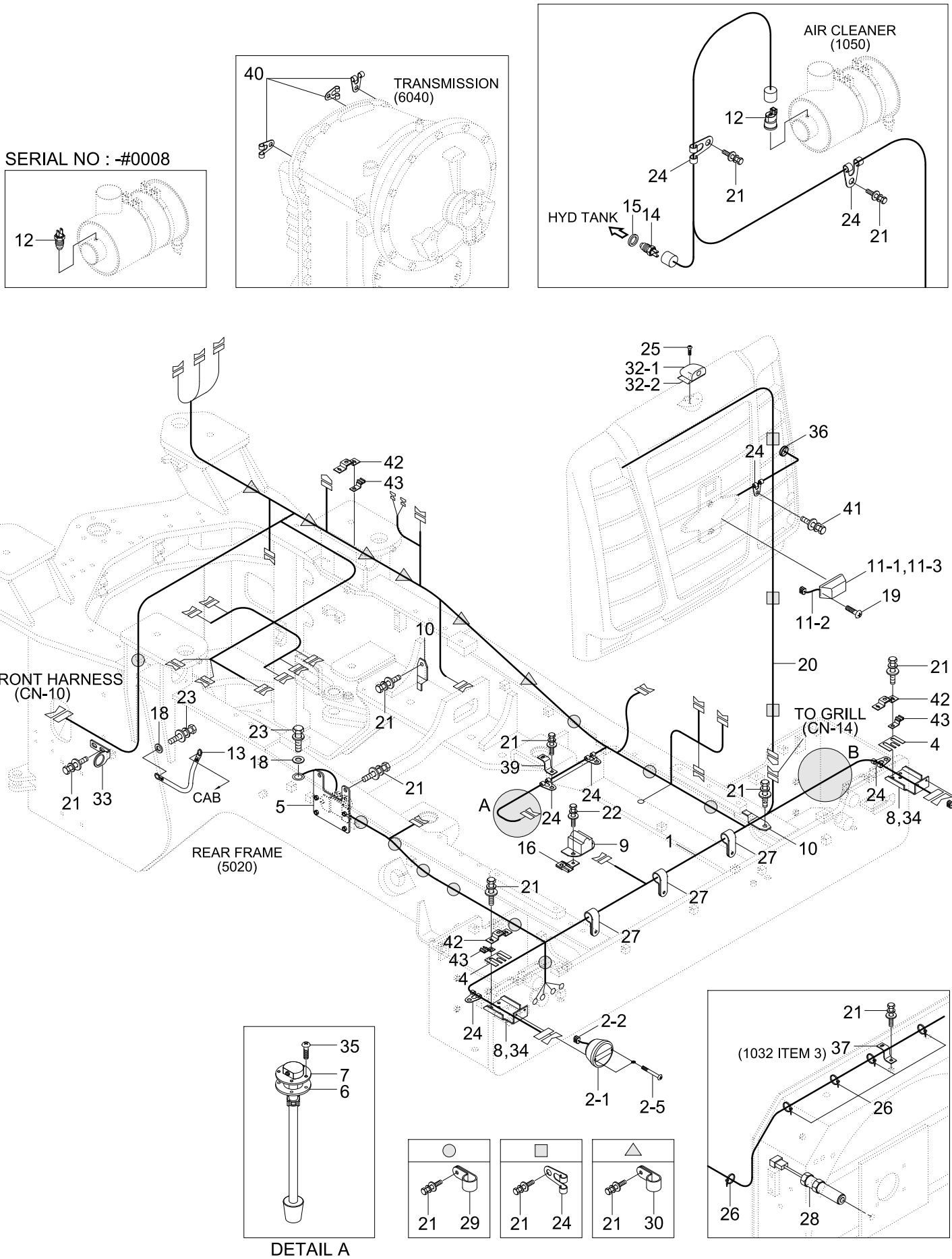

Item	Part_No	IS	Ord	T	Description	Qty	Serial_No	ITC	Remark
1	21LN-31012				HARNESS-FRAME	1	- #0003		
	21LN-31013				HARNESS-FRAME	1	#0004 - #0005	B	
	21LN-31014				HARNESS-FRAME	1	#0006 - #0008	B	
	21LN-31015				HARNESS-FRAME	1	#0009 -	D	
1-1	21LN-03290				.MAXI FUSE ASSY	1			NOT SHOWN
1-2	21L7-60290				.HOUSING-RECEPT	1			NOT SHOWN
1-3	21EA-50550				.DIODE-IN5406	1			NOT SHOWN
1-4	21LM-03180				.FUSE-MAXI(80A)	1			NOT SHOWN
1-5	21LM-03140				.FUSE-MAXI(40A)	1			NOT SHOWN
2	21EK-10411				LAMP-TAIL STOP FLASHER	2			
2-1	21EK-10180				.LAMP-TAIL STOP FLASHER	1			
2-2	21EK-20200				.HARNESS-REAR COMBI	1			
2-3	21EK-10290				.BULB-21W	2			NOT SHOWN
2-4	21EK-10270				.BULB-5W	1			NOT SHOWN
2-5	21LB-51550				.SCREW	2			
4	21LM-03220				SHIM	2			
5	21LN-03111				PLATE	1			
6	E128-1053				GASKET	1			
7	21LP-00180				FUEL SENDOR	1			
7-1	21N6-10710				.FLOAT	1			NOT SHOWN
8	21LM-03202				PLATE	2			HL740-9S
9	21N4-46800				BUZZER-BACK	1			
10	21N5-40340				CLIP-METAL	2			
11	21LB-34250				LAMP SUB-NUMBER PLATE	1			
11-1	21EK-10160				.LAMP-NUMBER PLATE	1			

Item	Part_No	IS	Ord	T	Description	Qty	Serial_No	ITC	Remark
11-2	21LB-34260				.HARNESS-EXT,NUM/LAMP	1			
11-3	21EK-10260				.BULB-10W	1			
12	11FG-20110				SENSOR-AIR CLEANER	1	- #0008		
	11Q4-21010				INDICATOR	1	#0009 -	D	
13	21NA-10500				STRAP-EARTH	1			
14	21EN-40100				SENDER-TEMP	1			
15	21EA-50260				PACKING-TEMP SW	1			
16	25D1-10640				CLIP ASSY	1			
18	S431-100002				WASHER-INTERNAL T/LOCK	3			
19	S151-040156				SCREW-TAPPING	2			
20	21LN-03134				HARNESS-GRILL	1			
21	S037-102026				BOLT-W/WASHER	34			
22	S035-082026				BOLT-W/WASHER	2			
23	S037-102022				BOLT-W/WASHER	3			
24	S593-000702				CLIP-HARNESS	10			
25	S161-060156				SCREW-CROSS R/ROUND	4			OPT,RR CAMERA
26	S552-035146				CLAMP-BAND	10			
27	31L7-10200				CLAMP-TUBE	3			
28	21LM-08210				SENSOR-SPEED	1			
29	31L7-10340				CLAMP-TUBE INS	10			
30	31L7-10210				CLAMP-TUBE INS	6			
32	21LM-39002				REAR VIEW CAMERA	1			OPT,RR CAMERA
32-1	21LM-38002				.REAR VIEW CAMERA ASSY	1			OPT,RR CAMERA
N32-2	21LM-38101				.BRACKET ASSY	1			NOT
33	21LL-31120				PLATE	1			

Item	Part_No	IS	Ord	T	Description	Qty	Serial_No	ITC	Remark
34	21LN-03400				PLATE	2			HL740XTD-9S
35	S161-050156				SCREW-CROSS R/ROUND	5			
36	S681-190400				GROMMET	1			
37	21N5-40340				CLIP-METAL	1			OPT,RR CAMERA
39	21E7-0606				PLATE-CONNECTOR	1			
40	S593-000902				CLIP-HARNESS	3			
41	S037-121526				BOLT-W/WASHER	1			
42	21N4-01130				PLATE-CLIP	3			
43	21N4-01111				CLIP-ECONO SEAL	3			
N	@				NOT SUPPLIED PARTS	AR			NOT

ENGINE ELECTRIC

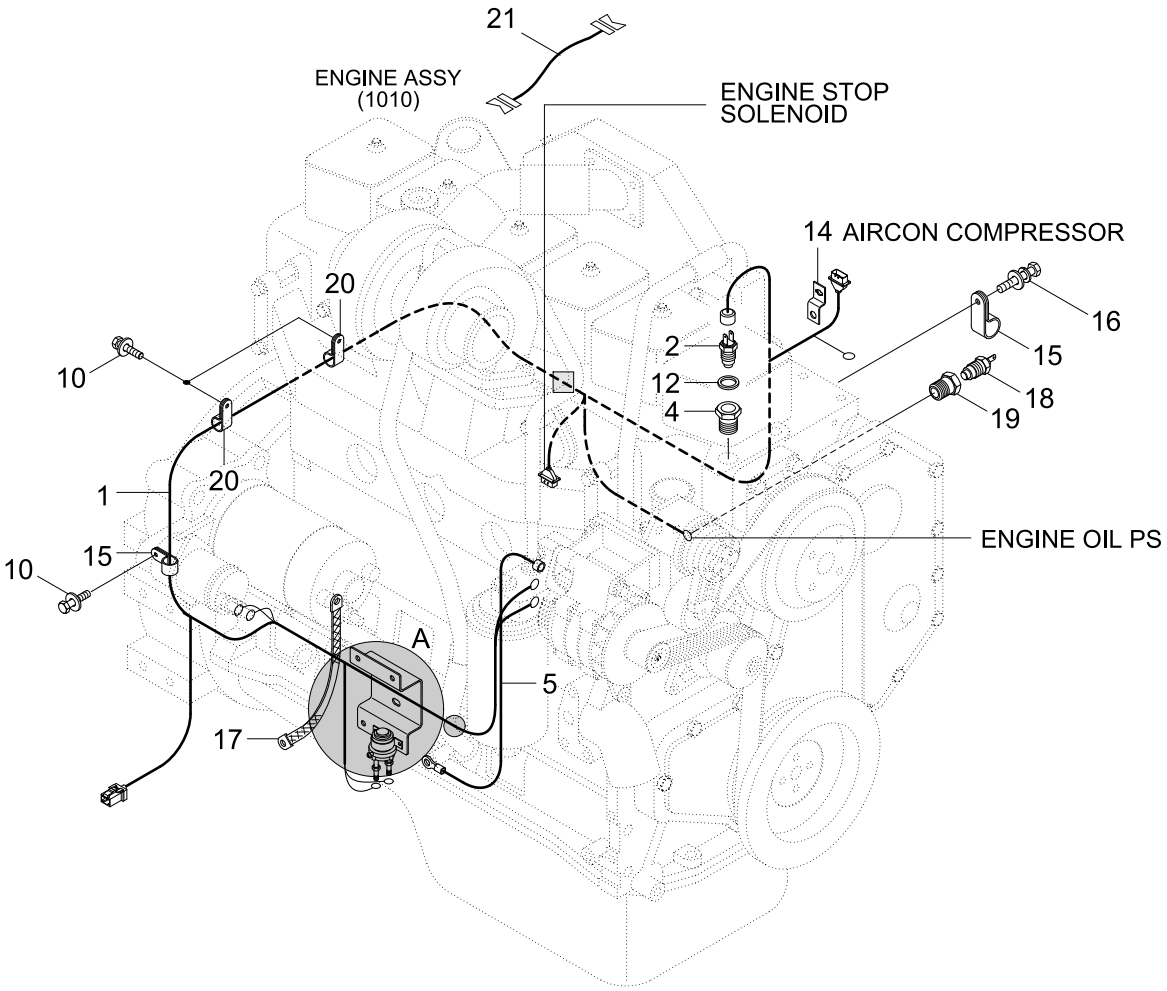

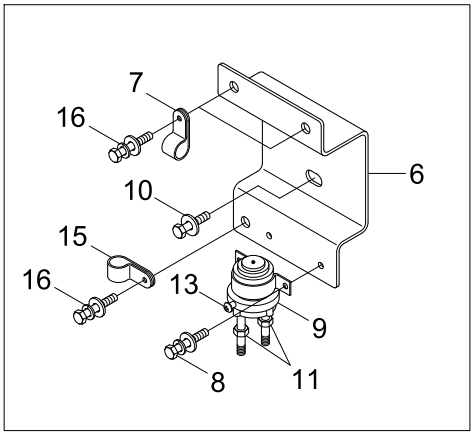

DETAIL A

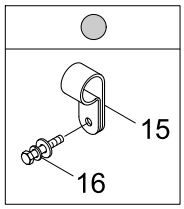

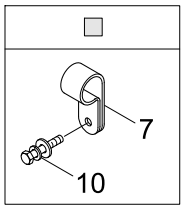

Item	Part_No	IS	Ord	T	Description	Qty	Serial_No	ITC	Remark
1	21LN-41111				HARNESS-ENGINE	1	- #0003		
	21LN-41112				HARNESS-ENGINE	1	#0004 -	B	
2	21EN-40100				SENDER-TEMP	1			
4	21EA-50171				FITTING-TEMP SW	1			
5	21LN-41130				CABLE(ALT-EARTH)	1			
6	21LF-04010				PLATE	1			
7	31L7-10340				CLAMP-TUBE INS	4			
8	S035-061526				BOLT-W/WASHER	2			
9	21N6-30120				RELAY-START	1			
10	S037-122056				BOLT-W/WASHER	5			
11	S285-06100B				NUT-FLANGED	2			
12	21EA-50260				PACKING-TEMP SW	1			
13	S131-041046				SCREW-W/WASHER	2			
14	21N4-01130				PLATE-CLIP	1			
15	31L7-10350				CLAMP	3			
16	S037-102026				BOLT-W/WASHER	5			
17	21LB-34720				EARTH STRAP	1			
18	21E3-5001				SWITCH-ENG OIL PRESS	1			
19	21LN-43200				ADAPTER-OIL PRESSURE	1			
20	31L7-10190				CLAMP-TUBE	2			
21	21LL-41120				HARNESS-EXT	1			

BATTERY CABLE ELECTRIC

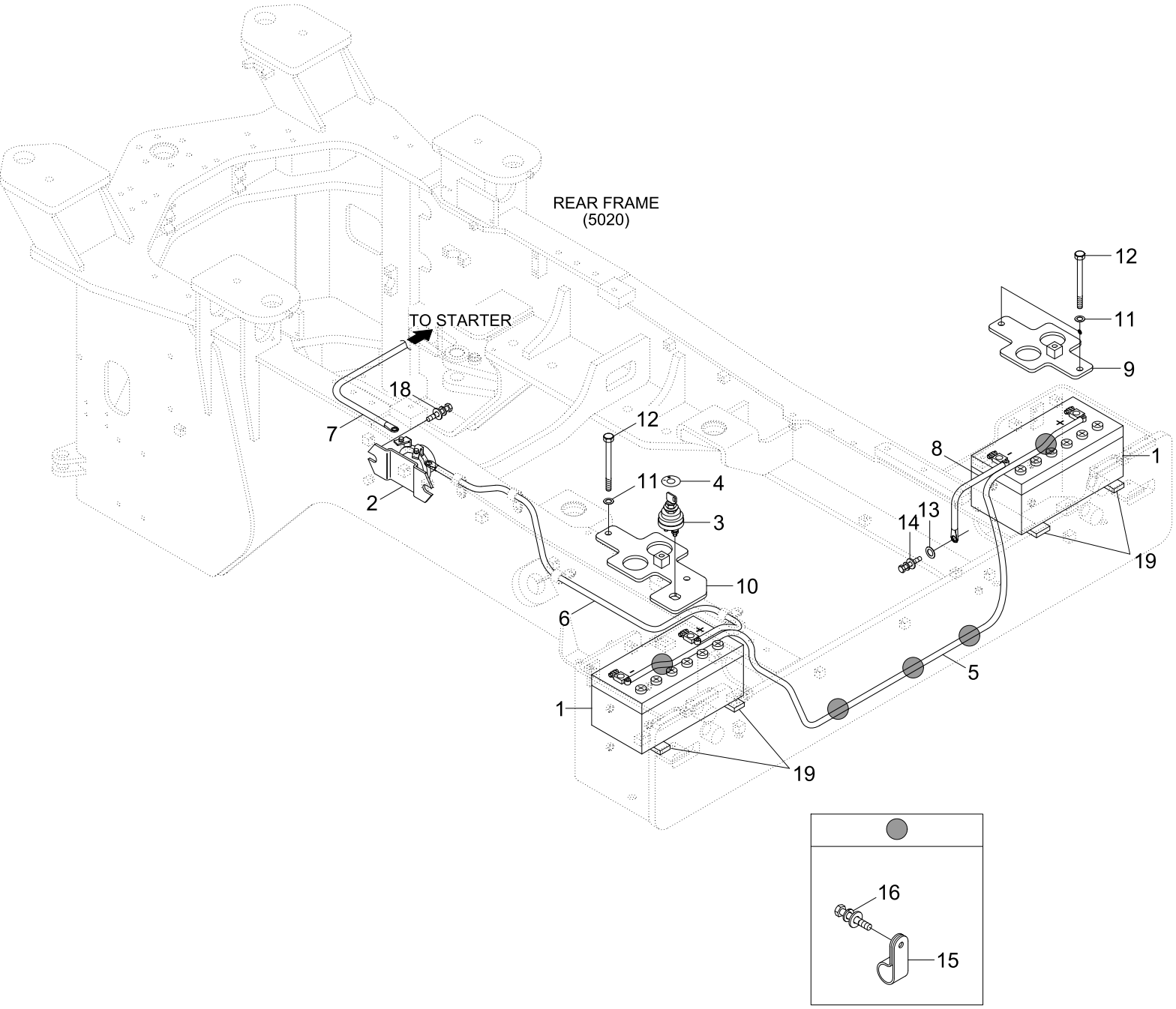

Item	Part_No	IS	Ord	T	Description	Qty	Serial_No	ITC	Remark
1	21LN-05010				BATTERY	2			
2	21QA-70010				RELAY-BATTERY	1			
3	21LM-10501				SWITCH-MASTER	1			
4	21N5-40370				DECAL-MASTER SW	1			
5	21LN-05503				CABLE(BATT-BATT)	1			
6	21LD-05511				CABLE(BATT(+)-RELAY)	1			
7	21LF-34131				CABLE(BATT RY-STARTER)	1			
8	21LB-34541				CABLE(BATT-EARTH)	1			
9	21LN-05100				PLATE	1			
10	21LN-05110				PLATE	1			
11	S411-100006				WASHER-SPRING	4			
12	S017-102306				BOLT-HEX	4			
13	S431-100002				WASHER-INTERNAL T/LOCK	1			
14	S037-102022				BOLT-W/WASHER	1			
15	31L7-10340				CLAMP-TUBE INS	5			
16	S037-102056				BOLT-W/WASHER	5			
18	S035-083526				BOLT-W/WASHER	2			
19	21L8-10170				PAD-RUBBER	4			

EMERGENCY STEERING ELECTRIC

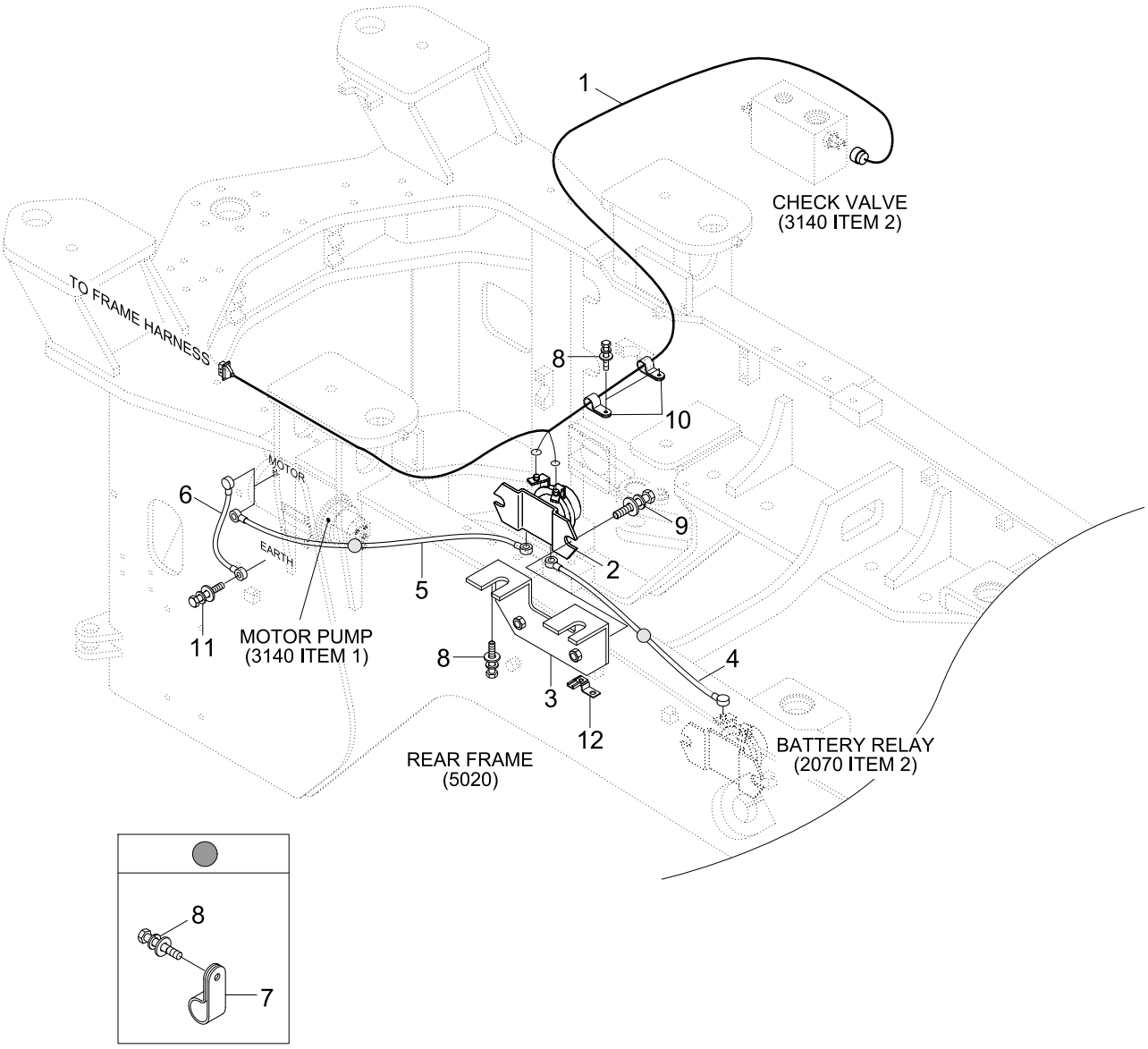

Item	Part_No	IS	Ord	T	Description	Qty	Serial_No	ITC	Remark
E	@				EMER STEERING ELECTRIC	1			NOT
1	21LN-06451				.HARNESS-EMERGENCY	1	- #0005		
	21LN-06452				.HARNESS-EMERGENCY	1	#0006 -	D	
2	21QA-70010				.RELAY-BATTERY	1			
3	21LF-40051				.PLATE	1			
4	21LF-34181				.CABLE(RELAY-RELAY)	1			
5	21LN-06422				.CABLE RELAY-MOTOR	1			
6	21LN-06441				.CABLE(MOTOR-EARTH)	1			
7	31L7-10200				.CLAMP-TUBE	2			
8	S037-102056				.BOLT-W/WASHER	6			
9	S035-082546				.BOLT-W/WASHER	2			
10	31L7-10190				.CLAMP-TUBE	2			
11	S037-102022				.BOLT-W/WASHER	1			
12	25D1-10650				.CLIP ASSY	1			
E43	@				.RELAY	1			NOT
E28	@				.SWITCH-EMER STEER	1			NOT

MAIN HYDRAULIC PIPING

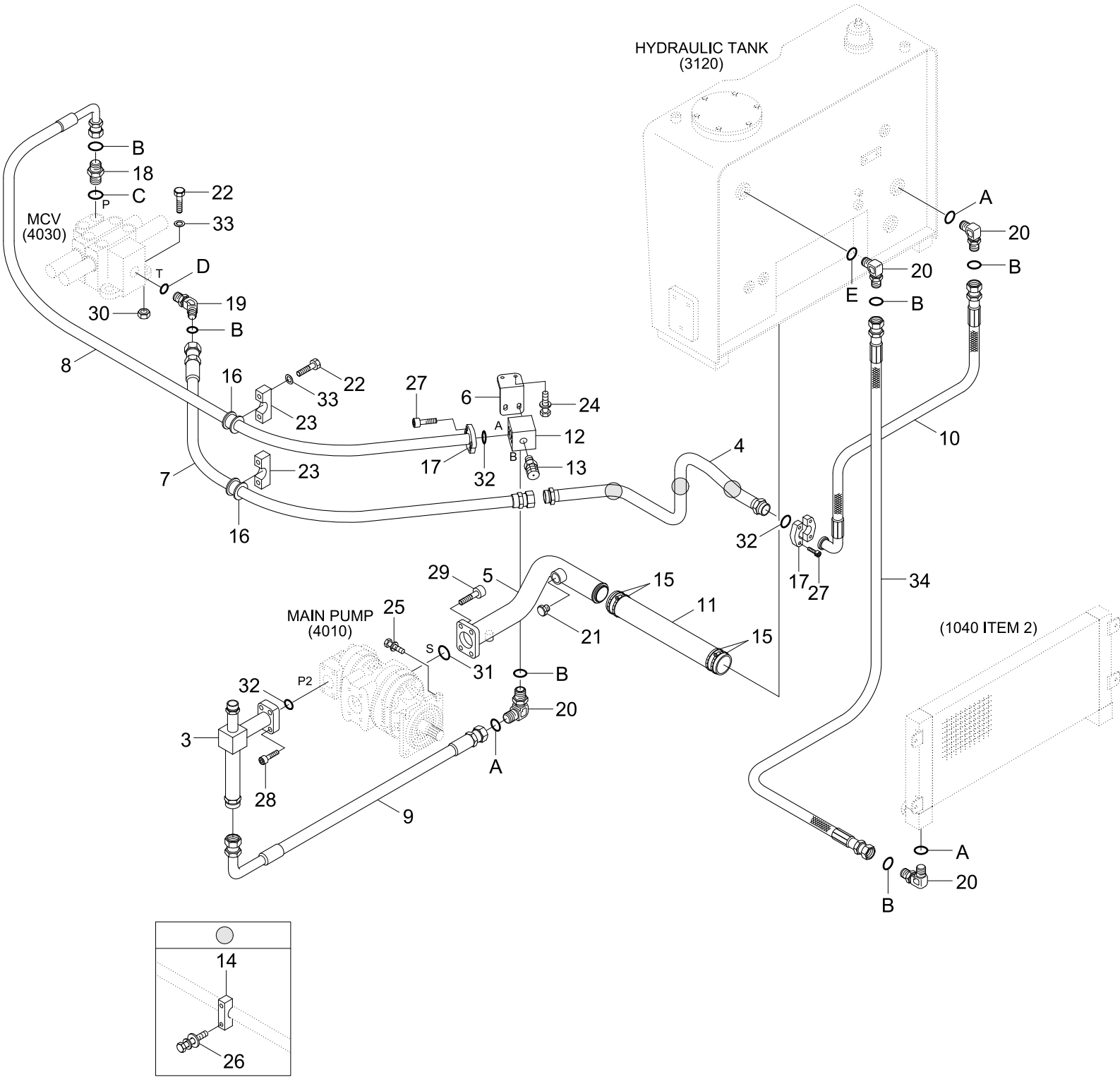

Item	Part_No	IS	Ord	T	Description	Qty	Serial_No	ITC	Remark
3	31LN-01510				PIPE WA	1			
4	31LN-01570				PIPE WA	1			
5	31LM-01541				PIPE ASSY	1			
6	31LF-00100				PLATE WA	1			
7	P910-162030				HOSE ASSY-ORFS 0X0	1			
8	P990-165336				HOSE ASSY-ORFS,FLG 0X90	1			2-SPOOL
	P990-165337				HOSE ASSY-ORFS,FLG 0X90	1			3-SPOOL
9	P930-165011				HOSE ASSY-ORFS 0X90	1			
10	P980-162313				HOSE ASSY-ORFS,FLG 0X90	1			
11	P760-081030				HOSE-RUBBER	1			
12	31LF-00120				BLOCK	1			
13	31EK-11130				COUPLING-SCREW	2			
14	31L7-40260				CLAMP	3			
15	S572-750006				CLAMP-HOSE,WIRE TYPE	4			
16	S690-039100				GROMMET	2			
17	P173-160104				FLANGE-HYD,SPLIT	4			
18	31LF-00071				CONNECTOR	1			
19	31LF-00080				ELBOW-45	1			
20	X520-110005				ELBOW-90,ORFS	4			
21	P220-110105				PLUG-HEX	1			
22	S017-120606				BOLT-HEX	8			
23	34L4-01120				CLAMP	2			
24	S037-122556				BOLT-W/WASHER	4			
25	S037-123556				BOLT-W/WASHER	4			
26	S037-124556				BOLT-W/WASHER	6			

Item	Part_No	IS	Ord	T	Description	Qty	Serial_No	ITC	Remark
27	S109-100306				BOLT-SOCKET	8			
28	S109-100406				BOLT-SOCKET	4			
29	S109-120306				BOLT-SOCKET	4			
30	S205-12100B				NUT-HEX	4			
31	Y172-006004				O-RING	1			
32	Y171-024004				O-RING	2			
33	S441-12000B				WASHER-HARDENED	12			
34	P913-162041				HOSE ASSY-ORFS 0X0	1			
A	S631-029004				O-RING	3			
B	S621-021001				O-RING	6			
C	S611-027001				O-RING	1			
D	S611-030001				O-RING	1			
E	S631-038004				O-RING	1			

PILOT HYDRAULIC PIPING 1 (2-SPOOL)

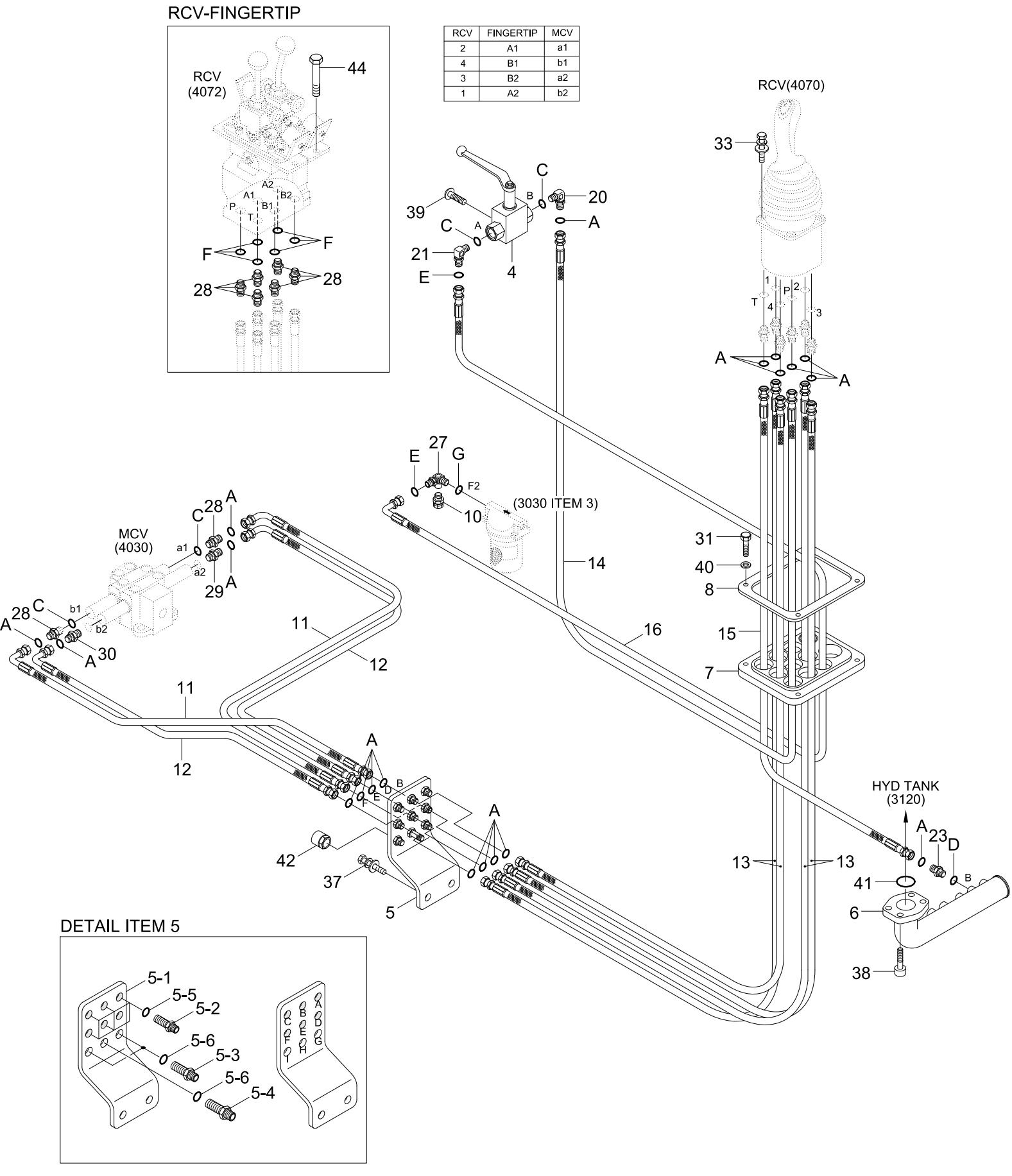

RCV	FINGERTIP	MCV
2	A1	a1
4	B1	b1
3	B2	a2
1	A2	b2

Item	Part_No	IS	Ord	T	Description	Qty	Serial_No	ITC	Remark
4	31LB-10170				SAFETY VALVE	1			
5	31LN-11540				CONNECTOR ASSY	1			
5-1	@				.PLATE	1			NOT
5-2	X540-120001				.CONNECTOR-ORFS	6			
5-3	X540-120002				.CONNECTOR-ORFS	2			
5-4	31LM-10160				.CONNECTOR	1			
5-5	S621-011001				.O-RING	12			
5-6	S621-012001				.O-RING	6			
6	31LN-10190				PIPE WA	1			
7	31LM-10130				PLATE	1			
8	31LM-10141				RUBBER	1			
10	31EK-11130				COUPLING-SCREW	1			
11	X420-042018				HOSE ASSY-ORFS 0X90	2			
12	X420-042017				HOSE ASSY-ORFS 0X90	2			
13	X400-042033				HOSE ASSY-SYNF,ORFS	4			
14	X400-042011				HOSE ASSY-SYNF,ORFS	1			
15	X400-042032				HOSE ASSY-SYNF,ORFS	1			
16	X420-062018				HOSE ASSY-ORFS 0X90	1			
20	X520-110012				ELBOW-90,ORFS	1			
21	X520-110002				ELBOW-90,ORFS	1			
23	X500-110013				CONNECTOR-ORFS	1			
27	31LD-10080				ELBOW-90	1			
28	31S7-00750				CONNECTOR	2			STD
					CONNECTOR	6	#0004 -	-	FINGERTIP
29	31LF-10090				VALVE-SHOCKLESS	1			

Item	Part_No	IS	Ord	T	Description	Qty	Serial_No	ITC	Remark
30	31LF-10100				CONNECTOR-ORIFICE	1			
31	S015-060306				BOLT-HEX	4			
33	S035-062026				BOLT-W/WASHER	4			STD
37	S037-123056				BOLT-W/WASHER	2			
38	S109-120306				BOLT-SOCKET	4			
39	S179-080406				SCREW-SOCKET RD HD	2			
40	S441-06000B				WASHER-HARDENED	4			
41	Y172-003004				O-RING	1			
42	X710-100103				CAP-HYD,ORFS	2			
44	S015-060106				BOLT-HEX	4	#0004 -	-	FINGERTIP
A	S621-011001				O-RING	20			
C	S631-014004				O-RING	4			
D	S631-011004				O-RING	1			
E	S621-012001				O-RING	2			
G	S631-018004				O-RING	1			
F	S611-012001				O-RING	6	#0004 -	-	FINGERTIP

PILOT HYDRAULIC PIPING 2 (2-SPOOL)

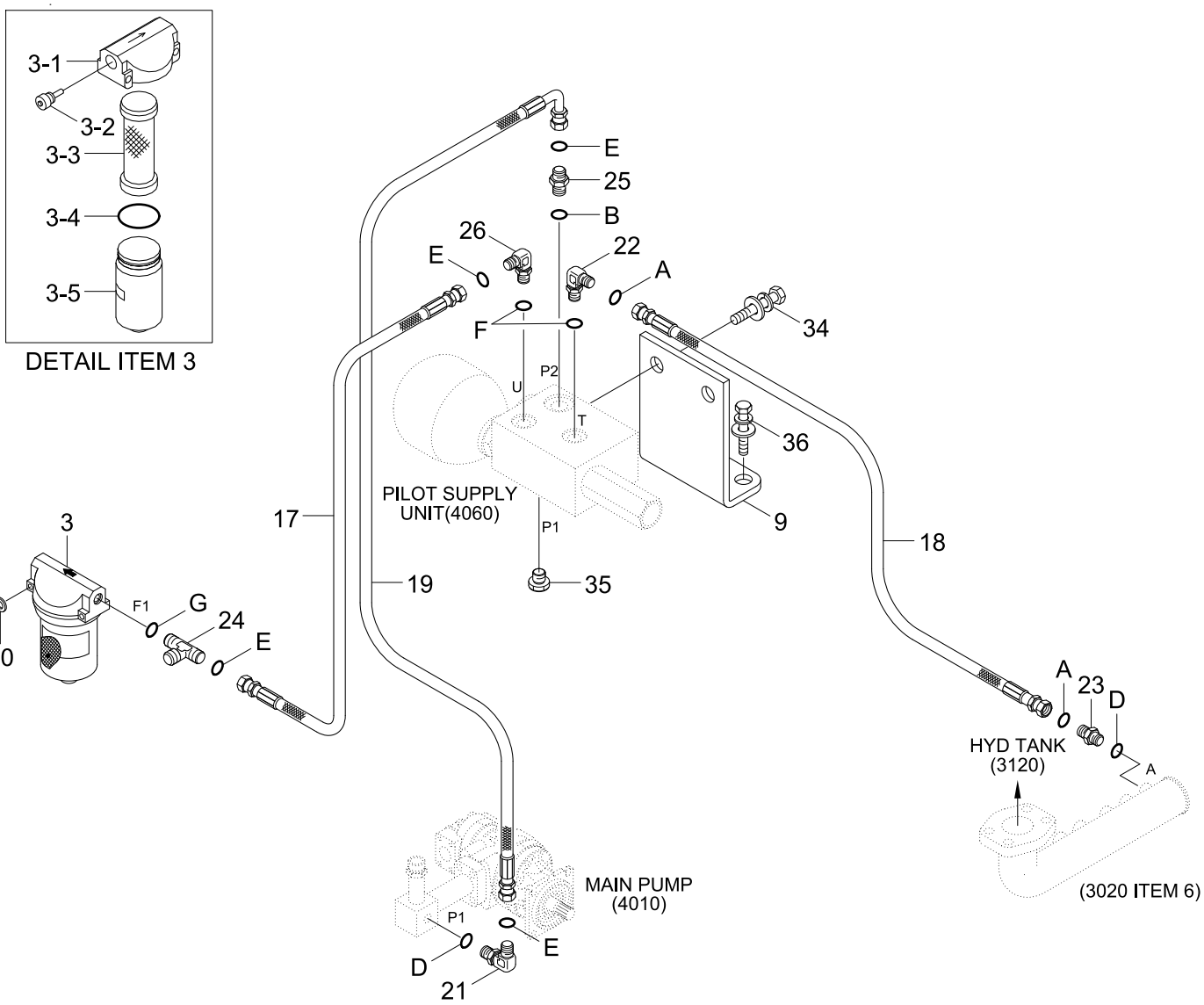

Item	Part_No	IS	Ord	T	Description	Qty	Serial_No	ITC	Remark
3	31E3-0017				FILTER-LINE	1			
3-1	31E3-00670				.HEAD-FILTER	1			
3-2	31E3-00680				.VALVE ASSY	1			
3-3	31E3-0018				.ELEMENT-LINE FILTER	1			
3-4	31E3-00700				.O-RING	1			
3-5	31E3-00710				.CASE-FILTER	1			
9	31LC-10910				PLATE	1			
17	X400-062007				HOSE ASSY-SYNF,ORFS	1			
18	X400-042018				HOSE ASSY-SYNF,ORFS	1			
19	P930-064015				HOSE ASSY-ORFS 0X90	1			
21	X520-110002				ELBOW-90,ORFS	1			
22	X520-310001				ELBOW-90,ORFS	1			
23	X500-110013				CONNECTOR-ORFS	1			
24	X820-085252				TEE-R/TYPE,ORFS	1			
25	31S8-20180				CONNECTOR	1			
26	31LB-10240				ELBOW-90,ORFS	1			
32	S015-060556				BOLT-HEX	2			
34	S035-082056				BOLT-W/WASHER	2			
35	P220-310103				PLUG-HEX	1			
36	S037-122556				BOLT-W/WASHER	2			
40	S441-06000B				WASHER-HARDENED	2			
A	S621-011001				O-RING	2			
B	S611-016001				O-RING	1			
D	S631-011004				O-RING	2			
E	S621-012001				O-RING	4			

Item	Part_No	IS	Ord	T	Description	Qty	Serial_No	ITC	Remark
F	S611-012001				O-RING	2			
G	S631-018004				O-RING	1			

PILOT HYDRAULIC PIPING(3-SPOOL)

RCV	FINGERTIP	MCV
1.1	A1	a1
2.1	B2	b1

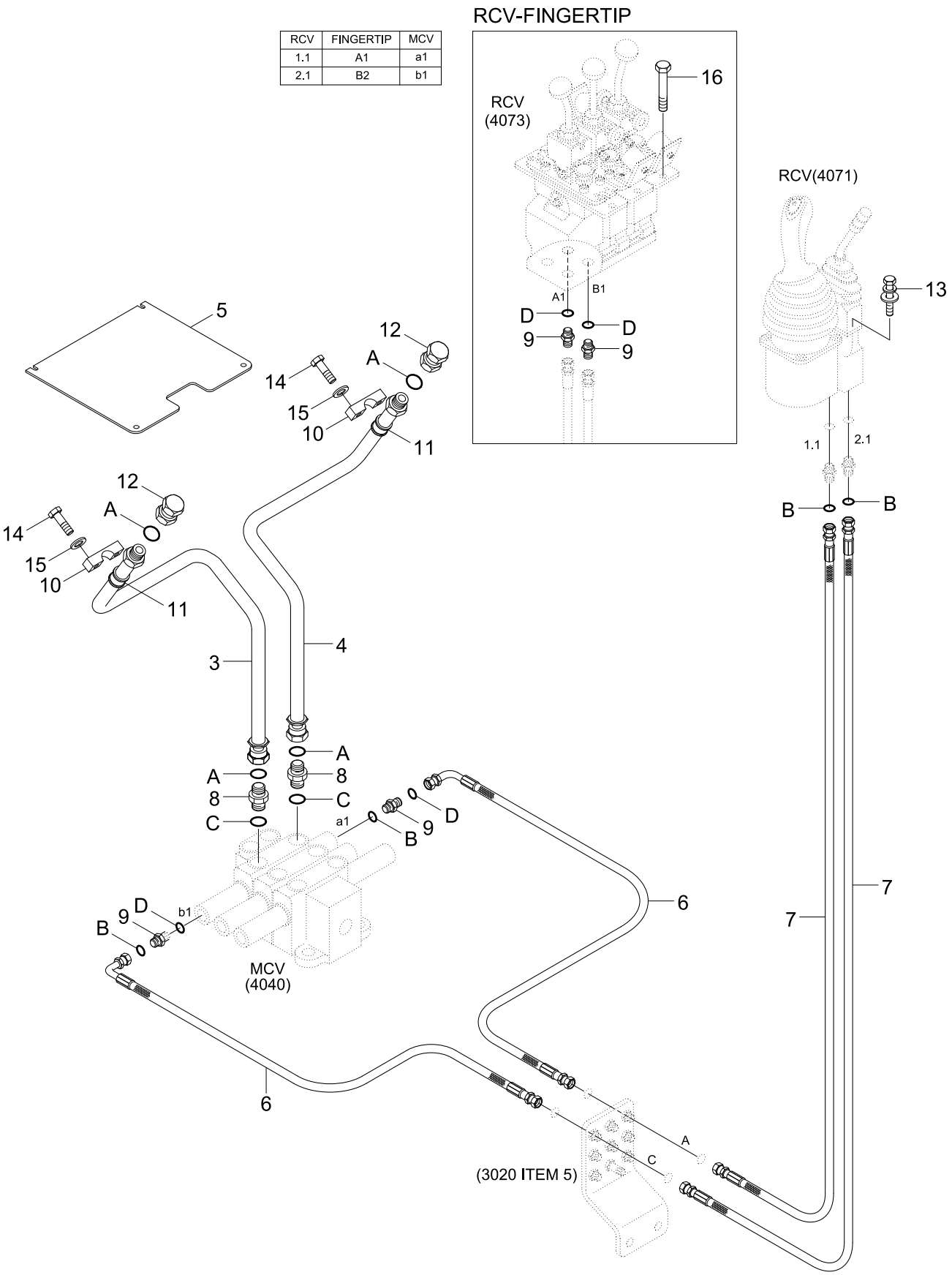

Item	Part_No	IS	Ord	T	Description	Qty	Serial_No	ITC	Remark
3	31LN-97201				PIPE WA-LH	1			
4	31LN-97211				PIPE WA-RH	1			
5	31LN-97350				COVER	1			
6	X420-042019				HOSE ASSY-ORFS 0X90	2			
7	X400-042033				HOSE ASSY-SYNF,ORFS	2			
8	31LF-20120				CONNECTOR	2			
9	31S7-00750				CONNECTOR	2			STD
					CONNECTOR	4	#0004 -	-	FINGERTIP
10	31L7-00370				CLAMP	2			
11	S690-027100				GROMMET(FOR ONE LINE)	2			
12	X710-100105				CAP-HYD ORFS	2			
13	S035-062556				BOLT-W/WASHER	2			
					BOLT-W/WASHER	4	#0004 -	-	STD RCV
14	S017-120556				BOLT-HEX	4			
15	S441-12000B				WASHER-HARDENED	4			
16	S015-060106				BOLT-HEX	6	#0004 -	-	FINGERTIP
A	S621-018001				O-RING	5			
B	S621-011001				O-RING	2	- #0003		
					O-RING	4	#0004 -	A	
C	S611-030001				O-RING	3			
D	S611-012001				O-RING	4			

ATTACHMENT HYDRAULIC PIPING

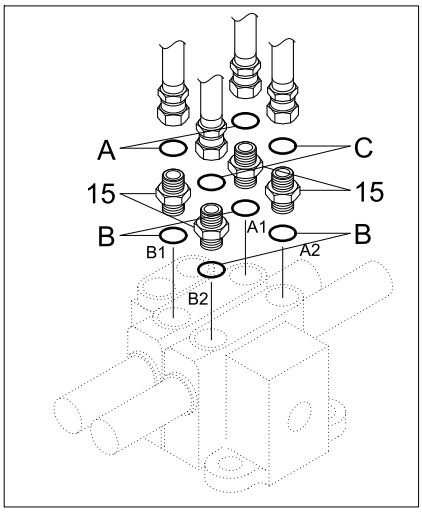

DETAIL A

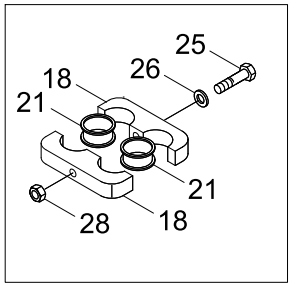

DETAIL B

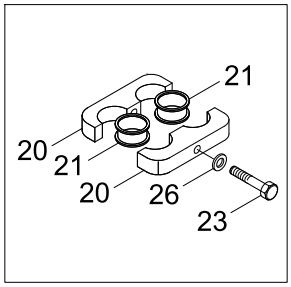

DETAIL C

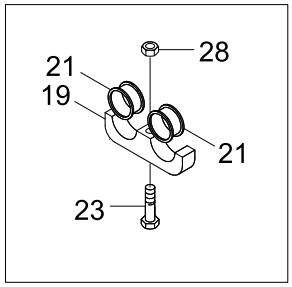

DETAIL D

Item	Part_No	IS	Ord	T	Description	Qty	Serial_No	ITC	Remark
4	31LN-21540				PIPE WA	1			
5	31LN-21550				PIPE WA	1			
6	31LN-21560				PIPE WA	1			
7	31LN-21570				PIPE WA	1			
8	31LN-21591				PIPE WA-RH	1			
9	31LN-21581				PIPE WA-LH	1			
10	31LN-21601				PIPE WA-LH	1			
11	31LN-21611				PIPE WA-RH	1			
12	P703-125321				HOSE ASSY-FLG 0X90	2			
13	P703-125323				HOSE ASSY-FLG 0X90	2			
14	31LF-20143				HOSE ASSY	2			
15	31LF-20120				CONNECTOR	4			
16	31LN-20200				COVER	1			
17	P173-120102				FLANGE-HYD,SPLIT	32			
18	31L7-20120				CLAMP	4			
19	31L7-20130				CLAMP	2			
20	31L7-20141				CLAMP	1			
21	S690-027100				GROMMET(FOR ONE LINE)	10			
22	S760-061006				GROMMET	2			
23	S017-120506				BOLT-HEX	3			
24	S037-122556				BOLT-W/WASHER	4			
25	S017-120706				BOLT-HEX	2			
26	S441-12000B				WASHER-HARDENED	5			
27	S109-100306				BOLT-SOCKET	64			
28	S205-12100B				NUT-HEX	2			

Item	Part_No	IS	Ord	T	Description	Qty	Serial_No	ITC	Remark
29	Y171-019004				O-RING	16			
A	S621-018001				O-RING	2			
B	S611-030001				O-RING	4			
C	S621-021001				O-RING	2			

STEERING HYDRAULIC PIPING 1

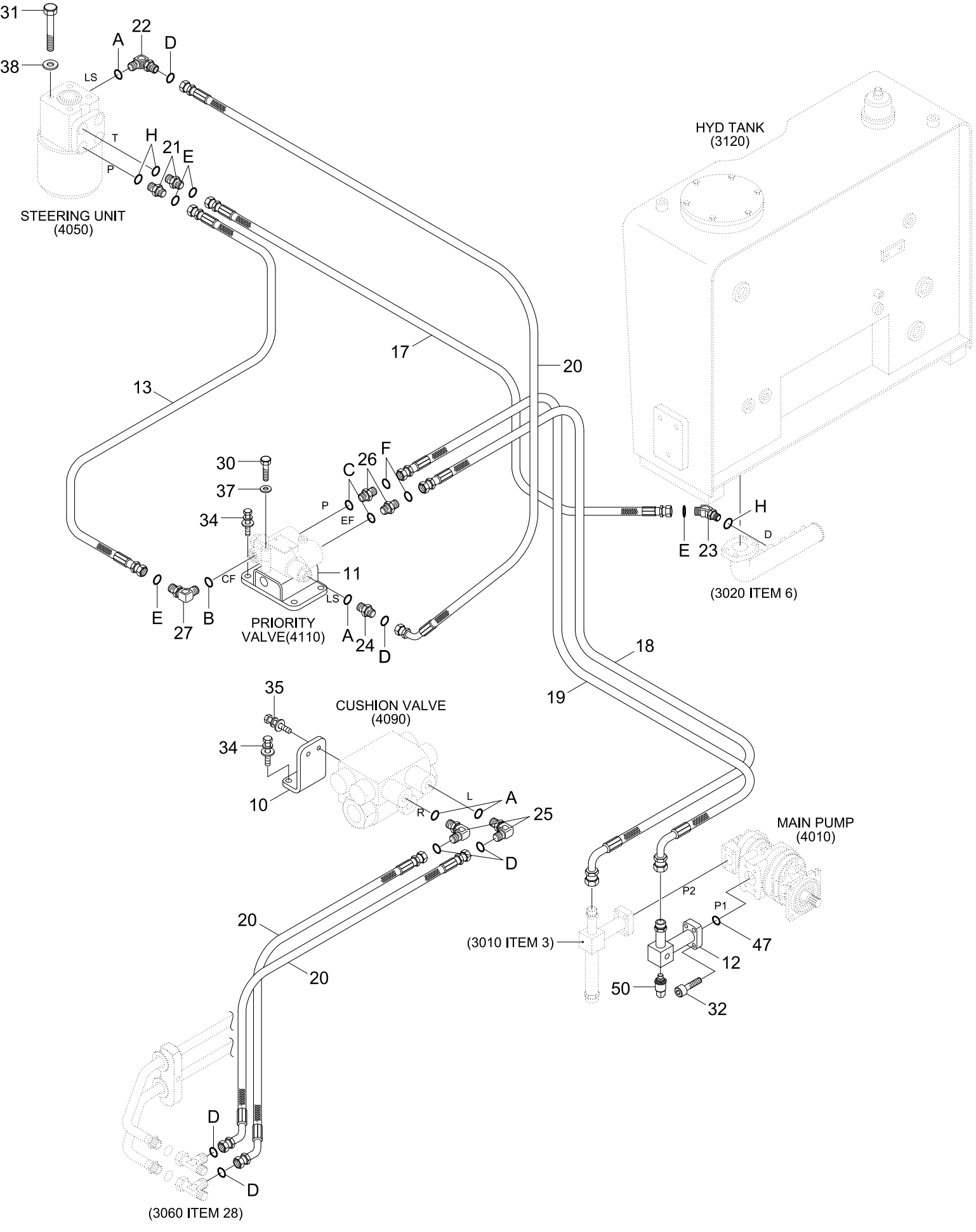

Item	Part_No	IS	Ord	T	Description	Qty	Serial_No	ITC	Remark
10	31LC-30090				PLATE	1			
11	31L7-30010				PLATE WA	1			
12	31LN-31510				PIPE WA	1	- #0005		
	31LN-31511				PIPE WA	1	#0006 -	B	
13	P910-084014				HOSE ASSY-ORFS 0X0	1			
17	P910-082030				HOSE ASSY-ORFS 0X0	1			
18	P930-124011				HOSE ASSY-ORFS 0X90	1			
19	P930-124012				HOSE ASSY-ORFS 0X90	1			
20	P920-044009				HOSE ASSY-ORFS 0X45	3			
21	X500-110003				CONNECTOR-ORFS	2			
22	X520-110001				ELBOW-90,ORFS	1			
23	X530-110003				ELBOW-45,ORFS	1			
24	X500-310001				CONNECTOR-ORFS	1			
25	31FG-10020				ELBOW-90	2			
26	31LF-30120				CONNECTOR	2			
27	31FQ-10050				ELBOW-90	1			
30	S015-080706				BOLT-HEX	2			
31	S017-100856				BOLT-HEX	4			
32	S109-100406				BOLT-SOCKET	4			
34	S037-122556				BOLT-W/WASHER	6			
35	S035-082056				BOLT-W/WASHER	2			
37	S441-08000B				WASHER-HARDENED	2			
38	S441-10000B				WASHER-HARDENED	4			
47	Y171-024004				O-RING	1			
50	31Q4-40800				SENSOR-PRESSURE	1	#0006 -		

Item	Part_No	IS	Ord	T	Description	Qty	Serial_No	ITC	Remark
A	S611-009001				O-RING	4			
B	S611-016001				O-RING	1			
C	S611-023001				O-RING	2			
D	S621-011001				O-RING	6			
E	S621-014001				O-RING	4			
F	S621-018001				O-RING	2			
H	S631-018004				O-RING	3			

STEERING HYDRAULIC PIPING 2

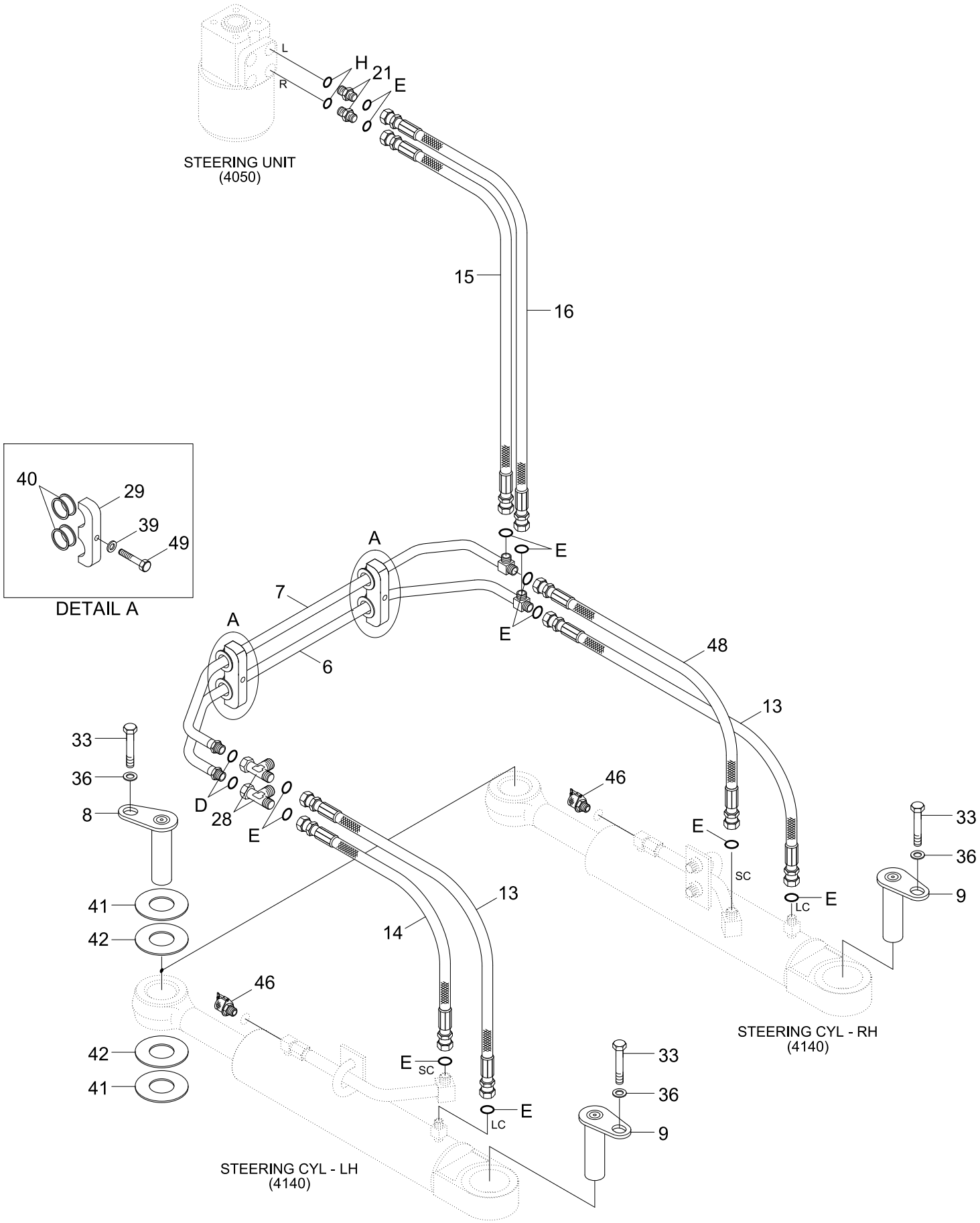

Item	Part_No	IS	Ord	T	Description	Qty	Serial_No	ITC	Remark
6	31LN-30050				PIPE WA	1			
7	31LN-30060				PIPE WA	1			
8	31LN-30330				PIN WA	2			
9	31LN-30340				PIN WA	2			
13	P910-084014				HOSE ASSY-ORFS 0X0	2			
14	P910-084012				HOSE ASSY-ORFS 0X0	1			
15	P910-084016				HOSE ASSY-ORFS 0X0	1			
16	P910-084018				HOSE ASSY-ORFS 0X0	1			
21	X500-110003				CONNECTOR-ORFS	2			
28	X840-535153				TEE-R/TYPE,SWIVEL,ORFS	2			
29	31L7-30060				CLAMP	2			
33	S017-16035D				BOLT-HEX	4			
36	64L3-01120-DA				WASHER-HARDENED	4			
39	S441-12000B				WASHER-HARDENED	2			
40	S690-022100				GROMMET(FOR ONE LINE)	4			
41	31L9-30130				SHIM(0.5T)	3			
42	31L9-30140				SHIM(1.0T)	3			
43	31LB-30580				SHIM(0.5T)	2			
44	31LB-30590				SHIM(1.0T)	2			
46	31EK-11130				COUPLING-SCREW	2			
48	P910-084013				HOSE ASSY-ORFS 0X0	1			
49	S017-120506				BOLT-HEX	2			
D	S621-011001				O-RING	2			
E	S621-014001				O-RING	12			
H	S631-018004				O-RING	2			

BRAKE HYDRAULIC PIPING 1

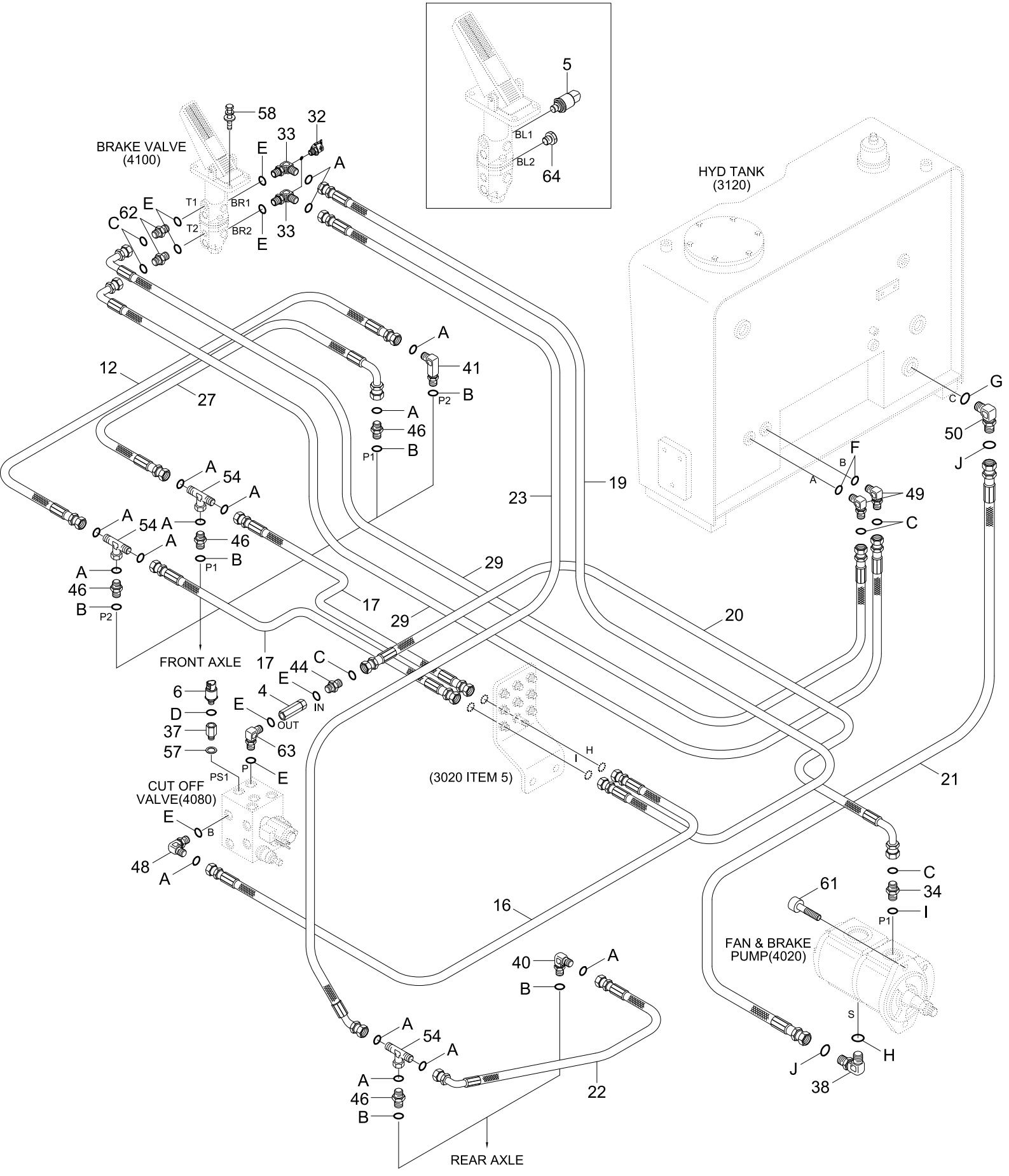

Item	Part_No	IS	Ord	T	Description	Qty	Serial_No	ITC	Remark
4	31L1-0139				FILTER-LINE	1			
5	31Q4-40910				PRESSURE SWITCH (4P)	1			SERVICE BRAKE
6	31Q4-40810				SENSOR-PRESSURE	1			PARKING
12	P910-064008				HOSE ASSY-ORFS 0X0	1			
16	P910-064023				HOSE ASSY-ORFS 0X0	1			
17	P910-064024				HOSE ASSY-ORFS 0X0	2			
19	P910-064026				HOSE ASSY-ORFS 0X0	1			
20	P930-084040				HOSE ASSY-ORFS 0X90	1			
21	P910-162018				HOSE ASSY-ORFS 0X0	1			
22	P920-064011				HOSE ASSY-ORFS 0X45	1			
23	P923-064036				HOSE ASSY-ORFS 0X45	1			
27	P930-064008				HOSE ASSY-ORFS 0X90	1			
29	P930-082040				HOSE ASSY-ORFS 0X90	2			
32	31EK-11130				COUPLING-SCREW	2			
33	31LB-40340				TEE	2			
34	31S8-20160				CONNECTOR	1			
37	31LG-40050				ADAPTER	1			
38	31LG-40060				ELBOW-90	1			
40	31LN-40180				ELBOW-90,ORFS	1			
41	31LN-40210				ELBOW-90,ORFS,LONG	1			
44	X500-110012				CONNECTOR-ORFS	1			
46	X500-210003				CONNECTOR-ORFS	4			
48	X520-110002				ELBOW-90,ORFS	1			
49	X520-110003				ELBOW-90,ORFS	2			
50	X520-110005				ELBOW-90,ORFS	1			

Item	Part_No	IS	Ord	T	Description	Qty	Serial_No	ITC	Remark
54	X830-525252				TEE-B/TYPE,SWIVEL,ORFS	3			
57	P392-220000				WASHER-COPPER	1			
58	S035-082556				BOLT-W/WASHER	4			
61	S109-120306				BOLT-SOCKET	2			
62	31LC-40340				CONNECTOR	2			
63	31LF-40060				ELBOW-90	1			
64	P220-110102				PLUG-HEX	1			
A	S621-012001				O-RING	15			
B	Y161-014001				O-RING	6			
C	S621-014001				O-RING	6			
D	S631-011004				O-RING	1			
E	S631-014004				O-RING	8			
F	S631-018004				O-RING	2			
G	S631-029004				O-RING	1			
H	S611-030001				O-RING	1			
I	S611-019001				O-RING	1			
J	S621-021001				O-RING	2			

BRAKE HYDRAULIC PIPING 2

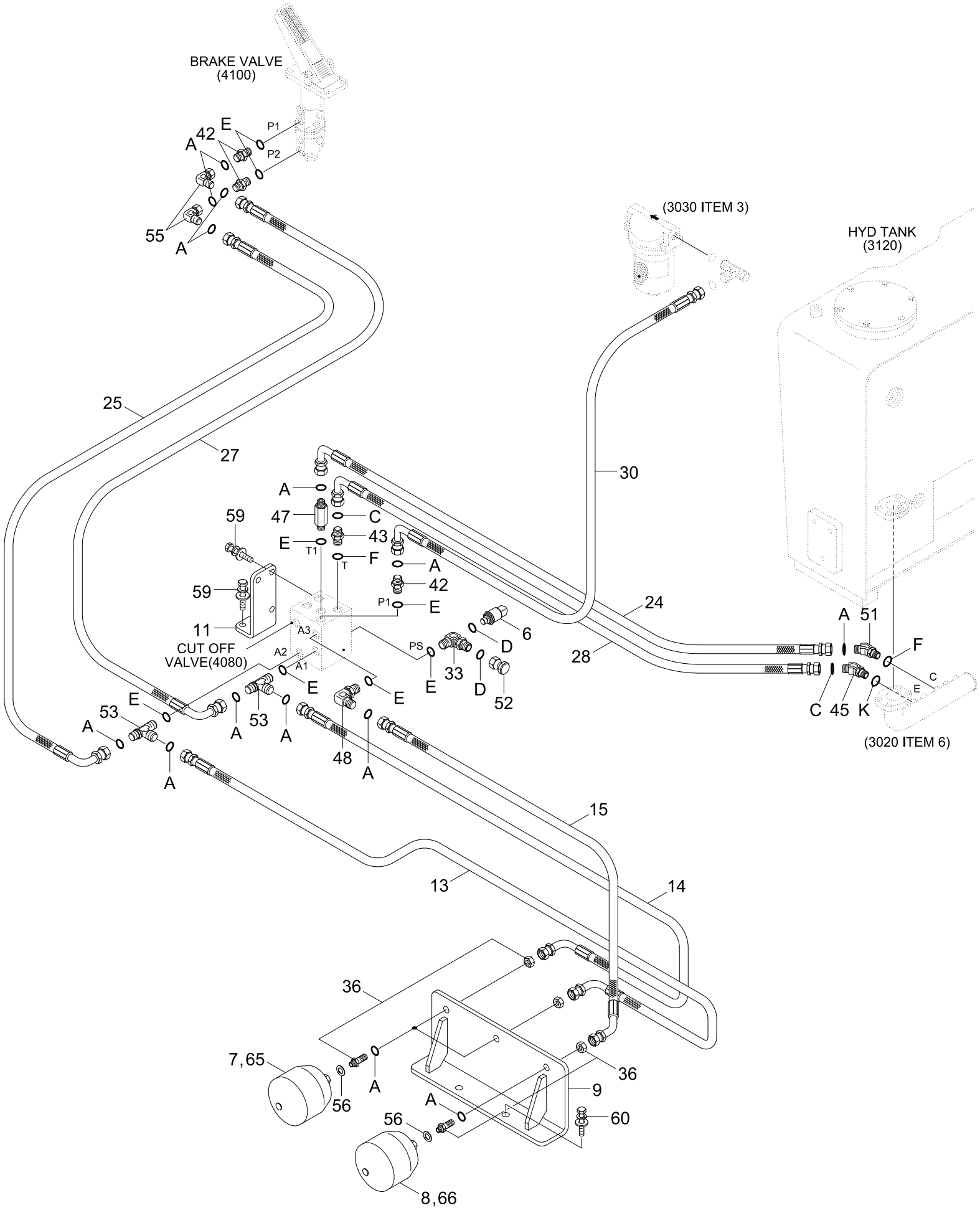

Item	Part_No	IS	Ord	T	Description	Qty	Serial_No	ITC	Remark
6	31Q4-40810				SENSOR-PRESSURE	1			CHARGING
7	81L1-0004				ACCUMULATOR	2			
8	31EC-02190				ACCUMULATOR	1			
9	31LN-40241				PLATE WA	1			
11	31LP-40044				PLATE	1			
13	P930-064010				HOSE ASSY-ORFS 0X90	1			
14	P930-064012				HOSE ASSY-ORFS 0X90	1			
15	P920-064009				HOSE ASSY-ORFS 0X45	1			
24	P930-062021				HOSE ASSY-ORFS 0X90	1			
25	P930-064007				HOSE ASSY-ORFS 0X90	1			
27	P930-064008				HOSE ASSY-ORFS 0X90	1			
28	P930-082020				HOSE ASSY-ORFS 0X90	1			
30	P930-064015				HOSE ASSY-ORFS 0X90	1			
33	31LB-40340				TEE	1			
36	31LB-40410				CONNECTOR	3			
42	X500-110002				CONNECTOR-ORFS	2			
43	X500-110003				CONNECTOR-ORFS	1			
45	X530-110003				ELBOW-45,ORFS	1			
47	X511-106523				CONNECTOR-LONG,ORFS	1			
48	X520-110002				ELBOW-90,ORFS	1			
51	X530-110002				ELBOW-45,ORFS	1			
52	X710-100103				CAP-HYD,ORFS	1			
53	X820-065252				TEE-R/TYPE,ORFS	2			
55	X850-525200				ELBOW-90,SWIVEL,ORFS	2			
56	P392-180000				WASHER-COPPER	3			

Item	Part_No	IS	Ord	T	Description	Qty	Serial_No	ITC	Remark
59	S037-122556				BOLT-W/WASHER	5			
60	S037-123556				BOLT-W/WASHER	2			
64	31LC-80040				ACCUMULATOR	1			ARTIC
65	31LC-80020				ACCUMULATOR	1			ARTIC
A	S621-012001				O-RING	15			
C	S621-014001				O-RING	2			
D	S631-011004				O-RING	1			
E	S631-014004				O-RING	8			
F	S631-018004				O-RING	2			
K	S631-024004				O-RING	1			

GREASE PIPING(FRONT)

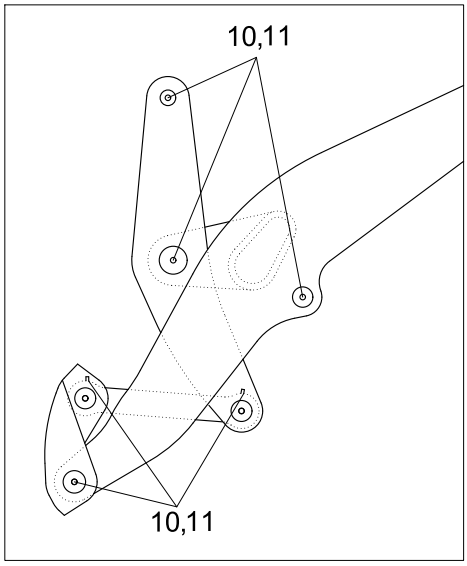

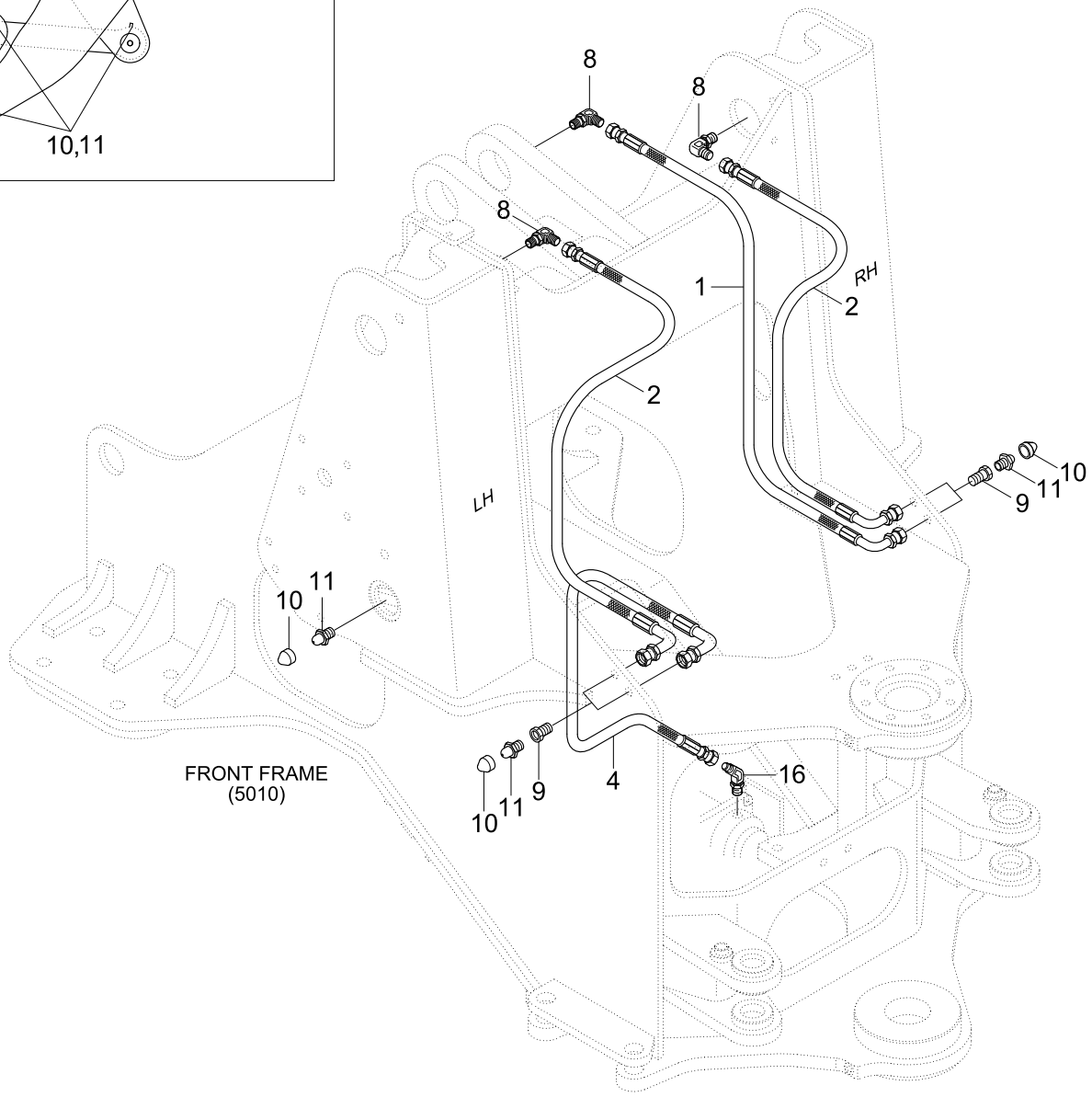

Item	Part_No	IS	Ord	T	Description	Qty	Serial_No	ITC	Remark
1	P860-042020				HOSE ASSY-SYN 0X90	1			
2	P860-042024				HOSE ASSY-SYN 0X90	2			
4	P860-042019				HOSE ASSY-SYN 0X90	1			
8	61L1-3909				ELBOW-90	3			
9	31LB-50020				CONNECTOR	4			
10	S654-000000				CAP-GREASE NIPPLE	18			
11	S651-810002				NIPPLE-GREASE	18			
16	E231-0207				ELBOW-45	1			

GREASE PIPING(REAR)

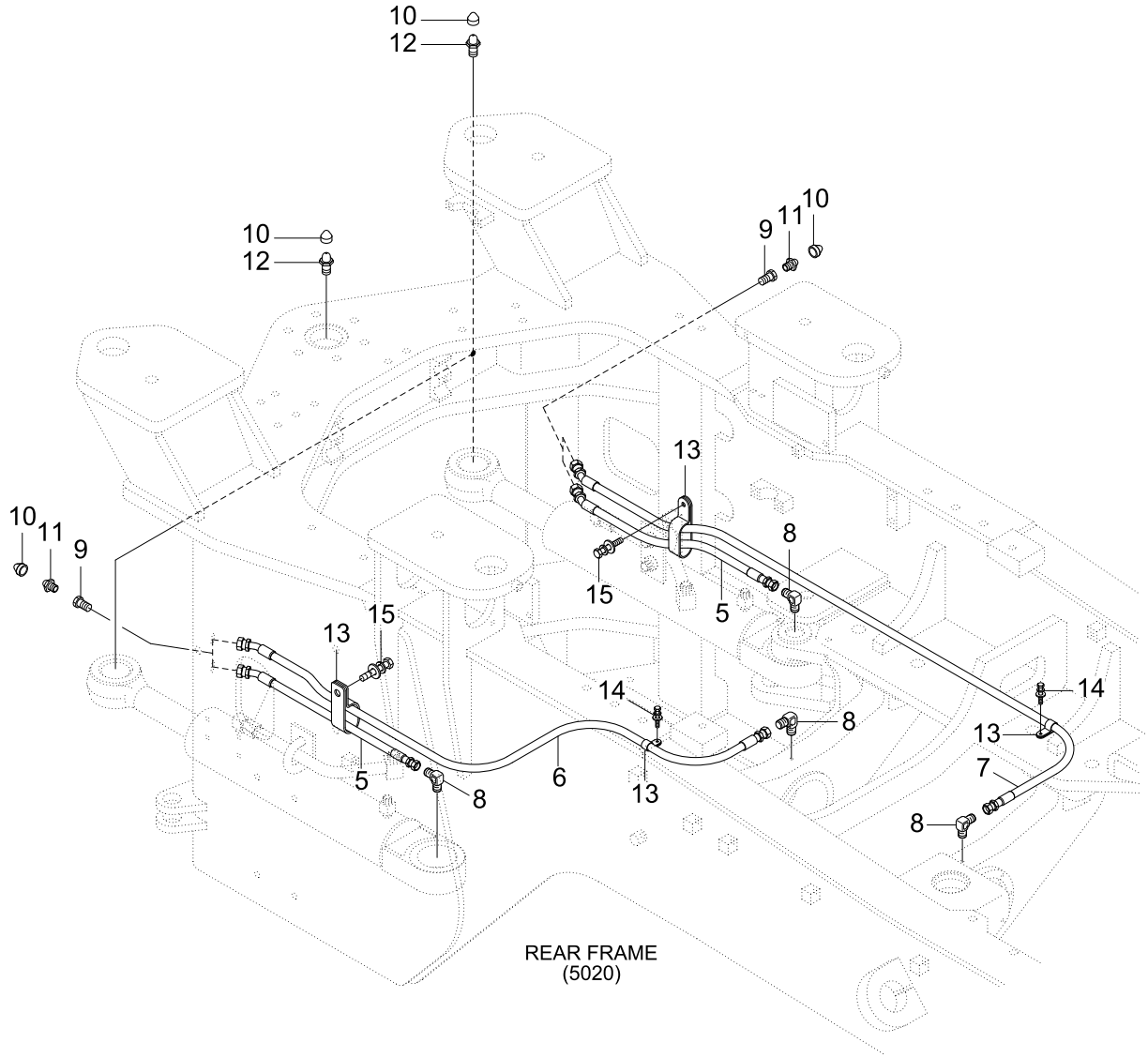

Item	Part_No	IS	Ord	T	Description	Qty	Serial_No	ITC	Remark
5	P850-042014				HOSE ASSY-SYN 0X45	2			
6	P850-042028				HOSE ASSY-SYN 0X45	1			
7	P850-042040				HOSE ASSY-SYN 0X45	1			
8	61L1-3909				ELBOW-90	4			
9	31LB-50020				CONNECTOR	4			
10	S654-000000				CAP-GREASE NIPPLE	8			
11	S651-810002				NIPPLE-GREASE	4			
12	S653-810002				NIPPLE-GREASE	4			
13	S543-140002				CLAMP-TUBE	5			
14	S037-102052				BOLT-W/WASHER	3			
15	31L7-10200				CLAMP-TUBE	2			

HYDRAULIC TANK

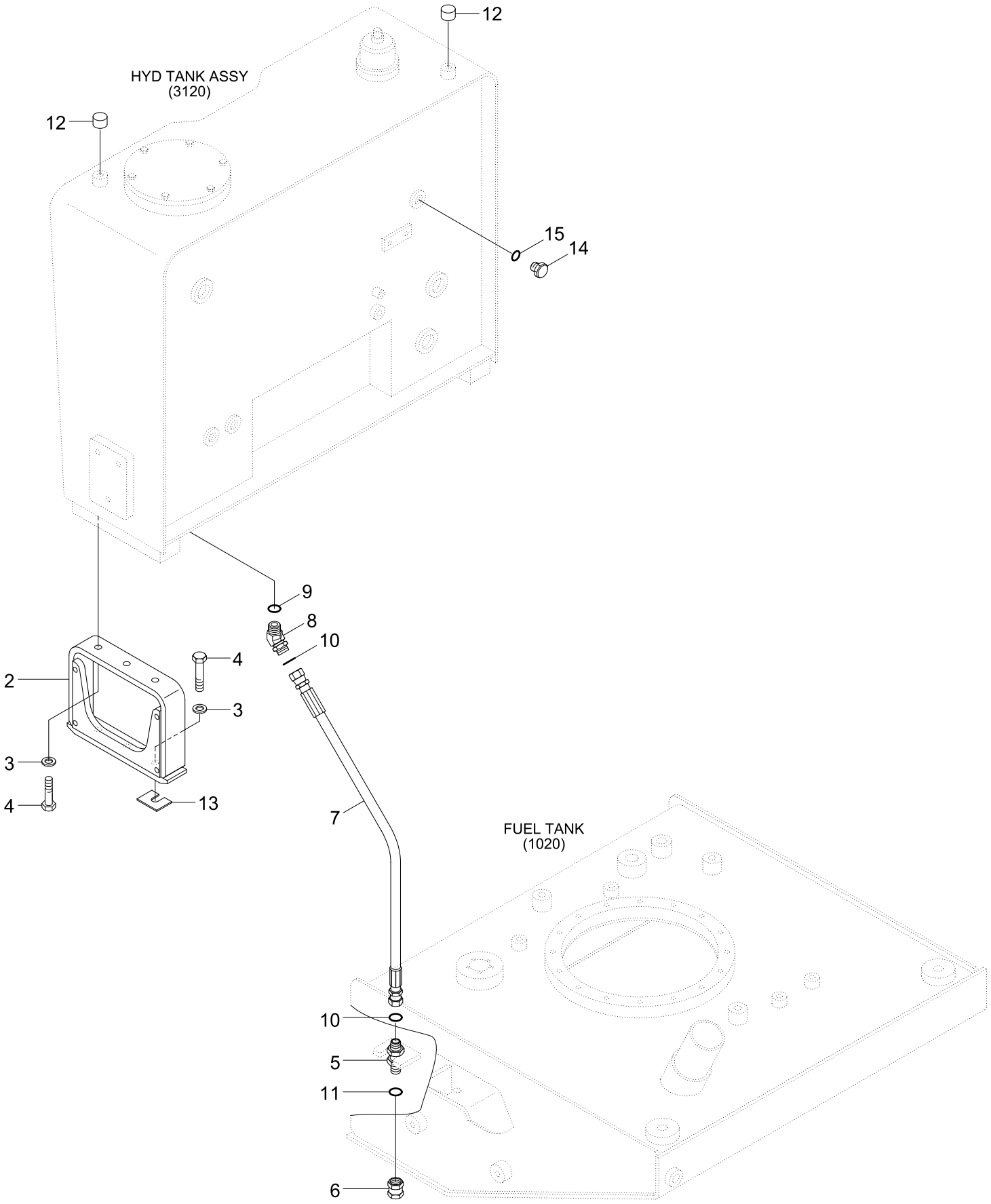

Item	Part_No	IS	Ord	T	Description	Qty	Serial_No	ITC	Remark
2	31LN-60501				BRACKET WA	2			
3	S441-160006				WASHER-HARDENED	12			
4	S017-16040D				BOLT-HEX	12			
5	31LB-60160				CONNECTOR	1			
6	X710-100105				CAP-HYD ORFS	1			
7	P910-162023				HOSE ASSY-ORFS 0X0	1	- #0010		
	P910-162027				HOSE ASSY-ORFS 0X0	1	#0011 -	B	
8	X530-110005				ELBOW-45,ORFS	1			
9	S631-029004				O-RING	1			
10	S621-021001				O-RING	2			
11	S621-018001				O-RING	1			
12	S981-121500				PLUG	2			
13	31LP-60901				SHIM	6			
14	P220-110104				PLUG-HEX	1			
15	S631-018004				O-RING	1			

HYDRAULIC TANK ASSY

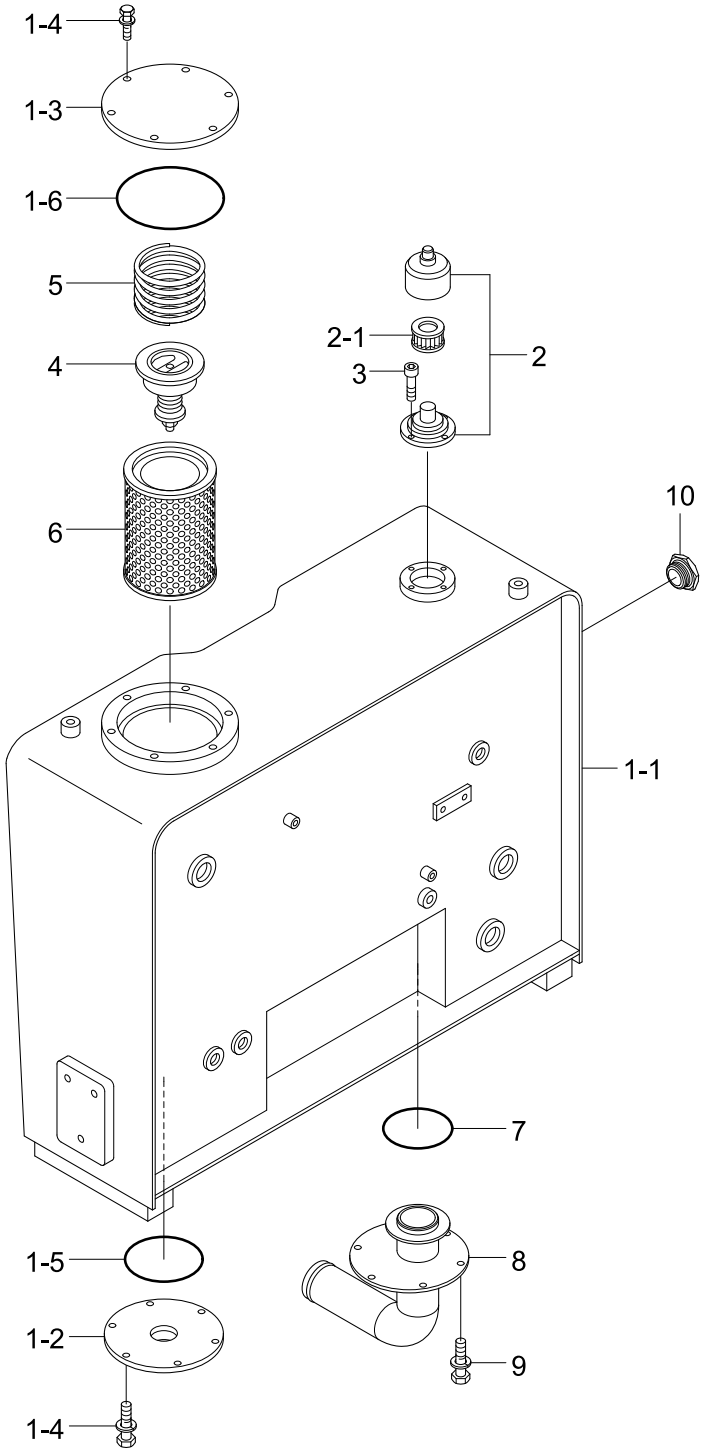

Item	Part_No	IS	Ord	T	Description	Qty	Serial_No	ITC	Remark
*	@				HYD TANK ASSY	1			NOT
1	31LN-61022				.HYD TANK SUB ASSY	1			
1-1	31LN-61032				..HYD TANK WA	1			
1-2	31LL-61180				..COVER WA	1			
1-3	31E3-4526				..COVER	1			
1-4	S037-102556				..BOLT-W/WASHER	12			
1-5	S632-140001				..O-RING	1			
1-6	S632-165001				..O-RING	1			
2	31EE-02100				.BREATHER-AIR	1			
2-1	31EE-02110				..ELEMENT	1			
3	S109-060156				.BOLT-SOCKET	4			
4	E131-0256				.VALVE-BYPASS	1			
5	E131-0220				.SPRING	1			
6	31LM-69040				.ELEMENT-RETURN	1			
7	S632-140001				.O-RING	1			
8	31LN-61550				.PIPE WA	1			
9	S037-102556				.BOLT-W/WASHER	6			
10	31M6-52140				.SIGHT GAUGE ASSY	1			

EMERGENCY STEERING HYD PIPING

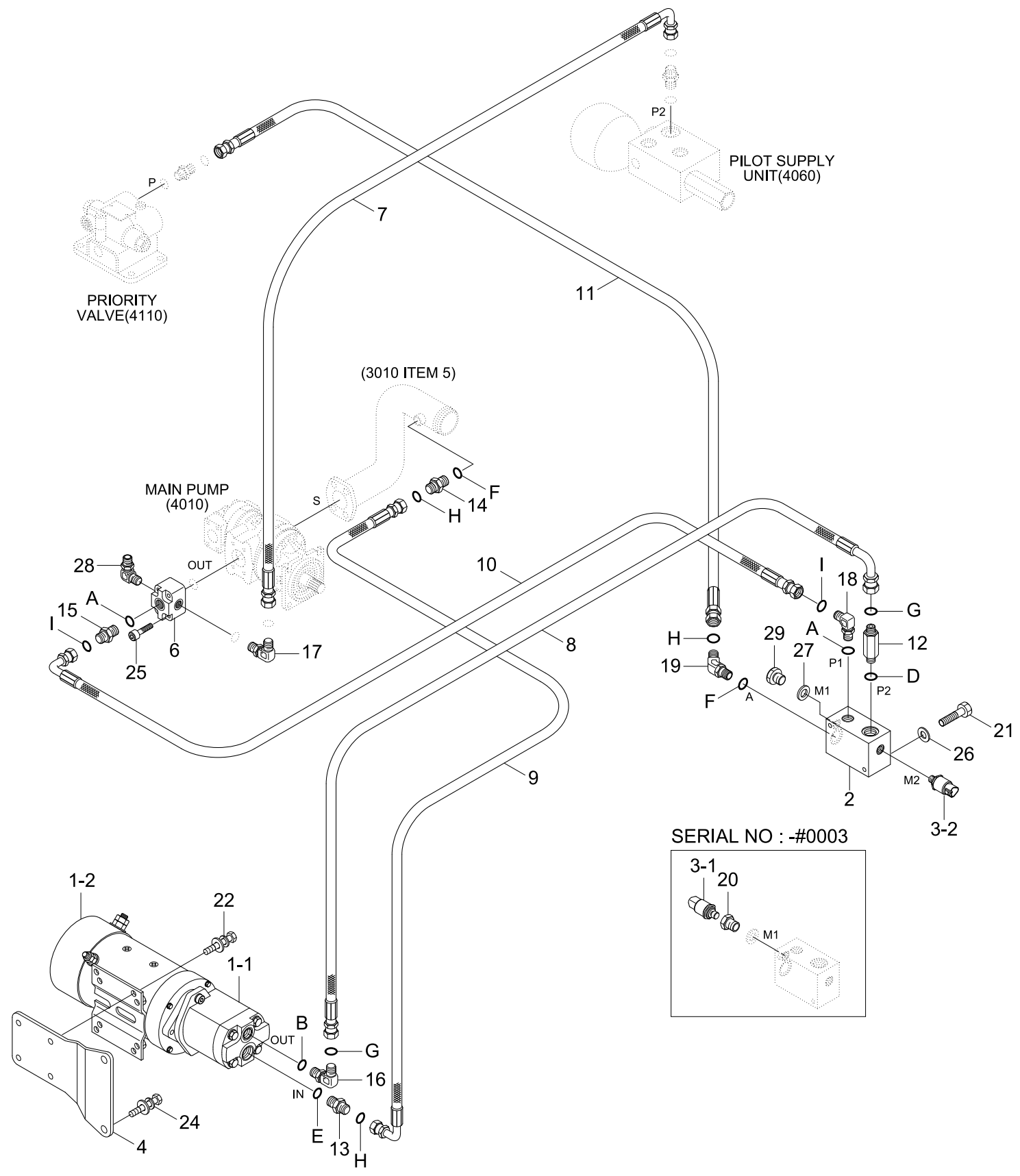

Item	Part_No	IS	Ord	T	Description	Qty	Serial_No	ITC	Remark
N*	30LN-75200				EMERGENCY STEERING KIT	1			NOT
1	31LM-41000				.PUMP & MOTOR ASSY	1			
1-1	31LM-41100				..PUMP ASSY	1			
1-2	31LM-41200				..DC MOTOR ASSY	1			
2	31L6-02201				.CHECK VALVE	1			
3-1	31Q4-40800				.SENSOR-PRESSURE	1	- #0005		MAIN PUMP
3-2	31Q4-40800				.SENSOR-PRESSURE	1			E/STEER PUMP
4	31LF-90291				.PLATE	1			
6	34L3-02510				.BLOCK	1	- #0005		
	31LM-02510				.BLOCK	1	#0006 -	B	
7	P930-064015				.HOSE ASSY-ORFS 0X90	1			
8	P930-084013				.HOSE ASSY-ORFS 0X90	1			
9	P930-122016				.HOSE ASSY-ORFS 0X90	1			
10	P930-124010				.HOSE ASSY-ORFS 0X90	1			
11	P910-124017				.HOSE ASSY-ORFS 0X0	1			
12	31N8-40190				.CONNECTOR-LONG,ORFS	1			
13	31S7-00390				.CONNECTOR	1			
14	X500-110004				.CONNECTOR-ORFS	1			
15	X500-110019				.CONNECTOR-ORFS	1			
16	31S7-90100				.ELBOW-90	1			
17	X520-110011				.ELBOW-90,ORFS	1			
18	X520-110018				.ELBOW-90,ORFS	1			
19	X530-110018				.ELBOW-45,ORFS	1			
20	31LG-40050				.ADAPTER	1	- #0005		
21	S017-100756				.BOLT-HEX	2			

Item	Part_No	IS	Ord	T	Description	Qty	Serial_No	ITC	Remark
22	S037-101556				.BOLT-W/WASHER	4			
24	S037-122556				.BOLT-W/WASHER	2			
25	S109-100506				.BOLT-SOCKET	4			
26	S441-10000B				.WASHER-HARDENED	2			
27	P392-120000				.WASHER-COPPER	1			
28	P020-110001				.ELBOW-90	1	#0006 -		
29	P220-220103				.PLUG-HEX	1	#0006 -		
E	@				.EMER STEERING ELEC	1			NOT
A	S631-029004				O-RING	2			
B	S611-019001				O-RING	1			
D	S631-018004				O-RING	1			
E	S611-023001				O-RING	1			
F	S631-024004				O-RING	2			
G	S621-014001				O-RING	1			
H	S631-018001				O-RING	1			
I	S631-021001				O-RING	2			

RIDE CONTROL HYDRAULIC PIPING

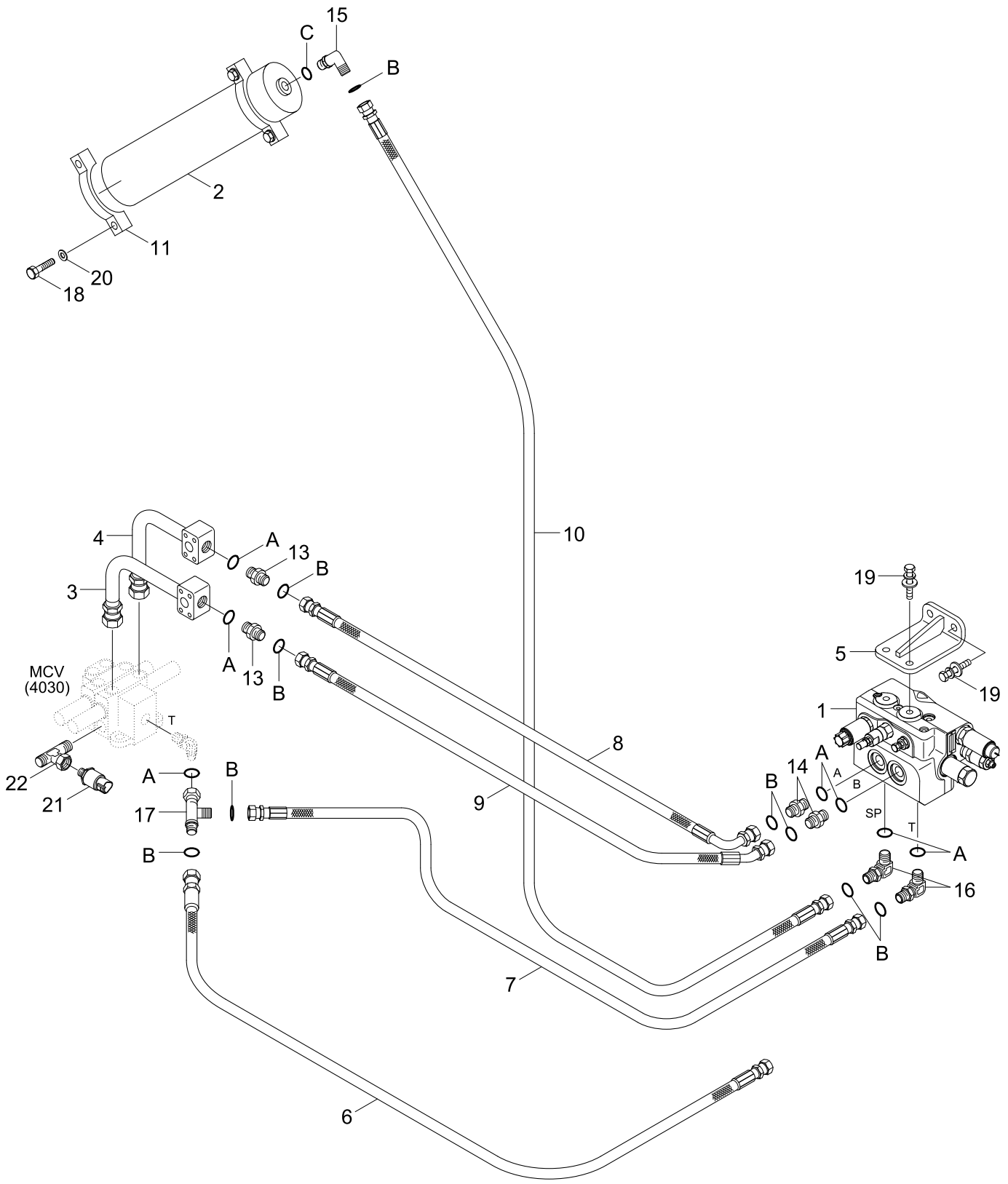

Item	Part_No	IS	Ord	T	Description	Qty	Serial_No	ITC	Remark
*	30LN-85200				RIDE CONTROL KIT	1			
1	@				.RIDE CONTROL VALVE	1			NOT
2	31LB-94000				.ACCUMULATOR	1			
3	31LN-97310				.PIPE WA	1	- #0002		
	31LN-97311				.PIPE W.A	1	#0003 -	B	
4	31LN-97320				.PIPE WA	1	- #0002		
	31LN-97321				.PIPE W.A	1	#0003 -	B	
5	31LL-97370				.PLATE WA	1			
6	P910-162028				.HOSE ASSY-ORFS 0X0	1			
7	P910-122011				.HOSE ASSY-ORFS 0X0	1			
8	P930-124010				.HOSE ASSY-ORFS 0X90	1			
9	P920-124012				.HOSE ASSY-ORFS 0X45	1			
10	P920-124017				.HOSE ASSY-ORFS 0X45	1			
11	31LL-97390				.CLAMP	2			
13	X500-110004				.CONNECTOR-ORFS	2			
14	X500-110019				.CONNECTOR-ORFS	2			
15	31S7-00460				.ELBOW-90	1			
16	X520-110018				.ELBOW-90,ORFS	2			
17	X840-555455				.TEE-R/TYPE,SWIVEL,ORFS	1			
18	S017-120656				.BOLT-HEX	4			
19	S037-122556				.BOLT-W/WASHER	4			
20	S441-12000B				.WASHER-HARDENED	4			
21	31Q4-40910				.SWITCH-PRESSURE(4P)	1			RIDE CONTROL
22	31N6-66080				.TEE-BRENCH TEST	1			
R2-17	@				.DECAL-RIDE CONTROL	1			NOT

Item	Part_No	IS	Ord	T	Description	Qty	Serial_No	ITC	Remark
R22	@				.SWITCH-RIDE CONTROL	1			NOT
R42	@				.RELAY 5P	1			NOT
A	S631-024004				O-RING	7			
B	S621-018001				O-RING	8			
C	S611-023001				O-RING	1			

MAIN PUMP

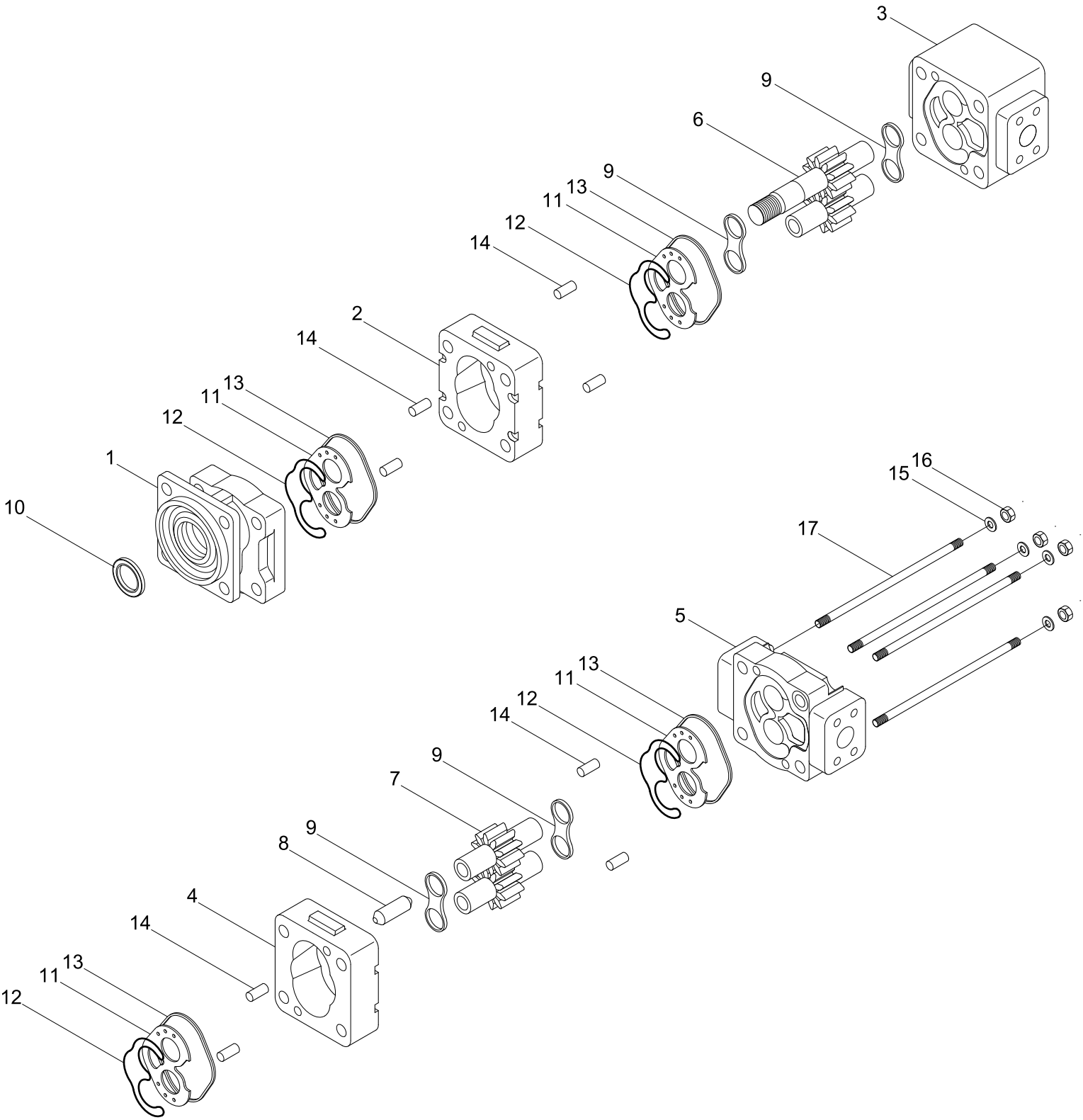
3
9
6
9
13
11
12
14
2
14
13
11
12
1
10
16
15
17
5
13
11
12
14
9
7
9
8
4
14
13
11
12

Item	Part_No	IS	Ord	T	Description	Qty	Serial_No	ITC	Remark
*	31LF-00410				MAIN PUMP	1			
1	XKCL-00066				.FRONT COVER	1			
2	XKCL-00067				.GEAR HOUSING	1			
3	XKCL-00068				.BEARING HOUSING	1			
4	XKCL-00067				.GEAR HOUSING	1			
5	XKCL-00069				.REAR COVER	1			
6	XKCL-00070				.SHAFT GEAR SET	1			
7	XKCL-00071				.DRIVE GEAR SET	1			
8	XKCL-00056				.SHAFT CONNECTING	1			
9	XKCL-00057				.THRUST PLATE	4			
10	XKCL-00058				.LIP SEAL	1			
11	XKCL-00059				.RUBBER SEAL	4			
12	XKCL-00060				.BACK UP SEAL	4			
13	XKCL-00061				.SQUARE SEAL	4			
14	XKCL-00062				.DOWEL PIN	8			
15	XKCL-00063				.WASHER	4			
16	XKCL-00064				.HEX NUT	4			
17	XKCL-00072				.STUD BOLT	4			

FAN & BRAKE PUMP

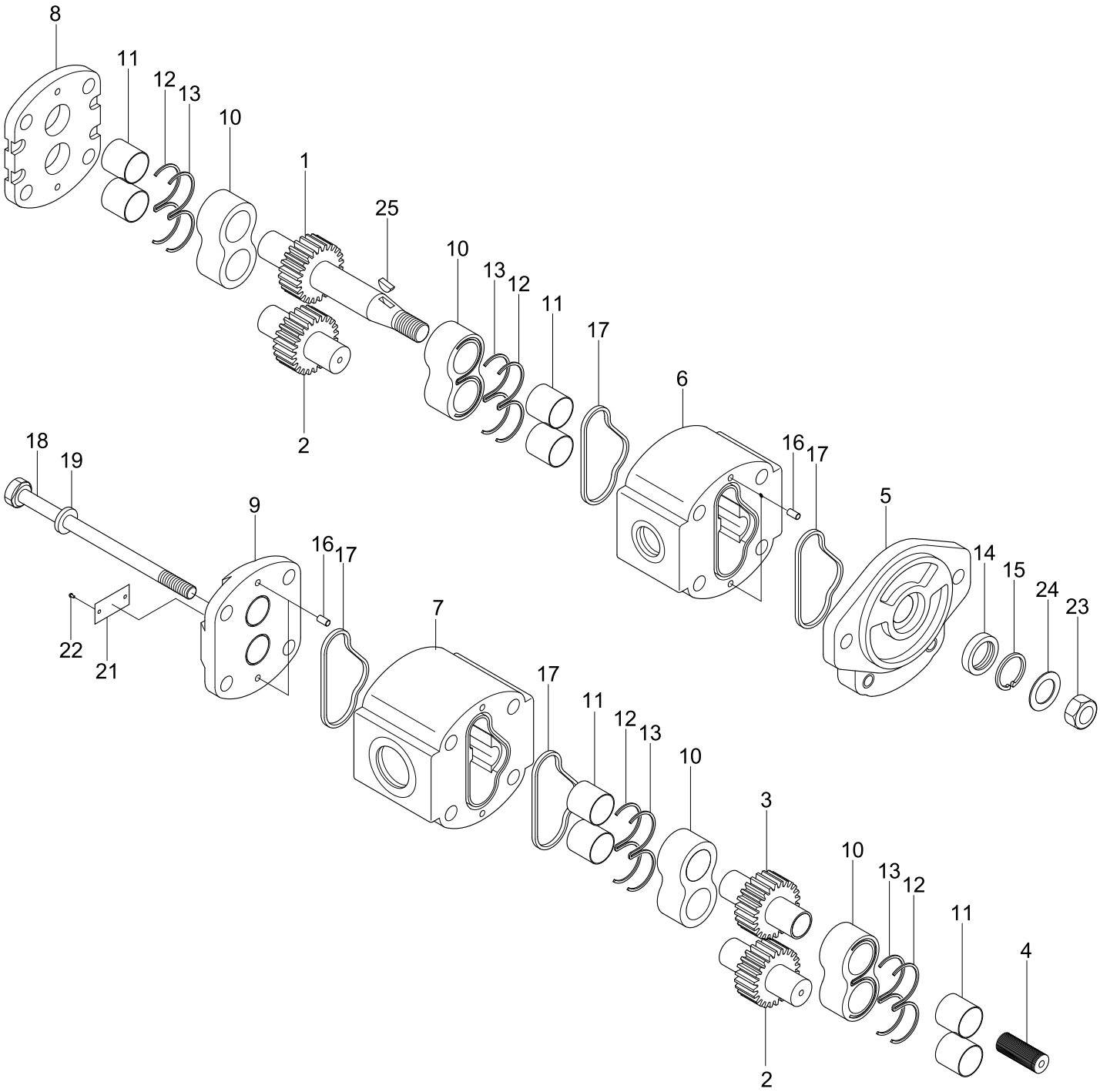

DESCRIPTION	PARTS NO	INCLUDED ITEM
SEAL KIT	XKAG-00017	12,13,14,17

Item	Part_No	IS	Ord	T	Description	Qty	Serial_No	ITC	Remark
*	31LF-40520				FAN & BRAKE PUMP	1			
1	XKAG-00125				.SHAFT GEAR	1			
2	XKAG-00110				.DRIVEN GEAR	2			
3	XKAG-00111				.GEAR-JOINT DRIVE	1			
4	XKAG-00036				.CONNECTOR	1			
5	XKAG-00126				.FRONT COVER	1			
6	XKAG-00112				.FRONT HOUSING	1			
7	XKAG-00113				.REAR HOUSING	1			
8	XKAG-00114				.MULTI SPACER	1			
9	XKAG-00040				.REAR COVER	1			
10	XKAG-00041				.BUSHING BLOCK	4			
11	XKAG-00042				.BUSHING-DU	8			
K12	XKAG-00025				.CHANNEL SEAL	4			
K13	XKAG-00026				.BACK UP SEAL	4			
K14	XKAG-00115				.RETAINER SEAL	1			
15	XKAG-00011				.RING-SNAP	1			
16	XKAG-00127				.DOWEL PIN	6			
K17	XKAG-00027				.D-RING	4			
18	XKAG-00117				.BOLT	4			
19	XKAG-00015				.WASHER	4			
21	XKAG-00080				.NAME PLATE	1			
22	XKAG-00081				.RIVET	2			
23	XKAG-00128				.NUT	1			
24	XKAG-00129				.CONICAL WASHER	1			
25	XKAG-00123				.WOODRUFF KEY	1			

Item	Part_No	IS	Ord	T	Description	Qty	Serial_No	ITC	Remark
K	XKAG-00017				SEAL KIT	1			SEE ILLUST

MAIN CONTROL VALVE(3-SPOOL)

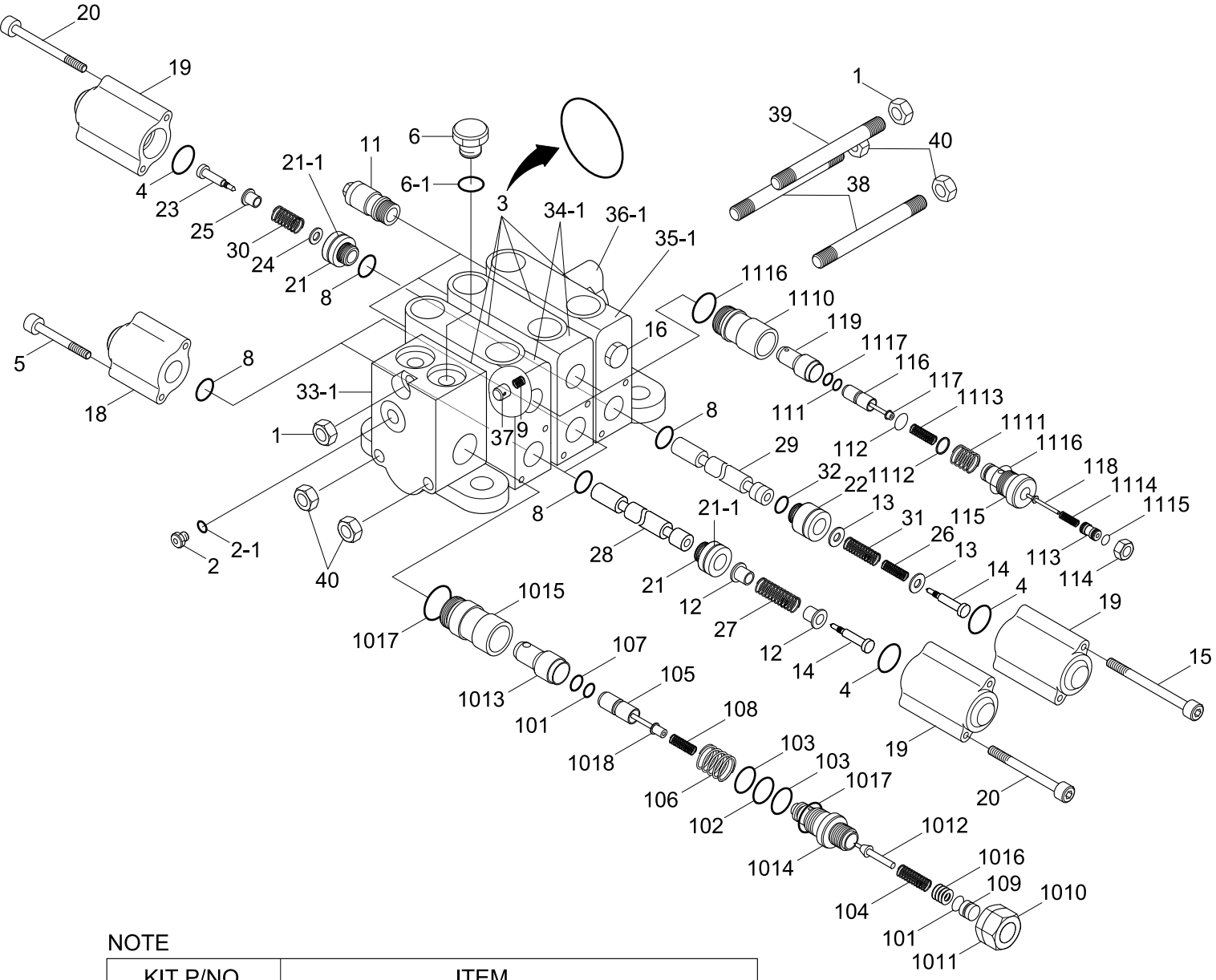

NOTE

KIT P/NO	ITEM
YUCE-00030	101-103,107,108,1017
YUCE-00049	111,112,1112,1113,1115-1117
YUCE-00071	2-1,6-1,10,33-1
YUCE-00073	3-5,8,9,11,12,14,18-21,21-1,27,28,34-1,37
YUCE-00075	3,4,8,9,11,13-16,19-26,29-32,35-1,37
YUCE-00077	36-1
SEAL KIT	2-1,3,4,6-1,8,21-1,32

Item	Part_No	IS	Ord	T	Description	Qty	Serial_No	ITC	Remark
*	31L7-00022				MAIN CONTROL VALVE	1			
1	YUCE-00001				.NUT-SPECIAL	2			
2	YUCE-00002				.PLUG	1			
K2-1	YUCE-00003				.O-RING	1			
K3	YUCE-00004				.O-RING	3			
K4	YUCE-00005				.O-RING	3			
5	YUCE-00173				.SCREW-CAP	2			
6	YUCE-00107				.PLUG	1			
K6-1	YUCE-00008				.O-RING	4			
K8	YUCE-00009				.O-RING	4			
9	YUCE-00010				.SPRING	2			
10	YUCE-00011				.MAIN RELIEF VALVE	1			
101	YUCE-00012				..O-RING	2			
102	YUCE-00013				..O-RING	1			
103	YUCE-00014				..RING-BACK UP	2			
N104	YUCE-00015				..SPRING	1			NOT
N105	YUCE-00016				..POPPET	1			NOT
N106	YUCE-00017				..SPRING	1			NOT
N107	YUCE-00018				..RING-BACK UP	1			NOT
N108	YUCE-00019				..SPRING	1			NOT
N109	YUCE-00020				..PLUG-ADJUST	1			NOT
N1010	YUCE-00021				..NUT-SPECIAL	1			NOT
N1011	YUCE-00022				..NUT-LOCK	1			NOT
N1012	YUCE-00023				..POPPET	1			NOT
N1013	YUCE-00024				..POPPET	1			NOT

Item	Part_No	IS	Ord	T	Description	Qty	Serial_No	ITC	Remark
N1014	YUCE-00025				..PLUG	1			NOT
N1015	YUCE-00026				..BODY	1			NOT
N1016	YUCE-00027				..SHIM	1			NOT
1017	YUCE-00028				..O-RING	2			
N1018	YUCE-00029				..PISTON	1			NOT
1019	YUCE-00030				.SEAL & SPRING KIT	1			SEE NOTE
11	YUCE-00031				.RELIEF VALVE-PORT	3			
111	YUCE-00032				..O-RING	1			
112	YUCE-00033				..O-RING	1			
N113	YUCE-00034				..SCREW-ADJUST	1			NOT
N114	YUCE-00035				..NUT-SPECIAL	1			NOT
N115	YUCE-00036				..PLUG	1			NOT
N116	YUCE-00037				..POPPET	1			NOT
N117	YUCE-00038				..PISTON	1			NOT
N118	YUCE-00039				..POPPET	1			NOT
N119	YUCE-00040				..POPPET	1			NOT
N1110	YUCE-00041				..BODY	1			NOT
N1111	YUCE-00042				..SPRING	1			NOT
N1112	YUCE-00043				..RING-BACK UP	1			NOT
N1113	YUCE-00044				..SPRING	1			NOT
N1114	YUCE-00045				..SPRING	1			NOT
1115	YUCE-00046				..O-RING	1			
N1116	YUCE-00047				..O-RING	2			NOT
N1117	YUCE-00048				..RING-BACK UP	1			NOT
1118	YUCE-00049				.KIT-SEAL & SPRING	1			SEE NOTE

Item	Part_No	IS	Ord	T	Description	Qty	Serial_No	ITC	Remark
12	YUCE-00174				.SPRING SEAT	2			
13	YUCE-00051				.WASHER-FLAT	2			
14	YUCE-00052				.SCREW-SHOULDER	2			
15	YUCE-00163				.SCREW-CAP	2			
16	YUCE-00054				.ANTI VOID ASSY	1			
18	YUCE-00166				.CAP-SPOOL	1			
19	YUCE-00167				.CAP-SPOOL	3			
20	YUCE-00168				.SCREW-CAP	4			
N21	YUCE-00176				.RETAINER-CAP,SPOOL	2			NOT
K21-1	YUCE-00070				..RING-BACK UP	4			
22	YUCE-00170				.RETAINER-CAP,SPOOL	1			
23	YUCE-00061				.SCREW-SHOULDER	1			
24	YUCE-00062				.WASHER-FLAT	1			
25	YUCE-00171				.SPACER	1			
26	YUCE-00064				.SPRING	1			
27	YUCE-00065				.SPRING	1			
N28	YUCE-00066				.SPOOL	1			NOT
N29	YUCE-00067				.SPOOL	1			NOT
30	YUCE-00068				.SPRING	1			
31	YUCE-00069				.SPRING	1			
NK32	YUCE-00177				.RING-BACK UP	1			NOT
33	YUCE-00071				.INLET SECTION ASSY	1			SEE NOTE,INLET
N33-1	YUCE-00072				..HOUSING-INLET	1			NOT
34	YUCE-00175				.SPOOL SECTION ASSY	1			SEE NOTE,BUCKET
N34-1	YUCE-00074				..HOUSING-SPOOL	1			NOT

Item	Part_No	IS	Ord	T	Description	Qty	Serial_No	ITC	Remark
35	YUCE-00075				.SPOOL SECTION ASSY	1			SEE NOTE,BOOM
N35-1	YUCE-00076				..HOUSING-SPOOL	1			NOT
36	YUCE-00077				.OUTLET SECTION ASSY	1			SEE NOTE,OUTLET
N36-1	YUCE-00078				..HOUSING-OUTLET	1			NOT
37	YUCE-00079				.POPPET	2			
38	YUCE-00084				.ROD-TIE	2			
39	YUCE-00085				.ROD-TIE	1			
40	YUCE-00082				.NUT-SPECIAL	4			
K	YUCE-00083				SEAL KIT	1			SEE NOTE
N	@				NOT INDIVIDUALLY SUPPLIED	AR			NOT

MAIN CONTROL VALVE(3-SPOOL)

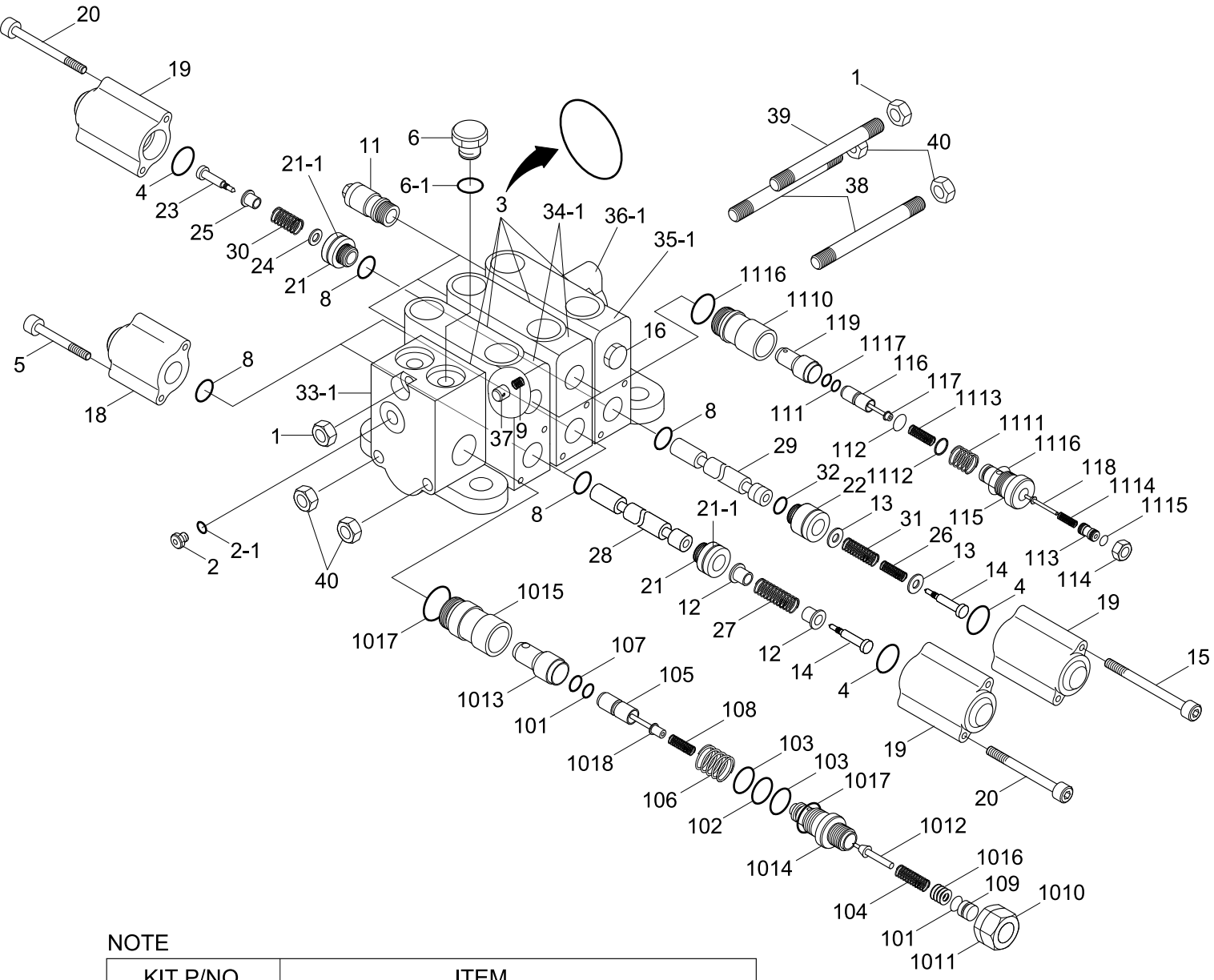

NOTE

KIT P/NO	ITEM
YUCE-00030	101-103,107,108,1017
YUCE-00049	111,112,1112,1113,1115-1117
YUCE-00071	2-1,6-1,10,33-1
YUCE-00073	3-5,8,9,11,12,14,18-21,21-1,27,28,34-1,37
YUCE-00075	3,4,8,9,11,13-16,19-26,29-32,35-1,37
YUCE-00077	36-1
SEAL KIT	2-1,3,4,6-1,8,21-1,32

Item	Part_No	IS	Ord	T	Description	Qty	Serial_No	ITC	Remark
*	31L7-00321				MAIN CONTROL VALVE	1			
1	YUCE-00001				.NUT-SPECIAL	2			
2	YUCE-00002				.PLUG	1			
K2-1	YUCE-00003				.O-RING	1			
K3	YUCE-00004				.O-RING	3			
K4	YUCE-00005				.O-RING	3			
5	YUCE-00173				.SCREW-CAP	4			
6	YUCE-00107				.PLUG	1			
K6-1	YUCE-00008				.O-RING	4			
K8	YUCE-00009				.O-RING	6			
9	YUCE-00010				.SPRING	3			
10	YUCE-00011				.MAIN RELIEF VALVE	1			
101	YUCE-00012				..O-RING	2			
102	YUCE-00013				..O-RING	1			
103	YUCE-00014				..RING-BACK UP	2			
N104	YUCE-00015				..SPRING	1			NOT
N105	YUCE-00016				..POPPET	1			NOT
N106	YUCE-00017				..SPRING	1			NOT
N107	YUCE-00018				..RING-BACK UP	1			NOT
N108	YUCE-00019				..SPRING	1			NOT
N109	YUCE-00020				..PLUG-ADJUST	1			NOT
N1010	YUCE-00021				..NUT-SPECIAL	1			NOT
N1011	YUCE-00022				..NUT-LOCK	1			NOT
N1012	YUCE-00023				..POPPET	1			NOT
N1013	YUCE-00024				..POPPET	1			NOT

Item	Part_No	IS	Ord	T	Description	Qty	Serial_No	ITC	Remark
N1014	YUCE-00025				..PLUG	1			NOT
N1015	YUCE-00026				..BODY	1			NOT
N1016	YUCE-00027				..SHIM	1			NOT
1017	YUCE-00028				..O-RING	2			
N1018	YUCE-00029				..PISTON	1			NOT
1019	YUCE-00030				.SEAL & SPRING KIT	1			SEE NOTE
11	YUCE-00031				.RELIEF VALVE-PORT	5			
111	YUCE-00032				..O-RING	1			
112	YUCE-00033				..O-RING	1			
N113	YUCE-00034				..SCREW-ADJUST	1			NOT
N114	YUCE-00035				..NUT-SPECIAL	1			NOT
N115	YUCE-00036				..PLUG	1			NOT
N116	YUCE-00037				..POPPET	1			NOT
N117	YUCE-00038				..PISTON	1			NOT
N118	YUCE-00039				..POPPET	1			NOT
N119	YUCE-00040				..POPPET	1			NOT
N1110	YUCE-00041				..BODY	1			NOT
N1111	YUCE-00042				..SPRING	1			NOT
N1112	YUCE-00043				..RING-BACK UP	1			NOT
N1113	YUCE-00044				..SPRING	1			NOT
N1114	YUCE-00045				..SPRING	1			NOT
1115	YUCE-00046				..O-RING	1			
N1116	YUCE-00047				..O-RING	2			NOT
N1117	YUCE-00048				..RING-BACK UP	1			NOT
1118	YUCE-00049				.KIT-SEAL & SPRING	1			SEE NOTE

Item	Part_No	IS	Ord	T	Description	Qty	Serial_No	ITC	Remark
12	YUCE-00174				.SPRING SEAT	4			
13	YUCE-00051				.WASHER-FLAT	2			
14	YUCE-00052				.SCREW-SHOULDER	3			
15	YUCE-00163				.SCREW-CAP	2			
16	YUCE-00054				.ANTI VOID ASSY	1			
18	YUCE-00166				.CAP-SPOOL	2			
19	YUCE-00167				.CAP-SPOOL	4			
20	YUCE-00168				.SCREW-CAP	6			
N21	YUCE-00176				.RETAINER-CAP,SPOOL	3			NOT
K21-1	YUCE-00070				..RING-BACK UP	4			
22	YUCE-00170				.RETAINER-CAP,SPOOL	1			
23	YUCE-00061				.SCREW-SHOULDER	1			
24	YUCE-00062				.WASHER-FLAT	1			
25	YUCE-00171				.SPACER	1			
26	YUCE-00064				.SPRING	1			
27	YUCE-00065				.SPRING	2			
N28	YUCE-00066				.SPOOL	2			NOT
N29	YUCE-00067				.SPOOL	1			NOT
30	YUCE-00068				.SPRING	1			
31	YUCE-00069				.SPRING	1			
NK32	YUCE-00177				.RING-BACK UP	1			NOT
33	YUCE-00071				.INLET SECTION ASSY	1			SEE NOTE,INLET
N33-1	YUCE-00072				..HOUSING-INLET	1			NOT
34	YUCE-00175				.SPOOL SECTION ASSY	2			SEE NOTE,BUCKET
N34-1	YUCE-00074				..HOUSING-SPOOL	2			NOT

Item	Part_No	IS	Ord	T	Description	Qty	Serial_No	ITC	Remark
35	YUCE-00075				.SPOOL SECTION ASSY	1			SEE NOTE,BOOM
N35-1	YUCE-00076				..HOUSING-SPOOL	1			NOT
36	YUCE-00077				.OUTLET SECTION ASSY	1			SEE NOTE,OUTLET
N36-1	YUCE-00078				..HOUSING-OUTLET	1			NOT
37	YUCE-00079				.POPPET	3			
38	YUCE-00084				.ROD-TIE	2			
39	YUCE-00085				.ROD-TIE	1			
40	YUCE-00082				.NUT-SPECIAL	4			
K	YUCE-00083				SEAL KIT	1			SEE NOTE
N	@				NOT INDIVIDUALLY SUPPLIED	AR			NOT

STEERING UNIT

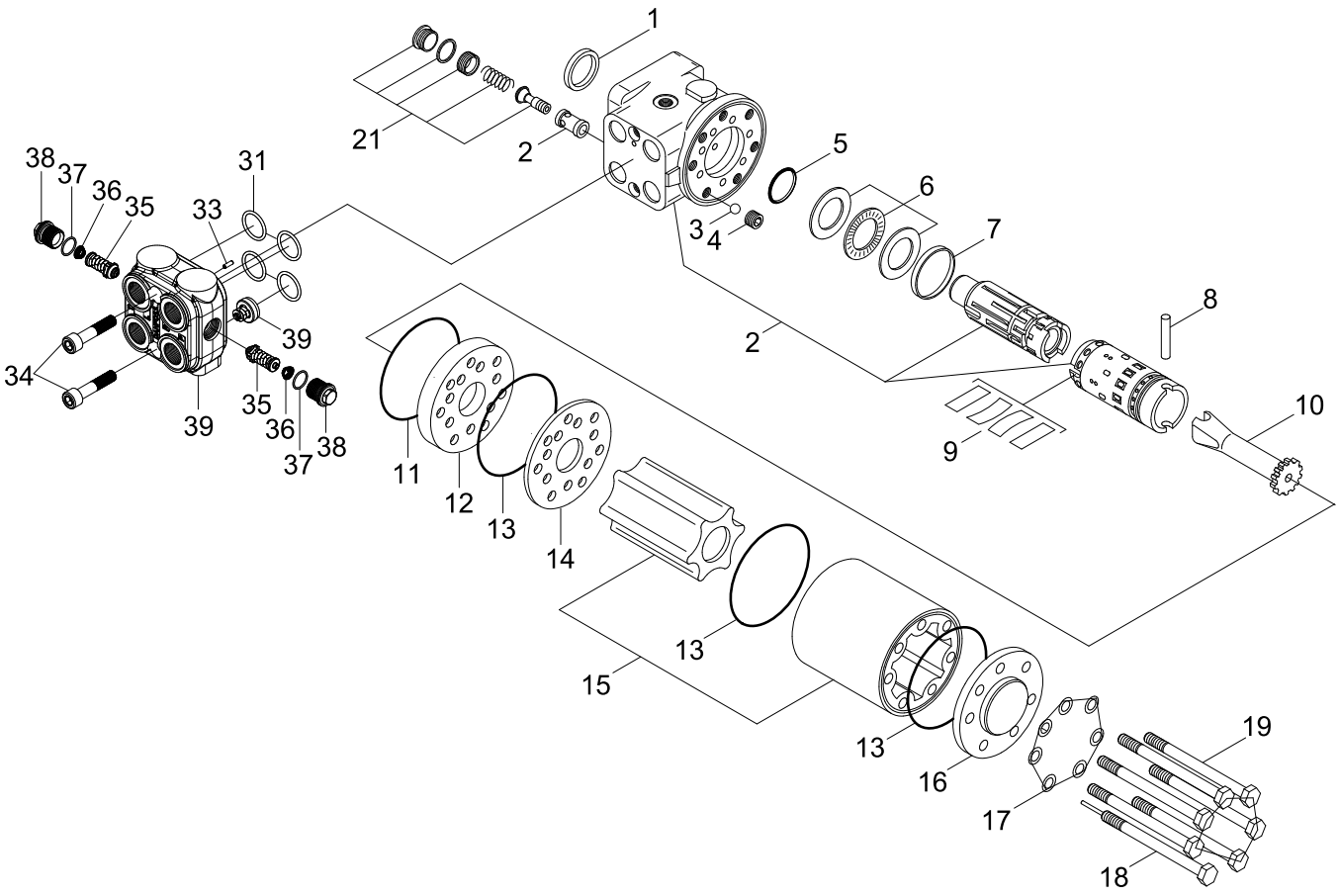

Item	Part_No	IS	Ord	T	Description	Qty	Serial_No	ITC	Remark
*	31LF-30010				STEERING UNIT	1			
1	YUBS-00001				.SEAL-DUST	1			
N2	@				.HOUSING,SPOOL,SLEEVE	1			NOT
3	YUBS-00002				.BALL	1			
4	YUBS-00003				.BUSHING-THREAD	1			
5	YUBS-00004				.O-RING	1			
6	YUBS-00005				.BEARING ASSY	1			
7	YUBS-00006				.RING	1			
8	YUBS-00007				.PIN-CROSS	1			
9	YUBS-00112				.SET OF SPRINGS	1			
10	YUBS-00008				.SHAFT-CARDAN	1			
11	YUBS-00010				.O-RING	1			
12	YUBS-00011				.PLATE-DISTRIBUTOR	1			
13	YUBS-00013				.O-RING	3			
14	YUBS-00011				.PLATE-DISTRIBUTOR	1			
N15	YUBS-00113				.GEARWHEEL SET	1			NOT
16	YUBS-00014				.COVER-END	1			
17	YUBS-00015				.WASHER	7			
18	YUBS-00114				.SCREW-PIN	1			
19	YUBS-00115				.SCREW	6			
21	YUBS-00116				.RELIEF VALVE-PILOT	1			
31	YUBS-00117				.O-RING SET	1			
33	YUBS-00118				.PIN-ROLLED	1			
34	YUBS-00119				.SCREW	2			
N35	YUBS-00120				.VALVE-SHOCK	2			NOT

Item	Part_No	IS	Ord	T	Description	Qty	Serial_No	ITC	Remark
36	YUBS-00121				.SPRING	2			
37	YUBS-00122				.O-RING	2			
38	YUBS-00123				.PLUG	2			
N39	@				.HOUSING,CHECK VALVE	1			NOT
N	@				NOT SUPPLIED PARTS	AR			NOT

PILOT SUPPLY UNIT

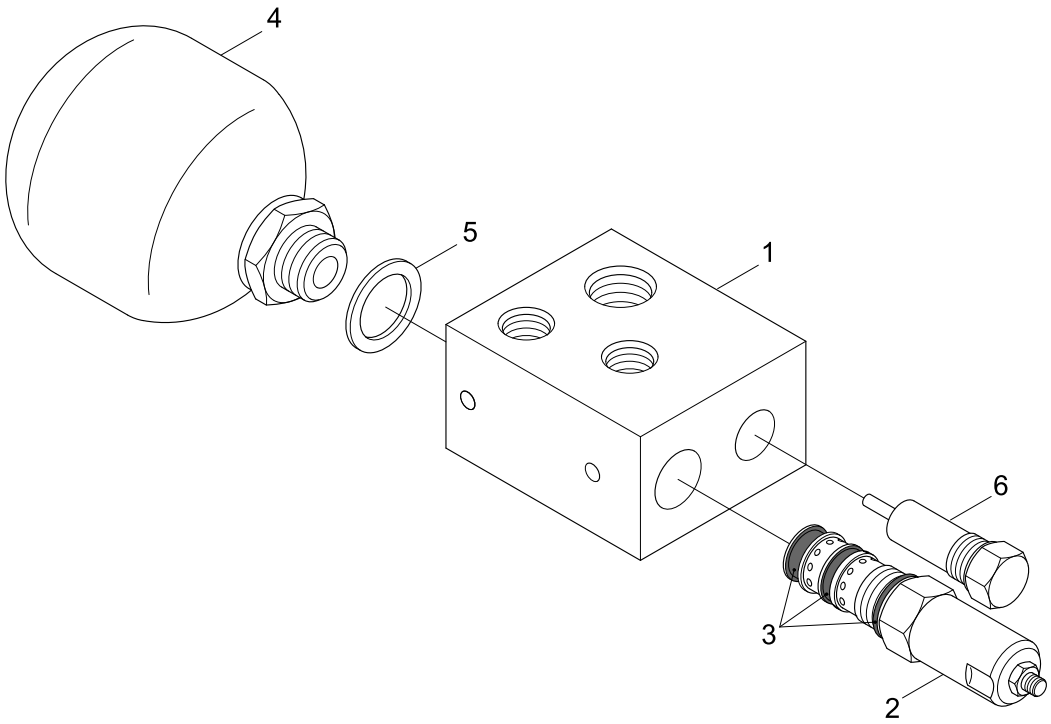

Item	Part_No	IS	Ord	T	Description	Qty	Serial_No	ITC	Remark
*	31L7-10280				PILOT SUPPLY UNIT	1			
	31L7-10380				PILOT SUPPLY UNIT	1			ARTIC
1	ZGAW-00001				.MANIFOLD COMPLETE	1			
2	ZGAW-00002				.REDUCING VALVE	1			
3	ZGAW-00003				.SEAL KIT	1			
4	ZGAW-00004				.ACCUMULATOR	1			
5	ZGAW-00005				.GASKET	1			
N6	@				.RELIEF VALVE	1			NOT
N	@				NOT SUPPLIED PARTS	AR			NOT

REMOTE CONTROL LEVER(2-SPOOL)

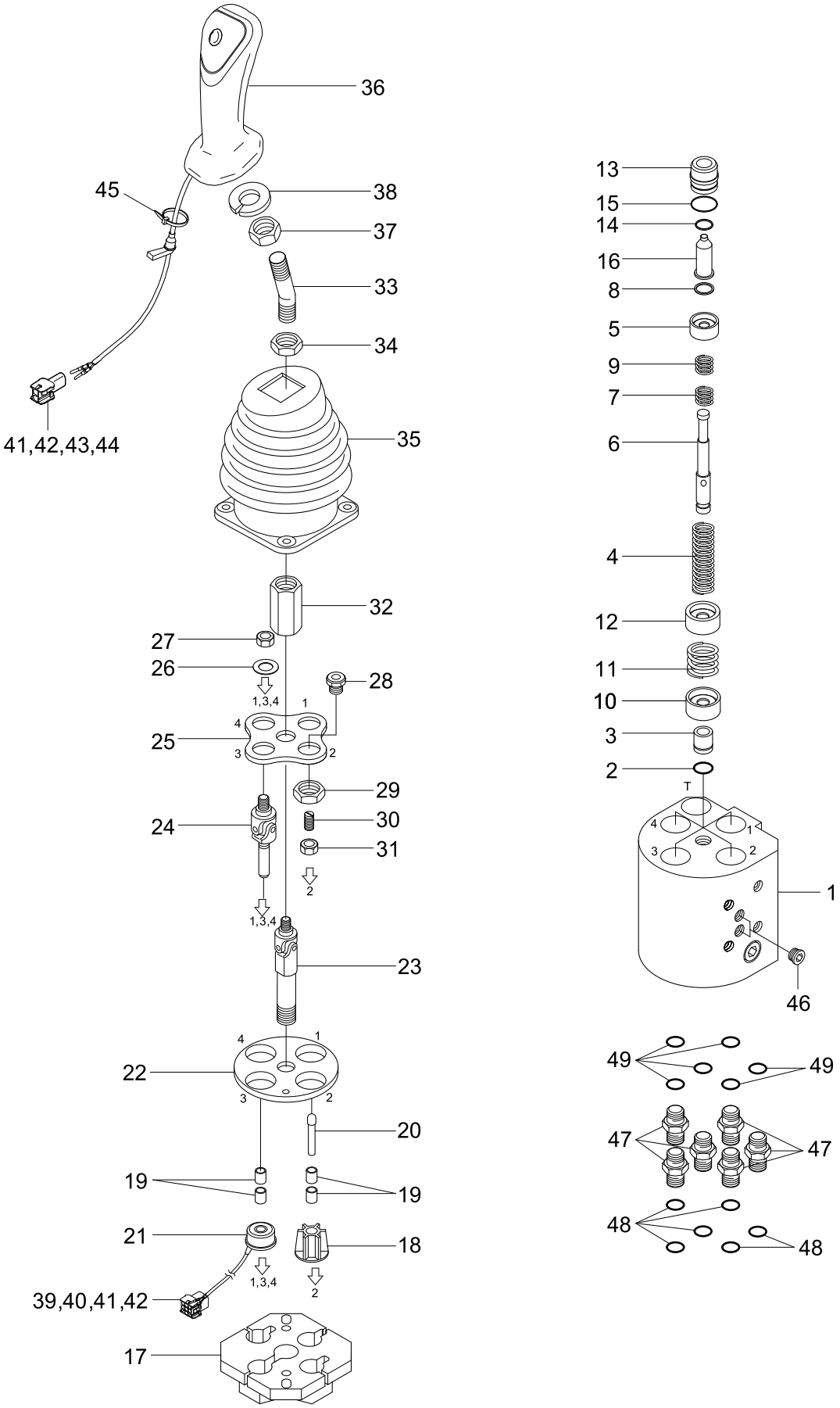

DESCRIPTION	PARTS NO	INCLUDED ITEM
SEAL KIT	XKAY-01944	2, 14, 15

Item	Part_No	IS	Ord	T	Description	Qty	Serial_No	ITC	Remark
*	31LF-10121				RCV-JOYSTICK-2SPOOL	1			
1	XKAY-01686				.BODY	1			
KN2	XKAY-00750				.O-RING	4			NOT
3	XKAY-00727				.PLUG	4			
4	XKAY-01725				.SPRING	4			
*-1	XKAY-01726				.SPOOL KIT	1			PORT 1
*-2	XKAY-01939				.SPOOL KIT	3			PORT 2, 3, 4
N5	@				..SPRING SEAT	4			NOT
6	@				..SPOOL	4			NOT
N7	@				..SPRING SEAT	4			NOT
N8	@				..STOPPER	4			NOT
N9	@				..SPRING	4			NOT
10	XKAY-01727				.SPRING SEAT	3			
11	XKAY-01728				.SPRING	3			
12	XKAY-01729				.SPRING SEAT	3			
*-3	XKAY-01689				.PLUG KIT	1			
N13	@				..PLUG	4			NOT
KN14	@				..ROD SEAL	4			NOT
KN15	@				..O-RING	4			NOT
N16	@				..PUSH ROD	4			NOT
17	XKAY-01940				.PLATE	1			
N*-4	XKAY-01690				.STOPPER KIT	1			NOT
N18	@				..ROD STOPPER	1			NOT
N19	@				..BUSHING	8			NOT
20	XKAY-01692				..ROD	1			

Item	Part_No	IS	Ord	T	Description	Qty	Serial_No	ITC	Remark
N*-5	XKAY-01691				.MAGNET KIT	1			NOT
N19	@				..BUSHING	8			NOT
20	XKAY-01692				..ROD	1			
N21	@				..MAGNET	3			NOT
22	XKAY-01693				.PLATE	1			
23	XKAY-01694				.JOINT ASSY	1			
*-6	XKAY-01695				.PLATE KIT	1			
N24	@				..JOINT ASSY	3			NOT
N25	@				..PLATE	1			NOT
N26	@				..WASHER	AR			NOT
N27	@				..NUT	3			NOT
N28	@				..PLUG	1			NOT
N29	@				..NUT	1			NOT
N30	@				..SET SCREW	1			NOT
N31	@				..NUT	1			NOT
32	XKAY-01730				.NUT	1			
*-7	XKAY-01697				.HANDLE KIT	1			
N33	@				..HANDLE BAR	1			NOT
N34	@				..NUT	1			NOT
N35	@				..BOOT	1			NOT
N36	@				..HANDLE ASSY	1			NOT
N37	@				..NUT	1			NOT
N38	@				..SPRING WASHER	1			NOT
39	XKAY-01731				.HOUSING	1			
N40	@				.HOLDER-REAR	1			NOT

Item	Part_No	IS	Ord	T	Description	Qty	Serial_No	ITC	Remark
N41	@				.TERMINAL	8			NOT
N42	@				.SEAL WIRE	8			NOT
43	XKAY-01732				.HOUSING	1			
N44	@				.HOLDER-REAR	1			NOT
N45	@				.CLIP BAND	2			NOT
46	XKAY-00880				.PLUG	7			
47	X500-110001				.CONNECTOR-ORFS	6			
48	S621-011001				.O-RING	6			
49	S631-011004				.O-RING	6			
K	XKAY-01944				SEAL KIT	1			SEE ILLUST
N	@				NOT SUPPLIED PARTS	AR			NOT

REMOTE CONTROL LEVER(3-SPOOL)

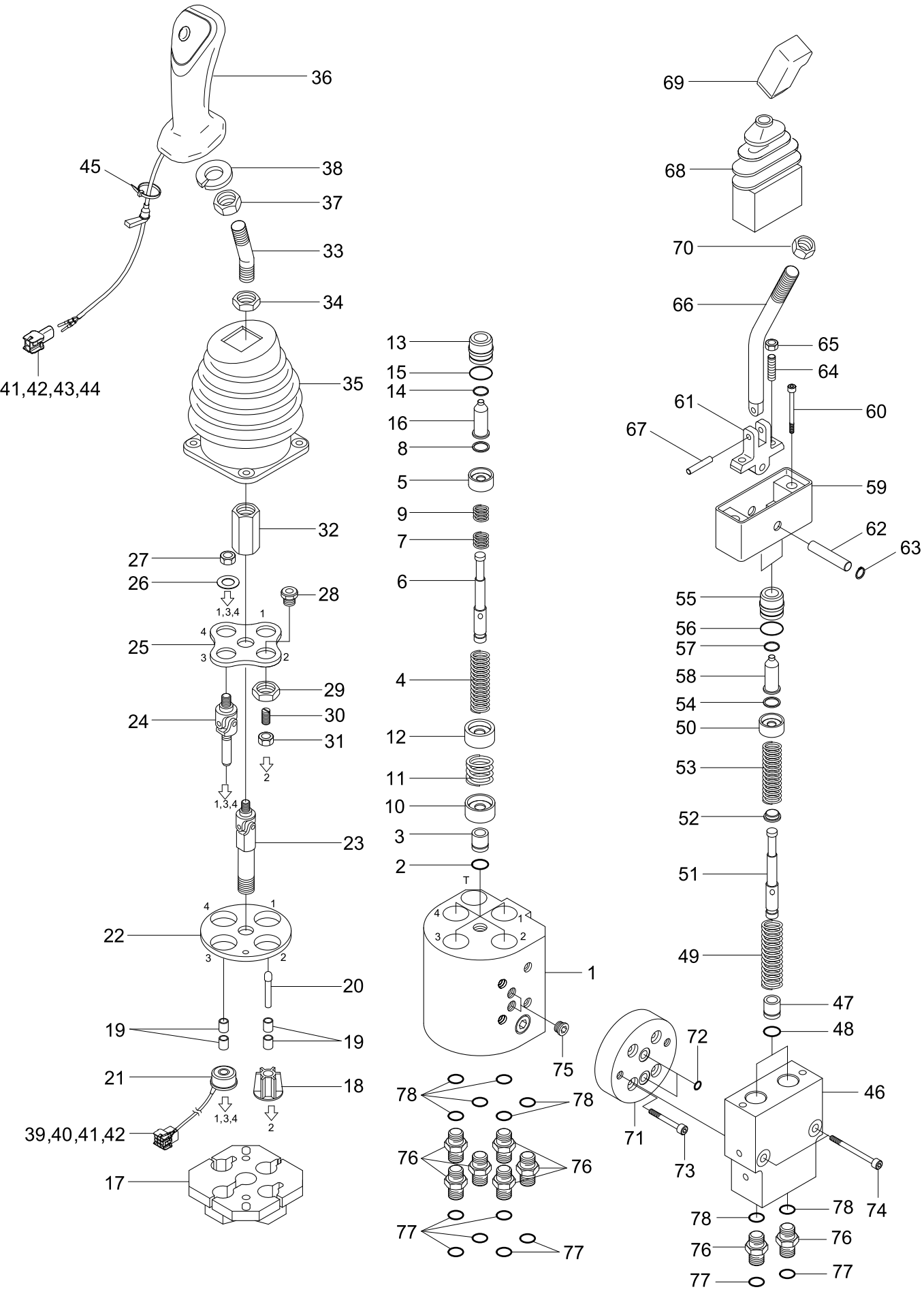

DESCRIPTION	PARTS NO	INCLUDED ITEM
SEAL KIT	XKAY-01744	2, 14, 15, 56, 57, 72

Item	Part_No	IS	Ord	T	Description	Qty	Serial_No	ITC	Remark
*	31LF-10130				RCV-JOYSTICK-3SPOOL	1			
1	XKAY-01686				.BODY	1			
KN2	XKAY-00750				.O-RING	4			NOT
3	XKAY-00727				.PLUG	4			
4	XKAY-01725				.SPRING	4			
*-1	XKAY-01726				.SPOOL KIT	1			PORT 1
*-2	XKAY-01939				.SPOOL KIT	3			PORT 2,3,4
N5	@				..SPRING SEAT	4			NOT
N6	XJDH-03741				..SPOOL	4			NOT
N7	@				..SPRING SEAT	4			NOT
N8	@				..STOPPER	4			NOT
N9	@				..SPRING	4			NOT
10	XKAY-01727				.SPRING SEAT	3			
11	XKAY-01728				.SPRING	3			
12	XKAY-01729				.SPRING SEAT	3			
*-3	XKAY-01689				.PLUG KIT	1			
N13	@				..PLUG	4			NOT
N14	@				..ROD SEAL	4			NOT
N15	@				..O-RING	4			NOT
N16	@				..PUSH ROD	4			NOT
N17	XKAY-01940				.PLATE	1			NOT
N*-4	XKAY-01690				.STOPPER KIT	1			NOT
N18	@				..ROD STOPPER	1			NOT
N19	@				..BUSHING	8			NOT
20	XKAY-01692				..ROD	1			

Item	Part_No	IS	Ord	T	Description	Qty	Serial_No	ITC	Remark
N*-5	XKAY-01691				.MAGNET KIT	1			NOT
N19	@				..BUSHING	8			NOT
20	XKAY-01692				..ROD	1			
N21	@				..MAGNET	3			NOT
22	XKAY-01693				.PLATE	1			
23	XKAY-01694				.JOINT ASSY	1			
*-6	XKAY-01695				.PLATE KIT	1			
N24	@				..JOINT ASSY	3			NOT
N25	@				..PLATE	1			NOT
N26	@				..WASHER	AR			NOT
N27	@				..NUT	3			NOT
N28	@				..PLUG	1			NOT
N29	@				..NUT	1			NOT
N30	@				..SET SCREW	1			NOT
N31	@				..NUT	1			NOT
32	XKAY-01730				.NUT	1			
*-7	XKAY-01697				.HANDLE KIT	1			
N33	@				..HANDLE BAR	1			NOT
N34	@				..NUT	1			NOT
N35	@				..BOOT	1			NOT
N36	@				..HANDLE ASSY	1			NOT
N37	@				..NUT	1			NOT
N38	@				..SPRING WASHER	1			NOT
39	XKAY-01731				.HOUSING	1			
N40	@				.HOLDER-REAR	1			NOT

Item	Part_No	IS	Ord	T	Description	Qty	Serial_No	ITC	Remark
N41	@				.TERMINAL	8			NOT
N42	@				.SEAL WIRE	8			NOT
43	XKAY-01732				.HOUSING	1			
N44	@				.HOLDER-REAR	1			NOT
N45	@				.CLIP BAND	2			NOT
46	XKAY-01733				.BODY	1			
*-8	XKAY-01735				.SPOOL KIT	1			
50	@				..SPRING SEAT	2			NOT
N51	XJDH-03741				..SPOOL	2			NOT
N52	@				..SPRING SEAT	2			NOT
N53	@				..SPRING	2			NOT
N54	@				..STOPPER	2			NOT
*-9	XKAY-01736				.PLUG KIT	1			
N55	@				..PLUG	2			NOT
N56	@				..O-RING	2			NOT
N57	@				..ROD SEAL	2			NOT
N58	@				..PUSH ROD	2			NOT
59	XKAY-01737				.COVER	1			
60	XKAY-00758				.BOLT-WRENCH	2			
61	XKAY-01738				.GUIDE	1			
62	XKAY-00760				.PIN	1			
63	XKAY-00763				.RING-SNAP	2			
64	XKAY-01461				.BOLT-SOCKET	2			
65	XKAY-00762				.NUT-HEX	2			
66	XKAY-01739				.LEVER	1			

Item	Part_No	IS	Ord	T	Description	Qty	Serial_No	ITC	Remark
67	XKAY-01463				.PIN-SPRING	1			
68	XKAY-01464				.BELLOWS	1			
69	XKAY-01740				.HANDLE	1			
70	XKAY-01741				.NUT	1			
71	XKAY-01742				.SPACE	1			
N72	@				.O-RING	4			NOT
73	XKAY-00758				.BOLT-WRENCH	4			
74	XKAY-00743				.HANDLE KIT-RH	2			
75	XKAY-00880				.PLUG	6			
76	X500-110001				.CONNECTOR-ORFS	8			
77	S621-011001				.O-RING	8			
78	S631-011004				.O-RING	8			
K	XKAY-01744				SEAL KIT	2			SEE ILLUST
N	@				NOT SUPPLIED PARTS	AR			NOT

CUT OFF VALVE

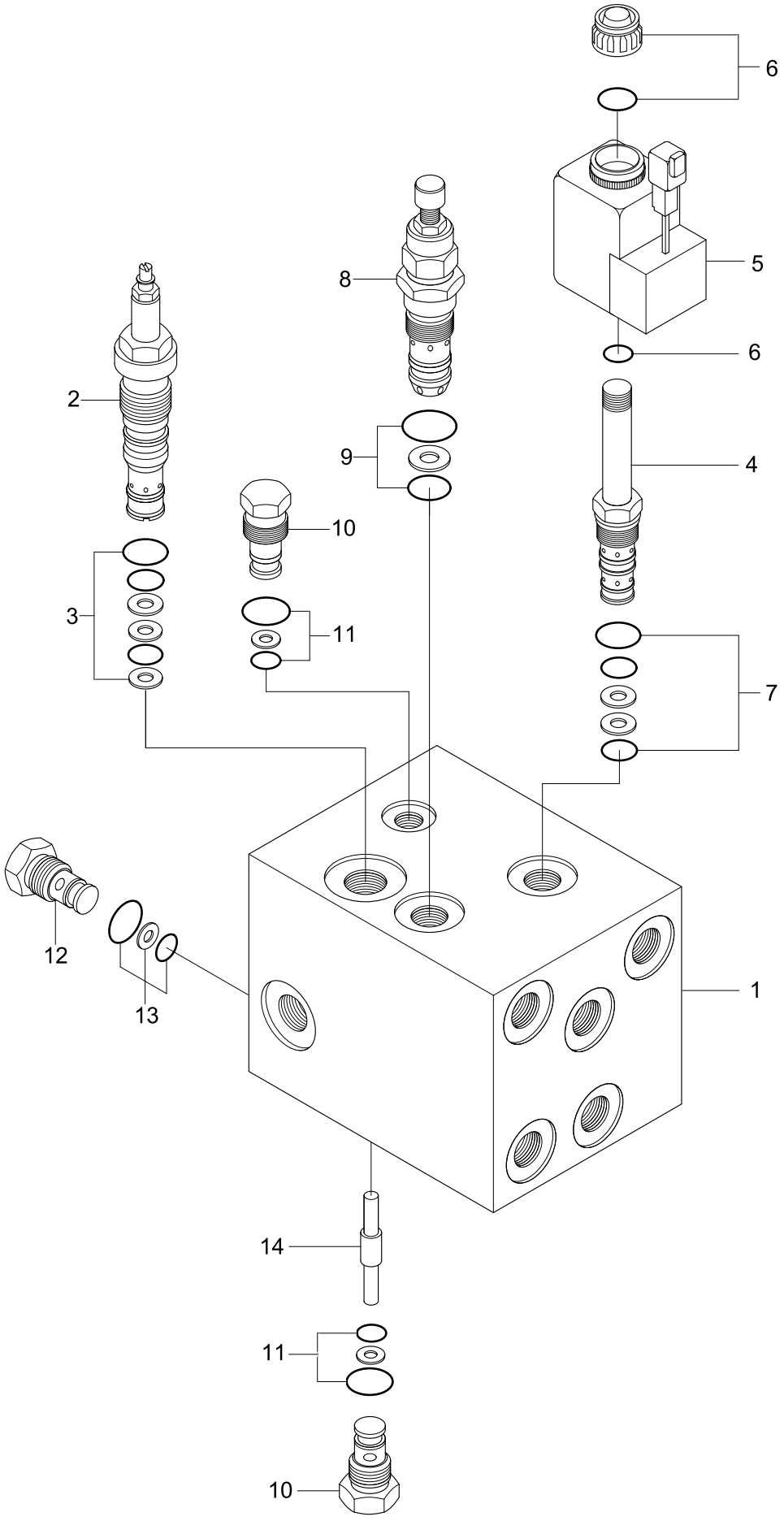

Item	Part_No	IS	Ord	T	Description	Qty	Serial_No	ITC	Remark
*	31LF-40101				CUT OFF VALVE	1			
1	31LF-40101-B				.MANIFOLD	1			
2	XKAL-00077				.CUT-OFF VALVE	1			
3	XKAL-00064				.SEAL KIT	1			
4	XKAL-00029				.SOLENOID VALVE	1			
5	XKAL-00065				.COIL	1			
6	@				.COIL CAP KIT	1			NOT
7	XKAL-00030				.SEAL KIT	1			
8	XKAL-00078				.RELIEF VALVE	1			
9	XKAL-00013				.SEAL KIT	1			
10	XKAL-00014				.CHECK VALVE	2			
11	XKAL-00015				.SEAL KIT	2			
12	XKAL-00018				.CHECK VALVE	1			
13	XKAL-00019				.SEAL KIT	1			
14	@				.SPOOL BAR	1			NOT

CUSHION VALVE

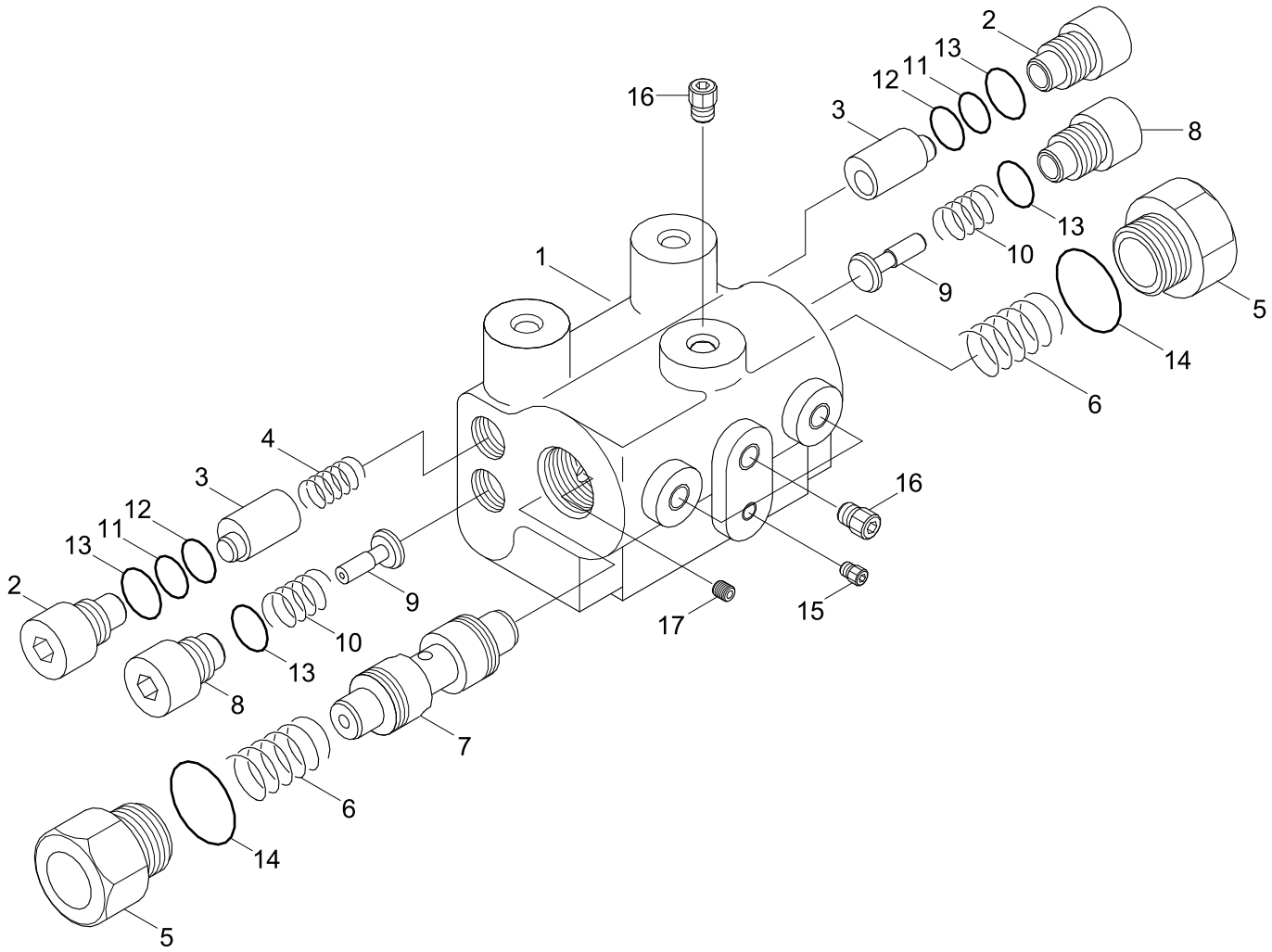

Item	Part_No	IS	Ord	T	Description	Qty	Serial_No	ITC	Remark
*	31LM-30310				CUSHION VALVE	1			
N1	XKAU-00317				.BODY	1			NOT
N2	XKAU-00318				.SEAT VALVE	2			NOT
N3	XKAU-00319				.POPPET	2			NOT
N4	XKAU-00320				.SPRING	1			NOT
N5	XKAU-00321				.PLUG	2			NOT
N6	XKAU-00322				.SPRING	2			NOT
N7	XKAU-00323				.SPOOL	1			NOT
N8	XKAU-00324				.PLUG	2			NOT
N9	XKAU-00325				.POPPET	2			NOT
N10	XKAU-00326				.SPRING	2			NOT
N11	XKAU-00327				.BACK UP RING	2			NOT
N12	XKAU-00328				.O-RING	2			NOT
N13	XKAU-00329				.O-RING	4			NOT
N14	XKAU-00330				.O-RING	2			NOT
N15	XKAU-00331				.PLUG	1			NOT
N16	XKAU-00332				.PLUG	4			NOT
N17	XKAU-00333				.ORIFICE	2			NOT
N	@				NOT SUPPLIED PARTS	AR			NOT

BRAKE VALVE

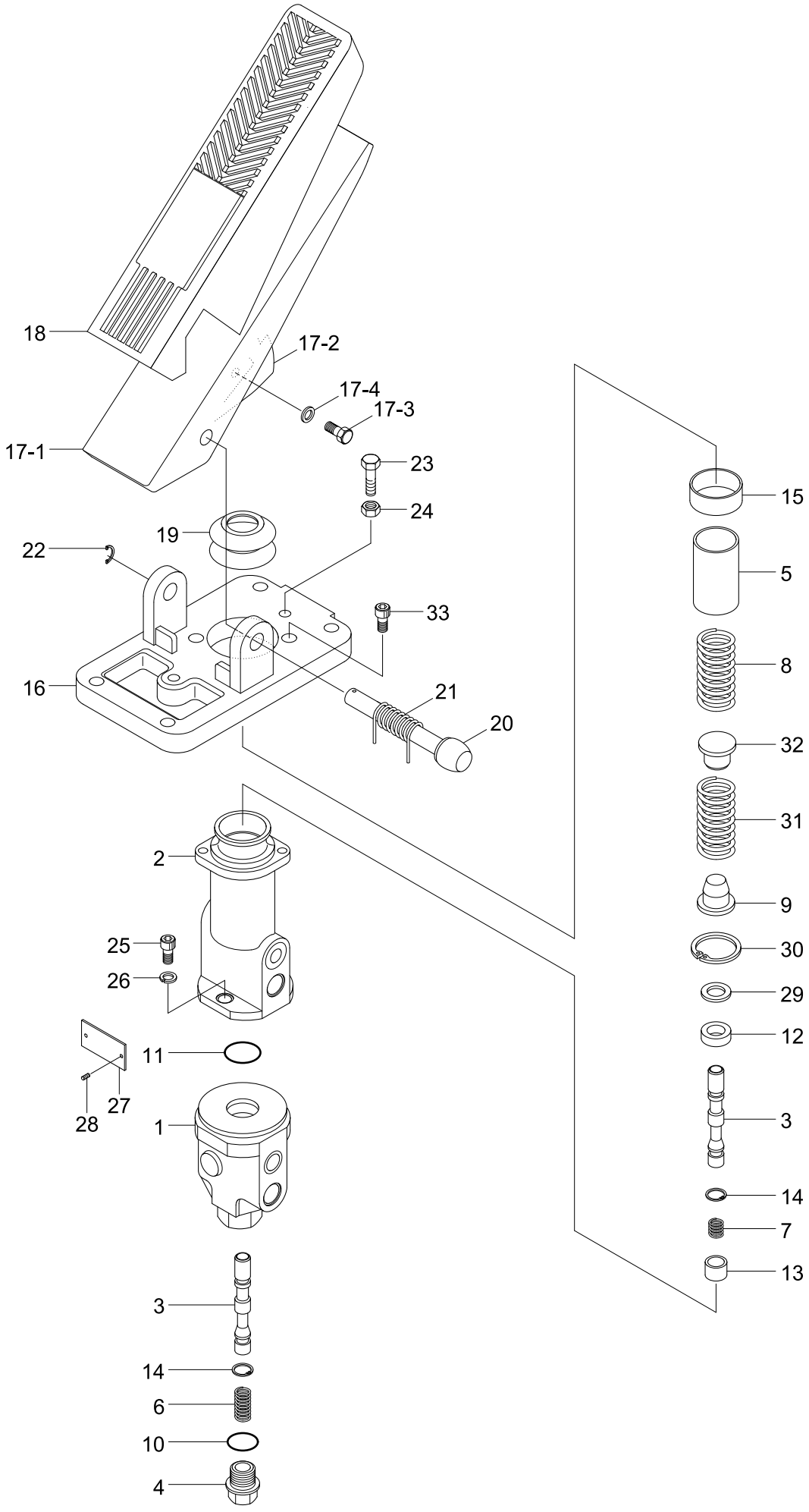
18
17-2
17-4
17-3
17-1
23
24
19
22
33
16
21
20
15
5
8
32
31
9
30
29
12
3
14
7
13
2
25
26
11
28
27
1
3
14
6
10
4

Item	Part_No	IS	Ord	T	Description	Qty	Serial_No	ITC	Remark
*	31LP-40210				BRAKE VALVE	1			
1	XKAK-00112				.LOWER BODY	1			
2	XKAK-00113				.UPPER BODY	1			
3	XKAK-00045				.SPOOL	2			
4	XKAK-00004				.PLUG	1			
5	XKAK-00077				.HOLDER	1			
6	XKAK-00006				.SPRING-LOWER	1			
7	XKAK-00007				.SPRING-UPPER	1			
8	XKAK-00075				.SPRING 1-MAIN	1			
9	XKAK-00009				.RETAINER-SPRING	1			
10	XKAK-00058				.O-RING	1			
11	XKAK-00035				.O-RING	1			
12	XKAK-00034				.SEAL-OIL	1			
13	XKAK-00010				.GUIDE	1			
14	XKAK-00059				.RING-SNAP	2			
15	XKAK-00060				.DU BUSH	1			
16	XKAK-00047				.PLATE-PEDAL	1			
17	XKAK-00012				.PEDAL ASSY	1			
17-1	@				..PEDAL	1			NOT
17-2	@				..LOCK PLATE	1			NOT
17-3	@				..HEX BOLT	1			NOT
17-4	@				..PLATE WASHER	1			NOT
18	XKAK-00071				.COVER-PEDAL	1			
19	XKAK-00048				.BELLOWS	1			
20	XKAK-00049				.PIN 1-LOCK	1			

Item	Part_No	IS	Ord	T	Description	Qty	Serial_No	ITC	Remark
21	XKAK-00050				.SPRING-TORSION	1			
22	XKAK-00063				.SNAP RING	1			
23	XKAK-00064				.BOLT-HEX	2			
24	XKAK-00065				.NUT-HEX	2			
25	XKAK-00068				.SOCKET BOLT	4			
26	XKAK-00114				.SPRING WASHER	4			
27	XKAK-00051				.NAME PLATE	1			
28	XKAK-00066				.DRIVE SCREW	2			
29	XKAK-00036				.WASHER-PLATE	1			
30	XKAK-00067				.SNAP RING	1			
31	XKAK-00073				.SPRING 2-MAIN	2			
32	XKAK-00019				.RETAINER 2-SPRING	1			
33	XKAK-00069				.TAPER PLUG	2			

PRIORITY VALVE

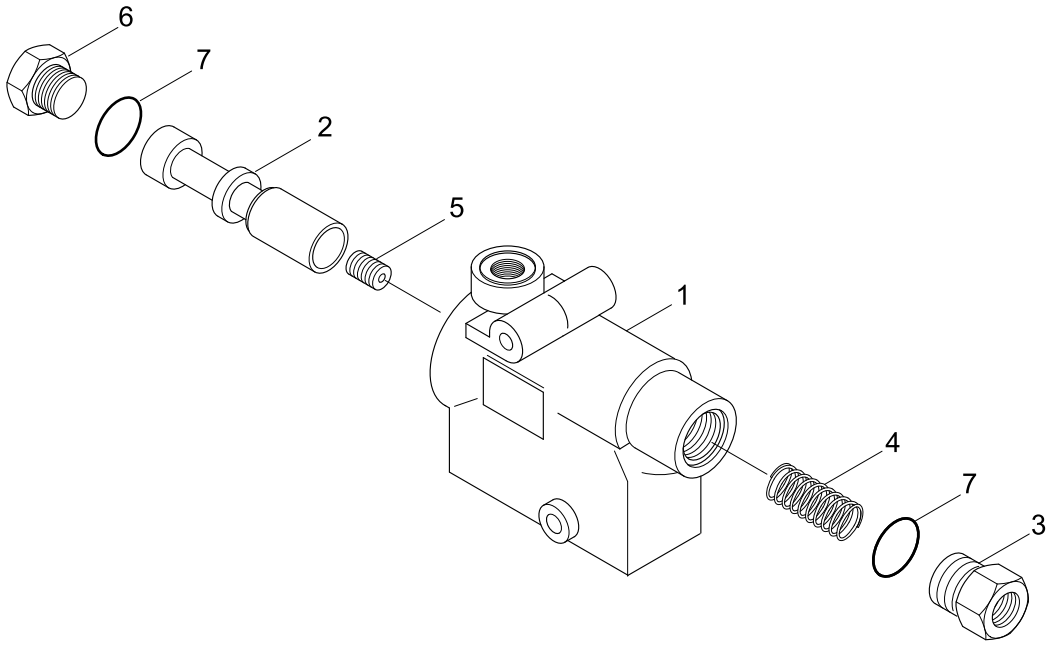

Item	Part_No	IS	Ord	T	Description	Qty	Serial_No	ITC	Remark
*	31LF-30210				PRIORITY VALVE	1			
N1	XKAU-00357				.BODY	1			NOT
N2	XKAU-00358				.SPOOL	1			NOT
N3	XKAU-00359				.PLUG	1			NOT
N4	XKAU-00360				.SPRING	1			NOT
N5	XKAU-00361				.ORIFICE	1			NOT
N6	XKAU-00362				.PLUG	1			NOT
7	XKAU-00363				.O-RING	2			
N	@				NOT SUPPLIED PARTS	AR			NOT

RIDE CONTROL VALVE

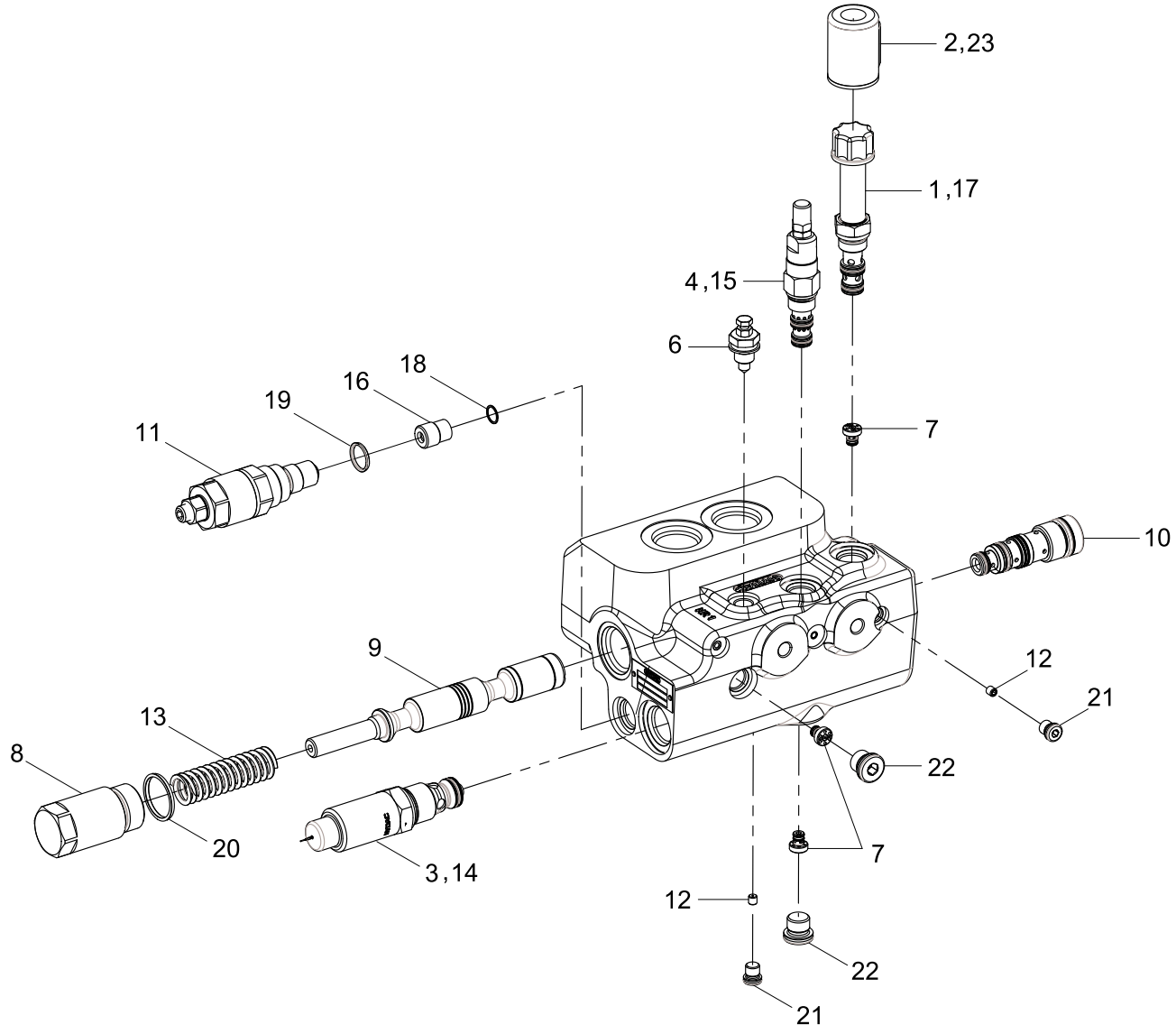

Item	Part_No	IS	Ord	T	Description	Qty	Serial_No	ITC	Remark
*	31LC-81010				RIDE CONTROL VALVE	1			
1	ZGAW-00025				.DIRECTIONAL VALVE	1			
2	ZGAW-00026				.COIL	1			
3	ZGAW-00041				.PRESSURE RELIEF VALVE	1			
4	ZGAW-00027				.PRESSURE REDUCING V/V	1			
6	ZGAW-00029				.MANUAL P/RELIEF LOCK	1			
7	ZGAW-00030				.CHECK VALVE	3			
8	ZGAW-00031				.CAP-SPOOL	1			
9	ZGAW-00032				.MAIN SPOOL	1			
10	ZGAW-00033				.ACC UNLOAD V/V	1			
11	ZGAW-00034				.PRESSURE RELIEF VALVE	1			
12	ZGAW-00035				.ORIFICE	2			
13	ZGAW-00036				.SPRING	1			
14	ZGAW-00037				.SEAL KIT FOR ITEM 3	1			
15	ZGAW-00038				.SEAL KIT FOR ITEM 4	1			
16	ZGAW-00039				.ORIFICE	1			
17	ZGAW-00040				.SEAL KIT FOR ITEM 1	1			
18	ZGAW-00043				.O-RING	1			
19	ZGAW-00044				.O-RING	2			
20	ZGAW-00045				.O-RING	2			
21	@				.PLUG	2			NOT
22	@				.PLUG	2			NOT
23	@				.O-RING	1			NOT

BOOM CYLINDER

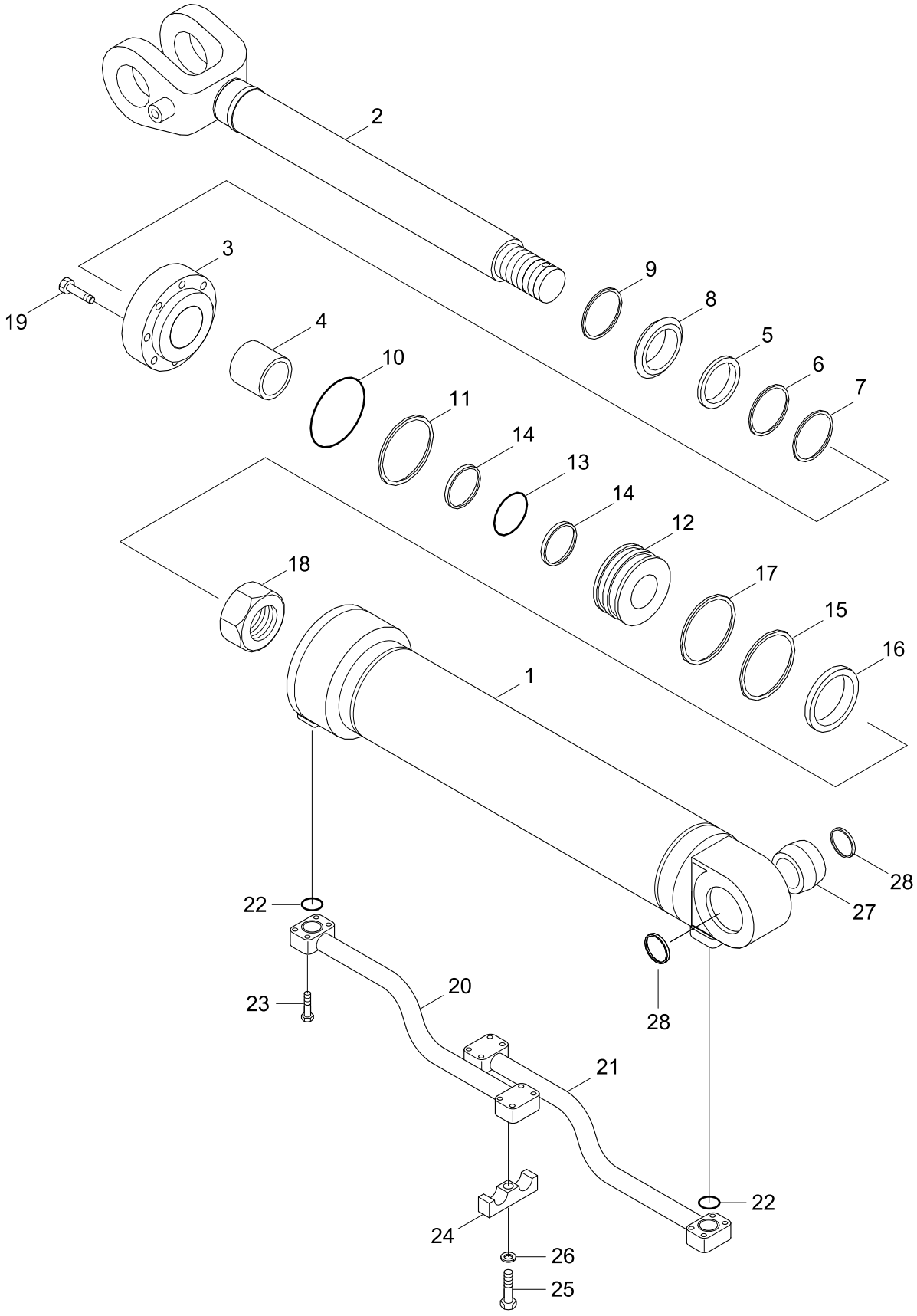

DESCRIPTION	PARTS NO	INCLUDED ITEM
SEAL KIT	31Y2-03751	5~8, 10, 11,13~17, 22, 28

Item	Part_No	IS	Ord	T	Description	Qty	Serial_No	ITC	Remark
*	31LN-21020				BOOM CYL ASSY-LH	1			LH
	31LN-21030				BOOM CYL ASSY-RH	1			RH
1	31Y2-09560				.TUBE ASSY-LH	1			
	31Y2-09570				.TUBE ASSY-RH	1			
2	31Y2-09130				.ROD ASSY	1			
3	31Y2-09620				.GLAND	1			
4	S731-070040				.BUSHING-DU	1			
K5	Y220-070011				.SEAL-ROD	1			
K6	Y180-070020				.RING-BACK UP	1			
K7	Y240-070011				.RING-BUFFER	1			
K8	Y110-070011				.WIPER-DUST	1			
9	Y190-084000				.RING-SNAP	1			
K10	S631-110004				.O-RING	1			
K11	S641-110003				.RING-BACK UP	1			
12	31Y2-03701				.PISTON	1			
K13	S632-070004				.O-RING	1			
K14	S642-070003				.RING-BACK UP	2			
K15	Y410-120000				.SEAL-PISTON	1			
K16	Y310-120100				.RING-WEAR	1			
K17	Y440-120000				.RING-DUST	1			
18	31YC-65370				.NUT-NYLON	1			
19	S109-160604				.BOLT-SOCKET	8			
20	31Y2-09151				.PIPE ASSY-R,LH	1			
	31Y2-09161				.PIPE ASSY-R,RH	1			
21	31Y2-09170				.PIPE ASSY-B,LH	1			

Item	Part_No	IS	Ord	T	Description	Qty	Serial_No	ITC	Remark
21	31Y2-09180				.PIPE ASSY-B,RH	1			
K22	Y171-019004				.O-RING	2			
23	S107-100454				.BOLT-SOCKET	8			
24	31Y2-05450				.CLAMP-PIPE	1			
25	S017-120402				.BOLT-HEX	1			
26	S411-120002				.WASHER-SPRING	1			
27	31YC-13160				.BUSHING-PIN	1			
K28	Y101-070085				.SEAL-DUST	2			
K	31Y2-03751				SEAL KIT	1			SEE ILLUST

BUCKET CYLINDER

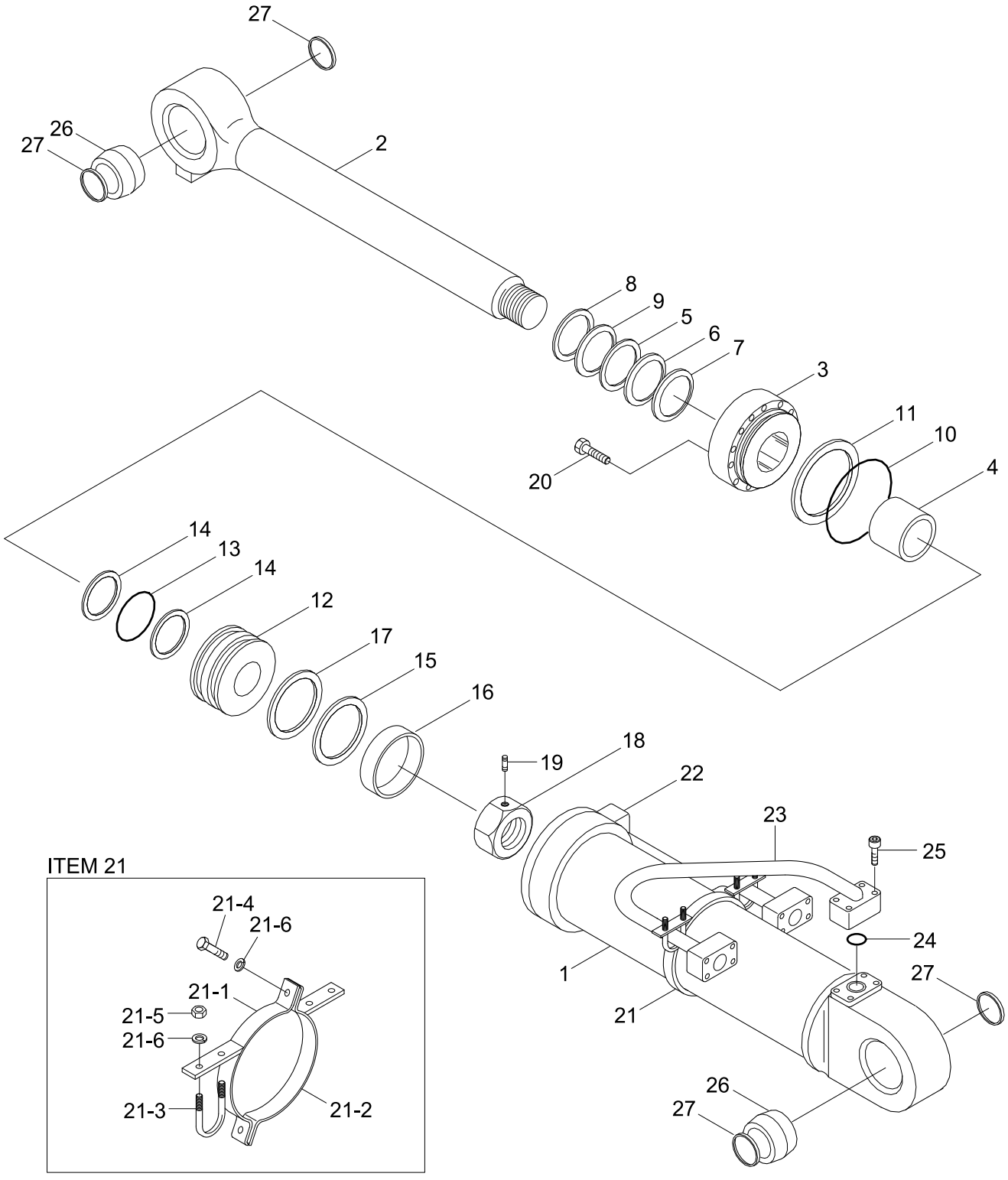

DESCRIPTION	PARTS NO	INCLUDED ITEM
SEAL KIT	31Y2-08080	5~8, 10, 11,13~17, 24, 27

Item	Part_No	IS	Ord	T	Description	Qty	Serial_No	ITC	Remark
*	31LN-21011				BUCKET CYLINDER ASSY	1			HL740-9S
	31LN-21510				BUCKET CYLINDER ASSY	1			HL740XTD-9S
1	31Y2-07961				.TUBE ASSY	1			
2	31Y2-44610				.ROD ASSY	1			HL740-9
	31Y2-44770				.ROD ASSY	1			HL740XTD-9
3	31Y2-07610				.GLAND	1			
4	S731-075035				.BUSHING-DU	1			
K5	Y220-075011				.SEAL-ROD	1			
K6	Y180-075020				.RING-BACK UP	1			
K7	Y240-075011				.RING-BUFFER	1			
K8	Y110-075011				.WIPER-DUST	1			
9	Y190-089000				.RING-SNAP	1			
K10	S631-130004				.O-RING	1			
K11	S641-130003				.RING-BACK UP	1			
12	31Y2-06060				.PISTON	1			
K13	S631-075004				.O-RING	1			
K14	S642-075003				.RING-BACK UP	2			
K15	Y410-140000				.SEAL-PISTON	1			
K16	Y300-140100				.RING-WEAR	1			
K17	Y440-140000				.RING-DUST	1			
18	31YC-62160				.NUT-LOCK	1			
19	S114-100124				.SCREW-SET	1			
20	S109-140554				.BOLT-SOCKET	12			
21	31Y2-08030				.BAND ASSY	1			
21-1	31Y2-08040				..BAND SUB ASSY	1			

Item	Part_No	IS	Ord	T	Description	Qty	Serial_No	ITC	Remark
21-2	31Y2-08050				..BAND SUB ASSY	1			
21-3	S071-022730				..U-BOLT	2			
21-4	S011-100352				..BOLT-HEX	2			
21-5	S201-101002				..NUT-HEX	4			
21-6	S411-100002				..WASHER-SPRING	6			
22	31Y2-08061				.PIPE ASSY-R	1			
23	31Y2-08070				.PIPE ASSY-B	1			
K24	Y171-024004				.O-RING	2			
25	S017-100554				.BOLT-HEX	8			
26	31YC-13050				.BUSHING-PIN	2			
K27	Y000-075300				.SEAL-DUST	4			
K	31Y2-08080				SEAL KIT	1			SEE ILLUST

FRONT FRAME

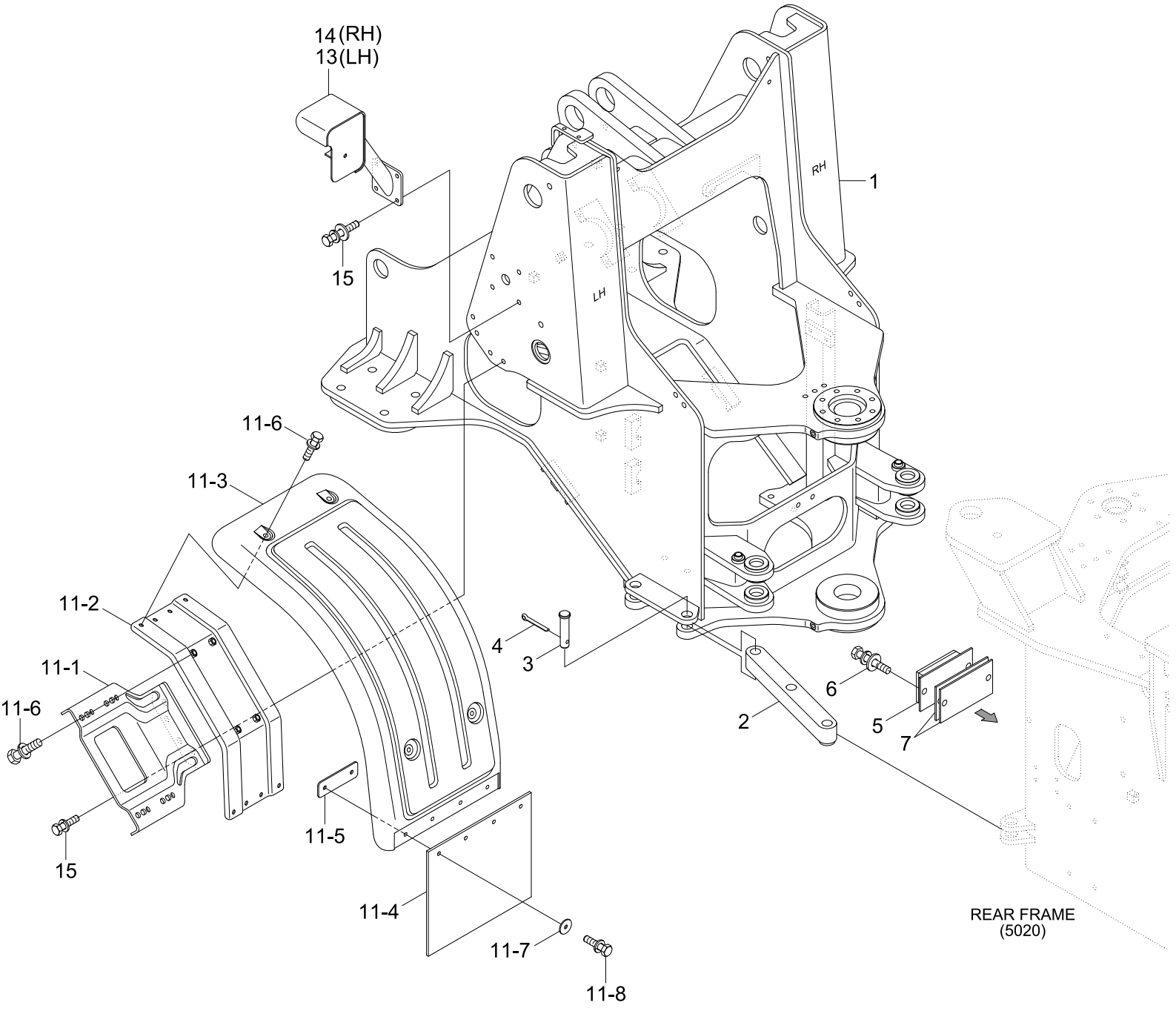
14(RH)
13(LH)
15
RH
1
LH
11-6
11-3
11-2
11-1
11-6
15
4
3
6
2
5
7
11-5
11-4
11-7
11-8
REAR FRAME
(5020)

Item	Part_No	IS	Ord	T	Description	Qty	Serial_No	ITC	Remark
1	47LN-00010				FRONT FRAME WA	1			
2	41LF-09010				BAR	1			
3	51L7-00430				PIN-CLEVIS	2			
4	41L1-1074				PIN	2			
5	41LB-29080				STOPPER	2			
6	S037-123026				BOLT-W/WASHER	4			
7	41LB-29070				SHIM(3.0T)	2			
11	72LN-70013				FRONT FENDER ASSY-LH	1			
	72LN-70023				FRONT FENDER ASSY-RH	1			
11-1	72LM-70111				.SUPPORT-FENDER	1			
11-2	72LM-70121				.BRACKET WA	1			
11-3	72LP-70130				.FENDER-FRONT	1			
11-4	72LM-70141				.RUBBER PAD	1			
11-5	72LM-70200				.PLATE WA	1			
11-6	S037-122556				.BOLT-W/WASHER	8			
11-7	64L3-01120				.WASHER-HARDENED	4			
11-8	S037-123556				.BOLT-W/WASHER	4			
13	72LM-70030				LAMP BOX WA-LH	1			
14	72LM-70040				LAMP BOX WA-RH	1			
15	S037-123056				BOLT-W/WASHER	16			

REAR FRAME

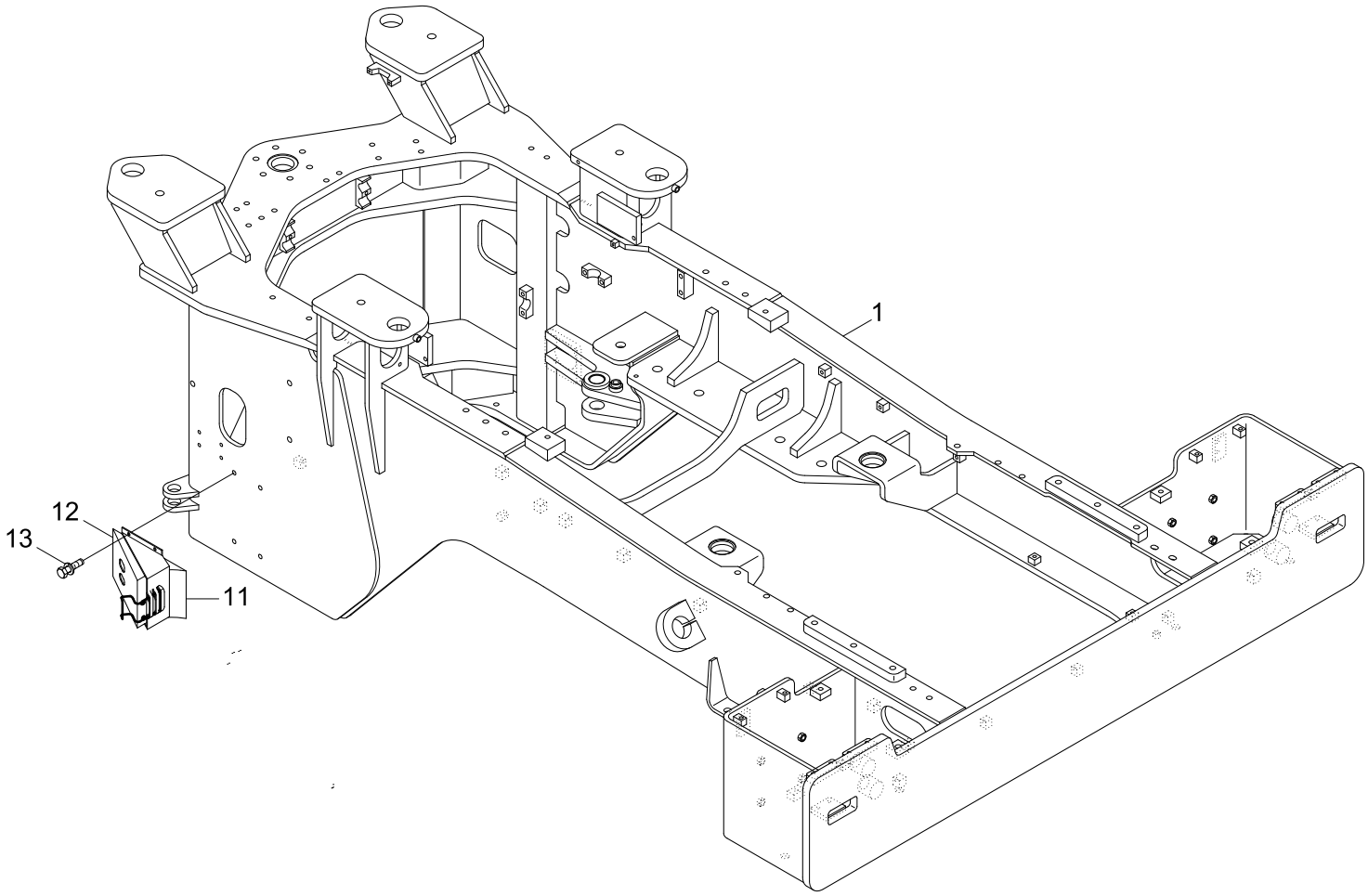

Item	Part_No	IS	Ord	T	Description	Qty	Serial_No	ITC	Remark
1	57LN-00010				REAR FRAME WA	1			
11	74L3-00012				CHOCK-WHEEL	2			
12	71L7-90070				BRACKET ASSY	2			
13	S035-082546				BOLT-W/WASHER	8			

CENTER PIVOT PIN(UPPER)

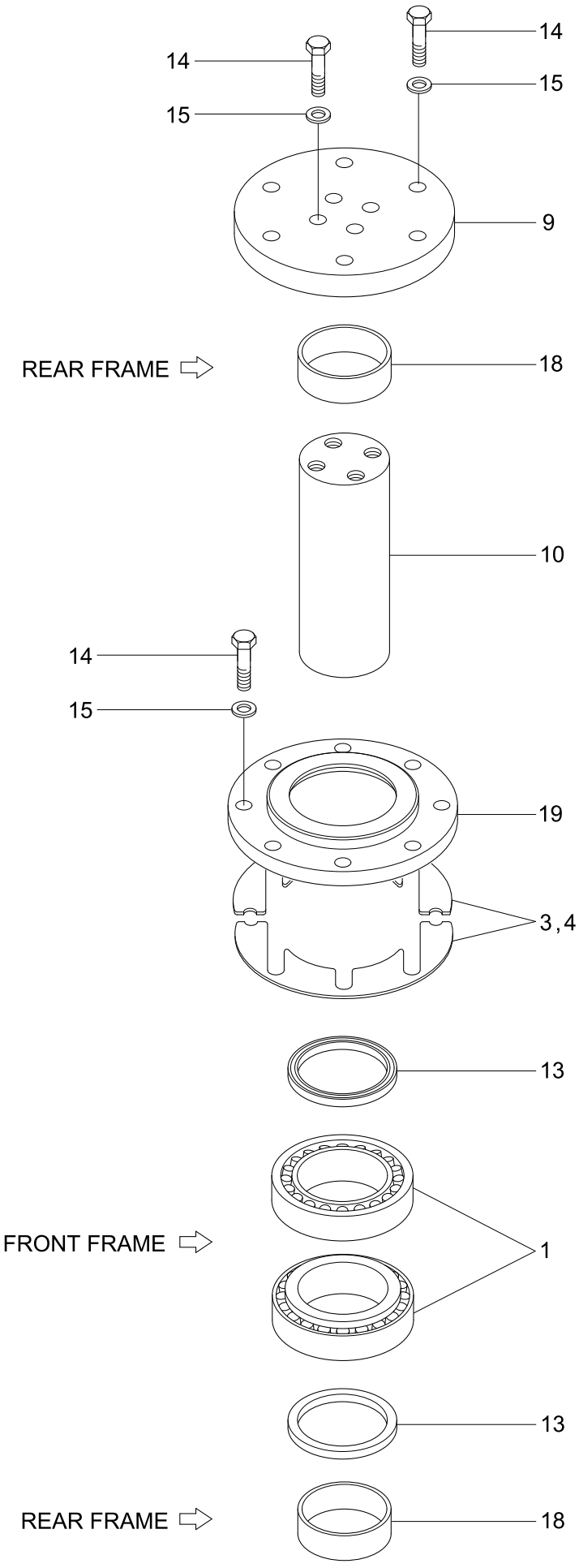

Item	Part_No	IS	Ord	T	Description	Qty	Serial_No	ITC	Remark
1	41L7-10010				BEARING	2			
3	41L7-10120				SHIM(0.1T)	2			
4	41L7-10130				SHIM(0.5T)	2			
9	41L7-10060				PLATE	1			
10	41LF-10112				PIN	1			
13	S700-065306				DUST SEAL-DKIY TYPE	2			
14	S017-120456				BOLT-HEX	18			
15	S441-12000B				WASHER-HARDENED	18			
18	41LF-10160				BUSHING	2			
19	41LF-10080				RETAINER	1			

CENTER PIVOT PIN(LOWER)

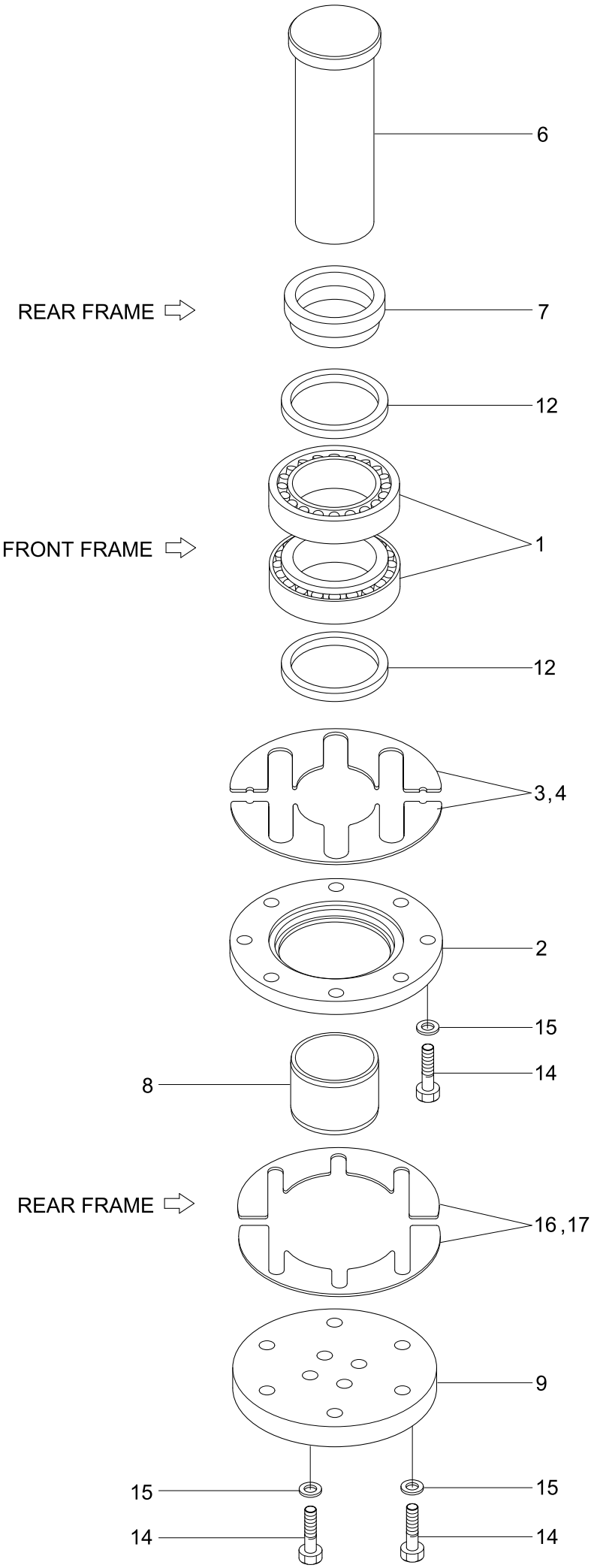

Item	Part_No	IS	Ord	T	Description	Qty	Serial_No	ITC	Remark
1	41L7-10010				BEARING	2			
2	41L7-10080				RETAINER	1			
3	41L7-10120				SHIM(0.1T)	2			
4	41L7-10130				SHIM(0.5T)	2			
6	41L7-10020				PIN WA	1			
7	41LF-10090				COLLAR	1			
8	41L7-10040				COLLAR	1			
	41L7-90040				COLLAR(FOR A/S)	1			FOR A/S(+3MM)
9	41L7-10060				PLATE	1			
12	S700-075307				DUST SEAL-DKIY TYPE	2			
14	S017-120456				BOLT-HEX	18			
15	S441-12000B				WASHER-HARDENED	18			
16	41L7-10100				SHIM(0.1T)	2			
17	41L7-10110				SHIM(0.5T)	2			

COUNTERWEIGHT

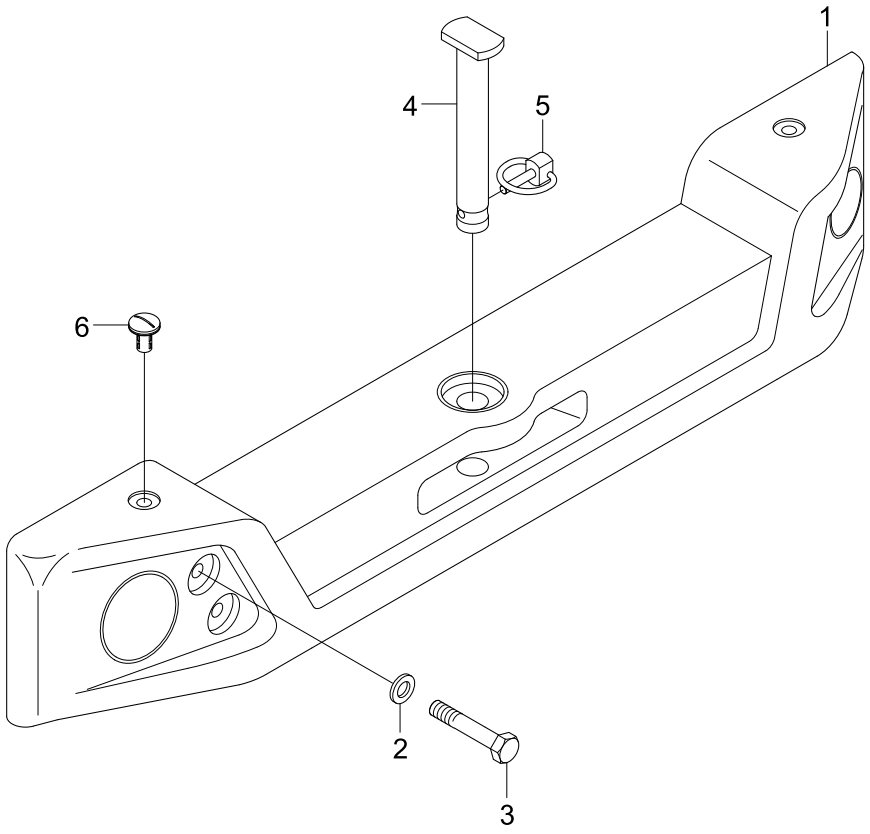

Item	Part_No	IS	Ord	T	Description	Qty	Serial_No	ITC	Remark
1	51LN-10012				COUNTERWEIGHT	1			HL740-9S
	51LN-10211				COUNTERWEIGHT	1			HL740XTD-9S
2	S441-300002				WASHER-HARDENED	4			
3	S017-30240D				BOLT-HEX	4			HL740-9S
	S017-30210D				BOLT-HEX	4			HL740XTD-9S
4	51LM-10050				PIN WA	1			
5	51LP-10090				PIN-LOCK	1			
6	51LP-10100				CAP-BOLT	2			

UNDER GUARD

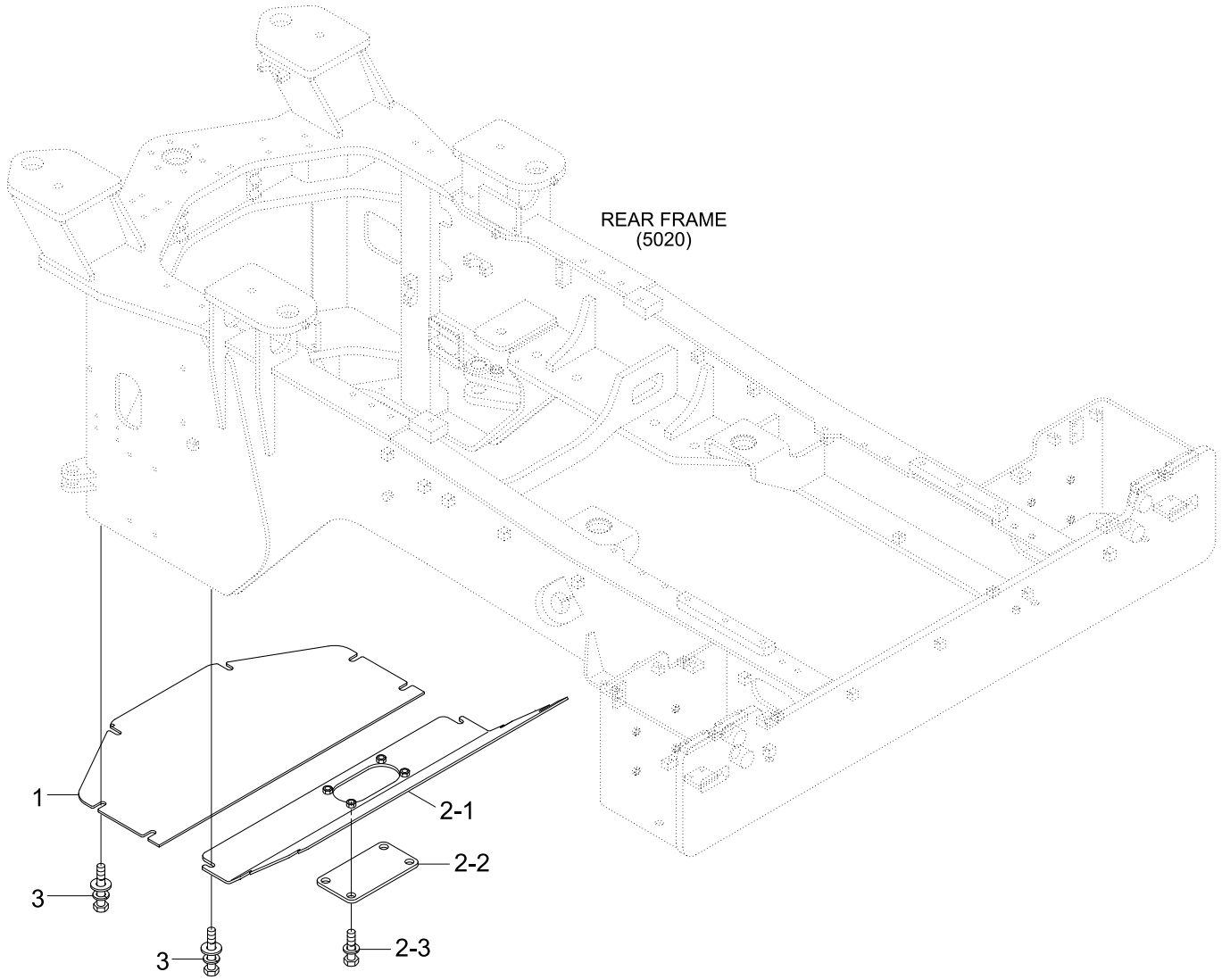

Item	Part_No	IS	Ord	T	Description	Qty	Serial_No	ITC	Remark
1	51LN-90010				PLATE	1			
2	51LN-90220				PLATE ASSY	1			
2-1	51LN-90230				.PLATE WA	1			
2-2	51LL-90030				.PLATE	1			
2-3	S037-123056				.BOLT-W/WASHER	4			
3	S037-123056				BOLT-W/WASHER	12			

CAB MOUNTING

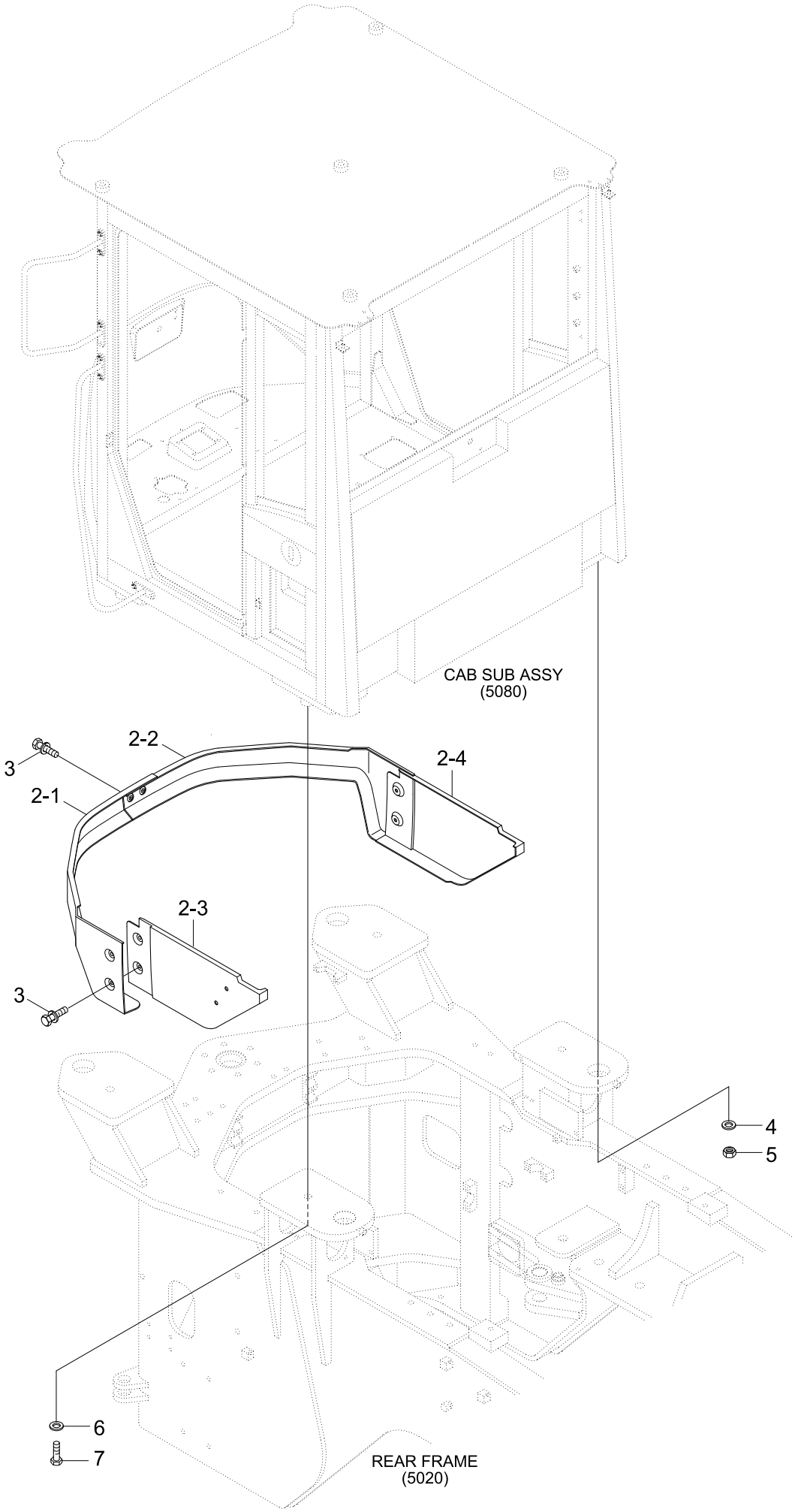

Item	Part_No	IS	Ord	T	Description	Qty	Serial_No	ITC	Remark
2	71LN-01014				CAB LOW COVER ASSY	1			
2-1	71LN-01024				.CAB LWR COVER-FR LH	1			
2-2	71LN-01034				.CAB LWR COVER-FR RH	1			
2-3	71LN-01040				.CAB LOW COVER-SD LH	1			
2-4	71LN-01050				.CAB LOW COVER-SD RH	1			
3	S037-122526				BOLT-W/WASHER	10			
4	S441-160006				WASHER-HARDENED	4			
5	S205-16100B				NUT-HEX	4			
6	S441-200006				WASHER-HARDENED	4			
7	S017-200606				BOLT-HEX	4			

CAB OPTION PARTS

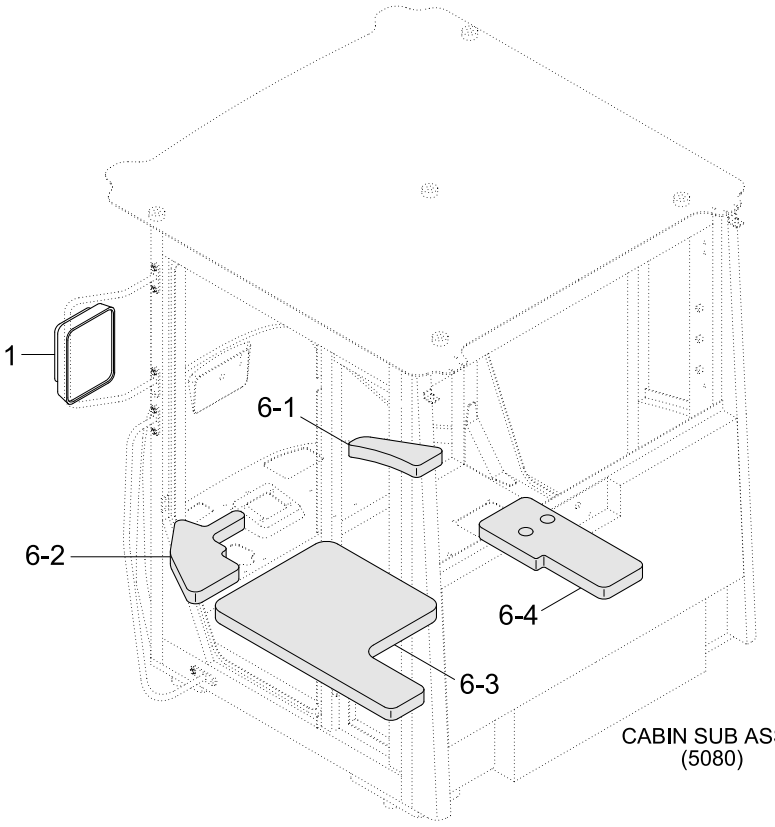

CABIN SUB ASSY
(5080)

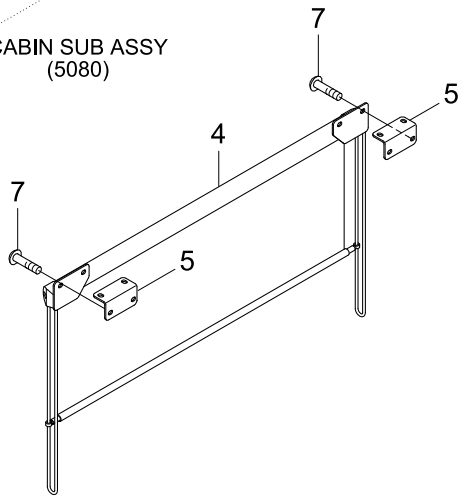

FINGERTIP TYPE

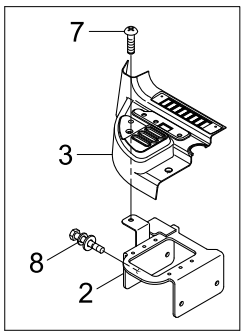

2-SPOOL

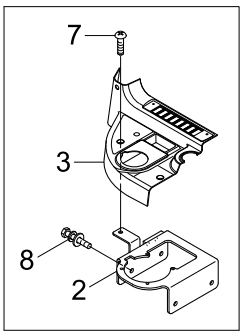

3-SPOOL

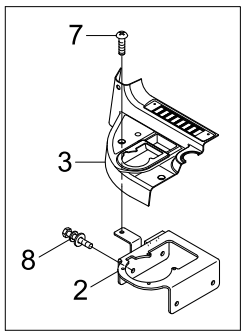

Item	Part_No	IS	Ord	T	Description	Qty	Serial_No	ITC	Remark
1	71LB-00111				MIRROR ASSY-EXT	2			STD
	71LM-00310				MIRROR ASSY-EXT/HEATED	2			HEATED, OPT
2	75LN-23541				SUPPPORT WA-JOY RCV	1			2-SPOOL RCV
					SUPPPORT WA-JOY RCV	1			3-SPOOL RCV
	75LN-23550				SUP-FINGER RCV	1	#0004 -	-	FINGERTIP
3	75LN-30231				CONSOLE-RH JOY 2S	1			2-SPOOL RCV
	75LN-30221				CONSOLE-RH JOY 3S	1			3-SPOOL RCV
	75LN-30240				CONSOLE-RCV FINGER	1	#0004 -	-	FINGERTIP
4	71LM-29042				SUN SCREEN	1			
5	71LM-11632				BRACKET RR-R/SCREEN	2			
6	75LN-27200				LOW NOISE PARTS	1			
6-1	75LN-27110				.SPONGE-BOTTOM A	1			
6-2	71LN-27122				.SPONGE-BOTTOM B	1			
6-3	71LN-27132				.SPONGE-BOTTOM C	1			
6-4	71LN-27142				.SPONGE-BOTTOM D	1			
7	S002-06015B				SCREW-TRUS HEAD	8			
8	S035-082026				BOLT-W/WASHER	4			

CAB SUB ASSY(1/4)

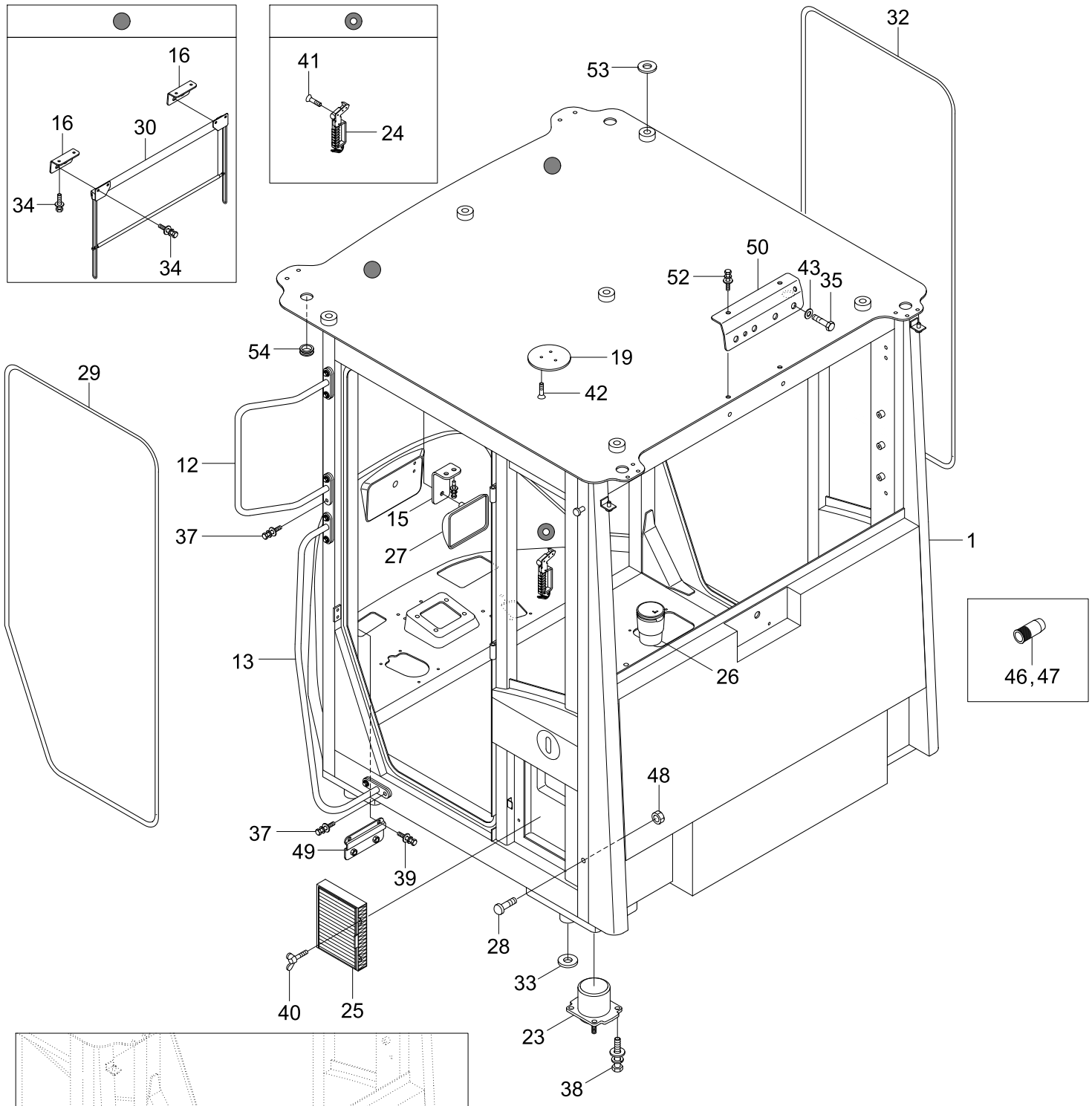

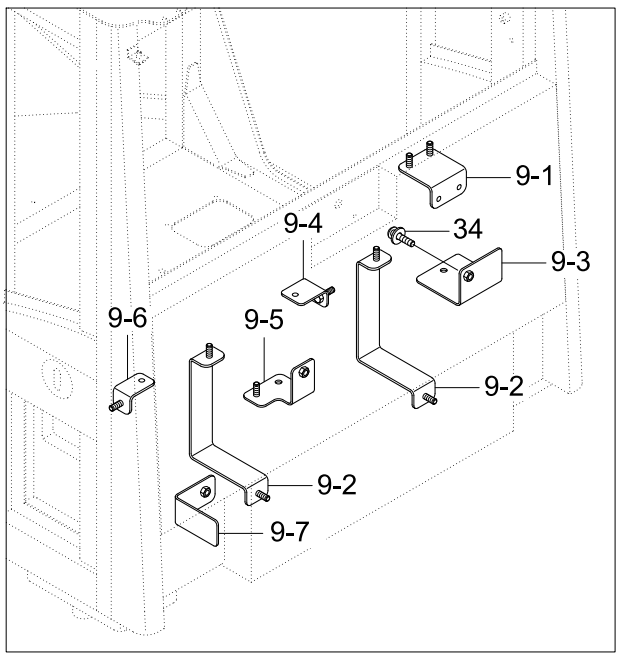

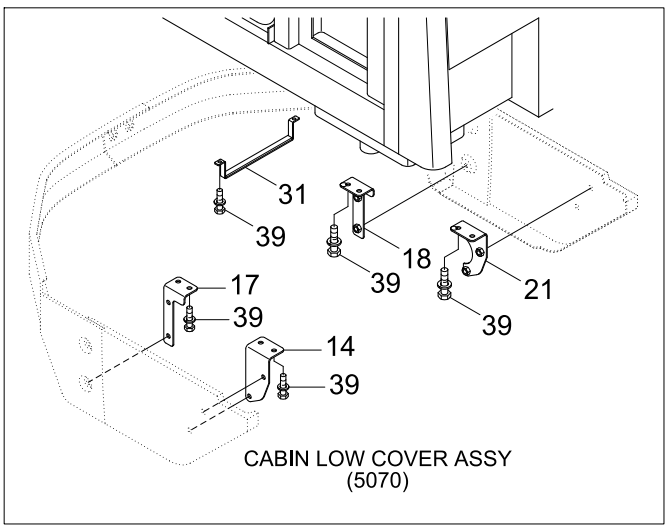

CABIN LOW COVER ASSY
(5070)

Item	Part_No	IS	Ord	T	Description	Qty	Serial_No	ITC	Remark
*	75LN-10001				CAB SUB ASSY-NON ROPS	1			NON ROPS
	73LN-10001				CAB SUB ASSY-ROPS	1			ROPS
1	75LN-11000				.CAB WA	1			NON ROPS
	73LN-11000				.CAB WA-ROPS	1			ROPS
9	71LN-24002				.SUPPORT KIT-REAR	1			
9-1	71LN-24012				..BRACKET-DUCT RR OUT	1			
9-2	71LN-24022				..BRACKET-ELEC RR	2			
9-3	71LN-24032				..BRACKET-RR COVER LWR	1			
9-4	71LN-24042				..BRACKET-RR COVER LWR	1			
9-5	71LN-24052				..BRACKET-RR COVER LWR	1			
9-6	71LN-24062				..BRACKET-RR COVER LWR	1			
9-7	71LN-24072				..BRACKET-RR COVER LH	1			
12	71LM-28032				.HANDRAIL WA-LH	2			
13	71LM-28122				.HANDRAIL-A PILLAR, LH	1			
14	71LF-01900				.PLATE WA-LH/RR	1			
15	71LM-11282				.SUPPORT WA	1			
16	71LM-11622				.BRACKET FRT-R/SCREEN	2			
17	71LN-01882				.PLATE WA-FR LOW CVR LH	1			
18	71LN-01892				.PLATE WA-FR LOW CVR RH	1			
19	71LM-28052				.PLATE-BEACON LAMP	1			
21	71LN-28022				.PLATE WA-RH/RR	1			
23	71LG-00031				.VISCOUS MOUNT	4			
24	71LM-29011				.HAMMER	1			
25	71LM-00290				.FILTER ASSY	1			
26	71Q6-22410				.ASH-TRAY	1			

Item	Part_No	IS	Ord	T	Description	Qty	Serial_No	ITC	Remark
27	71LB-01170				.MIRROR-ROOM	1			
28	71LN-29020				.BUMPER-RUBBER	4			
29	71LN-29112				.WEATHER STRIP-DOOR LH	1			
30	71LM-29042				.SUN SCREEN	1			
31	71LM-28182				.CLAMP-DUCT	1			
32	71LN-29122				.WEATHER STRIP-DOOR RH	1			
33	71LM-28022				.SPACER	4			
34	S002-06015B				.SCREW-TRUS HEAD	14			
35	S017-120256				.BOLT-HEX	2			
37	S037-102026				.BOLT-W/WASHER	8			
38	S037-104026				.BOLT-W/WASHER	16			
39	S037-122526				.BOLT-W/WASHER	9			
40	S091-050156				.BOLT-WING	4			
41	S141-040156				..SCREW-FLAT HD	3			
42	S141-060206				.SCREW-FLAT HD	3			
43	S403-125006				.WASHER-PLAIN	4			
44	71LM-29510				.DECAL KIT	1			
44-1	91N6-07290				..DECAL-FIRE	1			8020 ITEM 20-9
44-2	91N6-07261				..DECAL-ALTERNATE EXIT	1			8020 ITEM 20-8
44-3	91LB-01340				..DECAL-HAMMER	1			8020 ITEM 20-7
44-4	91LB-01240				..DECAL-ROLL OVER	1			8020 ITEM 20-6
44-5	91LB-01230				..DECAL-MAX H/REACH	1			8020 ITEM 20-5
44-6	91LF-21010				..ADHESIVE SUN SCREEN	1			
46	75LL-10180				.BLIND POP NUT-M8	9			
47	75LL-10160				.BLIND POP NUT-M6	21			

Item	Part_No	IS	Ord	T	Description	Qty	Serial_No	ITC	Remark
48	S285-10100B				.NUT-FLANGED	4			
49	71LN-12173				.BRACKET-FR COVER	1			
50	71LN-12682				.BRACKET RR-ROOF COVER	1			
52	S141-080156				.SCREW-FLAT HD	6			
53	71LB-01110				.WASHER-ROOF COVER	6			
54	71LB-09220				.GROMMET	6			

CAB SUB ASSY(2/4)

GLASS KIT

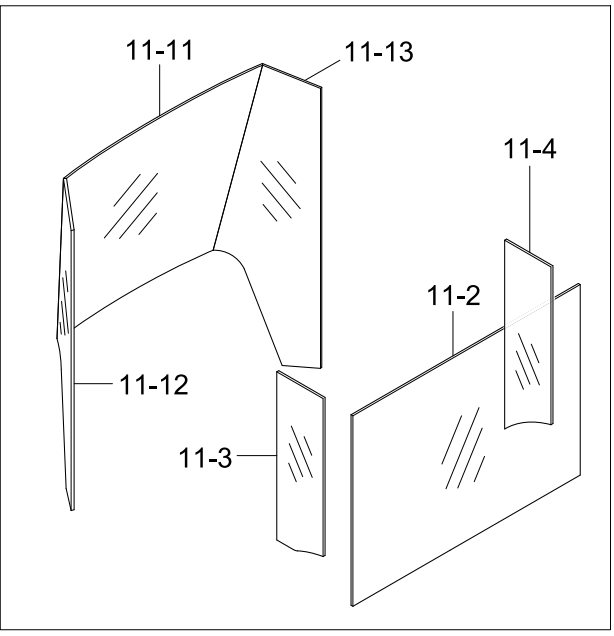

INSULATOR KIT

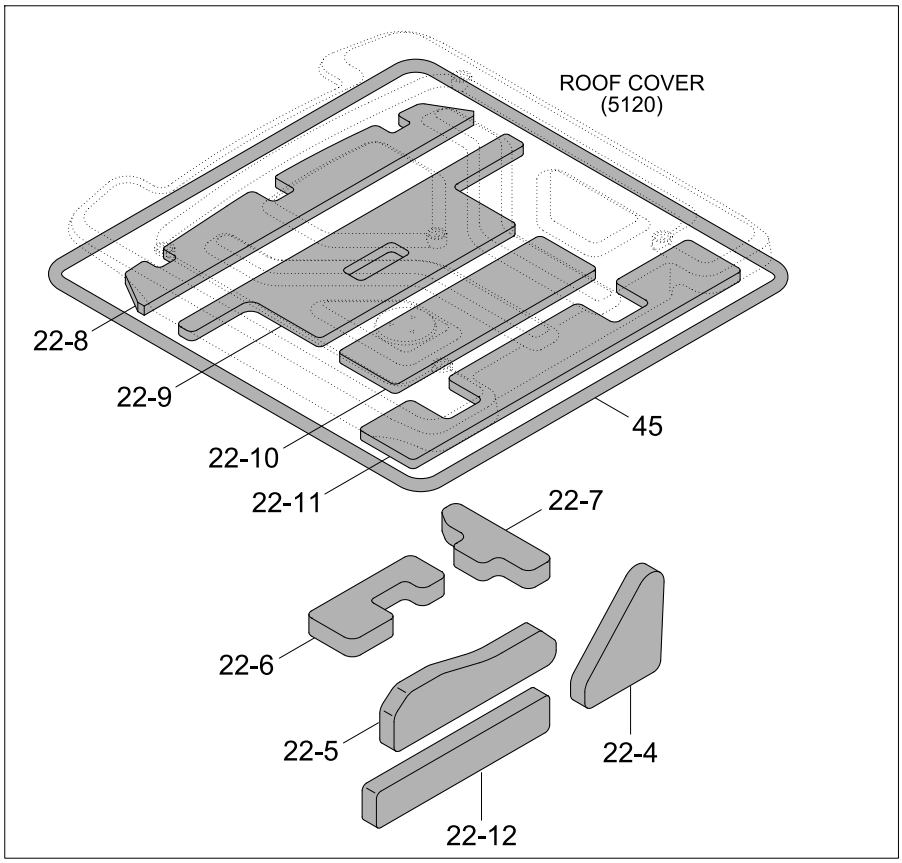

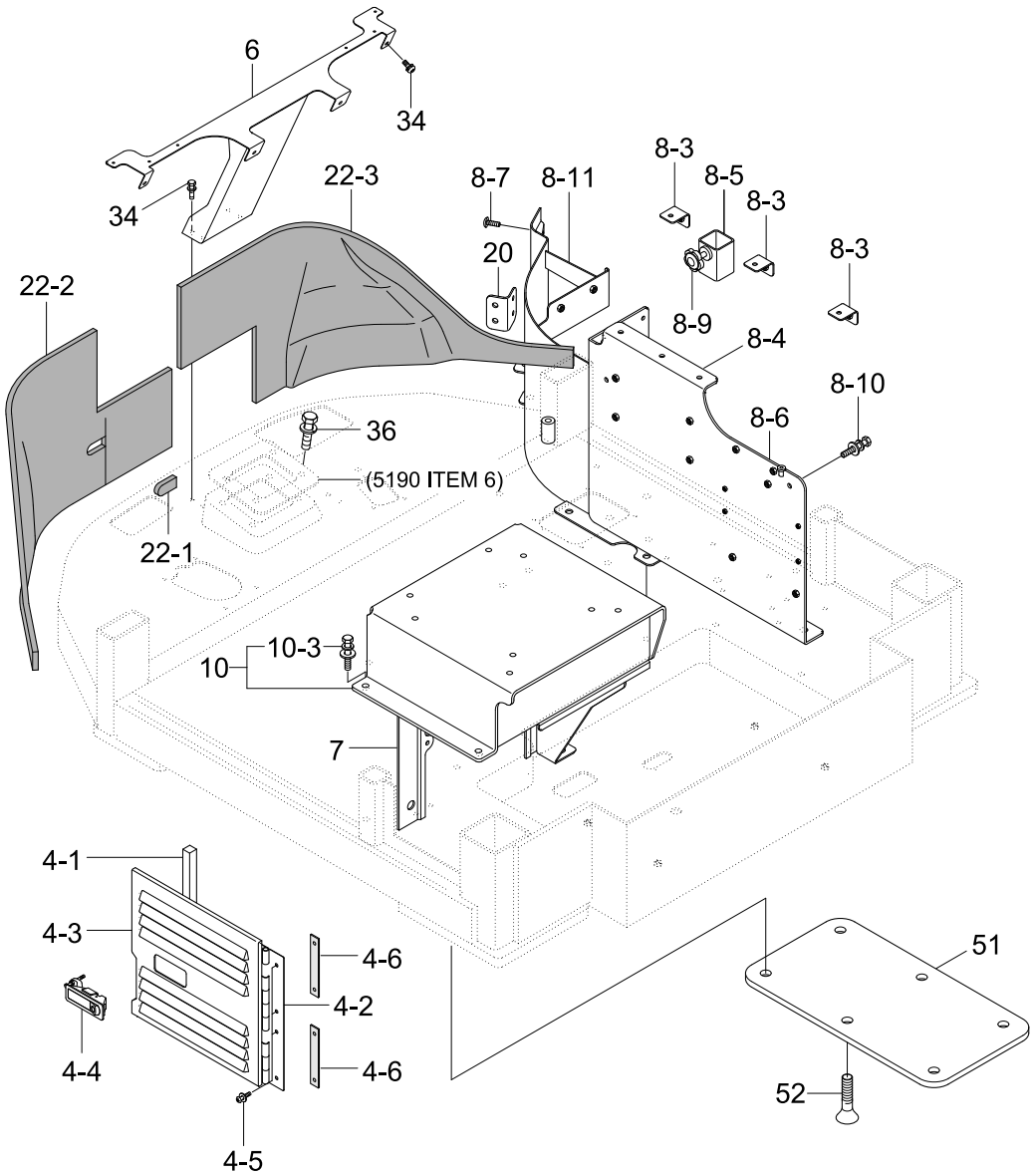

Item	Part_No	IS	Ord	T	Description	Qty	Serial_No	ITC	Remark
*	@				CAB SUB ASSY	1			NOT
4	71LN-25003				.MAINT DOOR ASSY	1			
4-1	71LM-25022				..RUBBER PAD-AIR FILTER	1			
N4-2	71LM-25033				..HINGE ASSY-AIR FILTER	1			NOT
N4-3	71LN-25013				..MAINT DOOR-AIR FILTER	1			NOT
4-4	71LM-01220				..LATCH ASSY	1			
4-5	S002-060166				..SCREW-TRUSHEAD	3			
4-6	71LB-02310				..BOSS-HINGE	2			
6	71LN-22003				.SUP WA-DASH	1			
7	71LN-23002				.SUPPORT ASSY-LH	1			
8	71LN-23502				.SUPPORT ASSY-CON RH	1			
8-3	71LN-23552				..PLATE-CONSOLE RH A	3			
8-4	71LN-23563				..SUPPPORT-RH ELEC	1			
8-5	71LN-23602				..SUPPORT ASY-WRIST REST	1			
8-6	71LN-23652				..BOSS-SUPPORT CON RH	1			
8-7	S002-060166				..SCREW-TRUSHEAD	1			
8-8	S037-122526				..BOLT-W/WASHER	8			
8-9	71LN-23692				..KNOB-WRISTREST	1			
8-10	S035-082526				..BOLT-W/WASHER	2			
8-11	75LN-23571				..SUPPORT WA-RH	1			
10	71LN-24504				.SUPPORT WA-SEAT	1			
10-3	S037-122536				..BOLT-W/WASHER	4			
N11	71LN-26002				.GLASS SUB KIT	1			NOT
N11-1	71LN-26012				..FRONT GLASS SUB ASSY	1			NOT
11-11	71LN-26110				...FRONT GLASS-CENTER	1			

Item	Part_No	IS	Ord	T	Description	Qty	Serial_No	ITC	Remark
11-12	71LN-26120				...FRONT GLASS-LH	1			
11-13	71LN-26130				...FRONT GLASS-RH	1			
11-2	71LN-26100				..GLASS-REAR	1			
11-3	71LN-26032				..GLASS-SD LH	1			
11-4	71LN-26042				..GLASS-SD RH	1			
20	71LN-23702				.BRACKET-DASH LWR RH	1			
22	71LN-27002				.INSULATOR SUB KIT	1			
22-1	71LM-27172				..SPONGE-CLAMP FR	1			
22-2	71LN-27012				..SPONGE-FRONT	1			
22-3	71LN-27022				..SPONGE-FRONT RH	1			
22-4	71LN-27032				..SPONGE-REAR A	1			
22-5	71LN-27042				..SPONGE-REAR B	1			
22-6	71LN-27052				..SPONGE-HVAC FRONT	1			
22-7	71LN-27062				..SPONGE-HVAC RH	1			
22-8	71LN-27072				..SPONGE-ROOF A	1			
22-9	71LN-27082				..SPONGE-ROOF B	1			
22-10	71LN-27092				..SPONGE-ROOF C	1			
22-11	71LN-27102				..SPONGE-ROOF D	1			
22-12	71LN-27162				..SPONBE-REAR C	1			
34	S002-06015B				.SCREW-TRUS HEAD	9			
36	S035-082526				.BOLT-W/WASHER	4			
45	71LN-28030				.SPONGE-ROOF COVER	1			
51	71LN-28220				.COVER-PUMP MAINT	1			
52	S141-080156				.SCREW-FLAT HD	6			
N	@				NOT SUPPLIED PARTS	AR			NOT

CAB SUB ASSY(3/4, LH DOOR ASSY)

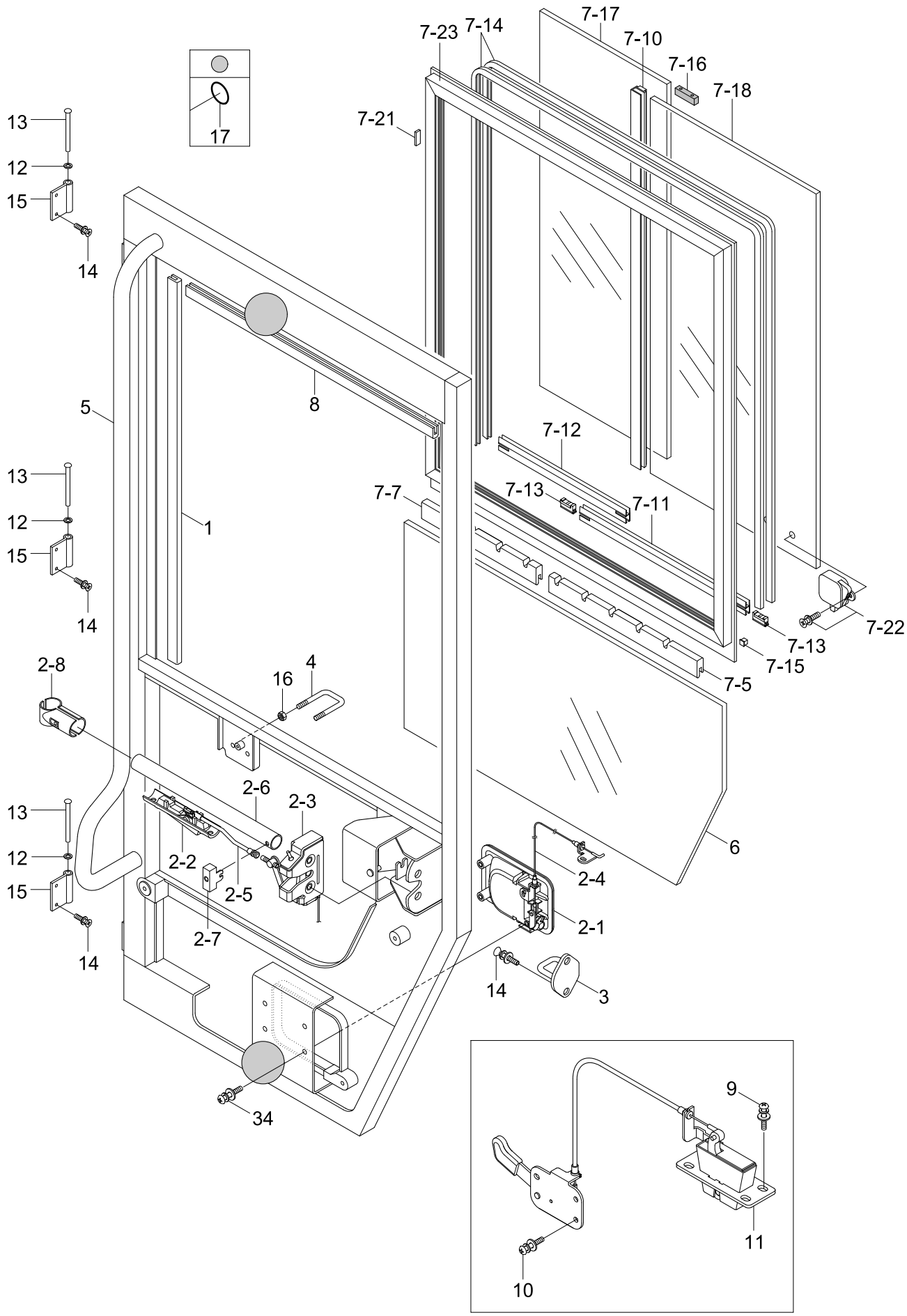

Item	Part_No	IS	Ord	T	Description	Qty	Serial_No	ITC	Remark
*	@				CAB SUB ASSY	1			NOT
*-1	71LN-21002				.DOOR ASSY-LH	1			
N1	71LM-21382				..SEAL-SASH SIDE	2			NOT
2	71LM-21512				..DOOR LATCH ASSY-LH	1			
2-1	71LM-21522				...DOOR HANDLE ASSY-LH	1			
2-2	71LM-21732				...HANDLE ASSY-LH IN	1			
2-3	71LM-21722				...DOOR LATCH-LH	1			
2-4	71LM-21782				...LINKAGE-HANDLE OUT	1			
2-5	71LM-21792				...LINKAGE-HANDLE IN	1			
2-6	71LM-21742				...PIPE-HANDLE IN	1			
2-7	71LM-21532				...BLOCK-HANDRAIL	1			
2-8	71LM-21552				...CLAMP-HANDRAIL	1			
3	71LM-21912				..STRIKER-DOOR LATCH LH	1			
4	71LM-21922				..STRIKER-BACK CATCH LH	1			
5	71LN-21012				..DOOR WA-LH	1			
6	71LN-21292				..GLASS-LH DOOR, LOW	1			
7	71LN-21314				..SASH ASSY-DOOR LH	1			
7-5	71LM-21362				...GUIDE-LOCK	1			
7-7	71LM-21442				...GUIDE-LOCK 2	1			
7-10	71LM-21612				...MOHAIR-CENTER	1			
7-11	71LM-21622				...RAIL-FRONT	1			
7-12	71LM-21632				...RAIL-REAR	1			
7-13	71LM-21642				...SLIDER-RAIL	4			
7-14	71LM-21652				...SEAL-GLASS	2			
7-15	71LM-21662				...SEAL-RAIL GUIDE	1			

Item	Part_No	IS	Ord	T	Description	Qty	Serial_No	ITC	Remark
7-16	71LM-21672				...STOPPER	2			
7-17	71LN-21462				...GLASS-SASH SMALL	1			
7-18	71LN-21452				...GLASS-SASH	1			
7-21	71Q6-03360				...RUBBER	9			
7-22	71Q6-03310				...LOCK ASSY	1			
7-23	71LN-21470				...SASH FRAME WA	1			
N8	71LM-21392				..SEAL-SASH TOP	1			NOT
9	S035-082526				..BOLT-W/WASHER	4			
10	S002-06015B				..SCREW-TRUS HEAD	3			
11	71LN-21812				..BACK LATCH ASSY-LH	1			
12	74L3-04450				..WASHER-COPPER	3			
13	74L3-05330				..PIN-HINGE	3			
14	S145-080166				..SCREW-FLAT HD	6			
15	71LM-21422				..HINGE-BODY	3			
16	S205-10200B				..NUT-HEX	4			
17	17E1-5146				..BUMPER-DOOR	2			
34	S002-06015B				.SCREW-TRUS HEAD	4			
N	@				NOT SUPPLIED PARTS	AR			NOT

CAB SUB ASSY(4/4, RH DOOR ASSY)

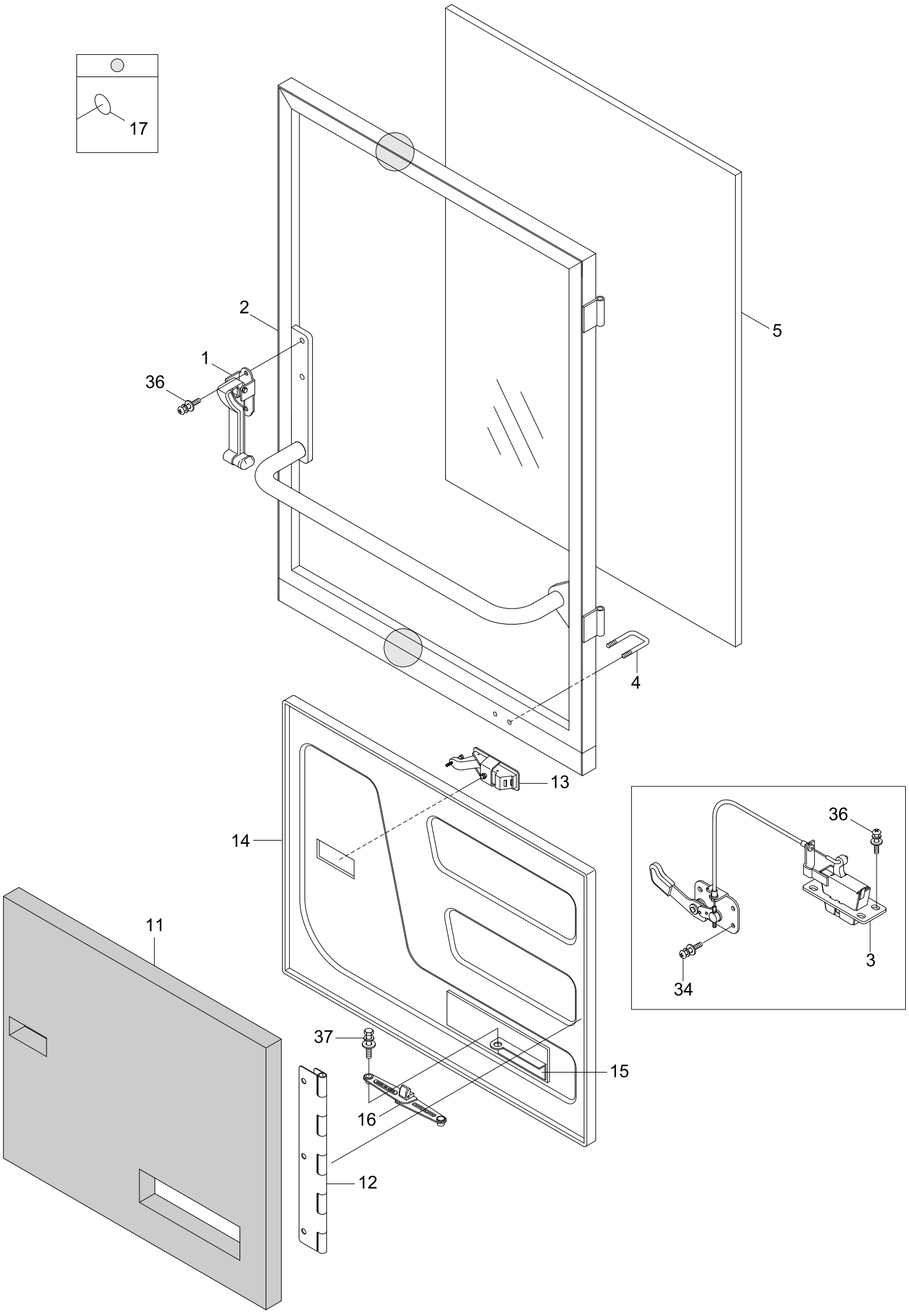

Item	Part_No	IS	Ord	T	Description	Qty	Serial_No	ITC	Remark
*	@				CAB SUB ASSY	1			NOT
*-2	71LN-21502				.DOOR ASSY-RH	1			
1	71LM-22412				..TILT HANDLE ASSY	1			
2	71LN-21512				..DOOR WA-RH	1			
3	71LN-21602				..BACK LATCH ASSY-RH	1			
4	71LN-21642				..STRIKER-BACK LATCH RH	1			
5	71LN-26071				..GLASS-DOOR RH	1			
*-3	71LN-25502				.COVER ASSY-MAINT	1			
11	71LN-25512				..SPONGE-RH FR	1			
N12	71LM-25032				..HINGE ASSY-AIR FILTER	1			NOT
13	71LM-01220				..LATCH ASSY	1			
N14	71LN-25522				..MAINT COVER-RH	1			NOT
15	72LM-41140				..BRACKET-LH	4			
16	71Q6-53180				..STAY ASSY-RH	1			
17	17E1-5146				..BUMPER-DOOR	2			
34	S002-06015B				.SCREW-TRUS HEAD	4			
36	S035-081526				.BOLT-W/WASHER	4			
37	S037-102026				.BOLT-W/WASHER	2			
N	@				NOT SUPPLIED PARTS	AR			NOT

CAB INTERIOR 1

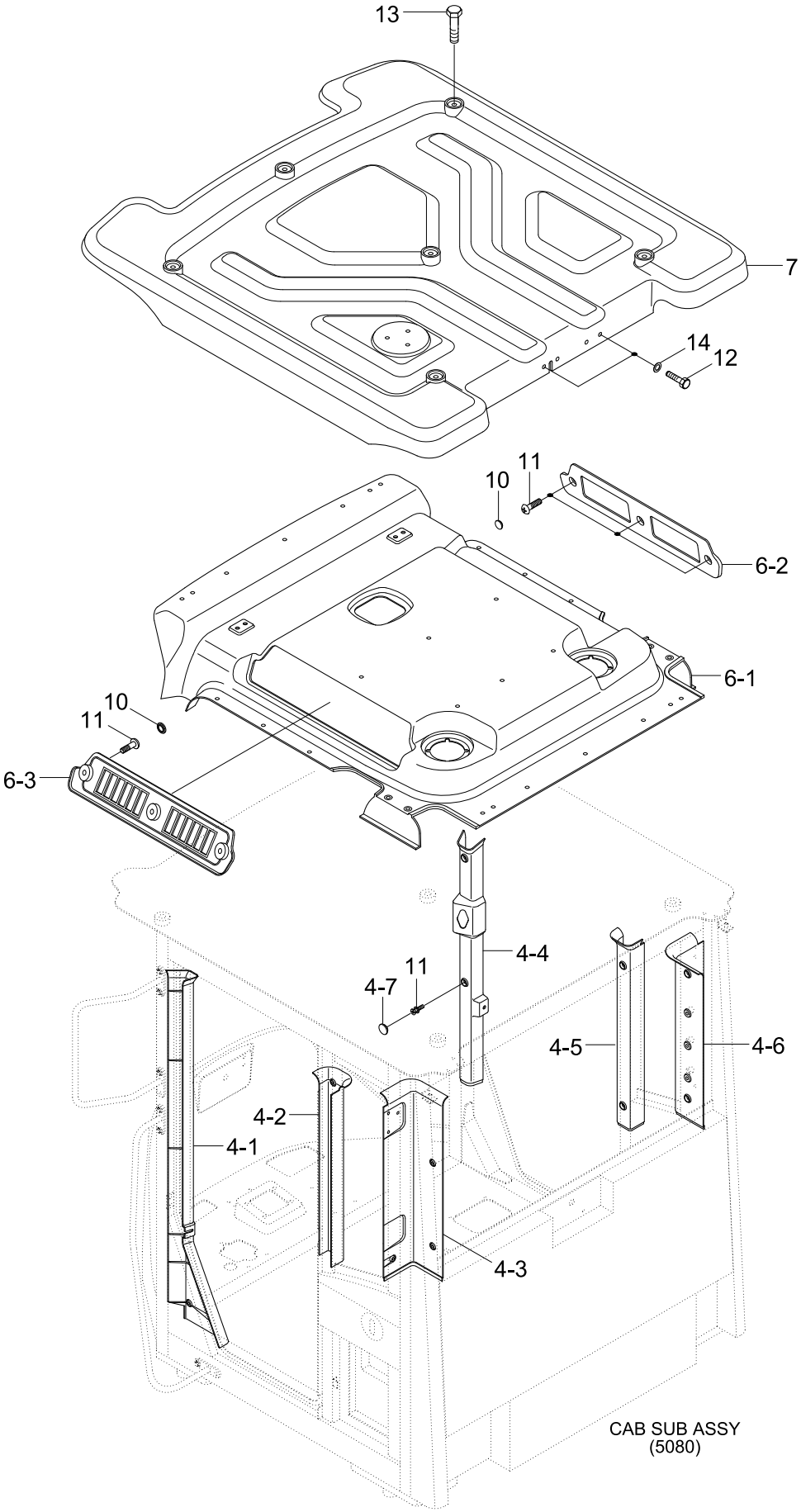

Item	Part_No	IS	Ord	T	Description	Qty	Serial_No	ITC	Remark
4	71LN-30403				PILLAR TRIM ASSY	1			
4-1	71LN-30413				.PILLAR TRIM-LH A	1			
4-2	71LN-30423				.PILLAR TRIM-LH B	1			
4-3	71LN-30433				.PILLAR TRIM-LH C	1			
4-4	71LN-30463				.PILLAR TRIM-RH A	1			
4-5	71LN-30473				.PILLAR TRIM-RH B	1			
4-6	71LN-30483				.PILLAR TRIM-RH C	1			
4-7	71Q6-22760				.CAP-TRIM	14			
6	71LN-30703				HEADLINING ASSY	1			
6-1	71LN-30713				.HEADLINING-BODY	1			
6-2	71LN-30723				.HEADLINING-TRIM LH	1			
6-3	71LN-30733				.HEADLINING-TRIM RH	1			
7	71LN-30915				ROOF COVER ASSY	1			
10	71Q6-22760				CAP-TRIM	6			
11	S002-06015B				SCREW-TRUS HEAD	20			
12	S017-120256				BOLT-HEX	2			
13	S017-20030D				BOLT-HEX	6			
14	S403-125006				WASHER-PLAIN	2			

CAB INTERIOR 2

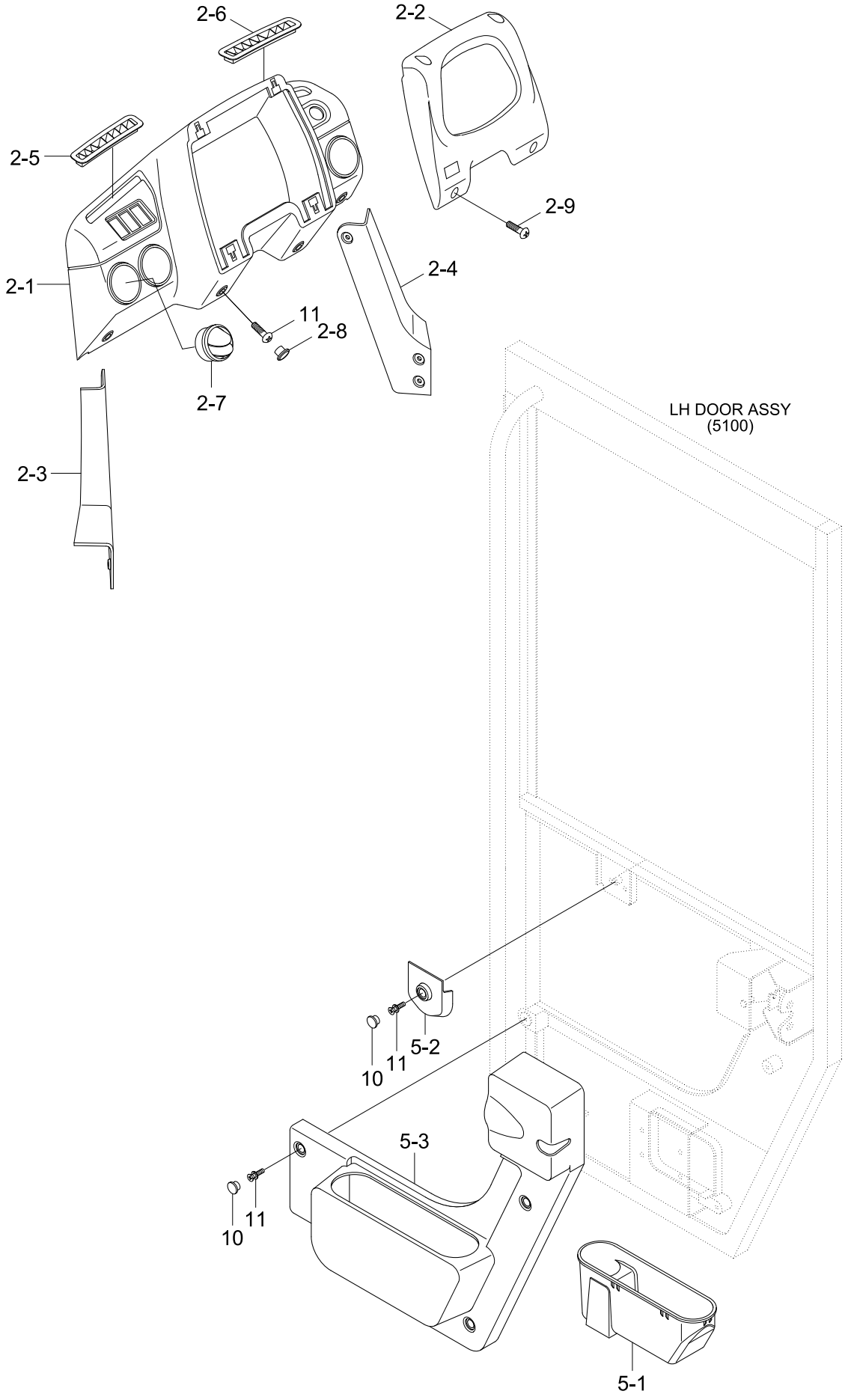

Item	Part_No	IS	Ord	T	Description	Qty	Serial_No	ITC	Remark
2	71LN-30103				DASHBOARD ASSY	1			
2-1	71LN-30113				.DASHBOARD-BODY	1			
2-2	71LM-30123				.DASHBOARD-CENTER	1			
2-3	71LN-30813				.LWR COVER-DASH LH	1			
2-4	71LN-30823				.LWR COVER-DASH RH	1			
2-5	71LM-30133				.AIR NOZZLE-DEF LH	1			
2-6	71LM-30143				.AIR NOZZLE-DEF RH	1			
2-7	71Q6-22400				.NOZZLE-AIR,REAR	4			
2-8	71Q6-22760				.CAP-TRIM	8			
2-9	S002-06015B				.SCREW-TRUS HEAD	4			
5	71LN-30603				.DOOR TRIM ASSY	1			
5-1	71LM-30623				..CUP HOLDER-DOOR LH	1			
5-2	71LM-30653				..COVER-BACK STRIKER	1			
5-3	71LN-30613				..DOOR TRIM-BODY	1			
10	71Q6-22760				.CAP-TRIM	4			
11	S002-06015B				SCREW-TRUS HEAD	12			

CAB INTERIOR 3

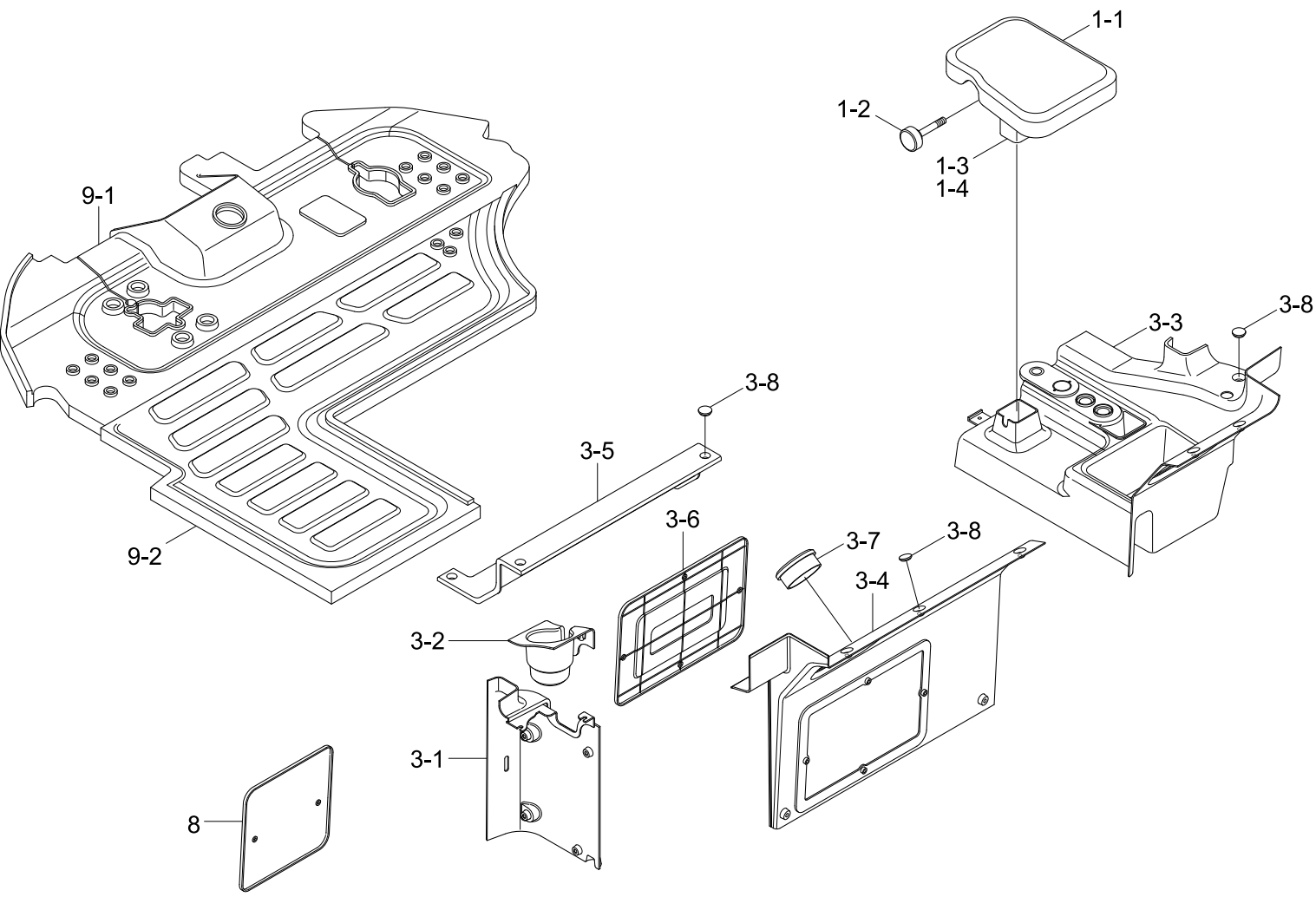

Item	Part_No	IS	Ord	T	Description	Qty	Serial_No	ITC	Remark
1	71LM-30803				WRIST REST ASSY	1			
N1-1	71LM-30920				.FRAME-WRIST REST	1			NOT
1-2	71LM-30940				.KNOB-WRIST REST	1			
N1-3	71LM-30950				.TUBE-WRIST REST	1			NOT
N1-4	71LM-30960				.FOAM-WRIST REST	1			NOT
3	71LN-30203				CONSOLE BOX ASSY	1			
3-1	71LN-30213				.CONSOLE-LH	1			
3-2	71LN-30253				.HOLDER-CUP LH	1			
3-3	71LN-30264				.CONSOLE-RH RR	1			
3-4	71LN-30273				.CONSOLE-RR UP	1			
3-5	71LN-30283				.CONSOLE-RR LWR	1			
3-6	71LN-30293				.CONSOLE-RR UP DOOR	1			
3-7	71LN-29011				.SCREW-CAPTIVE	4			
3-8	71Q6-22400				.NOZZLE-AIR,REAR	4			
8	71LN-30923				MAINT COVER-LH	1			
9	75LN-30961				MAT FLOOR-SINGLE	1			SINGLE BRAKE
9-1	75LN-30971				.MAT FLOOR-FRT SINGLE	1			SINGLE BRAKE
9-2	71LN-30953				.MAT FLOOR-RR	1			SINGLE BRAKE
N	@				NOT SUPPLIED PARTS	AR			NOT

CAB DUCT

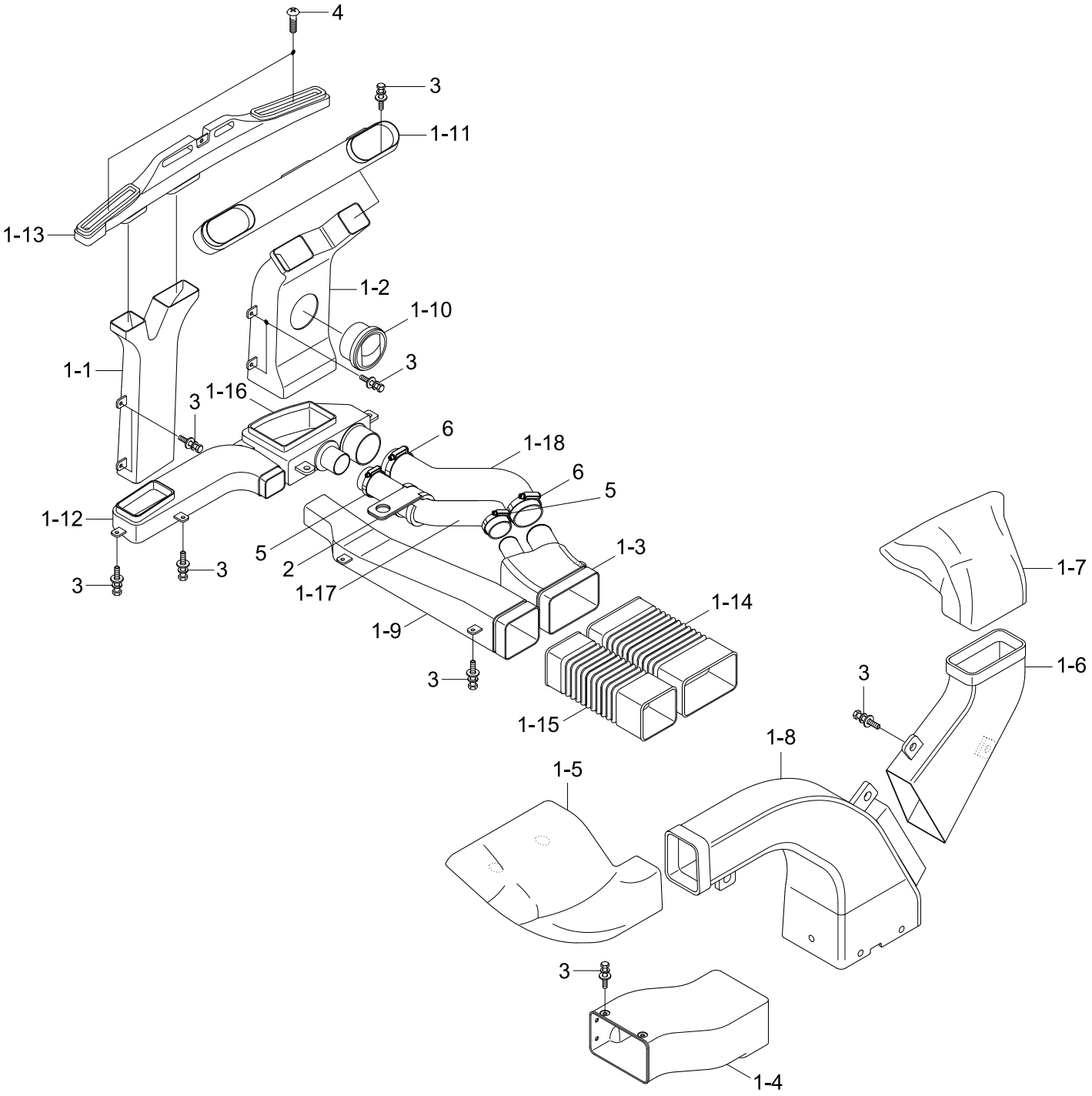
4
3
1-11
1-13
1-2
1-10
1-1
3
1-16
3
6
1-18
6
5
1-12
5
2
1-3
3
3
1-17
1-14
1-9
3
1-15
1-7
1-6
3
1-8
1-5
3
1-4

Item	Part_No	IS	Ord	T	Description	Qty	Serial_No	ITC	Remark
1	75LN-31001				DUCT SUB ASSY	1			
1-1	71LM-31234				.DUCT-DEF C	1			
1-2	71LM-31133				.DUCT-HUMAN C	1			
1-3	75LL-31150				.DUCT-HUMAN AA	1			
1-4	71LN-31413				.DUCT-IN	1			
1-5	71LN-31323				.DUCT-REAR LH	1			
1-6	71LN-31313				.DUCT-REAR MID RH	1			
1-7	71LN-31333				.DUCT-REAR RH	1			
1-8	71LN-31343				.DUCT-REAR MID LH	1			
1-9	71LN-31213				.DUCT-DEF E	1			
1-10	71Q6-22400				.NOZZLE-AIR,REAR	1			
1-11	71LM-31143				.DUCT-HUMAN D	1			
1-12	71LM-31223				.DUCT-DEF B	1			
1-13	71LM-31243				.DUCT-DEF D	1			
1-14	71LM-31113				.DUCT-HUMAN A	1			
1-15	71LM-31253				.DUCT-DEF A	1			
1-16	75LL-31121				.DUCT-HUMAN B	1			
1-17	75LN-31171				.HOSE	1			
1-18	75LN-31181				.HOSE	1			
2	71N6-20230				CLAMP-HOSE	1			
3	S035-082026				BOLT-W/WASHER	29			
4	S002-06015B				SCREW-TRUS HEAD	7			
5	S520-055000				CLAMP-HOSE	2			
6	S520-085000				CLAMP-HOSE	2			

SEAT MOUNTING

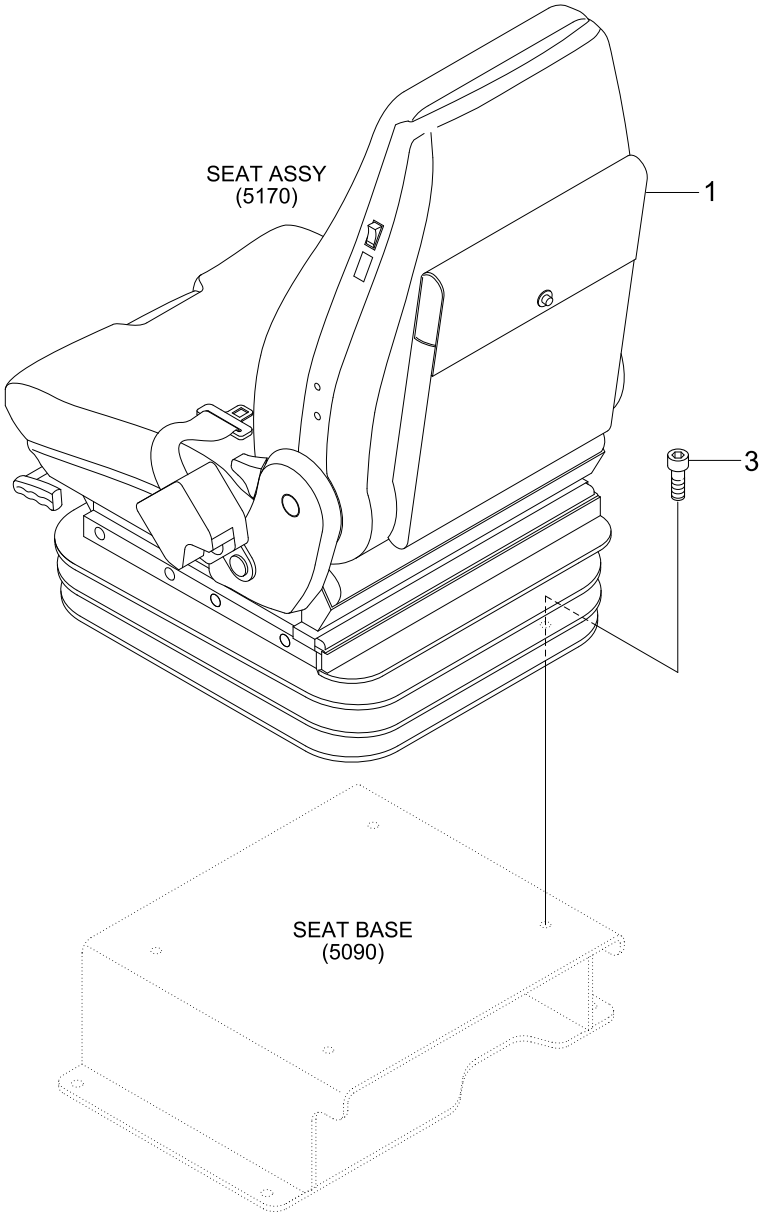

Item	Part_No	IS	Ord	T	Description	Qty	Serial_No	ITC	Remark
1	71LM-33011				SEAT ASSY-MECH 2"	1			SEE 5170, 5171
	71LM-33021				SEAT ASSY-MECH HEAT 2"	1			SEE 5172, 5173
	71LM-33031				SEAT ASSY-MECH 3"	1			SEE 5174, 5175
	71LM-33041				SEAT ASSY-AIR HEATED 3"	1			SEE 5176, 5177
	71LM-33211				SEAT ASSY-WOO MECH 2"	1			SEE 5180
3	S109-080256				BOLT-SOCKET	4			

SEAT(MECHANICAL, 2", 1/2)

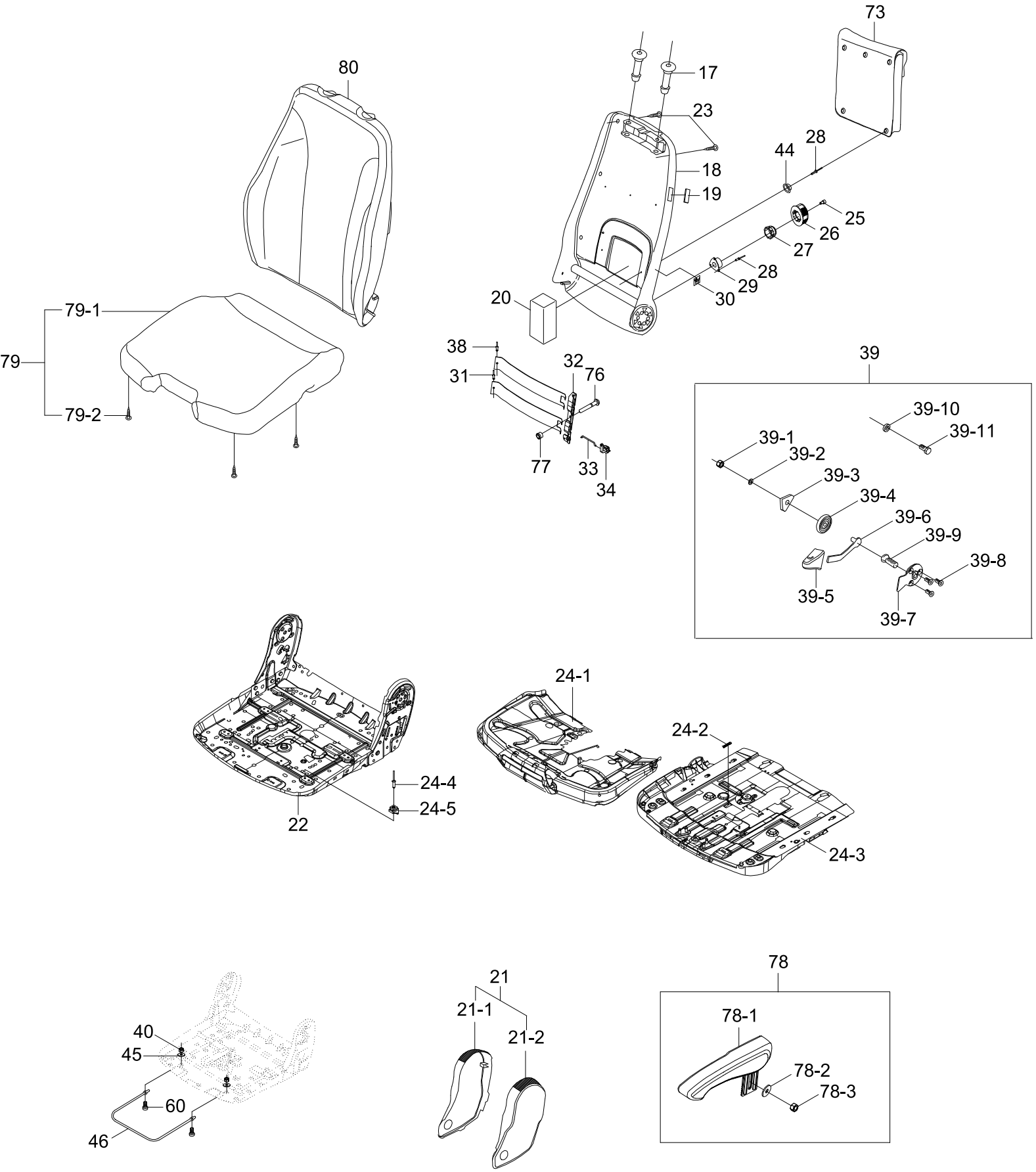

Item	Part_No	IS	Ord	T	Description	Qty	Serial_No	ITC	Remark
*	71LM-33011				SEAT ASSY-MECH 2"	1			GRAMMER
17	ZGBH-00004				.BUSH	2			
18	ZGBH-00166				.BACKREST-SCR	1			
19	ZGBH-00013				.COVER-PLASTIC	1			
20	ZGBH-00016				.SPONGE	1			
21	ZGBH-00204				.HINGE COVER KIT	1			
21-1	ZGBH-00182				..COVER-RH	1			
21-2	ZGBH-00181				..COVER-LH	1			
22	ZGBH-00110				.SEAT PLATE GS	1			
23	ZGBH-00037				.SCREW-SELF TAPPING	6			
24	ZGBH-00205				.SLIDER KIT	1			
24-1	ZGBH-00038				..ADJUSTMENT-TILTING	1			
24-2	ZGBH-00039				..SPRING	1			
24-3	ZGBH-00114				..ADJUSTMENT-SEAT	1			
24-4	ZGBH-00034				..RIVET	4			
24-5	ZGBH-00035				..PROFILE-GLIDING	4			
25	ZGBH-00055				.SCREW	1			
26	ZGBH-00007				.HANDLE	1			
N27	ZGBH-00008				.WHEEL-TOOLHEAD	1			NOT
28	ZGBH-00010				.RIVET-BLIND	8			
29	ZGBH-00011				.BRAKE-SLING SPRING	1			
30	ZGBH-00012				.STICKER	1			
31	ZGBH-00021				.PLATE	2			
32	ZGBH-00017				.WINKEL	1			
33	ZGBH-00019				.RODS	1			

Item	Part_No	IS	Ord	T	Description	Qty	Serial_No	ITC	Remark
34	ZGBH-00020				.CARRIER	1			
38	ZGBH-00107				.RIVET	2			
39	ZGBH-00207				.BACKREST KIT	1			
39-1	ZGBH-00109				..SELF LOCK NUT	1			
39-2	ZGBH-00024				..WASHER-BLACK	1			
39-3	ZGBH-00025				..SPRING HOLDER	1			
39-4	ZGBH-00026				..SPRING-LEG	1			
39-5	ZGBH-00033				..HANDLE	1			
39-6	ZGBH-00027				..LEVER	1			
39-7	ZGBH-00113				..PLATE	1			
39-8	ZGBH-00029				..SCREW	3			
39-9	ZGBH-00112				..SCREW	1			
39-10	ZGBH-00015				..WASHER	1			
39-11	ZGBH-00014				..SCREW-HEX HEAD	1			
40	ZGBH-00023				.HEX NUT-BLACK	2			
44	ZGBH-00208				.BALL	5			
45	ZGBH-00015				.WASHER	2			
46	ZGBH-00209				.HANDLE	1			
60	ZGBH-00043				.SCREW-CYLINDRIC HEAD	2			
73	ZGBH-00213				.BOX-LITERATURE	1			
76	ZGBH-00215				.BOLT	1			
77	ZGBH-00216				.SEEGER	1			
78	ZGBH-00217				.ARMREST KIT	1			
78-1	ZGBH-00030				..ARM REST-LH	1			
78-2	ZGBH-00015				..WASHER	1			

Item	Part_No	IS	Ord	T	Description	Qty	Serial_No	ITC	Remark
78-3	ZGBH-00023				..HEX NUT-BLACK	1			
79	ZGBH-00218				.CUSHION KIT	1			
79-1	ZGBH-00189				..CUSHION-SEAT,WHEAT	1			
79-2	ZGBH-00037				..SCREW-SELF TAPPING	4			
80	ZGBH-00219				.CUSHION-BACK	1			

SEAT(MECHANICAL, 2", 2/2)

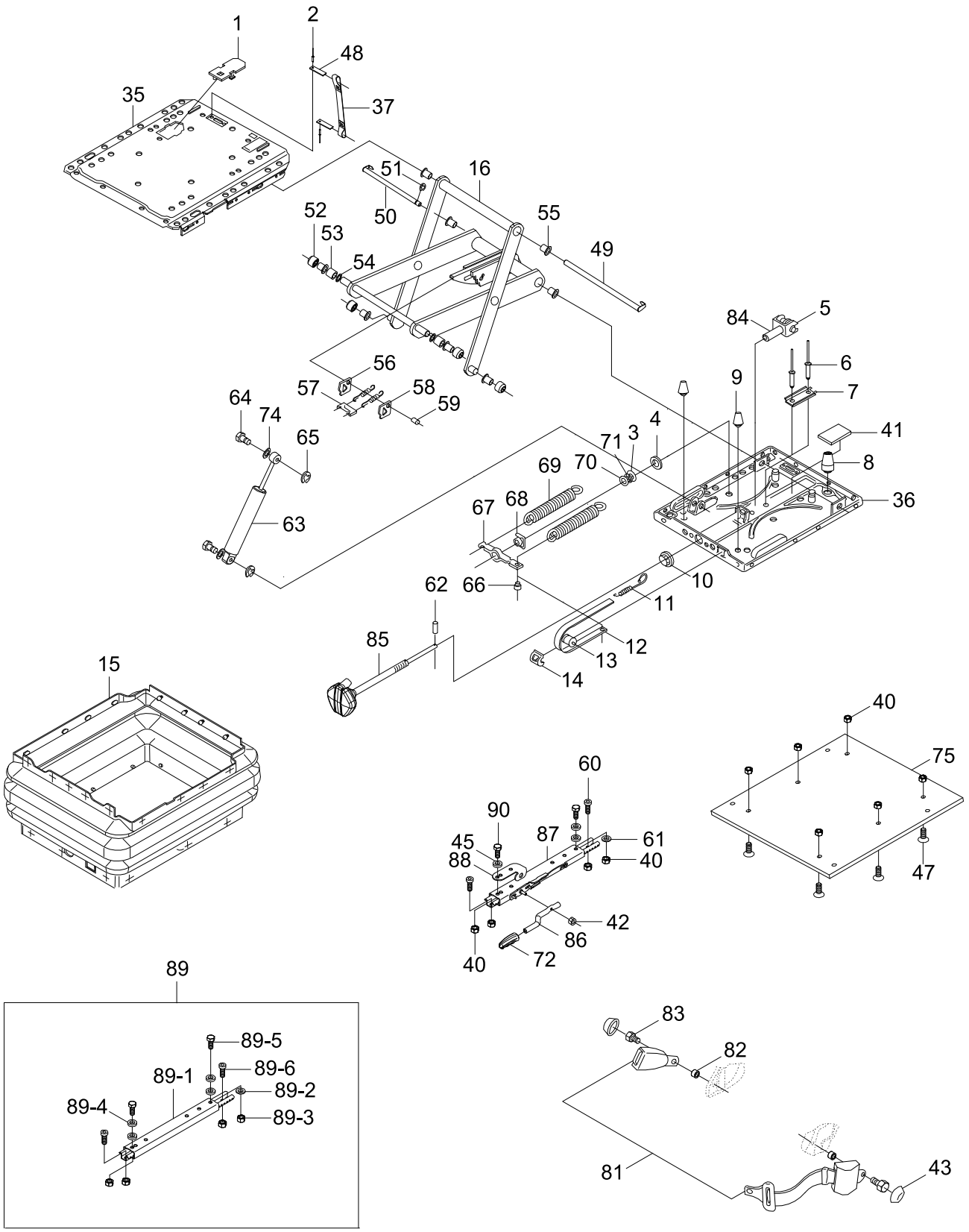

Item	Part_No	IS	Ord	T	Description	Qty	Serial_No	ITC	Remark
*	@				SEAT ASSY	1			NOT
1	ZGBH-00058				.PANEL-TRIM	1			
2	ZGBH-00059				.POP RIVET	2			
3	ZGBH-00085				.WASHER	1			
4	ZGBH-00086				.WASHER-PLASTIC	1			
5	ZGBH-00089				.BEARING-TRIPLE	1			
6	ZGBH-00090				.POP RIVET	2			
7	ZGBH-00197				.U-SHAPED PROFILE	1			
8	ZGBH-00092				.RUBBER	1			
9	ZGBH-00087				.RUBBER	2			
10	ZGBH-00094				.BUSH	1			
11	ZGBH-00095				.SPRING-TENSION	1			
12	ZGBH-00198				.INDICATOR	1			
13	ZGBH-00097				.ROLLER	1			
14	ZGBH-00098				.DEVICE-GUIDING	1			
15	ZGBH-00101				.BELLOWS	1			
N16	ZGBH-00064				.SWING ARM LA	1			NOT
35	ZGBH-00057				.PLATE-UPPER	1			
36	ZGBH-00206				.PLATE-SUSPENSION	1			
37	ZGBH-00195				.BELT-SECONDARY	1			
40	ZGBH-00023				.HEX NUT-BLACK	10			
41	ZGBH-00056				.PLATE-RUBBER	1			
42	ZGBH-00116				.SELF LOCK NUT	1			
43	ZGBH-00050				.COVER	2			
45	ZGBH-00015				.WASHER	3			

Item	Part_No	IS	Ord	T	Description	Qty	Serial_No	ITC	Remark
47	ZGBH-00168				.SCREW-COUNTERSUNK	6			
48	ZGBH-00060				.PLATE	2			
49	ZGBH-00210				.BOLT	1			
50	ZGBH-00062				.BOLT	1			
51	ZGBH-00063				.LOCK WASHER	1			
52	ZGBH-00072				.ROLLER	4			
53	ZGBH-00073				.BUSH	2			
54	ZGBH-00071				.WASHER	2			
55	ZGBH-00065				.BUSH-PLASTIC	8			
N56	ZGBH-00069				.PLATE	2			NOT
57	ZGBH-00070				.STRIP-COVER	1			
58	ZGBH-00211				.TENSION SPRING	2			
59	ZGBH-00067				.BOLT	1			
60	ZGBH-00043				.SCREW-CYLINDRIC HEAD	4			
61	ZGBH-00024				.WASHER-BLACK	1			
62	ZGBH-00078				.PIN	1			
63	ZGBH-00212				.ABSORBER	1			
64	ZGBH-00074				.BOLT	2			
65	ZGBH-00075				.LOCK WASHER	2			
66	ZGBH-00079				.INSERT	1			
67	ZGBH-00080				.SPRING BRACKET	1			
68	ZGBH-00081				.FLANGE NUT	1			
69	ZGBH-00082				.SPRING LA	2			
70	ZGBH-00083				.WASHER	1			
71	ZGBH-00084				.BEARING	1			

Item	Part_No	IS	Ord	T	Description	Qty	Serial_No	ITC	Remark
72	ZGBH-00049				.KNOB-PLASTIC	1			
74	ZGBH-00118				.SPRING WASHER	2			
75	ZGBH-00214				.PLATE-BOTTOM	1			
81	ZGBH-00220				.SEATBELT	1			
82	ZGBH-00051				.BUSH	2			
83	ZGBH-00053				.SCREW	2			
84	ZGBH-00088				.GABEL	1			
85	ZGBH-00077				.HANDLE	1			
86	ZGBH-00048				.HANDLE	1			
87	ZGBH-00221				.SLIDE	1			
88	ZGBH-00045				.BRACKET	1			
89	ZGBH-00222				.SLIDE RAIL RH	1			
89-1	ZGBH-00041				..SLIDE RAIL-RH	1			
89-2	ZGBH-00024				..WASHER-BLACK	1			
89-3	ZGBH-00023				..HEX NUT-BLACK	4			
89-4	ZGBH-00015				..WASHER	4			
89-5	ZGBH-00042				..SCREW-HEX HEAD	2			
89-6	ZGBH-00043				..SCREW-CYLINDRIC HEAD	2			
90	ZGBH-00042				.SCREW-HEX HEAD	2			

SEAT(MECHANICAL, HEATED, 2", 1/2)

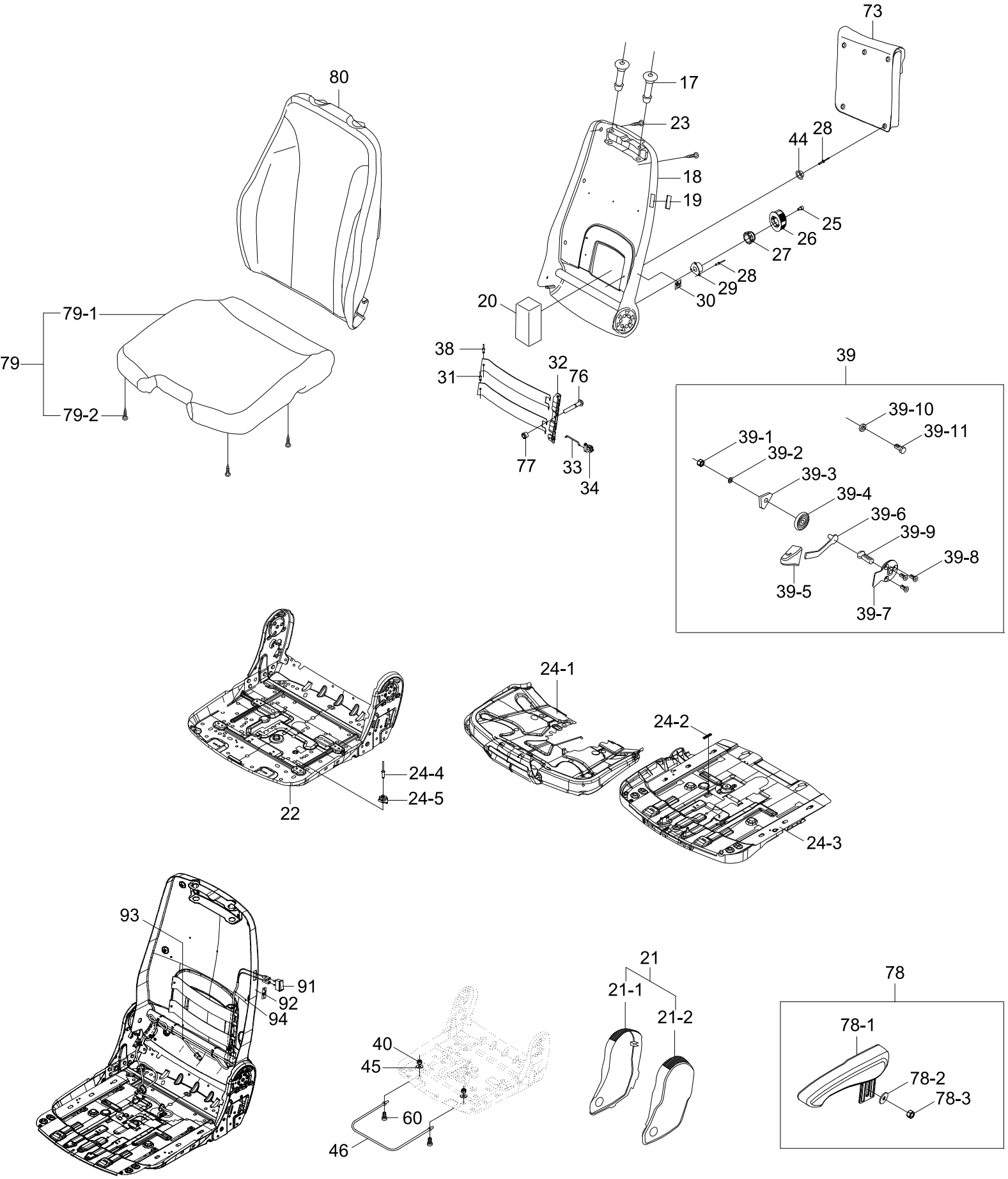

Item	Part_No	IS	Ord	T	Description	Qty	Serial_No	ITC	Remark
*	71LM-33021				SEAT ASSY-MECH HEAT 2"	1			GRAMMER
17	ZGBH-00004				.BUSH	2			
18	ZGBH-00166				.BACKREST-SCR	1			
19	ZGBH-00013				.COVER-PLASTIC	1			
20	ZGBH-00016				.SPONGE	1			
21	ZGBH-00204				.HINGE COVER KIT	1			
21-1	ZGBH-00182				..COVER-RH	1			
21-2	ZGBH-00181				..COVER-LH	1			
22	ZGBH-00110				.SEAT PLATE GS	1			
23	ZGBH-00037				.SCREW-SELF TAPPING	6			
24	ZGBH-00205				.SLIDER KIT	1			
24-1	ZGBH-00038				..ADJUSTMENT-TILTING	1			
24-2	ZGBH-00039				..SPRING	1			
24-3	ZGBH-00114				..ADJUSTMENT-SEAT	1			
24-4	ZGBH-00034				..RIVET	4			
24-5	ZGBH-00035				..PROFILE-GLIDING	4			
25	ZGBH-00055				.SCREW	1			
26	ZGBH-00007				.HANDLE	1			
N27	ZGBH-00008				.WHEEL-TOOLHEAD	1			NOT
28	ZGBH-00010				.RIVET-BLIND	8			
29	ZGBH-00011				.BRAKE-SLING SPRING	1			
30	ZGBH-00012				.STICKER	1			
31	ZGBH-00021				.PLATE	2			
32	ZGBH-00017				.WINKEL	1			
33	ZGBH-00019				.RODS	1			

Item	Part_No	IS	Ord	T	Description	Qty	Serial_No	ITC	Remark
34	ZGBH-00020				.CARRIER	1			
38	ZGBH-00107				.RIVET	2			
39	ZGBH-00207				.BACKREST KIT	1			
39-1	ZGBH-00109				..SELF LOCK NUT	1			
39-2	ZGBH-00024				..WASHER-BLACK	1			
39-3	ZGBH-00025				..SPRING HOLDER	1			
39-4	ZGBH-00026				..SPRING-LEG	1			
39-5	ZGBH-00033				..HANDLE	1			
39-6	ZGBH-00027				..LEVER	1			
39-7	ZGBH-00113				..PLATE	1			
39-8	ZGBH-00029				..SCREW	3			
39-9	ZGBH-00112				..SCREW	1			
39-10	ZGBH-00015				..WASHER	1			
39-11	ZGBH-00014				..SCREW-HEX HEAD	1			
40	ZGBH-00023				.HEX NUT-BLACK	2			
44	ZGBH-00208				.BALL	5			
45	ZGBH-00015				.WASHER	2			
46	ZGBH-00209				.HANDLE	1			
60	ZGBH-00043				.SCREW-CYLINDRIC HEAD	2			
73	ZGBH-00213				.BOX-LITERATURE	1			
76	ZGBH-00215				.BOLT	1			
77	ZGBH-00216				.SEEGER	1			
78	ZGBH-00217				.ARMREST KIT	1			
78-1	ZGBH-00030				..ARM REST-LH	1			
78-2	ZGBH-00015				..WASHER	1			

Item	Part_No	IS	Ord	T	Description	Qty	Serial_No	ITC	Remark
78-3	ZGBH-00023				..HEX NUT-BLACK	1			
79	ZGBH-00223				.CUSHION KIT	1			
79-1	ZGBH-00192				..SEAT CUSHION	1			
79-2	ZGBH-00037				..SCREW-SELF TAPPING	4			
80	ZGBH-00235				.BACKREST CUSHION	1			
91	ZGBH-00172				.SWITCH-HEATER	1			
92	ZGBH-00173				.STICKER	4			
93	ZGBH-00225				.HARNESS	4			
94	ZGBH-00226				.EXTESION CABLE	2			
N	@				NOT SUPPLIED PARTS	AR			NOT

SEAT(MECHANICAL, HEATED, 2", 2/2)

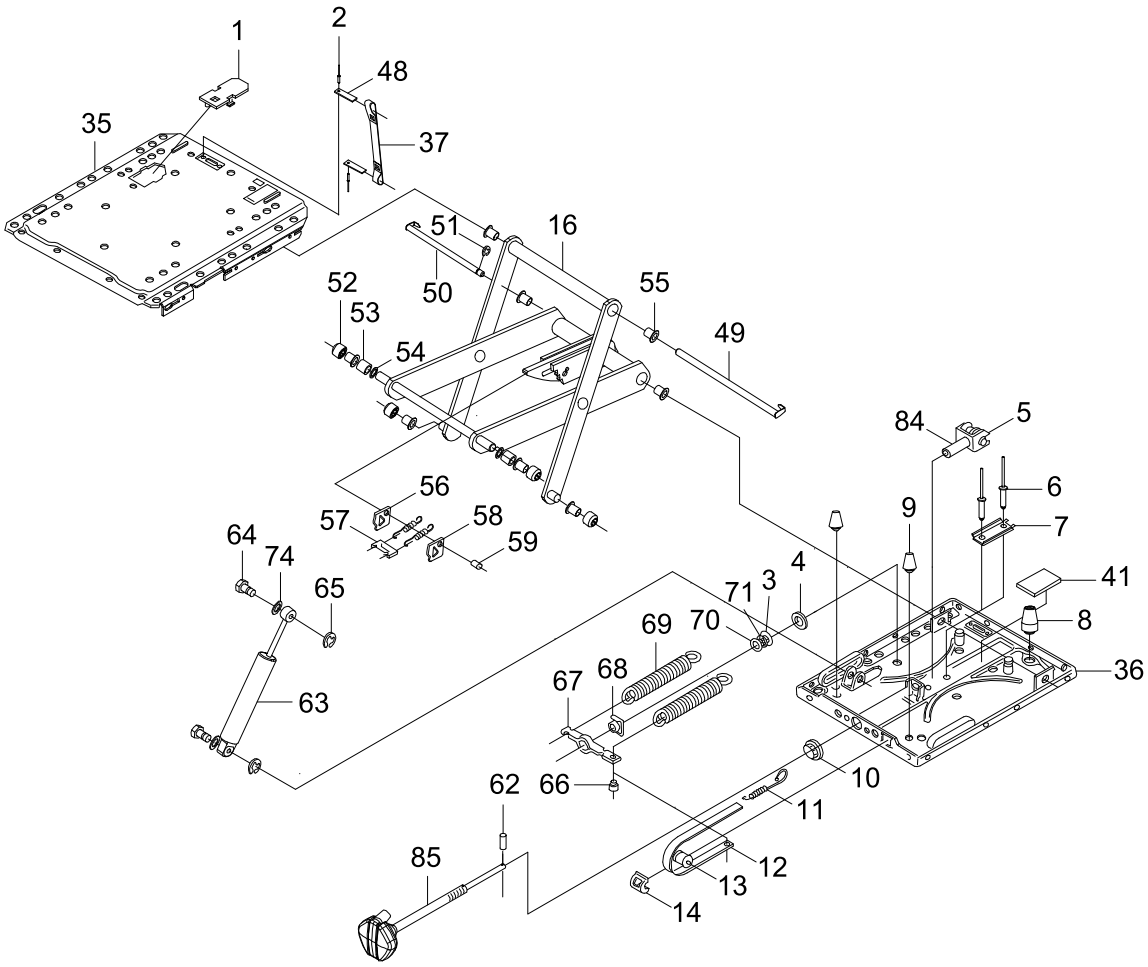

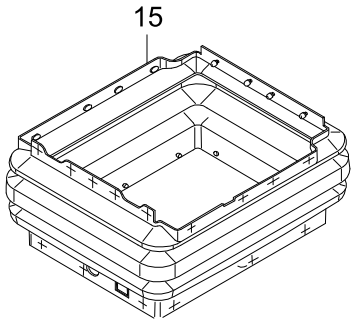

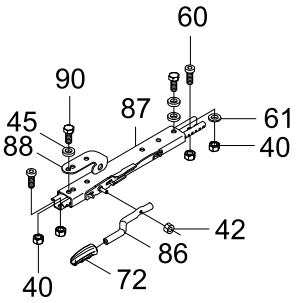

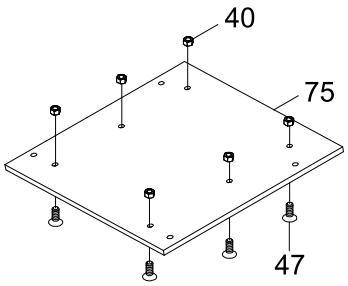

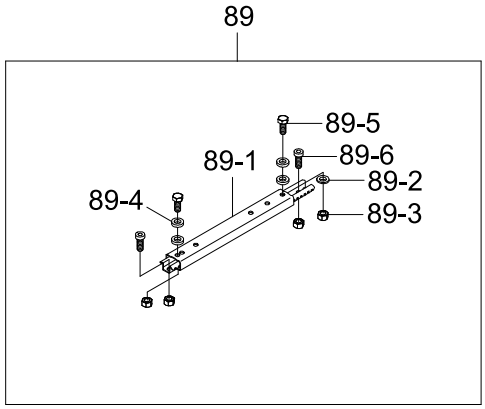

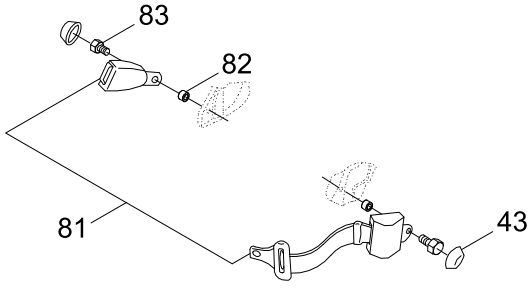

Item	Part_No	IS	Ord	T	Description	Qty	Serial_No	ITC	Remark
*	@				SEAT ASSY	1			NOT
1	ZGBH-00058				.PANEL-TRIM	1			
2	ZGBH-00059				.POP RIVET	2			
3	ZGBH-00085				.WASHER	1			
4	ZGBH-00086				.WASHER-PLASTIC	1			
5	ZGBH-00089				.BEARING-TRIPLE	1			
6	ZGBH-00090				.POP RIVET	2			
7	ZGBH-00197				.U-SHAPED PROFILE	1			
8	ZGBH-00092				.RUBBER	1			
9	ZGBH-00087				.RUBBER	2			
10	ZGBH-00094				.BUSH	1			
11	ZGBH-00095				.SPRING-TENSION	1			
12	ZGBH-00198				.INDICATOR	1			
13	ZGBH-00097				.ROLLER	1			
14	ZGBH-00098				.DEVICE-GUIDING	1			
15	ZGBH-00101				.BELLOWS	1			
N16	ZGBH-00064				.SWING ARM LA	1			NOT
35	ZGBH-00057				.PLATE-UPPER	1			
36	ZGBH-00206				.PLATE-SUSPENSION	1			
37	ZGBH-00195				.BELT-SECONDARY	1			
40	ZGBH-00023				.HEX NUT-BLACK	10			
41	ZGBH-00056				.PLATE-RUBBER	1			
42	ZGBH-00116				.SELF LOCK NUT	1			
43	ZGBH-00050				.COVER	2			
45	ZGBH-00015				.WASHER	3			

Item	Part_No	IS	Ord	T	Description	Qty	Serial_No	ITC	Remark
47	ZGBH-00168				.SCREW-COUNTERSUNK	6			
48	ZGBH-00060				.PLATE	2			
49	ZGBH-00210				.BOLT	1			
50	ZGBH-00062				.BOLT	1			
51	ZGBH-00063				.LOCK WASHER	1			
52	ZGBH-00072				.ROLLER	4			
53	ZGBH-00073				.BUSH	2			
54	ZGBH-00071				.WASHER	2			
55	ZGBH-00065				.BUSH-PLASTIC	8			
N56	ZGBH-00069				.PLATE	2			NOT
57	ZGBH-00070				.STRIP-COVER	1			
58	ZGBH-00211				.TENSION SPRING	2			
59	ZGBH-00067				.BOLT	1			
60	ZGBH-00043				.SCREW-CYLINDRIC HEAD	4			
61	ZGBH-00024				.WASHER-BLACK	1			
62	ZGBH-00078				.PIN	1			
63	ZGBH-00212				.ABSORBER	1			
64	ZGBH-00074				.BOLT	2			
65	ZGBH-00075				.LOCK WASHER	2			
66	ZGBH-00079				.INSERT	1			
67	ZGBH-00080				.SPRING BRACKET	1			
68	ZGBH-00081				.FLANGE NUT	1			
69	ZGBH-00082				.SPRING LA	2			
70	ZGBH-00083				.WASHER	1			
71	ZGBH-00084				.BEARING	1			

Item	Part_No	IS	Ord	T	Description	Qty	Serial_No	ITC	Remark
72	ZGBH-00049				.KNOB-PLASTIC	1			
74	ZGBH-00118				.SPRING WASHER	2			
75	ZGBH-00214				.PLATE-BOTTOM	1			
81	ZGBH-00220				.SEATBELT	1			
82	ZGBH-00051				.BUSH	2			
83	ZGBH-00053				.SCREW	2			
84	ZGBH-00088				.GABEL	1			
85	ZGBH-00077				.HANDLE	1			
86	ZGBH-00048				.HANDLE	1			
87	ZGBH-00221				.SLIDE	1			
88	ZGBH-00045				.BRACKET	1			
89	ZGBH-00222				.SLIDE RAIL RH	1			
89-1	ZGBH-00041				..SLIDE RAIL-RH	1			
89-2	ZGBH-00024				..WASHER-BLACK	1			
89-3	ZGBH-00023				..HEX NUT-BLACK	4			
89-4	ZGBH-00015				..WASHER	4			
89-5	ZGBH-00042				..SCREW-HEX HEAD	2			
89-6	ZGBH-00043				..SCREW-CYLINDRIC HEAD	2			
90	ZGBH-00042				.SCREW-HEX HEAD	2			
N	@				NOT SUPPLIED PARTS	AR			NOT

SEAT(MECHANICAL, RETRACT, 3", 1/2)

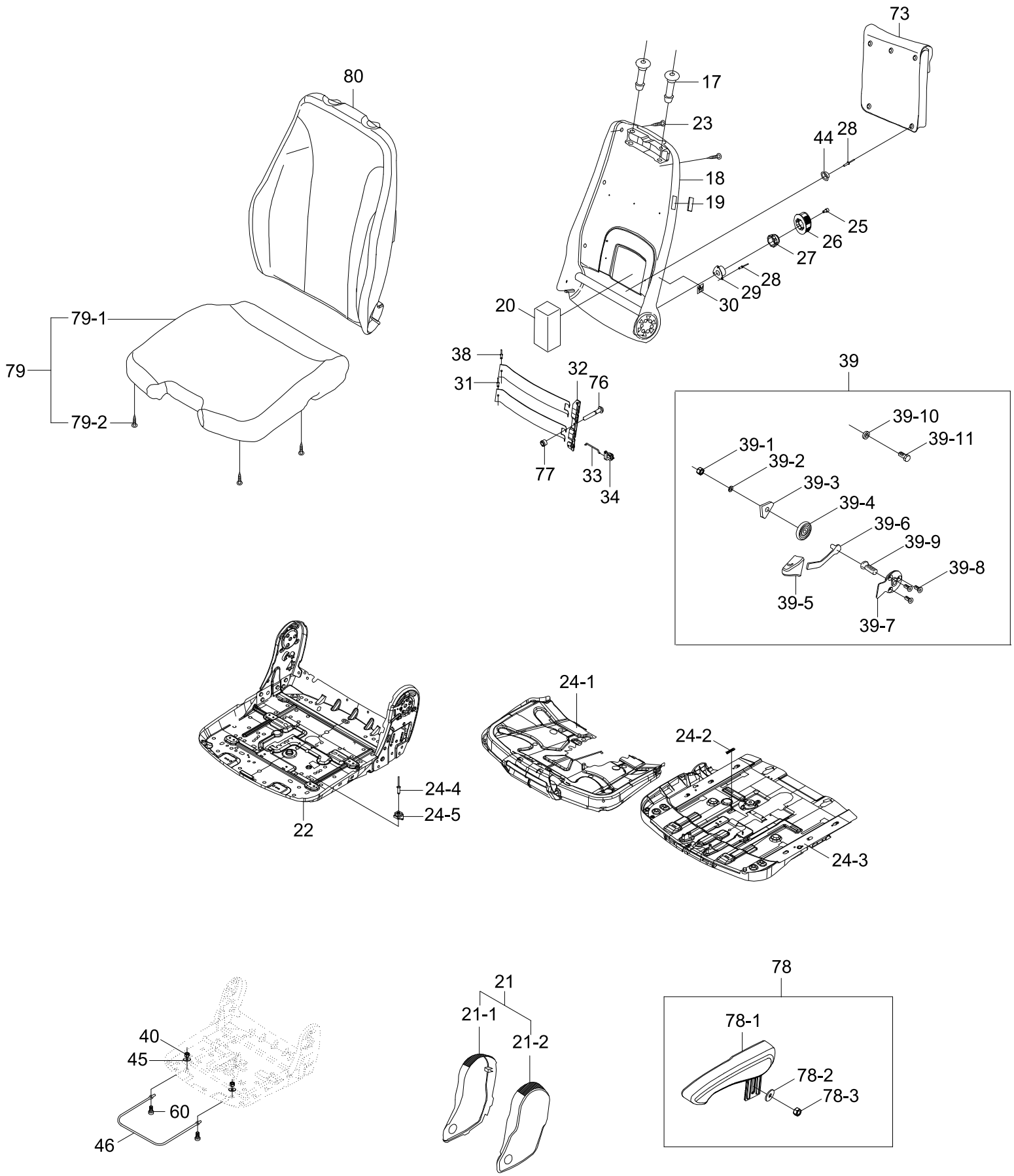

Item	Part_No	IS	Ord	T	Description	Qty	Serial_No	ITC	Remark
*	71LM-33031				SEAT ASSY-MECH 3"	1			GRAMMER
17	ZGBH-00004				.BUSH	2			
18	ZGBH-00166				.BACKREST-SCR	1			
19	ZGBH-00013				.COVER-PLASTIC	1			
20	ZGBH-00016				.SPONGE	1			
21	ZGBH-00204				.HINGE COVER KIT	1			
21-1	ZGBH-00182				..COVER-RH	1			
21-2	ZGBH-00181				..COVER-LH	1			
22	ZGBH-00110				.SEAT PLATE GS	1			
23	ZGBH-00037				.SCREW-SELF TAPPING	6			
24	ZGBH-00205				.SLIDER KIT	1			
24-1	ZGBH-00038				..ADJUSTMENT-TILTING	1			
24-2	ZGBH-00039				..SPRING	1			
24-3	ZGBH-00114				..ADJUSTMENT-SEAT	1			
24-4	ZGBH-00034				..RIVET	4			
24-5	ZGBH-00035				..PROFILE-GLIDING	4			
25	ZGBH-00055				.SCREW	1			
26	ZGBH-00007				.HANDLE	1			
N27	ZGBH-00008				.WHEEL-TOOLHEAD	1			NOT
28	ZGBH-00010				.RIVET-BLIND	8			
29	ZGBH-00011				.BRAKE-SLING SPRING	1			
30	ZGBH-00012				.STICKER	1			
31	ZGBH-00021				.PLATE	2			
32	ZGBH-00017				.WINKEL	1			
33	ZGBH-00019				.RODS	1			

Item	Part_No	IS	Ord	T	Description	Qty	Serial_No	ITC	Remark
34	ZGBH-00020				.CARRIER	1			
38	ZGBH-00107				.RIVET	2			
39	ZGBH-00207				.BACKREST KIT	1			
39-1	ZGBH-00109				..SELF LOCK NUT	1			
39-2	ZGBH-00024				..WASHER-BLACK	1			
39-3	ZGBH-00025				..SPRING HOLDER	1			
39-4	ZGBH-00026				..SPRING-LEG	1			
39-5	ZGBH-00033				..HANDLE	1			
39-6	ZGBH-00027				..LEVER	1			
39-7	ZGBH-00113				..PLATE	1			
39-8	ZGBH-00029				..SCREW	3			
39-9	ZGBH-00112				..SCREW	1			
39-10	ZGBH-00015				..WASHER	1			
39-11	ZGBH-00014				..SCREW-HEX HEAD	1			
40	ZGBH-00023				.HEX NUT-BLACK	2			
44	ZGBH-00208				.BALL	5			
45	ZGBH-00015				.WASHER	2			
46	ZGBH-00209				.HANDLE	1			
60	ZGBH-00043				.SCREW-CYLINDRIC HEAD	2			
73	ZGBH-00213				.BOX-LITERATURE	1			
76	ZGBH-00215				.BOLT	1			
77	ZGBH-00216				.SEEGER	1			
78	ZGBH-00217				.ARMREST KIT	1			
78-1	ZGBH-00030				..ARM REST-LH	1			
78-2	ZGBH-00015				..WASHER	1			

Item	Part_No	IS	Ord	T	Description	Qty	Serial_No	ITC	Remark
78-3	ZGBH-00023				..HEX NUT-BLACK	1			
79	ZGBH-00218				.CUSHION KIT	1			
79-1	ZGBH-00189				..CUSHION-SEAT,WHEAT	1			
79-2	ZGBH-00037				..SCREW-SELF TAPPING	4			
80	ZGBH-00219				.CUSHION-BACK	1			

SEAT(MECHANICAL, RETRACT, 3", 2/2)

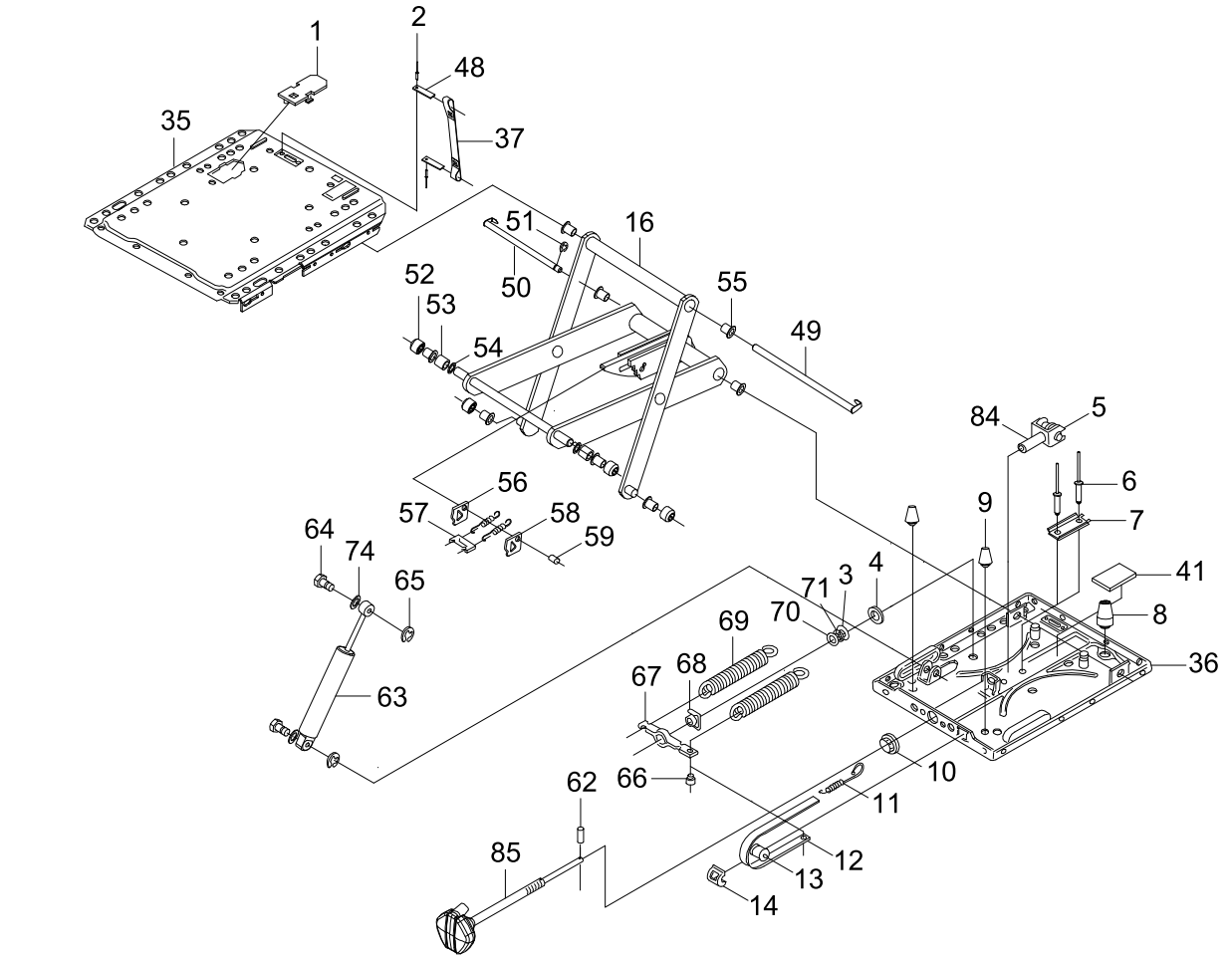

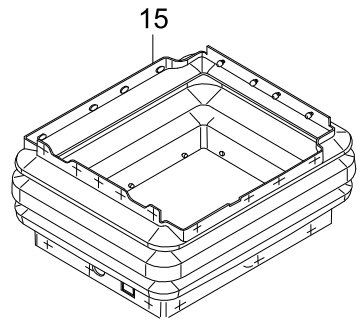

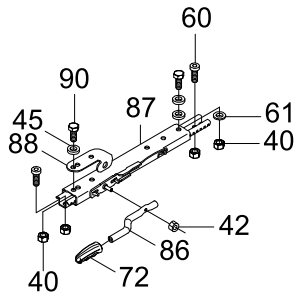

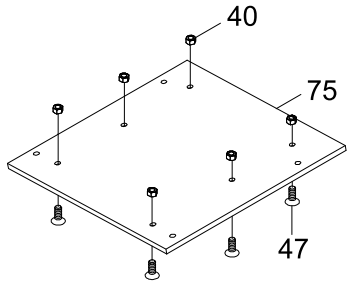

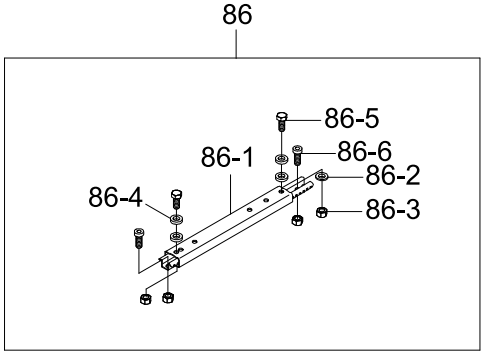

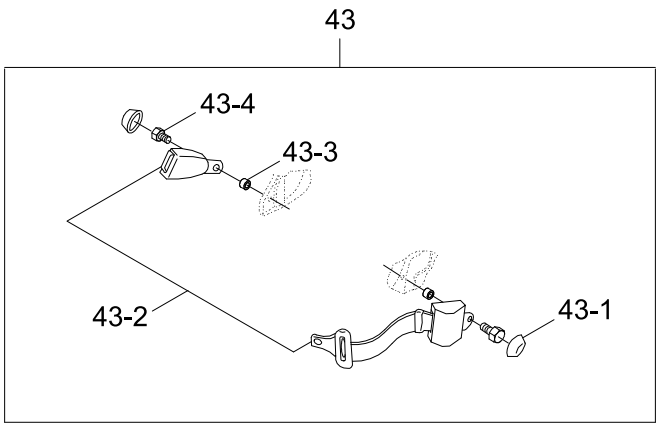

Item	Part_No	IS	Ord	T	Description	Qty	Serial_No	ITC	Remark
*	@				SEAT ASSY	1			NOT
1	ZGBH-00058				.PANEL-TRIM	1			
2	ZGBH-00059				.POP RIVET	2			
3	ZGBH-00085				.WASHER	1			
4	ZGBH-00086				.WASHER-PLASTIC	1			
5	ZGBH-00089				.BEARING-TRIPLE	1			
6	ZGBH-00090				.POP RIVET	2			
7	ZGBH-00197				.U-SHAPED PROFILE	1			
8	ZGBH-00092				.RUBBER	1			
9	ZGBH-00087				.RUBBER	2			
10	ZGBH-00094				.BUSH	1			
11	ZGBH-00095				.SPRING-TENSION	1			
12	ZGBH-00198				.INDICATOR	1			
13	ZGBH-00097				.ROLLER	1			
14	ZGBH-00098				.DEVICE-GUIDING	1			
15	ZGBH-00101				.BELLOWS	1			
N16	ZGBH-00064				.SWING ARM LA	1			NOT
35	ZGBH-00057				.PLATE-UPPER	1			
36	ZGBH-00206				.PLATE-SUSPENSION	1			
37	ZGBH-00195				.BELT-SECONDARY	1			
40	ZGBH-00023				.HEX NUT-BLACK	10			
41	ZGBH-00056				.PLATE-RUBBER	1			
42	ZGBH-00116				.SELF LOCK NUT	1			
43	ZGBH-00227				.SEAT BELT KIT	1			
43-1	ZGBH-00050				..COVER	2			

Item	Part_No	IS	Ord	T	Description	Qty	Serial_No	ITC	Remark
43-2	ZGBH-00102				..SEAT BELT	1			
43-3	ZGBH-00051				..BUSH	2			
43-4	ZGBH-00053				..SCREW	2			
45	ZGBH-00015				.WASHER	3			
47	ZGBH-00168				.SCREW-COUNTERSUNK	6			
48	ZGBH-00060				.PLATE	2			
49	ZGBH-00210				.BOLT	1			
50	ZGBH-00062				.BOLT	1			
51	ZGBH-00063				.LOCK WASHER	1			
52	ZGBH-00072				.ROLLER	4			
53	ZGBH-00073				.BUSH	2			
54	ZGBH-00071				.WASHER	2			
55	ZGBH-00065				.BUSH-PLASTIC	8			
N56	ZGBH-00069				.PLATE	2			NOT
57	ZGBH-00070				.STRIP-COVER	1			
58	ZGBH-00211				.TENSION SPRING	2			
59	ZGBH-00067				.BOLT	1			
60	ZGBH-00043				.SCREW-CYLINDRIC HEAD	4			
61	ZGBH-00024				.WASHER-BLACK	1			
62	ZGBH-00078				.PIN	1			
63	ZGBH-00212				.ABSORBER	1			
64	ZGBH-00074				.BOLT	2			
65	ZGBH-00075				.LOCK WASHER	2			
66	ZGBH-00079				.INSERT	1			
67	ZGBH-00080				.SPRING BRACKET	1			

Item	Part_No	IS	Ord	T	Description	Qty	Serial_No	ITC	Remark
68	ZGBH-00081				.FLANGE NUT	1			
69	ZGBH-00082				.SPRING LA	2			
70	ZGBH-00083				.WASHER	1			
71	ZGBH-00084				.BEARING	1			
72	ZGBH-00049				.KNOB-PLASTIC	1			
74	ZGBH-00118				.SPRING WASHER	2			
75	ZGBH-00214				.PLATE-BOTTOM	1			
81	ZGBH-00088				.GABEL	1			
82	ZGBH-00077				.HANDLE	1			
83	ZGBH-00048				.HANDLE	1			
84	ZGBH-00221				.SLIDE	1			
85	ZGBH-00045				.BRACKET	1			
86	ZGBH-00222				.SLIDE RAIL RH	1			
86-1	ZGBH-00041				..SLIDE RAIL-RH	1			
86-2	ZGBH-00024				..WASHER-BLACK	1			
86-3	ZGBH-00023				..HEX NUT-BLACK	4			
86-4	ZGBH-00015				..WASHER	4			
86-5	ZGBH-00042				..SCREW-HEX HEAD	2			
86-6	ZGBH-00043				..SCREW-CYLINDRIC HEAD	2			
87	ZGBH-00042				.SCREW-HEX HEAD	2			
N	@				NOT SUPPLIED PARTS	AR			NOT

SEAT(AIR, RETRACT, 3", 1/2)

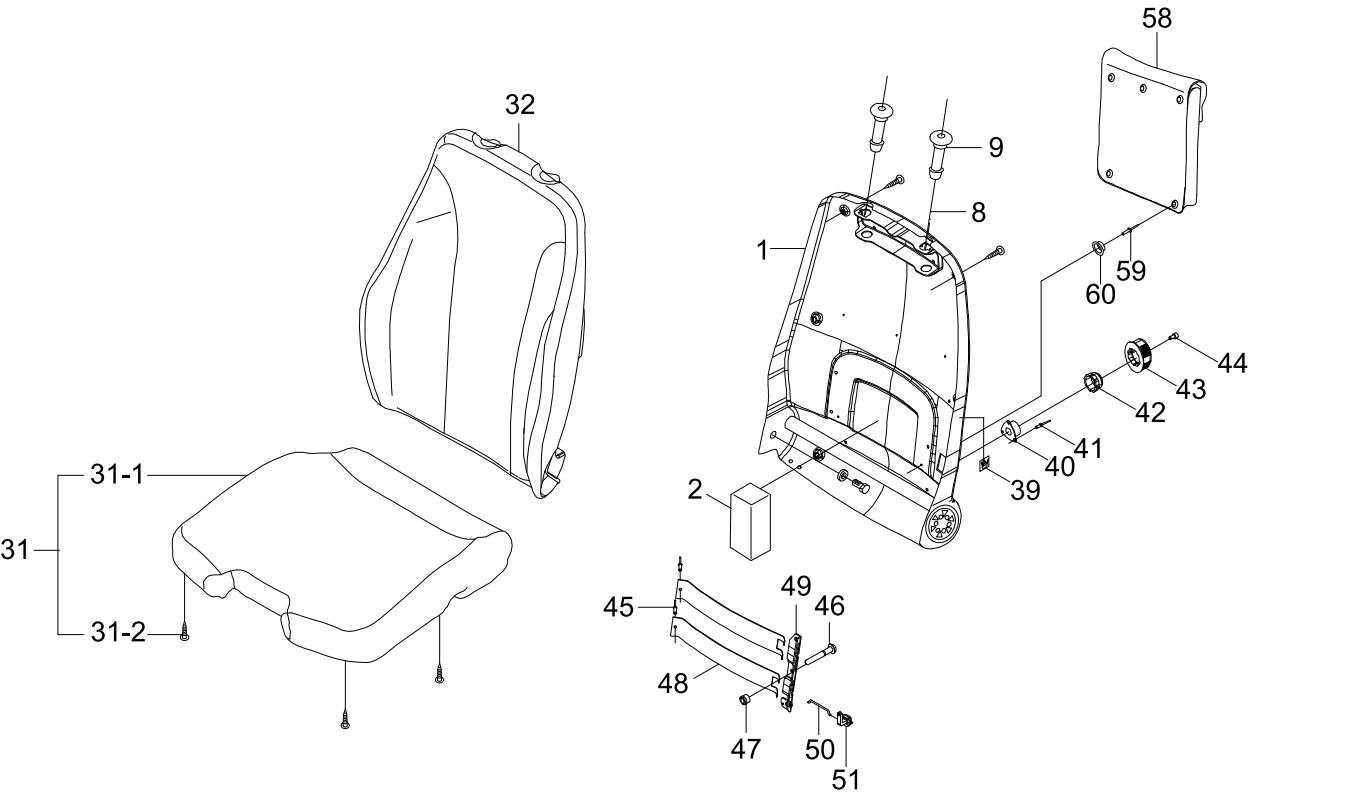

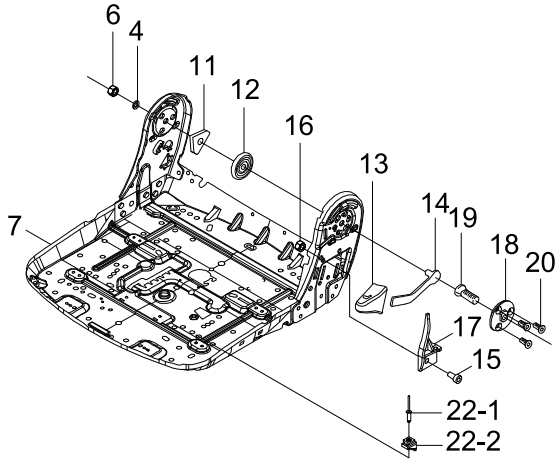

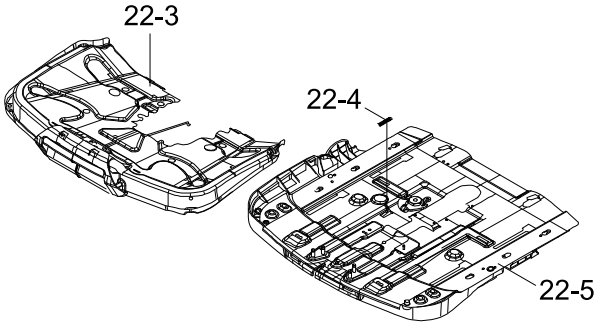

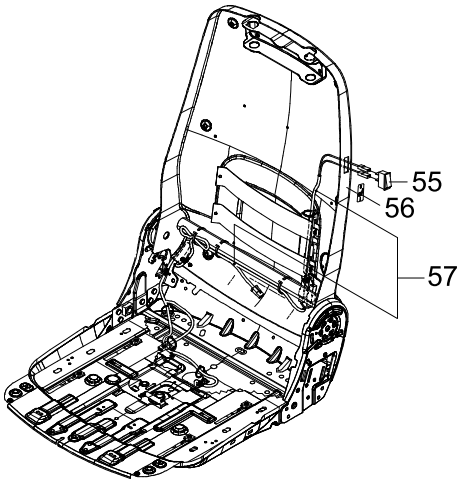

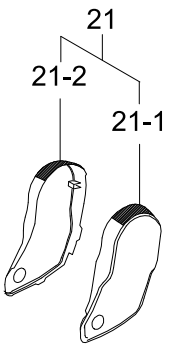

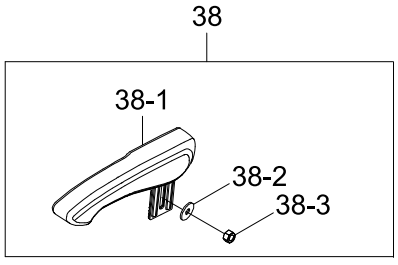

Item	Part_No	IS	Ord	T	Description	Qty	Serial_No	ITC	Remark
*	71LM-33041				SEAT ASSY-AIR HEATED 3"	1			GRAMMER
1	ZGBH-00166				.BACKREST-SCR	1			
2	ZGBH-00016				.SPONGE	1			
3	ZGBH-00015				.WASHER	12			
4	ZGBH-00024				.WASHER-BLACK	1			
5	ZGBH-00023				.HEX NUT-BLACK	4			
6	ZGBH-00109				.SELF LOCK NUT	1			
7	ZGBH-00110				.SEAT PLATE GS	1			
8	ZGBH-00037				.SCREW-SELF TAPPING	6			
9	ZGBH-00004				.BUSH	2			
10	ZGBH-00014				.SCREW-HEX HEAD	1			
11	ZGBH-00025				.SPRING HOLDER	1			
12	ZGBH-00026				.SPRING-LEG	1			
13	ZGBH-00033				.HANDLE	1			
14	ZGBH-00027				.LEVER	1			
15	ZGBH-00228				.SCREW	1			
16	ZGBH-00229				.NUT	1			
17	ZGBH-00234				.RETAINER CABLE	1			
18	ZGBH-00113				.PLATE	1			
19	ZGBH-00112				.SCREW	1			
20	ZGBH-00029				.SCREW	3			
21	ZGBH-00204				.HINGE COVER KIT	1			
21-1	ZGBH-00181				..COVER-LH	1			
21-2	ZGBH-00182				..COVER-RH	1			
22	ZGBH-00205				.SLIDER KIT	1			

Item	Part_No	IS	Ord	T	Description	Qty	Serial_No	ITC	Remark
22-1	ZGBH-00034				..RIVET	4			
22-2	ZGBH-00035				..PROFILE-GLIDING	4			
22-3	ZGBH-00038				..ADJUSTMENT-TILTING	1			
22-4	ZGBH-00039				..SPRING	1			
22-5	ZGBH-00114				..ADJUSTMENT-SEAT	1			
23	ZGBH-00041				.SLIDE RAIL-RH	1			
24	ZGBH-00115				.CYLINDRIC HEAD SCREW	4			
25	ZGBH-00045				.BRACKET	1			
26	ZGBH-00049				.KNOB-PLASTIC	1			
27	ZGBH-00048				.HANDLE	1			
28	ZGBH-00104				.SCREW-HEX HEAD	4			
29	ZGBH-00116				.SELF LOCK NUT	1			
30	ZGBH-00221				.SLIDE	1			
31	ZGBH-00223				.CUSHION KIT	1			
31-1	ZGBH-00192				..SEAT CUSHION	1			
31-2	ZGBH-00037				..SCREW-SELF TAPPING	4			
32	ZGBH-00235				.BACKREST CUSHION	1			
33	ZGBH-00220				.SEATBELT	1			
34	ZGBH-00053				.SCREW	2			
35	ZGBH-00051				.BUSH	2			
36	ZGBH-00052				.NUT	2			
37	ZGBH-00050				.COVER	2			
38	ZGBH-00217				.ARMREST KIT	1			
38-1	ZGBH-00030				..ARM REST-LH	1			
38-2	ZGBH-00015				..WASHER	1			

Item	Part_No	IS	Ord	T	Description	Qty	Serial_No	ITC	Remark
38-3	ZGBH-00023				..HEX NUT-BLACK	1			
39	ZGBH-00012				.STICKER	1			
40	ZGBH-00011				.BRAKE-SLING SPRING	1			
41	ZGBH-00010				.RIVET-BLIND	3			
N42	ZGBH-00008				.WHEEL-TOOLHEAD	1			NOT
43	ZGBH-00007				.HANDLE	1			
44	ZGBH-00055				.SCREW	1			
45	ZGBH-00107				.RIVET	2			
46	ZGBH-00215				.BOLT	1			
47	ZGBH-00216				.SEEGER	1			
48	ZGBH-00021				.PLATE	2			
49	ZGBH-00017				.WINKEL	1			
50	ZGBH-00019				.RODS	1			
51	ZGBH-00020				.CARRIER	1			
52	ZGBH-00214				.PLATE-BOTTOM	1			
53	ZGBH-00168				.SCREW-COUNTERSUNK	6			
54	ZGBH-00023				.HEX NUT-BLACK	6			
55	ZGBH-00172				.SWITCH-HEATER	1			
56	ZGBH-00173				.STICKER	1			
57	ZGBH-00231				.HARNESS	1			
58	ZGBH-00213				.BOX-LITERATURE	1			
59	ZGBH-00010				.RIVET-BLIND	5			
60	ZGBH-00208				.BALL	5			
61	ZGBH-00233				.SUSPENSION	1			
62	ZGBH-00232				.ADAPTER CABLE	1			

Item	Part_No	IS	Ord	T	Description	Qty	Serial_No	ITC	Remark
N	@				NOT SUPPLIED PARTS	AR			NOT

SEAT(AIR, RETRACT, 3", 2/2)

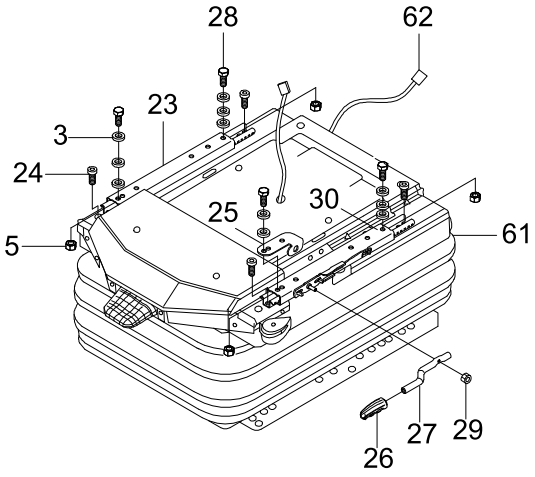

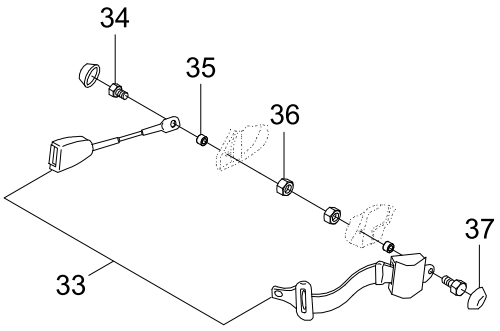

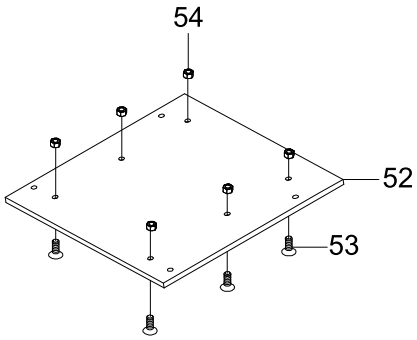

Item	Part_No	IS	Ord	T	Description	Qty	Serial_No	ITC	Remark
*	@				SEAT ASSY	1			NOT
1	ZGBH-00166				.BACKREST-SCR	1			
2	ZGBH-00016				.SPONGE	1			
3	ZGBH-00015				.WASHER	12			
4	ZGBH-00024				.WASHER-BLACK	1			
5	ZGBH-00023				.HEX NUT-BLACK	4			
6	ZGBH-00109				.SELF LOCK NUT	1			
7	ZGBH-00110				.SEAT PLATE GS	1			
8	ZGBH-00037				.SCREW-SELF TAPPING	6			
9	ZGBH-00004				.BUSH	2			
10	ZGBH-00014				.SCREW-HEX HEAD	1			
11	ZGBH-00025				.SPRING HOLDER	1			
12	ZGBH-00026				.SPRING-LEG	1			
13	ZGBH-00033				.HANDLE	1			
14	ZGBH-00027				.LEVER	1			
15	ZGBH-00228				.SCREW	1			
16	ZGBH-00229				.NUT	1			
17	ZGBH-00234				.RETAINER CABLE	1			
18	ZGBH-00230				.PLATE	1			
19	ZGBH-00112				.SCREW	1			
20	ZGBH-00029				.SCREW	3			
21	ZGBH-00204				.HINGE COVER KIT	1			
21-1	ZGBH-00181				..COVER-LH	1			
21-2	ZGBH-00182				..COVER-RH	1			
22	ZGBH-00205				.SLIDER KIT	1			

Item	Part_No	IS	Ord	T	Description	Qty	Serial_No	ITC	Remark
22-1	ZGBH-00034				..RIVET	4			
22-2	ZGBH-00035				..PROFILE-GLIDING	4			
22-3	ZGBH-00038				..ADJUSTMENT-TILTING	1			
22-4	ZGBH-00039				..SPRING	1			
22-5	ZGBH-00114				..ADJUSTMENT-SEAT	1			
23	ZGBH-00041				.SLIDE RAIL-RH	1			
24	ZGBH-00115				.CYLINDRIC HEAD SCREW	4			
25	ZGBH-00045				.BRACKET	1			
26	ZGBH-00049				.KNOB-PLASTIC	1			
27	ZGBH-00048				.HANDLE	1			
28	ZGBH-00104				.SCREW-HEX HEAD	4			
29	ZGBH-00116				.SELF LOCK NUT	1			
30	ZGBH-00221				.SLIDE	1			
31	ZGBH-00223				.CUSHION KIT	1			
31-1	ZGBH-00192				..SEAT CUSHION	1			
31-2	ZGBH-00037				..SCREW-SELF TAPPING	4			
32	ZGBH-00225				.HARNESS	1			
33	ZGBH-00220				.SEATBELT	1			
34	ZGBH-00053				.SCREW	2			
35	ZGBH-00051				.BUSH	2			
36	ZGBH-00052				.NUT	2			
37	ZGBH-00050				.COVER	2			
38	ZGBH-00217				.ARMREST KIT	1			
38-1	ZGBH-00030				..ARM REST-LH	1			
38-2	ZGBH-00015				..WASHER	1			

Item	Part_No	IS	Ord	T	Description	Qty	Serial_No	ITC	Remark
38-3	ZGBH-00023				..HEX NUT-BLACK	1			
39	ZGBH-00012				.STICKER	1			
40	ZGBH-00011				.BRAKE-SLING SPRING	1			
41	ZGBH-00010				.RIVET-BLIND	3			
N42	ZGBH-00008				.WHEEL-TOOLHEAD	1			NOT
43	ZGBH-00007				.HANDLE	1			
44	ZGBH-00055				.SCREW	1			
45	ZGBH-00107				.RIVET	2			
46	ZGBH-00215				.BOLT	1			
47	ZGBH-00216				.SEEGER	1			
48	ZGBH-00021				.PLATE	2			
49	ZGBH-00017				.WINKEL	1			
50	ZGBH-00019				.RODS	1			
51	ZGBH-00020				.CARRIER	1			
52	ZGBH-00214				.PLATE-BOTTOM	1			
53	ZGBH-00168				.SCREW-COUNTERSUNK	6			
54	ZGBH-00023				.HEX NUT-BLACK	6			
55	ZGBH-00172				.SWITCH-HEATER	1			
56	ZGBH-00173				.STICKER	1			
57	ZGBH-00231				.HARNESS	1			
58	ZGBH-00213				.BOX-LITERATURE	1			
59	ZGBH-00010				.RIVET-BLIND	5			
60	ZGBH-00208				.BALL	5			
61	ZGBH-00233				.SUSPENSION	1			
62	ZGBH-00232				.ADAPTER CABLE	1			

Item	Part_No	IS	Ord	T	Description	Qty	Serial_No	ITC	Remark
N	@				NOT SUPPLIED PARTS	AR			NOT

SEAT(MECHANICAL, WOO, 2")

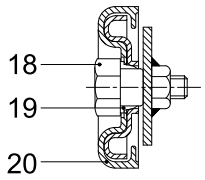

SECTION A-A

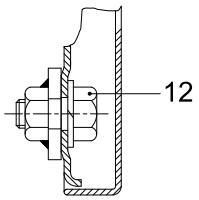

SECTION B-B

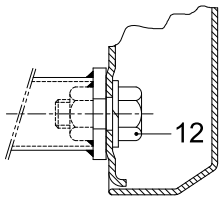

SECTION C-C

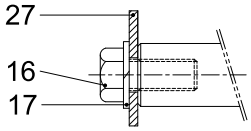

DETAIL D-D

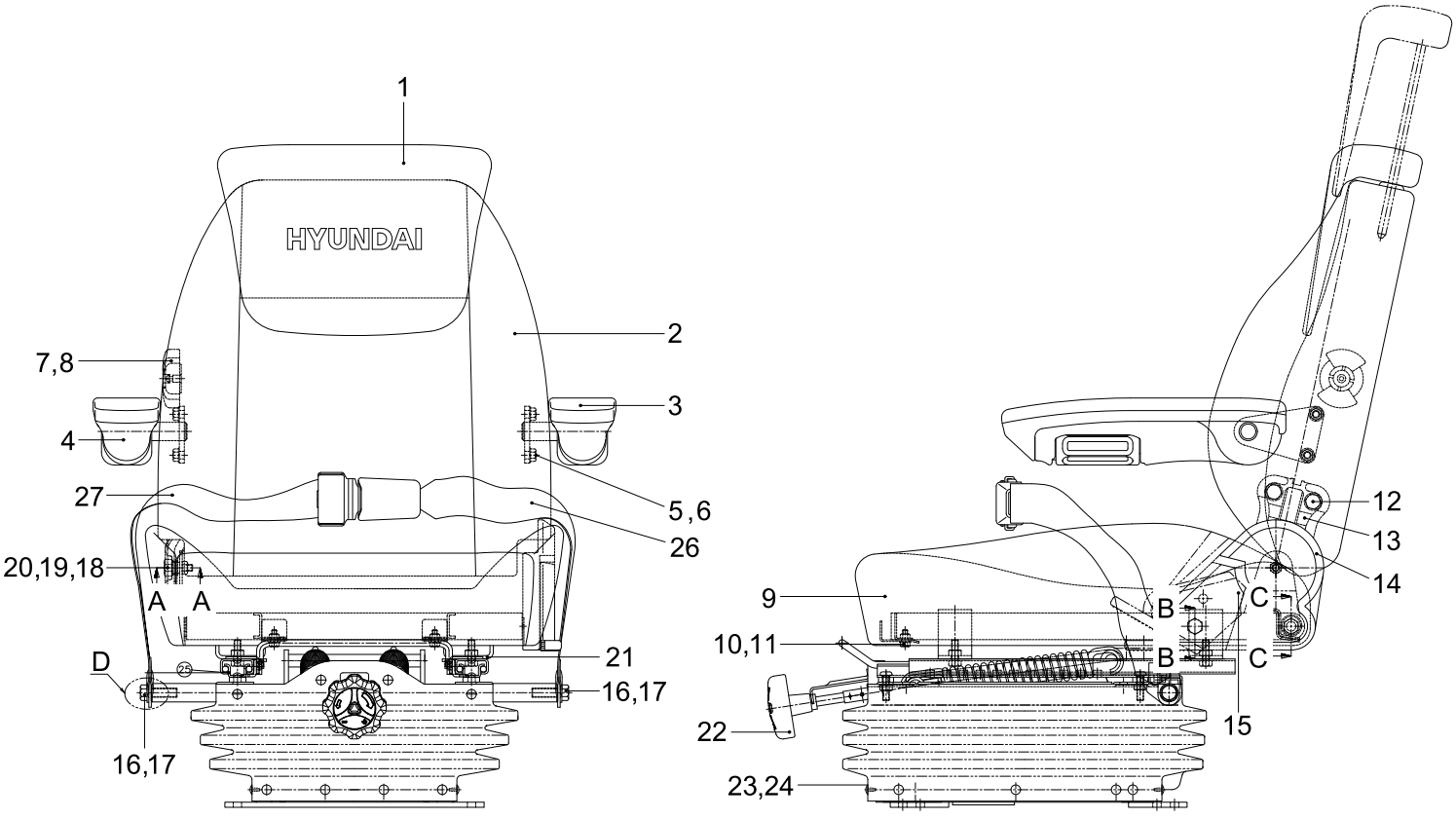

Item	Part_No	IS	Ord	T	Description	Qty	Serial_No	ITC	Remark
*	71LM-33211				SEAT ASSY-WOO MECH 2"	1			
1	XKCB-00045				.SHOULDER REST ASSY	1			
2	XKCB-00044				.BACKREST ASSY	1			
3	XKCB-00003				.ARM REST ASSY-LH	1			
4	XKCB-00046				.ARMREST ASSY-RH	1			
5	XKCB-00005				.BOLT	8			
6	XKCB-00006				.WASHER-SPRING	8			
7	XKCB-00007				.KNOB ASSY-L/SUPT	1			
8	XKCB-00008				.SCREW-M WITH WASHER	1			
9	XKCB-00009				.CUSHION ASSY	1			
10	XKCB-00010				.BOLT	2			
11	XKCB-00011				.WASHER-SPRING	2			
12	XKCB-00012				.BOLT-W/WASHER	4			
13	XKCB-00013				.RECLINER ASSY	1			
14	XKCB-00014				.COVER-RECLINER	1			
15	XKCB-00015				.KNOB-RECLINER	1			
16	XKCB-00016				.BOLT	2			
17	XKCB-00047				.SPRING WASHER	2			
18	XKCB-00018				.HINGE BOLT	1			
19	XKCB-00019				.BUSH	1			
20	XKCB-00020				.SIDE COVER	1			
21	XKCB-00048				.SEAT SUPPORT ASSY	1			
22	XKCB-00049				.SUSPENSION ASSY	1			
23	XKCB-00050				.DUST COVER	1			
24	XKCB-00029				.FASTENER	29			

Item	Part_No	IS	Ord	T	Description	Qty	Serial_No	ITC	Remark
25	XKCB-00034				.SLIDER ASSY	1			
26	XKCB-00035				.BELT-BUCKLE	1			
27	XKCB-00036				.BELT-TONGUE	1			

STEERING COLUMN

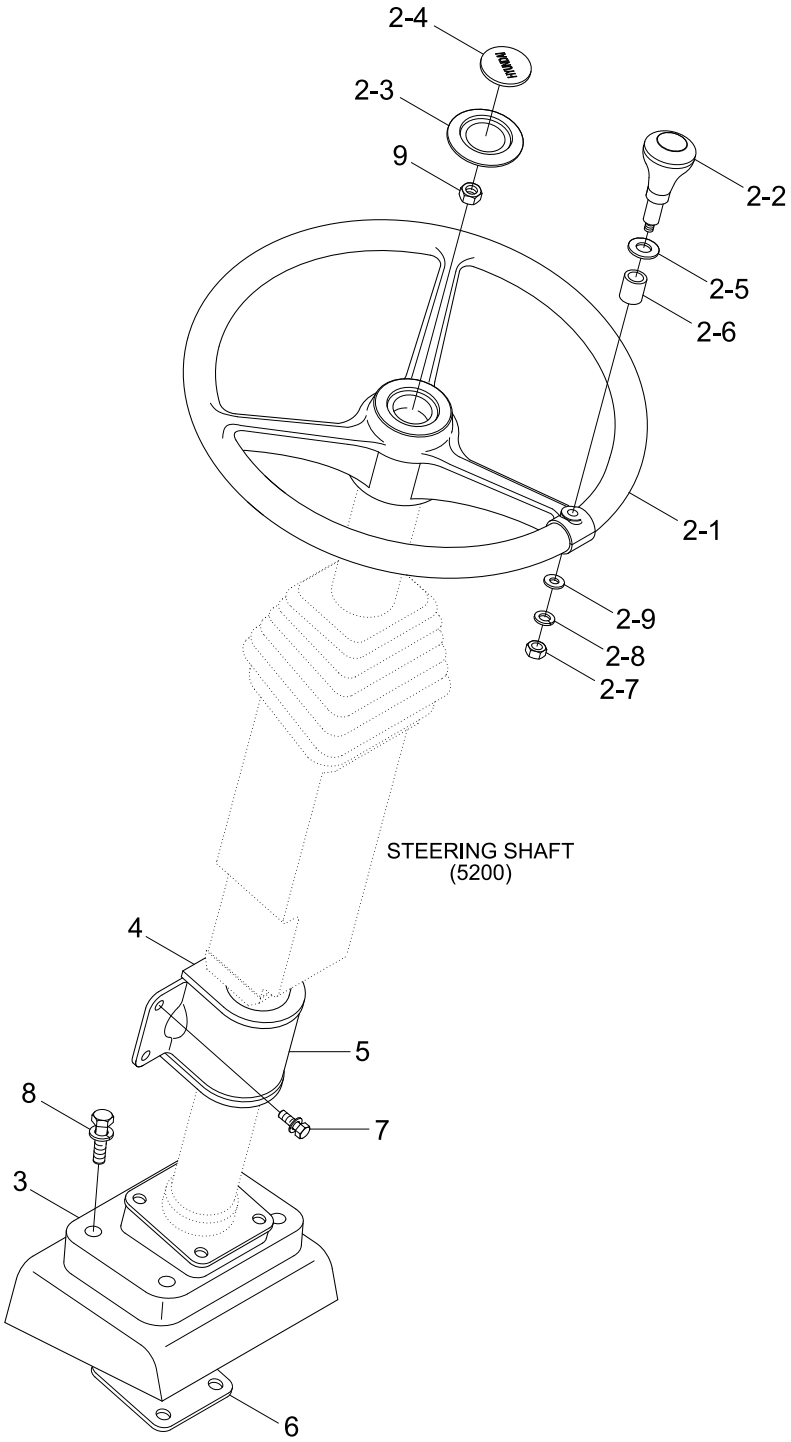

Item	Part_No	IS	Ord	T	Description	Qty	Serial_No	ITC	Remark
2	71AB-30101				STEERING WHEEL ASSY	1			
2-1	71AB-30111				.STEERING WHEEL	1			
2-2	71AB-30120				.KNOB-STEERING WHEEL	1			
2-3	71AB-30130				.CAP-STEERING WHEEL	1			
2-4	71AB-30140				.LOGO-STEERING WHEEL	1			
2-5	71AB-30210				.KNOB-RING	1			
2-6	71AB-30220				.BUSH	1			
2-7	71AB-30230				.NYLON NUT-SPECIAL	1			
2-8	71AB-30240				.SPRING WASHER-SPECIAL	1			
2-9	71AB-30250				.WASHER-SPECIAL	1			
3	71LM-32023				ANCHORAGE-BOTTOM	1			
4	71LM-32013				ANCHORAGE-UP	1			
5	71LM-32052				CLAMP	1			
6	71L6-10320				SHIM(4.0T)	1			
7	S035-082526				BOLT-W/WASHER	4			
8	S037-104526				BOLT-W/WASHER	4			
9	S207-16100B				NUT-HEX	1			

STEERING SHAFT

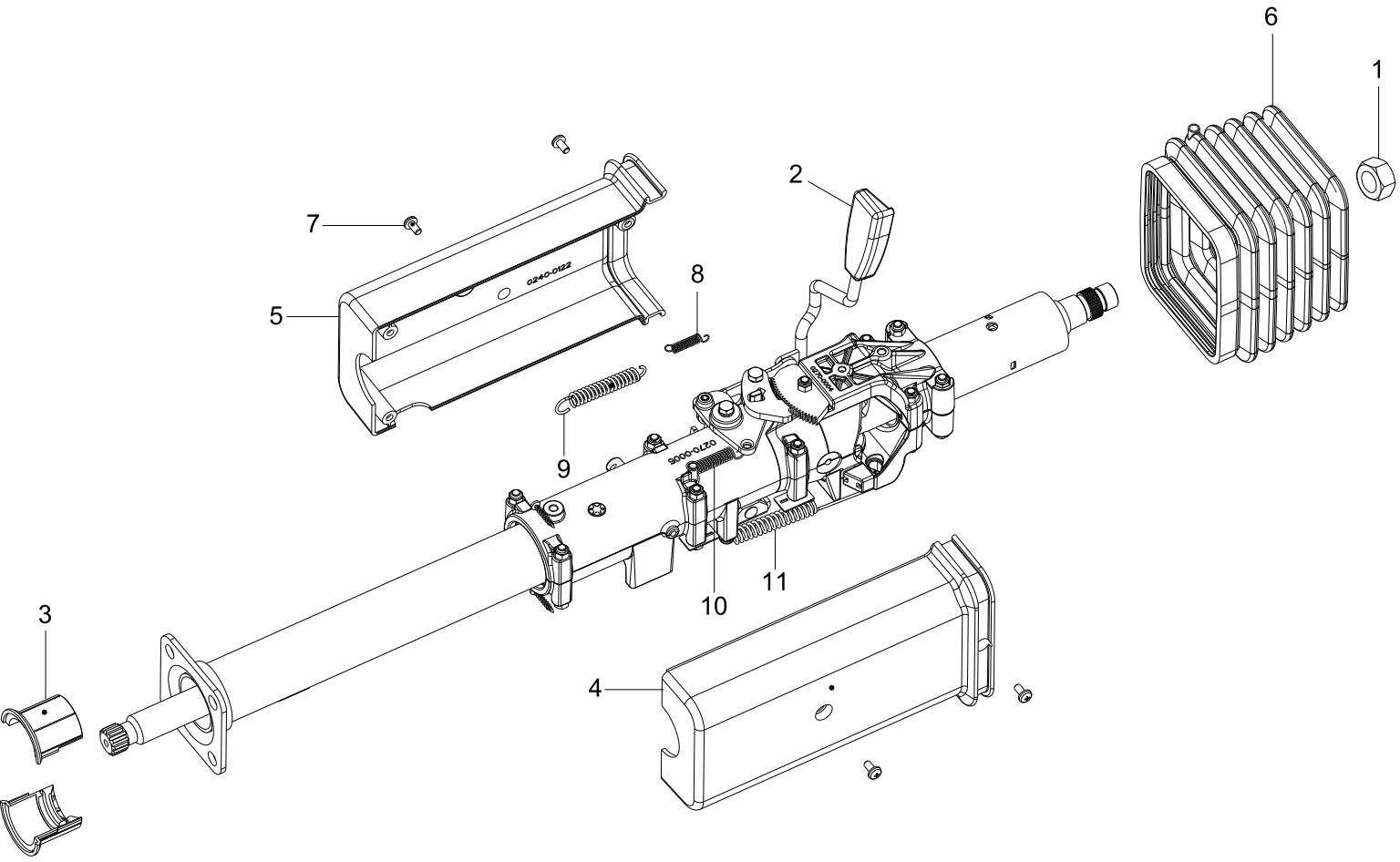

Item	Part_No	IS	Ord	T	Description	Qty	Serial_No	ITC	Remark
*	71LM-32100				STEERING COLUMN-COBO	1			
1	ZTAC-00001				.NUT-UN15589	1			
2	ZTAC-00002				.CONTROL LEVER	1			
3	ZTAC-00003				.LOWER GUIDE	2			
4	ZTAC-00004				.RIGHT CARTER	1			
5	ZTAC-00005				.LEFT CARTER	1			
6	ZTAC-00006				.BELLOWS IN RUBBER	1			
7	ZTAC-00007				.TAPPING SCREW	4			
8	ZTAC-00008				.COIL SPRING	1			
9	ZTAC-00009				.COIL SPRING	1			
10	ZTAC-00010				.COIL SPRING	1			
11	ZTAC-00011				.COIL SPRING	1			

MUD GUARD

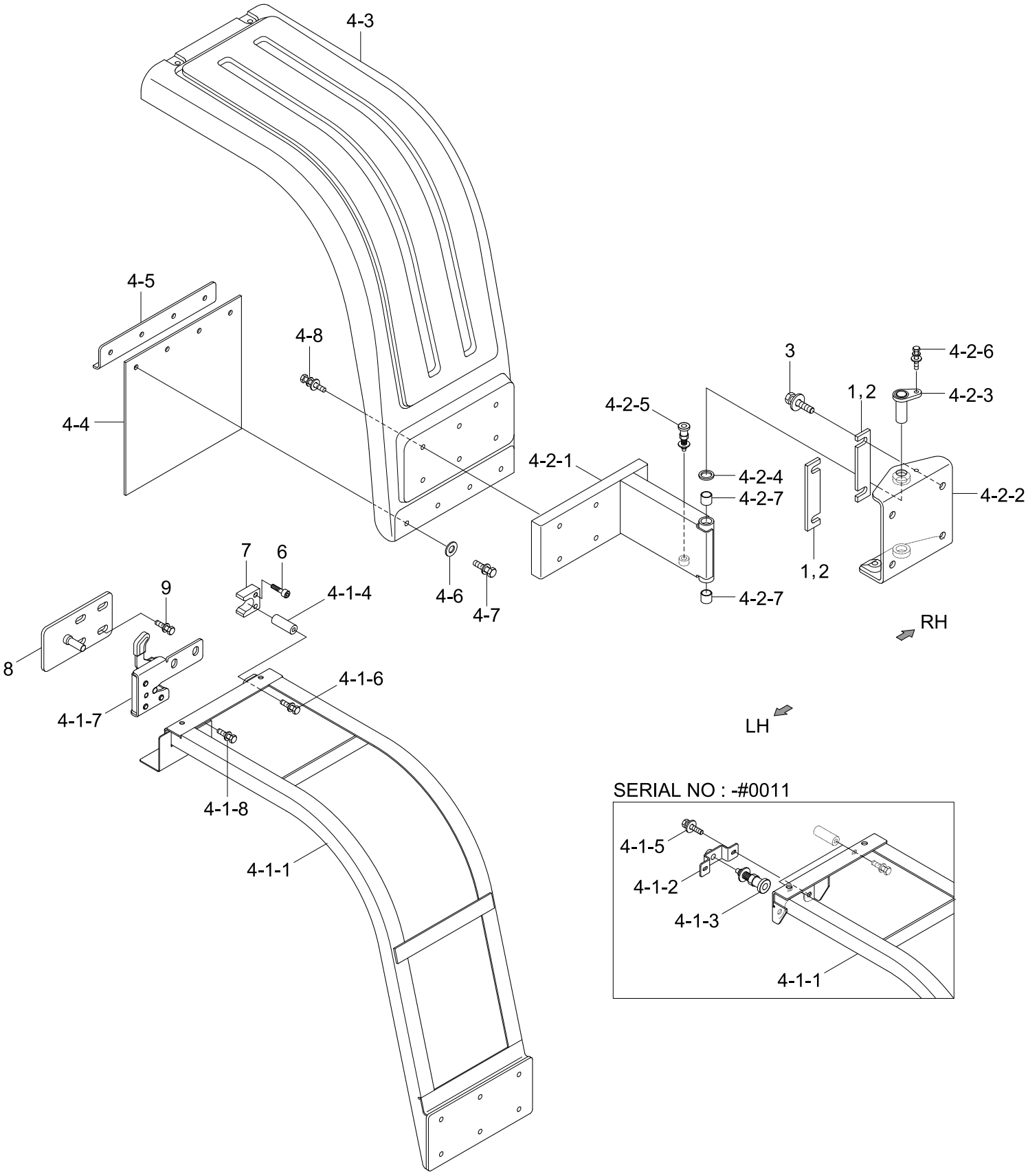

SERIAL NO : -#0011

Item	Part_No	IS	Ord	T	Description	Qty	Serial_No	ITC	Remark
1	71LB-82070				SHIM(3.0T)	2			
2	71LB-82080				SHIM(1.6T)	2			
3	71Q6-50040				BOLT-W/WASHER	8			
4	77LN-80010				MUDGUARD ASSY-LH	1	- #0011		
	77LN-80011				MUDGUARD ASSY-LH	1	#0012 -	B	
	77LN-80020				MUDGUARD ASSY-RH	1	- #0011		
	77LN-80021				MUDGUARD ASSY-RH	1	#0012 -	B	
4-1	72LM-80111				.SUPPORT ASSY-LH	1	- #0011		
	72LM-80112				.SUPPORT ASSY-LH	1	#0012 -	B	
	72LM-80211				.SUPPORT ASSY-RH	1	- #0011		
	72LM-80212				.SUPPORT ASSY-RH	1	#0012 -	B	
4-1-1	72LM-80121				..BRACKET WA-LH	1	- #0011		
	72LM-80122				..BRACKET WA-LH	1	#0012 -	B	
	72LM-80221				..BRACKET WA-RH	1	- #0011		
	72LM-80222				..BRACKET WA-RH	1	#0012 -	B	
4-1-2	72LM-80141				..BRACKET WA	1	- #0011	-	
4-1-3	72LM-80160				..PLUNGER	1	- #0011	-	
4-1-4	72LM-80172				..STOPPER-INNER	2			
4-1-5	S037-082066				..BOLT-W/WASHER	2	- #0011	-	
4-1-6	S037-124556				..BOLT-W/WASHER	2			
4-1-7	72LM-80310				..LATCH ASSY-LH	1	#0012 -		
	72LM-80320				..LATCH ASSY-RH	1	#0012 -		
4-1-8	S037-123056				..BOLT-W/WASHER	2	#0012 -		
4-2	77LN-80130				.HINGE ASSY-LH	1			
	77LN-80230				.HINGE ASSY-RH	1			

Item	Part_No	IS	Ord	T	Description	Qty	Serial_No	ITC	Remark
4-2-1	77LN-81310				..BRACKET WA-LH	1			
	77LN-82310				..BRACKET WA-RH	1			
4-2-2	72LM-81401				..BRACKET WA-LH	1			
	72LM-82401				..BRACKET WA-RH	1			
4-2-3	72LM-81440				..PIN WA	1			
4-2-4	72LM-81450				..SPACER	1			
4-2-5	72LM-80160				..PLUNGER	1			
4-2-6	S035-082016				..BOLT-W/WASHER	1			
4-2-7	S731-025015				..BUSHING-DU	2			
4-3	72LM-80181				.MUD GUARD	1			
4-4	72LM-70140				.RUBBER PAD	1			
4-5	72LM-70200				.PLATE WA	1			
4-6	64L3-01120				.WASHER-HARDENED	4			
4-7	S037-122556				.BOLT-W/WASHER	6			
4-8	S037-123556				.BOLT-W/WASHER	6			
6	S109-060256				BOLT-SOCKET	8	- #0011		
					BOLT-SOCKET	4	#0012 -	A	
7	72LM-89010				STOPPER	4	- #0011		
6	72LM-89010				STOPPER	2	#0012 -	A	
8	72LM-80330				STRIKER WA	2	#0012 -	-	
9	S037-103056				BOLT-W/WASHER	4	#0012 -	-	

LADDER & REAR FENDER

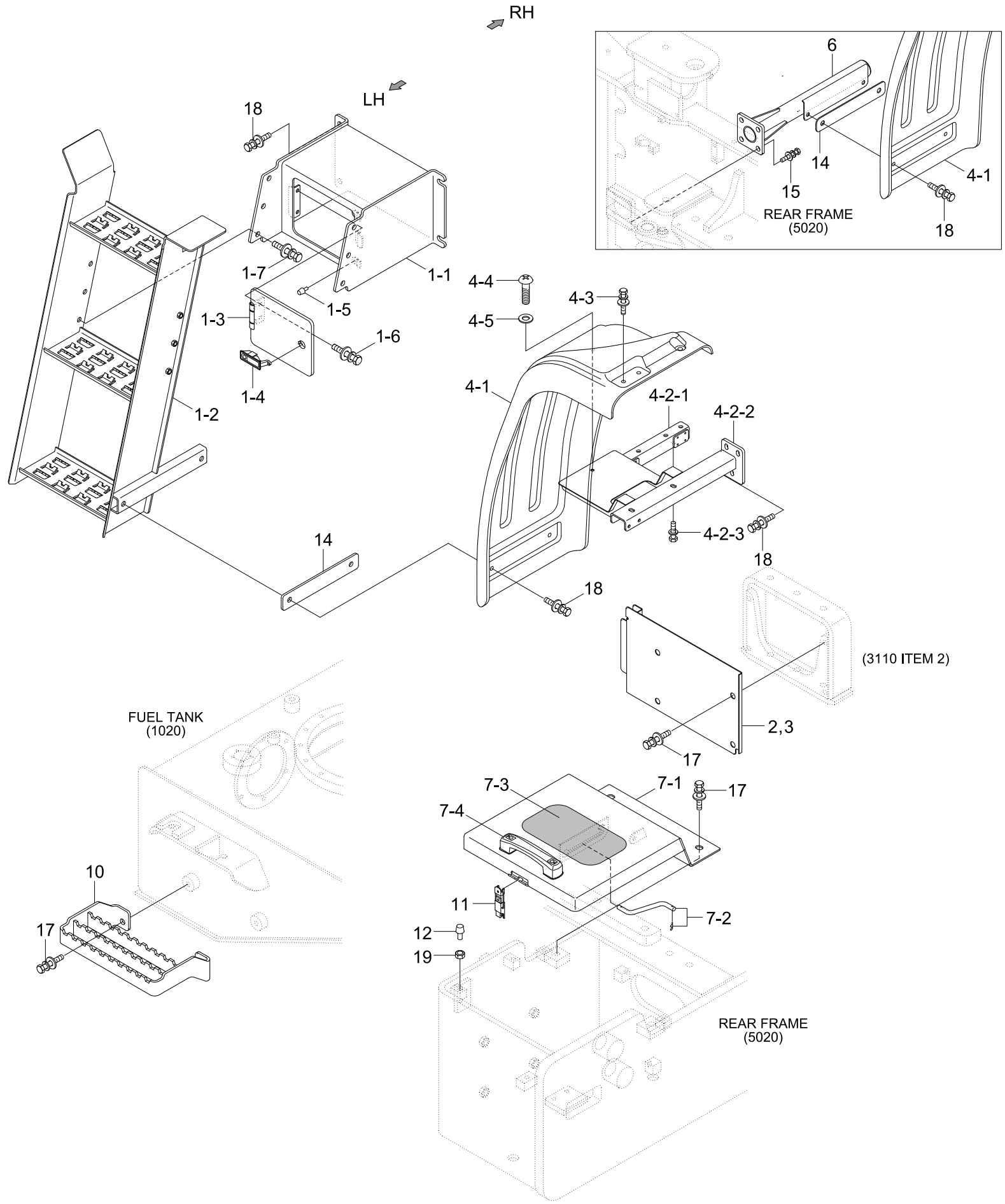

Item	Part_No	IS	Ord	T	Description	Qty	Serial_No	ITC	Remark
1	76LN-60010				LADDER TOTAL ASSY	1			
1-1	76LL-60100				.BOX WA	1			
1-2	76LN-60110				.LADDER WA	1			
1-3	72LL-63370				.COVER WA	1			
1-4	71FT-55660				.LATCH ASSY	1			
1-5	72LM-61590				.RUBBER-DAMPING	2			
1-6	S033-062026				.BOLT-W/WASHER	2			
1-7	S037-122556				.BOLT-W/WASHER	6			
2	72LN-60052				COVER-LH	1			
3	72LN-60062				COVER-RH	1			
4	72LN-60072				REAR FENDER ASSY-LH	1			
	72LN-60082				REAR FENDER ASSY-RH	1			
4-1	72LM-60701				.REAR FENDER-LH	1			
	72LM-60801				.REAR FENDER-RH	1			
4-2	72LN-60712				.SUPPORT ASSY-LH	1			
	72LN-60812				.SUPPORT ASSY-RH	1			
4-2-1	72LM-60732				..SUPPORT WA	1			
4-2-2	72LN-60722				..SUPPORT WA-LH	1			
	72LN-60822				..SUPPORT WA-RH	1			
4-2-3	S037-122556				..BOLT-W/WASHER	2			
4-3	S037-122556				.BOLT-W/WASHER	3			
4-4	S179-120256				.SCREW-SOCKET RD HD	1			
4-5	S403-125006				.WASHER-PLAIN	1			
6	72LN-60091				SUPPORT-R/FENDER	1			
7	72LN-50010				BATTERY COVER ASSY	2	- #0002		

Item	Part_No	IS	Ord	T	Description	Qty	Serial_No	ITC	Remark
7	72LN-60162				COVER ASSY-BATT,RH	1			
7-1	72LN-61502				.COVER WA-LH	1			
	72LN-61602				.COVER WA-RH	1			
7	76LN-50010				BATTERY COVER ASSY	2	#0003 -	B	
7-2	72LM-61590				.RUBBER-DAMPING	2			
7-3	91E1-26300				.DECAL-STEP TREAD	1			
7-4	72LM-61560				.HANDLE ASSY	1			
7-1	76LN-50100				.BATTERY COVER WA	1	#0003 -		
7-2	72LM-50140				.STAY ASSY	1	#0003 -		
7-3	72LM-61560				.HANDLE ASSY	1	#0003 -		
7-4	91E1-26300				.DECAL-STEP TREAD	1	#0003 -		
9	72LN-60170				COVER	2			
10	77LK-60250				STEP	2			
11	72LM-60180				LATCH ASSY	2			
12	71EH-13150				BUMPER-RUBBER	4			
13	72LM-60190				PIN	2			
14	72LN-60100				PLATE	2			
15	71Q6-50030				BOLT-W/WASHER	4			
16	S035-082056				BOLT-W/WASHER	8			
17	S037-122556				BOLT-W/WASHER	16			
18	S037-123056				BOLT-W/WASHER	14			
19	S285-10100B				NUT-FLANGED	4			

COWL 1(COOLING ROOM, 1/2)

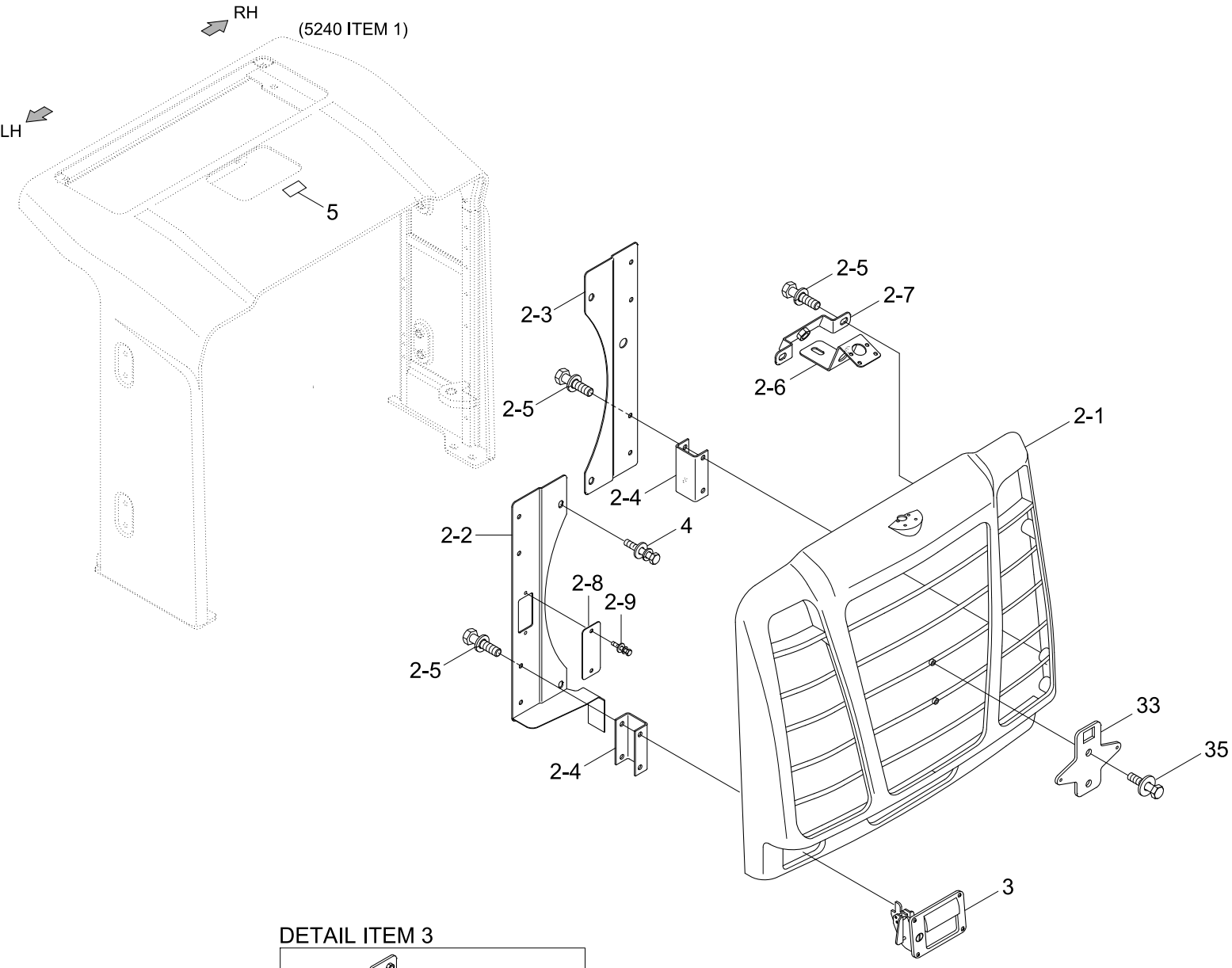

DETAIL ITEM 3

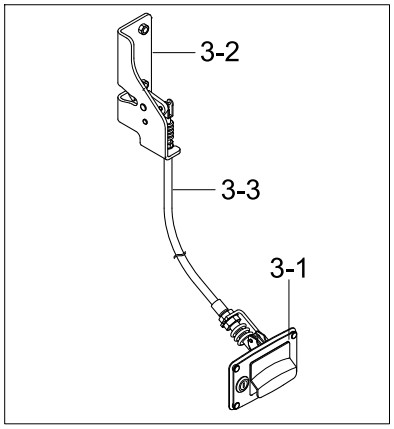

Item	Part_No	IS	Ord	T	Description	Qty	Serial_No	ITC	Remark
*	77LN-40021				COOLING ROOM ASSY	1			
*-1	@				.SUPPORT ASSY	2			NOT
2	72LP-40043				.GRILL ASSY	1			
2-1	72LP-40401				..GRILL	1			
2-2	72LP-40411				..BRACKET-LH	1			
2-3	72LP-40420				..BRACKET-RH	1			
2-4	72LP-40430				..BRACKET WA	4			
2-5	S037-102056				..BOLT-W/WASHER	11			
2-6	72LM-40440				..BRACKET	1			
2-7	72LM-40450				..PLATE WA	1			
2-8	72LP-40460				..COVER	1			
2-9	S035-061526				..BOLT-W/WASHER	2			
3	72LP-40051				.LATCH ASSY-GRILL	1			
3-1	72LM-40501				.HANDLE ASSY	1			
4	S037-122556				.BOLT-W/WASHER	6			
3-2	72LM-40511				.LATCH ASSY	1			
3-3	72LM-40520				.CABLE ASSY	1			
4	S037-122556				.BOLT-W/WASHER	6			
5	91N6-01121				.DECAL-RADIATOR CAP	1			
33	72LM-40060				NUMBER PLATE WA	1			
35	S037-122556				BOLT-W/WASHER	2			

COWL 2(COOLING ROOM, 2/2)

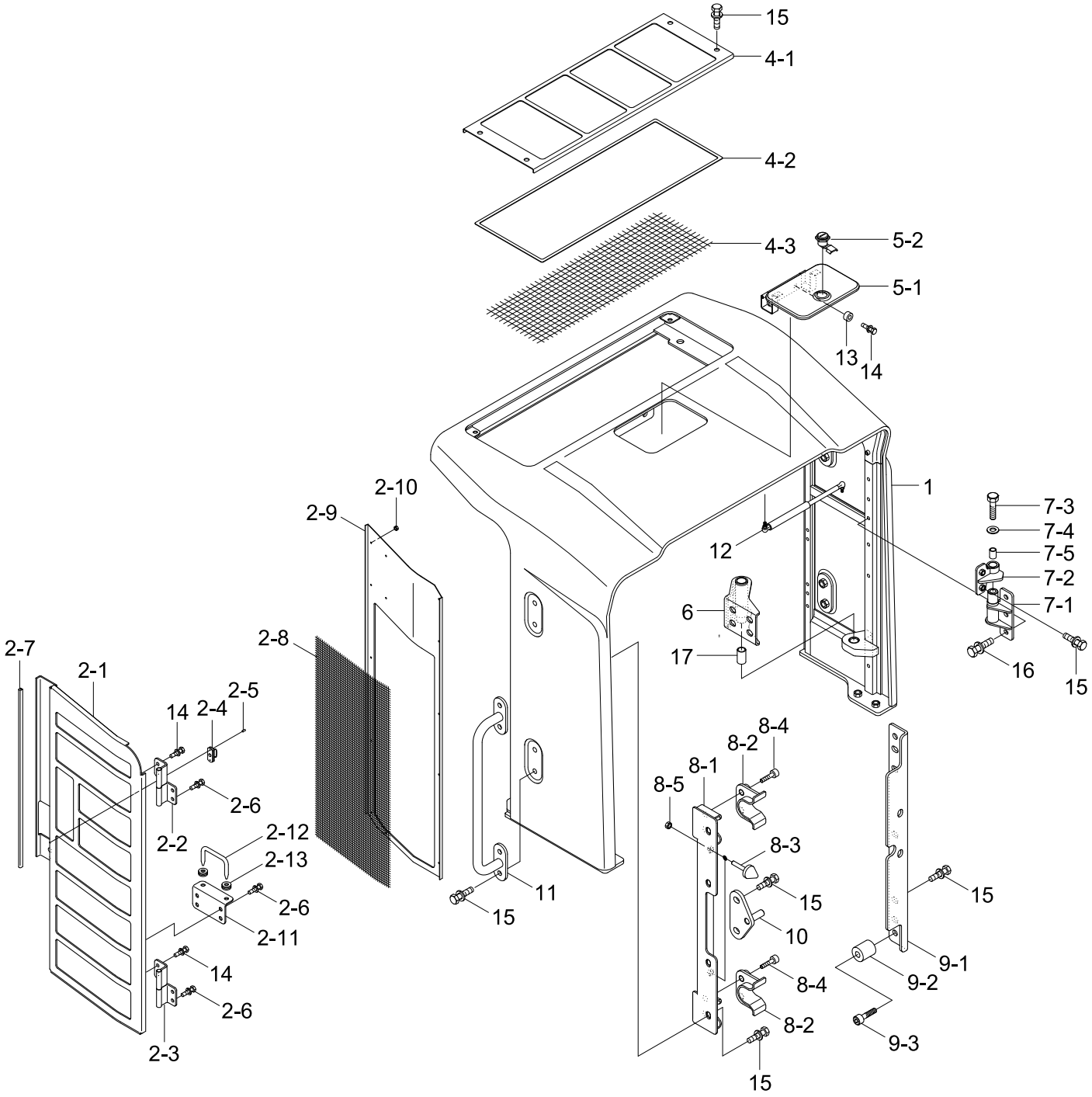

Item	Part_No	IS	Ord	T	Description	Qty	Serial_No	ITC	Remark
*	@				COOLING ROOM ASSY	1			NOT
*-1	77LN-40031				.SUPPORT ASSY	1			
1	77LN-40202				..COOLING ROOM WA	1			
2	77LN-40231				..INLET COVER ASSY-LH	1	- #0002		
	77LN-40232				..INLET COVER ASSY-LH	1	#0003 -	B	
	77LN-40241				..INLET COVER ASSY-RH	1	- #0002		
	77LN-40242				..INLET COVER ASSY-RH	1	#0003 -	B	
2-1	77LN-42301				...COVER WA-LH	1			
	77LN-42401				...COVER WA-RH	1			
2-2	72LM-49010				...HINGE ASSY-LH	1			
	72LM-49020				...HINGE ASSY-RH	1			
2-3	72LM-49030				...HINGE ASSY-LH	1			
	72LM-49040				...HINGE ASSY-RH	1			
2-4	72LM-42380				...LATCH	1			
2-5	72LM-42390				...RIVET	2			
2-6	S037-082056				...BOLT-W/WASHER	4	- #0002		
					...BOLT-W/WASHER	6	#0003 -	A	
2-7	S791-020060				...GROMMET-PLATE	1			
2-8	77LN-42332				...WIRE NET	1			
2-9	77LN-42341				...COVER-LH	1			
	77LN-42441				...COVER-RH	1			
2-10	S281-041006				...NUT-FLANGED	15			
2-11	72LM-42360				...PLATE	1	#0003 -	-	
2-12	72LM-42370				...BAR-LOCK	1	#0003 -	-	
2-13	S681-100400				...GROMMET	2	#0003 -	-	

Item	Part_No	IS	Ord	T	Description	Qty	Serial_No	ITC	Remark
4	77LN-40252				..COVER ASSY	1			
4-1	77LN-42511				...COVER	1			
4-2	77LN-42520				...COVER	1			
4-3	77LN-42531				...WIRENET	1			
5	72LM-40260				..COVER ASSY	1			
5-1	72LM-42600				...BRACKET	1			
5-2	71MH-55600				...KEY-LOCK	1			
6	72LP-40290				..HINGE WA	1			
7	72LP-40301				..HINGE ASSY	1			
7-1	76LN-50010				...BATTERY COVER ASSY	2			
7-2	72LP-43010				...HINGE WA(B)	1			
7-3	S037-103056				...BOLT-W/WASHER	1			
7-4	S441-160006				...WASHER-HARDENED	1			
7-5	S731-025025				...BUSHING-DU	1			
8	72LP-40311				..STOPPER ASSY	1			
8-1	72LP-43101				...BRACKET WA	1			
8-2	72LM-43111				...STOPPER-A	2			
8-3	E171-1178				...RUBBER-BUMPER	2			
8-4	S107-120406				...BOLT-SOCKET	4			
8-5	S285-10100B				...NUT-FLANGED	2			
9	72LP-40321				..STOPPER-INNER	1			
9-1	72LP-43201				...BRACKET	1			
9-2	72LM-43211				...BOSS	2			
9-3	S107-100556				...BOLT-SOCKET	2			
10	72LM-40330				..STRIKER WA	1			

Item	Part_No	IS	Ord	T	Description	Qty	Serial_No	ITC	Remark
11	72LN-40350				..BRACKET MTG-LH	1			
12	72LM-40370				..GAS SPRING	1			
13	74L3-11290				..BUMPER-RUBBER	4			
14	S037-082056				..BOLT-W/WASHER	18			
15	S037-122556				..BOLT-W/WASHER	6			
16	S037-123556				..BOLT-W/WASHER	3			
17	S731-025025				..BUSHING-DU	1			
34	71Q6-50030				BOLT-W/WASHER	4			

COWL 3(ENGINE ROOM)

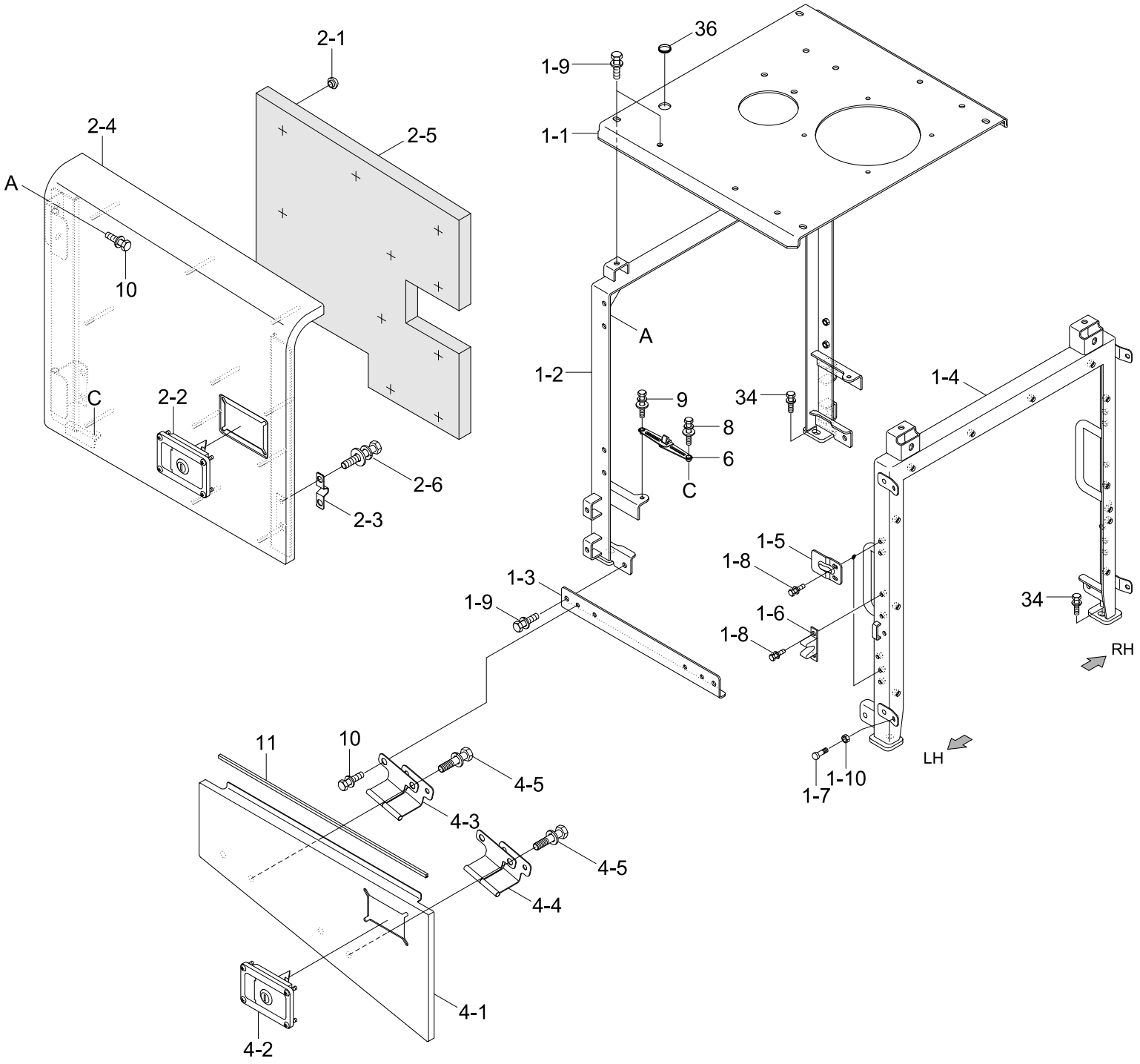

Item	Part_No	IS	Ord	T	Description	Qty	Serial_No	ITC	Remark
*	77LN-40010				ENGINE ROOM ASSY	1			
1	77LN-40101				.SUPPORT ASSY	1			
1-1	77LN-40150				..HOOD WA	1	- #0019		
	77LN-40151				..HOOD WA	1	#0020 -	B	
1-2	77LN-40160				..SUPPORT-FRONT	1			
1-3	77LN-40170				..BRACKET WA	2			
1-4	77LN-40191				..SUPPORT-MID	1			
1-5	72LM-41000				..PLATE-LOCK	4			
1-6	71Q6-53951				..STOPPER-B	2			
1-7	71EH-13150				..BUMPER-RUBBER	8			
1-8	S037-082056				..BOLT-W/WASHER	12			
1-9	S037-123056				..BOLT-W/WASHER	8	- #0019		
					..BOLT-W/WASHER	9	#0020 -	A	
1-10	S285-10100B				..NUT-FLANGED	8			
2	77LN-40110				.SIDE DOOR ASSY-LH	1			
	77LN-40120				.SIDE DOOR ASSY-RH	1			
2-1	71EM-51580				..CAP-STUD BOLT	12			
2-2	71Q6-52190				..LATCH ASSY	1			
2-3	71Q6-53911				..STOPPER-A	1			
2-4	77LN-41100				..SIDE DOOR WA-LH	1			
	77LN-41200				..SIDE DOOR WA-RH	1			
2-5	77LN-41110				..SPONGE-LH	1			
	77LN-41210				..SPONGE-RH	1			
2-6	S037-081556				..BOLT-W/WASHER	2			
4	77LN-40130				.SIDE COVER ASSY-LH	1			

Item	Part_No	IS	Ord	T	Description	Qty	Serial_No	ITC	Remark
4	77LN-40140				.SIDE COVER ASSY-RH	1			
4-1	77LN-41300				..COVER WA-LH	1			
	77LN-41400				..COVER WA-RH	1			
4-2	71Q6-52190				..LATCH ASSY	1			
4-3	72LM-49050				..HINGE-LH	1			
	72LM-49060				..HINGE-RH	1			
4-4	72LM-49070				..HINGE-LH	1			
	72LM-49080				..HINGE-RH	1			
4-5	S037-122556				..BOLT-W/WASHER	4			
6	71Q6-52180				.STAY ASSY-LH	1			
	71Q6-53180				.STAY ASSY-RH	1			
8	S037-102556				.BOLT-W/WASHER	2			
9	S037-103556				.BOLT-W/WASHER	2			
10	S037-122556				.BOLT-W/WASHER	16			
11	S771-008000				.WEATHER STRIP	2			
34	71Q6-50030				BOLT-W/WASHER	6			
36	S661-300800				CAP-RUBBER	1	#0020 -	-	

WHEEL RIM & TIRE

Type	Symbol
K	
C	

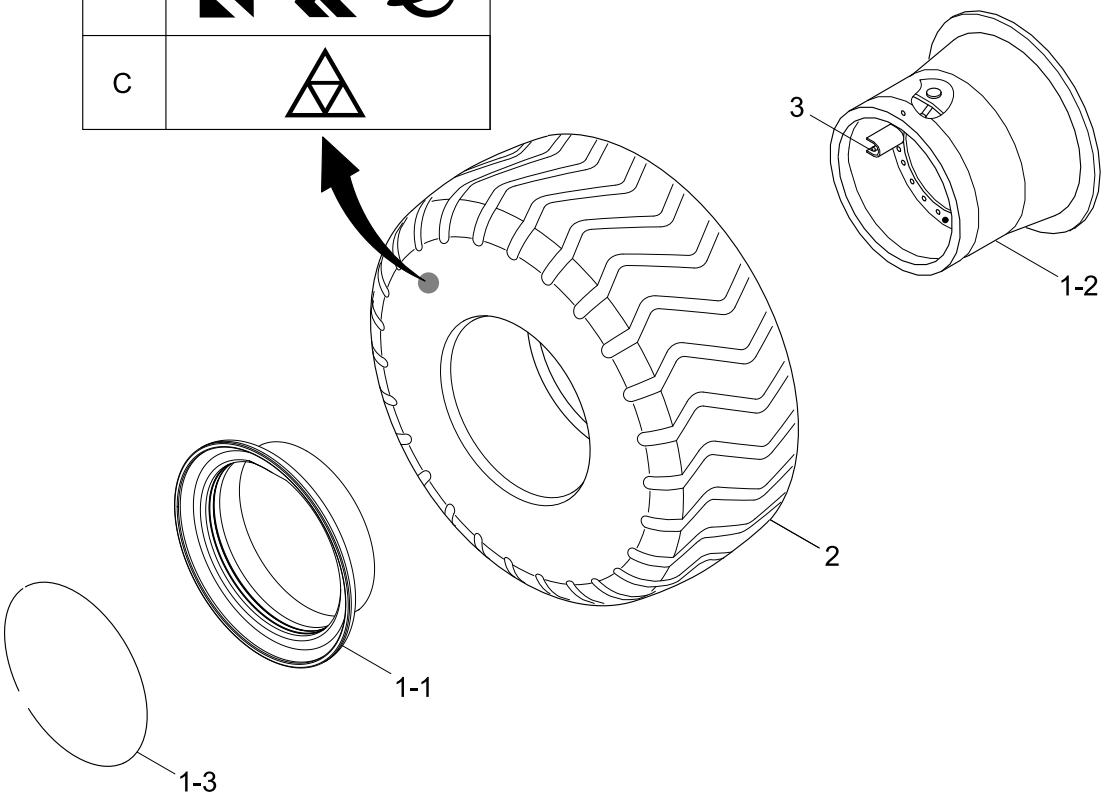

Item	Part_No	IS	Ord	T	Description	Qty	Serial_No	ITC	Remark
*	81LN-40010				WHEEL & TIRE ASSY	4			OPT
1	81LN-40100				.WHEEL RIM	1			
1-1	XIAA-00005				..FLANGE-DETACHABLE	1			
N1-2	XIAA-00046				..RIM BASE	1			NOT
1-3	XIAA-00002				..RING-LOCK	1			
2	81L2-3104				.TIRE(20.5-25 16PR,L3)	1			K TYPE
*	81LN-40020				WHEEL & TIRE ASSY	4			STD
1	81LN-40100				.WHEEL RIM	1			
1-1	XIAA-00005				..FLANGE-DETACHABLE	1			
N1-2	XIAA-00046				..RIM BASE	1			NOT
1-3	XIAA-00002				..RING-LOCK	1			
2	81L2-3104C				.TIRE(20.5-25 16PR,L3)	1			C TYPE
*	81LN-40030				WHEEL & TIRE ASSY	4			OPT
1	81LN-40100				.WHEEL RIM	1			
1-1	XIAA-00005				..FLANGE-DETACHABLE	1			
N1-2	XIAA-00046				..RIM BASE	1			NOT
1-3	XIAA-00002				..RING-LOCK	1			
N2	81L7-01030				.TIRE(20.5-25 16PR,L2)	1			NOT
*	81LN-40040				WHEEL & TIRE ASSY	4			OPT
1	81LN-40100				.WHEEL RIM	1			
1-1	XIAA-00005				..FLANGE-DETACHABLE	1			
N1-2	XIAA-00046				..RIM BASE	1			NOT
1-3	XIAA-00002				..RING-LOCK	1			
N2	82L1-1017				.TIRE(20.5 R 25XHA*)	1			NOT
*	81LN-40050				WHEEL & TIRE ASSY	4			OPT

Item	Part_No	IS	Ord	T	Description	Qty	Serial_No	ITC	Remark
1	81LN-40100				.WHEEL RIM	1			
1-1	XIAA-00005				..FLANGE-DETACHABLE	1			
N1-2	XIAA-00046				..RIM BASE	1			NOT
1-3	XIAA-00002				..RING-LOCK	1			
2	82L1-1017C				.TIRE(20.5 R 25XHA*)	1			C TYPE
*	81LN-40060				WHEEL & TIRE ASSY	4			OPT
1	81LN-40200				.WHEEL RIM	1			
1-1	81LG-40110				..WHEEL RIM	1			
1-2	81L7-00140				..DISK	1			
2	81L3-01030				.TIRE(17.5-25 12PR,L3)	1			K TYPE
*	81LN-40070				WHEEL & TIRE ASSY	4			OPT
1	81LN-40200				.WHEEL RIM	1			
1-1	81LG-40110				..WHEEL RIM	1			
1-2	81L7-00140				..DISK	1			
2	81L8-00210				.TIRE(17.5-25 12PR,L2)	1			C TYPE
*	81LN-40080				WHEEL & TIRE ASSY	4			OPT
1	81LN-40200				.WHEEL RIM	1			
1-1	81LG-40110				..WHEEL RIM	1			
1-2	81L7-00140				..DISK	1			
2	81L3-01030C				.TIRE(17.5-25 12PR,L3)	1			C TYPE
*	81LN-40090				WHEEL & TIRE ASSY	4			OPT
1	81LN-40200				.WHEEL RIM	1			
1-1	81LG-40110				..WHEEL RIM	1			
1-2	81L7-00140				..DISK	1			
N2	81L8-00190				.TIRE(17.5 R25 XHA*)	1			NOT

WOOD TIRE ASSY

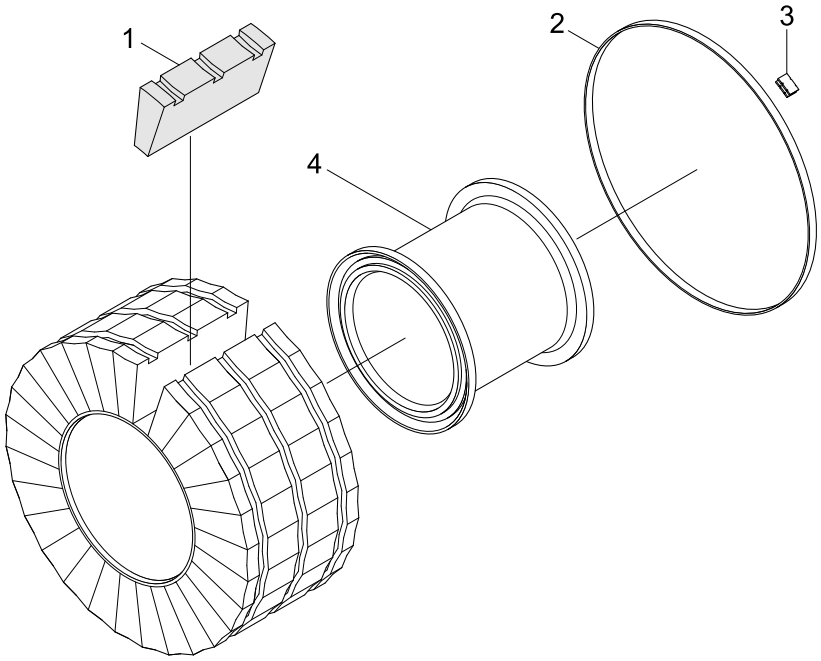

Item	Part_No	IS	Ord	T	Description	Qty	Serial_No	ITC	Remark
*	81LN-40600				RIM & WOOD TIRE ASSY	4			
1	81LN-40610				.WOOD TIRE	34			
2	81LN-40620				.BAND-STEEL	3			
3	81LL-40530				.CLAMP	3			
4	81LP-40100				.WHEEL RIM	1			

FRONT & REAR AXLE MOUNTING

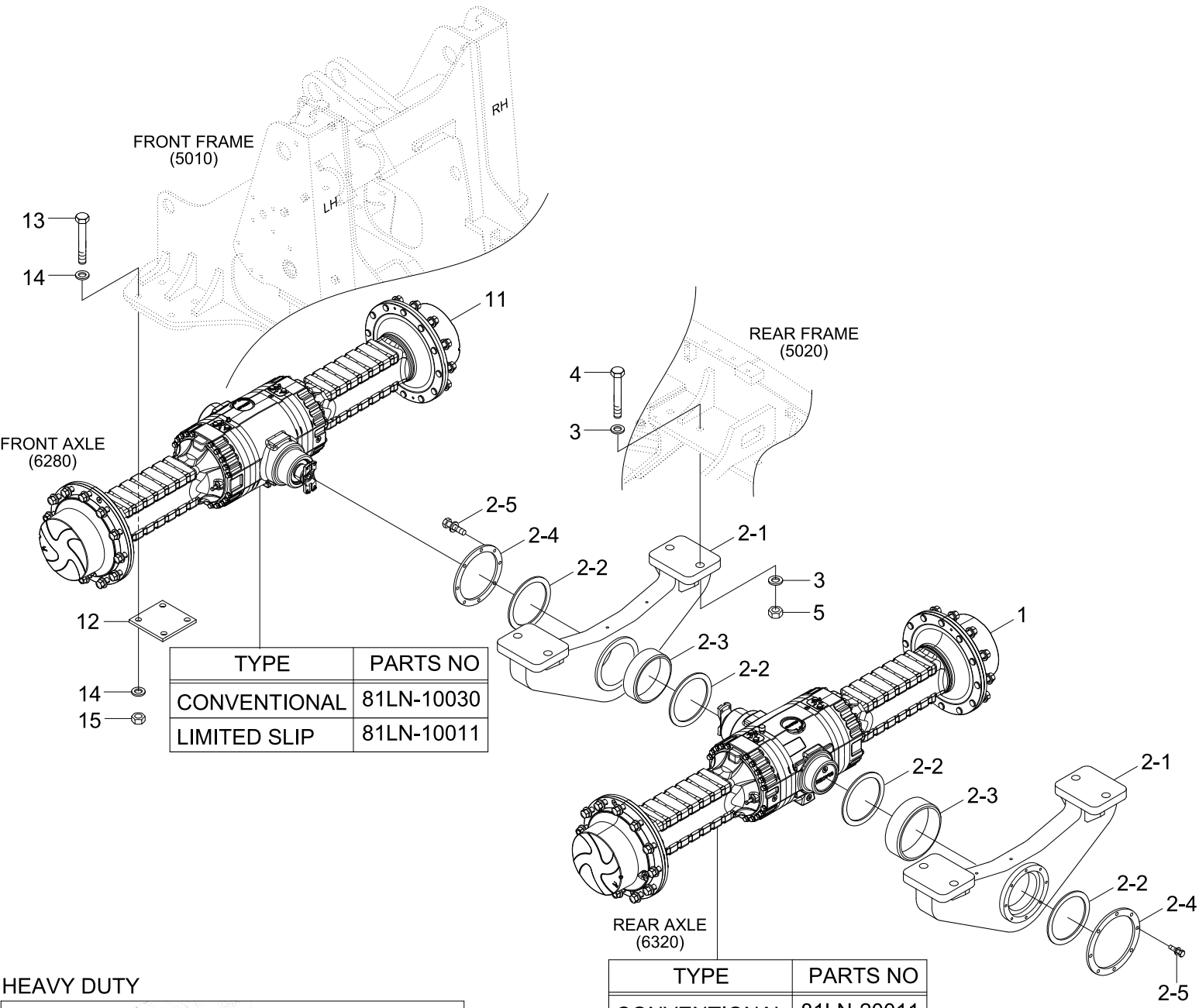

TYPE	PARTS NO
CONVENTIONAL	81LN-10030
LIMITED SLIP	81LN-10011

TYPE	PARTS NO
CONVENTIONAL	81LN-20011
LIMITED SLIP	81LN-20071
HEAVY DUTY	81LN-20091

HEAVY DUTY

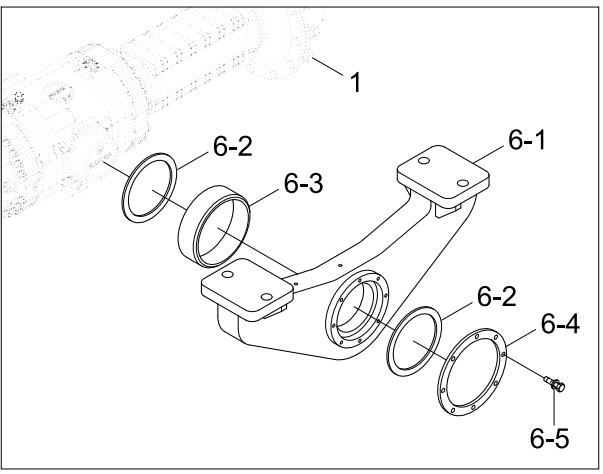

Item	Part_No	IS	Ord	T	Description	Qty	Serial_No	ITC	Remark
1	81LN-20011				REAR AXLE ASSY	1			CONVENTIONAL
	81LN-20071				REAR AXLE ASSY	1			LIMITED SLIP
	81LN-20090				REAR AXLE ASSY	1			HEAVY DUTY
2	81LN-20020				SUPPORT ASSY	1			
2-1	81LN-20030				.SUPPORT WA-FRONT	1			
2-2	81LN-20040				.SEAL-DUST	2			
2-3	81LN-20050				.BUSHING	1			
2-4	81LN-20060				.COVER	1			
2-5	S035-082056				.BOLT-W/WASHER	8			
3	S441-240006				WASHER-HARDENED	16			
4	S018-24095D				BOLT-HEX	8			
5	S206-24100B				NUT-HEX	8			
6	81LN-20120				SUPPORT ASSY-REAR	1			HEAVY DUTY
6-1	81LN-20130				SUPPORT-REAR	1			HEAVY DUTY
6-2	81LN-20040				SEAL-DUST	2			HEAVY DUTY
6-3	81LN-20050				BUSHING	1			HEAVY DUTY
6-4	81LN-20060				COVER	1			HEAVY DUTY
6-5	S035-082056				BOLT-W/WASHER	8			HEAVY DUTY
11	81LN-10011				FRONT AXLE ASSY	1			LIMITED SLIP
	81LN-10030				FRONT AXLE ASSY	1			CONVENTIONAL
12	81LN-10020				PLATE	2			
13	S018-24300D				BOLT-HEX	8			
14	S441-240006				WASHER-HARDENED	16			
15	S206-24100B				NUT-HEX	8			

DRIVE LINES

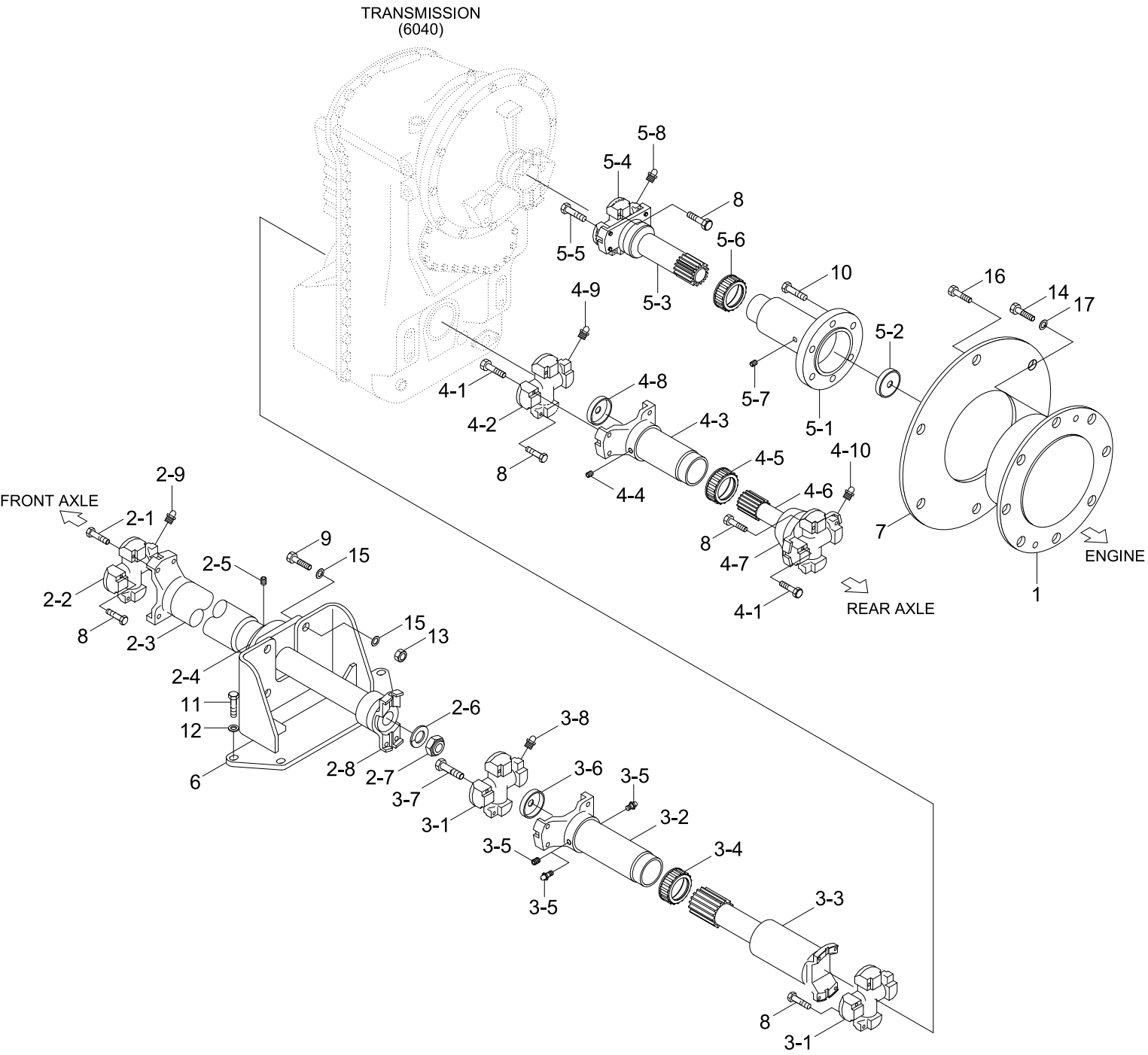
TRANSMISSION
(6040)
5-8
5-4
8
5-5
5-6
5-3
10
16
14
17
4-9
5-2
4-1
4-8
5-7
4-2
4-3
5-1
8
4-5
4-10
4-4
4-6
FRONT AXLE
2-9
2-1
8
4-7
7
ENGINE
9
15
2-5
2-2
4-1
REAR AXLE
1
8
2-3
15
13
2-4
11
2-6
3-8
12
2-8
2-7
3-6
3-5
6
3-7
3-1
3-2
3-5
3-4
3-5
3-3
8
3-1

Item	Part_No	IS	Ord	T	Description	Qty	Serial_No	ITC	Remark
1	81LN-30111				D/SHAFT-FRONT	1			
1-1	103-83UNF				.BOLT	4			
1-2	100-6C-2				.J/BEARING ASSY	1			
1-3	40AF-6C504L				.SHAFT SUB ASSY	1			
1-4	750-UCF311				.BEARING-FLANGE	1			
1-5	710-M1215				.SCREW-SET	1			
1-6	120-M27				.WASHER	1			
1-7	110-M27				.NUT-LOCK	1			
1-8	210-6C100L				.FLANGE COMPLETE	1			
1-9	102-PT41				.NIPPLE-GREASE	1			
2	81LN-30121				D/SHAFT-CENTER	1			
2-1	100-6C-2				.J/BEARING ASSY	2			
2-2	220-6C200L				.SLEEVE YOKE	1			
2-3	810-415JK				..SEAL-JOINT	1			
2-4	40AF-6C958L				..SHAFT SUB ASSY	1			
2-5	101-PT81				..NIPPLE-GREASE	2			
2-6	910-56				..PLUG	1			
2-7	103-83UNF				..BOLT	8			
2-8	102-PT41				..NIPPLE-GREASE	2			
3	81LN-30131				DRIVE SHAFT-REAR	1			CONVEN/LIMIT
	81LN-30141				DRIVE SHAFT-REAR	1			HEAVY DUTY
3-1	103-83UNF				.BOLT	8			
3-2	100-6C-2				.J/BEARING ASSY	2			
3-3	200-6C87L				.SLEEVE YOKE	1			CONVEN/LIMIT
	200-6C76L				.SLEEVE YOKE	1			HEAVY DUTY

Item	Part_No	IS	Ord	T	Description	Qty	Serial_No	ITC	Remark
3-4	710-PT81				.SCREW-PLUG	1			
3-5	810-415JK				.SEAL-JOINT	1			
3-6	300-6C135L				.YOKE SHAFT	1			CONVEN/LIMIT
	300-6C122L				.YOKE SHAFT	1			HEAVY DUTY
3-7	900-670				.EXPANSION PLUG	1			
3-8	102-PT41				.NIPPLE-GREASE	2			
4	81LN-30150				BRACKET WA	1			
5	S017-16045D				BOLT-HEX	4			
6	S017-20060D				BOLT-HEX	4			
7	S088-060286				BOLT-HEX,UNIFIED	20			
8	S205-20100B				NUT-HEX	4			
9	S441-160006				WASHER-HARDENED	4			
10	S441-200006				WASHER-HARDENED	8			

TRANSMISSION MOUNTING

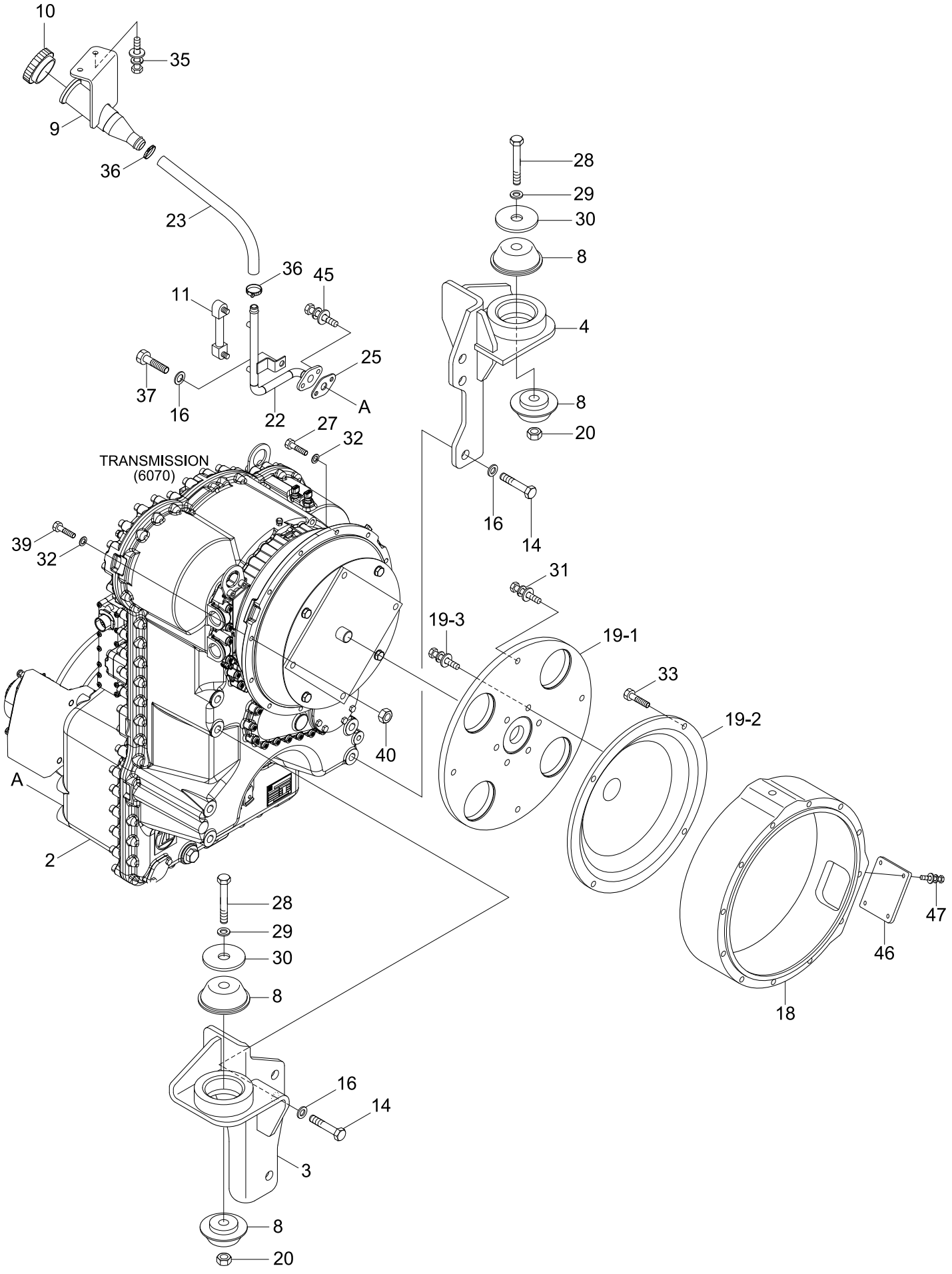

Item	Part_No	IS	Ord	T	Description	Qty	Serial_No	ITC	Remark
2	81LN-61100				T/M & T/C ASSY	1			
3	11LM-00730				BRACKET WA-LH	1			
4	11LM-00740				BRACKET WA-RH	1			
8	11N6-13060				RESILIENT	4			
9	11LM-00280				PIPE WA	1			
10	11LM-00330				CAP-FILLER	1			
11	11LM-00121				LEVEL GAUGE	1			
14	S017-20040D				BOLT-HEX	6			
16	S441-200006				WASHER-HARDENED	7			
18	11LN-00150				HOUSING-SPACER	1			
19	11LN-00170				ADAPTER ASSY	1			
19-1	11LN-00180				.PLATE	1			
19-2	11LN-00190				.ADAPTER	1			
19-3	S037-124056				.BOLT-W/WASHER	6			
20	S205-241006				NUT-HEX	2			
22	81LN-60101				PIPE WA	1			
23	P760-043065				HOSE-RUBBER LOW	1			
25	12L2-0013				GASKET	1			
27	S017-101506				BOLT-HEX	2			
28	S017-241806				BOLT-HEX	2			
29	S441-240006				WASHER-HARDENED	2			
30	11N8-00060				WASHER	2			
31	S037-103056				BOLT-W/WASHER	4			
32	S441-10000B				WASHER-HARDENED	12			
33	S087-060166				BOLT-HEX,UNIFIED	4			

Item	Part_No	IS	Ord	T	Description	Qty	Serial_No	ITC	Remark
35	S037-102056				BOLT-W/WASHER	2			
36	S572-380006				CLAMP-HOSE WIRE TYPE	2			
37	S018-200406				BOLT-HEX	1			
39	11LL-00400				BOLT-STUD	10			
40	S205-10100B				NUT-HEX	20			
45	S035-082526				BOLT-W/WASHER	2			
46	11LN-00160				PLATE	1			
47	S035-082026				BOLT-W/WASHER	4			

TRANSMISSION COOLING PIPING

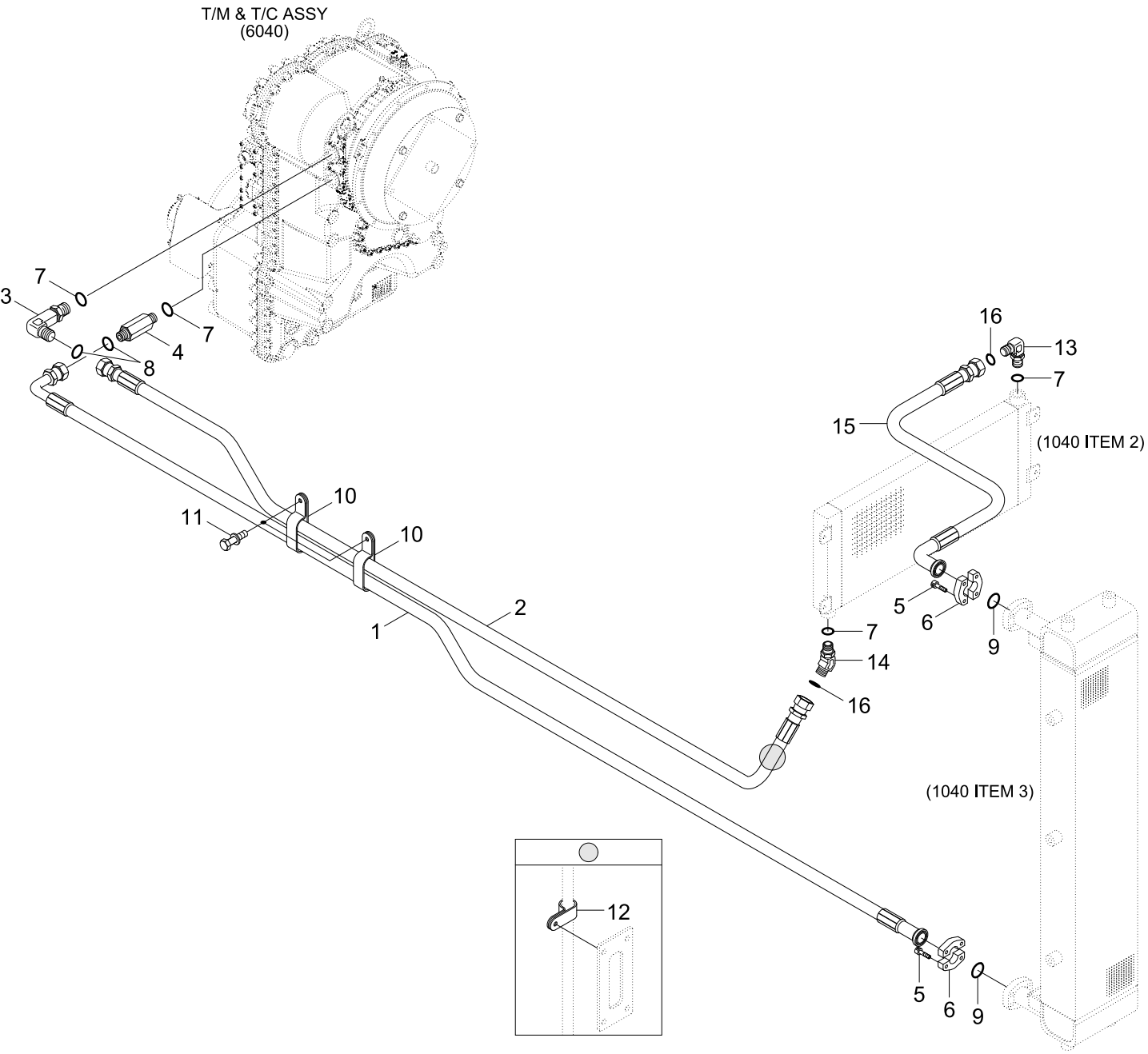

Item	Part_No	IS	Ord	T	Description	Qty	Serial_No	ITC	Remark
1	P993-162333				HOSE ASSY-ORFS 0X90	1			
2	P983-162351				HOSE ASSY-ORFS 0X90	1	- #0027		
	P913-162045				HOSE ASSY-ORFS 0X0	1	#0028 -	D	
3	81FT-81010				CONNECTOR	1			
4	X515-117555				CONNECTOR-LONG,ORFS	1			
5	S109-100306				BOLT-SOCKET	8			
6	P173-160104				FLANGE-HYD,SPLIT	4			
7	S621-021001				O-RING	2	- #0027		
					O-RING	4	#0028 -	A	
8	S611-030001				O-RING	2			
9	Y171-024004				O-RING	2			
10	S037-101556				BOLT-W/WASHER	2			
11	34L4-01010				CLAMP	2			
12	31L7-10230				CLAMP-TUBE	1			
13	X520-110017				ELBOW-90,ORFS	1	#0028 -		
14	X530-110017				ELBOW-45,ORFS	1	#0028 -		
15	P980-162314				HOSE ASSY-ORFS 0X90	1	#0028 -		
16	S631-024004				O-RING	2	#0028 -		

ENGINE CONNECTION GROUP

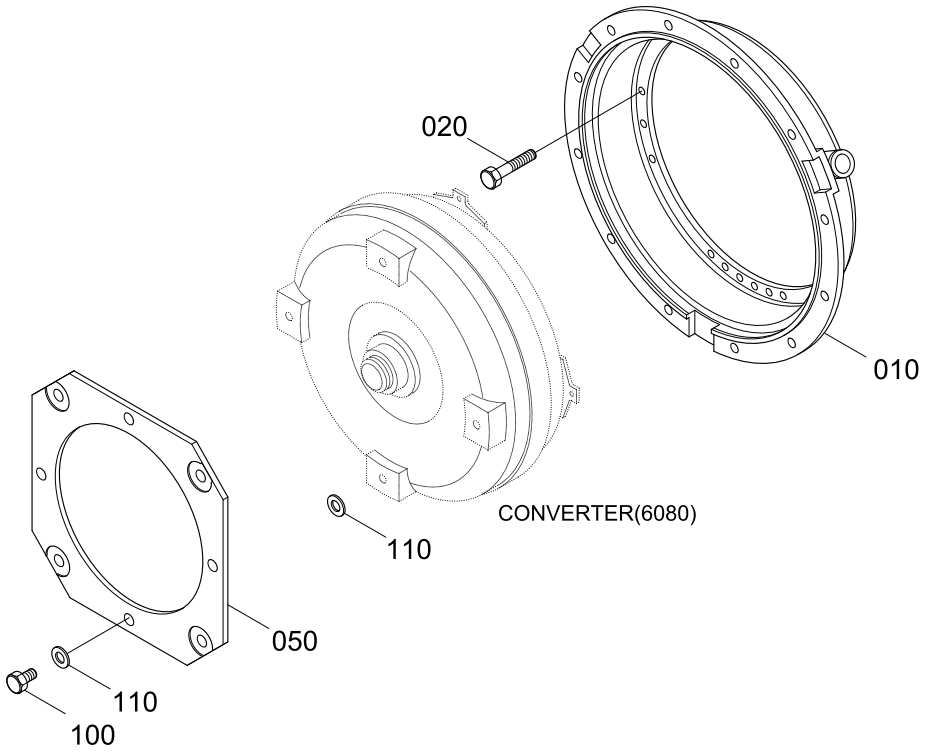

Item	Part_No	IS	Ord	T	Description	Qty	Serial_No	ITC	Remark
*	ZGAQ-04259				ENGINE CONNECTION	1			
010	ZGAQ-00757				BELL-CONVERTER	1			
020	ZGAQ-00758				SCREW	18			
050	ZGAQ-04260				DIAPHRAGM	1			
100	ZGAQ-00761				SCREW	4			
110	ZGAQ-00762				WASHER	8			

INPUT GROUP

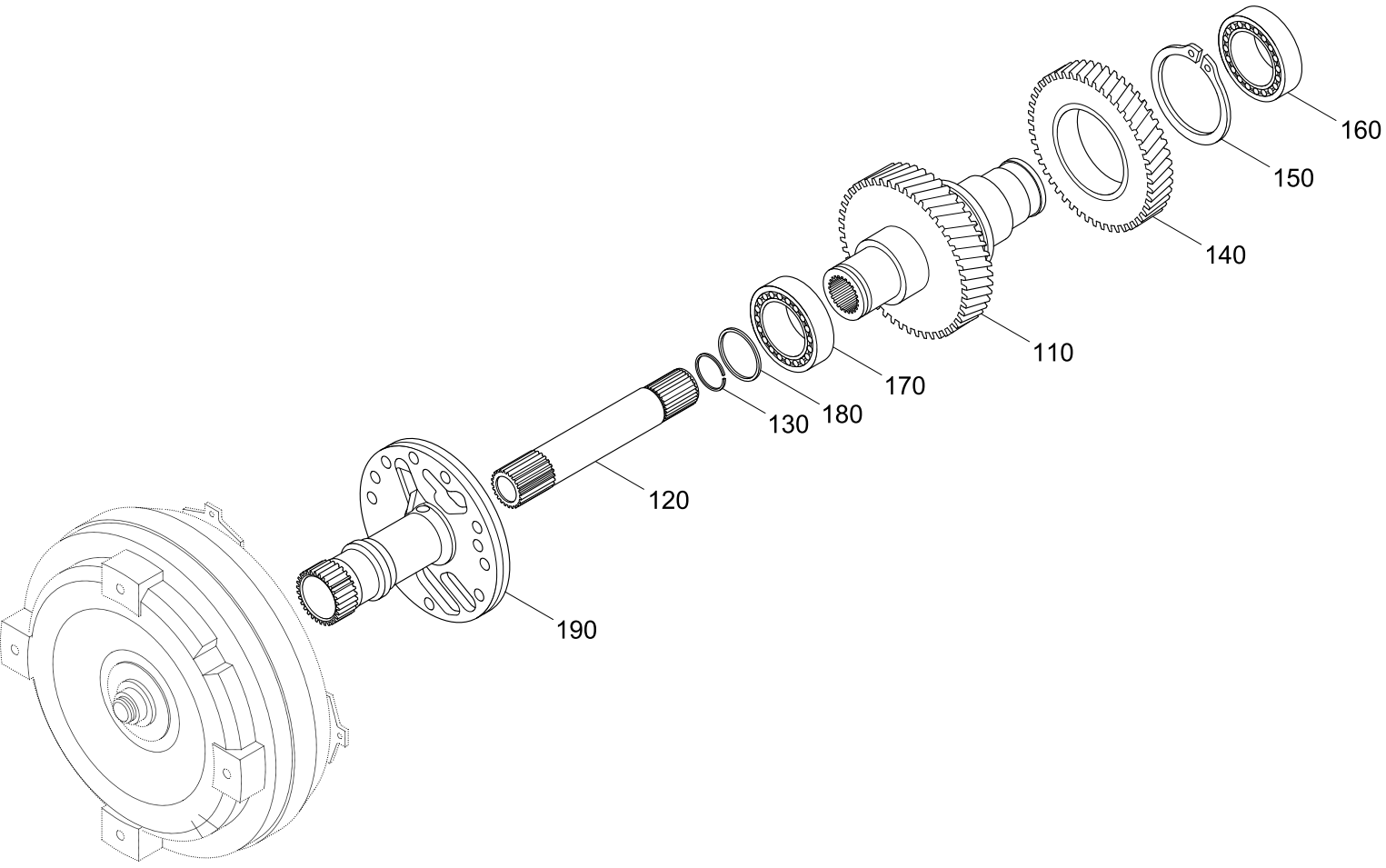

Item	Part_No	IS	Ord	T	Description	Qty	Serial_No	ITC	Remark
N*	ZGAQ-03133				INPUT GROUP	1			NOT
110	ZGAQ-01394				SHAFT-INPUT	1			
120	ZGAQ-00767				SHAFT-TURBINE	1			
130	ZGAQ-00768				RING-SNAP	1			
140	ZGAQ-01395				GEAR-INPUT	1			
150	ZGAQ-01396				RING-RETAINING	1			
160	ZGAQ-00769				BEARING-ROLLER	1			
170	ZGAQ-00769				BEARING-ROLLER	1			
180	ZGAQ-01397				RING-PISTON	1			
190	ZGAQ-02821				SHAFT-STATOR	1			

GEARBOX HOUSING GROUP(1/2)

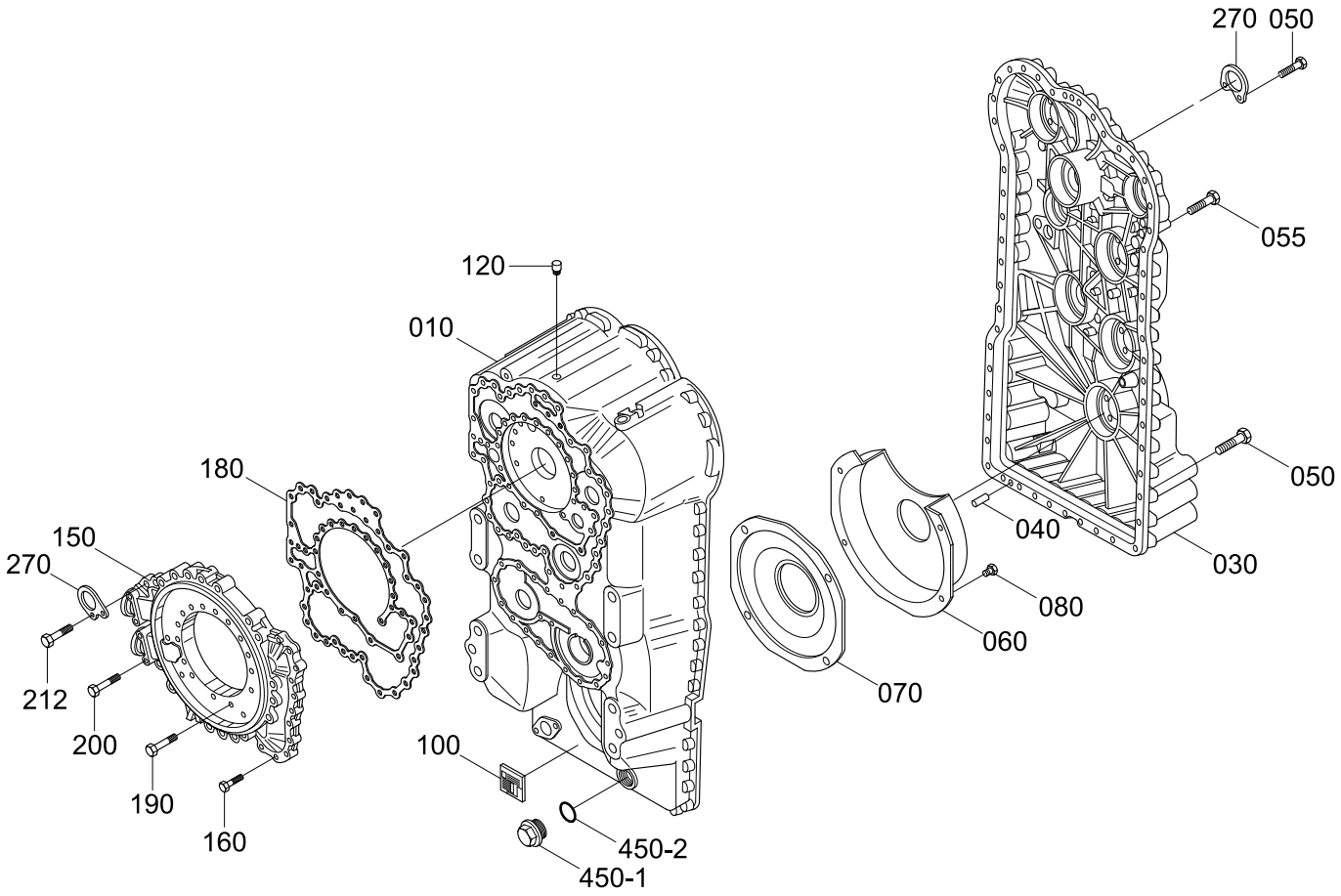

Item	Part_No	IS	Ord	T	Description	Qty	Serial_No	ITC	Remark
*	ZGAQ-03932				GEARBOX HOUSING	1			
010	ZGAQ-02822				HOUSING-FRONT SECT	1			
030	ZGAQ-03933				HOUSING-REAR	1			
040	ZGAQ-01401				PIN-CYLINDRICAL	2			
050	ZGAQ-00794				SCREW-CAP	35			
055	ZGAQ-03572				SCREW-CAP	6			
060	ZGAQ-01403				SHEET-SCREEN	1			
070	ZGAQ-01404				SHEET-SCREEN	1			
080	ZGAQ-00787				SCREW-CAP	4			
100	ZGAQ-00788				PLATE-TYPE	1			
120	ZGAQ-00258				BREATHER	1			
150	ZGAQ-01706				HOUSING-OIL FEED	1			
160	ZGAQ-00792				SCREW-CAP	15			
180	ZGAQ-00790				GASKET	1			
190	ZGAQ-00791				SCREW-CAP	21			
200	ZGAQ-00793				SCREW-CAP	4			
212	ZGAQ-00794				SCREW-CAP	2			
270	ZGAQ-00784				PLATE-FIXING	2			
450-1	ZGAQ-00252				PLUG-SCREW	1			
450-2	ZGAQ-00253				O-RING	1			

GEARBOX HOUSING GROUP(2/2)

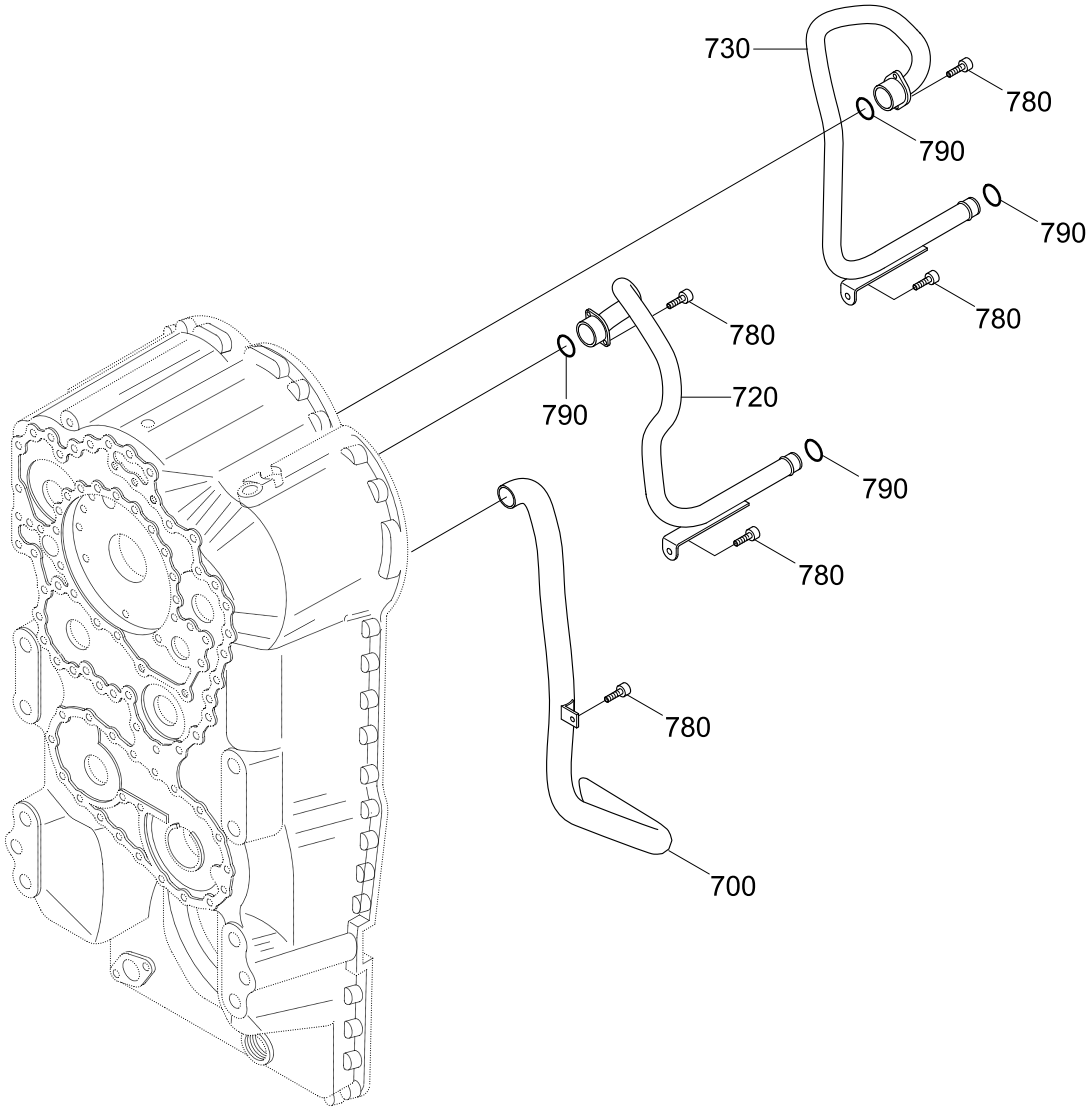

Item	Part_No	IS	Ord	T	Description	Qty	Serial_No	ITC	Remark
*	@				GEARBOX HOUSING	1			NOT
700	ZGAQ-02825				TUBE-SUCTION	1			
720	ZGAQ-01407				OIL TUBE	1			
730	ZGAQ-01408				OIL TUBE	1			
780	ZGAQ-00787				SCREW-CAP	7			
790	ZGAQ-02391				O-RING	4			

COUPLING GROUP(K1)

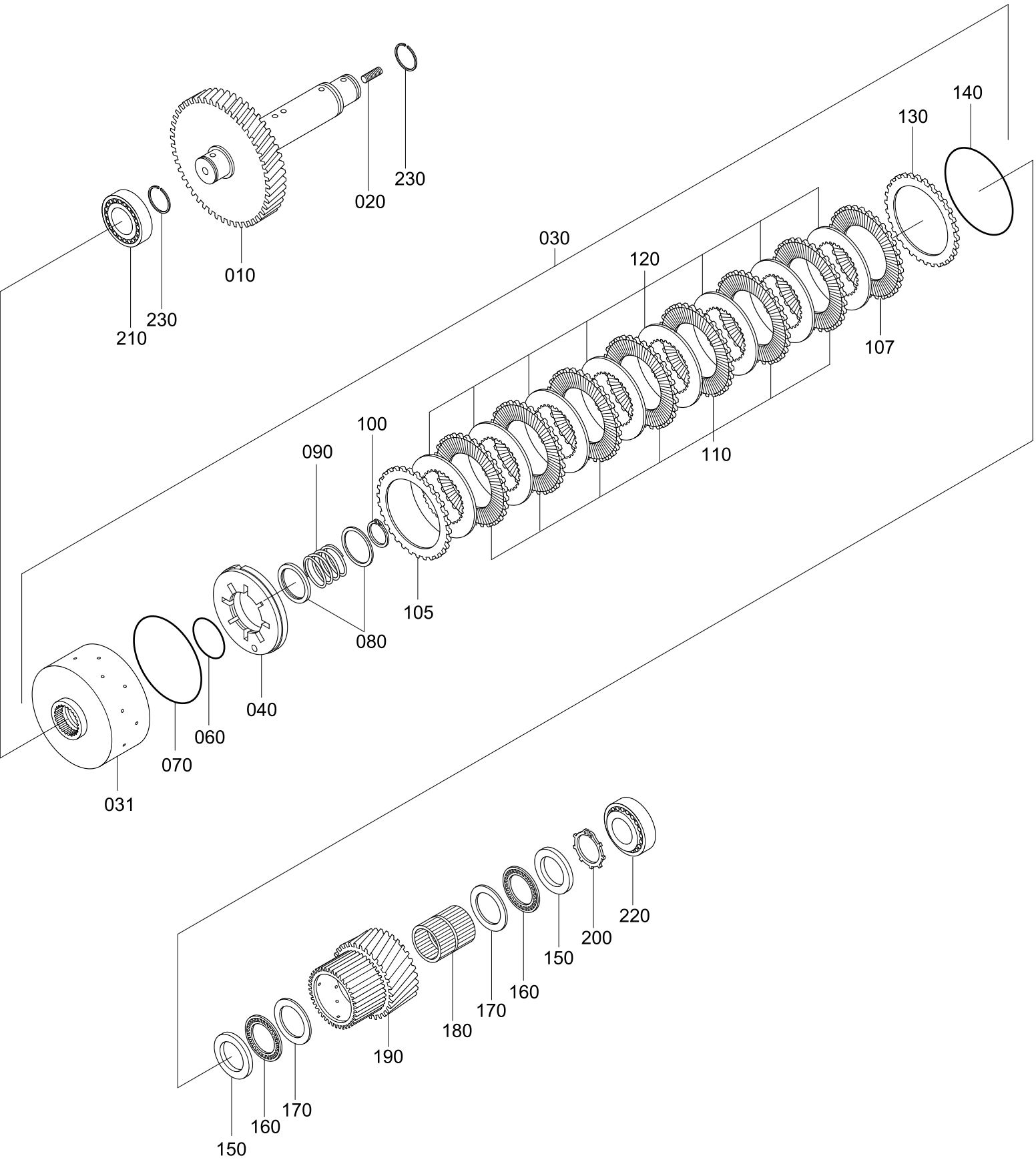

Item	Part_No	IS	Ord	T	Description	Qty	Serial_No	ITC	Remark
N*	ZGAQ-02392				COUPLING	1			NOT
010	ZGAQ-01410				SHAFT	1			
020	ZGAQ-00811				STUD	1			
030	ZGAQ-02393				COUPLING	1			
031	ZGAQ-01931				.DISC CARRIER	1			
040	ZGAQ-00849				.PISTON	1			
060	ZGAQ-00814				.O-RING	1			
070	ZGAQ-00850				.O-RING	1			
080	ZGAQ-01932				.GUIDE RING	2			
090	ZGAQ-01933				.SPRING	1			
100	ZGAQ-01934				.RING-RETAINING	1			
105	ZGAQ-01508				.DISC CLUTCH-OUTER	1			
107	ZGAQ-01508				.DISC CLUTCH-OUTER	1			
110	ZGAQ-01509				.DISC	7			
120	ZGAQ-00853				.DISC CLUTCH-INNER	8			
130	ZGAQ-00854				.SHIM-END	1			
	ZGAQ-00855				.RING-SNAP(2.1T)	1			
	ZGAQ-00856				.RING-SNAP(2.25T)	1			
	ZGAQ-00857				.RING-SNAP(2.4T)	1			
	ZGAQ-00858				.RING-SNAP(2.55T)	1			
140	ZGAQ-00859				.RING-SNAP(2.7T)	1			
	ZGAQ-00860				.RING-SNAP(2.85T)	1			
	ZGAQ-00861				.RING-SNAP(3.00T)	1			
	ZGAQ-00862				.RING-SNAP(3.15T)	1			
	ZGAQ-00863				.RING-SNAP(3.30T)	1			

Item	Part_No	IS	Ord	T	Description	Qty	Serial_No	ITC	Remark
140	ZGAQ-00864				.RING-SNAP(3.45T)	1			
	ZGAQ-00865				.RING-SNAP(3.60T)	1			
	ZGAQ-00866				.RING-SNAP(3.75T)	1			
	ZGAQ-00867				.RING-SNAP(3.90T)	1			
	ZGAQ-00868				.RING-SNAP(4.05T)	1			
	ZGAQ-00869				.RING-SNAP(4.20T)	1			
150	ZGAQ-00824				DISC-RUNNING	2			
160	ZGAQ-00825				CAGE-AXIAL NEEDLE	2			
170	ZGAQ-00826				WASHER-AXIAL	2			
180	ZGAQ-01412				CAGE-NEEDLE	1			
190	ZGAQ-01413				IDLER	1			
200	ZGAQ-00828				RING-RETAINING	1			
210	ZGAQ-00880				BEARING-ROLLER	1			
220	ZGAQ-00880				BEARING-ROLLER	1			
230	ZGAQ-00831				RING-PISTON	2			
N	@				NOT SUPPLIED PARTS	AR			NOT

COUPLING GROUP(K2)

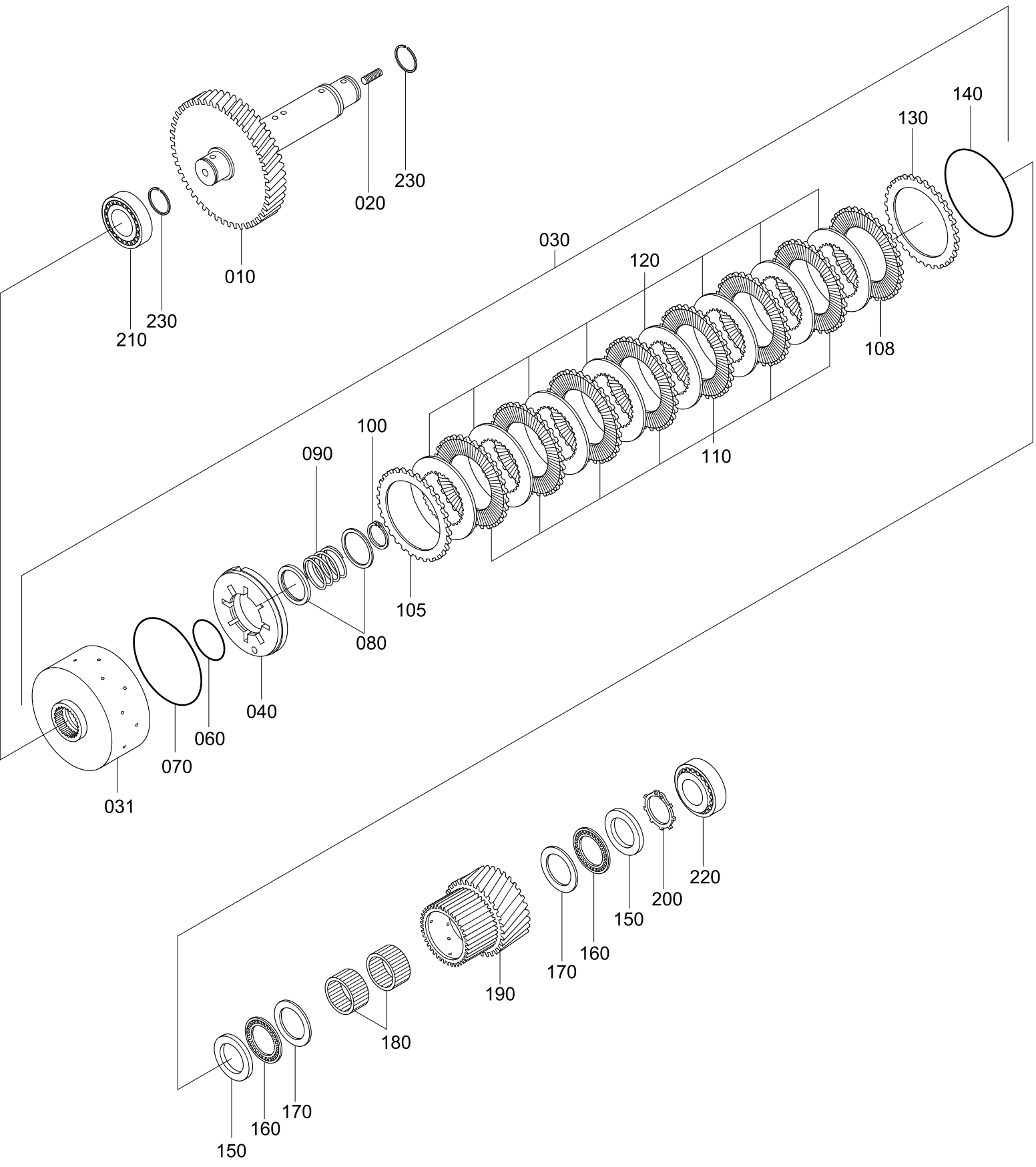

Item	Part_No	IS	Ord	T	Description	Qty	Serial_No	ITC	Remark
N*	ZGAQ-02394				COUPLING	1			NOT
010	ZGAQ-01415				SHAFT	1			
020	ZGAQ-00811				STUD	1			
030	ZGAQ-02395				COUPLING	1			
031	ZGAQ-01937				.DISC CARRIER	1			
040	ZGAQ-01938				.PISTON	1			
060	ZGAQ-01939				.O-RING	1			
070	ZGAQ-01940				.O-RING	1			
080	ZGAQ-01941				.RING-GUIDE	2			
090	ZGAQ-01942				.SPRING	1			
100	ZGAQ-01943				.RING-RETAINING	1			
105	ZGAQ-01944				.DISC-CLUTCH OUTER	1			
108	ZGAQ-01944				.DISC-CLUTCH OUTER	1			
110	ZGAQ-01945				.DISC	7			
120	ZGAQ-01946				.DISC-CLUTCH INNER	8			
130	ZGAQ-01947				.SHIM-END	1			
	ZGAQ-01948				.RING-SNAP (2.10)	1			
	ZGAQ-01949				.RING-SNAP (2.25)	1			
	ZGAQ-01950				.RING-SNAP (2.40)	1			
	ZGAQ-01951				.RING-SNAP (2.55)	1			
140	ZGAQ-01952				.RING-SNAP (2.70)	1			
	ZGAQ-01953				.RING-SNAP (2.85)	1			
	ZGAQ-01954				.RING-SNAP (3.00)	1			
	ZGAQ-01955				.RING-SNAP (3.15)	1			
	ZGAQ-01956				.RING-SNAP (3.30)	1			

Item	Part_No	IS	Ord	T	Description	Qty	Serial_No	ITC	Remark
140	ZGAQ-01957				.RING-SNAP (3.45)	1			
	ZGAQ-01958				.RING-SNAP (3.60)	1			
	ZGAQ-01959				.RING-SNAP (3.75)	1			
	ZGAQ-01960				.RING-SNAP (3.90)	1			
	ZGAQ-01961				.RING-SNAP (4.05)	1			
	ZGAQ-01962				.RING-SNAP (4.20)	1			
150	ZGAQ-01417				DISC-RUNNING	2			
160	ZGAQ-01418				CAGE-AXIAL NEEDLE	2			
170	ZGAQ-01419				WASHER-AXIAL	2			
180	ZGAQ-01420				CAGE-NEEDLE	2			
190	ZGAQ-01421				IDLER	1			
200	ZGAQ-01422				RING-RETAINING	1			
210	ZGAQ-00880				BEARING-ROLLER	1			
220	ZGAQ-00880				BEARING-ROLLER	1			
230	ZGAQ-00831				RING-PISTON	2			
N	@				NOT SUPPLIED PARTS	AR			NOT

COUPLING GROUP(K3)

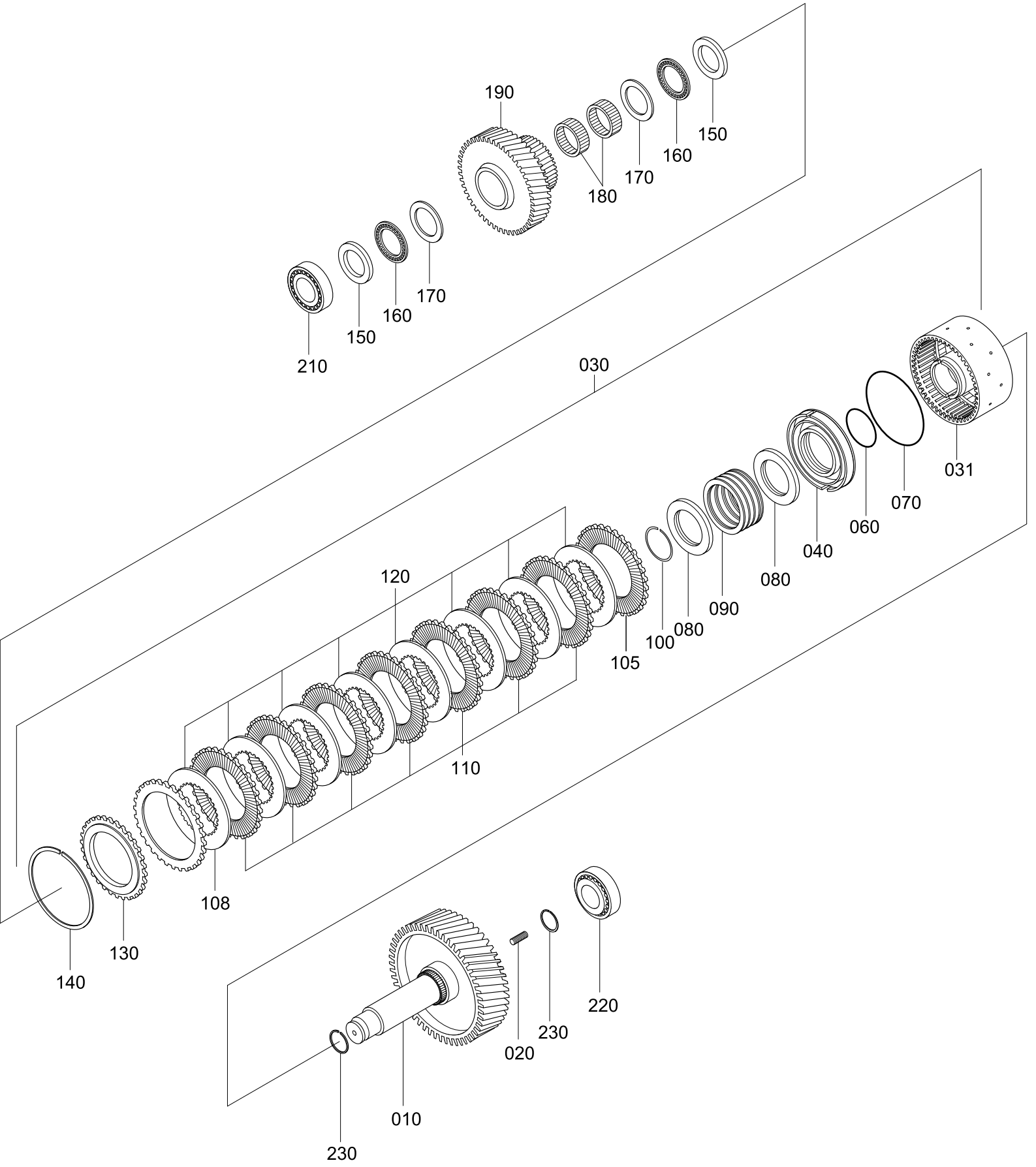

Item	Part_No	IS	Ord	T	Description	Qty	Serial_No	ITC	Remark
N*	ZGAQ-03130				COUPLING	1			NOT
010	ZGAQ-03132				SHAFT	1			
020	ZGAQ-00811				STUD	1			
030	ZGAQ-02395				COUPLING	1			
031	ZGAQ-01937				.DISC CARRIER	1			
040	ZGAQ-01938				.PISTON	1			
060	ZGAQ-01939				.O-RING	1			
070	ZGAQ-01940				.O-RING	1			
080	ZGAQ-01941				.RING-GUIDE	2			
090	ZGAQ-01942				.SPRING	1			
100	ZGAQ-01943				.RING-RETAINING	1			
105	ZGAQ-01944				.DISC-CLUTCH OUTER	1			
108	ZGAQ-01944				.DISC-CLUTCH OUTER	1			
110	ZGAQ-01945				.DISC	7			
120	ZGAQ-01946				.DISC-CLUTCH INNER	8			
130	ZGAQ-01947				.SHIM-END	1			
	ZGAQ-01948				.RING-SNAP (2.10)	1			
	ZGAQ-01949				.RING-SNAP (2.25)	1			
	ZGAQ-01950				.RING-SNAP (2.40)	1			
	ZGAQ-01951				.RING-SNAP (2.55)	1			
140	ZGAQ-01952				.RING-SNAP (2.70)	1			
	ZGAQ-01953				.RING-SNAP (2.85)	1			
	ZGAQ-01954				.RING-SNAP (3.00)	1			
	ZGAQ-01955				.RING-SNAP (3.15)	1			
	ZGAQ-01956				.RING-SNAP (3.30)	1			

Item	Part_No	IS	Ord	T	Description	Qty	Serial_No	ITC	Remark
140	ZGAQ-01957				.RING-SNAP (3.45)	1			
	ZGAQ-01958				.RING-SNAP (3.60)	1			
	ZGAQ-01959				.RING-SNAP (3.75)	1			
	ZGAQ-01960				.RING-SNAP (3.90)	1			
	ZGAQ-01961				.RING-SNAP (4.05)	1			
	ZGAQ-01962				.RING-SNAP (4.20)	1			
150	ZGAQ-01417				DISC-RUNNING	2			
160	ZGAQ-01418				CAGE-AXIAL NEEDLE	2			
170	ZGAQ-01419				WASHER-AXIAL	2			
180	ZGAQ-01420				CAGE-NEEDLE	2			
190	ZGAQ-01425				IDLER	1			
210	ZGAQ-00880				BEARING-ROLLER	1			
220	ZGAQ-00769				BEARING-ROLLER	1			
230	ZGAQ-00831				RING-PISTON	2			
N	@				NOT SUPPLIED PARTS	AR			NOT

COUPLING GROUP(K4)

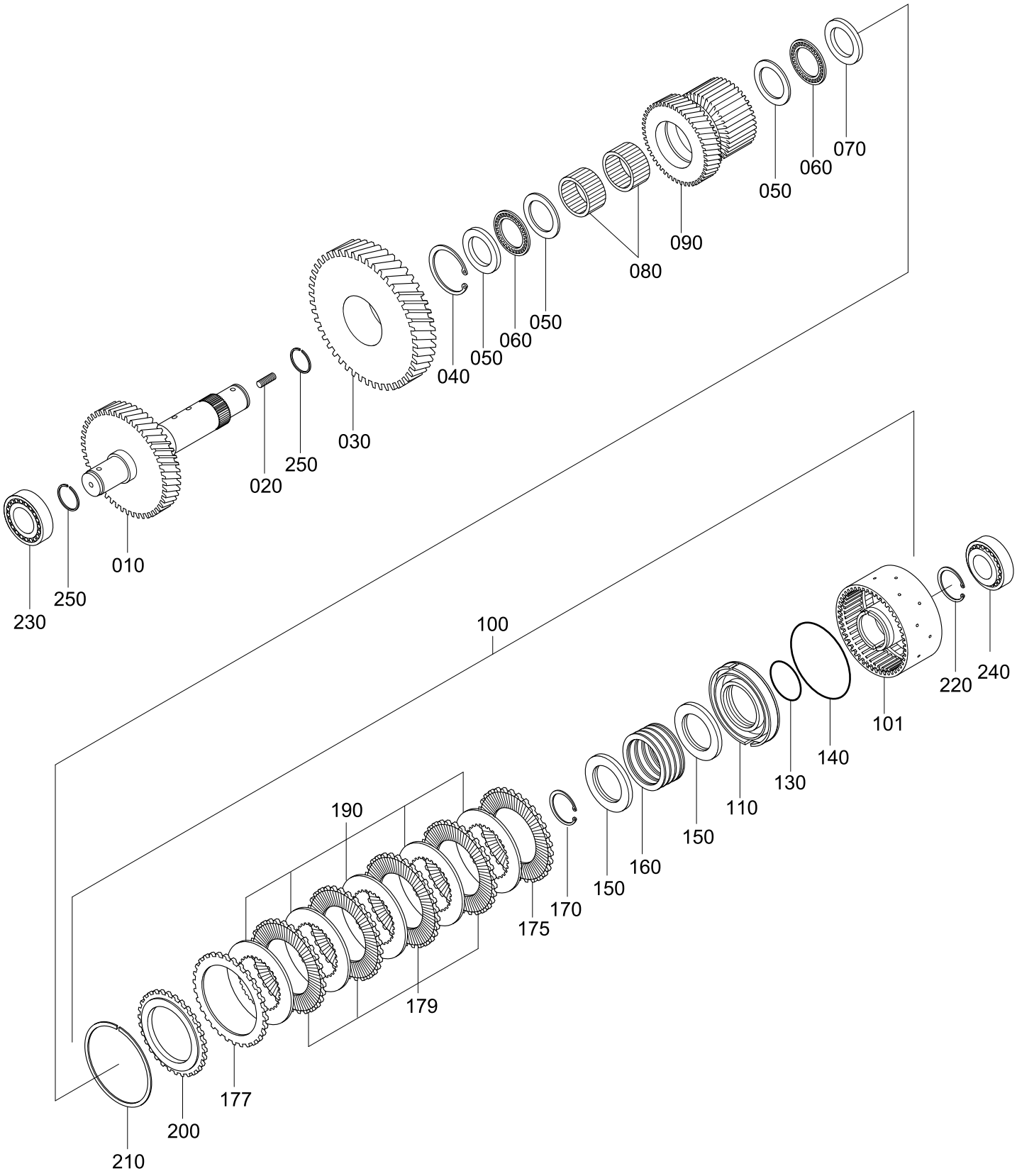

Item	Part_No	IS	Ord	T	Description	Qty	Serial_No	ITC	Remark
N*	ZGAQ-01964				COUPLING	1			NOT
010	ZGAQ-01427				SHAFT	1			
020	ZGAQ-00811				STUD	1			
030	ZGAQ-01428				GEAR	1			
040	ZGAQ-00876				RING-RETAINING	1			
050	ZGAQ-01419				WASHER-AXIAL	3			
060	ZGAQ-01418				CAGE-AXIAL NEEDLE	2			
070	ZGAQ-01417				DISC-RUNNING	1			
080	ZGAQ-01420				CAGE-NEEDLE	2			
090	ZGAQ-01429				IDLER	1			
100	ZGAQ-01965				COUPLING	1			
101	ZGAQ-01966				.DISC CARRIER	1			
110	ZGAQ-01938				.PISTON	1			
130	ZGAQ-01939				.O-RING	1			
140	ZGAQ-01940				.O-RING	1			
150	ZGAQ-01941				.RING-GUIDE	2			
160	ZGAQ-01942				.SPRING	1			
170	ZGAQ-01943				.RING-RETAINING	1			
175	ZGAQ-01944				.DISC-CLUTCH OUTER	1			
177	ZGAQ-01944				.DISC-CLUTCH OUTER	1			
179	ZGAQ-01945				.DISC	4			
190	ZGAQ-01946				.DISC-CLUTCH INNER	5			
200	ZGAQ-01947				.SHIM-END	1			
210	ZGAQ-01948				.RING-SNAP (2.10)	1			
	ZGAQ-01949				.RING-SNAP (2.25)	1			

Item	Part_No	IS	Ord	T	Description	Qty	Serial_No	ITC	Remark
	ZGAQ-01950				.RING-SNAP (2.40)	1			
	ZGAQ-01951				.RING-SNAP (2.55)	1			
	ZGAQ-01952				.RING-SNAP (2.70)	1			
	ZGAQ-01953				.RING-SNAP (2.85)	1			
	ZGAQ-01954				.RING-SNAP (3.00)	1			
	ZGAQ-01955				.RING-SNAP (3.15)	1			
210	ZGAQ-01956				.RING-SNAP (3.30)	1			
	ZGAQ-01957				.RING-SNAP (3.45)	1			
	ZGAQ-01958				.RING-SNAP (3.60)	1			
	ZGAQ-01959				.RING-SNAP (3.75)	1			
	ZGAQ-01960				.RING-SNAP (3.90)	1			
	ZGAQ-01961				.RING-SNAP (4.05)	1			
	ZGAQ-01962				.RING-SNAP (4.20)	1			
220	ZGAQ-01310				RING-RETAINING	1			
230	ZGAQ-00880				BEARING-ROLLER	1			
240	ZGAQ-00880				BEARING-ROLLER	1			
250	ZGAQ-00831				RING-PISTON	2			
N	@				NOT SUPPLIED PARTS	AR			NOT

COUPLING GROUP(KV)

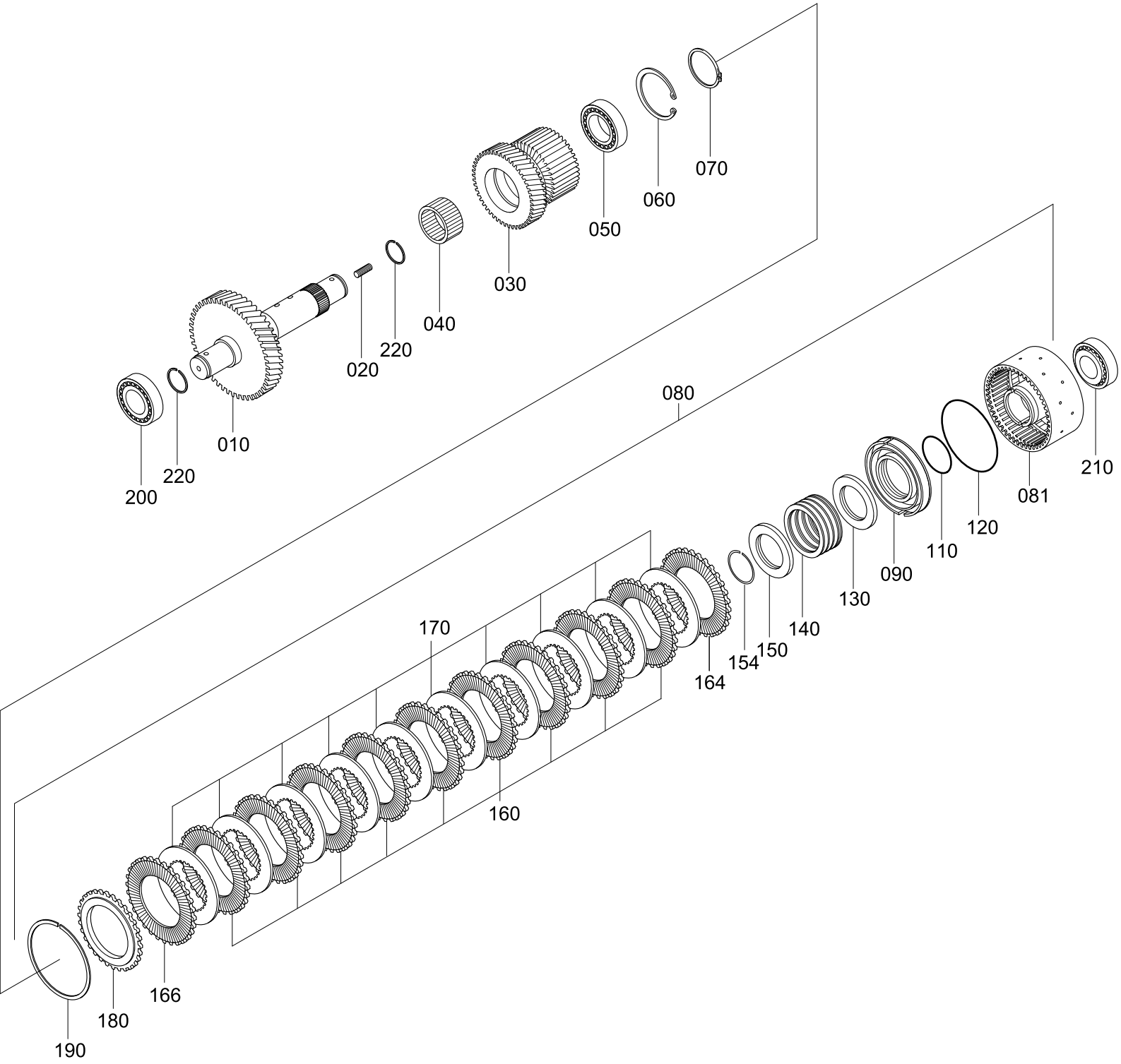

Item	Part_No	IS	Ord	T	Description	Qty	Serial_No	ITC	Remark
N*	ZGAQ-03147				COUPLING	1			NOT
010	ZGAQ-01432				SHAFT	1			
020	ZGAQ-00811				STUD	1			
030	ZGAQ-01433				IDLER	1			
040	ZGAQ-00886				CAGE-NEEDLE	1			
050	ZGAQ-01434				BEARING-BALL	1			
060	ZGAQ-00592				RING-RETAINING	1			
070	ZGAQ-00879				RING-RETAINER	1			
080	ZGAQ-02837				COUPLING	1			
081	ZGAQ-02827				.DISC CARRIER	1			
090	ZGAQ-00849				.PISTON	1			
110	ZGAQ-00814				.O-RING	1			
120	ZGAQ-00850				.O-RING	1			
130	ZGAQ-00883				.WASHER	1			
140	ZGAQ-00884				.SPRING-COMPRESSION	1			
150	ZGAQ-02828				.RING-SUPPORTING	1			
154	ZGAQ-02829				.L-RING	1			
160	ZGAQ-01509				.DISC	9			
164	ZGAQ-01508				.DISC CLUTCH-OUTER	1			
166	ZGAQ-01508				.DISC CLUTCH-OUTER	1			
170	ZGAQ-00853				.DISC CLUTCH-INNER	10			
180	ZGAQ-00854				.SHIM-END	1			
190	ZGAQ-00855				.RING-SNAP(2.1T)	1			
	ZGAQ-00856				.RING-SNAP(2.25T)	1			
	ZGAQ-00857				.RING-SNAP(2.4T)	1			

Item	Part_No	IS	Ord	T	Description	Qty	Serial_No	ITC	Remark
190	ZGAQ-00858				.RING-SNAP(2.55T)	1			
	ZGAQ-00859				.RING-SNAP(2.7T)	1			
	ZGAQ-00860				.RING-SNAP(2.85T)	1			
	ZGAQ-00861				.RING-SNAP(3.00T)	1			
	ZGAQ-00862				.RING-SNAP(3.15T)	1			
	ZGAQ-00863				.RING-SNAP(3.30T)	1			
	ZGAQ-00864				.RING-SNAP(3.45T)	1			
	ZGAQ-00865				.RING-SNAP(3.60T)	1			
	ZGAQ-00866				.RING-SNAP(3.75T)	1			
	ZGAQ-00867				.RING-SNAP(3.90T)	1			
	ZGAQ-00868				.RING-SNAP(4.05T)	1			
	ZGAQ-00869				.RING-SNAP(4.20T)	1			
200	ZGAQ-00880				BEARING-ROLLER	1			
210	ZGAQ-00880				BEARING-ROLLER	1			
220	ZGAQ-00831				RING-PISTON	2			

COUPLING GROUP(KR)

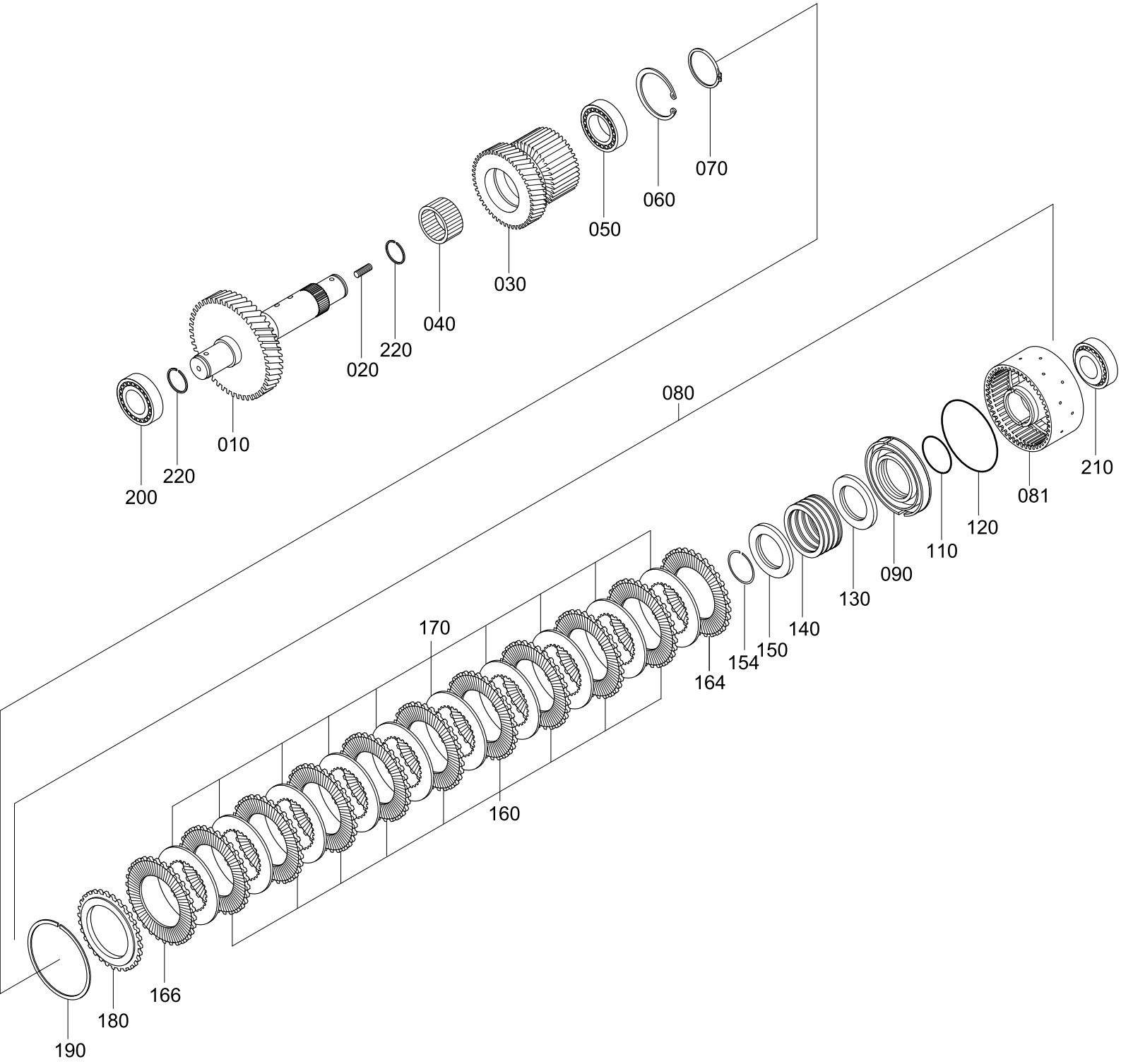

Item	Part_No	IS	Ord	T	Description	Qty	Serial_No	ITC	Remark
N*	ZGAQ-03148				COUPLING	1			NOT
010	ZGAQ-01437				SHAFT	1			
020	ZGAQ-00811				STUD	1			
030	ZGAQ-01433				IDLER	1			
040	ZGAQ-00886				CAGE-NEEDLE	1			
050	ZGAQ-01434				BEARING-BALL	1			
060	ZGAQ-00592				RING-RETAINING	1			
070	ZGAQ-00879				RING-RETAINER	1			
080	ZGAQ-02837				COUPLING	1			
081	ZGAQ-02827				.DISC CARRIER	1			
090	ZGAQ-00849				.PISTON	1			
110	ZGAQ-00814				.O-RING	1			
120	ZGAQ-00850				.O-RING	1			
130	ZGAQ-00883				.WASHER	1			
140	ZGAQ-00884				.SPRING-COMPRESSION	1			
150	ZGAQ-02828				.RING-SUPPORTING	1			
154	ZGAQ-02829				.L-RING	1			
160	ZGAQ-01509				.DISC	9			
164	ZGAQ-01508				.DISC CLUTCH-OUTER	1			
166	ZGAQ-01508				.DISC CLUTCH-OUTER	1			
170	ZGAQ-00853				.DISC CLUTCH-INNER	10			
180	ZGAQ-00854				.SHIM-END	1			
190	ZGAQ-00855				.RING-SNAP(2.1T)	1			
	ZGAQ-00856				.RING-SNAP(2.25T)	1			
	ZGAQ-00857				.RING-SNAP(2.4T)	1			

Item	Part_No	IS	Ord	T	Description	Qty	Serial_No	ITC	Remark
190	ZGAQ-00858				.RING-SNAP(2.55T)	1			
	ZGAQ-00859				.RING-SNAP(2.7T)	1			
	ZGAQ-00860				.RING-SNAP(2.85T)	1			
	ZGAQ-00861				.RING-SNAP(3.00T)	1			
	ZGAQ-00862				.RING-SNAP(3.15T)	1			
	ZGAQ-00863				.RING-SNAP(3.30T)	1			
	ZGAQ-00864				.RING-SNAP(3.45T)	1			
	ZGAQ-00865				.RING-SNAP(3.60T)	1			
	ZGAQ-00866				.RING-SNAP(3.75T)	1			
	ZGAQ-00867				.RING-SNAP(3.90T)	1			
	ZGAQ-00868				.RING-SNAP(4.05T)	1			
	ZGAQ-00869				.RING-SNAP(4.20T)	1			
200	ZGAQ-00880				BEARING-ROLLER	1			
210	ZGAQ-00880				BEARING-ROLLER	1			
220	ZGAQ-00831				RING-PISTON	2			

OUTPUT GROUP

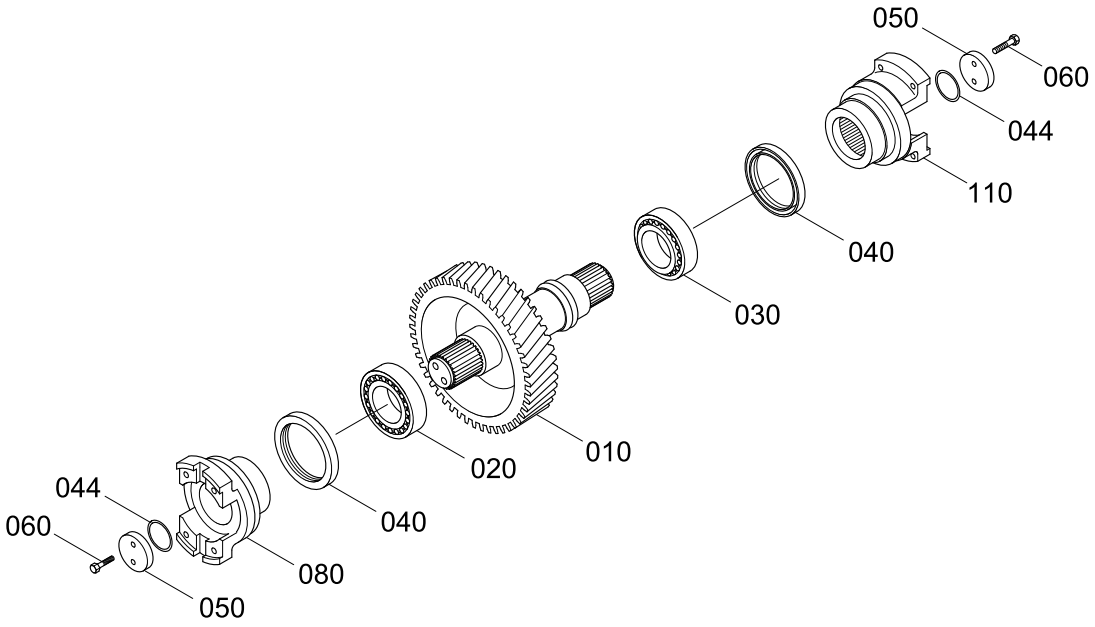

Item	Part_No	IS	Ord	T	Description	Qty	Serial_No	ITC	Remark
N*	ZGAQ-01438				OUTPUT GROUP	1			NOT
010	ZGAQ-02842				SHAFT-OUTPUT	1			
020	ZGAQ-00769				BEARING-ROLLER	1			
030	ZGAQ-00769				BEARING-ROLLER	1			
040	ZGAQ-01440				SEAL-SHAFT	2			
044	ZGAQ-01441				O-RING	2			
050	ZGAQ-01442				WASHER	2			
060	ZGAQ-01443				SCREW	4			
080	ZGAQ-01445				FLANGE-OUTPUT	1			
110	ZGAQ-01445				FLANGE-OUTPUT	1			

POWER TAKE OFF GROUP

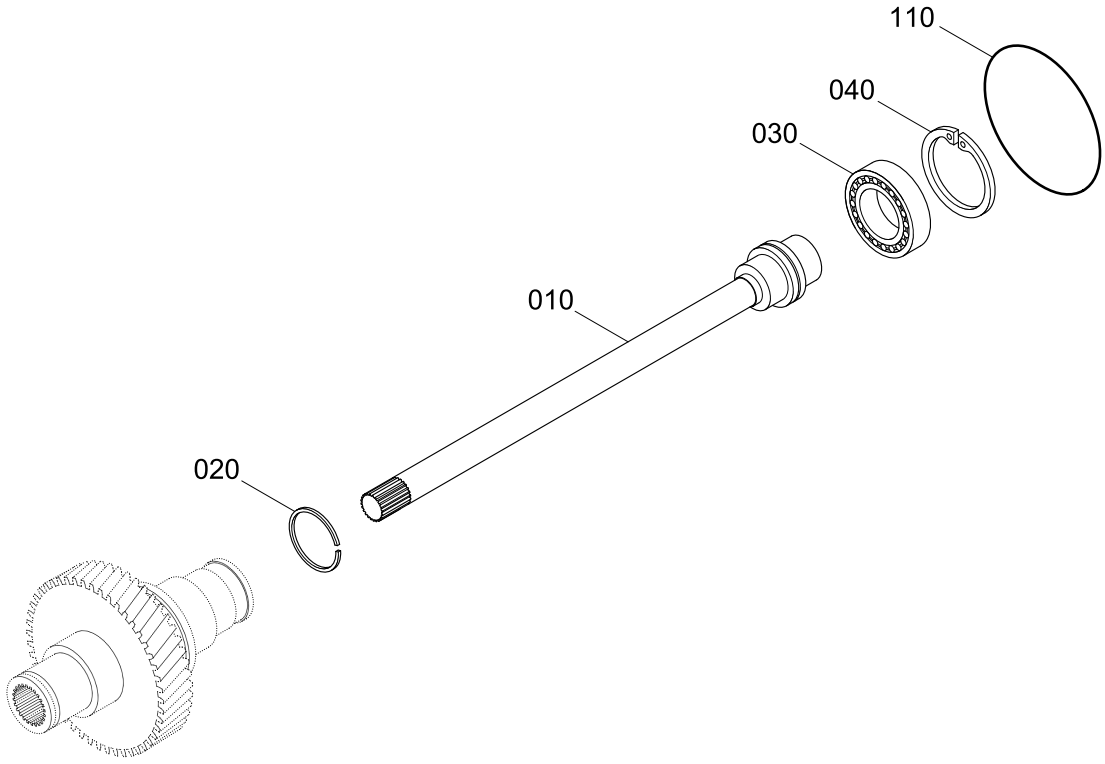

Item	Part_No	IS	Ord	T	Description	Qty	Serial_No	ITC	Remark
N*	ZGAQ-01446				POWER TAKE OFF	1			NOT
010	ZGAQ-01447				SHAFT-PUMP	1			
020	ZGAQ-01448				RING-PISTON	1			
030	ZGAQ-00895				BEARING-BALL	1			
040	ZGAQ-00896				RING-RETAINING	1			
110	ZGAQ-01450				O-RING	1			
N	@				NOT SUPPLIED PARTS	AR			NOT

GEARSHIFT SYSTEM(1/3)

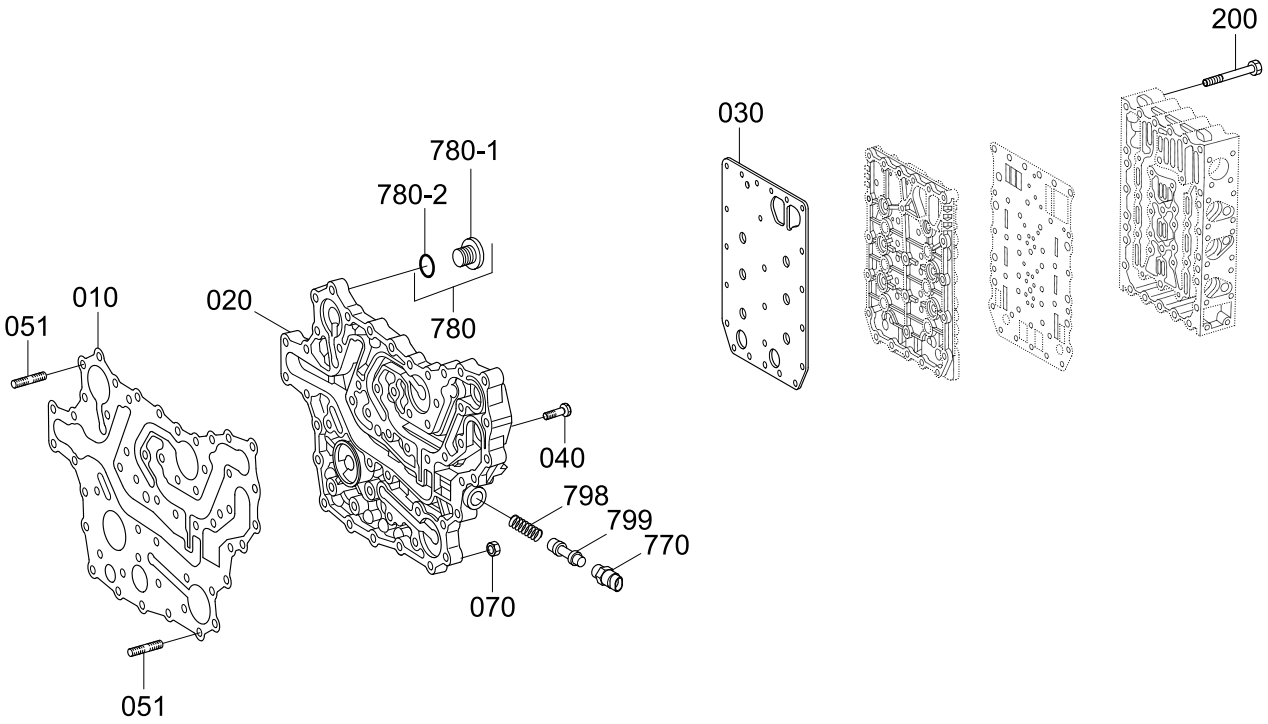

Item	Part_No	IS	Ord	T	Description	Qty	Serial_No	ITC	Remark
N*	ZGAQ-03142				GEARSHIFT SYSTEM	1			NOT
010	ZGAQ-01452				GASKET	1			
020	ZGAQ-01974				PLATE-DUCT	1			
030	ZGAQ-02808				PLATE-SEALING	1			
040	ZGAQ-00792				SCREW-CAP	37			
051	ZGAQ-01405				STUD	14			
070	ZGAQ-00799				NUT-HEX	14			
200	ZGAQ-00608				SCREW-TORX	23			
780-1	ZGAQ-00613				SCREW-PLUG	1			
780-2	ZGAQ-00614				O-RING	1			
798	ZGAQ-00903				SPRING-COMPRESSURE	1			
799	ZGAQ-01454				PISTON	1			
770	ZGAQ-00697				SWITCH-TAPPET	1			

GEARSHIFT SYSTEM(2/3)

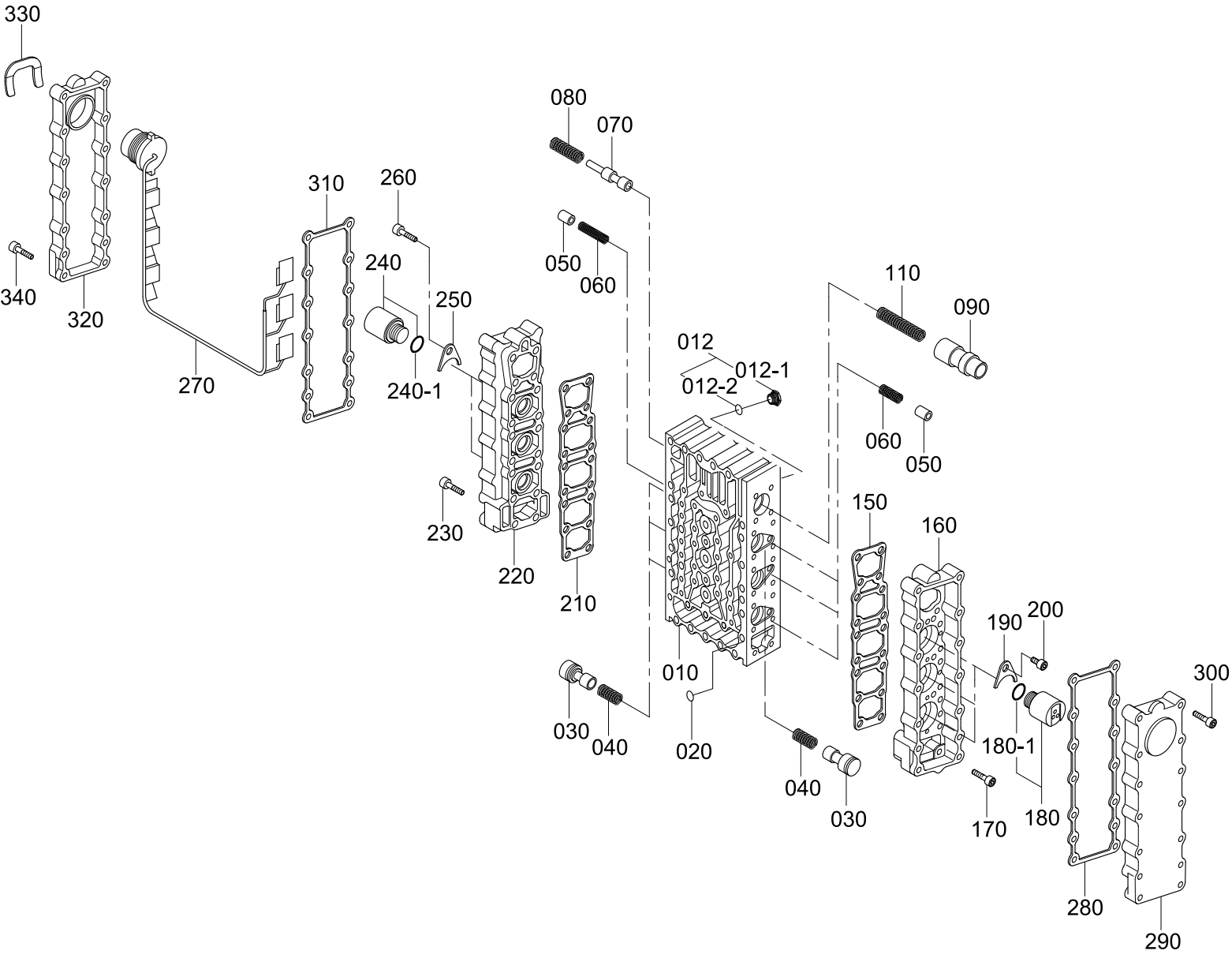

Item	Part_No	IS	Ord	T	Description	Qty	Serial_No	ITC	Remark
*	ZGAQ-03143				GEARSHIFT SYSTEM	1			INCL 010~340
010	ZGAQ-02802				BLOCK-VALVE	1			
012-1	ZGAQ-00230				PLUG-SCREW	8			
012-2	ZGAQ-00231				O-RING	8			
020	ZGAQ-00617				ORIFICE	6			
030	ZGAQ-00618				PISTON	6			
040	ZGAQ-00619				SPRING-COMPRESSION	6			
050	ZGAQ-00620				PISTON	6			
060	ZGAQ-00621				SPRING-COMPRESSION	6			
070	ZGAQ-00622				PISTON	1			
080	ZGAQ-00623				SPRING-COMPRESSION	1			
090	ZGAQ-01455				PISTON-CONTROL	1			
110	ZGAQ-00625				SPRING-COMPRESSION	1			
150	ZGAQ-01578				GASKET	1			
160	ZGAQ-00627				HOUSING	1			
170	ZGAQ-00628				SCREW-TORX	18			
180	ZGAQ-00629				REGULATOR-PRESSURE	3			
180-1	ZGAQ-00630				.O-RING	3			
190	ZGAQ-00631				PLATE-FIXING	3			
200	ZGAQ-00632				SCREW-TORX	3			
210	ZGAQ-01578				GASKET	1			
220	ZGAQ-00627				HOUSING	1			
230	ZGAQ-00628				SCREW-TORX	18			
240	ZGAQ-00629				REGULATOR-PRESSURE	3			
240-1	ZGAQ-00630				.O-RING	3			

Item	Part_No	IS	Ord	T	Description	Qty	Serial_No	ITC	Remark
250	ZGAQ-00631				PLATE-FIXING	3			
260	ZGAQ-00632				SCREW-TORX	3			
270	ZGAQ-00633				HARNESS-WIRING	1			
280	ZGAQ-01579				GASKET	1			
290	ZGAQ-00635				COVER	1			
300	ZGAQ-00628				SCREW-TORX	14			
310	ZGAQ-01579				GASKET	1			
320	ZGAQ-00636				COVER	1			
330	ZGAQ-00637				CLAMP-RETAINING	1			
340	ZGAQ-00628				SCREW-TORX	14			

GEARSHIFT SYSTEM(3/3)

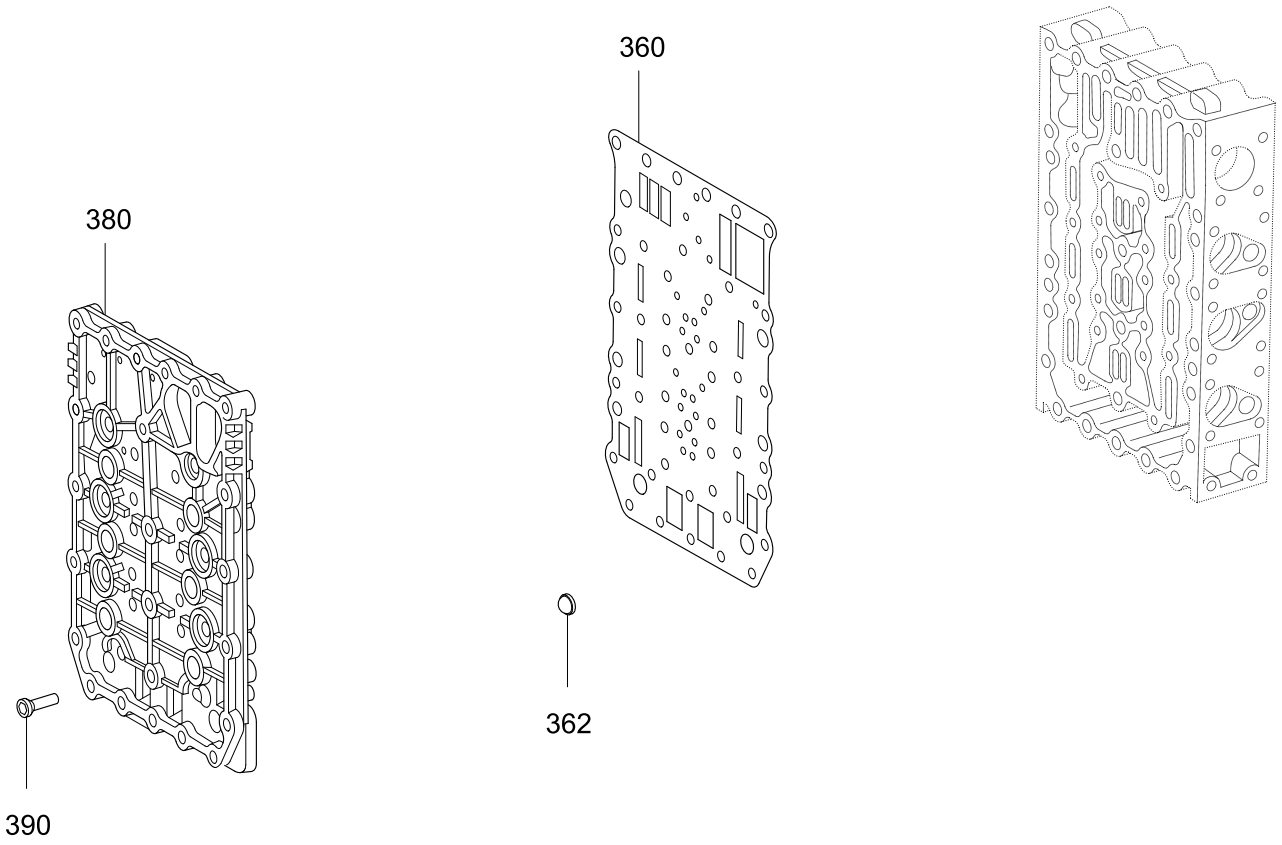

Item	Part_No	IS	Ord	T	Description	Qty	Serial_No	ITC	Remark
*	@				GEARSHIFT SYSTEM	1			NOT
360	ZGAQ-02803				PLATE-SEALING	1			
362	ZGAQ-00639				SCREEN	6			
380	ZGAQ-01456				PLATE-DUCT	1			
390	ZGAQ-00641				SCREW-TORX	18			

PRESSURE REGULATOR

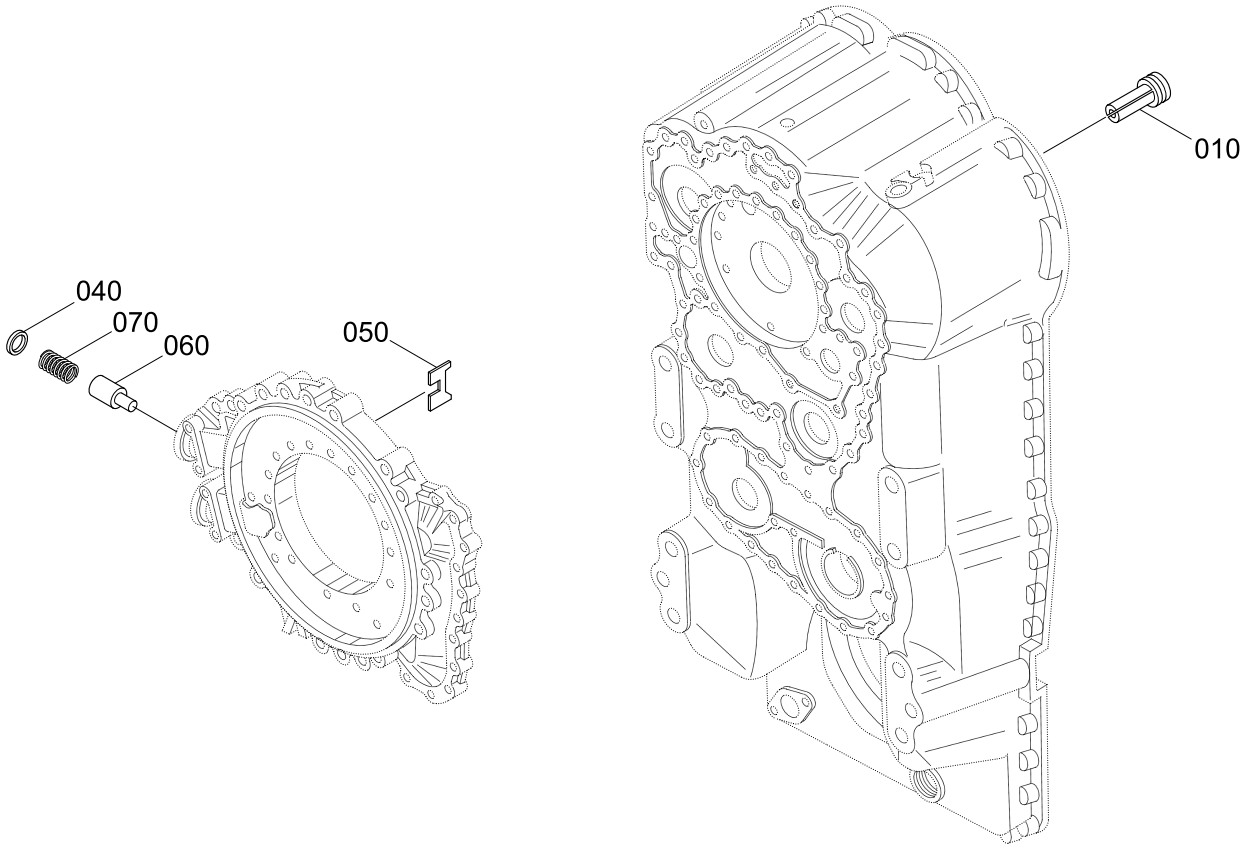

Item	Part_No	IS	Ord	T	Description	Qty	Serial_No	ITC	Remark
N*	ZGAQ-03144				PRESSURE REGULATOR	1			NOT
010	ZGAQ-00910				VALVE	1			
040	ZGAQ-00913				PLATE-PRESSUREE	1			
050	ZGAQ-00914				WASHER-TAB	1			
060	ZGAQ-00911				PISTON	1			
070	ZGAQ-00912				SPRING-COMPRESSION	1			
N	@				NOT SUPPLIED PARTS	AR			NOT

PRESSURE OIL PUMP

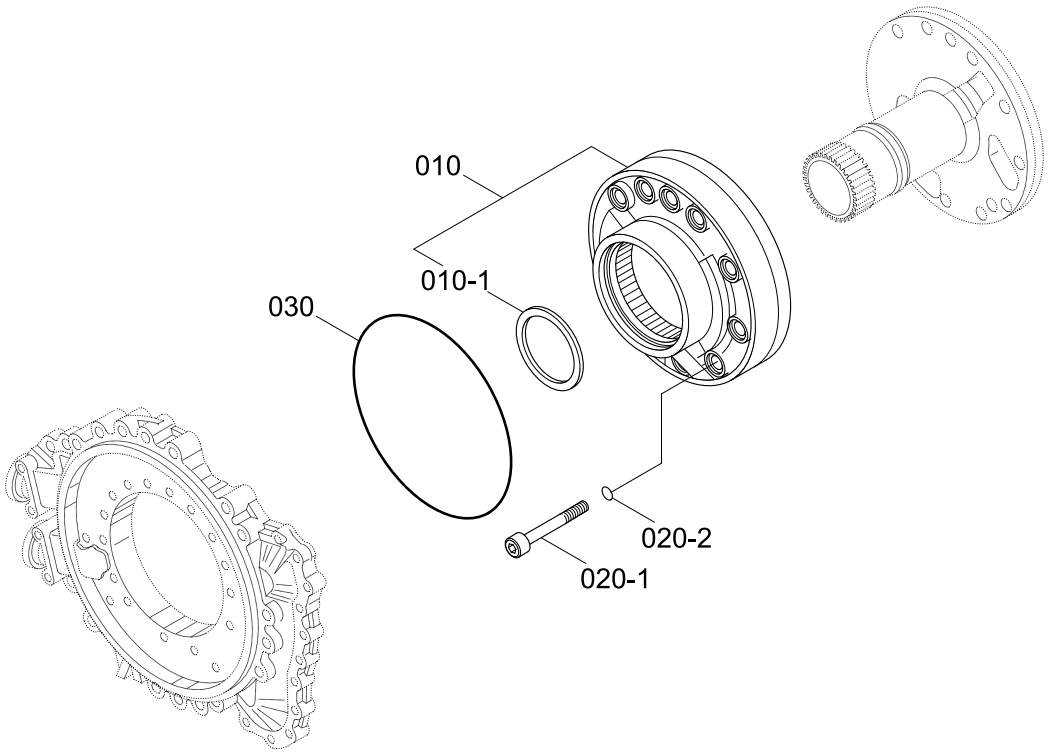

Item	Part_No	IS	Ord	T	Description	Qty	Serial_No	ITC	Remark
N*	ZGAQ-03145				PRESSURE OIL PUMP	1			NOT
010	ZGAQ-02830				PUMP-GEAR	1			
010-1	ZGAQ-00778				.SEAL-SHAFT	1			
020-1	ZGAQ-01460				SCREW-CAP	10			
020-2	ZGAQ-03575				O-RING	10			
030	ZGAQ-02809				O-RING	1			
N	@				NOT SUPPLIED PARTS	AR			NOT

EMERGENCY STEERING PUMP GROUP

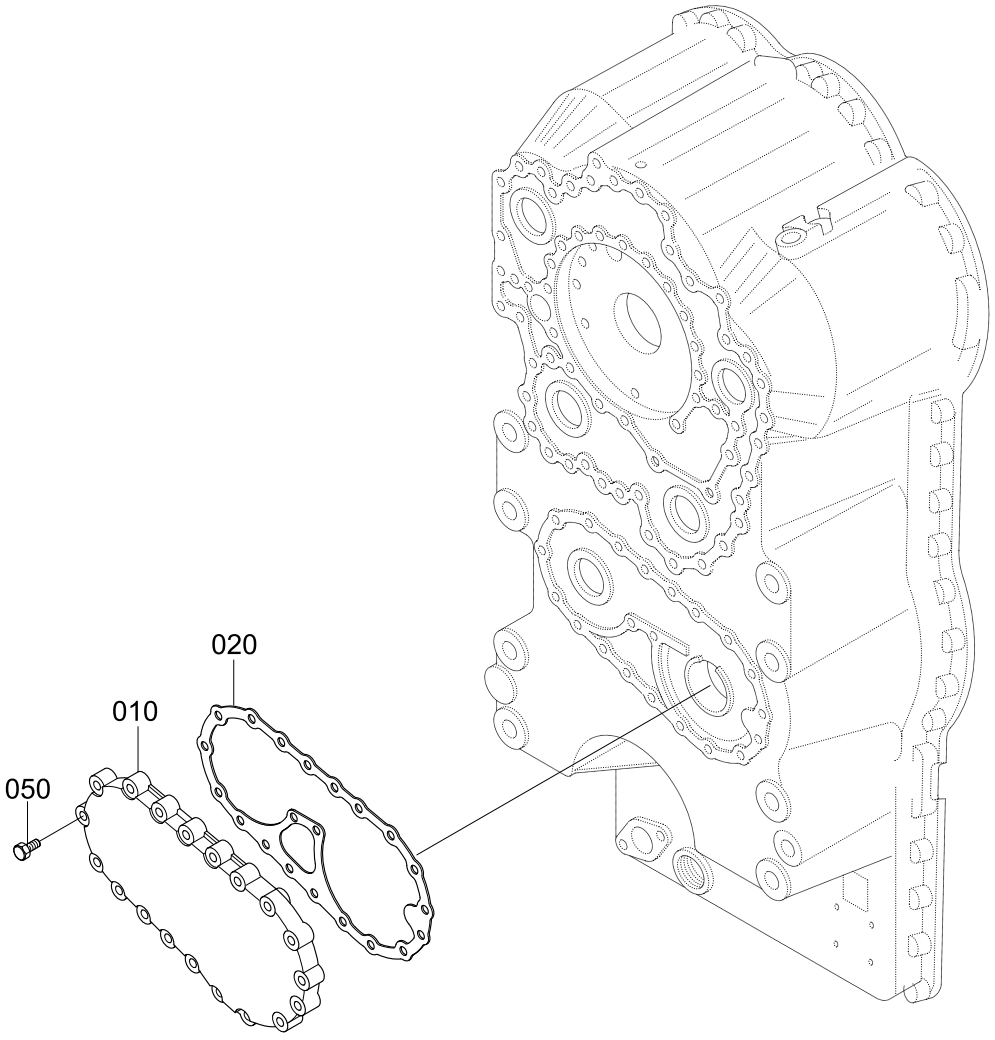

Item	Part_No	IS	Ord	T	Description	Qty	Serial_No	ITC	Remark
N*	ZGAQ-03128				EMERGENCY PUMP	1			NOT
010	ZGAQ-03129				COVER	1			
020	ZGAQ-01464				GASKET	1			
050	ZGAQ-00920				SCREW	23			
N	@				NOT SUPPLIED PARTS	AR			NOT

INDICATOR TRANSMITTER GROUP

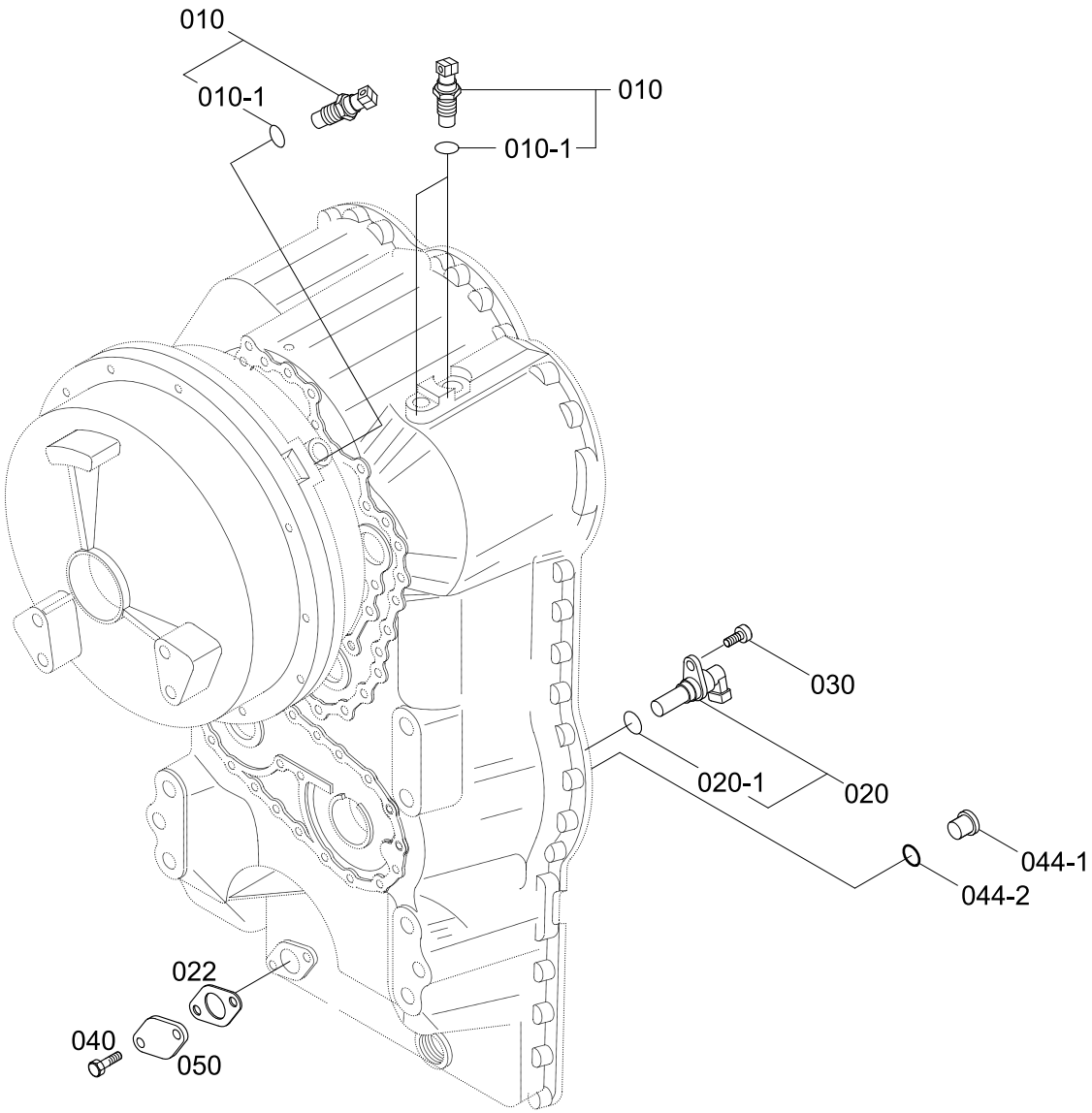

Item	Part_No	IS	Ord	T	Description	Qty	Serial_No	ITC	Remark
N*	ZGAQ-01465				IND TRANSMITTER	1			NOT
010	ZGAQ-00651				TRANSMITTER-INDICATOR	3			
010-1	ZGAQ-01466				.O-RING	3			
020	ZGAQ-00653				TRANSMITTER-SPEED	1			
020-1	ZGAQ-00654				.O-RING	1			
030	ZGAQ-00922				SCREW-CAP	1			
044-1	ZGAQ-00908				PLUG-SCREW	1			
044-2	ZGAQ-00909				O-RING	1			
N	@				NOT SUPPLIED PARTS	AR			NOT

TEMPERATURE SENSOR

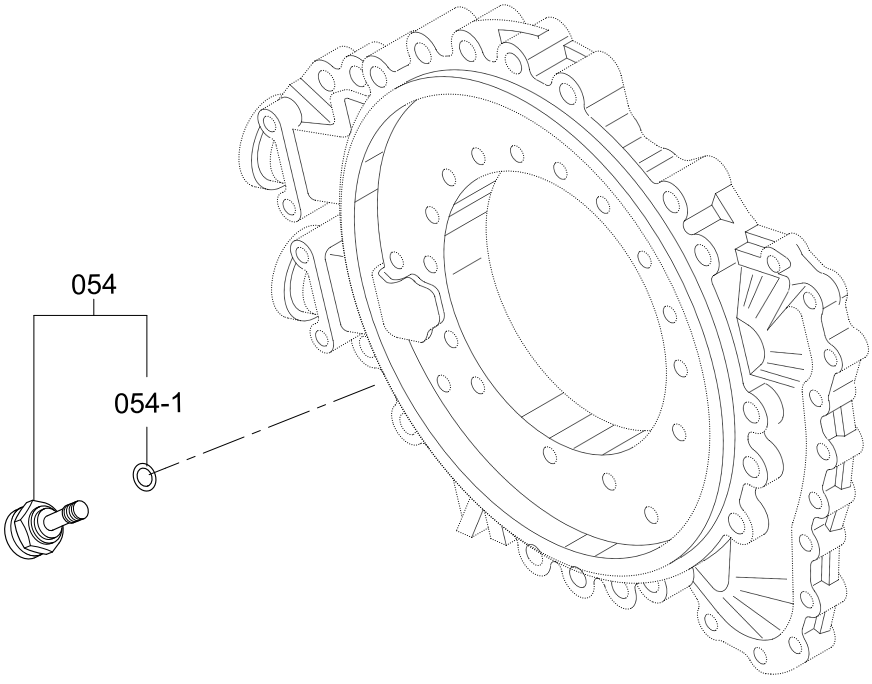

Item	Part_No	IS	Ord	T	Description	Qty	Serial_No	ITC	Remark
N*	ZGAQ-01467				TEMP SENSOR	1			NOT
054	ZGAQ-01924				SENSOR-TEMP	1			
054-1	ZGAQ-00923				.O-RING	1			
N	@				NOT SUPPLIED PARTS	AR			NOT

FILTER

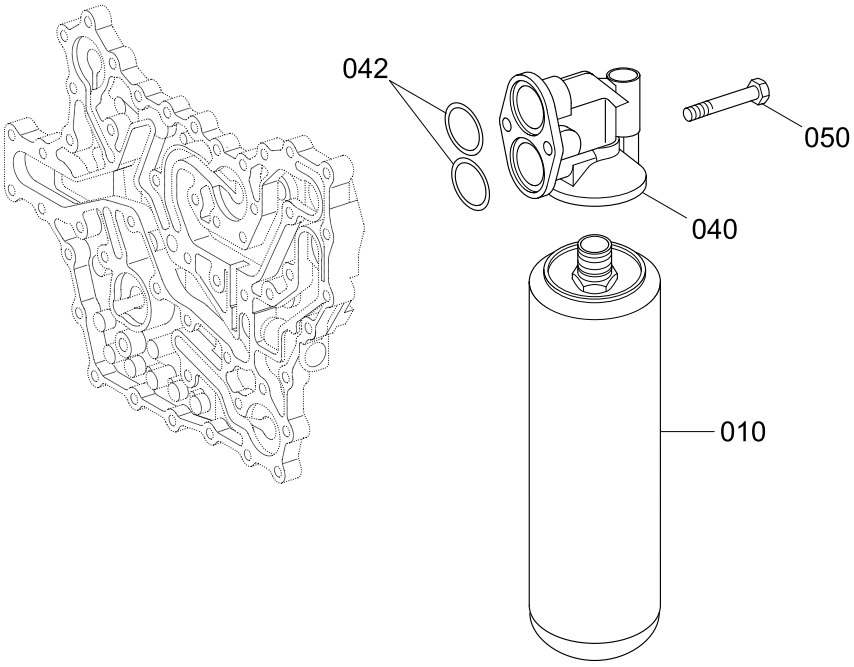

Item	Part_No	IS	Ord	T	Description	Qty	Serial_No	ITC	Remark
N*	ZGAQ-03149				FILTER GROUP	1			NOT
010	ZGAQ-02400				FILTER-PRESSURE	1			
040	ZGAQ-00925				HEAD-FILTER	1			
042	ZGAQ-02401				O-RING	2			
050	ZGAQ-00793				SCREW-CAP	2			
N	@				NOT SUPPLIED PARTS	AR			NOT

FILLER NECK

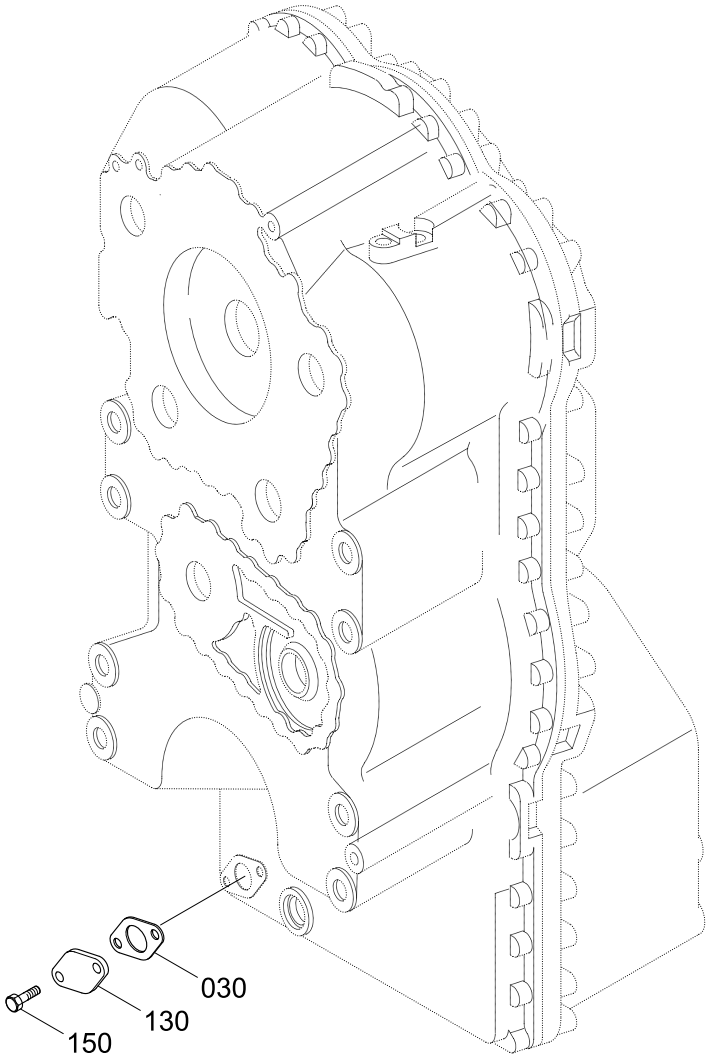

Item	Part_No	IS	Ord	T	Description	Qty	Serial_No	ITC	Remark
030	ZGAQ-00673				GASKET	1			
150	ZGAQ-00920				SCREW	2			
130	ZGAQ-00674				PLATE-COVER	1			

FRONT CENTRAL HOUSING

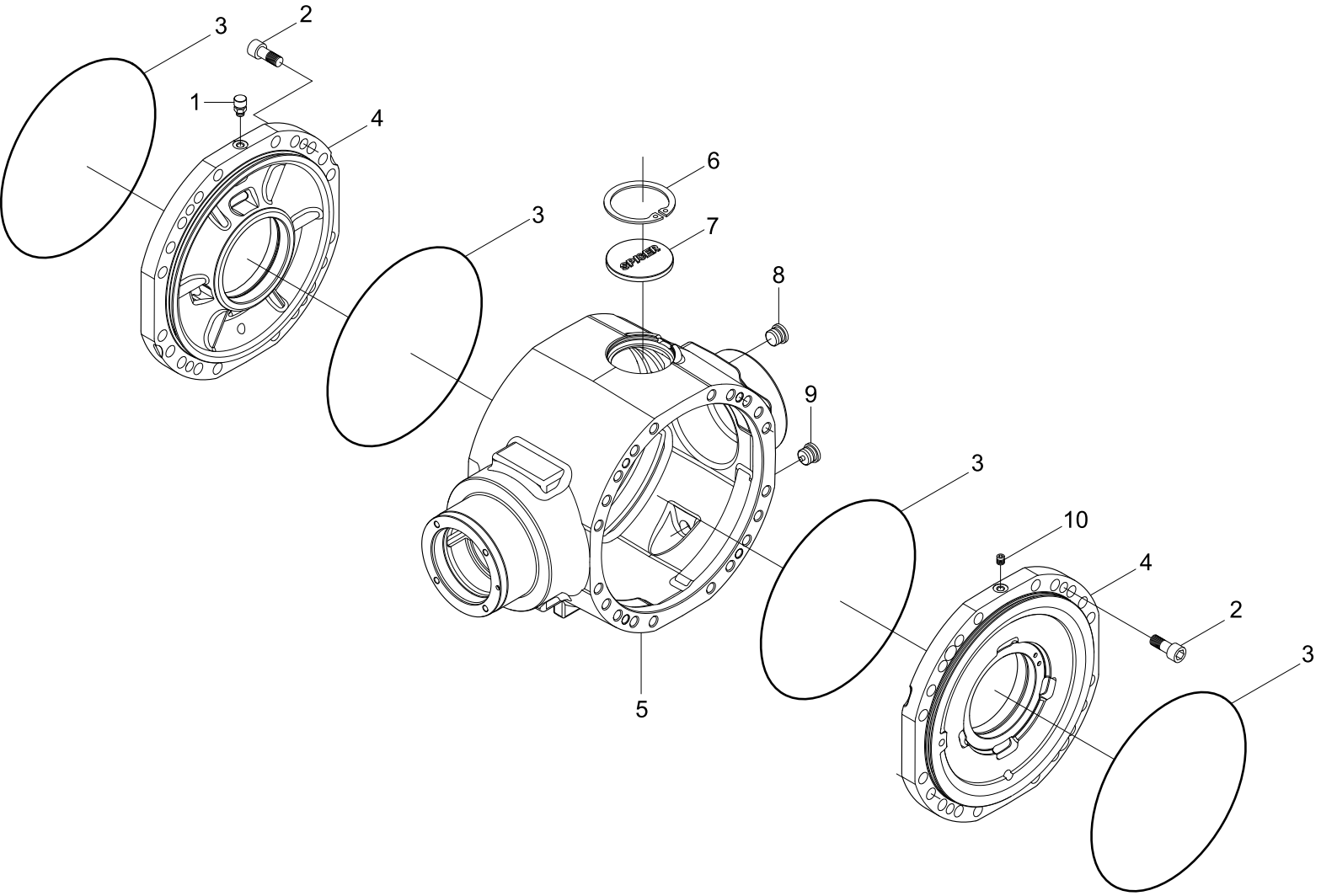

Item	Part_No	IS	Ord	T	Description	Qty	Serial_No	ITC	Remark
1	ZTAM-00990				VENT	1			
2	ZTAM-00861				BOLT-CYLINDER	4			
3	ZTAM-00862				O-RING	4			
4	ZTAM-00863				COVER-INTERMEDIATE	2			
5	ZTAM-01016				HOUSING	1			
6	ZTAM-00265				RING-SNAP	1			
7	ZTAM-00281				PLUG	1			
8	ZTAM-00866				PLUG	1			
9	ZTAM-00867				PLUG-MAGNET	1			
10	ZTAM-00237				PLUG	1			

FRONT DIFFERENTIAL(LIMITED SLIP)

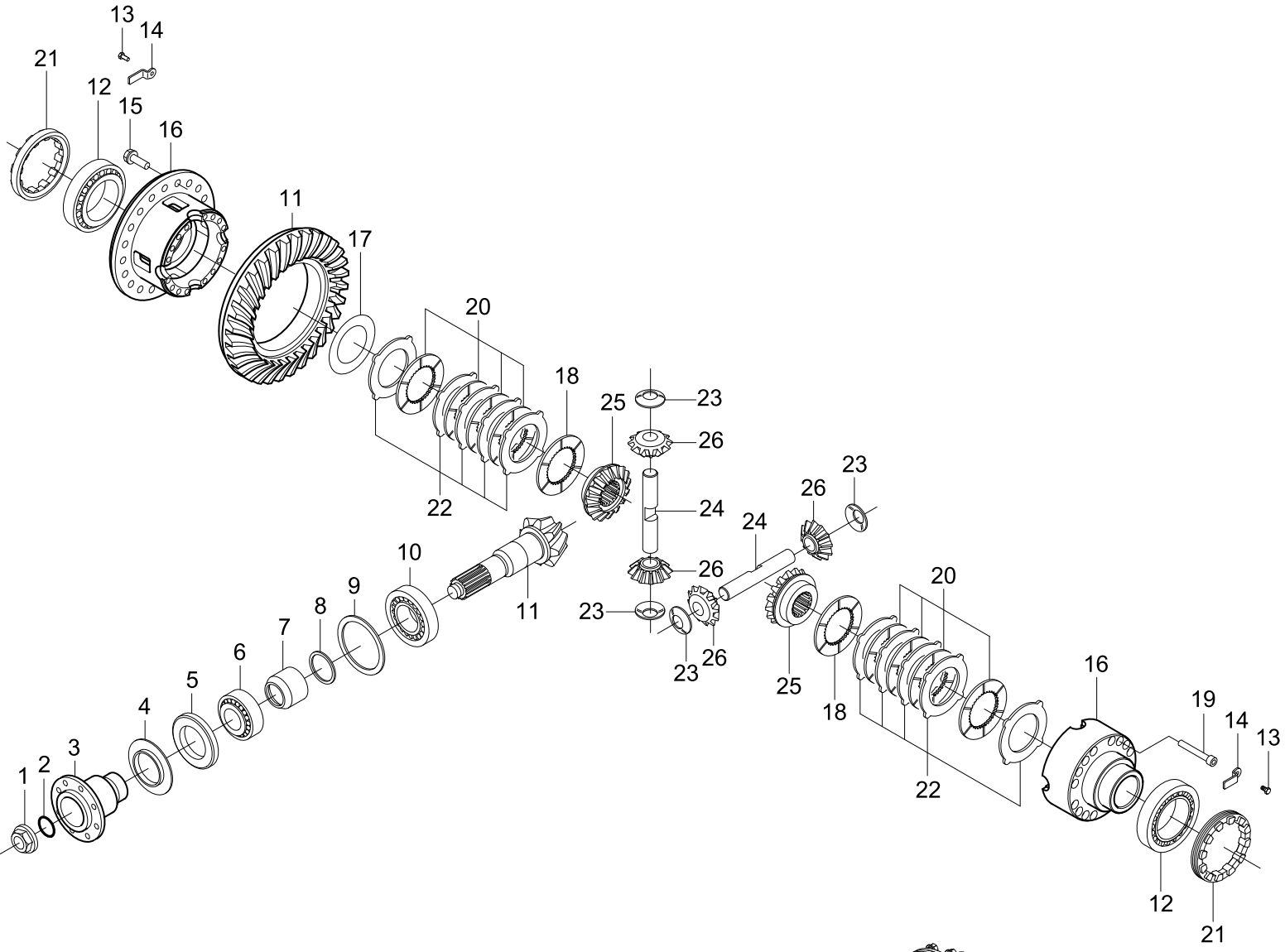

TYPE	PARTS NO
LIMITED SLIP	81LN-10011

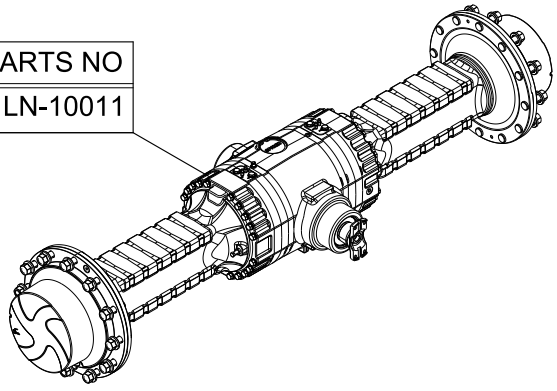

Item	Part_No	IS	Ord	T	Description	Qty	Serial_No	ITC	Remark
1	ZTAM-00171				NUT	1			
2	ZTAM-00170				O-RING	1			
3	ZTAM-00172				FLANGE	1			
4	ZTAM-00868				PLATE-COVER	1			
5	ZTAM-00173				SEAL	1			
6	ZTAM-00176				BEARING	1			
N7	ZTAM-00869				SPACER	1			NOT
8	ZTAM-00163				SHIM(0.30T)	1			
	ZTAM-00164				SHIM(0.40T)	1			
	ZTAM-00161				SHIM(0.15T)	1			
	ZTAM-00162				SHIM(0.20T)	1			
	ZTAM-00165				SHIM(0.50T)	1			
9	ZTAM-00157				SHIM(0.10T)	1			
	ZTAM-00160				SHIM(0.15T)	1			
	ZTAM-00159				SHIM(0.50T)	1			
	ZTAM-00158				SHIM(0.20T)	1			
10	ZTAM-00168				BEARING	1			
11	ZTAM-00870				BEVEL GEAR SET	1			
12	ZTAM-00137				BEARING	2			
13	ZTAM-00871				BOLT-HEXAGON	4			
14	ZTAM-00872				PLATE-LOCKING	2			
15	ZTAM-00019				BOLT	20			
N16	ZTAM-00873				CARRIER-DIFFERENTIAL	1			NOT
17	ZTAM-00142				SHIM(0.10T)	1			
	ZTAM-00140				SHIM(0.30T)	1			

Item	Part_No	IS	Ord	T	Description	Qty	Serial_No	ITC	Remark
17	ZTAM-00141				SHIM(0.40T)	1			
18	ZTAM-00146				DISC	2			
19	ZTAM-00874				BOLT	16			
20	ZTAM-00143				DISC	8			
21	ZTAM-00242				NUT-RING	2			
22	ZTAM-00145				DISC	10			
23	ZTAM-00875				WASHER-FRICTION	4			
24	ZTAM-00876				PIN	2			
25	ZTAM-00147				GEAR-DIFF SIDE	2			
26	ZTAM-00148				PINION-DIFF	4			
N	@				NOT SUPPLIED PARTS	AR			NOT

FRONT DIFFERENTIAL(CONVENTIONAL)

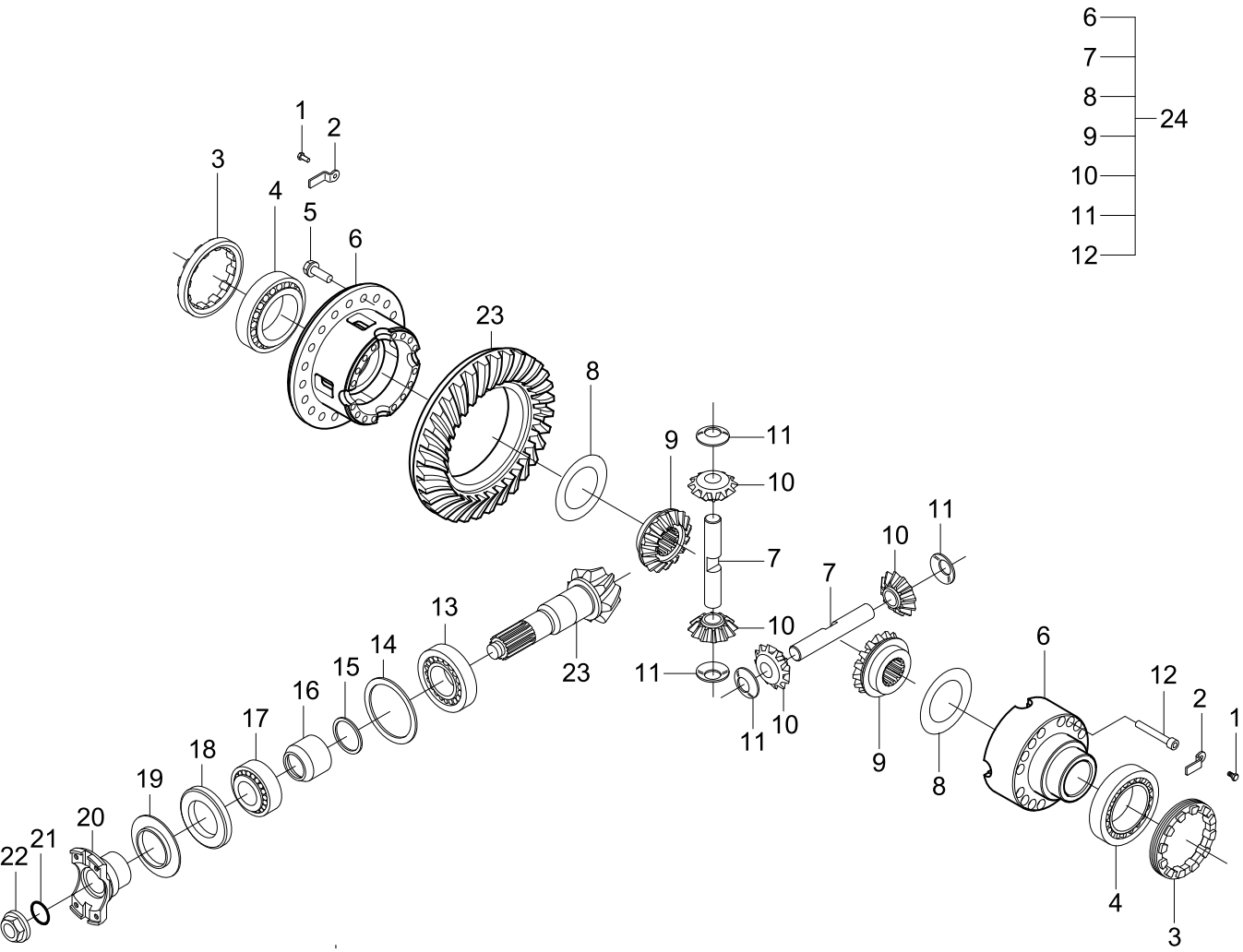

TYPE	PARTS NO
CONVENTIONAL	81LN-10030

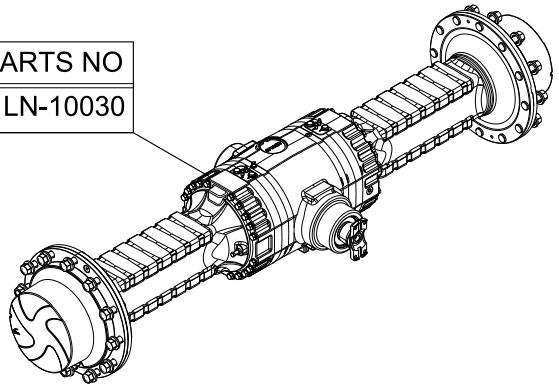

Item	Part_No	IS	Ord	T	Description	Qty	Serial_No	ITC	Remark
1	ZTAM-00871				BOLT-HEXAGON	4			
2	ZTAM-00872				PLATE-LOCKING	2			
3	ZTAM-00242				NUT-RING	2			
4	ZTAM-00137				BEARING	2			
5	ZTAM-00019				BOLT	20			
6	ZTAM-01013				CARRIER-DIFFERENTIAL	1			
7	ZTAM-01001				SHAFT-DIFF	2			
8	ZTAM-01007				WASHER-FRICTION	2			
9	ZTAM-01006				DIFF. SIDE GEAR	2			
10	ZTAM-00148				PINION-DIFF	4			
11	ZTAM-01000				WASHER-FRICTION	4			
12	ZTAM-01003				BOLT	15			
13	ZTAM-00176				BEARING	1			
14	ZTAM-00157				SHIM(0.10T)	1			
	ZTAM-00158				SHIM(0.20T)	1			
	ZTAM-00159				SHIM(0.50T)	1			
	ZTAM-00160				SHIM(0.15T)	1			
15	ZTAM-01014				RING KIT	1			
16	ZTAM-00998				SPACER	1			
17	ZTAM-00168				BEARING	1			
18	ZTAM-00173				SEAL	1			
19	ZTAM-00868				PLATE-COVER	1			
20	ZTAM-00172				FLANGE	1			
21	ZTAM-00170				O-RING	1			
22	ZTAM-00171				NUT	1			

Item	Part_No	IS	Ord	T	Description	Qty	Serial_No	ITC	Remark
23	ZTAM-00870				BEVEL GEAR SET	1			
24	ZTAM-01015				DIFFERENTIAL	1			

FRONT HUB REDUCTION

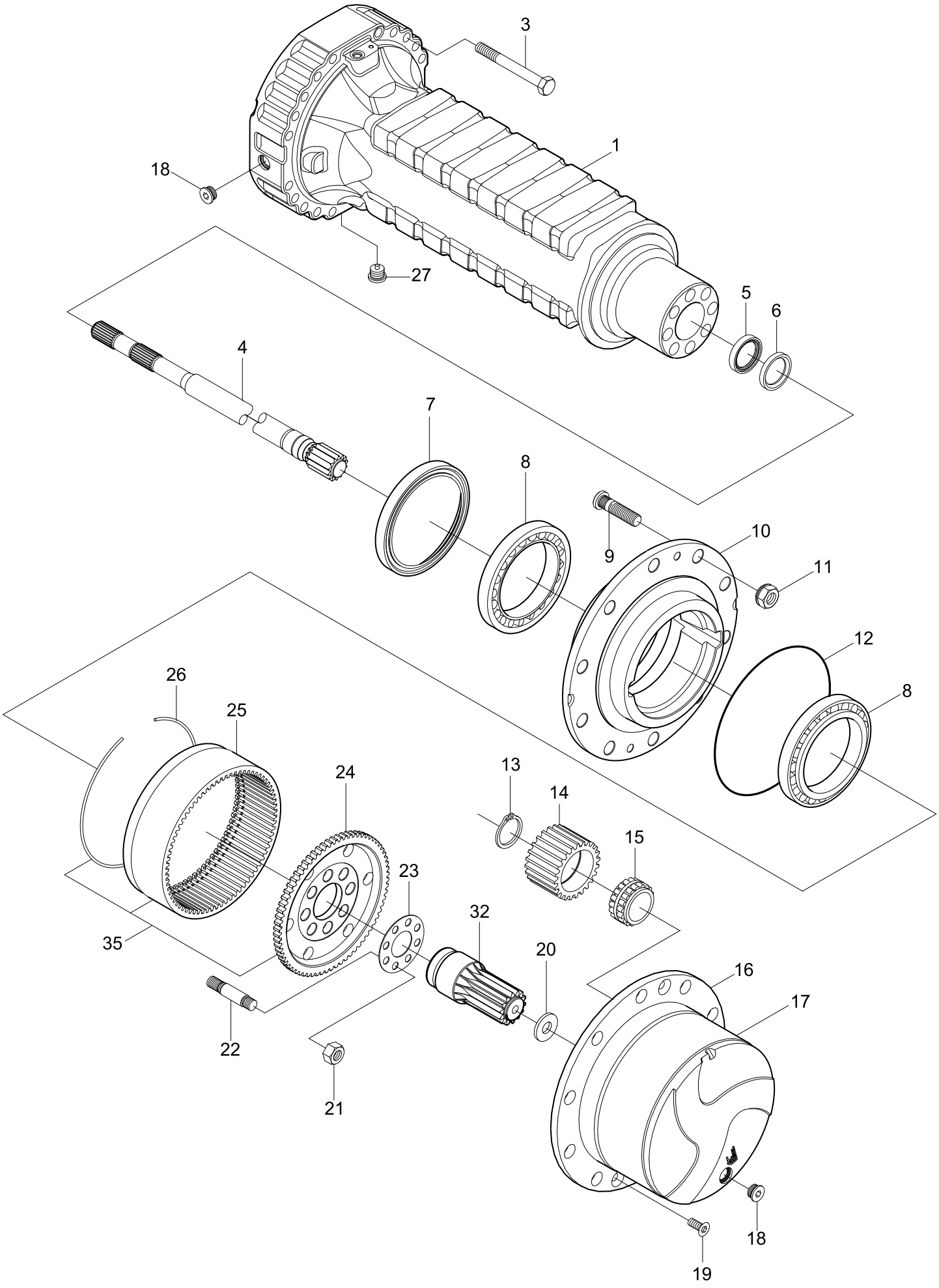

Item	Part_No	IS	Ord	T	Description	Qty	Serial_No	ITC	Remark
1	ZTAM-00877				CASE-AXLE	2			
3	ZTAM-00878				BOLT	40			
4	ZTAM-00879				SHAFT-HALF	2			
5	ZTAM-00257				SEAL	2			
6	ZTAM-00880				RING	2			
7	ZTAM-00373				SEAL	2			
8	ZTAM-00189				BEARING	4			
9	ZTAM-00066				STUD-WHEEL	24			
10	ZTAM-00882				HUB-WHEEL	2			
11	ZTAM-00883				NUT	24			
12	ZTAM-00177				O-RING	2			
13	ZTAM-00884				RING-SNAP	8			
14	ZTAM-00885				GEAR-PLANET	8			
15	ZTAM-00886				BEARING	4			
16	ZTAM-00887				CARRIER KIT-PLANET GEAR	2			
17	ZTAM-00888				CARRIER-PLANET GEAR	2			
18	ZTAM-00866				PLUG	2			
19	ZTAM-00075				BOLT-COUNTERSUNK	4			
20	ZTAM-00116				WASHER-FRICTION	2			
21	ZTAM-00889				NUT	16			
22	ZTAM-00890				STUD	16			
23	ZTAM-00891				PLATE-LOCKING	2			
24	ZTAM-00892				SUPPORT-RING GEAR	2			
25	ZTAM-00893				RING GEAR	2			
26	ZTAM-00894				CIRCLIP	2			

Item	Part_No	IS	Ord	T	Description	Qty	Serial_No	ITC	Remark
27	ZTAM-00867				PLUG-MAGNET	6			
32	ZTAM-00895				PINION	2			
35	ZTAM-00896				SUPPORT KIT-RING GEAR	2			

FRONT BRAKE

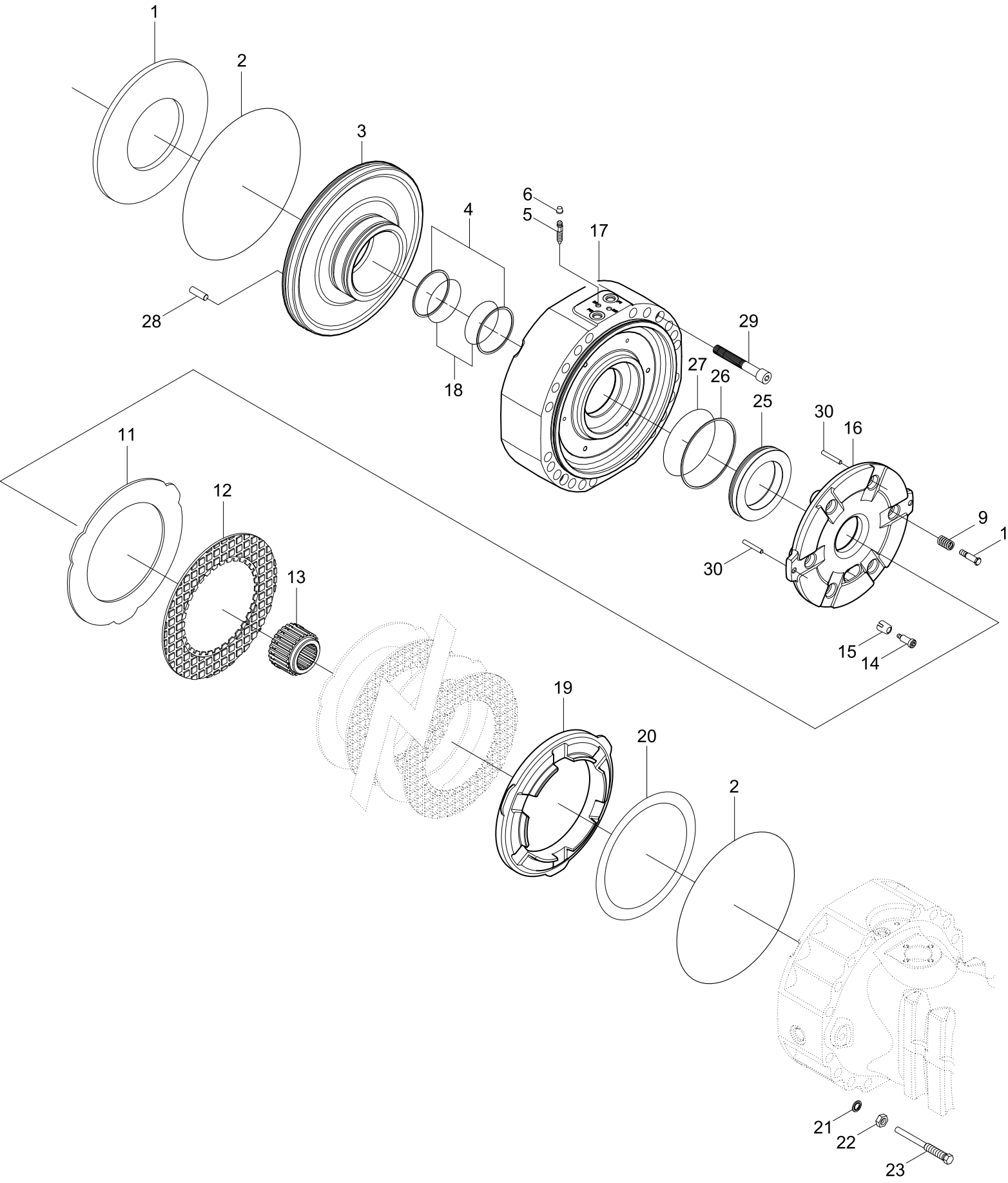
1
2
3
4
5
6
17
28
18
29
27
26
25
30
16
11
12
13
9
10
30
15
14
19
20
2
21
22
23

Item	Part_No	IS	Ord	T	Description	Qty	Serial_No	ITC	Remark
1	ZTAM-00897				SPRING	2			
2	ZTAM-00898				O-RING	2			
3	ZTAM-00899				PISTON	2			
4	1110700401				RING-BACK UP	4			
5	ZTAM-00100				BOLT-BLEEDING	4			
6	ZTAM-00101				PLUG	4			
9	ZTAM-00418				SPRING	6			
10	ZTAM-00901				BOLT-ADJUSTING	6			
11	ZTAM-00902				DISC-INTERMEDIATE BRAKE	6			
12	ZTAM-00903				DISC-BRAKE	6			
13	ZTAM-00904				BUSHING-REDUCTION	2			
14	ZTAM-00905				BOLT-ADJUSTING	6			
15	ZTAM-00092				SPRING	6			
16	ZTAM-00906				DISC-INTERMEDIATE BRAKE	2			
17	ZTAM-00907				COVER-INTERMEDIATE	2			
18	ZTAM-00908				SEAL	4			
19	ZTAM-00909				SPACER	2			
20	ZTAM-00910				SHIM	2			
	ZTAM-00911				SHIM	2			
	ZTAM-00912				SHIM	2			
21	ZTAM-00205				WASHER-LOCK	4			
22	ZTAM-00206				NUT	4			
23	ZTAM-00913				BOLT	4			
25	ZTAM-00914				PISTON	2			
26	ZTAM-00915				RING-BACK UP	2			

Item	Part_No	IS	Ord	T	Description	Qty	Serial_No	ITC	Remark
27	ZTAM-00916				O-RING	2			
28	ZTAM-00917				PIN-ROLL	2			
29	ZTAM-00918				BOLT-CYLINDER	4			
30	ZTAM-00919				DOWEL	4			

REAR CENTRAL HOUSING

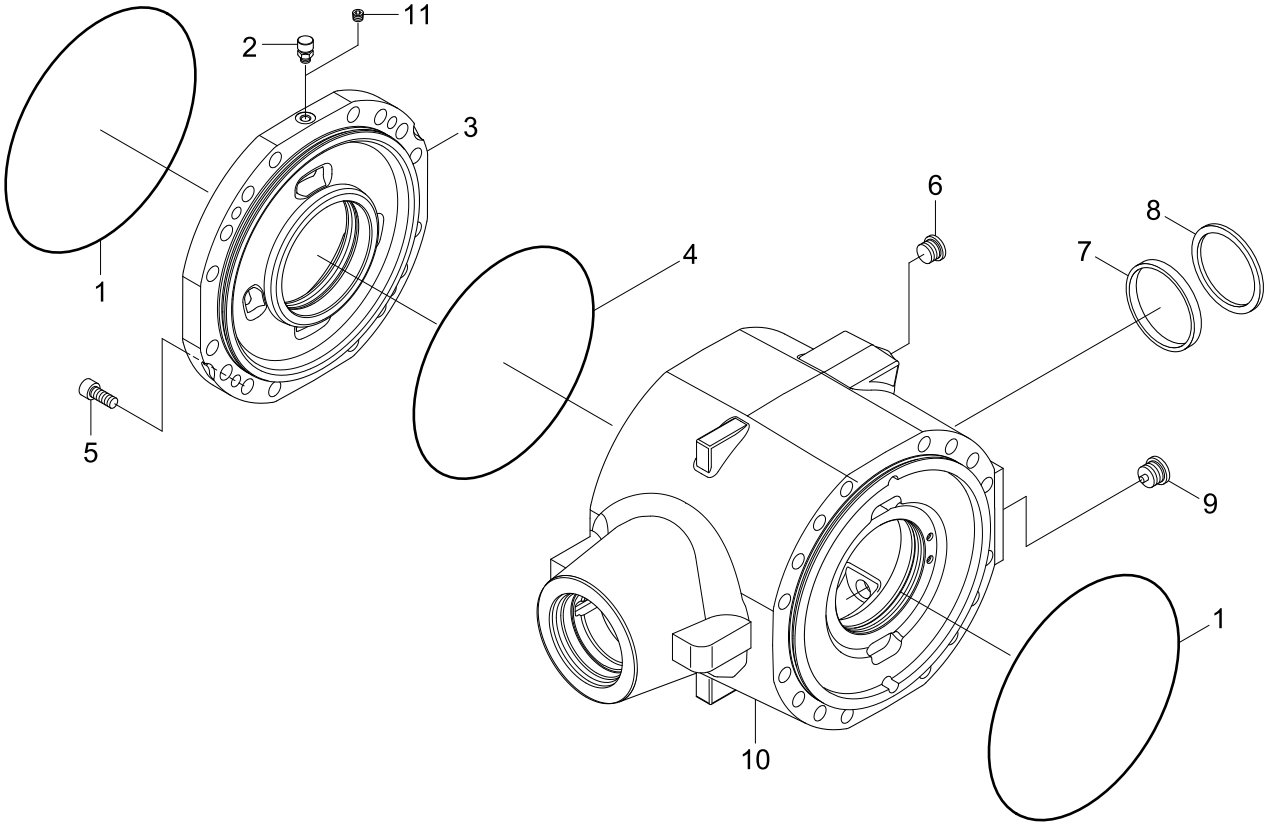

Item	Part_No	IS	Ord	T	Description	Qty	Serial_No	ITC	Remark
1	ZTAM-00920				O-RING	2			
2	ZTAM-00990				VENT	1			
3	ZTAM-00921				COVER-INTERMEDIATE	1			
N4	ZTAM-00068				O-RING	1			NOT
5	ZTAM-00922				BOLT	4			
6	ZTAM-00866				PLUG	1			
7	ZTAM-00004				PLUG	1			
8	ZTAM-00008				CIRCLIP	1			
9	ZTAM-00867				PLUG-MAGNET	1			
10	ZTAM-01017				HOUSING	1			

REAR DIFFERENTIAL(CONVENTIONAL)

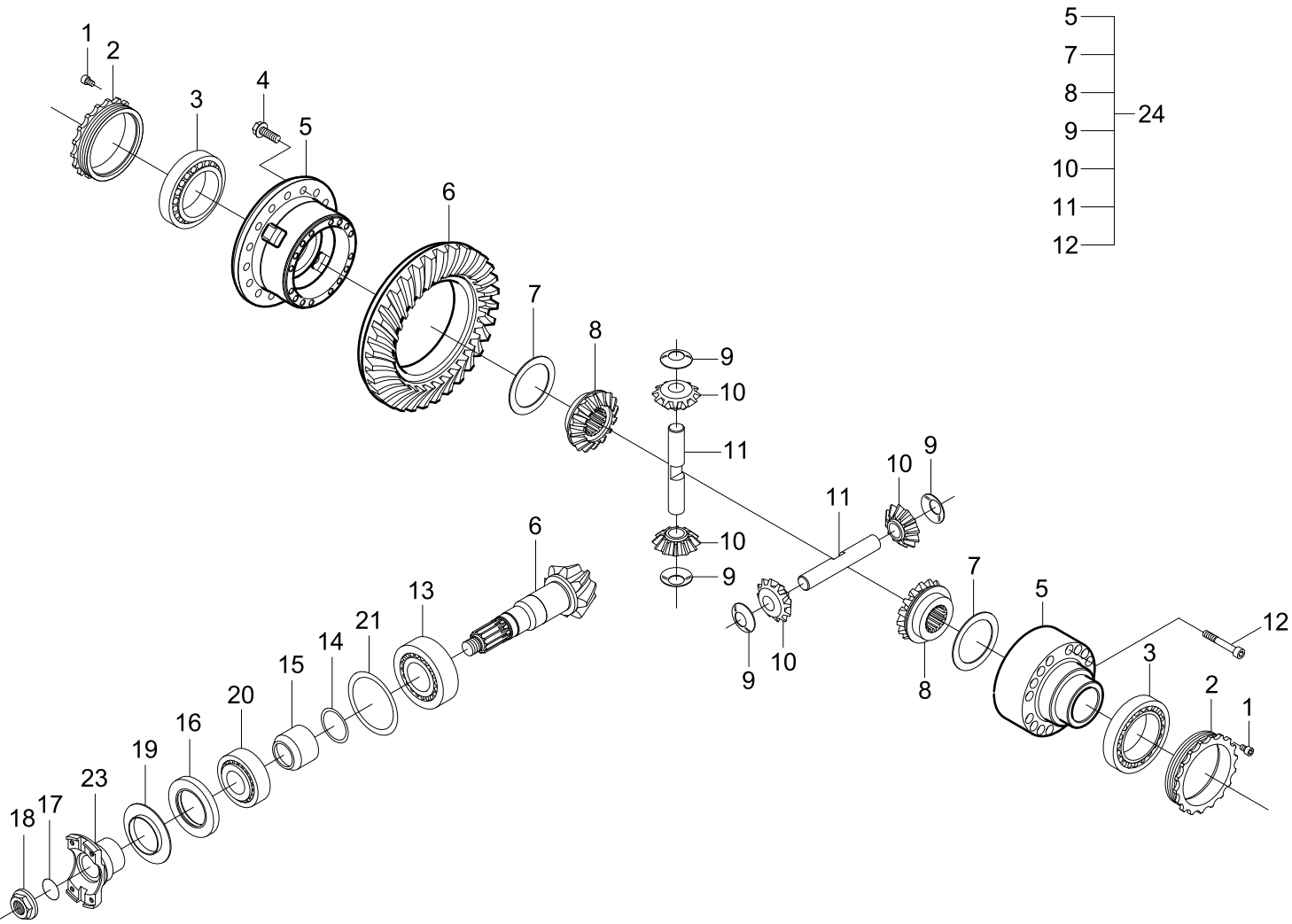

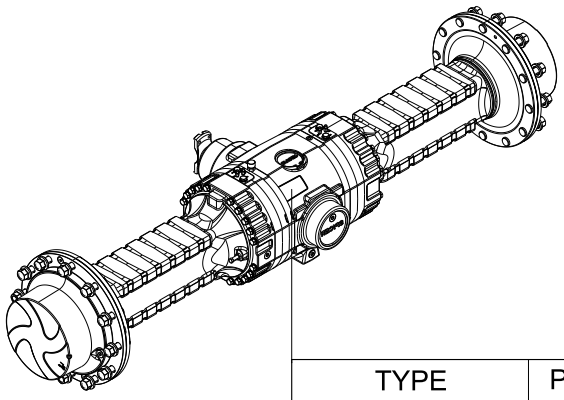

TYPE	PARTS NO
CONVENTIONAL	81LN-20011
LIMITED SLIP	81LN-20071
HEAVY DUTY	81LN-20091

Item	Part_No	IS	Ord	T	Description	Qty	Serial_No	ITC	Remark
1	ZTAM-00927				BOLT	2			
2	ZTAM-00928				NUT-RING	2			
3	ZTAM-00137				BEARING	2			
4	ZTAM-00019				BOLT	16			
N5	ZTAM-00929				DIFFERENTIAL	1			NOT
6	ZTAM-00252				BEVEL GEAR SET	1			
7	ZTAM-00240				WASHER-FRICTION	2			
8	ZTAM-00239				GEAR-DIFF SIDE	2			
9	ZTAM-00875				WASHER-FRICTION	4			
10	ZTAM-00148				PINION-DIFF	4			
11	ZTAM-00876				PIN	2			
12	ZTAM-00930				BOLT	15			
13	ZTAM-00168				BEARING	1			
14	ZTAM-00164				SHIM(0.40T)	1			
	ZTAM-00162				SHIM(0.20T)	1			
	ZTAM-00161				SHIM(0.15T)	1			
	ZTAM-00165				SHIM(0.50T)	1			
	ZTAM-00163				SHIM(0.30T)	1			
N15	ZTAM-00869				SPACER	1			NOT
16	ZTAM-00173				SEAL	1			
17	ZTAM-00170				O-RING	1			
18	ZTAM-00171				NUT	1			
19	ZTAM-00868				PLATE-COVER	1			
20	ZTAM-00176				BEARING	1			
21	ZTAM-00160				SHIM(0.15T)	1			

Item	Part_No	IS	Ord	T	Description	Qty	Serial_No	ITC	Remark
21	ZTAM-00158				SHIM(0.20T)	1			
	ZTAM-00159				SHIM(0.50T)	1			
	ZTAM-00157				SHIM(0.10T)	1			
23	ZTAM-00172				FLANGE	1			
N24	ZTAM-00931				DIFFERENTIAL KIT	1			NOT

REAR DIFFERENTIAL(LIMITED SLIP)

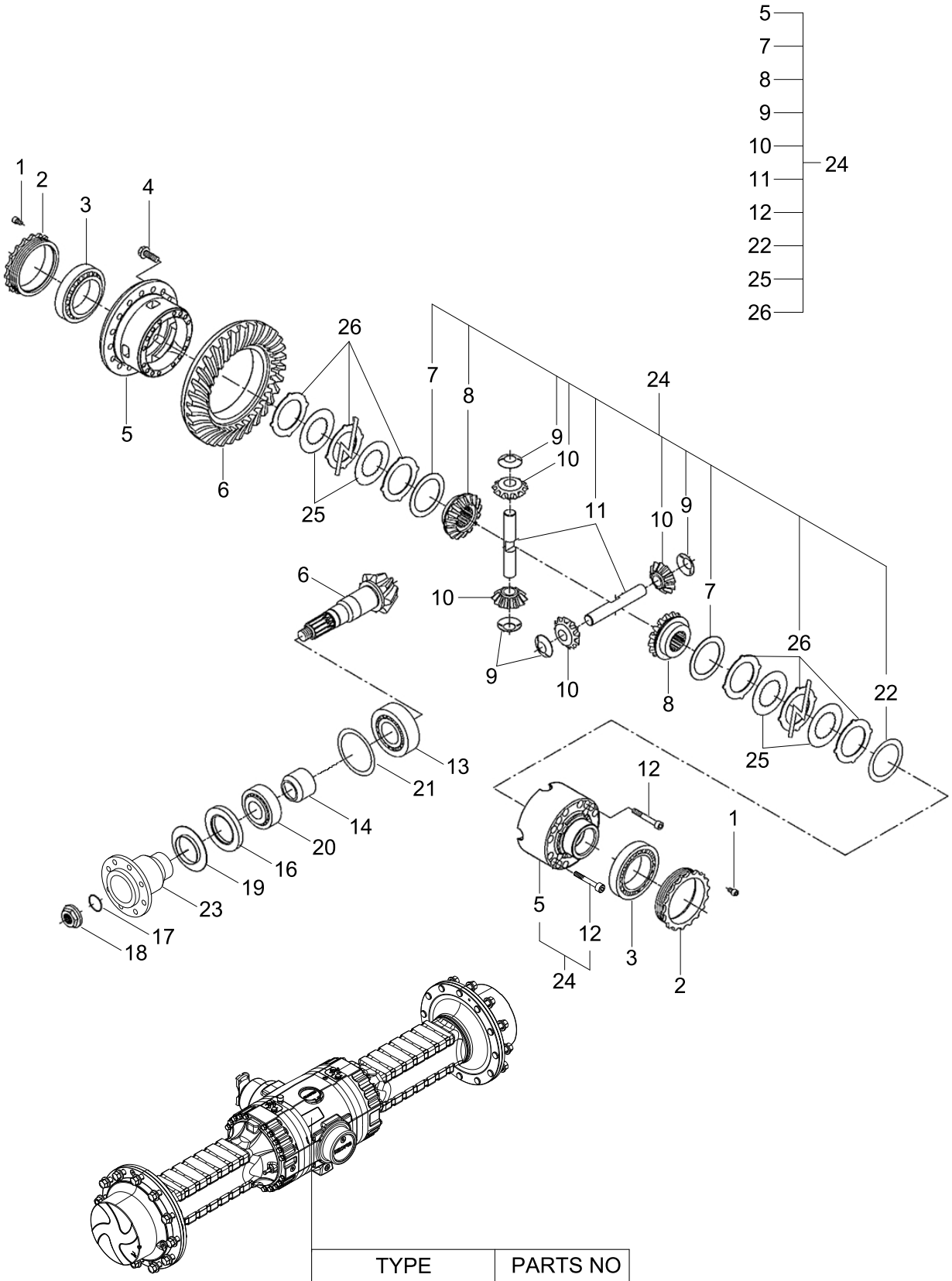

TYPE	PARTS NO
CONVENTIONAL	81LN-20011
LIMITED SLIP	81LN-20071
HEAVY DUTY	81LN-20091

Item	Part_No	IS	Ord	T	Description	Qty	Serial_No	ITC	Remark
1	ZTAM-00927				BOLT	2			
2	ZTAM-00928				NUT-RING	2			
3	ZTAM-00137				BEARING	2			
4	ZTAM-00019				BOLT	16			
5	ZTAM-00999				CARRIER-DIFF	1			
6	ZTAM-00252				BEVEL GEAR SET	1			
7	ZTAM-00146				DISC	2			
8	ZTAM-00147				GEAR-DIFF SIDE	2			
9	ZTAM-01000				WASHER-FRICTION	4			
10	ZTAM-00148				PINION-DIFF	4			
11	ZTAM-01001				SHAFT-DIFF	2			
12	ZTAM-00874				BOLT	16			
13	ZTAM-00176				BEARING	1			
14	ZTAM-00998				SPACER	1			
16	ZTAM-00173				SEAL	1			
17	ZTAM-00170				O-RING	1			
18	ZTAM-00171				NUT	1			
19	ZTAM-00868				PLATE-COVER	1			
20	ZTAM-00168				BEARING	1			
21	ZTAM-00159				SHIM(0.50T)	1			
	ZTAM-00158				SHIM(0.20T)	1			
	ZTAM-00160				SHIM(0.15T)	1			
	ZTAM-00157				SHIM(0.10T)	1			
22	ZTAM-00141				SHIM(0.40T)	2			
	ZTAM-00140				SHIM(0.30T)	2			

Item	Part_No	IS	Ord	T	Description	Qty	Serial_No	ITC	Remark
22	ZTAM-00142				SHIM(0.10T)	2			
23	ZTAM-00172				FLANGE	1			
24	ZTAM-01002				DIFFERENTIAL	1			
25	ZTAM-00143				DISC	8			
26	ZTAM-00145				DISC	10			

REAR HUB REDUCTION

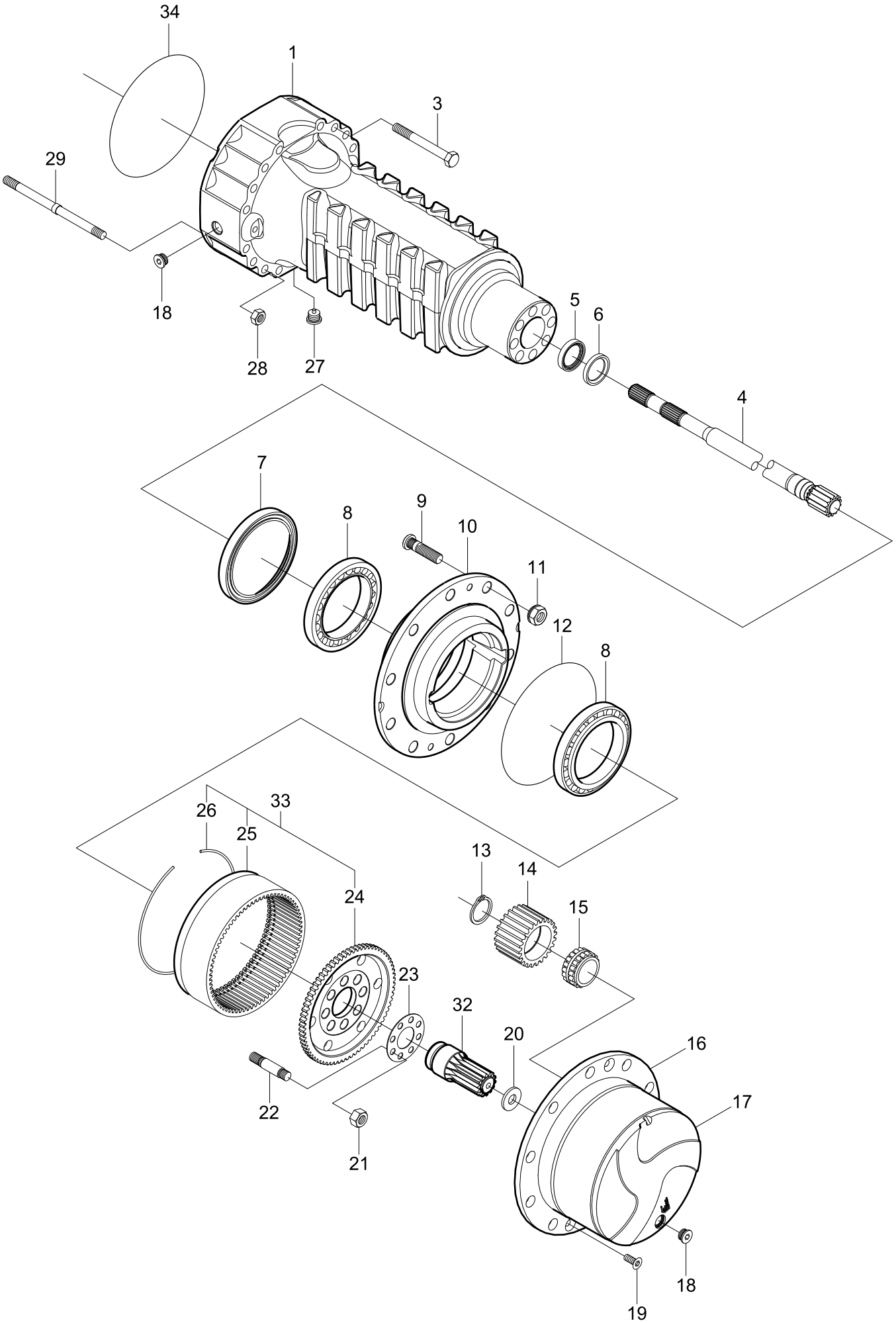

Item	Part_No	IS	Ord	T	Description	Qty	Serial_No	ITC	Remark
1	ZTAM-00932				CASE-AXLE	2			
3	ZTAM-00933				BOLT-HEXAGON	32			
4	ZTAM-00934				SHAFT-HALF	2			
5	ZTAM-00257				SEAL	2			
6	ZTAM-00880				RING	2			
7	ZTAM-00935				SEAL	2			
8	ZTAM-00189				BEARING	4			
9	ZTAM-00066				STUD-WHEEL	24			
10	ZTAM-00882				HUB-WHEEL	2			
11	ZTAM-00883				NUT	24			
12	ZTAM-00177				O-RING	2			
13	ZTAM-00884				RING-SNAP	8			
14	ZTAM-00885				GEAR-PLANET	6			
15	ZTAM-00886				BEARING	6			
16	ZTAM-00936				CARRIER KIT-PLANET GEAR	2			
17	ZTAM-00937				CARRIER-PLANET GEAR	2			
18	ZTAM-00866				PLUG	4			
19	ZTAM-00075				BOLT-COUNTERSUNK	4			
20	ZTAM-00116				WASHER-FRICTION	2			
21	ZTAM-00889				NUT	16			
22	ZTAM-00890				STUD	16			
23	ZTAM-00891				PLATE-LOCKING	2			
24	ZTAM-00892				SUPPORT-RING GEAR	2			
25	ZTAM-00893				RING GEAR	2			
26	ZTAM-00894				CIRCLIP	2			

Item	Part_No	IS	Ord	T	Description	Qty	Serial_No	ITC	Remark
27	ZTAM-00867				PLUG-MAGNET	2			
33	ZTAM-00896				SUPPORT KIT-RING GEAR	2			

BELL CRANK & LINK

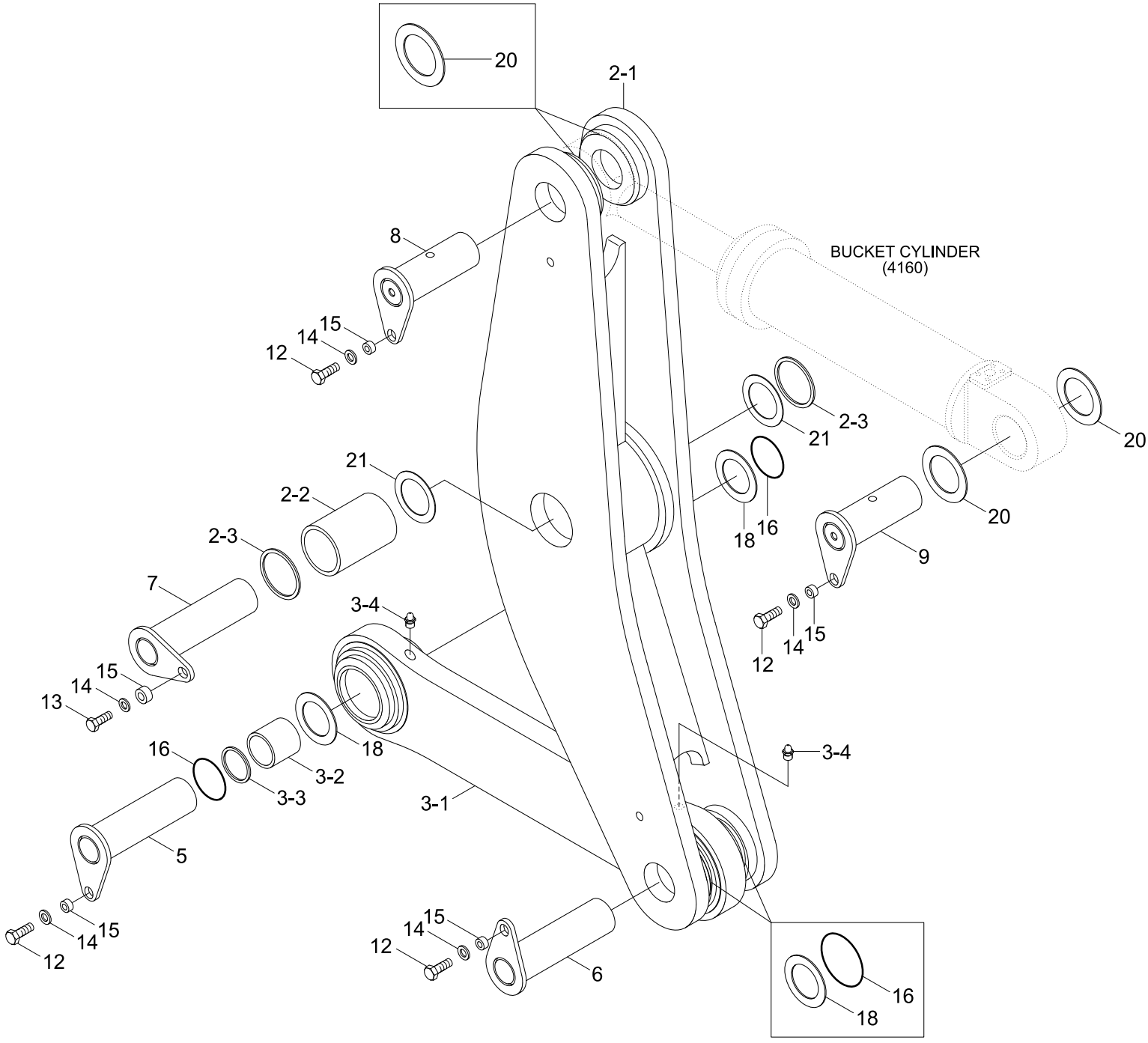

Item	Part_No	IS	Ord	T	Description	Qty	Serial_No	ITC	Remark
2	62LN-10140				BELL CRANK ASSY	1			
2-1	62LN-10150				.BELL CRANK WA	1			
2-2	61LF-10121				.BUSHING	1			
2-3	Y020-100211				.SEAL-DUST,DLI,KPU	2			
3	61LN-10162				LINK ASSY	1			
N3-1	61LN-10172				.LINK WA	1			NOT
3-2	X112-702063				.BUSHING	2			
3-3	Y020-070011				.SEAL-DUST,DLI,KPU	4			
3-4	S651-810002				.NIPPLE-GREASE	2			
5	61LM-15210				PIN WA	1			
6	61LM-15030				PIN WA	1			
7	61LN-10200				PIN WA	1			
8	61LM-15040				PIN WA	1			
9	61LM-15050				PIN WA	1			
12	S017-16035D				BOLT-HEX	4			
13	S017-16045D				BOLT-HEX	1			
14	64L3-01120-DA				WASHER-HARDENED	5			
15	61LF-10280				SPACER	5			
16	61Q6-06500				O-RING	4			
18	S391-070120				SHIM-ROUND(1.0T)	4			
20	S391-075135				SHIM-ROUND(1.0T)	4			
21	S391-100200				SHIM-ROUND(1.0T)	2			

BOOM

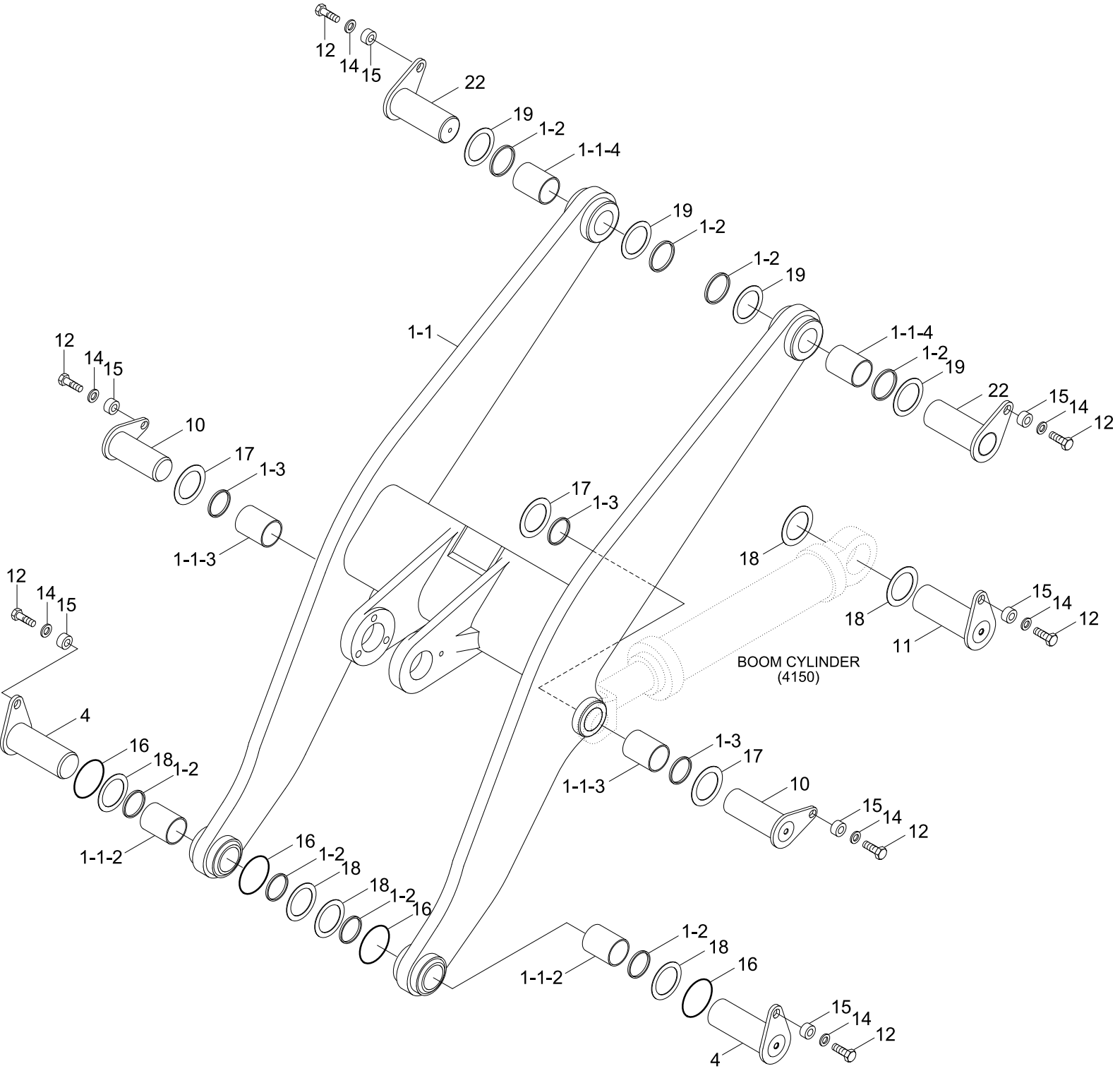
12
14
15
22
19
1-2
1-1-4
19
1-2
1-2
19
1-1
1-1-4
1-2
19
22
15
14
12
12
14
15
10
17
1-3
1-1-3
17
1-3
18
18
15
14
12
11
12
14
15
BOOM CYLINDER
(4150)
4
16
18
1-2
1-1-2
1-3
17
1-1-3
10
15
14
12
16
1-2
18
18
1-2
16
1-2
18
16
1-1-2
15
14
12
4

Item	Part_No	IS	Ord	T	Description	Qty	Serial_No	ITC	Remark
1	62LN-10010				BOOM ASSY	1			HL740-9S
	62LN-12010				BOOM ASSY	1			HL740XTD-9S
1-1	62LN-10020				.BOOM WA	1			HL740-9S
	62LN-12020				.BOOM WA	1			HL740XTD-9S
1-1-2	61LF-10090				..BUSHING	2			
1-1-3	61LF-10100				..BUSHING	2			
1-1-4	61LF-10110				..BUSHING	2			
1-2	Y020-070011				.SEAL-DUST,DLI,KPU	16			
1-3	Y020-065111				.SEAL-DUST,DLI,KPU	8			
4	61LM-15200				PIN WA	2			
10	61LM-15060				PIN WA	2			
11	61LM-15070				PIN WA	2			
12	S017-16035D				BOLT-HEX	8			
14	64L3-01120-DA				WASHER-HARDENED	8			
15	61LF-10280				SPACER	8			
16	61Q6-06500				O-RING	4			
17	S391-065120				SHIM-ROUND(1.0T)	4			
18	S391-070120				SHIM-ROUND(1.0T)	8			
19	S391-070130				SHIM-ROUND(1.0T)	4			
22	61LM-15080				PIN WA	2			

BUCKET(2.1m^3, CUTTING EDGE)

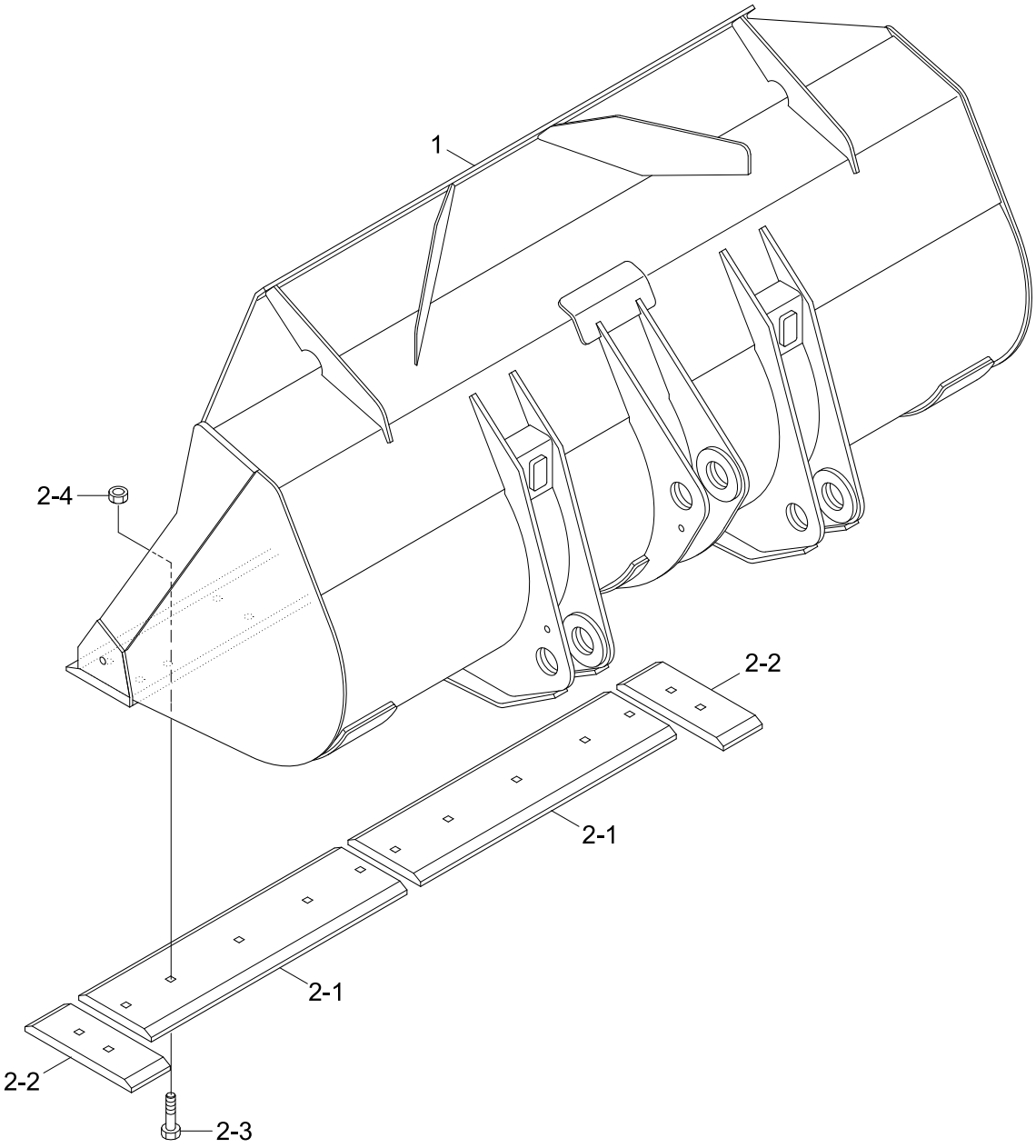

Description	Parts no	Included item
Cutting edge kit	61LF-00910BG	2-1~2-4

Item	Part_No	IS	Ord	T	Description	Qty	Serial_No	ITC	Remark
*	62LN-00010				BUCKET ASSY	1	- #0003		
	62LN-00011				BUCKET ASSY	1	#0004 -	B	
1	62LN-00030				.BUCKET WA	1	- #0003		
	62LN-00031				.BUCKET WA	1	#0004 -	B	
2	61LF-00910BG				.CUTTING EDGE KIT	1			SEE ILLUST
2-1	61LF-00330BG				..CUTTING EDGE-CENTER	2			
2-2	61LD-00370BG				..CUTTING EDGE-SIDE	2			
2-3	61L3-0198	04			..BOLT-TOOTH	12			
2-4	S206-20100B				..NUT-HEX	12			

BUCKET(2.0m^3, TOOTH)

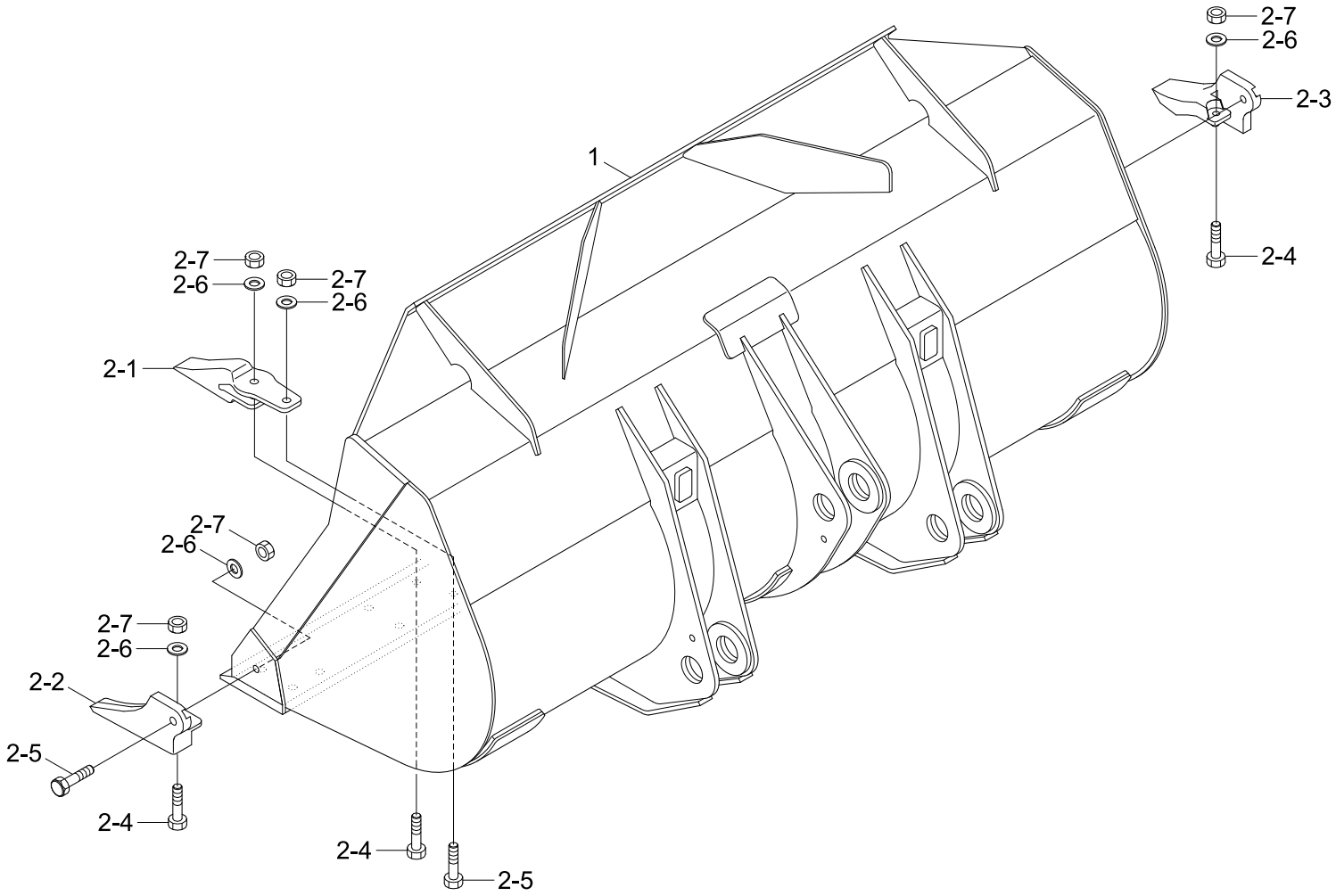

Description	Parts no	Included item
Tooth kit	61LN-00950	2-1~2-7

Item	Part_No	IS	Ord	T	Description	Qty	Serial_No	ITC	Remark
*	62LN-00500				BUCKET ASSY	1	- #0003		
	62LN-00501				BUCKET ASSY	1	#0004 -	B	
1	62LN-00030				.BUCKET WA	1	- #0003		
	62LN-00031				.BUCKET WA	1	#0004 -	B	
2	61LN-00950				.TOOTH KIT(1-PIECE)	1			SEE ILLUST
2-1	61L3-0169GG				..TOOTH-CENTER	5			
2-2	61L3-0170GG				..TOOTH-LH	1			
2-3	61L3-0171GG				..TOOTH-RH	1			
2-4	S018-20075D				..BOLT-HEX	7			
2-5	S018-20065D				..BOLT-HEX	7			
2-6	S441-200006				..WASHER-HARDENED	14			
2-7	S206-20100B				..NUT-HEX	14			

BUCKET(2.0m^3, 2-PIECE TOOTH)

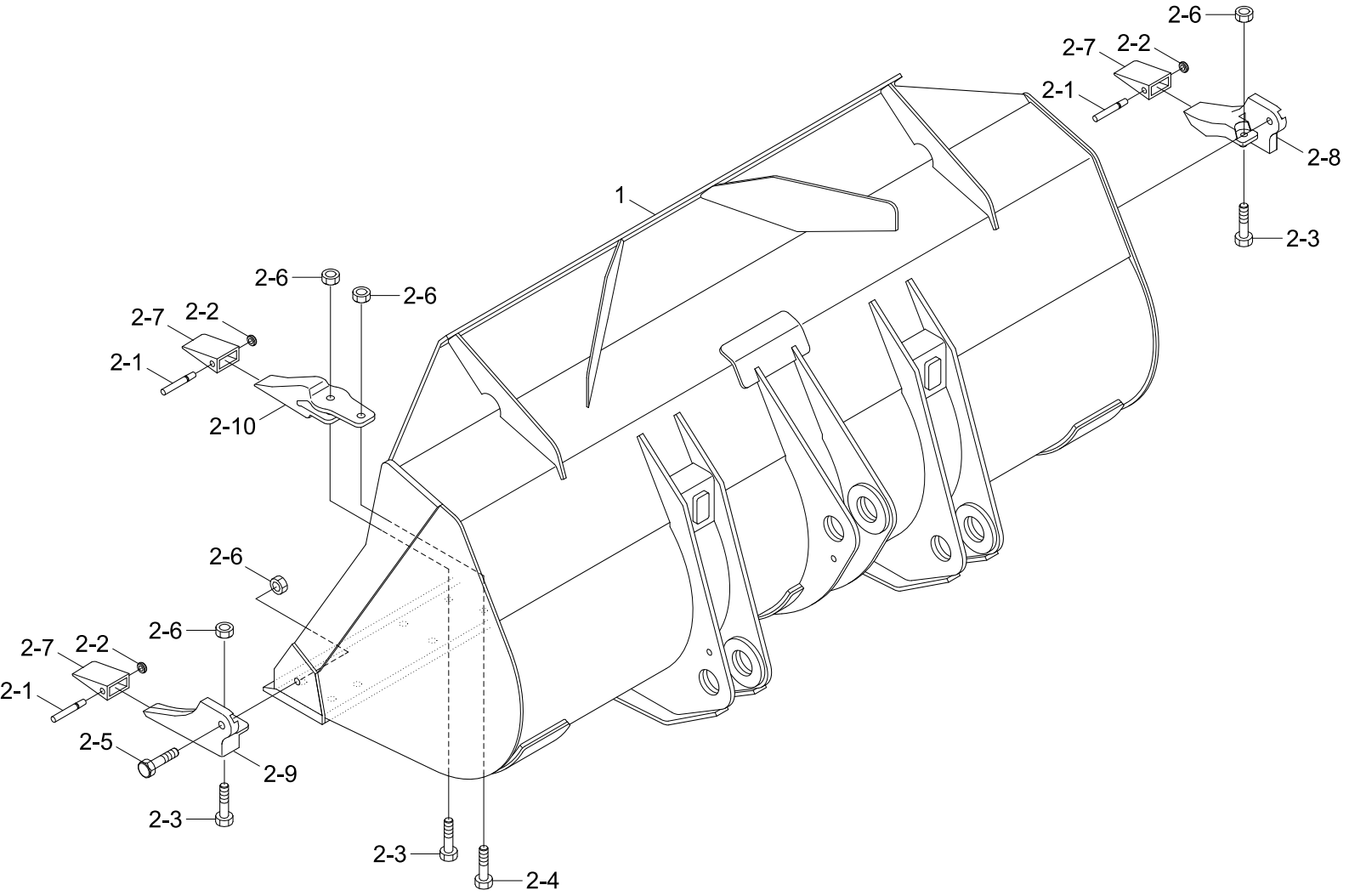

Description	Parts no	Included item
Tooth kit	61LN-00960	2-1~2-10

Item	Part_No	IS	Ord	T	Description	Qty	Serial_No	ITC	Remark
*	62LN-00700				BUCKET ASSY	1	- #0003		
	62LN-00701				BUCKET ASSY	1	#0004 -	B	
1	62LN-00030				.BUCKET WA	1	- #0003		
	62LN-00031				.BUCKET WA	1	#0004 -	B	
2	61LN-00960				.TOOTH KIT(2-PIECE)	1			SEE ILLUST
2-1	64L3-01260GG				..ADAPTER-TOOTH,CENTER	5			
2-2	64L3-01270GG				..ADAPTER-TOOTH,LH	1			
2-3	64L3-01280GG				..ADAPTER-TOOTH,RH	1			
2-4	64L3-01290GG				..POINT-TOOTH	7			
2-5	64L3-01300				..PIN-TOOTH	7			
2-6	64L3-01310				..WASHER-LOCK	7			
2-7	64L3-01320				..BOLT-TOOTH	7			
2-8	64L3-01330				..BOLT-TOOTH	5			
2-9	64L3-01340				..BOLT-TOOTH	2			
2-10	S206-20100B				..NUT-HEX	14			

TOOLS

1

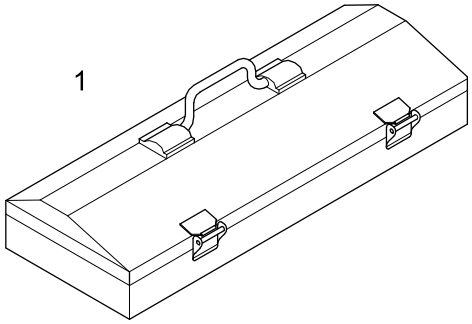

12,13,14,15,16,17,18,19

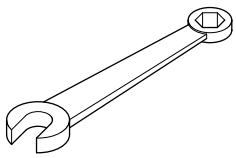

20,21

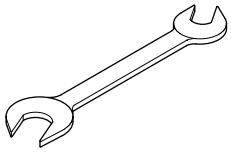

2, 3, 4 ,5 ,6, 7, 8, 9,10,11,42,43



28,29

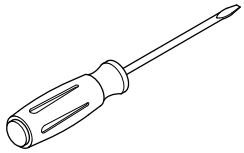

30

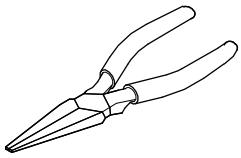

22,23,24,25,26,27

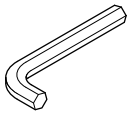

32

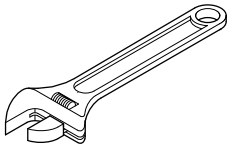

33

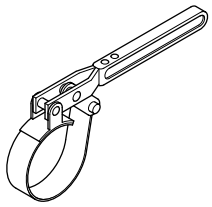

31

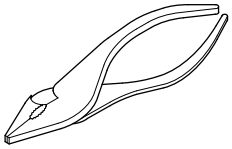

35

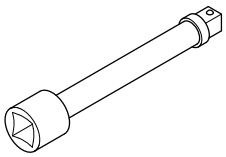

36,38

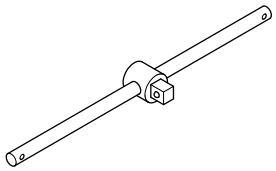

34

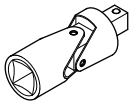

39

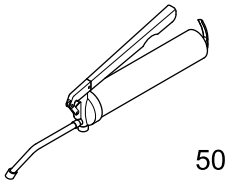

40

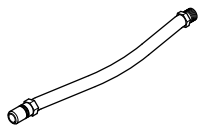

50

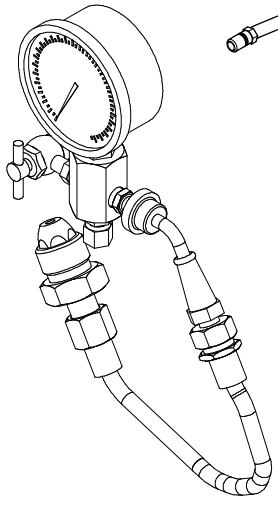

For ride control system
(Accumulator charging & gauging kit)

37

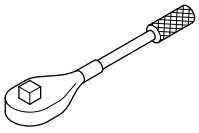

Item	Part_No	IS	Ord	T	Description	Qty	Serial_No	ITC	Remark
*	94L1-20002				TOOL KIT ASSY	1			
1	E191-2000				.TOOL BOX	1			
2	S953-127100				.SOCKET-METRIC	1			
3	S953-127130				.SOCKET-METRIC	1			
4	S953-127140				.SOCKET-METRIC	1			
5	S953-127170				.SOCKET-METRIC	1			
6	S953-127190				.SOCKET-METRIC	1			
7	S953-127220				.SOCKET-METRIC	1			
8	S953-127240				.SOCKET-METRIC	1			
9	S953-127300				.SOCKET-METRIC	1			
10	S953-190320				.SOCKET-METRIC	1			
11	S953-190360				.SOCKET-METRIC	1			
12	S962-100003				.WRENCH-COMBINATION	1			10
13	S962-120003				.WRENCH-COMBINATION	1			12
14	S962-130003				.WRENCH-COMBINATION	1			13
15	S962-170003				.WRENCH-COMBINATION	1			17
16	S962-190003				.WRENCH-COMBINATION	1			19
17	S962-220003				.WRENCH-COMBINATION	1			22
18	S962-240003				.WRENCH-COMBINATION	1			24
19	S962-270003				.WRENCH-COMBINATION	1			27
20	S962-303202				.WRENCH-DOUBLE,METRIC	1			
21	S962-364102				.WRENCH-DOUBLE,METRIC	1			
22	S967-040025				.L-WRENCH	1			
23	S967-050028				.L-WRENCH	1			
24	S967-060032				.L-WRENCH	1			

Item	Part_No	IS	Ord	T	Description	Qty	Serial_No	ITC	Remark
25	S967-080036				.L-WRENCH	1			
26	S967-100040				.L-WRENCH	1			
27	S967-120045				.L-WRENCH	1			
28	S959-081512				.DRIVER(-)	1			
29	S959-081522				.DRIVER(+)	1			
30	S961-150016				.PLIER-LONG NOSE	1			6"
31	S960-150020				.PLIER-SLIP JOINT	1			150
32	S963-200024				.WRENCH-ADJ ANGLE	1			
33	E191-2043				.WRENCH-FILTER,300MM	1			
34	S954-127080				.UNIVERSAL JOINT	1			
35	S955-127075				.BAR-EXTENSION	1			
36	E191-2048				.HANDLE-SLIDING,1/2"X10"	1			
37	S958-127250				.HANDLE-RATCHET	1			
38	E191-2049				.HANDLE-SLIDING,3/4"X20"	1			
39	E191-2053				.GUN-GREASE,500CC	1			
40	E191-2054				.TIP-HOSE,RUBBER	1			
41	94L1-20012				.TOOL LIST	1			
42	S968-190240				.SOCKET-3/4"X1 1/2"	1			
43	S968-190300				.SOCKET-3/4'X1 7/8"	1			
50	31LM-90100				CHARGE & GAUGE KIT	1			RIDE CONTROL

DECALS

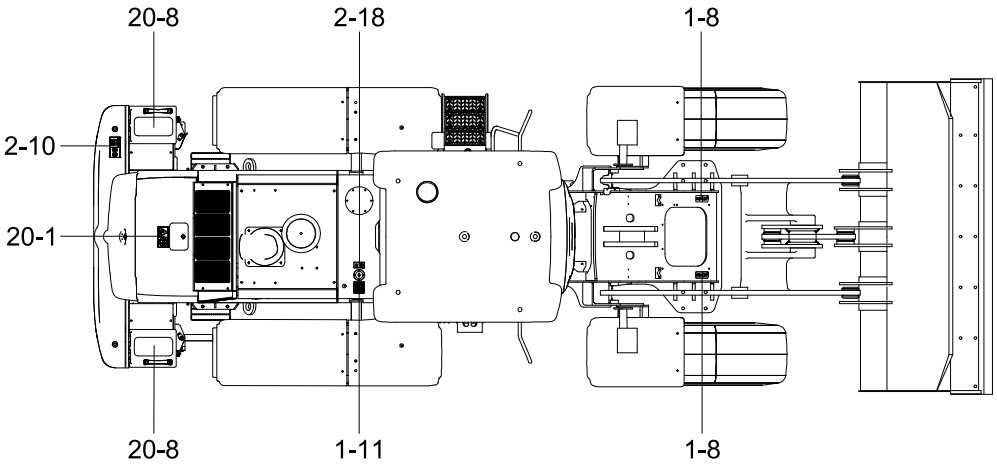

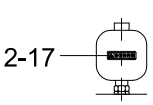

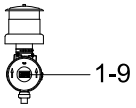

AIR CLEANER

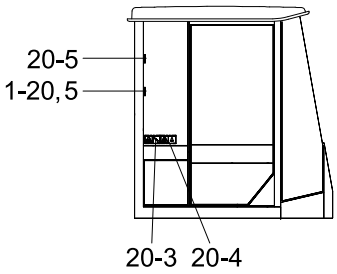

CABIN INSIDE - LH

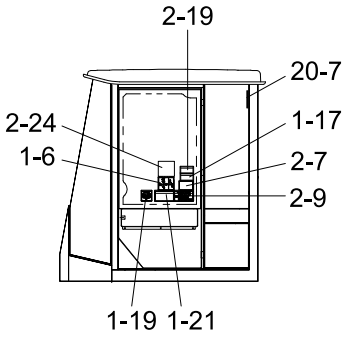

CABIN INSIDE - RH

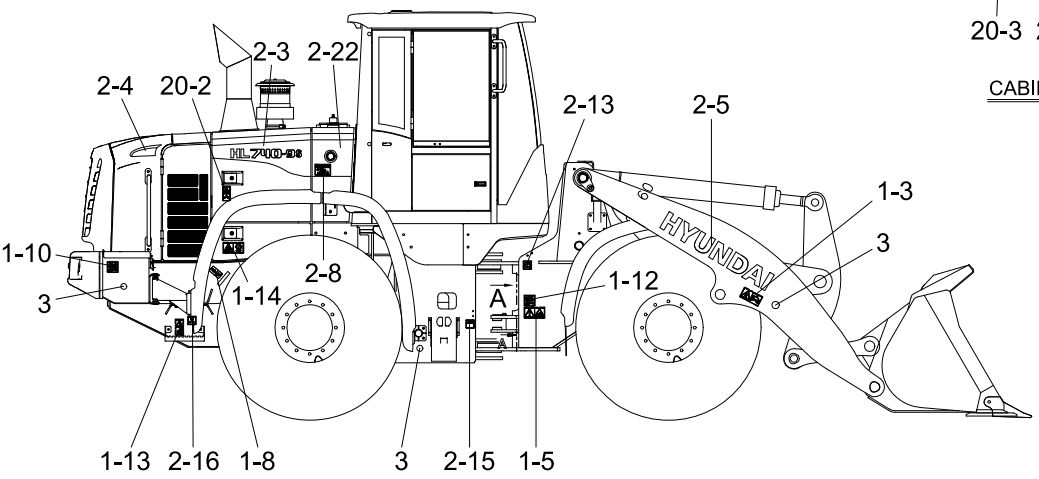

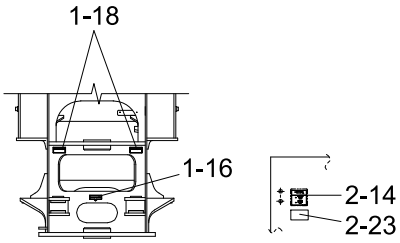

VIEW - A

VIEW - B

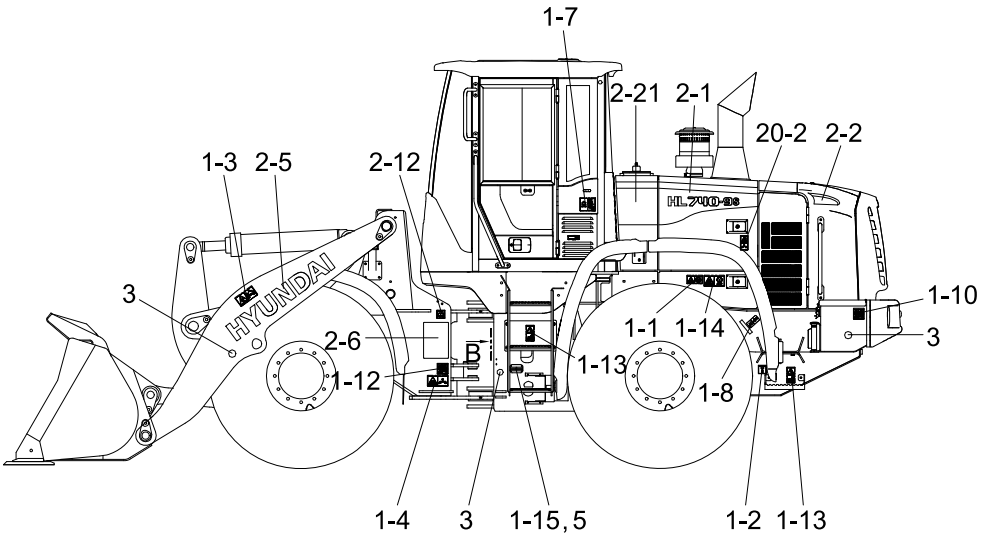

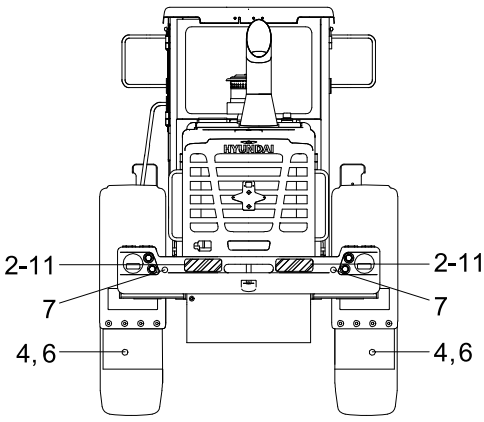

Item	Part_No	IS	Ord	T	Description	Qty	Serial_No	ITC	Remark
1	92LN-00101				DECAL KIT(A)	1	- #0002		
	92LN-00102				DECAL KIT(A)	1	#0003 - #0020	D	
	92LN-00103				DECAL KIT(A)	1	#0021 -	D	
1-1	91LB-01110				.DECAL-START MOTOR	1			
1-2	91LB-01190				.DECAL-DRAIN/REMOTE	1			
1-3	91LB-01210				.DECAL-BUCKET STOPPER	2			
1-4	91LB-01260				.DECAL-STEER WARN/LH	1			
1-5	91LB-01270				.DECAL-STEER WARN/RH	1			
1-6	91LB-01300				.DECAL-CNTRL IDEOGRAM	1			1-LEVER
	91LB-01310				.DECAL-CNTRL IDEOGRAM	1			2-LEVER
1-7	91LB-01320				.DECAL-AIRCON FILTER	1			
1-8	92LB-14000				.DECAL-LIFT & TIE	4			
1-9	91N6-01102				.DECAL-A/CLEANER FILTER	1			
1-10	91N6-02120				.DECAL-BATT ACCIDENT	2	- #0020		
	91LM-02120				.DECAL-BATTERY ACCIDENT	2	#0021 -	D	
1-11	91N6-03111				.DECAL-HYD OIL LUBRICAT	1			
1-12	91N6-03130				.DECAL-H/PRESS HOSE	2			
1-13	91N6-03140				.DECAL-FALLING	3			
1-14	91N6-07121				.DECAL-SHEARING	2			
1-15	91LM-14110				.DECAL-PIN PLATE	1			
1-16	91LH-01220				.DECAL-GREASE CENTER	1			
1-17	91N6-07390				.DECAL-TURBOCHARGER	1			
R1-18	91LB-01360				.DECAL-RIDE CONTROL	2			RIDE CONTROL
1-19	91Q6-07260				.DECAL-SAFETY,RR WINOW	1			
1-20	91LB-01280				.DECAL-ROPS PLATE	1	#0003 -		ROPS CAB

Item	Part_No	IS	Ord	T	Description	Qty	Serial_No	ITC	Remark
1-21	91LB-01250				.DECAL-ROPS CAB	1	#0003 -		ROPS CAB
2	92LN-02102				DECAL KIT(B)	1	- #0010		
	92LN-02103				DECAL KIT(B)	1	#0011 -	D	
2-1	92LN-25111				.DECAL-MODEL NAME(LH)	1			
2-2	92LN-15170				.MODEL NAME-LH/RR	1			
2-3	92LN-25121				.DECAL-MODEL NAME(RH)	1			
2-4	92LN-15180				.MODEL NAME-RH/RR	1			
2-5	91N6-23120				.DECAL-HYUNDAI LOGO	2			
2-6	92LN-20711				.DECAL-S/INSTRUCTION	1			
2-7	92LN-20510				.DECAL-SPEC SHEET	1			
2-8	91LB-01130				.DECAL-HYD OIL LEVEL	1			
2-9	91LM-01290				.DECAL-CAUTION E/G START	1			
2-10	91M8-01140				.DECAL-FUELING	1			
2-11	91LB-01400				.DECAL-K/CLEAR/REFLECT	2			
2-12	91LB-02110				.DECAL-GREASE(A)	1			
2-13	91LB-02120				.DECAL-GREASE(B)	1			
2-14	91LB-01170				.DECAL-GREASE(C)	1			
2-15	91LB-01180				.DECAL-GREASE(D)	1			
2-16	91LB-01370				.DECAL-DRAIN/ENGINE	1			
2-17	91N6-03200				.DECAL-ACCUMULATOR	4			
R2-17	91N6-03200				.DECAL-ACCUMULATOR	6			RIDE CONTROL
2-18	91Q6-03230				.DECAL-FUEL SHUT OFF	1			
2-19	91Q4-07180				.DECAL-WATER SEPARATOR	1			
2-21	92LN-25190				.DECAL-LH/HYD TANK	1			
2-22	92LN-25210				.DECAL-RH/HYD TANK	1			

Item	Part_No	IS	Ord	T	Description	Qty	Serial_No	ITC	Remark
2-23	91LM-01700				.DECAL-T/M OIL SPECK	1	#0011 -	-	
2-24	91LM-02500				.DECAL-M/LANGUAGE SEL	1	#0011 -	-	
3	21EK-10150				REFLECTOR-SIDE	6			
4	51EK-52990				REFLECTOR-REAR	2	- #0010		
					REFLECTOR-REAR	2	#0011 -	-	MUD GUARD
5	E171-1246				RIVET	4	#0003 -		ROPS CAB
6	S403-05200B				WASHER-PLAIN	2	- #0010		
					WASHER-PLAIN	2	#0011 -	-	MUD GUARD
7	91S8-04030				REFLECTOR-REAR	2	#0011 -	-	IRAN
20	92LC-00092				DECAL KIT-A/S	1			
20-1	91N6-01121				.DECAL-RADIATOR CAP	1			
20-2	91N6-07112				.DECAL-STAY FIX	2			
20-3	91LB-01230				.DECAL-MAX H/REACH	1			
20-4	91LB-01240				.DECAL-ROLL OVER	1			
20-5	91Q6-07280				.DECAL-HAMMER	1			
20-7	91Q6-07290				.DECAL-FIRE EXTINGUISHER	1			
20-8	91E1-26300				.DECAL-STEP TREAD	2			

MANUALS

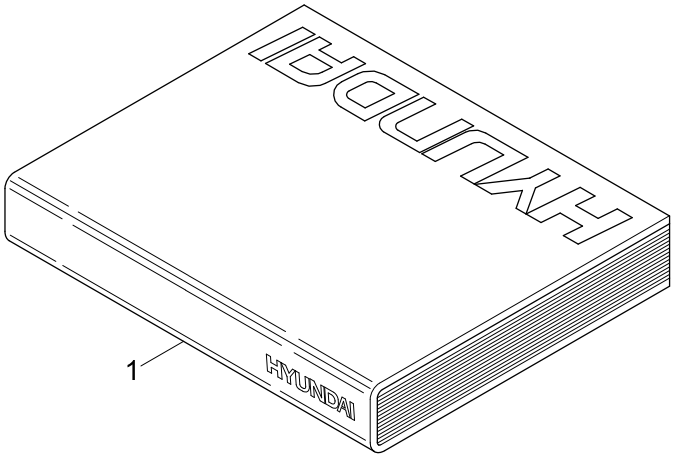

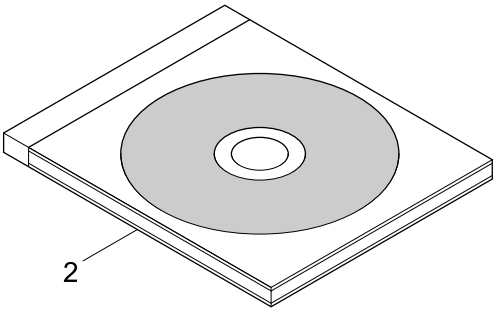

Item	Part_No	IS	Ord	T	Description	Qty	Serial_No	ITC	Remark
1	91LN-33000				PARTS MANUAL	1			KOREAN/ENGLISH
	91LN-33040				OPERATORS MANUAL	1			ENGLISH
	91LN-33050				SERVICE MANUAL	1			ENGLISH
2	HLCD-30000				CD-PARTS MANUAL	1			LOADER/CRANE
	HACD-30000				CD-PARTS MANUAL	1			ALL MODEL
	HLDV-30000				DVD-PARTS MANUAL	1			LOADER/CRANE
	HADV-30000				DVD-PARTS MANUAL	1			ALL MODEL

HCE-DT KIT

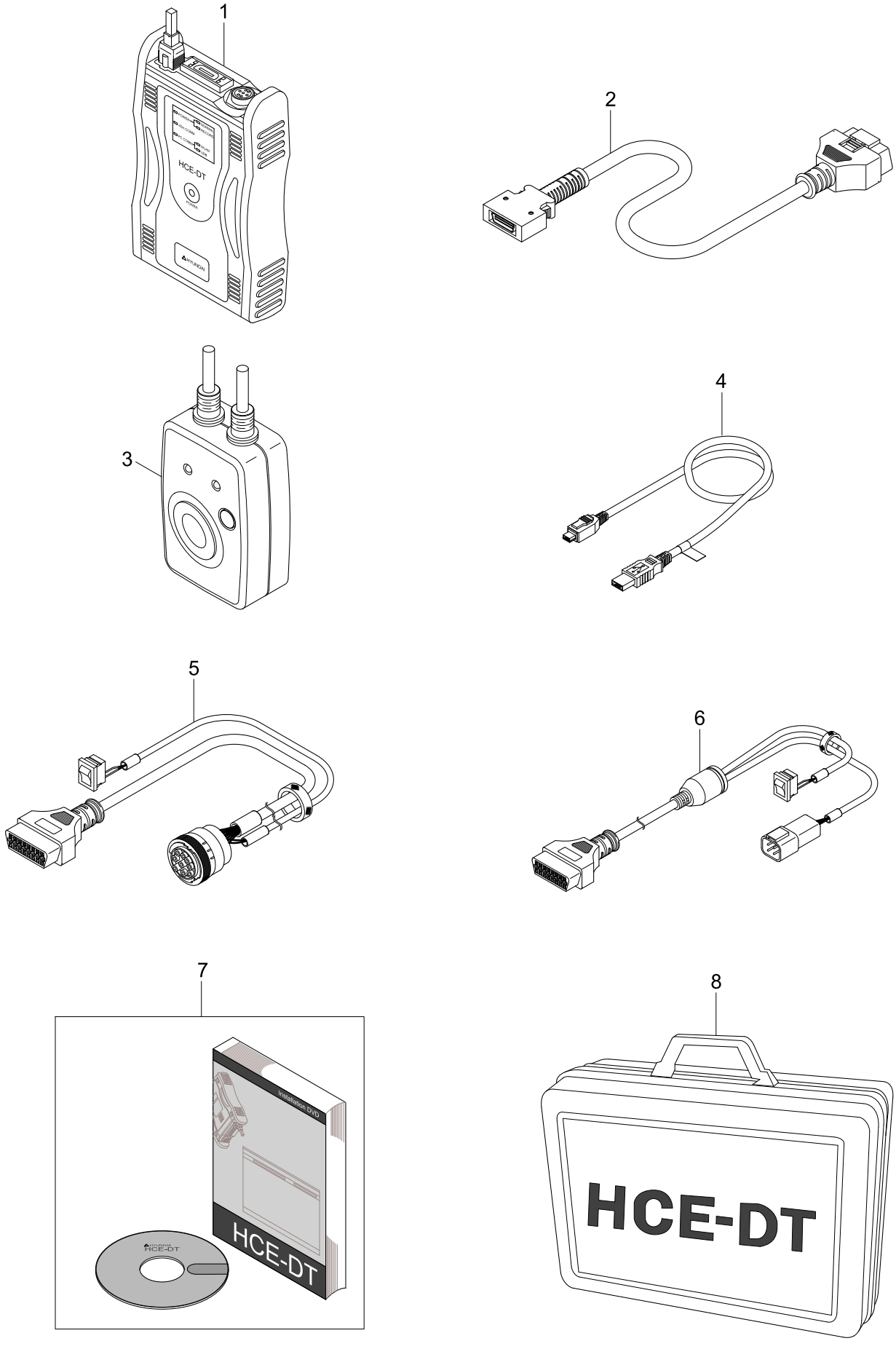

Item	Part_No	IS	Ord	T	Description	Qty	Serial_No	ITC	Remark
*	21QB-32900				HCE-DT KIT	1	#0001 -	-	
1	21QB-32910				.VCI MAIN MODULE	1			
2	21QB-32920				.VCI COMM. CABLE-16P	1			
3	21QB-32930				.POWER & TRIGGER MODULE	1			
4	21QB-32940				.USB CABLE(VCI TO PC)	1			
5	21QB-32950				.MACHINE COMM. CABLE-9P	1			
6	21QB-32960				.MACHINE COMM. CABLE-4P	1			
7	21QB-32970				.CD-INSTALL	1			
8	21QB-32980				.CASE	1			

AIR INTAKE HEATER

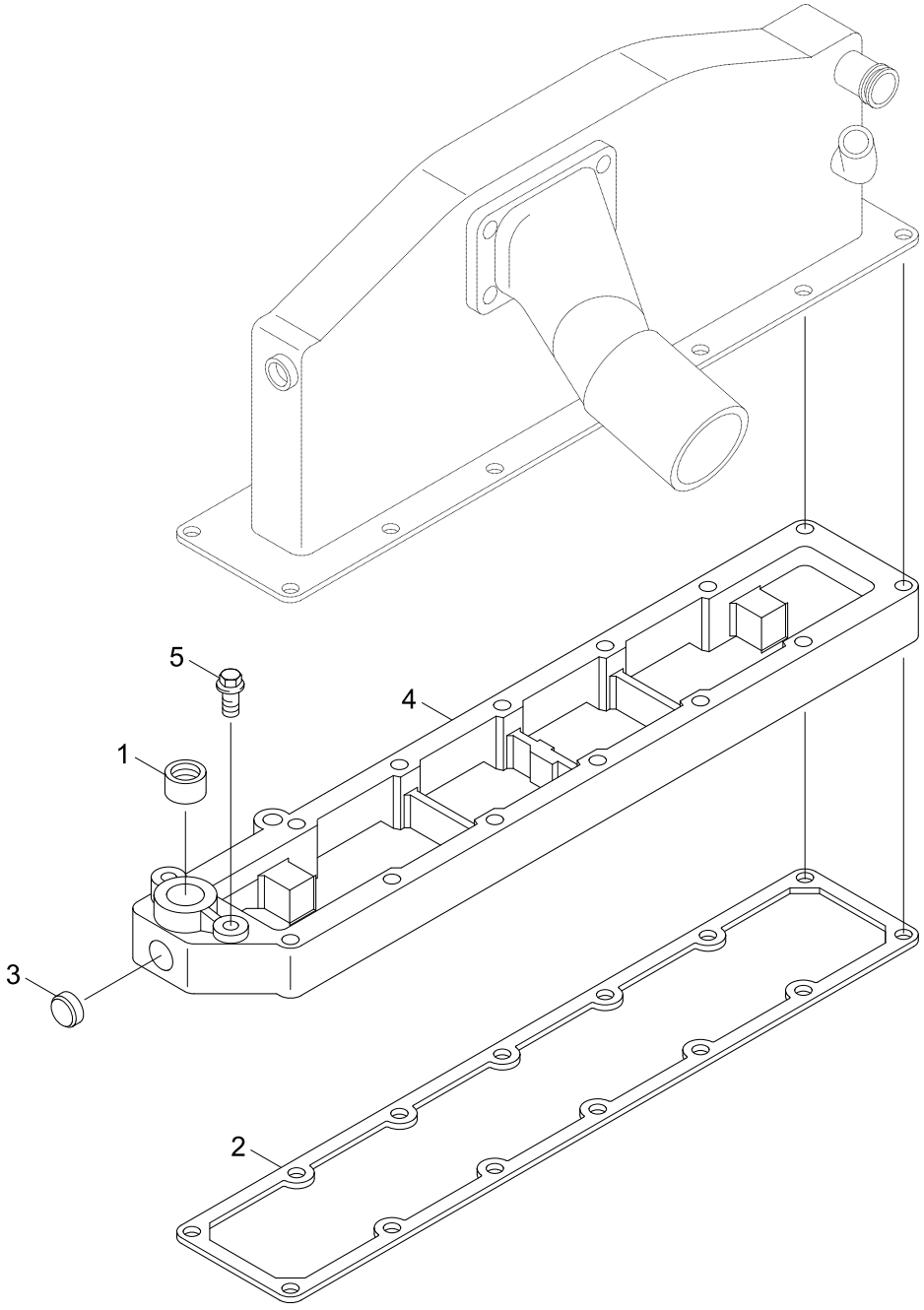

Item	Part_No	IS	Ord	T	Description	Qty	Serial_No	ITC	Remark
1	3008468				PLUG-PIPE	1			AH9050-01
2	3938152				GASKET	1			
3	3900956				.PLUG-EXPANSION	2			
4	3927991				.CONNECTION-SPACER	1			
5	3913638				SCREW-HEX F/HEAD CAP	1			

DATAPLATE

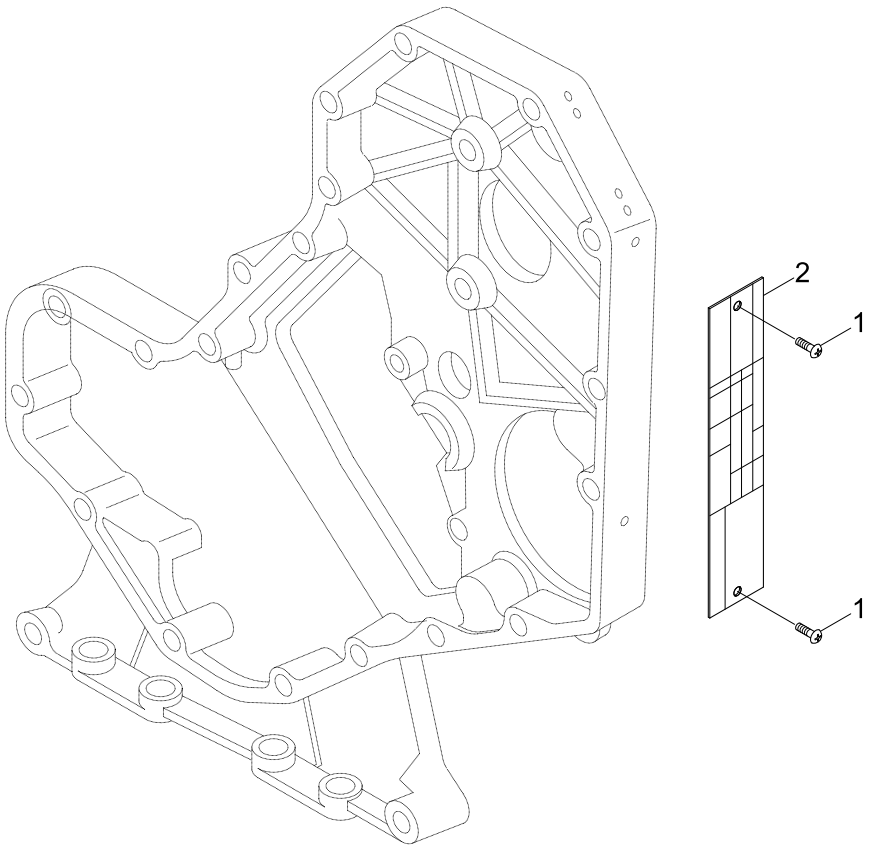

Item	Part_No	IS	Ord	T	Description	Qty	Serial_No	ITC	Remark
1	3931342				DATAPLATE	1			AP9001-03
2	3908612				SCREW-DRIVE	2			

FRONT GEAR COVER

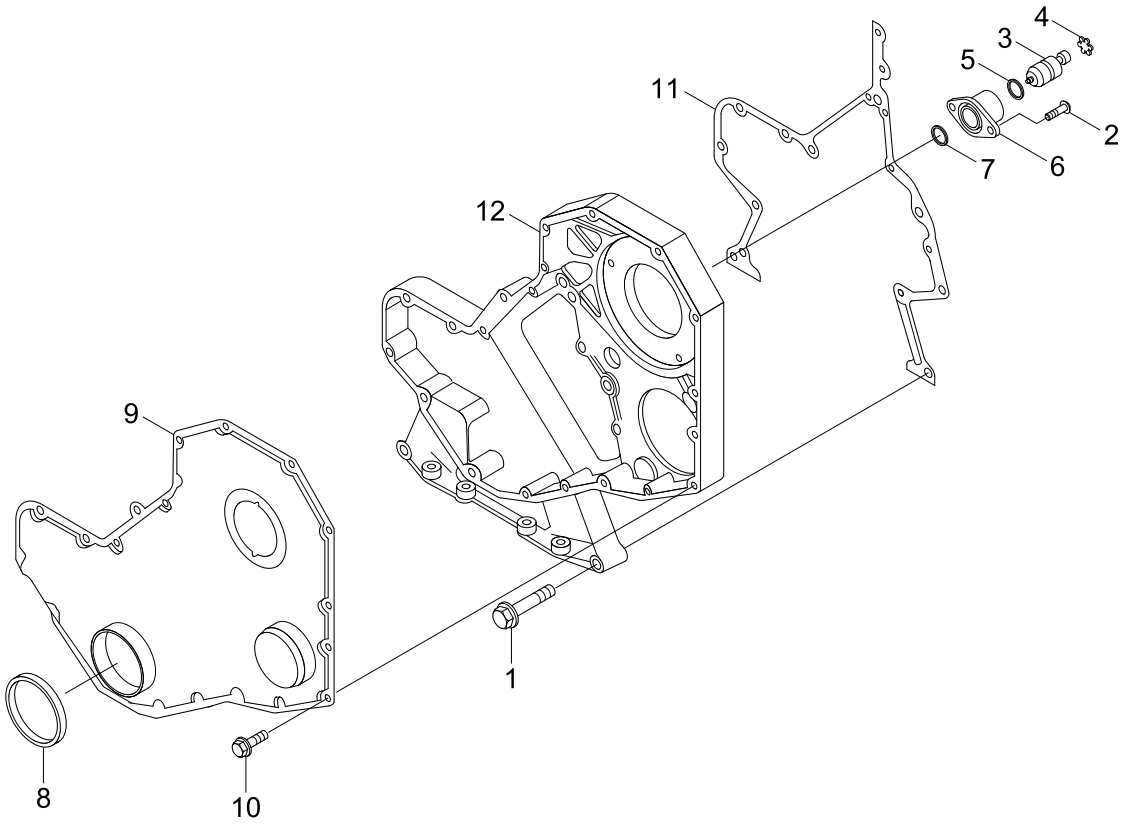

Item	Part_No	IS	Ord	T	Description	Qty	Serial_No	ITC	Remark
1	3900633				SCREW-HEX F/HEAD CAP	11			BP9110-01
2	3907998				SCREW-RD HD CAP	2			
N*-1	3913995				HOUSING-TIMING PIN	1			NOT
3	3903924				.PIN-TIMING	1			
4	3904849				.RING-RETAINING	1			
5	3913994				.O-RING	1			
6	3919683				.HOUSING-TIMING PIN	1			
7	3915772				SEAL-RECT RING	1			
N*-2	3918674				COVER-GEAR	1			NOT
8	3937111				.SEAL KIT-FRONT	1			
N9	3918675				.COVER-GEAR	1			NOT
10	3924962				SCREW	16			
N11	3916131				GASKET-GEAR HOUSING	1			NOT
12	3964422				HOUSING-GEAR	1			
*-3	3937111				SEAL KIT-FRONT				
N8	3935959				.SEAL-OIL	1			NOT
N*-4	3904351				.SEAL INSTALLATION-TOOL	1			NOT
N*-5	3904352				.SEAL INSTALLATION-TOOL	1			NOT
N	@				NOT SUPPLIED PARTS	AR			NOT

CYLINDER BLOCK

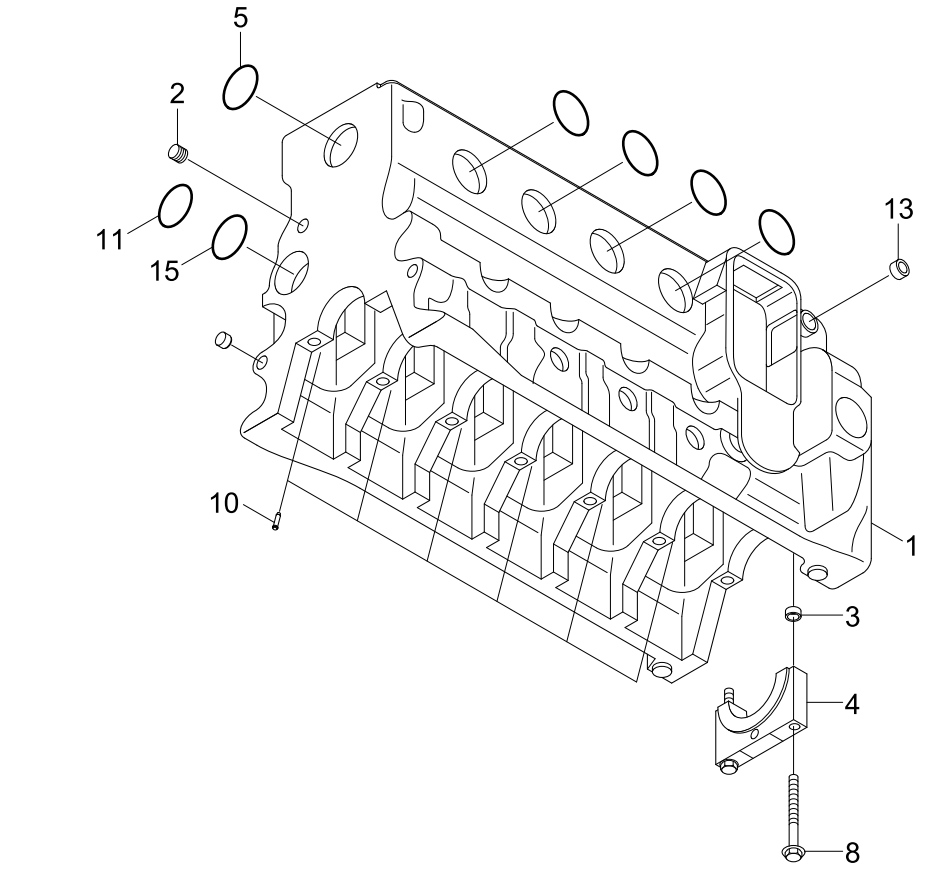

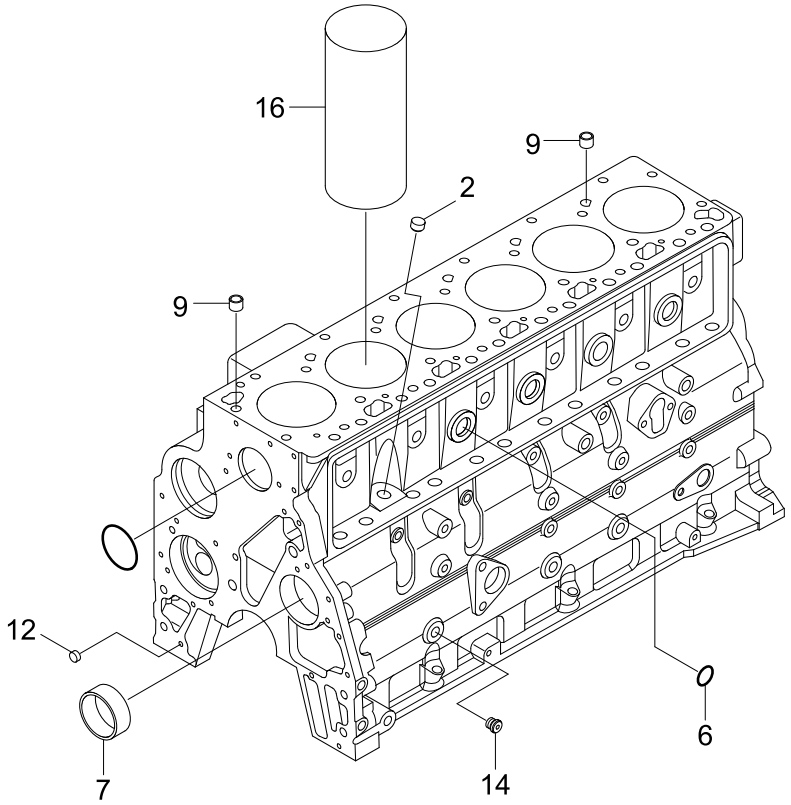

Item	Part_No	IS	Ord	T	Description	Qty	Serial_No	ITC	Remark
N1	3928788				CYLINDER BLOCK	1			NOT
2	3900956				PLUG-EXPANSION	3			
3	3900068				DOWEL-RING	2			
N*-1	3903492				CAP-MAIN BEARING	7			NOT
3	3900068				.DOWEL-RING	2			
N4	3900967				.CAP-MAIN BEARING	1			NOT
5	3812090				PLUG-EXPANSION	6			
6	3914035				PLUG-EXPANSION	4			
7	3901306				BUSHING	2			
8	3904217				SCREW	14			
9	3902343				DOWEL-RING	2			
10	3937214				NOZZLE	6			
11	3900687				PLUG-EXPANSION	1			
12	3900257				DOWEL-PIN	2			
13	3936641				PLUG-PIPE	1			
14	4093857				PLUG-PIPE	1			
15	3926047				SEAL/O-RING	1			
16	3904166				SLEEVE-SALVAGE	AR			
N	@				NOT SUPPLIED PARTS	AR			NOT

CRANKSHAFT AND BEARINGS

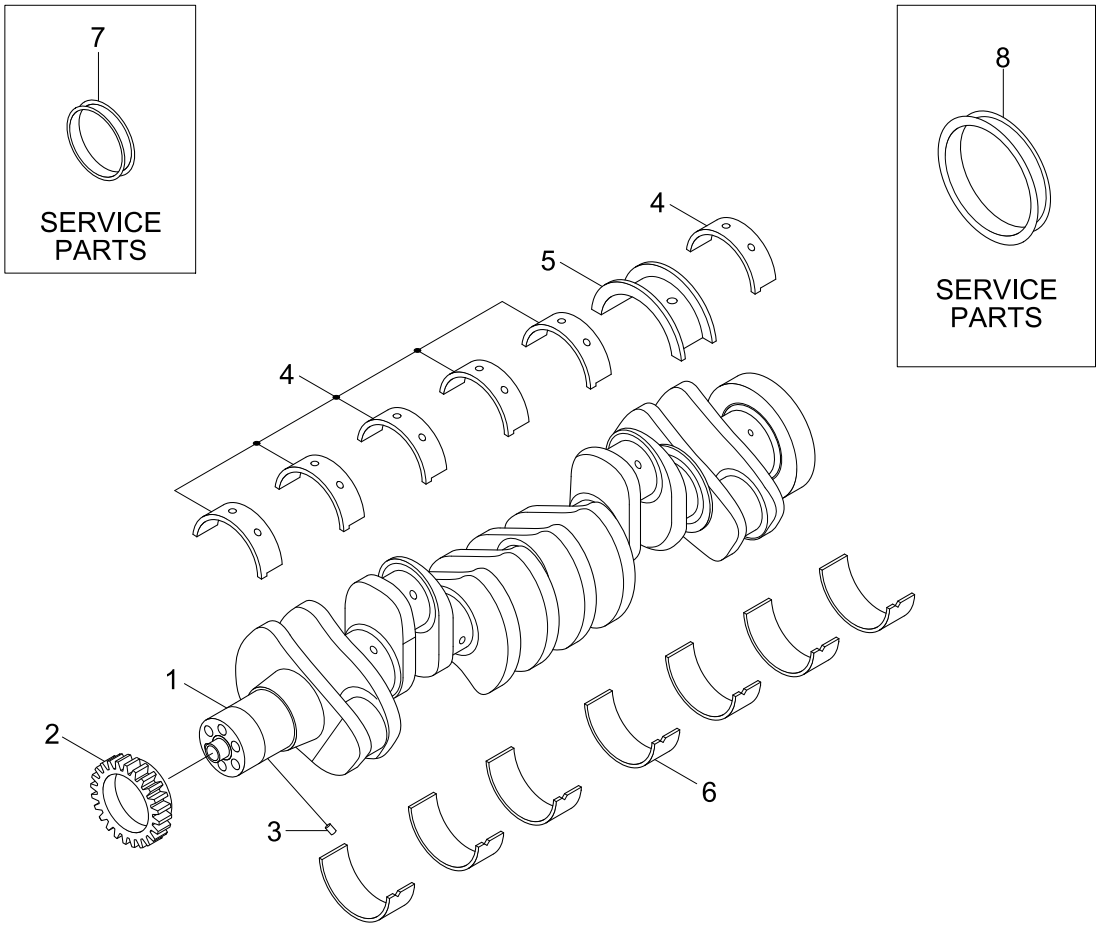

Item	Part_No	IS	Ord	T	Description	Qty	Serial_No	ITC	Remark
1	3908032				CRANKSHAFT ASSY	1			BP9115
N1	3929037				.CRANKSHAFT-ENGINE	1			NOT
2	3929027				.GEAR-CRANKSHAFT	1			
3	3904483				.PIN-DOWEL	1			
4	3929016				BEARING-MAIN	6			STD
N5	3906230				BEARING-CRANKSHAFT	1			NOT
6	3929021				BEARING-MAIN	7			STD
4	3929017				BEARING-MAIN	AR			0.25MM OVERSIZE
	3929018				BEARING-MAIN	AR			0.50MM OVERSIZE
	3929019				BEARING-MAIN	AR			0.75MM OVERSIZE
	3929020				BEARING-MAIN	AR			1.00MM OVERSIZE
N5	3906231				BEARING-CRANKSHAFT	AR			NOT
	3906232				BEARING-CRANKSHAFT	AR			NOT
	3906233				BEARING-CRANKSHAFT	AR			NOT
	3906234				BEARING-CRANKSHAFT	AR			NOT
5	3906452				BEARING-CRANKSHAFT	AR			0.50MM OVERSIZE
	3906454				BEARING-CRANKSHAFT	AR			1.00MM OVERSIZE
6	3929022				BEARING-MAIN	AR			0.25MM OVERSIZE
N6	3929023				BEARING-MAIN	AR			NOT
	3929024				BEARING-MAIN	AR			NOT
	3929025				BEARING-MAIN	AR			NOT
7	3802820				KIT-WEAR SLEEVE SEAL,FR	AR			FRONT
8	3926126				KIT-WEAR SLEEVE SEAL,RR	AR			REAR
N	@				NOT SUPPLIED PARTS	AR			NOT

VALVE TAPPET

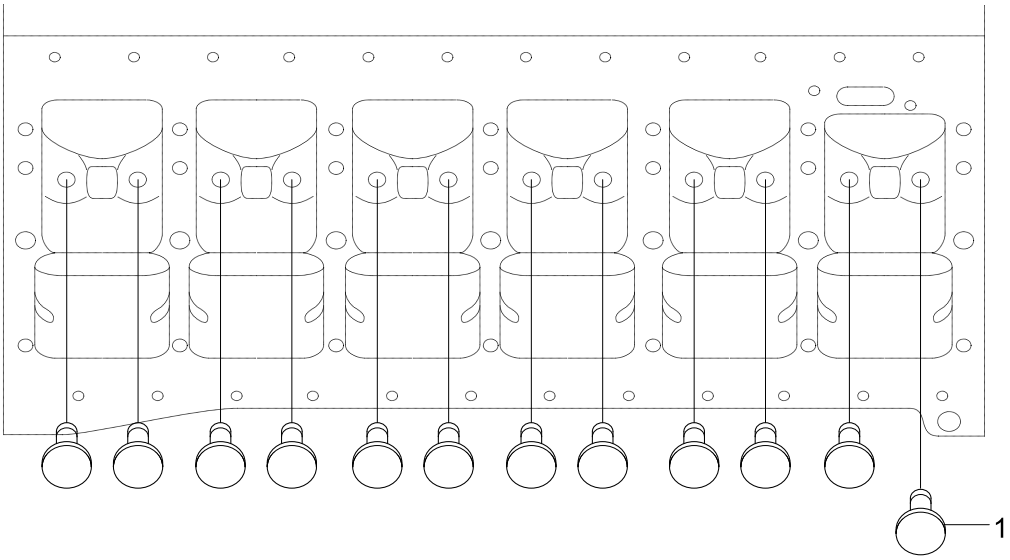

Item	Part_No	IS	Ord	T	Description	Qty	Serial_No	ITC	Remark
1	3931623				TAPPET-VALVE	12			BP9711-01

ROCKER LEVERS

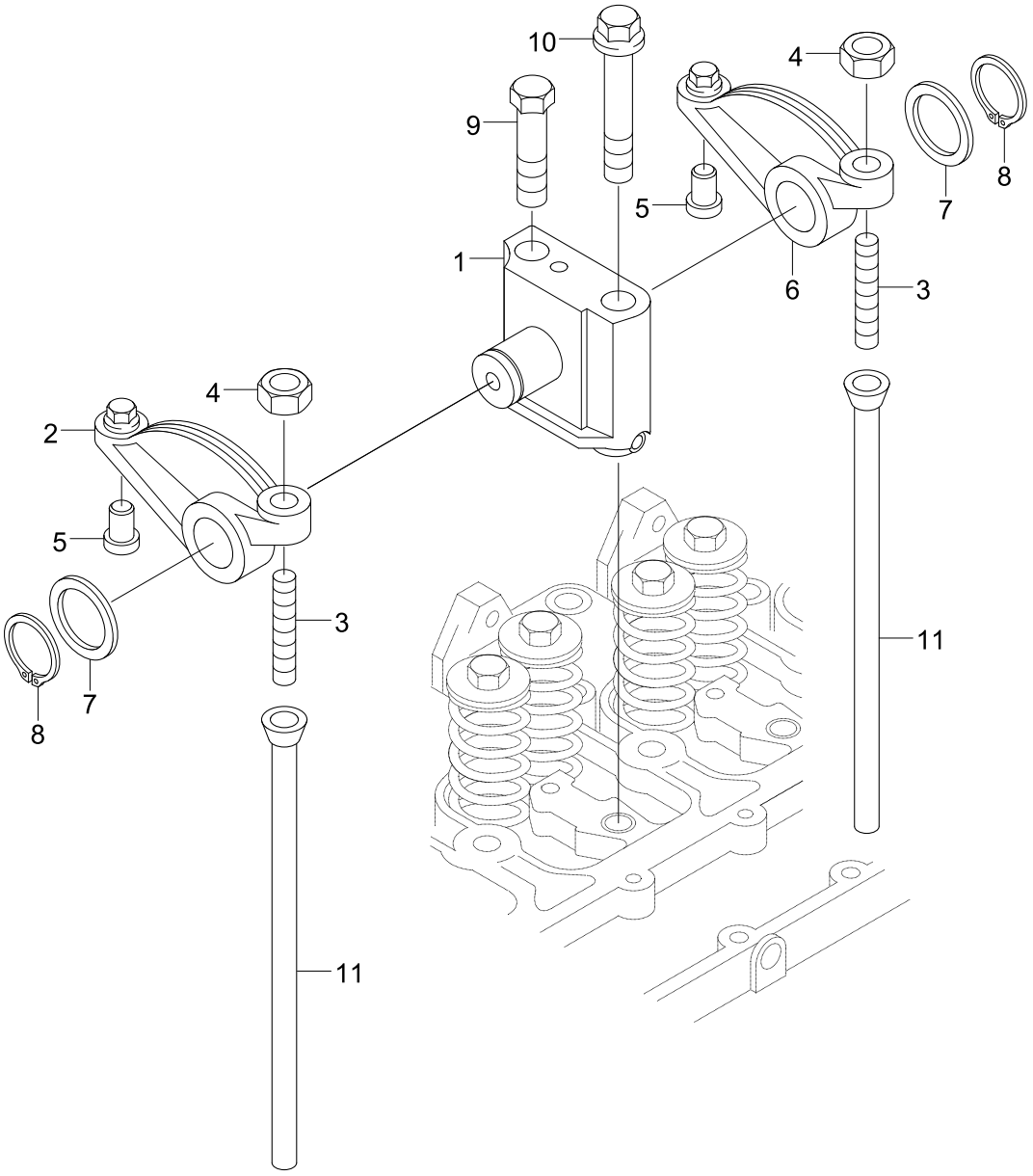

Item	Part_No	IS	Ord	T	Description	Qty	Serial_No	ITC	Remark
*-1	3922488				SUPPORT-R/LEVER	6			BP9710-04
1	3911423				.SUPPORT-R/LEVER	1			
N*-2	3922487				.SHAFT-R/LEVER	1			NOT
2	3910811				LEVER-ROCKER	6			
N*-3	3910809				.LEVER-ROCKER	1			NOT
3	3937438				.SCREW	1			
4	3927692				.NUT-HEAVY HEX	1			
N5	3900705				.INSERT-R/LEVER	1			NOT
6	3910810				LEVER-ROCKER	6			
N*-4	3910808				.LEVER-ROCKER	1			NOT
3	3937438				.SCREW	1			
4	3927692				.NUT-HEAVY HEX	1			
N5	3900705				.INSERT-R/LEVER	1			NOT
7	3900245				WASHER-PLAIN	12			
8	3900242				RING-RETAINING	12			
9	3901221				SCREW	6			
10	3920781				SCREW	6			
11	3284377				ROD-PUSH	12			
N	@				NOT SUPPLIED PARTS	AR			NOT

CAM FOLLOWER COVER

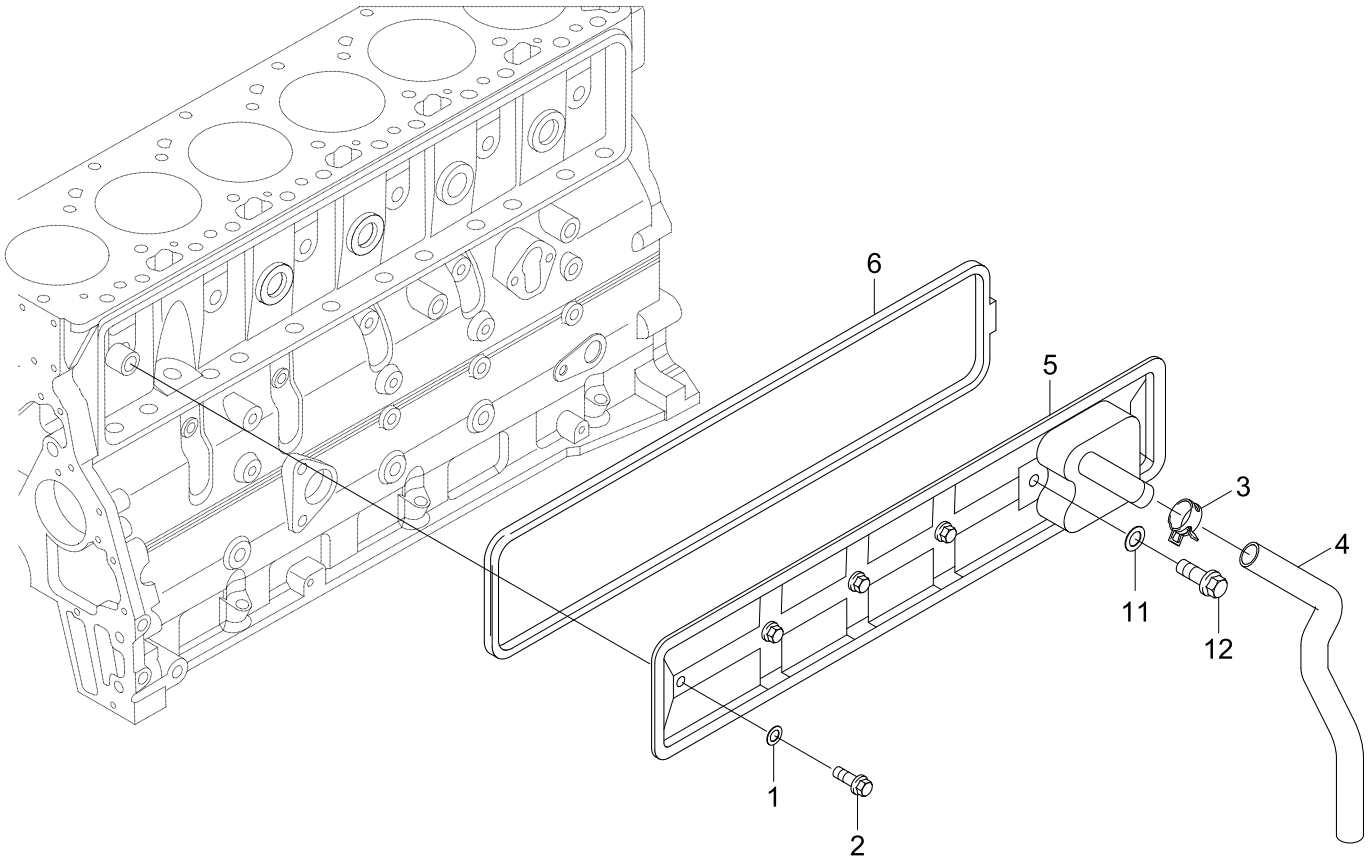

Item	Part_No	IS	Ord	T	Description	Qty	Serial_No	ITC	Remark
1	3928759				SEAL-GROMMET	4			CM9073
2	3900629				SCREW-HEX F/HEAD CAP	4			
3	3904230				CLAMP-SPRING HOSE	1			
4	3918614				HOSE-PLAIN	1			
5	3927913				COVER-PUSH ROD	1			
6	3284623				GASKET	1			
11	3928759				SEAL-GROMMET	2			CM9701
12	3900629				SCREW-HEX F/HEAD CAP	2			

VIBRATION DAMPER

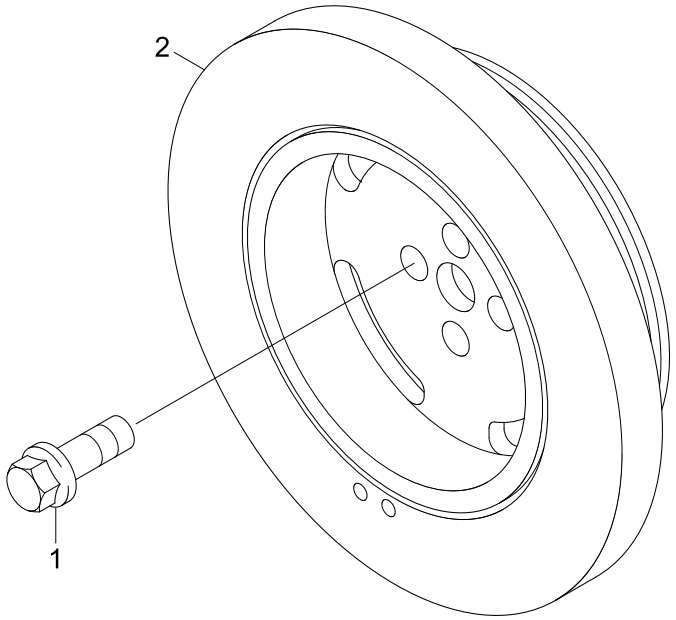

Item	Part_No	IS	Ord	T	Description	Qty	Serial_No	ITC	Remark
1	3903857				SCREW	4			DA9274
N2	4947829				DAMPER-VIBRATION	1			NOT
N	@				NOT SUPPLIED PARTS	AR			NOT

FRONT GEAR TRAIN ACCESSORY DRIVE

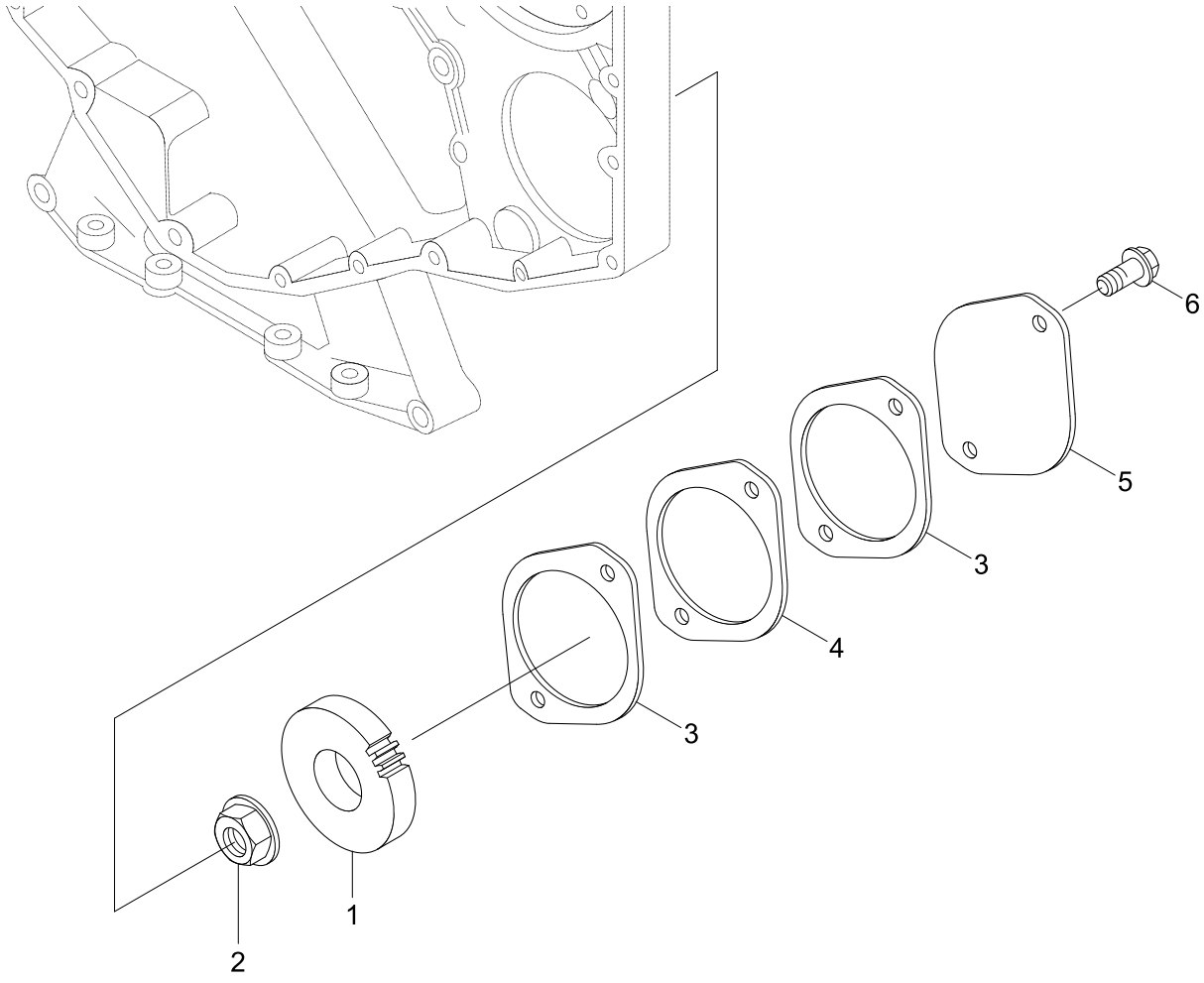

Item	Part_No	IS	Ord	T	Description	Qty	Serial_No	ITC	Remark
1	3924186				GEAR, ACCESSORY DRIVE	1			DF9012
2	3904828				NUT, HEXAGON FLANGE	1			
3	3929751				GASKET-ACC DRIVE CVR	2			
4	3902603				SPACER-HYDRAULIC PUMP	1			
5	3914868				PLATE-COVER	1			
6	3901249				SCREW-HEX F/HEAD CAP	2			

DRAIN LOCATION

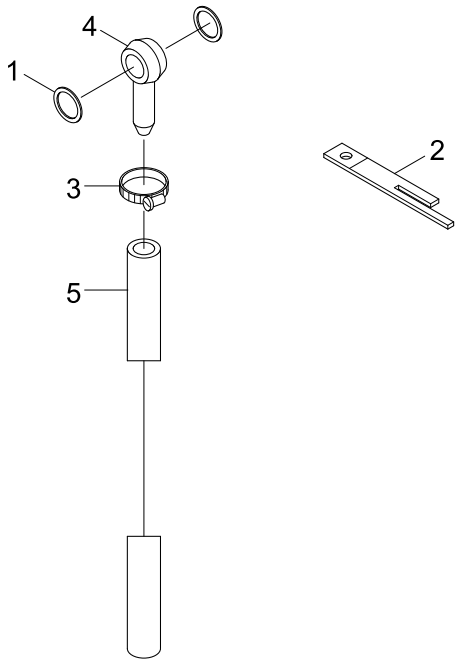

Item	Part_No	IS	Ord	T	Description	Qty	Serial_No	ITC	Remark
1	3918192				WASHER-SEALING	2			DL9287
2	3935267				CLAMP-TUBE	1			
N3	3936583				CLAMP-HOSE	1			NOT
4	3936593				BANJO CONNECTOR	1			
5	3936594				HOSE-PLAIN	1			
N	@				NOT SUPPLIED PARTS	AR			NOT

THERMOSTAT

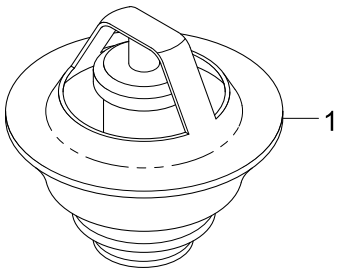

Item	Part_No	IS	Ord	T	Description	Qty	Serial_No	ITC	Remark
1	4080631				THERMOSTAT	1			EC9040

ALTERNATOR

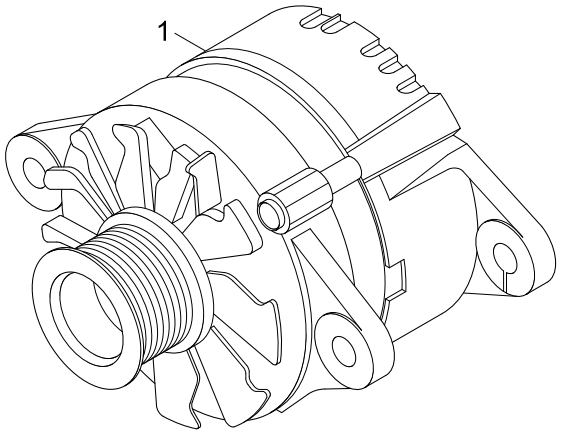

Item	Part_No	IS	Ord	T	Description	Qty	Serial_No	ITC	Remark
1	5263220				ALTERNATOR	1			EE9345

ALTERNATOR DRIVE

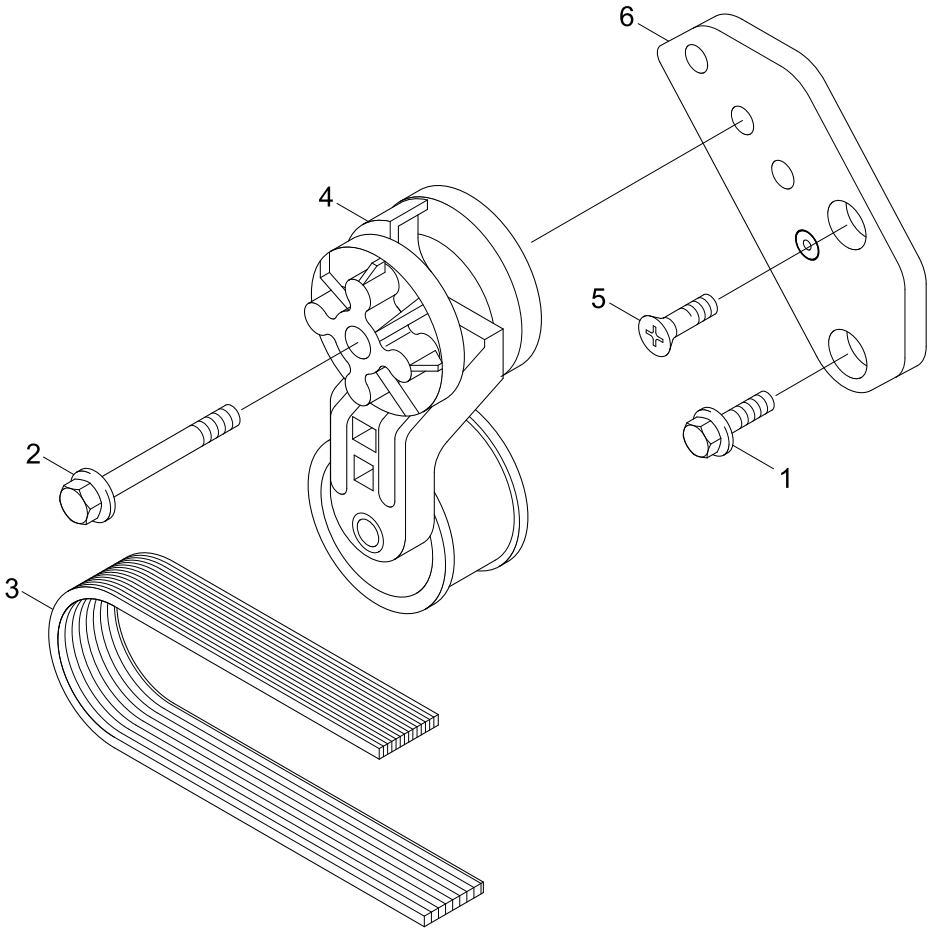

Item	Part_No	IS	Ord	T	Description	Qty	Serial_No	ITC	Remark
1	3900631				SCREW-HEX F/HEAD CAP	1			EH9702-05
2	3904446				SCREW-HEX F/HEAD CAP	1			
3	3288768				BELT-V RIBBED	1			
4	3937553				TENSIONER-BELT	1			
5	3925186				SCREW	1			
6	3925207				BRACKET	1			

ALTERNATOR MOUNTING

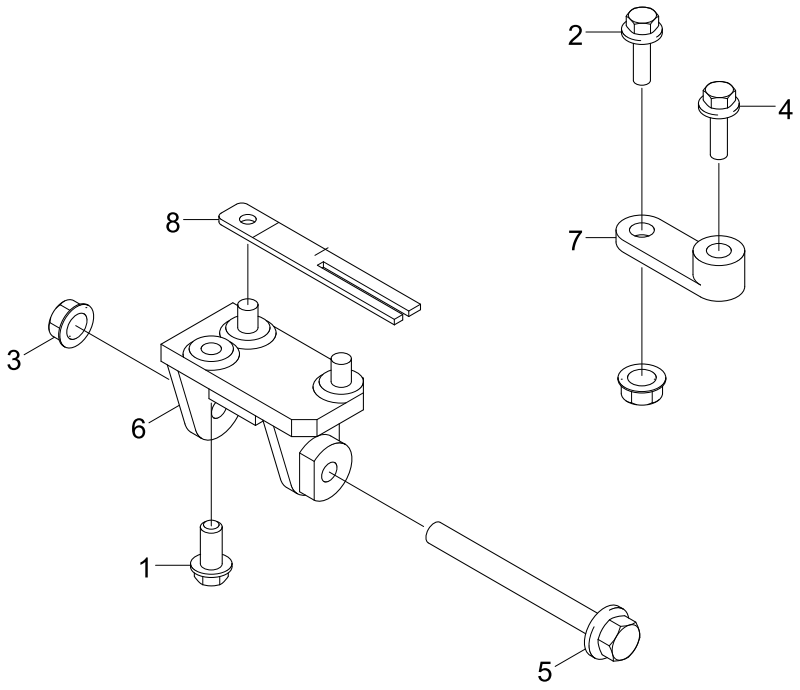

Item	Part_No	IS	Ord	T	Description	Qty	Serial_No	ITC	Remark
1	3900631				SCREW-HEX F/HEAD CAP	3			EH97613-01
2	3902114				SCREW-HEX F/HEAD CAP	1			
3	3902662				NUT-HEX FLANGE	2			
4	3903112				SCREW-HEX F/HEAD CAP	1			
5	3916518				SCREW-HEX F/HEAD CAP	1			
N6	4080803				SUPPORT-ALTERNATOR	1			NOT
7	4093839				BRACE-ALTERNATOR	1			
8	3935267				CLAMP-TUBE	1			
N	@				NOT SUPPLIED PARTS	AR			NOT

MECHANICAL TACHOMETER DRIVE

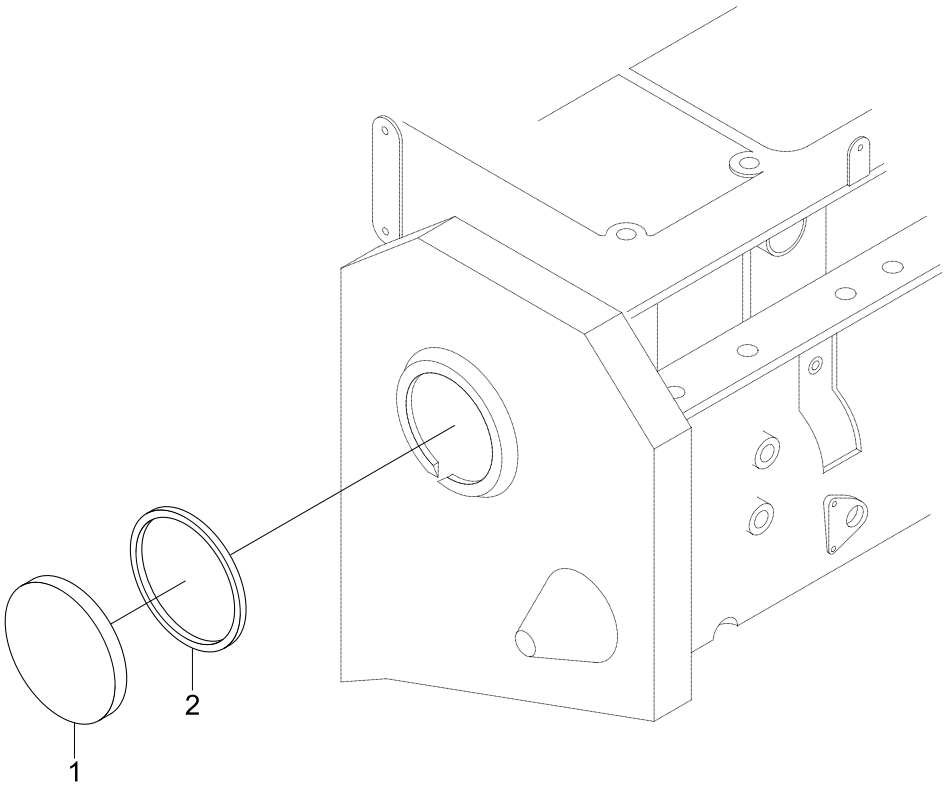

Item	Part_No	IS	Ord	T	Description	Qty	Serial_No	ITC	Remark
1	3903463				COVER-ACCESS HOLE	1			EI9701-02
2	3903475				SEAL-RECT RING	1			

FAN DRIVE AND MOUNTING

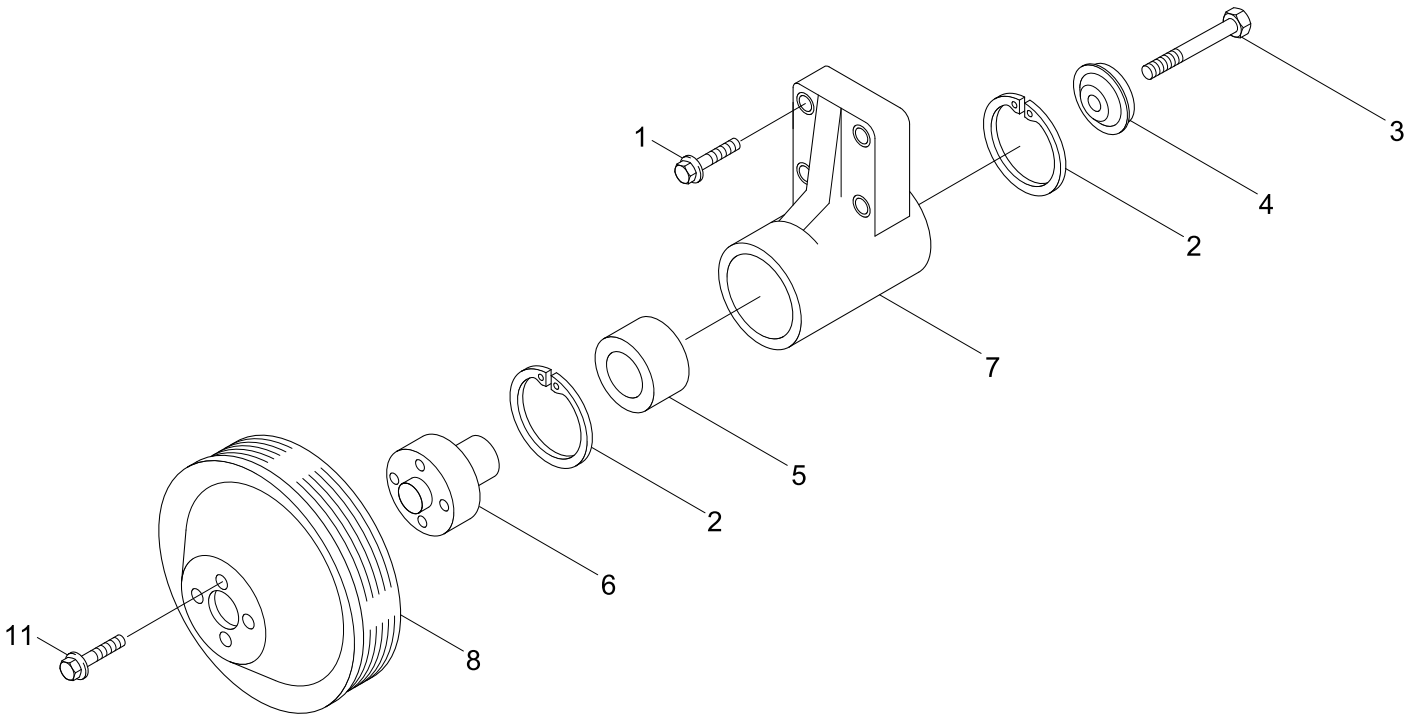

Item	Part_No	IS	Ord	T	Description	Qty	Serial_No	ITC	Remark
1	3900678				SCREW-HEX F/HEAD CAP	4			FA9616
*-1	3913433				SUPPORT-FAN	1			
2	3035960				.RING-RETAINING	2			
3	3907769				.SCREW-H/HEAD CAP	1			
4	3923044				.RETAINER-FAN HUB	1			
5	3910739				.BEARING-BALL	1			
6	5272335				.HUB-FAN	1			
N7	3913434				.SUPPORT-FAN	1			NOT
8	3935363				PULLEY-FAN	1			
11	3908226				SCREW	4			FA9627

AIR FUEL CONTROL PLUMBING

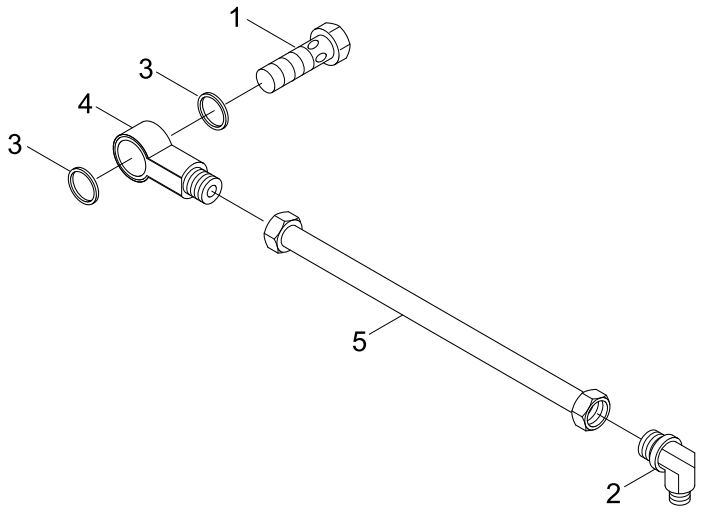

Item	Part_No	IS	Ord	T	Description	Qty	Serial_No	ITC	Remark
1	3903035				SCREW	1			FE9073
2	3910265				ELBOW-MALE ADAPTER	1			
3	3918191				WASHER-SEALING	2			
4	3919644				CONNECTOR-BANJO	1			
5	3991513				TUBE-AIR FUEL CONTROL	1			

FUEL FILTER

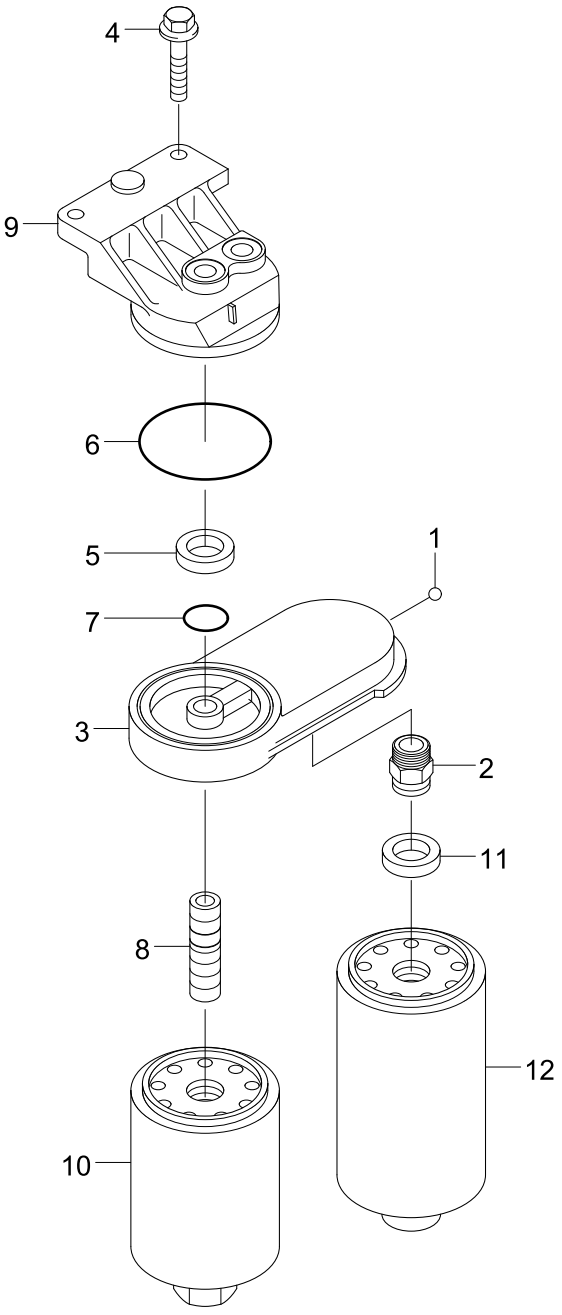

Item	Part_No	IS	Ord	T	Description	Qty	Serial_No	ITC	Remark
*-1	4989116				HEAD-FUEL FILTER	1			FF90040-01
N1	3897329				.BALL	1			NOT
N2	3936337				.ADAPTER-FILTER HEAD	1			NOT
N3	4989115				.HEAD-FUEL FILTER	1			NOT
4	3900632				SCREW-HEX F/HEAD CAP	2			
5	3903293				NUT	1			
6	4980085				SEAL-RECTANGULAR RING	1			
7	3903846				SEAL/O-RING	1			
8	3925955				ADAPTER-FILTER HEAD	1			
9	3930969				HEAD-FUEL FILTER	1			
10	3931063				FILTER-FUEL	1			
11	4080678				GASKET-RECTANGULAR	1			
12	4093730				SEPARATOR-FUEL WATER	1			
N	@				NOT SUPPLIED PARTS	AR			NOT

FUEL FILTER PLUMBING

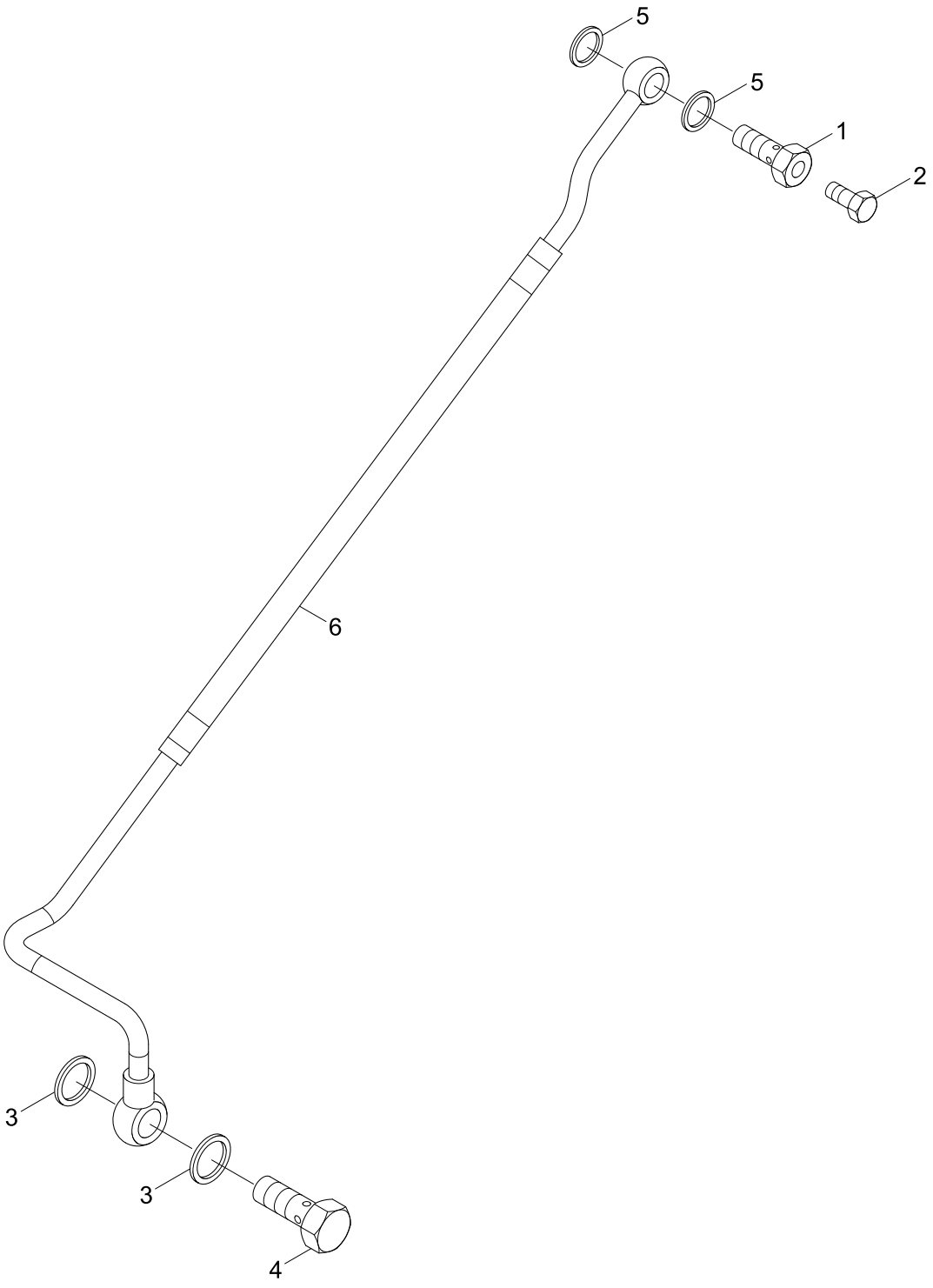

Item	Part_No	IS	Ord	T	Description	Qty	Serial_No	ITC	Remark
N*-1	3905860				SCREW	1			NOT
1	3911446				.SCREW	1			
2	3939570				.SCREW	1			
3	3918191				WASHER-SEALING	2			
4	3924725				SCREW	1			
5	3918192				WASHER-SEALING	2			
N6	4080764				TUBE-FUEL SUPPLY	1			NOT
N	@				NOT SUPPLIED PARTS	AR			NOT

FLYWHEEL HOUSING

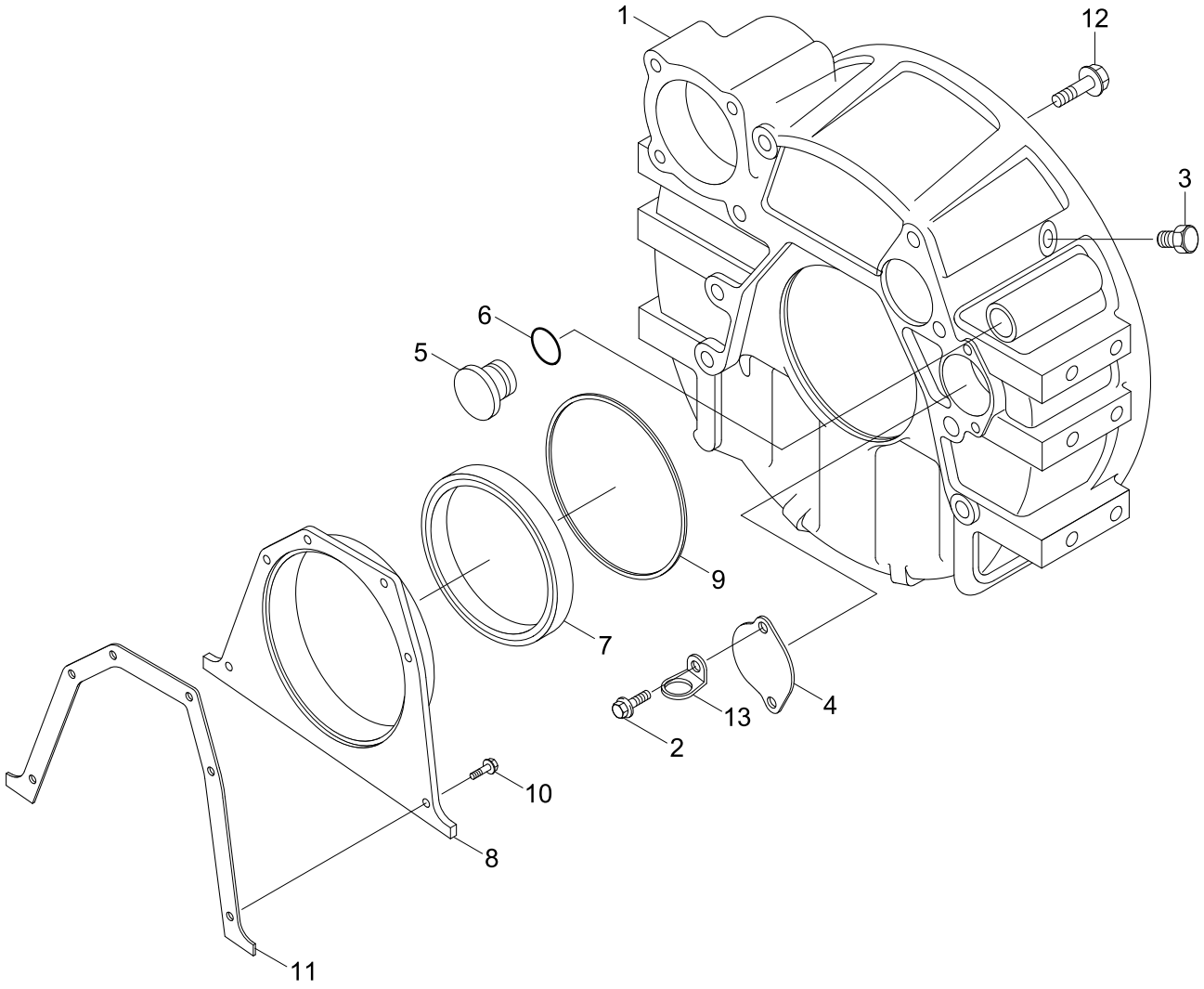

Item	Part_No	IS	Ord	T	Description	Qty	Serial_No	ITC	Remark
1	3353826				FLYWHEEL HOUSING	1			FH9086-10
2	3900225				SCREW-HEX HEAD CAP	2			
3	3904181				PLUG-THREADED	1			
4	3925234				PLATE-COVER	1			
5	3910248				PLUG/O-RING	1			
6	3910260				SEAL/O-RING	1			
*-1	4946177				COVER-REAR	1			
7	4955566				.KIT-CRANK SHAFT SEAL	1			
8	4946178				.COVER-REAR	1			
9	3912473				SEAL-RECT RING	1			
10	3913638				SCREW-HEX F/HEAD CAP	6			
11	3914386				GASKET-REAR COVER	1			
12	3920447				SCREW-HEX F/HEAD CAP	8			
13	4080757				CLIP	1			
*-2	4955566				KIT-CRANK SHAFT SEAL				
N7	3973745				SEAL-OIL	1			NOT
N*-3	4089425				.TOOL-SEAL INSTALLATION	1			NOT
N*-4	4940231				.TOOL-SEAL INSTALLATION	1			NOT
N	@				NOT SUPPLIED PARTS	AR			NOT

FUEL PUMP COUPLING

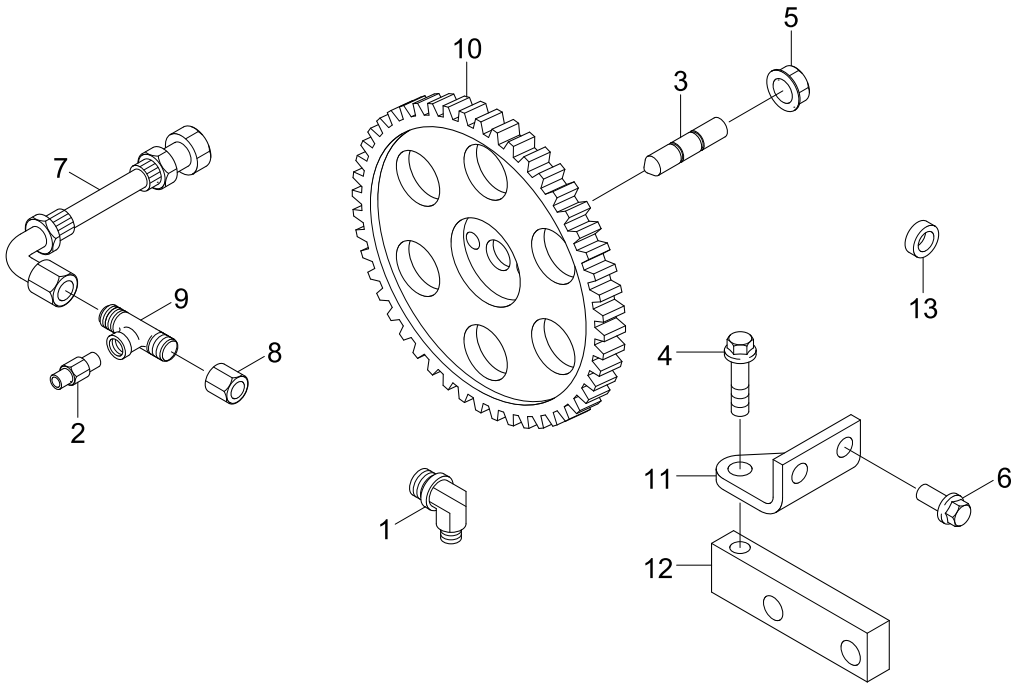

Item	Part_No	IS	Ord	T	Description	Qty	Serial_No	ITC	Remark
1	68139				ELBOW-MALE ADAPTER	1			FP90987
2	4990174				NIPPLE-PLAIN HEXAGON	1			
3	3282372				STUD	4			
4	3900632				SCREW-HEX F/HEAD CAP	3			
5	3902662				NUT-HEX FLANGE	4			
6	3903990				SCREW-HEX F/HEAD CAP	2			
7	3918536				HOSE-FLEXIBLE	1			
8	3921556				CAP	1			
9	3924346				TEE	1			
10	3934636				GEAR-FUEL PUMP	1			
N11	3936646				BRACE-FUEL PUMP	1			NOT
N12	3936647				BRACE-FUEL PUMP	1			NOT
13	4094052				SPACER-MOUNTING	1			
N	@				NOT SUPPLIED PARTS	AR			NOT

FUEL INJECTION PUMP

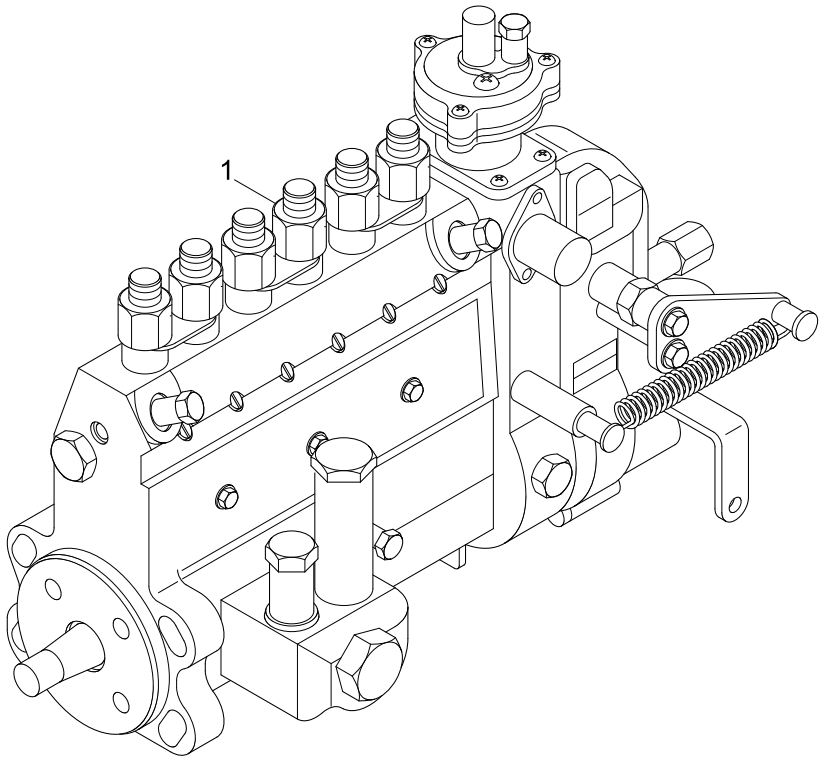

Item	Part_No	IS	Ord	T	Description	Qty	Serial_No	ITC	Remark
1	4981028				PUMP-FUEL INJETION	1			FP91171

LIFT PUMP

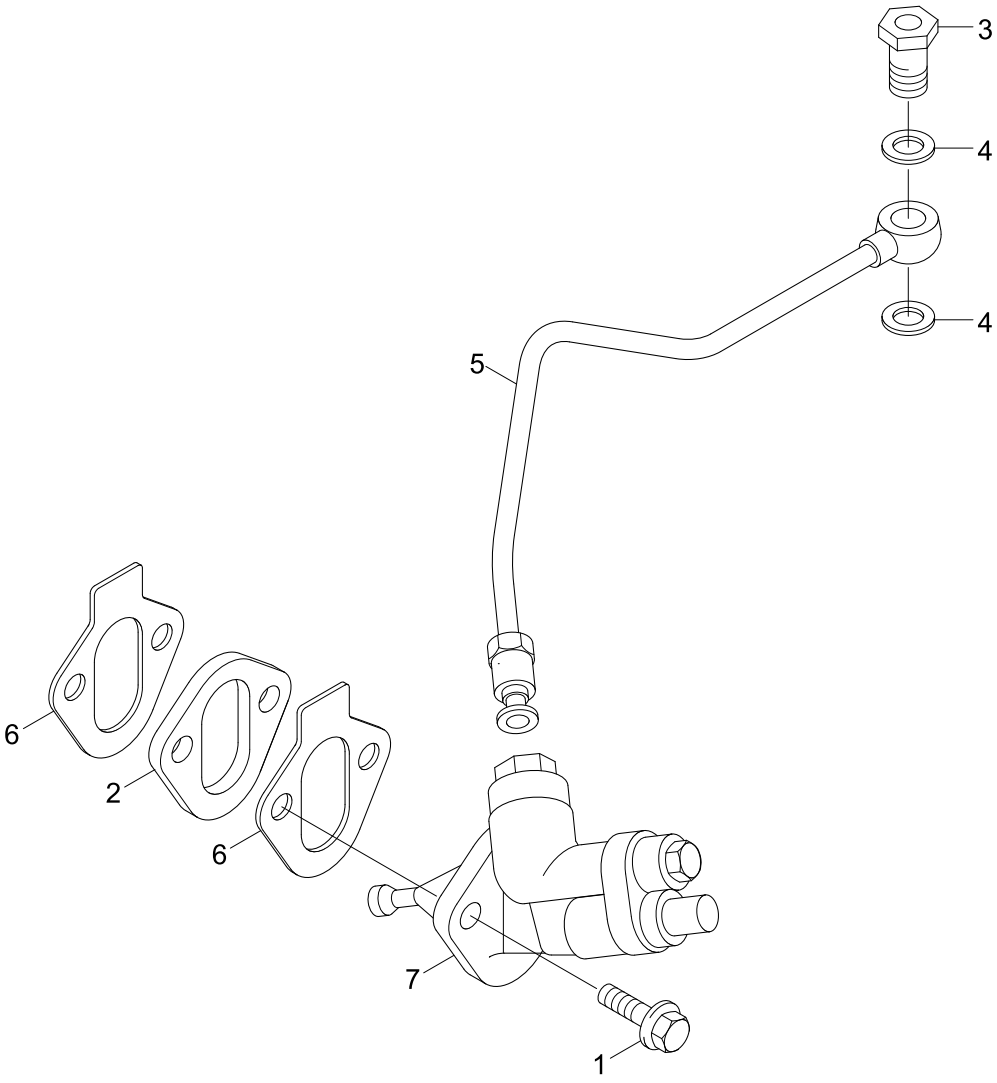

Item	Part_No	IS	Ord	T	Description	Qty	Serial_No	ITC	Remark
1	3900631				SCREW-HEX F/HEAD CAP	2			FS9185-05
2	3914284				SPACER-MOUNTING	1			
3	3916361				SCREW	2			
4	3963983				WASHER-SEALING	1			
5	3935480				TUBE-FUEL SUPPLY	2			
6	3939258				GASKET-COVER PLATE	1			
7	3936317				PUMP-FUEL TRANSFER	1			

FUEL PLUMBING

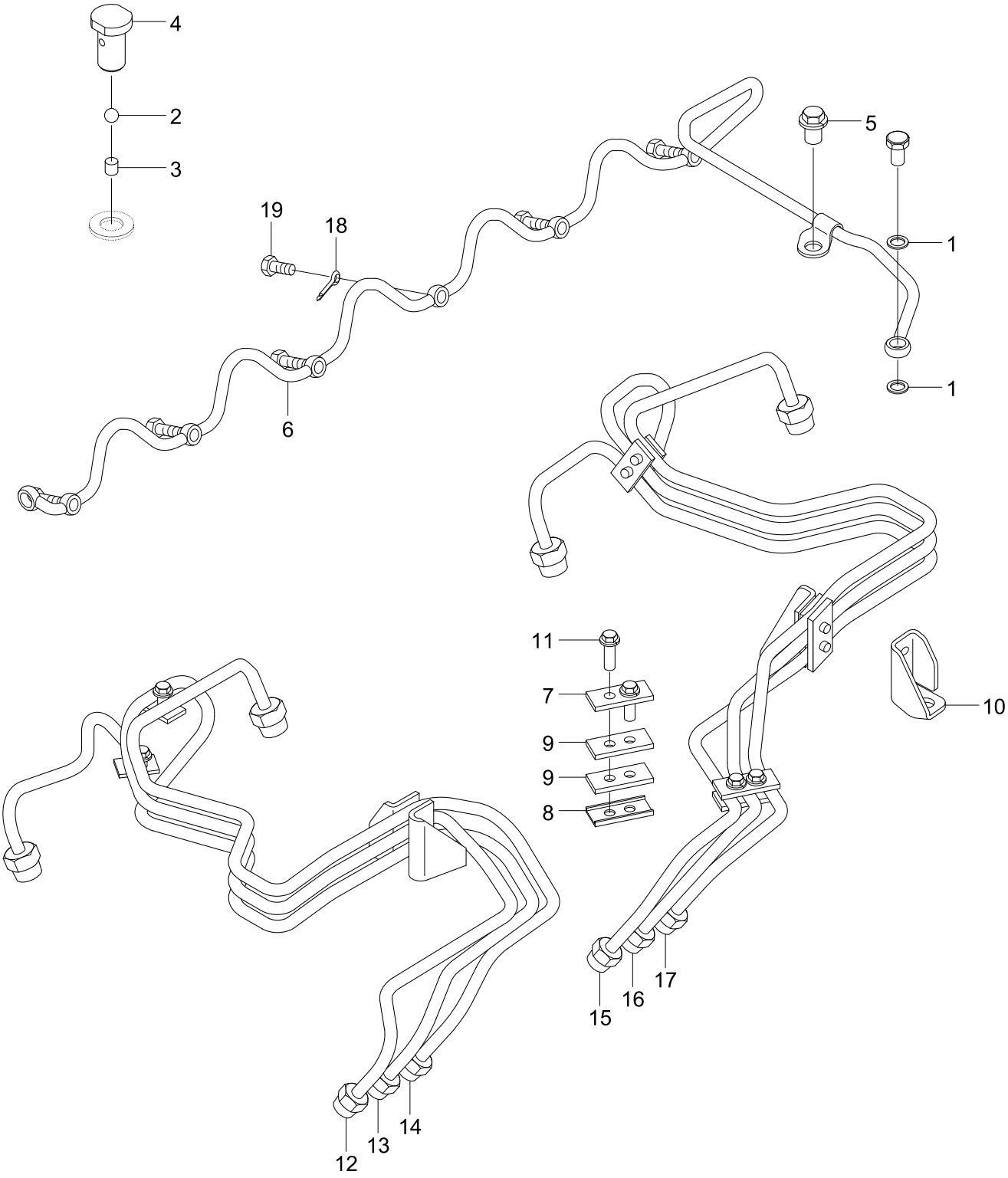

Item	Part_No	IS	Ord	T	Description	Qty	Serial_No	ITC	Remark
1	3918188				WASHER-SEALING	2			FT9259
*-1	3924726				VALVE-CHECK	1			
2	167157				.BALL-CHECK	1			
3	3916895				.PIN-ROLL	1			
4	3924723				.SCREW-BANJO CONN	1			
5	3924962				SCREW	1			
6	4080675				MANIFOLD-FUEL	1			
*-2	4080761				TUBE-INJECTOR F/SUPPLY	1			
7	3904519				.BRACE-TUBE	3			
8	3917716				.BRACE-TUBE	2			
9	3917747				.ISOLATOR-VIBRATION	6			
10	3917777				.BRACE-TUBE	1			
11	3920854				.SCREW-CAPTIVE WASHER	6			
12	4080759				.TUBE-INJECTOR F/SUPPLY	1			
13	4080760				.TUBE-INJECTOR F/SUPPLY	1			
14	4080763				.TUBE-INJECTOR F/SUPPLY	1			
*-3	4080762				TUBE-INJECTOR F/SUPPLY	1			
7	3904519				.BRACE-TUBE	3			
8	3917716				.BRACE-TUBE	2			
9	3917747				.ISOLATOR-VIBRATION	6			
10	3917777				.BRACE-TUBE	1			
11	3920854				.SCREW-CAPTIVE WASHER	6			
15	4080768				.TUBE-INJECTOR F/SUPPLY	1			
16	4080760				.TUBE-INJECTOR F/SUPPLY	1			
17	4080770				TUBE-INJECTOR F/SUPPLY	1			

Item	Part_No	IS	Ord	T	Description	Qty	Serial_No	ITC	Remark
18	3920854				.SCREW-CAPTIVE WASHER	6			
19	4094055				SCREW-CAPTIVE W/CAP	6			

FUEL SHUTOFF VALVE

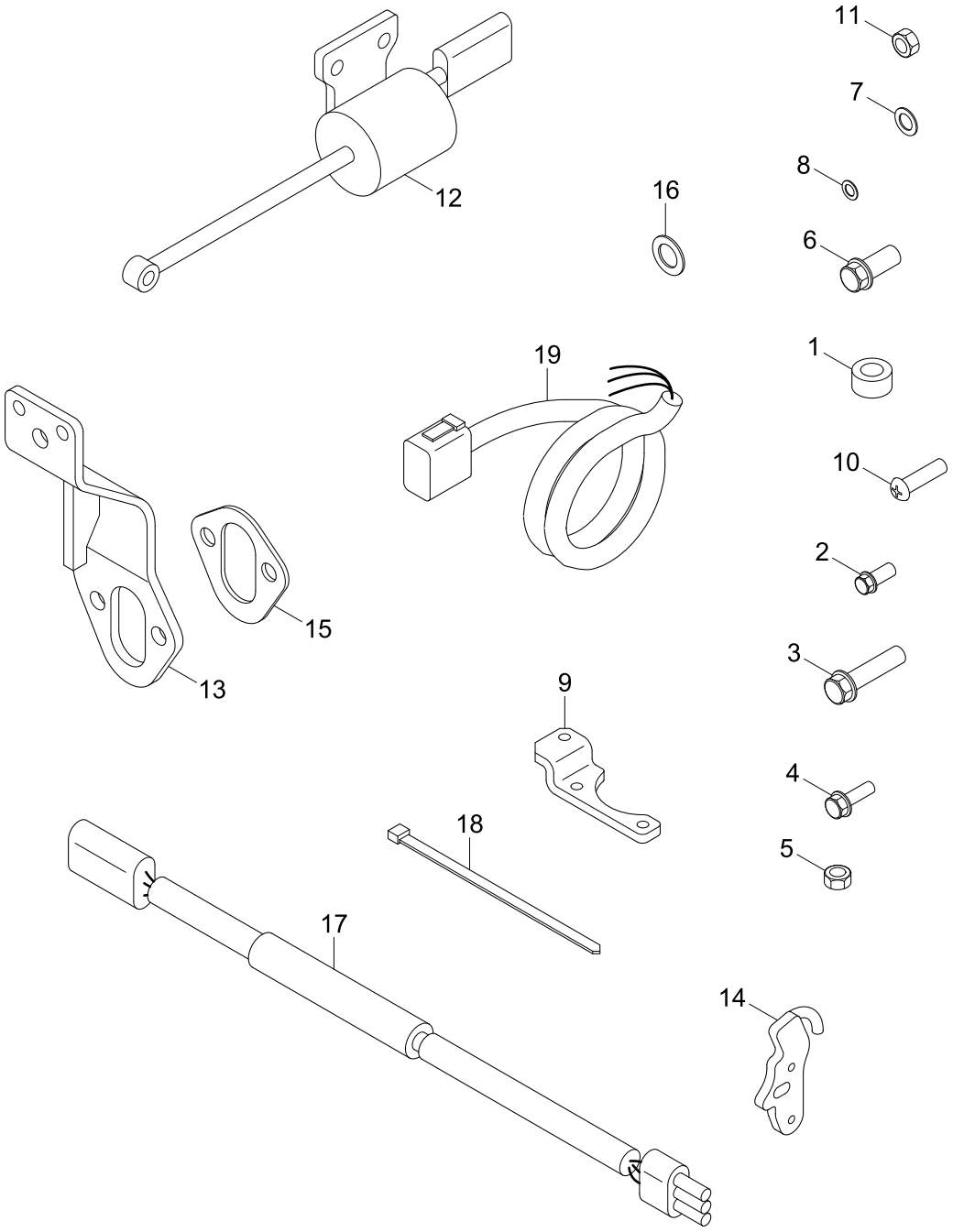

Item	Part_No	IS	Ord	T	Description	Qty	Serial_No	ITC	Remark
N1	504607				SPACER-MOUNTING	1			NOT
2	3600815				SCREW-HEX HEAD CAP	2			
3	3900678				SCREW-HEX F/HEAD CAP	1			
4	3901865				SCREW-HEX F/HEAD CAP	2			
5	3910959				LOCK NUT	1			
6	3918109				SCREW-HEX F/HEAD CAP	1			
7	3918188				WASHER-SEALING	2			
8	3934022				WASHER-PLAIN	1			
9	3934449				BRACKET-GOVERNOR	1			
10	3934450				SCREW-HEX HEAD CAP	1			
11	3934451				LOCK NUT	1			
12	3800603				KIT-SOLENOID 6A-24V	1			
13	3935433				BRACKET-SOLENOID	1			
14	3935759				LEVER-SHUTOFF VALVE	1			
15	3939258				GASKET-COVER PLATE	2			
16	3963983				WASHER-SEALING	2			
17	3972266				TIMER-OVERCRANK	1			
N18	4054632				CLAMP-WIRE TIE	2			NOT
19	4963448				HARNESS-WIRING	1			
*-1	3800603				KIT-SOLENOID 6A-24V				
N	@				NOT SUPPLIED PARTS	AR			NOT

FLYWHEEL

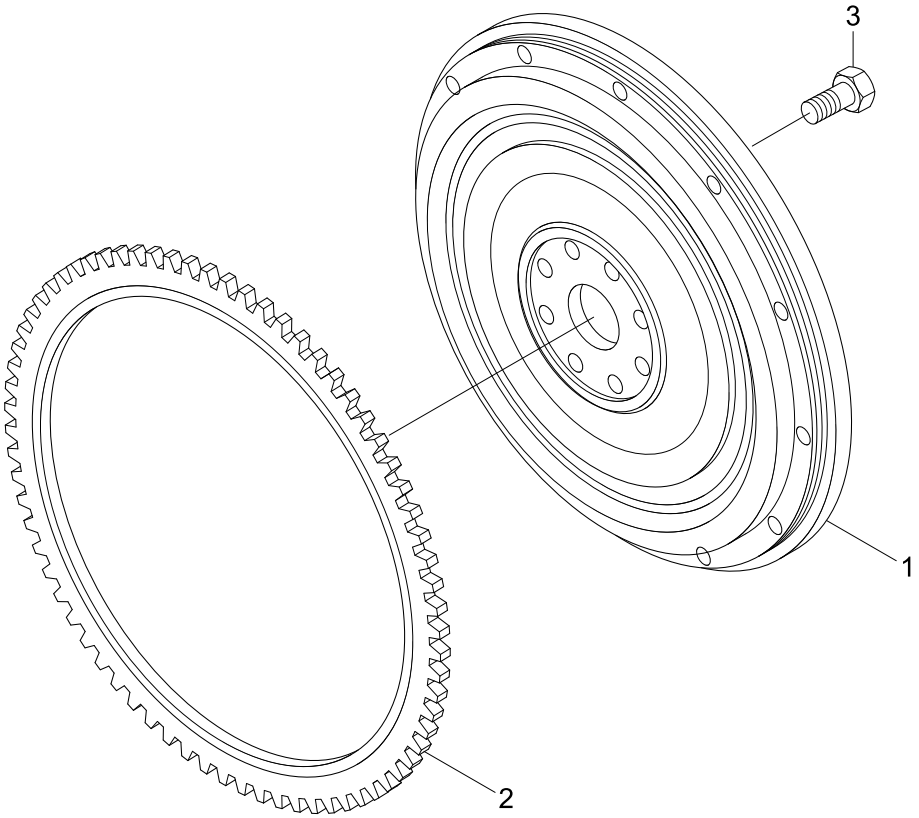

Item	Part_No	IS	Ord	T	Description	Qty	Serial_No	ITC	Remark
*-1	3972705				FLYWHEEL	1			FW9855-01
N1	3972704				.FLYWHEEL	1			NOT
2	3905427				.GEAR-FLYWHEEL RING	1			
3	4942710				SCREW-CAPTIVE W/CAP	8			

LIFTING BRACKET

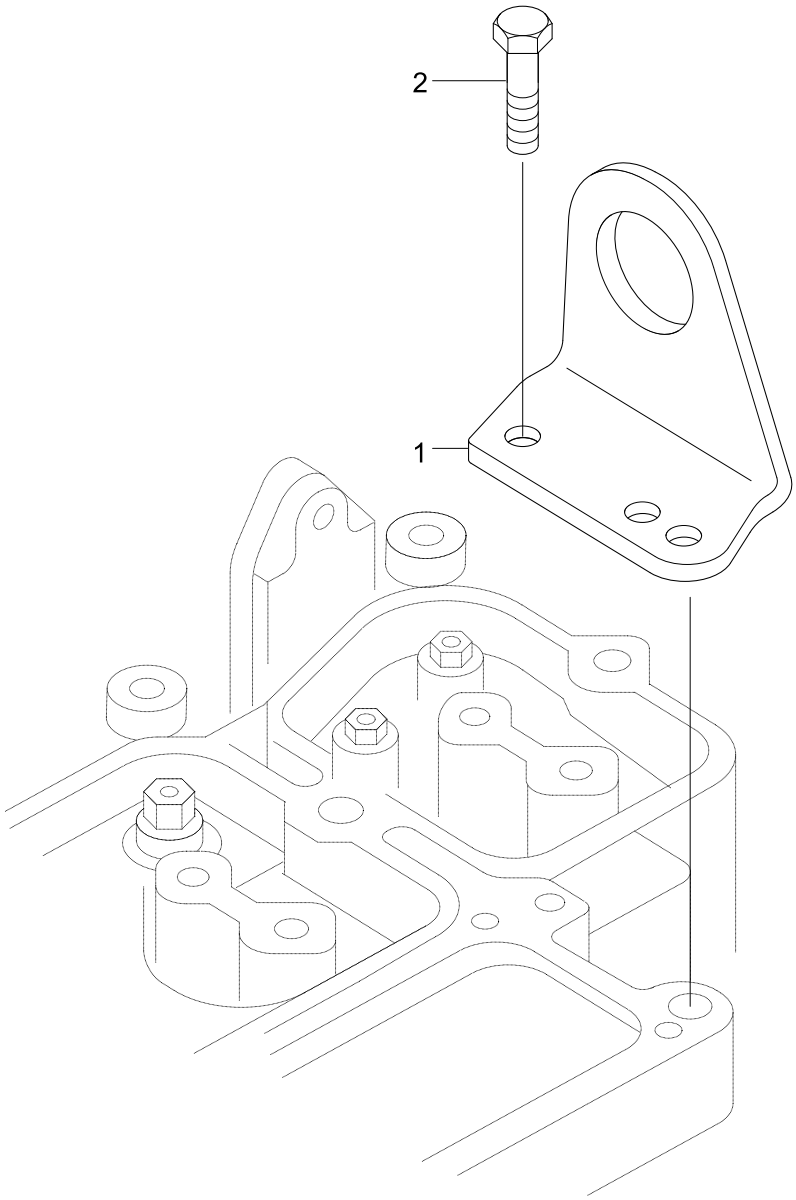

Item	Part_No	IS	Ord	T	Description	Qty	Serial_No	ITC	Remark
1	3281012				BRACKET-LIFTING	1			LA9019
2	3910495				SCREW-HEX F/HEAD CAP	2			

ENGINE OIL COOLER

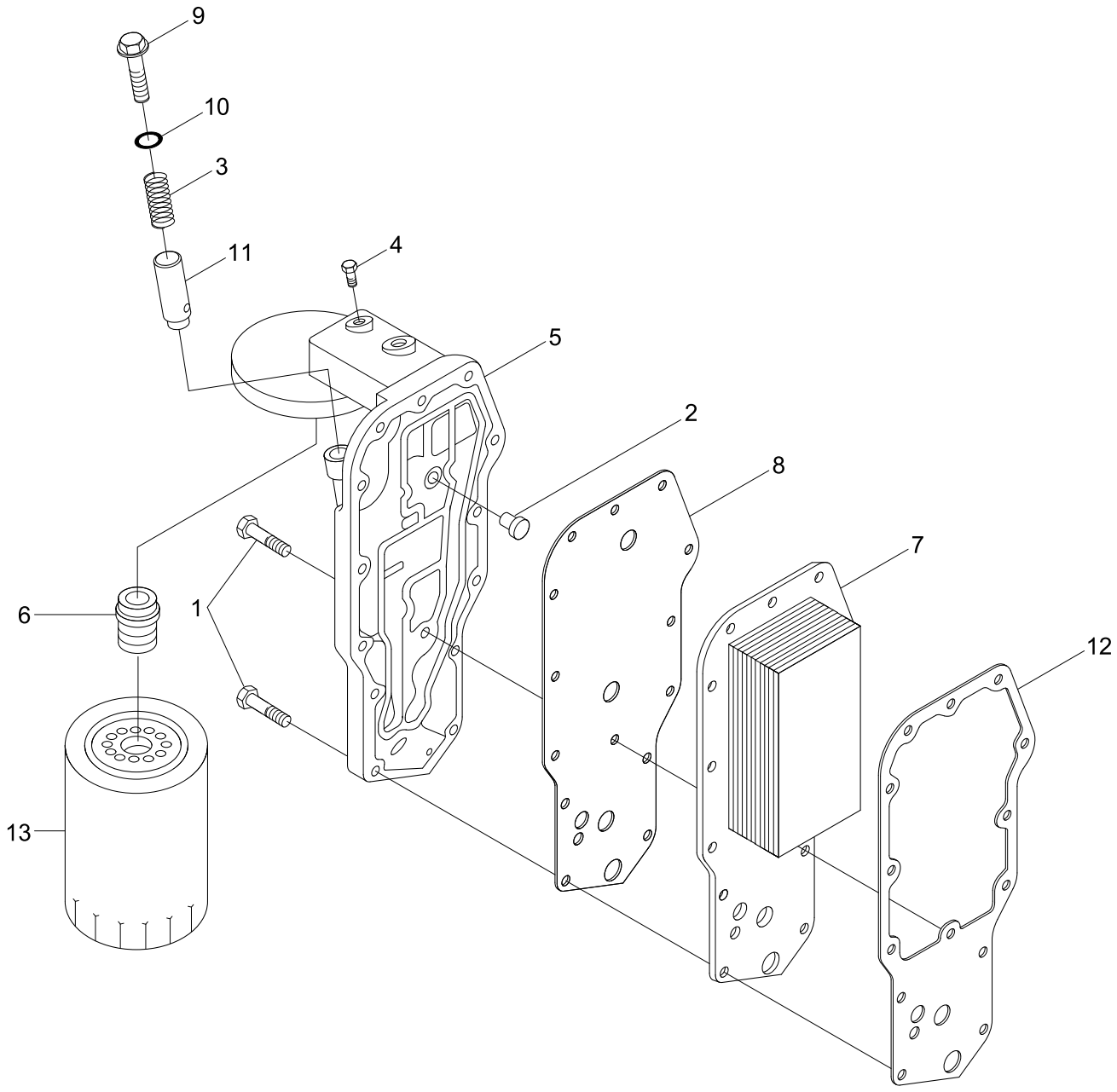

Item	Part_No	IS	Ord	T	Description	Qty	Serial_No	ITC	Remark
1	3900632				SCREW-HEX F/HEAD CAP	14			LC9020-08
2	3936365				VALVE-PRESS RELIEF	1			
3	3925009				SPRING-COMPRESSION	1			
4	3906619				PLUG-PIPE	1			
*-1	4024827				HEAD-LUB OIL FILTER	1			
N5	3924338				.HEAD-LUB OIL FILTER	1			NOT
6	3909355				.ADAPTER-FILTER HEAD	1			
7	3957544				CORE-COOLER	1			
8	3942915				GASKET-FILTER HEAD	1			
9	3915787				PLUG-THREADED	1			
10	3929457				SEAL/O-RING	1			
11	3918428				PLUNGER	1			
12	3942914				GASKET-O/COOLER CORE	1			
13	3937743				LUBE OIL FILTER	1			
N*-2	3937746				DECAL	1			NOT
N	@				NOT SUPPLIED PARTS	AR			NOT

OIL LEVEL GAUGE

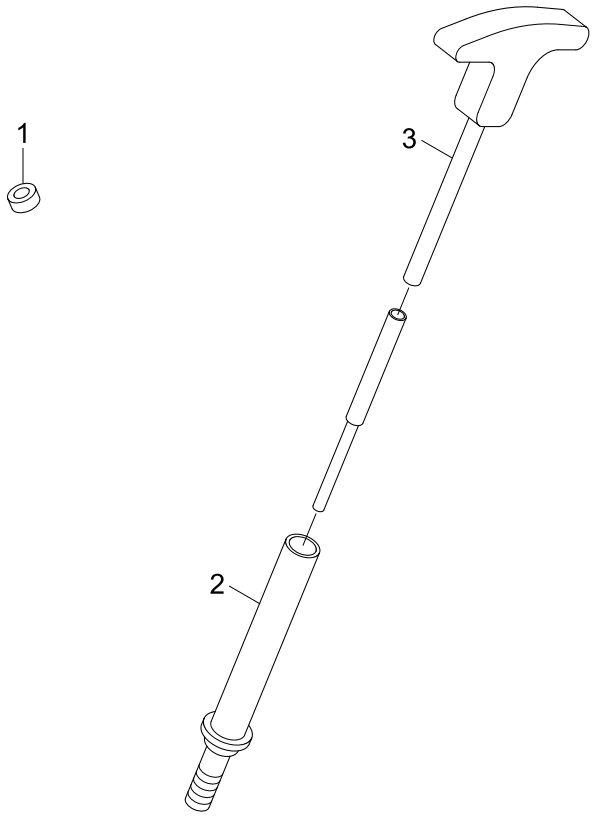

Item	Part_No	IS	Ord	T	Description	Qty	Serial_No	ITC	Remark
1	3900955				PLUG-EXPANSION	2			LG90343
2	4080672				TUBE-OIL GAUGE	1			
3	4080673				DIPSTICK	1			

LUBRICATING OIL PUMP

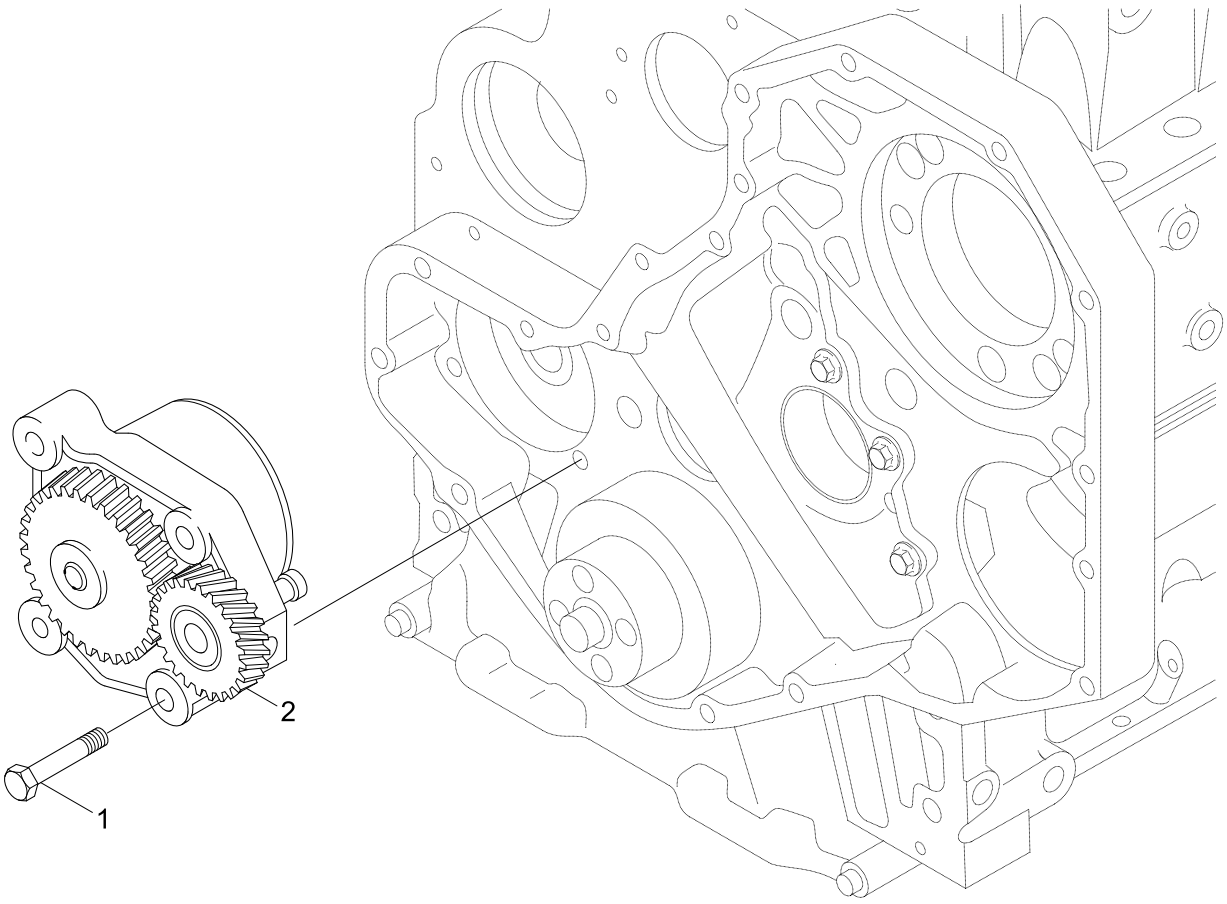

Item	Part_No	IS	Ord	T	Description	Qty	Serial_No	ITC	Remark
1	3900677				SCREW-HEX HEAD CAP	4			LP9064
2	3937404				PUMP-LUBE OIL	1			

NOISE PANEL

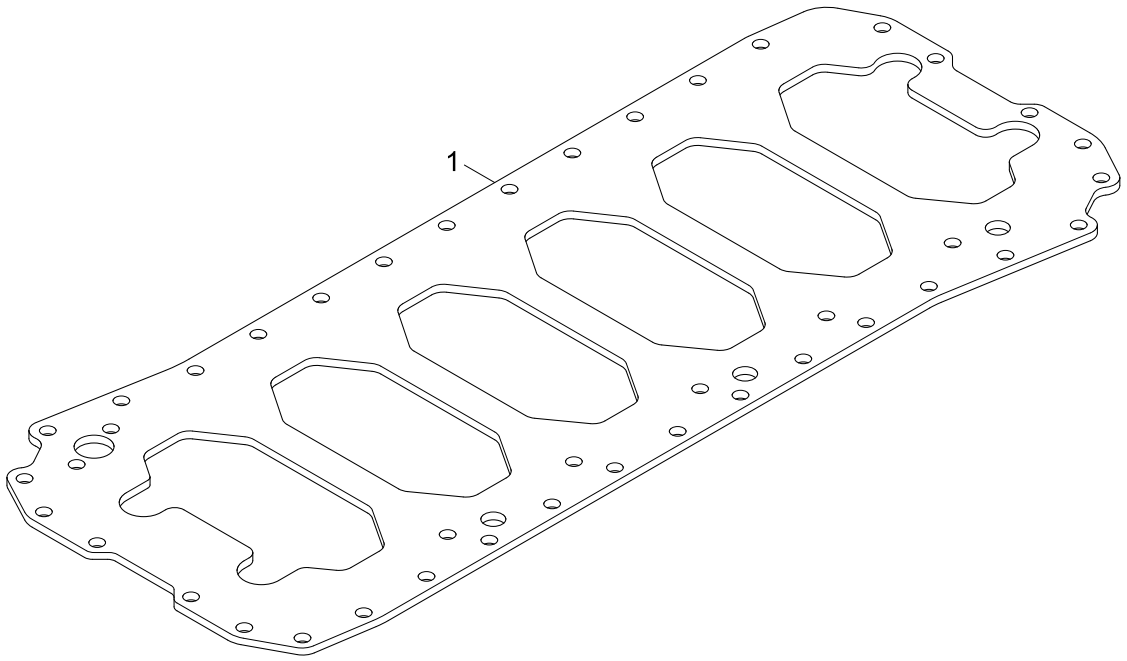

Item	Part_No	IS	Ord	T	Description	Qty	Serial_No	ITC	Remark
1	3941556				PLATE-CYL BLOCK	1			NP9020-02

OIL FILLER ARRANGEMENT

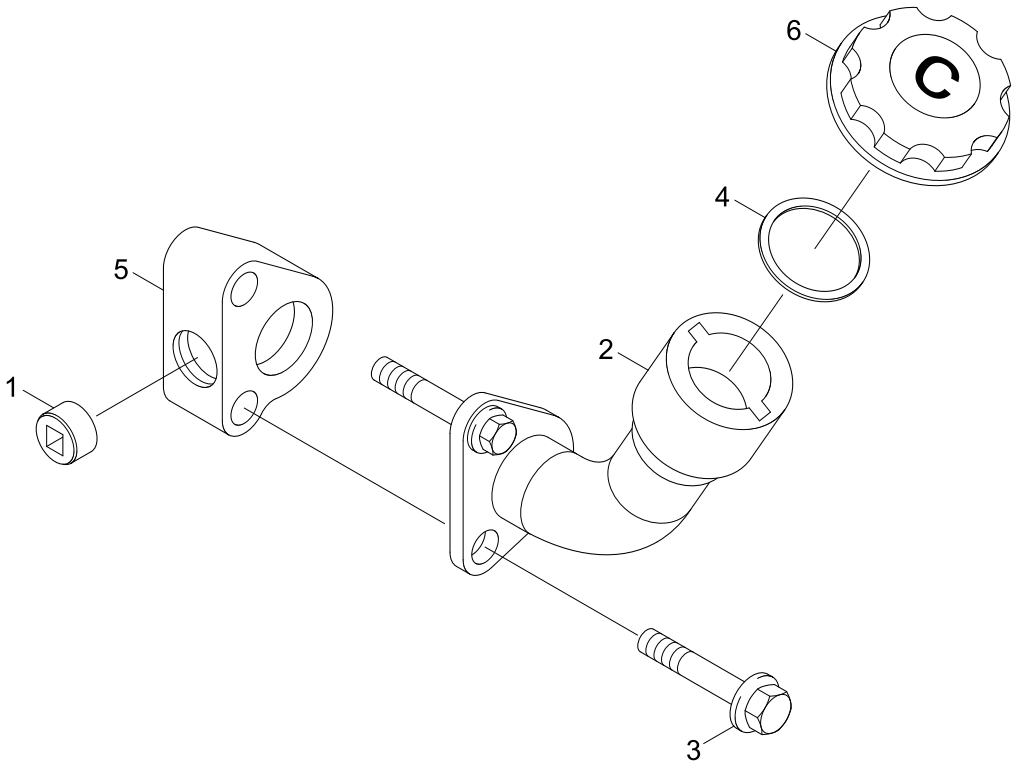

Item	Part_No	IS	Ord	T	Description	Qty	Serial_No	ITC	Remark
1	S915A				PLUG-PIPE	1			OB9527
2	3815044				TUBE-OIL FILTER	1			
3	3905372				SCREW	2			
4	3906704				SEAL/O-RING	1			
5	3935502				CONNECTION-SPACER	1			
6	4962891				CAP-FILLER	1			

CYLINDER BLOCK COVER

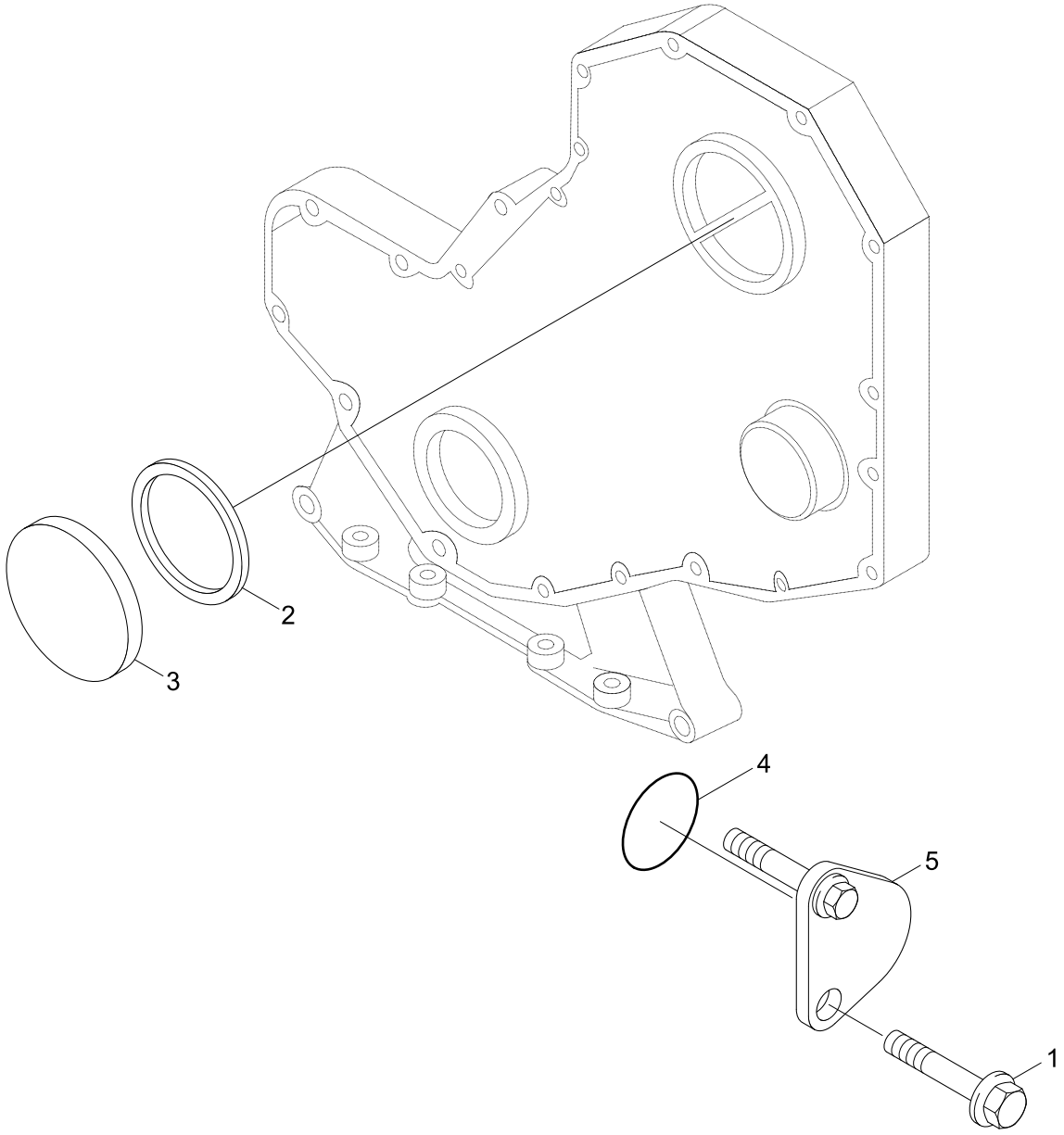

Item	Part_No	IS	Ord	T	Description	Qty	Serial_No	ITC	Remark
1	3901249				SCREW-HEX F/HEAD CAP	2			OB9491
2	3903475				SEAL-RECT RING	1			
3	3903463				COVER-ACCESS HOLE	1			
4	3906704				SEAL/O-RING	1			
5	4093886				PLATE-COVER	1			

OIL PAN AND MOUNTING

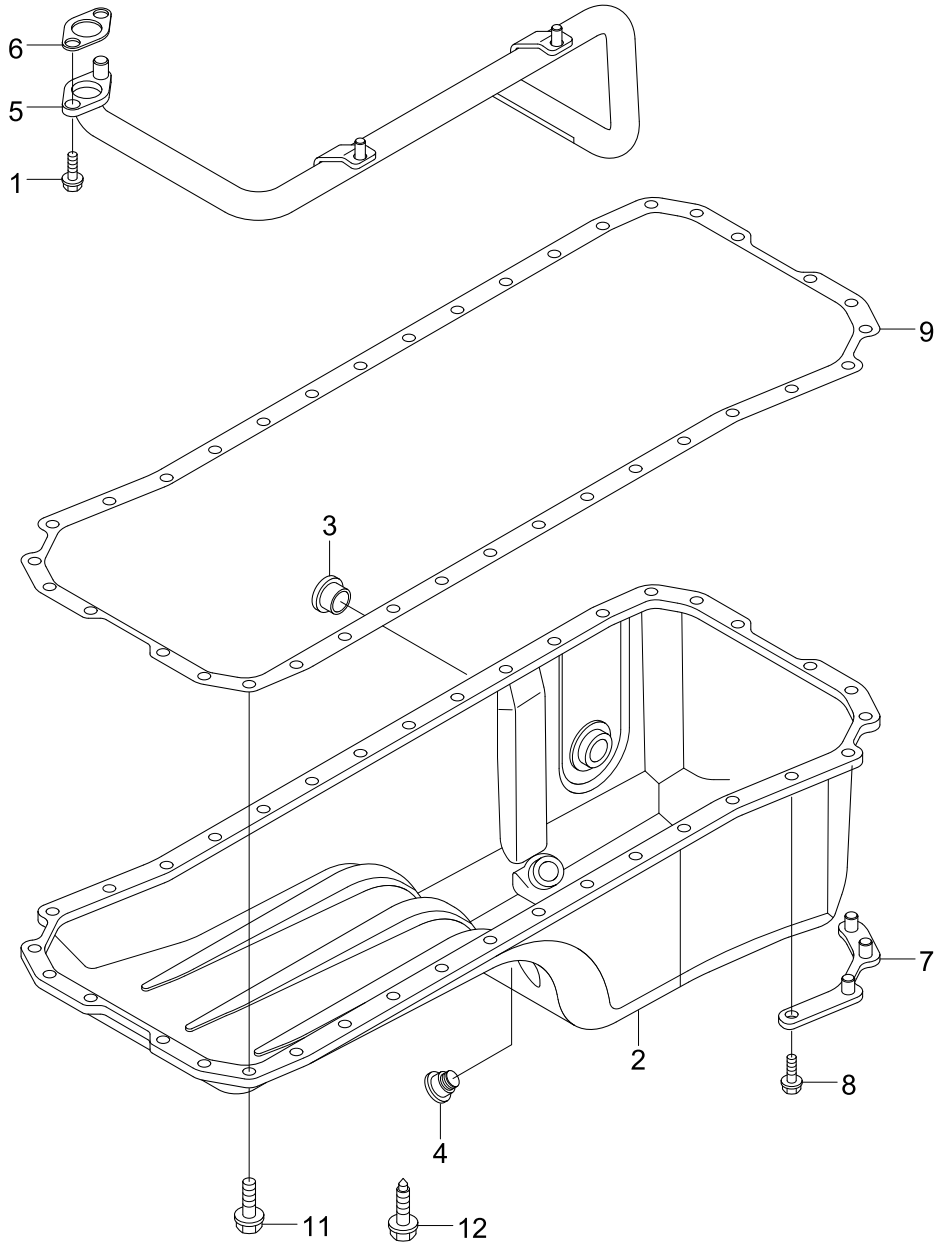

Item	Part_No	IS	Ord	T	Description	Qty	Serial_No	ITC	Remark
1	3900630				SCREW-HEX F/HEAD CAP	2			OP9005-08
2	3900960				KIT-OIL PAN SERVICE	1			
3	3973071				PLUG-THREADED	1			
4	4992508				PLUG-THREADED	1			
5	3934942				CONNECTION	1			
6	3938157				GASKET-FLANGE	1			
*-1	3900960				KIT-OIL PAN SERVICE				
N2	3915703				.PAN-OIL	1			NOT
7	3935482				.PLATE-CLAMPING	1			
8	3907860				.SCREW-HEX F/HEAD CAP	4			
9	3959052				.GASKET-OIL PAN	1			
11	3900630				SCREW-HEX F/HEAD CAP	2			OP9703-02
12	3907860				SCREW-HEX F/HEAD CAP	36			
N	@				NOT SUPPLIED PARTS	AR			NOT

CAMSHAFT

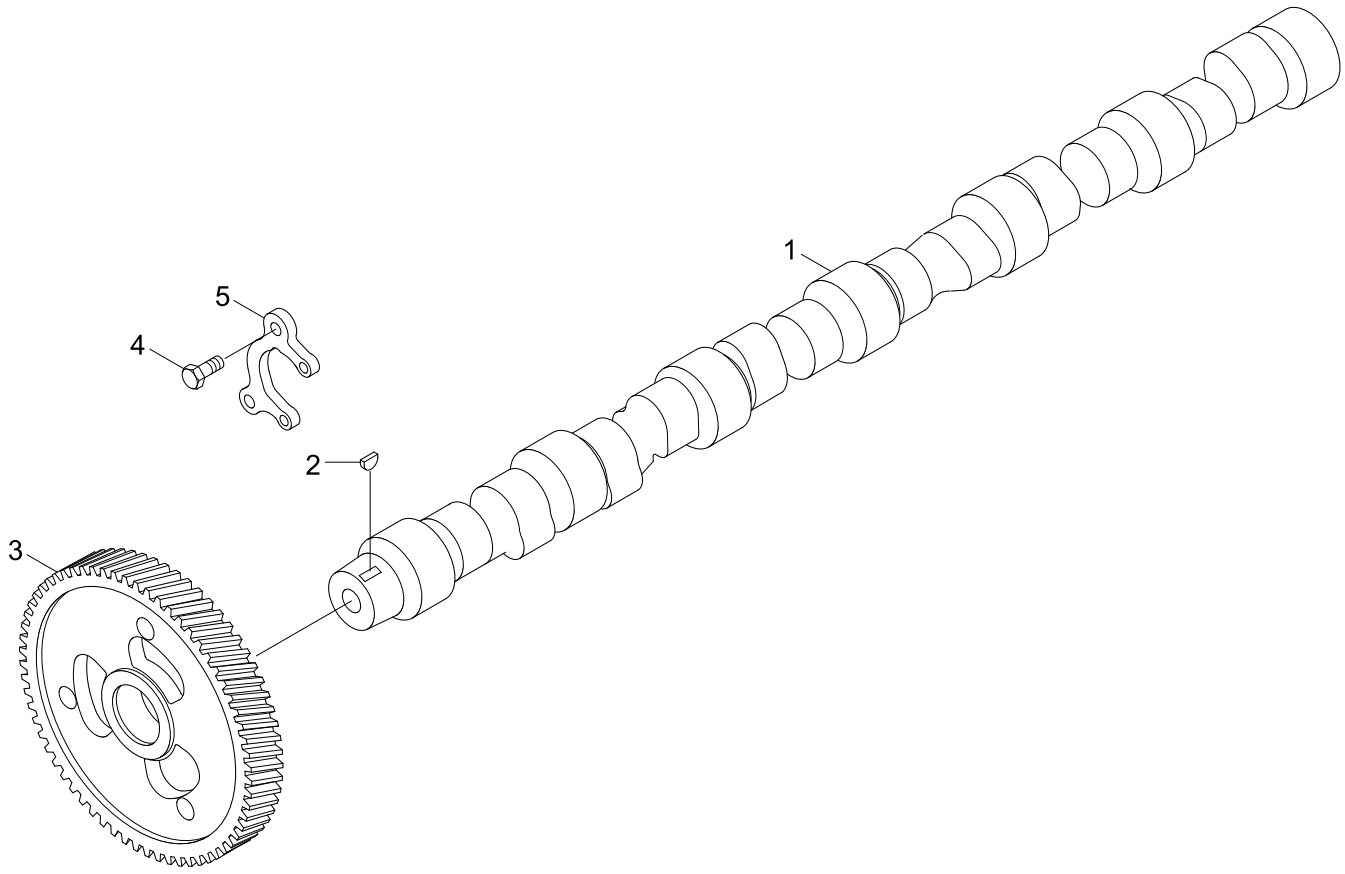

Item	Part_No	IS	Ord	T	Description	Qty	Serial_No	ITC	Remark
N*-1	3280102				CAMSHAFT	1			NOT
1	3283179				.CAMSHAFT	1			
2	3936612				.KEY-PLAIN WOODRUFF	1			
3	3929028				.GEAR-CAMSHAFT	1			
4	3900227				.SCREW-HEX HEAD CAP	2			
5	3927155				.SUPPORT	1			
N	@				NOT SUPPLIED PARTS	AR			NOT

CONNECTING ROD AND PISTON

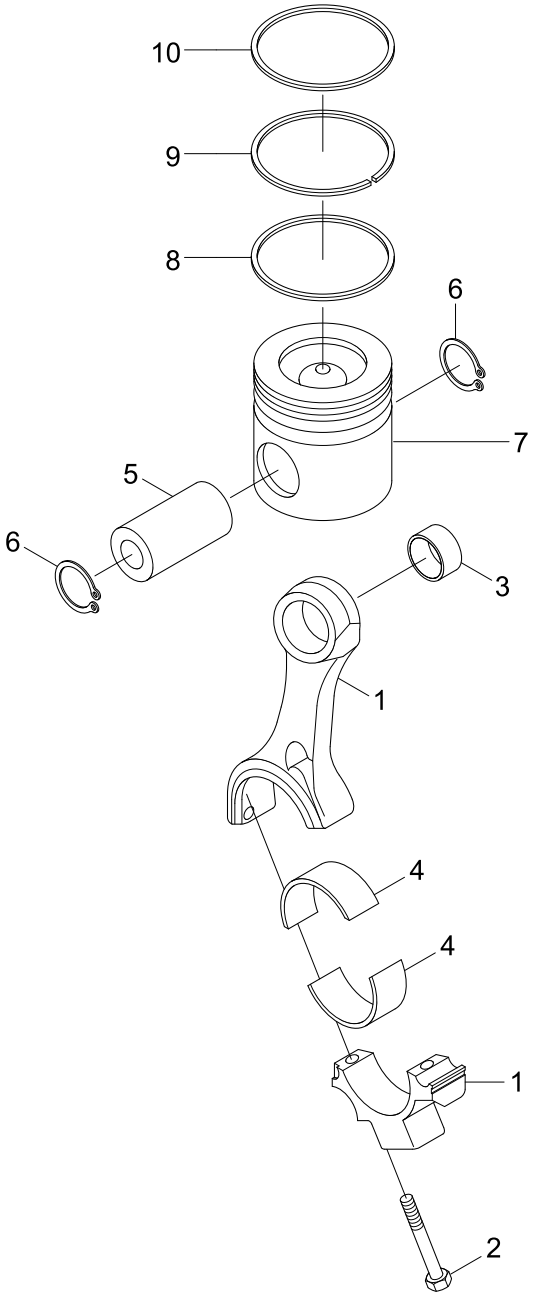

Item	Part_No	IS	Ord	T	Description	Qty	Serial_No	ITC	Remark
N*-1	4094066				PISTON-ENGINE	1			NOT
*-2	3935349				.ROD-ENGINE CONNECTING	6			
N1	3935348				..ROD-ENGINE CONNECTING	2			NOT
2	3900919				..SCREW	2			
3	4891178				..BUSHING	1			
4	3939859				.BEARING-C/ROD(STD)	12			STD
5	3934047				.PIN-PISTON	6			
*-3	3806219				.KIT-ENGINE PISTON	6			
6	3920691				..RING-RETAINING	2			
N7	3930450				..PISTON	1			NOT
*-4	3802421				..SET-PISTON RING	1			
8	3932520				...RING-OIL PISTON	1			
9	3904531				...RING-COMPRESSION	1			
10	3918315				...RING-COMPRESSION	1			
5	3901171				BEARING-C/ROD	AR			0.25MM OVERSIZE
	3901172				BEARING-C/ROD	AR			0.50MM OVERSIZE
	3901173				BEARING-C/ROD	AR			0.75MM OVERSIZE
	3901174				BEARING-C/ROD	AR			1.00MM OVERSIZE
N	@				NOT SUPPLIED PARTS	AR			NOT

INJECTOR

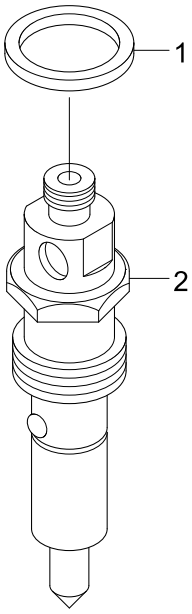

Item	Part_No	IS	Ord	T	Description	Qty	Serial_No	ITC	Remark
N*-1	4093693				INJECTOR	1			NOT
1	3909356				.SEAL-RECT RING	6			
2	3936624				.INJECTOR	6			

CYLINDER HEAD

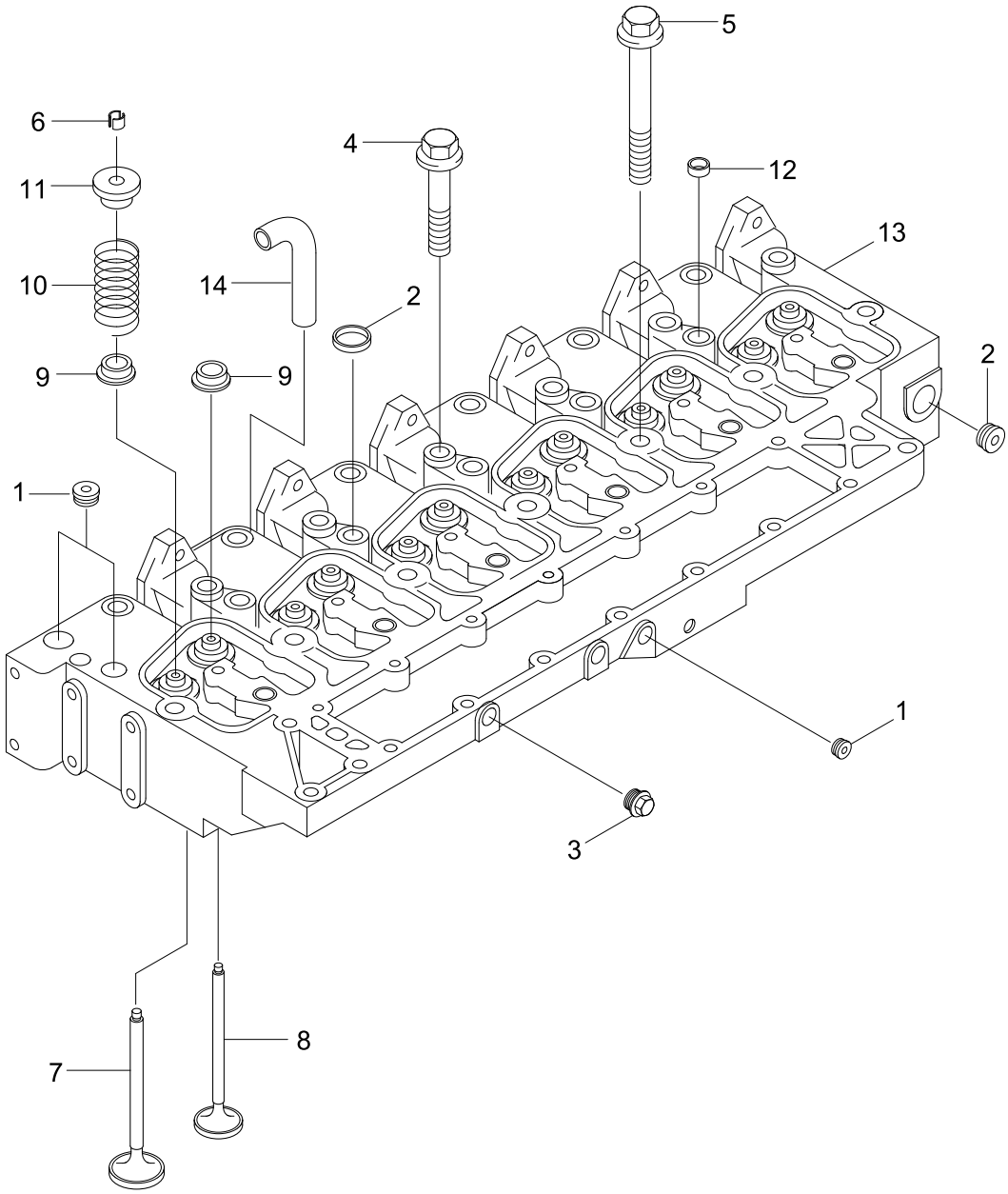

Item	Part_No	IS	Ord	T	Description	Qty	Serial_No	ITC	Remark
1	3936641				PLUG-PIPE	4			PP99255
2	3936642				PLUG-PIPE	1			
N3	4093857				PLUG-PIPE	1			NOT
4	3920779				SCREW	6			
5	3920780				SCREW	14			
N*-1	3968652				CYLINDER HEAD	1			NOT
*-2	3967449				.CYLINDER HEAD	1			
*-3	3802355				..VALVE-INTAKE	6			
6	3900250				...COLLET-VALVE	2			
7	3920867				...VALVE-INTAKE	1			
*-4	3802356				..VALVE-EXHAUST	6			
6	3900250				...COLLET-VALVE	2			
8	3920868				...EXHAUST VALVE	1			
9	3957912				..SEAL-VALVE	12			
10	3926700				..SPRING-VALVE	12			
11	3957913				..RETAINER-VALVE SPRING	12			
N*-5	3966454				..CYLINDER HEAD	1			NOT
N12	3812092				...PLUG-EXPANSION	5			NOT
N13	3966453				...CYLINDER HEAD	1			NOT
14	3926446				.TUBE-AFTERCOOLER	1			
N	@				NOT SUPPLIED PARTS	AR			NOT

CYLINDER HEAD GASKET

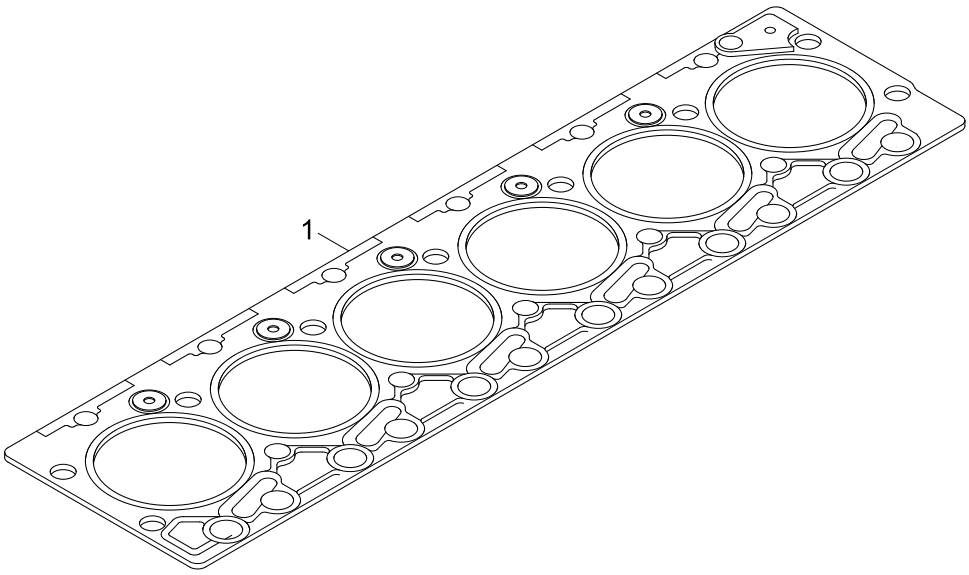

Item	Part_No	IS	Ord	T	Description	Qty	Serial_No	ITC	Remark
1	3283570				GASKET-CYLINDER HEAD	1			PP97298

TURBOCHARGER

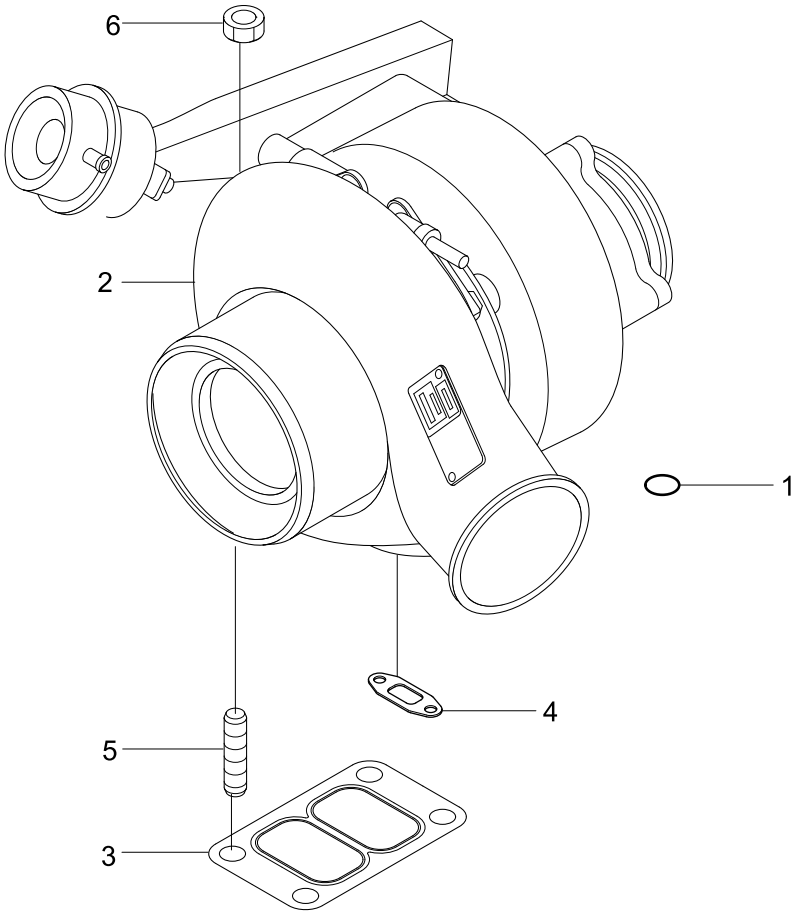

Item	Part_No	IS	Ord	T	Description	Qty	Serial_No	ITC	Remark
*	2882128NX				KIT-TURBOCHARGER	1			PP99339
1	3037236				.SEAL/O-RING	1			
2	2882128				.TURBOCHARGER	1			
3	3901356				.GASKET-TURBOCHARGER	1			
4	5264569				GASKET-OIL DRAIN	1			
5	3818823				.STUD	4			
6	3818824				.NUT-HEX FLANGE	4			

THERMOSTAT HOUSING

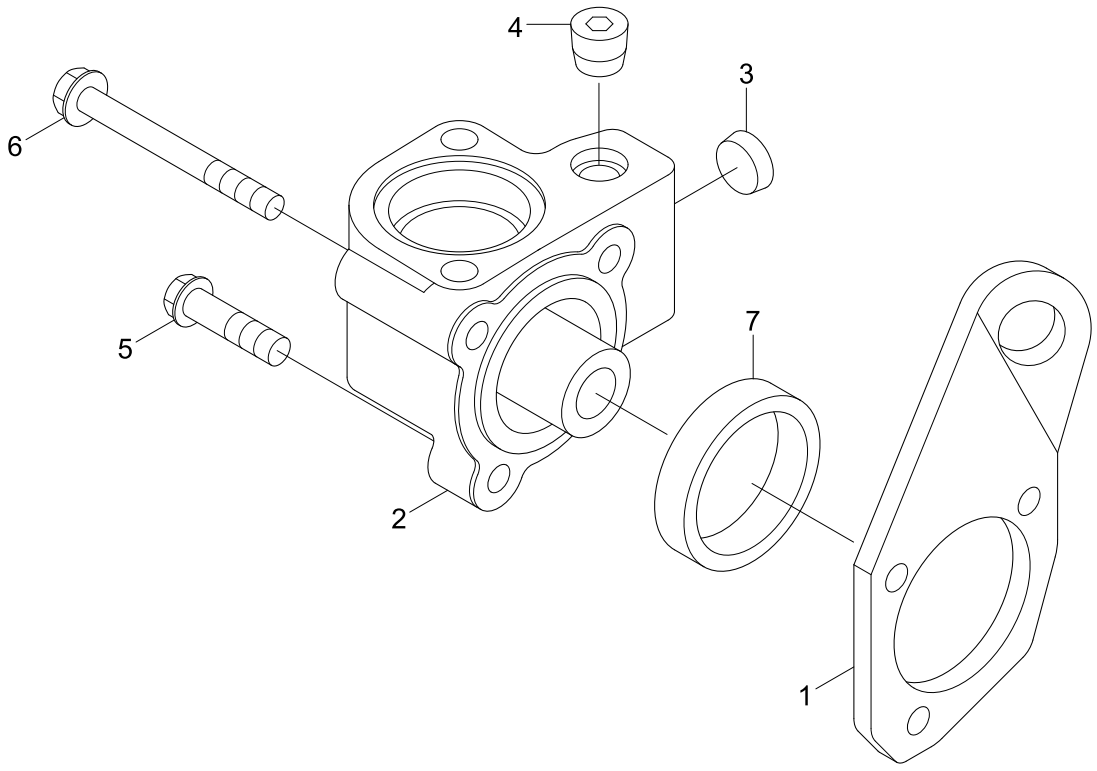

Item	Part_No	IS	Ord	T	Description	Qty	Serial_No	ITC	Remark
1	3903757				BRACKET-LIFTING	1			TH9011-03
2	3903757				BRACKET-LIFTING	1			
3	3900956				PLUG-EXPANSION	1			
4	3008468				PLUG-PIPE	1			
5	3919995				SCREW	2			
6	3928873				SCREW-HEX F/HEAD CAP	1			
7	3906697				SEAL-RECT RING	1			

STARTING MOTOR & MOUNTING

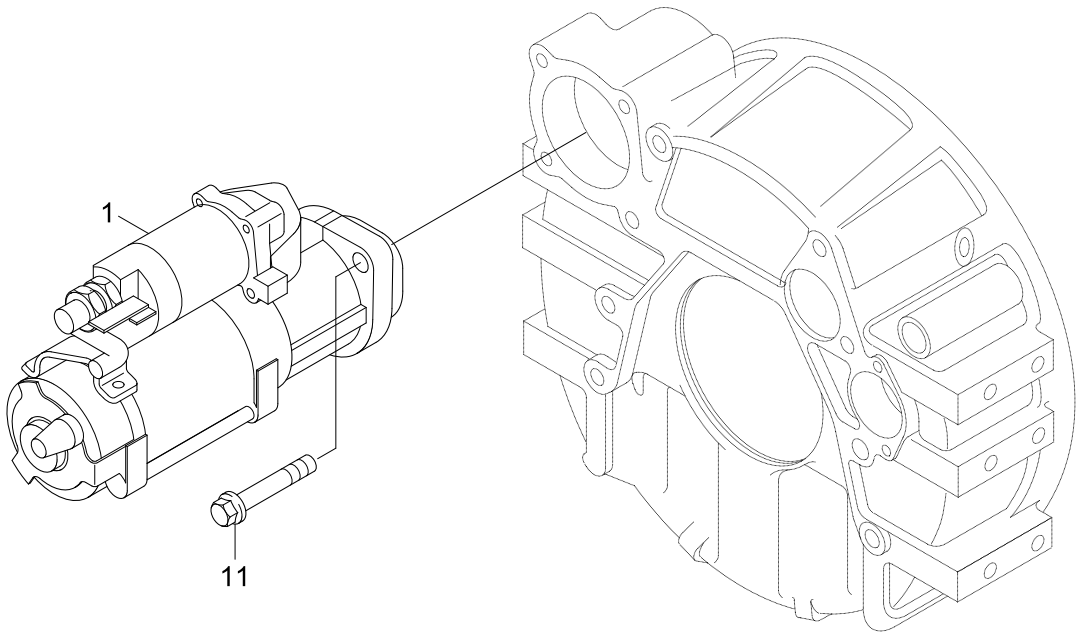

Item	Part_No	IS	Ord	T	Description	Qty	Serial_No	ITC	Remark
1	2889951				MOTOR, STARTING	1			
11	3903834				SCREW-TWELVE P/CAP	3			

EXHAUST MANIFOLD MOUNTING

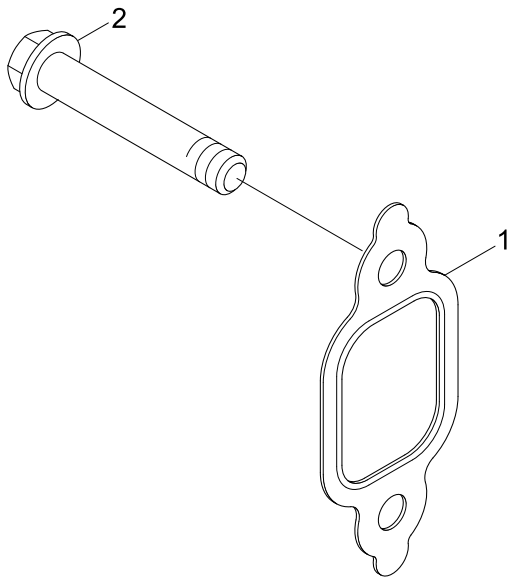

Item	Part_No	IS	Ord	T	Description	Qty	Serial_No	ITC	Remark
1	3905443				GASKET-EXH MANIFOLD	6			TB91486
2	3901448				SCREW	12			

TURBOCHARGER ARRANGEMENT

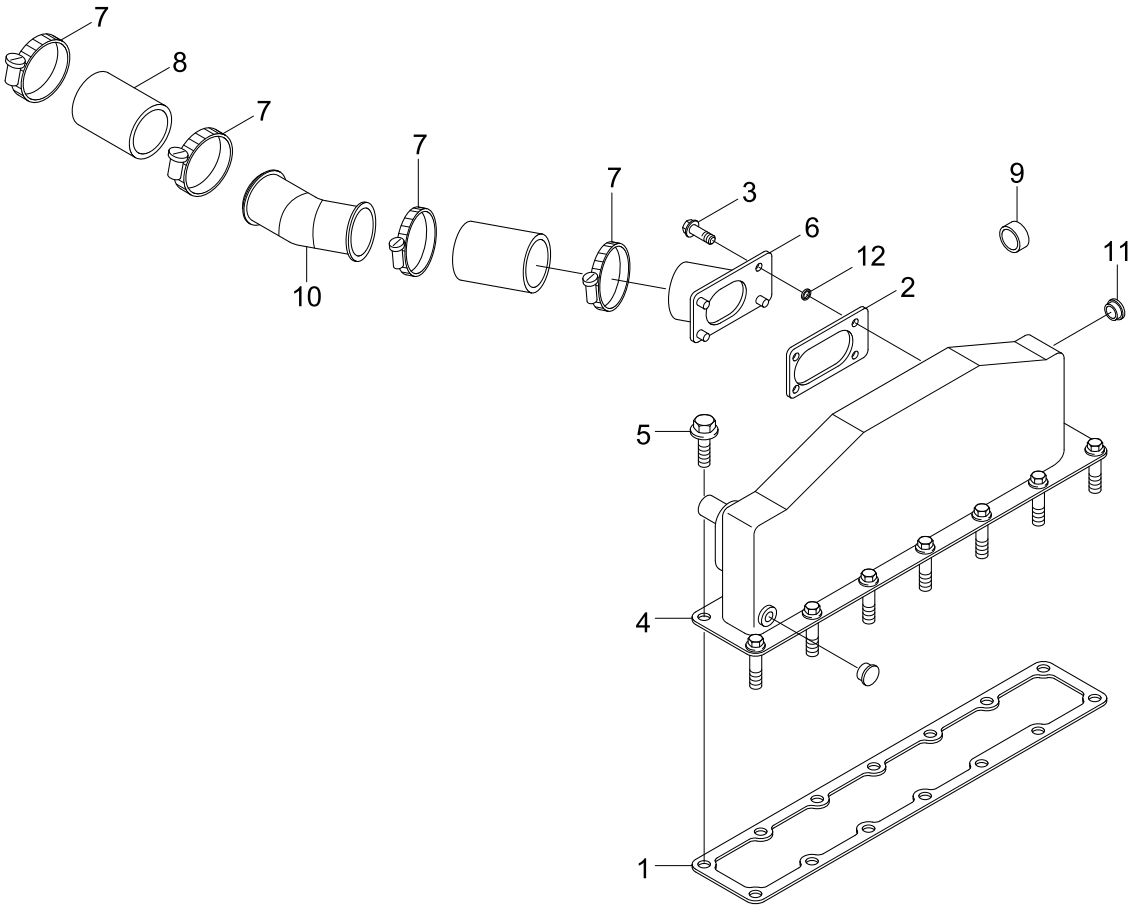

Item	Part_No	IS	Ord	T	Description	Qty	Serial_No	ITC	Remark
1	3931347				GASKET-MANIFOLD CVR	1			TB91507-01
2	3914856				GASKET-CONT	1			
3	3918109				SCREW-HEX F/HEAD CAP	4			
4	5262611				AFTERCOOLER	1			
5	3930837				SCREW	14			
6	3933334				CONNECTION-AIR	1			
7	3936552				CLAMP-HOSE	4			
8	3936631				HOSE-PLAIN	2			
9	3936641				PLUG-PIPE	2			
10	4080656				TUBE-AIR	1			
11	4093857				PLUG-PIPE	2			
12	3928759				SEAL-GROMMET	4			

EXHAUST MANIFOLD

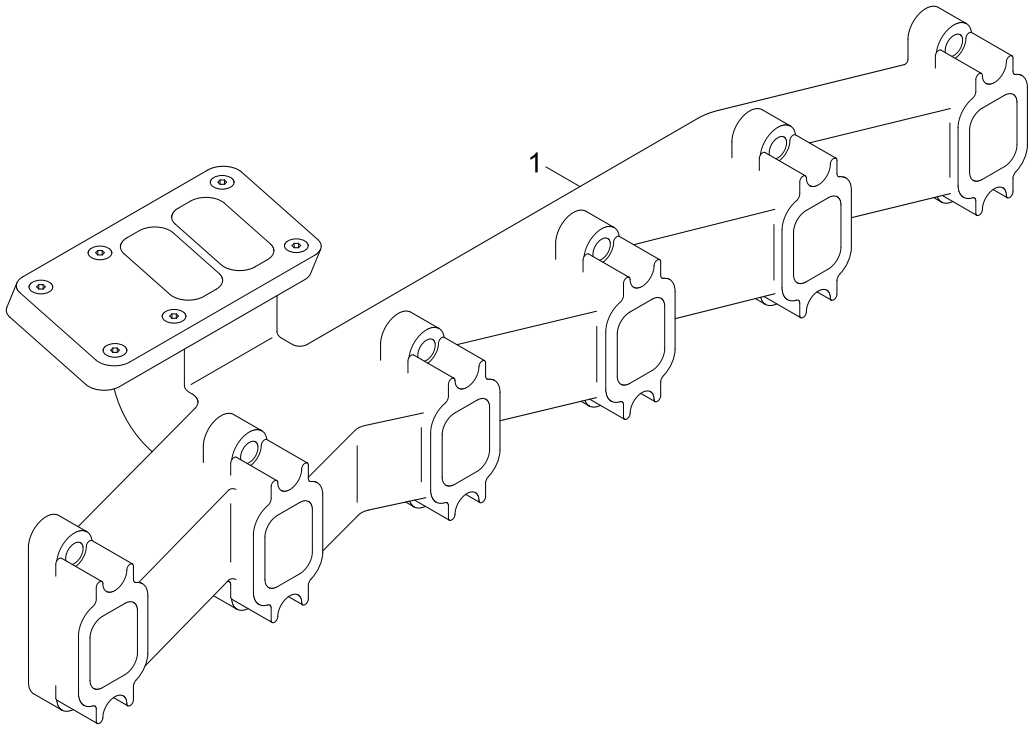

Item	Part_No	IS	Ord	T	Description	Qty	Serial_No	ITC	Remark
1	3901683				MANIFOLD-EXHAUST	1			TB9792

THERMOSTAT HOUSING

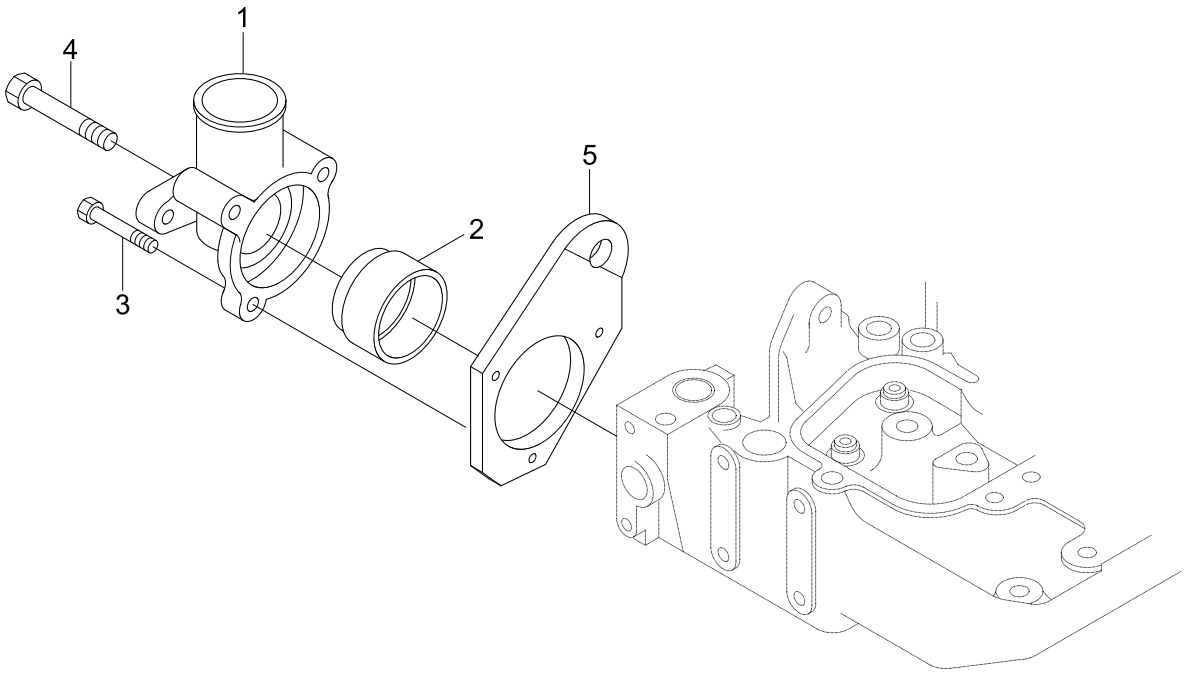

Item	Part_No	IS	Ord	T	Description	Qty	Serial_No	ITC	Remark
1	3903757				BRACKET-LIFTING	1			TH9011-03
2	3282550				HOUSING-THERMOSTAT	1			
3	3900956				PLUG-EXPANSION	1			
4	3008468				PLUG-PIPE	1			
5	3919995				SCREW	2			
6	3928873				SCREW-HEX F/HEAD CAP	1			
7	3906697				SEAL-RECT RING	1			

THROTTLE LEVER

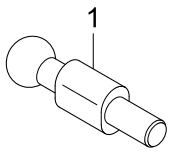

Item	Part_No	IS	Ord	T	Description	Qty	Serial_No	ITC	Remark
1	3931900				PIN-THROTTLE	1			TL9120

TURBOCHARGER PLUMBING

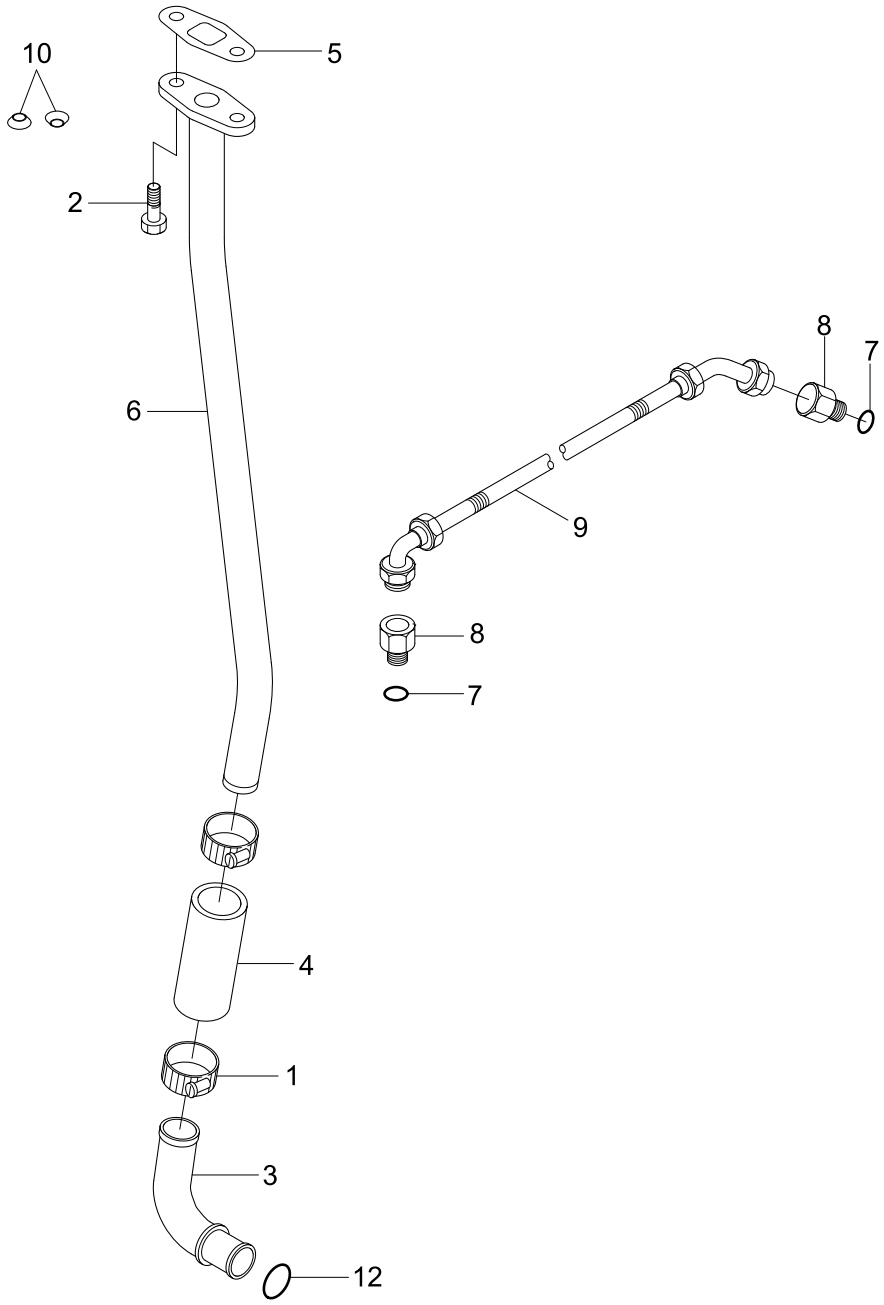

Item	Part_No	IS	Ord	T	Description	Qty	Serial_No	ITC	Remark
1	3412320				CLAMP	2			TP9703-12
2	3900630				SCREW-HEX F/HEAD CAP	2			
3	3931973				TUBE-T/OIL DRAIN	1			
4	3286499				HOSE-PLAIN	1			
5	5264569				GASKET-OIL DRAIN	1			
6	3934093				CONNECTION-OIL DRAIN	1			
*-1	3919687				CONNECTOR-FEMALE	2			
7	3037236				.SEAL/O-RING	1			
8	3920801				.CONNECTOR	1			
9	3918562				HOSE	1			
10	3924389				WASHER	2			
12	3931824				SEAL/O-RING	1			
*-2	3920706				PLUG-EXPANSION	1			

VALVE COVER

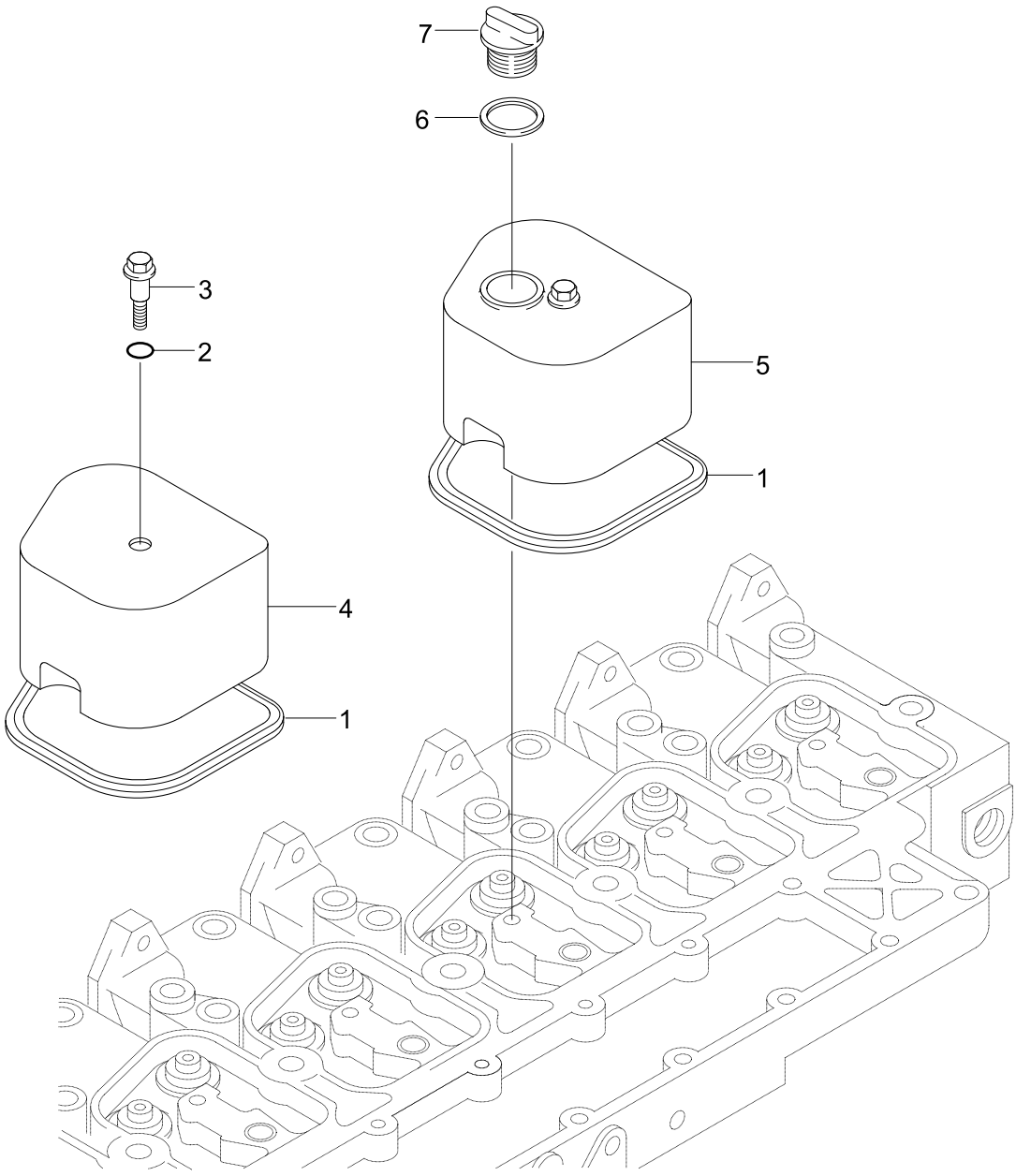

Item	Part_No	IS	Ord	T	Description	Qty	Serial_No	ITC	Remark
1	3930906				GASKET-VALVE COVER	6			VC9022-03
2	3935449				ISOLATOR	6			
3	3907049				SCREW	6			
4	3928404				COVER-VALVE	5			
5	3928405				COVER-VALVE	1			
6	3936876				SEAL-RECT RING	1			
7	3901895				CAP-FILLER	1			

AFTERCOOLER PLUMBLING

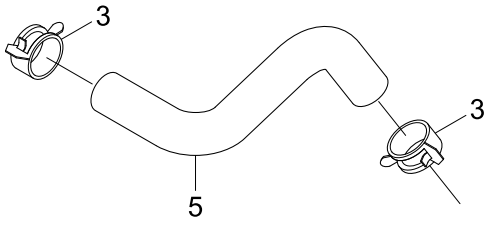

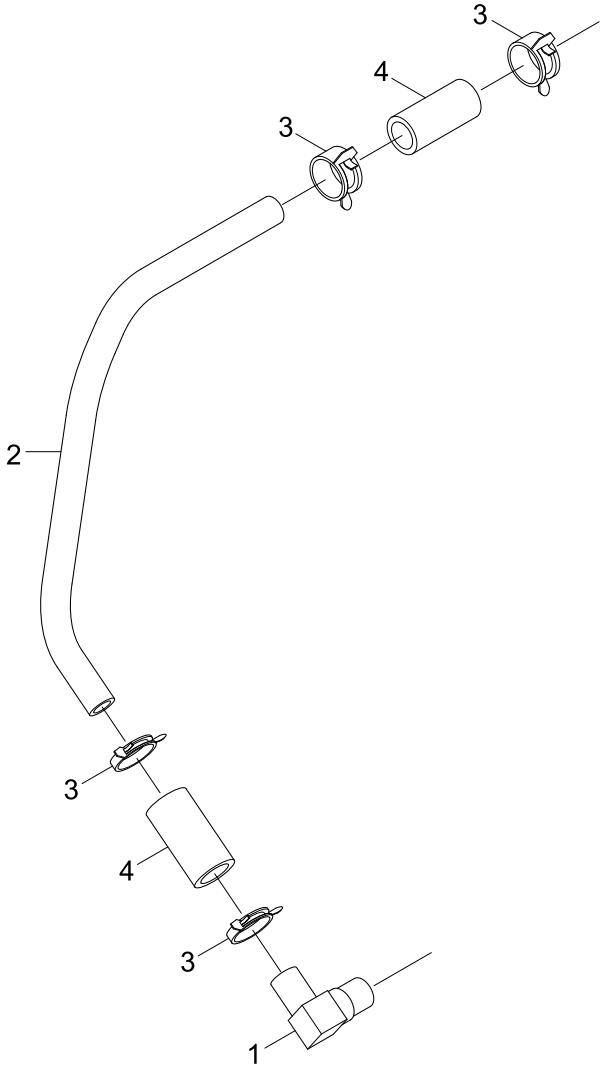

Item	Part_No	IS	Ord	T	Description	Qty	Serial_No	ITC	Remark
1	4080718				COUPLING-ELBOW HOSE	1			WA9761
2	3282704				TUBE-AFTERCOOLER	1			
3	3937613				CLAMP-HOSE	6			
4	4940670				HOSE-PLAIN	2			
5	4080654				HOSE-ELBOW	1			

ENGINE COOLANT VENT

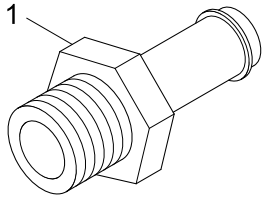

Item	Part_No	IS	Ord	T	Description	Qty	Serial_No	ITC	Remark
1	3935266				CONNECTOR-MALE	1			WH9133

WATER INLET CONNECTION

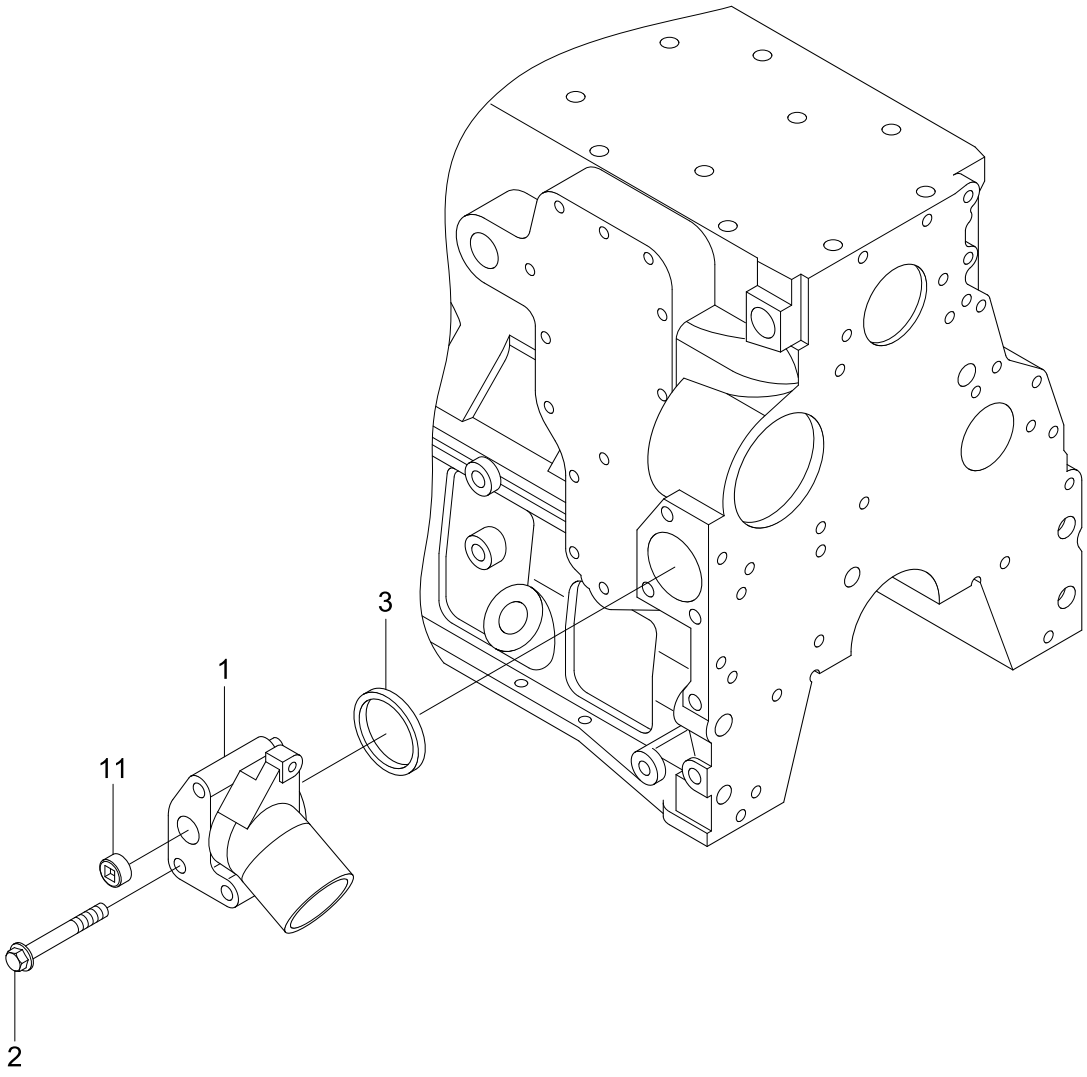

Item	Part_No	IS	Ord	T	Description	Qty	Serial_No	ITC	Remark
1	3934878				CONN-WATER INLET	1			WI9002-01
2	3901757				SCREW	3			
3	3906697				SEAL-RECT RING	1			
11	3008468				PLUG-PIPE	2			WI9701

WATER PUMP

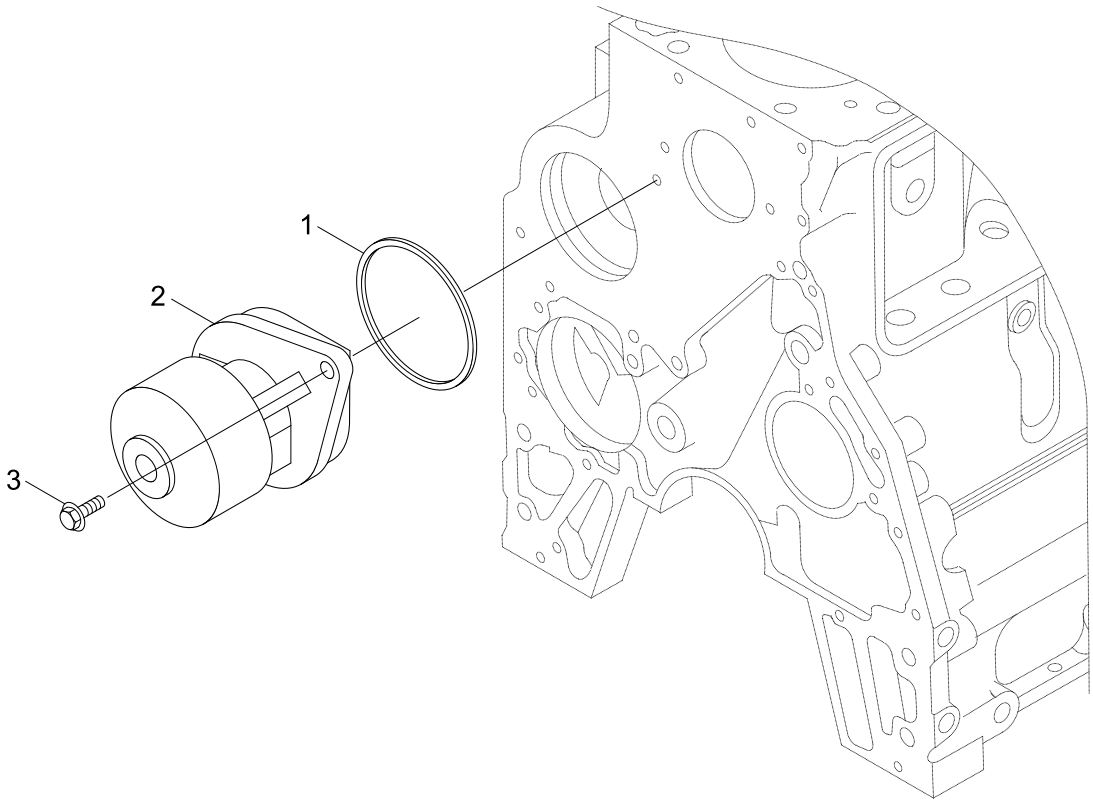

Item	Part_No	IS	Ord	T	Description	Qty	Serial_No	ITC	Remark
*-1	3800984NX/RX				PUMP-WATER	1			WP9618
1	3906698				.SEAL-RECT RING	1			
2	3800984				.PUMP-WATER	1			
3	3900227				SCREW-HEX HEAD CAP	2			

WATER OUTLET CONNECTION

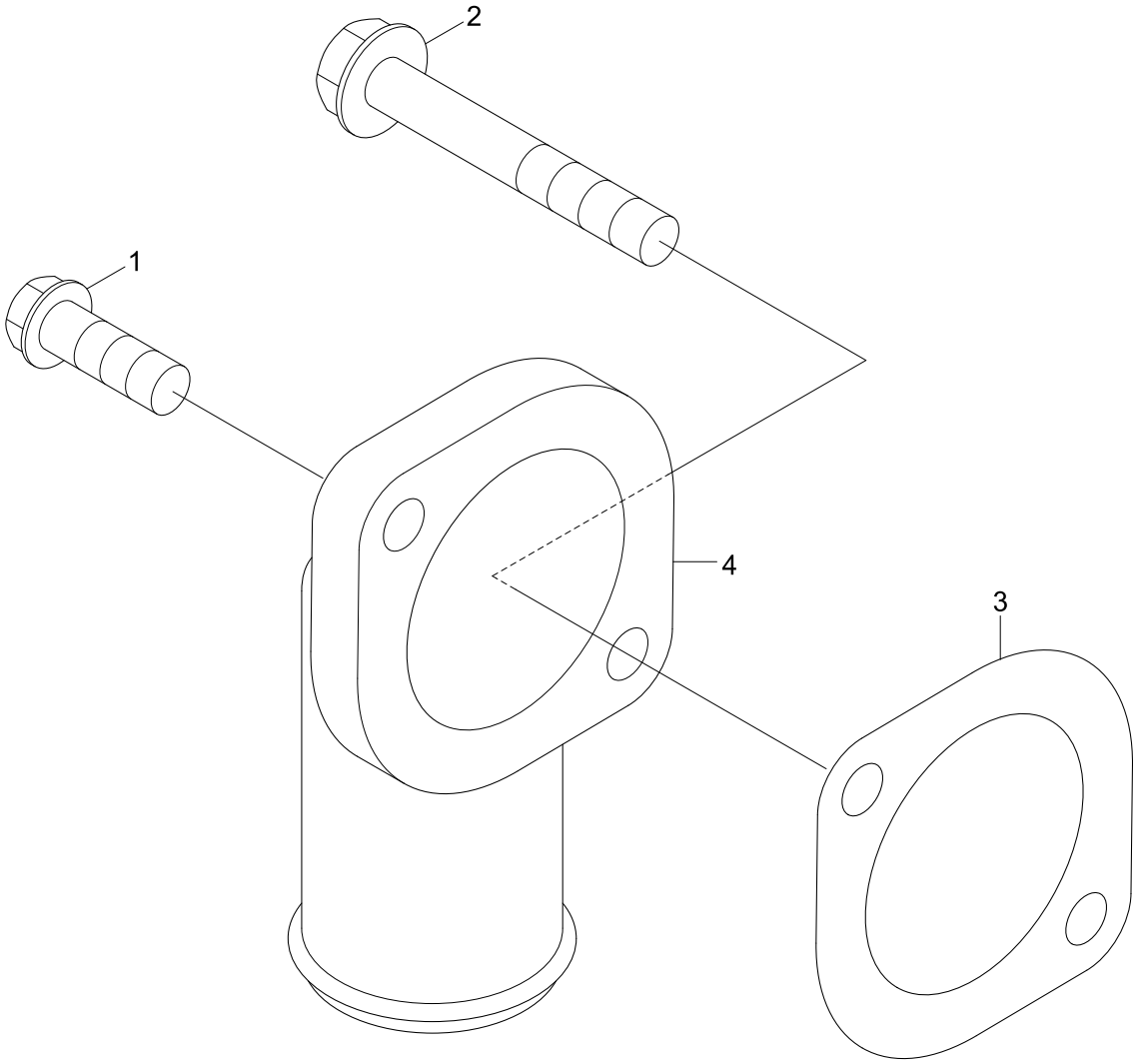

Item	Part_No	IS	Ord	T	Description	Qty	Serial_No	ITC	Remark
1	3900631				SCREW-HEX F/HEAD CAP	1			WO9031
2	3901446				SCREW-HEX HD CAP	1			
3	3912558				GASKET-CONNECTION	1			
4	3932436				CONNECTION-W/OUTLET	1			

EXHAUST OUTLET CONNECTION

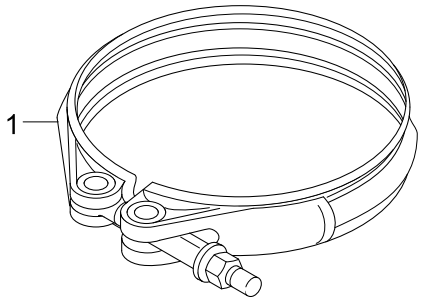

Item	Part_No	IS	Ord	T	Description	Qty	Serial_No	ITC	Remark
1	3935338				CLAMP-V BAND	1			XS9431