ENGINE MOUNTING

HL757-7 HYUNDAI

RUTHZIL TRATOR COMERCIAL DE PEÇAS LTDA 11 97083-6812 ROLANDO

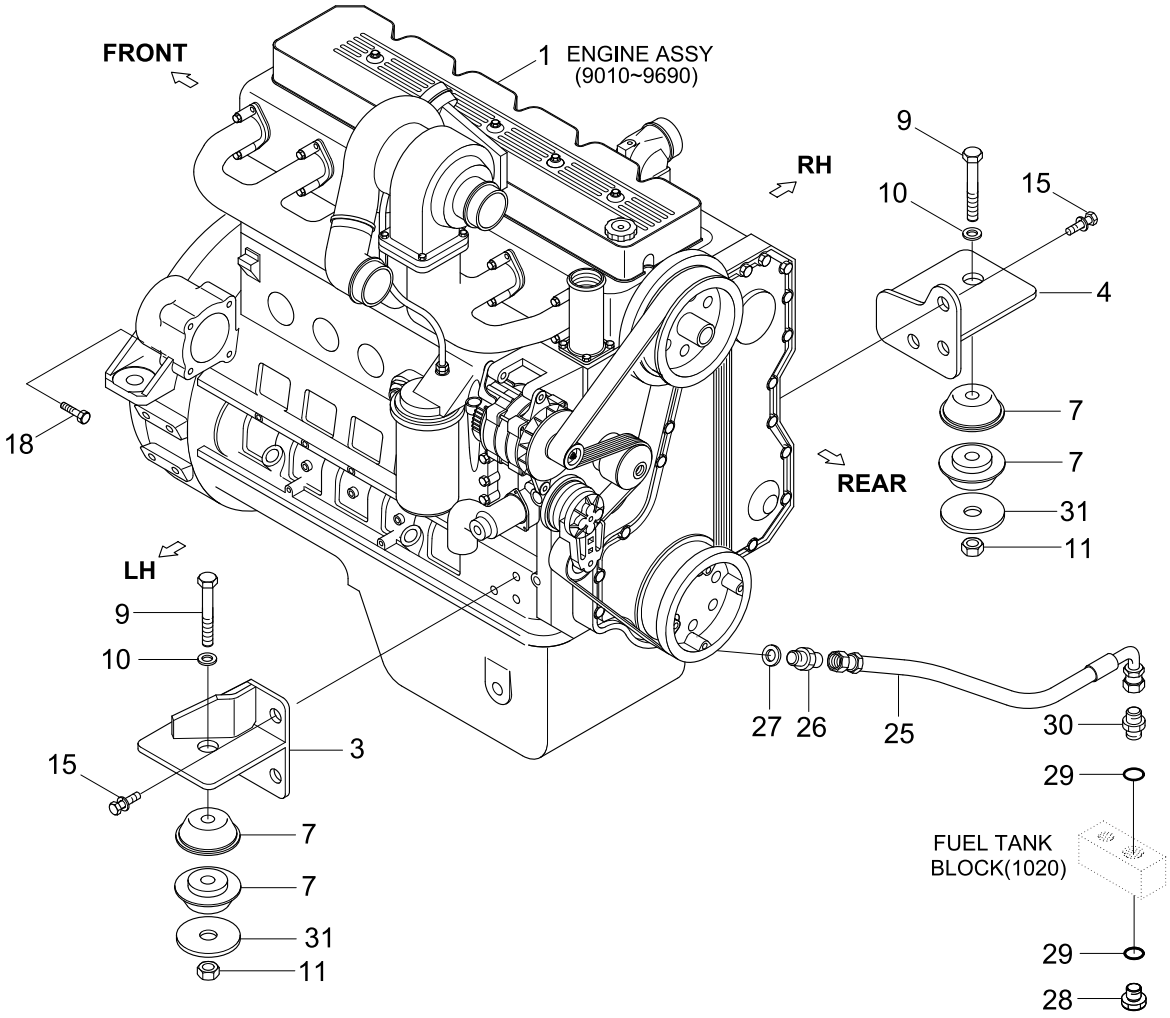

Item	Part_No	IS	Ord	T	Description	Qty	Serial_No	ITC	Remark
1	11LD-00010				ENGINE ASSY	1			
3	11LD-00110				BRACKET WA-LH	1			
4	11LD-00120				BRACKET WA-RH	1			
7	11N6-10450				RUBBER-MOUNT	4			
9	S017-201302				BOLT-HEX	2			
10	S441-200002				WASHER-HARDENED	2			
11	S205-201002				NUT-HEX	2			
15	S037-123552				BOLT-W/WASHER HEX	6			
18	S107-100354				BOLT-SOCKET	4			
25	P620-081013				HOSE ASSY-THD 0X90	1			
26	P010-220008				CONNECTOR	1			
27	P392-180000				WASHER-COPPER	1			
28	P220-110104				PLUG-HEX	1			
29	S631-018001				O-RING	2			
30	P010-110004				CONNECTOR	1			
31	11L7-00170				WASHER-REBOUND	2			

FUEL TANK

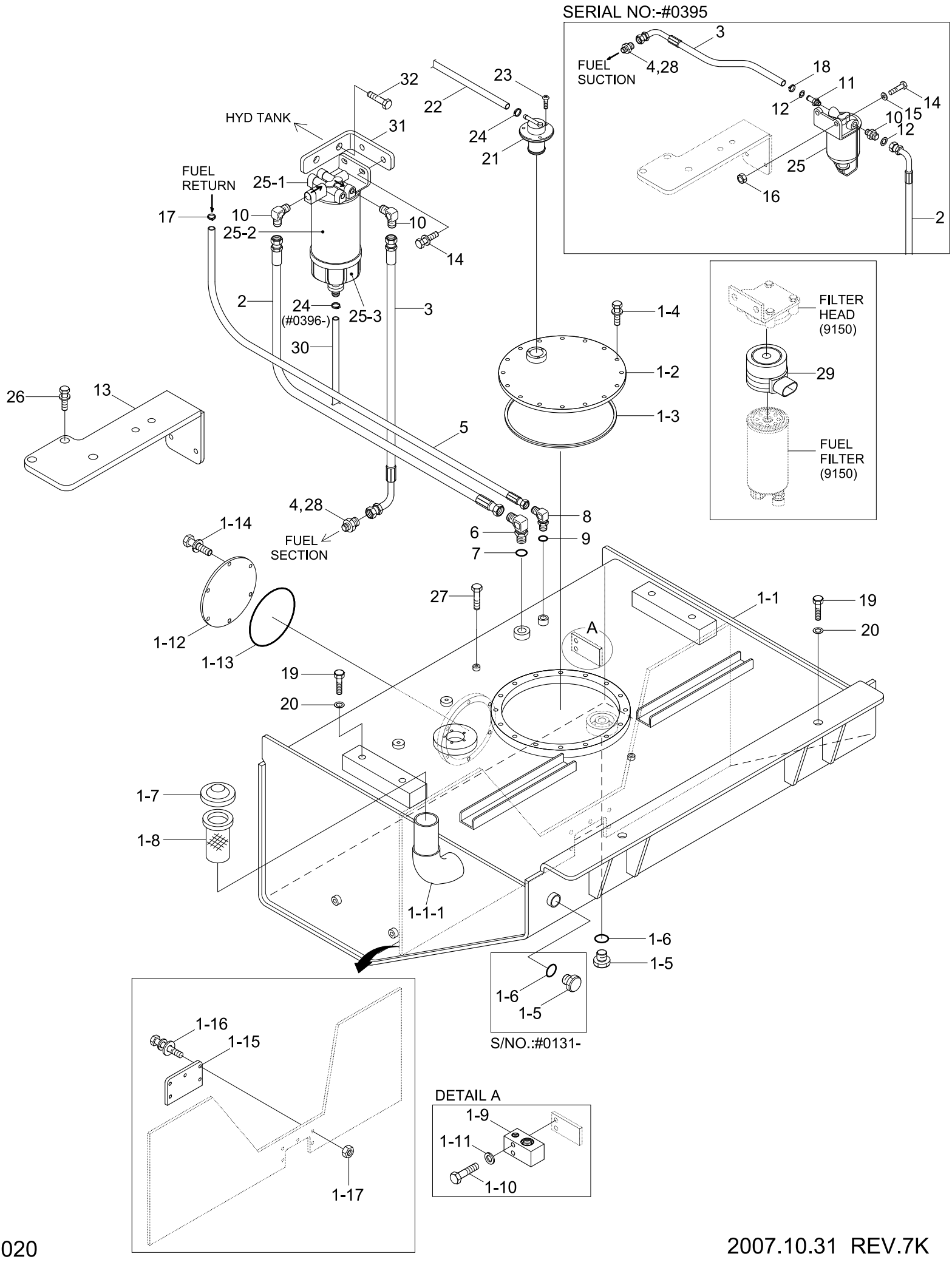
SERIAL NO:-#0395
FUEL SUCTION
HYD TANK
FUEL RETURN
FUEL SECTION
FILTER HEAD (9150)
FUEL FILTER (9150)
DETAIL A
S/NO.:#0131-
(#0396-)
3
4,28
18
11
14
12
15
10
25
16
2
32
23
22
24
21
31
25-1
17
10
25-2
14
25-3
30
1-4
1-2
1-3
26
13
5
8
6
9
7
27
1-1
19
20
A
1-14
1-12
1-13
1-7
1-8
1-1-1
1-6
1-5
1-16
1-15
1-17
1-9
1-11
1-10
29

Item	Part_No	IS	Ord	T	Description	Qty	Serial_No	ITC	Remark
1	@				FUEL TANK ASSY	1			NOT
1-1	11LD-20022				.FUEL TANK WA	1	- #0130		
	11LD-20023				.FUEL TANK WA	1	#0131 -	D	
1-1-1	11LD-20180				..FILLER WA	1	#0001 -	-	
1-2	11LB-20040				.COVER WA	1			
1-3	14L1-02180				.RUBBER	1			
1-4	S035-082022				.BOLT-W/WASHER	16			
1-5	P220-110104				.PLUG-HEX,HEAD	1	- #0130		
					.PLUG-HEX,HEAD	2	#0131 -	A	
1-6	S631-018001				.O-RING	1	- #0130		
					.O-RING	2	#0131 -	A	
1-7	11LB-20050				.FUEL CAP ASSY	1			
1-8	31E1-10300				.STRAINER	1			
1-9	11LB-20232				.BLOCK-DRAIN	1	#0131 -	-	
1-10	S017-100752				.BOLT-HEX	2	#0131 -	-	
1-11	S441-100002				.WASHER-HARDENED	2	#0131 -	-	
1-12	31E3-4526				.COVER	1	#0131 -	-	
1-13	S632-165001				.O-RING	1	#0131 -	-	
1-14	S037-102552				.BOLT-W/WASHER	6	#0131 -	-	
1-15	11LB-20280				.PLATE	1	#0131 -	-	
1-16	S035-062022				.BOLT-W/WASHER	5	#0131 -	-	
1-17	S205-061002				.NUT-HEX	5	#0131 -	-	
2	P620-081023				HOSE ASSY-THD 0X90	1	- #0130		
	P620-081025				HOSE ASSY-THD 0X90	1	#0131 - #0395	D	
	11LD-20290				HOSE ASSY	1	#0396 -	D	

Item	Part_No	IS	Ord	T	Description	Qty	Serial_No	ITC	Remark
3	11LD-20041				HOSE ASSY	1	- #0395		
	11LD-20300				HOSE ASSY	1	#0396 -	D	
4	11LD-20170				CONNECTOR	1	- #0395		
	11LD-20220				CONNECTOR	1	#0396 -	D	
5	11LD-20050				HOSE ASSY	1	- #0130		
	11LD-20051				HOSE ASSY	1	#0131 -	D	
6	P020-110003				ELBOW-90	1			
7	S631-018001				O-RING	1			
8	P020-110002				ELBOW-90	1			
9	S631-014001				O-RING	1			
10	11LD-20160				CONNECTOR	1	- #0395		
	11LB-20350				ELBOW-90	2	#0396 -	D	
11	14L3-01920				CONNECTOR	1	- #0395	-	
12	P392-140000				WASHER-COPPER	2	- #0395	-	
13	11LD-20200				BRACKET WA	1			
14	S035-082522				BOLT-W/WASHER	2	- #0395		
	S035-083022				BOLT-W/WASHER	2	#0396 -	D	
15	S403-082002				WASHER-PLAIN	2	- #0395	-	
16	S205-081002				NUT-HEX	2	- #0395	-	
17	S520-015000				CLAMP-HOSE	1			
18	S520-027000				CLAMP-HOSE	1	- #0395	-	
19	S017-160502				BOLT-HEX	6			
20	S441-160002				WASHER-HARDENED	6			
21	11FA-50300				VALVE-FUEL CUT	1			
22	11S4-00561				HOSE-FUEL	1			

Item	Part_No	IS	Ord	T	Description	Qty	Serial_No	ITC	Remark
23	S131-051546				SCREW-W/WASHER	3			
24	S571-140002				CLAMP-HOSE WIRE TYPE	1	- #0395		
					CLAMP-HOSE WIRE TYPE	2	#0396 -	A	
25	3908633				PRE-FILTER	1	- #0395		
	11LD-20230				FUEL FILTER/WS ASSY	1	#0396 - #1025	D	
	11LD-20400				FUEL FILTER/WS ASSY	1	#1026 -	B	
25-1	11LD-20240				.HEAD-FILTER	1	#0396 -	-	
25-2	11LD-20250				.ELEMENT ASSY- F/FILTER	1	#0396 -	-	
25-3	11LD-20260				.BOWL ASSY-W/KNOB	1	#0396 - #1025	-	
	11NB-70410				.BOWL ASSY-W/HEATER	1	#1026 -	B	
25-3-1	11NB-70420				..GASKET-DRAIN KNOB	1	#1026 -	-	NOT SHOWN
26	S037-103052				BOLT-W/WASHER	3			
27	S017-160202				BOLT-HEX	2	#0131 -	-	
28	11LD-20220				CONNECTOR	1			
29	11N8-70410				FUEL WARMER KIT	1	#0080 - #1025	-	FUEL WARMER
30	11S4-00590				HOSE-FUEL	1	#0396 -	-	
31	11LC-20160				BRACKET	1	#0396 -	-	
32	S037-122552				BOLT-W/WASHER	1	#0396 -	-	

COOLING SYSTEM

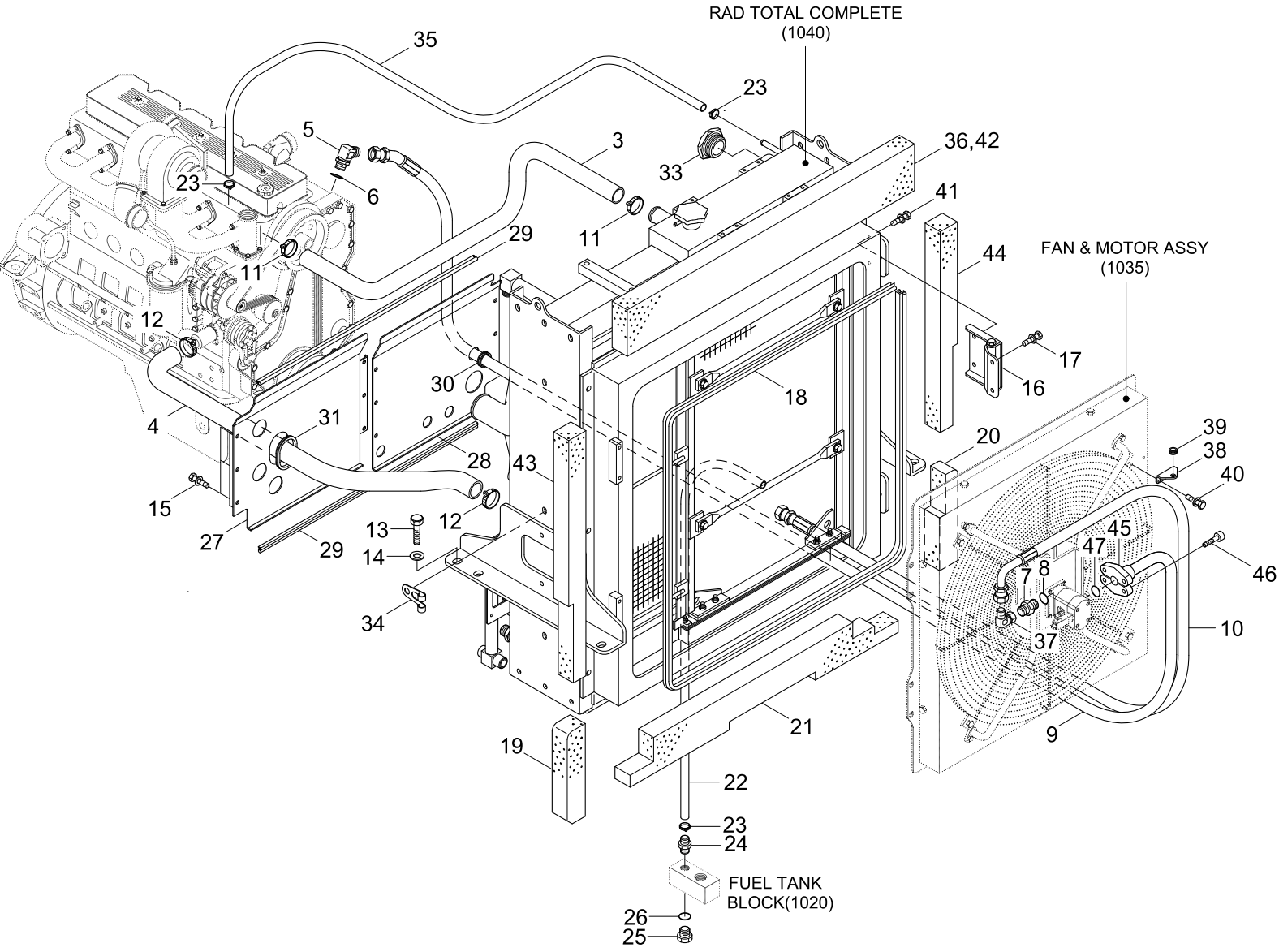

Item	Part_No	IS	Ord	T	Description	Qty	Serial_No	ITC	Remark
3	11LD-30131				HOSE-RUBBER	1			
4	11LD-30140				HOSE-RUBBER	1			
5	P020-310009				ELBOW-90	1			
6	S611-023001				O-RING	1			
7	P010-310013				CONNECTOR	1			
8	S611-030001				O-RING	1			
9	P650-127339				HOSE ASSY-THD FLG	1			
10	P620-161030				HOSE ASSY-THD 0X90	1			
11	S572-580002				CLAMP-HOSE WIRE TYPE	2			
12	S572-640006				CLAMP-HOSE WIRE TYPE	2			
13	S017-160502				BOLT-HEX	8			
14	S441-160002				WASHER-HARDENED	8			
15	S037-101552				BOLT-W/WASHER	13			
16	11LD-30150				HINGE ASSY	2			
17	S037-102052				BOLT-W/WASHER	4			
18	S771-034400				WEATHER STRIP	1			
19	11LD-30290				SPONGE	1			
20	11LD-30300				SPONGE	1			
21	11LD-30310				SPONGE	1			
22	P760-021088				HOSE-RUBBER,LOW	1			
23	S520-020000				CLAMP-HOSE	4			
24	P090-100808				CONNECTOR	1			
25	P220-110104				PLUG-HEX	1			
26	S631-018001				O-RING	1			
27	11LD-30191				PLATE-SCREEN,LH	1			

Item	Part_No	IS	Ord	T	Description	Qty	Serial_No	ITC	Remark
28	11LD-30201				PLATE-SCREEN,RH	1			
29	S771-009000				WEATHER STRIP	2			
30	S681-460400				GROMMET	1			
31	S791-020030				GROMMET-PLATE	1			
33	14E7-01070				GAUGE-SIGHT	1			
34	S593-000752				CLIP-HARNESS	2			
35	P760-011136				HOSE-RUBBER,LOW	1			
36	11LD-30350				SPONGE	1	#0203 -	-	ROUND COWL TYPE
37	31EE-90110				ELBOW-90,SWIVEL NUT	1			
38	11LB-30440				PLATE	1			
39	S681-130800				GROMMET	1			
40	S035-082022				BOLT-W/WASHER	2			
41	S037-102552				BOLT-W/WASHER	6			
42	11LD-30320				SPONGE	1			
43	11LD-30330				SPONGE	1			
44	11LD-30340				SPONGE	1			
45	P173-120102				FLANGE-SPLIT	2			
46	S109-100306				BOLT-SOCKET	4			
47	Y171-019004				O-RING	1			

FAN & MOTOR ASSY

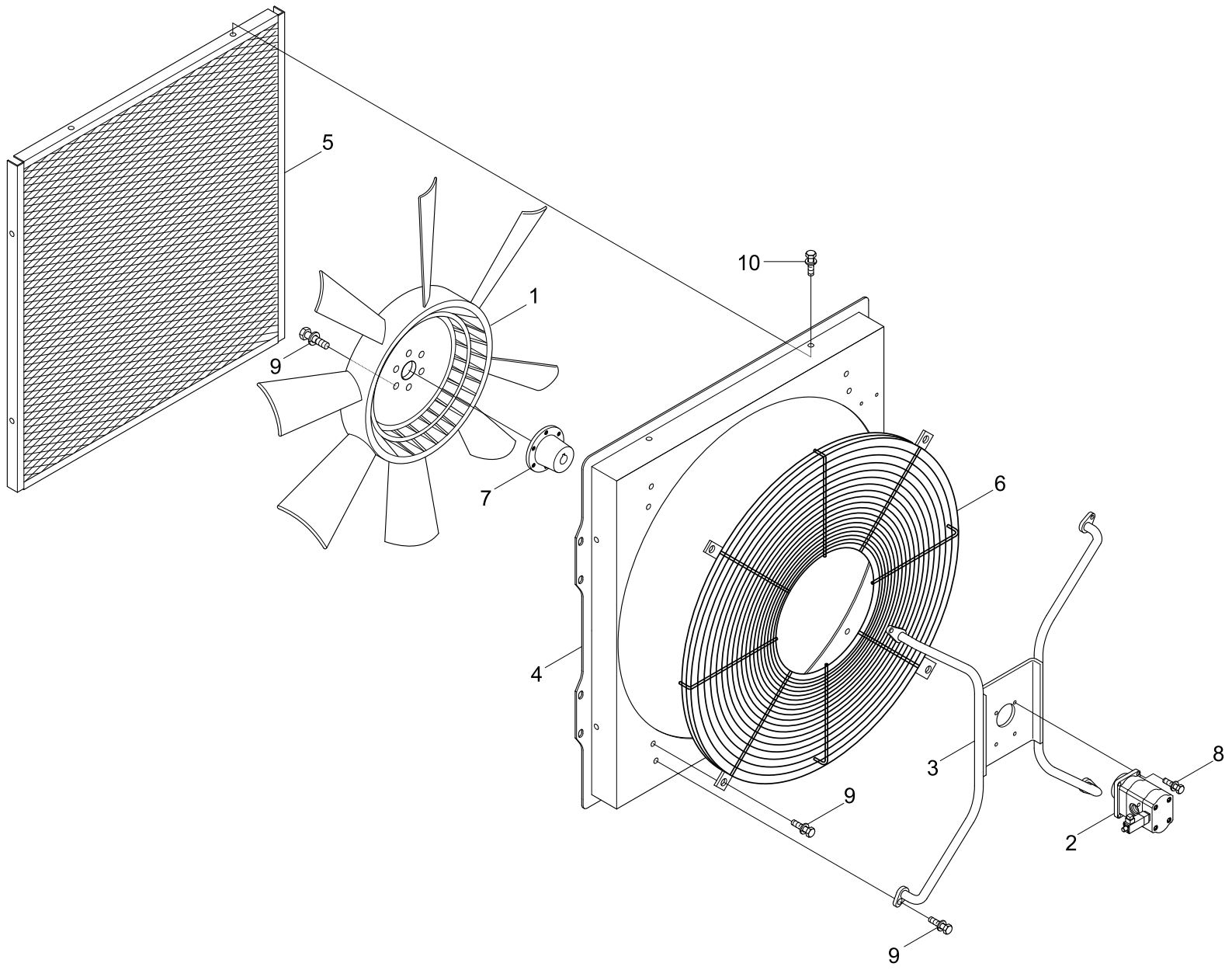

Item	Part_No	IS	Ord	T	Description	Qty	Serial_No	ITC	Remark
*	@				FAN & MOTOR ASSY	1	#0001 -	-	NOT
1	11LD-30280				.FAN-COOLING	1	- #0758		
	11LD-30281				.FAN-COOLING	1	#0759 -	B	
2	@				.MOTOR-FAN	1			NOT
3	11LD-30221				.BRACKET WA	1			
4	11LD-30231				.SHROUD WA	1			
5	11LD-30270				.FAN GUARD WA-FRONT	1			
6	11LD-30251				.FAN GUARD WA-REAR	1	- #1623		
	11LD-30252				.FAN GUARD WA-REAR	1	#1624 -	B	
7	11LB-30180				.ADAPTER	1			
8	S109-080256				.BOLT-SOCKET	4			
9	S037-102052				.BOLT-W/WASHER	14			
10	S035-081522				.BOLT-W/WASHER	8			

FAN & MOTOR ASSY(LOW NOISE, #0669-)

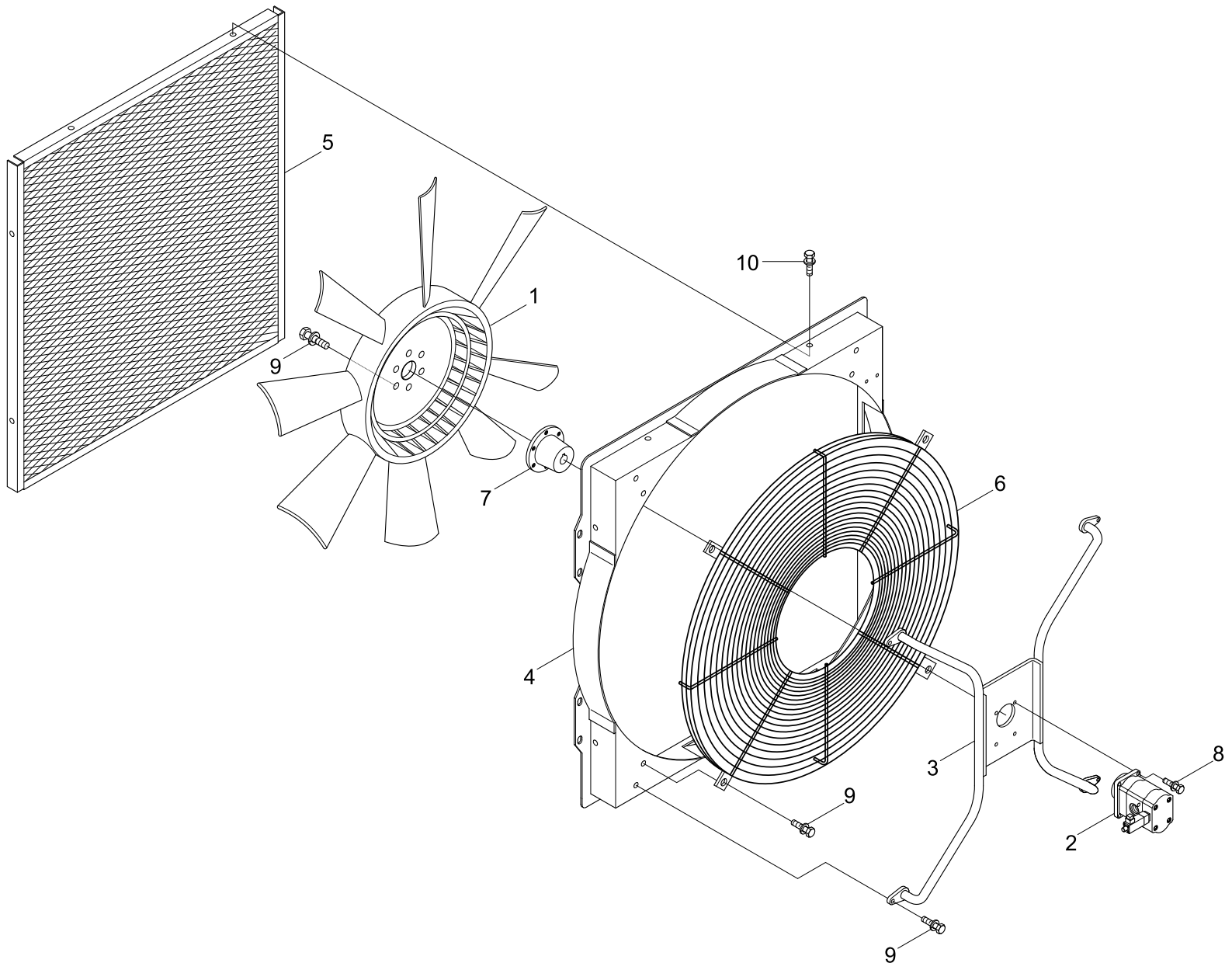

Item	Part_No	IS	Ord	T	Description	Qty	Serial_No	ITC	Remark
*	@				FAN & MOTOR ASSY	1	#0669 -	-	NOT
1	11LB-30120				.FAN-COOLING	1	- #0758		
	11LB-30121				.FAN	1	#0759 -	B	
2	@				.MOTOR-FAN	1			NOT
3	11LD-30510				.BRACKET WA	1			
4	11LD-30521				.SHROUD WA	1			
5	11LD-30270				.FAN GUARD WA-FRONT	1			
6	11LC-30111				.FAN GUARD WA-REAR	1	- #1623		
	11LC-30112				.FAN GUARD WA-REAR	1	#1624 -	B	
7	11LB-30180				.ADAPTER	1			
8	S109-08025V				.BOLT-SOCKET	4			
9	S037-10205V				.BOLT-W/WASHER	14			
10	S035-08152V				.BOLT-W/WASHER	8			

FAN MOTOR

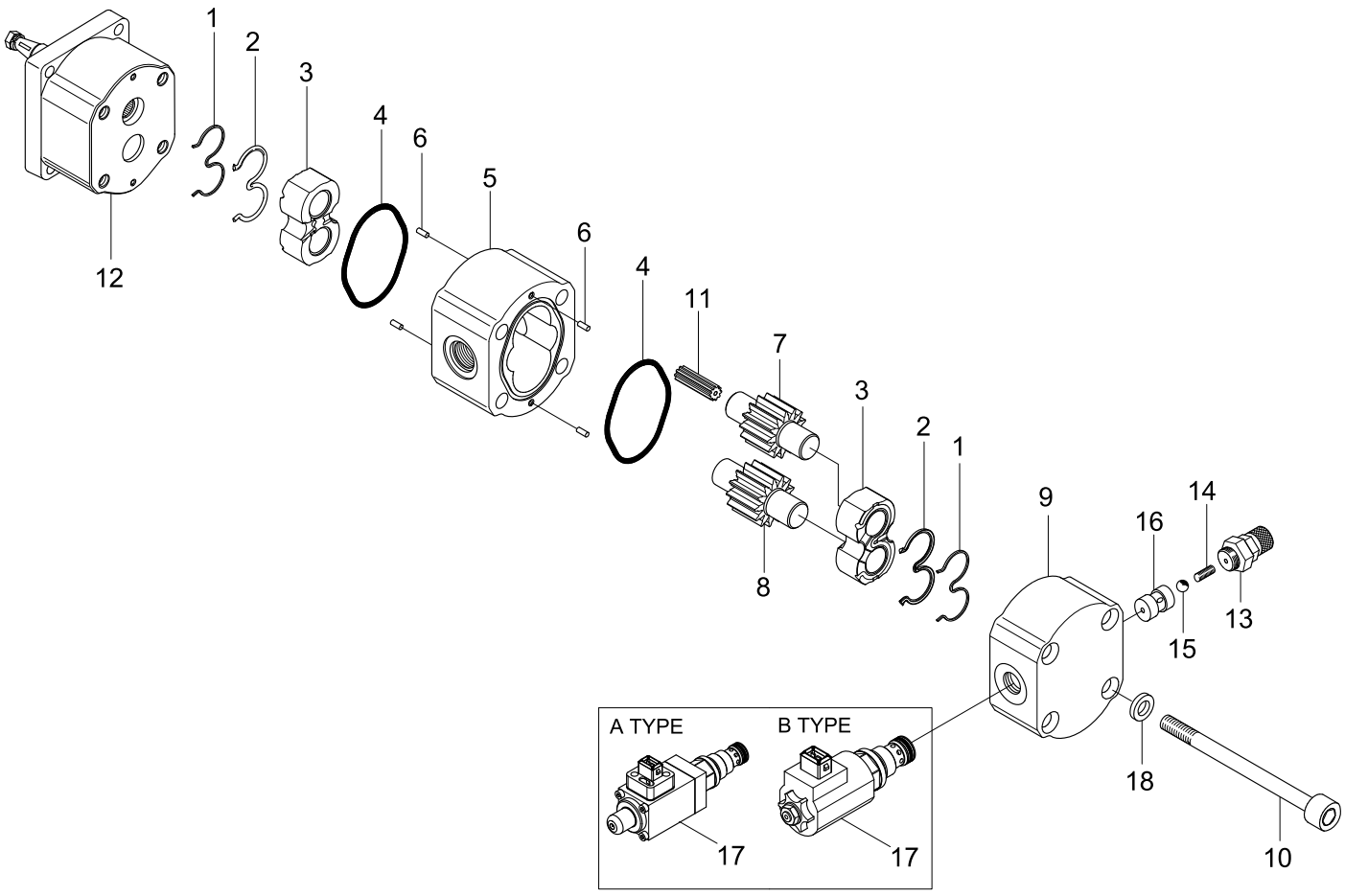

Item	Part_No	IS	Ord	T	Description	Qty	Serial_No	ITC	Remark
*	11LD-30111				FAN MOTOR-ONE DIRECTION	1	#0001 - #1690	-	
	11LD-30112				FAN MOTOR-ONE DIRECTION	1	#1691 -	B	
K1	@				.RING-BACK UP	2			NOT
K2	@				.SEAL	2			NOT
3	@				.BEARING BLOCK	2			NOT
K4	@				.O-RING	2			NOT
5	@				.GEAR HOUSING	1			NOT
6	@				.DOWEL PIN	4			NOT
7	@				.DRIVE GEAR	1			NOT
8	@				.IDLER GEAR	1			NOT
9	@				.COVER	1			NOT
10	@				.BOLT	4			NOT
11	@				.COUPLING	1			NOT
12	@				.FRONT BEARING	1			NOT
K12-1	@				..SHAFT SEAL I	1			NOT
K12-2	@				..SHAFT SEAL II	1			NOT
13	@				.COUPLING-MEASURING	1			NOT
14	@				.SPRING	1			NOT
15	@				.BALL	1			NOT
16	@				.VALVE SEAT	1			NOT
17	5030339				.RELIEF VALVE CARTRIDGE	1			
K17-1	@				..SEAL KIT	1			NOT
18	@				.WASHER	4			NOT
K	5060053				SEAL KIT	1			

RADIATOR TOTAL ASSY

SERIAL NO : -#1579

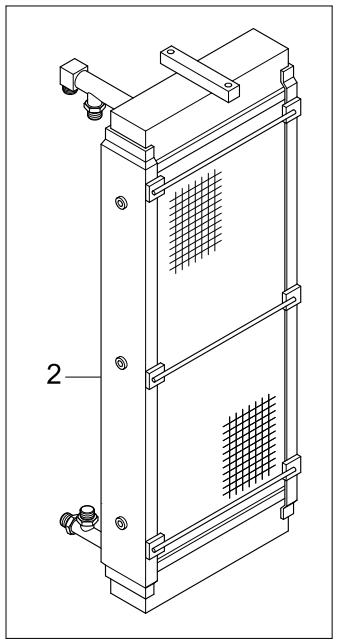

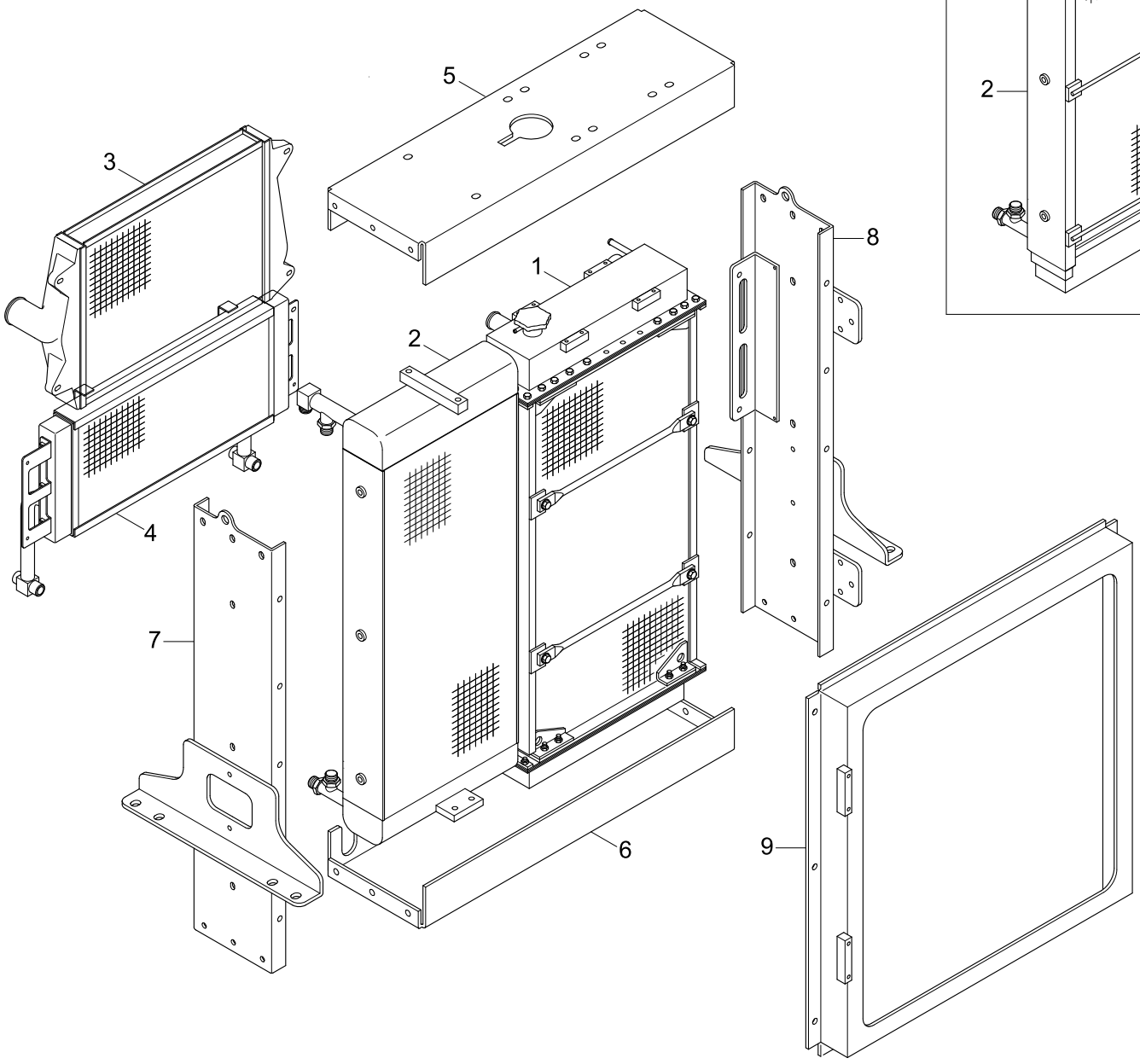

Item	Part_No	IS	Ord	T	Description	Qty	Serial_No	ITC	Remark
*	11LD-30011				RAD TOTAL COMPLETE	1	- #0033		
	11LD-30012				RAD TOTAL COMPLETE	1	#0034 - #1579	B	
	11LD-30013				RAD TOTAL COMPLETE	1	#1580 -	B	
1	11LD-30020				.RADIATOR ASSY	1			
1-1	12101811				..CAP-RADIATOR	1			
2	11LD-30031				.T/M OIL COOLER ASSY	1	- #1579	B	
	11LD-30032				.T/M OIL COOLER ASSY	1	#1580 -		
3	11LD-30041				.CHARGED AIR COOLER	1			
4	11LD-30051				.HYD OIL COOLER ASSY	1	- #0033		
	11LD-30052				.HYD OIL COOLER ASSY	1	#0034 -	B	
5	11LD-30060				.SUPPORT-UPPER	1			
6	11LD-30070				.SUPPORT-LOWER	1			
7	11LD-30080				.SUPPORT-LH,SIDE	1			
8	11LD-30090				.SUPPORT-RH,SIDE	1			
9	11LD-30101				.SHROUD ASSY	1			

AIR INTAKE SYSTEM

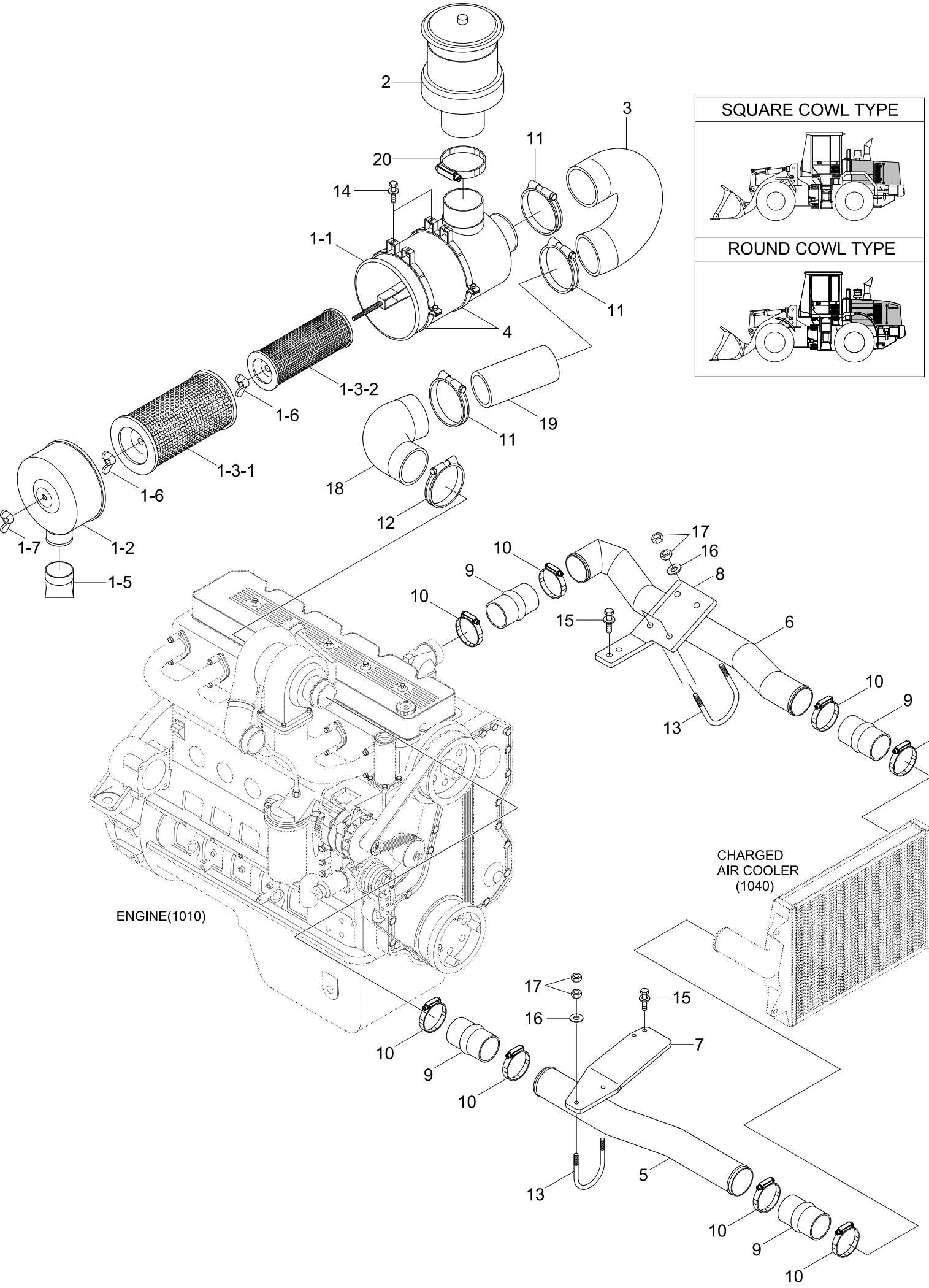

Item	Part_No	IS	Ord	T	Description	Qty	Serial_No	ITC	Remark
1	11LD-40010				AIR CLEANER ASSY	1			
1-1	11LD-40020				.HOUSING-AIR CLEANER	1			
1-2	11N6-20120				.CAP-AIR CLEANER	1	- #0833		
	11LD-40180				.CAP-AIR CLEANER	1	#0834 -	A	
1-3	11EM-T000-A				.ELEMENT SET-A/CLEAN	1	#0001 -	-	
1-3-1	11EM-21041				..ELEMENT-PRIMARY	1	#0001 -	-	
1-3-2	11EM-21051				..ELEMENT-SAFETY	1	#0001 -	-	
1-5	E211-2105				.VALVE-VACUUM	1			
1-6	11EM-21060				.NUT-WING	2			
1-7	11EM-21070				.NUT-WING	1			
2	11N8-20180				PRECLEANER	1	- #0498		
	11N8-20181				PRECLEANER	1	#0499 -	B	
3	11LD-40032				HOSE-AIR CLEANER	1			SQ COWL TYPE
	11LD-40130				HOSE-AIR CLEANER	1	#0203 - #0545	-	ROUND COWL TYPE
	11LD-40131				HOSE-AIR CLEANER	1	#0546 -	D	ROUND COWL TYPE
4	14EA-23060				CLAMP-BAND	2			
5	11LD-40040				PIPE	1			
6	11LD-40053				PIPE WA	1			
7	11LD-40061				BRACKET	1			
8	11LD-40073				BRACKET	1			
9	11LD-40080				HOSE-CHARGED AIR	4			
10	11LD-40090				CLAMP-T/RETENTION	8			
11	14E7-01120				CLAMP-HOSE	3	- #0545		
	11LB-40190				CLAMP-HOSE	3	#0546 -	A	
12	11E6-21240				CLAMP-HOSE	1	- #0545		

Item	Part_No	IS	Ord	T	Description	Qty	Serial_No	ITC	Remark
12	11LB-40180				CLAMP-HOSE	1	#0546 - #0833	A	
	11LB-40310				CLAMP-T/BOLT	1	#0834 -	A	
13	11LD-40101				U-BOLT	4			
14	S035-082032				BOLT-W/WASHER	4	- #0833		
	S035-082036				BOLT-W/WASHER	4	#0834 -	A	
15	S037-103052				BOLT-W/WASHER	4	- #0833		
	S037-103056				BOLT-W/WASHER	4	#0834 -	A	
16	S441-100002				WASHER-HARDENED	8	- #0833		
	S441-100006				WASHER-HARDENED	8	#0834 -	A	
17	S205-101002				NUT-HEX	16	- #0833		
	S205-101006				NUT-HEX	16	#0834 -	A	
18	11LD-40111				HOSE-AIR CLEANER	1	- #0545		
	11LD-40112				HOSE-AIR CLEANER	1	#0546 -	D	
19	11LD-40121				PIPE	1			
20	11LB-40320				CLAMP-HOSE	1	#1051 -	-	

EXHAUST SYSTEM

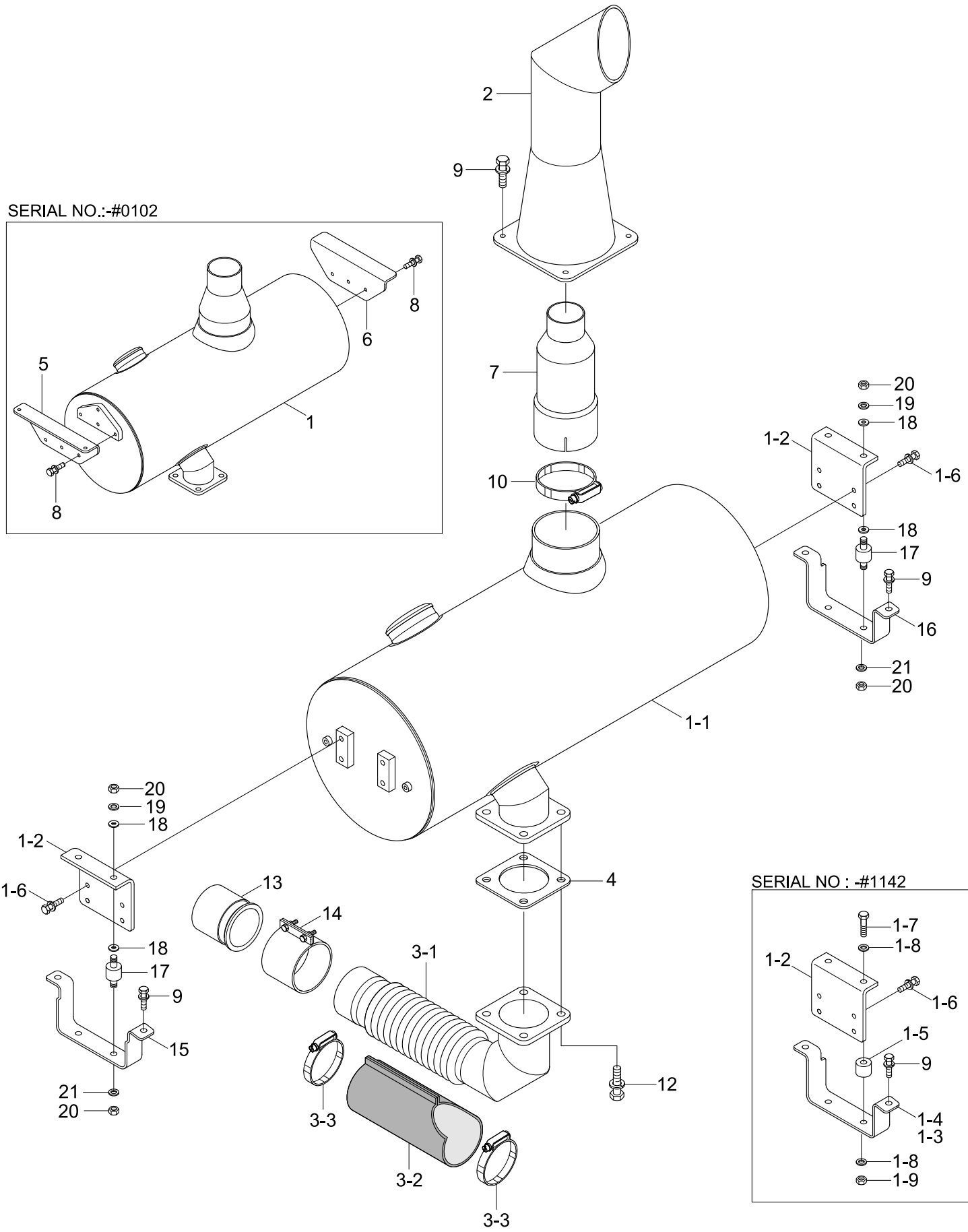

Item	Part_No	IS	Ord	T	Description	Qty	Serial_No	ITC	Remark
1	11LD-50040				MUFFLER WA	1	- #0102		STD
	11LD-50070				MUFFLER ASSY	1	#0103 - #0833	D	STD
	11LD-50071				MUFFLER ASSY	1	#0834 - #1142	A	STD
	11LD-50072				MUFFLER ASSY	1	#1143 -	D	STD
	11LD-50180				MUFFLER ASSY	1	#0669 - #0833	-	LOW NOISE
	11LD-50181				MUFFLER ASSY	1	#0834 - #1142	A	LOW NOISE
	11LD-50182				MUFFLER ASSY	1	#1143 -	D	LOW NOISE
1-1	11LD-50080				.MUFFLER ASSY	1	#0103 - #0833	-	STD
	11LD-50081				.MUFFLER ASSY	1	#0834 -	A	STD
	11LD-50190				.MUFFLER SUB ASSY	1	#0669 - #0833	-	LOW NOISE
	11LD-50191				.MUFFLER SUB ASSY	1	#0834 -	A	LOW NOISE
1-2	11LB-50041				.BRACKET	2	#0103 - #1142	-	
	11LB-50860				.BRACKET	2	#1143 -	D	
1-3	11LB-50240				.BRACKET WA-LH	1	#0103 - #1142	-	
1-4	11LB-50250				.BRACKET WA-RH	1	#0103 - #1142	-	
1-5	11LB-50160				.SPACER	4	#0103 - #1142	-	
1-6	S037-122556				.BOLT-W/WASHER	8	#0103 -	-	
1-7	S017-120656				.BOLT-HEX	4	#0103 - #1142	-	
1-8	S441-120006				.WASHER-HARDENED	8	#0103 - #1142	-	
1-9	S207-121006				.NUT-HEX	4	#0103 - #1142	-	
2	11LB-50090				PIPE WA-TAIL	1			
3	11LD-50030				PIPE WA	1	- #0102		
	11LD-50031				BELLOWS PIPE ASSY	1	#0103 -	B	
	11LD-50140				BELLOWS PIPE ASSY	1	#0203 - #1142	-	ROUND COWL TYPE
	11LD-50141				BELLOWS PIPE ASSY	1	#1143 -	D	ROUND COWL TYPE

Item	Part_No	IS	Ord	T	Description	Qty	Serial_No	ITC	Remark
3-1	11LD-50150				.PIPE WA	1	#0103 -	-	
	11LD-50170				.PIPE WA	1	#0203 - #1142	-	ROUND COWL TYPE
	11LD-50171				.PIPE WA	1	#1143 -	D	ROUND COWL TYPE
3-2	11LD-50160				.INSULATOR	1	#0103 - #1142	-	
	11LD-50161				.INSULATOR	1	#1143 -	D	
3-3	S520-090000				.CLAMP-HOSE	2	#0103 -	-	
4	14L3-00220				GASKET	1			
5	11LC-50040				BRACKET-LH	1	- #0102	-	
6	11LC-50050				BRACKET-RH	1	- #0102	-	
7	11LC-50130				PIPE-REDUCER	1	#0103 -	-	
8	S037-122552				BOLT-W/WASHER	8	- #0102	-	
9	S037-123052				BOLT-W/WASHER	8	- #0833		
	S037-123056				BOLT-W/WASHER	8	#0834 -	A	
10	11EH-32080				CLAMP-EXHAUST PIPE	1	#0103 -	-	
12	S037-102552				BOLT-W/WASHER	4	- #0833		
	S037-103056				BOLT-W/WASHER	4	#0834 -	A	
13	11LD-50290				PIPE WA-EXHAUST	1	#1142 -	D	
14	11N6-30040				CLAMP-SEAL	1	#1142 -	D	
15	11LB-50320				BRACKET WA-LH	1	#1142 -	A	
16	11LB-50330				BRACKET WA-RH	1	#1142 -	A	
17	11LB-88600				MOUNT	4	#1142 -	D	
					MOUNT	4	#1142 - #1594	D	
	11LB-88601				MOUNT	4	#1595 -	B	
18	11LB-50870				INSULATOR	8	#1142 -	D	
					INSULATOR	8	#1142 - #1594	D	

Item	Part_No	IS	Ord	T	Description	Qty	Serial_No	ITC	Remark
18	11LB-50940				INSULATOR	8	#1595 -	B	
19	11L7-30070				WASHER	4	#1142 -	D	
20	S205-12100B				NUT-HEX	8	#1142 -	D	
21	S441-12000B				WASHER-HARDENED	4	#1142 -	D	

AIRCON & HEATER MOUNTING

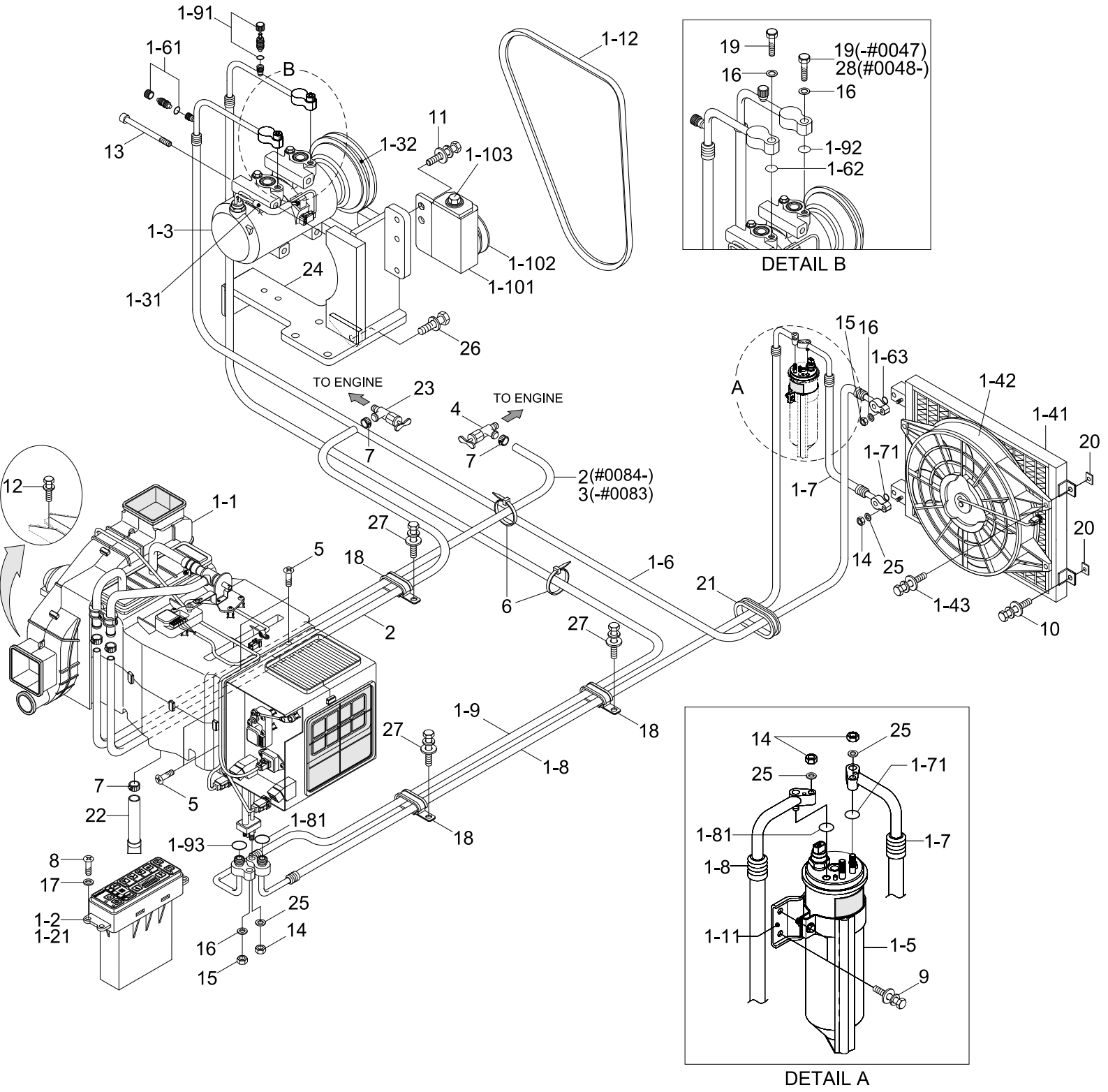

Item	Part_No	IS	Ord	T	Description	Qty	Serial_No	ITC	Remark
1	11LD-90022				AIRCON & HEATER ASSY	1	- #0083		
	11LD-90023				AIRCON & HEATER ASSY	1	#0084 - #0141	B	
	11LD-90024				AIRCON & HEATER ASSY	1	#0142 - #0684	B	
	11LD-90025				AIRCON & HEATER ASSY	1	#0685 - #1624	D	
	11LD-90027				AIRCON & HEATER ASSY	1	#1625 -	D	
1-1	@				.AIRCON & HEATER UNIT	1			NOT
1-2	11LB-90110				.CONTROL ASSY	1	- #0083		
	11LB-90111				.CONTROL ASSY	1	#0084 - #0684	B	
	11LB-90112				.CONTROL ASSY	1	#0685 -	B	
1-21	11LB-90220				..DECAL	1	#0001 -	-	NOT SHOWN
1-3	11N6-90040				.COMPRESSOR ASSY	1	- #1624		
	11Q6-90040				.COMPRESSOR ASSY	1	#1625 -	D	
1-31	11LF-90230				..THERMAL SW-COMP	1	#0001 - #1624	-	
1-32	A5W00153				..CLUTCH	1	#0001 - #1624	-	
1-4	11LC-90110				.CONDENSER ASSY	1	- #0684		
	11LH-90090				.COND & FAN ASSY	1	#0685 -	D	
1-41	A2100589000				..CONDENSER	1	#0001 - #0684	-	
	A2W01133				..CONDENSER	1	#0685 -	D	
1-42	A2W00594				..FAN & MOTOR ASSY	1	#0001 - #0684	-	
	A2W01178				..FAN & MOTOR ASSY	1	#0685 -	D	
1-42-1	A411350201B1				...FAN ASSY	1	#0001 - #0684	-	NOT SHOWN
	AC100180				...FAN ASSY	1	#0685 -	D	NOT SHOWN
1-42-2	A2W00595				...MOTOR ASSY	1	#0001 - #0684	-	NOT SHOWN
	A2W01179				...MOTOR ASSY	1	#0685 -	D	NOT SHOWN
1-42-3	A285051700A0				...SHROUD	1	#0001 - #0684	-	NOT SHOWN

Item	Part_No	IS	Ord	T	Description	Qty	Serial_No	ITC	Remark
1-42-3	AC100189				...SHROUD	1	#0685 -	D	NOT SHOWN
1-43	A8900105073				..BOLT-W/WASHER	4	#0001 - #0684	-	
	RA000004				..BOLT-W/WASHER	4	#0685 -	D	
1-5	11N6-90060				.DRIER-RECEIVER	1			
1-6	11LC-90043				.HOSE-DISCHARGE	1	- #0141		
	11LC-90044				.HOSE-DISCHARGE	1	#0142 - #1624	B	
	11LC-90045				.HOSE-DISCHARGE	1	#1625 -	D	
1-61	A304000301-4				..CHARGE VALVE ASSY	1			
1-62	A305000206-2				..O-RING	1			
1-63	A305000205-2				..O-RING	1			
1-7	11LC-90053				.HOSE(A)-LIQUID	1			
1-71	A305000207-2				..O-RING	2			
1-8	11LD-90063				.HOSE(B)-LIQUID	1			
1-81	A305000209-2				..O-RING	2			
1-9	11LD-90073				.HOSE-SUCTION	1	- #0141		
	11LD-90074				.HOSE-SUCTION	1	#0142 - #1624	B	
	11LD-90075				.HOSE-SUCTION	1	#1625 -	D	
1-91	A304000601-4				..CHARGE VALVE ASSY-L	1			
1-92	A310069299-2				..O-RING	1	- #1624	-	
1-93	A305000203-2				..O-RING	1			
1-10	11N6-90110				.PULLEY-IDLE	1			
1-101	A4760-508-00-2				..BRACKET-PULLEY	1			
1-102	A4700-511-01-2				..PULLEY-IDLE	1			INCL 1-103
1-103	A8900-518-03-3				...BOLT-TENSION	1	#0001 -	-	
1-11	11N6-90120				.BRACKET-R/DRIER	1			

Item	Part_No	IS	Ord	T	Description	Qty	Serial_No	ITC	Remark
1-12	11E9-3503				.V-BELT	1			
2	11LD-90090				HOSE-HEATER	1	- #0083		
	11LC-90100				HOSE-HEATER	2	#0084 -	B	
3	11LD-90100				HOSE-HEATER	1	- #0083	-	
4	11L7-90150				VALVE-HEATER	1			
5	S152-04012V				SCREW-TAPPING	4			
6	S551-035146				TIE-WIRE	2			
7	S520-027000				CLAMP-HOSE,SCREW TYPE	5			
8	S161-050166				SCREW-CROSS R/ROUND	4			
9	S035-061522				BOLT-W/WASHER	2			
10	S035-082522				BOLT-W/WASHER	4			
11	S037-102522				BOLT-W/WASHER	6			
12	S037-122052				BOLT-W/WASHER	4			
13	S109-080956				BOLT-SOCKET	4	- #1624		
	S109-080906				BOLT-SOCKET	4	#1625 -	D	
14	S203-061002				NUT-HEX	4			
15	S203-081002				NUT-HEX	2			
16	S403-08200B				WASHER-PLAIN	4	#0001 - #1624	-	
					WASHER-PLAIN	6	#1625 -	A	
17	S403-052002				WASHER-PLAIN	4			
18	S543-400002				CLAMP-TUBE	3			
19	S015-080302				BOLT-HEX	2	- #0047		
	S015-080306				BOLT-HEX	1	#0048 - #1624	-	
20	14L3-00741				RESILIENT	4			
21	S681-460400				GROMMET	1			

Item	Part_No	IS	Ord	T	Description	Qty	Serial_No	ITC	Remark
22	11EK-92130				HOSE-DRAIN	1			
23	14L1-01350				VALVE-HEATER	1			
24	11LD-90082				BRACKET WA	1	- #0395		
	11LD-90083				BRACKET WA	1	#0396 - #1624	D	
	11LD-90084				BRACKET WA	1	#1625 -	D	
25	S403-062002				WASHER-PLAIN	4	#0001 -	-	
26	S037-103552				BOLT-W/WASHER	1			
27	S035-081522				BOLT-W/WASHER	3			
28	S015-080352				BOLT-HEX	1	#0048 - #1624	-	
29	S018-100356				BOLT-HEX	1	#1625 -	-	
30	S441-100006				WASHER-HARDENED	1	#1625 -	-	
31	S403-10200B				WASHER-PLAIN	1	#1625 -	-	

AIRCON & HEATER UNIT(-#0721)

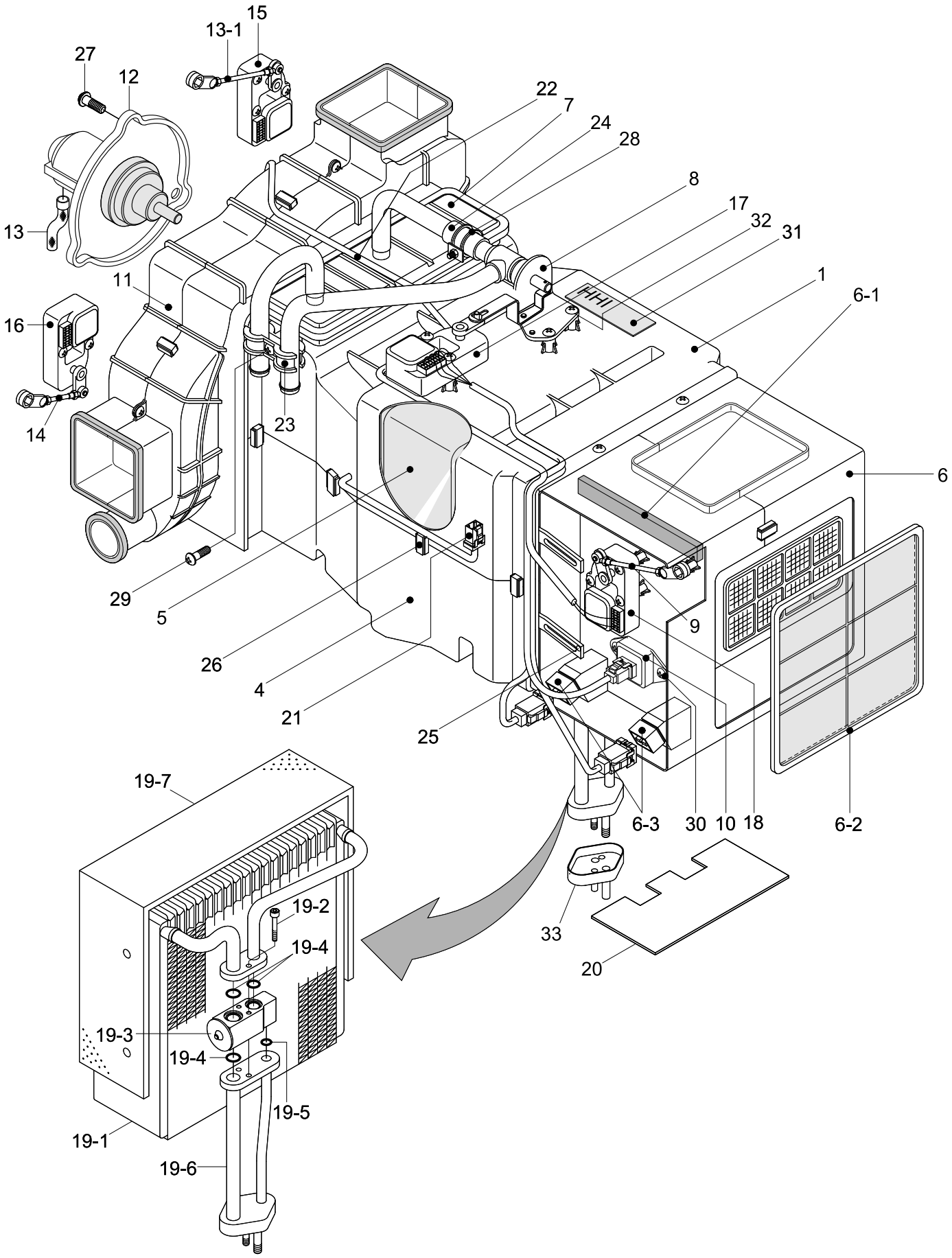

Item	Part_No	IS	Ord	T	Description	Qty	Serial_No	ITC	Remark
*	11LB-90130				AIRCON & HEATER UNIT	1	- #0083		
					AIRCON & HEATER UNIT	1	- #0721	-	
1	AH000089				.HVAC CASE-UPP	1			
	AH000086				.HVAC CASE UPP ASSY	1	#0084 -	B	
4	AM1210400-0				.HVAC CASE LOWER	1			
5	AM75001000-2				.EVAC INSULATION-LOW	1			
6	AH000055				.INTAKE CASE ASSY	1			
6-1	AM70003600-3				..SEAL-FILTER,FRESH	1			
6-2	11N6-9077O				..REC AIR FILTER	1			
6-3	11N6-90820				..RELAY	2			
7	11N6-90780				.HEATER CORE	1			
8	11N6-90730				.VALVE ASSY-WATER	1			
	AH001160				.WATER VLAVE	1	#0084 -	B	
9	AM52300100-4				.ROD-INTAKE	1			
10	11N6-90750				.RESISTOR ASSY	1			
11	AH000106				.BLOWER CASE ASSY	1			
					.BLOWER CASE ASSY	1			
12	11N6-90700				.FAN & MOTOR	1			
12-1	AW22000800-2				..FAN	1	#0001 -	-	NOT SHOWN
12-2	AW21002500-1				..MOTOR	1	#0001 -	-	NOT SHOWN
12-3	A710051601-3				..HOSE-DRAIN	1			
13	AW70002300-4				.ROD-VENT	1			
14	AW70002400-4				.ROD-DEF/FOOT	1			
15	11N6-90710				.MOTOR ACT-VENT	1			
16	11N6-90810				.MOTOR ACT-FOOT/DEF	1			

Item	Part_No	IS	Ord	T	Description	Qty	Serial_No	ITC	Remark
17	11N6-90720				.MOTOR ACT-TEMP	1			
18	11N6-90740				.MOTOR ACT-INTAKE	1			
19	11N6-90790				.EVAP CORE ASSY	1			
19-1	A111056400-1				..CORE ASSY-LAMI	1			
19-2	A111750100-4				..BOLT-WRENCH,HEX	2			
19-3	11N6-90800				..VALVE-EXPANSION	1			
19-4	A305000212-2				..O-RING	3			
19-5	A305000211-2				..O-RING	1			
19-6	A112059600-2				..PIPE ASSY	1			
19-7	A115004900-2				..INSULATION-CORE	1			
20	A112050700-3				.PLATE-SIDE	1			
21	A165400100-2				.SENSOR-DUCT	1			
22	11N6-90830				.WIRING ASSY	1			
23	AH000314				.CLAMP-H/RAD PIPE	1			
24	3AH-1007				.HOSE-WATER	1			
25	4AH-0643				.HOLDER-WIRE	6			
26	4AH-0688				.CLIP-CASE	9			
27	4AH-0886				.SCREW	3			
28	4AH-0929				.CLAMP ASSY-HOSE	1			
29	K500531				.SCREW	28			
30	K500533				.SCREW	30			
31	AM99001201Z3				.NAME PLATE	1			
32	AH000315				.SCREW-T.H TAP	1			
33	A306201301-3				.CAP-FLANGE	1			

AIRCON & HEATER UNIT(#0722-)

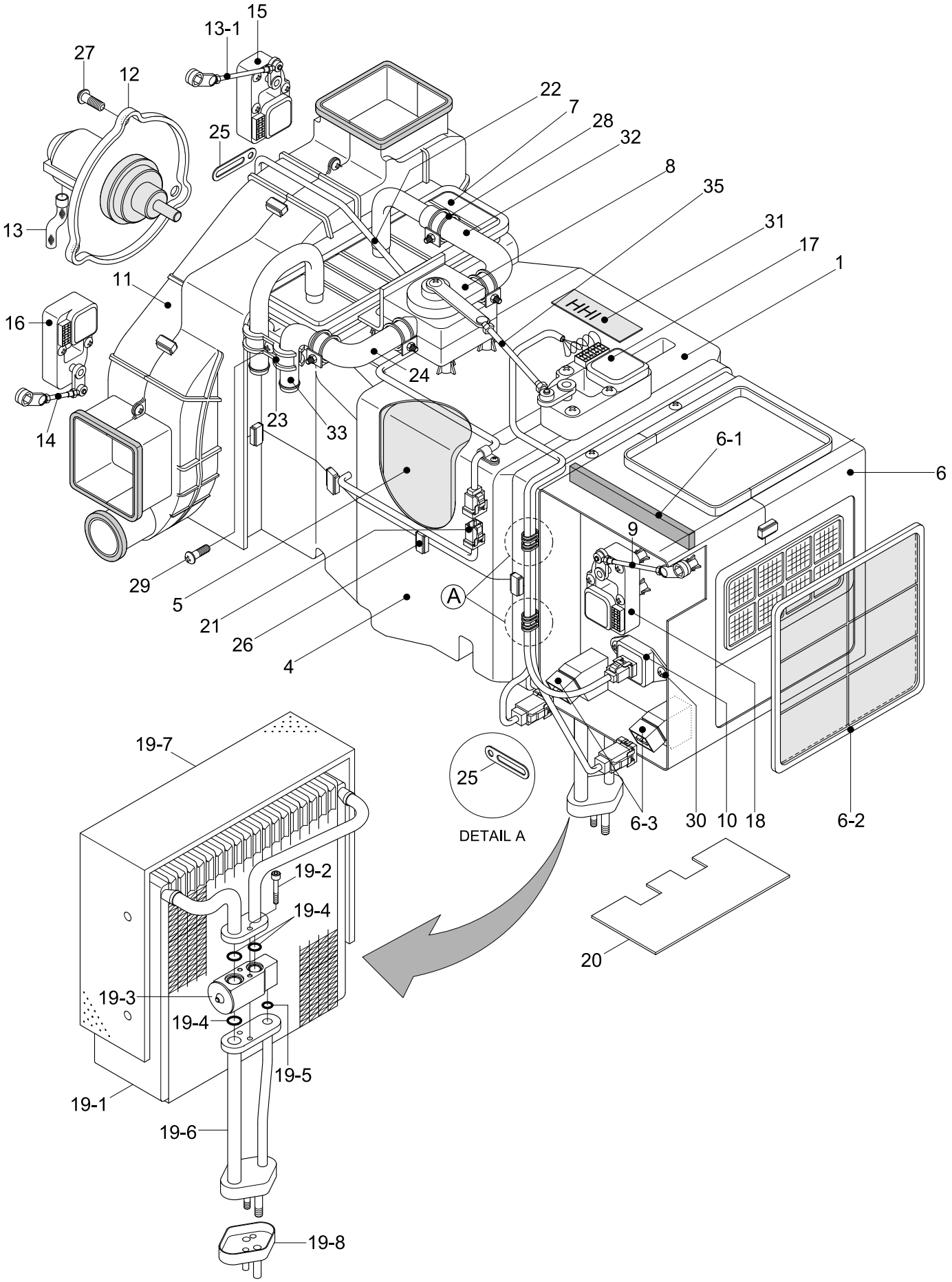

Item	Part_No	IS	Ord	T	Description	Qty	Serial_No	ITC	Remark
*	11LB-90131				AIRCON & HEATER UNIT	1	#0722 - #1624	A	
	11LH-90241				AIRCON & HEATER UNIT	1	#1625 -	D	
1	AH000089				.HVAC CASE-UPP	1			
4	AM12101400-0				.HVAC CASE-LOW	1			
5	AM75001000-2				.EVAC INSULATION-LOW	1			
6	AH000983				.INTAKE CASE ASSY	1			
6-1	AM70003600-3				..SEAL-FILTER,FRESH	1			
6-2	11N6-9077O				..REC AIR FILTER	1			
6-3	11N6-90820				..RELAY	2			
7	11N6-90780				.HEATER CORE	1			
8	AH001160				.VLAVE-WATER	1			
9	AM52300100-4				.ROD-INTAKE	1			
10	11N6-90750				.RESISTOR ASSY	1			
11	AH000106				.BLOWER CASE ASSY	1			
12	11N6-90700				.FAN & MOTOR	1			
12-1	AW22000800-2				..FAN	1			NOT SHOWN
12-2	AW21002500-1				..MOTOR	1			NOT SHOWN
12-3	A710051601-3				..HOSE-DRAIN	1			
13	AW70002300-4				.ROD-VENT	1			
14	AW70002400-4				.ROD-DEF/FOOT	1			
15	AH100108				.MOTOR ACT-REAR	1			
16	AH100109				.MOTOR ACT-FRONT	1			
17	AH100311				.MOTOR ACT-TEMP	1			
18	11N6-90740				.MOTOR ACT-INTAKE	1			
19	11N6-90790				.EVAP CORE ASSY	1	- #1624		

Item	Part_No	IS	Ord	T	Description	Qty	Serial_No	ITC	Remark
19	11N6-90791				.EVAP CORE ASSY	1	#1625 -	D	
19-1	A111056400-1				..CORE ASSY-LAMI	1			
19-2	A111750100-4				..BOLT-WRENCH,HEX	2			
19-3	11N6-90800				..VALVE-EXPANSION	1	- #1624		
	11N6-90801				..EXPANSION VALVE ASSY	1	#1625 -	D	
19-4	A305000212-2				..O-RING	3			
19-5	A305000211-2				..O-RING	1			
19-6	A112059600-2				..PIPE ASSY	1			
19-7	A115004900-2				..INSULATION-CORE	1			
20	A112050700-3				.PLATE-SIDE	1			
21	A165400100-2				.SENSOR-DUCT	1			
22	AH100110				.WIRING ASSY	1			
23	AH000314				.CLAMP-H/RAD PIPE	1			
24	AH001287				.HOSE-INLET,WATER	1			
25	4AH-0643				.HOLDER-WIRE	6			
26	4AH-0688				.CLIP-CASE	9			
27	4AH-0886				.SCREW	3			
28	AM27000201-3				.CLAMP-WATER HOSE	1			
29	K500531				.SCREW	28			
30	K500533				.SCREW	30			
31	AM99001201Z3				.NAME PLATE	1			
32	AH001288				.HOSE-OUTLET,WATER	1			
33	AH001415				.HEATER PIPE-INLET	1			
35	AH000856				.ROD-TEMP	1			

AIR CONDITIONER MOUNTING

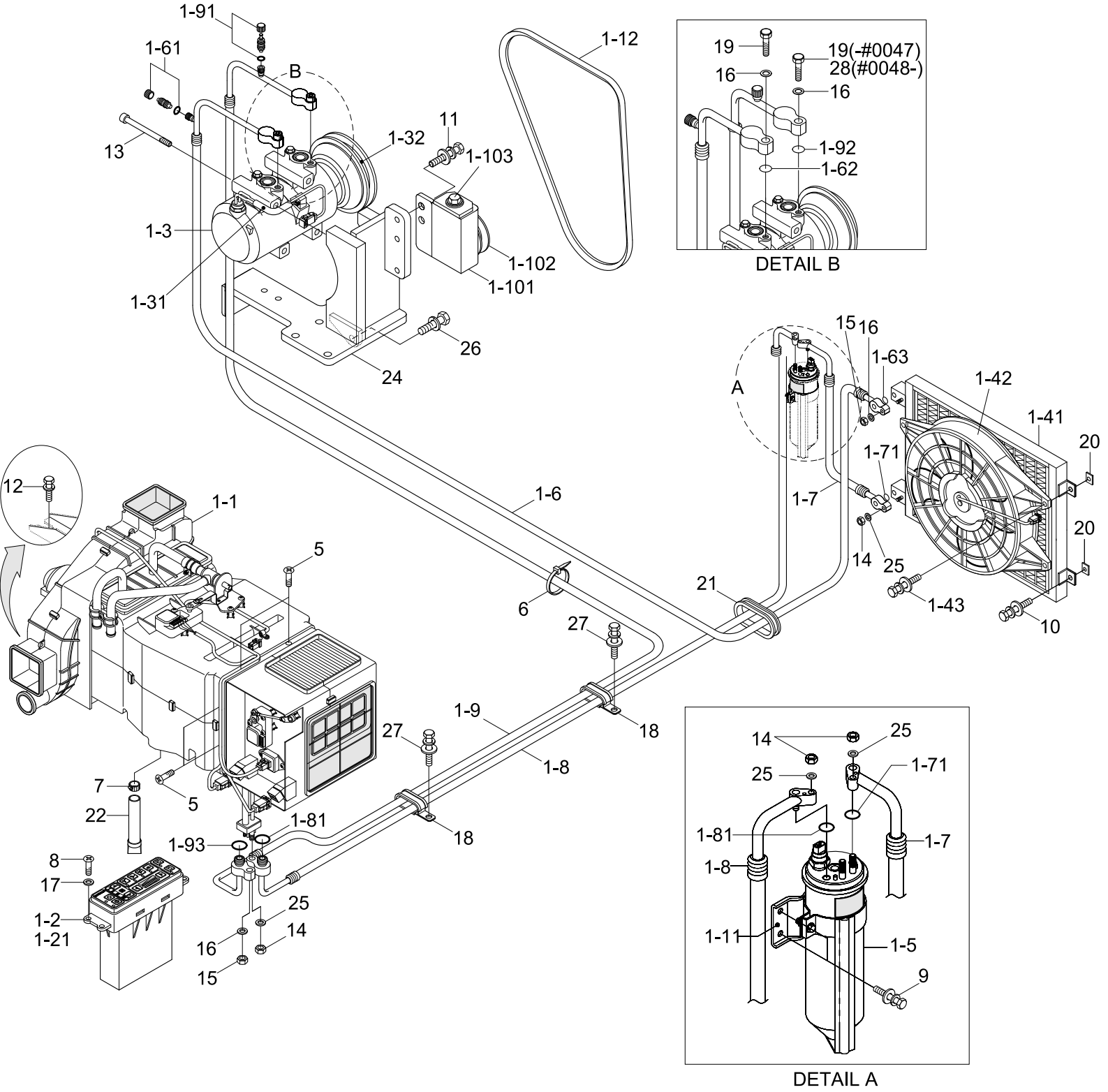

Item	Part_No	IS	Ord	T	Description	Qty	Serial_No	ITC	Remark
1	11LD-90012				AIRCON ASSY	1	- #0083		
	11LD-90013				AIRCON ASSY	1	#0084 - #0141	B	
	11LD-90014				AIRCON ASSY	1	#0142 - #0684	B	
	11LD-90015				AIRCON ASSY	1	#0685 - #1624	D	
	11LD-90017				AIRCON ASSY	1	#1625 -	D	
1-1	@				.AIRCON UNIT	1			NOT
1-2	11LB-90110				.CONTROL ASSY	1	- #0083		
	11LB-90111				.CONTROL ASSY	1	#0084 - #0684	B	
	11LB-90112				.CONTROL ASSY	1	#0685 -	B	
1-21	11LB-90220				..DECAL	1	#0001 -	-	NOT SHOWN
1-3	11N6-90040				.COMPRESSOR ASSY	1	- #1624		
	11Q6-90040				.COMPRESSOR ASSY	1	#1625 -	D	
1-31	11LF-90230				..THERMAL SW-COMP	1	#0001 - #1624	-	
1-32	A5W00153				..CLUTCH	1	#0001 - #1624	-	
1-4	11LC-90110				.CONDENSER ASSY	1	- #0684		
	11LH-90090				.COND & FAN ASSY	1	#0685 -	D	
1-41	A2100589000				..CONDENSER	1	#0001 - #0684	-	
	A2W01133				..CONDENSER	1	#0685 -	D	
1-42	A2W00594				..FAN & MOTOR ASSY	1	#0001 - #0684	-	
	A2W01178				..FAN & MOTOR ASSY	1	#0685 -	D	
1-42-1	A411350201B1				...FAN ASSY	1	#0001 - #0684	-	NOT SHOWN
	AC100180				...FAN ASSY	1	#0685 -	D	NOT SHOWN
1-42-2	A2W00595				...MOTOR ASSY	1	#0001 - #0684	-	NOT SHOWN
	A2W01179				...MOTOR ASSY	1	#0685 -	D	NOT SHOWN
1-42-3	A285051700A0				...SHROUD	1	#0001 - #0684	-	NOT SHOWN

Item	Part_No	IS	Ord	T	Description	Qty	Serial_No	ITC	Remark
1-42-3	AC100189				...SHROUD	1	#0685 -	D	NOT SHOWN
1-43	A8900105073				..BOLT-W/WASHER	4	#0001 - #0684	-	
	RA000004				..BOLT-W/WASHER	4	#0685 -	D	
1-5	11N6-90060				.DRIER-RECEIVER	1			
1-6	11LC-90043				.HOSE-DISCHARGE	1	- #0141		
	11LC-90044				.HOSE-DISCHARGE	1	#0142 - #1624	B	
	11LC-90045				.HOSE-DISCHARGE	1	#1625 -	D	
1-61	A304000301-4				..CHARGE VALVE ASSY	1			
1-62	A305000206-2				..O-RING	1	- #1624	-	
1-63	A305000205-2				..O-RING	1			
1-7	11LC-90053				.HOSE(A)-LIQUID	1			
1-71	A305000207-2				..O-RING	2			
1-8	11LD-90063				.HOSE(B)-LIQUID	1			
1-81	A305000209-2				..O-RING	2			
1-9	11LD-90073				.HOSE-SUCTION	1	- #0141		
	11LD-90074				.HOSE-SUCTION	1	#0142 - #1624	B	
	11LD-90075				.HOSE-SUCTION	1	#1625 -	D	
1-91	A304000601-4				..CHARGE VALVE ASSY-L	1			
1-92	A310069299-2				..O-RING	1	- #1624	-	
1-93	A305000203-2				..O-RING	1			
1-10	11N6-90110				.PULLEY-IDLE	1			
1-101	A4760-508-00-2				..BRACKET-PULLEY	1			
1-102	A4700-511-01-2				..PULLEY-IDLE	1			INCL 1-103
1-103	A8900-518-03-3				...BOLT-TENSION	1	#0001 -	-	
1-11	11N6-90120				.BRACKET-R/DRIER	1			

Item	Part_No	IS	Ord	T	Description	Qty	Serial_No	ITC	Remark
1-12	11E9-3503	10			.V-BELT	1			
5	S152-04012V				SCREW-TAPPING	4			
6	S551-035146				TIE-WIRE	2			
7	S520-027000				CLAMP-HOSE,SCREW TYPE	1			
8	S161-050166				SCREW-CROSS R/ROUND	4			
9	S035-081522				BOLT-W/WASHER	2			
10	S035-082522				BOLT-W/WASHER	4			
11	S037-102522				BOLT-W/WASHER	6			
12	S037-122052				BOLT-W/WASHER	4			
13	S109-080956				BOLT-SOCKET	4	- #1624		
	S109-080906				BOLT-SOCKET	4	#1625 -	D	
14	S203-061002				NUT-HEX	4			
15	S203-081002				NUT-HEX	2			
16	S403-08200B				WASHER-PLAIN	4	#0001 - #1624	-	
					WASHER-PLAIN	6	#1625 -	A	
17	S403-052002				WASHER-PLAIN	4			
18	S543-400002				CLAMP-TUBE	2			
19	S015-080302				BOLT-HEX	2	- #0047		
	S015-080306				BOLT-HEX	1	#0048 - #1624	-	
20	14L3-00741				RESILIENT	4			
21	S681-460400				GROMMET	1			
22	11EK-92130				HOSE-DRAIN	1			
24	11LD-90082				BRACKET WA	1	- #0395		
	11LD-90083				BRACKET WA	1	#0396 - #1624	D	
	11LD-90084				BRACKET WA	1	#1625 -	D	

Item	Part_No	IS	Ord	T	Description	Qty	Serial_No	ITC	Remark
25	S403-062002				WASHER-PLAIN	4	#0001 -	-	
26	S037-103552				BOLT-W/WASHER	1			
27	S035-081522				BOLT-W/WASHER	2			
28	S015-080356				BOLT-HEX	1	#0048 - #1624	-	
29	S018-100356				BOLT-HEX	1	#1625 -	-	
30	S441-100006				WASHER-HARDENED	1	#1625 -	-	
31	S403-10200B				WASHER-PLAIN	1	#1625 -	-	

AIR CONDITIONER UNIT

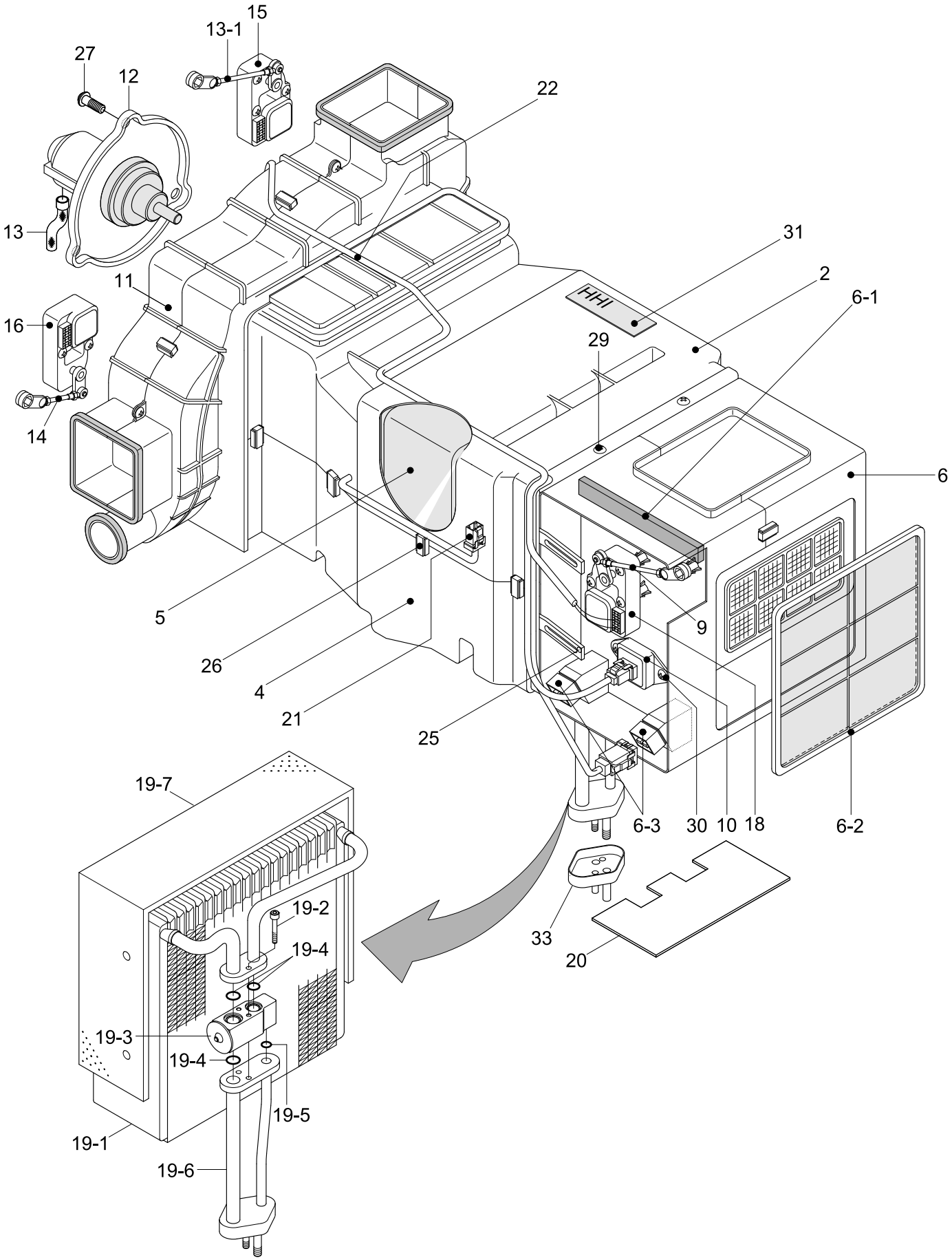

Item	Part_No	IS	Ord	T	Description	Qty	Serial_No	ITC	Remark
*	11LB-90140				AIRCON UNIT	1	- #0083		
	11LB-90141				AIRCON UNIT	1	#0084 - #1624	B	
	11LH-90251				AIRCON UNIT	1	#1625 -	D	
2	AH000090				.HVAC CASE UPP ASSY	1			
4	AM12101400-0				.HVAC CASE-LOW	1			
5	AM75001000-2				.EVAC INSULATION-LOW	1			
6	AH000055				.INTAKE CASE ASSY	1			
6-1	AM70003600-3				..SEAL-FILTER,FRESH	1			
6-2	11N6-90770				..AIR FILTER-REFRESH	1			
6-3	11N6-90820				..RELAY	2			
9	AM52300100-4				.ROD-INTAKE	1			
10	11N6-90750				.RESISTOR ASSY	1			
11	AH000106				.BLOWER CASE ASSY	1			
12	11N6-90700				.FAN & MOTOR	1			
12-1	AW22000800-2				..FAN	1	#0001 -	-	NOT SHOWN
12-2	AW21002500-1				..MOTOR	1	#0001 -	-	NOT SHOWN
13	A710051601-3				.HOSE-DRAIN	1			
13-1	AW70002300-4				..ROD-VENT	1			
14	AW70002400-4				.ROD-DEF/FOOT	1			
15	11N6-90710				.MOTOR ACT-VENT	1			
16	11N6-90810				.MOTOR ACT-FOOT/DEF	1			
18	11N6-90740				.MOTOR ACT-INTAKE	1			
19	11N6-90790				.EVAP CORE ASSY	1	- #1624		
	11N6-90791				.EVAP CORE ASSY	1	#1625 -	D	
19-1	A111056400-1				..CORE ASSY-LAMI	1			

Item	Part_No	IS	Ord	T	Description	Qty	Serial_No	ITC	Remark
19-2	A111750100-4				..BOLT-WRENCH,HEX	2			
19-3	11N6-90800				..VALVE-EXPANSION	1	- #1624		
	11N6-90801				..EXPANSION VALVE ASSY	1	#1625 -	D	
19-4	A305000212-2				..O-RING	3			
19-5	A305000211-2				..O-RING	1			
19-6	A112059600-2				..PIPE ASSY	1			
19-7	A115004900-2				..INSULATION-CORE	1			
20	A112050700-3				.PLATE-SIDE	1			
21	A165400100-2				.SENSOR-DUCT	1			
22	11N6-90830				.WIRING ASSY	1			
25	4AH-0643				.HOLDER-WIRE	6			
26	4AH-0688				.CLIP-CASE	9			
27	4AH-0886				.SCREW	3			
29	K500531				.SCREW	22			
30	K500533				.SCREW	2			
31	AM99001201Z3				.NAME PLATE	1			
33	A306201301-3				CAP-FLANGE	1			

HEATER MOUNTING

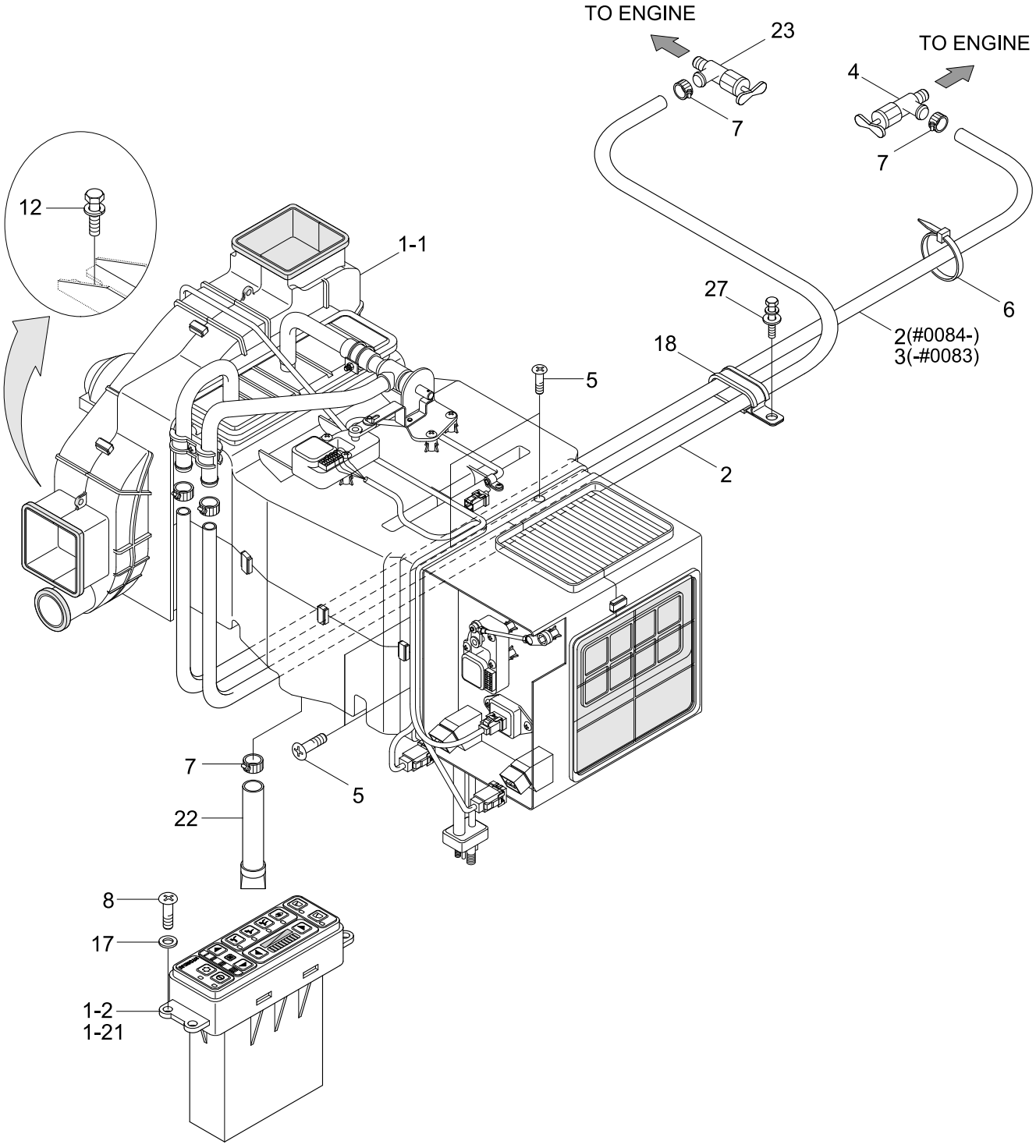

Item	Part_No	IS	Ord	T	Description	Qty	Serial_No	ITC	Remark
1	11LB-90030				HEATER ASSY	1	- #0083		
	11LB-90031				HEATER ASSY	1	#0084 - #0684	B	
	11LB-90032				HEATER ASSY	1	#0685 -	D	
1-1	@				.HEATER UNIT	1			NOT
1-2	11LB-90120				.CONTROL ASSY	1	- #0083		
	11LB-90121				.CONTROL ASSY	1	#0084 - #0684	B	
	11LB-90122				.CONTROL ASSY	1	#0685 -	B	
1-21	11LB-90210				..DECAL(HEATER ONLY)	1	#0001 -	-	NOT SHOWN
2	11LD-90090				HOSE-HEATER	1	- #0083		
	11LC-90100				HOSE-HEATER	2	#0084 -	B	
3	11LD-90100				HOSE-HEATER	1	- #0083	-	
4	11L7-90150				VALVE-HEATER	1			
5	S152-040122				SCREW-TAPPING	4			
6	S551-035146				TIE-WIRE	2			
7	S520-027000				CLAMP-HOSE	5			
8	S161-050166				SCREW-CROSS R/ROUND	4			
12	S037-122052				BOLT-W/WASHER	4			
17	S403-052002				WASHER-PLAIN	4			
18	S543-400002				CLAMP-TUBE	1			
22	11EK-92130				HOSE-DRAIN	1			
23	14L1-01350				VALVE-HEATER	1			
27	S035-081522				BOLT-W/WASHER	1			

HEATER UNIT(-#0721)

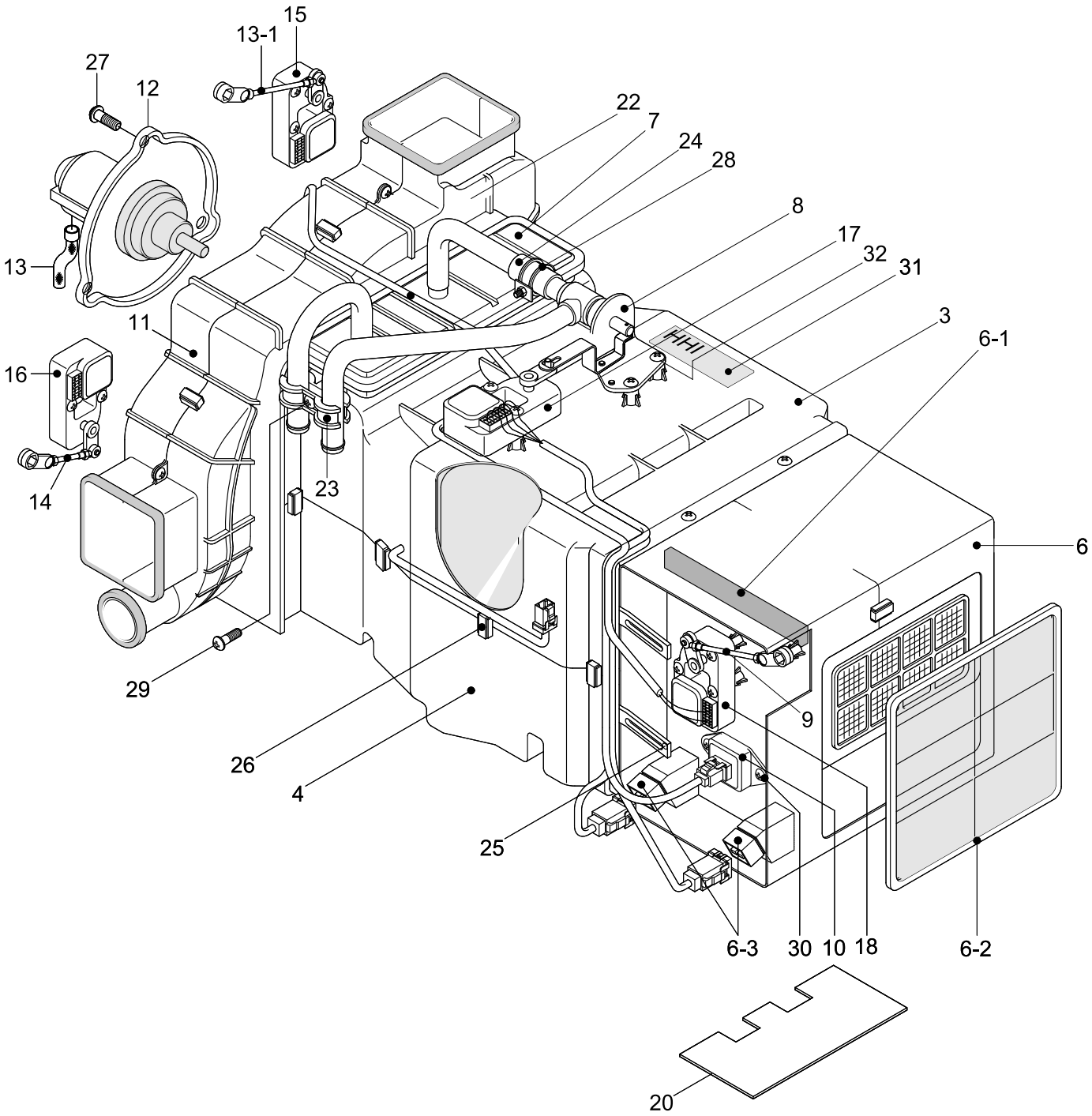

Item	Part_No	IS	Ord	T	Description	Qty	Serial_No	ITC	Remark
*	11LB-90150				HEATER UNIT	1	- #0721	-	
	11LB-90151				HEATER UNIT	1	#0084 -	B	
3	AH000086				.HVAC CASE UPP ASSY	1			
	AH000089				.HVAC CASE UPP ASSY	1	#0084 -	B	
4	AM12101400-0				.HVAC CASE-LOW	1			
6	AH000055				.INTAKE CASE ASSY	1			
6-1	AM70003600-3				..SEAL-FILTER,FRESH	1			
6-2	11N6-90770				..AIR FILTER-REFRESH	1			
6-3	11N6-90820				..RELAY	2			
7	11N6-90780				.HEATER CORE	1			
8	11N6-90730				.VALVE ASSY-WATER	1			
	AH001160				.WATER VLAVE	1	#0084 -	B	
9	AM52300100-4				.ROD-INTAKE	1			
10	11N6-90750				.RESISTOR ASSY	1			
11	AH000106				.BLOWER CASE ASSY	1			
12	11N6-90700				.FAN & MOTOR	1			
12-1	AW22000800-2				..FAN	1	#0001 -	-	NOT SHOWN
12-2	AW21002500-1				..MOTOR	1	#0001 -	-	NOT SHOWN
12-3	A710051601-3				..HOSE-DRAIN	1			
13	AW70002300-4				.ROD-VENT	1			
14	AW70002400-4				.ROD-DEF/FOOT	1			
15	11N6-90710				.MOTOR ACT-VENT	1			
16	11N6-90810				.MOTOR ACT-FOOT/DEF	1			
17	11N6-90720				.MOTOR ACT-TEMP	1			
18	11N6-90740				.MOTOR ACT-INTAKE	1			

Item	Part_No	IS	Ord	T	Description	Qty	Serial_No	ITC	Remark
20	A112050700-3				.PLATE-SIDE	1			
22	11N6-90830				.WIRING ASSY	1			
23	AH000314				.CLAMP-H/RAD PIPE	1			
24	3AH-1007				.HOSE-WATER	1			
25	4AH-0643				.HOLDER-WIRE	6			
26	4AH-0688				.CLIP-CASE	9			
27	4AH-0886				.SCREW	3			
28	4AH-0929				.CLAMP ASSY-HOSE	1			
29	K500531				.SCREW	28			
30	K500533				.SCREW	2			
31	AM99001201Z3				.NAME PLATE	1			
32	AH000315				.SCREW-T.H TAP	1			

HEATER UNIT(#0722-)

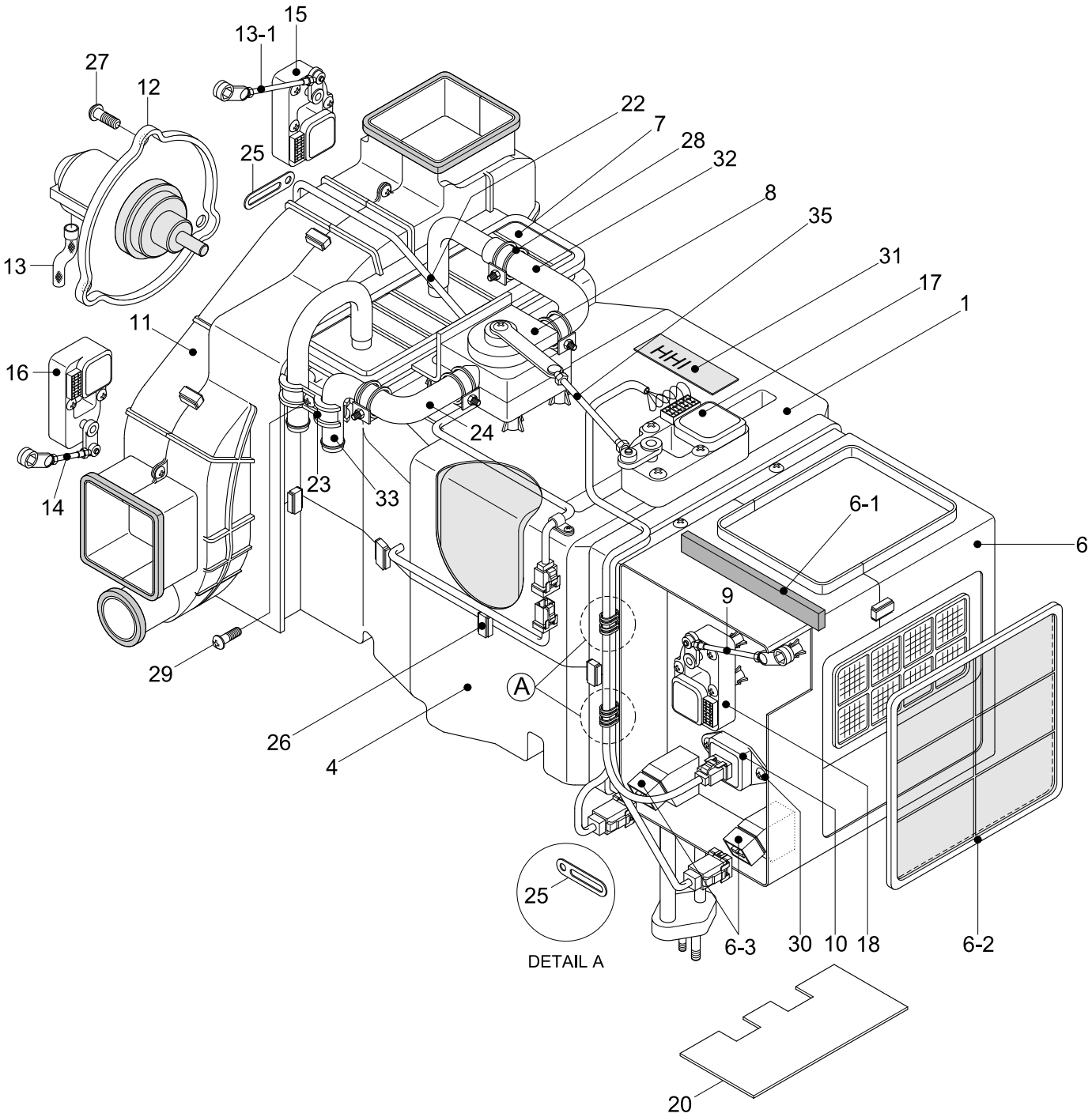

Item	Part_No	IS	Ord	T	Description	Qty	Serial_No	ITC	Remark
*	11LB-90151				HEATER UNIT	1	#0722 -	A	
3	AH000086				.HVAC CASE UPP ASSY	1			
4	AM12101400-0				.HVAC CASE-LOW	1			
6	AH000983				.INTAKE CASE ASSY	1			
6-1	AM70003600-3				..SEAL-FILTER,FRESH	1			
6-2	11N6-90770				..AIR FILTER-RE	1			
6-3	11N6-90820				..RELAY	2			
7	11N6-90780				.HEATER CORE	1			
8	AH001160				.WATER VLAVE	1			
9	AM52300100-4				.ROD-INTAKE	1			
10	11N6-90750				.RESISTOR ASSY	1			
11	AH001187				.BLOWER CASE ASSY	1			
12	11N6-90700				.FAN & MOTOR	1			
12-1	AW22000800-2				..FAN	1			NOT SHOWN
12-2	AW21002500-1				..MOTOR	1			NOT SHOWN
13	A710051601-3				.HOSE-DRAIN	1			
13-1	AW70002300-4				..ROD-VENT	1			
14	AW70002400-4				.ROD-DEF/FOOT	1			
15	AH100108				.MOTOR ACT-REAR	1			
16	AH100109				.MOTOR ACT-FRONT	1			
17	AH100311				.MOTOR ACT-TEMP	1			
18	11N6-90740				.MOTOR ACT-INTAKE	1			
20	A112050700-3				.PLATE-SIDE	1			
22	AH100110				.WIRING ASSY	1			
23	AH000314				.H/RAD PIPE CLAMP	1			

Item	Part_No	IS	Ord	T	Description	Qty	Serial_No	ITC	Remark
24	AH001287				.HOSE,INLET-WATER	1			
25	4AH-0643				.HOLDER-WIRE	6			
26	4AH-0688				.CLIP-CASE	9			
27	AH000866				.SCREW	3			
28	AM27000201-3				.CLAMP-WATER HOSE	1			
29	K500531				.SCREW	28			
30	K500533				.SCREW	2			
31	AM99001201Z3				.NAME PLATE	1			
32	AH001288				.HOSE,OUTLET-WATER	1			
33	AH001415				.HEATER PIPE-INLET	1			
35	AH000856				.ROD-TEMP	1			

CAB ELECTRIC 1

SERIAL NO.:#0685-

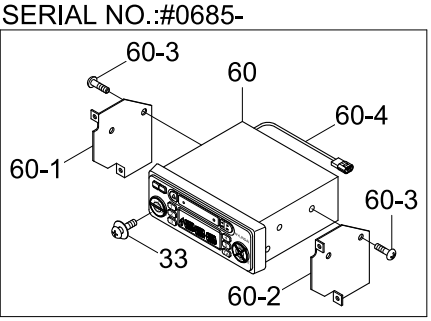

SERIAL NO.:-#0684

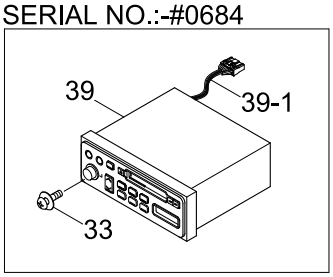

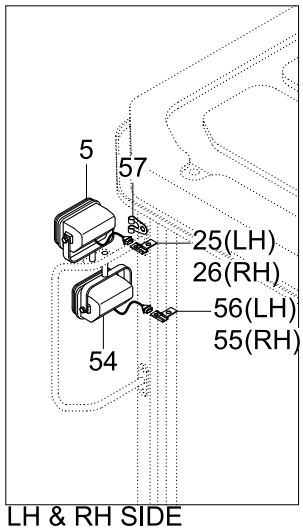

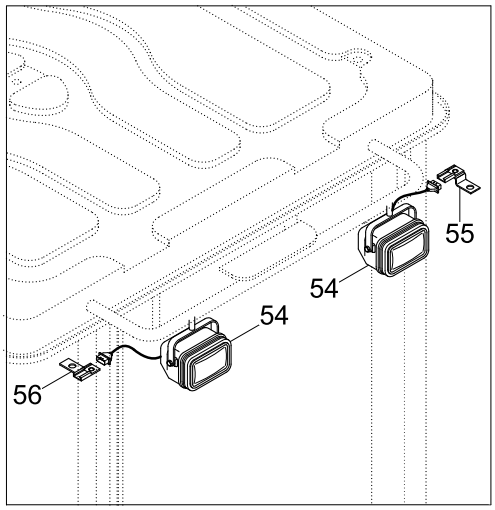

LH & RH SIDE

SERIAL NO.:-#0938

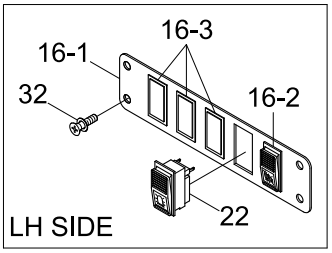

LH SIDE

SERIAL NO.:-#1623

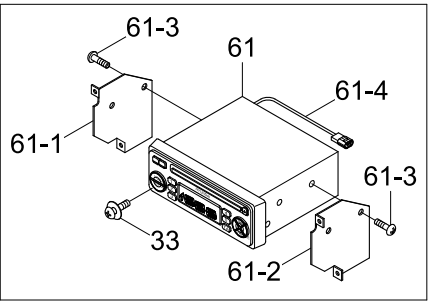

SERIAL NO.:#0939-

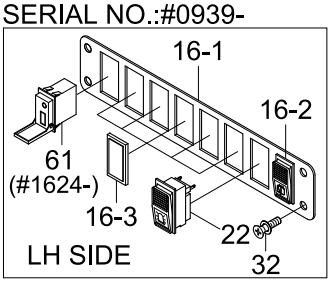

LH SIDE

CANOPY TYPE(#0096-)

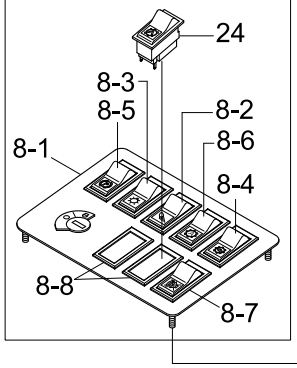

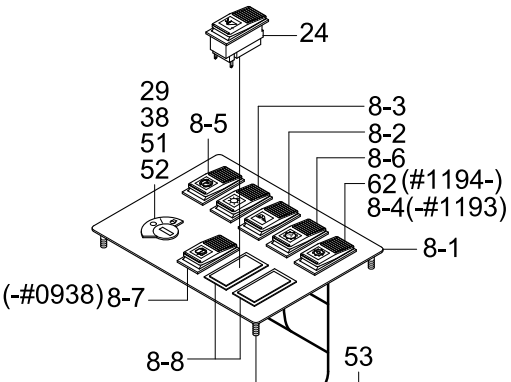

Item	Part_No	IS	Ord	T	Description	Qty	Serial_No	ITC	Remark
5	21N6-20211				WORK LAMP ASSY	2			
5-1	S866-240650				.BULB	1			NOT SHOWN
8	21LB-20210				SWITCH BOARD ASSY	1	- #1193		CAB TYPE
	21LB-20211				SWITCH BOARD ASSY	1	#1194 -	C	CAB TYPE
	21LD-80210				SWITCH BOARD ASSY	1	#0096 -	-	CANOPY TYPE
8-1	21LB-20350				.PLATE-SWITCH BOARD	1			
8-2	21LB-40250				.SWITCH-WORK LAMP	1			CAB TYPE
	21L8-30420				.SWITCH-REAR LAMP	1	#0096 -	-	CANOPY TYPE
8-3	21LB-40240				.SWITCH-MAIN LIGHT	1			CAB TYPE
	21L7-03090				.SWITCH-MAIN LIGHT	1	#0096 -	-	CANOPY TYPE
8-4	21LB-40270				.SWITCH-CLUTCH CUT-OFF	1	- #1193	-	CAB TYPE
	21E6-30560				.SWITCH-INCHING	1	#0096 -	-	CANOPY TYPE
8-5	21LB-40230				.SWITCH-PARKING	1			CAB TYPE
	21E6-30510				.SWITCH-PARKING	1	#0096 -	-	CANOPY TYPE
8-6	21LB-40260				.SWITCH-AUTO SELECT	1			CAB TYPE
	21L7-03150				.SWITCH-FULL AUTOMATIC	1	#0096 -	-	CANOPY TYPE
8-7	21LB-40280				.SW-RR WIPER/WASHER	1			CAB TYPE
	21E6-30490				.SWITCH-BUZZER STOP	1	#0096 -	-	CANOPY TYPE
8-8	21E6-10460				.COVER	2	- #0938		CAB TYPE
					.COVER	3	#0939 -	A	CAB TYPE
					.COVER	2			CANOPY TYPE
9	21LB-50011				CLUSTER ASSY	1	- #1043		
	21LB-50012				CLUSTER ASSY	1	#1044 -	A	
12	21N8-20010				SOCKET-12V	1			OPT
13	S661-260300				CAP-RUBBER	1			STD

Item	Part_No	IS	Ord	T	Description	Qty	Serial_No	ITC	Remark
15	21E4-0008	30			LIGHTER-CIGAR	1	- #0969		
	21LM-07110				LIGHTER-CIGAR	1	#0970 -	B	
16	21LB-40120				SWITCH ASSY	1	- #0938		
	21LB-41110				SWITCH ASSY	1	#0939 -	D	
16-1	21LB-40090				.COVER-PLATE	1	- #0938		
	21LB-34240				.COVER-PLATE	1	#0939 -	D	
16-2	21LB-40290				.SWITCH-BUZZER STOP	1			
16-3	21E6-10460				.COVER	4	- #0938		
					.COVER	7	#0939 -	A	
19	21LB-40140				SWITCH-HAZARD	1			CAB TYPE
	21E6-30570				SWITCH-HAZARD	1	#0096 -	-	CANOPY TYPE
21	21LD-10013				HARNESS-MAIN	1	- #0597		CAB TYPE
	21LD-10014				HARNESS-MAIN	1	#0598 - #1025	D	CAB TYPE
	21LD-10015				HARNESS-MAIN	1	#1026 - #1058	D	CAB TYPE
	21LD-10016				HARNESS-MAIN	1	#1059 - #1193	D	CAB TYPE
	21LD-10017				HARNESS-MAIN	1	#1194 -	B	CAB TYPE
21-3	21LG-10150				.HARNESS-PLUG	1	#1194 -	-	CAB TYPE
21	21LB-80010				HARNESS-MAIN	1	#0096 -	-	CANOPY TYPE
22	21LB-40300				SWITCH-BEACON	1			OPT
23	21L6-03600				PEDAL-ELECTRONIC	1	- #1570		
	21FT-15190				ACCELERATOR PEDAL	1	#1571 -	B	
R24	21LB-40210				SWITCH-RIDE CONTROL	1			RIDE CONTROL
	21L8-01340				SWITCH-RIDE CONTROL	1	#0096 -	-	CANOPY TYPE
25	25D1-10650				CLIP ASSY	1			
26	25D1-10640				CLIP ASSY	1			

Item	Part_No	IS	Ord	T	Description	Qty	Serial_No	ITC	Remark
29	21N4-10430				SWITCH ASSY-INCL KEY	1	- #1508		KOREA/CHINA
	21N3-00020				SWITCH ASSY-INCL KEY	1	#1509 -	B	KOREA/CHINA
29-1	21N4-10430K100				.KEY-START	1			NOT SHOWN
30	21LB-10110				PLATE-CONNECTOR	1			
31	S681-290400				GROMMET	1			
32	S131-061546				SCREW-W/WASHER	14			
33	S131-051546				SCREW-W/WASHER	13			
34	S035-082022				BOLT-W/WASHER	8			
35	S593-000902				CLIP-HARNESS	11			
36	S401-062006				WASHER-PLAIN	4			
37	S161-050206				SCREW-CROSS R/ROUND	4			
38	21LB-40151				DECAL-START KEY	1			
39	21E9-20310				CASSETTE RADIO	1	- #0684		U.S.A
	21E9-20320				CASSETTE RADIO	1	- #0684		EUROPE
	21E9-20330				CASSETTE RADIO	1	- #0684		GENERAL
	21E9-20340				CASSETTE RADIO	1	- #0684	-	KOREA
39-1	E2004050700C				.CONN-A,H818HHD/HHU	1	- #0684		
43	21L7-20350				PLATE	1			
44	S552-050203				CLAMP-BAND	2			
46	S017-080452				BOLT-HEX	2			
47	S411-080002				WASHER-SPRING	2			
48	S201-061002				NUT-HEX	4			
49	21E6-10460				COVER	3			
50	21LB-40070				PLATE	1			
52	21N4-10400				SWITCH ASSY-INCL KEY	1			EXPORT

Item	Part_No	IS	Ord	T	Description	Qty	Serial_No	ITC	Remark
52-1	21N4-10400K				.KEY-START	1			NOT SHOWN
53	21N4-11070				HOUR METER ASSY	1			OPT
54	21N6-20211				WORK LAMP ASSY	4			OPT
54-1	S866-240650				.BULB	1			NOT SHWON
55	25D1-10650				CLIP ASSY	2			OPT
56	25D1-10640				CLIP ASSY	2			OPT
57	S593-001302				CLIP-HARNESS	2	#0052 -		
58	21LC-60120				EXT HARNESS(SEAT)	1	#0051 - #0792		OPT
	21LB-34310				EXT HARNESS(SEAT)	1	#0793 -	D	OPT
60	21N8-50020				CASSETTE RADIO ASSY	1	#0685 - #1496		STD
	21N8-50060				CASSETTE RADIO ASSY	1	#1497 - #1623	A	STD
	21N8-51000				RADIO/USB PLAYER ASSY	1	#1624 -	D	STD
60-1	21N6-10470				.BRACKET-LH	1	#0685 -		STD
60-2	21N6-10460				.BRACKET-RH	1	#0685 -		STD
60-3	S141-050102				.SCREW-FLAT HD	4	#0685 -		STD
N60-4	21N8-01620				.HARNESS-WIRE,EXT	1	#0685 -		NOT
61	21N8-40600				CD PLAYER ASSY	1	#0685 - #1623	-	OPT
	21LM-31200				USB & SOCKET ASSY	1	#1624 -	D	
61-1	21N6-10470				.BRACKET-LH	1	#0685 - #1623		OPT
61-2	21N6-10460				.BRACKET-RH	1	#0685 - #1623		OPT
61-3	S141-050102				.SCREW-FLAT HD	4	#0685 - #1623		OPT
N61-4	21N8-01620				.HARNESS-WIRE,EXT	1	#0685 - #1623		NOT
62	21LB-40270				SWITCH-CLUTCH CUT-OFF	1	#1194 -		
63	21LG-10160				HARNESS-PLUG	1	#1194 - #1508		DUAL PEDAL
65	21LB-51600				HARNESS-EXT	1	#1324 - #1508		

Item	Part_No	IS	Ord	T	Description	Qty	Serial_No	ITC	Remark
66	21LH-30180				HARNESS-EXT	1	#1233 -		
70	21L7-03160				SWITCH-ATTACH LOCK	1	#1440 -		Q/COUPLER
71	21L7-03170				SWITCH-ATTACH UNLOCK	1	#1440 -		Q/COUPLER

CAB ELECTRIC 2

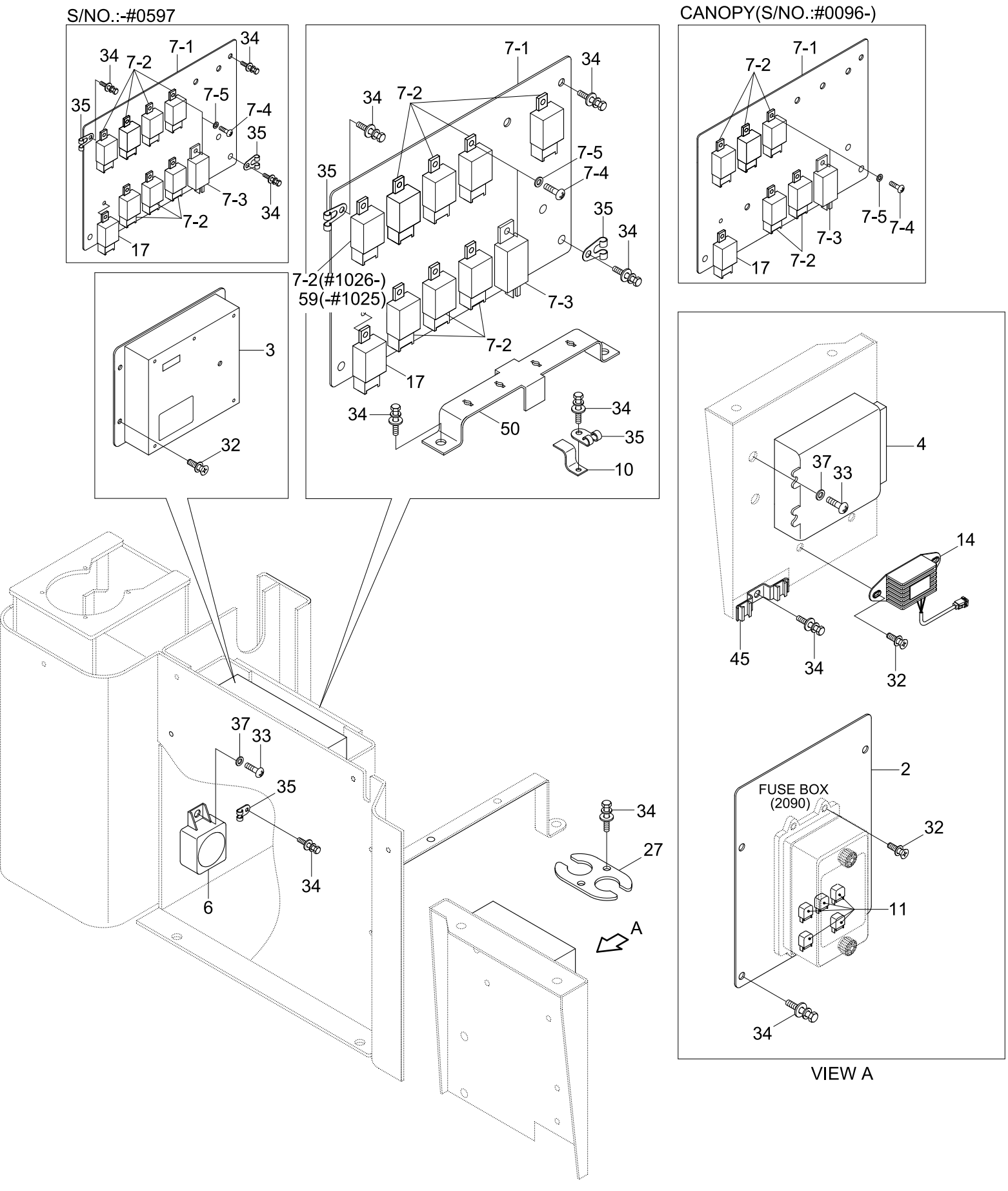

Item	Part_No	IS	Ord	T	Description	Qty	Serial_No	ITC	Remark
2	21LB-40110				PLATE	1			
3	21LB-40101				MCU	1	- #0833		
	21LB-40102				MCU	1	#0834 -	B	
4	21LD-30010				CONTROL UNIT(EST-37A)	1			
6	21E4-2025	10			BUZZER-WARNING	1			
7	21LC-20070				RELAY BOARD ASSY	1	- #0597		
	21LC-20071				RELAY BOARD ASSY	1	#0598 - #1025	B	
	21LC-20072				RELAY BOARD ASSY	1	#1026 -	B	
	21LD-80220				RELAY BOARD ASSY	1	#0096 -	-	CANOPY
7-1	21LC-20080				.PLATE WA	1	- #0597		
	21LC-20081				.PLATE-RELAY BOARD	1	#0598 -	B	
7-2	21E4-0011	20			.RELAY-4P	7	- #1025		
					.RELAY-4P	8	#1026 -	A	
					.RELAY-4P	5	#0096 -	-	CANOPY
7-3	21ER-60700				.FLASHER UNIT ASSY	1	- #0432		
	21ER-60702				.FLASHER UNIT ASSY	1	#0433 -	B	
7-4	S161-050102				.SCREW-RD HD	8	- #1025		
					.SCREW-RD HD	9	#1026 -	A	
					.SCREW-RD HD	6	#0096 -	-	CANOPY
7-5	S411-050002				.WASHER-SPRING	8	- #1025		
					.WASHER-SPRING	9	#1026 -	A	
					.WASHER-SPRING	6	#0096 -	-	CANOPY
10	21E7-0612				PLATE-CONNECTOR	1			
11	24L1-05100				RELAY	5			
					RELAY	3	#0096 -	-	CANOPY

Item	Part_No	IS	Ord	T	Description	Qty	Serial_No	ITC	Remark
14	21N8-20201				DC-DC CONVERTER ASSY	1			OPT
R17	21E4-0011	20			RELAY-4P	1			RIDE CONTROL
27	21LB-20331				PLATE	1			
32	S131-061546				SCREW-W/WASHER	14			
33	S131-051546				SCREW-W/WASHER	13			
34	S035-082022				BOLT-W/WASHER	21			
35	S593-000902				CLIP-HARNESS	11			
45	S543-420002				CLAMP-TUBE	1			
50	21LB-40070				PLATE	1			
59	21E4-0011	20			RELAY-4P	1	#0598 - #1025	-	FUEL WARMER

CAB ELECTRIC 3

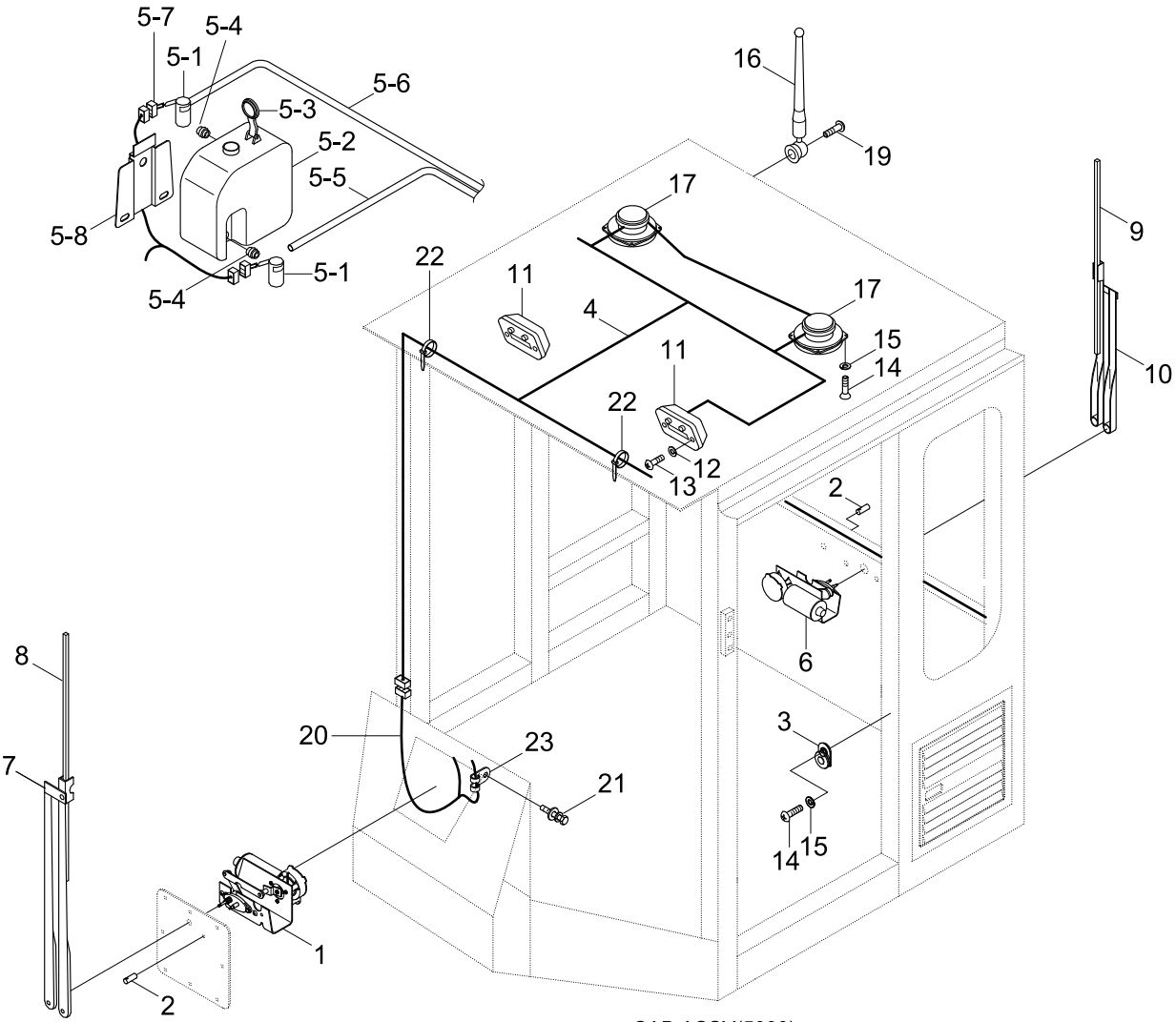

CAB ASSY(5080)

Item	Part_No	IS	Ord	T	Description	Qty	Serial_No	ITC	Remark
*	@				CAB ASSY	1			NOT
*-2	@				.ELECTRIC CAB ASSY	1			NOT
1	24L3-41000				..WIPER MOTOR-FRONT	1	- #1211		
	24L3-41100				..WIPER MOTOR-FRONT	1	#1212 -	A	
2	24L3-41080				..VALVE-WIPER	2	- #1211		
	24L3-41500				..VALVE-WIPER	2	#1212 -	A	
3	E123-3022	20			..SWITCH-DOOR	2			
4	21LB-00153				..HARNESS-CAB	1	- #1623		
	21LB-00154				..HARNESS-CAB	1	#1624 -	D	
5	24L3-30631				..RESERVOIR-WASH ASSY	1	- #1521		
	21LD-35210				..RESERVOIR-WASH ASSY	1	#1522 -	B	
5-1	21EM-00170				...MOTOR & PUMP ASSY	2			
5-2	24L3-30650				...TANK	1	- #1521		
	24L3-30860				...TANK	1	#1522 -	B	
5-3	24L3-30660				...CAP	1			
5-4	24L3-30670				...RUBBER-BUSHING	2			
5-5	24L3-30680				...HOSE-VINYL	1			
5-6	24L3-30690				...HOSE-VINYL	1			
5-7	S814-102000				...PLUG-2P	2			
5-8	24L3-30710				...PLATE	1			
6	21L6-31000				..WIPER MOTOR-REAR	1	- #1211		
	24L3-41120				..WIPER MOTOR-REAR	1	#1212 -	A	
7	24L3-41010				..WIPER ARM-FRONT	1	- #1211		
	24L3-41210				..WIPER ARM-FRONT	1	#1212 -	A	
8	24L3-41020				..WIPER BLADE-FRONT	1	- #1211		

Item	Part_No	IS	Ord	T	Description	Qty	Serial_No	ITC	Remark
8	24L3-41300				..WIPER BLADE-FRONT	1	#1212 -	A	
9	21L6-31020				..WIPER BLADE-REAR	1	- #1211		
	21M8-50300				..WIPER BLADE-REAR	1	#1212 -	A	
10	21L6-31010				..WIPER ARM-REAR	1	- #1211		
	24L3-41200				..WIPER ARM-REAR	1	#1212 -	A	
11	21EH-0011				..LAMP-ROOM	2			
11-1	21E1-49690				...BULB-ROOM LAMP	1			NOT SHOWN
12	S411-050006				..WASHER-SPRING	2			
13	S161-050166				..SCREW-CROSS R/ROUND	2			
14	S161-040106				..SCREW-CROSS R/ROUND	10			
15	S411-040006				..WASHER-SPRING	10			
16	21N6-10410				..ANTENNA	1			
17	21LB-20400				..SPEAKER ASSY	2	- #0448		
	21LB-20401				..SPEAKER ASSY	2	#0449 -	B	
					..SPEAKER ASSY	2	#0449 -	B	
19	S151-040156				..SCREW-TAPPING	2			
20	21LB-10050				..HARNESS-CAB,FRONT	1			
21	S035-082022				..BOLT-W/WASHER	1			
22	S553-035140				..CLAMP-BAND	7			
23	S593-000902				..CLIP-HARNESS	1			

FRONT ELECTRIC

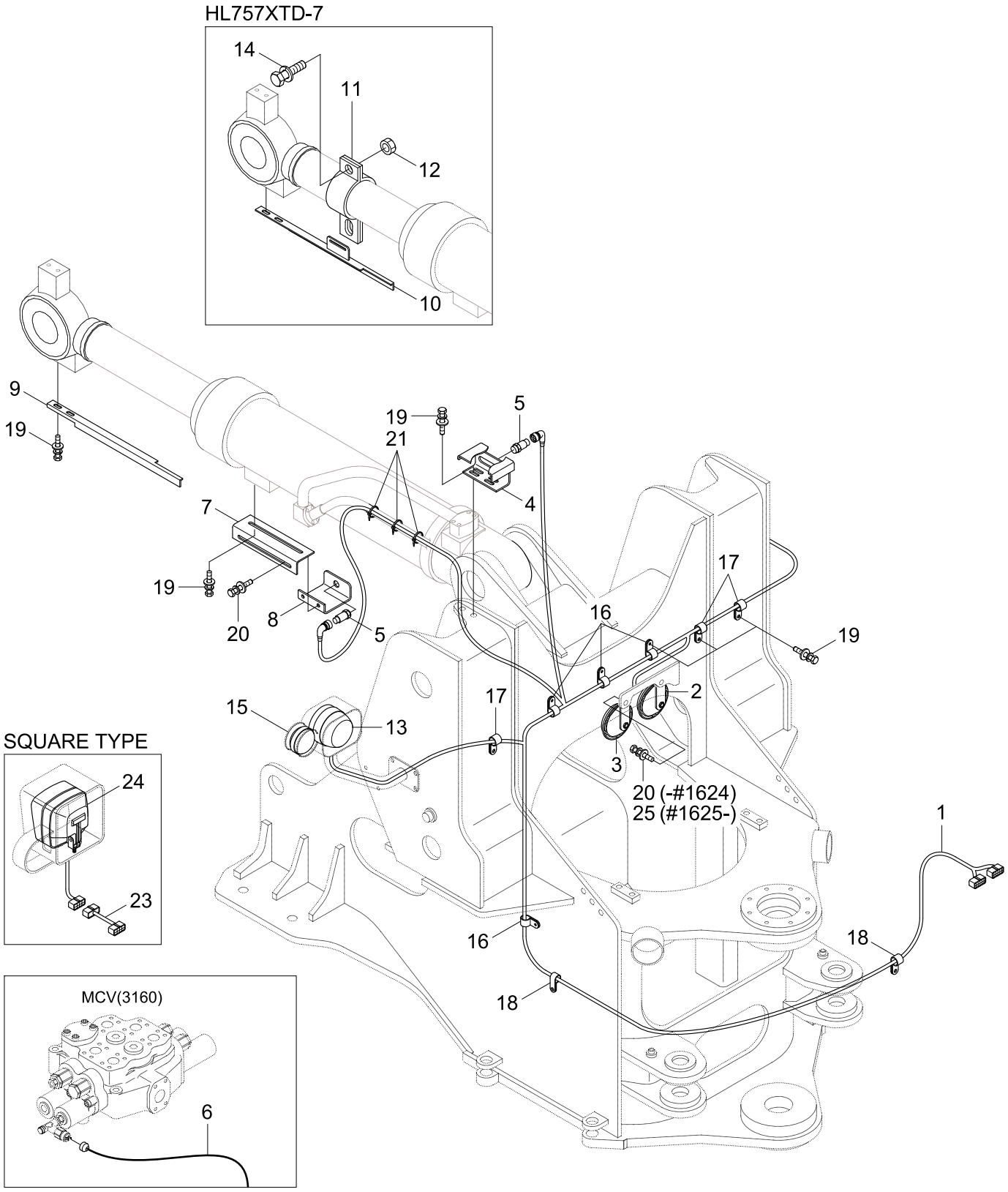

Item	Part_No	IS	Ord	T	Description	Qty	Serial_No	ITC	Remark
1	21LD-10042				HARNESS-FRONT	1	- #1624		
	21LD-10043				HARNESS FRONT	1	#1625 -	D	
2	21N5-10060				HORN-HIGH	1	- #1624		
	21Q8-10060				HORN-HIGH	1	#1625 -	D	
3	21N5-10050				HORN-LOW	1	- #1624		
	21Q8-10050				HORN-LOW	1	#1625 -	D	
4	21LD-20012				PLATE-BOOM KICKOUT	1			
5	21L6-20010				SWITCH-PROXIMITY	2			
R6	21LD-10080				HARNESS-RIDE CONTROL	1			RIDE CONTROL
7	21LB-20250				PLATE	1	- #0047		
	21LB-20251				PLATE	1	#0048 -	B	
8	21LB-20231				PLATE	1			
9	21LD-20151				ANGLE	1	#0001 -		HL757-7
10	21LD-20142				ANGLE	1	#0001 -		HL757XTD-7
11	21LD-20110				CLAMP	2			HL757XTD-7
12	S275-100002				NUT-SELF LOCKING	2			HL757XTD-7
13	24L3-20010				HEAD LAMP ASSY	2	- #0231		CIRCLE TYPE
13-1	21EK-10130				.BULB-H4, 70/75W	1	- #0231		NOT SHOWN
13-2	21EK-10250				.BULB-HEAD LAMP	1	- #0231		NOT SHOWN
13-3	21EK-20220				.HARNESS-HEAD LAMP	1	- #0231		NOT SHOWN
14	S037-102522				BOLT-W/WASHER	2			HL757XTD-7
15	21EK-10380				LAMP-FRONT TURN	2			CIRCLE TYPE
15-1	21EK-10290				.BULB-21W	1			NOT SHOWN
15-2	21EK-10250				.BULB-HEAD LAMP	2	#0001 -		NOT SHOWN
16	S543-160002				CLAMP-TUBE	4			

Item	Part_No	IS	Ord	T	Description	Qty	Serial_No	ITC	Remark
17	S543-100002				CLAMP-TUBE	4			
18	31E7-0315				CLAMP-HOSE	2			
19	S037-102022				BOLT-W/WASHER	14			
20	S035-081526				BOLT-W/WASHER	4	- #1624		
					BOLT-W/WASHER	2	#1625 -	A	
21	S552-035146				CLAMP-BAND	8			
23	21LB-20120				EXT-HARNESS(HEAD LAMP)	2	#0058 -		
24	21LB-20110				HEAD LAMP(ABL)	2	#0058 -		SQUARE TYPE
24-1	21EK-10131				.BULB	2	#0058 -		NOT SHOWN
24-2	21EK-10250				.BULB-HEAD LAMP	2	#0058 -		NOT SHOWN
					.BULB-HEAD LAMP	2	#0058 -	-	NOT SHOWN
25	S037-101526				.BOLT-W/WASHER	2	#1625 -		

REAR ELECTRIC

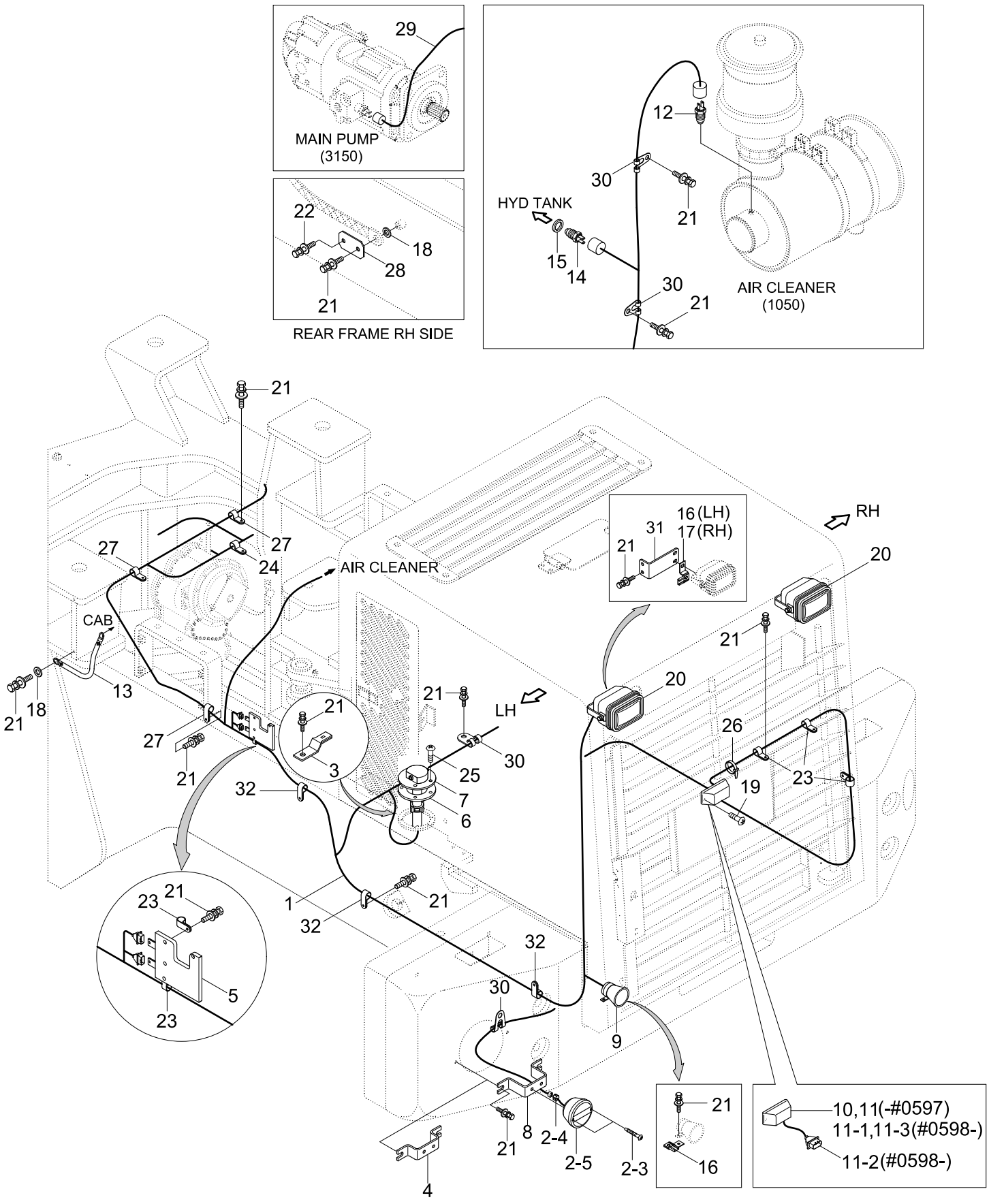

Item	Part_No	IS	Ord	T	Description	Qty	Serial_No	ITC	Remark
1	21LD-10032				HARNESS-FRAME	1	- #0202		
	21LD-10033				HARNESS-FRAME	1	#0203 - #0597	D	
	21LD-10034				HARNESS-FRAME	1	#0598 - #0684	D	
	21LD-10035				HARNESS-FRAME	1	#0685 - #0833	D	
	21LD-10036				HARNESS-FRAME	1	#0834 -	B	
2	21EK-10410				LAMP-T/STOP FLASHER	2	- #1180		
	21EK-10411				LAMP-TAIL STOP FLASHER	2	#1181 -	A	
2-1	21EK-10290				.BULB	2			NOT SHOWN
2-2	21EK-10270				.BULB(5W)	1			NOT SHOWN
2-3	21LB-51550				.SCREW	2	#1181 -	-	
2-4	21EK-20200				.HARNESS-REAR COMBI	1	#0001 -	-	
2-5	21EK-10180				.LAMP-TAIL STOP FLASHER	1	#0001 -	-	
3	21E7-0606				PLATE-CONNECTOR	1			
4	21LD-20211				PLATE-LAMP	2	#0001 -	-	HL757-7
5	21LB-40061				PLATE	1			
6	E128-1053	10			GASKET	1			
7	21LB-00181				FUEL SENDER	1			
8	21LD-20221				PLATE-LAMP	2	#0001 -	-	HL757XTD-7
9	21N6-20321				BUZZER-TRAVEL ALARM	1	- #0684		
	21N6-20322				BUZZER-TRAVEL ALARM	1	#0685 -	B	
10	21EK-10260				BULB	1	- #0597	-	
11	21EK-10160				LAMP-NUMBER PLATE	1	- #0597		
	21LB-34250				LAMP SUB ASSY(N/PLATE)	1	#0598 -	B	
11-1	21EK-10160				.LAMP-NUMBER PLATE	1	#0598 -	-	
11-2	21LB-34260				.HARNESS-EXT(N/LAMP)	1	#0598 -	-	

Item	Part_No	IS	Ord	T	Description	Qty	Serial_No	ITC	Remark
11-3	21EK-10260				.BULB	1	#0598 -	-	NOT SHOWN
12	21L7-20100				SWITCH-AIR CLEANER	1			
13	21EH-30720				STRAP-EARTH	1			
14	21EN-40100				SENDER-TEMP	1			
15	21EA-50260				PACKING-TEMP SWITCH	1			
16	25D1-10640				CLIP ASSY	2			
17	25D1-10650				CLIP ASSY	1			
18	S431-100002				WASHER-INTERNAL T/LOCK	3			
19	S151-040152				SCREW-TAPPING	2			
20	21N6-20211				WORK LAMP ASSY	2			
21	S037-102022				BOLT-W/WASHER	27	- #0202		
					BOLT-W/WASHER	25	#0203 -	A	
22	S035-061522				BOLT-W/WASHER	1			
23	S543-160002				CLAMP-TUBE	5	- #0202		
					CLAMP-TUBE	3	#0203 -	A	
24	S593-000702				CLIP-HARNESS	1			
25	S161-050102				SCREW-RD HD	5			
26	S552-035146				CLAMP-BAND	2			
27	S543-200002				CLAMP-TUBE,INS SINGLE	3			
28	21EA-50380				PLATE	1			
29	21LD-10091				HARNESS-E/STEERING	1	- #1025		EMERGENCY STEER
	21LD-10092				HARNESS E-STEERING	1	#1026 -	D	EMERGENCY STEER
30	S593-000902				CLIP-HARNESS	6			
31	21LB-20340				PLATE-WORK LAMP	2	- #0202	-	
32	S543-300002				CLAMP-TUBE	5			

ENGINE ELECTRIC

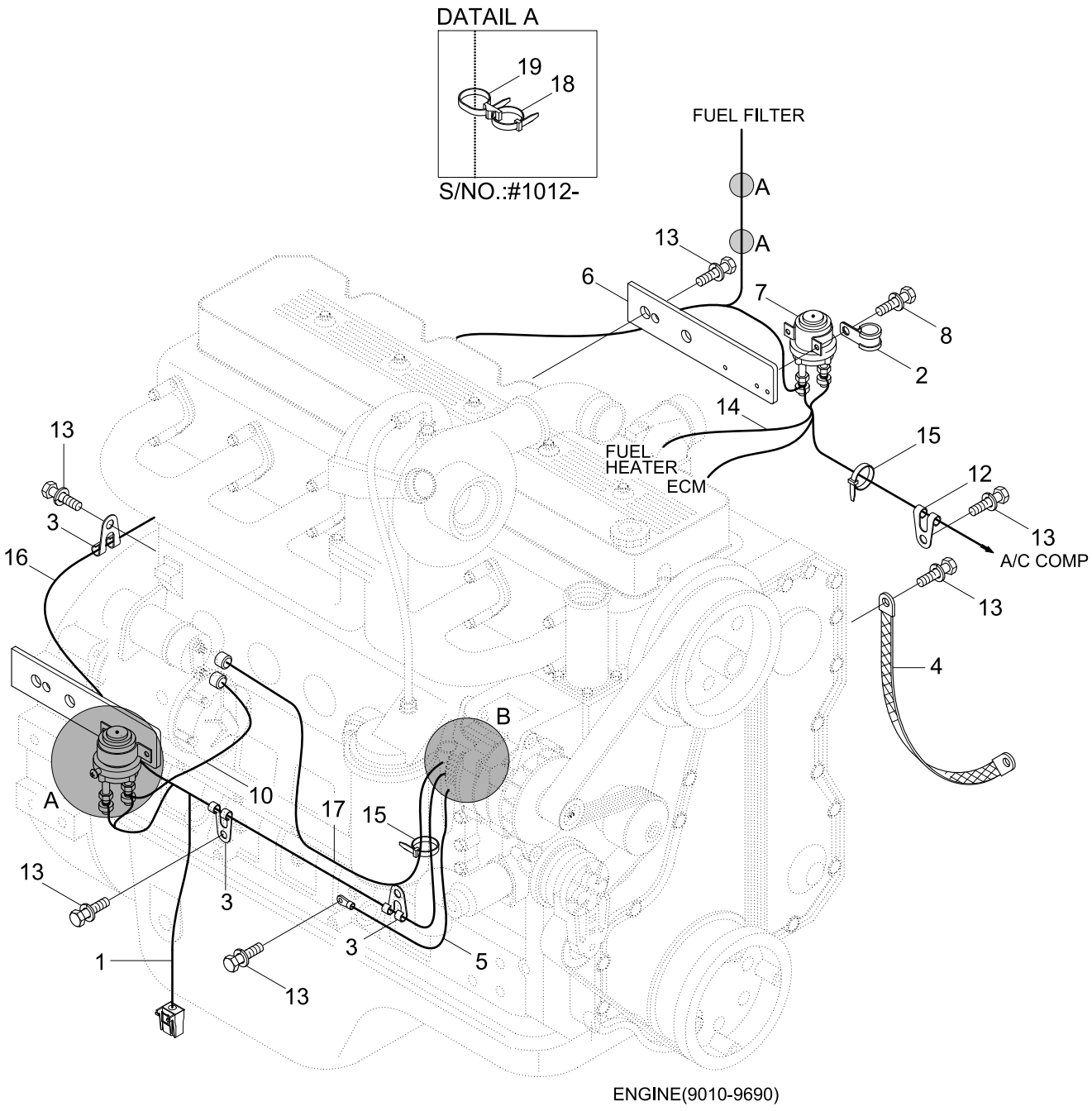

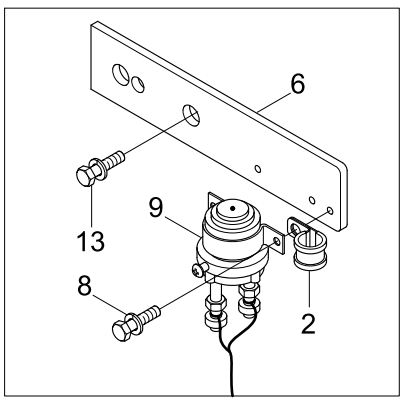

DETAIL A

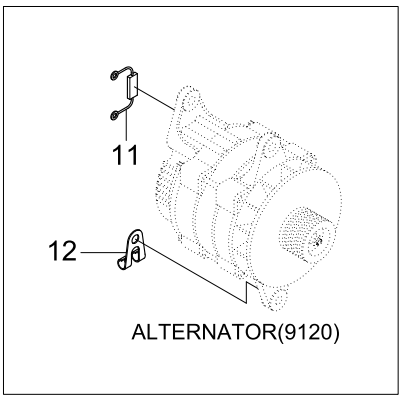

DETAIL B

Item	Part_No	IS	Ord	T	Description	Qty	Serial_No	ITC	Remark
1	21LD-10022				HARNESS-ENGINE	1	- #0833		
	21LD-10023				HARNESS-ENGINE	1	#0834 - #1025	D	
	21LD-10024				HARNESS-ENGINE	1	#1026 - #1624	B	
	21LD-10025				HARNESS-ENGINE	1	#1625 -	B	
2	S593-000752				CLIP-HARNESS	2			
3	21E9-00170				CLIP-HARNESS	4			
4	21EH-30720				STRAP-EARTH	1			
5	21LC-40090				CABLE(ALT-EARTH)	1			
6	21LB-40082				PLATE-RELAY	2			
7	E225-0006	10			RELAY-HEATER	1			
8	S035-061522				BOLT-W/WASHER	4			
9	21E4-3012	10			RELAY-START	1			
10	21EA-00190				HARNESS-EXT,START RY	1			
11	21E1-21120				WIRE LINK-ALTERNATOR	1	- #0833	-	
12	S593-000702				CLIP-HARNESS	2			
13	S037-122552				BOLT-W/WASHER	10			
14	21LD-20070				CABLE(HEATER RY-HEATE)	1			
15	S552-050203				CLAMP-BAND	10			
16	21LD-20060				CABLE(HEATER RY-STARTER)	1			
17	21LC-40071				CABLE(ALT-STARTER)	1	- #0833		
	21LC-41010				CABLE(ALT-STARTER)	1	#0834 -	B	
18	S552-035146				CLAMP-BAND	2	#1026 -	-	
19	S554-054300				CLAMP-BAND	2	#1026 -	-	
20	21N4-01130				PLATE-CLIP	1	#1625 -	-	

BATTERY CABLE ELECTRIC

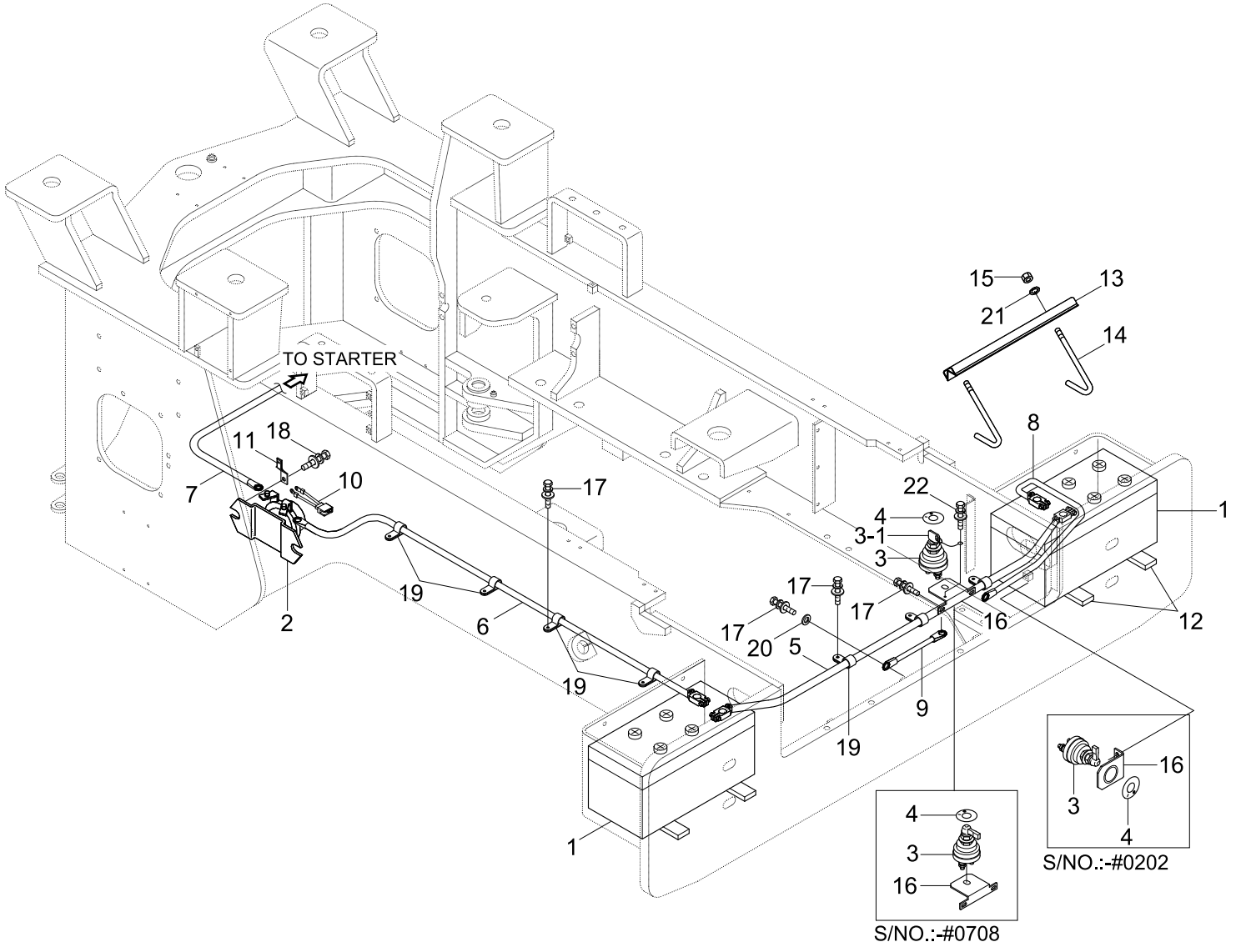

Item	Part_No	IS	Ord	T	Description	Qty	Serial_No	ITC	Remark
1	E125-1501	10			BATTERY ASSY	2			
2	21E5-0003	10			RELAY-BATTERY	1			
3	21L7-10500				SWITCH-MASTER	1	- #0708		
	21N4-10441				SWITCH-MASTER	1	#0709 -	B	
3-1	21N4-10441K				.KEY-MASTER SWITCH	1	#0709 -	-	NOT SHOWN
4	21EN-00420				DECAL-MASTER SW	1	- #0708		
	21N4-10451				DECAL-MASTER SW	1	#0709 -	B	
5	21LD-20040				CABLE(BATT-BATT)	1			
6	21LD-20031				CABLE(RELAY-BATT)	1			
7	21LD-20051				CABLE(RELAY-STARTER)	1			
8	21LB-40011				CABLE(BATT-MASTER SW)	1			
9	21EN-10130				CABLE(MASTER SW-EARTH)	1			
10	21EA-40171				LINK-FUSIBLE	1			
11	21E7-0612				PLATE-CONNECTOR	1			
12	24L1-40360				PAD	4			
13	21L1-1013	20			ANGLE WA	2			
14	21LC-20150				BAR	4			
15	S205-081002				NUT-HEX	4			
16	21LB-20360				PLATE(MASTER SWITCH)	1	- #0202		
	21LB-20390				PLATE(MASTER SWITCH)	1	#0203 - #0708	D	
	21LB-20391				PLATE(MASTER SWITCH)	1	#0709 -	B	
17	S037-102022				BOLT-W/WASHER	6			
18	S035-082522				BOLT-W/WASHER	2			
19	S543-220002				CLAMP-TUBE	3			
20	S431-100002				WASHER-INTERNAL T/LOCK	1			

Item	Part_No	IS	Ord	T	Description	Qty	Serial_No	ITC	Remark
21	S411-080002				WASHER-SPRING	4			
22	S035-062026				BOLT-W/WASHER	1	#0709 -	-	

BEACON LAMP

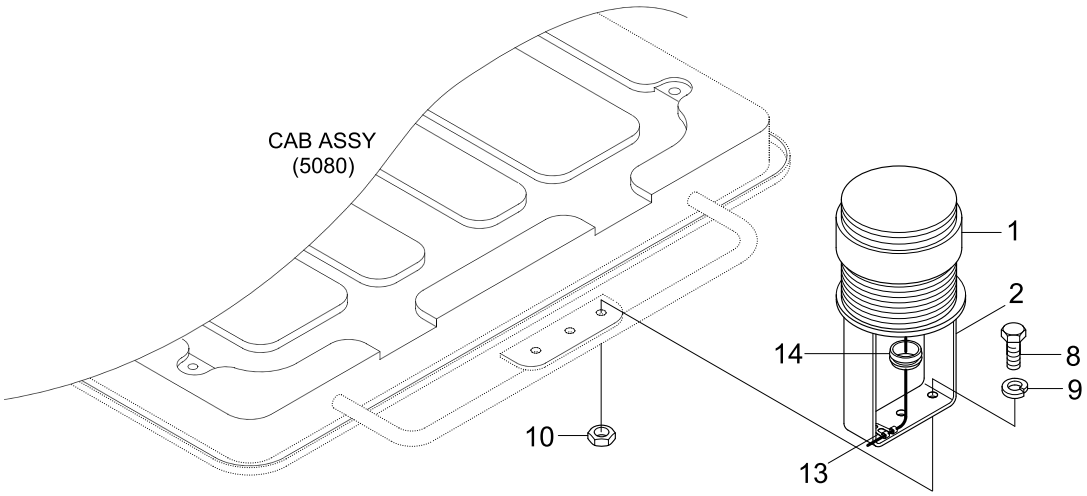

SERIAL NO:-#0356

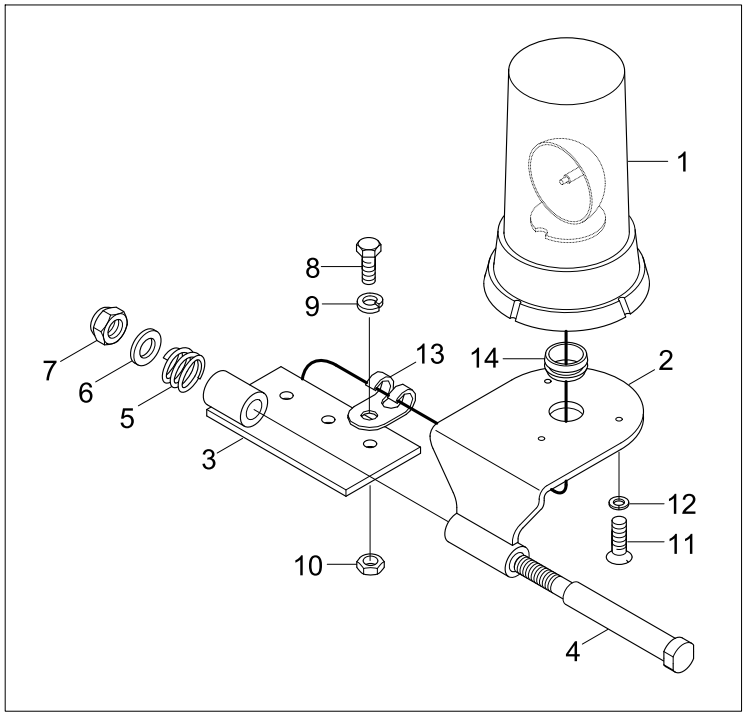

Item	Part_No	IS	Ord	T	Description	Qty	Serial_No	ITC	Remark
1	21EK-10420				BEACON LAMP ASSY	1	- #0356		
	F23842010				BEACON LAMP ASSY	1	#0357 -	D	
1-1	21EK-10140				.LAMP-BEACON	1	- #0356	-	NOT SHOWN
1-2	21EK-10330				.BULB	1	- #0356	-	NOT SHOWN
1-3	21EK-20240				.HARNESS-B/LAMP	1	- #0356	-	NOT SHOWN
2	21L7-10420				PLATE WA	1	- #0356		
	21LD-20230				BRACKET-BEACON	1	#0357 -	D	
3	21L7-10410				PLATE WA	1	- #0356	-	
4	21L7-10430				BOLT	1	- #0356	-	
5	21L7-10440				SPRING	1	- #0356	-	
6	S403-162002				WASHER-PLAIN	1	- #0356	-	
7	S275-160002				NUT-SELF LOCKING	1	- #0356	-	
8	S017-100202				BOLT-HEX	3			
9	S411-100002				WASHER-SPRING	3			
10	S205-101002				NUT-HEX	3			
11	S161-050152				SCREW-RD HD	3	- #0356	-	
12	S411-050002				WASHER-SPRING	3	- #0356	-	
13	S593-000902				CLIP-HARNESS	1			
14	S880-132060				GROMMET	1			

FUSE BOX

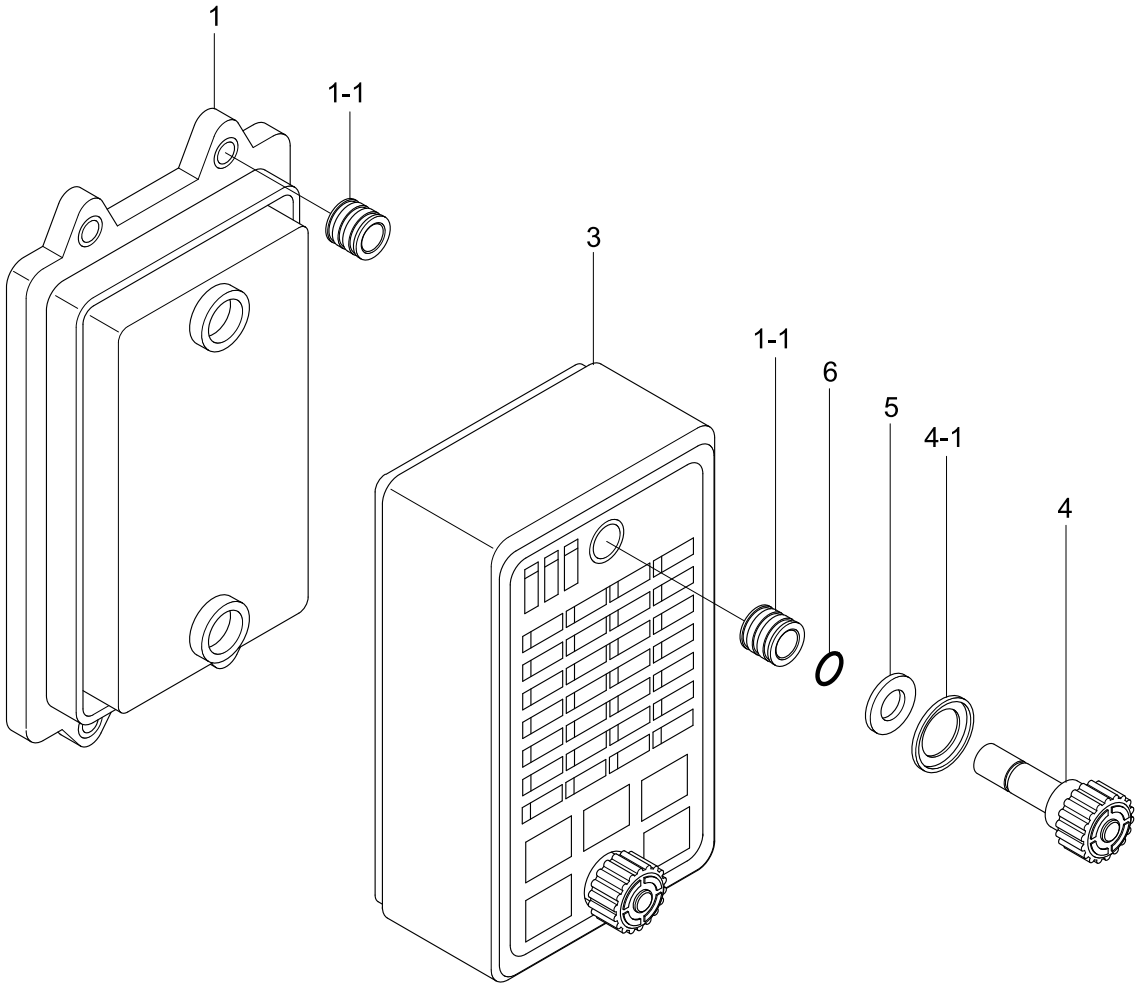

Item	Part_No	IS	Ord	T	Description	Qty	Serial_No	ITC	Remark
1	21N8-20041				BODY-FUSE BOX	1			
1-1	21N8-20110				.NUT-INSERT	6			
*	21LB-40311				COVER ASSY-FUSE BOX	1	- #0597		
	21LB-40312				COVER ASSY(FUSE BOX)	1	#0598 -	D	
	21LB-40311				COVER ASSY-FUSE BOX	1	#0096 -	-	CANOPY
3	21N8-20061				.COVER-FUSE BOX	1			
4	21N8-20070				.KNOB ASSY	2			
4-1	21N8-20140				..INSERT	2			
5	21N8-20080				.PAD-RUBBER	2			
6	21N8-20150				.O-RING	2			

MAIN HYDRAULIC PIPING 1

SERIAL NO:-#0394

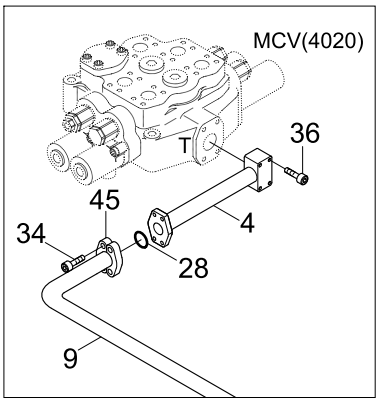

Item	Part_No	IS	Ord	T	Description	Qty	Serial_No	ITC	Remark
3	31LD-00040				PIPE WA	1			
4	31LD-00050				PIPE WA	1	- #0394	-	
6	31LD-00071				PIPE WA	1			
7	31LD-00080				BLOCK	1			
8	P700-164336				HOSE ASSY	1			
9	P700-202331				HOSE ASSY	1	- #0394		
	31LD-00280				HOSE ASSY	1	#0395 -	D	
10	31LD-00120				HOSE ASSY	1			
14	P760-083040				HOSE-RUBBER LOW	1			
18	X530-110005				ELBOW-45,ORFS	1			
20	31LD-00100				CLAMP	1			
22	S572-730006				CLAMP-HOSE WIRE TYPE	4			
23	S631-011004				O-RING	1			
24	S631-029004				O-RING	1			
26	S621-021001				O-RING,ORFS	1			
27	Y171-024004				O-RING	4			
28	Y171-027004				O-RING	3	- #0394		
					O-RING	2	#0395 -	A	
29	Y172-006004				O-RING	1			
30	31EK-11130				COUPLING-SCREW	1			
31	S690-039100				GROMMET	1			
32	S690-043100				GROMMET	1			
33	31LD-00110				PLATE	1			
34	S109-100306				BOLT-SOCKET	20			
35	S109-100406				BOLT-SOCKET	8			

Item	Part_No	IS	Ord	T	Description	Qty	Serial_No	ITC	Remark
36	S109-100656				BOLT-SOCKET	4	- #0394	-	
37	S109-120356				BOLT-SOCKET	4			
39	S017-120552				BOLT-HEX	1			
40	S017-121052				BOLT-HEX	3			
41	S037-122552				BOLT-W/WASHER	6			
42	S037-123052				BOLT-W/WASHER	4			
43	S441-120002				WASHER-HARDENED	4			
44	P173-160104				FLANGE-SPLIT	6			
45	P173-200106				FLANGE-SPLIT	4			

MAIN HYDRAULIC PIPING 2

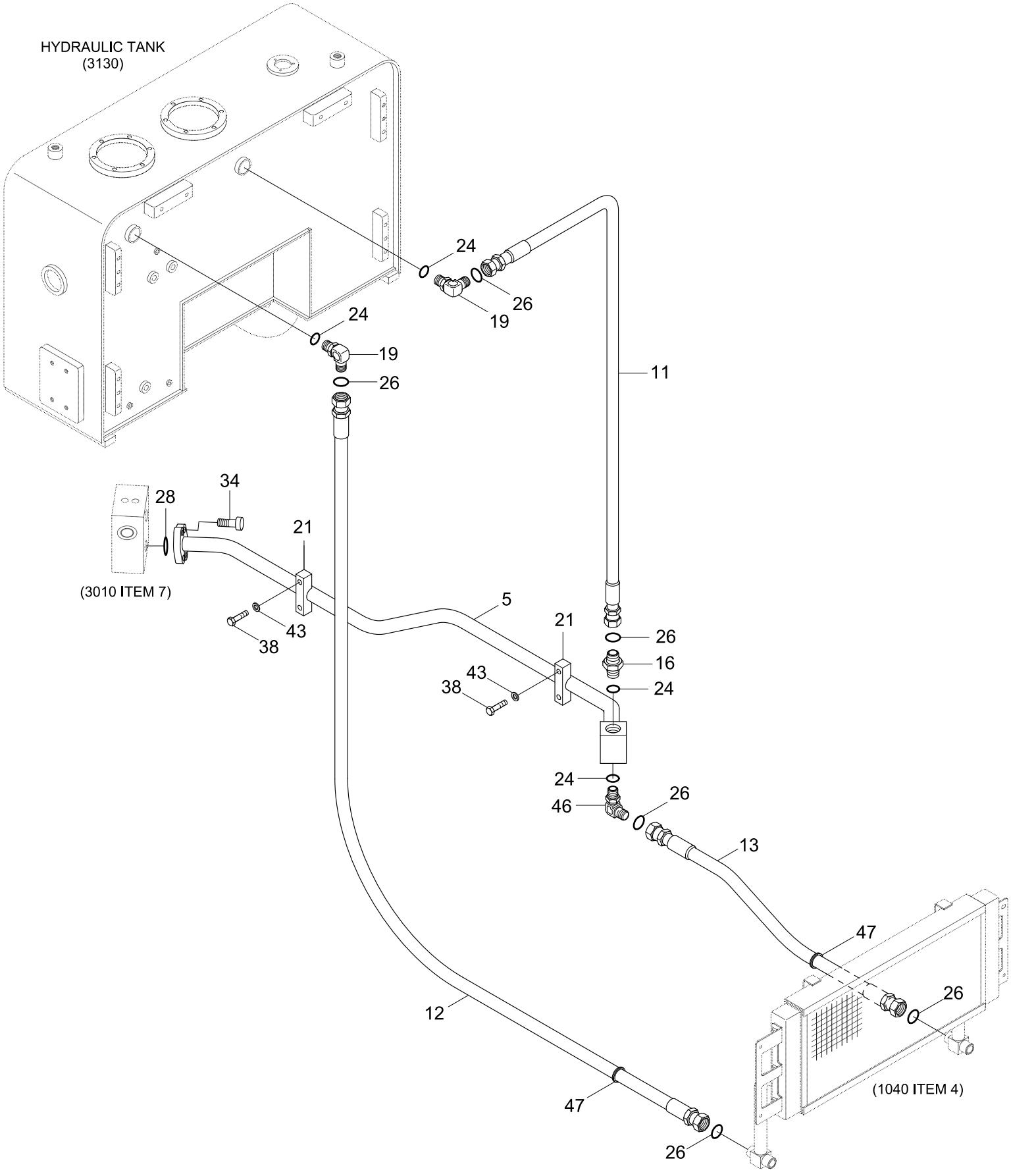

Item	Part_No	IS	Ord	T	Description	Qty	Serial_No	ITC	Remark
5	31LD-00060				PIPE WA	1			
11	P910-162025				HOSE ASSY-ORFS 0X0	1			
12	P910-162041				HOSE ASSY-ORFS 0X0	1	- #0054		
	P910-162040				HOSE ASSY-ORFS 0X0	1	#0055 - #0426	B	
	P910-162039				HOSE ASSY-ORFS 0X0	1	#0427 -	B	
13	31LD-00140				HOSE ASSY	1			
16	X500-110005				CONNECTOR-ORFS	1			
19	X520-110005				ELBOW-90,ORFS	2			
21	31L7-00240				CLAMP	2			
24	S631-029004				O-RING	4			
26	S621-021001				O-RING,ORFS	6			
28	Y171-027004				O-RING	1			
34	S109-100306				BOLT-SOCKET	4			
38	S017-120452				BOLT-HEX	4			
43	S441-120002				WASHER-HARDENED	4			
46	31LC-00050				ELBOW-ORIFICE	1			
47	S681-460400				GROMMET	2			

PILOT HYDRAULIC PIPING 1

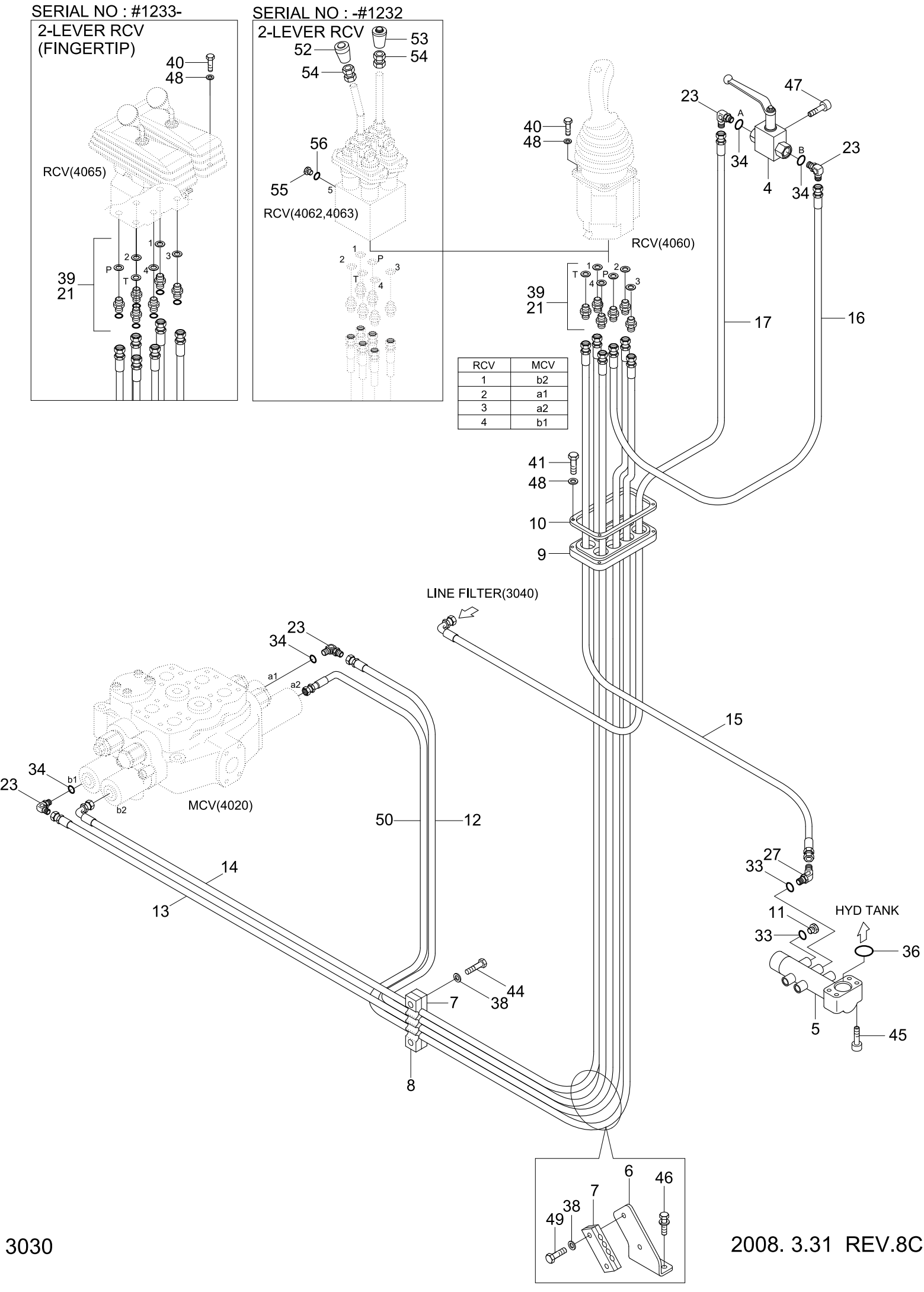

Item	Part_No	IS	Ord	T	Description	Qty	Serial_No	ITC	Remark
4	31LB-10170				SAFETY VALVE	1			
5	31LD-10061				PIPE WA	1			
6	31LB-10040				PLATE	1			
7	31LB-10050				CLAMP	3			
8	31LF-10070				CLAMP	1			
9	31L7-10040				PLATE	1			
10	31L7-10030				RUBBER	1			
11	P220-110102				PLUG	1			
12	P600-042061				HOSE ASSY-THD 0X0	1			
13	P600-042056				HOSE ASSY-THD 0X0	1			
14	P620-042055				HOSE ASSY-THD 0X90	1			
15	P600-042033				HOSE ASSY-THD 0X0	1			
16	P600-042013				HOSE ASSY-THD 0X0	1	- #0054		
	P600-042011				HOSE ASSY-THD 0X0	1	#0055 -	A	
17	P620-042020				HOSE ASSY-THD 0X90	1			
21	P010-120002				CONNECTOR	6			
23	P020-110012				ELBOW-90	3			
33	S631-011004				O-RING	1			
34	S631-014004				O-RING	3			
36	Y172-003004				O-RING(AN ??)	1			
38	S441-100002				WASHER-HARDENED	4			
39	P391-040000				WASHER-COPPER	6			
40	S035-062022				BOLT-W/WASHER	4			
41	S015-060302				BOLT-HEX	4			
44	S017-100652				BOLT-HEX	2			

Item	Part_No	IS	Ord	T	Description	Qty	Serial_No	ITC	Remark
45	S109-120556				BOLT-SOCKET	4			
46	S037-123052				BOLT-W/WASHER	2			
47	S179-080402				SCREW-SOCKET RD HD	2			
48	S441-060002				WASHER-HARDENED	4			
49	S017-100452				BOLT-HEX	2			
50	P620-042062				HOSE ASSY-THD 0X90	1			
52	34L4-02330				KNOB ASSY	1	- #1232	-	2-LEVER RCV
53	34L4-02340				KNOB ASSY	1	- #0054		2-LEVER RCV
	31LB-10180				KNOB ASSY	1	#0055 - #1232	B	2-LEVER RCV
54	S207-120002				NUT-HEX	4	- #1232	-	2-LEVER RCV
55	P220-110102				PLUG	1	- #0054		2-LEVER RCV
	P220-120102				PLUG	1	#0055 - #1232	B	2-LEVER RCV
56	P391-040000				WASHER-COPPER	1	- #1232	-	2-LEVER RCV

PILOT HYDRAULIC PIPING 2

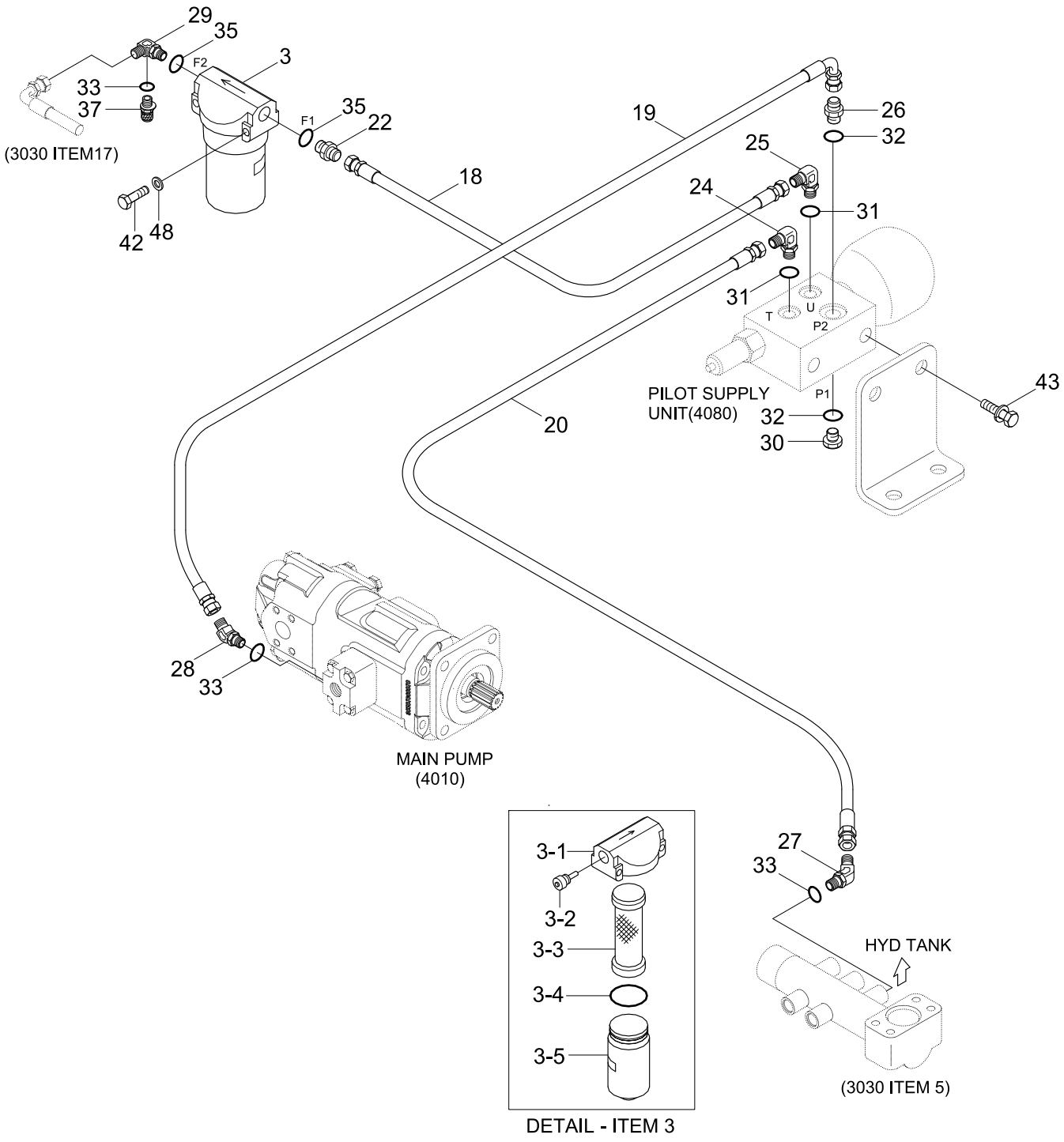

Item	Part_No	IS	Ord	T	Description	Qty	Serial_No	ITC	Remark
3	31E3-0017				FILTER-LINE	1			
3-1	31E3-00670				.HEAD-FILTER	1	#0001 -	-	
3-2	31E3-00680				.VALVE ASSY	1	#0001 -	-	
3-3	31E3-0018	10			.ELEMENT-LINE FILTER	1	#0001 -	-	
3-4	31E3-00700				.O-RING	1	#0001 -	-	
3-5	31E3-00710				.CASE-FILTER	1	#0001 -	-	
18	P600-062014				HOSE ASSY-THD	1	- #0054		
	P600-062013				HOSE ASSY-THD	1	#0055 -	B	
19	P620-066023				HOSE ASSY-THD 0X90	1			
20	P600-042026				HOSE ASSY-THD 0X0	1			
22	P010-110015				CONNECTOR	1			
24	P020-310002				ELBOW-90	1			
25	P020-310003				ELBOW-90	1			
26	P010-310005				CONNECTOR	1			
27	P030-110001				ELBOW-45	2			
28	P030-110011				ELBOW-45	1			
29	31L3-0375				ELBOW-90	1			
30	P220-310103				PLUG-HEX	1			
31	S611-012001				O-RING	2			
32	S611-016001				O-RING	2			
33	S631-011004				O-RING	3			
35	S631-018004				O-RING	2			
37	31EK-11130				COUPLING-SCREW	1			
42	S015-060552				BOLT-HEX	2			
43	S035-082052				BOLT-W/WASHER	2			

Item	Part_No	IS	Ord	T	Description	Qty	Serial_No	ITC	Remark
48	S441-060002				WASHER-HARDENED	2			

ATTACHMENT HYDRAULIC PIPING

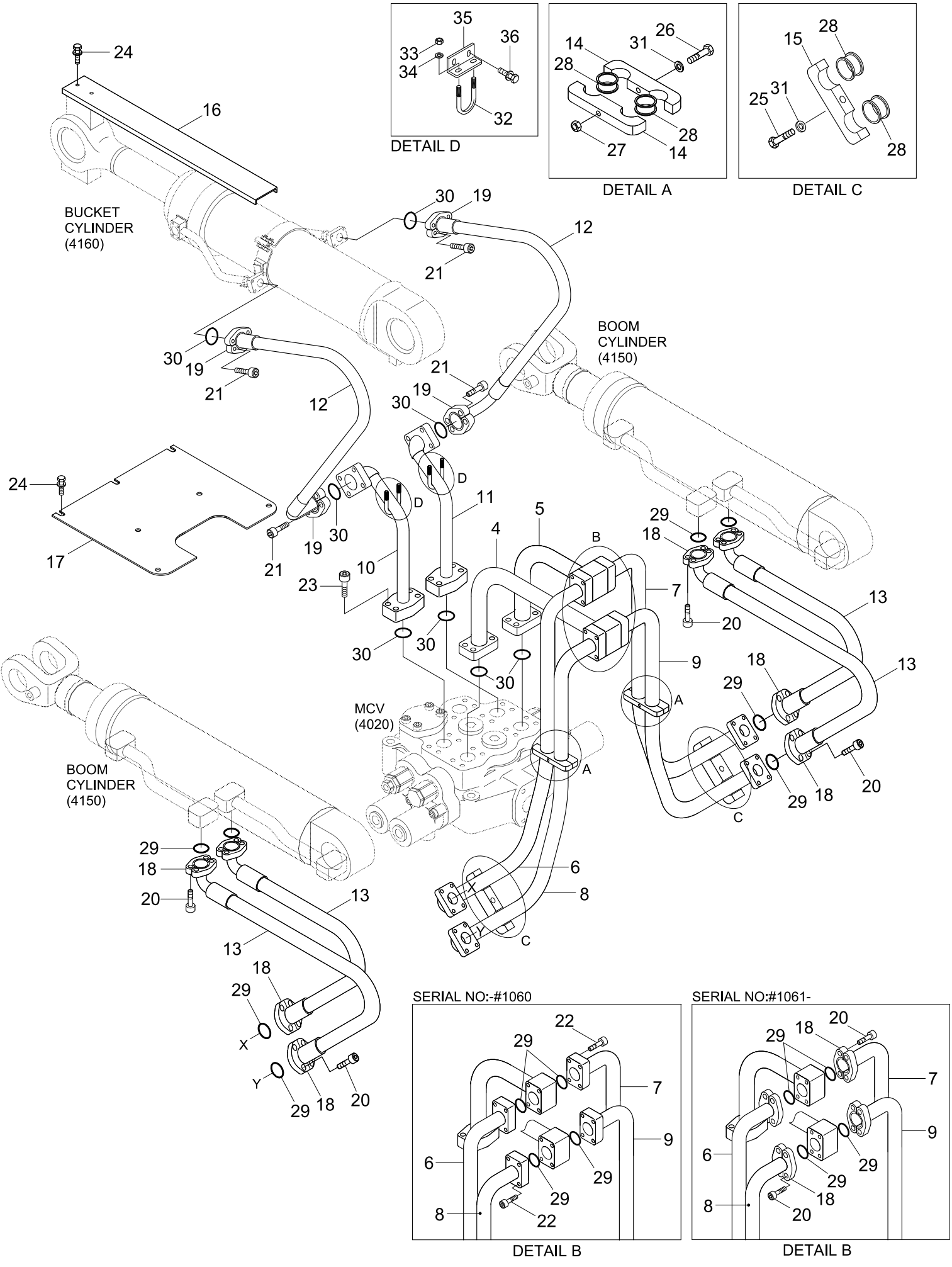

Item	Part_No	IS	Ord	T	Description	Qty	Serial_No	ITC	Remark
4	31LD-20040				PIPE WA	1			
5	31LD-20050				PIPE WA	1			
6	31LD-20060				PIPE WA-LH	1	- #1060		
	31LD-20061				PIPE WA-LH	1	#1061 -	D	
7	31LD-20070				PIPE WA-RH	1	- #1060		
	31LD-20071				PIPE WA-RH	1	#1061 -	D	
8	31LD-20080				PIPE WA-LH	1	- #1060		
	31LD-20081				PIPE WA-LH	1	#1061 -	D	
9	31LD-20090				PIPE WA-RH	1	- #1060		
	31LD-20091				PIPE WA-RH	1	#1061 -	D	
10	31LD-20100				PIPE WA-LH	1			
11	31LD-20110				PIPE WA-RH	1			
12	31LD-20150				HOSE ASSY	2	- #0567		
	31LD-20151				HOSE ASSY	2	#0568 -	B	
13	P703-124325				HOSE ASSY-FLG 0X90	4			
14	34L3-00710				CLAMP	4			
15	34L3-00730				CLAMP	2			
16	31LC-20110				COVER WA	1	- #0237		HL757-7
	31LB-20420				COVER	1	#0238 -	A	HL757-7
	31LC-20130				COVER WA	1	- #0237		HL757XTD-7
	31LB-20430				COVER	1	#0238 -	A	HL757XTD-7
17	31LD-20130				COVER WA	1			
18	P173-120102				FLANGE-SPLIT	16	- #1060		
					FLANGE-SPLIT	24	#1061 -	A	
19	P173-160104				FLANGE-SPLIT	8			

Item	Part_No	IS	Ord	T	Description	Qty	Serial_No	ITC	Remark
20	S109-100256				BOLT-SOCKET	32	- #1060		
					BOLT-SOCKET	48	#1061 -	A	
21	S109-100306				BOLT-SOCKET	16			
22	S109-100356				BOLT-SOCKET	16	- #1060	-	
23	S109-100406				BOLT-SOCKET	16			
24	S037-122552				BOLT-W/WASHER	7			
25	S017-120552				BOLT-HEX	2			
26	S017-120702				BOLT-HEX	2			
27	S205-121002				NUT-HEX	2			
28	S690-027100				GROMMET	8			
29	Y171-019004				O-RING	12			
30	Y171-024004				O-RING	8			
31	S441-120002				WASHER-HARDENED	4			
32	S070-023450				U-BOLT	2			
33	S275-100002				NUT-SELF LOCKING	4			
34	S441-100002				WASHER-HARDENED	4			
35	31LC-20140				PLATE	2			
36	S037-101552				BOLT-W/WASHER	4			

STEERING HYDRAULIC PIPING 1

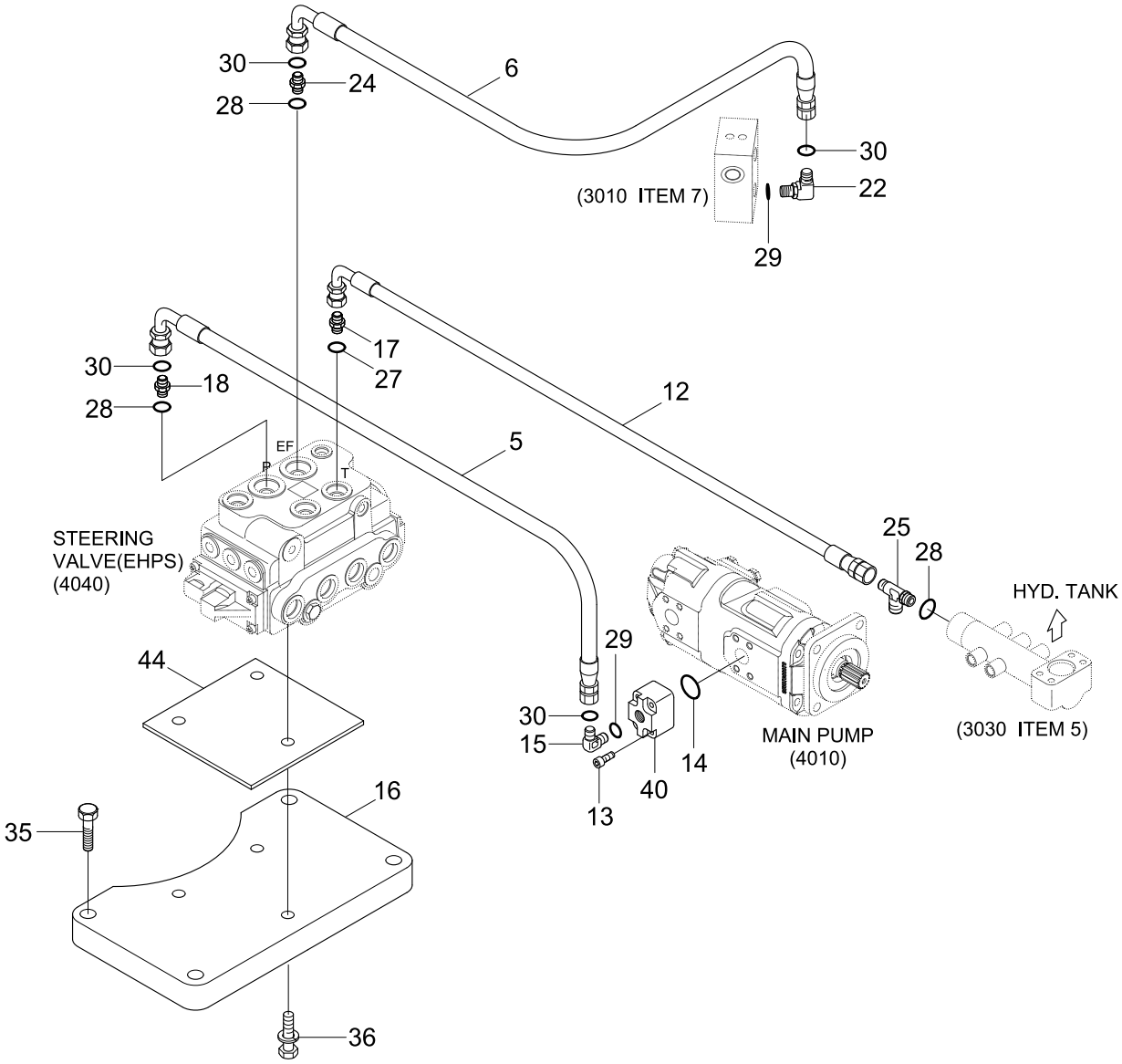

Item	Part_No	IS	Ord	T	Description	Qty	Serial_No	ITC	Remark
5	P930-124012				HOSE ASSY	1			
6	P930-124016				HOSE ASSY	1			
12	P620-082015				HOSE ASSY-THD 0X90	1			
13	S109-100506				BOLT-SOCKET	4			
14	Y171-024004				O-RING	1			
15	X520-110018				ELBOW-90,ORFS	1			
16	31LD-30051				PLATE	1			
17	P010-110004				CONNECTOR	1			
18	X511-112543				CONNECTOR-LONG,ORFS	1			
22	X520-110018				ELBOW-90,ORFS	1			
24	X500-110004				CONNECTOR-ORFS	1			
25	P320-120808				TEE-RUN TYPE	1			
27	S631-018004				O-RING	1			
28	S631-024004				O-RING	3			
29	S631-029004				O-RING	2			
30	S621-018001				O-RING	4			
35	S037-123552				BOLT-W/WASHER HEX	4			
36	S035-082052				BOLT-W/WASHER HEX	3			
40	34L3-02510				BLOCK	1			
44	31LC-30060				PLATE-RUBBER	1			

STEERING HYDRAULIC PIPING 2

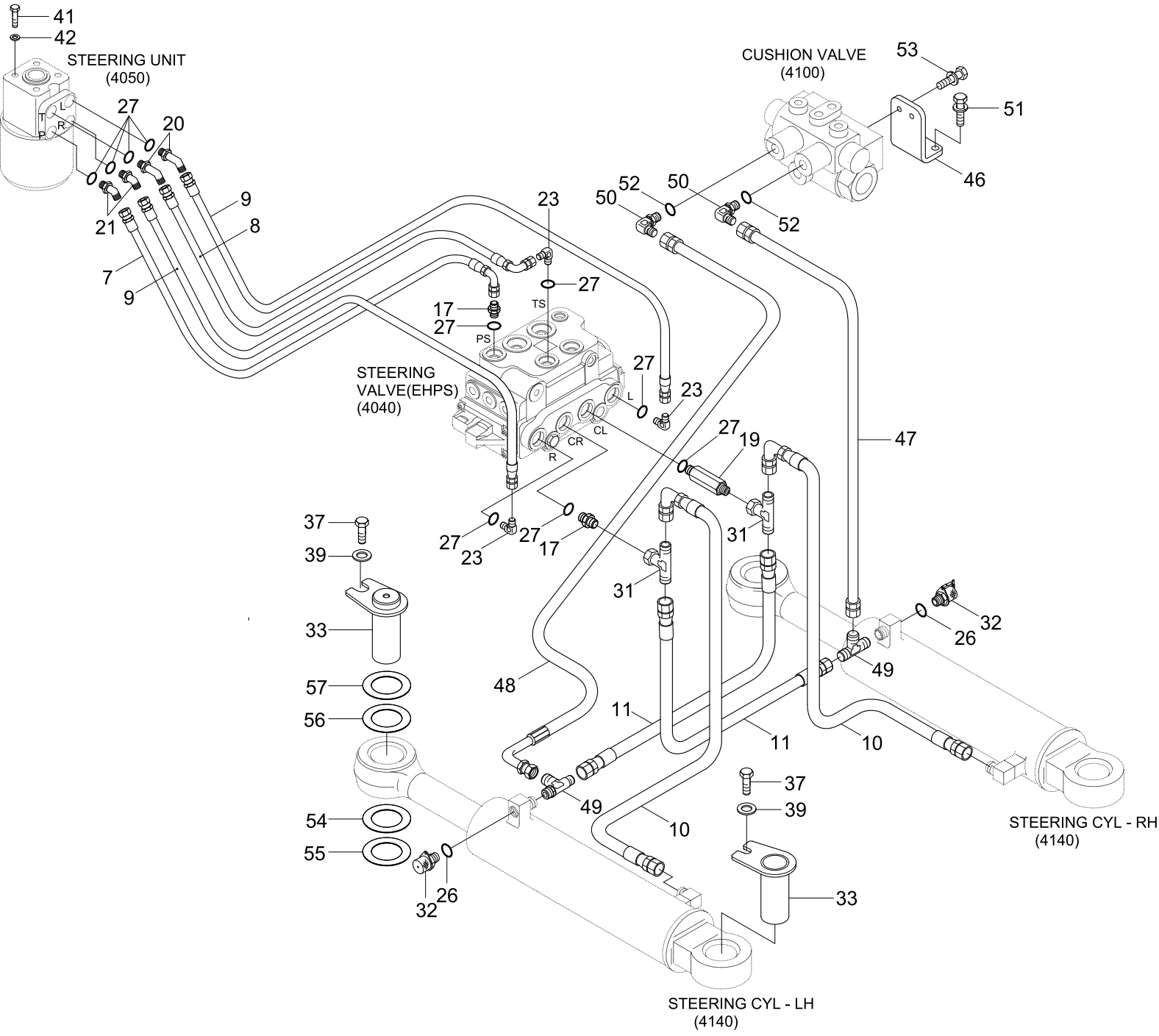

Item	Part_No	IS	Ord	T	Description	Qty	Serial_No	ITC	Remark
7	P620-082010				HOSE ASSY-THD 0X90	1			
8	P620-082011				HOSE ASSY-THD 0X90	1			
9	P600-084016				HOSE ASSY-THD	2			
10	P620-084023				HOSE ASSY-THD 0X90	2			
11	P610-084015				HOSE ASSY-THD 0X45	2			
17	P010-110004				CONNECTOR	2			
19	P101-108085				CONNECTOR-LONG	1			
20	31LD-30060				ELBOW-45	2			
21	P030-110003				ELBOW-45	2			
23	P020-110003				ELBOW-90	3			
26	S631-011004				O-RING	2			
27	S631-018004				O-RING	10			
31	31L3-0220	01			TEE B/TYPE-S/NUT	2			
32	31EK-11130				COUPLING-SCREW	2			
33	31LD-30090				PIN WA	4	- #1121		
	31LD-30310				PIN WA	4	#1122 -	B	
37	S017-16035D				BOLT-HEX	4			
39	61L7-10290				WASHER	4			
41	S017-100856				BOLT-HEX	4			
42	S441-10000B				WASHER-HARDENED	4			
46	31LC-30090				PLATE	1			
47	P600-044017				HOSE ASSY-THD	1			
48	P620-044020				HOSE ASSY-THD 0X90	1			
49	P320-080408				TEE-RUN TYPE	2			
50	P020-310001				ELBOW-90	2			

Item	Part_No	IS	Ord	T	Description	Qty	Serial_No	ITC	Remark
51	S037-122556				BOLT-W/WASHER	2			
52	S611-009001				O-RING	2			
53	S035-082056				BOLT-W/WASHER	2			
54	31L9-30150				SHIM(0.5MM)	2	#1144 -	-	
55	31L9-30160				SHIM(1.0MM)	2	#1144 -	-	
56	31LB-30600				SHIM(0.5MM)	2	#1144 -	-	
57	31LB-30610				SHIM(1.0MM)	2	#1144 -	-	

BRAKE HYDRAULIC PIPING 1(-#1274)

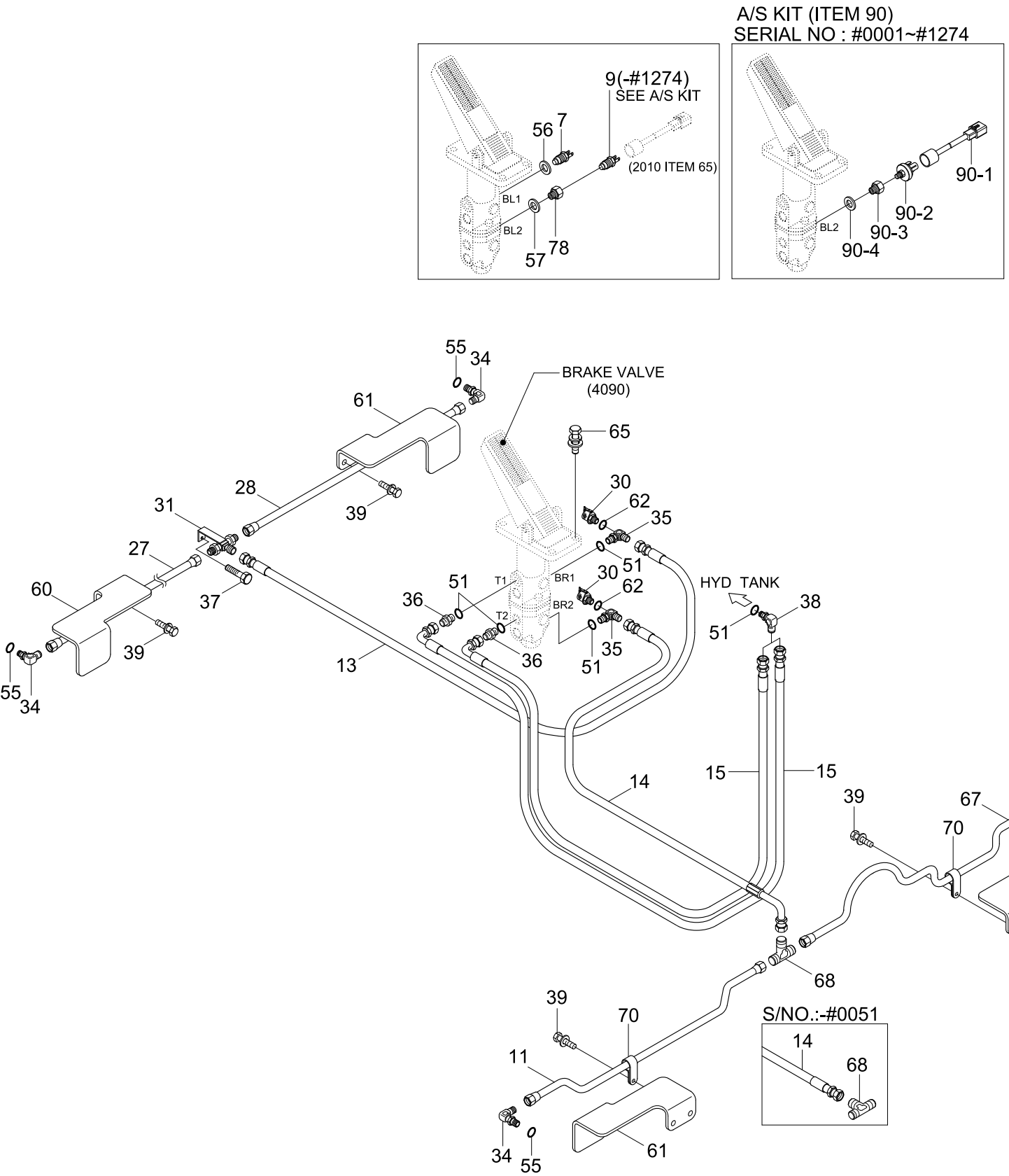

Item	Part_No	IS	Ord	T	Description	Qty	Serial_No	ITC	Remark
7	31LB-40170				SWITCH-PRESSURE	1			CLUTCH CUT OFF
9	31L7-40030				SWITCH-PRESSURE	1	- #1025		SERVICE BRAKE
N9	@				SWITCH-PRESSURE	1	#1026 - #1274	D	NOT
9	81FH-47120				PRESSURE SWITCH ASSY	1	#1250 -	D	SERVICE BRAKE
11	31LD-40110				TUBE ASSY-LH	1	- #0051		
	31LD-40160				TUBE ASSY-LH	1	#0052 -	D	
13	P600-064064				HOSE ASSY-THD 0X0	1			
14	P600-064044				HOSE ASSY-THD 0X0	1	- #0051		
	P620-064044				HOSE ASSY-THD 0X90	1	#0052 -	D	
15	P620-062051				HOSE ASSY-THD 0X90	2			
27	31LD-40030				TUBE ASSY	1	- #0051		
	31LD-40140				TUBE ASSY	1	#0052 -	D	
28	31LD-40040				TUBE ASSY	1	- #0051		
	31LD-40150				TUBE ASSY	1	#0052 -	D	
30	31EK-11130				COUPLER-SCREW	2			
31	31LD-40051				TEE WA	1	- #0051		
	31LD-40052				TEE WA	1	#0052 -	D	
34	31LB-40140				ELBOW-90	4	- #0426		
	31LB-40420				ELBOW-90	4	#0427 -	D	
35	34L1-00350				ELBOW-90	2			ONE PEDAL
36	P010-110003				CONNECTOR	2			ONE PEDAL
37	S035-081522				BOLT-W/WASHER	1			
38	P020-110002				ELBOW-90	2			
39	S037-102052				BOLT-W/WASHER	8			
51	S631-014004				O-RING	6			

Item	Part_No	IS	Ord	T	Description	Qty	Serial_No	ITC	Remark
55	Y161-016001				O-RING	4			
56	P391-040000				WASHER-COPPER	1			
57	P392-120000				WASHER-COPPER	1			
60	31LD-40061				PLATE	2			
61	31LD-40071				PLATE	2			
62	S631-011004				O-RING	2	- #1025		
					O-RING	3	#1026 -	A	
65	S035-082542				BOLT-W/WASHER	4			
67	31LD-40120				TUBE ASSY-RH	1	- #0051		
	31LD-40170				TUBE ASSY-RH	1	#0052 -	D	
68	31LD-40100				TEE WA	1	- #0051		
	31LD-40180				TEE WA	1	#0052 -	D	
70	31LD-40130				CLAMP	2			
N78	@				ADAPTER	1	#1026 - #1274	-	NOT
78	31LG-40070				ADAPTER	1	#1250 -	D	
90	21LB-51700				KIT-STOP LAMP PRESSURE	1	#0001 - #1274	-	FOR A/S
90-1	21LB-51600				.HARNESS-EXT	1			
90-2	81FH-47120				.SWITCH-PRESSURE	1			
90-3	31LG-40070				.ADAPTER	1			
90-4	P392-120000				.WASHER-COPPER	1			
N	@					AR			NOT

BRAKE HYDRAULIC PIPING 1(#1275-)

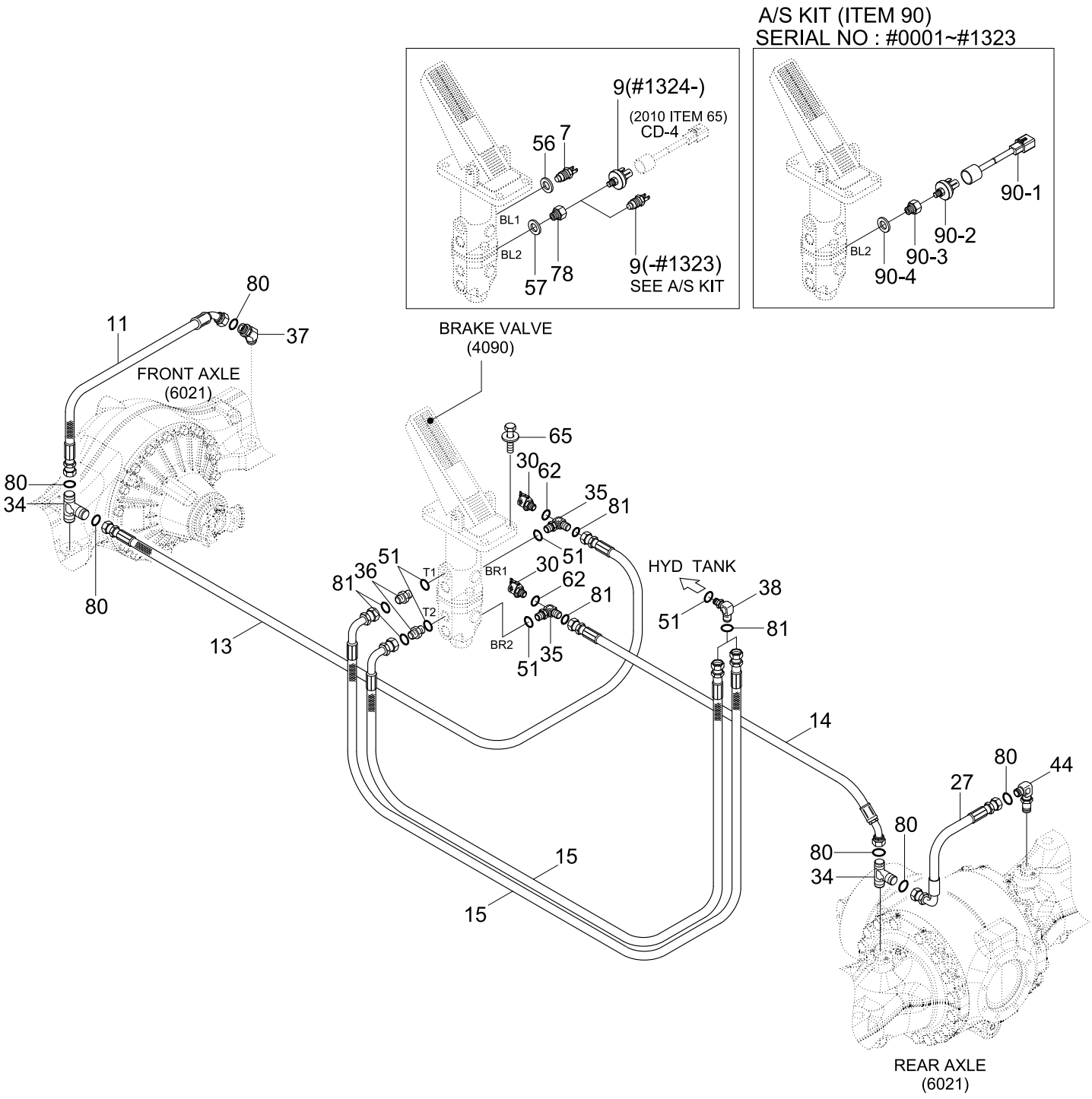

Item	Part_No	IS	Ord	T	Description	Qty	Serial_No	ITC	Remark
7	31LB-40170				SWITCH-PRESSURE	1			CLUTCH CUT OFF
N9	@				SWITCH-PRESSURE	1	- #1323		NOT
9	81FH-47120				SWITCH-PRESSURE	1	#1324 -	D	SERVICE BRAKE
	31Q4-40560				PRESSURE SWITCH	1			SERVICE BRAKE
11	P920-063012				HOSE ASSY-ORFS 0X45	1			
13	P910-063066				HOSE ASSY-ORFS 0X0	1			
14	P920-063044				HOSE ASSY-ORFS 0X45	1			
15	P930-062050				HOSE ASSY-ORFS 0X90	2			
27	P930-063011				HOSE ASSY-ORFS 0X90	1			
30	31EK-11130				COUPLER-SCREW	2			
34	31LD-40270				TEE	4			
35	31LB-40340				TEE	2			
36	X500-110002				CONNECTOR-ORFS	2			
37	X530-210004				ELBOW-45,ORFS	1			
38	X520-110002				ELBOW-90,ORFS	2			
44	31N6-41080				ELBOW-90,ORFS,LONG	1			
51	S631-014004				O-RING	6			
56	P391-040000				WASHER-COPPER	1			
57	P392-120000				WASHER-COPPER	1			
62	S631-011004				O-RING	3			
65	S035-082556				BOLT-W/WASHER	4			
80	S621-011001				O-RING	6			
81	S621-012001				O-RING	4			
88	31LG-40050				ADAPTER	1			
N	@				NOT INDIVIDUALLY SUPPLIED	AR			NOT

Item	Part_No	IS	Ord	T	Description	Qty	Serial_No	ITC	Remark
N78	@				ADAPTER	1	- #1323		NOT
78	31LG-40070				ADAPTER	1	#1324 -	D	
90	21LB-51700				KIT-STOP LAMP PRESSURE	1	- #1323		FOR A/S
90-1	21LB-51600				.HARNESS-EXT	1			
90-2	81FH-47120				.SWITCH-PRESSURE	1			
90-3	31LG-40070				.ADAPTER	1			
90-4	P392-120000				.WASHER-COPPER	1			
N	@					AR			NOT

BRAKE HYDRAULIC PIPING 2(-#1274)

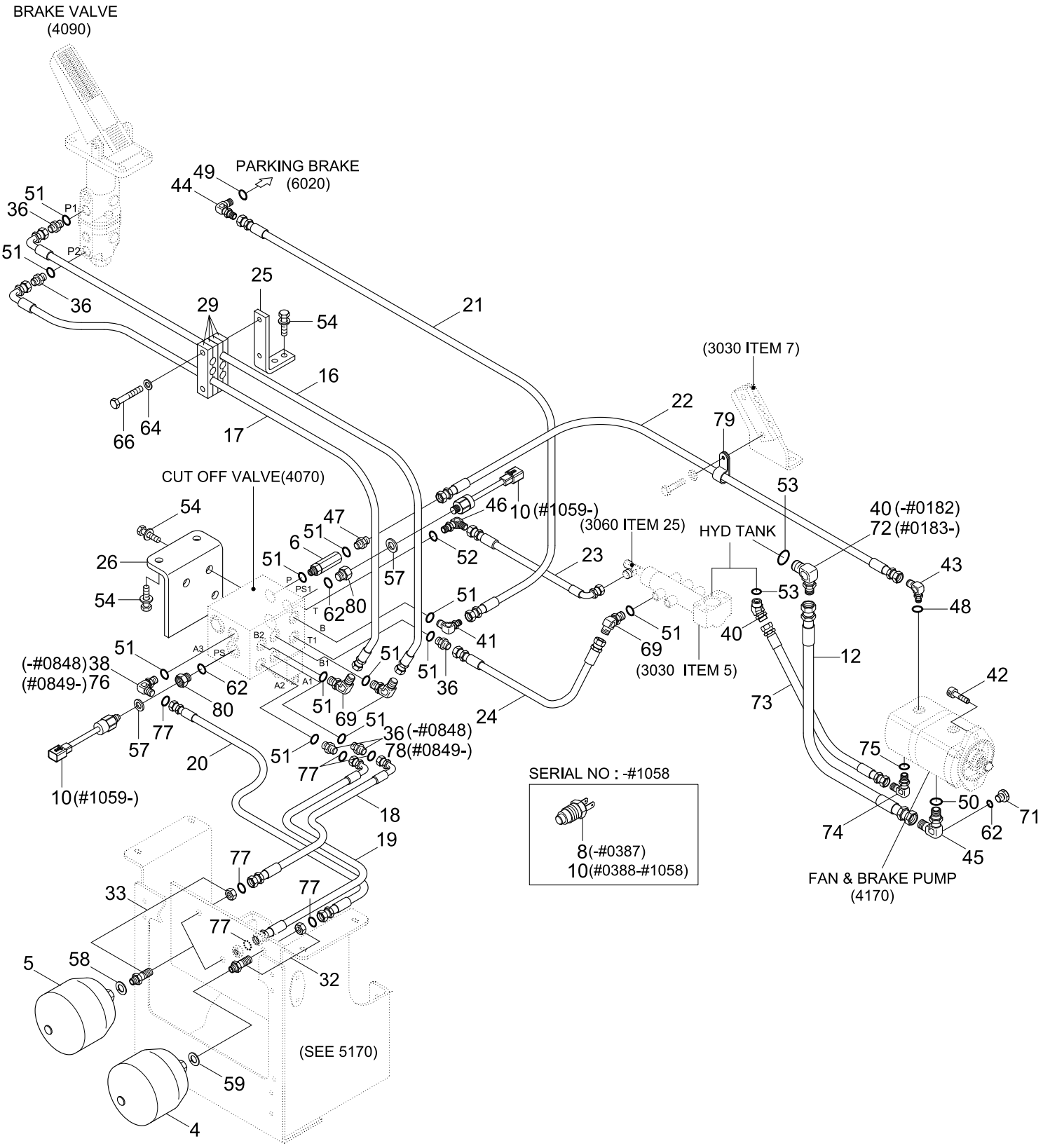

Item	Part_No	IS	Ord	T	Description	Qty	Serial_No	ITC	Remark
4	81L1-0003	01			ACCUMULATOR	1			CHARGING
5	81L1-0004	01			ACCUMULATOR	2			SERVICE BRAKE
6	31L1-0139				FILTER-LINE	1			
8	31M6-51310				SWITCH-PRESSURE	1	- #0387	-	PARKING
10	31L1-0095				SWITCH-PRESSURE	1	- #0387		CHARGING
					SWITCH-PRESSURE	2	#0388 - #1058	A	CHARGING/PARK
	31LF-00500				SWITCH-PRESSURE	2	#1059 -	D	CHARGING/PARK
12	P610-162012				HOSE ASSY-THD 0X45	1	- #0071		
	P600-162012				HOSE ASSY-THD 0X0	1	#0072 - #0182	D	
	P600-162014				HOSE ASSY-THD 0X0	1	#0183 -	D	
16	P620-064022				HOSE ASSY-THD 0X90	1			
17	P620-064021				HOSE ASSY-THD 0X90	1			
18	P610-064018				HOSE ASSY-THD 0X45	1	- #0848		
	P920-064018				HOSE ASSY-ORFS 0X45	1	#0849 -	D	
19	P610-064017				HOSE ASSY-THD 0X45	1	- #0848		
	P920-064017				HOSE ASSY-ORFS 0X45	1	#0849 -	D	
20	P600-064018				HOSE ASSY-THD 0X0	1	- #0848		
	P910-064018				HOSE ASSY-ORFS 0X0	1	#0849 -	D	
21	P600-044039				HOSE ASSY-THD 0X0	1	- #0116		
	P600-044040				HOSE ASSY-THD 0X0	1	#0117 -	A	
22	P600-084037				HOSE ASSY-THD 0X0	1			
23	P620-082016				HOSE ASSY-THD 0X90	1			
24	P600-062017				HOSE ASSY-THD 0X0	1			
25	31LB-40060				PLATE	1			
26	31LB-40070				PLATE	1			

Item	Part_No	IS	Ord	T	Description	Qty	Serial_No	ITC	Remark
29	31LB-40130				CLAMP	5			
32	31LB-40150				CONNECTOR ASSY	1	- #0848		
	31LB-40400				CONNECTOR	1	#0849 -	D	
33	31LB-40160				CONNECTOR ASSY	2	- #0848		
	31LB-40410				CONNECTOR	2	#0849 -	D	
36	P010-110003				CONNECTOR	5	- #0848		
					CONNECTOR	3	#0849 -	A	ONE PEDAL
					CONNECTOR	1	#1194 -	-	DUAL PEDAL
38	P020-110002				ELBOW-90	1	- #0848	-	
40	P020-110005				ELBOW-90	1	- #0071		
	P030-110005				ELBOW-45	1	#0072 - #0182	D	
	P030-110018				ELBOW-45	1	#0183 -	D	
41	P020-110012				ELBOW-90	1			
42	S109-100256				BOLT-SOCKET	2			
43	P020-310006				ELBOW-90	1			
44	P020-310001				ELBOW-90	1			
45	P020-310012				ELBOW-90	1	- #0116		
	31LC-40190				ELBOW-90	1	#0117 -	D	
46	P020-110003				ELBOW-90	1			
47	P010-110014				CONNECTOR	1			
48	S611-019001				O-RING(INCH)	1			
49	S611-009001				O-RING	1			
50	S611-030001				O-RING	1			
51	S631-014004				O-RING	12			
52	S631-018004				O-RING	1			

Item	Part_No	IS	Ord	T	Description	Qty	Serial_No	ITC	Remark
53	S631-029004				O-RING	1			
54	S037-122552				BOLT-W/WASHER	5			
57	P392-12000				WASHER-COPPER	2			
58	P392-180000				WASHER-COPPER	2			
59	P392-220000				WASHER-COPPER	1			
62	S631-011004				O-RING	1	#0117 - #1058	-	
					O-RING	3	#1059 -	A	
64	S441-100002				WASHER-HARDENED	2			
66	S017-100702				BOLT-HEX	2			
69	P030-110002				ELBOW-45	3			
71	P220-110102				PLUG	1	#0117 -	-	
72	P020-110005				ELBOW-90	1	#0183 -	-	
73	P600-122010				HOSE ASSY-THD 0X0	1	#0183 -	-	
74	P020-310009				ELBOW-90	1	#0183 -	-	
75	S611-023001				O-RING	1	#0183 -	-	
76	X520-110002				ELBOW-90,ORFS	1	#0849 -	-	
77	S621-012001				O-RING	6	#0849 -	-	
78	X500-110002				CONNECTOR-ORFS	2	#0849 -	-	
79	S543-240002				CLAMP-TUBE	1	#0865 -	-	
80	31LG-40050				ADAPTER	2	#1059 -	-	

BRAKE HYDRAULIC PIPING 2(#1275-)

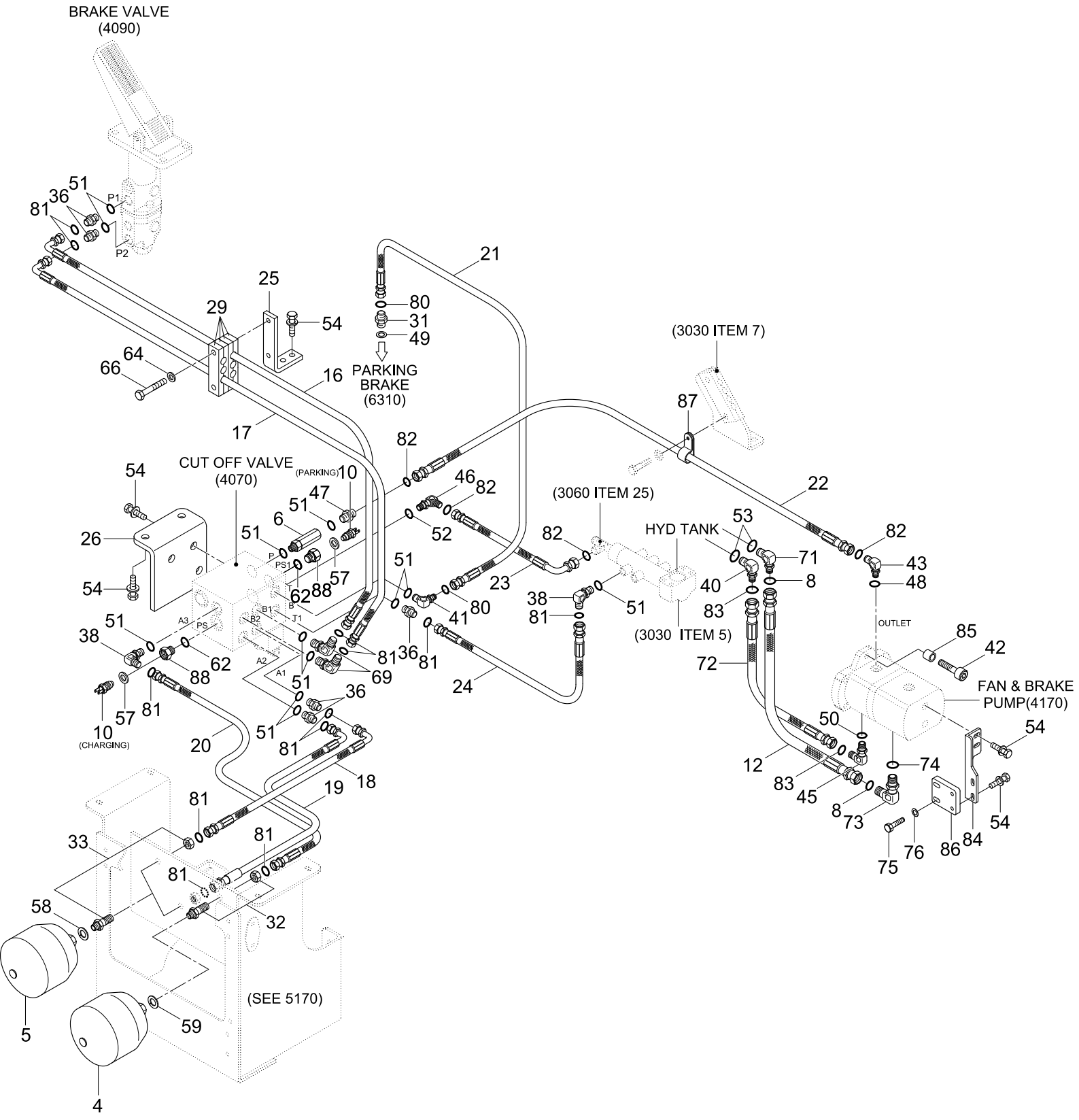

Item	Part_No	IS	Ord	T	Description	Qty	Serial_No	ITC	Remark
4	81L1-0003	01			ACCUMULATOR	1			CHARGING
5	81L1-0004	01			ACCUMULATOR	2			SERVICE BRAKE
6	31L1-0139				FILTER-LINE	1			
8	S621-021001				O-RING	2			
10	31LF-00500				SWITCH-PRESSURE	2			CHARGE,PARKING
12	P920-162009				HOSE ASSY-ORFS 0X45	1			
16	P930-063022				HOSE ASSY-ORFS 0X90	1			
17	P930-063021				HOSE ASSY-ORFS 0X90	1			
18	P920-063018				HOSE ASSY-ORFS 0X45	1			
19	P920-063017				HOSE ASSY-ORFS 0X45	1			
20	P910-063018				HOSE ASSY-ORFS 0X0	1			
21	P920-043011				HOSE ASSY-ORFS 0X45	1			
22	P910-084037				HOSE ASSY-ORFS 0X0	1			
23	P930-082016				HOSE ASSY-ORFS 0X90	1			
24	P910-062017				HOSE ASSY-ORFS 0X0	1			
25	31LB-40060				PLATE	1			
26	31LB-40071				PLATE	1			
29	31LB-40130				CLAMP	5			
31	31LH-40120				CONNECTOR	1			
32	31LB-40400				CONNECTOR	1			
33	31LB-40410				CONNECTOR	2			
36	X500-110002				CONNECTOR-ORFS	5			
38	X520-110002				ELBOW-90,ORFS	3			
40	X530-110018				ELBOW-45,ORFS	1			
41	X530-110012				ELBOW-45,ORFS	1			

Item	Part_No	IS	Ord	T	Description	Qty	Serial_No	ITC	Remark
42	S109-100356				BOLT-SOCKET	2			
43	31LB-40360				ELBOW-90	1			
45	31LB-40370				ELBOW-90,ORFS	1			
46	X520-110003				ELBOW-90,ORFS	1			
47	X500-110012				CONNECTOR-ORFS	1			
48	S611-019001				O-RING(INCH)	1			
49	P392-100000				WASHER-COPPER	1			
50	S611-030001				O-RING	1			
51	S631-014004				O-RING	12			
52	S631-018004				O-RING	1			
53	S631-029004				O-RING	2			
54	S037-122556				BOLT-W/WASHER	11			
57	P392-120000				WASHER-COPPER	2			
58	P392-180000				WASHER-COPPER	2			
59	P392-220000				WASHER-COPPER	1			
62	S631-011004				O-RING	2			
64	S441-100006				WASHER-HARDENED	2			
66	S017-100706				BOLT-HEX	2			
69	X530-110002				ELBOW-45,ORFS	2			
71	X520-110005				ELBOW-90,ORFS	1			
72	P930-122007				HOSE ASSY-ORFS 0X90	1			
73	31S7-00460				ELBOW-90	1			
74	S611-023001				O-RING	1			
75	S017-120406				BOLT-HEX	2			
76	S441-120006				WASHER-HARDENED	2			

Item	Part_No	IS	Ord	T	Description	Qty	Serial_No	ITC	Remark
80	S621-011001				O-RING	2			
81	S621-012001				O-RING	12			
82	S621-014001				O-RING	4			
83	S621-018001				O-RING	2			
84	31LC-40521				BRACKET-PUMP	1			
85	31LC-40210				SPACER-PUMP	1			
86	31LC-40511				BRACKET-PUMP	1			
87	S543-240002				CLAMP-TUBE	1			
88	31LG-40050				ADAPTER	2			

BRAKE HYD PIPING(DUAL PEDAL, #1194-)

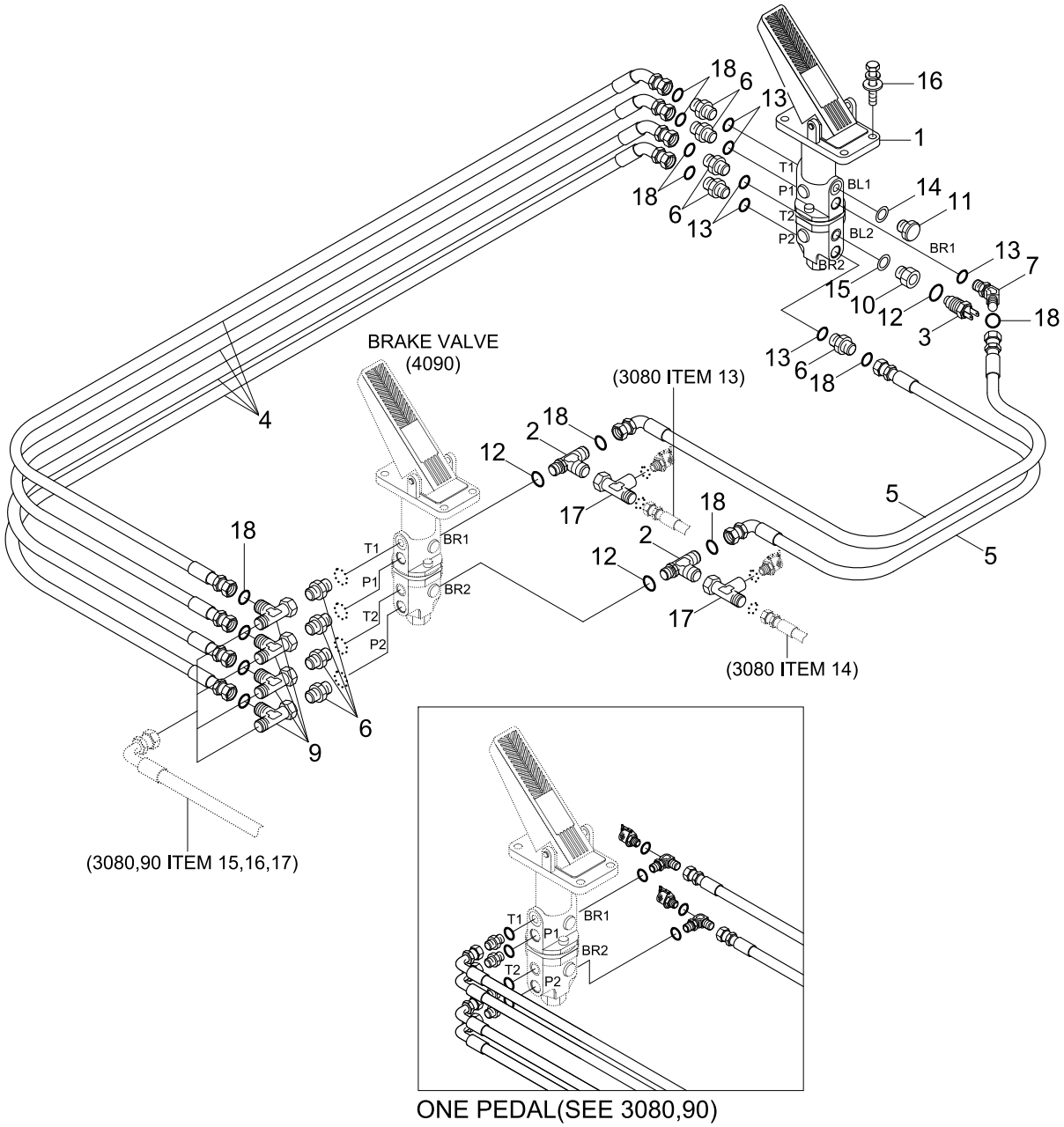

Item	Part_No	IS	Ord	T	Description	Qty	Serial_No	ITC	Remark
1	31LF-40300				BRAKE VALVE-DUAL(RH)	1			
2	31LF-40310				TEE-SHUTTLE	2			
3	31L7-41030				SWITCH-PRESSURE	1			
4	P920-063014				HOSE ASSY-ORFS 0X45	4			
5	P930-063013				HOSE ASSY	2			
6	X500-110002				CONNECTOR-ORFS	9			
7	X530-110002				ELBOW-45,ORFS	1			
9	31LG-40310				TEE-SWIVEL	4			
10	31LG-40050				ADAPTER	1			
11	P220-110102				PLUG-HEX,HEAD	1			
12	S631-011004				O-RING	1			
13	S631-014004				O-RING	6			
14	P391-040000				WASHER-COPPER	1			
15	P392-120000				WASHER-COPPER	1			
16	S035-082552				BOLT-W/WASHER	2			
17	31LG-40320				TEE-SWIVEL	2			
18	S621-012001				O-RING	12			

GREASE PIPING(FRONT)

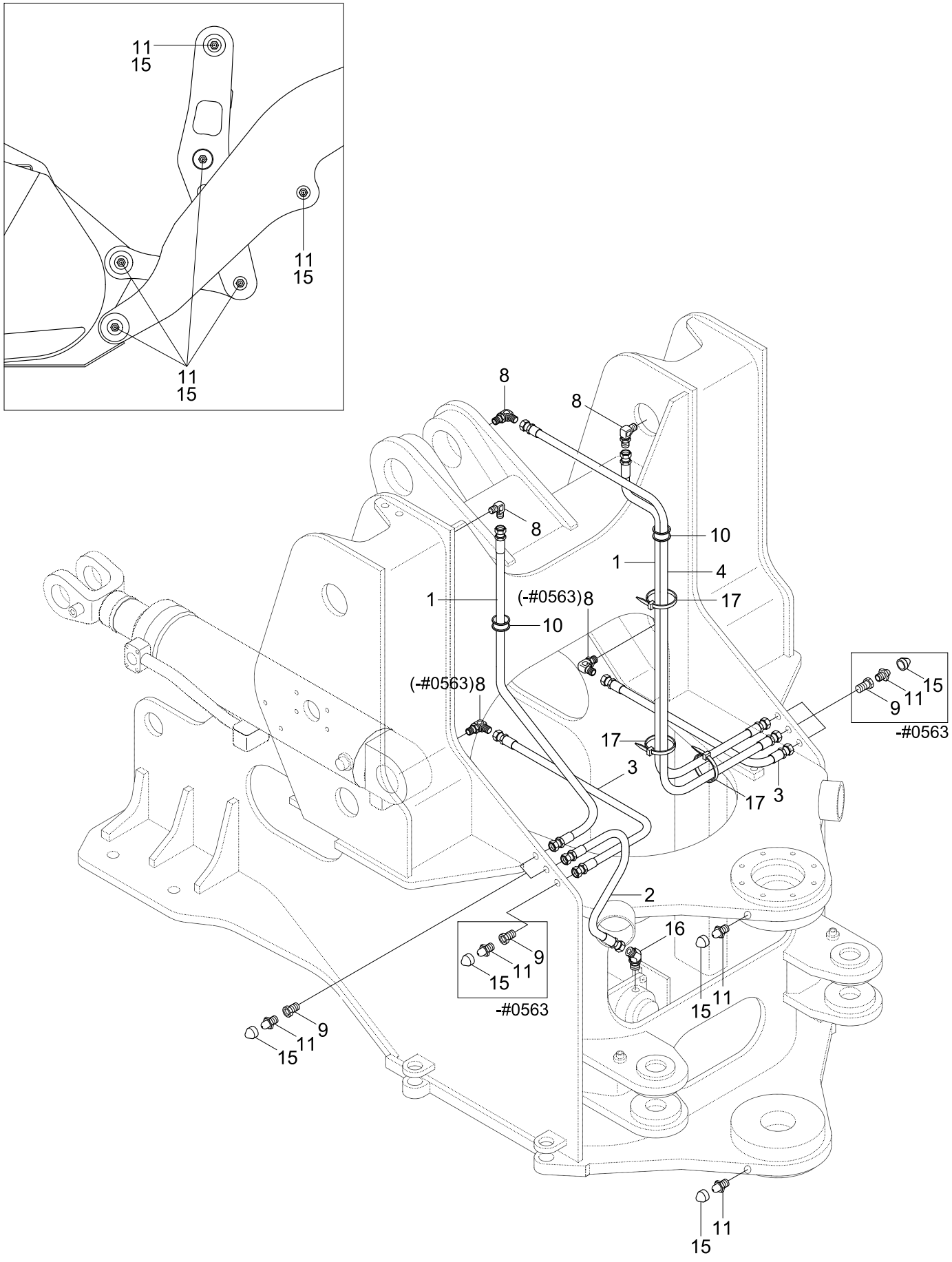

Item	Part_No	IS	Ord	T	Description	Qty	Serial_No	ITC	Remark
1	P620-042019				HOSE ASSY-THD 0X90	2	- #0364		
	P420-042019				HOSE ASSY-COMP 0X90	2	#0365 -	A	
2	P620-042023				HOSE ASSY-THD 0X90	1	- #0364		
	P420-042023				HOSE ASSY-COMP 0X90	1	#0365 -	A	
3	P620-042011				HOSE ASSY-THD 0X90	2	- #0364		
	P420-042011				HOSE ASSY-COMP 0X90	2	#0365 - #0563	A	
4	P620-042026				HOSE ASSY-THD 0X90	1	- #0364		
	P420-042026				HOSE ASSY-COMP 0X90	1	#0365 -	A	
8	61L1-3909				ELBOW-90	5	- #0563		
					ELBOW-90	3	#0564 -	A	
9	31LB-50020				CONNECTOR	6	- #0563		
					CONNECTOR	4	#0564 -	A	
10	S681-411200				GROMMET	4			
11	S651-810002				NIPPLE-GREASE	16			
15	S654-000000				CAP-GREASE NIPPLE	16			
16	E231-0207	10			ELBOW-45	1			
17	S552-050203				CLAMP-BAND	20			

GREASE PIPING(REAR)

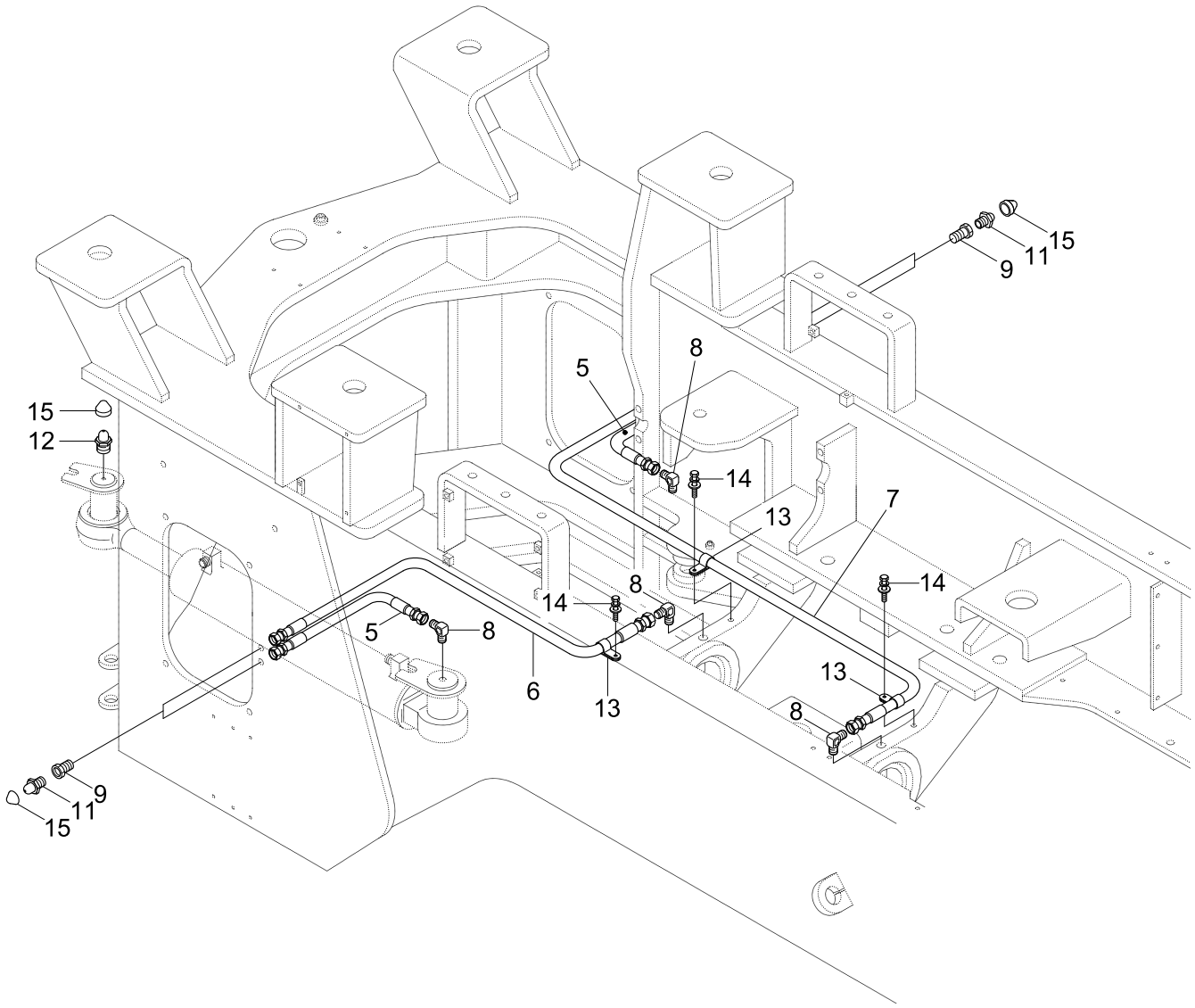

Item	Part_No	IS	Ord	T	Description	Qty	Serial_No	ITC	Remark
5	P610-042007				HOSE ASSY-THD 0X45	2	- #0286		
	P620-042017				HOSE ASSY-THD 0X90	2	#0287 - #0364	D	
	P420-042017				HOSE ASSY-COMP 0X90	2	#0365 -	A	
6	P610-042022				HOSE ASSY	1	- #0286		
	P620-042032				HOSE ASSY-THD 0X90	1	#0287 - #0364	D	
	P420-042032				HOSE ASSY-COMP 0X90	1	#0365 -	A	
7	P610-042031				HOSE ASSY	1	- #0286		
	P620-042041				HOSE ASSY-THD 0X90	1	#0287 - #0364	D	
	P420-042041				HOSE ASSY-COMP 0X90	1	#0365 -	A	
8	61L1-3909				ELBOW-90	4			
9	31LB-50020				CONNECTOR	4			
11	S651-810002				NIPPLE-GREASE	4			
12	S653-810002				NIPPLE-GREASE	2			
13	S543-140002				CLAMP-TUBE	3			
14	S035-081522				BOLT-W/WASHER	3	- #0286		
	S035-081526				BOLT-W/WASHER	7	#0287 -	A	
15	S654-000000				CAP-GREASE NIPPLE	6			
18	31L7-50010				CLAMP	4	#0287 -	-	

HYDRAULIC TANK GROUP

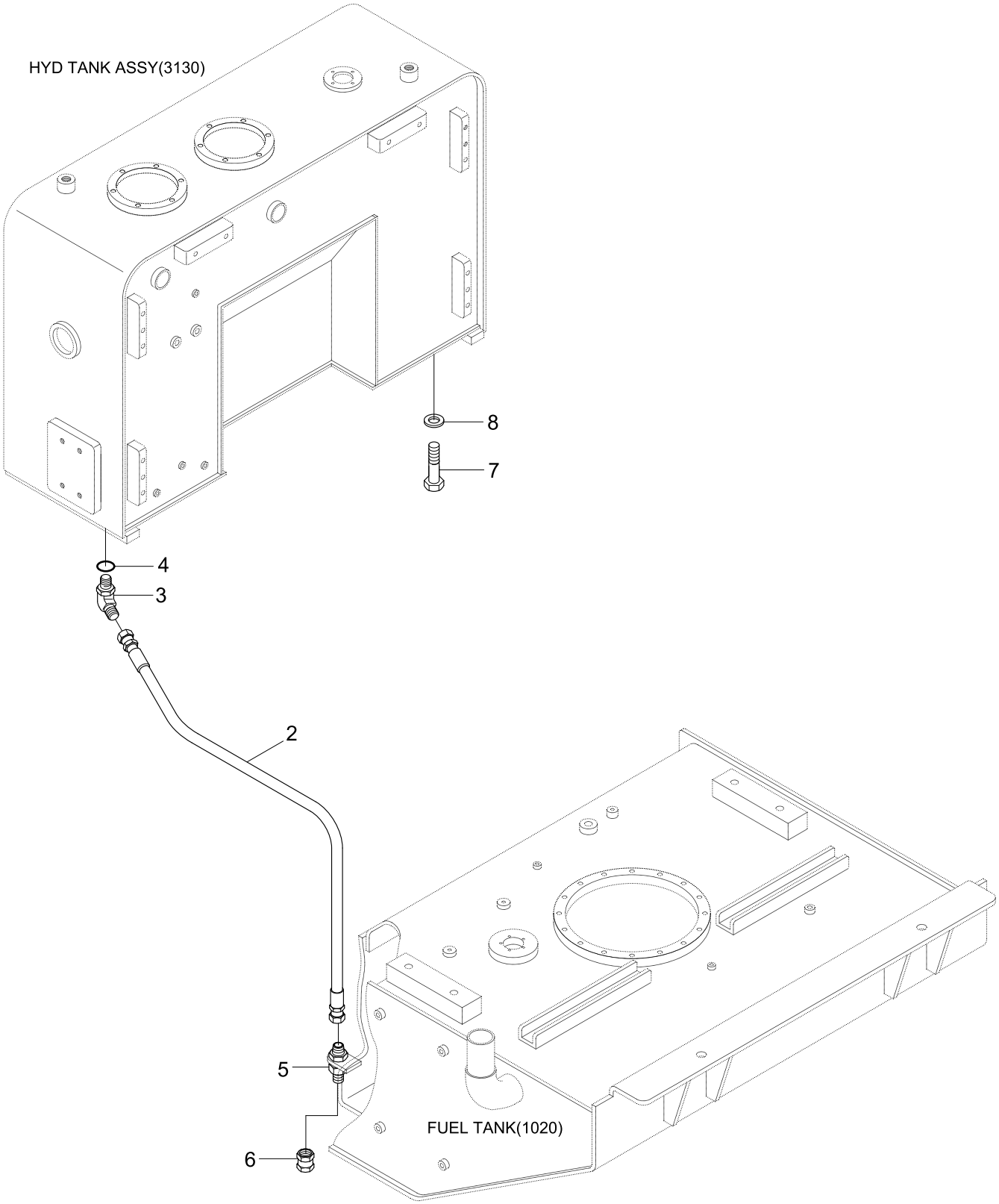

Item	Part_No	IS	Ord	T	Description	Qty	Serial_No	ITC	Remark
2	P600-162026				HOSE ASSY-THD	1			
3	P030-110005				ELBOW-45	1			
4	S631-029001				O-RING	1			
5	31LB-60060				CONNECTOR ASSY	1			
6	P290-100106				CAP	1			
7	S017-160402				BOLT-HEX	6			
8	S441-160002				WASHER-HARDENED	6			

HYDRAULIC TANK ASSY

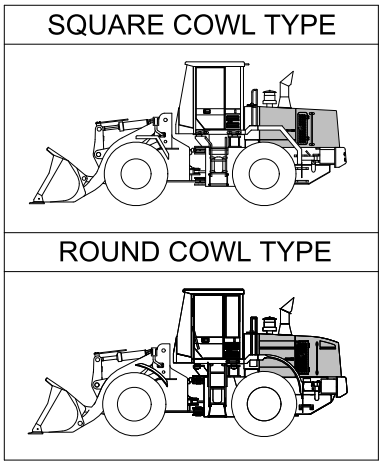

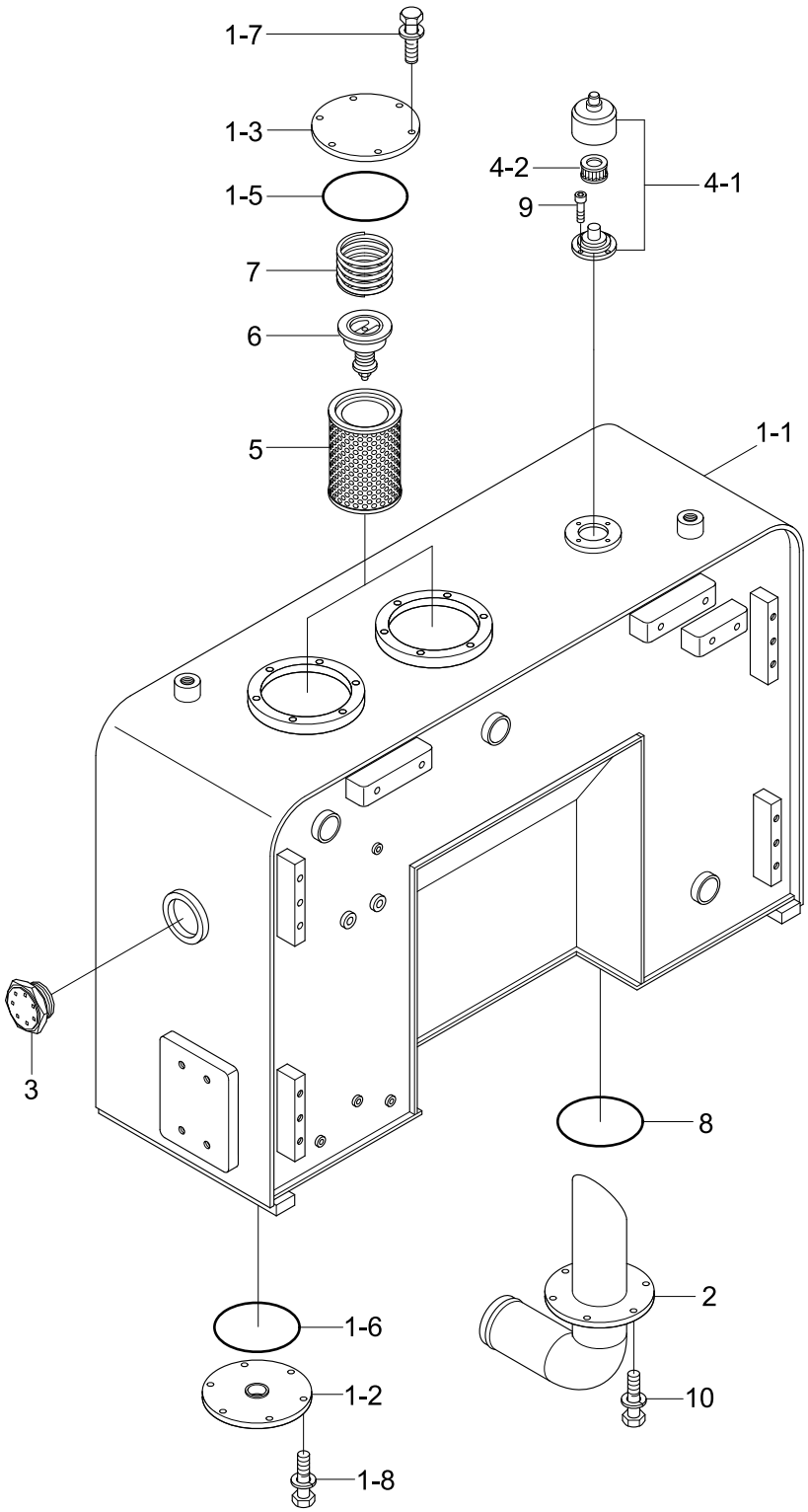

Item	Part_No	IS	Ord	T	Description	Qty	Serial_No	ITC	Remark
*	@				HYD TANK ASSY	1			NOT
1	31LD-60022				.HYD TANK SUB ASSY	1	- #0182		
	31LD-60023				.HYD TANK SUB ASSY	1	#0183 -	D	
	31LD-60191				.HYD TANK SUB ASSY	1	#0203 - #0387	-	ROUND COWL TYPE
	31LD-60192				.HYD TANK SUB ASSY	1	#0388 - #1210	B	ROUND COWL TYPE
	31LD-60310				.HYD TANK SUB ASSY	1	#1211 -	D	ROUND COWL TYPE
1-1	31LD-60032				..HYD TANK WA	1	- #0182		
	31LD-60033				..HYD TANK WA	1	#0183 -	D	
	31LD-60201				..HYD TANK WA	1	#0203 - #0387	-	ROUND COWL TYPE
	31LD-60202				..HYD TANK WA	1	#0388 - #1210	B	ROUND COWL TYPE
	31LD-60320				..HYD TANK WA	1	#1211 -	D	ROUND COWL TYPE
1-2	31LD-60050				..COVER WA	1			
1-3	31E3-4526				..COVER	2			
1-5	S632-165001				..O-RING	2			
1-6	S632-140001				..O-RING	1			
1-7	S037-102556				..BOLT-W/WASHER	12			
1-8	S037-102056				..BOLT-W/WASHER	6			
2	31LD-60040				.PIPE WA	1	- #1623		
	31LD-60490				.PIPE WA	1	#1624 -	A	
3	31L1-4047				.GAUGE-SIGHT	1			
4	31EE-02100				.AIR BREATHER	1			
4-1	PM102-0001R				..BODY	1			
4-2	31EE-02110				..ELEMENT	1			
5	34L3-00341				.ELEMENT-HYD	2			
6	E131-0256	20			.VALVE-BYPASS	2			

Item	Part_No	IS	Ord	T	Description	Qty	Serial_No	ITC	Remark
7	E131-0220	20			.SPRING	2			
8	S632-140001				.O-RING	2			
9	S109-060156				.BOLT-SOCKET	4			
10	S037-102052				.BOLT-W/WASHER	6			

PILOT HYDRAULIC PIPING(3-SPOOL)

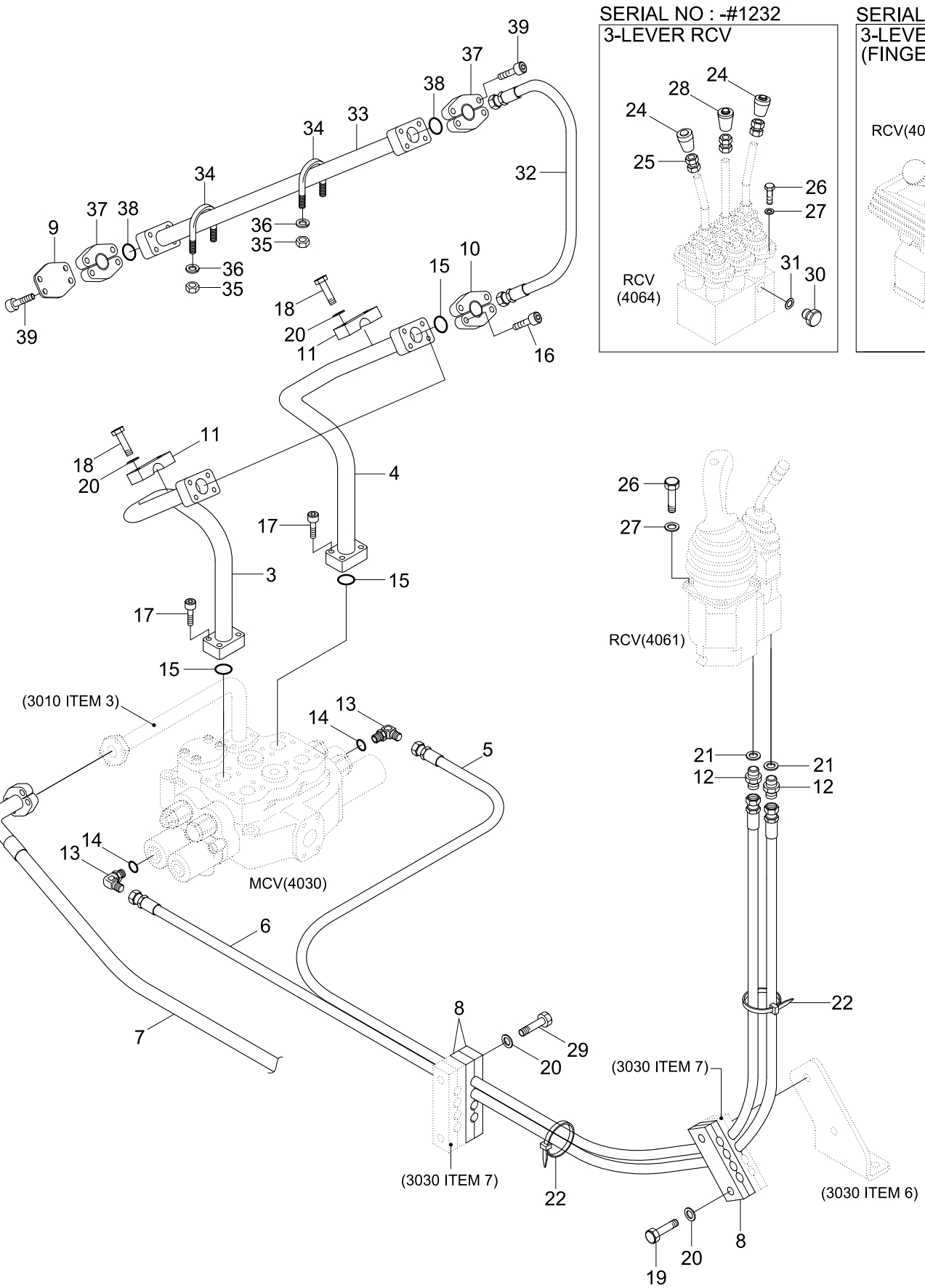

Item	Part_No	IS	Ord	T	Description	Qty	Serial_No	ITC	Remark
3	31LD-90020				PIPE WA-LH	1			
4	31LD-90030				PIPE WA-RH	1			
5	P600-042062				HOSE ASSY-THD 0X0	1			
6	P600-042057				HOSE ASSY-THD 0X0	1			
7	P700-164337				HOSE ASSY-FLG 0X90	1			
8	31LF-10060				CLAMP	2			
9	P280-163000				COVER-FLANGE	2			
10	P173-160104				FLANGE-HYD,SPLIT	4			
11	31L7-00370				CLAMP	2			
12	P010-120002				CONNECTOR	2			
13	P020-110012				ELBOW-90	2			
14	S631-014004				O-RING	2			
15	Y171-024004				O-RING	4			
16	S109-100306				BOLT-SOCKET	8			
17	S109-120406				BOLT-SOCKET	8			
18	S017-120452				BOLT-HEX	4			
19	S017-100652				BOLT-HEX	2			
20	S441-100002				WASHER-HARDENED	8			
21	P391-040000				WASHER-COPPER	2			
22	S552-050203				CLAMP-BAND	10			
24	34L4-02330				KNOB ASSY	2	- #1232	-	3-LEVER RCV
25	S207-120002				NUT-HEX	6	- #1232	-	3-LEVER RCV
26	S015-060252				BOLT-HEX	2			3-LEVER RCV
27	S441-060002				WASHER-HARDENED	2			3-LEVER RCV
28	34L4-02340				KNOB ASSY	1	- #0054		3-LEVER RCV

Item	Part_No	IS	Ord	T	Description	Qty	Serial_No	ITC	Remark
28	31LB-10180				KNOB ASSY	1	#0055 - #1232	B	3-LEVER RCV
29	S017-100852				BOLT-HEX	2	- #1232	-	3-LEVER RCV
30	P220-120102				PLUG	1	#0055 - #1232	-	3-LEVER RCV
31	P391-040000				WASHER-COPPER	1	#0055 - #1232	-	3-LEVER RCV
32	P680-164330				HOSE ASSY-FLG 0X0	2	#0056 -	-	EXTRA PIPING
33	31LD-90150				PIPE WA	2	#0056 -	-	EXTRA PIPING
34	S070-023450				U-BOLT	4	#0056 -	-	EXTRA PIPING
35	S275-100002				NUT-SELF LOCKING	8	#0056 -	-	EXTRA PIPING
36	S441-100002				WASHER-HARDENED	8	#0056 -	-	EXTRA PIPING
37	P173-160104				FLANGE-HYD,SPLIT	8	#0056 -	-	EXTRA PIPING
38	Y171-024004				O-RING	4	#0056 -	-	EXTRA PIPING
39	S109-100306				BOLT-SOCKET	16	#0056 -	-	EXTRA PIPING

EMERGENCY STEERING HYD PIPING

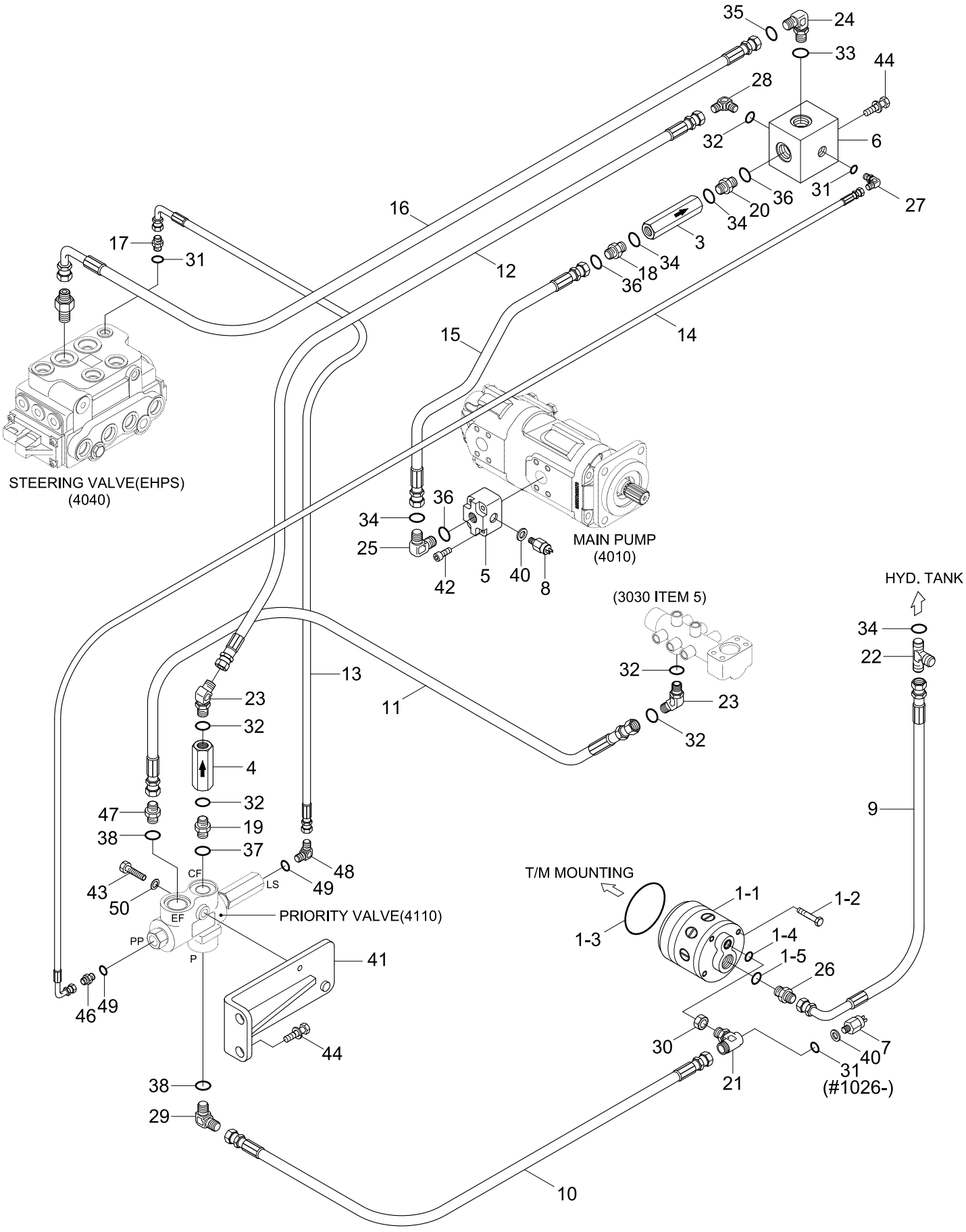

Item	Part_No	IS	Ord	T	Description	Qty	Serial_No	ITC	Remark
*	90LD-91000				EMER STEERING KIT	1	#0002 - #0176	-	
	90LD-91010				EMER STEERING KIT	1	#0177 - #0182	D	
	90LD-91020				EMER STEERING KIT	1	#0183 - #1025	D	
	90LD-91030				EMER STEERING KIT	1	#1026 -	D	
1	34L4-01780				.EMER STEER PUMP KIT	1			
1-1	31L9-90090				..PUMP-PISTON	1			
1-2	31L8-90260				..SCREW-HEX	1			
1-3	31L9-90130				..O-RING	1			
1-4	31LC-90240				..O-RING	1	#0001 -	-	
1-5	31LC-90250				..O-RING	1	#0001 -	-	
3	31LD-90050				.CHECK VALVE	1			
4	34L3-01311				.CHECK VALVE	1	#0001 -	-	
5	31LD-90060				.BLOCK	1			
6	31LD-90070				.BLOCK	1			
7	31L7-40030				.SWITCH-PRESSURE	1	- #1025		
	31L7-41030				.SWITCH-PRESSURE	1	#1026 -	D	
8	34L3-01600				.SWITCH-PRESSURE	1			
9	P610-162015				.HOSE ASSY-THD 0X45	1			
10	P603-124017				.HOSE ASSY-THD	1			
11	P610-082013				.HOSE ASSY-THD 0X45	1			
12	P600-084029				.HOSE ASSY-THD	1			
13	P620-044024				.HOSE ASSY-THD 0X90	1			
14	P620-044035				.HOSE ASSY-THD 0X90	1			
15	P920-164020				.HOSE ASSY-ORFS 0X45	1			
16	P930-124021				.HOSE ASSY-ORFS 0X90	1			

Item	Part_No	IS	Ord	T	Description	Qty	Serial_No	ITC	Remark
17	P010-110001				.CONNECTOR	1	#0001 -	-	
18	X500-110005				.CONNECTOR-ORFS	1			
19	31LD-90140				.CONNECTOR	1			
20	P000-110016				.CONNECTOR	1			
21	31L7-90200				.TEE	1	- #1025		
	31LG-90130				.TEE	1	#1026 -	D	
22	31LD-90160				.TEE	1	#0002 - #0176	-	
	P320-161616				.TEE-RUN TYPE	1	#0177 - #0182	D	
	P320-161212				.TEE-RUN TYPE	1	#0183 -	D	
23	P030-110003				.ELBOW-45	2			
24	X520-110004				.ELBOW-90,ORFS	1			
25	X520-110005				.ELBOW-90,ORFS	1			
26	P010-210015				.CONNECTOR	1	#0001 -	-	
27	P020-110001				.ELBOW-90	1			
28	P020-110003				.ELBOW-90	1			
29	P020-310017				.ELBOW-90	1			
30	31L8-90100				.ELBOW-SWIVEL NUT	1			
31	S631-011004				.O-RING	4	- #1025		
					.O-RING	5	#1026 -	A	
32	S631-018004				.O-RING	8			
33	S631-024004				.O-RING	1			
34	S631-029004				.O-RING	5			
35	S621-018001				.O-RING,ORFS	1			
36	S621-021001				.O-RING,ORFS	2			
37	S611-016001				.O-RING	1			

Item	Part_No	IS	Ord	T	Description	Qty	Serial_No	ITC	Remark
38	S611-019001				.O-RING	1			
40	P392-120000				.WASHER-COPPER	2			
41	31LD-90091				.PLATE	1			
42	S109-100506				.BOLT-SOCKET	4			
43	S015-080552				.BOLT-HEX	1			
44	S037-122552				.BOLT-W/WASHER	4			
46	P010-310001				.CONNECTOR	1			
47	P010-310008				.CONNECTOR	1			
48	P020-310001				.ELBOW-90	1			
49	S611-009001				.O-RING	2			
50	S441-080002				.WASHER-HARDENED	1			
53	@				.HARNESS-E/STEERING	1			NOT

RIDE CONTROL HYDRAULIC PIPING

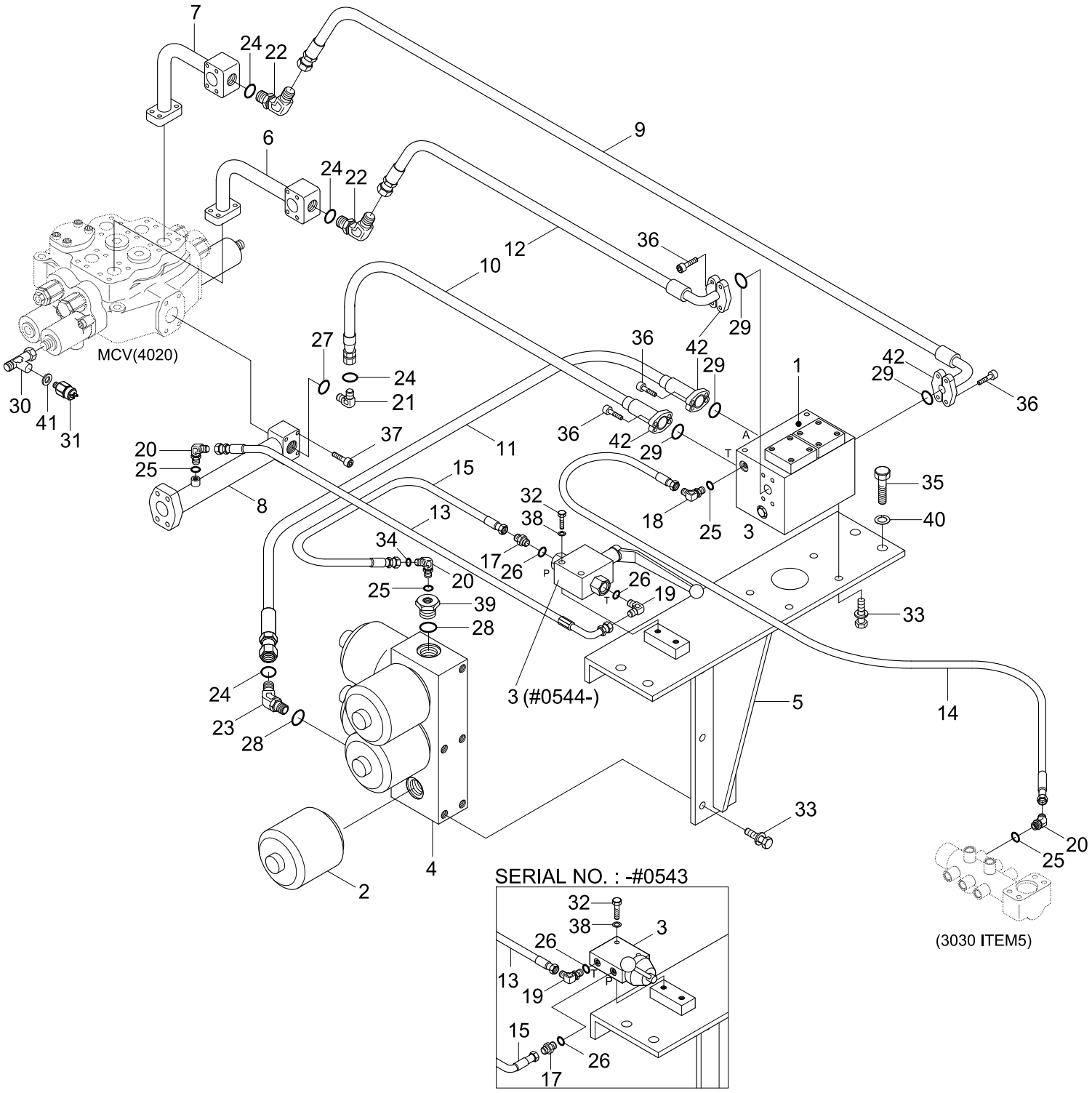

Item	Part_No	IS	Ord	T	Description	Qty	Serial_No	ITC	Remark
*	30LD-95000				RIDE CONTROL KIT	1	- #0394		
	30LD-95010				RIDE CONTROL KIT	1	#0395 - #0543	D	
	30LD-95020				RIDE CONTROL KIT	1	#0544 -	D	
1	@				.RIDE CONTROL VALVE	1			NOT
2	34L1-02530				.ACCUMULATOR	6			
3	31L7-10010				.SAFETY VALVE	1	- #0543		SEE 4120
	31LB-90250				.SAFETY VALVE	1	#0544 -	D	
4	34L3-02082				.BLOCK	1			
5	31LD-90100				.PLATE WA	1	- #0543		
	31LC-90210				.PLATE WA	1	#0544 -	D	
6	31LD-90111				.PIPE WA	1			
7	31LD-90121				.PIPE WA	1			
8	31LD-90130				.PIPE WA	1			
9	P980-124313				.HOSE ASSY-ORFSXFLG	1			
10	P970-122314				.HOSE ASSY-ORFSXFLG	1			
11	P940-124314				.HOSE ASSY-ORFSXFLG	1			
12	P980-124311				.HOSE ASSY-ORFSXFLG	1			
13	P600-042015				.HOSE ASSY-THD 0X0	1	- #0543		
	P620-042017				.HOSE ASSY-THD 0X90	1	#0544 -	D	
14	P600-042058				.HOSE ASSY-THD	1			
15	P620-044008				.HOSE ASSY-THD 0X90	1	- #0543		
	P600-044008				.HOSE ASSY-THD	1	#0544 -	D	
16	P700-202331				.HOSE ASSY	1	#0395 -	-	
17	P010-110013				.CONNECTOR	1			
18	P020-110001				.ELBOW-90	1			

Item	Part_No	IS	Ord	T	Description	Qty	Serial_No	ITC	Remark
19	P020-110012				.ELBOW-90	1			
20	P030-110001				.ELBOW-45	3			
21	X520-110004				.ELBOW-90,ORFS	1			
22	X530-110004				.ELBOW-45,ORFS	2			
23	X530-110018				.ELBOW-45,ORFS	1			
24	S621-018001				.O-RING,ORFS 1.3/16-12UNF	4			
25	S631-011004				.O-RING PF1/4	4			
26	S631-014004				.O-RING PF3/8	2			
27	S631-024004				.O-RING PF3/4	3			
28	S631-029004				.O-RING PF1	2			
29	Y171-019004				.O-RING	4			
30	34L1-02461				.TEE	1			
31	31L7-90030				.SWITCH-PRESSURE	1			RIDE CONTROL
32	S017-080452				.BOLT-HEX	2			
33	S037-102552				.BOLT-W/WASHER	10			
35	S017-160352				.BOLT-HEX	4			
36	S109-100306				.BOLT-SOCKET	16			
37	S109-100606				.BOLT-SOCKET	4			
38	S441-080002				.WASHER-HARDENED	2			
39	34L1-02570				.PLUG	1			
40	S441-160002				.WASHER-HARDENED	4			
41	P392-120000				.WASHER-COPPER	1			
42	P173-120102				.FLANGE-SPLIT	8			
43	Y171-027004				.O-RING	1	#0395 -	-	
R1-4	@				.DECAL-SHUT OFF VALVE	1			NOT

Item	Part_No	IS	Ord	T	Description	Qty	Serial_No	ITC	Remark
R6	@				.HARNESS-RIDE CONTROL	1			NOT
R17	@				.RELAY-4P	1			NOT
R24	@				.SWITCH-RIDE CONTROL	1			NOT

QUICK COUPLER PIPING(VOLVO TYPE, #1440-)

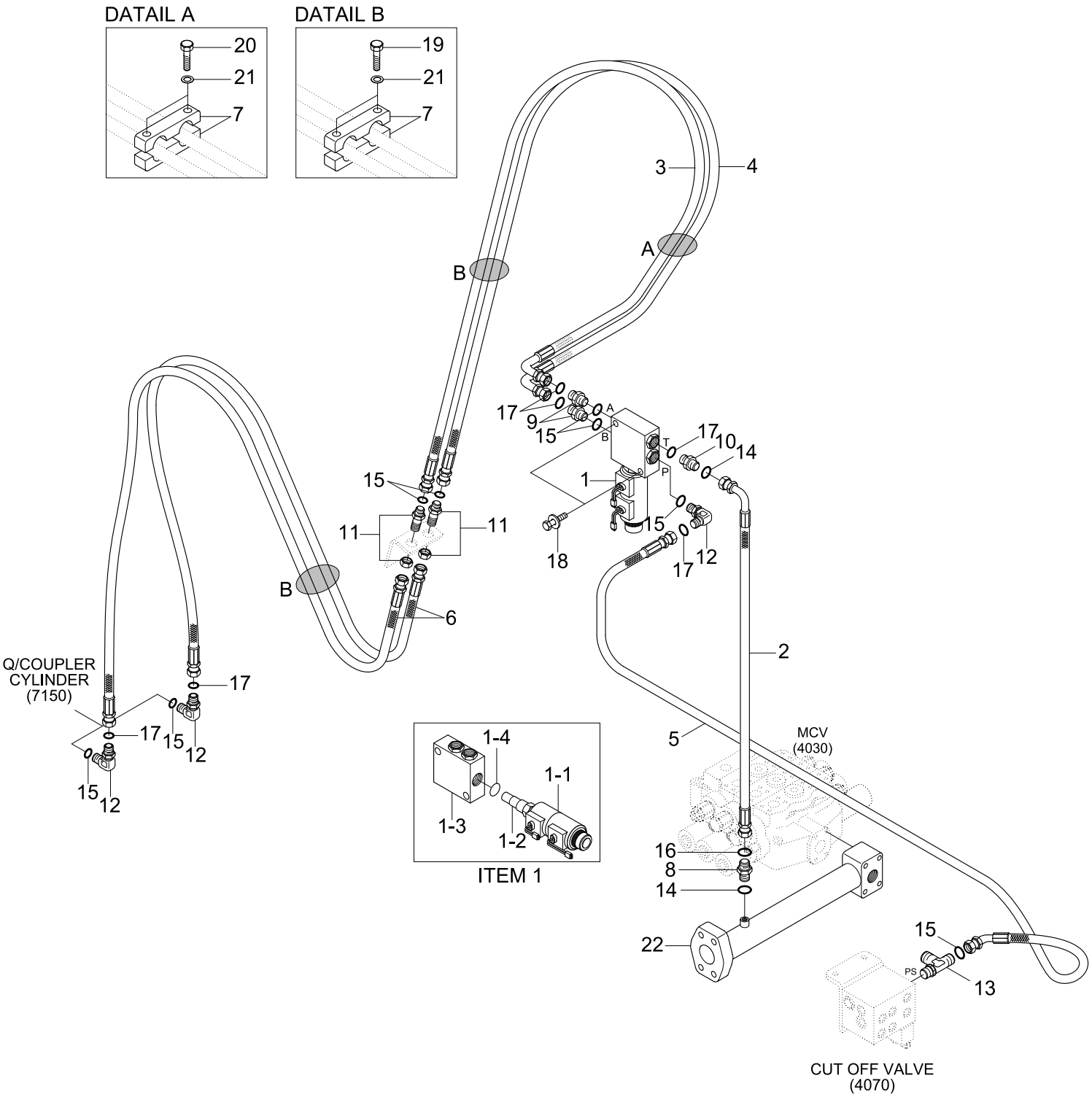

Item	Part_No	IS	Ord	T	Description	Qty	Serial_No	ITC	Remark
1	31L7-20210				SOLENOID VALVE	1			
1-1	XKAL-00071				.COIL	2			
1-2	XKAL-00072				.CARTRIDGE VALVE	1			
1-3	@				.MANIFOLD	1			NOT
1-4	XKAL-00004				.SEAL	1			
2	P930-042020				HOSE ASSY-ORFS 0X90	1			
3	P910-064062				HOSE ASSY-ORFS 0X0	1			
4	P910-064063				HOSE ASSY-ORFS 0X0	1			
5	P930-064060				HOSE ASSY-ORFS 0X90	1			
6	31LF-90260				HOSE ASSY	2			
7	31LF-90270				CLAMP	6			
8	X500-110001				CONNECTOR-ORFS	1			
9	X500-110002				CONNECTOR-ORFS	2			
10	X500-110013				CONNECTOR-ORFS	1			
11	X540-120002				CONNECTOR-ORFS	2			
12	X520-110002				ELBOW-90,ORFS	3			
13	X820-065252				TEE-R/TYPE,ORFS	1			
14	S621-011001				O-RING	2			
15	S621-012001				O-RING(SEAL LOCK TYPE)	10			
16	S631-011004				O-RING	1			
17	S631-014004				O-RING	6			
18	S037-102556				BOLT-W/WASHER	2			
19	S017-120506				BOLT-HEX	2			
20	S017-120806				BOLT-HEX	4			
21	S441-120006				WASHER-HARDENED	6			

Item	Part_No	IS	Ord	T	Description	Qty	Serial_No	ITC	Remark
22	31LD-90130				PIPE WA	1			

MAIN PUMP

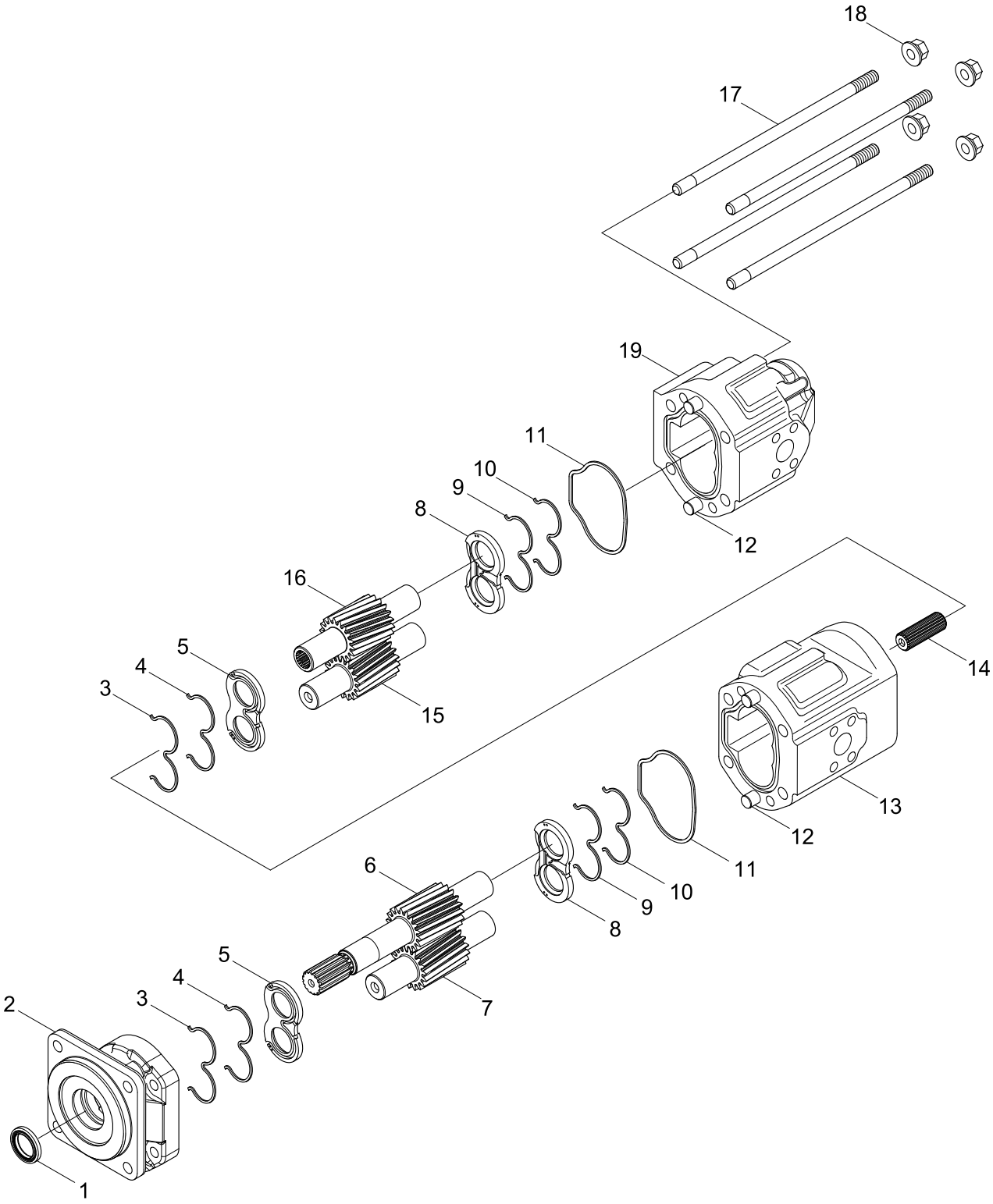

Item	Part_No	IS	Ord	T	Description	Qty	Serial_No	ITC	Remark
*	31LD-00010				MAIN PUMP	1			
NK1	P9445000101				.SHAFT SEAL-VITON	1			NOT
N2	P22X5000500				.ADAPTER	1			NOT
NK3	P8991000371				.SEAL-BACK UP	2			NOT
NK4	P55X5000001				.SEAL/O-RING	2			NOT
NK5	P50X5000002				.WEARPLATE	2			NOT
N6	P62X5051C00				.DRIVE GEAR	1			NOT
N7	P60X5051000				.DRIVEN GEAR	1			NOT
NK8	P50X5000001				.WEARPLATE	2			NOT
NK9	P55X5000001				.SEAL/O-RING	2			NOT
NK10	P8991000361				.SEAL-BACK UP	2			NOT
NK11	P9119000841				.SEAL-INTERFACE	2			NOT
N12	P9093000121				.DOWEL	4			NOT
N13	P33X5051EC0				.FRONT BODY	1			NOT
N14	P7407000781				.COUPLING-SPLINE	1			NOT
N15	P60X5051000				.DRIVEN GEAR	1			NOT
N16	P64X5051000				.DRIVE GEAR	1			NOT
N17	P9153000022				.STUD	4			NOT
N18	P9709000061				.NUT-FLANGED	4			NOT
N19	P34X5051AC0				.REAR BODY	1			NOT
N	@				NOT INDIVIDUALLY SUPPLIED	AR			NOT
K	SKX5002				SEAL KIT	2			

MAIN CONTROL VALVE(2-SPOOL)

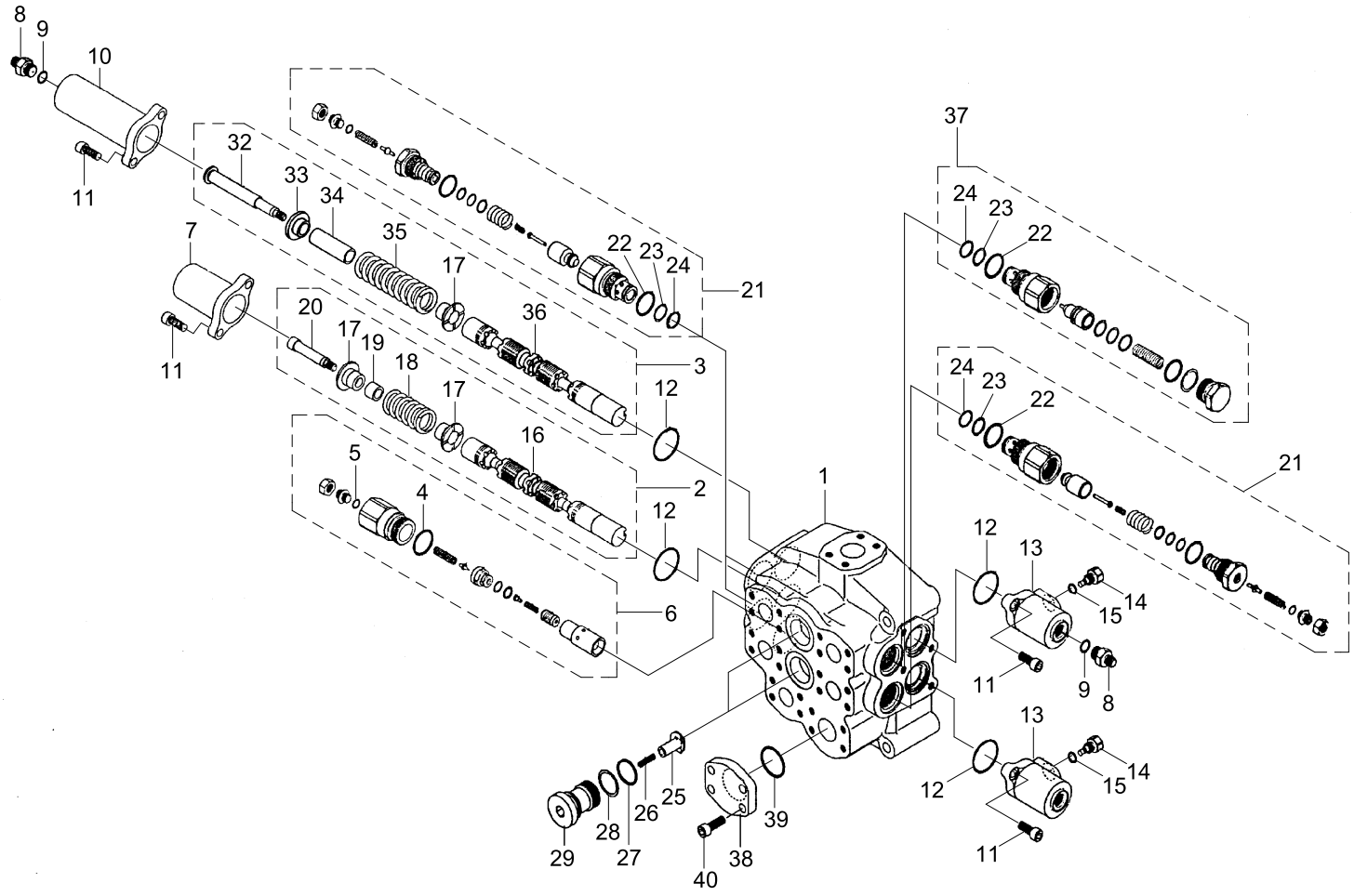

Item	Part_No	IS	Ord	T	Description	Qty	Serial_No	ITC	Remark
*	31LD-00020				MAIN CONTROL VALVE	1			
N1	@				.HOUSING ASSY	1			NOT
2	XJDB-00257				.PLUNGER ASSY	1			
3	XJDB-00258				.PLUNGER	1			
4	XJDB-00120				.O-RING	1			0207-010
5	XJDB-00075				.O-RING	1			8202-007
6	XJDB-00259				.MAIN RELIEF ASSY	1			
7	XJDB-00260				.COVER	1			
8	XJDB-00261				.NIPPLE	2			
9	XJDB-00136				.O-RING	2			8202-011
10	XJDB-00262				.COVER	1			
11	XJDB-00263				.BOLT-SOCKET	8			8072-102
12	XJDB-00264				.O-RING	4			0201-067
13	XJDB-00265				.COVER	2			
14	XJDB-00266				.PLUG	2			
15	XJDB-00018				.O-RING	2			8202-009
16	XJDB-00267				.PLUNGER	1			
17	XJDB-00268				.GUIDE	3			
18	XJDB-00269				.SPRING	1			
19	XJDB-00270				.SPACER	1			
20	XJDB-00271				.NIPPLE	1			
21	XJDB-00272				.PORT RELIEF	3			
22	XJDB-00099				.O-RING	3			0207-003
23	XJDB-00100				.RING-BACK UP	3			0859-233
24	XJDB-00101				.O-RING	3			0207-005

Item	Part_No	IS	Ord	T	Description	Qty	Serial_No	ITC	Remark
25	XJDB-00102				.CHECK	2			3513-251
26	XJDB-00043				.SPRING	2			3590-288
27	XJDB-00096				.O-RING	2			0207-002
28	XJDB-00095				.RING-BACK UP	2			0859-228
29	XJDB-00088				.CAP	2			3526-483
32	XJDB-00273				.CAP	1			
33	XJDB-00274				.GUIDE	1			
34	XJDB-00275				.SPACER	1			
35	XJDB-00276				.SPRING	1			
36	XJDB-00277				.PLUNGER	1			
37	XJDB-00278				.MAKE UP ASSY	1			
38	XJDB-00279				.COVER	1			
39	XJDB-00138				.O-RING	1			0201-112
40	XJDB-00280				.BOLT	4			8072-103
N	@				NOT INDIVIDUALLY SUPPLIED	AR			NOT

MAIN CONTROL VALVE(2-SPOOL, #1229-)

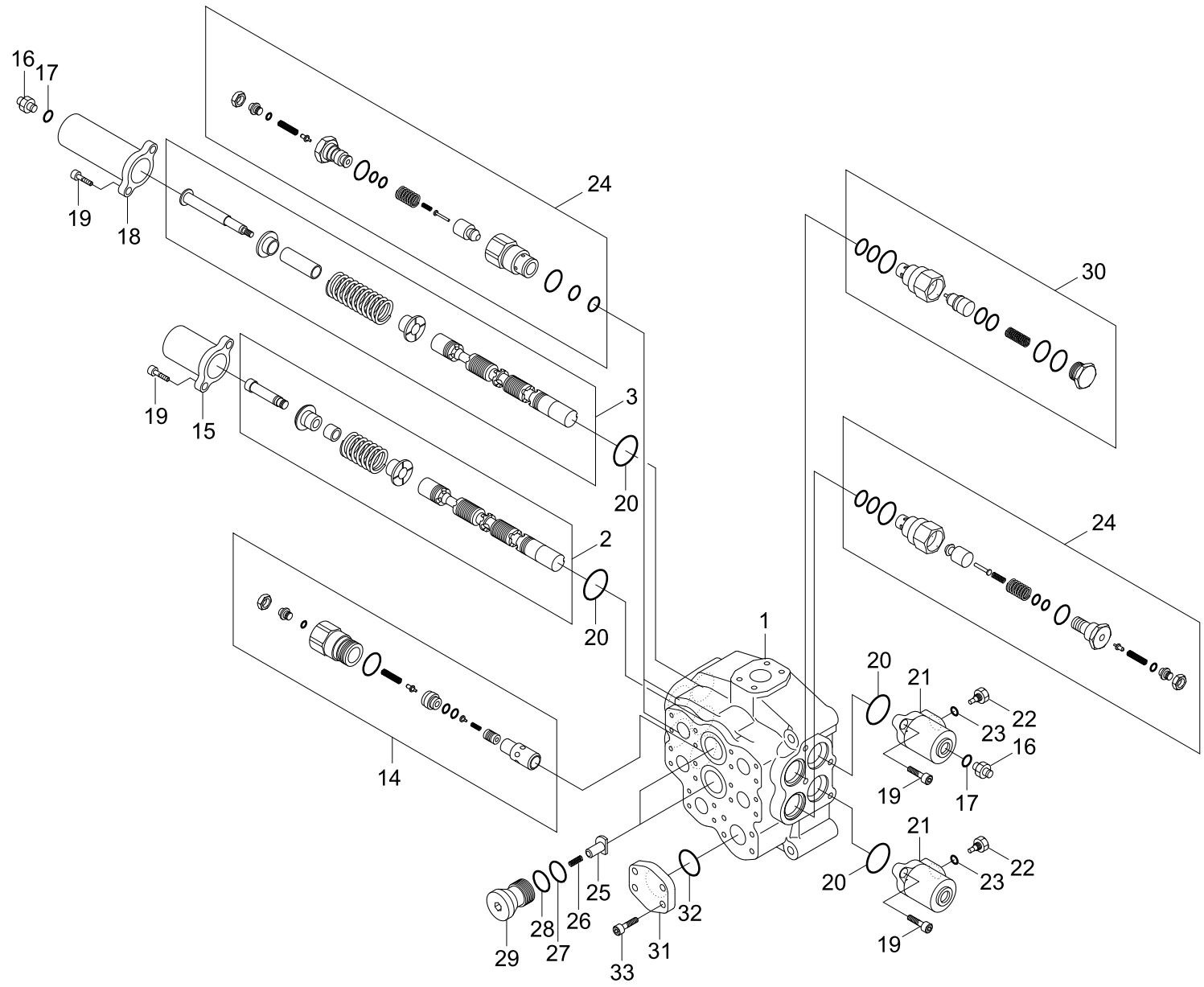

Item	Part_No	IS	Ord	T	Description	Qty	Serial_No	ITC	Remark
*	31LD-00520				MAIN CONTROL VALVE	1	#1229 -	-	JEIL
1	XKAY-00989				.BLOCK	1			
2	XKAY-00990				.SPOOL ASSY	1			
3	XKAY-00991				.SPOOL ASSY	1			
14	XKAY-01003				.MAIN RELIEF V/V	1			
15	XKAY-01004				.CAP(A)-PILOT	1			
16	XKAY-01005				.NIPPLE	2			
17	XKAY-01006				.O-RING	2			
18	XKAY-01007				.CAP(B)-PILOT	1			
19	XKAY-00901				.WRENCH BOLT	8			
20	XKAY-01008				.O-RING	4			
21	XKAY-01009				.CAP(C)-PILOT	2			
22	XKAY-01010				.PLUG-GUIDE	2			
23	XKAY-01011				.O-RING	2			
24	XKAY-01012				.RELIEF V/V ASSY-O/LOAD	3			
25	XKAY-01013				.CHECK	2			
26	XKAY-01014				.SPRING	2			
27	XKAY-01015				.O-RING	2			
28	XKAY-01016				.BAKC UP RING	2			
29	XKAY-01017				.PLUG	2			
30	XKAY-01018				.MAKE UP V/V ASSY	1			
31	XKAY-01019				.COVER	1			
32	XKAY-01020				.O-RING	1			
33	XKAY-00251				.BOLT-SOCKET	4			

MAIN CONTROL VALVE(3-SPOOL)

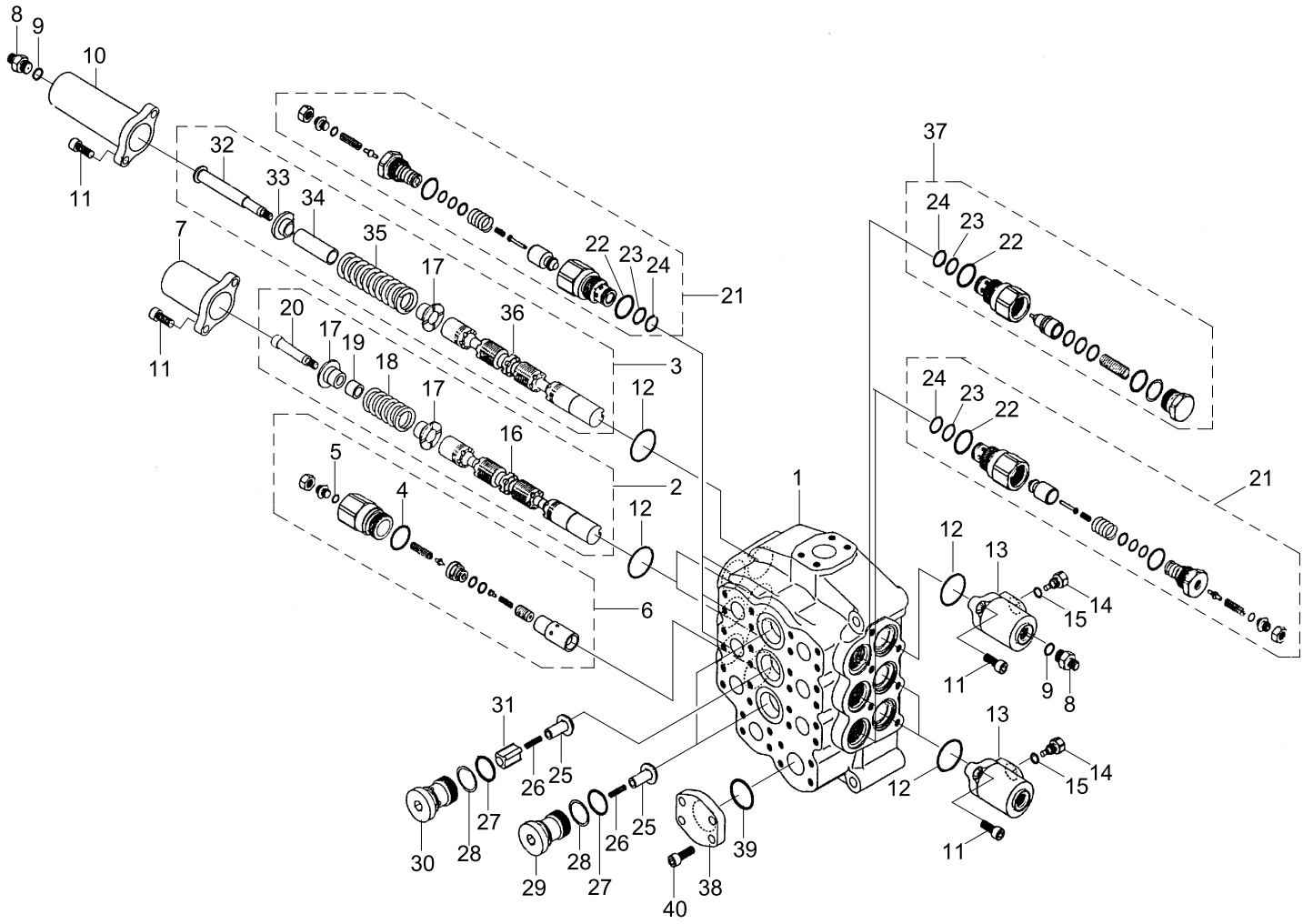

Item	Part_No	IS	Ord	T	Description	Qty	Serial_No	ITC	Remark
*	31LD-00030				MAIN CONTROL VALVE	1			
N1	@				.HOUSING ASSY	1			NOT
2	XJDB-00257				.PLUNGER ASSY	2			
3	XJDB-00258				.PLUNGER	1			
4	XJDB-00120				.O-RING	1			0207-010
5	XJDB-00075				.O-RING	1			8202-007
6	XJDB-00259				.MAIN RELIEF ASSY	1			
7	XJDB-00260				.COVER	2			
8	XJDB-00261				.NIPPLE	2			
9	XJDB-00136				.O-RING	2			8202-011
10	XJDB-00262				.COVER	1			
11	XJDB-00263				.BOLT-SOCKET	12			8072-102
12	XJDB-00264				.O-RING	6			0201-067
13	XJDB-00265				.COVER	3			
14	XJDB-00266				.PLUG	3			
15	XJDB-00018				.O-RING	3			8202-009
16	XJDB-00267				.PLUNGER	2			
17	XJDB-00268				.GUIDE	5			
18	XJDB-00269				.SPRING	2			
19	XJDB-00270				.SPACER	2			
20	XJDB-00271				.NIPPLE	2			
21	XJDB-00272				.PORT RELIEF	5			
22	XJDB-00099				.O-RING	5			0207-003
23	XJDB-00100				.RING-BACK UP	5			0859-233
24	XJDB-00101				.O-RING	5			0207-005

Item	Part_No	IS	Ord	T	Description	Qty	Serial_No	ITC	Remark
25	XJDB-00102				.CHECK	3			3513-251
26	XJDB-00043				.SPRING	3			3590-288
27	XJDB-00096				.O-RING	3			0207-002
28	XJDB-00095				.RING-BACK UP	3			0859-228
29	XJDB-00088				.CAP	2			3526-483
30	XJDB-00087				.CAP	1			3526-484
31	XJDB-00103				.CHECK	1			3513-252
32	XJDB-00273				.CAP	1			
33	XJDB-00274				.GUIDE	1			
34	XJDB-00275				.SPACER	1			
35	XJDB-00276				.SPRING	1			
36	XJDB-00277				.PLUNGER	1			
37	XJDB-00278				.MAKE UP ASSY	1			
38	XJDB-00279				.COVER	1			
39	XJDB-00138				.O-RING	1			0201-112
40	XJDB-00280				.BOLT	4			8072-103
N	@				NOT INDIVIDUALLY SUPPLIED	AR			NOT

MAIN CONTROL VALVE(3-SPOOL, #1229-)

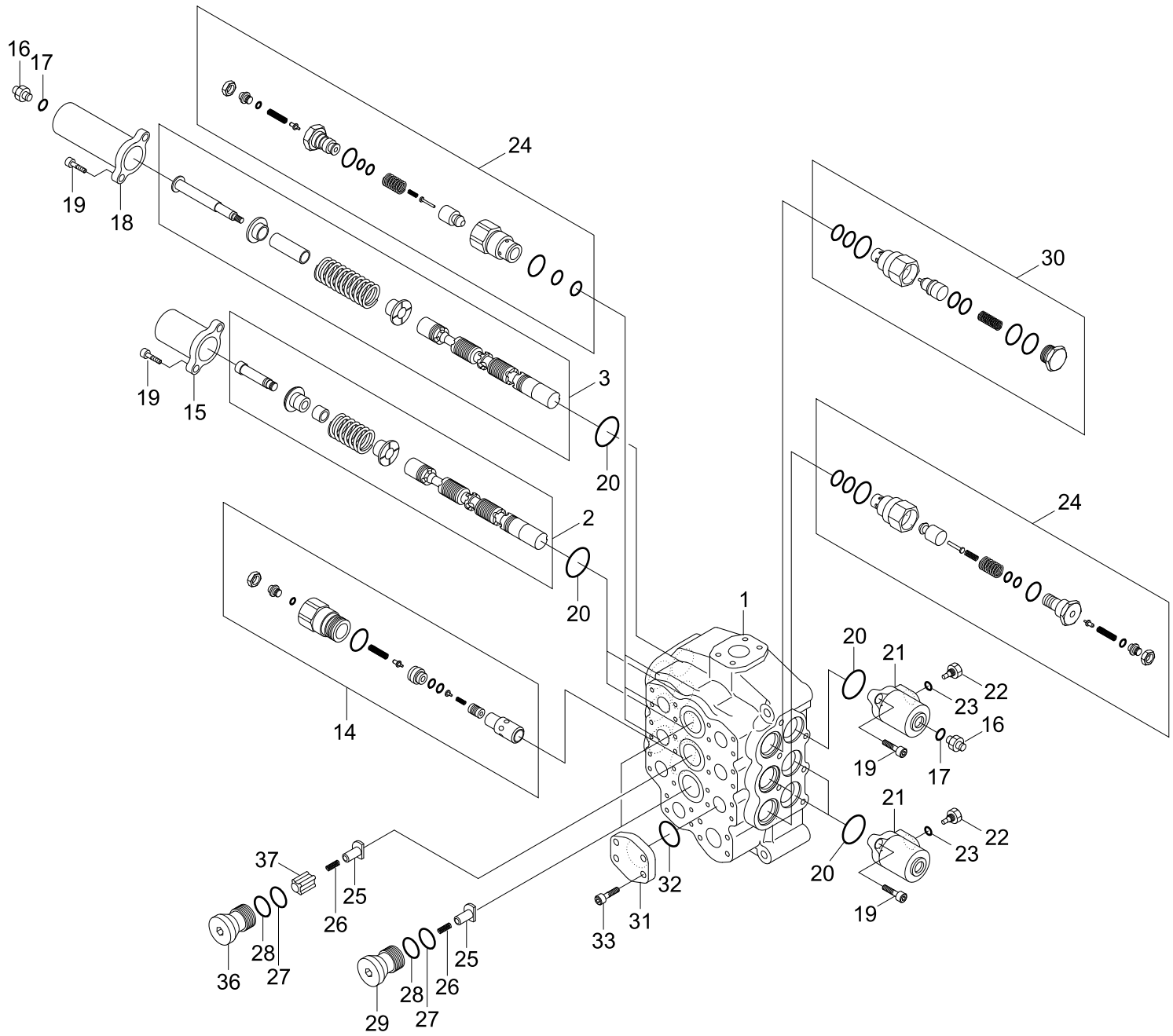

Item	Part_No	IS	Ord	T	Description	Qty	Serial_No	ITC	Remark
*	31LD-00530				MAIN CONTROL VALVE	1	#1229 -	-	JEIL
1	XKAY-01052				.BLOCK	1			
2	XKAY-00990				.SPOOL ASSY	2			
3	XKAY-00991				.SPOOL ASSY	1			
14	XKAY-01003				.MAIN RELIEF V/V	1			
15	XKAY-01004				.CAP(A)-PILOT	2			
16	XKAY-01005				.NIPPLE	2			
17	XKAY-01006				.O-RING	2			
18	XKAY-01007				.CAP(B)-PILOT	1			
19	XKAY-00901				.WRENCH BOLT	12			
20	XKAY-01008				.O-RING	6			
21	XKAY-01009				.CAP(C)-PILOT	3			
22	XKAY-01010				.PLUG-GUIDE	3			
23	XKAY-01011				.O-RING	3			
24	XKAY-01012				.RELIEF V/V ASSY-O/LOAD	5			
25	XKAY-01013				.CHECK	3			
26	XKAY-01014				.SPRING	3			
27	XKAY-01015				.O-RING	3			
28	XKAY-01016				.BAKC UP RING	3			
29	XKAY-01017				.PLUG	1			
30	XKAY-01018				.MAKE UP V/V ASSY	1			
31	XKAY-01019				.COVER	1			
32	XKAY-01053				.O-RING	1			
33	XKAY-00251				.BOLT-SOCKET	4			
36	XKAY-01054				.PLUG	1			

Item	Part_No	IS	Ord	T	Description	Qty	Serial_No	ITC	Remark
37	XKAY-01055				.CHECK	1			

STEERING VALVE(EHPS)

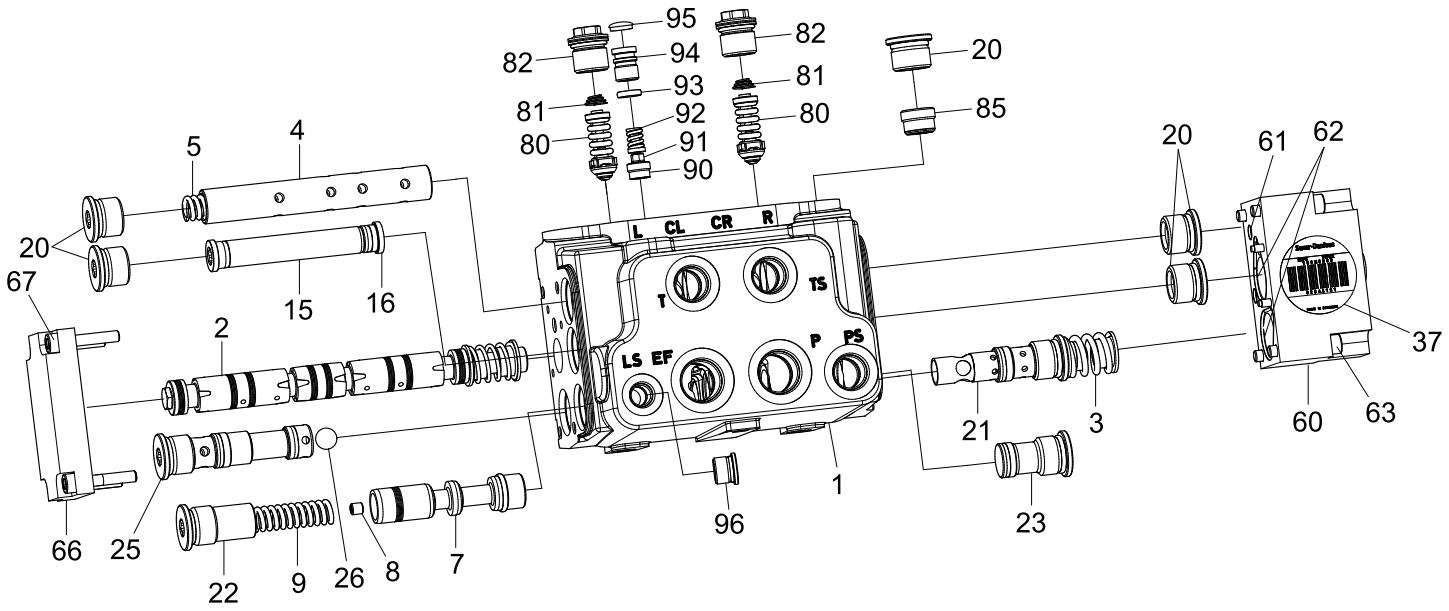

STEERING UNIT

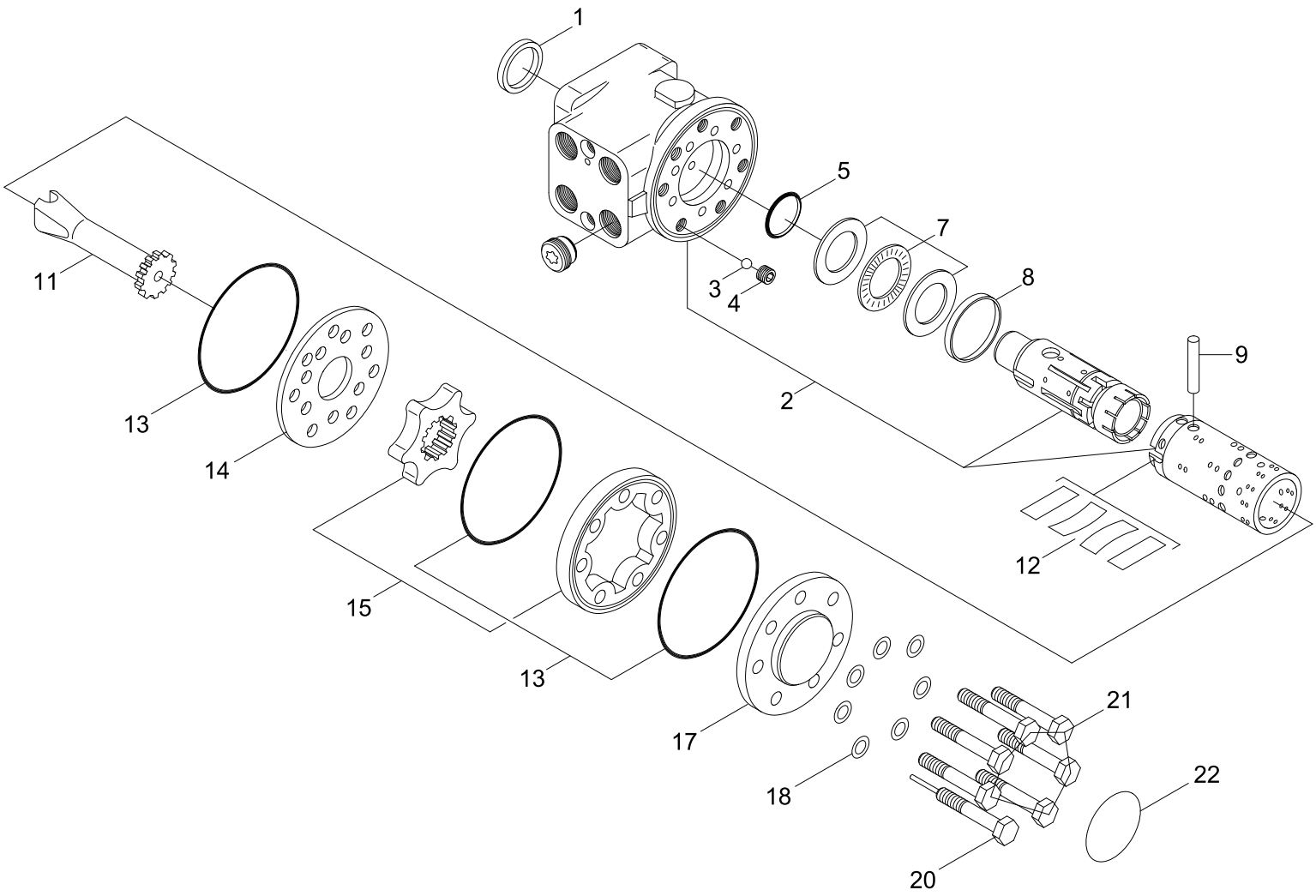

Item	Part_No	IS	Ord	T	Description	Qty	Serial_No	ITC	Remark
*	31LD-30010				STEERING UNIT	1			
K1	YUBS-00001				.SEAL-DUST	1			633B9002
2	@				.HSG SPOOL/SLEEVE	1			NOT
3	YUBS-00002				.BALL	1			689X1031
4	YUBS-00003				.BUSHING-THREAD	1			150-0304
K5	YUBS-00004				.O-RING	1			150N4014
7	YUBS-00005				.BEARING ASSY	1			150-4262
8	YUBS-00006				.RING	1			150-0310
9	YUBS-00007				.PIN-CROSS	1			150-0305
11	YUBS-00008				.SHAFT-CARDAN	1			150-0844
12	YUBS-00107				.SET OF SPRINGS	1			
K13	YUBS-00010				.O-RING	3			633B1202
14	YUBS-00011				.PLATE-DISTRIBUTOR	1			150N0610
15	150-4172				.WHEEL SET-GEAR	1			
17	YUBS-00014				.COVER-END	1			150-0328
K18	YUBS-00015				.WASHER	7			684X2481
20	150-0321				.SCREW & BORE	1			
21	YUBS-00110				.SCREW	6			
22	150A6009				.PLATE-NAME	1			
K	YUBS-00102				SEAL KIT(1,5,13,18)	1			

REMOTE CONTROL LEVER(2-SPOOL)

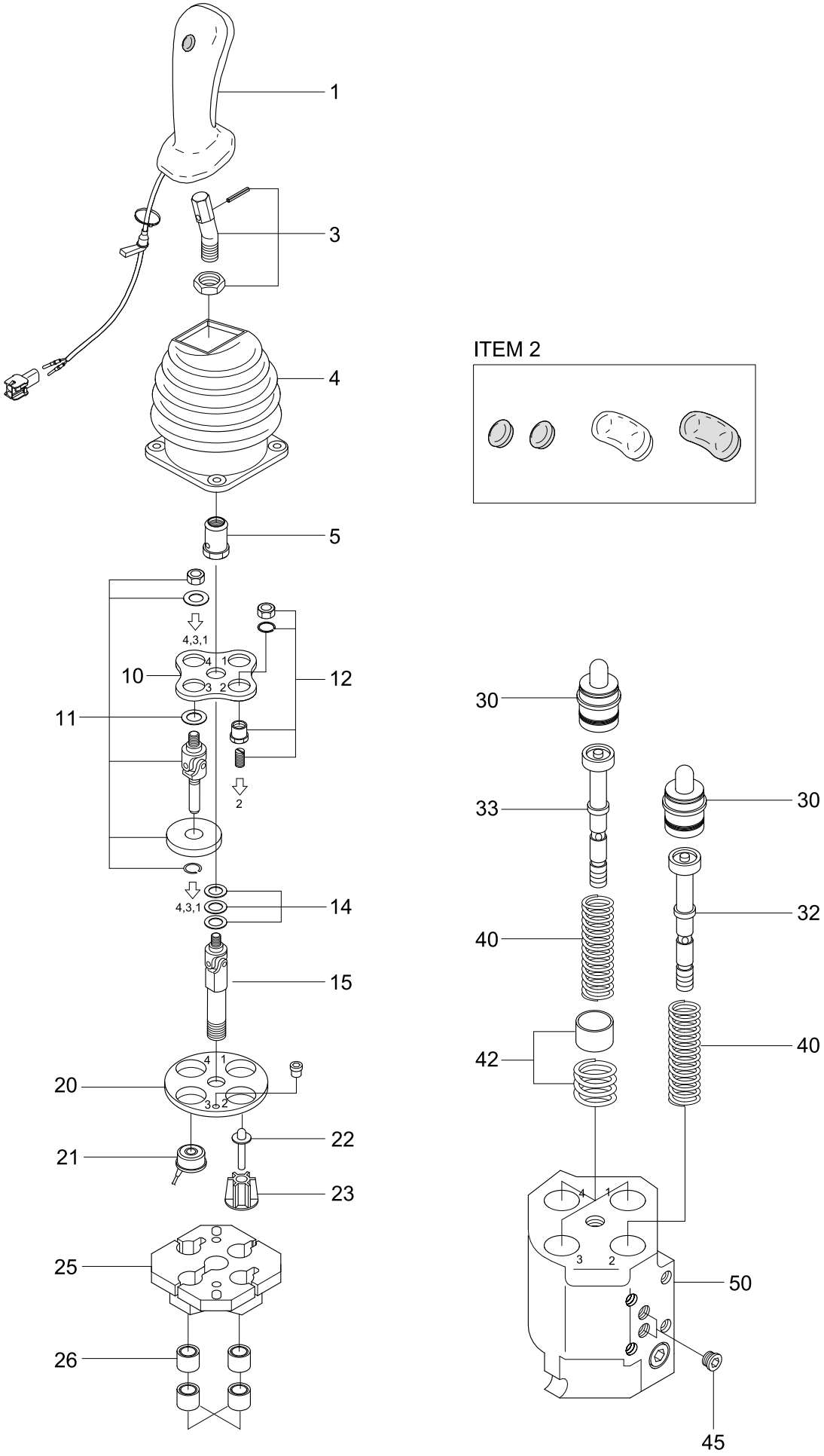

Item	Part_No	IS	Ord	T	Description	Qty	Serial_No	ITC	Remark
*	31LB-10020				RCV LEVER-2 SPOOL	1			
1	ZFAB-00037				.HANDLE	1			AMP CONNECTOR
2	ZFAB-00038				.PUSH BUTTON KIT	1			
3	ZFAB-00039				.LEVER KIT	1			
4	ZFAB-00040				.RUBBER BOOT	1			
5	ZFAB-00041				.NUT-LOCKING	1			
10	ZFAB-00042				.BRACKET	1			
11	ZFAB-00043				.DETENT KIT	3			
12	ZFAB-00044				.PLUNGER KIT	1			
14	ZFAB-00045				.SHIM SET(0.1,0.2,0.5)	1			
15	ZFAB-00046				.CARDAN	1			
20	ZFAB-00047				.FLANGE	1			
21	ZFAB-00048				.SOLENOID COMPLETE	3			
22	ZFAB-00049				.PLUNGER KIT	1			
23	ZFAB-00050				.PLUNGER GUIDE	1			
25	ZFAB-00051				.BRACKET-ELECTRIC	1			
26	ZFAB-00052				.BUSHING SET	1			
30	ZFAB-00053				.PLUNGER KIT	4			
32	ZFAB-00054				.REGULATING UNIT	1			
33	ZFAB-00055				.REGULATING UNIT	3			
40	ZFAB-00056				.SPRING SET-RETURN	4			
42	ZFAB-00057				.PREFEEL POINT KIT	3			
45	ZFAB-00058				.PLUG SET	1			
N50	@				.BODY	1			NOT
N	@				NOT INDIVIDUALLY SUPPLIED	AR			NOT

REMOTE CONTROL LEVER(3-SPOOL)

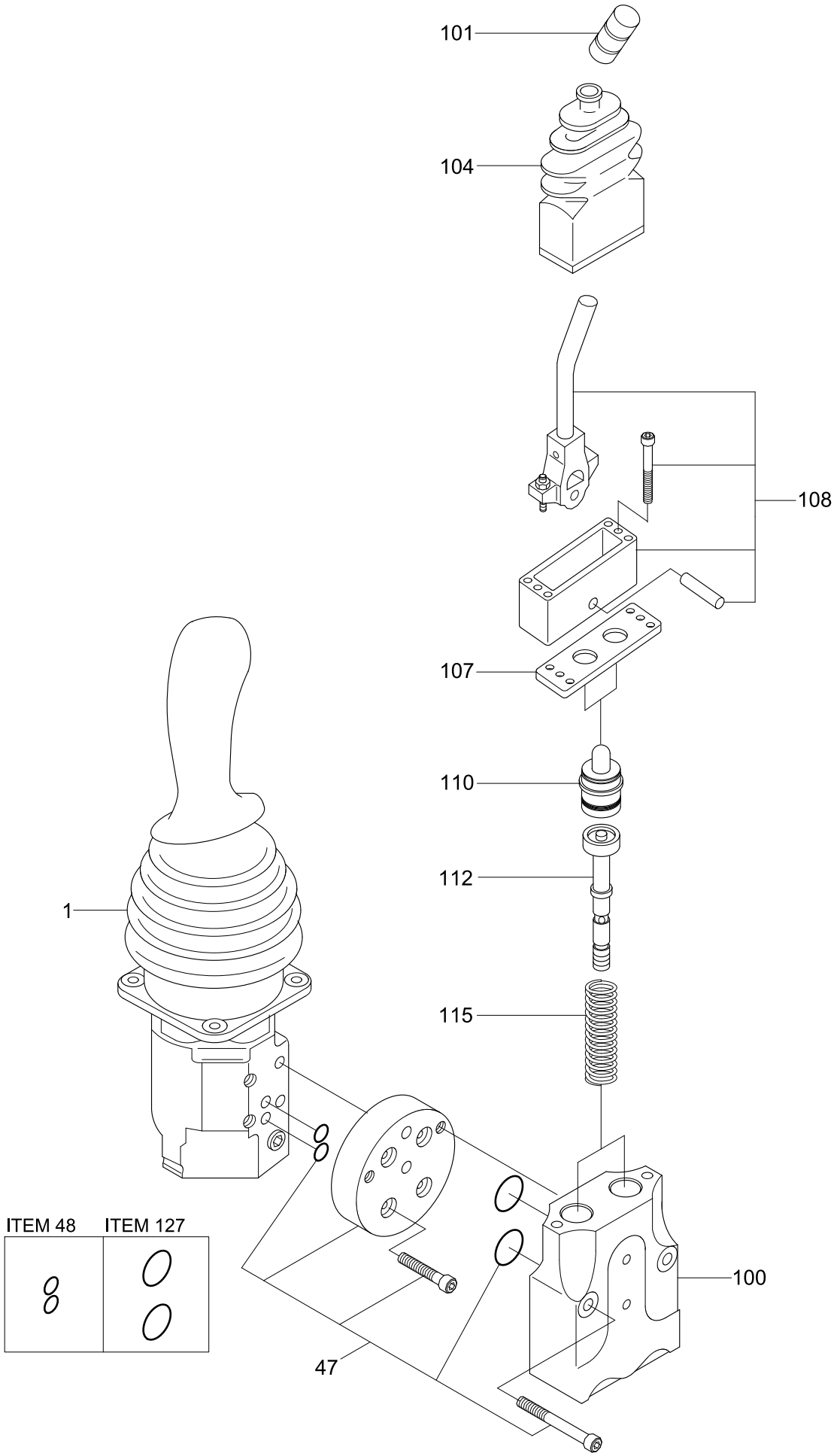

Item	Part_No	IS	Ord	T	Description	Qty	Serial_No	ITC	Remark
*	31LB-10030				RCV LEVER-3 SPOOL	1			
N1	@				.RCV LEVER-2 SPOOL	1			NOT
2	ZFAB-00059				.RCV LEVER	1			
N100	@				..BODY	1			NOT
101	ZFAB-00060				..GRIP	1			
104	ZFAB-00061				..RUBBER BOOT	1			
107	ZFAB-00062				..RETAINING PLATE	1			
108	ZFAB-00063				..OPERATION KIT	1			
110	ZFAB-00064				..PLUNGER KIT	2			
112	ZFAB-00065				..REGULATING UNIT	2			
115	ZFAB-00066				..SPRING SET-RETURN	2			
47	ZFAB-00067				.ASSEMBLY KIT	1			
48	ZFAB-00068				..O-RING SET	1			
127	ZFAB-00069				..O-RING SET	1			
N	@				NOT INDIVIDUALLY SUPPLIED	AR			NOT

REMOTE CONTROL LEVER(1/2, 2-LEVER)

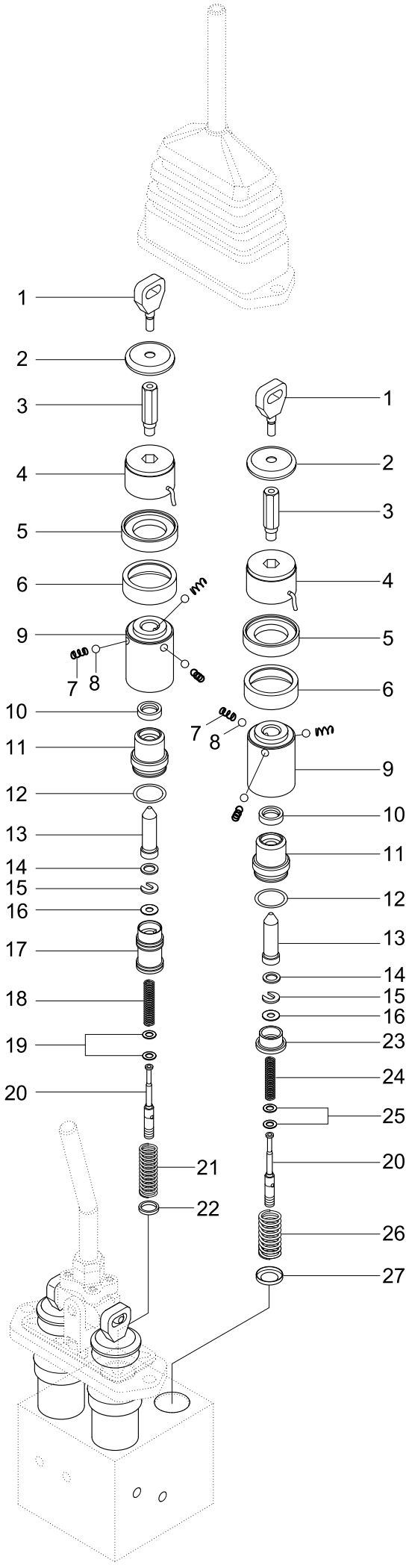

Item	Part_No	IS	Ord	T	Description	Qty	Serial_No	ITC	Remark
*	31L6-02490				RCV-2 LEVER	1	- #1232	-	SEE 4063
1	ZUAH-00002				.ATTACHMENT-PISTON	4			P7460000021
2	ZUAH-00003				.PLATE-ARMATURE	4			P7460000051
3	ZUAH-00004				.SPINDLE STEP-PREFEEL	4			P7460000091
4	ZUAH-00005				.SOLENOID-HOLD	4			P7745000371
5	ZUAH-00153				.ADAPTOR-SPVL COIL	4	#0001 -	-	P7470000071
6	ZUAH-00007				.RETAINER-SPRING	4			P7470000021
7	ZUAH-00008				.SPRING-CMPR HELICAL	12			P8501008611
8	ZUAH-00009				.BALL	12			P8329000070
9	ZUAH-00010				.CARRIER-BALL	4			P7470000011
10	ZUAH-00011				.PROFILE-ROD SEAL	4			P9658000011
11	ZUAH-00012				.GUIDE-SPINDLE	4			P7259000041
12	ZUAH-00013				.O-RING	4			P9101000291
13	ZUAH-00014				.SPLINDLE-OPERATING	4			P7460000041
14	ZUAH-00015				.WASHER	4			P9231000331
15	ZUAH-00016				.WASHER-SLOTTED	4			P9659000001
16	ZUAH-00017				.WASHER	4			P9231000221
17	ZUAH-00018				.SPOOL-FLOAT SEQUENCE	1			P7208000011
18	ZUAH-00019				.SPRING-CMPR HELICAL	2			P8501008541
19	ZUAH-00020				.WASHER	4			P9231000281
20	ZUAH-00021				.PISTON	4			P9634000293
21	ZUAH-00019				.SPRING-CMPR HELICAL	1			P8501008541
22	ZUAH-00022				.WASHER	1			P9231000171
23	ZUAH-00023				.RETAINER-SPRING	3			P7208000001
24	ZUAH-00024				.SPRING-CMPR HELICAL	3			P8501008731

Item	Part_No	IS	Ord	T	Description	Qty	Serial_No	ITC	Remark
25	ZUAH-00025				.WASHER	6			P9231000241
26	ZUAH-00019				.SPRING-CMPR HELICAL	3			P8501008541
27	ZUAH-00026				.WASHER	3			P9466000551

REMOTE CONTROL LEVER(2/2, 2-LEVER)

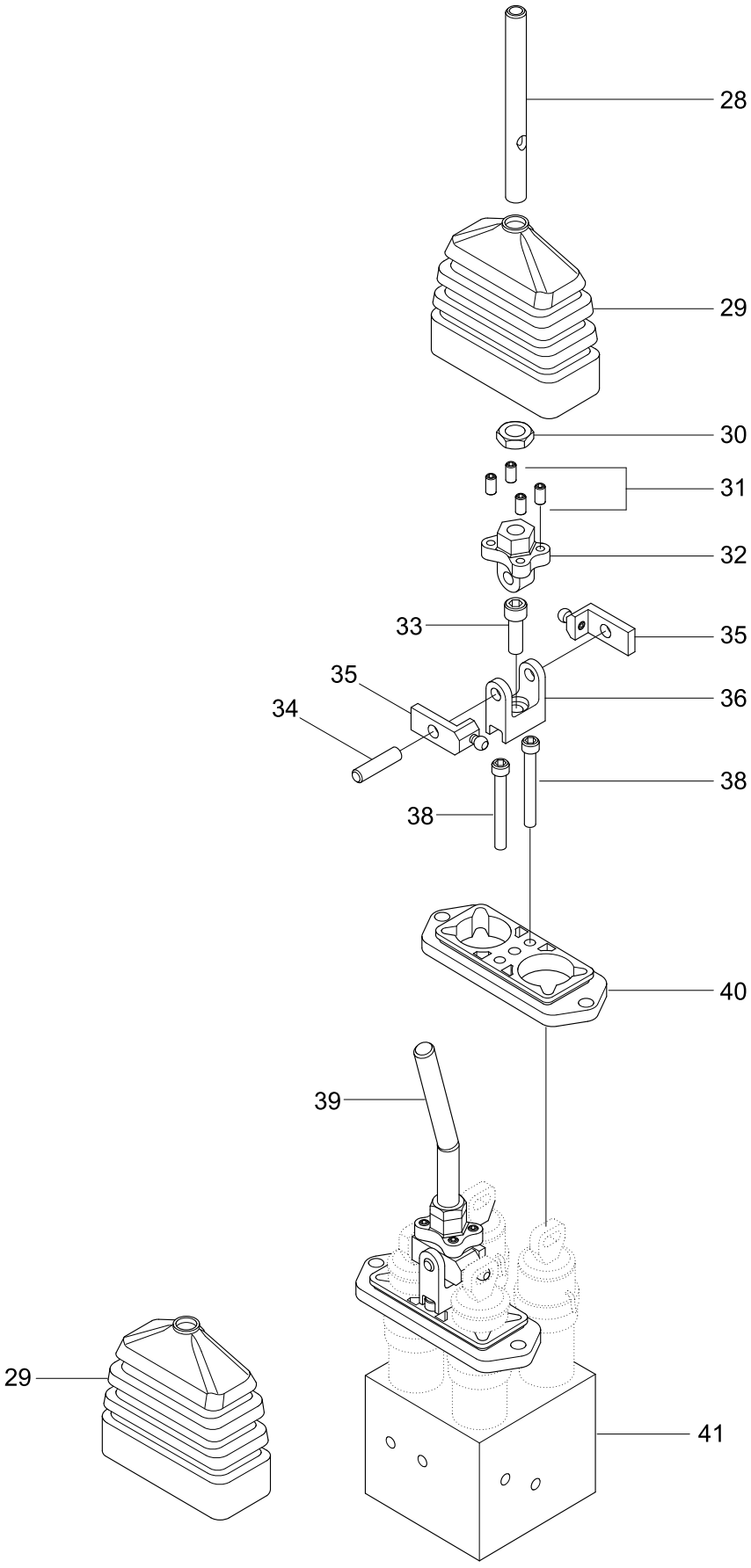

Item	Part_No	IS	Ord	T	Description	Qty	Serial_No	ITC	Remark
*	@				RCV LEVER	1	- #1232	-	NOT
28	ZUAH-00027				.HOLLOW-LEVER STRAIGHT	1			P7450000071
29	ZUAH-00028				.BOOT-RUBBER	2			P9258000321
30	ZUAH-00029				.NUT-HEX	2			P9298000271
31	ZUAH-00030				.SCREW-HEX SOCKET SET	8			P9245000441
32	ZUAH-00031				.ADAPTER-LEVER	2			P7450000251
33	ZUAH-00032				.SCREW-HEX S/HEAD CAP	2			P9334000101
34	ZUAH-00033				.PIN	2			P7256000901
35	ZUAH-00152				.KIT-SPVL	4	#0001 -	-	P7430000191
36	ZUAH-00035				.BRACKET-SPVL LEVER	2			P7901000061
38	ZUAH-00037				.SCREW-HEX S/HEAD CAP	4			P9372000161
N39	ZUAH-00038				.SOLID-LEVER BENT	1			NOT
40	ZUAH-00039				.PLATE	2			P7917000331
N41	@				.MAIN BODY ASSY	1			NOT
N	@				NOT INDIVIDUALLY SUPPLIED	AR			NOT

REMOTE CONTROL LEVER(#0001-, 3-LEVER)

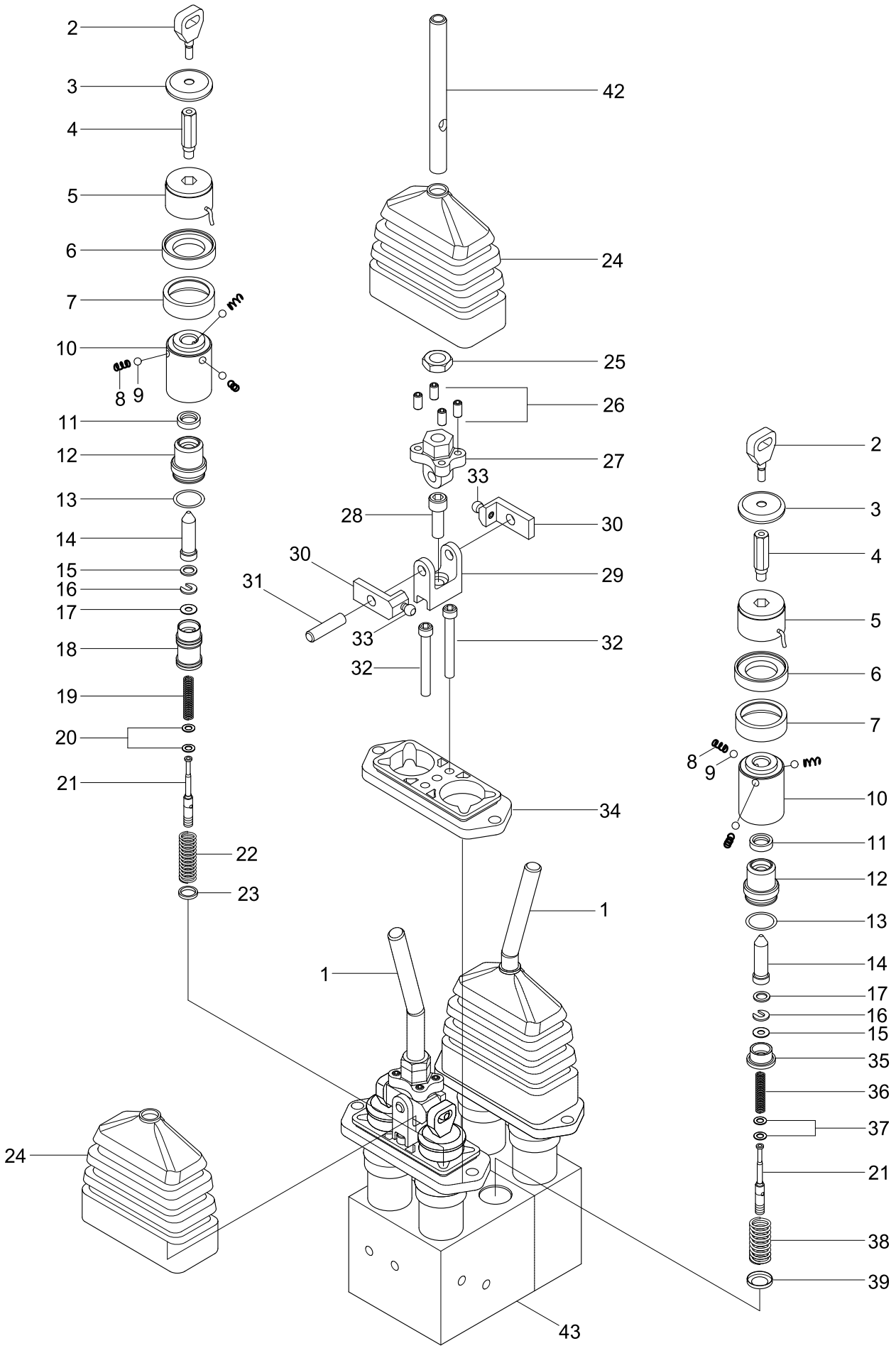

Item	Part_No	IS	Ord	T	Description	Qty	Serial_No	ITC	Remark
*	31L6-02500				RCV-3 LEVER	1	#0001 - #1232	-	
N1	ZUAH-00038				.SOLID-LEVER BENT	2			NOT
2	ZUAH-00002				.ATTACHMENT-PISTON	6			
3	ZUAH-00003				.PLATE-ARMATURE	6			
4	ZUAH-00004				.SPINDLE STEP-PREFEEL	6			
5	ZUAH-00005				.SOLENOID-HOLD	6			
6	ZUAH-00006				.ADAPTER-SPVL COIL	6			
7	ZUAH-00007				.RETAINER-SPRING	6			
8	ZUAH-00008				.SPRING-CMPR HELICAL	18			
9	ZUAH-00009				.BALL	18			
10	ZUAH-00010				.CARRIER-BALL	6			
11	ZUAH-00011				.PROFILE-ROD SEAL	6			
12	ZUAH-00012				.GUIDE-SPINDLE	6			
13	ZUAH-00013				.O-RING	6			
14	ZUAH-00014				.SPLINDLE-OPERATING	6			
15	ZUAH-00015				.WASHER	6			
16	ZUAH-00016				.WASHER-SLOTTED	6			
17	ZUAH-00017				.WASHER	6			
18	ZUAH-00018				.SPOOL-FLOAT SEQUENCE	1			
19	ZUAH-00019				.SPRING-CMPR HELICAL	1			
20	ZUAH-00020				.WASHER	2			
21	ZUAH-00021				.PISTON	6			
22	ZUAH-00019				.SPRING-CMPR HELICAL	1			
23	ZUAH-00022				.WASHER	1			
24	ZUAH-00028				.BOOT-RUBBER	3			

Item	Part_No	IS	Ord	T	Description	Qty	Serial_No	ITC	Remark
25	ZUAH-00029				.NUT-HEX	3			
26	ZUAH-00030				.SCREW-HEX SOCKET SET	12			
27	ZUAH-00031				.ADAPTER-LEVER	3			
28	ZUAH-00032				.SCREW-HEX S/HEAD CAP	3			
29	ZUAH-00035				.BRACKET-SPVL LEVER	3			
30	ZUAH-00034				.SELECTOR-SPVL	6			
31	ZUAH-00033				.PIN	3			
32	ZUAH-00037				.SCREW-HEX S/HEAD CAP	6			
33	ZUAH-00036				.PIN-DRIVE	6			
34	ZUAH-00039				.PLATE	3			
35	ZUAH-00023				.RETAINER-SPRING	5			
36	ZUAH-00024				.SPRING-CMPR HELICAL	5			
37	ZUAH-00025				.WASHER	10			
38	ZUAH-00019				.SPRING-CMPR HELICAL	5			
39	ZUAH-00026				.WASHER	5			
42	ZUAH-00027				.HOLLOW-LEVER STRAIGHT	1			
43	@				.MAIN BODY SUB ASSY	1			NOT
N	@				NOT INDIVIDUALLY SUPPLIED	AR			NOT

RCV(FINGERTIP, 2-LEVER, #1233-)

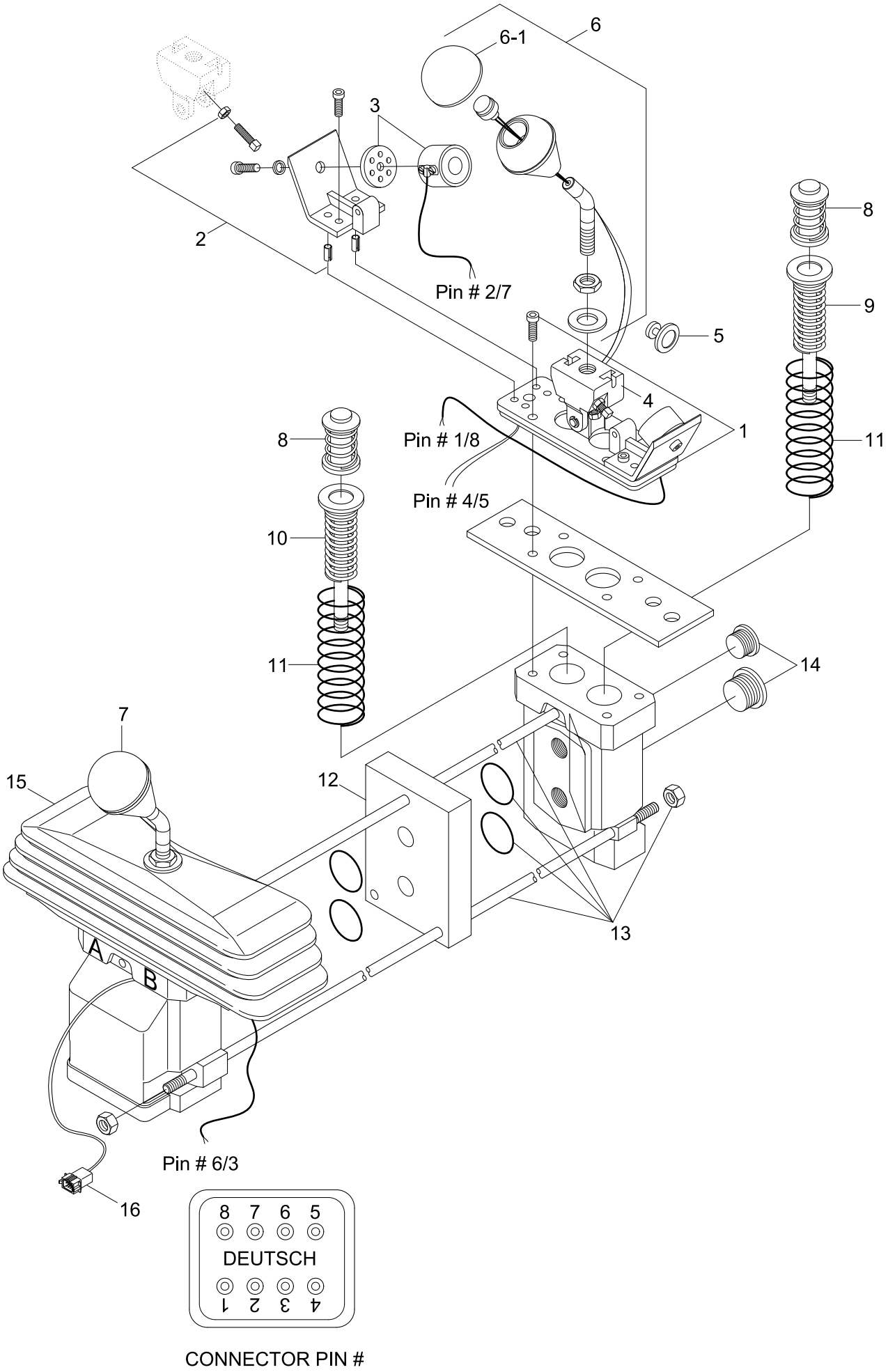

Item	Part_No	IS	Ord	T	Description	Qty	Serial_No	ITC	Remark
*	31LH-10120				RCV LEVER-2 SPOOL	1	#1233 -	D	
N1	YUCT-00002				.PLATE-MOUNTING	2			NOT
2	YUCT-00003				.BRACKET KIT-MAGNET	3			
3	YUCT-00005				.MAGNET	3			
4	YUCT-00004				.BEARING PLATE	2			
5	YUCT-00006				.ANCHOR PLATE(I/HOLE 8)	3			STD DETENT
	YUCT-00038				.ANCHOR PLATE(I/HOLE 10)	3			LIGHT DETENT
6	YUCT-00008				.HANDLE B5	1	#1233 -	-	
6-1	YUCT-00046				..COVER-BOOT	1	#1233 -	-	
7	YUCT-00007				.HANDLE KIT	1	#1233 -	-	
8	YUCT-00009				.PUSH PIN	4			
N9	YUCT-00011				.SPRING PACK	3			NOT
N10	YUCT-00012				.SPRING PACK	1			NOT
11	YUCT-00015				.RETURN SPRING	4			
12	YUCT-00016				.SPACEBLOCK	1			
13	YUCT-00017				.ROD KIT-TIE	1			
14	YUCT-00018				.PLUG KIT	1			
N15	YUCT-00019				.BOOT KIT	1			NOT
N16	YUCT-00020				.CONNECTOR KIT	1			NOT

RCV(FINGERTIP, 3-LEVER, #1233-)

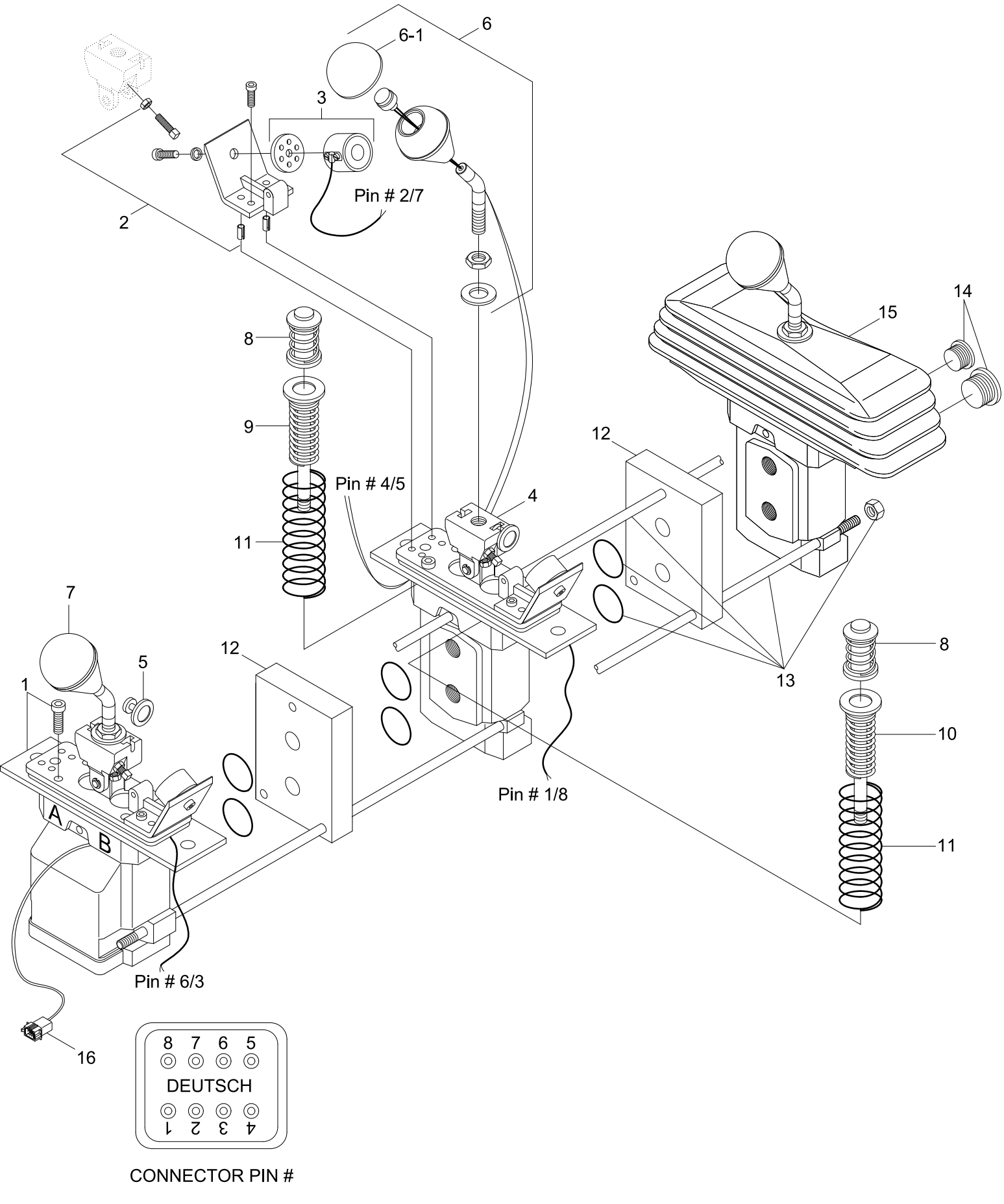

Item	Part_No	IS	Ord	T	Description	Qty	Serial_No	ITC	Remark
*	31LH-10130				RCV LEVER-3 SPOOL	1	#1233 -	D	
N1	YUCT-00002				.PLATE-MOUNTING	3			NOT
2	YUCT-00003				.BRACKET KIT-MAGNET	3			
3	YUCT-00005				.MAGNET	3			
4	YUCT-00004				.BEARING PLATE	3			
5	YUCT-00006				.ANCHOR PLATE(I/HOLE 8)	3			STD DETENT
	YUCT-00038				.ANCHOR PLATE(I/HOLE 10)	3			LIGHT DETENT
6	YUCT-00008				.HANDLE B5	2	#1233 -	-	
6-1	YUCT-00046				..COVER-BOOT	1	#1233 -	-	
7	YUCT-00007				.HANDLE KIT	1	#1233 -	-	
8	YUCT-00009				.PUSH PIN	6			
N9	YUCT-00011				.SPRING PACK	5			NOT
N10	YUCT-00012				.SPRING PACK	1			NOT
11	YUCT-00015				.RETURN SPRING	6			
12	YUCT-00016				.SPACEBLOCK	2			
13	YUCT-00021				.ROD KIT-TIE	1			
14	YUCT-00018				.PLUG KIT	1			
N15	YUCT-00019				.BOOT KIT	1			NOT
N16	YUCT-00020				.CONNECTOR KIT	1			NOT

CUT-OFF VALVE(-#0777)

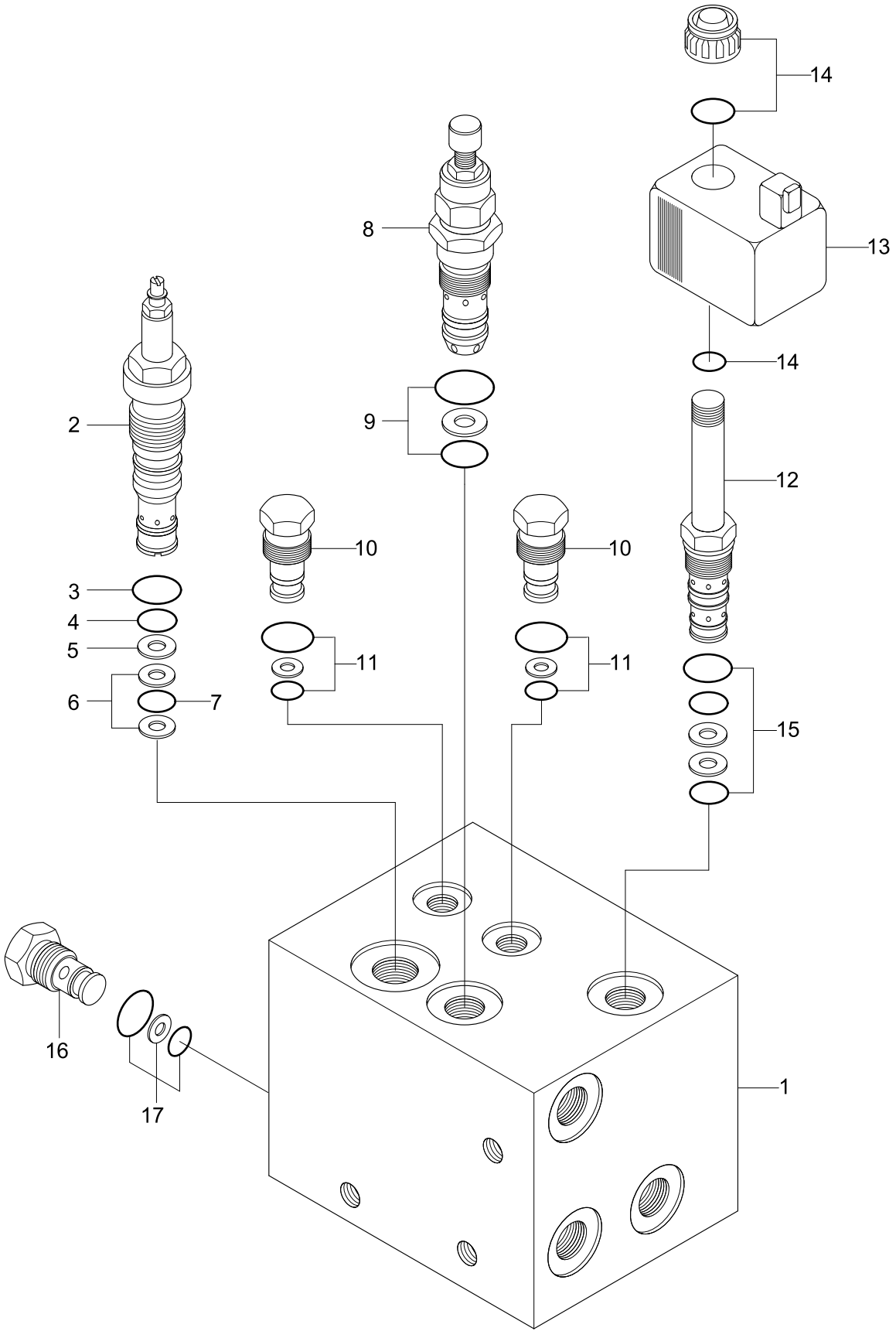

Item	Part_No	IS	Ord	T	Description	Qty	Serial_No	ITC	Remark
*	31LB-40021				CUT-OFF VALVE	1	- #0490		
	31LB-40022				CUT-OFF VALVE	1	#0491 - #0777	B	
1	XKAL-00005				.MANIFOLD	1	- #0490		
	XKAL-00052				.MANIFOLD	1	#0491 -	D	
2	XKAL-00006				.CUT-OFF VALVE	1			
N3	XKAL-00007				.O-RING	1	#0001 -	-	NOT
N4	XKAL-00008				.O-RING	1	#0001 -	-	NOT
N5	XKAL-00009				.BACK-UP RING	1	#0001 -	-	NOT
N6	XKAL-00010				.BACK-UP RING	2	#0001 -	-	NOT
N7	XKAL-00011				.O-RING	1	#0001 -	-	NOT
8	XKAL-00012				.RELIEF VALVE	1			
9	XKAL-00013				.SEAL KIT	1			
10	XKAL-00014				.CHECK VALVE	2			
11	XKAL-00015				.SEAL KIT	2			
12	XKAL-00016				.SOLENOID VALVE	1	- #0490		
	XKAL-00053				.SOLENOID VALVE	1	#0491 -	D	
14	@				..COIL CAP KIT	1	#0001 -	-	NOT
13	XKAL-00050				.COIL-2	1	#0001 - #0490	-	
	XKAL-00043				.COIL	1	#0491 -	D	
14	@				.COIL CAP KIT	1			NOT
15	XKAL-00017				.SEAL KIT	1			
16	XKAL-00018				.CHECK VALVE	1			
17	XKAL-00019				.SEAL KIT	1			
18	XKAL-00067				.SEAL KIT	1	#0001 -	-	INCL ITEM 3-7
N	@				NOT INDIVIDUALLY SUPPLIED	AR			NOT

CUT OFF VALVE(#0778-)

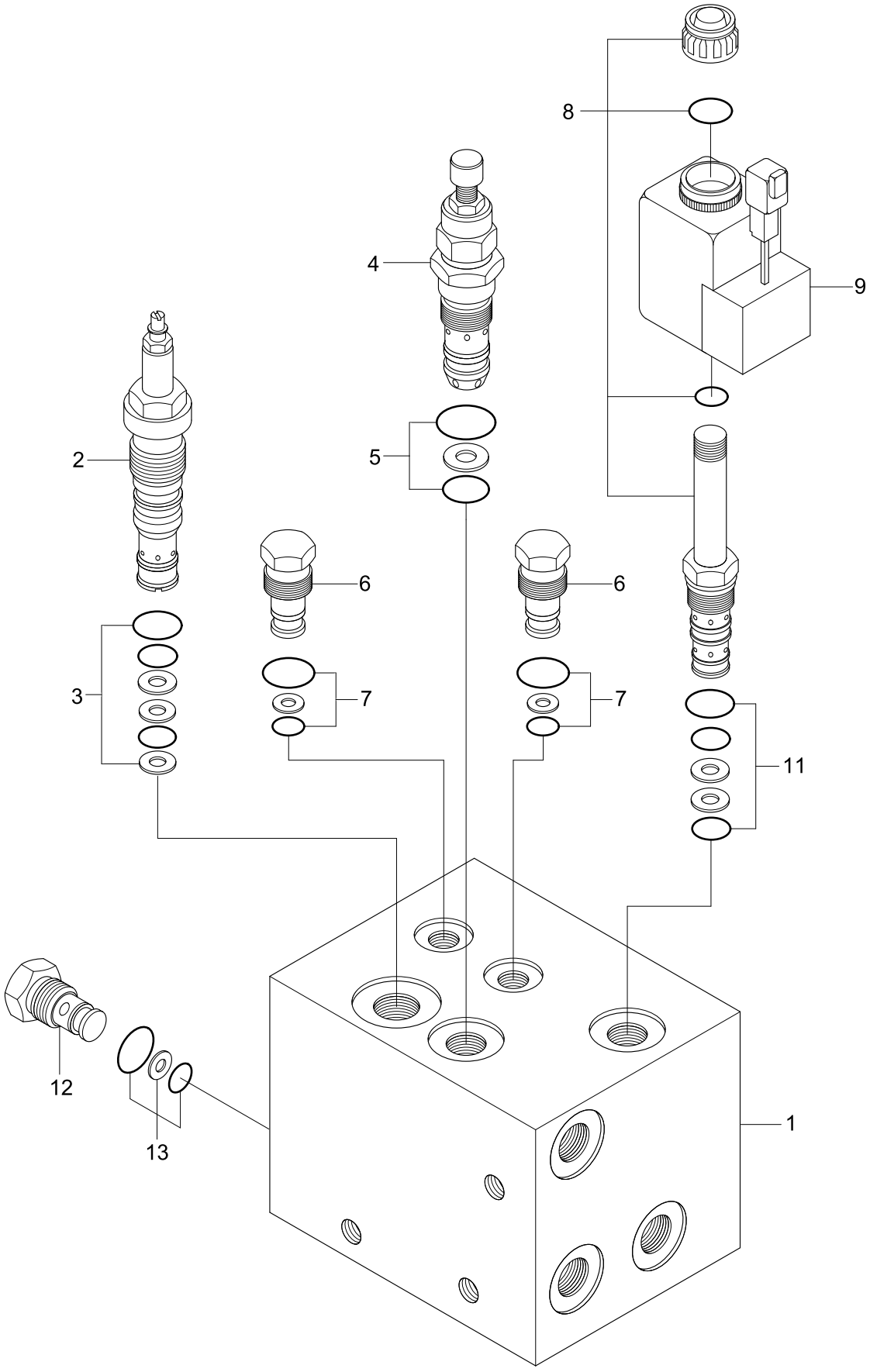

Item	Part_No	IS	Ord	T	Description	Qty	Serial_No	ITC	Remark
*	31LH-40400				CUT-OFF VALVE	1	#0778 -	B	
1	XKAL-00062				.MANIFOLD	1			
2	XKAL-00063				.CUT-OFF VALVE	1			
3	XKAL-00064				.SEAL KIT	1			
4	XKAL-00012				.RELIEF VALVE	1			
5	XKAL-00013				.SEAL KIT	1			
6	XKAL-00014				.CHECK VALVE	2			
7	XKAL-00015				.SEAL KIT	2			
8	XKAL-00029				.SOLENOID VALVE	1			
9	XKAL-00065				.COIL	1			
11	XKAL-00030				.SEAL KIT	1			
12	XKAL-00066				.CHECK VALVE	1			
13	XKAL-00019				.SEAL KIT	1			

PILOT SUPPLY UNIT

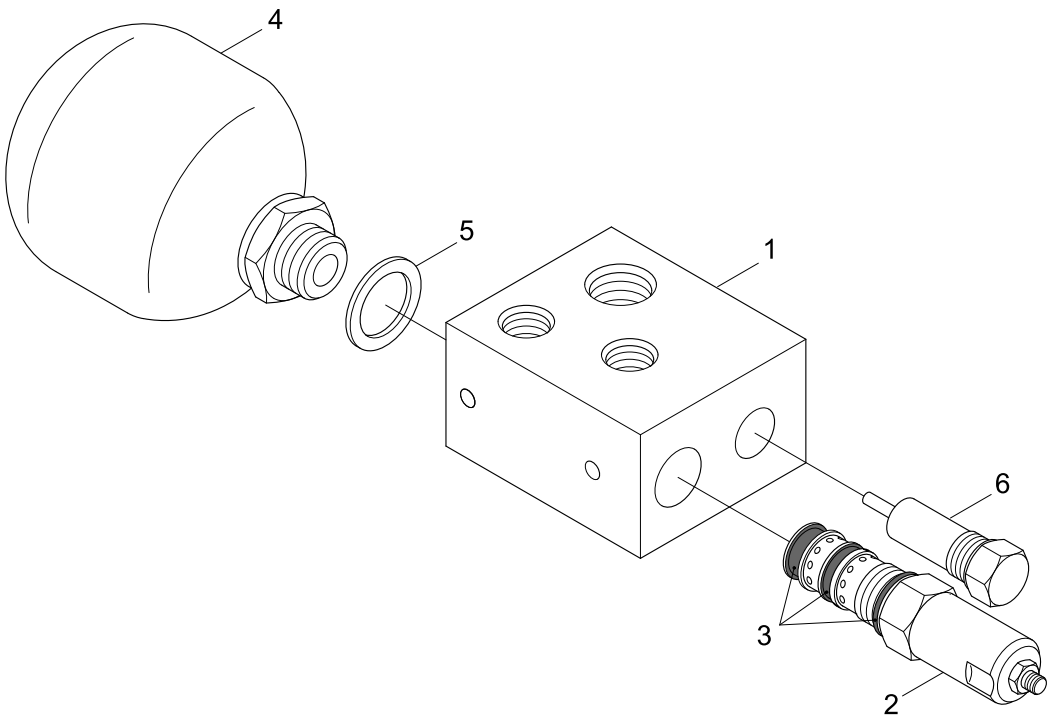

Item	Part_No	IS	Ord	T	Description	Qty	Serial_No	ITC	Remark
*	31L7-10280				PILOT SUPPLY UNIT	1			
1	ZGAW-00001				.MANIFOLD COMPLETE	1			3037077
2	ZGAW-00002				.REDUCING VALVE	1			3026818
3	ZGAW-00003				.SEAL KIT	1			3049443
4	ZGAW-00004				.ACCUMULATOR	1			3037081
5	ZGAW-00005				.GASKET	1			608548
N6	@				.RELIEF VALVE	1			NOT
N	@				NOT INDIVIDUALLY SUPPLIED	AR			NOT

BRAKE VALVE

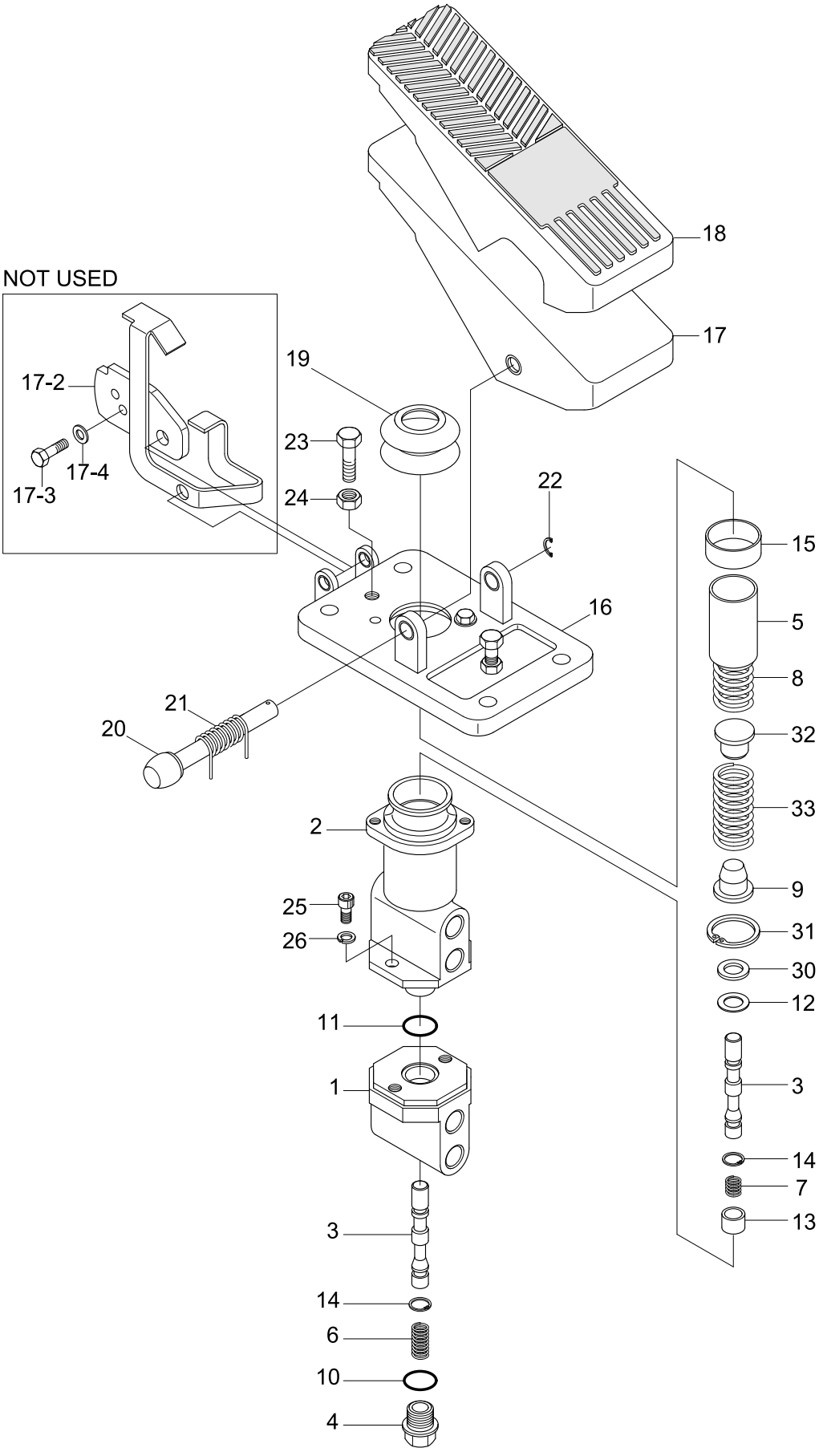
NOT USED
17-2
17-3
17-4
18
17
19
23
24
22
16
21
20
2
25
26
11
1
3
14
6
10
4
15
5
8
32
33
9
31
30
12
3
14
7
13

Item	Part_No	IS	Ord	T	Description	Qty	Serial_No	ITC	Remark
*	31LB-40200				BRAKE VALVE	1	- #0864		
	31LH-40041				BRAKE VALVE	1	#0865 -	B	
1	XKAK-00001				.BODY-LOWER	1	- #0864		
	XKAK-00043				.BODY-LOWER	1	#0865 -	D	
2	XKAK-00002				.BODY-UPPER	1	- #0864		
	XKAK-00044				.BODY-UPPER	1	#0865 -	D	
3	XKAK-00003				.SPOOL	2	- #0864		
	XKAK-00045				.SPOOL	2	#0865 -	D	
4	XKAK-00004				.PLUG	1			
5	XKAK-00005				.HOLDER	1	- #0864		
	XKAK-00053				.HOLDER	1	#0865 -	D	
6	XKAK-00006				.SPRING-LOWER	1			
7	XKAK-00007				.SPRING-UPPER	1			
8	XKAK-00008				.SPRING 1-MAIN	1			
9	XKAK-00009				.RETAINER 1-SPRING	1			
N10	@				.O-RING	1			NOT
N11	@				.O-RING	1			NOT
N12	@				.SEAL-OIL	1			NOT
13	XKAK-00010				.GUIDE	1			
N14	@				.RING-RETAINING	2	- #0864		NOT
14	XKAK-00059				.RING-SNAP	2	#0865 -	D	
N15	@				.BUSHING	1			NOT
16	XKAK-00011				.PLATE-PEDAL	1	- #0864		
	XKAK-00047				.PLATE-PEDAL	1	#0865 -	D	
17	XKAK-00012				.PEDAL ASSY	1			

Item	Part_No	IS	Ord	T	Description	Qty	Serial_No	ITC	Remark
17-1	@				..PEDAL	1		-	NOT
17-2	@				..PLATE-LOCK	1		-	NOT
17-3	@				..BOLT-HEX	1		-	NOT
N17-4	@				..WASHER-PLATE	1		-	NOT
18	XKAK-00015				.COVER-PEDAL	1	- #0864		
	XKAK-00071				.COVER-PEDAL	1	#0865 -	D	
19	XKAK-00016				.BELLOWS	1	- #0864		
	XKAK-00048				.BELLOWS	1	#0865 -	D	
20	XKAK-00017				.PIN 1-LOCK	1	- #0864		
	XKAK-00049				.PIN 1-LOCK	1	#0865 -	D	
21	XKAK-00018				.SPRING 1	1	- #0864		
	XKAK-00050				.SPRING-TORSION	1	#0865 -	D	
N22	@				.RING-RETAINER,C TYPE	1			NOT
N23	@				.BOLT-HEX	2			NOT
N24	@				.NUT-HEX	2			NOT
N25	@				.BOLT-SOCKET	2			NOT
N26	@				.WASHER-SPRING	4			NOT
N30	@				.WASHER-PLAIN	1			NOT
N31	@				.RING-RETAINER,C TYPE	1			NOT
32	XKAK-00019				.RETAINER 2-SPRING	1			
33	XKAK-00020				.SPRING 2-MAIN	1			
N	@				NOT INDIVIDUALLY SUPPLIED	AR			NOT

CUSHION VALVE(-#1645)

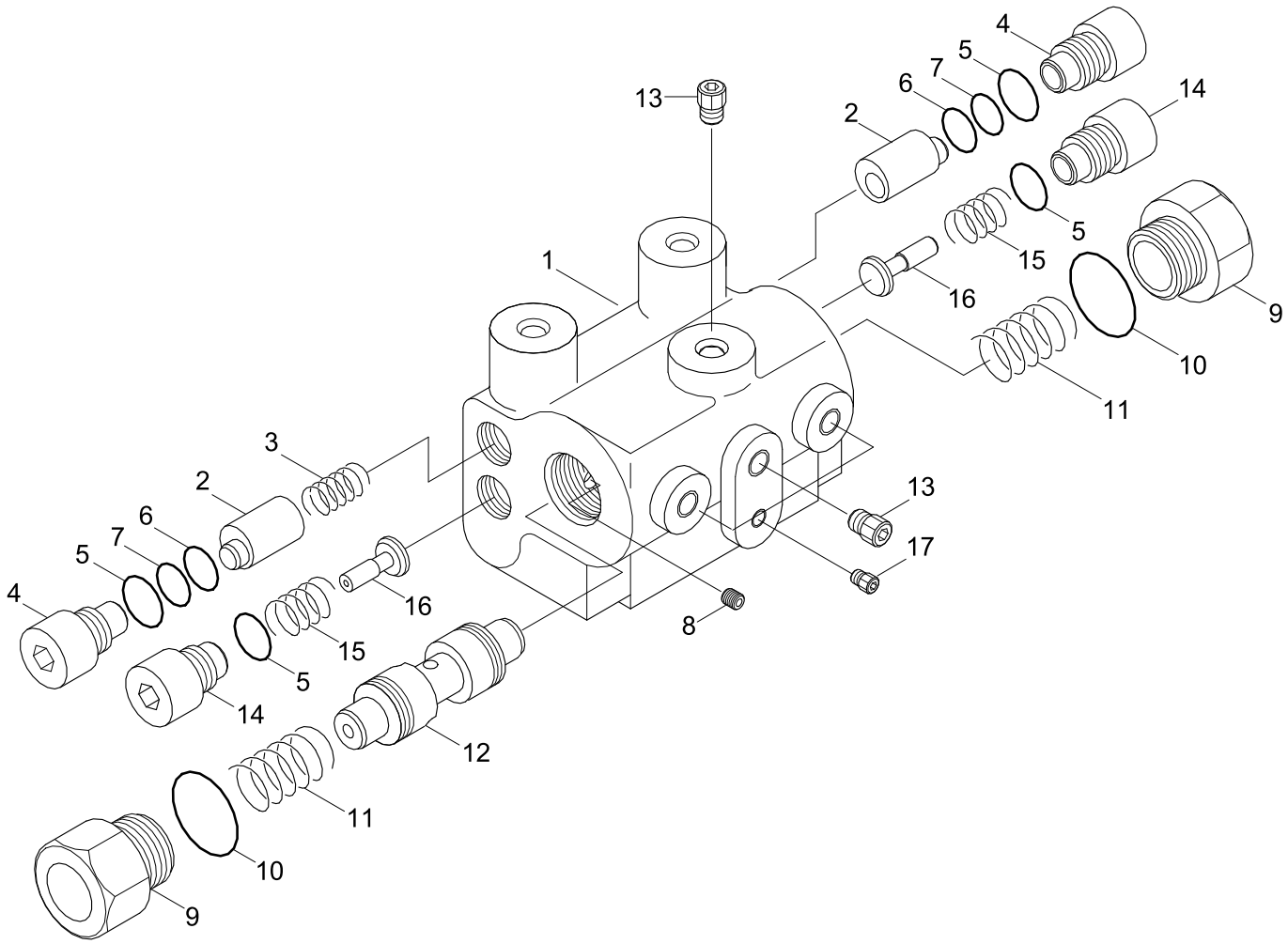

Item	Part_No	IS	Ord	T	Description	Qty	Serial_No	ITC	Remark
*	31L2-3004	01			CUSHION VALVE	1	- #1645		
N1	YUAF-00001				.HOUSING	1			NOT
N2	YUAF-00002				.POPPET	2			NOT
3	YUAF-00003				.SPRING	1			
4	YUAF-00004				.SEAT-VALVE	2			
K5	YUAF-00005				.O-RING	4			
K6	YUAF-00006				.O-RING	2			
K7	YUAF-00007				.RING-BACK UP	2			
8	YUAF-00008				.ORIFICE	2			
N9	YUAF-00009				.PLUG	2			NOT
K10	YUAF-00010				.O-RING	2			
11	YUAF-00011				.SPRING	2			
N12	YUAF-00012				.SPOOL	1			NOT
13	YUAF-00013				.PLUG	4			
14	YUAF-00014				.PLUG	2			
N15	YUAF-00015				.SPRING	2			NOT
16	YUAF-00016				.POPPET	2			
17	YUAF-00017				.PLUG	1			
K	91L2-2708				SEAL KIT	1			
N	@				NOT SUPPLIED PARTS	AR			NOT

Item	Part_No	IS	Ord	T	Description	Qty	Serial_No	ITC	Remark
*	31LM-30310				CUSHION VALVE	1	#1646 -	A	
1	XKAU-00317				.BODY	1			
2	XKAU-00318				.SEAT VALVE	2			
3	XKAU-00319				.POPPET	2			
4	XKAU-00320				.SPRING	1			
5	XKAU-00321				.PLUG	2			
6	XKAU-00322				.SPRING	2			
7	XKAU-00323				.SPOOL	1			
8	XKAU-00324				.PLUG	2			
9	XKAU-00325				.POPPET	2			
10	XKAU-00326				.SPRING	2			
11	XKAU-00327				.BACK UP RING	2			
12	XKAU-00328				.O-RING	2			
13	XKAU-00329				.O-RING	4			
14	XKAU-00330				.O-RING	2			
15	XKAU-00331				.PLUG	1			
16	XKAU-00332				.PLUG	4			
17	XKAU-00333				.ORIFICE	2			

PRIORITY VALVE

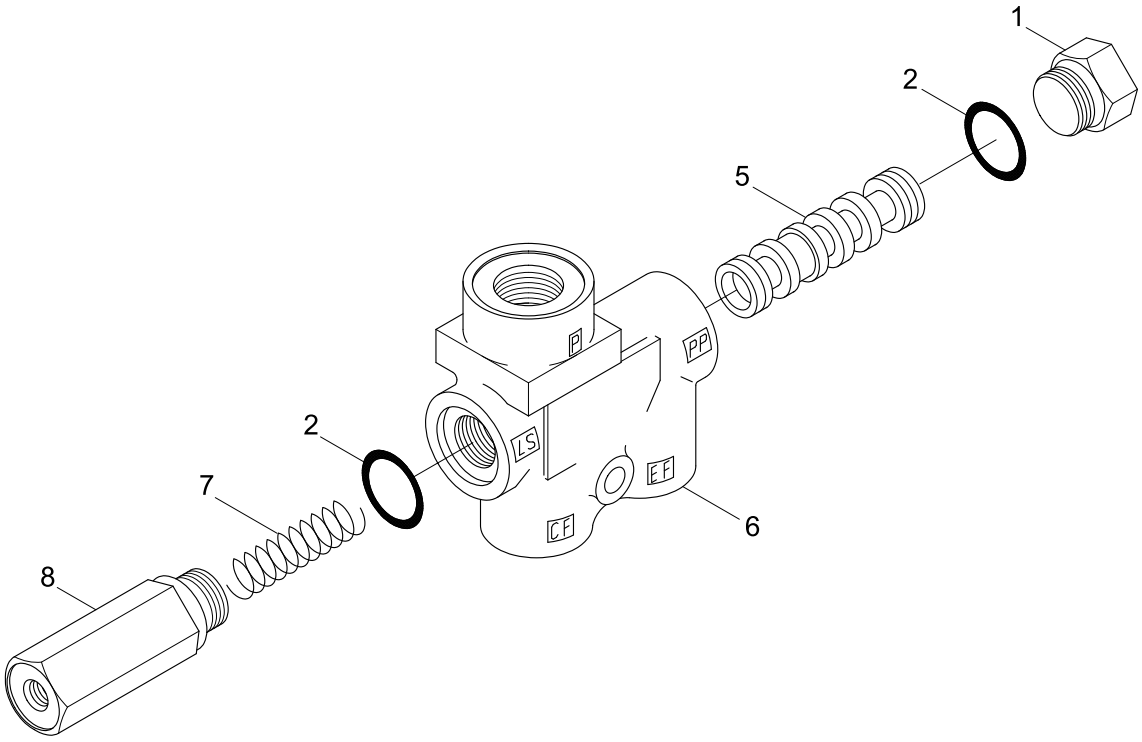

Item	Part_No	IS	Ord	T	Description	Qty	Serial_No	ITC	Remark
*	31LD-90040				PRIORITY VALVE	1			
1	YUBS-00103				.PLUG	1			
2	YUBS-00105				.SET OF SEALS	2			
N5	@				.SPOOL	1			NOT
N6	@				.HOUSING	1			NOT
7	YUBS-00104				.SPRING	1			
8	YUBS-00106				.PLUG	1			152B0368
N	@				NOT INDIVIDUALLY SUPPLIED	AR			NOT

SAFETY VALVE(-#0543)

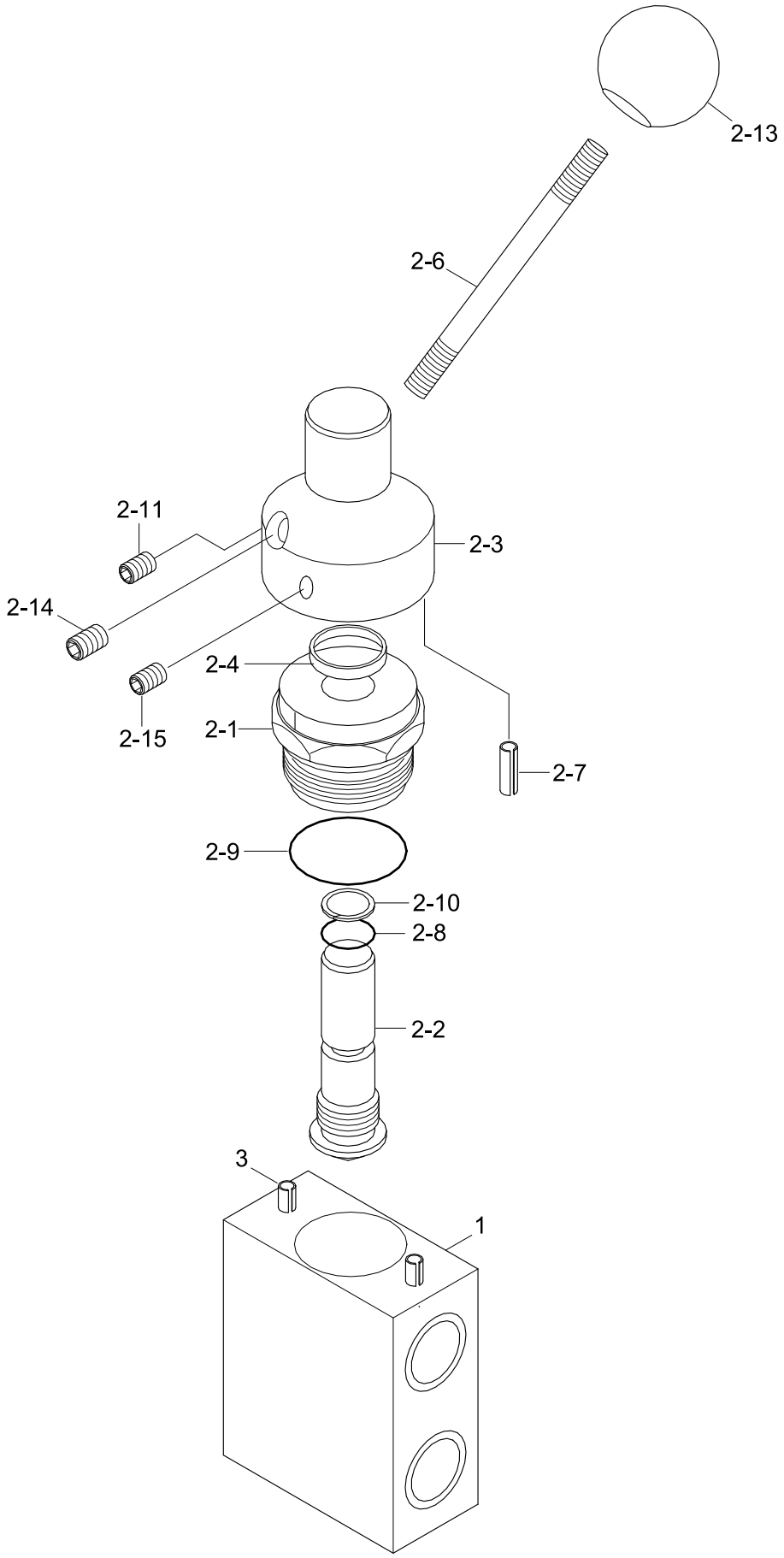

Item	Part_No	IS	Ord	T	Description	Qty	Serial_No	ITC	Remark
*	31L7-10010				SAFETY VALVE	1	- #0543	D	SEE 3160 ITEM 3
1	ZUAN-00001				.BODY	1			AXP14944
2	ZUAN-00002				.LEVER ADJUSTER	1			BXP8718-05
2-1	ZUAN-00003				..RETAINER	1			AXP8729
2-2	ZUAN-00004				..ADJUST STEM	1			AXP8730
2-3	ZUAN-00005				..HOUSING	1			BPX15090
2-4	ZUAN-00006				..RING-CLUTCH	1			APX3824
2-6	ZUAN-00007				..HANDLE	1			APX15091
2-7	ZUAN-00008				..PIN-SPRING	2			77M03016
2-8	ZUAN-00009				..O-RING	1			61131105
2-9	ZUAN-00010				..O-RING	1			61134117
2-10	ZUAN-00011				..RING-BACK UP	1			62142010
2-11	ZUAN-00012				..SCREW	1			72M05010-01
2-13	ZUAN-00013				..KNOB-RED	1			B3303-01
2-14	ZUAN-00014				..SET SCREW-SOCKET	1			72M06010-01
2-15	ZUAN-00012				..SCREW	1			72M05010-01
3	ZUAN-00015				.PIN-SPRING	1			7703013

RIDE CONTROL VALVE

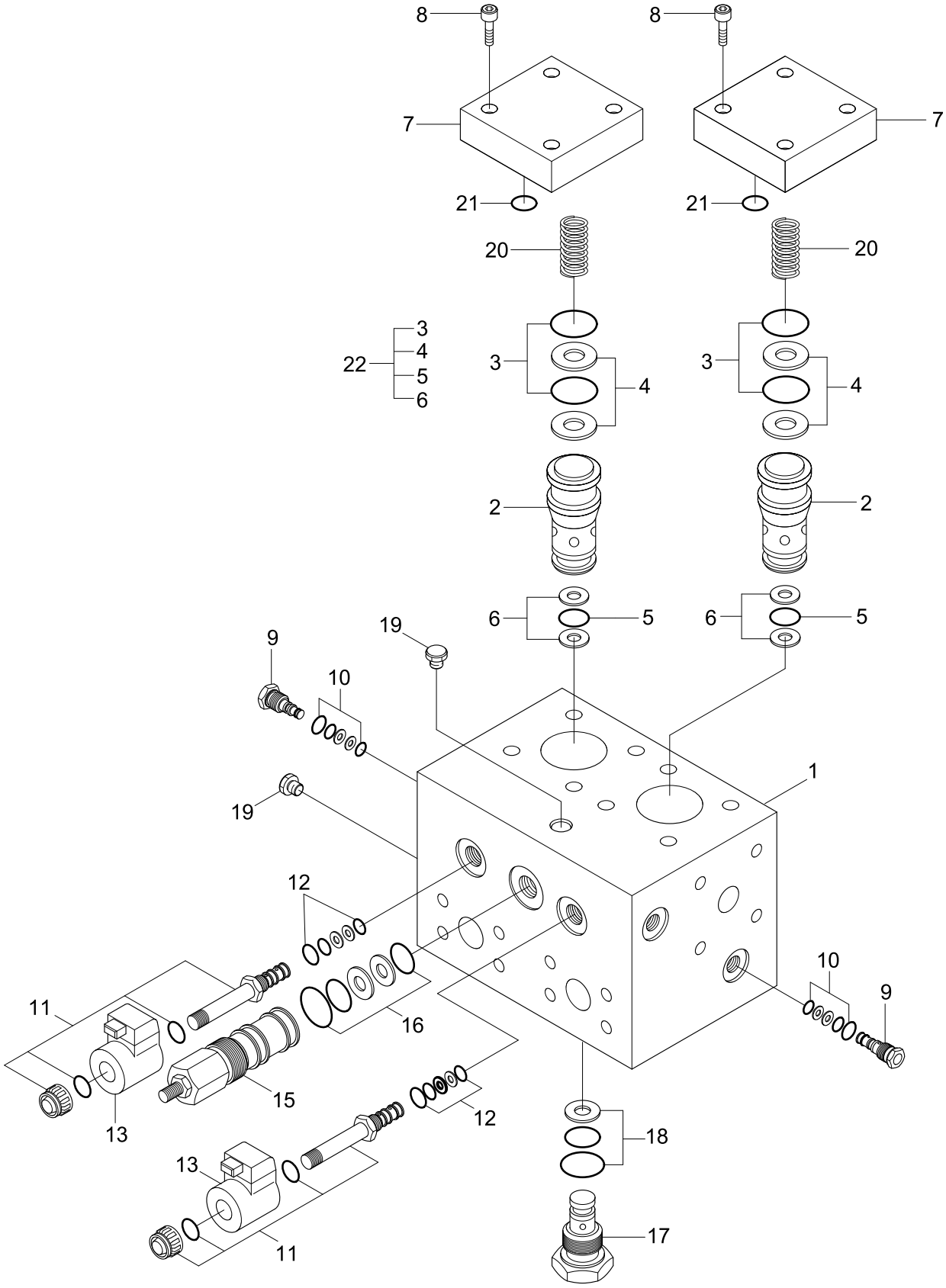

Item	Part_No	IS	Ord	T	Description	Qty	Serial_No	ITC	Remark
*	31LD-90010				RIDE CONTROL VALVE	1			
1	XKAL-00035				.MANIFOLD	1			
2	XKAL-00036				.LOGIC VALVE	2			
N3	XKAL-00037				.O-RING	4	#0001 -	-	NOT
N4	XKAL-00038				.BACK-UP RING	4	#0001 -	-	NOT
N5	XKAL-00039				.O-RING	2	#0001 -	-	NOT
N6	XKAL-00040				.BACK-UP RING	4	#0001 -	-	NOT
7	XKAL-00058				.LOGIC COVER	2	#0001 -	-	
8	XKAL-00070				.BOLT	8	#0001 -	-	
9	XKAL-00027				.SHUTTLE VALVE	2			
10	XKAL-00028				.SEAL KIT	2			
11	XKAL-00029				.SOLENOID VALVE	2			
12	XKAL-00030				.SEAL KIT	2			
13	XKAL-00043				.COIL	2			
N14	@				.COIL CAP KIT	1			NOT
15	XKAL-00041				.REDUCING VALVE	1			
16	XKAL-00042				.SEAL KIT	1			
17	XKAL-00033				.CHECK VALVE	1			
18	XKAL-00034				.SEAL KIT	1			
N19	@				.PLUG	2			NOT
20	XKAL-00059				.SPRING	2	#0001 -	-	
21	XKAL-00060				.O-RING	2	#0001 -	-	
22	XKAL-00068				.SEAL KIT	2	#0001 -	-	INCL ITEM 3-6
N	@				NOT INDIVIDUALLY SUPPLIED	AR			NOT

Item	Part_No	IS	Ord	T	Description	Qty	Serial_No	ITC	Remark
*	31LD-30030				STEERING CYLINDER-LH	1			
	31LD-30040				STEERING CYLINDER-RH	1			
1	31Y2-07470				.TUBE ASSY-LH	1			
	31Y2-07480				.TUBE ASSY-RH	1			
2	31Y2-07540				.ROD ASSY	1			
3	31Y2-07570				.GLAND	1			
4	S731-045020				.BUSHING-DU	1			
K5	Y220-045011				.SEAL-ROD	1			
K6	Y180-045020				.RING-BACK UP	1			
K7	Y240-045011				.RING-BUFFER	1			
K8	Y110-045011				.WIPER-DUST	1			
9	Y190-057000				.RING-SNAP	1			
K10	S632-060004				.O-RING	1			
K11	S642-060003				.RING-BACK UP	1			
K12	S632-070001				.O-RING	1			
13	31Y2-07580				.PISTON	1			
K14	S632-030004				.O-RING	1			
K15	Y410-070000				.SEAL-PISTON	1			
K16	Y310-070000				.RING-WEAR	1			
17	31YC-65200				.NUT	1			
18	Y820-045001				.BEARING-SPHERICAL	2			
19	S602-068004				.RING-RETAINING	4			
K	31Y2-07590				SEAL KIT	1			SEE ILLUST

BOOM CYLINDER

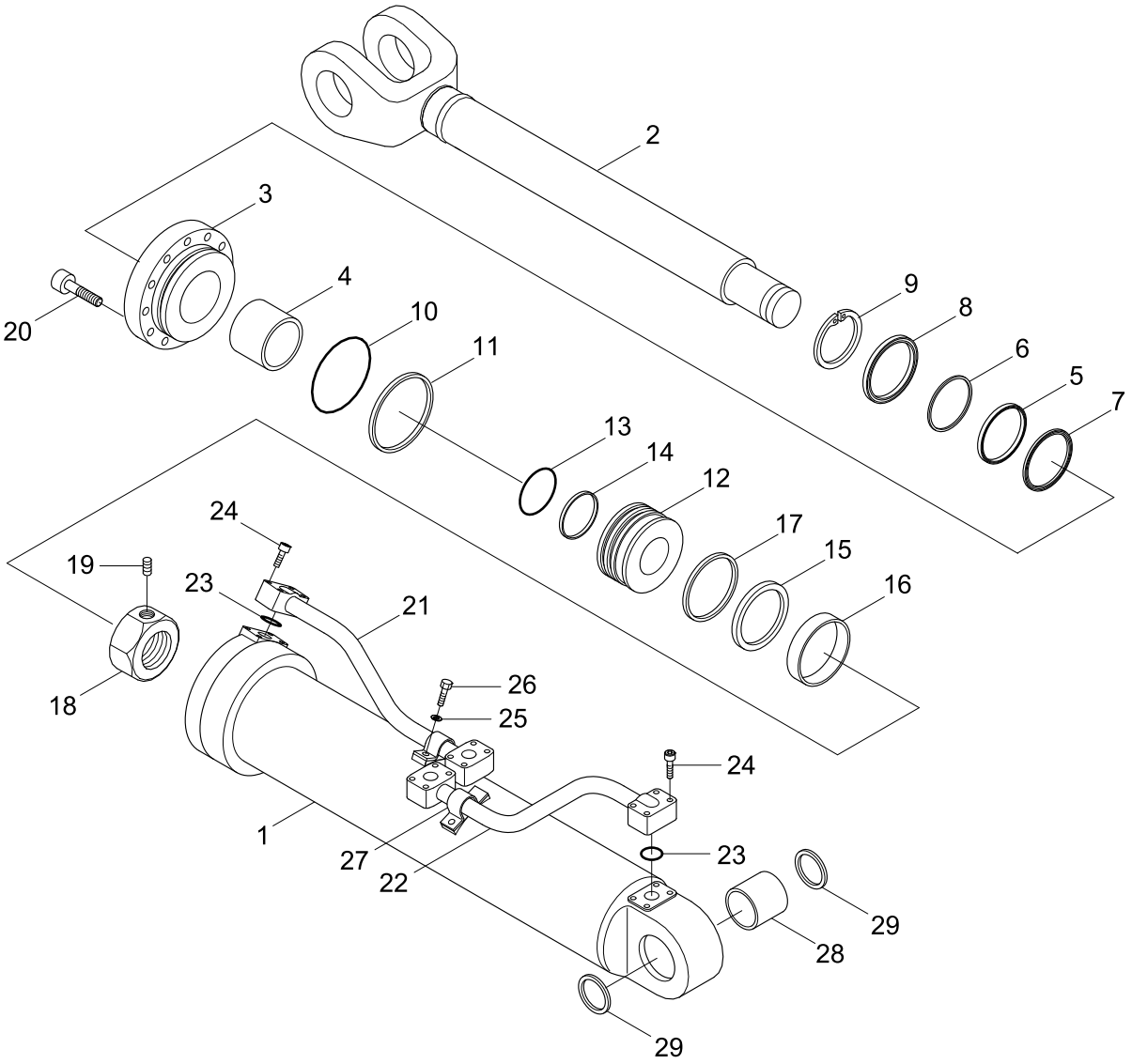

Item	Part_No	IS	Ord	T	Description	Qty	Serial_No	ITC	Remark
*	31LD-20011				BOOM CYLINDER-LH	1			
	31LD-20021				BOOM CYLINDER-RH	1			
1	31Y2-08541				.TUBE ASSY-LH	1			
	31Y2-08551				.TUBE ASSY-RH	1			
2	31Y2-08590				.ROD ASSY	1			
3	31Y2-07610				.GLAND	1			
4	S731-075035				.BUSHING-DU	1			
K5	Y220-075011				.SEAL-ROD	1			
K6	Y180-075020				.RING-BACK UP	1			
K7	Y240-075011				.RING-BUFFER	1			
K8	Y110-075011				.WIPER-DUST	1			
9	Y190-089000				.RING-SNAP	1			
K10	S631-130004				.O-RING	1			
K11	S641-130003				.RING-BACK UP	1			
12	31Y2-06060				.PISTON	1			
K13	S632-075004				.O-RING	1			
K14	S642-075003				.RING-BACK UP	2			
K15	Y410-140000				.SEAL-PISTON	1			
K16	Y300-140100				.RING-WEAR	1			
K17	Y440-140000				.RING-DUST	1			
18	31YC-62160				.NUT-LOCK	1			
19	S114-100124				.SCREW-SET	1			
20	S109-140554				.BOLT-HEX SOCKET	12			
21	31Y2-08621				.PIPE ASSY-R,LH	1			
	31Y2-08631				.PIPE ASSY-R,RH	1			

Item	Part_No	IS	Ord	T	Description	Qty	Serial_No	ITC	Remark
22	31Y2-01970				.PIPE ASSY-B,LH	1			
	31Y2-01980				.PIPE ASSY-B,RH	1			
K23	Y171-024004				.O-RING	2			
24	S107-100554				.BOLT-SOCKET	8			
25	S411-100002				.WASHER-SPRING	4			
26	S011-100152				.BOLT-HEX	4			
27	31YC-38020				.CLAMP-PIPE	2			
28	31YC-13050				.BUSHING-PIN	1			
K29	Y000-075300				.SEAL-DUST	2			
K	31Y2-06260				SEAL KIT(4-8,10,11,13-17,	1			

Item	Part_No	IS	Ord	T	Description	Qty	Serial_No	ITC	Remark
*	31LD-20031				BUCKET CYLINDER	1			
	31LD-20160				BUCKET CYLINDER	1			HL757XTD-7
1	31Y2-07340				.TUBE ASSY	1			
2	31Y2-07371				.ROD ASSY	1			
	31Y2-09500				.ROD ASSY	1			HL757XTD-7
3	31Y2-07620				.GLAND	1			
4	S731-080040				.BUSHING	1			
K5	Y220-080011				.SEAL-ROD	1			
K6	Y180-080020				.RING-BACK UP	1			
K7	Y240-080011				.RING-BUFFER	1			
K8	Y110-080011				.WIPER-DUST	1			
9	Y190-094000				.RING-SNAP	1			
K10	S631-150004				.O-RING	1			
K11	S641-150003				.RING-BACK UP	1			
12	31Y2-03311				.PISTON	1			
K13	S632-080004				.O-RING	1			
K14	S642-080003				.RING-BACK UP	2			
K15	Y410-160000				.SEAL-PISTON	1			
K16	Y300-160100				.RING-WEAR	1			
K17	Y440-160000				.RING-DUST	1			
18	31YC-62160				.NUT-LOCK	1			
19	S114-100124				.SCREW-SET	1			
20	S109-160654				.BOLT-HEX SOCKET	12			
21	31Y2-07400				.PIPE ASSY-R	1			
22	31Y2-07410				.PIPE ASSY-B	1			

Item	Part_No	IS	Ord	T	Description	Qty	Serial_No	ITC	Remark
K23	Y171-024004				.O-RING	2			
24	S107-100554				.BOLT-SOCKET	8			
25	31Y2-07420				.BAND ASSY	1			
26	31YC-13070				.BUSHING	1			
K27	31YC-13080				.BUSHING-PIN	1			
K28	Y000-090000				.SEAL-DUST	2			
29	S700-095208				.SEAL-DUST	2			
K	31Y2-07430				SEAL KIT(5-8,10,11,13-17,	1			

FAN & BRAKE PUMP

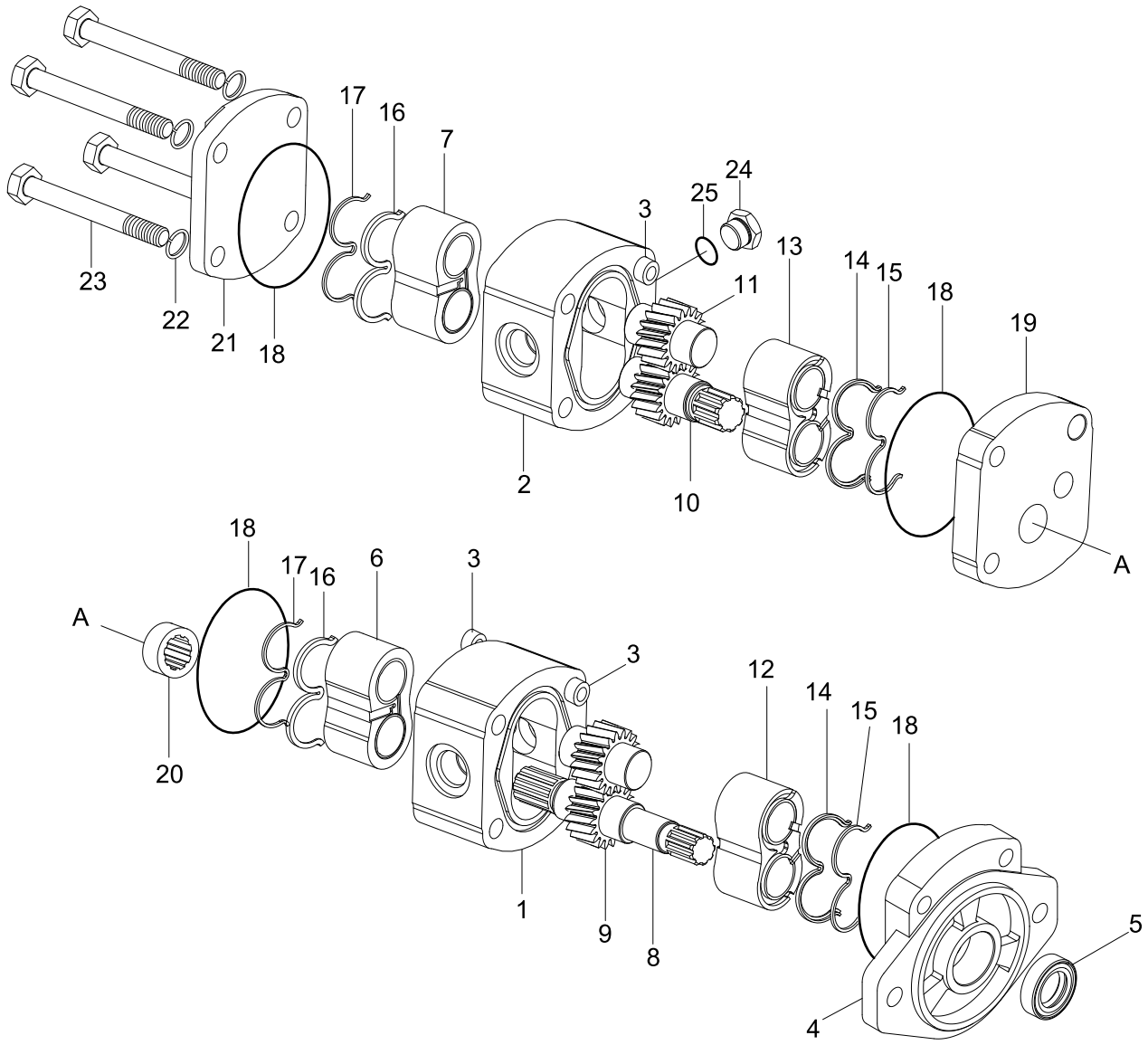

DESCRIPTION	PARTS NO	INCLUDED ITEM
SEAL KIT	ZUAH-00175	5,14~18

Item	Part_No	IS	Ord	T	Description	Qty	Serial_No	ITC	Remark
*	31LD-40010				FAN & BRAKE PUMP	1	#0001 - #0182	-	
	31LD-40011				FAN & BRAKE PUMP	1	#0183 -	D	
1	@				.BODY	1			NOT
2	@				.BODY	1			NOT
3	@				.PIN-DOWEL	6			NOT
4	@				.COVER-FRONT	1			NOT
K5	@				.SHAFT SEAL	1			NOT
6	@				.BUSHING	1			NOT
7	@				.BUSHING	1			NOT
8	@				.DRIVE GEAR	1			NOT
9	@				.DRIVEN GEAR	1			NOT
10	@				.DRIVE GEAR	1			NOT
11	@				.DRIVEN GEAR	1			NOT
12	@				.BUSHING	1			NOT
13	@				.BUSHING	1			NOT
K14	@				.BUSH LOBE SEAL	2			NOT
K15	@				.BACKING RING	2			NOT
K16	@				.BUSH LOBE SEAL	2			NOT
K17	@				.BACKING RING	2			NOT
K18	@				.BODY SEAL	4			NOT
19	@				.INTERMEDIATE PLATE	1			NOT
20	@				.COUPLING	1			NOT
21	@				.COVER-REAR	1			NOT
22	@				.WASHER-SPRING	4			NOT
23	@				.SCREW	4			NOT

Item	Part_No	IS	Ord	T	Description	Qty	Serial_No	ITC	Remark
24	@				.PLUG	1	#0183 -	-	NOT
25	@				.O-RING	1	#0183 -	-	NOT
K	ZUAH-00175				SEAL KIT	1			SEE ILLUST

QUICK COUPLER CYLINDER(VOLVO TYPE)

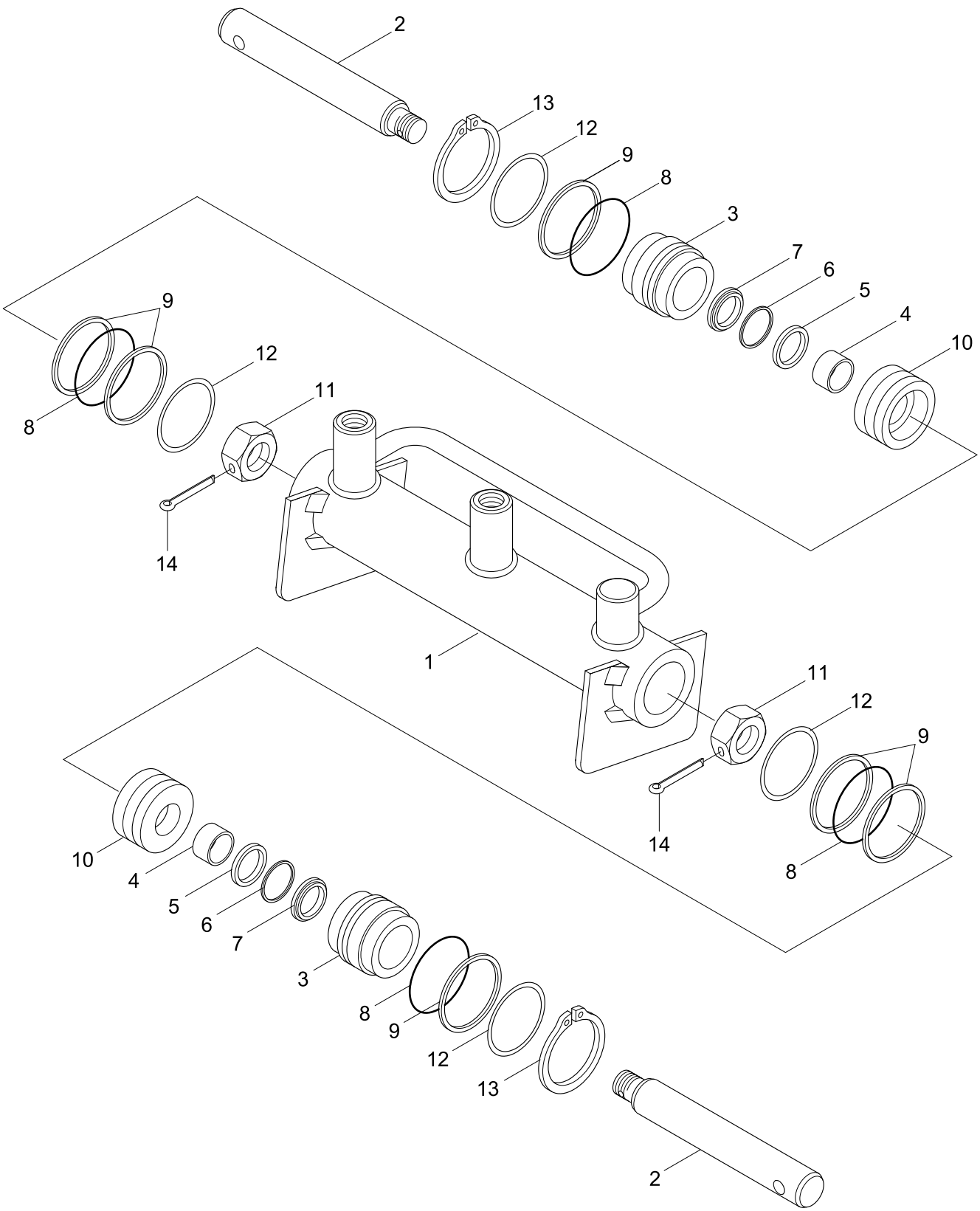

DESCRIPTION	PARTS NO	INCLUDED ITEM
SEAL KIT	31Y2-05920	5~9

Item	Part_No	IS	Ord	T	Description	Qty	Serial_No	ITC	Remark
*	31LF-21501				CYLINDER ASSY	1	#1440 -	-	
1	31Y2-10240				.TUBE ASSY	1			
2	31Y2-10271				.ROD	2			
3	31Y2-05880				.GLAND	2			
4	S731-025015				.BUSHING-DU	2			
K5	Y200-025011				.SEAL-ROD	2			
K6	Y180-025020				.RING-BACK UP	2			
K7	Y120-025011				.WIPER-DUST	2			
K8	S631-044004				.O-RING	4			
K9	S641-044003				.RING-BACK UP	6			
10	31Y2-05890				.PISTON	2			
11	S227-180002				.NUT-SLOTTED	2			
12	31Y2-05900				.RING-STOP	4			
13	S601-045004				.RING-RETAINING	2			
14	S461-400326				.PIN-SPLIT	2			
K	31Y2-05920				SEAL KIT	1			SEE ILLUST

FRONT FRAME

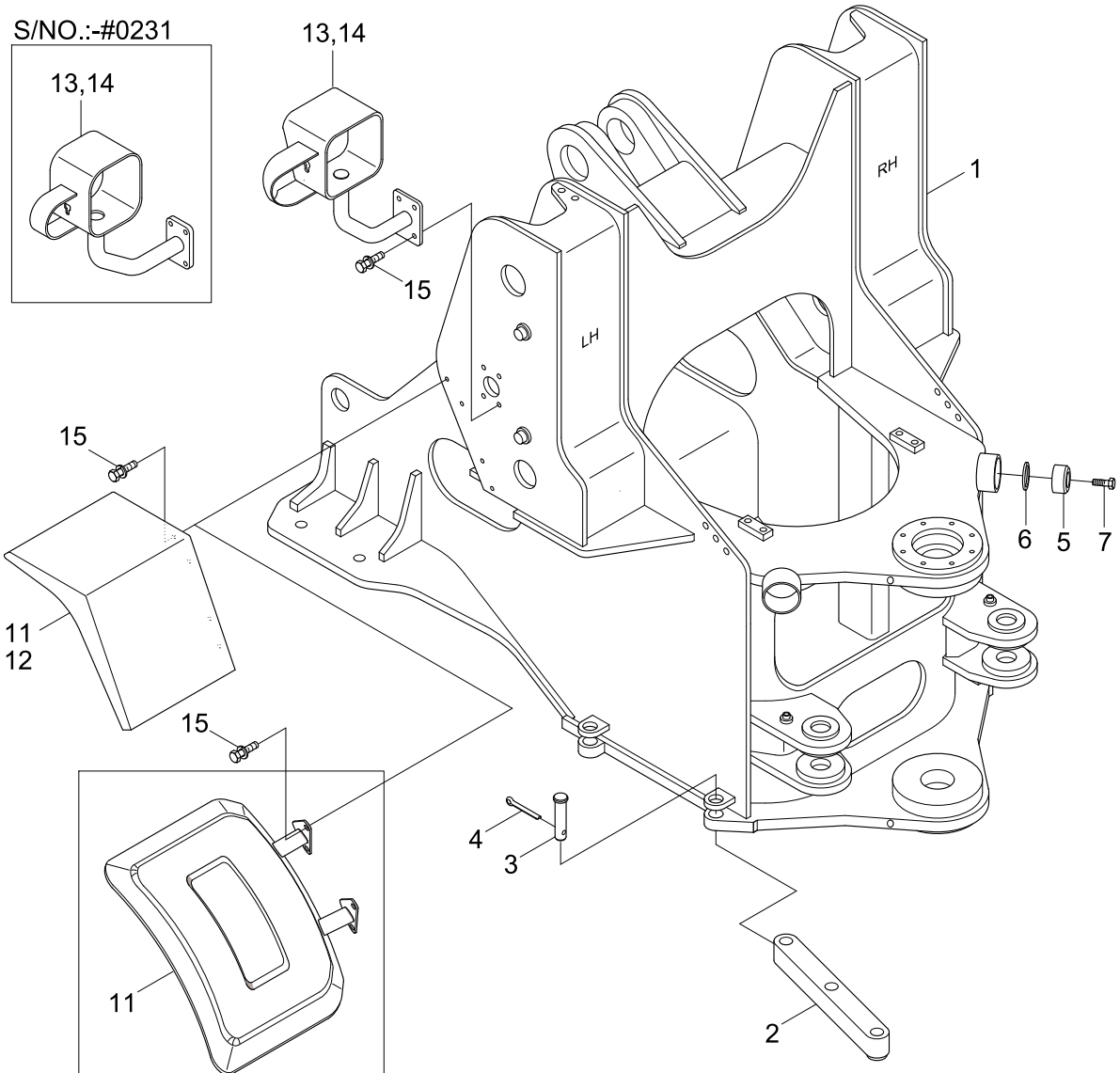

ROUND COWL TYPE

OPTION

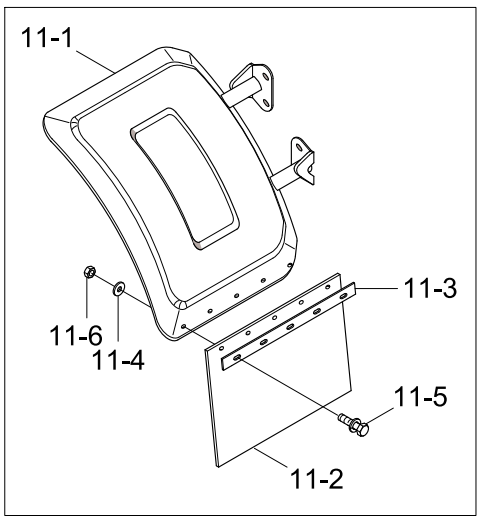

Item	Part_No	IS	Ord	T	Description	Qty	Serial_No	ITC	Remark
1	41LD-00012				FRONT FRAME WA	1			
	43LD-00010				FRONT FRAME WA	1	#0203 - #1274	-	R/COWL,VOLVO
	45LD-00011				FRONT FRAME WA	1	#1275 -	D	R/COWL,ZF AXLE
2	41LD-09010				BAR	1			
3	41LD-09020				PIN-CLEVIS	2			
4	41L1-1074				PIN	2			
5	44L3-00541				STOPPER	2			
6	44L3-00550				SHIM	2			
7	S017-120452				BOLT-HEX	2			
11	71LD-70010				FENDER WA-LH,FR	1			
	71LF-72010				FENDER WA-FRONT	2	#0203 - #1465	-	ROUND COWL TYPE
	71LF-72011				FENDER WA-FRONT	2	#1466 -	B	ROUND COWL TYPE
	71LD-72050				FENDER ASSY-LH	1	#1058 - #1465		ROUND COWL TYPE
	71LD-72051				FENDER ASSY-LH	1	#1466 -	B	ROUND COWL TYPE
	71LD-72060				FENDER ASSY-RH	1	#1058 - #1465		ROUND COWL TYPE
13	71LC-72030				LAMP BOX WA-LH	1	#0232 -	D	SQUARE TYPE
	71LD-70090				LAMP BOX WA-LH	1	#0058 - #0231	-	SQUARE TYPE
11	71LD-72061				FENDER ASSY-RH	1	#1466 -	B	ROUND COWL TYPE
11-1	71LD-72070				.FENDER WA-LH	1	#1058 - #1465		ROUND COWL TYPE
14	71LC-72040				LAMP BOX WA-RH	1	#0232 -	D	SQUARE TYPE
	71LD-70100				LAMP BOX WA-RH	1	#0058 - #0231	-	SQUARE TYPE
11-1	71LD-72071				.FENDER WA-LH	1	#1466 -	B	ROUND COWL TYPE
	71LD-72080				.FENDER WA-RH	1	#1058 - #1465		ROUND COWL TYPE
	71LD-72081				.FENDER WA-RH	1	#1466 -	B	ROUND COWL TYPE
11-2	71LD-72090				.RUBBER-FENDER	1	#1058 -	-	ROUND COWL TYPE

Item	Part_No	IS	Ord	T	Description	Qty	Serial_No	ITC	Remark
11-3	71LD-72100				.PLATE	1	#1058 -	-	ROUND COWL TYPE
11-4	71LB-72130				.WASHER-WIDE	5	#1058 -	-	ROUND COWL TYPE
11-5	S037-122556				.BOLT-W/WASHER	5	#1058 -	-	ROUND COWL TYPE
11-6	S205-121006				.NUT-HEX	5	#1058 -	-	ROUND COWL TYPE
11	71LD-70010				FENDER WA-LH,FR	1			SQUARE COWL
12	71LD-70020				FENDER WA-RH,FR	1			SQUARE COWL
13	71LD-70050				LAMP BOX WA-LH	1	- #0231		
	71LC-72030				LAMP BOX WA-LH	1	#0232 -	D	
	71LD-70090				LAMP BOX WA-LH	1	#0058 - #0231	-	
14	71LD-70060				LAMP BOX WA-RH	1	- #0231		
	71LC-72040				LAMP BOX WA-RH	1	#0232 -	D	
	71LD-70100				LAMP BOX WA-RH	1	#0058 - #0231	-	
15	S037-123052				BOLT-W/WASHER	16			

REAR FRAME

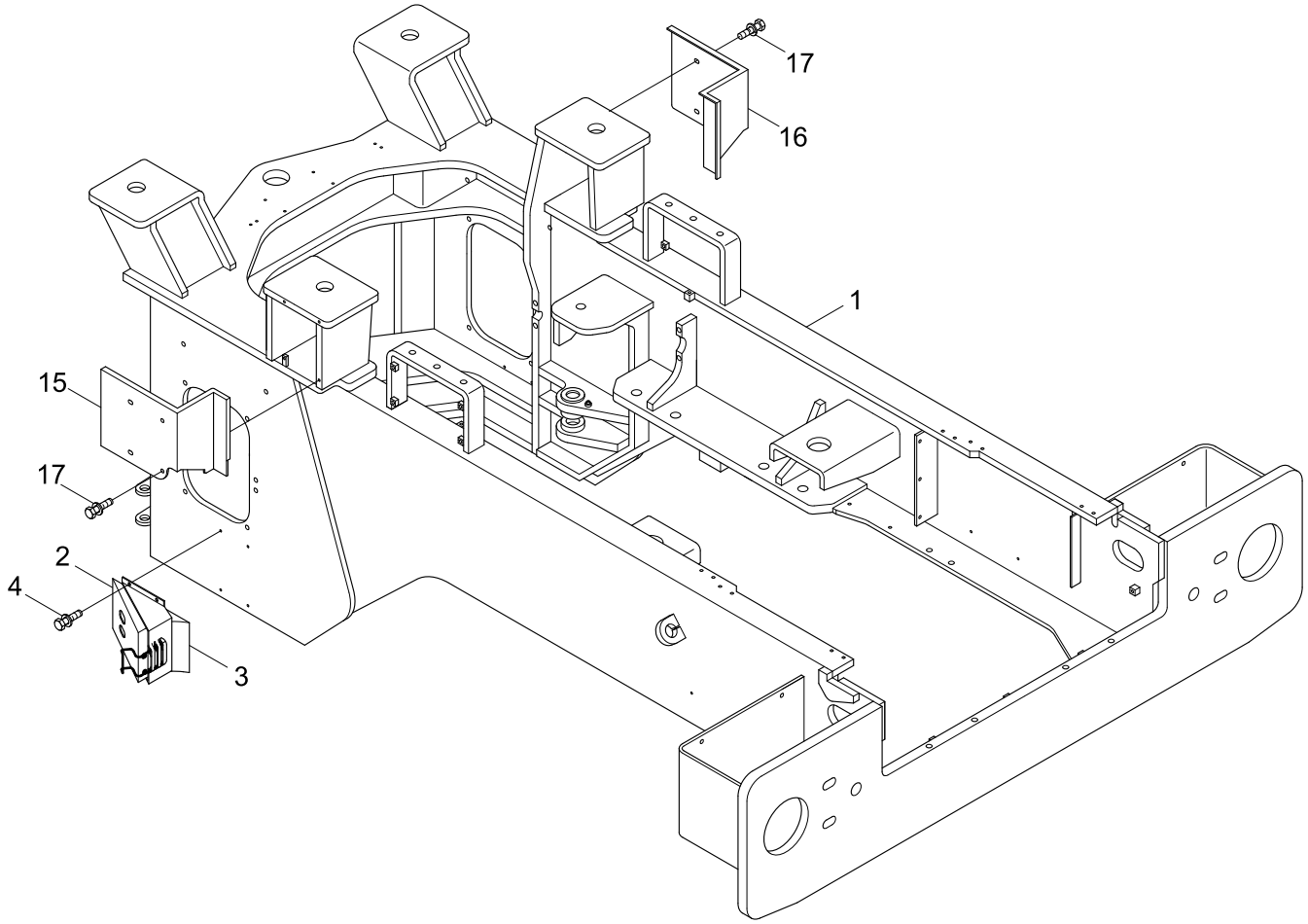

Item	Part_No	IS	Ord	T	Description	Qty	Serial_No	ITC	Remark
1	51LD-00012				REAR FRAME WA	1	- #0047		
	51LD-00013				REAR FRAME WA	1	#0048 - #0286	D	
	51LD-00014				REAR FRAME WA	1	#0287 -	D	
	53LD-00010				REAR FRAME WA	1	#0203 - #0286	-	ROUND COWL TYPE
	53LD-00011				REAR FRAME WA	1	#0287 - #1274	D	R/COWL,VOLVO
	55LD-00011				REAR FRAME WA	1	#1275 -	D	R/COWL,ZF AXLE
2	74L3-00012				CHOCK-WHEEL	2			
3	71L7-90070				BRACKET ASSY	2			
4	S035-082542				BOLT-W/WASHER	8			
15	71LD-70070				COVER-LH	1	- #0047		
	71LD-70071				COVER-LH	1	#0048 -	D	
16	71LD-70080				COVER-RH	1	- #0047		
	71LD-70081				COVER-RH	1	#0048 -	D	
17	S037-123052				BOLT-W/WASHER	8			

CENTER PIVOT PIN(UPPER)

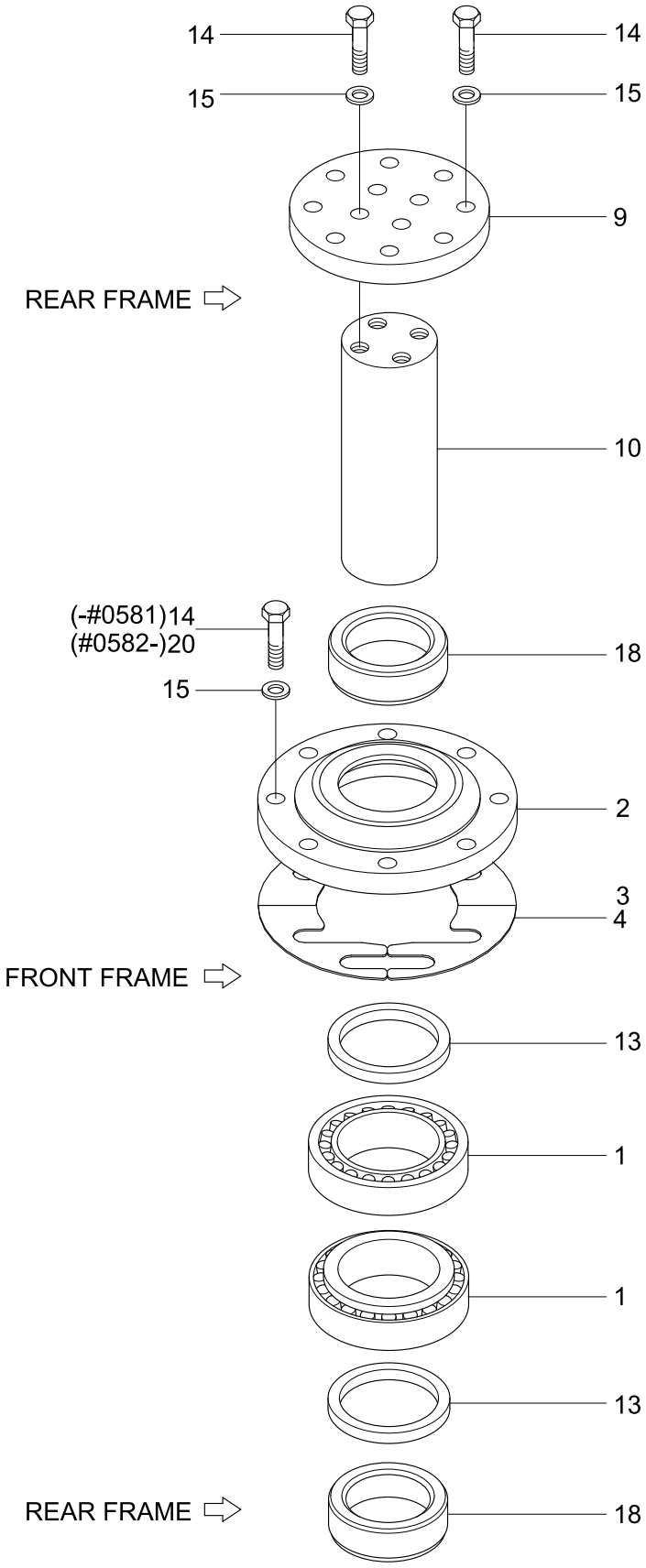

Item	Part_No	IS	Ord	T	Description	Qty	Serial_No	ITC	Remark
1	41LD-10010				BEARING	2			
2	41LD-10021				COVER	1			
3	41LD-10040				SHIM(0.1)	2			
4	41LD-10050				SHIM(0.5)	2			
9	41LD-10100				PLATE	1			
10	41LD-10111				PIN	1	- #1623		
	41LD-10112				PIN	1	#1624 -	A	
13	S700-075307				DUST SEAL-DKIY TYPE	2			
14	S017-120452				BOLT-HEX	20	- #0581		
					BOLT-HEX	12	#0582 -	A	
15	S441-120002				WASHER-HARDENED	20			
18	41LD-10160				BUSHING	2			
20	S017-120402				BOLT-HEX	8	#0582 -	A	

CENTER PIVOT PIN(LOWER)

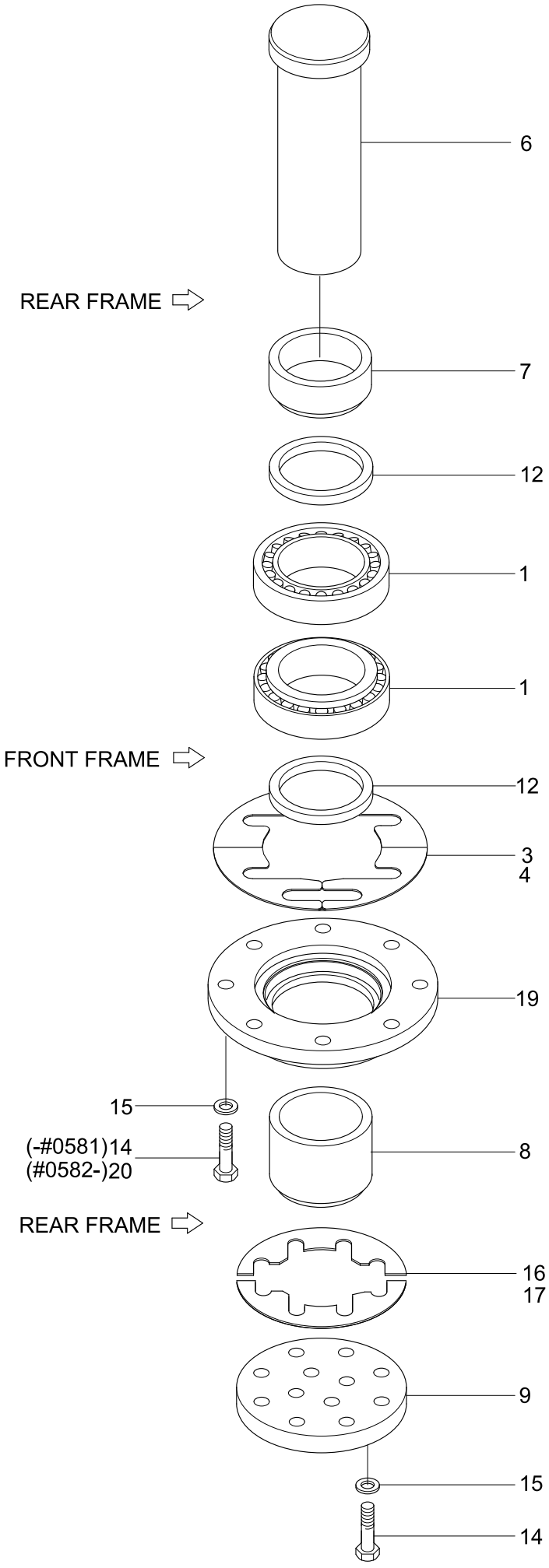

Item	Part_No	IS	Ord	T	Description	Qty	Serial_No	ITC	Remark
1	41LD-10010				BEARING	2			
3	41LD-10040				SHIM(0.1)	2			
4	41LD-10050				SHIM(0.5)	2			
6	41LD-10070				PIN	1			
7	41LD-10080				COLLAR	1	- #0136		
	41LD-10081				COLLAR	1	#0137 -	B	
8	41LD-10090				COLLAR	1			
	41LD-90090				COLLAR(FOR A/S)	1	#0001 -	-	FOR A/S(+3mm)
9	41LD-10100				PLATE	1			
12	S700-090206				SEAL-SUST,DKIY	2			
14	S017-120452				BOLT-HEXAGON HEAD	20	- #0581		
					BOLT-HEXAGON HEAD	12	#0582 -	A	
15	S441-120002				WASHER-HARDENED	20			
16	41LD-10140				SHIM(0.1)	2			
17	41LD-10150				SHIM(0.5)	2			
19	41LD-10171				COVER	1			
20	S017-120402				BOLT-HEX	8	#0582 -	A	

COUNTERWEIGHT

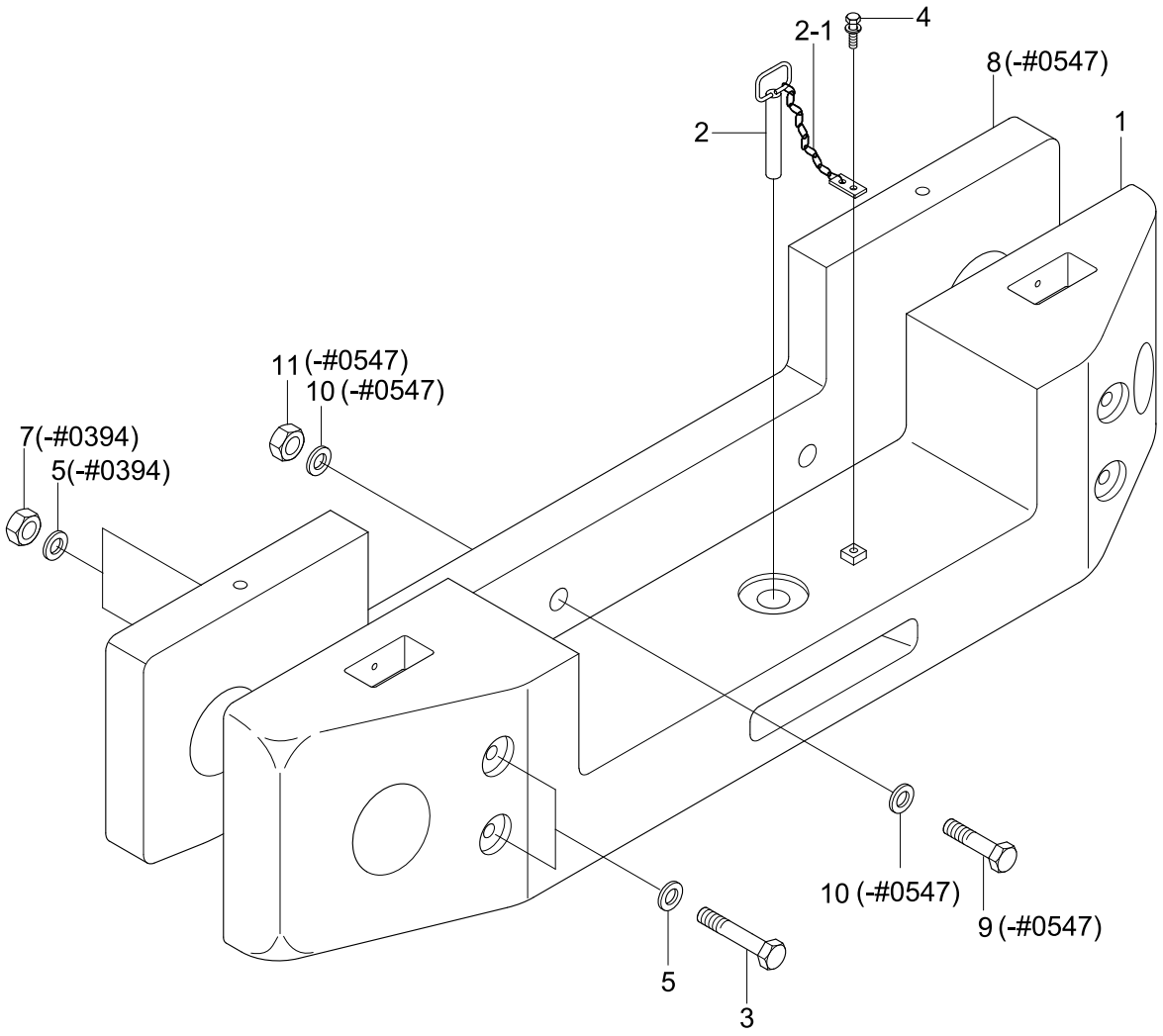

Item	Part_No	IS	Ord	T	Description	Qty	Serial_No	ITC	Remark
1	51LD-10012				COUNTERWEIGHT	1	- #1210		HL757-7
	51LD-10100				COUNTERWEIGHT	1	#1211 -	D	HL757-7
	51LD-11010				COUNTERWEIGHT	1	#0510 -	-	HL757XTD-7
	51LD-10012				COUNTERWEIGHT	1			
	51LD-11010				COUNTERWEIGHT	1	#0548 - #1210	-	HL757XTD-7
	51LD-11100				COUNTERWEIGHT	1	#1211 -	D	HL757XTD-7
2	51LD-10021				PIN ASSY	1			
2-1	54L3-00940				.CHAIN ASSY	1			
3	S018-302002				BOLT-HEX	4	- #0394		HL757-7
	S018-30210D				BOLT-HEX	4	#0395 - #0848	D	HL757-7
	S017-30210D				BOLT-HEX	4	#0849 -	D	HL757-7
	S018-30250D				BOLT-HEX	4	- #0547		HL757XTD-7
	S018-30230D				BOLT-HEX	4	#0548 - #0848	D	HL757XTD-7
	S017-30230D				BOLT-HEX	4	#0849 -	D	HL757XTD-7
4	S037-102056				BOLT-W/WASHER	1			
5	S441-300006				WASHER-HARDENED	8	- #0394		
					WASHER-HARDENED	4	#0395 -	A	
7	S206-301002				NUT-HEX	4	- #0394	-	
8	51LD-10030				ADDITIONAL CWT	1	- #0547	-	HL757XTD-7
9	S017-241202				BOLT-HEX	2	- #0547	-	HL757XTD-7
10	S441-240002				WASHER-HARDENED	4	- #0547	-	HL757XTD-7
11	S207-241002				NUT-HEX	2	- #0547	-	HL757XTD-7

UNDER GUARD

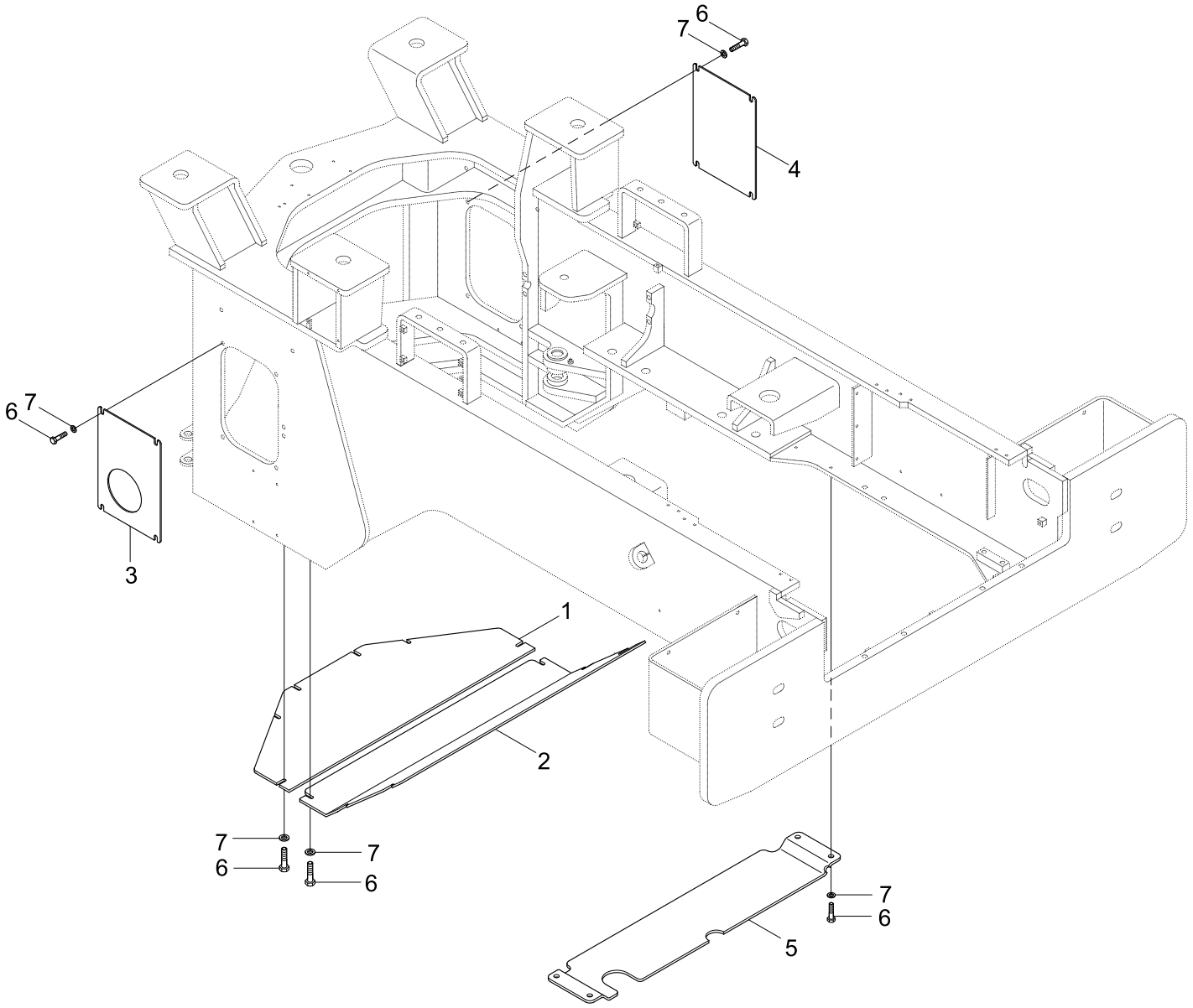

Item	Part_No	IS	Ord	T	Description	Qty	Serial_No	ITC	Remark
1	51LD-90011				PLATE	1			
2	51LD-90021				PLATE	1			
3	51LD-90030				PLATE	1			
4	51LD-90040				PLATE	1			
5	51LD-90050				PLATE	1			
6	S017-120352				BOLT-HEX	24			
7	S441-120002				WASHER-HARDENED	24			

CAB MOUNTING

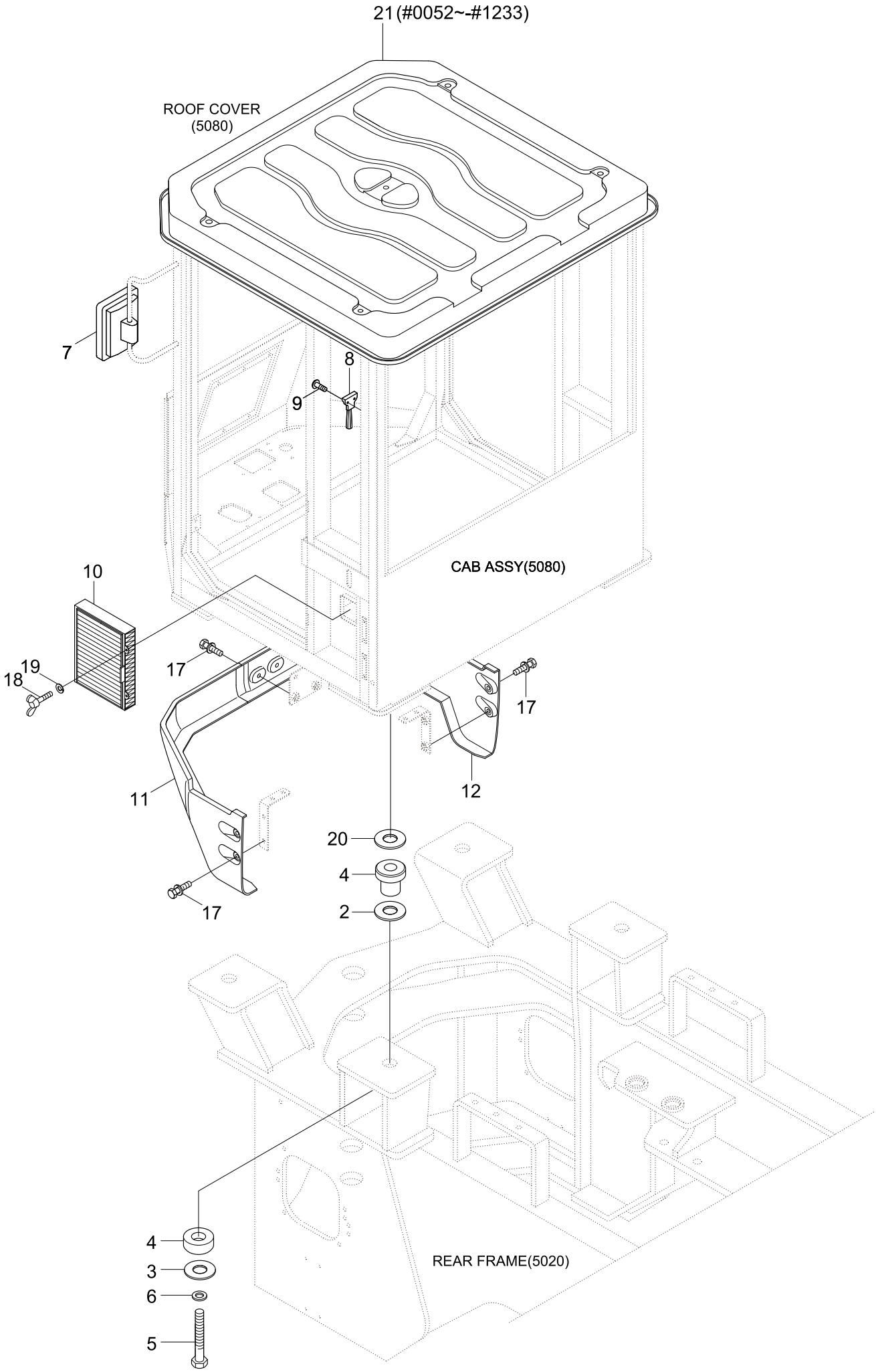

Item	Part_No	IS	Ord	T	Description	Qty	Serial_No	ITC	Remark
2	74L1-10061				SPACER	4			
3	71LB-00240				WASHER-SNUBBING	4			
4	71LF-00230				ISOLATION MOUNT-CAB	4			
5	S018-271652				BOLT-HEX	4			
6	S403-271002				WASHER-PLAIN	4			
7	71LB-00111				MIRROR ASSY-EXT	2			
8	71E1-60340				HAMMER-SAFETY	1			
9	S141-040102				SCREW-FLAT HD	2			
10	71LB-00290				FILTER ASSY	1			
11	71LB-00122				FRONT COVER-LOWER,LH	1			
12	71LB-00132				FRONT COVER-LOWER,RH	1			
17	S037-122052				BOLT-W/WASHER	6			
18	S091-050152				BOLT-WING	2			
19	S401-052002				WASHER-PLAIN	2			
20	71LB-00300				SPACER-UP	4			
21	71LB-01131				COVER-ROOF	1	#0052 - #1233	-	SEE 5080

CAB(1/5)

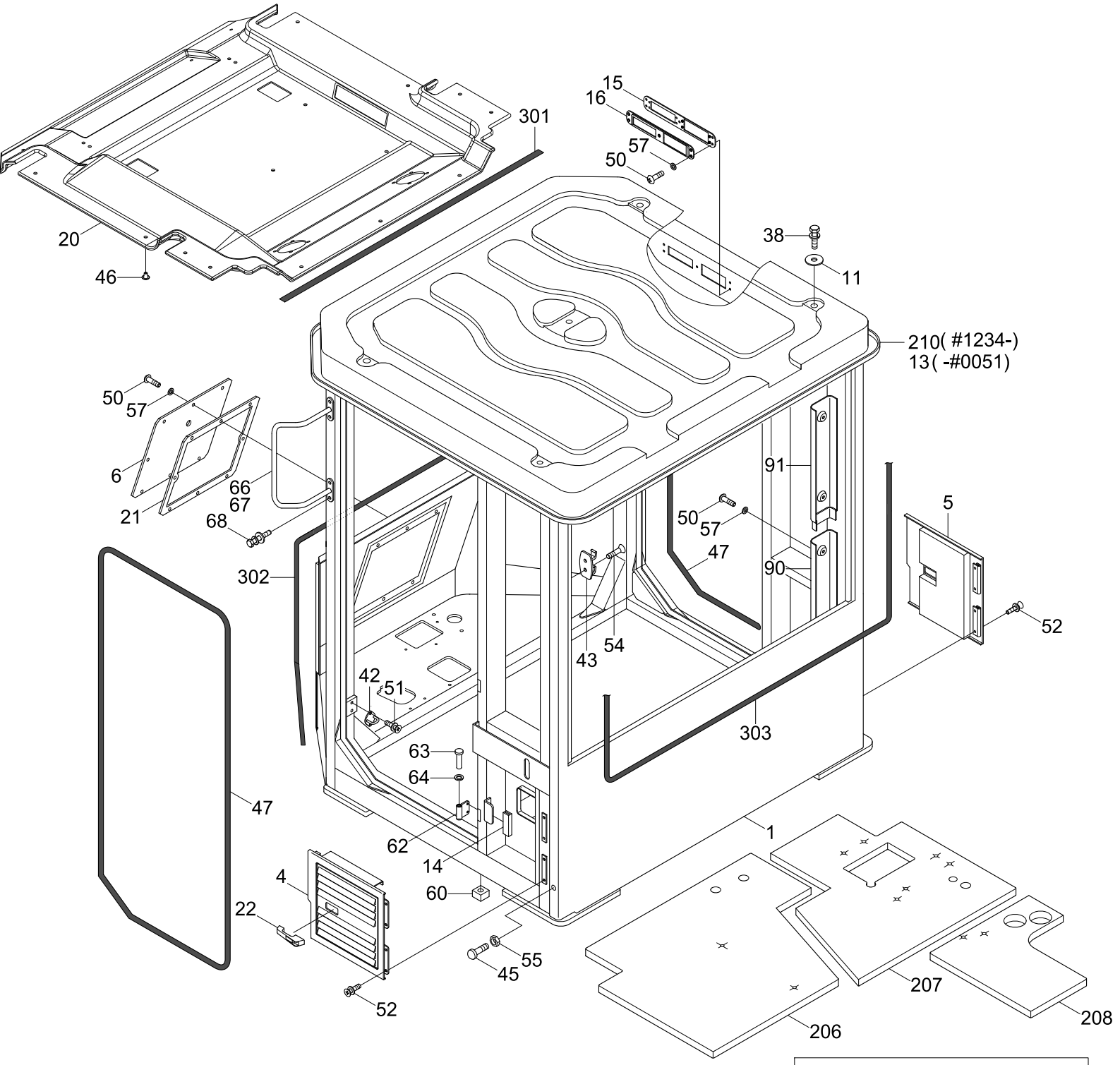
301
15
16
57
50
38
11
20
46
210(#1234-)
13(-#0051)
50
57
6
66
67
21
68
91
5
50
57
47
90
52
302
43
54
42
51
303
63
64
47
1
62
14
4
60
22
55
45
52
207
208
206

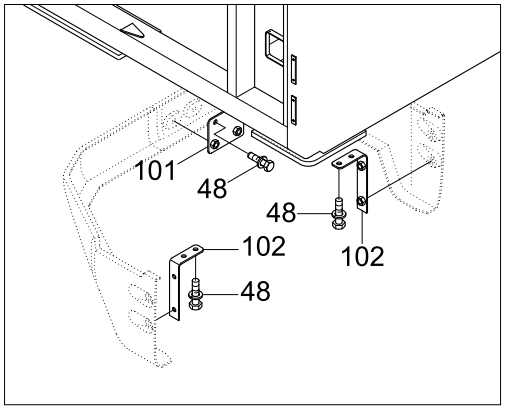
101
48
48
102
102
48

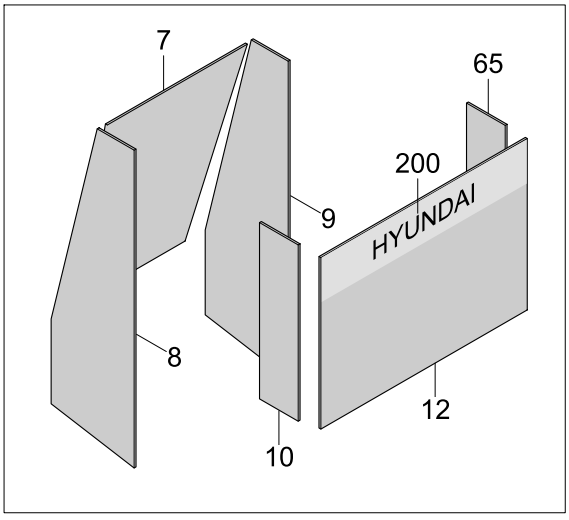
7
65
200
9
HYUNDAI
8
12
10

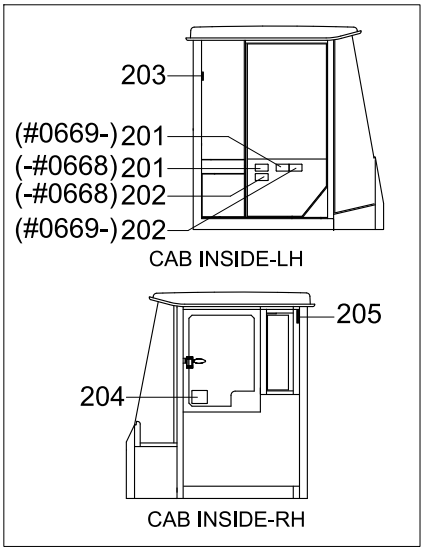
203
(#0669-) 201
(-#0668) 201
(-#0668) 202
(#0669-) 202
CAB INSIDE-LH
205
204
CAB INSIDE-RH

Item	Part_No	IS	Ord	T	Description	Qty	Serial_No	ITC	Remark
	71LB-00013				CAB ASSY	1	- #0051		FIXED WINDOW
	71LB-00014				CAB ASSY	1	#0052 - #0245	A	FIXED WINDOW
	71LB-00015				CAB ASSY	1	#0246 - #0459	B	FIXED WINDOW
	71LB-00016				CAB ASSY	1	#0460 - #0938	B	FIXED WINDOW
	71LB-00017				CAB ASSY	1	#0939 - #1173	D	FIXED WINDOW
	71LB-00019				CAB ASSY	1	#1174 - #1210	B	FIXED WINDOW
	71LB-00090				CAB ASSY	1	#1211 - #1232	D	FIXED WINDOW
	71LB-00092				CAB ASSY	1	#1233 - #1594	D	FIXED WINDOW
	71LB-00090				CAB ASSY	1	#1211 -	D	FIWED WINDOW
	71LB-00093				CAB ASSY	1	#1595 - #1623		FIXED WINDOW
	71LB-00094				CAB ASSY	1	#1624 -		FIXED WINDOW
	71LB-00070				CAB ASSY-F/WIN,L/NOISE	1	#0669 - #0938	-	FIXED,LOW NOISE
*	71LB-00071				CAB ASSY-F/WIN,L/NOISE	1	#0939 - #1173	D	FIXED,LOW NOISE
	71LB-00073				CAB ASSY-F/WIN,L/NOISE	1	#1174 - #1210	B	FIXED,LOW NOISE
	71LB-00074				CAB ASSY-F/WIN,L/NOISE	1	#1211 - #1232	D	FIXED,LOW NOISE
	71LB-00076				CAB ASSY-F/WIN,L/NOISE	1	#1233 - #1594	D	FIXED,LOW NOISE
	71LB-00077				CAB ASSY-F/WIN,L/NOISE	1	#1595 - #1623		FIXED,LOW NOISE
	71LB-00078				CAB ASSY-F/WIN,L/NOISE	1	#1624 -		FIXED,LOW NOISE
	71LB-00020				CAB ASSY	1	- #0051		SLIDING WINDOW
	71LB-00021				CAB ASSY	1	#0052 - #0245	A	SLIDING WINDOW
	71LB-00022				CAB ASSY	1	#0246 - #0459	B	SLIDING WINDOW
	71LB-00023				CAB ASSY	1	#0460 - #0938	B	SLIDING WINDOW
	71LB-00024				CAB ASSY	1	#0939 - #1173	D	SLIDING WINDOW
	71LB-00026				CAB ASSY	1	#1174 - #1210	B	SLIDING WINDOW
	71LB-00027				CAB ASSY	1	#1211 - #1232	D	SLIDING WINDOW

Item	Part_No	IS	Ord	T	Description	Qty	Serial_No	ITC	Remark
*	71LB-00029				CAB ASSY	1	#1233 -	D	SLIDING WINDOW
*-1	71LB-07010				.CAB SUB ASSY	1	- #0459		SLIDING WINDOW
	71LB-07011				.CAB SUB ASSY	1	#0460 -	B	SLIDING WINDOW
1	71LB-02012				..CABIN WA	1			
*	71LB-00080				CAB ASSY-S/WIN,L/NOISE	1	#0669 - #0938	-	SLIDE,LOW NOISE
	71LB-00081				CAB ASSY-S/WIN,L/NOISE	1	#0939 - #1173	D	SLIDE,LOW NOISE
	71LB-00083				CAB ASSY-S/WIN,L/NOISE	1	#1174 - #1120	B	SLIDE,LOW NOISE
	71LB-00084				CAB ASSY-S/WIN,L/NOISE	1	#1211 - #1232	D	SLIDE,LOW NOISE
	71LB-00086				CAB ASSY-S/WIN,L/NOISE	1	#1233 -	B	SLIDE,LOW NOISE
*-1	71LB-01013				.CAB SUB ASSY	1	- #0459		FIXED WINDOW
	71LB-01014				.CAB SUB ASSY	1	#0460 - #0938	B	FIXED WINDOW
	71LB-01015				.CAB SUB ASSY	1	#0939 - #1189	D	FIXED WINDOW
	71LB-01016				.CAB SUB ASSY	1	#1190 - #1210	D	FIXED WINDOW
	71LB-01017				.CAB SUB ASSY	1	#1211 - #1232	D	FIXED WINDOW
	71LB-01018				.CAB SUB ASSY	1	#1233 -	D	
	71LB-07010				.CAB SUB ASSY	1	- #0459		SLIDING WINDOW
	71LB-07011				.CAB SUB ASSY	1	#0460 - #0938	B	SLIDING WINDOW
	71LB-01015				.CAB SUB ASSY	1	#0939 - #1189	D	SLIDING WINDOW
	71LB-01016				.CAB SUB ASSY	1	#1190 - #1210	D	SLIDING WINDOW
	71LB-01017				.CAB SUB ASSY	1	#1211 - #1232	D	SLIDING WINDOW
	71LB-01018				.CAB SUB ASSY	1	#1233 -	D	
1	71LB-02012				..CAB WA	1	- #0938		SLIDING WINDOW
	71LB-02013				..CAB WA	1	#0939 - #1210	D	SLIDING WINDOW
	71LB-02014				..CAB WA	1	#1211 -	D	SLIDING WINDOW
4	71LB-01041				..COVER ASSY-LH	1			AIRCON FILTER

Item	Part_No	IS	Ord	T	Description	Qty	Serial_No	ITC	Remark
5	71LB-01051				..COVER ASSY-RH	1			
6	71LB-01061				..COVER WA-W/MOTOR	1			
7	71LB-01071				..GLASS-FRONT,CENTER	1			
8	71LB-01081				..GLASS-FRONT,SIDE,LH	1			
9	71LB-01091				..GLASS-FRONT,SIDE,RH	1			
10	71LB-01101				..GLASS-SIDE,LH	1			
11	71LB-01110				..WASHER-ROOF COVER	5	#0001 -	-	
12	71LB-01121				..GLASS-REAR	1			
13	71LB-01131				..COVER-ROOF	1	- #0051	-	SEE 5070
14	71LB-01140				..PAD-RUBBER	1			
15	71LB-01151				..PLATE WA-CASSETTE	1			
16	71LB-01161				..COVER-CASSETTE	1	- #0684		
	71LB-01162				..COVER-CASSETTE	1	#0685 -	B	
20	71LB-01201				..HEADLINING	1	- #0938		
	71LB-11450				..HEADLINING	1	#0939 -	D	
21	71LB-01211				..PAD-RUBBER	1			
22	71LB-01220				..LATCH ASSY	2			
38	S017-16020D				..BOLT-HEX	5	- #0938		
	S017-20020D				..BOLT-HEX	5	#0939 -	D	
42	71N6-02770				..STRIKER	2			
43	71N6-02920				..HOOK-COAT	1			
45	71EH-13150				..RUBBER-BUMPER	4			
46	E171-1310				..PLUG-HEADLINER	14			
47	S771-039500				..WEATHER STRIP	2			
48	S037-122552				..BOLT-W/WASHER	6			

Item	Part_No	IS	Ord	T	Description	Qty	Serial_No	ITC	Remark
50	S161-080206				..SCREW-CROSS R/ROUND	20			
51	S145-080166				..SCREW-FLAT HD	4			
52	S132-061656				..SCREW-W/WASHER	8			
54	S141-040206				..SCREW-FLAT HD	2			
55	S203-101006				..NUT-HEX	4			
57	S403-082006				..WASHER-PLAIN	20			
60	71LB-01560				..FOAM-SPONGE	1			
62	71LB-01600				..HINGE	6			
63	74L3-05330				..PIN-HINGE	6			
64	74L3-04450				..WASHER-COPPER	6			
65	71LB-01681				..GLASS-SIDE,RH	1			
66	71LB-01692				..HANDRAIL WA-LH	1			
67	71LB-01702				..HANDRAIL WA-RH	1			
68	S037-102026				..BOLT-W/WASHER	4			
90	71LB-20141				..COVER-HARNESS(LOW)	1			
91	71LB-20151				..COVER-HARNESS(UP)	1			
101	71LB-04190				..PLATE WA-FRONT	1			
102	71LB-04200				..PLATE WA-SIDE	2			
301	71LB-03540				..SEAL-FRONT/UP	1	#0001 -	-	
302	71LB-03550				..SEAL-FRONT/LOW	1	#0001 -	-	
303	71LB-03560				..SEAL-REAR	1	#0001 -	-	
301	71LB-03540				..SEAL-FRONT/UP	1	#0001 -	-	
302	71LB-03550				..SEAL-FRONT/LOW	1	#0001 -	-	
303	71LB-03560				..SEAL-REAR	1	#0001 -	-	
200	91LB-21000				.ADHESIVE SUN SCREEN	1	#0246 - #1173	-	

Item	Part_No	IS	Ord	T	Description	Qty	Serial_No	ITC	Remark
200	91LB-21010				.ADHESIVE SUN SCREEN	1	#1174 -	B	
201	91LB-01230				.DECAL-MAX H/REACH	1	#0669 -	-	LOW NOISE
202	91LB-01240				.DECAL-ROLL OVER	1	#0669 -	-	LOW NOISE
203	91LB-01340				.DECAL-HAMMER	1	#0669 -	-	LOW NOISE
204	91N6-07261				.ALTERNATE EXIT	1	#0669 -	-	LOW NOISE
205	91N6-07290				.FIRE	1	#0669 -	-	LOW NOISE
206	71LB-11261				.SPONGE-BOTTOM/LOW(1)	1	#0669 -	-	LOW NOISE
207	71LB-11271				.SPONGE-BOTTOM/LOW(2)	1	#0669 -	-	LOW NOISE
208	71LB-11281				.SPONGE-BOTTOM/LOW(3)	1	#0669 - #0938	-	LOW NOISE
	71LB-04240				.SPONGE-BOTTOM/LOW(3)	1	#0939 -	B	LOW NOISE
210	71LB-01131				.COVER-ROOF	1	#1234 -	A	
*-2	@				.ELECTRIC CAB ASSY	1			NOT

CAB(2/5)

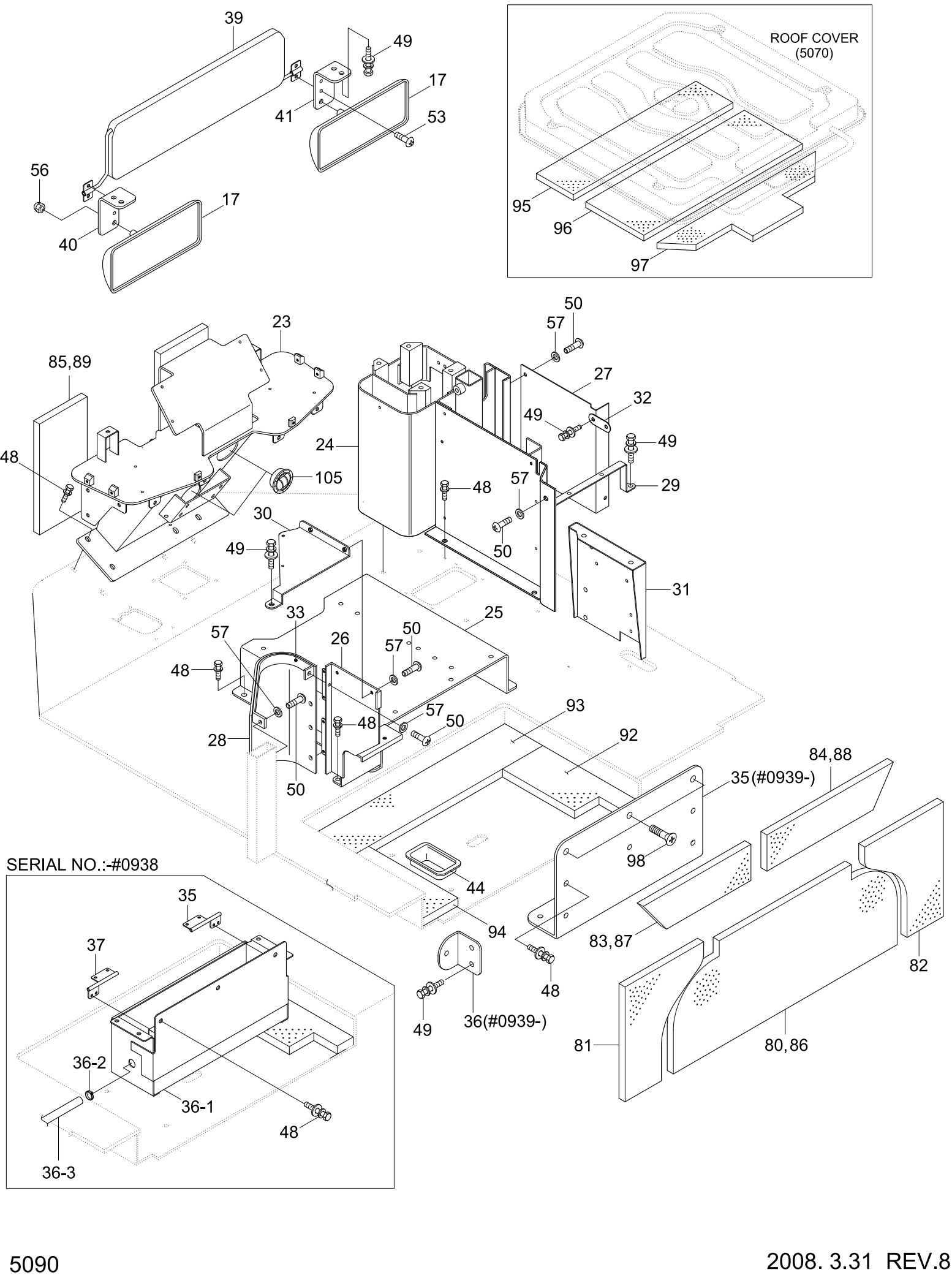
ROOF COVER
(5070)
SERIAL NO.:-#0938
39
49
17
41
53
56
17
40
95
96
97
50
57
23
85,89
27
32
49
24
49
48
105
48
57
29
50
30
49
31
33
25
57
26
50
57
48
93
57
48
50
28
92
50
84,88
35(#0939-)
98
44
94
83,87
82
48
49
36(#0939-)
81
80,86
35
37
36-2
36-1
48
36-3

Item	Part_No	IS	Ord	T	Description	Qty	Serial_No	ITC	Remark
*	@				CAB ASSY	1			NOT
*-1	@				.CAB SUB ASSY	1			NOT
17	71LB-01170				..MIRROR-ROOM	2			
23	71LB-05012				..SUPPORT WA	1	- #0938		
	71LB-11250				..SUPPORT WA-D/BOARD	1	#0939 -	D	
24	71LB-05022				..SUPPORT WA-CONSOLE	1	- #1232		
	71LB-20390				..SUPPORT WA-CONSOLE	1	#1233 -	D	
25	71LB-05032				..SEAT BASE WA	1	- #0403		
	71LB-05033				..SEAT BASE WA	1	#0404 -	A	
26	71LB-05041				..BRACKET WA	1			
27	71LB-05062				..COVER-ELEC	1			
28	71LB-05072				..COVER-WASHER TANK	1			
29	71LB-05082				..BRACKET WA	1			
30	71LB-05091				..BRACKET WA	1			
31	71LB-05102				..BRACKET WA	1			
32	71LB-05110				..PLATE WA-CONSOLE	1			
33	71LB-05121				..COVER-WASHER TANK	1			
34	71LB-02491				..BRACKET WA	1			
35	71LB-05201				..HINGE ASSY-RH	1	- #0938		
	71LB-11370				..PLATE WA-STORAGE BOX	1	#0939 -	D	
36	71LB-05152				..STORAGE BOX ASSY	1	- #0938		
	71LB-11380				..PLATE WA-STORAGE BOX	2	#0939 -	D	
36-1	71LB-05181				...STORAGE BOX WA	1	- #0938	-	
36-2	71N6-20360				...HOSE-STORAGE BOX	1	- #0938	-	
36-3	71N6-20370				...CLIP-HOSE	1	- #0938	-	

Item	Part_No	IS	Ord	T	Description	Qty	Serial_No	ITC	Remark
37	71LB-05161				..HINGE ASSY-STORAGE	1	- #0938	-	
39	74L3-04642				..SUN VISOR ASSY	1			
40	71LB-01710				..PLATE-R/MIRROR,LH	1			
41	71LB-01720				..PLATE-R/MIRROR,RH	1			
44	71E9-10640				..GROMMET	2			
48	S037-122552				..BOLT-W/WASHER	22			
49	S035-082026				..BOLT-W/WASHER	19			
50	S175-080206				..SCREW-SOCKET RD HD	34			
53	S141-060152				..SCREW-FLAT HD	4			
56	S275-060006				..NUT-SELF LOCKING	4			
57	S403-082006				..WASHER-PLAIN	30			
80	71LB-01740				..FOAM-REAR,LO,CENTER	1			
81	71LB-01750				..FOAM-REAR,LO,LH	1			
82	71LB-01760				..FOAM-REAR,LO,RH	1			
83	71LB-01770				..FOAM-REAR,UP,LH	1			
84	71LB-01780				..FOAM-REAR,UP,RH	1			
85	71LB-01790				..FOAM-FRONT	1			
86	71LB-01800				..EVA SHEET-RR,LO,CENTER	1			
87	71LB-01810				..EVA SHEET-RR,UP,LH	1			
88	71LB-01820				..EVA SHEET-RR,UP,RH	1			
89	71LB-01830				..EVA SHEET-FRONT	1			
92	71LB-04090				..FOAM-BOTTOM(1)	1			
93	71LB-04100				..FOAM-BOTTOM(2)	1			
94	71LB-04110				..FOAM-BOTTOM(3)	1			
95	71LB-04130				..FOAM-ROOF(1)	1			

Item	Part_No	IS	Ord	T	Description	Qty	Serial_No	ITC	Remark
96	71LB-04140				..FOAM-ROOF(2)	1			
97	71LB-04150				..FOAM-ROOF(3)	1			
98	S145-120166				..SCREW-FLAT HD	3	#0939 -	-	
105	71N6-03300				..AIR VENT	2	#0460 -	-	

CAB(3/5, DUCT)

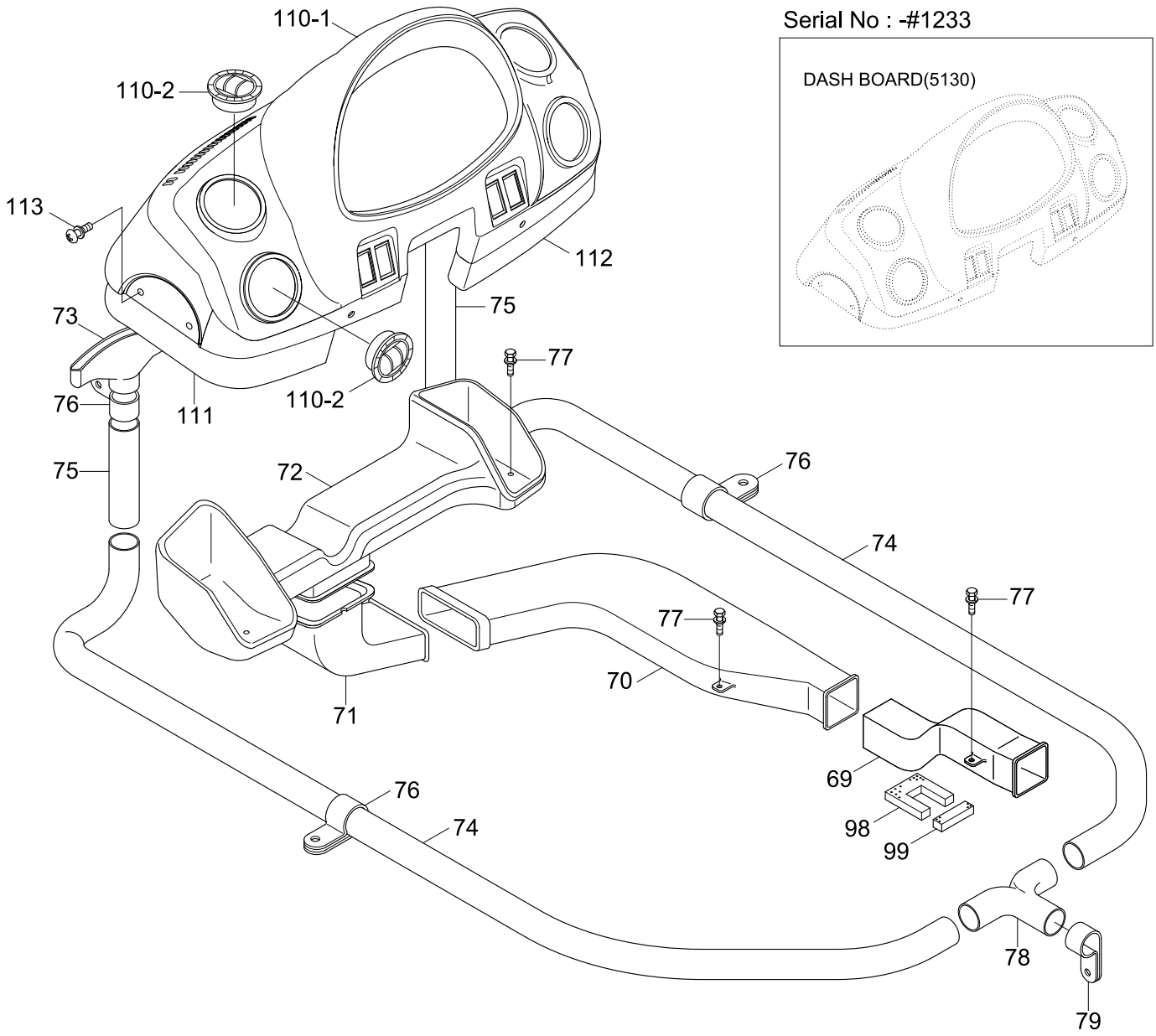
110-1
110-2
113
112
73
75
77
76
111
110-2
75
72
76
74
77
77
70
71
69
98
99
76
74
78
79
Serial No : -#1233
DASH BOARD(5130)

Item	Part_No	IS	Ord	T	Description	Qty	Serial_No	ITC	Remark
*	@				CAB ASSY	1			NOT
*-1	@				.CAB SUB ASSY	1			NOT
69	71LB-10011				..DUCT-FRONT(1)	1			
70	71LB-10021				..DUCT-FRONT(2)	1			
71	71LB-10031				..DUCT-FRONT(3)	1			
72	71LB-10041				..DUCT-FRONT(4)	1			
73	71LB-10081				..DUCT-DEFROSTER	1			
74	71LB-10090				..HOSE-DEFROSTER(1)	2			
75	71LB-10100				..HOSE-DEFROSTER(2)	2			
76	71N6-20230				..CLAMP-HOSE	4			
77	S035-082042				..BOLT-W/WASHER	16			
78	71LB-10130				..CONNECTOR-HOSE	1			
79	S520-055000				..CLAMP-HOSE	9			
98	71LB-04160				..FOAM-BOTTOM(4)	1			
99	71LB-04170				..PAD-BOTTOM	1			
110	71LB-20320				..DASHBOARD ASSY	1	#1234 -	-	
110-1	71LB-30021				...DASHBOARD	1	#1234 -	-	
110-2	71N6-03300				...AIR VENT	2	#1234 -	-	
111	71LB-20161				..COVER-DASHBOARD,LH	1	#1234 -	-	
112	71LB-20171				..COVER-DASHBOARD,RH	1	#1234 -	-	
113	S132-08152V				..SCREW-W/WASHER	16	#1234 -	-	

Item	Part_No	IS	Ord	T	Description	Qty	Serial_No	ITC	Remark
*-1	@				CAB SUB ASSY	1	- #0938		NOT
*	@				CAB ASSY	1	#0939 -	A	NOT
	71LB-01021				.SIDE DOOR ASSY-LH	1			
	71LB-01031				.SIDE DOOR ASSY-RH	1			
1	71LB-01231				..SIDE DOOR WA-LH	1			
	71LB-01281				..SIDE DOOR WA-RH	1			
2	71LB-01241				..GLASS-DOOR,UPPER,LH	1			
	71LB-04050				..GLASS-DOOR,UPPER,RH	1			
3	71LB-01251				..HANDLE ASSY-LH	1			
	71LB-01301				..HANDLE ASSY-RH	1			
3-1	71LB-01651				...HANDLE	1			
3-2	71LB-04010				...HANDLE-INNER,LH	1			
	71LB-04020				...HANDLE-INNER,RH	1			
3-2-1	71L7-01160				....KNOB	1			
3-2-2	71LB-04060				....PLATE-LH	1			
	71LB-04070				....PLATE-RH	1			
3-2-3	71L7-01180				....PLATE WA	1			
3-2-6	S401-102002				....WASHER-PLAIN	2			
3-2-7	S601-010001				....RING-RETAINING	1			
3-3	71N6-03410				...LATCH	1			
3-4	71LB-04030				...ROD-HANDLE	1			
3-5	71LB-04040				...ROD-HANDLE	1			
3-6	71N6-03440				...PIN-1	2			
3-7	71N6-03450				...PIN	1			
3-8	S560-050006				...E-RING	3			

Item	Part_No	IS	Ord	T	Description	Qty	Serial_No	ITC	Remark
4	71LB-01262				..COVER-DOOR,LH	1			
	71LB-01312				..COVER-DOOR,RH	1			
5	S131-051546				..SCREW-W/WASHER	8			
6	S131-061646				..SCREW-W/WASHER	7			
7	71LB-01271				..PAD-RUBBER	1			
8	17E1-5146				..BUMPER-DOOR	2			
9	71N6-03650				..STRIKER	1			
10	S203-101006				..NUT-HEX	4			
11	71LB-01940				..FOAM-SPONGE,LH	1			
	71LB-01950				..FOAM-SPONGE,RH	1			
12	71LB-01960				..HANDRAIL WA-LH	1			
	71LB-01970				..HANDRAIL WA-RH	1			
13	S037-102026				..BOLT-W/WASHER	6			
14	E171-1176				..ASHTRAY	1			RH ONLY
15	S141-040166				..SCREW-FLAT HD	2			RH ONLY
16	S141-060156				..SCREW-FLAT HD	4	#0001 -	-	
304	71LB-03570				..SEAL-DOOR	1	#0001 -	-	

CAB(4/5, SIDE DOOR, SLIDING WINDOW)

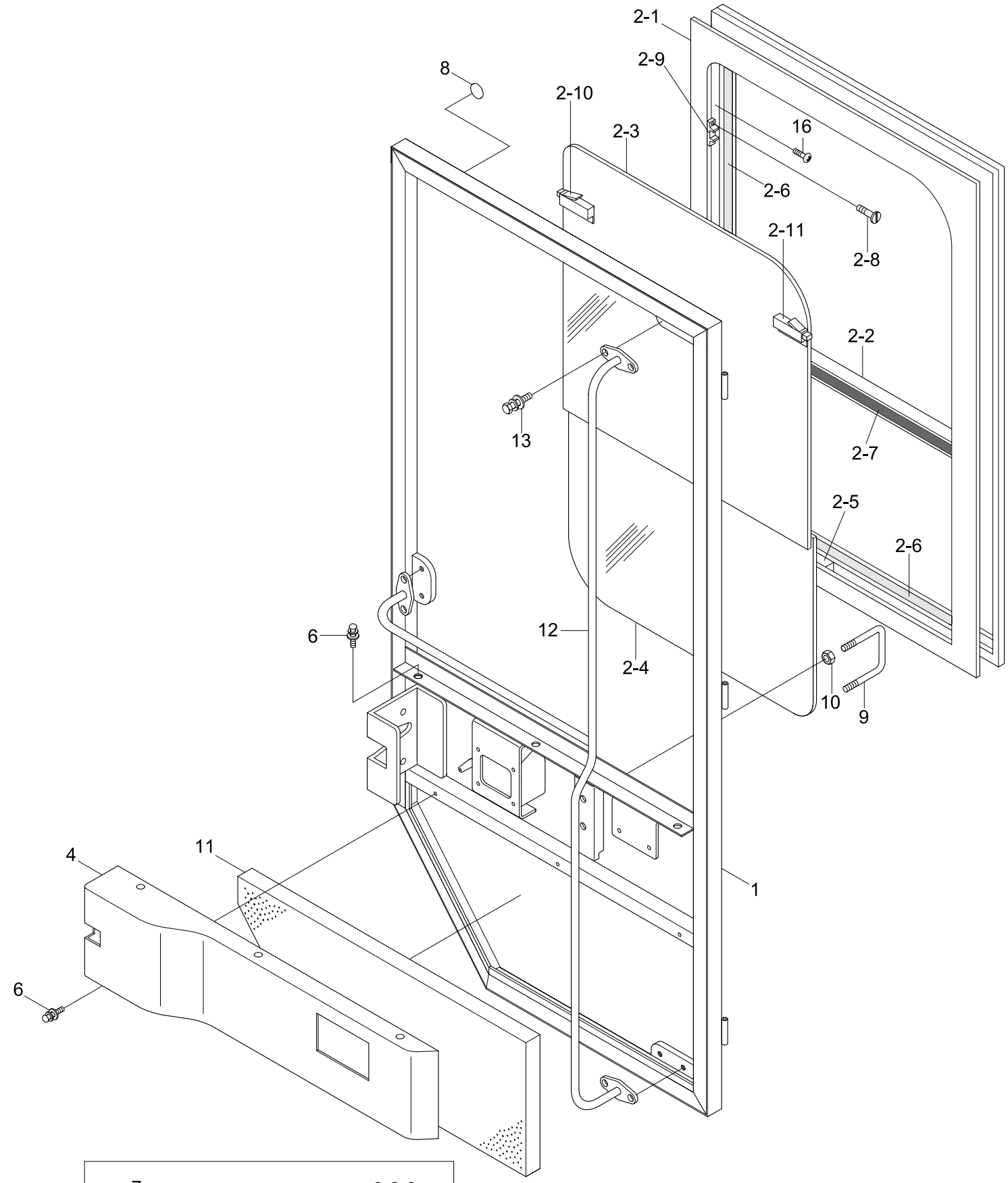

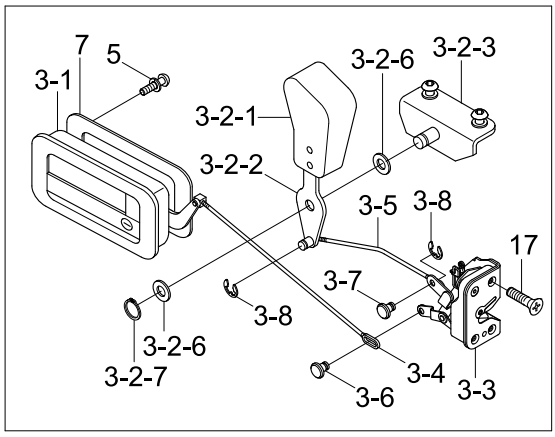

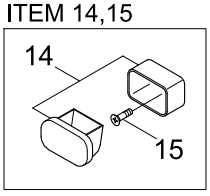

Item	Part_No	IS	Ord	T	Description	Qty	Serial_No	ITC	Remark
*-1	@				CAB SUB ASSY	1	- #0938		NOT
*	@				CAB ASSY	1	#0939 -	A	NOT
	71LB-07020				.SIDE DOOR ASSY-LH	1			
	71LB-07030				.SIDE DOOR ASSY-RH	1			
1	71LB-07040				..SIDE DOOR WA-LH	1			
	71LB-07050				..SIDE DOOR WA-RH	1			
2	71LB-07060				..SLIDING WINDOW ASSY	1			
2-1	71LB-07310				...AL SASH-A TYPE	1			
2-2	71LB-07320				...AL SASH-B TYPE	1			
2-3	71LB-07330				...GLASS-OUT	1			
2-4	71LB-07340				...GLASS-IN	1			
2-5	71LB-07350				...STOPPER-GLASS	1			
2-6	E171-1163				...SEAL	2			
2-7	E171-1164				...SEAL	1			
2-8	S141-030082				...SCREW-FLAT HD	12			
2-9	71L1-3328				...BLOCK	6			
2-10	71L1-3332				...LOCK-LH	1			
2-11	71L1-3353				...LOCK-RH	1			
3	71LB-01251				..HANDLE ASSY-LH	1			
	71LB-01301				..HANDLE ASSY-RH	1			
3-1	71LB-01651				...HANDLE	1			
3-2	71LB-04010				...HANDLE-INNER,LH	1			
	71LB-04020				...HANDLE-INNER,RH	1			
3-2-1	71L7-01160				....KNOB	1			
3-2-2	71LB-04060				....PLATE-LH	1			

Item	Part_No	IS	Ord	T	Description	Qty	Serial_No	ITC	Remark
3-2-2	71LB-04070				....PLATE-RH	1			
3-2-3	71L7-01180				....PLATE WA	1			
3-2-6	S401-102002				....WASHER-PLAIN	2			
3-2-7	S601-010001				....RING-RETAINING	1			
3-3	71N6-03410				...LATCH	1			
3-4	71LB-04030				...ROD-HANDLE	1			
3-5	71LB-04040				...ROD-HANDLE	1			
3-6	71N6-03440				...PIN-1	2			
3-7	71N6-03450				...PIN	1			
3-8	S560-050006				...E-RING	3			
4	71LB-07070				..COVER-DOOR,LH	1			
	71LB-07080				..COVER-DOOR,RH	1			
5	S131-051546				..SCREW-W/WASHER	8			
6	S131-061646				..SCREW-W/WASHER	7			
7	71LB-01271				..PAD-RUBBER	1			
8	17E1-5146				..BUMPER-DOOR	2			
9	71N6-03650				..STRIKER	1			
10	S203-101006				..NUT-HEX	4			
11	71LB-07090				..FOAM-DOOR/LH	1			
	71LB-07100				..FOAM-DOOR/RH	1			
12	71LB-07110				..HANDRAIL WA-LH	1			
	71LB-07120				..HANDRAIL WA-RH	1			
13	S037-102026				..BOLT-W/WASHER	6			
14	E171-1176				..ASHTRAY	1			
15	S141-040166				..SCREW-FLAT HD	2			

Item	Part_No	IS	Ord	T	Description	Qty	Serial_No	ITC	Remark
16	S151-040162				..SCREW-TAPPING	10			
17	S141-060156				..SCREW-FLAT HD	4	#0001 -	-	
304	71LB-03570				..SEAL-DOOR	1	#0001 -	-	

CAB(5/5, DOOR LATCH ASSY)

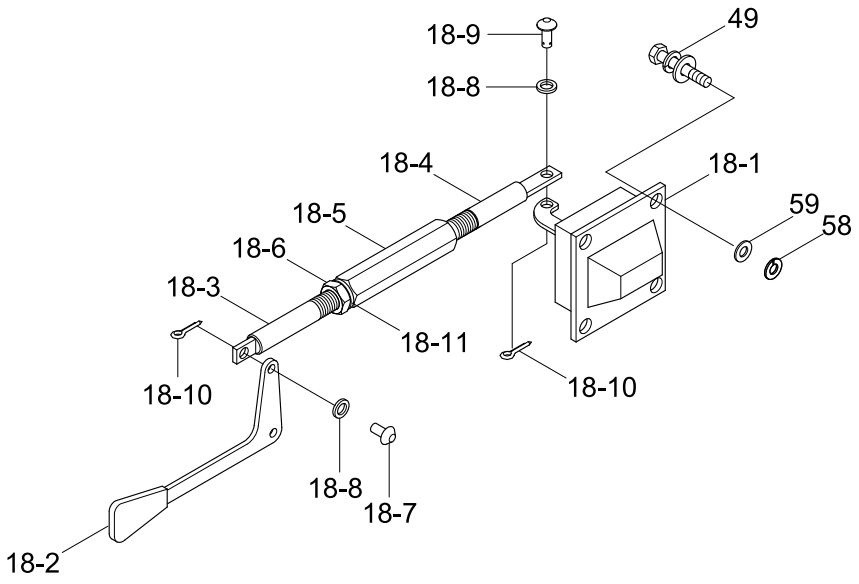

Item	Part_No	IS	Ord	T	Description	Qty	Serial_No	ITC	Remark
*-1	@				CAB SUB ASSY	1			NOT
18	71LB-01181				.LATCH ASSY-BACK/LH	1			
	71LB-01191				.LATCH ASSY-BACK/RH	1			
18-1	71EH-11260				..LOCK ASSY-LH	1			
	71LB-01340				..LOCK ASSY-RH	1			
18-2	71LB-01620				..LEVER ASSY	1			
18-3	71LB-01320				..ROD	1			
18-4	71LB-01330				..ROD	1			
18-5	71EH-11210				..NUT	1			
18-6	S205-081002				..NUT-HEX	1			
18-7	71EH-11250				..PIN-ROUND	1			
18-8	S403-05200B				..WASHER-PLAIN	2	#0001 -	-	
18-9	71EH-11240				..PIN-ROUND	1			
18-10	S051-050002				..PIN-SELF LOCK	2	#0001 -	-	
18-11	S411-080006				..WASHER-SPRING	1			
49	S035-082026				.BOLT-W/WASHER	8			

CONSOLE BOX(-#0938)

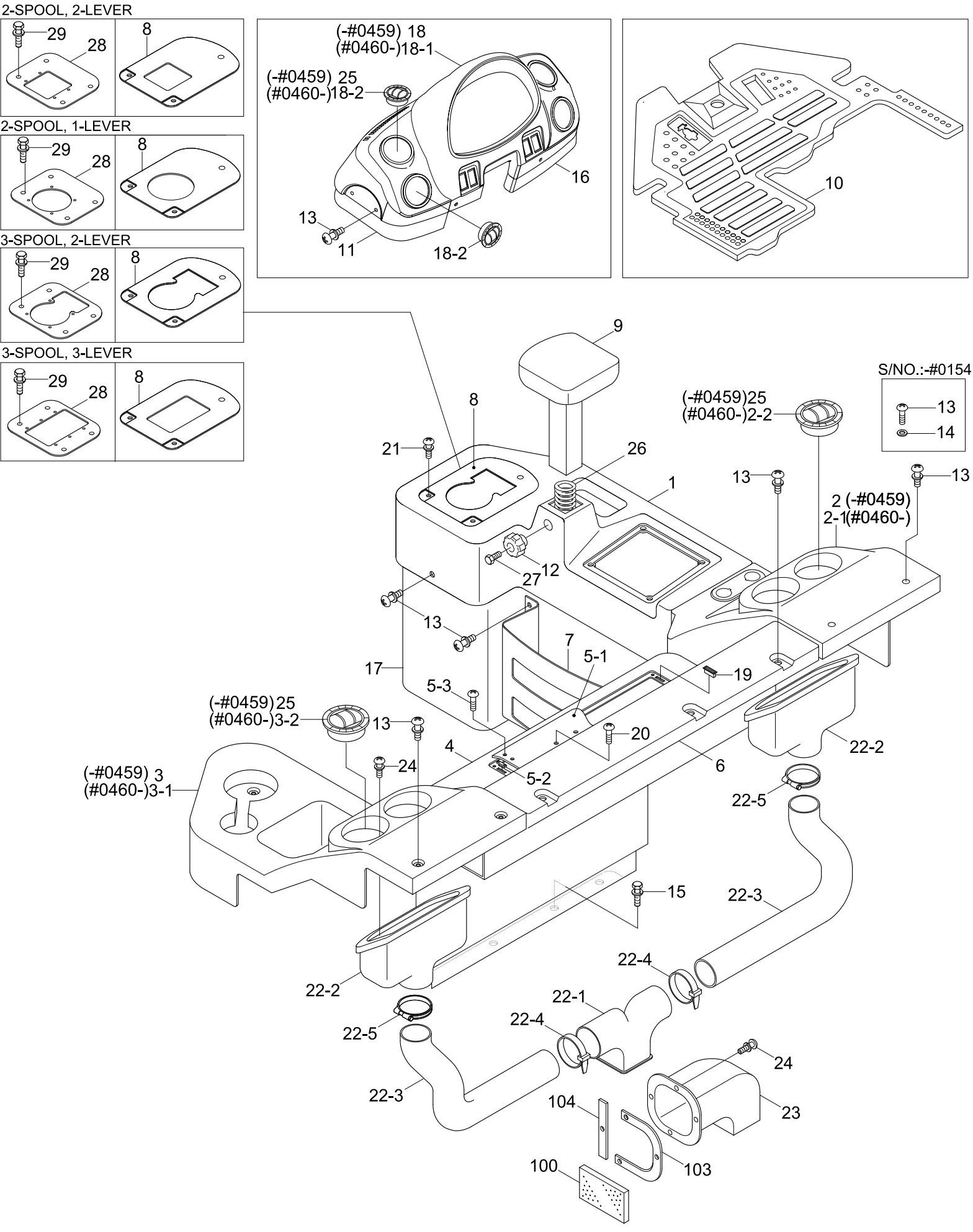

Item	Part_No	IS	Ord	T	Description	Qty	Serial_No	ITC	Remark
1	71LB-20011				CONSOLE BOX-RH,FR	1			
2	71LB-20021				CONSOLE BOX-RH,RR	1	- #0459		
	71LB-20300				CONSOLE BOX ASSY-RH/RR	1	#0460 -	B	
2-1	71LB-20021				.CONSOLE BOX-RH,RR	1	#0460 -	-	
2-2	71N6-03300				.AIR VENT	2	#0460 -	-	
3	71LB-20031				CONSOLE BOX-LH	1	- #0459		
	71LB-20310				CONSOLE BOX ASSY-LH	1	#0460 -	B	
3-1	71LB-20031				.CONSOLE BOX-LH	1	#0460 -	-	
3-2	71N6-03300				.AIR VENT	2	#0460 -	-	
4	71LB-20051				COVER-AIRCON	1			
5	71LB-20180				COVER ASSY-S/BOX	1			
5-1	71LB-20061				.COVER-STORAGE BOX	1			
5-2	71LB-05170				.TAP PLATE-STORAGE	2			
5-3	S141-060102				.SCREW-C/RD	4			
6	71LB-20090				COVER-WIPER MOTOR	1			
7	71LB-20101				BOOK BOX	1			
8	71LB-20111				COVER-J/LEVER/3S/2L	1			3-SPOOL,2-LEVER
	71LB-20200				COVER-J/LEVER/2S/1L	1			2-SPOOL,1-LEVER
	71LB-20210				COVER-J/LEVER/2S/2L	1			2-SPOOL,2-LEVER
	71LB-20220				COVER-J/LEVER/3S/3L	1			3-SPOOL,3-LEVER
9	71LB-20121				WRIST REST ASSY	1			
10	71LB-20131				MAT-FLOOR	1			
11	71LB-20161				COVER-DASHBOARD,LH	1			
12	61S1-1037				HANDLE	1			
13	S161-080206				SCREW-RD HD	51	- #0154		

Item	Part_No	IS	Ord	T	Description	Qty	Serial_No	ITC	Remark
13	S132-081526				SCREW-W/WASHER	51	#0155 -	B	
14	S403-082006				WASHER-PLAIN	51	- #0154	-	
15	S035-082026				BOLT-W/WASHER	12			
16	71LB-20171				COVER-DASHBOARD,RH	1			
17	71LB-05051				COVER-RCV	1			
18	71LB-30021				DASHBOARD	1	- #0459		
	71LB-20320				DASHBOARD ASSY	1	#0460 -	B	
18-1	71LB-30021				.DASHBOARD	1	#0460 -	-	
18-2	71N6-03300				.AIR VENT	4	#0460 -	-	
19	71N6-20390				MAGNETIC	2			
20	S141-060152				SCREW-FLAT HD	4			
21	S131-051546				SCREW-W/WASHER	2			
22	71LB-10150				DUCT ASSY-REAR	1			
22-1	71LB-10051				.DUCT-REAR(1)	1			
22-2	71LB-10061				.DUCT-REAR(2)	2			
22-3	71LB-10070				.HOSE-REAR	2			
22-4	S552-102370				.CLAMP-BAND	2			
22-5	S520-085000				.CLAMP-HOSE	2			
23	71LB-10111				DUCT-INLET	1			
24	S151-030106				SCREW-TAPPING	3			
25	71N6-03300				AIR VENT	10	- #0459	-	
26	71LB-20190				SPRING	1			
27	S015-080356				BOLT-HEX	1			
28	71LB-20230				PLATE-RCV/2S/1L	1			2-SPOOL,1-LEVER
	71LB-20240				PLATE-RCV/3S/2L	1			3-SPOOL,2-LEVER

Item	Part_No	IS	Ord	T	Description	Qty	Serial_No	ITC	Remark
28	71LB-20250				PLATE-RCV/2S/2L	1			2-SPOOL,2-LEVER
	71LB-20260				PLATE-RCV/3S/3L	1			3-SPOOL,3-LEVER
29	S037-122526				BOLT-W/WASHER	4			
100	71LB-04180				FOAM-BOTTOM(5)	1			
103	71LB-04220				PLATE-DUCT(1)	1			
104	71LB-04230				PLATE-DUCT(2)	1			

CONSOLE BOX(#0939-)

2-SPOOL, 1-LEVER

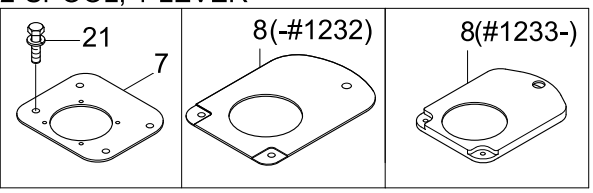

3-SPOOL, 2-LEVER

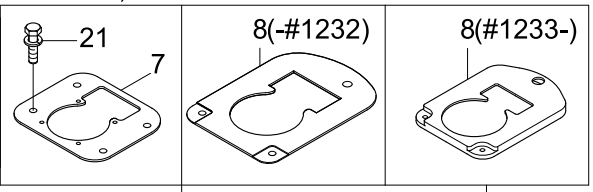

2-SPOOL, 2-LEVER(-#1232)

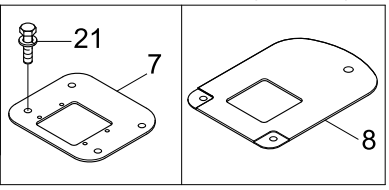

3-SPOOL, 3-LEVER(-#1232)

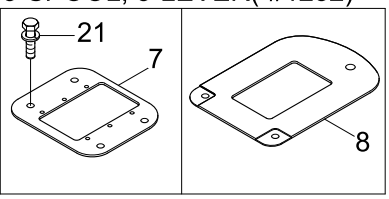

FINGERTIP CONTROL
2-SPOOL, 2-LEVER(#1233-)

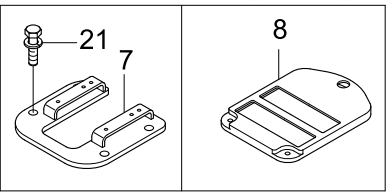

3-SPOOL, 3-LEVER(#1233-)

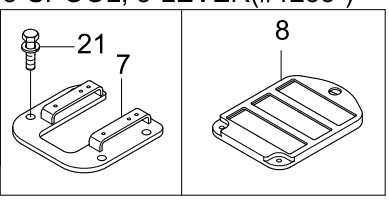

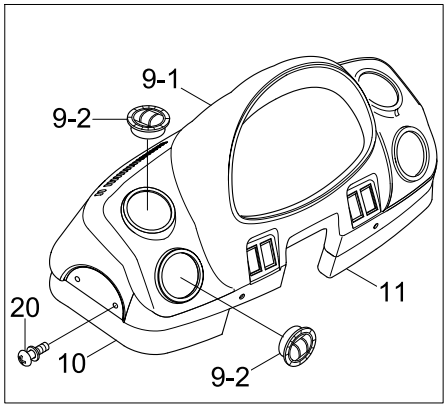

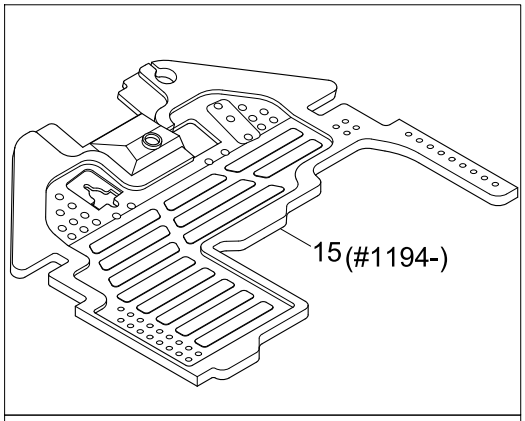

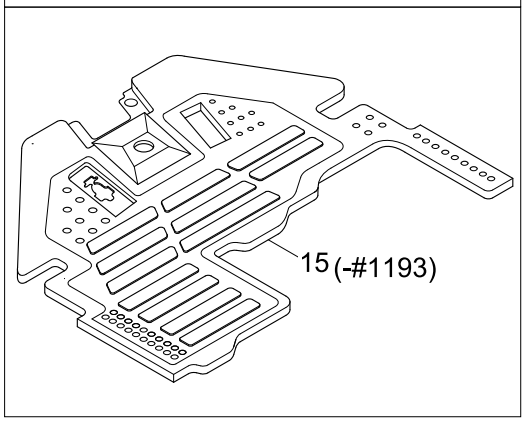

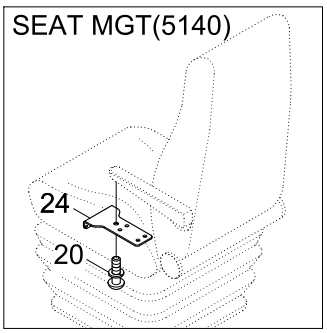

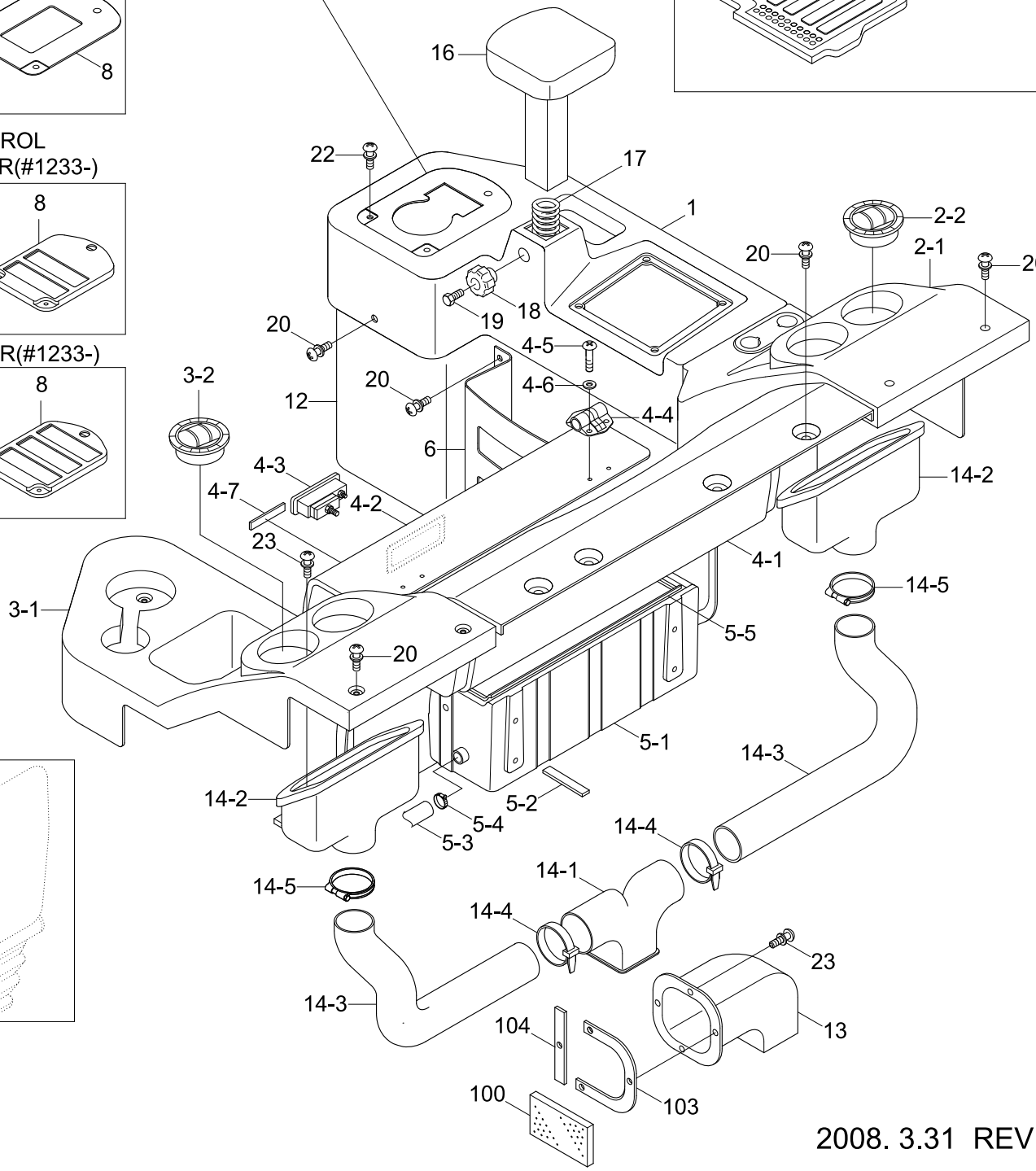

Item	Part_No	IS	Ord	T	Description	Qty	Serial_No	ITC	Remark
1	71LB-20011				CONSOLE BOX-RH,FR	1			
2	71LB-20300				CONSOLE BOX ASSY-RH/RR	1			
2-1	71LB-20021				.CONSOLE BOX-RH,RR	1			
2-2	71N6-03300				.AIR VENT	2			
3	71LB-20310				CONSOLE BOX ASSY-LH	1			
3-1	71LB-20031				.CONSOLE BOX-LH	1			
3-2	71N6-03300				.AIR VENT	2			
4	71LB-21022				REAR COVER ASSY	1			
4-1	71LB-21031				.REAR COVER-BODY	1			
4-2	71LB-21041				.COVER-DOOR	1			
4-3	71LB-21180				.LATCH ASSY	1			
4-4	71N6-21900				.HINGE	2			
4-5	S161-050166				.SCREW-CROSS R/ROUND	4			
4-6	S403-052006				.WASHER-PLAIN	4			
4-7	71LB-21160				.PAD-RUBBER	4			
5	71LB-21150				STORAGE BOX ASSY	1			
5-1	71LB-21051				.STORAGE BOX	1			
5-2	71LB-21170				.PAD-RUBBER/STORAGE	3			
5-3	71N6-20360				.HOSE-STORAGE BOX	1			
5-4	71N6-20370				.CLIP-HOSE	1			
5-5	71LB-21190				.SPONGE	1			
6	71LB-20101				BOOK BOX	1			
7	71LB-20230				PLATE-RCV/2S/1L	1			2-SPOOL,1-LEVER
	71LB-20240				PLATE-RCV/3S/2L	1			3-SPOOL,2-LEVER
	71LB-20250				PLATE-RCV/2S/2L	1	- #1232		2-SPOOL,2-LEVER

Item	Part_No	IS	Ord	T	Description	Qty	Serial_No	ITC	Remark
7	71LB-20331				PLATE-RCV	1	#1233 -	D	2-SPOOL,2-LEVER
	71LB-20260				PLATE-RCV/3S/3L	1	- #1232		3-SPOOL,3-LEVER
	71LB-20331				PLATE-RCV	1	#1233 -	D	3-SPOOL,3-LEVER
8	71LB-20200				COVER-J/LEVER/2S/1L	1	- #1232		2-SPOOL,1-LEVER
	71LB-20201				COVER-J/LEVER/2S/1L	1	#1233 -	D	2-SPOOL,1-LEVER
	71LB-20111				COVER-J/LEVER/3S/2L	1	- #1232		3-SPOOL,2-LEVER
	71LB-20112				COVER-J/LEVER/3S/2L	1	#1233 -	D	3-SPOOL,2-LEVER
	71LB-20210				COVER-J/LEVER/2S/2L	1	- #1232		2-SPOOL,2-LEVER
	71LB-20371				COVER-J/LEVER/2S/2L	1	#1233 -	D	2-SPOOL,2-LEVER
	71LB-20220				COVER-J/LEVER/3S/3L	1	- #1232		3-SPOOL,3-LEVER
	71LB-20381				COVER-J/LEVER/3S/3L	1	#1233 -	D	3-SPOOL,3-LEVER
9	71LB-20320				DASHBOARD ASSY	1	- #1233	-	SEE 5100
9-1	71LB-30021				.DASHBOARD	1	- #1233	-	SEE 5100
9-2	71N6-03300				.AIR VENT	2	- #1233	-	SEE 5100
10	71LB-20161				COVER-DASHBOARD,LH	1	- #1233	-	SEE 5100
11	71LB-20171				COVER-DASHBOARD,RH	1	- #1233	-	SEE 5100
12	71LB-05051				COVER-RCV	1			
13	71LB-10111				DUCT-INLET	1			
14	71LB-10150				DUCT ASSY-REAR	1			
14-1	71LB-10051				.DUCT-REAR(1)	1			
14-2	71LB-10061				.DUCT-REAR(2)	2			
14-3	71LB-10070				.HOSE-REAR	2			
14-4	S552-102370				.CLAMP-BAND	2			
14-5	S520-085000				.CLAMP-HOSE	2			
15	71LB-21061				MAT-FLOOR/DUAL BRAKE	1	- #1193		

Item	Part_No	IS	Ord	T	Description	Qty	Serial_No	ITC	Remark
15	71LB-21062				MAT-FLOOR	1	#1194 -	D	
16	71LB-20121				WRIST REST ASSY	1			
17	71LB-20190				SPRING	1			
18	61S1-1037				HANDLE	1			
19	S015-08035V				BOLT-HEX	1			
20	S132-08152V				SCREW-W/WASHER	51	- #1233		
					SCREW-W/WASHER	35	#1234 -	A	
21	S037-10255V				BOLT-W/WASHER	4			
22	S131-05154V				SCREW-W/WASHER	2			
23	S151-03010V				SCREW-TAPPING	3			
24	71LB-21141				PLATE-J/STRG LEVER	1			OPT
100	71LB-04180				FOAM-BOTTOM(5)	1			
103	71LB-04220				PLATE-DUCT(1)	1			
104	71LB-04230				PLATE-DUCT(2)	1			

SEAT MOUNTING

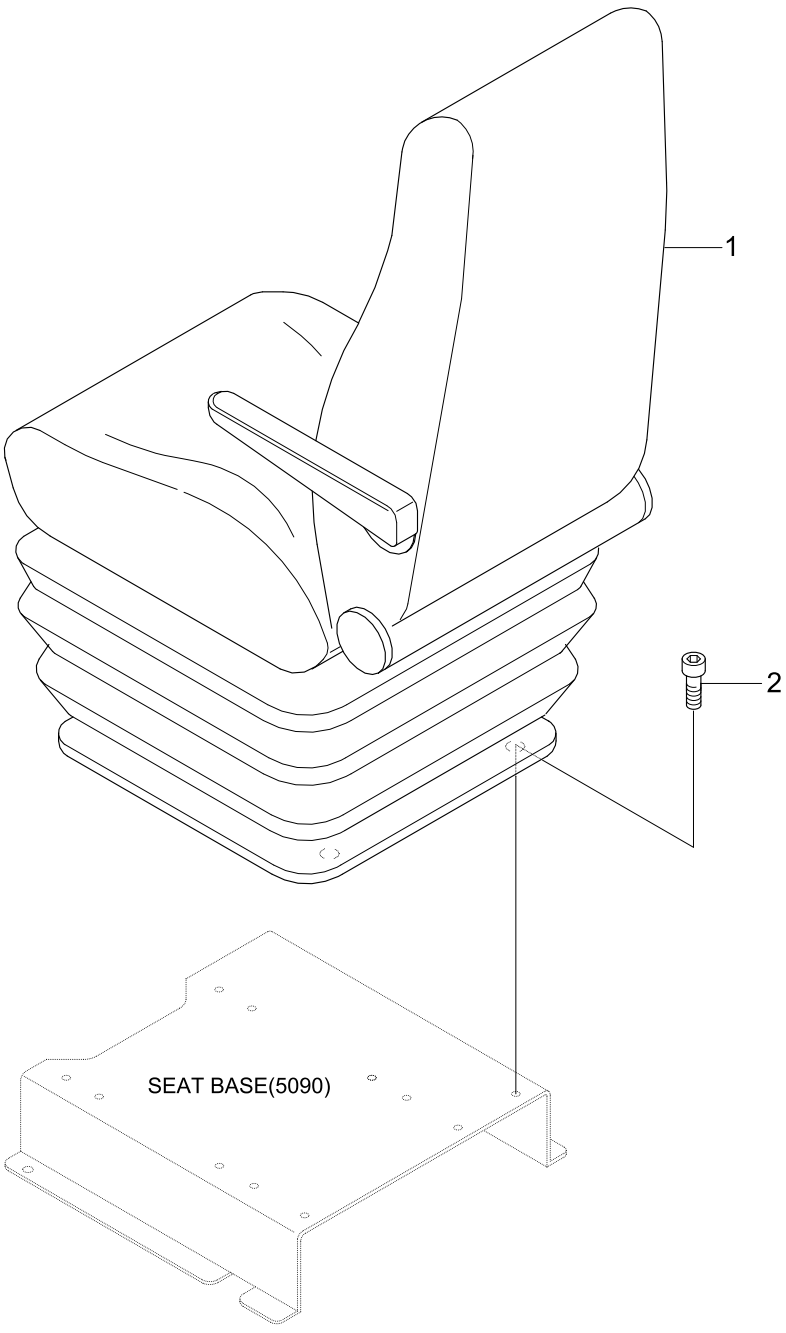

Item	Part_No	IS	Ord	T	Description	Qty	Serial_No	ITC	Remark
1	71LB-31010				SEAT ASSY-LOCAL	1	- #0403	-	KOREA ONLY
	71L1-16550				SEAT ASSY-2",STATIC	1			SEE 5150
	71LB-31020				SEAT ASSY-3",RETRACTABLE	1	- #0403		
	71LB-32020				SEAT ASSY-3",MECHENICAL	1	#0404 -	A	SEE 5151/52
	71LB-31060				SEAT ASSY-3",RET,A/R/PVC	1	- #0403	-	
	71LB-32040				SEAT ASSY-3",AIR RIDE	1	#0404 -	A	SEE 5154/5155
	74L4-00010				SEAT ASSY-2",VINYL	1			SEE 5156
	74L1-10140				SEAT ASSY-2",AIR RIDE	1	#0404 -	-	SEE 5153
	71LB-33010				SEAT ASSY-MECH,2"	1	#0685 - #1304	-	
	71LB-33011				SEAT ASSY-MECH,2"	1	#1305 -	A	WOO CHANG
	71LB-33111				SEAT ASSY-HEATED	1	#1327 -		WOO CHANG
	71LB-32060				SEAT ASSY-MECH,2",WOO	1	#1083 -	-	
	71LB-32070				SEAT ASSY-MECH,2",WOO	1	#1083 -	-	
	71LB-32080				SEAT ASSY-HEATED/AIR	1	#1083 -	-	
2	S105-080156				BOLT-SOCKET	4			

SEAT(MECHANICAL, KAB)

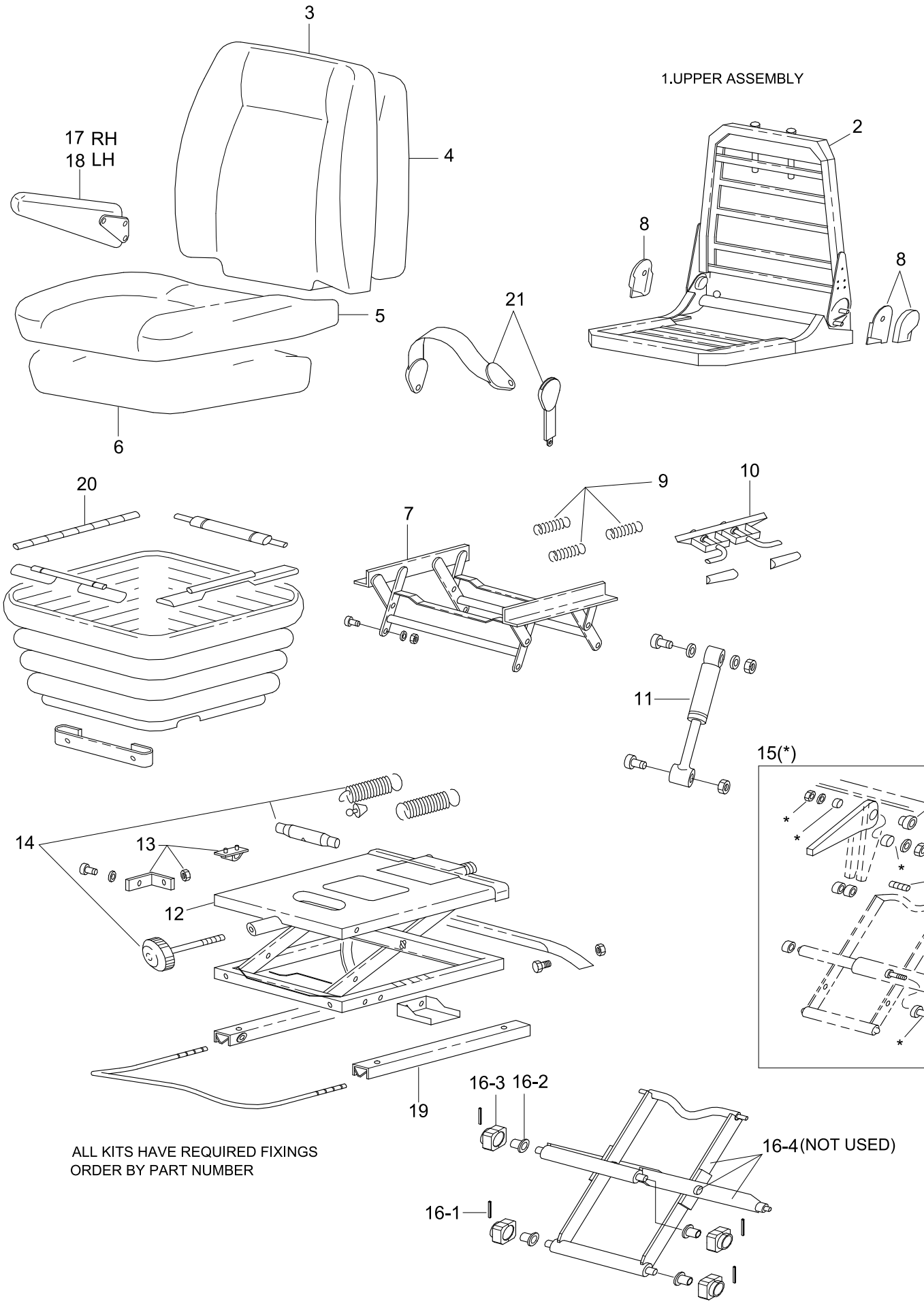

ALL KITS HAVE REQUIRED FIXINGS
ORDER BY PART NUMBER

Item	Part_No	IS	Ord	T	Description	Qty	Serial_No	ITC	Remark
*	71L1-16550				SEAT ASSY-2",STATIC	1	#0001 -	-	LEATHER
1	166115				.UPPER ASSY	1			
2	160428				.FRAME ASSY	1			
3	166116				.COVER ASSY-BACK	1			
4	160430				.KIT-BACK FOAM	1			
5	166117				.COVER ASSY-SEAT	1			
6	160432				.KIT-SEAT FOAM	1			
7	160055				.KIT-HEIGHT RISER	1			
8	160433				.KIT-HANDLE ASSY	1			
9	160122				.KIT-HEIGHT RISER SPRING	1			
10	157157				.KIT-HEIGHTRISER LATCH	1			
11	160435				.KIT-DAMPER	1			
12	160452				.KIT-SUSPENSION COVER	1			
13	160436				.KIT-U/STOP B/STOP	1			
14	160438				.KIT-WEIGHT ADJUSTER	1			
15	165989				.KIT-LVR/CENTER PIVOT	1			
16	160439				.KIT-BEARING	1			
16-1	53590140009				..PIN-ROLL	4			
16-2	789171				..BEARING-FLANGED	4			
16-3	165694				..SUPPORT-HALF BEARING	4			
16-4	165989				..KIT-LVR/CENTER PIVOT	4	- #0001	-	NOT USED
17	156707				.KIT-ARM REST,RH	1			
18	156706				.KIT-ARM REST,LH	1			
19	160442				.KIT-FORE & AFT ADJUST	1			
20	160441				.KIT-SUSPENSION COVER	1			

Item	Part_No	IS	Ord	T	Description	Qty	Serial_No	ITC	Remark
21	78987				.KIT-SEATBELT	1			

Item	Part_No	IS	Ord	T	Description	Qty	Serial_No	ITC	Remark
*	71LB-32020				SEAT ASSY-3",MECHENICAL	1	#0404 -	-	OPT
1	ZGBH-00001				.SEAT CUSHION	1			
2	ZGBH-00002				.BACKREST CUSHION	1			
3	ZGBH-00009				.HEADREST	1			
4	ZGBH-00004				.BUSH	2			
5	ZGBH-00005				.BACKREST PLATE	1			
6	ZGBH-00103				.SCREW-SELF TAPPING	4			
7	ZGBH-00007				.HANDLE	1			
8	ZGBH-00008				.WHEEL-TOOLHEAD	1			
9	ZGBH-00010				.RIVET-BLIND	3			
10	ZGBH-00011				.BRAKE-SLING SPRING	1			
11	ZGBH-00012				.STICKER	1			
12	ZGBH-00013				.COVER-PLASTICK	1			
13	ZGBH-00014				.SCREW-HEX HEAD	1			
14	ZGBH-00015				.WASHER	13			
15	ZGBH-00016				.SPONGE	1			
16	ZGBH-00017				.WINKEL	1			
17	ZGBH-00018				.RIVET	3			
18	ZGBH-00019				.RODS	1			
19	ZGBH-00020				.CARRIER	1			
20	ZGBH-00021				.PLATE	2			
21	ZGBH-00022				.COVER-RH	1			
22	ZGBH-00023				.HEX NUT-BLACK	10			
23	ZGBH-00024				.WASHER-BLACK	1			
24	ZGBH-00025				.SPRING HOLDER	1			

Item	Part_No	IS	Ord	T	Description	Qty	Serial_No	ITC	Remark
25	ZGBH-00026				.SPRING-LEG	1			
26	ZGBH-00027				.LEVER	1			
27	ZGBH-00028				.SCREW	1			
28	ZGBH-00029				.SCREW	3			
29	ZGBH-00030				.ARMREST-LH	1			
30	ZGBH-00031				.COVER-LH	1			
31	ZGBH-00032				.PLATE	1			
32	ZGBH-00033				.HANDLE	1			
33	ZGBH-00034				.RIVET	4			
34	ZGBH-00035				.PROFILE-GLIDING	4			
35	ZGBH-00036				.SEAT PLATE	1			
36	ZGBH-00037				.SCREW-SELF TAPPING	4			
37	ZGBH-00038				.ADJUSTMENT-TILTING	1			
38	ZGBH-00039				.SPRING	1			
39	ZGBH-00040				.ADJUSTMENT-SEAT DEPTH	1			
40	ZGBH-00041				.SLIDE RAIL-RH	1			
41	ZGBH-00042				.SCREW-HEX HEAD	4			
42	ZGBH-00043				.SCREW-CYLINDRIC HEAD	4			
43	ZGBH-00044				.ROLLING RAIL-LH	1			
44	ZGBH-00045				.BRACKET	1			
45	ZGBH-00046				.WASHER	1			
46	ZGBH-00047				.NUT	1			
47	ZGBH-00048				.HANDLE	1			
48	ZGBH-00049				.KNOB-PLASTIC	1			
49	ZGBH-00050				.COVER	2			

Item	Part_No	IS	Ord	T	Description	Qty	Serial_No	ITC	Remark
50	ZGBH-00051				.BUSH	2			
51	ZGBH-00052				.NUT	2			
52	ZGBH-00053				.SCREW	2			
53	ZGBH-00102				.SEAT BELT	2			
54	ZGBH-00055				.SCREW	1			
55	ZGBH-00056				.PLATE-RUBBER	1			

SEAT(MECHANICAL, GRAMMER, 2/2)

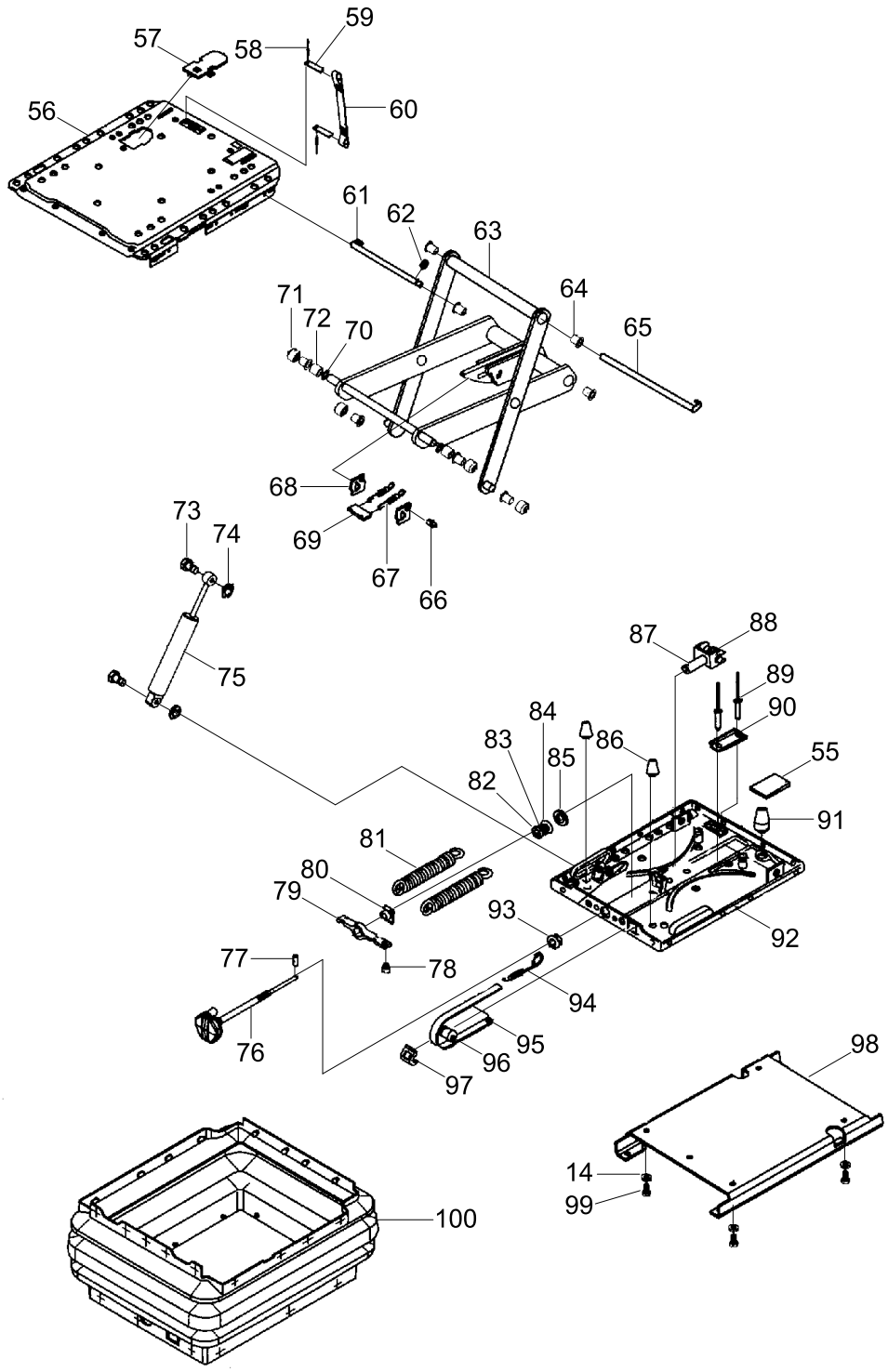

Item	Part_No	IS	Ord	T	Description	Qty	Serial_No	ITC	Remark
*	@				SEAT ASSY-3",MECHENICAL	1	#0404 -	-	NOT
56	ZGBH-00057				.UPPER PLATE-SUSPENSION	1			
57	ZGBH-00058				.PANEL-TRIM	1			
58	ZGBH-00059				.POP RIVET	2			
59	ZGBH-00060				.PLATE	2			
60	ZGBH-00061				.BELT-TETHER	1			
61	ZGBH-00062				.BOLT	1			
62	ZGBH-00063				.LOCK WASHER	1			
63	ZGBH-00064				.SWING ARM	1			
64	ZGBH-00065				.BUSH-PLASTIC	8			
65	ZGBH-00066				.PIN	1			
66	ZGBH-00067				.BOLT	1			
67	ZGBH-00068				.SPRING-TENSION	2			
68	ZGBH-00069				.PLATE	2			
69	ZGBH-00070				.STRIP-COVER	1			
70	ZGBH-00071				.WASHER	2			
71	ZGBH-00072				.ROLLER	4			
72	ZGBH-00073				.BUSH	2			
73	ZGBH-00074				.BOLT	2			
74	ZGBH-00075				.LOCK WASHER	2			
75	ZGBH-00076				.ABSORBER-SHOCK	1			
76	ZGBH-00077				.HANDLE	1			
77	ZGBH-00078				.PIN	1			
78	ZGBH-00079				.INSERT	1			
79	ZGBH-00080				.SPRING BRACKET	1			

Item	Part_No	IS	Ord	T	Description	Qty	Serial_No	ITC	Remark
80	ZGBH-00081				.FLANGE NUT	1			
81	ZGBH-00082				.SPRING	2			
82	ZGBH-00083				.WASHER	1			
83	ZGBH-00084				.BEARING	1			
84	ZGBH-00085				.WASHER	1			
85	ZGBH-00086				.WASHER-PLASTIC	1			
86	ZGBH-00087				.RUBBER	2			
87	ZGBH-00088				.GABEL	1			
88	ZGBH-00089				.BEARING-TRIPLE	1			
89	ZGBH-00090				.POP RIVET	2			
90	ZGBH-00091				.U-PROFILE	1			
91	ZGBH-00092				.RUBBER	1			
92	ZGBH-00093				.PLATE-BOTTOM	1			
93	ZGBH-00094				.BUSH	1			
94	ZGBH-00095				.SPRING-TENSION	1			
95	ZGBH-00096				.INDICATOR	1			
96	ZGBH-00097				.ROLLER	1			
97	ZGBH-00098				.DEVICE-GUIDING	1			
98	ZGBH-00099				.PLATE-BOTTOM	1			
99	ZGBH-00104				.SCREW-HEX HEAD	4			
100	ZGBH-00101				.BELLOWS	1			

SEAT(AIR RIDE, KAB)

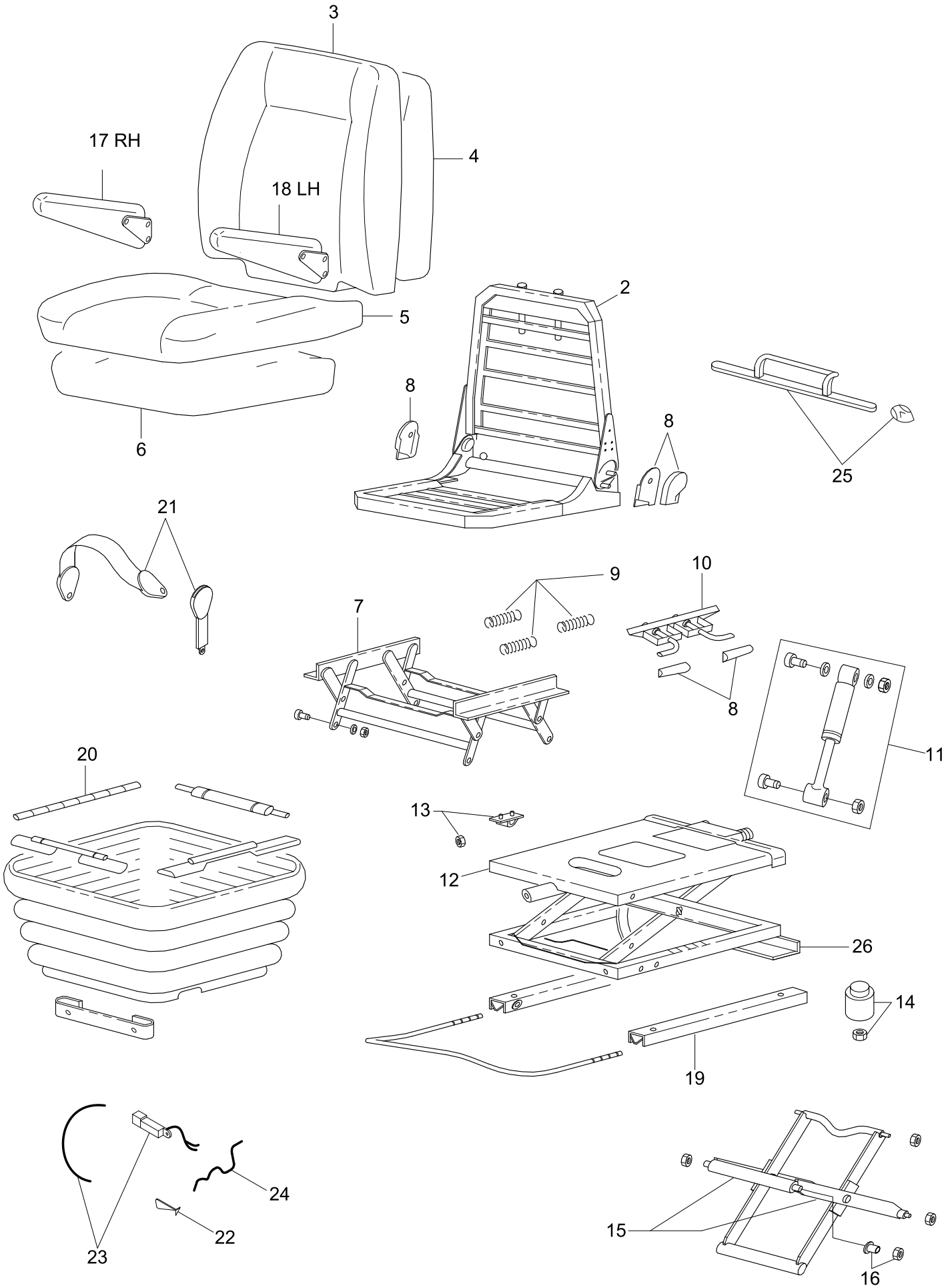

Item	Part_No	IS	Ord	T	Description	Qty	Serial_No	ITC	Remark
*	74L1-10140				SEAT ASSY-2",AIR RIDE	1	#0404 -	-	OPT
1	ZUAQ-00001				.UPPER ASSY KIT	1			
2	ZUAQ-00002				.FRAME ASSY KIT	1			
3	ZUAQ-00003				.BACK COVER ASSY KIT	1			GRAY FABRIC/PVC
	ZUAQ-00004				.BACK COVER ASSY KIT	1			GRAY PVC
4	ZUAQ-00005				.BACK FOAM KIT	1			
5	ZUAQ-00006				.SEAT COVER ASSY KIT	1			GRAY FABRIC/PVC
	ZUAQ-00007				.SEAT COVER ASSY KIT	1			GRAY PVC
6	ZUAQ-00008				.SEAT FOAM KIT	1			
7	ZUAQ-00009				.HEIGHT RISER KIT	1			
8	ZUAQ-00010				.HANDLE KIT	1			GREY
	ZUAQ-00011				.HANDLE KIT	1			YELLOW
9	ZUAQ-00012				.HEIGHT RISER SPRING KIT	1			
10	ZUAQ-00013				.HEIGHT RISER LATCH KIT	1			
11	ZUAQ-00014				.DAMPER KIT	1			
12	ZUAQ-00015				.SUSPENSION ASSY KIT	1			
13	ZUAQ-00016				.UP STOP/BUMP STOP KIT	1			
14	ZUAQ-00017				.AIR SPRING KIT	1			
15	ZUAQ-00018				.LEVER/CENTER PIVOT KIT	1			
16	ZUAQ-00019				.BEARING KIT	1			
17	ZUAQ-00020				.ARMREST KIT-RH	1			
18	ZUAQ-00021				.ARMREST KIT-LH	1			
19	ZUAQ-00022				.FORE & AFT ADJUST KIT	1			
20	ZUAQ-00023				.SUSPENSION COVER KIT	1			
N21	@				.T BELT KIT-2" STATIC	1	#0001 -	-	NOT

Item	Part_No	IS	Ord	T	Description	Qty	Serial_No	ITC	Remark
21	ZUAQ-00025				.SEAT BELT KIT-3" RETRACT	1			
22	ZUAQ-00026				.COMBINATION VALVE KIT	1			
23	ZUAQ-00027				.COMPRESSOR KIT-24V	1			
24	ZUAQ-00028				.FLY LEAD KIT	1			
25	ZUAQ-00029				.LUMBAR KIT-GREY	1			
	ZUAQ-00030				.LUMBAR KIT-YELLOW	1			
26	ZUAQ-00031				.TETHER KIT	1			

SEAT(AIR RIDE, 3", 1/2)

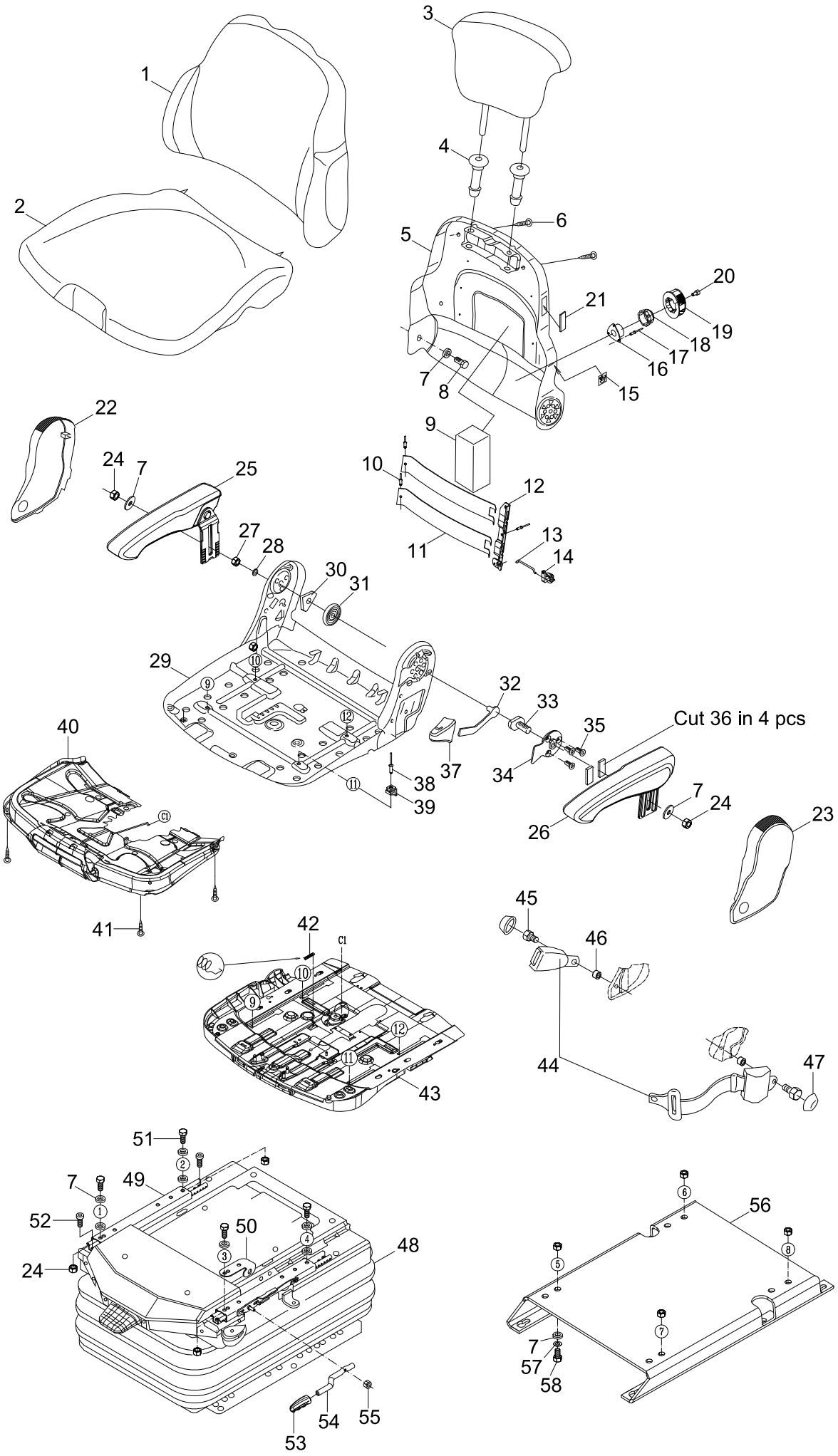

Item	Part_No	IS	Ord	T	Description	Qty	Serial_No	ITC	Remark
*	71LB-32040				SEAT ASSY-3",AIR RIDE	1	#0001 -	-	
1	ZGBH-00002				.BACKREST CUSHION	1			
2	ZGBH-00001				.SEAT CUSHION	1			
3	ZGBH-00009				.HEADREST	1			
4	ZGBH-00004				.BUSH	2			
5	ZGBH-00005				.BACKREST PLATE	1			
6	ZGBH-00103				.SCREW-SELF TAPPING	4			
7	ZGBH-00015				.WASHER	14			
8	ZGBH-00014				.SCREW-HEX HEAD	1			
9	ZGBH-00016				.SPONGE	1			
10	ZGBH-00107				.RIVET	3			
11	ZGBH-00021				.PLATE	2			
12	ZGBH-00017				.WINKEL	1			
13	ZGBH-00019				.RODS	1			
14	ZGBH-00020				.CARRIER	1			
15	ZGBH-00012				.STICKER	1			
16	ZGBH-00011				.BRAKE-SLING SPRING	1			
17	ZGBH-00010				.RIVET-BLIND	3			
18	ZGBH-00008				.WHEEL-TOOLHEAD	1			
19	ZGBH-00007				.HANDLE	1			
20	ZGBH-00055				.SCREW	1			
21	ZGBH-00013				.COVER-PLASTIC	1			
22	ZGBH-00022				.COVER-RH	1			
23	ZGBH-00031				.COVER-LH	1			
24	ZGBH-00023				.HEX NUT-BLACK	9			

Item	Part_No	IS	Ord	T	Description	Qty	Serial_No	ITC	Remark
25	ZGBH-00108				.ARM REST-RH	1			
26	ZGBH-00030				.ARMREST-LH	1			
27	ZGBH-00109				.SELF LOCK NUT	1			
28	ZGBH-00024				.WASHER-BLACK	1			
29	ZGBH-00110				.SEAT PLATE GS.LA.	1			
30	ZGBH-00025				.SPRING HOLDER	1			
31	ZGBH-00026				.SPRING-LEG	1			
32	ZGBH-00027				.LEVER	1			
33	ZGBH-00112				.SCREW	1			
34	ZGBH-00113				.PLATE	1			
35	ZGBH-00029				.SCREW	3			
36	ZGBH-00056				.PLATE-RUBBER	4			
37	ZGBH-00033				.HANDLE	1			
38	ZGBH-00034				.RIVET	4			
39	ZGBH-00035				.PROFILE-GLIDING	4			
40	ZGBH-00038				.ADJUSTMENT-TILTING	1			
41	ZGBH-00037				.SCREW-SELF TAPPING	4			
42	ZGBH-00039				.SPRING	1			
43	ZGBH-00114				.ADJUSTMENT-SEAT DEPTH	1			
44	ZGBH-00102				.SEAT BELT	1			
45	ZGBH-00053				.SCREW	2			
46	ZGBH-00051				.BUSH	2			
47	ZGBH-00050				.COVER	2			
48	@				.SUSPENSION SYSTEM	1			NOT
49	ZGBH-00041				.SLIDE RAIL-RH	1			

Item	Part_No	IS	Ord	T	Description	Qty	Serial_No	ITC	Remark
50	ZGBH-00045				.BRACKET	1			
51	ZGBH-00042				.SCREW-HEX HEAD	4			
52	ZGBH-00115				.CYLINDRIC HEAD SCREW	2			
53	ZGBH-00049				.KNOB-PLASTIC	1			
54	ZGBH-00048				.HANDLE	1			
55	ZGBH-00116				.SELF LOCK NUT	1			
56	ZGBH-00117				.BOTTOM PLATE LA.	1			
57	ZGBH-00118				.SPRING WASHER	4			
58	ZGBH-00104				.SCREW-HEX HEAD	4			

SEAT(AIR RIDE, 3", 2/2)

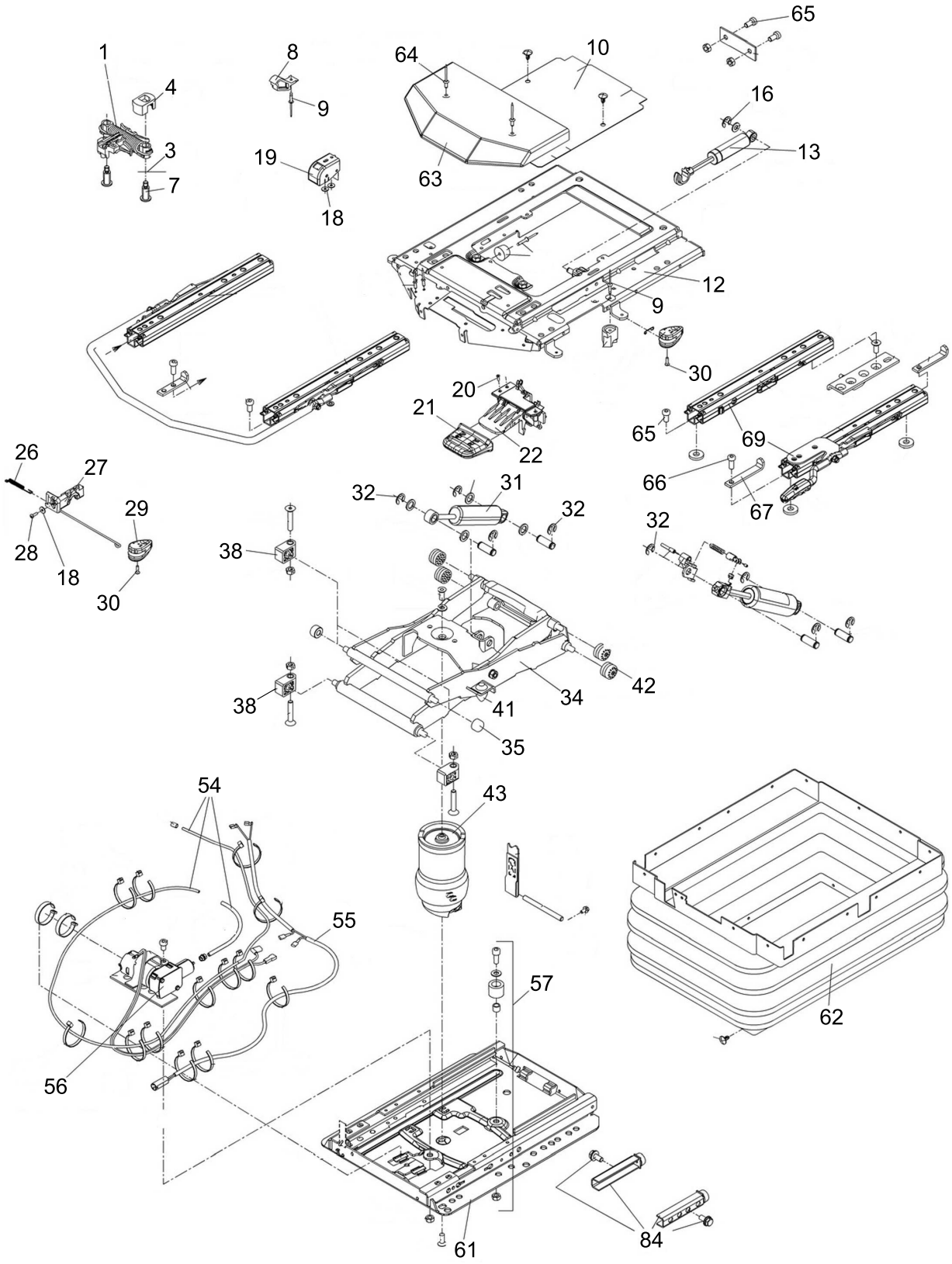

Item	Part_No	IS	Ord	T	Description	Qty	Serial_No	ITC	Remark
*	ZGBH-00105				SUSPENSION SYSTEM	1	#0001 -	-	
1	ZGBH-00120				.FORE-AFT ISOLATOR KI	1			
3	ZGBH-00121				.BUSHING	2			
4	ZGBH-00122				.BUMPER	1			
7	ZGBH-00123				.BOLT-SHOULDER	2			
8	ZGBH-00124				.ENDSTOP	2			
9	ZGBH-00125				.RIVET	2			
10	ZGBH-00126				.COVER KIT,MSG95	1			
12	ZGBH-00127				.SUSPENSION UPPER PAR	1			
13	ZGBH-00128				.SHOCK ABSORBER KIT	1			
14	ZGBH-00129				.BUMPER KIT	1			
16	ZGBH-00131				.LOCK WASHER	1			
17	ZGBH-00132				.RIVET	2			
18	ZGBH-00133				.WASHER-FLAT,M4	3			
19	ZGBH-00134				.LEVEL CONTROL KIT	1			
20	ZGBH-00135				.SCREW	3			
21	ZGBH-00136				.HANDLE FOR HA,GREY	1			
22	ZGBH-00137				.VALVE AIR CONTROL,MS	1			
26	ZGBH-00138				.TENSION SPRING	2			
27	ZGBH-00139				.LOCKING LEVER KIT,MS	1			
28	ZGBH-00140				.EJOT SCREW DELTA PT	1			
29	ZGBH-00141				.HANDLE F.FAI.CPL.	1			
30	ZGBH-00142				.SCREW	1			
31	ZGBH-00143				.SHOCK ABSORBER KIT	1			
32	ZGBH-00144				.LOCK WASHER PHR. 10.	2			

Item	Part_No	IS	Ord	T	Description	Qty	Serial_No	ITC	Remark
34	ZGBH-00145				.SWING ARM KIT	1			
35	ZGBH-00146				.ROLLER KIT	2			
38	ZGBH-00147				.THRUST BEARING,PLAST	2			
41	ZGBH-00148				.DAMPING BUMPER BLACK	2			
42	ZGBH-00149				.ROLLER	4			
43	ZGBH-00150				.AIR SPRING KIT	1			
54	ZGBH-00151				.AIR TUBE	1			
55	ZGBH-00152				.CONNECTING CABLE	1			
56	ZGBH-00153				.COMPRESSOR,24V,MSG95	1			
57	ZGBH-00154				.BUMPER KIT	1			
36	ZGBH-00155				.SUSPENSION LOWER PAR	1			
62	ZGBH-00156				.BELLOWS KIT,BLK,MSG9	1			
63	ZGBH-00157				.COVER CPL.	1			
64	ZGBH-00158				.RIVET	2			
65	ZGBH-00043				.SCREW-CYLINDRIC HEAD	3			
66	ZGBH-00159				.SCREW	1			
67	ZGBH-00160				.STOP,SLIDE RAIL,BLKC	1			
69	ZGBH-00161				.ADJUSTMENT RAIL SET	1			
84	ZGBH-00162				.ENDSTOP KIT	1			

STEERING COLUMN

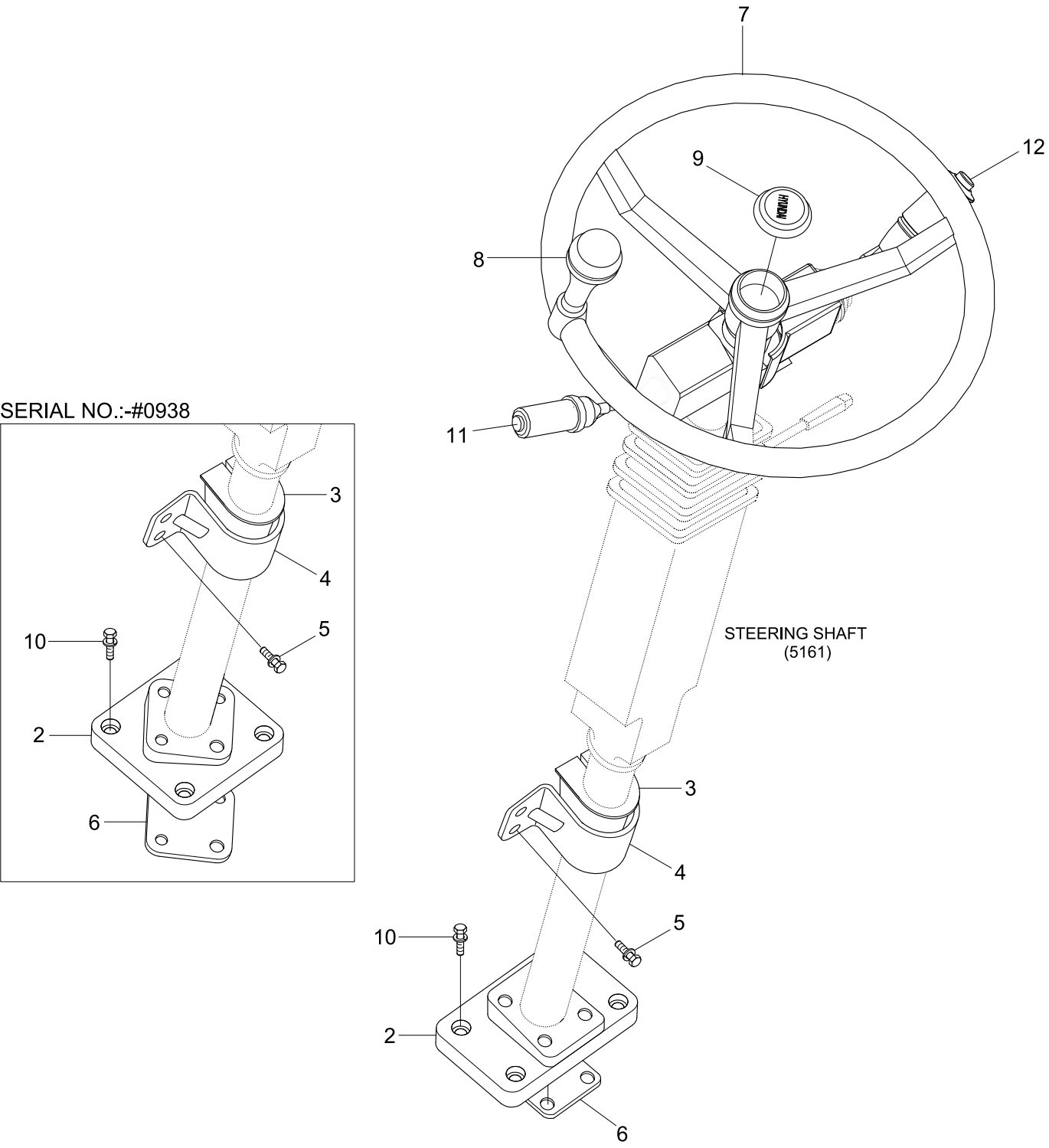

SEAT(VINYL, 2", KAB)

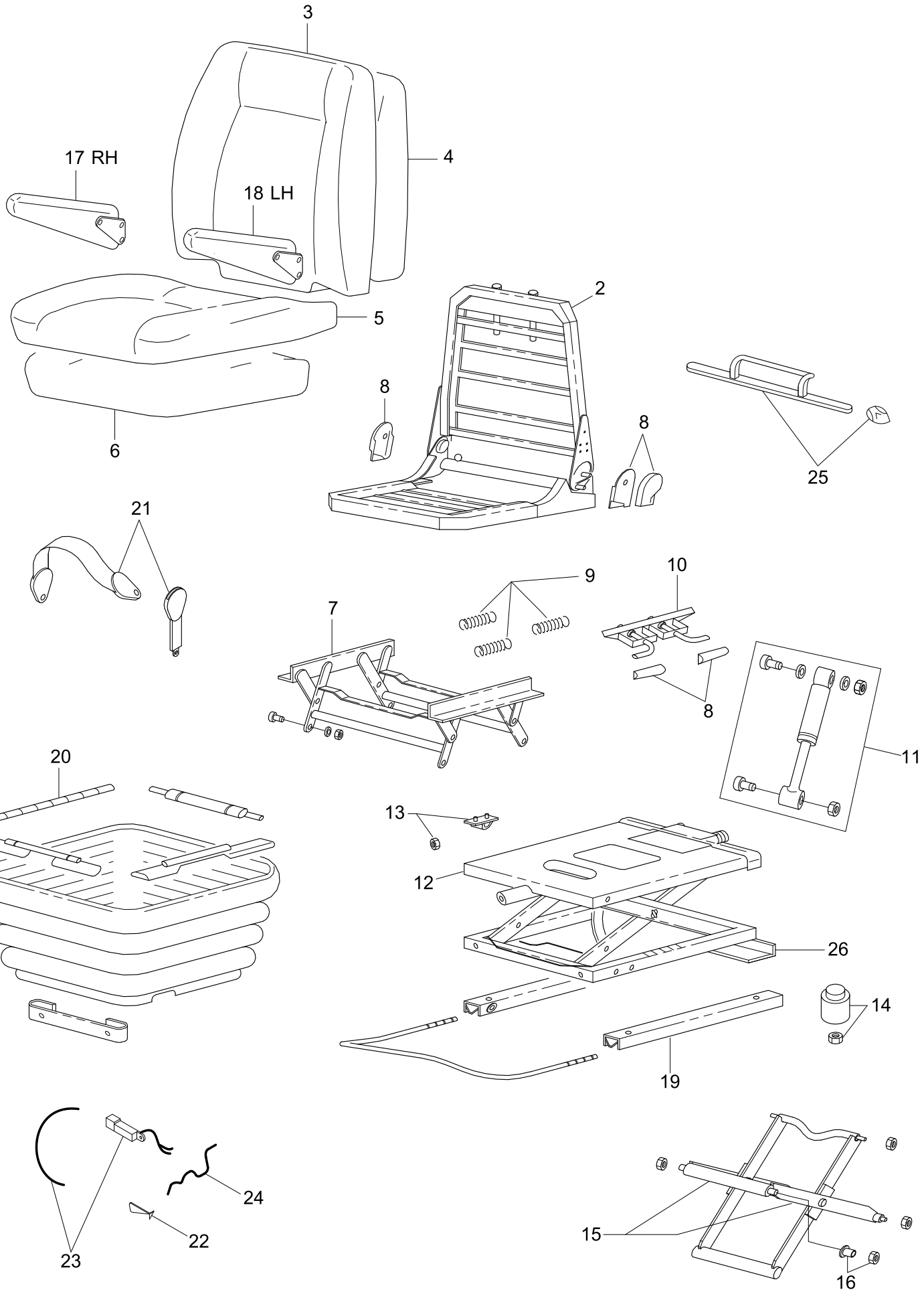

Item	Part_No	IS	Ord	T	Description	Qty	Serial_No	ITC	Remark
*	74L4-00010				SEAT ASSY-2",VINYL	1	#0001 -	-	OPT
1	ZUAQ-00001				.UPPER ASSY KIT	1			
2	ZUAQ-00002				.FRAME ASSY KIT	1			
3	ZUAQ-00004				.BACK COVER ASSY KIT	1			GRAY PVC
4	ZUAQ-00005				.BACK FOAM KIT	1			
5	ZUAQ-00007				.SEAT COVER ASSY KIT	1			GRAY PVC
6	ZUAQ-00008				.SEAT FOAM KIT	1			
7	ZUAQ-00009				.HEIGHT RISER KIT	1			
8	ZUAQ-00010				.HANDLE KIT	1			GREY
9	ZUAQ-00012				.HEIGHT RISER SPRING KIT	1			
10	ZUAQ-00013				.HEIGHT RISER LATCH KIT	1			
11	ZUAQ-00014				.DAMPER KIT	1			
12	ZUAQ-00015				.SUSPENSION ASSY KIT	1			
13	ZUAQ-00016				.UP STOP/BUMP STOP KIT	1			
14	ZUAQ-00017				.AIR SPRING KIT	1			
15	ZUAQ-00018				.LEVER/CENTER PIVOT KIT	1			
16	ZUAQ-00019				.BEARING KIT	1			
17	ZUAQ-00020				.ARMREST KIT-RH	1			
18	ZUAQ-00021				.ARMREST KIT-LH	1			
19	ZUAQ-00022				.FORE & AFT ADJUST KIT	1			
20	ZUAQ-00023				.SUSPENSION COVER KIT	1			
N21	@				.T BELT KIT-2" STATIC	1	#0001 -	-	NOT
22	ZUAQ-00026				.COMBINATION VALVE KIT	1			
23	ZUAQ-00027				.COMPRESSOR KIT-24V	1			
24	ZUAQ-00028				.FLY LEAD KIT	1			

Item	Part_No	IS	Ord	T	Description	Qty	Serial_No	ITC	Remark
25	ZUAQ-00029				.LUMBAR KIT-GREY	1			
26	ZUAQ-00031				.TETHER KIT	1			

Item	Part_No	IS	Ord	T	Description	Qty	Serial_No	ITC	Remark
2	71LB-30031				ANCHORAGE ASSY	1	- #0938		
	71LB-21071				ANCHORAGE ASSY	1	#0939 -	D	
3	71LB-30040				ANCHORAGE	1			
4	71L7-20261				CLAMP	1			
5	S037-103056				BOLT-W/WASHER	4	- #0938		
	S037-10255V				BOLT-W/WASHER	4	#0939 -	A	
6	71L6-10320				SHIM(4.0T)	1			
7	71L7-20310				STEERING WHEEL	1			
8	71L7-20320				KNOB-WHEEL	1			
9	71L7-20330				CAP-CENTER	1			
10	S037-104052				BOLT-W/WASHER	4	- #0938		
	S037-10405V				BOLT-W/WASHER	4	#0939 -	A	
11	21L8-50040				GEAR SELECTOR	1	- #1536		
	ZGAQ-03788				GEAR SELECTOR	1	#1537 -	B	
12	24L3-00340				SWITCH-MULTIFUNCTION	1			

STEERING SHAFT

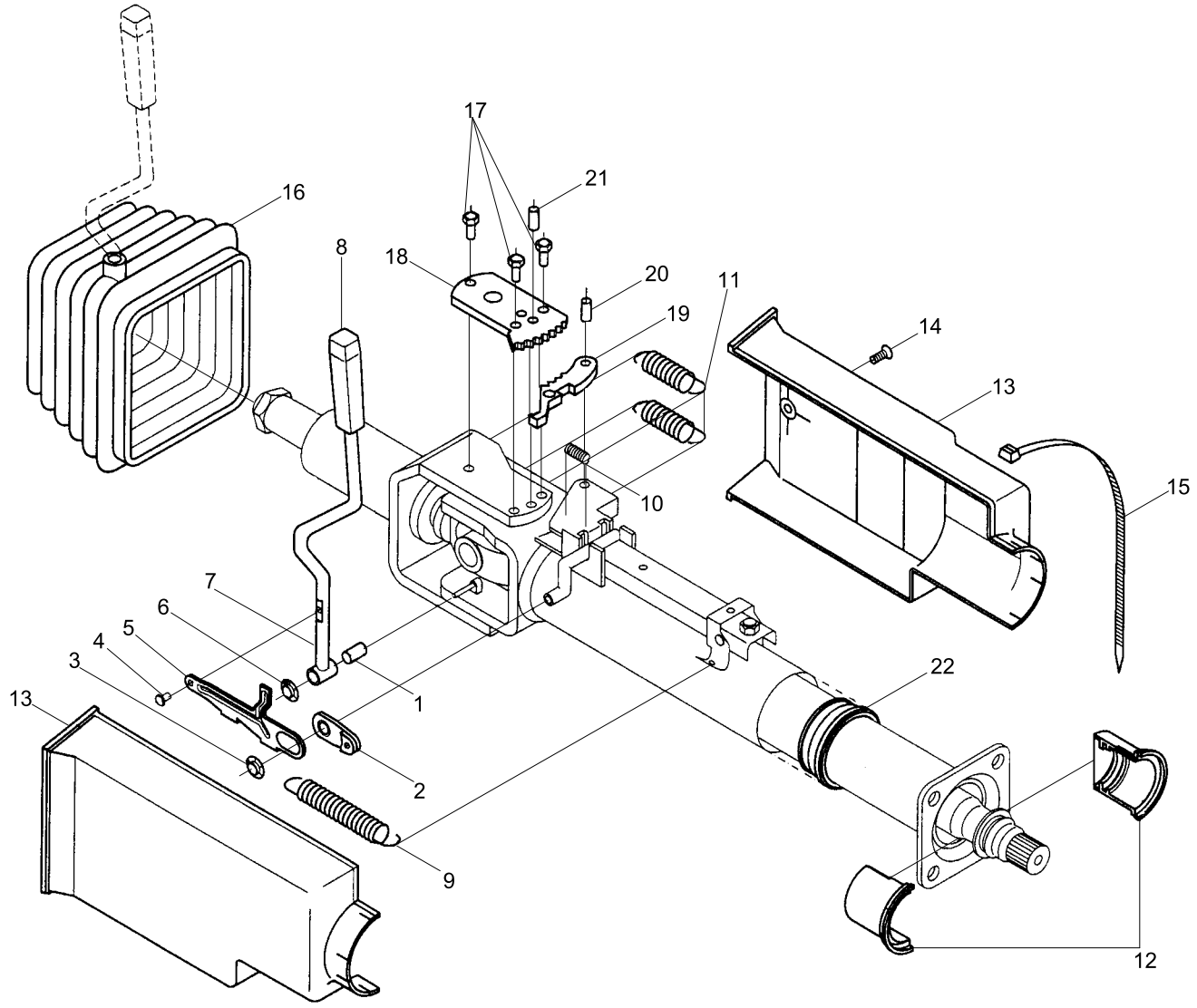

5161

Item	Part_No	IS	Ord	T	Description	Qty	Serial_No	ITC	Remark
*	71LB-30010				STEERING COLUMN ASSY	1			
*-1	150Z4000				.COMPLETE HANDLE	1			
1	@				..BEARING-LEVER	1			NOT
2	@				..BUSHING-LINK ARM	1			NOT
3	@				..WASHER-LOCK	1			NOT
4	@				..RIVET	1			NOT
5	@				..LINK ARM	1			NOT
6	@				..WASHER-LOCK	1			NOT
7	@				..LEVER	1			NOT
8	@				..KNOB	1			NOT
*-2	150Z4001				.SPRINGS	1			
9	@				..SPRING-TELESCOPE	1			NOT
10	@				..SPRING-CATCH	1			NOT
11	@				..SPRING-TILT RETURN	2			NOT
*-3	150Z4002				.AXIAL BEARING	1			
12	@				..BEARING-AXIAL	1			NOT
*-4	150Z4003				.COVER	1			
13	@				..COVER	1			NOT
14	@				..SCREW	1			NOT
15	@				..TIE-CABLE	1			NOT
*-5	150Z4004				.BUBBER BELLOWS	1			
16	@				..RUBBER BELLOWS	1			NOT
*-6	150Z4005				.CABLE TIE	1			
15	@				..TIE-CABLE	1			NOT
*-7	150Z4006				.TILT LOCK DEVICE	1			

Item	Part_No	IS	Ord	T	Description	Qty	Serial_No	ITC	Remark
17	@				..SCREW	1			NOT
18	@				..TOOTH SEGMENT	1			NOT
19	@				..CATCH	1			NOT
20	@				..PIN	1			NOT
21	@				..PIN	1			NOT
*-8	150Z4007				.TELESCOPE BEARING	1			
22	@				..BEARING-TELESCOPE	1			NOT

PLATFORM

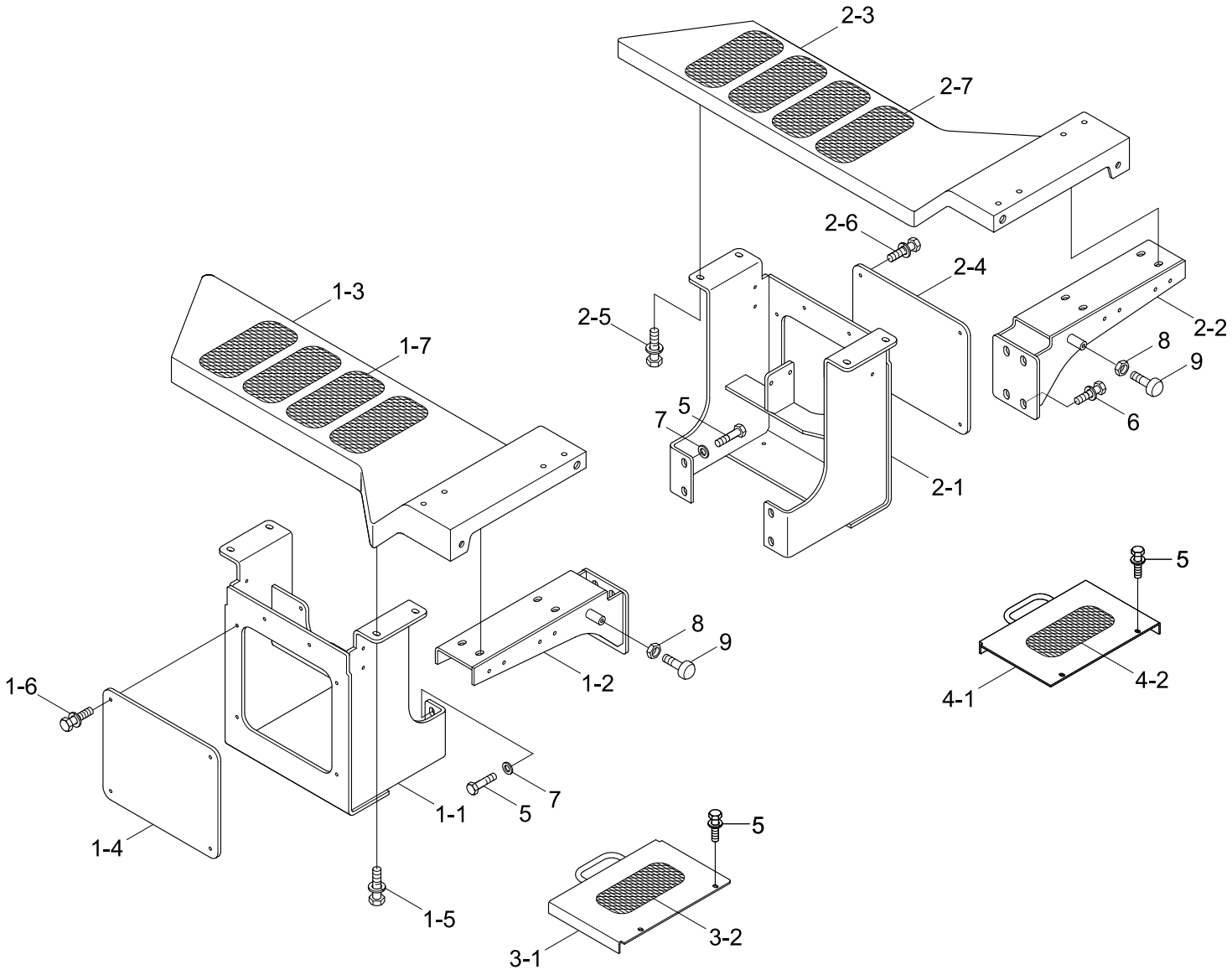

Item	Part_No	IS	Ord	T	Description	Qty	Serial_No	ITC	Remark
1	71LD-50201				PLATFORM ASSY-LH	1	- #0848		
	71LD-50202				PLATFORM ASSY-LH	1	#0849 - #1496	B	
	71LD-50203				PLATFORM ASSY-LH	1	#1497 -	B	
1-1	71LD-50221				.SUPPORT WA-LH	1	- #0848		
	71LD-50222				.SUPPORT WA-LH	1	#0849 -	B	
1-2	71LD-50241				.SUPPORT WA-LH	1			
1-3	71LD-50260				.PLATFORM WA-LH	1			
1-4	71LD-50281				.COVER-SIDE	1			
1-5	S037-123056				.BOLT-W/WASHER	8			
1-6	S037-122526				.BOLT-W/WASHER	4			
1-7	91E1-26300				.STEP TREAD	4	#1497 -	-	
2	71LD-50211				PLATFORM ASSY-RH	1	- #1496		
	71LD-50212				PLATFORM ASSY-RH	1	#1497 -	B	
2-1	71LD-50231				.SUPPORT WA-RH	1			
2-2	71LD-50251				.SUPPORT WA-RH	1			
2-3	71LD-50270				.PLATFORM WA-RH	1			
2-4	71LD-50281				.COVER-SIDE	1			
2-5	S037-123056				.BOLT-W/WASHER	8			
2-6	S037-122526				.BOLT-W/WASHER	4			
2-7	91E1-26300				.STEP TREAD	4	#1497 -	-	
3	71LD-50300				COVER WA-BATT(LH)	1	- #1496		
	71LD-50301				COVER WA-BATT(LH)	1	#1497 -	B	
3-1	71LD-50300				.COVER WA-BATT(LH)	1	#1497 -	-	
3-2	91E1-26300				.STEP TREAD	1	#1497 -	-	
4	71LD-50310				COVER WA-BATT(RH)	1	- #1496		

Item	Part_No	IS	Ord	T	Description	Qty	Serial_No	ITC	Remark
4	71LD-50311				COVER WA-BATT(RH)	1	#1497 -	B	
4-1	71LD-50310				.COVER WA-BATT(RH)	1	#1497 -	-	
4-2	91E1-26300				.STEP TREAD	1	#1497 -	-	
5	S017-160352				BOLT-HEX	8			
6	S037-123052				BOLT-W/WASHER	16			
7	S441-160002				WASHER-HARDENED	8			
8	S285-101002				NUT-FLANGED	2			
9	71EH-13150				RUBBER-BUMPER	2			

MUD GUARD(SQUARE COWL TYPE MACHINE ONLY)

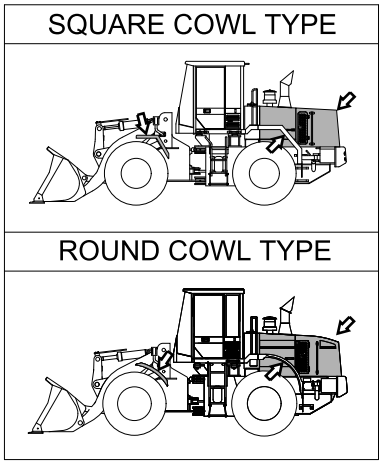

Item	Part_No	IS	Ord	T	Description	Qty	Serial_No	ITC	Remark
1	71LD-80150				MUD GUARD ASSY-LH	1			
	71LD-80160				MUD GUARD ASSY-RH	1			
1-1	71LD-80210				.MUD GUARD WA-LH	1			
	71LD-80220				.MUD GUARD WA-RH	1			
1-2	71LD-80230				.HINGE ASSY-LH	1			
	71LD-80240				.HINGE ASSY-RH	1	#0001 -	-	
1-2-1	71LD-80250				..FRONT HINGE WA	1			
1-2-2	71LD-80260				..REAR HINGE WA	1			
1-2-3	71LD-80270				..PIN-HINGE	1			
1-2-4	71LD-80280				..PLATE-STOPPER	1			
1-2-5	71LD-80290				..BUSHING	2			
1-2-6	S017-120302				..BOLT-HEX	1			
1-2-7	S441-120002				..WASHER-HARDENED	1			
1-2-8	S403-301002				..WASHER-PLAIN	2			
1-2-9	S651-810002				..NIPPLE-GREASE	1			
1-3	S491-140402				.PIN-CLEVIS	1			
1-4	S501-140002				.PIN-SELF LOCKING	1			
1-5	S017-160402				.BOLT-HEX	6			
1-6	S441-160002				.WASHER-HARDENED	6			
1-7	71LF-80290				.LATCH ASSY	1			
	71LF-80300				.LATCH ASSY	1			
3	71LB-80220				PLATE	2			
4	71LB-80230				PLATE	2			
5	71LB-80240				PLATE	4			
6	74L3-20331				RUBBER	2			

Item	Part_No	IS	Ord	T	Description	Qty	Serial_No	ITC	Remark
7	71LD-80170				PLATE-TAPPED	2			
8	71LD-80180				STRIKER	2			
9	71EH-13150				RUBBER-BUMPER	4			
10	S017-160402				BOLT-HEX	8			
11	S037-122552				BOLT-W/WASHER	16			
12	S285-101002				NUT-FLANGED	6			
13	S441-160002				WASHER-HARDENED	10			
14	S141-060152				SCREW-FLAT HD	8			
15	S275-160002				NUT-SELF LOCKING	2			

MUD GUARD(ROUND COWL TYPE MACHINE ONLY)

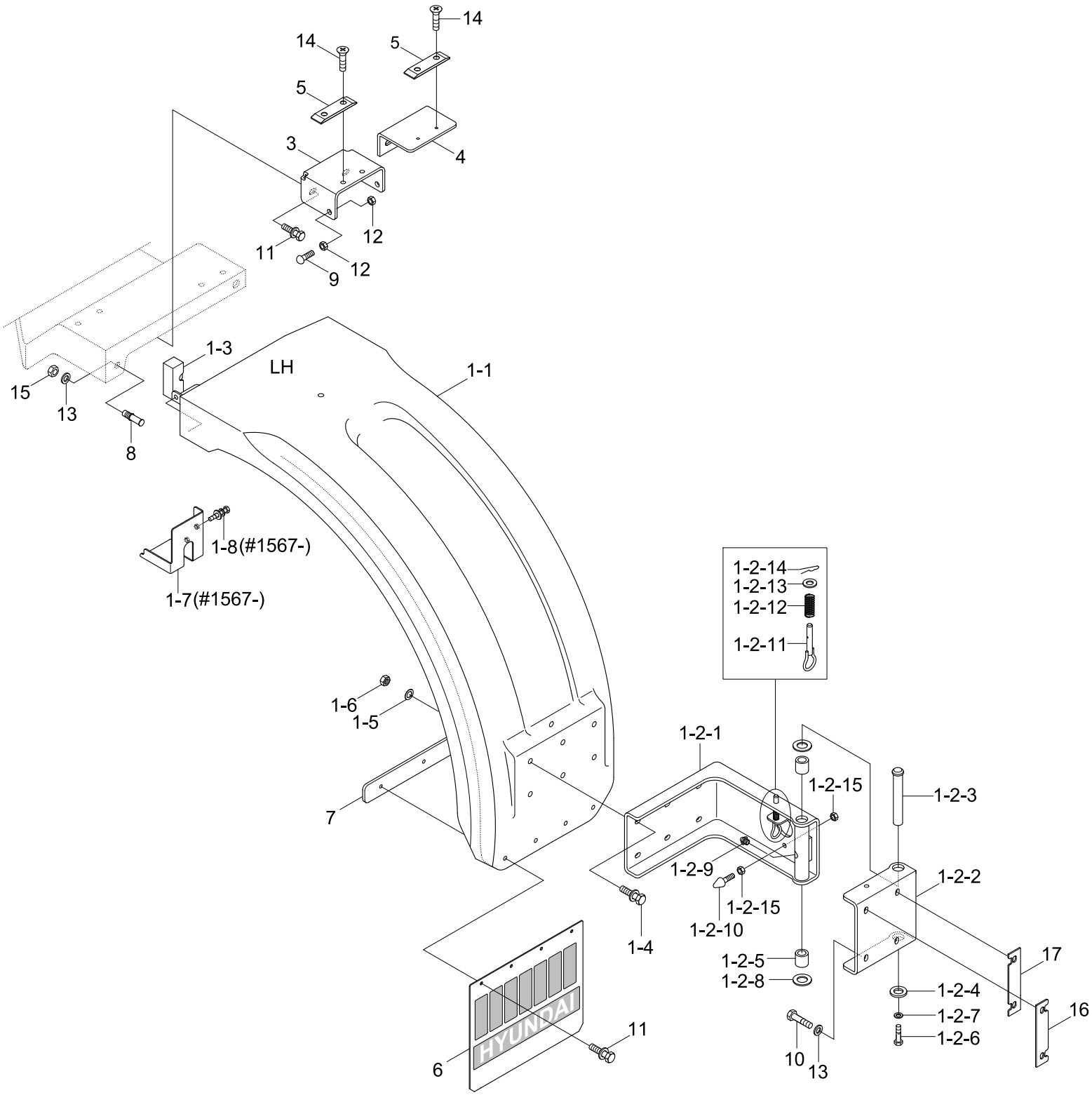

Item	Part_No	IS	Ord	T	Description	Qty	Serial_No	ITC	Remark
*	@				MUD GUARD	1	#0203 -	-	NOT
1	71LD-82011				MUD GUARD ASSY-LH	1	- #1566		
	71LD-82012				MUD GUARD ASSY-LH	1	#1567 -	B	
	71LD-82021				MUD GUARD ASSY-RH	1	- #1566		
	71LD-82022				MUD GUARD ASSY-RH	1	#1567 -	B	
1-1	71LF-82051				.MUD GUARD WA-LH	1			
	71LF-82061				.MUD GUARD WA-RH	1			
1-2	71LD-82090				.HINGE ASSY-LH	1			
	71LD-82100				.HINGE ASSY-RH	1			
1-2-1	71LD-82111				..FRONT HINGE WA	1			
1-2-2	71LC-82120				..REAR HINGE WA	1			
1-2-3	71LD-80270				..PIN-HINGE	1			
1-2-4	71LD-80280				..PLATE-STOPPER	1			
1-2-5	71LD-80290				..BUSHING	2			
1-2-6	S017-120302				..BOLT-HEX	1			
1-2-7	S441-120002				..WASHER-HARDENED	1			
1-2-8	S403-301002				..WASHER-PLAIN	2			
1-2-9	S651-810002				..NIPPLE-GREASE	1			
1-2-10	E171-1178				RUBBER-BUMPER	1			
1-2-11	FBC0900600				LOCK PIN	1			
1-2-12	FBC0900610-01				SPRING	1			
1-2-13	S403-122002				WASHER-PLAIN	1			
1-2-14	S461-250252				PIN-SPLIT	1			
1-2-15	S285-101002				NUT-FLANGED	2			
1-3	71LF-80290				.LATCH ASSY	1			

Item	Part_No	IS	Ord	T	Description	Qty	Serial_No	ITC	Remark
1-3	71LF-80300				.LATCH ASSY	1			
1-4	S037-123556				.BOLT-W/WASHER	6			
1-5	S205-121006				.NUT-HEX	6			
1-6	S441-120006				.WASHER-HARDENED	6			
1-7	71LB-82170				.COVER WA-LH	1	#1567 -		
	71LB-82180				.COVER WA-RH	1	#1567 -		
1-8	S033-062026				.BOLT-W/WASHER	2	#1567 -		
3	71LB-80220				PLATE	2			
4	71LB-80230				PLATE	2			
5	71LB-80240				PLATE	4			
N6	71L8-90030				RUBBER-MUDGUARD	2	- #0684		NOT
6	71LG-82160				RUBBER-MUDGUARD	2	#0685 -	A	
7	71LF-82150				PLATE	2			
8	71LD-80180				STRIKER	2			
9	71EH-13150				BUMPER-RUBBER	4			
10	S017-160402				BOLT-HEX	8			
11	S037-122552				BOLT-W/WASHER	28			
12	S285-101002				NUT-FLANGED	4			
13	S441-160002				WASHER-HARDENED	10			
14	S141-060152				SCREW-FLAT HD	8			
15	S275-160002				NUT-SELF LOCKING	2			
16	71LB-82070				SHIM(3.0T)	4			
17	71LB-82080				SHIM(1.6T)	8			

LADDER & HANDRAIL

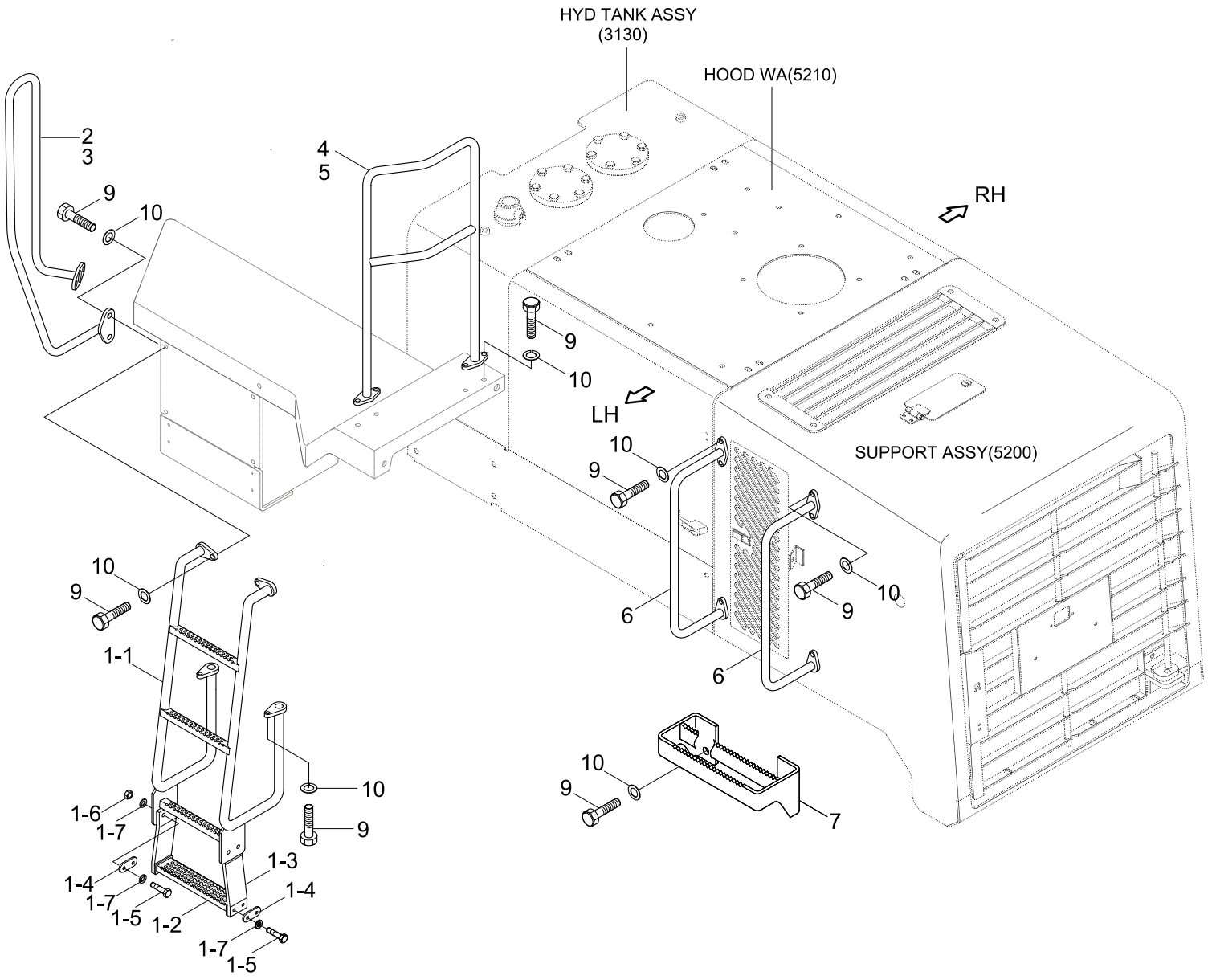

Item	Part_No	IS	Ord	T	Description	Qty	Serial_No	ITC	Remark
1	71LD-60101				LADDER ASSY	2	- #1210		
	71LD-63080				LADDER ASSY	2	#1211 -	D	
1-1	71LD-60151				.LADDER WA	1	- #1210		
	71LD-63090				.LADDER WA	1	#1211 -	D	
1-2	71LB-60260				.PLATE	1	- #1210		
	71LB-63030				.PLATE	1	#1211 -	D	
1-3	71LD-60170				.BELT-LADDER	2	- #1508		
	72LH-63150				.RUBBER	2	#1509 -	B	
1-4	71LD-60181				.PLATE	4	- #1210		
	71LB-63040				.PLATE	4	#1211 -	D	
1-5	S017-100456				.BOLT-HEX	8	- #1508		
	S017-100356				.BOLT-HEX	8	#1509 -	B	
1-6	S207-101002				.NUT-HEXAGON HEAD	4			
	S275-10000B				.NUT-SELF LOCKING	4			
1-7	S441-10000B				.WASHER-HARDENED	12			
2	71LD-60301				HANDRAIL WA-FR,LH	1	- #1210		
	71LD-63031				HANDRAIL WA-FR,LH	1	#1211 -	D	
3	71LD-60311				HANDRAIL WA-FR,RH	1	- #1210		
	71LD-63041				HANDRAIL WA-FR,RH	1	#1211 -	D	
4	71LD-60330				HANDRAIL WA-RR,LH	1	- #1210		
	71LD-63110				HANDRAIL WA-RR,LH	1	#1211 -	D	
5	71LD-60340				HANDRAIL WA-RR,RH	1	- #1210		
	71LD-63120				HANDRAIL WA-RR,RH	1	#1211 -	D	
6	71LD-60350				HANDRAIL WA	4	- #1210		
	71LB-63210				HANDRAIL WA	4	#1211 -	D	

Item	Part_No	IS	Ord	T	Description	Qty	Serial_No	ITC	Remark
7	71LB-60240				FOOT BOARD WA	2			
9	S017-120352				BOLT-HEX	40			
10	S441-120002				WASHER-HARDENED	40			
9	S037-123056				BOLT-W/WASHER	44	#0001 -	-	

COWL 1

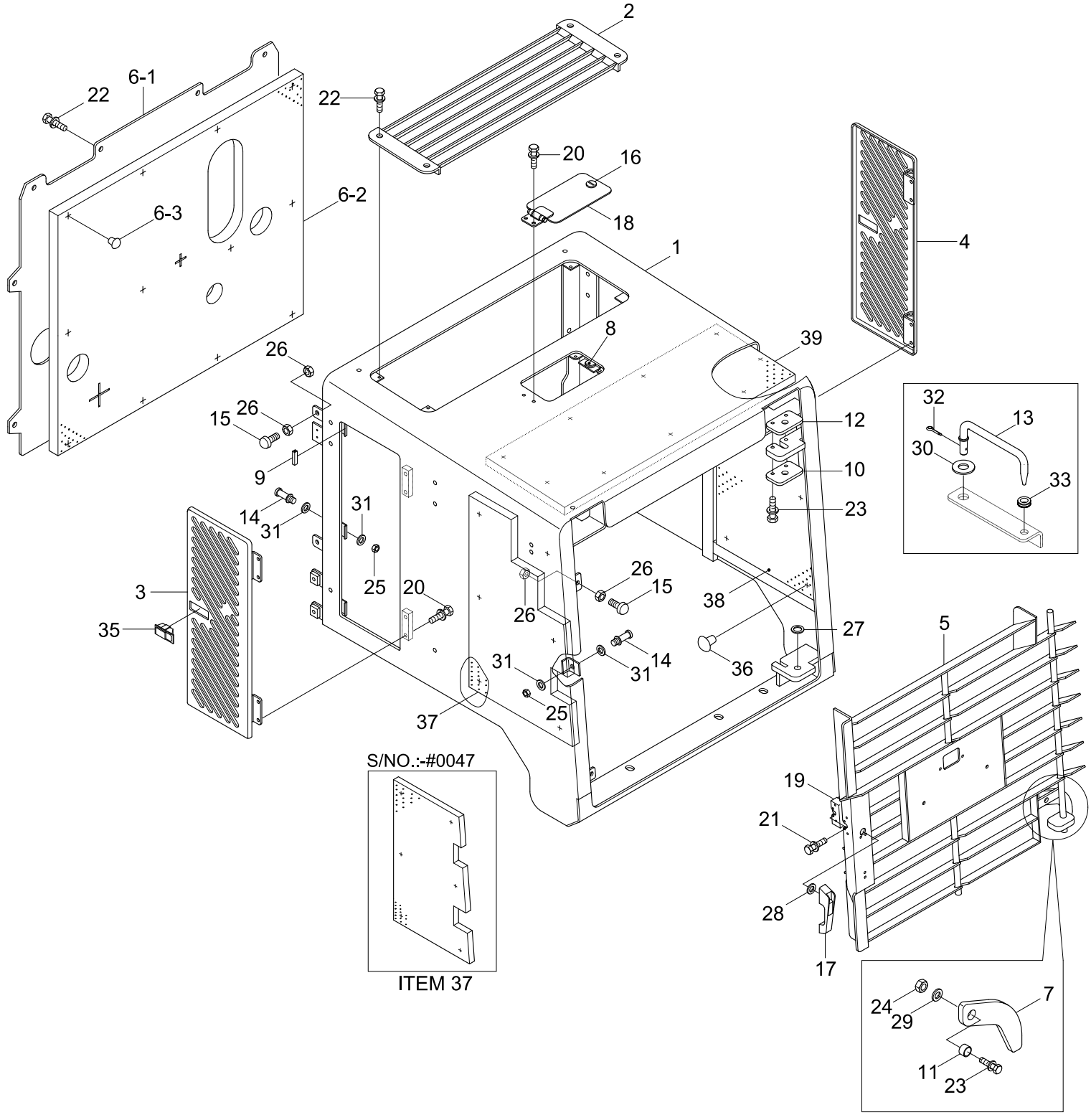
2
6-1
22
22
20
16
6-2
6-3
18
4
1
8
39
26
15
26
9
12
32
13
30
33
10
14
31
31
23
3
25
20
26
26
15
38
35
27
5
31
14
31
36
37
25
S/NO.:-#0047
ITEM 37
19
21
28
17
24
29
7
11
23

Item	Part_No	IS	Ord	T	Description	Qty	Serial_No	ITC	Remark
*	71LD-40012				SUPPORT ASSY	1	- #0047		
	71LD-40013				SUPPORT ASSY	1	#0048 -	D	
1	71LD-40063				.SUPPORT WA	1	- #0047		
	71LD-40064				.SUPPORT WA	1	#0048 -	D	
2	71LD-40290				.COVER WA	1			
3	71LD-40270				.COVER WA-LH	1			
4	71LD-40280				.COVER WA-RH	1			
5	71LD-40093				.GRILL WA	1	- #0047		
	71LD-40094				.GRILL WA	1	#0048 -	D	
6	71LD-41001				.SCREEN ASSY	1			
6-1	71LD-40193				..SCREEN PLATE	1	#0001 -	-	
6-2	71LD-41011				..SPONGE-SCREEN	1			
6-3	71EM-51580				..CAP-STUD BOLT	12			
7	71LC-41020				.PLATE-HOLDING	1			
8	74L3-11290				.BUMPER-RUBBER	2			
9	S791-030005				.GROMMET-PLATE	6			
10	71LB-40200				.PLATE	1			
11	71LB-40290				.COLLAR	1			
12	71LB-40300				.PLATE	1			
13	71LD-41060				.STAY WA	1			
14	71LD-80180				.STRIKER	3			
15	71EH-13150				.BUMPER-RUBBER	6			
16	71LB-41220				.LOCK ASSY	1			
17	74L3-11380				.HANDLE ASSY	1			
18	74L3-10891				.DOOR-RADIATOR CAP	1			

Item	Part_No	IS	Ord	T	Description	Qty	Serial_No	ITC	Remark
19	74L3-10900				.LATCH ASSY	1			
20	S033-061522				.BOLT-W/WASHER	10			
21	S033-062516				.BOLT-W/WASHER	4			
22	S037-122552				.BOLT-W/WASHER	12			
23	S037-124552				.BOLT-W/WASHER	3			
24	S205-121002				.NUT-HEX	1			
25	S205-161002				.NUT-HEX	3			
26	S285-101002				.NUT-FLANGED	12			
27	S392-020030				.SHIM-ROUND(2.0T)	1			
28	S403-062002				.WASHER-PLAIN	4			
29	S403-122002				.WASHER-PLAIN	1			
30	S403-142002				.WASHER-PLAIN	1			
31	S441-160002				.WASHER-HARDENED	6			
32	S461-250202				.PIN-SPLIT	1			
33	S681-130800				.GROMMET	1			
35	71LB-01220				.LATCH ASSY	2			
36	71EM-51580				.CAP-STUD BOLT	23			
37	71LD-40910				.SPONGE-LH	1	- #0047		
	71LD-40911				.SPONGE-LH	1	#0048 -	D	
38	71LD-40921				.SPONGE-RH	1	- #0047		
	71LD-40922				.SPONGE-RH	1	#0048 -	D	
39	71LD-40930				.SPONGE-TOP	1			

COWL 1(ROUND COWL TYPE)

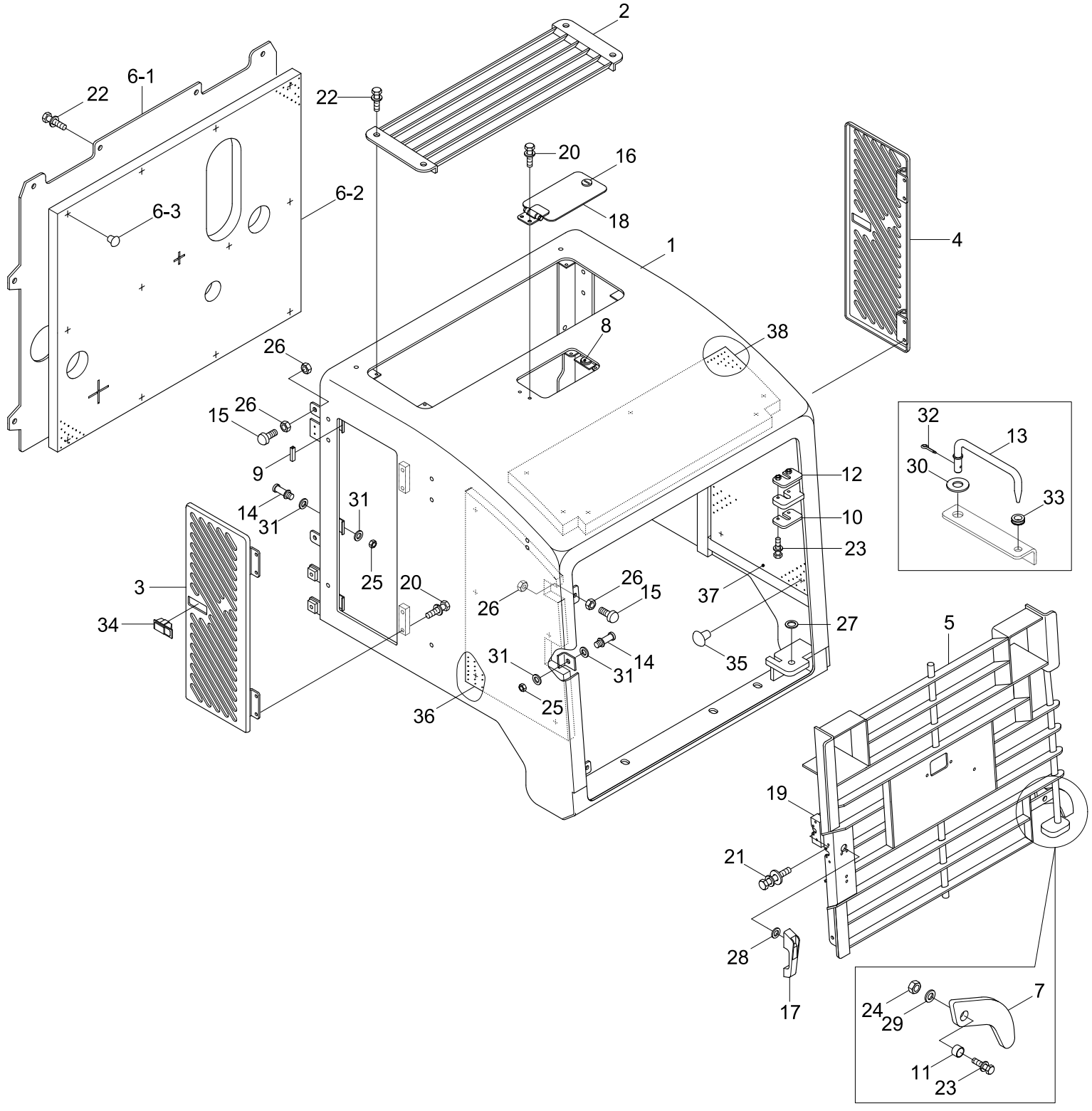

Item	Part_No	IS	Ord	T	Description	Qty	Serial_No	ITC	Remark
*	71LD-42010				SUPPORT ASSY	1	#0203 -	-	ROUND COWL TYPE
1	71LD-42100				.SUPPORT WA	1			
2	71LD-40290				.COVER WA	1			
3	71LD-40270				.COVER WA-LH	1			
4	71LD-40280				.COVER WA-RH	1			
5	71LD-42201				.GRILL WA	1	- #1210		
	71LD-42202				.GRILL WA	1	#1211 -	D	
6	71LD-41001				.SCREEN ASSY	1			
6-1	71LD-40193				..SCREEN PLATE	1	#0203 -	-	
6-2	71LD-41011				..SPONGE-SCREEN	1			
6-3	71EM-51580				..CAP-STUD BOLT	12			
7	71LC-41020				.PLATE-HOLDING	1			
8	74L3-11290				.BUMPER-RUBBER	2			
9	S791-030005				.GROMMET-PLATE	6			
10	71LB-42370				.PLATE	1			
11	71LB-40290				.COLLAR	1			
12	71LB-42380				.PLATE	1			
13	71LD-41060				.STAY WA	1			
14	71LD-80180				.STRIKER	3			
15	71EH-13150				.RUBBER-BUMPER	6			
16	71LB-41220				.LOCK ASSY	1			
17	74L3-11380				.HANDLE ASSY	1			
18	74L3-10891				.DOOR-RADIATOR CAP	1			
19	74L3-10900				.LATCH ASSY	1			
20	S033-061522				.BOLT-W/WASHER	10			

Item	Part_No	IS	Ord	T	Description	Qty	Serial_No	ITC	Remark
21	S033-062516				.BOLT-W/WASHER	4			
22	S037-122552				.BOLT-W/WASHER	12			
23	S037-124552				.BOLT-W/WASHER	3			
24	S205-121002				.NUT-HEX	1			
25	S205-161002				.NUT-HEX	3			
26	S285-101002				.NUT-FLANGED	12			
27	S392-020030				.SHIM-ROUND(2.0T)	1			
28	S403-062002				.WASHER-PLAIN	4			
29	S403-122002				.WASHER-PLAIN	1			
30	S403-142002				.WASHER-PLAIN	1			
31	S441-160002				.WASHER-HARDENED	6			
32	S461-250202				.PIN-SPLIT	1			
33	S681-130800				.GROMMET	1			
34	71LB-01220				.LATCH ASSY	2			
35	71EM-51580				.CAP-STUD BOLT	23			
36	71LD-42410				.SPONGE-SIDE,LH	1			
37	71LD-42420				.SPONGE-SIDE,RH	1			
38	71LD-42430				.SPONGE-TOP	1			

COWL 1(LOW NOISE, #0669-)

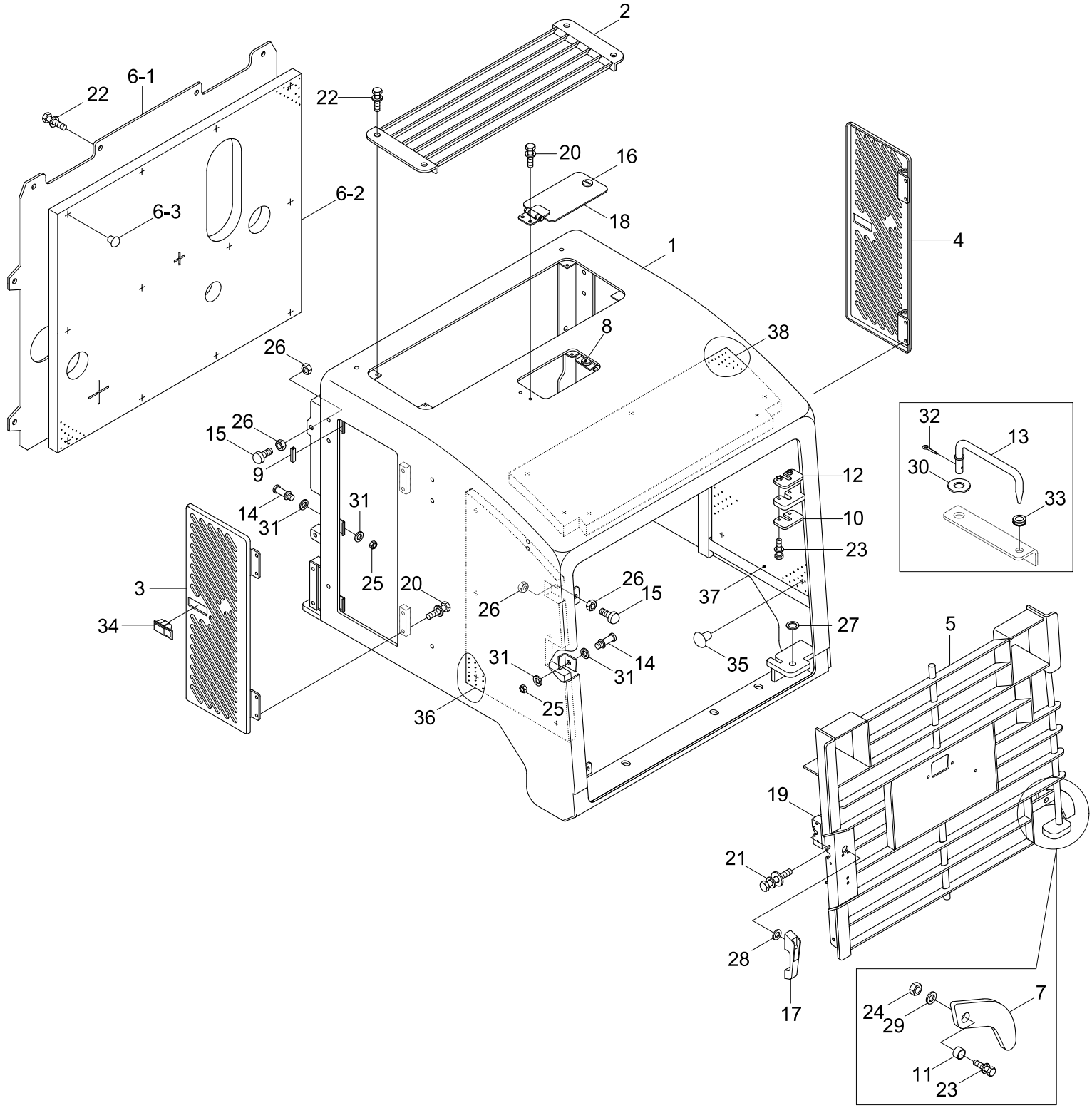

Item	Part_No	IS	Ord	T	Description	Qty	Serial_No	ITC	Remark
*	71LD-43010				SUPPORT ASSY	1	#0699 -	-	
1	71LD-43100				.SUPPORT WA	1			
2	71LD-40290				.COVER WA	1			
3	71LD-40270				.COVER WA-LH	1			
4	71LD-40280				.COVER WA-RH	1			
5	71LD-42201				.GRILL WA	1	- #1210		
	71LD-42202				.GRILL WA	1	#1211 -	D	
6	71LD-43210				.SCREEN ASSY	1			
6-1	71LD-43220				..SCREEN PLATE	1			
6-2	71LD-41011				..SPONGE-SCREEN	1			
6-3	71EM-51580				..CAP-STUD BOLT	12			
7	71LC-41020				.PLATE-HOLDING	1			
8	74L3-11290				.BUMPER-RUBBER	2			
9	S791-030005				.GROMMET-PLATE	6			
10	71LB-42370				.PLATE	1			
11	71LB-40290				.COLLAR	1			
12	71LB-42380				.PLATE	1			
13	71LD-41060				.STAY WA	1			
14	71LD-80180				.STRIKER	3			
15	71EH-13150				.RUBBER-BUMPER	6			
16	71LB-41220				.LOCK ASSY	1			
17	74L3-11380				.HANDLE ASSY	1			
18	74L3-10891				.DOOR-RADIATOR CAP	1			
19	74L3-10900				.LATCH ASSY	1			
20	S033-06152V				.BOLT-W/WASHER	10			

Item	Part_No	IS	Ord	T	Description	Qty	Serial_No	ITC	Remark
21	S033-06251V				.BOLT-W/WASHER	4			
22	S037-12255V				.BOLT-W/WASHER	12			
23	S037-12455V				.BOLT-W/WASHER	3			
24	S205-12100V				.NUT-HEX	1			
25	S205-16100V				.NUT-HEX	3			
26	S285-10100V				.NUT-FLANGED	12			
27	S392-020030				.SHIM-ROUND(2.0T)	1			
28	S403-06200V				.WASHER-PLAIN	4			
29	S403-12200V				.WASHER-PLAIN	1			
30	S403-14200V				.WASHER-PLAIN	1			
31	S441-16000V				.WASHER-HARDENED	6			
32	S461-250202				.PIN-SPLIT	1			
33	S681-130800				.GROMMET	1			
34	71LB-01220				.LATCH ASSY	2			
35	71EM-51580				.CAP-STUD BOLT	24			
36	71LD-42410				.SPONGE-SIDE,LH	1			
37	71LD-42420				.SPONGE-SIDE,RH	1			
38	71LD-42430				.SPONGE-TOP	1			

COWL 2

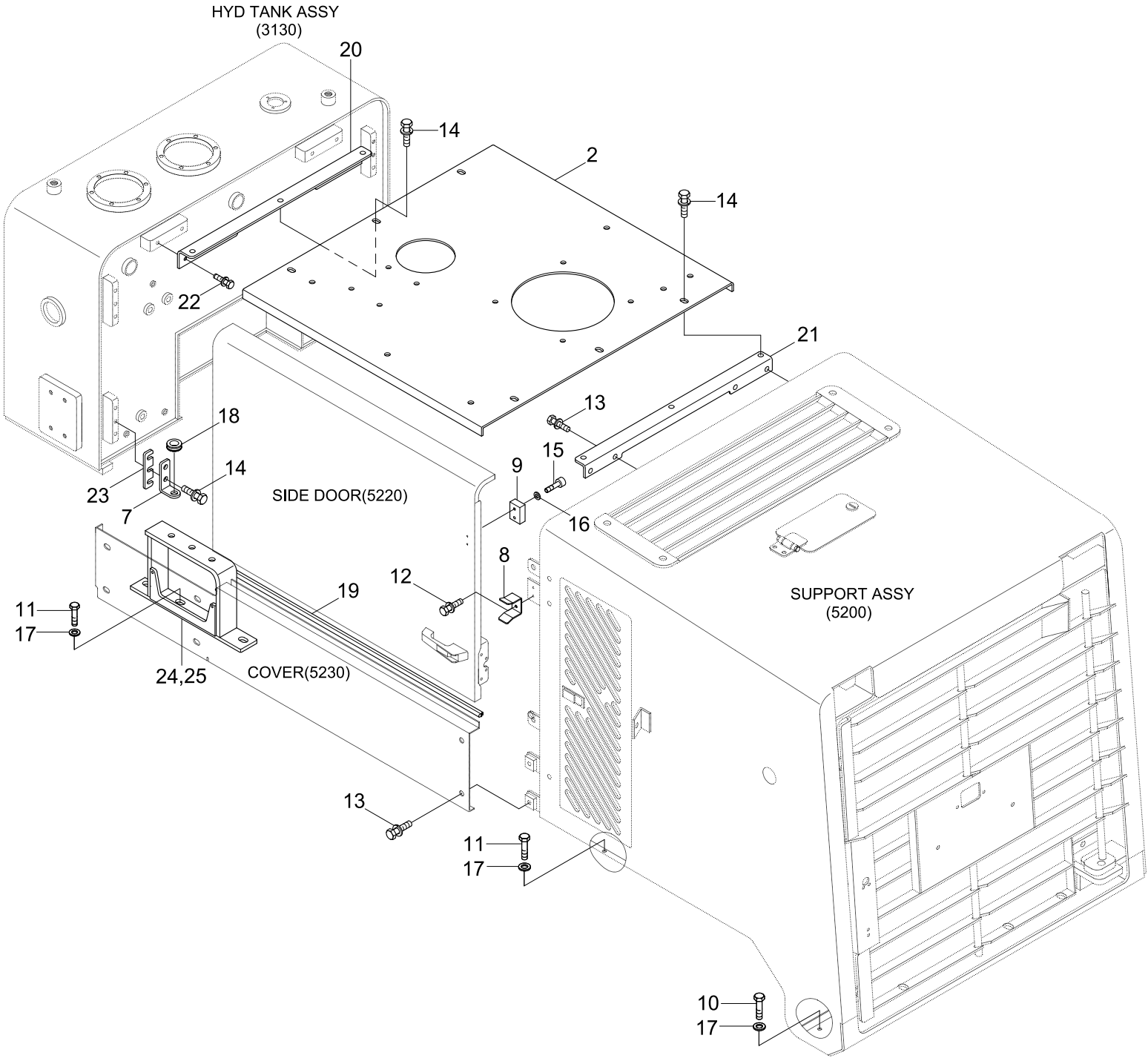
HYD TANK ASSY
(3130)
20
14
2
14
22
21
13
18
15
9
14
23
SIDE DOOR(5220)
16
7
8
12
19
SUPPORT ASSY
(5200)
11
17
24,25
COVER(5230)
13
11
17
10
17

Item	Part_No	IS	Ord	T	Description	Qty	Serial_No	ITC	Remark
2	71LD-40043				HOOD WA	1			
	71LD-42020				HOOD WA	1	#0203 -	-	ROUND COWL TYPE
7	71LD-41030				PLATE	2			
8	74L3-11140				PLATE	2			
9	74L3-11150				STOPPER	2			
10	S017-160302				BOLT-HEX	4			
11	S017-160602				BOLT-HEX	4	- #0047		
					BOLT-HEX	12	#0048 -	A	
12	S035-061522				BOLT-W/WASHER	4			
13	S037-122552				BOLT-W/WASHER	16			
14	S037-123052				BOLT-W/WASHER	18			
15	S109-060206				BOLT-SOCKET	4			
16	S403-062002				WASHER-PLAIN	4			
17	S441-160002				WASHER-HARDENED	8	- #0047		
					WASHER-HARDENED	16	#0048 -	A	
18	S681-130800				GROMMET	2			
19	S771-008100				WEATHER STRIP	2			
20	71LD-40110				BRACKET	1			
21	71LD-40120				BRACKET	1			
22	S037-122052				BOLT-W/WASHER	4			
23	71LD-41070				SHIM	4			
24	71LD-40850				BRACKET-LH	1	#0048 -	-	
	71LD-42050				BRACKET-LH	1	#0203 -	-	ROUND COWL TYPE
25	71LD-40860				BRACKET-RH	1	#0048 -	-	
	71LD-42060				BRACKET-RH	1	#0203 -	-	ROUND COWL TYPE

COWL 2(LOW NOISE, #0669-)

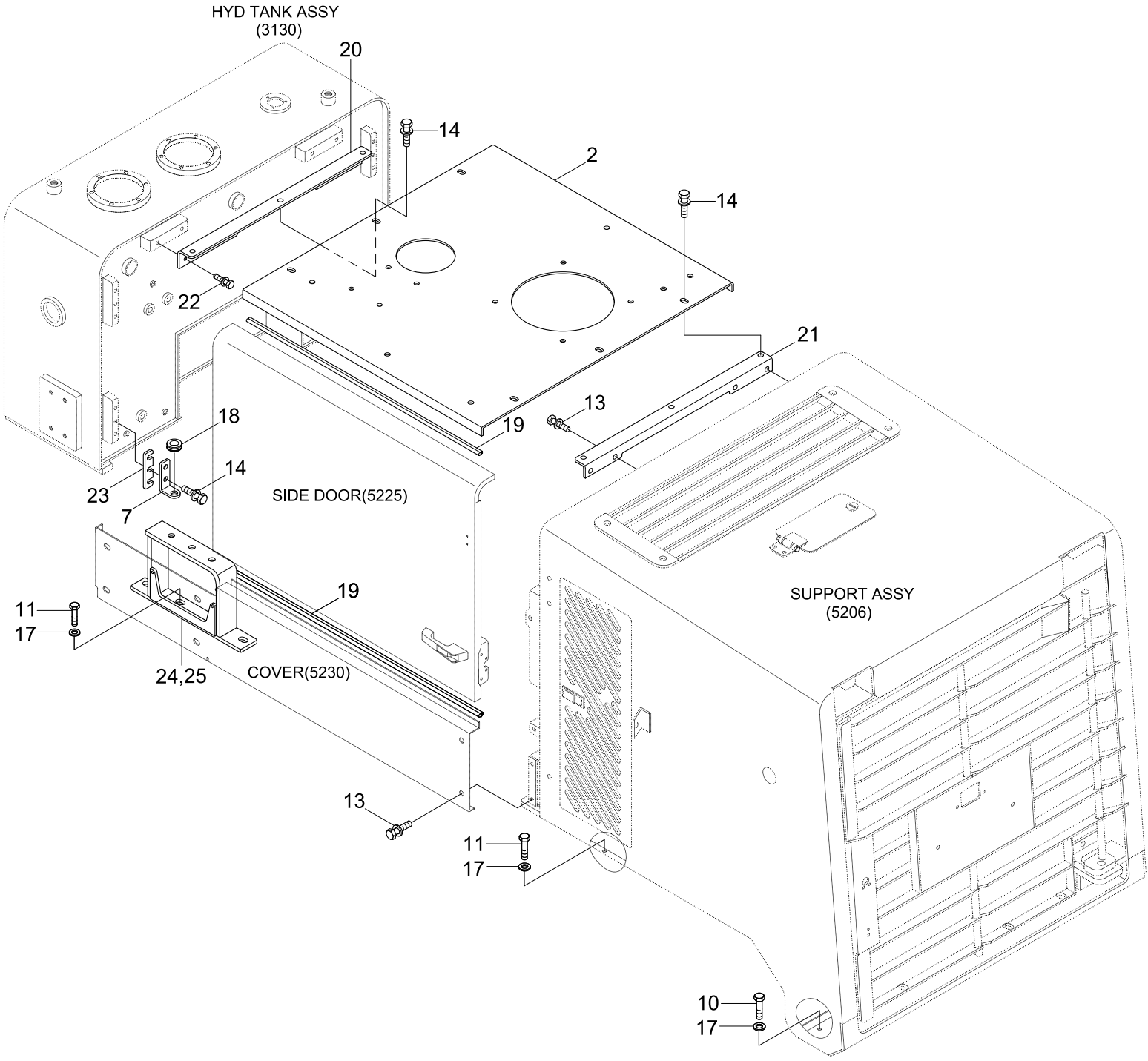

Item	Part_No	IS	Ord	T	Description	Qty	Serial_No	ITC	Remark
*	@				COWL(LOW NOISE)	1	#0669 -	-	NOT
2	71LD-42020				HOOD WA	1			
7	71LD-41030				PLATE	2			
10	S017-16030W				BOLT-HEX	4			
11	S017-16060W				BOLT-HEX	12			
13	S037-12255V				BOLT-W/WASHER	16			
14	S037-12305V				BOLT-W/WASHER	18			
17	S441-16000V				WASHER-HARDENED	16			
18	S681-130800				GROMMET	2			
19	S771-008100				WEATHER STRIP	4			
20	71LD-40110				BRACKET	1			
21	71LD-40120				BRACKET	1			
22	S037-12205V				BOLT-W/WASHER	4			
23	71LD-41070				SHIM	4			
24	71LD-42050				BRACKET-LH	1			
25	71LD-42060				BRACKET-RH	1			

COWL 3(SIDE DOOR)

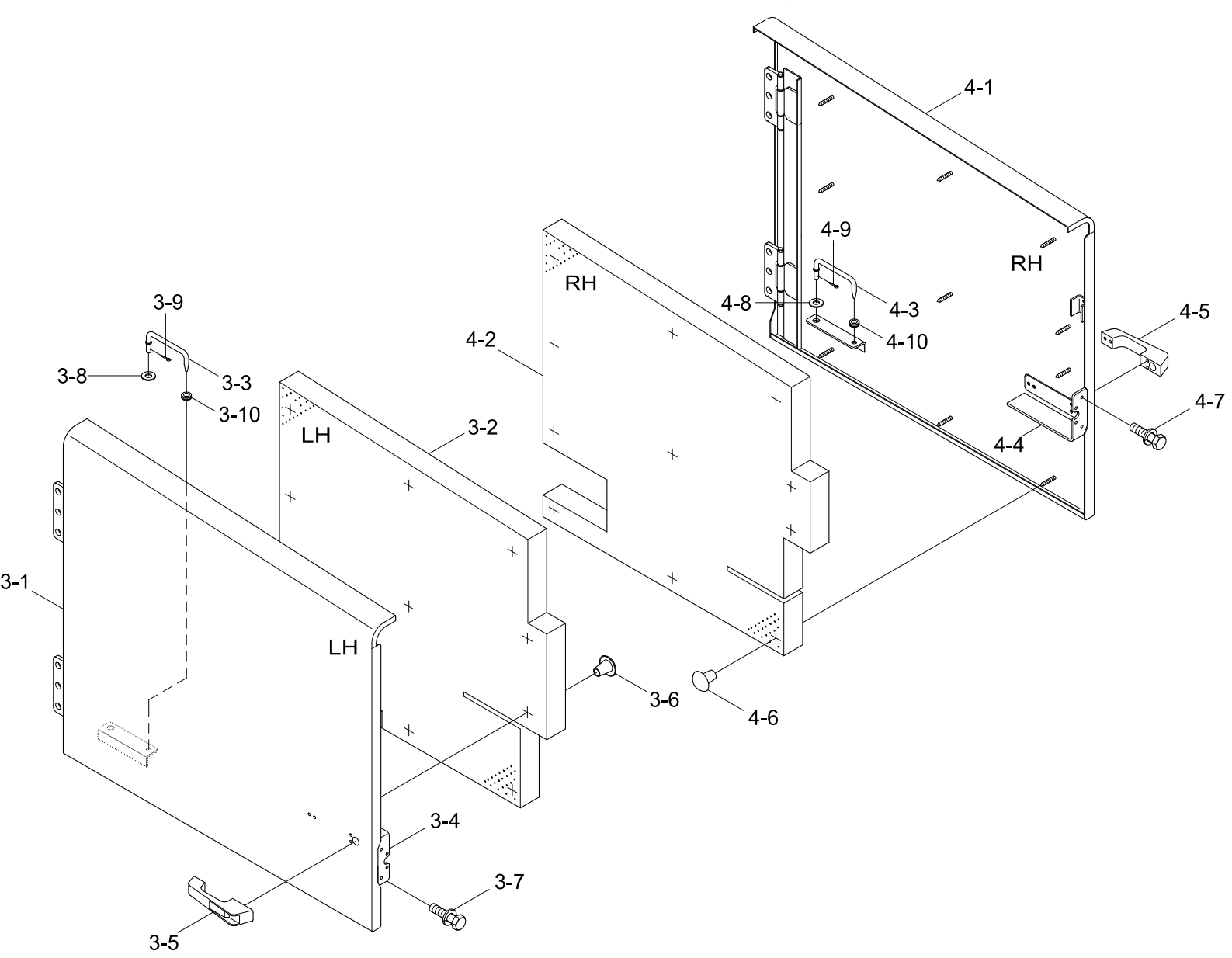

Item	Part_No	IS	Ord	T	Description	Qty	Serial_No	ITC	Remark
3	71LD-40022				SIDE DOOR ASSY-LH	1			
	71LD-42030				SIDE DOOR ASSY-LH	1	#0203 -	-	ROUND COWL TYPE
3-1	71LD-40133				.SIDE DOOR WA-LH	1			
	71LD-42310				.SIDE DOOR WA-LH	1	#0203 -	-	ROUND COWL TYPE
3-2	71LD-40951				.SPONGE-DOOR/LEFT	1			
3-3	71LD-41050				.STAY WA	1			
3-4	74L3-10900				.LATCH ASSY	1			
3-5	74L3-11380				.HANDLE ASSY	1			
3-6	71EM-51580				.CAP-STUD BOLT	11			
3-7	S033-062516				.BOLT-W/WASHER	4			
3-8	S403-142002				.WASHER-PLAIN	1			
3-9	S461-250202				.PIN-SPLIT	1			
3-10	S681-130800				.GROMMET	1			
4	71LD-40032				SIDE DOOR ASSY-RH	1			
	71LD-42040				SIDE DOOR ASSY-RH	1	#0203 -	-	ROUND COWL TYPE
4-1	71LD-40143				.SIDE DOOR WA-RH	1			
	71LD-42320				.SIDE DOOR WA-RH	1	#0203 -	-	ROUND COWL TYPE
4-2	71LD-40961				.SPONGE-DOOR/RIGHT	1			
4-3	71LD-41050				.STAY WA	1			
4-4	74L3-10900				.LATCH ASSY	1			
4-5	74L3-11380				.HANDLE ASSY	1			
4-6	71EM-51580				.CAP-STUD BOLT	11			
4-7	S033-062516				.BOLT-W/WASHER	4			
4-8	S403-142002				.WASHER-PLAIN	1			
4-9	S461-250202				.PIN-SPLIT	1			

Item	Part_No	IS	Ord	T	Description	Qty	Serial_No	ITC	Remark
4-10	S681-130800				.GROMMET	1			

COWL 3(SIDE DOOR, LOW NOISE, #0669-)

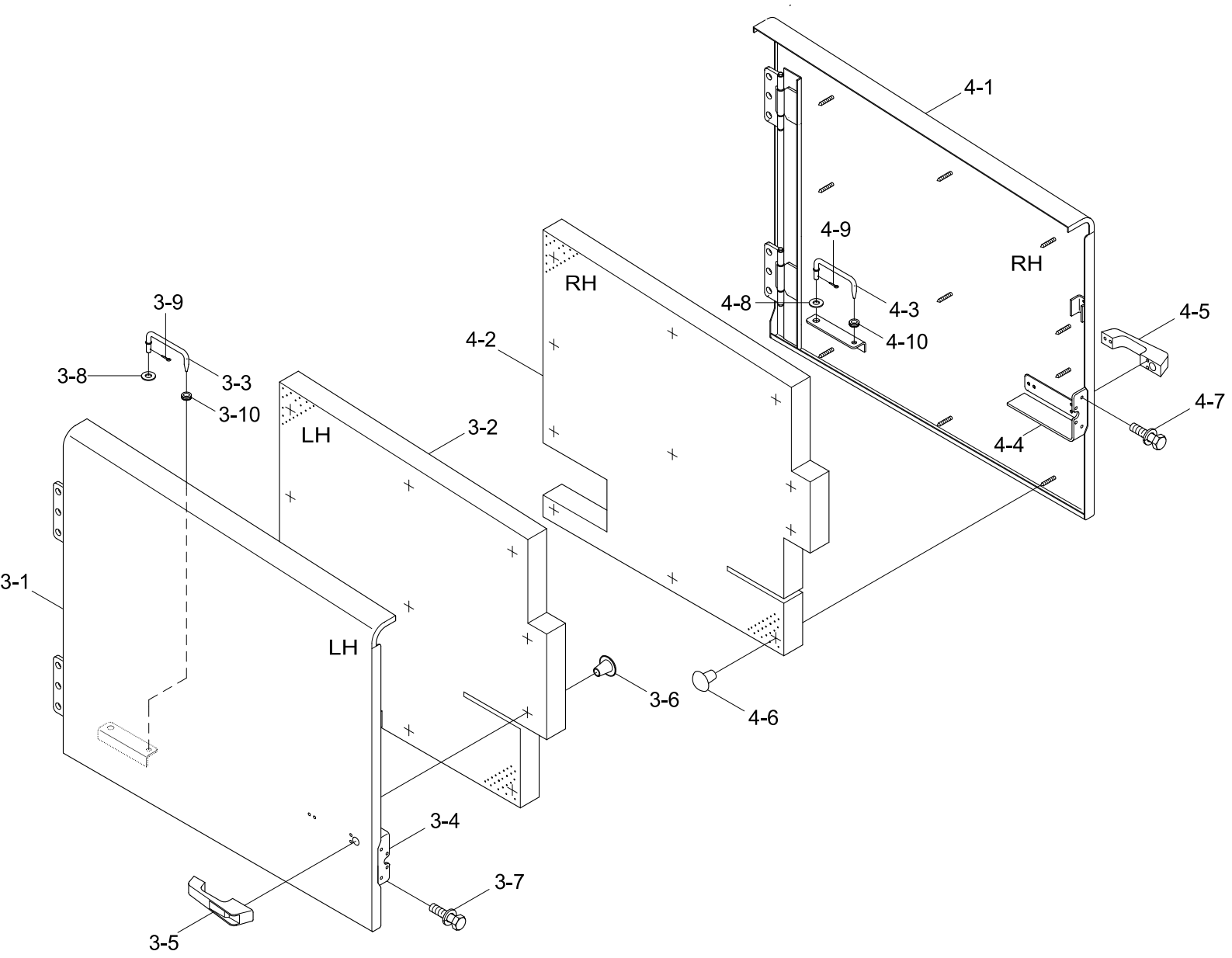

Item	Part_No	IS	Ord	T	Description	Qty	Serial_No	ITC	Remark
*	@				COWL(LOW NOISE)	1	#0669 -	-	NOT
3	71LD-43030				SIDE DOOR ASSY-LH	1			
3-1	71LD-43310				.SIDE DOOR WA-LH	1			
3-2	71LD-40951				.SPONGE-DOOR/LEFT	1			
3-3	71LD-41050				.STAY WA	1			
3-4	74L3-10900				.LATCH ASSY	1			
3-5	74L3-11380				.HANDLE ASSY	1			
3-6	71EM-51580				.CAP-STUD BOLT	12			
3-7	S033-06251V				.BOLT-W/WASHER	4			
3-8	S403-14200V				.WASHER-PLAIN	1			
3-9	S461-250202				.PIN-SPLIT	1			
3-10	S681-130800				.GROMMET	1			
4	71LD-43040				SIDE DOOR ASSY-RH	1			
4-1	71LD-43320				.SIDE DOOR WA-RH	1			
4-2	71LD-40961				.SPONGE-DOOR/RIGHT	1			
4-3	71LD-41050				.STAY WA	1			
4-4	74L3-10900				.LATCH ASSY	1			
4-5	74L3-11380				.HANDLE ASSY	1			
4-6	71EM-51580				.CAP-STUD BOLT	12			
4-7	S033-06251V				.BOLT-W/WASHER	4			
4-8	S403-14200V				.WASHER-PLAIN	1			
4-9	S461-250202				.PIN-SPLIT	1			
4-10	S681-130800				.GROMMET	1			

COWL 4(SIDE COVER)

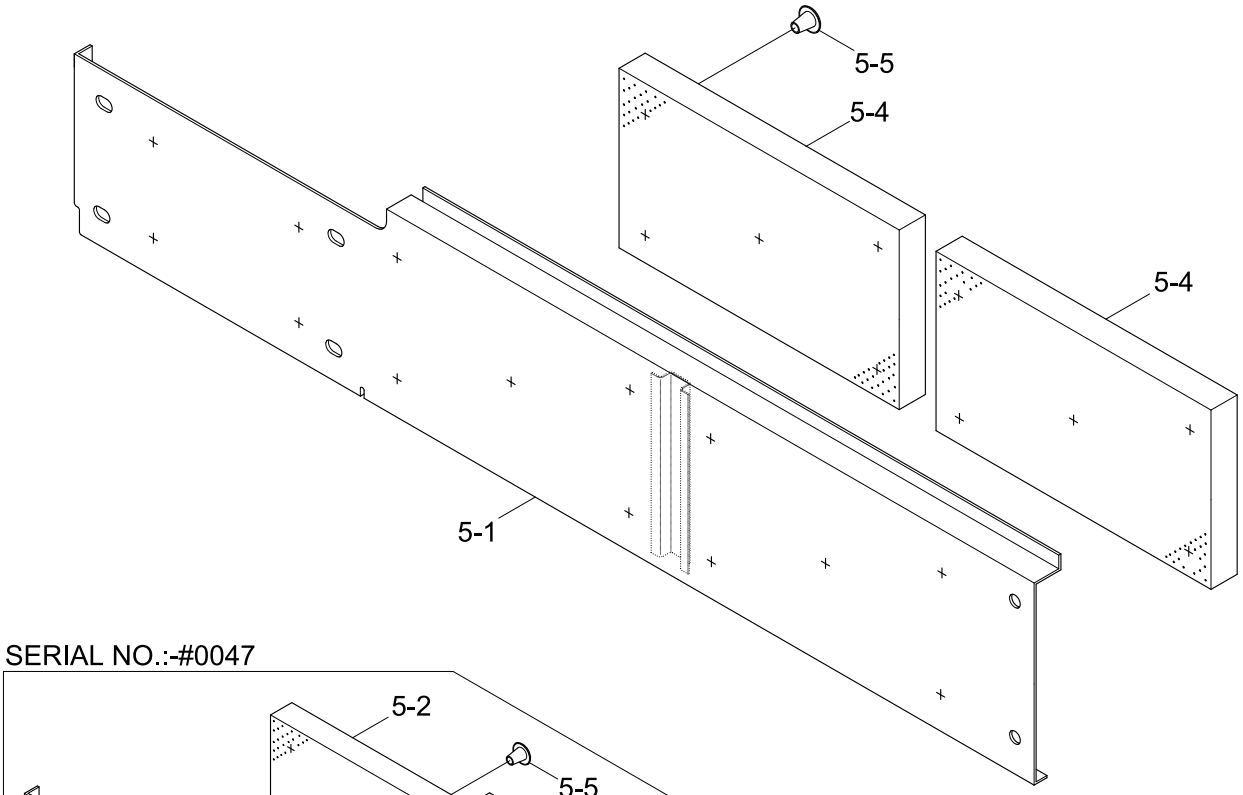

SERIAL NO.:-#0047

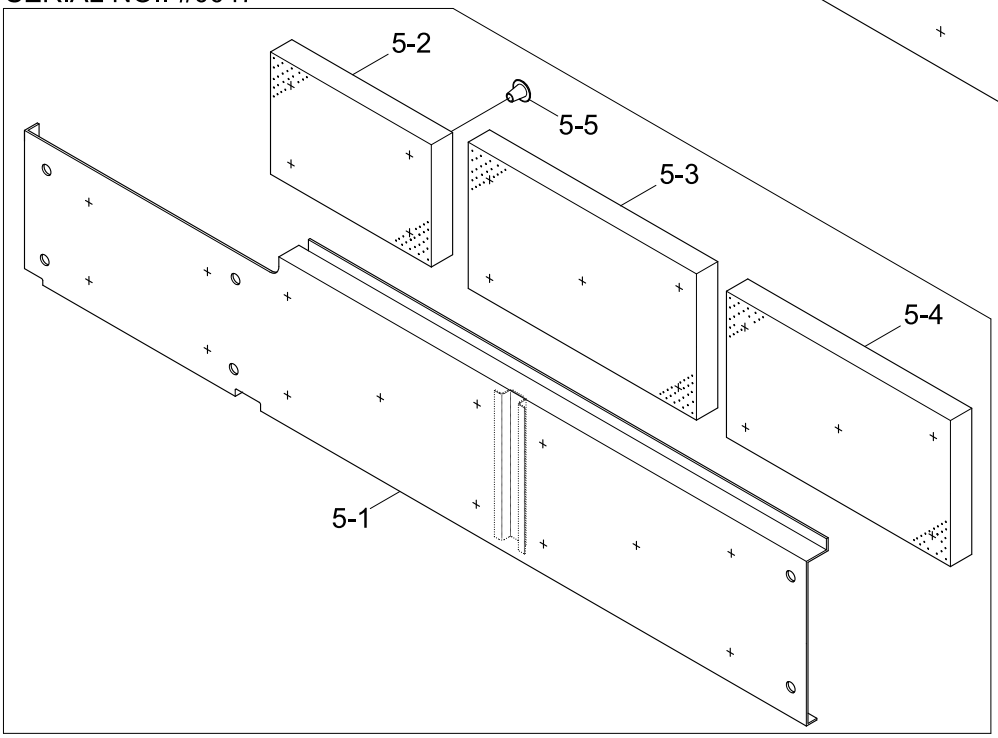

Item	Part_No	IS	Ord	T	Description	Qty	Serial_No	ITC	Remark
5	71LD-40810				COVER ASSY-LH	1	- #0047		
	71LD-40811				COVER ASSY-LH	1	#0048 -	D	
					COVER ASSY-LH	1	#0669 -	-	LOW NOISE
	71LD-40820				COVER ASSY-RH	1	- #0047		
	71LD-40821				COVER ASSY-RH	1	#0048 -	D	
					COVER ASSY-RH	1	#0669 -	-	LOW NOISE
5-1	71LD-40830				.COVER WA-LH	1	- #0047		
	71LD-40831				.COVER WA-LH	1	#0048 -	D	
					.COVER WA-LH	1	#0669 -	-	LOW NOISE
	71LD-40840				.COVER WA-RH	1	- #0047		
	71LD-40841				.COVER WA-RH	1	#0048 -	D	
					.COVER WA-RH	1	#0669 -	-	LOW NOISE
5-2	71LD-40970				.SPONGE-FRONT	1	- #0047	-	
5-3	71LD-40980				.SPONGE-MID	1	- #0047	-	
5-4	71LD-40990				.SPONGE-REAR	1	- #0047		
					.SPONGE-REAR	2	#0048 -	D	
					.SPONGE-REAR	2	#0669 -	-	LOW NOISE
5-5	71EM-51580				.CAP-STUD BOLT	14	- #0047		
					.CAP-STUD BOLT	10	#0048 -	A	
					.CAP-STUD BOLT	10	#0669 -	-	LOW NOISE

CANOPY 1

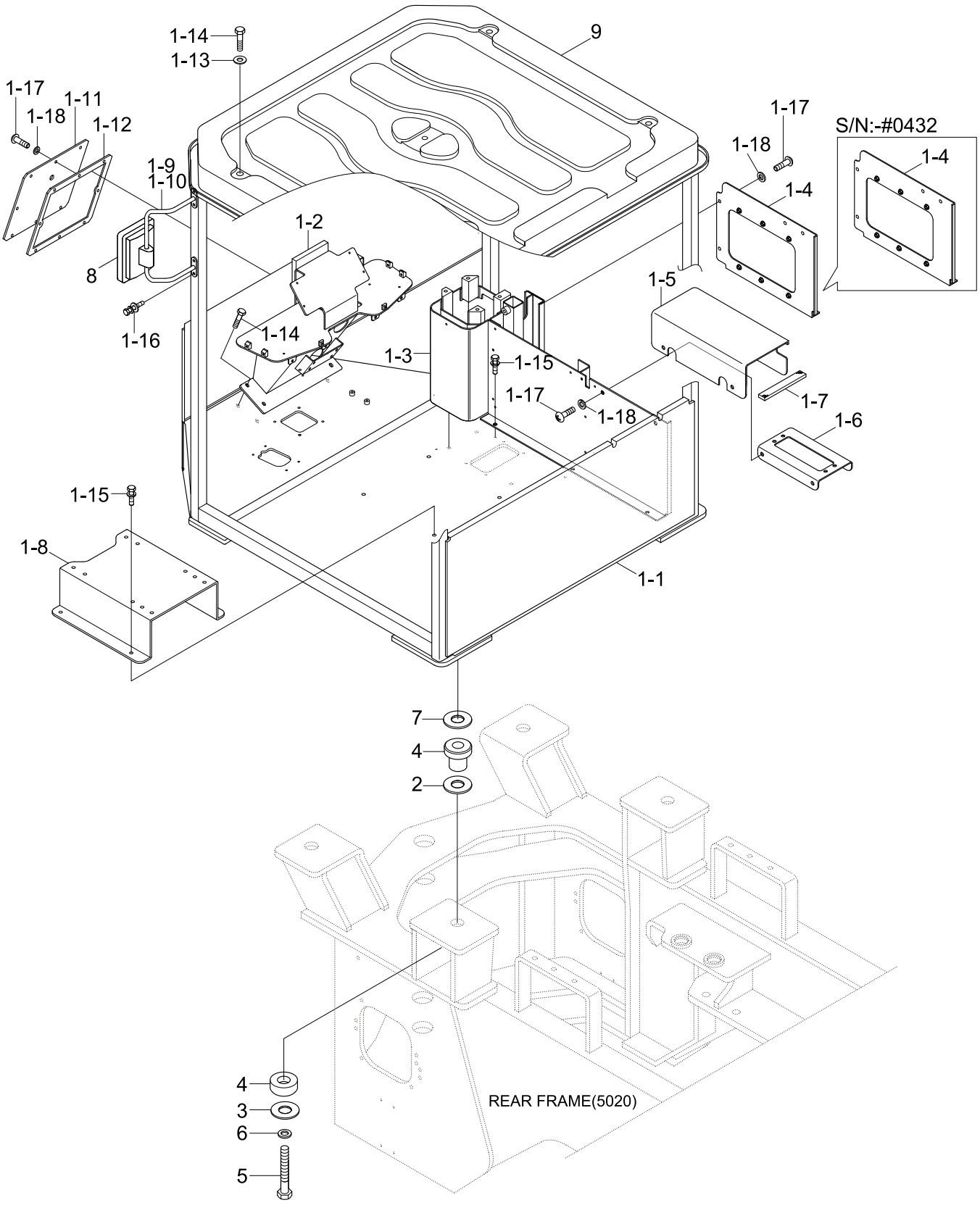
1-14
1-13
9
1-17
1-18
1-11
1-12
1-9
1-10
8
1-16
1-2
1-14
1-3
1-15
1-17
1-18
1-5
1-7
1-6
1-15
1-8
1-1
7
4
2
4
3
6
5
REAR FRAME(5020)
1-17
1-18
1-4
S/N:-#0432
1-4

Item	Part_No	IS	Ord	T	Description	Qty	Serial_No	ITC	Remark
*	@				CANOPY GROUP	1	#0096 -	-	NOT
1	71LB-08010				CANOPY ASSY	1			
1-1	71LB-08100				.CANOPY SUB ASSY	1	- #0432		
	71LB-08101				.CANOPY SUB ASSY	1	#0433 -	B	
1-2	71LB-08030				.SUPPORT WA-DASHBO	1	- #0432		
	71LB-08031				.SUPPORT WA-DASHBO	1	#0433 -	B	
1-3	71LB-08040				.SUPPORT WA-CONSO	1			
1-4	71LB-08050				.SUPPORT ASSY-CONSO	1	- #0432		
	71LB-08051				.SUPPORT ASSY-CONSO	1	#0433 -	B	
1-5	71LB-08060				.COVER-CONSOLE/UP	1			
1-6	71LB-08070				.PLATE-FUSE BOX	1			
1-7	71LB-08080				.PAD-RUBBER	1			
1-8	71LF-01090				.SEAT BASE WA	1	- #0432		
	71LF-01091				.SEAT BASE WA	1	#0433 -	B	
1-9	71LB-01692				.HANDRAIL WA-LH	1			
1-10	71LB-01702				.HANDRAIL WA-RH	1			
1-11	71LB-01061				.COVER WA-W/MOTOR	1			
1-12	71LB-01211				.PAD-RUBBER	1			
1-13	71LB-01110				.WASHER-ROOF COVER	5			
1-14	S017-200202				.BOLT-HEX	5			
1-15	S037-122552				.BOLT-W/WASHER	17			
1-16	S037-102026				.BOLT-W/WASHER	8			
1-17	S161-080206				.SCREW-RD HD	16			
1-18	S403-082006				.WASHER-PLAIN	16			
2	74L1-10061				SPACER	4			

Item	Part_No	IS	Ord	T	Description	Qty	Serial_No	ITC	Remark
3	71LB-00240				WASHER-SNUBBING	4			
4	71LB-00230				ISOLATION MOUNT-CAB	4			
5	S018-271652				BOLT-HEX	4			
6	S403-271002				WASHER-PLAIN	4			
7	71LB-00300				SPACER-UP	4			
8	71LB-00111				MIRROR ASSY-EXT	2			
9	71LB-01131				COVER-ROOF	1			

CANOPY 2(CONSOLE BOX)

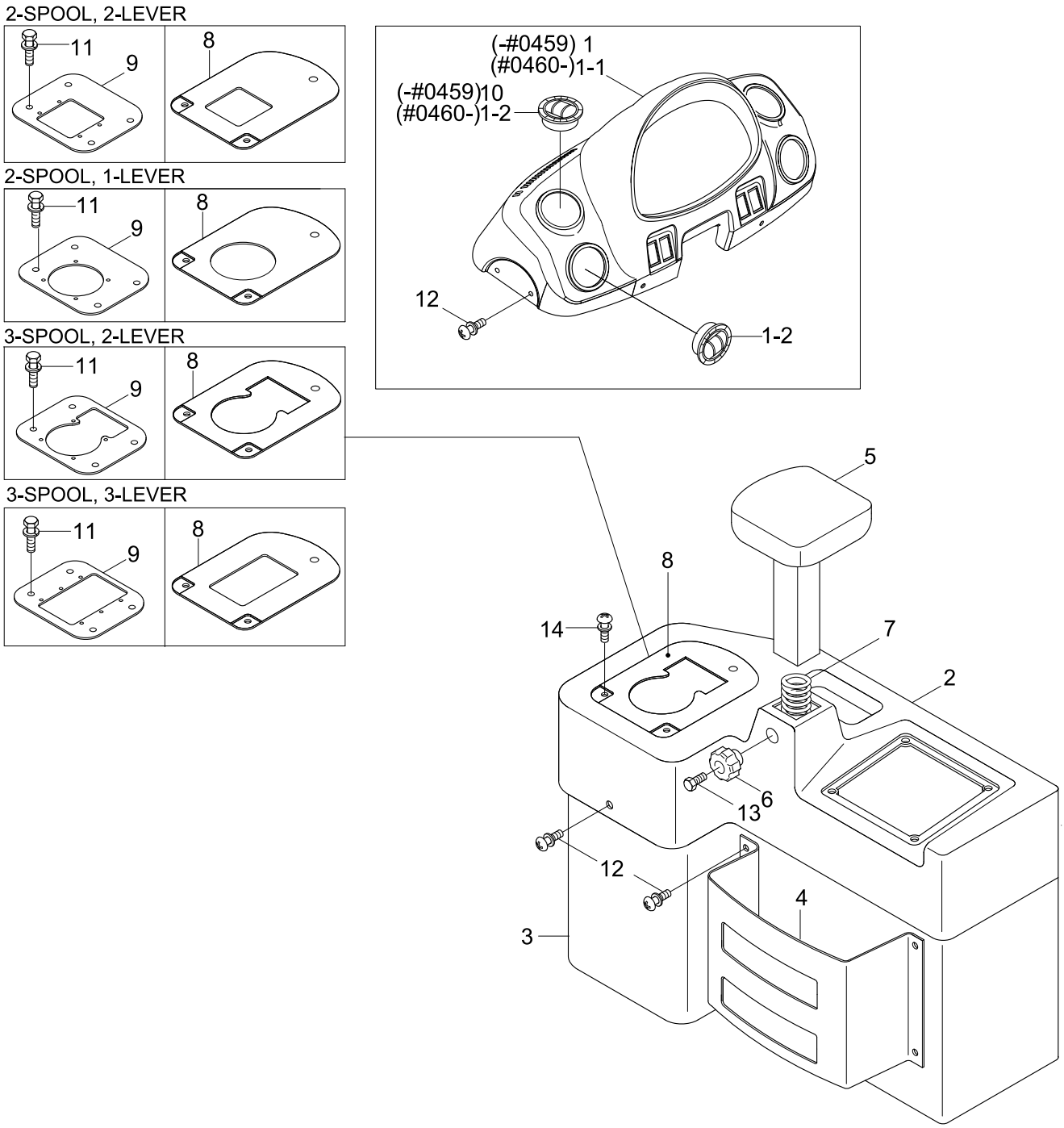

Item	Part_No	IS	Ord	T	Description	Qty	Serial_No	ITC	Remark
*	@				CANOPY GROUP	1	#0096 -	-	NOT
1	71LB-30021				DASHBOARD	1	- #0459		
	71LB-20320				DASHBOARD ASSY	1	#0460 -	B	
1-1	71LB-30021				.DASHBOARD	1	#0460 -	A	
1-2	71N6-03300				.AIR VENT	4	#0460 -	A	
2	71LB-20011				CONSOLE BOX-RH,FR	1			
3	71LB-05051				COVER-RCV	1			
4	71LB-20101				BOOK BOX	1			
5	71LB-20121				WRIST REST ASSY	1			
6	61S1-1037				HANDLE	1			
7	71LB-20190				SPRING	1			
8	71LB-20111				COVER-J/LEVER/3S/2L	1			3-SPOOL,2-LEVER
	71LB-20200				COVER-J/LEVER/2S/1L	1			2-SPOOL,1-LEVER
	71LB-20210				COVER-J/LEVER/2S/2L	1			2-SPOOL,2-LEVER
	71LB-20220				COVER-J/LEVER/3S/3L	1			3-SPOOL,3-LEVER
9	71LB-20230				PLATE-RCV/2S/1L	1			2-SPOOL,1-LEVER
	71LB-20240				PLATE-RCV/3S/2L	1			3-SPOOL,2-LEVER
	71LB-20250				PLATE-RCV/2S/2L	1			2-SPOOL,2-LEVER
	71LB-20260				PLATE-RCV/3S/3L	1			3-SPOOL,3-LEVER
10	71N6-03300				AIR VENT	4	- #0459	-	
11	S037-122526				BOLT-W/WASHER	4			
12	S132-081526				SCREW-W/WASHER	19			
13	S015-080356				BOLT-HEX	1			
14	S131-051546				SCREW-W/WASHER	2			

WHEEL RIM & TIRE(-#1274)

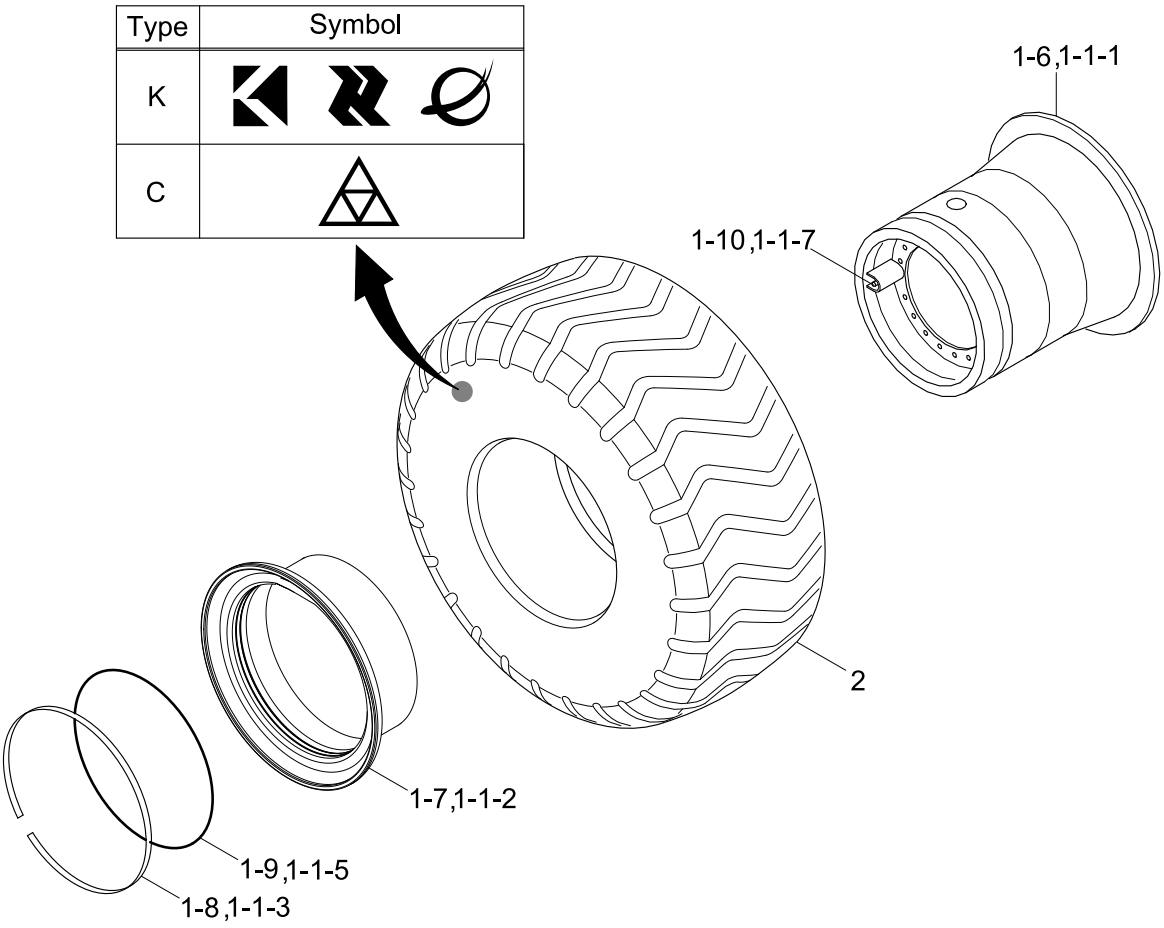

SERIAL NO:-#0178

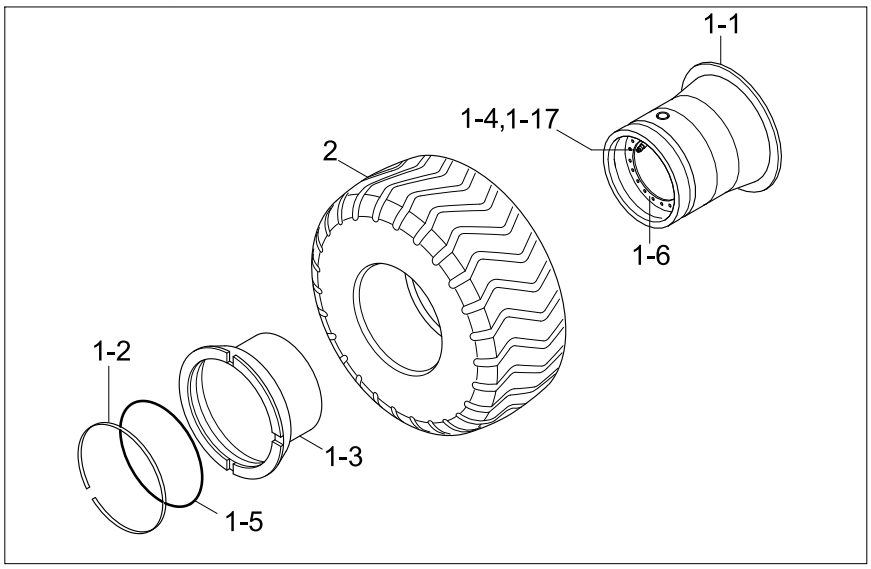

Item	Part_No	IS	Ord	T	Description	Qty	Serial_No	ITC	Remark
*	81LD-40010				WHEEL & TIRE ASSY	4	#0001 -	-	K TYPE
	81LD-41000				WHEEL & TIRE ASSY	4	#0433 - #1274	-	C TYPE
1	81LD-00010				.WHEEL RIM ASSY	1	- #0178		
	81LD-40130				.WHEEL RIM ASSY	1	#0179 -	A	
1-1	ZDAB-00019				..RIM BASE	1	- #0178	-	
1-2	ZDAB-00015				..RING-LOCK	1	- #0178	-	
1-3	ZDAB-00020				..FLANGE-SIDE	1	- #0178	-	
1-4	ZDAB-00006				..VALVE-AIR	1	- #0178	-	
1-5	ZDAB-00016				..O-RING	1	- #0178	-	
1-6	XIAA-00004				..RIM BASE(NSP)	1	#0179 -	D	
1-7	XIAA-00005				..FLANGE-DETACHABLE	1	#0179 -	D	
1-8	XIAA-00002				..RING-LOCK	1	#0179 -	D	
1-9	XIAA-00020				..O-RING	1	#0179 -	D	
1-10	XIAA-00022				..VALVE-AIR	1	#0179 -	D	
2	81L2-3104	01			.TIRE	1			K TYPE
	81L2-3104C				.TIRE(20.5-25 16PR,L3)	1	#0433 -	-	C TYPE
*	81LD-40020				WHEEL & TIRE ASSY	4	#0001 - #0170	-	OPT
	81LD-40021				WHEEL & TIRE ASSY	4	#0171 - #1274	B	OPT
1	81LD-00020				.WHEEL RIM ASSY	1	- #0170		
	81LD-40130				.WHEEL RIM ASSY	1	#0171 -	B	
1-1	ZDAB-00021				..RIM BASE	1	- #0170	-	
1-2	ZDAB-00015				..RING-LOCK	1	- #0170	-	
1-3	ZDAB-00014				..FLANGE-SIDE	1	- #0170	-	
1-4	ZDAB-00006				..VALVE-AIR	1	- #0170	-	
1-5	ZDAB-00016				..O-RING	1	- #0170	-	

Item	Part_No	IS	Ord	T	Description	Qty	Serial_No	ITC	Remark
1-6	XIAA-00004				..RIM BASE(NSP)	1	#0171 -	D	
1-7	XIAA-00005				..FLANGE-DETACHABLE	1	#0171 -	D	
1-8	XIAA-00002				..RING-LOCK	1	#0171 -	D	
1-9	XIAA-00020				..O-RING	1	#0171 -	D	
1-10	XIAA-00022				..VALVE-AIR	1	#0171 -	D	
2	82L1-1017				.TIRE(20.5 R 25XHA*)	1			
*	81LD-40030				WHEEL & TIRE ASSY	4	#0001 - #1274	-	OPT
1	81LD-40110				.WHEEL RIM ASSY	1	- #0178		
	81LD-40111				.WHEEL RIM ASSY	1	#0179 -	A	
1-1	81L8-00230				..WHEEL RIM	1	#0001 - #0178	-	
	81LG-40110				..WHEEL RIM	1	#0179 -	A	
1-1-1	XIAA-00001				...RIM BASE	1	#0179 -	D	
1-1-2	XIAA-00003				...DETACHABLE FLANGE	1	#0179 -	D	
1-1-3	XIAA-00002				...RING-LOCK	1	#0179 -	D	
1-1-5	XIAA-00020				...O-RING	1	#0179 -	D	
1-1-7	XIAA-00022				...VALVE-AIR	1	#0179 -	D	
1-2	ZDAB-00015				..RING-LOCK	1	- #0178	-	
1-3	ZDAB-00020				..FLANGE-SIDE	1	- #0178	-	
1-4	ZDAB-00006				..VALVE-AIR	1	- #0178	-	
1-5	ZDAB-00016				..O-RING	1	- #0178	-	
1-6	81LD-40120				..DISC	1	- #0178	-	
2	81L3-01030				.TIRE(17.5-25 12PR,L3)	1			
*	81LD-40040				WHEEL & TIRE ASSY	4	#0001 - #1274	-	OPT
1	81LD-00010				.WHEEL RIM ASSY	1	- #0178		
	81LD-40130				.WHEEL RIM ASSY	1	#0179 -	A	

Item	Part_No	IS	Ord	T	Description	Qty	Serial_No	ITC	Remark
1-1	ZDAB-00019				..RIM BASE	1	- #0178	-	
1-2	ZDAB-00015				..RING-LOCK	1	- #0178	-	
1-3	ZDAB-00020				..FLANGE-SIDE	1	- #0178	-	
1-4	ZDAB-00006				..VALVE-AIR	1	- #0178	-	
1-5	ZDAB-00016				..O-RING	1	- #0178	-	
1-6	XIAA-00004				..RIM BASE(NSP)	1	#0179 -	D	
1-7	XIAA-00005				..FLANGE-DETACHABLE	1	#0179 -	D	
1-8	XIAA-00002				..RING-LOCK	1	#0179 -	D	
1-9	XIAA-00020				..O-RING	1	#0179 -	D	
1-10	XIAA-00022				..VALVE-AIR	1	#0179 -	D	
2	81L7-01030				.TIRE(20.5-25 16PR,L2)	1			
*	81LD-40050				WHEEL & TIRE ASSY	4	#0001 - #1274	-	OPT
1	81LD-00010				.WHEEL RIM ASSY	1	- #0178		
	81LD-40130				.WHEEL RIM ASSY	1	#0179 -	A	
1-1	ZDAB-00019				..RIM BASE	1	- #0178	-	
1-2	ZDAB-00015				..RING-LOCK	1	- #0178	-	
1-3	ZDAB-00020				..FLANGE-SIDE	1	- #0178	-	
1-4	ZDAB-00006				..VALVE-AIR	1	- #0178	-	
1-5	ZDAB-00016				..O-RING	1	- #0178	-	
1-6	XIAA-00004				..RIM BASE(NSP)	1	#0179 -	D	
1-7	XIAA-00005				..FLANGE-DETACHABLE	1	#0179 -	D	
1-8	XIAA-00002				..RING-LOCK	1	#0179 -	D	
1-9	XIAA-00020				..O-RING	1	#0179 -	D	
1-10	XIAA-00022				..VALVE-AIR	1	#0179 -	D	
2	84L3-00030				.TIRE(20.5-25 16PR L-5)	1			

Item	Part_No	IS	Ord	T	Description	Qty	Serial_No	ITC	Remark
*	81LD-41010				WHEEL & TIRE ASSY	1	#0433 - #1274	-	OPT,C TYPE
1	81LD-40111				.WHEEL RIM ASSY	1			
1-1	81LG-40110				..WHEEL RIM	1			
1-1-1	XIAA-00001				...RIM BASE	1			
1-1-2	XIAA-00003				...DETACHABLE FLANGE	1			
1-1-3	XIAA-00002				...RING-LOCK	1			
1-1-5	XIAA-00020				...O-RING	1			
1-1-7	XIAA-00022				...VALVE-AIR	1			
2	81L3-01030C				.TIRE(17.5-25 12PR,L3)	1			C TYPE
*	81LD-40060				WHEEL & TIRE ASSY	1	#0433 - #1274	-	MICHELIN,SMALL
1	81LD-40111				.WHEEL RIM ASSY	1			
1-1	81LG-40110				..WHEEL RIM	1			
1-1-1	XIAA-00001				...RIM BASE	1			
1-1-2	XIAA-00003				...DETACHABLE FLANGE	1			
1-1-3	XIAA-00002				...RING-LOCK	1			
1-1-5	XIAA-00020				...O-RING	1			
1-1-7	XIAA-00022				...VALVE-AIR	1			
2	81L8-00190				.TIRE(17.5 R25 XHA*)	1			

WHEEL RIM & TIRE(#1275-)

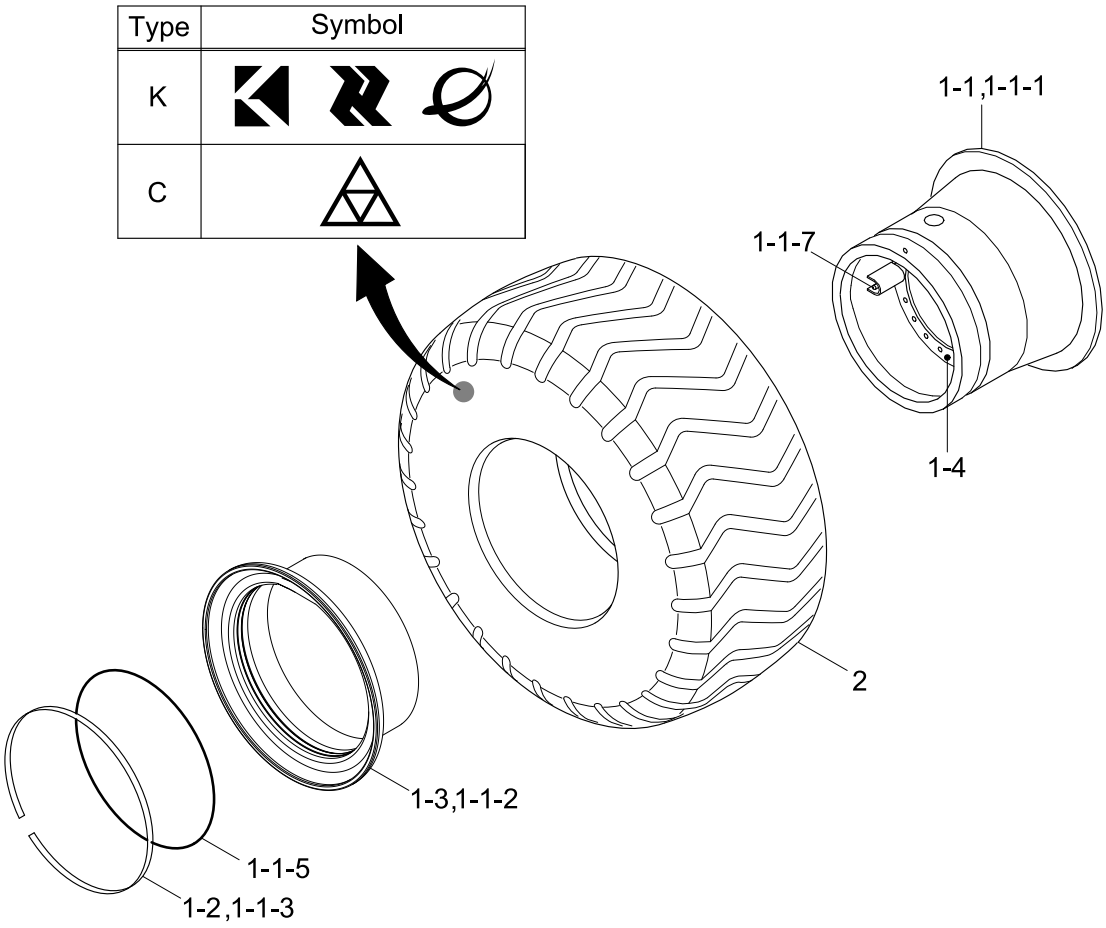

Item	Part_No	IS	Ord	T	Description	Qty	Serial_No	ITC	Remark
*	81LD-42100				WHEEL & TIRE ASSY	4	#1275 -	D	C TYPE
1	81LD-40150				.WHEEL RIM ASSY	1			
1-1	XIAA-00029				..RIM BASE	1	#1275 -	-	
1-2	XIAA-00002				..RING-LOCK	1			
1-3	XIAA-00005				..FLANGE-DETACHABLE	1			
2	81L2-3104C				.TIRE(20.5-25 16PR,L3)	1			
*	81LD-42200				WHEEL & TIRE ASSY	4	#1275 -	D	K TYPE
1	81LD-40150				.WHEEL RIM ASSY	1			
1-1	XIAA-00029				..RIM BASE	1	#1275 -	-	
1-2	XIAA-00002				..RING-LOCK	1			
1-3	XIAA-00005				..FLANGE-DETACHABLE	1			
2	81L2-3104				.TIRE	1			
*	81LD-42300				WHEEL & TIRE ASSY	4	#1275 -	D	OPT, K TYPE
1	81LD-40150				.WHEEL RIM ASSY	1			
1-1	XIAA-00029				..RIM BASE	1	#1275 -	-	
1-2	XIAA-00002				...RING-LOCK	1			
1-3	XIAA-00005				...FLANGE-DETACHABLE	1			
2	81L7-01030				.TIRE(20.5-25 16PR,L2)	1			
*	81LD-42500				WHEEL & TIRE ASSY	4	#1275 -	D	OPT, K TYPE
1	81LD-40150				.WHEEL RIM ASSY	1			
1-1	XIAA-00029				..RIM BASE	1	#1275 -	-	
1-2	XIAA-00002				..RING-LOCK	1			
1-3	XIAA-00005				..FLANGE-DETACHABLE	1			
2	84L3-00030				.TIRE(20.5-25 16PR L-5)	1			
*	81LD-42700				WHEEL & TIRE ASSY	4	#1275 -	D	OPT,MICHELIN

Item	Part_No	IS	Ord	T	Description	Qty	Serial_No	ITC	Remark
1	81LD-40150				.WHEEL RIM ASSY	1			
1-1	XIAA-00029				..RIM BASE	1	#1275 -	-	
1-2	XIAA-00002				..RING-LOCK	1			
1-3	XIAA-00005				..FLANGE-DETACHABLE	1			
2	82L1-1017				.TIRE(20.5 R 25XHA*)	1			
*	81LD-42400				WHEEL & TIRE ASSY	4	#1275 -	D	K TYPE,SMALL
1	81LD-40100				.WHEEL RIM ASSY	1			
1-1	81LG-40110				..WHEEL RIM	1			
1-1-1	XIAA-00001				...RIM BASE	1			
1-1-2	XIAA-00003				...DETACHABLE FLANGE	1			
1-1-3	XIAA-00002				...RING-LOCK	1			
1-1-5	XIAA-00020				...O-RING	1			
1-1-7	XIAA-00022				...VALVE-AIR	1			
1-4	81LD-40120				..DISC	1			
2	81L3-01030				.TIRE(17.5-25 12PR,L3)	1			
*	81LD-42600				WHEEL & TIRE ASSY	4	#1275 -	D	C TYPE,SMALL
1	81LD-40100				.WHEEL RIM ASSY	1			
1-1	81LG-40110				..WHEEL RIM	1			
1-1-1	XIAA-00001				...RIM BASE	1			
1-1-2	XIAA-00003				...DETACHABLE FLANGE	1			
1-1-3	XIAA-00002				...RING-LOCK	1			
1-1-5	XIAA-00020				...O-RING	1			
1-1-7	XIAA-00022				...VALVE-AIR	1			
1-4	81LD-40120				..DISC	1			
2	81L3-01030C				.TIRE(17.5-25 12PR,L3)	1			

Item	Part_No	IS	Ord	T	Description	Qty	Serial_No	ITC	Remark
*	81LD-42800				WHEEL & TIRE ASSY	4	#1275 -	D	MICHELIN,SMALL
1	81LD-40100				.WHEEL RIM ASSY	1			
1-1	81LG-40110				..WHEEL RIM	1			
1-1-1	XIAA-00001				...RIM BASE	1			
1-1-2	XIAA-00003				...DETACHABLE FLANGE	1			
1-1-3	XIAA-00002				...RING-LOCK	1			
1-1-5	XIAA-00020				...O-RING	1			
1-1-7	XIAA-00022				...VALVE-AIR	1			
1-4	81LD-40120				..DISC	1			
2	81L8-00190				.TIRE(17.5 R25 XHA*)	1			

Item	Part_No	IS	Ord	T	Description	Qty	Serial_No	ITC	Remark
2	81LD-20080				SUPPORT ASSY-FRONT	1			
2-1	81LD-20100				.SUPPORT WA-FRONT	1			
2-2	84L3-00180				.COVER	1			
2-3	S700-160309				.DUST SEAL-DKIY TYPE	2			
2-4	84L3-00200				.BUSHING	1			
2-5	S035-082052				.BOLT-W/WASHER	12			
2-6	84L3-00190				.COVER	1			
3	81LD-20090				SUPPORT ASSY-REAR	1	- #0101		
	81LD-20091				SUPPORT ASSY-REAR	1	#0102 -	B	
3-1	81LD-20110				.SUPPORT WA-REAR	1	- #0101		
	81LD-20111				.SUPPORT WA-REAR	1	#0102 -	B	
3-2	81L3-01121				.SHAFT	1			
3-3	S700-160309				.DUST SEAL-DKIY TYPE	2			
3-4	84L3-00200				.BUSHING	1			
4	81LD-20070				COVER	1			
5	81L3-0113	01			DISC(5T)	2	- #0101		
	81LD-20120				DISC(5T)	2	#0102 -	B	
	81LD-20410				DISC(6T)	2	#0001 -	-	OPT
	81LD-20420				DISC(7T)	2	#0001 -	-	OPT
	81LD-20430				DISC(8T)	2	#0001 -	-	OPT
	81LD-20440				DISC(9T)	2	#0001 -	-	OPT
6	S018-141402				BOLT-HEX	8	- #0101		
	S018-141356				BOLT-HEX	8	#0102 -	B	
7	S411-140002				WASHER-SPRING	8	- #0101	-	
8	S441-140002				WASHER-HARDENED	8			

Item	Part_No	IS	Ord	T	Description	Qty	Serial_No	ITC	Remark
9	S018-271052				BOLT-HEX	8			
10	S441-270002				WASHER-HARDENED	16			
11	S206-271002				NUT-HEX	8			
12	81L3-0116				SHIM(0.2)	2	- #0101	-	
13	81L3-0117				SHIM(0.5)	2	- #0101	-	
14	81L3-0118				SHIM(1.0)	1	- #0101	-	
22	S018-241752				BOLT-HEX	8			
23	S206-241002				NUT-HEX	8	- #0141		
					NUT-HEX	4	#0142 -	A	
24	S441-240002				WASHER-HARDENED	16			
25	81LC-10030				NUT-SQUARE	4	#0142 -	-	

FRONT & REAR AXLE MOUNTING(#1275-, ZF)

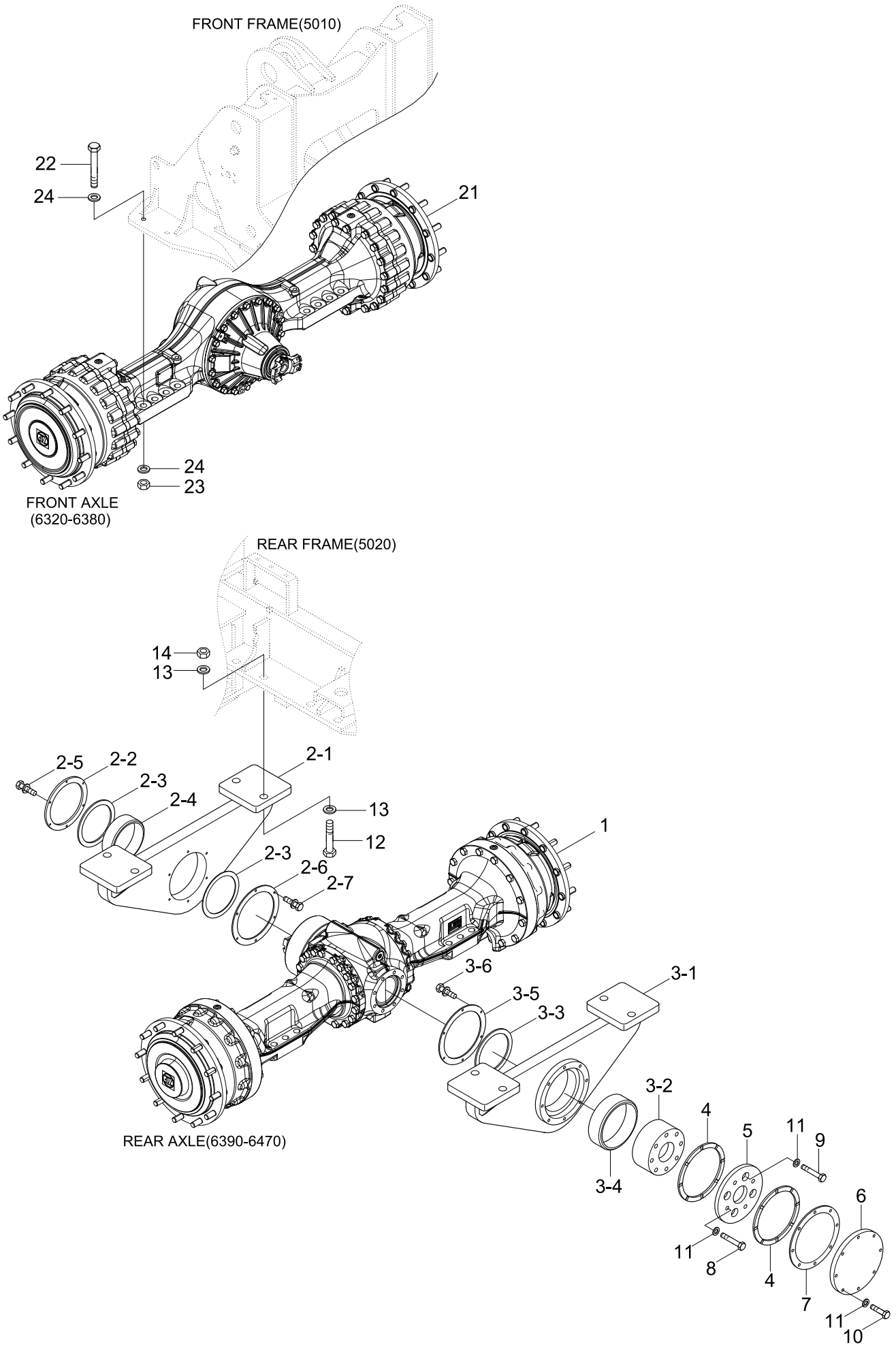

Item	Part_No	IS	Ord	T	Description	Qty	Serial_No	ITC	Remark
1	81LD-20130				REAR AXLE ASSY	1	#1275 -	D	
2	81LD-20301				SUPPORT ASSY-FRONT	1	- #1615		
	81LD-20302				SUPPORT ASSY-FRONT	1	#1616 -	B	
2-1	81LD-20312				.SUPPORT WA-FRONT	1	- #1615		
	81LD-20313				.SUPPORT WA-FRONT	1	#1616 -	B	
2-2	81LC-20120				.COVER	1			
2-3	81LC-20130				.SEAL-DUST	2			
2-4	81LC-20140				.BUSHING	1			
2-5	S037-102556				.BOLT-W/WASHER	12			
2-6	81LD-20340				.COVER	1			
2-7	S035-081556				.BOLT-W/WASHER	6			
3	81LD-20201				SUPPORT ASSY-REAR	1	- #1615		
	81LD-20202				SUPPORT ASSY-REAR	1	#1616 -	B	
3-1	81LD-20212				.SUPPORT WA-REAR	1	- #1615		
	81LD-20213				.SUPPORT WA-REAR	1	#1616 -	B	
3-2	81LD-20280				.SHAFT	1			
3-3	81LD-20320				.SEAL-DUST(DKIY TYPE)	1			
3-4	81LD-20140				.BUSHING	1			
3-5	81LD-20330				.COVER	1			
3-6	S035-081556				.BOLT-W/WASHER	6			
4	81LD-20240				WASHER-THRUST	2			
5	81LD-20250				DISC	1			
6	81LD-20260				COVER	1			
7	81LD-20270				SHIM	2			
8	S017-16115D				BOLT-HEX	4			

Item	Part_No	IS	Ord	T	Description	Qty	Serial_No	ITC	Remark
9	S017-16100D				BOLT-HEX	4			
10	S017-16050D				BOLT-HEX	8			
11	S441-160006				WASHER-HARDENED	16			
12	S018-27100D				BOLT-HEX	8			
13	S441-270006				WASHER-HARDENED	16			
14	S206-271006				NUT-HEX	8			
21	81LD-10040				FRONT AXLE ASSY	1			
22	S018-27135D				BOLT-HEX	8			
23	S206-271006				NUT-HEX	8			
24	S441-270006				WASHER-HARDENED	16			

DRIVE LINES(-#1274, VOLVO)

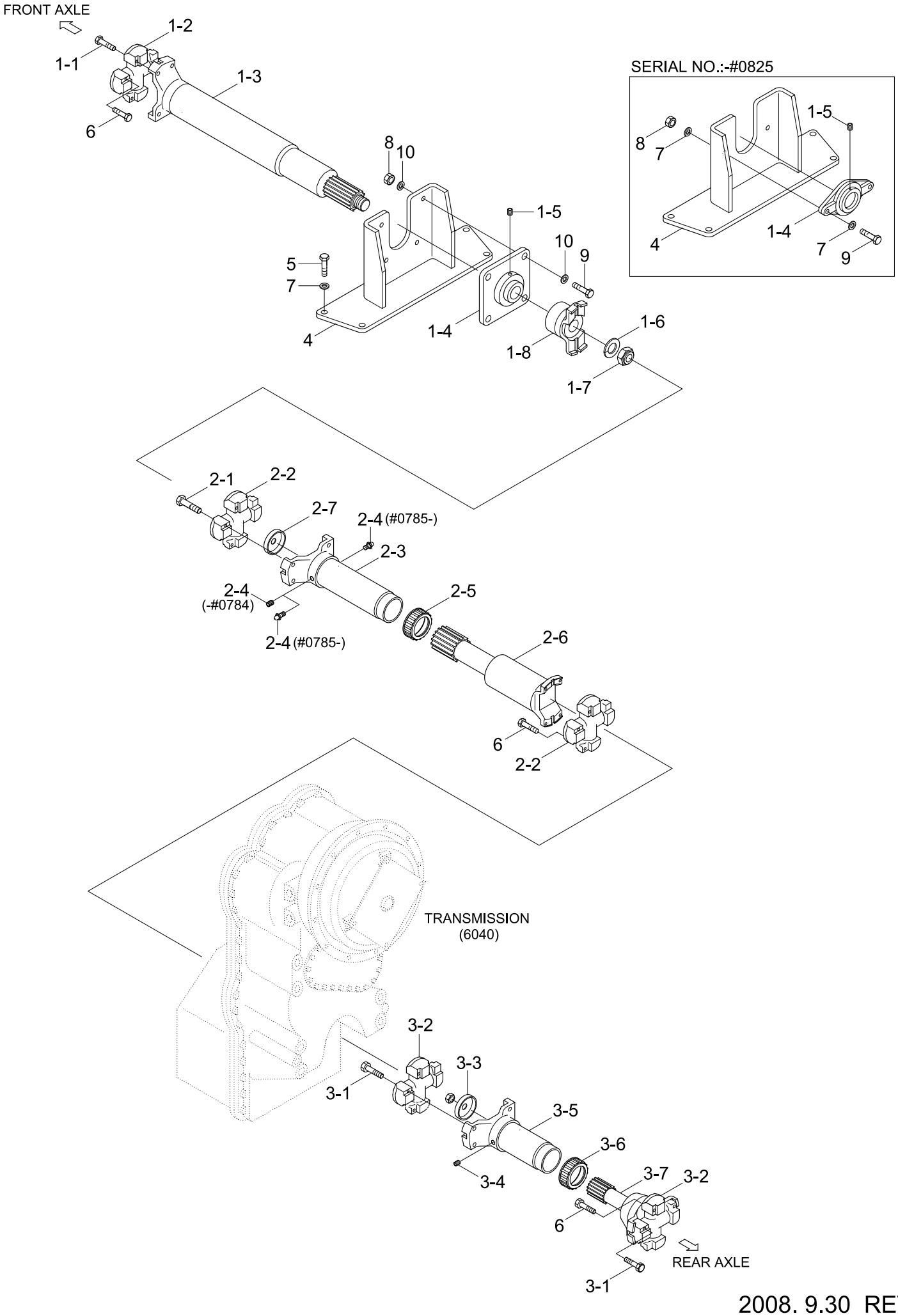

Item	Part_No	IS	Ord	T	Description	Qty	Serial_No	ITC	Remark
1	81LD-30010				DRIVE SHAFT-FRONT	1	- #0825		
	81LD-30060				DRIVE SHAFT-FRONT	1	#0826 -	D	
1-1	103-83UNF				.BOLT	4			
1-2	100-6C-1				.J/BEARING ASSY	1			
1-3	40AF-6C615				.SLIP SHAFT ASSY	1	- #0825		
	40AF-6C615L				.SLIP SHAFT ASSY	1	#0826 -	D	
1-4	700-UCF211				.BEARING-FLANGE	1	- #0825		
	700-UCF311				.BEARING-FLANGE	1	#0826 -	D	
1-5	710-M10				.SCREW-SET	1	- #0825		
	710-M1215				.SCREW-SET	1	#0826 -	D	
1-6	120-M27				.WASHER	1			
1-7	110-M27				.NUT-LOCK	1			
1-8	210-6C100L				.FLANGE COMPLETE	1			
2	81LD-30020				DRIVE SHAFT-CENTER	1	- #0784		
		01			DRIVE SHAFT-CENTER	1	#0785 -	A	
2-1	103-83UNF				.BOLT	8			
2-2	100-6C-1				.J/BEARING ASSY	2			
2-3	200-6C200L				.YOKE ASSY-SLIP	1			CHANGE WITH 2-5
2-4	710-PT81				.SCREW-PLUG	1	- #0784		
	101-PT81				.NIPPLE-GREASE	2	#0785 -	D	
2-5	810-415JK				.SEAL-JOINT	1			
2-6	40AF-6C775L				.SLIP SHAFT ASSY	1			
2-7	910-56				.PLUG	1			
3	81LD-30030				DRIVE SHAFT-REAR	1			
3-1	103-83UNF				.BOLT	8			

Item	Part_No	IS	Ord	T	Description	Qty	Serial_No	ITC	Remark
3-2	100-6C-1				.J/BEARING ASSY	2			
3-3	910-56				.PLUG	1			
3-4	710-PT81				.SCREW-PLUG	1			
3-5	200-6C148L				.SLIP YOKE	1			
3-6	810-415JK				.SEAL-JOINT	1			
3-7	300-6C200L				.SHAFT-SLIP	1			
4	81LD-30040				BRACKET WA	1	- #0825		
	81LD-30050				BRACKET WA	1	#0826 -	D	
5	S017-160502				BOLT-HEX	4			
6	84L3-00100				BOLT-HEX	20	- #0087		
	S088-080322				BOLT-HEX,UNIFIED	20	#0088 -	A	
7	S441-160002				WASHER-HARDENED	8	- #0825		
					WASHER-HARDENED	4	#0826 -	A	
8	S205-161002				NUT-HEX	2	- #0825		
	S205-201002				NUT-HEX	4	#0826 -	D	
9	S017-160602				BOLT-HEX	2	- #0825		
	S017-200602				BOLT-HEX	4	#0826 -	D	
10	S441-200002				WASHER-HARDENED	8	#0826 -	-	

DRIVE LINES(#1275-, ZF)

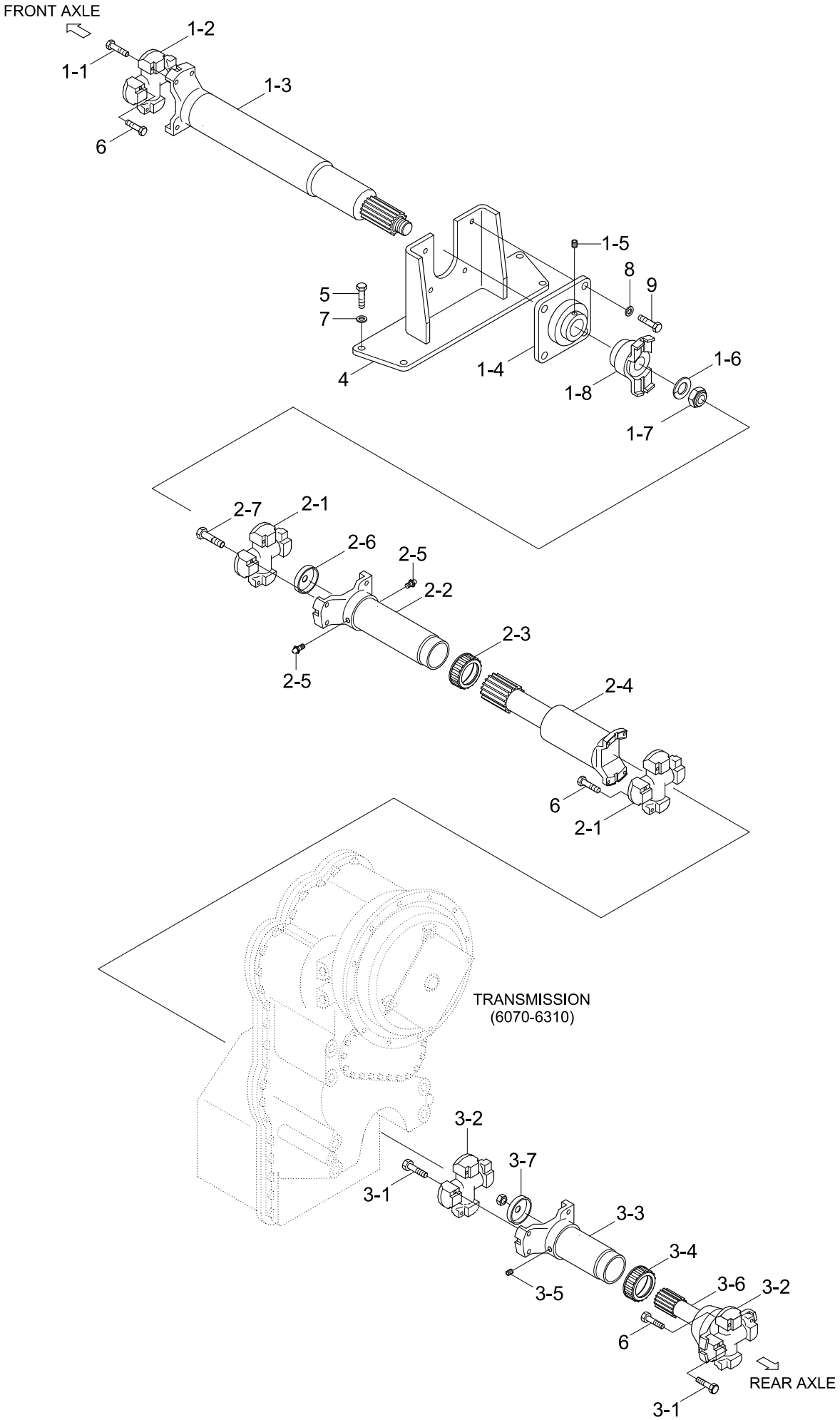

Item	Part_No	IS	Ord	T	Description	Qty	Serial_No	ITC	Remark
1	81LD-30070				DRIVE SHAFT-FRONT	1	#1275 -	D	
1-1	103-21UNF				.BOLT	4			
1-2	100-7C-1				.J/BEARING ASSY	1			
1-3	40AF-7C646L				.SLIP SHAFT SUB ASSY	1			
1-4	700-UCF312				.BEARING-FLANGE	1			
1-5	710-M1215				.SCREW-SET	1			
1-6	120-M27				.WASHER	1			
1-7	110-M27				.NUT-LOCK	1			
1-8	210-7C863L				.FLANGE COMPLETE	1			
2	81LD-30080				DRIVE SHAFT-CENTER	1			
2-1	100-7C-1				.J/BEARING ASSY	2			
2-2	220-7C200L				.YOKE-SLEEVE	1			CHANGE WITH 2-3
2-3	810-415JK				.SEAL-JOINT	1			
2-4	40AC-7C728L				.SLIP SHAFT SUB ASSY	1			
2-5	101-PT81				.NIPPLE-GREASE	2			
2-6	910-56				.PLUG	1			
2-7	103-21UNF				.BOLT	8			
3	81LD-30090				DRIVE SHAFT-REAR	1			
3-1	103-21UNF				.BOLT	8			
3-2	100-7C-1				.J/BEARING ASSY	2			
3-3	200-7C155L				.YOKE-SLEEVE	1			CHANGE WITH 3-4
3-4	810-415JK				.SEAL-JOINT	1			
3-5	710-PT81				.SCREW-PLUG	1			
3-6	300-7C180L				.SHAFT-YOKE	1			
3-7	910-56				.PLUG	1			

Item	Part_No	IS	Ord	T	Description	Qty	Serial_No	ITC	Remark
4	81LD-30100				BRACKET WA	1			
5	S017-16050D				BOLT-HEX	4			
6	S088-060326				BOLT-HEX,UNIFIED	20			
7	S441-160006				WASHER-HARDENED	4			
8	S441-200006				WASHER-HARDENED	4			
9	S017-20060D				BOLT-HEX	4			

TRANSMISSION MOUNTING

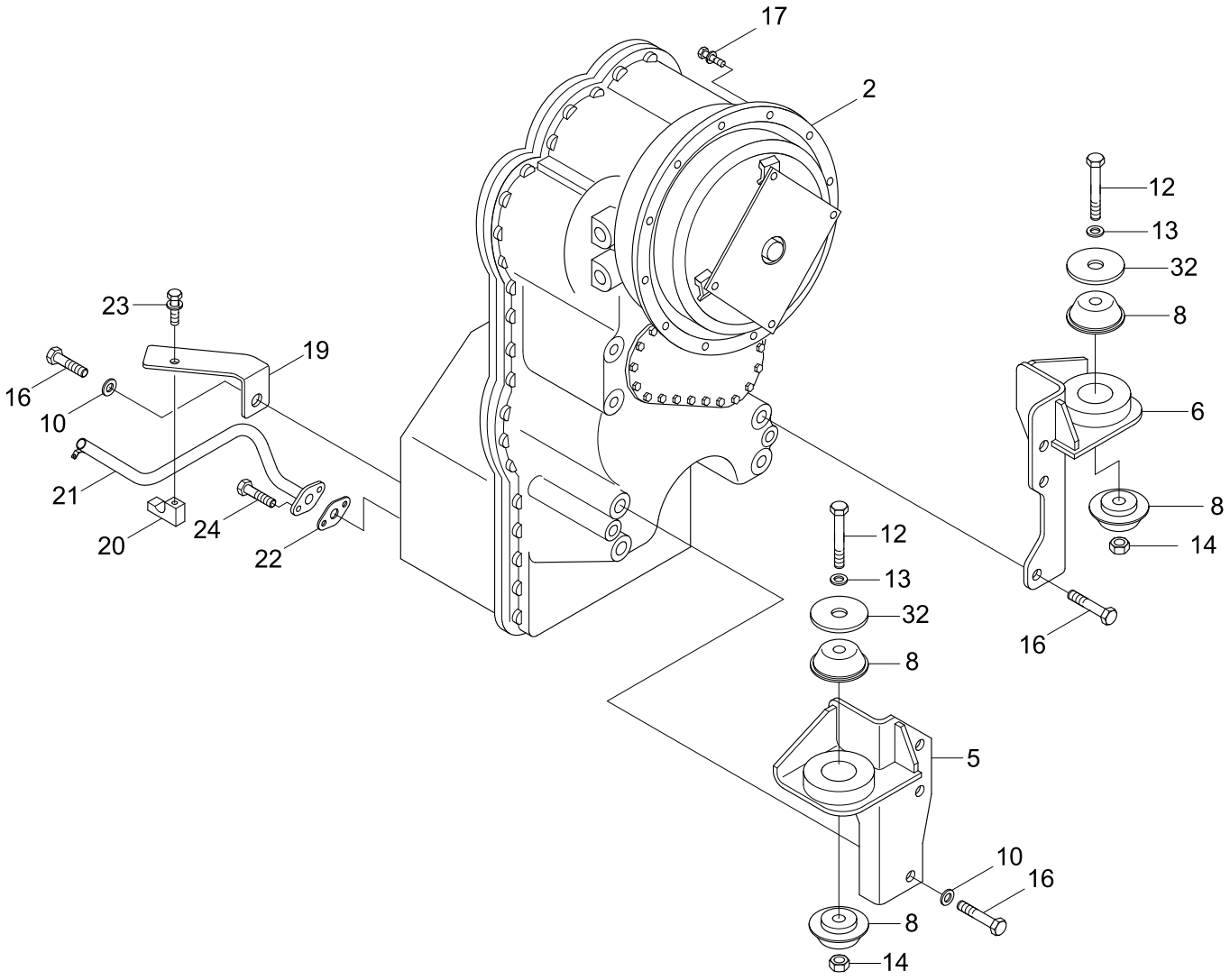

Item	Part_No	IS	Ord	T	Description	Qty	Serial_No	ITC	Remark
2	11LD-00020				T/M & T/C ASSY	1	- #1326		VOLVO AXLE
	11LD-00021				T/M & T/C ASSY	AR	#1327 -	D	ZF AXLE
5	11LD-00030				BRACKET WA-LH	1			
6	11LD-00040				BRACKET WA-RH	1			
8	11N6-13060				RESILIENT	4			
10	S441-200002				WASHER-HARDENED	7			
12	S017-241802				BOLT-HEX	2			
13	S441-240002				WASHER-HARDENED	2			
14	S205-241002				NUT-HEX	2			
16	S017-200402				BOLT-HEX	7			
17	S037-103552				BOLT-W/WASHER	12			
19	11LD-00090				PLATE	1			
20	11LD-00060				BLOCK	1			
21	11LD-00101				PIPE WA	1			
22	12L2-0013				GASKET	1			
23	S037-102052				BOLT-W/WASHER	1			
24	S035-082522				BOLT-W/WASHER	2			
32	11N8-00060				WASHER	2			

TRANSMISSION COOLING PIPING

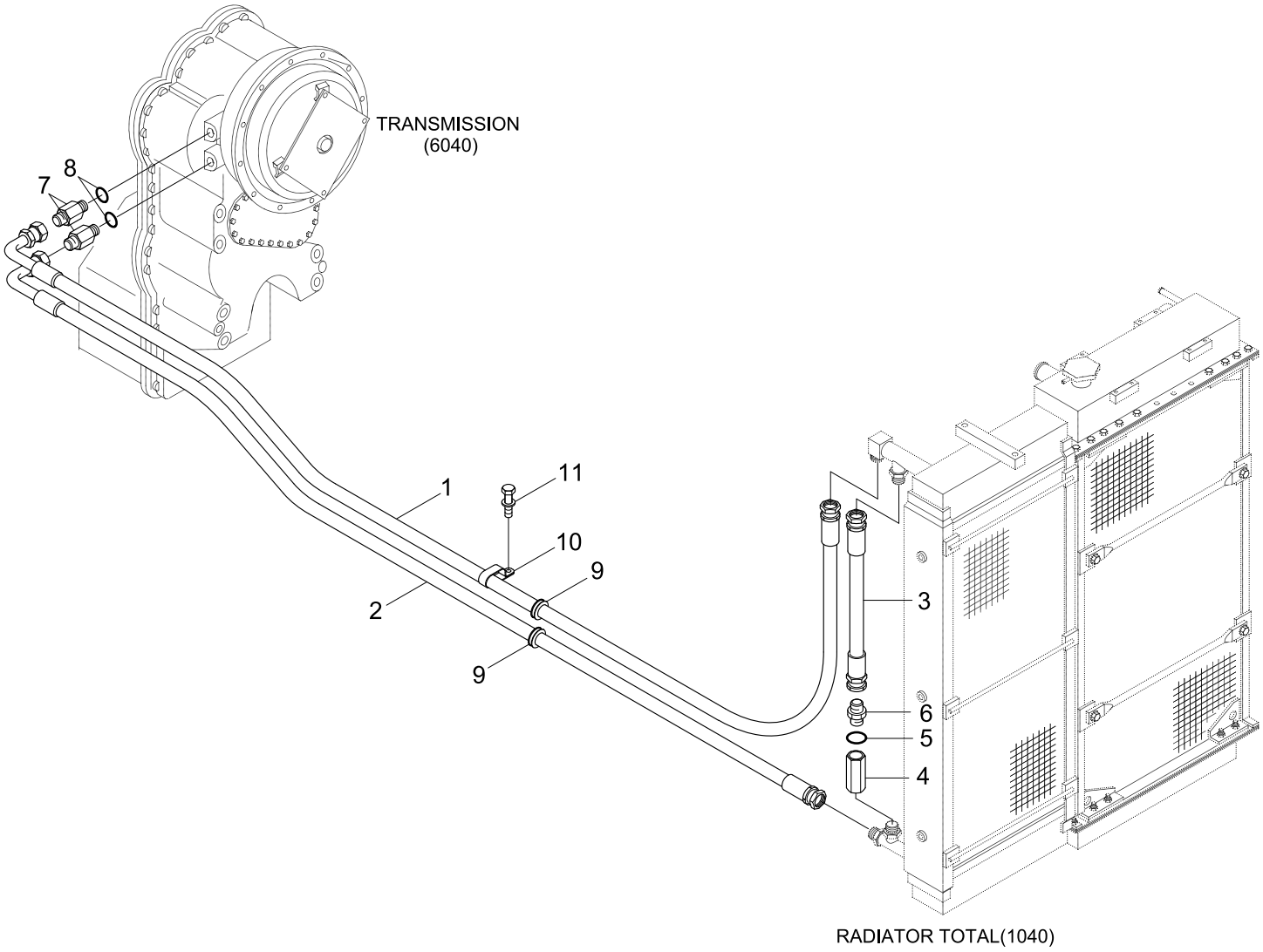

Item	Part_No	IS	Ord	T	Description	Qty	Serial_No	ITC	Remark
1	P620-161042				HOSE ASSY-THD 0X90	1			
2	P620-161030				HOSE ASSY-THD 0X90	1			
3	81LD-60060				HOSE ASSY	1			
4	81L6-01260				CHECK VALVE	1			
5	S631-030001				O-RING	2			
6	P010-110006				CONNECTOR	1			
7	P105-117165				CONNECTOR-LONG	2			
8	S611-030001				O-RING	2			
9	S681-460400				GROMMET	2			
10	31L7-10230				CLAMP	1			
11	S037-101552				BOLT-W/WASHER HEXAGON	1			

ENGINE CONNECTION

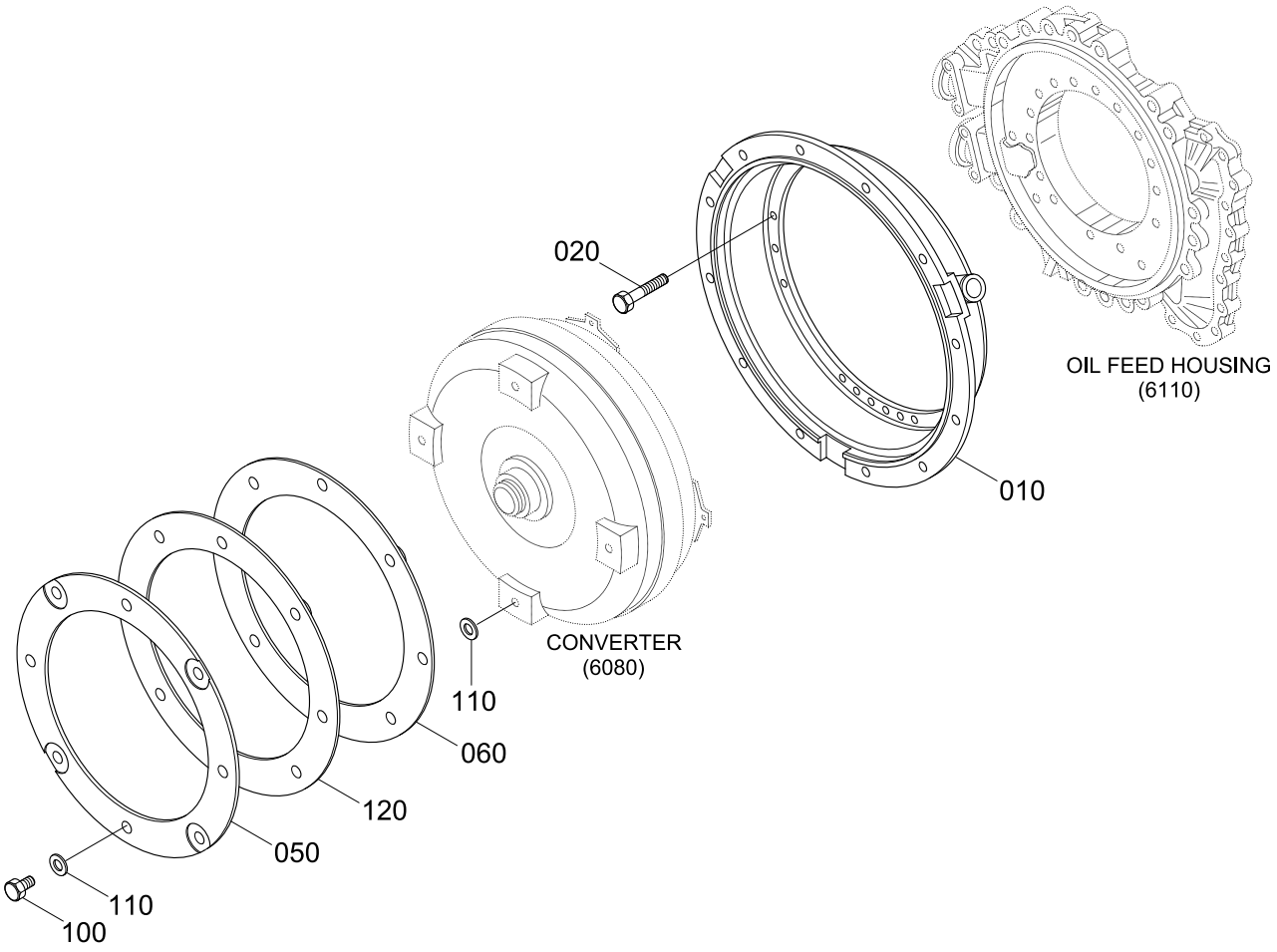

ITEM	PART NO.	DESCRIPTION	T/M SERIAL NO.
050	ZGAQ-00759	DIAPHRAGM	~#571037
	ZGAQ-01651		#571038~
120	ZGAQ-01652	DIAPHRAGM	#571038~

Item	Part_No	IS	Ord	T	Description	Qty	Serial_No	ITC	Remark
010	ZGAQ-00757				BELL-CONVERTER	1			4656-330-008
020	ZGAQ-00758				SCREW	18			0636-010-593
050	ZGAQ-00759				DIAPHRAGM	1			SEE ILLUST
	ZGAQ-01651				DIAPHRAGM	1		D	SEE ILLUST
060	ZGAQ-00760				DIAPHRAGM	1			4657-230-002
100	ZGAQ-00761				SCREW	4			0636-016-221
110	ZGAQ-00762				WASHER	8			0730-105-318
120	ZGAQ-01652				DIAPHRAGM	1		-	SEE ILLUST

CONVERTER

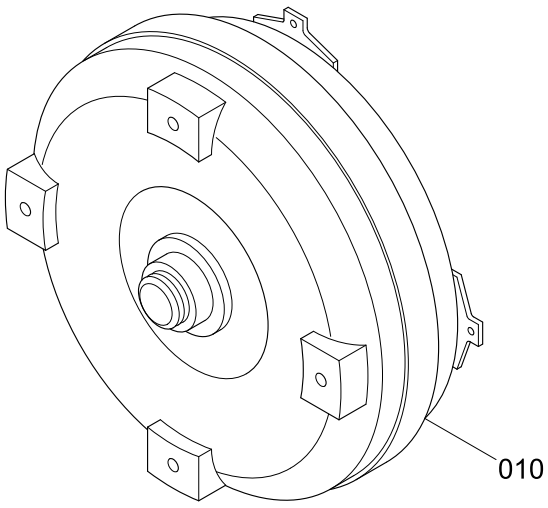

ITEM	PART NO.	DESCRIPTION	T/M SERIAL NO.
010	ZGAQ-01498	CONVERTER	~#571037
	ZGAQ-01653		#571038~

Item	Part_No	IS	Ord	T	Description	Qty	Serial_No	ITC	Remark
010	ZGAQ-01498				CONVERTER	1			SEE ILLUST
	ZGAQ-01653				CONVERTER	1		D	SEE ILLUST

INPUT GROUP

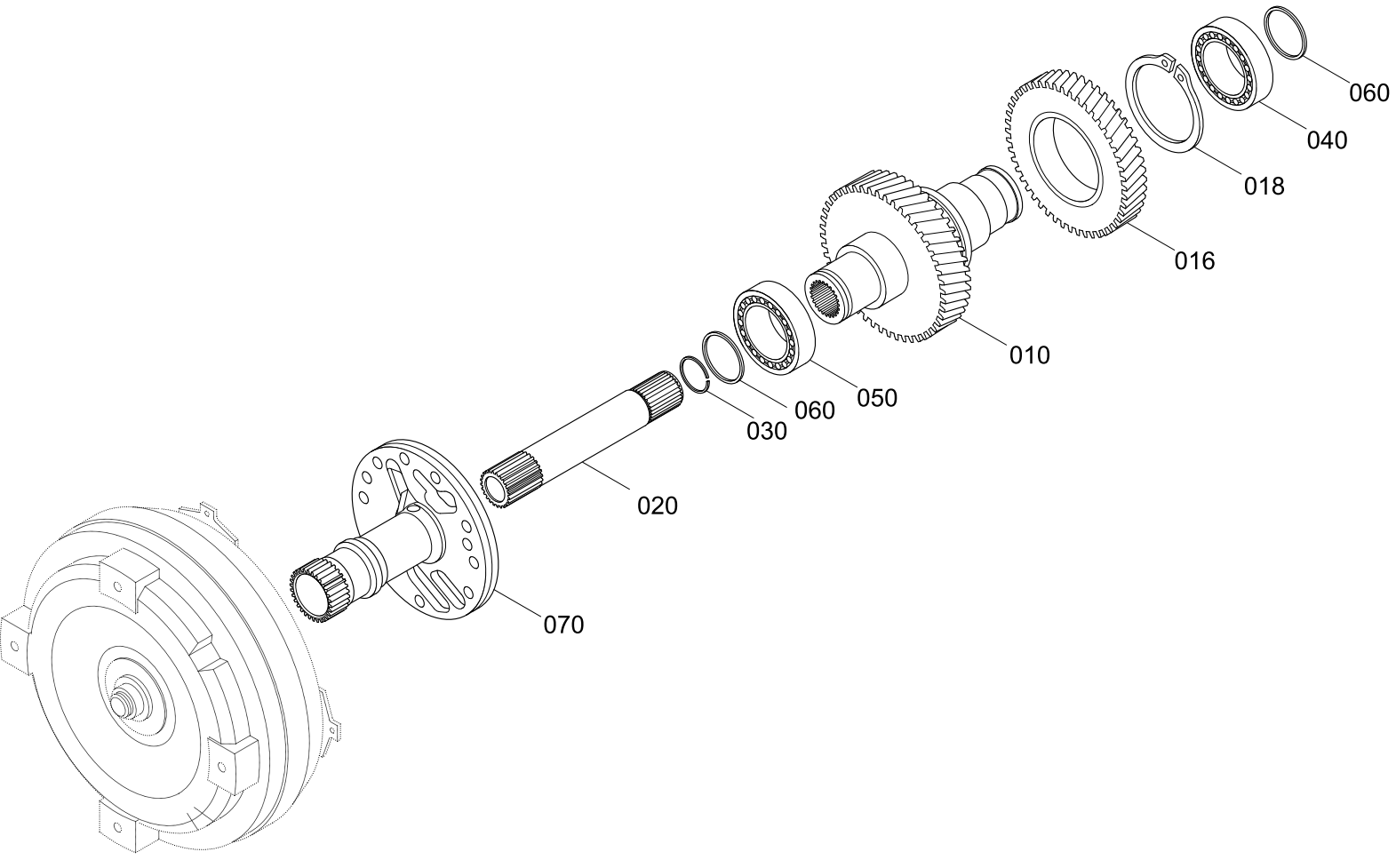

Item	Part_No	IS	Ord	T	Description	Qty	Serial_No	ITC	Remark
010	ZGAQ-00764				SHAFT-INPUT	1			4657-302-005
016	ZGAQ-00765				GEAR	1			4657-302-003
018	ZGAQ-00766				RING-TURBINE	1			0630-501-056
020	ZGAQ-00767				SHAFT-TURBINE	1			4656-302-010
030	ZGAQ-00768				RING-SNAP	1			0630-513-099
040	ZGAQ-00769				BEARING-ROLLER	1			0735-371-722
050	ZGAQ-00769				BEARING-ROLLER	1			0735-371-722
060	0634-402-557				RING-PISTON	2			
070	ZGAQ-00771				SHAFT-STATOR	1			4656-302-027

Item	Part_No	IS	Ord	T	Description	Qty	Serial_No	ITC	Remark
010	ZGAQ-01499				GEAR PUMP	1	- #0177		SEE ILLUST
	ZGAQ-01519				GEAR PUMP	1	#0178 - #1496	B	SEE ILLUST
	ZGAQ-02856				PUMP-GEAR	1	#1497 -	B	SEE ILLUST
010-1	ZGAQ-00775				.RING	1	- #1496	-	0501-316-582
010-2	ZGAQ-00776				.SHIM-SUPPORT	1	- #1496	-	0501-316-583
010-3	ZGAQ-00777				.BEARING-NEEDLE	1	- #1496	-	0501-316-584
010-4	ZGAQ-00778				.SEAL-SHAFT	1			0634-311-837
010-5	ZGAQ-00779				.RING-SNAP	1	- #1496	-	0501-316-586
020	@				SCREW-CAP	10			NOT
020-1	ZGAQ-01460				.SCREW-CAP	10			
020-2	ZGAQ-01461				.O-RING	10			
040	ZGAQ-01462				O-RING	1			
	ZGAQ-02809				O-RING	1	#1497 -	B	

GEARBOX HOUSING 1

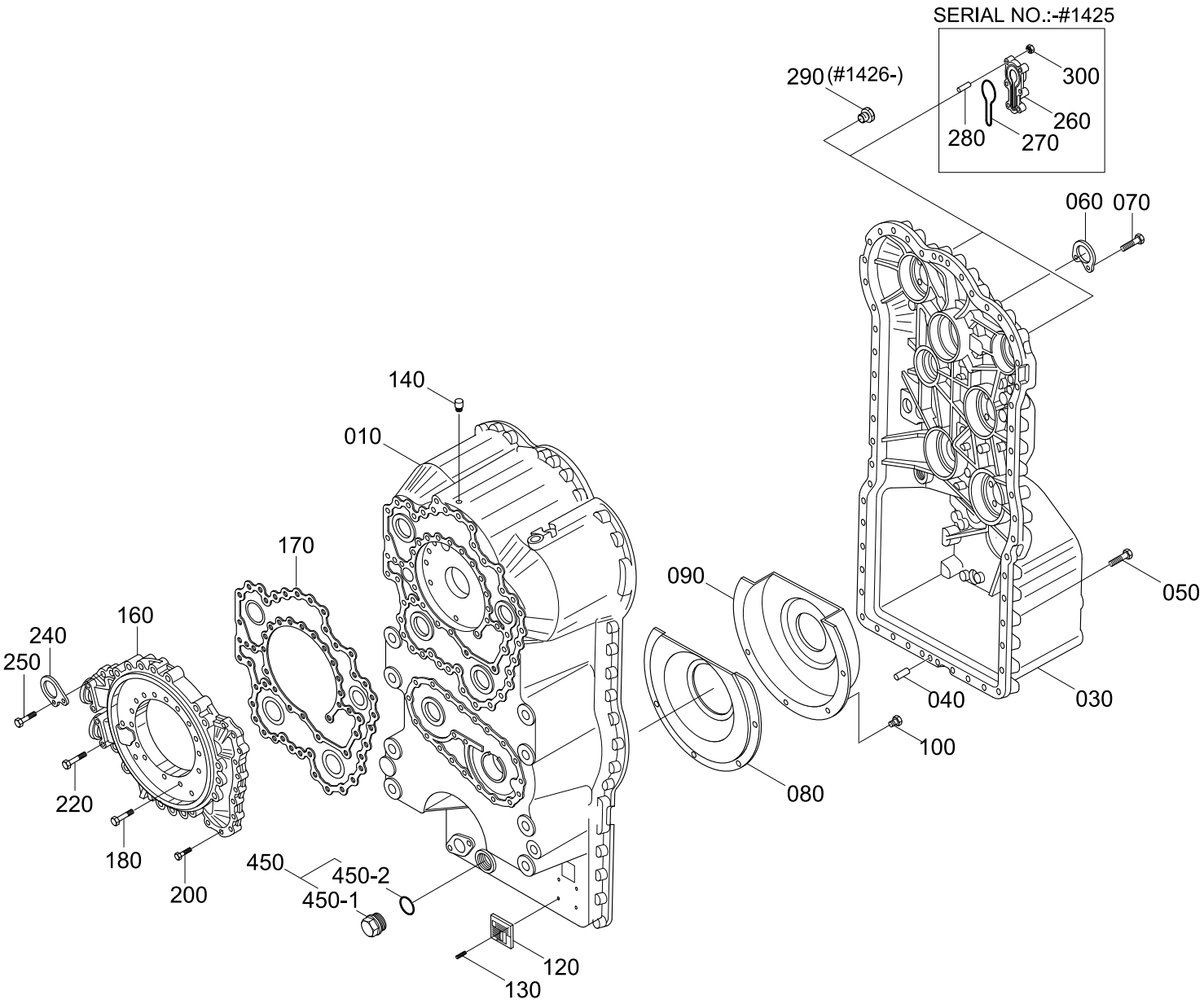

Item	Part_No	IS	Ord	T	Description	Qty	Serial_No	ITC	Remark
010	ZGAQ-01500				HOUSING-FRONT SECT	1	- #1425		
					HOUSING-FRONT SECT	1			
	ZGAQ-02843				HOUSING-FRONT SECT	1	#1426 -	D	
030	ZGAQ-01501				HOUSING-REAR SECT	1	- #1425		
	ZGAQ-02844				HOUSING-REAR SECT	1	#1426 -	D	
040	ZGAQ-01502				PIN-CYLINDRICAL	2	- #1425		
	ZGAQ-01401				PIN-CYLINDRICAL	2	#1426 -	D	
050	ZGAQ-00783				SCREW-CAP	51	- #1425		
					SCREW-CAP	40	#1426 -	A	
060	ZGAQ-00784				PLATE-FIXING	1			
070	ZGAQ-00783				SCREW-CAP	2			
080	ZGAQ-00785				SHEET-SCREEN	1			
140	ZGAQ-00258				BREATHER	1			
090	ZGAQ-00786				SHEET-SCREEN	1			
100	ZGAQ-00787				SCREW-CAP	5			
120	ZGAQ-00788				PLATE-TYPE	1			
130	ZGAQ-00087				STUD-GROOVED	4			
140	ZGAQ-00258				BREATHER	1			
160	ZGAQ-00789				HOUSING-OIL FEED	1	- #1425		
	ZGAQ-01706				HOUSING-OIL FEED	1	#1426 -	B	
170	ZGAQ-00790				GASKET	1			
180	ZGAQ-00791				SCREW-CAP	21			
200	ZGAQ-00792				SCREW-CAP	15			
220	ZGAQ-00793				SCREW-CAP	4			
240	ZGAQ-00784				PLATE-FIXING	1			

Item	Part_No	IS	Ord	T	Description	Qty	Serial_No	ITC	Remark
250	ZGAQ-00794				SCREW-CAP	2			
260	ZGAQ-00795				COVER	2	- #1425	-	
270	ZGAQ-00796				O-RING	2	- #1425	-	
280	ZGAQ-01405				STUD	12	- #1425	-	
290	ZGAQ-02824				PLUG	4	#1426 -	-	
300	ZGAQ-00799				NUT-HEX	12	- #1425	-	
450	@				PLUG-SCREW	1			NOT
450-1	ZGAQ-00252				.PLUG-SCREW	1			
450-2	ZGAQ-00253				.O-RING	1			
450	@				PLUG-SCREW	1			NOT
450-1	ZGAQ-00252				.PLUG-SCREW	1			
450-2	ZGAQ-00253				.O-RING	1			

GEARBOX HOUSING 2

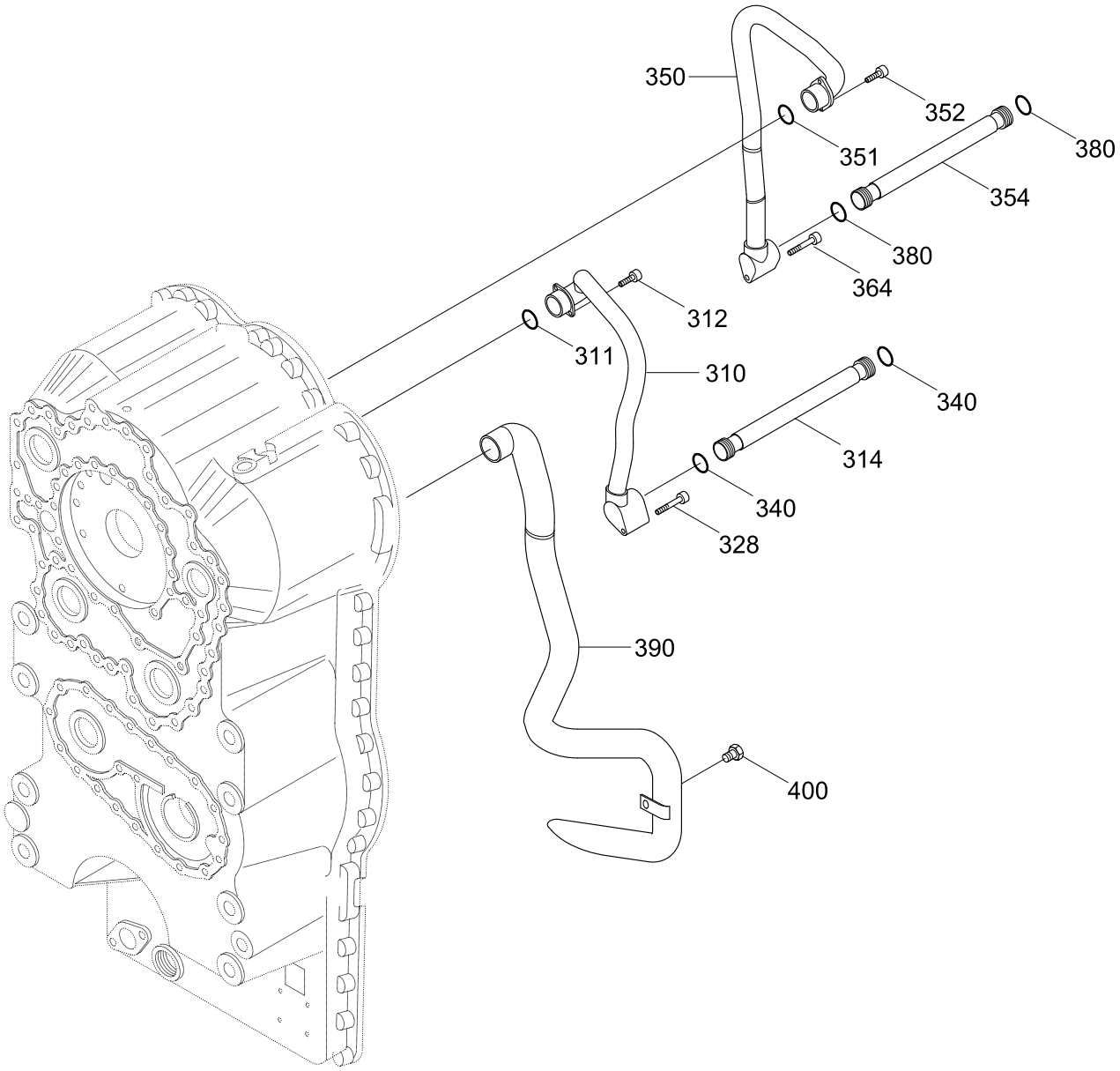

Item	Part_No	IS	Ord	T	Description	Qty	Serial_No	ITC	Remark
310	ZGAQ-01503				OIL TUBE	1			
311	ZGAQ-00804				O-RING	1	- #1425		
	ZGAQ-02391				O-RING	1	#1426 -	B	
312	ZGAQ-00787				SCREW-CAP	2			
314	ZGAQ-00802				PIPE	1			
328	ZGAQ-01504				SCREW-CAP	1			
340	ZGAQ-00804				O-RING	2	- #1425		
	ZGAQ-02391				O-RING	2	#1426 -	B	
350	ZGAQ-01505				OIL TUBE	1			
351	ZGAQ-00804				O-RING	1			
	ZGAQ-02391				O-RING	1		B	
352	ZGAQ-00787				SCREW-CAP	2			
354	ZGAQ-00802				PIPE	1			
364	ZGAQ-01504				SCREW-CAP	1			
380	ZGAQ-00804				O-RING	2	- #1425		
	ZGAQ-02391				O-RING	2	#1426 -	B	
390	ZGAQ-00806				TUBE-SUCTION	1	- #1425		
	ZGAQ-02845				TUBE-SUCTION	1	#1426 -	D	
400	ZGAQ-00787				SCREW-CAP	1			

CLUTCH(K1)

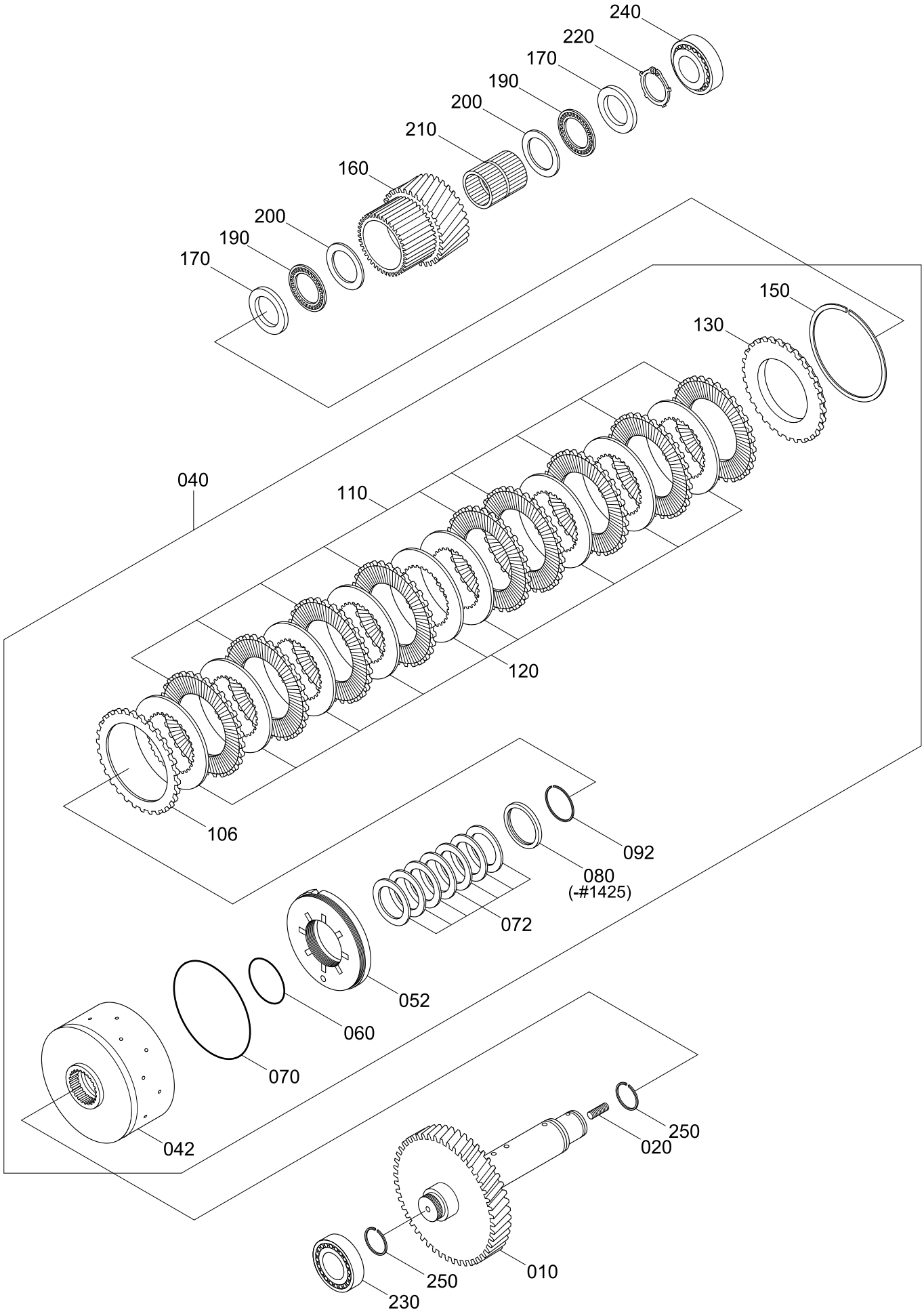
240
220
170
190
200
210
160
200
190
170
150
130
040
110
120
106
092
080
(-#1425)
072
052
060
070
042
250
020
010
250
230

Item	Part_No	IS	Ord	T	Description	Qty	Serial_No	ITC	Remark
010	ZGAQ-00810				SHAFT	1			
020	ZGAQ-00811				STUD	1			
042	ZGAQ-00812				CARRIER-DISC	1			
040	ZGAQ-01920				COUPLING	1	- #1425		
054	ZGAQ-00284				VALVE	1			
040	ZGAQ-02846				COUPLING	1	#1426 -	D	
042	ZGAQ-00812				.CARRIER-DISC	1	- #1425		
	ZGAQ-02847				.CARRIER-DISC	1	#1426 -	D	
052	ZGAQ-01709				.PISTON	1			
054	ZGAQ-00284				.VALVE	1		-	NOT USED
060	ZGAQ-00814				.O-RING	1			
070	ZGAQ-00815				.O-RING	1			
072	ZGAQ-00816				.SPRING-CUP	7			
080	ZGAQ-00817				.RING-RETAINING	1	- #1425	-	
092	ZGAQ-00818				.RING-SNAP	1	- #1425		
	ZGAQ-02829				.L-RING	1	#1426 -	D	
106	ZGAQ-01506				.DISC	1			
110	ZGAQ-01507				.DISC	9			
120	ZGAQ-00821				.DISC-BRAKE,INNER	9			
130	ZGAQ-00822				.SHIM-END	1			
150	ZGAQ-00832				.RING-SNAP(2.1)	1			
	ZGAQ-00833				.RING-SNAP(2.25)	1			
	ZGAQ-00834				.RING-SNAP(2.4)	1			
	ZGAQ-00835				.RING-SNAP(2.55)	1			
	ZGAQ-00836				.RING-SNAP(2.7)	1			

Item	Part_No	IS	Ord	T	Description	Qty	Serial_No	ITC	Remark
150	ZGAQ-00837				.RING-SNAP(2.85)	1			
	ZGAQ-00838				.RING-SNAP(3.0)	1			
	ZGAQ-00839				.RING-SNAP(3.15)	1			
	ZGAQ-00840				.RING-SNAP(3.30)	1			
	ZGAQ-00841				.RING-SNAP(3.45)	1			
	ZGAQ-00842				.RING-SNAP(3.60)	1			
	ZGAQ-00843				.RING-SNAP(3.75)	1			
	ZGAQ-00844				.RING-SNAP(3.90)	1			
	ZGAQ-00845				.RING-SNAP(4.05)	1			
	ZGAQ-00846				.RING-SNAP(4.20)	1			
160	ZGAQ-00823				IDLER	1			
170	ZGAQ-00824				DISC-RUNNING	2			
190	ZGAQ-00825				CAGE-AXIAL NEEDLE	2			
200	ZGAQ-00826				WASHER-AXIAL	2			
210	ZGAQ-00827				CAGE-NEEDLE	1			
220	ZGAQ-00828				RING-RETAINING	1			
230	ZGAQ-00829				BEARING-ROLLER	1			
240	ZGAQ-00830				BEARING-ROLLER	1			
250	ZGAQ-00831				RING-PISTON	2			

CLUTCH(K2)

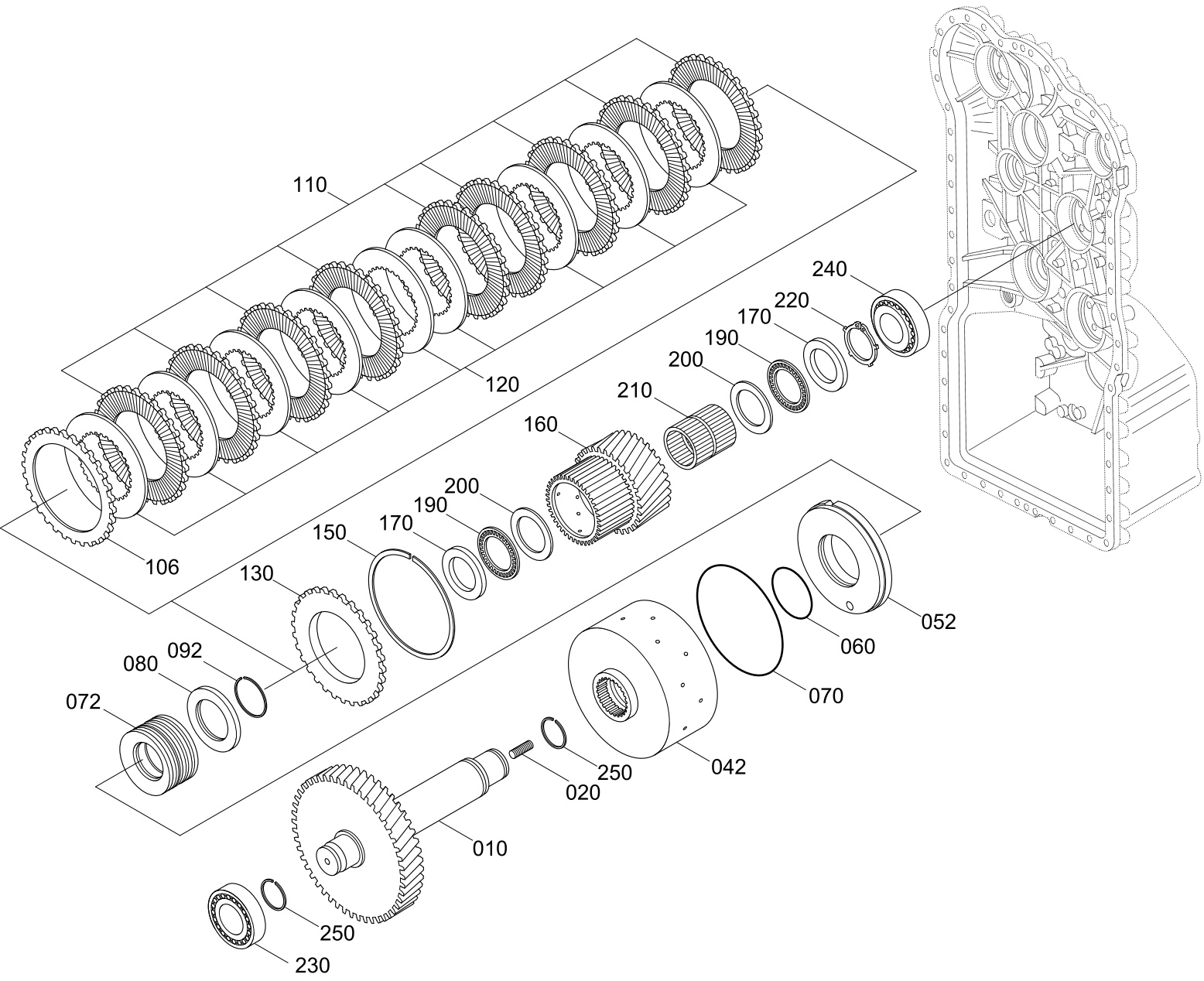
110
120
106
240
220
170
190
200
210
160
200
190
170
150
130
080
092
072
060
052
070
042
250
020
010
250
230

Item	Part_No	IS	Ord	T	Description	Qty	Serial_No	ITC	Remark
010	ZGAQ-00847				SHAFT	1			
020	ZGAQ-00811				STUD	1			
040	ZGAQ-01921				COUPLING	1	#0001 -	-	
					COUPLING	1	- #1425		
	ZGAQ-02848				COUPLING	1	#1426 -	D	
042	ZGAQ-00848				.CARRIER-DISC	1	- #1425		
	ZGAQ-02847				.CARRIER-DISC	1	#1426 -	D	
052	ZGAQ-00849				.PISTON	1			
060	ZGAQ-00814				.O-RING	1			
070	ZGAQ-00850				.O-RING	1			
072	ZGAQ-00816				.SPRING-CUP	7			
080	ZGAQ-00817				.RING-RETAINING	1	- #1425	-	
092	ZGAQ-00818				.RING-SNAP	1	- #1425		
	ZGAQ-02829				.L-RING	1	#1426 -	D	
106	ZGAQ-01508				.DISC-CLUTCH OUTER	1			
110	ZGAQ-01509				.DISC	7			
120	ZGAQ-00853				.DISC-CLUTCH,INNER	7			
130	ZGAQ-00854				.SHIM-END	1			
150	ZGAQ-00855				.RING-SNAP(2.1)	1			
	ZGAQ-00856				.RING-SNAP(2.25)	1			
	ZGAQ-00857				.RING-SNAP(2.4)	1			
	ZGAQ-00858				.RING-SNAP(2.55)	1			
	ZGAQ-00859				.RING-SNAP(2.7)	1			
	ZGAQ-00860				.RING-SNAP(2.85)	1			
	ZGAQ-00861				.RING-SNAP(3.00)	1			

Item	Part_No	IS	Ord	T	Description	Qty	Serial_No	ITC	Remark
150	ZGAQ-00862				.RING-SNAP(3.15)	1			
	ZGAQ-00863				.RING-SNAP(3.30)	1			
	ZGAQ-00864				.RING-SNAP(3.45)	1			
	ZGAQ-00865				.RING-SNAP(3.60)	1			
	ZGAQ-00866				.RING-SNAP(3.75)	1			
	ZGAQ-00867				.RING-SNAP(3.90)	1			
	ZGAQ-00868				.RING-SNAP(4.05)	1			
	ZGAQ-00869				.RING-SNAP(4.20)	1			
160	ZGAQ-01510				IDLER	1			
170	ZGAQ-00824				DISC-RUNNING	2			
190	ZGAQ-00825				CAGE-AXIAL NEEDLE	2			
200	ZGAQ-00826				WASHER-AXIAL	2			
210	ZGAQ-01412				CAGE-NEEDLE	1			
220	ZGAQ-00828				RING-RETAINING	1			
230	ZGAQ-00830				BEARING-ROLLER	1			
240	ZGAQ-00830				BEARING-ROLLER	1			
250	ZGAQ-00831				RING-PISTON	2			

CLUTCH(K3)

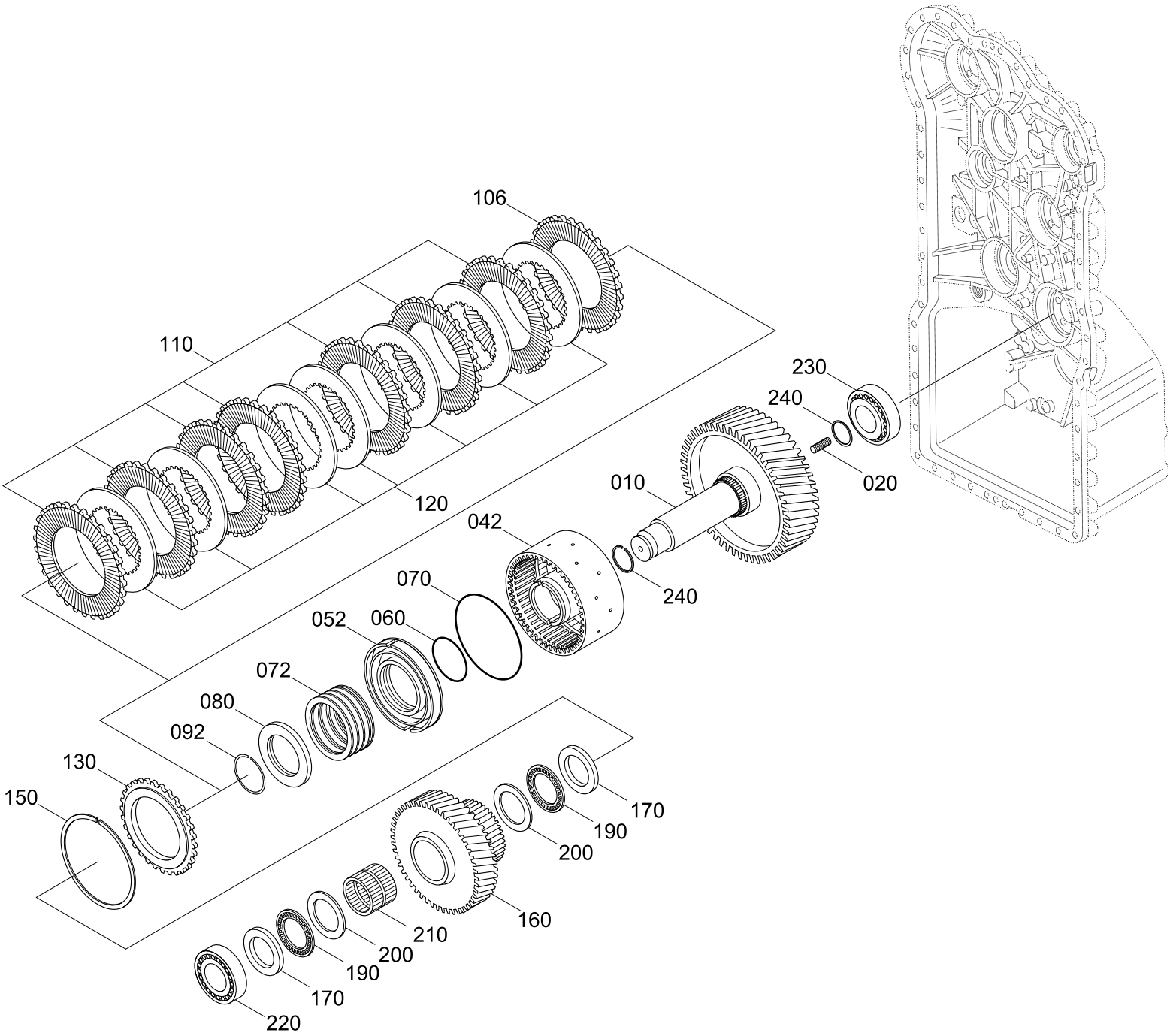

ITEM	PART NO.	DESCRIPTION	T/M SERIAL NO.
010	ZGAQ-00872	SHAFT	-#1673602
	ZGAQ-03152		#1673603-

Item	Part_No	IS	Ord	T	Description	Qty	Serial_No	ITC	Remark
010	ZGAQ-00872				SHAFT	1			SEE ILLUST
	ZGAQ-03152				SHAFT	1		D	SEE ILLUST
040	ZGAQ-01921				COUPLING	1	#0001 -	-	
020	ZGAQ-00811				STUD	1			
040	ZGAQ-01921				COUPLING	1	#0001 - #1425	-	
	ZGAQ-02850				COUPLING	1	#1426 -	D	
042	ZGAQ-00848				.CARRIER-DISC	1	- #1425		
	ZGAQ-02849				.CARRIER-DISC	1	#1426 -	D	
052	ZGAQ-00849				.PISTON	1			
060	ZGAQ-00814				.O-RING	1			
070	ZGAQ-00850				.O-RING	1			
072	ZGAQ-00816				.SPRING-CUP	7			
080	ZGAQ-00817				.RING-RETAINING	1	- #1425	-	
092	ZGAQ-00818				.RING-SNAP	1	- #1425		
	ZGAQ-02829				.L-RING	1	#1426 -	D	
106	ZGAQ-01508				.DISC-CLUTCH OUTER	1			
110	ZGAQ-01509				.DISC	7			
120	ZGAQ-00853				.DISC-CLUTCH,INNER	7			
130	ZGAQ-00854				.SHIM-END	1			
150	ZGAQ-00855				.RING-SNAP(2.1)	1			
	ZGAQ-00856				.RING-SNAP(2.25)	1			
	ZGAQ-00857				.RING-SNAP(2.4)	1			
	ZGAQ-00858				.RING-SNAP(2.55)	1			
	ZGAQ-00859				.RING-SNAP(2.7)	1			
	ZGAQ-00860				.RING-SNAP(2.85)	1			

Item	Part_No	IS	Ord	T	Description	Qty	Serial_No	ITC	Remark
	ZGAQ-00861				.RING-SNAP(3.00)	1			
	ZGAQ-00862				.RING-SNAP(3.15)	1			
	ZGAQ-00863				.RING-SNAP(3.30)	1			
	ZGAQ-00864				.RING-SNAP(3.45)	1			
150	ZGAQ-00865				.RING-SNAP(3.60)	1			
	ZGAQ-00866				.RING-SNAP(3.75)	1			
	ZGAQ-00867				.RING-SNAP(3.90)	1			
	ZGAQ-00868				.RING-SNAP(4.05)	1			
	ZGAQ-00869				.RING-SNAP(4.20)	1			
160	ZGAQ-00873				IDLER	1			
170	ZGAQ-00824				DISC-RUNNING	2			
190	ZGAQ-00825				CAGE-AXIAL NEEDLE	2			
200	ZGAQ-00826				WASHER-AXIAL	2			
210	ZGAQ-01412				CAGE-NEEDLE	1			
220	ZGAQ-00830				BEARING-ROLLER	1			
230	ZGAQ-00829				BEARING-ROLLER	1			
240	ZGAQ-00831				RING-PISTON	2			

CLUTCH(K4)

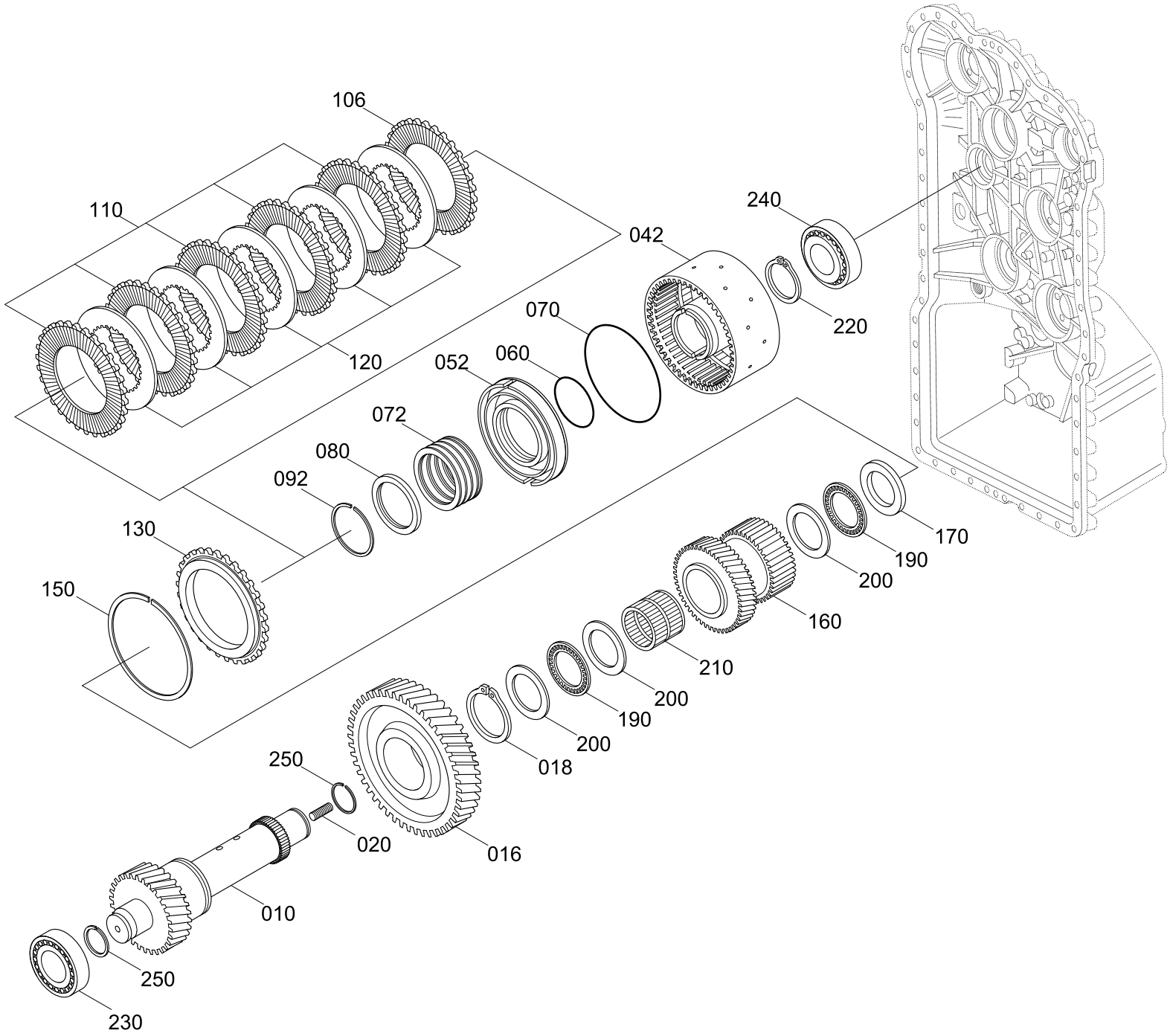
106
110
120
042
240
220
070
052
060
072
080
092
130
150
170
190
200
160
210
200
190
200
018
250
020
016
010
250
230

Item	Part_No	IS	Ord	T	Description	Qty	Serial_No	ITC	Remark
010	ZGAQ-00874				SHAFT	1			
016	ZGAQ-00875				GEAR	1			
018	ZGAQ-00876				RING-RETAINING	1			
020	ZGAQ-00811				STUD	1			
040	ZGAQ-01922				COUPLING	1	#0001 -	-	
					COUPLING	1	- #1425		
	ZGAQ-02857				COUPLING	1	#1426 -	D	
042	ZGAQ-01511				.CARRIER-DISC	1	- #1425		
	ZGAQ-02858				.CARRIER-DISC	1	#1426 -	D	
052	ZGAQ-00849				.PISTON	1			
060	ZGAQ-00814				.O-RING	1			
070	ZGAQ-00850				.O-RING	1			
072	ZGAQ-00816				.SPRING-CUP	7			
080	ZGAQ-00817				.RING-RETAINING	1	- #1425	-	
092	ZGAQ-00818				.RING-SNAP	1	- #1425		
	ZGAQ-02829				.L-RING	1	#1426 -	D	
106	ZGAQ-01508				.DISC-CLUTCH OUTER	1			
110	ZGAQ-01509				.DISC	5			
120	ZGAQ-00853				.DISC-CLUTCH,INNER	5			
130	ZGAQ-00854				.SHIM-END	1			
150	ZGAQ-00855				.RING-SNAP(2.1)	1			
	ZGAQ-00856				.RING-SNAP(2.25)	1			
	ZGAQ-00857				.RING-SNAP(2.4)	1			
	ZGAQ-00858				.RING-SNAP(2.55)	1			
	ZGAQ-00859				.RING-SNAP(2.7)	1			

Item	Part_No	IS	Ord	T	Description	Qty	Serial_No	ITC	Remark
150	ZGAQ-00860				.RING-SNAP(2.85)	1			
	ZGAQ-00861				.RING-SNAP(3.00)	1			
	ZGAQ-00862				.RING-SNAP(3.15)	1			
	ZGAQ-00863				.RING-SNAP(3.30)	1			
	ZGAQ-00864				.RING-SNAP(3.45)	1			
	ZGAQ-00865				.RING-SNAP(3.60)	1			
	ZGAQ-00866				.RING-SNAP(3.75)	1			
	ZGAQ-00867				.RING-SNAP(3.90)	1			
	ZGAQ-00868				.RING-SNAP(4.05)	1			
	ZGAQ-00869				.RING-SNAP(4.20)	1			
160	ZGAQ-00878				IDLER	1	- #1425		
	ZGAQ-02859				IDLER	1	#1426 -	D	
170	ZGAQ-00824				DISC-RUNNING	1			
190	ZGAQ-00825				CAGE-AXIAL NEEDLE	2			
200	ZGAQ-00826				WASHER-AXIAL	3			
210	ZGAQ-01412				CAGE-NEEDLE	1			
220	ZGAQ-00879				RING-RETAINER	1			
230	ZGAQ-00830				BEARING-ROLLER	1			
240	ZGAQ-00880				BEARING-ROLLER	1			
250	ZGAQ-00831				RING-PISTON	2			

CLUTCH(KV)

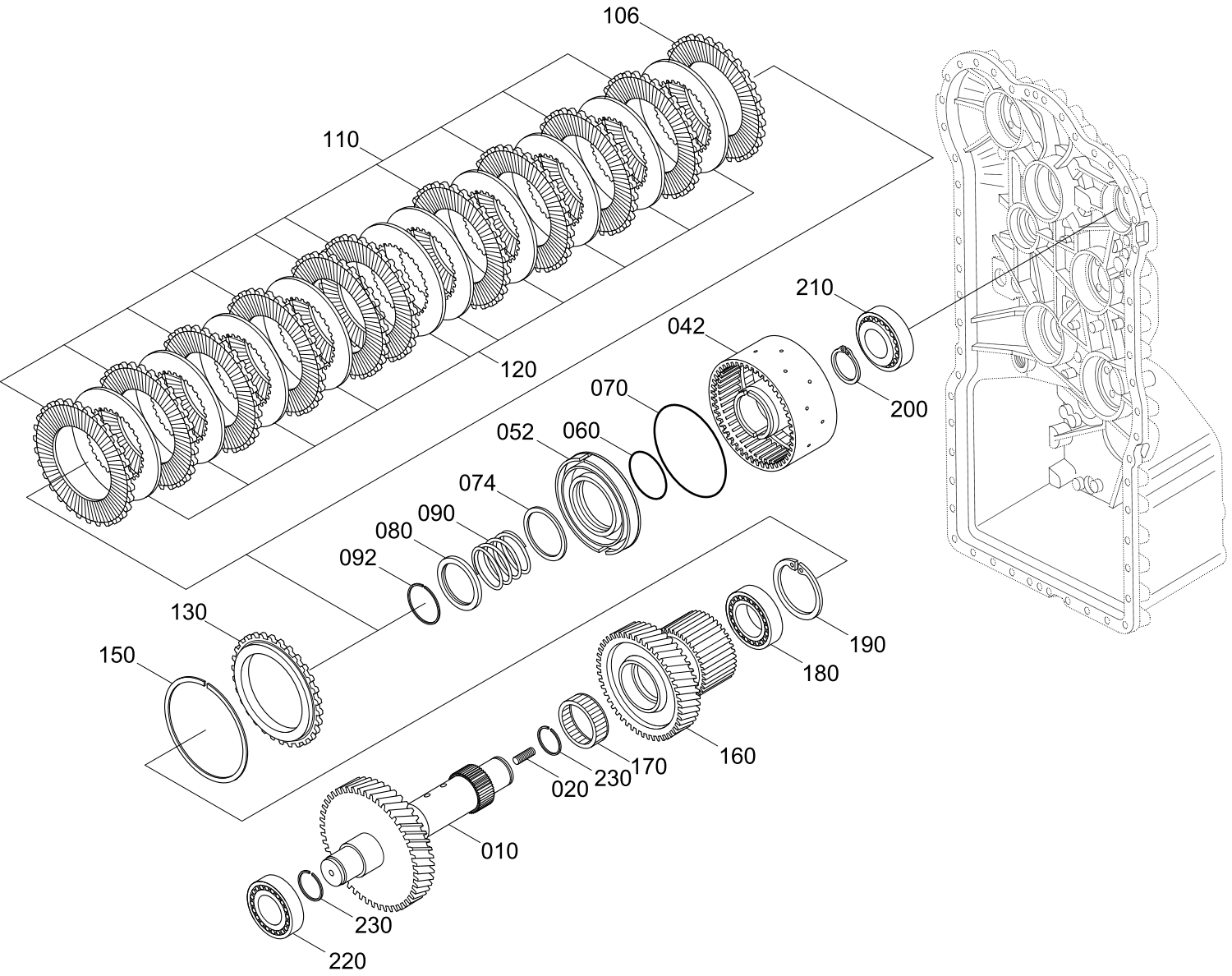
106
110
120
210
042
200
070
052
060
074
090
080
092
130
150
190
180
160
170
230
020
010
230
220

Item	Part_No	IS	Ord	T	Description	Qty	Serial_No	ITC	Remark
010	ZGAQ-00881				SHAFT	1			
020	ZGAQ-00811				STUD	1			
040	ZGAQ-01923				COUPLING	1	#0001 -	-	
					COUPLING	1	#0001 - #1425	-	
	ZGAQ-02853				COUPLING	1	#1426 -	D	
042	ZGAQ-00882				.CARRIER-DISC	1	- #1425		
	ZGAQ-02854				CARRIER-DISC	1	#1426 -	D	
052	ZGAQ-00849				.PISTON	1			
060	ZGAQ-00814				.O-RING	1			
070	ZGAQ-00850				.O-RING	1			
074	ZGAQ-00883				.WASHER	1			
080	ZGAQ-00817				.RING-RETAINING	1	- #1425		
	ZGAQ-02828				.SHIM-SUPPORT	1	#1426 -	D	
090	ZGAQ-00884				.SPRING	1			
092	ZGAQ-00818				.RING-SNAP	1	- #1425		
	ZGAQ-02829				.L-RING	1	#1426 -	D	
106	ZGAQ-01506				.DISC	1			
110	ZGAQ-01507				.DISC	10			
120	ZGAQ-00821				.DISC-BRAKE,INNER	10			
130	ZGAQ-00822				.SHIM-END	1			
150	ZGAQ-00832				.RING-SNAP(2.1)	1			
	ZGAQ-00833				.RING-SNAP(2.25)	1			
	ZGAQ-00834				.RING-SNAP(2.4)	1			
	ZGAQ-00835				.RING-SNAP(2.55)	1			
	ZGAQ-00836				.RING-SNAP(2.7)	1			

Item	Part_No	IS	Ord	T	Description	Qty	Serial_No	ITC	Remark
150	ZGAQ-00837				.RING-SNAP(2.85)	1			
	ZGAQ-00838				.RING-SNAP(3.0)	1			
	ZGAQ-00839				.RING-SNAP(3.15)	1			
	ZGAQ-00840				.RING-SNAP(3.30)	1			
	ZGAQ-00841				.RING-SNAP(3.45)	1			
	ZGAQ-00842				.RING-SNAP(3.60)	1			
	ZGAQ-00843				.RING-SNAP(3.75)	1			
	ZGAQ-00844				.RING-SNAP(3.90)	1			
	ZGAQ-00845				.RING-SNAP(4.05)	1			
	ZGAQ-00846				.RING-SNAP(4.20)	1			
160	ZGAQ-00885				IDLER	1			
170	ZGAQ-00886				CAGE-NEEDLE	1			
180	ZGAQ-01434				BEARING-BALL	1			
190	ZGAQ-00592				RING-RETAINING	1			
200	ZGAQ-00879				RING-RETAINER	1			
210	ZGAQ-00880				BEARING-ROLLER	1			
220	ZGAQ-00880				BEARING-ROLLER	1			
230	ZGAQ-00831				RING-PISTON	2			

CLUTCH(KR)

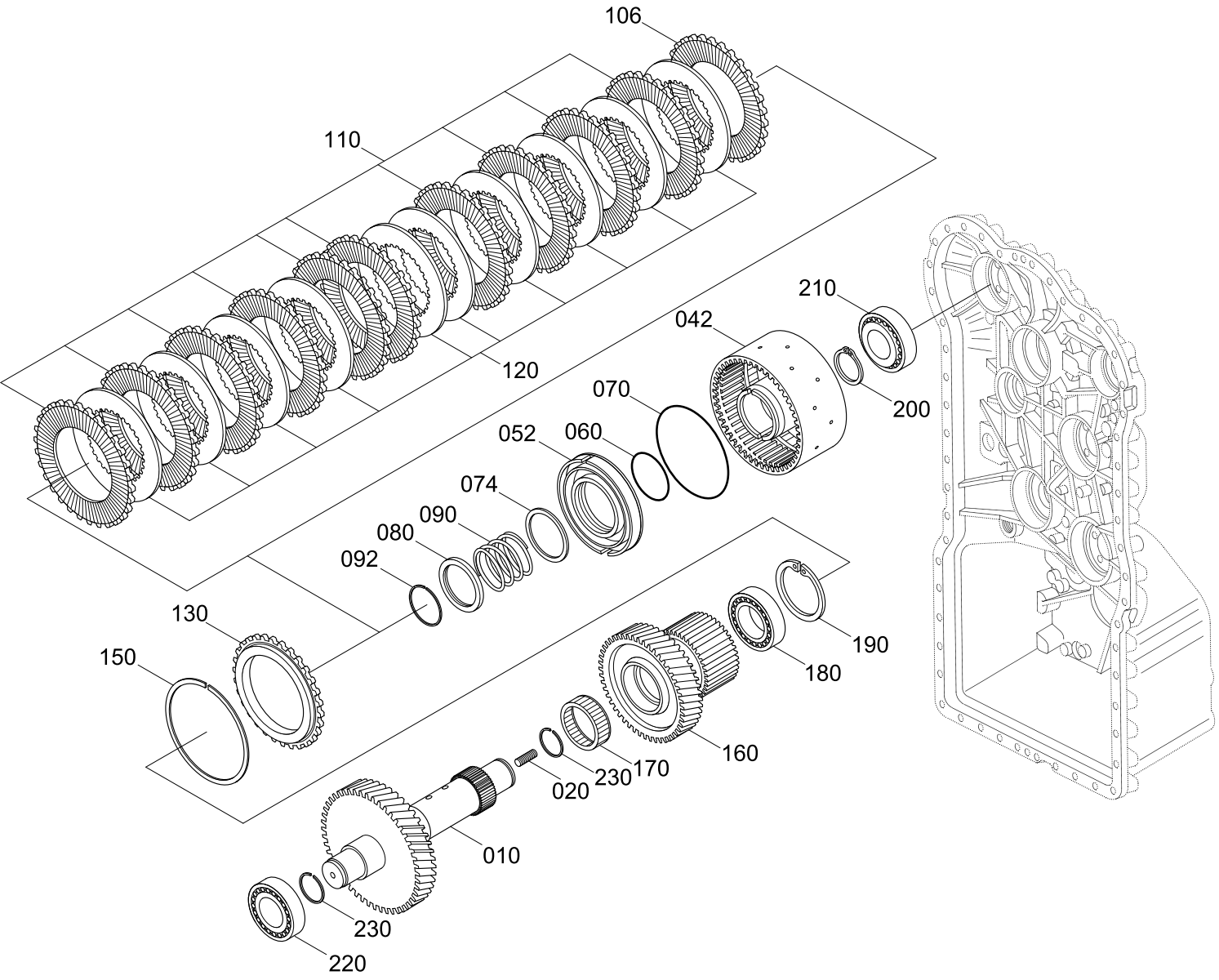
106
110
120
210
042
200
070
052
060
074
090
080
092
130
150
190
180
160
170
230
020
010
230
220

Item	Part_No	IS	Ord	T	Description	Qty	Serial_No	ITC	Remark
010	ZGAQ-00888				SHAFT	1			
020	ZGAQ-00811				STUD	1			
040	ZGAQ-01923				COUPLING	1	#0001 -	-	
					COUPLING	1	#0001 - #1425	-	
	ZGAQ-02853				COUPLING	1	#1426 -	D	
042	ZGAQ-00882				.CARRIER-DISC	1	- #1425		
	ZGAQ-02854				.CARRIER-DISC	1	#1426 -	D	
052	ZGAQ-00849				.PISTON	1			
060	ZGAQ-00814				.O-RING	1			
070	ZGAQ-00850				.O-RING	1			
074	ZGAQ-00883				.WASHER	1			
080	ZGAQ-00817				.RING-RETAINING	1	- #1425		
	ZGAQ-02828				.SHIM-SUPPORT	1	#1426 -	D	
090	ZGAQ-00884				.SPRING	1			
092	ZGAQ-00818				.RING-SNAP	1	- #1425		
	ZGAQ-02829				.L-RING	1	#1426 -	D	
106	ZGAQ-01506				.DISC	1			
110	ZGAQ-01507				.DISC	10			
120	ZGAQ-00821				.DISC-BRAKE,INNER	10			
130	ZGAQ-00822				.SHIM-END	1			
150	ZGAQ-00832				.RING-SNAP(2.1)	1			
	ZGAQ-00833				.RING-SNAP(2.25)	1			
	ZGAQ-00834				.RING-SNAP(2.4)	1			
	ZGAQ-00835				.RING-SNAP(2.55)	1			
	ZGAQ-00836				.RING-SNAP(2.7)	1			

Item	Part_No	IS	Ord	T	Description	Qty	Serial_No	ITC	Remark
150	ZGAQ-00837				.RING-SNAP(2.85)	1			
	ZGAQ-00838				.RING-SNAP(3.0)	1			
	ZGAQ-00839				.RING-SNAP(3.15)	1			
	ZGAQ-00840				.RING-SNAP(3.30)	1			
	ZGAQ-00841				.RING-SNAP(3.45)	1			
	ZGAQ-00842				.RING-SNAP(3.60)	1			
	ZGAQ-00843				.RING-SNAP(3.75)	1			
	ZGAQ-00844				.RING-SNAP(3.90)	1			
	ZGAQ-00845				.RING-SNAP(4.05)	1			
	ZGAQ-00846				.RING-SNAP(4.20)	1			
160	ZGAQ-00885				IDLER	1			
170	ZGAQ-00886				CAGE-NEEDLE	1			
180	ZGAQ-01434				BEARING-BALL	1			
190	ZGAQ-00592				RING-RETAINING	1			
200	ZGAQ-00879				RING-RETAINER	1			
210	ZGAQ-00830				BEARING-ROLLER	1			
220	ZGAQ-00880				BEARING-ROLLER	1			
230	ZGAQ-00831				RING-PISTON	2			

OUTPUT GROUP

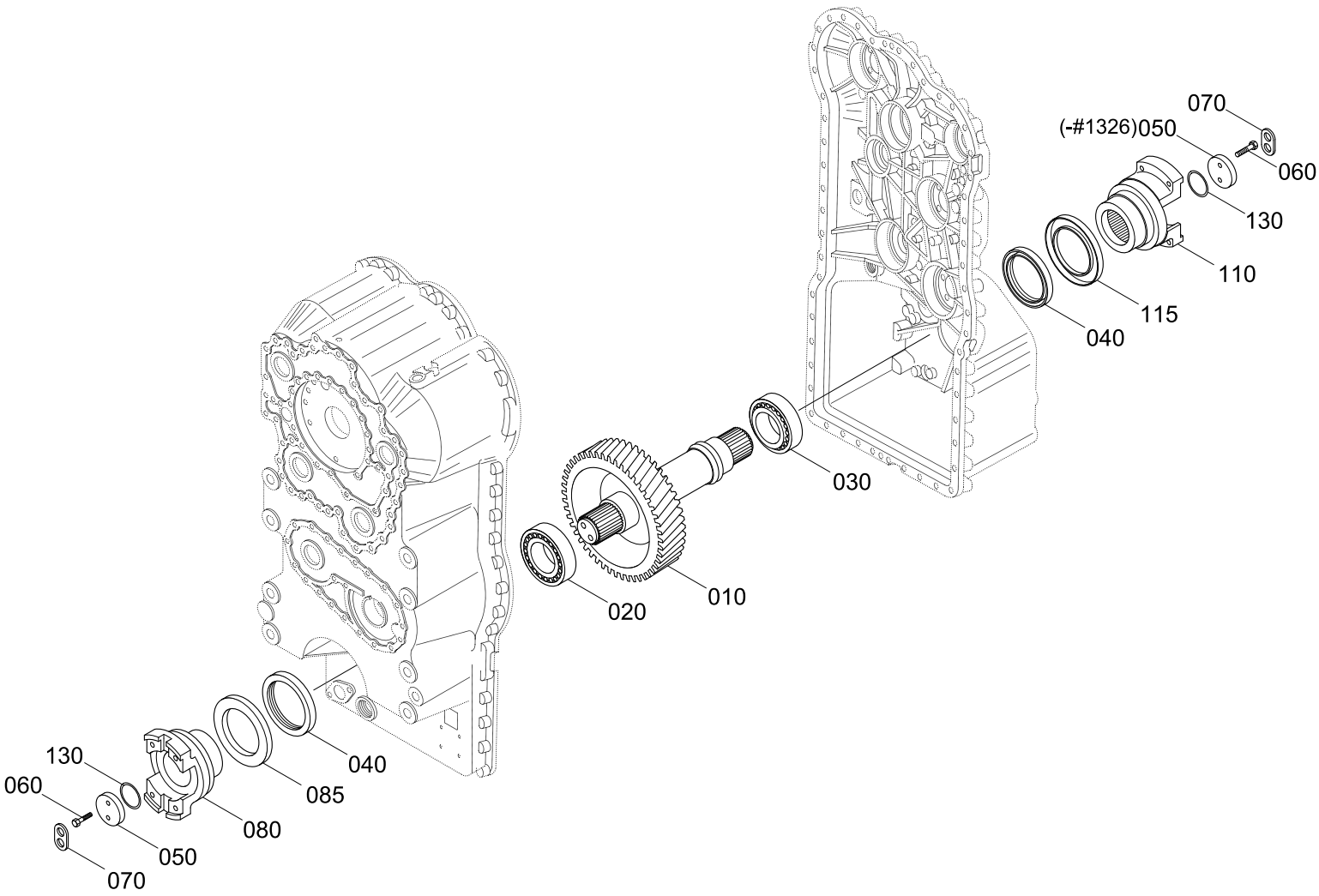

Item	Part_No	IS	Ord	T	Description	Qty	Serial_No	ITC	Remark
010	ZGAQ-00889				SHAFT-OUTPUT	1	- #1425		
	ZGAQ-02605				SHAFT-OUTPUT	1	#1426 -	B	
020	ZGAQ-00829				BEARING-ROLLER	1			
030	ZGAQ-00829				BEARING-ROLLER	1			
040	ZGAQ-00890				SEAL-SHAFT	2			
050	ZGAQ-01512				WASHER	2	- #1326		
					WASHER	1	#1327 -	A	
060	ZGAQ-00891				SCREW-HEX	4			
070	ZGAQ-00196				WASHER-TAB	2	- #1425	-	
080	ZGAQ-01513				FLANGE-OUTPUT	1	- #1326		
	ZGAQ-00200				FLANGE-OUTPUT	1	#1327 -	D	
085	ZGAQ-01514				SHEET-SCREEN	1			
110	ZGAQ-01513				FLANGE-OUTPUT	1			
115	ZGAQ-01515				SHEET-SCREEN	1	- #1326		
	ZGAQ-02855				SHEET-SCREEN	1	#1327 -	D	
130	ZGAQ-00893				O-RING	2			

POWER TAKE OFF

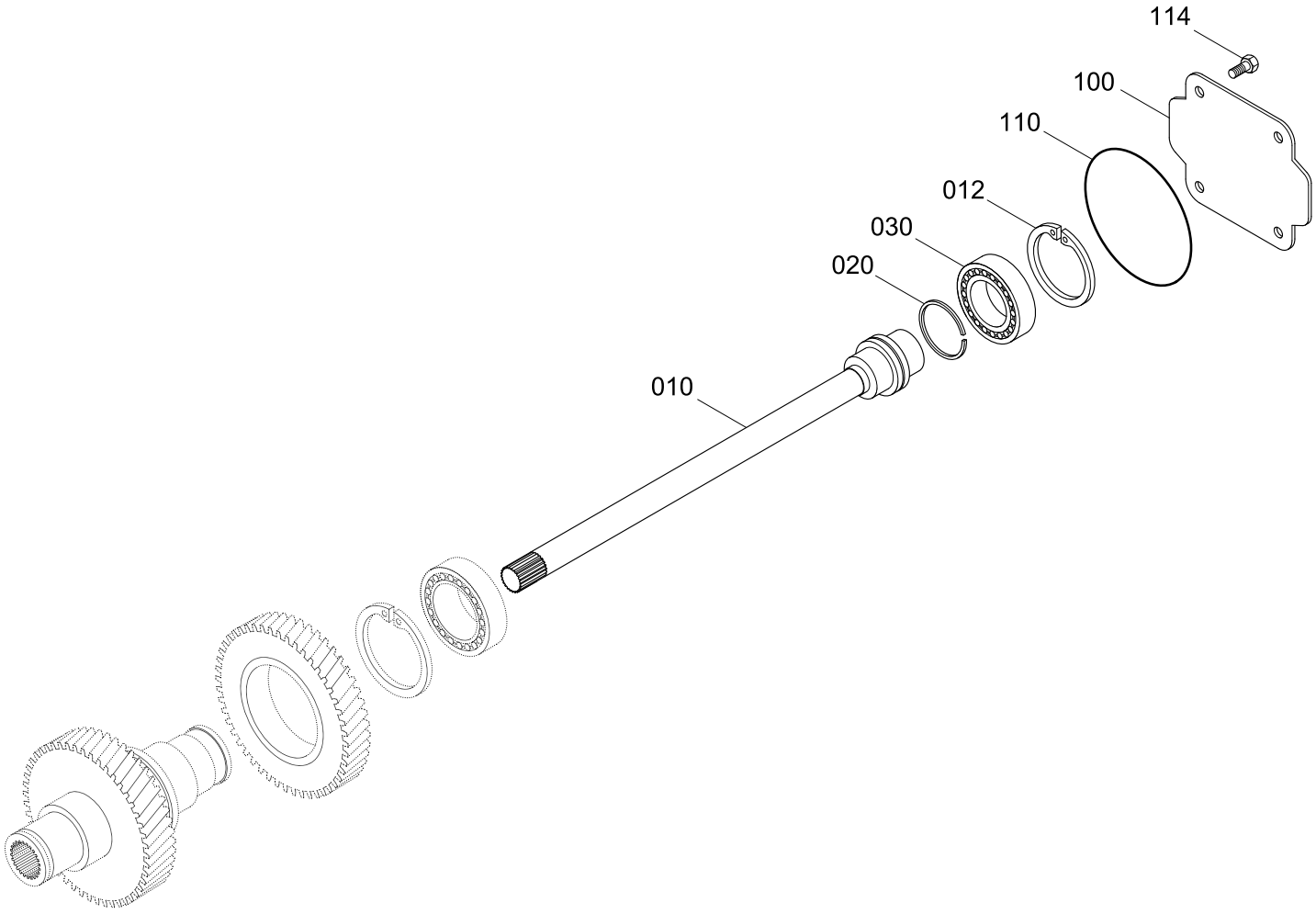

Item	Part_No	IS	Ord	T	Description	Qty	Serial_No	ITC	Remark
010	ZGAQ-00894				SHAFT-PUMP	1			
012	ZGAQ-00896				RING-RETAINING	1			
020	ZGAQ-01397				RING-PISTON	1			
030	ZGAQ-00895				BEARING-BALL	1			
100	ZGAQ-00897				PLATE-COVER	1			
110	ZGAQ-00597				O-RING	1			
114	ZGAQ-00761				SCREW	4			

GEARSHIFT SYSTEM(1/3)

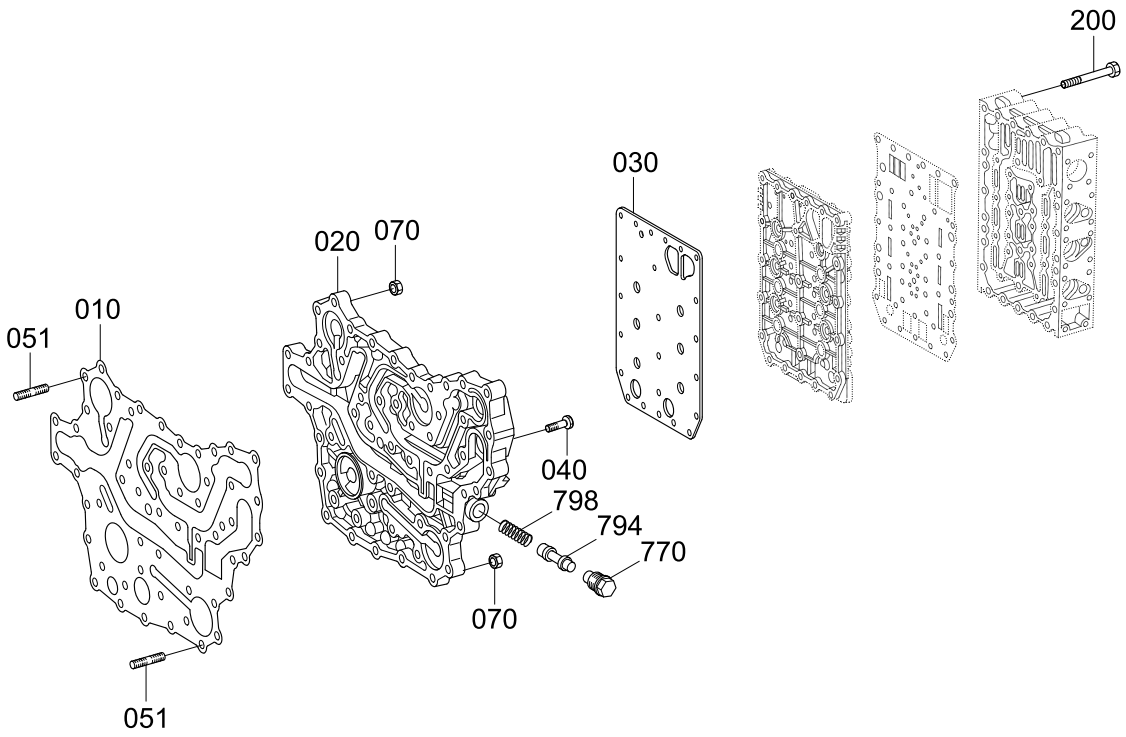

T/M serial No.: -#739819
Machine serial No.: #1426-

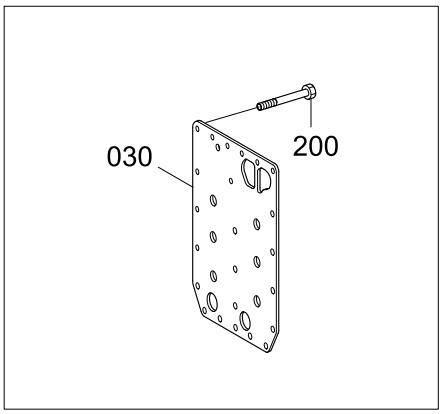

T/M serial No.: #739820-
Machine serial No.: -#1425

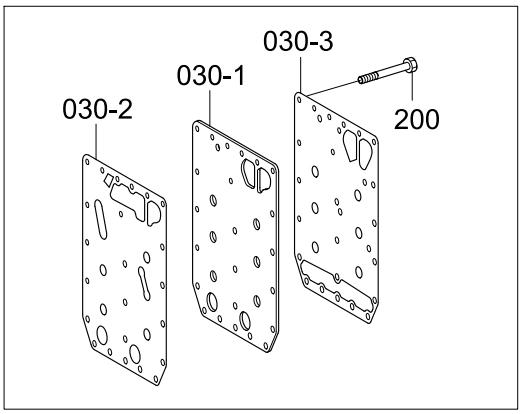

Item	Description	Parts no	T/M serial No.
030	SCREEN	ZGAQ-00900	-#739819
200	SCREW-TORX	ZGAQ-00608	

Item	Description	Parts no	T/M serial No.
030-1	SHEET-INTERMEDIATE	ZGAQ-01702	#739820-
030-2	SEALING	ZGAQ-01701	
030-3	GASKET	ZGAQ-01703	
200	SCREW-TORX	ZGAQ-00607	

Item	Part_No	IS	Ord	T	Description	Qty	Serial_No	ITC	Remark
798	ZGAQ-00903				SPRING-COMPRESSURE	1			
010	ZGAQ-01516				GASKET	1			
020	ZGAQ-01517				PLATE-DUCT	1	- #1425		
	ZGAQ-01715				PLATE-DUCT	1	#1426 -	B	
030	ZGAQ-00900				SHEET	1			SEE ILLUST
	@				SHEET-INTERMITTER	1	- #1425	B	NOT
	ZGAQ-02808				PLATE-SEALING	1	#1426 -	D	
030-1	ZGAQ-01702				.SHEET-INTERMEDIATE	1	- #1425	-	SEE ILLUST
030-2	ZGAQ-01701				.SEALING	1	- #1425	-	SEE ILLUST
030-3	ZGAQ-01703				.GASKET	1	- #1425	-	SEE ILLUST
040	ZGAQ-00792				SCREW-CAP	36			
050	ZGAQ-01405				STUD	14			
070	ZGAQ-00799				NUT-HEX	14			
200	ZGAQ-00608				SCREW-TORX	23			SEE ILLUST
	ZGAQ-00607				SCREW-TORX	23	- #1425	D	SEE ILLUST
	ZGAQ-00608				SCREW-TORX	23	#1426 -	D	
770	ZGAQ-00697				SWITCH	1			
794	ZGAQ-01454				PISTON	1	#0001 -	-	ILLUST CHANGE
798	ZGAQ-00903				SPRING-COMPRESSURE	1			

GEARSHIFT SYSTEM(2/3)

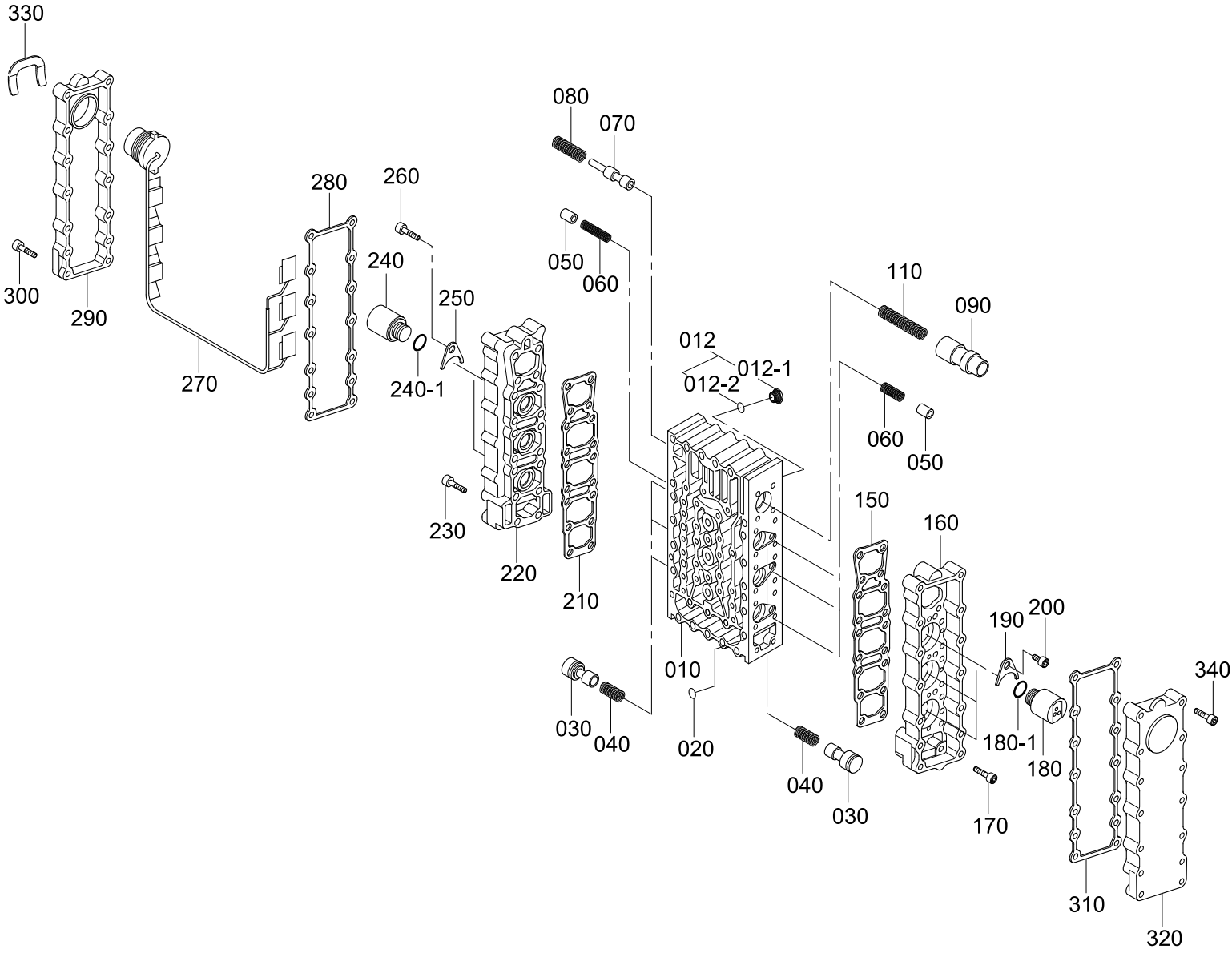

Item	Part_No	IS	Ord	T	Description	Qty	Serial_No	ITC	Remark
010	ZGAQ-00616				BLOCK-VALVE	1	- #1425		
	ZGAQ-02802				BLOCK-VALVE	1	#1426 -	D	
012	@				PLUG-SCREW	1			NOT
012-1	ZGAQ-00230				.PLUG-SCREW	8			
012-2	ZGAQ-00231				.O-RING	8			
020	ZGAQ-00617				ORIFICE	6			
030	ZGAQ-00618				PISTON	6			
040	ZGAQ-00619				SPRING-COMPRESSION	6			
050	ZGAQ-00620				PISTON	6			
060	ZGAQ-00621				SPRING-COMPRESSION	6			
070	ZGAQ-00622				PISTON	1			
080	ZGAQ-00623				SPRING-COMPRESSION	1			
090	ZGAQ-01455				PISTON-CONTROL	1			
110	ZGAQ-00625				SPRING-COMPRESSION	1			
150	ZGAQ-00626				GASKET	1			
160	ZGAQ-00627				HOUSING	1			
170	ZGAQ-00628				SCREW-CAP	18			
180	ZGAQ-00629				REGULATOR-PRESSURE	3			
180-1	ZGAQ-00630				.O-RING	3			
190	ZGAQ-00631				PLATE-FIXING	3			
200	ZGAQ-00632				SCREW-CAP	3			
210	ZGAQ-00626				GASKET	1			
220	ZGAQ-00627				HOUSING	1			
230	ZGAQ-00628				SCREW-CAP	18			
240	ZGAQ-00629				REGULATOR-PRESSURE	3			

Item	Part_No	IS	Ord	T	Description	Qty	Serial_No	ITC	Remark
240-1	ZGAQ-00630				.O-RING	3			
250	ZGAQ-00631				PLATE-FIXING	3			
260	ZGAQ-00632				SCREW-CAP	3			
270	ZGAQ-00633				HARNESS-WIRING	1			
280	ZGAQ-00634				GASKET	1			
290	ZGAQ-00635				COVER	1			
300	ZGAQ-00628				SCREW-CAP	14			
310	ZGAQ-00634				GASKET	1			
320	ZGAQ-00636				COVER	1			
330	ZGAQ-00637				CLAMP-RETAINING	1			
340	ZGAQ-00628				SCREW-CAP	14			

GEARSHIFT SYSTEM(3/3)

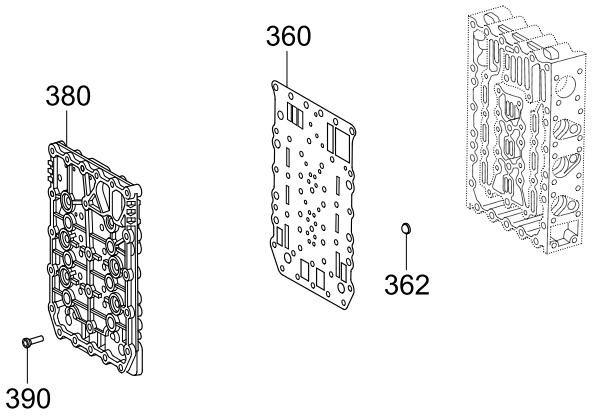

T/M serial No.: -#739819
Machine serial No.: #1426-

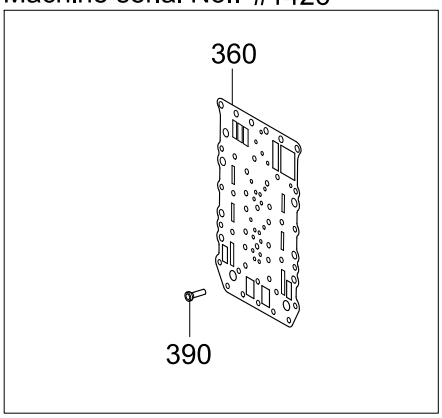

T/M serial No.: #739820-
Machine serial No.: -#1425

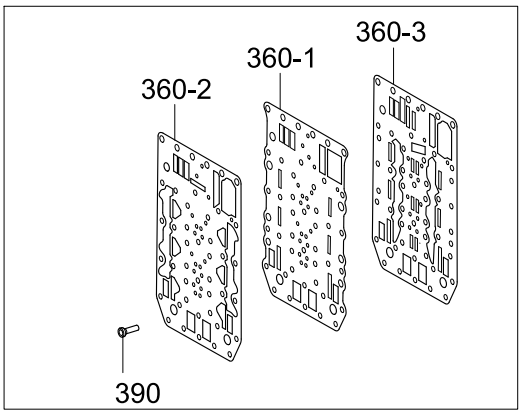

Item	Description	Parts no	T/M serial No.
360	SCREEN	ZGAQ-00638	-#739819
390	SCREW-TORX	ZGAQ-00641	

Item	Description	Parts no	T/M serial No.
360-1	SHEET-INTERMEDIATE	ZGAQ-01687	#739820-
360-2	SEALING	ZGAQ-01688	
360-3	GASKET	ZGAQ-01686	
390	SCREW-TORX	ZGAQ-01689	

Item	Part_No	IS	Ord	T	Description	Qty	Serial_No	ITC	Remark
360	ZGAQ-00638				SHEET-INTERMITTER	1			SEE ILLUST
	@				SHEET-INTERMITTER	1	- #1425	D	NOT
	ZGAQ-02803				PLATE-SEALING	1	#1426 -	D	
360-1	ZGAQ-01687				.SHEET-INTERMITTER	1	- #1425	-	SEE ILLUST
360-2	ZGAQ-01688				.GASKET	1	- #1425	-	SEE ILLUST
360-3	ZGAQ-01686				.GASKET	1	- #1425	-	SEE ILLUST
362	ZGAQ-00639				SCREEN	6			
380	ZGAQ-01456				PLATE-DUCT	1			
390	ZGAQ-00641				SCREW-TORX	18			SEE ILLUST
	ZGAQ-01689				SCREW-TORX	18	- #1425	D	SEE ILLUST
	ZGAQ-00641				SCREW-TORX	18	#1426 -	D	

CONTROL UNIT

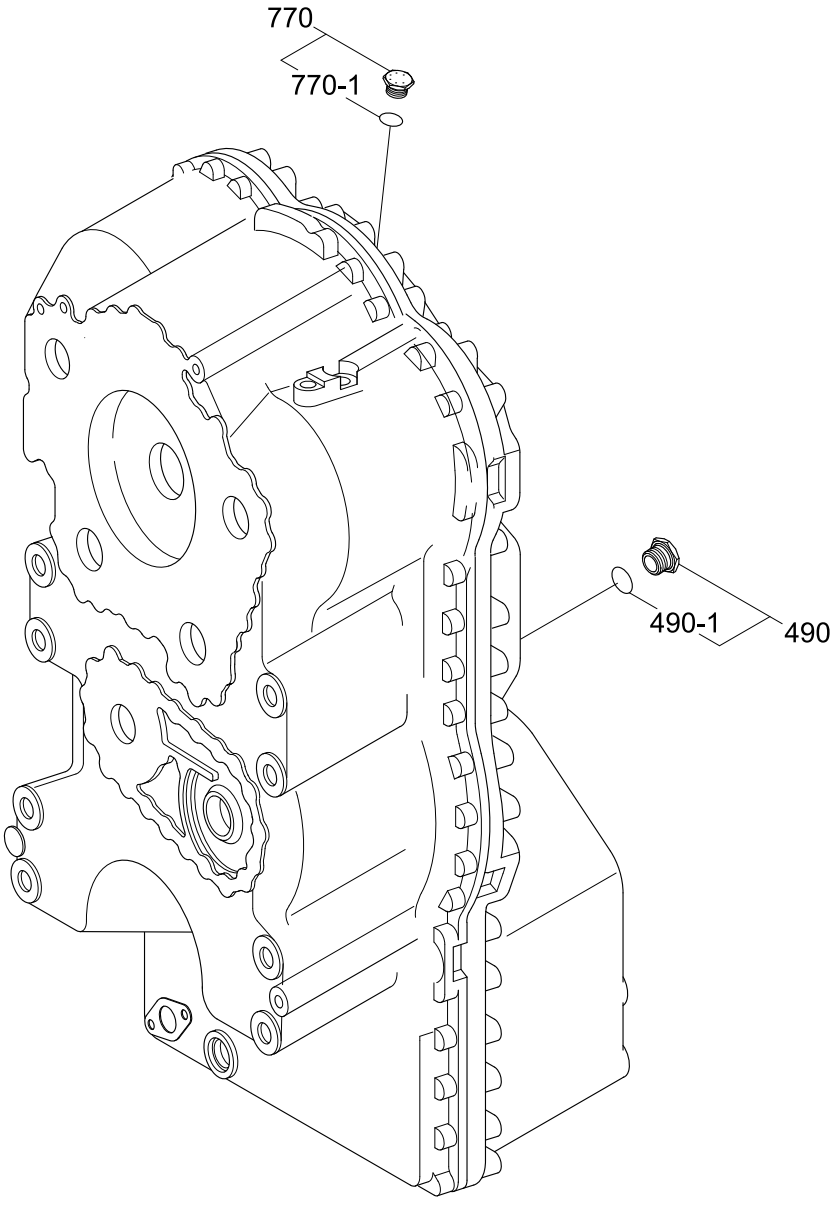

Item	Part_No	IS	Ord	T	Description	Qty	Serial_No	ITC	Remark
490	ZGAQ-00908				PLUG-SCREW	1			
490-1	ZGAQ-00909				.O-RING	1			
770	ZGAQ-00613				SCREW-PLUG	1			
770-1	ZGAQ-00614				.O-RING	1			

PRESSURE REGULATOR

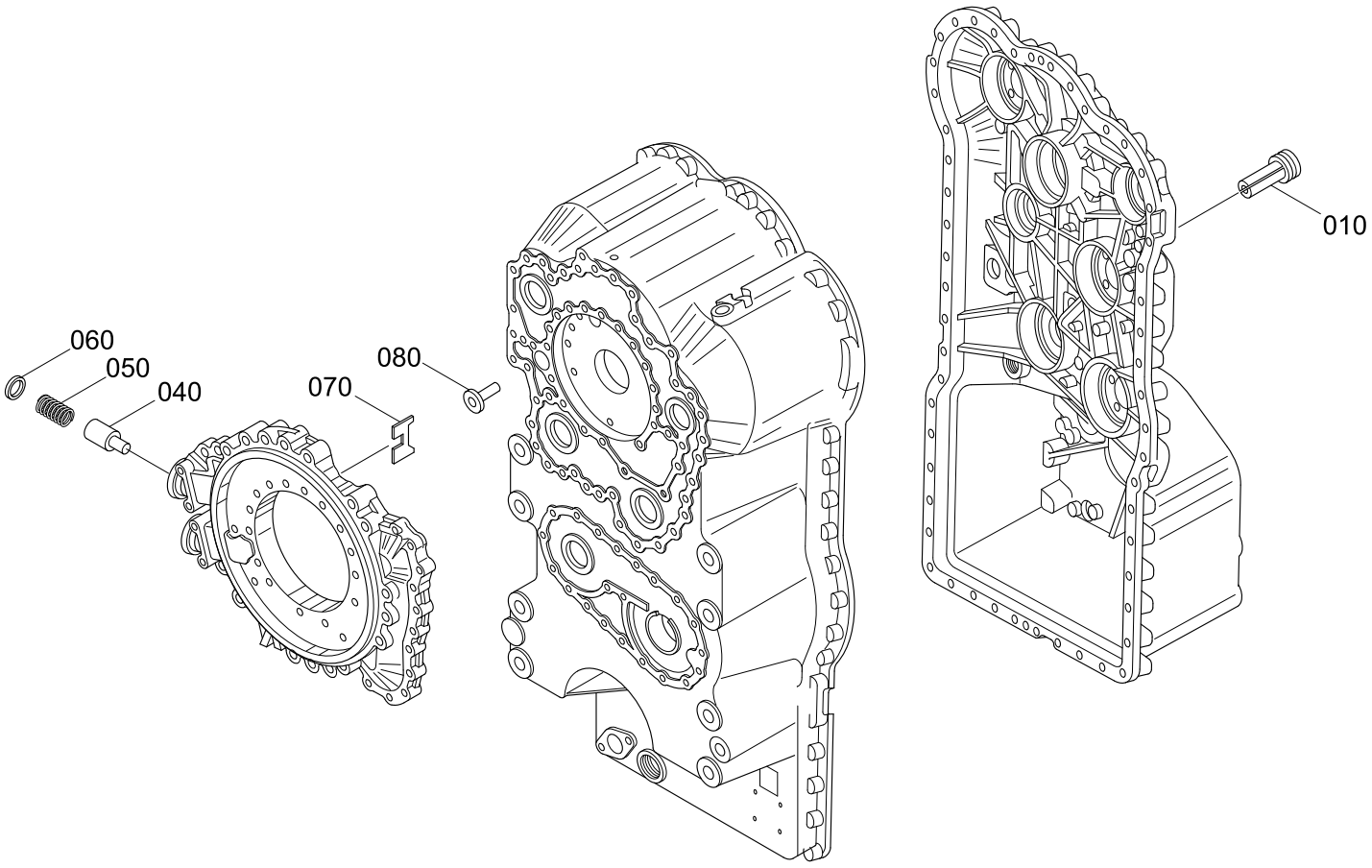

Item	Part_No	IS	Ord	T	Description	Qty	Serial_No	ITC	Remark
010	ZGAQ-00910				VALVE	1			
040	ZGAQ-00911				PISTON	1			
050	ZGAQ-00912				SPRING-PRESSURE	1			
060	ZGAQ-00913				PLATE-PRESSUREE	1			
070	ZGAQ-00914				WASHER-TAB	1			
080	ZGAQ-00915				VALVE-PRESSURE	1	- #1425	-	

EMERGENCY STEERING PUMP

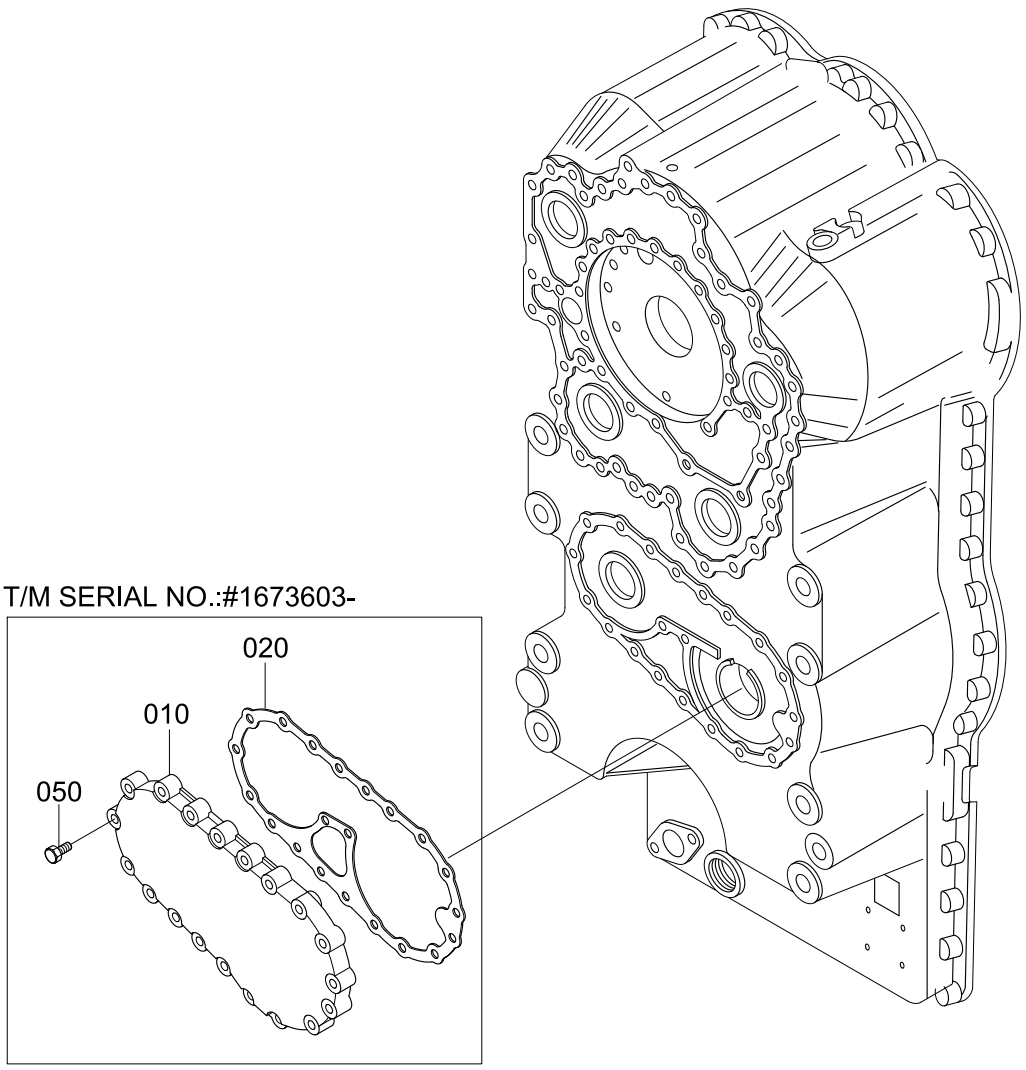

ITEM	PART NO.	DESCRIPTION	T/M SERIAL NO.
010	ZGAQ-00916	COVER	-#1673602
	ZGAQ-03129	COVER	#1673603-

Item	Part_No	IS	Ord	T	Description	Qty	Serial_No	ITC	Remark
010	ZGAQ-00916				COVER	1			SEE ILLUST
	ZGAQ-03129				COVER	1		D	SEE ILLUST
012	ZGAQ-00917				COVER	1		-	SEE ILLUST
020	ZGAQ-01464				GASKET	1			
022	ZGAQ-00919				GASKET	1		-	SEE ILLUST
040	ZGAQ-00792				SCREW-CAP	23		-	SEE ILLUST
050	ZGAQ-00920				SCREW	8			SEE ILLUST
					SCREW	23		A	SEE ILLUST
060	ZGAQ-00921				BEARING-PLAIN	1		-	SEE ILLUST

IND TRANSMITTER

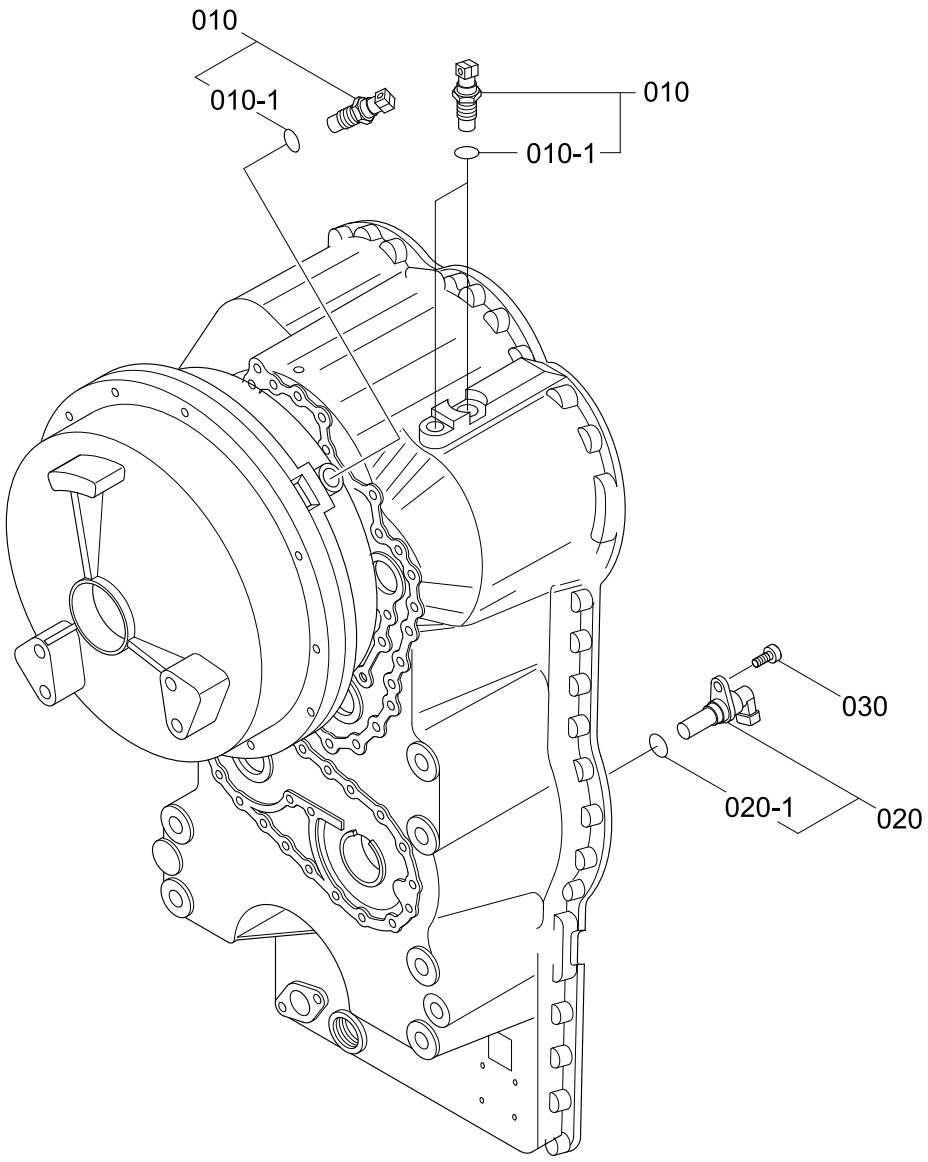

Item	Part_No	IS	Ord	T	Description	Qty	Serial_No	ITC	Remark
010	ZGAQ-00651				IND TRANSMITTER	3			
010-1	ZGAQ-01466				.O-RING	3			
020	ZGAQ-00653				TRANSMITTER-SPEED	1			
020-1	ZGAQ-00654				.O-RING	1			
030	ZGAQ-00922				SCREW-CAP	1			

TEMP SENSOR

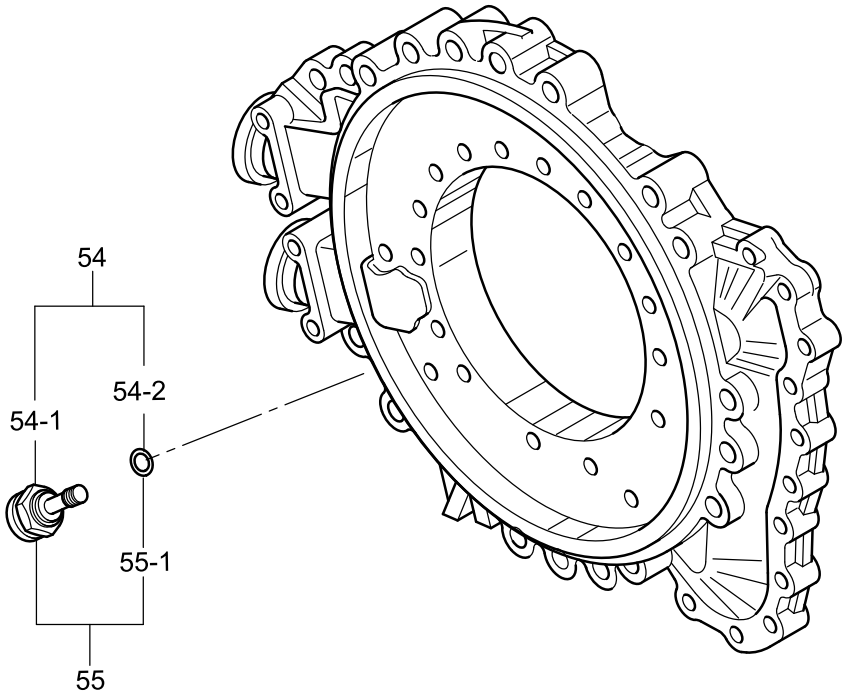

2008. 7.31 REV.8G

Item	Part_No	IS	Ord	T	Description	Qty	Serial_No	ITC	Remark
54	@				TEMP-SENSOR	1	- #1425	-	NOT
54-1	ZGAQ-01468				.TEMP SENSOR	1	- #1425	-	
54-2	ZGAQ-00923				.O-RING	1	- #1425	-	
55	ZGAQ-01924				SENSOR-TEMP	1	#1426 -	B	
55-1	ZGAQ-00923				.O-RING	1	#1426 -	-	

OIL DIPSTICK

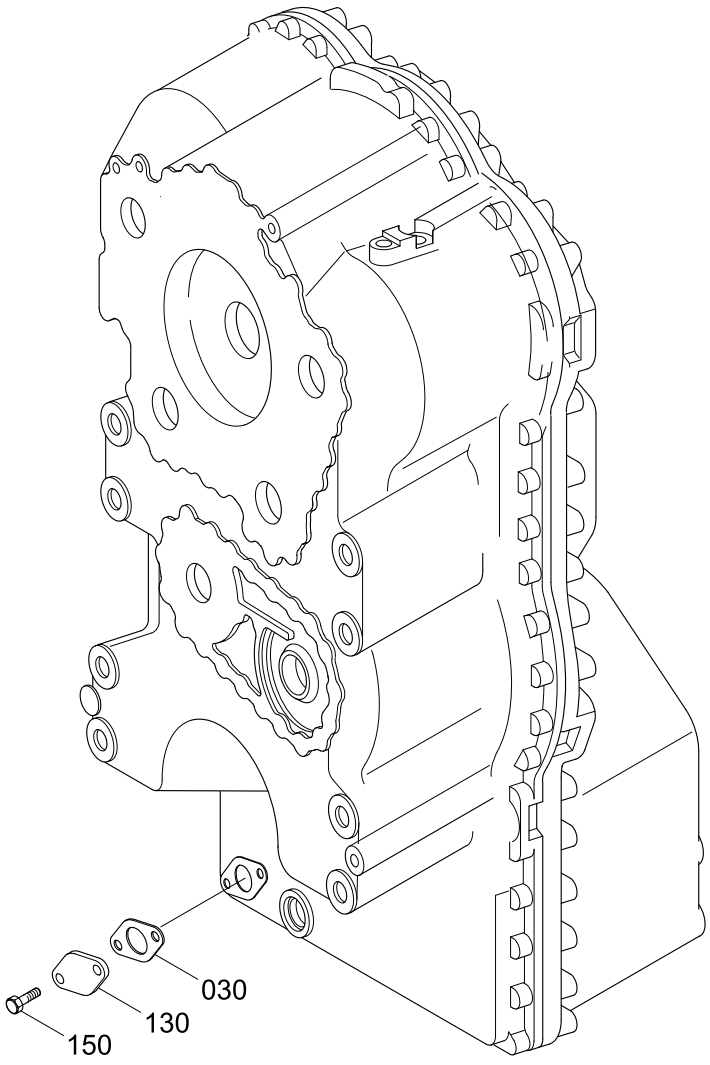

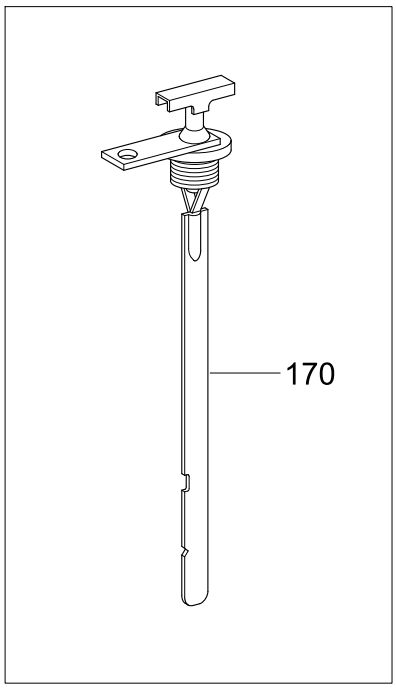

Item	Part_No	IS	Ord	T	Description	Qty	Serial_No	ITC	Remark
030	ZGAQ-00673				GASKET	1	#0001 -	-	
130	ZGAQ-00674				PLATE-COVER	1	#0001 -	-	
150	ZGAQ-00920				SCREW	2			
170	ZGAQ-01470				DIPSTICK-OIL	1			

FILTER

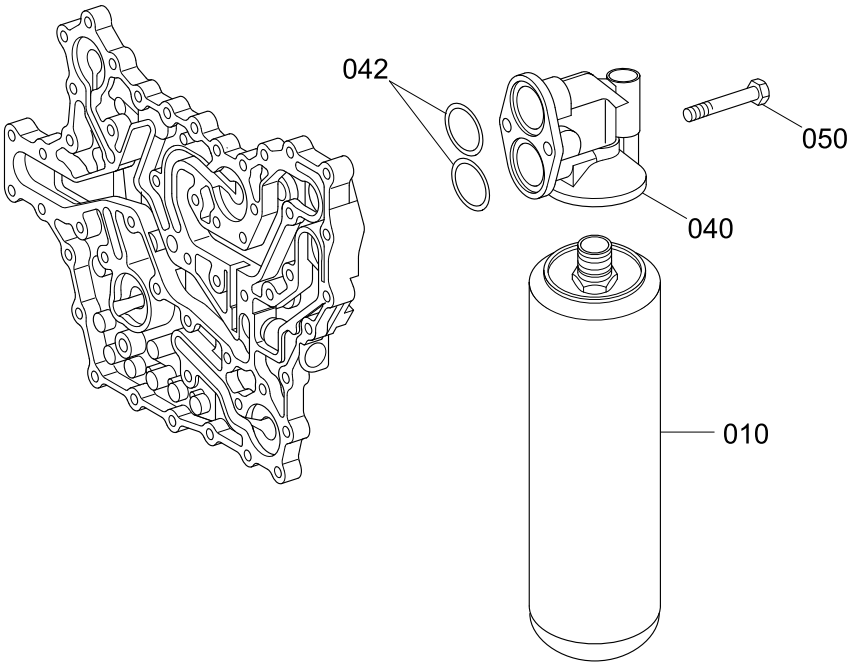

Item	Part_No	IS	Ord	T	Description	Qty	Serial_No	ITC	Remark
010	ZGAQ-00001				FILTER-T/M OIL	1	- #1425		
	ZGAQ-02400				FILTER-T/M OIL(AUTO)	1	#1426 -	B	
040	ZGAQ-00925				HEAD-FILTER	1			
042	ZGAQ-00926				O-RING	2	- #1425		
	ZGAQ-02401				O-RING	2	#1426 -	B	
050	ZGAQ-00793				SCREW-CAP	2			

FRONT AXLE ASSEMBLY(-#1274, VOLVO)

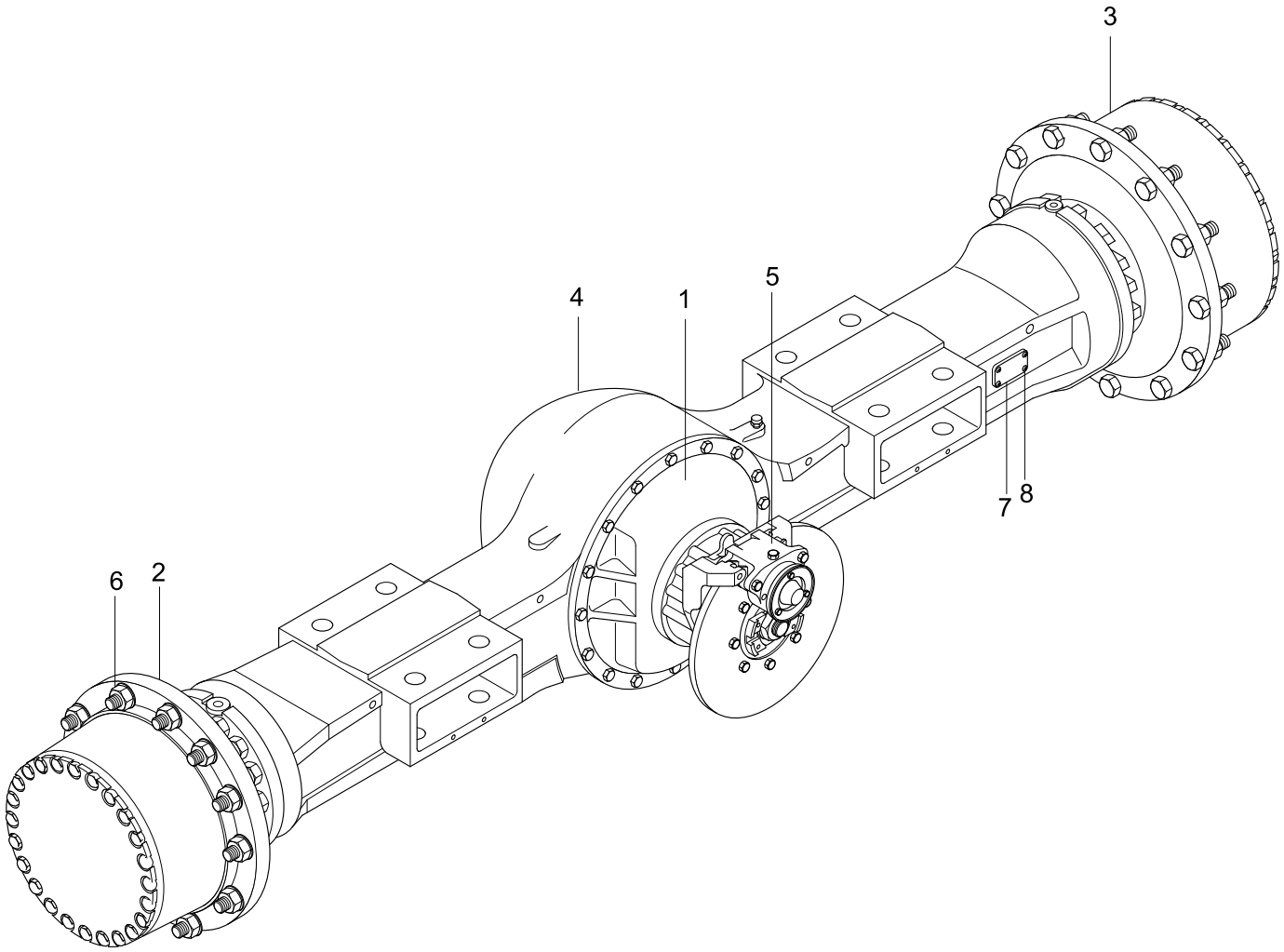

Item	Part_No	IS	Ord	T	Description	Qty	Serial_No	ITC	Remark
*	81LD-10010				FRONT AXLE ASSY	1	- #1109		T/PROPORTIONING
	81LD-10011				FRONT AXLE ASSY	1	#1110 - #1274	B	T/PROPORTIONING
	81LD-10020				FRONT AXLE ASSY	1	#0001 - #1109	-	LIMITED SLIP
	81LD-10021				FRONT AXLE ASSY	1	#1110 - #1274	B	LIMITED SLIP
	81LD-10010				FRONT AXLE ASSY	1			T/PROPORTIONING
	81LD-10020				FRONT AXLE ASSY	1	#0001 -	-	LIMITED SLIP
1	@				.FR DIFFERENTIAL ASSY	1			NOT
2	@				.REDUCTION GEAR-LH	1			NOT
3	@				.REDUCTION GEAR-RH	1			NOT
4	@				.HOUSING ASSY-FRONT	1			NOT
5	@				.PARKING BRAKE ASSY	1			NOT
6	XKBQ-00001				.NUT-WHEEL	24			
7	XKBQ-00002				.PLATE-NAME	1			
8	XKBQ-00003				.SCREW	4			

AXLE HOUSING ASSEMBLY(FR, -#1274, VOLVO)

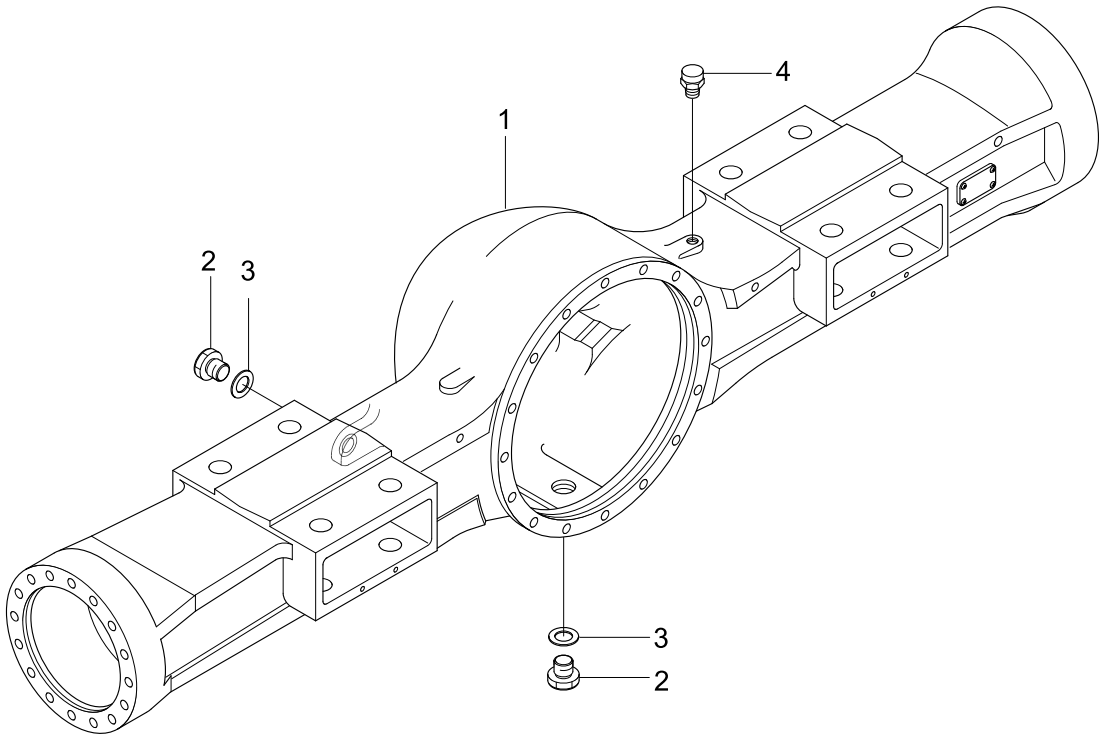

Item	Part_No	IS	Ord	T	Description	Qty	Serial_No	ITC	Remark
*	XKBQ-00376				HOUSING ASSY-FRONT	1	- #1274	-	
1	XKBQ-00377				.HOUSING-FRONT	1			
2	XKBQ-00008				.PLUG-DRAIN	2			
3	XKBQ-00009				.O-RING	2			
4	XKBQ-00010				.BREATHER-AIR	1			

DIFFERENTIAL ASSEMBLY(FR, -#1274, VOLVO)

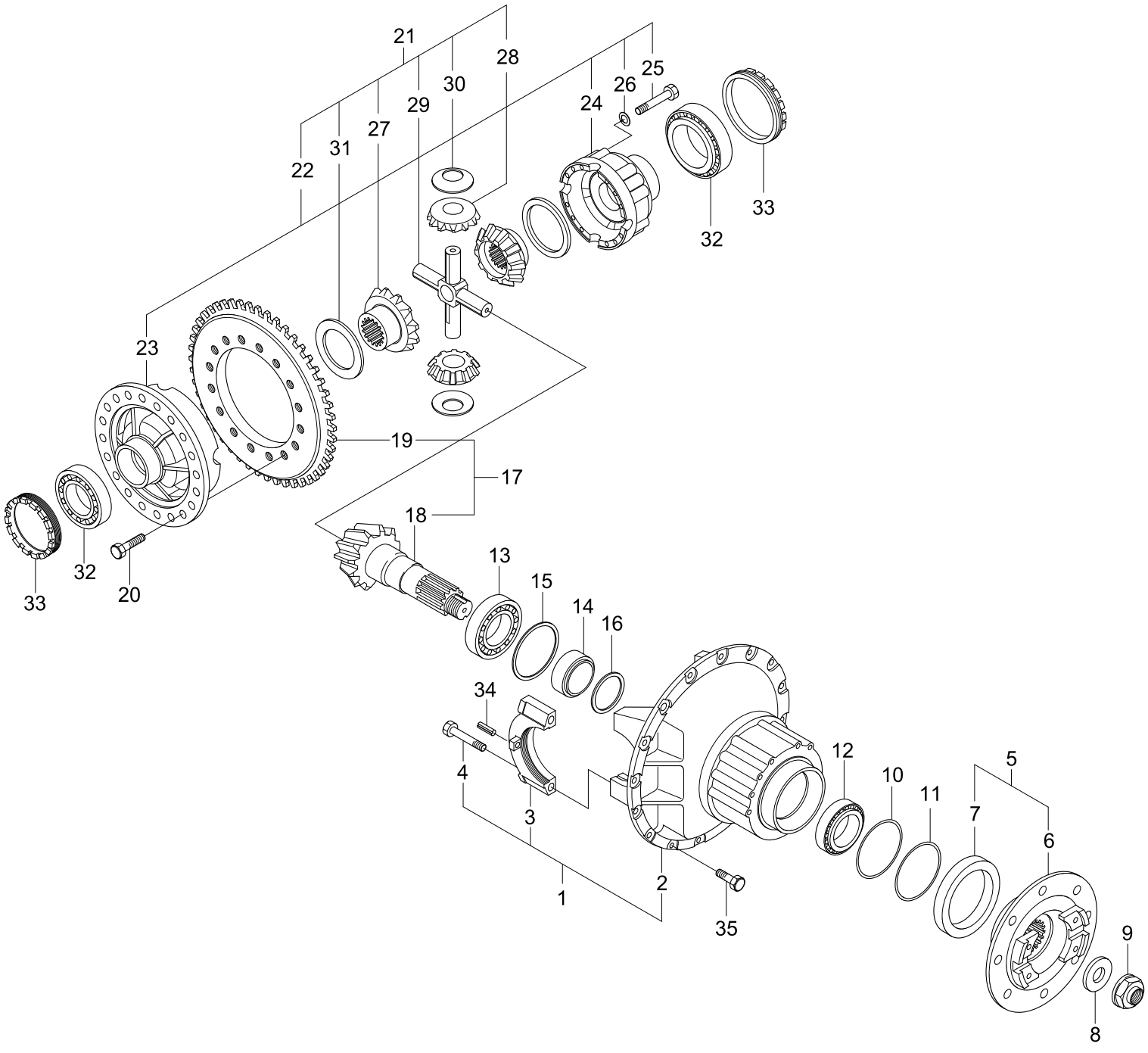

Item	Part_No	IS	Ord	T	Description	Qty	Serial_No	ITC	Remark
*	XKBQ-00378				DIFF ASSY-FRONT	1	- #1101		
	XKBQ-00598				DIFF ASSY-FRONT	1	#1102 - #1274	B	
	XKBQ-00378				DIFF ASSY-FRONT	1			
1	XKBQ-00379				.CARRIER ASSY	1			
N2	XKBQ-00380				..CARRIER-FRONT	1			NOT
N3	XKBQ-00295				..CAP	2			NOT
4	XKBQ-00296				..BOLT-HEX	4			
5	XKBQ-00381				.FLANGE ASSY	1			
N6	XKBQ-00382				..FLANGE	1			NOT
N7	XKBQ-00383				..COVER-DUST	1			NOT
8	XKBQ-00384				.HOLDER	1			
9	XKBQ-00027				.NUT	1			
10	XKBQ-00385				.SEAL-OIL	1			
11	XKBQ-00386				.SEAL-GAMMA	1			
12	XKBQ-00387				.BEARING	1			
13	XKBQ-00388				.BEARING	1			
14	XKBQ-00389				.SPACER(47.200)	1	#0001 -	-	
	XKBQ-00390				.SPACER(47.225)	AR			
	XKBQ-00391				.SPACER(47.250)	AR			
	XKBQ-00392				.SPACER(47.275)	AR			
15	XKBQ-00393				.SHIM(0.1)	AR			
	XKBQ-00394				.SHIM(0.2)	AR			
	XKBQ-00395				.SHIM(0.3)	AR			
16	XKBQ-00322				.SHIM(1.0)	AR			
	XKBQ-00323				.SHIM(1.1)	1			

Item	Part_No	IS	Ord	T	Description	Qty	Serial_No	ITC	Remark
16	XKBQ-00324				.SHIM(1.3)	AR			
	XKBQ-00325				.SHIM(1.5)	1			
	XKBQ-00326				.SHIM(1.7)	AR			
	XKBQ-00327				.SHIM(1.8)	AR			
	XKBQ-00328				.SHIM(1.9)	AR			
17	XKBQ-00396				.SET-BEVEL	1	- #1109		
	XKBQ-00599				.SET-BEVEL	1	#1110 -	B	
N18	XKBQ-00397				..PINION-BEVEL	1	- #1109		NOT
	XKBQ-00600				..PINION-BEVEL	1	#1110 -	B	NOT
N19	XKBQ-00398				..GEAR-BEVEL RING	1	- #1109		NOT
	XKBQ-00601				..GEAR-BEVEL RING	1	#1110 -	B	NOT
20	XKBQ-00399				.BOLT-HEX	16			
21	XKBQ-00400				.TRAC ASSY-MAX	1			
22	XKBQ-00401				..CASE ASSY	1			
N23	XKBQ-00402				...CASE-LH	1			NOT
N24	XKBQ-00299				...CASE-RH	1			NOT
25	XKBQ-00260				...BOLT-HEX	8			
26	XKBQ-00403				...WASHER-PLAIN	8			
27	XKBQ-00308				..GEAR-SIDE	2			
28	XKBQ-00309				..PINION-DIFF	4			
29	XKBQ-00310				..SPIDER	1			
30	XKBQ-00312				..WASHER-THRUST	4			
31	XKBQ-00311				..WASHER-THRUST	2			
32	XKBQ-00304				.BEARING	2			
33	XKBQ-00303				.NUT-ADJUSTING	2			

Item	Part_No	IS	Ord	T	Description	Qty	Serial_No	ITC	Remark
34	XKBQ-00067				.PIN-SPRING	2			
35	XKBQ-00289				.BOLT-HEX	16			
N	@				NOT INDIVIDUALLY SUPPLIED	AR			NOT

DIFFERENTIAL ASSY(-#0310, FR, LIMITED SLIP)

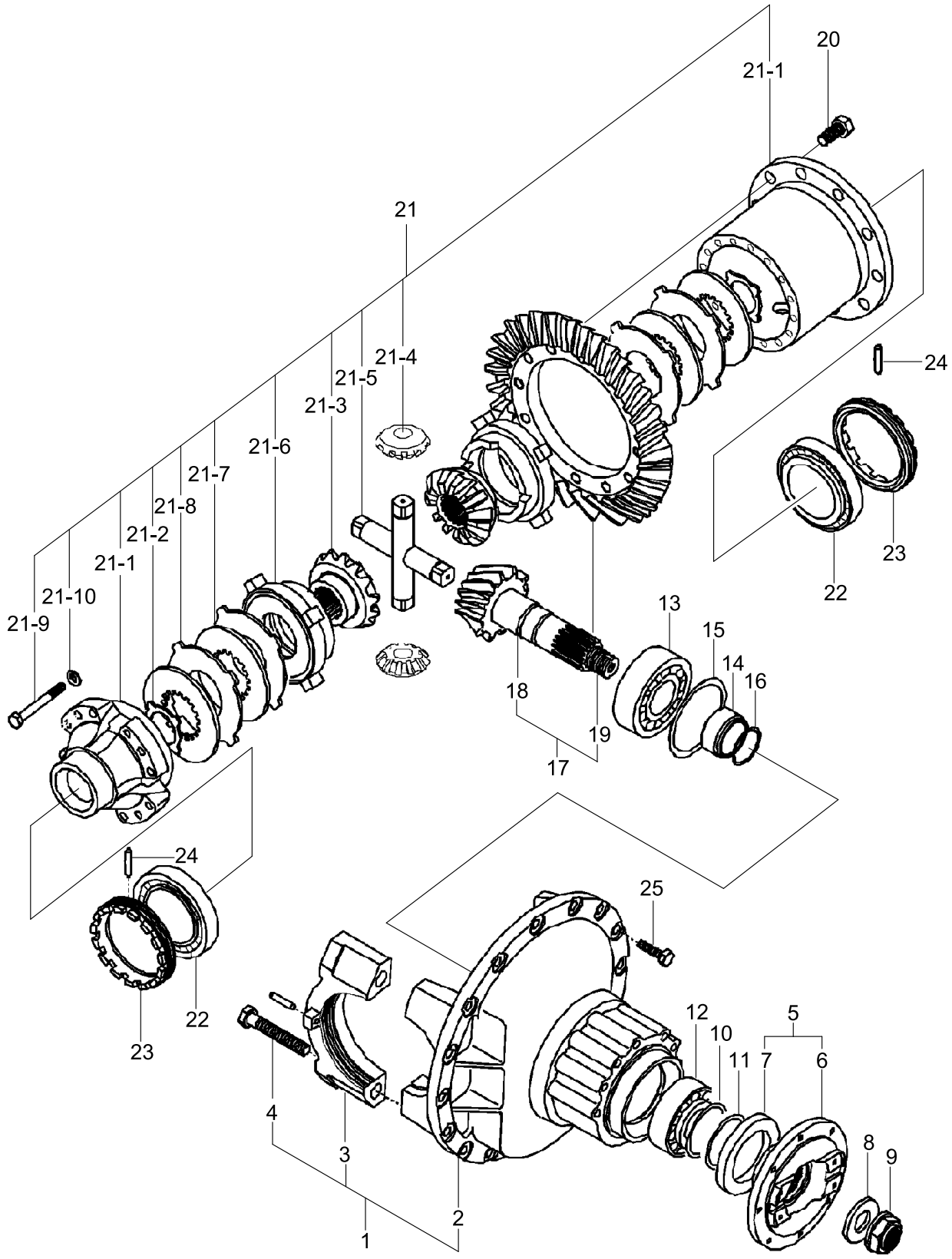

Item	Part_No	IS	Ord	T	Description	Qty	Serial_No	ITC	Remark
*	XKBQ-00490				DIFF ASSY-FRONT	1	- #0310	-	LIMITED SLIP
1	XKBQ-00379				.CARRIER ASSY	1			
N2	XKBQ-00380				..CARRIER-FRONT	1			NOT
N3	XKBQ-00295				..CAP	2			NOT
4	XKBQ-00296				..BOLT-HEX	4			
5	XKBQ-00381				.FLANGE ASSY	1			
N6	XKBQ-00382				..FLANGE	1			NOT
N7	XKBQ-00383				..COVER-DUST	1			NOT
8	XKBQ-00384				.HOLDER	1			
9	XKBQ-00027				.NUT	1			
10	XKBQ-00385				.SEAL-OIL	1			
11	XKBQ-00386				.SEAL-GAMMA	1			
12	XKBQ-00387				.BEARING	1			
13	XKBQ-00388				.BEARING	1			
14	XKBQ-00389				.SPACER(47.200)	1			
	XKBQ-00390				.SPACER(47.225)	AR			
	XKBQ-00391				.SPACER(47.250)	AR			
	XKBQ-00392				.SPACER(47.275)	AR			
15	XKBQ-00393				.SHIM(0.1)	AR			
	XKBQ-00394				.SHIM(0.2)	AR			
	XKBQ-00395				.SHIM(0.3)	AR			
16	XKBQ-00322				.SHIM(1.0)	AR			
	XKBQ-00323				.SHIM(1.1)	1			
	XKBQ-00324				.SHIM(1.3)	AR			
	XKBQ-00325				.SHIM(1.5)	1			

Item	Part_No	IS	Ord	T	Description	Qty	Serial_No	ITC	Remark
16	XKBQ-00326				.SHIM(1.7)	AR			
	XKBQ-00327				.SHIM(1.8)	AR			
	XKBQ-00328				.SHIM(1.9)	AR			
17	XKBQ-00396				.SET-BEVEL	1			
N18	XKBQ-00397				..PINION-BEVEL	1			NOT
N19	XKBQ-00398				..GEAR-BEVEL RING	1			NOT
20	XKBQ-00399				.BOLT-HEX	16			
21	XKBQ-00491				.SLIP ASSY-LIMIT	1			
N21-1	XKBQ-00492				..CASE ASSY	1			NOT
N21-2	XKBQ-00493				..WASHER-THRUST	2			NOT
N21-3	XKBQ-00494				..GEAR-SIDE	2			NOT
N21-4	XKBQ-00495				..PINION	4			NOT
N21-5	XKBQ-00496				..SHAFT	2			NOT
N21-6	XKBQ-00497				..HOUSING	2			NOT
21-7	XKBQ-00498				..PLATE-REACTION	4			
	XKBQ-00499				..PLATE-REACTION	AR			
N21-7	XKBQ-00500				..PLATE-REACTION	4	#0001 -	-	NOT
N21-8	XKBQ-00501				..PLATE-FRICTION	4			NOT
N21-9	XKBQ-00502				..SCREW	16			NOT
N21-10	XKBQ-00503				..WASHER-PLAIN	16			NOT
22	XKBQ-00304				.BEARING	2			
23	XKBQ-00303				.NUT-ADJUSTING	2			
24	XKBQ-00067				.PIN-SPRING	2			
25	XKBQ-00289				.BOLT-HEX	16			
N	@				NOT INDIVIDUALLY SUPPLIED	AR			NOT

DIFF ASSY(#0311~#1274, FR, LIMITED SLIP)

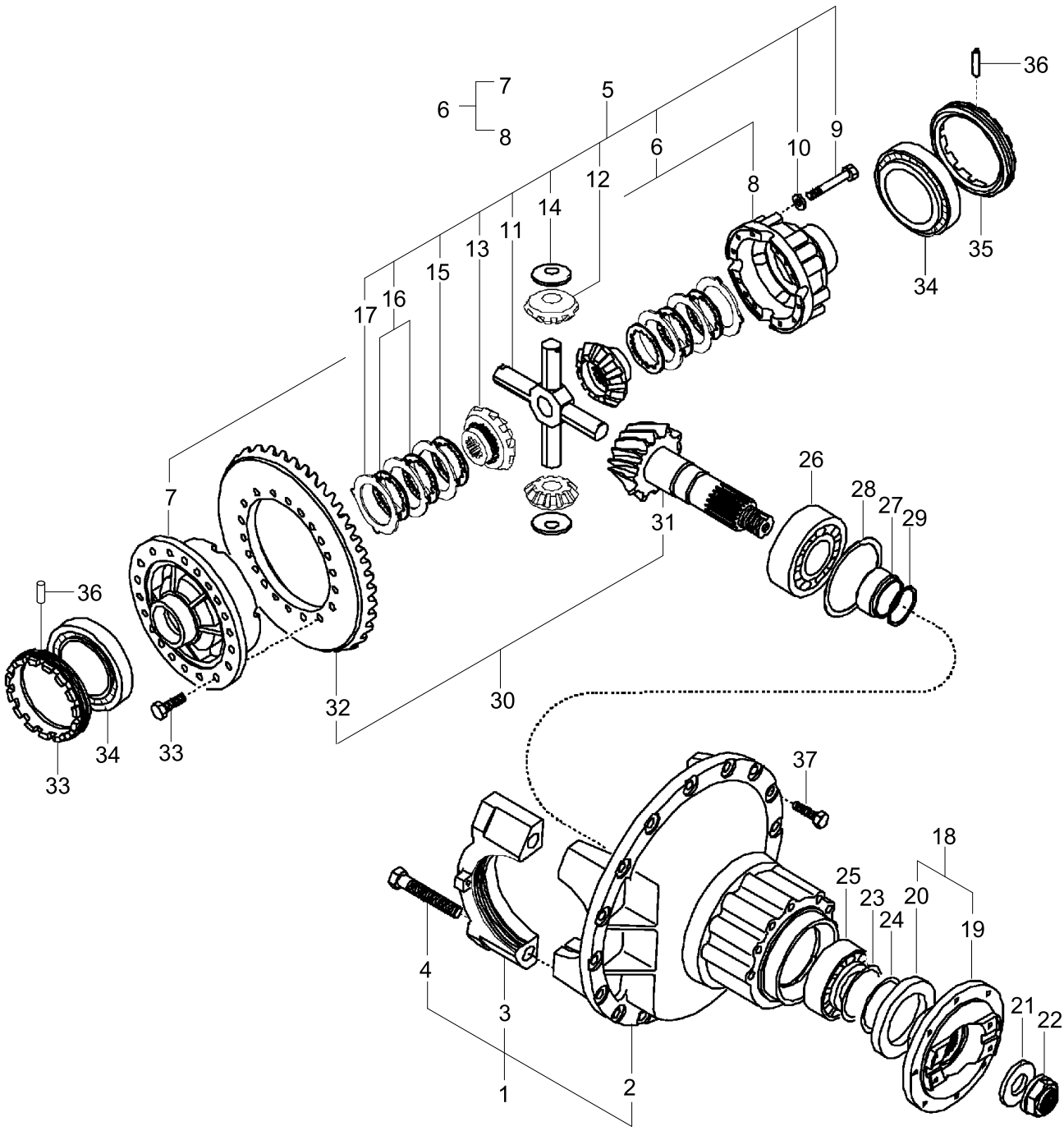

Item	Part_No	IS	Ord	T	Description	Qty	Serial_No	ITC	Remark
*	XKBQ-00530				DIFF ASSY-FRONT	1	#0311 - #1101	A	LIMITED SLIP
	XKBQ-00608				DIFF ASSY-FRONT	1	#1102 - #1274	B	LIMITED SLIP
1	XKBQ-00379				.CARRIER ASSY	1			
N2	XKBQ-00380				..CARRIER-FRONT	1			NOT
N3	XKBQ-00295				..CAP	2			NOT
4	XKBQ-00296				..BOLT-HEX	4			
5	XKBQ-00531				.DIFF ASSY-SMT	1			
6	XKBQ-00532				..CASE ASSY-FRONT	1			
N7	XKBQ-00533				...CASE-LH,FRONT	1			NOT
N8	XKBQ-00534				...CASE-RH,FRONT	1			NOT
9	XKBQ-00535				..BOLT-HEX HD	16			
10	XKBQ-00481				..WASHER-PLAIN	16			
11	XKBQ-00310				..SPIDER	1			
12	XKBQ-00309				..PINION-DIFF	4			
13	XKBQ-00523				..SIDE GEAR	2			
14	XKBQ-00312				..WASHER-THRUST	4			
15	XKBQ-00524				..PLATE-FRICTION	2			
16	XKBQ-00525				..PLATE-FRICTION	4			
17	XKBQ-00529				..DISC(3.3T)	AR			
	XKBQ-00528				..DISC(3.2T)	6			
	XKBQ-00527				..DISC(3.1T)	AR			
	XKBQ-00526				..DISC(3.0T)	AR			
18	XKBQ-00381				.FLANGE ASSY	1			
N19	XKBQ-00382				..FLANGE	1			NOT
N20	XKBQ-00383				..COVER-DUST	1			NOT

Item	Part_No	IS	Ord	T	Description	Qty	Serial_No	ITC	Remark
21	XKBQ-00384				.HOLDER	2			
22	XKBQ-00027				.NUT	2			
23	XKBQ-00385				.SEAL-OIL	1			
24	XKBQ-00386				.SEAL-GAMMA	1			
25	XKBQ-00387				.BEARING	1			
26	XKBQ-00388				.BEARING	1			
27	XKBQ-00392				.SPACER(47.275)	AR			
	XKBQ-00391				.SPACER(47.250)	AR			
	XKBQ-00390				.SPACER(47.225)	AR			
	XKBQ-00389				.SPACER(47.200)	1			
28	XKBQ-00393				.SHIM(0.1)	AR	#0001 -	-	
	XKBQ-00394				.SHIM(0.2)	AR	#0001 -	-	
	XKBQ-00393				.SHIM(0.1)	1			
29	XKBQ-00328				.SHIM(1.9)	AR			
	XKBQ-00327				.SHIM(1.8)	AR			
	XKBQ-00326				.SHIM(1.7)	AR			
	XKBQ-00325				.SHIM(1.5)	AR			
	XKBQ-00324				.SHIM(1.3)	1			
	XKBQ-00323				.SHIM(1.1)	AR			
	XKBQ-00322				.SHIM(1.0)	1			
30	XKBQ-00396				.SET-BEVEL	1	- #1109		
	XKBQ-00599				.SET-BEVEL	1	#1110 -	B	
N31	XKBQ-00397				..PINION-BEVEL	1	- #1109		NOT
	XKBQ-00600				..PINION-BEVEL	1	#1110 -	B	NOT
N32	XKBQ-00398				..GEAR-BEVEL RING	1	- #1109		NOT

Item	Part_No	IS	Ord	T	Description	Qty	Serial_No	ITC	Remark
N32	XKBQ-00601				..GEAR-BEVEL RING	1	#1110 -	B	NOT
33	XKBQ-00399				.BOLT-HEX	16			
34	XKBQ-00304				.BEARING	2			
35	XKBQ-00303				.NUT-ADJUSTING	2			
36	XKBQ-00067				.PIN-SPRING	2			
37	XKBQ-00289				.BOLT-HEX	16			
N	@					AR			NOT

REDUCTION ASSEMBLY(LH/RH, FR, -#1274)

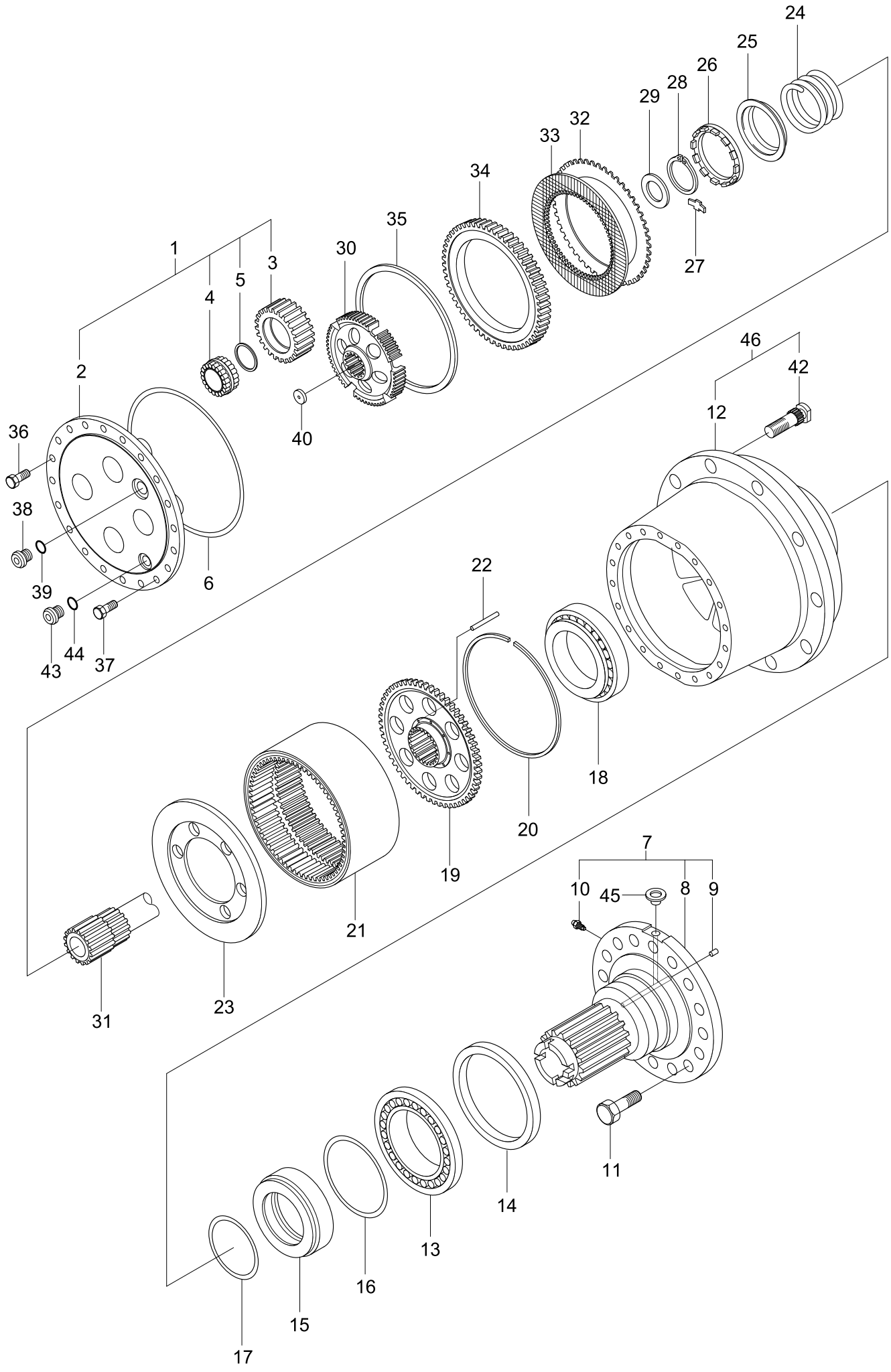

Item	Part_No	IS	Ord	T	Description	Qty	Serial_No	ITC	Remark
*	XKBQ-00404				REDUCTION ASSY-LH	1			
	@				REDUCTION ASSY-LH	1	- #1274	-	NOT
					REDUCTION ASSY-RH	1	- #1274	-	NOT
1	XKBQ-00406				.COVER-ASSY	1	- #1101		
	XKBQ-00602				.COVER-ASSY	1	#1102 -	D	
2	XKBQ-00407				..COVER-HUB	1	- #1101		
	XKBQ-00603				..COVER-HUB	1	#1102 -	D	
3	XKBQ-00408				..GEAR-PLANETARY	4	- #1101		
	XKBQ-00604				..GEAR-PLANETARY	4	#1102 -	D	
4	XKBQ-00409				..BEARING-NEEDLE	4			
5	XKBQ-00358				..RING-RETAINING	4			
6	XKBQ-00410				.O-RING	1			
7	XKBQ-00411				.SPINDEL ASSY-RH	1	- #0419		
	XKBQ-00550				.SPINDLE ASSY-RH	1	#0420 -	B	
	XKBQ-00412				.SPINDEL ASSY-LH	1	- #0419		
	XKBQ-00551				.SPINDLE ASSY-LH	1	#0420 -	B	
N8	XKBQ-00413				..SPINDEL-RH	1	- #0419		NOT
	XKBQ-00552				..SPINDLE-RH	1	#0420 -	B	NOT
	XKBQ-00414				..SPINDEL-LH	1	- #0419		NOT
	XKBQ-00553				..SPINDLE-LH	1	#0420 -	B	NOT
N9	XKBQ-00090				..SEAL	2			NOT
10	XKBQ-00118				..BREATHER	1			
11	XKBQ-00415				.BOLT HEX HD	16			
12	XKBQ-00416				.HUB-WHEEL	1			
13	XKBQ-00417				.BEARING	1			

Item	Part_No	IS	Ord	T	Description	Qty	Serial_No	ITC	Remark
14	XKBQ-00418				.SEAL-OIL	1			
15	XKBQ-00419				.PISTON-BRAKE	1			
16	XKBQ-00420				.O-RING	1			
17	XKBQ-00421				.O-RING	1			
18	XKBQ-00369				.BEARING	1			
19	XKBQ-00422				.SUPPORT	1			
20	XKBQ-00423				.RING-RETAIN	1			
21	XKBQ-00424				.GEAR-RING	1			
22	XKBQ-00425				.PUSH ROD	6			
23	XKBQ-00426				.PLATE-PRESSURE	1			
24	XKBQ-00427				.SPRING-RETURN	1			
25	XKBQ-00428				.COVER-SPRING	1			
26	XKBQ-00429				.NUT-ADJUSTING	1			
27	XKBQ-00430				.PLATE-LOCK	2			
28	XKBQ-00431				.RING-RETAIN	1			
29	XKBQ-00432				.WASHER-THRUST	1			
30	XKBQ-00433				.DRUM	1	- #1101		
	XKBQ-00605				.DRUM	1	#1102 -	D	
31	XKBQ-00434				.SHAFT	1	- #1101		
	XKBQ-00606				.SHAFT	1	#1102 -	D	
32	XKBQ-00435				.DISC(3.75)	AR			
	XKBQ-00436				.DISC(4.00)	1			
	XKBQ-00437				.DISC(4.25)	3			
	XKBQ-00438				.DISC(4.50)	AR			
33	XKBQ-00439				.DISC-BRAKE	4			

Item	Part_No	IS	Ord	T	Description	Qty	Serial_No	ITC	Remark
34	XKBQ-00440				.PLATE-BRAKE	1			
35	XKBQ-00441				.RING-RETAINING	1			
36	XKBQ-00289				.BOLT-HEX	19			
37	XKBQ-00442				.BOLT-HEX	1			
38	XKBQ-00006				.PLUG-MAGNETIC	1			
39	XKBQ-00007				.O-RING	1			
40	XKBQ-00081				.PLATE	1			
41	@				.SHIM	AR	#0001 -	-	NOT
42	XKBQ-00446				.STUD-WHEEL	12			
43	XKBQ-00008				.PLUG-DRAIN	1			
44	XKBQ-00009				.O-RING	1			
45	XKBQ-00122				.PLUG	1			
46	XKBQ-00554				.HUB ASSY	1	#0001 -	-	
12	XKBQ-00416				..HUB-WHEEL	1			
42	XKBQ-00446				..STUD-WHEEL	12			
N	@					AR			NOT

PARKING BRAKE ASSEMBLY(-#1274, VOLVO)

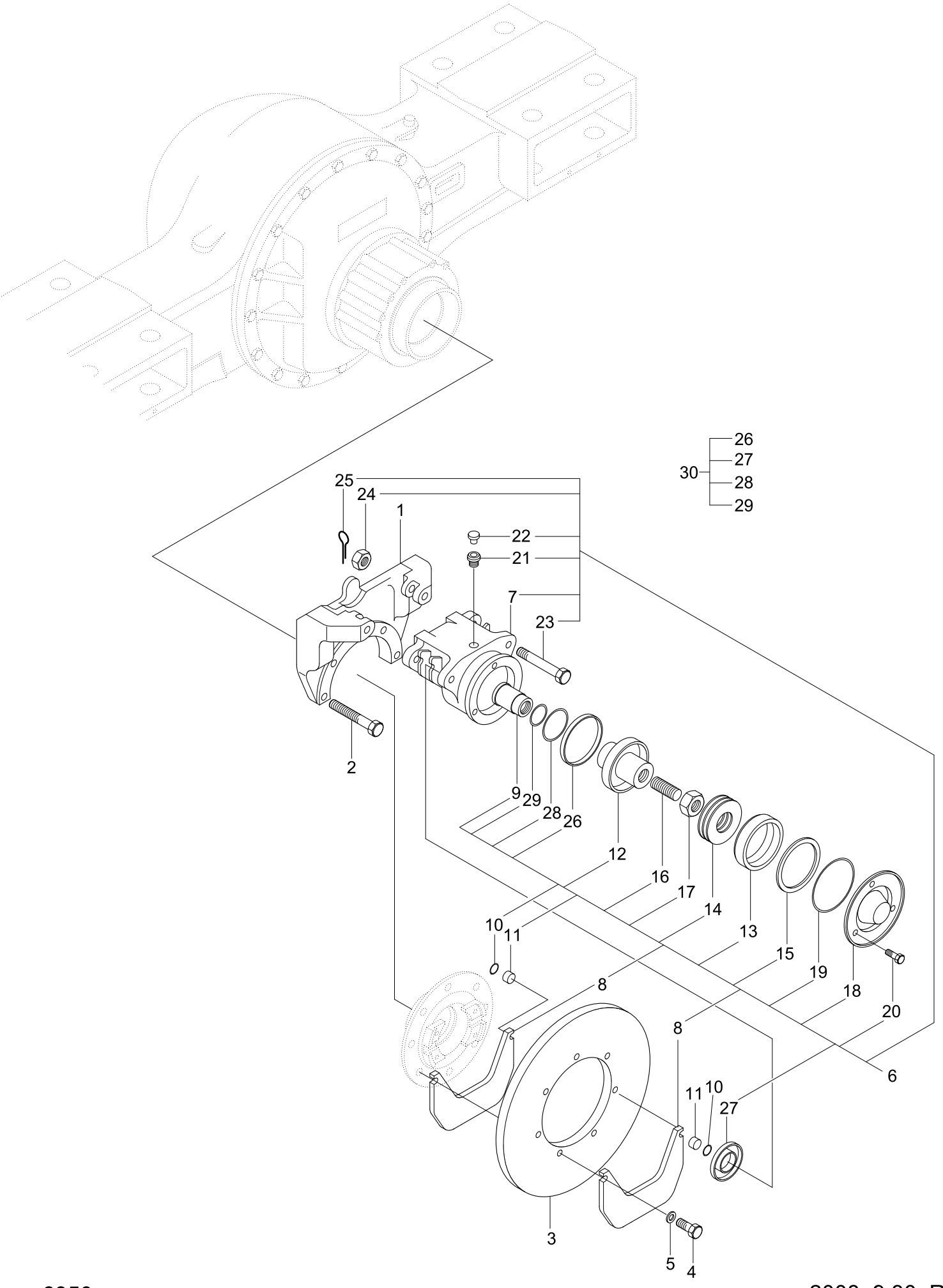

Item	Part_No	IS	Ord	T	Description	Qty	Serial_No	ITC	Remark
*	@				PARKING BRAKE ASSY	1	#0001 - #1274	-	NOT
1	XKBQ-00448				.BRACKET-CALIPER	1			
2	XKBQ-00289				.BOLT-HEX	7			
3	XKBQ-00449				.DISC	1			
4	XKBQ-00130				.BOLT	8			
5	XKBQ-00131				.WASHER-SPRING	8			
6	XKBQ-00132				.CALIPER-BRAKE	1			
N7	XKBQ-00133				..BODY	1			NOT
8	XKBQ-00134				..PAD	2			
9	XKBQ-00135				..SHUTTLE	1			
10	XKBQ-00136				..RING	2			
11	XKBQ-00137				..MAGNET	2			
12	XKBQ-00138				..PISTON	1			
13	XKBQ-00139				..RING	1			
14	XKBQ-00140				..RING-PLATE	1			
15	XKBQ-00141				..PLATE-LOCK	1			
16	XKBQ-00142				..PIN	1			
17	XKBQ-00143				..NUT	1			
18	XKBQ-00144				..COVER	1			
19	XKBQ-00145				..O-RING	1			
20	XKBQ-00146				..BOLT	3			
21	XKBQ-00147				..BREATHER	1			
22	XKBQ-00148				..CAP	1			
23	XKBQ-00149				..BOLT	2			
24	XKBQ-00150				..NUT	2			

Item	Part_No	IS	Ord	T	Description	Qty	Serial_No	ITC	Remark
25	XKBQ-00151				..PIN-SPLIT	2			
N26	XKBQ-00152				..RING	1			NOT
N27	XKBQ-00153				..SEAL	1			NOT
N28	XKBQ-00154				..RING	1			NOT
N29	XKBQ-00155				..O-RING	1			NOT
30	XKBQ-00597				..SEAL KIT-P/BRAKE	1	#0001 -	-	ITEM 26-29
21	XKBQ-00147				.BREATHER	1	#0001 -	-	
22	XKBQ-00148				.CAP	1	#0001 -	-	
N	@					AR			NOT

REAR AXLE ASSEMBLY(-#1274, VOLVO)

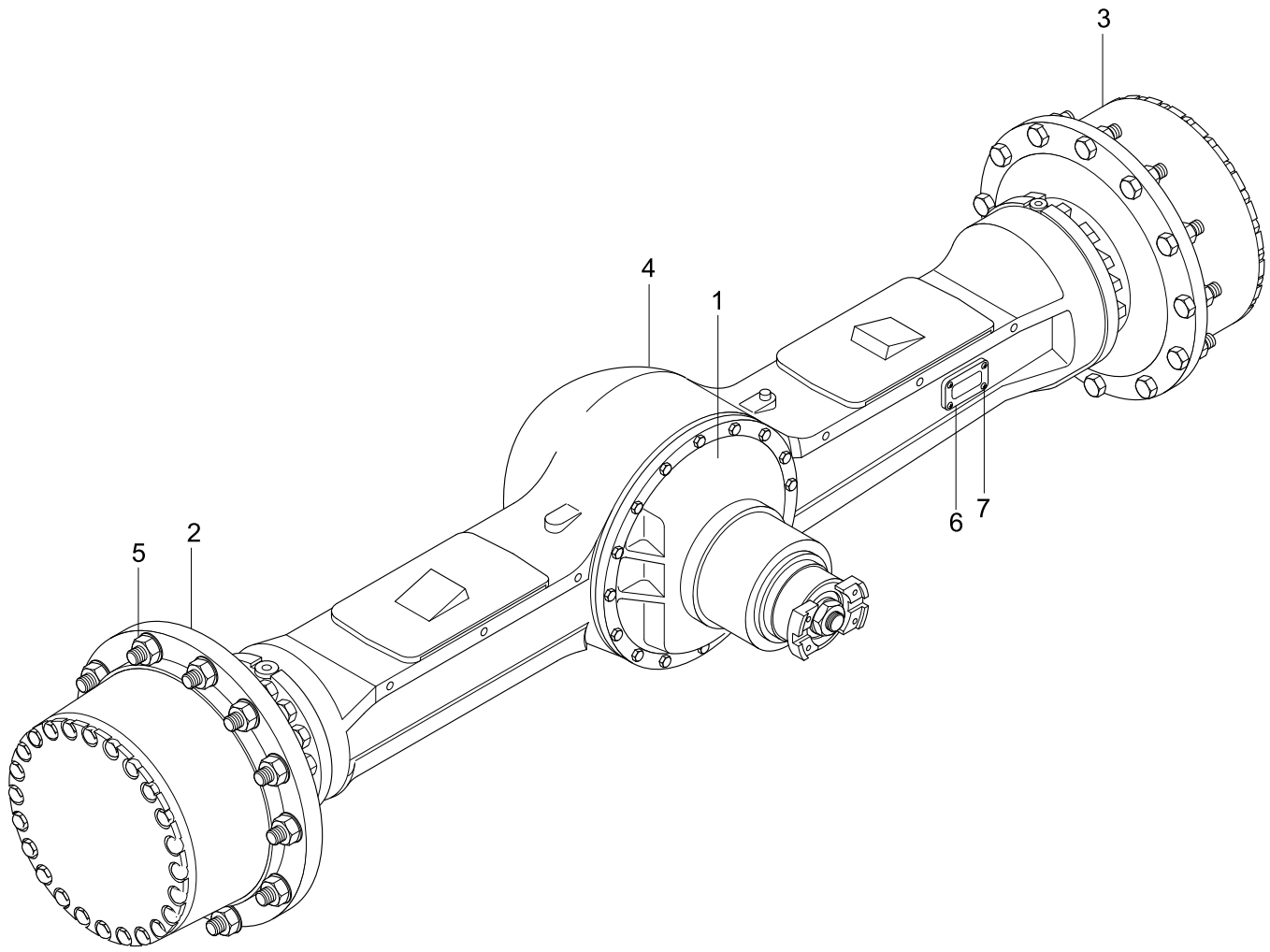

Item	Part_No	IS	Ord	T	Description	Qty	Serial_No	ITC	Remark
*	81LD-20010				REAR AXLE ASSY	1	- #1109		T/PROPORTIONING
	81LD-20011				REAR AXLE ASSY	1	#1110 - #1274	B	T/PROPORTIONING
	81LD-20020				REAR AXLE ASSY	1	#0001 - #1109	-	LIMITED SLIP
	81LD-20021				REAR AXLE ASSY	1	#1110 - #1274	B	LIMITED SLIP
1	@				.DIFFERENTIAL ASSY-RR	1			NOT
2	@				.REDUCTION ASSY-RH	1			NOT
3	@				.REDUCTION ASSY-LH	1			NOT
4	@				.HOUSING ASSY-REAR	1			NOT
5	XKBQ-00001				.NUT-WHEEL	24			
6	XKBQ-00002				.PLATE-NAME	1			
7	XKBQ-00003				.SCREW	4			

Item	Part_No	IS	Ord	T	Description	Qty	Serial_No	ITC	Remark
*	XKBQ-00450				HOUSING ASSY-REAR	1	- #1274	-	
1	XKBQ-00451				.HOUSING-REAR	1			
2	XKBQ-00008				.PLUG-DRAIN	2			
3	XKBQ-00009				.O-RING	2			
4	XKBQ-00010				.BREATHER-AIR	1			

DIFFERENTIAL ASSEMBLY(RR, -#1274, VOLVO)

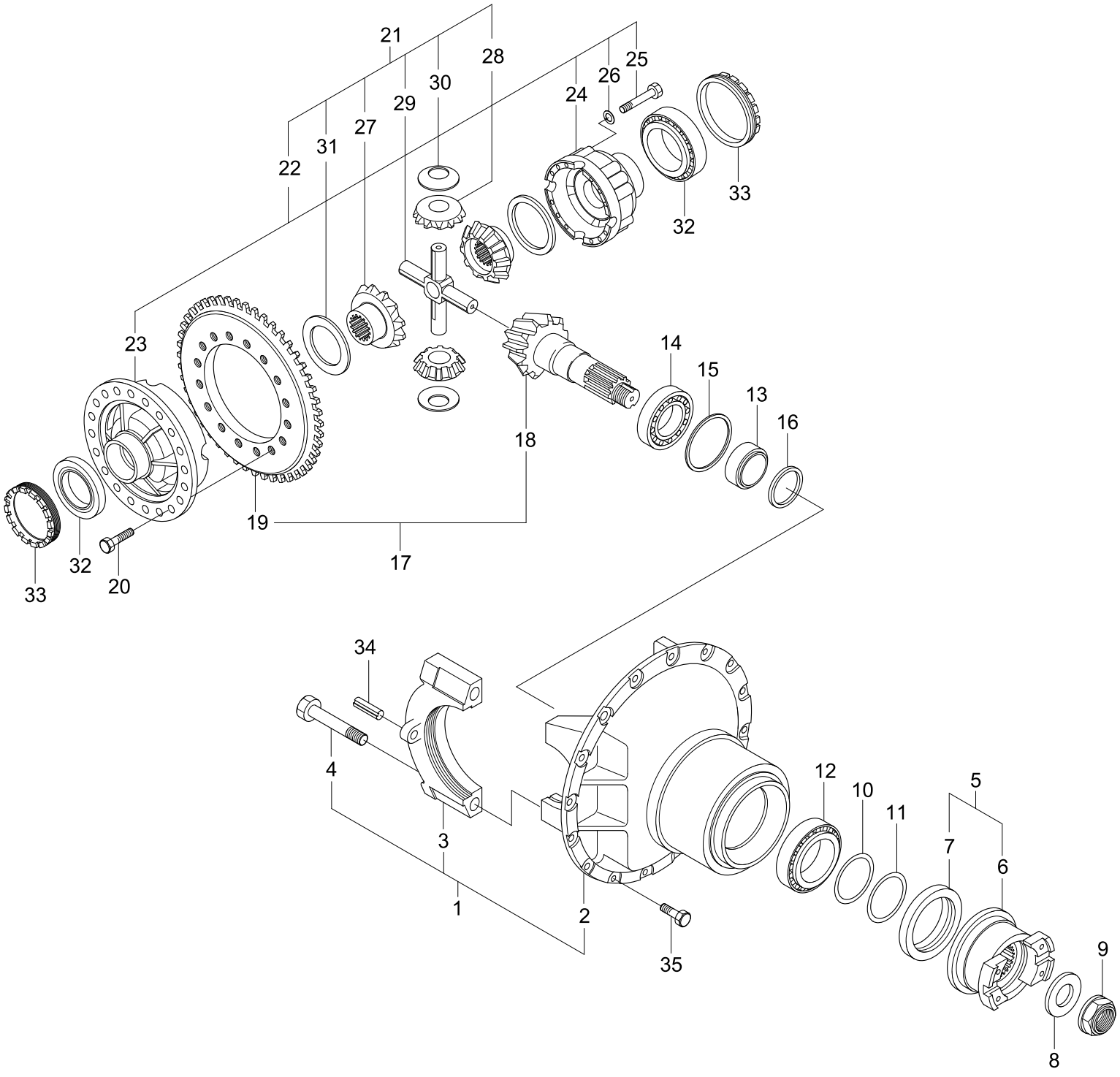

Item	Part_No	IS	Ord	T	Description	Qty	Serial_No	ITC	Remark
*	XKBQ-00452				DIFF ASSY-REAR	1	- #1274	-	
1	XKBQ-00453				.CARRIER ASSY	1			
N2	XKBQ-00454				..CARRIER-REAR	1			NOT
N3	XKBQ-00295				..CAP	2			NOT
4	XKBQ-00296				..BOLT-HEX	4			
5	XKBQ-00455				.FLANGE ASSY	1			
N6	XKBQ-00456				..FLANGE	1			NOT
N7	XKBQ-00383				..COVER-DUST	1			NOT
8	XKBQ-00384				.HOLDER	1			
9	XKBQ-00027				.NUT	1			
10	XKBQ-00385				.SEAL-OIL	1			
11	XKBQ-00386				.SEAL-GAMMA	1			
12	XKBQ-00457				.BEARING	1			
13	XKBQ-00458				.SPACER(29.600)	1			
	XKBQ-00459				.SPACER(29.625)	AR			
	XKBQ-00460				.SPACER(29.650)	AR			
	XKBQ-00461				.SPACER(29.675)	AR			
14	XKBQ-00462				.BEARING	1			
15	XKBQ-00463				.SHIM(0.1)	AR			
	XKBQ-00464				.SHIM(0.3)	AR			
	XKBQ-00465				.SHIM(0.5)	AR			
16	XKBQ-00466				.SHIM(1.0)	AR			
	XKBQ-00467				.SHIM(1.1)	1			
	XKBQ-00468				.SHIM(1.3)	AR			
	XKBQ-00469				.SHIM(1.5)	1			

Item	Part_No	IS	Ord	T	Description	Qty	Serial_No	ITC	Remark
16	XKBQ-00470				.SHIM(1.7)	AR			
	XKBQ-00471				.SHIM(1.8)	AR			
	XKBQ-00472				.SHIM(1.9)	AR			
17	XKBQ-00473				.SET-BEVEL	1			
N18	XKBQ-00474				..PINION-BEVEL	1			NOT
N19	XKBQ-00475				..GEAR-BEVEL RING	1			NOT
20	XKBQ-00321				.BOLT-HEX	12			
21	XKBQ-00476				.TRAC ASSY-MAX	1			
22	XKBQ-00477				..CASE ASSY	1			
N23	XKBQ-00478				...CASE-LH	1			NOT
N24	XKBQ-00479				...CASE-RH	1			NOT
25	XKBQ-00480				...BOLT-HEX	12			
26	XKBQ-00481				...WASHER-PLAIN	12			
27	XKBQ-00482				..GEAR-SIDE	2			
28	XKBQ-00483				..PINION-DIFF	4			
29	XKBQ-00484				..SPIDER	1			
30	XKBQ-00485				..WASHER-THRUST	4			
31	XKBQ-00486				..WASHER-THRUST	2			
32	XKBQ-00304				.BEARING	2			
33	XKBQ-00303				.NUT-ADJUSTING	2			
34	XKBQ-00067				.PIN-SPRING	2			
35	XKBQ-00289				.BOLT-HEX	19			
N	@					AR			NOT

DIFFERENTIAL ASSY(-#0310, REAR, LIMITED SLIP)

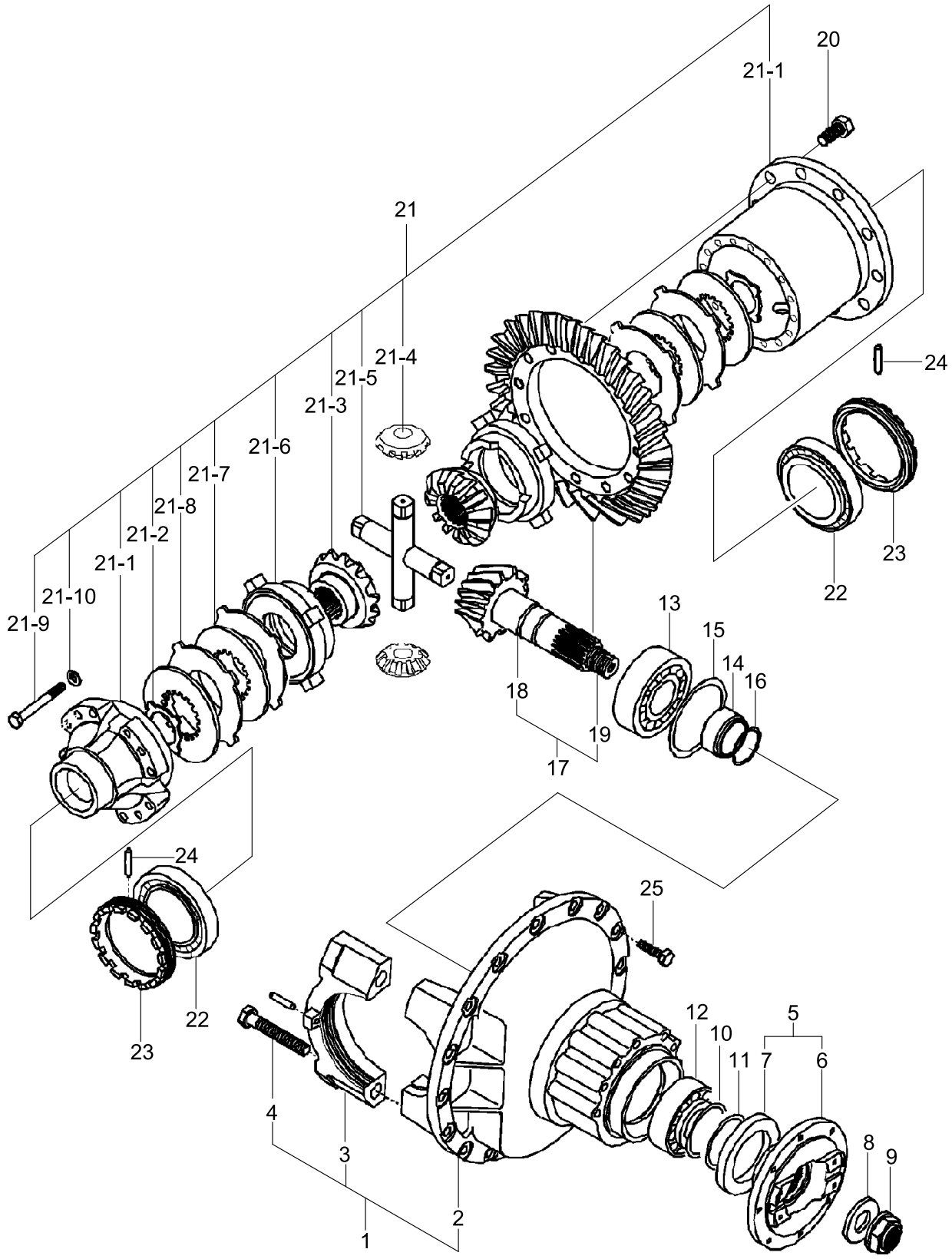

Item	Part_No	IS	Ord	T	Description	Qty	Serial_No	ITC	Remark
*	XKBQ-00504				DIFF ASSY-REAR	1	- #0310	-	LIMITED SLIP
1	XKBQ-00453				.CARRIER ASSY	1			
N2	XKBQ-00454				..CARRIER-REAR	1			NOT
N3	XKBQ-00295				..CAP	2			NOT
4	XKBQ-00296				..BOLT-HEX	4			
5	XKBQ-00455				.FLANGE ASSY	1			
N6	XKBQ-00456				..FLANGE	1			NOT
N7	XKBQ-00383				..COVER-DUST	1			NOT
8	XKBQ-00384				.HOLDER	1			
9	XKBQ-00027				.NUT	1			
10	XKBQ-00385				.SEAL-OIL	1			
11	XKBQ-00386				.SEAL-GAMMA	1			
12	XKBQ-00457				.BEARING	1			
13	XKBQ-00462				.BEARING	1			
14	XKBQ-00461				.SPACER(29.675)	AR			
	XKBQ-00460				.SPACER(29.650)	AR			
	XKBQ-00459				.SPACER(29.625)	AR			
	XKBQ-00458				.SPACER(29.600)	1	#0001 -	-	
15	XKBQ-00465				.SHIM(0.5)	AR	#0001 -	-	
	XKBQ-00464				.SHIM(0.3)	AR			
	XKBQ-00463				.SHIM(0.1)	AR			
16	XKBQ-00472				.SHIM(1.9)	AR			
	XKBQ-00471				.SHIM(1.8)	AR			
	XKBQ-00470				.SHIM(1.7)	AR			
	XKBQ-00469				.SHIM(1.5)	1			

Item	Part_No	IS	Ord	T	Description	Qty	Serial_No	ITC	Remark
16	XKBQ-00468				.SHIM(1.3)	AR			
	XKBQ-00467				.SHIM(1.1)	1			
	XKBQ-00466				.SHIM(1.0)	AR			
17	XKBQ-00473				.SET-BEVEL	1			
N18	XKBQ-00474				..PINION-BEVEL	1			NOT
N19	XKBQ-00475				..GEAR-BEVEL RING	1			NOT
20	XKBQ-00321				.BOLT-HEX	12			
21	XKBQ-00505				.SLIP ASSY-LIMIT	1			
N21-1	XKBQ-00506				..CASE ASSY	1			NOT
N21-2	XKBQ-00507				..WASHER-THRUST	2			NOT
N21-3	XKBQ-00508				..GEAR-SIDE	2			NOT
N21-4	XKBQ-00509				..PINION	4			NOT
N21-5	XKBQ-00510				..SHAFT	2			NOT
N21-6	XKBQ-00511				..HOUSING	2			NOT
N21-7	XKBQ-00514				..PLATE-REACTION	4			NOT
21-7	XKBQ-00513				..PLATE-REACTION	AR			
	XKBQ-00512				..PLATE-REACTION	AR			
N21-8	XKBQ-00515				..PLATE-FRICTION	4			NOT
N21-9	XKBQ-00502				..SCREW	16			NOT
N21-10	XKBQ-00503				..WASHER-PLAIN	16			NOT
22	XKBQ-00304				.BEARING	2			
23	XKBQ-00303				.NUT-ADJUSTING	2			
24	XKBQ-00067				.PIN-SPRING	2			
25	XKBQ-00289				.BOLT-HEX	19			
N	@				NOT INDIVIDUALLY SUPPLIED	AR			NOT

DIFFERENTIAL ASSY(#0311~1274, REAR, LIMITED SLIP)

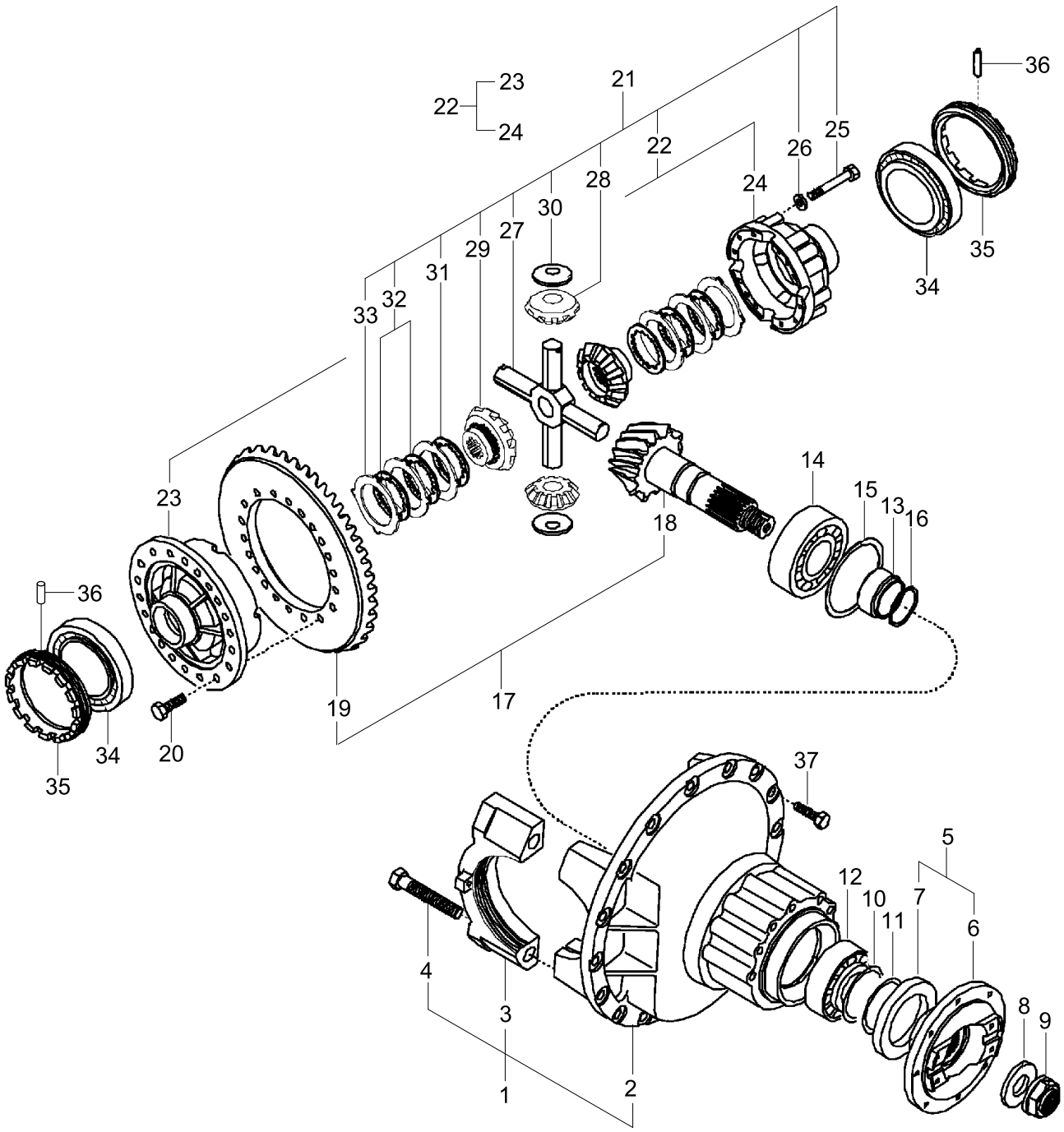

Item	Part_No	IS	Ord	T	Description	Qty	Serial_No	ITC	Remark
*	XKBQ-00536				DIFF ASSY-REAR	1	#0311 - #1274	A	LIMITED SLIP
1	XKBQ-00453				.CARRIER ASSY	1			
N2	XKBQ-00454				..CARRIER-REAR	1			NOT
N3	XKBQ-00295				..CAP	2			NOT
4	XKBQ-00296				..BOLT-HEX	4			
5	XKBQ-00455				.FLANGE ASSY	1			
N6	XKBQ-00456				..FLANGE	1			NOT
N7	XKBQ-00383				..COVER-DUST	1			NOT
8	XKBQ-00384				.HOLDER	1			
9	XKBQ-00027				.NUT	1			
10	XKBQ-00385				.SEAL-OIL	1			
11	XKBQ-00386				.SEAL-GAMMA	1			
12	XKBQ-00457				.BEARING	1			
13	XKBQ-00461				.SPACER(29.675)	AR			
	XKBQ-00460				.SPACER(29.650)	AR			
	XKBQ-00459				.SPACER(29.625)	AR			
	XKBQ-00458				.SPACER(29.600)	1	#0001 -	-	
14	XKBQ-00462				.BEARING	1	#0001 -	-	
15	XKBQ-00465				.SHIM(0.5)	AR	#0001 -	-	
	XKBQ-00464				.SHIM(0.3)	AR	#0001 -	-	
	XKBQ-00463				.SHIM(0.1)	AR	#0001 -	-	
16	XKBQ-00472				.SHIM(1.9)	1			
	XKBQ-00471				.SHIM(1.8)	AR			
	XKBQ-00470				.SHIM(1.7)	AR			
	XKBQ-00469				.SHIM(1.5)	1			

Item	Part_No	IS	Ord	T	Description	Qty	Serial_No	ITC	Remark
16	XKBQ-00468				.SHIM(1.3)	AR			
	XKBQ-00467				.SHIM(1.1)	1			
	XKBQ-00466				.SHIM(1.0)	AR			
17	XKBQ-00473				.SET-BEVEL	1			
N18	XKBQ-00474				..PINION-BEVEL	1			NOT
N19	XKBQ-00475				..GEAR-BEVEL RING	1			NOT
20	XKBQ-00321				.BOLT-HEX	12			
21	XKBQ-00537				.DIFF ASSY-SMT	1	#0001 -	-	
22	XKBQ-00538				..CASE ASSY-REAR	1			
N23	XKBQ-00539				...CASE-LH,REAR	1			NOT
N24	XKBQ-00540				...CASE-RH,REAR	1			NOT
25	XKBQ-00535				..BOLT-HEX HD	12			
26	XKBQ-00481				..WASHER-PLAIN	12			
27	XKBQ-00484				..SPIDER	1			
28	XKBQ-00483				..PINION-DIFF	4			
29	XKBQ-00541				..GEAR-SIDE	2			
30	XKBQ-00485				..WASHER-THRUST	4			
31	XKBQ-00542				..PLATE-FRICTION	2			
32	XKBQ-00543				..PLATE-FRICTION	4			
33	XKBQ-00547				..PLATE(3.3)-COUNT	AR			
	XKBQ-00546				..PLATE(3.2)-COUNT	6			
	XKBQ-00545				..PLATE(3.1)-COUNT	AR			
	XKBQ-00544				..PLATE(3.0)-COUNT	AR			
34	XKBQ-00304				.BEARING	2			
35	XKBQ-00303				.NUT-ADJUSTING	2			

Item	Part_No	IS	Ord	T	Description	Qty	Serial_No	ITC	Remark
36	XKBQ-00067				.PIN-SPRING	2			
37	XKBQ-00289				.BOLT-HEX	19			
N	@					AR			NOT

REDUCTION ASSEMBLY(LH/RH, REAR, -#1274)

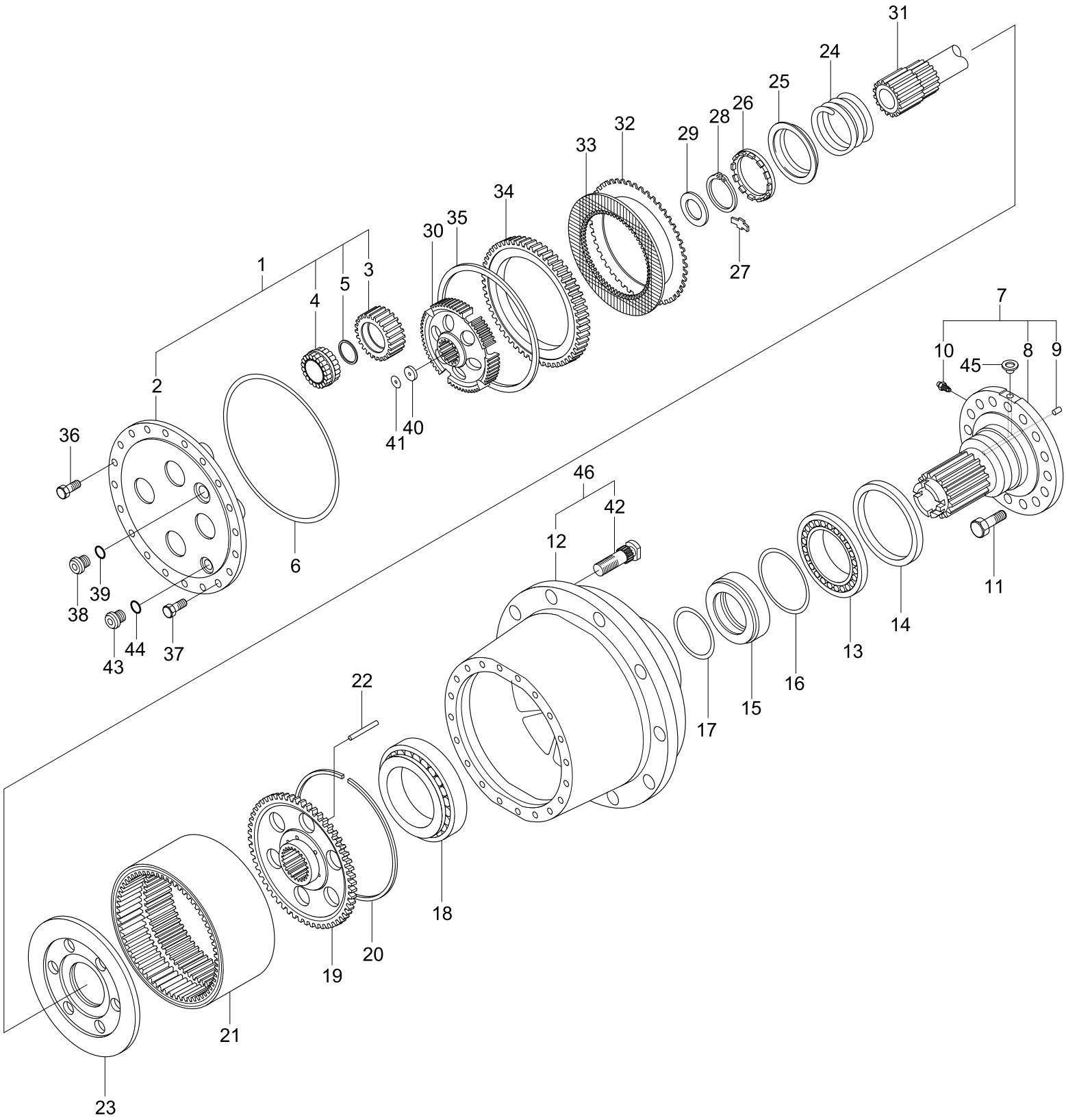

Item	Part_No	IS	Ord	T	Description	Qty	Serial_No	ITC	Remark
*	@				REDUCTION ASSY-LH	1	- #1274	-	NOT
					REDUCTION ASSY-RH	1	- #1274	-	NOT
1	XKBQ-00406				.COVER-ASSY	1	- #1101		
	XKBQ-00602				.COVER-ASSY	1	#1102 -	D	
2	XKBQ-00407				..COVER-HUB	1	- #1101		
	XKBQ-00603				..COVER-HUB	1	#1102 -	D	
3	XKBQ-00408				..GEAR-PLANETARY	4	- #1101		
	XKBQ-00604				..GEAR-PLANETARY	4	#1102 -	D	
4	XKBQ-00409				..BEARING-NEEDLE	4			
5	XKBQ-00358				..RING-RETAINING	4			
6	XKBQ-00410				.O-RING	1			
7	XKBQ-00411				.SPINDEL ASSY-RH	1	- #0419		
	XKBQ-00550				.SPINDLE ASSY-RH	1	#0420 -	B	
	XKBQ-00412				.SPINDEL ASSY-LH	1	- #0419		
	XKBQ-00551				.SPINDLE ASSY-LH	1	#0420 -	B	
N8	XKBQ-00413				..SPINDEL-RH	1	- #0419		NOT
	XKBQ-00552				..SPINDLE-RH	1	#0420 -	B	NOT
	XKBQ-00414				..SPINDEL-LH	1	- #0419		NOT
	XKBQ-00553				..SPINDLE-LH	1	#0420 -	B	NOT
N9	XKBQ-00090				..SEAL	2			NOT
10	XKBQ-00118				..BREATHER	1			
11	XKBQ-00415				.BOLT HEX HD	16			
12	XKBQ-00416				.HUB-WHEEL	1			
13	XKBQ-00417				.BEARING	1			
14	XKBQ-00418				.SEAL-OIL	1			

Item	Part_No	IS	Ord	T	Description	Qty	Serial_No	ITC	Remark
15	XKBQ-00419				.PISTON-BRAKE	1			
16	XKBQ-00420				.O-RING	1			
17	XKBQ-00421				.O-RING	1			
18	XKBQ-00369				.BEARING	1			
19	XKBQ-00422				.SUPPORT	1			
20	XKBQ-00423				.RING-RETAIN	1			
21	XKBQ-00424				.GEAR-RING	1			
22	XKBQ-00425				.PUSH ROD	6			
23	XKBQ-00426				.PLATE-PRESSURE	1			
24	XKBQ-00427				.SPRING-RETURN	1			
25	XKBQ-00428				.COVER-SPRING	1			
26	XKBQ-00429				.NUT-ADJUSTING	1			
27	XKBQ-00430				.PLATE-LOCK	2			
28	XKBQ-00431				.RING-RETAIN	1			
29	XKBQ-00432				.WASHER-THRUST	1			
30	XKBQ-00433				.DRUM	1	- #1101		
	XKBQ-00605				.DRUM	1	#1102 -	D	
31	XKBQ-00489				.SHAFT	1	- #1101		
	XKBQ-00607				.SHAFT	1	#1102 -	D	
32	XKBQ-00435				.DISC(3.75)	AR			
	XKBQ-00436				.DISC(4.00)	1			
	XKBQ-00437				.DISC(4.25)	3			
	XKBQ-00438				.DISC(4.50)	AR			
33	XKBQ-00439				.DISC-BRAKE	4			
34	XKBQ-00440				.PLATE-BRAKE	1			

Item	Part_No	IS	Ord	T	Description	Qty	Serial_No	ITC	Remark
35	XKBQ-00441				.RING-RETAINING	1			
36	XKBQ-00289				.BOLT-HEX	19			
37	XKBQ-00442				.BOLT-HEX	1			
38	XKBQ-00006				.PLUG-MAGNETIC	1			
39	XKBQ-00007				.O-RING	1			
40	XKBQ-00081				.PLATE	1			
41	XKBQ-00445				.SHIM(0.5T)	1	#0001 -	-	
	XKBQ-00444				.SHIM(0.3T)	1	#0001 -	-	
	XKBQ-00443				.SHIM(0.1T)	1	#0001 -	-	
42	XKBQ-00446				.STUD-WHEEL	12			
43	XKBQ-00008				.PLUG-DRAIN	1			
44	XKBQ-00009				.O-RING	1			
45	XKBQ-00122				.PLUG	1			
46	XKBQ-00554				.HUB ASSY	1	#0001 -	-	
12	XKBQ-00416				..HUB-WHEEL	1			
42	XKBQ-00446				..STUD-WHEEL	12			
N	@					AR			NOT

PARKING BRAKE(#1275-, ZF)

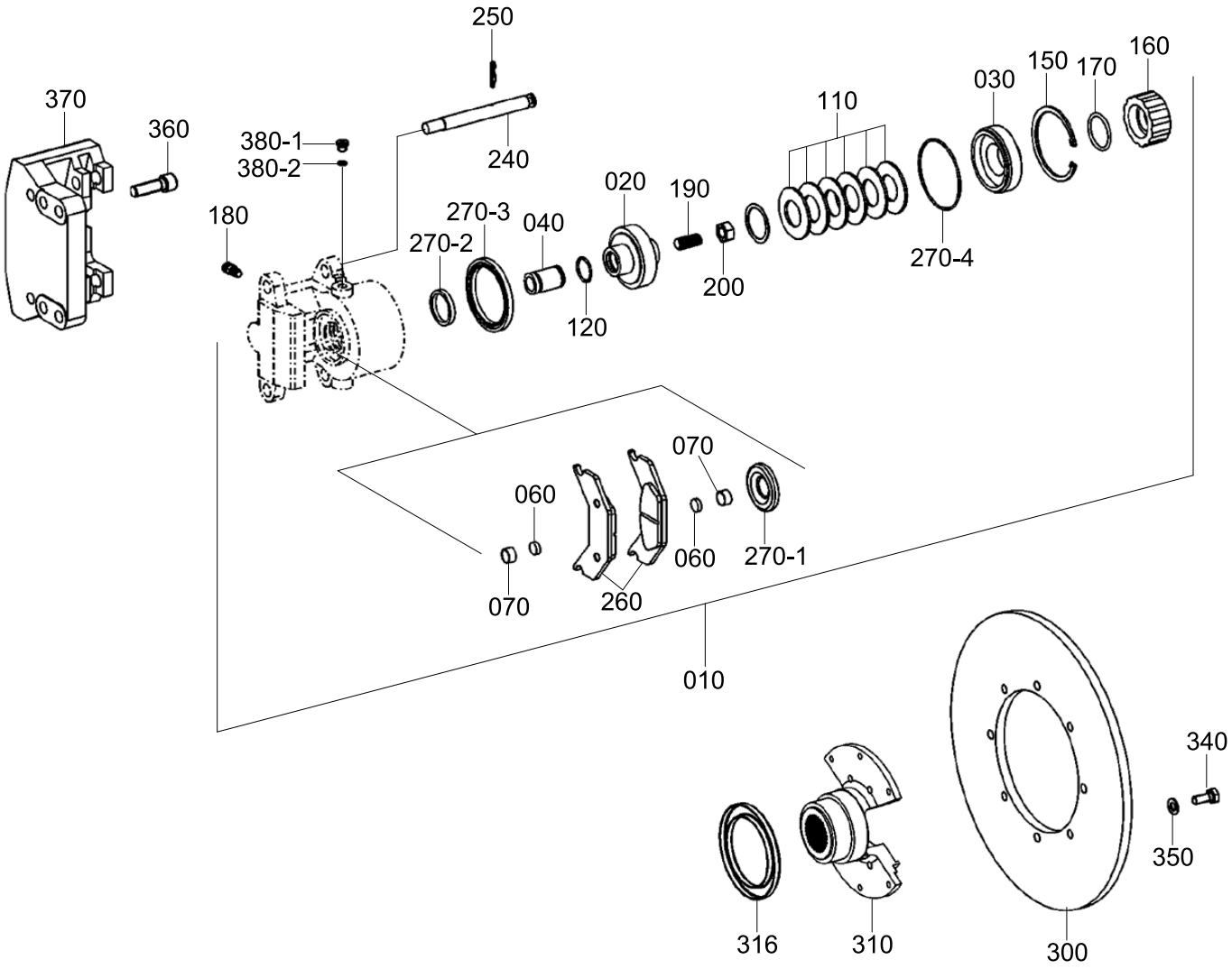

Item	Part_No	IS	Ord	T	Description	Qty	Serial_No	ITC	Remark
010	ZGAQ-02607				PARKING BRAKE	1			
020	ZGAQ-02608				.PISTON	1			
030	ZGAQ-02609				.RING-PRESSURE	1			
040	ZGAQ-01622				.PIN-PRESSURE	1			
060	ZGAQ-01623				.MAGNET	2			
070	ZGAQ-01624				.RING-CLEARANCE	2			
110	ZGAQ-02610				.SPRING-CUP	6			
120	ZGAQ-01626				.O-RING	1			
150	ZGAQ-02611				.RING-RETAINING	1			
160	ZGAQ-02612				.CAP-SCREW	1			
170	ZGAQ-02613				.O-RING	1			
180	ZGAQ-01629				..BREATHER	1			
190	ZGAQ-02614				.SET SCREW	1			
200	ZGAQ-02615				.NUT-HEX	1			
240	ZGAQ-01632				.PIN	2			
250	ZGAQ-01633				.PIN-SPR COTTER	2			
260	ZGAQ-02616				.BR LINING KIT	1			
270	ZGAQ-02617				.SEAL KIT	1			
270-1	ZGAQ-01636				..CAP-DUST	1			
270-2	ZGAQ-01637				..U-RING	1			
270-3	ZGAQ-02618				..U-RING	1			
270-4	ZGAQ-02619				..O-RING	1			
300	ZGAQ-02620				DISC-BRAKE	1			
310	ZGAQ-02624				FLANGE	1			
316	ZGAQ-01515				SHEET-SCREEN	1	- #1425		

Item	Part_No	IS	Ord	T	Description	Qty	Serial_No	ITC	Remark
316	ZGAQ-02855				SHEET-SCREEN	1	#1426 -	D	
340	ZGAQ-02621				SCREW-HEX	6			
350	ZGAQ-00251				WASHER	6			
360	ZGAQ-02622				CAP SCREW	4			
370	ZGAQ-02623				BR ANCHOR PLATE	1			
380-1	ZGAQ-00230				PLUG-SCREW	1			
380-2	ZGAQ-00231				O-RING	1			

FRONT DIFFERENTIAL CARRIER 1(#1275-, ZF)

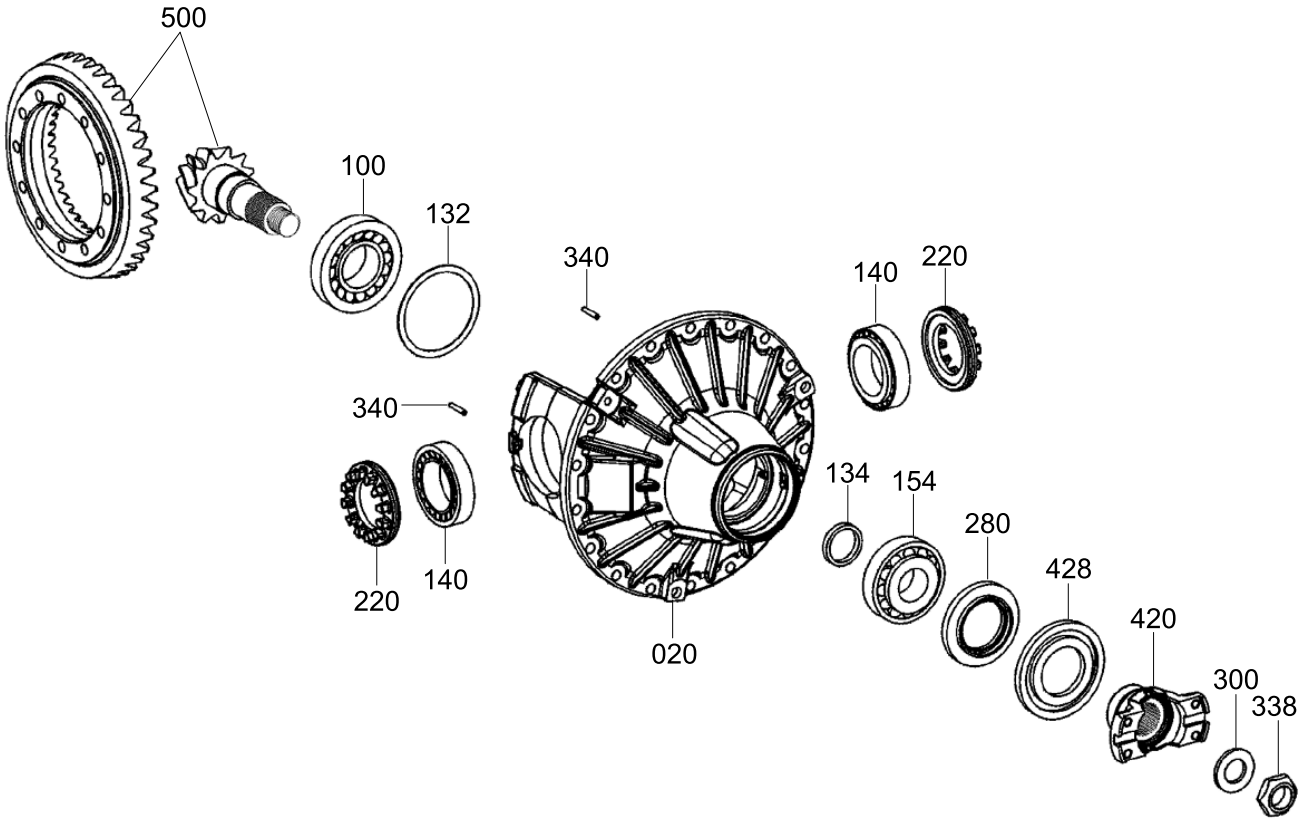

Item	Part_No	IS	Ord	T	Description	Qty	Serial_No	ITC	Remark
*	ZGAQ-02408				DIFF CARRIER	1	#1275 -	D	
020	ZGAQ-02416				.AXLE DR HOUSING	1			
100	ZGAQ-02417				.TAPER ROLL BEARING	1			
	ZGAQ-02419				.WASHER(0.7)	1			
	ZGAQ-02420				.WASHER(0.8)	1			
	ZGAQ-02421				.WASHER(0.9)	1			
	ZGAQ-02422				.WASHER(1.0)	1			
	ZGAQ-02423				.WASHER(1.1)	1			
132	ZGAQ-02424				.WASHER(1.2)	1			
	ZGAQ-02425				.WASHER(1.3)	1			
	ZGAQ-02426				.WASHER(1.4)	1			
	ZGAQ-02427				.WASHER(1.5)	1			
	ZGAQ-02428				.WASHER(0.2)	1			
	ZGAQ-02429				.WASHER(0.1)	1			
	ZGAQ-02430				.SPACING WASHER(8.8)	1			
	ZGAQ-02431				.SPACING WASHER(8.7)	1			
	ZGAQ-02432				.SPACING WASHER(8.6)	1			
	ZGAQ-02433				.SPACING WASHER(8.5)	1			
	ZGAQ-02434				.SPACING WASHER(8.4)	1			
134	ZGAQ-02435				.SPACING WASHER(8.3)	1			
	ZGAQ-02436				.SPACING WASHER(8.9)	1			
	ZGAQ-02437				.SPACING WASHER(9.1)	1			
	ZGAQ-02438				.SPACING WASHER(9.2)	1			
	ZGAQ-02439				.SPACING WASHER(9.3)	1			
	ZGAQ-02440				.SPACING WASHER(9.4)	1			

Item	Part_No	IS	Ord	T	Description	Qty	Serial_No	ITC	Remark
140	ZGAQ-02441				.ROLLER BEARING	2			
154	ZGAQ-02442				.ROLLER BEARING	1			
220	ZGAQ-02443				.NUT-ADJUSTING	2			
280	ZGAQ-02444				.SEAL-SHAFT	1			
300	ZGAQ-02445				.WASHER	1			
338	ZGAQ-02446				.NUT-HEX	1			
340	ZGAQ-01149				.PIN-SLOT	2			
420	ZGAQ-02447				.FLANGE-INPUT	1			
428	ZGAQ-02448				.PROTECTION-DUST	1			
500	ZGAQ-02449				.BEVEL GEAR SET	1			
550	@				.LIMITED SLIP DIFF	1			NOT

FRONT DIFFERENTIAL CARRIER 2(#1275-, ZF)

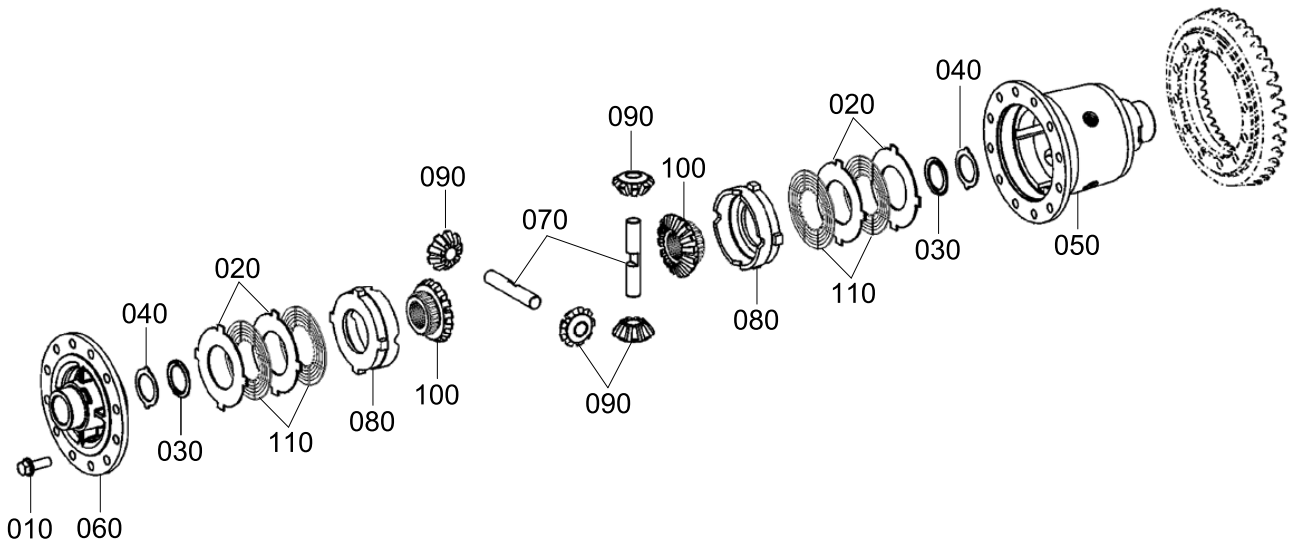

Item	Part_No	IS	Ord	T	Description	Qty	Serial_No	ITC	Remark
*	ZGAQ-02450				.LIMITED SLIP DIFF	1	#1275 -	D	SEE 6320
010	ZGAQ-02451				..SCREW-LOCKING	12			
020	ZGAQ-02452				..O/CLUTCH DISC(2.9)	4			
	ZGAQ-02453				..O/CLUTCH DISC(3.0)	4			
	ZGAQ-02454				..O/CLUTCH DISC(3.1)	4			
030	ZGAQ-02455				..WASHER-THRUST	2			
040	ZGAQ-02456				..SHIM-END	2			
050	ZGAQ-02457				..HOUSING-DIFF	1			
060	ZGAQ-02458				..COVER-HOUSING	1			
070	ZGAQ-02459				..AXLE-DIFF	2			
080	ZGAQ-02460				..RING-PRESSURE	2			
090	ZGAQ-02461				..PINION-BEVEL	4			
100	ZGAQ-02462				..BEVEL GEAR-AXLE	2			
110	ZGAQ-02463				..CLUTCH DISC-INNER	4			

FRONT AXLE CASING 1(#1275-, ZF)

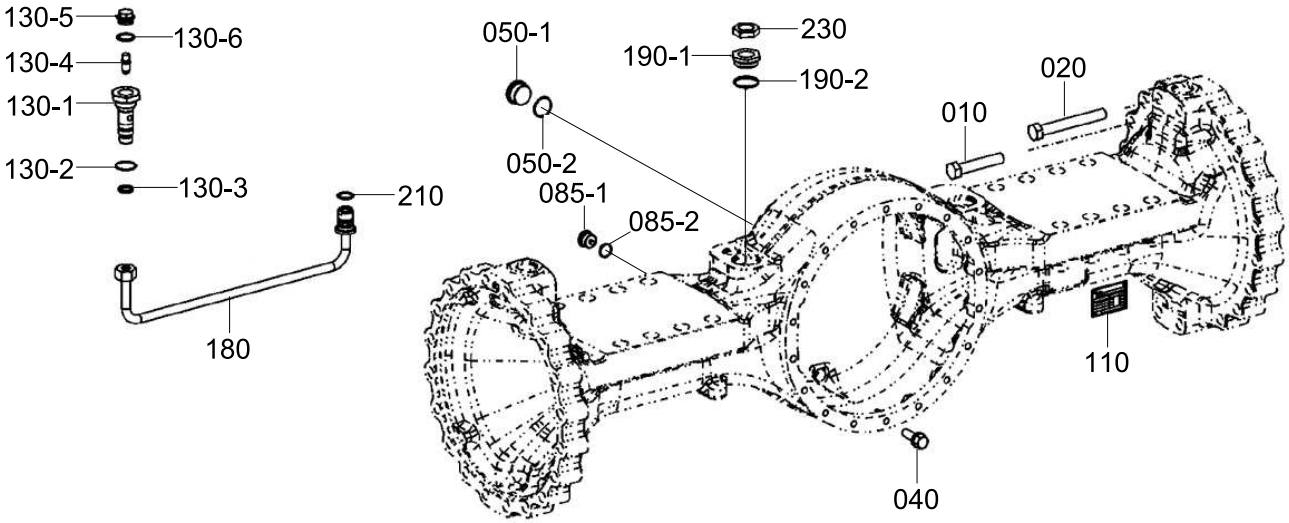

Item	Part_No	IS	Ord	T	Description	Qty	Serial_No	ITC	Remark
*	ZGAQ-02409				AXLE CASING	1	#1275 -	D	
010	ZGAQ-02464				.SCREW-HEX	32			
020	ZGAQ-02465				.SCREW-HEX	8			
040	ZGAQ-01355				.SCREW-LOCKING	18			
050-1	ZGAQ-02191				.PLUG	2			
050-2	ZGAQ-02192				.O-RING	2			
085-1	ZGAQ-02467				.PLUG-SCREW	3			
085-2	ZGAQ-00085				.O-RING	3			
110	ZGAQ-00788				.PLATE-TYPE	1			
130-1	ZGAQ-02468				.CONN PART	2			
130-2	ZGAQ-02469				.O-RING	2			
130-3	ZGAQ-02470				.RING-PISTON	2			
130-4	ZGAQ-02200				.VALVE-VENT	2			
130-5	ZGAQ-00265				.PLUG-SCREW	2			
130-6	ZGAQ-02471				.RING-SEALING	2			
180	ZGAQ-02472				.BRAKE TUBE	2			
190-1	ZGAQ-02473				.SCREW-UNION	2			
190-2	ZGAQ-00082				.O-RING	2			
210	ZGAQ-02391				.O-RING	2			
230	ZGAQ-02474				.NUT-HEX	2			

FRONT AXLE CASING 2(#1275-, ZF)

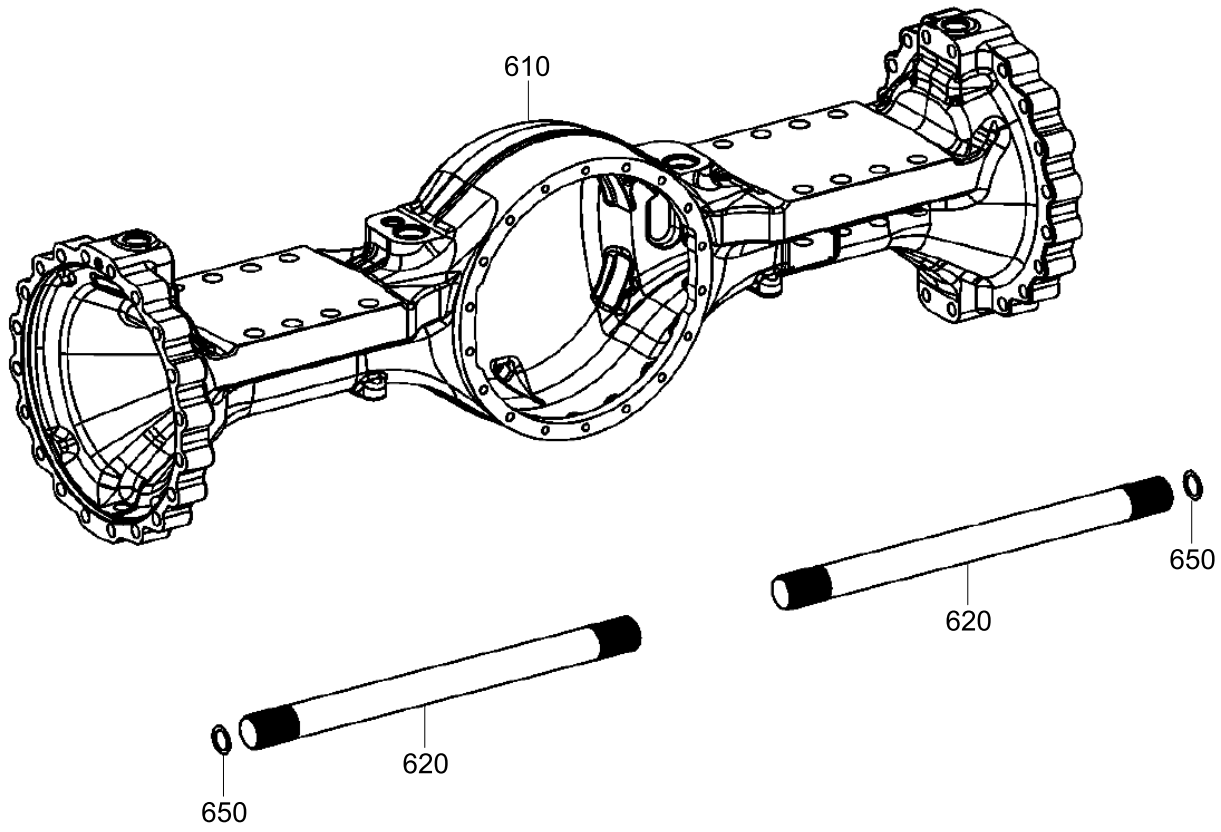

Item	Part_No	IS	Ord	T	Description	Qty	Serial_No	ITC	Remark
*	ZGAQ-02410				AXLE CASING	1	#1275 -	D	
610	ZGAQ-02475				AXLE CASING	1			
620	ZGAQ-02476				STUB SHAFT	2			
650	ZGAQ-02477				SHIM(0.60)	2			
	ZGAQ-02478				SHIM(1.00)	2			
	ZGAQ-02479				SHIM(1.60)	2			
	ZGAQ-02480				SHIM(2.00)	2			
	ZGAQ-02481				SHIM(2.50)	2			

FRONT BRAKE BLEEDER(#1275-, ZF)

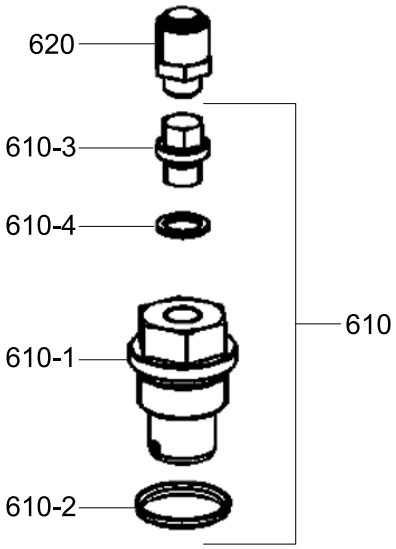

Item	Part_No	IS	Ord	T	Description	Qty	Serial_No	ITC	Remark
*	ZGAQ-02411				AXLE BRAKE BLEEDER	1	#1275 -	D	
610	ZGAQ-02482				.PLUG-SCREW	1			
610-1	ZGAQ-00092				.PLUG-SCREW	1			
610-2	ZGAQ-00085				.O-RING	1			
610-3	ZGAQ-01614				.PLUG-SCREW	1			
610-4	ZGAQ-01615				.RING-SEALING	1			
620	ZGAQ-00093				.VALVE-VENT	1			

FRONT OUTPUT GROUP(#1275-, ZF)

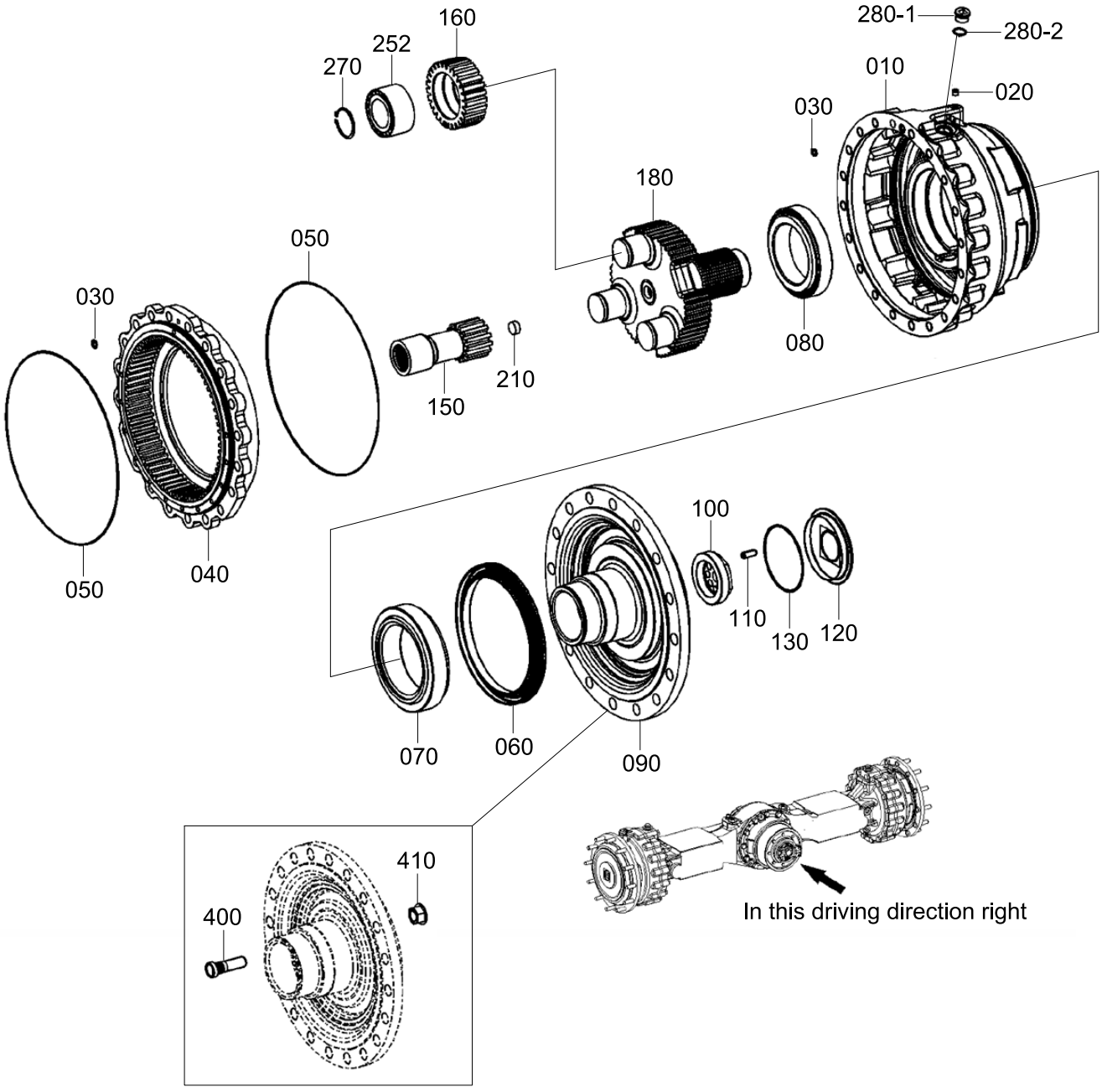

Item	Part_No	IS	Ord	T	Description	Qty	Serial_No	ITC	Remark
*	ZGAQ-02412				OUTPUT GROUP	1	#1275 -	D	
010	ZGAQ-02483				.HOUSING-BRAKE	1			
020	ZGAQ-00725				.PLUG	1			
030	ZGAQ-01538				.O-RING	2			
040	ZGAQ-02484				.GEAR-RING	1			
050	ZGAQ-02485				.O-RING	2			
060	ZGAQ-02486				.SEAL RING-MULTI	1			
070	ZGAQ-02487				.TAPER ROLLER BEARING	1			
080	ZGAQ-02488				.TAPER ROLLER BEARING	1			
090	ZGAQ-02489				.OUTPUT SHAFT	1			
100	ZGAQ-02490				.NUT-ADJUTING	1			
110	ZGAQ-02491				.PIN-SLOTTED	1			
120	ZGAQ-02492				.COVER	1			
130	ZGAQ-00597				.O-RING	1			
150	ZGAQ-02493				.SHAFT-SUN GEAR	1			
160	ZGAQ-02495				.GEAR-PLANET	3			
180	ZGAQ-02497				.CARRIER-PLANET	1			
210	ZGAQ-02498				.BOLT-STOP	1			
250	ZGAQ-02499				.INNER RING-BEARING	3			
252	ZGAQ-02500				.CY ROLL BEARING	3			
270	ZGAQ-02502				.RETAINING RING	3			
280-1	ZGAQ-02004				.PLUG-SCREW	1			
280-2	ZGAQ-00085				.O-RING	1			
*	ZGAQ-02413				WHEEL BOLT & NUT	1			
400	ZGAQ-02504				.BOLT-WHEEL	12			

Item	Part_No	IS	Ord	T	Description	Qty	Serial_No	ITC	Remark
410	ZGAQ-00161				.NUT-WHEEL	12			

FRONT BRAKE GROUP(#1275-, ZF)

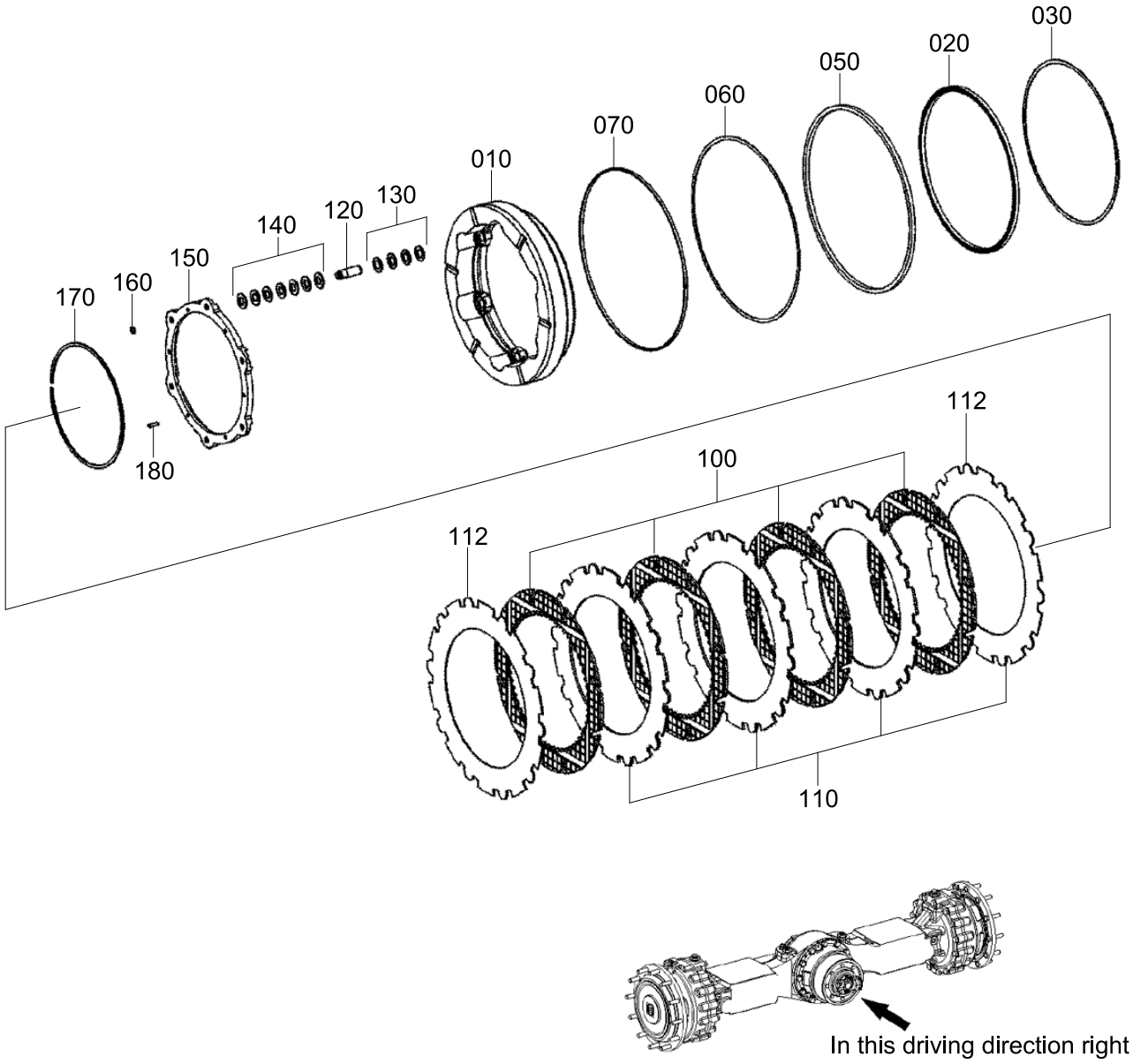

Item	Part_No	IS	Ord	T	Description	Qty	Serial_No	ITC	Remark
*	ZGAQ-02414				BRAKE GROUP	1	#1275 -	D	
010	ZGAQ-02505				.PISTON	1			
020	ZGAQ-02506				.U-RING	1			
030	ZGAQ-02507				.RING-SUPPORT	1			
050	ZGAQ-02508				.U-RING	1			
060	ZGAQ-02509				.RING-SUPPORT	1			
070	ZGAQ-02510				.RING-GUIDE	1			
100	ZGAQ-02511				.CLUTCH DISC-INNER	4			
110	ZGAQ-02512				.CLUTCH DISC-OUTER	3			
112	ZGAQ-02513				.CLUTCH DISC-OUTER	2			
120	ZGAQ-02514				.PIN	6			
130	ZGAQ-02515				.RING-GRIPPING	24			
140	ZGAQ-02516				.SPRING-CUP	42			
150	ZGAQ-02517				.SHIM-SUPPORT	1			
160	ZGAQ-02518				.RING-SNAP	6			
170	ZGAQ-02519				.RING-SNAP	1			
180	ZGAQ-00229				.PIN-SLOT	6			

REAR AXLE HOUSING(#1275-, ZF)

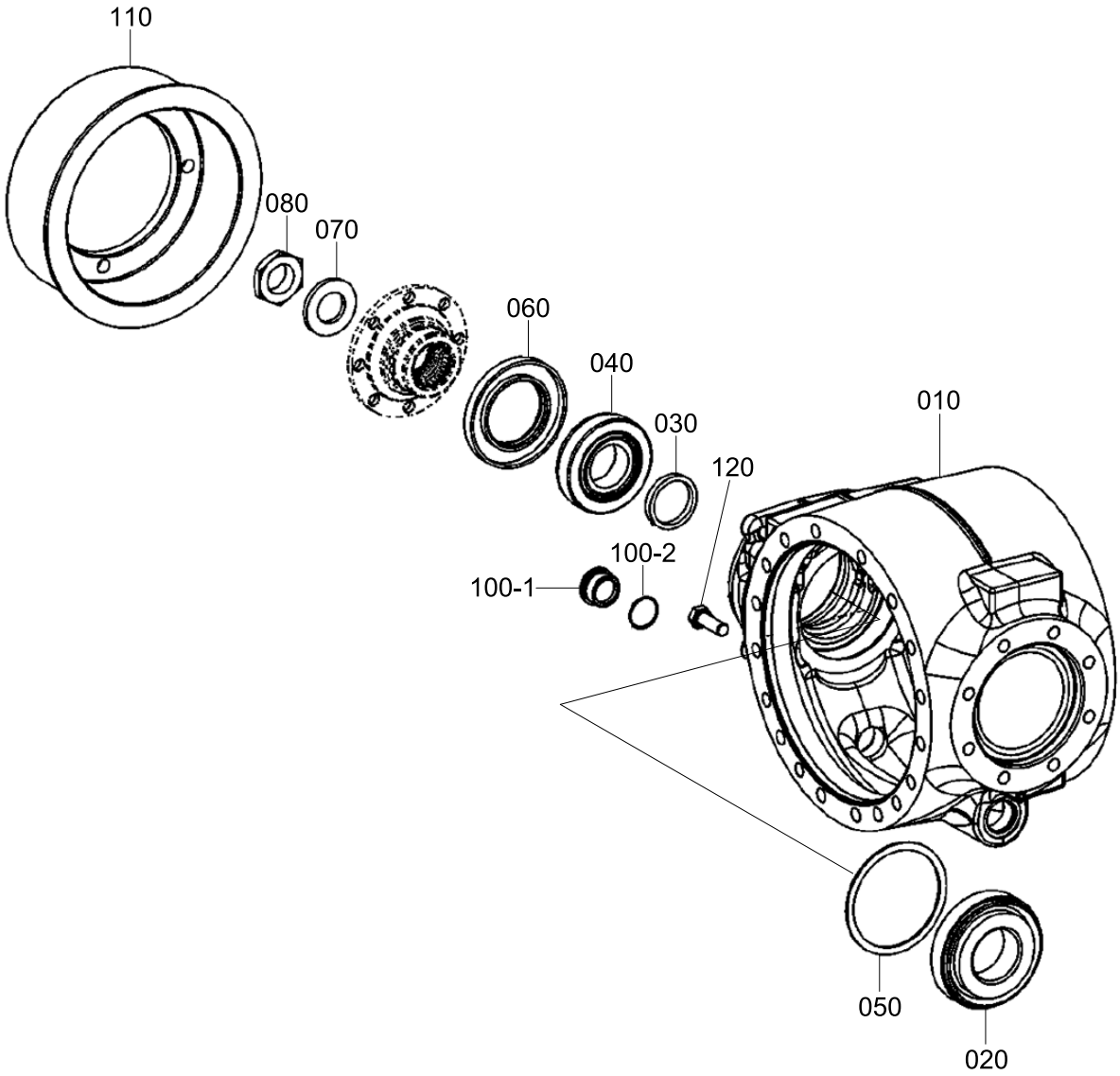

Item	Part_No	IS	Ord	T	Description	Qty	Serial_No	ITC	Remark
*	ZGAQ-02521				AXLE DR HOUSING	1	#1275 -	D	
010	ZGAQ-02529				.AXLE DR HOUSING	1			
020	ZGAQ-02530				.ROLLER BEARING	1			
030	ZGAQ-02430				.SPACING WASHER(8.8)	1			
	ZGAQ-02431				.SPACING WASHER(8.7)	1			
	ZGAQ-02433				.SPACING WASHER(8.5)	1			
	ZGAQ-02435				.SPACING WASHER(8.3)	1			
	ZGAQ-02436				.SPACING WASHER(8.9)	1			
	ZGAQ-02437				.SPACING WASHER(9.1)	1			
	ZGAQ-02438				.SPACING WASHER(9.2)	1			
	ZGAQ-02439				.SPACING WASHER(9.3)	1			
	ZGAQ-02440				.SPACING WASHER(9.4)	1			
040	ZGAQ-02625				.ROLLER BEARING	1			
050	ZGAQ-02531				.WASHER(0.7)	1			
	ZGAQ-02532				.WASHER(0.8)	1			
	ZGAQ-02533				.WASHER(0.9)	1			
	ZGAQ-02534				.WASHER(1.0)	1			
	ZGAQ-02535				.WASHER(1.2)	1			
	ZGAQ-02536				.WASHER(1.3)	1			
	ZGAQ-02537				.WASHER(1.4)	1			
	ZGAQ-02538				.WASHER(1.5)	1			
	ZGAQ-02539				.WASHER(1.6)	1			
	ZGAQ-02540				.WASHER(1.7)	1			
	ZGAQ-02541				.WASHER(1.8)	1			
	0730-002-543				.WASHER(1.9)	1			

Item	Part_No	IS	Ord	T	Description	Qty	Serial_No	ITC	Remark
050	ZGAQ-02543				.WASHER(2.0)	1			
	ZGAQ-02544				.WASHER(1.1)	1			
060	ZGAQ-02444				.SEAL-SHAFT	1			
070	ZGAQ-02445				.WASHER	1			
080	ZGAQ-02446				.NUT-HEX	1			
100-1	ZGAQ-02193				.PLUG-SCREW	2			
100-2	ZGAQ-02192				.O-RING	2			
110	ZGAQ-02545				.BEARING FLANGE	1			
120	ZGAQ-02546				.HEXAGON SCREW	4			

REAR INPUT GROUP(#1275-, ZF)

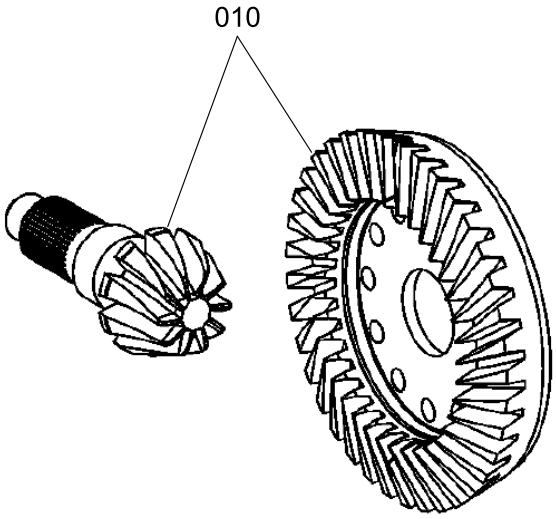

Item	Part_No	IS	Ord	T	Description	Qty	Serial_No	ITC	Remark
010	ZGAQ-02547				BEVEL GEAR SET	1	#1275 -	D	

REAR INPUT FLANGE(#1275-, ZF)

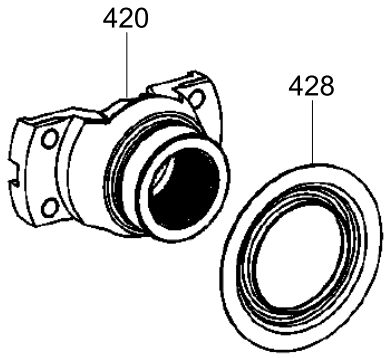

Item	Part_No	IS	Ord	T	Description	Qty	Serial_No	ITC	Remark
*	ZGAQ-02523				INPUT FLANGE	1	#1275 -	D	
420	ZGAQ-02447				.FLANGE-INPUT	1			
428	ZGAQ-02548				.PROTECT SHEET	1			

REAR LIMITED SLIP DIFFERENTIAL(#1327-, ZF)

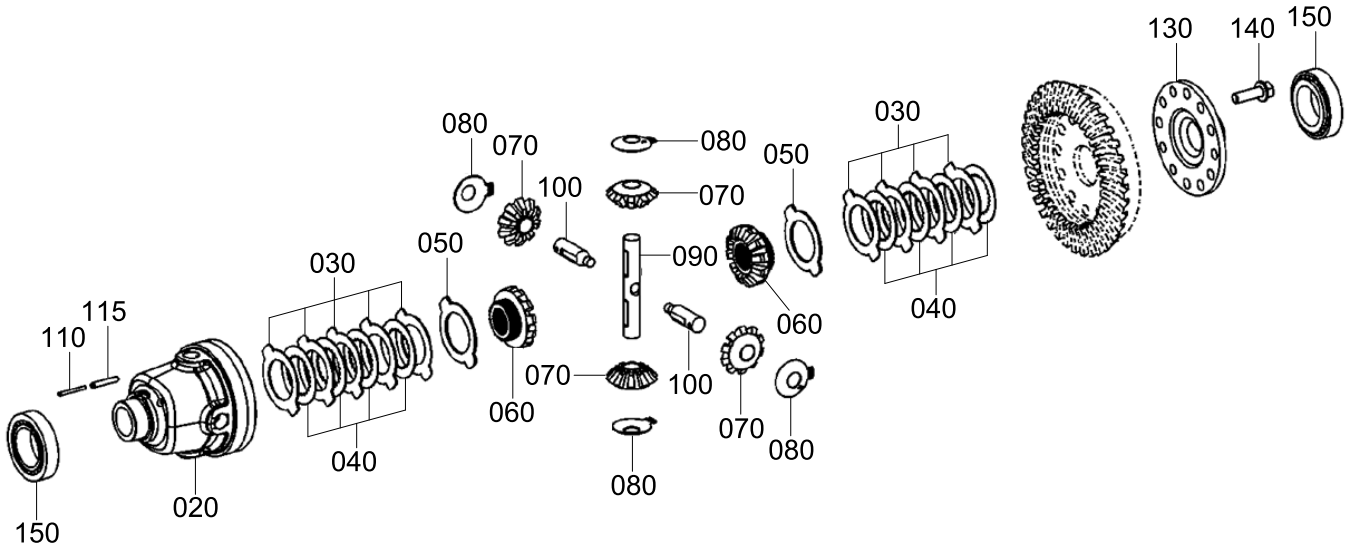

Item	Part_No	IS	Ord	T	Description	Qty	Serial_No	ITC	Remark
*	ZGAQ-02524				LIMITED SLIP DIFFERENTIAL	1	#1275 -	D	
020	ZGAQ-02549				.DIFF CASE	1			
030	ZGAQ-02550				.OUTER CLUTCH DISC	9			
	ZGAQ-02551				.OUTER CLUTCH DISC	9			
	ZGAQ-02552				.OUTER CLUTCH DISC	9			
040	ZGAQ-02553				.INNER CLUTCH DISC	8			
050	ZGAQ-02554				.THRUST WASHER	2			
060	ZGAQ-02555				.AXLE BEVEL GEAR	2			
070	ZGAQ-02556				.DIFF BEVEL GEAR	4			
080	ZGAQ-02557				.THRUST WASHER	4			
090	ZGAQ-02558				.DIFF AXLE	1			
100	ZGAQ-02559				.DIFF AXLE	2			
110	ZGAQ-02560				.SLOT PIN	2			
115	ZGAQ-02561				.SLOT PIN	2			
130	ZGAQ-02562				.HOUSING COVER	1			
140	ZGAQ-02563				.SCREW-LOCKING	12			
150	ZGAQ-02564				.TAPER ROLL BEARING	2			

REAR AXLE CASING(#1275-, ZF)

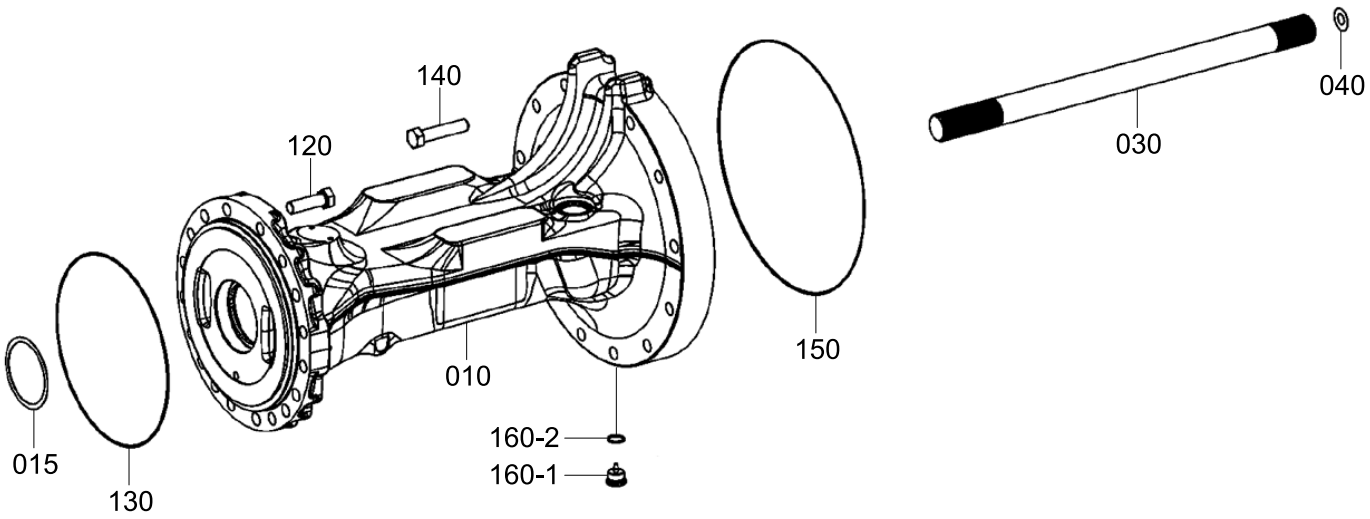

Item	Part_No	IS	Ord	T	Description	Qty	Serial_No	ITC	Remark
*	ZGAQ-02525				AXLE CASING	1	#1275 -	D	
010	ZGAQ-02565				.AXLE CASING	1			
015	ZGAQ-02566				.SHIM(0.8)	1			
	ZGAQ-02567				.SHIM(0.9)	1			
	ZGAQ-02568				.SHIM(1.0)	1			
	ZGAQ-02569				.SHIM(1.1)	1			
	ZGAQ-02570				.SHIM(1.2)	1			
030	ZGAQ-02571				.STUB SHAFT	1			
040	ZGAQ-02572				.WASHER(0.2)	1			
	ZGAQ-02573				.WASHER(0.4)	1			
	ZGAQ-02574				.WASHER(1.0)	1			
	ZGAQ-02575				.WASHER(1.5)	1			
120	ZGAQ-01361				.SCREW-HEX	18			
130	ZGAQ-02576				.O-RING	1			
140	ZGAQ-02577				.HEXAGON SCREW	12			
150	ZGAQ-02485				.O-RING	1			
160-1	ZGAQ-02467				.PLUG-SCREW	1			
160-2	ZGAQ-00085				.O-RING	1			

REAR OUTPUT GROUP(#1275-, ZF)

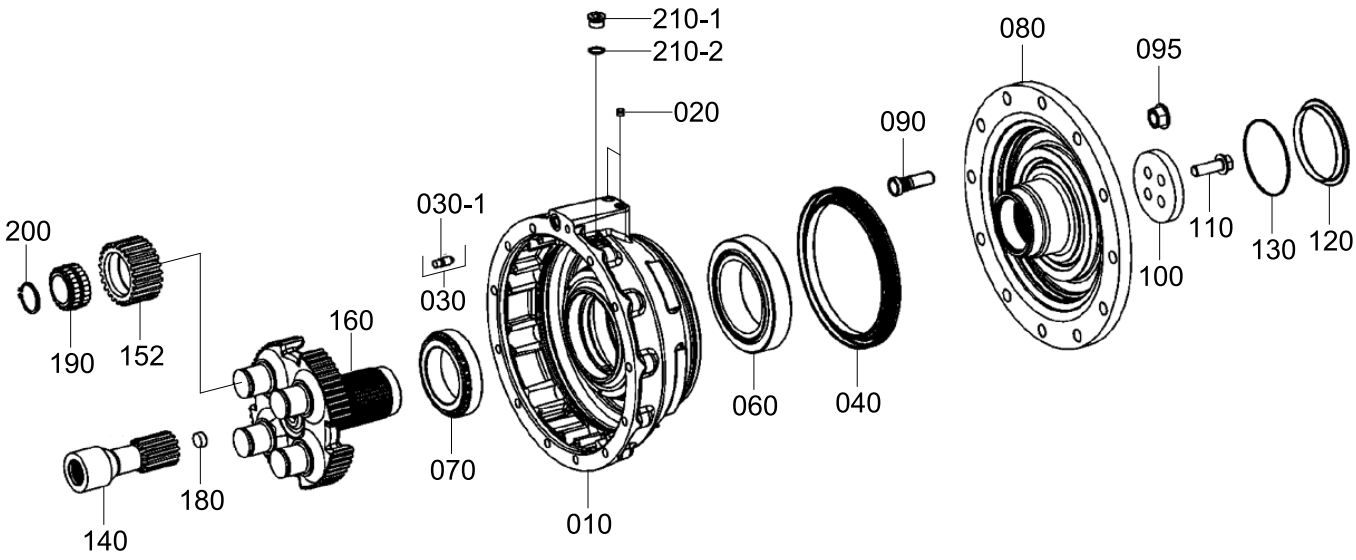

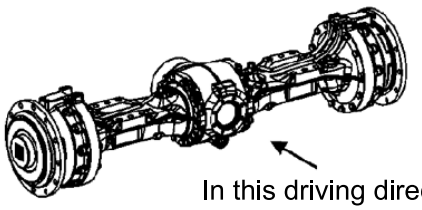

Item	Part_No	IS	Ord	T	Description	Qty	Serial_No	ITC	Remark
*	ZGAQ-02526				OUTPUT GROUP	1	#1275 -	D	
010	ZGAQ-02578				.BRAKE HOUSING	1			
020	ZGAQ-00725				.PLUG	2			
030	ZGAQ-02200				.VALVE-VENT	1			
030-1	ZGAQ-02201				.CAP-DUST	1			
040	ZGAQ-02486				.SEAL RING-MULTI	1			
060	ZGAQ-02579				.TAPER ROLLER BEARING	1			
070	ZGAQ-02580				.TAPER ROLL BEARING	1			
080	ZGAQ-02581				.OUTPUT SHAFT	1			
090	ZGAQ-02504				.BOLT-WHEEL	12			
095	ZGAQ-00161				.NUT-WHEEL	12			
100	ZGAQ-02582				.COVER	1			
110	ZGAQ-02583				.LOCKING SCREW	4			
120	ZGAQ-02584				.COVER	1			
130	ZGAQ-00597				.O-RING	1			
140	ZGAQ-02585				.SUN GEAR SHAFT	1			
152	ZGAQ-02586				.PLANET GEAR	4			
160	ZGAQ-02587				.PLANET CARRIER	1			
180	ZGAQ-02498				.BOLT-STOP	1			
190	ZGAQ-02588				.CY ROLL BEARING	4			
200	ZGAQ-02589				.RETAINING RING	4			
210-1	ZGAQ-02004				.PLUG-SCREW	1			
210-2	ZGAQ-00085				.O-RING	1			

REAR BRAKE GROUP(#1275-, ZF)

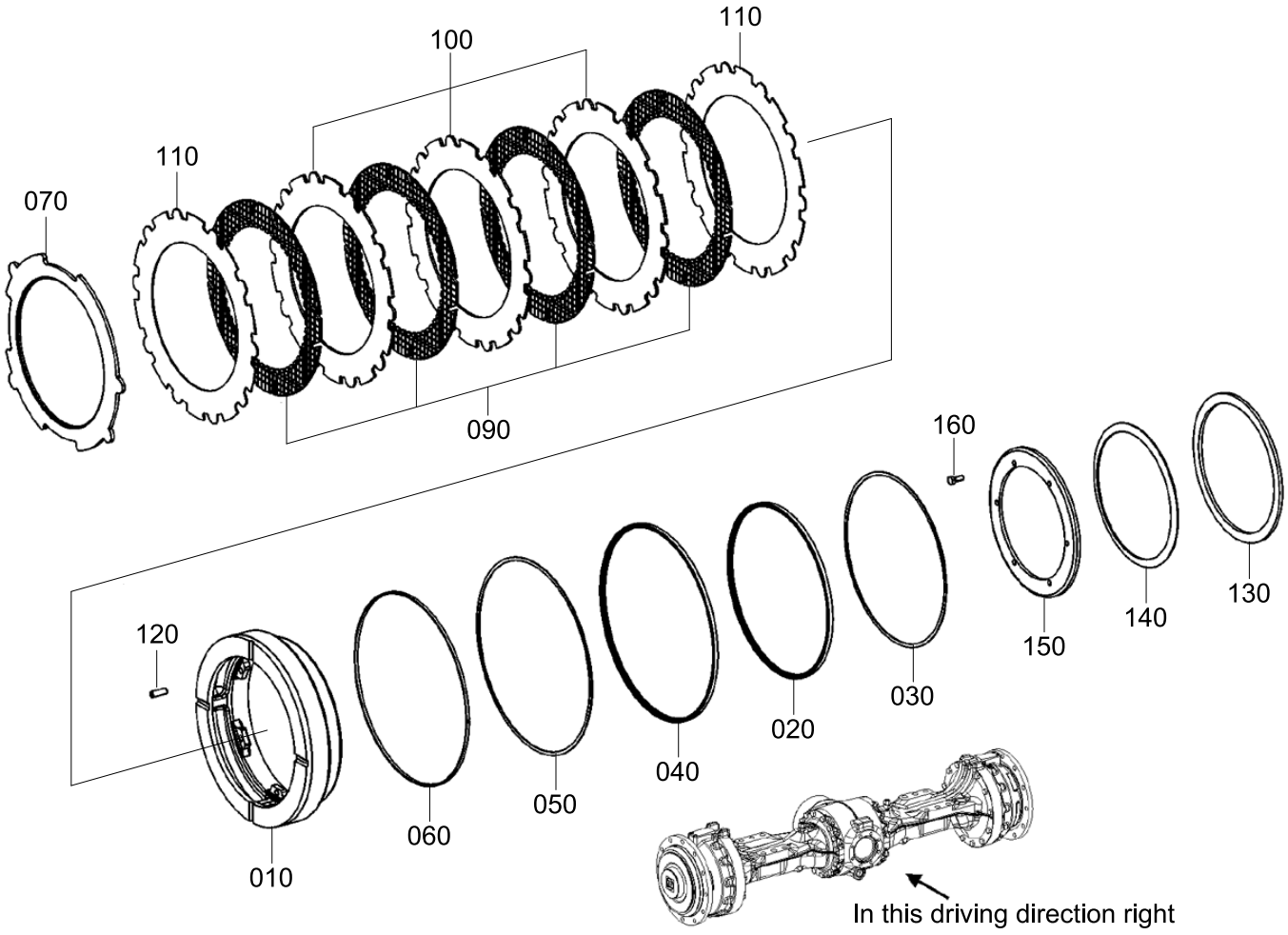

Item	Part_No	IS	Ord	T	Description	Qty	Serial_No	ITC	Remark
*	ZGAQ-02527				BRAKE GROUP	1	#1275 -	D	
010	ZGAQ-02590				.PISTON	1			
020	ZGAQ-02591				.U-RING	1			
030	ZGAQ-02507				.RING-SUPPORT	1			
040	ZGAQ-02592				.U-RING	1			
050	ZGAQ-02509				.RING-SUPPORT	1			
060	ZGAQ-02510				.RING-GUIDE	1			
070	ZGAQ-02593				.END SHIM	1			
090	ZGAQ-02511				.CLUTCH DISC-INNER	4			
100	ZGAQ-02512				.CLUTCH DISC-OUTER	3			
110	ZGAQ-02513				.CLUTCH DISC-OUTER	2			
120	ZGAQ-02594				.SLOT PIN	6			
130	ZGAQ-02595				.WASHER	1			
140	ZGAQ-02596				.CUP SPRING	1			
150	ZGAQ-02597				.COVER	1			
160	ZGAQ-02598				.HEXAGON SCREW	6			

Item	Part_No	IS	Ord	T	Description	Qty	Serial_No	ITC	Remark
*	ZGAQ-02528				AXLE PARTS	1	#1275 -	D	
020	ZGAQ-01614				.PLUG-SCREW	2			
026	ZGAQ-01615				.RING-SEALING	2			
027-1	ZGAQ-00963				.SCREW IN SLEEVE	2			
027-2	ZGAQ-00964				.O-RING	2			
030	ZGAQ-02599				.BRAKE TUBE	2			
034	ZGAQ-02600				.CAP SCREW	4			
040	ZGAQ-00788				.PLATE-TYPE	1			
070	ZGAQ-02601				.OIL DIPSTICK	1			
080	ZGAQ-01212				.O-RING	1			
090-1	ZGAQ-00081				.PLUG-SCREW	1			
090-2	ZGAQ-01212				.O-RING	1			
100-1	ZGAQ-02193				.PLUG-SCREW	2			
100-2	ZGAQ-02192				.O-RING	2			

WHEEL NUT & VENT VALVE(#1275-, ZF)

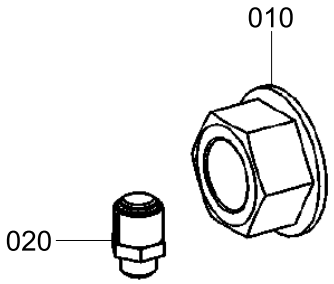

Item	Part_No	IS	Ord	T	Description	Qty	Serial_No	ITC	Remark
*	ZGAQ-02415				LOOSE PARTS	1	#1275 -	D	
010	ZGAQ-00161				.NUT-WHEEL	24			
020	ZGAQ-00093				.VALVE-VENT	1			

BELL CRANK & LINK

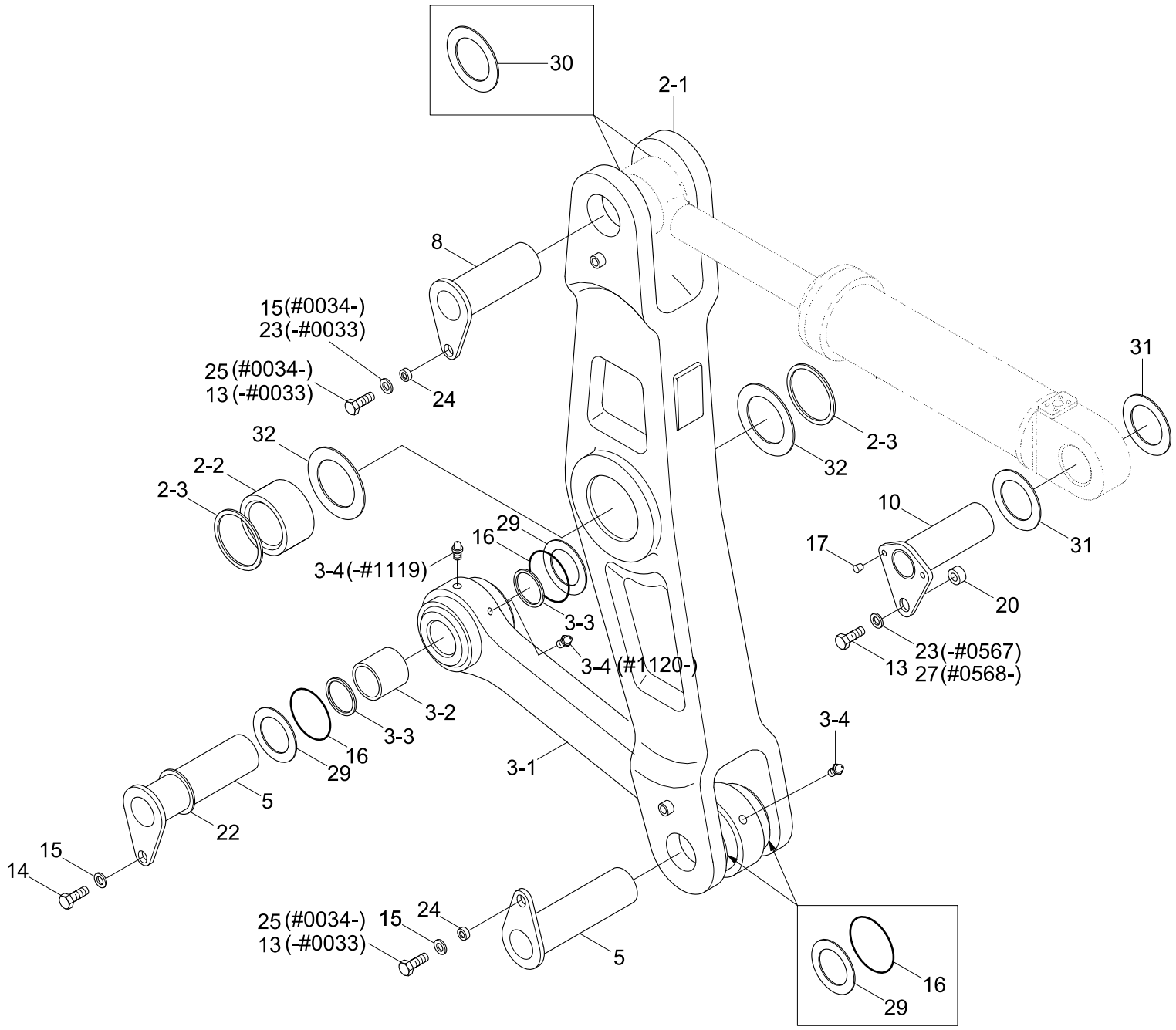

Item	Part_No	IS	Ord	T	Description	Qty	Serial_No	ITC	Remark
2	61LD-10141				BELL CRANK ASSY	1			
N2-1	61LD-10151				.BELL CRANK	1			NOT
2-2	61LD-10120				.BUSHING	1			
2-3	S700-110309				.SEAL-DUST, DKIY TYPE	2			
3	61LD-10160				LINK ASSY	1	- #1119		
	61LD-10161				LINK ASSY	1	#1120 -	B	
N3-1	61LD-10170				.LINK WA	1	- #1119		NOT
	61LD-10171				.LINK WA	1	#1120 -	B	NOT
3-2	X112-802087				.BUSHING	2			
3-3	S700-080206				.DUST SEAL-DKIY TYPE	4			
3-4	E8841022				.NIPPLE-GREASE	2			
5	61N8-05320				PIN WA	2	- #1121		
	61LB-15320				PIN WA	2	#1122 - #1210	B	
	61LB-15360				PIN WA	2	#1211 -	D	
8	61N8-06040				PIN WA	1	- #1121		
	61LB-16040				PIN WA	1	#1122 -	B	
10	61LD-10270				PIN WA	1	- #0017		
	61N8-07170				PIN WA	1	#0018 - #1121	D	
	61LB-17170				PIN WA	1	#1122 -	B	
13	S017-200302				BOLT-HEX	2	- #0033		
					BOLT-HEX	1	#0034 - #1119	A	
	S017-20040D				BOLT-HEX	1	#1120 -	B	
14	S017-160252				BOLT-HEX	2	- #0033		
	S017-16025D				BOLT-HEX	1	#0034 -	A	
15	64L3-01120				WASHER-HARDENED	2	- #0033		

Item	Part_No	IS	Ord	T	Description	Qty	Serial_No	ITC	Remark
15	64L3-01120-DA				WASHER-HARDENED	3	#0034 -	A	
16	E161-3050	10			O-RING	4			
17	S981-182000				PLUG	2			
20	61LB-10270				SPACER(Ø21)	1			
22	61N8-00160				SPACER-PIN	2	- #1439		
					SPACER-PIN	1	#1440 - #1566	A	
	61LM-10220				SPACER-PIN	1	#1567 -	B	
23	61N8-00320				WASHER-HARDENED	2	- #0033	A	
					WASHER-HARDENED	1	#0034 - #0567	-	
24	61L8-30380				BOSS	2	#0034 - #1119	-	
	61L8-30381				BOSS	2	#1120 -	B	
25	S017-16045D				BOLT-HEX	2	#0034 -	-	
27	91E6-60200D				WASHER-HARDENED(DACRO)	1	#0568 -	B	
29	S391-080120				SHIM-ROUND(1.0T)	4	#1122 -	-	
30	S391-090160				SHIM-ROUND(1.0T)	2	#1122 -	-	
31	S391-095160				SHIM-ROUND(1.0T)	2	#1122 -	-	
32	S391-110220				SHIM-ROUND(1.0T)	2	#1122 -	-	

BOOM

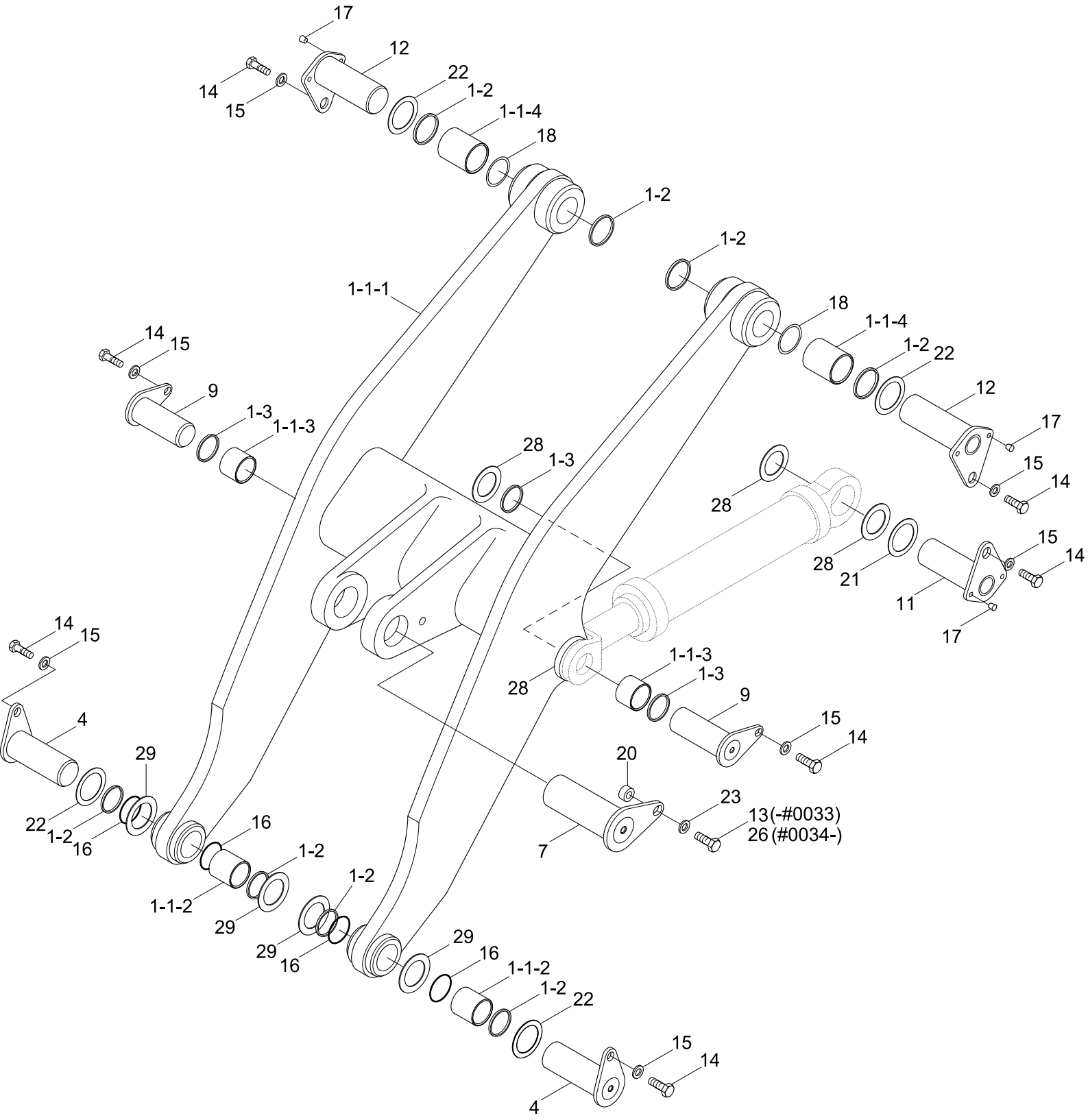
17
12
14
15
22
1-2
1-1-4
18
1-2
1-2
1-1-1
18
1-1-4
14
15
1-2
22
12
9
1-3
1-1-3
17
28
1-3
15
14
28
15
14
28
21
11
17
14
15
1-1-3
28
1-3
9
15
14
4
29
20
23
13(-#0033)
26(#0034-)
22
1-2
16
7
16
1-2
1-1-2
1-2
29
29
16
29
16
1-1-2
1-2
22
15
14
4

Item	Part_No	IS	Ord	T	Description	Qty	Serial_No	ITC	Remark
1	61LD-10011				BOOM ASSY	1			HL757-7
	61LD-12010				BOOM	1			HL757XTD-7
	61LD-10310				BOOM	1	#0056 -	-	HL757-7
	61LD-12310				BOOM ASSY(EXTRA PIP)	1	#0056 -	-	HL757XTD-7
	61LD-10410				BOOM ASSY(Q/COUPLER)	1	#1625 -	-	VOLVO, XTD
1-1	61LD-10031				.BOOM WA	1			HL757-7
	61LD-12030				.BOOM WA	1			HL757XTD-7
	61LD-10330				.BOOM WA(EXTRA PIP)	1	#0056 -	-	HL757-7
	61LD-12330				.BOOM WA(EXTRA PIP)	1	#0056 -	-	HL757XTD-7
	61LD-10340				.BOOM SUB ASSY	1	#1625 -	-	VOLVO, XTD
1-1-2	61LD-10090				..BUSHING	2			
1-1-3	61LD-10100				..BUSHING	2			
1-1-4	61LD-10110				..BUSHING	2			
1-2	S700-080206				.DUST SEAL-DKIY TYPE	8			
1-3	S700-075205				.DUST SEAL-DKIY TYPE	4			
4	61N8-05310				PIN WA	2	- #1121		
	61LB-15310				PIN WA	2	#1122 - #1210	B	
	61LB-15350				PIN WA	2	#1211 -	D	
7	61N8-06170				PIN WA	1	- #1121		
	61LB-16170				PIN WA	1	#1122 -	B	
9	61N8-05160				PIN WA	2	- #1121		
	61LB-15160				PIN WA	2	#1122 -	B	
11	61N8-07010				PIN WA	2	- #0563		
	61N8-07510				PIN WA	2	#0564 - #1121	D	
	61LB-17510				PIN WA	2	#1122 -	B	

Item	Part_No	IS	Ord	T	Description	Qty	Serial_No	ITC	Remark
12	61N8-07060				PIN WA	2	- #1121		
	61LB-17060				PIN WA	2	#1122 -	B	
13	S017-200302				BOLT-HEX	1	- #0033	-	
14	S017-16025D				BOLT-HEX	8			
15	64L3-01120				WASHER-HARDENED	8			
16	E161-3050	10			O-RING	4			
17	S981-182000				PLUG	8			
18	S391-080160				SHIM-ROUND(1.0T)	4			
20	61LB-10270				SPACER(Ø21)	1	#0034 -	-	
21	61N8-00150				SPACER-PIN	2	- #1566		
	61LM-10210				SPACER-PIN	2	#1567 -	B	
22	61N8-00160				SPACER-PIN	4	- #1566		
	61LM-10220				SPACER-PIN	4	#1567 -	B	
23	61N8-00320				WASHER-HARDENED	1			
26	S017-20050D				BOLT-HEX	1	#0034 -	B	
28	S391-075135				SHIM-ROUND(1.0T)	8	#1122 -	-	
29	S391-080120				SHIM-ROUND(1.0T)	4	#1122 -	-	

BUCKET(2.7m^3, CUTTING EDGE)

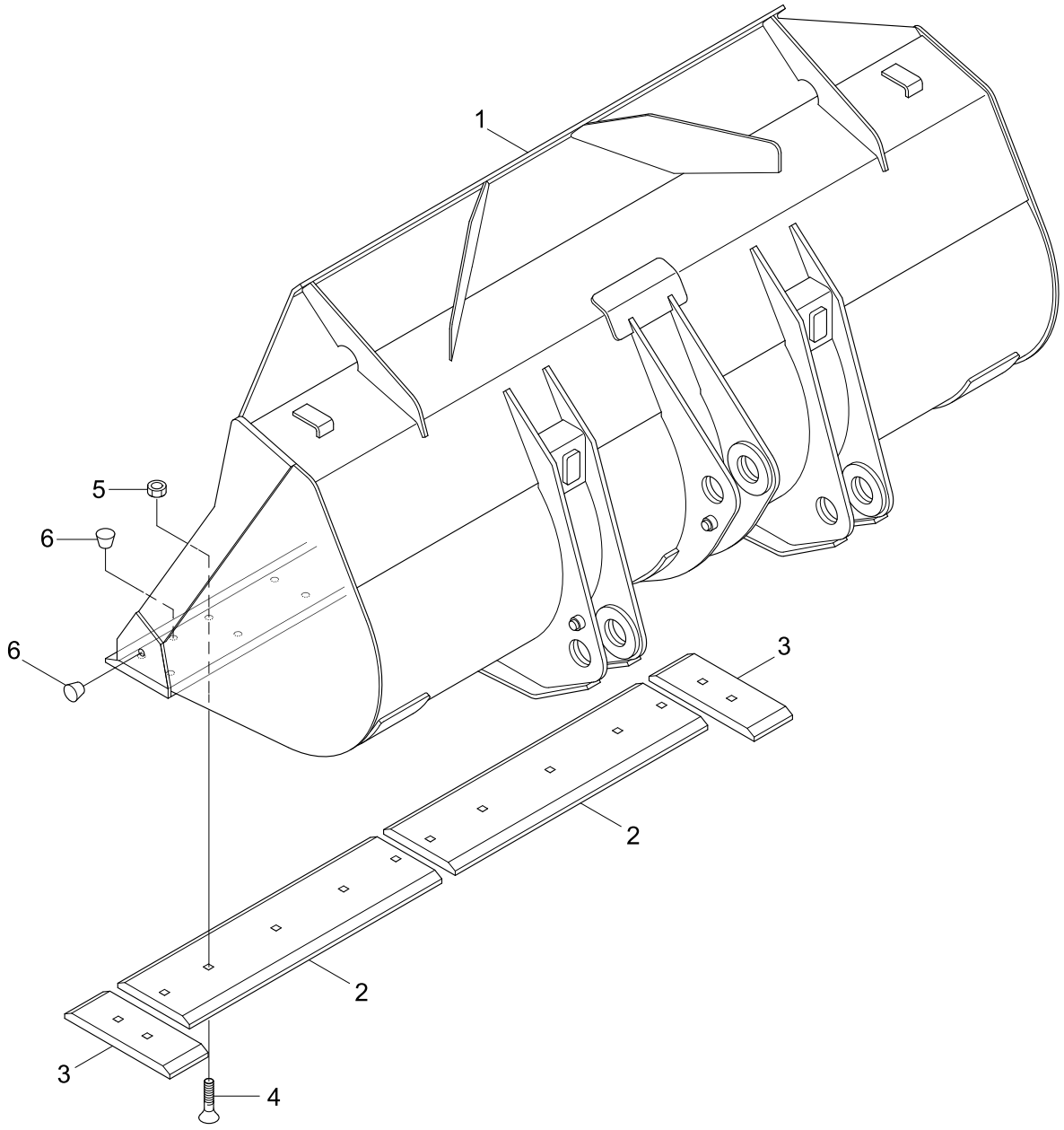

Description	Parts no	Included item
Cutting edge kit	61LD-00910	2~5
Cutting edge kit	61LD-00910BG	2~5

Item	Part_No	IS	Ord	T	Description	Qty	Serial_No	ITC	Remark
*	61LD-00011				BUCKET ASSY	1	- #1210		
	61LD-00011BG				BUCKET ASSY	1	#1211 -	D	
1	61LD-00031				.BUCKET WA	1	- #1210		
	61LD-00031BG				.BUCKET WA	1	#1211 -	D	
K2	61LD-00360				.CUTTING EDGE-CENTER	2	- #1210		
	61LD-00360BG				.CUTTING EDGE-CENTER	2	#1211 -	D	
K3	61LD-00370				.CUTTING EDGE-SIDE	2	- #1210		
	61LD-00370BG				.CUTTING EDGE-SIDE	2	#1211 -	D	
K4	61L3-0198				.BOLT-TOOTH	14			
K5	S206-20100B				.NUT-HEX	14			
6	S981-242500				.PLUG	8	- #0079	-	
K	61LD-00910				CUTTING EDGE KIT	1	- #1210	-	SEE ILLUST
	61LD-00910BG				CUTTING EDGE KIT	1	#1211 -	D	SEE ILLUST

BUCKET(2.6m^3, TOOTH)

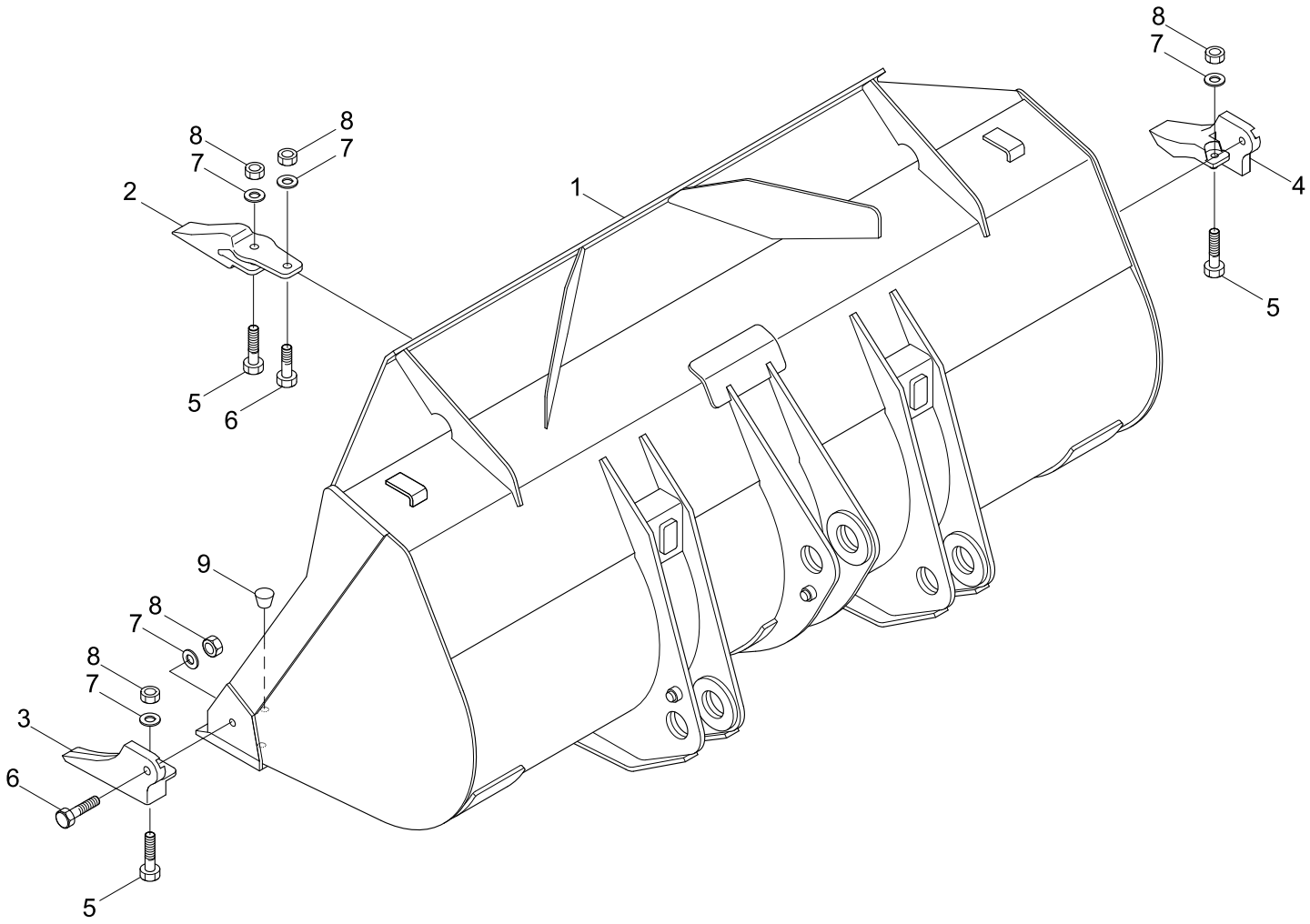

Description	Parts no	Included item
Tooth kit	61LD-00950	2~8
Tooth kit	61LD-00950BG	2~8

Item	Part_No	IS	Ord	T	Description	Qty	Serial_No	ITC	Remark
*	61LD-00021				BUCKET ASSY	1	- #1210		
	61LD-00021BG				BUCKET ASSY	1	#1211 -	D	
1	61LD-00031				.BUCKET WA	1	- #1210		
	61LD-00031BG				.BUCKET WA	1	#1211 -	D	
K2	61L3-0169				.TOOTH-CENTER	6	- #1210		
	61L3-0169BG				.TOOTH-CENTER	6	#1211 -	D	
K3	61L3-0170				.TOOTH-LH	1	- #1210		
	61L3-0170BG				.TOOTH-LH	1	#1211 -	D	
K4	61L3-0171				.TOOTH-RH	1	- #1210		
	61L3-0171BG				.TOOTH-RH	1	#1211 -	D	
K5	S018-20075D				.BOLT-HEX	8			
K6	S018-20065D				.BOLT-HEX	8			
K7	S441-200006				.WASHER-HARDENED	16			
K8	S206-20100B				.NUT-HEX	16			
9	S981-242500				.PLUG	6	- #0079	-	
K	61LD-00950				TOOTH KIT(1-PIECE)	1	- #1210	-	SEE ILLUST
	61LD-00950BG				TOOTH KIT(1-PIECE)	1	#1211 -	D	SEE ILLUST

BUCKET(2.7M^3, 1TOOTH & SEGMENT, #0969-)

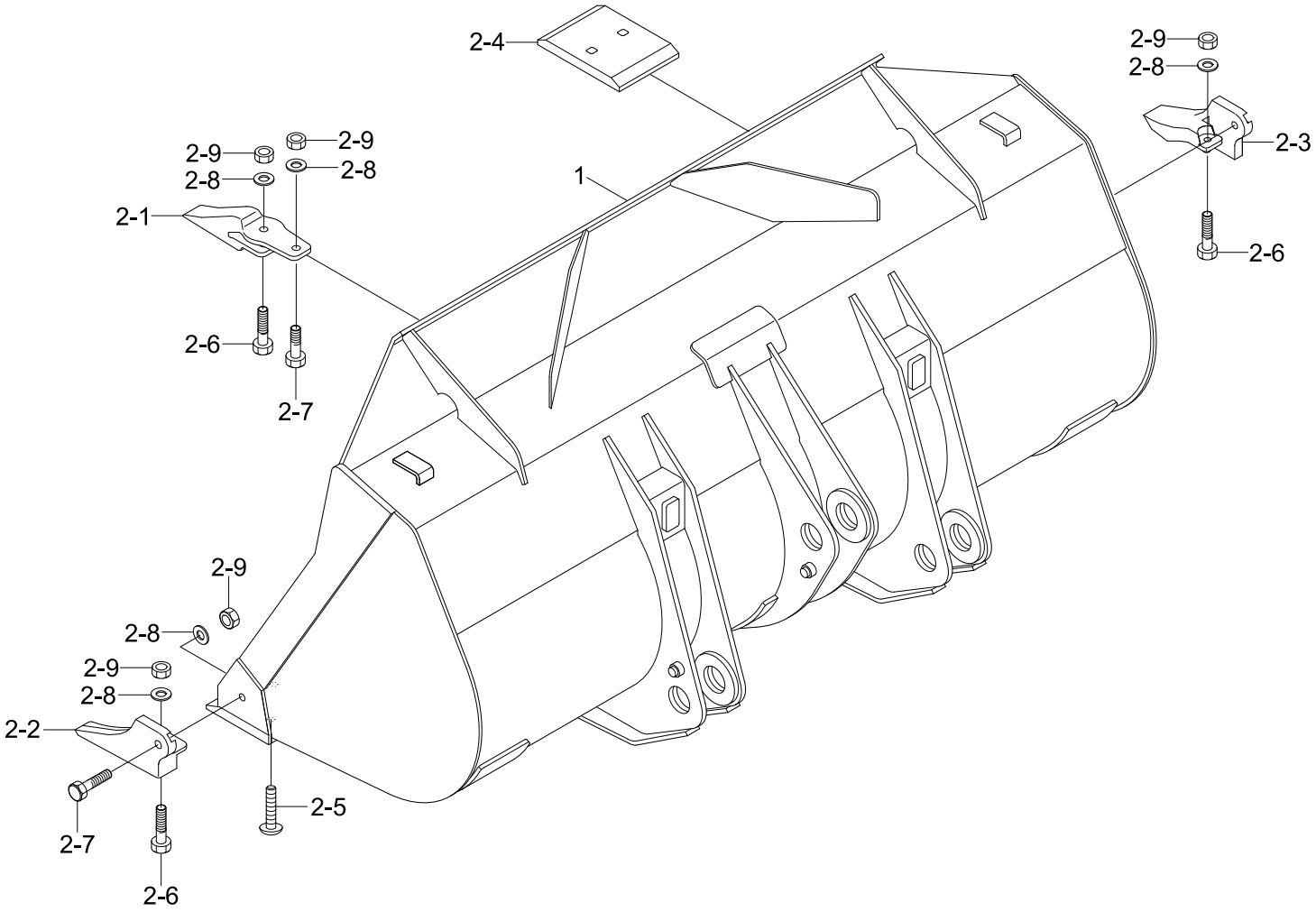

Item	Part_No	IS	Ord	T	Description	Qty	Serial_No	ITC	Remark
*	61LD-06200				BUCKET ASSY	1	#0969 -	-	
1	61LD-06220				.BUCKET WA	1			
2	61LD-00930				.TOOTH & SEGMENT KIT	1			
2-1	61L3-0169BG				..TOOTH-CENTER	6			
2-2	61L3-0170BG				..TOOTH-LH	1			
2-3	61L3-0171BG				..TOOTH-RH	1			
2-4	61LD-06240				..SEGMENT	7			
2-5	61L3-0198				..BOLT-TOOTH	14			
2-6	S018-20075D				..BOLT-HEX	8			
2-7	S018-20065D				..BOLT-HEX	8			
2-8	S441-200006				..WASHER-HARDENED	16			
2-9	S206-20100B				..NUT-HEX	30			

BUCKET(2.7M^3, 2TOOTH & SEGMENT, #0969-)

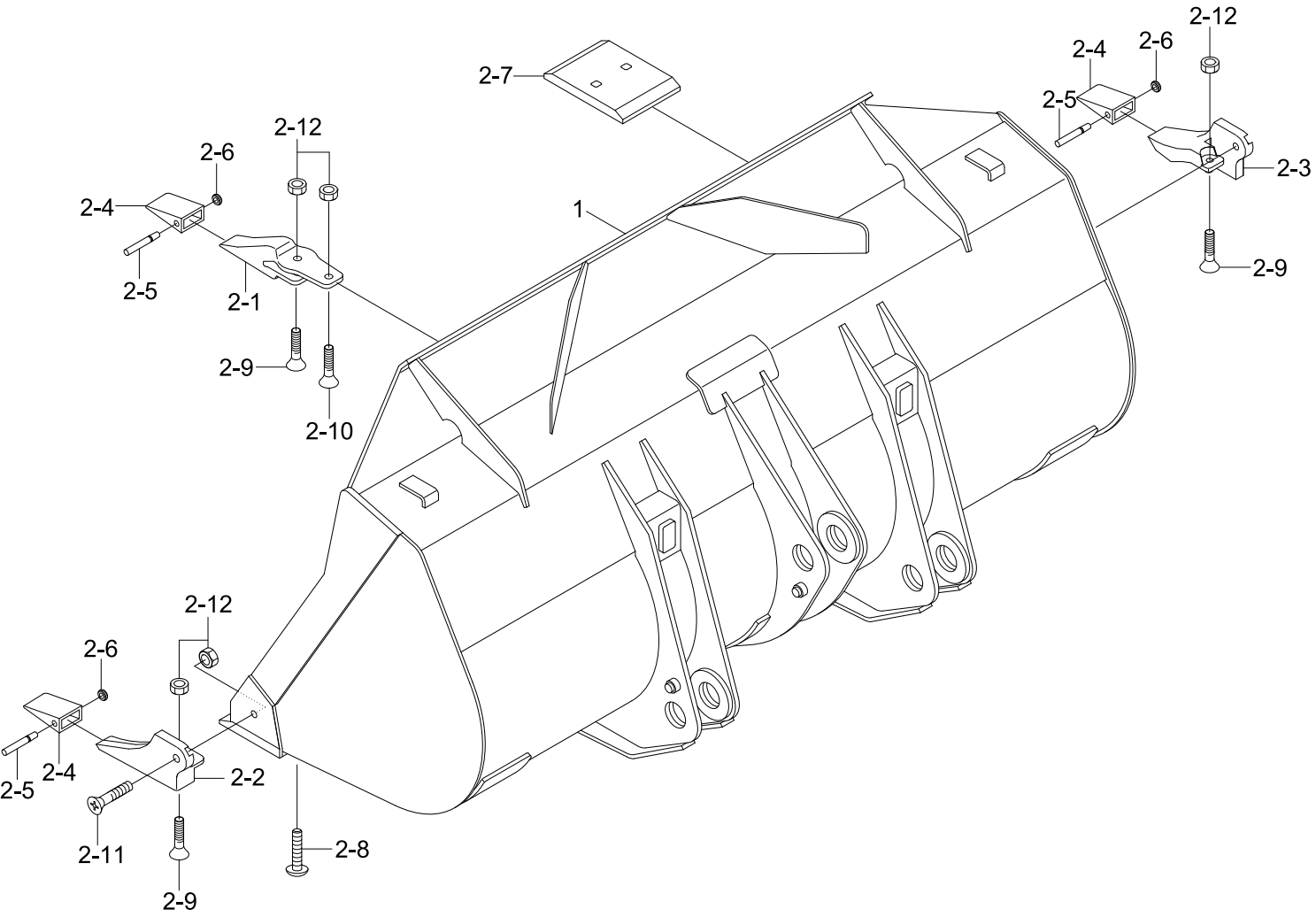

Item	Part_No	IS	Ord	T	Description	Qty	Serial_No	ITC	Remark
*	61LD-06210				BUCKET ASSY	1	#0969 -	-	
1	61LD-06220				.BUCKET WA	1			
2	61LD-00940				.TOOTH & SEGMENT KIT	1			
2-1	64L3-01260BG				..ADAPTER-TOOTH,CENTER	6			
2-2	64L3-01270BG				..ADAPTER-TOOTH,LH	1			
2-3	64L3-01280BG				..ADAPTER-TOOTH,RH	1			
2-4	64L3-01290BG				..POINT-TOOTH	8			
2-5	64L3-01300				..PIN-TOOTH	8			
2-6	64L3-01310				..WASHER-LOCK	8			
2-7	61LD-06240				..SEGMENT	7			
2-8	61L3-0198				..BOLT-TOOTH	14			
2-9	64L3-01320				..BOLT-TOOTH	8			
2-10	64L3-01330				..BOLT-TOOTH	6			
2-11	64L3-01340				..BOLT-TOOTH	2			
2-12	S206-20100B				..NUT-HEX	30			

BUCKET(2.6m^3, 2-PIECE TOOTH)

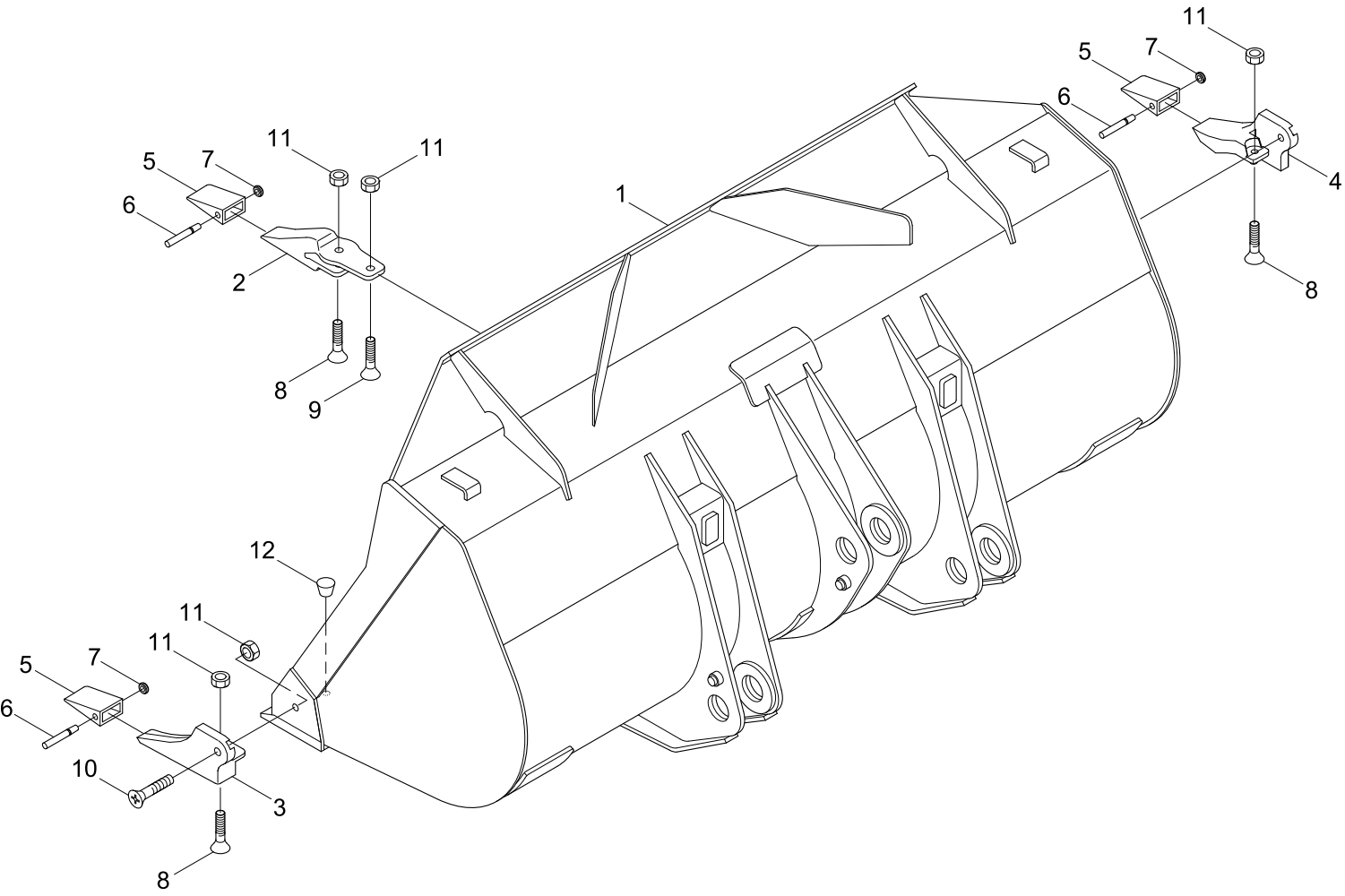

Description	Parts no	Included item
Tooth kit	61LD-00960	2~11
Tooth kit	61LD-00960BG	2~11

Item	Part_No	IS	Ord	T	Description	Qty	Serial_No	ITC	Remark
*	61LD-00390				BUCKET ASSY	1	- #1210		
	61LD-00390BG				BUCKET ASSY	1	#1211 -	D	
1	61LD-00031				.BUCKET WA	1	- #1210		
	61LD-00031BG				.BUCKET WA	1	#1211 -	D	
K2	64L3-01260				.ADAPTER-TOOTH,CENTER	6	- #1210		
	64L3-01260BG				.ADAPTER-TOOTH,CENTER	6	#1211 -	D	
K3	64L3-01270				.ADAPTER-TOOTH,LH	1	- #1210		
	64L3-01270BG				.ADAPTER-TOOTH,LH	1	#1211 -	D	
K4	64L3-01280				.ADAPTER-TOOTH,RH	1	- #1210		
	64L3-01280BG				.ADAPTER-TOOTH,RH	1	#1211 -	D	
K5	64L3-01290				.POINT-TOOTH	8	- #1210		
	64L3-01290BG				.POINT-TOOTH	8	#1211 -	D	
K6	64L3-01300				.PIN-TOOTH	8			
K7	64L3-01310				.WASHER-LOCK	8			
K8	64L3-01320				.BOLT-TOOTH	8			
K9	64L3-01330				.BOLT-TOOTH	6			
K10	64L3-01340				.BOLT-TOOTH	2			
K11	S206-20100B				.NUT-HEX	16			
12	S981-242500				.PLUG	6	- #0079	-	
K	61LD-00960				TOOTH KIT(2-PIECE)	1	- #1210	-	SEE ILLUST
	61LD-00960BG				TOOTH KIT(2-PIECE)	1	#1211 -	D	SEE ILLUST

BUCKET(2.6m^3, CUTTING EDGE, #0161-)

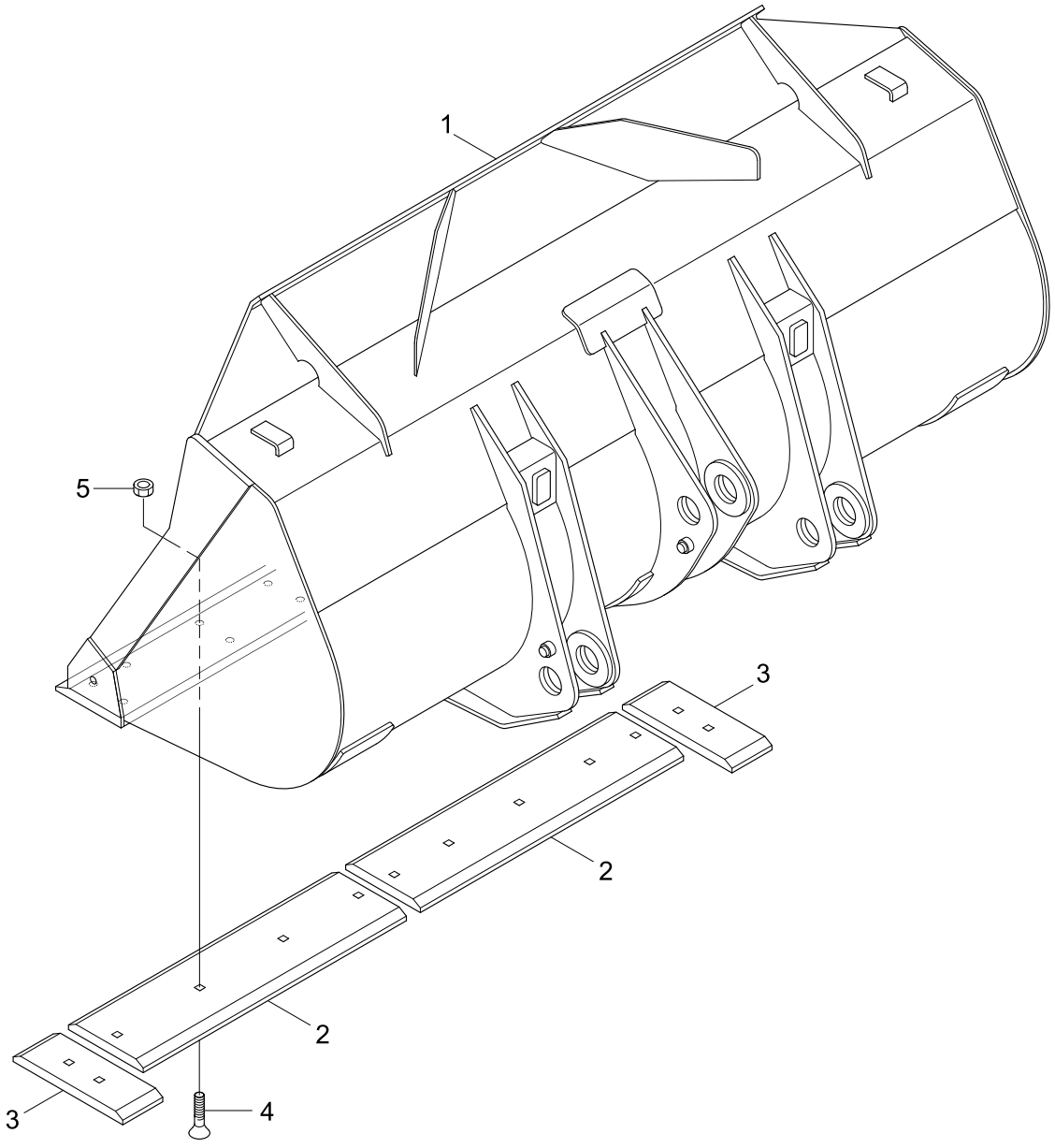

Description	Parts no	Included item
Cutting edge kit	61LD-00920	2~5
Cutting edge kit	61LD-00920BG	2~5

Item	Part_No	IS	Ord	T	Description	Qty	Serial_No	ITC	Remark
*	61LD-04000				BUCKET ASSY	1	#0161 - #1210	-	
	61LD-04000BG				BUCKET ASSY	1	#1211 -	D	
1	61LD-04010				.BUCKET WA	1	- #1210		
	61LD-04010BG				.BUCKET WA	1	#1211 -	D	
K2	61LD-04050				.CUTTING EDGE-CENTER	2			
K3	61LD-00370				.CUTTING EDGE-SIDE	2			
K4	61L3-0198				.BOLT-TOOTH	12			
K5	S206-20100B				.NUT-HEX	12			
K	61LD-00920				CUTTING EDGE KIT	1	- #1210	-	SEE ILLUST
	61LD-00920BG				CUTTING EDGE KIT	1	#1211 -	D	SEE ILLUST

BUCKET(2.9m^3, CUTTING EDGE, #0211-)

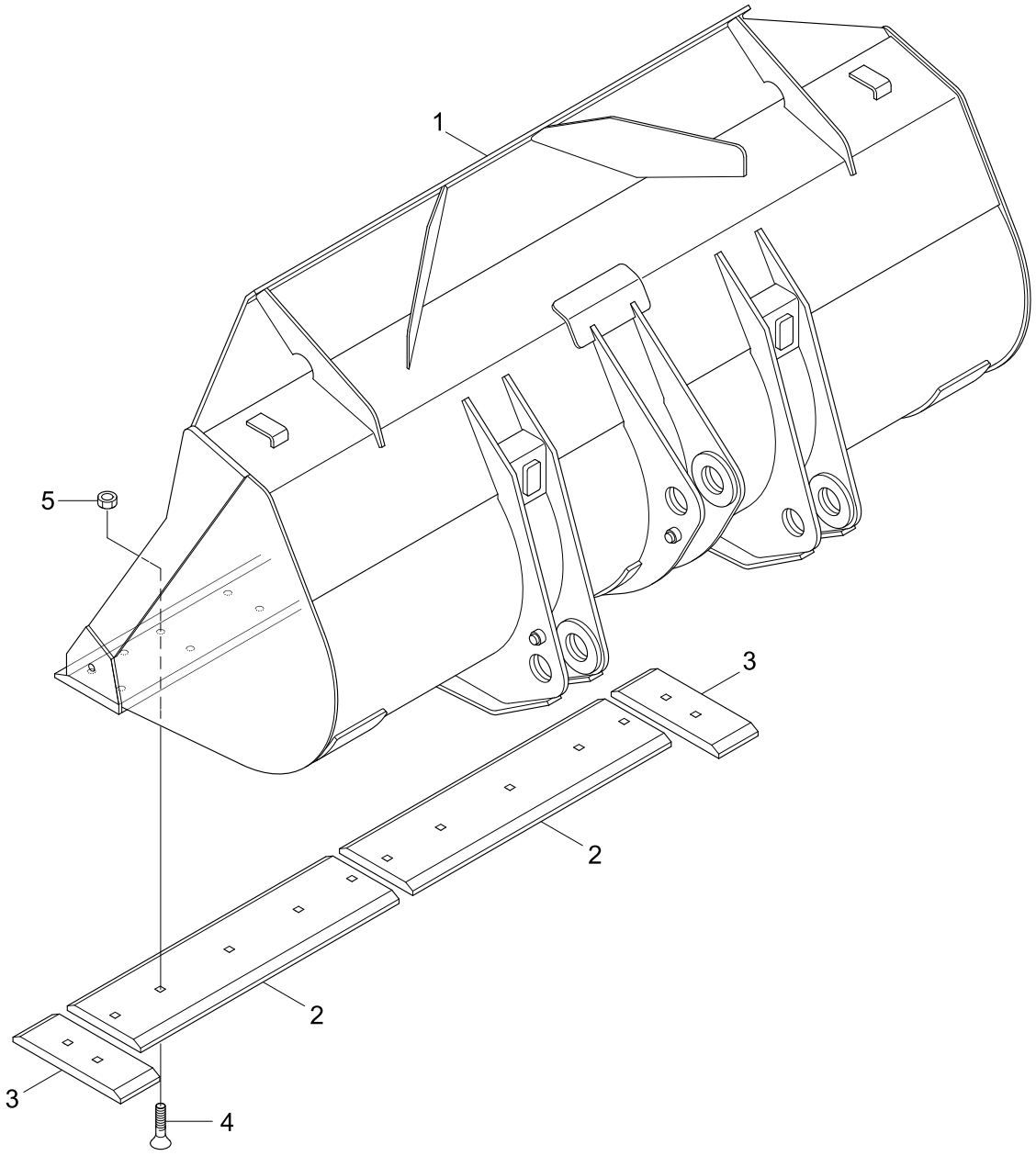

Description	Parts no	Included item
Cutting edge kit	61LD-00910	2~5
Cutting edge kit	61LD-00910BG	2~5

Item	Part_No	IS	Ord	T	Description	Qty	Serial_No	ITC	Remark
*	61LD-02000				BUCKET ASSY	1	#0211 - #1210	-	
	61LD-02000BG				BUCKET ASSY	1	#1211 -	D	
1	61LD-02010				.BUCKET WA	1	- #1210		
	61LD-02010BG				.BUCKET WA	1	#1211 -	D	
K2	61LD-00360				.CUTTING EDGE-CENTER	2			
K3	61LD-00370				.CUTTING EDGE-SIDE	2			
K4	61L3-0198				.BOLT-TOOTH	14			
K5	S206-20100B				.NUT-HEX	14			
K	61LD-00910				CUTTING EDGE KIT	1	- #1210	-	SEE ILLUST
	61LD-00910BG				CUTTING EDGE KIT	1	#1211 -	D	SEE ILLUST

BUCKET(2.8m^3, TOOTH, #0211-)

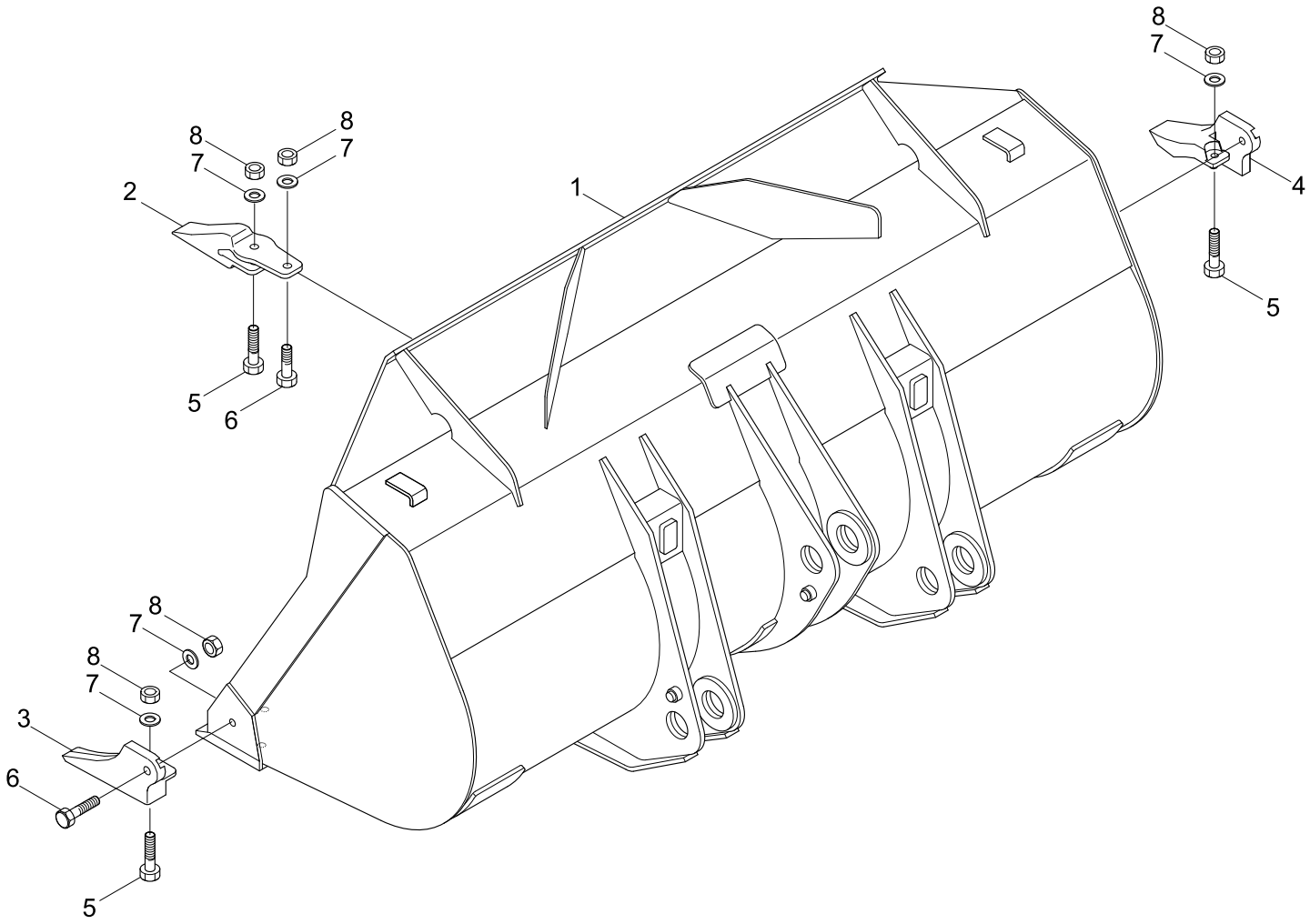

Description	Parts no	Included item
Tooth kit	61LD-00950	2~8
Tooth kit	61LD-00950BG	2~8

Item	Part_No	IS	Ord	T	Description	Qty	Serial_No	ITC	Remark
*	61LD-02500				BUCKET ASSY	1	- #1210	-	
	61LD-02500BG				BUCKET ASSY	1	#1211 -	D	
1	61LD-02010				.BUCKET WA	1	- #1210		
	61LD-02010BG				.BUCKET WA	1	#1211 -	D	
K2	61L3-0169				.TOOTH-CENTER	6	- #1210		
	61L3-0169BG				.TOOTH-CENTER	6	#1211 -	D	
K3	61L3-0170				.TOOTH-LH	1	- #1210		
	61L3-0170BG				.TOOTH-LH	1	#1211 -	D	
K4	61L3-0171				.TOOTH-RH	1	- #1210		
	61L3-0171BG				.TOOTH-RH	1	#1211 -	D	
K5	S018-20075D				.BOLT-HEX	8			
K6	S018-20065D				.BOLT-HEX	8			
K7	S441-200006				.WASHER-HARDENED	16			
K8	S206-20100B				.NUT-HEX	16			
K	61LD-00950				TOOTH KIT(1-PIECE)	1	- #1210	-	SEE ILLUST
	61LD-00950BG				TOOTH KIT(1-PIECE)	1	#1211 -	D	SEE ILLUST

BUCKET(2.8m^3, 2-PIECE TOOTH, #0211-)

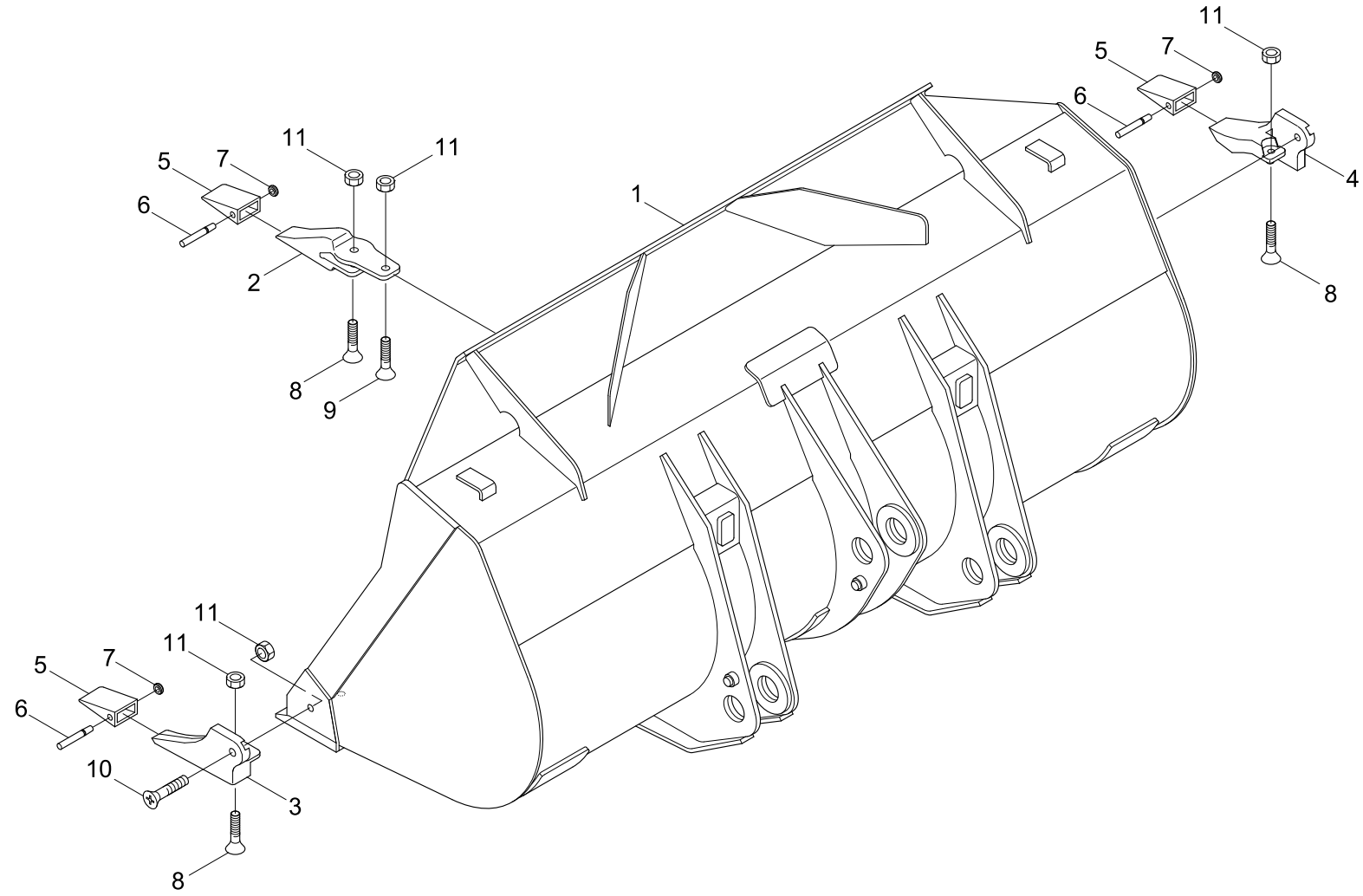

Description	Parts no	Included item
Tooth kit	61LD-00960	2~11
Tooth kit	61LD-00960BG	2~11

Item	Part_No	IS	Ord	T	Description	Qty	Serial_No	ITC	Remark
*	61LD-02700				BUCKET ASSY	1	- #1210	-	
	61LD-02700BG				BUCKET ASSY	1	#1211 -	D	
1	61LD-02010				.BUCKET WA	1	- #1210		
	61LD-02010BG				.BUCKET WA	1	#1211 -	D	
K2	64L3-01260				.ADAPTER-TOOTH,CENTER	6	- #1210		
	64L3-01260BG				.ADAPTER-TOOTH,CENTER	6	#1211 -	D	
K3	64L3-01270				.ADAPTER-TOOTH,LH	1	- #1210		
	64L3-01270BG				.ADAPTER-TOOTH,LH	1	#1211 -	D	
K4	64L3-01280				.ADAPTER-TOOTH,RH	1	- #1210		
	64L3-01280BG				.ADAPTER-TOOTH,RH	1	#1211 -	D	
K5	64L3-01290				.POINT-TOOTH	8	- #1210		
	64L3-01290BG				.POINT-TOOTH	8	#1211 -	D	
K6	64L3-01300				.PIN-TOOTH	8			
K7	64L3-01310				.WASHER-LOCK	8			
K8	64L3-01320				.BOLT-TOOTH	8			
K9	64L3-01330				.BOLT-TOOTH	6			
K10	64L3-01340				.BOLT-TOOTH	2			
K11	S206-20100B				.NUT-HEX	16			
K	61LD-00960				TOOTH KIT(2-PIECE)	1	- #1210	-	SEE ILLUST
	61LD-00960BG				TOOTH KIT(2-PIECE)	1	#1211 -	D	SEE ILLUST

BUCKET(2.1m^3, CUTTING EDGE, #0452-)

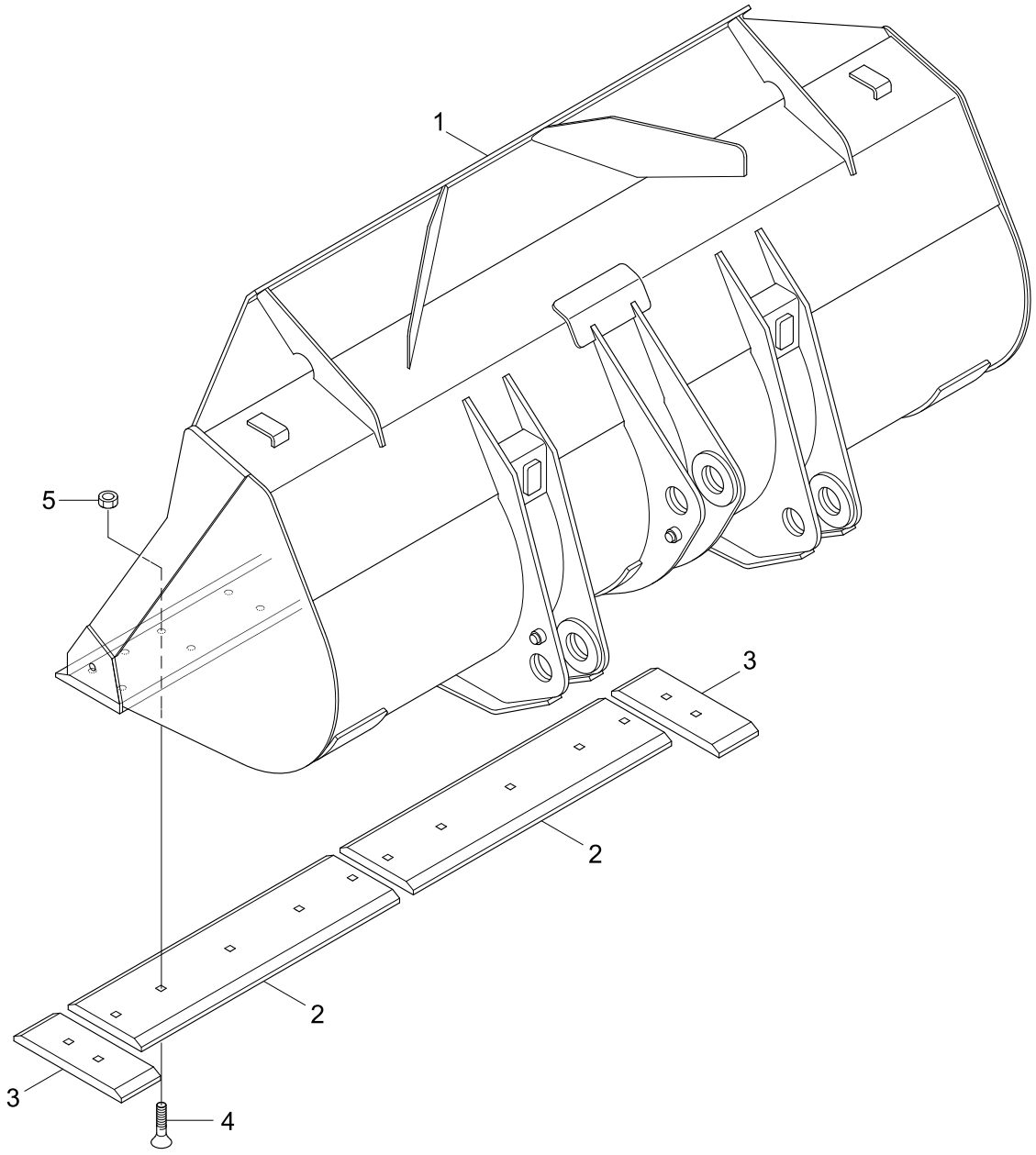

Description	Parts no	Included item
Cutting edge kit	61LD-00910	2~5
Cutting edge kit	61LD-00910BG	2~5

Item	Part_No	IS	Ord	T	Description	Qty	Serial_No	ITC	Remark
*	61LD-01010				BUCKET ASSY	1	- #1210		
	61LD-01010BG				BUCKET ASSY	1	#1211 -	D	
1	61LD-01020				.BUCKET WA	1	- #1210		
	61LD-01020BG				.BUCKET WA	1	#1211 -	D	
K2	61LD-00360				.CUTTING EDGE-CENTER	2	- #1210		
	61LD-00360BG				.CUTTING EDGE-CENTER	2	#1211 -	D	
K3	61LD-00370				.CUTTING EDGE-SIDE	2	- #1210		
	61LD-00370BG				.CUTTING EDGE-SIDE	2	#1211 -	D	
K4	61L3-0198				.BOLT-TOOTH	14			
K5	S206-20100B				.NUT-HEX	14			
K	61LD-00910				CUTTING EDGE KIT	1	- #1210	-	SEE ILLUST
	61LD-00910BG				CUTTING EDGE KIT	1	#1211 -	D	SEE ILLUST

BUCKET(3.2m^3, CUTTING EDGE, #0001-)

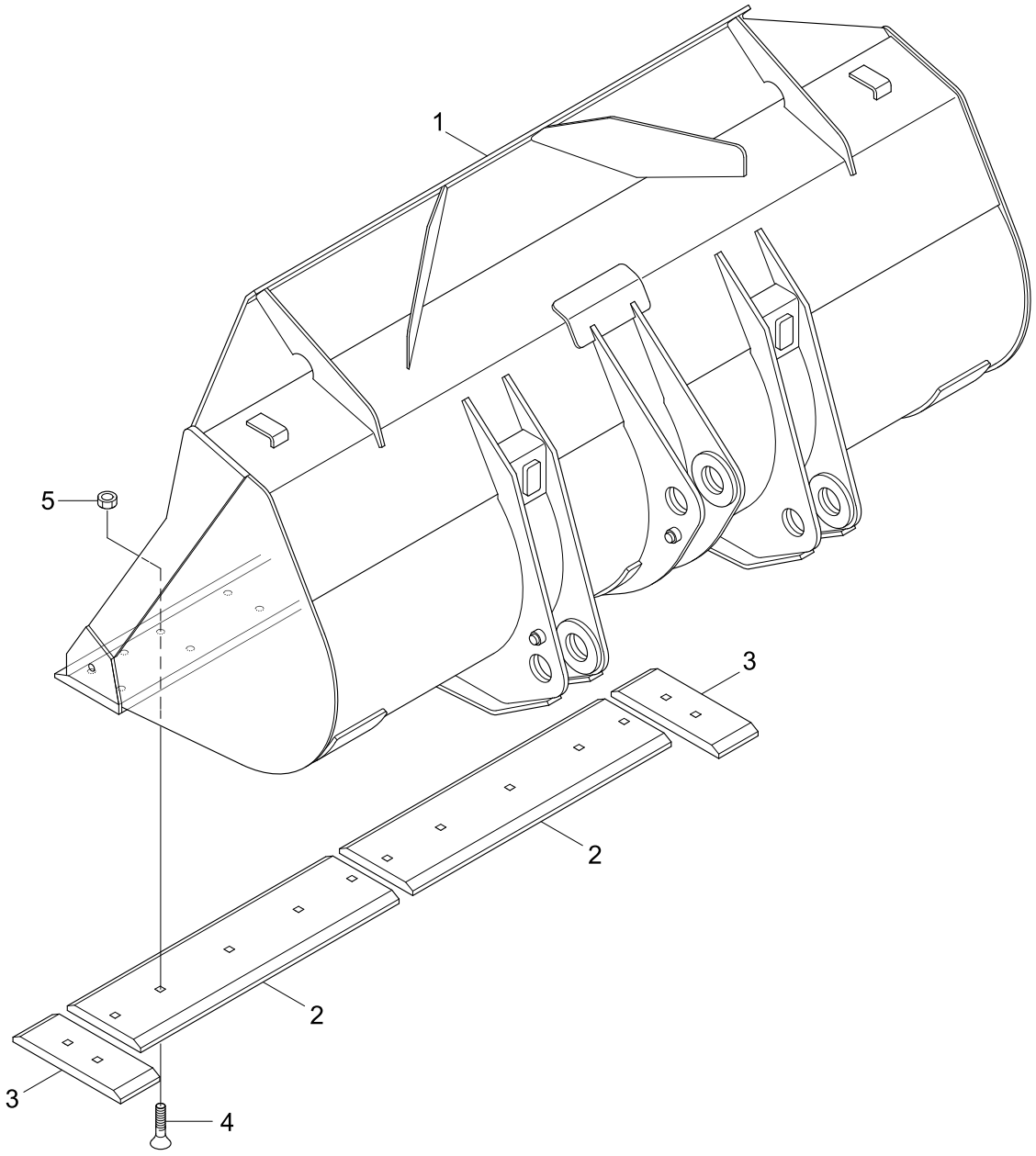

Description	Parts no	Included item
Cutting edge kit	61LD-00910	2~5
Cutting edge kit	61LD-00910BG	2~5

Item	Part_No	IS	Ord	T	Description	Qty	Serial_No	ITC	Remark
*	61LD-03000				BUCKET ASSY	1	#0001 - #1210	-	
	61LD-03000BG				BUCKET ASSY	1	#1211 -	D	
1	61LD-03010				.BUCKET WA	1	- #1210		
	61LD-03010BG				.BUCKET WA	1	#1211 -	D	
K2	61LD-00360				.CUTTING EDGE-CENTER	2	- #1210		
	61LD-00360BG				.CUTTING EDGE-CENTER	2	#1211 -	D	
K3	61LD-00370				.CUTTING EDGE-SIDE	2	- #1210		
	61LD-00370BG				.CUTTING EDGE-SIDE	2	#1211 -	D	
K4	61L3-0198				.BOLT-TOOTH	14			
K5	S206-20100B				.NUT-HEX	14			
K	61LD-00910				CUTTING EDGE KIT	1	- #1210	-	SEE ILLUST
	61LD-00910BG				CUTTING EDGE KIT	1	#1211 -	D	SEE ILLUST

BUCKET(3.1m^3, TOOTH, #0001-)

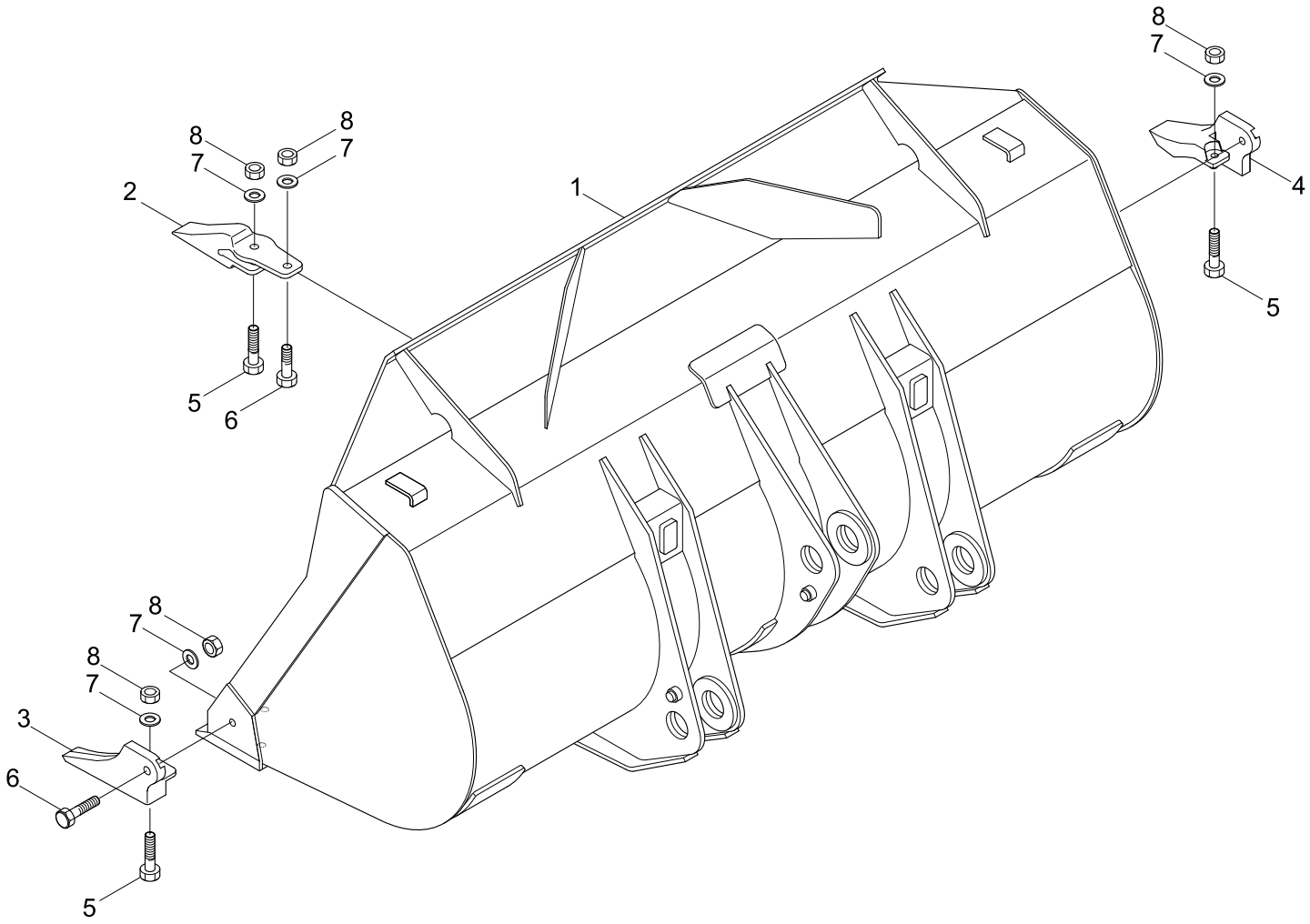

Description	Parts no	Included item
Tooth kit	61LD-00950	2~8
Tooth kit	61LD-00950BG	2~8

Item	Part_No	IS	Ord	T	Description	Qty	Serial_No	ITC	Remark
*	61LD-03500				BUCKET ASSY	1	#0001 - #1210	-	
	61LD-03500BG				BUCKET ASSY	1	#1211 -	D	
1	61LD-03010				.BUCKET WA	1	- #1210		
	61LD-03010BG				.BUCKET WA	1	#1211 -	D	
K2	61L3-0169				.TOOTH-CENTER	6	- #1210		
	61L3-0169BG				.TOOTH-CENTER	6	#1211 -	D	
K3	61L3-0170				.TOOTH-LH	1	- #1210		
	61L3-0170BG				.TOOTH-LH	1	#1211 -	D	
K4	61L3-0171				.TOOTH-RH	1	- #1210		
	61L3-0171BG				.TOOTH-RH	1	#1211 -	D	
K5	S018-20075D				.BOLT-HEX	8			
K6	S018-20065D				.BOLT-HEX	8			
K7	S441-200006				.WASHER-HARDENED	16			
K8	S206-20100B				.NUT-HEX	16			
K	61LD-00950				TOOTH KIT(1-PIECE)	1	- #1210	-	SEE ILLUST
	61LD-00950BG				TOOTH KIT(1-PIECE)	1	#1211 -	D	SEE ILLUST

BUCKET(3.1m^3, 2-PIECE TOOTH, #0001-)

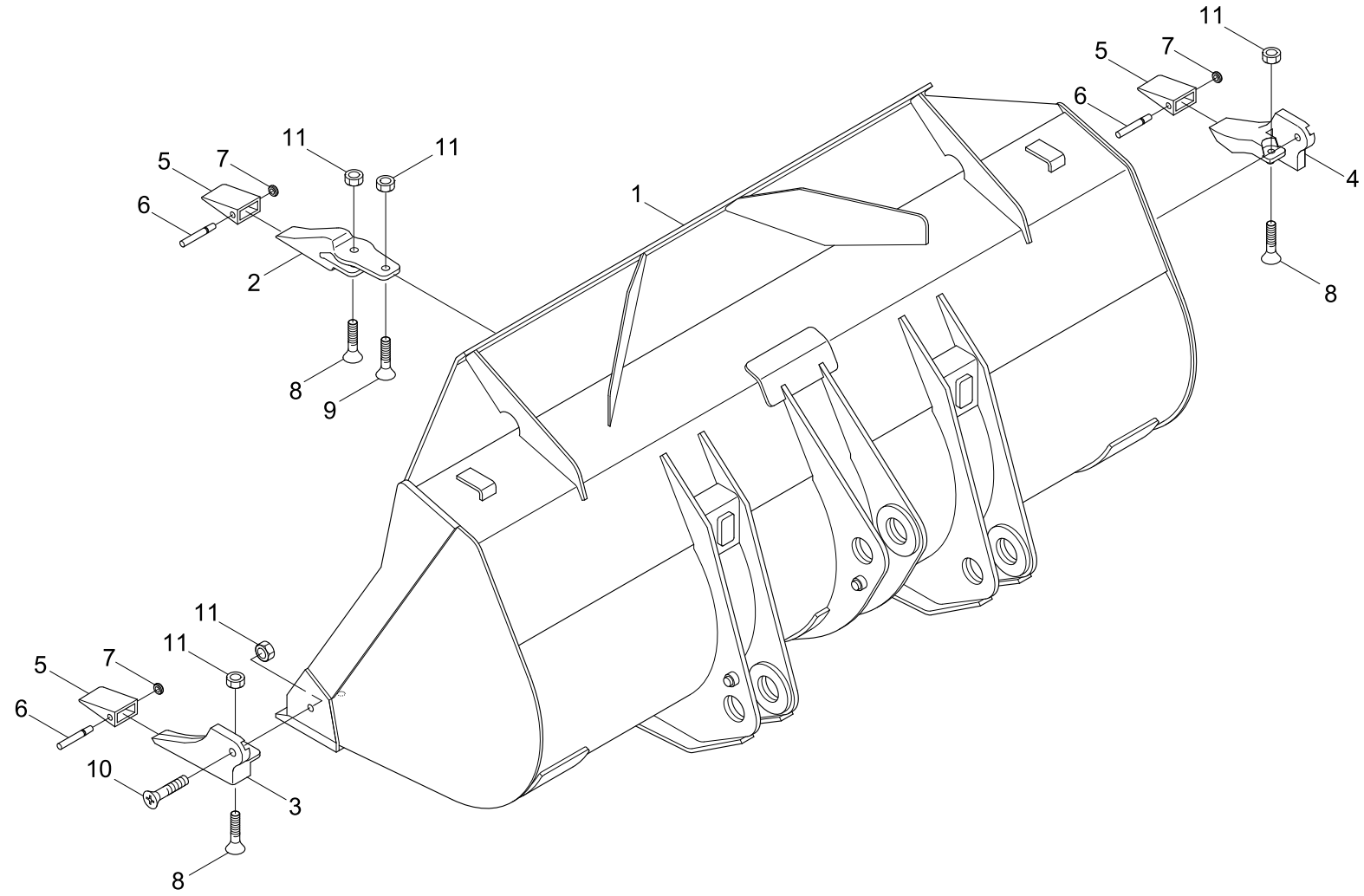

Description	Parts no	Included item
Tooth kit	61LD-00960	2~11
Tooth kit	61LD-00960BG	2~11

Item	Part_No	IS	Ord	T	Description	Qty	Serial_No	ITC	Remark
*	61LD-03700				BUCKET ASSY	1	#0001 - #1210	-	
	61LD-03700BG				BUCKET ASSY	1	#1211 -	D	
1	61LD-03010				.BUCKET WA	1	- #1210		
	61LD-03010BG				.BUCKET WA	1	#1211 -	D	
K2	64L3-01260				.ADAPTER-TOOTH,CENTER	6	- #1210		
	64L3-01260BG				.ADAPTER-TOOTH,CENTER	6	#1211 -	D	
K3	64L3-01270				.ADAPTER-TOOTH,LH	1	- #1210		
	64L3-01270BG				.ADAPTER-TOOTH,LH	1	#1211 -	D	
K4	64L3-01280				.ADAPTER-TOOTH,RH	1	- #1210		
	64L3-01280BG				.ADAPTER-TOOTH,RH	1	#1211 -	D	
K5	64L3-01290				.POINT-TOOTH	8	- #1210		
	64L3-01290BG				.POINT-TOOTH	8	#1211 -	D	
K6	64L3-01300				.PIN-TOOTH	8			
K7	64L3-01310				.WASHER-LOCK	8			
K8	64L3-01320				.BOLT-TOOTH	8			
K9	64L3-01330				.BOLT-TOOTH	6			
K10	64L3-01340				.BOLT-TOOTH	2			
K11	S208-201002				.NUT-HEX	16			
K	61LD-00960				TOOTH KIT(2-PIECE)	1	- #1210	-	SEE ILLUST
	61LD-00960BG				TOOTH KIT(2-PIECE)	1	#1211 -	D	SEE ILLUST

PALLET FORK

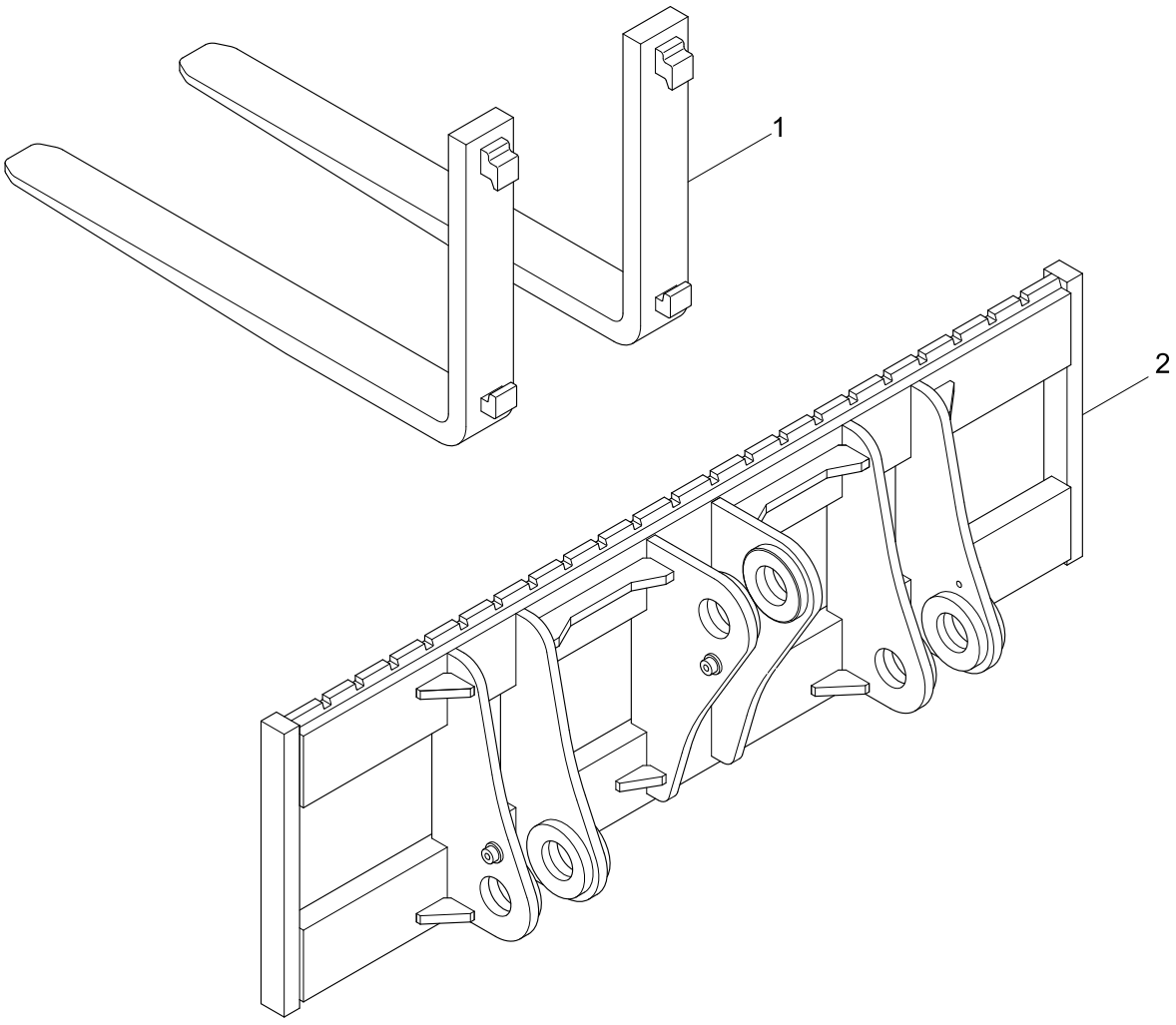

Item	Part_No	IS	Ord	T	Description	Qty	Serial_No	ITC	Remark
*	61LD-80000				PALLET FORK ASSY	1	#0939 -	-	
1	F14710111				.FORK ASSY(STD,1200)	2			
2	61LD-80010				.CARRIAGE WA	1			

QUICK COUPLER(VOLVO TYPE, #1440-)

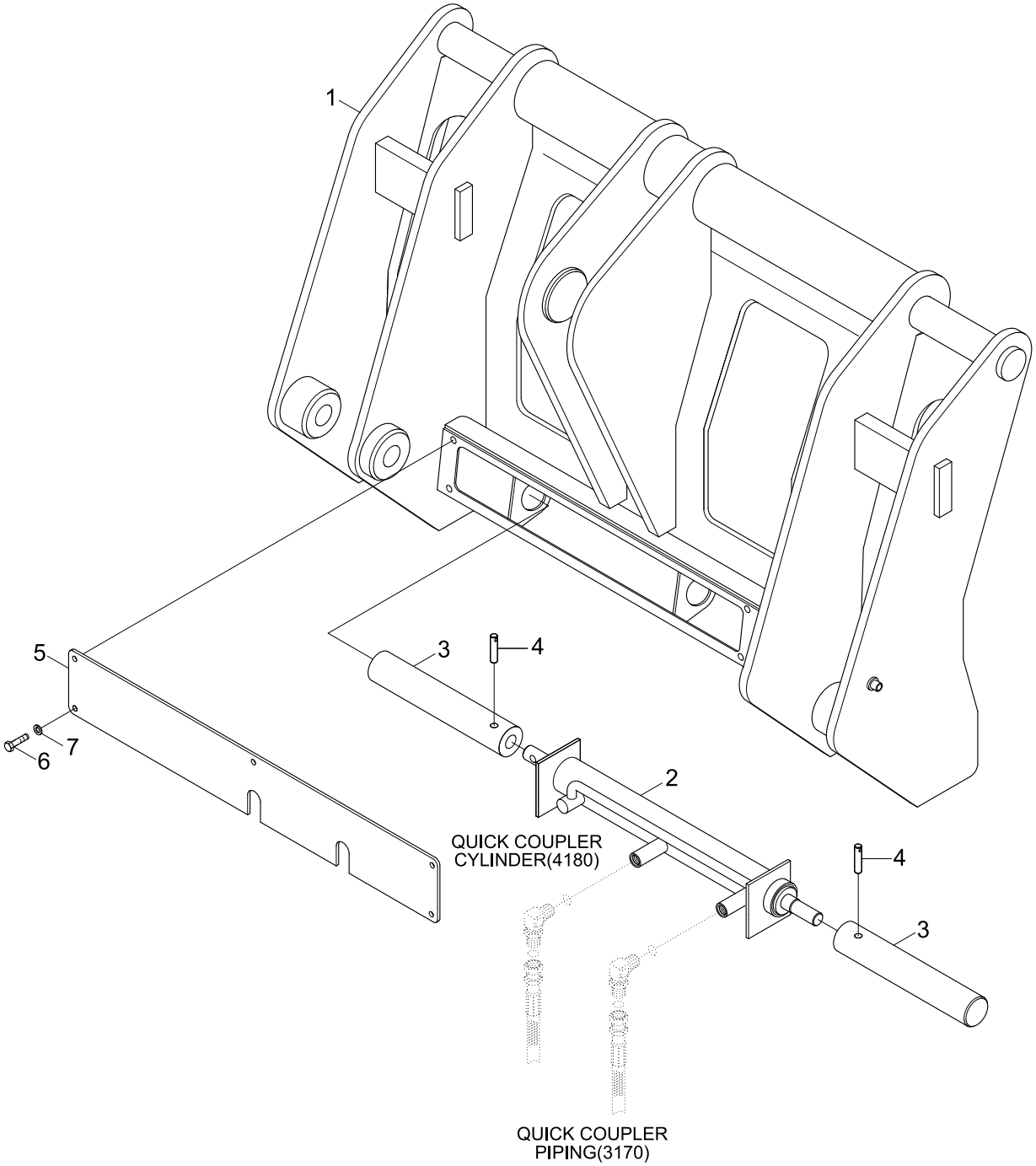

Item	Part_No	IS	Ord	T	Description	Qty	Serial_No	ITC	Remark
*	61LD-91000				QUICK COUPLER ASSY	1	#1440 -	-	VOLVO TYPE
1	61LD-91010				.QUICK COUPLER WA	1			
2	@				.QUICK COUPLER CYLINDER	1			NOT
3	61LC-91240				.PIN-COUPLER	2			
4	S471-910452				.PIN-SPRING	2			
5	61LC-91520				.COVER	1			
6	S015-080256				.BOLT-HEX	5			
7	S403-08200B				.WASHER-PLAIN	5			

TOOLS(-#0011)

1

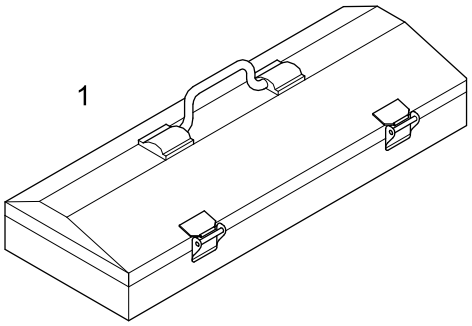

2, 3, 4 ,5 ,6, 7, 8, 9,10,
11,12,13,14,15



46

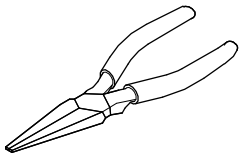

62

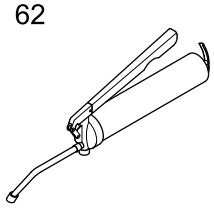

60

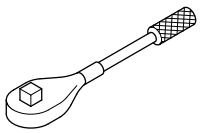

19,21,23,
26,28,29,30

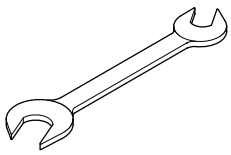

47

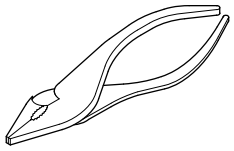

55

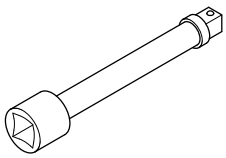

63

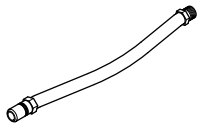

34,35,36,
37,38,39

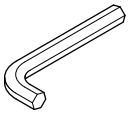

48

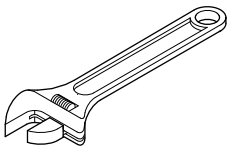

53

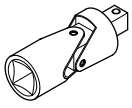

42,44

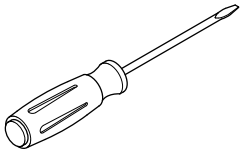

50

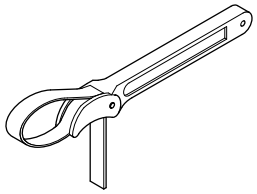

58,59

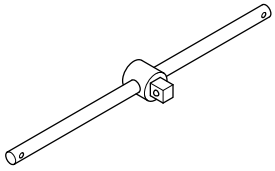

Item	Part_No	IS	Ord	T	Description	Qty	Serial_No	ITC	Remark
*	94L1-20001				TOOL KIT ASSY	1	- #0011	-	
1	E191-2000	10			.TOOL BOX	1			
2	S953-127100				.SOCKET-1/2"X10MM	1			
3	S953-127130				.SOCKET-1/2"X13MM	1			
4	S953-127140				.SOCKET-1/2"X14MM	1			
5	S953-127170				.SOCKET-1/2"X17MM	1			
6	S953-127190				.SOCKET-1/2"X19MM	1			
7	S953-127220				.SOCKET-1/2"X22MM	1			
8	S953-127240				.SOCKET-1/2"X24MM	1			
9	S953-127300				.SOCKET-1/2"X30MM	1			
10	S953-190320				.SOCKET-3/4"X32MM	1			
11	S953-190360				.SOCKET-3/4"X36MM	1			
12	S953-190460				.SOCKET-3/4"X46MM	1			
13	S953-190550				.SOCKET-3/4"X55MM	1			
14	S968-190240				.SOCKET-3/4"X1 1/2"	1			
15	S968-190300				.SOCKET-3/4'X1 7/8"	1			
19	S962-080902				.WRENCH-DOUBLE,8X9	1			
21	S962-101202				.WRENCH-DOUBLE,10X12	1			
23	S962-131702				.WRENCH-DOUBLE,13X17	1			
26	S962-192202				.WRENCH-DOUBLE,19X22	1			
28	S962-242702				.WRENCH-DOUBLE,24X27	1			
29	S962-303202				.WRENCH-DOUBLE,30X32	1			
30	S962-364102				.WRENCH-DOUBLE,36X41	1			
34	S967-040025				.L-WRENCH,4MM	1			
35	S967-050028				.L-WRENCH,5MM	1			

Item	Part_No	IS	Ord	T	Description	Qty	Serial_No	ITC	Remark
36	S967-060032				.L-WRENCH,6MM	1			
37	S967-080036				.L-WRENCH,8MM	1			
38	S967-100040				.L-WRENCH,10MM	1			
39	S967-120045				.L-WRENCH,12MM	1			
42	S959-081512				.DRIVER(-)	1			
44	S959-081522				.DRIVER(+)	1			
46	S961-150016				.PLIER-LONG NOSE	1			
47	S960-150020				.PLIER-SLIP JOINTS	1			
48	S963-200024				.WRENCH-ADJ ANGLE,8"	1			
50	E191-2043				.WRENCH-FILTER,300MM	1			
53	S954-127080				.UNIVERSAL JOINT-1/2"	1			
55	S955-127075				.EXTENSION BAR-1/2"X5"	1			
58	E191-2048				.HANDLE-SLIDING,1/2"X10"	1			
59	E191-2049				.HANDLE-SLIDING,3/4"X20"	1			
60	S958-127250				.HANDLE-RATCHET 1/2"	1			
62	E191-2053				.GUN-GREASE,500CC	1			
63	E191-2054				.TIP-HOSE,RUBBER	1			
70	94L1-20011				.TOOL LIST	1			

TOOLS(#0012-)

1

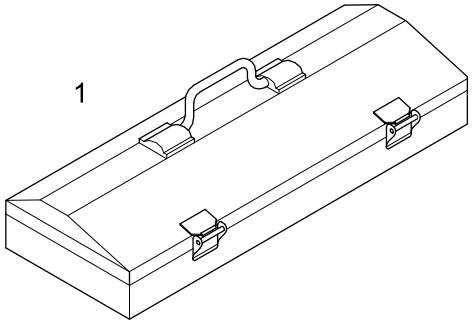

2, 3, 4 ,5 ,6, 7, 8, 9,10,11,42,43



12,13,14,15,16,17,18,19

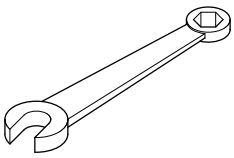

20,21

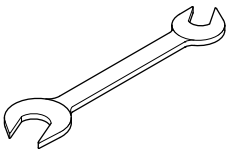

22,23,24,25,26,27

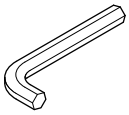

28,29

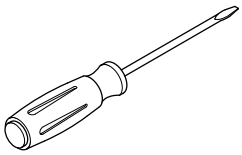

30

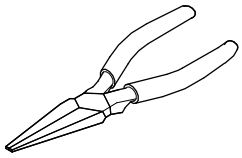

31

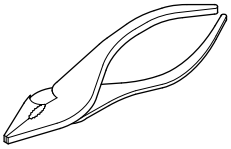

32

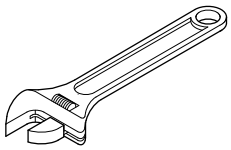

33

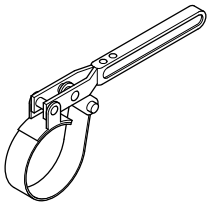

34

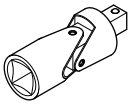

35

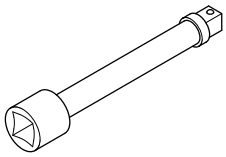

36,38

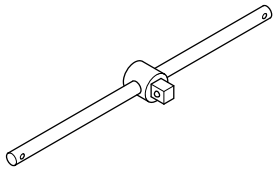

37

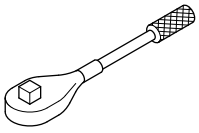

39

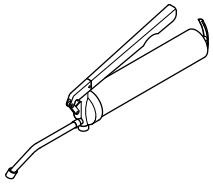

40

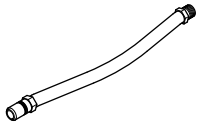

Item	Part_No	IS	Ord	T	Description	Qty	Serial_No	ITC	Remark
*	94L1-20002				TOOL KIT ASSY	1	#0012 -	B	
1	E191-2000	10			.TOOL BOX	1			
2	S953-127100				.SOCKET-1/2"X10MM	1			
3	S953-127130				.SOCKET-1/2"X13MM	1			
4	S953-127140				.SOCKET-1/2"X14MM	1			
5	S953-127170				.SOCKET-1/2"X17MM	1			
6	S953-127190				.SOCKET-1/2"X19MM	1			
7	S953-127220				.SOCKET-1/2"X22MM	1			
8	S953-127240				.SOCKET-1/2"X24MM	1			
9	S953-127300				.SOCKET-1/2"X30MM	1			
10	S953-190320				.SOCKET-3/4"X32MM	1			
11	S953-190360				.SOCKET-3/4"X36MM	1			
12	S962-100003				.WRENCH-COMBINATION	1			10
13	S962-120003				.WRENCH-COMBINATION	1			12
14	S962-130003				.WRENCH-COMBINATION	1			13
15	S962-170003				.WRENCH-COMBINATION	1			17
16	S962-190003				.WRENCH-COMBINATION	1			19
17	S962-220003				.WRENCH-COMBINATION	1			22
18	S962-240003				.WRENCH-COMBINATION	1			24
19	S962-270003				.WRENCH-COMBINATION	1			27
20	S962-303202				.WRENCH-DOUBLE,30X32	1			
21	S962-364102				.WRENCH-DOUBLE,36X41	1			
22	S967-040025				.L-WRENCH,4MM	1			
23	S967-050028				.L-WRENCH,5MM	1			
24	S967-060032				.L-WRENCH,6MM	1			

Item	Part_No	IS	Ord	T	Description	Qty	Serial_No	ITC	Remark
25	S967-080036				.L-WRENCH,8MM	1			
26	S967-100040				.L-WRENCH,10MM	1			
27	S967-120045				.L-WRENCH,12MM	1			
28	S959-081512				.DRIVER(-)	1			
29	S959-081522				.DRIVER(+)	1			
30	S961-150016				.PLIER-LONG NOSE	1			6"
31	S960-150020				.PLIER-SLIP JOINTS	1			150
32	S963-200024				.WRENCH-ADJ ANGLE,8"	1			
33	E191-2043				.WRENCH-FILTER,300MM	1			
34	S954-127080				.UNIVERSAL JOINT-1/2"	1			
35	S955-127075				.EXTENSION BAR-1/2"X5"	1			
36	E191-2048				.HANDLE-SLIDING,1/2"X10"	1			
37	S958-127250				.HANDLE-RATCHET 1/2"	1			
38	E191-2049				.HANDLE-SLIDING,3/4"X20"	1			
39	E191-2053				.GUN-GREASE,500CC	1			
40	E191-2054				.TIP-HOSE,RUBBER	1			
41	94L1-20012				.TOOL LIST	1			
42	S968-190240				.SOCKET-3/4"X1 1/2"	1			
43	S968-190300				.SOCKET-3/4'X1 7/8"	1			

DECALS(ENGLISH)

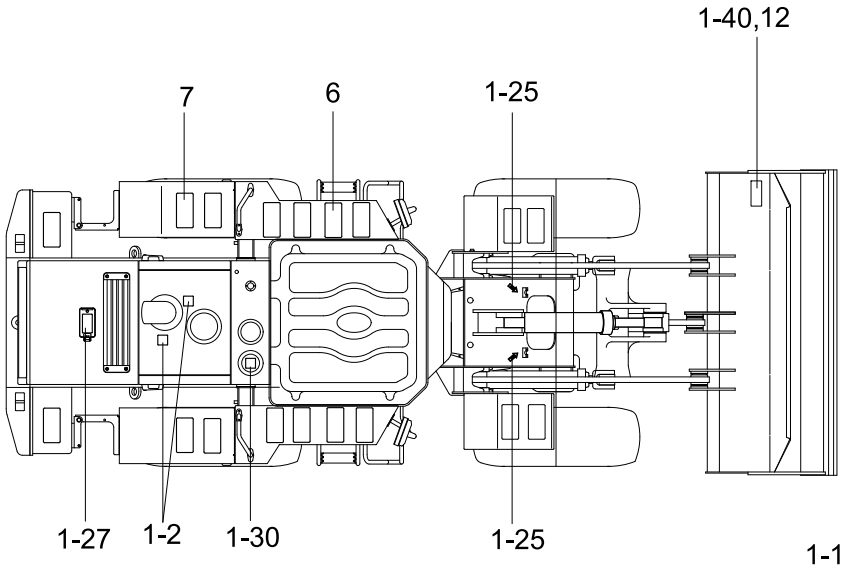

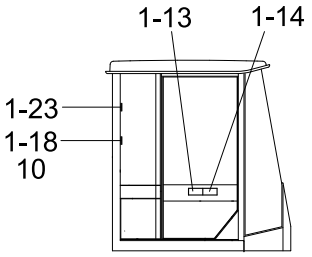

CAB INSIDE-LH

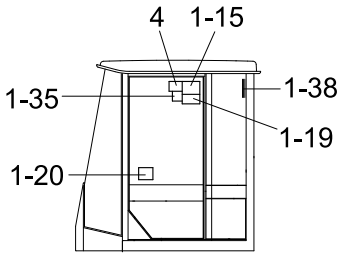

CAB INSIDE-RH

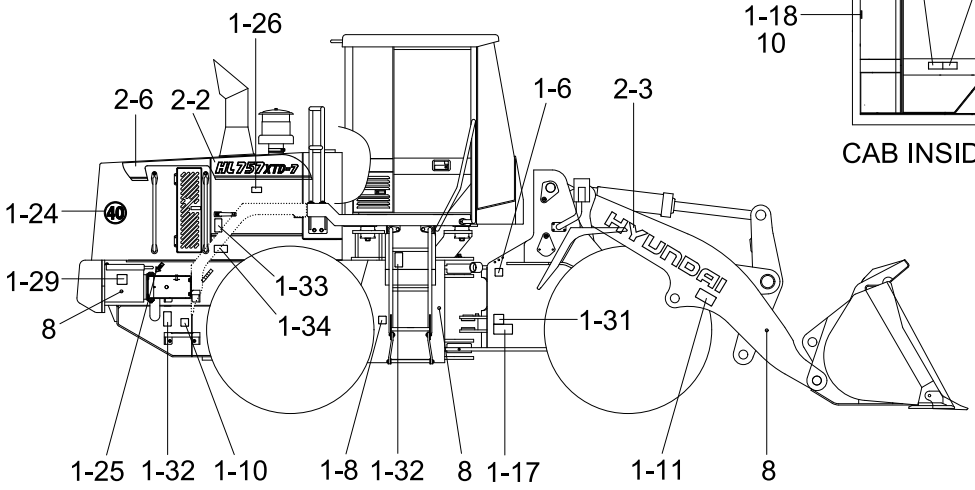

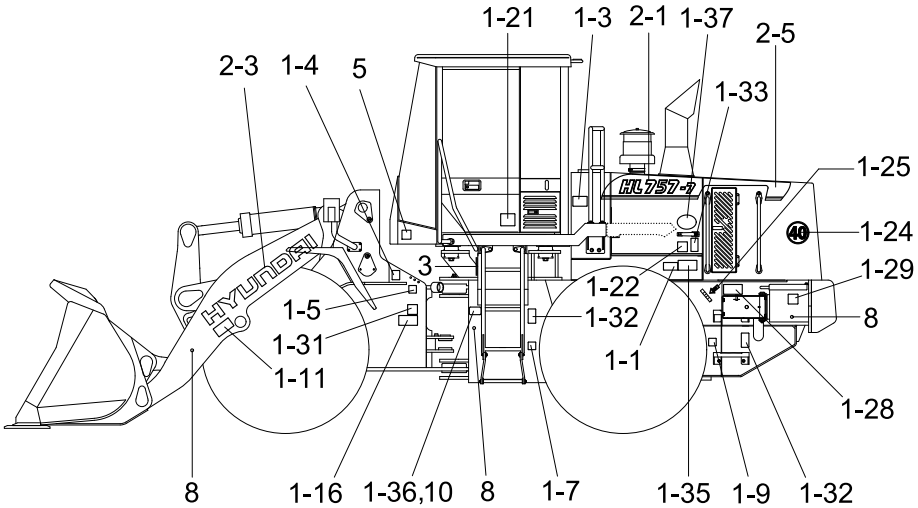

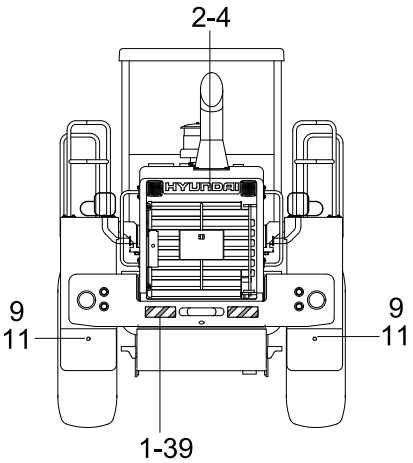

Item	Part_No	IS	Ord	T	Description	Qty	Serial_No	ITC	Remark
1	91LB-01102				DECAL KIT(A)	1	- #0079		ENGLISH
	91LB-01103				DECAL KIT(A)	1	#0080 - #0100	B	ENGLISH
	91LB-01104				DECAL KIT(A)	1	#0101 -	B	ENGLISH
1-1	91LB-01110				.START MOTOR	1			
1-2	91LB-01120				.EXHAUST PIPE	1			
1-3	91LB-01130				.HYD OIL LEVEL	1			
R1-4	91LB-01141				.SHUT OFF VALVE	1			RIDE CONTROL
1-5	91LB-01150				.GREASE(A)	1			
1-6	91LB-01160				.GREASE(B)	1			
1-7	91LB-01170				.GREASE(C)	1			
1-8	91LB-01180				.GREASE(D)	1			
1-9	91LB-01190				.DRAIN REMOTE(HYD)	1			
1-10	91LB-01200				.DRAIN REMOTE(ENGINE)	1			
1-11	91LB-01210				.BUCKET STOPPER	2			
1-13	91LB-01230				.MAX H-REACH	1			
1-14	91LB-01240				.ROLL OVER	1			
1-15	91LB-01250				.ROPS CAB	1			
1-16	91LB-01260				.STEERING WARNING-LH	1			
1-17	91LB-01270				.STEERING WARNING-RH	1			
1-18	91LB-01280				.ROPS PLATE	1			
1-19	91LB-01290				.REFERENCE MANUAL	1			
1-20	91LB-01300				.CONTROL IDEOGRAM	1			1-LEVER RCV
	91LB-01310				.CONTROL IDEOGRAM	1			2-LEVER RCV
1-21	91LB-01320				.AIR CONDITIONER FILTER	1			
1-22	91LB-01330				.ENG CONTROL MODULE	1			

Item	Part_No	IS	Ord	T	Description	Qty	Serial_No	ITC	Remark
1-23	91LB-01340				.HAMMER	1			
1-24	91L7-00360				.SPEED-LIMIT	2			EUROPE
1-25	94L3-00420				.SLINGING IDEOGRAM	4			
1-26	91N6-01102				.AIR CLEANER FILTER	1			
1-27	91N6-01121				.RADIATOR CAP	1			
1-28	91N6-01131				.FUELING	1			
1-29	91N6-02120				.BATTERY-ACCIDENT	2			
1-30	91N6-03111				.HYD OIL LUBRICATION	1			
1-31	91N6-03130				.HIGH PRESSURE HOSE	2			
1-32	91N6-03140				.FALLING	4			
1-33	91N6-07112				.STAY FIX	2			
1-34	91N6-07121				.SHEARING	2			
1-35	91N6-07261				.ALTERNATE EXIT	1			
1-36	91E1-14110				.NAME PLATE	1			
	91E1-14130				.NAME PLATE	1			EUROPE
1-37	91E1-27110				.LOW EMISSION ENG	1			
1-38	91N6-07290				.FIRE EXTINGUISHER	1			
1-39	91LB-01410				.KEEP CLEAR	1	#0080 -	-	
1-40	91N6-06410				.NAME PLATE-BUCKET	1	#0101 -	-	
2	91LD-11100				DECAL KIT(B)	1	- #0068		HL757-7
	91LD-11101				DECAL KIT(B)	1	#0069 -	A	HL757-7
2-1	91LD-11110				.MODEL NAME-LH	1	- #0068		
	91LD-11111				.MODEL NAME-LH/FRONT	1	#0069 -	D	
2-2	91LD-11120				.MODEL NAME-RH	1	- #0068		
	91LD-11121				.MODEL NAME-RH/FRONT	1	#0069 -	D	

Item	Part_No	IS	Ord	T	Description	Qty	Serial_No	ITC	Remark
2-3	91N6-21070				.TRADE MARK	2			
2-4	91N6-21150				.TRADE MARK-BOOM/CWT	1			
2-5	91LD-12110				.MODEL NAME-LH/REAR	1	#0069 -	-	
2-6	91LD-12120				.MODEL NAME-RH/REAR	1	#0069 -	-	
2	91LD-11200				DECAL KIT(B)	1	- #0068		HL757XTD-7
	91LD-11201				DECAL KIT(B)	1	#0069 -	A	HL757XTD-7
2-1	91LD-11210				.MODEL NAME-LH	1	- #0068		
	91LD-11211				.MODEL NAME-LH/FRONT	1	#0069 -	D	
2-2	91LD-11220				.MODEL NAME-RH	1	- #0068		
	91LD-11221				.MODEL NAME-RH/FRONT	1	#0069 -	D	
2-3	91N6-21070				.TRADE MARK	2			
2-4	91N6-21150				.TRADE MARK-BOOM/CWT	1			
2-5	91LD-12110				.MODEL NAME-LH/REAR	1	#0069 -	-	
2-6	91LD-12120				.MODEL NAME-RH/REAR	1	#0069 -	-	
3	91LD-11130				SERVICE INSTRUCTION	1	- #0210		
	91LD-11131				SERVICE INSTRUCTION	1	#0211 -	B	
4	91LD-11141				SPEC SHEET	1	#0001 -	-	HL757-7
	91LD-11240				SPEC SHEET	1			HL757XTD-7
5	91N6-22180				NOISE LEVEL-LWA	1			EUROPE
6	91E1-26300				STEP TREAD	14			
7	91E1-26300				STEP TREAD	4			FULL MUD GUARD
8	21EK-10150				REFLECTOR-SIDE	6			
9	51EK-52990				REFLECTOR-REAR	2			
10	E171-1246				RIVET	8			
11	S401-052002				WASHER-PLAIN	2			

Item	Part_No	IS	Ord	T	Description	Qty	Serial_No	ITC	Remark
12	91N6-06420				METAL TACK	4	#0101 -	-	

DECALS(KOREAN)

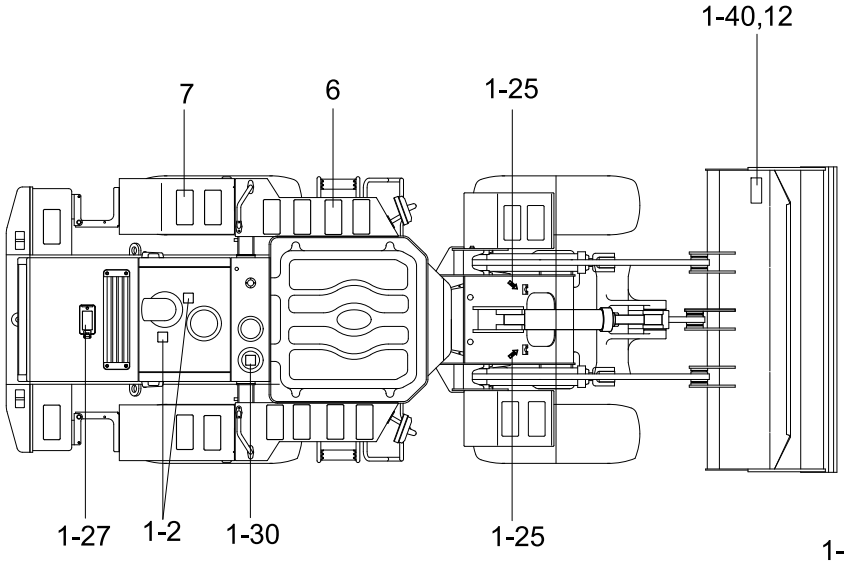

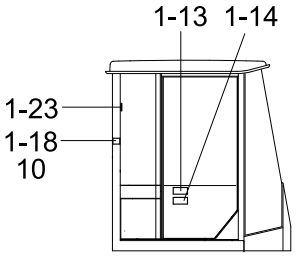

CAB INSIDE-LH

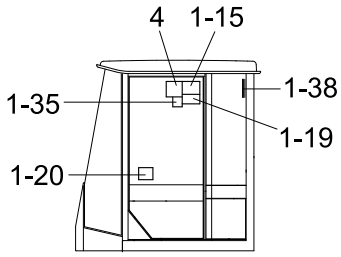

CAB INSIDE-RH

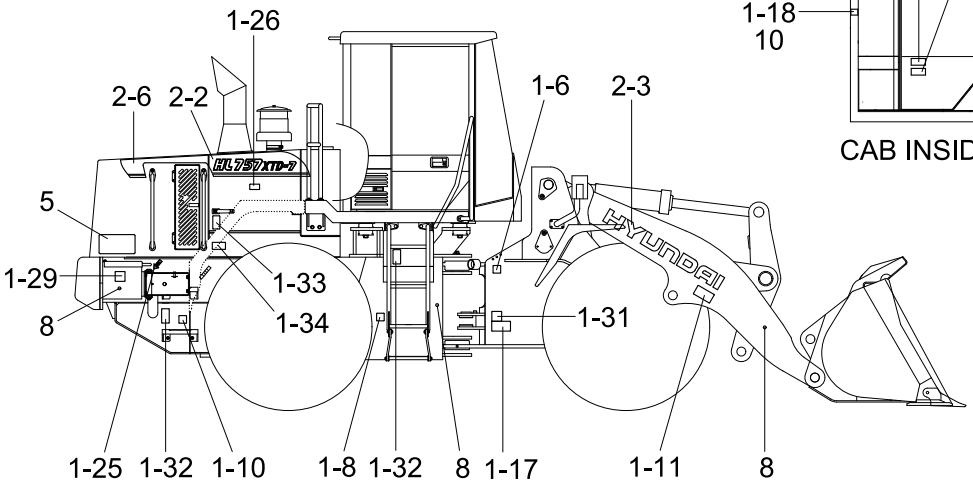

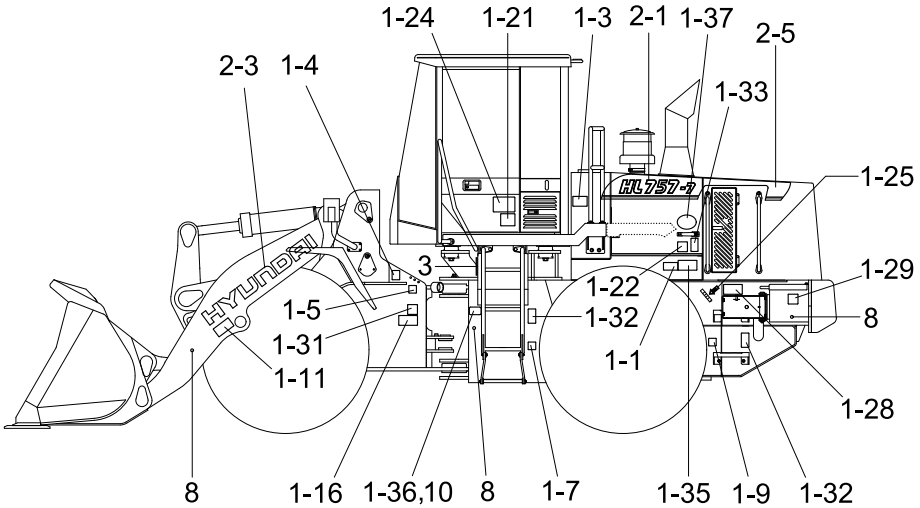

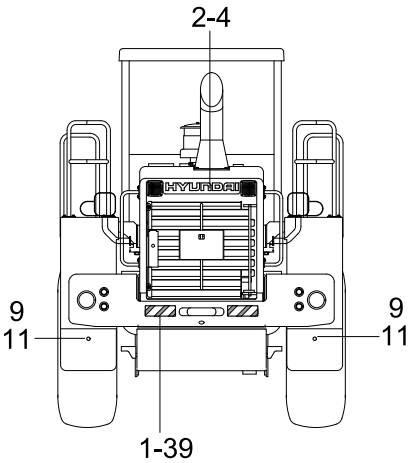

Item	Part_No	IS	Ord	T	Description	Qty	Serial_No	ITC	Remark
*	91LB-06102				DECAL KIT(A)	1	- #0079		KOREAN
	91LB-06103				DECAL KIT(A)	1	#0080 - #0100	B	KOREAN
	91LB-06104				DECAL KIT(A)	1	#0101 -	B	KOREAN
1-1	91LB-01110				.START MOTOR	1			
1-2	91LB-01120				.EXHAUST PIPE	1			
1-3	91LB-06130				.HYD OIL LEVEL	1			
1-4	91LB-06140				.DECAL-SHUT OFF VALVE	1			RIDE CONTROL
1-5	91LB-06150				.GREASE(A)	1			
1-6	91LB-06160				.GREASE(B)	1			
1-7	91LB-06170				.GREASE(C)	1			
1-8	91LB-06180				.GREASE(D)	1			
1-9	91LB-01190				.DRAIN REMOTE(HYD)	1			
1-10	91LB-01200				.DRAIN REMOTE(ENGINE)	1			
1-11	91LB-01210				.BUCKET STOPPER	2			
1-13	91LB-01230				.MAX H-REACH	1			
1-14	91LB-01240				.ROLL OVER	1			
1-15	91LB-06250				.ROPS CABIN	1			
1-16	91LB-01260				.STEERING WARNING-LH	1			
1-17	91LB-01270				.STEERING WARNING-RH	1			
1-18	91LB-01280				.ROPS PLATE	1			
1-19	91LB-06290				.REFERENCE MANUAL	1			
1-20	91LB-01300				.CONTROL IDEOGRAM	1			
	91LB-01310				.CONTROL IDEOGRAM	1			2-LEVER RCV
1-21	91LB-01320				.AIR CONDITIONER FILTER	1			
1-22	91LB-06330				.ENG CONTROL MODULE	1			

Item	Part_No	IS	Ord	T	Description	Qty	Serial_No	ITC	Remark
1-23	91LB-01340				.HAMMER	1			
1-24	91E1-18080				.PUBLIC PERMISSION	1			
1-25	94L3-00420				.SLINGING IDEOGRAM	4			
1-26	91N6-01102				.AIR CLEANER FILTER	1			
1-27	91N6-01121				.RADIATOR CAP	1			
1-28	91N6-01131				.FUELING	1			
1-29	91N6-02120				.BATTERY-ACCIDENT	2			
1-30	91N6-03111				.HYD OIL LUBRICATION	1			
1-31	91N6-03130				.HIGH PRESSURE HOSE	2			
1-32	91N6-03140				.FALLING	4			
1-33	91N6-07112				.STAY FIX	2			
1-34	91N6-07121				.SHEARING	2			
1-35	91N6-07261				.ALTERNATE EXIT	1			
1-36	91E1-14110				.NAME PLATE	1			
1-37	91E1-27110				.LOW EMISSION ENG	1			
1-38	91N6-07290				.FIRE EXTINGUISHER	1			
1-39	91LB-01410				.KEEP CLEAR	1	#0080 -	-	
1-40	91N6-06410				.NAME PLATE-BUCKET	1	#0101 -	-	
2	91LD-11100				DECAL KIT(B)	1	- #0054		
	91LD-11101				DECAL KIT(B)	1	#0055 -	A	
2-1	91LD-11110				.MODEL NAME-LH	1	- #0054		
	91LD-11111				.MODEL NAME-LH/FRONT	1	#0055 -	D	
2-2	91LD-11120				.MODEL NAME-RH	1	- #0054		
	91LD-11121				.MODEL NAME-RH/FRONT	1	#0055 -	D	
2-3	91N6-21070				.TRADE MARK	2			

Item	Part_No	IS	Ord	T	Description	Qty	Serial_No	ITC	Remark
2-4	91N6-21150				.TRADE MARK-BOOM/CWT	1			
2-5	91LD-12110				.MODEL NAME-LH/REAR	1	#0055 -	-	
2-6	91LD-12120				.MODEL NAME-RH/REAR	1	#0055 -	-	
3	91LD-16130				SERVICE INSTRUCTION	1	- #0210		
	91LD-16131				SERVICE INSTRUCTION	1	#0211 -	B	
4	91LD-16140				SPEC SHEET	1			
5	91LD-16150				OVERALL WIDTH	2			
6	91E1-26300				STEP TREAD	14			
7	91E1-26300				STEP TREAD	4			FULL MUD GUARD
8	21EK-10150				REFLECTOR-SIDE	6			
9	51EK-52990				REFLECTOR-REAR	2			
10	E171-1246				RIVET	8			
11	S401-052002				WASHER-PLAIN	2			
12	91N6-06420				METAL TACK	4	#0101 -	-	

DECALS(CANOPY)

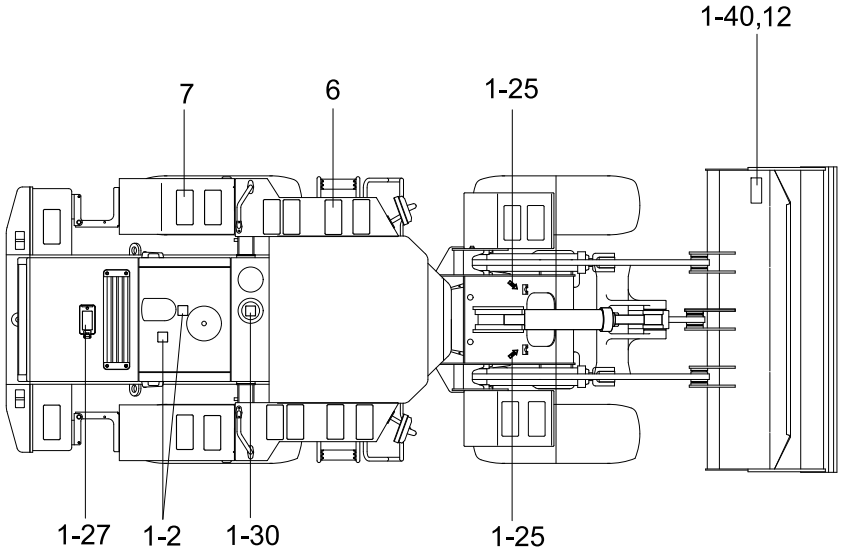

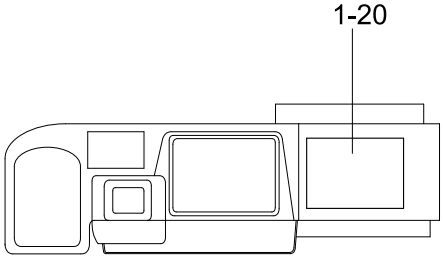

CONSOLE BOX-RH

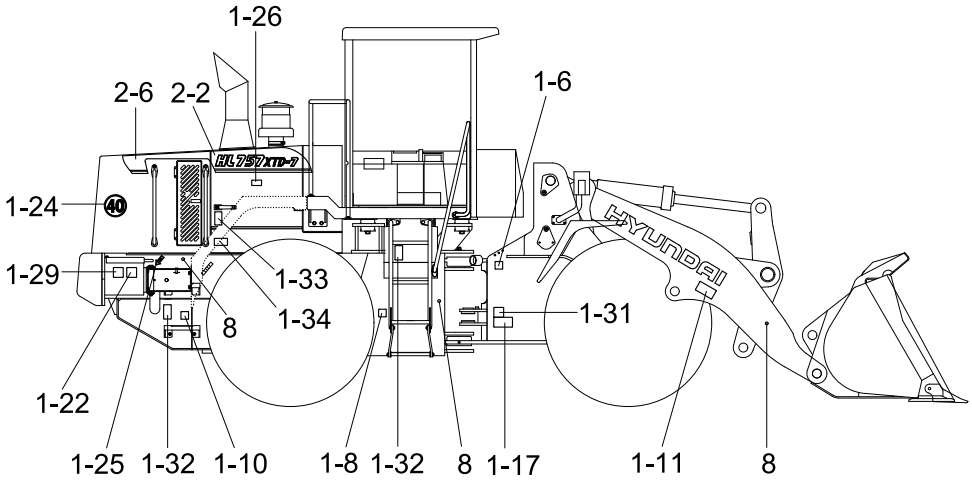

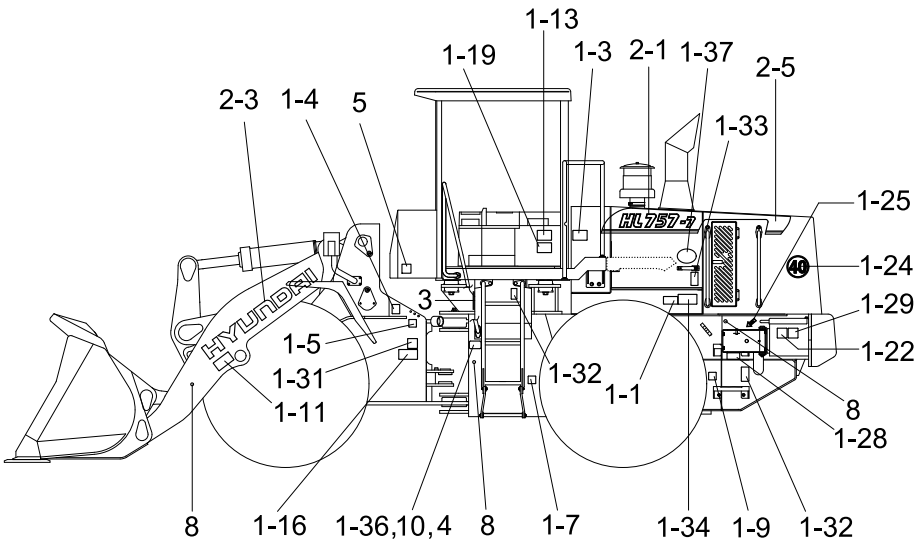

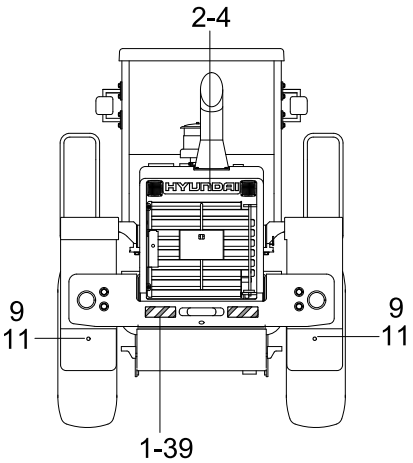

Item	Part_No	IS	Ord	T	Description	Qty	Serial_No	ITC	Remark
1	91LD-04101				DECAL KIT(A)	1	#0101 -	-	CANOPY
1-1	91LB-01110				.START MOTOR	1			
1-2	91LB-01120				.EXHAUST PIPE	1			
1-3	91LB-01130				.HYD OIL LEVEL	1			
R1-4	91LB-01141				.SHUT OFF VALVE	1			RIDE CONTROL
1-5	91LB-01150				.GREASE(A)	1			
1-6	91LB-01160				.GREASE(B)	1			
1-7	91LB-01170				.GREASE(C)	1			
1-8	91LB-01180				.GREASE(D)	1			
1-9	91LB-01190				.DRAIN REMOTE(HYD)	1			
1-10	91LB-01200				.DRAIN REMOTE(ENGINE)	1			
1-11	91LB-01210				.BUCKET STOPPER	2			
1-13	91LB-01230				.MAX H-REACH	1			
1-14	91LB-01240				.ROLL OVER	1			
1-16	91LB-01260				.STEERING WARNING-LH	1			
1-17	91LB-01270				.STEERING WARNING-RH	1			
1-19	91LB-01290				.REFERENCE MANUAL	1			
1-20	91LB-01300				.CONTROL IDEOGRAM	1			1-LEVER RCV
	91LB-01310				.CONTROL IDEOGRAM	1			2-LEVER RCV
1-22	91LB-02330				.ENG CONTROL MODULE	2			
1-24	91L7-00360				.SPEED-LIMIT	2			EUROPE
1-25	94L3-00420				.SLINGING IDEOGRAM	4			
1-26	91N6-01102				.AIR CLEANER FILTER	1			
1-27	91N6-01121				.RADIATOR CAP	1			
1-28	91N6-01131				.FUELING	1			

Item	Part_No	IS	Ord	T	Description	Qty	Serial_No	ITC	Remark
1-29	91N6-02120				.BATTERY-ACCIDENT	2			
1-30	91N6-03111				.HYD OIL LUBRICATION	1			
1-31	91N6-03130				.HIGH PRESSURE HOSE	2			
1-32	91N6-03140				.FALLING	4			
1-33	91N6-07112				.STAY FIX	2			
1-34	91N6-07121				.SHEARING	2			
1-36	91E1-14110				.NAME PLATE	1			
	91E1-14130				.NAME PLATE	1			EUROPE
1-37	91E1-27110				.LOW EMISSION ENG	1			
1-39	91LB-01410				.KEEP CLEAR	1			
1-40	91N6-06410				.NAME PLATE-BUCKET	1			
2	91LD-11101				DECAL KIT(B)	1			HL757-7
2-1	91LD-11111				.MODEL NAME-LH/FRONT	1			
2-2	91LD-11121				.MODEL NAME-RH/FRONT	1			
2-3	91N6-21070				.TRADE MARK	2			
2-4	91N6-21150				.TRADE MARK-BOOM/CWT	1			
2-5	91LD-12110				.MODEL NAME-LH/REAR	1			
2-6	91LD-12120				.MODEL NAME-RH/REAR	1			
2	91LD-11201				DECAL KIT(B)	1			HL757XTD-7
2-1	91LD-11211				.MODEL NAME-LH/FRONT	1			
2-2	91LD-11221				.MODEL NAME-RH/FRONT	1			
2-3	91N6-21070				.TRADE MARK	2			
2-4	91N6-21150				.TRADE MARK-BOOM/CWT	1			
2-5	91LD-12110				.MODEL NAME-LH/REAR	1			
2-6	91LD-12120				.MODEL NAME-RH/REAR	1			

Item	Part_No	IS	Ord	T	Description	Qty	Serial_No	ITC	Remark
3	91LD-14130				SERVICE INSTRUCTION	1	- #0210		
	91LD-14131				SERVICE INSTRUCTION	1	#0211 -	B	
4	91LD-14140				SPEC SHEET	1			HL757-7
	91LD-14240				SPEC SHEET	1			HL757XTD-7
5	91N6-22180				NOISE LEVEL-LWA	1			EUROPE
6	91E1-26300				STEP TREAD	14			
7	91E1-26300				STEP TREAD	4			FULL MUD GUARD
8	21EK-10150				REFLECTOR-SIDE	6			
9	51EK-52990				REFLECTOR-REAR	2			
10	E171-1246				RIVET	8			
11	S401-052002				WASHER-PLAIN	2			
12	91N6-06420				METAL TACK	4			

DECALS(ENGLISH, ROUND COWL TYPE)

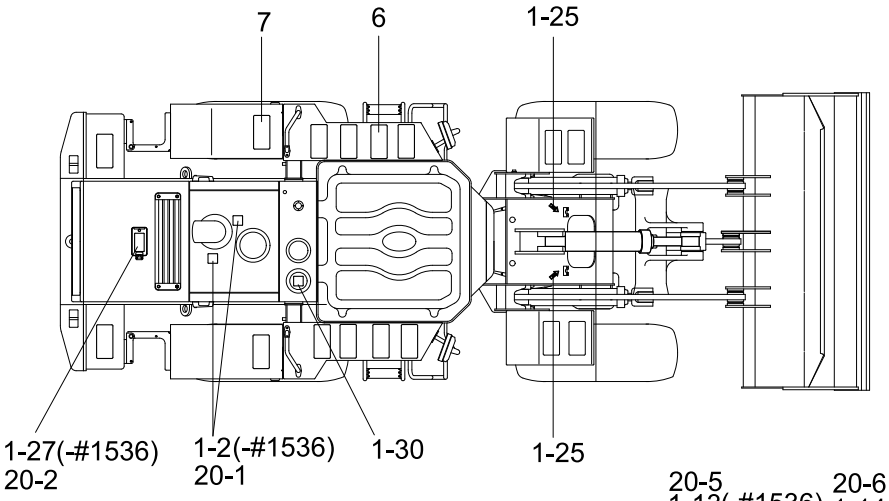

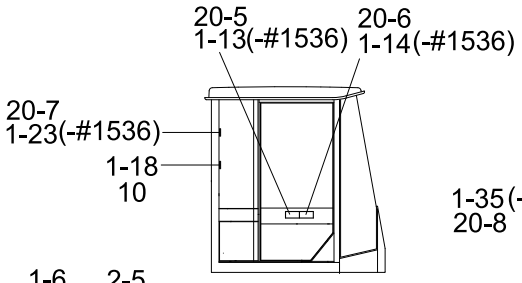

CAB INSIDE-LH

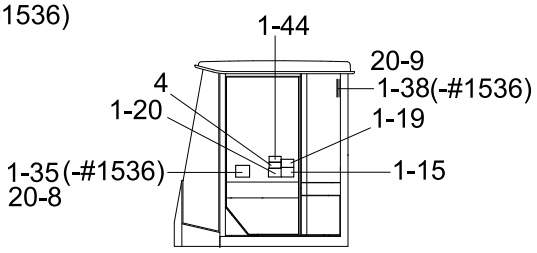

CAB INSIDE-RH

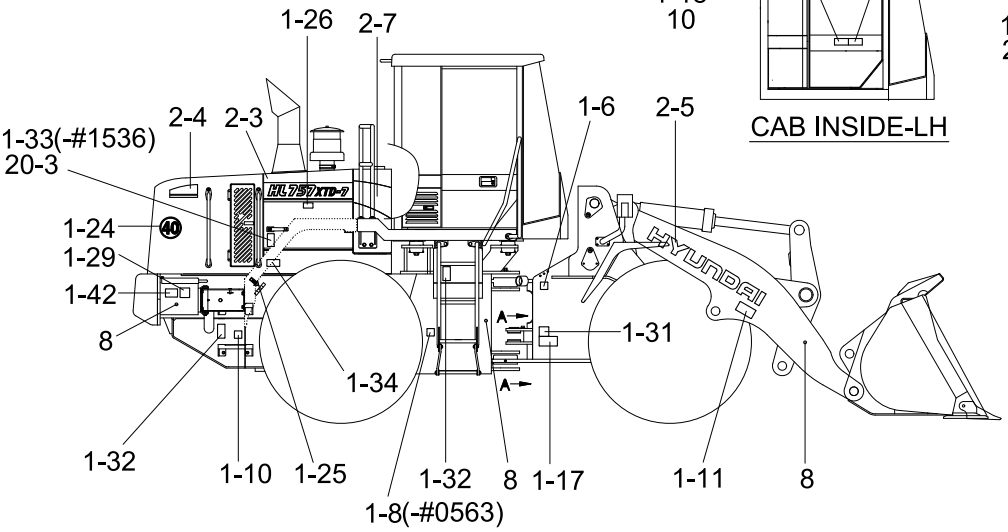

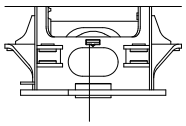

VIEW A
(FRONT FRAME)

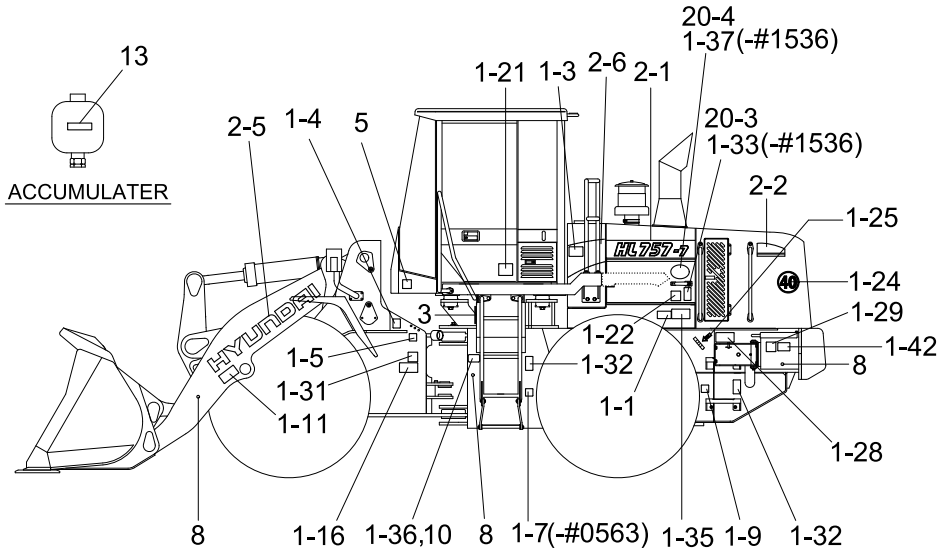

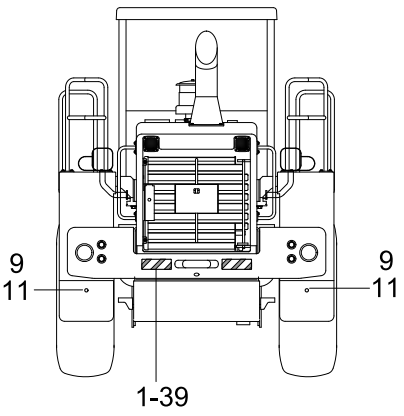

Item	Part_No	IS	Ord	T	Description	Qty	Serial_No	ITC	Remark
1	91LB-01103				DECAL KIT(A)	1	- #0100		
	91LB-01104				DECAL KIT(A)	1	#0101 - #0532	B	
	91LB-01106				DECAL KIT(A)	1	#0533 - #0563	B	
	91LB-01107				DECAL KIT(A)	1	#0564 - #0684	B	
	91LB-01108				DECAL KIT(A)	1	#0685 - #0784	B	
	91LB-01109				DECAL KIT(A)	1	#0785 - #1536	D	
	91LB-02100				DECAL KIT(A)	1	#1537 - #1566	D	
	91LB-02101				DECAL KIT(A)	1	#1567 - #1624	A	
	91LB-02102				DECAL KIT(A)	1	#1625 -	D	
1-1	91LB-01110				.DECAL-START MOTOR	1			
1-2	91N6-01111				.DECAL-TURBO COVER	2	- #1536	-	
1-3	91LB-01130				.DECAL-HYD OIL LEVEL	1			
R1-4	91LB-01141				.DECAL-SHUT OFF VALVE	1			RIDE CONTROL
1-5	91LB-01150				.DECAL-GREASE(A)	1	- #0563		
	91LB-02110				.DECAL-GREASE(A)	1	#0564 -	D	
1-6	91LB-01160				.DECAL-GREASE(B)	1	- #0563		
	91LB-02120				.DECAL-GREASE(B)	1	#0564 -	D	
1-7	91LB-01170				.DECAL-GREASE(C)	1	- #0563	-	
1-8	91LB-01180				.DECAL-GREASE(D)	1	- #0563	-	
1-9	91LB-01190				.DECAL-DRAIN/REMOTE	1			
1-10	91LB-01200				.DECAL-DRAIN/REMOTE	1			
1-11	91LB-01210				.DECAL-BUCKET STOPPER	2			
1-13	91LB-01230				.DECAL-MAX H/REACH	1	- #1536	-	
1-14	91LB-01240				.DECAL-ROLL OVER	1	- #1536	-	
1-15	91LB-01250				.DECAL-ROPS CAB	1			

Item	Part_No	IS	Ord	T	Description	Qty	Serial_No	ITC	Remark
1-16	91LB-01260				.DECAL-STEER WARN/LH	1			
1-17	91LB-01270				.DECAL-STEER WARN/RH	1			
1-18	91LB-01280				.ROPS PLATE	1			
1-19	91LB-01290				.DECAL-REF MANUAL	1			
1-20	91LB-01300				.CONTROL IDEOGRAM	1			1-LEVER RCV
	91LB-01310				.CONTROL IDEOGRAM	1			2-LEVER RCV
1-21	91LB-01320				.DECAL-AIRCON FILTER	1			
1-22	91LB-01330				.DECAL-ECM	1	- #0784	-	
1-23	91LB-01340				.DECAL-HAMMER	1	- #1536	-	
1-24	91L7-00360				.DECAL-SPEED LIMIT	2			EUROPE
1-25	94L3-00420				.SLINGING IDEOGRAM	4			
1-26	91N6-01102				.DECAL-A/CLEANER FILTER	1			
1-27	91N6-01121				.DECAL-RADIATOR CAP	1	- #1536	-	
1-28	91N6-01131				.DECAL-FUELING	1			
1-29	91N6-02120				.DECAL-BATT ACCIDENT	2			
1-30	91N6-03111				.DECAL-OIL LUBRICATION	1			
1-31	91N6-03130				.DECAL-HIGH PRESS HOSE	2			
1-32	91N6-03140				.DECAL-FALLING	4			
1-33	91N6-07112				.DECAL-STAY FIX	2	- #1536	-	
1-34	91N6-07121				.DECAL-SHEARING	2			
1-35	91N6-07261				.DECAL-ALTERNATE EXIT	1	- #1536	-	
1-36	91E1-14110				.NAME PLATE	1	- #1624		
	91LM-14110				.DECAL-PIN PLATE	1	#1625 -	D	
	91E1-14130				.NAME PLATE	1	- #1624		EUROPE
	91LM-14130				.DECAL-PIN PLATE	1	#1625 -	D	EUROPE

Item	Part_No	IS	Ord	T	Description	Qty	Serial_No	ITC	Remark
1-37	91E1-27110				.DECAL-LOW EMI ENGINE	1	- #1536	-	
1-38	91N6-07290				.DECAL-FIRE	1	- #1536	-	
1-39	91LB-01410				.DECAL-K/CLEAR/REFLECT	2			
1-40	91N6-06410				.NAME PLATE-BUCKET	1	#0101 - #1536	-	
1-41	91LB-08110				.DECAL-STEERING WHEEL	1	#0533 - #1566	-	
	91U2-08110				.DECAL-STEERING WHEEL	1	#1567 -	B	
1-42	91LB-01350				.DECAL-ECM CONNECTOR	2	#0685 -	-	
1-43	91LH-01220				.DECAL-GREASE CENTER	1	#0785 -	-	
1-44	91N6-07390				.DECAL-TURBOCHARGER	1	#0785 -	-	
2	91LD-11400				DECAL KIT(B)	1	- #1210		HL757-7
	91LD-11410				DECAL KIT(B)	1	#1211 -	D	
2-1	91LD-15111				.MODEL NAME-LH/FR	1	- #1210		
	91LD-15210				.MODEL NAME-LH/FR	1	#1211 -	D	
2-2	91LD-15121				.MODEL NAME-LH/RR	1	- #1210		
	92LD-15170				.MODEL NAME-LH/RR	1	#1211 -	D	
2-3	91LD-15131				.MODEL NAME-RH/FR	1	- #1210		
	91LD-15310				.MODEL NAME-RH/FR	1	#1211 -	D	
2-4	91LD-15141				.MODEL NAME-RH/RR	1	- #1210		
	92LD-15180				.MODEL NAME-RH/RR	1	#1211 -	D	
2-5	91N6-21070				.DECAL-TRADE MARK	2	- #1173		
	91N6-23100				.DECAL-HYUNDAI LOGO	2	#1174 -	B	
2-6	92LD-15210				.DECAL-LH/HYD TANK	1	#1211 -	-	
2-7	92LD-15210				.DECAL-LH/HYD TANK	1	#1211 -	-	
2	91LD-11500				DECAL KIT(B)	1	- #1210		HL757XTD-7
	91LD-11510				DECAL KIT(B)	1	#1211 -	D	

Item	Part_No	IS	Ord	T	Description	Qty	Serial_No	ITC	Remark
2-1	91LD-15150				.MODEL NAME-LH/FR	1	- #1210		
	91LD-15220				.MODEL NAME-LH/FR	1	#1211 -	D	
2-2	91LD-15121				.MODEL NAME-LH/RR	1	- #1210		
	92LD-15170				.MODEL NAME-LH/RR	1	#1211 -	D	
2-3	91LD-15160				.MODEL NAME-RH/FR	1	- #1210		
	91LD-15320				.MODEL NAME-RH/FR	1	#1211 -	D	
2-4	91LD-15141				.MODEL NAME-RH/RR	1	- #1210		
	92LD-15180				.MODEL NAME-RH/RR	1	#1211 -	D	
2-5	91N6-21070				.DECAL-TRADE MARK	2	- #1173		
	91N6-23100				.DECAL-HYUNDAI LOGO	2	#1174 -	B	
2-6	92LD-15210				.DECAL-LH/HYD TANK	1	#1211 -	-	
2-7	92LD-15220				.DECAL-RH/HYD TANK	1	#1211 -	-	
3	91LD-11131				SERVICE INSTRUCTION	1	- #0395		
	91LD-12130				SERVICE INSTRUCTION	1	#0396 - #1274	D	
	91LD-12131				SERVICE INSTRUCTION	1	#1275 - #1504	D	
	91LD-12132				SERVICE INSTRUCTION	1	#1505 - #1623	D	
	91LD-12133				SERVICE INSTRUCTION	1	#1624 -	D	
4	91LD-11140				SPEC SHEET	1			HL757-7
	91LD-11240				SPEC SHEET	1			HL757XTD-7
5	91N6-22180				DECAL-NOISE LWA	1	#0669 -	-	EUROPE,STD
	91N6-22150				DECAL-NOISE LWA/105DB	1	#0669 -	-	LOW NOISE
6	91E1-26300				DECAL-STEP TREAD	8	- #1496		
					DECAL-STEP TREAD	10	#1497 -	A	
7	91E1-26300				DECAL-STEP TREAD	2	- #1496	-	FULL MUD GUARD
8	21EK-10150				REFLECTOR-SIDE	6			

Item	Part_No	IS	Ord	T	Description	Qty	Serial_No	ITC	Remark
9	51EK-52990				REFLECTOR-REAR	2			
10	E171-1246				RIVET	8			
11	S401-052002				WASHER-PLAIN	2			
12	91N6-06420				METAL TACK	4	#0101 -	-	
13	91N6-03200				DECAL-ACCUMULATOR	4	#1229 -	-	
R13	91N6-03200				DECAL-ACCUMULATOR	10	#1229 -	-	RIDE CONTROL
14	91Q6-03230				DECAL-FUEL SHUT OFF	1	#1625 -	-	
15	91Q4-07180				DECAL-WATER SEPARATOR	1	#1625 -	-	
20	92LB-00080				DECAL KIT-A/S	1	#0001 -	-	
20-1	91N6-01111				.DECAL-TURBO COVER	2			
20-2	91N6-01121				.DECAL-RADIATOR CAP	1			
20-3	91N6-07112				.DECAL-STAY FIX	2			
20-4	91E1-27110				.DECAL-LOW EMI ENGINE	1			
20-5	91LB-01230				.DECAL-MAX H/REACH	1			
20-6	91LB-01240				.DECAL-ROLL OVER	1			
20-7	91LB-01340				.DECAL-HAMMER	1			
20-8	91N6-07261				.DECAL-ALTERNATE EXIT	1			
20-9	91N6-07290				.DECAL-FIRE	1			

DECALS(KOREAN, ROUND COWL TYPE)

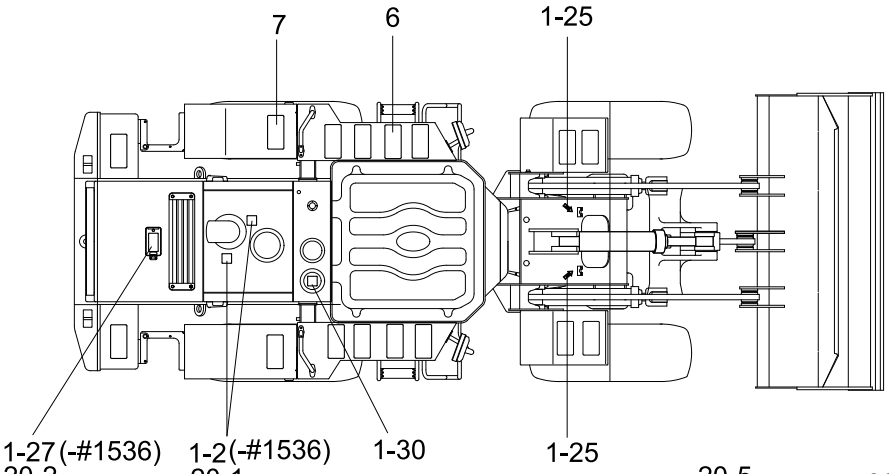

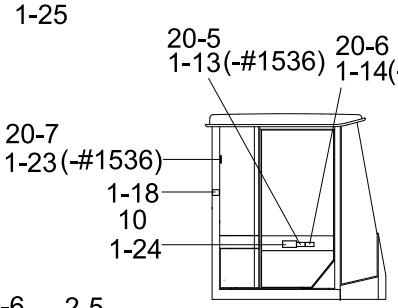

CAB INSIDE-LH

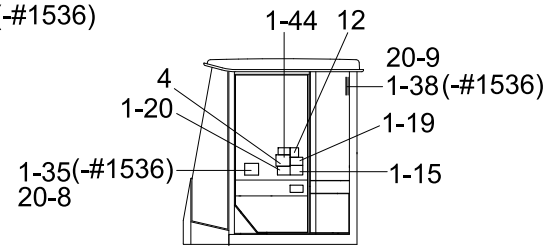

CAB INSIDE-RH

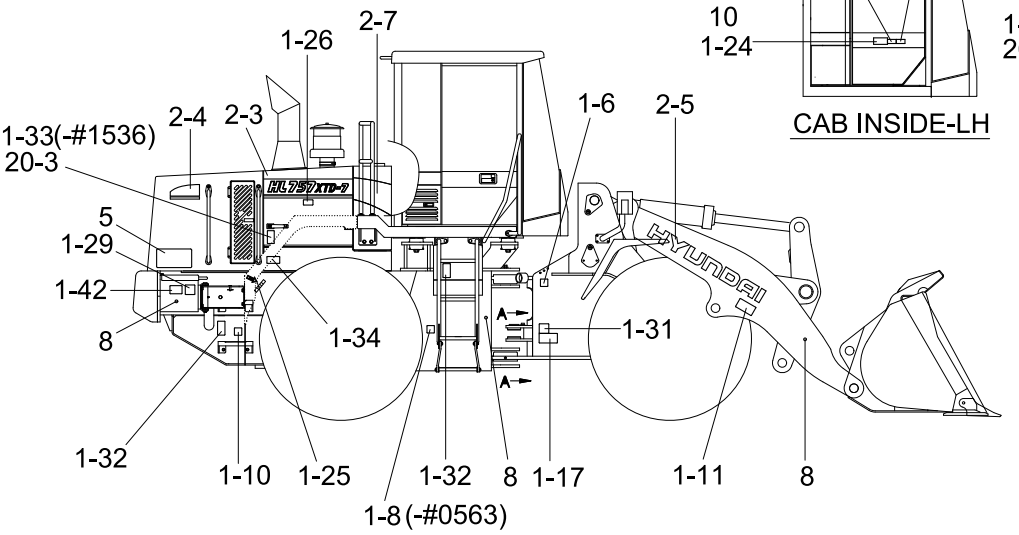

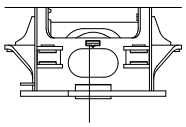

VIEW A
(FRONT FRAME)

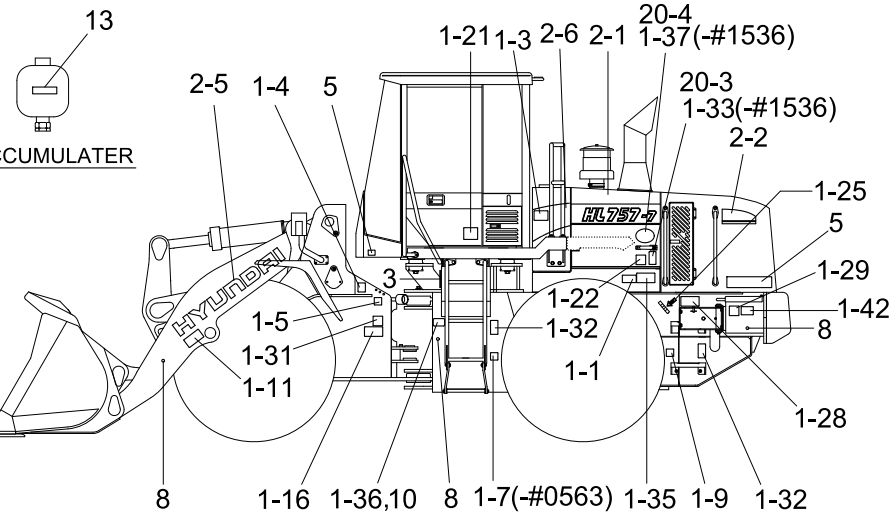

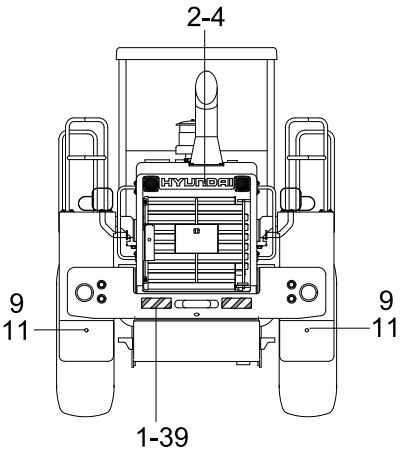

Item	Part_No	IS	Ord	T	Description	Qty	Serial_No	ITC	Remark
*	91LB-06103				DECAL KIT(A)	1	- #0100		
	91LB-06104				DECAL KIT(A)	1	#0101 - #0339	B	
	91LB-06106				DECAL KIT(A)	1	#0533 - #0563	B	
	91LB-06107				DECAL KIT(A)	1	#0564 - #0684	B	
	91LB-06108				DECAL KIT(A)	1	#0685 - #0784	B	
	91LB-06109				DECAL KIT(A)	1	#0785 - #1536	D	
	91LB-06110				DECAL KIT(A)	1	#1537 - #1566	D	
	91LB-06111				DECAL KIT(A)	1	#1567 - #1624	E	
	91LB-06112				DECAL KIT(A)	1	#1625 -	D	
	91LB-06106				DECAL KIT(A)	1	#0533 -	B	KOREAN
1-1	91LB-01110				.DECAL-START MOTOR	1			
1-2	91LB-01120				.DECAL-EXHAUST PIPE	1	- #1536	-	
1-3	91LB-06130				.DECAL-HYD OIL LEVEL	1			
1-4	91LB-06140				.SHUT OFF VALVE	1			RIDE CONTROL
1-5	91LB-06150				.GREASE(A)	1	- #0563		
	91LB-06190				.DECAL-GREASE(A)	1	#0564 -	D	
1-6	91LB-06160				.GREASE(B)	1	- #0563		
	91LB-06200				.DECAL-GREASE(B)	1	#0564 -	D	
1-7	91LB-06170				.DECAL-GREASE(C)	1	- #0563	-	
1-8	91LB-06180				.DECAL-GREASE(D)	1	- #0563	-	
1-9	91LB-01190				.DECAL-DRAIN/REMOTE	1			
1-10	91LB-01200				.DECAL-DRAIN/REMOTE	1			
1-11	91LB-01210				.DECAL-BUCKET STOPPER	2			
1-13	91LB-01230				.DECAL-MAX H/REACH	1	- #1536	-	
1-14	91LB-01240				.DECAL-ROLL OVER	1	- #1536	-	

Item	Part_No	IS	Ord	T	Description	Qty	Serial_No	ITC	Remark
1-15	91LB-06250				.DECAL-ROPS CABIN	1			
1-16	91LB-01260				.DECAL-STEER WARN/LH	1			
1-17	91LB-01270				.DECAL-STEER WARN/RH	1			
1-18	91LB-01280				.ROPS PLATE	1			
1-19	91LB-06290				.DECAL-REFER MANUAL	1			
1-20	91LB-01300				.CONTROL IDEOGRAM	1			
	91LB-01310				.CONTROL IDEOGRAM	1			2-LEVER RCV
1-21	91LB-01320				.DECAL-AIRCON FILTER	1			
1-22	91LB-06330				.ENG CONTROL MODULE	1	- #0784	-	
1-23	91LB-01340				.DECAL-HAMMER	1	- #1536	-	
1-24	91E1-18080				.DECAL-PUBLIC PERMIT	1			
1-25	94L3-00420				.SLINGING IDEOGRAM	4			
1-26	91N6-01102				.DECAL-A/CLEANER FILTER	1			
1-27	91N6-01121				.DECAL-RADIATOR CAP	1	- #1536	-	
1-28	91N6-01131				.DECAL-FUELING	1			
1-29	91N6-02120				.DECAL-BATT ACCIDENT	2			
1-30	91N6-03111				.DECAL-OIL LUBRICATION	1			
1-31	91N6-03130				.DECAL-HIGH PRESS HOSE	2			
1-32	91N6-03140				.DECAL-FALLING	4			
1-33	91N6-07112				.DECAL-STAY FIX	2	- #1536	-	
1-34	91N6-07121				.DECAL-SHEARING	2	- #1536	-	
1-35	91N6-07261				.DECAL-ALTERNATE EXIT	1	- #1536	-	
1-36	91E1-14110				.NAME PLATE	1	- #1624		
	91LM-14110				.DECAL-PIN PLATE	1	#1625 -	D	
1-37	91E1-27110				.DECAL-LOW EMI ENGINE	1	- #1536	-	

Item	Part_No	IS	Ord	T	Description	Qty	Serial_No	ITC	Remark
1-38	91N6-07290				.DECAL-FIRE	1	- #1536	-	
1-39	91LB-01410				.DECAL-K/CLEAR/REFLECT	2			
1-40	91LB-01410				.DECAL-K/CLEAR/REFLECT	1	#0101 -	-	
1-41	91LB-08110				.DECAL-STEERING WHEEL	1	#0533 - #1566	-	
	91U2-08110				.DECAL-STEERING WHEEL	1	#1567 -	B	
1-42	91LB-06350				.DECAL-MCU CONNECT	2	#0685 -	-	
1-43	91LH-01210				.DECAL-GREASE CENTER	1	#0785 -	-	
1-44	91N8-07390				.DECAL-TURBOCHARGER	1	#0785 -	-	
2	91LD-11400				DECAL KIT(B)	1	- #1210		
	91LD-11410				DECAL KIT(B)	1	#1211 -	D	
2-1	91LD-15111				.MODEL NAME-LH/FR	1	- #1210		
	91LD-15210				.MODEL NAME-LH/FR	1	#1211 -	D	
2-2	91LD-15121				.MODEL NAME-LH/RR	1	- #1210		
	92LD-15170				.MODEL NAME-LH/RR	1	#1211 -	D	
2-3	91LD-15131				.MODEL NAME-RH/FR	1	- #1210		
	91LD-15310				.MODEL NAME-RH/FR	1	#1211 -	D	
2-4	91LD-15141				.MODEL NAME-RH/RR	1	- #1210		
	92LD-15180				.MODEL NAME-RH/RR	1	#1211 -	D	
2-5	91N6-21070				.DECAL-TRADE MARK	2	- #1173		
	91N6-23100				.DECAL-HYUNDAI LOGO	2	#1174 -	B	
2-6	92LD-15210				.DECAL-LH/HYD TANK	1	#1211 -	-	
2-7	92LD-15220				.DECAL-RH/HYD TANK	1	#1211 -	-	
2	91LD-11500				DECAL KIT(B)	1	- #1210		
	91LD-11510				DECAL KIT(B)	1	#1211 -	D	
2-1	91LD-15150				.MODEL NAME-LH/FR	1	- #1210		

Item	Part_No	IS	Ord	T	Description	Qty	Serial_No	ITC	Remark
2-1	91LD-15220				.MODEL NAME-LH/FR	1	#1211 -	D	
2-2	91LD-15121				.MODEL NAME-LH/RR	1	- #1210		
	92LD-15170				.MODEL NAME-LH/RR	1	#1211 -	D	
2-3	91LD-15160				.MODEL NAME-RH/FR	1	- #1210		
	91LD-15320				.MODEL NAME-RH/FR	1	#1211 -	D	
2-4	91LD-15141				.MODEL NAME-RH/RR	1	- #1210		
	92LD-15180				.MODEL NAME-RH/RR	1	#1211 -	D	
2-5	91N6-21070				.DECAL-TRADE MARK	2	- #1173		
	91N6-23100				.DECAL-HYUNDAI LOGO	2	#1174 -	B	
2-6	92LD-15210				.DECAL-LH/HYD TANK	1	#1211 -	-	
2-7	92LD-15220				.DECAL-RH/HYD TANK	1	#1211 -	-	
3	91LD-16131				SERVICE INSTRUCTION	1	- #0395		
	91LD-17130				SERVICE INSTRUCTION	1	#0396 - #1274	D	
	91LD-17131				SERVICE INSTRUCTION	1	#1275 - #1504	D	
	91LD-17132				SERVICE INSTRUCTION	1	#1505 - #1623	D	
	91LD-17133				SERVICE INSTRUCTION	1	#1624 -	D	
4	91LD-16140				SPEC SHEET	1			
5	91LD-16150				OVERALL WIDTH	2			
6	91E1-26300				DECAL-STEP TREAD	8	- #1496		
					DECAL-STEP TREAD	10	#1497 -	A	
7	91E1-26300				DECAL-STEP TREAD	2	- #1496	-	FULL MUD GUARD
8	21EK-10150				REFLECTOR-SIDE	6			
9	51EK-52990				REFLECTOR-REAR	2			
10	E171-1246				RIVET	8			
11	S401-052002				WASHER-PLAIN	2			

Item	Part_No	IS	Ord	T	Description	Qty	Serial_No	ITC	Remark
12	91N6-06420				METAL TACK	4	#0101 -	-	
13	91N6-03200				DECAL-ACCUMULATOR	4	#1229 -	-	
R13	91N6-03200				DECAL-ACCUMULATOR	10	#1229 -	-	RIDE CONTROL
14	91LD-17010				DECAL-NOISE LEVEL	1	#1229 -	-	
15	91Q6-03230				DECAL-FUEL SHUT OFF	1	#1625 -	-	
16	91Q4-07170				DECAL-WATER SEPARATOR	1	#1625 -	-	
20	92LB-00080				DECAL KIT-A/S	1	#0001 -	-	
20-1	91N6-01111				.DECAL-TURBO COVER	2			
20-2	91N6-01121				.DECAL-RADIATOR CAP	1			
20-3	91N6-07112				.DECAL-STAY FIX	2			
20-4	91E1-27110				.DECAL-LOW EMI ENGINE	1			
20-5	91LB-01230				.DECAL-MAX H/REACH	1			
20-6	91LB-01240				.DECAL-ROLL OVER	1			
20-7	91LB-01340				.DECAL-HAMMER	1			
20-8	91N6-07261				.DECAL-ALTERNATE EXIT	1			
20-9	91N6-07290				.DECAL-FIRE	1			

MANUALS

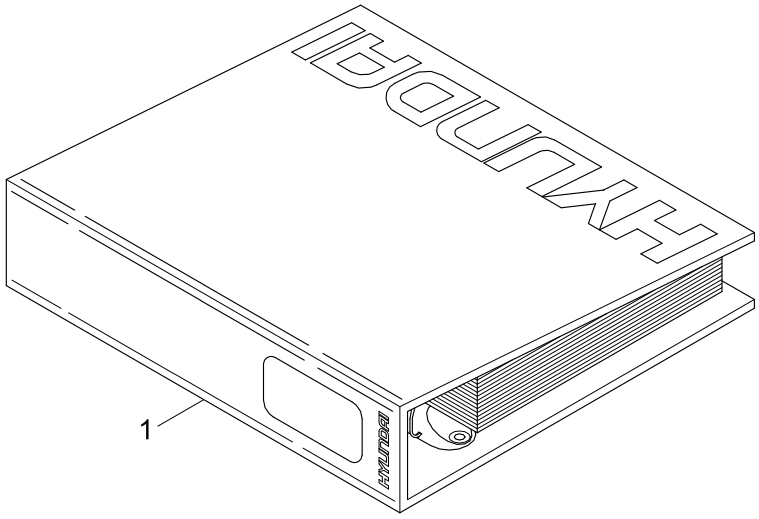

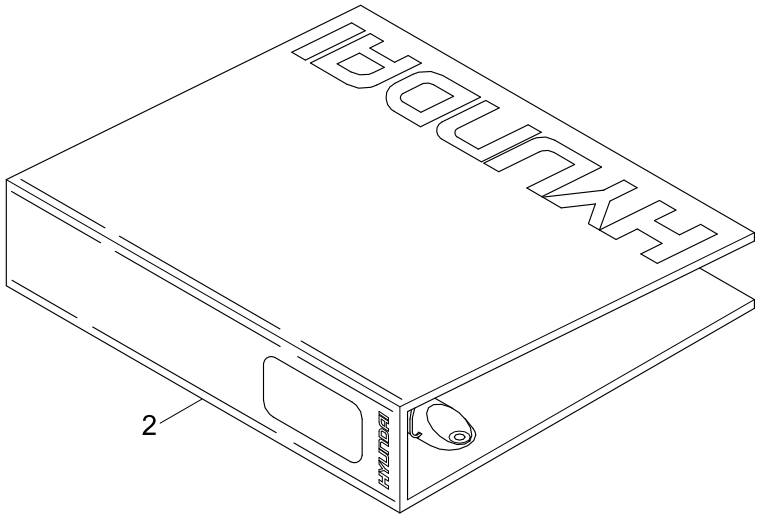

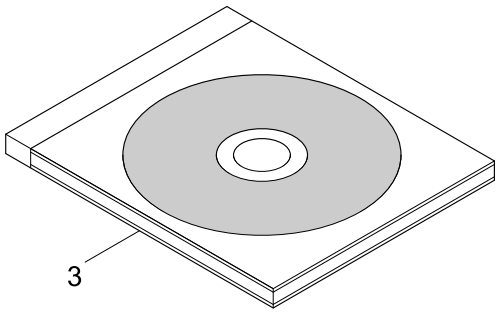

Item	Part_No	IS	Ord	T	Description	Qty	Serial_No	ITC	Remark
1	91LD-30000				PARTS MANUAL	1			KOREAN
	91LD-30010				OPERATOR'S MANUAL	1	- #1043		KOREAN
	91LD-30011				OPERATOR'S MANUAL	1	#1044 -	B	KOREAN
	91LD-30020				SERVICE MANUAL	1			KOREAN
	91LD-30030				PARTS MANUAL	1			ENGLISH
	91LD-30040				OPERATOR'S MANUAL	1	- #1043		ENGLISH
	91LD-30041				OPERATOR'S MANUAL	1	#1044 -	B	ENGLISH
	91LD-30340				OPERATORS MANUAL IN SPANISH	1	#1086 -	-	SPANISH
	91LD-30050				SERVICE MANUAL	1			ENGLISH
2	91LD-30940				BINDER & STICKER	1			P/M, O/M
	91LD-30950				BINDER & STICKER	1			S/M
3	HLCD-30000				CD-PARTS MANUAL	1			LOADER/CRANE
	HACD-30000				CD-PARTS MANUAL	1			ALL MODEL
	HLDV-30000				DVD-PARTS MANUAL	1			LOADER/CRANE
	HADV-30000				DVD-PARTS MANUAL	1			ALL MODEL

AIR HEATER STARTING AID

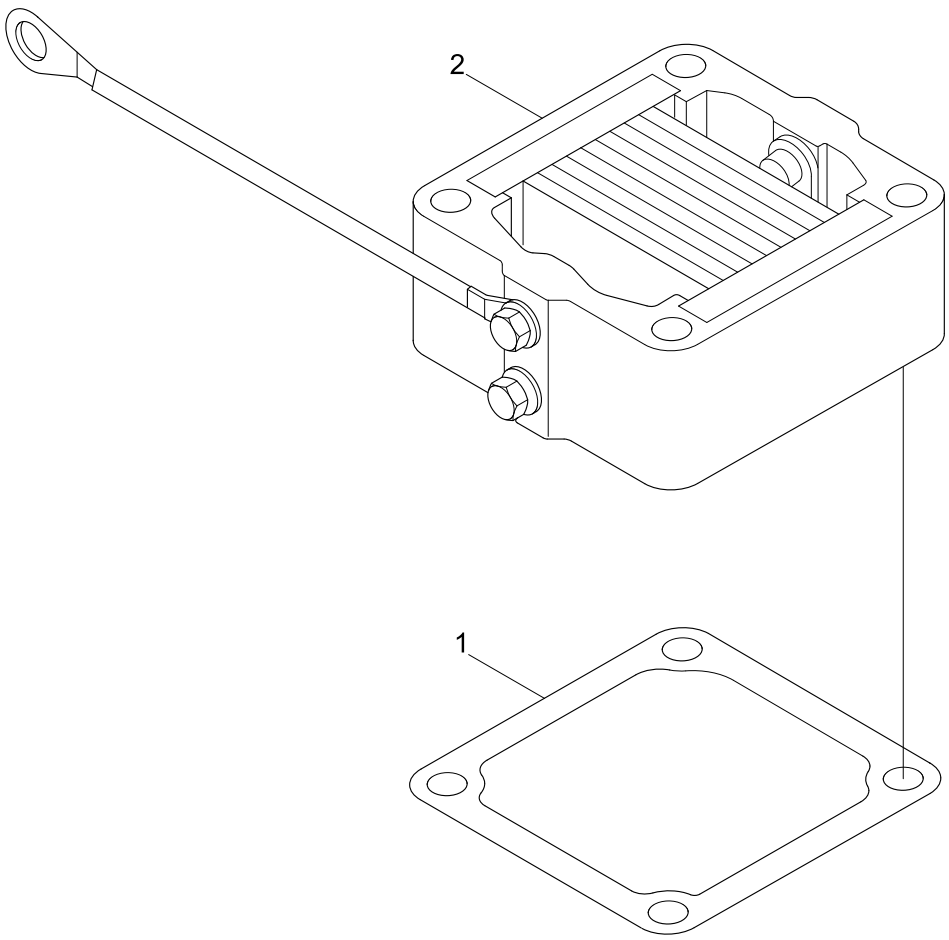

Item	Part_No	IS	Ord	T	Description	Qty	Serial_No	ITC	Remark
1	3938158				GASKET-CONNECTION	1			AH9126
2	3939914				HEATER-INTAKE AIR	1			
	3927335				TAG-INSTRUCTION	1			NOT SHOWN

DATAPLATE

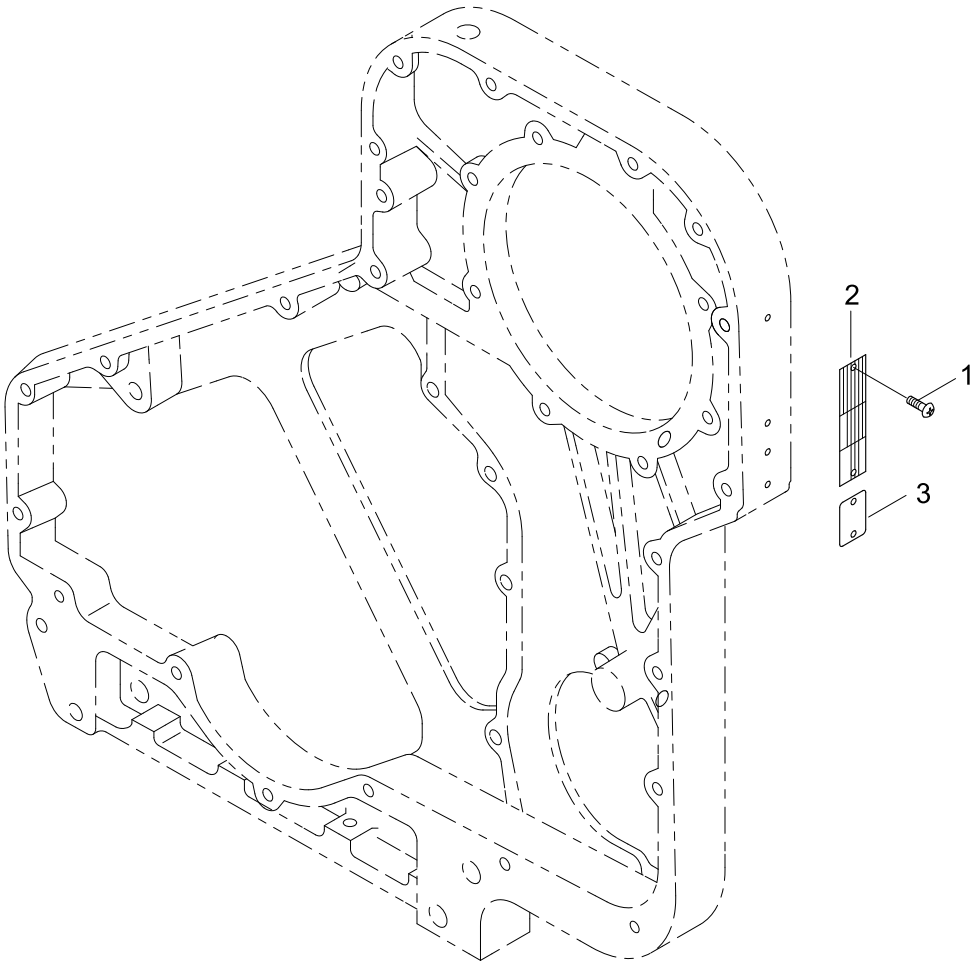

Item	Part_No	IS	Ord	T	Description	Qty	Serial_No	ITC	Remark
1	3908612				SCREW	2	#0001 -	-	AP9348
2	3284906				DATAPLATE	1	#0001 -	-	
3	3966565				DATAPLATE	1	#0001 -	-	

FRONT GEAR HOUSING

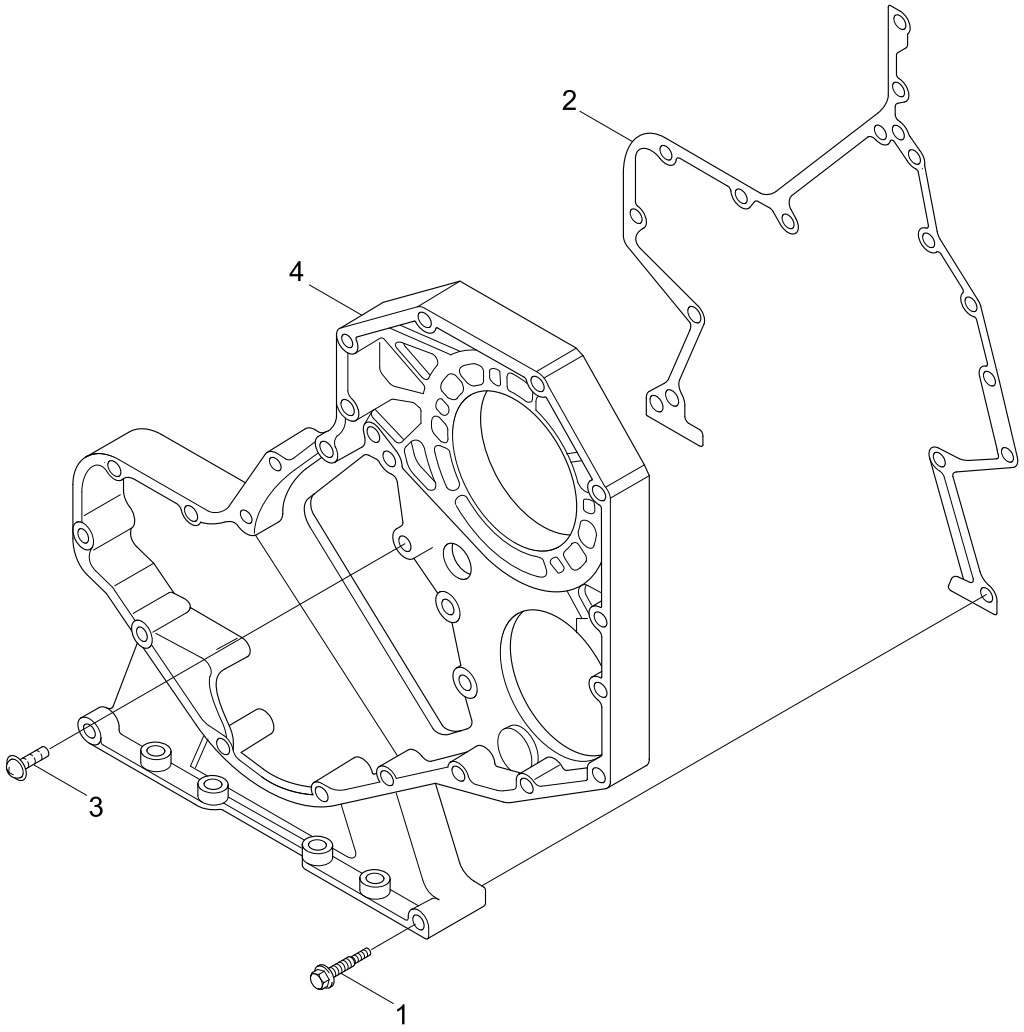

Item	Part_No	IS	Ord	T	Description	Qty	Serial_No	ITC	Remark
1	3900633				SCREW-HEX HD CAP	2			BB9838-02
2	3938156				GASKET-GEAR HSG	1			
3	3946047				SCREW-ROUND HEAD CAP	5			
N4	3957379				HOUSING-GEAR	1			NOT
N	@				NOT INDIVIDUALLY SUPPLIED	AR			NOT

CYLINDER BLOCK

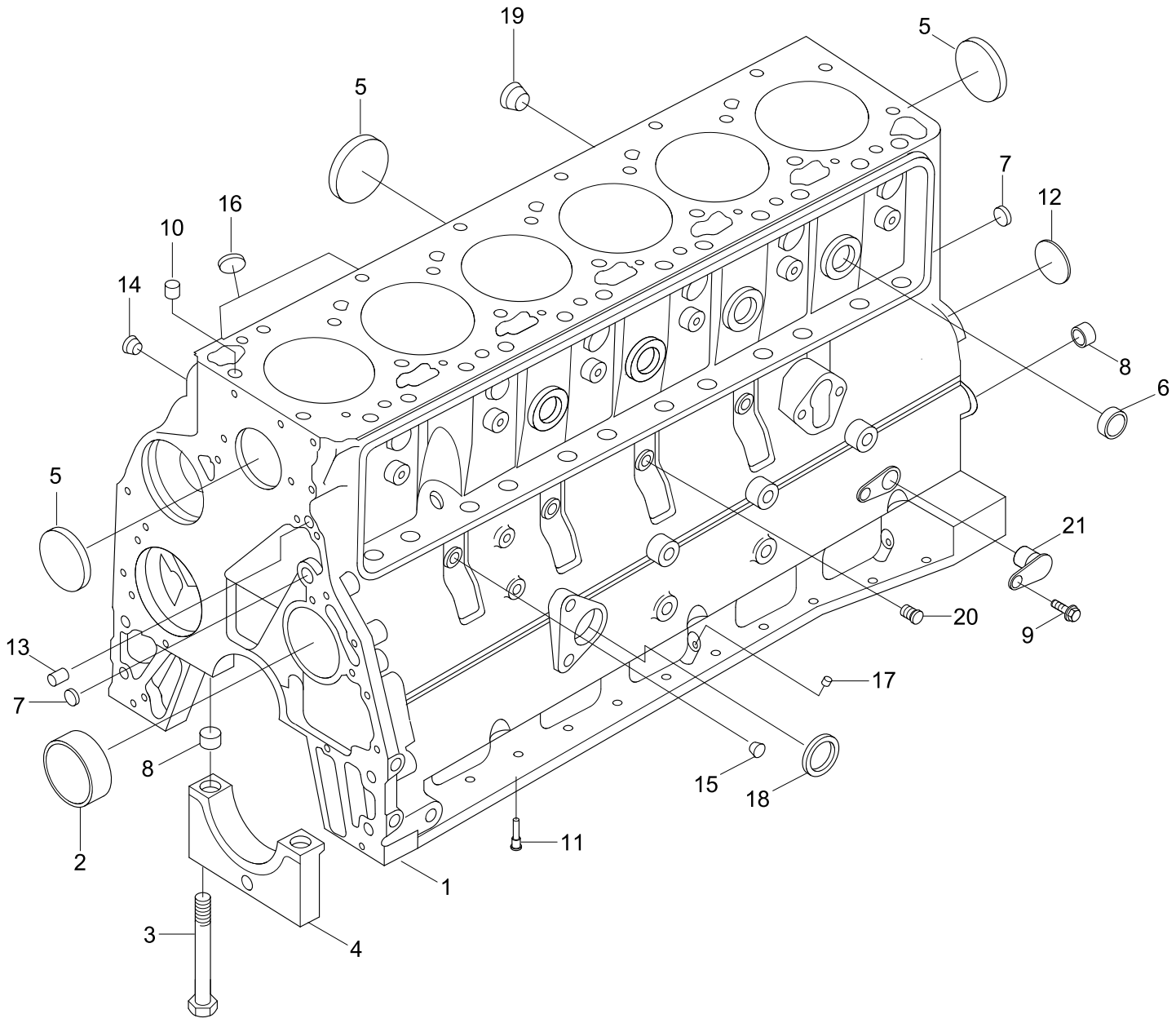

Item	Part_No	IS	Ord	T	Description	Qty	Serial_No	ITC	Remark
N1	3935936				BLOCK-CYLINDER	1			NOT
2	3940059				BUSHING	1			
3	3927948				SCREW	14			
4	3936791				CAP-MAIN BEARING	7			
5	3922072				PLUG-EXPANSION	5			
6	3914035				PLUG-EXPANSION	4			
7	3900956				PLUG-EXPANSION	3			
8	3900068				DOWEL-RING	14			
	3933220				KIT-BLOCK HARDWARE	1			
	3900068				DOWEL-RING	2			
9	3900629				SCREW-HEX F/HEAD CAP	1			
10	3902343				DOWEL-RING	2			
11	3937214				NOZZLE	6			
12	3900687				PLUG-EXPANSION	1			
13	3900257				PIN-DOWEL	2			
14	3008468				PLUG-PIPE	1			
15	3678923				PLUG-THREADED	3			
16	3920706				PLUG-EXPANSION	1			
17	3900955				PLUG-EXPANSION	3			
18	3900958				PLUG-EXPANSION	1			
19	3008469				PLUG-PIPE	1			
20	3678921				PLUG-THREADED	1			
21	3932296				PLUG	1			
	3904483				DOWEL-PIN	1			
	3926047				SEAL/O-RING	1			

Item	Part_No	IS	Ord	T	Description	Qty	Serial_No	ITC	Remark
@	@				NOT INDIVIDUALLY SUPPLIED				NOT

CRANKSHAFT & MAIN BEARING

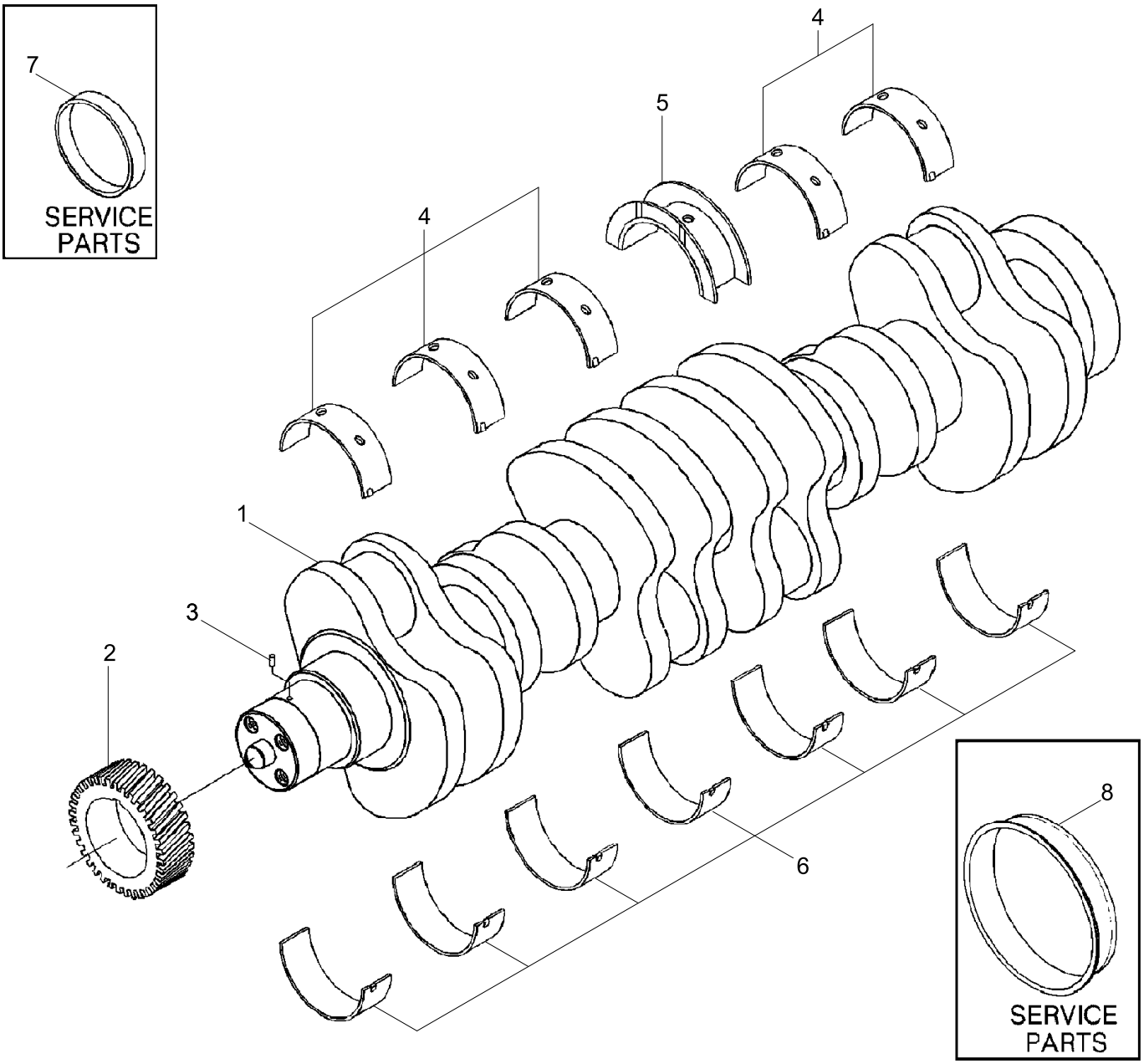

Item	Part_No	IS	Ord	T	Description	Qty	Serial_No	ITC	Remark
*	3908032				CRANKSHAFT ASSY	1			BB9839
N1	3929037				.CRANKSHAFT-ENGINE	1			NOT
2	3929027				.GEAR-CRANKSHAFT	1			
3	3904483				.PIN-DOWEL	1			
*	3802070				MAIN BEARING SET	1			STD
N4	3929016				.BEARING-MAIN	6			NOT
N5	3926723				.BEARING-C/SHAFT THRUST	1			NOT
N6	3926723				.BEARING-C/SHAFT THRUST	7			NOT
*	3802071				MAIN BEARING SET	1			0.25MM O/S
N4	3929017				.BEARING-MAIN	6			NOT
N5	3283065				.BEARING-C/SHAFT THRUST	1			NOT
6	3929022				.BEARING-MAIN	7			
*	3802072				MAIN BEARING SET	1			0.50MM O/S
N4	3929018				.BEARING-MAIN	6			NOT
N5	3283066				.BEARING-C/SHAFT THRUST	1			NOT
6	3929023				.BEARING-MAIN	7			
*	3802073				MAIN BEARING SET	1			0.75MM O/S
N4	3929019				.BEARING-MAIN	6			NOT
N5	3283067				.BEARING-C/SHAFT THRUST	1			NOT
6	3929024				.BEARING-MAIN	7			
*	3800330				BEARING-C/SHAFT(0.5 O/S)	1			
N5	3283063				.BEARING-C/SHAFT THRUST	1			NOT
6	3929023				.BEARING-MAIN	1			
*	3800331				BEARING-C/SHAFT(1.0MM O/S)	1			
N5	3283064				.BEARING-THRUST	1			NOT

Item	Part_No	IS	Ord	T	Description	Qty	Serial_No	ITC	Remark
6	3929025				.BEARING-MAIN	1			
7	3802820				SEAL-W/SLEEVE KIT	1			
8	3926126				SEAL-W/SLEEVE KIT	1			

VALVE TAPPET

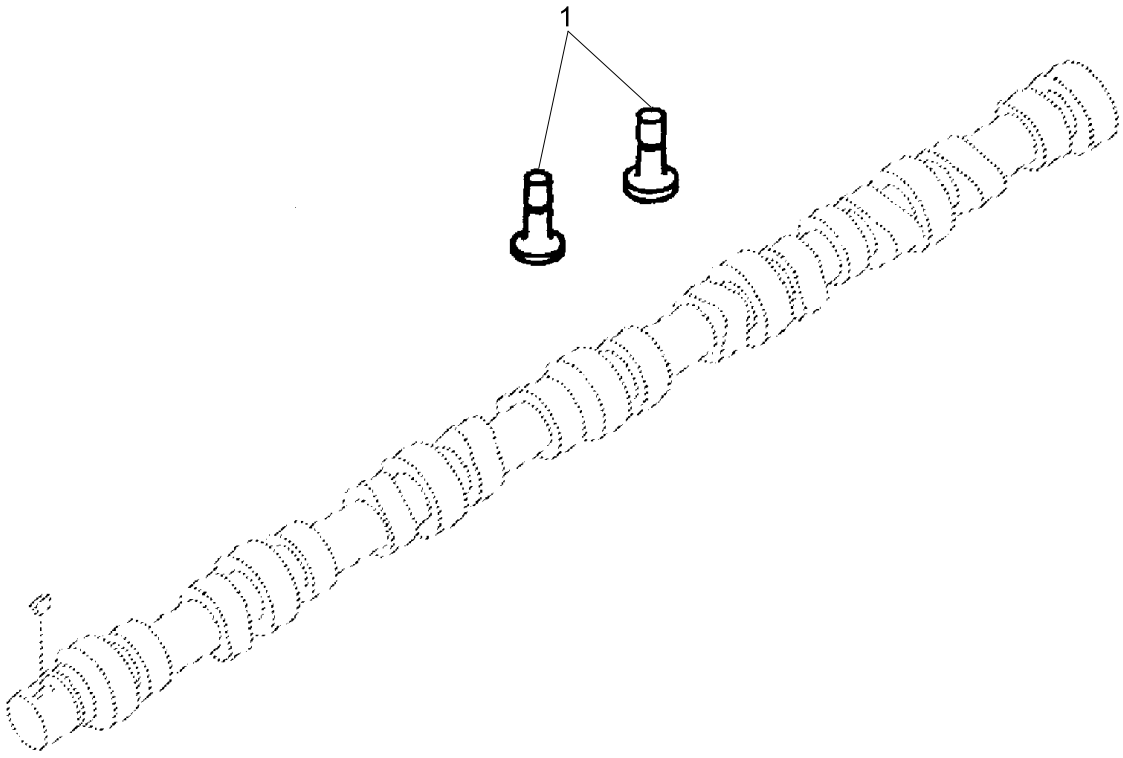

Item	Part_No	IS	Ord	T	Description	Qty	Serial_No	ITC	Remark
1	3931623				TAPPET-VALVE	12			BB9839

CRANKCASE BREATHER

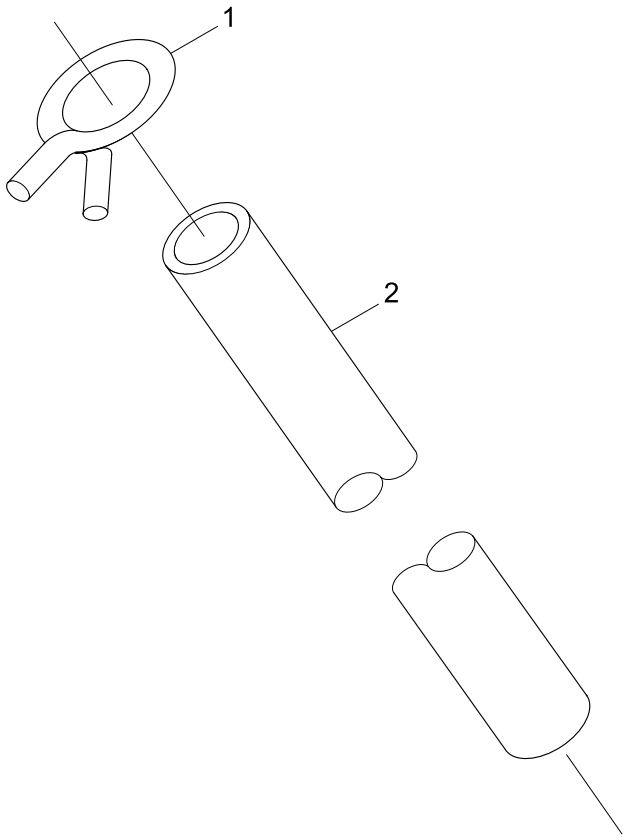

Item	Part_No	IS	Ord	T	Description	Qty	Serial_No	ITC	Remark
1	3904230				CLAMP-SPRING HOSE	1			BR9119
2	3918614				HOSE-PLAIN	1			

Item	Part_No	IS	Ord	T	Description	Qty	Serial_No	ITC	Remark
1	3008469				PLUG-PIPE	1			CH9071

CAM FOLLOWER COVER

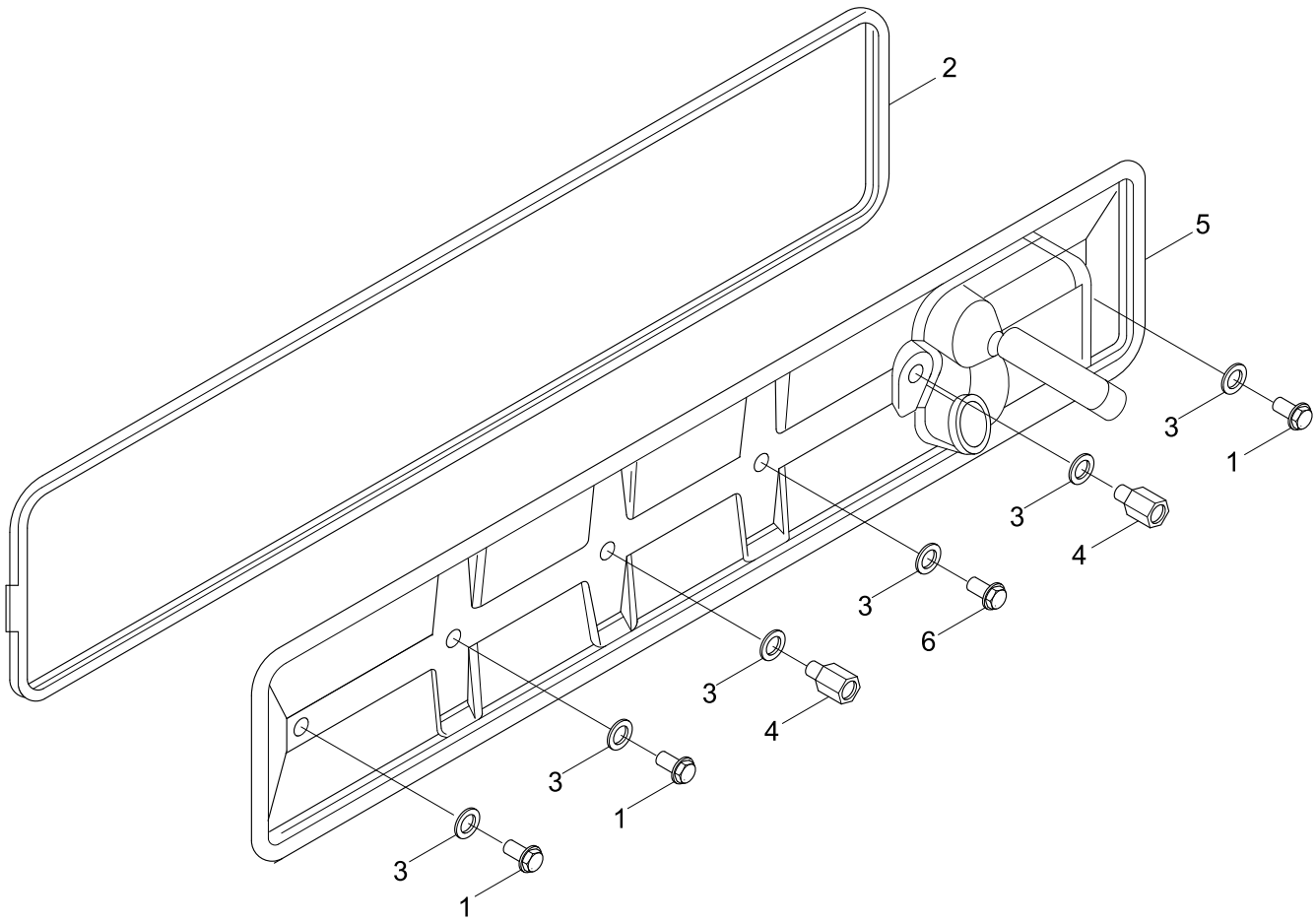

Item	Part_No	IS	Ord	T	Description	Qty	Serial_No	ITC	Remark
1	3093923				SCREW-HEX HED CAP	3			CM9709-02
2	3284623				GASKET	1			
3	3928759				SEAL-GROMMET	6			
4	3936236				SPACER	2			
N5	3990730				COVER-PUSH ROD	1			NOT
6	3921816				SCREW	1			
N	@				NOT INDIVIDUALLY SUPPLIED	AR			NOT

VIBRATION DAMPER

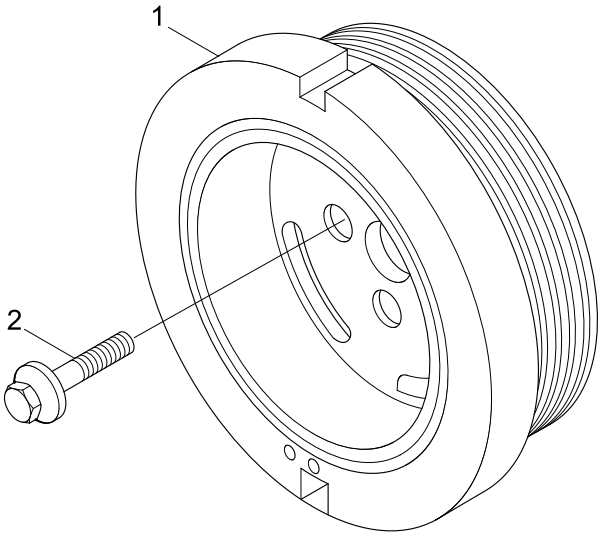

Item	Part_No	IS	Ord	T	Description	Qty	Serial_No	ITC	Remark
N1	3958258				DAMPER-VIBRATION	1			NOT
2	3903857				SCREW	4			
N	@				NOT INDIVIDUALLY SUPPLIED	AR			NOT

FRONT GEAR TRAIN ACCESSORY

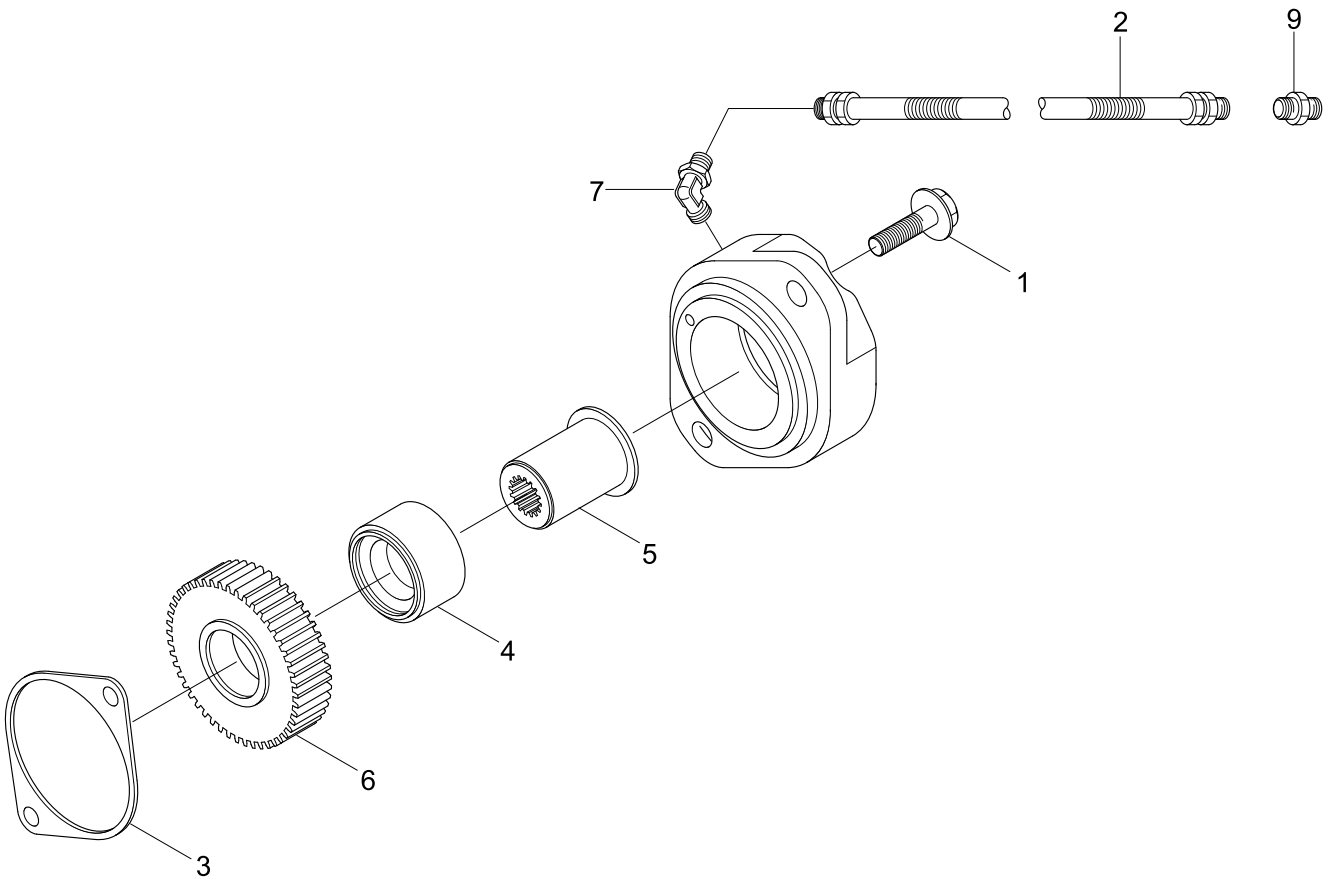

Item	Part_No	IS	Ord	T	Description	Qty	Serial_No	ITC	Remark
1	3900637				SCREW	2			DF9737
2	3920794				HOSE-FLEXIBLE	1			
3	3938655				GASKET-ACC DRIVE CVR	1			
*	3939962				ADAPTER-HYD PUMP	1			
4	3935644				.BEARING-ROLLER	1			
5	3935646				.SHAFT-ACCESSORY DRIVE	1			
6	3936136				.GEAR-ACCESSORY DRIVE	1			
7	3939694				.ELBOW-PLAIN UNION	1			
N8	3939958				.ADAPTER-HYD PUMP	1			NOT
9	3941472				UNION-MALE	1			
N	@				NOT INDIVIDUALLY SUPPLIED	AR			NOT

THERMOSTAT

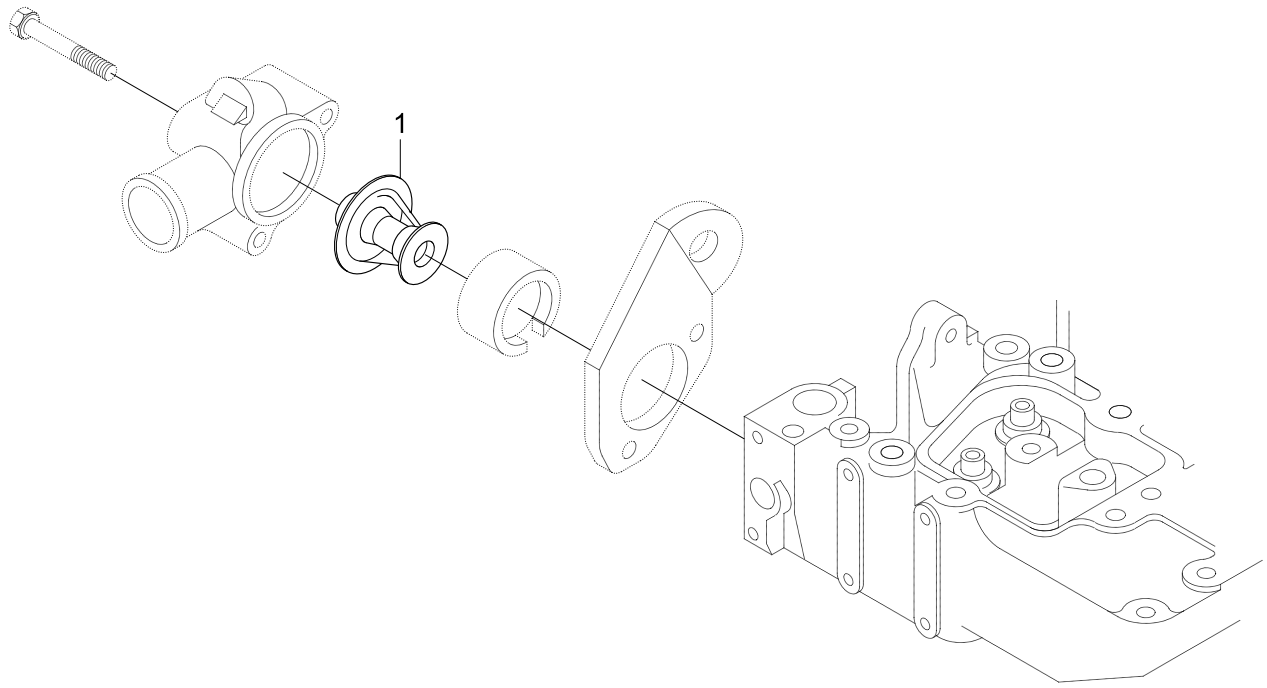

Item	Part_No	IS	Ord	T	Description	Qty	Serial_No	ITC	Remark
1	3917324				THERMOSTAT	1			EC9706

Item	Part_No	IS	Ord	T	Description	Qty	Serial_No	ITC	Remark
1	3935530				ALTERNATOR	1	- #0833		EE9176
	3972735				ALTERNATOR	1	#0834 -	D	

ALTERNATOR AND MOUNTING

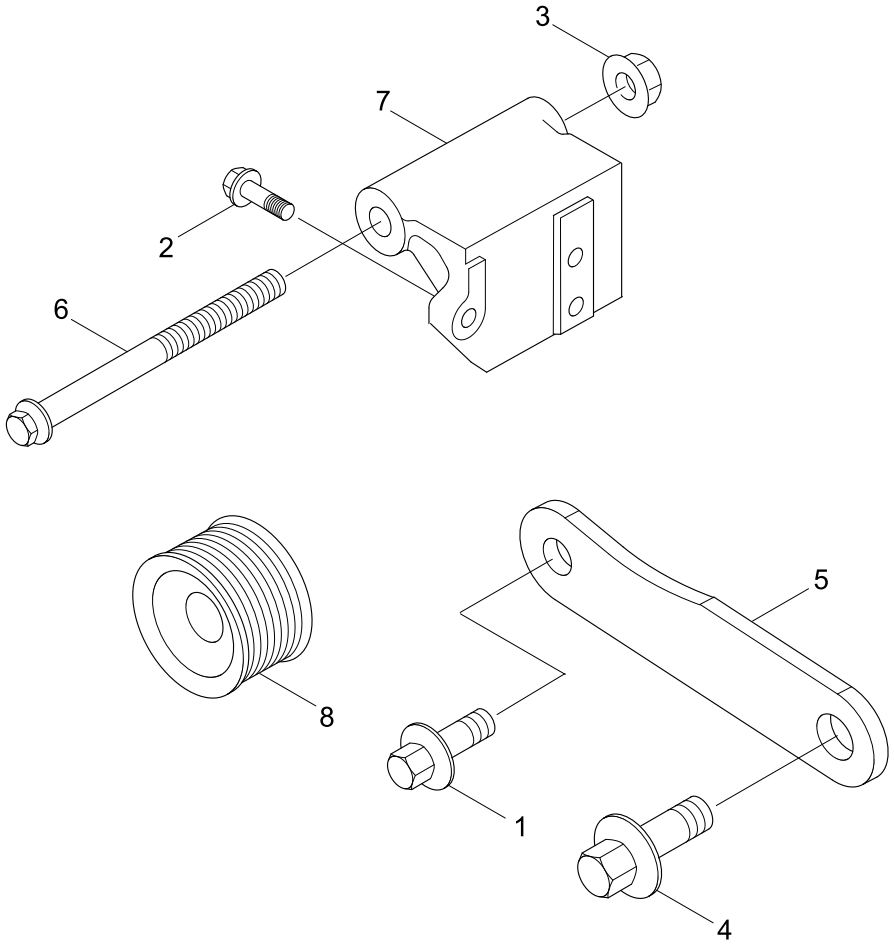

Item	Part_No	IS	Ord	T	Description	Qty	Serial_No	ITC	Remark
1	3052061				SCREW-HEX H/CAP	1			EH9465
2	3900631				SCREW-HEX F/HEAD CAP	3			
3	3903210				NUT-HEX FLANGE	1			
4	3902460				SCREW-HEX F/HEAD CAP	1			
N5	3939905				BRACE-ALTERNATOR	1			NOT
6	3903105				SCREW-HEX F/HEAD CAP	1			
7	3921737				SUPPORT-ALTERNATOR	1			
8	3925852				PULLEY-ALTERNATOR	1			
N	@				NOT INDIVIDUALLY SUPPLIED	AR			NOT

FAN DRIVE MOUNTING

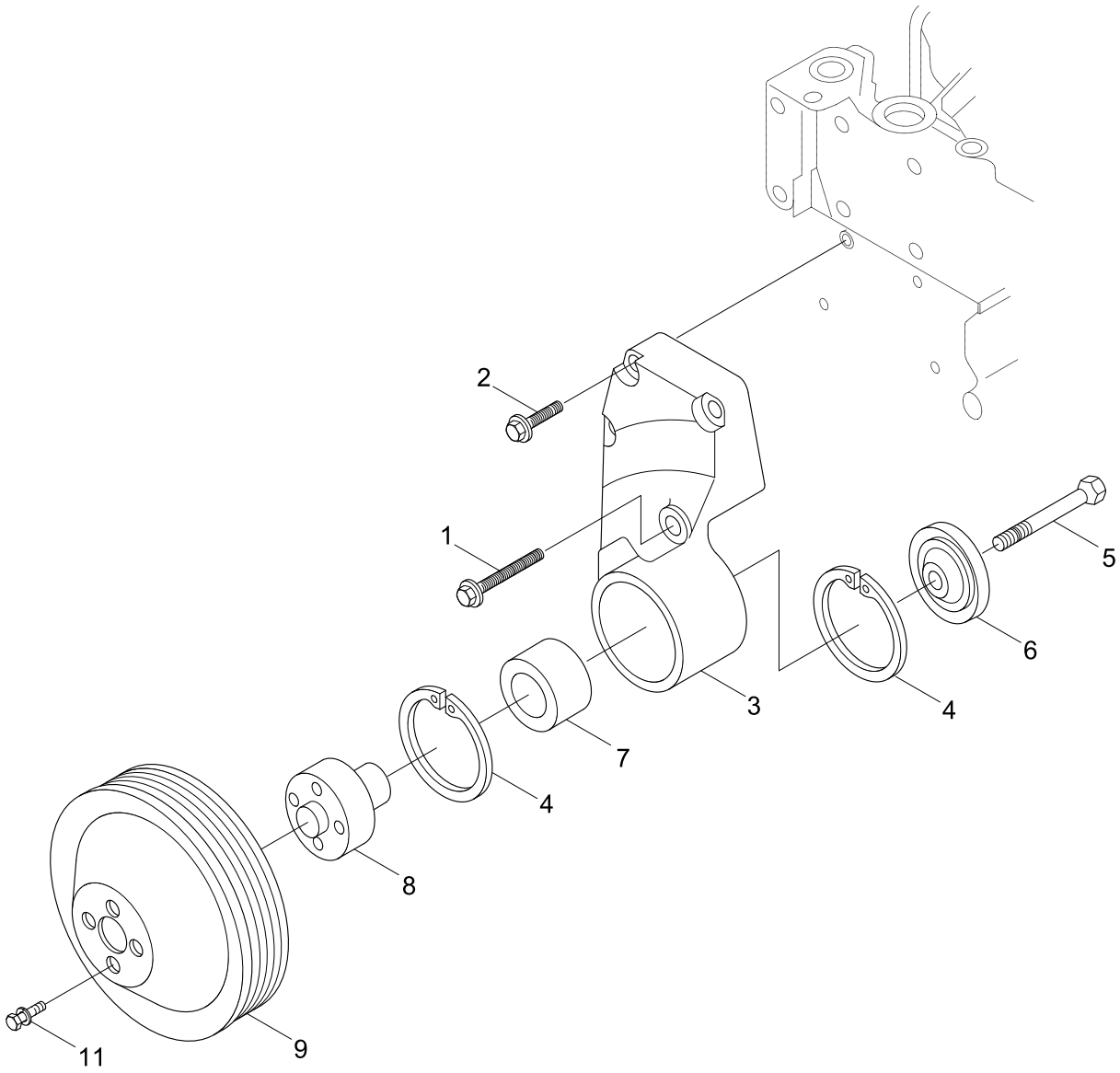

Item	Part_No	IS	Ord	T	Description	Qty	Serial_No	ITC	Remark
1	3901447				SCREW	1			FA9336
2	3902114				SCREW-HEX HEAD CAP	3			
N*	3285949				SUPPORT-FAN	1			NOT
N3	3285946				.SUPPORT-FAN	1			NOT
4	3035960				.RING-RETAINING	2			
5	3907769				.SCREW	1			
6	3923044				.RETAINER-FAN HUB	1			
7	3910739				.BEARING-BALL	1			
8	3911924				.HUB-FAN	1			
9	3914462				PULLEY-FAN	1			
11	3903990				SCREW-HEX HEAD CAP	4			FA9739-01
N	@				NOT INDIVIDUALLY SUPPLIED	AR			NOT

Item	Part_No	IS	Ord	T	Description	Qty	Serial_No	ITC	Remark
1	3900632				SCREW-HEX F/HEAD CAP	1			FF9419
*	3678923				PLUG-THREADED	2	#0001 -	-	
N2	3678924				.PLUG-THREADED	1	#0001 -	-	NOT
3	3678925				.SEAL/O-RING	1	#0001 -	-	
4	11LD-70010				FUEL FILTER	1	#0001 -	-	
5	3942453				ADAPTER	1			
6	3942627				HEAD-FUEL FILTER	1			
N	@				NOT INDIVIDUALLY SUPPLIED	AR			NOT

FUEL FILTER PLUMBING

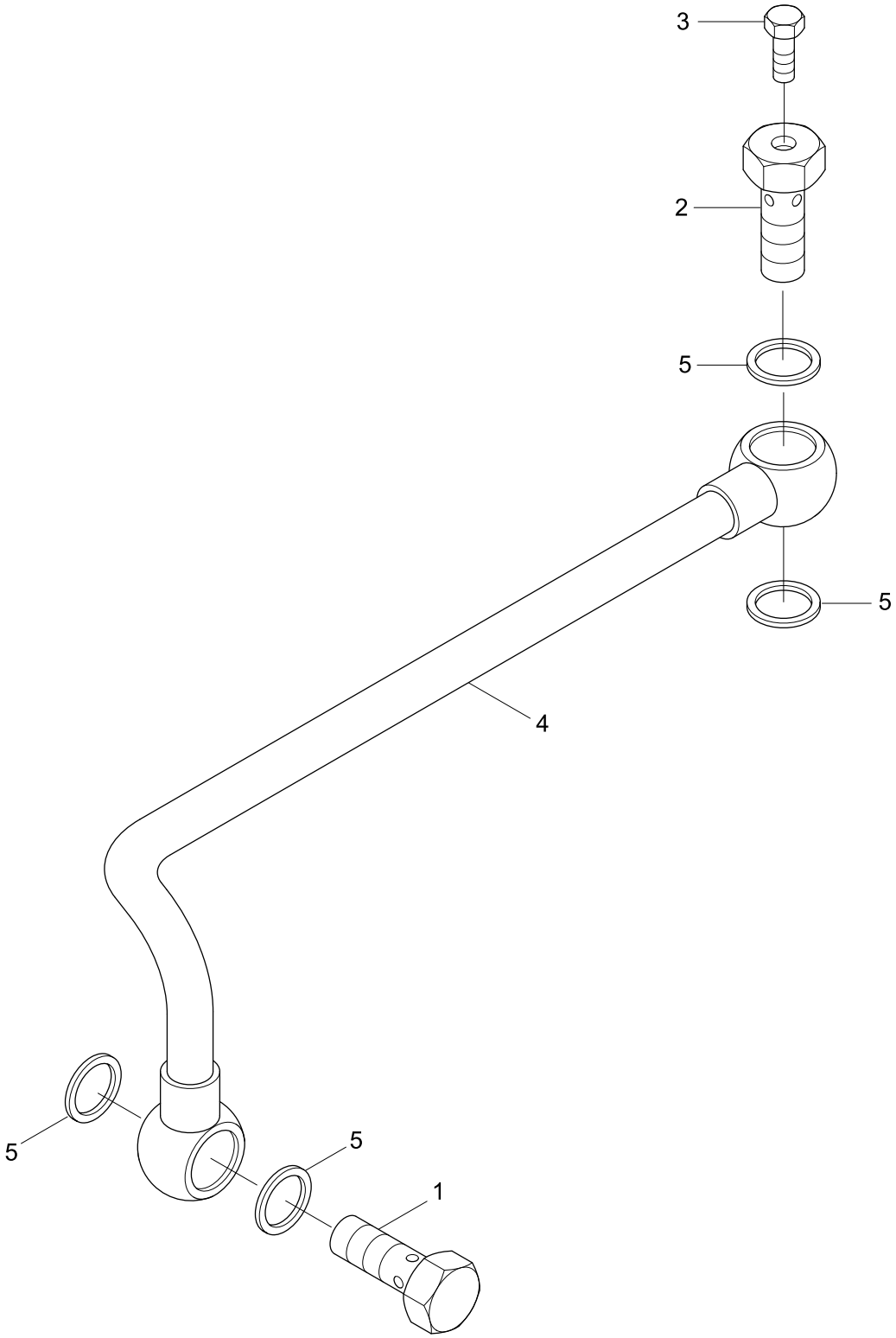

Item	Part_No	IS	Ord	T	Description	Qty	Serial_No	ITC	Remark
1	3903035				SCREW-BANJO CONN	1			FF9420
N*	3905860				SCREW	1			NOT
2	3911446				.SCREW	1			
3	3939570				.SCREW	1			
N4	3964492				TUBE-FUEL SUPPLY	1			NOT
5	3963983				WASHER-SEALING	4			
N	@				NOT INDIVIDUALLY SUPPLIED	AR			NOT

FLYWHEEL HOUSING

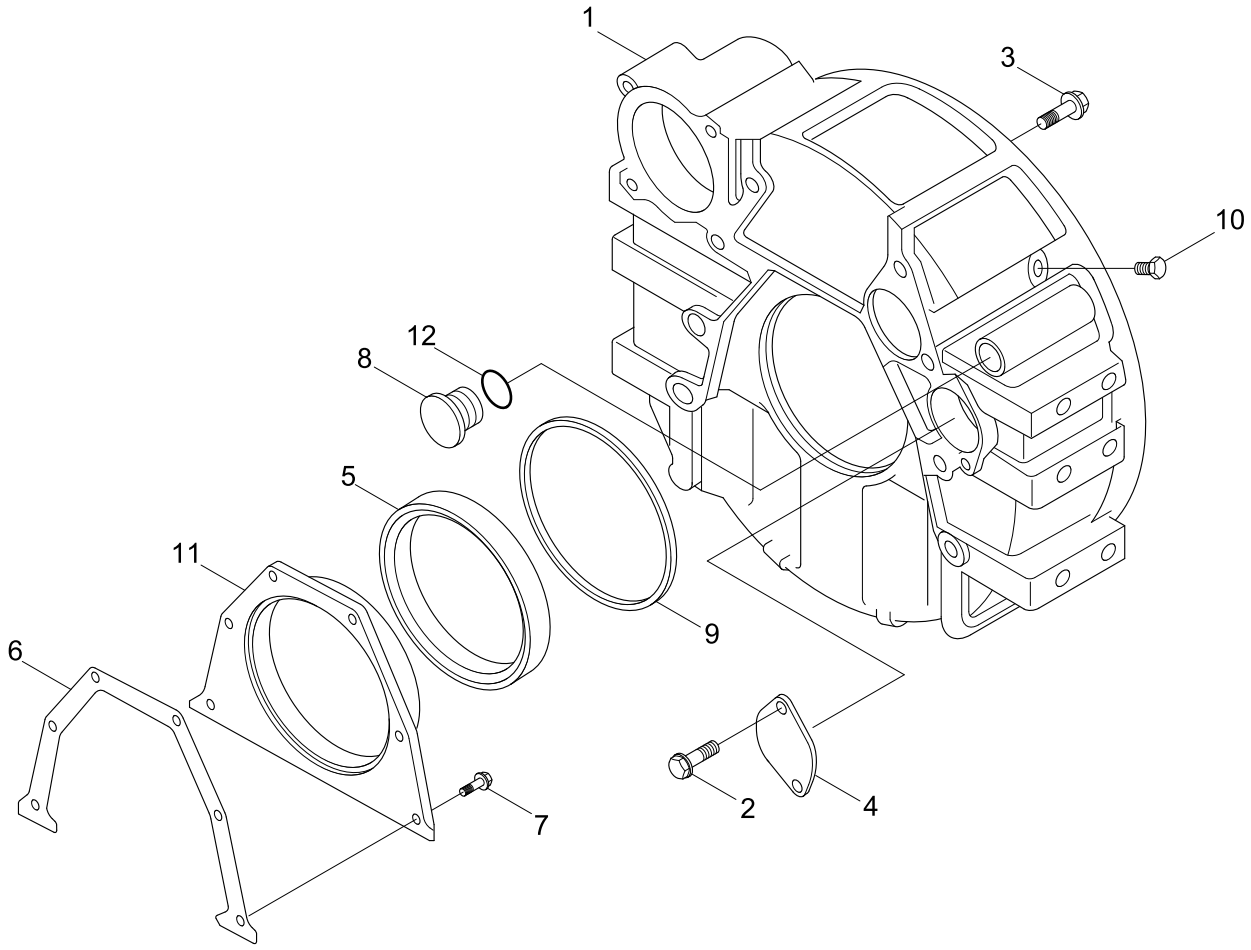

Item	Description	Parts no	Serial No.
1	FLYWHEEL HOUSING	3353826	#395,400,417~424,475~481,487,488, 497~499,503,505,512~
2	SCREW	3900225	

Item	Part_No	IS	Ord	T	Description	Qty	Serial_No	ITC	Remark
1	3937426				FLYWHEEL HOUSING	1	- #0511		FH9343-01
	3353826				FLYWHEEL HOUSING	1	#0512 -	B	FH9401,SEE NOTE
2	3912072				SCREW	2	- #0511		SEE NOTE
	3900225				SCREW-HEX HED CAP	2	#0512 -	B	SEE NOTE
3	3920447				SCREW-HEX HEAD CAP	8			
4	3925234				PLATE-COVER	1			
N*	3934486				KIT-SEAL	1			NOT
N5	3933262				.SEAL-OIL	1			NOT
6	3938159				GASKET-REAR COVER	1			
7	3991306				SCREW-FLANGE HEAD CAP	6			
8	3910248				PLUG/O-RING	1			
9	3912473				SEAL-RECT RING	1			
10	3904181				PLUG-THREADED	1			
N11	3936895				COVER-REAR	1			NOT
12	3910260				SEAL/O-RING	1			
N	@				NOT INDIVIDUALLY SUPPLIED	AR			NOT

FUEL INJECTION PUMP

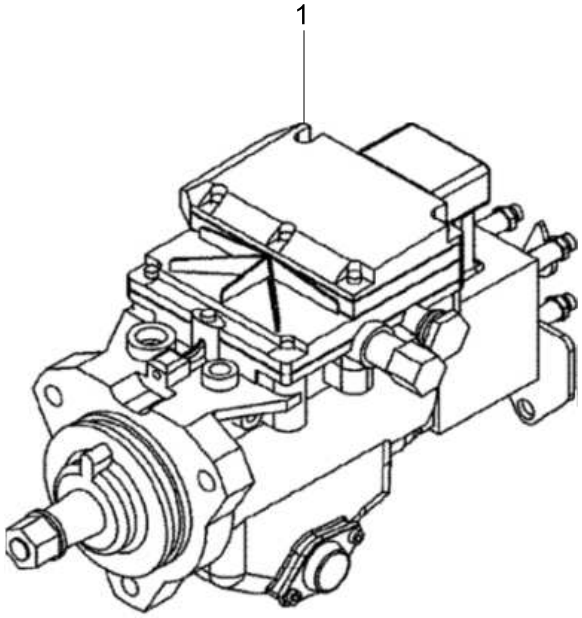

Item	Part_No	IS	Ord	T	Description	Qty	Serial_No	ITC	Remark
1	3965403				PUMP-FUEL INJECTION	1	#0001 -	-	FP90009

FUEL PUMP MOUNTING

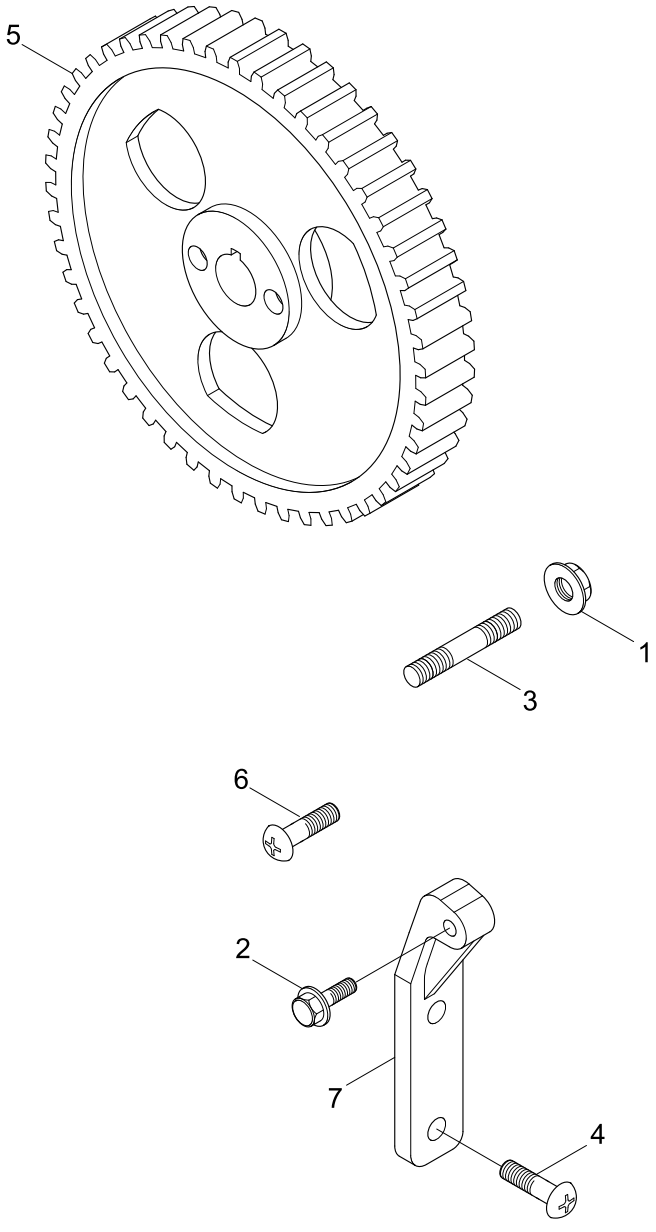

Item	Part_No	IS	Ord	T	Description	Qty	Serial_No	ITC	Remark
1	3900589				NUT-HEX FLANGE	2			FP99287-03
2	3900630				SCREW-HEX HEAD CAP	1			
3	3902501				STUD	2			
4	3900631				SCREW-HEX HEAD CAP	2			
5	3936021				GEAR-FUEL PUMP	1			
N6	3957836				SCREW-ROUND HEAD CAP	1			NOT
N7	3991820				BRACE-FUEL PUMP	1			NOT
N7-1	3964189				.SEAL-RECTANGULAR RING	1			NOT
N	@				NOT INDIVIDUALLY SUPPLIED	AR			NOT

FUEL TRANSFER PUMP

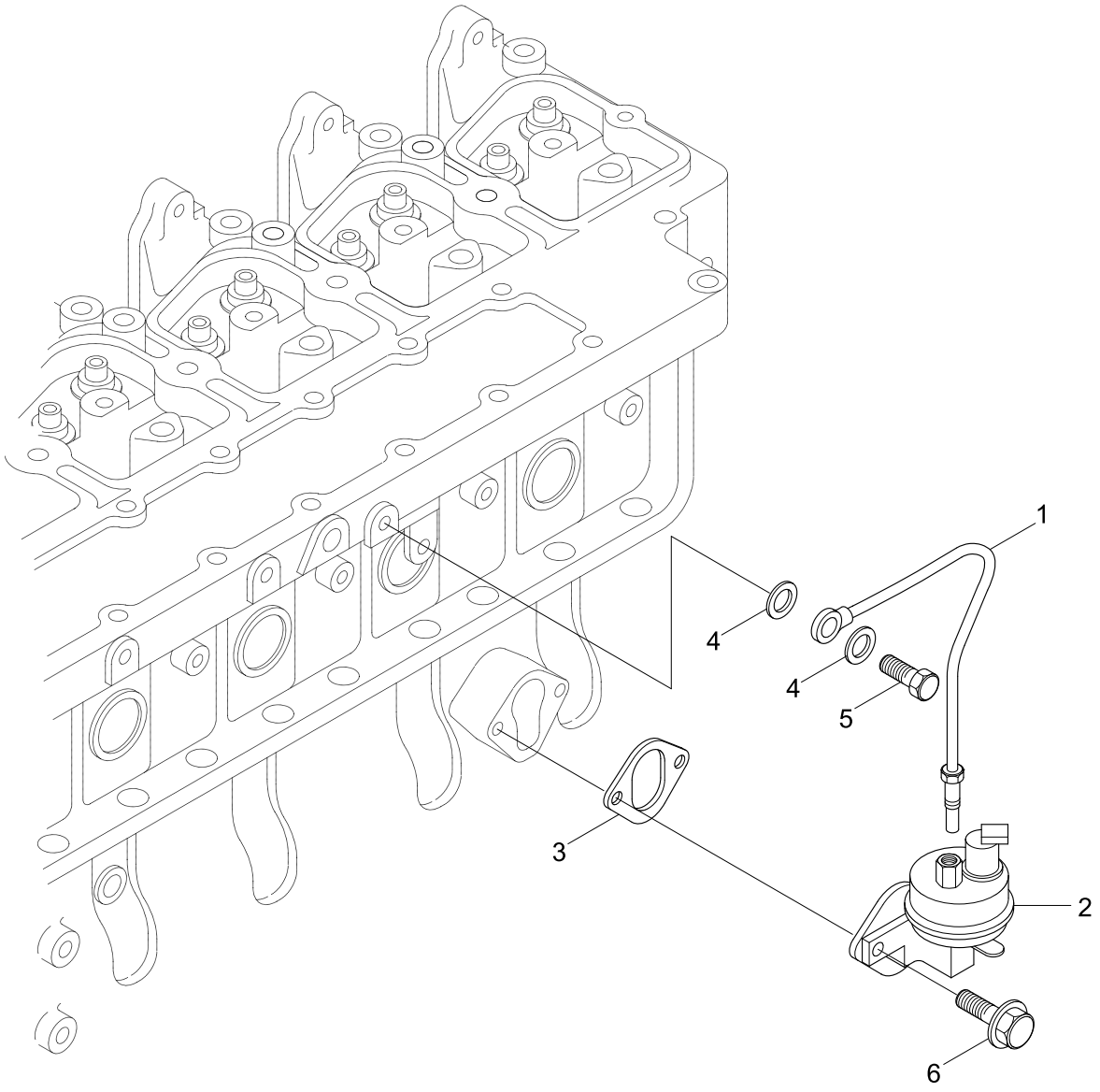

Item	Part_No	IS	Ord	T	Description	Qty	Serial_No	ITC	Remark
N1	3964476				TUBE-FUEL SUPPLY	1			NOT
N2	3966154				PUMP-FUEL TRANSPER	1			NOT
3	3939258				GASKET-COVER PLATE	1			
4	3935171				WASHER-SEALING	2			
5	3916361				SCREW	1			
6	3900631				SCREW-HEX HEAD CAP	2			
N	@				NOT INDIVIDUALLY SUPPLIED	AR			NOT

FUEL STRAINER

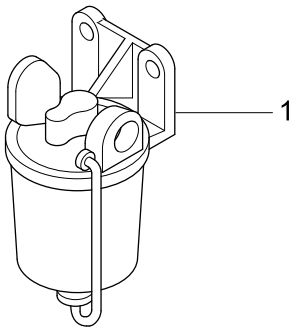

Item	Part_No	IS	Ord	T	Description	Qty	Serial_No	ITC	Remark
*	@				FUEL PLUMBING	1	#0001 -	-	NOT
1	3903380				.SEAL-BANJO CONN	6			
2	3905307				.SCREW-BANJO CONN	6			
3	3918109				.SCREW	1			
4	3918188				.WASHER-SEALING	2			
5	3924726				.VALVE-CHECK	1			
*	167157				..BALL-CHECK	1			
	3916895				..PIN-ROLL	1			
	3924723				..SCREW-BANJO CONN	1			
6	3934476				.CONNECTOR-BANJO	1			
7	3963983				.WASHER-SEALING	2			
8	3966864				.MANIFOLD-FUEL	1			

FUEL PLUMBING

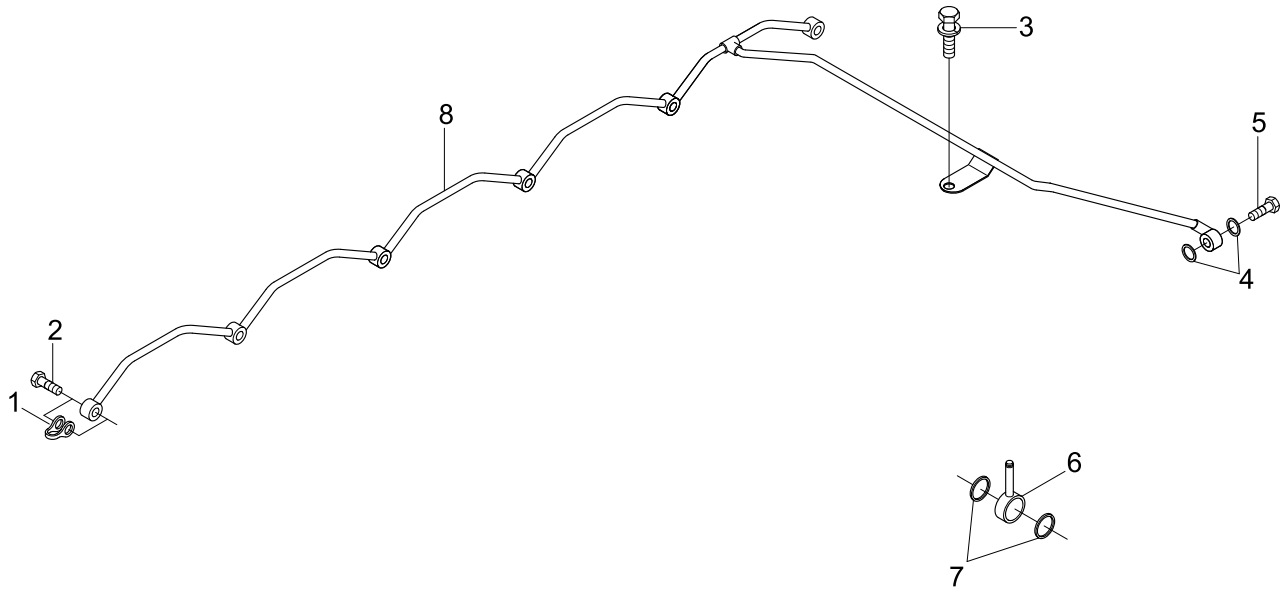

Item	Part_No	IS	Ord	T	Description	Qty	Serial_No	ITC	Remark
*	@				FUEL PLUMBING	1	#0001 -	-	NOT
1	3903380				.SEAL-BANJO CONN	6			
2	3905307				.SCREW-BANJO CONN	6			
3	3918109				.SCREW	1			
4	3918188				.WASHER-SEALING	2			
5	3924726				.VALVE-CHECK	1			
*	167157				..BALL-CHECK	1			
	3916895				..PIN-ROLL	1			
	3924723				..SCREW-BANJO CONN	1			
6	3934476				.CONNECTOR-BANJO	1			
7	3963983				.WASHER-SEALING	2			
8	3966864				.MANIFOLD-FUEL	1			

FLYWHEEL AND MOUNTING

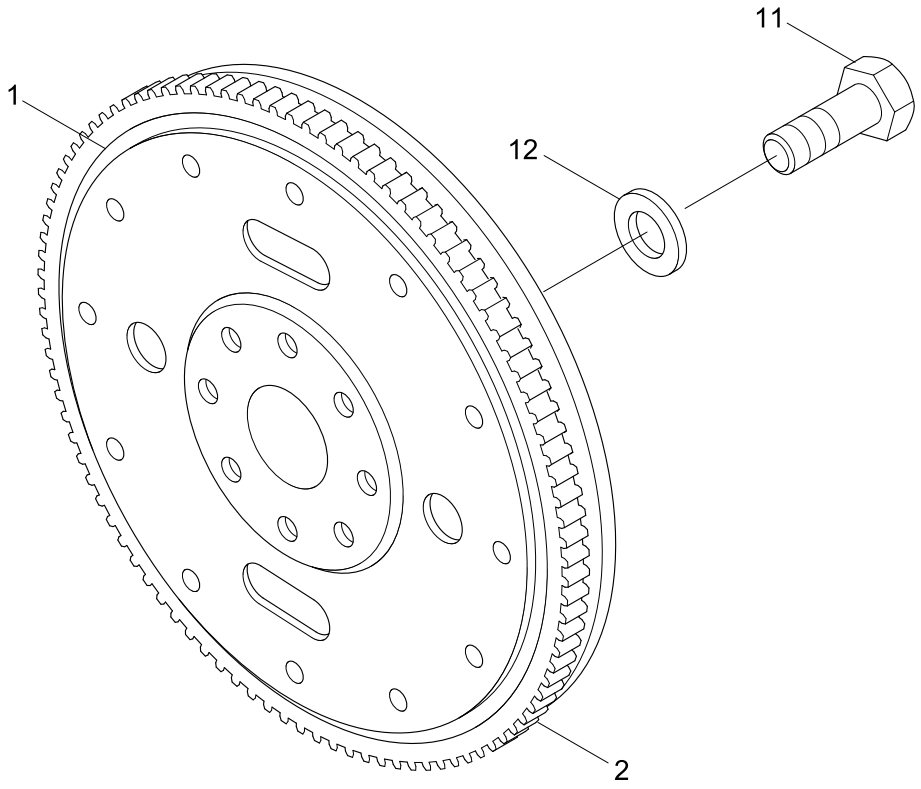

Item	Part_No	IS	Ord	T	Description	Qty	Serial_No	ITC	Remark
*	3935089				FLYWHEEL	1			FW9589
N1	3935088				.FLYWHEEL	1			NOT
2	3905427				.GEAR-FLYWHEEL RING	1			
11	3901395				SCREW	8			FW9704
12	3900269				WASHER-PLAIN	8			
N	@				NOT INDIVIDUALLY SUPPLIED	AR			NOT

FRONT GEAR COVER

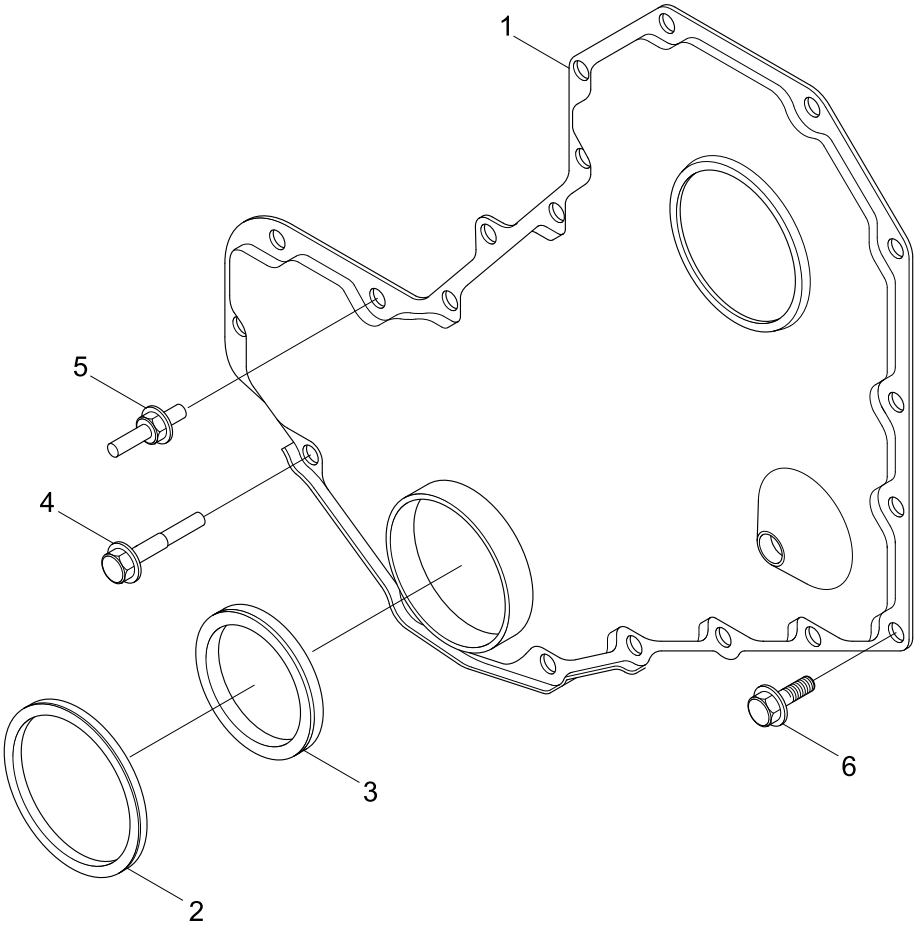

Item	Part_No	IS	Ord	T	Description	Qty	Serial_No	ITC	Remark
N*-1	3287076				COVER-GEAR	1			NOT
N1	3286313				.COVER-GEAR	1			NOT
*-2	3804899				SEAL KIT-FRONT				
N*-21	3937111				.SEAL KIT-FRONT	1			NOT
2	3933261				..SHIELD-DUST	1			
N3	3935959				..SEAL-OIL	1			NOT
4	3900633				SCREW-HEX HD CAP	9			
5	3921816				SCREW	2			
6	3924962				SCREW	9			
N	@				NOT INDIVIDUALLY SUPPLIED	AR			NOT

CAB HEATER PLUMBING

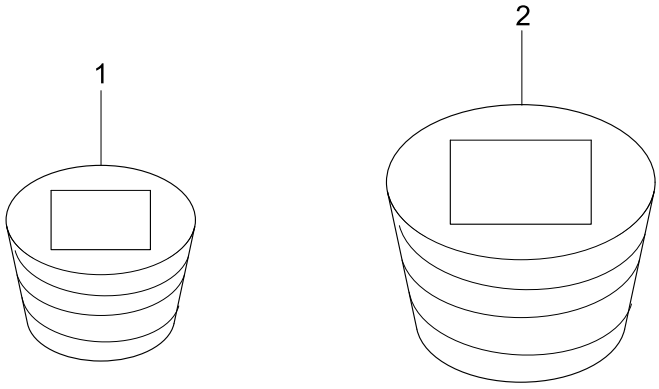

Item	Part_No	IS	Ord	T	Description	Qty	Serial_No	ITC	Remark
1	3008468				PLUG-PIPE	1			HC9031
2	3008469				PLUG-PIPE	1			

AUXILIARY PUMP MOUNTING

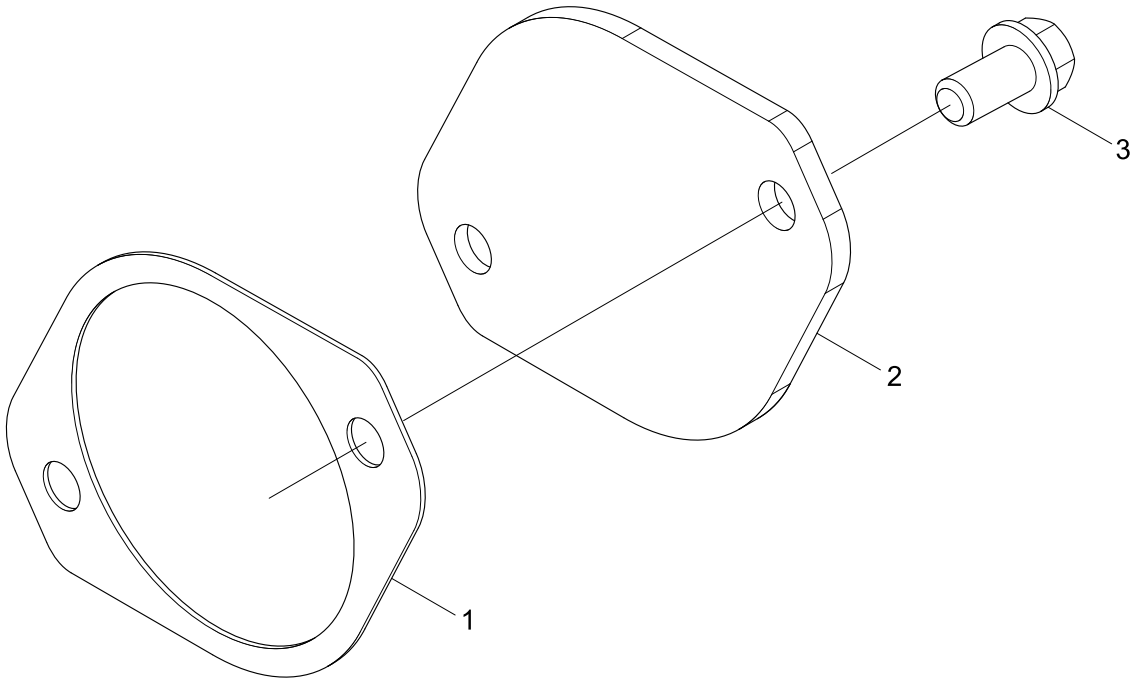

Item	Part_No	IS	Ord	T	Description	Qty	Serial_No	ITC	Remark
1	154916				GASKET-GEAR PUMP	1			HD9716
2	204048				PLATE-COVER	1			
3	3903990				SCREW-HEX HEAD CAP	2			

AIR INTAKE CONNECTION AND MOUNTING

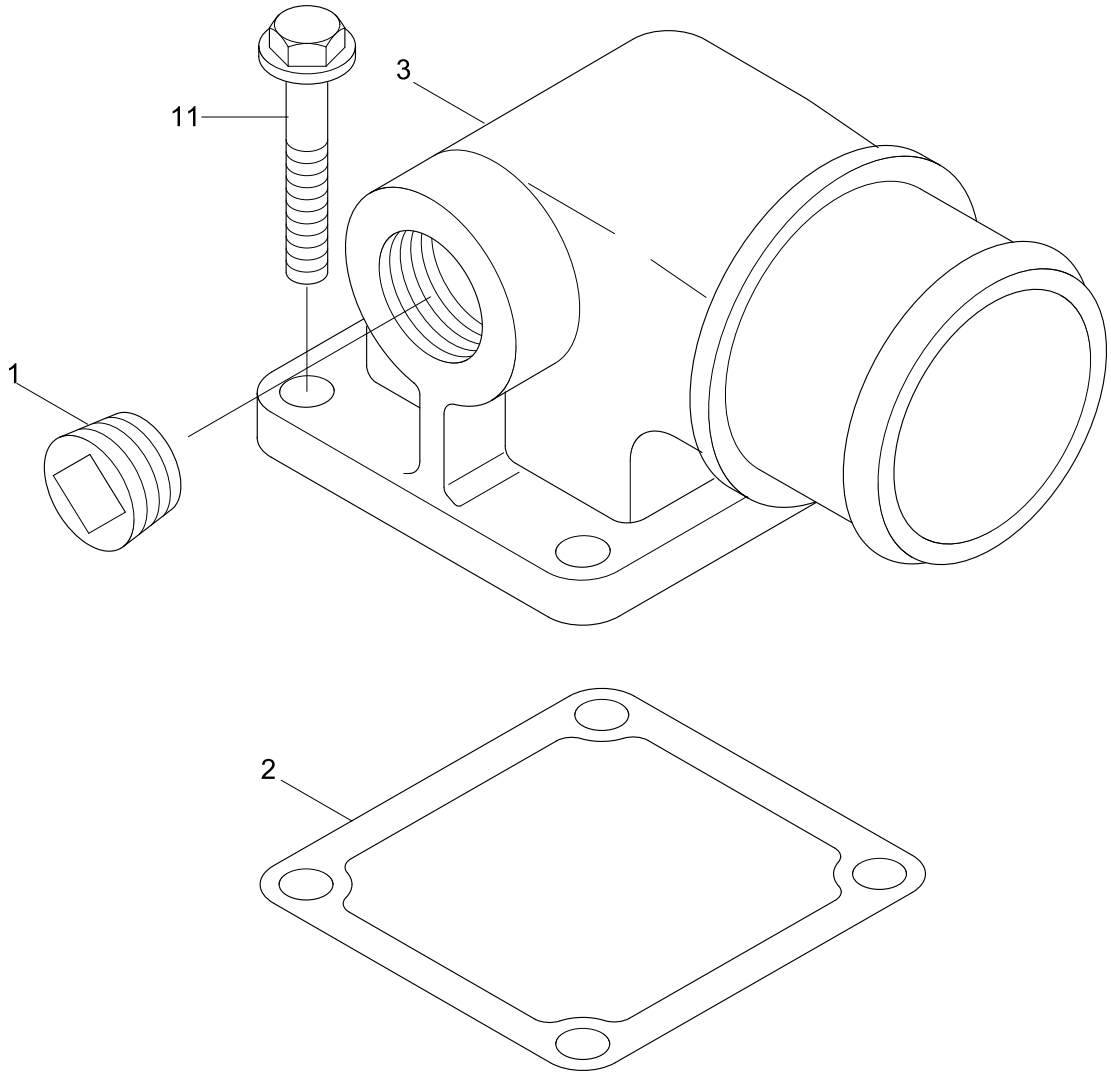

Item	Part_No	IS	Ord	T	Description	Qty	Serial_No	ITC	Remark
1	3008469				PLUG-PIPE	1			IC9280
2	3938158				GASKET-CONNECTION	1			
3	3927104				CONECTION-AIR INTAKE	1			
11	3919864				SCREW-HEX FLANGE	4			IC9736

AIR INTAKE HOSE

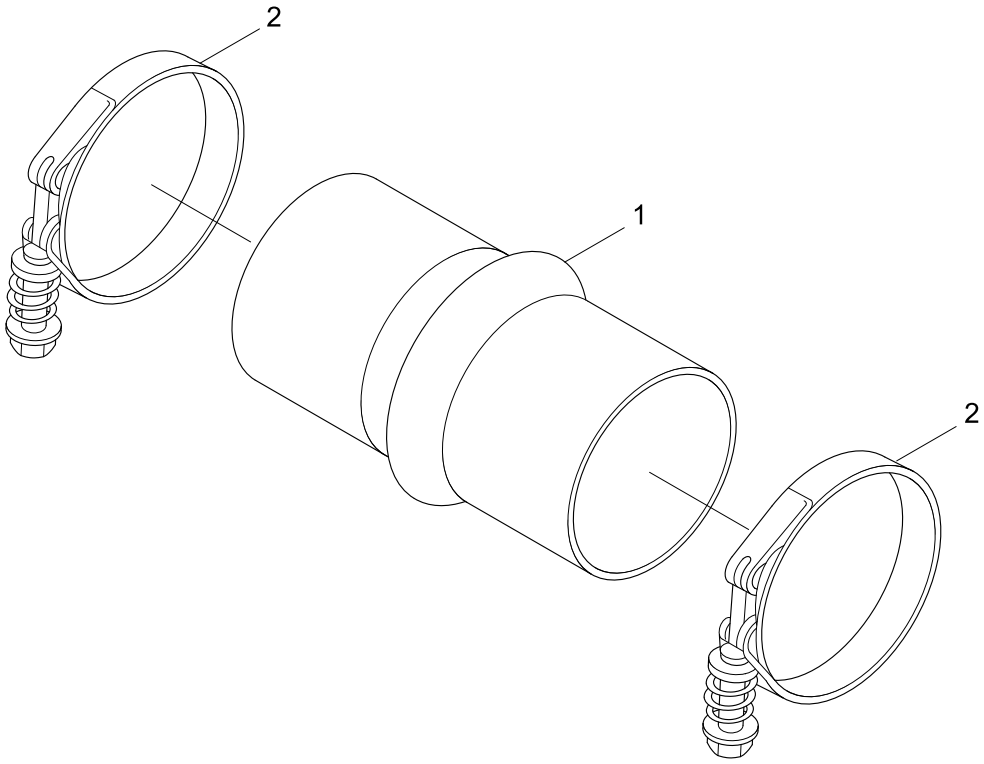

Item	Part_No	IS	Ord	T	Description	Qty	Serial_No	ITC	Remark
1	3071051				HOSE-PUMP	4			IC9288
2	3926702				CLAMP-SPRING HOSE	8			

Item	Part_No	IS	Ord	T	Description	Qty	Serial_No	ITC	Remark
1	3918109				SCREW	3			IM9735-02
2	3938152				GASKET	1			
N3	3991819				COVER-INTAKE MANIFOLD	1			NOT
N	@				NOT INDIVIDUALLY SUPPLIED	AR			NOT

AIR TRANSFER CONNECTION

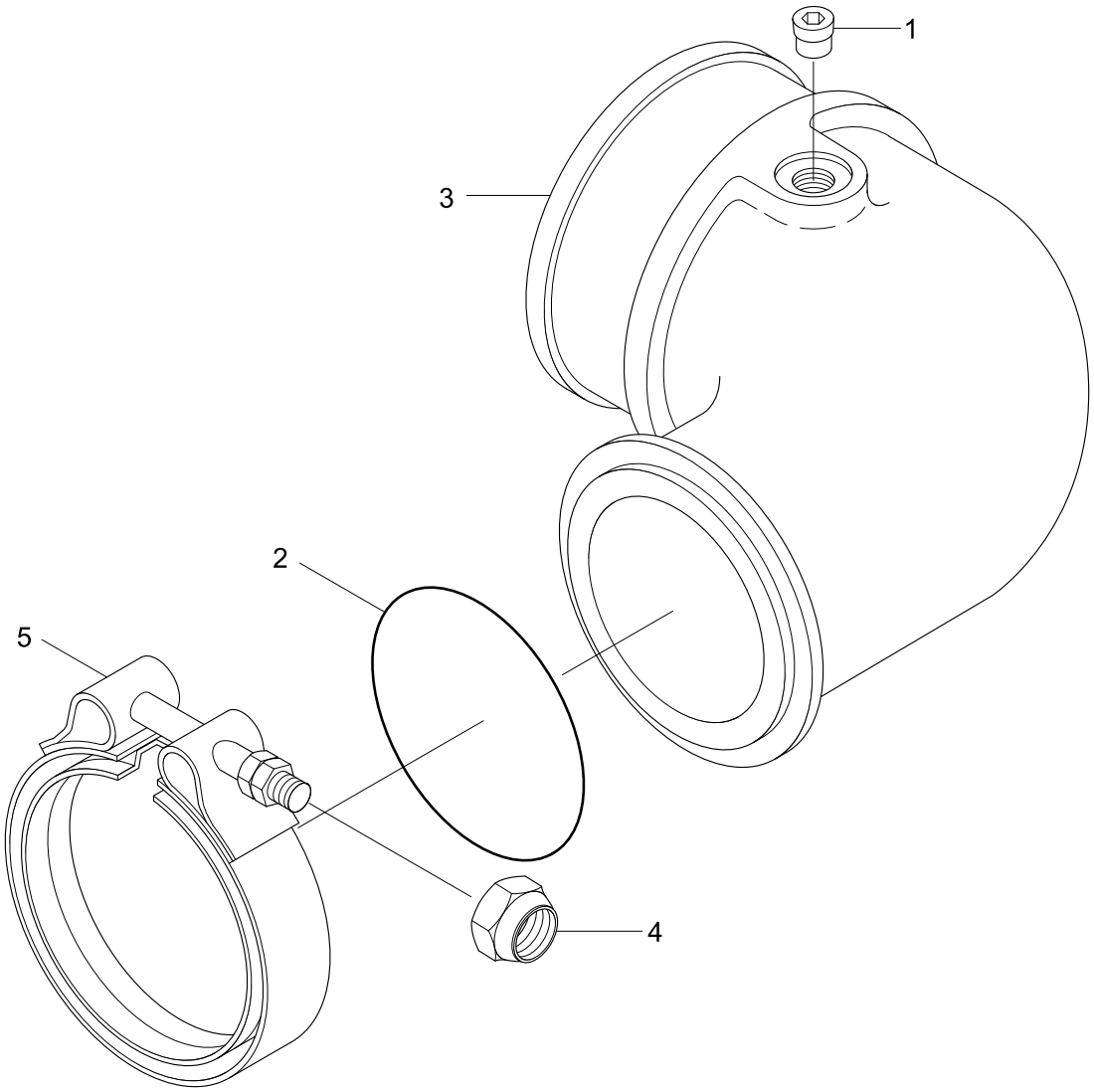

Item	Part_No	IS	Ord	T	Description	Qty	Serial_No	ITC	Remark
1	3008465				PLUG-PIPE	1			IT9039
2	3883284				SEAL/O-RING	1			
3	3918685				PIPE-AIR TRANSFER	1			
4	3923041				NUT-LOCK	1			
N5	3923060				CLAMP-V BAND	1			NOT
N	@				NOT INDIVIDUALLY SUPPLIED	AR			NOT

LIFTING ARRANGEMENT

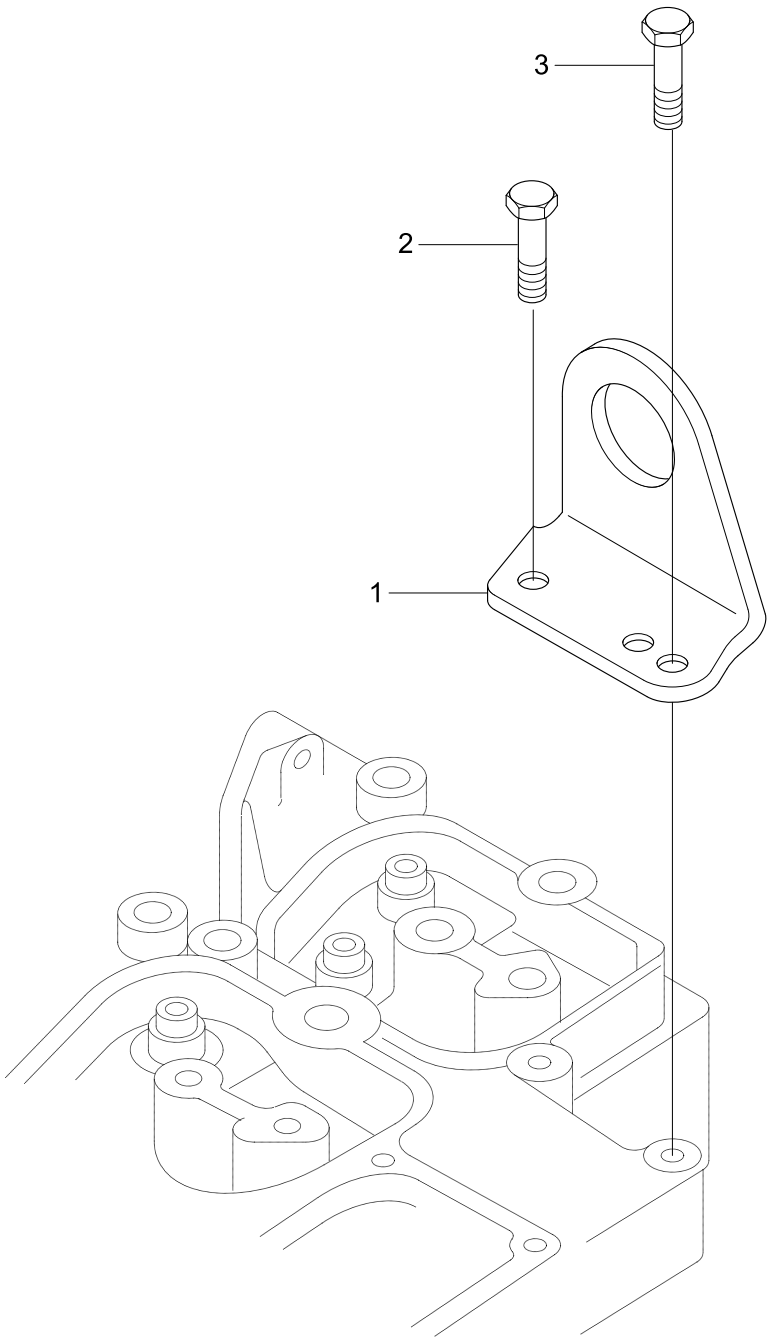

Item	Part_No	IS	Ord	T	Description	Qty	Serial_No	ITC	Remark
1	3908118				BRACKET-LIFTING	1			LA9071-01
2	3910495				SCREW	1			
3	3944061				SCREW-HEX F/HD CAP	1			

ENGINE OIL COOLER

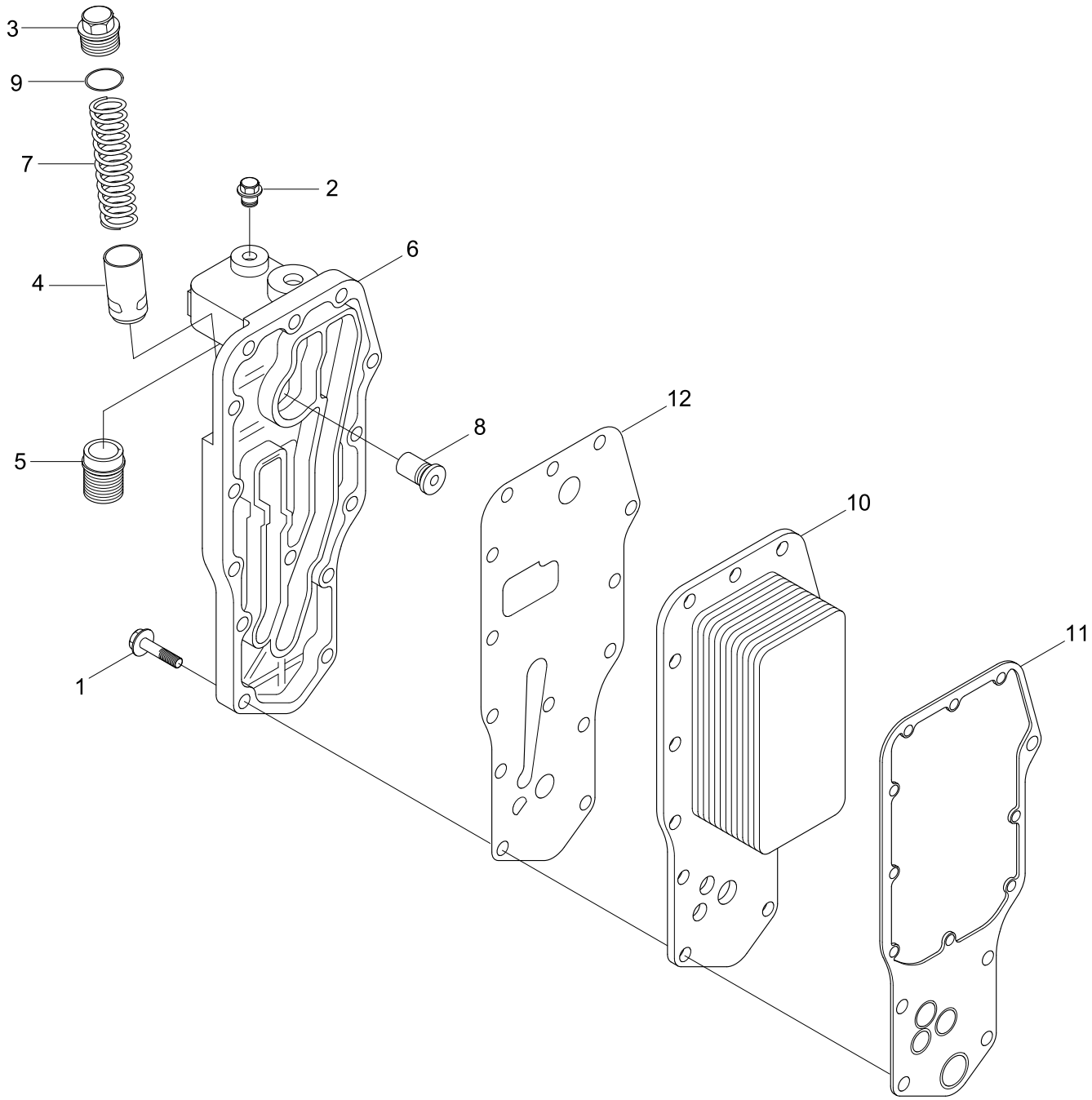

Item	Part_No	IS	Ord	T	Description	Qty	Serial_No	ITC	Remark
1	3900632				SCREW	14			LC9727-01
2	3906619				PLUG-PIPE	1			
3	3915787				PLUG-THREADED	1			
4	3918428				PLUNGER	1			
*	3918954				HEAD-LUB OIL FILTER	1			
5	3909355				.ADAPTER-FILTER HEAD	1			
N6	3924338				.HEAD-LUB OIL FILTER	1			NOT
7	3925009				SPRING-COMPRESSION	1			
8	3936365				VALVE	1			
9	3929457				SEAL/O-RING	1			
10	3957544				CORE-COOLER	1			
11	3942914				GASKET-O/COOLER CORE	1			
12	3942915				GASKET-FILTER HEAD	1			
N	@				NOT INDIVIDUALLY SUPPLIED	AR			NOT

LUBE OIL FILTER

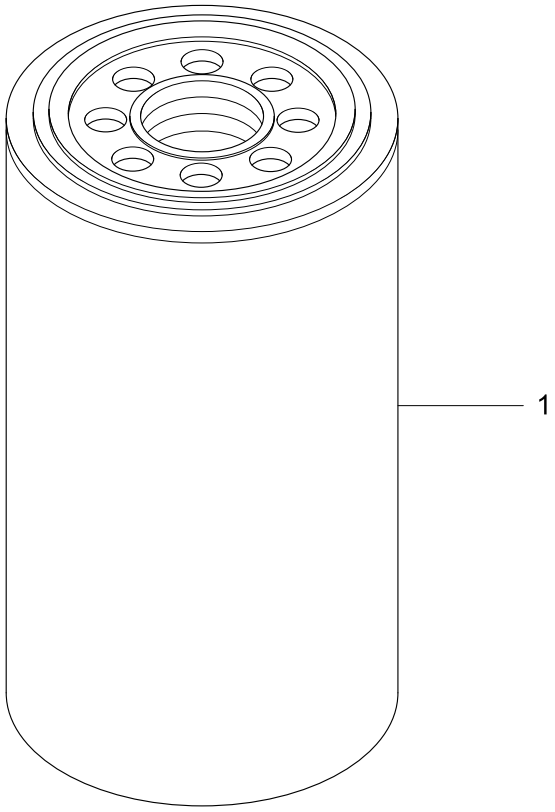

Item	Part_No	IS	Ord	T	Description	Qty	Serial_No	ITC	Remark
1	11E1-70140				FILTER-LUB OIL	1	#0001 -	-	LF9098

OIL LEVEL GAUGE

SERIAL NO. : -#0179

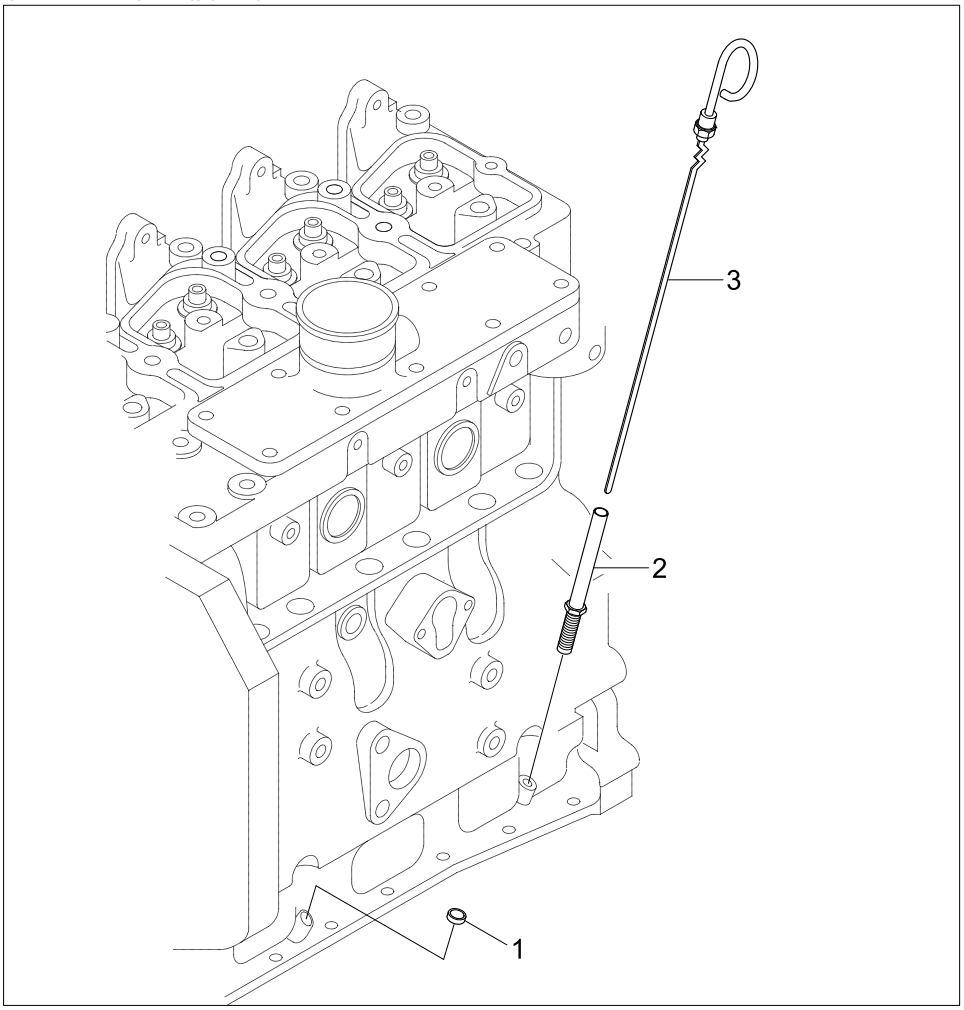

SERIAL NO. : #0180-

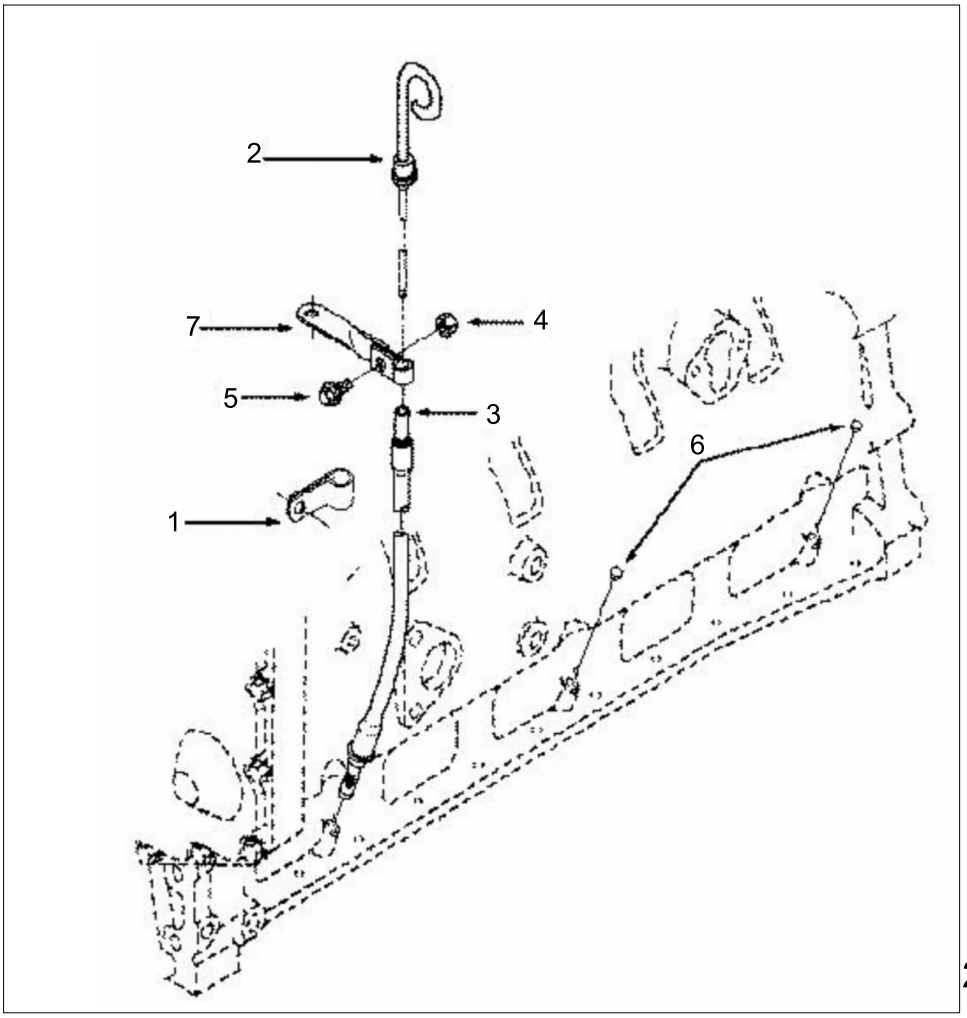

Item	Part_No	IS	Ord	T	Description	Qty	Serial_No	ITC	Remark
1	3900955				PLUG-EXPANSION	3	- #0179	-	LG90003
2	3905128				TUBE-OIL GAUGE	1	- #0179	-	
3	3907714				DIPSTICK	1	- #0179	-	
1	554013				CLAMP-TUBE	1	#0180 -	-	LG9777
2	3965027				DIPSTICK	1	#0180 -	-	
3	3957927				TUBE-OIL GAUGE	1	#0180 -	-	
4	3900240				NUT	1	#0180 -	-	
5	3900629				SCREW-H/FLANGE CAP	1	#0180 -	-	
6	3900955				PLUG-EXPANSION	3	#0180 -	-	
7	3965089				BRACE-TUBE	1	#0180 -	-	

LUBE OIL PUMP

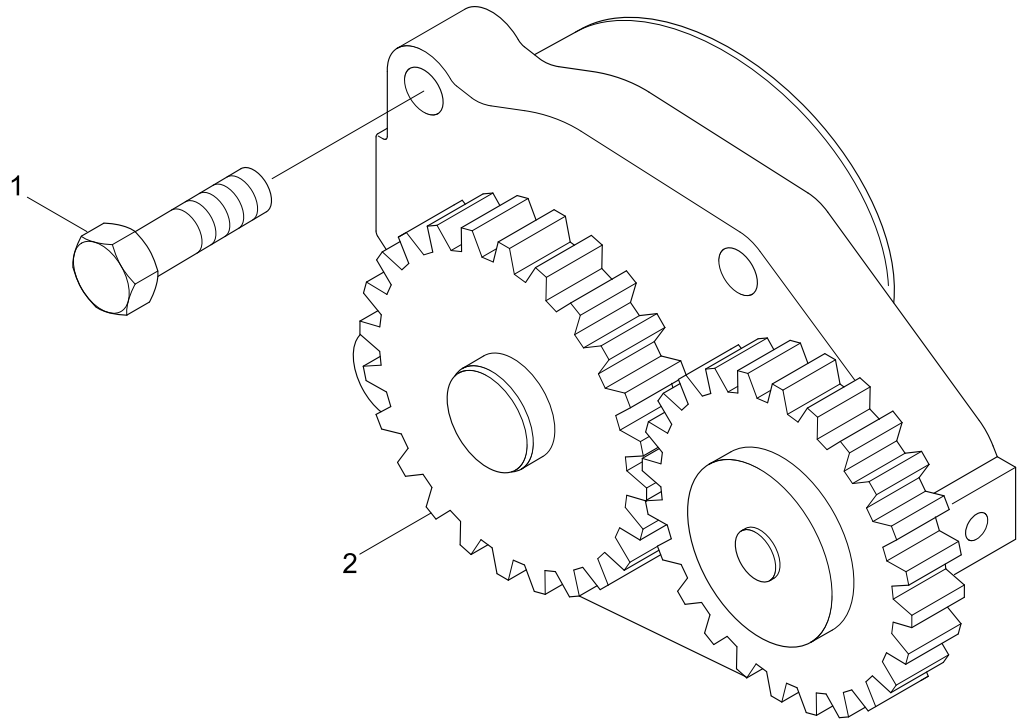

Item	Part_No	IS	Ord	T	Description	Qty	Serial_No	ITC	Remark
1	3900677				SCREW	4			LP9729
2	3937404				PUMP-LUBE OIL	1			

NOISE REDUCTION DEVICE

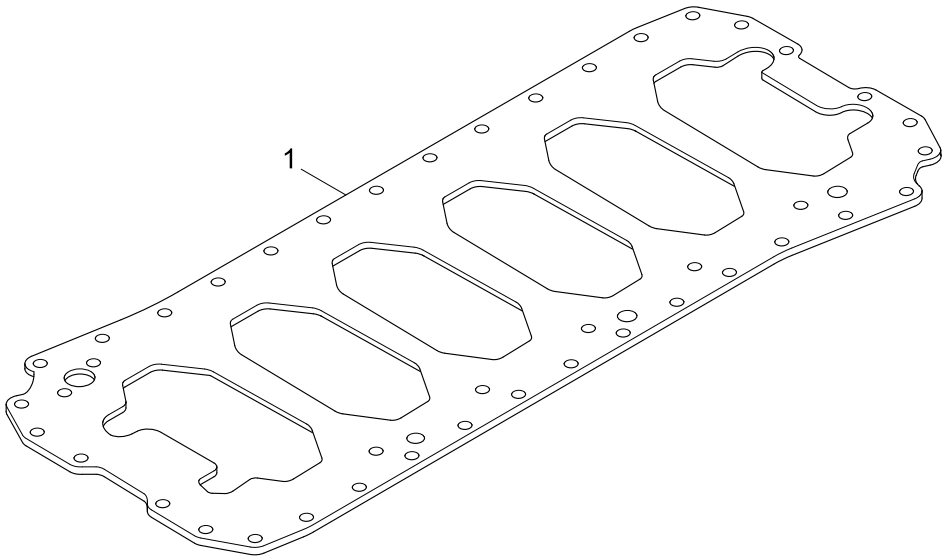

Item	Part_No	IS	Ord	T	Description	Qty	Serial_No	ITC	Remark
1	3941556				PLATE-CYL BLOCK	1			NP9044

OIL FILLER ARRANGEMENT

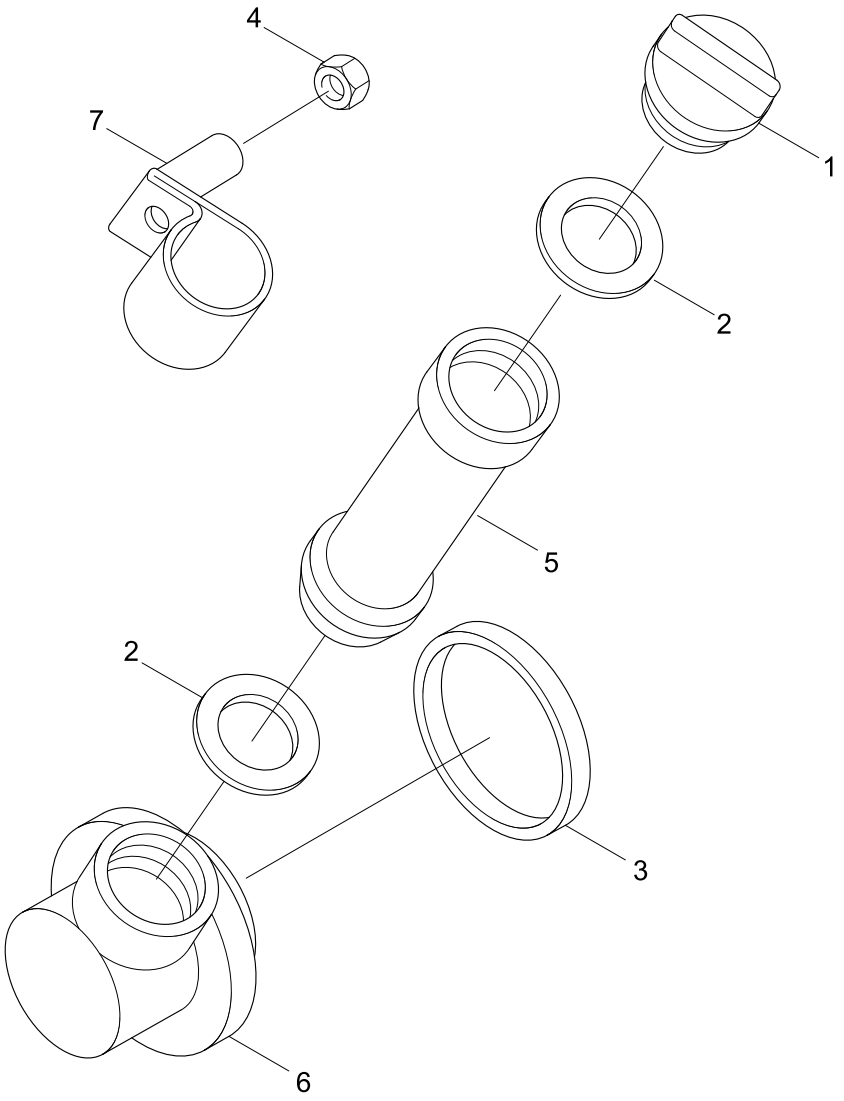

Item	Part_No	IS	Ord	T	Description	Qty	Serial_No	ITC	Remark
1	3914136				CAP-FILLER	1			OB9292
2	3936876				SEAL-RECT RING	2			
3	3903475				SEAL-RECT RING	1			
4	3906216				NUT-HEX FLANGE	1			
5	3914738				TUBE-OIL FILLER	1			
6	3921644				CONNECTION-OIL FILTER	1			
7	3921815				CLIP	1			

HAND HOLE COVER

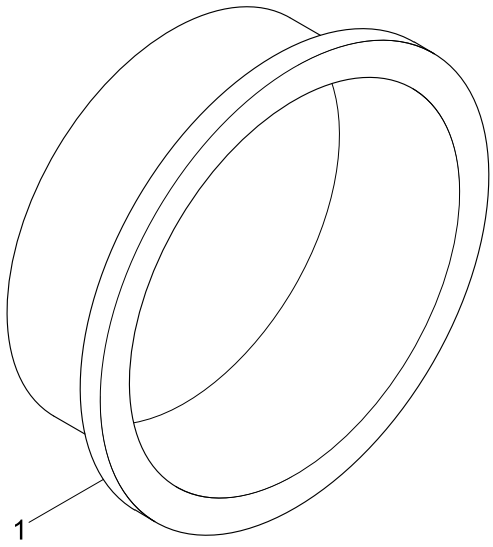

Item	Part_No	IS	Ord	T	Description	Qty	Serial_No	ITC	Remark
1	3900958				PLUG-EXPANSION	1			OB9721

OIL PAN AND MOUNTING

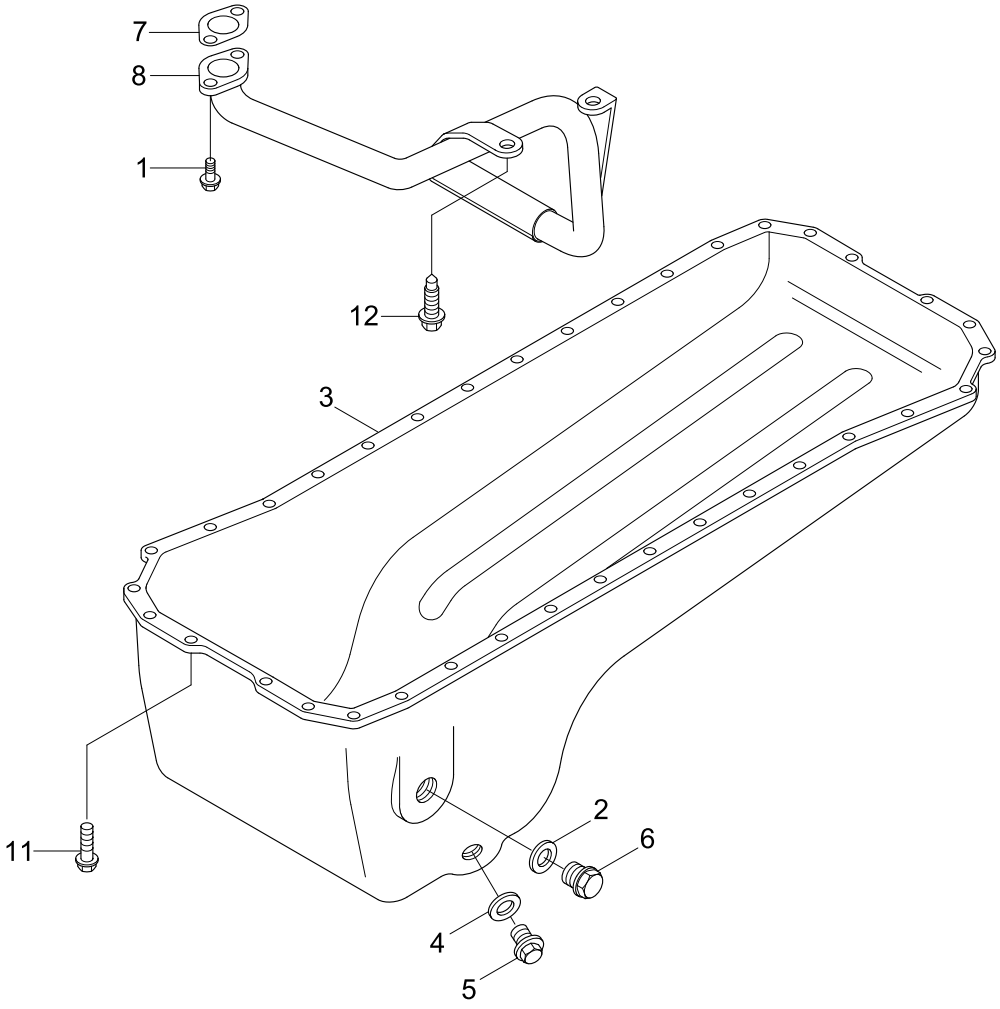

Item	Part_No	IS	Ord	T	Description	Qty	Serial_No	ITC	Remark
N1	@				BOLT	AR			NOT
2	3902425				WASHER-SEALING	1			
N3	3915703				PAN-OIL	1			NOT
4	3920773				WASHER-SEALING	1			
5	3924147				PLUG	1			
6	3924148				PLUG	1			
7	3938157				GASKET-FLANGE	1			
8	3934942				CONNECTION	1			
11	3900631				SCREW-HEX HEAD CAP	36			OP9739
12	3907860				SCREW	2			
N	@				NOT INDIVIDUALLY SUPPLIED	AR			NOT

ACCESSORY DRIVE PULLEY

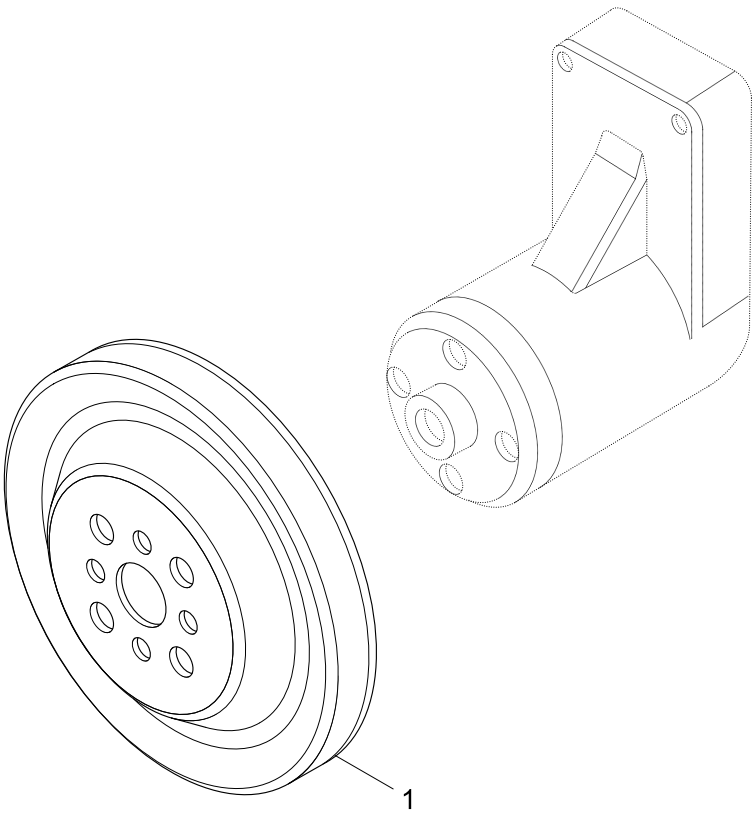

Item	Part_No	IS	Ord	T	Description	Qty	Serial_No	ITC	Remark
1	3919624				PULLEY	1			PA9001-01

ENGINE CONTROL MODULE

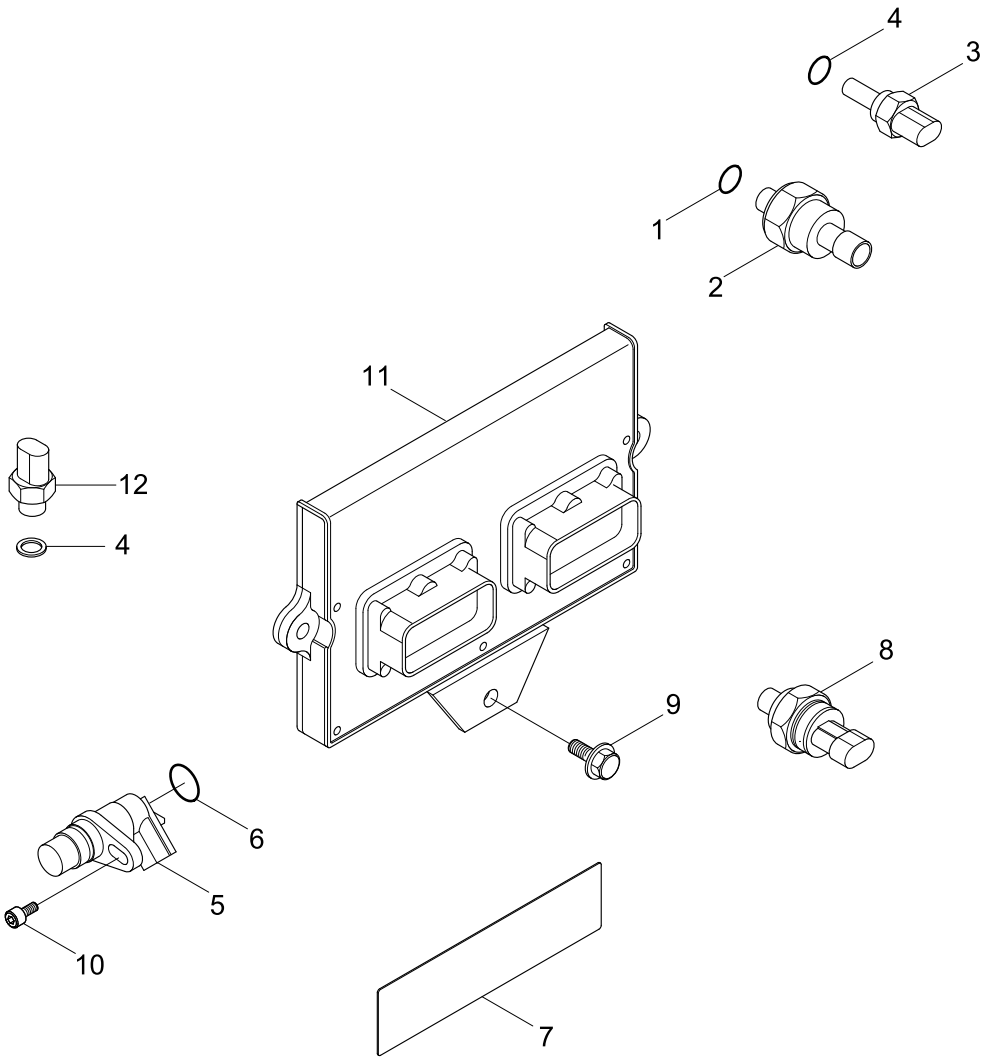

Item	Part_No	IS	Ord	T	Description	Qty	Serial_No	ITC	Remark
*-1	3348747				SENSOR-PRESSURE	1		-	INTAKE AIR
1	3330202				.SEAL/O-RING	1			PH9845-08
N2	3348748				.SENSOR-PRESSURE	1			NOT
*-2	3408345				TEMP SENSOR-AIR	1		-	INTAKE AIR
N3	3408346				.SENSOR-TEMP	1			NOT
4	4010519				.SEAL/O-RING	1			
N*-3	4921597				SENSOR-POSITION	1		-	NOT
N5	4921598				.SENSOR-POSITION	1			NOT
6	3408438				.SEAL/O-RING	1			
7	3609867				DATAPLATE	1			
8	3613547				SENSOR-TEMPERATURE	1		-	COOLANT
9	3900630				SCREW-HEX F/HEAD CAP	3			
10	3906391				SCREW-F/HEAD CAP	1			
N11	3990517				MODULE	1	#0001 -	-	NOT
*-4	4076930				SW-PRESSURE	1		-	OIL PRESSURE
4	4010519				.SEAL/O-RING	1			
12	4076931				.SW-PRESSURE	1			
N	@				NOT INDIVIDUALLY SUPPLIED	AR			NOT

CONNECTING ROD

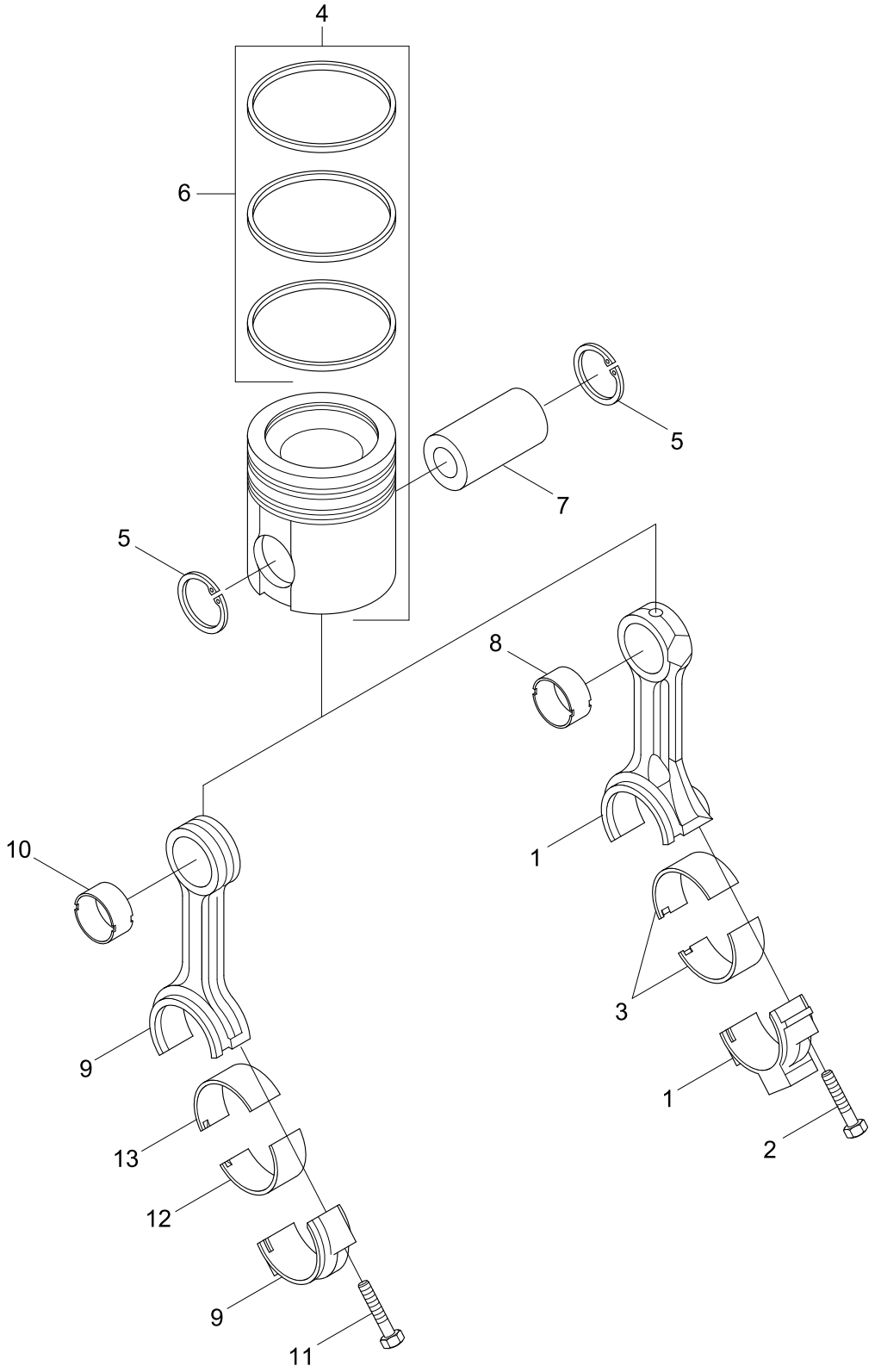

Item	Part_No	IS	Ord	T	Description	Qty	Serial_No	ITC	Remark
1	3954658				ROD-CONNECTING	6			PP8296-01
*-1	3954657				ROD-CONNECTING	1			NOT SHOWN
2	3900919				.SCREW	2			
8	3941476				.BUSHING	1			
3	3939859				BEARING-CONN ROD	12			
4	3802747				KIT-ENGINE PISTON	6			
N4-1	3957416				.PISTON-ENGINE	1			NOT
5	3920691				.RING-RETAINING	2			
6	3802421				.SET-PISTON RING	1			
7	3934047				PIN-PISTON	6			
3	3901171				BRG-CONN ROD(0.25 OS)	AR			
	3901172				BRG-CONN ROD(0.50 OS)	AR			
	3901173				BRG-CONN ROD(0.75 OS)	AR			
	3901174				BRG-CONN ROD(1.00 OS)	AR			
4	3802764				KIT-ENG PISTON	6			
N4-1	3928674				.PISTON-ENGINE	1			NOT
5	3920691				.RING-RETAINING	2			
6	3802422				.SET-P/RING(0.50 O/S)	1			
4	3802765				KIT-ENG PISTON	6			
N4-1	3928675				.PISTON-ENGINE	1			NOT
5	3920691				.RING-RETAINING	2			
6	3802423				.SET-PISTON RING	1			
9	4891176				ROAD-ENGINE CONNECTING	6			
10	4891178				.BUSHING	1			
11	4891179				.SCREW	2			

Item	Part_No	IS	Ord	T	Description	Qty	Serial_No	ITC	Remark
12	4893693				BEARING-CONN ROD	6			
13	3939859				BEARING-CONN ROD	6			
N	@				NOT INDIVIDUALLY SUPPLIED	AR			NOT

CAMSHAFT

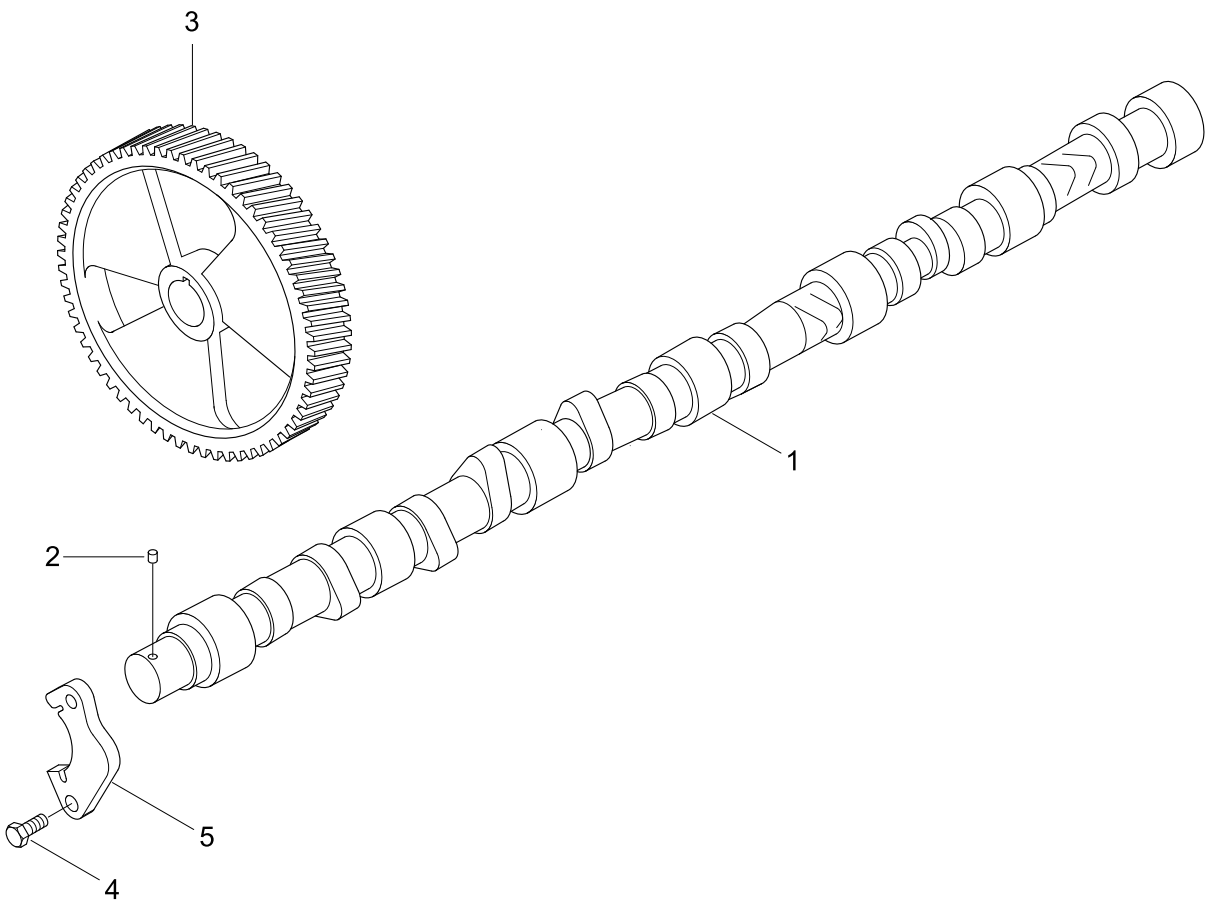

Item	Part_No	IS	Ord	T	Description	Qty	Serial_No	ITC	Remark
1	3929886				CAMSHAFT	1			PP8296
2	3902332				KEY-PLAIN WOODRUFF	1			
3	3946436				GEAR-CAMSHAFT	1	#0001 -	-	
4	3900227				SCREW	2			
5	3927155				SUPPORT	1			

Item	Part_No	IS	Ord	T	Description	Qty	Serial_No	ITC	Remark
1	3008468				PLUG-PIPE	2			PP98060
N2	3283570				GASKET-CYLINDER HEAD	1			NOT
3	3906619				PLUG-PIPE	2			
4	3920779				SCREW	6			
5	3920780				SCREW	14			
6	3900250				COLLET-VALVE	24			
N7	3920867				VALVE-INTAKE	6			NOT
N8	3920868				VALVE-EXHAUST	6			NOT
9	3921640				SEAL-VALVE STEM	12			
10	3932453				SPRING-VALVE	12			
N11	3812092				PLUG-EXPANSION	5			NOT
N13	3934747				HEAD-CYLINDER	1			NOT
14	3935038				RETAINER	12			

INJECTOR

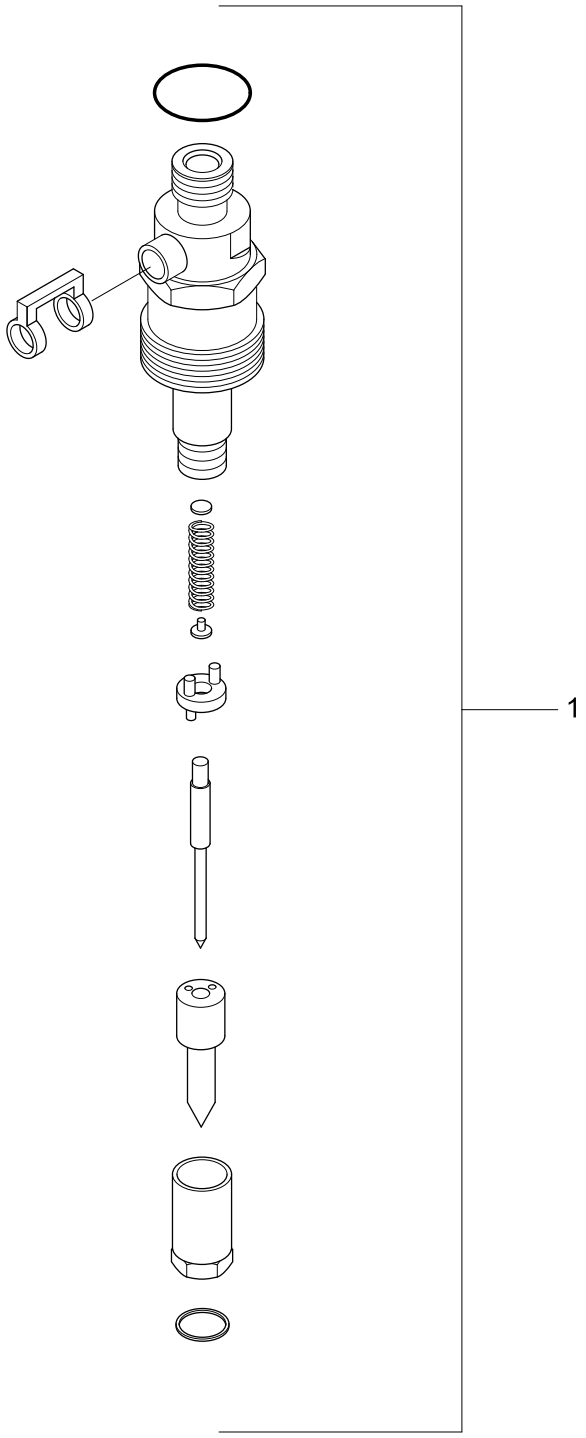

Item	Part_No	IS	Ord	T	Description	Qty	Serial_No	ITC	Remark
1	3939696				INJECTOR	1	#0001 -	-	PP8339

INJECTOR PLUMBING

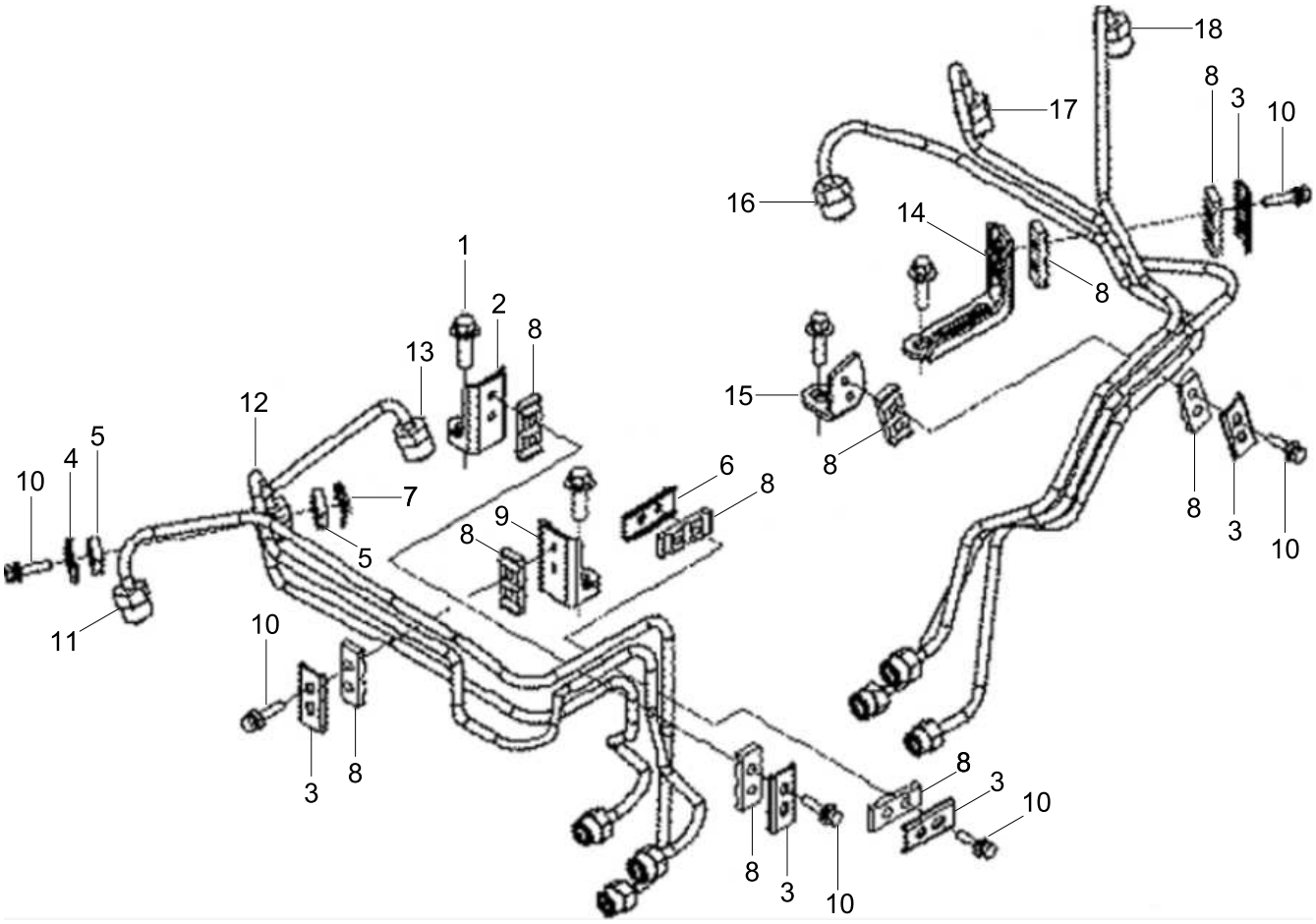

Item	Part_No	IS	Ord	T	Description	Qty	Serial_No	ITC	Remark
*	@				INJECTOR PLUMBING	1	#0001 -	-	NOT
1	3918109				.SCREW	4			
*N	3964737				.TUBE	1			NOT
2	3282942				..BRACE-TUBE	1			
3	3904519				..BRACE-TUBE	3			
4	3904711				..BRACE-TUBE	1			
5	3914338				..ISOLATOR-VIBRATION	2			
6	3917716				..BRACE-TUBE	1			
7	3917717				..BRACE-TUBE	1			
8	3917747				..ISOLATOR-VIBRATION	10			
9	3920414				..BRACE-TUBE	1			
10	3920854				..SCREW	11			
N11	3964703				..TUBE	1			NOT
N12	3964704				..TUBE	1			NOT
N13	3964705				..TUBE	1			NOT
N*	3964738				.TUBE	1			NOT
14	3866734				..BRACE-TUBE	1			
15	3917778				..BRACE-TUBE	1			
N16	3964706				..TUBE	1			NOT
N17	3964723				..TUBE	1			NOT
N18	3964724				..TUBE	1			NOT
N	@				NOT INDIVIDUALLY SUPPLIED	AR			NOT

TURBOCHARGER

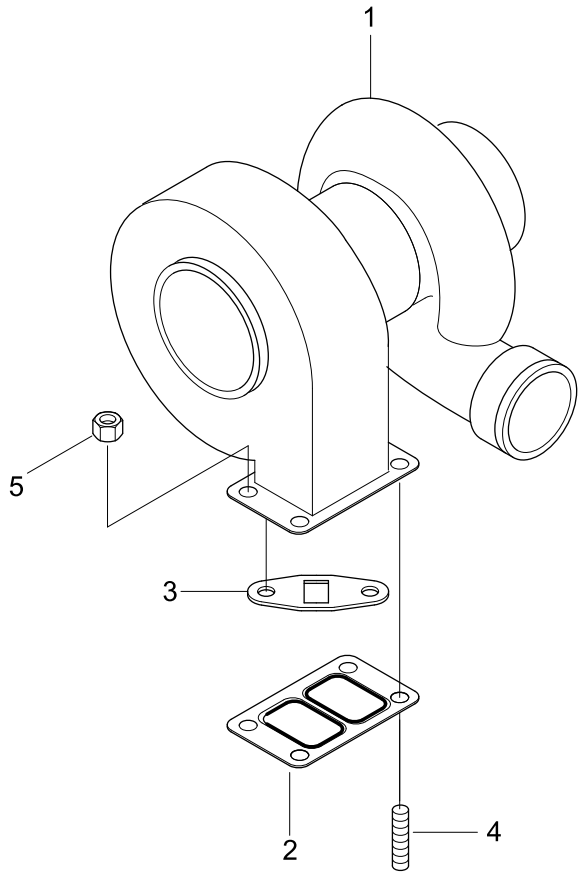

Item	Part_No	IS	Ord	T	Description	Qty	Serial_No	ITC	Remark
*	4025328				TURBOCHARGER	1	#0001 -	-	
N1	3598898				.TURBOCHARGER	1			NOT
2	3901356				.GASKET-TURBOCHARGER	1			
3	3937706				.GASKET-OIL DRAIN	1			
4	3818823				STUD	4			
5	3818824				NUT	4			
N	@				NOT INDIVIDUALLY SUPPLIED	AR			NOT

ROCKER LEVER

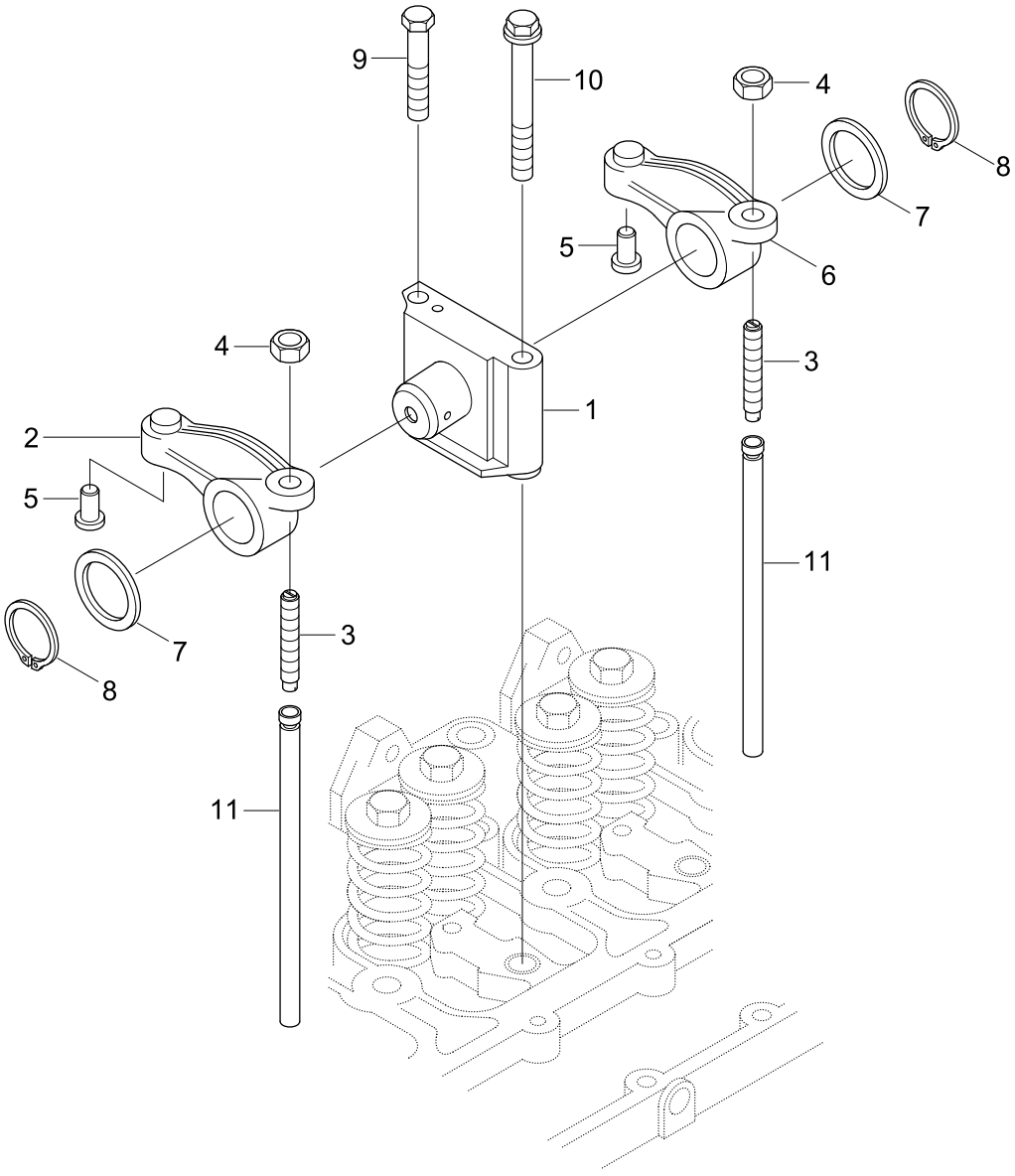

Item	Part_No	IS	Ord	T	Description	Qty	Serial_No	ITC	Remark
N1	3911423				.SUPPORT-R/LEVER	1			NOT
	3922487				.SHAFT-R/LEVER	1			NOT
1	3919434				..RIVET	1		-	NOT USED
N1	3922486				..SHAFT-R/LEVER	1		-	NOT
1	3922488				..SHAFT-R/LEVER	1		-	NOT USED
2	3910811				LEVER-ROCKER	1			
N2	3910809				.LEVER-ROCKER	1			NOT
N3	3937438				SCREW	2	#0001 -	-	NOT
3	3922488				.SHAFT-R/LEVER	1		-	NOT USED
4	3927692				NUT-HEAVY HEX	2			
N5	3900705				INSERT-R/LEVER	2			NOT
N6	3910808				LEVER-ROCKER	1			NOT
6	3910810				LEVER-ROCKER	1			
7	3900245				WASHER-PLAIN	12	#0001 -	-	
8	3900242				RING-RETAINING	12	#0001 -	-	
9	3901221				SCREW	6			
10	3920781				SCREW	6			
11	3284377				ROD-PUSH	12			
N	@				NOT INDIVIDUALLY SUPPLIED	AR			NOT

ENGINE COOLANT VENT

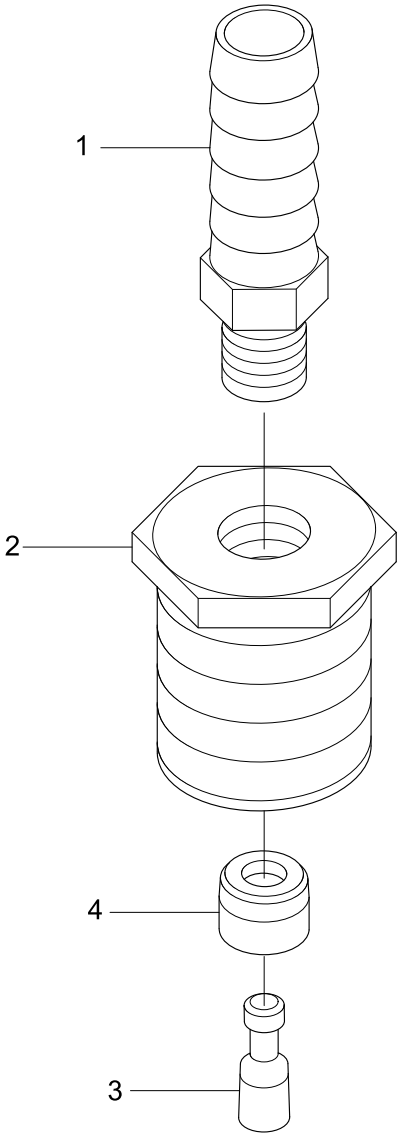

Item	Part_No	IS	Ord	T	Description	Qty	Serial_No	ITC	Remark
*	3935152				VALVE	1			RP9035
1	3922503				.COUPLING	1			
2	3935153				.BUSHING	1			
N3	3935182				.PLUNGER	1			NOT
N4	3935183				.BUSHING	1			NOT
N	@				NOT INDIVIDUALLY SUPPLIED	AR			NOT

STARTING MOTOR MOUNTING

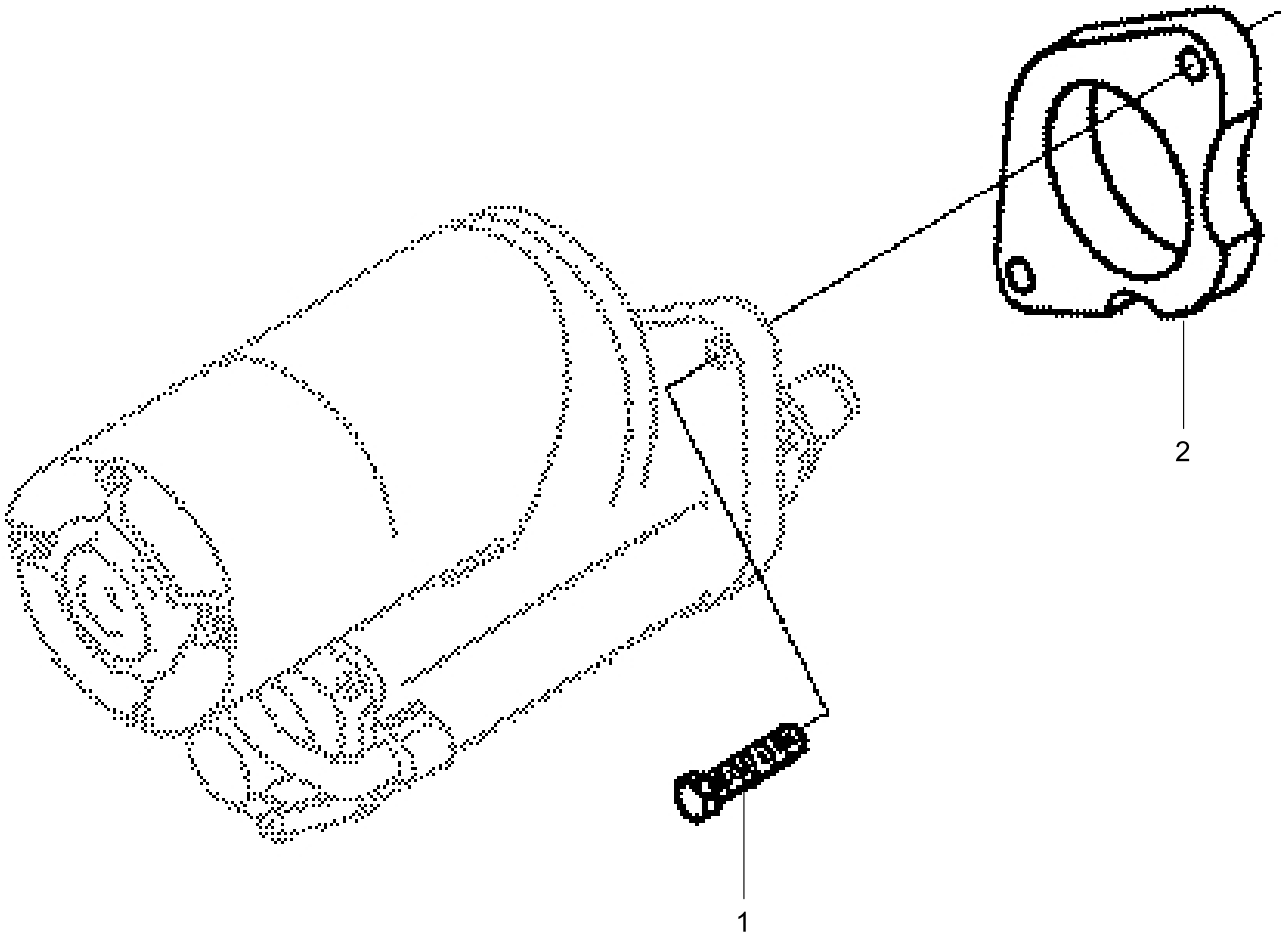

Item	Part_No	IS	Ord	T	Description	Qty	Serial_No	ITC	Remark
1	3903834				SCREW-TWELVE P/CAP	2			SM9037
2	3965057				SPACER-STARTING MOTOR	1			

FAN PILOT SPACER

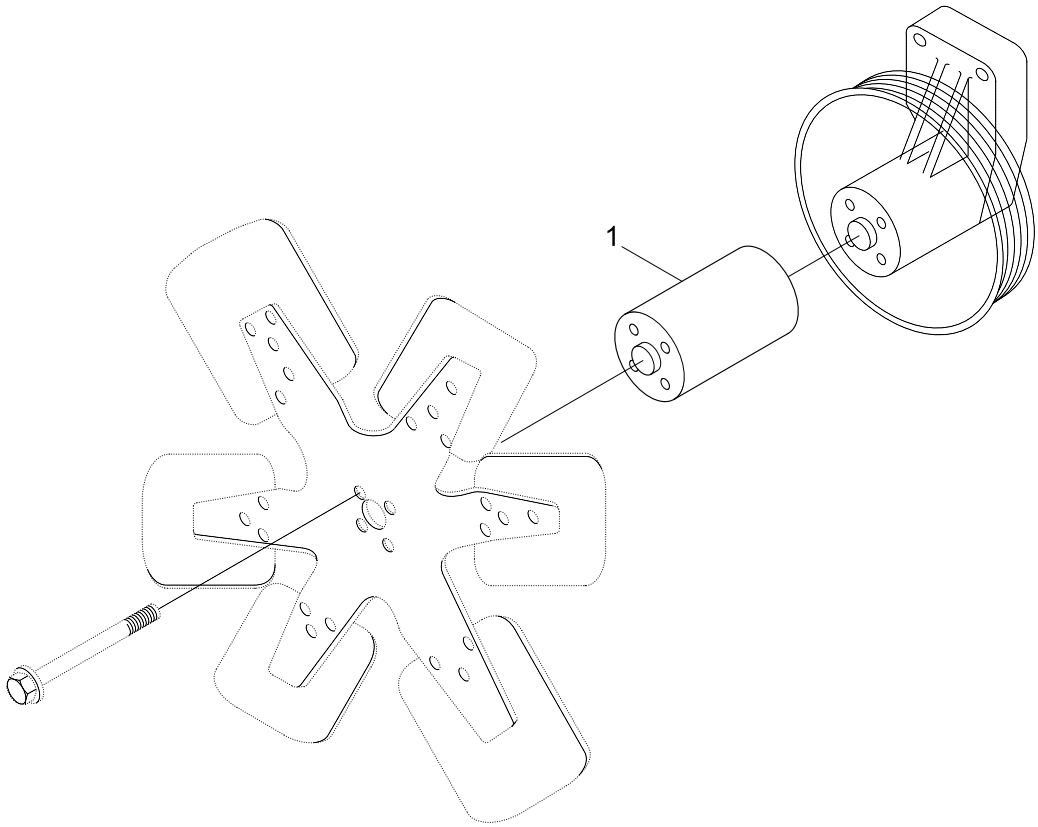

Item	Part_No	IS	Ord	T	Description	Qty	Serial_No	ITC	Remark
1	3910128				SPACER-FAN(1")	1			SP9080

Item	Part_No	IS	Ord	T	Description	Qty	Serial_No	ITC	Remark
1	3957593				MOTOR-STARTING	1			ST9265

EXHAUST MANIFOLD MOUNTING

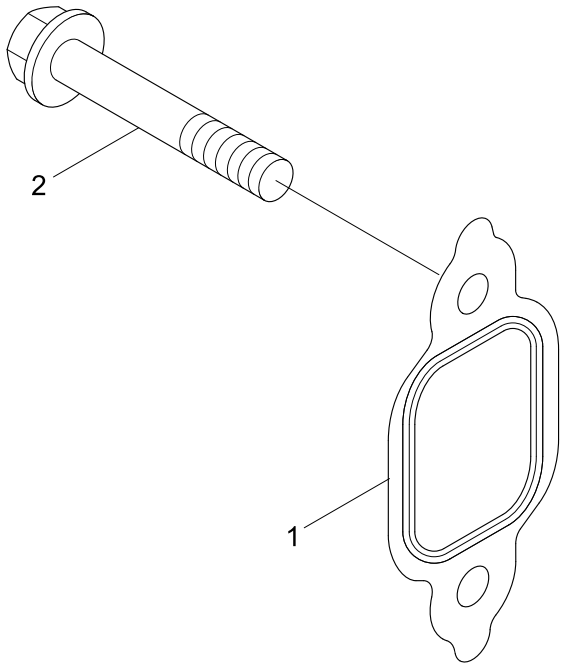

Item	Part_No	IS	Ord	T	Description	Qty	Serial_No	ITC	Remark
1	3927154				GASKET-EXH MANIFOLD	6			TB97049
2	3901448				SCREW	12			

EXHAUST MAINFOLD

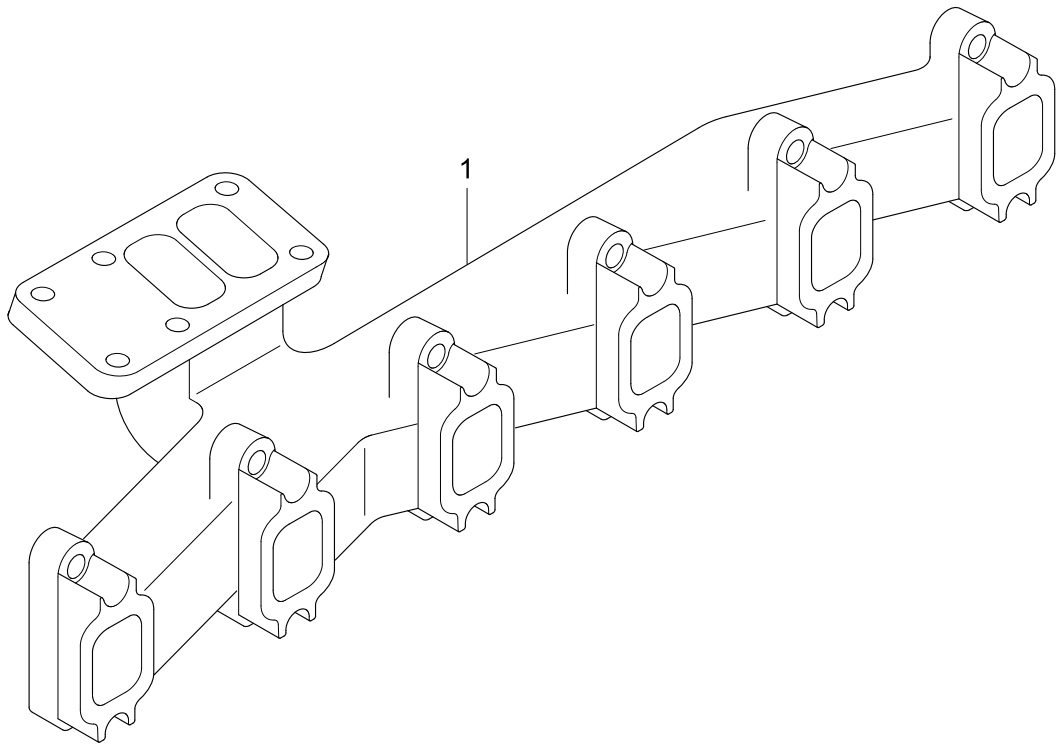

Item	Part_No	IS	Ord	T	Description	Qty	Serial_No	ITC	Remark
N1	3901683				MANIFOLD-EXHAUST	1			NOT
N	@				NOT INDIVIDUALLY SUPPLIED	AR			NOT

THERMOSTAT HOUSING

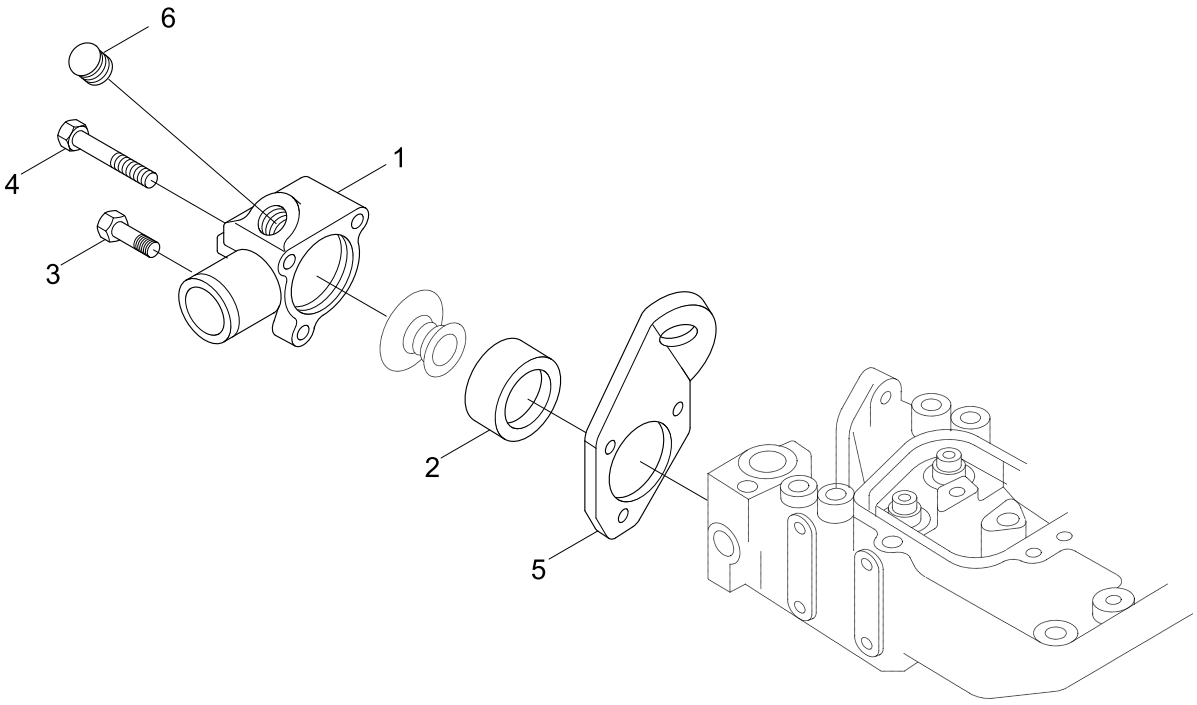

Item	Part_No	IS	Ord	T	Description	Qty	Serial_No	ITC	Remark
1	3914414				HOUSING-THERMOSTAT	1			TH9709
2	3923331				GASKET-THM HSG CVR	1			
3	3900632				SCREW	1			
4	3926972				SCREW	2			
5	3903757				BRACKET-LIFTING	1			
6	3008468				PLUG-PIPE	1			

TURBOCHARGER OIL PLUMBING

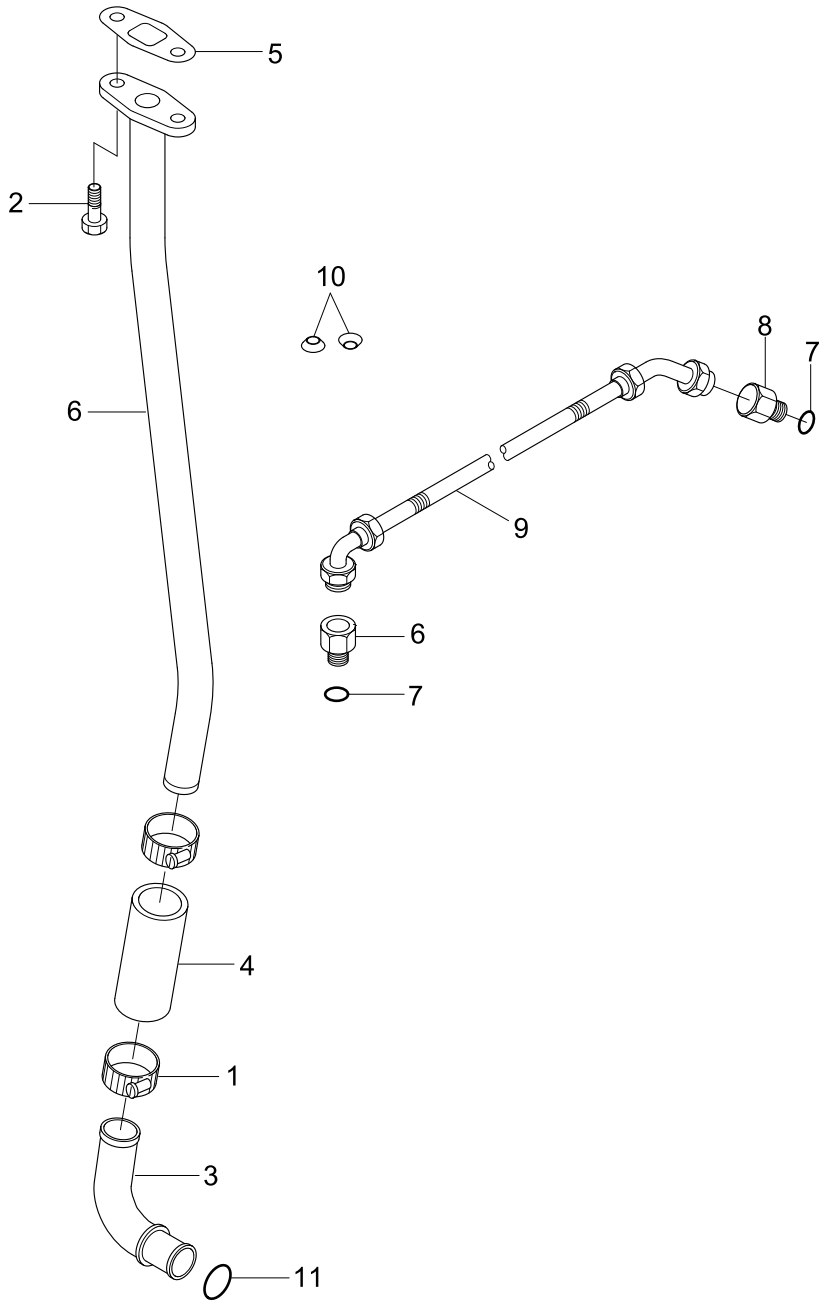

Item	Part_No	IS	Ord	T	Description	Qty	Serial_No	ITC	Remark
1	3412320				CLAMP	2			TP97181
2	3900630				SCREW-HEX HEAD CAP	2			
3	3931973				TUBE-T/OIL DRAIN	1			
4	3286499				HOSE-PLAIN	1			
5	3937706				GASKET-OIL DRAIN	1			
6	3934093				CONNECTION-OIL DRAIN	1			
*-1	3919687				CONNECTOR-FEMALE	2			
7	3037236				.SEAL/O-RING	1			
N8	3284244				.CONNECTOR	1			NOT
9	3918562				HOSE	1			
10	3924389				WASHER	2			
11	3931824				SEAL/O-RING	1			
*-2	3920706				PLUG-EXPANSION	1			
N	@				NOT INDIVIDUALLY SUPPLIED	AR			NOT

Item	Part_No	IS	Ord	T	Description	Qty	Serial_No	ITC	Remark
1	3930906				GASKET-VALVE COVER	6			VC9764
2	3935449				ISOLATOR	6			
3	3907049				SCREW	6			
4	3928404				COVER-VALVE	6			

WATER INLET CONNECTION

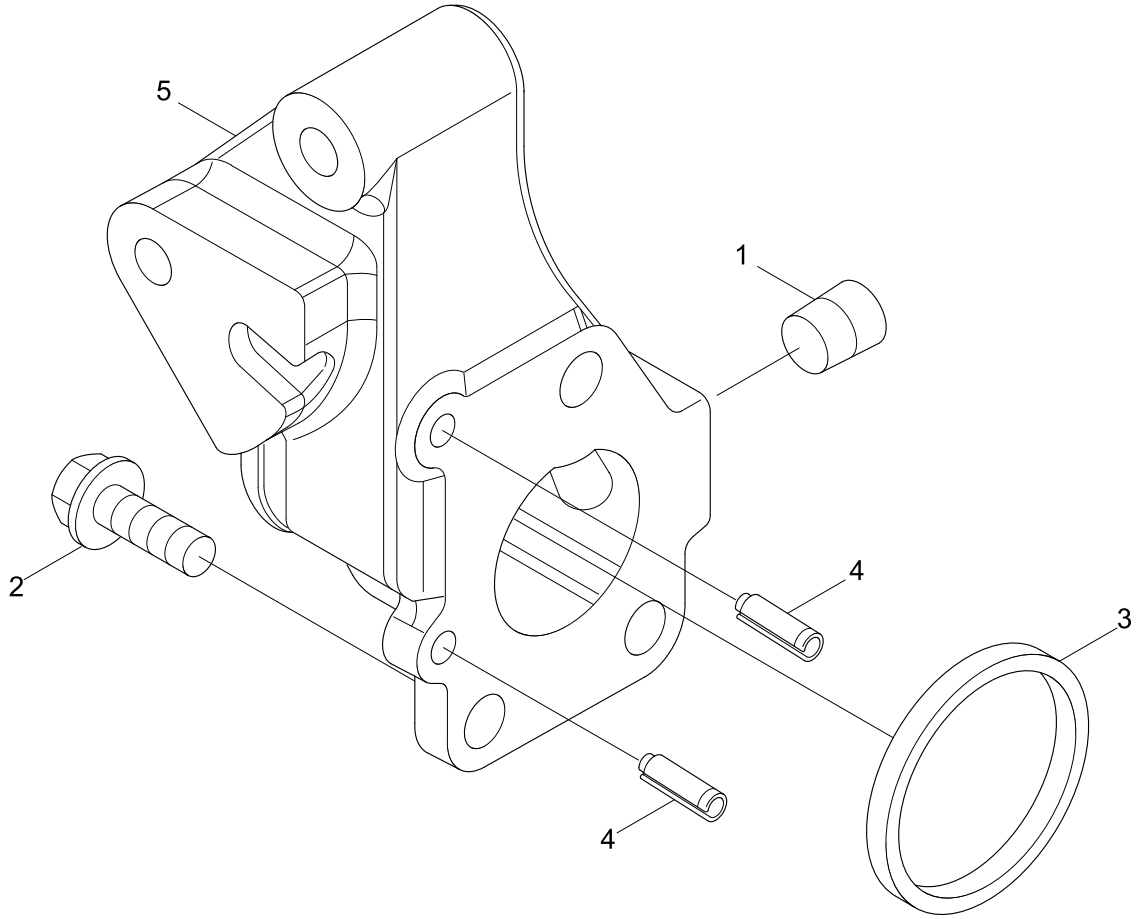

Item	Part_No	IS	Ord	T	Description	Qty	Serial_No	ITC	Remark
1	3008468				PLUG-PIPE	1			WI9178
2	3902460				SCREW-HEX HEAD CAP	3			
3	3906697				SEAL-RECT RING	1			
*	3943990				CONNECTION	1			
4	131584				.PIN-ROLL	2			
N5	3943991				.CONNECTION	1			NOT
N	@				NOT INDIVIDUALLY SUPPLIED	AR			NOT

WATER PUMP

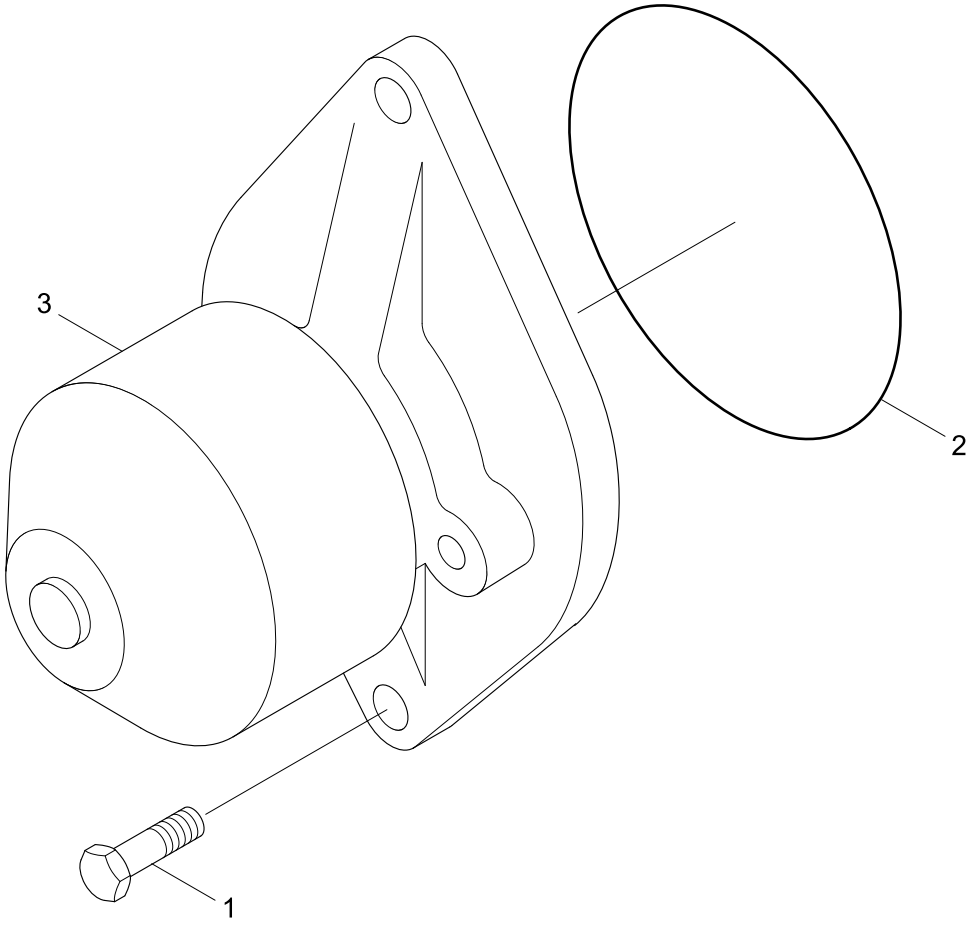

Item	Part_No	IS	Ord	T	Description	Qty	Serial_No	ITC	Remark
1	3941981				SCREW	2			WP9950
*	3286277				KIT-WATER PUMP	1			
2	3906698				SEAL-RECT RING	1			
N3	3285441				PUMP-WATER	1			NOT
N	@				NOT INDIVIDUALLY SUPPLIED	AR			NOT

BELT TENSIONER AND BELT

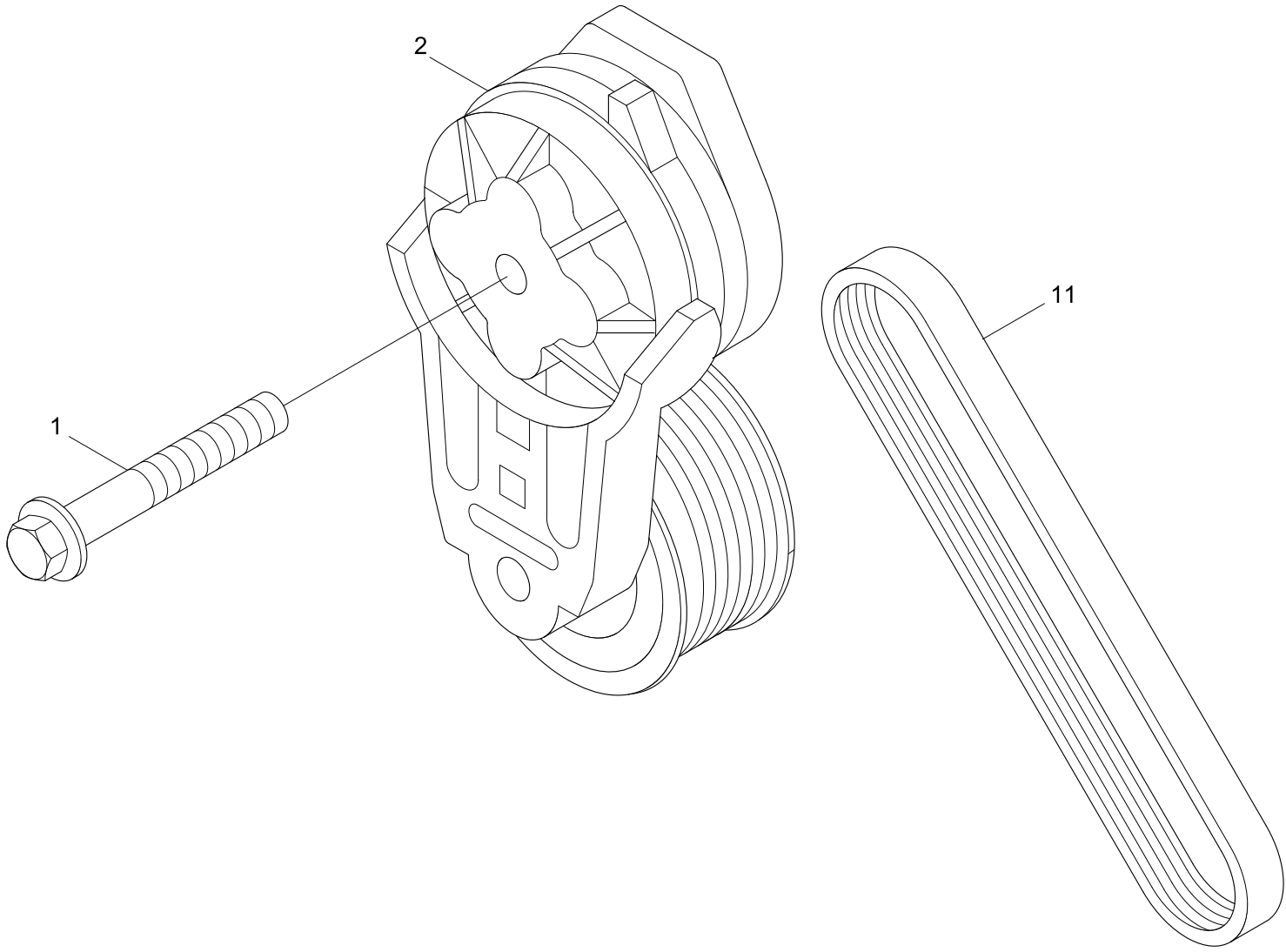

Item	Part_No	IS	Ord	T	Description	Qty	Serial_No	ITC	Remark
1	3282081				SCREW	1			WP9949
2	3936213				TENSIONER-BELT	1			
N11	3289089				VELT-V RIBBED	1	#0001 -	-	NOT
N	@				NOT INDIVIDUALLY SUPPLIED	AR			NOT

EXTERNAL CONTROL MODULE WIRING

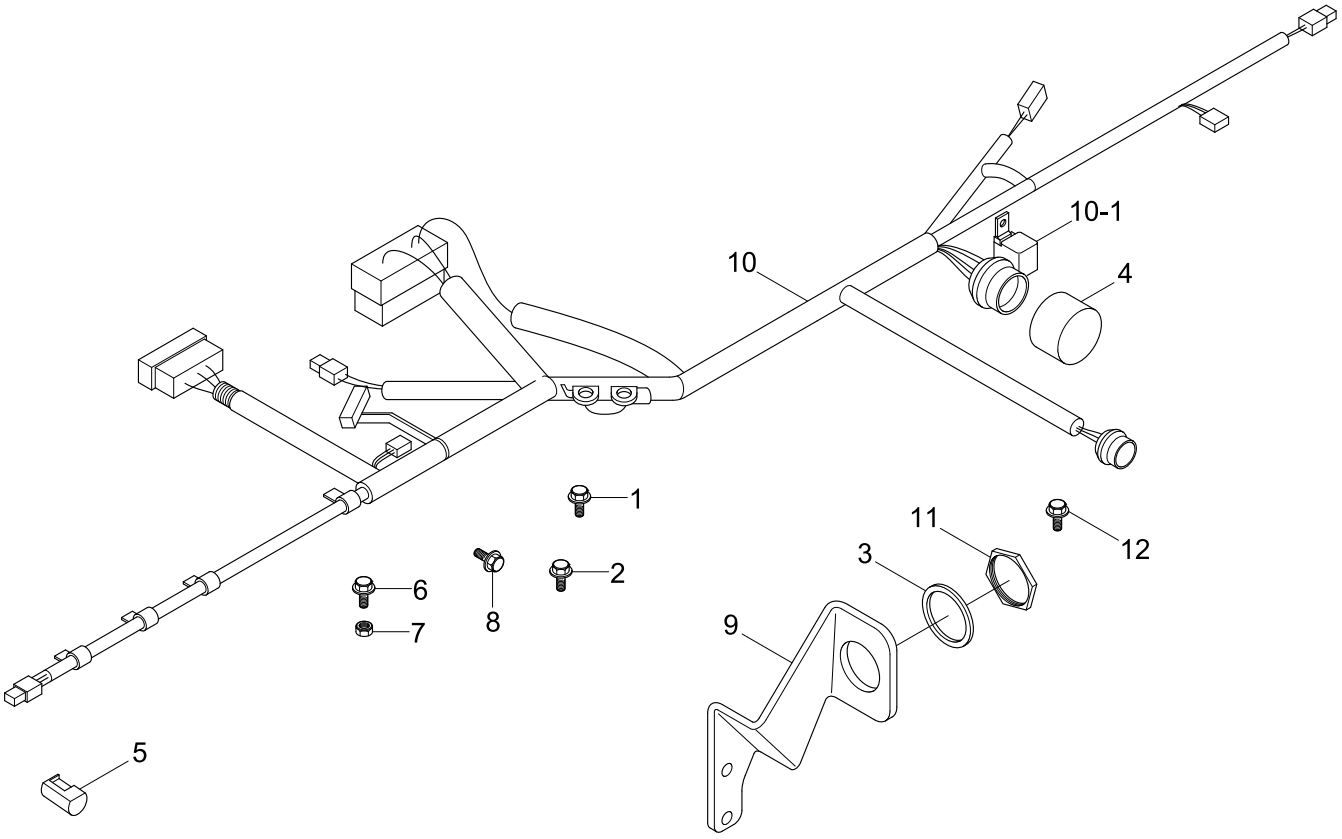

Item	Part_No	IS	Ord	T	Description	Qty	Serial_No	ITC	Remark
1	3093956				SCREW-HEX F/HEAD CAP	2			WR9260-03
2	3093957				SCREW-HEX FLANGE HEAD	1			
3	3617959				WASHER-LOCK	1			
4	3654215				COVER	1			
5	3658544				COVER	1			
6	3900626				SCREW-HEX F/HEAD CAP	2			
6-1	3902023				.SCREW	2			NOT SHOWN
7	3906216				NUT-HEX FLANGE	2			
8	3925883				SCREW-HEX F/HEAD CAP	2			
9	3957931				BRACE-WIRING	1			
10	3970378				HARNESS-ETR CNT MDL	1	#0001 -	-	
10-1	3658780				.RELAY	1	#0001 -	-	
11	3979420				NUT-REGULAR HEX	1	#0001 -	-	
12	3902023				SCREW-HEX F/HEAD CAP	1	#0001 -	-	

EXHAUST OUTLET CONNECTION

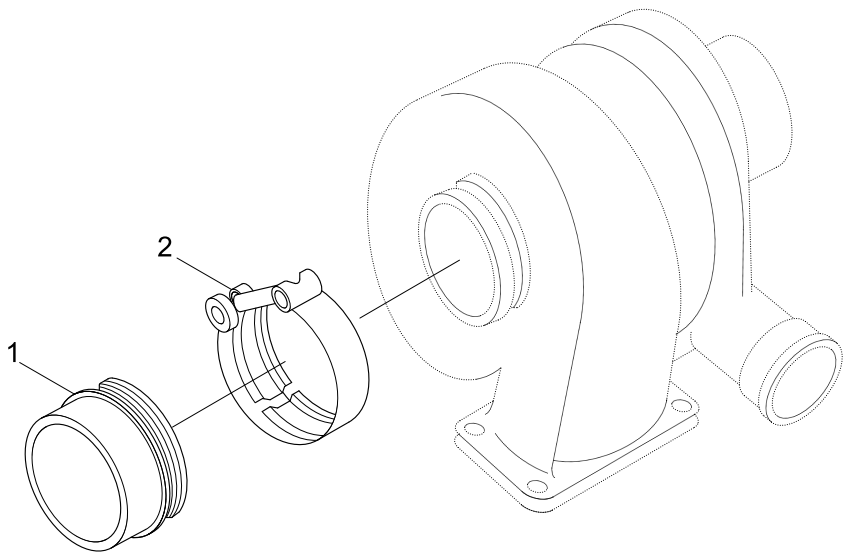

Item	Part_No	IS	Ord	T	Description	Qty	Serial_No	ITC	Remark
1	3910990				TUBE-EXHAUST OUTLET	1			XS9244
2	3903652				CLAMP-V BAND	1			