HL757-7A PÁ CARREGADEIRA HYUNDAI

RUTHZIL TRATOR COMERCIAL DE PEÇAS LTDA 11 97083-6812 ROLANDO

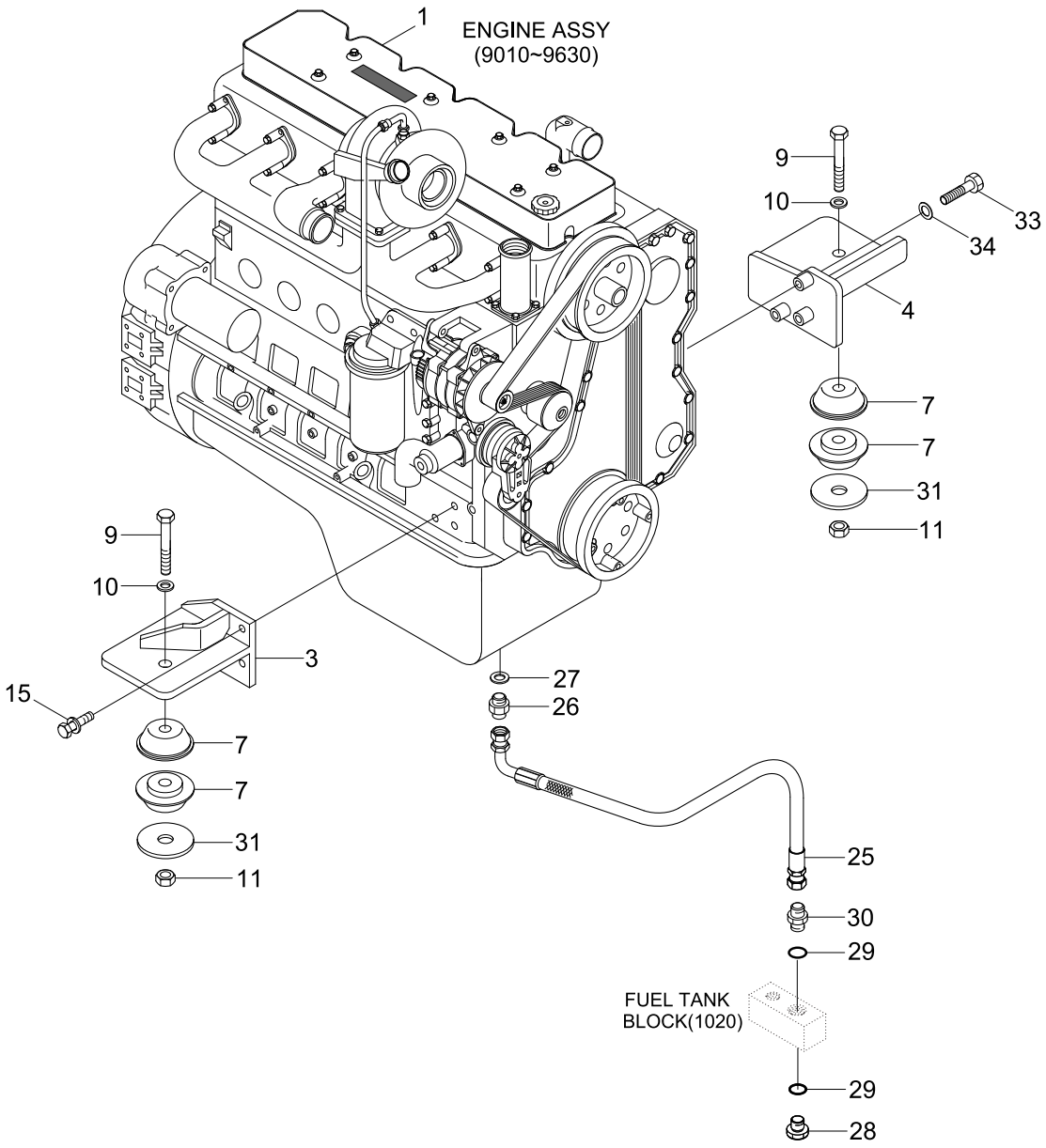

Item	Part_No	IS	Ord	T	Description	Qty	Serial_No	ITC	Remark
1	11LD-01000				ENGINE ASSY	1			
3	11LC-00090				BRACKET WA-LH	1			
4	11LC-00081				BRACKET WA-RH	1			
7	11N6-10450				RUBBER-MOUNT	4			
9	S017-201306				BOLT-HEX	2			
10	S441-200006				WASHER-HARDENED	2			
11	S205-201006				NUT-HEX	2			
15	S037-123556				BOLT-W/WASHER	3			
25	P620-081016				HOSE ASSY-THD 0X90	1			
26	P010-220008				CONNECTOR	1			
27	P392-180000				WASHER-COPPER	1			
28	P220-110104				PLUG-HEX	1			
29	S631-018001				O-RING	2			
30	P010-110004				CONNECTOR	1			
31	11L7-00170				WASHER-REBOUND	2			
33	S017-120606				BOLT-HEX	3			
34	S441-120006				WASHER-HARDENED	3			

FUEL TANK

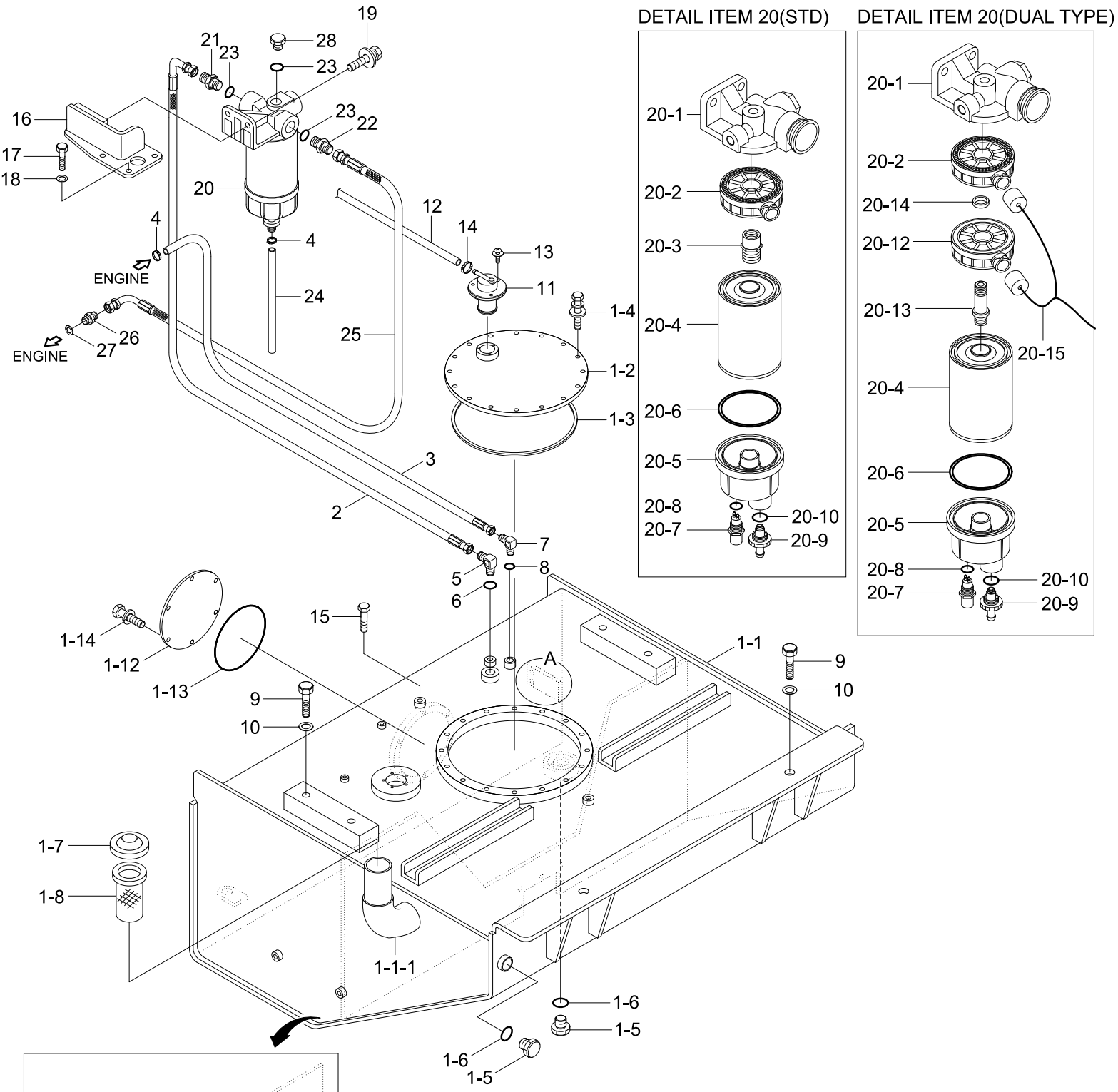

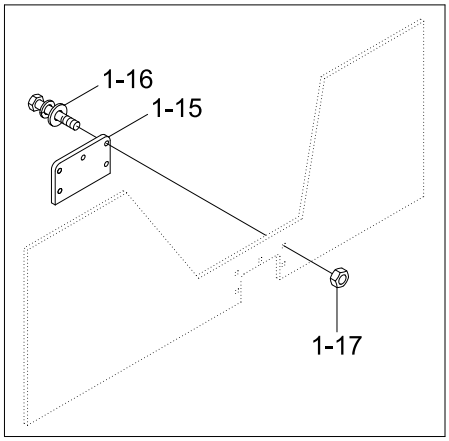

DETAIL A

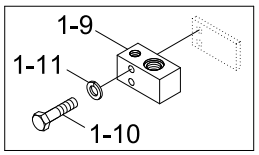

Item	Part_No	IS	Ord	T	Description	Qty	Serial_No	ITC	Remark
1	@				FUEL TANK ASSY	1			NOT
1-1	11LD-20023				.FUEL TANK WA	1			
1-1-1	11LD-20180				..FILLER WA	1			
1-2	11LB-20040				.COVER WA	1			
1-3	14L1-02180				.RUBBER	1			
1-4	S035-082026				.BOLT-W/WASHER	16			
1-5	P220-110104				.PLUG-HEX	2			
1-6	S631-018001				.O-RING	2			
1-7	11LB-20050				.FUEL CAP ASSY	1			
1-8	31E1-10300				.STRAINER	1			
1-9	11LB-20232				.BLOCK-DRAIN	1			
1-10	S017-100756				.BOLT-HEX	2			
1-11	S441-100006				.WASHER-HARDENED	2			
1-12	31E3-4526				.COVER	1			
1-13	S632-165001				.O-RING	1			
1-14	S037-102556				.BOLT-W/WASHER	6			
1-15	11LB-20280				.PLATE	1			
1-16	S035-062026				.BOLT-W/WASHER	5			
1-17	S205-061006				.NUT-HEX	5			
2	11LD-20350				HOSE ASSY	1			
3	11LC-20211				HOSE ASSY	1			
4	S520-015000				CLAMP-HOSE	2			
5	P020-110003				ELBOW-90	1			
6	S631-018001				O-RING	1			
7	P020-110002				ELBOW-90	1			
8	S631-014001				O-RING	1			

Item	Part_No	IS	Ord	T	Description	Qty	Serial_No	ITC	Remark
9	S017-16050D				BOLT-HEX	6			
10	S441-160006				WASHER-HARDENED	6			
11	11FA-50300				FUEL CUT VALVE	1			
12	11S4-00561				HOSE	1			
13	S131-051546				SCREW-W/WASHER	3			
14	S571-140002				CLAMP-HOSE,WIRE TYPE	1			
15	S017-16020D				BOLT-HEX	2			
16	11LD-20370				BRACKET WA	1			
17	S015-080506				BOLT-HEX	4			
18	S403-08200B				WASHER-PLAIN	4			
19	S037-103056				BOLT-W/WASHER	2			
20	11NA-71000				FUEL FILTER W/S ASSY	1	- #0407		
	11NA-71001				FUEL FILTER ASSY	1	#0408 -	B	
	11NA-73000				FUEL FILTER ASSY	1	#0408 -		DUAL F/WARMER
20-1	11NA-71010				.HEAD-FILTER	1			
20-2	11NA-71020				.HEATER-FUEL	1			
20-3	11NA-71030				.CONNECTOR	1			
20-4	11NA-71040				.ELEMENT ASSY	1	- #0407		
	11NA-71041				.ELEMENT ASSY	1	#0408 -	B	
20-5	11NA-71050				.BOWL-CLEAR	1			
20-6	11NA-71060				.O-RING	1			
20-7	11NA-71070				.SENSOR	1			
20-8	11NA-71080				.O-RING	1			
20-9	11NA-71090				.VALVE-SCREW	1			
20-10	11NA-71100				.O-RING	1			
20-12	11NA-71020				.HEATER-FUEL	1	#0408 -		DUAL F/WARMER

Item	Part_No	IS	Ord	T	Description	Qty	Serial_No	ITC	Remark
20-13	11Q6-50100				.CONNECTOR	1	#0408 -		DUAL F/WARMER
20-14	11Q6-50110				.SPACER	1	#0408 -		DUAL F/WARMER
20-15	21Q8-23200				.HARNESS-FUEL WARMER	1	#0408 -		DUAL F/WARMER
	11NA-71150				.HEAD-PUMP-NSP	1			
20-16	11NA-71160				.HOLDER(NSP)	1			
20-17	11NA-71170				.O-RING(NSP)	1			
20-18	11NA-71180				.PLATE-VALVE(NSP)	2			
20-19	11NA-71190				.FRAME-VALVE(NSP)	2			
20-20	11NA-71200				.O-RING(NSP)	2			
21	11LD-20320				CONNECTOR	1			
22	11LD-20330				CONNECTOR	1			
23	S631-011001				O-RING	3			
24	11N1-50020				HOSE ASSY	1			
25	11LD-20360				HOSE ASSY	1			
26	11LD-20340				CONNECTOR	1			
27	P392-120000				WASHER-COPPER	1			
28	P210-101400				PLUG-HEX	1			

COOLING SYSTEM(FAN, FORWARD ONLY)

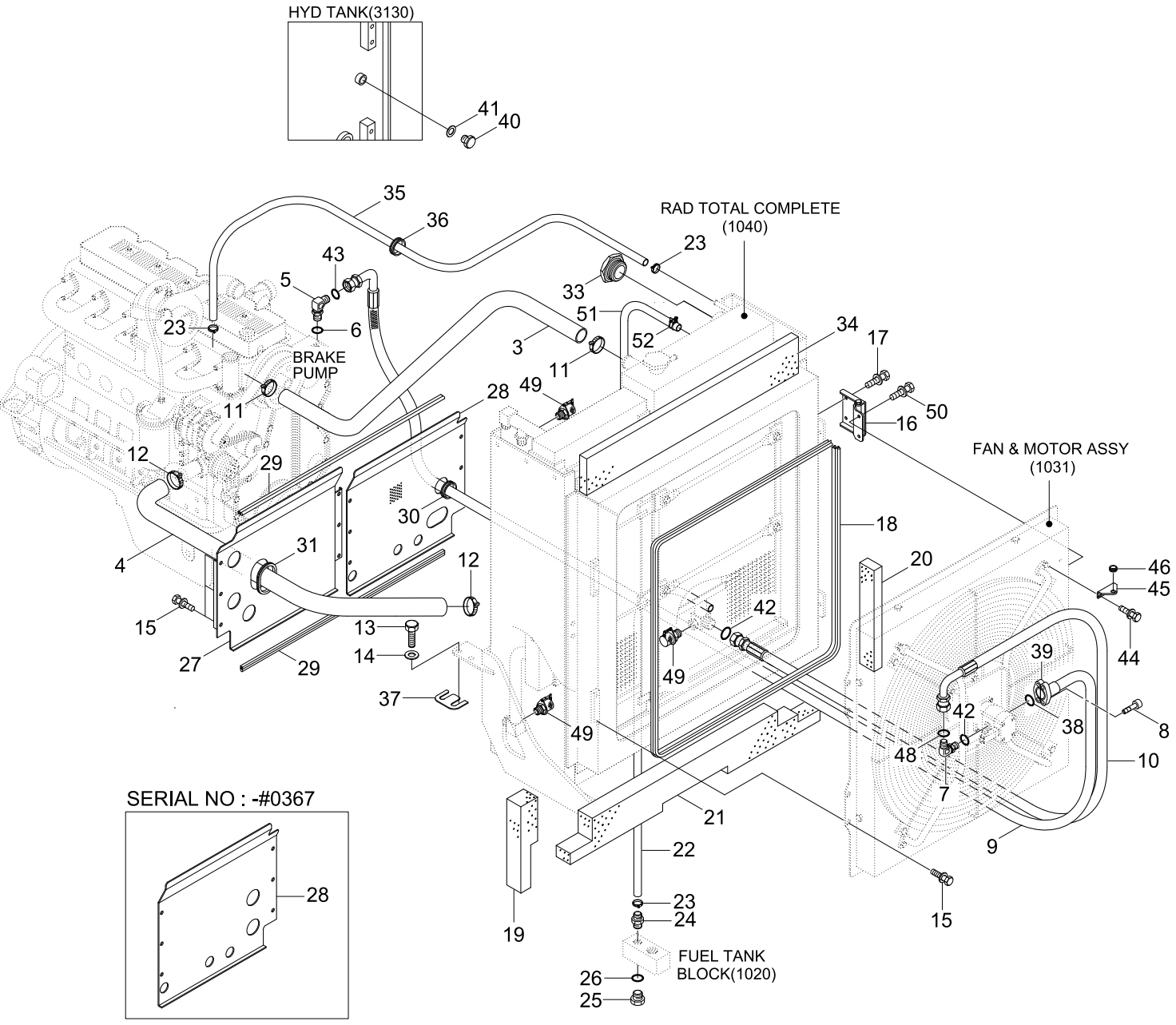

SERIAL NO : -#0367

Item	Part_No	IS	Ord	T	Description	Qty	Serial_No	ITC	Remark
3	11LD-30850				HOSE-RUBBER	1			
4	11LD-30860				HOSE-RUBBER	1			
5	31LF-30080				ELBOW-90	1			
6	S611-023001				O-RING	1			
7	11LB-30690				ELBOW-90	1			
8	S109-100306				BOLT-SOCKET	4			
9	P990-124359				HOSE ASSY-ORFS,FLG 0X90	1	- #0401		
	P990-124354				HOSE ASSY-ORFS,FLG 0X90	1	#0402 -	B	
10	P930-162030				HOSE ASSY-ORFS 0X90	1			
11	S572-580002				CLAMP-HOSE,WIRE TYPE	2			
12	S572-640006				CLAMP-HOSE,WIRE TYPE	2			
13	S017-16035D				BOLT-HEX	8			
14	S441-160006				WASHER-HARDENED	8			
15	S037-101556				BOLT-W/WASHER	13			
16	11LD-30150				HINGE ASSY	2			
17	S037-102556				BOLT-W/WASHER	6			
18	S771-034400				WEATHER STRIP	1			
19	11LD-30870				SPONGE	1			
20	11LD-30880				SPONGE	1			
21	11LD-30890				SPONGE	1			
22	P760-021088				HOSE-RUBBER	1			
23	S520-020000				CLAMP-HOSE	4			
24	P090-100808				CONNECTOR-HOSE	1			
25	P220-110104				PLUG-HEX	1			
26	S631-018001				O-RING	1			
27	11LD-30830				PLATE-SCREEN,LH	1	- #0367		

Item	Part_No	IS	Ord	T	Description	Qty	Serial_No	ITC	Remark
27	11LD-30910				SCREEN PLATE-LH	1	#0368 -	D	
28	11LD-30840				PLATE-SCREEN,RH	1	- #0367		
	11LD-30920				SCREEN PLATE-RH	1	#0368 -	D	
29	S771-009400				WEATHER STRIP	2			
30	S760-021206				GROMMET	1			
31	S791-020030				GROMMET-PLATE	1			
33	14E7-01070				SIGHT GAUGE ASSY	1			
34	11LC-30330				SPONGE	1			
35	P760-011200				HOSE-RUBBER	1			
36	S681-290400				GROMMET	5			
37	11LB-30220				SHIM(1.0T)	8			
38	Y171-019004				O-RING	1			
39	P173-120102				FLANGE-HYD,SPLIT	2			
40	P220-110103				PLUG-HEX	1			
41	S631-014001				O-RING	1			
42	S621-021001				O-RING	2			
43	S621-018001				O-RING	1			
44	S035-082026				BOLT-W/WASHER	2			
45	11LB-30440				PLATE	1			
46	S681-130800				GROMMET	1			
48	S611-030001				O-RING	1			
49	31EK-11130				COUPLING-SCREW	4	- #0380	-	
50	S037-102056				BOLT-W/WASHER	4			
51	P760-033125				HOSE-RUBBER	1			
52	S572-320002				CLAMP-HOSE,WIRE TYPE	2			
53	X500-110005				CONNECTOR-ORFS	3	#0459 -	E	

Item	Part_No	IS	Ord	T	Description	Qty	Serial_No	ITC	Remark
54	S631-029004				O-RING	3	#0459 -	E	

COOLING SYSTEM(FAN, FORWARD & REVERSE)

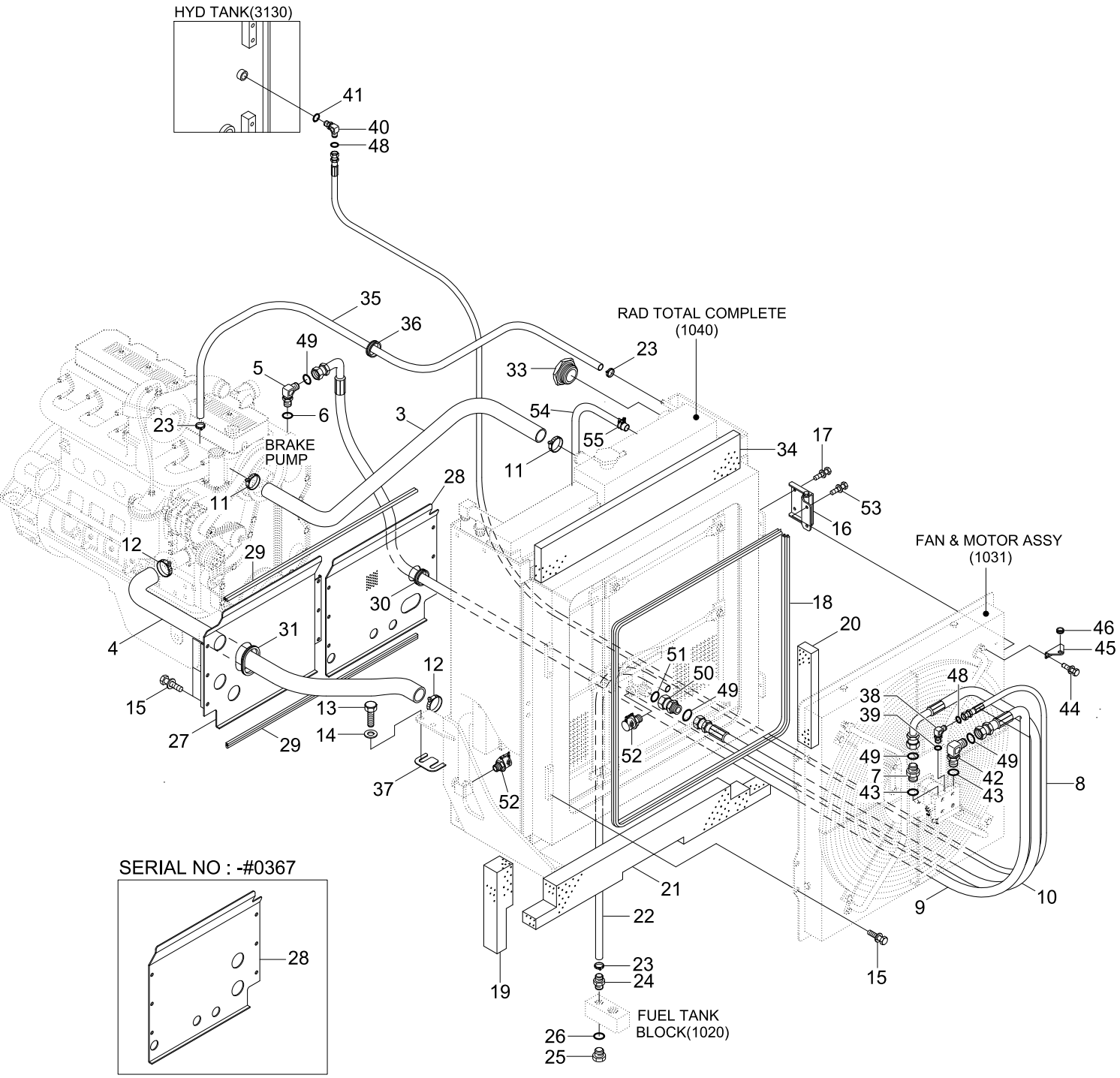

Item	Part_No	IS	Ord	T	Description	Qty	Serial_No	ITC	Remark
3	11LD-30850				HOSE-RUBBER	1			
4	11LD-30860				HOSE-RUBBER	1			
5	31LF-30080				ELBOW-90	1			
6	S611-023001				O-RING	1			
7	11LC-30470				CONNECTOR-ORFS	1			
8	P910-042067				HOSE ASSY-ORFS 0X0	1			
9	P930-124059				HOSE ASSY-ORFS 0X90	1	- #0319		
	P930-124054				HOSE ASSY-ORFS 0X90	1	#0320 -	B	
10	P930-122029				HOSE ASSY-ORFS 0X90	1	- #0458		
	P930-122030				HOSE ASSY-ORFS 0X90	1	#0459 -	E	
11	S572-580002				CLAMP-HOSE,WIRE TYPE	2			
12	S572-640006				CLAMP-HOSE,WIRE TYPE	2			
13	S017-16035D				BOLT-HEX	8			
14	S441-160006				WASHER-HARDENED	8			
15	S037-101556				BOLT-W/WASHER	13			
16	11LD-30150				HINGE ASSY	2			
17	S037-102556				BOLT-W/WASHER	6			
18	S771-034400				WEATHER STRIP	1			
19	11LD-30870				SPONGE	1			
20	11LD-30880				SPONGE	1			
21	11LD-30890				SPONGE	1			
22	P760-021088				HOSE-RUBBER	1			
23	S520-020000				CLAMP-HOSE	4			
24	P090-100808				CONNECTOR-HOSE	1			
25	P220-110104				PLUG-HEX	1			
26	S631-018001				O-RING	1			

Item	Part_No	IS	Ord	T	Description	Qty	Serial_No	ITC	Remark
27	11LD-30830				PLATE-SCREEN,LH	1	- #0367		
	11LD-30910				SCREEN PLATE-LH	1	#0368 -	D	
28	11LD-30840				PLATE-SCREEN,RH	1	- #0367		
	11LD-30920				SCREEN PLATE-RH	1	#0368 -	D	
29	S771-009400				WEATHER STRIP	2			
30	S760-021206				GROMMET	1			
31	S791-020030				GROMMET-PLATE	1			
33	14E7-01070				SIGHT GAUGE ASSY	1			
34	11LC-30330				SPONGE	1			
35	P760-011200				HOSE-RUBBER	1			
36	S681-290400				GROMMET	5			
37	11LB-30220				SHIM(1.0T)	8			
38	31FG-10020				ELBOW-90	1			
39	S611-009001				O-RING	1			
40	X520-110012				ELBOW-90,ORFS	1			
41	S631-014001				O-RING	1			
42	11LC-30480				ELBOW-90,ORFS	1			
43	S611-016001				O-RING	2			
44	S035-082026				BOLT-W/WASHER	2			
45	11LB-30440				PLATE	1			
46	S681-130800				GROMMET	1			
48	S621-011001				O-RING	2			
49	S621-018001				O-RING	4			
50	11LC-30450				CONNECTOR	1	- #0458	-	
51	S621-021001				O-RING	1	- #0458	-	
52	31EK-11130				COUPLING-SCREW	4	- #0380	-	

Item	Part_No	IS	Ord	T	Description	Qty	Serial_No	ITC	Remark
53	S037-102056				BOLT-W/WASHER	4			
54	P760-033125				HOSE-RUBBER	1			
55	S572-320002				CLAMP-HOSE,WIRE TYPE	2			
56	X500-110005				CONNECTOR-ORFS	2	#0459 -	E	
57	X500-110019				CONNECTOR-ORFS	1	#0459 -	E	
58	S631-029004				O-RING	3	#0459 -	E	

FAN & MOTOR ASSY

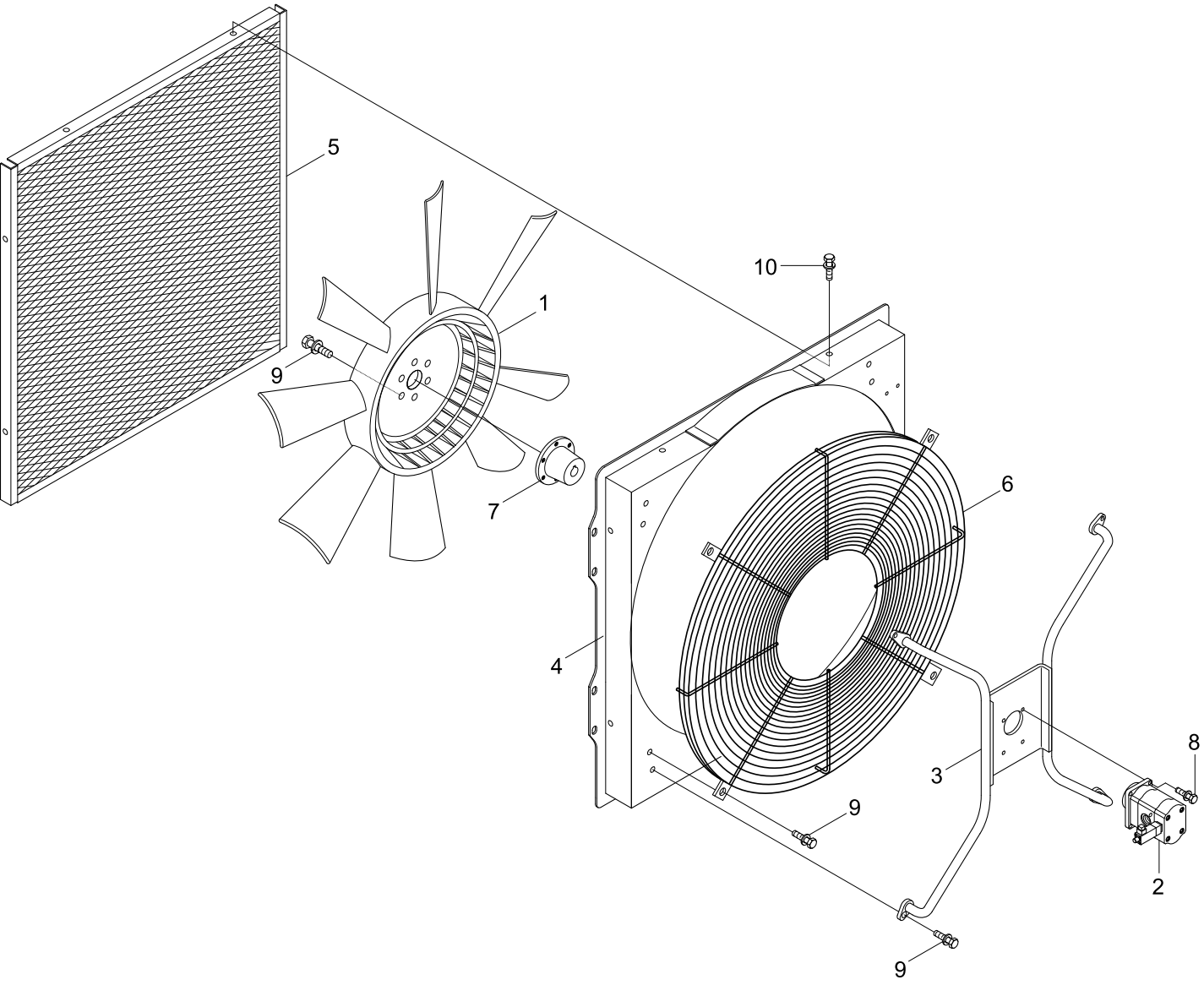

Item	Part_No	IS	Ord	T	Description	Qty	Serial_No	ITC	Remark
*	@				FAN & MOTOR ASSY	1			NOT
1	11LB-30121				.FAN	1			
2	@				.MOTOR-FAN	1			NOT
3	11LD-30510				.BRACKET WA	1			
4	11LD-30810				.SHROUD WA	1			
5	11LD-30820				.FAN GUARD WA-FRONT	1			
6	11LC-30111				.FAN GUARD WA-REAR	1	- #0397		
	11LC-30112				.FAN GUARD WA-REAR	1	#0398 -	B	
7	11LB-30180				.ADAPTER	1			
8	S109-080256				.BOLT-SOCKET	4			
9	S037-102056				.BOLT-W/WASHER	14			
10	S035-081526				.BOLT-W/WASHER	8			

FAN MOTOR(FAN, FORWARD ONLY)

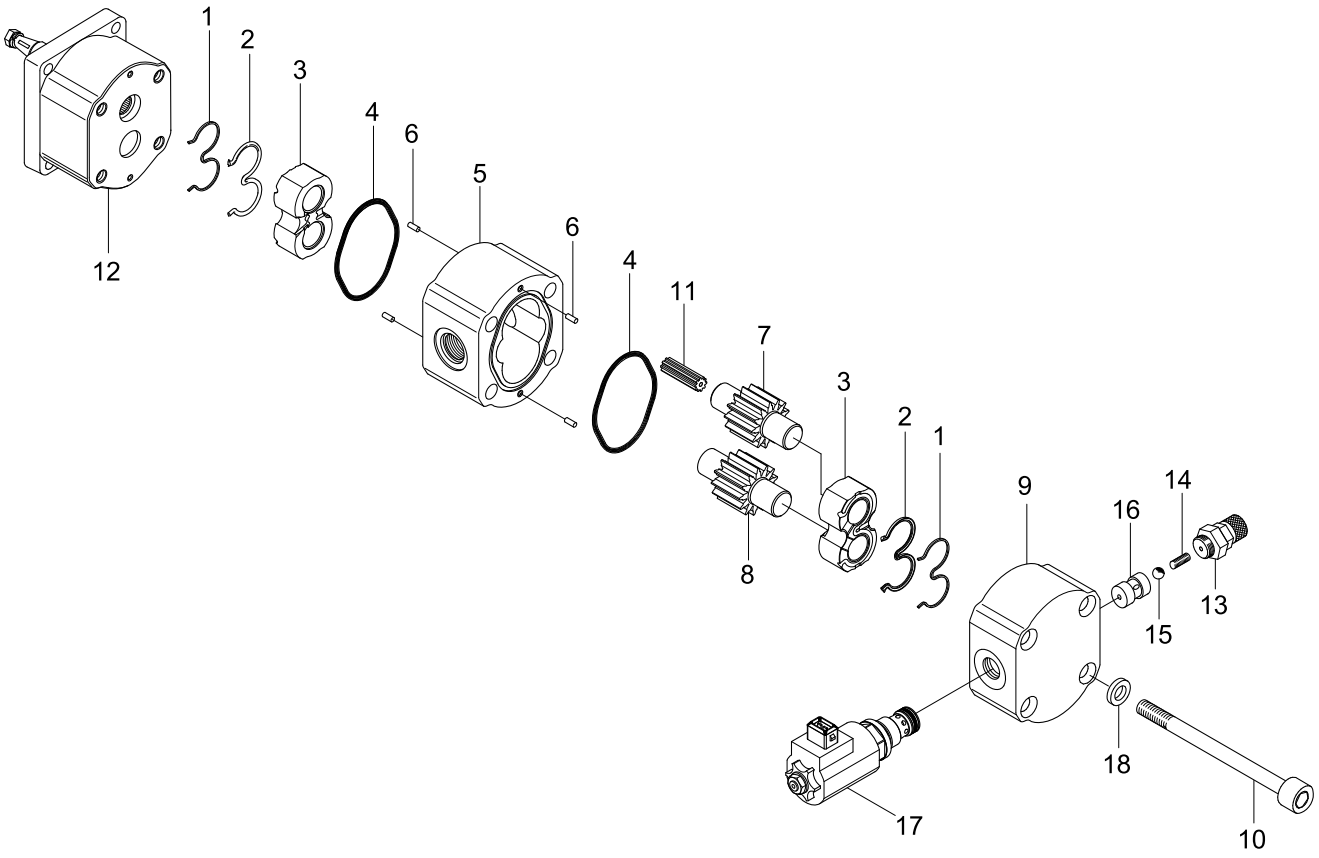

DESCRIPTION	PARTS NO	INCLUDED ITEM
SEAL KIT	5060053	1, 2, 4,12-1,12-2, 17-1

Item	Part_No	IS	Ord	T	Description	Qty	Serial_No	ITC	Remark
*	11LD-30600				MOTOR-FAN	1	- #0413		
	11LD-30601				FAN MOTOR ONE-DIRECTION	1	#0414 -	B	
NK1	5060003				.RING-BACK UP	2			NOT
NK2	5060002				.SEAL	2			NOT
3	@				.BEARING BLOCK	2			NOT
NK4	2120305				.O-RING	2			NOT
5	@				.GEAR HOUSING	1			NOT
6	@				.DOWEL PIN	4			NOT
7	@				.DRIVE GEAR	1			NOT
8	@				.IDLER GEAR	1			NOT
9	@				.COVER	1			NOT
10	@				.BOLT	4			NOT
11	@				.COUPLING	1			NOT
12	@				.FRONT BEARING	1			NOT
K12-1	20-103838				..SHAFT SEAL I	1			NOT SHOWN
K12-2	758403				..SHAFT SEAL II	1			NOT SHOWN
13	@				.COUPLING-MEASURING	1			NOT
14	@				.SPRING	1			NOT
15	@				.BALL	1			NOT
16	@				.VALVE SEAT	1			NOT
17	5030338				.RELIEF VALVE CARTRIDGE	1			
K17-1	20-103836				..SEAL KIT	1			NOT SHOWN
18	@				.WASHER	4			NOT
K	5060053				SEAL KIT	1			SEE ILLUST

FAN MOTOR(FAN, FORWARD & REVERSE)

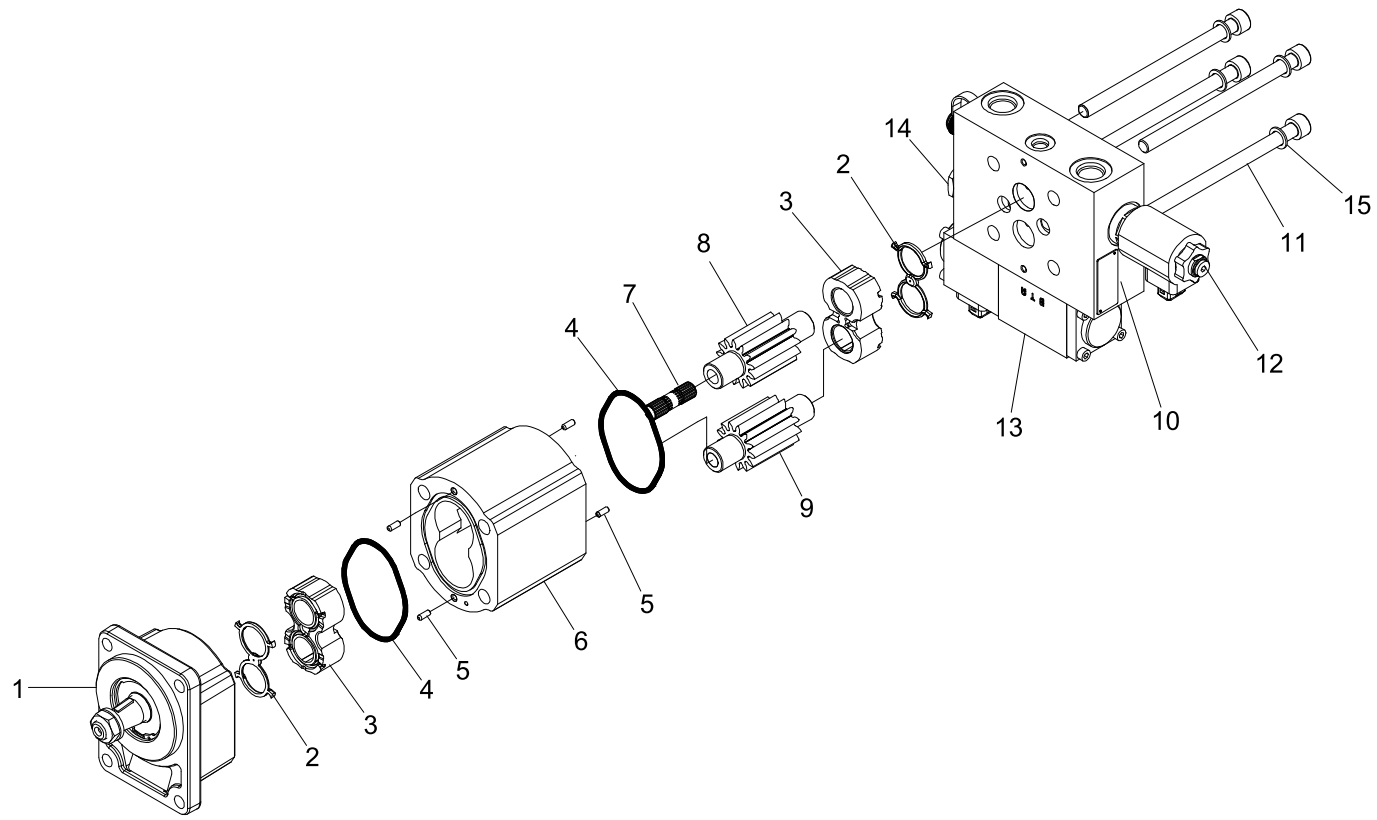

DESCRIPTION	PARTS NO	INCLUDED ITEM
SEAL KIT	5060026	1-1,1-2, 2, 4

Item	Part_No	IS	Ord	T	Description	Qty	Serial_No	ITC	Remark
*	11LD-30700				MOTOR-FAN	1			
1	@				.FRONT BEARING	1			NOT
K1-1	20-103838				..SHAFT SEAL I	1			NOT SHOWN
K1-2	758403				..SHAFT SEAL II	1			NOT SHOWN
K2	5060017				.SEAL	2			
3	@				.BEARING BLOCK	2			NOT
K4	2120305				.O-RING	2			
5	@				.DOWEL PIN	4			NOT
6	@				.GEAR HOUSING	1			NOT
7	@				.COUPLING	1			NOT
8	@				.DRIVE GEAR	1			NOT
9	@				.IDLER GEAR	1			NOT
10	@				.VALVE COVER	1			NOT
11	@				.BOLT	4			NOT
12	5030339				.RELIEF VALVE CARTRIDGE	1			
13	20-104301				.SOLENOID VALVE	1			
14	20-104302				.CHECK VLV CARTRIDGE	1			
15	@				.WASHER	4			NOT
K	5060026				SEAL KIT	1			SEE ILLUST

RADIATOR TOTAL ASSY

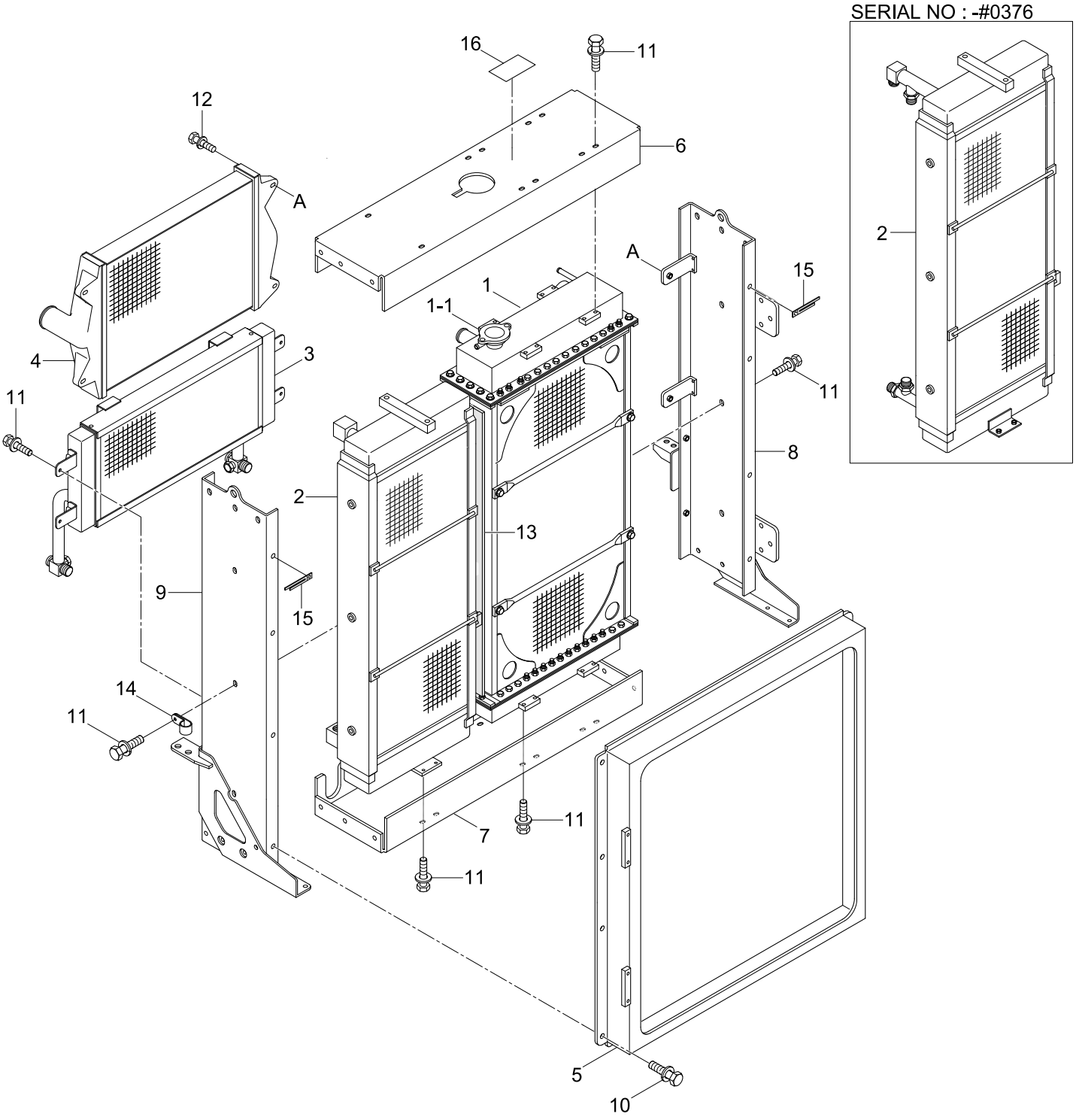

Item	Part_No	IS	Ord	T	Description	Qty	Serial_No	ITC	Remark
*	11LD-30610				RAD TOTAL COMPLETE	1	- #0367		
	11LD-30611				RADIATOR TOTAL COLMPLETE	1	#0368 - #0376	D	
	11LD-30612				RAD TOTAL COMPLETE	1	#0377 - #0458	D	
1	11LD-30621				.RAD COMPLETE	1			
1-1	12101811				..CAP-RADIATOR	1			
N1-2	XKAP-00001				..GASKET	1			NOT
2	11LD-30640				.T/M OIL COOLER ASSY	1	- #0376		
	11LD-30641				.T/M OIL COOLER ASSY	1	#0377 -	D	
3	11LD-30630				.HYD OIL COOLER ASSY	1	- #0376		
	11LD-30631				.HYD OIL COOLER ASSY	1	#0377 -	D	
4	11LD-30650				.CHARGED AIR COOLER	1			
5	11LD-30900				.SHROUD ASSY	1			
6	11LD-30660				.SUPPORT-UPPER	1			
7	11LD-30670				.SUPPORT-LOWER	1			
8	11LD-30680				.SUPPORT-LH,SIDE	1			
9	11LD-30690				.SUPPORT-RH,SIDE	1			
10	91008160				.BOLT-ASM	8			
11	91010251				.BOLT-ASM	44			
12	91010451				.BOLT-ASM	4			
13	45305320				.PACKING	1			
14	45601710				.CLIP-HOSE	4			
15	45603670				.CLIP-HARNESS	6			
16	45151310				.NAME PLATE	1			

AIR INTAKE SYSTEM

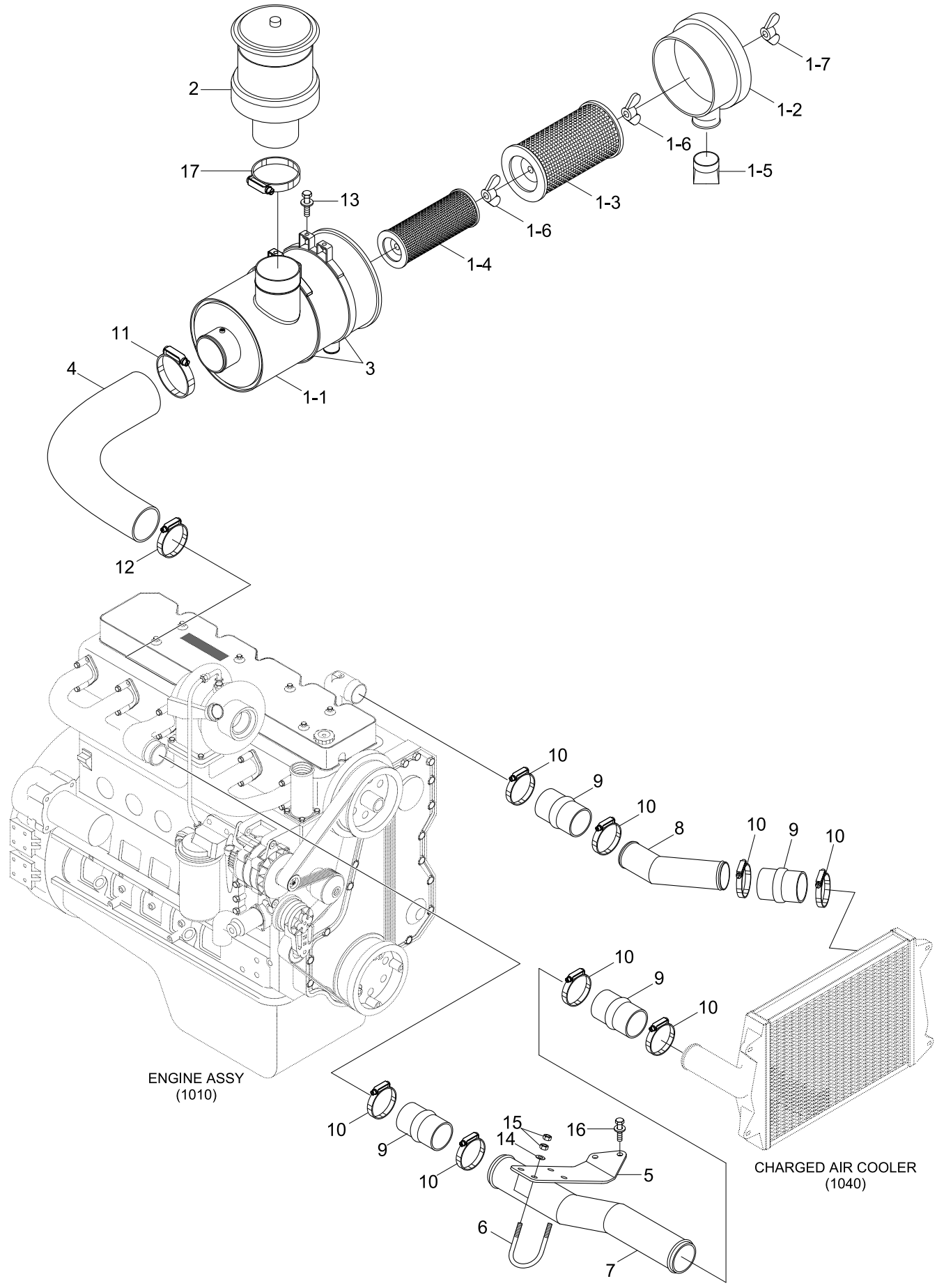

Item	Part_No	IS	Ord	T	Description	Qty	Serial_No	ITC	Remark
1	11LD-40200				AIR CLEANER ASSY	1			
1-1	11LD-40210				.HOUSING-AIR CLEANER	1			
1-2	11LD-40220				.CAP WA	1			
1-3	11N8-22140				.ELEMENT-OUTER	1			PRIMARY
1-4	11N8-22150				.ELEMENT-INNER	1			SAFETY
1-5	E211-2105				.VALVE-VACUUM	1			
1-6	11EM-21060				.NUT-WING	2			
1-7	11EM-21070				.NUT-WING	1			
2	11N8-20181				PRECLEANER	1			
3	11L1-20050				CLAMP ASSY	2			
4	11LD-40190				HOSE-AIR CLEANER	1			
5	11LC-40132				BRACKET	1			
6	11LD-40101				U-BOLT	2			
7	11LD-40160				PIPE WA	1			
8	11LD-40170				PIPE WA	1			
9	11LD-40080				HOSE-CHARGED AIR	4			
10	11LD-40090				CLAMP-T/RETENTION	8			
11	11LB-40190				CLAMP-HOSE	1			
12	11LB-40310				CLAMP-T/BOLT	1			
13	S037-102556				BOLT-W/WASHER	4			
14	S441-100006				WASHER-HARDENED	4			
15	S205-101006				NUT-HEX	8			
16	S037-103056				BOLT-W/WASHER	2			
17	11LB-40320				CLAMP-HOSE	1			

EXHAUST SYSTEM

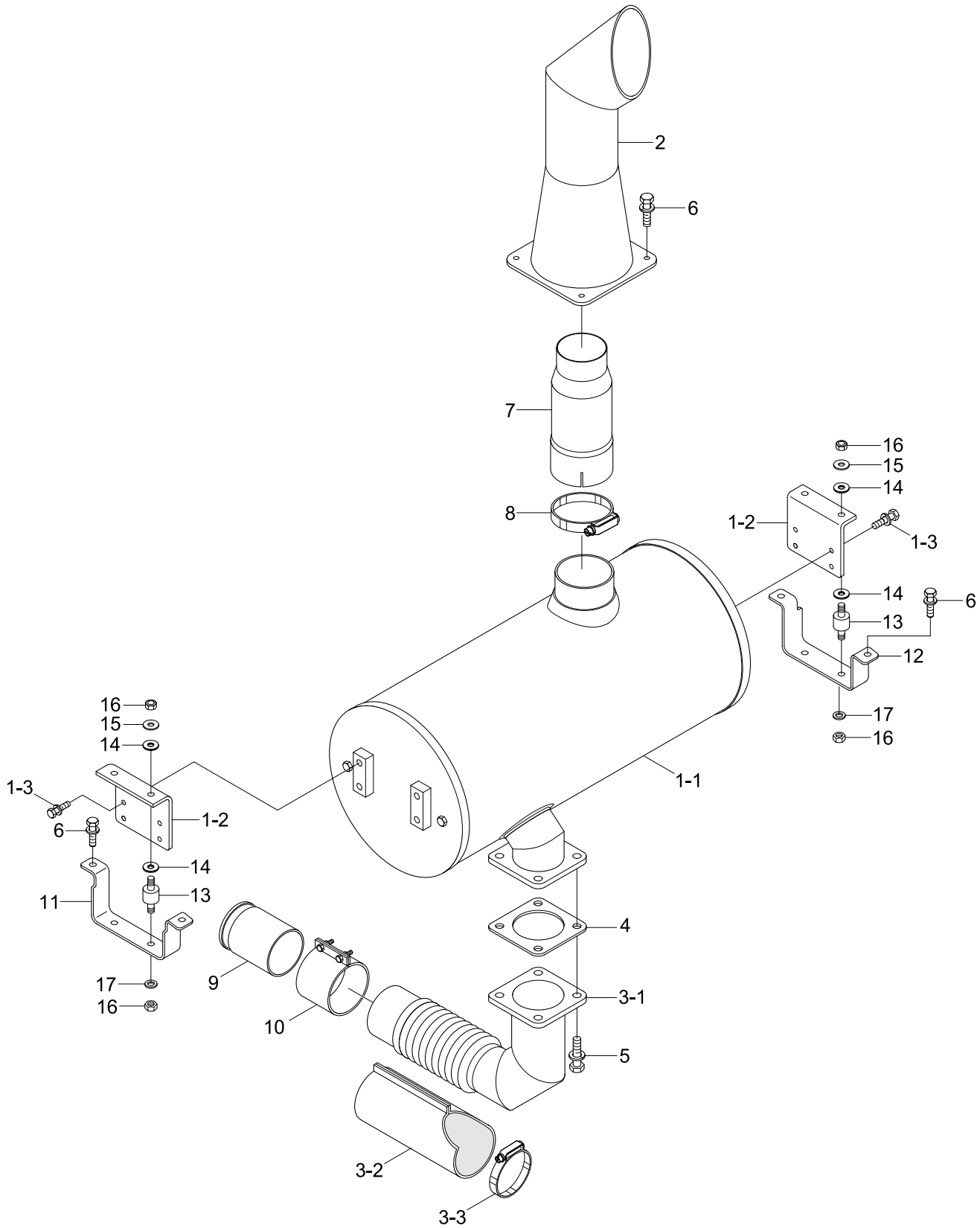

Item	Part_No	IS	Ord	T	Description	Qty	Serial_No	ITC	Remark
1	11LD-50330				MUFFLER ASSY	1			
1-1	11LC-50390				.MUFFLER SUB ASSY	1			
1-2	11LB-50860				.BRACKET	2			
1-3	S037-122556				.BOLT-W/WASHER	8			
2	11LB-50090				PIPE WA-TAIL	1			
3	11LD-50340				BELLOWS PIPE ASSY	1			
3-1	11LD-50350				.PIPE WA	1			
3-2	11LD-50320				.INSULATOR	1			
3-3	S520-090000				.CLAMP-HOSE	1			
4	14L3-00220				GASKET	1			
5	S037-103056				BOLT-W/WASHER	4			
6	S037-123056				BOLT-W/WASHER	8			
7	11LC-50470				PIPE	1			
8	11EH-32080				CLAMP-EXHAUST PIPE	1			
9	11LD-50290				PIPE WA-EXHAUST	1			
10	11N6-30040				CLAMP-SEAL	1			
11	11LB-50320				BRACKET WA-LH	1			
12	11LB-50330				BRACKET WA-RH	1			
13	11LB-88600				MOUNT	4	- #0383		
	11LB-88601				MOUNT	4	#0384 -	B	
14	11LB-50870				INSULATOR	8	- #0383		
	11LB-50940				INSULATOR	8	#0384 -	B	
15	11L7-30070				WASHER	4			
16	S205-121006				NUT-HEX	8			
17	S441-120006				WASHER-HARDENED	4			

AIRCON & HEATER MOUNTING

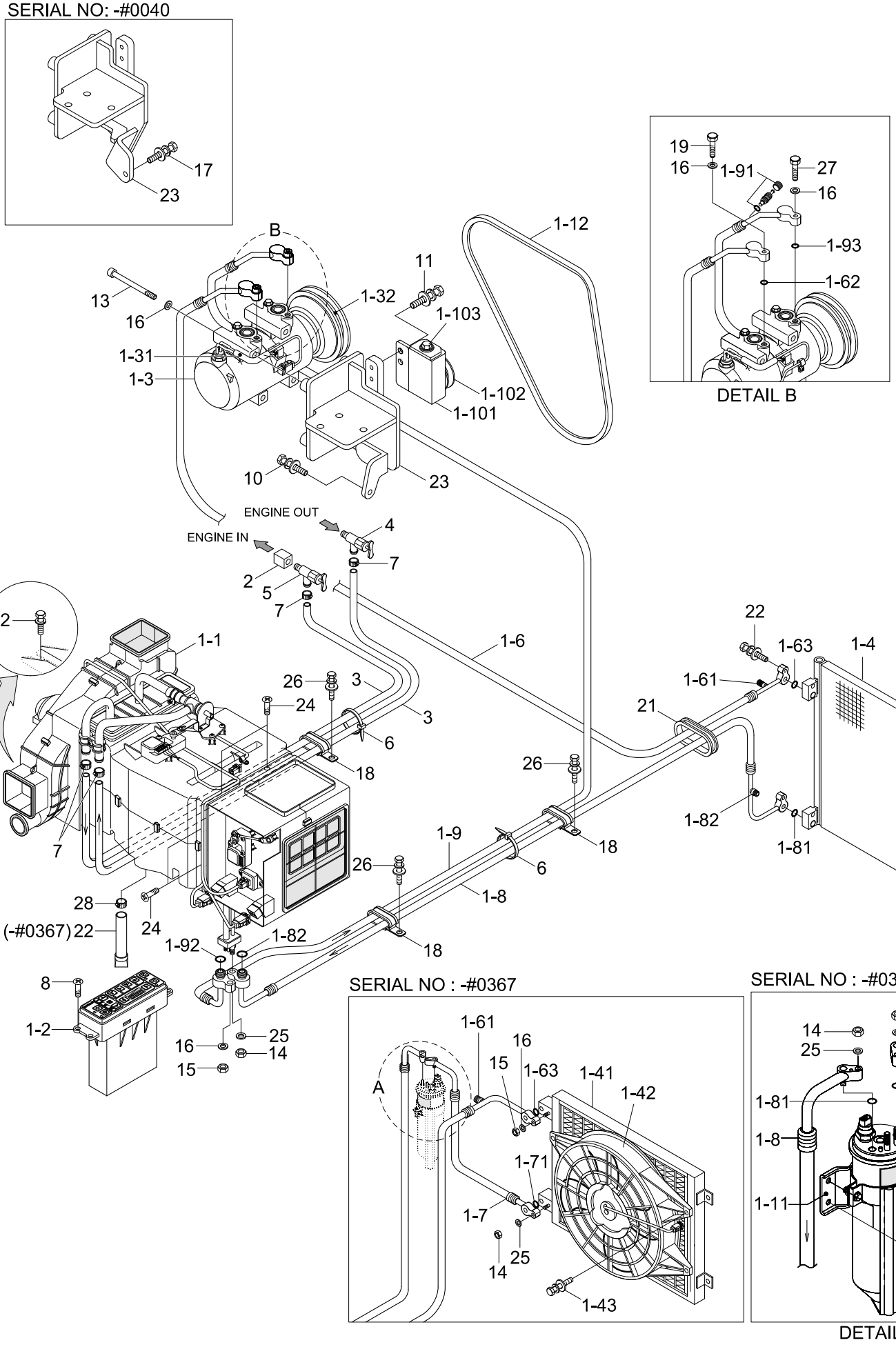

Item	Part_No	IS	Ord	T	Description	Qty	Serial_No	ITC	Remark
1	11LD-91021				AIRCON & HEATER ASSY	1	- #0367		
	11LD-91022				AIRCON & HEATER ASSY	1	#0368 - #0406	D	
	11LD-91024				AIRCON & HEATER ASSY	1	#0407 -	D	
1-1	@				.AIRCON & HEATER UNIT	1			NOT
1-2	11LB-90112				.CONTROL ASSY	1			
1-21	11LB-90220				..DECAL	1			NOT SHOWN
1-3	11N6-90040				.COMPRESSOR ASSY	1	- #0406		
	11Q6-90040				.COMPRESSOR ASSY	1	#0407 -	D	
1-31	11LF-90230				..THERMAL SW-COMP	1	- #0406	-	
1-32	A5W00153				..CLUTCH	1	- #0406	-	
1-4	11LH-90090				.COND & FAN ASSY	1	- #0367		
	11Q6-90071				.CONDENSER-R/DRYER	1	#0368 -	D	
1-41	A2W01133				..CONDENSER	1	- #0367	-	
1-42	A2W01178				..FAN & MOTOR ASSY	1	- #0367	-	
142.1	AC100287				...BLOWER ASSY	1	- #0367	-	NOT SHOWN
142.11	AC100180				....FAN ASSY	1	- #0367	-	NOT SHOWN
142.12	AC110288				....MOTOR ASSY	1	- #0367	-	NOT SHOWN
142.13	AC100189				....SHROUD	1	- #0367	-	NOT SHOWN
1-43	AA000004				..BOLT-W/WASHER	4	- #0367	-	
1-5	11N6-90060				.DRIER-RECEIVER	1	- #0367	-	
1-6	11LD-90121				.HOSE-DISCHARGE	1	- #0367		
	11LD-90122				.HOSE-DISCHARGE	1	#0368 - #0406	D	
	11LD-90123				.HOSE-DISCHARGE	1	#0407 -	D	
1-61	A304000301-4				..CHARGE VALVE ASSY	1			
1-62	A305000217-2				..O-RING	1	#0001 - #0406	-	
1-63	A305000205-2				..O-RING	1	#0001 -	-	

Item	Part_No	IS	Ord	T	Description	Qty	Serial_No	ITC	Remark
1-7	11LC-90053				.HOSE(A)-LIQUID	1	- #0367	-	
1-71	A305000209-2				..O-RING	1	- #0367	-	
1-72	A305000207-2				..O-RING	1	- #0367	-	
1-8	11LD-90063				.HOSE(B)-LIQUID	1	- #0367		
	11LD-90064				.HOSE(B)-LIQUID	1	#0368 -	D	
1-81	A305000209-2				..O-RING	2	#0001 -	-	
N1-82	A8220-010-00-2				..SWITCH-PRESSURE	1	#0368 -	-	NOT
1-9	11LC-90171				.HOSE-SUCTION	1	- #0406		
	11LC-90172				.HOSE-SUCTION	1	#0407 -	D	
1-91	A304000601-4				..CHARGE VALVE ASSY-L	1			
1-92	A305000203-2				..O-RING	1			
1-93	A305000216-2				..O-RING	1	- #0406	-	
1-10	11N6-90110				.PULLEY-IDLE	1			
1-101	A4760-508-00-2				..BRACKET-PULLEY	1			
1-102	A4700-511-01-2				..PULLEY-IDLE	1			INCL 1-103
1-103	A8900-518-03-3				...BOLT-TENSION	1			
1-11	11N6-90120				.BRACKET-R/DRIER	1	- #0367	-	
1-12	11N4-92130				.V-BELT	1			
1-13	11EK-92130				.HOSE-DRAIN	1	#0407 -	-	
2	11LC-90150				BLOCK	1			
3	11LC-90100				HOSE-HEATER	2			
4	11L7-90150				VALVE-HEATER	1			
5	14L1-01350				VALVE-HEATER	1			
6	S551-035146				TIE-WIRE	2			
7	S520-027000				CLAMP-HOSE,SCREW TYPE	4			
8	S131-052046				SCREW-W/WASHER	4			

Item	Part_No	IS	Ord	T	Description	Qty	Serial_No	ITC	Remark
9	S035-061526				BOLT-W/WASHER	2	- #0367	-	
10	S035-082526				BOLT-W/WASHER	4	- #0040		
					BOLT-W/WASHER	5	#0041 -	A	
11	S037-102526				BOLT-W/WASHER	3			
12	S037-122056				BOLT-W/WASHER	4			
13	S109-080956				BOLT-SOCKET	4	- #0406		
	S109-080906				BOLT-SOCKET	4	#0407 -	D	
14	S203-061006				NUT-HEX	4	- #0367		
	S205-06100B				NUT-HEX	1	#0368 -	A	
15	S203-081006				NUT-HEX	2	- #0367		
	S205-08100B				NUT-HEX	1	#0368 -	A	
16	S403-08200B				WASHER-PLAIN	4	- #0040		
					WASHER-PLAIN	7	#0041 - #0406	A	
					WASHER-PLAIN	5	#0407 -	A	
17	S035-082026				BOLT-W/WASHER	1	- #0367		
	S035-063526				BOLT-W/WASHER	1	#0368 -	D	
18	S543-400002				CLAMP-TUBE	3			
19	S015-080306				BOLT-HEX	1	- #0406	-	
20	14L3-00741				RESILIENT	4			
21	S681-460400				GROMMET	1			
22	11EK-92130				HOSE-DRAIN	1	- #0367		
	S035-084026				BOLT-W/WASHER	1	#0368 -	D	
23	11LF-90313				BRACKET WA	1	- #0040		
	11LF-90314				BRACKET WA	1	#0041 - #0406	B	
	11LL-90100				BRACKET WA	1	#0407 -	D	
24	S151-040126				SCREW-TAPPING	4			

Item	Part_No	IS	Ord	T	Description	Qty	Serial_No	ITC	Remark
25	S403-06200B				WASHER-PLAIN	4	- #0367		
					WASHER-PLAIN	1	#0368 -	A	
26	S035-081526				BOLT-W/WASHER	3			
27	S015-080356				BOLT-HEX	1	- #0406	-	
28	S520-015000				CLAMP-HOSE	1			
29	S018-100356				BOLT-HEX	1	#0407 -	-	
30	S441-100006				WASHER-HARDENED	1	#0407 -	-	
31	S403-10200B				WASHER-PLAIN	1	#0407 -	-	

AIRCON & HEATER UNIT

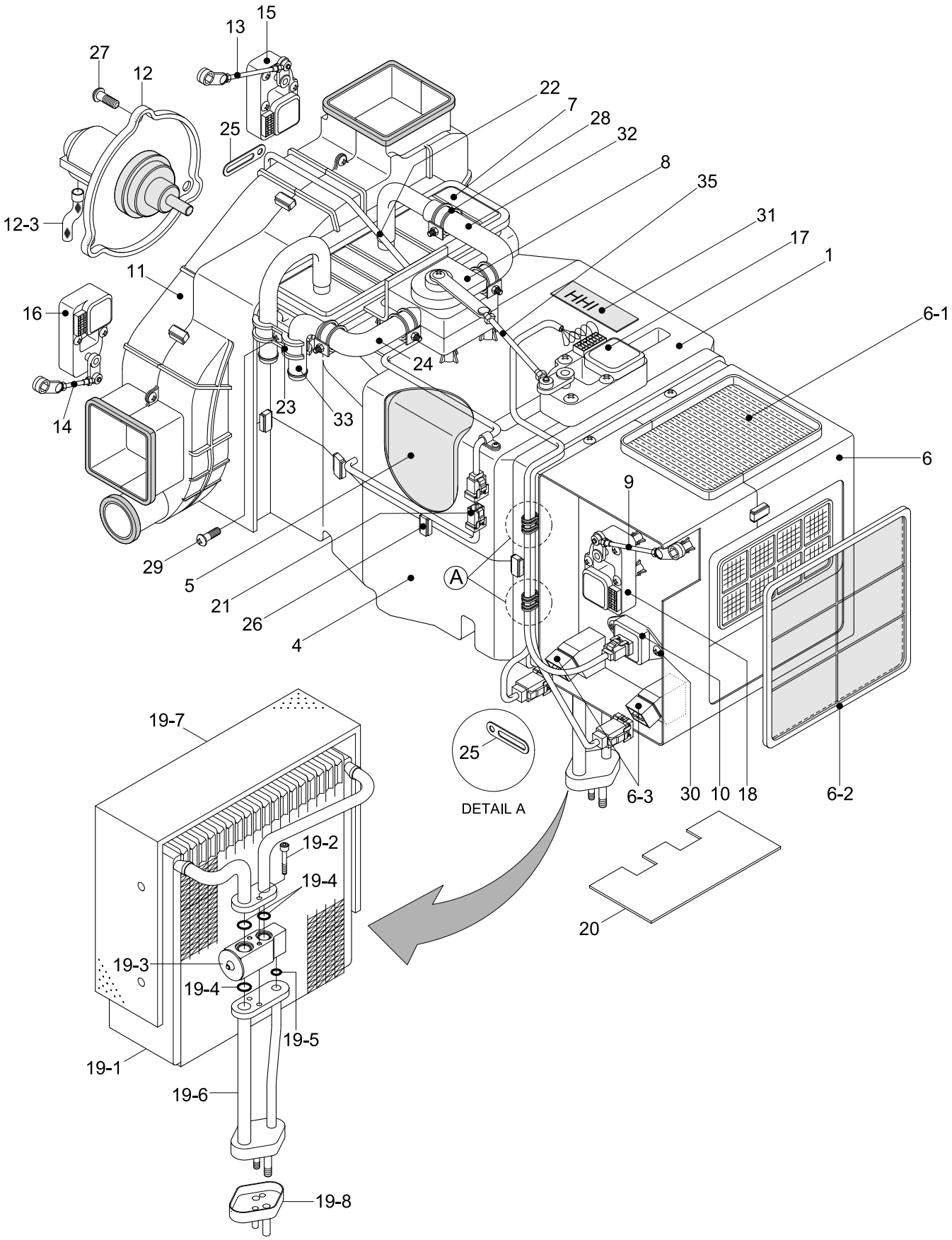

Item	Part_No	IS	Ord	T	Description	Qty	Serial_No	ITC	Remark
*	11LH-90240				AIRCON & HEATER UNIT	1	- #0406		
	11LH-90241				AIRCON & HEATER UNIT	1	#0407 -	D	
1	AH000089				.HVAC CASE-UPP	1			
4	AM1210400-0				.HVAC CASE LOWER	1			
5	AM75001000-2				.EVAC INSULATION-LOW	1			
6	AH000983				.INTAKE CASE ASSY	1			
6-1	AM70003600-3				..SEAL-FILTER,FRESH	1			
6-2	11N6-90770				..AIR FILTER-REFRESH	1			
6-3	11N6-90820				..RELAY	2			
7	11N6-90780				.HEATER CORE	1			
8	AH001160				.VLAVE-WATER	1			
9	AM52300100-4				.ROD-INTAKE	1			
10	11N6-90750				.RESISTOR ASSY	1			
11	AH001187				.BLOWER CASE ASSY	1			
12	11N6-90700				.FAN & MOTOR	1			
12-1	AW22000800-2				..FAN	1			NOT SHOWN
12-2	AW21002500-1				..MOTOR	1			NOT SHOWN
12-3	A710051601-3				..HOSE-DRAIN	1			
13	AW70002300-4				.ROD-VENT	1			
14	AW70002400-4				.ROD-DEF/FOOT	1			
15	AH100108				.MOTOR ACT-REAR	1			
16	AH100109				.MOTOR ACT-FRONT	1			
17	AH100311				.MOTOR ACT-TEMP	1			
18	11N6-90740				.MOTOR ACT-INTAKE	1			
19	11N6-90790				.EVAP CORE ASSY	1	- #0406		
	11N6-90791				.EVAP CORE ASSY	1	#0407 -	D	

Item	Part_No	IS	Ord	T	Description	Qty	Serial_No	ITC	Remark
19-1	A111056400-1				..CORE ASSY-LAMI	1			
19-2	A111750100-4				..BOLT-WRENCH,HEX	2			
19-3	11N6-90800				..VALVE-EXPANSION	1	- #0406		
	11N6-90801				..EXPANSION VALVE ASSY	1	#0407 -	D	
19-4	A305000212-2				..O-RING	3			
19-5	A305000211-2				..O-RING	1			
19-6	A112059600-2				..PIPE ASSY	1			
19-7	A115004900-2				..INSULATION-CORE	1			
19-8	A306201301-3				..CAP-FLANGE	1			
20	A120150700-3				.PLATE-SIDE	1			
21	A165400100-2				.SENSOR-DUCT	1			
22	AH100110				.WIRING ASSY	1			
23	AH000314				.CLAMP-H/RAD PIPE	1			
24	AH001287				.HOSE-INLET,WATER	1			
25	4AH-0643				.HOLDER-WIRE	6			
26	4AH-0688				.CLIP-CASE	9			
27	AH000866				.SCREW	3			
28	AH001853				.CLAMP-WATER HOSE	4			
29	K500531				.SCREW	28			
30	K500533				.SCREW	2			
31	AH001696				.NAME PLATE	1			
32	AH001288				.HOSE-OUTLET,WATER	1			
33	AH001852				.HEATER PIPE-INLET	1			
35	AH000856				.ROD-TEMP	1			

AIRCONDITIONER MOUNTING

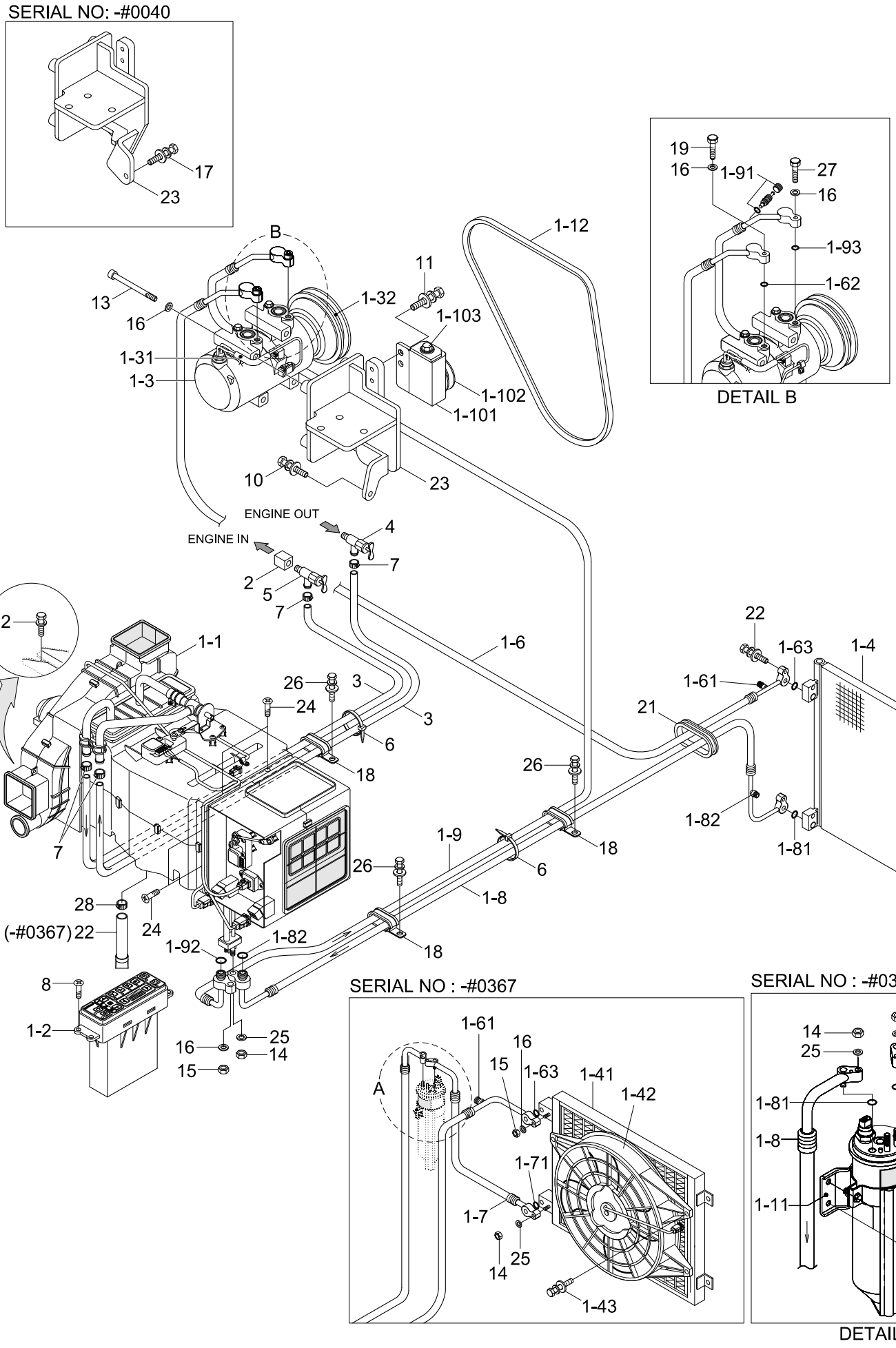

Item	Part_No	IS	Ord	T	Description	Qty	Serial_No	ITC	Remark
1	11LD-91011				AIRCON ASSY	1	- #0367		
	11LD-91012				AIRCON ASSY	1	#0368 - #0406	D	
	11LD-91014				AIRCON ASSY	1	#0407 -	D	
1-1	11LH-90250				.AIRCON UNIT	1			SEE 1100
1-2	11LB-90112				.CONTROL ASSY	1			
1-21	11LB-90220				.DECAL	1			NOT SHOWN
1-3	11N6-90040				.COMPRESSOR ASSY	1	- #0406		
	11Q6-90040				.COMPRESSOR ASSY	1	#0407 -	D	
1-31	11LF-90230				..THERMAL SW-COMP	1	- #0406	-	
1-32	A5W00153				..CLUTCH	1	- #0406	-	
1-4	11LH-90090				.COND & FAN ASSY	1	- #0367		
	11Q6-90071				.CONDENSER-R/DRYER	1	#0368 -	D	
1-41	A2W01133				..CONDENSER	1	- #0367	-	
1-42	A2W01178				..FAN & MOTOR ASSY	1	- #0367	-	
142.1	AC100287				...BLOWER ASSY	1	- #0367	-	NOT SHOWN
142.11	AC100180				....FAN ASSY	1	- #0367	-	NOT SHOWN
142.12	A2W01179				....MOTOR ASSY	1	- #0367	-	NOT SHOWN
142.13	AC100189				....SHROUD	1	- #0367	-	NOT SHOWN
1-43	AA000004				..BOLT-W/WASHER	4	- #0367	-	
1-5	11N6-90060				.DRIER-RECEIVER	1	- #0367	-	
1-6	11LD-90121				.HOSE-DISCHARGE	1	- #0367		
	11LD-90122				.HOSE-DISCHARGE	1	#0368 - #0406	D	
	11LD-90123				.HOSE-DISCHARGE	1	#0407 -	D	
1-61	A304000301-4				..CHARGE VALVE ASSY	1			
1-62	A305000217-2				..O-RING	1	#0001 - #0406	-	
1-63	A305000205-2				..O-RING	1	#0001 -	-	

Item	Part_No	IS	Ord	T	Description	Qty	Serial_No	ITC	Remark
1-7	11LC-90053				.HOSE(A)-LIQUID	1	- #0367	-	
1-71	A305000209-2				..O-RING	1	- #0367	-	
1-72	A305000207-2				..O-RING	1	- #0367	-	
1-8	11LD-90063				.HOSE(B)-LIQUID	1	- #0367		
	11LD-90064				.HOSE(B)-LIQUID	1	#0368 -	D	
1-81	A305000209-2				..O-RING	2	#0001 -	-	
N1-82	A8220-010-00-2				..SWITCH-PRESSURE	1	#0368 -	-	NOT
1-9	11LC-90171				.HOSE-SUCTION	1	- #0406		
	11LC-90172				.HOSE-SUCTION	1	#0407 -	D	
1-91	A304000601-4				..CHARGE VALVE ASSY-L	1			
1-92	A305000203-2				..O-RING	1			
1-93	A305000216-2				..O-RING	1	- #0406	-	
1-10	11N6-90110				.PULLEY-IDLE	1			
1-101	A4760-508-00-2				..BRACKET-PULLEY	1			
1-102	A4700-511-01-2				..PULLEY-IDLE	1			INCL 1-103
1-103	A8900-518-03-3				...BOLT-TENSION	1			
1-11	11N6-90120				.BRACKET-R/DRIER	1	- #0367	-	
1-12	11N4-92130				.V-BELT	1			
1-13	11EK-92130				.HOSE-DRAIN	1	#0407 -	-	
6	S551-035146				TIE-WIRE	2			
8	S131-052046				SCREW-W/WASHER	4			
9	S035-061526				BOLT-W/WASHER	2	- #0367	-	
10	S035-082526				BOLT-W/WASHER	4	- #0040		
					BOLT-W/WASHER	5	#0041 -	A	
11	S037-102526				BOLT-W/WASHER	3			
12	S037-122056				BOLT-W/WASHER	4			

Item	Part_No	IS	Ord	T	Description	Qty	Serial_No	ITC	Remark
13	S109-080956				BOLT-SOCKET	4	- #0406		
	S109-080906				BOLT-SOCKET	4	#0407 -	D	
14	S203-061006				NUT-HEX	4	- #0367		
	S205-06100B				NUT-HEX	1	#0368 -	A	
15	S203-081006				NUT-HEX	2	- #0367		
	S205-08100B				NUT-HEX	2	#0368 -	A	
16	S403-08200B				WASHER-PLAIN	4	- #0040		
					WASHER-PLAIN	8	#0041 - #0367	A	
					WASHER-PLAIN	7	#0368 - #0406	A	
					WASHER-PLAIN	5	#0407 -	A	
17	S035-082026				BOLT-W/WASHER	1	- #0367		
	S035-063526				BOLT-W/WASHER	1	#0368 -	D	
18	S543-400002				CLAMP-TUBE	2			
19	S015-080306				BOLT-HEX	1	- #0406	-	
20	14L3-00741				RESILIENT	4			
21	S681-460400				GROMMET	1			
22	11EK-92130				HOSE-DRAIN	1	- #0367		
	S035-084026				BOLT-W/WASHER	1	#0368 -	D	
23	11LF-90313				BRACKET WA	1	- #0040		
	11LF-90314				BRACKET WA	1	#0041 - #0406	B	
	11LL-90100				BRACKET WA	1	#0407 -	D	
24	S151-040126				SCREW-TAPPING	4			
25	S403-06200B				WASHER-PLAIN	4	- #0367		
					WASHER-PLAIN	1	#0368 -	A	
26	S035-081526				BOLT-W/WASHER	2			
27	S015-080356				BOLT-HEX	1	- #0406	-	

Item	Part_No	IS	Ord	T	Description	Qty	Serial_No	ITC	Remark
28	S520-015000				CLAMP-HOSE	1			
29	S018-100356				BOLT-HEX	1	#0407 -	-	
30	S441-100006				WASHER-HARDENED	1	#0407 -	-	
31	S403-10200B				WASHER-PLAIN	1	#0407 -	-	

AIR CONDITIONER UNIT

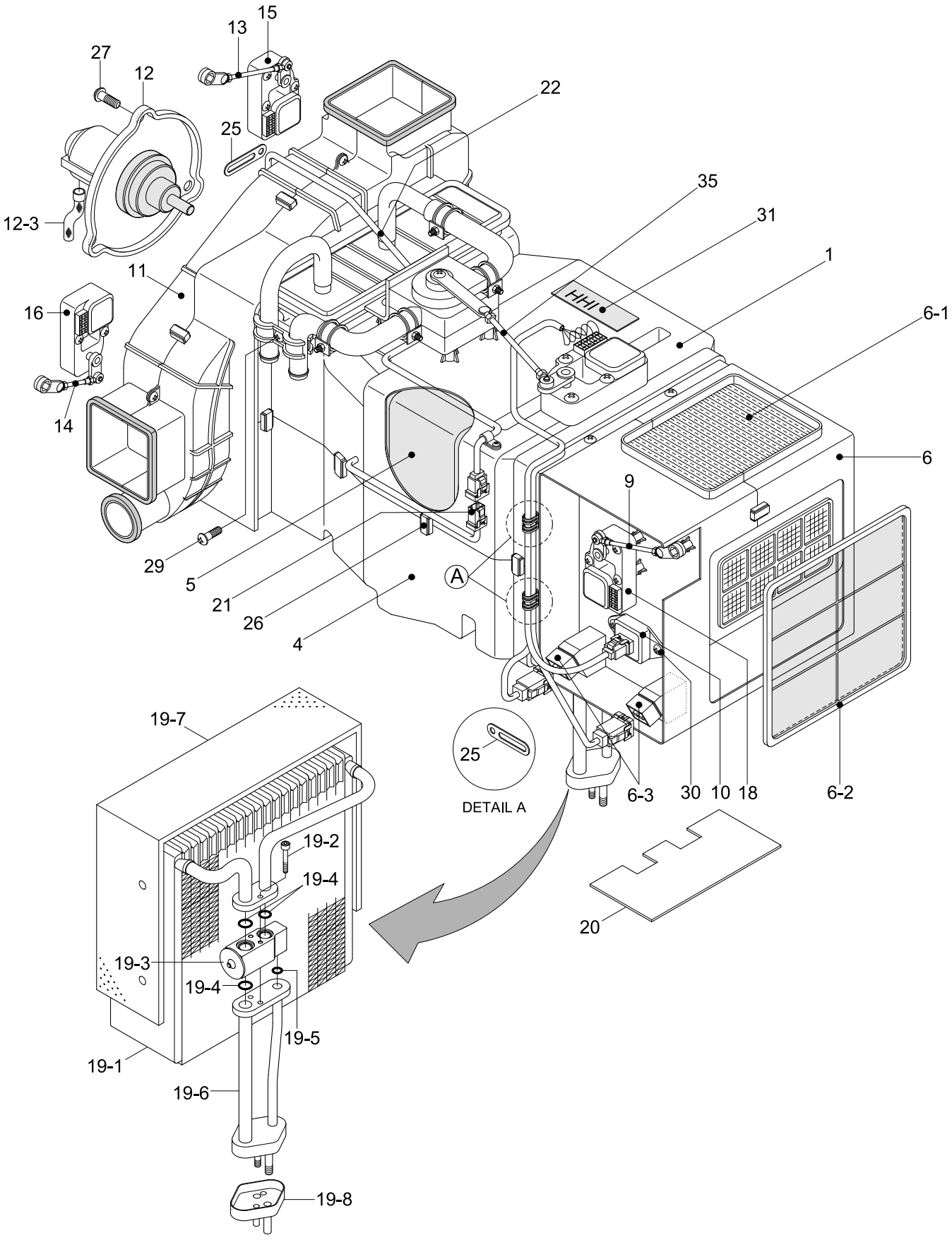

Item	Part_No	IS	Ord	T	Description	Qty	Serial_No	ITC	Remark
*	11LH-90250				AIRCON UNIT	1	- #0406		
	11LH-90251				AIRCON UNIT	1	#0407 -	D	
1	AH000090				.HVAC CASE UPP ASSY	1			
4	AM1210400-0				.HVAC CASE LOWER	1			
5	AM75001000-2				.EVAC INSULATION-LOW	1			
6	AH000983				.INTAKE CASE ASSY	1			
6-1	AM70003600-3				..SEAL-FILTER,FRESH	1			
6-2	11N6-90770				..AIR FILTER-REFRESH	1			
6-3	11N6-90820				..RELAY	2			
9	AM52300100-4				.ROD-INTAKE	1			
10	11N6-90750				.RESISTOR ASSY	1			
11	AH001187				.BLOWER CASE ASSY	1			
12	11N6-90700				.FAN & MOTOR	1			
12-1	AW22000800-2				..FAN	1			NOT SHOWN
12-2	AW21002500-1				..MOTOR	1			NOT SHOWN
12-3	A710051601-3				..HOSE-DRAIN	1			
13	AW70002300-4				.ROD-VENT	1			
14	AW70002400-4				.ROD-DEF/FOOT	1			
15	AH100108				.MOTOR ACT-REAR	1			
16	AH100109				.MOTOR ACT-FRONT	1			
18	11N6-90740				.MOTOR ACT-INTAKE	1			
19	11N6-90790				.EVAP CORE ASSY	1	- #0406		
	11N6-90791				.EVAP CORE ASSY	1	#0407 -	D	
19-1	A111056400-1				..CORE ASSY-LAMI	1			
19-2	A111750100-4				..BOLT-WRENCH,HEX	2			
19-3	11N6-90800				..VALVE-EXPANSION	1	- #0406		

Item	Part_No	IS	Ord	T	Description	Qty	Serial_No	ITC	Remark
19-3	11N6-90801				..EXPANSION VALVE ASSY	1	#0407 -	D	
19-4	A305000212-2				..O-RING	3			
19-5	A305000211-2				..O-RING	1			
19-6	A112059600-2				..PIPE ASSY	1			
19-7	A115004900-2				..INSULATION-CORE	1			
19-8	A306201301-3				..CAP-FLANGE	1			
20	A120150700-3				.PLATE-SIDE	1			
21	A165400100-2				.SENSOR-DUCT	1			
22	AH100110				.WIRING ASSY	1			
25	4AH-0643				.HOLDER-WIRE	6			
26	4AH-0688				.CLIP-CASE	9			
27	AH000866				.SCREW	3			
29	K500531				.SCREW	22			
30	K500533				.SCREW	2			
31	AH001696				.NAME PLATE	1			
35	AH000856				.ROD-TEMP	1			

HEATER MOUNTING

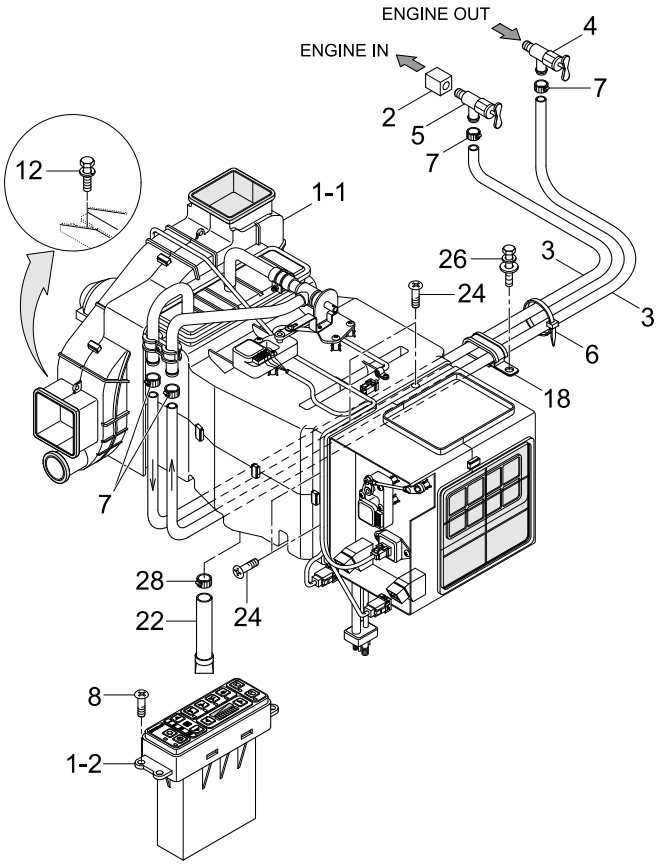

Item	Part_No	IS	Ord	T	Description	Qty	Serial_No	ITC	Remark
1	11LH-90032				HEATER ASSY	1			
1-1	@				.HEATER UNIT	1			NOT
1-2	11LB-90122				.CONTROL ASSY	1			
1-21	11LB-90210				..DECAL(HEATER ONLY)	1			NOT SHOWN
2	11LC-90150				BLOCK	1			
3	11LC-90100				HOSE-HEATER	2			
4	11L7-90150				VALVE-HEATER	1			
5	14L1-01350				VALVE-HEATER	1			
6	S551-035146				TIE-WIRE	2			
7	S520-027000				CLAMP-HOSE	4			
8	S131-052046				SCREW-W/WASHER	4			
12	S037-122056				BOLT-W/WASHER	4			
18	S543-400002				CLAMP-TUBE	1			
22	11EK-92130				HOSE-DRAIN	1			
24	S151-040126				SCREW-TAPPING	4			
26	S035-081526				BOLT-W/WASHER	1			
28	S520-015000				CLAMP-HOSE	1			

HEATER UNIT

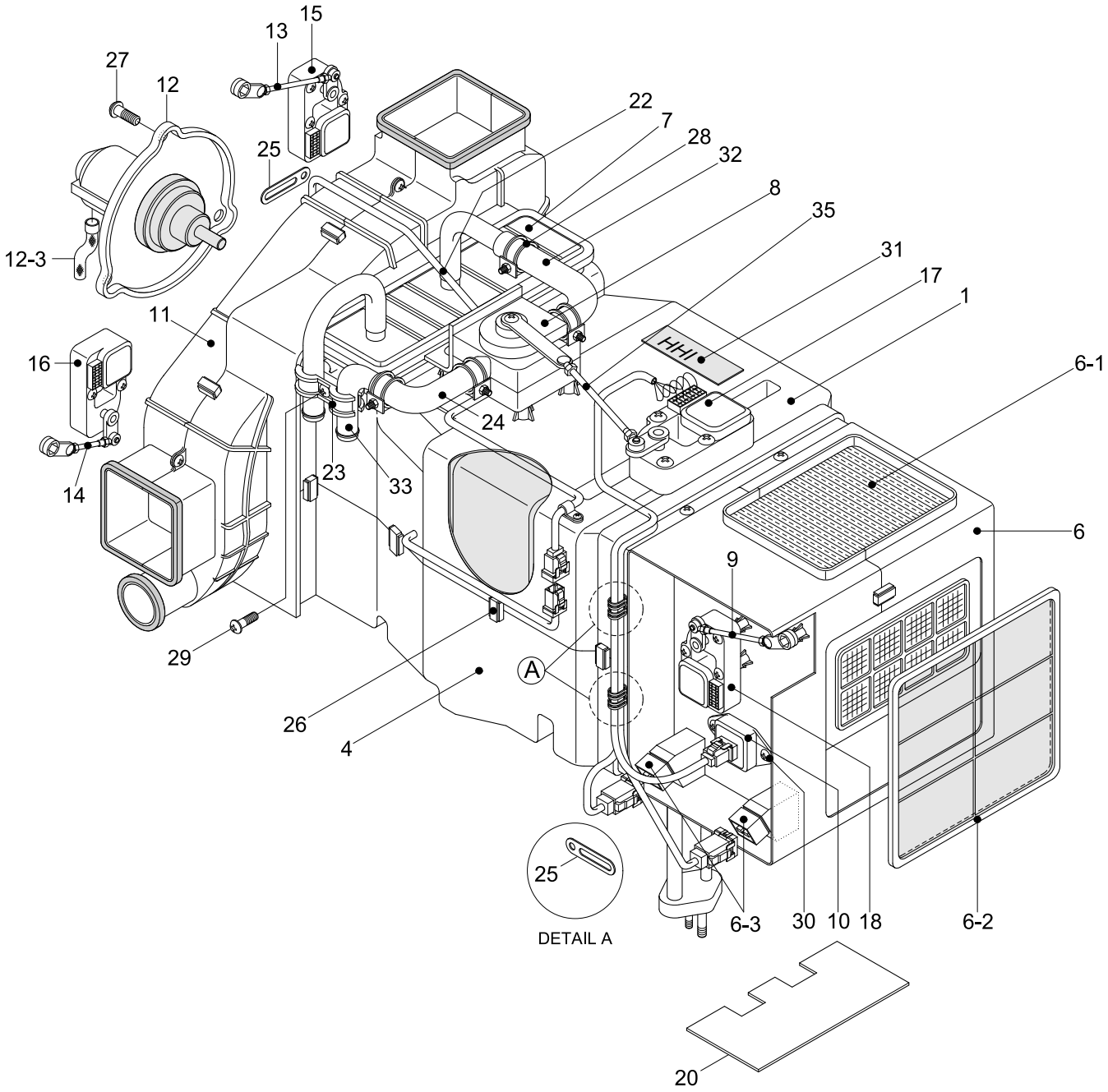
15
13
27
12
22
7
28
32
25
8
35
12-3
31
17
11
1
16
6-1
24
14
23
33
6
9
29
A
26
4
25
DETAIL A
6-3
30
10
18
6-2
20

Item	Part_No	IS	Ord	T	Description	Qty	Serial_No	ITC	Remark
*	11LH-90260				HEATER UNIT	1			
1	AH000086				.HVAC CASE UPP ASSY	1			
4	AM1210400-0				.HVAC CASE LOWER	1			
6	AH000983				.INTAKE CASE ASSY	1			
6-1	AM70003600-3				..SEAL-FILTER,FRESH	1			
6-2	11N6-90770				..AIR FILTER-REFRESH	1			
6-3	11N6-90820				..RELAY	2			
7	11N6-90780				.HEATER CORE	1			
8	AH001160				.WATER VLAVE	1			
9	AM52300100-4				.ROD-INTAKE	1			
10	11N6-90750				.RESISTOR ASSY	1			
11	AH001187				.BLOWER CASE ASSY	1			
12	11N6-90700				.FAN & MOTOR	1			
12-1	AW22000800-2				..FAN	1			NOT SHOWN
12-2	AW21002500-1				..MOTOR	1			NOT SHOWN
12-3	A710051601-3				..HOSE-DRAIN	1			
13	AW70002300-4				.ROD-VENT	1			
14	AW70002400-4				.ROD-DEF/FOOT	1			
15	AH100108				.MOTOR ACT-REAR	1			
16	AH100109				.MOTOR ACT-FRONT	1			
17	AH100311				.MOTOR ACT-TEMP	1			
18	11N6-90740				.MOTOR ACT-INTAKE	1			
20	A120150700-3				.PLATE-SIDE	1			
22	AH100110				.WIRING ASSY	1			
23	AH000314				.CLAMP-H/RAD PIPE	1			
24	AH001287				.HOSE-INLET,WATER	1			

Item	Part_No	IS	Ord	T	Description	Qty	Serial_No	ITC	Remark
25	4AH-0643				.HOLDER-WIRE	6			
26	4AH-0688				.CLIP-CASE	9			
27	AH000866				.SCREW	3			
28	AH001853				.CLAMP-WATER HOSE	4			
29	K500531				.SCREW	28			
30	K500533				.SCREW	2			
31	AH001696				.NAME PLATE	1			
32	AH001288				.HOSE-OUTLET,WATER	1			
33	AH001852				.HEATER PIPE-INLET	1			
35	AH000856				.ROD-TEMP	1			

CAB ELECTRIC 1

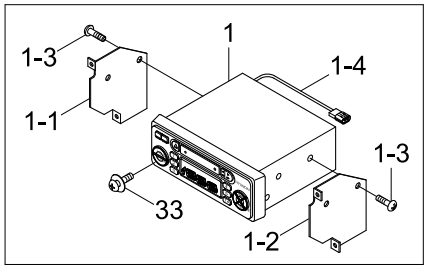

SERIAL NO.:-#0386

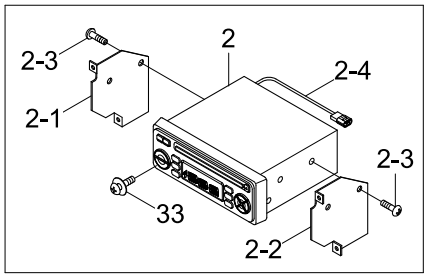

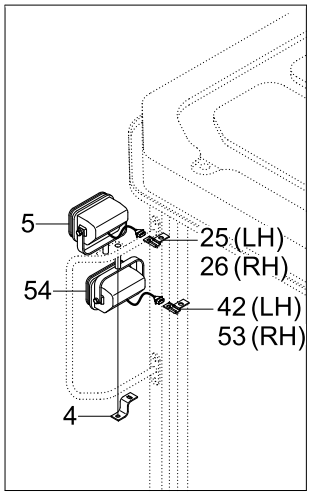

LH & RH SIDE

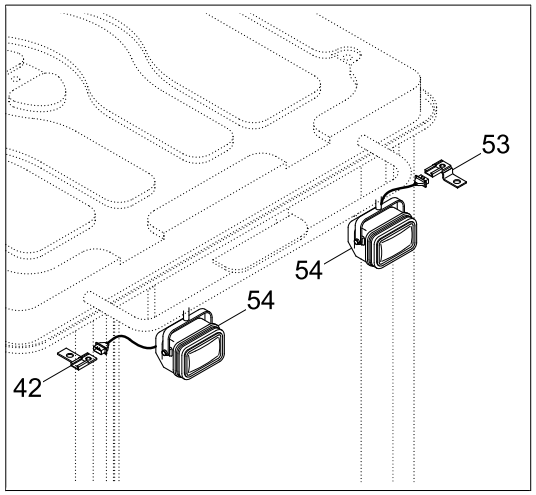

REAR SIDE

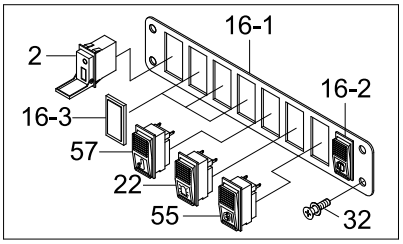

LH SIDE

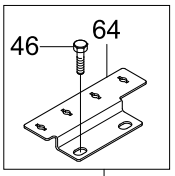

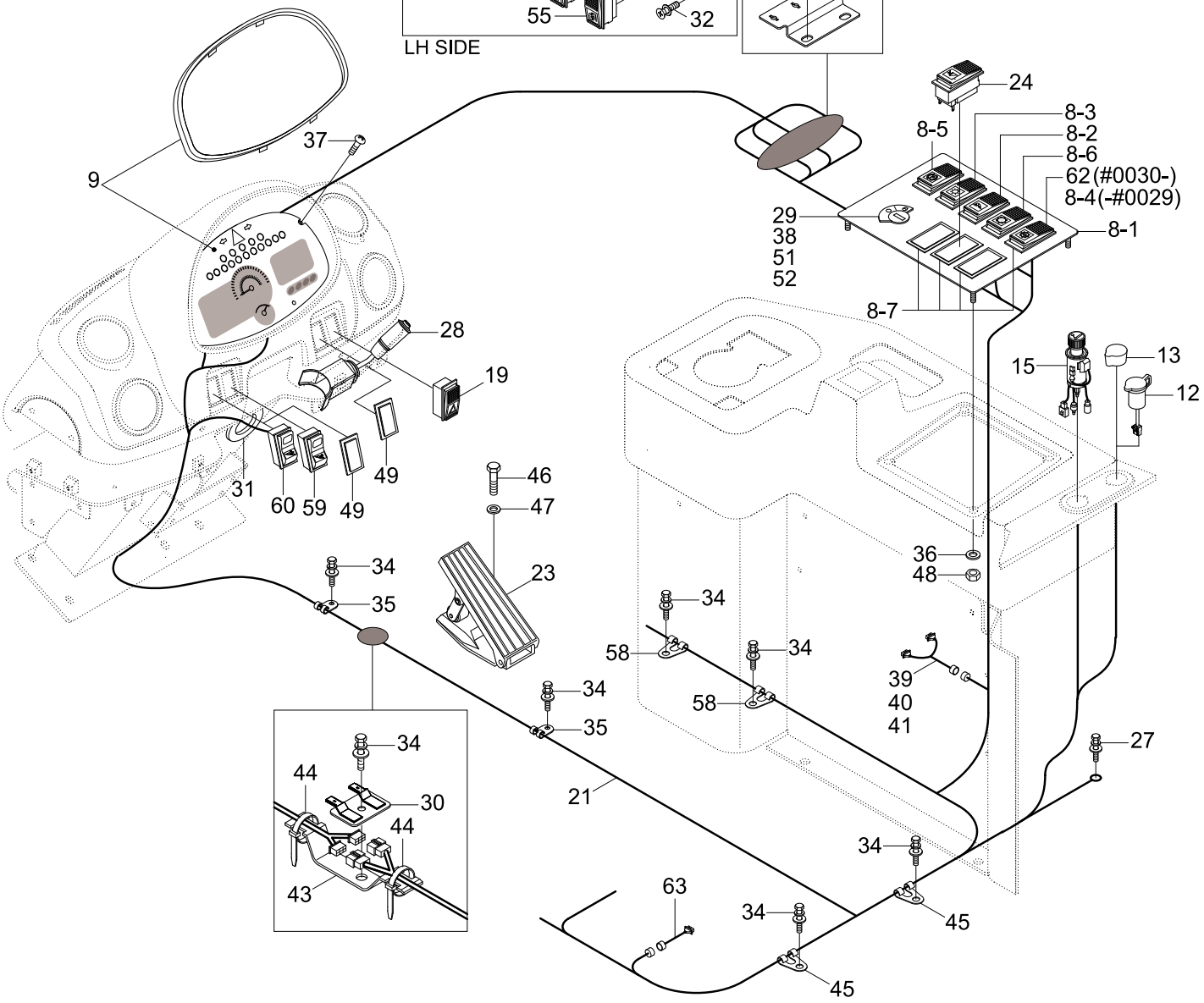

Item	Part_No	IS	Ord	T	Description	Qty	Serial_No	ITC	Remark
1	21N8-50020				CASSETTE RADIO ASSY	1	- #0180		STD
	21N8-50060				CASSETTE RADIO ASSY	1	#0181 - #0386	A	STD
	21N8-51000				RADIO/USB PLAYER ASSY	1	#0387 -	D	STD
1-1	21N6-10470				.BRACKET-LH	1			
1-2	21N6-10460				.BRACKET-RH	1			
1-3	S141-050102				.SCREW-FLAT HD	4			
N1-4	21N8-01620				.HARNESS-WIRE,EXT	1			NOT
2	21N8-40600				CD PLAYER ASSY	1	- #0386		OPT
	21LM-31200				USB & SOCKET ASSY	1	#0387 -	D	
2-1	21N6-10470				.BRACKET-LH	1	- #0386		
2-2	21N6-10460				.BRACKET-RH	1	- #0386		
2-3	S141-050102				.SCREW-FLAT HD	4	- #0386		
N2-4	21N8-01620				.HARNESS-WIRE,EXT	1	- #0386		NOT
4	21N4-01130				PLATE-CLIP	2			
5	21N6-20211				WORK LAMP ASSY	2			
5-1	S866-240650				.BULB	1			NOT SHOWN
8	21LB-34101				SWITCH BOARD ASSY	1			
	21LB-34102				SWITCH BOARD ASSY	1	#0030 - #0319	C	
8-1	21LB-20350				.PLATE-SWITCH BOARD	1			
8-2	21LB-40250				.SWITCH-WORK LAMP	1			
8-3	21LB-40240				.SWITCH-MAIN LIGHT	1			
8-4	21LB-40270				.SWITCH-CLUTCH CUT-OFF	1	- #0029	-	
8-5	21LB-40230				.SWITCH-PARKING	1			
8-6	21LB-40260				.SWITCH-AUTO SELECT	1			
8-7	21E6-10460				.COVER	3	- #0029		
					.COVER	4	#0030 -	A	

Item	Part_No	IS	Ord	T	Description	Qty	Serial_No	ITC	Remark
9	21LB-50501				CLUSTER ASSY	1			
12	21N8-20010				SOCKET-12V	1			OPT
13	S661-260300				CAP-RUBBER	1			STD
15	21E4-0008	30			LIGHTER-CIGAR	1	- #0270		
	21LM-07110				LIGHTER-CIGAR	1	#0271 -	B	
16	21LB-34112				SWITCH ASSY	1			
16-1	21LB-34240				.COVER-PLATE	1			
16-2	21LB-40280				.SW-RR WIPER/WASHER	1			
16-3	21E6-10460				.COVER	6			
19	21LB-40140				SWITCH-HAZARD	1			
21	21LD-40010				HARNESS-MAIN	1	- #0029		
	21LD-40011				HARNESS-MAIN	1	#0030 - #0127	D	
	21LD-40012				HARNESS-MAIN	1	#0128 -	D	
21-1	21LG-10150				.HARNESS-PLUG	1	#0030 -	-	
21-2	21EA-50550				.DIODE	2	#0001 - #0029	-	NOT SHOWN
					.DIODE	4	#0030 -	A	NOT SHOWN
22	21LB-40300				SWITCH-BEACON	1			OPT
23	21L6-03600				PEDAL-ELECTRONIC	1	- #0376		
	21FT-15190				ACCELERATOR PEDAL	1	#0377 -	B	
R24	21LB-40210				SWITCH-RIDE CONTROL	1			SEE 3160
25	25D1-10650				CLIP ASSY	1			
26	25D1-10640				CLIP ASSY	1			
27	S035-082026				BOLT-W/WASHER	1			
28	24L3-00340				SWITCH-MULTIFUNCTION	1			
29	21N4-10430				SWITCH ASSY-INCL KEY	1	- #0319		KOREA,CHINA
	21N3-00020				SWITCH ASSY-INCL KEY	1	#0320 -	B	KOREA,CHINA

Item	Part_No	IS	Ord	T	Description	Qty	Serial_No	ITC	Remark
29-1	21N4-10430K100				.KEY-START	1			NOT SHOWN
30	21LB-10110				PLATE-CONNECTOR	1			
31	S681-290400				GROMMET	1			
32	S131-061546				SCREW-W/WASHER	4			
33	S131-051546				SCREW-W/WASHER	6			
34	S035-082026				BOLT-W/WASHER	10			
35	S593-000902				CLIP-HARNESS	3			
36	S403-06200B				WASHER-PLAIN	4			
37	S161-050206				SCREW-CROSS R/ROUND	4			
38	21LB-40151				DECAL-START KEY	1			
39	21LH-30140				HARNESS-EXT	1			FNR RCV
40	21LH-30111				HARNESS-EXT	1			MONO, 2-LEVER
41	21LH-30121				HARNESS-EXT	1	- #0101		2,3-LEVER
	21LH-30122				HARNESS-EXT	1	#0102 -	D	2,3-LEVER
42	25D1-10640				CLIP ASSY	2			
43	21L7-20350				PLATE	1			
44	S552-050203				CLAMP-BAND	4			
45	S593-001302				CLIP-HARNESS	7			
46	S017-080206				BOLT-HEX	2			
47	S411-080006				WASHER-SPRING	2			
48	S201-061006				NUT-HEX	4			
49	21E6-10460				COVER	3			
51	21N4-10400				SWITCH ASSY-INCL KEY	1			EXPORT
51-1	21N4-10400K				.KEY-START	1			NOT SHOWN
53	25D1-10650				CLIP ASSY	2			
54	21N6-20211				WORK LAMP ASSY	4			OPT

Item	Part_No	IS	Ord	T	Description	Qty	Serial_No	ITC	Remark
54-1	S866-240650				.BULB	1			NOT SHOWN
55	21LB-34060				SWITCH-MIRROR DEFROST	1			OPT
57	21LF-34040				SWITCH-HEATED SEAT	1			OPT
58	21E9-00170				CLIP-HARNESS	2			
59	21L7-03160				SWITCH-ATTACH LOCK	1			Q/COUPLER
60	21L7-03170				SWITCH-ATTACH UNLOCK	1			Q/COUPLER
61	21LD-34210				SWITCH-ECONO	1			
62	21LB-40270				SWITCH-CLUTCH CUT-OFF	1	#0030 - #0319	-	
63	21LG-10160				HARNESS-PLUG	1	#0030 - #0319	-	DUAL PEDAL
64	21LB-34340				PLATE	1	#0030 -	-	

CAB ELECTRIC 2

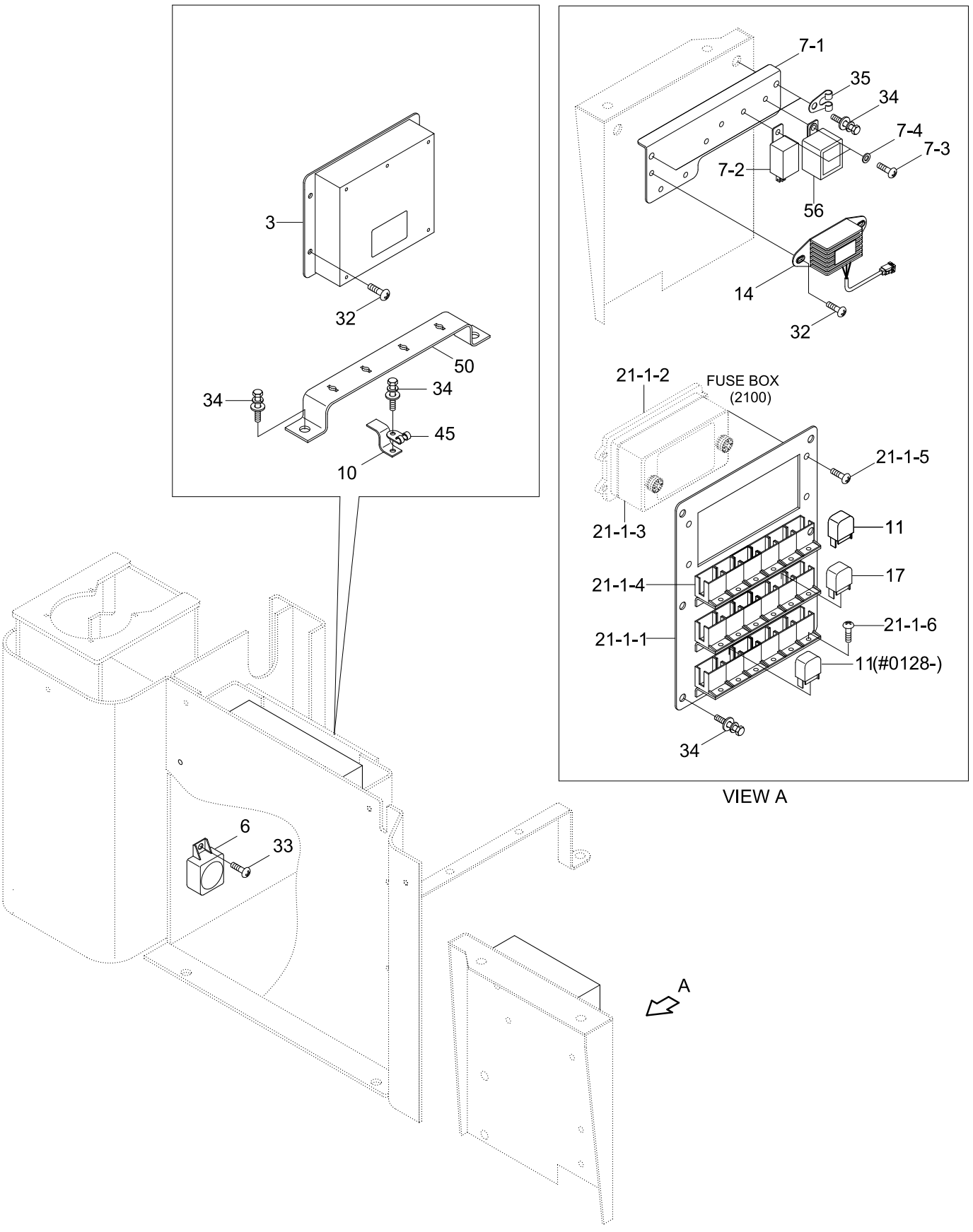

Item	Part_No	IS	Ord	T	Description	Qty	Serial_No	ITC	Remark
3	21LB-33101				MCU	1	- #0011		
	21LB-33102				MCU	1	#0012 - #0367	A	
	21LB-33103				MCU	1	#0368 -	B	
6	21E4-2025	10			BUZZER-WARNING	1			
7	21LB-34123				RELAY BOARD ASSY	1	- #0270		
	21LB-34124				RELAY BOARD ASSY	1	#0271 -	B	
7-1	21LB-34132				.PLATE-RELAY BOARD	1			
7-2	21ER-60702				.FLASHER UNIT ASSY	1	- #0270		
	21ER-60703				.FLASHER UNIT	1	#0271 -	B	
7-3	S161-050102				.SCREW-CROSS R/ROUND	2			
7-4	S411-050002				.WASHER-SPRING	2			
10	21E7-0612				PLATE-CONNECTOR	1			
11	24L1-05100				RELAY	16	- #0127		
					RELAY	17	#0128 -	B	
14	21N8-20201				DC-DC CONVERTER ASSY	1			OPT
R17	24L1-05100				RELAY	1			R/CONTROL, 3160
21	@				HARNESS-MAIN	1			NOT
21-1	21LB-34032				.RELAY BOARD ASSY	1	- #0128		
	21LB-34033				.RELAY BOARD ASSY	1	#0128 -	B	
21-1-1	21LB-34040				..RELAY BOARD	1			
21-1-2	@				..BODY-FUSE BOX	1			NOT
21-1-3	@				..COVER ASSY(FUSE BOX)	1			NOT
21-1-4	8JA003526-001				..RELAY SOCKET	18			
21-1-5	S132-081526				..SCREW-W/WASHER	4			
21-1-6	S131-051046				..SCREW-W/WASHER	6			
32	S131-061546				SCREW-W/WASHER	6			

Item	Part_No	IS	Ord	T	Description	Qty	Serial_No	ITC	Remark
33	S131-051546				SCREW-W/WASHER	1			
34	S035-082026				BOLT-W/WASHER	8			
35	S593-000902				CLIP-HARNESS	2			
45	S593-001302				CLIP-HARNESS	1			
50	21LB-34010				PLATE	1			
56	21LB-34140				TIMER-DEFROST	1			MIRROR DEFROST

CAB ELECTRIC 3

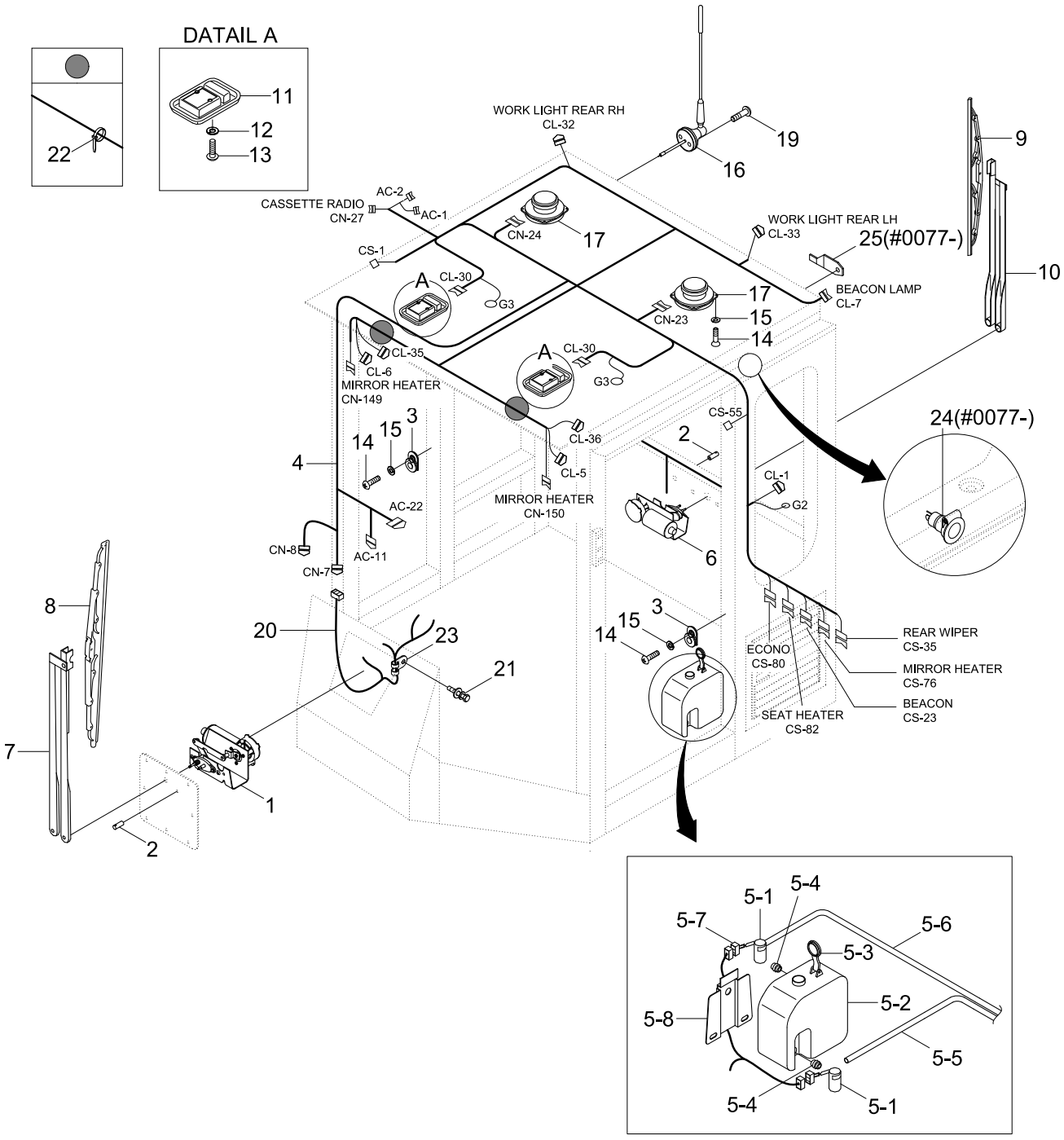

Item	Part_No	IS	Ord	T	Description	Qty	Serial_No	ITC	Remark
*	@				CAB ASSY	1			NOT
*-2	@				.ELECTRIC CAB ASSY	1			NOT
1	24L3-41000				..WIPER MOTOR-FRONT	1	- #0049		
	24L3-41100				..WIPER MOTOR-FRONT	1	#0050 -	A	
2	24L3-41080				..VALVE-WIPER	2	- #0049		
	24L3-41500				..VALVE-WIPER	2	#0050 -	A	
3	E123-3022	20			..SWITCH-DOOR	2			
4	21LB-30153				..HARNESS-CAB	1	- #0386		
	21LB-30155				..HARNESS-CAB	1	#0387 -	D	
	21LB-30140				..HARNESS-CAB	1	#0077 - #0386	-	INTERIOR
	21LB-30141				..HARNESS-CAB	1	#0387 -	D	INTERIOR
5	24L3-30631				..RESERVOIR-WASH ASSY	1	- #0335		
	21LD-35210				..RESERVOIR-WASH ASSY	1	#0336 -	B	
5-1	21EM-00170				...MOTOR & PUMP ASSY	2			
5-2	24L3-30650				...TANK	1	- #0335		
	24L3-30860				...TANK	1	#0336 -	B	
5-3	24L3-30660				...CAP	1			
5-4	24L3-30670				...RUBBER-BUSHING	2			
5-5	24L3-30680				...HOSE-VINYL	1			
5-6	24L3-30690				...HOSE-VINYL	1			
5-7	S814-102000				...PLUG-2P	2			
5-8	24L3-30710				...PLATE	1			
6	21L6-31000				..WIPER MOTOR-REAR	1	- #0049		
	24L3-41120				..WIPER MOTOR-REAR	1	#0050 -	A	
7	24L3-41010				..WIPER ARM-FRONT	1	- #0049		
	24L3-41210				..WIPER ARM-FRONT	1	#0050 -	A	

Item	Part_No	IS	Ord	T	Description	Qty	Serial_No	ITC	Remark
8	24L3-41020				..WIPER BLADE-FRONT	1	- #0049		
	24L3-41300				..WIPER BLADE-FRONT	1	#0050 -	A	
9	21L6-31020				..WIPER BLADE-REAR	1	- #0049		
	21M8-50300				..WIPER BLADE-REAR	1	#0050 -	A	
10	21L6-31010				..WIPER ARM-REAR	1	- #0049		
	24L3-41200				..WIPER ARM-REAR	1	#0050 -	A	
11	21EH-0011				..LAMP-ROOM	2			
11-1	21E1-49690				...BULB-ROOM LAMP	1			NOT SHOWN
12	S411-050006				..WASHER-SPRING	2			
13	S161-050166				..SCREW-CROSS R/ROUND	2			
14	S161-040106				..SCREW-CROSS R/ROUND	10			
15	S411-040006				..WASHER-SPRING	10			
16	21N6-10410				..ANTENNA	1			
17	21LB-20401				..SPEAKER ASSY	2			
19	S151-040156				..SCREW-TAPPING	2			
20	21LB-30052				..HARNESS-CAB,FRONT	1			
21	S035-082026				..BOLT-W/WASHER	1			
22	S553-035140				..CLAMP-BAND	7			
23	S593-000902				..CLIP-HARNESS	1			
24	21LM-01420				..SOCKET-POWER	1	#0077 -	-	INTERIOR
25	21N5-40340				..CLIP-METAL	2	#0077 -	-	INTERIOR

FRONT ELECTRIC

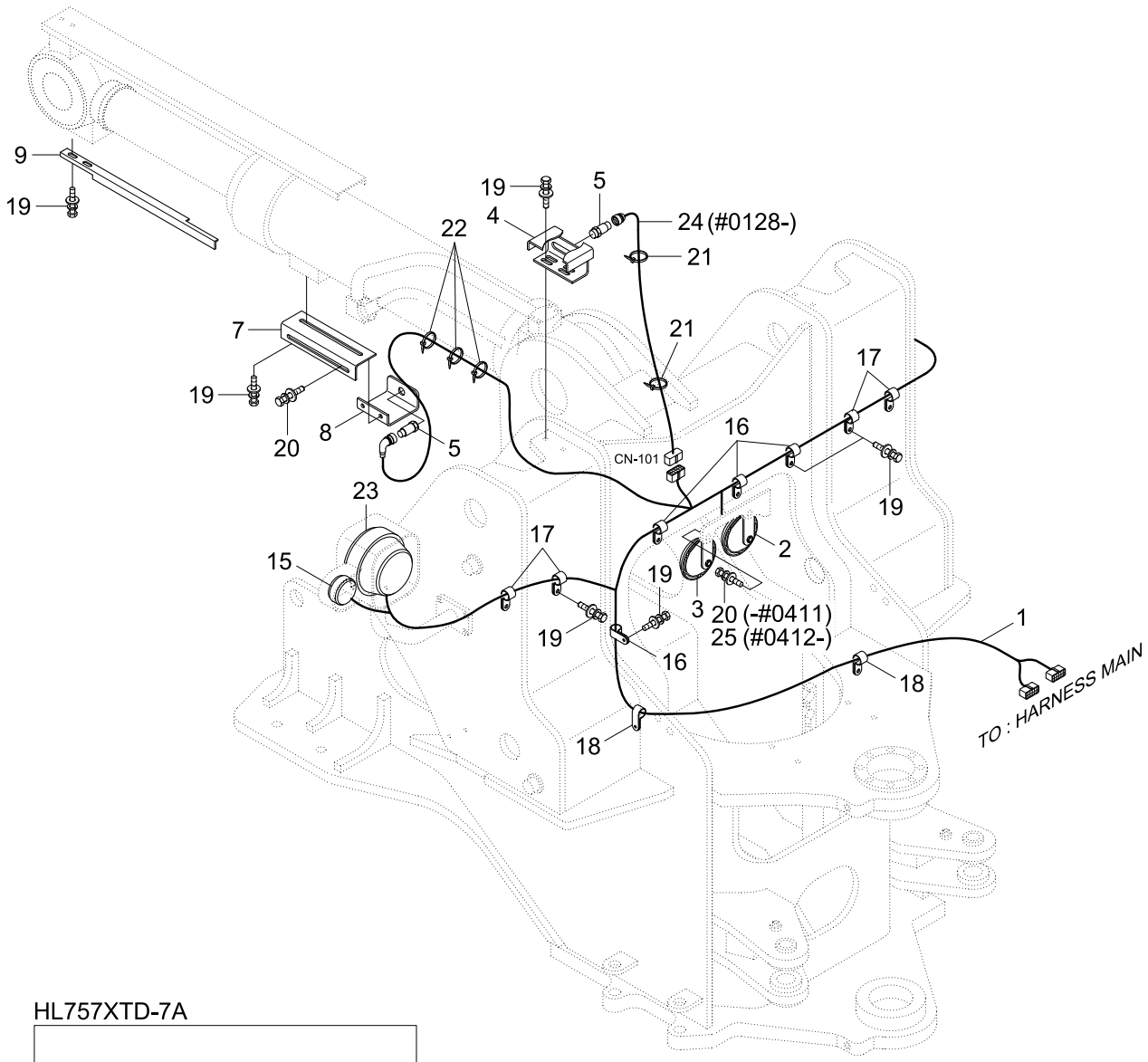

HL757XTD-7A

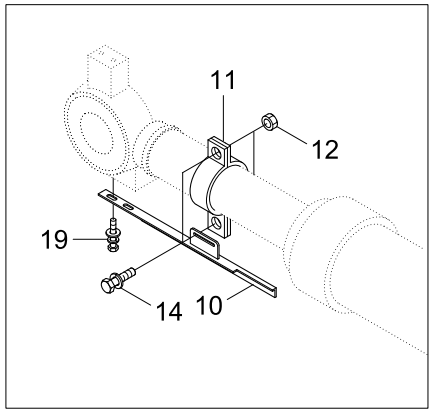

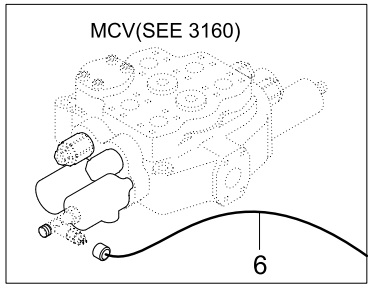

Item	Part_No	IS	Ord	T	Description	Qty	Serial_No	ITC	Remark
1	21LD-30041				HARNESS-FRONT	1	- #0127		
	21LD-30042				HARNESS-FRONT	1	#0128 - #0411	B	
	21LD-30043				HARNESS-FRONT	1	#0412 -	D	
2	21N5-10060				HORN-HIGH	1	- #0411		
	21Q8-10060				HORN-HIGH	1	#0412 -	D	
3	21N5-10050				HORN-LOW	1	- #0411		
	21Q8-10050				HORN-LOW	1	#0412 -	D	
4	21LD-20012				PLATE-BOOM KICKOUT	1			
5	21L6-20010				SWITCH-PROXIMITY	2			
R6	21LD-30080				HARNESS-RIDE CONTROL	1			RIDE CONTROL
7	21LB-20251				PLATE	1			
8	21LB-20231				PLATE	1			
9	21LD-20151				ANGLE	1			HL757-7A
10	21LD-20142				ANGLE	1			HL757XTD-7A
11	21LD-20110				CLAMP	2			HL757XTD-7A
12	S275-100002				NUT-SELF LOCKING	2			HL757XTD-7A
14	S037-102522				BOLT-W/WASHER	2			NOT SHOWN
15	21EK-10380				LAMP-FRONT TURN	2			
15-1	21EK-10170				.LAMP-TURN	1			NOT SHOWN
15-2	21EK-10290				.BULB-21W	1			NOT SHOWN
15-3	S814-102000				.PLUG-2P	1			NOT SHOWN
15-5	24L3-00410				.LAMP-LEAD TURN	1			NOT SHOWN
16	S543-160002				CLAMP-TUBE	4			
17	S543-100002				CLAMP-TUBE	4			
18	31E7-0315				CLAMP-HOSE	2			
19	S037-102022				BOLT-W/WASHER	14			

Item	Part_No	IS	Ord	T	Description	Qty	Serial_No	ITC	Remark
20	S035-081526				BOLT-W/WASHER	4	- #0411		
					BOLT-W/WASHER	2	#0412 -	A	
21	S552-035146				CLAMP-BAND	8			
22	S554-054300				CLAMP-BAND	3			
23	21LB-20110				HEAD LAMP(ABL)	2			
23-1	21EK-10131				.BULB	1			NOT SHOWN
23-2	21EK-10270				.BULB-5W	1			NOT SHOWN
24	21LH-50310				EXT-HARNESS	1	#0128 -		
25	S037-101526				BOLT-W/WASHER	2	#0412 -		

REAR ELECTRIC

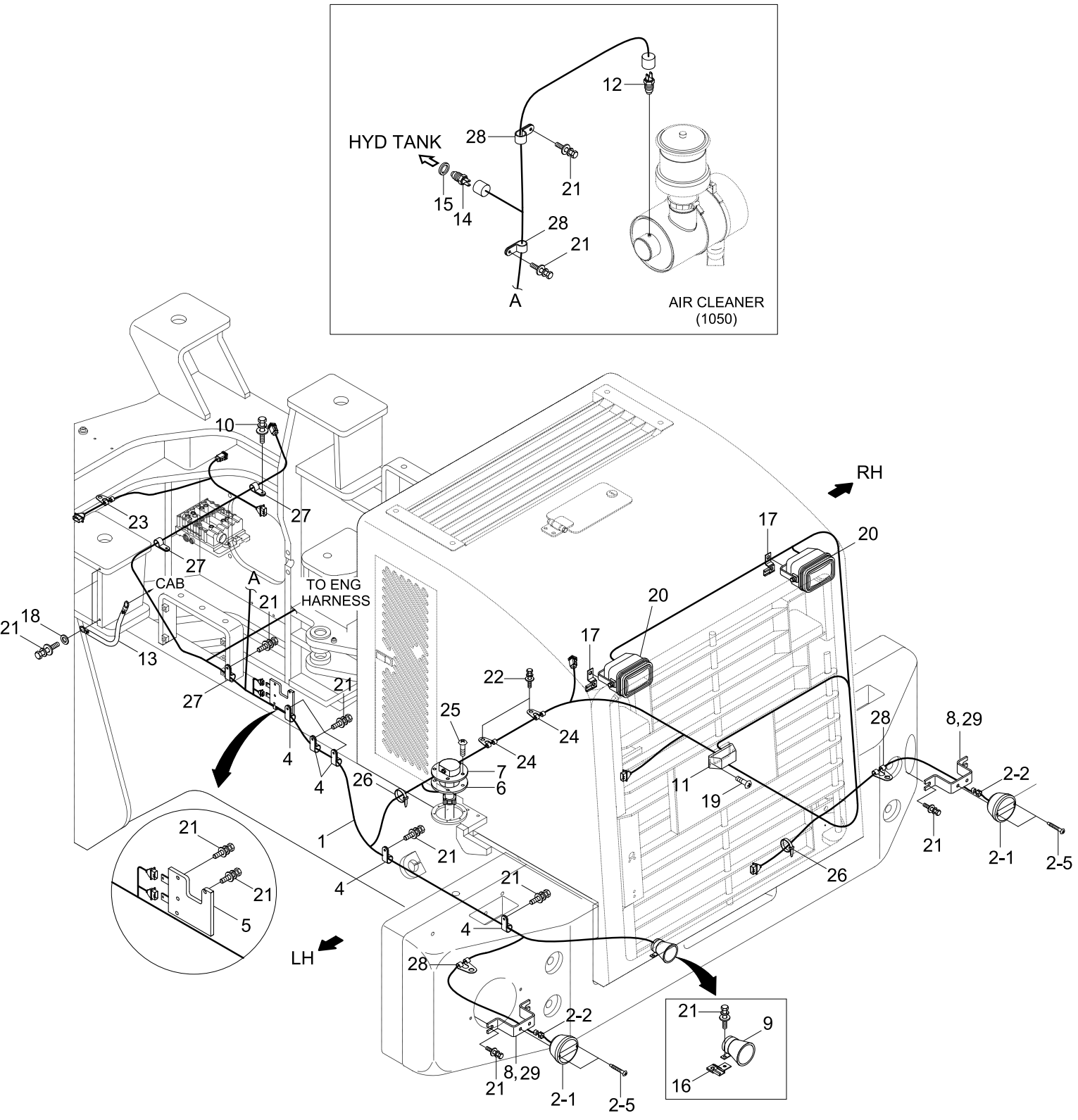

Item	Part_No	IS	Ord	T	Description	Qty	Serial_No	ITC	Remark
1	21LD-30031				HARNESS-FRAME	1			
2	21EK-10410				LAMP-T/STOP FLASHER	2	- #0023		
	21EK-10411				LAMP-TAIL STOP FLASHER	2	#0024 -	A	
2-1	21EK-10180				.LAMP-TAIL STOP FLASHER	1			
2-2	21EK-20200				.HARNESS-REAR COMBI	1			
2-3	21EK-10290				.BULB	2			NOT SHOWN
2-4	21EK-10270				.BULB(5W)	1			NOT SHOWN
2-5	21LB-51550				.SCREW	2	#0024 -	-	
4	31L7-10190				CLAMP-TUBE,INS SINGLE	8			
5	21LB-40061				PLATE	1			
6	E128-1053	10			GASKET	1			
7	21LB-00181				FUEL SENDER	1			
8	21LD-20211				PLATE-LAMP	2			HL757-7A
9	21N6-20322				BUZZER-TRAVEL ALARM	1			
10	S035-082026				BOLT-W/WASHER	2			
11	21LB-34250				LAMP SUB ASSY(N/PLATE)	1			
11-1	21EK-10160				.LAMP-NUMBER PLATE	1			NOT SHOWN
11-2	21LB-34260				.HARNESS-EXT(N/LAMP)	1			NOT SHOWN
11-3	21EK-10260				.BULB	1			NOT SHOWN
12	21L7-20100				SWITCH-AIR CLEANER	1			
13	21L8-30720				STRAP-EARTH	1			
14	21EN-40100				SENDER-TEMP	1			
15	21EA-50260				PACKING-TEMP SWITCH	1			
16	25D1-10640				CLIP ASSY	1			
17	25D1-10650				CLIP ASSY	2			
18	S431-100002				WASHER-INTERNAL T/LOCK	4			

Item	Part_No	IS	Ord	T	Description	Qty	Serial_No	ITC	Remark
19	S151-040156				SCREW-TAPPING	2			
20	21N6-20211				WORK LAMP ASSY	2			
21	S037-102026				BOLT-W/WASHER	22			
22	S037-101556				BOLT-W/WASHER	2			
23	21E9-00170				CLIP-HARNESS	2			
24	S593-000702				CLIP-HARNESS	2			
25	S151-050156				SCREW-TAPPING	5			
26	S552-035146				CLAMP-BAND	5			
27	31L7-10200				CLAMP	3			
28	S593-000902				CLIP-HARNESS	5			
29	21LD-20221				PLATE-LAMP	2			HL757XTD-7A

ENGINE ELECTRIC

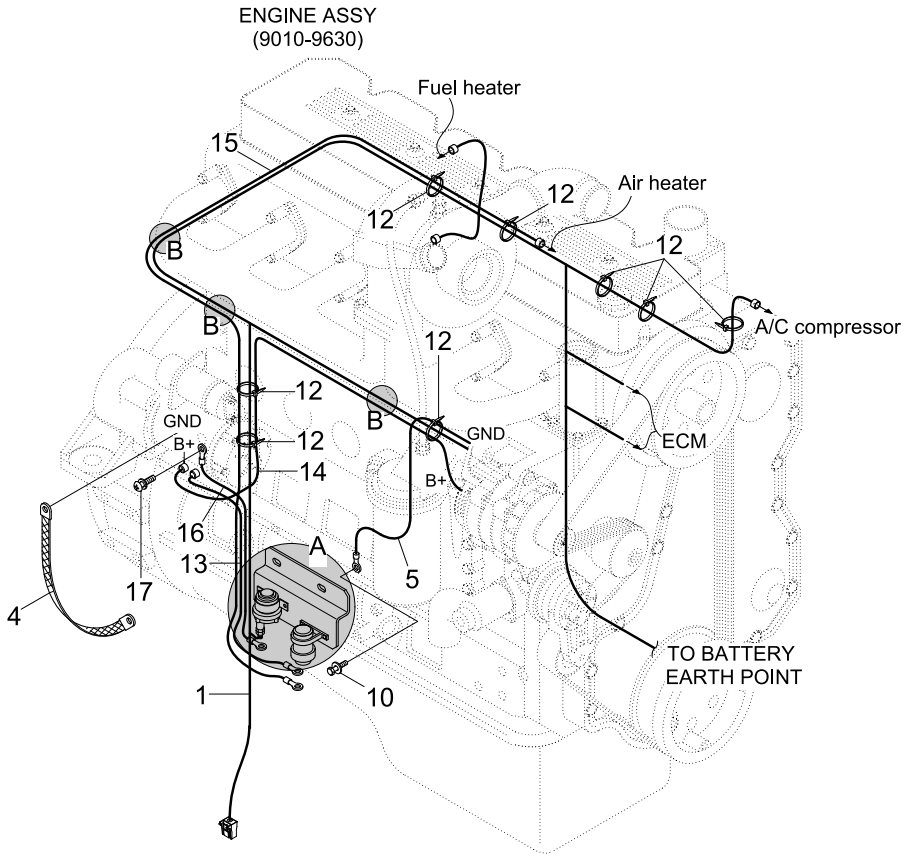

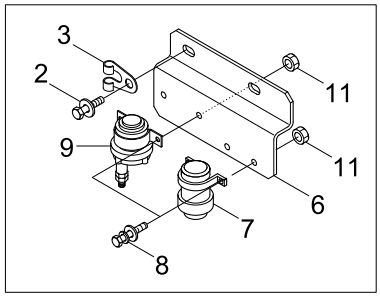

DETAIL A

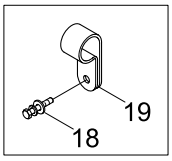

DETAILB

Item	Part_No	IS	Ord	T	Description	Qty	Serial_No	ITC	Remark
1	21LD-30020				HARNESS-ENGINE	1	- #0406		
	21LD-30021				HARNESS-ENGINE	1	#0407 -	B	
2	S037-122056				BOLT-W/WASHER	4			
3	21E9-00170				CLIP-HARNESS	4			
4	21LB-34720				EARTH STRAP	1			
5	21LC-40090				CABLE(ALT-EARTH)	1			
6	21N8-40180				BRACKET	1			
7	21N8-42050				RELAY-HEATER	1			
8	S035-061526				BOLT-W/WASHER	4			
9	21N6-30120				RELAY-START	1			
10	S037-102022				BOLT-W/WASHER	1			
11	S285-061006				NUT-FLANGED	4			
12	S552-050203				CLAMP-BAND	14			
13	21LC-40061				CABLE(STARTER-HEAT RY)	1			
14	21LB-34200				CABLE(ALT-STARTER)	1			
15	21LF-20141				CABLE(HEAT RY-AIR HEAT)	1			
16	21LC-31051				HARNESS-EXT(START RY)	1			
17	S131-041026				SCREW-W/WASHER	2			
18	S035-081526				BOLT-W/WASHER	3			
19	31L7-10190				CLAMP-TUBE	3			
20	21N4-01130				PLATE-CLIP	1	#0407 -	-	

BATTERY CABLE ELECTRIC

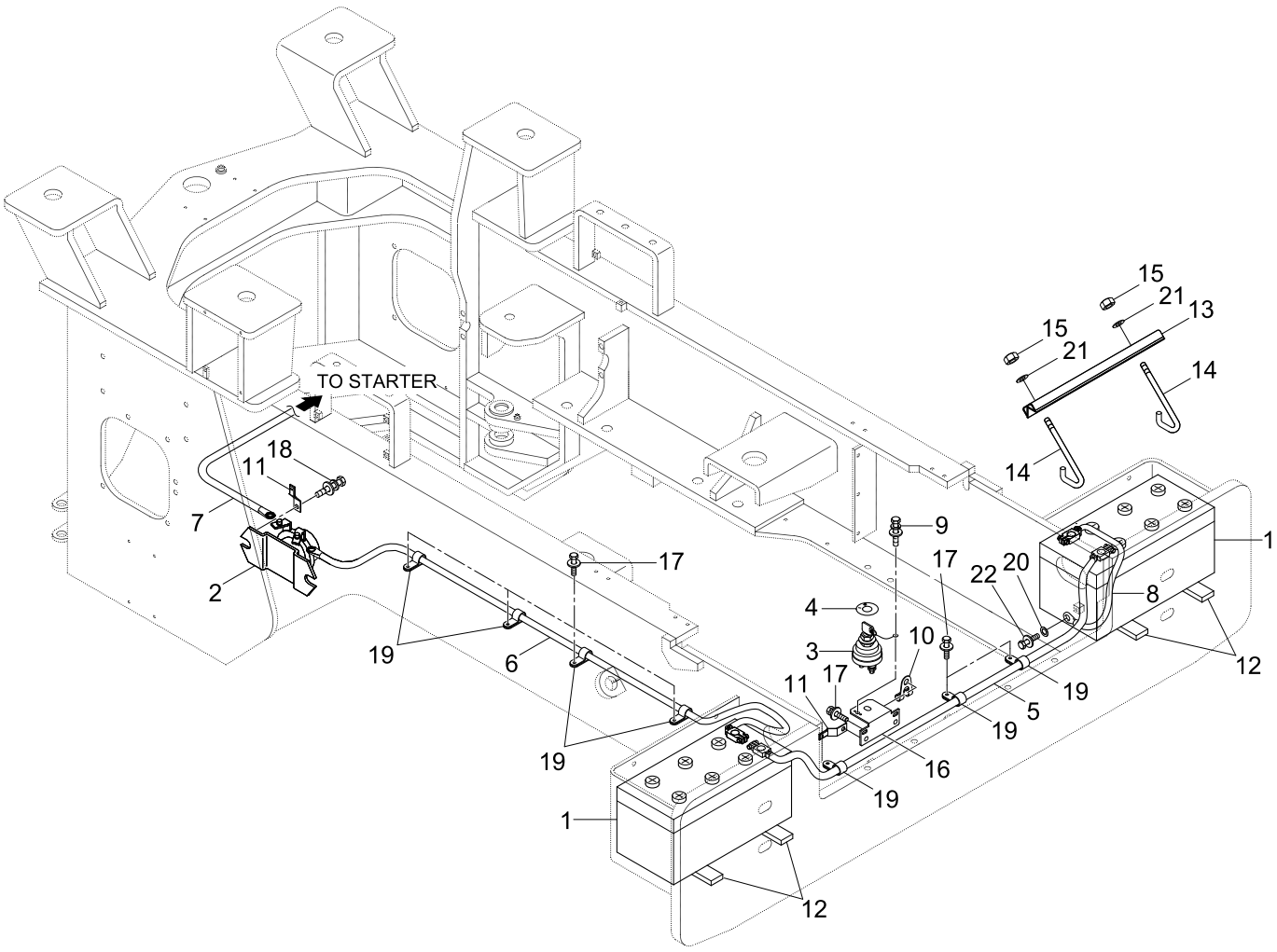

Item	Part_No	IS	Ord	T	Description	Qty	Serial_No	ITC	Remark
1	E125-1501	10			BATTERY	2			
2	21E5-0003	10			RELAY-BATTERY	1			
3	21N4-10441				SWITCH-MASTER	1	- #0127		
	21L7-10500				SWITCH-MASTER	1	#0128 -	B	
3-1	21N4-10441K				.KEY-MASTER SWITCH	1	#0128 -	-	
4	21N4-10451				DECAL-MASTER SW	1	- #0127		
	21LD-34180				DECAL-MASTER SW	1	#0128 -	D	
5	21LD-34110				CABLE(BATT-BATT)	1			
6	21LD-34120				CABLE(BATT-BATT RY)	1			
6-1	21N4-01320				.LINK-FUSIBLE	1	#0001 -	-	NOT SHOWN
7	21LD-34130				CABLE(RELAY-STARTER)	1			
8	21LB-34540				CABLE(BATT-EARTH)	1			
9	S035-061526				BOLT-W/WASHER	1			
10	S593-000902				CLIP-HARNESS	1			
11	21E7-0612				PLATE-CONNECTOR	2			
12	24L1-40360				PAD	4			
13	21L1-1013	20			ANGLE WA	2			
14	21LD-34170				BAR	4			
15	S205-081006				NUT-HEX	4			
16	21LC-31011				PLATE-MASTER SWITCH	1			
17	S037-102026				BOLT-W/WASHER	9			
18	S035-083026				BOLT-W/WASHER	2			
19	31L7-10200				CLAMP	7			
20	S431-100002				WASHER-INTERNAL T/LOCK	1			
21	S411-080006				WASHER-SPRING	4			
22	S037-102026				BOLT-W/WASHER	1			

EMERGENCY STEERING ELECTRIC

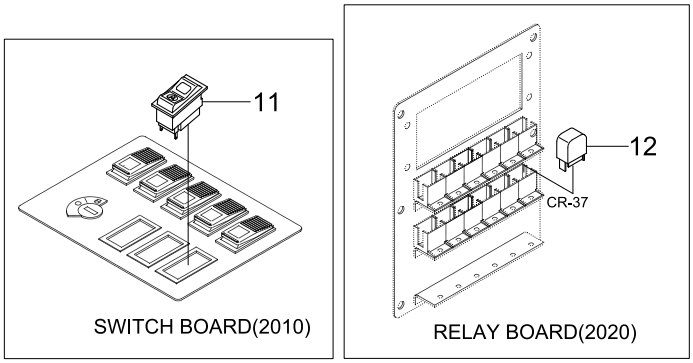

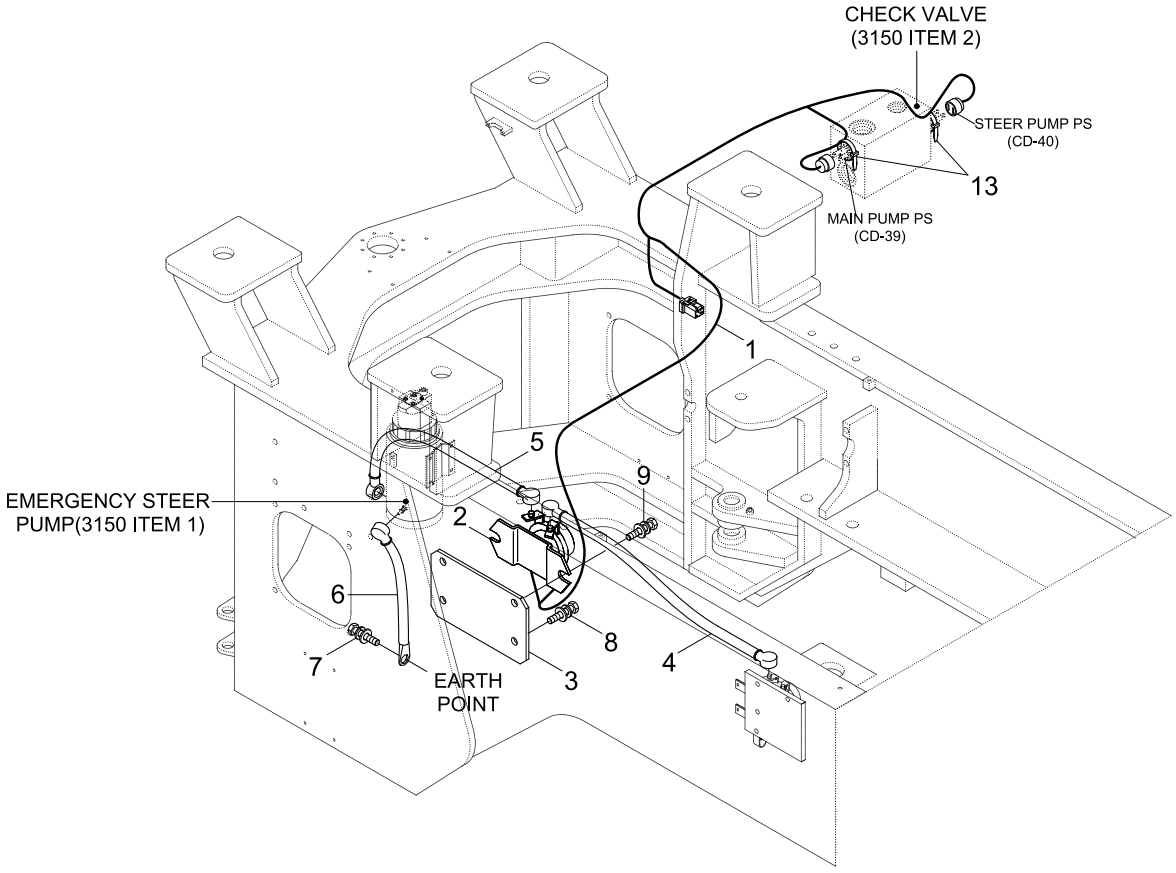

Item	Part_No	IS	Ord	T	Description	Qty	Serial_No	ITC	Remark
1	21LD-30091				HARNESS-EMERGENCY	1			
2	21E5-0003	10			RELAY-BATTERY	1			
3	21LB-40051				PLATE	1			
4	21LD-34000				CABEL(RELAY-RELAY)	1			
5	21LD-34140				CABLE(RELAY-MOTOR)	1			
6	21LD-34010				CABLE(MOTOR-EARTH)	1			
7	S037-102022				BOLT-W/WASHER	1			
8	S037-102026				BOLT-W/WASHER	2			
9	S035-083026				BOLT-W/WASHER	2			
11	21L6-02260				SWITCH-PUMP MOTOR	1			
12	24L1-05100				RELAY-24V	1			
13	31E7-0315				CLAMP-HOSE	2			

BEACON LAMP

(INTERIOR, #0077-)

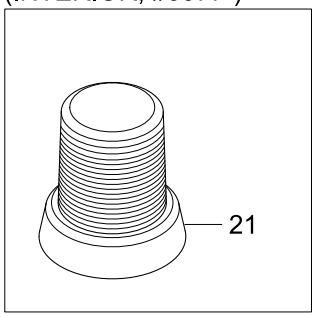

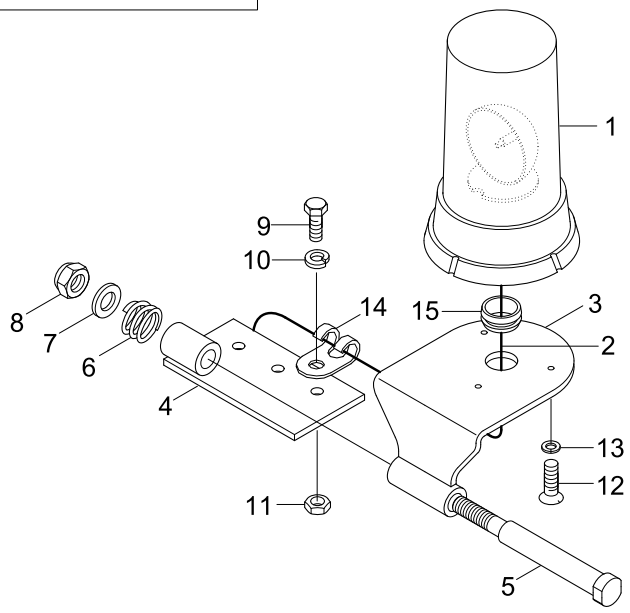

Item	Part_No	IS	Ord	T	Description	Qty	Serial_No	ITC	Remark
*N	21L7-10401				BEACON LAMP ASSY	1			NOT
1	21EK-10140				.LAMP-BEACON	1			
1-1	21EK-10330				..BULB	1			NOT SHOWN
2	21EK-20240				.HARNESS-BEACON LAMP	1			
3	21L7-10420				.PLATE WA	1	- #0134		
	21L7-10421				.PLATE WA	1	#0135 -	D	
4	21L7-10410				.PLATE WA	1			
5	21L7-10430				.BOLT	1			
6	21L7-10440				.SPRING	1			
7	S403-162006				.WASHER-PLAIN	1			
8	S275-16000B				.NUT-SELF LOCKING	1			
9	S017-100206				.BOLT-HEX	3			
10	S411-100006				.WASHER-SPRING	3			
11	S205-10100B				.NUT-HEX	3			
12	S151-050156				.SCREW-TAPPING	3	- #0134		
	S035-052026				.BOLT-W/WASHER	3	#0135 -	D	
13	S411-050006				.WASHER-SPRING	3	- #0134	-	
14	S593-000902				.CLIP-HARNESS	1			
15	S880-132060				.GROMMET	1			
21	21LM-01400				BEACON LAMP-MAGNETIC ASSY	1	#0077 -	-	INTERIOR
N	@				NOT INDIVIDUALLY SUPPLIED	AR			NOT

FUSE BOX

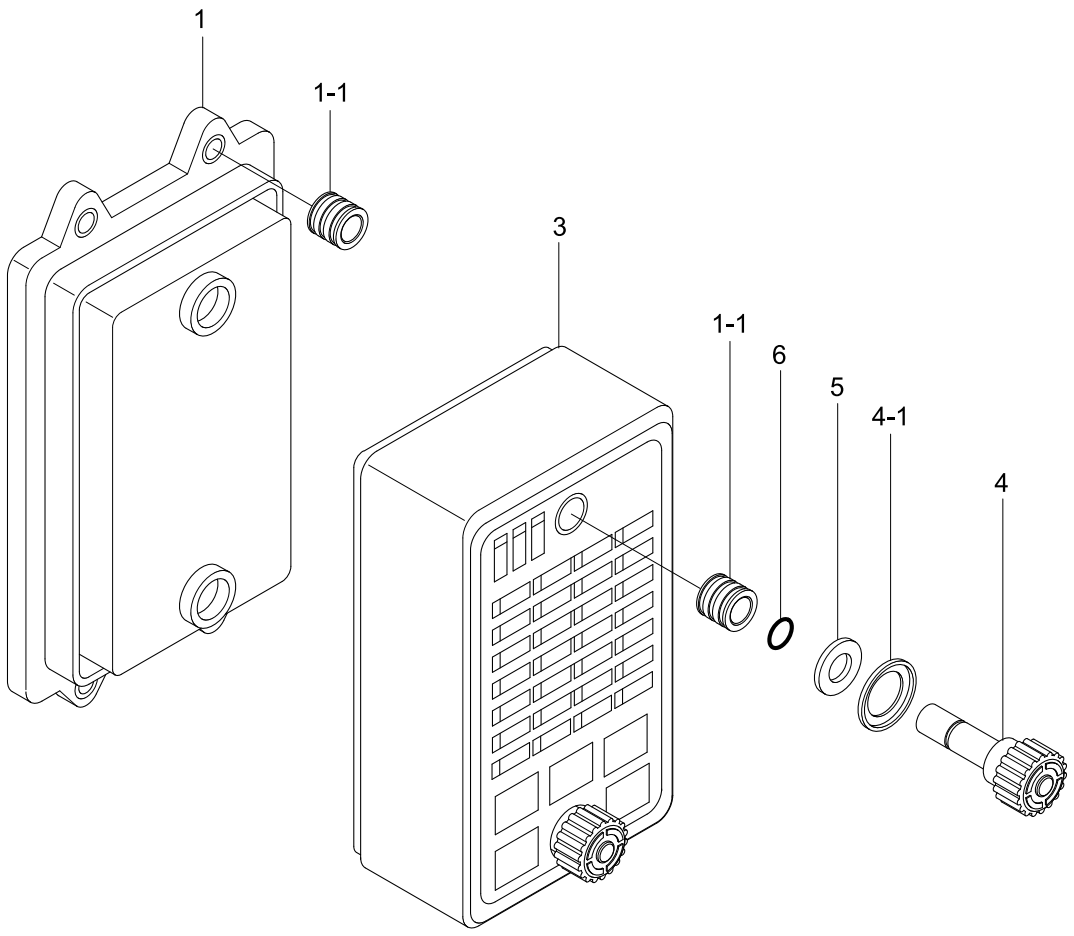

Item	Part_No	IS	Ord	T	Description	Qty	Serial_No	ITC	Remark
1	21N8-20041				BODY-FUSE BOX	1			
1-1	21N8-20110				.NUT-INSERT	6			
*	21LB-30162				COVER ASSY-FUSE BOX	1			
3	21N8-20061				.COVER-FUSE BOX	1			
4	21N8-20070				.KNOB ASSY	2			
4-1	21N8-20140				..INSERT	2			
5	21N8-20080				.PAD-RUBBER	2			
6	21N8-20150				.O-RING	2			

MAIN HYDRAULIC PIPING 1

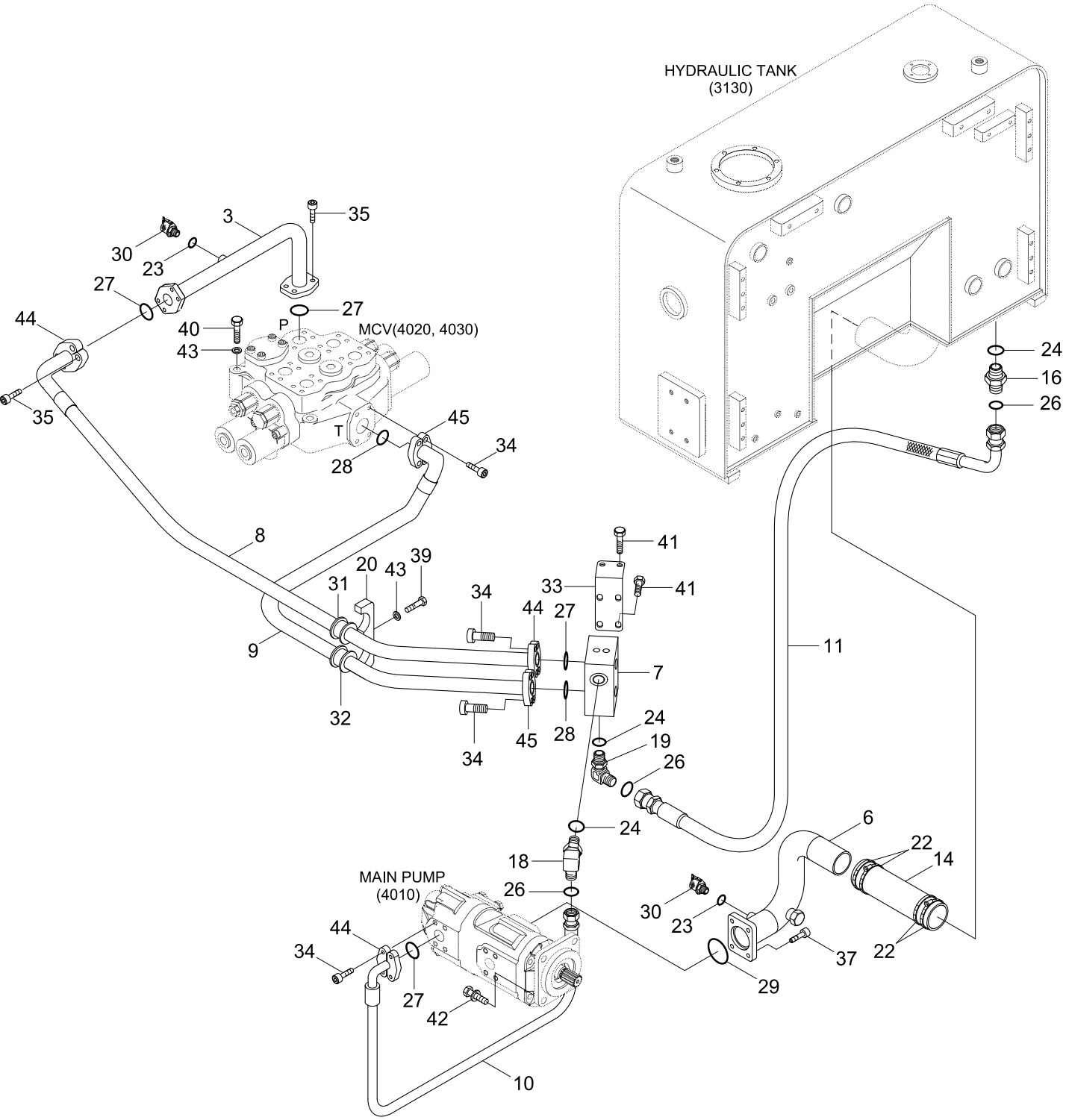

Item	Part_No	IS	Ord	T	Description	Qty	Serial_No	ITC	Remark
3	31LD-00040				PIPE WA	1			
6	31LD-00290				PIPE WA	1			
7	31LD-00310				BLOCK	1			
8	P700-164336				HOSE ASSY	1			
9	31LD-00280				HOSE ASSY	1			
10	31LD-00120				HOSE ASSY	1			
11	P920-162024				HOSE ASSY-ORFS 0X45	1			
14	P760-093044				HOSE-RUBBER LOW	1			
16	X500-110005				CONNECTOR(ORFS)	1			
18	X530-110005				ELBOW-45,ORFS	1			
19	X520-110005				ELBOW-90,ORFS	1			
20	31LD-00100				CLAMP	1			
22	S572-930006				CLAMP-HOSE WIRE TYPE	4			
23	S631-011004				O-RING	2			
24	S631-029004				O-RING	2			
26	S621-021001				O-RING	3			
27	Y171-024004				O-RING	4			
28	Y171-027004				O-RING	2			
29	Y172-010004				O-RING	1			
30	31EK-11130				COUPLING-SCREW	2			
31	S690-039100				GROMMET	1			
32	S690-043100				GROMMET	1			
33	31LD-00110				PLATE	1			
34	S109-100306				BOLT-SOCKET	16			
35	S109-100406				BOLT-SOCKET	8			
37	S109-120356				BOLT-SOCKET	4			

Item	Part_No	IS	Ord	T	Description	Qty	Serial_No	ITC	Remark
39	S017-120556				BOLT-HEX	1			
40	S017-121056				BOLT-HEX	3			
41	S037-122556				BOLT-W/WASHER	6			
42	S037-123056				BOLT-W/WASHER	4			
43	S441-120006				WASHER-HARDENED	4			
44	P173-160104				FLANGE-SPLIT	6			
45	P173-200106				FLANGE-SPLIT	4			

MAIN HYDRAULIC PIPING 2

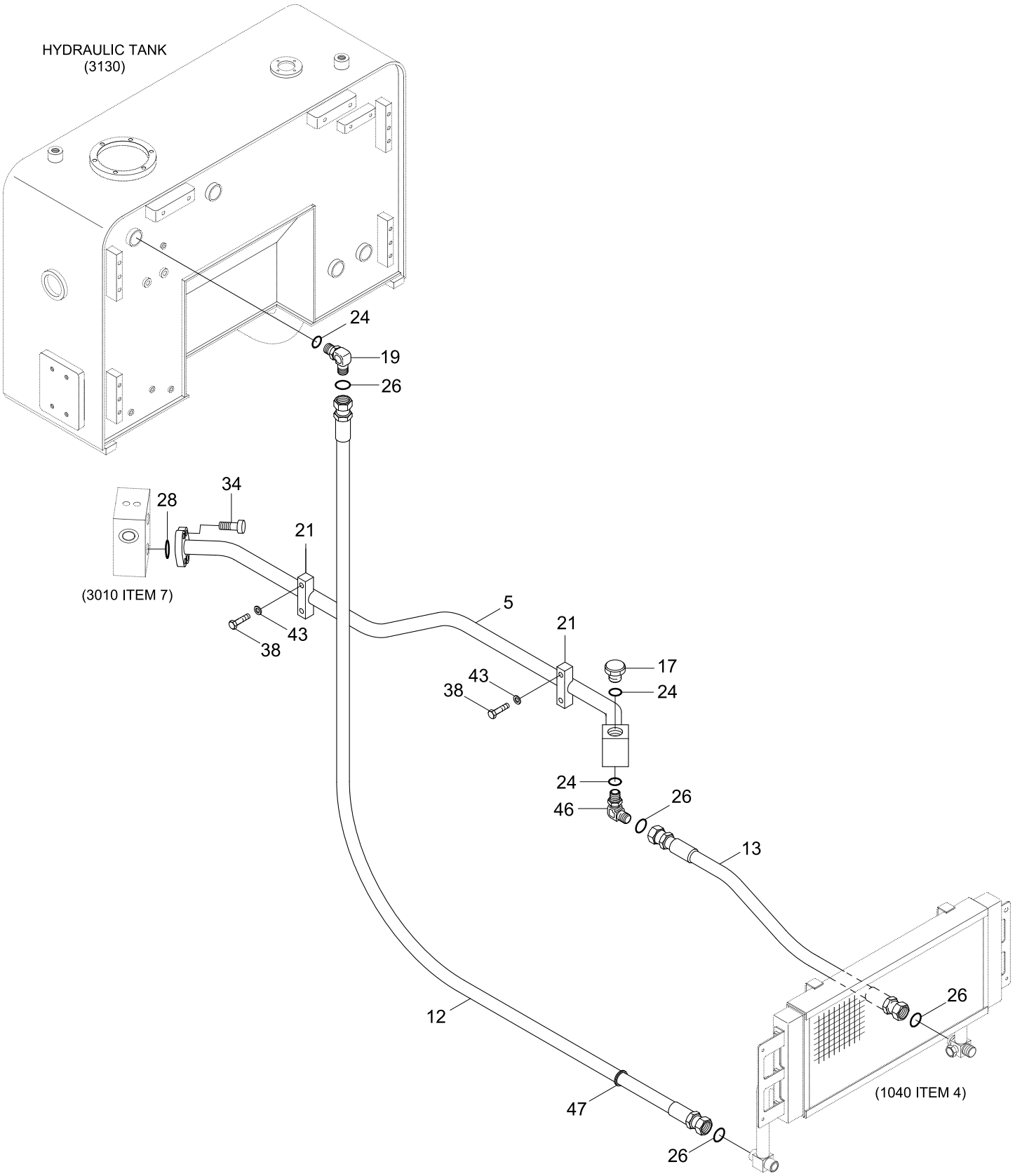

Item	Part_No	IS	Ord	T	Description	Qty	Serial_No	ITC	Remark
5	31LD-00060				PIPE WA	1			
12	P910-162039				HOSE ASSY-ORFS 0X0	1			
13	31LD-00140				HOSE ASSY	1			
17	P220-110106				PLUG-HEX	1			
19	X520-110005				ELBOW-90,ORFS	1			
21	31L7-00240				CLAMP	2			
24	S631-029004				O-RING	3			
26	S621-021001				O-RING	4			
28	Y171-027004				O-RING	1			
34	S109-100306				BOLT-SOCKET	4			
38	S017-120556				BOLT-HEX	4			
43	S441-120006				WASHER-HARDENED	4			
46	31LC-00050				ELBOW-ORIFICE	1			
47	S681-460400				GROMMET	1			

PILOT HYDRAULIC PIPING 1

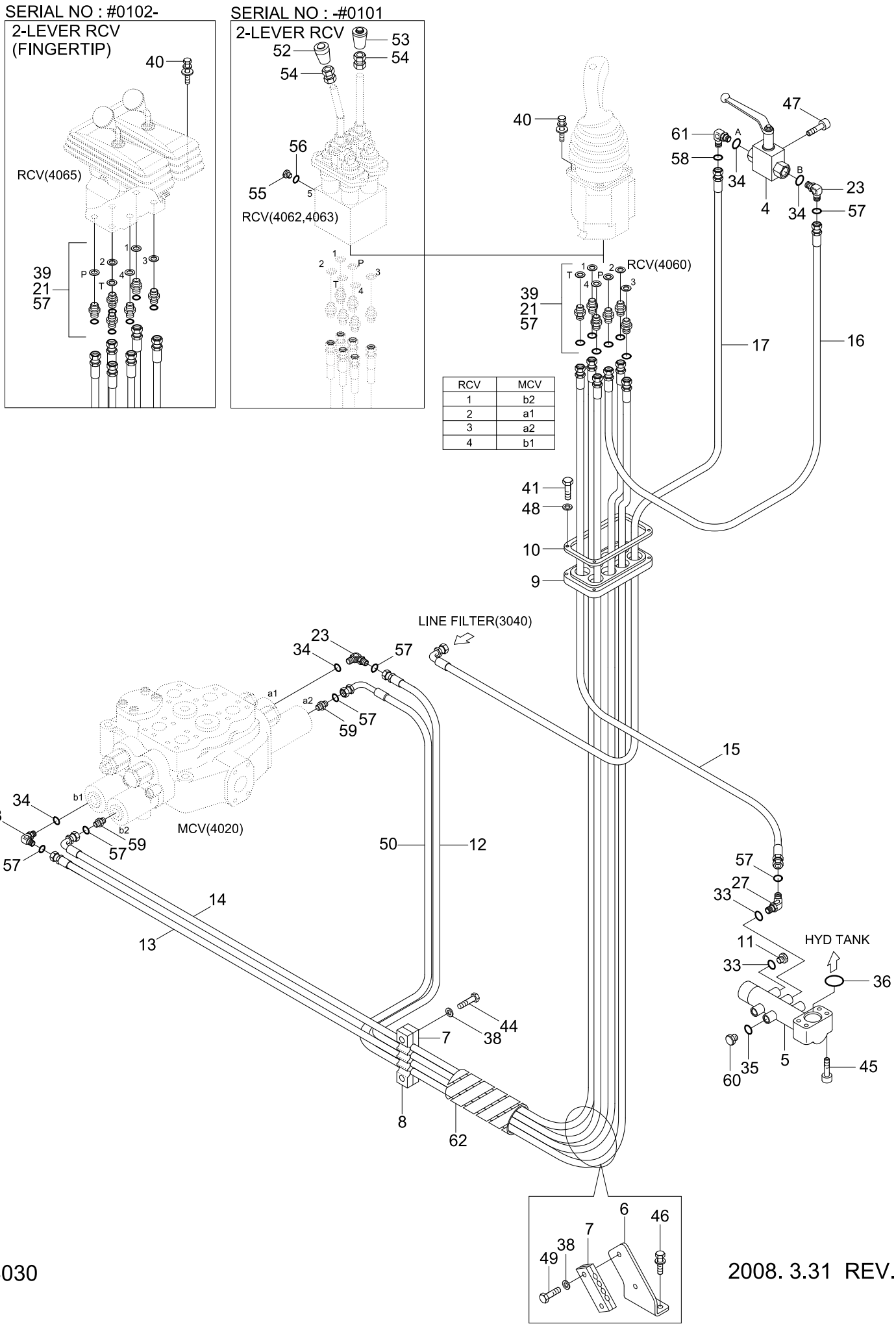

2008. 3.31 REV.8C

Item	Part_No	IS	Ord	T	Description	Qty	Serial_No	ITC	Remark
4	31LB-10170				SAFETY VALVE	1			
5	31LD-10061				PIPE WA	1			
6	31LB-10040				PLATE	1			
7	31LB-10050				CLAMP	3			
8	31LF-10070				CLAMP	1			
9	31L7-10040				PLATE	1			
10	31L7-10030				RUBBER	1			
11	P220-110102				PLUG-HEX	1			
12	P910-042061				HOSE ASSY-ORFS 0X0	1			
13	P910-042056				HOSE ASSY-ORFS 0X0	1			
14	P930-042055				HOSE ASSY-ORFS 0X90	1			
15	P910-042033				HOSE ASSY-ORFS 0X0	1			
16	P910-042011				HOSE ASSY-ORFS 0X0	1			
17	P930-062020				HOSE ASSY-ORFS 0X90	1			
21	X500-120001				CONNECTOR-ORFS	6			
23	X520-110012				ELBOW-90,ORFS	3			
27	X530-110001				ELBOW-45,ORFS	1			
33	S631-011004				O-RING	2			
34	S631-014004				O-RING	4			
35	S631-018004				O-RING	1			
36	Y172-003004				O-RING	1			
38	S441-100006				WASHER-HARDENED	4			
39	P391-040000				WASHER-COPPER	6			
40	S035-062026				BOLT-W/WASHER	4			
41	S015-060306				BOLT-HEX	4			
44	S017-100656				BOLT-HEX	2			

Item	Part_No	IS	Ord	T	Description	Qty	Serial_No	ITC	Remark
45	S109-120556				BOLT-SOCKET	4			
46	S037-123056				BOLT-W/WASHER	2			
47	S179-080406				SCREW-SOCKET RD HD	2			
48	S441-060006				WASHER-HARDENED	4			
49	S017-100456				BOLT-HEX	2			
50	P930-042062				HOSE ASSY-ORFS 0X90	1			
52	34L4-02330				KNOB ASSY	1	- #0101	-	2-LEVER RCV
53	31LB-10180				KNOB ASSY	1	- #0101	-	2-LEVER RCV
54	S207-120006				NUT-HEX	4	- #0101	-	2-LEVER RCV
55	P220-120102				PLUG-HEX	1	- #0101	-	2-LEVER RCV
56	P391-040000				WASHER-COPPER	1	- #0101	-	2-LEVER RCV
57	S621-011001				O-RING	12			
58	S621-012001				O-RING	1			
59	31LC-10040				CONNECTOR-SWIVEL	2			
60	P220-110104				PLUG-HEX	1			
61	X520-110002				ELBOW-90,ORFS	1			
62	P753-080020				PROTECT COVER-HOSE	3			

PILOT HYDRAULIC PIPING 2

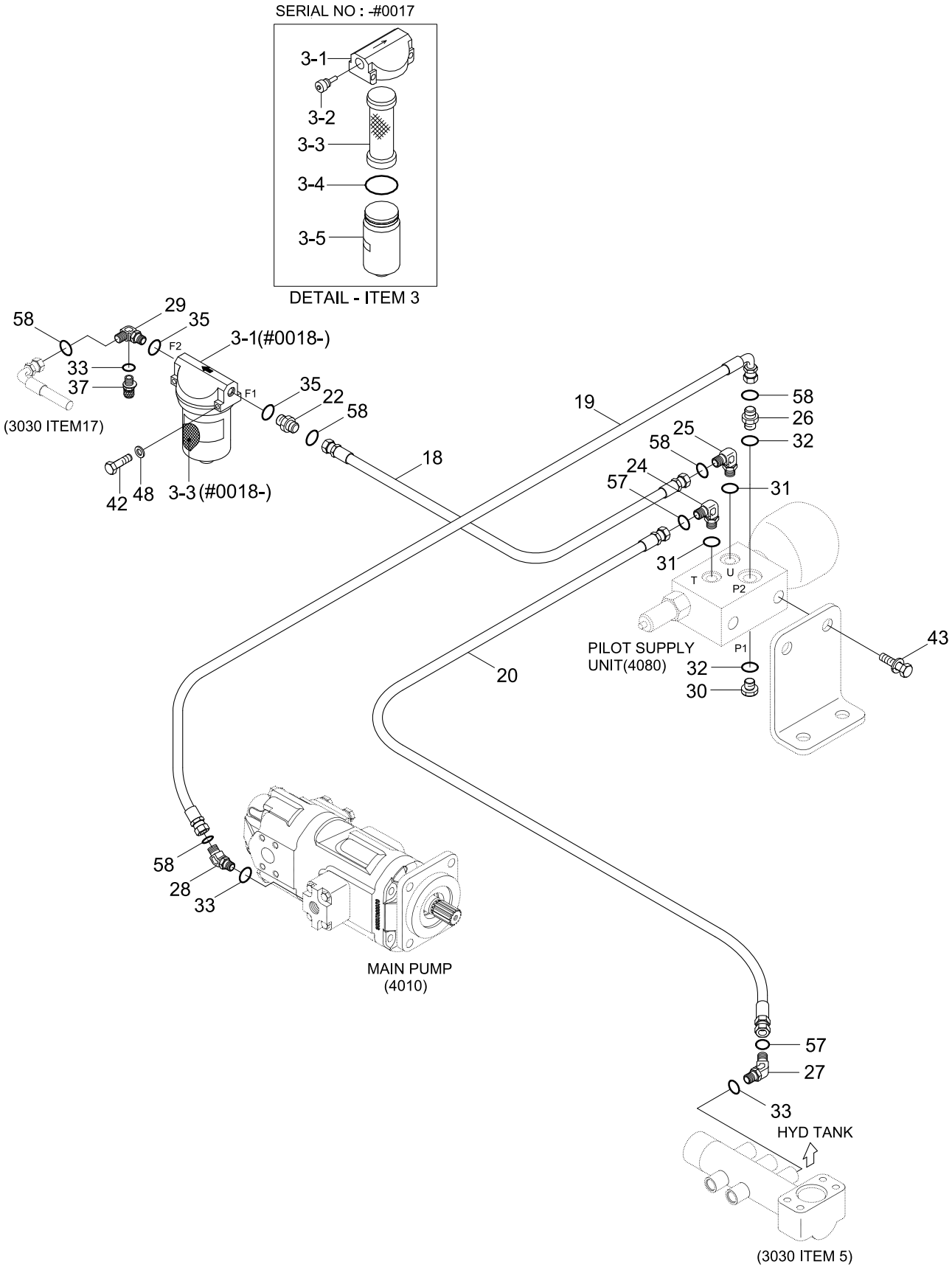

Item	Part_No	IS	Ord	T	Description	Qty	Serial_No	ITC	Remark
3	31E3-0017	10			FILTER-LINE	1	- #0017		
	31MH-20310				FILTER-LINE	1	#0018 -	B	
3-1	31E3-00670				.HEAD-FILTER	1	- #0017		
	31E3-0044				.BODY	1	#0018 -	D	
3-2	31E3-00680				.VALVE ASSY	1	- #0017	-	
3-3	31E3-0018	10			.ELEMENT-LINE FILTER	1	- #0017		
	31MH-20320				.ELEMENT-LINE FILTER	1	#0018 -	B	
3-4	31E3-00700				.O-RING	1	- #0017	-	
3-5	31E3-00710				.CASE-FILTER	1	- #0017	-	
18	P910-062013				HOSE ASSY-ORFS 0X0	1	- #0392		
	P910-062010				HOSE ASSY-ORFS 0X0	1	#0393 -	D	
19	P930-064023				HOSE ASSY-ORFS 0X90	1	- #0392		
	P930-064020				HOSE ASSY-ORFS 0X90	1	#0393 -	D	
20	P910-042026				HOSE ASSY-ORFS 0X0	1	- #0392		
	P910-042023				HOSE ASSY-ORFS 0X0	1	#0393 -	D	
22	X500-110015				CONNECTOR-ORFS	1			
24	X520-310001				ELBOW-90,ORFS	1			
25	31LB-10240				ELBOW-90,ORFS	1			
26	31S8-20180				CONNECTOR	1			
27	X530-110001				ELBOW-45,ORFS	1			
28	X530-110011				ELBOW-45,ORFS	1			
29	31LD-10080				ELBOW-90	1			
30	P220-310103				PLUG-HEX	1			
31	S611-012001				O-RING	2			
32	S611-016001				O-RING	2			
33	S631-011004				O-RING	3			

Item	Part_No	IS	Ord	T	Description	Qty	Serial_No	ITC	Remark
35	S631-018004				O-RING	2			
37	31EK-11130				COUPLING-SCREW	1			
42	S015-060556				BOLT-HEX	2			
43	S035-082056				BOLT-W/WASHER	2			
48	S441-060006				WASHER-HARDENED	2			
57	S621-011001				O-RING	2			
58	S621-012001				O-RING	5			

ATTACHMENT HYDRAULIC PIPING

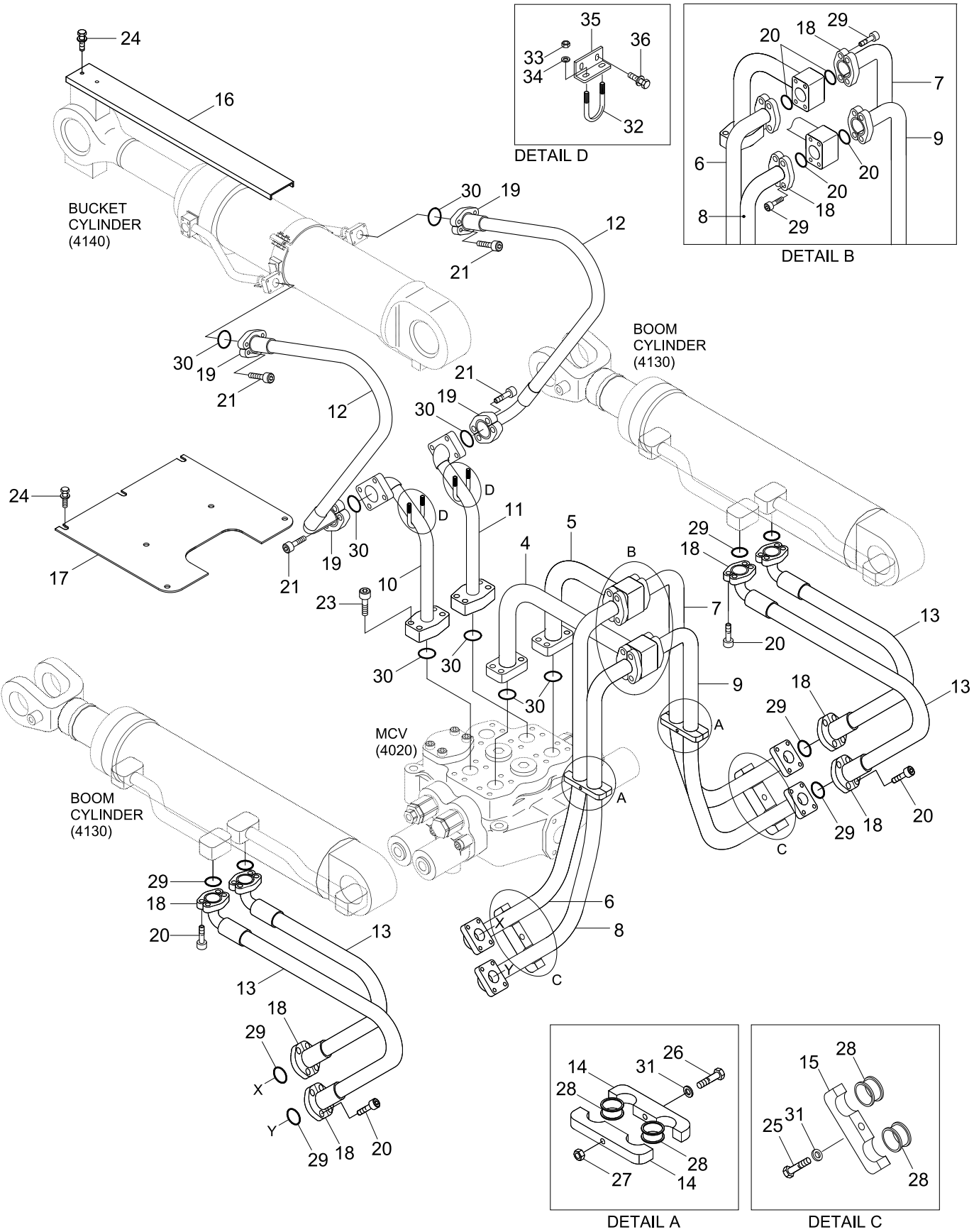

Item	Part_No	IS	Ord	T	Description	Qty	Serial_No	ITC	Remark
4	31LD-20040				PIPE WA	1			
5	31LD-20050				PIPE WA	1			
6	31LD-20060				PIPE WA-LH	1			
7	31LD-20070				PIPE WA-RH	1			
8	31LD-20080				PIPE WA-LH	1			
9	31LD-20090				PIPE WA-RH	1			
10	31LD-20100				PIPE WA-LH	1			
11	31LD-20110				PIPE WA-RH	1			
12	31LD-20460				HOSE ASSY	2			
13	P703-124325				HOSE ASSY-FLG 0X90	4			
14	34L3-00710				CLAMP	4			
15	34L3-00730				CLAMP	2			
16	31LB-20420				COVER	1			
	31LB-20430				COVER	1			HL757XTD-7A
17	31LD-20130				COVER WA	1			
18	P173-120102				FLANGE-SPLIT	16			
19	P173-160104				FLANGE-SPLIT	8			
20	S109-100256				BOLT-HEXAGON SOCKET HEAD	32			
21	S109-100306				BOLT-SOCKET	16			
22	S109-100356				BOLT-SOCKET	16			
23	S109-100406				BOLT-SOCKET	16			
24	S037-122556				BOLT-W/WASHER	7			
25	S017-120556				BOLT-HEX	2			
26	S017-120706				BOLT-HEXAGON HEAD	2			
27	S205-121006				NUT-HEX	2			
28	S690-027100				GROMMET	8			

Item	Part_No	IS	Ord	T	Description	Qty	Serial_No	ITC	Remark
29	Y171-019004				O-RING	12			
30	Y171-024004				O-RING	8			
31	S441-120006				WASHER-HARDENED	4			
32	S070-023450				U-BOLT	2			
33	S275-100006				NUT-SELF LOCKING	4			
34	S441-100006				WASHER-HARDENED	4			
35	31LC-20140				PLATE	2			
36	S037-101556				BOLT-W/WASHER	4			

STEERING HYDRAULIC PIPING 1

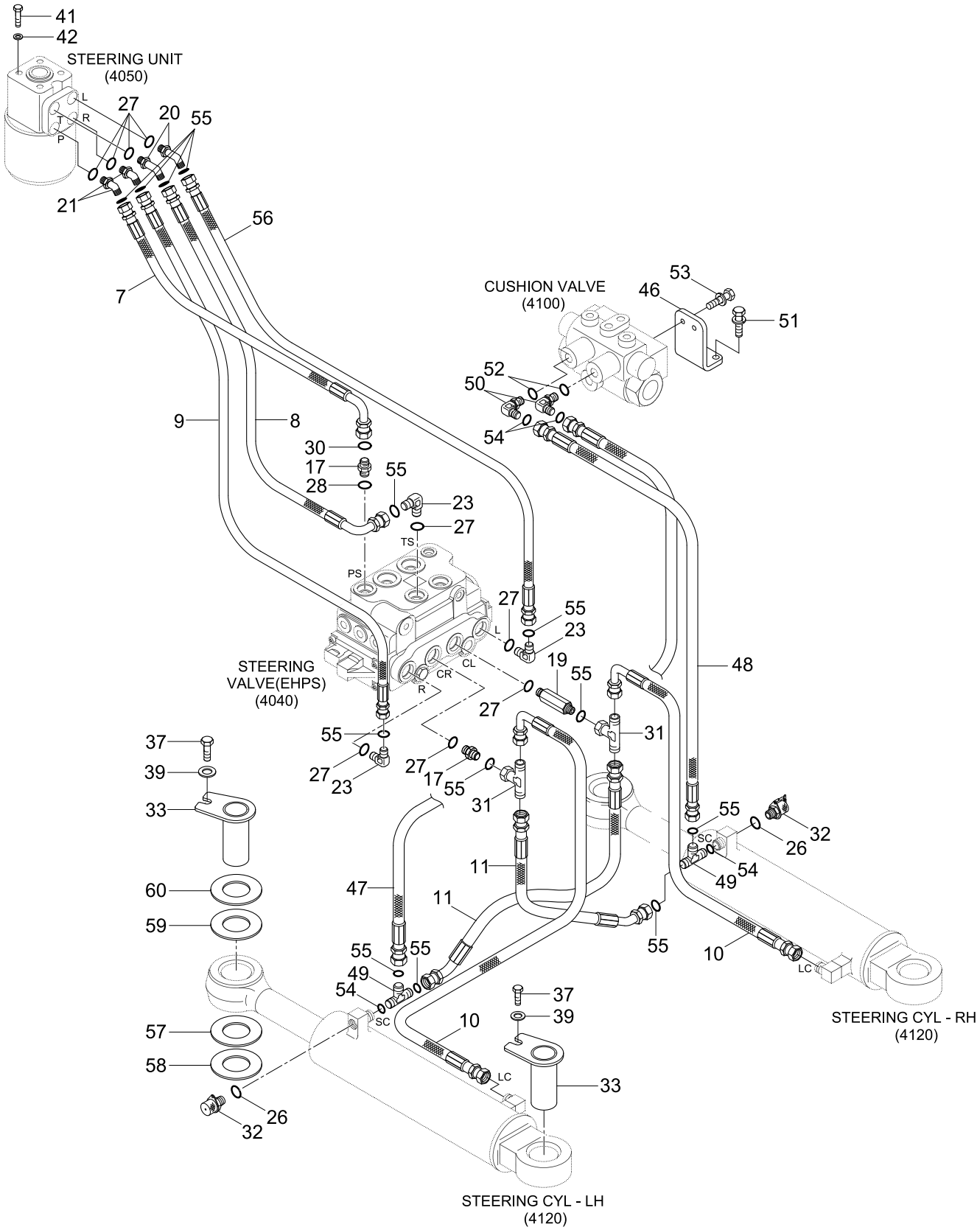

Item	Part_No	IS	Ord	T	Description	Qty	Serial_No	ITC	Remark
7	P930-082010				HOSE ASSY-ORFS 0X90	1			
8	P930-082011				HOSE ASSY-ORFS 0X90	1			
9	P910-084016				HOSE ASSY-ORFS 0X0	1			
10	P930-084023				HOSE ASSY-ORFS 0X90	2			
11	P920-084014				HOSE ASSY-ORFS 0X45	2			
17	X500-110003				CONNECTOR-ORFS	2			
19	31N8-40200				CONNECTOR-ORFS.LONG	1			
20	31LB-30130				ELBOW-45	2			
21	X530-110003				ELBOW-45,ORFS	2			
23	X520-110003				ELBOW-90,ORFS	3			
26	S631-011004				O-RING	2			
27	S631-018004				O-RING	9			
28	S631-024004				O-RING	1			
30	S621-018001				O-RING	1			
31	X830-535353				TEE-B/TYPE,ORFS	2			
32	31EK-11130				COUPLING-SCREW	2			
33	31LD-30310				PIN WA	4			
37	S017-16035D				BOLT-HEX	4			
39	61L7-10290				WASHER	4			
41	S017-100856				BOLT-HEX	4			
42	S441-100006				WASHER-HARDENED	4			
46	31LC-30090				PLATE	1			
47	P910-044015				HOSE ASSY-ORFS 0X0	1			
48	P930-044020				HOSE ASSY-ORFS 0X90	1			
49	X840-535153				TEE-R/TYPE,ORFS	2			
50	31FG-10020				ELBOW-90	2			

Item	Part_No	IS	Ord	T	Description	Qty	Serial_No	ITC	Remark
51	S037-122556				BOLT-W/WASHER	2			
52	S611-009001				O-RING	2			
53	S035-082056				BOLT-W/WASHER	2			
54	S621-011001				O-RING	4			
55	S621-014001				O-RING	13			
56	P930-084015				HOSE ASSY-ORFS 0X90	1			
57	31L9-30150				SHIM(0.5MM)	2			
58	31L9-30160				SHIM(1.0MM)	2			
59	31LB-30600				SHIM(0.5MM)	2			
60	31LB-30610				SHIM(1.0MM)	2			

STEERING HYDRAULIC PIPING 2

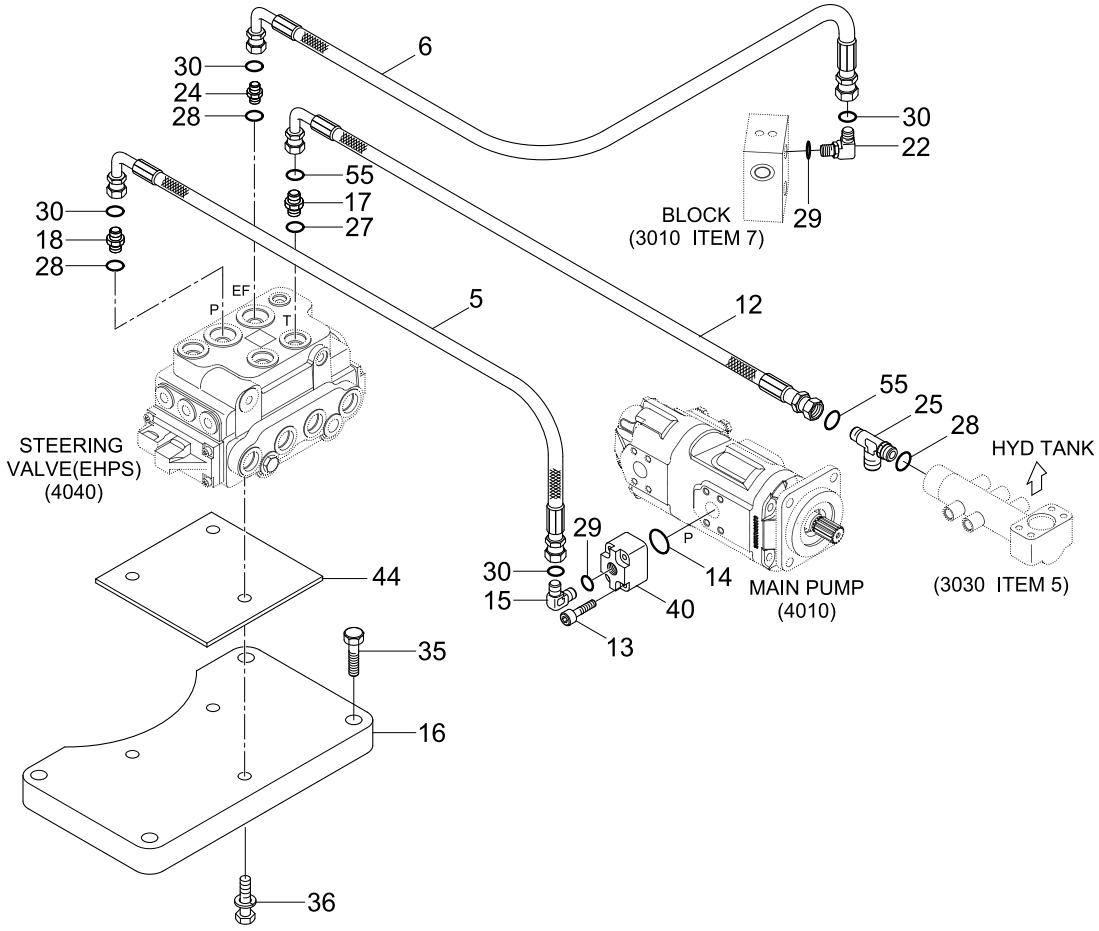

Item	Part_No	IS	Ord	T	Description	Qty	Serial_No	ITC	Remark
5	P930-124012				HOSE ASSY-ORFS 0X90	1			
6	P930-124016				HOSE ASSY-ORFS 0X90	1			
12	P930-082014				HOSE ASSY-ORFS 0X90	1			
13	S109-100506				BOLT-SOCKET	4			
14	Y171-024004				O-RING	1			
15	X520-110018				ELBOW-90,ORFS	1			
16	31LD-30051				PLATE	1			
17	X500-110003				CONNECTOR-ORFS	1			
18	X511-112543				CONNECTOR-LONG,ORFS	1			
22	X520-110018				ELBOW-90,ORFS	1			
24	X500-110004				CONNECTOR(ORFS)	1			
25	X820-125353				TEE-R/TYPE,ORFS	1			
27	S631-018004				O-RING	1			
28	S631-024004				O-RING	3			
29	S631-029004				O-RING	2			
30	S621-018001				O-RING	4			
35	S037-123556				BOLT-W/WASHER	4			
36	S035-082556				BOLT-W/WASHER	3			
40	34L3-02510				BLOCK	1			
44	31LC-30060				PLATE-RUBBER	1			
55	S621-014001				O-RING	2			

BRAKE HYDRAULIC PIPING 1

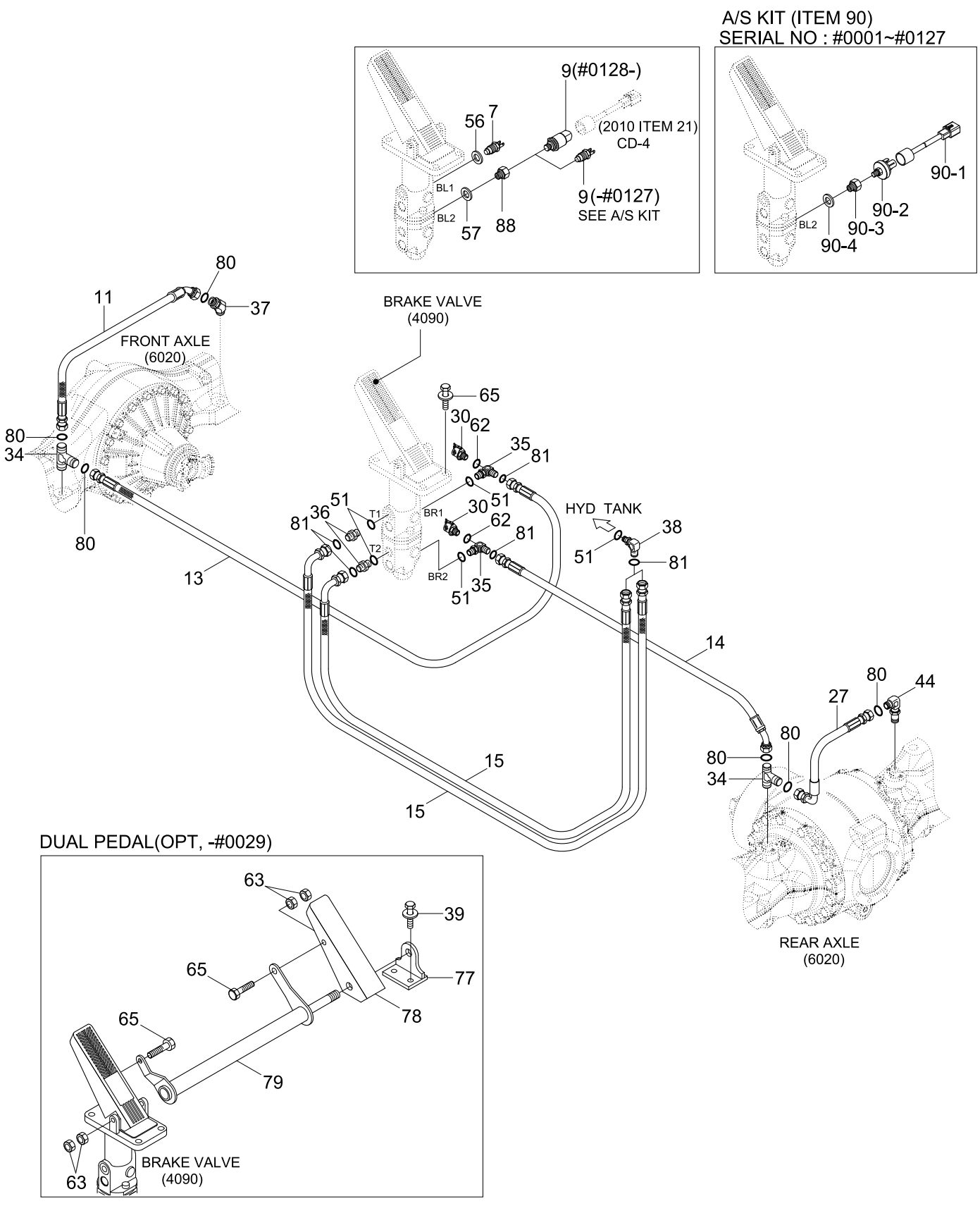

Item	Part_No	IS	Ord	T	Description	Qty	Serial_No	ITC	Remark
7	31LB-40170				SWITCH-PRESSURE	1			CLUTCH CUT OFF
N9	@				SWITCH-PRESSURE	1	- #0127		NOT
9	31Q4-40560				SWITCH-PRESSURE	1	#0128 -	D	SERVICE BRAKE
11	P920-063012				HOSE ASSY-ORFS 0X45	1			
13	P910-063066				HOSE ASSY-ORFS 0X0	1			
14	P920-063044				HOSE ASSY-ORFS 0X45	1			
15	P930-062050				HOSE ASSY-ORFS 0X90	2			
27	P930-063011				HOSE ASSY-ORFS 0X90	1			
30	31EK-11130				COUPLING-SCREW	2			
34	31LD-40270				TEE	4			
35	31LB-40340				TEE	2			
36	X500-110002				CONNECTOR-ORFS	2			
37	X530-210004				ELBOW-45,ORFS	1			
38	X520-110002				ELBOW-90,ORFS	2			
39	S037-102056				BOLT W/WASHER-HEX	2	- #0029	-	DUAL PEDAL
44	31N6-41080				ELBOW-90,ORFS,LONG	1			
51	S631-014004				O-RING	6			
56	P391-040000				WASHER-COPPER	1			
57	P392-120000				WASHER-COPPER	1			
62	S631-011004				O-RING	3			
63	S201-081006				NUT-HEX	4	- #0029	-	DUAL PEDAL
65	S035-082556				BOLT-W/WASHER	4			
					BOLT-W/WASHER	2	- #0029	-	DUAL PEDAL
77	31LH-40071				BRACKET ASSY	1	- #0029	-	DUAL PEDAL
78	31LH-40051				PEDAL ASSY-RH	1	- #0029	-	DUAL PEDAL
79	31LH-40060				LINK WA	1	- #0029	-	DUAL PEDAL

Item	Part_No	IS	Ord	T	Description	Qty	Serial_No	ITC	Remark
80	S621-011001				O-RING	6			
81	S621-012001				O-RING	4			
88	31LG-40050				ADAPTER	1			
90	21LB-51700				KIT-STOP LAMP PRESSURE	1	#0001 - #0127	-	FOR A/S
90-1	21LB-51600				.HARNESS-EXT	1			
90-2	81FH-47120				.SWITCH-PRESSURE	1			
90-3	31LG-40070				.ADAPTER	1			
90-4	P392-120000				.WASHER-COPPER	1			
N	@					AR			NOT

BRAKE HYDRAULIC PIPING 2

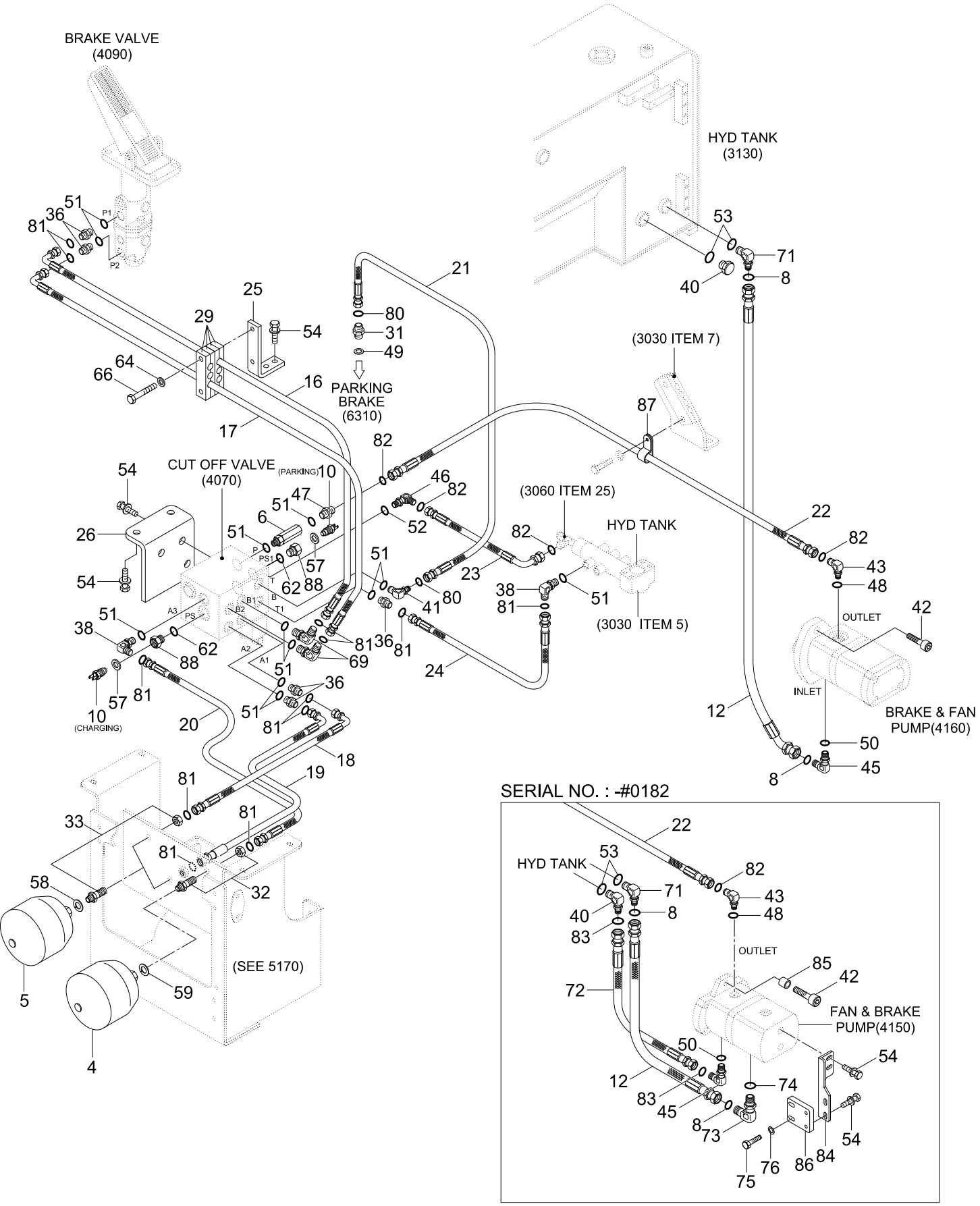

Item	Part_No	IS	Ord	T	Description	Qty	Serial_No	ITC	Remark
4	81L1-0003	01			ACCUMULATOR	1			CHARGING
5	81L1-0004	01			ACCUMULATOR	2			SERVICE BRAKE
6	31L1-0139				FILTER-LINE	1			
8	S621-021001				O-RING	2	- #0182		
	S621-025001				O-RING	2	#0183 -	D	
10	31LF-00500				SWITCH-PRESSURE	2			CHARGE,PARKING
12	P920-162009				HOSE ASSY-ORFS 0X45	1	- #0183		
	P920-202009				HOSE ASSY-ORFS 0X45	1	#0183 - #0370	D	
	P920-202008				HOSE ASSY-ORFS 0X45	1	#0371 -	D	
16	P930-063022				HOSE ASSY-ORFS 0X90	1			
17	P930-063021				HOSE ASSY-ORFS 0X90	1			
18	P920-063018				HOSE ASSY-ORFS 0X45	1	- #0392		
	P920-063016				HOSE ASSY-ORFS 0X45	1	#0393 -	D	
19	P920-063017				HOSE ASSY-ORFS 0X45	1	- #0392		
	P920-063015				HOSE ASSY-ORFS 0X45	1	#0393 -	D	
20	P910-063018				HOSE ASSY-ORFS 0X0	1	- #0392		
	P910-063016				HOSE ASSY-ORFS 0X0	1	#0393 -	D	
21	P920-043011				HOSE ASSY-ORFS 0X45	1			
22	P910-084037				HOSE ASSY-ORFS 0X0	1			
23	P930-082016				HOSE ASSY-ORFS 0X90	1			
24	P910-062017				HOSE ASSY-ORFS 0X0	1			
25	31LB-40060				PLATE	1			
26	31LB-40071				PLATE	1			
29	31LB-40130				CLAMP	5			
31	31LH-40120				CONNECTOR	1			
32	31LB-40400				CONNECTOR	1			

Item	Part_No	IS	Ord	T	Description	Qty	Serial_No	ITC	Remark
33	31LB-40410				CONNECTOR	2			
36	X500-110002				CONNECTOR-ORFS	5			
38	X520-110002				ELBOW-90,ORFS	3			
40	X530-110018				ELBOW-45,ORFS	1	- #0182		
	P220-110206				PLUG-HEX	1	#0183 -	D	
41	X530-110012				ELBOW-45,ORFS	1			
42	S109-100356				BOLT-SOCKET	2	- #0182		
	S109-100256				BOLT-SOCKET	2	#0183 -	D	
43	31LB-40360				ELBOW-90	1			
45	31LB-40370				ELBOW-90,ORFS	1	- #0182		
	37FQ-20050				ELBOW-90,ORFS	1	#0183 -	D	
46	X520-110003				ELBOW-90,ORFS	1			
47	X500-110012				CONNECTOR-ORFS	1			
48	S611-019001				O-RING	1			
49	P392-100000				WASHER-COPPER	1			
50	S611-030001				O-RING	1			
51	S631-014004				O-RING	12			
52	S631-018004				O-RING	1			
53	S631-029004				O-RING	2			
54	S037-122556				BOLT-W/WASHER	11	- #0182		
					BOLT-W/WASHER	7	#0183 -	A	
57	P392-120000				WASHER-COPPER	2			
58	P392-180000				WASHER-COPPER	2			
59	P392-220000				WASHER-COPPER	1			
62	S631-011004				O-RING	2			
64	S441-100006				WASHER-HARDENED	2			

Item	Part_No	IS	Ord	T	Description	Qty	Serial_No	ITC	Remark
66	S017-100706				BOLT-HEX	2			
69	X530-110002				ELBOW-45,ORFS	2			
71	X520-110005				ELBOW-90,ORFS	1	- #0182		
	X520-110019				ELBOW-90,ORFS	1	#0183 -	D	
72	P930-122007				HOSE ASSY-ORFS 0X90	1	- #0182	-	
73	31S7-00460				ELBOW-90	1	- #0182	-	
74	S611-023001				O-RING	1	- #0182	-	
75	S017-120406				BOLT-HEX	2	- #0182	-	
76	S441-120006				WASHER-HARDENED	2	- #0182	-	
80	S621-011001				O-RING	2			
81	S621-012001				O-RING	12			
82	S621-014001				O-RING	4			
83	S621-018001				O-RING	2	- #0182	-	
84	31LC-40521				BRACKET-PUMP	1	- #0182	-	
85	31LC-40210				SPACER-PUMP	1	- #0182	-	
86	31LC-40511				BRACKET-PUMP	1			
87	S543-240002				CLAMP-TUBE	1			
88	31LG-40050				ADAPTER	2			

BRAKE HYD PIPING(DUAL PEDAL, #0030-)

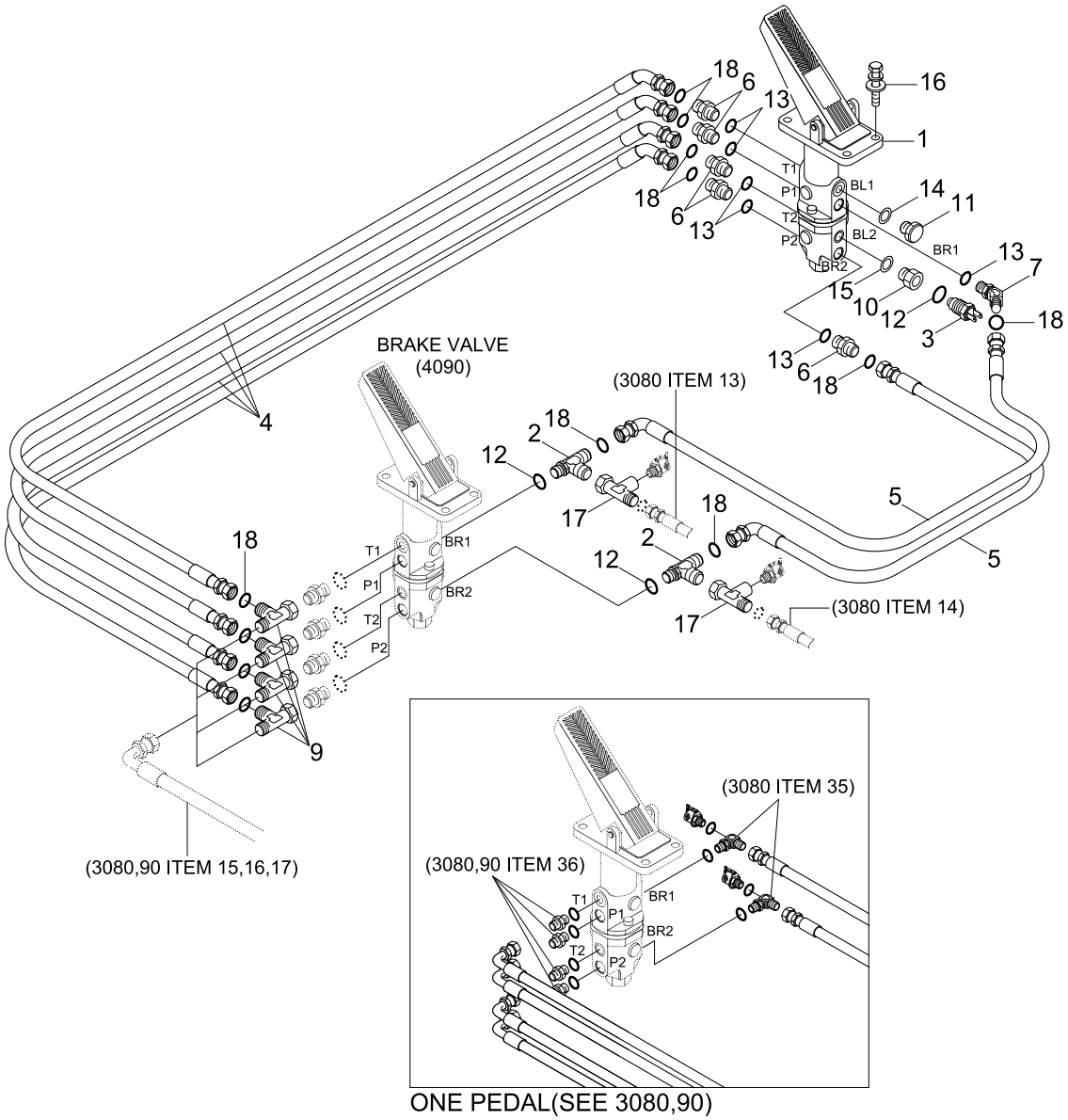

Item	Part_No	IS	Ord	T	Description	Qty	Serial_No	ITC	Remark
1	31LF-40300				BRAKE VALVE-DUAL(RH)	1			
2	31LF-40310				TEE-SHUTTLE	2			
3	31L7-41030				SWITCH-PRESSURE	1			
4	P920-063014				HOSE ASSY-ORFS 0X45	4			
5	P930-063013				HOSE ASSY	2			
6	X500-110002				CONNECTOR-ORFS	5			
7	X530-110002				ELBOW-45,ORFS	1			
9	X840-525252				TEE-R/TYPE,SWIVEL,ORFS	4			
10	31LG-40050				ADAPTER	1			
11	P220-110102				PLUG-HEX,HEAD	1			
12	S631-011004				O-RING	1			
13	S631-014004				O-RING	6			
14	P391-040000				WASHER-COPPER	1			
15	P392-120000				WASHER-COPPER	1			
16	S035-082552				BOLT-W/WASHER	2			
17	31N6-66090				TEE-TEST	2			
18	S621-012001				O-RING	12			

GREASE PIPING(FRONT)

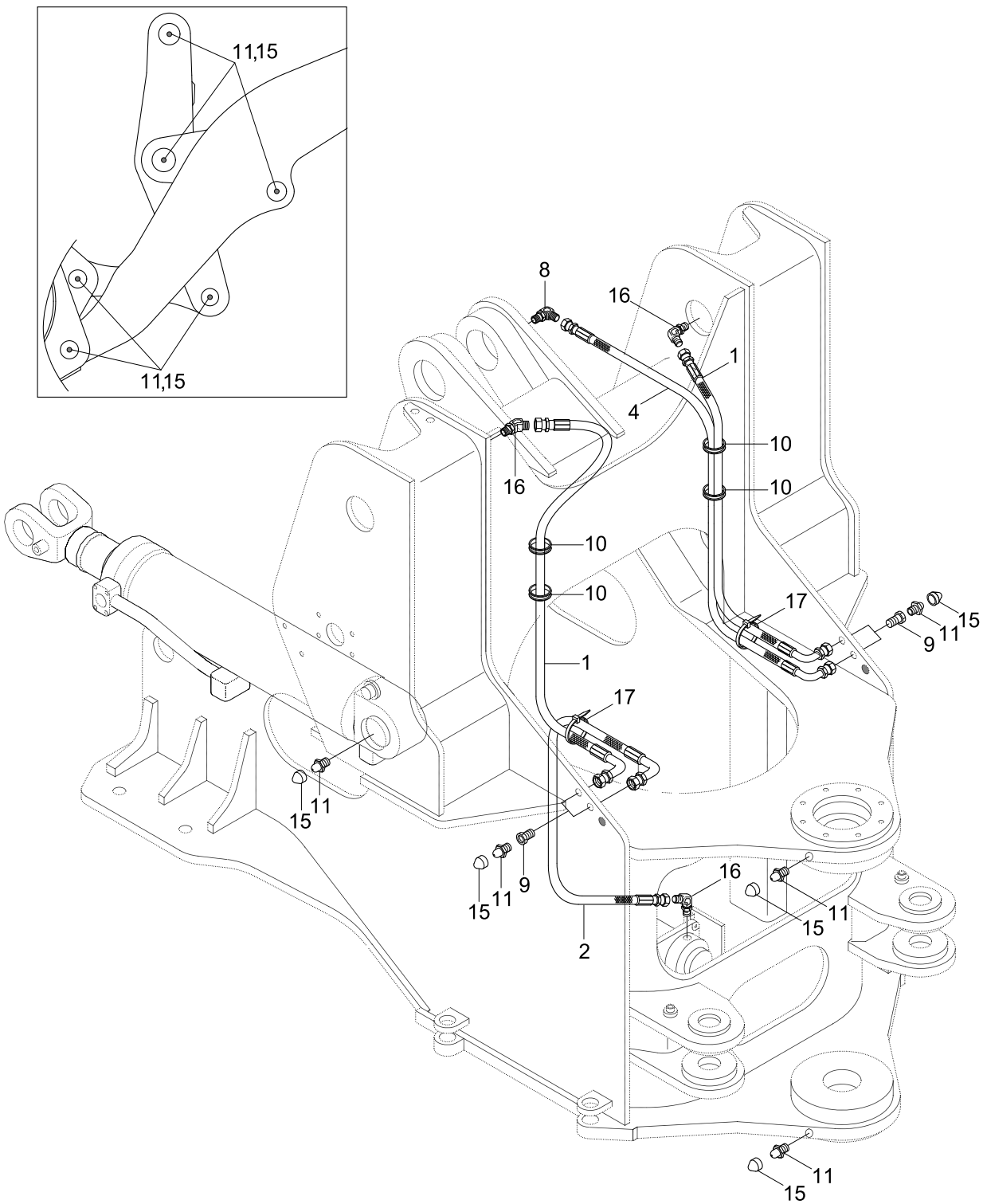

Item	Part_No	IS	Ord	T	Description	Qty	Serial_No	ITC	Remark
1	P420-042019				HOSE ASSY-COMP 0X90	2	- #0450		
	P860-042019				HOSE ASSY-SYN 0X90	2	#0451 -	A	
2	P420-042023				HOSE ASSY-COMP 0X90	1	- #0450		
	P860-042023				HOSE ASSY-SYN 0X90	1	#0451 -	A	
4	P420-042026				HOSE ASSY-COMP 0X90	1	- #0450		
	P860-042026				HOSE ASSY-SYN 0X90	1	#0451 -	A	
8	61L1-3909				ELBOW-90	1			
9	31LB-50020				CONNECTOR	4			
10	S681-411200				GROMMET	4			
11	S651-810002				NIPPLE-GREASE	16			
15	S654-000000				CAP-GREASE NIPPLE	16			
16	E231-0207	10			ELBOW-45	3			
17	S552-050203				CLAMP-BAND	20			

GREASE PIPING(REAR)

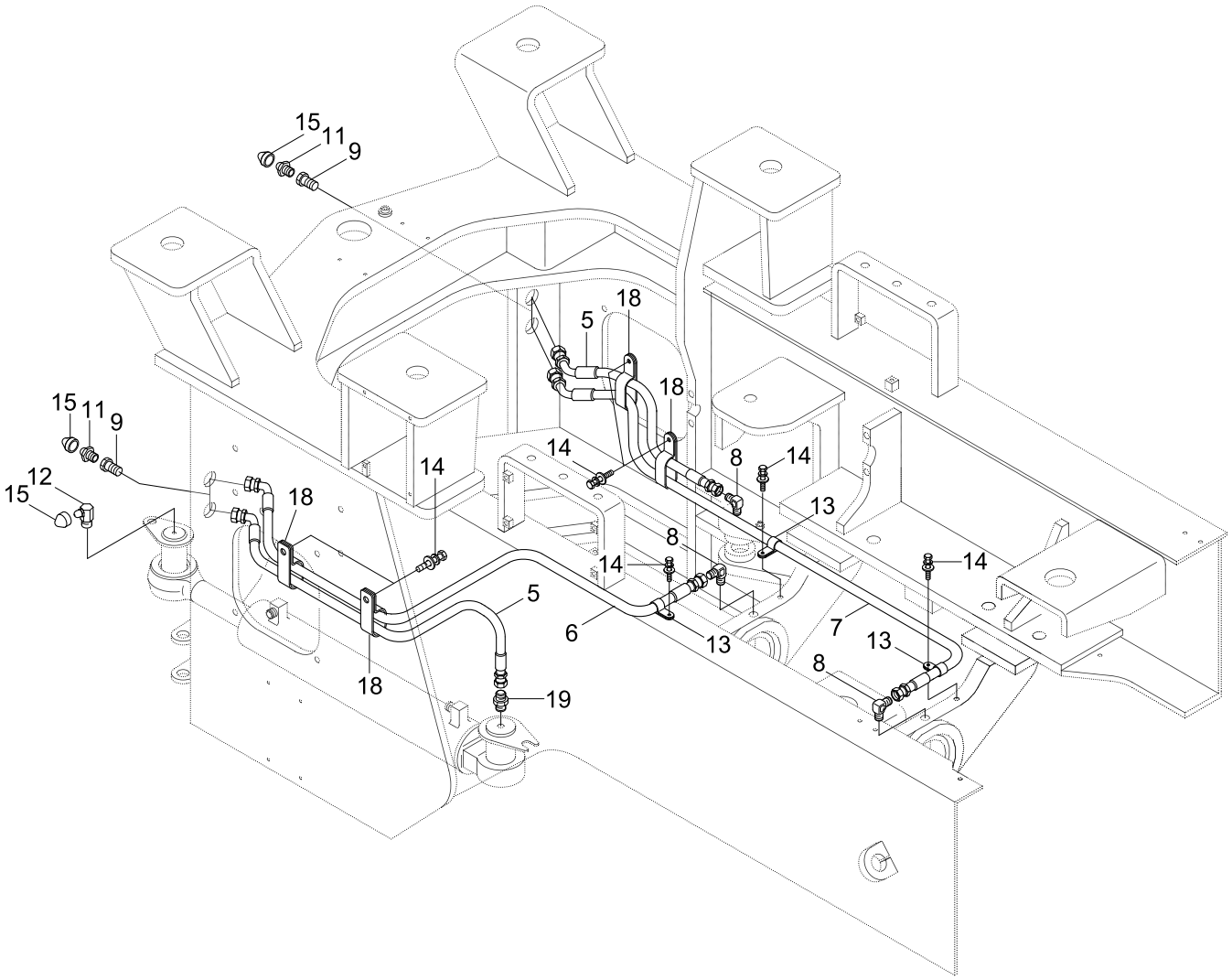

Item	Part_No	IS	Ord	T	Description	Qty	Serial_No	ITC	Remark
5	P420-042017				HOSE ASSY-COMP 0X90	2	- #0450		
	P860-042017				HOSE ASSY-SYN 0X90	2	#0451 -	A	
6	P420-042032				HOSE ASSY-COMP 0X90	1	- #0450		
	P860-042032				HOSE ASSY-SYN 0X90	1	#0451 -	A	
7	P420-042041				HOSE ASSY-COMP 0X90	1	- #0450		
	P860-042041				HOSE ASSY-SYN 0X90	1	#0451 -	A	
8	61L1-3909				ELBOW-90	3			
9	31LB-50020				CONNECTOR	4			
11	S651-810002				NIPPLE-GREASE	4			
12	S653-810002				NIPPLE-GREASE	2			
13	S543-140002				CLAMP-TUBE	3			
14	S035-081526				BOLT-W/WASHER	7			
15	S654-000000				CAP-GREASE NIPPLE	6			
18	31L7-50010				CLAMP	4			
19	P010-430011				CONNECTOR	1			

HYDRAULIC TANK GROUP

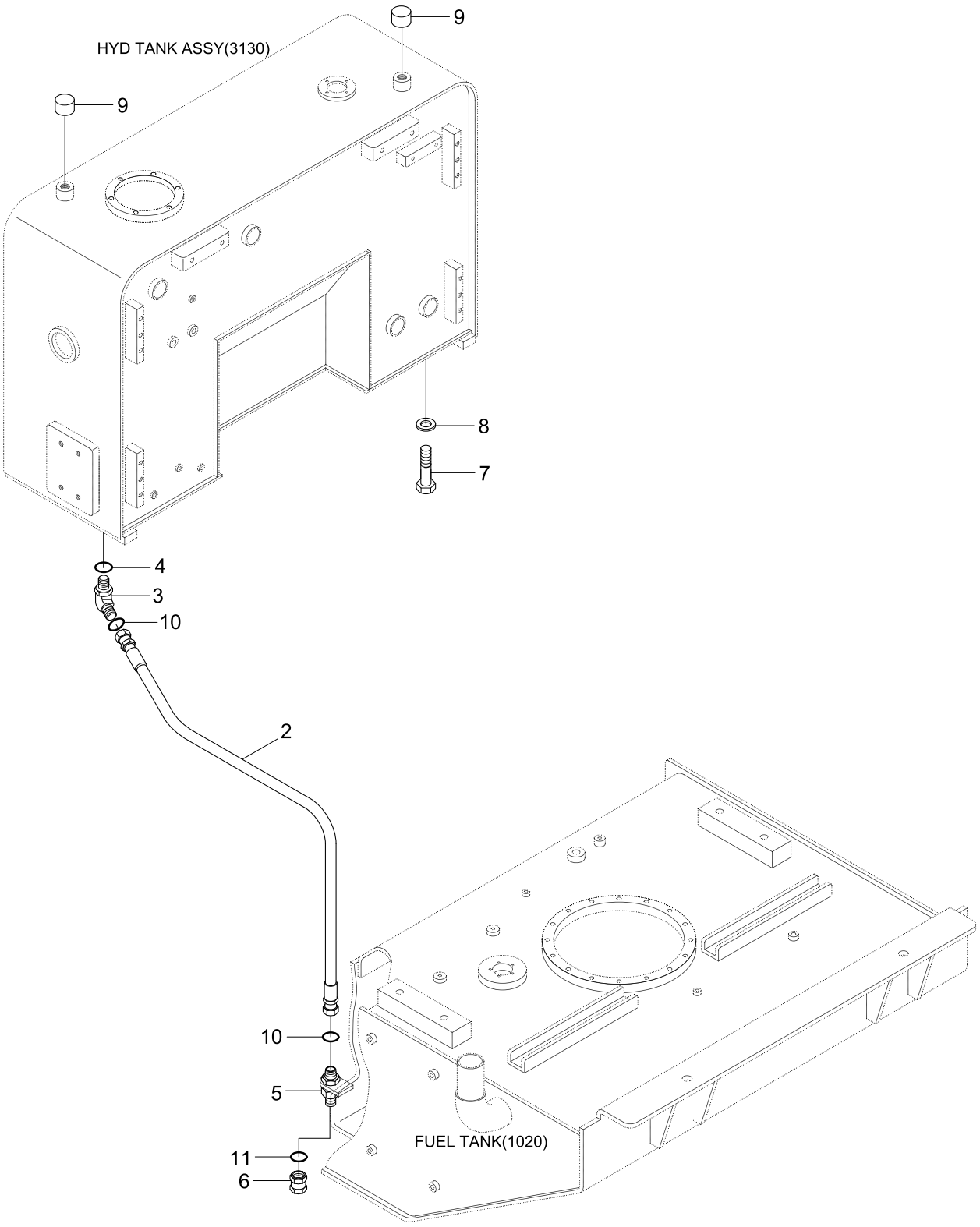

Item	Part_No	IS	Ord	T	Description	Qty	Serial_No	ITC	Remark
2	P910-162026				HOSE ASSY-ORFS 0X0	1			
3	X530-110005				ELBOW-45,ORFS	1			
4	S631-029001				O-RING	1			
5	31LB-60160				CONNECTOR ASSY	1			
6	X710-100105				CAP-DUST	1			
7	S017-16040D				BOLT-HEX	6			
8	S441-160006				WASHER-HARDENED	6			
9	S981-121500				PLUG	2			
10	S621-021001				O-RING	2			
11	S621-018001				O-RING	1			

HYDRAULIC TANK ASSY

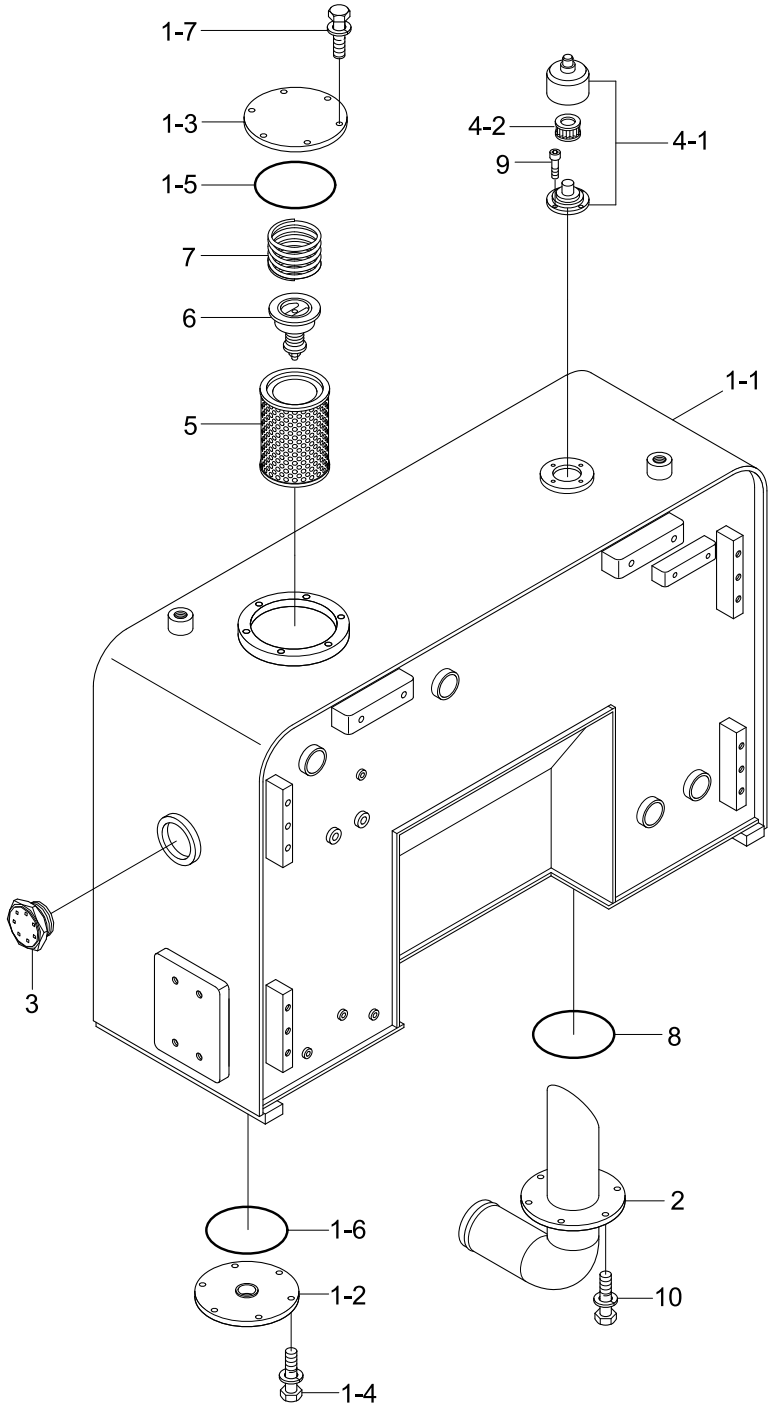

Item	Part_No	IS	Ord	T	Description	Qty	Serial_No	ITC	Remark
*	@				HYD TANK ASSY	1			NOT
1	31LD-60264				HYD TANK SUB ASSY	1			
1-1	31LD-60274				.HYD TANK WA	1			
1-2	31LD-60050				.COVER WA	1			
1-3	31E3-4526				.COVER	1			
1-4	S037-102056				.BOLT-W/WASHER	6			
1-5	S632-165001				.O-RING	1			
1-6	S632-140001				.O-RING	1			
1-7	S037-102556				.BOLT-W/WASHER	6			
2	31LD-60280				PIPE WA	1	- #0407		
	31LD-60500				PIPE WA	1	#0408 -	A	
3	31M6-52140				SIGHT GAUGE ASSY	1			
4	31EE-02100				AIR BREATHER	1			
4-1	PM102-0001R				.BODY	1			
4-2	31EE-02110				.ELEMENT	1			
5	31LD-60290				.ELEMENT ASSY	1	- #0017		
	31LD-60070				ELEMENT ASSY	1	#0018 -	B	
6	E131-0256	20			VALVE-BYPASS	1			
7	E131-0220	20			SPRING	1			
8	S632-140001				O-RING	1			
9	S109-060156				BOLT-SOCKET	4			
10	S037-102556				BOLT-W/WASHER	6			

PILOT HYDRAULIC PIPING(3-SPOOL)

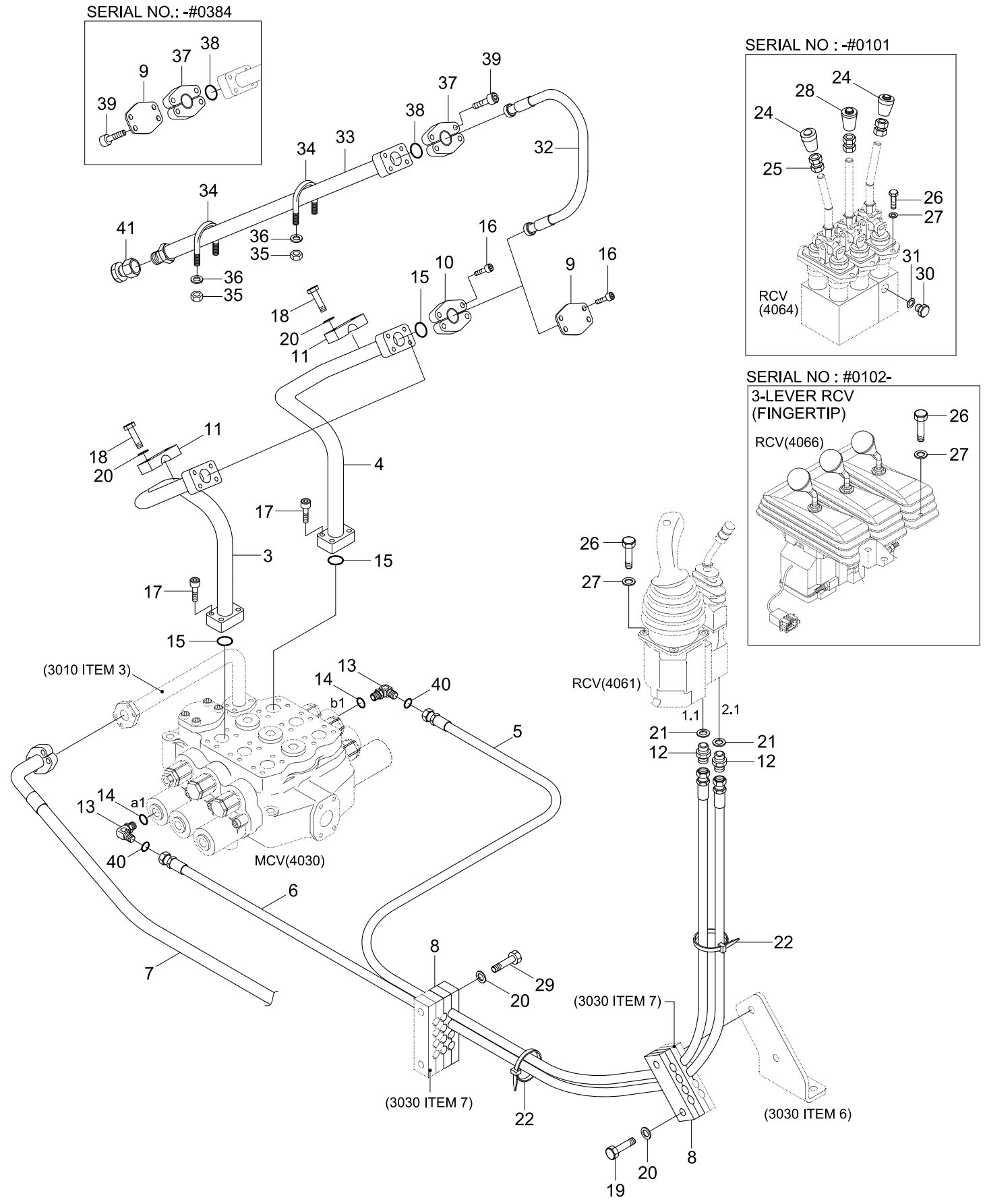

Item	Part_No	IS	Ord	T	Description	Qty	Serial_No	ITC	Remark
3	31LD-90020				PIPE WA-LH	1			
4	31LD-90030				PIPE WA-RH	1			
5	P910-042062				HOSE ASSY-ORFS 0X0	1	- #0450		
	X400-042062				HOSE ASSY-SYNFLEX,ORFS	1	#0451 -	A	
6	P910-042057				HOSE ASSY-ORFS 0X0	1	- #0450		
	X400-042057				HOSE ASSY-SYNFLEX,ORFS	1	#0451 -	A	
7	P700-164337				HOSE ASSY-FLG 0X90	1			
8	31LF-10060				CLAMP	2			
9	P280-163000				COVER-FLANGE	2			
10	P173-160104				FLANGE-HYD,SPLIT	4			
11	31L7-00370				CLAMP	2			
12	X500-120001				CONNECTOR-ORFS	2			
13	X520-110012				ELBOW-90,ORFS	2			
14	S631-014004				O-RING	2			
15	Y171-024004				O-RING	4			
16	S109-100306				BOLT-SOCKET	8			
17	S109-120406				BOLT-SOCKET	8			
18	S017-120606				BOLT-HEX	4			
19	S017-100656				BOLT-HEX	2			
20	S441-100006				WASHER-HARDENED	8			
21	P391-040000				WASHER-COPPER	2			
22	S552-050203				CLAMP-BAND	10			
24	34L4-02330				KNOB ASSY	2	- #0101	-	3-LEVER RCV
25	S207-120006				NUT-HEX	6	- #0101	-	3-LEVER RCV
26	S015-060256				BOLT-HEX	2			3-LEVER RCV
27	S441-060006				WASHER-HARDENED	2			3-LEVER RCV

Item	Part_No	IS	Ord	T	Description	Qty	Serial_No	ITC	Remark
28	31LB-10180				KNOB ASSY	1	- #0101	-	3-LEVER RCV
29	S017-100856				BOLT-HEX	2			3-LEVER RCV
30	P220-120102				PLUG-HEX	1	- #0101	-	3-LEVER RCV
31	P391-040000				WASHER-COPPER	1	- #0101	-	3-LEVER RCV
32	P680-164330				HOSE ASSY-FLG 0X0	2			EXTRA PIPING
33	31LD-90150				PIPE WA	2	- #0384		EXTRA PIPING
	31LD-90240				PIPE WA	2	#0385 -	D	EXTRA PIPING
34	S070-023450				U-BOLT	4			EXTRA PIPING
35	S275-100006				NUT-SELF LOCKING	8			EXTRA PIPING
36	S441-100006				WASHER-HARDENED	8			EXTRA PIPING
37	P173-160104				FLANGE-HYD,SPLIT	8	- #0384		EXTRA PIPING
					FLANGE-HYD,SPLIT	4	#0385 -	A	EXTRA PIPING
38	Y171-024004				O-RING	4	- #0384		EXTRA PIPING
					O-RING	2	#0385 -	A	EXTRA PIPING
39	S109-100306				BOLT-SOCKET	16	- #0384		EXTRA PIPING
					BOLT-SOCKET	8	#0385 -	A	EXTRA PIPING
40	S621-011001				O-RING	4			EXTRA PIPING
41	P290-100104				PLUG-CAP	2	#0385 -	-	EXTRA PIPING

EMERGENCY STEERING HYD PIPING

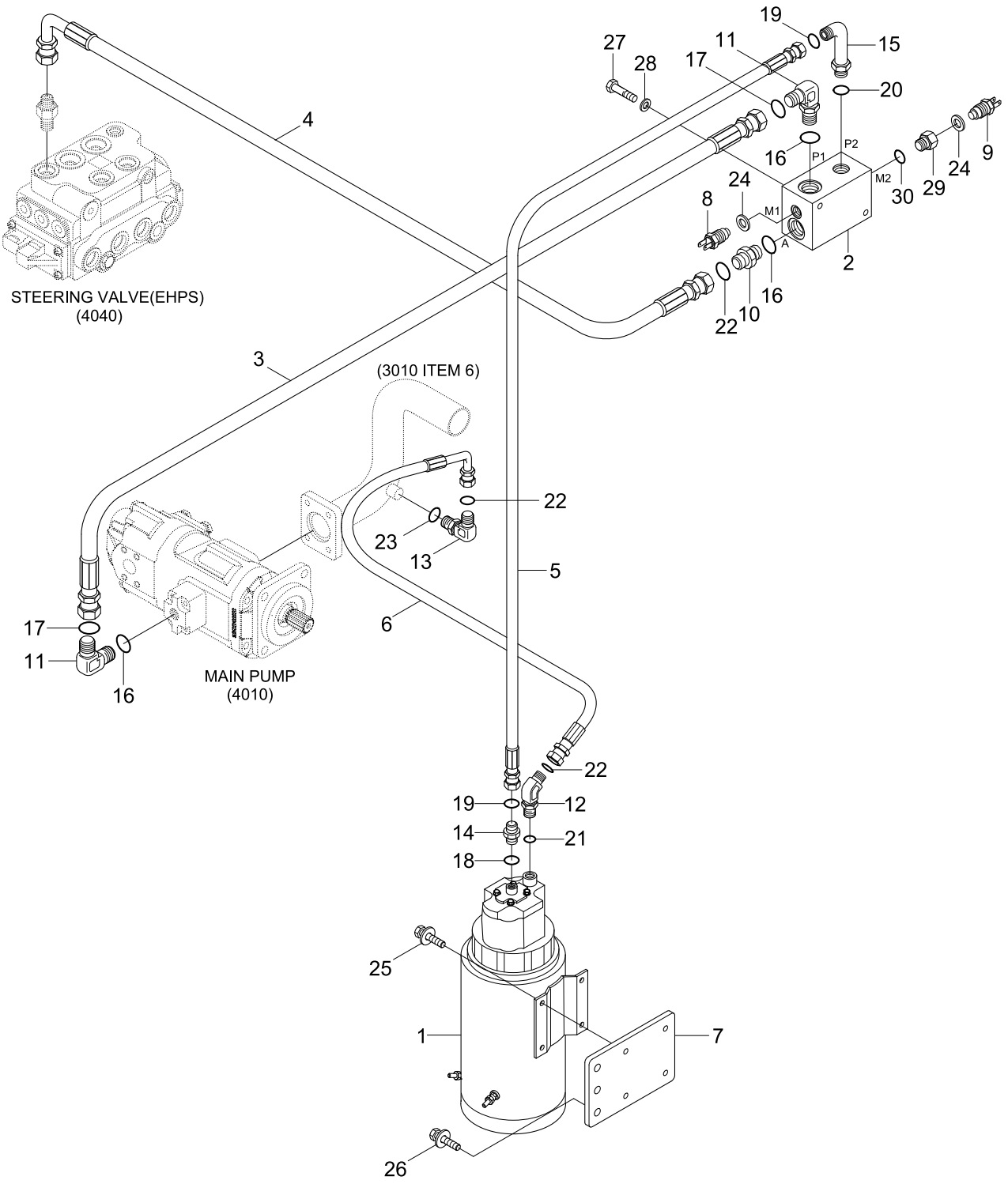

Item	Part_No	IS	Ord	T	Description	Qty	Serial_No	ITC	Remark
*	90LD-92000				EMER STEERING KIT	1			
1	31L6-02150				.MOTOR PUMP ASSY	1			
2	31L6-02201				.CHECK VALVE	1			
3	P920-164022				.HOSE ASSY-ORFS 0X45	1	- #0392		
	P920-164019				.p920-164019	1	#0393 -	D	
4	P930-124020				.HOSE ASSY-ORFS 0X90	1	- #0392		
	P930-124017				.HOSE ASSY-ORFS 0X90	1	#0393 -	D	
5	P910-084030				.HOSE ASSY-ORFS 0X0	1	- #0392		
	P910-084027				.HOSE ASSY-ORFS 0X0	1	#0393 -	D	
6	P920-122014				.HOSE ASSY-ORFS 0X45	1			
7	31LC-90270				.PLATE	1			
8	34L3-01600				.SWITCH-PRESSURE	1			STEERING PUMP
9	31L7-41030				.SWITCH-PRESSURE	1	- #0127		E/STEERING PUMP
	31Q4-40560				.SWITCH-PRESSURE	1	#0128 -	D	E/STEERING PUMP
10	31LC-90290				.CONNECTOR	1			
11	X520-110005				.ELBOW-90,ORFS	2			
12	31LC-90280				.ELBOW-45	1			
13	X520-110004				.ELBOW-90,ORFS	1			
14	31S8-20160				.CONNECTOR	1			
15	31LB-90200				.CONNECTOR-ORFS	1			
16	S631-029004				.O-RING	3			
17	S621-021001				.O-RING	2			
18	S611-019001				.O-RING	1			
19	S621-014001				.O-RING	2			
20	S631-018004				.O-RING	1			
21	S611-023001				.O-RING	1			

Item	Part_No	IS	Ord	T	Description	Qty	Serial_No	ITC	Remark
22	S621-018001				.O-RING	3			
23	S631-024004				.O-RING	1			
24	P392-120000				.WASHER-COPPER	2			
25	S037-101556				.BOLT-W/WASHER	4			
26	S037-123056				.BOLT-W/WASHER	3			
27	S017-100756				.BOLT-HEX	2			
28	S441-100006				.WASHER-HARDENED	2			
29	31LG-40050				.ADAPTER	1			
30	S631-011004				.O-RING	1			
31	@				.EMER STEERING ELEC	1			NOT

RIDE CONTROL HYDRAULIC PIPING

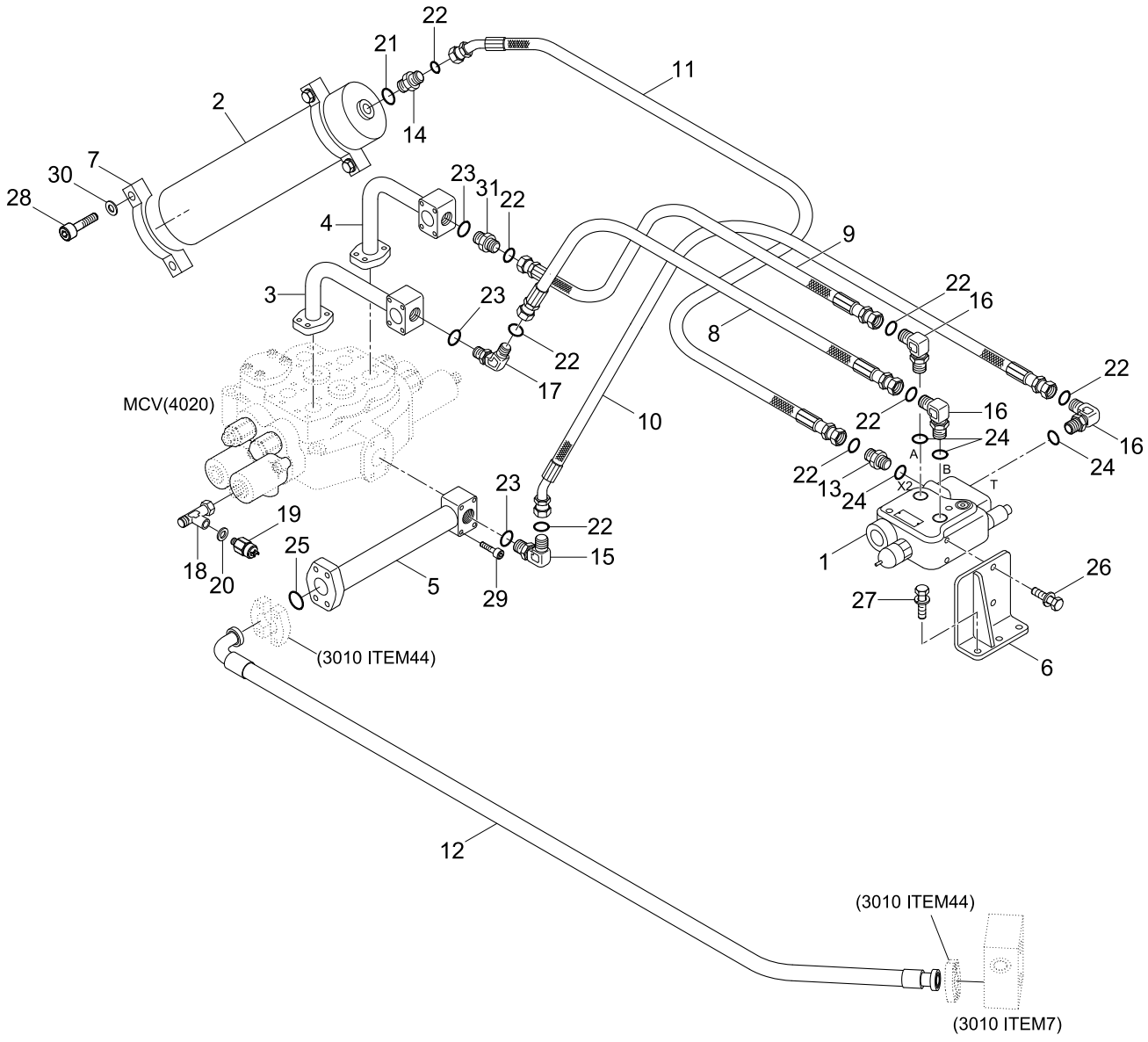

Item	Part_No	IS	Ord	T	Description	Qty	Serial_No	ITC	Remark
*	30LD-97000				RIDE CONTROL KIT	1			
1	@				.RIDE CONTROL VALVE	1			NOT
2	31LB-94000				.ACCUMULATOR	1			
3	31LD-90111				.PIPE WA	1			
4	31LD-90121				.PIPE WA	1			
5	31LD-90180				.PIPE WA	1			
6	31LD-90190				.PLATE WA	1			
7	31LB-90340				.CLAMP	2			
8	P910-124011				.HOSE ASSY-ORFS 0X0	1			
9	P910-124010				.HOSE ASSY-ORFS 0X0	1			
	P920-124010				.HOSE ASSY-ORFS 0X45	1			
10	P920-122015				.HOSE ASSY-ORFS 0X45	1			
11	P920-124014				.HOSE ASSY-ORFS 0X45	1			
12	P700-202331				.HOSE ASSY-FLG 0X90	1			
13	X500-210015				.CONNECTOR-ORFS	1			
14	X500-310004				.CONNECTOR-ORFS	1			
15	X520-110004				.ELBOW-90,ORFS	1			
16	31LD-90200				.ELBOW 90	3			
17	X530-110004				.ELBOW-45,ORFS	1			
18	31LC-90220				.TEE	1			
19	31L7-90030				.SWITCH-PRESSURE	1			RIDE CONTROL
20	P392-120000				.WASHER-COPPER	1			
21	S611-023001				.O-RING	8			
22	S621-018001				.O-RING	3			
23	S631-024004				.O-RING	4			
24	Y161-033001				.O-RING	4			

Item	Part_No	IS	Ord	T	Description	Qty	Serial_No	ITC	Remark
25	Y171-027004				.O-RING	1			
26	S037-102556				.BOLT-W/WASHER	2			
27	S037-123056				.BOLT-W/WASHER	3			
28	S017-120656				.BOLT-HEX	4			
29	S109-100606				.BOLT-SOCKET	4			
30	S441-120006				.WASHER-HARDENED	4			
31	31N8-40240				.CONNECTOR-ORFS.LONG	1			
R1-23	@				.DECAL-RIDE CONTROL	1			NOT
R6	@				.HARNESS-RIDE CONTROL	1			NOT
R17	@				.RELAY-4P	1			NOT
R24	@				.SWITCH-RIDE CONTROL	1			NOT

QUICK COUPLER PIPING(VOLVO TYPE, #0248-)

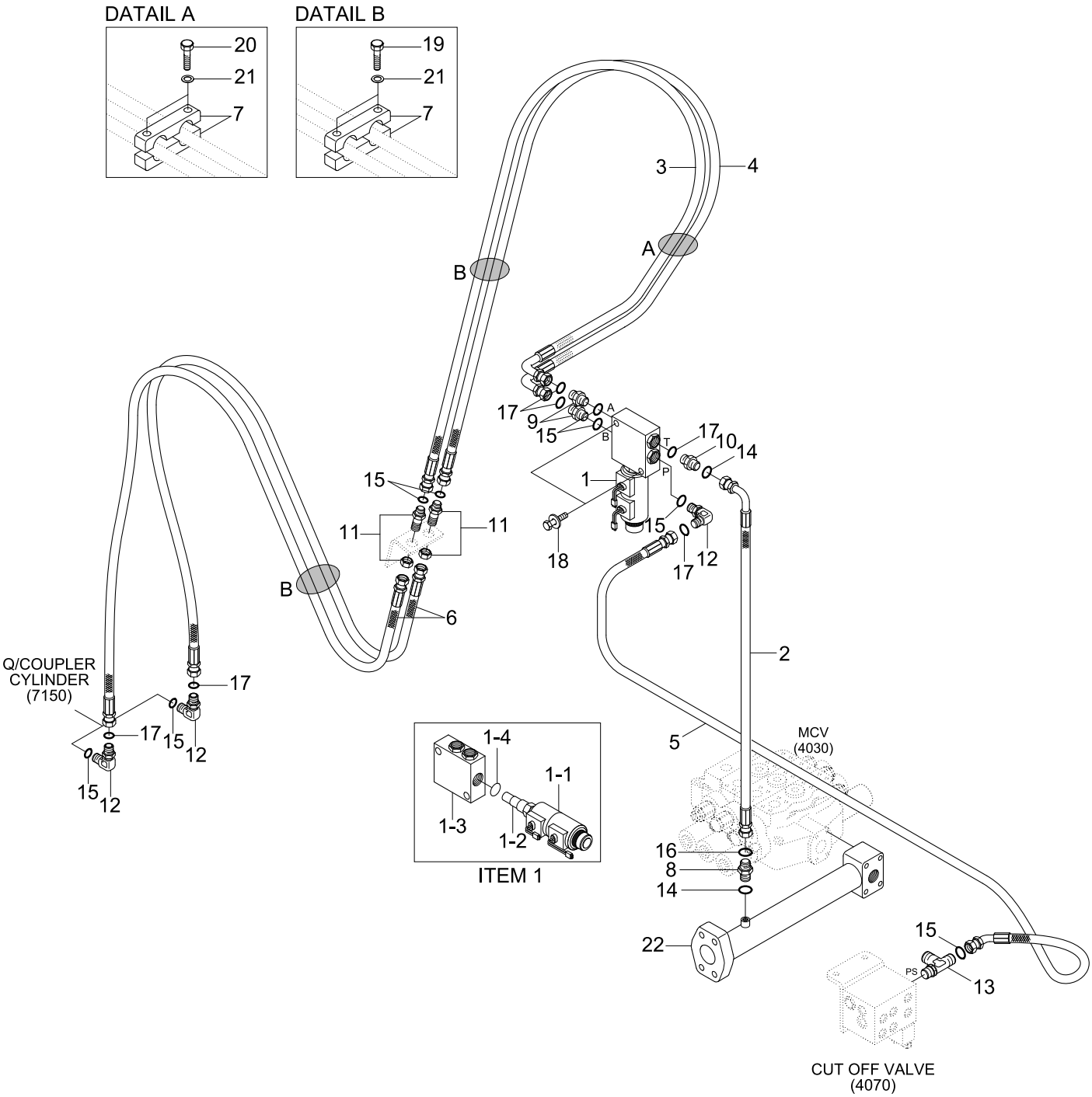

Item	Part_No	IS	Ord	T	Description	Qty	Serial_No	ITC	Remark
1	31L7-20210				SOLENOID VALVE	1			
1-1	XKAL-00071				.COIL	2			
1-2	XKAL-00072				.CARTRIDGE VALVE	1			
1-3	@				.MANIFOLD	1			NOT
1-4	XKAL-00004				.SEAL	1			
3	P910-064062				HOSE ASSY-ORFS 0X0	1			
4	P910-064063				HOSE ASSY-ORFS 0X0	1			
5	P930-064060				HOSE ASSY-ORFS 0X90	1			
6	31LF-90260				HOSE ASSY	2			
7	31LF-90270				CLAMP	6			
8	X500-110001				CONNECTOR-ORFS	1			
9	X500-110002				CONNECTOR-ORFS	2			
10	X500-110013				CONNECTOR-ORFS	1			
11	X540-120002				CONNECTOR-ORFS	2			
12	X520-110002				ELBOW-90,ORFS	3			
13	X820-065252				TEE-R/TYPE,ORFS	1			
14	S621-011001				O-RING	2			
15	S621-012001				O-RING(SEAL LOCK TYPE)	10			
16	S631-011004				O-RING	1			
17	S631-014004				O-RING	6			
18	S037-102556				BOLT-W/WASHER	2			
19	S017-120506				BOLT-HEX	2			
20	S017-120806				BOLT-HEX	4			
21	S441-120006				WASHER-HARDENED	6			
22	31LD-90130				PIPE WA	1			

MAIN PUMP

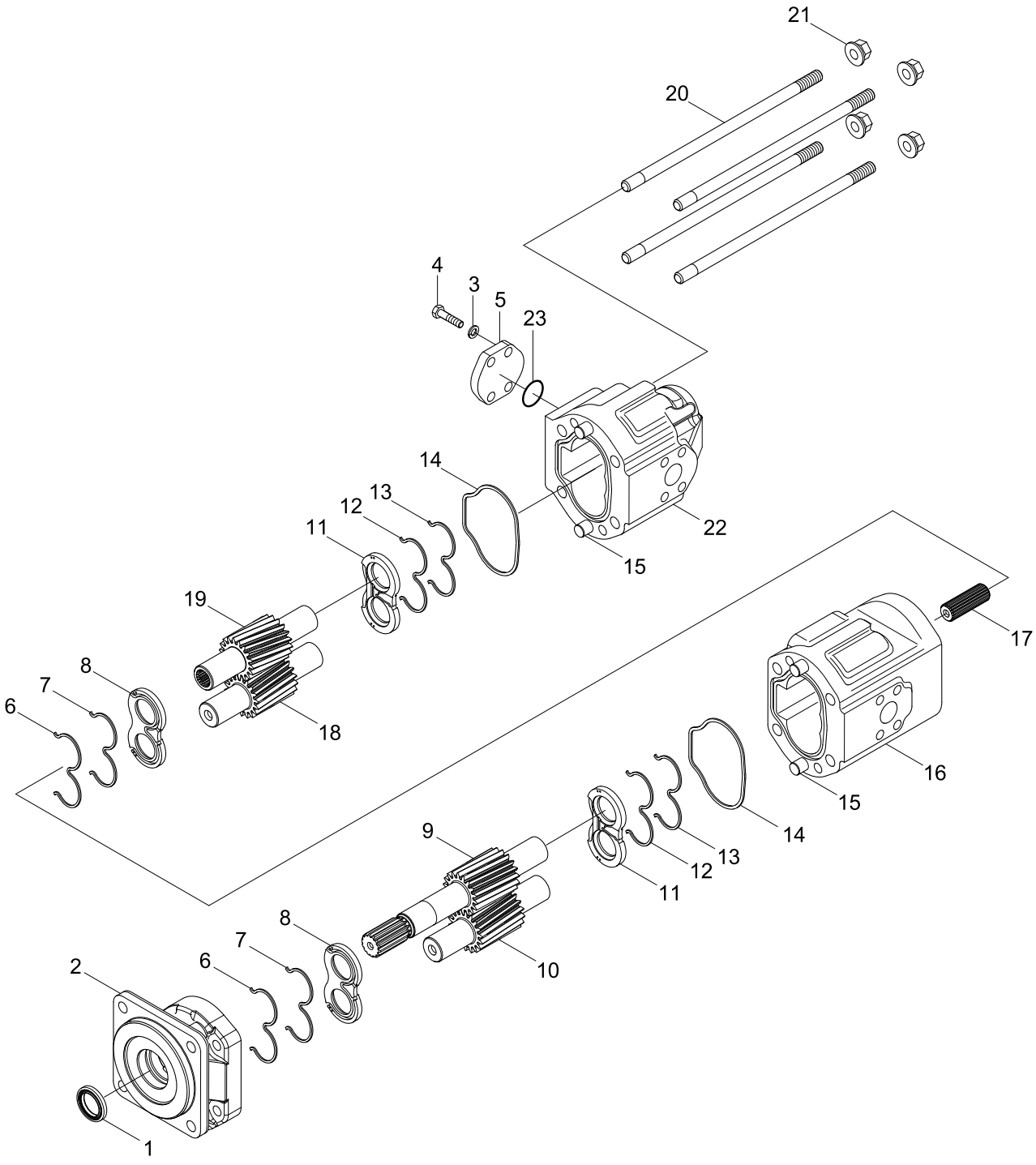

DESCRIPTION	PARTS NO	INCLUDED ITEM
SEAL KIT	SKX5002	6~8, 11~14

Item	Part_No	IS	Ord	T	Description	Qty	Serial_No	ITC	Remark
*	31LD-00300				MAIN PUMP	1			
N1	@				.SHAFT SEAL-VITON	1			NOT
N2	@				.ADAPTER	1			NOT
N3	@				.WASHER	4			NOT
N4	@				.BOLT	4			NOT
N5	@				.FLANGE	1			NOT
NK6	@				.SEAL-BACK UP	2			NOT
NK7	@				.SEAL/O-RING	2			NOT
NK8	@				.WEARPLATE	2			NOT
N9	@				.DRIVE GEAR-FRONT	1			NOT
N10	@				.DRIVEN GEAR-FRONT	1			NOT
NK11	@				.WEARPLATE	2			NOT
NK12	@				.SEAL/O-RING	2			NOT
NK13	@				.SEAL-BACK UP	2			NOT
NK14	@				.SEAL-INTERFACE	2			NOT
N15	@				.DOWEL	4			NOT
N16	@				.BODY-FRONT	1			NOT
N17	@				.COUPLING-SPLINE	1			NOT
N18	@				.DRIVEN GEAR-REAR	1			NOT
N19	@				.DRIVE GEAR-REAR	1			NOT
N20	@				.STUD	4			NOT
N21	@				.NUT-FLANGED	4			NOT
N22	@				.BODY-REAR	1			NOT
N23	P8395001191				.O-RING	1			NOT
N	@				NOT INDIVIDUALLY SUPPLIED	AR			NOT
K	SKX5002				SEAL KIT	1			SEE ILLUST

MAIN CONTROL VALVE(2-SPOOL)

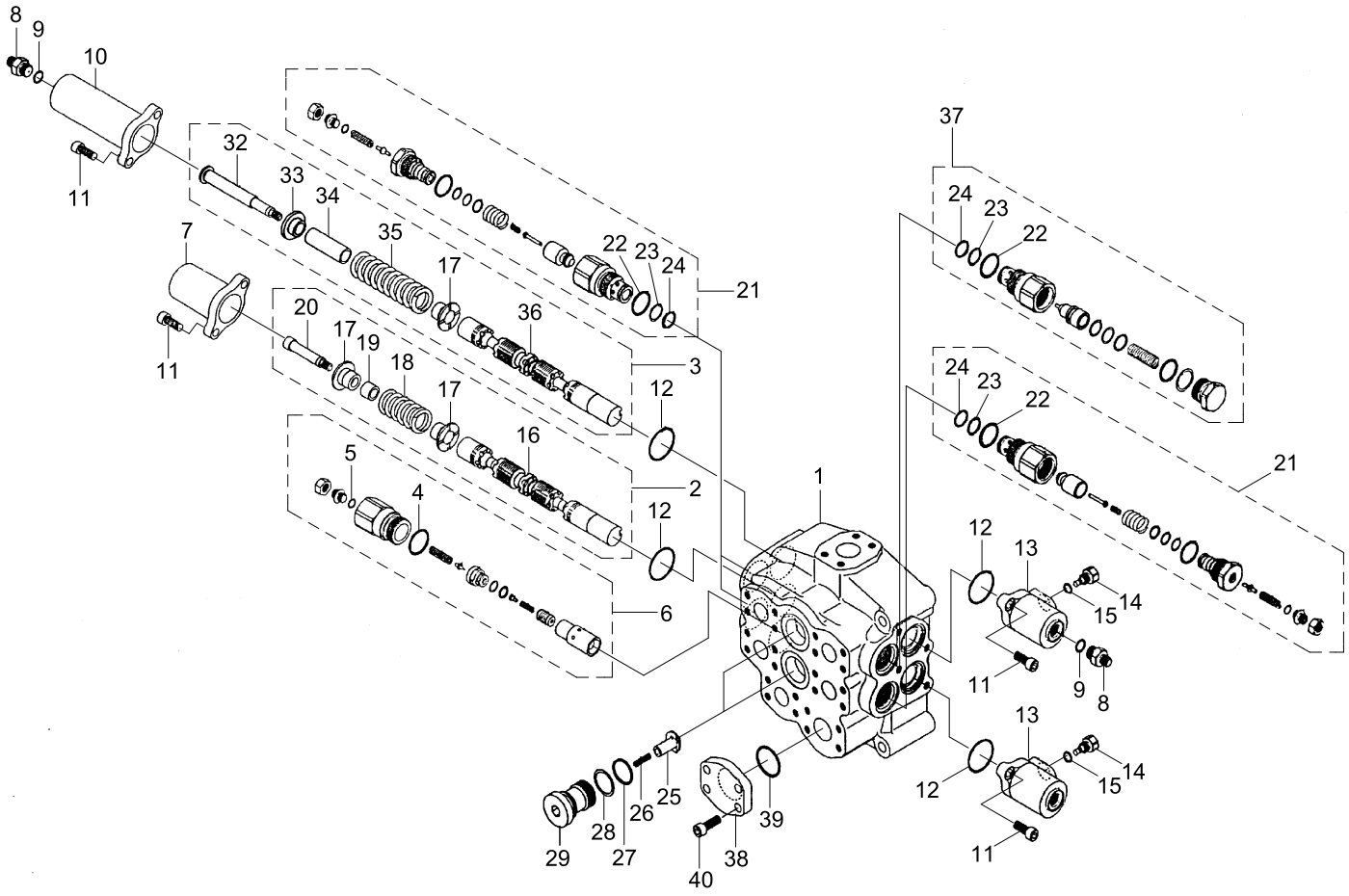

Item	Part_No	IS	Ord	T	Description	Qty	Serial_No	ITC	Remark
*	31LD-00020				MAIN CONTROL VALVE	1			
N1	@				.HOUSING ASSY	1			NOT
2	XJDB-00257				.PLUNGER ASSY	1			
3	XJDB-00258				.PLUNGER	1			
4	XJDB-00120				.O-RING	1			0207-010
5	XJDB-00075				.O-RING	1			8202-007
6	XJDB-00259				.MAIN RELIEF ASSY	1			
7	XJDB-00260				.COVER	1			
8	XJDB-00261				.NIPPLE	2			
9	XJDB-00136				.O-RING	2			8202-011
10	XJDB-00262				.COVER	1			
11	XJDB-00263				.BOLT-SOCKET	8			8072-102
12	XJDB-00264				.O-RING	4			0201-067
13	XJDB-00265				.COVER	2			
14	XJDB-00266				.PLUG	2			
15	XJDB-00018				.O-RING	2			8202-009
16	XJDB-00267				.PLUNGER	1			
17	XJDB-00268				.GUIDE	3			
18	XJDB-00269				.SPRING	1			
19	XJDB-00270				.SPACER	1			
20	XJDB-00271				.NIPPLE	1			
21	XJDB-00272				.RELIEF-PORT	3			
22	XJDB-00099				.O-RING	3			0207-003
23	XJDB-00100				.RING-BACK UP	3			0859-233
24	XJDB-00101				.O-RING	3			0207-005
25	XJDB-00102				.CHECK	2			3513-251

Item	Part_No	IS	Ord	T	Description	Qty	Serial_No	ITC	Remark
26	XJDB-00043				.SPRING	2			3590-288
27	XJDB-00096				.O-RING	2			0207-002
28	XJDB-00095				.RING-BACK UP	2			0859-228
29	XJDB-00088				.CAP	2			3526-483
32	XJDB-00273				.CAP	1			
33	XJDB-00274				.GUIDE	1			
34	XJDB-00275				.SPACER	1			
35	XJDB-00276				.SPRING	1			
36	XJDB-00277				.PLUNGER	1			
37	XJDB-00278				.MAKE UP ASSY	1			
38	XJDB-00279				.COVER	1			
39	XJDB-00138				.O-RING	1			0201-112
40	XJDB-00280				.BOLT	4			8072-103
N	@				NOT INDIVIDUALLY SUPPLIED	AR			NOT

MAIN CONTROL VALVE(2-SPOOL, #0073-)

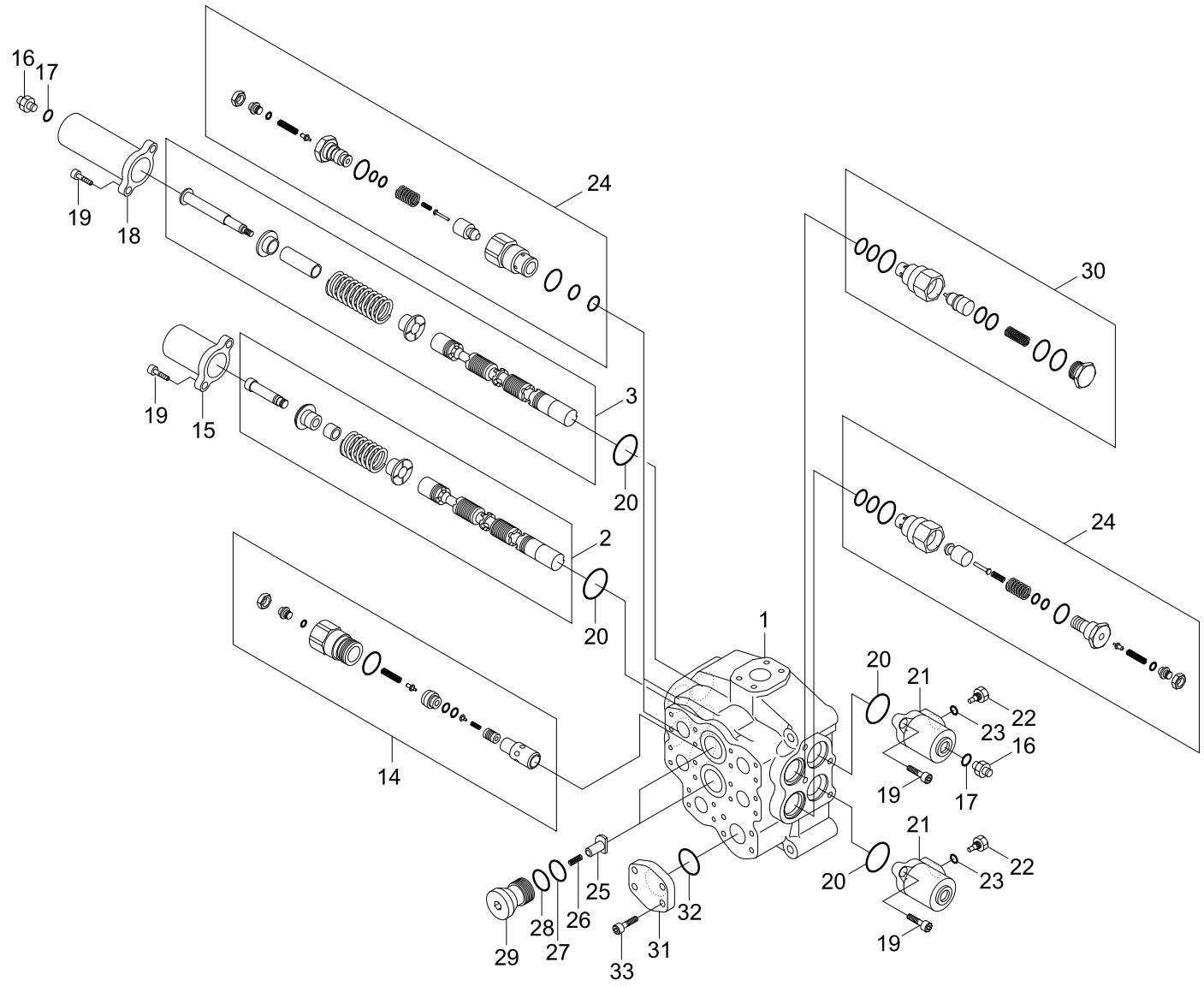

Item	Part_No	IS	Ord	T	Description	Qty	Serial_No	ITC	Remark
*	31LD-00520				MAIN CONTROL VALVE	1	#0073 -	-	JEIL
1	XKAY-00989				.BLOCK	1			
2	XKAY-00990				.SPOOL ASSY	1			
3	XKAY-00991				.SPOOL ASSY	1			
14	XKAY-01003				.MAIN RELIEF V/V	1			
15	XKAY-01004				.CAP(A)-PILOT	1			
16	XKAY-01005				.NIPPLE	2			
17	XKAY-01006				.O-RING	2			
18	XKAY-01007				.CAP(B)-PILOT	1			
19	XKAY-00901				.WRENCH BOLT	8			
20	XKAY-01008				.O-RING	4			
21	XKAY-01009				.CAP(C)-PILOT	2			
22	XKAY-01010				.PLUG-GUIDE	2			
23	XKAY-01011				.O-RING	2			
24	XKAY-01012				.RELIEF V/V ASSY-O/LOAD	3			
25	XKAY-01013				.CHECK	2			
26	XKAY-01014				.SPRING	2			
27	XKAY-01015				.O-RING	2			
28	XKAY-01016				.BAKC UP RING	2			
29	XKAY-01017				.PLUG	2			
30	XKAY-01018				.MAKE UP V/V ASSY	1			
31	XKAY-01019				.COVER	1			
32	XKAY-01020				.O-RING	1			
33	XKAY-00251				.BOLT-SOCKET	4			

MAIN CONTROL VALVE(3-SPOOL)

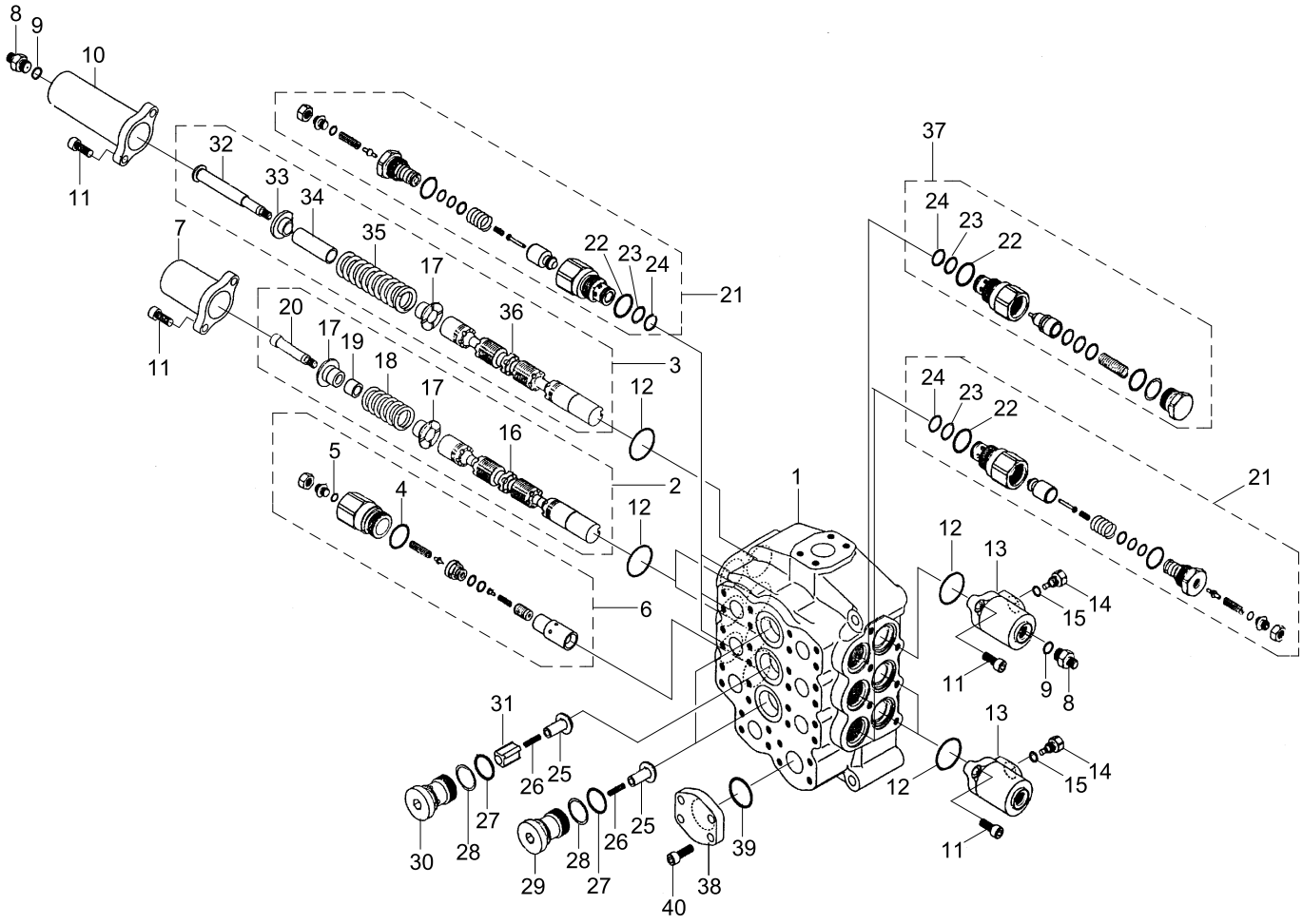

Item	Part_No	IS	Ord	T	Description	Qty	Serial_No	ITC	Remark
*	31LD-00030				MAIN CONTROL VALVE	1			
N1	@				.HOUSING ASSY	1			NOT
2	XJDB-00257				.PLUNGER ASSY	2			
3	XJDB-00258				.PLUNGER	1			
4	XJDB-00120				.O-RING	1			0207-010
5	XJDB-00075				.O-RING	1			8202-007
6	XJDB-00259				.MAIN RELIEF ASSY	1			
7	XJDB-00260				.COVER	2			
8	XJDB-00261				.NIPPLE	2			
9	XJDB-00136				.O-RING	2			8202-011
10	XJDB-00262				.COVER	1			
11	XJDB-00263				.BOLT-SOCKET	12			8072-102
12	XJDB-00264				.O-RING	6			0201-067
13	XJDB-00265				.COVER	3			
14	XJDB-00266				.PLUG	3			
15	XJDB-00018				.O-RING	3			8202-009
16	XJDB-00267				.PLUNGER	2			
17	XJDB-00268				.GUIDE	5			
18	XJDB-00269				.SPRING	2			
19	XJDB-00270				.SPACER	2			
20	XJDB-00271				.NIPPLE	2			
21	XJDB-00272				.RELIEF-PORT	5			
22	XJDB-00099				.O-RING	5			0207-003
23	XJDB-00100				.RING-BACK UP	5			0859-233
24	XJDB-00101				.O-RING	5			0207-005
25	XJDB-00102				.CHECK	3			3513-251

Item	Part_No	IS	Ord	T	Description	Qty	Serial_No	ITC	Remark
26	XJDB-00043				.SPRING	3			3590-288
27	XJDB-00096				.O-RING	3			0207-002
28	XJDB-00095				.RING-BACK UP	3			0859-228
29	XJDB-00088				.CAP	2			3526-483
30	XJDB-00087				.CAP	1			3526-484
31	XJDB-00103				.CHECK	1			3513-252
32	XJDB-00273				.CAP	1			
33	XJDB-00274				.GUIDE	1			
34	XJDB-00275				.SPACER	1			
35	XJDB-00276				.SPRING	1			
36	XJDB-00277				.PLUNGER	1			
37	XJDB-00278				.MAKE UP ASSY	1			
38	XJDB-00279				.COVER	1			
39	XJDB-00138				.O-RING	1			0201-112
40	XJDB-00280				.BOLT	4			8072-103
N	@				NOT INDIVIDUALLY SUPPLIED	AR			NOT

MAIN CONTROL VALVE(3-SPOOL, #0073-)

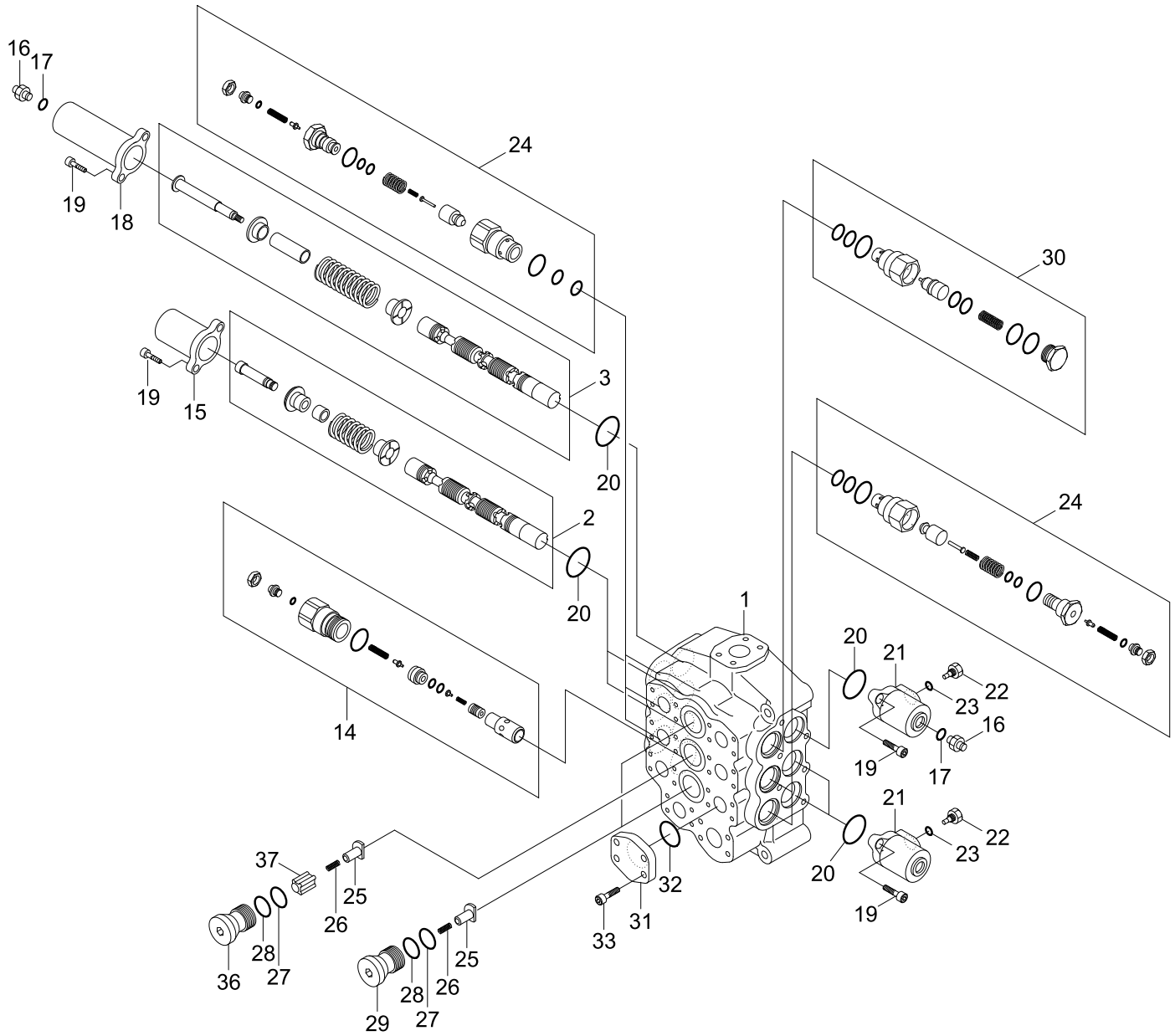

Item	Part_No	IS	Ord	T	Description	Qty	Serial_No	ITC	Remark
*	31LD-00530				MAIN CONTROL VALVE	1	#0073 -	-	JEIL
1	XKAY-01052				.BLOCK	1			
2	XKAY-00990				.SPOOL ASSY	2			
3	XKAY-00991				.SPOOL ASSY	1			
14	XKAY-01003				.MAIN RELIEF V/V	1			
15	XKAY-01004				.CAP(A)-PILOT	2			
16	XKAY-01005				.NIPPLE	2			
17	XKAY-01006				.O-RING	2			
18	XKAY-01007				.CAP(B)-PILOT	1			
19	XKAY-00901				.WRENCH BOLT	12			
20	XKAY-01008				.O-RING	6			
21	XKAY-01009				.CAP(C)-PILOT	3			
22	XKAY-01010				.PLUG-GUIDE	3			
23	XKAY-01011				.O-RING	3			
24	XKAY-01012				.RELIEF V/V ASSY-O/LOAD	5			
25	XKAY-01013				.CHECK	3			
26	XKAY-01014				.SPRING	3			
27	XKAY-01015				.O-RING	3			
28	XKAY-01016				.BAKC UP RING	3			
29	XKAY-01017				.PLUG	1			
30	XKAY-01018				.MAKE UP V/V ASSY	1			
31	XKAY-01019				.COVER	1			
32	XKAY-01053				.O-RING	1			
33	XKAY-00251				.BOLT-SOCKET	4			
36	XKAY-01054				.PLUG	1			
37	XKAY-01055				.CHECK	1			

STEERING VALVE(EHPS)

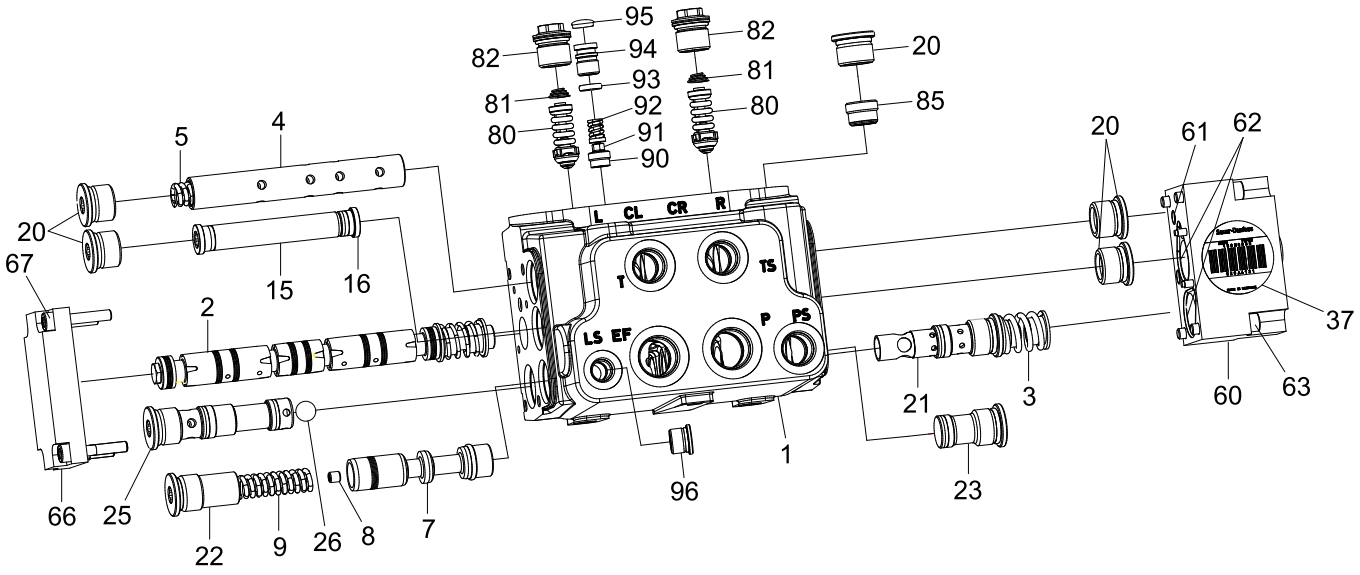

DESCRIPTION	PARTS NO	INCLUDED ITEM
SEAL KIT	YUBS-00101	61, 62, 93

Item	Part_No	IS	Ord	T	Description	Qty	Serial_No	ITC	Remark
*	31LD-30020				STEERING VALVE(EHPS)	1			
N1	YUBS-00069				.BLOCK-VALVE	1			NOT
N2	YUBS-00332				.SPOOL-W/SPRING,80/8	1			NOT
N3	YUBS-00071				.SPOOL-REDUCTION VLV	1			NOT
N4	YUBS-00072				.SPOOL-METERING	1			NOT
N5	YUBS-00073				.SPRING-COMPRESS	1			NOT
N7	YUBS-00074				.SPOOL-DYNAMIC/PP	1			NOT
N8	YUBS-00075				.SCREW-THROTTLE	1			NOT
N9	YUBS-00073				.SPRING-COMPRESS	1			NOT
N15	YUBS-00076				.PIPE WITH O-RING	1			NOT
N16	YUBS-00077				.PLUG WITH O-RING-PIPE	1			NOT
N20	YUBS-00078				.PLUG WITH O-RING	5			NOT
N21	YUBS-00079				.BUSH-REDUCTION VALVE	1			NOT
N22	YUBS-00080				.PLUG WITH O-RING-LS	1			NOT
N23	YUBS-00081				.PLUG WITH O-RING-PP	1			NOT
N25	YUBS-00082				.PLUG W/O-RING-SHUTTLE	1			NOT
N26	YUBS-00083				.BALL	1			NOT
N37	YUBS-00084				.LABEL	1			NOT
N60	YUBS-00085				.COVER-SPRING HSG	1			NOT
NK61	YUBS-00086				.O-RING	1			NOT
NK62	YUBS-00087				.O-RING	2			NOT
N63	YUBS-00088				.SCREW	4			NOT
N66	YUBS-00089				.COVER	1			NOT
N67	YUBS-00090				.SCREW	4			NOT
N80	YUBS-00091				.VALVE-SHOCK	1			NOT
N81	YUBS-00092				.SPRING-CONICALLY	1			NOT

Item	Part_No	IS	Ord	T	Description	Qty	Serial_No	ITC	Remark
N82	YUBS-00093				.PLUG WITH O-RING	1			NOT
N85	YUBS-00094				.VALVE-CHECK	1			NOT
N90	YUBS-00095				.SEAT-VALVE	1			NOT
N91	YUBS-00096				.CONE-PILOT	1			NOT
N92	YUBS-00097				.SPRING	1			NOT
NK93	YUBS-00098				.O-RING	1			NOT
N94	YUBS-00099				.SCREW-AJUSTMENT	1			NOT
N95	YUBS-00100				.PLUG	1			NOT
N96	YUBS-00111				.PLUG	1			NOT
K	YUBS-00101				SEAL KIT	1			SEE ILLUST
N	@				NOT INDIVIDUALLY SUPPLIED	AR			NOT

STEERING UNIT

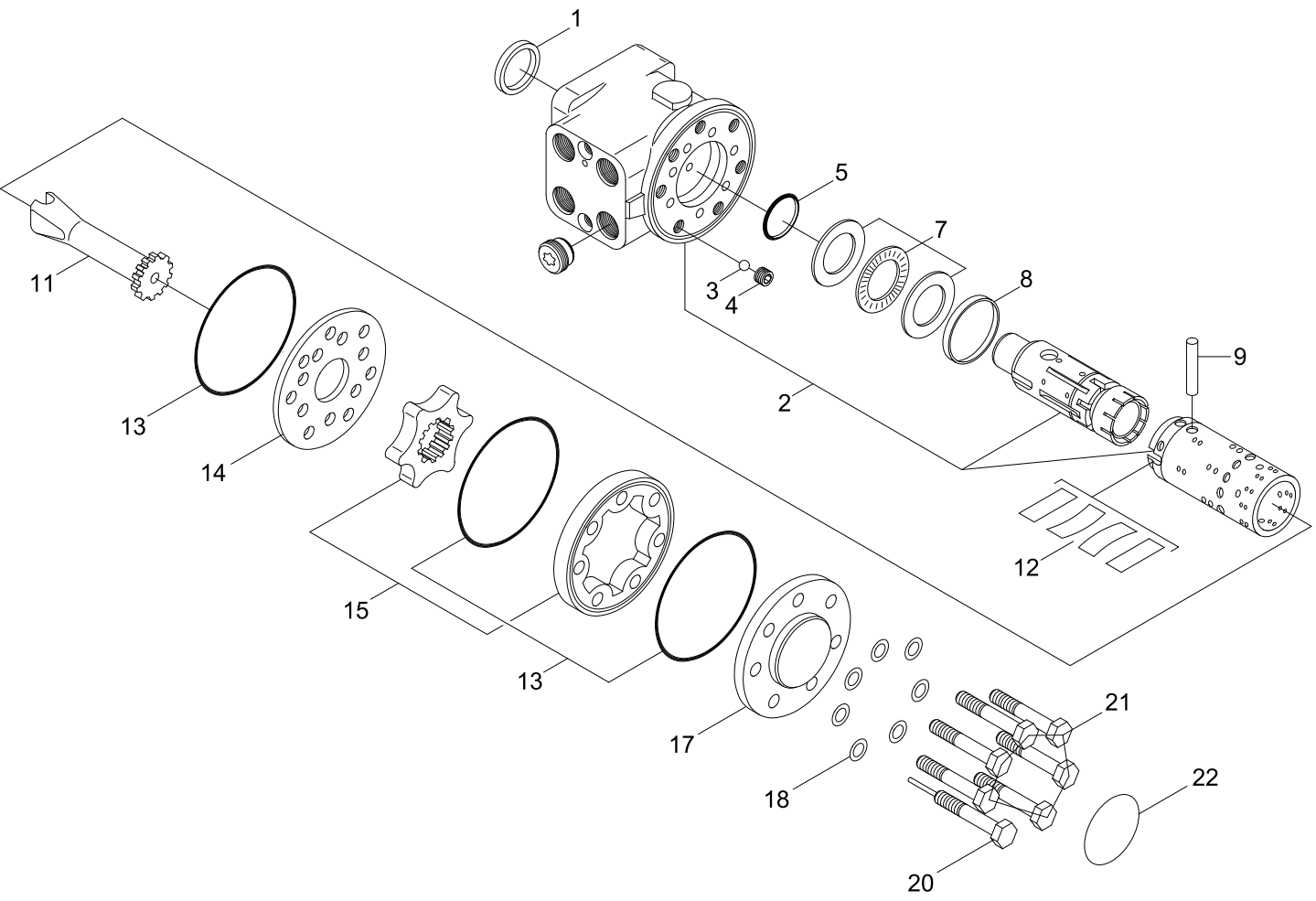

DESCRIPTION	PARTS NO	INCLUDED ITEM
SEAL KIT	YUBS-00102	1, 5, 13, 18

Item	Part_No	IS	Ord	T	Description	Qty	Serial_No	ITC	Remark
*	31LD-30010				STEERING UNIT	1			
K1	YUBS-00001				.SEAL-DUST	1			633B9002
2	@				.HSG SPOOL/SLEEVE	1			NOT
3	YUBS-00002				.BALL	1			689X1031
4	YUBS-00003				.BUSHING-THREAD	1			150-0304
K5	YUBS-00004				.O-RING	1			150N4014
7	YUBS-00005				.BEARING ASSY	1			150-4262
8	YUBS-00006				.RING	1			150-0310
9	YUBS-00007				.PIN-CROSS	1			150-0305
11	YUBS-00008				.SHAFT-CARDAN	1			150-0844
12	YUBS-00107				.SET OF SPRINGS	1			
K13	YUBS-00010				.O-RING	3			633B1202
14	YUBS-00011				.PLATE-DISTRIBUTOR	1			150N0610
15	150-4172				.WHEEL SET-GEAR	1			
17	YUBS-00014				.COVER-END	1			150-0328
K18	YUBS-00015				.WASHER	7			684X2481
20	150-0321				.SCREW & BORE	1			
21	YUBS-00110				.SCREW	6			
22	150A6009				.PLATE-NAME	1			
K	YUBS-00102				SEAL KIT	1			SEE ILLUST

REMOTE CONTROL LEVER(2-SPOOL)

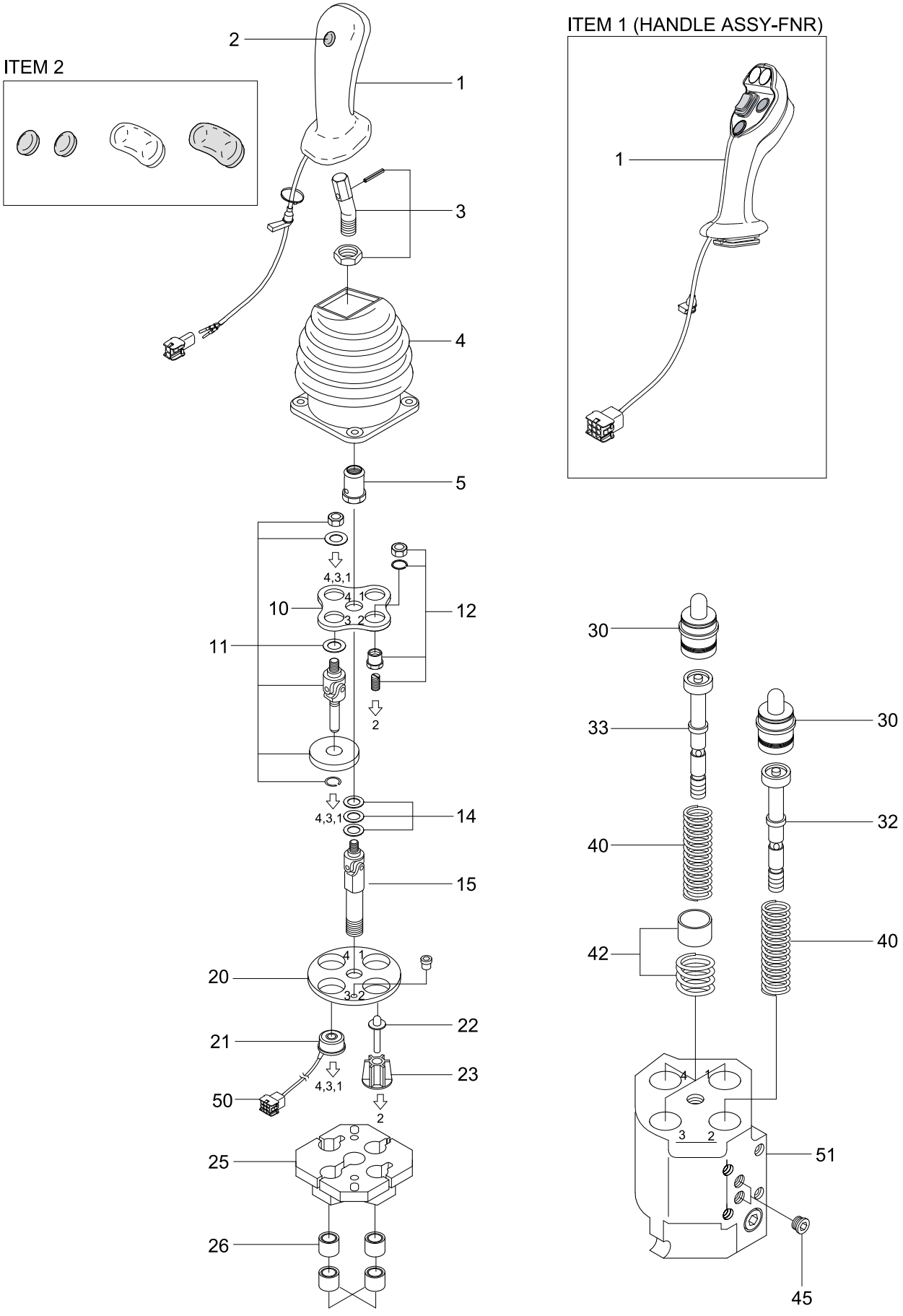

Item	Part_No	IS	Ord	T	Description	Qty	Serial_No	ITC	Remark
*	31LC-10120				RCV LEVER-2 SPOOL	1			STD
	31LC-10020				RCV LEVER-2 SPOOL	1			FNR RCV
1	ZFAB-00070				.HANDLE KIT(EC2000)	1			
	ZFAB-00071				.HANDLE (EC4000)	1			FNR RCV
2	ZFAB-00038				.PUSH BUTTON KIT	1			STD ONLY
3	ZFAB-00039				.LEVER KIT	1			
4	ZFAB-00040				.RUBBER BOOT	1			
5	ZFAB-00041				.NUT-LOCKING	1			
10	ZFAB-00042				.BRACKET	1			
11	ZFAB-00043				.DETENT KIT	3			
12	ZFAB-00044				.PLUNGER KIT	1			
14	ZFAB-00045				.SHIM SET(0.1,0.2,0.5)	1			
15	ZFAB-00046				.CARDAN	1			
20	ZFAB-00047				.FLANGE	1			
21	ZFAB-00048				.SOLENOID COMPLETE	3			
22	ZFAB-00049				.PLUNGER KIT	1			
23	ZFAB-00050				.PLUNGER GUIDE	1			
25	ZFAB-00051				.BRACKET-ELECTRIC	1			
26	ZFAB-00052				.BUSHING SET	1			
30	ZFAB-00053				.PLUNGER KIT	4			
32	ZFAB-00072				.REGULATING UNIT(C11)	1			
33	ZFAB-00074				.REGULATING UNIT	3			
40	ZFAB-00056				.SPRING SET-RETURN	4			
42	ZFAB-00057				.PREFEEL POINT KIT	3			
45	ZFAB-00058				.PLUG SET	1			2-SPOOL ONLY
50	ZFAB-00087				.AMP CONNECTOR	3			

Item	Part_No	IS	Ord	T	Description	Qty	Serial_No	ITC	Remark
51	@				.BODY	1			NOT
N	@				NOT INDIVIDUALLY SUPPLIED	AR			NOT

REMOTE CONTROL LEVER(3-SPOOL)

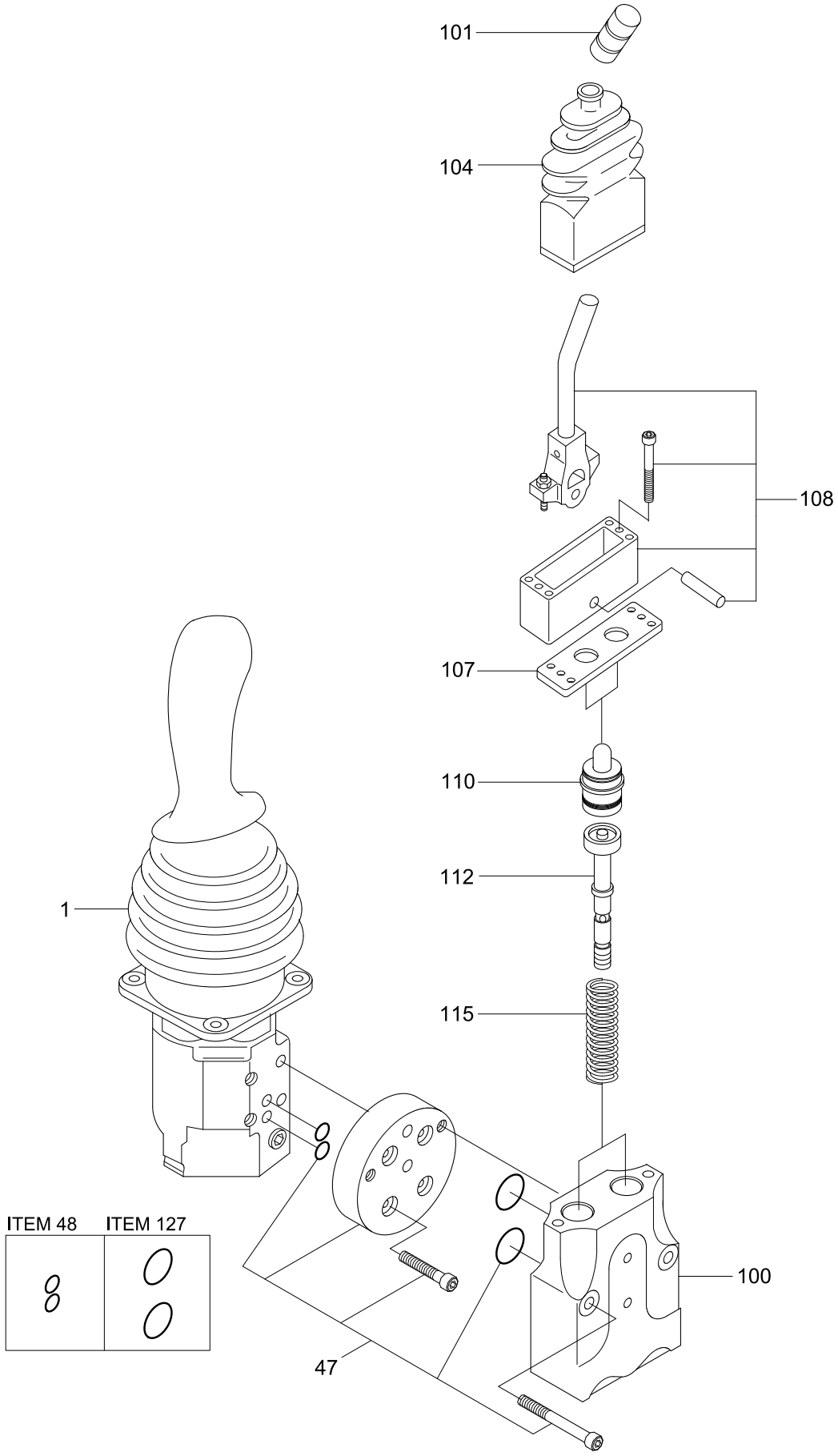

Item	Part_No	IS	Ord	T	Description	Qty	Serial_No	ITC	Remark
*	31LC-10130				RCV LEVER-3 SPOOL	1			
	31LC-10030				RCV LEVER-3 SPOOL	1			FNR RCV
N1	@				.RCV LEVER-2 SPOOL	1			NOT
2	ZFAB-00059				.RCV LEVER	1			
N100	@				..BODY	1			NOT
101	ZFAB-00060				..GRIP	1			
104	ZFAB-00061				..RUBBER BOOT	1			
107	ZFAB-00062				..RETAINING PLATE	1			
108	ZFAB-00063				..OPERATION KIT	1			
110	ZFAB-00064				..PLUNGER KIT	2			
112	ZFAB-00065				..REGULATING UNIT	2			
115	ZFAB-00066				..SPRING SET-RETURN	2			
47	ZFAB-00067				.ASSEMBLY KIT	1			
48	ZFAB-00068				..O-RING SET	1			
127	ZFAB-00069				..O-RING SET	1			
N	@				NOT INDIVIDUALLY SUPPLIED	AR			NOT

REMOTE CONTROL LEVER(1/2, 2-LEVER)

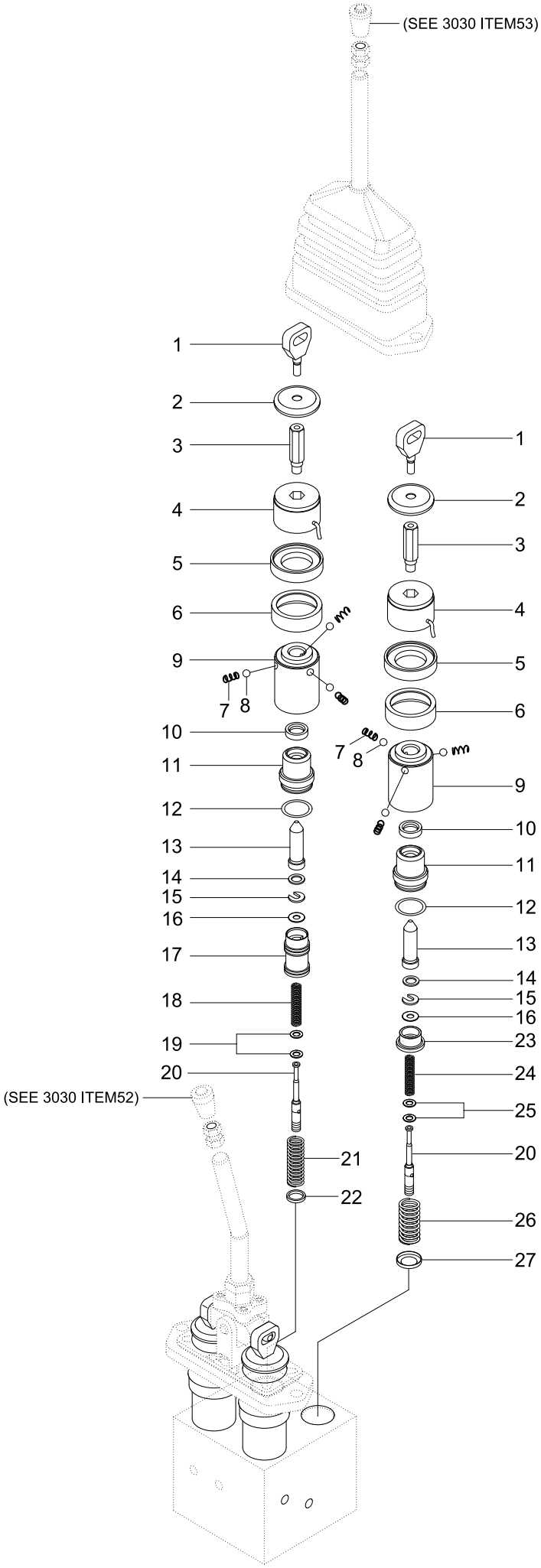

Item	Part_No	IS	Ord	T	Description	Qty	Serial_No	ITC	Remark
*	31L6-02490				RCV-2 LEVER	1	- #0101	-	SEE 4063
1	ZUAH-00002				.ATTACHMENT-PISTON	4			P7460000021
2	ZUAH-00003				.PLATE-ARMATURE	4			P7460000051
3	ZUAH-00004				.SPINDLE STEP-PREFEEL	4			P7460000091
4	ZUAH-00005				.SOLENOID-HOLD	4			P7745000371
5	ZUAH-00153				.ADAPTOR-SPVL COIL	4			P7470000071
6	ZUAH-00007				.RETAINER-SPRING	4			P7470000021
7	ZUAH-00008				.SPRING-CMPR HELICAL	12			P8501008611
8	ZUAH-00009				.BALL	12			P8329000070
9	ZUAH-00010				.CARRIER-BALL	4			P7470000011
10	ZUAH-00011				.PROFILE-ROD SEAL	4			P9658000011
11	ZUAH-00012				.GUIDE-SPINDLE	4			P7259000041
12	ZUAH-00013				.O-RING	4			P9101000291
13	ZUAH-00014				.SPLINDLE-OPERATING	4			P7460000041
14	ZUAH-00015				.WASHER	4			P9231000331
15	ZUAH-00016				.WASHER-SLOTTED	4			P9659000001
16	ZUAH-00017				.WASHER	4			P9231000221
17	ZUAH-00018				.SPOOL-FLOAT SEQUENCE	1			P7208000011
18	ZUAH-00019				.SPRING-CMPR HELICAL	2			P8501008541
19	ZUAH-00020				.WASHER	4			P9231000281
20	ZUAH-00021				.PISTON	4			P9634000293
21	ZUAH-00019				.SPRING-CMPR HELICAL	1			P8501008541
22	ZUAH-00022				.WASHER	1			P9231000171
23	ZUAH-00023				.RETAINER-SPRING	3			P7208000001
24	ZUAH-00024				.SPRING-CMPR HELICAL	3			P8501008731
25	ZUAH-00025				.WASHER	6			P9231000241

Item	Part_No	IS	Ord	T	Description	Qty	Serial_No	ITC	Remark
26	ZUAH-00019				.SPRING-CMPR HELICAL	3			P8501008541
27	ZUAH-00026				.WASHER	3			P9466000551

REMOTE CONTROL LEVER(2/2, 2-LEVER)

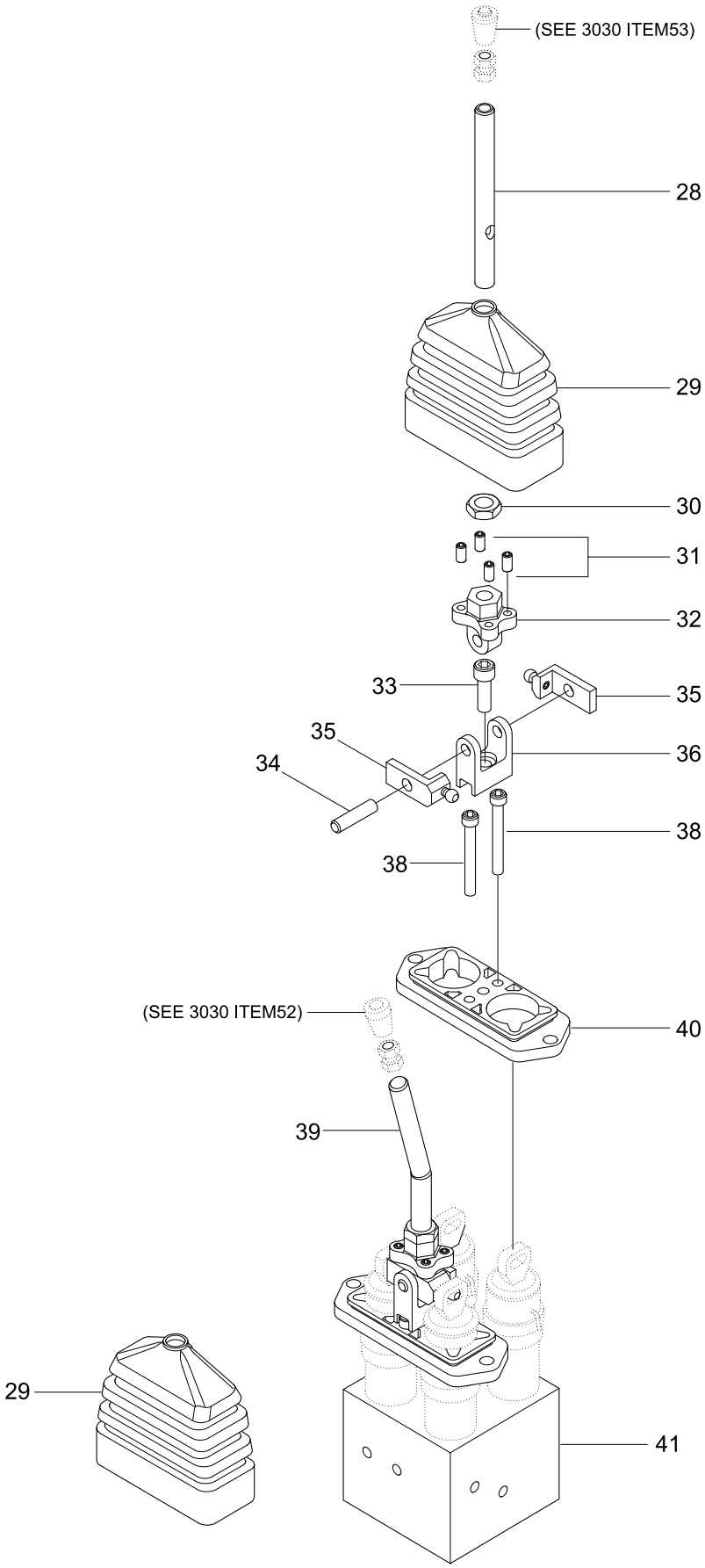

Item	Part_No	IS	Ord	T	Description	Qty	Serial_No	ITC	Remark
*	@				RCV LEVER	1	- #0101	-	NOT
28	ZUAH-00027				.HOLLOW-LEVER STRAIGHT	1			P7450000071
29	ZUAH-00028				.BOOT-RUBBER	2			P9258000321
30	ZUAH-00029				.NUT-HEX	2			P9298000271
31	ZUAH-00030				.SCREW-HEX SOCKET SET	8			P9245000441
32	ZUAH-00031				.ADAPTER-LEVER	2			P7450000251
33	ZUAH-00032				.SCREW-HEX S/HEAD CAP	2			P9334000101
34	ZUAH-00033				.PIN	2			P7256000901
35	ZUAH-00152				.KIT-SPVL	4			P7430000191
36	ZUAH-00035				.BRACKET-SPVL LEVER	2			P7901000061
38	ZUAH-00037				.SCREW-HEX S/HEAD CAP	4			P9372000161
N39	ZUAH-00038				.SOLID-LEVER BENT	1			NOT
40	ZUAH-00039				.PLATE	2			P7917000331
N41	@				.MAIN BODY ASSY	1			NOT
N	@				NOT INDIVIDUALLY SUPPLIED	AR			NOT

REMOTE CONTROL LEVER(3-LEVER)

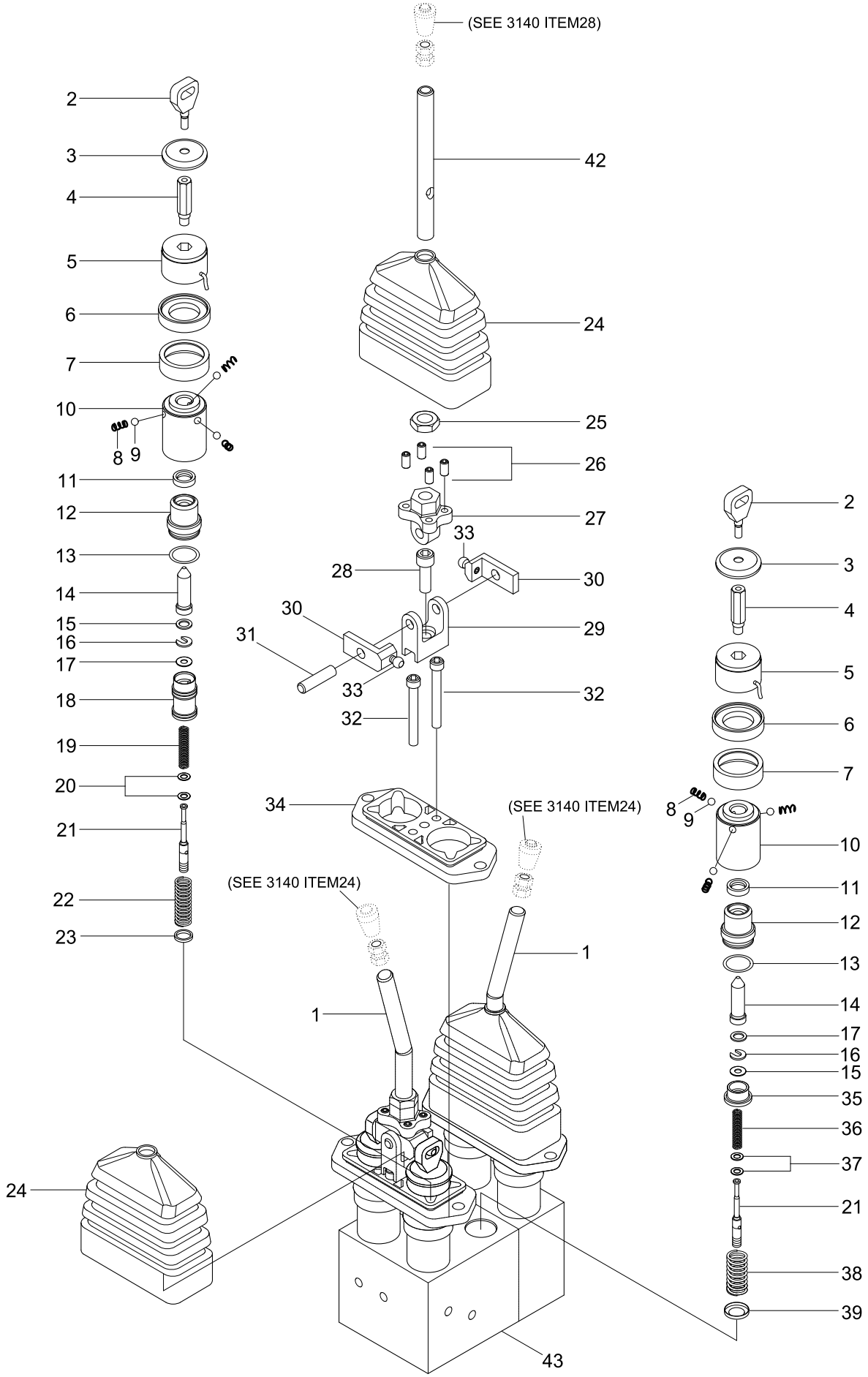

Item	Part_No	IS	Ord	T	Description	Qty	Serial_No	ITC	Remark
*	31L6-02500				RCV-3 LEVER	1	- #0101	-	
1	P7450000101				.SOLID-LEVER BENT	2			
2	P7460000021				.ATTACHMENT-PISTON	6			
3	P7460000051				.PLATE-ARMATURE	6			
4	P7460000091				.SPINDLE STEP-PREFEEL	6			
5	P7745000371				.SOLENOID-HOLD	6			
6	P7470000041				.ADAPTER-SPVL COIL	6			
7	P7470000021				.RETAINER-SPRING	6			
8	P8501008611				.SPRING-CMPR HELICAL	18			
9	P8329000070				.BALL	18			
10	P7470000011				.CARRIER-BALL	6			
11	P9658000011				.PROFILE-ROD SEAL	6			
12	P7259000041				.GUIDE-SPINDLE	6			
13	P9101000291				.O-RING	6			
14	P7460000041				.SPLINDLE-OPERATING	6			
15	P9231000331				.WASHER	6			
16	P9659000001				.WASHER-SLOTTED	6			
17	P9231000221				.WASHER	6			
18	P7208000011				.SPOOL-FLOAT SEQUENCE	1			
19	P8501008541				.SPRING	1			
20	P9231000281				.WASHER	2			
21	P9634000293				.PISTON	6			
22	P8501008541				.SPRING	1			
23	P9231000171				.WASHER	1			
24	P9258000321				.BOOT-RUBBER	3			
25	P9298000271				.NUT-HEX	3			

Item	Part_No	IS	Ord	T	Description	Qty	Serial_No	ITC	Remark
26	P9245000441				.SCREW-HEX SOCKET SET	12			
27	P7450000251				.ADAPTER-LEVER	3			
28	P9334000101				.SCREW-CAP	3			
29	P7901000061				.BRACKET-SPVL LEVER	3			
30	P7430000161				.SELECTOR-SPVL	6			
31	P7256000901				.PIN	3			
32	P9372000161				.SCREW-HEX S/HEAD CAP	6			
33	P7430000121				.PIN-DRIVE	6			
34	P7917000331				.PLATE	3			
35	P7208000001				.RETAINER-SPRING	5			
36	P8501008731				.SPRING-CMPR HELICAL	5			
37	P9231000241				.WASHER	10			
38	P8501008541				.SPRING	5			
39	P9466000551				.WASHER	5			
42	P7450000071				.HOLLOW-LEVER STRAIGHT	1			
N43	@				.MAIN BODY SUB ASSY	1			NOT
N	@				NOT INDIVIDUALLY SUPPLIED	AR			NOT

RCV(FINGERTIP, 2-LEVER, #0102-)

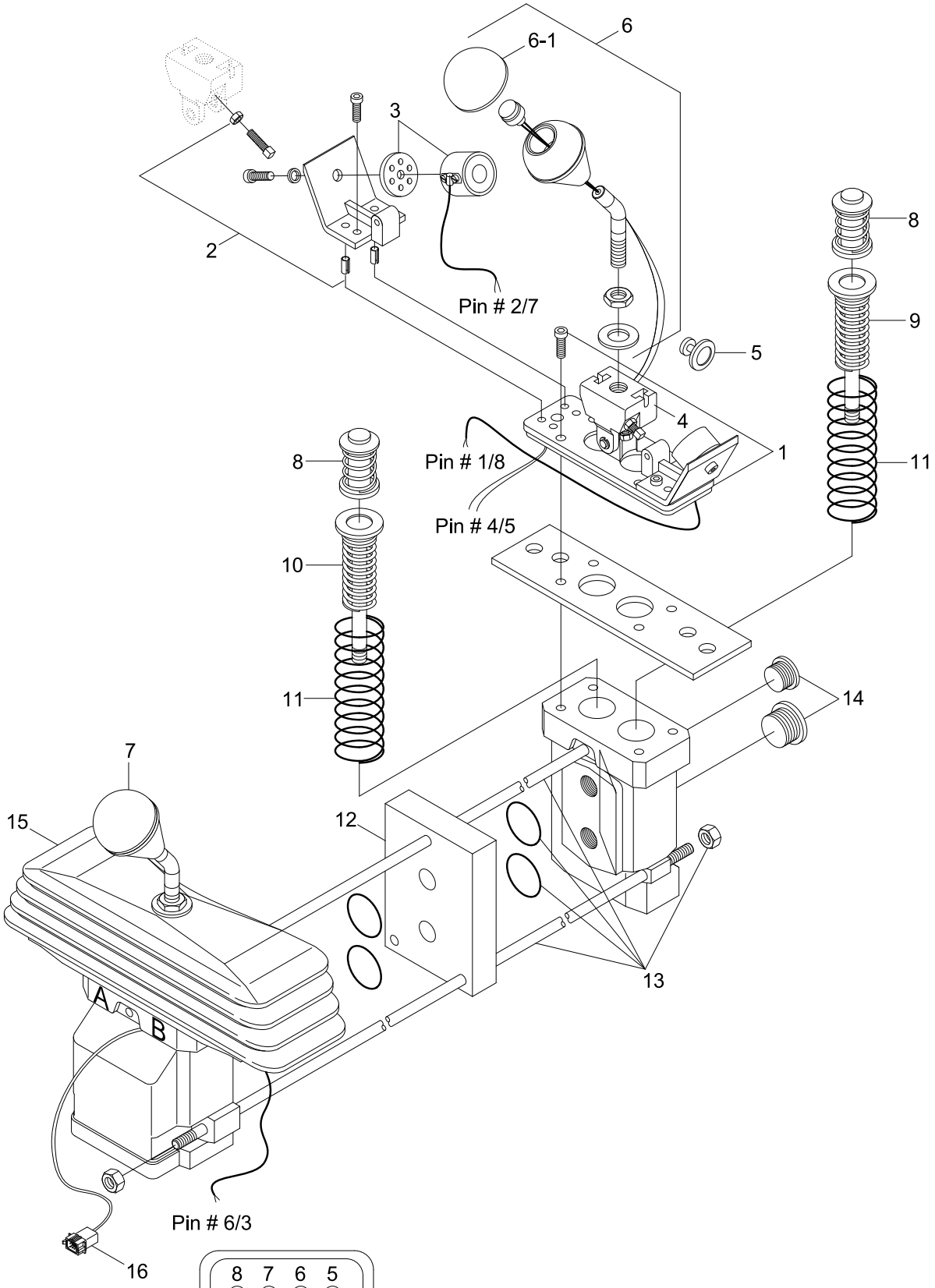

CONNECTOR PIN #

Item	Part_No	IS	Ord	T	Description	Qty	Serial_No	ITC	Remark
*	31LH-10120				RCV LEVER-2 SPOOL	1	#0102 -	D	
N1	YUCT-00002				.PLATE-MOUNTING	2			NOT
2	YUCT-00003				.BRACKET KIT-MAGNET	3			
3	YUCT-00005				.MAGNET	3			
4	YUCT-00004				.BEARING PLATE	2			
5	YUCT-00006				.ANCHOR PLATE(I/HOLE 8)	3			STD DETENT
	YUCT-00038				.ANCHOR PLATE(I/HOLE 10)	3			LIGHT DETENT
6	YUCT-00008				.HANDLE B5	1	#0102 -	-	
6-1	YUCT-00046				..COVER-BOOT	1	#0102 -	-	
7	YUCT-00007				.HANDLE KIT	1	#0102 -	-	
8	YUCT-00009				.PUSH PIN	4			
N9	YUCT-00011				.SPRING PACK	3			NOT
N10	YUCT-00012				.SPRING PACK	1			NOT
11	YUCT-00015				.RETURN SPRING	4			
12	YUCT-00016				.SPACEBLOCK	1			
13	YUCT-00017				.ROD KIT-TIE	1			
14	YUCT-00018				.PLUG KIT	1			
N15	YUCT-00019				.BOOT KIT	1			NOT
N16	YUCT-00020				.CONNECTOR KIT	1			NOT

RCV(FINGERTIP, 3-LEVER, #0102-)

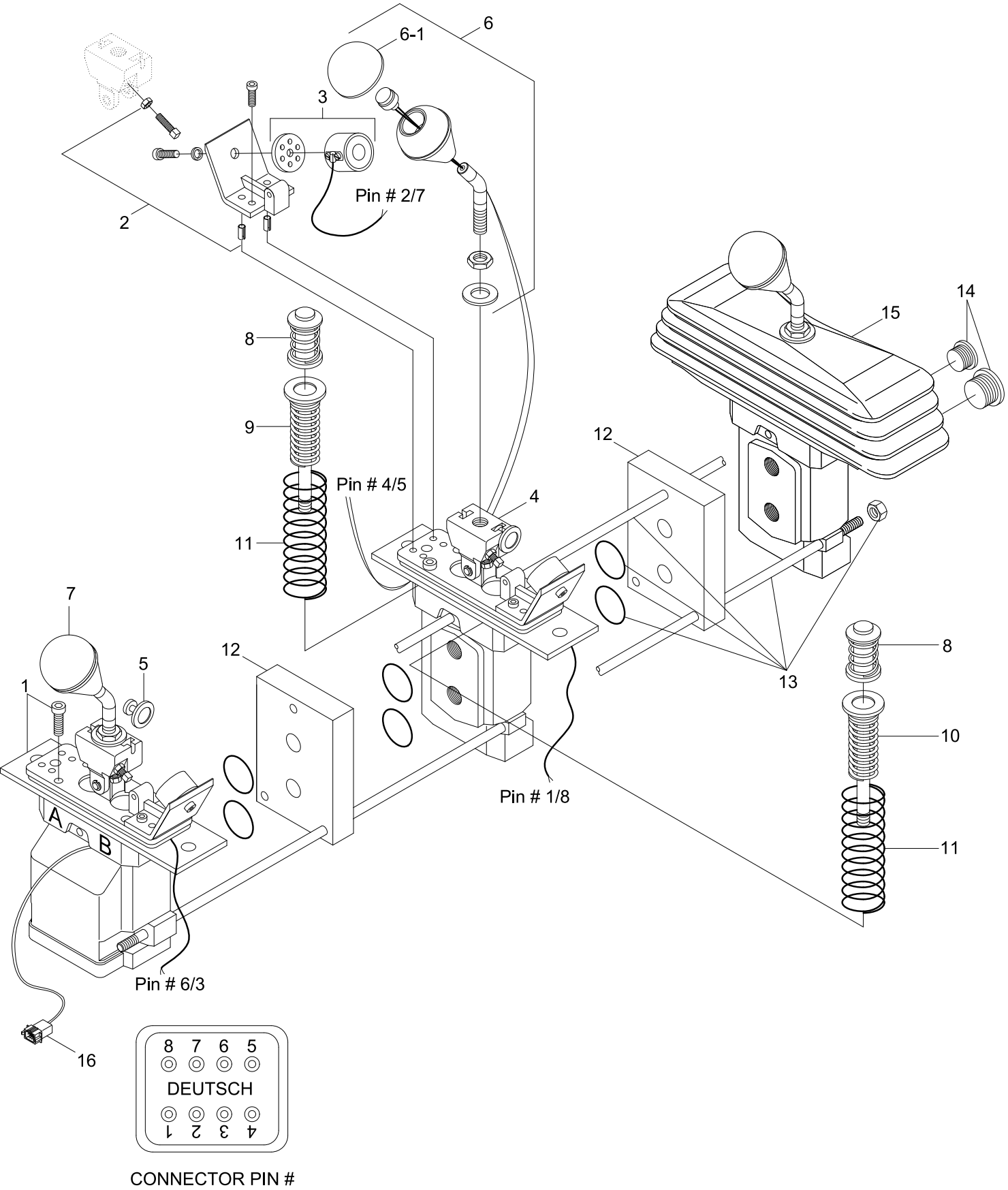

Item	Part_No	IS	Ord	T	Description	Qty	Serial_No	ITC	Remark
*	31LH-10130				RCV LEVER-3 SPOOL	1	#0102 -	D	
N1	YUCT-00002				.PLATE-MOUNTING	3			NOT
2	YUCT-00003				.BRACKET KIT-MAGNET	3			
3	YUCT-00005				.MAGNET	3			
4	YUCT-00004				.BEARING PLATE	3			
5	YUCT-00006				.ANCHOR PLATE(I/HOLE 8)	3			STD DETENT
	YUCT-00038				.ANCHOR PLATE(I/HOLE 10)	3			LIGHT DETENT
6	YUCT-00008				.HANDLE B5	2	#0102 -	-	
6-1	YUCT-00046				..COVER-BOOT	1	#0102 -	-	
7	YUCT-00007				.HANDLE KIT	1	#0102 -	-	
8	YUCT-00009				.PUSH PIN	6			
N9	YUCT-00011				.SPRING PACK	5			NOT
N10	YUCT-00012				.SPRING PACK	1			NOT
11	YUCT-00015				.RETURN SPRING	6			
12	YUCT-00016				.SPACEBLOCK	2			
13	YUCT-00021				.ROD KIT-TIE	1			
14	YUCT-00018				.PLUG KIT	1			
N15	YUCT-00019				.BOOT KIT	1			NOT
N16	YUCT-00020				.CONNECTOR KIT	1			NOT

CUT OFF VALVE

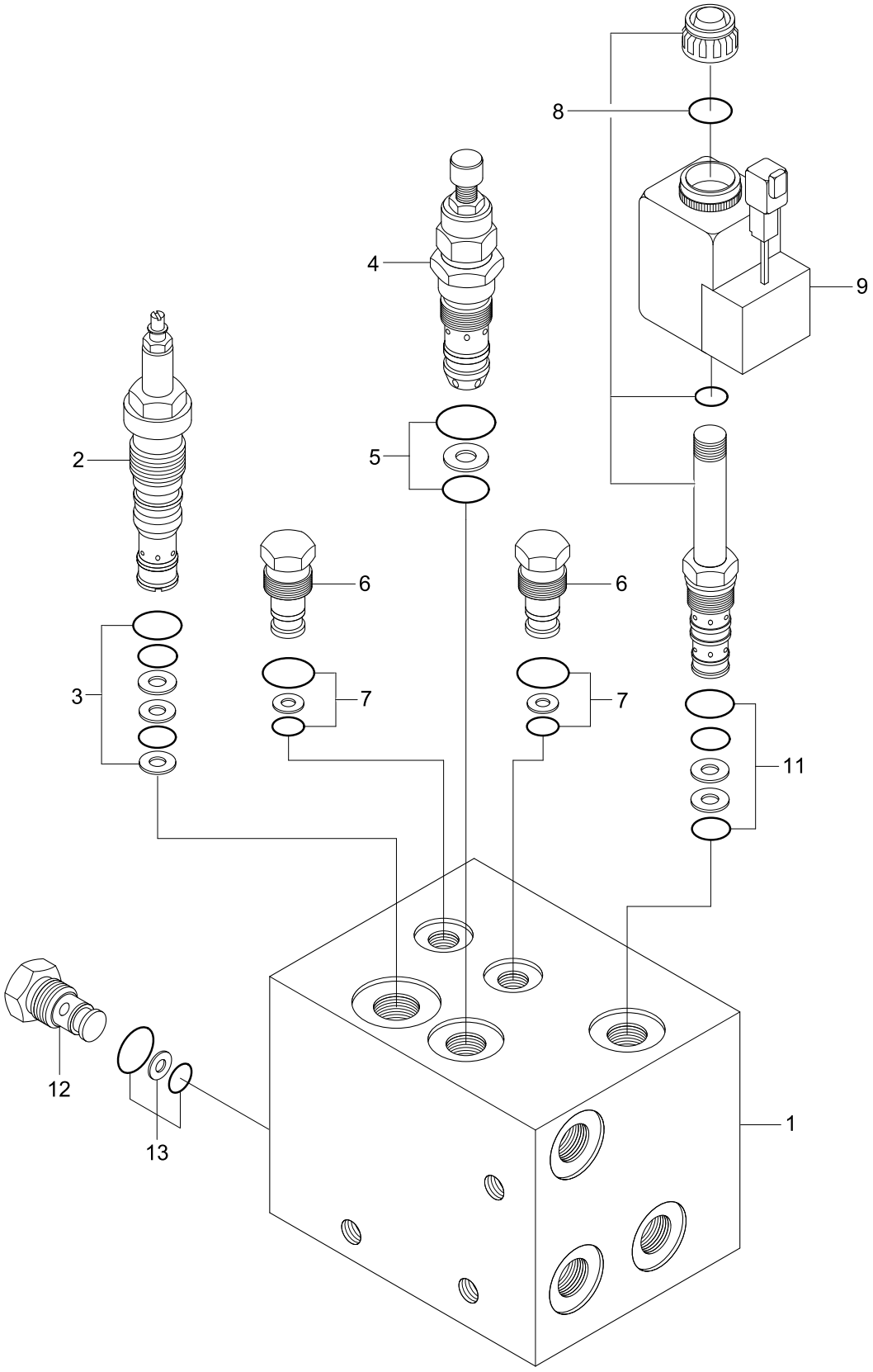

Item	Part_No	IS	Ord	T	Description	Qty	Serial_No	ITC	Remark
*	31LH-40400				CUT-OFF VALVE	1			
1	XKAL-00062				.MANIFOLD	1			
2	XKAL-00063				.CUT-OFF VALVE	1			
3	XKAL-00064				.SEAL KIT	1			
4	XKAL-00012				.RELIEF VALVE	1			
5	XKAL-00013				.SEAL KIT	1			
6	XKAL-00014				.CHECK VALVE	2			
7	XKAL-00015				.SEAL KIT	2			
8	XKAL-00029				.SOLENOID VALVE	1			
9	XKAL-00065				.COIL	1			
11	XKAL-00030				.SEAL KIT	1			
12	XKAL-00066				.CHECK VALVE	1			
13	XKAL-00019				.SEAL KIT	1			
N	@				NOT INDIVIDUALLY SUPPLIED	AR			NOT

PILOT SUPPLY UNIT

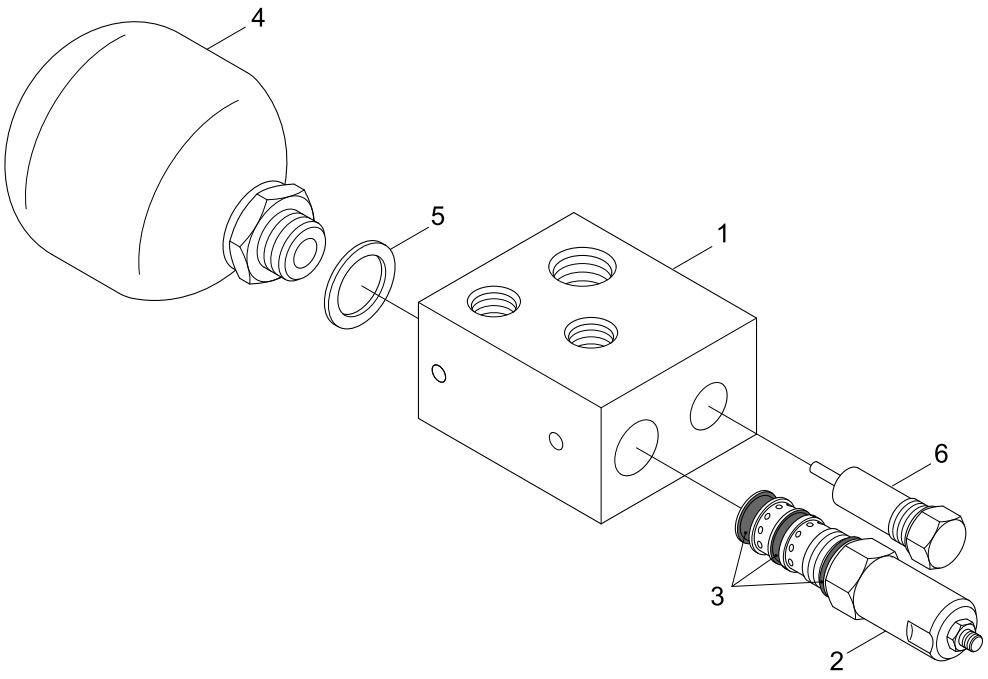

Item	Part_No	IS	Ord	T	Description	Qty	Serial_No	ITC	Remark
*	31L7-10280				PILOT SUPPLY UNIT	1			
1	ZGAW-00001				.MANIFOLD COMPLETE	1			3037077
2	ZGAW-00002				.REDUCING VALVE	1			3026818
3	ZGAW-00003				.SEAL KIT	1			3049443
4	ZGAW-00004				.ACCUMULATOR	1			3037081
5	ZGAW-00005				.GASKET	1			608548
N6	@				.RELIEF VALVE	1			NOT
N	@				NOT INDIVIDUALLY SUPPLIED	AR			NOT

BRAKE VALVE

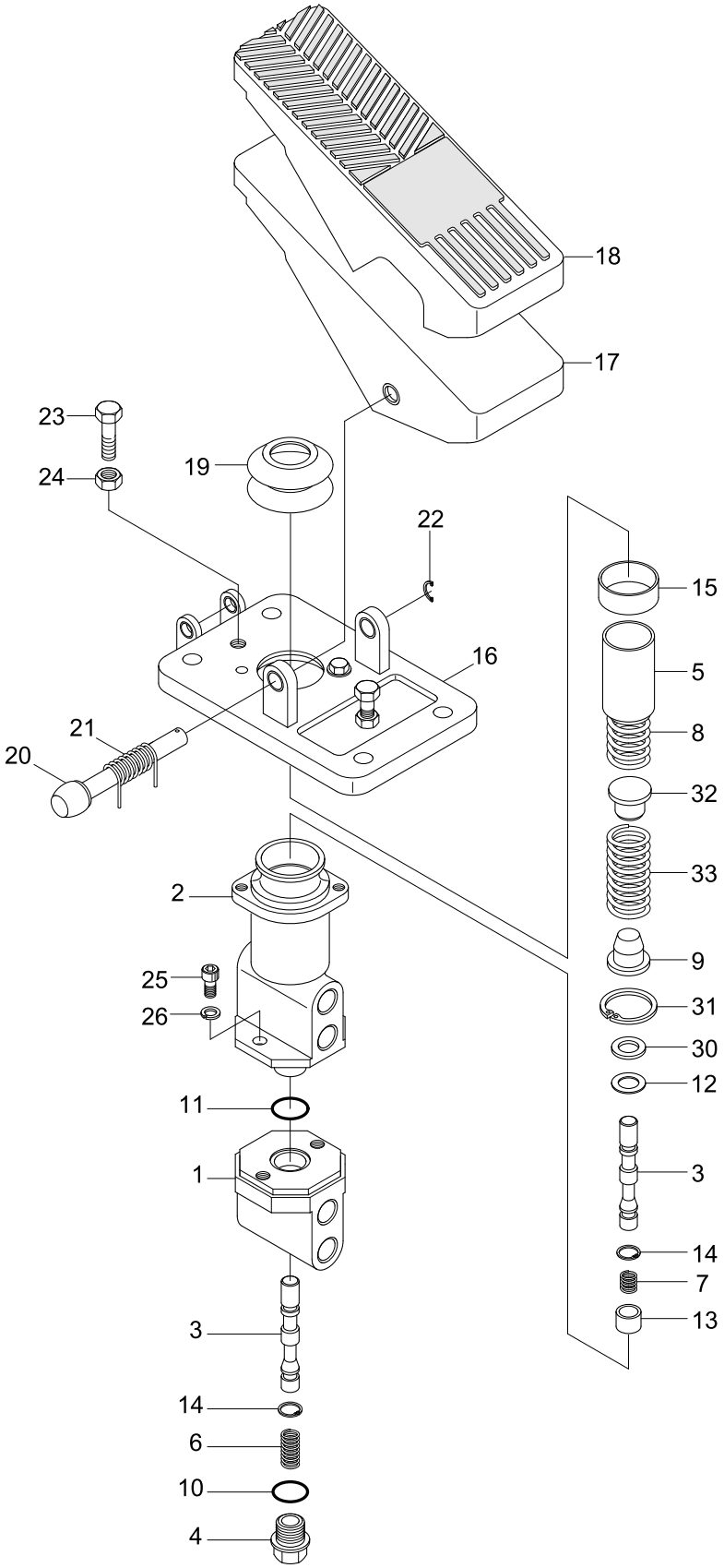
18
17
23
24
19
22
15
16
5
8
21
20
32
33
2
9
25
31
26
30
12
11
3
1
14
7
13
3
14
6
10
4

Item	Part_No	IS	Ord	T	Description	Qty	Serial_No	ITC	Remark
*	31LH-40041				BRAKE VALVE	1			
1	XKAK-00043				.BODY-LOWER	1			
2	XKAK-00044				.BODY-UPPER	1			
3	XKAK-00045				.SPOOL	2			
4	XKAK-00004				.PLUG	1			
5	XKAK-00053				.HOLDER	1			
6	XKAK-00006				.SPRING-LOWER	1			
7	XKAK-00007				.SPRING-UPPER	1			
8	XKAK-00008				.SPRING 1-MAIN	1			
9	XKAK-00009				.RETAINER 1-SPRING	1			
N10	@				.O-RING	1			NOT
N11	@				.O-RING	1			NOT
N12	@				.GUIDE-SPRING	1			NOT
13	XKAK-00010				.GUIDE	1			
14	XKAK-00059				.RING-SNAP	2			
N15	@				.DU BUSHING	1			NOT
16	XKAK-00047				.PLATE-PEDAL	1			
17	XKAK-00012				.PEDAL ASSY	1			
18	XKAK-00071				.COVER-PEDAL	1			
19	XKAK-00048				.BELLOWS	1			
20	XKAK-00049				.PIN 1-LOCK	1			
21	XKAK-00050				.SPRING-TORSION	1			
N22	@				.STOP RING C-TYPE	1			NOT
N23	@				.BOLT-HEX	2			NOT
N24	@				.NUT-HEX	2			NOT
N25	@				.BOLT-SOCKET	2			NOT

Item	Part_No	IS	Ord	T	Description	Qty	Serial_No	ITC	Remark
N26	@				.WASHER-SPRING	4			NOT
N30	@				.WASHER-PLAIN	1			NOT
32	XKAK-00019				.RETAINER 2-SPRING	1			
33	XKAK-00020				.SPRING 2-MAIN	1			
N	@				NOT INDIVIDUALLY SUPPLIED	AR			NOT

CUSHION VALVE(-#0418)

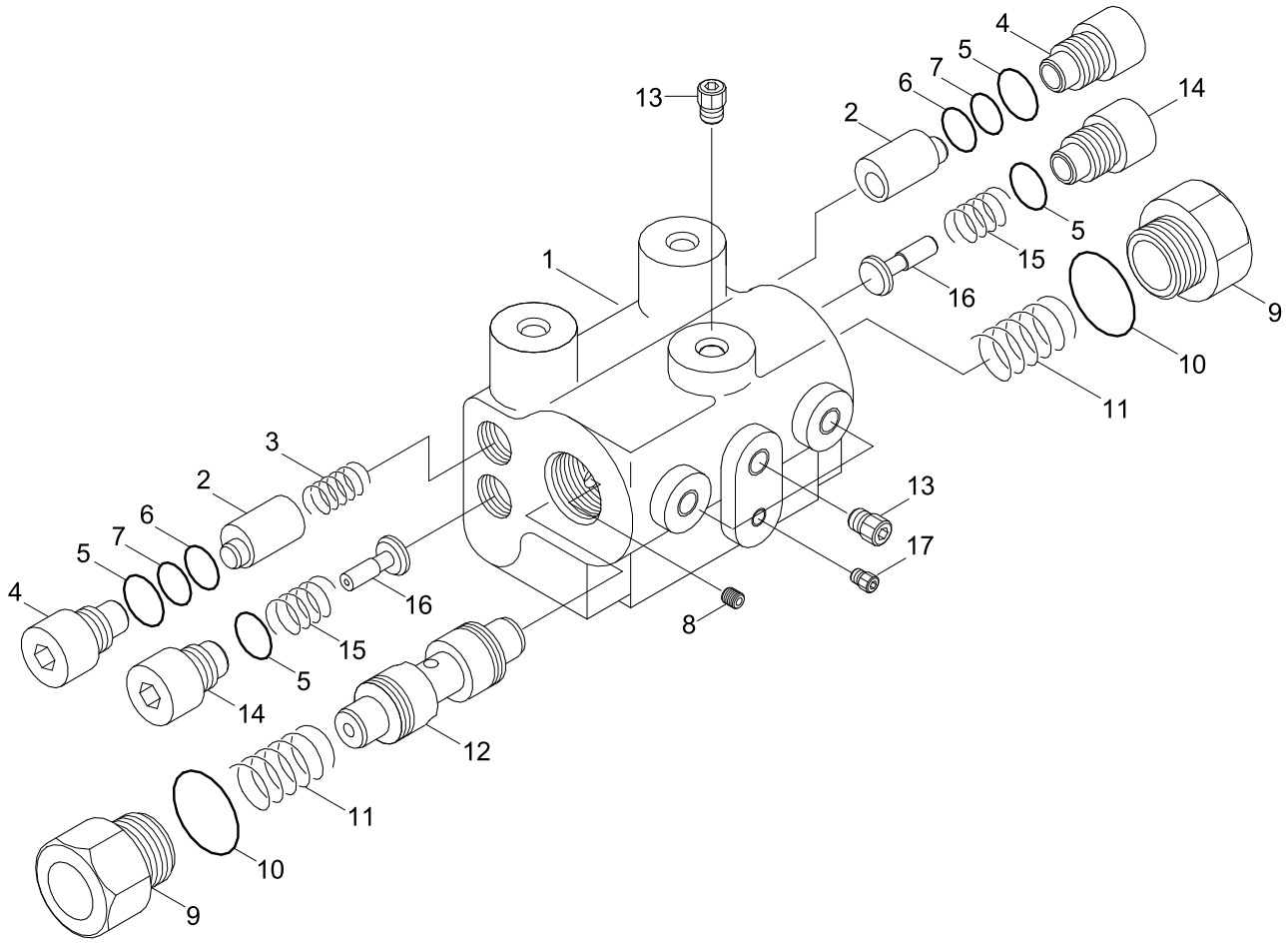

DESCRIPTION	PARTS NO	INCLUDED ITEM
SEAL KIT	91L2-2708	5~7,10

Item	Part_No	IS	Ord	T	Description	Qty	Serial_No	ITC	Remark
*	31L2-3004	01			CUSHION VALVE	1	- #0418		
N1	YUAF-00001				.HOUSING	1			NOT
N2	YUAF-00002				.POPPET	2			NOT
3	YUAF-00003				.SPRING	1			
4	YUAF-00004				.SEAT-VALVE	2			
K5	YUAF-00005				.O-RING	4			
K6	YUAF-00006				.O-RING	2			
K7	YUAF-00007				.RING-BACK UP	2			
8	YUAF-00008				.ORIFICE	2			
N9	YUAF-00009				.PLUG	2			NOT
K10	YUAF-00010				.O-RING	2			
11	YUAF-00011				.SPRING	2			
N12	YUAF-00012				.SPOOL	1			NOT
13	YUAF-00013				.PLUG	4			
14	YUAF-00014				.PLUG	2			
N15	YUAF-00015				.SPRING	2			NOT
16	YUAF-00016				.POPPET	2			
17	YUAF-00017				.PLUG	1			
K	91L2-2708				SEAL KIT	1			SEE ILLUST
N	@				NOT SUPPLIED PARTS	AR			NOT

CUSHION VALVE(#0419-)

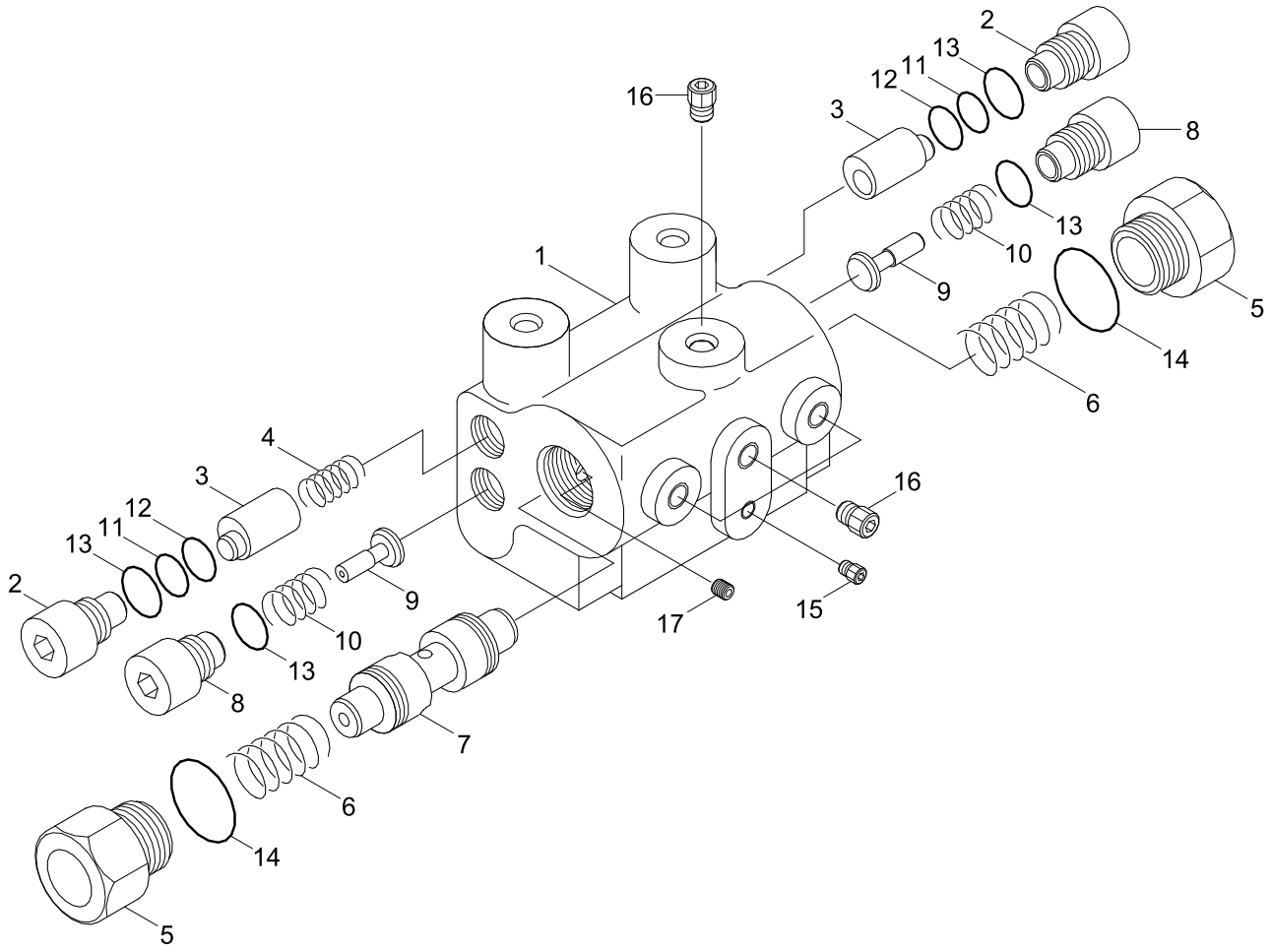

Item	Part_No	IS	Ord	T	Description	Qty	Serial_No	ITC	Remark
*	31LM-30310				CUSHION VALVE	1	#0419 -	A	
1	XKAU-00317				.BODY	1			
2	XKAU-00318				.SEAT VALVE	2			
3	XKAU-00319				.POPPET	2			
4	XKAU-00320				.SPRING	1			
5	XKAU-00321				.PLUG	2			
6	XKAU-00322				.SPRING	2			
7	XKAU-00323				.SPOOL	1			
8	XKAU-00324				.PLUG	2			
9	XKAU-00325				.POPPET	2			
10	XKAU-00326				.SPRING	2			
11	XKAU-00327				.BACK UP RING	2			
12	XKAU-00328				.O-RING	2			
13	XKAU-00329				.O-RING	4			
14	XKAU-00330				.O-RING	2			
15	XKAU-00331				.PLUG	1			
16	XKAU-00332				.PLUG	4			
17	XKAU-00333				.ORIFICE	2			

RIDE CONTROL VALVE

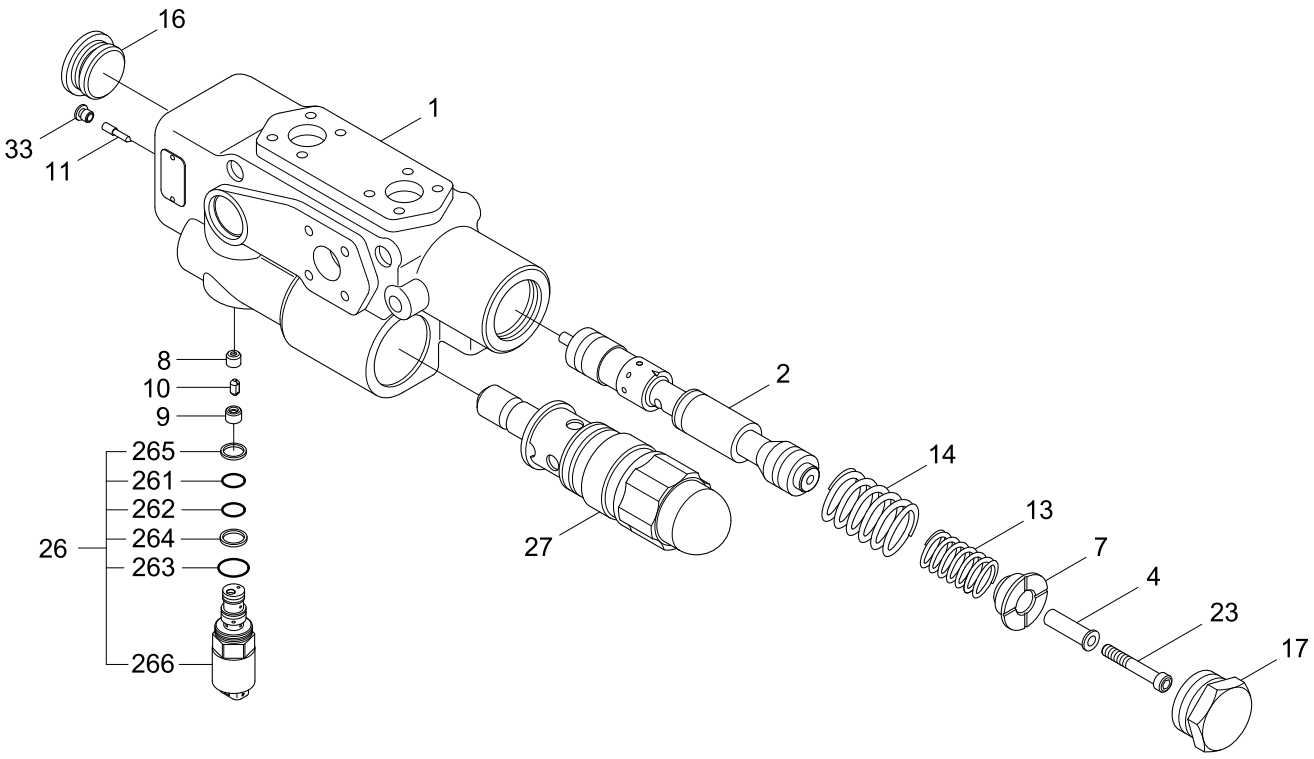

DESCRIPTION	PARTS NO	INCLUDED ITEM
SEAL KIT	ZGAR-00577	261~265

Item	Part_No	IS	Ord	T	Description	Qty	Serial_No	ITC	Remark
*	31LC-80000				RIDE CONTROL VAVLE	1			
N1	@				.BODY	1			NOT
2	ZGAR-00578				.SPOOL	1			
4	ZGAR-00579				.SLEEVE	1			
7	ZGAR-00580				.RETAINER-SPRING	1			
8	ZGAR-00566				.SEAT-VALVE	1			
9	ZGAR-00565				.SEAT-VALVE	1			
10	ZGAR-00581				.SCREW-THROTTLE	1			
11	ZGAR-00582				.SCREW-GRUB	1			
13	ZGAR-00583				.SPRING-PRESSURE	1			
14	ZGAR-00584				.SPRING-PRESSURE	1			
16	ZGAR-00585				.PLUG	1			
17	ZGAR-00586				.PLUG	1			
23	ZGAR-00588				.SCREW-SOCKET HEAD	1			
26	ZGAR-00574				.SOLENOID VALVE(FTWE)	1			
NK261	@				..O-RING	1			NOT
NK262	@				..O-RING	1			NOT
NK263	@				..O-RING	1			NOT
NK264	@				..THRUST RING	1			NOT
NK265	@				..THRUST RING	1			NOT
N266	@				..SOLENOID VALVE	1			NOT
27	ZGAR-00589				.RELIEF VALVE(DBDS 20)	1			
33	ZGAR-00576				.PLUG	1			
K	ZGAR-00577				SEAL KIT	1			SEE ILLUST
N	@				NOT INDIVIDUALLY SUPPLIED	AR			NOT

STEERING CYLINDER

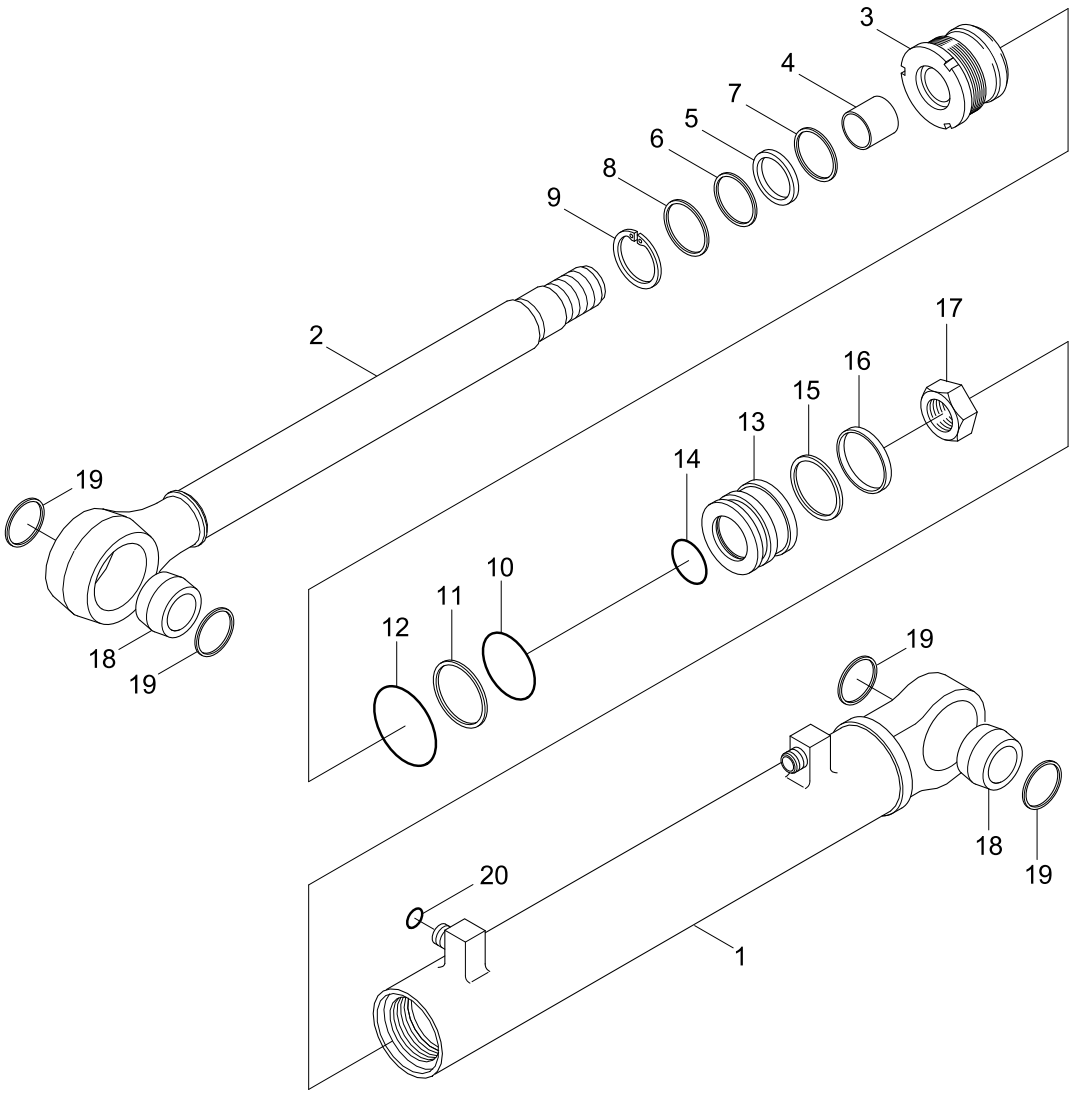

DESCRIPTION	PARTS NO	INCLUDED ITEM
SEAL KIT	31Y2-10430	5~8, 10~12, 14~16, 20

Item	Part_No	IS	Ord	T	Description	Qty	Serial_No	ITC	Remark
*	31LD-30110				CYLINDER ASSY-LH	1			
	31LD-30120				CYLINDER ASSY-RH	1			
1	31Y2-10390				.TUBE ASSY-LH	1			
	31Y2-10400				.TUBE ASSY-RH	1			
2	31Y2-07540				.ROD ASSY	1			
3	31Y2-07570				.GLAND	1			
4	S731-045020				.BUSHING-DU	1			
K5	Y220-045011				.SEAL-ROD	1			
K6	Y180-045020				.RING-BACK UP	1			
K7	Y240-045011				.RING-BUFFER	1			
K8	Y110-045011				.WIPER-DUST	1			
9	Y190-057000				.RING-SNAP	1			
K10	S632-060004				.O-RING	1			
K11	S642-060003				.RING-BACK UP	1			
K12	S632-070001				.O-RING	1			
13	31Y2-07580				.PISTON	1			
K14	S632-030004				.O-RING	1			
K15	Y410-070000				.SEAL-PISTON	1			
K16	Y310-070000				.RING-WEAR	1			
17	31YC-65200				.NUT	1			
18	Y820-045001				.BEARING-SPHERICAL	2			
19	S602-068004				.RING-RETAINING,C-TYPE	4			
K20	S621-014001				.O-RING	2			
K	31Y2-10430				SEAL KIT	1			SEE ILLUST

BOOM CYLINDER

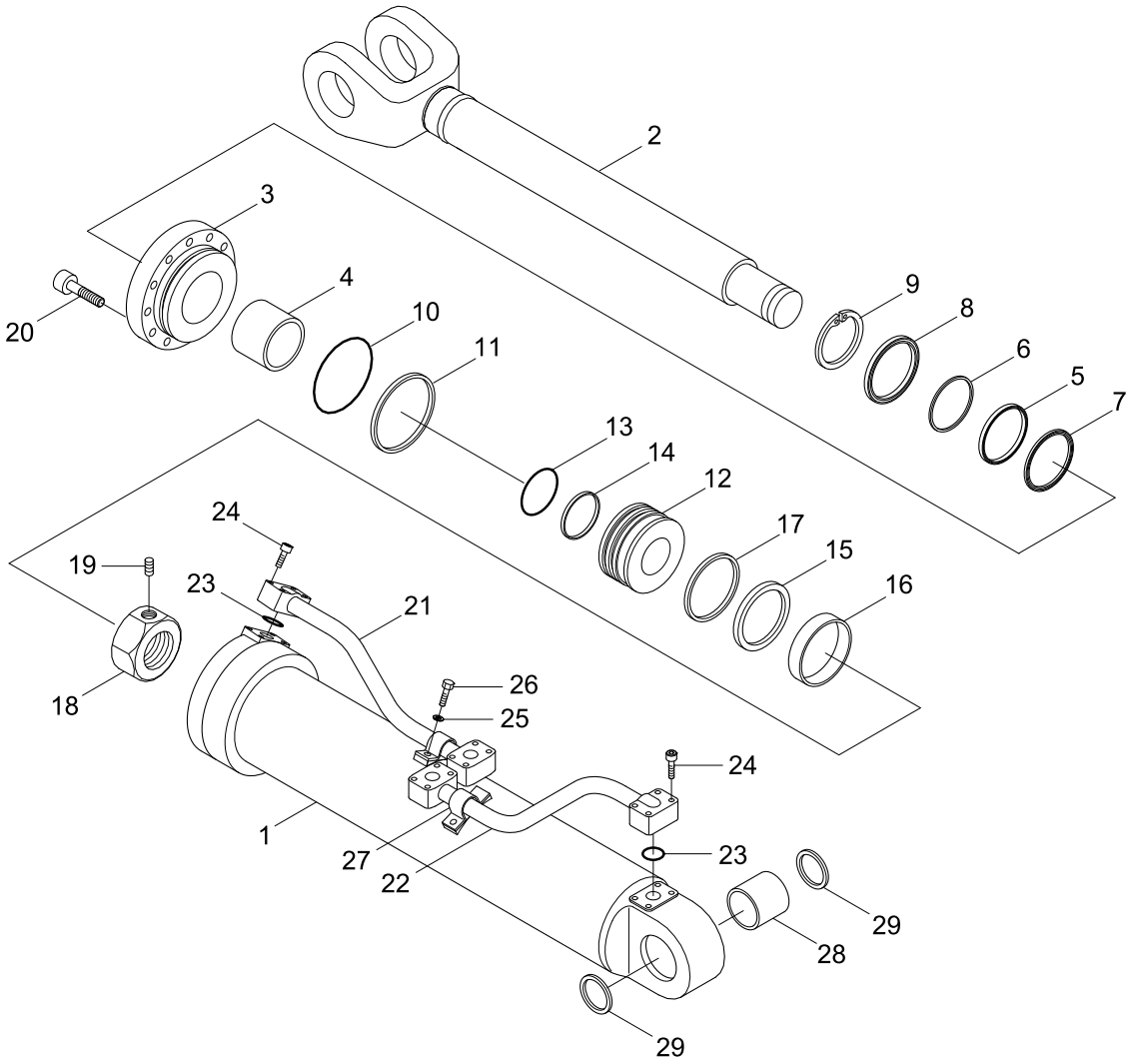

DESCRIPTION	PARTS NO	INCLUDED ITEM
SEAL KIT	31Y2-06260	5~8, 10, 11,13~17, 23, 29

Item	Part_No	IS	Ord	T	Description	Qty	Serial_No	ITC	Remark
*	31LD-20011				CYLINDER ASSY-LH	1			
	31LD-20021				CYLINDER ASSY-RH	1			
1	31Y2-08541				.TUBE ASSY-LH	1			
	31Y2-08551				.TUBE ASSY-RH	1			
2	31Y2-08590				.ROD ASSY	1			
3	31Y2-07610				.GLAND	1			
4	S731-075035				.BUSHING-DU	1			
K5	Y220-075011				.SEAL-ROD	1			
K6	Y180-075020				.RING-BACK UP	1			
K7	Y240-075011				.RING-BUFFER	1			
K8	Y110-075011				.WIPER-DUST	1			
9	Y190-089000				.RING-SNAP	1			
K10	S631-130004				.O-RING	1			
K11	S641-130003				.RING-BACK UP	1			
12	31Y2-06060				.PISTON	1			
K13	S632-075004				.O-RING	1			
K14	S642-075003				.RING-BACK UP	2			
K15	Y410-140000				.SEAL-PISTON	1			
K16	Y300-140100				.RING-WEAR	1			
K17	Y440-140000				.RING-DUST	1			
18	31YC-62160				.NUT-LOCK	1			
19	S114-100124				.SCREW-SET	1			
20	S109-140554				.BOLT-SOCKET	12			
21	31Y2-08621				.PIPE ASSY-R,LH	1			
	31Y2-08631				.PIPE ASSY-R,RH	1			
22	31Y2-01970				.PIPE ASSY-B,LH	1			

Item	Part_No	IS	Ord	T	Description	Qty	Serial_No	ITC	Remark
22	31Y2-01980				.PIPE ASSY-B,RH	1			
K23	Y171-024004				.O-RING	2			
24	S107-100554				.BOLT-SOCKET	8			
25	S411-100002				.WASHER-SPRING	4			
26	S011-100152				.BOLT-HEX	4			
27	31YC-38020				.CLAMP-PIPE	2			
28	31YC-13050				.BUSHING-PIN	1			
K29	Y000-075300				.SEAL-DUST	2			
K	31Y2-06260				SEAL KIT	1			SEE ILLUST

BUCKET CYLINDER

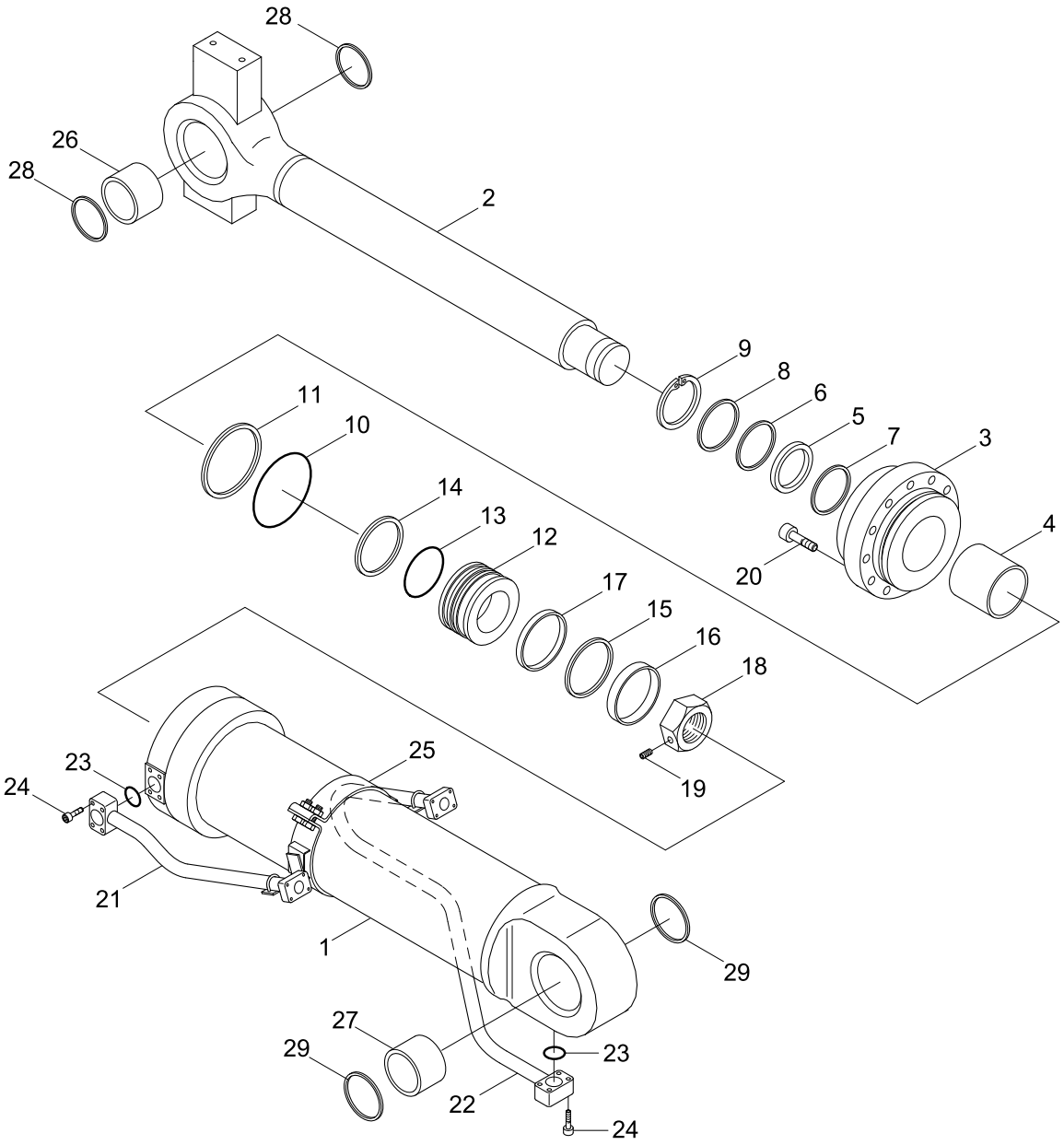

DESCRIPTION	PARTS NO	INCLUDED ITEM
SEAL KIT	31Y2-07430	5~8, 10, 11,13~17, 23, 28, 29

Item	Part_No	IS	Ord	T	Description	Qty	Serial_No	ITC	Remark
*	31LD-20420				CYLINDER ASSY	1			HL757-7A
	31LD-20430				BUCKET CYLINDER	1			HL757XTD-7A
1	31Y2-07340				.TUBE ASSY	1			
2	31Y2-07371				.ROD ASSY	1			HL757-7A
	31Y2-09500				.ROD ASSY	1			HL757XTD-7A
3	31Y2-07620				.GLAND	1			
4	S731-080040				.BUSHING-DU	1			
K5	Y220-080011				.SEAL-ROD	1			
K6	Y180-080020				.RING-BACK UP	1			
K7	Y240-080011				.RING-BUFFER	1			
K8	Y110-080011				.WIPER-DUST	1			
9	Y190-094000				.RING-SNAP	1			
K10	S631-150004				.O-RING	1			
K11	S641-150003				.RING-BACK UP	1			
12	31Y2-03311				.PISTON	1			
K13	S632-080004				.O-RING	1			
K14	S642-080003				.RING-BACK UP	2			
K15	Y410-160000				.SEAL-PISTON	1			
K16	Y300-160100				.RING-WEAR	1			
K17	Y440-160000				.RING-DUST	1			
18	31YC-62160				.NUT-LOCK	1			
19	S114-100124				.SCREW-SET	1			
20	S109-160654				.BOLT-SOCKET	12			
21	31Y2-10360				.PIPE ASSY-RH	12			
22	31Y2-10370				PIPE ASSY-B	1			
K23	Y171-024004				O-RING	2			

Item	Part_No	IS	Ord	T	Description	Qty	Serial_No	ITC	Remark
24	S107-100554				BOLT-SOCKET	8			
25	31Y2-10380				BAND ASSY	1			
26	31YC-13070				BUSHING	1			
27	31YC-13080				BUSHING-PIN	1			
K28	Y000-090000				SEAL-DUST	2			
K29	S700-095208				SEAL-DUST	2			
K	31Y2-07430				SEAL KIT	1			SEE ILLUST

FAN & BRAKE PUMP(-#0182)

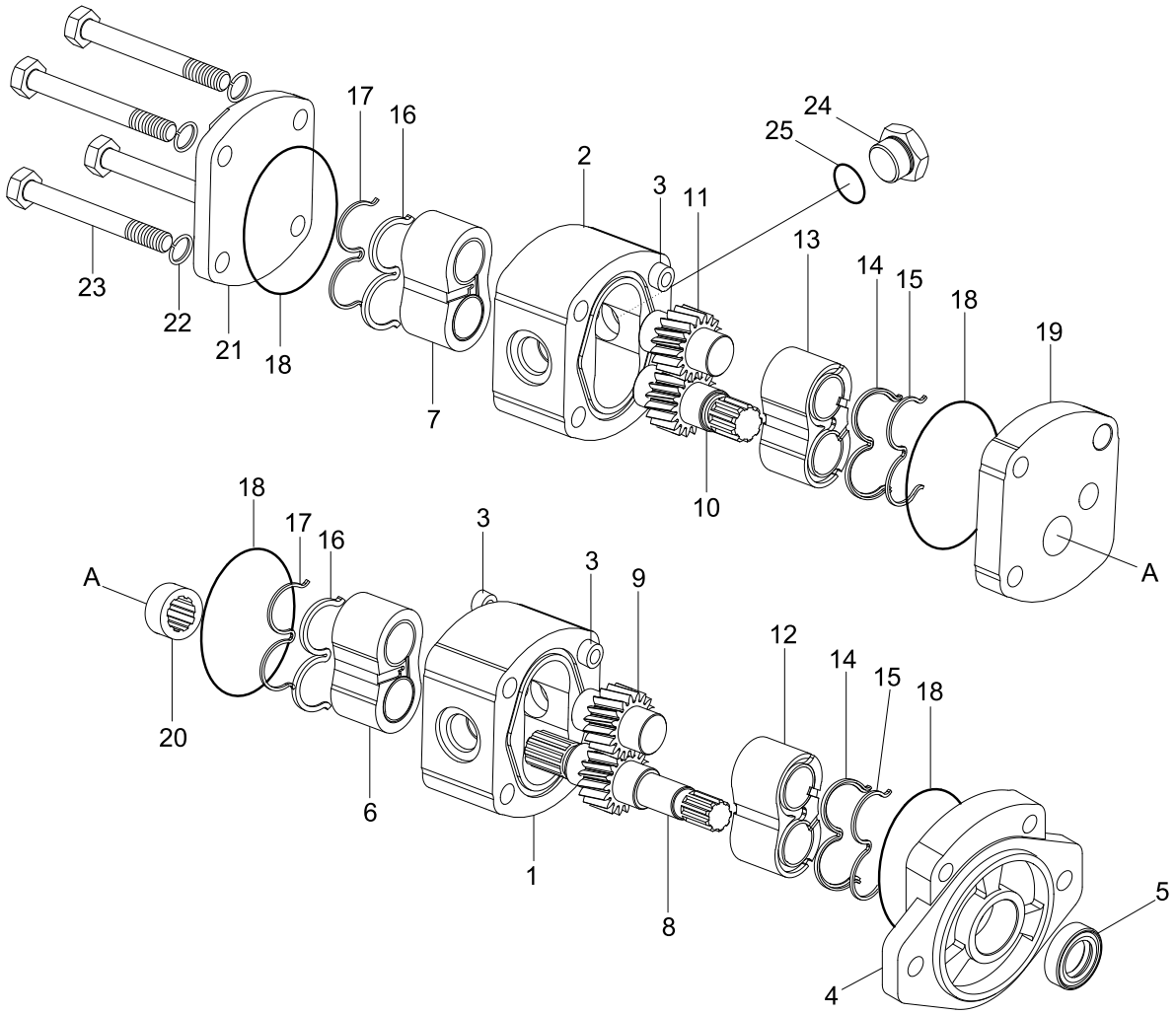

DESCRIPTION	PARTS NO	INCLUDED ITEM
SEAL KIT	ZUAH-00175	5,14~18

Item	Part_No	IS	Ord	T	Description	Qty	Serial_No	ITC	Remark
*	31LC-40400				FAN & BRAKE PUMP	1	- #0182	-	
	31LD-40250				BRAKE & FAN PUMP	1	#0183 -	D	
1	@				.BODY	1			NOT
2	@				.BODY	1			NOT
3	@				.PIN-DOWEL	6			NOT
4	@				.COVER-FRONT	1			NOT
K5	@				.SEAL-SHAFT	1			NOT
6	@				.BUSHING	1			NOT
7	@				.BUSHING	1			NOT
8	@				.GEAR-DRIVE	1			NOT
9	@				.GEAR-DRIVEN	1			NOT
10	@				.GEAR-DRIVE	1			NOT
11	@				.GEAR-DRIVEN	1			NOT
12	@				.BUSHING	1			NOT
13	@				.BUSHING	1			NOT
K14	@				.SEAL-BUSH LOBE	2			NOT
K15	@				.RING-BACKING	2			NOT
K16	@				.SEAL-BUSH LOBE	2			NOT
K17	@				.RING-BACKING	2			NOT
K18	@				.BODY SEAL	4			NOT
19	@				.PLATE-INTERMEDIATE	1			NOT
20	@				.COUPLING	1			NOT
21	@				.COVER-REAR	1			NOT
22	@				.WASHER-SPRING	4			NOT
23	@				.SCREW	4			NOT
24	@				.PLUG	1			NOT

Item	Part_No	IS	Ord	T	Description	Qty	Serial_No	ITC	Remark
25	@				.O-RING	1			NOT
K	ZUAH-00175				SEAL KIT	1			SEE ILLUST

BRAKE & FAN PUMP(#0183-)

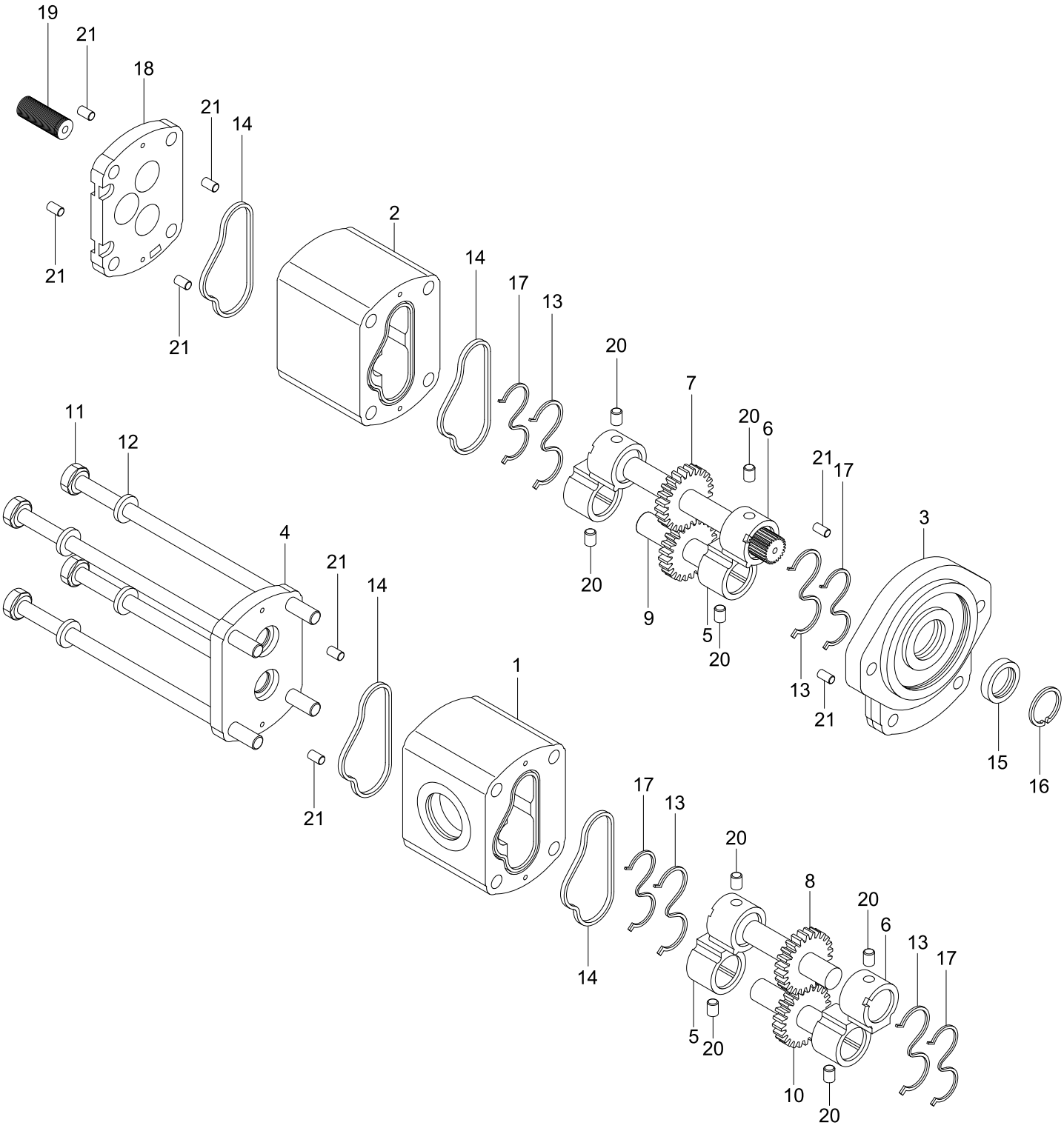

DESCRIPTION	PARTS NO	INCLUDED ITEM
SEAL KIT	6204661M	13, 14, 17, 20

Item	Part_No	IS	Ord	T	Description	Qty	Serial_No	ITC	Remark
*	31LD-40250				FAN & BRAKE PUMP	1	#0183 - #0428	D	
1	@				.HOUSING	1			NOT
2	@				.BODY	1			NOT
3	@				.COVER-FRONT	1			NOT
4	@				.COVER-REAR	1			NOT
5	@				.PLATE-HALFB THRUST	4			NOT
6	@				.PLATE-HALFB THRUST	4			NOT
7	@				.SHAFT-DRIVE	1			NOT
8	@				.GEAR-DRIVE	1			NOT
9	@				.GEAR-DRIVEN	1			NOT
10	@				.GEAR-DRIVEN	1			NOT
11	@				.SCREW	4			NOT
12	@				.WASHER	4			NOT
K13	@				.SEAL	4			NOT
K14	@				.SEAL	4			NOT
15	@				.SEAL-SHAFT	1			NOT
16	@				.RING	1			NOT
K17	@				.RING-BACKING	4			NOT
18	@				.FLANGE	1			NOT
19	@				.SHAFT-SPLINED	1			NOT
K20	@				.SPRING	8			NOT
21	@				.PIN-DOWEL	8			NOT
K	6204661M				SEAL KIT	1			SEE ILLUST
					SEAL KIT	1			SEE ILLUST

QUICK COUPLER CYLINDER(VOLVO TYPE)

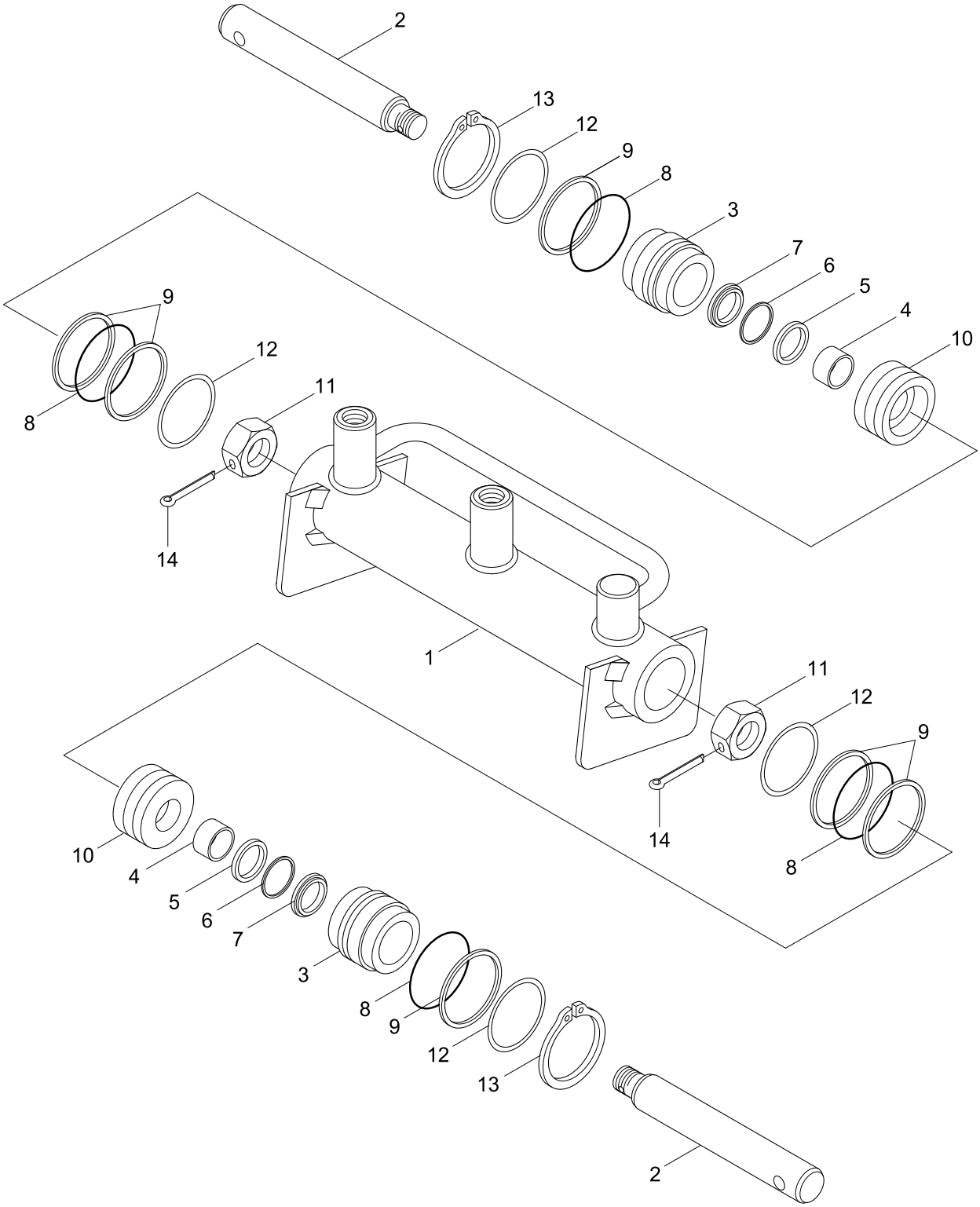

DESCRIPTION	PARTS NO	INCLUDED ITEM
SEAL KIT	31Y2-05920	5~9

Item	Part_No	IS	Ord	T	Description	Qty	Serial_No	ITC	Remark
*	31LF-21001	00			CYLINDER ASSY	1	#0248 - #0370	-	
	31LF-21501				CYLINDER ASSY	1	#0371 -	B	
1	31Y2-10240				.TUBE ASSY	1			
2	31Y2-10270				.ROD	2	- #0370		
	31Y2-10271				.ROD	2	#0371 -	D	
3	31Y2-05880				.GLAND	2			
4	S731-025015				.BUSHING-DU	2			
K5	Y200-025011				.SEAL-ROD	2			
K6	Y180-025020				.RING-BACK UP	2			
K7	Y120-025011				.WIPER-DUST	2			
K8	S631-044004				.O-RING	4			
K9	S641-044003				.RING-BACK UP	6			
10	31Y2-05890				.PISTON	2			
11	31YC-65120				.NUT-NYLON	2	- #0370		
	S227-180002				.NUT-SLOTTED	2	#0371 -	D	
12	31Y2-05900				.RING-STOP	4			
13	S601-045004				.RING-RETAINING	2			
14	S461-400326				.PIN-SPLIT	2	#0371 -	-	
K	31Y2-05920				SEAL KIT	1			SEE ILLUST

FRONT FRAME

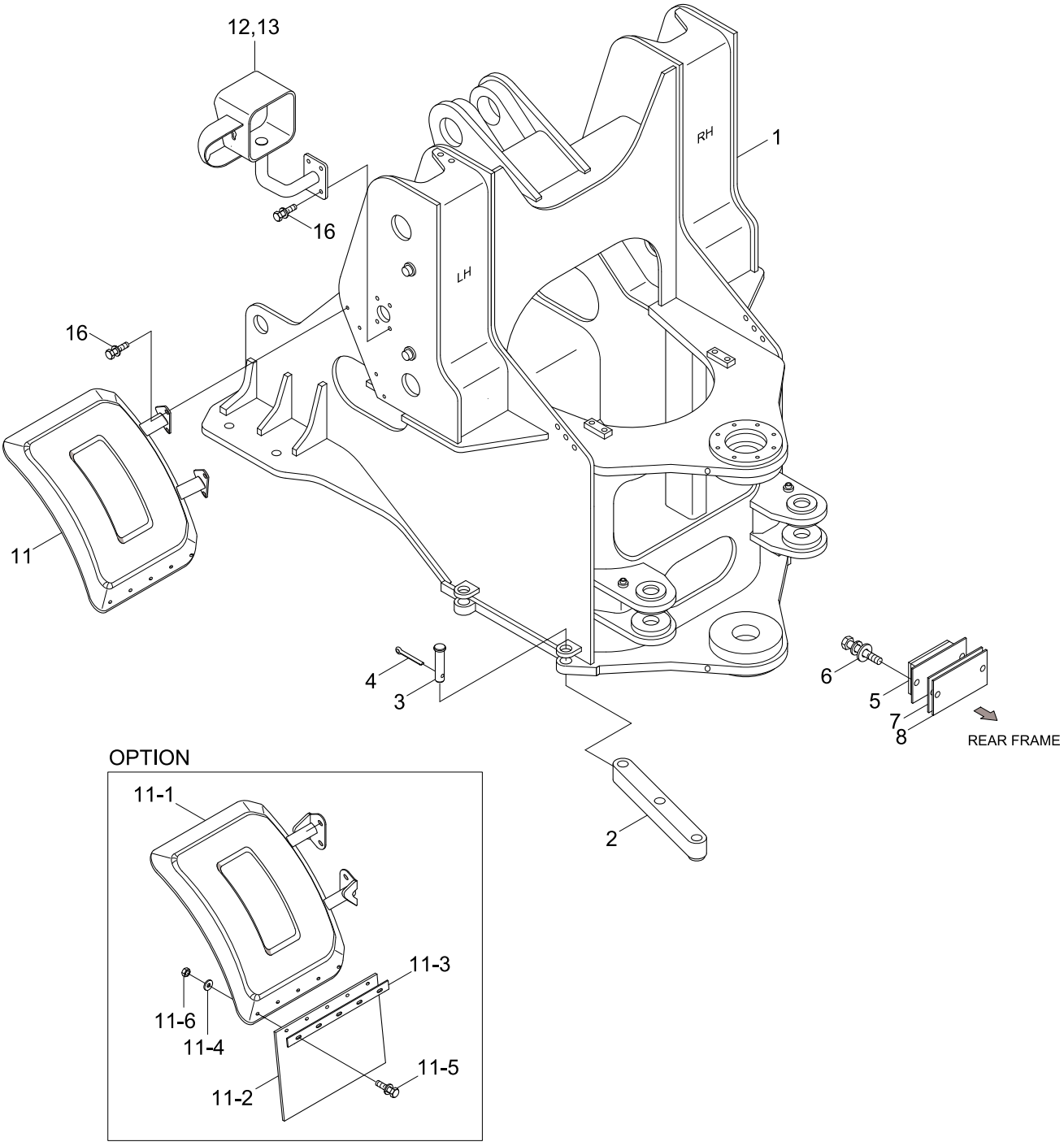
12,13
16
16
1
RH
LH
11
4
3
6
5
7
8
REAR FRAME
2
OPTION
11-1
11-3
11-6
11-4
11-5
11-2

Item	Part_No	IS	Ord	T	Description	Qty	Serial_No	ITC	Remark
1	45LD-20010				FRONT FRAME WA	1			
2	41LD-09010				BAR	1			
3	41LD-09020				PIN-CLEVIS	2			
4	41L1-1074				PIN	2			
5	41LB-29080				STOPPER	2			
6	S037-123026				BOLT-W/WASHER	4			
7	41LB-29070				SHIM(3.0T)	2			
11	71LF-72010				FENDER WA-FRONT	2	- #0313		
	71LF-72011				FENDER WA-FRONT	2	#0314 -	B	
	71LD-72051				FENDER ASSY-LH	1	#0314 -		OPT
	71LD-72061				FENDER ASSY-RH	1	#0314 -		OPT
11-1	71LD-72071				.FENDER WA-LH	1	#0314 -		OPT
	71LD-72081				.FENDER WA-RH	1	#0314 -		OPT
11-2	71LD-72090				.RUBBER-FENDER	1	#0314 -		OPT
11-3	71LD-72100				.PLATE	1	#0314 -		OPT
11-4	71LB-72130				.WASHER-WIDE	5	#0314 -		OPT
11-5	S037-122556				.BOLT-W/WASHER	5	#0314 -		OPT
11-6	S205-121006				.NUT-HEX	5	#0314 -		OPT
12	71LC-72030				LAMP BOX WA-LH	1			
13	71LC-72040				LAMP BOX WA-RH	1			
16	S037-123056				BOLT-W/WASHER	16			
					BOLT-W/WASHER	16			

REAR FRAME

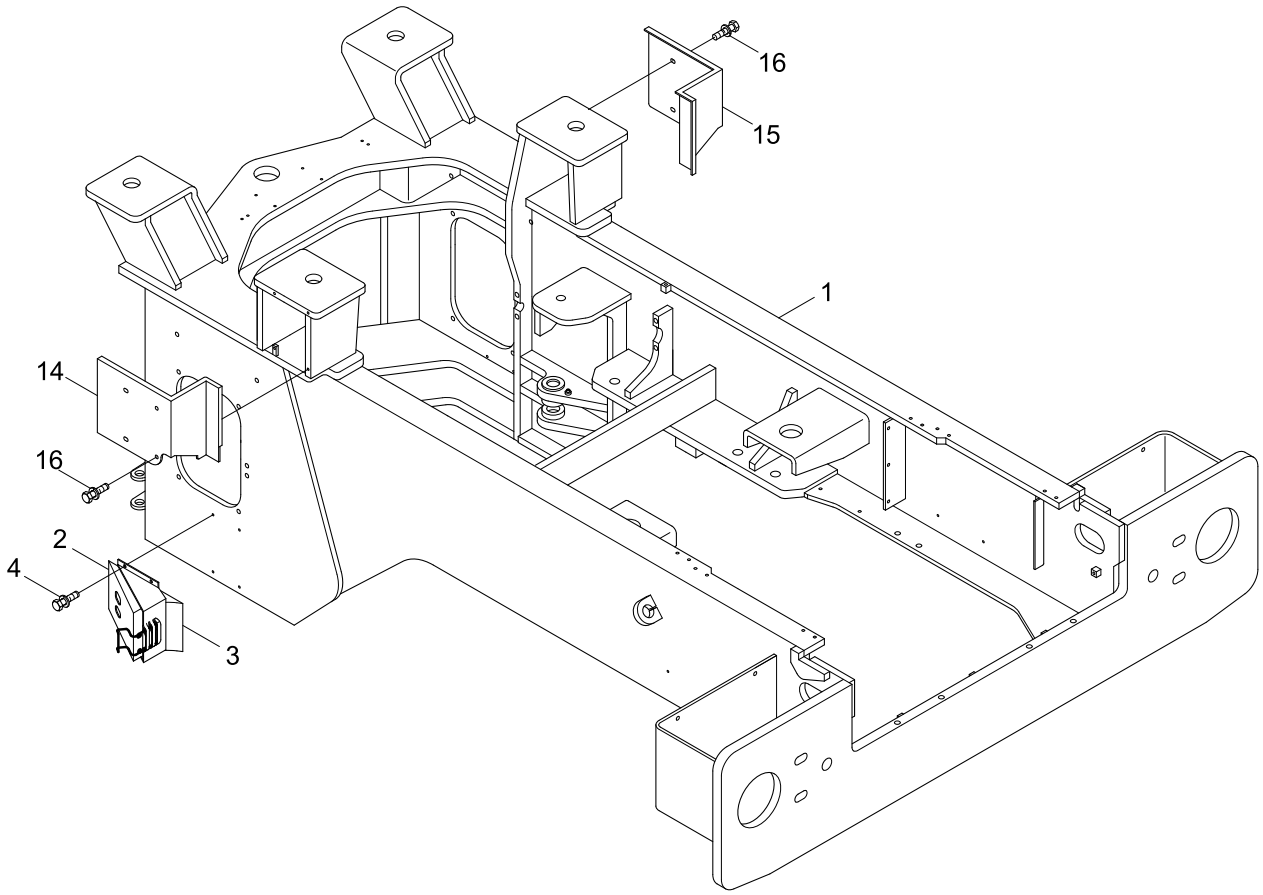

Item	Part_No	IS	Ord	T	Description	Qty	Serial_No	ITC	Remark
1	55LD-20010				REAR FRAME WA	1			
2	74L3-00012				CHOCK-WHEEL	2			
3	71L7-90070				BRACKET ASSY	2			
4	S035-082546				BOLT-W/WASHER	8			
14	71LD-70071				COVER-LH	1			
15	71LD-70081				COVER-RH	1			
16	S037-123056				BOLT-W/WASHER	8			

CENTER PIVOT PIN(UPPER)

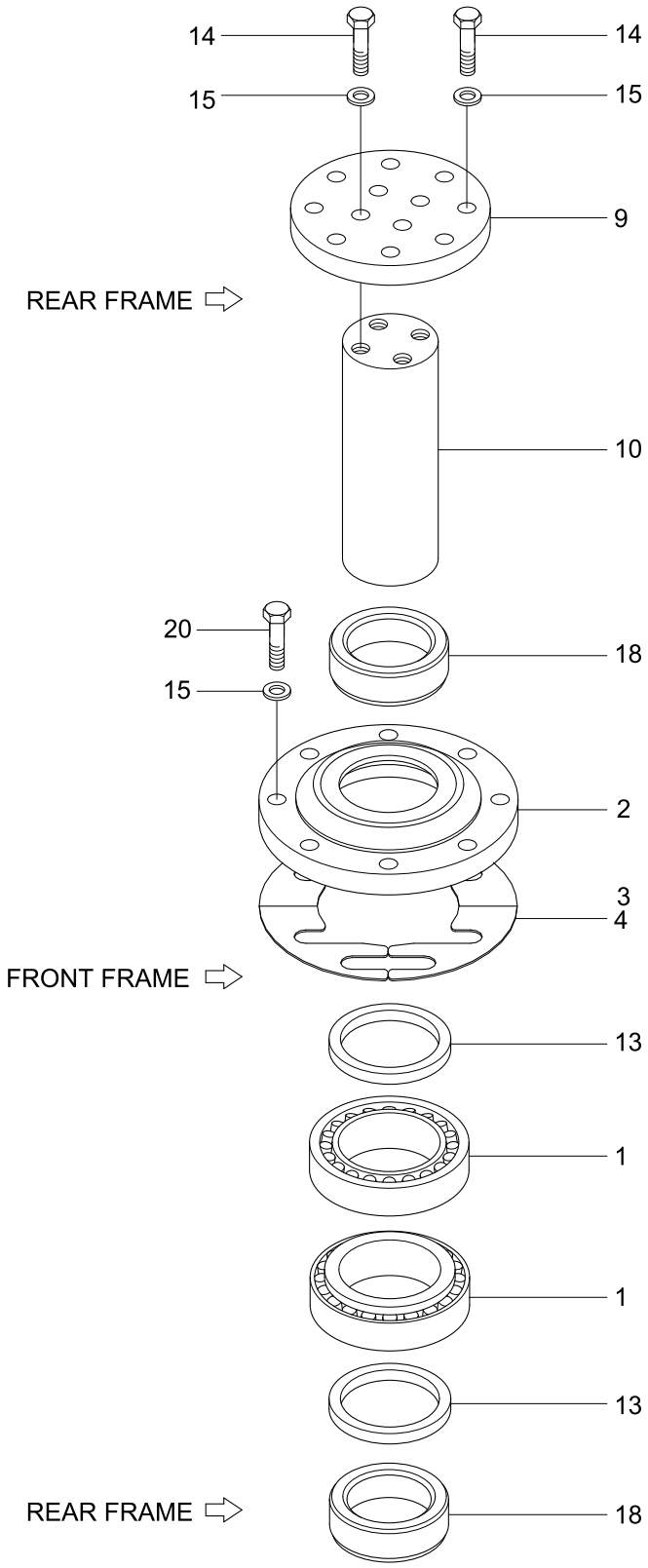

Item	Part_No	IS	Ord	T	Description	Qty	Serial_No	ITC	Remark
1	41LD-10010				BEARING	2			
2	41LD-10021				COVER	1			
3	41LD-10040				SHIM(0.1)	2			
4	41LD-10050				SHIM(0.5)	2			
9	41LD-10100				PLATE	1			
10	41LD-10111				PIN	1	- #0386		
	41LD-10112				PIN	1	#0387 -	A	
13	S700-075307				DUST SEAL-DKIY TYPE	2			
14	S017-120456				BOLT-HEX	12			
15	S441-120006				WASHER-HARDENED	20			
18	41LD-10160				BUSHING	2			
20	S017-120406				BOLT-HEX	8			

CENTER PIVOT PIN(LOWER)

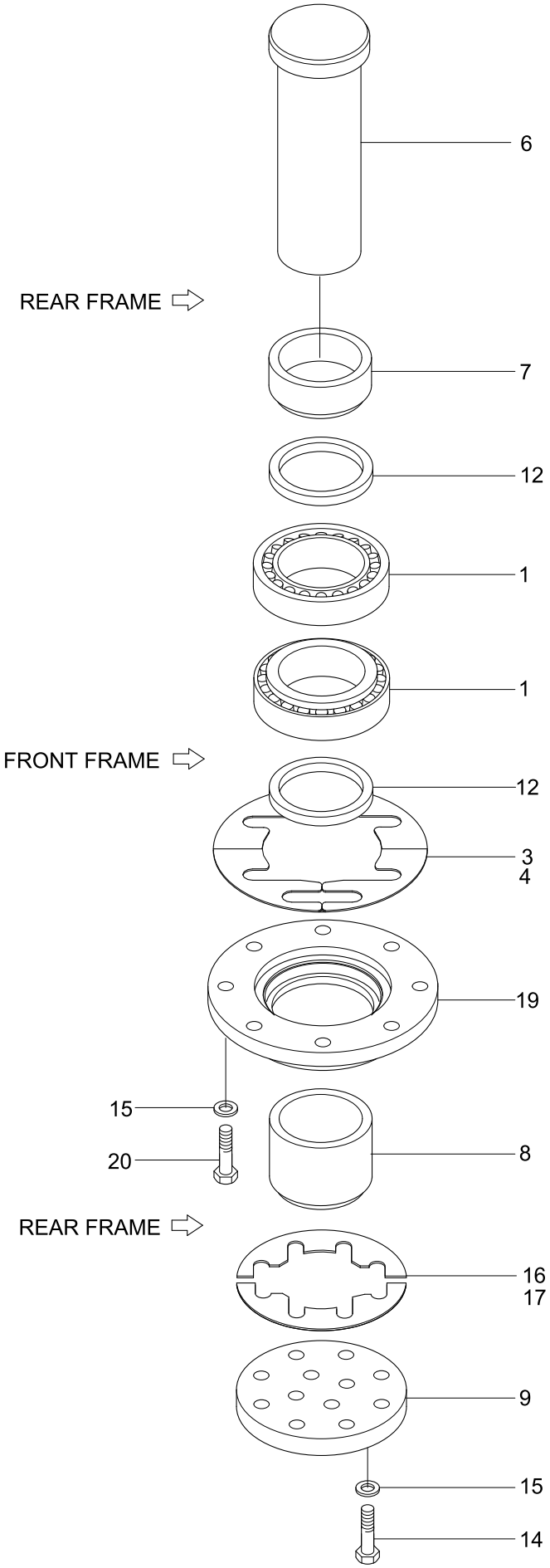

Item	Part_No	IS	Ord	T	Description	Qty	Serial_No	ITC	Remark
1	41LD-10010				BEARING	2			
3	41LD-10040				SHIM(0.1)	2			
4	41LD-10050				SHIM(0.5)	2			
6	41LD-10070				PIN	1			
7	41LD-10081				COLLAR	1			
8	41LD-10090				COLLAR	1			
9	41LD-10100				PLATE	1			
12	S700-090206				SEAL-DUST	2			
14	S017-120456				BOLT-HEX	12			
15	S441-120006				WASHER-HARDENED	20			
16	41LD-10140				SHIM(0.1)	2			
17	41LD-10150				SHIM(0.5)	2			
19	41LD-10171				COVER	1			
20	S017-120406				BOLT-HEXAGON HEAD	8			

COUNTERWEIGHT

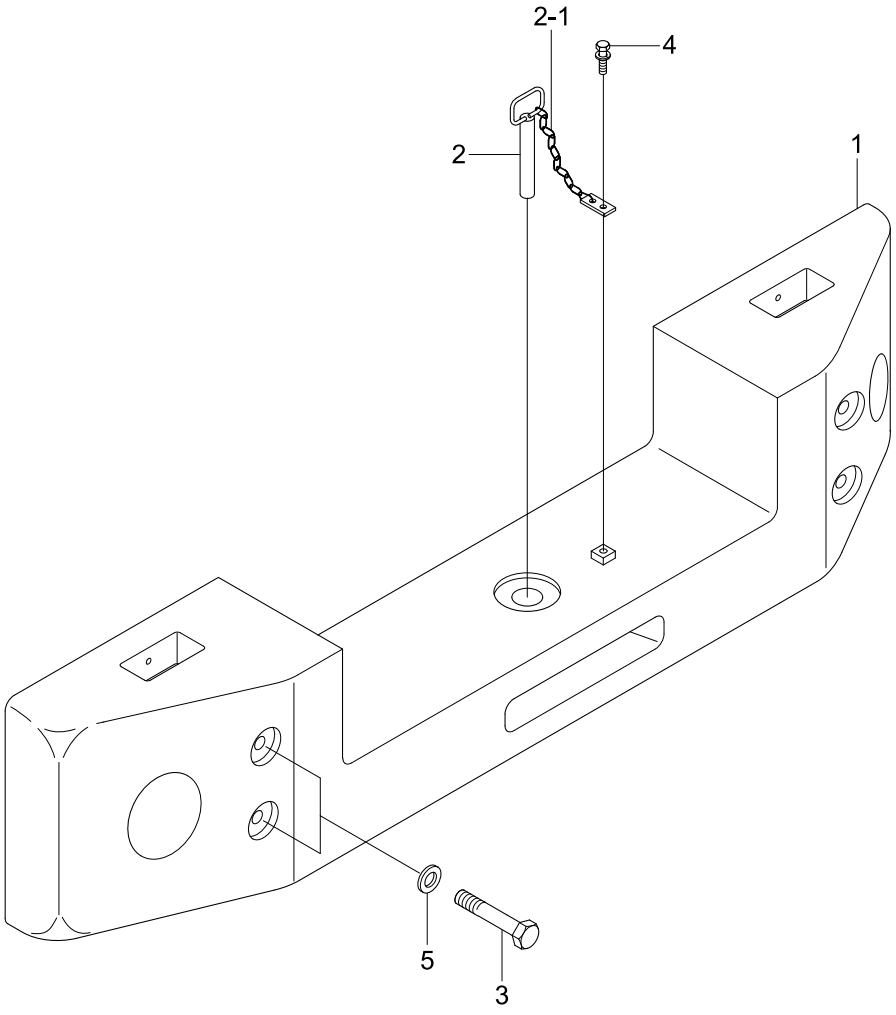

Item	Part_No	IS	Ord	T	Description	Qty	Serial_No	ITC	Remark
1	51LD-10100				COUNTERWEIGHT	1			HL757-7A
	51LD-11100				COUNTERWEIGHT	1			HL757XTD-7A
2	51LD-10021				PIN ASSY	1			
2-1	54L3-00940				.CHAIN ASSY	1			
3	S017-30210D				BOLT-HEX	4			HL757-7A
	S017-30230D				BOLT-HEX	4			HL757XTD-7A
4	S037-102056				BOLT-W/WASHER	1			
5	S441-300006				WASHER-HARDENED	4			

UNDER GUARD

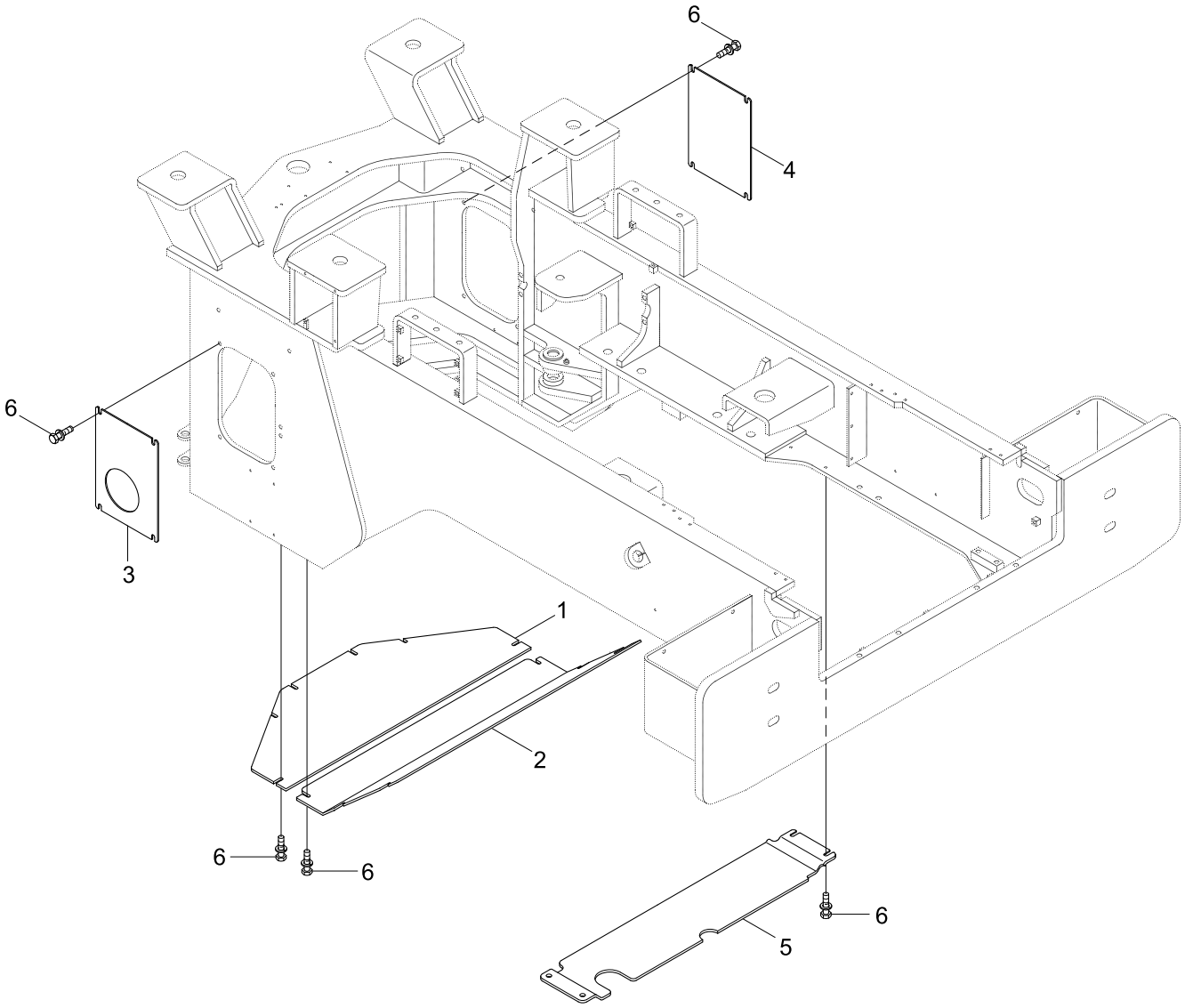

Item	Part_No	IS	Ord	T	Description	Qty	Serial_No	ITC	Remark
1	51LD-90011				PLATE	1			
2	51LD-90021				PLATE	1			
3	51LD-90030				PLATE	1			
4	51LD-90040				PLATE	1			
5	51LD-92051				PLATE	1			
6	S037-123556				BOLT-W/WASHER	24			

CAB MOUNTING

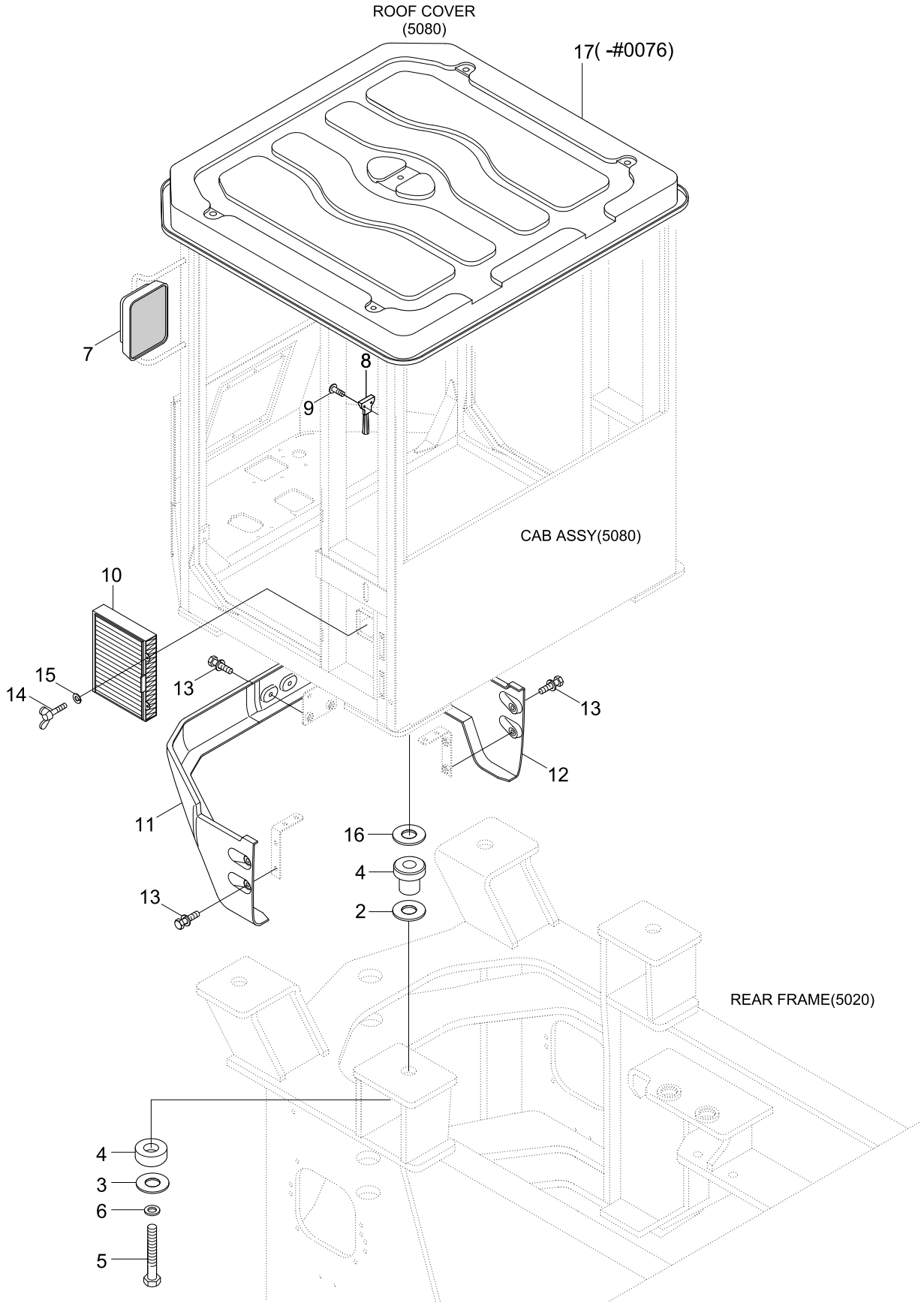

Item	Part_No	IS	Ord	T	Description	Qty	Serial_No	ITC	Remark
2	74L1-10061				SPACER	4			
3	71LB-00240				WASHER-SNUBBING	4			
4	71LF-00230				ISOLATION MOUNT-CAB	4			
5	S018-27165D				BOLT-HEX	4			
6	S441-270006				WASHER-HARDENED	4			
7	71LB-00111				MIRROR ASSY-EXT	2			STD
	71LB-00310				MIRROR ASSY-EXT/HEATED	2			OPT
8	71E1-60340				HAMMER-SAFETY	1			
9	S141-040106				SCREW-FLAT HD	2			
10	71LB-00290				FILTER ASSY	1			
11	71LB-00122				FRONT COVER-LOWER,LH	1			
12	71LB-00132				FRONT COVER-LOWER,RH	1			
13	S037-122556				BOLT-W/WASHER	6			
14	S091-050156				BOLT-WING	2			
15	S403-05200B				WASHER-PLAIN	2			
16	71LB-00300				SPACER-UP	4			
17	71LB-01131				COVER-ROOF	1	- #0076	-	SEE 5080

CAB(1/5)

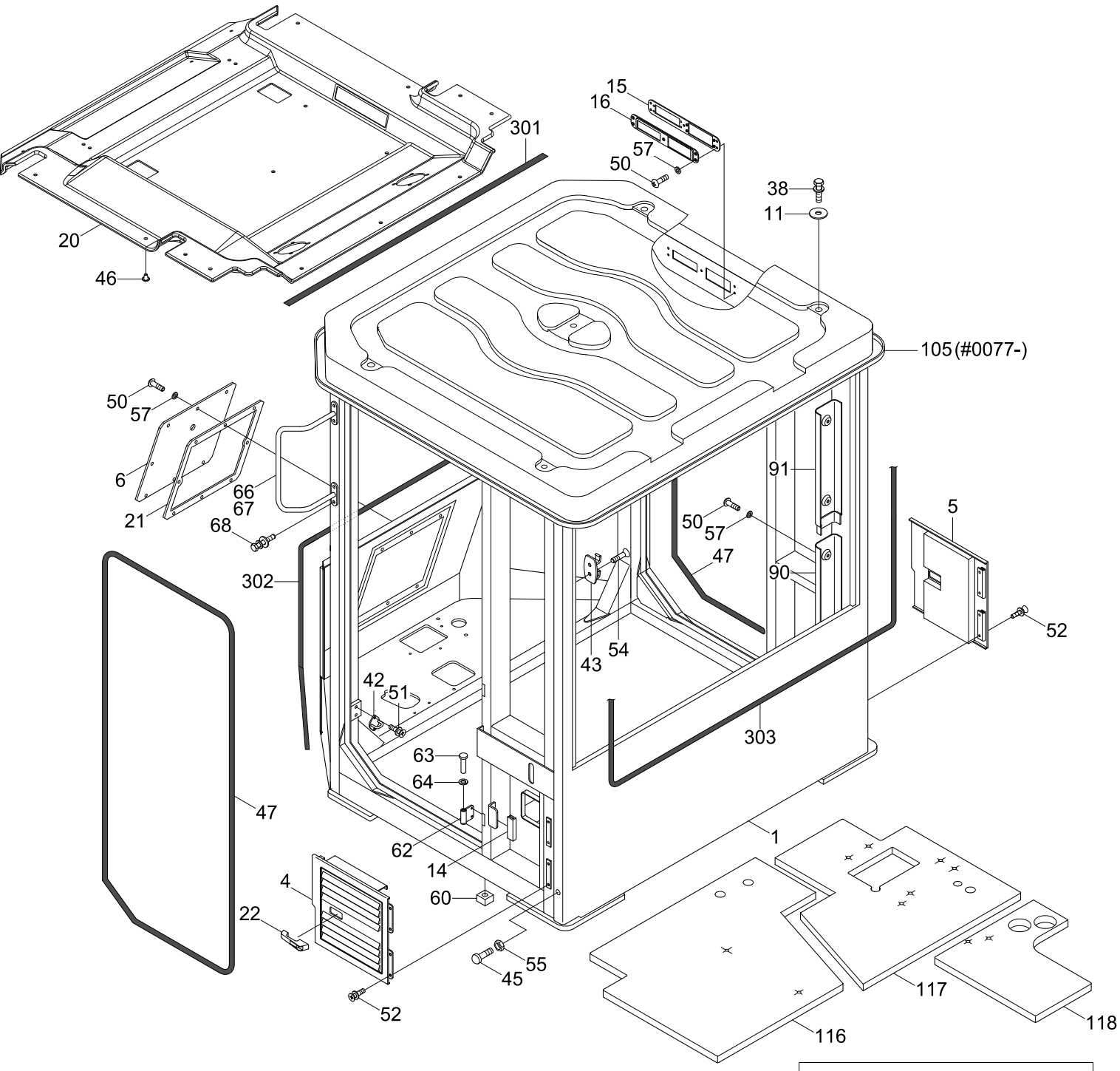
301
15
16
57
50
38
11
20
46
105(#0077-)
50
57
6
66
67
21
68
91
5
50
57
47
90
302
52
43
54
42
51
303
63
64
47
1
62
14
4
22
60
55
45
52
117
118
116

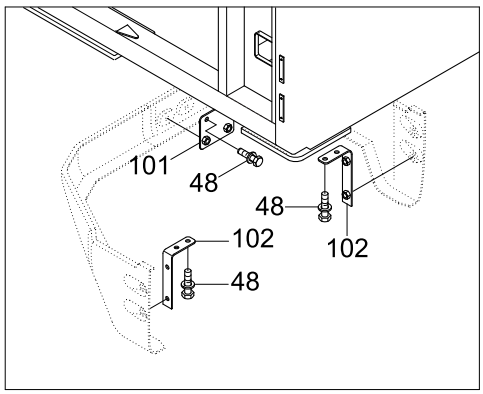
101
48
48
102
102
48

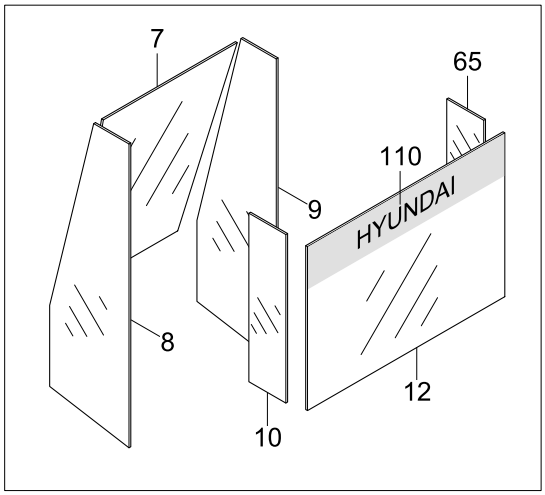
7
65
110
9
HYUNDAI
8
12
10

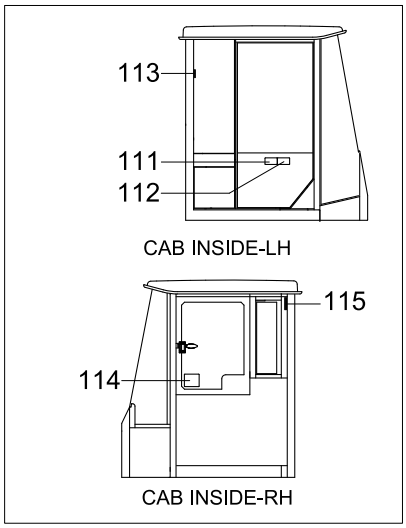
113
111
112
CAB INSIDE-LH
115
114
CAB INSIDE-RH

Item	Part_No	IS	Ord	T	Description	Qty	Serial_No	ITC	Remark
*	71LB-11011				CAB ASSY-FIXED WINDOW	1	- #0029		FIXED WINDOW
	71LB-11012				CAB ASSY-FIXED WINDOW	1	#0030 - #0076	B	FIXED WINDOW
	71LB-11013				CAB ASSY-FIXED WINDOW	1	#0077 - #0101	B	FIXED WINDOW
	71LB-11014				CAB ASSY-FIXED WINDOW	1	#0102 -	D	FIXED WINDOW
	71LB-11021				CAB ASSY-SLIDING WIN	1	- #0029		SLIDING WINDOW
	71LB-11022				CAB ASSY-SLIDING WIN	1	#0030 - #0076	B	SLIDING WINDOW
	71LB-11023				CAB ASSY-SLIDING WIN	1	#0077 - #0101	B	SLIDING WINDOW
	71LB-11024				CAB ASSY-SLIDING WIN	1	#0102 -	D	SLIDING WINDOW
	71LB-11031				CAB ASSY-F/WIN,L/NOISE	1	- #0029		FIXED,LOW NOISE
	71LB-11032				CAB ASSY-F/WIN,L/NOISE	1	#0030 - #0076	B	FIXED,LOW NOISE
	71LB-11033				CAB ASSY-F/WIN,L/NOISE	1	#0077 - #0101	B	FIXED,LOW NOISE
	71LB-11034				CAB ASSY-F/WIN,L/NOISE	1	#0102 -	D	FIXED,LOW NOISE
	71LB-11041				CAB ASSY-S/WIN,L/NOISE	1	- #0029		SLIDE,LOW NOISE
	71LB-11042				CAB ASSY-S/WIN,L/NOISE	1	#0030 - #0076	B	SLIDE,LOW NOISE
	71LB-11043				CAB ASSY-S/WIN,L/NOISE	1	#0077 - #0101	B	SLIDE,LOW NOISE
	71LB-11044				CAB ASSY-S/WIN,L/NOISE	1	#0102 -	D	SLIDE,LOW NOISE
*-1	71LB-11213				.CAB SUB ASSY	1	- #0029		
	71LB-11214				.CAB SUB ASSY	1	#0030 - #0101	B	
	71LB-11215				.CAB SUB ASSY	1	#0102 -	D	
1	71LB-12012				..CAB WA	1	- #0029		
	71LB-12013				..CAB WA	1	#0030 -	D	
4	71LB-01041				..COVER ASSY-LH	1			
5	71LB-01051				..COVER ASSY-RH	1			
6	71LB-01061				..COVER WA-W/MOTOR	1			
7	71LB-01071				..GLASS-FRONT,CENTER	1			
8	71LB-01081				..GLASS-FRONT,SIDE,LH	1			

Item	Part_No	IS	Ord	T	Description	Qty	Serial_No	ITC	Remark
9	71LB-01091				..GLASS-FRONT,SIDE,RH	1			
10	71LB-01101				..GLASS-SIDE,LH	1			
11	71LB-01110				..WASHER-ROOF COVER	5	#0001 -	-	
12	71LB-01121				..GLASS-REAR	1			
15	71LB-01151				..PLATE WA-CASSETTE	1			
16	71LB-01162				..COVER-CASSETTE	1			
20	71LB-11450				..HEADLINING	1			
21	71LB-01211				..PAD-RUBBER	1			
22	71LB-01220				..LATCH ASSY	2			
38	S017-20020D				..BOLT-HEX	5			
42	71N6-02770				..STRIKER	2			
43	71N6-02920				..HOOK-COAT	1			
45	71EH-13150				..RUBBER-BUMPER	4			
46	E171-1310				..PLUG-HEADLINER	14			
47	S771-039500				..WEATHER STRIP	2			
48	S037-122556				..BOLT-W/WASHER	6			
50	S161-080206				..SCREW-CROSS R/ROUND	20			
51	S145-080166				..SCREW-FLAT HD	4			
52	S132-061656				..SCREW-W/WASHER	8			
54	S141-040206				..SCREW-FLAT HD	2			
55	S203-101006				..NUT-HEX	4			
57	S403-08200B				..WASHER-PLAIN	20			
60	71LB-01560				..FOAM-SPONGE	1			
62	71LB-01600				..HINGE	6			
63	74L3-05330				..PIN-HINGE	6			
64	74L3-04450				..WASHER-COPPER	6			

Item	Part_No	IS	Ord	T	Description	Qty	Serial_No	ITC	Remark
65	71LB-01681				..GLASS-SIDE,RH	1			
66	71LB-01692				..HANDRAIL WA-LH	1			
67	71LB-01702				..HANDRAIL WA-RH	1			
68	S037-102026				..BOLT-W/WASHER	4			
90	71LB-20141				..COVER-HARNESS(LOW)	1			
91	71LB-20151				..COVER-HARNESS(UP)	1			
101	71LB-04190				..PLATE WA-FRONT	1			
102	71LB-04200				..PLATE WA-SIDE	2			
105	71LB-01131				..COVER-ROOF	1	#0077 -	A	
301	71LB-03540				..SEAL-FRONT/UP	1			
302	71LB-03550				..SEAL-FRONT/LOW	1			
303	71LB-03560				..SEAL-REAR	1			
105	71LB-01131				.COVER-ROOF	1	#0077 -	A	
110	91LB-21000				.ADHESIVE SUN SCREEN	1			
111	91LB-01230				.DECAL-MAX H/REACH	1			
112	91LB-01240				.DECAL-ROLL OVER	1			
113	91LB-01340				.DECAL-HAMMER	1			
114	91N6-07261				.ALTERNATE EXIT	1			
115	91N6-07290				.DECAL-FIRE	1			
116	71LB-11261				.SPONGE-BOTTOM/LOW(1)	1			LOW NOISE
117	71LB-11271				.SPONGE-BOTTOM/LOW(2)	1			LOW NOISE
118	71LB-11281				.SPONGE-BOTTOM/LOW(3)	1			LOW NOISE
*-2	@				.ELECTRIC CAB ASSY	1			NOT

CAB(1/5, INTERIOR, #0077-)

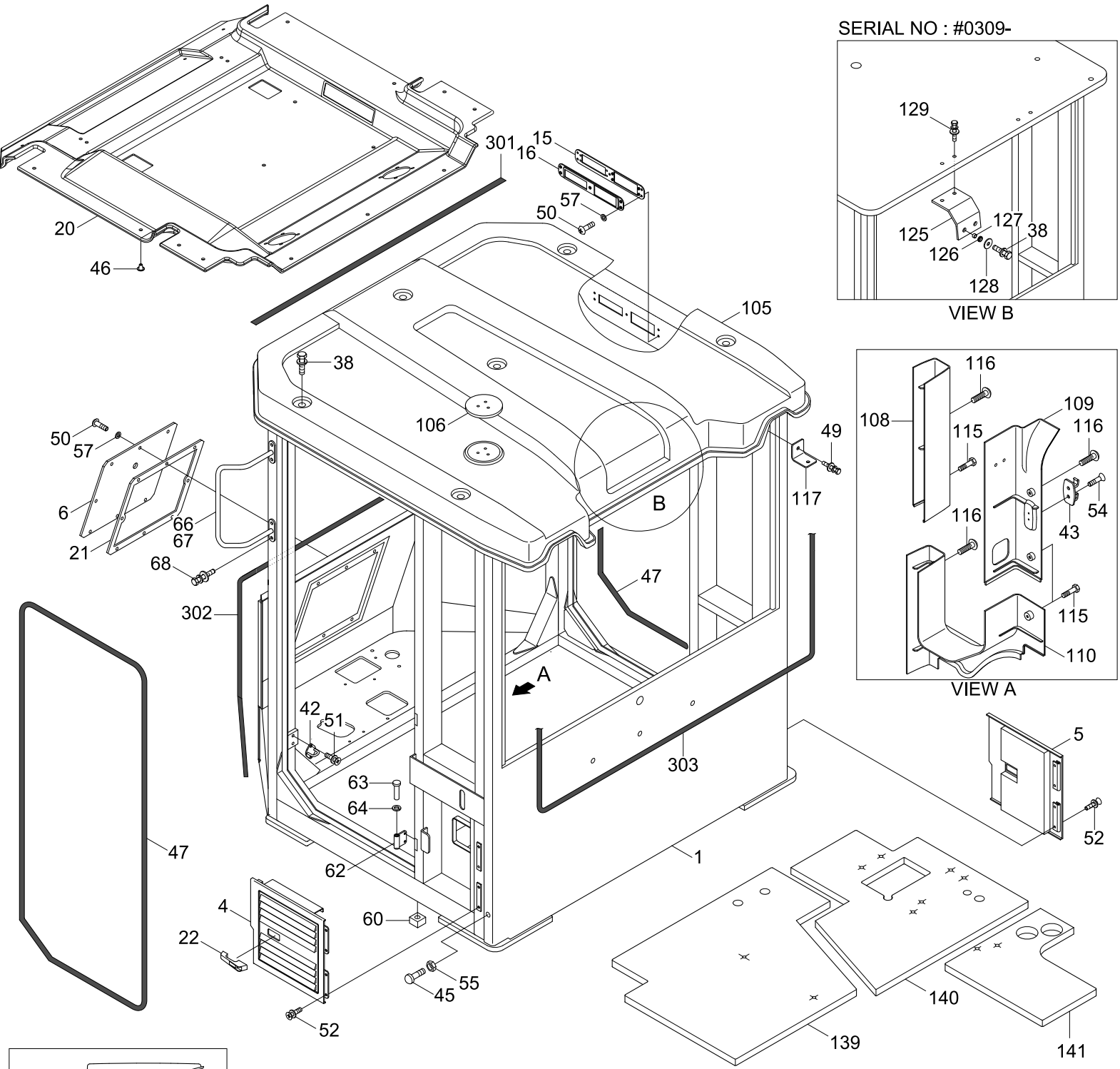

Item	Part_No	IS	Ord	T	Description	Qty	Serial_No	ITC	Remark
*	71LB-23010				CAB ASSY-FIXED WINDOW	1	- #0101		FIXED WINDOW
	71LB-23011				CAB ASSY-FIXED WINDOW	1	#0102 - #0308	D	FIXED WINDOW
	71LB-23012				CAB ASSY-FIXED WINDOW	1	#0309 -	B	FIXED WINDOW
	71LB-23020				CAB ASSY-SLIDING WIN	1	- #0101		SLIDING WINDOW
	71LB-23021				CAB ASSY-SLIDING WIN	1	#0102 - #0308	D	SLIDING WINDOW
	71LB-23022				CAB ASSY-SLIDING WIN	1	#0309 -	B	SLIDING WINDOW
	71LB-23030				CAB ASSY-F/WIN,L/NOISE	1	- #0101		FIXED,LOW NOISE
	71LB-23031				CAB ASSY-F/WIN,L/NOISE	1	#0102 - #0308	D	FIXED,LOW NOISE
	71LB-23032				CAB ASSY-F/WIN,L/NOISE	1	#0309 -	B	FIXED,LOW NOSE
	71LB-23040				CAB ASSY-S/WIN,L/NOISE	1	- #0101		SLIDE,LOW NOISE
	71LB-23041				CAB ASSY-S/WIN,L/NOISE	1	#0102 - #0308	D	SLIDE,LOW NOISE
	71LB-23042				CAB ASSY-S/WIN,L/NOISE	1	#0309 -	B	SLIDE,LOW NOSE
*-1	71LB-23050				.CAB SUB ASSY	1	- #0101		
	71LB-23051				.CAB SUB ASSY	1	#0102 - #0308	D	
	71LB-23052				.CAB SUB ASSY	1	#0309 -	B	
1	71LB-23060				..CAB WA	1	- #0308		
	71LB-23061				..CAB WA	1	#0309 -	D	
4	71LB-01041				..COVER ASSY-LH	1			
5	71LB-01051				..COVER ASSY-RH	1			
6	71LB-01061				..COVER WA-W/MOTOR	1			
7	71LB-01071				..GLASS-FRONT,CENTER	1			
8	71LB-01081				..GLASS-FRONT,SIDE,LH	1			
9	71LB-01091				..GLASS-FRONT,SIDE,RH	1			
10	71LB-01101				..GLASS-SIDE,LH	1			
12	71LB-01121				..GLASS-REAR	1			
15	71LB-01151				..PLATE WA-CASSETTE	1			

Item	Part_No	IS	Ord	T	Description	Qty	Serial_No	ITC	Remark
16	71LB-01162				..COVER-CASSETTE	1			
20	71LB-11450				..HEADLINING	1			
21	71LB-01211				..PAD-RUBBER	1			
22	71LB-01220				..LATCH ASSY	3			
38	S017-120256				..BOLT-HEX	5	- #0308		
					..BOLT-HEX	10	#0309 -	A	
	S017-20020D				..BOLT-HEX	5			
42	71N6-02770				..STRIKER	2			
43	71N6-02920				..HOOK-COAT	1			
45	71EH-13150				..RUBBER-BUMPER	4			
46	E171-1310				..PLUG-HEADLINER	14			
47	S771-039500				..WEATHER STRIP	2			
48	S037-122556				..BOLT-W/WASHER	6			
49	S035-082026				..BOLT-W/WASHER	4			
50	S151-080206				..SCREW-TAPPING	12			
51	S141-080166				..SCREW-FLAT HD	4			
52	S132-061656				..SCREW-W/WASHER	8			
54	S141-040206				..SCREW-FLAT HD	2			
55	S205-10100B				..NUT-HEX	4			
57	S403-08200B				..WASHER-PLAIN	20			
60	71LB-01560				..FOAM-SPONGE	1			
62	71LB-01600				..HINGE	6			
63	74L3-05330				..PIN-HINGE	6			
64	74L3-04450				..WASHER-COPPER	6			
65	71LB-01681				..GLASS-SIDE,RH	1			
66	71LB-01692				..HANDRAIL WA-LH	1			

Item	Part_No	IS	Ord	T	Description	Qty	Serial_No	ITC	Remark
67	71LB-01702				..HANDRAIL WA-RH	1			
68	S037-102026				..BOLT-W/WASHER	4			
101	71LB-04190				..PLATE WA-FRONT	1			
102	71LB-04200				..PLATE WA-SIDE	2			
105	71LB-22010				..COVER-ROOF	1	- #0308		
	71LB-22011				..COVER-ROOF	1	#0309 -	D	
106	71LB-23090				..PLATE-BEACON LAMP	1			
108	71LB-22030				..PILLAR COVER-LH/B	1			
109	71LB-22040				..PILLAR COVER-LH/C	1			
110	71LB-22050				..PILLAR COVER-LH/D	1			
115	71LB-22100				..CAP-BOLT	8			
116	S002-060166				..SCREW-TRUSHEAD	8			
117	71LB-23080				..BRACKET-WORK LAMP	2			
125	71LB-09210				..BRACKET	2	#0309 -	-	
126	71LB-09220				..DECAL-ROLL OVER	10	#0309 -	-	
127	71LB-09230				..WASHER-WIDE	10	#0309 -	-	
128	71LB-09240				..WASHER-WIDE	10	#0309 -	-	
129	S037-082026				..BOLT-W/WASHER	4	#0309 -	-	
130	S017-120256				..BOLT-HEX	10	#0309 -	-	
301	71LB-03540				..SEAL-FRONT/UP	1			
302	71LB-03550				..SEAL-FRONT/LOW	1			
303	71LB-03560				..SEAL-REAR	1			
131	91LB-21010				.ADHESIVE SUN SCREEN	1			
132	91LB-01230				.DECAL-MAX H/REACH	1			
133	91LB-01240				.DECAL-ROLL OVER	1			
134	91LB-01340				.DECAL-HAMMER	1			

Item	Part_No	IS	Ord	T	Description	Qty	Serial_No	ITC	Remark
135	91N6-07261				.ALTERNATE EXIT	1			
136	91N6-07290				.DECAL-FIRE	1			
139	71LB-11261				.SPONGE-BOTTOM/LOW(1)	1			
140	71LB-11271				.SPONGE-BOTTOM/LOW(2)	1			
141	71LB-11281				.SPONGE-BOTTOM/LOW(3)	1			
*-2	@				.ELECTRIC CAB ASSY	1			NOT

CAB(2/5)

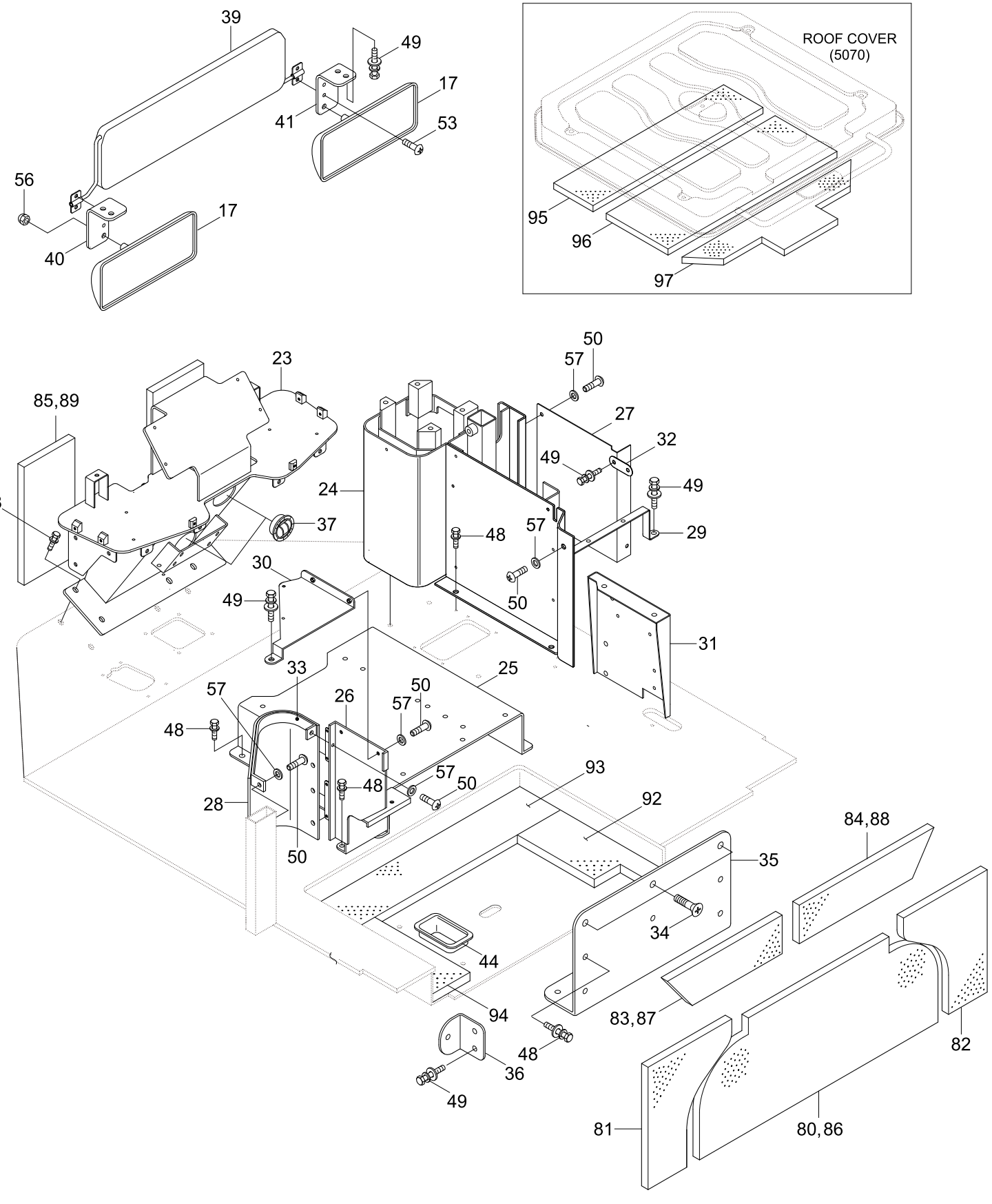
ROOF COVER
(5070)
39
49
17
41
53
56
17
40
95
96
97
50
57
23
85,89
27
32
49
24
49
48
57
29
37
48
50
30
49
31
33
25
57
50
26
57
48
57
50
93
28
48
50
92
84,88
35
34
44
94
83,87
82
48
36
49
81
80,86

Item	Part_No	IS	Ord	T	Description	Qty	Serial_No	ITC	Remark
*	@				CAB ASSY	1			NOT
*-1	@				.CAB SUB ASSY	1			NOT
17	71LB-01170				..MIRROR-ROOM	2			
23	71LB-11250				..SUPPORT WA-D/BOARD	1	- #0029		
	71LB-11251				..SUPPORT WA-D/BOARD	1	#0030 -	D	
24	71LB-11420				..SUPPORT WA-CONSOLE	1	- #0029		
	71LB-11421				..SUPPORT WA-CONSOLE	1	#0030 - #0101	B	
	71LB-20341				..SUPPORT WA-CONSOLE	1	#0102 -	D	
25	71LB-05034				..SEAT BASE WA	1			
26	71LB-05041				..BRACKET WA	1			
27	71LB-05062				..COVER-ELEC	1			
28	71LB-05072				..COVER-WASHER TANK	1			
29	71LB-05082				..BRACKET WA	1			
30	71LB-05091				..BRACKET WA	1			
31	71LB-11410				..SUPPORT WA-ELEC	1			
32	71LB-05110				..PLATE WA-CONSOLE	1			
33	71LB-05121				..COVER-WASHER TANK	1			
34	S145-120166				..SCREW-FLAT HD	3			
35	71LB-11370				..PLATE WA-STORAGE BOX	1			
36	71LB-11380				..PLATE WA-STORAGE BOX	2			
37	71N6-03300				..AIR VENT	2			
39	74L3-04642				..SUN VISOR ASSY	1			
40	71LB-01710				..PLATE-R/MIRROR,LH	1			
41	71LB-01720				..PLATE-R/MIRROR,RH	1			
44	71E9-10640				..GROMMET	2			
48	S037-122556				..BOLT-W/WASHER	16			

Item	Part_No	IS	Ord	T	Description	Qty	Serial_No	ITC	Remark
49	S035-082026				..BOLT-W/WASHER	19			
50	S161-080206				..SCREW-CROSS R/ROUND	30			
53	S141-060156				..SCREW-FLAT HD	4			
56	S275-060006				..NUT-SELF LOCKING	4			
57	S403-08200B				..WASHER-PLAIN	30			
80	71LB-01740				..FOAM-REAR,LO,CENTER	1			
81	71LB-01750				..FOAM-REAR,LO,LH	1			
82	71LB-01760				..FOAM-REAR,LO,RH	1			
83	71LB-01770				..FOAM-REAR,UP,LH	1			
84	71LB-01780				..FOAM-REAR,UP,RH	1			
85	71LB-01790				..FOAM-FRONT	1			
86	71LB-01800				..EVA SHEET-RR,LO,CENTER	1			
87	71LB-01810				..EVA SHEET-RR,UP,LH	1			
88	71LB-01820				..EVA SHEET-RR,UP,RH	1			
89	71LB-01830				..EVA SHEET-FRONT	1			
92	71LB-04090				..FOAM-BOTTOM(1)	1			
93	71LB-04100				..FOAM-BOTTOM(2)	1			
94	71LB-04110				..FOAM-BOTTOM(3)	1			
95	71LB-04130				..FOAM-ROOF(1)	1			
96	71LB-04140				..FOAM-ROOF(2)	1			
97	71LB-04150				..FOAM-ROOF(3)	1			

CAB(2/5, INTERIOR, #0077-)

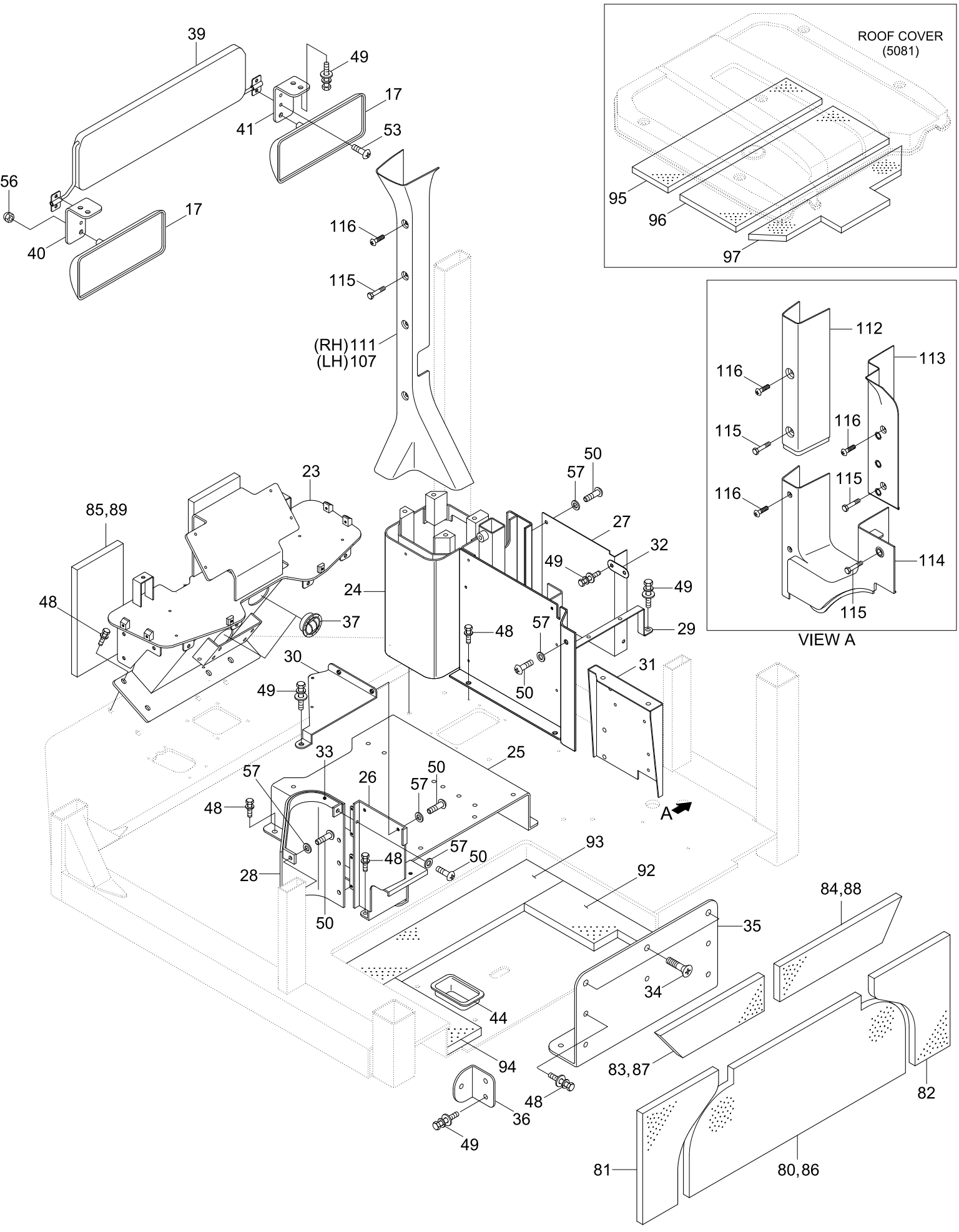

Item	Part_No	IS	Ord	T	Description	Qty	Serial_No	ITC	Remark
*	@				CAB ASSY	1			NOT
*-1	@				.CAB SUB ASSY	1			NOT
17	71LB-01170				..MIRROR-ROOM	2			
23	71LB-11251				..SUPPORT WA-D/BOARD	1			
24	71LB-11421				..SUPPORT WA-CONSOLE	1			
25	71LB-05034				..SEAT BASE WA	1			
26	71LB-05041				..BRACKET WA	1			
27	71LB-05062				..COVER-ELEC	1			
28	71LB-05072				..COVER-WASHER TANK	1			
29	71LB-05082				..BRACKET WA	1			
30	71LB-05091				..BRACKET WA	1			
31	71LB-11410				..SUPPORT WA-ELEC	1			
32	71LB-05110				..PLATE WA-CONSOLE	1			
33	71LB-05121				..COVER-WASHER TANK	1			
34	S141-120166				..SCREW-FLAT HD	3			
35	71LB-11370				..PLATE WA-STORAGE BOX	1			
36	71LB-11380				..PLATE WA-STORAGE BOX	2			
37	71N6-03300				..AIR VENT	2			
39	74L3-04642				..SUN VISOR ASSY	1			
40	71LB-01710				..PLATE-R/MIRROR,LH	1			
41	71LB-01720				..PLATE-R/MIRROR,RH	1			
44	71E9-10640				..GROMMET	2			
48	S037-122556				..BOLT-W/WASHER	16			
49	S035-082026				..BOLT-W/WASHER	17			
50	S151-080206				..SCREW-TAPPING	38			
53	S141-060156				..SCREW-FLAT HD	4			

Item	Part_No	IS	Ord	T	Description	Qty	Serial_No	ITC	Remark
56	S275-06000B				..NUT-SELF LOCKING	4			
57	S403-08200B				..WASHER-PLAIN	30			
80	71LB-01740				..FOAM-REAR,LO,CENTER	1			
81	71LB-01750				..FOAM-REAR,LO,LH	1			
82	71LB-01760				..FOAM-REAR,LO,RH	1			
83	71LB-01770				..FOAM-REAR,UP,LH	1			
84	71LB-01780				..FOAM-REAR,UP,RH	1			
85	71LB-01790				..FOAM-FRONT	1			
86	71LB-01800				..EVA SHEET-RR,LO,CENTER	1			
87	71LB-01810				..EVA SHEET-RR,UP,LH	1			
88	71LB-01820				..EVA SHEET-RR,UP,RH	1			
89	71LB-01830				..EVA SHEET-FRONT	1			
92	71LB-04090				..FOAM-BOTTOM(1)	1			
93	71LB-04100				..FOAM-BOTTOM(2)	1			
94	71LB-04110				..FOAM-BOTTOM(3)	1			
95	71LB-04130				..FOAM-ROOF(1)	1			
96	71LB-04140				..FOAM-ROOF(2)	1			
97	71LB-04150				..FOAM-ROOF(3)	1			
107	71LB-22020				..PILLAR COVER-LH/A	1			
111	71LB-22060				..PILLAR COVER-RH/A	1			
112	71LB-22070				..PILLAR COVER-RH/B	1			
113	71LB-22080				..PILLAR COVER-RH/C	2			
114	71LB-22090				..PILLAR COVER-RH/D	1			
115	71LB-22100				..CAP-BOLT	10			
116	S002-060166				..SCREW-TRUSHEAD	10			

CAB(3/5, DUCT)

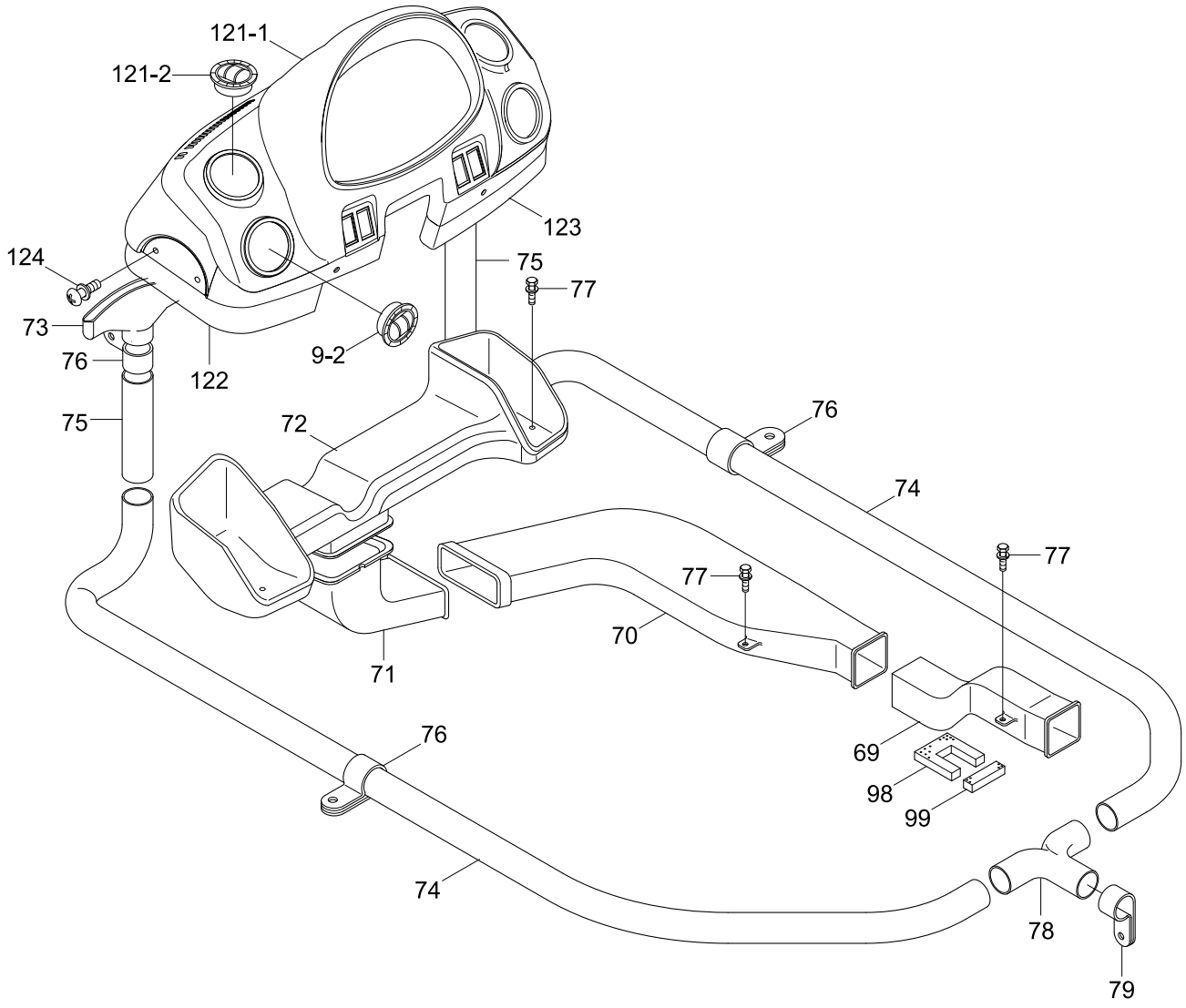
121-1
121-2
123
124
75
77
73
9-2
76
122
75
72
76
74
77
77
70
71
76
69
98
99
74
78
79

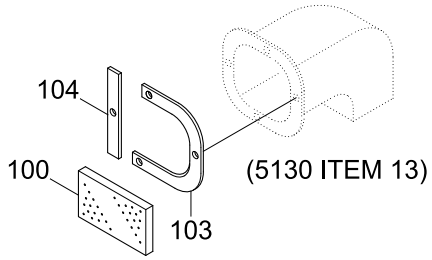
104
100
(5130 ITEM 13)
103

Item	Part_No	IS	Ord	T	Description	Qty	Serial_No	ITC	Remark
*	@				CAB ASSY	1			NOT
*-1	@				.CAB SUB ASSY	1			NOT
69	71LB-10011				..DUCT-FRONT(1)	1			
70	71LB-10021				..DUCT-FRONT(2)	1	- #0029		
	71LB-21230				..DUCT ASSY-A	1	#0030 -	D	
71	71LB-10031				..DUCT-FRONT(3)	1	- #0029		
	71LB-21240				..DUCT ASSY-B	1	#0030 -	D	
72	71LB-10041				..DUCT-FRONT(4)	1			
73	71LB-10081				..DUCT-DEFROSTER	1			
74	71LB-10090				..HOSE-DEFROSTER(1)	2			
75	71LB-10100				..HOSE-DEFROSTER(2)	2			
76	71N6-20230				..CLAMP-HOSE	4			
77	S035-082046				..BOLT-W/WASHER	16			
78	71LB-10130				..CONNECTOR-HOSE	1			
79	S520-055000				..CLAMP-HOSE	9			
98	71LB-04160				..FOAM-BOTTOM(4)	1			
99	71LB-04170				..PAD-BOTTOM	1			
100	71LB-04180				..FOAM-BOTTOM(5)	1	#0077 -	-	
103	71LB-04220				..PLATE-DUCT(1)	1	#0077 -	-	
104	71LB-04230				..PLATE-DUCT(2)	1	#0077 -	-	
121	71LB-20320				..DASHBOARD ASSY	1	#0077 -	-	
121-1	71LB-30021				...DASHBOARD	1	#0077 -	-	
121-2	71N6-03300				...AIR VENT	4	#0077 -	-	
122	71LB-20161				..COVER-DASHBOARD,LH	1	#0077 -	-	
123	71LB-20171				..COVER-DASHBOARD,RH	1	#0077 -	-	
124	S132-081526				..SCREW-W/WASHER	10	#0077 -	-	

CAB(4/5, SIDE DOOR, FIXED WINDOW)

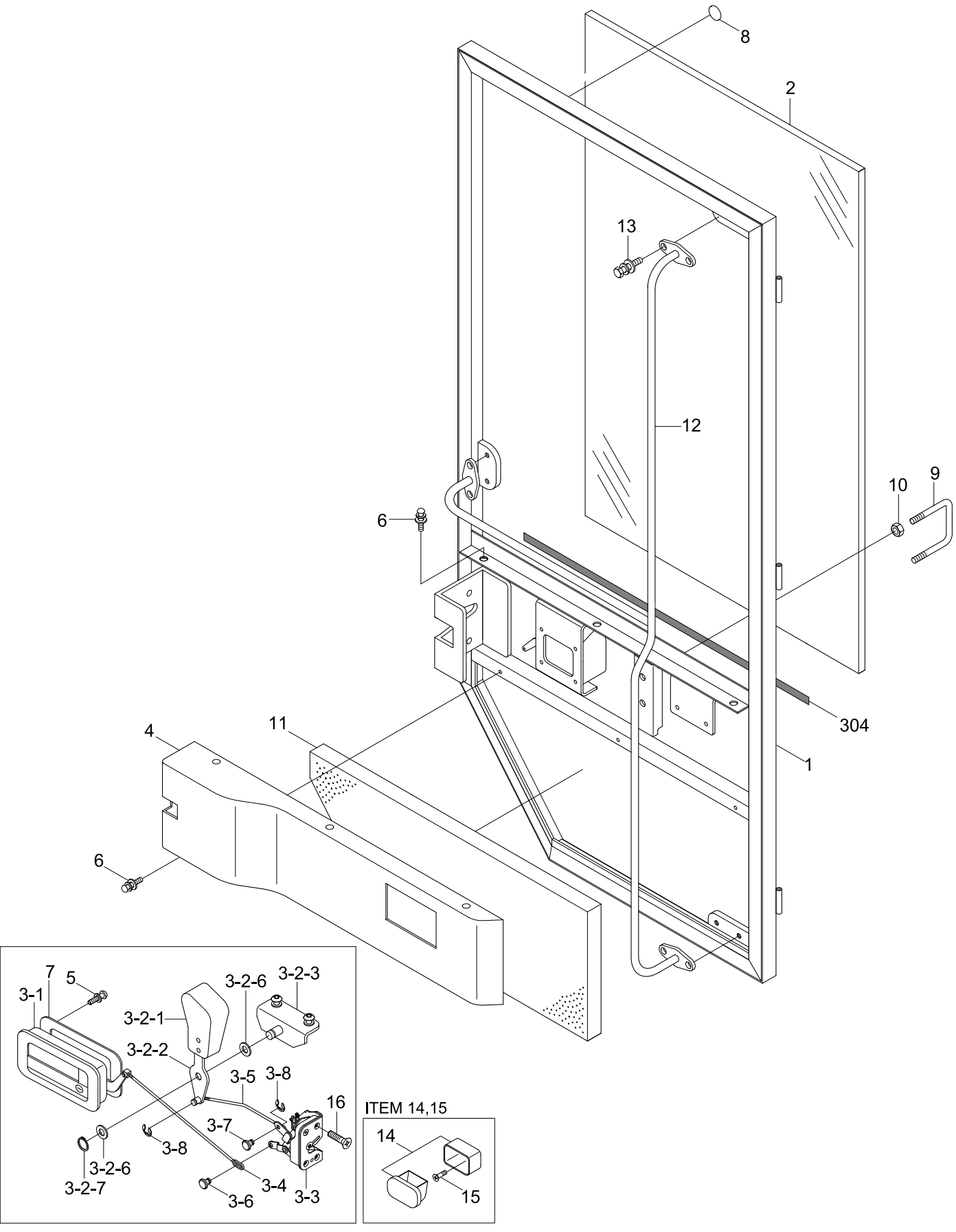

Item	Part_No	IS	Ord	T	Description	Qty	Serial_No	ITC	Remark
*	@				CAB ASSY	1			NOT
	71LB-01021				.SIDE DOOR ASSY-LH	1			
	71LB-01031				.SIDE DOOR ASSY-RH	1			
1	71LB-01231				..SIDE DOOR WA-LH	1			
	71LB-01281				..SIDE DOOR WA-RH	1			
2	71LB-01241				..GLASS-DOOR,UPPER,LH	1			
	71LB-04050				..GLASS-DOOR,UPPER,RH	1			
3	71LB-01251				..HANDLE ASSY-LH	1			
	71LB-01301				..HANDLE ASSY-RH	1			
3-1	71LB-01651				...HANDLE	1			
3-2	71LB-04010				...HANDLE-INNER,LH	1			
	71LB-04020				...HANDLE-INNER,RH	1			
3-2-1	71L7-01160				....KNOB	1			
3-2-2	71LB-04060				....PLATE-LH	1			
	71LB-04070				....PLATE-RH	1			
3-2-3	71L7-01180				....PLATE WA	1			
3-2-6	S401-102002				....WASHER-PLAIN	2			
3-2-7	S601-010001				....RING-RETAINING	1			
3-3	71N6-03410				...LATCH	1			
3-4	71LB-04030				...ROD-HANDLE	1			
3-5	71LB-04040				...ROD-HANDLE	1			
3-6	71N6-03440				...PIN-1	2			
3-7	71N6-03450				...PIN	1			
3-8	S560-050006				...E-RING	3			
4	71LB-01262				..COVER-DOOR,LH	1			
	71LB-01312				..COVER-DOOR,RH	1			

Item	Part_No	IS	Ord	T	Description	Qty	Serial_No	ITC	Remark
5	S131-051546				..SCREW-W/WASHER	8			
6	S131-061646				..SCREW-W/WASHER	7			
7	71LB-01271				..PAD-RUBBER	1			
8	17E1-5146				..BUMPER-DOOR	2			
9	71N6-03650				..STRIKER	1			
10	S203-101006				..NUT-HEX	4			
11	71LB-01940				..FOAM-SPONGE,LH	1			
	71LB-01950				..FOAM-SPONGE,RH	1			
12	71LB-01960				..HANDRAIL WA-LH	1			
	71LB-01970				..HANDRAIL WA-RH	1			
13	S037-102026				..BOLT-W/WASHER	6			
14	E171-1176				..ASHTRAY	1			RH ONLY
15	S141-040166				..SCREW-FLAT HD	2			RH ONLY
304	71LB-03570				..SEAL-DOOR	1			

CAB(4/5, SIDE DOOR, SLIDING WINDOW)

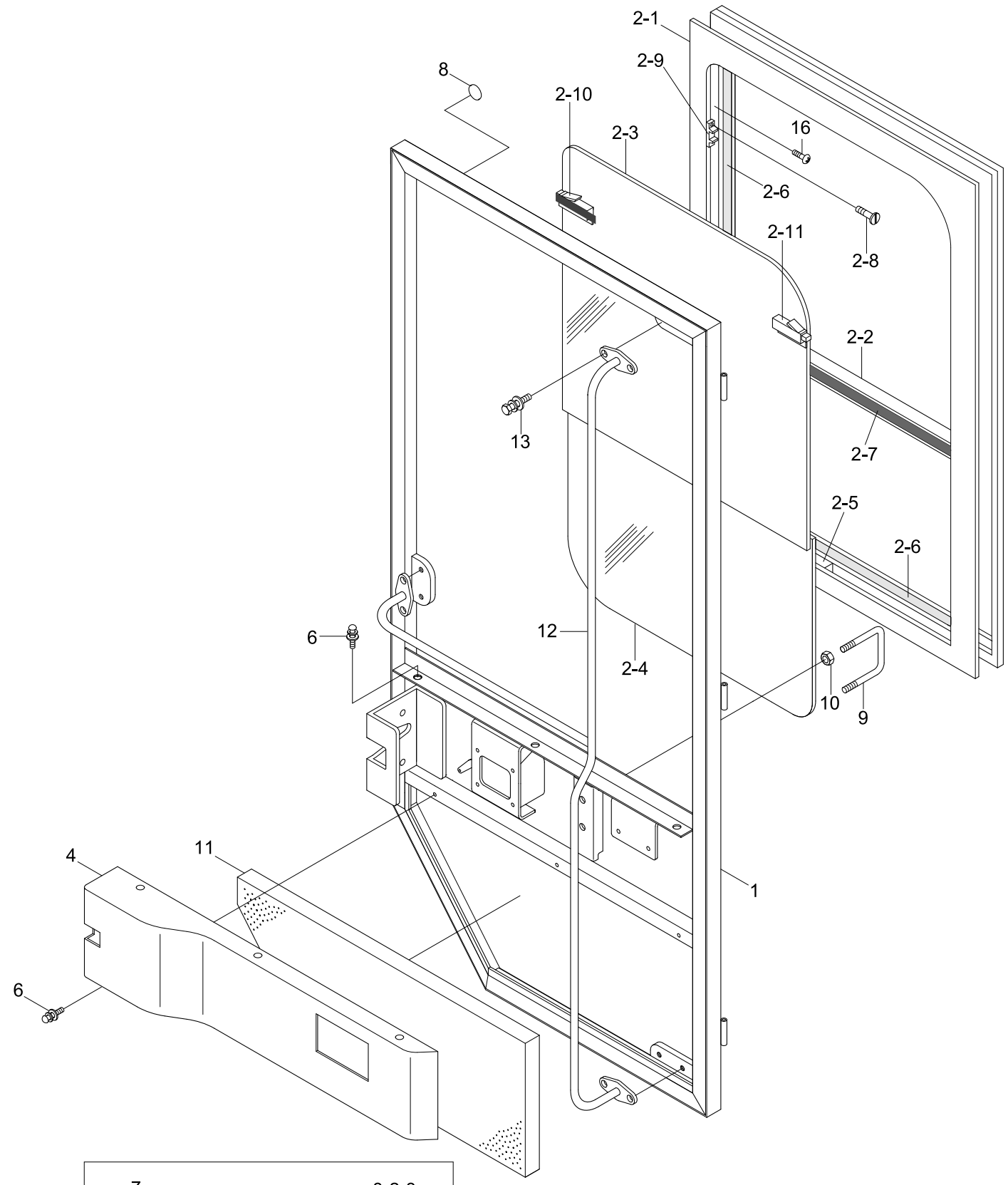

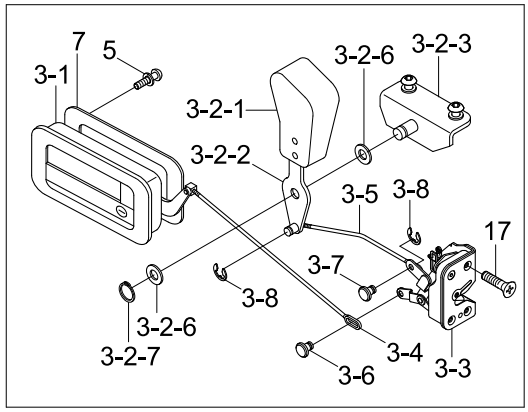

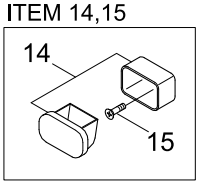

Item	Part_No	IS	Ord	T	Description	Qty	Serial_No	ITC	Remark
*	@				CAB ASSY	1			NOT
	71LB-07020				.SIDE DOOR ASSY-LH	1			
	71LB-07030				.SIDE DOOR ASSY-RH	1			
1	71LB-07040				..SIDE DOOR WA-LH	1			
	71LB-07050				..SIDE DOOR WA-RH	1			
2	71LB-07060				..SLIDING WINDOW ASSY	1			
2-1	71LB-07310				...AL SASH-A TYPE	1			
2-2	71LB-07320				...AL SASH-B TYPE	1			
2-3	71LB-07330				...GLASS-OUT	1			
2-4	71LB-07340				...GLASS-IN	1			
2-5	71LB-07350				...STOPPER-GLASS	1			
2-6	E171-1163				...SEAL	2			
2-7	E171-1164				...SEAL	1			
2-8	S141-030086				...SCREW-FLAT HD	12			
2-9	71L1-3328				...BLOCK	6			
2-10	71L1-3332				...LOCK-LH	1			
2-11	71L1-3353				...LOCK-RH	1			
3	71LB-01251				..HANDLE ASSY-LH	1			
	71LB-01301				..HANDLE ASSY-RH	1			
3-1	71LB-01651				...HANDLE	1			
3-2	71LB-04010				...HANDLE-INNER,LH	1			
	71LB-04020				...HANDLE-INNER,RH	1			
3-2-1	71L7-01160				....KNOB	1			
3-2-2	71LB-04060				....PLATE-LH	1			
	71LB-04070				....PLATE-RH	1			
3-2-3	71L7-01180				....PLATE WA	1			

Item	Part_No	IS	Ord	T	Description	Qty	Serial_No	ITC	Remark
3-2-6	S401-102002				....WASHER-PLAIN	2			
3-2-7	S601-010001				....RING-RETAINING	1			
3-3	71N6-03410				...LATCH	1			
3-4	71LB-04030				...ROD-HANDLE	1			
3-5	71LB-04040				...ROD-HANDLE	1			
3-6	71N6-03440				...PIN-1	2			
3-7	71N6-03450				...PIN	1			
3-8	S560-050006				...E-RING	3			
4	71LB-07070				..COVER-DOOR,LH	1			
	71LB-07080				..COVER-DOOR,RH	1			
5	S131-051546				..SCREW-W/WASHER	8			
6	S131-061646				..SCREW-W/WASHER	7			
7	71LB-01271				..PAD-RUBBER	1			
8	17E1-5146				..BUMPER-DOOR	2			
9	71N6-03650				..STRIKER	1			
10	S203-101006				..NUT-HEX	4			
11	71LB-07090				..FOAM-DOOR/LH	1			
	71LB-07100				..FOAM-DOOR/RH	1			
12	71LB-07110				..HANDRAIL WA-LH	1			
	71LB-07120				..HANDRAIL WA-RH	1			
13	S037-102026				..BOLT-W/WASHER	6			
14	E171-1176				..ASHTRAY	1			
15	S141-040166				..SCREW-FLAT HD	2			
16	S151-040156				..SCREW-TAPPING	10			
304	71LB-03570				..SEAL-DOOR	1			

CAB(5/5, DOOR LATCH ASSY)

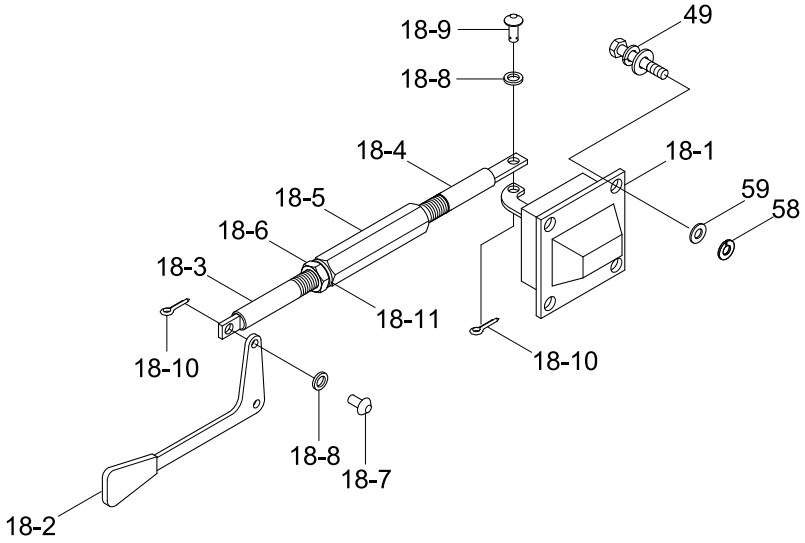

Item	Part_No	IS	Ord	T	Description	Qty	Serial_No	ITC	Remark
*-1	@				CAB SUB ASSY	1			NOT
18	71LB-01181				.LATCH ASSY-BACK/LH	1			
	71LB-01191				.LATCH ASSY-BACK/RH	1			
18-1	71EH-11260				..LOCK ASSY-LH	1			
	71LB-01340				..LOCK ASSY-RH	1			
18-2	71LB-01620				..LEVER ASSY	1			
18-3	71LB-01320				..ROD	1			
18-4	71LB-01330				..ROD	1			
18-5	71EH-11210				..NUT	1			
18-6	S205-081002				..NUT-HEX	1			
18-7	71EH-11250				..PIN-ROUND	1			
18-8	S403-05200B				..WASHER-PLAIN	2	#0001 -	-	
18-9	71EH-11240				..PIN-ROUND	1			
18-10	S051-050002				..PIN-SELF LOCK	2	#0001 -	-	
18-11	S411-080006				..WASHER-SPRING	1			
49	S035-082026				.BOLT-W/WASHER	8			
58	S403-06200B				.WASHER-PLAIN	8			
59	S411-060006				.WASHER-SPRING	8			

CONSOLE BOX

2-SPOOL, 1-LEVER

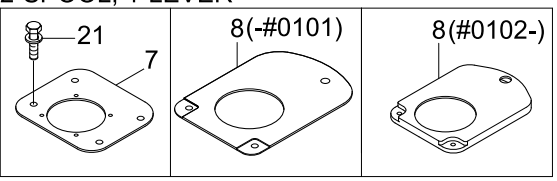

3-SPOOL, 2-LEVER

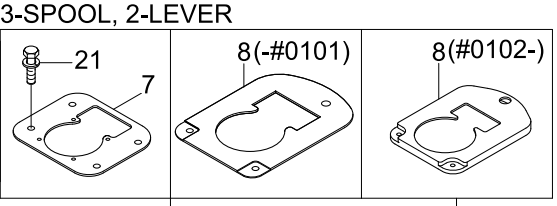

2-SPOOL, 2-LEVER(-#0101)

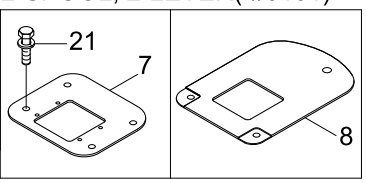

3-SPOOL, 3-LEVER(-#0101)

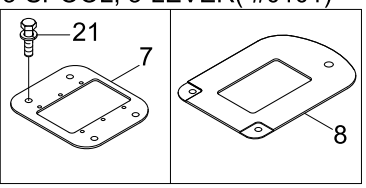

FINGERTIP CONTROL
2-SPOOL, 2-LEVER(#0102-)

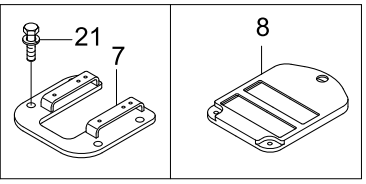

3-SPOOL, 3-LEVER(#0102-)

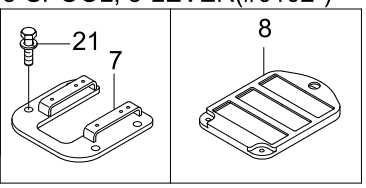

SERIAL NO : -#0076

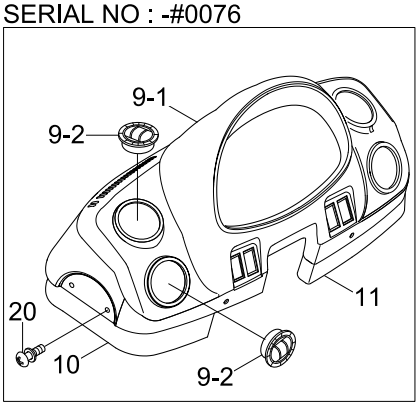

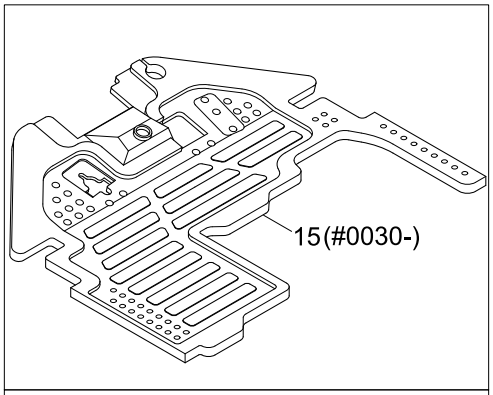

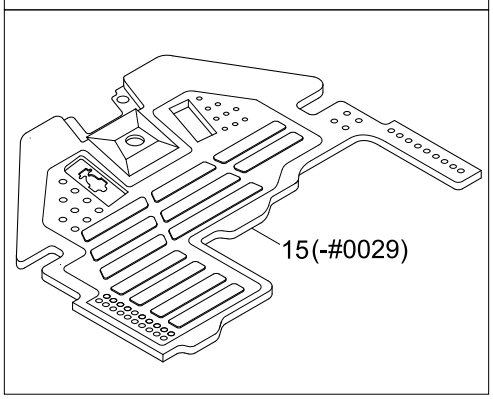

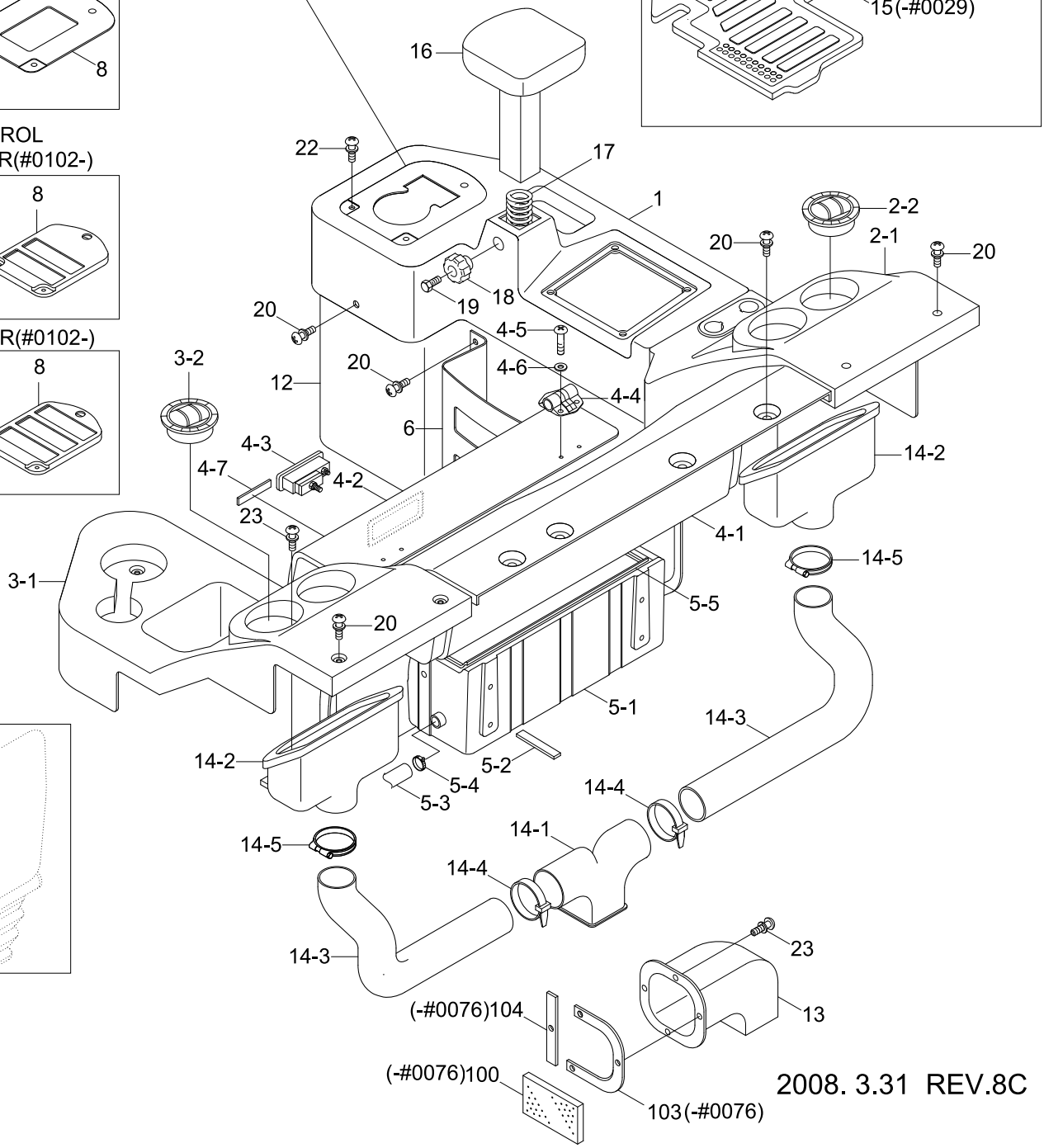

SEAT MGT(5140)

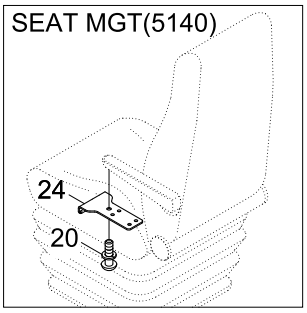

Item	Part_No	IS	Ord	T	Description	Qty	Serial_No	ITC	Remark
1	71LB-20011				CONSOLE BOX-RH,FR	1			
2	71LB-20300				CONSOLE BOX ASSY-RH/RR	1			
2-1	71LB-20021				.CONSOLE BOX-RH,RR	1			
2-2	71N6-03300				.AIR VENT	2			
3	71LB-20310				CONSOLE BOX ASSY-LH	1			
3-1	71LB-20031				.CONSOLE BOX-LH	1			
3-2	71N6-03300				.AIR VENT	2			
4	71LB-21022				REAR COVER ASSY	1			
4-1	71LB-21031				.REAR COVER-BODY	1			
4-2	71LB-21041				.COVER-DOOR	1			
4-3	71LB-21180				.LATCH ASSY	1			
4-4	71N6-21900				.HINGE	2			
4-5	S161-050166				.SCREW-CROSS R/ROUND	4			
4-6	S403-052006				.WASHER-PLAIN	4			
4-7	71LB-21160				.PAD-RUBBER	4			
5	71LB-21150				STORAGE BOX ASSY	1			
5-1	71LB-21051				.STORAGE BOX	1			
5-2	71LB-21170				.PAD-RUBBER/STORAGE	3			
5-3	71N6-20360				.HOSE-STORAGE BOX	1			
5-4	71N6-20370				.CLIP-HOSE	1			
5-5	71LB-21190				.SPONGE	1			
6	71LB-20101				BOOK BOX	1			
7	71LB-20230				PLATE-RCV/2S/1L	1			2-SPOOL,1-LEVER
	71LB-20240				PLATE-RCV/3S/2L	1			3-SPOOL,2-LEVER
	71LB-20250				PLATE-RCV/2S/2L	1	- #0101		2-SPOOL,2-LEVER
	71LB-20331				PLATE-RCV	1	#0102 -	D	2-SPOOL,2-LEVER

Item	Part_No	IS	Ord	T	Description	Qty	Serial_No	ITC	Remark
7	71LB-20260				PLATE-RCV/3S/3L	1	- #0101		3-SPOOL,3-LEVER
	71LB-20331				PLATE-RCV	1	#0102 -	D	3-SPOOL,3-LEVER
8	71LB-20200				COVER-J/LEVER/2S/1L	1	- #0101		2-SPOOL,1-LEVER
	71LB-20201				COVER-J/LEVER/2S/1L	1	#0102 -	D	2-SPOOL,1-LEVER
	71LB-20111				COVER-J/LEVER/3S/2L	1	- #0101		3-SPOOL,2-LEVER
	71LB-20112				COVER-J/LEVER/3S/2L	1	#0102 -	D	3-SPOOL,2-LEVER
	71LB-20210				COVER-J/LEVER/2S/2L	1	- #0101		2-SPOOL,2-LEVER
	71LB-20371				COVER-J/LEVER/2S/2L	1	#0102 -	D	2-SPOOL,2-LEVER
	71LB-20220				COVER-J/LEVER/3S/3L	1	- #0101		3-SPOOL,3-LEVER
	71LB-20381				COVER-J/LEVER/3S/3L	1	#0102 -	D	3-SPOOL,3-LEVER
9	71LB-20320				DASHBOARD ASSY	1	- #0076	-	SEE 5100
9-1	71LB-30021				.DASHBOARD	1	- #0076	-	SEE 5100
9-2	71N6-03300				.AIR VENT	4	- #0076	-	SEE 5100
10	71LB-20161				COVER-DASHBOARD,LH	1	- #0076	-	SEE 5100
11	71LB-20171				COVER-DASHBOARD,RH	1	- #0076	-	SEE 5100
12	71LB-05051				COVER-RCV	1			
13	71LB-10111				DUCT-INLET	1			
14	71LB-10150				DUCT ASSY-REAR	1			
14-1	71LB-10051				.DUCT-REAR(1)	1			
14-2	71LB-10061				.DUCT-REAR(2)	2			
14-3	71LB-10070				.HOSE-REAR	2			
14-4	S552-102370				.CLAMP-BAND	2			
14-5	S520-085000				.CLAMP-HOSE	2			
15	71LB-21061				MAT-FLOOR/DUAL BRAKE	1	- #0029		
	71LB-21062				MAT-FLOOR	1	#0030 -	D	
16	71LB-20121				WRIST REST ASSY	1			

Item	Part_No	IS	Ord	T	Description	Qty	Serial_No	ITC	Remark
17	71LB-20190				SPRING	1			
18	61S1-1037				HANDLE	1			
19	S015-080356				BOLT-HEX	1			
20	S132-081526				SCREW-W/WASHER	51			
21	S037-102556				BOLT-W/WASHER	4			
22	S131-051546				SCREW-W/WASHER	2			
23	S151-030106				SCREW-TAPPING	3			
24	71LB-21141				PLATE-J/STRG LEVER	1			
100	71LB-04180				FOAM-BOTTOM(5)	1	- #0076	-	SEE 5100
103	71LB-04220				PLATE-DUCT(1)	1	- #0076	-	SEE 5100
104	71LB-04230				PLATE-DUCT(2)	1	- #0076	-	SEE 5100

SEAT MOUNTING

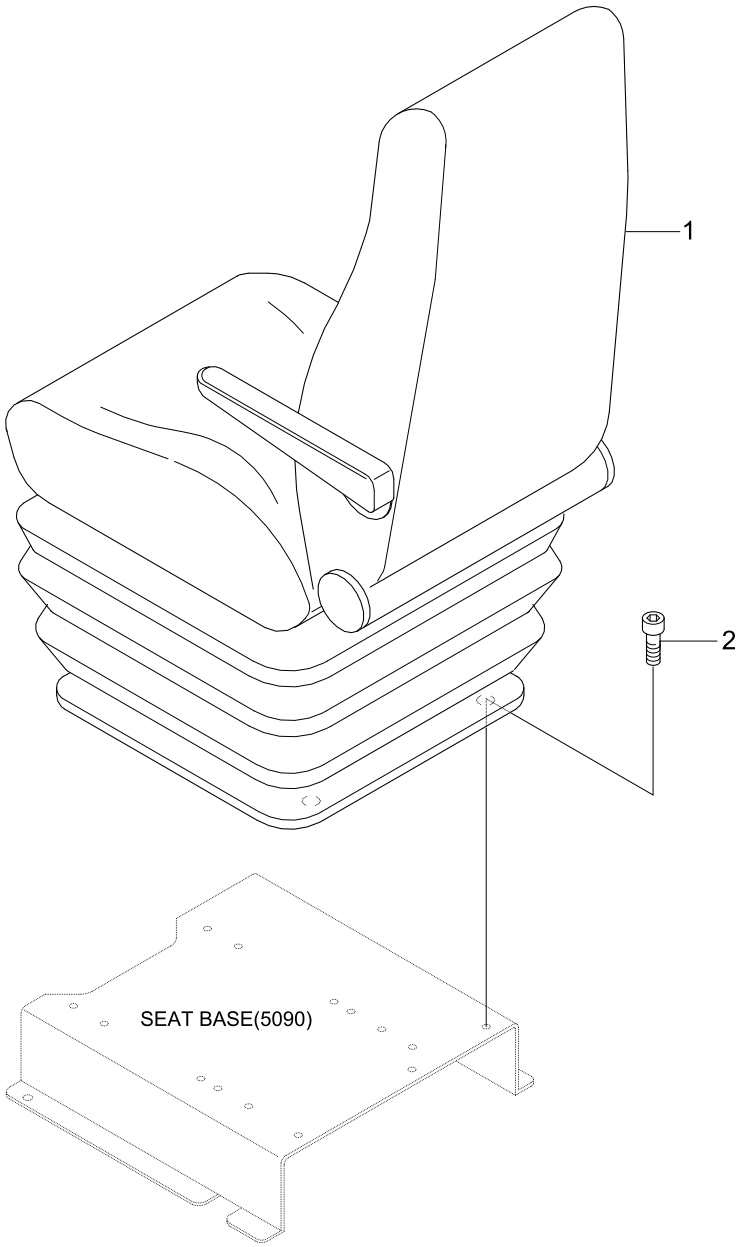

Item	Part_No	IS	Ord	T	Description	Qty	Serial_No	ITC	Remark
	71L1-16550				SEAT ASSY-2",STATIC	1			SEE 5150
	71LB-32020				SEAT ASSY-3",MECHENICAL	1			SEE 5151/52
	71LB-32040				SEAT ASSY-3",AIR RIDE	1			SEE 5153/54
	74L4-00010				SEAT ASSY-2",VINYL	1			SEE 5156
	71LB-33010				SEAT ASSY-MECH,2"	1	- #0120		
1	71LB-33011				SEAT ASSY-MECH,2"	1	#0121 -	A	
	71LB-33110				SEAT ASSY-HEATED	1	- #0120		SEE 5155
	71LB-33111				SEAT ASSY-HEATED	1	#0121 -	A	SEE 5155
	71LB-32060				SEAT ASSY-LONG/AIR/HEATED	1			
	71LB-32070				SEAT ASSY-HEATED/MECHANICAL	1			
	71LB-32080				SEAT ASSY-HEATED/AIR RIDE	1			
2	S105-08015V				BOLT-SOCKET	4			

SEAT(MECHANICAL, KAB)

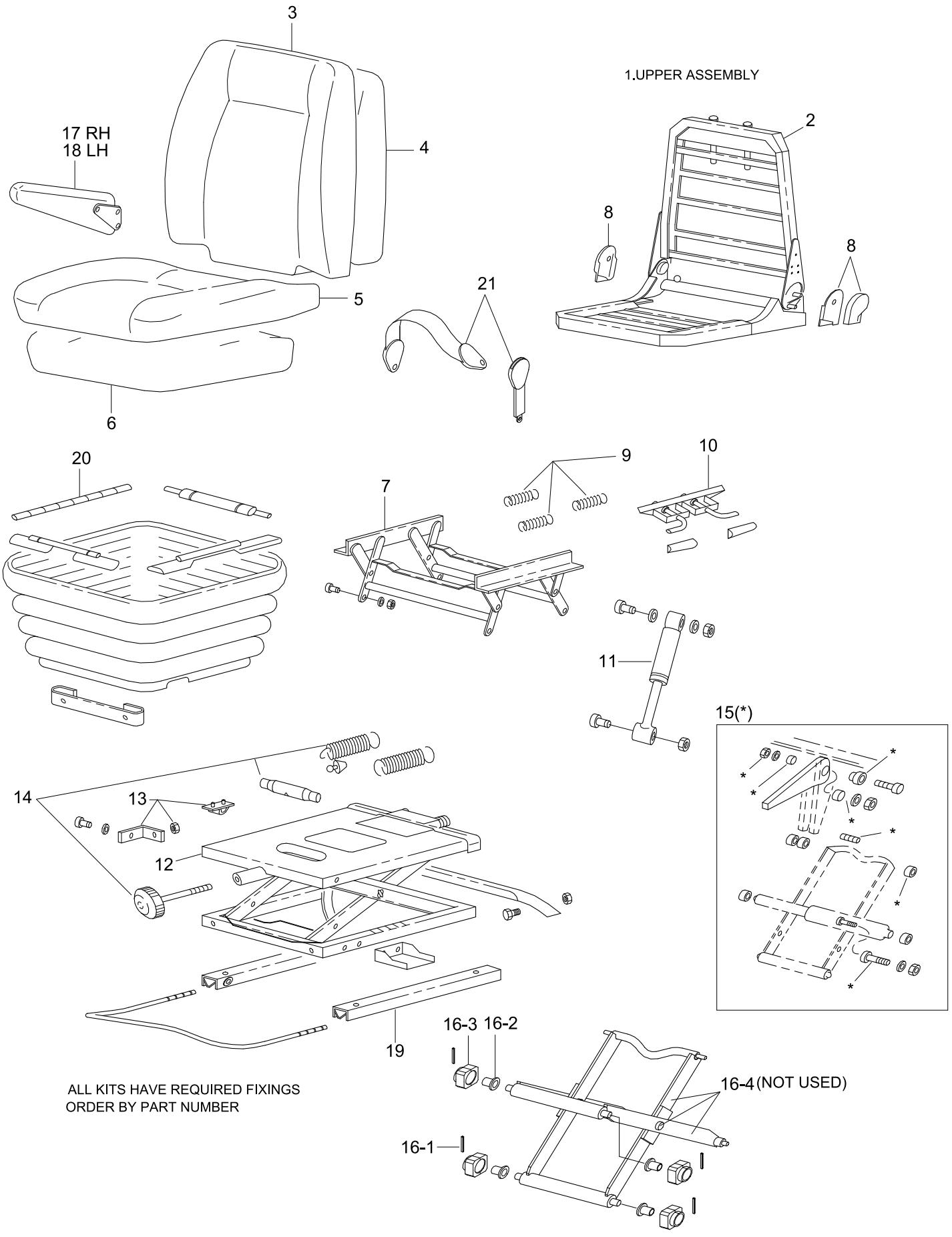

ALL KITS HAVE REQUIRED FIXINGS
ORDER BY PART NUMBER

Item	Part_No	IS	Ord	T	Description	Qty	Serial_No	ITC	Remark
*	71L1-16550				SEAT ASSY-2",STATIC	1			LEATHER
1	166115				.UPPER ASSY	1			
2	160428				.FRAME ASSY	1			
3	166116				.COVER ASSY-BACK	1			
4	160430				.KIT-BACK FOAM	1			
5	166117				.COVER ASSY-SEAT	1			
6	160432				.KIT-SEAT FOAM	1			
7	160055				.KIT-HEIGHT RISER	1			
8	160433				.KIT-HANDLE ASSY	1			
9	160122				.KIT-HEIGHT RISER SPRING	1			
10	157157				.KIT-HEIGHTRISER LATCH	1			
11	160435				.KIT-DAMPER	1			
12	160452				.KIT-SUSPENSION COVER	1			
13	160436				.KIT-U/STOP B/STOP	1			
14	160438				.KIT-WEIGHT ADJUSTER	1			
15	165989				.KIT-LVR/CENTER PIVOT	1			
16	160439				.KIT-BEARING	1			
16-1	53590140009				..PIN-ROLL	4			
16-2	789171				..BEARING-FLANGED	4			
16-3	165694				..SUPPORT-HALF BEARING	4			
16-4	165989				..KIT-LVR/CENTER PIVOT	4	- #0001	-	NOT USED
17	156707				.KIT-ARM REST,RH	1			
18	156706				.KIT-ARM REST,LH	1			
19	160442				.KIT-FORE & AFT ADJUST	1			
20	160441				.KIT-SUSPENSION COVER	1			
21	78987				.KIT-SEATBELT	1			

SEAT(MECHANICAL, GRAMMER, 1/2)

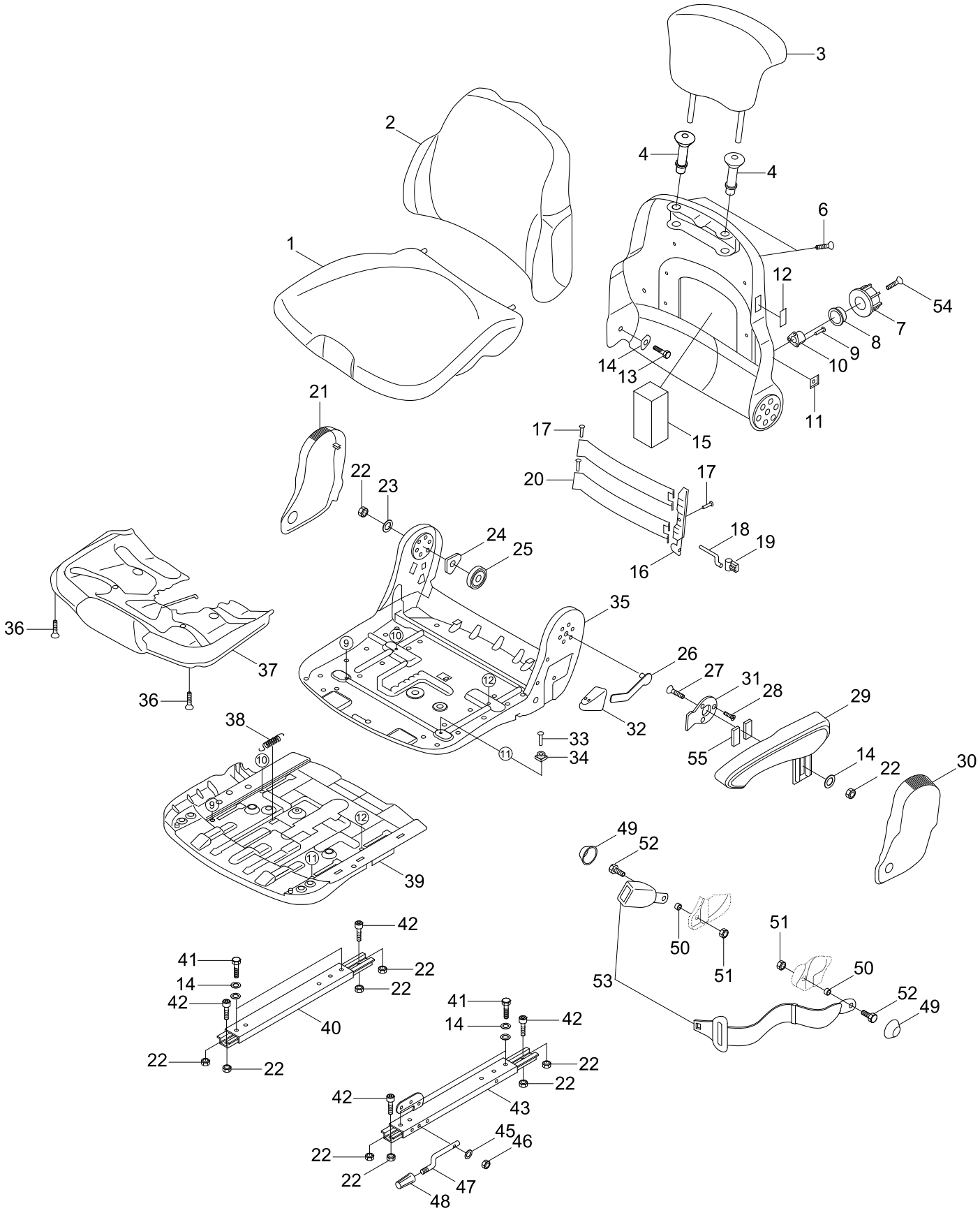

Item	Part_No	IS	Ord	T	Description	Qty	Serial_No	ITC	Remark
*	71LB-32020				SEAT ASSY-3",MECHENICAL	1			
1	ZGBH-00001				.SEAT CUSHION	1			
2	ZGBH-00002				.BACKREST CUSHION	1			
3	ZGBH-00009				.HEADREST	1			
4	ZGBH-00004				.BUSH	2			
5	ZGBH-00005				.BACKREST PLATE	1			
6	ZGBH-00103				.SCREW-SELF TAPPING	4			
7	ZGBH-00007				.HANDLE	1			
8	ZGBH-00008				.WHEEL-TOOLHEAD	1			
9	ZGBH-00010				.RIVET-BLIND	3			
10	ZGBH-00011				.BRAKE-SLING SPRING	1			
11	ZGBH-00012				.STICKER	1			
12	ZGBH-00013				.COVER-PLASTIC	1			
13	ZGBH-00014				.SCREW-HEX HEAD	1			
14	ZGBH-00015				.WASHER	13			
15	ZGBH-00016				.SPONGE	1			
16	ZGBH-00017				.WINKEL	1			
17	ZGBH-00018				.RIVET	3			
18	ZGBH-00019				.RODS	1			
19	ZGBH-00020				.CARRIER	1			
20	ZGBH-00021				.PLATE	2			
21	ZGBH-00022				.COVER-RH	1			
22	ZGBH-00023				.HEX NUT-BLACK	10			
23	ZGBH-00024				.WASHER-BLACK	1			
24	ZGBH-00025				.SPRING HOLDER	1			
25	ZGBH-00026				.SPRING-LEG	1			

Item	Part_No	IS	Ord	T	Description	Qty	Serial_No	ITC	Remark
26	ZGBH-00027				.LEVER	1			
27	ZGBH-00028				.SCREW	1			
28	ZGBH-00029				.SCREW	3			
29	ZGBH-00030				.ARMREST-LH	1			
30	ZGBH-00031				.COVER-LH	1			
31	ZGBH-00032				.PLATE	1			
32	ZGBH-00033				.HANDLE	1			
33	ZGBH-00034				.RIVET	4			
34	ZGBH-00035				.PROFILE-GLIDING	4			
35	ZGBH-00036				.SEAT PLATE	1			
36	ZGBH-00037				.SCREW-SELF TAPPING	4			
37	ZGBH-00038				.ADJUSTMENT-TILTING	1			
38	ZGBH-00039				.SPRING	1			
39	ZGBH-00040				.ADJUSTMENT-SEAT DEPTH	1			
40	ZGBH-00041				.SLIDE RAIL-RH	1			
41	ZGBH-00042				.SCREW-HEX HEAD	4			
42	ZGBH-00043				.SCREW-CYLINDRIC HEAD	4			
43	ZGBH-00044				.ROLLING RAIL-LH	1			
44	ZGBH-00045				.BRACKET	1			
45	ZGBH-00046				.WASHER	1			
46	ZGBH-00047				.NUT	1			
47	ZGBH-00048				.HANDLE	1			
48	ZGBH-00049				.KNOB-PLASTIC	1			
49	ZGBH-00050				.COVER	2			
50	ZGBH-00051				.BUSH	2			
51	ZGBH-00052				.NUT	2			

Item	Part_No	IS	Ord	T	Description	Qty	Serial_No	ITC	Remark
52	ZGBH-00053				.SCREW	2			
53	ZGBH-00102				.SEAT BELT	2			
54	ZGBH-00055				.SCREW	1			
55	ZGBH-00056				.PLATE-RUBBER	1			

SEAT(MECHANICAL, GRAMMER, 2/2)

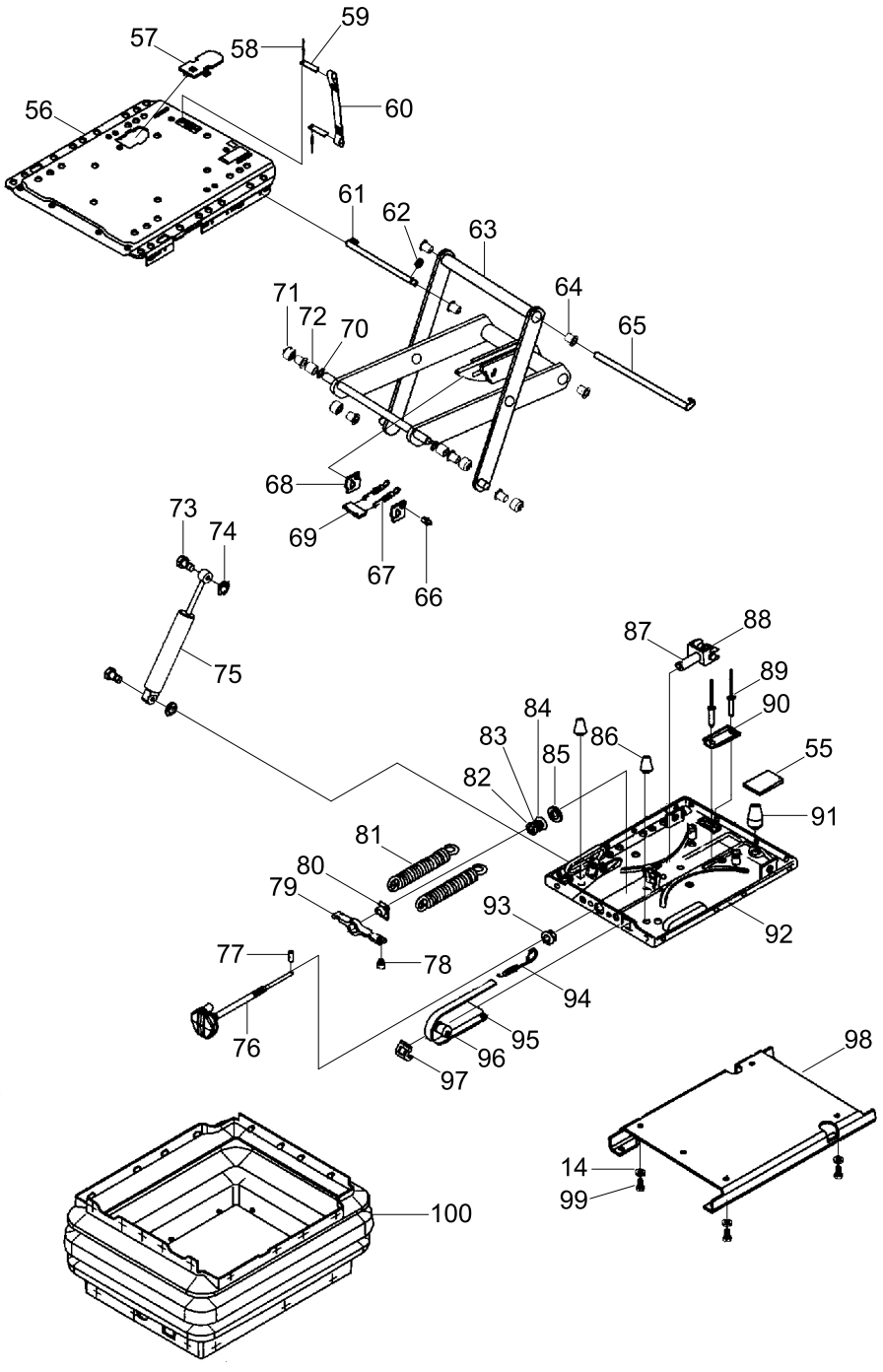

Item	Part_No	IS	Ord	T	Description	Qty	Serial_No	ITC	Remark
*	@				SEAT ASSY-3",MECHENICAL	1			NOT
56	ZGBH-00057				.UPPER PLATE-SUSPENSION	1			
57	ZGBH-00058				.PANEL-TRIM	1			
58	ZGBH-00059				.POP RIVET	2			
59	ZGBH-00060				.PLATE	2			
60	ZGBH-00061				.BELT-TETHER	1			
61	ZGBH-00062				.BOLT	1			
62	ZGBH-00063				.LOCK WASHER	1			
63	ZGBH-00064				.SWING ARM	1			
64	ZGBH-00065				.BUSH-PLASTIC	8			
65	ZGBH-00066				.PIN	1			
66	ZGBH-00067				.BOLT	1			
67	ZGBH-00068				.SPRING-TENSION	2			
68	ZGBH-00069				.PLATE	2			
69	ZGBH-00070				.STRIP-COVER	1			
70	ZGBH-00071				.WASHER	2			
71	ZGBH-00072				.ROLLER	4			
72	ZGBH-00073				.BUSH	2			
73	ZGBH-00074				.BOLT	2			
74	ZGBH-00075				.LOCK WASHER	2			
75	ZGBH-00076				.ABSORBER-SHOCK	1			
76	ZGBH-00077				.HANDLE	1			
77	ZGBH-00078				.PIN	1			
78	ZGBH-00079				.INSERT	1			
79	ZGBH-00080				.SPRING BRACKET	1			
80	ZGBH-00081				.FLANGE NUT	1			

Item	Part_No	IS	Ord	T	Description	Qty	Serial_No	ITC	Remark
81	ZGBH-00082				.SPRING	2			
82	ZGBH-00083				.WASHER	1			
83	ZGBH-00084				.BEARING	1			
84	ZGBH-00085				.WASHER	1			
85	ZGBH-00086				.WASHER-PLASTIC	1			
86	ZGBH-00087				.RUBBER	2			
87	ZGBH-00088				.GABEL	1			
88	ZGBH-00089				.BEARING-TRIPLE	1			
89	ZGBH-00090				.POP RIVET	2			
90	ZGBH-00091				.U-PROFILE	1			
91	ZGBH-00092				.RUBBER	1			
92	ZGBH-00093				.PLATE-BOTTOM	1			
93	ZGBH-00094				.BUSH	1			
94	ZGBH-00095				.SPRING-TENSION	1			
95	ZGBH-00096				.INDICATOR	1			
96	ZGBH-00097				.ROLLER	1			
97	ZGBH-00098				.DEVICE-GUIDING	1			
98	ZGBH-00099				.PLATE-BOTTOM	1			
99	ZGBH-00104				.SCREW-HEX HEAD	4			
100	ZGBH-00101				.BELLOWS	1			

SEAT(AIR RIDE, 3", 1/2)

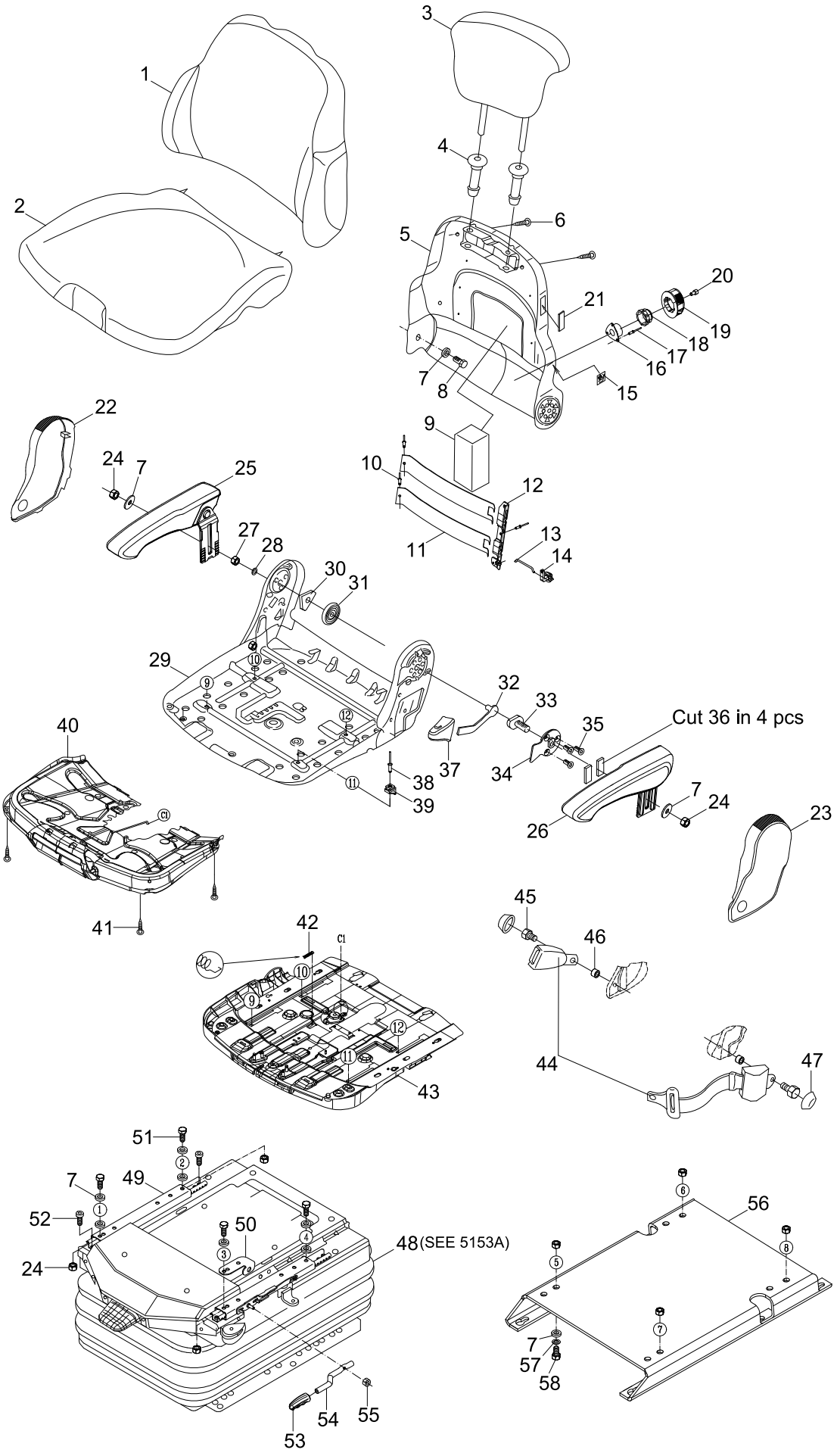

Item	Part_No	IS	Ord	T	Description	Qty	Serial_No	ITC	Remark
*	71LB-32040				SEAT ASSY-3",AIR RIDE	1			
1	ZGBH-00002				.BACKREST CUSHION	1			
2	ZGBH-00001				.SEAT CUSHION	1			
3	ZGBH-00009				.HEADREST	1			
4	ZGBH-00004				.BUSH	2			
5	ZGBH-00005				.BACKREST PLATE	1			
6	ZGBH-00103				.SCREW-SELF TAPPING	4			
7	ZGBH-00015				.WASHER	14			
8	ZGBH-00014				.SCREW-HEX HEAD	1			
9	ZGBH-00016				.SPONGE	1			
10	ZGBH-00107				.RIVET	3			
11	ZGBH-00021				.PLATE	2			
12	ZGBH-00017				.WINKEL	1			
13	ZGBH-00019				.RODS	1			
14	ZGBH-00020				.CARRIER	1			
15	ZGBH-00012				.STICKER	1			
16	ZGBH-00011				.BRAKE-SLING SPRING	1			
17	ZGBH-00010				.RIVET-BLIND	3			
18	ZGBH-00008				.WHEEL-TOOLHEAD	1			
19	ZGBH-00007				.HANDLE	1			
20	ZGBH-00055				.SCREW	1			
21	ZGBH-00013				.COVER-PLASTIC	1			
22	ZGBH-00022				.COVER-RH	1			
23	ZGBH-00031				.COVER-LH	1			
24	ZGBH-00023				.HEX NUT-BLACK	9			
25	ZGBH-00108				.ARM REST-RH	1			

Item	Part_No	IS	Ord	T	Description	Qty	Serial_No	ITC	Remark
26	ZGBH-00030				.ARMREST-LH	1			
27	ZGBH-00109				.SELF LOCK NUT	1			
28	ZGBH-00024				.WASHER-BLACK	1			
29	ZGBH-00110				.SEAT PLATE GS.LA.	1			
30	ZGBH-00025				.SPRING HOLDER	1			
31	ZGBH-00026				.SPRING-LEG	1			
32	ZGBH-00027				.LEVER	1			
33	ZGBH-00112				.SCREW	1			
34	ZGBH-00113				.PLATE	1			
35	ZGBH-00029				.SCREW	3			
36	ZGBH-00056				.PLATE-RUBBER	4			
37	ZGBH-00033				.HANDLE	1			
38	ZGBH-00034				.RIVET	4			
39	ZGBH-00035				.PROFILE-GLIDING	4			
40	ZGBH-00038				.ADJUSTMENT-TILTING	1			
41	ZGBH-00037				.SCREW-SELF TAPPING	4			
42	ZGBH-00039				.SPRING	1			
43	ZGBH-00114				.ADJUSTMENT-SEAT DEPTH	1			
44	ZGBH-00102				.SEAT BELT	1			
45	ZGBH-00053				.SCREW	2			
46	ZGBH-00051				.BUSH	2			
47	ZGBH-00050				.COVER	2			
48	@				.SUSPENSION SYSTEM	1			NOT
49	ZGBH-00041				.SLIDE RAIL-RH	1			
50	ZGBH-00045				.BRACKET	1			
51	ZGBH-00042				.SCREW-HEX HEAD	4			

Item	Part_No	IS	Ord	T	Description	Qty	Serial_No	ITC	Remark
52	ZGBH-00115				.CYLINDRIC HEAD SCREW	2			
53	ZGBH-00049				.KNOB-PLASTIC	1			
54	ZGBH-00048				.HANDLE	1			
55	ZGBH-00116				.SELF LOCK NUT	1			
56	ZGBH-00117				.BOTTOM PLATE LA.	1			
57	ZGBH-00118				.SPRING WASHER	4			
58	ZGBH-00104				.SCREW-HEX HEAD	4			

SEAT(AIR RIDE, 3", 2/2)

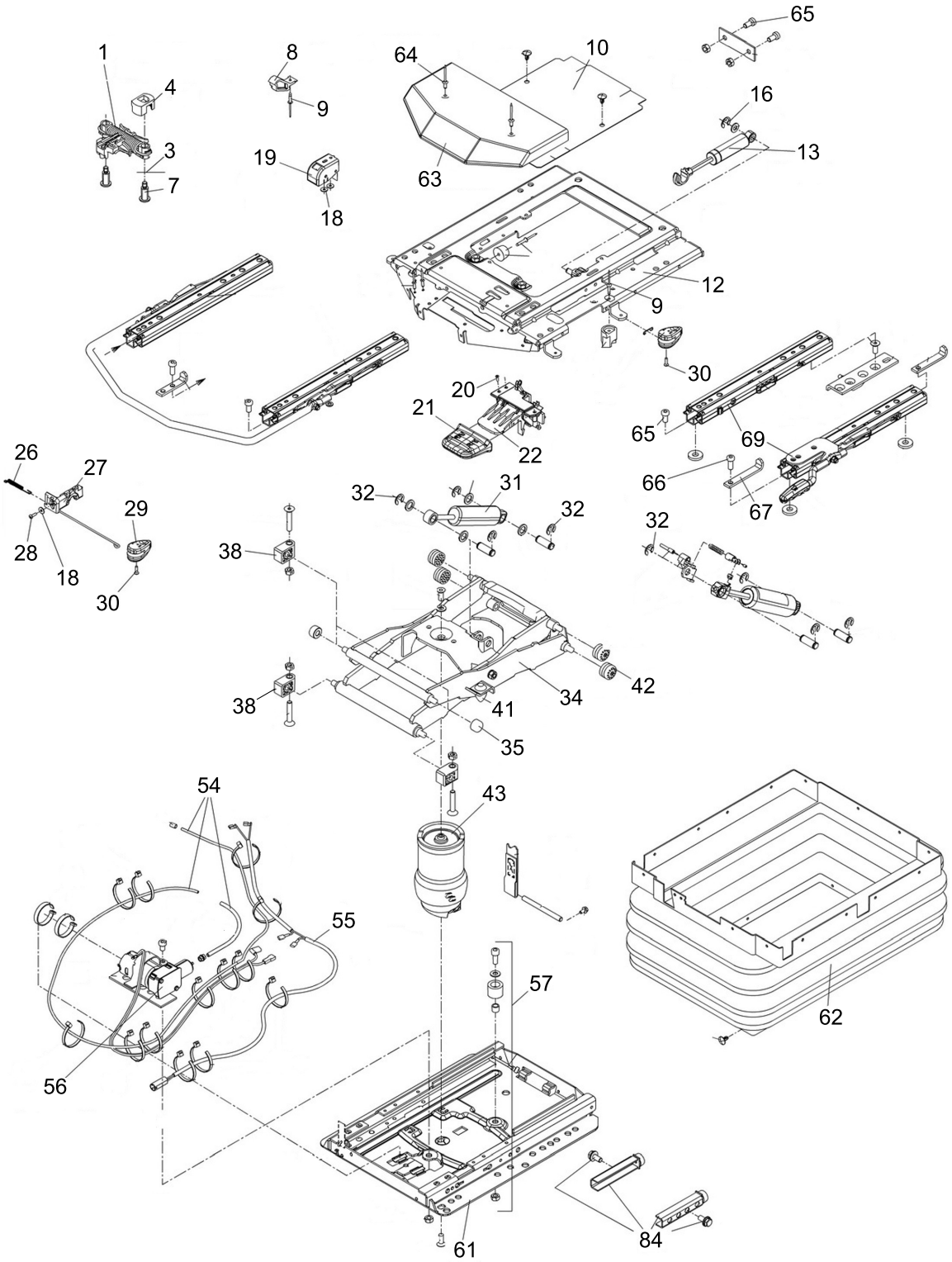

Item	Part_No	IS	Ord	T	Description	Qty	Serial_No	ITC	Remark
*	ZGBH-00105				SUSPENSION SYSTEM	1			SEE 5153
1	ZGBH-00120				.FORE-AFT ISOLATOR KI	1			
3	ZGBH-00121				.BUSHING	2			
4	ZGBH-00122				.BUMPER	1			
7	ZGBH-00123				.BOLT-SHOULDER	2			
8	ZGBH-00124				.ENDSTOP	2			
9	ZGBH-00125				.RIVET	2			
10	ZGBH-00126				.COVER KIT,MSG95	1			
12	ZGBH-00127				.SUSPENSION UPPER PAR	1			
13	ZGBH-00128				.SHOCK ABSORBER KIT	1			
14	ZGBH-00129				.BUMPER KIT	1			
16	ZGBH-00131				.LOCK WASHER	1			
17	ZGBH-00132				.RIVET	2			
18	ZGBH-00133				.WASHER-FLAT,M4	3			
19	ZGBH-00134				.LEVEL CONTROL KIT	1			
20	ZGBH-00135				.SCREW	3			
21	ZGBH-00136				.HANDLE FOR HA,GREY	1			
22	ZGBH-00137				.VALVE AIR CONTROL,MS	1			
26	ZGBH-00138				.TENSION SPRING	2			
27	ZGBH-00139				.LOCKING LEVER KIT,MS	1			
28	ZGBH-00140				.EJOT SCREW DELTA PT	1			
29	ZGBH-00141				.HANDLE F.FAI.CPL.	1			
30	ZGBH-00142				.SCREW	1			
31	ZGBH-00143				.SHOCK ABSORBER KIT	1			
32	ZGBH-00144				.LOCK WASHER PHR. 10.	2			
34	ZGBH-00145				.SWING ARM KIT	1			

Item	Part_No	IS	Ord	T	Description	Qty	Serial_No	ITC	Remark
35	ZGBH-00146				.ROLLER KIT	2			
38	ZGBH-00147				.THRUST BEARING,PLAST	2			
41	ZGBH-00148				.DAMPING BUMPER BLACK	2			
42	ZGBH-00149				.ROLLER	4			
43	ZGBH-00150				.AIR SPRING KIT	1			
54	ZGBH-00151				.AIR TUBE	1			
55	ZGBH-00152				.CONNECTING CABLE	1			
56	ZGBH-00153				.COMPRESSOR,24V	1			
57	ZGBH-00154				.BUMPER KIT	1			
36	ZGBH-00155				.SUSPENSION LOWER PAR	1			
62	ZGBH-00156				.BELLOWS KIT,BLK,MSG9	1			
63	ZGBH-00157				.COVER CPL.	1			
64	ZGBH-00158				.RIVET	2			
65	ZGBH-00043				.SCREW-CYLINDRIC HEAD	3			
66	ZGBH-00159				.SCREW	1			
67	ZGBH-00160				.STOP,SLIDE RAIL,BLKC	1			
69	ZGBH-00161				.ADJUSTMENT RAIL SET	1			
84	ZGBH-00162				.ENDSTOP KIT	1			

SEAT(HEATED)

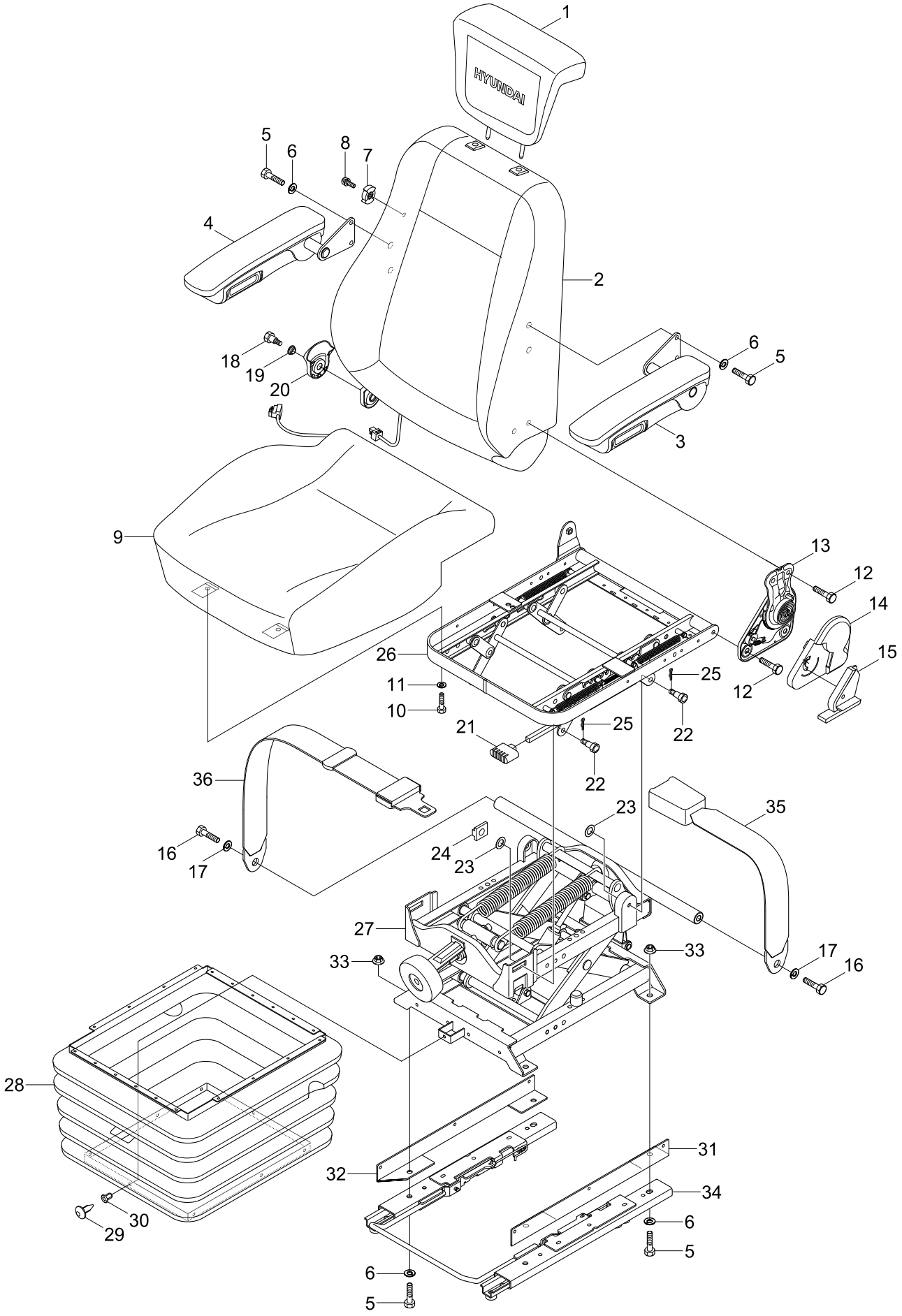
HYUNDAI
1
2
3
4
5
6
7
8
9
10
11
12
13
14
15
16
17
18
19
20
21
22
23
24
25
26
27
28
29
30
31
32
33
34
35
36

Item	Part_No	IS	Ord	T	Description	Qty	Serial_No	ITC	Remark
*	71LB-33110				SEAT ASSY-HEATED	1	- #0120		
	71LB-33111				SEAT ASSY-HEATED	1	#0121 -	A	
1	XKCB-00001				.SHOULDER REST ASSY	1			
2	XKCB-00002				.BACKREST ASSY	1			
3	XKCB-00003				.ARMREST ASSY-LH	1			
4	XKCB-00004				.ARMREST ASSY-RH	1			
5	XKCB-00005				.BOLT	8			
6	XKCB-00006				.WASHER-SPRING	8			
7	XKCB-00007				.KNOB ASSY-L/SUPT	1			
8	XKCB-00008				.SCREW-M WITH WASHER	1			
9	XKCB-00009				.CUSHION ASSY	1			
10	XKCB-00010				.BOLT	2			
11	XKCB-00011				.WASHER-SPRING	2			
12	XKCB-00012				.BOLT-W/WASHER	4			
13	XKCB-00013				.RECLINER ASSY	1			
14	XKCB-00014				.COVER-RECLINER	1			
15	XKCB-00015				.KNOB-RECLINER	1			
16	XKCB-00016				.BOLT	2			
17	XKCB-00017				.WASHER-SPRING	2			
18	XKCB-00018				.HINGE BOLT	1			
19	XKCB-00019				.BUSH	1			
20	XKCB-00020				.SIDE COVER	1			
21	XKCB-00021				.KNOB	1			
22	XKCB-00022				.FLANGE BOLT	4			
23	XKCB-00023				.WASHER-PLAIN	4			
24	XKCB-00024				.NUT-SQUARE	2			

Item	Part_No	IS	Ord	T	Description	Qty	Serial_No	ITC	Remark
25	XKCB-00025				.PIN-R	4			
26	XKCB-00026				.ADJUSTER ASSY-HEIGHT	1			
27	XKCB-00027				.SUSPENSION ASSY	1			
28	XKCB-00028				.DUST COVER	1			
29	XKCB-00029				.FASTENER	11			
30	XKCB-00030				.FASTENER	11			
31	XKCB-00031				.BRACKET-SIDE FIX,LH	1			
32	XKCB-00032				.BRACKET-SIDE FIX,RH	1			
33	XKCB-00033				.NUT-FLANGE	4			
34	XKCB-00034				.SLIDER ASSY	1			
35	XKCB-00035				.BELT-BUCKLE	1			
36	XKCB-00036				.BELT-TONGUE	1			

SEAT(VINYL, 2", KAB)

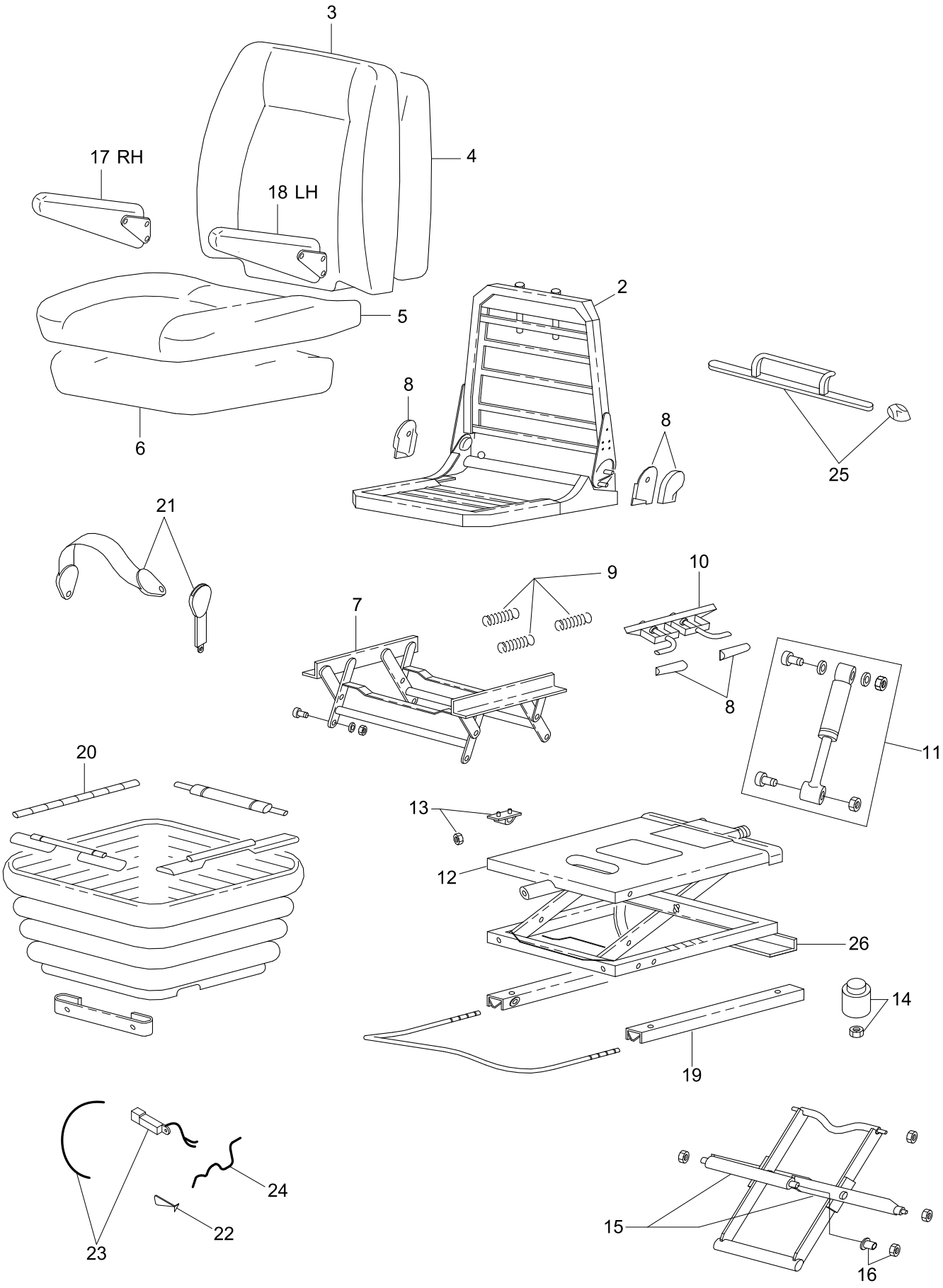

Item	Part_No	IS	Ord	T	Description	Qty	Serial_No	ITC	Remark
*	74L4-00010				SEAT ASSY-2",VINYL	1			OPT
1	ZUAQ-00001				.UPPER ASSY KIT	1			
2	ZUAQ-00002				.FRAME ASSY KIT	1			
3	ZUAQ-00004				.BACK COVER ASSY KIT	1			GRAY PVC
4	ZUAQ-00005				.BACK FOAM KIT	1			
5	ZUAQ-00007				.SEAT COVER ASSY KIT	1			GRAY PVC
6	ZUAQ-00008				.SEAT FOAM KIT	1			
7	ZUAQ-00009				.HEIGHT RISER KIT	1			
8	ZUAQ-00010				.HANDLE KIT	1			GREY
9	ZUAQ-00012				.HEIGHT RISER SPRING KIT	1			
10	ZUAQ-00013				.HEIGHT RISER LATCH KIT	1			
11	ZUAQ-00014				.DAMPER KIT	1			
12	ZUAQ-00015				.SUSPENSION ASSY KIT	1			
13	ZUAQ-00016				.UP STOP/BUMP STOP KIT	1			
14	ZUAQ-00017				.AIR SPRING KIT	1			
15	ZUAQ-00018				.LEVER/CENTER PIVOT KIT	1			
16	ZUAQ-00019				.BEARING KIT	1			
17	ZUAQ-00020				.ARMREST KIT-RH	1			
18	ZUAQ-00021				.ARMREST KIT-LH	1			
19	ZUAQ-00022				.FORE & AFT ADJUST KIT	1			
20	ZUAQ-00023				.SUSPENSION COVER KIT	1			
21	ZUAQ-00024				.T BELT KIT-2" STATIC	1			
22	ZUAQ-00026				.COMBINATION VALVE KIT	1			
23	ZUAQ-00027				.COMPRESSOR KIT-24V	1			
24	ZUAQ-00028				.FLY LEAD KIT	1			
25	ZUAQ-00029				.LUMBAR KIT-GREY	1			

Item	Part_No	IS	Ord	T	Description	Qty	Serial_No	ITC	Remark
26	ZUAQ-00031				.TETHER KIT	1			

STEERING COLUMN

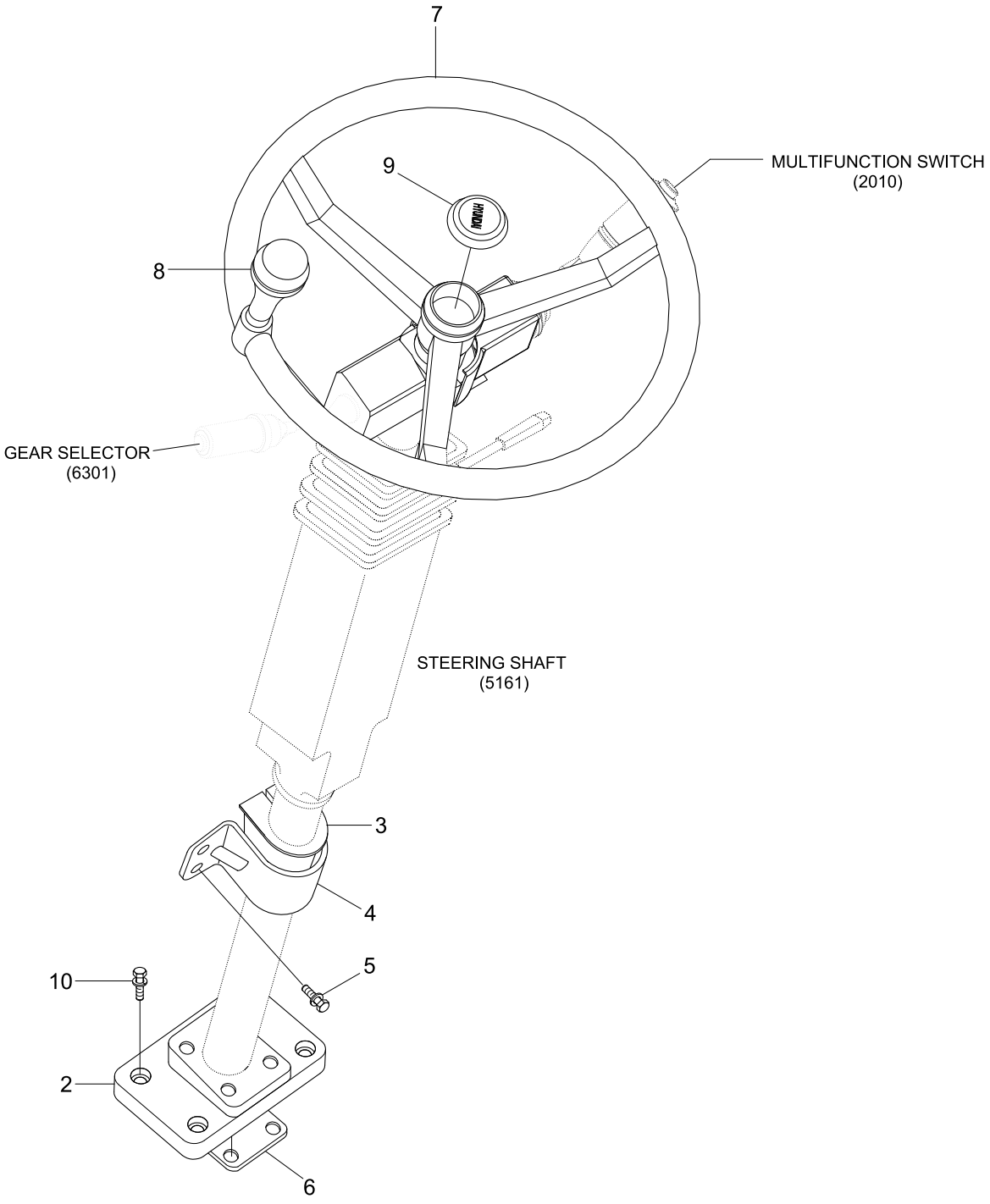

Item	Part_No	IS	Ord	T	Description	Qty	Serial_No	ITC	Remark
2	71LB-21071				ANCHORAGE ASSY	1			
3	71LB-30040				ANCHORAGE	1			
4	71L7-20261				CLAMP	1			
5	S037-102556				BOLT-W/WASHER	4			
6	71L6-10320				SHIM(4.0T)	1			
7	71L7-20310				STEERING WHEEL	1			
8	71L7-20320				KNOB-WHEEL	1			
9	71L7-20330				CAP-CENTER	1			
10	S037-104056				BOLT-W/WASHER	4			

STEERING SHAFT

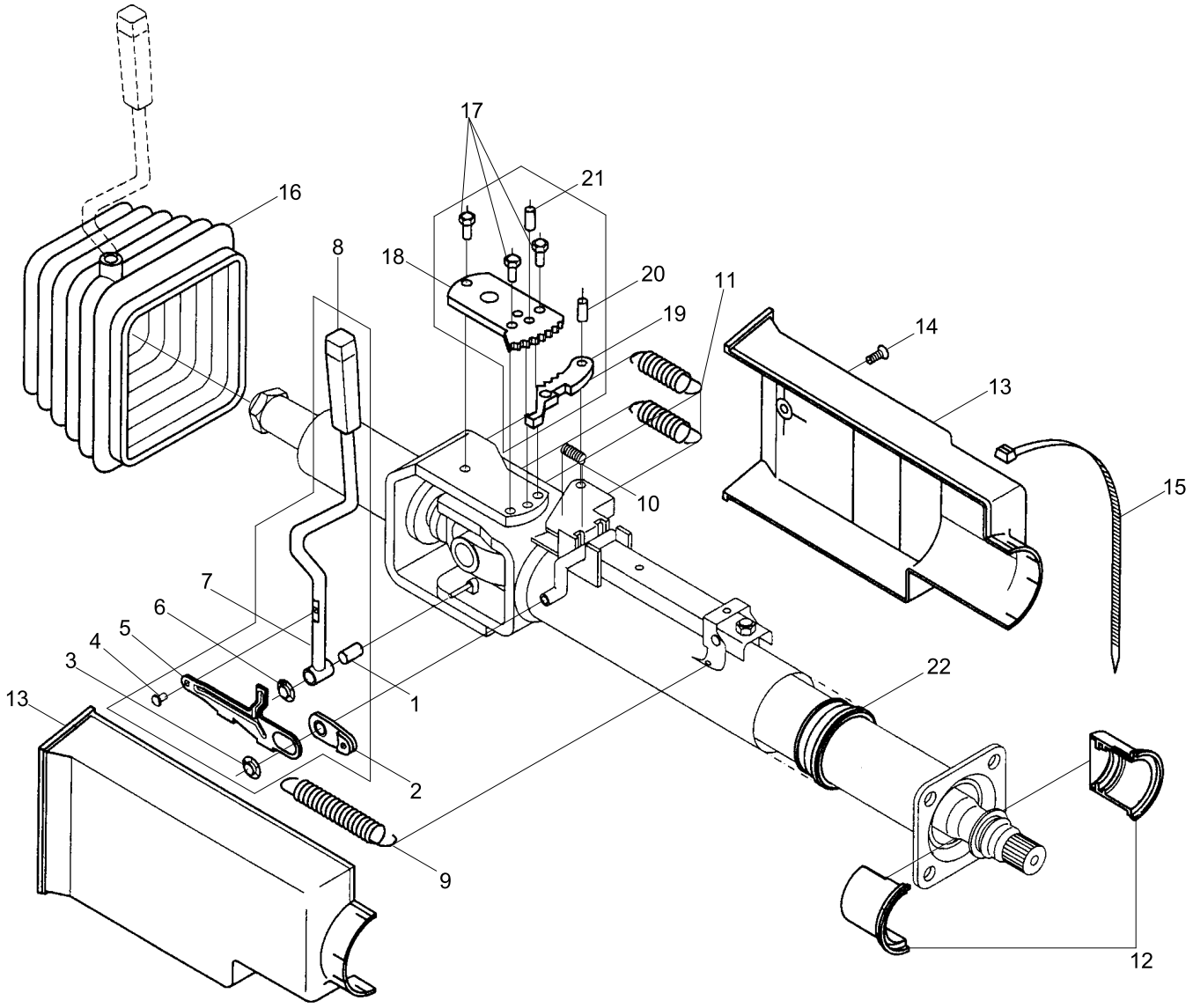

Item	Part_No	IS	Ord	T	Description	Qty	Serial_No	ITC	Remark
*	71LB-30010				STEERING COLUMN ASSY	1			
*-1	150Z4000				.HANDLE-COMPLETE	1			
1	@				..BEARING-LEVER	1			NOT
2	@				..BUSHING-LINK ARM	1			NOT
3	@				..WASHER-LOCK	1			NOT
4	@				..RIVET	1			NOT
5	@				..ARM-LINK	1			NOT
6	@				..WASHER-LOCK	1			NOT
7	@				..LEVER	1			NOT
8	@				..KNOB	1			NOT
*-2	150Z4001				.SPRINGS	1			
9	@				..SPRING-TELESCOPE	1			NOT
10	@				..SPRING-CATCH	1			NOT
11	@				..SPRING-TILT RETURN	2			NOT
*-3	150Z4002				.BEARING-AXIAL	1			
12	@				..BEARING-AXIAL	1			NOT
*-4	150Z4003				.COVER	1			
13	@				..COVER	1			NOT
14	@				..SCREW	1			NOT
15	@				..TIE-CABLE	1			NOT
*-5	150Z4004				.BELLOWS-BUBBER	1			
16	@				..BELLOWS-RUBBER	1			NOT
*-6	150Z4005				.TIE-CABLE	1			
15	@				..TIE-CABLE	1			NOT
*-7	150Z4006				.DEVICE-TILT LOCK	1			
17	@				..SCREW	1			NOT

Item	Part_No	IS	Ord	T	Description	Qty	Serial_No	ITC	Remark
18	@				..SEGMENT-TOOTH	1			NOT
19	@				..CATCH	1			NOT
20	@				..PIN	1			NOT
21	@				..PIN	1			NOT
*-8	150Z4007				.BEARING-TELESCOPE	1			
22	@				..BEARING-TELESCOPE	1			NOT

PLATFORM

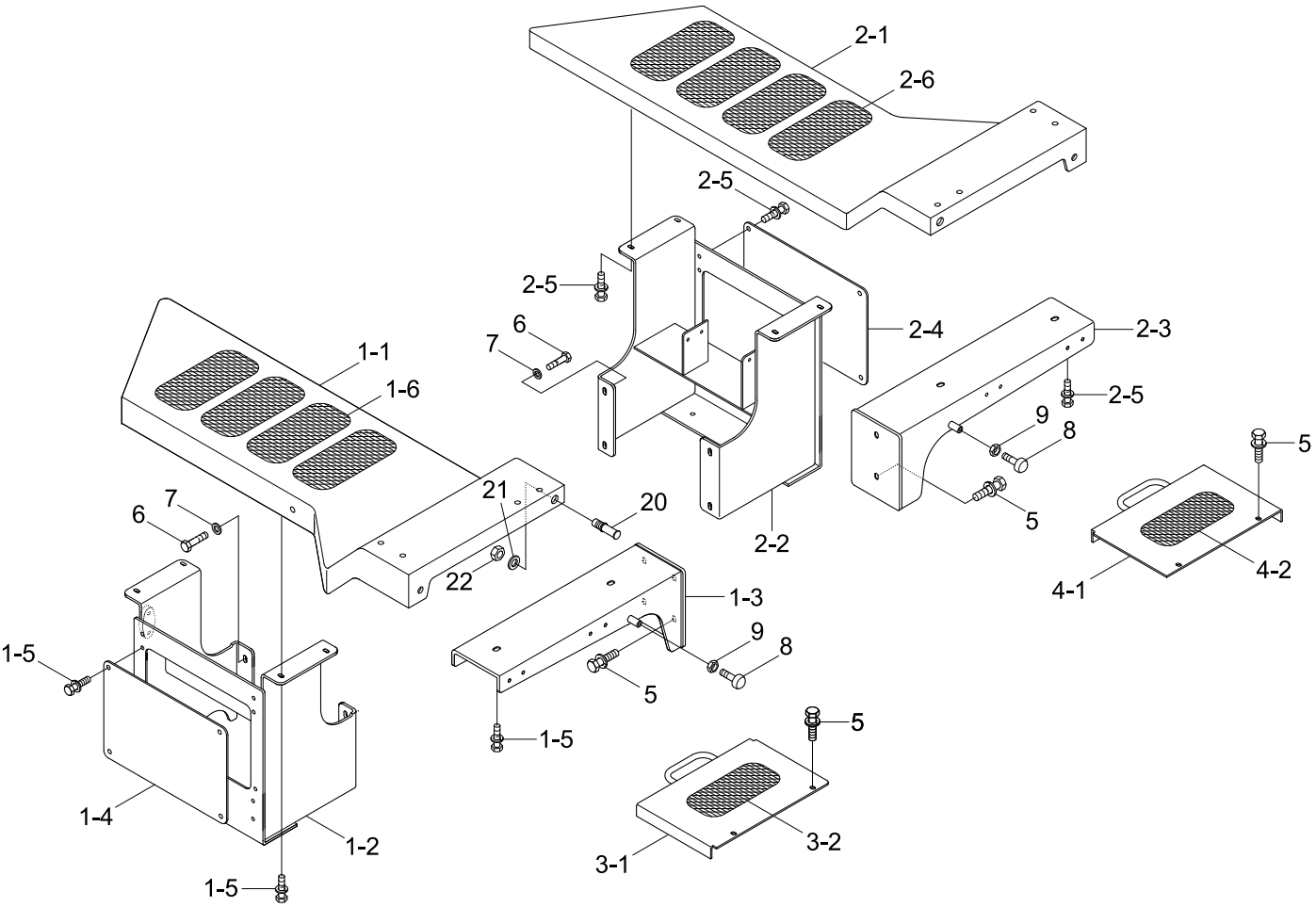
2-1
2-6
2-5
2-5
6
7
2-4
2-3
2-5
1-1
1-6
9
8
5
5
4-2
4-1
7
6
21
20
22
2-2
1-3
9
8
5
1-5
1-5
1-5
1-4
1-2
1-5
5
3-2
3-1

Item	Part_No	IS	Ord	T	Description	Qty	Serial_No	ITC	Remark
1	71LD-53011				PLATFORM ASSY-LH	1	- #0300		
	71LD-53012				PLATFORM ASSY-LH	1	#0301 - #0392	B	
	72LD-54010				PLATFORM ASSY-LH	1	#0393 -	D	
1-1	71LD-53032				.COVER WA-LH	1	- #0392		
	72LD-54030				.COVER WA-LH	1	#0393 -	D	
1-2	71LD-53051				.SUPPORT WA-LH	1	- #0392		
	72LD-54050				.SUPPORT WA-LH	1	#0393 -	D	
1-3	71LD-53071				.SUPPORT WA-LH	1			
1-4	71LD-50281				.COVER-SIDE	1	- #0392		
	72LD-54070				.COVER-SIDE	1	#0393 -	D	
1-5	S037-123056				.BOLT-W/WASHER	10			
1-6	91E1-26300				.DECAL-STEP TREAD	4	#0301 - #0392	-	
	91FQ-00191				.SAFETY WORK	6	#0393 -	D	
2	71LD-53021				PLATFORM ASSY-RH	1	- #0300		
	71LD-53022				PLATFORM ASSY-RH	1	#0301 - #0392	B	
	72LD-54020				PLATFORM ASSY-RH	1	#0393 -	D	
2-1	71LD-53042				.COVER WA-RH	1	- #0392		
	72LD-54040				.COVER WA-RH	1	#0393 -	D	
2-2	71LD-53061				.SUPPORT WA-RH	1	- #0392		
	72LD-54060				.SUPPORT WA-RH	1	#0393 -	D	
2-3	71LD-53081				.SUPPORT WA-RH	1			
2-4	71LD-50281				.COVER-SIDE	1	- #0392		
	72LD-54070				.COVER-SIDE	1	#0393 -	D	
2-5	S037-123056				.BOLT-W/WASHER	10			
2-6	91E1-26300				.DECAL-STEP TREAD	4	#0301 - #0392	-	
	91FQ-00191				.SAFETY WORK	4	#0393 -	D	

Item	Part_No	IS	Ord	T	Description	Qty	Serial_No	ITC	Remark
3	71LD-50300				COVER WA-BATT(LH)	1	- #0300		
	71LD-50301				COVER WA-BATT(LH)	1	#0301 -	B	
3-1	71LD-50300				.COVER WA-BATT(LH)	1	#0301 -	-	
3-2	91E1-26300				.DECAL-STEP TREAD	1	#0301 -	-	
4	71LD-50310				COVER WA-BATT(RH)	1	- #0300		
	71LD-50311				COVER WA-BATT(RH)	1	#0301 -	B	
4-1	71LD-50310				.COVER WA-BATT(RH)	1	#0301 -	-	
4-2	91E1-26300				.DECAL-STEP TREAD	1	#0301 -	-	
5	S017-16035D				BOLT-HEX	8			
	S037-123056				BOLT-W/WASHER	12	#0001 -	-	
6	S017-16035D				BOLT-HEX	8	#0001 -	-	
7	S441-160006				WASHER-HARDENED	8			
8	71EH-13150				BUMPER-RUBBER	2			
9	S285-101006				NUT-FLANGED	2			
20	71LD-80180				STRIKER	2			
21	S441-160002				WASHER-HARDENED	2			
22	S275-160002				NUT-SELF LOCKING	2			

MUD GUARD

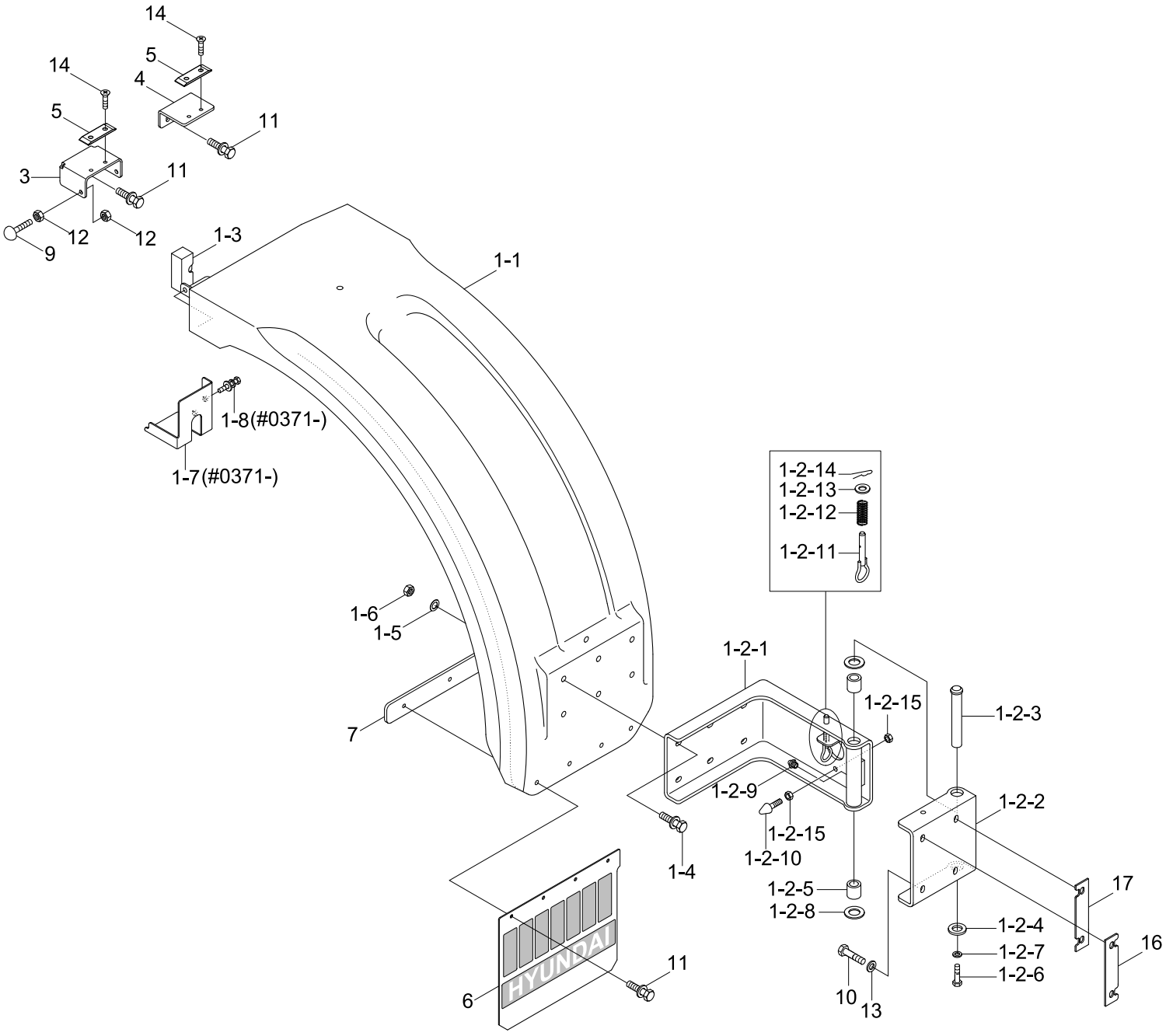
14
5
4
11
14
5
3
11
12
12
9
1-3
1-1
1-8(#0371-)
1-7(#0371-)
1-6
1-5
7
1-2-14
1-2-13
1-2-12
1-2-11
1-2-1
1-2-15
1-2-3
1-2-9
1-2-2
1-2-15
1-2-10
1-4
1-2-5
1-2-8
17
1-2-4
1-2-7
1-2-6
16
10
13
11
6
HYUNDAI

Item	Part_No	IS	Ord	T	Description	Qty	Serial_No	ITC	Remark
1	71LD-82011				MUD GUARD ASSY-LH	1	- #0370		
	71LD-82012				MUD GUARD ASSY-LH	1	#0371 -	B	
	71LD-82021				MUD GUARD ASSY-RH	1	- #0370		
	71LD-82022				MUD GUARD ASSY-RH	1	#0371 -	B	
1-1	71LF-82051				.MUD GUARD WA-LH	1			
	71LF-82061				.MUD GUARD WA-RH	1			
1-2	71LD-82090				.HINGE ASSY-LH	1			
	71LD-82100				.HINGE ASSY-RH	1			
1-2-1	71LD-82111				..FRONT HINGE WA	1			
1-2-2	71LC-82120				..REAR HINGE WA	1			
1-2-3	71LD-80270				..PIN-HINGE	1			
1-2-4	71LD-80280				..PLATE-STOPPER	1			
1-2-5	71LD-80290				..BUSHING	2			
1-2-6	S017-120306				..BOLT-HEX	1			
1-2-7	S441-120006				..WASHER-HARDENED	1			
1-2-8	S403-301006				..WASHER-PLAIN	2			
1-2-9	S651-810002				..NIPPLE-GREASE	1			
1-2-10	E171-1178				..RUBBER-BUMPER	1			
1-2-11	FBC0900600				..LOCK PIN	1			
1-2-12	FBC0900610-01				..SPRING	1			
1-2-13	S403-12200B				..WASHER-PLAIN	1			
1-2-14	S461-250252				..PIN-SPLIT	1			
1-2-15	S285-101006				..NUT-FLANGED	2			
1-3	71LF-80290				.LATCH ASSY	1			
	71LF-80300				.LATCH ASSY	1			
1-4	S037-123556				.BOLT-W/WASHER	6			

Item	Part_No	IS	Ord	T	Description	Qty	Serial_No	ITC	Remark
1-5	S205-121006				.NUT-HEX	6			
1-6	S441-120006				.WASHER-HARDENED	6			
1-7	71LB-82170				.COVER WA-LH	1	#0371 -		
	71LB-82180				.COVER WA-RH	1	#0371 -		
1-8	S033-062026				.BOLT-W/WASHER	2	#0371 -		
3	71LB-80220				PLATE	2			
4	71LB-80230				PLATE	2			
5	71LB-80240				PLATE	4			
6	71LG-82160				RUBBER-MUDGUARD	2			
7	71LF-82150				PLATE	2			
8	71LD-80180				STRIKER	2			
9	71EH-13150				BUMPER-RUBBER	4			
10	S017-16040D				BOLT-HEX	8			
11	S037-122556				BOLT-W/WASHER	28			
12	S285-101006				NUT-FLANGED	4			
13	S441-160006				WASHER-HARDENED	10			
14	S141-060156				SCREW-FLAT HD	8			
15	S275-160006				NUT-SELF LOCKING	2			
16	71LB-82070				SHIM(3.0T)	4			
17	71LB-82080				SHIM(1.6T)	8			

LADDER & HANDRAIL(-#0392)

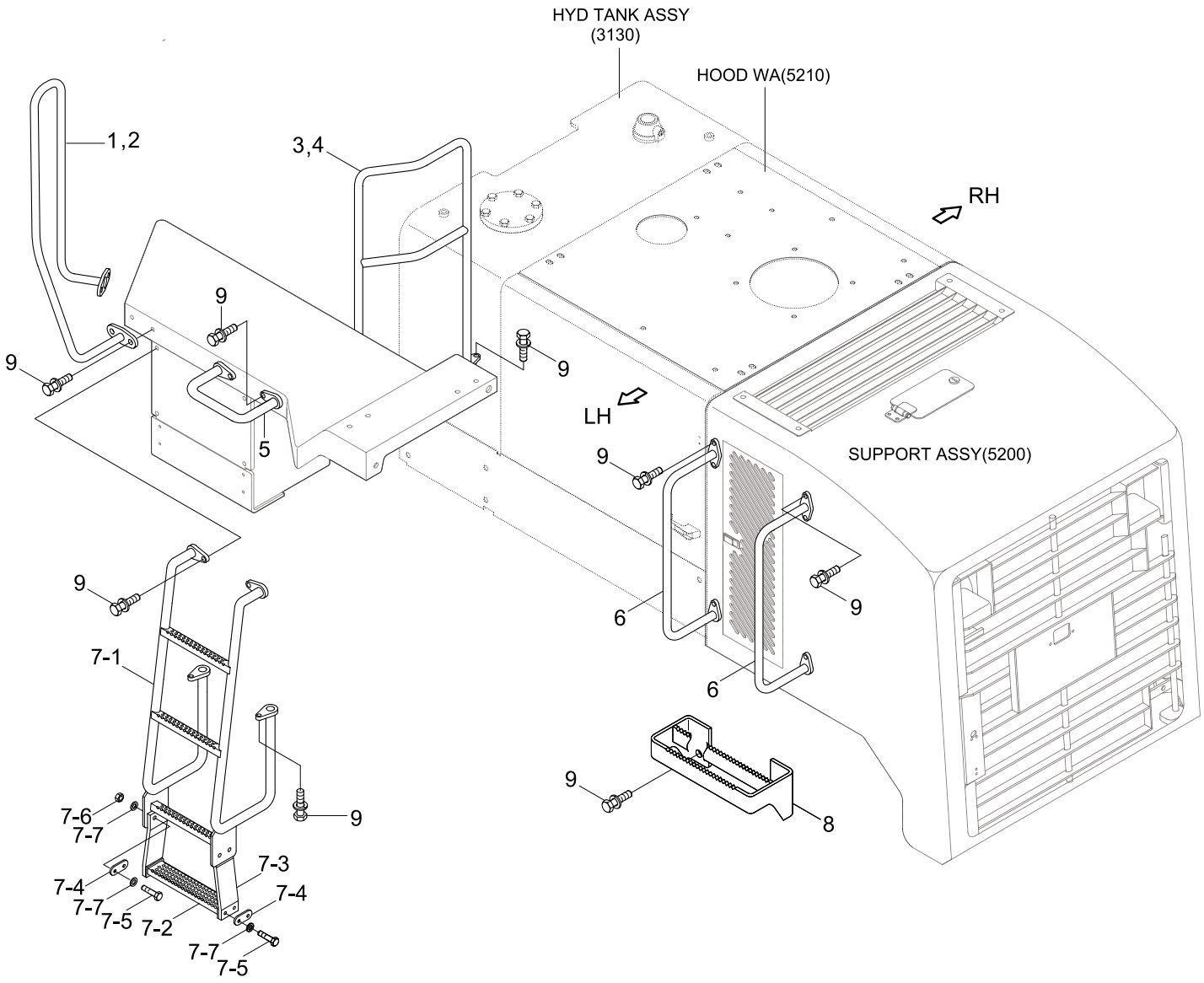

Item	Part_No	IS	Ord	T	Description	Qty	Serial_No	ITC	Remark
1	71LD-63031				HANDRAIL WA-FR,LH	1			
2	71LD-63041				HANDRAIL WA-FR,RH	1			
3	71LD-63110				HANDRAIL WA-RR,LH	1	#0001 -	-	
4	71LD-63120				HANDRAIL WA-RR,RH	1	#0001 -	-	
5	71LD-63070				HANDRAIL WA	2			
6	71LB-63210				HANDRAIL WA	4			
7	71LD-63080				LADDER ASSY	2			
7-1	71LD-63090				.LADDER WA	1			
7-2	71LB-63030				.PLATE	1			
7-3	71LD-60170				.BELT-LADDER	2	- #0333		
	72LH-63150				.RUBBER	2	#0334 -	B	
7-4	71LB-63040				.PLATE	4			
7-5	S017-100456				.BOLT-HEX	8	- #0333		
	S017-100356				.BOLT-HEX	8	#0334 -	B	
7-6	S205-101006				.NUT-HEX	4			
	S275-10000B				.NUT-SELF LOCKING	4			
7-7	S441-10000B				.WASHER-HARDENED	12			
8	71LB-60240				FOOT BOARD WA	2			
9	S037-123056				BOLT-W/WASHER	44			

COWL 1

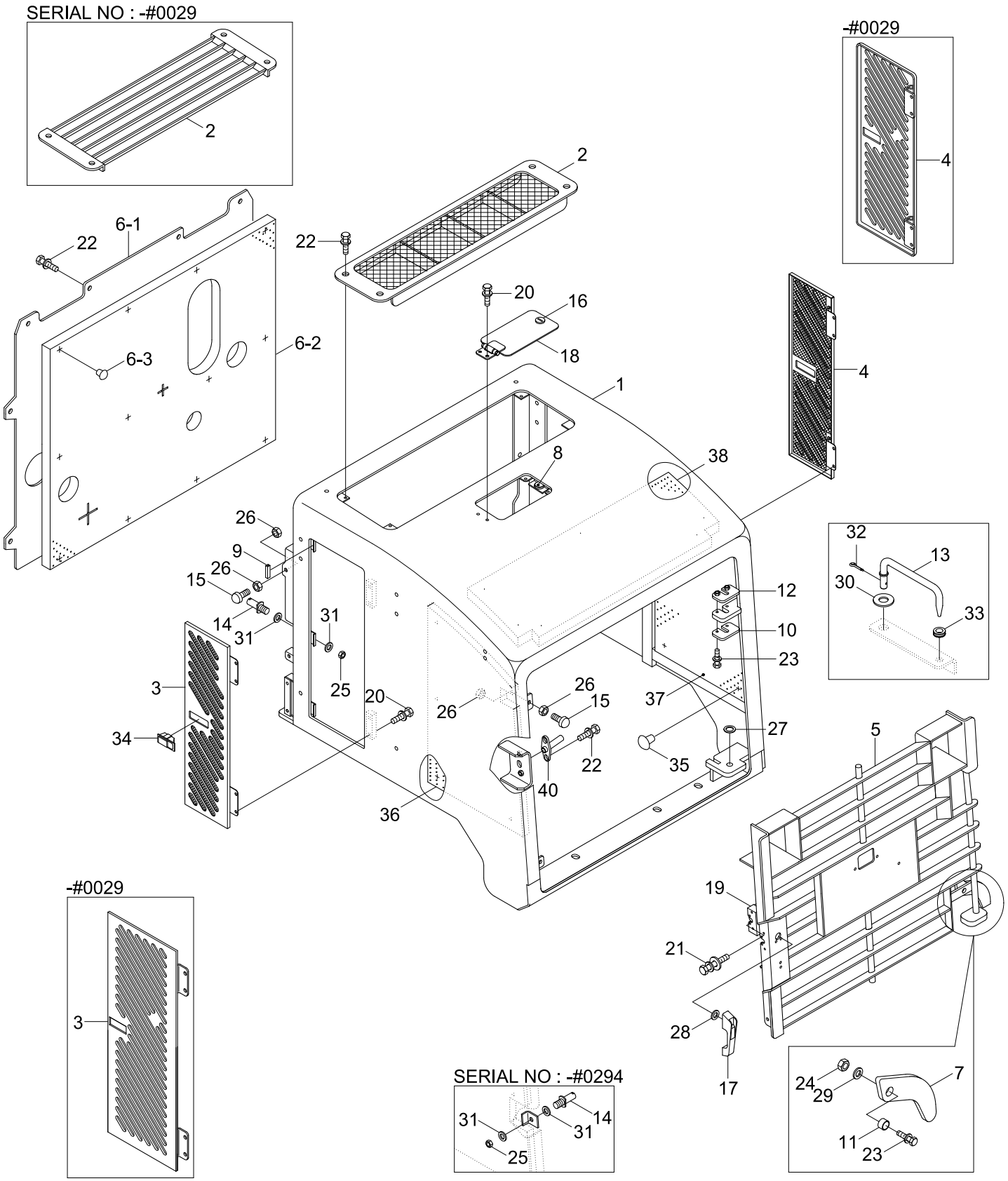
SERIAL NO : -#0029
2
-#0029
4
2
22
22
6-1
6-2
6-3
20
16
18
4
1
8
38
26
9
26
15
14
31
31
25
3
34
20
26
26
15
37
27
22
35
40
36
12
10
23
32
13
30
33
5
19
21
28
17
-#0029
3
SERIAL NO : -#0294
31
14
31
25
24
29
7
11
23

Item	Part_No	IS	Ord	T	Description	Qty	Serial_No	ITC	Remark
*	71LD-44010				SUPPORT ASSY	1	- #0029		
	71LD-44011				SUPPORT ASSY	1	#0030 -	A	
1	71LD-43101				.SUPPORT WA	1	- #0294		
	71LD-44101				.SUPPORT WA	1	#0295 -	D	
2	71LD-40290				.COVER WA	1	- #0029		
	71LD-44290				.COVER WA	1	#0030 -	A	
3	71LD-40270				.COVER WA-LH	1	- #0029		
	71LD-44270				.COVER WA-LH	1	#0030 -	A	
4	71LD-40280				.COVER WA-RH	1	- #0029		
	71LD-44280				.COVER WA-RH	1	#0030 -	A	
5	71LD-42202				.GRILL WA	1			
6	71LD-44210				.SCREEN ASSY	1			
6-1	71LD-44220				..SCREEN-PLATE	1			
6-2	71LD-44230				..SPONGE-SCREEN	1			
6-3	71EM-51580				..CAP-STUD BOLT	13			
7	71LG-40200				.PLATE-HOLDING	1			
8	74L3-11290				.BUMPER-RUBBER	2			
9	S791-030005				.GROMMET-PLATE	6			
10	71LB-42370				.PLATE	1			
11	71LB-40290				.COLLAR	1			
12	71LB-42380				.PLATE	1			
13	71LD-41060				.STAY WA	1			
14	71LD-80180				.STRIKER	3	- #0294		
					.STRIKER	2	#0295 -	A	
15	71EH-13150				.RUBBER-BUMPER	6			
16	71LB-41220				.LOCK ASSY	1			

Item	Part_No	IS	Ord	T	Description	Qty	Serial_No	ITC	Remark
17	74L3-11380				.HANDLE ASSY	1			
18	74L3-10891				.DOOR-RADIATOR CAP	1			
19	74L3-10900				.LATCH ASSY	1			
20	S035-061526				.BOLT-W/WASHER	10			
21	S035-062516				.BOLT-W/WASHER	4			
22	S037-122556				.BOLT-W/WASHER	12	- #0294		
					.BOLT-W/WASHER	14	#0295 -	A	
23	S037-124556				.BOLT-W/WASHER	3			
24	S205-121006				.NUT-HEX	1			
25	S205-161006				.NUT-HEX	3	- #0294		
					.NUT-HEX	2	#0295 -	A	
26	S285-101006				.NUT-FLANGED	12			
27	S392-020030				.SHIM-ROUND(2.0T)	1			
28	S403-06200B				.WASHER-PLAIN	4			
29	S403-12200B				.WASHER-PLAIN	1			
30	S403-142006				.WASHER-PLAIN	1			
31	S441-160006				.WASHER-HARDENED	6	- #0294		
					.WASHER-HARDENED	4	#0295 -	A	
32	S461-250202				.PIN-SPLIT	1			
33	S681-130800				.GROMMET	1			
34	71LB-01220				.LATCH ASSY	2			
35	71EM-51580				.CAP-STUD BOLT	24			
36	71LD-42410				.SPONGE-SIDE,LH	1			
37	71LD-42420				.SPONGE-SIDE,RH	1			
38	71LD-42430				.SPONGE-TOP	1			
39	91N6-01121				.RADIATOR CAP	1			

Item	Part_No	IS	Ord	T	Description	Qty	Serial_No	ITC	Remark
40	71LD-80190				.STRIKER	1	#0295 -	-	

COWL 2

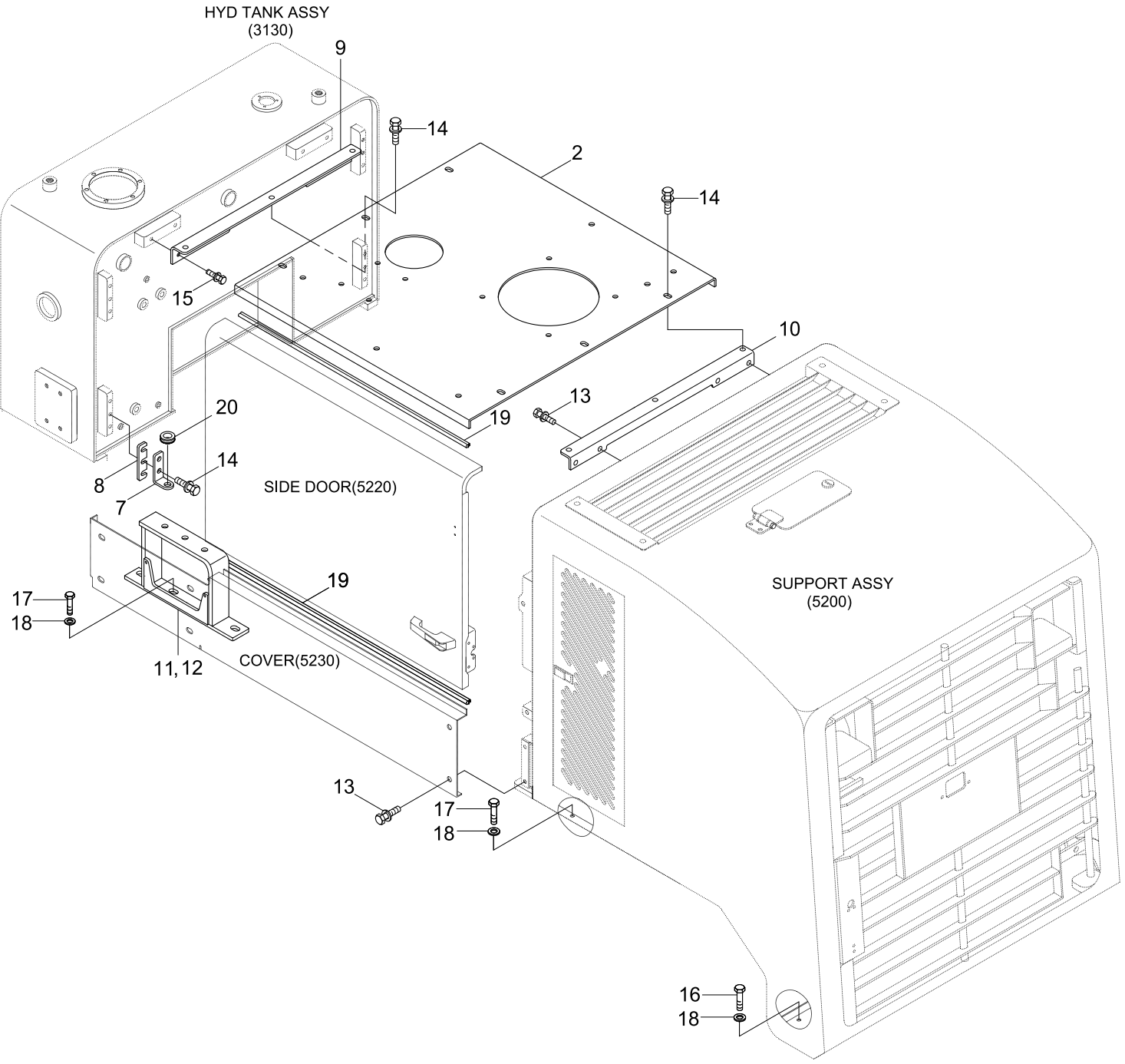
HYD TANK ASSY
(3130)
9
14
2
14
15
10
13
19
20
14
8
7
SIDE DOOR(5220)
19
17
18
11, 12
COVER(5230)
SUPPORT ASSY
(5200)
13
17
18
16
18

Item	Part_No	IS	Ord	T	Description	Qty	Serial_No	ITC	Remark
2	71LD-43020				HOOD WA	1			
7	71LD-41030				PLATE	2			
8	71LD-41070				SHIM	4			
9	71LD-40110				BRACKET	1			
10	71LD-40120				BRACKET	1			
11	71LD-42050				BRACKET-LH	1			
12	71LD-42060				BRACKET-RH	1			
13	S037-122556				BOLT-W/WASHER	16			
14	S037-123056				BOLT-W/WASHER	18			
15	S037-122056				BOLT-W/WASHER	4			
16	S017-16030D				BOLT-HEX	4			
17	S017-16060D				BOLT-HEX	12			
18	S441-160006				WASHER-HARDENED	16			
19	S771-008100				WEATHER STRIP	4			
20	S681-130800				GROMMET	2			

COWL 3(SIDE DOOR)

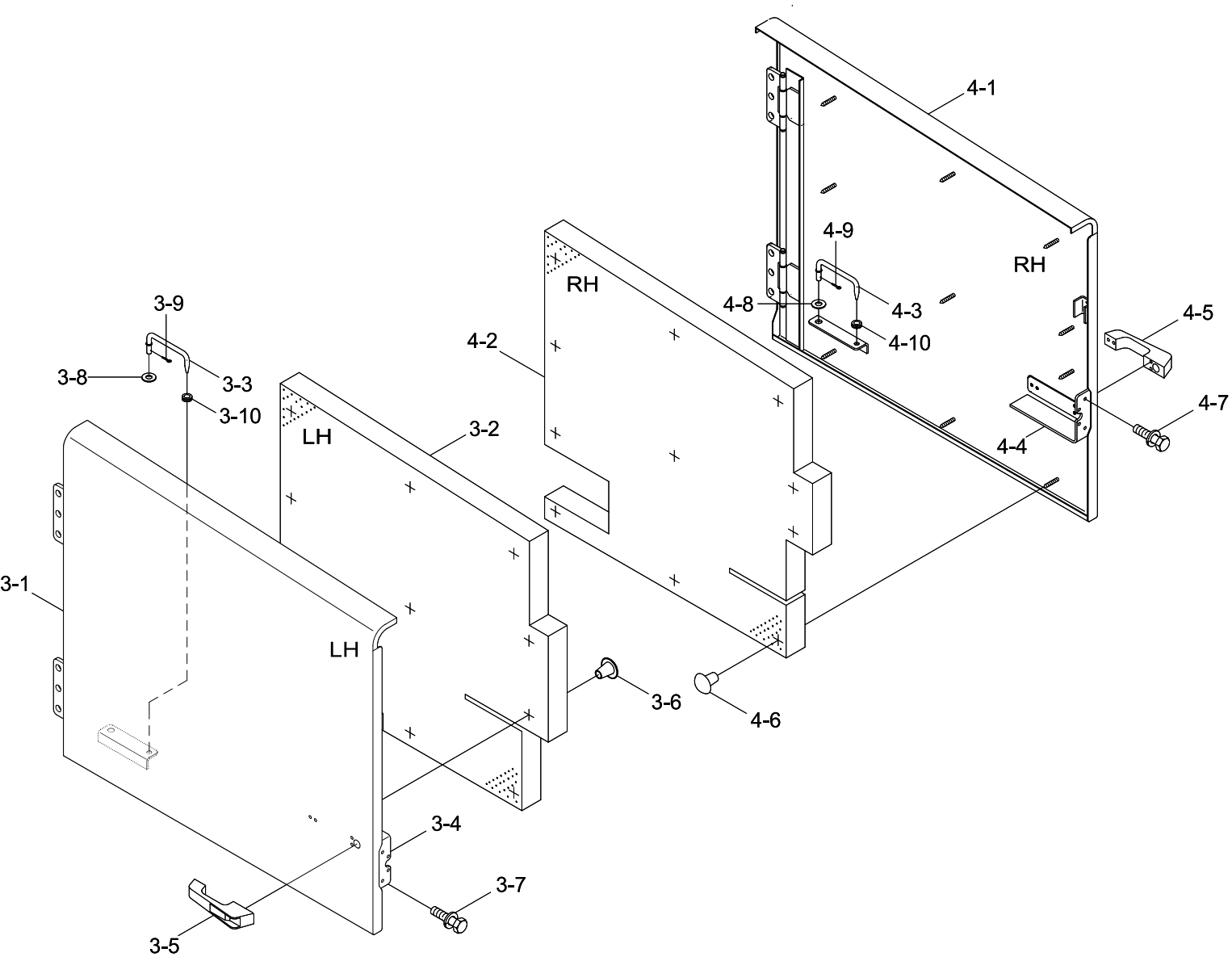

Item	Part_No	IS	Ord	T	Description	Qty	Serial_No	ITC	Remark
3	71LD-43030				SIDE DOOR ASSY-LH	1			
3-1	71LD-43310				.SIDE DOOR WA-LH	1			
3-2	71LD-40951				.SPONGE-DOOR/LEFT	1			
3-3	71LD-41050				.STAY WA	1			
3-4	74L3-10900				.LATCH ASSY	1			
3-5	74L3-11380				.HANDLE ASSY	1			
3-6	71EM-51580				.CAP-STUD BOLT	12			
3-7	S033-062516				.BOLT-W/WASHER	4			
3-8	S403-142006				.WASHER-PLAIN	1			
3-9	S461-250202				.PIN-SPLIT	1			
3-10	S681-130800				.GROMMET	1			
3-11	91N6-07112				.DECAL-STAY FIX	1			
3-12	91E1-27110				.DECAL-L/EMISSION ENG	1			
4	71LD-43040				SIDE DOOR ASSY-RH	1			
4-1	71LD-43320				.SIDE DOOR WA-RH	1			
4-2	71LD-40961				.SPONGE-DOOR/RIGHT	1			
4-3	71LD-41050				.STAY WA	1			
4-4	74L3-10900				.LATCH ASSY	1			
4-5	74L3-11380				.HANDLE ASSY	1			
4-6	71EM-51580				.CAP-STUD BOLT	12			
4-7	S035-062516				.BOLT-W/WASHER	4			
4-8	S403-142006				.WASHER-PLAIN	1			
4-9	S461-250202				.PIN-SPLIT	1			
4-10	S681-130800				.GROMMET	1			
4-11	91N6-07112				.DECAL-STAY FIX	1			

COWL 4(SIDE COVER)

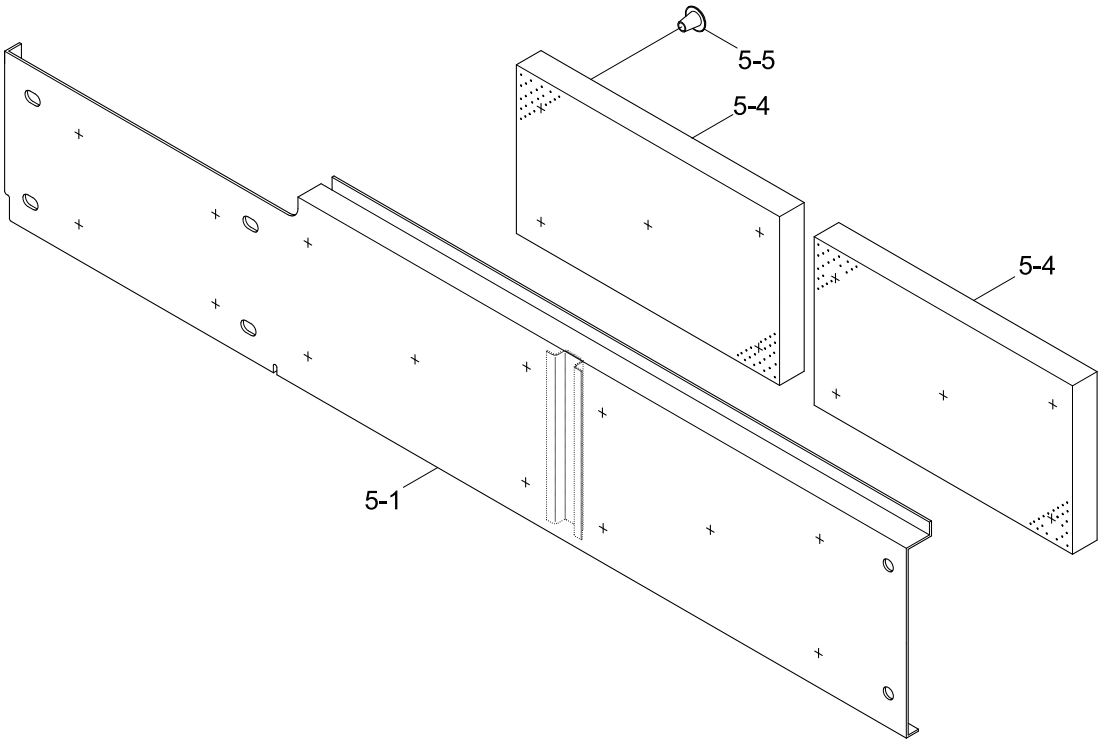

Item	Part_No	IS	Ord	T	Description	Qty	Serial_No	ITC	Remark
5	71LD-40811				COVER ASSY-LH	1			
	71LD-40821				COVER ASSY-RH	1			
5-1	71LD-40831				.COVER WA-LH	1			
	71LD-40841				.COVER WA-RH	1			
5-4	71LD-40990				.SPONGE-REAR	2			
5-5	71EM-51580				.CAP-STUD BOLT	10			
					.CAP-STUD BOLT	10			

WHEEL RIM & TIRE

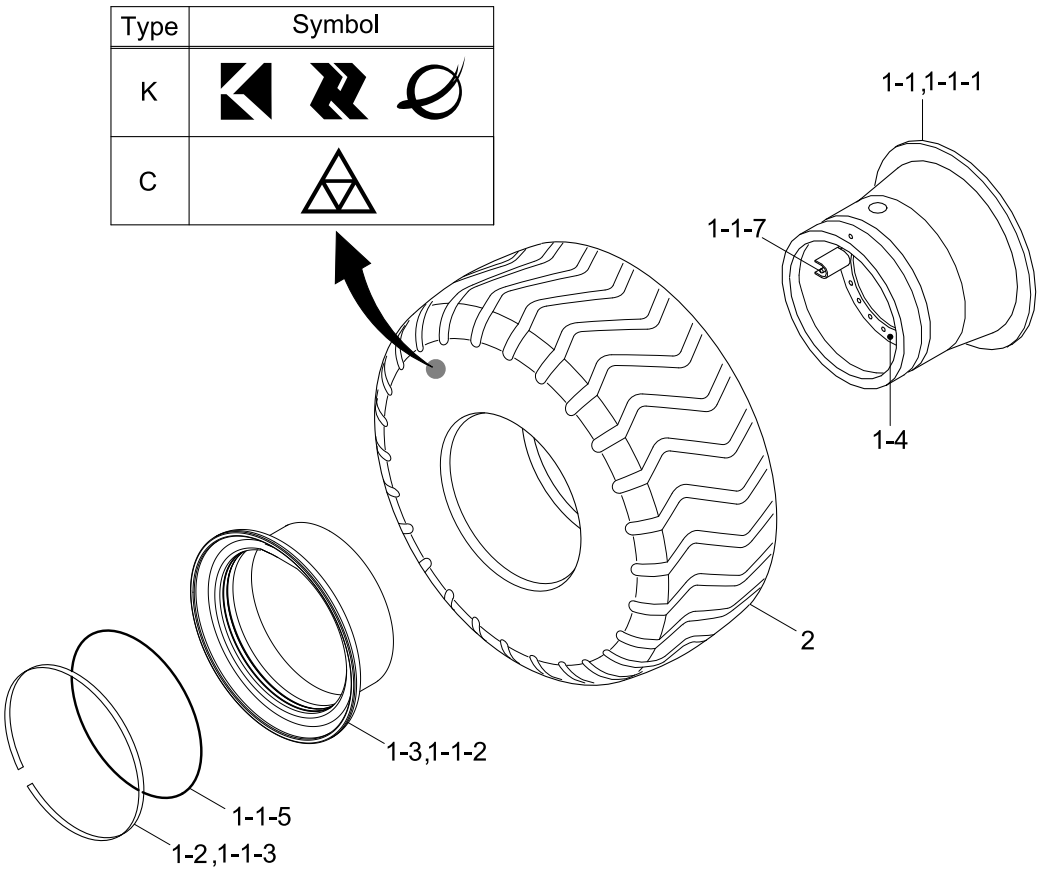

Item	Part_No	IS	Ord	T	Description	Qty	Serial_No	ITC	Remark
*	81LD-42100				WHEEL & TIRE ASSY	4			C TYPE
1	81LD-40150				.WHEEL RIM ASSY	1			
1-1	XIAA-00029				..RIM BASE	1	#0001 -	-	
1-2	XIAA-00002				..RING-LOCK	1			
1-3	XIAA-00005				..FLANGE-DETACHABLE	1			
2	81L2-3104C				.TIRE(20.5-25 16PR,L3)	1			
*	81LD-42200				WHEEL & TIRE ASSY	4			K TYPE
1	81LD-40150				.WHEEL RIM ASSY	1			
1-1	XIAA-00029				..RIM BASE	1	#0001 -	-	
1-2	XIAA-00002				..RING-LOCK	1			
1-3	XIAA-00005				..FLANGE-DETACHABLE	1			
2	81L2-3104				.TIRE	1			
*	81LD-42300				WHEEL & TIRE ASSY	4			OPT, K TYPE
1	81LD-40150				.WHEEL RIM ASSY	1			
1-1	XIAA-00029				..RIM BASE	1	#0001 -	-	
1-2	XIAA-00002				...RING-LOCK	1			
1-3	XIAA-00005				...FLANGE-DETACHABLE	1			
2	81L7-01030				.TIRE(20.5-25 16PR,L2)	1			
*	81LD-42500				WHEEL & TIRE ASSY	4			OPT, K TYPE
1	81LD-40150				.WHEEL RIM ASSY	1			
1-1	XIAA-00029				..RIM BASE	1	#0001 -	-	
1-2	XIAA-00002				..RING-LOCK	1			
1-3	XIAA-00005				..FLANGE-DETACHABLE	1			
2	84L3-00030				.TIRE(20.5-25 16PR L-5)	1			
*	81LD-42700				WHEEL & TIRE ASSY	4			OPT,MICHELIN
1	81LD-40150				.WHEEL RIM ASSY	1			

Item	Part_No	IS	Ord	T	Description	Qty	Serial_No	ITC	Remark
1-1	XIAA-00029				..RIM BASE	1	#0001 -	-	
1-2	XIAA-00002				..RING-LOCK	1			
1-3	XIAA-00005				..FLANGE-DETACHABLE	1			
2	82L1-1017				.TIRE(20.5 R 25XHA*)	1			
*	81LD-42400				WHEEL & TIRE ASSY	4			K TYPE,SMALL
1	81LD-40100				.WHEEL RIM ASSY	1			
1-1	81LG-40110				..WHEEL RIM	1			
1-1-1	XIAA-00001				...RIM BASE	1			
1-1-2	XIAA-00003				...DETACHABLE FLANGE	1			
1-1-3	XIAA-00002				...RING-LOCK	1			
1-1-5	XIAA-00020				...O-RING	1			
1-1-7	XIAA-00022				...VALVE-AIR	1			
1-4	81LD-40120				..DISC	1			
2	81L3-01030				.TIRE(17.5-25 12PR,L3)	1			
*	81LD-42600				WHEEL & TIRE ASSY	4			C TYPE,SMALL
1	81LD-40100				.WHEEL RIM ASSY	1			
1-1	81LG-40110				..WHEEL RIM	1			
1-1-1	XIAA-00001				...RIM BASE	1			
1-1-2	XIAA-00003				...DETACHABLE FLANGE	1			
1-1-3	XIAA-00002				...RING-LOCK	1			
1-1-5	XIAA-00020				...O-RING	1			
1-1-7	XIAA-00022				...VALVE-AIR	1			
1-4	81LD-40120				..DISC	1			
2	81L3-01030C				.TIRE(17.5-25 12PR,L3)	1			
*	81LD-42800				WHEEL & TIRE ASSY	4			MICHELIN,SMALL
1	81LD-40100				.WHEEL RIM ASSY	1			

Item	Part_No	IS	Ord	T	Description	Qty	Serial_No	ITC	Remark
1-1	81LG-40110				..WHEEL RIM	1			
1-1-1	XIAA-00001				...RIM BASE	1			
1-1-2	XIAA-00003				...DETACHABLE FLANGE	1			
1-1-3	XIAA-00002				...RING-LOCK	1			
1-1-5	XIAA-00020				...O-RING	1			
1-1-7	XIAA-00022				...VALVE-AIR	1			
1-4	81LD-40120				..DISC	1			
2	81L8-00190				.TIRE(17.5 R25 XHA*)	1			
*	81LD-42900				WHEEL & TIRE ASSY	4	#0176 -	-	OPT, C TYPE
1	81LD-40150				.WHEEL RIM ASSY	1	#0176 -	-	
1-1	XIAA-00004				..RIM BASE	1	#0176 -	-	
1-2	XIAA-00002				..RING-LOCK	1	#0176 -	-	
1-3	XIAA-00005				..FLANGE-DETACHABLE	1	#0176 -	-	
2	82L1-1017C				.TIRE(20.5 R 25XHA*)	1	#0176 -	-	

FRONT & REAR AXLE MOUNTING

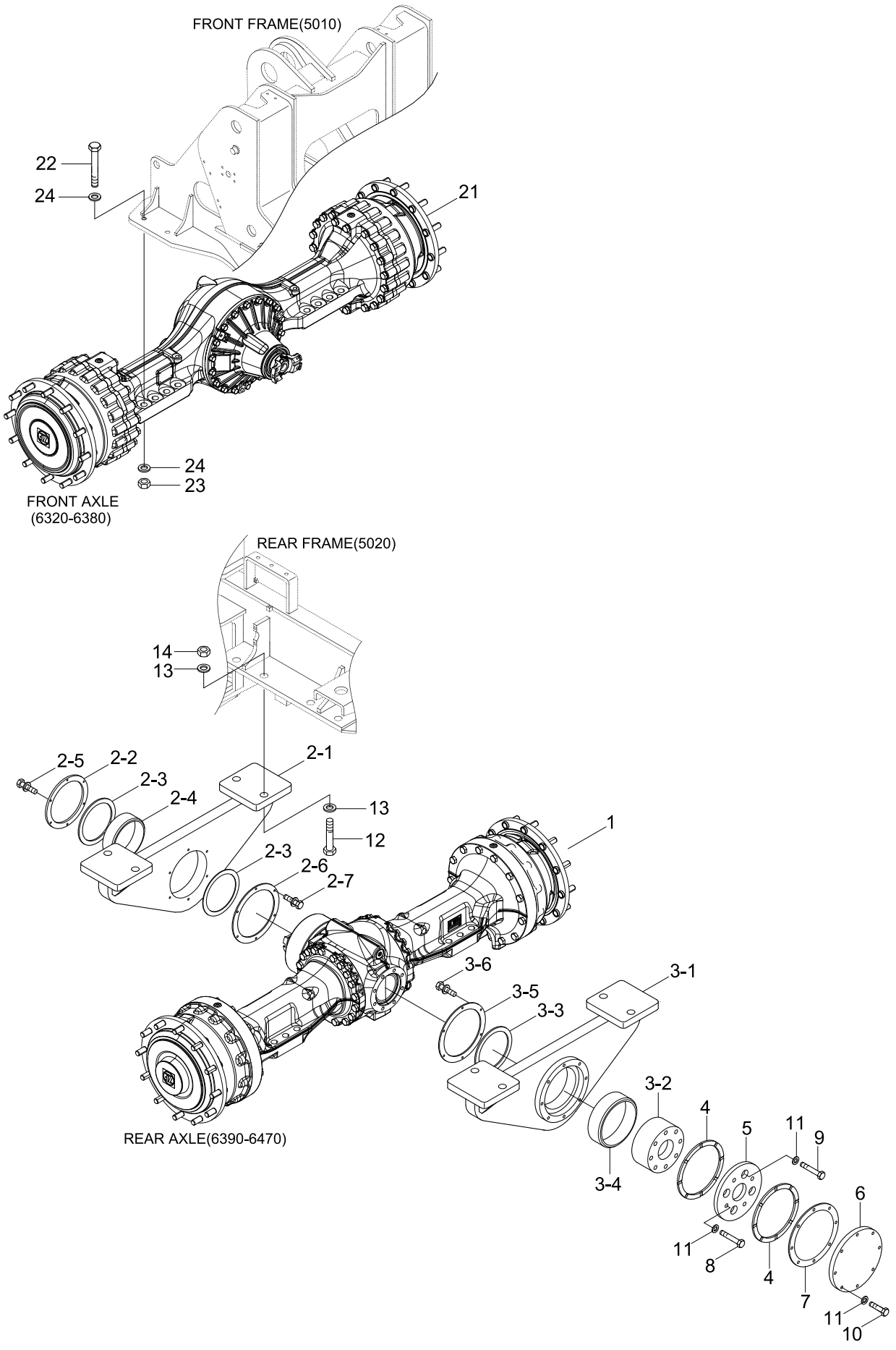

Item	Part_No	IS	Ord	T	Description	Qty	Serial_No	ITC	Remark
1	81LD-20130				REAR AXLE ASSY	1			
2	81LD-20300				SUPPORT ASSY-FRONT	1	- #0068		
	81LD-20301				SUPPORT ASSY-FRONT	1	#0069 - #0384	D	
	81LD-20302				SUPPORT ASSY-FRONT	1	#0385 -	B	
2-1	81LD-20310				.SUPPORT WA-FRONT	1	- #0068		
	81LD-20312				.SUPPORT WA-FRONT	1	#0069 - #0384	D	
	81LD-20313				.SUPPORT WA-FRONT	1	#0385 -	B	
2-2	81LC-20120				.COVER	1			
2-3	81LC-20130				.SEAL-DUST	2			
2-4	81LC-20140				.BUSHING	1			
2-5	S037-102556				.BOLT-W/WASHER	12			
2-6	81LD-20340				.COVER	1	#0004 -	-	
2-7	S035-081556				.BOLT-W/WASHER	6	#0004 -	-	
3	81LD-20200				SUPPORT ASSY-REAR	1	- #0068		
	81LD-20201				SUPPORT ASSY-REAR	1	#0069 - #0384	D	
	81LD-20202				SUPPORT ASSY-REAR	1	#0385 -	B	
3-1	81LD-20210				.SUPPORT WA-REAR	1	- #0068		
	81LD-20212				.SUPPORT WA-REAR	1	#0069 - #0384	D	
	81LD-20213				.SUPPORT WA-REAR	1	#0385 -	B	
3-2	81LD-20280				.SHAFT	1			
3-3	81LD-20320				.SEAL-DUST(DKIY TYPE)	1			
3-4	81LD-20140				.BUSHING	1			
3-5	81LD-20330				.COVER	1	#0004 -	-	
3-6	S035-081556				.BOLT-W/WASHER	6	#0004 -	-	
4	81LD-20240				WASHER-THRUST	2			
5	81LD-20250				DISC	1			

Item	Part_No	IS	Ord	T	Description	Qty	Serial_No	ITC	Remark
6	81LD-20260				COVER	1			
7	81LD-20270				SHIM	2			
8	S017-16115D				BOLT-HEX	4			
9	S017-16100D				BOLT-HEX	4			
10	S017-16050D				BOLT-HEX	8			
11	S441-160006				WASHER-HARDENED	16			
12	S018-27100D				BOLT-HEX	8			
13	S441-270006				WASHER-HARDENED	16			
14	S206-271006				NUT-HEX	8			
21	81LD-10040				FRONT AXLE ASSY	1			
22	S018-27135D				BOLT-HEX	8			
23	S206-271006				NUT-HEX	8			
24	S441-270006				WASHER-HARDENED	16			

DRIVE LINES

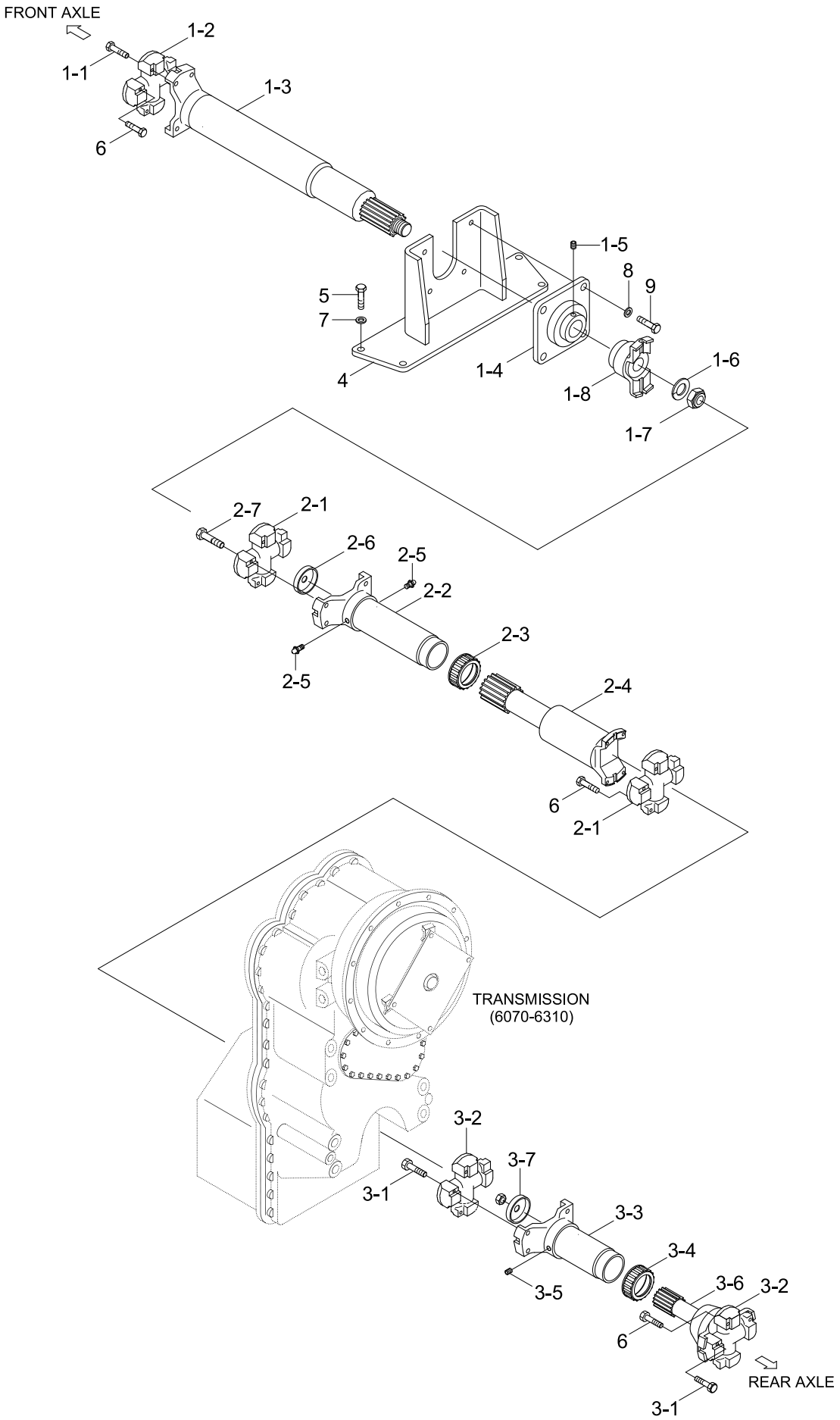
FRONT AXLE
1-2
1-1
1-3
6
1-5
8
9
5
7
4
1-4
1-6
1-8
1-7
2-7
2-1
2-6
2-5
2-2
2-3
2-5
2-4
6
2-1
TRANSMISSION
(6070-6310)
3-2
3-7
3-1
3-3
3-4
3-6
3-2
3-5
6
REAR AXLE
3-1

Item	Part_No	IS	Ord	T	Description	Qty	Serial_No	ITC	Remark
1	81LD-30070				DRIVE SHAFT-FRONT	1			
1-1	103-21UNF				.BOLT	4			
1-2	100-7C-1				.J/BEARING ASSY	1			
1-3	40AF-7C646L				.SLIP SHAFT SUB ASSY	1			
1-4	700-UCF312				.BEARING-FLANGE	1			
1-5	710-M1215				.SCREW-SET	1			
1-6	120-M27				.WASHER	1			
1-7	110-M27				.NUT-LOCK	1			
1-8	210-7C863L				.FLANGE COMPLETE	1			
2	81LD-30080				DRIVE SHAFT-CENTER	1			
2-1	100-7C-1				.J/BEARING ASSY	2			
2-2	220-7C200L				.YOKE-SLEEVE	1			CHANGE WITH 2-3
2-3	810-415JK				.SEAL-JOINT	1			
2-4	40AC-7C728L				.SLIP SHAFT SUB ASSY	1			
2-5	101-PT81				.NIPPLE-GREASE	2			
2-6	910-56				.PLUG	1			
2-7	103-21UNF				.BOLT	8			
3	81LD-30090				DRIVE SHAFT-REAR	1			
3-1	103-21UNF				.BOLT	8			
3-2	100-7C-1				.J/BEARING ASSY	2			
3-3	200-7C155L				.YOKE-SLEEVE	1			CHANGE WITH 3-4
3-4	810-415JK				.SEAL-JOINT	1			
3-5	710-PT81				.SCREW-PLUG	1			
3-6	300-7C180L				.SHAFT-YOKE	1			
3-7	910-56				.PLUG	1			
4	81LD-30100				BRACKET WA	1			

Item	Part_No	IS	Ord	T	Description	Qty	Serial_No	ITC	Remark
5	S017-16050D				BOLT-HEX	4			
6	S088-060326				BOLT-HEX,UNIFIED	20			
7	S441-160006				WASHER-HARDENED	4			
8	S441-200006				WASHER-HARDENED	4			
9	S017-20060D				BOLT-HEX	4			

TRANSMISSION MOUNTING

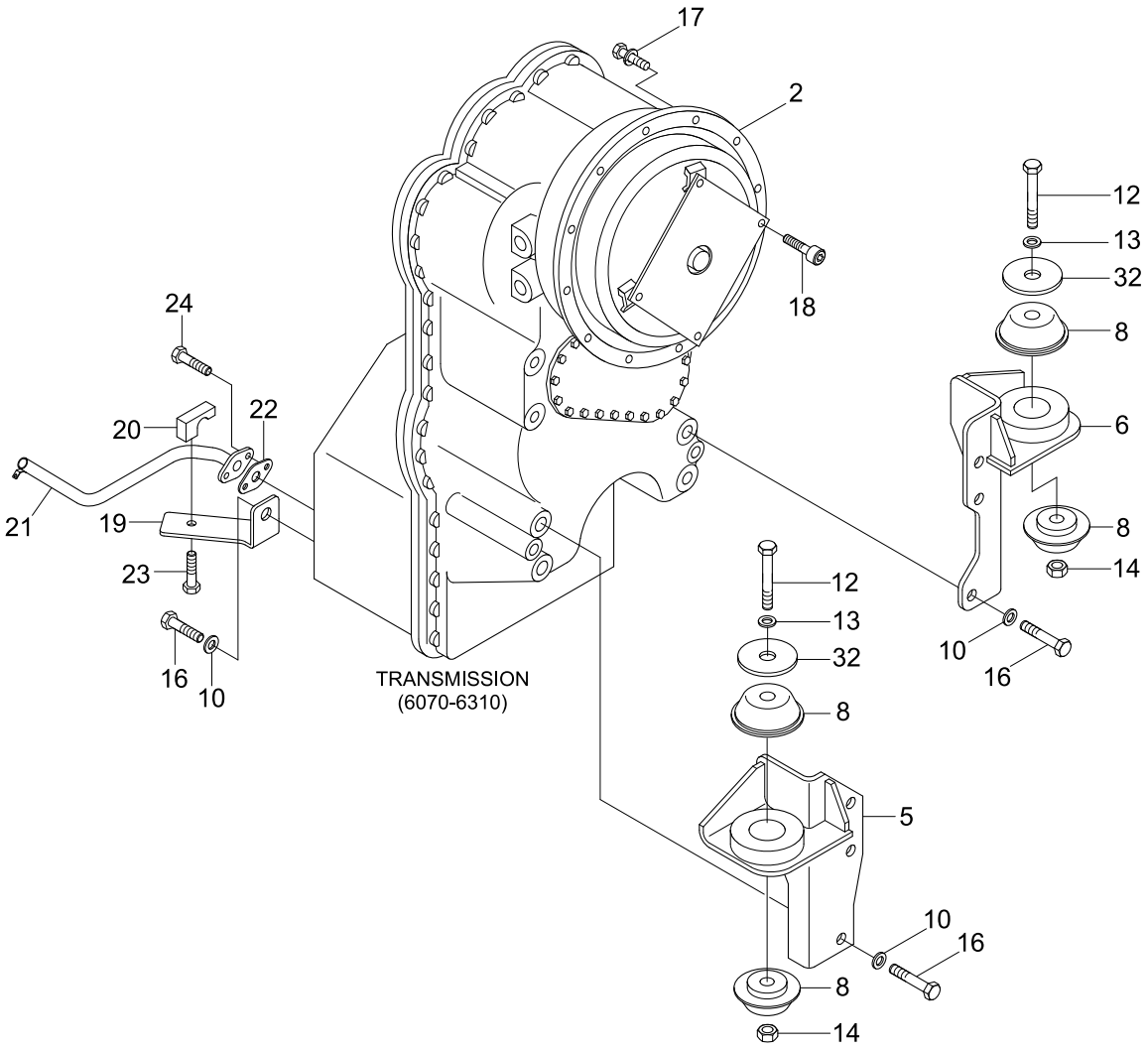

Item	Part_No	IS	Ord	T	Description	Qty	Serial_No	ITC	Remark
2	11LD-01110				T/M & T/C ASSY	1	- #0202		
	11LD-01111				T/C & T/M ASSY	1	#0203 -	B	
5	11LD-00030				BRACKET WA-LH	1			
6	11LD-00040				BRACKET WA-RH	1			
8	11N6-13060				RESILIENT	4			
10	S441-200006				WASHER-HARDENED	7			
12	S017-241806				BOLT-HEX	2			
13	S441-240006				WASHER-HARDENED	2			
14	S205-241006				NUT-HEX	2			
16	S017-20040D				BOLT-HEX	7			
17	S037-103556				BOLT-W/WASHER	12			
18	S107-100356				BOLT-SOCKET	4			
19	11LD-00140				PLATE	1			
20	11LD-00060				BLOCK	1			
21	11LD-00130				PIPE WA	1			
22	12L2-0013				GASKET	1			
23	S037-102056				BOLT-W/WASHER	1			
24	S035-082526				BOLT-W/WASHER	2			
32	11N8-00060				WASHER	2			

TRANSMISSION COOLING PIPING

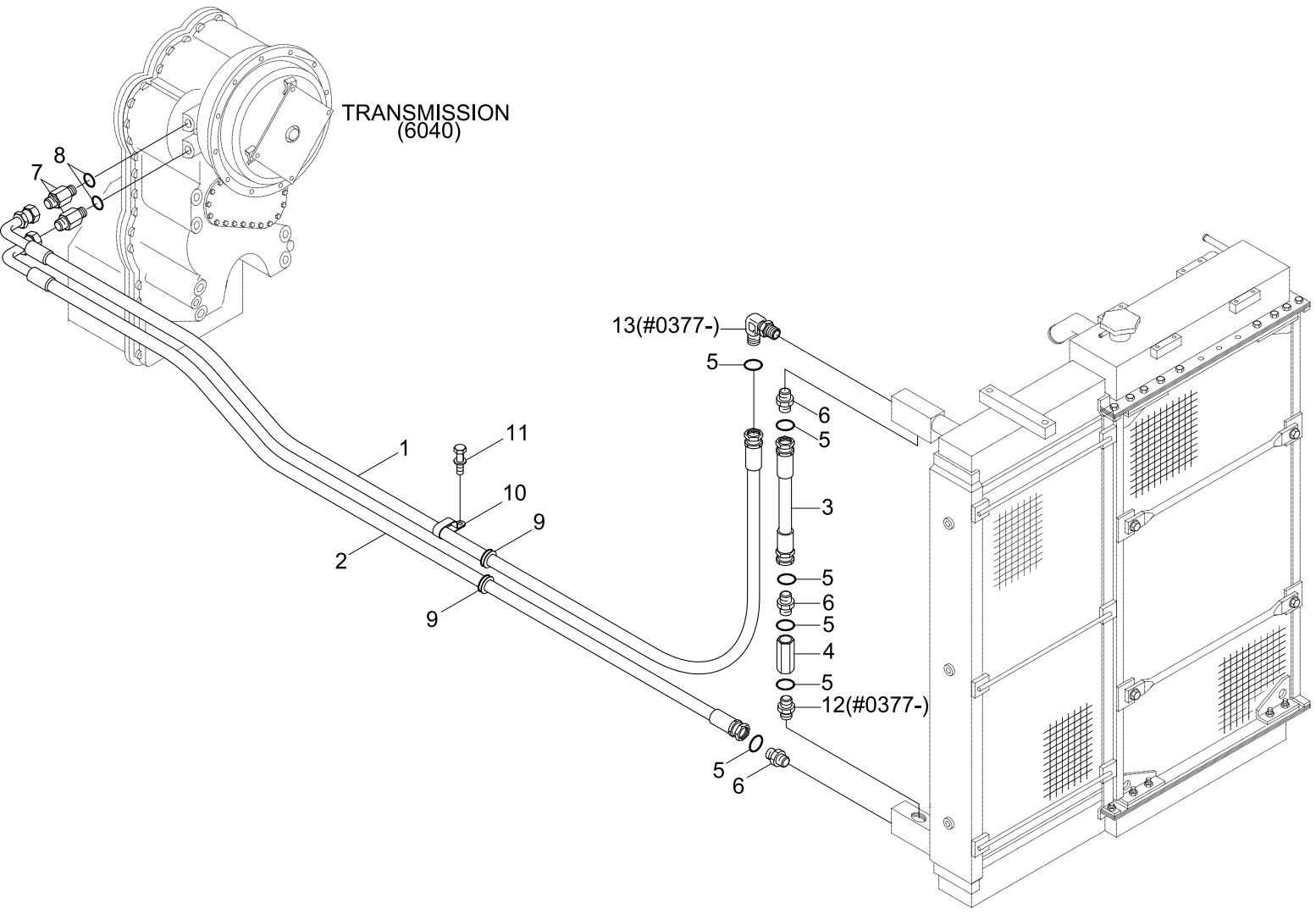

Item	Part_No	IS	Ord	T	Description	Qty	Serial_No	ITC	Remark
1	P620-161043				HOSE ASSY-THD 0X90	1			
2	P620-161030				HOSE ASSY-THD 0X90	1			
3	81LD-60060				HOSE ASSY	1	- #0376		
	P600-162015				HOSE ASSY-THD 0X0	1	#0377 -	D	
4	81L6-01260				CHECK VALVE	1			
5	S631-030001				O-RING	2	- #0376		
	S631-029004				O-RING	6	#0377 -	A	
6	P010-110006				CONNECTOR	1			
					CONNECTOR	1	- #0376		
					CONNECTOR	3	#0377 -	A	
7	P105-117165				CONNECTOR-LONG	2			
8	S611-030001				O-RING	2			
9	S681-460400				GROMMET	2			
10	31L7-10230				CLAMP	1			
11	S037-101556				BOLT-W/WASHER	1			
12	P000-110016				CONNECTOR	1	#0377 -	-	
13	P020-110005				ELBOW-90	1	#0377 -	-	

ENGINE CONNECTION

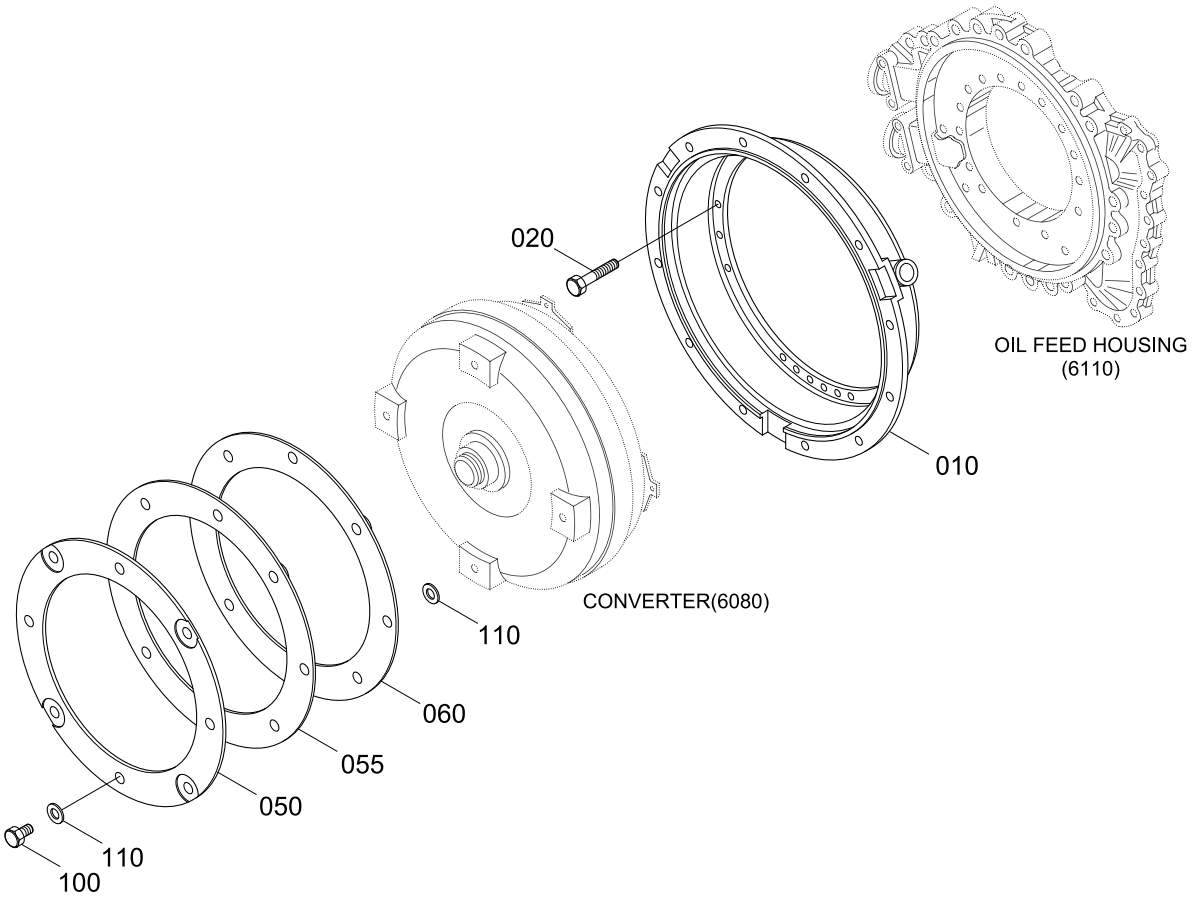

Item	Part_No	IS	Ord	T	Description	Qty	Serial_No	ITC	Remark
010	ZGAQ-00757				BELL-CONVERTER	1			
020	ZGAQ-00758				SCREW	18			
050	ZGAQ-01651				DIAPHRAGM	1			
055	ZGAQ-01652				DIAPHRAGM	1			
060	ZGAQ-00760				DIAPHRAGM	1			
100	ZGAQ-00761				SCREW	4			
110	ZGAQ-00762				WASHER	8			

CONVERTER

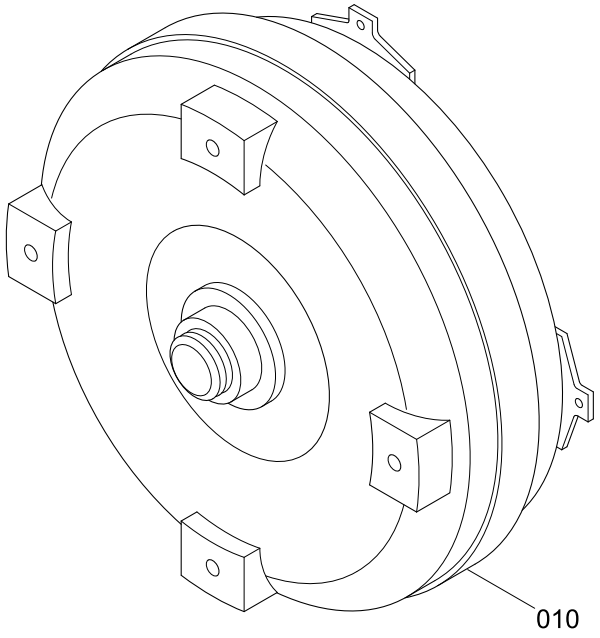

Item	Part_No	IS	Ord	T	Description	Qty	Serial_No	ITC	Remark
010	ZGAQ-02604				CONVERTER	1			

INPUT GROUP

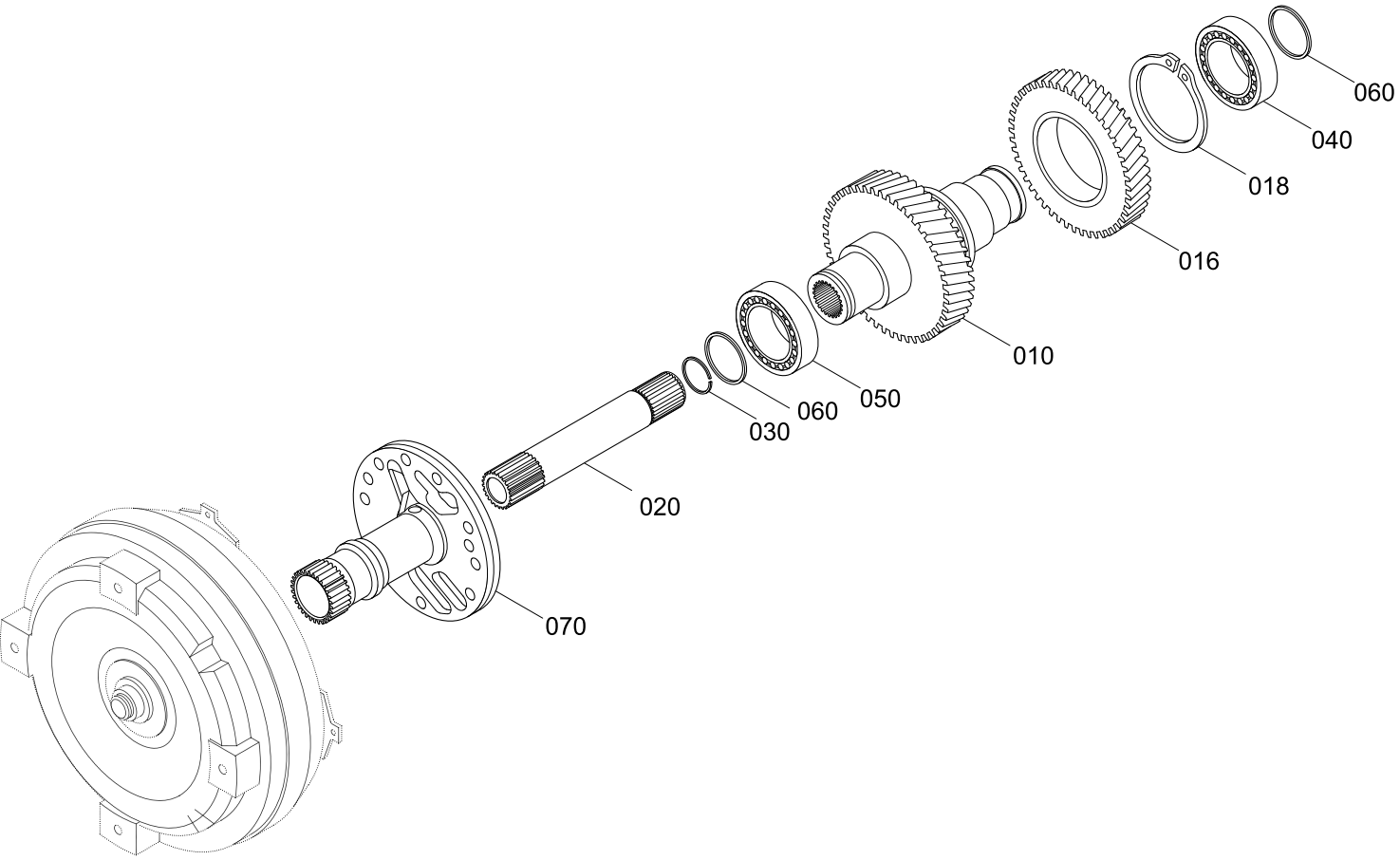

Item	Part_No	IS	Ord	T	Description	Qty	Serial_No	ITC	Remark
010	ZGAQ-00764				SHAFT-INPUT	1			4657-302-005
016	ZGAQ-00765				GEAR	1			4657-302-003
018	ZGAQ-00766				RING-TURBINE	1			0630-501-056
020	ZGAQ-00767				SHAFT-TURBINE	1			4656-302-010
030	ZGAQ-00768				RING-SNAP	1			0630-513-099
040	ZGAQ-00769				BEARING-ROLLER	1			0735-371-722
050	ZGAQ-00769				BEARING-ROLLER	1			0735-371-722
060	ZGAQ-01397				RING-PISTON	2			
070	ZGAQ-00771				SHAFT-STATOR	1			4656-302-027

PRESSURE OIL PUMP

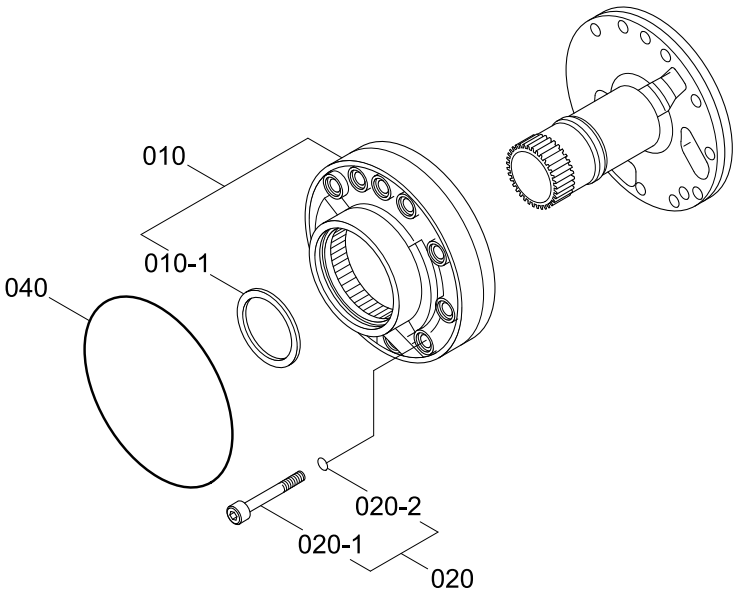

Item	Part_No	IS	Ord	T	Description	Qty	Serial_No	ITC	Remark
010	ZGAQ-01919				PUMP-GEAR	1	- #0202		
	ZGAQ-02856				PUMP-GEAR	1	#0203 -	B	
010-1	ZGAQ-00778				.SEAL-SHAFT	1	#0203 -	-	
020	@				SCREW-CAP	10			NOT
020-1	ZGAQ-01460				.SCREW-CAP	10			
020-2	ZGAQ-01461				.O-RING	10			
040	ZGAQ-02809				O-RING	1	#0001 -	-	

GEARBOX HOUSING 1

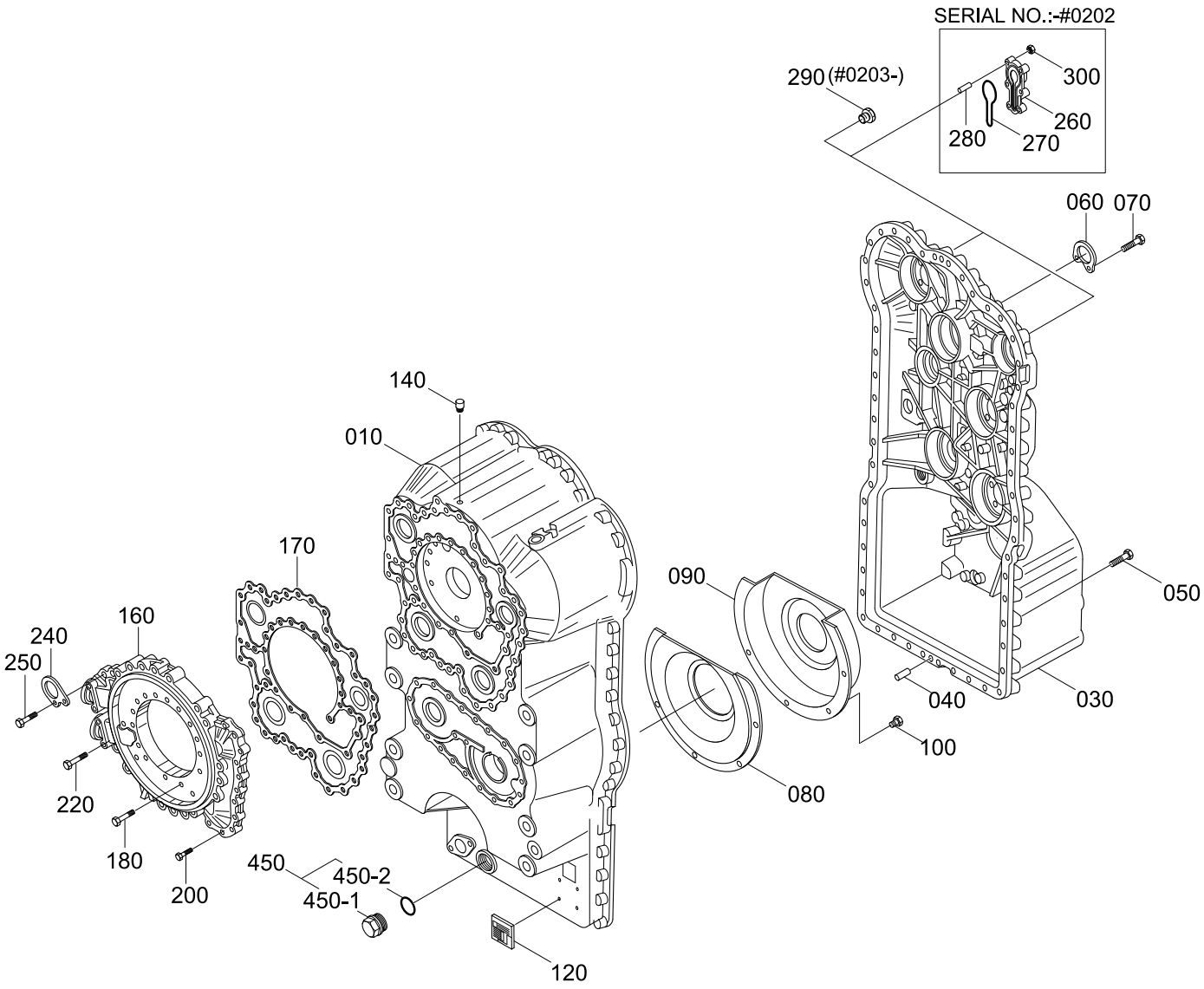

Item	Part_No	IS	Ord	T	Description	Qty	Serial_No	ITC	Remark
010	ZGAQ-01500				HOUSING-FRONT SECT	1	- #0202		
	ZGAQ-02843				HOUSING-FRONT SECT	1	#0203 -	D	
030	ZGAQ-01501				HOUSING-REAR SECT	1	- #0202		
	ZGAQ-02844				HOUSING-REAR SECT	1	#0203 -	D	
040	ZGAQ-01502				PIN-CYLINDRICAL	2	- #0202		
	ZGAQ-01401				PIN-CYLINDRICAL	2	#0203 -	D	
050	ZGAQ-00783				SCREW-CAP	51	- #0202		
					SCREW-CAP	40	#0203 -	A	
060	ZGAQ-00784				PLATE-FIXING	1			
070	ZGAQ-00783				SCREW-CAP	2			
080	ZGAQ-00785				SHEET-SCREEN	1			
090	ZGAQ-00786				SHEET-SCREEN	1			
100	ZGAQ-00787				SCREW-CAP	5			
120	ZGAQ-00788				PLATE-TYPE	1			
140	ZGAQ-00258				BREATHER	1			
160	ZGAQ-01706				HOUSING-OIL FEED	1			
170	ZGAQ-00790				GASKET	1			
180	ZGAQ-00791				SCREW-CAP	21			
200	ZGAQ-00792				SCREW-CAP	15			
220	ZGAQ-00793				SCREW-CAP	4			
240	ZGAQ-00784				PLATE-FIXING	1			
250	ZGAQ-00794				SCREW-CAP	2			
260	ZGAQ-00795				COVER	2	- #0202	-	
270	ZGAQ-00796				O-RING	2	- #0202	-	
280	ZGAQ-01405				STUD	12	- #0202	-	
290	ZGAQ-02824				PLUG	4	#0203 -	-	

Item	Part_No	IS	Ord	T	Description	Qty	Serial_No	ITC	Remark
300	ZGAQ-00799				NUT-HEX	12	- #0202	-	
450	@				PLUG-SCREW	1			NOT
450-1	ZGAQ-00252				.PLUG-SCREW	1			
450-2	ZGAQ-00253				.O-RING	1			

GEARBOX HOUSING 2

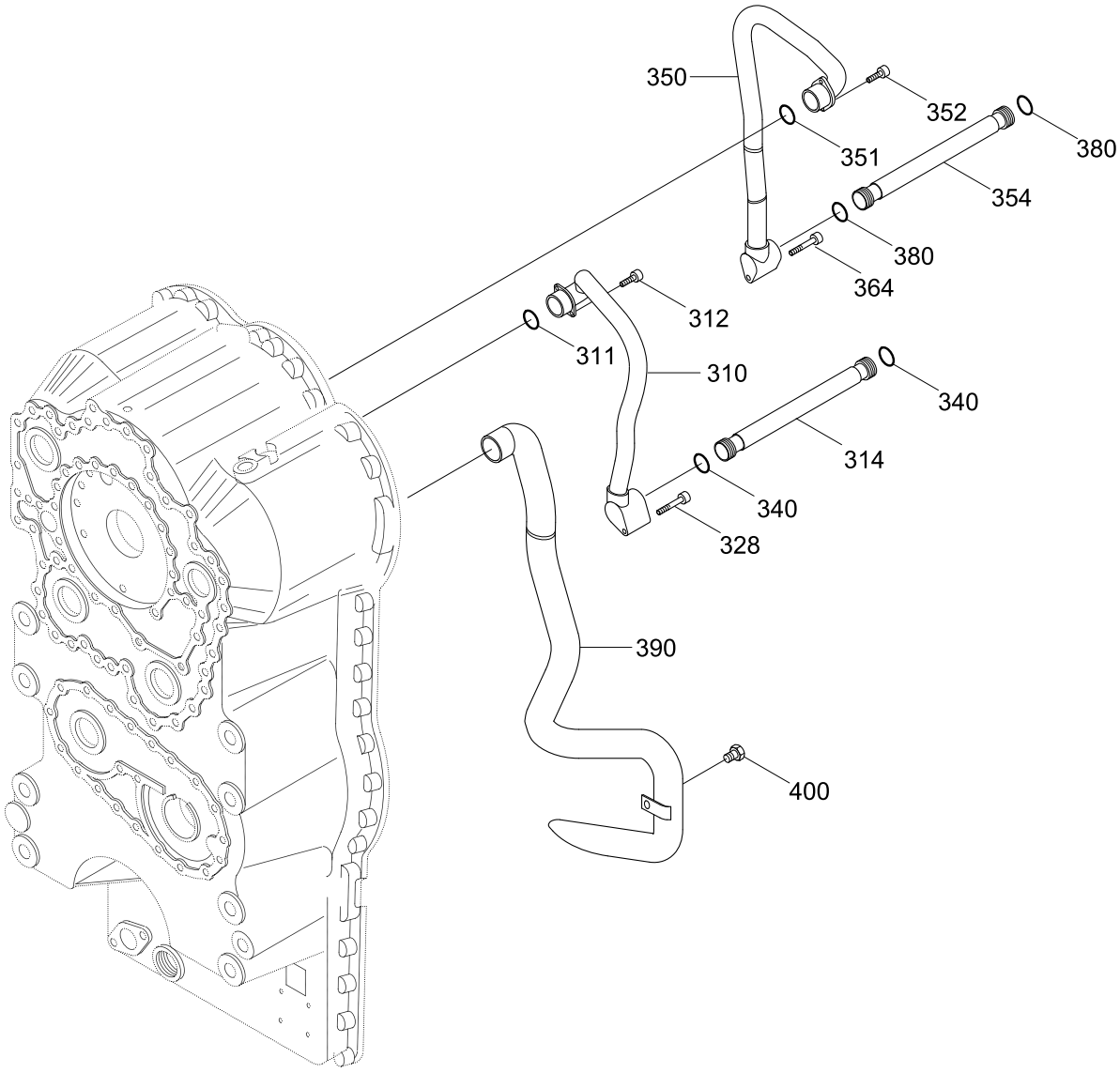

Item	Part_No	IS	Ord	T	Description	Qty	Serial_No	ITC	Remark
310	ZGAQ-01503				OIL TUBE	1			
311	ZGAQ-02391				O-RING	1	#0001 -	-	
312	ZGAQ-00787				SCREW-CAP	2			
314	ZGAQ-00802				OIL TUBE	1			
328	ZGAQ-01504				SCREW-CAP	1			
340	ZGAQ-02391				O-RING	2	#0001 -	-	
350	ZGAQ-01505				OIL TUBE	1			
351	ZGAQ-02391				O-RING	1	#0001 -	-	
352	ZGAQ-00787				SCREW-CAP	2			
354	ZGAQ-00802				OIL TUBE	1			
364	ZGAQ-01504				SCREW-CAP	1			
380	ZGAQ-02391				O-RING	2	#0001 -	-	
390	ZGAQ-00806				TUBE-SUCTION	1	- #0202		
	ZGAQ-02845				TUBE-SUCTION	1	#0203 -	D	
400	ZGAQ-00787				SCREW-CAP	1			

CLUTCH(K1)

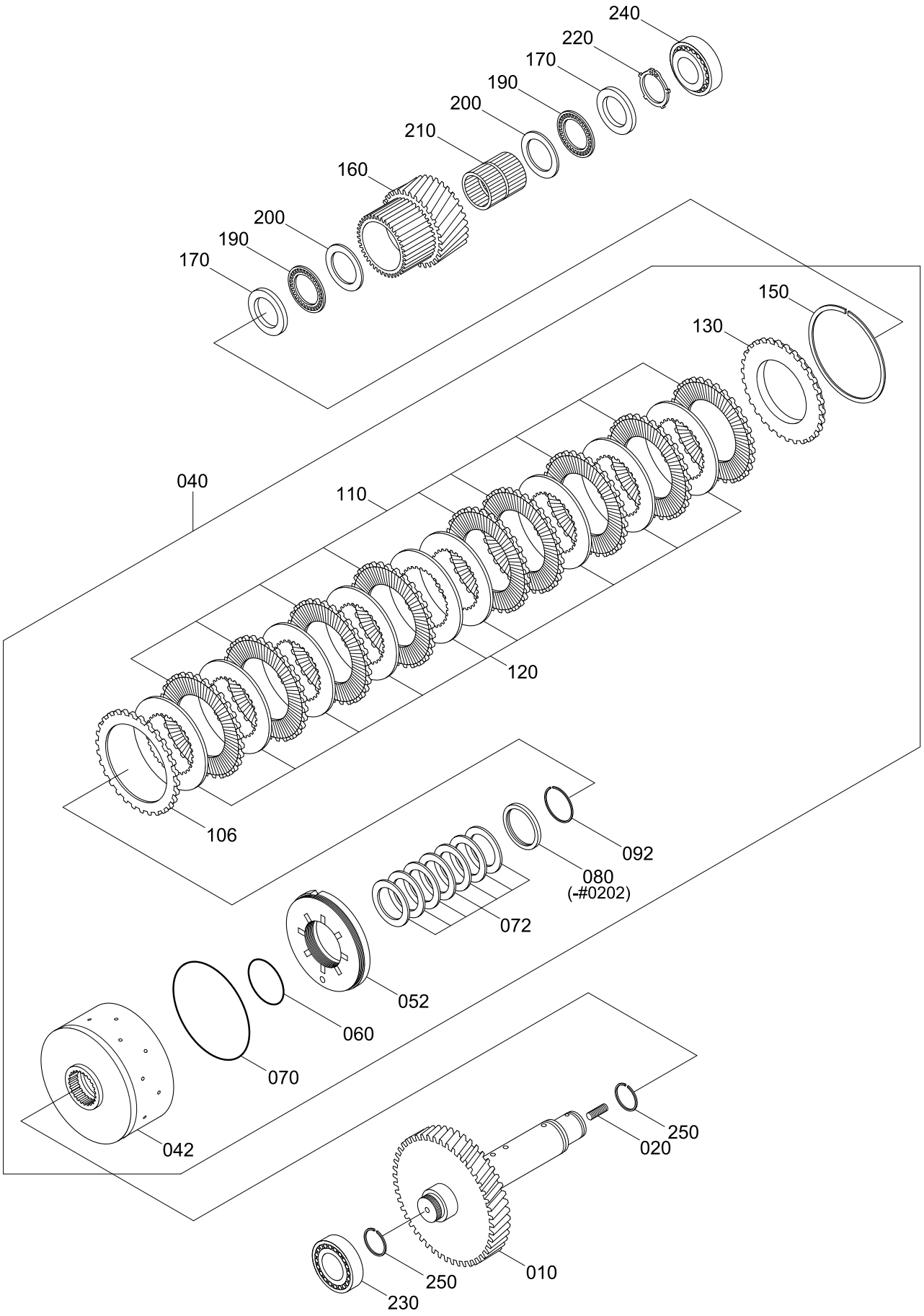
240
220
170
190
200
210
160
200
190
170
150
130
040
110
120
106
092
080
(-#0202)
072
052
060
070
042
250
020
010
250
230

Item	Part_No	IS	Ord	T	Description	Qty	Serial_No	ITC	Remark
010	ZGAQ-00810				SHAFT	1			
020	ZGAQ-00811				STUD	1			
040	ZGAQ-01920				COUPLING	1	- #0202		
	ZGAQ-02846				COUPLING	1	#0203 -	D	
042	ZGAQ-00812				.CARRIER-DISC	1	- #0202		
	ZGAQ-02847				.CARRIER-DISC	1	#0203 -	D	
052	ZGAQ-01709				.PISTON	1			
054	ZGAQ-00284				.VALVE	1		-	NOT USED
060	ZGAQ-00814				.O-RING	1			
070	ZGAQ-00815				.O-RING	1			
072	ZGAQ-00816				.SPRING-CUP	7			
080	ZGAQ-00817				.RING-RETAINING	1	- #0202	-	
092	ZGAQ-00818				.RING-SNAP	1	- #0202		
	ZGAQ-02829				.L-RING	1	#0203 -	D	
106	ZGAQ-01506				.DISC	1			
110	ZGAQ-01507				.DISC	9			
120	ZGAQ-00821				.DISC-BRAKE,INNER	9			
130	ZGAQ-00822				.SHIM-END	1			
150	ZGAQ-00832				.RING-SNAP(2.1)	1			
	ZGAQ-00833				.RING-SNAP(2.25)	1			
	ZGAQ-00834				.RING-SNAP(2.4)	1			
	ZGAQ-00835				.RING-SNAP(2.55)	1			
	ZGAQ-00836				.RING-SNAP(2.7)	1			
	ZGAQ-00837				.RING-SNAP(2.85)	1			
	ZGAQ-00838				.RING-SNAP(3.0)	1			
	ZGAQ-00839				.RING-SNAP(3.15)	1			

Item	Part_No	IS	Ord	T	Description	Qty	Serial_No	ITC	Remark
	ZGAQ-00840				.RING-SNAP(3.30)	1			
	ZGAQ-00841				.RING-SNAP(3.45)	1			
	ZGAQ-00842				.RING-SNAP(3.60)	1			
150	ZGAQ-00843				.RING-SNAP(3.75)	1			
	ZGAQ-00844				.RING-SNAP(3.90)	1			
	ZGAQ-00845				.RING-SNAP(4.05)	1			
	ZGAQ-00846				.RING-SNAP(4.20)	1			
160	ZGAQ-00823				IDLER	1			
170	ZGAQ-00824				DISC-RUNNING	2			
190	ZGAQ-00825				CAGE-AXIAL NEEDLE	2			
200	ZGAQ-00826				WASHER-AXIAL	2			
210	ZGAQ-00827				CAGE-NEEDLE	1			
220	ZGAQ-00828				RING-RETAINING	1			
230	ZGAQ-00829				BEARING-ROLLER	1			
240	ZGAQ-00830				BEARING-ROLLER	1			
250	ZGAQ-00831				RING-PISTON	2			

CLUTCH(K2)

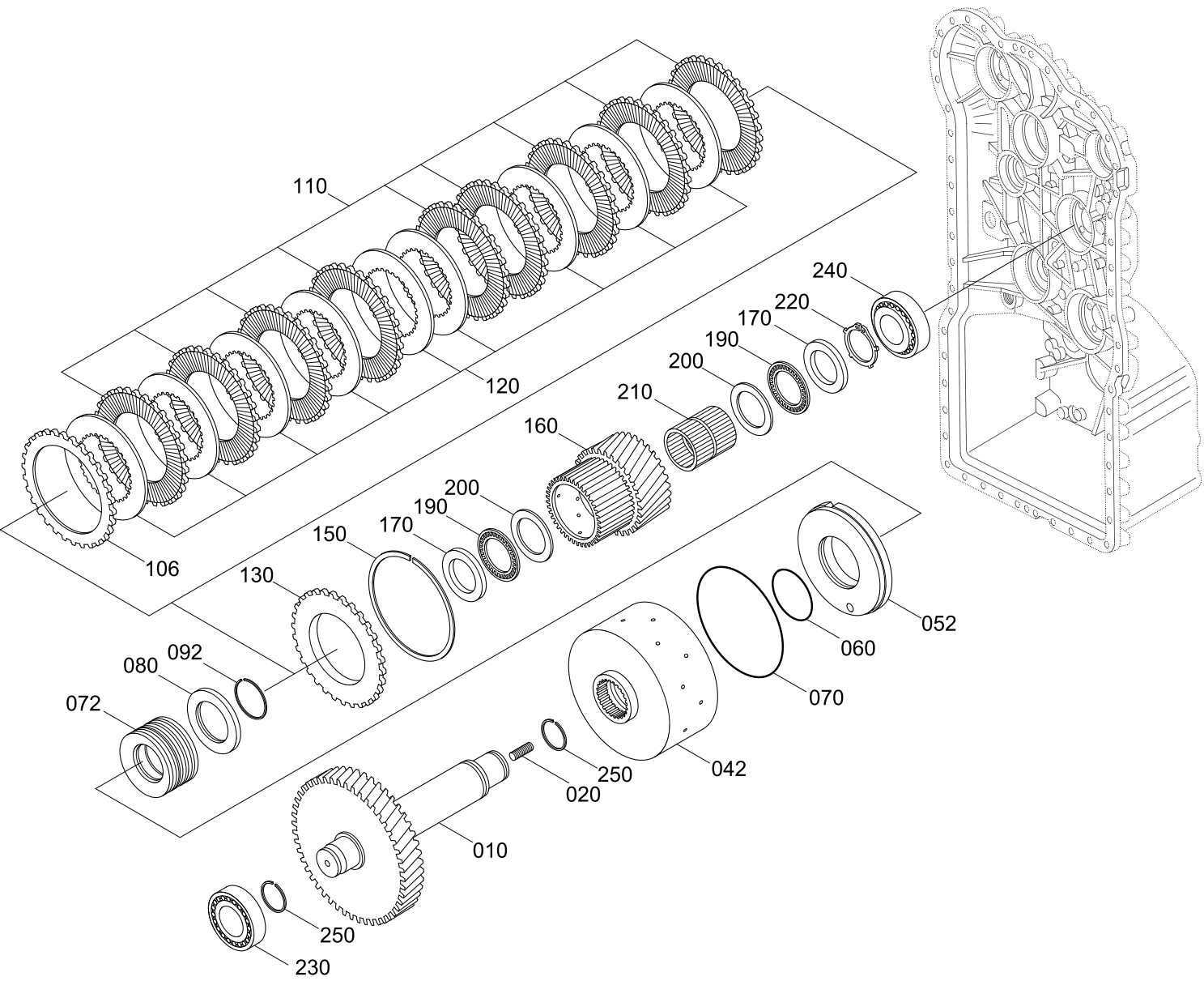
110
120
106
240
220
170
190
200
210
160
200
190
170
150
130
092
080
072
060
052
070
042
250
020
010
250
230

Item	Part_No	IS	Ord	T	Description	Qty	Serial_No	ITC	Remark
010	ZGAQ-00847				SHAFT	1			
020	ZGAQ-00811				STUD	1			
040	ZGAQ-01921				COUPLING	1	- #0202		
	ZGAQ-02848				COUPLING	1	#0203 -	D	
042	ZGAQ-00848				.CARRIER-DISC	1	- #0202		
	ZGAQ-02847				.CARRIER-DISC	1	#0203 -	D	
052	ZGAQ-00849				.PISTON	1			
060	ZGAQ-00814				.O-RING	1			
070	ZGAQ-00850				.O-RING	1			
072	ZGAQ-00816				.SPRING-CUP	7			
080	ZGAQ-00817				.RING-RETAINING	1	- #0202	-	
092	ZGAQ-00818				.RING-SNAP	1	- #0202		
	ZGAQ-02829				.L-RING	1	#0203 -	D	
106	ZGAQ-01508				.DISK-CLUTCH OUTER	1			
110	ZGAQ-01509				.DISC	7			
120	ZGAQ-00853				.DISC-CLUTCH,INNER	7			
130	ZGAQ-00854				.SHIM-END	1			
150	ZGAQ-00855				.RING-SNAP(2.1)	1			
	ZGAQ-00856				.RING-SNAP(2.25)	1			
	ZGAQ-00857				.RING-SNAP(2.4)	1			
	ZGAQ-00858				.RING-SNAP(2.55)	1			
	ZGAQ-00859				.RING-SNAP(2.7)	1			
	ZGAQ-00860				.RING-SNAP(2.85)	1			
	ZGAQ-00861				.RING-SNAP(3.00)	1			
	ZGAQ-00862				.RING-SNAP(3.15)	1			
	ZGAQ-00863				.RING-SNAP(3.30)	1			

Item	Part_No	IS	Ord	T	Description	Qty	Serial_No	ITC	Remark
150	ZGAQ-00864				.RING-SNAP(3.45)	1			
	ZGAQ-00865				.RING-SNAP(3.60)	1			
	ZGAQ-00866				.RING-SNAP(3.75)	1			
	ZGAQ-00867				.RING-SNAP(3.90)	1			
	ZGAQ-00868				.RING-SNAP(4.05)	1			
	ZGAQ-00869				.RING-SNAP(4.20)	1			
160	ZGAQ-01510				IDLER	1			
170	ZGAQ-00824				DISC-RUNNING	2			
190	ZGAQ-00825				CAGE-AXIAL NEEDLE	2			
200	ZGAQ-00826				WASHER-AXIAL	2			
210	ZGAQ-01412				CAGE-NEEDLE	1			
220	ZGAQ-00828				RING-RETAINING	1			
230	ZGAQ-00830				BEARING-ROLLER	1			
240	ZGAQ-00830				BEARING-ROLLER	1			
250	ZGAQ-00831				RING-PISTON	2			

CLUTCH(K3)

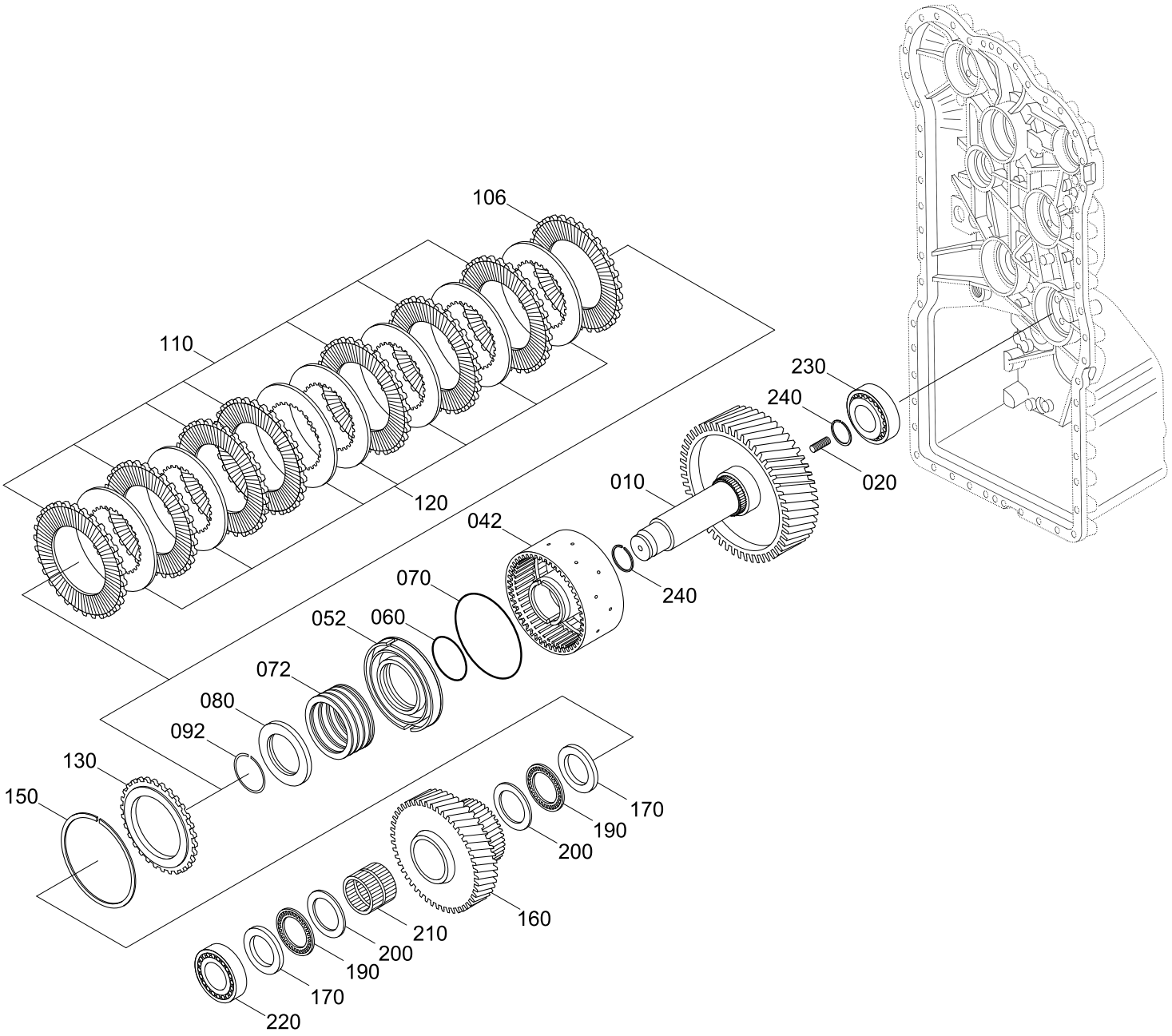

ITEM	PART NO.	DESCRIPTION	T/M SERIAL NO.
010	ZGAQ-00872	SHAFT	-#1683913
	ZGAQ-03152	SHAFT	#1683914-

Item	Part_No	IS	Ord	T	Description	Qty	Serial_No	ITC	Remark
010	ZGAQ-00872				SHAFT	1			SEE ILLUST
	ZGAQ-03152				SHAFT	1		D	SEE ILLUST
020	ZGAQ-00811				STUD	1			
040	ZGAQ-01921				COUPLING	1	- #0202		
	ZGAQ-02850				COUPLING	1	#0203 -	D	
042	ZGAQ-00848				.CARRIER-DISC	1	- #0202		
	ZGAQ-02849				.CARRIER-DISC	1	#0203 -	D	
052	ZGAQ-00849				.PISTON	1			
060	ZGAQ-00814				.O-RING	1			
070	ZGAQ-00850				.O-RING	1			
072	ZGAQ-00816				.SPRING-CUP	7			
080	ZGAQ-00817				.RING-RETAINING	1	- #0202	-	
092	ZGAQ-00818				.RING-SNAP	1	- #0202		
	ZGAQ-02829				.L-RING	1	#0203 -	D	
106	ZGAQ-01508				.DISK-CLUTCH OUTER	1			
110	ZGAQ-01509				.DISC	7			
120	ZGAQ-00853				.DISC-CLUTCH,INNER	7			
130	ZGAQ-00854				.SHIM-END	1			
150	ZGAQ-00855				.RING-SNAP(2.1)	1			
	ZGAQ-00856				.RING-SNAP(2.25)	1			
	ZGAQ-00857				.RING-SNAP(2.4)	1			
	ZGAQ-00858				.RING-SNAP(2.55)	1			
	ZGAQ-00859				.RING-SNAP(2.7)	1			
	ZGAQ-00860				.RING-SNAP(2.85)	1			
	ZGAQ-00861				.RING-SNAP(3.00)	1			
	ZGAQ-00862				.RING-SNAP(3.15)	1			

Item	Part_No	IS	Ord	T	Description	Qty	Serial_No	ITC	Remark
150	ZGAQ-00863				.RING-SNAP(3.30)	1			
	ZGAQ-00864				.RING-SNAP(3.45)	1			
	ZGAQ-00865				.RING-SNAP(3.60)	1			
	ZGAQ-00866				.RING-SNAP(3.75)	1			
	ZGAQ-00867				.RING-SNAP(3.90)	1			
	ZGAQ-00868				.RING-SNAP(4.05)	1			
	ZGAQ-00869				.RING-SNAP(4.20)	1			
160	ZGAQ-00873				IDLER	1			
170	ZGAQ-00824				DISC-RUNNING	2			
190	ZGAQ-00825				CAGE-AXIAL NEEDLE	2			
200	ZGAQ-00826				WASHER-AXIAL	2			
210	ZGAQ-01412				CAGE-NEEDLE	1			
220	ZGAQ-00830				BEARING-ROLLER	1			
230	ZGAQ-00829				BEARING-ROLLER	1			
240	ZGAQ-00831				RING-PISTON	2			

CLUTCH(K4)

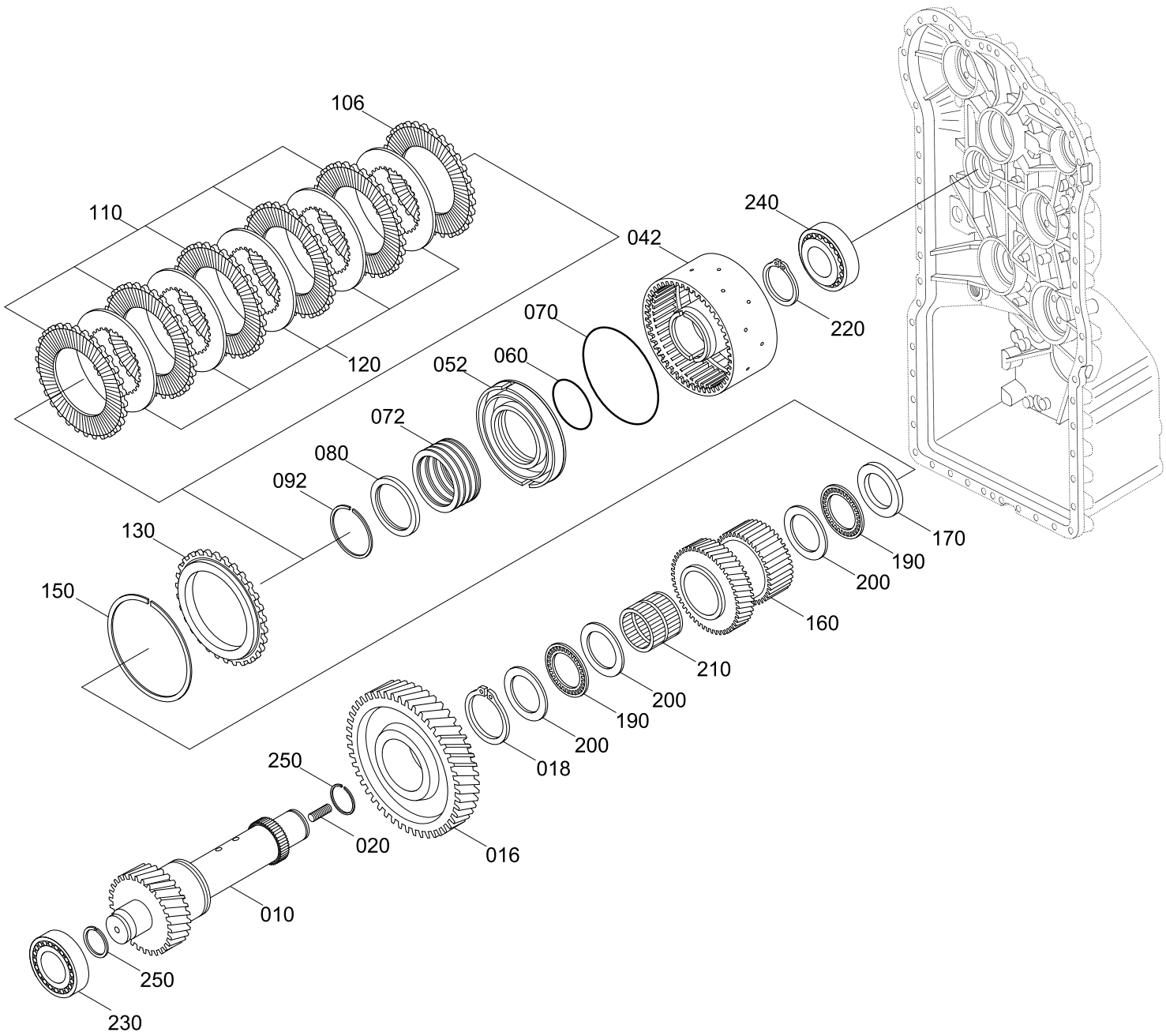
106
110
120
042
240
220
070
052
060
072
080
092
130
150
170
190
200
160
210
200
190
200
018
250
020
016
010
250
230

Item	Part_No	IS	Ord	T	Description	Qty	Serial_No	ITC	Remark
010	ZGAQ-00874				SHAFT	1			
016	ZGAQ-00875				GEAR	1			
018	ZGAQ-00876				RING-RETAINING	1			
020	ZGAQ-00811				STUD	1			
040	ZGAQ-01922				COUPLING	1			
					COUPLING	1	- #0202		
	ZGAQ-02857				COUPLING	1	#0203 -	D	
042	ZGAQ-01511				.CARRIER-DISC	1	- #0202		
	ZGAQ-02858				.CARRIER-DISC	1	#0203 -	D	
052	ZGAQ-00849				.PISTON	1			
060	ZGAQ-00814				.O-RING	1			
070	ZGAQ-00850				.O-RING	1			
072	ZGAQ-00816				.SPRING-CUP	7			
080	ZGAQ-00817				.RING-RETAINING	1	- #0202	-	
092	ZGAQ-00818				.RING-SNAP	1	- #0202		
	ZGAQ-02829				.L-RING	1	#0203 -	D	
106	ZGAQ-01508				.DISK-CLUTCH OUTER	1			
110	ZGAQ-01509				.DISC	5			
120	ZGAQ-00853				.DISC-CLUTCH,INNER	5			
130	ZGAQ-00854				.SHIM-END	1			
150	ZGAQ-00855				.RING-SNAP(2.1)	1			
	ZGAQ-00856				.RING-SNAP(2.25)	1			
	ZGAQ-00857				.RING-SNAP(2.4)	1			
	ZGAQ-00858				.RING-SNAP(2.55)	1			
	ZGAQ-00859				.RING-SNAP(2.7)	1			
	ZGAQ-00860				.RING-SNAP(2.85)	1			

Item	Part_No	IS	Ord	T	Description	Qty	Serial_No	ITC	Remark
150	ZGAQ-00861				.RING-SNAP(3.00)	1			
	ZGAQ-00862				.RING-SNAP(3.15)	1			
	ZGAQ-00863				.RING-SNAP(3.30)	1			
	ZGAQ-00864				.RING-SNAP(3.45)	1			
	ZGAQ-00865				.RING-SNAP(3.60)	1			
	ZGAQ-00866				.RING-SNAP(3.75)	1			
	ZGAQ-00867				.RING-SNAP(3.90)	1			
	ZGAQ-00868				.RING-SNAP(4.05)	1			
	ZGAQ-00869				.RING-SNAP(4.20)	1			
160	ZGAQ-00878				IDLER	1	- #0202		
	ZGAQ-02859				IDLER	1	#0203 -	D	
170	ZGAQ-00824				DISC-RUNNING	1			
190	ZGAQ-00825				CAGE-AXIAL NEEDLE	2			
200	ZGAQ-00826				WASHER-AXIAL	3			
210	ZGAQ-01412				CAGE-NEEDLE	1			
220	ZGAQ-00879				RING-RETAINER	1			
230	ZGAQ-00830				BEARING-ROLLER	1			
240	ZGAQ-00880				BEARING-ROLLER	1			
250	ZGAQ-00831				RING-PISTON	2			

CLUTCH(KV)

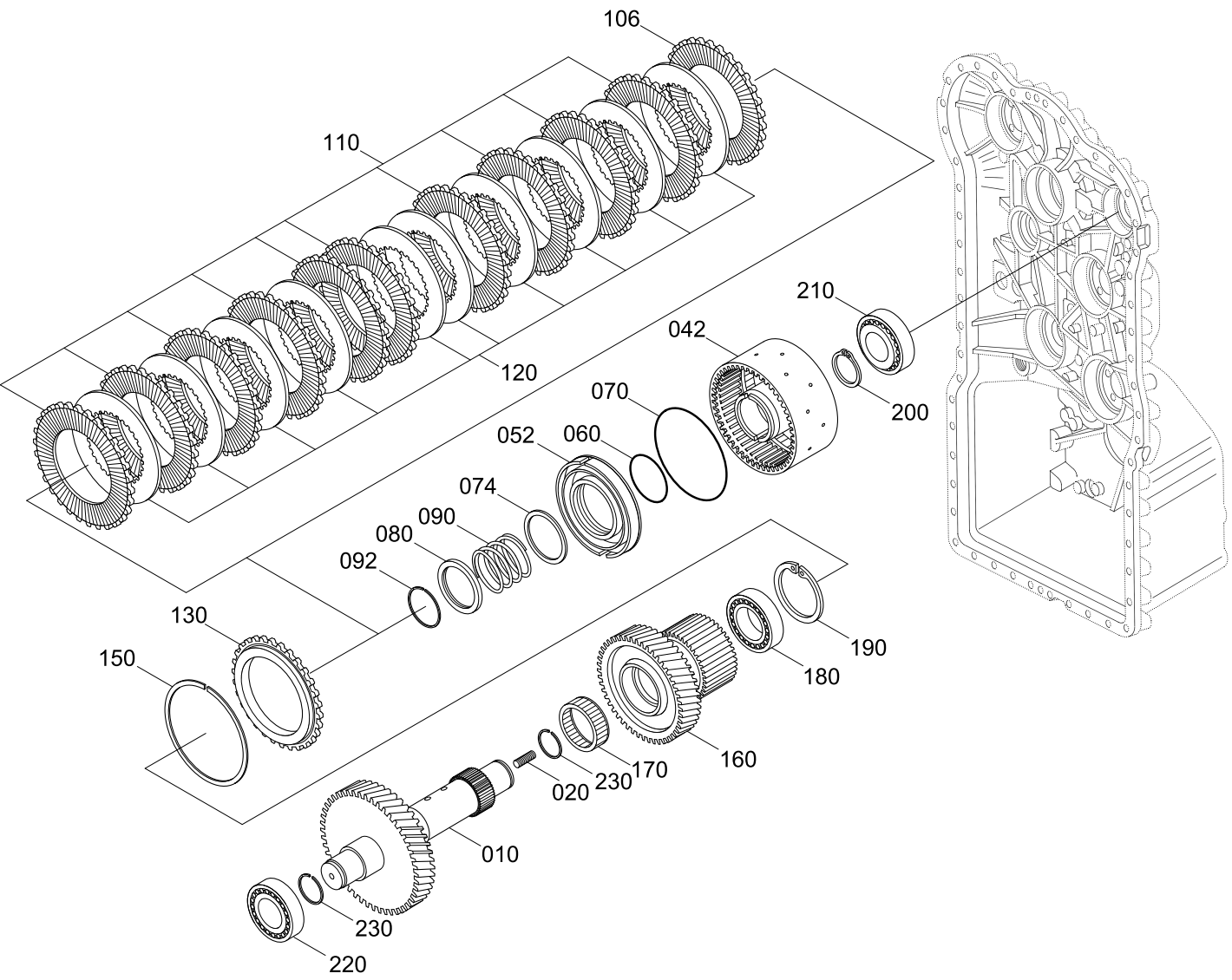
106
110
120
210
042
200
070
052
060
074
090
080
092
130
150
190
180
160
170
230
020
010
230
220

Item	Part_No	IS	Ord	T	Description	Qty	Serial_No	ITC	Remark
010	ZGAQ-00881				SHAFT	1			
020	ZGAQ-00811				STUD	1			
040	ZGAQ-01923				COUPLING	1	- #0202		
	ZGAQ-02853				COUPLING	1	#0203 -	D	
042	ZGAQ-00882				.CARRIER-DISC	1	- #0202		
	ZGAQ-02854				CARRIER-DISC	1	#0203 -	D	
052	ZGAQ-00849				.PISTON	1			
060	ZGAQ-00814				.O-RING	1			
070	ZGAQ-00850				.O-RING	1			
074	ZGAQ-00883				.WASHER	1			
080	ZGAQ-00817				.RING-RETAINING	1	- #0202		
	ZGAQ-02828				.SHIM-SUPPORT	1	#0203 -	D	
090	ZGAQ-00884				.SPRING	1			
092	ZGAQ-00818				.RING-SNAP	1	- #0202		
	ZGAQ-02829				.L-RING	1	#0203 -	D	
106	ZGAQ-01506				.DISC	1			
110	ZGAQ-01507				.DISC	10			
120	ZGAQ-00821				.DISC-BRAKE,INNER	10			
130	ZGAQ-00822				.SHIM-END	1			
150	ZGAQ-00832				.RING-SNAP(2.1)	1			
	ZGAQ-00833				.RING-SNAP(2.25)	1			
	ZGAQ-00834				.RING-SNAP(2.4)	1			
	ZGAQ-00835				.RING-SNAP(2.55)	1			
	ZGAQ-00836				.RING-SNAP(2.7)	1			
	ZGAQ-00837				.RING-SNAP(2.85)	1			
	ZGAQ-00838				.RING-SNAP(3.0)	1			

Item	Part_No	IS	Ord	T	Description	Qty	Serial_No	ITC	Remark
150	ZGAQ-00839				.RING-SNAP(3.15)	1			
	ZGAQ-00840				.RING-SNAP(3.30)	1			
	ZGAQ-00841				.RING-SNAP(3.45)	1			
	ZGAQ-00842				.RING-SNAP(3.60)	1			
	ZGAQ-00843				.RING-SNAP(3.75)	1			
	ZGAQ-00844				.RING-SNAP(3.90)	1			
	ZGAQ-00845				.RING-SNAP(4.05)	1			
	ZGAQ-00846				.RING-SNAP(4.20)	1			
160	ZGAQ-00885				IDLER	1			
170	ZGAQ-00886				CAGE-NEEDLE	1			
180	ZGAQ-01434				BEARING-BALL	1			
190	ZGAQ-00592				RING-RETAINING	1			
200	ZGAQ-00879				RING-RETAINER	1			
210	ZGAQ-00880				BEARING-ROLLER	1			
220	ZGAQ-00880				BEARING-ROLLER	1			
230	ZGAQ-00831				RING-PISTON	2			

CLUTCH(KR)

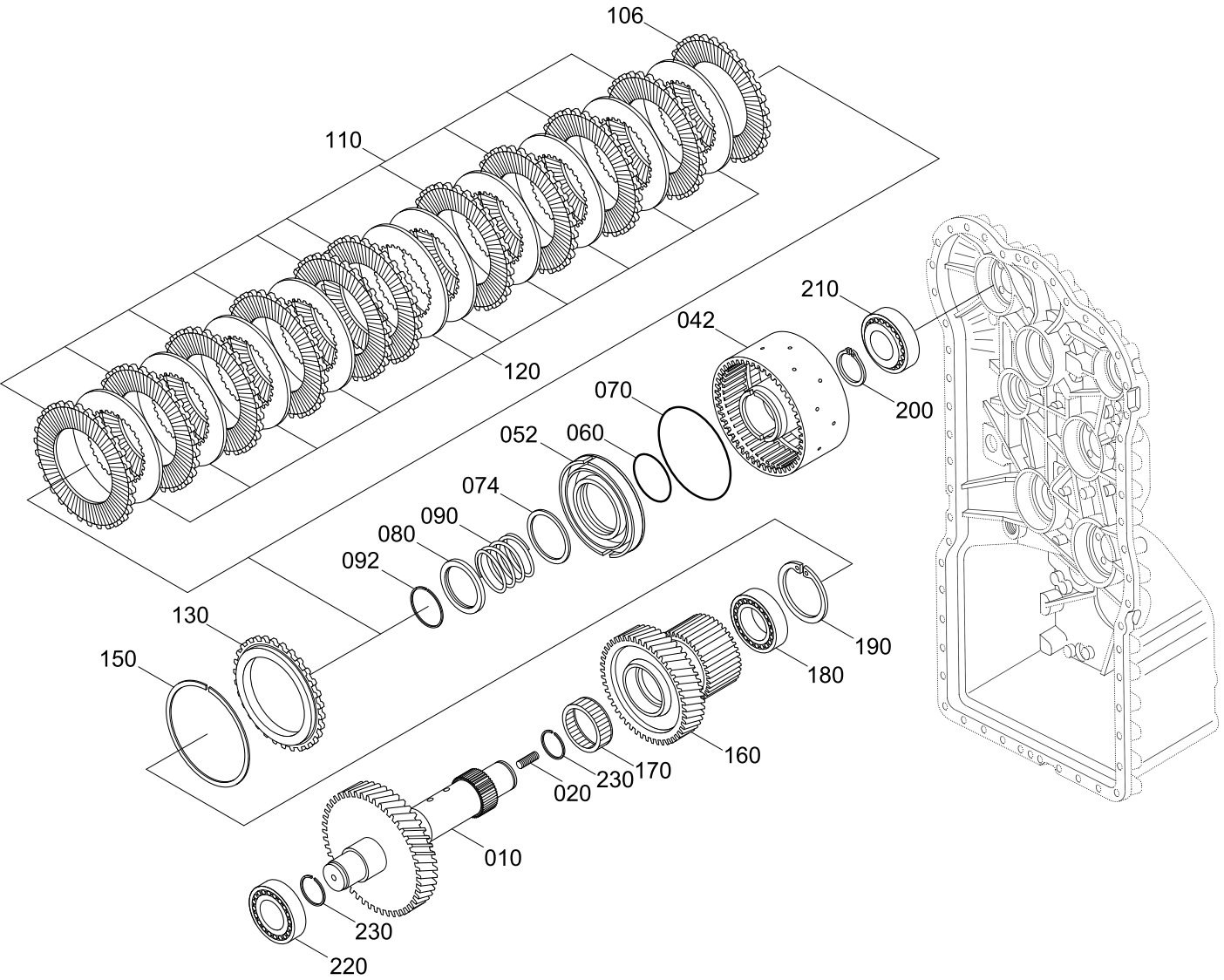
106
110
120
210
042
200
070
052
060
074
090
080
092
130
150
190
180
160
170
230
020
010
230
220

Item	Part_No	IS	Ord	T	Description	Qty	Serial_No	ITC	Remark
010	ZGAQ-00888				SHAFT	1			
020	ZGAQ-00811				STUD	1			
040	ZGAQ-01923				COUPLING	1			
					COUPLING	1	- #0202		
	ZGAQ-02853				COUPLING	1	#0203 -	D	
042	ZGAQ-00882				.CARRIER-DISC	1	- #0202		
	ZGAQ-02854				.CARRIER-DISC	1	#0203 -	D	
052	ZGAQ-00849				.PISTON	1			
060	ZGAQ-00814				.O-RING	1			
070	ZGAQ-00850				.O-RING	1			
074	ZGAQ-00883				.WASHER	1			
080	ZGAQ-00817				.RING-RETAINING	1	- #0202		
	ZGAQ-02828				.SHIM-SUPPORT	1	#0203 -	D	
090	ZGAQ-00884				.SPRING	1			
092	ZGAQ-00818				.RING-SNAP	1	- #0202		
	ZGAQ-02829				.L-RING	1	#0203 -	D	
106	ZGAQ-01506				.DISC	1			
110	ZGAQ-01507				.DISC	10			
120	ZGAQ-00821				.DISC-BRAKE,INNER	10			
130	ZGAQ-00822				.SHIM-END	1			
150	ZGAQ-00832				.RING-SNAP(2.1)	1			
	ZGAQ-00833				.RING-SNAP(2.25)	1			
	ZGAQ-00834				.RING-SNAP(2.4)	1			
	ZGAQ-00835				.RING-SNAP(2.55)	1			
	ZGAQ-00836				.RING-SNAP(2.7)	1			
	ZGAQ-00837				.RING-SNAP(2.85)	1			

Item	Part_No	IS	Ord	T	Description	Qty	Serial_No	ITC	Remark
	ZGAQ-00838				.RING-SNAP(3.0)	1			
	ZGAQ-00839				.RING-SNAP(3.15)	1			
	ZGAQ-00840				.RING-SNAP(3.30)	1			
	ZGAQ-00841				.RING-SNAP(3.45)	1			
150	ZGAQ-00842				.RING-SNAP(3.60)	1			
	ZGAQ-00843				.RING-SNAP(3.75)	1			
	ZGAQ-00844				.RING-SNAP(3.90)	1			
	ZGAQ-00845				.RING-SNAP(4.05)	1			
	ZGAQ-00846				.RING-SNAP(4.20)	1			
160	ZGAQ-00885				IDLER	1			
170	ZGAQ-00886				CAGE-NEEDLE	1			
180	ZGAQ-01434				BEARING-BALL	1			
190	ZGAQ-00592				RING-RETAINING	1			
200	ZGAQ-00879				RING-RETAINER	1			
210	ZGAQ-00830				BEARING-ROLLER	1			
220	ZGAQ-00880				BEARING-ROLLER	1			
230	ZGAQ-00831				RING-PISTON	2			

OUTPUT GROUP

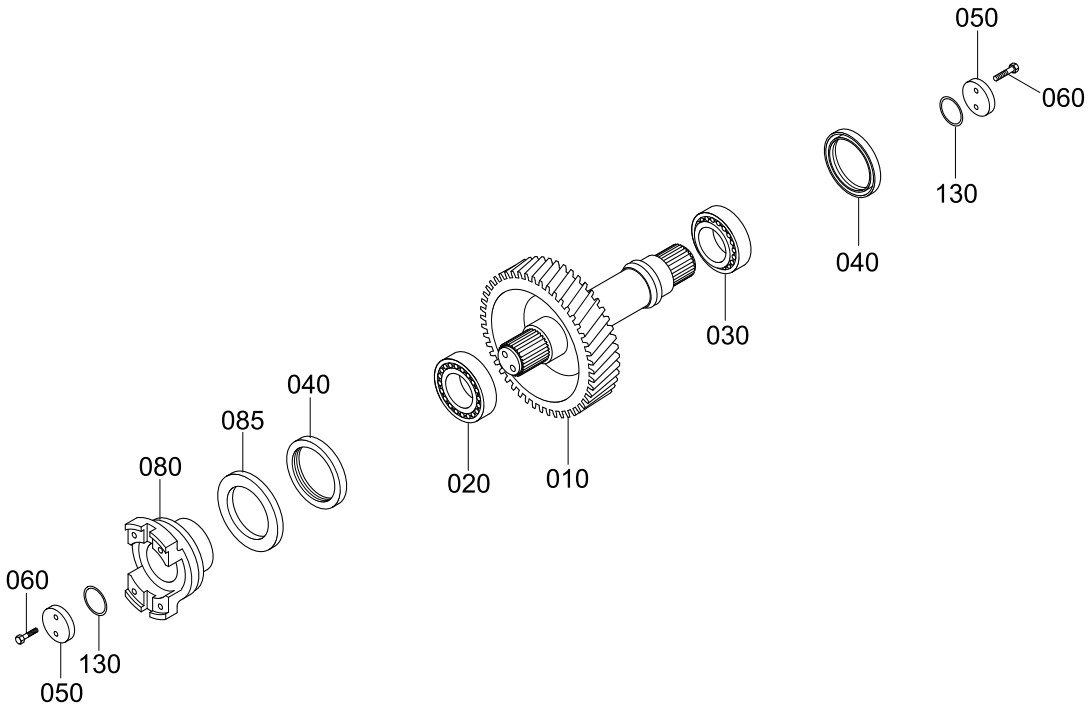

Item	Part_No	IS	Ord	T	Description	Qty	Serial_No	ITC	Remark
010	ZGAQ-02605				SHAFT-OUTPUT	1			
020	ZGAQ-00829				BEARING-ROLLER	1			
030	ZGAQ-00829				BEARING-ROLLER	1			
040	ZGAQ-00890				SEAL-SHAFT	2			
050	ZGAQ-01512				WASHER	2			
060	ZGAQ-00891				SCREW-HEX	4			
080	ZGAQ-00200				FLANGE-OUTPUT	1			
085	ZGAQ-01514				SHEET-SCREEN	1			
130	ZGAQ-00893				O-RING	2			

POWER TAKE OFF

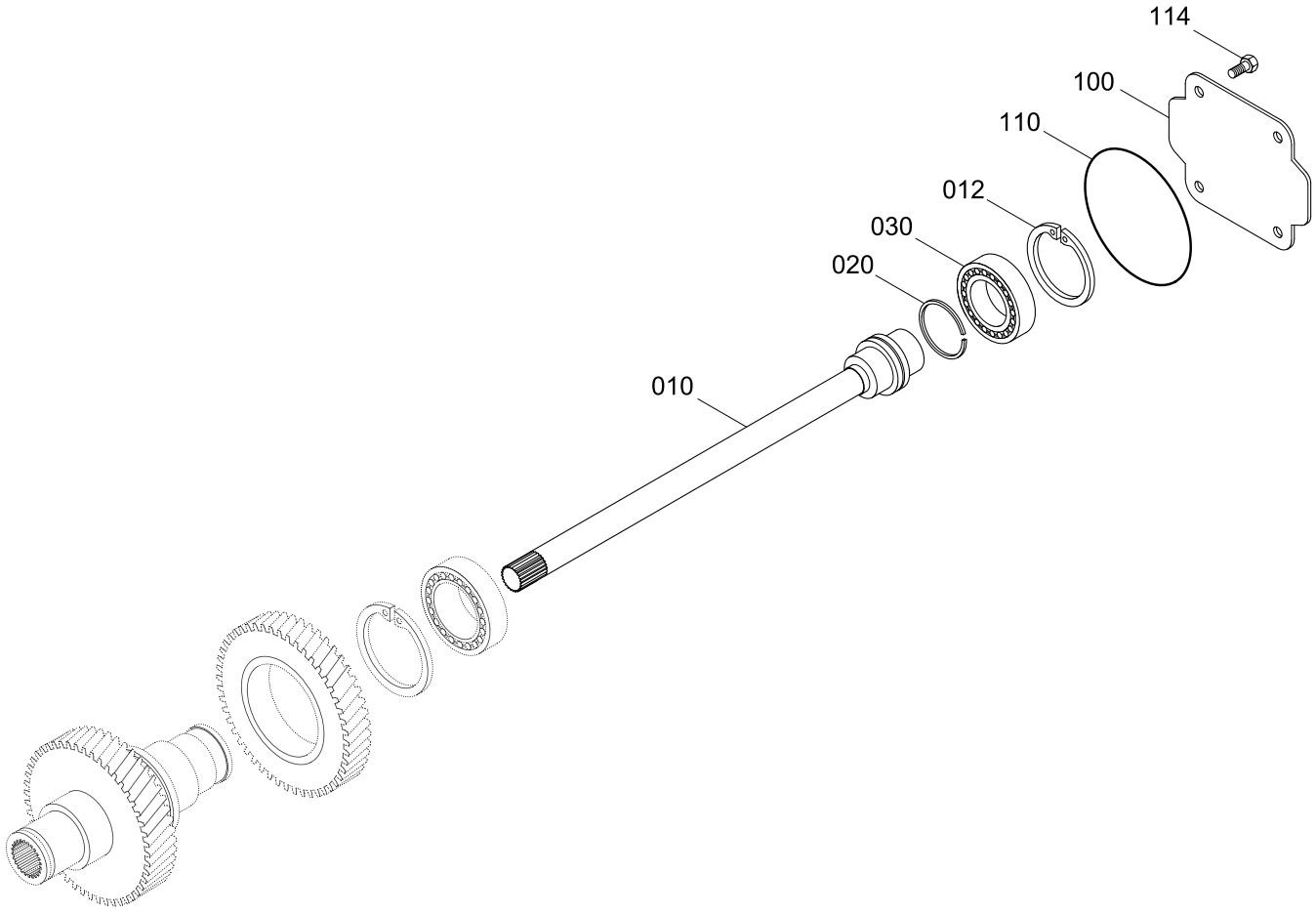

Item	Part_No	IS	Ord	T	Description	Qty	Serial_No	ITC	Remark
010	ZGAQ-00894				SHAFT-PUMP	1			
012	ZGAQ-00896				RING-RETAINING	1			
020	ZGAQ-01397				RING-PISTON	1			
030	ZGAQ-00895				BEARING-BALL	1			
100	ZGAQ-00897				PLATE-COVER	1			
110	ZGAQ-00597				O-RING	1			
114	ZGAQ-00761				SCREW	4			

GEARSHIFT SYSTEM 1

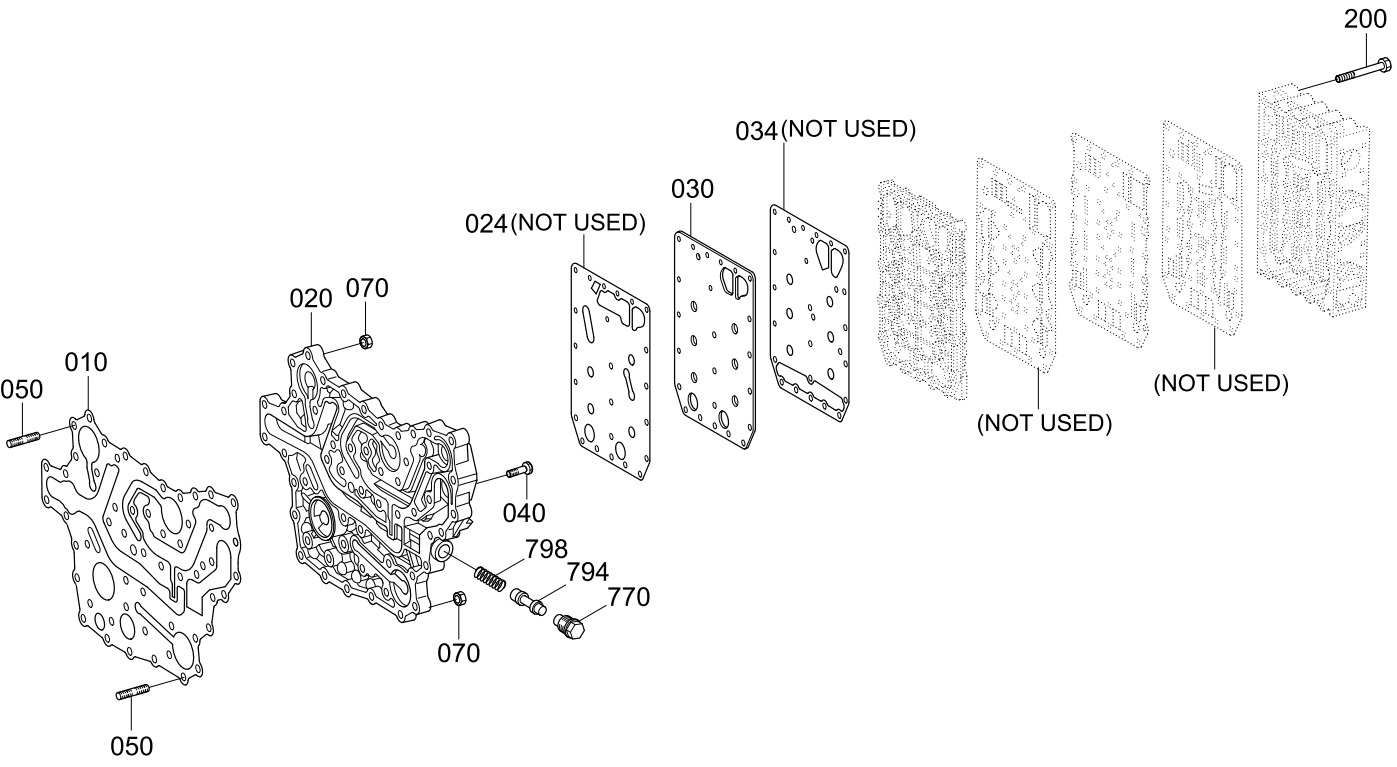

Item	Part_No	IS	Ord	T	Description	Qty	Serial_No	ITC	Remark
010	ZGAQ-01516				GASKET	1			
020	ZGAQ-01715				PLATE-DUCT	1			
024	ZGAQ-01704				GASKET	1			NOT USED
030	ZGAQ-02808				.PLATE-SEALING	1	#0001 -	-	
034	ZGAQ-01703				.GASKET	1			NOT USED
040	ZGAQ-00792				SCREW-CAP	36			
050	ZGAQ-01405				STUD	14			
070	ZGAQ-00799				NUT-HEX	14			
200	ZGAQ-00608				SCREW-TORX	23	#0001 -	-	
770	ZGAQ-00697				SWITCH	1			
794	ZGAQ-01454				PISTON	1			
798	ZGAQ-00903				SPRING-COMPRESSURE	1			

GEARSHIFT SYSTEM 2

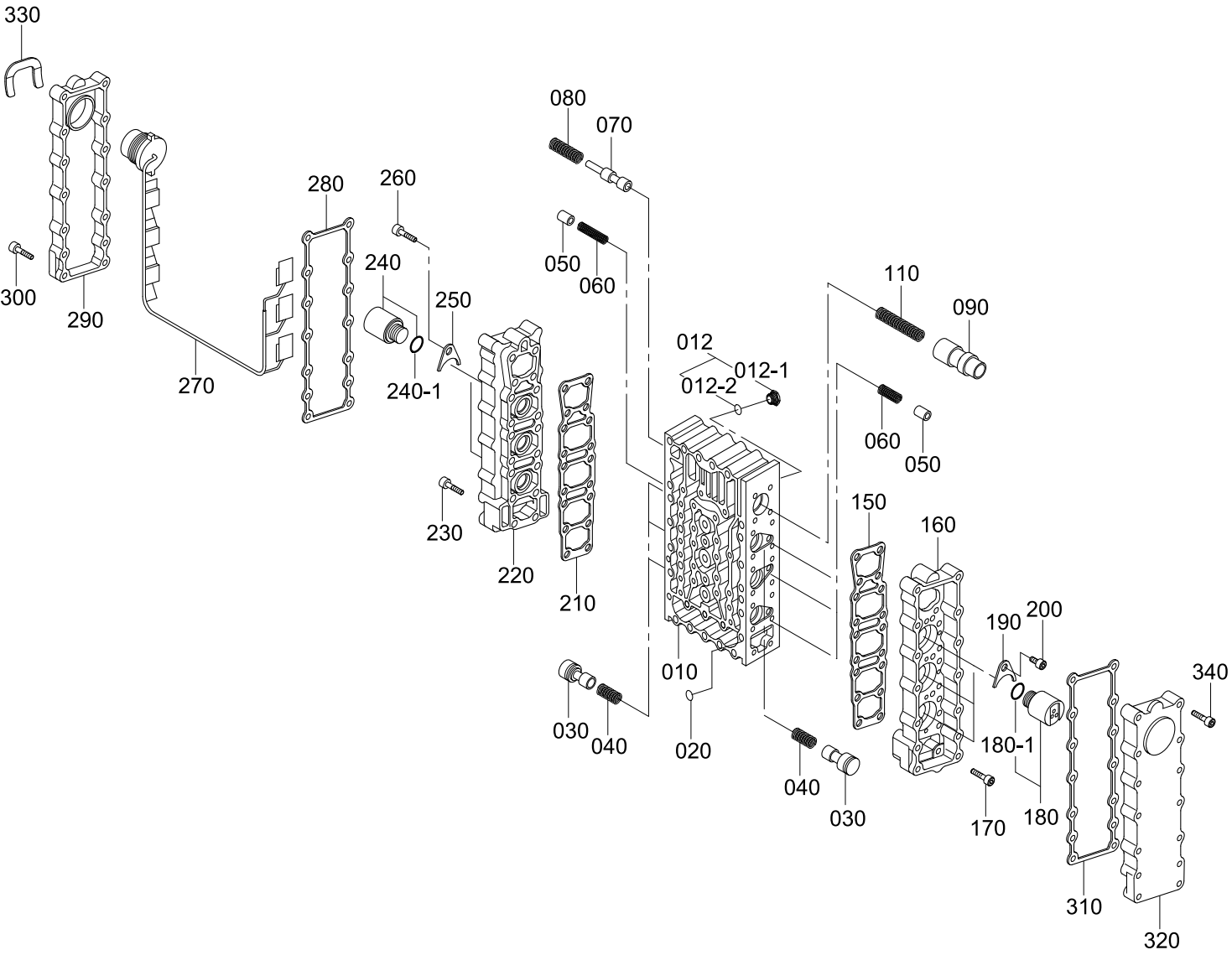

Item	Part_No	IS	Ord	T	Description	Qty	Serial_No	ITC	Remark
010	ZGAQ-02802				BLOCK-VALVE	1	#0001 -	-	
012	@				PLUG-SCREW	8			NOT
012-1	ZGAQ-00230				.PLUG-SCREW	8			
012-2	ZGAQ-00231				.O-RING	8			
020	ZGAQ-00617				ORIFICE	6			
030	ZGAQ-00618				PISTON	6			
040	ZGAQ-00619				SPRING-COMPRESSION	6			
050	ZGAQ-00620				PISTON	6			
060	ZGAQ-00621				SPRING-COMPRESSION	6			
070	ZGAQ-00622				PISTON	1			
080	ZGAQ-00623				SPRING-COMPRESSION	1			
090	ZGAQ-01455				PISTON-CONTROL	1			
110	ZGAQ-00625				SPRING-COMPRESSION	1			
150	ZGAQ-01578				GASKET	1			
160	ZGAQ-00627				HOUSING	1			
170	ZGAQ-00628				SCREW-CAP	18			
180	ZGAQ-00629				REGULATOR-PRESSURE	3			
180-1	ZGAQ-00630				.O-RING	3			
190	ZGAQ-00631				PLATE-FIXING	3			
200	ZGAQ-00632				SCREW-CAP	3			
210	ZGAQ-01578				GASKET	1			
220	ZGAQ-00627				HOUSING	1			
230	ZGAQ-00628				SCREW-CAP	18			
240	ZGAQ-00629				REGULATOR-PRESSURE	3			
240-1	ZGAQ-00630				.O-RING	3			
250	ZGAQ-00631				PLATE-FIXING	3			

Item	Part_No	IS	Ord	T	Description	Qty	Serial_No	ITC	Remark
260	ZGAQ-00632				SCREW-CAP	3			
270	ZGAQ-00633				HARNESS-WIRING	1			
280	ZGAQ-01579				GASKET	1			
290	ZGAQ-00635				COVER	1			
300	ZGAQ-00628				SCREW-CAP	14			
310	ZGAQ-01579				GASKET	1			
320	ZGAQ-00636				COVER	1			
330	ZGAQ-00637				CLAMP-RETAINING	1			
340	ZGAQ-00628				SCREW-CAP	14			

GEARSHIFT SYSTEM 3

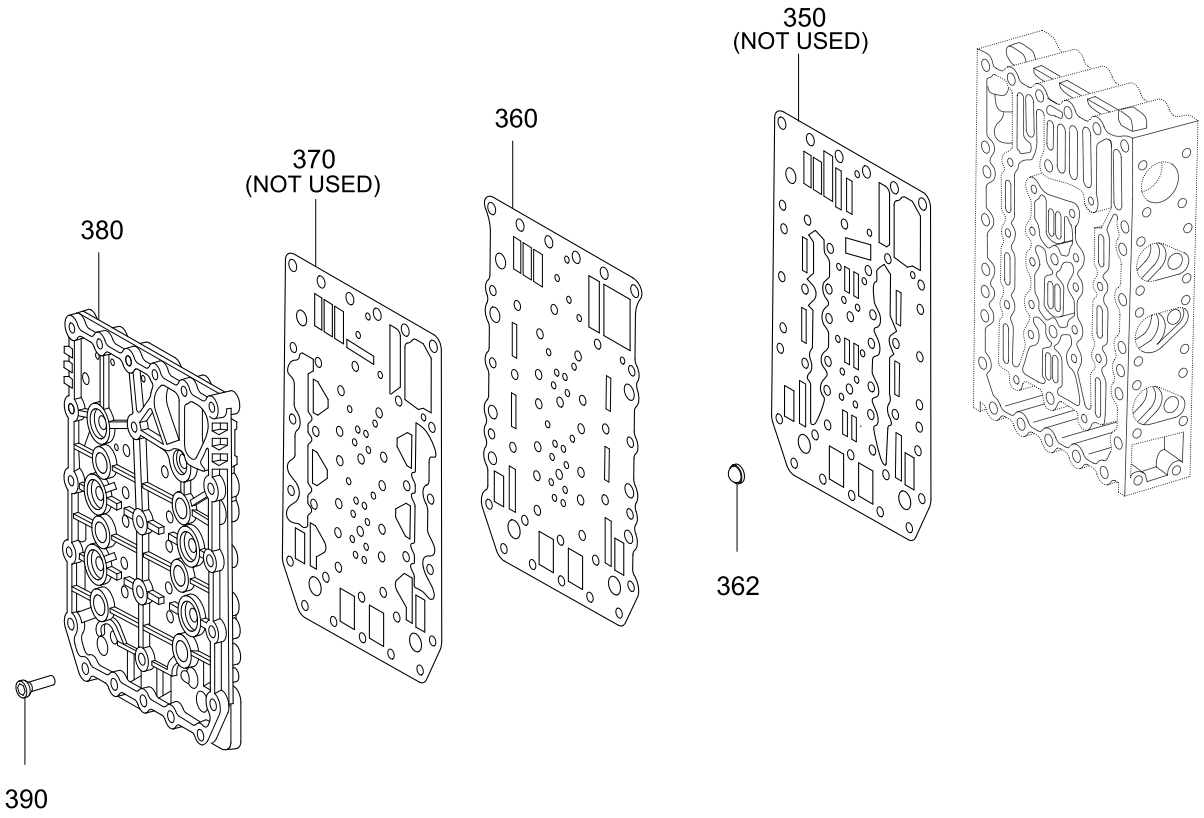

Item	Part_No	IS	Ord	T	Description	Qty	Serial_No	ITC	Remark
350	ZGAQ-01686				.GASKET	1		-	NOT USED
360	ZGAQ-02803				.PLATE-SEALING	1	#0001 -	-	
370	ZGAQ-01688				.GASKET	1		-	NOT USED
362	ZGAQ-00639				SCREEN	6			
380	ZGAQ-01456				PLATE-DUCT	1			
390	ZGAQ-00641				SCREW-TORX	18	#0001 -	-	

CONTROL UNIT

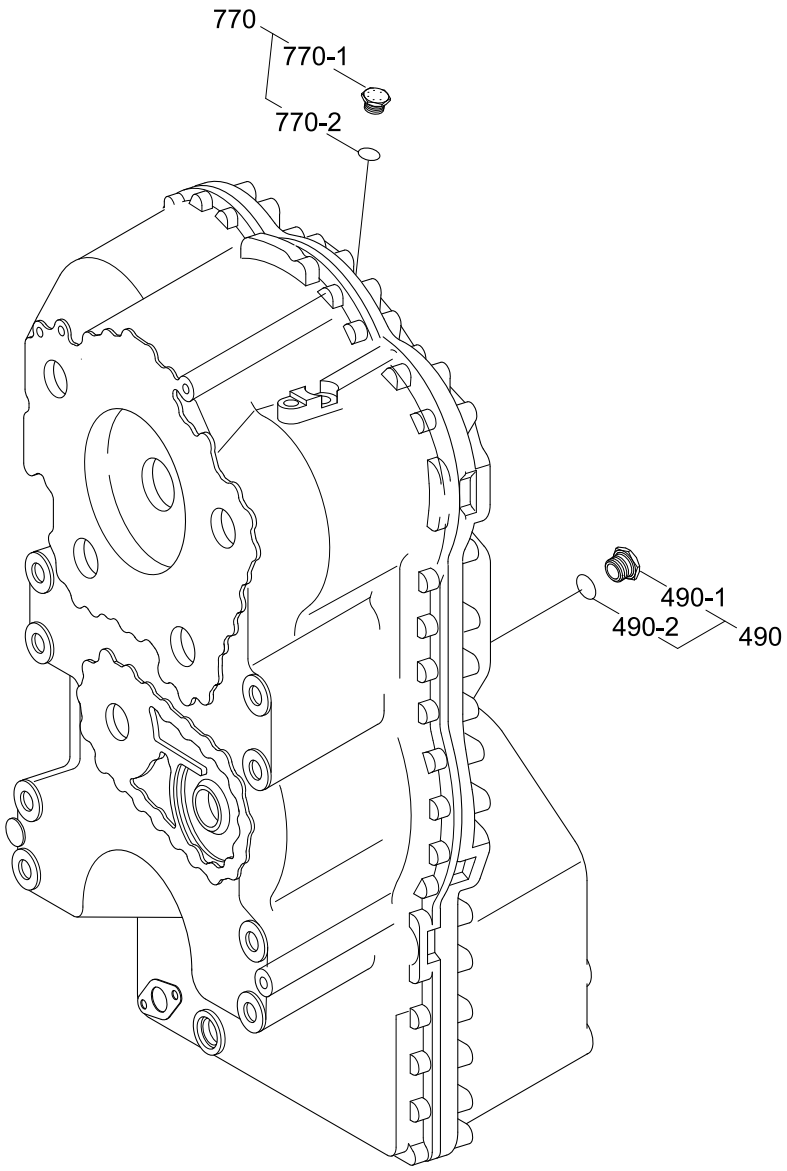

Item	Part_No	IS	Ord	T	Description	Qty	Serial_No	ITC	Remark
490	@				SCREW PLUG ASSY	1			NOT
490-1	ZGAQ-00908				.PLUG-SCREW	1			
490-2	ZGAQ-00909				.O-RING	1			
770	@				SCREW PLUG ASSY	1			NOT
770-1	ZGAQ-00613				.SCREW-PLUG	1			
770-2	ZGAQ-00614				.O-RING	1			

PRESSURE REGULATOR

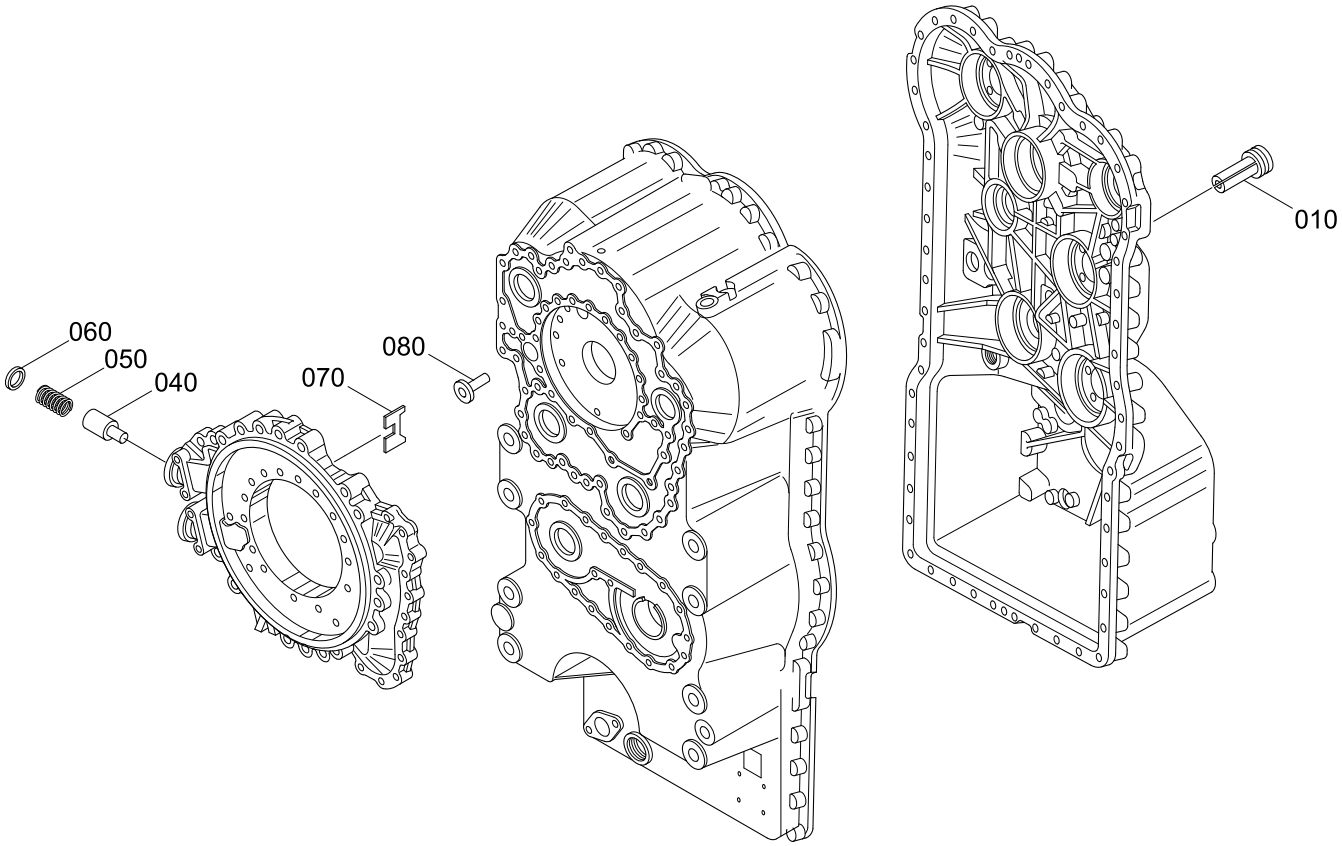

Item	Part_No	IS	Ord	T	Description	Qty	Serial_No	ITC	Remark
010	ZGAQ-00910				VALVE	1			
040	ZGAQ-00911				PISTON	1			
050	ZGAQ-00912				SPRING-PRESSURE	1			
060	ZGAQ-00913				PLATE-PRESSUREE	1			
070	ZGAQ-00914				WASHER-TAB	1			
080	ZGAQ-00915				VALVE-PRESSURE	1			

EMERGENCY STEERING PUMP

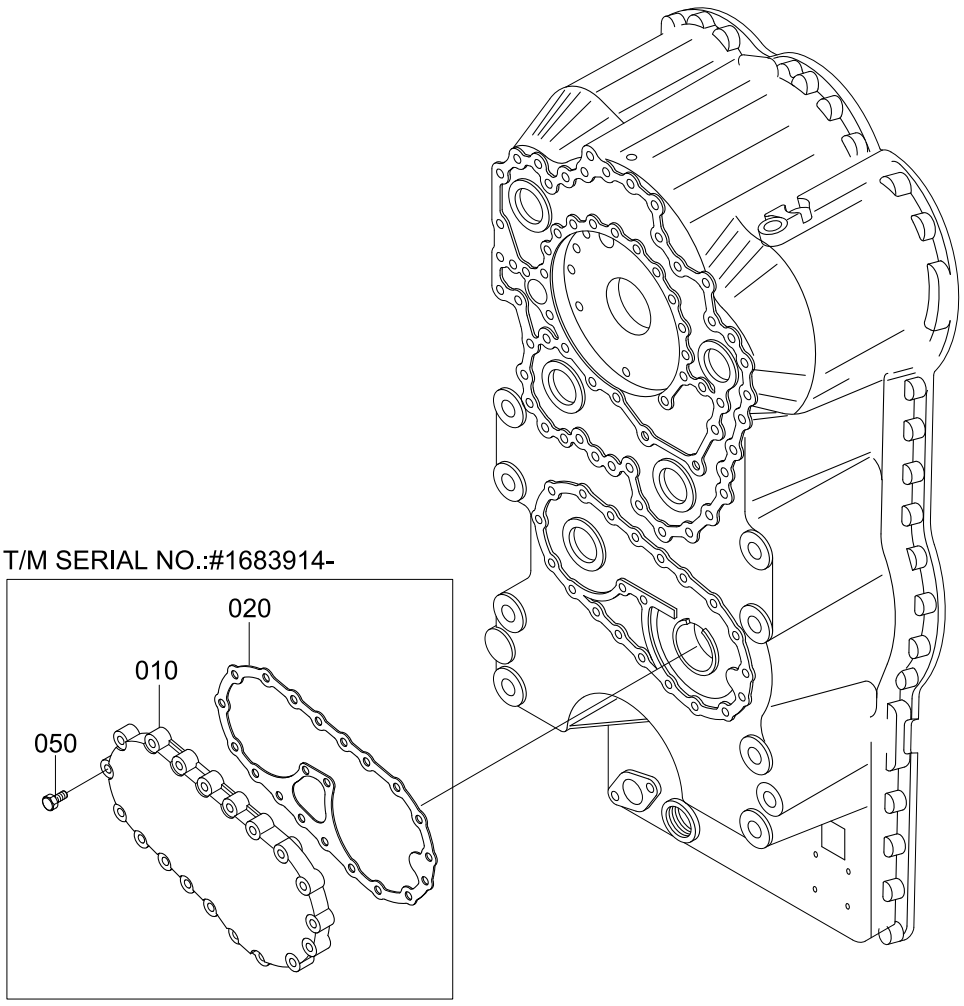

ITEM	PART NO.	DESCRIPTION	T/M SERIAL NO.
010	ZGAQ-00916	COVER	-#1683913
	ZGAQ-03129	COVER	#1683914-

Item	Part_No	IS	Ord	T	Description	Qty	Serial_No	ITC	Remark
010	ZGAQ-00916				COVER	1			SEE ILLUST
	ZGAQ-03129				COVER	1		D	SEE ILLUST
012	ZGAQ-00917				COVER	1		-	SEE ILLUST
020	ZGAQ-01464				GASKET	1			
022	ZGAQ-00919				GASKET	1		-	SEE ILLUST
040	ZGAQ-00792				SCREW-CAP	23		-	SEE ILLUST
050	ZGAQ-00920				SCREW	8			SEE ILLUST
					SCREW	23		A	SEE ILLUST
060	ZGAQ-00921				BEARING-PLAIN	1		-	SEE ILLUST

IND TRANSMITTER

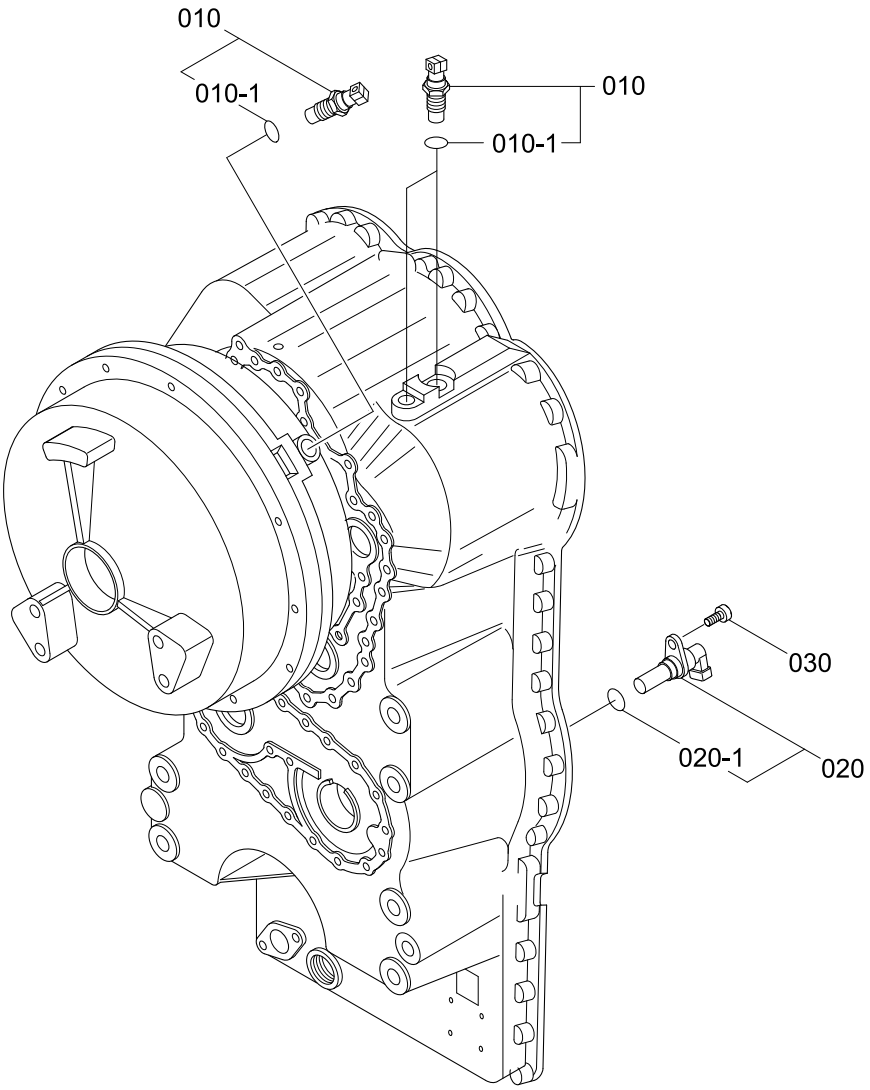

Item	Part_No	IS	Ord	T	Description	Qty	Serial_No	ITC	Remark
010	ZGAQ-00651				TRANSMITTER-IND	3			
010-1	ZGAQ-01466				.O-RING	3			
020	ZGAQ-00653				TRANSMITTER-SPEED	1			
020-1	ZGAQ-00654				.O-RING	1			
030	ZGAQ-00922				SCREW-CAP	1			

TEMP SENSOR

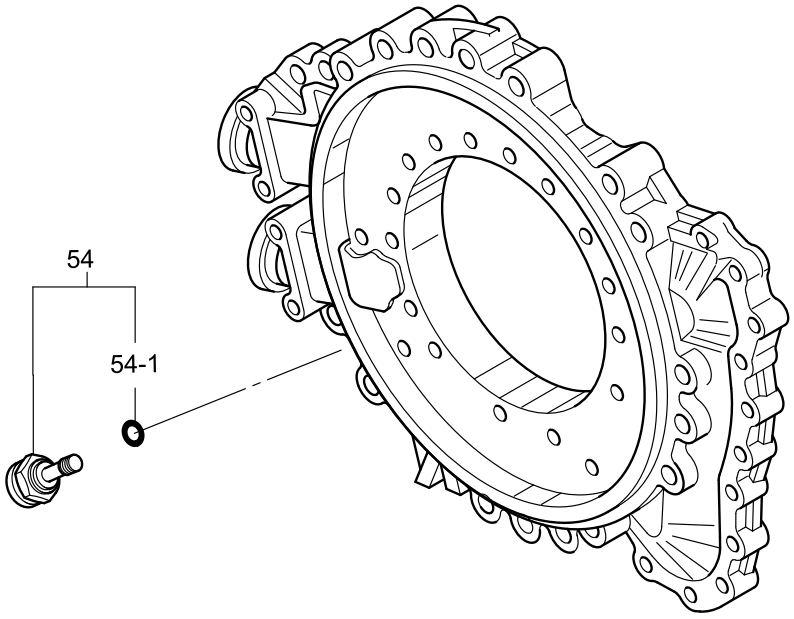

Item	Part_No	IS	Ord	T	Description	Qty	Serial_No	ITC	Remark
54	ZGAQ-01924				SENSOR-TEMP	1			
54-1	ZGAQ-00923				.O-RING	1			

FILLER NECK & OIL DIPSTICK

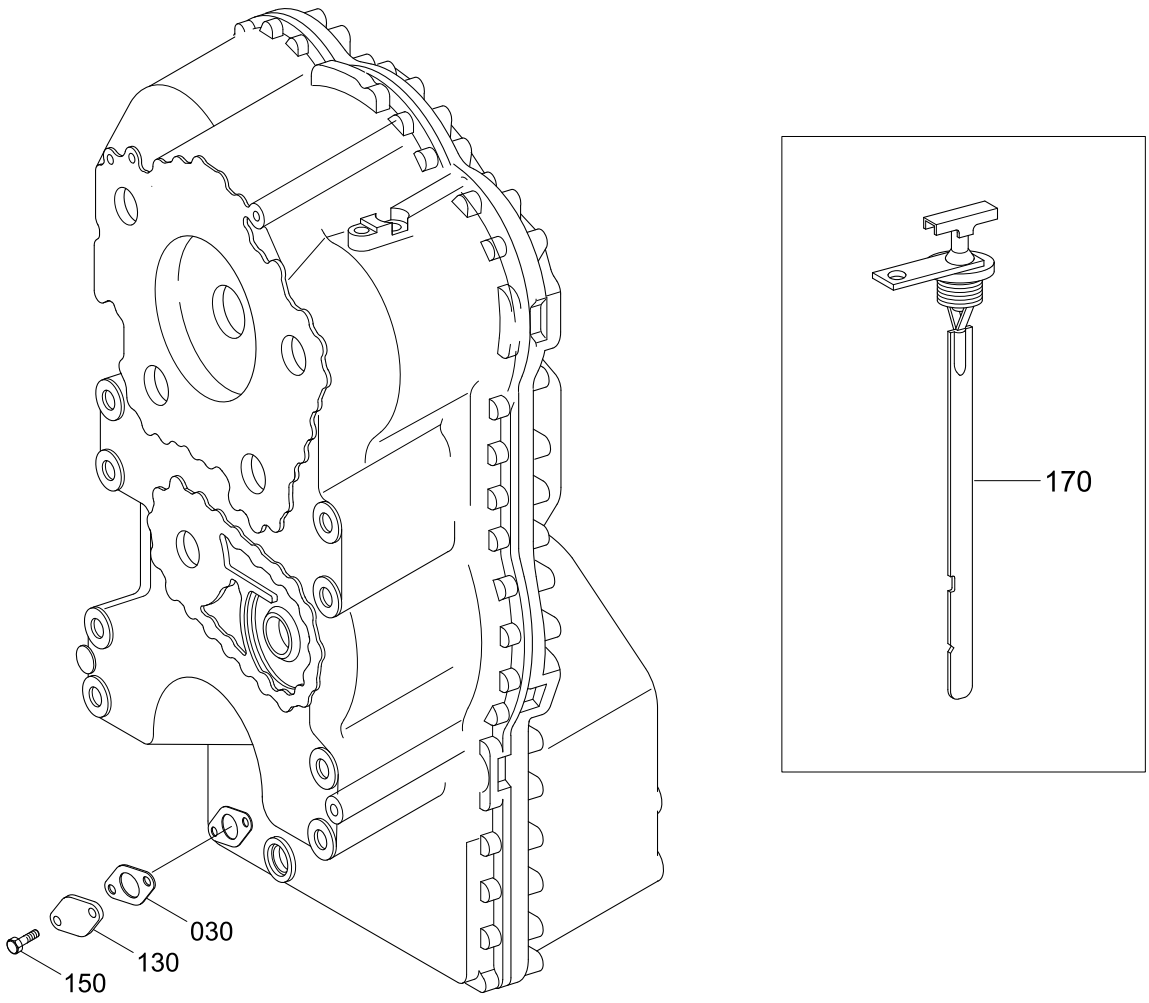

Item	Part_No	IS	Ord	T	Description	Qty	Serial_No	ITC	Remark
030	ZGAQ-00673				GASKET	1			
130	ZGAQ-00674				PLATE-COVER	1			
150	ZGAQ-00920				SCREW	2			
170	ZGAQ-01470				DIPSTICK-OIL	1			

FILTER

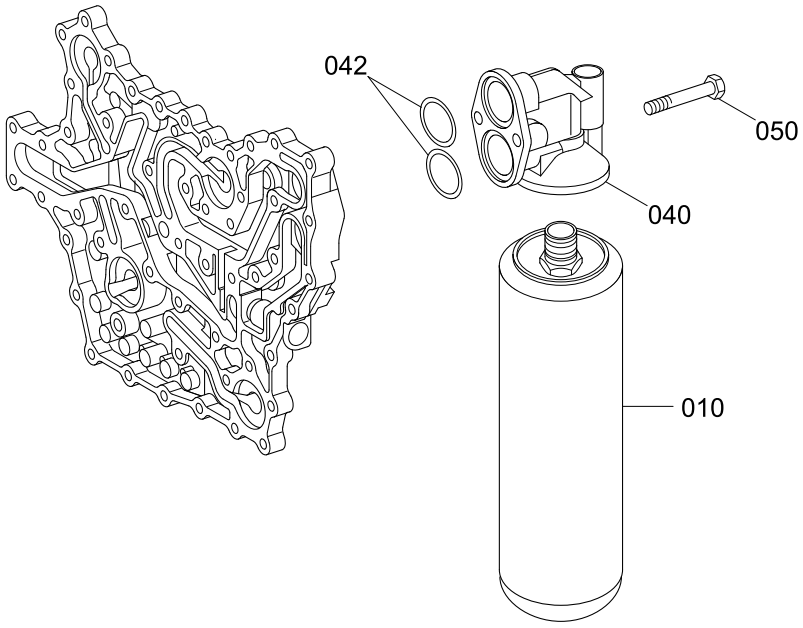

Item	Part_No	IS	Ord	T	Description	Qty	Serial_No	ITC	Remark
010	ZGAQ-02400				FILTER-T/M OIL(AUTO)	1	#0001 -	-	
040	ZGAQ-00925				HEAD-FILTER	1			
042	ZGAQ-02401				O-RING	2	#0001 -	-	
050	ZGAQ-00793				SCREW-CAP	2			

GEAR SELECTOR & T/M CONTROL UNIT

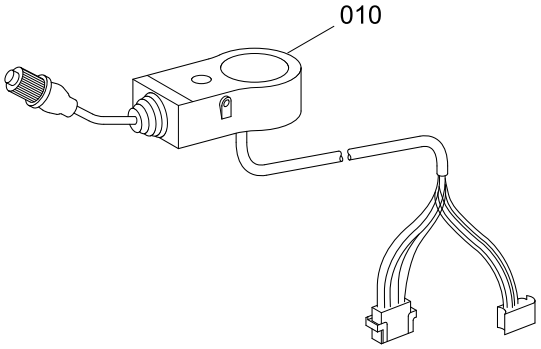

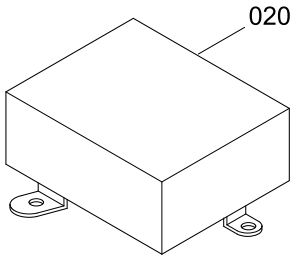

Item	Part_No	IS	Ord	T	Description	Qty	Serial_No	ITC	Remark
010	ZGAQ-00693				GEAR SELECTOR	1	- #0339		
	ZGAQ-03788				GEAR SELECTOR	1	#0340 -	B	
020	ZGAQ-01925				CONTROL UNIT-T/M	1			

PARKING BRAKE

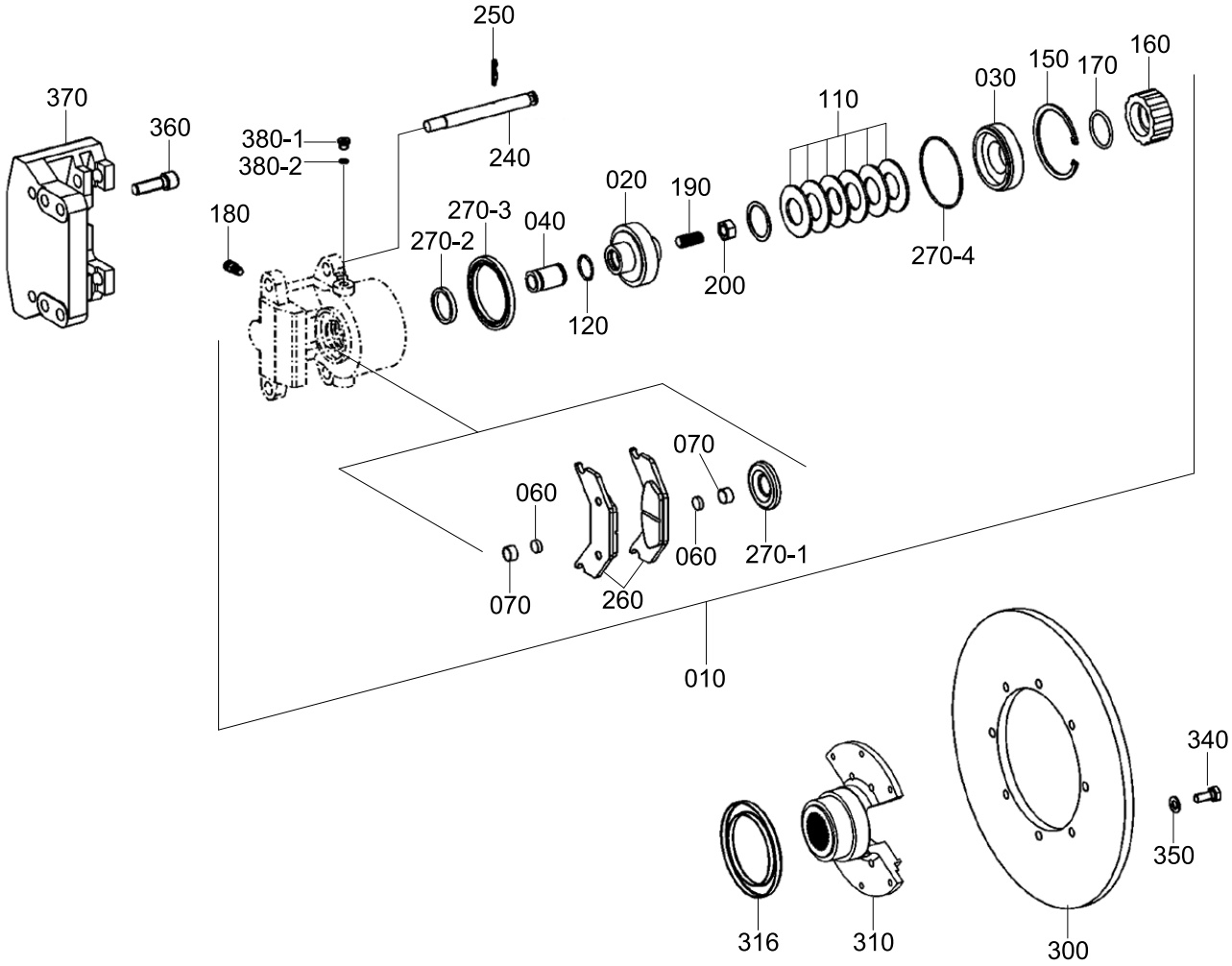

Item	Part_No	IS	Ord	T	Description	Qty	Serial_No	ITC	Remark
010	ZGAQ-02607				PARKING BRAKE	1			
020	ZGAQ-02608				.PISTON	1			
030	ZGAQ-02609				.RING-PRESSURE	1			
040	ZGAQ-01622				.PIN-PRESSURE	1			
060	ZGAQ-01623				.MAGNET	2			
070	ZGAQ-01624				.RING-CLEARANCE	2			
110	ZGAQ-02610				.SPRING-CUP	6			
120	ZGAQ-01626				.O-RING	1			
150	ZGAQ-02611				.RING-RETAINING	1			
160	ZGAQ-02612				.CAP-SCREW	1			
170	ZGAQ-02613				.O-RING	1			
180	ZGAQ-01629				..BREATHER	1			
190	ZGAQ-02614				.SET SCREW	1			
200	ZGAQ-02615				.NUT-HEX	1			
240	ZGAQ-01632				.PIN	2			
250	ZGAQ-01633				.PIN-SPR COTTER	2			
260	ZGAQ-02616				.BR LINING KIT	1			
270	ZGAQ-02617				.SEAL KIT	1			
270-1	ZGAQ-01636				..CAP-DUST	1			
270-2	ZGAQ-01637				..U-RING	1			
270-3	ZGAQ-02618				..U-RING	1			
270-4	ZGAQ-02619				..O-RING	1			
300	ZGAQ-02620				DISC-BRAKE	1			
310	ZGAQ-02624				FLANGE	1			
316	ZGAQ-01515				SHEET-SCREEN	1	- #0202		
	ZGAQ-02855				SHEET-SCREEN	1	#0203 -	D	

Item	Part_No	IS	Ord	T	Description	Qty	Serial_No	ITC	Remark
340	ZGAQ-02621				SCREW-HEX	6			
350	ZGAQ-00251				WASHER	6			
360	ZGAQ-02622				CAP SCREW	4			
370	ZGAQ-02623				BR ANCHOR PLATE	1			
380-1	ZGAQ-00230				PLUG-SCREW	1			
380-2	ZGAQ-00231				O-RING	1			

FRONT DIFFERENTIAL CARRIER 1

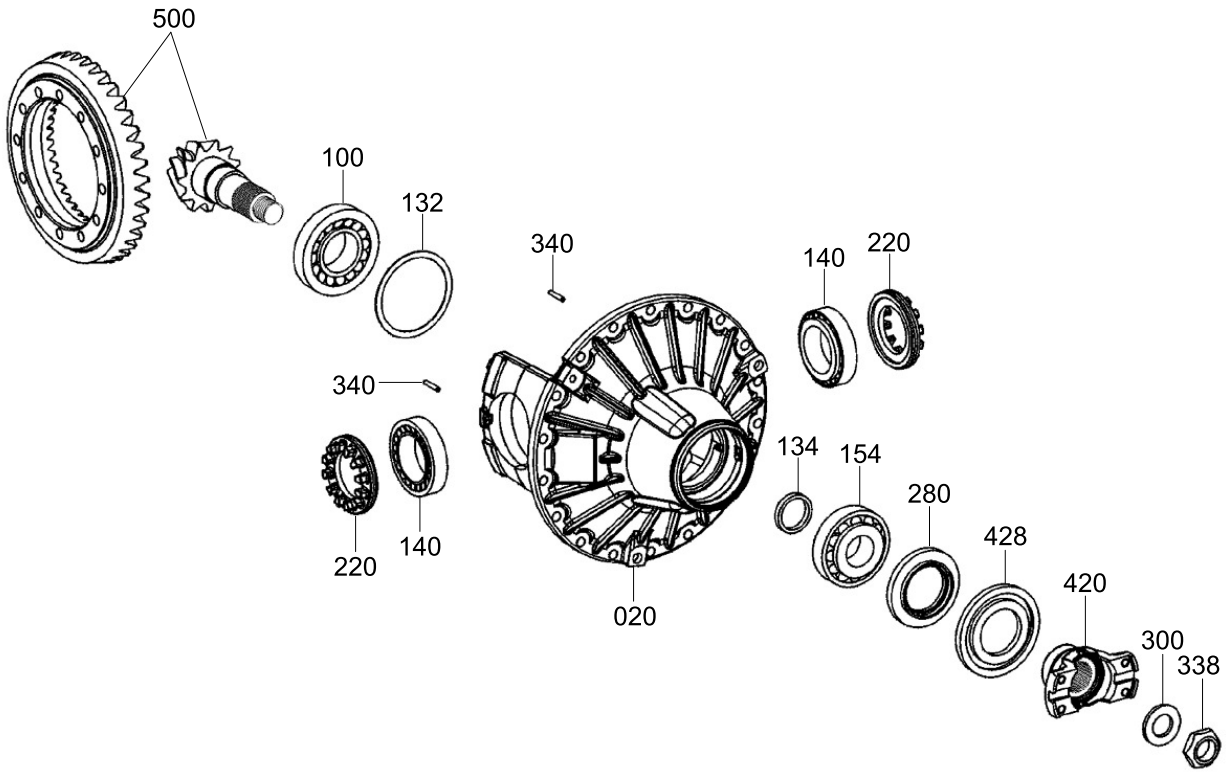

Item	Part_No	IS	Ord	T	Description	Qty	Serial_No	ITC	Remark
*	ZGAQ-02408				DIFF CARRIER	1			
020	ZGAQ-02416				.AXLE DR HOUSING	1			
100	ZGAQ-02417				.TAPER ROLL BEARING	1			
	ZGAQ-02419				.WASHER(0.7)	1			
	ZGAQ-02420				.WASHER(0.8)	1			
	ZGAQ-02421				.WASHER(0.9)	1			
	ZGAQ-02422				.WASHER(1.0)	1			
	ZGAQ-02423				.WASHER(1.0)	1			
132	ZGAQ-02424				.WASHER(1.2)	1			
	ZGAQ-02425				.WASHER(1.3)	1			
	ZGAQ-02426				.WASHER(1.4)	1			
	ZGAQ-02427				.WASHER(1.5)	1			
	ZGAQ-02428				.WASHER(0.2)	1			
	ZGAQ-02429				.WASHER(0.1)	1			
	ZGAQ-02430				.SPACING WASHER(8.8)	1			
	ZGAQ-02431				.SPACING WASHER(8.7)	1			
	ZGAQ-02432				.SPACING WASHER(8.6)	1			
	ZGAQ-02433				.SPACING WASHER(8.5)	1			
	ZGAQ-02434				.SPACING WASHER(8.4)	1			
134	ZGAQ-02435				.SPACING WASHER(8.3)	1			
	ZGAQ-02436				.SPACING WASHER(8.9)	1			
	ZGAQ-02437				.SPACING WASHER(9.1)	1			
	ZGAQ-02438				.SPACING WASHER(9.2)	1			
	ZGAQ-02439				.SPACING WASHER(9.3)	1			
	ZGAQ-02440				.SPACING WASHER(9.4)	1			
140	ZGAQ-02441				.ROLLER BEARING	2			

Item	Part_No	IS	Ord	T	Description	Qty	Serial_No	ITC	Remark
154	ZGAQ-02442				.ROLLER BEARING	1			
220	ZGAQ-02443				.ADJUSTING NUT	2			
280	ZGAQ-02444				.SHAFT SEAL	1			
300	ZGAQ-02445				.WASHER	1			
338	ZGAQ-02446				.HEXAGON NUT	1			
340	ZGAQ-01149				.PIN-SLOT	2			
420	ZGAQ-02447				.INPUT FLANGE	1			
428	ZGAQ-02448				.DUST PROTECTION	1			
500	ZGAQ-02449				.BEVEL GEAR SET	1			
550	@				.LIMITED SLIP DIFF	1			NOT

FRONT DIFFERENTIAL CARRIER 2

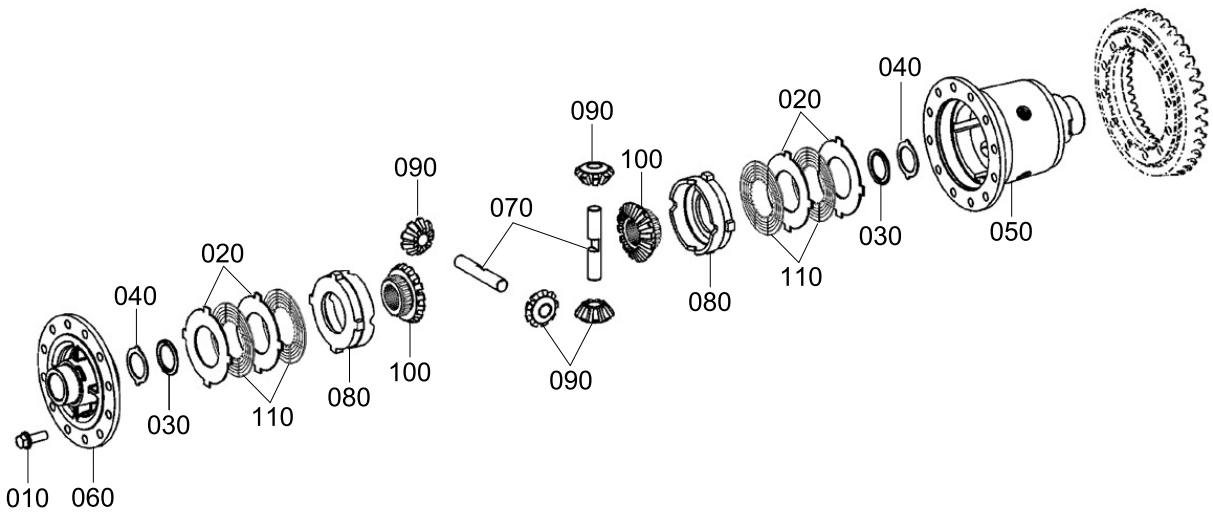

Item	Part_No	IS	Ord	T	Description	Qty	Serial_No	ITC	Remark
*	ZGAQ-02450				.LIMIT SLIP DIFF	1			SEE 6320
010	ZGAQ-02451				..LOCKING SCREW	12			
020	ZGAQ-02452				..O/CLUTCH DISC(2.9)	4			
	ZGAQ-02453				..O/CLUTCH DISC(3.0)	4			
	ZGAQ-02454				..O/CLUTCH DISC(3.1)	4			
030	ZGAQ-02455				..THRUST WASHER	2			
040	ZGAQ-02456				..END SHIM	2			
050	ZGAQ-02457				..DIFF HOUSING	1			
060	ZGAQ-02458				..HOUSING COVER	1			
070	ZGAQ-02459				..DIFF AXLE	2			
080	ZGAQ-02460				..PRESSURE RING	2			
090	ZGAQ-02461				..BEVEL PINION	4			
100	ZGAQ-02462				..AXLE BEBEL GEAR	2			
110	ZGAQ-02463				..INNER CLUTCH DISC	4			

FRONT AXLE CASING 1

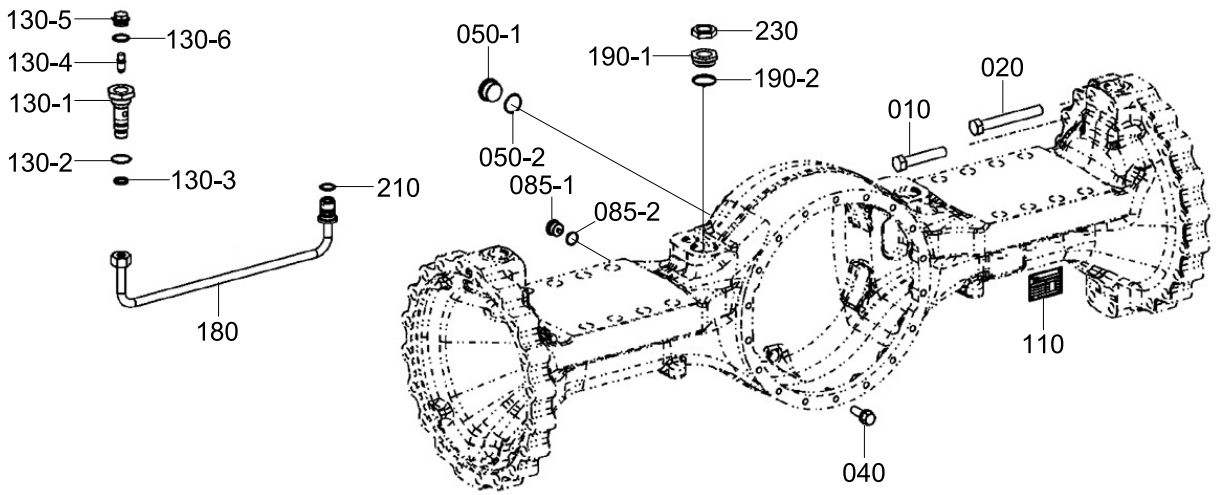

Item	Part_No	IS	Ord	T	Description	Qty	Serial_No	ITC	Remark
*	ZGAQ-02409				AXLE CASING	1			
010	ZGAQ-02464				.HEXACON SCREW	32			
020	ZGAQ-02465				.HEXAGON SCREW	8			
040	ZGAQ-01355				.SCREW-LOCKING	18			
050-1	ZGAQ-02191				.PLUG	2			
050-2	ZGAQ-02192				.O-RING	2			
085-1	ZGAQ-02467				.SCREW PLUG	3			
085-2	ZGAQ-00085				.O-RING	3			
110	ZGAQ-00788				.PLATE-TYPE	1			
130-1	ZGAQ-02468				.CONN PART	2			
130-2	ZGAQ-02469				.O-RING	2			
130-3	ZGAQ-02470				.PISTON RING	2			
130-4	ZGAQ-02200				.VALVE-VENT	2			
130-5	ZGAQ-00265				.PLUG-SCREW	2			
130-6	ZGAQ-02471				.SEALING RING	2			
180	ZGAQ-02472				.BRAKE TUBE	2			
190-1	ZGAQ-02473				.UNION SCREW	2			
190-2	ZGAQ-00082				.O-RING	2			
210	ZGAQ-02391				.O-RING	2			
230	ZGAQ-02474				.HEXAGON NUT	2			

FRONT AXLE CASING 2

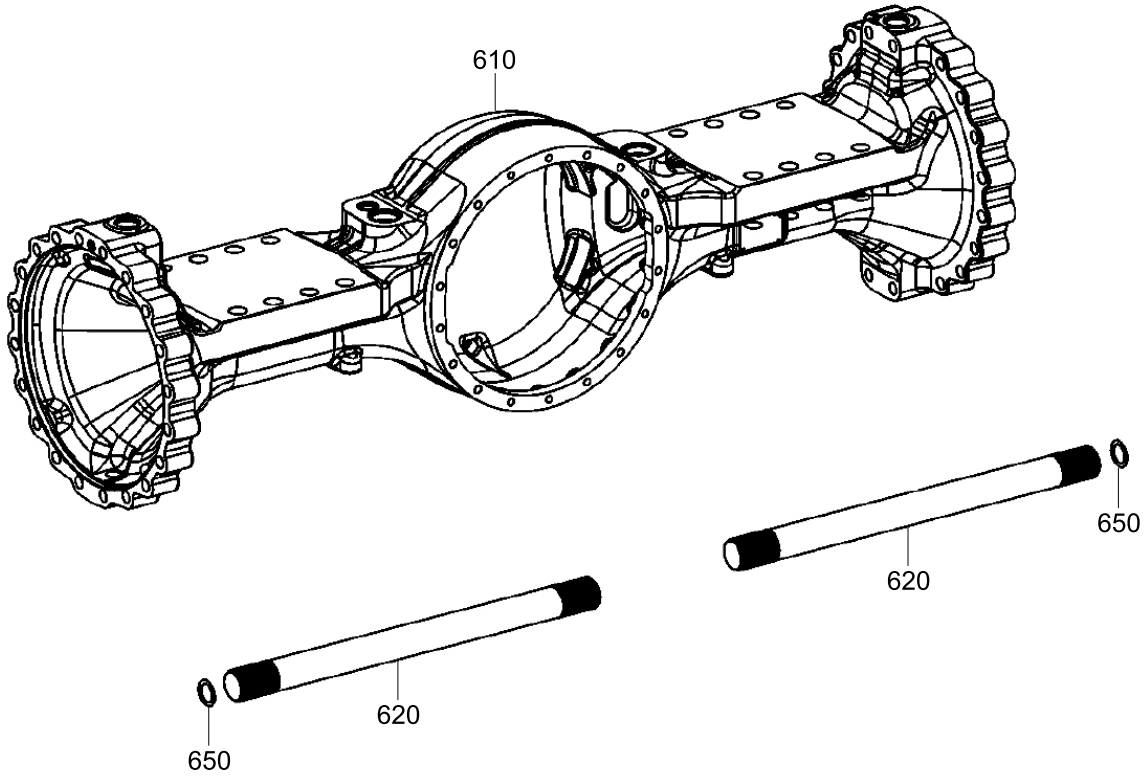

Item	Part_No	IS	Ord	T	Description	Qty	Serial_No	ITC	Remark
*	ZGAQ-02410				AXLE CASING	1			
610	ZGAQ-02475				AXLE CASING	1			
620	ZGAQ-02476				STUB SHAFT	2			
650	ZGAQ-02477				SHIM(0.60)	2			
	ZGAQ-02478				SHIM(1.00)	2			
	ZGAQ-02479				SHIM(1.60)	2			
	ZGAQ-02480				SHIM(2.00)	2			
	ZGAQ-02481				SHIM(2.50)	2			

FRONT BRAKE BLEEDER

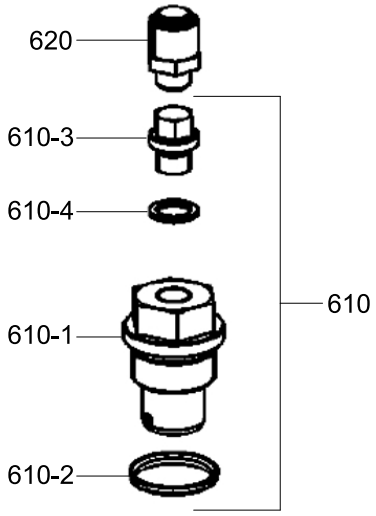

Item	Part_No	IS	Ord	T	Description	Qty	Serial_No	ITC	Remark
*	ZGAQ-02411				AXLE BRAKE BLEEDER	1			
610	ZGAQ-02482				.PLUG-SCREW	1			
610-1	ZGAQ-00092				.PLUG-SCREW	1			
610-2	ZGAQ-00085				.O-RING	1			
610-3	ZGAQ-01614				.PLUG-SCREW	1			
610-4	ZGAQ-01615				.RING-SEALING	1			
620	ZGAQ-00093				.VALVE-VENT	1			

FRONT OUTPUT GROUP

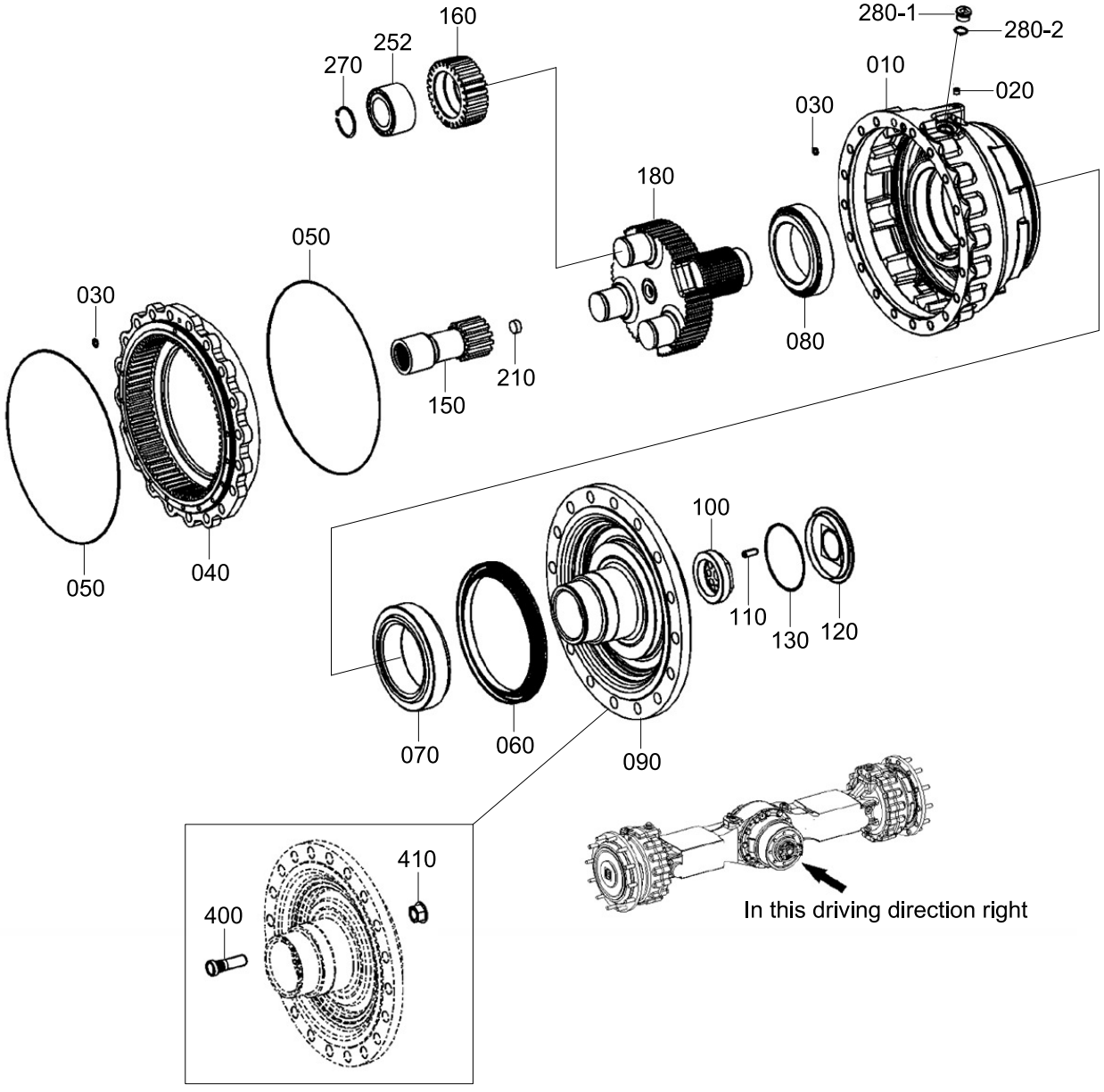

Item	Part_No	IS	Ord	T	Description	Qty	Serial_No	ITC	Remark
*	ZGAQ-02412				OUTPUT GROUP	1			
010	ZGAQ-02483				.BRAKE HOUSING	1			
020	ZGAQ-00725				.PLUG	1			
030	ZGAQ-01538				.O-RING	2			
040	ZGAQ-02484				.RING GEAR	1			
050	ZGAQ-02485				.O-RING	2			
060	ZGAQ-02486				.MULTI SEAL RING	1			
070	ZGAQ-02487				.TAPER ROLL BEARING	1			
080	ZGAQ-02488				.TAPER ROLL BEARING	1			
090	ZGAQ-02489				.OUTPUT SHAFT	1			
100	ZGAQ-02490				.ADJUTING NUT	1			
110	ZGAQ-02491				.SLOT PIN	1			
120	ZGAQ-02492				.COVER	1			
130	ZGAQ-00597				.O-RING	1			
150	ZGAQ-02493				.SUN GEAR SHAFT	1			
160	ZGAQ-02495				.PLANET GEAR	3			
180	ZGAQ-02497				.PLANET CARRIER	1			
210	ZGAQ-02498				.STOP BOLT	1			
250	ZGAQ-02499				.BEARING INNER RING	3			
252	ZGAQ-02500				.CY ROLL BEARING	3			
270	ZGAQ-02502				.RETAINING RING	3			
280-1	ZGAQ-02004				.PLUG	1			
280-2	ZGAQ-00085				.O-RING	1			
*	ZGAQ-02413				WHEEL BOLT & NUT	1			
400	ZGAQ-02504				.WHEEL BOLT	12			
410	ZGAQ-00161				.NUT-WHEEL	12			

FRONT BRAKE GROUP

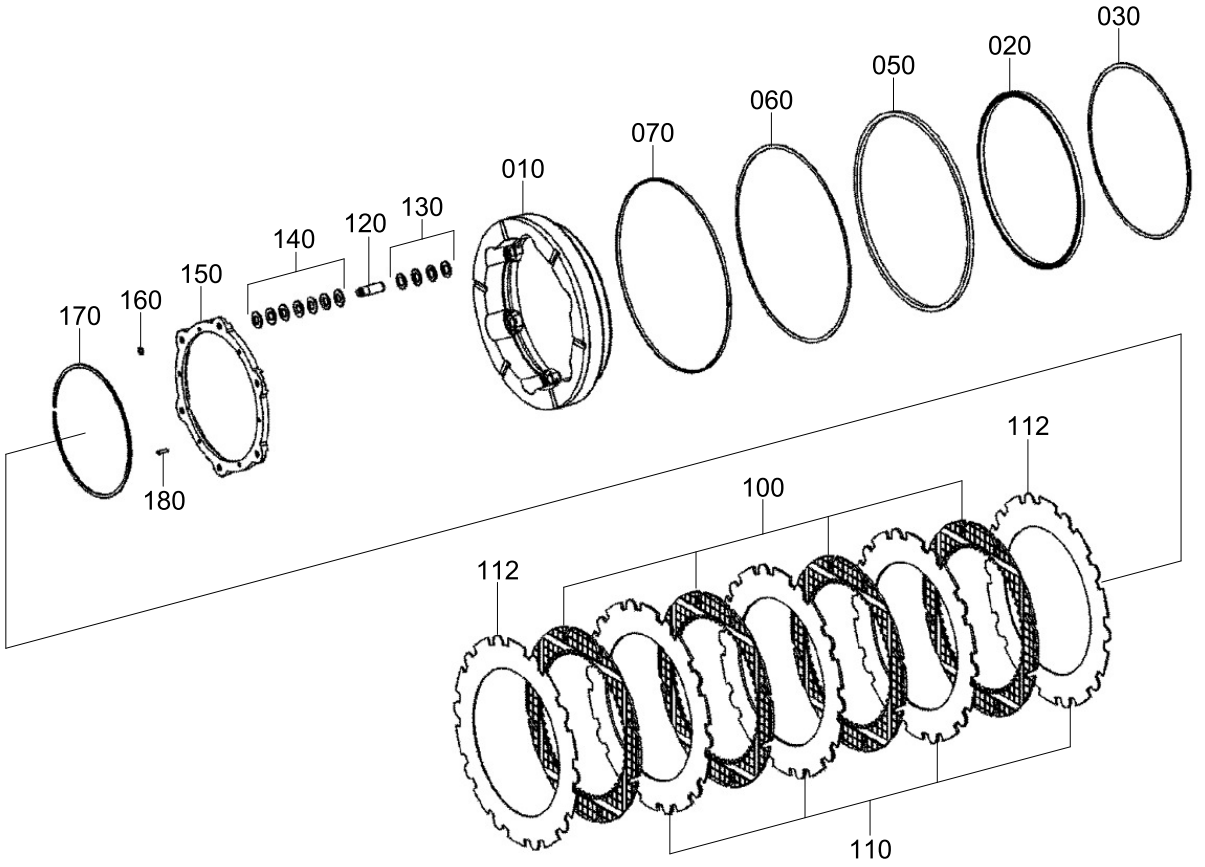

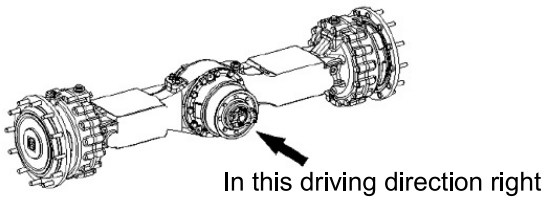

Item	Part_No	IS	Ord	T	Description	Qty	Serial_No	ITC	Remark
*	ZGAQ-02414				BRAKE GROUP	1			
010	ZGAQ-02505				.PISTON	1			
020	ZGAQ-02506				.U-RING	1			
030	ZGAQ-02507				.SUPPORT RING	1			
050	ZGAQ-02508				.U-RING	1			
060	ZGAQ-02509				.SUPPORT RING	1			
070	ZGAQ-02510				.GUIDE RING	1			
100	ZGAQ-02511				.INNER CLUTCH DISC	4			
110	ZGAQ-02512				.OUTER CLUTCH DISC	3			
112	ZGAQ-02513				.OUTER CLUTCH DISC	2			
120	ZGAQ-02514				.PIN	6			
130	ZGAQ-02515				.GRIPPING RING	24			
140	ZGAQ-02516				.CUP SPRING	42			
150	ZGAQ-02517				.SUPPORT SHIM	1			
160	ZGAQ-02518				.SNAP RING	6			
170	ZGAQ-02519				.SNAP RING	1			
180	ZGAQ-00229				.PIN-SLOT	6			

REAR AXLE HOUSING

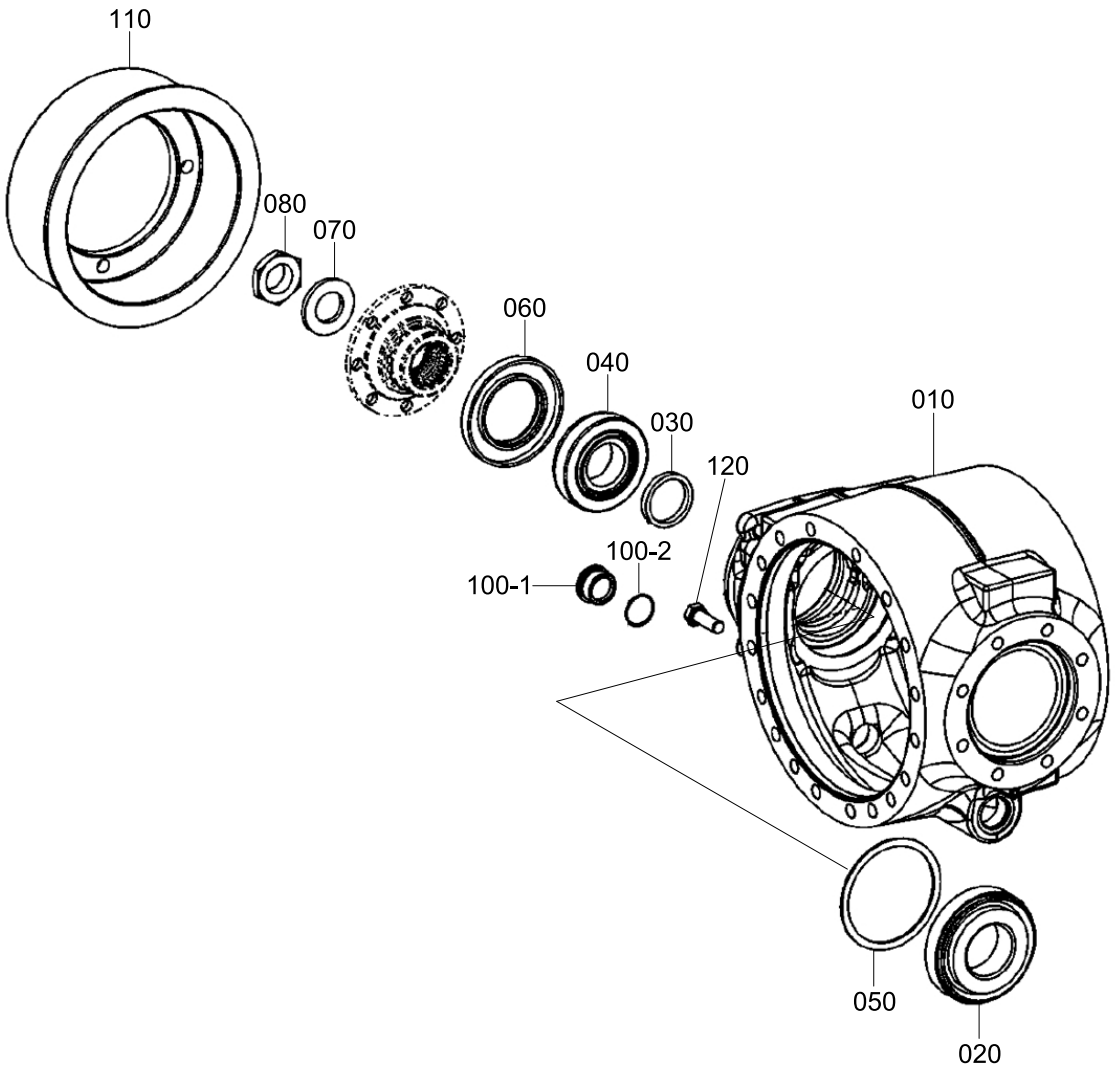

Item	Part_No	IS	Ord	T	Description	Qty	Serial_No	ITC	Remark
*	ZGAQ-02521				AXLE DR HOUSING	1			
010	ZGAQ-02529				.AXLE DR HOUSING	1			
020	ZGAQ-02530				.ROLLER BEARING	1			
	ZGAQ-02430				.SPACING WASHER(8.8)	1			
	ZGAQ-02431				.SPACING WASHER(8.7)	1			
	ZGAQ-02433				.SPACING WASHER(8.5)	1			
	ZGAQ-02435				.SPACING WASHER(8.3)	1			
030	ZGAQ-02436				.SPACING WASHER(8.9)	1			
	ZGAQ-02437				.SPACING WASHER(9.1)	1			
	ZGAQ-02438				.SPACING WASHER(9.2)	1			
	ZGAQ-02439				.SPACING WASHER(9.3)	1			
	ZGAQ-02440				.SPACING WASHER(9.4)	1			
040	ZGAQ-02625				.ROLLER BEARING	1			
	ZGAQ-02531				.WASHER(0.7)	1			
	ZGAQ-02532				.WASHER(0.8)	1			
	ZGAQ-02533				.WASHER(0.9)	1			
	ZGAQ-02534				.WASHER(1.0)	1			
	ZGAQ-02535				.WASHER(1.2)	1			
	ZGAQ-02536				.WASHER(1.3)	1			
050	ZGAQ-02537				.WASHER(1.4)	1			
	ZGAQ-02538				.WASHER(1.5)	1			
	ZGAQ-02539				.WASHER(1.6)	1			
	ZGAQ-02540				.WASHER(1.7)	1			
	ZGAQ-02541				.WASHER(1.8)	1			
	0730-002-543				.WASHER(1.9)	1			
	ZGAQ-02543				.WASHER(2.0)	1			

Item	Part_No	IS	Ord	T	Description	Qty	Serial_No	ITC	Remark
050	ZGAQ-02544				.WASHER(1.1)	1			
060	ZGAQ-02444				.SHAFT SEAL	1			
070	ZGAQ-02445				.WASHER	1			
080	ZGAQ-02446				.HEXAGON NUT	1			
100-1	ZGAQ-02193				.PLUG-SCREW	2			
100-2	ZGAQ-02192				.O-RING	2			
110	ZGAQ-02545				.BEARING FLANGE	1			
120	ZGAQ-02546				.HEXAGON SCREW	4			

REAR INPUT GROUP

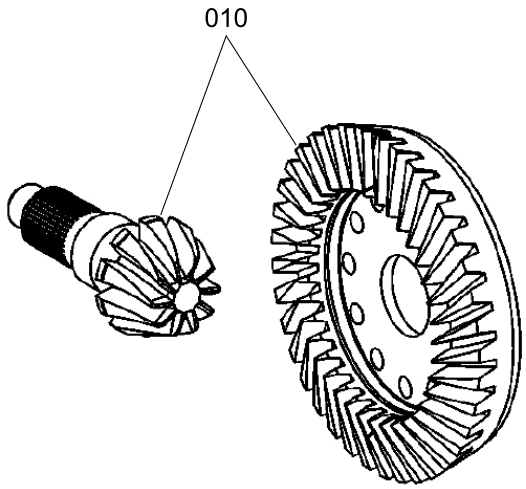

Item	Part_No	IS	Ord	T	Description	Qty	Serial_No	ITC	Remark
010	ZGAQ-02547				BEVEL GEAR SET	1			

REAR INPUT FLANGE

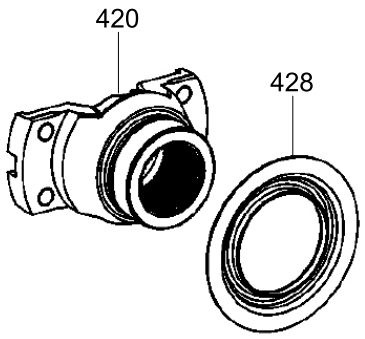

Item	Part_No	IS	Ord	T	Description	Qty	Serial_No	ITC	Remark
*	ZGAQ-02523				INPUT FLANGE	1			
420	ZGAQ-02447				.INPUT FLANGE	1			
428	ZGAQ-02548				.PROTECT SHEET	1			

REAR LIMITED SLIP DIFFERENTIAL

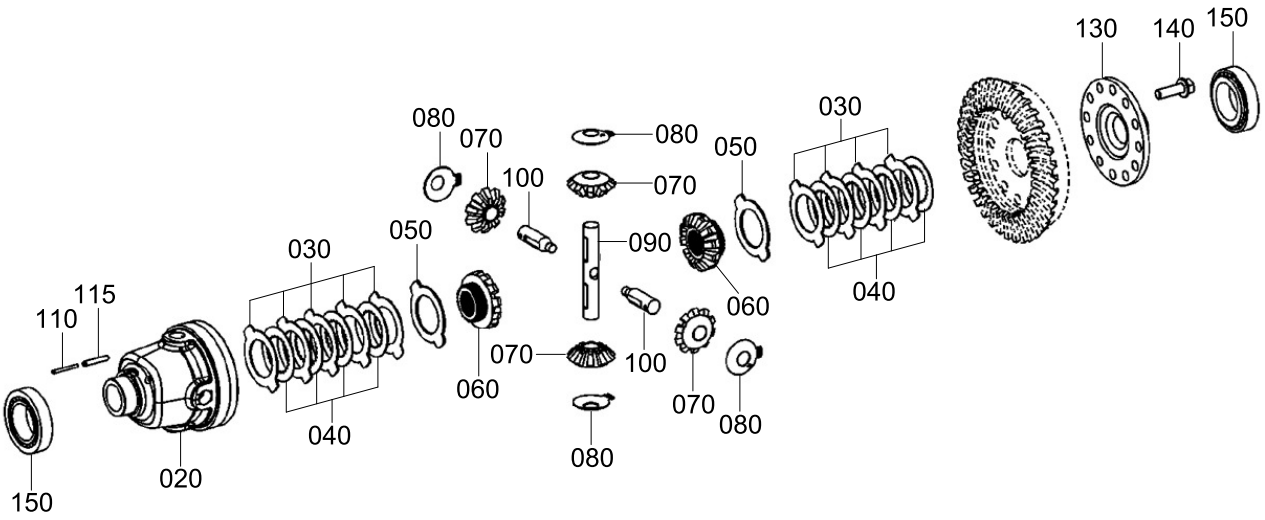

Item	Part_No	IS	Ord	T	Description	Qty	Serial_No	ITC	Remark
*	ZGAQ-02524				LIMITED SLIP DIFFERENTIAL	1			
020	ZGAQ-02549				.DIFF CASE	1			
030	ZGAQ-02550				.OUTER CLUTCH DISC	9			
	ZGAQ-02551				.OUTER CLUTCH DISC	9			
	ZGAQ-02552				.OUTER CLUTCH DISC	9			
040	ZGAQ-02553				.INNER CLUTCH DISC	8			
050	ZGAQ-02554				.THRUST WASHER	2			
060	ZGAQ-02555				.AXLE BEVEL GEAR	2			
070	ZGAQ-02556				.DIFF BEVEL GEAR	4			
080	ZGAQ-02557				.THRUST WASHER	4			
090	ZGAQ-02558				.DIFF AXLE	1			
100	ZGAQ-02559				.DIFF AXLE	2			
110	ZGAQ-02560				.SLOT PIN	2			
115	ZGAQ-02561				.SLOT PIN	2			
130	ZGAQ-02562				.HOUSING COVER	1			
140	ZGAQ-02563				.LOCKING SCREW	12			
150	ZGAQ-02564				.TAPER ROLL BEARING	2			

REAR AXLE CASING

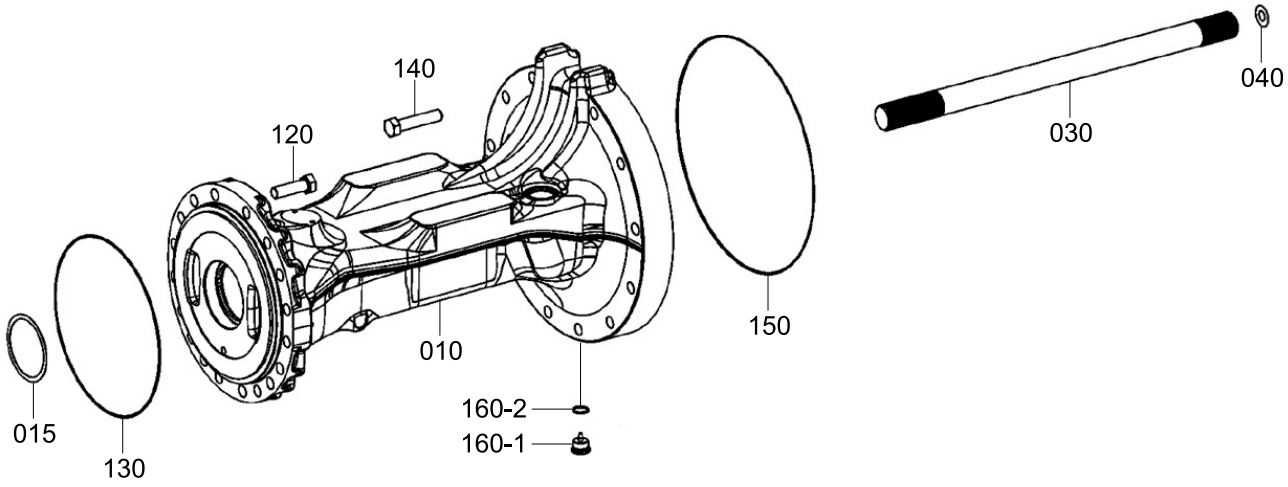

Item	Part_No	IS	Ord	T	Description	Qty	Serial_No	ITC	Remark
*	ZGAQ-02525				AXLE CASING	1			
010	ZGAQ-02565				.AXLE CASING	1			
015	ZGAQ-02566				.SHIM(0.8)	1			
	ZGAQ-02567				.SHIM(0.9)	1			
	ZGAQ-02568				.SHIM(1.0)	1			
	ZGAQ-02569				.SHIM(1.1)	1			
	ZGAQ-02570				.SHIM(1.2)	1			
030	ZGAQ-02571				.STUB SHAFT	1			
040	ZGAQ-02572				.WASHER(0.2)	1			
	ZGAQ-02573				.WASHER(0.4)	1			
	ZGAQ-02574				.WASHER(1.0)	1			
	ZGAQ-02575				.WASHER(1.5)	1			
120	ZGAQ-01361				.SCREW-HEX	18			
130	ZGAQ-02576				.O-RING	1			
140	ZGAQ-02577				.HEXAGON SCREW	12			
150	ZGAQ-02485				.O-RING	1			
160-1	ZGAQ-02467				.SCREW PLUG	1			
160-2	ZGAQ-00085				.O-RING	1			

REAR OUTPUT GROUP

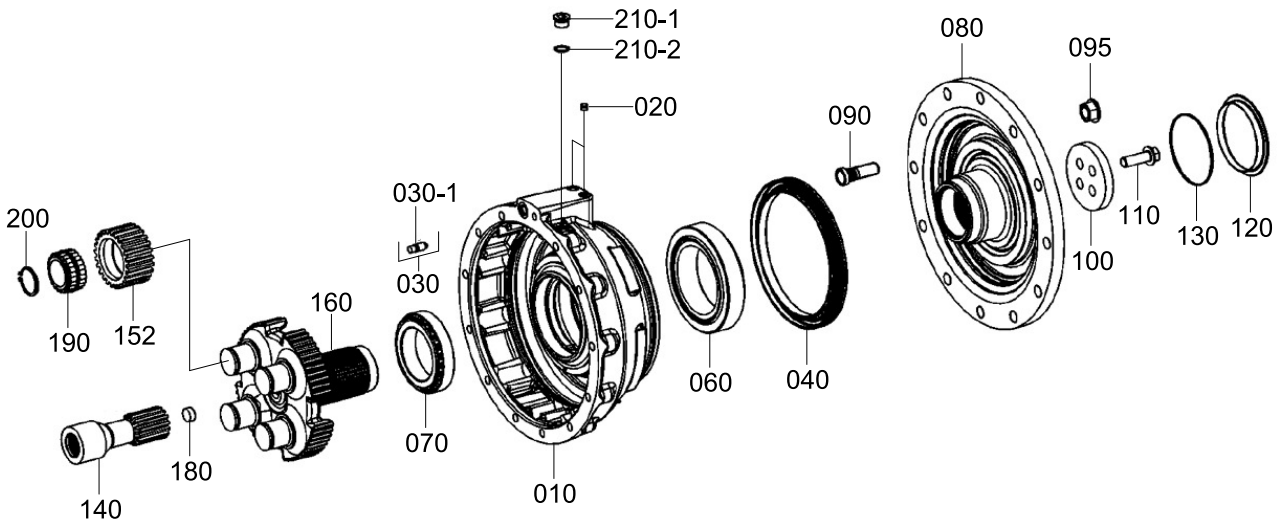

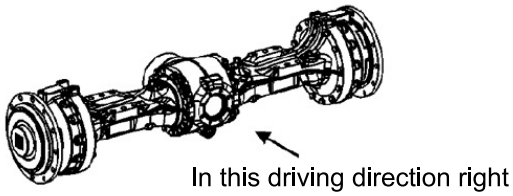

Item	Part_No	IS	Ord	T	Description	Qty	Serial_No	ITC	Remark
*	ZGAQ-02526				OUTPUT GROUP	1			
010	ZGAQ-02578				.BRAKE HOUSING	1			
020	ZGAQ-00725				.PLUG	2			
030	ZGAQ-02200				.VALVE-VENT	1			
030-1	ZGAQ-02201				.CAP-DUST	1			
040	ZGAQ-02486				.MULTI SEAL RING	1			
060	ZGAQ-02579				.TAPER ROLL BEARING	1			
070	ZGAQ-02580				.TAPER ROLL BEARING	1			
080	ZGAQ-02581				.OUTPUT SHAFT	1			
090	ZGAQ-02504				.WHEEL BOLT	12			
095	ZGAQ-00161				.NUT-WHEEL	12			
100	ZGAQ-02582				.COVER	1			
110	ZGAQ-02583				.LOCKING SCREW	4			
120	ZGAQ-02584				.COVER	1			
130	ZGAQ-00597				.O-RING	1			
140	ZGAQ-02585				.SUN GEAR SHAFT	1			
152	ZGAQ-02586				.PLANET GEAR	4			
160	ZGAQ-02587				.PLANET CARRIER	1			
180	ZGAQ-02498				.STOP BOLT	1			
190	ZGAQ-02588				.CY ROLL BEARING	4			
200	ZGAQ-02589				.RETAINING RING	4			
210-1	ZGAQ-02004				.PLUG	1			
210-2	ZGAQ-00085				.O-RING	1			

REAR BRAKE GROUP

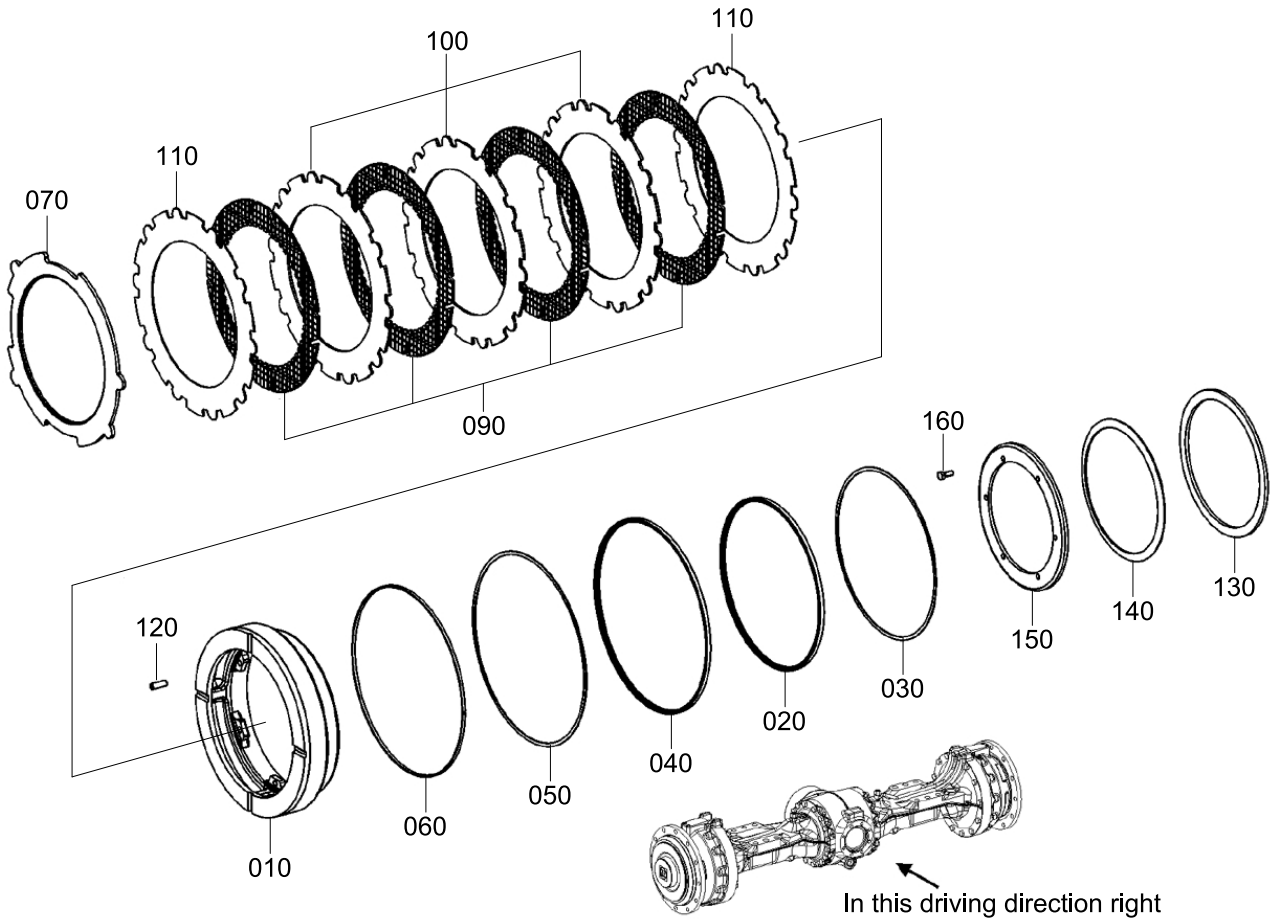

Item	Part_No	IS	Ord	T	Description	Qty	Serial_No	ITC	Remark
*	ZGAQ-02527				BRAKE GROUP	1			
010	ZGAQ-02590				.PISTON	1			
020	ZGAQ-02591				.U-RING	1			
030	ZGAQ-02507				.SUPPORT RING	1			
040	ZGAQ-02592				.U-RING	1			
050	ZGAQ-02509				.SUPPORT RING	1			
060	ZGAQ-02510				.GUIDE RING	1			
070	ZGAQ-02593				.END SHIM	1			
090	ZGAQ-02511				.INNER CLUTCH DISC	4			
100	ZGAQ-02512				.OUTER CLUTCH DISC	3			
110	ZGAQ-02513				.OUTER CLUTCH DISC	2			
120	ZGAQ-02594				.SLOT PIN	6			
130	ZGAQ-02595				.WASHER	1			
140	ZGAQ-02596				.CUP SPRING	1			
150	ZGAQ-02597				.COVER	1			
160	ZGAQ-02598				.HEXAGON SCREW	6			

REAR AXLE PARTS

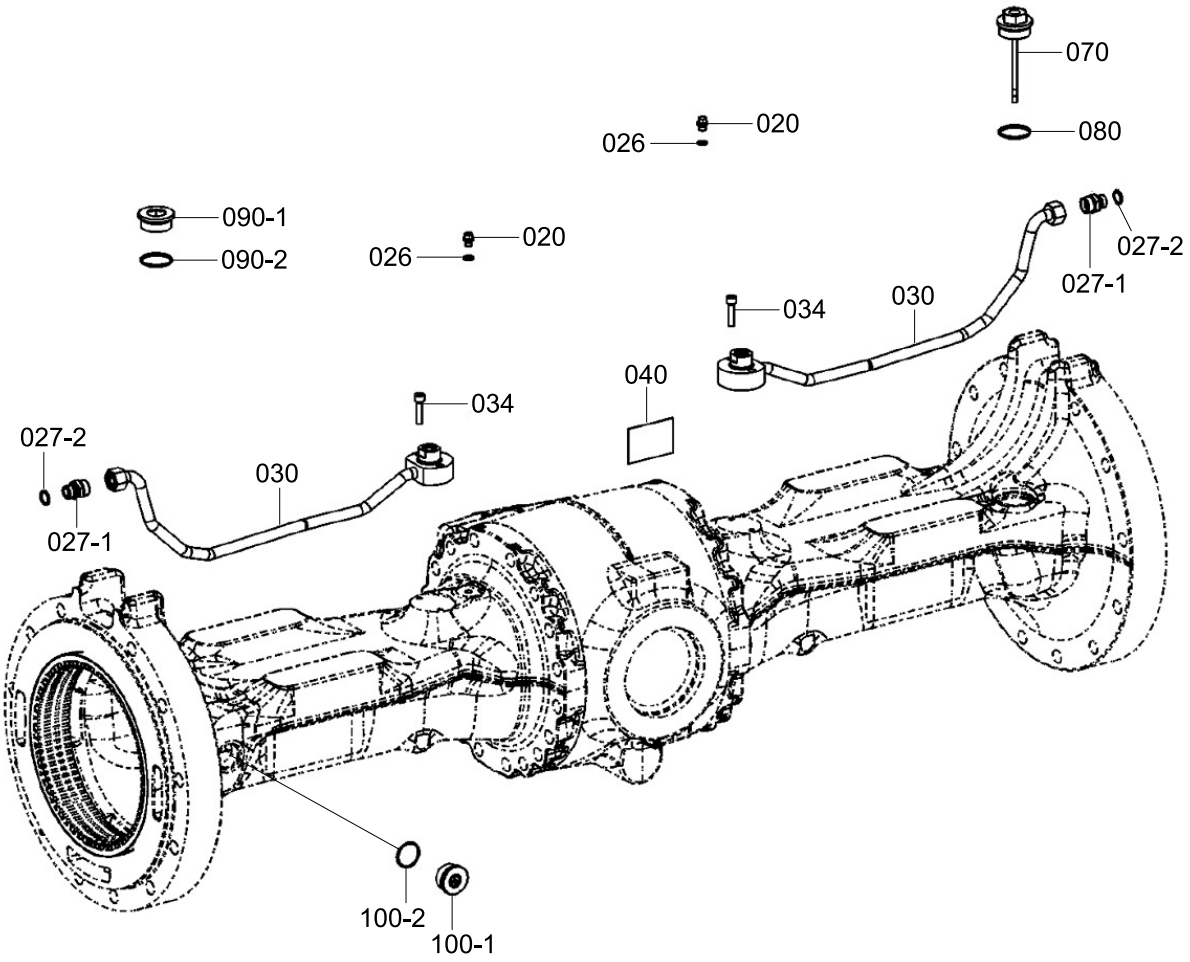

Item	Part_No	IS	Ord	T	Description	Qty	Serial_No	ITC	Remark
*	ZGAQ-02528				AXLE PARTS	1			
020	ZGAQ-01614				.PLUG-SCREW	2			
026	ZGAQ-01615				.RING-SEALING	2			
027-1	ZGAQ-00963				.SCREW IN SLEEVE	2			
027-2	ZGAQ-00964				.O-RING	2			
030	ZGAQ-02599				.BRAKE TUBE	2			
034	ZGAQ-02600				.CAP SCREW	4			
040	ZGAQ-00788				.PLATE-TYPE	1			
070	ZGAQ-02601				.OIL DIPSTICK	1			
080	ZGAQ-01212				.O-RING	1			
090-1	ZGAQ-00081				.PLUG-SCREW	1			
090-2	ZGAQ-01212				.O-RING	1			
100-1	ZGAQ-02193				.PLUG-SCREW	2			
100-2	ZGAQ-02192				.O-RING	2			

WHEEL NUT & VENT VALVE

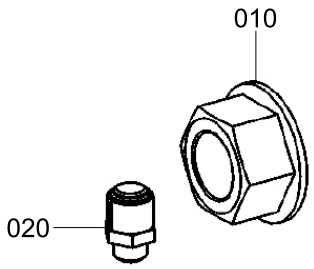

Item	Part_No	IS	Ord	T	Description	Qty	Serial_No	ITC	Remark
*	ZGAQ-02415				LOOSE PARTS	1			
010	ZGAQ-00161				.NUT-WHEEL	24			
020	ZGAQ-00093				.VALVE-VENT	1			

BELL CRANK & LINK

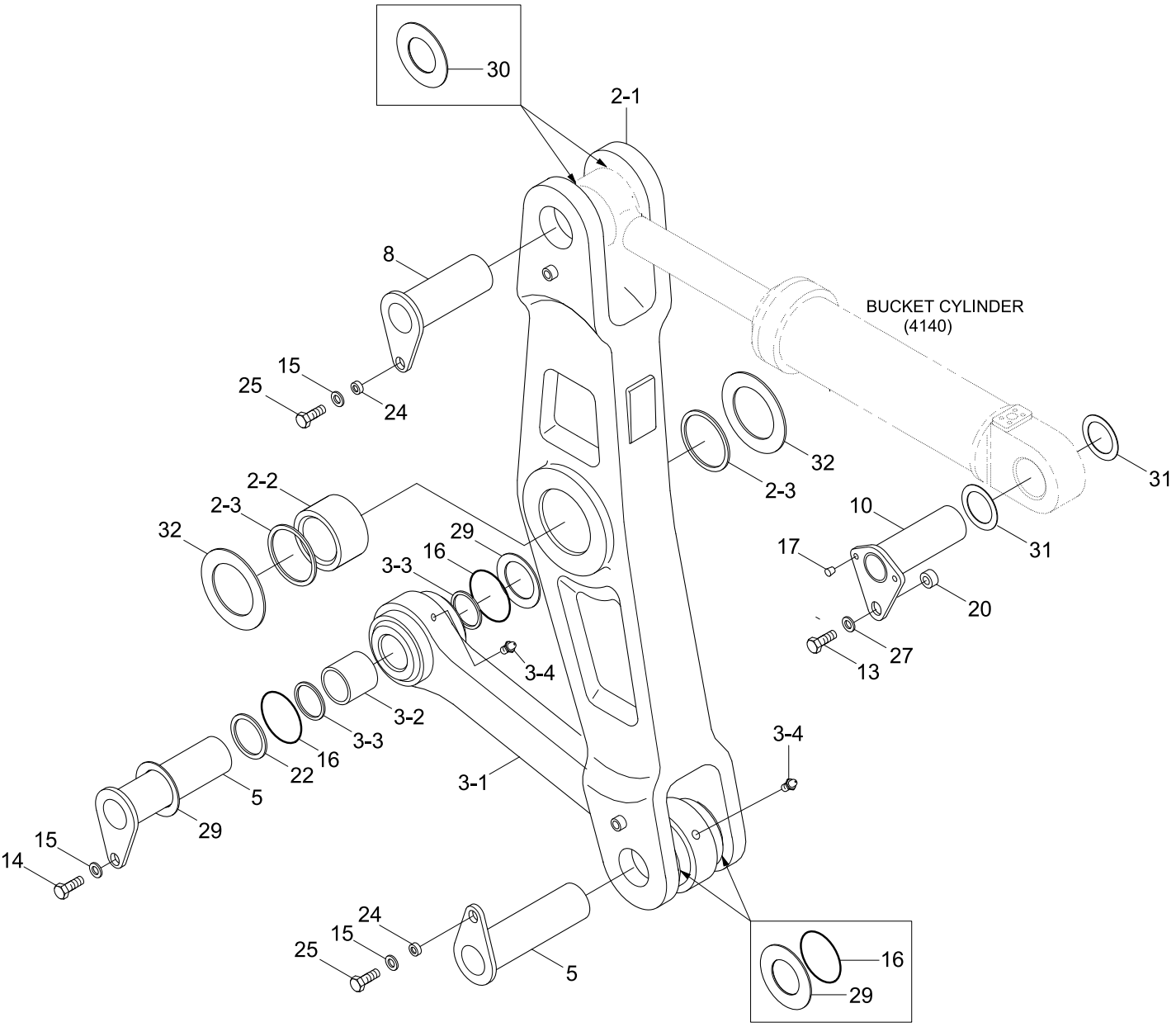

Item	Part_No	IS	Ord	T	Description	Qty	Serial_No	ITC	Remark
2	61LD-10141				BELL CRANK ASSY	1			
N2-1	61LD-10151				.BELL CRANK	1			NOT
2-2	61LD-10120				.BUSHING	1			
2-3	S700-110309				.SEAL-DUST, DKIY TYPE	2			
3	61LD-10161				LINK ASSY	1			
N3-1	61LD-10171				.LINK WA	1			NOT
3-2	X112-802087				.BUSHING	2			
3-3	S700-080206				.DUST SEAL-DKIY TYPE	4			
3-4	E8841022				.NIPPLE-GREASE	2			
5	61LB-15360				PIN WA	2			
8	61LB-16040				PIN WA	1			
10	61LB-17170				PIN WA	1			
13	S017-20040D				BOLT-HEX	1			
14	S017-16025D				BOLT-HEX	1			
15	64L3-01120				WASHER-HARDENED	3			
16	E161-3050	10			O-RING	4			
17	S981-182000				PLUG	2			
20	61LB-10270				SPACER(Ø21)	1			
22	61N8-00160				SPACER-PIN	2	- #0247		
					SPACER-PIN	1	#0248 - #0376	A	
	61LM-10220				SPACER-PIN	1	#0377 -	B	
24	61L8-30381				BOSS	2			
25	S017-16045D				BOLT-HEX	2			
27	91E6-60200				WASHER-HARDENED	1			
29	S391-080120				SHIM-ROUND(1.0T)	4			
30	S391-090160				SHIM-ROUND(1.0T)	2			

Item	Part_No	IS	Ord	T	Description	Qty	Serial_No	ITC	Remark
31	S391-095160				SHIM-ROUND(1.0T)	2			
32	S391-110220				SHIM-ROUND(1.0T)	2			

BOOM

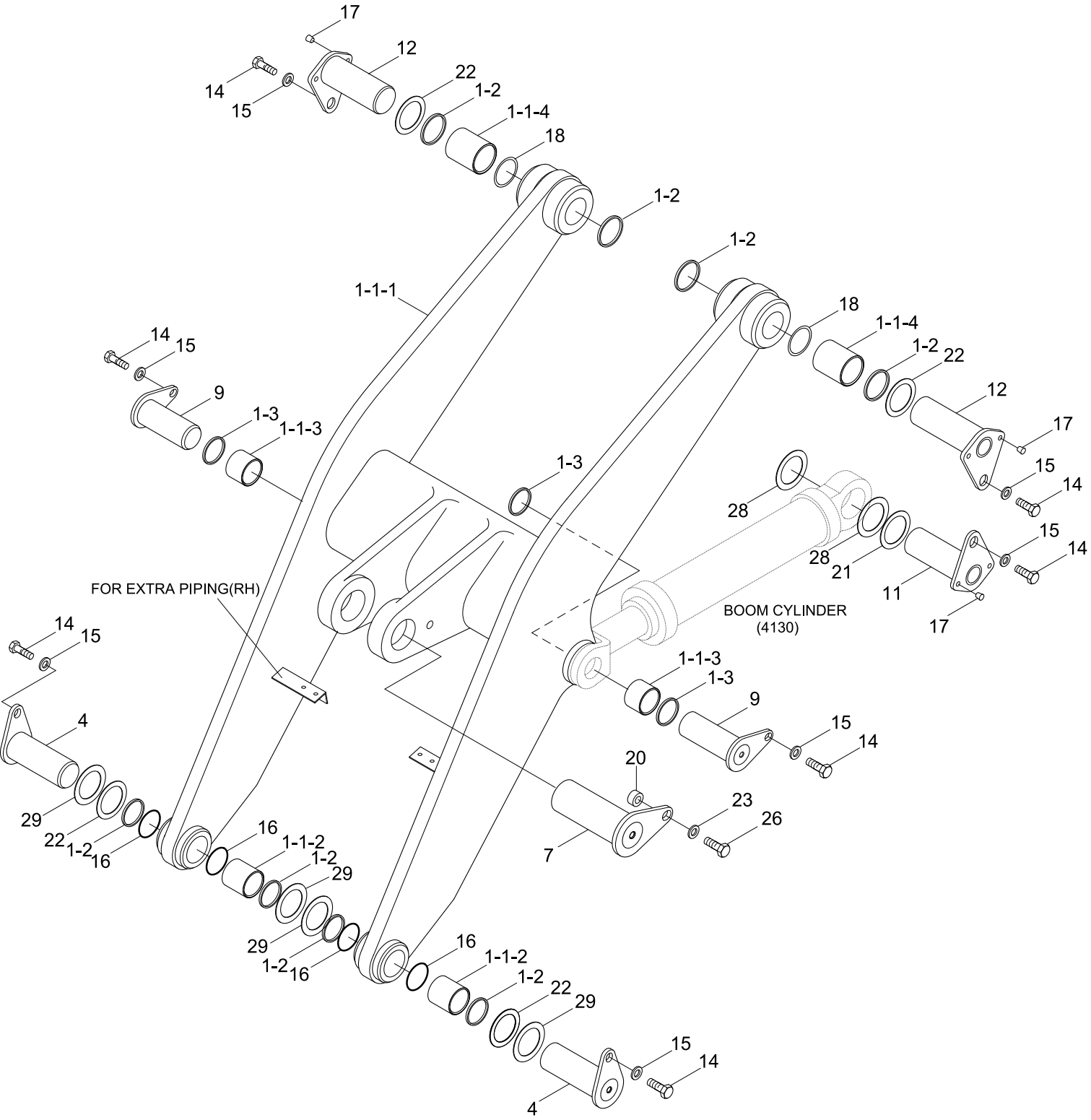
17
12
14
15
22
1-2
1-1-4
18
1-2
1-2
1-1-1
18
1-1-4
1-2
22
12
17
15
14
14
15
9
1-3
1-1-3
1-3
28
28
21
11
15
14
17
FOR EXTRA PIPING(RH)
BOOM CYLINDER
(4130)
14
15
1-1-3
1-3
9
15
14
4
20
23
26
7
29
22
1-2
16
16
1-1-2
1-2
29
29
1-2
16
16
1-1-2
1-2
22
29
15
14
4

Item	Part_No	IS	Ord	T	Description	Qty	Serial_No	ITC	Remark
1	61LD-10011				BOOM ASSY	1			HL757-7A
	61LD-12010				BOOM	1			HL757XTD-7A
	61LD-10310				BOOM	1			HL757-7A
	61LD-12310				BOOM ASSY(EXTRA PIP)	1			HL757XTD-7A
	61LD-10410				BOOM ASSY(Q/COUPLER)	1	#0248 -	-	VOLVO, XTD
1-1	61LD-10031				.BOOM WA	1			HL757-7A
	61LD-12030				.BOOM WA	1			HL757XTD-7A
	61LD-10330				.BOOM WA(EXTRA PIP)	1			HL757-7A
	61LD-12330				.BOOM WA(EXTRA PIP)	1			HL757XTD-7A
	61LD-10430				.BOOM WA	1	#0248 -	-	VOLVO, XTD
1-1-2	61LD-10090				..BUSHING	2			
1-1-3	61LD-10100				..BUSHING	2			
1-1-4	61LD-10110				..BUSHING	2			
1-2	S700-080206				.DUST SEAL-DKIY TYPE	8			
1-3	S700-075205				.DUST SEAL-DKIY TYPE	4			
4	61LB-15350				PIN WA	2			
7	61LB-16170				PIN WA	1			
9	61LB-15160				PIN WA	2			
11	61LB-17510				PIN WA	2			
12	61LB-17060				PIN WA	2			
14	S017-16025D				BOLT-HEX	8			
15	64L3-01120				WASHER-HARDENED	8			
16	E161-3050	10			O-RING	4			
17	S981-182000				PLUG	8			
18	S391-080160				SHIM-ROUND(1.0T)	4			
20	61LB-10270				SPACER(Ø21)	1			

Item	Part_No	IS	Ord	T	Description	Qty	Serial_No	ITC	Remark
21	61N8-00150				SPACER-PIN	2	- #0376		
	61LM-10210				SPACER-PIN	2	#0377 -	B	
22	61N8-00160				SPACER-PIN	4	- #0376		
	61LM-10220				SPACER-PIN	4	#0377 -	B	
23	61N8-00320				WASHER-HARDENED	1			
26	S017-20050D				BOLT-HEX	1			
28	S391-080120				SHIM-ROUND(1.0T)	8			
29	S391-080120				SHIM-ROUND(1.0T)	4			

BUCKET(2.7m^3, CUTTING EDGE)

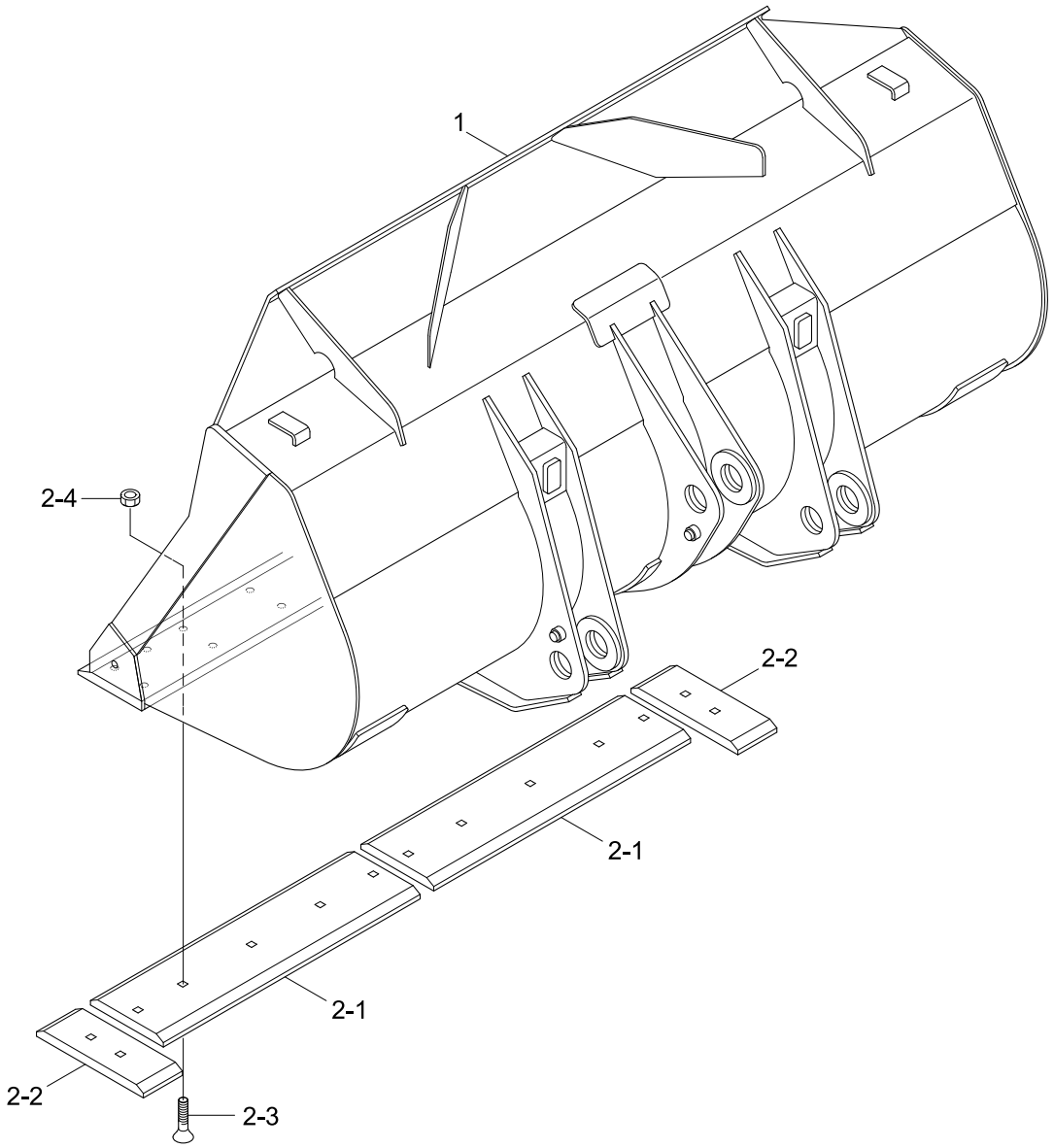

Description	Parts no	Included item
Cutting edge kit	61LD-00910BG	2-1~2-4

Item	Part_No	IS	Ord	T	Description	Qty	Serial_No	ITC	Remark
*	61LD-00011BG				BUCKET ASSY	1			
1	61LD-00031BG				.BUCKET WA	1			
2	61LD-00910BG				.CUTTING EDGE KIT	1			SEE ILLUST
2-1	61LD-00360BG				..CUTTING EDGE-CENTER	2			
2-2	61LD-00370BG				..CUTTING EDGE-SIDE	2			
2-3	61L3-0198				..BOLT-TOOTH	14			
2-4	S206-20100B				..NUT-HEX	14			

BUCKET(2.6m^3, TOOTH)

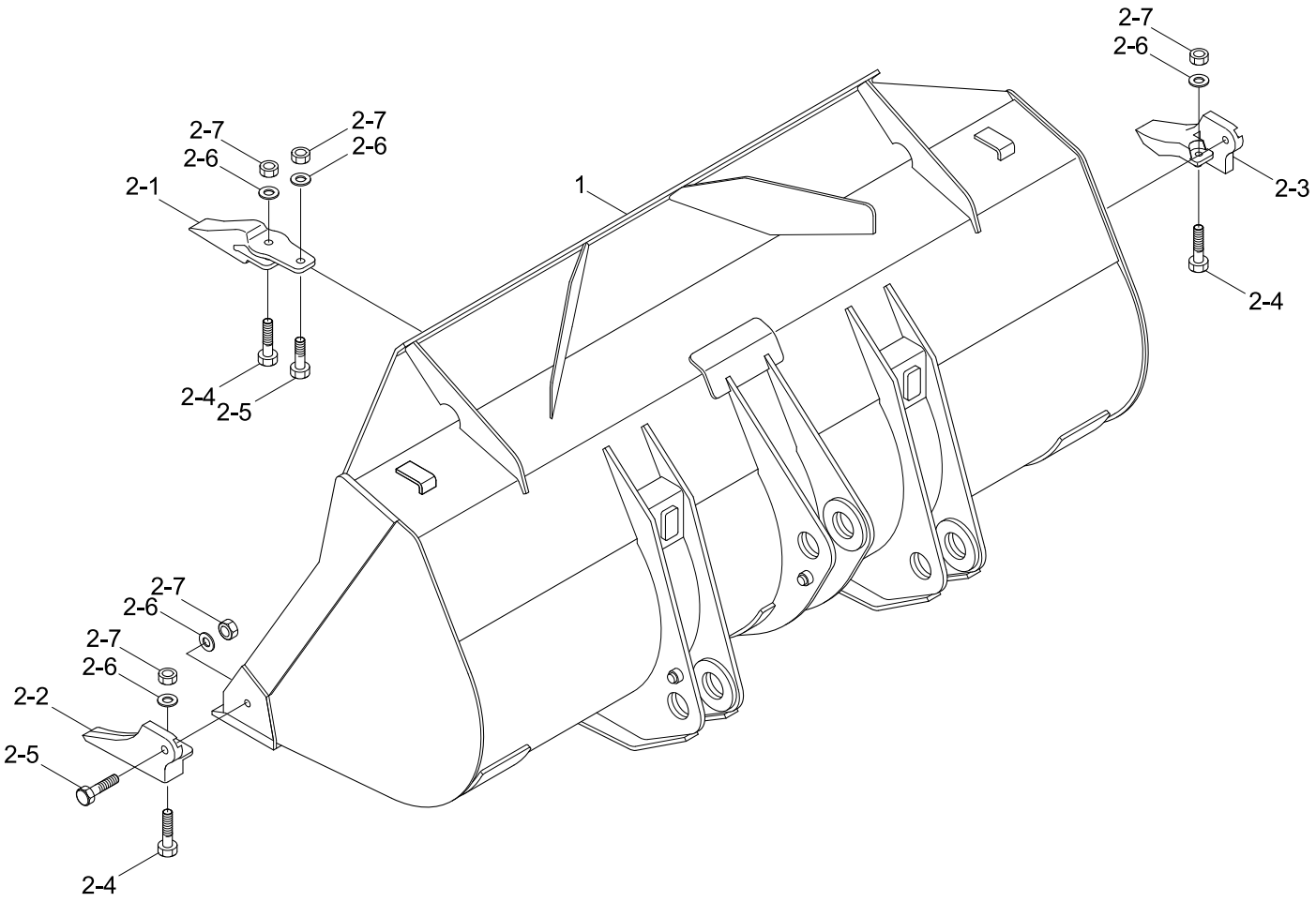

Description	Parts no	Included item
Tooth kit	61LD-00950BG	2-1~2-7

Item	Part_No	IS	Ord	T	Description	Qty	Serial_No	ITC	Remark
*	61LD-00021BG				BUCKET ASSY	1			
1	61LD-00031BG				.BUCKET WA	1			
2	61LD-00950BG				.TOOTH KIT(1-PIECE)	1			SEE ILLUST
2-1	61L3-0169BG				..TOOTH-CENTER	6			
2-2	61L3-0170BG				..TOOTH-LH	1			
2-3	61L3-0171BG				..TOOTH-RH	1			
2-4	S018-20075D				..BOLT-HEX	8			
2-5	S018-20065D				..BOLT-HEX	8			
2-6	S441-200006				..WASHER-HARDENED	16			
2-7	S206-20100B				..NUT-HEX	16			

BUCKET(2.7M^3, 1-TOOTH & SEGMENT, #0196-)

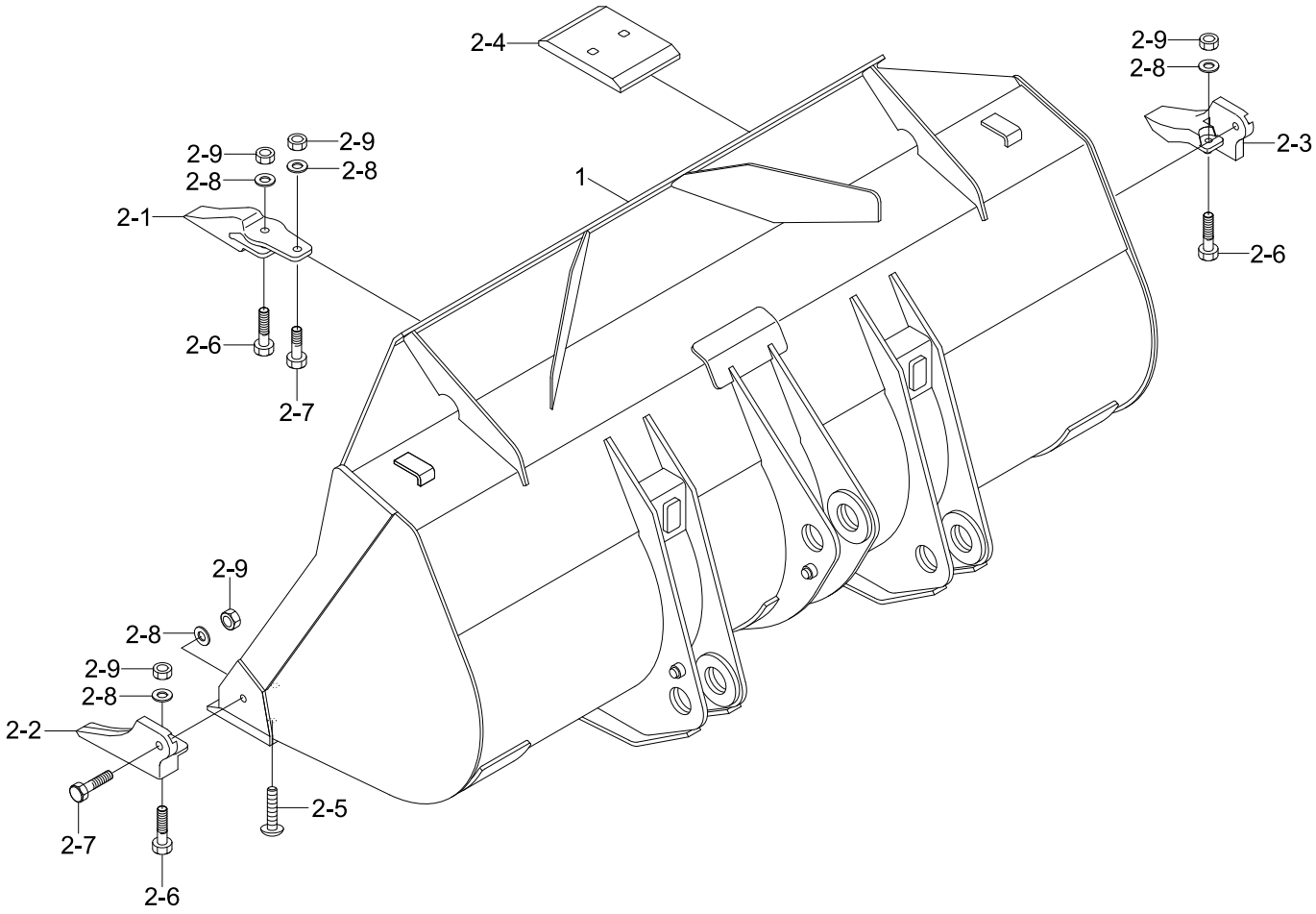

Item	Part_No	IS	Ord	T	Description	Qty	Serial_No	ITC	Remark
*	61LD-06200				BUCKET ASSY	1	#0196 -	-	
1	61LD-06220				.BUCKET WA	1			
2	61LD-00930				.TOOTH & SEGMENT KIT	1			
2-1	61L3-0169BG				..TOOTH-CENTER	6			
2-2	61L3-0170BG				..TOOTH-LH	1			
2-3	61L3-0171BG				..TOOTH-RH	1			
2-4	61LD-06240				..SEGMENT	7			
2-5	61L3-0198				..BOLT-TOOTH	14			
2-6	S018-20075D				..BOLT-HEX	8			
2-7	S018-20065D				..BOLT-HEX	8			
2-8	S441-200006				..WASHER-HARDENED	16			
2-9	S206-20100B				..NUT-HEX	30			

BUCKET(2.7M^3, 2-TOOTH & SEGMENT, #0196-)

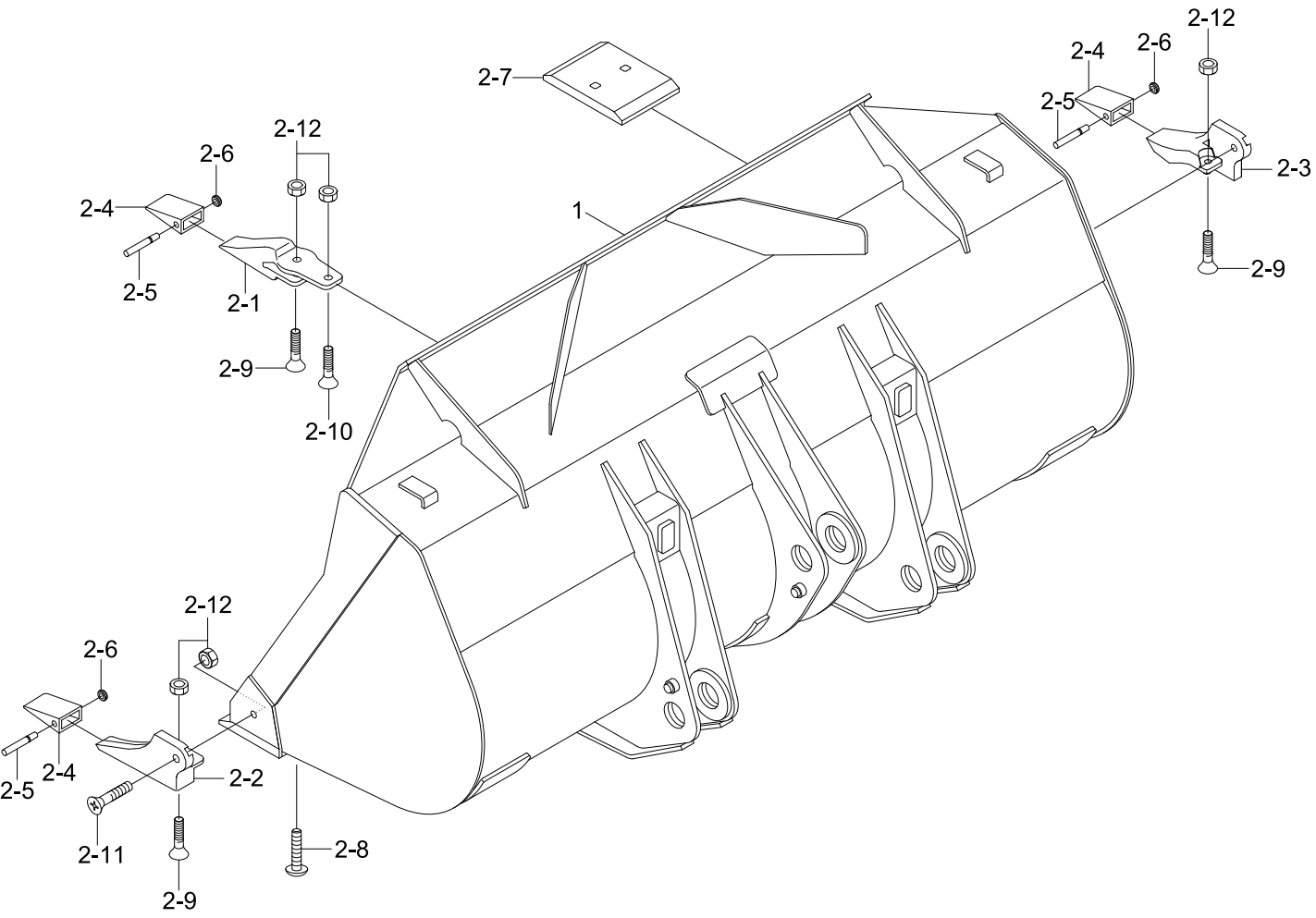

Item	Part_No	IS	Ord	T	Description	Qty	Serial_No	ITC	Remark
*	61LD-06210				BUCKET ASSY	1	#0196 -	-	
1	61LD-06220				.BUCKET WA	1			
2	61LD-00940				.TOOTH & SEGMENT KIT	1			
2-1	64L3-01260BG				..ADAPTER-TOOTH,CENTER	6			
2-2	64L3-01270BG				..ADAPTER-TOOTH,LH	1			
2-3	64L3-01280BG				..ADAPTER-TOOTH,RH	1			
2-4	64L3-01290BG				..POINT-TOOTH	8			
2-5	64L3-01300				..PIN-TOOTH	8			
2-6	64L3-01310				..WASHER-LOCK	8			
2-7	61LD-06240				..SEGMENT	7			
2-8	61L3-0198				..BOLT-TOOTH	14			
2-9	64L3-01320				..BOLT-TOOTH	8			
2-10	64L3-01330				..BOLT-TOOTH	6			
2-11	64L3-01340				..BOLT-TOOTH	2			
2-12	S206-20100B				..NUT-HEX	30			

BUCKET(2.6m^3, 2-PIECE TOOTH)

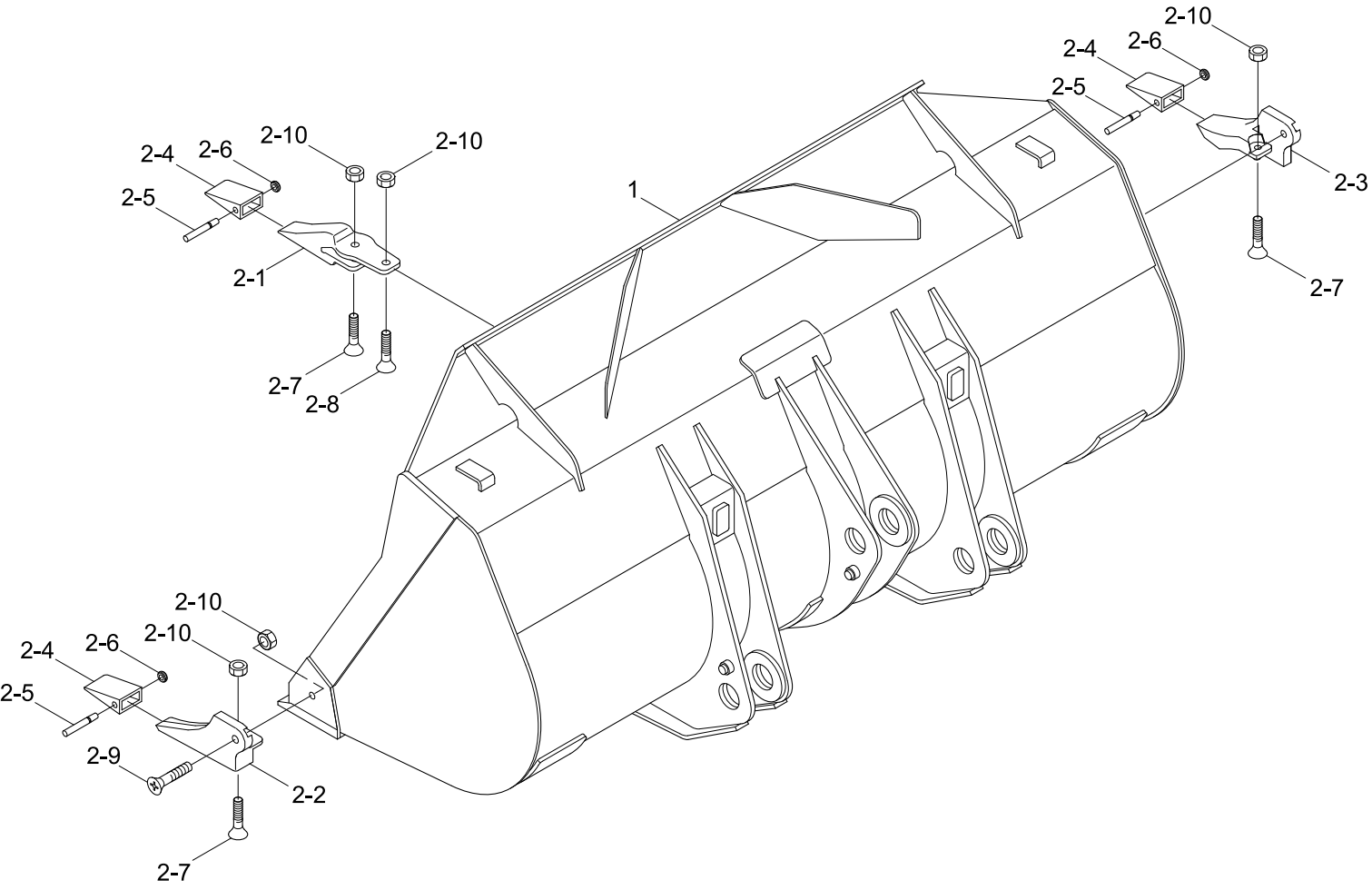

Description	Parts no	Included item
Tooth kit	61LD-00960BG	2-1~2-10

Item	Part_No	IS	Ord	T	Description	Qty	Serial_No	ITC	Remark
*	61LD-00390BG				BUCKET ASSY	1			
1	61LD-00031BG				.BUCKET WA	1			
2	61LD-00960BG				.TOOTH KIT(2-PIECE)	1			SEE ILLUST
2-1	64L3-01260BG				..ADAPTER-TOOTH,CENTER	6			
2-2	64L3-01270BG				..ADAPTER-TOOTH,LH	1			
2-3	64L3-01280BG				..ADAPTER-TOOTH,RH	1			
2-4	64L3-01290BG				..POINT-TOOTH	8			
2-5	64L3-01300				..PIN-TOOTH	8			
2-6	64L3-01310				..WASHER-LOCK	8			
2-7	64L3-01320				..BOLT-TOOTH	8			
2-8	64L3-01330				..BOLT-TOOTH	6			
2-9	64L3-01340				..BOLT-TOOTH	2			
2-10	S206-20100B				..NUT-HEX	16			

BUCKET(2.6m^3, CUTTING EDGE)

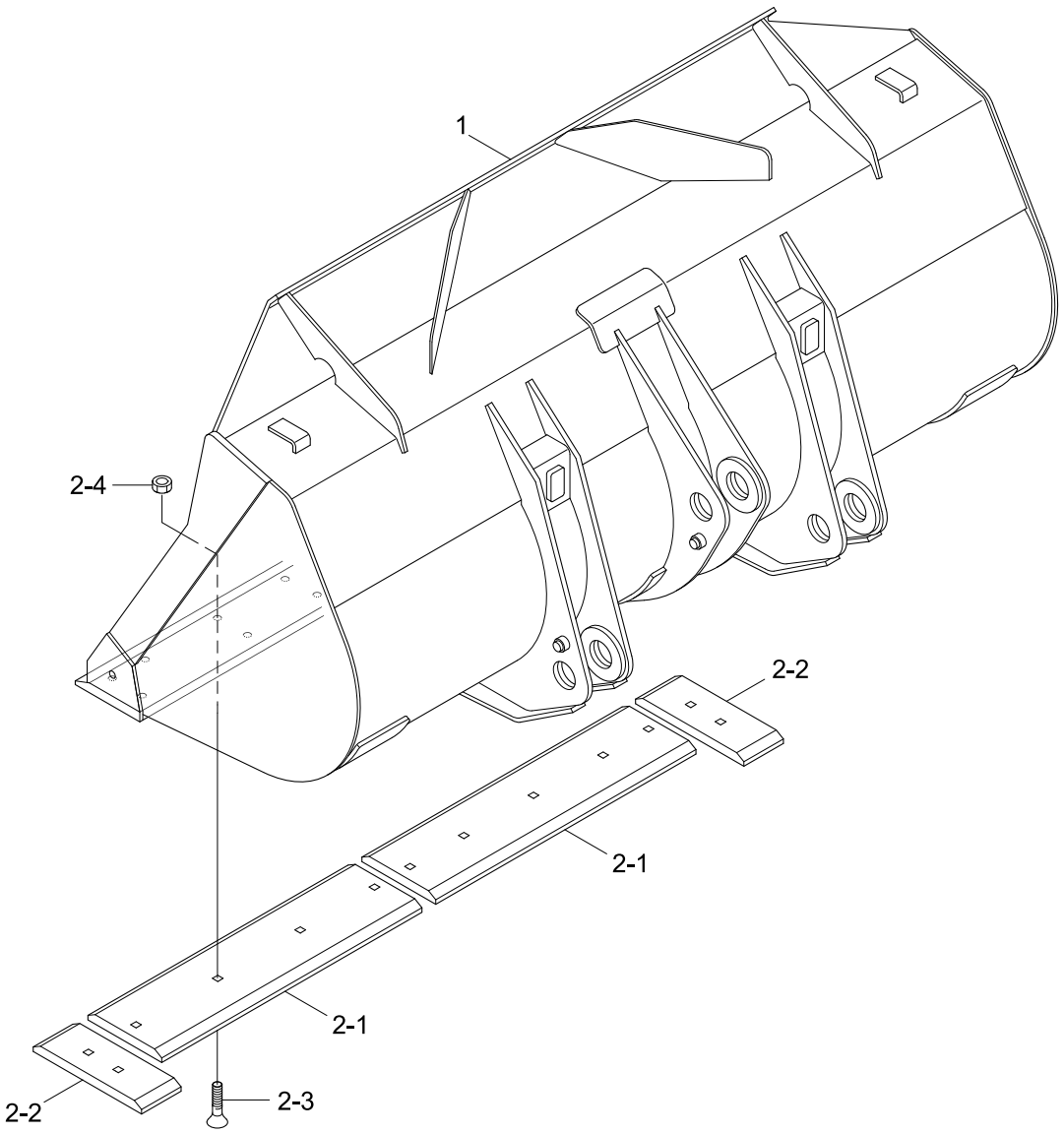

Description	Parts no	Included item
Cutting edge kit	61LD-00920BG	2-1~2-4

Item	Part_No	IS	Ord	T	Description	Qty	Serial_No	ITC	Remark
*	61LD-04000BG				BUCKET ASSY	1			
1	61LD-04010BG				.BUCKET WA	1			
2	61LD-00920BG				.CUTTING EDGE KIT	1			SEE ILLUST
2-1	61LD-04050BG				..CUTTING EDGE-CENTER	2			
2-2	61LD-00370BG				..CUTTING EDGE-SIDE	2			
2-3	61L3-0198				..BOLT-TOOTH	12			
2-4	S206-20100B				..NUT-HEX	12			

BUCKET(2.9m^3, CUTTING EDGE)

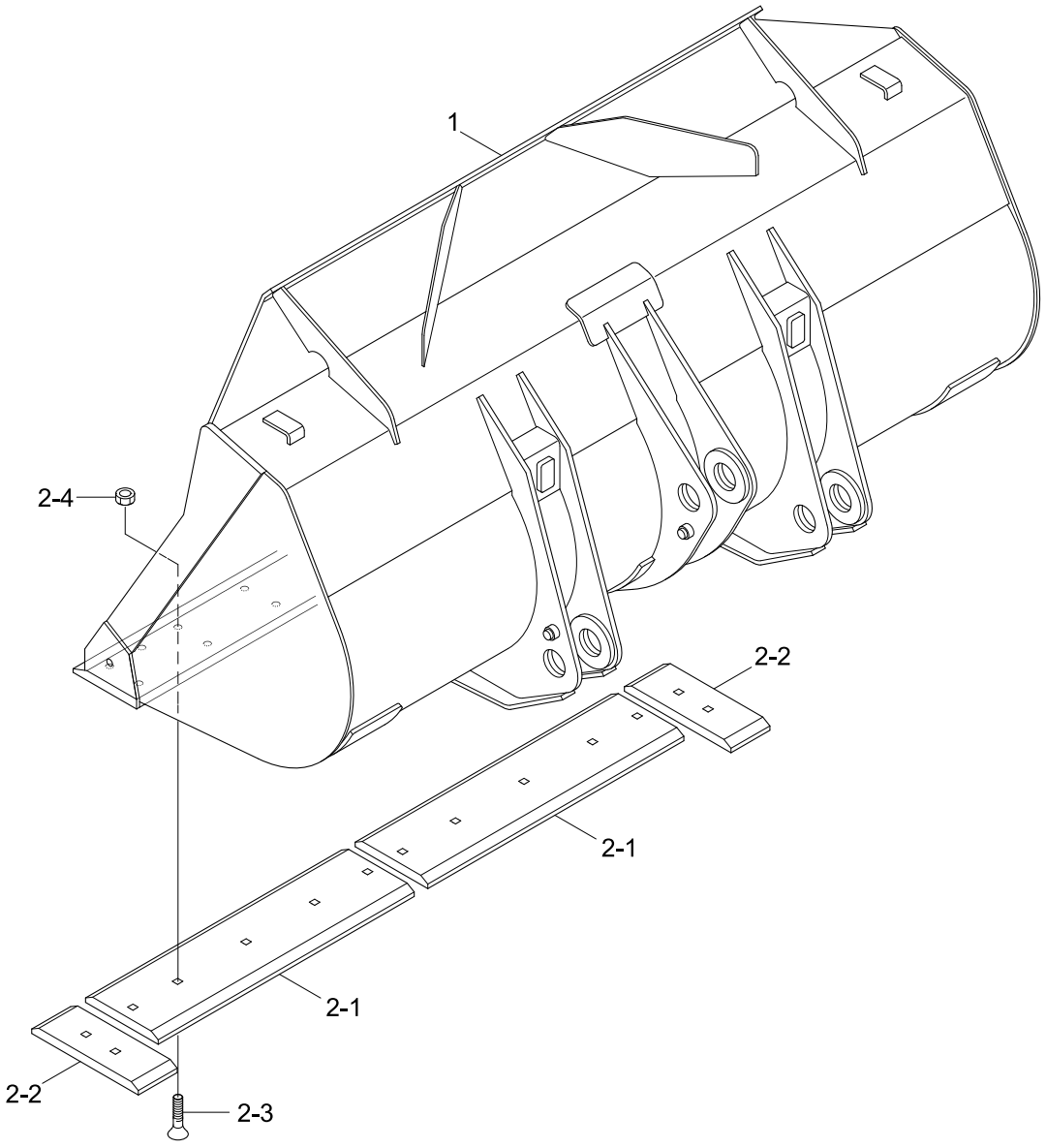

Description	Parts no	Included item
Cutting edge kit	61LD-00910BG	2-1~2-4

Item	Part_No	IS	Ord	T	Description	Qty	Serial_No	ITC	Remark
*	61LD-02000BG				BUCKET ASSY	1			
1	61LD-02010BG				.BUCKET WA	1			
2	61LD-00910BG				.CUTTING EDGE KIT	1			SEE ILLUST
2-1	61LD-00360BG				..CUTTING EDGE-CENTER	2			
2-2	61LD-00370BG				..CUTTING EDGE-SIDE	2			
2-3	61L3-0198				..BOLT-TOOTH	14			
2-4	S206-20100B				..NUT-HEX	14			

BUCKET(2.8m^3, TOOTH)

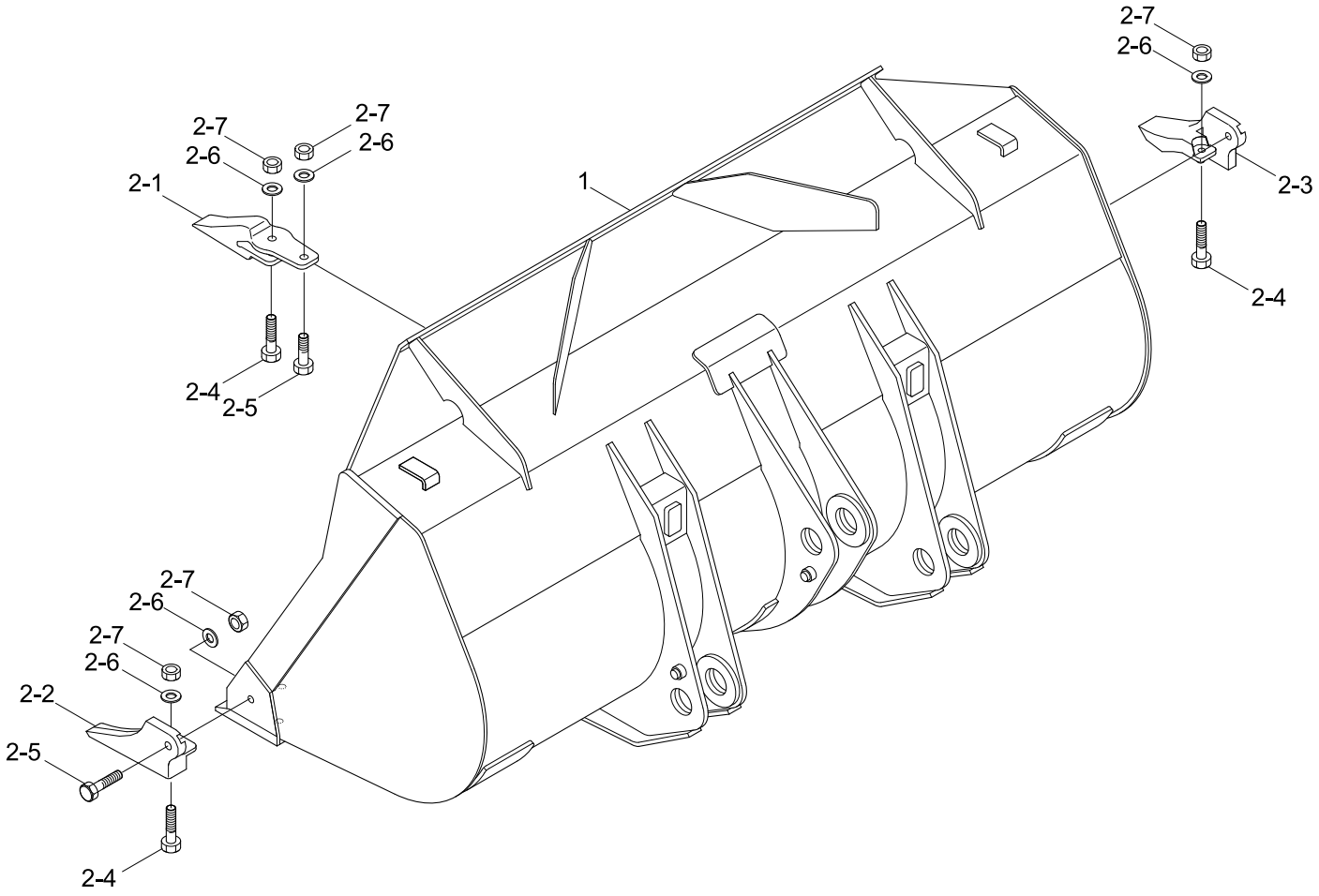

Description	Parts no	Included item
Tooth kit	61LD-00950BG	2-1~2-7

Item	Part_No	IS	Ord	T	Description	Qty	Serial_No	ITC	Remark
*	61LD-02500BG				BUCKET ASSY	1			
1	61LD-02010BG				.BUCKET WA	1			
2	61LD-00950BG				.TOOTH KIT(1-PIECE)	1			SEE ILLUST
2-1	61L3-0169BG				..TOOTH-CENTER	6			
2-2	61L3-0170BG				..TOOTH-LH	1			
2-3	61L3-0171BG				..TOOTH-RH	1			
2-4	S018-20075D				..BOLT-HEX	8			
2-5	S018-20065D				..BOLT-HEX	8			
2-6	S441-200006				..WASHER-HARDENED	16			
2-7	S206-20100B				..NUT-HEX	16			

BUCKET(2.8m^3, 2-PIECE TOOTH)

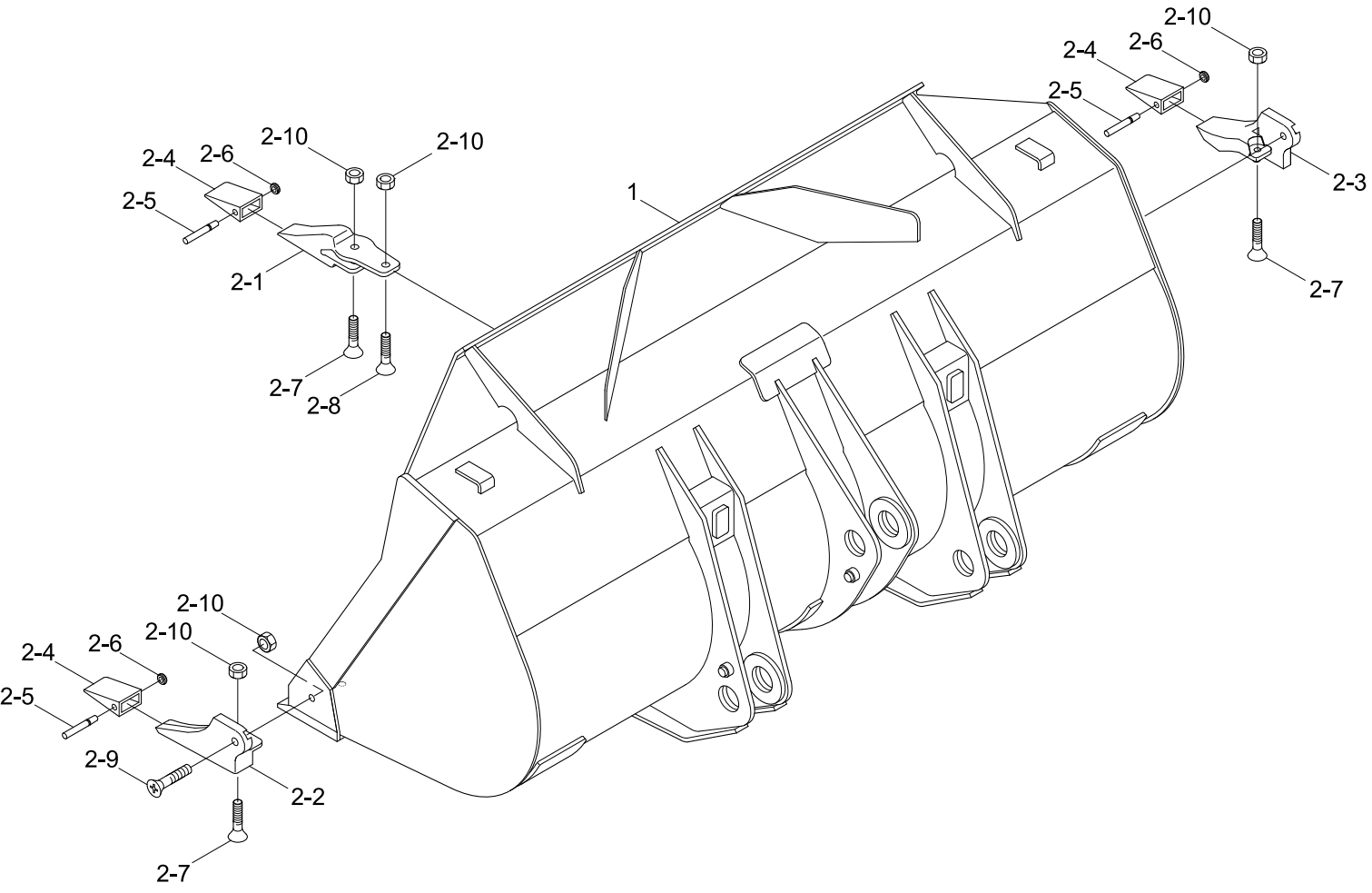

Description	Parts no	Included item
Tooth kit	61LD-00960BG	2-1~2-5

Item	Part_No	IS	Ord	T	Description	Qty	Serial_No	ITC	Remark
*	61LD-02700BG				BUCKET ASSY	1			
1	61LD-02010BG				.BUCKET WA	1			
2	61LD-00960BG				.TOOTH KIT(2-PIECE)	1			SEE ILLUST
2-1	64L3-01260BG				..ADAPTER-TOOTH,CENTER	6			
2-2	64L3-01270BG				..ADAPTER-TOOTH,LH	1			
2-3	64L3-01280BG				..ADAPTER-TOOTH,RH	1			
2-4	64L3-01290BG				..POINT-TOOTH	8			
2-5	64L3-01300				..PIN-TOOTH	8			
2-6	64L3-01310				..WASHER-LOCK	8			
2-7	64L3-01320				..BOLT-TOOTH	8			
2-8	64L3-01330				..BOLT-TOOTH	6			
2-9	64L3-01340				..BOLT-TOOTH	2			
2-10	S206-20100B				..NUT-HEX	16			

BUCKET(2.1m^3, CUTTING EDGE)

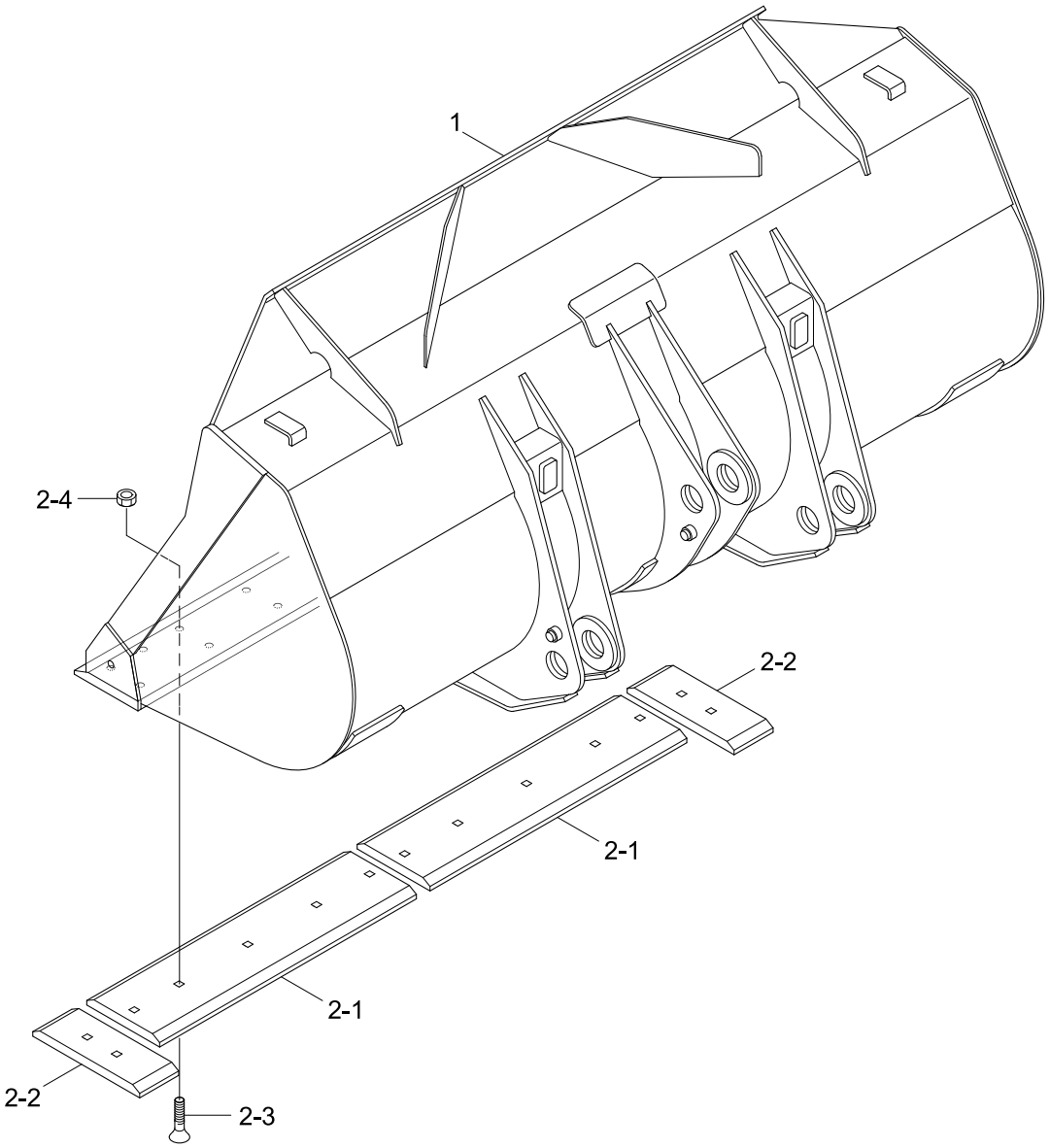

Description	Parts no	Included item
Cutting edge kit	61LD-00910BG	2-1~2-4

Item	Part_No	IS	Ord	T	Description	Qty	Serial_No	ITC	Remark
*	61LD-01010BG				BUCKET ASSY	1			
1	61LD-01020BG				.BUCKET WA	1			
2	61LD-00910BG				.CUTTING EDGE KIT	1			SEE ILLUST
2-1	61LD-00360BG				..CUTTING EDGE-CENTER	2			
2-2	61LD-00370BG				..CUTTING EDGE-SIDE	2			
2-3	61L3-0198				..BOLT-TOOTH	14			
2-4	S206-20100B				..NUT-HEX	14			

BUCKET(3.2m^3, CUTTING EDGE)

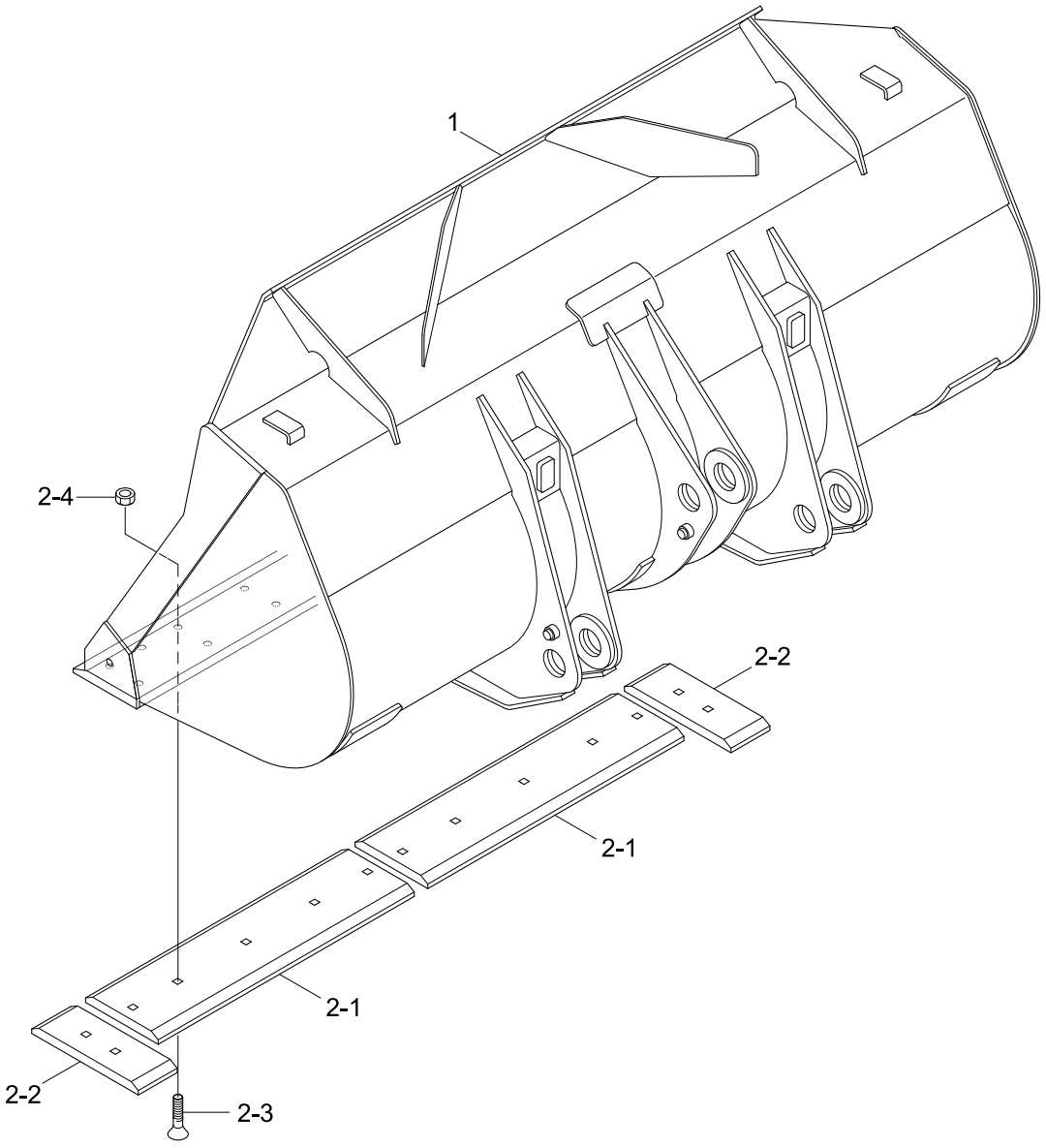

Description	Parts no	Included item
Cutting edge kit	61LD-00910BG	2-1~2-4

Item	Part_No	IS	Ord	T	Description	Qty	Serial_No	ITC	Remark
*	61LD-03000BG				BUCKET ASSY	1			
1	61LD-03010BG				.BUCKET WA	1			
2	61LD-00910BG				.CUTTING EDGE KIT	1			SEE ILLUST
2-1	61LD-00360BG				..CUTTING EDGE-CENTER	2			
2-2	61LD-00370BG				..CUTTING EDGE-SIDE	2			
2-3	61L3-0198				..BOLT-TOOTH	14			
2-4	S206-20100B				..NUT-HEX	14			

BUCKET(3.1m^3, TOOTH)

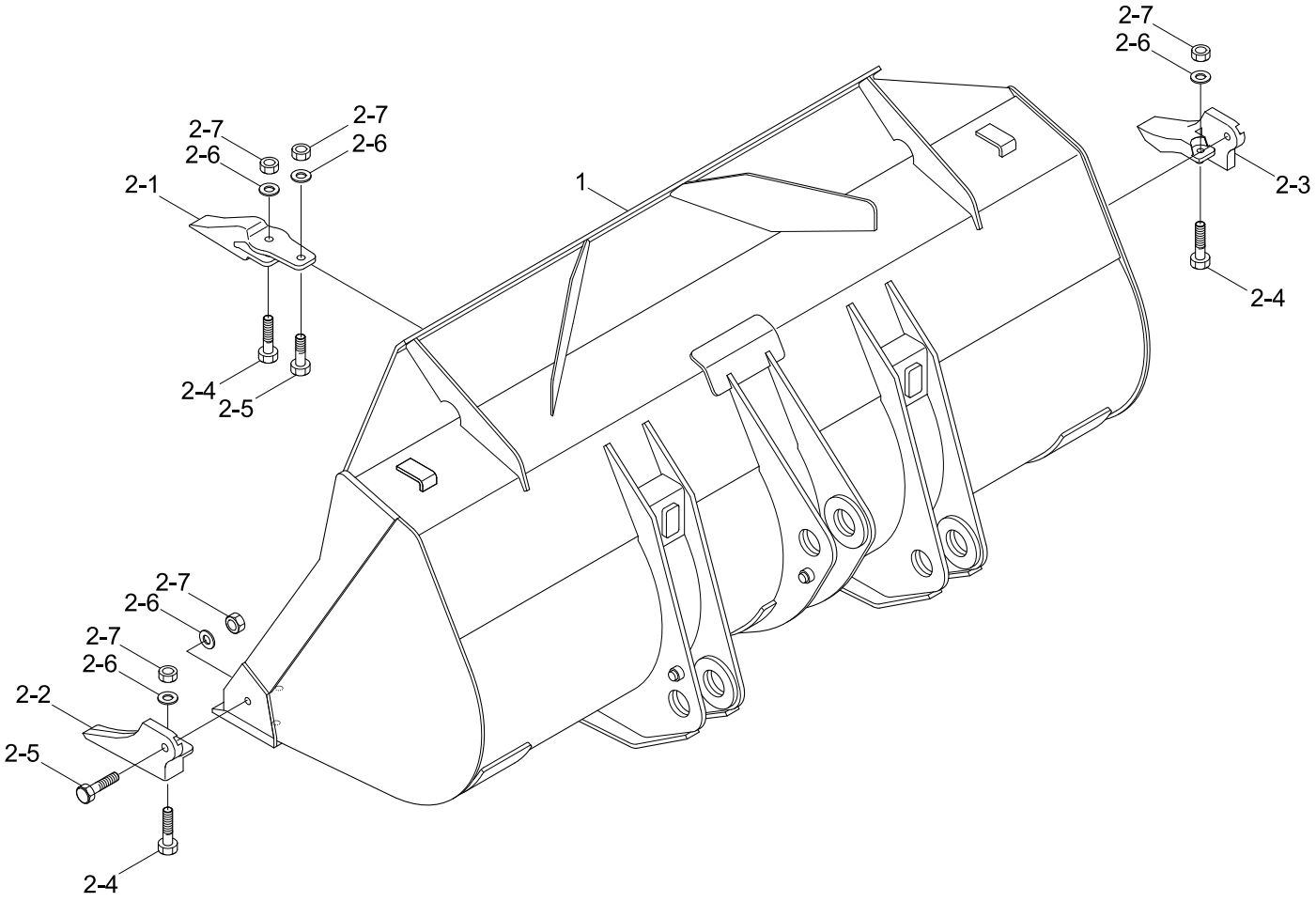

Description	Parts no	Included item
Tooth kit	61LD-00950BG	2-1~2-7

Item	Part_No	IS	Ord	T	Description	Qty	Serial_No	ITC	Remark
*	61LD-03500BG				BUCKET ASSY	1			
1	61LD-03010BG				.BUCKET WA	1			
2	61LD-00950BG				.TOOTH KIT(1-PIECE)	1			SEE ILLUST
2-1	61L3-0169BG				..TOOTH-CENTER	6			
2-2	61L3-0170BG				..TOOTH-LH	1			
2-3	61L3-0171BG				..TOOTH-RH	1			
2-4	S018-20075D				..BOLT-HEX	8			
2-5	S018-20065D				..BOLT-HEX	8			
2-6	S441-200006				..WASHER-HARDENED	16			
2-7	S206-20100B				..NUT-HEX	16			

BUCKET(3.1m^3, 2-PIECE TOOTH)

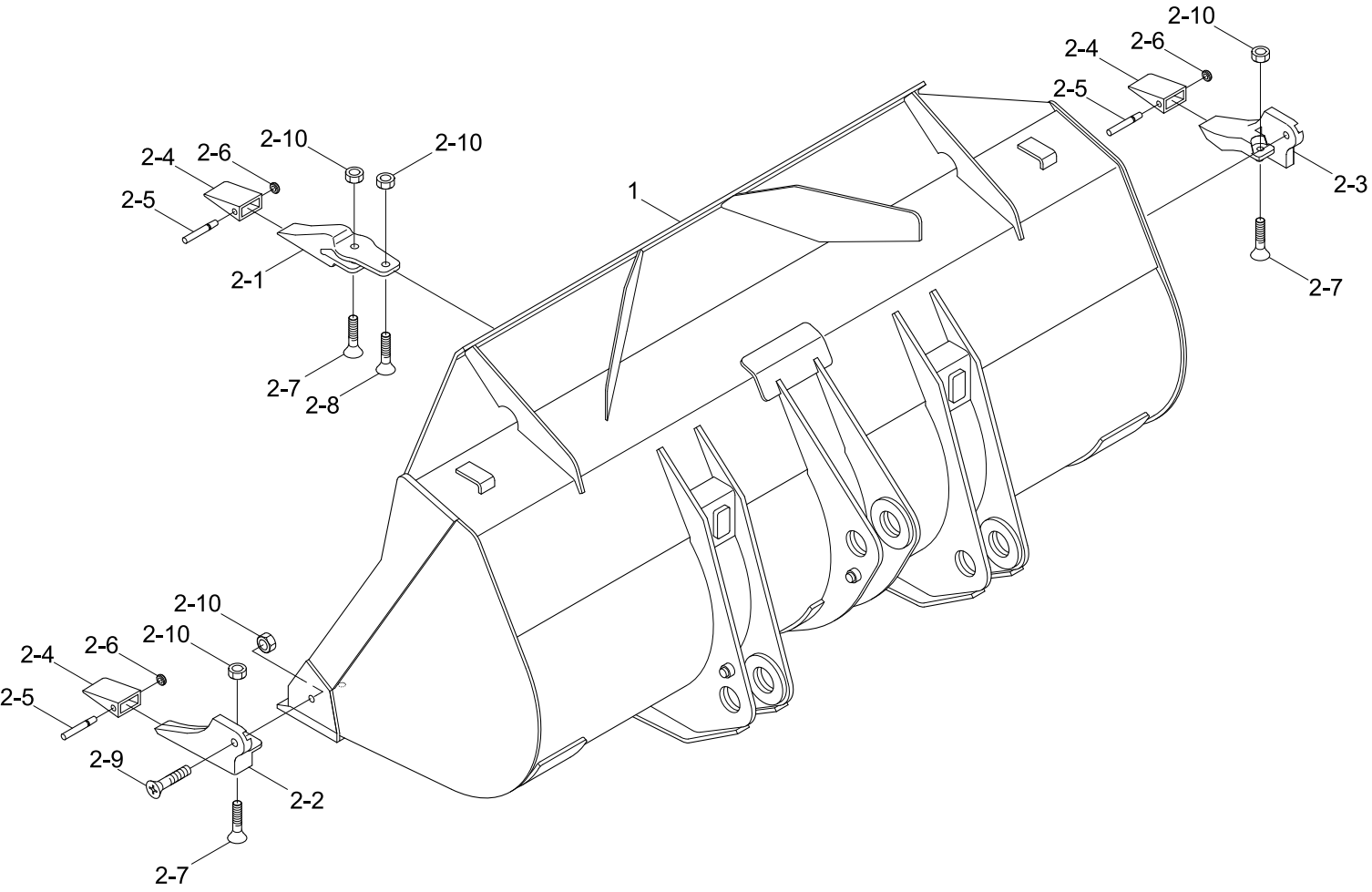

Description	Parts no	Included item
Tooth kit	61LD-00960BG	2-1~2-10

Item	Part_No	IS	Ord	T	Description	Qty	Serial_No	ITC	Remark
*	61LD-03700BG				BUCKET ASSY	1			
1	61LD-03010BG				.BUCKET WA	1			
2	61LD-00960BG				.TOOTH KIT(2-PIECE)	1			SEE ILLUST
2-1	64L3-01260BG				..ADAPTER-TOOTH,CENTER	6			
2-2	64L3-01270BG				..ADAPTER-TOOTH,LH	1			
2-3	64L3-01280BG				..ADAPTER-TOOTH,RH	1			
2-4	64L3-01290BG				..POINT-TOOTH	8			
2-5	64L3-01300				..PIN-TOOTH	8			
2-6	64L3-01310				..WASHER-LOCK	8			
2-7	64L3-01320				..BOLT-TOOTH	8			
2-8	64L3-01330				..BOLT-TOOTH	6			
2-9	64L3-01340				..BOLT-TOOTH	2			
2-10	S206-20100B				..NUT-HEX	16			

PALLET FORK

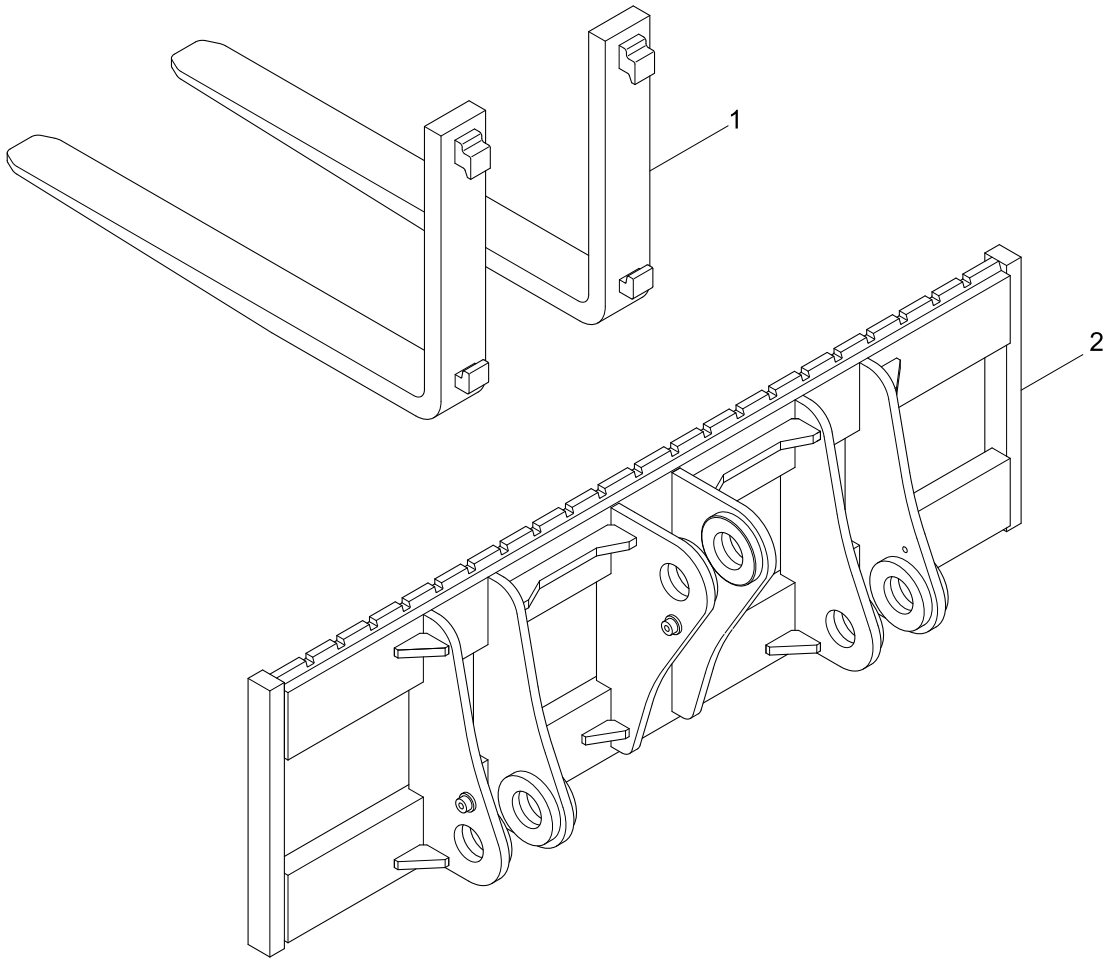

Item	Part_No	IS	Ord	T	Description	Qty	Serial_No	ITC	Remark
*	61LD-80000				PALLET FORK ASSY	1			
1	F14710111				.FORK ASSY(STD,1200)	2			
2	61LD-80010				.CARRIAGE WA	1			

QUICK COUPLER(VOLVO TYPE, #0248-)

SERIAL NO : -#0382

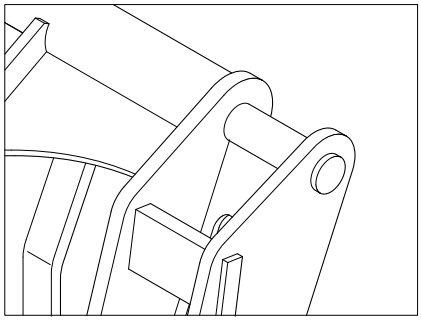

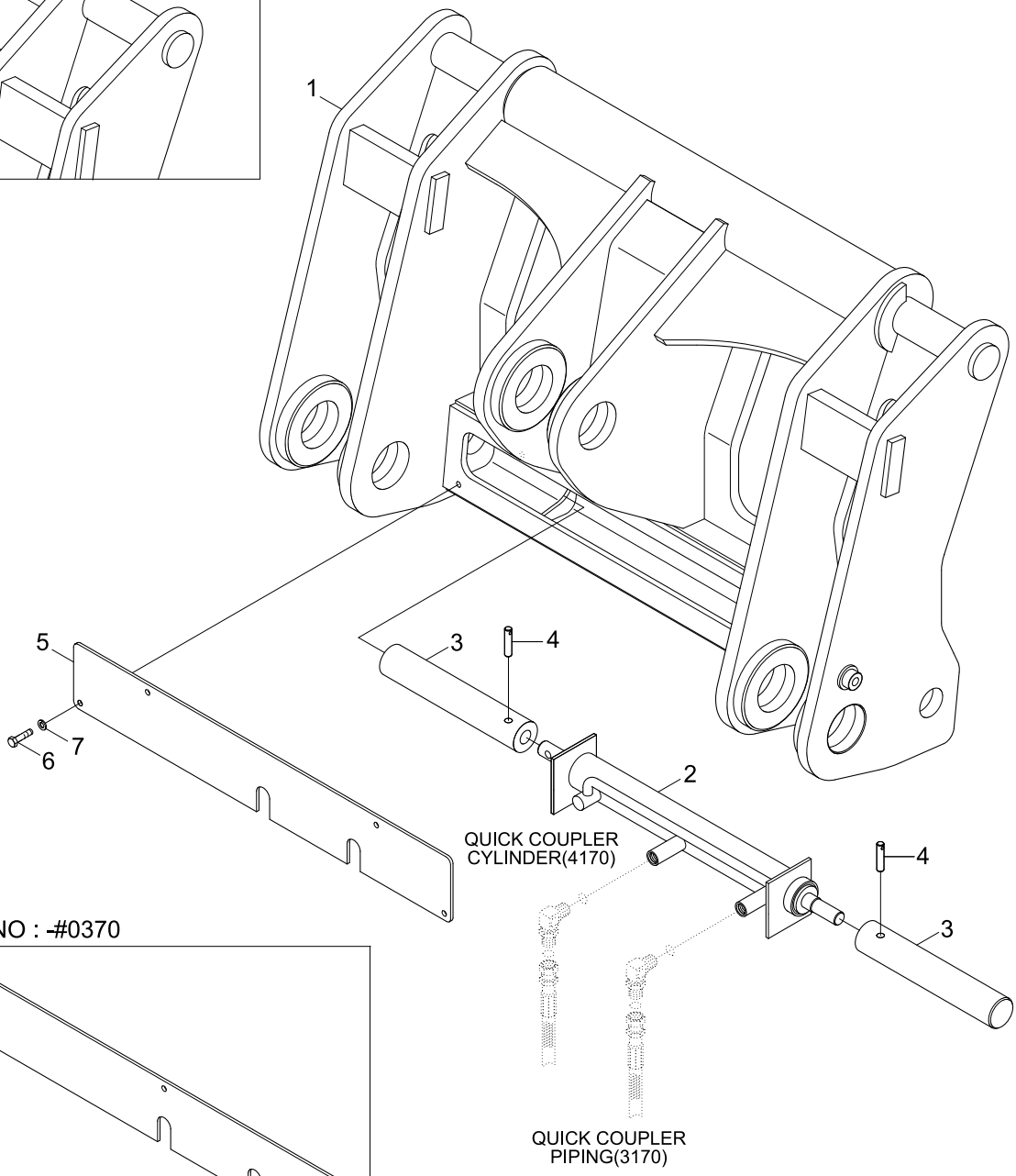

SERIAL NO : -#0370

Item	Part_No	IS	Ord	T	Description	Qty	Serial_No	ITC	Remark
*	61LD-91000				QUICK COUPLER ASSY	1	#0248 - #0370	-	VOLVO TYPE
	61LD-91001				QUICK COUPLER ASSY	1	#0371 - #0382	B	VOLVO TYPE
	61LD-91002				QUICK COUPLER ASSY	1	#0383 -	B	VOLVO TYPE
1	61LD-91010				.QUICK COUPLER WA	1	- #0370		
	61LD-91011				.QUICK COUPLER WA	1	#0371 - #0382	B	
	61LD-91012				.QUICK COUPLER WA	1	#0383 -	B	
2	@				.QUICK COUPLER CYLINDER	1			NOT
3	61LC-91240				.PIN-COUPLER	2	- #0346		
	61LC-91241				.PIN-COUPLER	2	#0347 -	B	
4	S471-910452				.PIN-SPRING	2			
5	61LC-91520				.COVER	1	- #0370		
	61LC-91521				.COVER	1	#0371 -	B	
6	S015-080256				.BOLT-HEX	5	- #0370		
					.BOLT-HEX	4	#0371 -	A	
7	S403-08200B				.WASHER-PLAIN	5	- #0370		
					.WASHER-PLAIN	4	#0371 -	A	

TOOLS

1

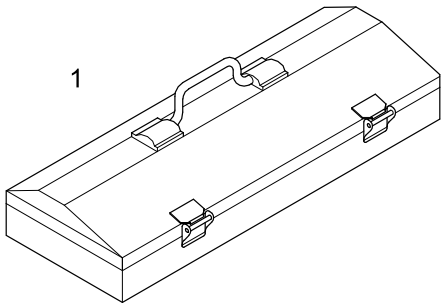

12,13,14,15,16,17,18,19

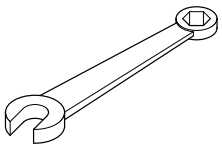

20,21

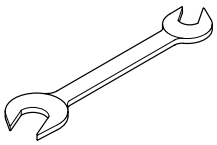

2, 3, 4 ,5 ,6, 7, 8, 9,10,11,42,43



28,29

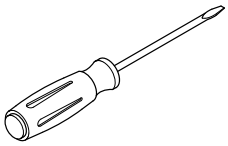

30

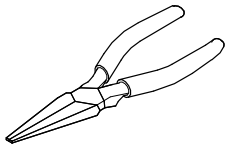

22,23,24,25,26,27

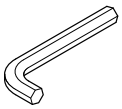

32

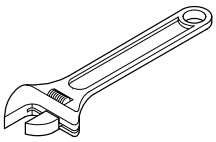

33

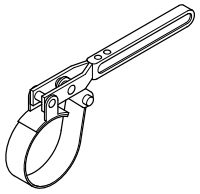

31

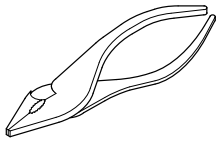

35

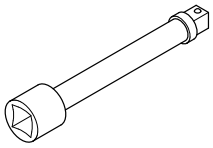

36,38

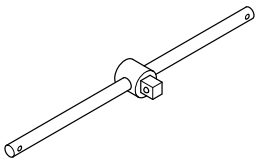

34

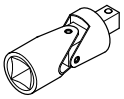

39

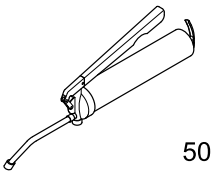

40

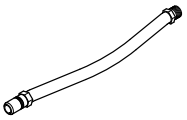

50

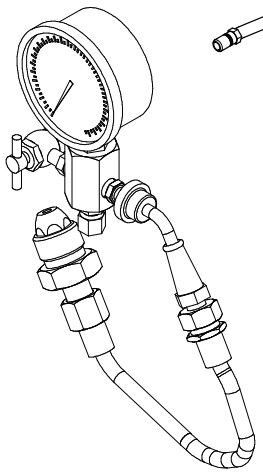

For ride control system
(Accumulator charging & gauging kit)

37

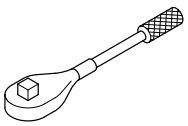

Item	Part_No	IS	Ord	T	Description	Qty	Serial_No	ITC	Remark
*	94L1-20002				TOOL KIT ASSY	1			
1	E191-2000	10			.TOOL BOX	1			
2	S953-127100				.SOCKET-1/2"X10MM	1			
3	S953-127130				.SOCKET-1/2"X13MM	1			
4	S953-127140				.SOCKET-1/2"X14MM	1			
5	S953-127170				.SOCKET-1/2"X17MM	1			
6	S953-127190				.SOCKET-1/2"X19MM	1			
7	S953-127220				.SOCKET-1/2"X22MM	1			
8	S953-127240				.SOCKET-1/2"X24MM	1			
9	S953-127300				.SOCKET-1/2"X30MM	1			
10	S953-190320				.SOCKET-3/4"X32MM	1			
11	S953-190360				.SOCKET-3/4"X36MM	1			
12	S962-100003				.WRENCH-COMBINATION	1			10
13	S962-120003				.WRENCH-COMBINATION	1			12
14	S962-130003				.WRENCH-COMBINATION	1			13
15	S962-170003				.WRENCH-COMBINATION	1			17
16	S962-190003				.WRENCH-COMBINATION	1			19
17	S962-220003				.WRENCH-COMBINATION	1			22
18	S962-240003				.WRENCH-COMBINATION	1			24
19	S962-270003				.WRENCH-COMBINATION	1			27
20	S962-303202				.WRENCH-DOUBLE,30X32	1			
21	S962-364102				.WRENCH-DOUBLE,36X41	1			
22	S967-040025				.L-WRENCH,4MM	1			
23	S967-050028				.L-WRENCH,5MM	1			
24	S967-060032				.L-WRENCH,6MM	1			
25	S967-080036				.L-WRENCH,8MM	1			

Item	Part_No	IS	Ord	T	Description	Qty	Serial_No	ITC	Remark
26	S967-100040				.L-WRENCH,10MM	1			
27	S967-120045				.L-WRENCH,12MM	1			
28	S959-081512				.DRIVER(-)	1			
29	S959-081522				.DRIVER(+)	1			
30	S961-150016				.PLIER-LONG NOSE	1			6"
31	S960-150020				.PLIER-SLIP JOINTS	1			150
32	S963-200024				.WRENCH-ADJ ANGLE,8"	1			
33	E191-2043				.WRENCH-FILTER,300MM	1			
34	S954-127080				.UNIVERSAL JOINT-1/2"	1			
35	S955-127075				.EXTENSION BAR-1/2"X5"	1			
36	E191-2048				.HANDLE-SLIDING,1/2"X10"	1			
37	S958-127250				.HANDLE-RATCHET 1/2"	1			
38	E191-2049				.HANDLE-SLIDING,3/4"X20"	1			
39	E191-2053				.GUN-GREASE,500CC	1			
40	E191-2054				.TIP-HOSE,RUBBER	1			
41	94L1-20012				.TOOL LIST	1			
42	S968-190240				.SOCKET-3/4"X1 1/2"	1			
43	S968-190300				.SOCKET-3/4'X1 7/8"	1			
50	31LM-90100				CHARGE & GAUGE KIT	1			RIDE CONTROL

DECALS(ENGLISH)

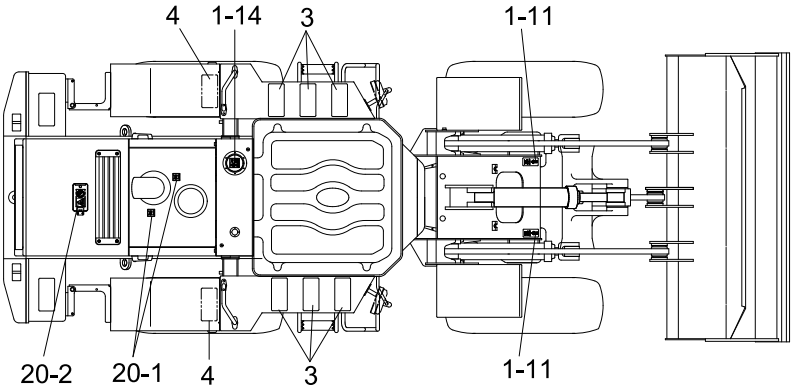

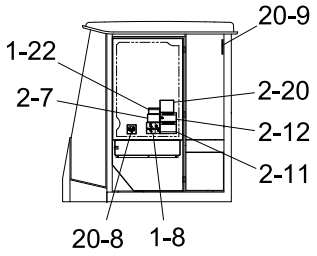

CABIN INSIDE - RH

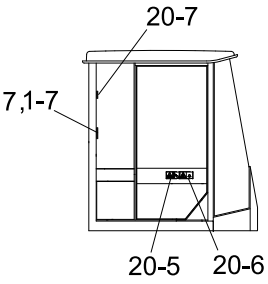

CABIN INSIDE - LH

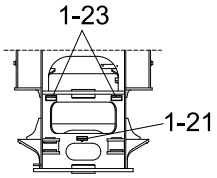

VIEW A-A

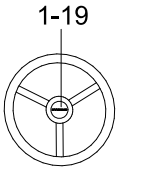

STEERING WHEEL

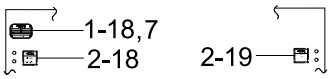

VIEW C VIEW B

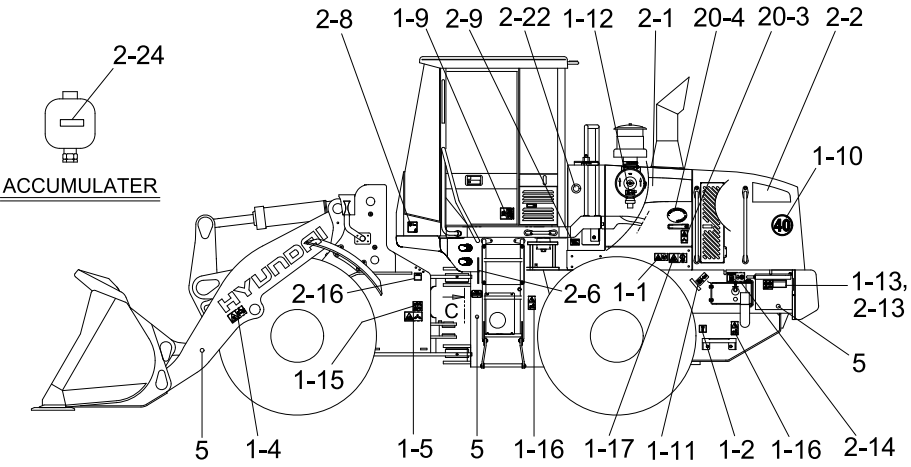

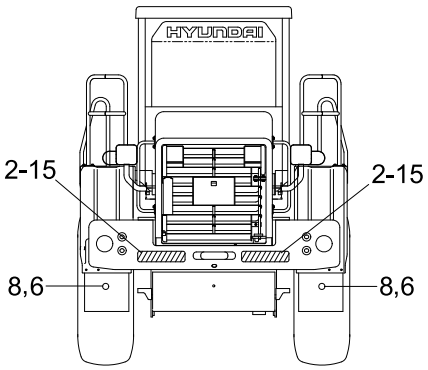

Item	Part_No	IS	Ord	T	Description	Qty	Serial_No	ITC	Remark
1	92LB-00012				DECAL KIT(A)	1	- #0339		
	92LB-00013				DECAL KIT(A)	1	#0340 -	B	
1-1	91LB-01110				.DECAL-START MOTOR	1			
1-2	91LB-01190				.DECAL-DRAIN/REMOTE	1			HYDRAULIC OIL
1-4	91LB-01210				.DECAL-BUCKET STOPPER	1			
1-5	91LB-01260				.DECAL-STEER WARN/LH	1			
1-6	91LB-01270				.DECAL-STEER WARN/RH	1			
1-7	91LB-01280				.ROPS PLATE	1			
1-8	91LB-01300				.CONTROL IDEOGRAM	1			1-LEVER RCV
	91LB-01310				.CONTROL IDEOGRAM	1			2-LEVER RCV
1-9	91LB-01320				.DECAL-AIRCON FILTER	1			
1-10	91L7-00360				.DECAL-SPEED LIMIT	2			EUROPE ONLY
1-11	94L3-00420				.SLINGING IDEOGRAM	4	- #0339		
	92LB-14000				.DECAL-LIFT & TIE	4	#0340 -	B	
1-12	91N6-01102				.AIR CLEANER FILTER	1			
1-13	91N6-02120				.DECAL-BATT ACCIDENT	2			
1-14	91N6-03111				.HYD OIL LUBR	1			
1-15	91N6-03130				.DECAL-H/PRESSURE HOSE	2			
1-16	91N6-03140				.FALLING	4			
1-17	91N6-07121				.SHEARING	2			
1-18	91E1-14110				.NAME PLATE	1			
	91E1-14130				.NAME PLATE	1			EUROPE ONLY
1-19	91LB-08110				.DECAL-STEERING WHEEL	1			
1-21	91LH-01220				.DECAL-GREASE CENTER	1			
1-22	91N6-07390				.TURBOCHARGER	1			
R1-23	91LB-01360				.DECAL-RIDE CONTROL	2			RIDE CONTROL

Item	Part_No	IS	Ord	T	Description	Qty	Serial_No	ITC	Remark
2	92LD-01101				DECAL KIT(B)	1	- #0072		HL757-7A
	92LD-01102				DECAL KIT(B)	1	#0073 -	B	HL757-7A
	92LD-01201				DECAL KIT(B)	1	- #0072		HL757XTD-7A
	92LD-01202				DECAL KIT(B)	1	#0073 - #0339	B	HL757XTD-7A
	92LD-01203				DECAL KIT(B)	1	#0340 -	D	HL757XTD-7A
2-1	92LD-15112				.MODEL NAME-LH/FR	1			HL757-7A
	92LD-15132				.MODEL NAME-LH/FR	1			HL757XTD-7A
2-2	92LD-15170				.MODEL NAME-LH/RR	1			
2-3	92LD-15122				.MODEL NAME-RH/FR	1			HL757-7A
	92LD-15142				.MODEL NAME-RH/FR	1			HL757XTD-7A
2-4	92LD-15180				.MODEL NAME-RH/RR	1			
2-5	91N6-23100				.DECAL-TRADE MARK	2			
2-6	92LD-10710				.DECAL-S/INSTRUCTION	1	- #0339		
	92LD-10712				.DECAL-S/INSTRUCTION	1	#0340 -	D	
2-7	92LD-10510				.DECAL-SPEC SHEET	1			HL757-7A
	92LD-10520				.DECAL-SPEC SHEET	1			HL757XTD-7A
2-8	91N6-22150				.NOISE LEVEL-LWA	1			EUROPE ONLY
2-9	91LB-01130				.DECAL-HYD OIL LEVEL	1			
2-11	91LB-01250				.DECAL-ROPS CAB	1			
2-12	91LB-01290				.DECAL-REF MANUAL	1			
2-13	91LB-01350				.ECU CONNECTOR	2			
2-14	91N6-01131				.FUELING	1			
2-15	91LB-01410				.DECAL-K/CLEAR/REFLECT	2			
2-16	91LB-02110				.DECAL-GREASE(A)	1			
2-17	91LB-02120				.DECAL-GREASE(B)	1			
2-18	91LB-01170				.DECAL-GREASE(C)	1			

Item	Part_No	IS	Ord	T	Description	Qty	Serial_No	ITC	Remark
2-19	91LB-01180				.DECAL-GREASE(D)	1			
2-20	91LC-11180				.DECAL-START PROCEDURE	1			
2-21	91LB-01370				.DECAL-DRAIN/ENGINE	1			ENGINE OIL
2-22	92LD-15210				.DECAL-LH/HYD TANK	1			
2-23	92LD-15220				.DECAL-RH/HYD TANK	1			
2-24	91N6-03200				.DECAL-ACCUMULATER	4	#0073 -	-	
R2-24	91N6-03200				.DECAL-ACCUMULATER	5	#0073 -	-	RIDE CONTROL
3	91E1-26300				STEP TREAD	8	- #0300		
					STEP TREAD	10	#0301 -	A	A/S ITEM
4	91E1-26300				STEP TREAD	2	- #0300	-	FULL MUD GUARD
5	21EK-10150				REFLECTOR-SIDE	6			
6	51EK-52990				REFLECTOR-REAR	2			
7	E171-1246				RIVET	8			
8	S403-05200B				WASHER-PLAIN	2			
20	92LB-00080				DECAL KIT-A/S	1			
20-1	91N6-01111				.TURBO COVER	2			
20-2	91N6-01121				.DECAL-RADIATOR CAP	1			
20-3	91N6-07112				.STAY FIX	2			
20-4	91E1-27110				.LOW EMISSION ENG	1			
20-5	91LB-01230				.DECAL-MAX H/REACH	1			
20-6	91LB-01240				.DECAL-ROLL OVER	1			
20-7	91LB-01340				.DECAL-HAMMER	1			
20-8	91N6-07261				.ALTERNATE EXIT	1			
20-9	91N6-07290				.DECAL-FIRE	1			

DECALS(KOREAN, #0128-)

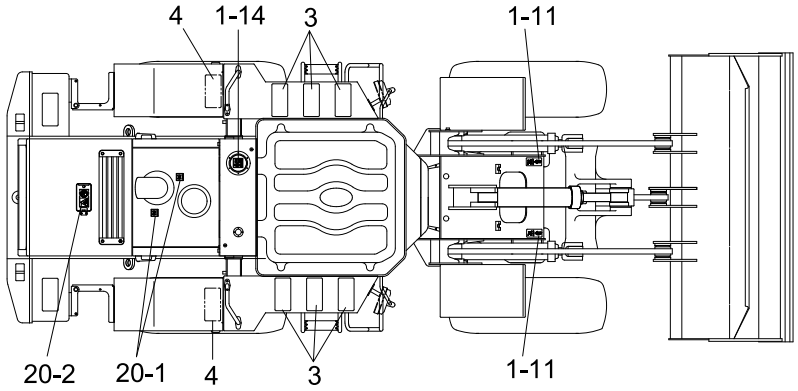

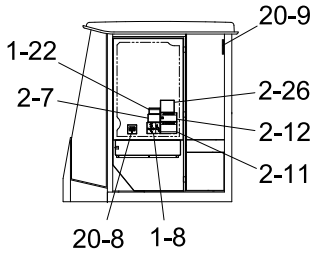

CABIN INSIDE - RH

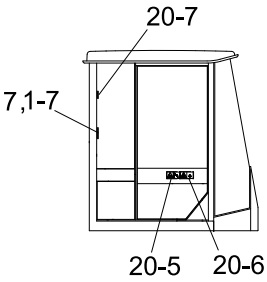

CABIN INSIDE - LH

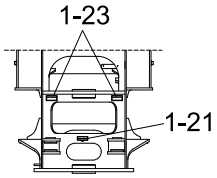

VIEW A-A

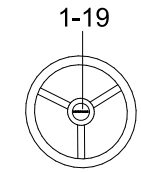

STEERING WHEEL

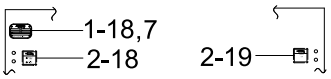

VIEW C VIEW B

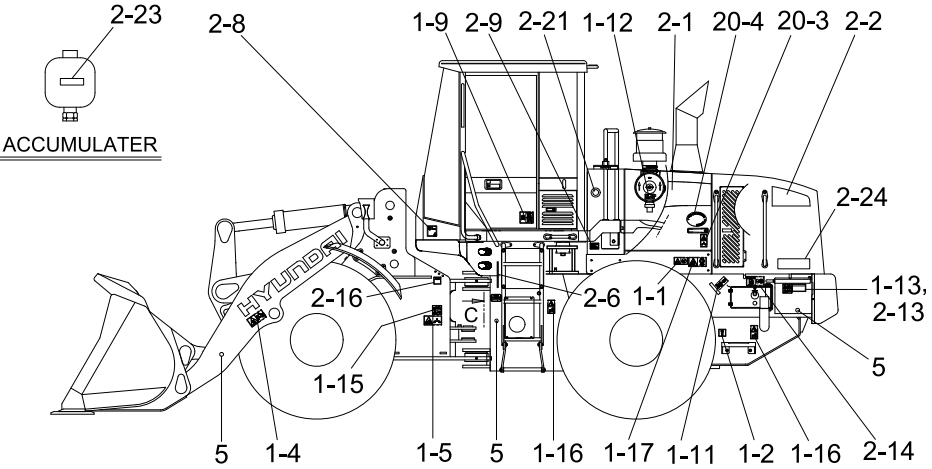

ACCUMULATER

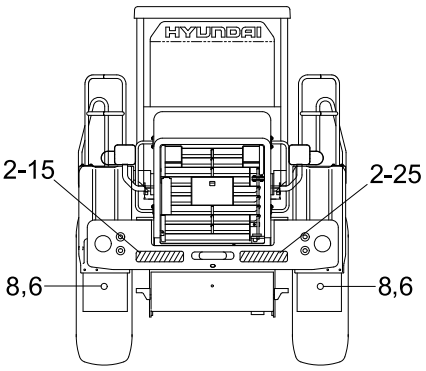

Item	Part_No	IS	Ord	T	Description	Qty	Serial_No	ITC	Remark
1	92LB-00020				DECAL KIT(A)	1	#0128 - #0339	-	
	92LB-00021				DECAL KIT(A)	1	#0340 -	B	
1-1	91LB-01110				.DECAL-START MOTOR	1			
1-2	91LB-01190				.DECAL-DRAIN/REMOTE	1			HYDRAULIC OIL
1-4	91LB-01210				.DECAL-BUCKET STOPPER	2			
1-5	91LB-01260				.DECAL-STEER WARN/LH	1			
1-6	91LB-01270				.DECAL-STEER WARN/RH	1			
1-7	91LB-01280				.ROPS PLATE	1			
1-8	91LB-01300				.CONTROL IDEOGRAM	1			1-LEVER RCV
	91LB-01310				.CONTROL IDEOGRAM	1			2-LEVER RCV
1-9	91LB-01320				.DECAL-AIRCON FILTER	1			
1-10	91E1-18080				.DECAL-PUBLIC PERMIT	2			
1-11	94L3-00420				.SLINGING IDEOGRAM	4	- #0339		
	92LB-14000				.DECAL-LIFT & TIE	4	#0340 -	B	
1-12	91N6-01102				.AIR CLEANER FILTER	1			
1-13	91N6-02120				.DECAL-BATT ACCIDENT	2			
1-14	91N6-03111				.HYD OIL LUBR	1			
1-15	91N6-03130				.DECAL-H/PRESSURE HOSE	2			
1-16	91N6-03140				.FALLING	4			
1-17	91N6-07121				.SHEARING	2			
1-18	91E1-14110				.NAME PLATE	1			
1-19	91LB-08110				.DECAL-STEERING WHEEL	1			
1-21	91LH-01220				.DECAL-GREASE CENTER	1			
1-22	91N8-07390				.DECAL-TURBOCHARGER	1			
R1-23	91LB-01360				.DECAL-RIDE CONTROL	2			RIDE CONTROL
2	92LD-06100				DECAL KIT(B)	1	- #0339		

Item	Part_No	IS	Ord	T	Description	Qty	Serial_No	ITC	Remark
2	92LD-06101				DECAL KIT(B)	1	#0340 -	D	
2-1	92LD-15112				.MODEL NAME-LH/FR	1			
2-2	92LD-15170				.MODEL NAME-LH/RR	1			
2-3	92LD-15122				.MODEL NAME-RH/FR	1			
2-4	92LD-15180				.MODEL NAME-RH/RR	1			
2-5	91N6-23100				.DECAL-TRADE MARK	2			
2-6	92LD-60710				.DECAL-S/INSTRUCTION	1	- #0339		
	92LD-60711				.DECAL-S/INSTRUCTION	1	#0340 -	D	
2-7	92LD-60510				.DECAL-SPECIFICATIONS	1			
2-8	91LD-67010				.DECAL NOISE LEVEL-LWA	1			
2-9	91LB-06130				.DECAL-HYD OIL LEVEL	1			
2-11	91LB-06250				.DECAL-ROPS CABIN	1			
2-12	91LB-06290				.DECAL-REFER MANUAL	1			
2-13	91LB-06350				.DECAL-MCU CONNECT	2			
2-14	91N8-01130				.DECAL-FUELING	1			
2-15	91LB-06410				.DECAL-KEEPCLEAR	1			
2-16	91LB-06190				.GREASE(A)	1			
2-17	91LB-06200				.GREASE(B)	1			
2-18	91LB-06170				.GREASE(C)	1			
2-19	91LB-06180				.GREASE(D)	1			
2-20	91LB-01370				.DECAL-DRAIN/ENGINE	1			ENGINE OIL
2-21	91LD-15210				.MODEL NAME-LH/FR	1			
2-22	92LD-15220				.DECAL-RH/HYD TANK	1			
R2-23	91N6-03200				.DECAL-ACCUMULATER	5			RIDE CONTROL
2-23	91N6-03200				.DECAL-ACCUMULATER	4			
2-24	92LD-16150				.DECAL-K/OVERALL WIDTH	2			

Item	Part_No	IS	Ord	T	Description	Qty	Serial_No	ITC	Remark
2-25	91LB-06420				.DECAL-KEEPCLEAR	1			
2-26	91LC-16170				.DECAL-START PROCEDURE	1			
3	91E1-26300				STEP TREAD	8	- #0300		
					STEP TREAD	10	#0301 -	A	A/S ITEM
4	91E1-26300				STEP TREAD	2	- #0300	-	FULL MUD GUARD
5	21EK-10150				REFLECTOR-SIDE	6			
6	51EK-52990				REFLECTOR-REAR	2			
7	E171-1246				RIVET	8			
8	S403-05200B				WASHER-PLAIN	2			
18	91N6-06410				NAME PLATE-BUCKET	1			
19	91N6-06420				METAL TACK	4			
20	92LB-00080				DECAL KIT-A/S	1			
20-1	91N6-01111				.TURBO COVER	2			
20-2	91N6-01121				.DECAL-RADIATOR CAP	1			
20-3	91N6-07112				.STAY FIX	2			
20-4	91E1-27110				.LOW EMISSION ENG	1			
20-5	91LB-01230				.DECAL-MAX H/REACH	1			
20-6	91LB-01240				.DECAL-ROLL OVER	1			
20-7	91LB-01340				.DECAL-HAMMER	1			
20-8	91N6-07261				.ALTERNATE EXIT	1			
20-9	91N6-07290				.DECAL-FIRE	1			

MANUALS

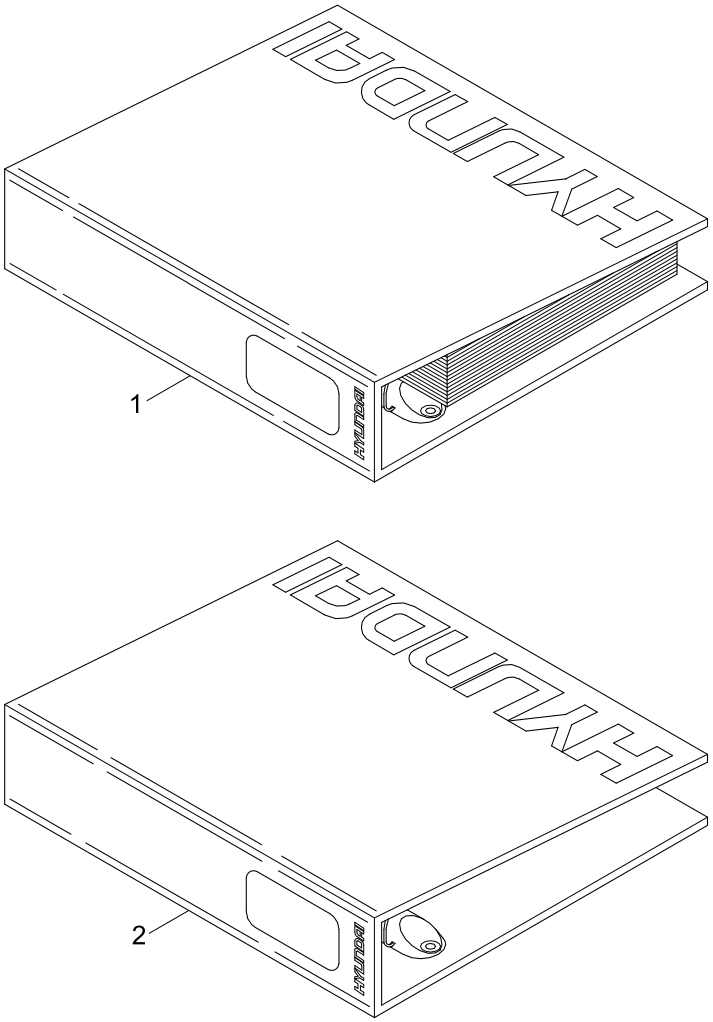

Item	Part_No	IS	Ord	T	Description	Qty	Serial_No	ITC	Remark
1	91LD-31000				PARTS MANUAL	1			KOREAN
	91LD-31010				OPERATOR'S MANUAL	1			KOREAN
	91LD-31020				SERVICE MANUAL	1			KOREAN
	91LD-31030				PARTS MANUAL	1			ENGLISH
	91LD-31040				OPERATOR'S MANUAL	1			ENGLISH
	91LD-31050				SERVICE MANUAL	1			ENGLISH
2	91LD-31940				BINDER & STICKER	1			P/M, O/M
	91LD-31950				BINDER & STICKER	1			S/M
3	HLCD-30000				CD-PARTS MANUAL	1			LOADER/CRANE
	HACD-30000				CD-PARTS MANUAL	1			ALL MODEL
	HLDV-30000				DVD-PARTS MANUAL	1			LOADER/CRANE
	HADV-30000				DVD-PARTS MANUAL	1			ALL MODEL

AIR HEATER STARTING AID

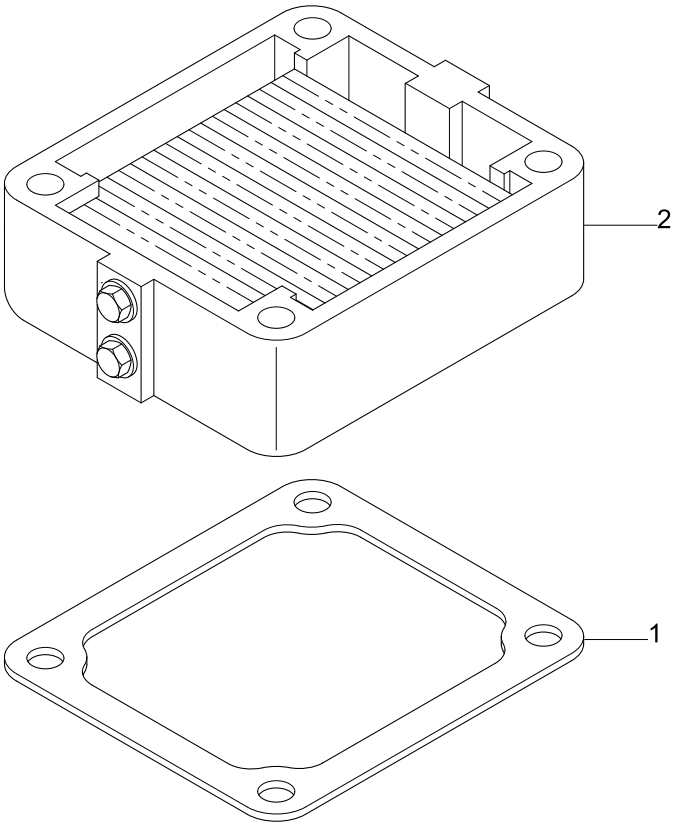

Item	Part_No	IS	Ord	T	Description	Qty	Serial_No	ITC	Remark
1	3969988				GASKET-CONNECTION	1			AH9147-01
2	3970001				HEATER-AIR INTAKE	1			

CYLINDER BLOCK

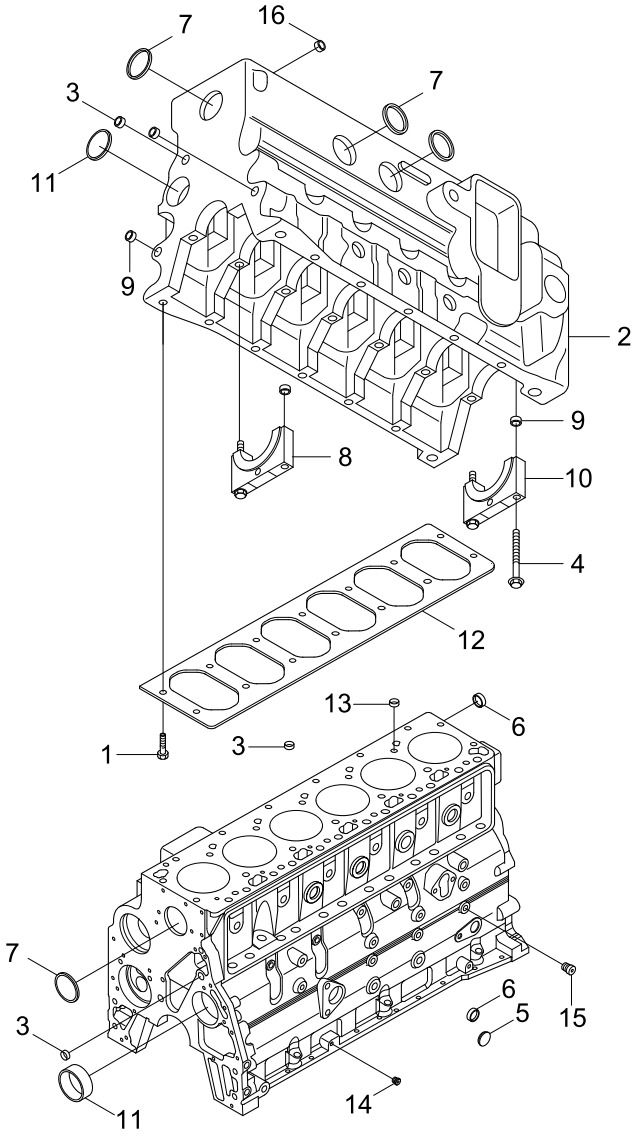

Item	Part_No	IS	Ord	T	Description	Qty	Serial_No	ITC	Remark
1	3902460				SCREW-HEX F/HEAD CAP	14			BB9206
*N	4929972				CYLINDER BLOCK	1			NOT
N2	3999925				.CYLINDER BLOCK	1			NOT
3	3900956				.PLUG-EXPANSION	3			
4	3927948				.SCREW	14			
5	3905401				.PLUG-EXPANSION	2			
6	3007635				.PLUG-EXPANSION	3			
7	3975796				.PLUG-EXPANSION	4			
*	3974159				.CAP-MAIN BEARING	1			
N8	3974158				..CAP-MAIN BEARING	1			NOT
9	3900068				..DOWEL-RING	2			
*	3974157				.CAP-MAIN BEARING	6			
9	3900068				..DOWEL-RING	2			
N10	3974156				..CAP-MAIN BEARING	1			NOT
11	3940059				.BUSHING	2			
12	3965764				PLATE-CYL BLOCK	1			
13	3902343				DOWEL-RING	2			
14	3977851				PLUG-THREADED	1			
15	3977853				PLUG-THREADED	1			
16	3977855				PLUG-THREADED	2			
N	@				NOT INDIVIDUALLY SUPPLIED	AR			NOT

CRANKSHAFT & BEARINGS

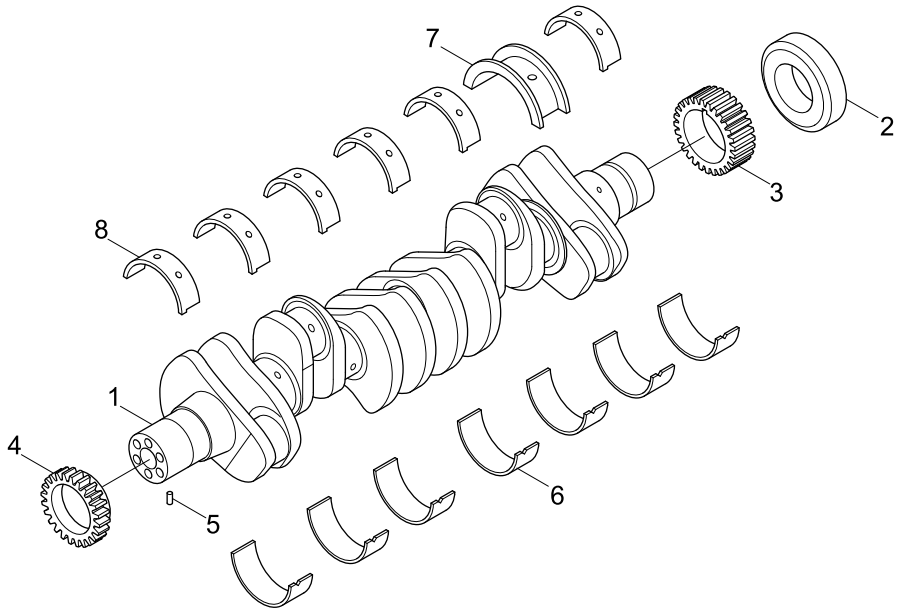

Item	Part_No	IS	Ord	T	Description	Qty	Serial_No	ITC	Remark
*	3974635				CRANKSHAFT-ENGINE	1			BB9206
	3974538				.CRANKSHAFT-ENGINE	1			
1	3968164				..CRANKSHAFT-ENGINE	1			
N2	2831066				..COLLAR-SHAFT	1			NOT
3	3955150				..GEAR-CRANKSHAFT	1			
4	3955151				..GEAR-CRANKSHAFT	1			
5	3904483				.DOWEL-PIN	1			
*	3357480				MAIN BEARING SET	1			
6	3929021				.BEARING-MAIN	7			
7	3927772				.BEARING-C/THRUST	1			
8	3929016				.BEARING-MAIN	6			

VALVE TAPPET

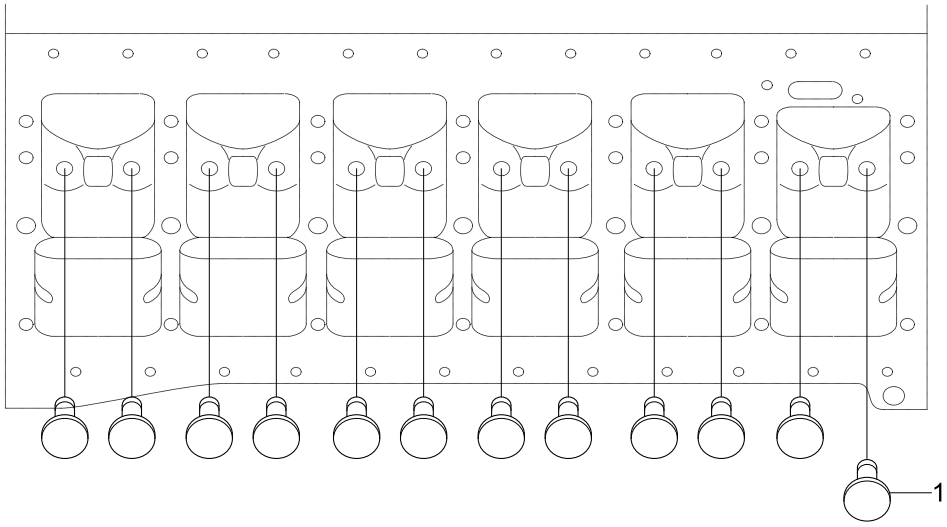

Item	Part_No	IS	Ord	T	Description	Qty	Serial_No	ITC	Remark
1	3947759				TAPPET-VALVE	12			BB9206

REAR GEAR HOUSING

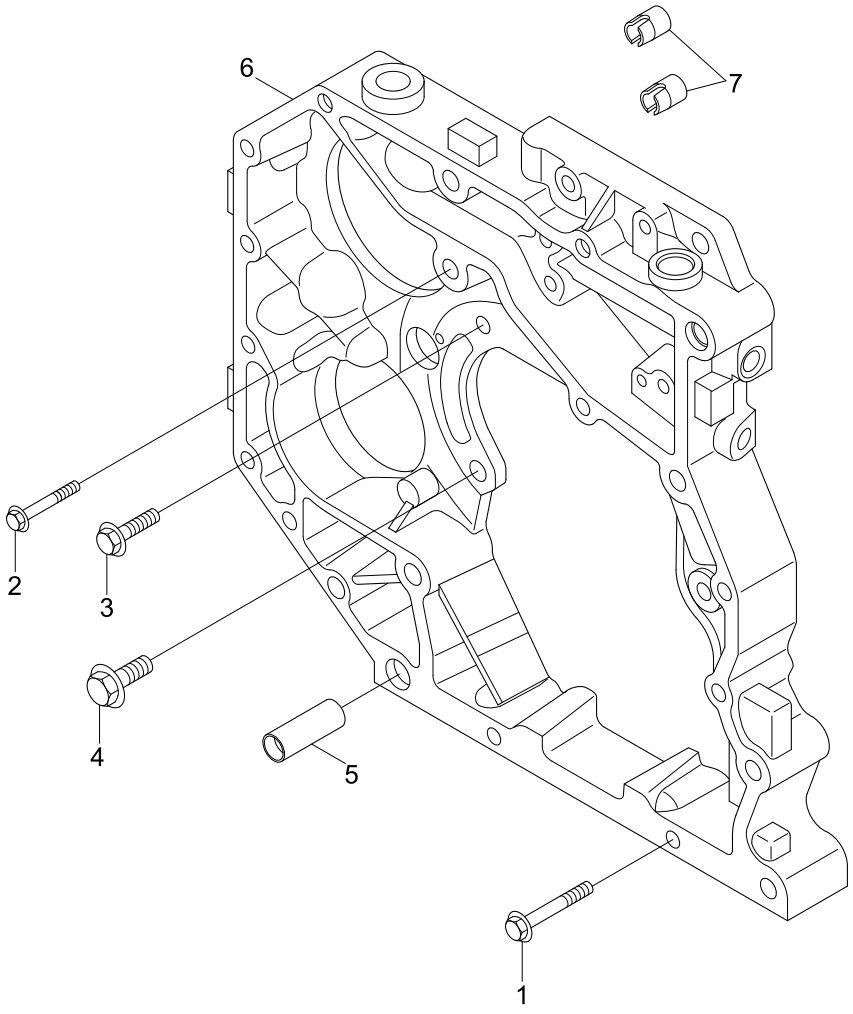

Item	Part_No	IS	Ord	T	Description	Qty	Serial_No	ITC	Remark
1	3918153				SCREW-HEX F/HEAD CAP	3			BB9132-01
2	3901445				SCREW-HEX F/HEAD CAP	4			
3	3903112				SCREW-HEX F/HEAD CAP	2			
4	3910495				SCREW-HEX F/HEAD CAP	1			
*	3971016				HOUSING-GEAR	1			
5	3954616				.DOWEL-RING	2			
6	3971013				.HOUSING-GEAR	1			
7	4929128				.INSERT-THREADED	2			

CRANKCASE BREATHER

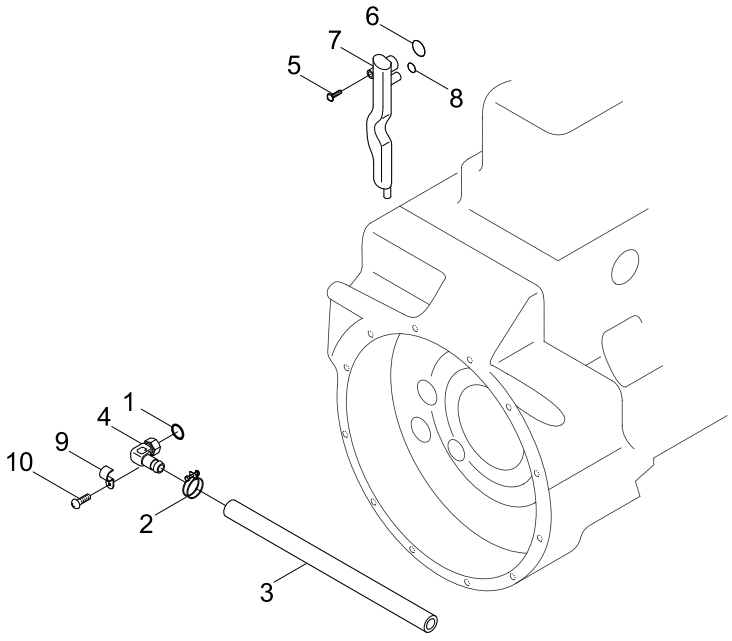

Item	Part_No	IS	Ord	T	Description	Qty	Serial_No	ITC	Remark
1	145530				SEAL/O-RING	1			BR9191-01
2	3917995				CLAMP-SPRING HOSE	1			
3	3918614				HOSE-PLAIN	1			
4	3966164				BREATHER-CRANKCASE	1			
5	4936493				SCREW-ROUND HEAD CAP	2			
*	3971371				TUBE-BREATHER	1			
6	3958414				.SEAL/O-RING	2			
N7	3968786				.TUBE-BREATHER	1			NOT
8	3052587				.SEAL/O-RING	1			
9	4899498				PLATE-CLAMPING	1			
10	4899706				SCREW-ROUND HEAD CAP	1			
N	@				NOT INDIVIDUALLY SUPPLIED	AR			NOT

COOLANT HEATER STARTING AID

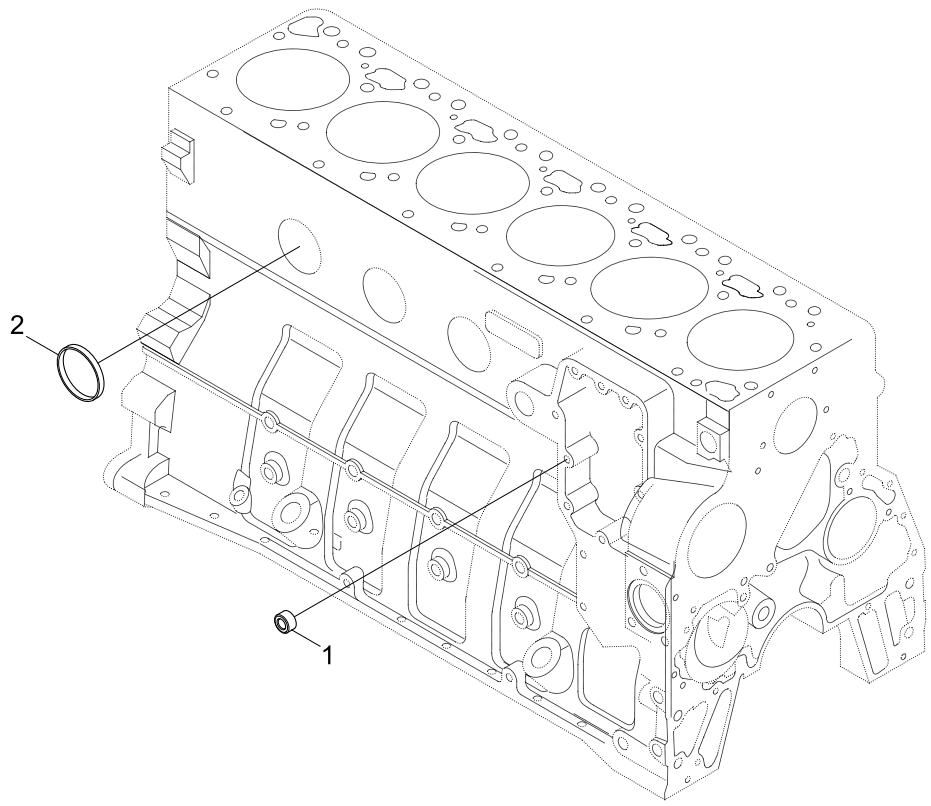

Item	Part_No	IS	Ord	T	Description	Qty	Serial_No	ITC	Remark
1	3008469				PLUG-PIPE	1			CH9070-03
2	3922072				PLUG-EXPANSION	1			

VIBRATION DAMPER

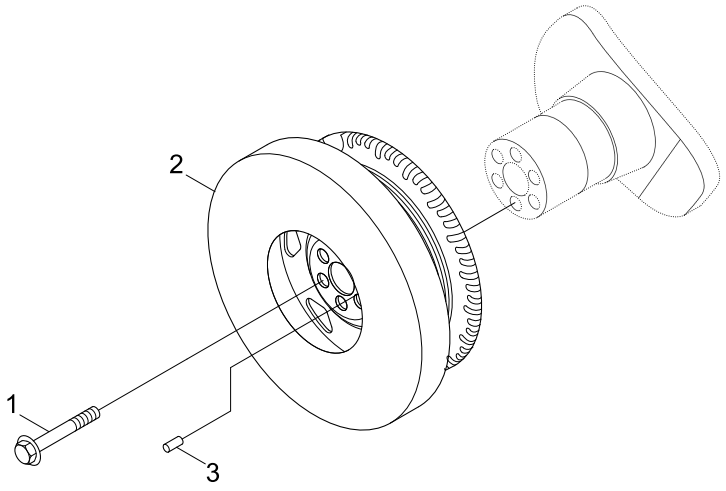

Item	Part_No	IS	Ord	T	Description	Qty	Serial_No	ITC	Remark
1	3968075				SCREW-CAPTIVE W/CAP	6			DA9168-01
2	3977785				DAMPER-VIBRATION	1			
3	3955030				DOWEL-PIN	1			

DRAIN LOCATION

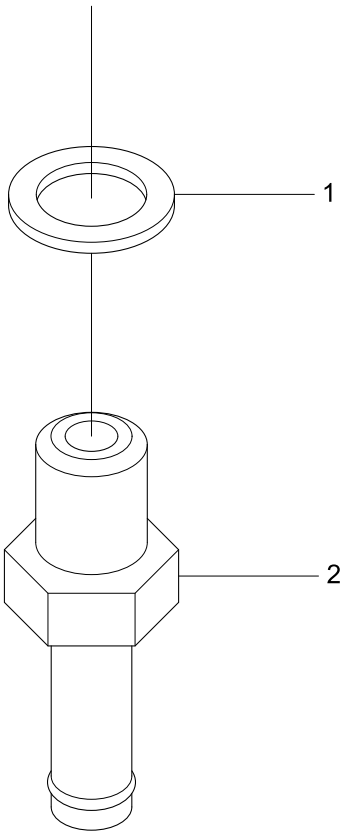

Item	Part_No	IS	Ord	T	Description	Qty	Serial_No	ITC	Remark
1	3963983				WASHER-SEALING	1			DL9208
2	3974812				COUPLING-PLAIN HOSE	1			

REAR GEAR TRAIN

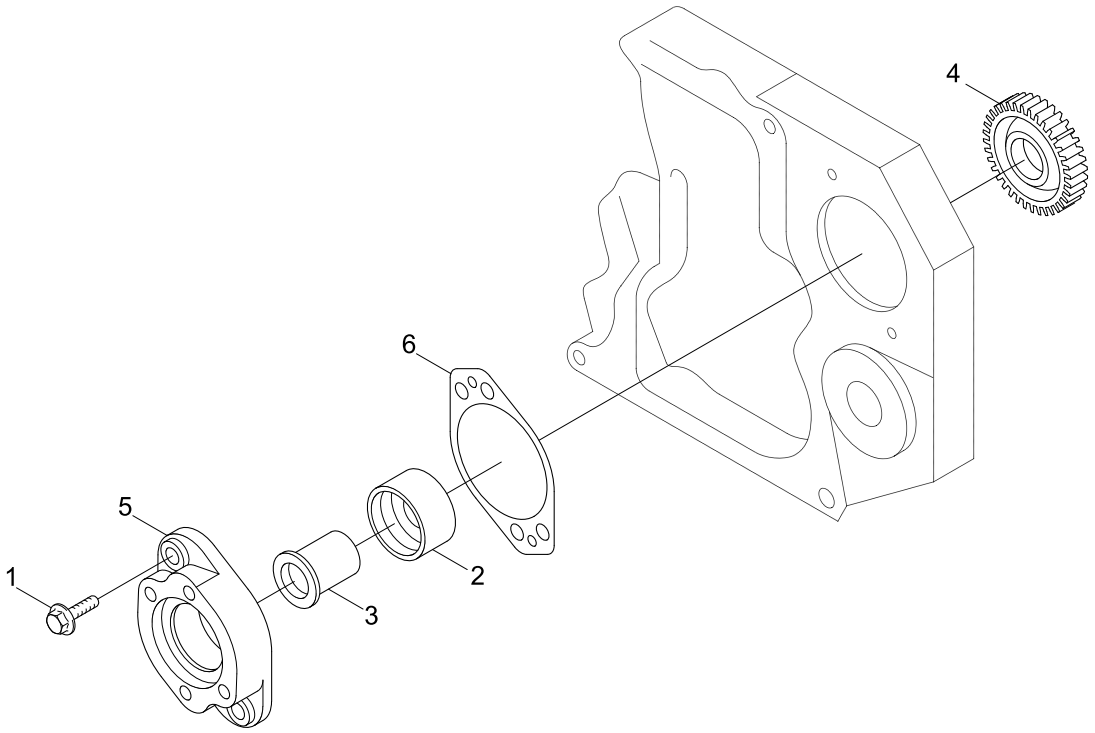

Item	Part_No	IS	Ord	T	Description	Qty	Serial_No	ITC	Remark
1	3900637				SCREW-HEX F/HEAD CAP	2			DR9028
*	3974850				ADAPTER-HYD PUMP	1			
2	3935644				.BEARING-ROLLER	1			
3	3935646				.SHAFT-ACCESSORY DRIVE	1			
4	3974847				.GEAR-ACCESSORY DRIVE	1			
N5	3975311				.ADAPTER-HYD PUMP	1			NOT
6	4896897				GASKET-ACC DRIVE COV	1			
N	@				NOT INDIVIDUALLY SUPPLIED	AR			NOT

THERMOSTAT

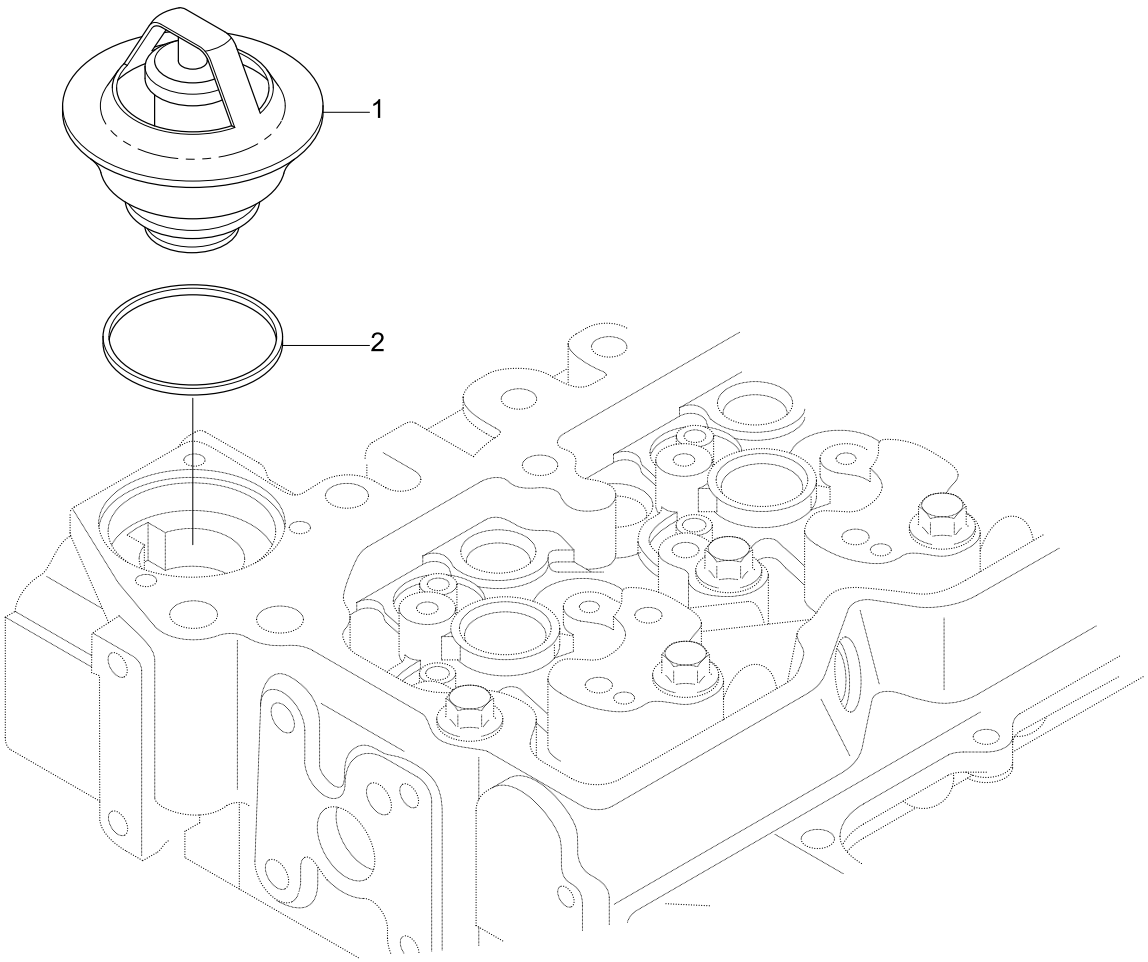

Item	Part_No	IS	Ord	T	Description	Qty	Serial_No	ITC	Remark
*	4929642				THERMOSTAT	1			EC9045-01
N1	4929641				.THERMOSTAT	1			NOT
2	3954829				.SEAL-THERMOSTAT	1			
N	@				NOT INDIVIDUALLY SUPPLIED	AR			NOT

ALTERNATOR

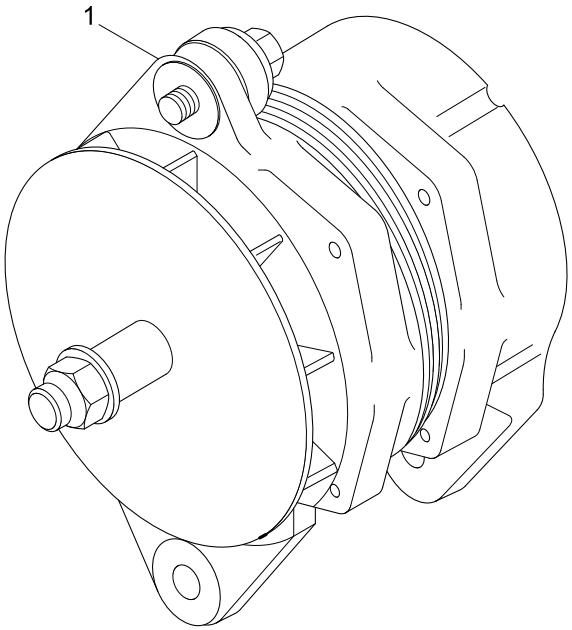

Item	Part_No	IS	Ord	T	Description	Qty	Serial_No	ITC	Remark
1	3972735				ALTERNATOR	1			EE9247

ALTERNATOR MOUNTING

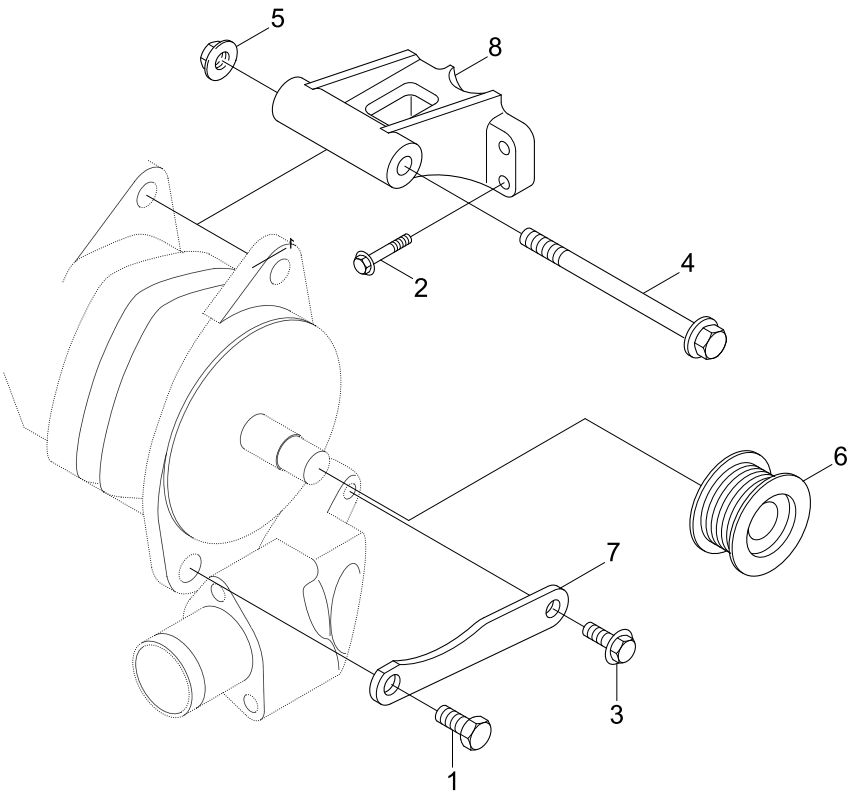

Item	Part_No	IS	Ord	T	Description	Qty	Serial_No	ITC	Remark
1	3052061				SCREW-HEX H/CAP	1			EH9469-01
2	3900632				SCREW-HEX F/HEAD CAP	4			
3	3902460				SCREW-HEX F/HEAD CAP	1			
4	3903105				SCREW-HEX F/HEAD CAP	1			
5	3903210				NUT-HEX FLANGE	1			
6	3925852				PULLEY-ALTERNATOR	1			
7	3942821				BRACE-ALTERNATOR	1			
8	3955179				SUPPORT-ALTERNATOR	1			

FAN DRIVE AND MOUNTING

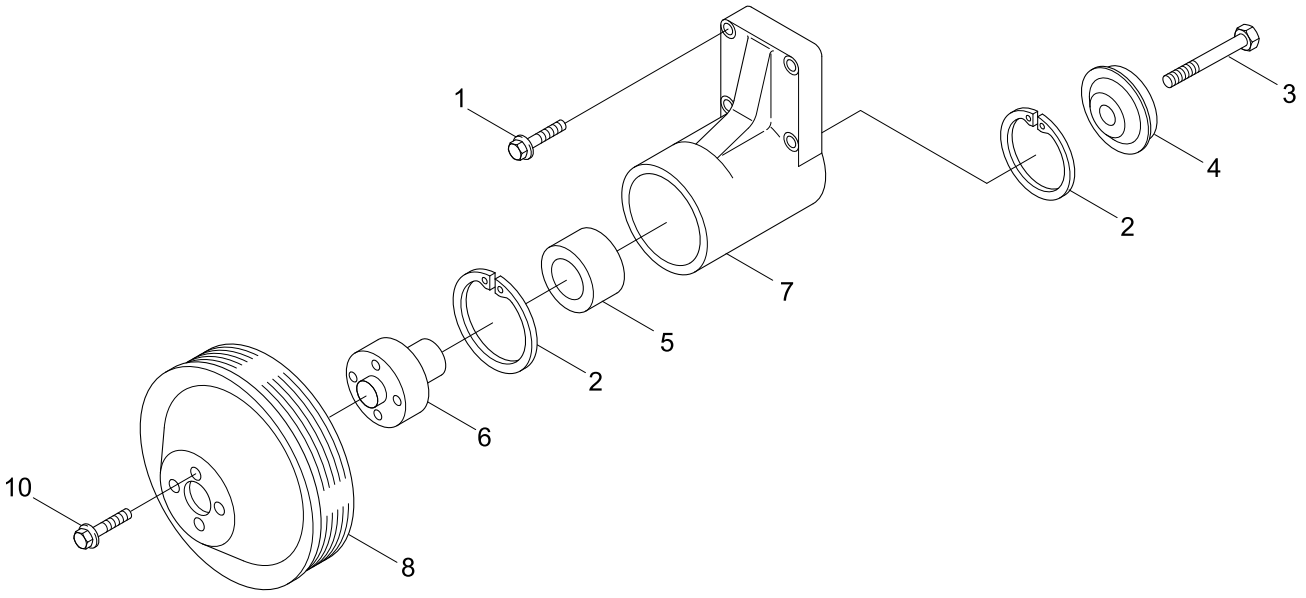

Item	Part_No	IS	Ord	T	Description	Qty	Serial_No	ITC	Remark
1	3928873				SCREW-HEX HD CAP	4			FA9345
*	3913433				SUPPORT-FAN	1			
2	3035960				.RING-RETAINING	2			
3	3907769				.SCREW	1			
4	3923044				.RETAINER-FAN HUB	1			
5	3910739				.BEARING-BALL	1			
6	3911924				.HUB-FAN	1			
N7	3913434				.SUPPORT-FAN	1			NOT
8	3914461				PULLEY-FAN	1			
10	3903990				SCREW-HEX F/HEAD CAP	4			FA9739-01
N	@				NOT INDIVIDUALLY SUPPLIED	AR			NOT

FUEL FILTER LOACTION

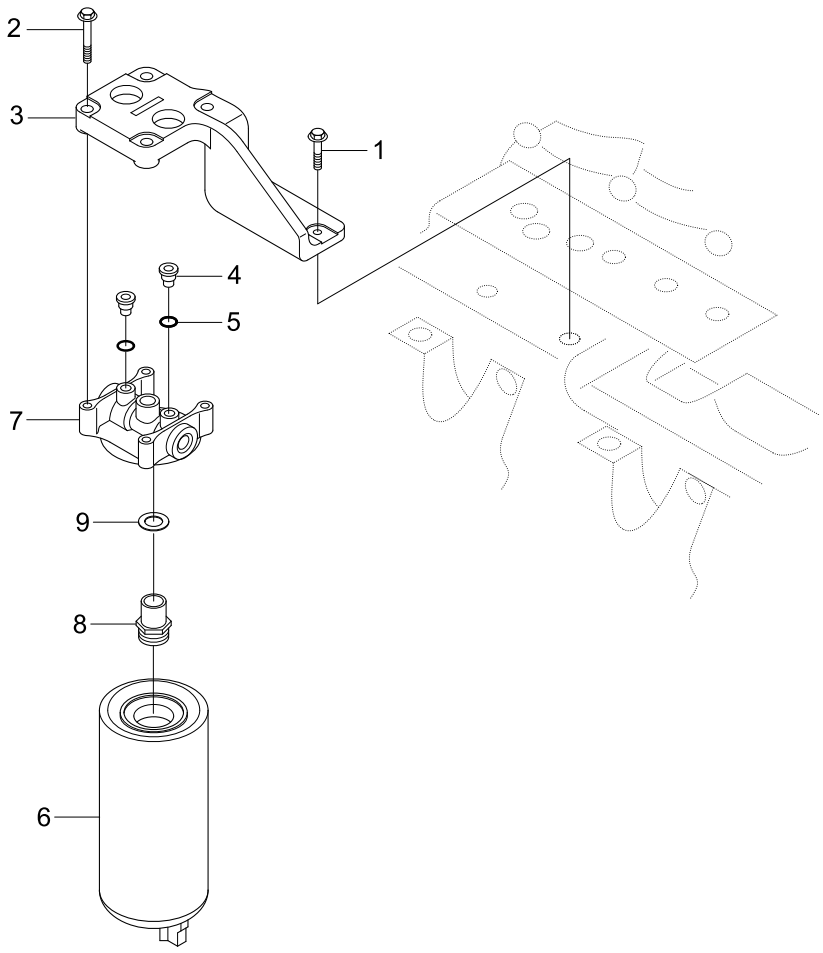

Item	Part_No	IS	Ord	T	Description	Qty	Serial_No	ITC	Remark
1	3900632				SCREW-HEX F/HEAD CAP	3			FF9541-02
2	3901445				SCREW-CAPTIVE WASHER	4			
3	4931860				SUPPORT-FILTER	1			
N*	4990856				FILTER-FUEL	1	#0001 -	-	NOT
*-1	YUBP-00525				.PLUG-THREADED	2			
N4	3678924				..PLUG-THREADED	1			NOT
5	3678925				..O-RING	1			
6	11LG-70010				FILTER-FUEL	1	#0001 -	-	
7	4990848				HEAD-FUEL FILTER	1	#0001 -	-	
8	3975396				ADAPTER-FILTER HEAD	1			
9	4937285				GASKET-FILTER	1	#0001 -	-	
N	@				NOT SUPPLIED PARTS	AR			NOT

FUEL FILTER PLUMBING

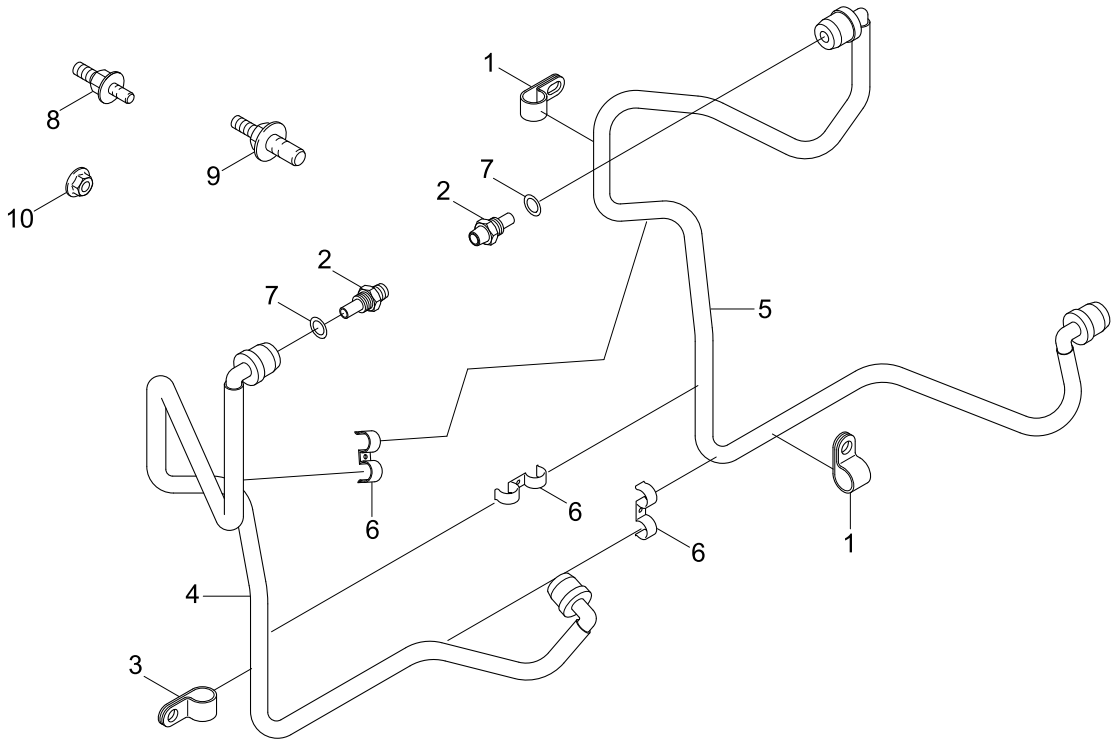

Item	Part_No	IS	Ord	T	Description	Qty	Serial_No	ITC	Remark
1	3609967				CLIP	2			FF9573-02
2	3964337				CONNECTOR	2			
3	68152				CLIP	1			
*	4928865				TUBE-FUEL SUPPLY	1			
4	4928863				.TUBE-FUEL SUPPLY	1			
5	4928864				.TUBE-FUEL SUPPLY	1			
6	4899288				.CLIP	3			
7	4891385				WASHER-SEALING	2			
8	4929065				SCREW-HEX F/HD CAP	1			
9	3944061				SCREW-HEX F/HD CAP	2			
10	3900589				NUT-HEX FLANGE	3			

FLYWHEEL HOUSING

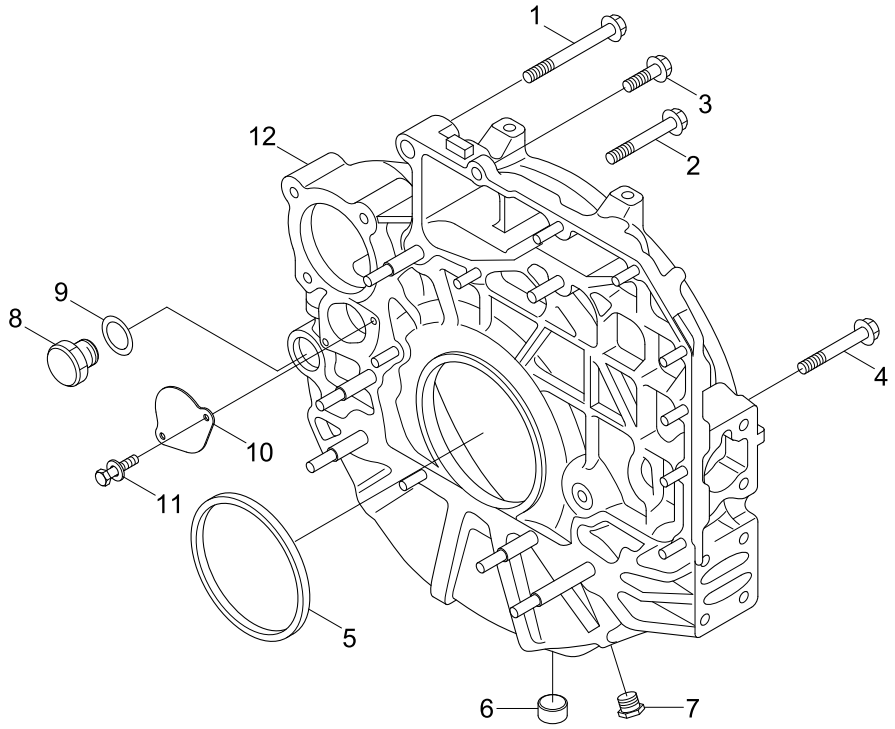

Item	Part_No	IS	Ord	T	Description	Qty	Serial_No	ITC	Remark
1	3089188				SCREW-HEX F/HEAD CAP	2			FH9482
2	3900679				SCREW-HEX F/HEAD CAP	2			
3	3903464				SCREW-HEX F/HEAD CAP	10			
4	3914177				SCREW-HEX F/HEAD CAP	6			
N5	3970548				SEAL-OIL	1			NOT
*N	3976901				HOUSING-FLYWHEEL	1			NOT
6	3008469				.PLUG-PIPE	1			
7	3904181				.PLUG-THREADED	1			
8	3910248				.PLUG/O-RING	1			
9	3910260				.SEAL/O-RING	1			
10	3925234				.PLATE-COVER	1			
11	3925883				.SCREW-HEX F/HEAD CAP	2			
12	3976899				.HOUSING-FLYWHEEL	1			
*	4089342				CRANKSHAFT SEAL KIT	1			SERVICE PARTS
N5	3970548				.SEAL-OIL	1			NOT
*	3909409				.SERVICE SEAL KIT	1			SERVICE PARTS
*N	4089425				.TOOL-SEAL INSTALLATION	1			NOT
N	@				NOT INDIVIDUALLY SUPPLIED	AR			NOT

FUEL PUMP

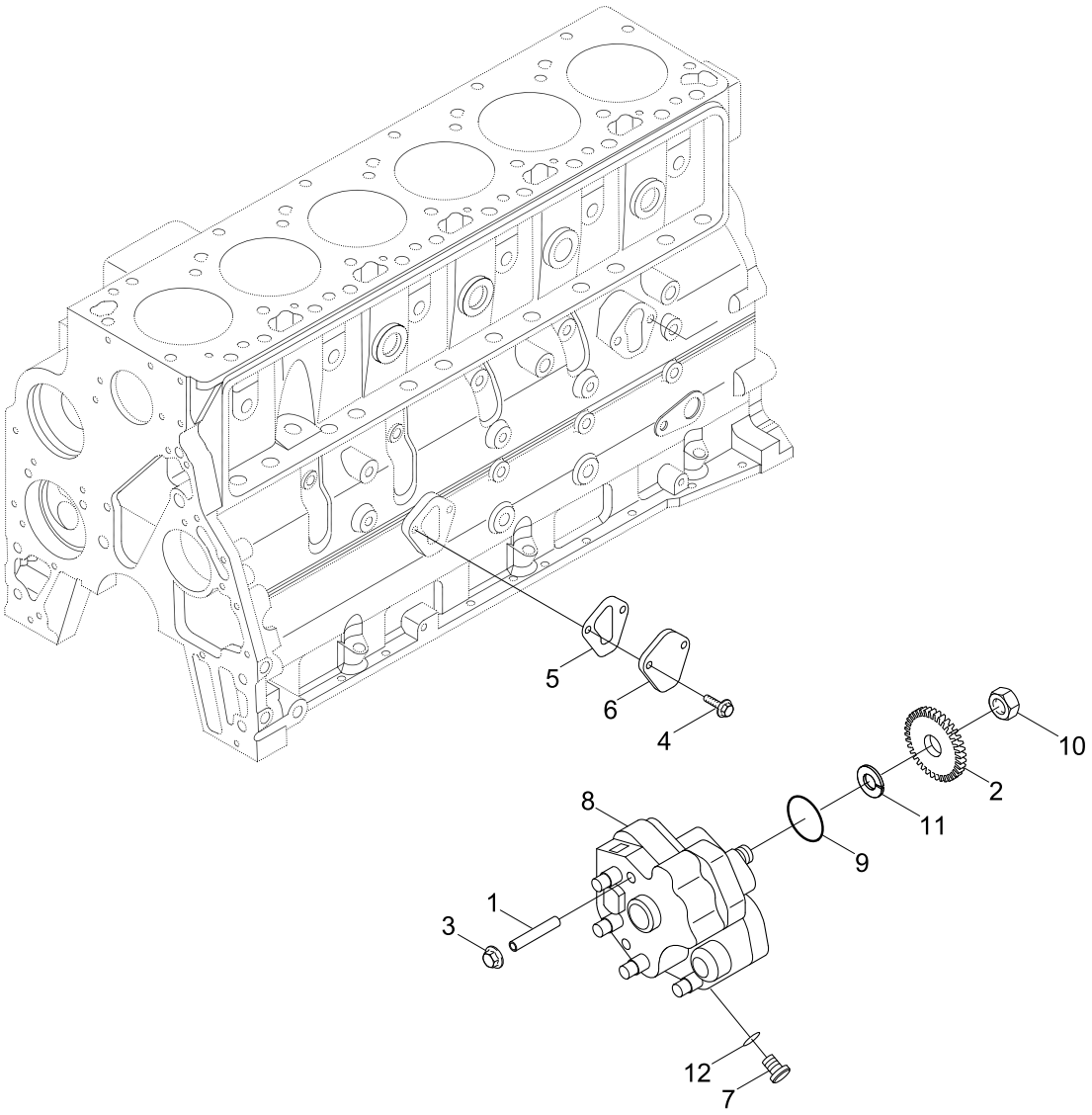

Item	Part_No	IS	Ord	T	Description	Qty	Serial_No	ITC	Remark
1	3954498				STUD	3			FP90312-01
2	3955153				GEAR-FUEL PUMP	1			
3	3900589				NUT-HEX FLANGE	3			
4	3900630				SCREW-HEX F/HEAD CAP	2			
5	3939258				GASKET-COVER PLATE	1			
6	3948083				PLATE-COVER	1			
*	3975701				PUMP-FUEL INJECTION	1			
7	3974765				.CONNECTOR	1			
N8	3975700				.PUMP-FUEL INJECTION	1			NOT
9	2830977				.SEAL/O-RING	1			
10	4890634				.NUT-REGULAR HEX	1			
11	4890635				.WASHER-PLAIN	1			
12	4891385				.WASHER-SEALING	1			
N	@				NOT INDIVIDUALLY SUPPLIED	AR			NOT

FUEL PLUMBING

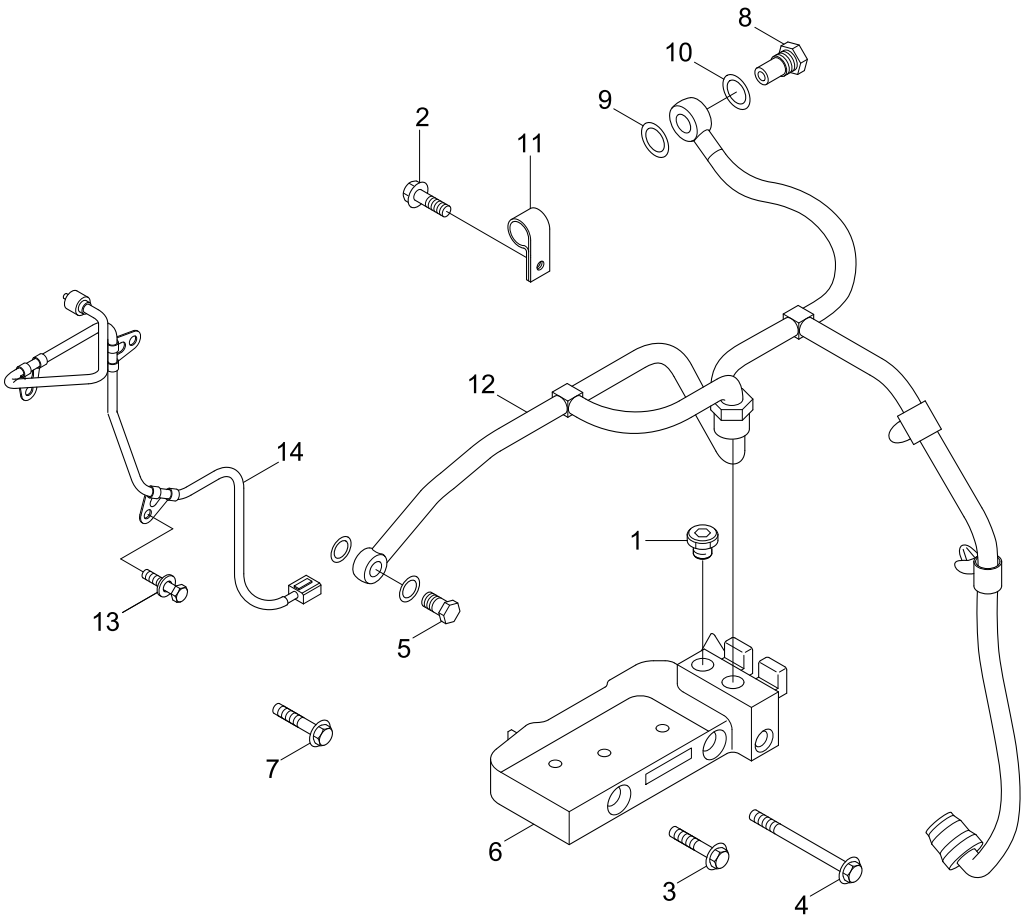

Item	Part_No	IS	Ord	T	Description	Qty	Serial_No	ITC	Remark
1	4929619				PLUG-THREADED	1			FT9113-02
3	3900632				SCREW-HEX F/HEAD CAP	1			
4	3902112				SCREW-HEX F/HEAD CAP	2			
5	3903035				SCREW-BANJO CONN	2			
2	3913638				SCREW-HEX F/HEAD CAP	2			
6	3955080				CONNECTION-FUEL BLOCK	1			
7	3925883				SCREW-HEX F/HEAD CAP	1			
8	3957290				VALVE-CHECK	1			
9	3963990				WASHER-SEALING	6			
10	3963988				WASHER-SEALING	1			
11	68152				CLIP	2			
12	3978505				TUBE-FUEL DRAIN	1			
13	4929065				SCREW-HEX F/HD CAP	2			
14	4933414				TUBE-FUEL SUPPLY	1			

FLYWHEEL AND MOUNTING

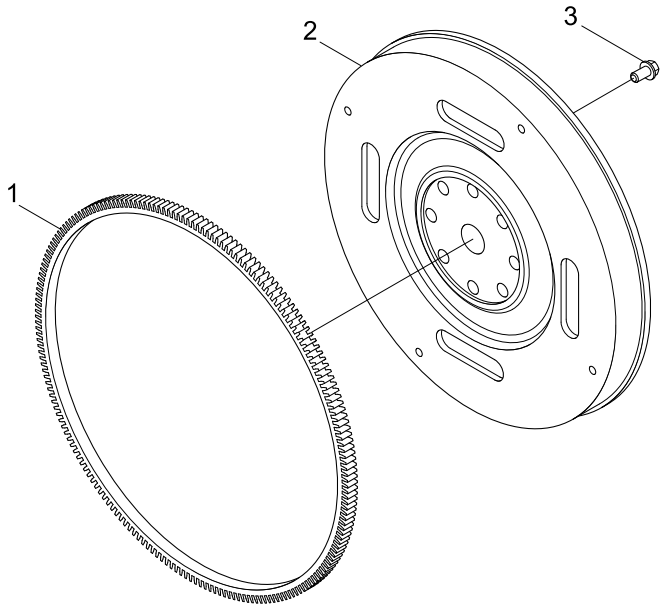

Item	Part_No	IS	Ord	T	Description	Qty	Serial_No	ITC	Remark
*	3972549				FLYWHEEL	1			FW9875
1	3905427				.GEAR-FLYWHEEL RING	1			
2	3972521				.FLYWHEEL	1			
3	4894641				SCREW-CAPTIVE WASHER	8			FW9934

FRONT GEAR COVER

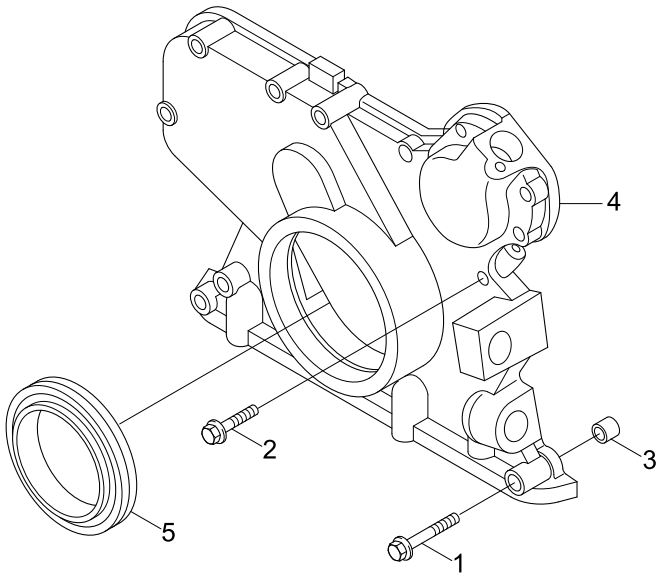

Item	Part_No	IS	Ord	T	Description	Qty	Serial_No	ITC	Remark
1	3901445				SCREW-HEX F/HEAD CAP	7			GG9835
2	3902114				SCREW-HEX F/HEAD CAP	6			
3	3949326				DOWEL-RING	2			
4	4930846				COVER-FRONT	1			
5	4890832				SEAL-OIL	1			

CAB HEATER PLUMBING

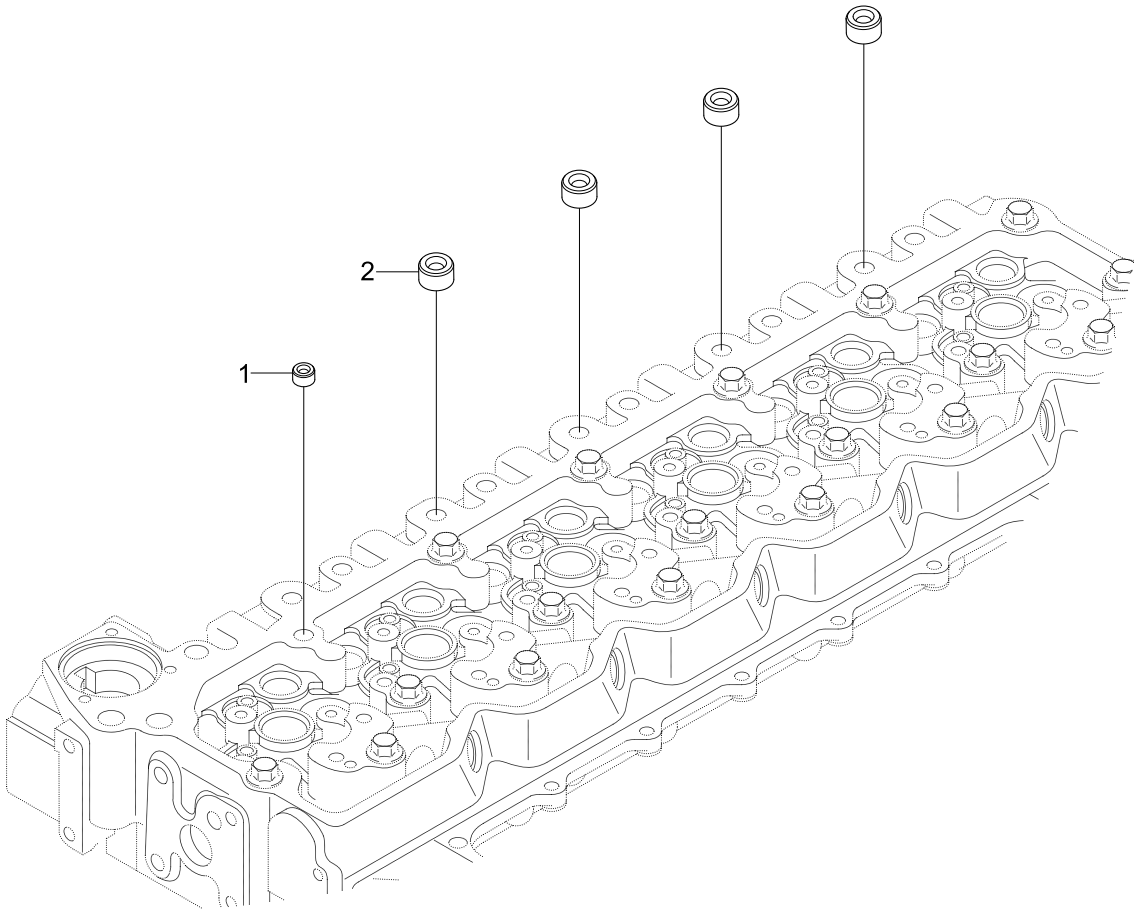

Item	Part_No	IS	Ord	T	Description	Qty	Serial_No	ITC	Remark
1	3008466				PLUG-PIPE	1			HC9026-02
2	3008468				PLUG-PIPE	4			

AUXILIARY PUMP MOUNTING

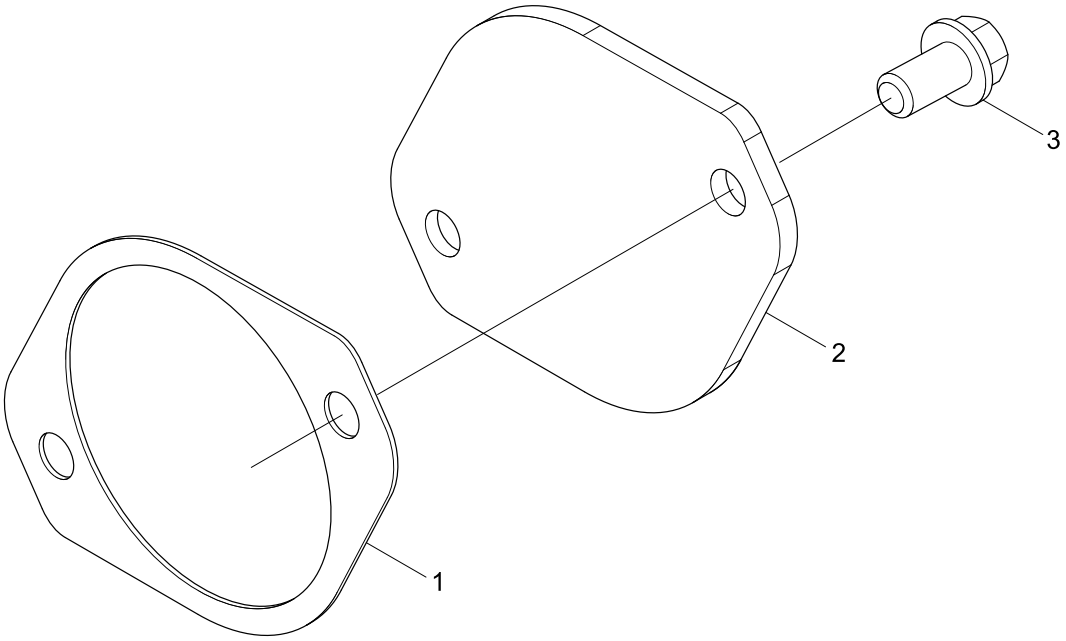

Item	Part_No	IS	Ord	T	Description	Qty	Serial_No	ITC	Remark
1	154916				GASKET-GEAR PUMP	1			HD9716-01
2	204048				PLATE-COVER	1			
3	3903990				SCREW-HEX F/HEAD CAP	2			

AIR INTAKE CONNECTION 1

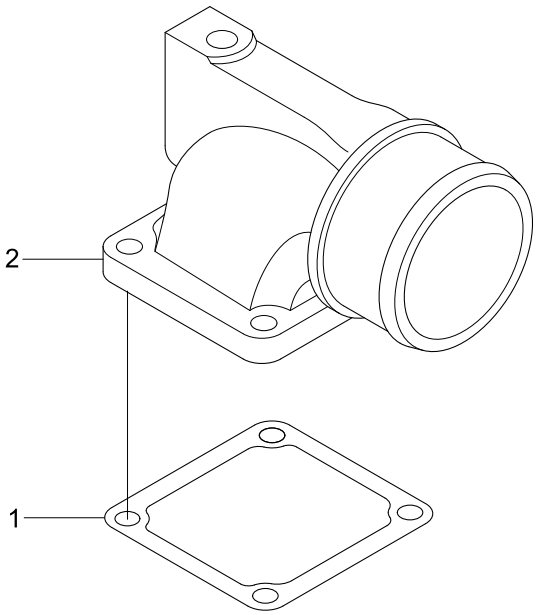

Item	Part_No	IS	Ord	T	Description	Qty	Serial_No	ITC	Remark
1	3969988				GASKET-CONNECTION	1			IC9368-01
2	3921836				CONNECTION	1			

AIR INTAKE CONNECTION 2

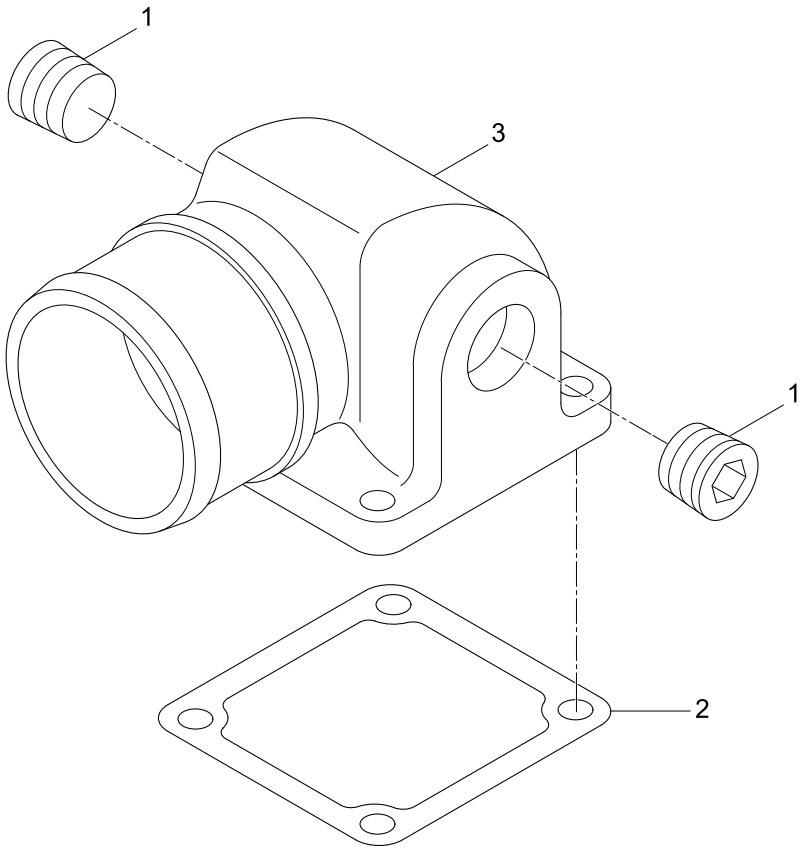

Item	Part_No	IS	Ord	T	Description	Qty	Serial_No	ITC	Remark
1	3008469				PLUG-PIPE	2			IC9455
2	3969988				GASKET-CONNECTION	1			
3	3924990				CONNECTION-AIR INTAKE	1			

AIR INTAKE COVER

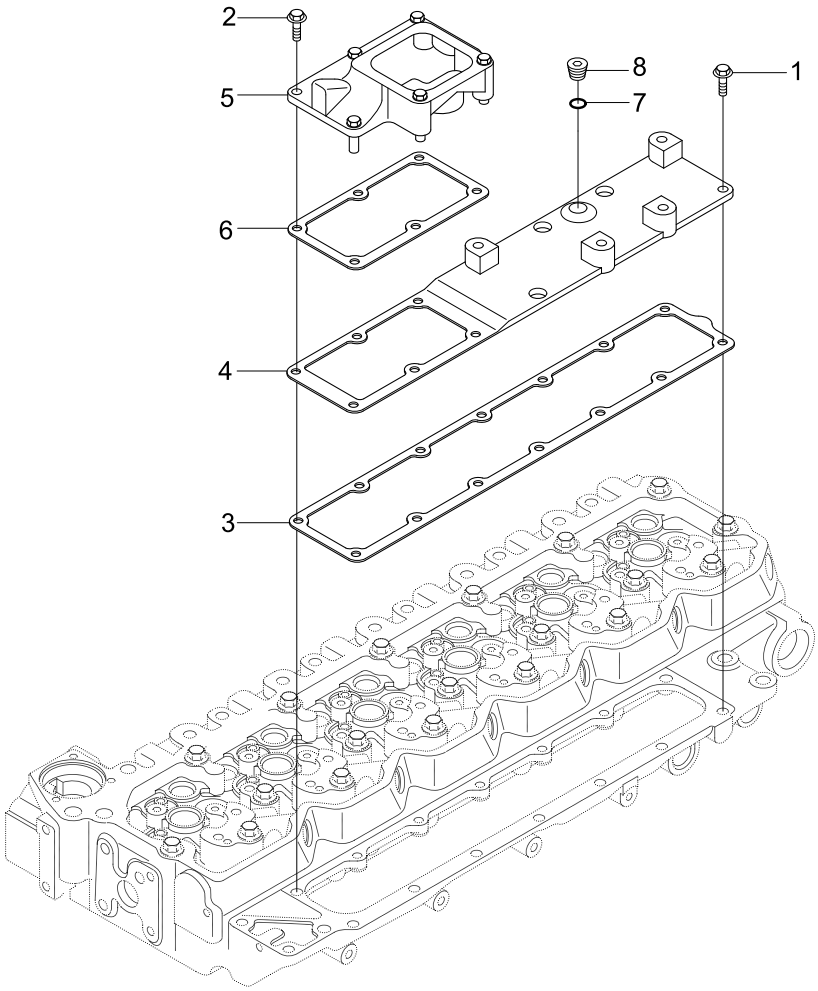

Item	Part_No	IS	Ord	T	Description	Qty	Serial_No	ITC	Remark
1	3918109				SCREW-HEX F/HEAD CAP	4			IM9061-04
2	3938036				SCREW-HEX F/HEAD CAP	5			
3	3947530				GASKET-INT MANIFOLD	1			
4	3973157				COVER-INTAKE MANIFOLD	1	#0001 -	-	CHANGE ILLUST
5	3975535				CONNECTION-ADAPTOR	1	#0001 -	-	CHANGE ILLUST
6	3978072				GASKET-CONNECTION	1	#0001 -	-	CHANGE ILLUST
*	3678921				PLUG-THREADED	1			
7	3678912				.SEAL/O-RING	1			
N8	3678922				.PLUG-THREADED	1			NOT
N	@				NOT INDIVIDUALLY SUPPLIED	AR			NOT

AIR TRANSFER CONNECTION

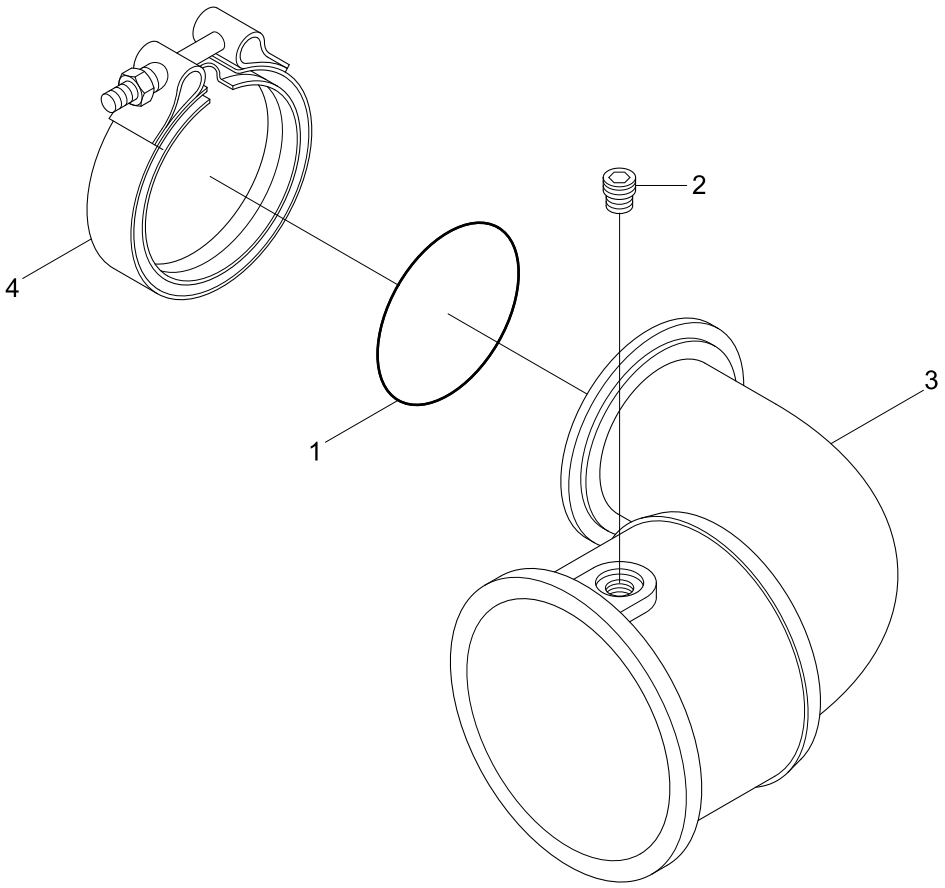

Item	Part_No	IS	Ord	T	Description	Qty	Serial_No	ITC	Remark
1	3883284				SEAL/O-RING	1			IT9039-04
2	3008465				PLUG-PIPE	1			
3	3918685				PIPE-AIR TRANSFER	1			
4	3972681				CLAMP-V BAND	1			

LIFTING ARRANGEMENT AND MOUNTING

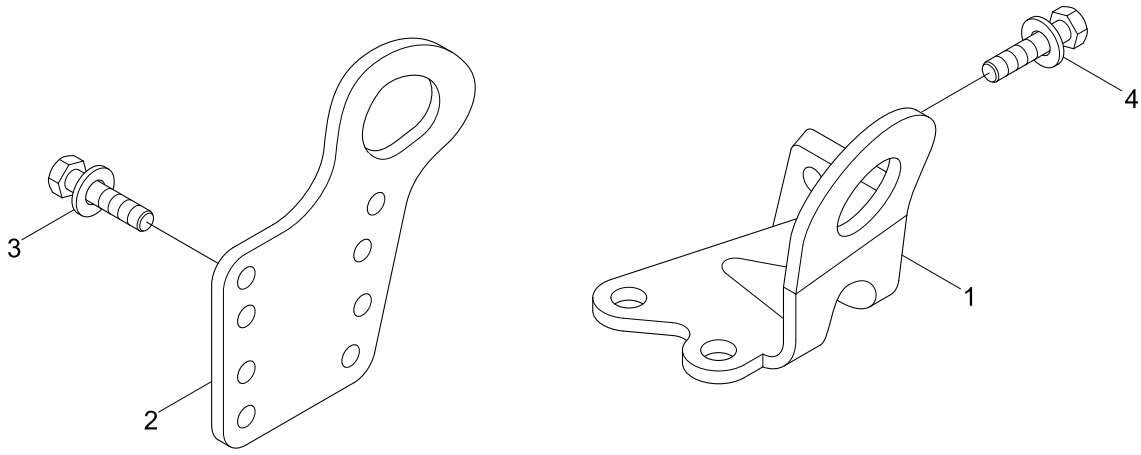

Item	Part_No	IS	Ord	T	Description	Qty	Serial_No	ITC	Remark
1	4933232				BRACKET-LIFTING	1			LA9145
2	4894100				BRACKET-LIFTING	1			
3	3902460				SCREW-HEX F/HEAD CAP	4			LA9147
4	3903990				SCREW-HEX F/HEAD CAP	2			

ENGINE OIL COOLER

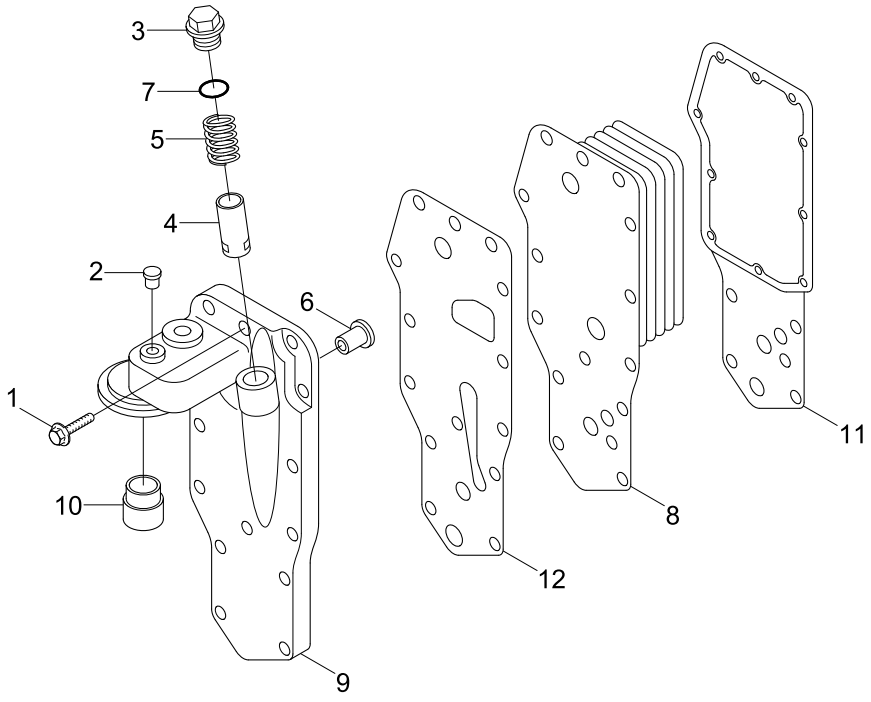

Item	Part_No	IS	Ord	T	Description	Qty	Serial_No	ITC	Remark
1	3901445				SCREW-HEX F/HEAD CAP	15			LC9244-02
2	3906619				PLUG-PIPE	2			
3	3946947				PLUG-THREADED	1			
4	3947287				PLUNGER-PRS REGULATOR	1			
5	3925009				SPRING-COMPRESSION	1			
6	3936365				VALVE-PRESS RELIEF	1			
7	3929457				SEAL/O-RING	1			
8	3975818				COOLER-OIL	1			
*	3955034				HEAD-LUB OIL FILTER	1			
N9	3965153				.HEAD-LUB OIL FILTER	1			NOT
N10	3942367				.ADAPTER	1			NOT
11	2830559				GASKET-O/COOLER CORE	1			
12	3974127				GASKET-FILTER HEAD	1			
N	@				NOT INDIVIDUALLY SUPPLIED	AR			NOT

ENGINE OIL FILTER

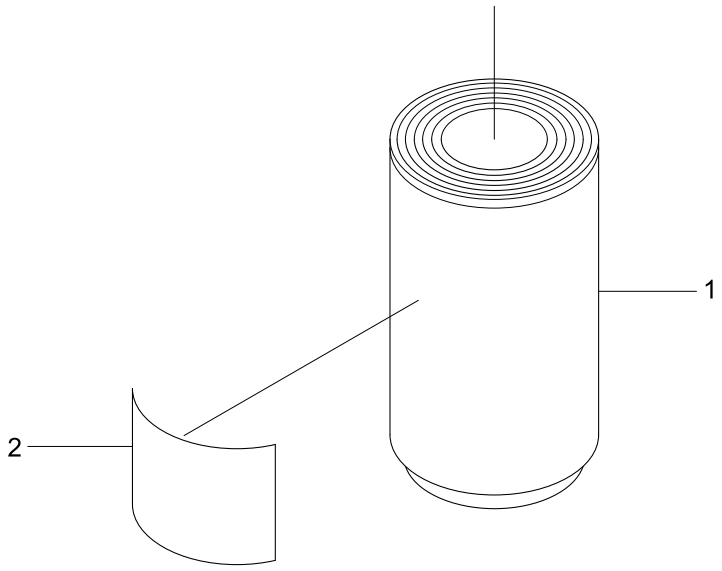

Item	Part_No	IS	Ord	T	Description	Qty	Serial_No	ITC	Remark
1	11N8-70110				FILTER-ENGINE OIL	1	#0001 -	-	LF9136
2	3937745				DECAL	1			

OIL LEVEL GAUGE

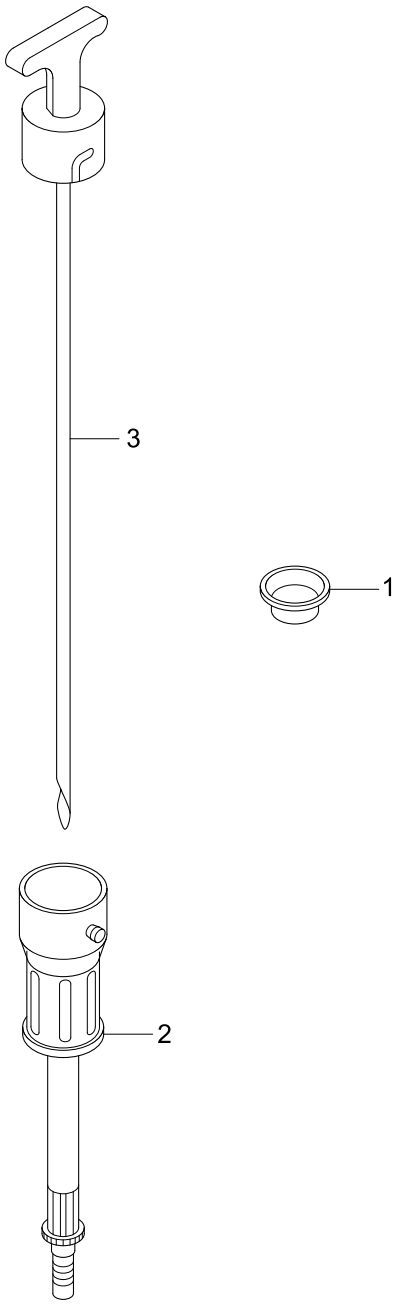

Item	Part_No	IS	Ord	T	Description	Qty	Serial_No	ITC	Remark
1	3900955				PLUG-EXPANSION	4			LG90116
*N	3976995				DIPSTICK	1			NOT
2	3974252				.TUBE-OIL GAUGE	1			
3	3976996				.DIPSTICK	1			
N	@				NOT INDIVIDUALLY SUPPLIED	AR			NOT

LUBRICATION OIL PUMP

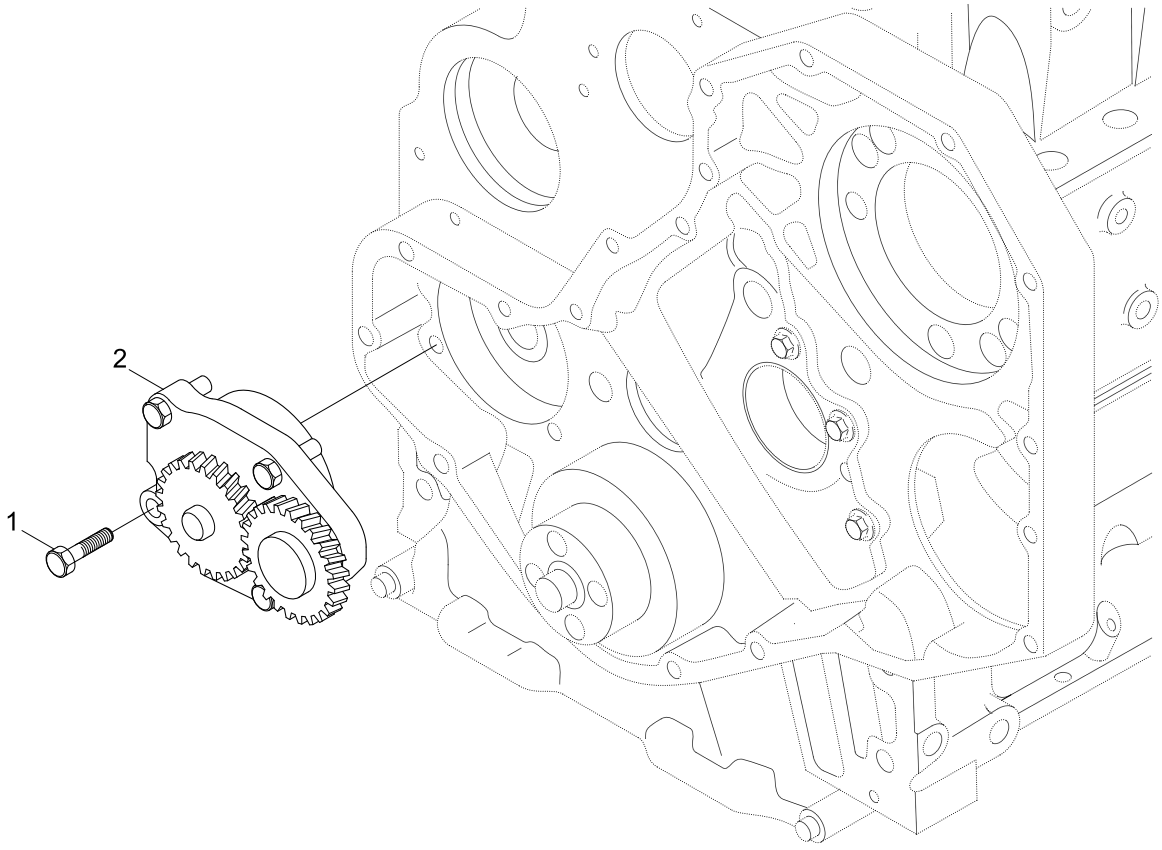

Item	Part_No	IS	Ord	T	Description	Qty	Serial_No	ITC	Remark
1	3900677				SCREW-HEX HEAD CAP	4			IP9065
2	3976089				PUMP-LUBRICATING OIL	1			

OIL FILLER ARRANGEMENT

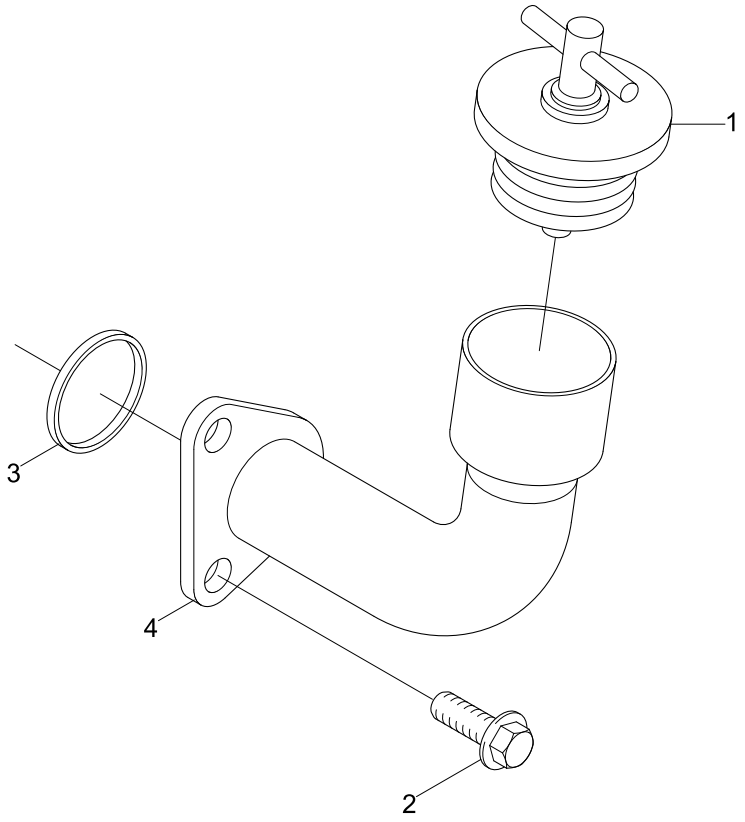

Item	Part_No	IS	Ord	T	Description	Qty	Serial_No	ITC	Remark
1	101322				CAP-FILLER	1			OB9322
2	3901249				SCREW-HEX F/HEAD CAP	2			
3	3906696				SEAL-RECT RING	1			
4	3933493				TUBE-OIL FILLER	1			

OIL PAN

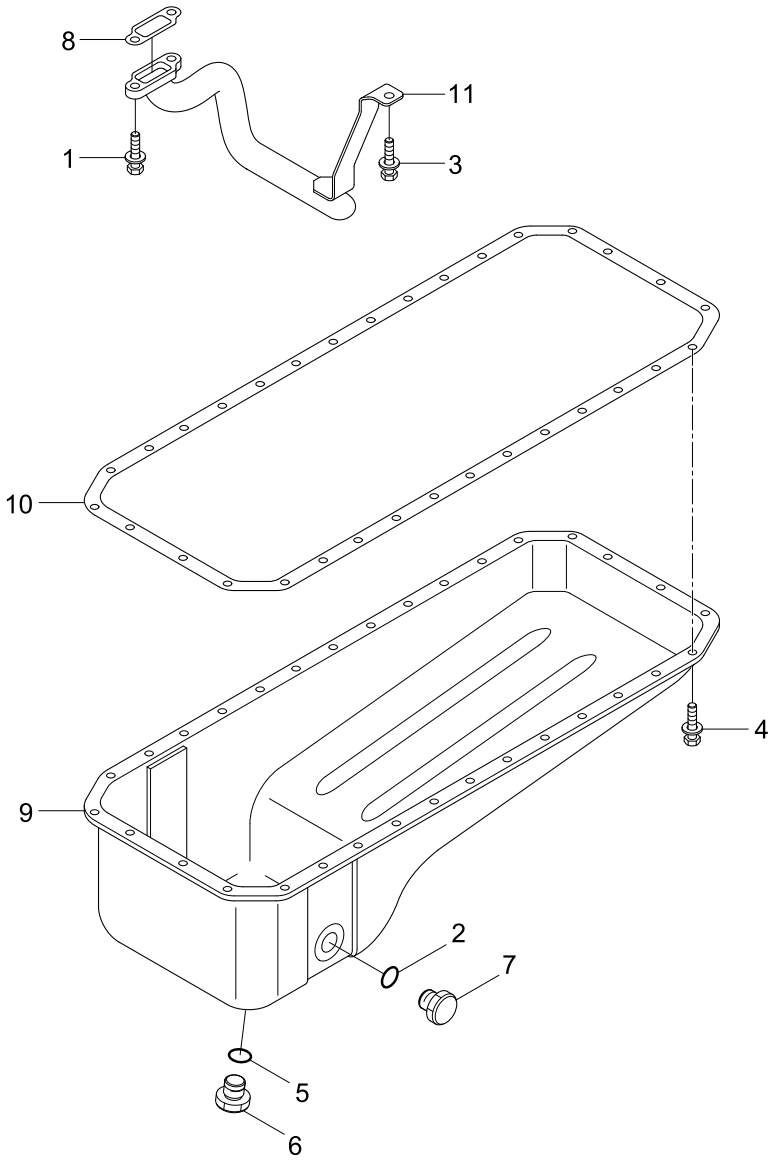

Item	Part_No	IS	Ord	T	Description	Qty	Serial_No	ITC	Remark
1	3900631				SCREW-HEX F/HEAD CAP	2			OP9315-05
2	3902425				WASHER-SEALING	1			
3	3902460				SCREW-HEX F/HEAD CAP	2			
4	3920400				SCREW-HEA F/HEAD CAP	32			
5	3920773				WASHER-SEALING	1			
6	3924147				PLUG-THREADED	1			
7	3924148				PLUG-THREADED	1			
8	3949562				GASKET-FLANGE	1			
9	3958209				OIL PAN	1			
10	3959797				GASKET-OIL PAN	1			
11	3977666				TUBE-LUB OIL SUCTION	1			

ACCESSORY DRIVE PULLEY

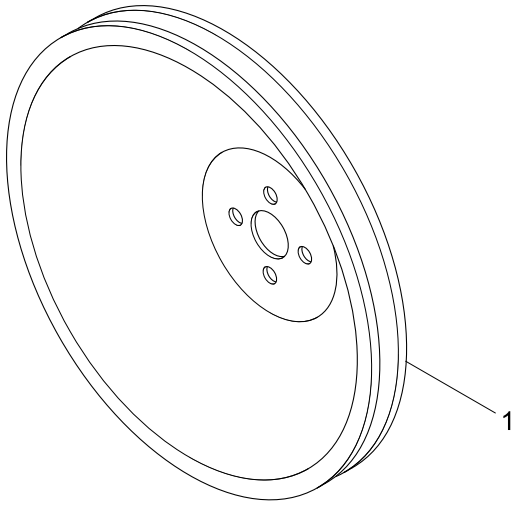

Item	Part_No	IS	Ord	T	Description	Qty	Serial_No	ITC	Remark
1	3919624				PULLEY	1			PA9001

ENGINE CONTROL MODULE(ECM)

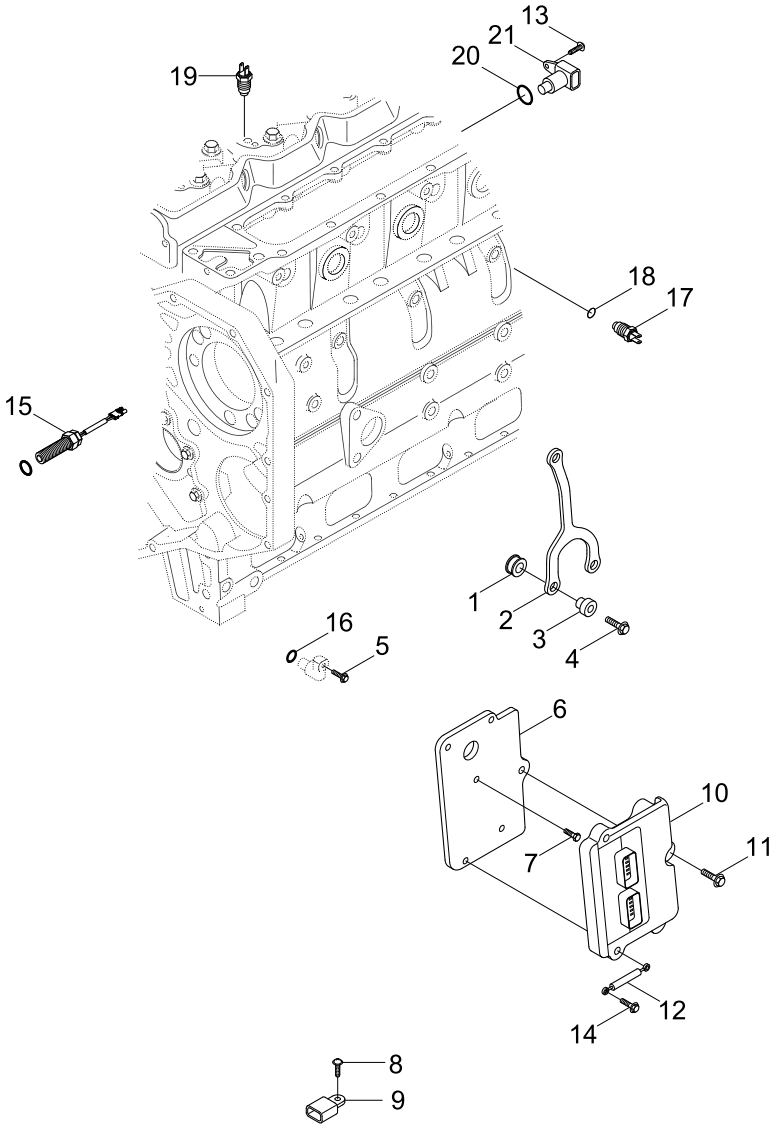

Item	Part_No	IS	Ord	T	Description	Qty	Serial_No	ITC	Remark
1	3955219				ISOLATOR-VIBRATION	3			PH9075-07
2	3977324				BRACKET-CNTL MODULE	1			
3	3955220				ISOLATOR-VIBRATION	3			
4	3901445				SCREW-HEX F/HEAD CAP	2			
5	3906391				SCREW-SOCKET HEAD CAP	3			
6	3977325				SUPPORT-CON MODULE	1			
7	3284216				SCREW-FLAT HEAD CAP	3			
8	3920854				SCREW-CAPTIVE WASHER	2			
9	4076493				SENSOR-PRESSURE	1			AMBIENT AIR
10	4921776				MODULE-ELE CONTROL	1			
11	3947206				SCREW-HEX F/HEAD CAP	1			
12	3977357				WIRE-GROUND	1			
13	3957849				SCREW-SOCKET HEAD CAP	3			
14	3093956				SCREW-HEX F/HEAD CAP	1			
*	3408529				SENSOR-POSITION	2			CAM,CRANK
N15	3408530				.SENSOR-POSITION	1			NOT
16	4010643				.SEAL/O-RING	1			
*	4076930				SWITCH-PRESSURE	1			OIL PRESSURE
17	4076931				.SWITCH-PRESSURE	1			
18	4921574				.SEAL/O-RING	1			
*	4088750				SENSOR-TEMPERATURE	1			COOLANT
18	4921574				.SEAL/O-RING	1			
N19	4088751				.SENSOR-TEMPERATURE	1			NOT
*	4903286				SENSOR-PRS TEMP	1			INTAKE AIR
20	4903482				.SEAL/O-RING	1			
N21	4903285				.SENSOR-PRS TEMP	1			NOT

Item	Part_No	IS	Ord	T	Description	Qty	Serial_No	ITC	Remark
N	@				NOT INDIVIDUALLY SUPPLIED	AR			NOT

CAMSHAFT

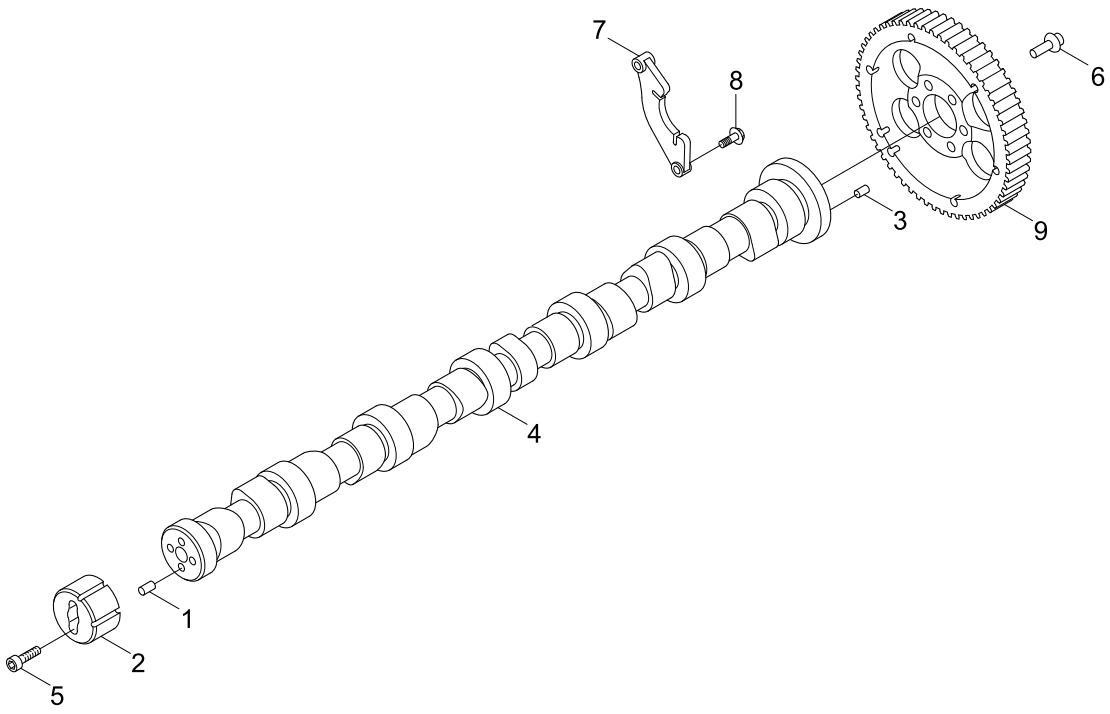

Item	Part_No	IS	Ord	T	Description	Qty	Serial_No	ITC	Remark
*	3954100				CAMSHAFT	1			PP40426
1	3954111				.DOWEL-RING	1			
2	3955069				.RING-SPEED INDICATOR	1			
*	3979506				.CAMSHAFT	1			
3	3904483				..DOWEL-PIN	1			
4	3954099				..CAMSHAFT	1			
5	4895877				.SCREW-S/HEAD CAP	2			
6	3093730				SCREW-HEX F/HEAD CAP	6			
7	4897457				SUPPORT-C/SHAFT THRUST	1			
8	3925883				SCREW-HEX F/HEAD CAP	2			
9	3955152				GEAR-CAMSHAFT	1			

CONNECTING ROD AND PISTON

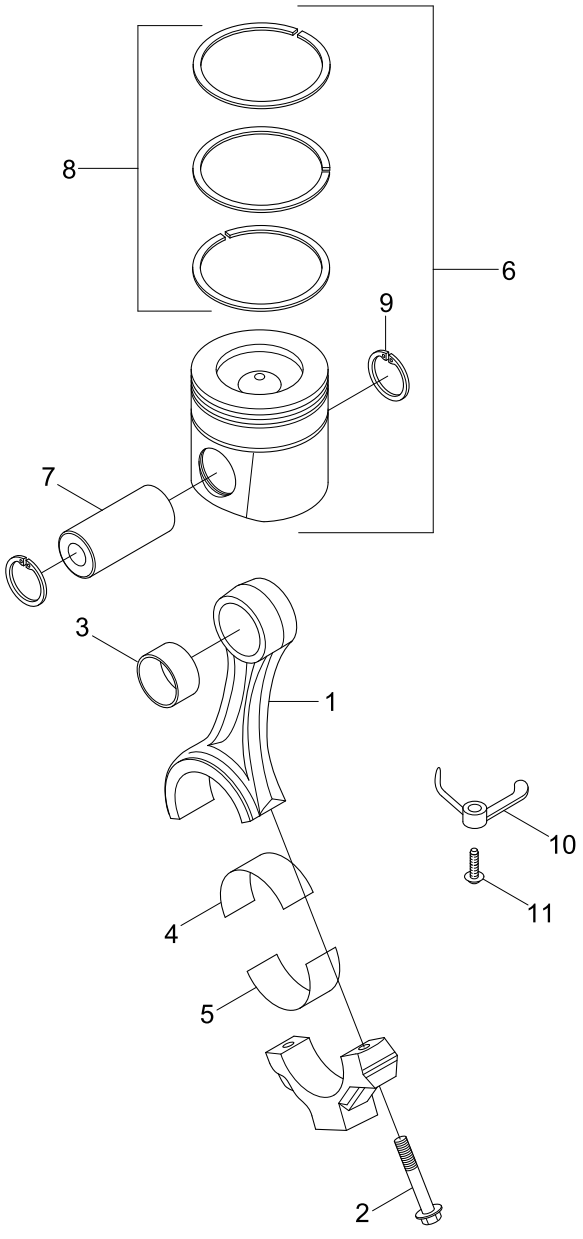

Item	Part_No	IS	Ord	T	Description	Qty	Serial_No	ITC	Remark
*	4898808				ROD-ENG CONNECTING	6			PP40426
1	4891177				.ROD-ENG CONNECTING	1			
2	4891179				.SCREW-CONN ROD CAP	2			
3	4891178				.BUSHING	1			
4	3969562				BEARING-C/ROD(STD)	6			
5	4893693				BEARING-C/ROD(STD)	6			
6	4955160				ENGINE PISTON KIT	6			
*	4955251				.PISTON RING SET	1			
7	4931041				.PIN-PISTON	1			
N8	4931888				.PISTON-ENGINE	1			NOT
9	3920691				RING-RETAINING	12			
10	3968877				NOZZLE-PISTON COOLING	6			
11	3964817				SCREW-BANJO CONN	6			
N	@				NOT INDIVIDUALLY SUPPLIED	AR			NOT

INJECTOR

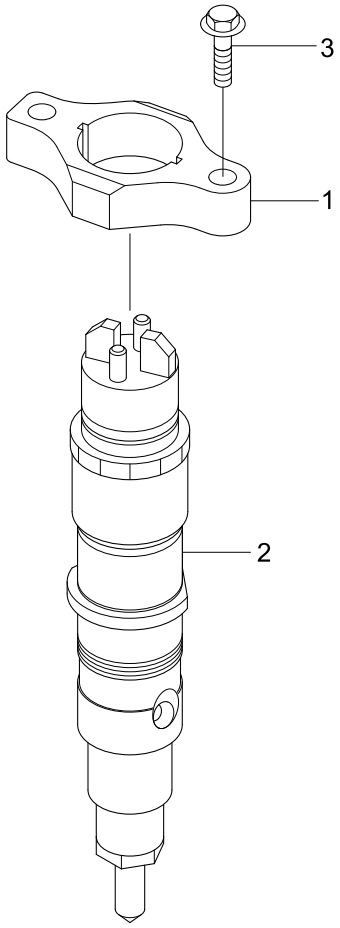

Item	Part_No	IS	Ord	T	Description	Qty	Serial_No	ITC	Remark
1	3976370				CLAMP-INJECTOR	6			PP40426
2	3976372				INJECTOR	6			
3	3900628				SCREW-HEX F/HEAD CAP	12			

INJECTOR PLUMBING

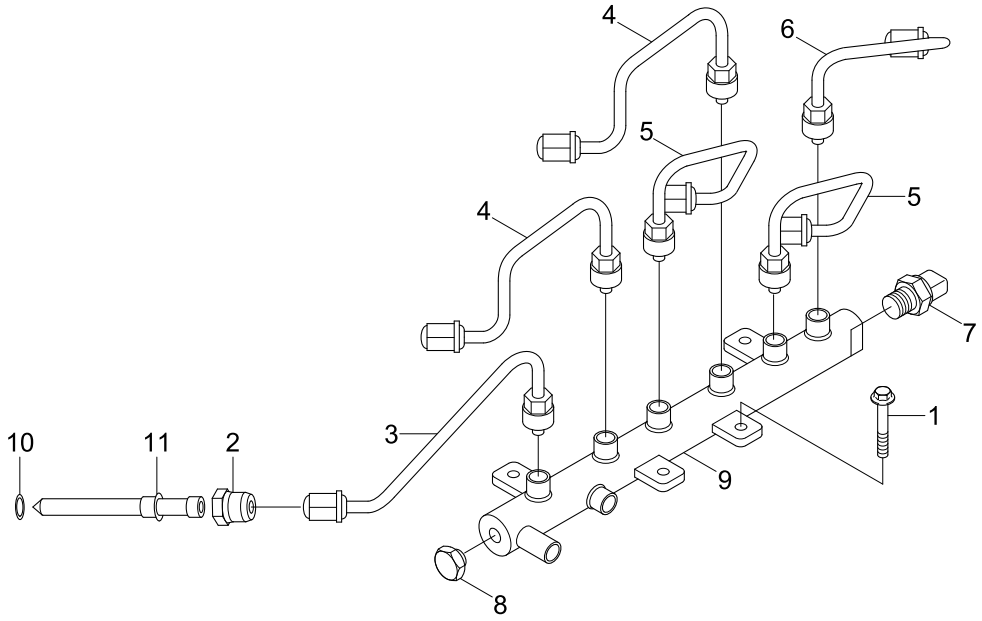

Item	Part_No	IS	Ord	T	Description	Qty	Serial_No	ITC	Remark
1	3900633				SCREW-HEX F/HEAD CAP	4			PP40426
2	3946625				RETAINER-INJ FUEL SUP	6			
3	3978031				TUBE-INJECTOR F/SUPPLY	1			
4	3978032				TUBE-INJECTOR F/SUPPLY	2			
5	3978034				TUBE-INJECTOR F/SUPPLY	2			
6	3978036				TUBE-INJECTOR F/SUPPLY	1			
*	3977530				MANIFOLD-FUEL	1			
7	3974092				.SENSOR-PRESSURE	1			
8	3974093				.RELIEF VALVE-PRESSURE	1			
N9	3978448				.MANIFOLD-FUEL	1			NOT
*	3975703				CONNECTOR-INJ F/SUPPLY	6			
10	4062328				.SEAL/O-RING	1			
N11	3975702				.CONNECTOR-INJ F/SUP	1			NOT
N	@				NOT INDIVIDUALLY SUPPLIED	AR			NOT

CYLINDER HEAD

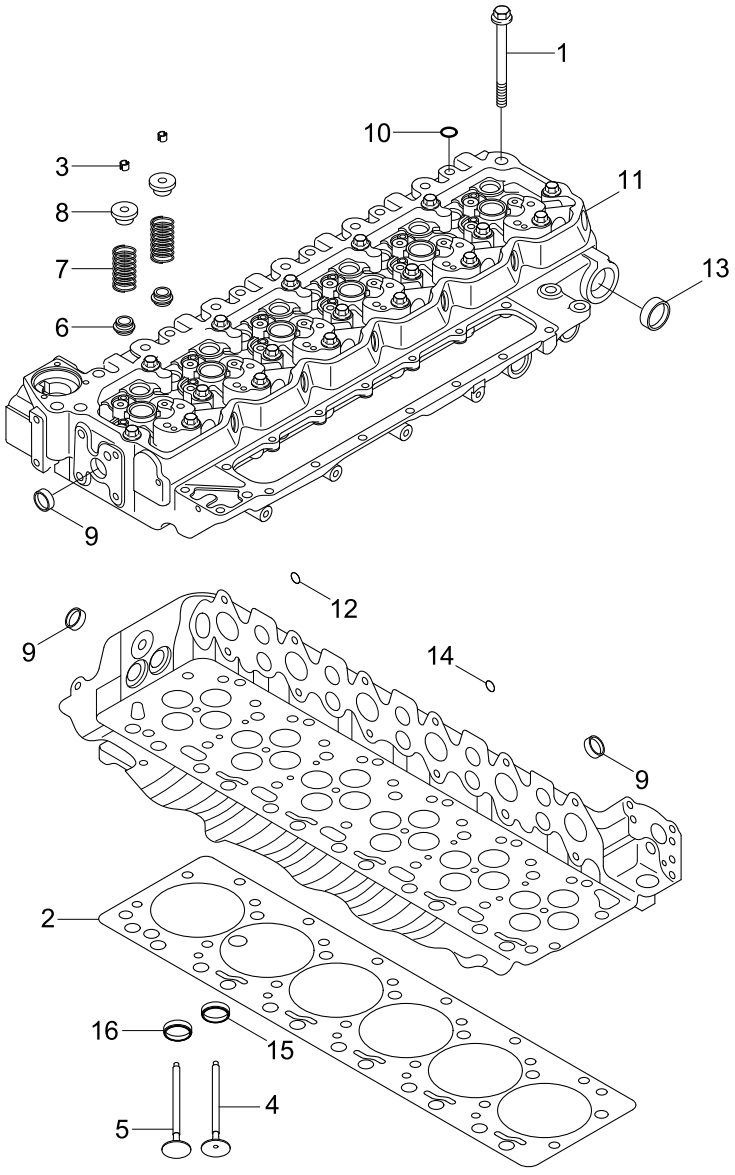

Item	Part_No	IS	Ord	T	Description	Qty	Serial_No	ITC	Remark
1	3927063				SCREW-HEX F/HEAD CAP	26			PP40426
*	3977226				HEAD-CYLINDER	1			
	4089672				.EXHAUST VALVE KIT	12			
3	3940123				..COLLET-VALVE	2			
6	3955394				..SEAL-VALVE STEM	1			
N5	3968183				..EXHAUST VALVE	1			NOT
*	3802924				.KIT-INTAKE VALVE	12			
3	3940123				..COLLET-VALVE	2			
N4	3940735				..VALVE-INTAKE	1			NOT
6	3955393				..SEAL-VALVE STEM	1			
7	3943161				.SPRING-VALVE	24			
8	3943198				.RETAINER-VALVE SPRING	24			
*	3977225				.HEAD-CYLINDER	1			
12	3007632				..PLUG-EXPANSION	7			
9	3007635				..PLUG-EXPANSION	13			
10	3920706				..PLUG-EXPANSION	11			
15	3943449				..INSERT-VALVE	12			
16	3943450				..INSERT-VALVE	12			
13	3945094				..PLUG-EXPANSION	2			
14	3945095				..PLUG-EXPANSION	2			
11	3977222				..HEAD-CYLINDER	1			
2	4932210				GASKET-CYLINDER HEAD	1			
N	@				NOT INDIVIDUALLY SUPPLIED	AR			NOT

TURBOCHARGER

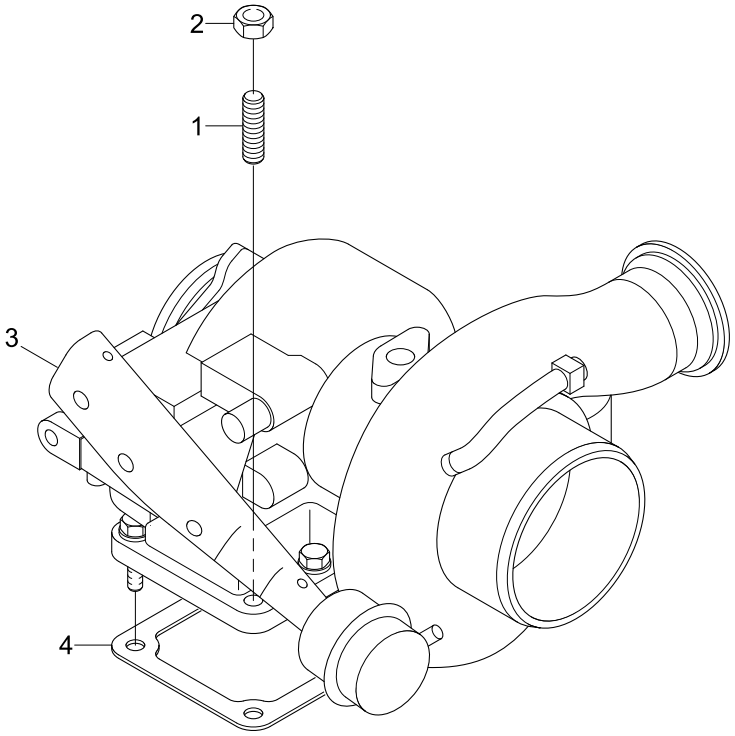

Item	Part_No	IS	Ord	T	Description	Qty	Serial_No	ITC	Remark
1	3818823				STUD	4			PP98666
2	3818824				NUT-HEXAGON FLANGE	4			
3	4038211				TURBOCHARGER	1			
4	3949530				GASKET-TURBOCHARGER	1			

ROCKER LEVER

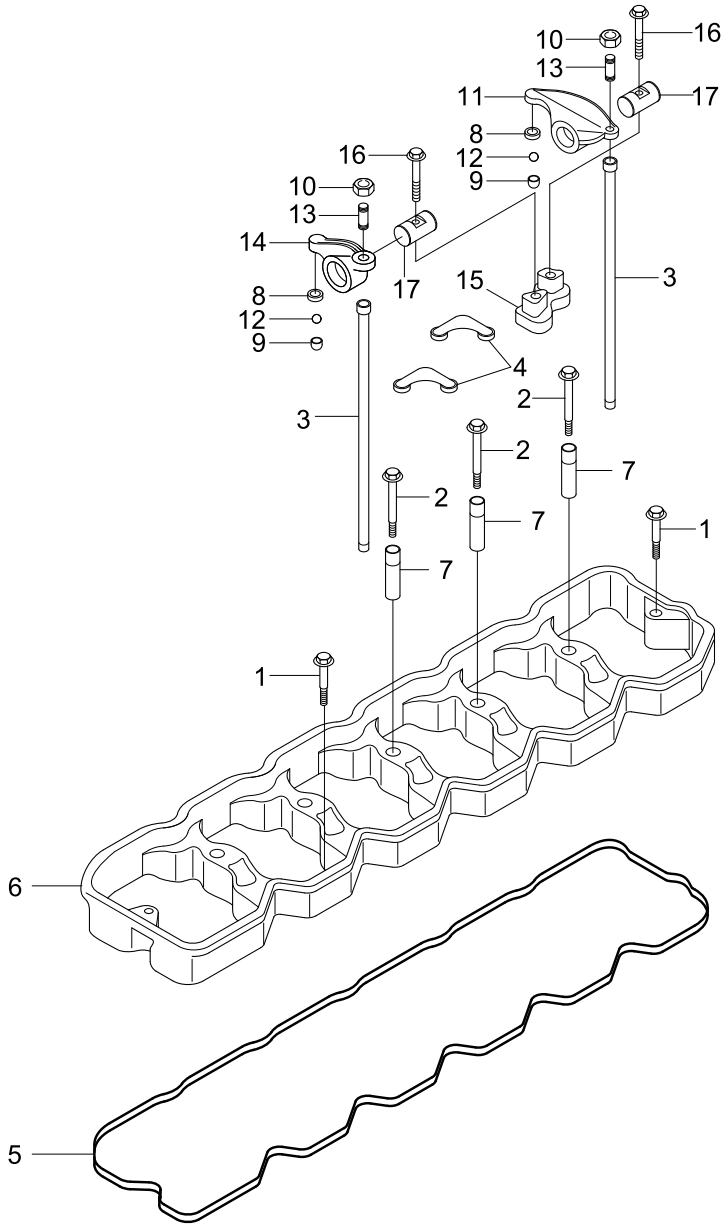

Item	Part_No	IS	Ord	T	Description	Qty	Serial_No	ITC	Remark
1	3900633				SCREW-HEX F/HEAD CAP	2			RL9765
2	3903096				SCREW-HEX F/HEAD CAP	5			
3	3941253				ROD-PUSH	12			
4	3943626				CROSSHEAD-VALVE	12			
5	4899231				GASKET-R/LEVER HOUSING	1			
*	4899257				HOUSING-ROCKER LEVER	1			
N6	4899235				.HOUSING-ROCKER LEVER	1			NOT
N7	4899245				.SLEEVE	5			NOT
*	4928698				ROCKER LEVER ASSY	6			
	3937219				.LEVER-ROCKER	1			
N8	3935945				..RETAINER-SOCKET	1			NOT
N9	3935946				..SOCKET-ROCKER LEVER	1			NOT
N*	3942735				..LEVER-ROCKER	1			NOT
10	3927692				...NUT-HEAVY HEX	1			
N11	3941928				...LEVER-ROCKER	1			NOT
N12	3942730				...BALL-ROCKER LEVERS	1			NOT
13	3959128				...SCREW-R/LEVER ADJUSTING	1			
*	3937220				.LEVER-ROCKER	1			
N8	3935945				..RETAINER-SOCKET	1			NOT
N9	3935946				..SOCKET-ROCKER LEVER	1			NOT
N*	3942734				..LEVER-ROCKER	1			NOT
10	3927692				...NUT-HEAVY HEX	1			
N12	3942730				...BALL-ROCKER LEVERS	1			NOT
13	3959128				...SCREW-R/LEVER ADJUSTING	1			
N14	3941927				...LEVER-ROCKER	1			NOT
15	3964908				.SUPPORT-ROCKER LEVER	1			

Item	Part_No	IS	Ord	T	Description	Qty	Serial_No	ITC	Remark
16	3990127				.SCREW-HEX F/HEAD CAP	2			
17	4928699				.SHAFT-ROCKER LEVER	2			
N	@				NOT INDIVIDUALLY SUPPLIED	AR			NOT

ENGINE COOLANT VENT

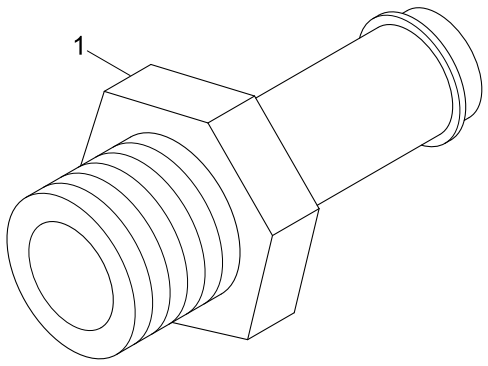

Item	Part_No	IS	Ord	T	Description	Qty	Serial_No	ITC	Remark
1	3943670				FITTING-ORIFICE	1			RP9046

HEAT SHIELD

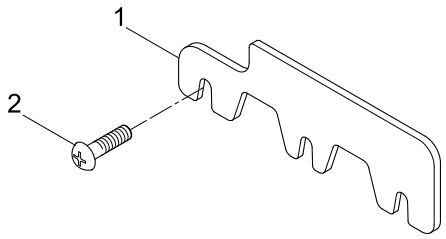

Item	Part_No	IS	Ord	T	Description	Qty	Serial_No	ITC	Remark
1	4941238				SHIELD-HEAT	1			SH9059
2	3926846				SCREW-HEX F/HEAD CAP	3			

STARTING MOTOR AND MOUNTING

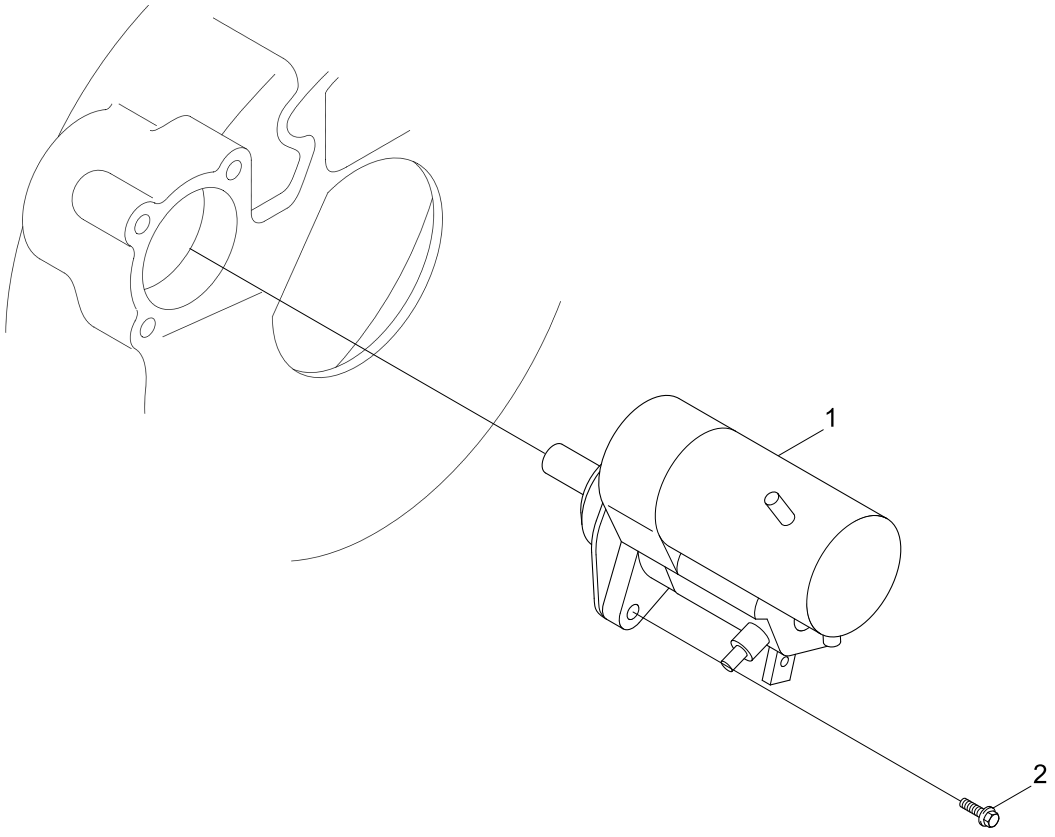

Item	Part_No	IS	Ord	T	Description	Qty	Serial_No	ITC	Remark
1	3957593				MOTOR-STARTING	1			ST9265
2	3968470				SCREW-TWELVE P/CAP	2			SM9790-03

FAN PILOT SPACER

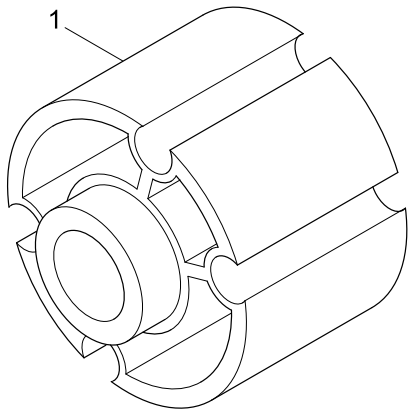

Item	Part_No	IS	Ord	T	Description	Qty	Serial_No	ITC	Remark
1	3910132				SPACER-FAN PILOT	1			SP9085

TURBOCHARGER ARRANGEMENT

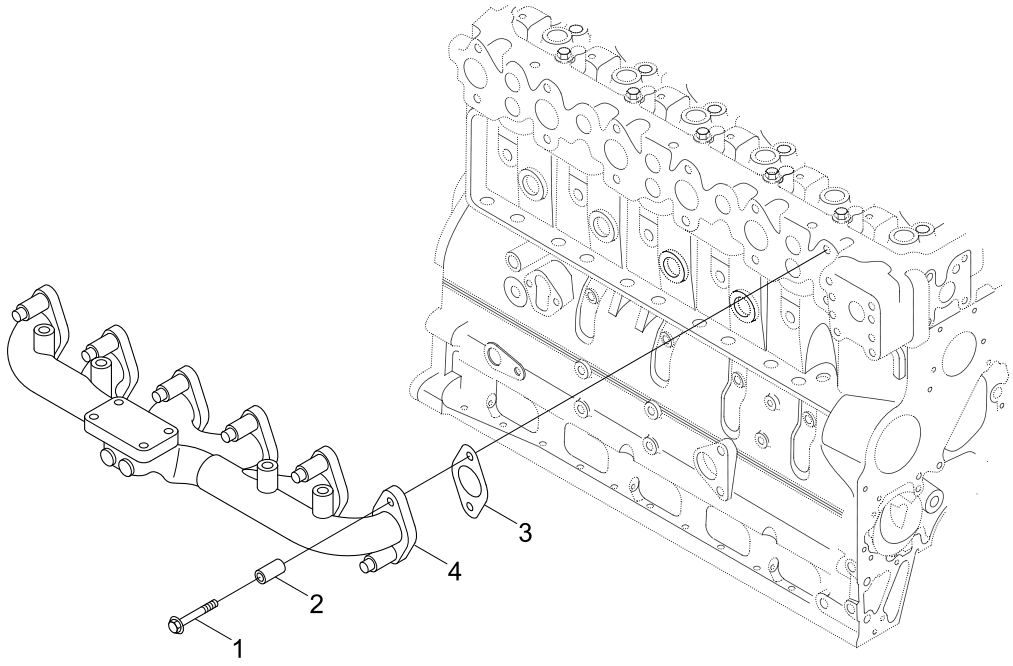

Item	Part_No	IS	Ord	T	Description	Qty	Serial_No	ITC	Remark
1	3944593				SCREW-HEX F/HEAD CAP	12			TB91174
2	3945252				SPACER-MOUNTING	12			
3	3955339				GASKET	6			
4	3976789				MANIFOLD-EXHAUST	1			

TORQUE CONVERTER OIL COOLER

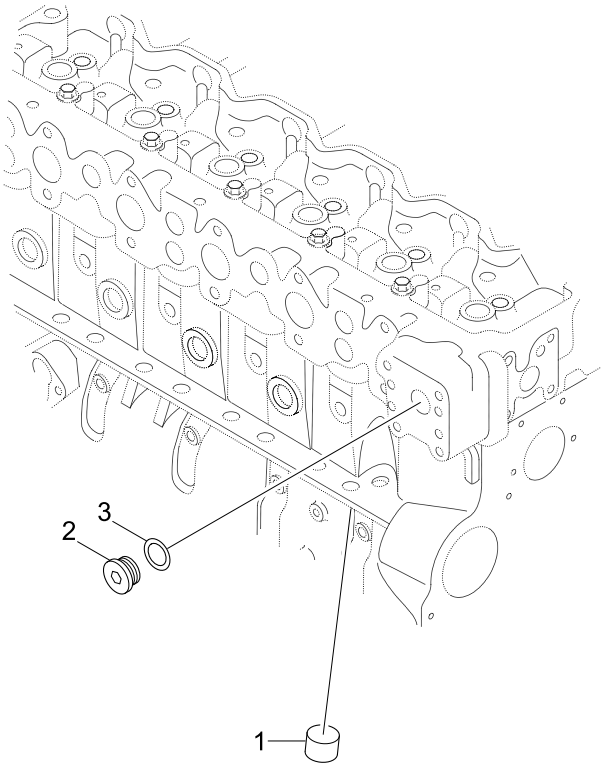

Item	Part_No	IS	Ord	T	Description	Qty	Serial_No	ITC	Remark
1	3008469				PLUG-PIPE	1			TK9036
*	3089238				PLUG-THREADED	1			
N2	3089239				.PLUG-THREADER	1			NOT
3	3089240				.SEAL/O-RING	1			
N	@				NOT INDIVIDUALLY SUPPLIED	AR			NOT

TUBOCHARGER PLUMBING

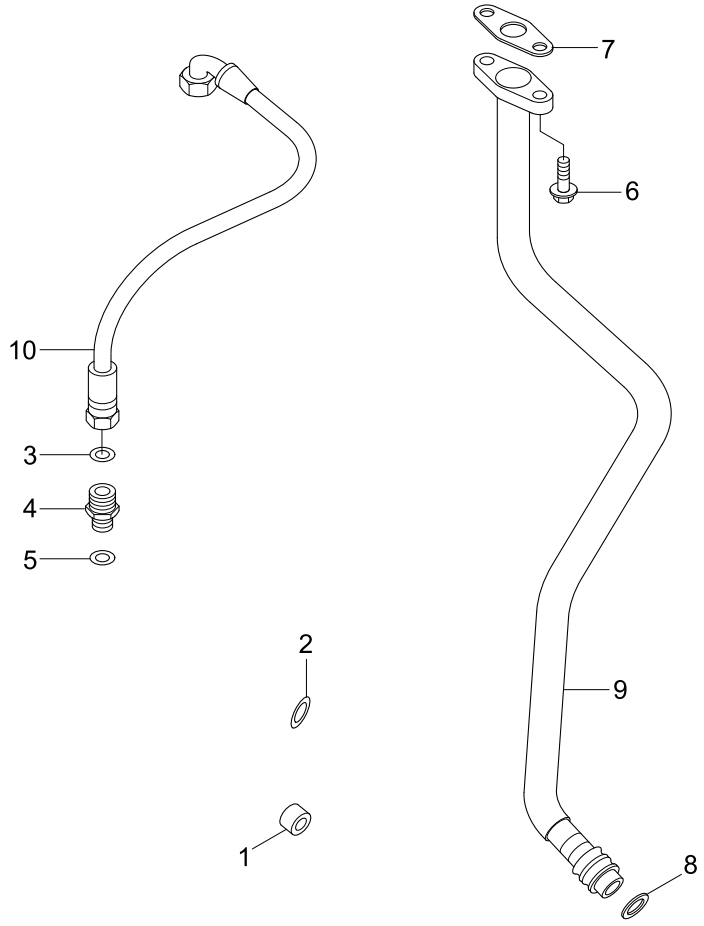

Item	Part_No	IS	Ord	T	Description	Qty	Serial_No	ITC	Remark
1	3008469				PLUG-PIPE	1			TP97325
2	3920706				PLUG-EXPANSION	1			
*	3922789				CONNECTOR-MALE	2			
3	3678603				.SEAL/O-RING	1			
N4	3922790				.CONNECTOR-MALE	1			NOT
5	3922794				.SEAL/O-RING	1			
6	3941981				SCREW	2			
7	3949499				GASKET-OIL DRAIN	1			
*	3977158				CONNECTION	1			
8	3928624				.SEAL/O-RING	2			
N9	3978945				.CONNECTION	1			NOT
10	3942223				HOSE-FLEXIBLE	1			
N	@				NOT INDIVIDUALLY SUPPLIED	AR			NOT

VALVE COVER ARRANGEMENT

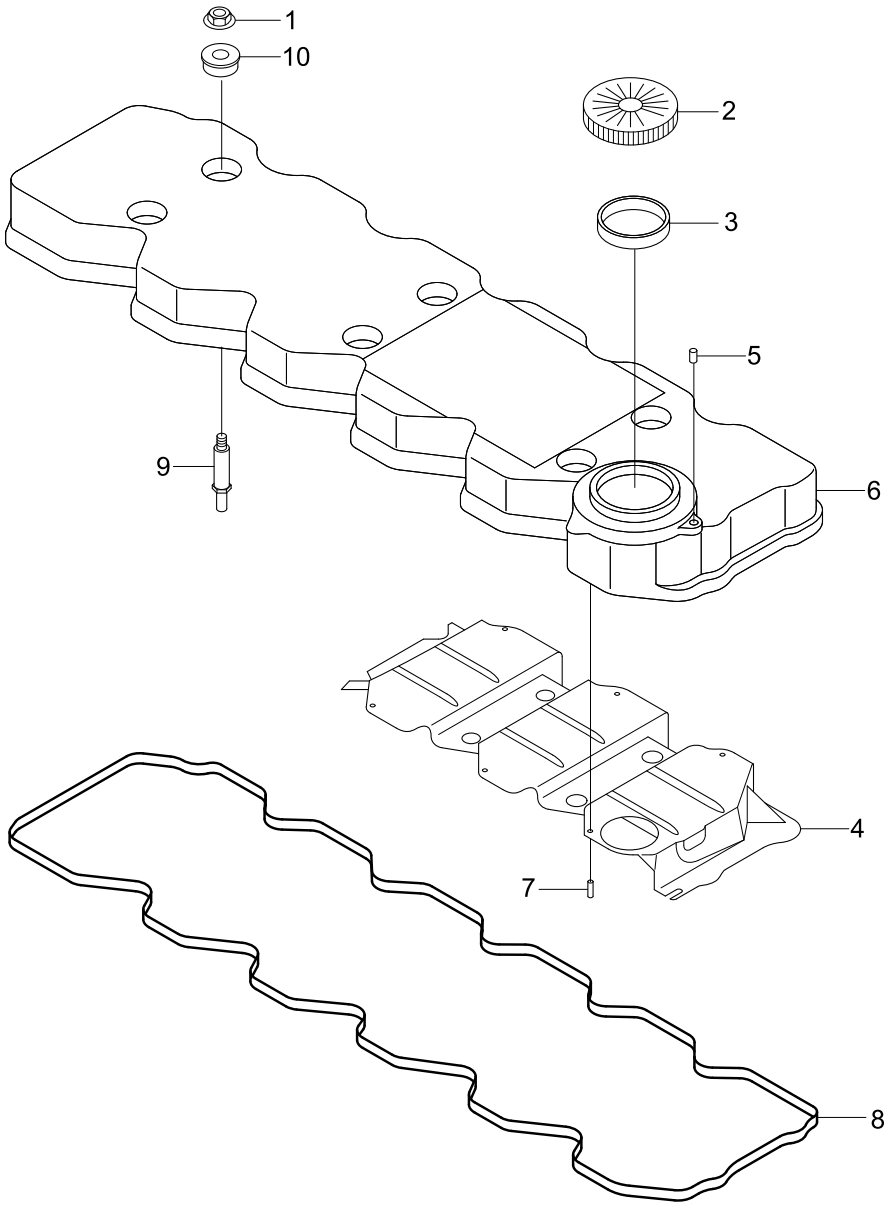

Item	Part_No	IS	Ord	T	Description	Qty	Serial_No	ITC	Remark
1	4893936				NUT-HEXAGON FLANGE	6			VC9304
*	3976167				COVER-VALVE	1			
	4895459				.CAP-FILLER	1			
2	4895460				..CAP-FILLER	1			
3	4895461				..GASKET-FILLER CAP	1			
*	3968862				.COVER-VALVE	1			
4	4898648				..BAFFLE-BREATHER	1			
*	2831347				..COVER-VALVE	1			
5	3945095				...PLUG-EXPANSION	1			
N6	2831325				...COVER-VALVE	1			NOT
7	4899188				..RIVET	8			
8	4899226				.GASKET-VALVE COVER	1			
9	4896991				STUD	6			
10	4899239				ISOLATOR-NOISE	6			
N	@				NOT INDIVIDUALLY SUPPLIED	AR			NOT

WATER INLET CONNECTION

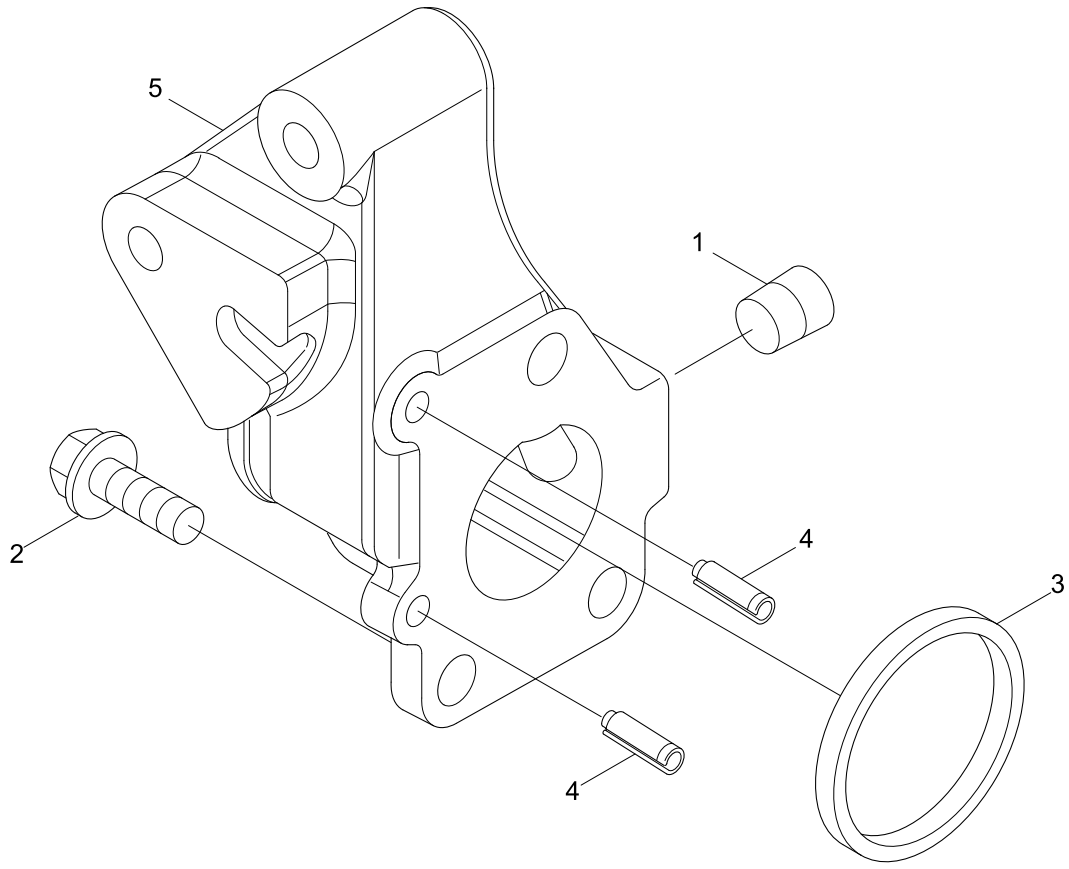

Item	Part_No	IS	Ord	T	Description	Qty	Serial_No	ITC	Remark
1	3008468				PLUG-PIPE	1			WI9178
2	3902460				SCREW-HEX F/HEAD CAP	3			
3	3906697				SEAL-RECT RING	1			
*	3943990				CONN-WATER INLET	1			
4	131584				.PIN-ROLL	2			
N5	3943991				.CONN-WATER INLET	1			NOT
N	@				NOT INDIVIDUALLY SUPPLIED	AR			NOT

WATER OUTLET CONNECTION

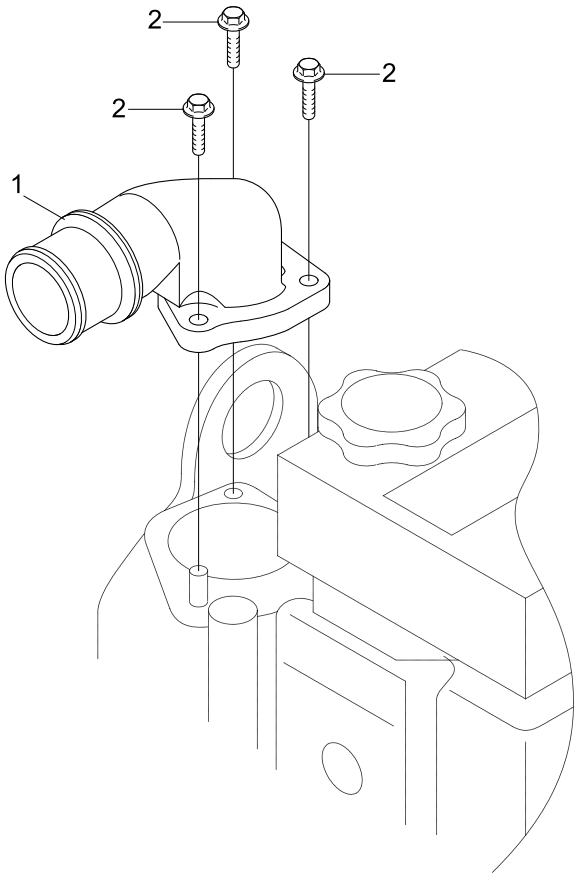

Item	Part_No	IS	Ord	T	Description	Qty	Serial_No	ITC	Remark
1	3943133				CONN-WATER OUTLET	1			WO9068-02
2	3901865				SCREW-HEX F/HEAD CAP	3			

WATER PUMP

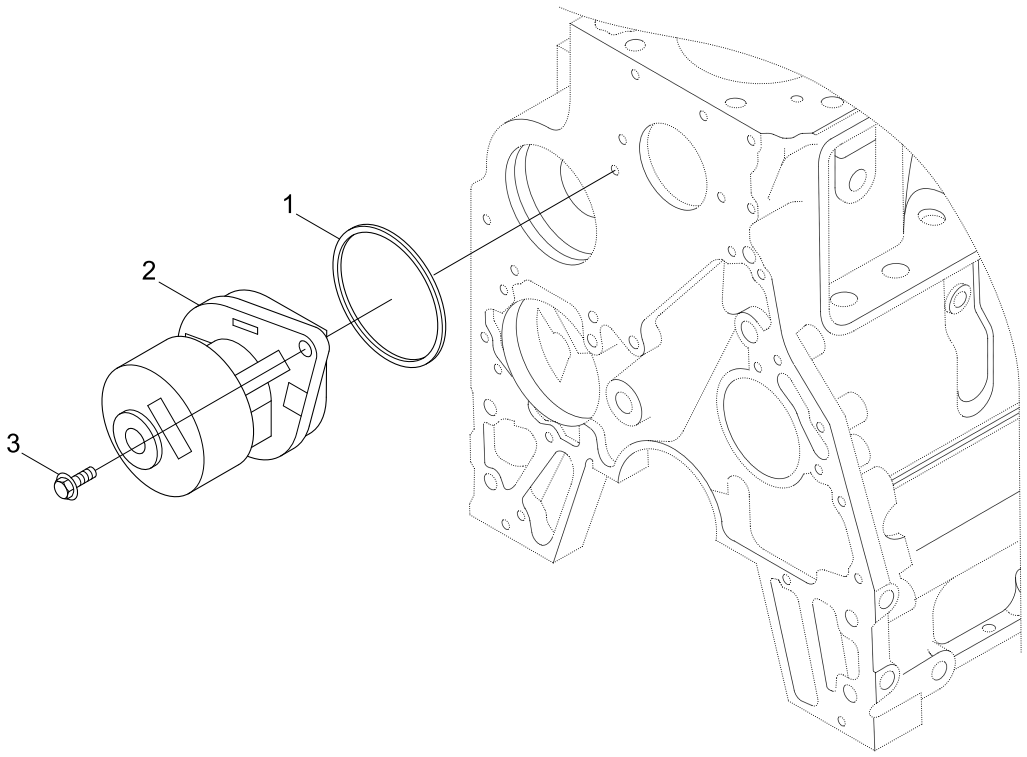

Item	Part_No	IS	Ord	T	Description	Qty	Serial_No	ITC	Remark
*	3800984				PUMP-WATER	1			WP9757-03
1	3906698				.SEAL-RECT RING	1			
N2	4891252				.PUMP-WATER	1			NOT
3	3093730				SCREW-HEX F/HEAD CAP	2			
N	@				NOT INDIVIDUALLY SUPPLIED	AR			NOT

WATER PUMP DRIVE

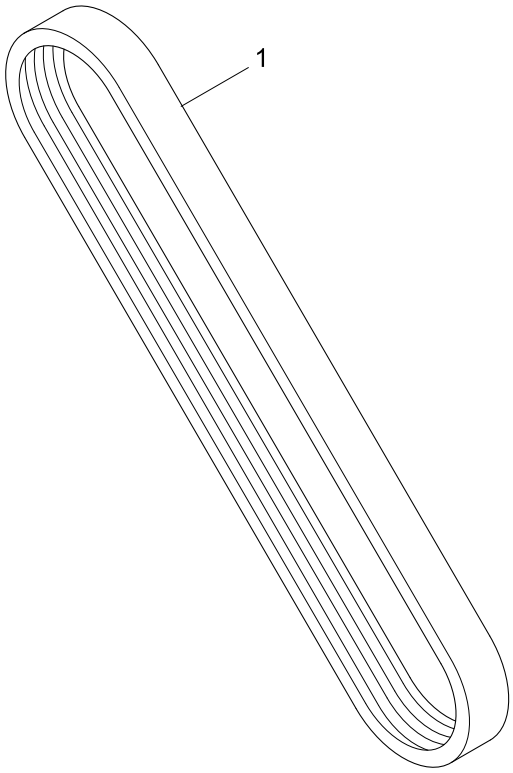

Item	Part_No	IS	Ord	T	Description	Qty	Serial_No	ITC	Remark
1	3290051				BELT/V-RIBBED	1			WP97017-03

BELT TENSIONER

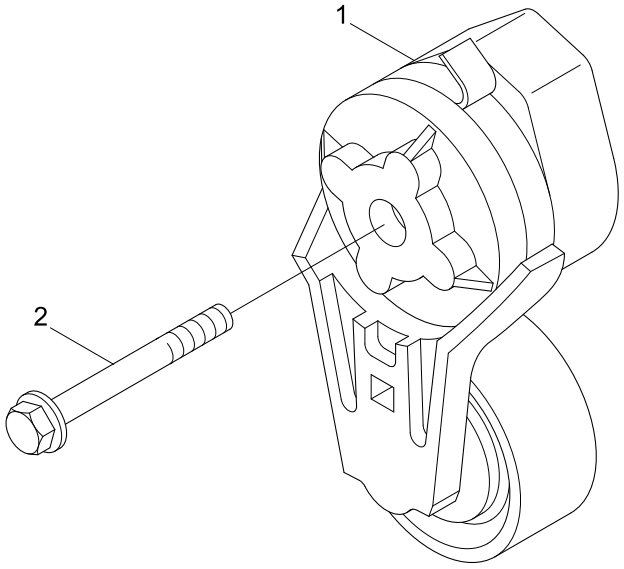

Item	Part_No	IS	Ord	T	Description	Qty	Serial_No	ITC	Remark
1	3976834				TENSIONER-BELT	1			WP97056-02
2	3900679				SCREW-HEX F/HEAD CAP	1			

ENGINE CONTROL MODULE HARNESS

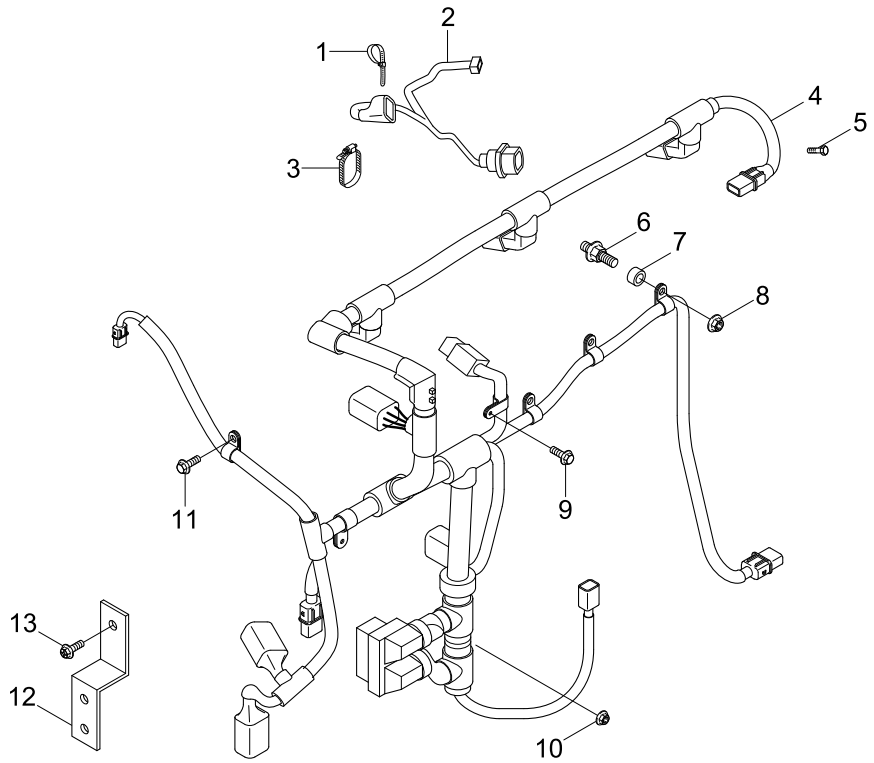

Item	Part_No	IS	Ord	T	Description	Qty	Serial_No	ITC	Remark
1	3963736				CLIP-WIRE RETAINING	6			WR9392
2	3287699				HARNESS-WIRING	3			
3	4890404				CLIP-WIRE RETAINING	3			
4	4939039				HARNESS-ECM WIRING	1			
5	3913638				SCREW-HEX F/HEAD CAP	3			
6	4929065				SCREW-HEX F/HD CAP	1			
7	3918363				SPACER-MOUNTING	2			
8	3900589				NUT-HEX FLANGE	2			
9	3093956				SCREW-HEX F/HEAD CAP	1			
10	3906216				NUT-HEX FLANGE	3			
11	3900626				SCREW-HEX F/HEAD CAP	1			
12	4933023				BRACE-WIRING	1			
13	3900627				SCREW-HEX F/HEAD CAP	2			

EXHAUST OUTLET CONNECTION

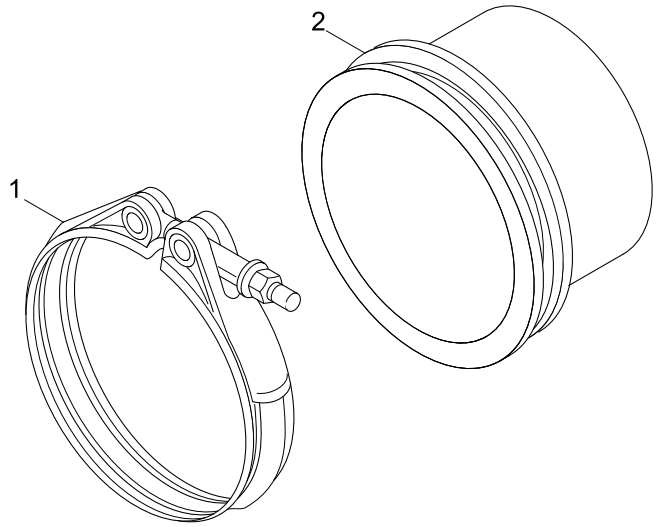

Item	Part_No	IS	Ord	T	Description	Qty	Serial_No	ITC	Remark
1	3903552				TUBE-EXHAUST OUTLET	1			XS9290
2	3903652				CLAMP-V BAND	1			