RUTHZIL TRATOR COMERCIAL DE PEÇAS LTDA 11 97083-6812 ROLANDO

HYUNDAI

WHEEL LOADER

PARTS CATALOGUE

HL770-9A
HL770XTD-9A



Serial No.

HYUNDAI

ENGINE MOUNTING

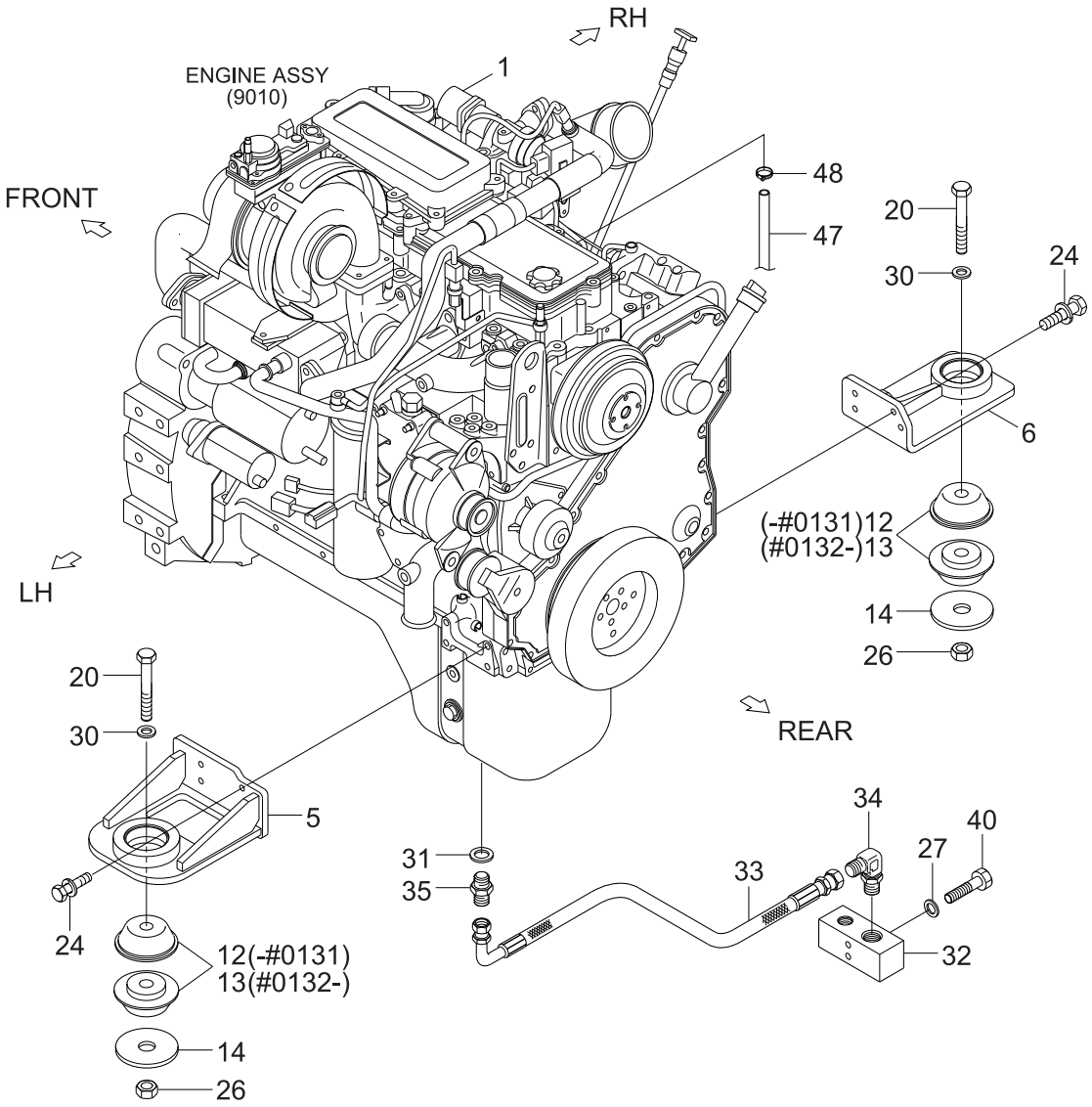

Item	Part_No	IS	Ord	T	Description	Qty	Serial_No	ITC	Remark
1	11LK-00110				ENGINE ASSY	1	-		
1	11LK-00111				ENGINE ASSY	1	#0113 -	D	
1	11LK-02110				ENGINE ASSY	1	#0161 -		TPEM/EU FLEXIBILITY
1	11LK-00111				ENGINE ASSY	1	#0113 -	D	
5	11LK-05010				BRACKET WA-LH	1			
6	11LK-05020				BRACKET WA-RH	1			
5	11LK-05010				BRACKET WA-LH	1			
6	11LK-05020				BRACKET WA-RH	1			
12	11N6-13050				RUBBER-MOUNT	4	-		
13	11N6-13060				RESILIENT	4	#0132 -		
14	11N8-00060				WASHER	2			
12	11N6-13050				RUBBER-MOUNT	4			
20	S017-241856				BOLT-HEX	2			
14	11N8-00060				WASHER	2			
24	S037-123556				BOLT-W/WASHER	8			
26	S205-24100B				NUT-HEX	2			
27	S441-100006				WASHER-SPRING	2			
20	S017-241856				BOLT-HEX	2			
30	S441-240006				WASHER-HARDENED	2			
31	P392-180000				WASHER-COPPER	1			
32	11LM-00200				DRAIN VALVE	1			
33	P930-082014				HOSE ASSY-ORFS 0X90	1			
34	X520-110003				ELBOW-90,ORFS	1			
35	X500-220007				CONNECTOR-ORFS	1			
27	S441-100006				WASHER-SPRING	2			
30	S441-240006				WASHER-HARDENED	2			
40	S017-100756				BOLT-HEX	2			

Item	Part_No	IS	Ord	T	Description	Qty	Serial_No	ITC	Remark
40	S017-100756				BOLT-HEX	2			
47	11QA-00070				HOSE-BREATHER	1	#0006 -	-	
48	S572-280006				CLAMP-HOSE,WIRE TYPE	1	#0006 -	-	
34	X520-110003				ELBOW-90,ORFS	1			
35	X500-220007				CONNECTOR-ORFS	1			
40	S017-100756				BOLT-HEX	2			
47	11QA-00070				HOSE-BREATHER	1	#0006 -	-	
48	S572-280006				CLAMP-HOSE WIRE TYPE	1	#0006 -	-	

FUEL TANK

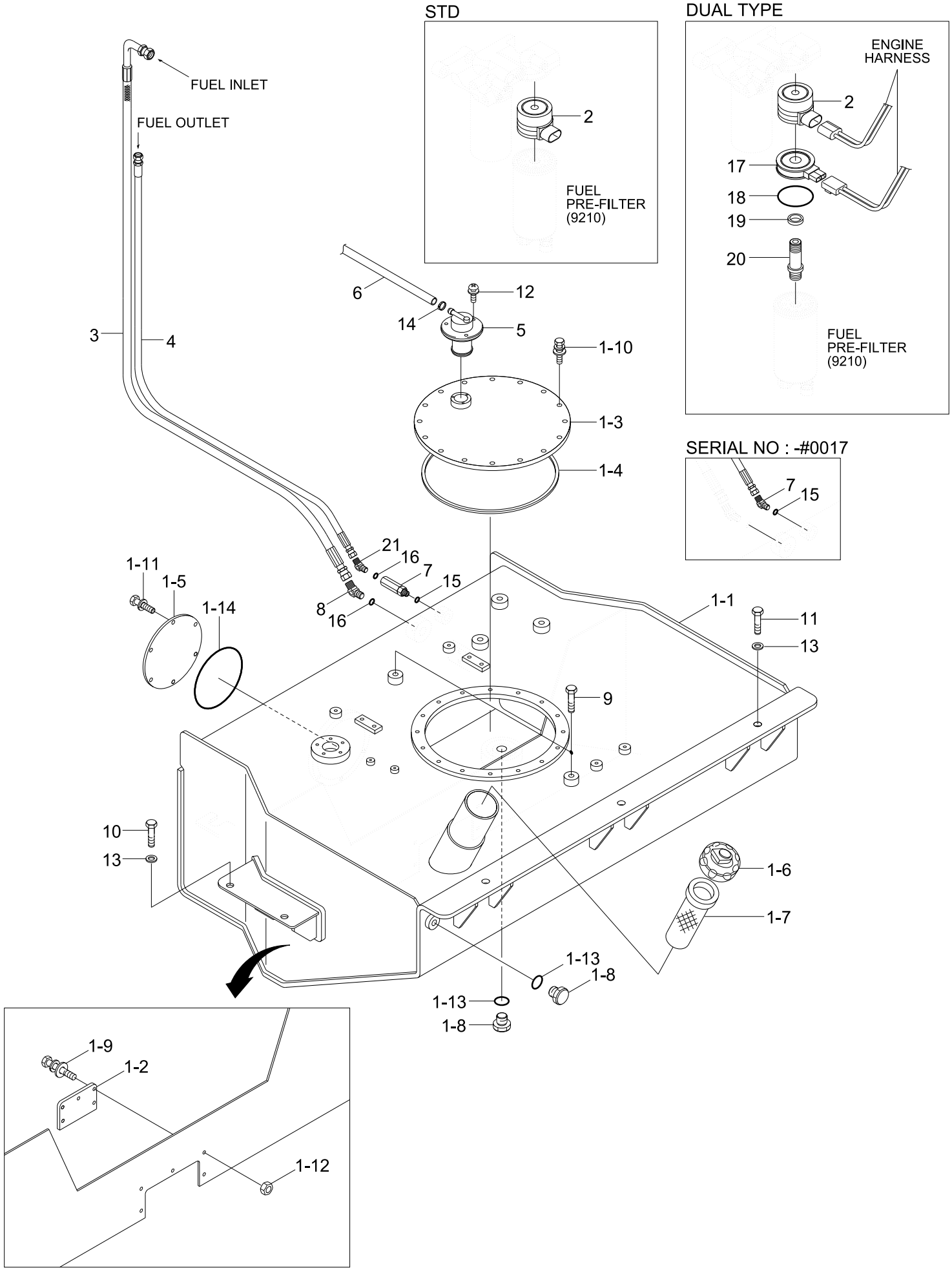
STD
2
FUEL
PRE-FILTER
(9210)
DUAL TYPE
ENGINE
HARNESS
2
17
18
19
20
FUEL
PRE-FILTER
(9210)
SERIAL NO : -#0017
7
15
FUEL INLET
FUEL OUTLET
3
4
6
14
12
5
1-10
1-3
1-4
21
16
7
15
8
16
1-11
1-5
1-14
1-1
11
13
9
10
13
1-6
1-7
1-13
1-8
1-13
1-8
1-9
1-2
1-12

Item	Part_No	IS	Ord	T	Description	Qty	Serial_No	ITC	Remark
1	11LK-26502				FUEL TANK ASSY	1			SAME KEY, STD
1	11LK-27500				FUEL TANK ASSY	1			VARIANT KEY,OPT
1	11LK-2650T				FUEL TANK ASSY	1	#0027 -		HEAVY DUTY
1-1	11LK-26512				.FUEL TANK WA	1			
1-1	11LK-2651T				.FUEL TANK WA	1	#0027 -		HEAVY DUTY
1-2	11LB-20280				.PLATE	1			
1-3	11LM-26230				.BOSS	1			
1-4	14L1-02180				.RUBBER	1			
1-5	11LM-26240				.COVER	1			
1-6	11LB-20050				.FUEL CAP ASSY	1			SAME KEY, STD
1-6	11FT-55210				.FUEL CAP ASSY	1			VARIANT KEY,OPT
1-7	31QA-02080				.STRAINER	1			
1-8	P220-110104				.PLUG-HEX	2			
1-9	S035-062026				.BOLT-W/WASHER	5			
1-10	S035-082026				.BOLT-W/WASHER	16			
1-11	S037-102556				.BOLT-W/WASHER	6			
1-12	S205-06100B				.NUT-HEX	5			
1-13	S631-018001				.O-RING	2			
1-14	S632-165001				.O-RING	1			
2	11NA-70410				FUEL WARMER KIT	1			STD
3	11LK-21010				HOSE ASSY	1			
4	11LB-20440				HOSE ASSY	1			
5	11FA-50300				FUEL CUT VALVE	1			
6	11S4-00561				HOSE	1			
7	P030-110002				ELBOW-45	1	-		
7	11LK-10260				CHECK VALVE	1	#0018 -	D	
8	P030-110003				ELBOW-45,ORFS	1			

Item	Part_No	IS	Ord	T	Description	Qty	Serial_No	ITC	Remark
8	P030-110003				ELBOW-45,ORFS	1			
9	S017-160206				BOLT-HEX	2			
10	S017-160456				BOLT-HEX	4			
11	S017-160506				BOLT-HEX	3			
12	S131-051546				SCREW-W/WASHER	3			
13	S441-160006				WASHER-HARDENED	7			
14	S571-140002				CLAMP-HOSE,WIRE TYPE	1			
15	S631-014004				O-RING	1			
16	S631-018004				O-RING	1	-		
16	S631-018004				O-RING	2	#0018 -	D	
17	392702300				HEATER	1			DUAL F/WARMER
18	392666000				O-RING	1			DUAL F/WARMER
19	11LK-50110				SPACER	1			DUAL F/WARMER
20	11LK-50100				CONNECTOR	1			DUAL F/WARMER
21	P030-110014				ELBOW-45	1	#0018 -		DUAL F/WARMER

COOLING SYSTEM

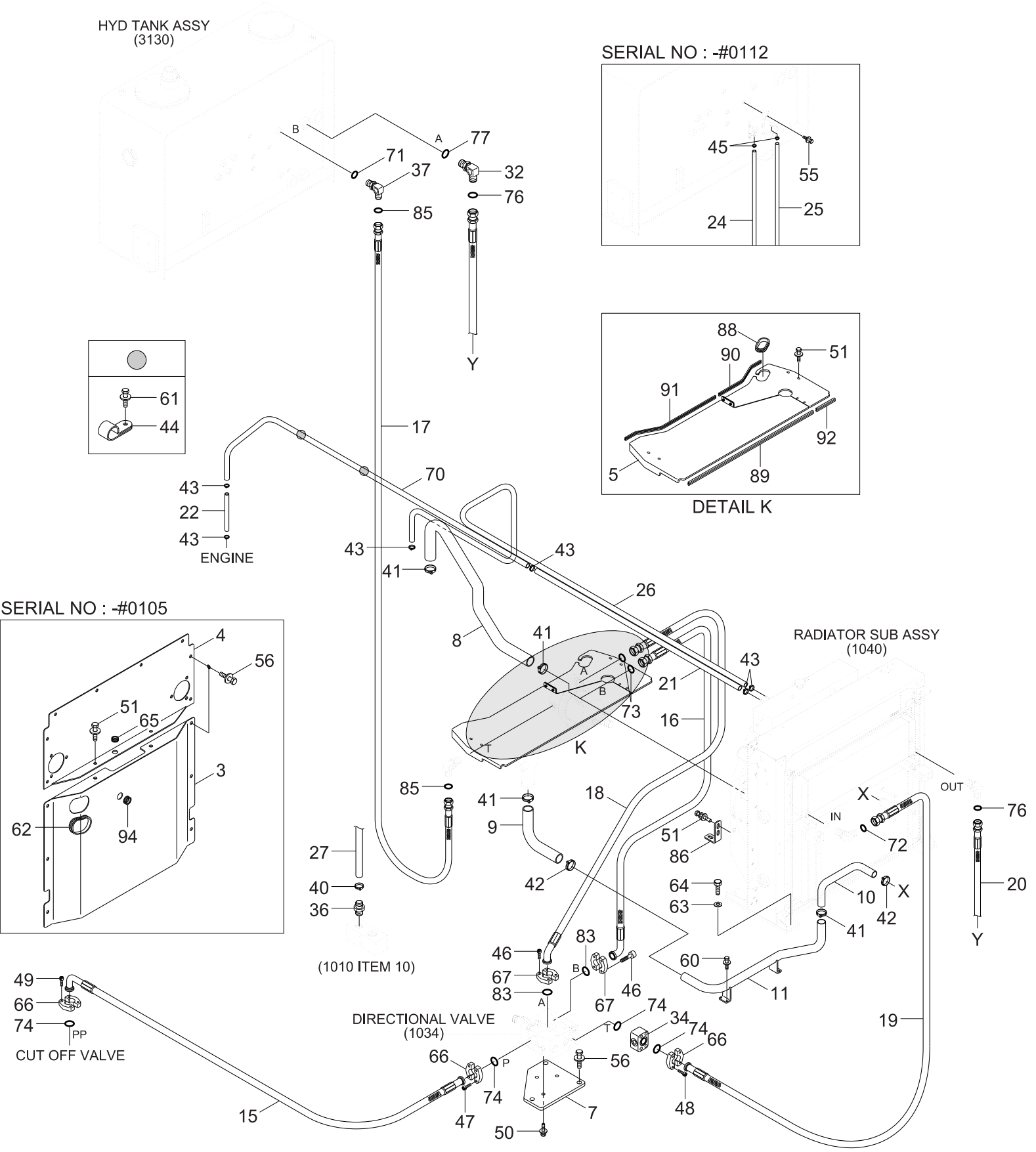

Item	Part_No	IS	Ord	T	Description	Qty	Serial_No	ITC	Remark
3	11LK-35242				SCREEN PLATE WA	1	-		
4	11LK-35253				SCREEN PLATE WA	1	-		
5	11LK-35280				SCREEN ASSY	1			
7	11LL-35281				BRACKET	1			
8	11LK-35291				HOSE-RUBBER LOW	1			
9	11LK-35301				HOSE-RUBBER LOW	1			
10	11LK-35311				HOSE-RUBBER LOW	1			
11	11LK-35371				PIPE WA	1			
15	P700-124369				HOSE ASSY-FLG 0X90	1			
16	P980-084320				HOSE ASSY-ORFS 0X90	1			
17	P930-062069				HOSE ASSY-ORFS 0X90	1			
18	P950-084321				HOSE ASSY-ORFS,FLG	1			
19	P943-122352				HOSE ASSY-ORFS,FLG	1			
20	P913-162072				HOSE ASSY-ORFS 0X0	1			
21	P760-011032				HOSE-RUBBER	1			
22	P760-011040				HOSE-RUBBER	1			
24	P760-011070				HOSE-RUBBER	2	-		
25	P760-011080				HOSE-RUBBER	1	-		
26	P760-011110				HOSE-RUBBER	1			
27	P760-021120				HOSE-RUBBER LOW	1			
32	X520-110020				ELBOW-90,ORFS	1			
34	11LL-30590				BLOCK-FLANGE	1			W/O COOLING
34	11LK-30590				BLOCK-FLANGE	1	#0027 -		HEAVY DUTY COOLING
36	P090-100808				CONNECTOR-HOSE	1			
37	X520-110014				ELBOW-90,ORFS	1			
40	S572-200006				CLAMP-HOSE,WIRE TYPE	2			
41	S572-710006				CLAMP-HOSE,WIRE TYPE	8			

Item	Part_No	IS	Ord	T	Description	Qty	Serial_No	ITC	Remark
41	S572-710006				CLAMP-HOSE,WIRE TYPE	8			
42	S572-750006				CLAMP-HOSE,WIRE TYPE	4			
43	S520-017000				CLAMP-HOSE	6			
44	S543-100002				CLAMP-TUBE	2			
45	S520-015000				CLAMP-HOSE,S/DRIVE	4	- #0112		
46	S109-080256				BOLT-SOCKET	8			
47	S109-100256				BOLT-SOCKET	4			
48	S109-100606				BOLT-SOCKET	4			W/O COOLING
48	S109-100856				BOLT-SOCKET	4	#0027 -		HEAVY DUTY COOLING
49	S109-100306				BOLT-SOCKET	4			
50	S037-082056				BOLT-W/WASHER	3			
51	S037-102056				BOLT-W/WASHER	12	- #0102		
51	S037-102056				BOLT-W/WASHER	10	#0104 -	A	
55	S035-082056				BOLT-W/WASHER	3	- #0112		
56	S037-122556				BOLT-W/WASHER	17	- #0102		
56	S037-122556				BOLT-W/WASHER	3	#0104 -	A	
60	S037-102556				BOLT-W/WASHER	4			
61	S037-101556				BOLT-W/WASHER	2			
62	S791-020040				GROMMET-PLATE	1	- #0102		
63	S441-160006				WASHER-HARDENED	6			
64	S017-16050D				BOLT-HEX	6			
65	S681-190400				GROMMET	1	- #0102		
66	P173-120102				FLANGE-HYD,SPLIT	6			
67	P173-080101				FLANGE-HYD,SPLIT	4			
70	11LL-35640				TUBE	1			
71	S631-018004				O-RING	1			
72	S621-018001				O-RING	3			

Item	Part_No	IS	Ord	T	Description	Qty	Serial_No	ITC	Remark
72	S621-018001				O-RING	3			
73	S621-014001				O-RING	2			
74	Y171-019004				O-RING	5			
76	S621-021001				O-RING	3			
77	S631-038004				O-RING	1			
83	Y171-015004				O-RING	2			
85	S621-012001				O-RING	2			
86	11LK-31990				PLATE	2			
88	S760-031012				GROMMET	1			
89	S772-010500				WEATHER STRIP	1			
90	S772-004600				WEATHER STRIP	1			
91	S772-007000				WEATHER STRIP	1			
92	S772-001700				WEATHER STRIP	1			
94	S661-360400				CAP-RUBBER	1	-		

FAN MOTOR

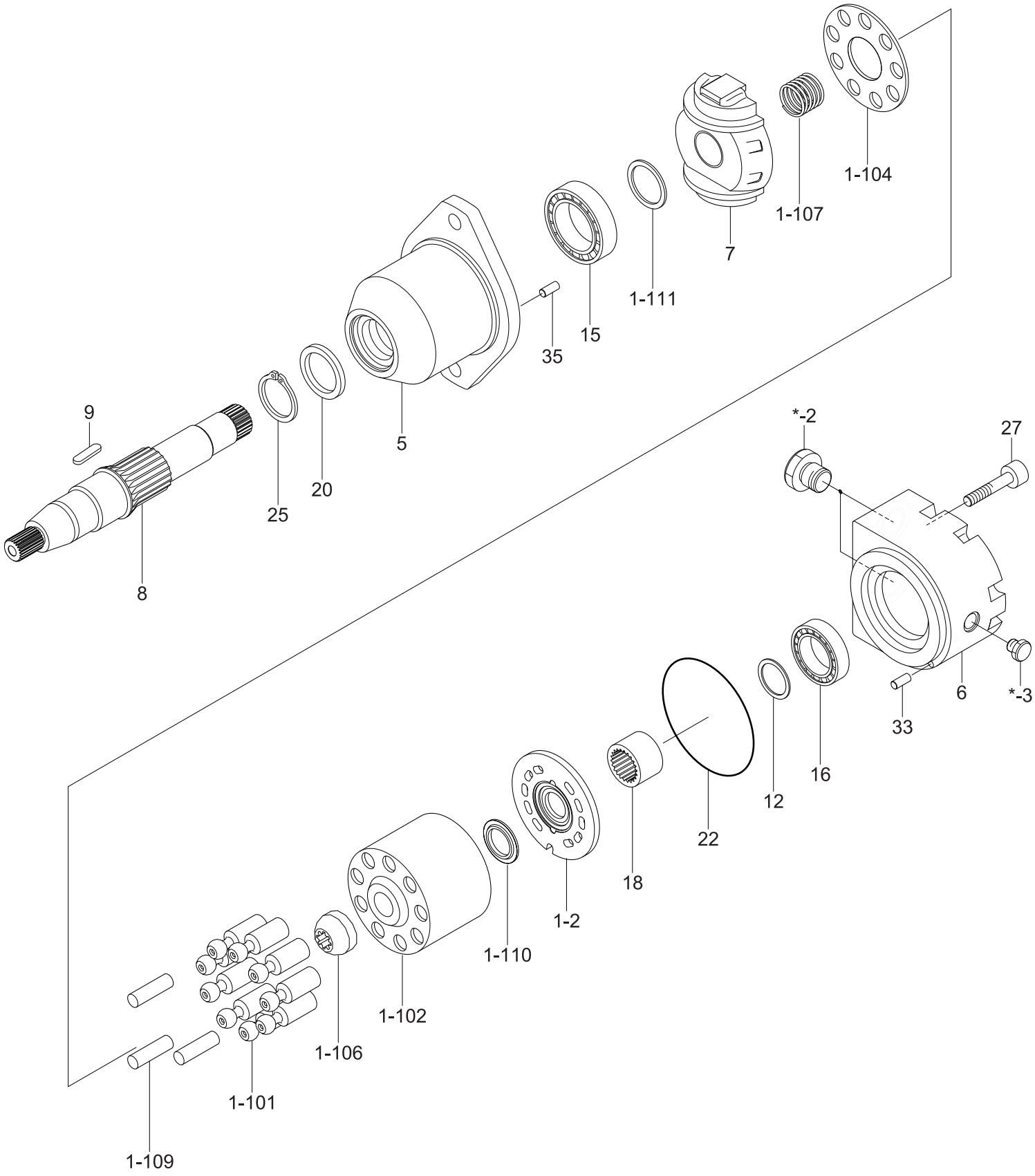
1-104
1-107
7
1-111
15
35
5
20
25
9
8
*-2
27
6
*-3
33
16
12
22
18
1-2
1-110
1-102
1-106
1-101
1-109

Item	Part_No	IS	Ord	T	Description	Qty	Serial_No	ITC	Remark
*	11LL-30520				FAN MOTOR	1			
*-1	ZGBP-00296				.PISTON MOTOR	1			
1	ZGBP-00297				..ROTARY GROUP	1			
N1-1	ZGBP-00308				...ROTARY GROUP	1			NOT
1-101	ZGBP-00310				....PISTON	9			
1-102	ZGBP-00311				....CYLINDER	1			
1-104	ZGBP-00312				....RETAINING PLATE	1			
1-106	ZGBP-00313				....RETAINING BALL	1			
1-107	ZGBP-00314				....SPRING	1			
N1-10	ZGBP-00315				....PRESSURE PIN	3			NOT
1-110	ZGBP-00316				....V-RING	1			
1-111	ZGBP-00317				....BACK-UP PLATE	1			
1-2	ZGBP-00309				...CONTROL PLATE	1			
5	ZGBP-00298				..MOTOR HOUSING	1			
6	ZGBP-00299				..PORT PLATE	1			
7	ZGBP-00300				..CAM PLATE	1			
8	ZGBP-00301				..DRIVE SHAFT	1			
9	ZGBP-00275				..SHAFT KEY	1			
12	ZGBP-00276				..ADJUSTABLE SHIM	1			
15	ZGBP-00278				..TAPERED ROLLER	1			
16	ZGBP-00279				..TAPERED ROLLER	1			
18	ZGBP-00302				..BEARING BUSHING	1			
20	ZGBP-00303				..SHAFT SEAL RING	1			
22	ZGBP-00304				..O-RING	1			
25	ZGBP-00282				..RETAINING RING	1			
27	ZGBP-00305				..SCREW-SOCKET HEAD	8			
33	ZGBP-00306				..CYLINDER PIN	1			

Item	Part_No	IS	Ord	T	Description	Qty	Serial_No	ITC	Remark
33	ZGBP-00306				..CYLINDER PIN	1			
35	ZGBP-00307				..CYLINDER PIN	2			
N*-2	@				.SCREW	2			NOT
N*-3	@				.SCREW	1			NOT
N	@				NOT SUPPLIED PARTS	AR			NOT

DIRECTIONAL VALVE

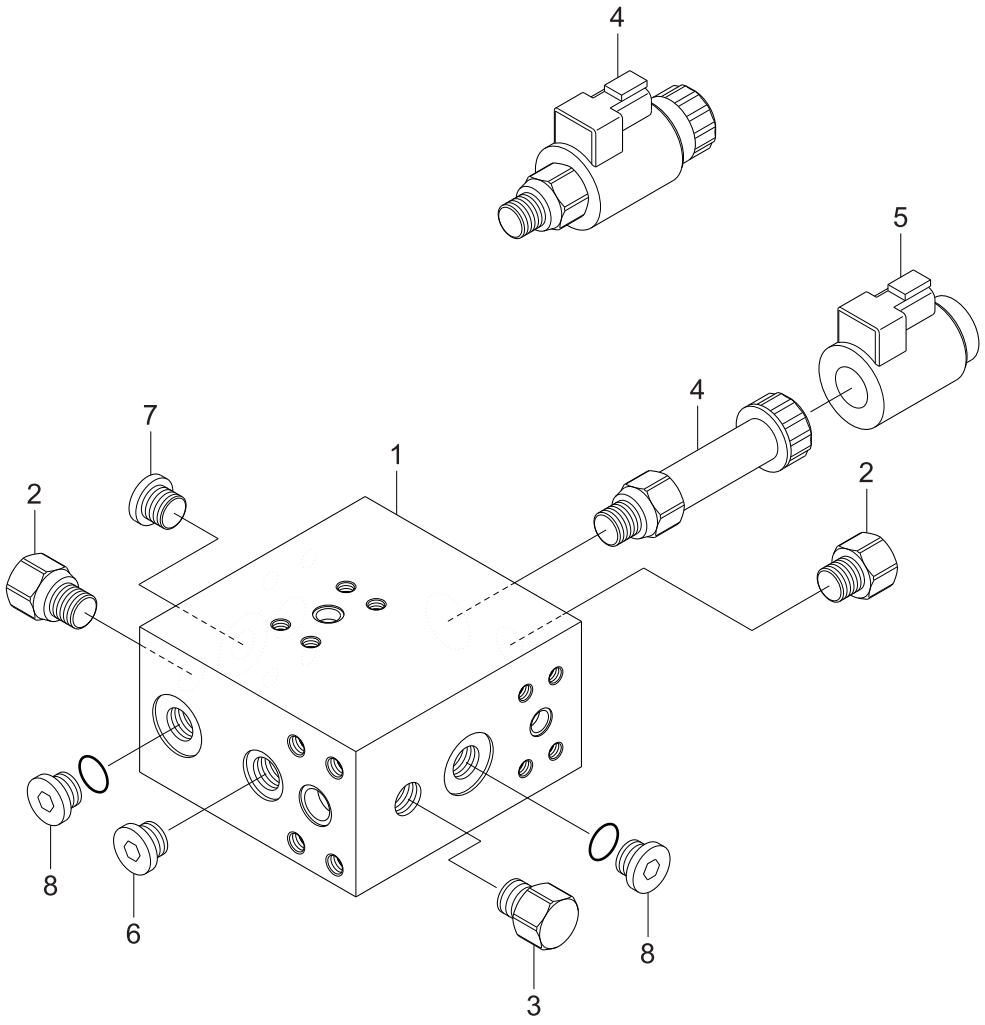

Item	Part_No	IS	Ord	T	Description	Qty	Serial_No	ITC	Remark
*	11LL-30531				DIRECTIONAL VALVE	1			W/O COOLING
N*	11LK-30540				DIRECTIONAL VALVE	1	#0004 -	-	NOT
1	XKBL-00091				.BODY	1			
2	XKBL-00075				.CHECK VALVE	2			
3	XKBL-00092				.CHECK VALVE	1			
4	XKBL-00093				.SOLENOID VALVE	1			
5	XKBL-00084				.COIL	1			
6	XKBL-00094				.WRENCH PLUG	1			
7	XKBL-00095				.WRENCH PLUG	1			
8	XKBL-00096				.WRENCH PLUG	2			
N	@				NOT SUPPLIED PARTS	AR			NOT

RADIATOR SUB ASSY (-#0134)

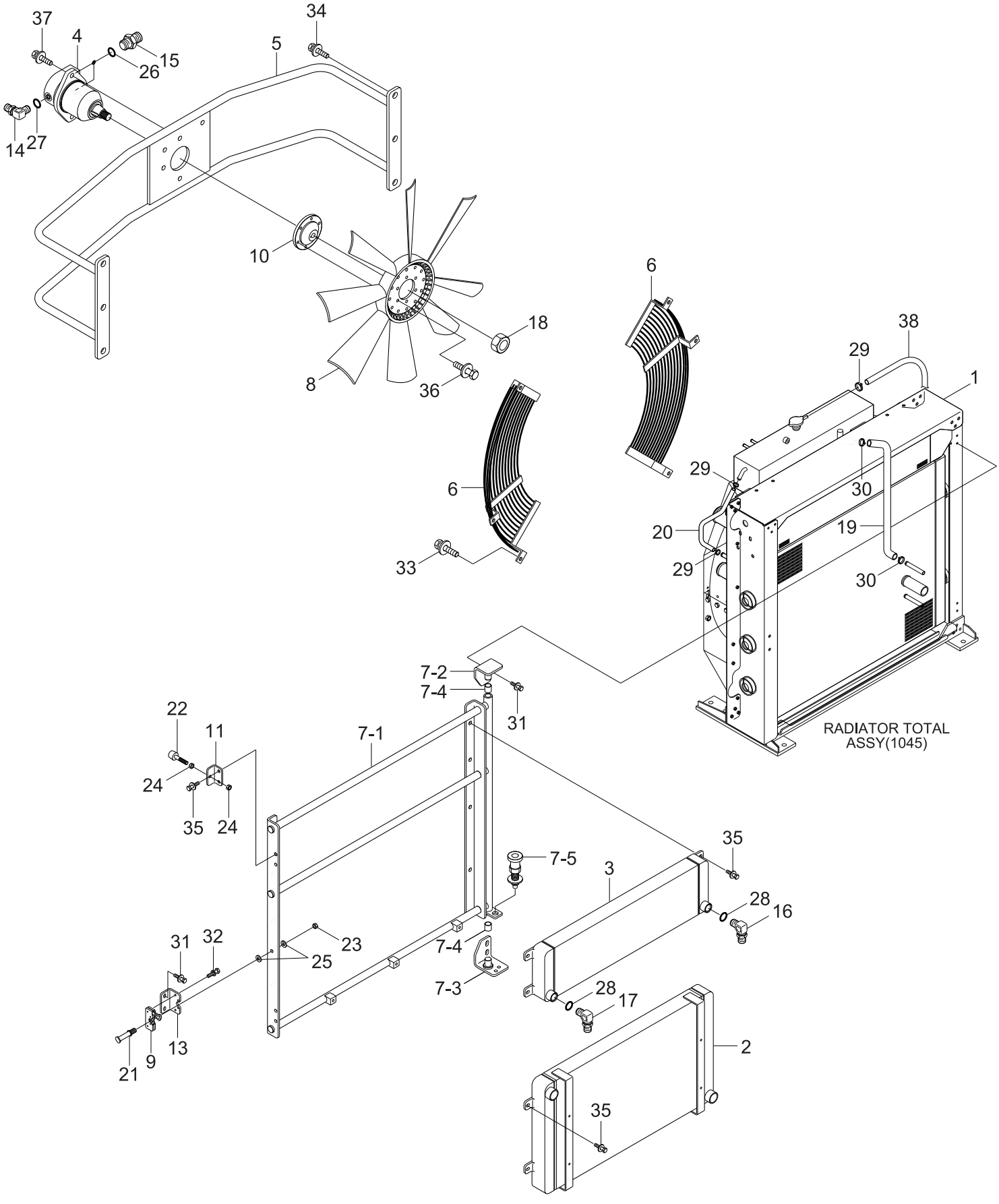

Item	Part_No	IS	Ord	T	Description	Qty	Serial_No	ITC	Remark
*	11LK-35501				RADIATOR SUB ASSY	1			
*	11LK-35501				RADIATOR SUB ASSY	1	-		W/O COOLING
*	11LK-35600				RADIATOR SUB ASSY	1	#0027 -	-	HEAVY DUTY COOLING
1	@				.RADIATOR TOTAL ASSY	1			NOT
1	@				.RADIATOR TOTAL ASSY	1			NOT
2	11LK-35072				.T/M OIL COOLER ASSY	1			
3	11LK-35051				.HYD OIL COOLER	1			
4	@				.FAN MOTOR	1			NOT
5	11LK-35215				.BRACKET WA	1			
6	11LL-35630				.FAN GUARD WA-REAR	2			
7	11LK-30703				.HINGE ASSY	1			
7-1	11LK-30713				..BRACKET WA	1			
7-2	11LL-30750				..HINGE WA	1			
7-3	11LK-30780				..PLATE	1			
7-4	S741-242535				..DU BUSINGH-FLANGE	2			
7-5	11LK-30790				..PLUNGER	1			
8	11LL-35320				.FAN	1			
9	11LK-31750				.LATCH ASSY	1			
10	11LL-35220				.ADAPTER	1			
11	11LK-31770				.PLATE	2			
13	11LK-32710				.PLATE WA	1	-		
13	11LK-31760				.PLATE WA	1	#0004 -	B	
14	31FG-80400				.ELBOW-90	1			
15	31S8-20160				.CONNECTOR	2			
16	X520-110017				.ELBOW-90,ORFS	1			
17	X520-110004				.ELBOW-90,ORFS	1			
18	11LL-35230				.NUT	1			

Item	Part_No	IS	Ord	T	Description	Qty	Serial_No	ITC	Remark
18	11LL-35230				.NUT	1			
19	P760-043200				.HOSE-RUBBER	1			
20	P760-011060				.HOSE-RUBBER LOW	1			
21	71LD-80180				.STRIKER	1			
22	71EH-13150				.BUMPER-RUBBER	2			
23	S205-16100B				.NUT-HEX	1			
24	S285-101006				.NUT-FLANGED	4			
25	S441-160006				.WASHER-HARDENED	3			
26	S611-019001				.O-RING	2			
27	S611-012001				.O-RING	1			
28	S631-024001				.O-RING	2			
29	S520-017000				.CLAMP-HOSE	3			
30	S572-400006				.CLAMP-HOSE,WIRE TYPE	4			
31	S037-122556				.BOLT-W/WASHER	6			
32	S033-062516				.BOLT-W/WASHER	4			
33	S035-102026				.BOLT-W/WASHER	6			
34	S037-122056				.BOLT-W/WASHER	6			
35	S037-102556				.BOLT-W/WASHER	16			
36	S037-102056				.BOLT-W/WASHER	6			
37	S037-123556				.BOLT-W/WASHER	2			
38	P760-011200				.HOSE-RUBBER	1			

RADIATOR SUB ASSY (#0135-)

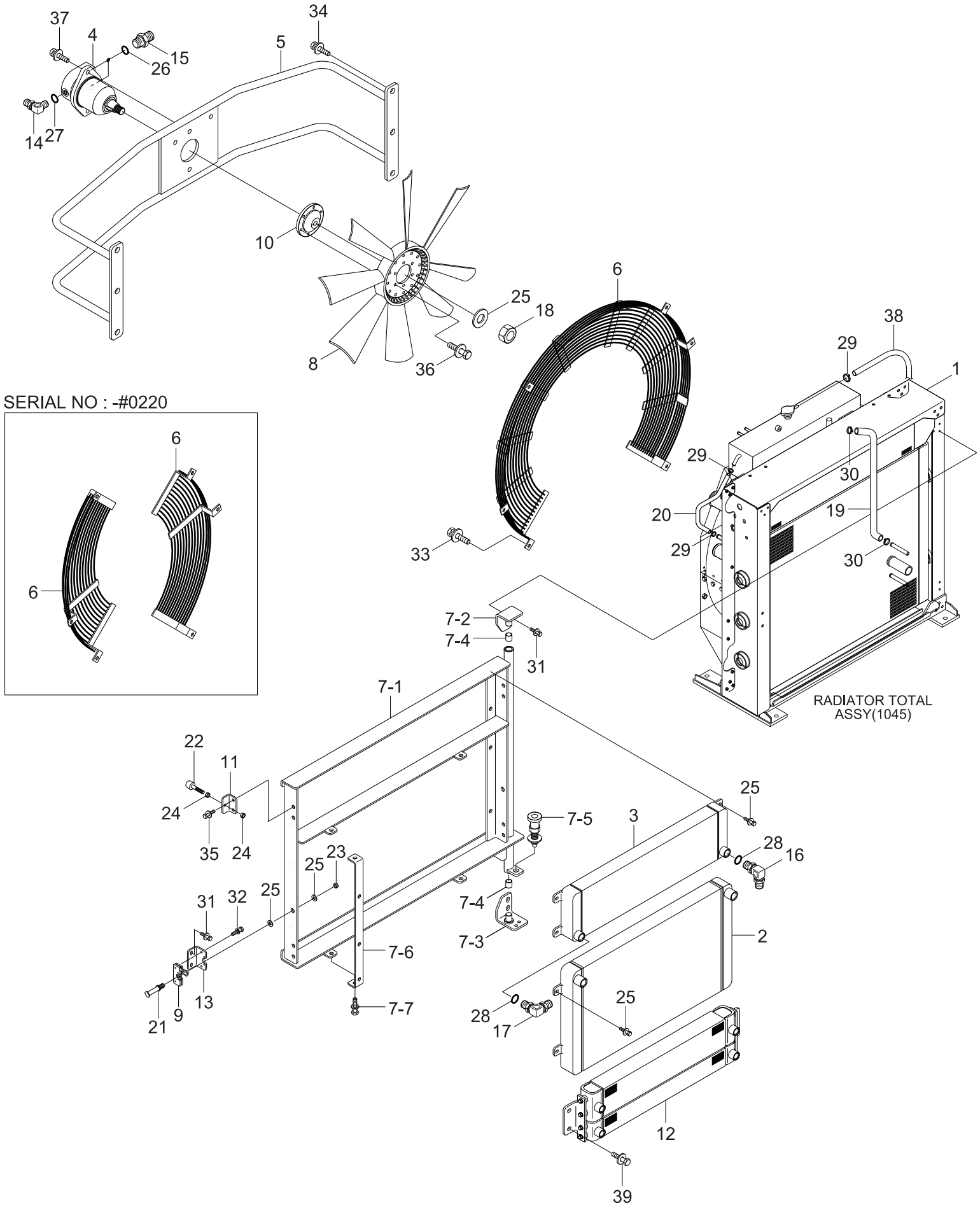

Item	Part_No	IS	Ord	T	Description	Qty	Serial_No	ITC	Remark
*	11LK-35501				RADIATOR SUB ASSY	1	#0135 -		W/O COOLING
*	11LK-35601				RADIATOR SUB ASSY	1	#0135 -		HEAVY DUTY COOLING
1	@				RADIATOR TOTAL ASSY	1			NOT
2	11LK-35073				T/M OIL COOLER ASSY	1			
3	11LK-35051				HYD OIL COOLER	1			
4	@				FAN MOTOR	1			NOT
5	11LK-35215				BRACKET WA	1			
6	11LL-35630				FAN GUARD WA-REAR	2	-		
6	11LL-35671				FAN GUARD WA	1	#0221 -	B	
7	11LK-35711				HINGE ASSY	1			
7-1	11LK-35721				.BRACKET WA	1			
7-2	11LL-30750				.HINGE WA	1			
7-3	11LK-30780				.PLATE	1			
7-4	S741-242535				.DU BUSHING-FLANGE	2			
7-5	11LK-30790				.PLUNGER	1			
7-6	11LK-35731				.PLATE WA	2			
7-7	S037-102556				.BOLT-W/WASHER	4			
8	11LL-35321				FAN	1			
9	11LK-31750				LATCH ASSY	1			
10	11LL-35220				ADAPTER	1			
11	11LK-31770				PLATE	2			
12	11LK-35450				AXLE OIL COOLER	1			
13	11LK-31760				PLATE WA	1			
14	31FG-80400				ELBOW-90	1			
15	31S8-20160				CONNECTOR	2			
16	X520-110017				ELBOW-90,ORFS	1			
17	X520-110004				ELBOW-90,ORFS	1			

Item	Part_No	IS	Ord	T	Description	Qty	Serial_No	ITC	Remark
17	X520-110004				ELBOW-90,ORFS	1			
18	11LL-35230				NUT	1			
19	P760-043200				HOSE-RUBBER	1			
20	P760-011060				HOSE-RUBBER LOW	1			
21	71LD-80180				STRIKER	1			
22	71EH-13150				BUMPER-RUBBER	2			
23	S205-16100B				NUT-HEX	1			
24	S285-101006				NUT-FLANGED	4			
25	S441-160006				WASHER-HARDENED	3			
26	S611-019001				O-RING	2			
27	S611-012001				O-RING	1			
28	S631-024001				O-RING	2			
29	S520-017000				CLAMP-HOSE	3			
30	S572-400006				CLAMP-HOSE,WIRE TYPE	4			
31	S037-122556				BOLT-W/WASHER	6			
32	S033-062516				BOLT-W/WASHER	4			
33	S035-102026				BOLT-W/WASHER	6			
34	S037-122056				BOLT-W/WASHER	6			
35	S037-102556				BOLT-W/WASHER	16			
36	S037-102056				BOLT-W/WASHER	6			
37	S037-123556				BOLT-W/WASHER	2			
38	P760-011200				HOSE-RUBBER	1			
39	S037-103056				BOLT-W/WASHER	4			

RADIATOR TOTAL ASSY

A/S ITEM SERIAL : #0002~#0151

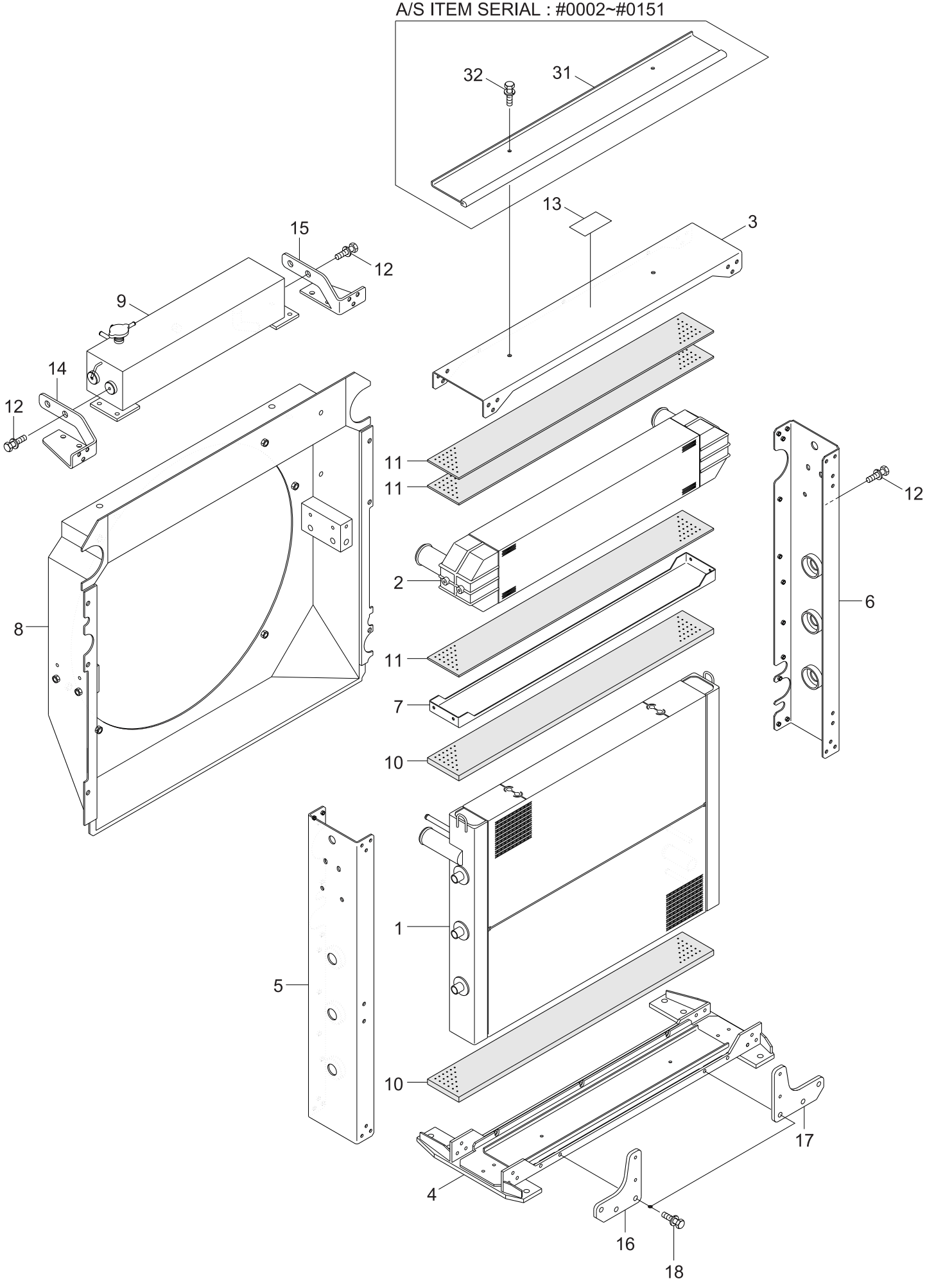

Item	Part_No	IS	Ord	T	Description	Qty	Serial_No	ITC	Remark
*	11LK-35013				RADIATOR TOTAL ASSY	1			
*	11LK-35013				RADIATOR TOTAL ASSY	1	- #0134		
*	11LK-36011				RADIATOR TOTAL ASSY	1	#0135 -	D	
1	11LK-35023				.RADIATOR ASSY	1			
2	11LK-35031				.CHARGE AIR COOLER	1	- #0185		
2	11LK-35032				.CHARGE AIR COOLER	1	#0186 -	A	
3	11LK-35122				.UPPER SUPPORT ASSY	1	- #0134		
3	11LK-35123				.UPPER SUPPORT ASSY	1	#0135 -	D	
4	11LK-35132				.LOWER SUPPORT ASSY	1	- #0134		
4	11LK-36020				.LOWER SUPPORT ASSY	1	#0135 -	D	
5	11LK-35152				.SUPPORT ASSY-RH,SIDE	1	- #0134		
5	11LK-35153				.SUPPORT ASSY-RH,SIDE	1	#0135 -	D	
6	11LK-35142				.SUPPORT ASSY-LH,SIDE	1	- #0134		
6	11LK-35143				.SUPPORT ASSY-LH,SIDE	1	#0135 -	D	
7	22306371				.UPPERR GUIDE ASSY	1			
8	11LK-35104				.SHROUD ASSY	1	- #0134		
8	11LK-35105				.SHROUD ASSY	1	#0135 -	D	
8	11LK-35104				.SHROUD ASSY	1			
9	11LK-35042				.SURGE TANK	1			
9	11LK-35042				.SURGE TANK	1	- #0134		
9	11LK-35043				.SURGE TANK	1	#0135 -	D	
9-1	XKAP-00083				..CAP COMPL	1	#0001 -	-	
10	45510051				.RAD AIR SEAL	2			
12	91310251				.BOLT-ASM	43			
11	XKAP-00055				.CAC AIR SEAL	3			
12	XKAP-00037				.BOLT-W/WASHER	43			
13	45155582				.NAME PLATE	1			

Item	Part_No	IS	Ord	T	Description	Qty	Serial_No	ITC	Remark
13	45155582				.NAME PLATE	1			
14	XKAP-00084				MTG BRKT(1) ASSY	1			
15	XKAP-00085				MTG BRKT(2) ASSY	1			
16	11LK-36030				BRACKET WA	1			
17	11LK-36040				BRACKET WA	1			
18	XKDG-00003				ASM BOLT	6	#0001 -		
31	11LK-35740				SCREEN PLATE ASSY	1	#0002 -		FOR A/S
32	S037-121556				BOLT-W/WASHER	2	#0002 -		FOR A/S

AIR INTAKE SYSTEM (-#0119)

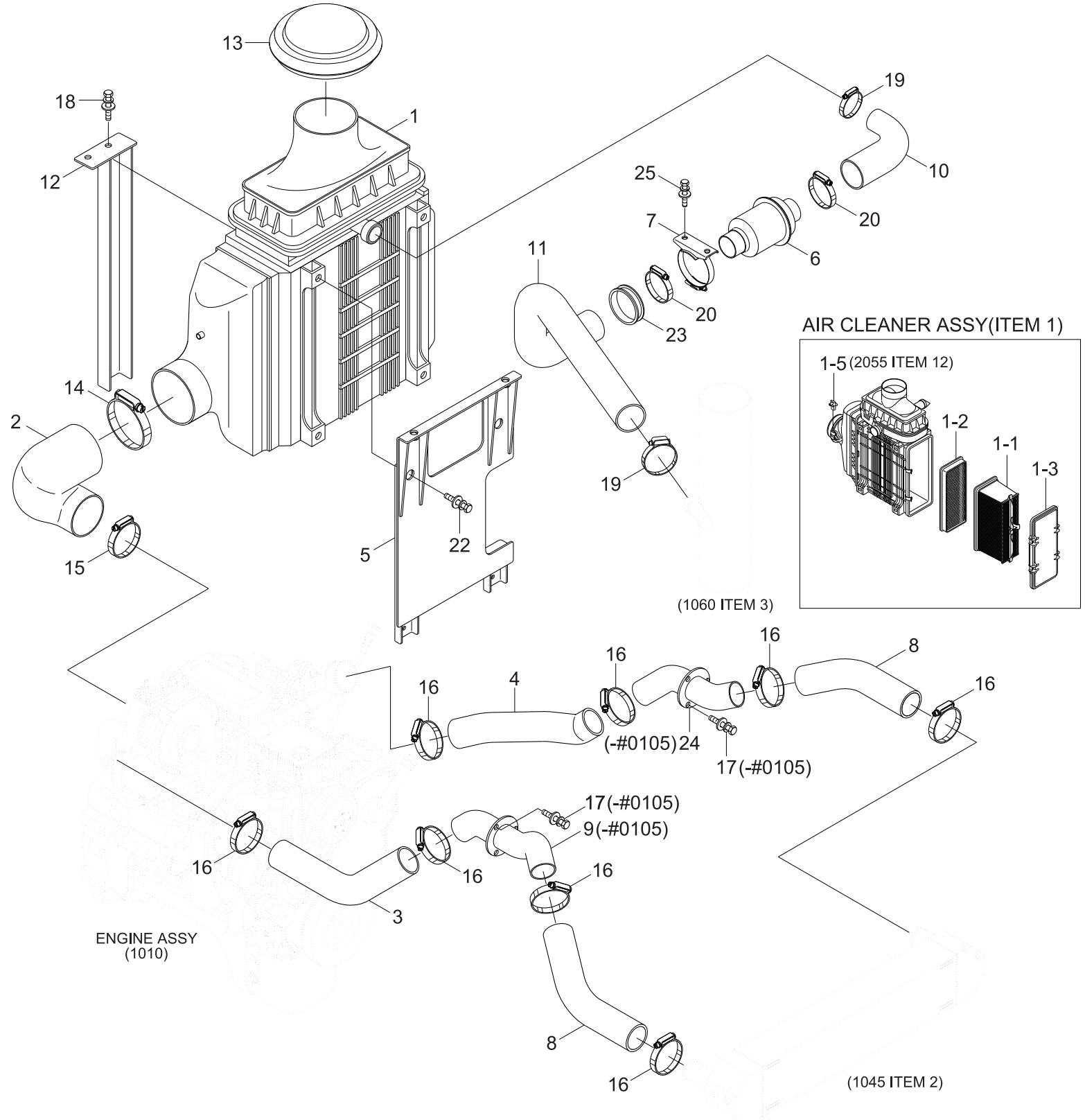

Item	Part_No	IS	Ord	T	Description	Qty	Serial_No	ITC	Remark
1	11LL-45010				AIR CLEANER ASSY	1			
1-1	11LL-45180				.FILTER-PRIMARY	1			
1-2	11LL-45190				.FILTER-SECONDARY	1			
2	11LK-45030				HOSE-AIR CLEANER	1			
3	11LK-45041				HOSE-CHARGED AIR	1			
4	11LK-45051				HOSE-CHARGED AIR	1			
5	11LL-45061				BRACKET WA	1			
6	11LL-45070				CHECK VALVE-EJECTOR	1			
7	11LK-45150				BRACKET WA	1			
8	11LK-45102				HOSE-CHARGED AIR	2			
9	11LK-45112				PIPE WA	1	- #0102		
10	11LL-45120				HOSE	1			
11	11LK-45170				HOSE	1	- #0110	-	FOR A/S
11	11LK-45131				HOSE	1			
12	11LL-45170				BRACKET WA	1			
13	11LP-40020				CAP-AIR CLEANER	1			
14	11LB-40190				CLAMP-HOSE	1			
15	11LB-40310				CLAMP-T BOLT	1			
16	11LQ-40030				CLAMP-T-RETENTION	8			
17	S037-102056				BOLT-W/WASHER	6	- #0102		
18	S037-122556				BOLT-W/WASHER	4			
19	S520-050000				CLAMP-HOSE	2			
20	S520-065000				CLAMP-HOSE	2			
22	S035-062026				BOLT-W/WASHER	6			SB-S-2014-016.PDF
23	S791-045025				GROMMET-PLATE	1			
24	11LK-45122				PIPE WA	1	- #0102		
25	S037-122056				BOLT-W/WASHER	2			

Item	Part_No	IS	Ord	T	Description	Qty	Serial_No	ITC	Remark
25	S037-122056				BOLT-W/WASHER	2			

AIR INTAKE SYSTEM (#0120-)

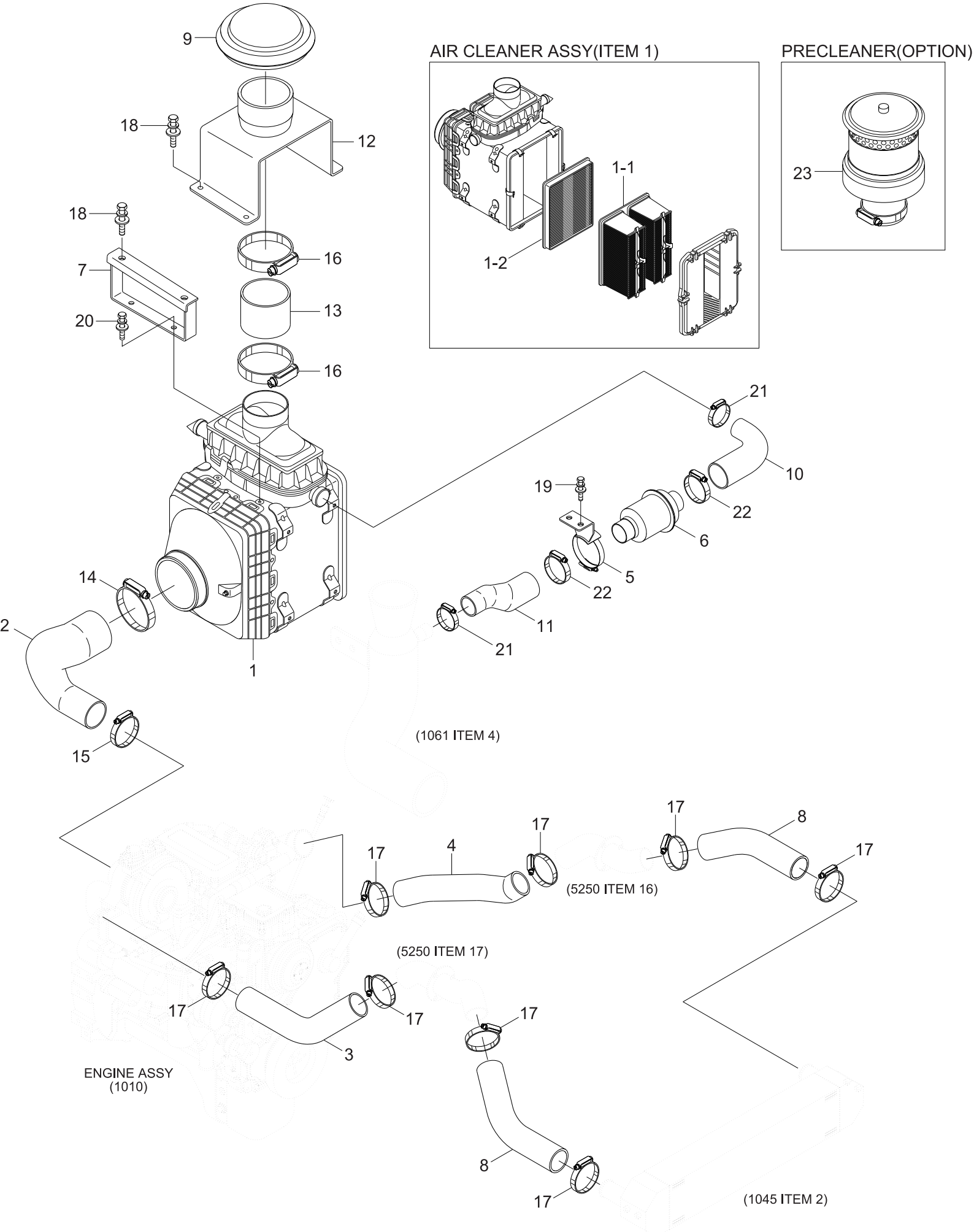

Item	Part_No	IS	Ord	T	Description	Qty	Serial_No	ITC	Remark
1	11LK-45010				AIR CLEANER ASSY	1			SB-S-2014-021.PDF
1-1	11Q9-10180				.FILTER-PRIMARY	1			
1-2	11Q9-10190				.FILTER-SECONDARY	1			
2	11LK-45070				HOSE-AIR CLEANER	1			
3	11LK-45041				HOSE-CHARGED AIR	1			
4	11LK-45051				HOSE-CHARGED AIR	1			
5	11LK-45200				BRACKET WA	1			
6	11LL-45070				CHECK VALVE-EJECTOR	1			
7	11LK-45080				BRACKET WA	2			
8	11LK-45102				HOSE-CHARGED AIR	2			
9	11Q8-22040				CAP-RAIN	1			
10	11LL-45120				HOSE	1			
11	11LK-45140				HOSE	1			
12	11LK-45250				PIPE W.A	1			
13	11LL-40260				HOSE-AIR CLEANER	1			
14	11LB-40240				CLAMP-T BOLT	1			
15	11LB-40310				CLAMP-T BOLT	1			
16	11LB-40190				CLAMP-HOSE	2			
17	11LQ-40030				CLAMP-T-RETENTION	8			
18	S037-123056				BOLT-W/WASHER	8			
19	S037-122056				BOLT-W/WASHER	2			
20	S037-102056				BOLT-W/WASHER	4			
21	S520-050000				CLAMP-HOSE	2			
22	S520-065000				CLAMP-HOSE	2			
23	11LL-40080				PRECLEANER	1			OPTION

EXHAUST SYSTEM (-#0119)

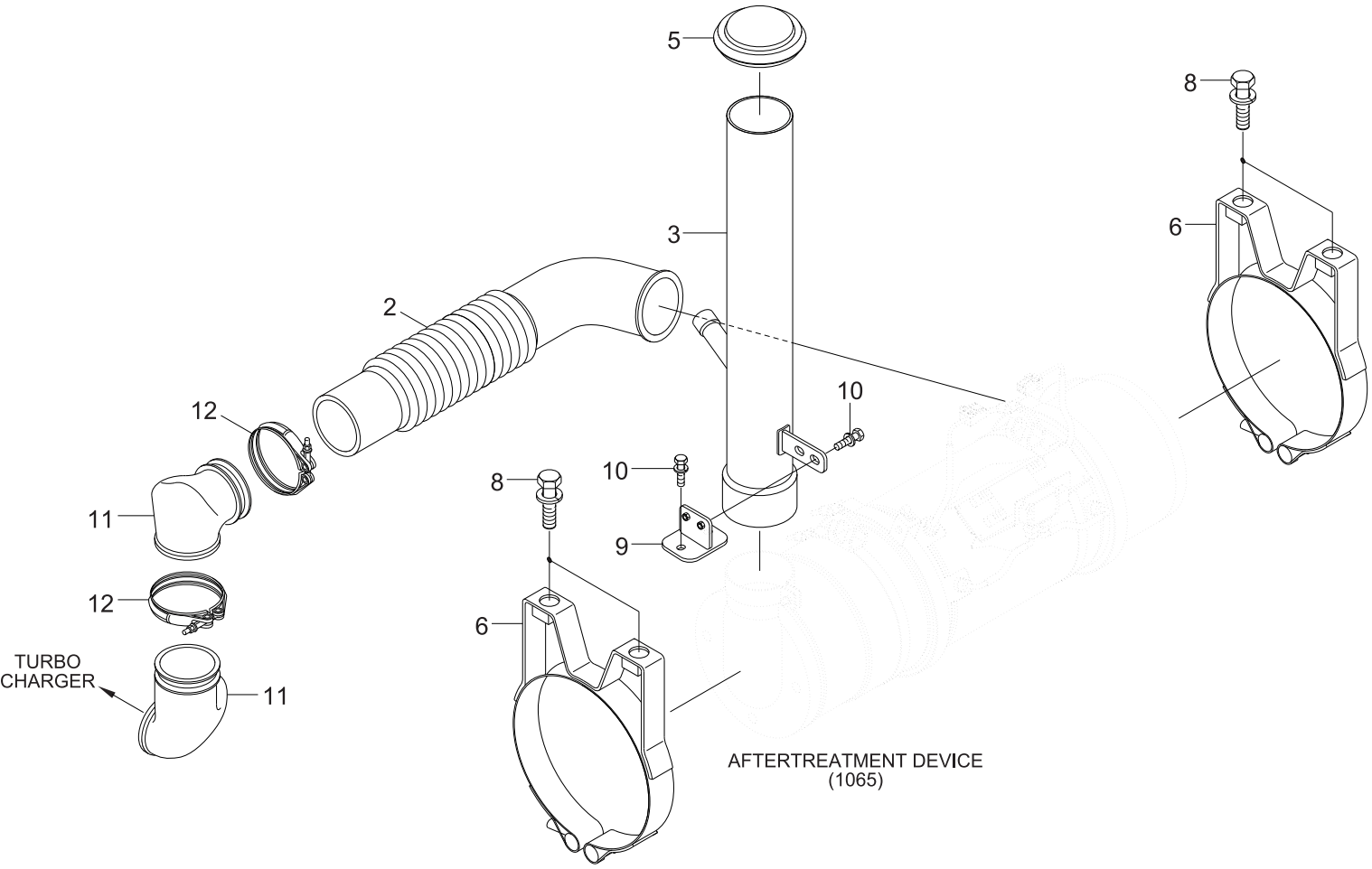

SERIAL NO : -#0103

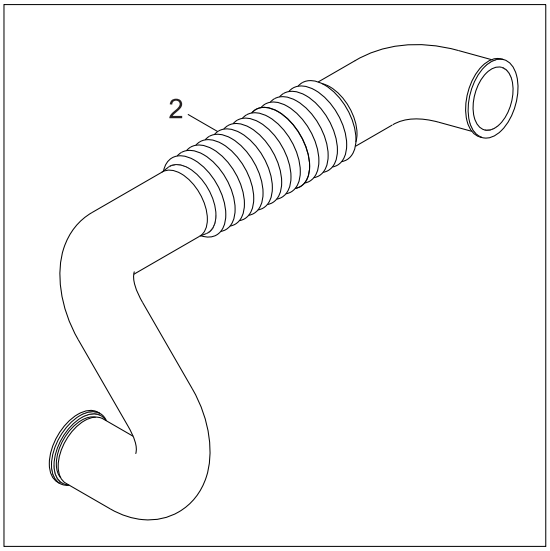

SERIAL NO : -#0042

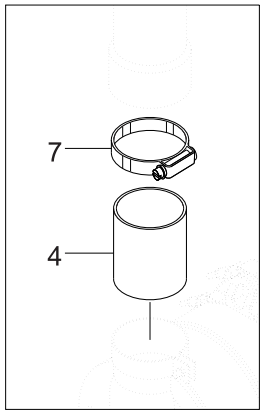

Item	Part_No	IS	Ord	T	Description	Qty	Serial_No	ITC	Remark
N2	11LK-55040				BELLOWS PIPE ASSY	1	-		NOT
N2	11LK-55080				BELLOWS PIPE ASSY	1	#0047 -	B	NOT
N2	11LK-55081				BELLOWS PIPE ASSY	1	#0104 -	B	NOT
3	11LL-55050				PIPE WA-EXHAUST	1	-		
3	11LK-55200				TAIL PIPE WA	1	#0016 -	B	
3	11LK-55201				TAIL PIPE WA	1	#0043 -	D	
4	11LL-55060				PIPE-EXHAUST	1	-	-	
5	11LL-55070				CAP-TAIL PIPE	1			
6	11LK-55100				CLAMP ASSY	2			
7	11LB-40180				CLAMP-HOSE	1	-	-	
8	S037-123056				BOLT-W/WASHER	4			
9	11LL-55130				PLATE	1	#0043 -	-	
10	S037-102556				BOLT-W/WASHER	4	#0043 -	-	
11	3970420				CONNECTION-E/OUTLET	2	#0104 -		
12	102408				CLAMP-V BAND	2	#0104 -		

EXHAUST SYSTEM (#0120-)

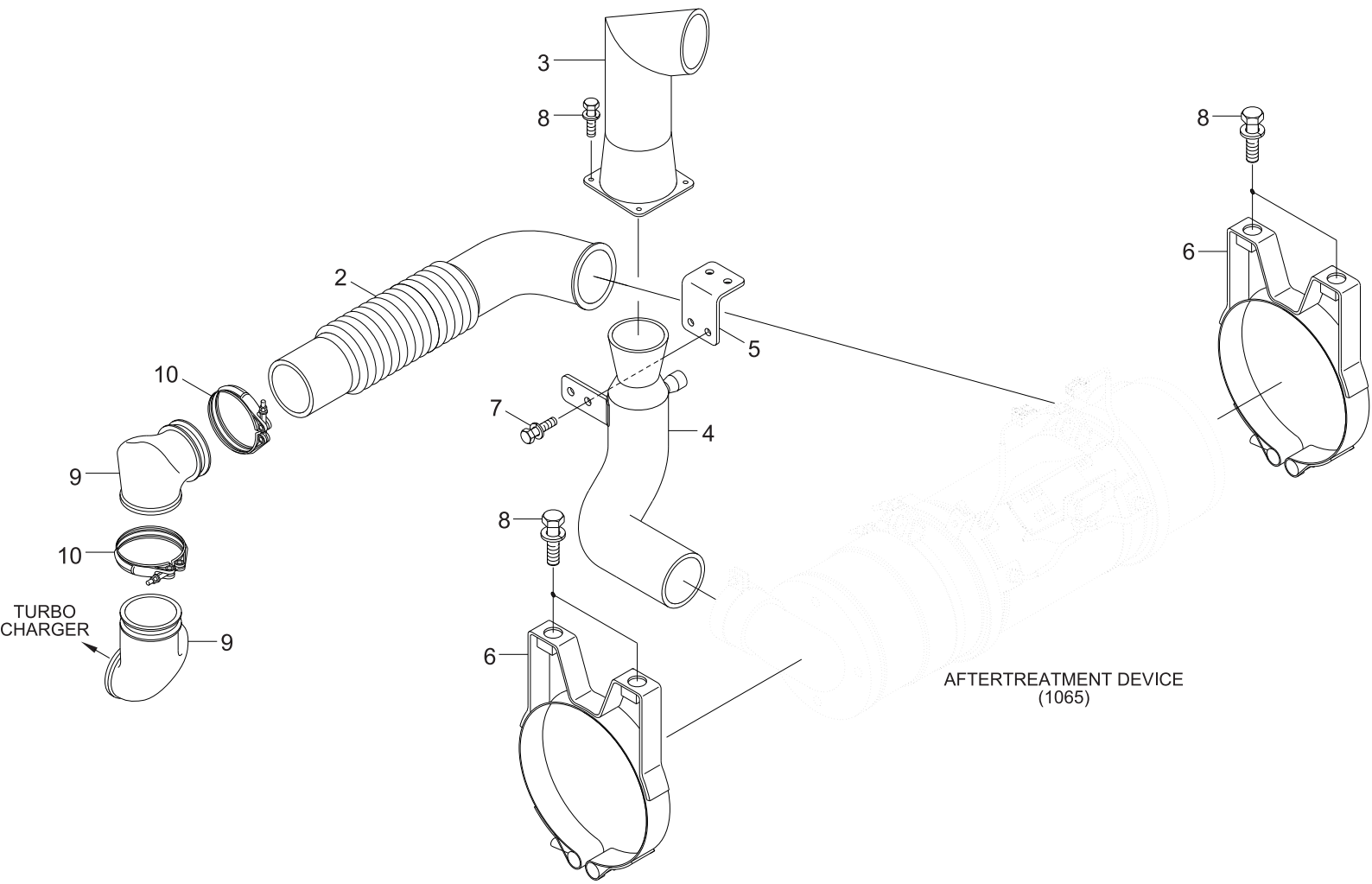

Item	Part_No	IS	Ord	T	Description	Qty	Serial_No	ITC	Remark
1	11Q9-03031				AFTERTREATMENT DEVICE	1			
2	11LK-55081				BELLOWS PIPE ASSY	1			
3	11LB-50090				PIPE WA-TAIL	1			
4	11LM-55250				PIPE WA	1			
5	11LK-55260				BRACKET WA	1			
6	11LK-55100				CLAMP ASSY	2			
7	S037-102556				BOLT-W/WASHER	5			
8	S037-123056				BOLT-W/WASHER	8			
9	3970420				CONNECTION-E/OUTLET	2			
10	102408				CLAMP-V BAND	2			

AFTERTREATMENT DEVICE

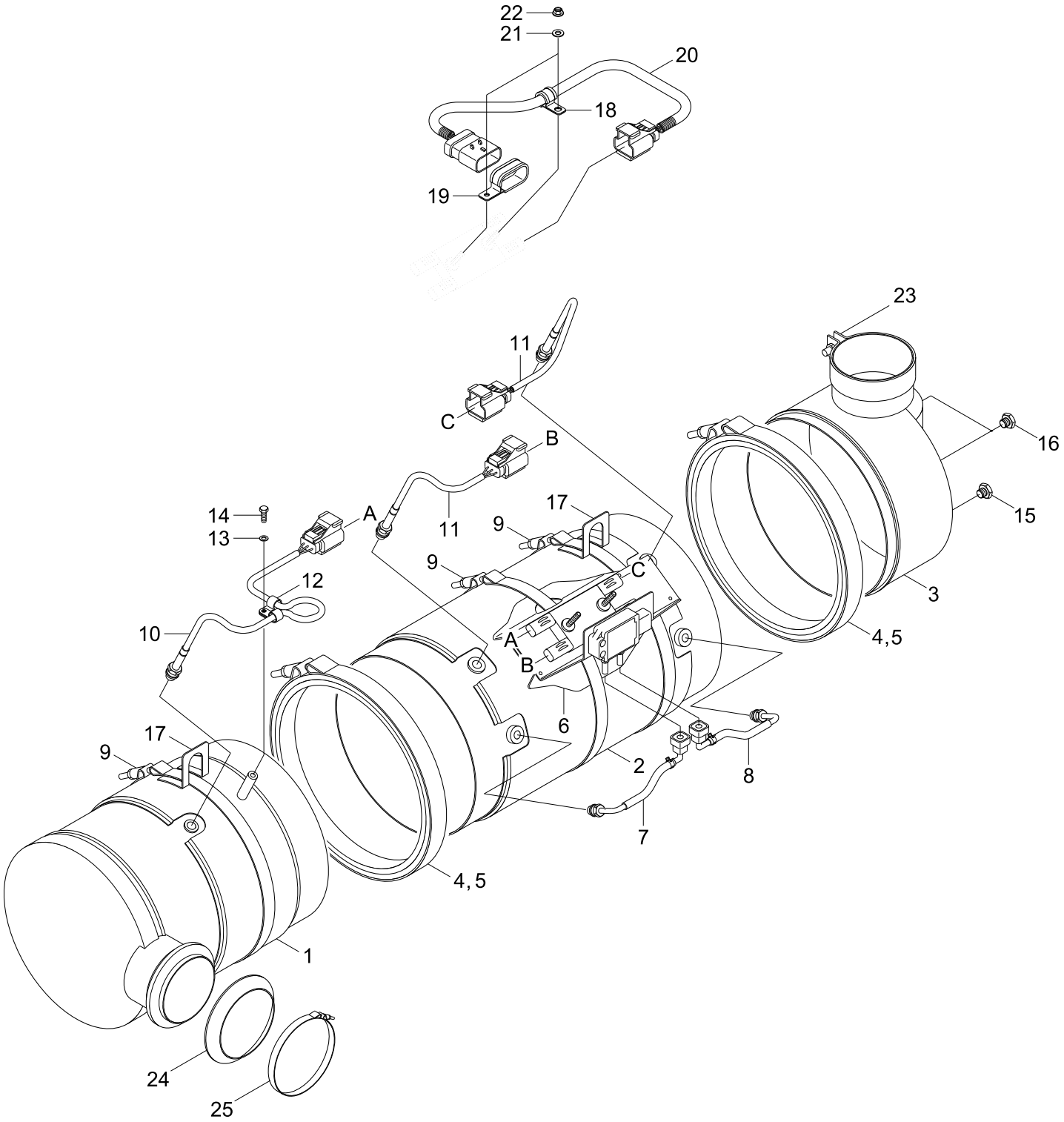

Item	Part_No	IS	Ord	T	Description	Qty	Serial_No	ITC	Remark
*	11Q9-03031				AFTERTREATMENT DEVICE	1			SEE 1060
1	2871749				.MODULE-INLET CATALYST	1			
2	2888189				.MODULE-P/FILTER	1			
3	2888184				.MODULE-OUTLET	1			
4	2871772				.GASKET-CIRCULAR	2			
5	5272750				.CLAMP-V BAND	2			
6	5284282				.BRACKET-SUPPORT	1			
7	2885923				.TUBE-FORMED MULTIPLE	1			
8	2885924				.TUBE-FORMED MULTIPLE	1			
9	5284618				.CLAMP-BAND	3			
10	2872467				.SENSOR-TEMPERATURE	1			
11	2872468				.SENSOR-TEMPERATURE	2			
12	2871507				.CLIP	2			
13	4965094				.WASHER-PLAIN	1			
14	2880474				.SCREW-HEX F/HEAD CAP	1			
15	2871528				.PLUG-PIPE	1			
16	2871529				.PLUG-PIPE	2			
17	2888187				.BRACKET	2			
18	5284068				.CLIP	1			
19	5284266				.CLIP	1			
20	5283506				.HARNESS-WIRING	1			
21	2885920				.WASHER	2			
22	5284265				.NUT	2			
23	4965323				.CLAMP-TUBE	1			
24	2866636				.GASKET	1			
25	2880482				.CLAMP-V BAND	1			

AIRCON & HEATER MOUNTING

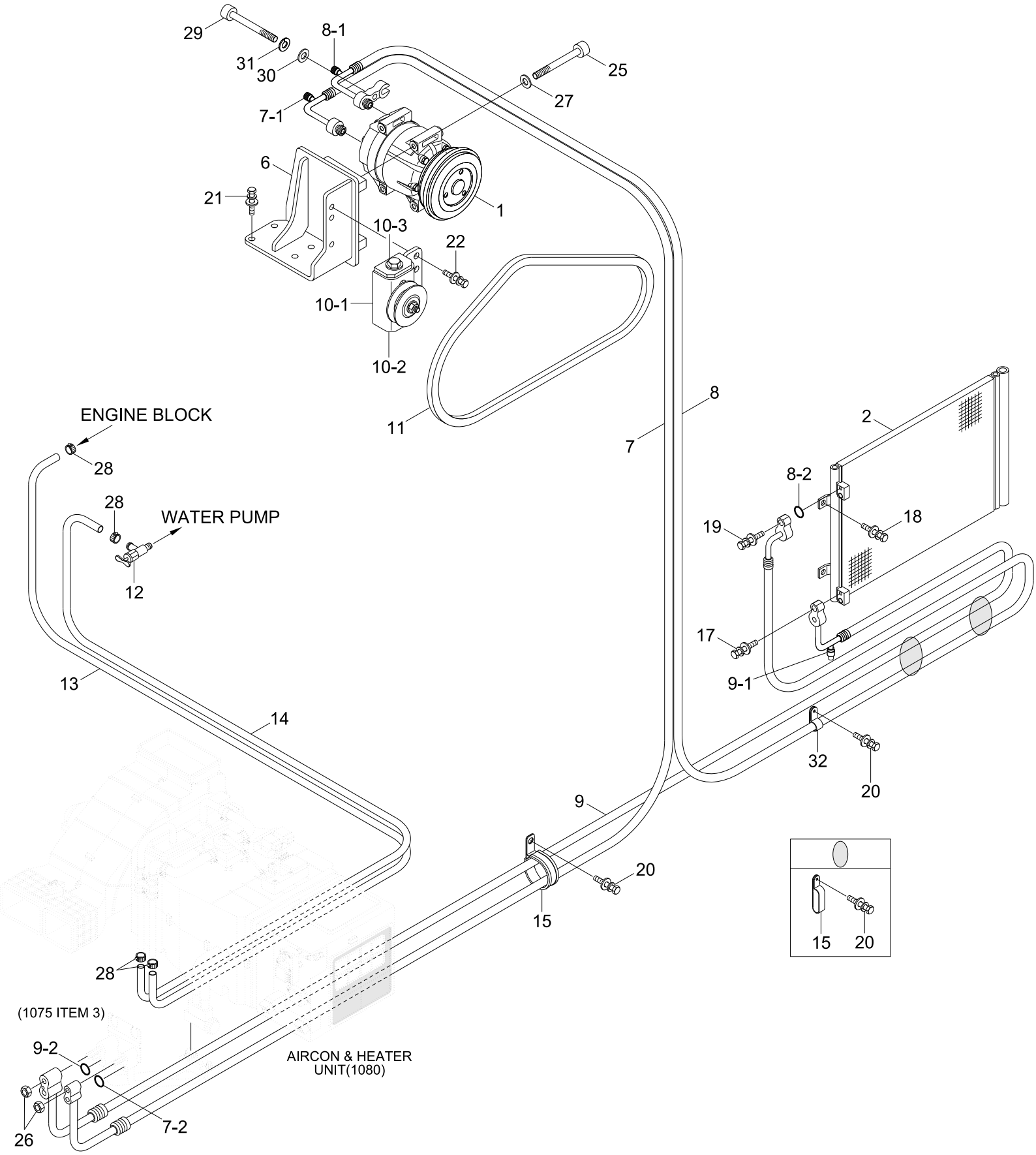

Item	Part_No	IS	Ord	T	Description	Qty	Serial_No	ITC	Remark
1	11Q6-90040				COMPRESSOR ASSY	1			
2	11Q6-90071				CONDENSER-R/DRYER	1			
6	11LK-90211				BRACKET WA	1			
7	11LK-90062				HOSE ASSY-SUCTION	1			
7-1	A30430040IZ4				.CAP-CHARGE VALVE L	1			
7-2	A305000203-2				.O-RING	1			
8	11LK-96021				HOSE-DISCHARGE	1			
8-1	A30430040IZ4				.CAP-CHARGE VALVE L	1			
8-2	A305000205-2				.O-RING	1			
9	11LK-96032				HOSE-LIQUID(B)	1			
9-1	A802200100-2				.PRESSURE SWITCH	1			
9-2	A305000209-2				.O-RING	1			
10	11N6-90110				PULLEY-IDLE	1			
10-1	A4760-508-00·				.BRACKET-PULLEY	1			
10-2	A4700-511-01·				.PULLEY-IDLE	1			INCL 10-3
10-3	A8900-518-03·				..BOLT-TENSION	1			
11	12E2-3505				V-BELT	1	-		
11	11LK-90470				V-BELT	1	#0113 -	D	
12	14L1-01350				VALVE-HEATER	1			
13	11LQ-90251				HOSE-HEATER	1			
14	11LQ-90261				HOSE-HEATER	1			
15	31L7-10250				CLAMP-TUBE,INS SINGLE	3			
17	S035-063526				BOLT-W/WASHER	1			
18	S035-082526				BOLT-W/WASHER	4			
19	S035-083026				BOLT-W/WASHER	1			
20	S037-101556				BOLT-W/WASHER	4			
21	S037-102556				BOLT-W/WASHER	4			

Item	Part_No	IS	Ord	T	Description	Qty	Serial_No	ITC	Remark
21	S037-102556				BOLT-W/WASHER	4			
22	S037-103026				BOLT-W/WASHER	3			
25	S109-080906				BOLT-SOCKET	4			
26	S285-06100B				NUT-FLANGED	2			
27	S403-08200B				WASHER-PLAIN	4			
28	S520-027000				CLAMP-HOSE	4			
29	S018-100356				BOLT-HEX	1			
30	S403-10200B				WASHER-PLAIN	1			
31	S411-100006				WASHER-SPRING	1			
32	31L7-10200				CLAMP-TUBE	1			

AIRCON & HEATER CAB SUB

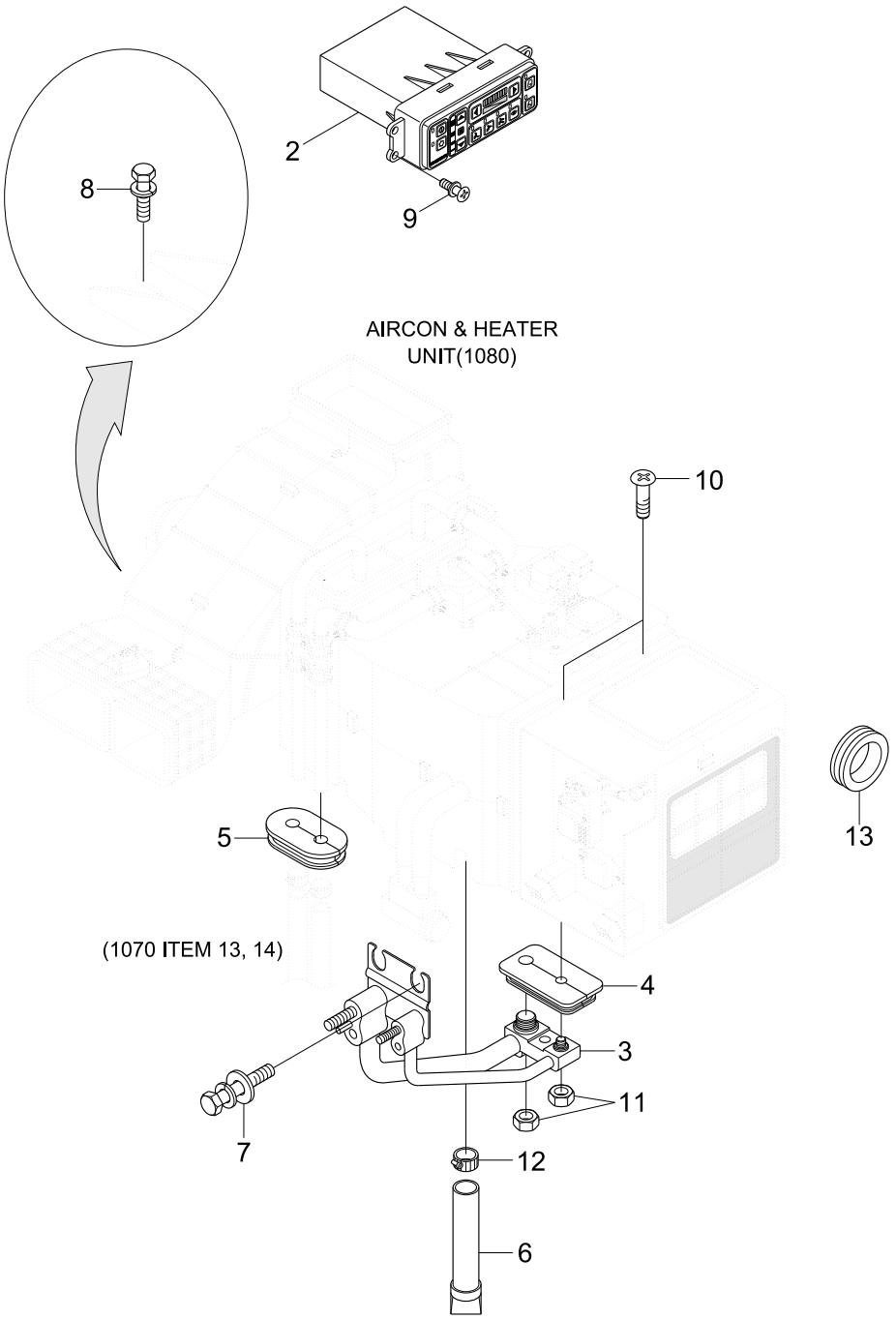

Item	Part_No	IS	Ord	T	Description	Qty	Serial_No	ITC	Remark
2	11LM-90070				CONTROL ASSY(FATC)	1			
3	11LM-96050				PIPE ASSY-AIRCON	1			
4	11Q6-90430				GROMMET	1	-		
4	11LM-90430				GROMMET-AIR CON	1	#0069 -	A	
5	11Q6-90440				GROMMET	1			
6	11EK-92130				HOSE-DRAIN	1			
7	S037-102056				BOLT-W/WASHER	2			
8	S037-122056				BOLT-W/WASHER	4			
9	S131-052046				SCREW-W/WASHER	4			
10	S151-040126				SCREW-TAPPING	4			
11	S285-08100B				NUT-FLANGED	1			
12	S520-020000				CLAMP-HOSE	1			
13	S681-190400				GROMMET	1			

AIRCON & HEATER UNIT

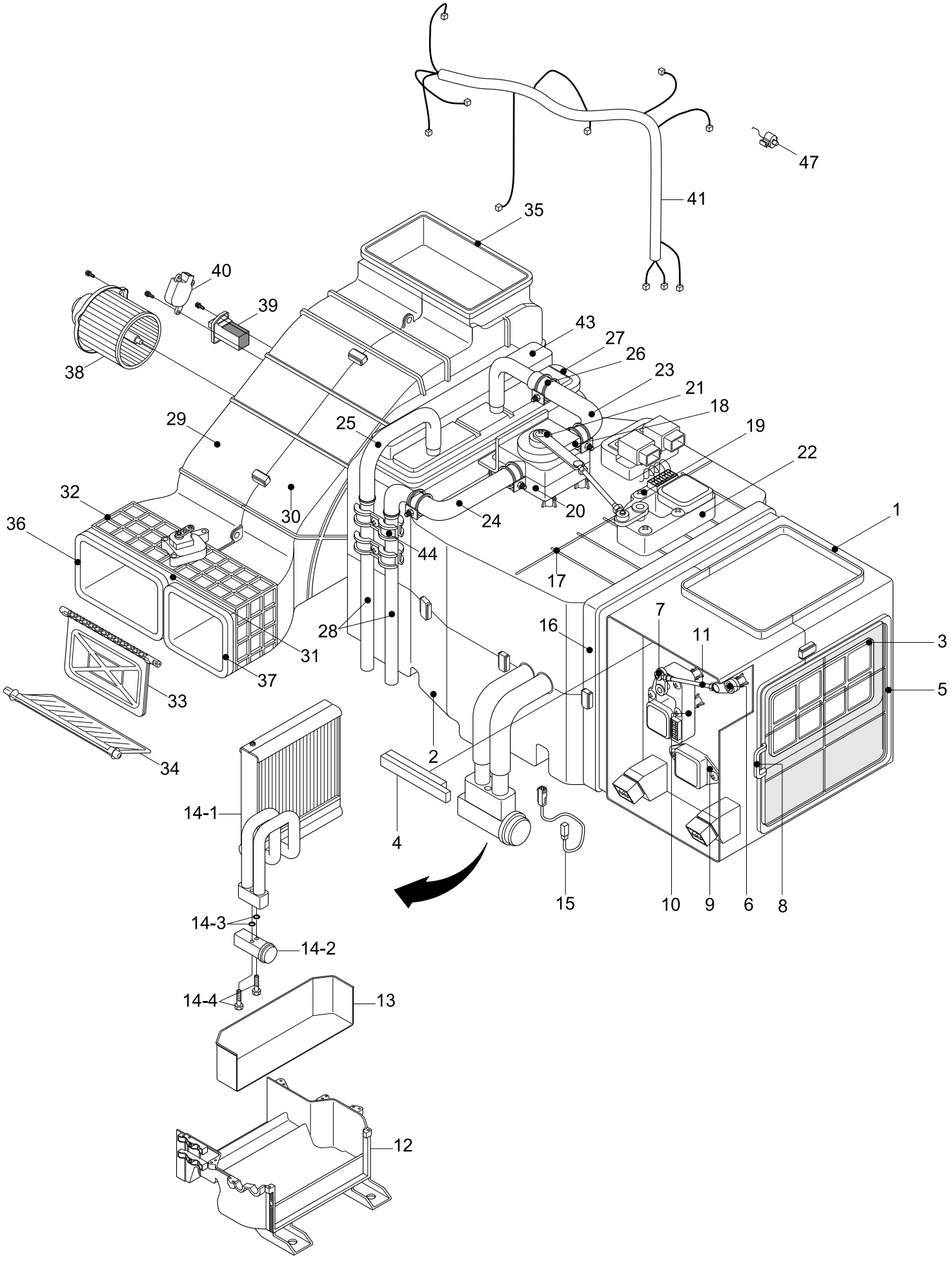

Item	Part_No	IS	Ord	T	Description	Qty	Serial_No	ITC	Remark
*	11LM-90042				FATC UNIT	1			FATC
*	11LM-96031				FATC UNIT-W/APTC	1			APTC
1	AH002686				.CASE-UPPER,INTAKE	1			
N2	AM13200100-0				.CASE-LOWER,INTAKE	1			NOT
N3	AM47000200-2				.DAMPER ASSY-INTAKE	1			NOT
4	AM70003600-3				.SEAL-FILTER,FRESH	1			
5	11N6-90770				.AIR FILTER-REFRESH	1			
N6	AH54100100-3				.LEVER-DEF	1			NOT
7	3AH0705				.ROD-CLAMP	1			
8	4AH0688				.CLIP-CASE	4			
9	AH001617				.SEAL-SPONGE	1			
10	11Q6-90570				.MOTOR ACT-INTAKE	1			
11	AM52300100-4				.ROD-INTAKE	1			
12	AH002402				.HVAC CASE-LOW	1			
13	AH002463				.HVAC INSULATION-LOW	1			
14	11Q6-90560				.CORE ASSY-EVAP	1			
14-1	A1W00864				..CORE-EVAP	1			
14-2	11Q6-90551				..VALVE-EXPANSION	1			
14-3	A305000214-2				..O-RING	2			
14-4	A1W00837				..BOLT-TXV	2			
15	AH100730				.THERMISTOR	1			
N16	AH002401				.HVAC CASE-UPP	1			NOT
16	AH002680				.HVAC CASE-UPP	1			APTC
17	4AH0643				.HOLDER-WIRE	5			
18	11N6-90820				.RELAY	1			
19	AH000865				.SCREW	70			
20	AH001160				.VLAVE-WATER	1			

Item	Part_No	IS	Ord	T	Description	Qty	Serial_No	ITC	Remark
20	AH001160				.VLAVE-WATER	1			
21	AH000559				.ROD-TEMP	1			
22	AH100656				.MOTOR ACT ASSY-TEMP	1			
23	AH001287				.HOSE-INLET,WATER	1			
24	AH002411				.HOSE-INLET,WATER	1			
25	AH002412				.HOSE-OUTLET,WATER	1			
26	AH001853				.CLAMP-WATER HOSE	6			
27	11Q6-90540				.HEATER SET-RAD	1			
28	AH002410				.PIPE-INLET/OUTLET	2			
29	AH002892				.CASE-BLOWER,LH	1			
30	AH002406				.CASE-BLOWER,RH	1			
31	AH002512				.CASE-BLOWER,LOW	1			
32	AH002513				.CASE-BLOWER,UPP	1			
33	AH002407				.DOOR ASSY-VENT	1			
34	AH002514				.DOOR ASSY-F/D	1			
35	AW80000303-3				.SEAL-SPONGE A	2			
36	AW80000305-3				.SEAL-SPONGE B	1			
37	AW80000306-3				.SEAL-SPONGE C	1			
38	11N6-90700				.FAN & MOTOR	1			
39	11Q6-90530				.FET	1			
40	11Q6-90520				.MOTOR ACT ASSY-VENT	2			
41	11LM-90240				.WIRING ASSY-FATC	1			
43	AH100774				.APTC ASSY	1			APTC ONLY
44	AH000314				.CLAMP-H/RAD PIPE	2			
47	11N6-90890				.SENSOR-TEMP	2			
N	@				NOT SUPPLIED PARTS	AR			NOT

CAB ELECTRIC 1

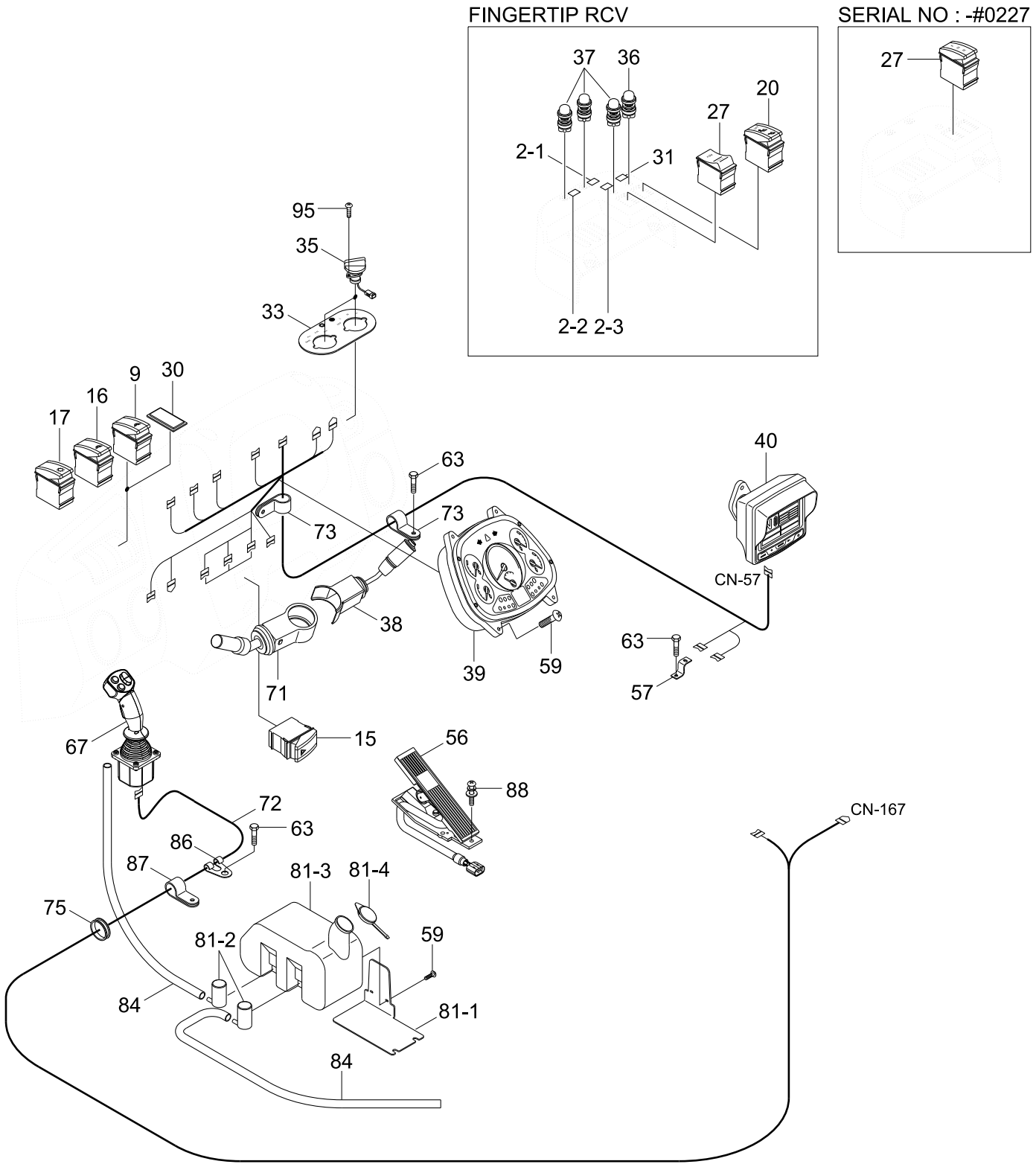

Item	Part_No	IS	Ord	T	Description	Qty	Serial_No	ITC	Remark
2	21LM-10280				DECAL KIT	1			
2-1	21LM-10260				.DECAL-KICK DOWN	1			
2-2	21LM-10240				.DECAL-HORN	1			
2-3	21LM-10250				.DECAL-FNR	1			
9	21LM-02071				SWITCH-LOCK UP	1			5-SPEED T/M
15	21LM-01940				SWITCH-HAZARD	1			
16	21LM-01921				SWITCH-WORK LIGHT	1			
17	21LM-01910				SWITCH-MAIN LIGHT	1			
20	21LM-01890				SWITCH-DETENT ENABLE	1			
27	21LM-02020				SWITCH-FNR	1	-		FNR RCV
27	21WD-02020				SWITCH-FNR	1	#0228 -	D	FNR RCV
27	21LM-02020				SWITCH-FNR	1			FNR RCV
30	21E6-10460				COVER	1			
31	21LM-10270				DECAL-WORK LOAD	1			
33	21LM-10210				DECAL-T/M MODE	1			
35	21LM-03260				ROTARY SWITCH-4POSI	2			
36	21LM-01700				SWITCH-BUTTON	1			
37	21LM-01700				SWITCH-BUTTON	3			2/3-LEVER RCV
38	24L3-00341				SWITCH-MULTIFUNCTION	1			
39	21LM-37500				CLUSTER ASSY	1			
40	21LM-38500				MONITOR	1	-		SB-S-2013-029.PDF
40	21LM-38501				MONITOR	1	#0122 -	B	
56	21LL-01570				PEDAL-ELECTRONIC	1			
57	21N4-01130				PLATE-CLIP	1			
59	S132-061546				SCREW-W/WASHER	6			
63	S035-082026				BOLT-W/WASHER	3			
67	31LL-30440				JOYSTICK-STEERING	1			JOYSTICK STEER

Item	Part_No	IS	Ord	T	Description	Qty	Serial_No	ITC	Remark
67	31LL-30440				JOYSTICK-STEERING	1			JOYSTICK STEER
71	11LK-00070				GEAR SELECTOR	1			
72	21LM-01082				HARNESS-JOYSTICK	1			JOYSTICK STEER
73	31L7-10210				CLAMP-TUBE INS	2			
75	S661-300400				GROMMET	1			
81	21LN-30631				WASHER TANK ASSY	1			
81-1	MH305310				.PLATE	1			
81-2	21EG-10310				.MOTOR-WIPER	2			
81-3	@				.TANK	1			NOT
81-4	@				.CAP	1			NOT
84	21EM-30581				HOSE-RUBBER	2			
86	31L7-10190				CLAMP-TUBE	1			
87	31L7-10190				CLAMP-TUBE	1			
88	S132-082026				SCREW-W/WASHER	2			
95	S141-040142				SCREW-FLAT HD	4			

CAB ELECTRIC 2

LH & RH SIDE(STD)

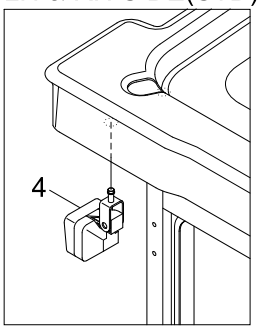

LH & RH SIDE(OPT)

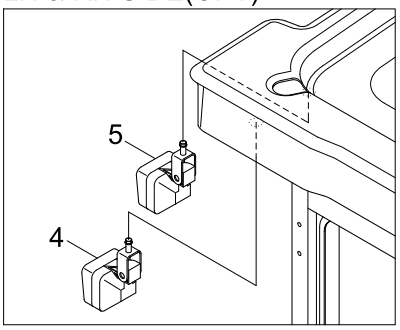

LH & RH SIDE(OPT, HIGH WAY)

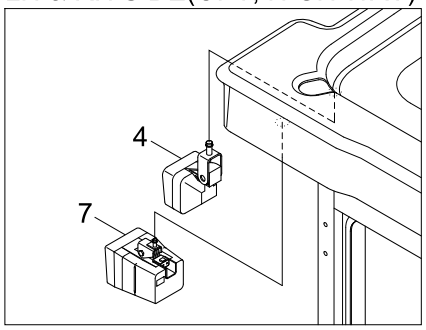

REAR SIDE(OPT)

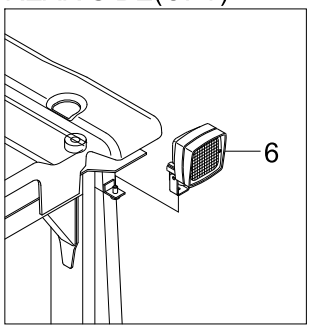

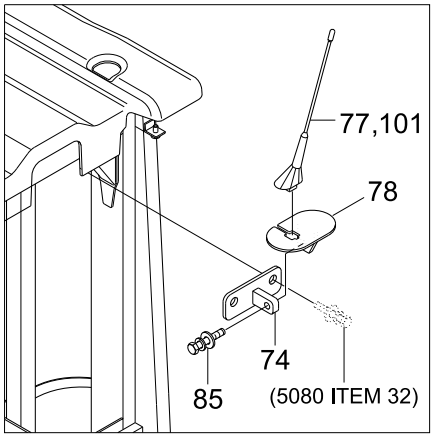

DETAIL ITEM 94

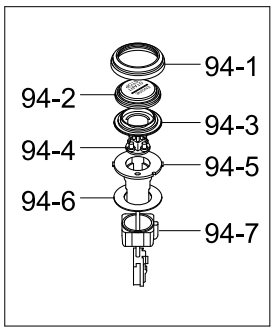

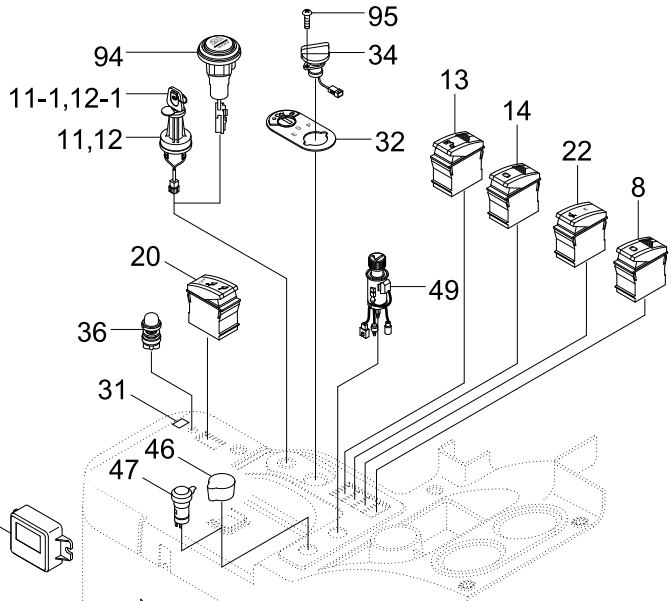

FNR 2,3-LEVER

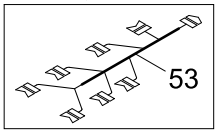

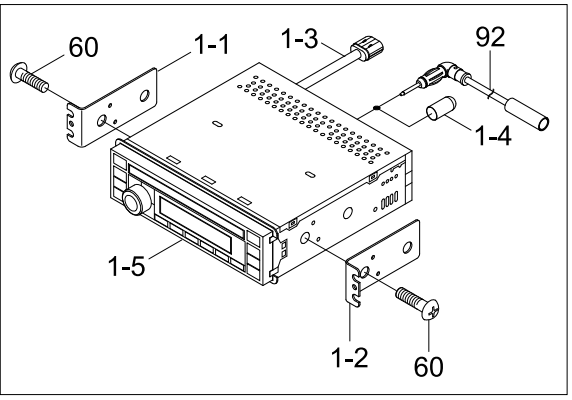

SERIAL NO : -#0113

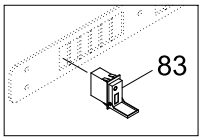

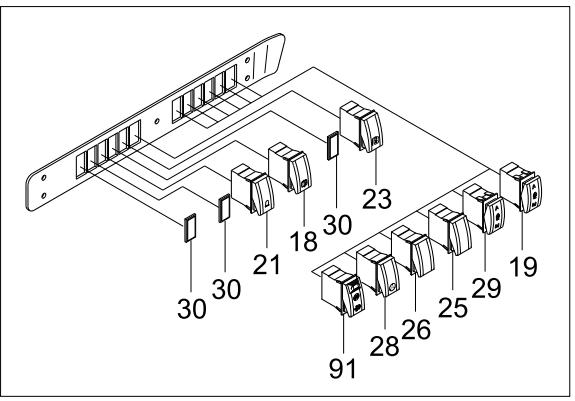

AUTO GREASE

CAB INSIDE - LH

TYPE	DESCRIPTION
SMT 1	SMART KEY(SAME, KEY TYPE)
SMT 2	SMART KEY(VARIANT, KEY TYPE)
SMT 3	SMART KEY(SAME, BOTTON TYPE)
SMT 4	SMART KEY(VARIANT, BUTTON TYPE)

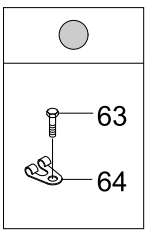

Item	Part_No	IS	Ord	T	Description	Qty	Serial_No	ITC	Remark
1	21LM-30501				RADIO/USB PLAYER ASSY	1	- #0106		BLUETOOTH
1	21K8-42200				RADIO & USB PLAYER	1	#0107 -	B	BLUETOOTH
1-1	21LM-31010				.BRACKET L	1	- #0106		
1-2	21LM-31020				.BRACKET R	1	- #0106		
1-3	21LM-30510				.USB GENDER	1	- #0106		
1-4	21LM-31040				.CAP	1	- #0106		
1-5	21LM-30520				.BODY-RADIO/USB	1	- #0106		
4	21LH-51200				WORK LAMP-CAB	2			STD
5	21LH-51200				WORK LAMP-CAB	2			OPT
6	21LM-03500				WORK LAMP	2			OPT
7	21LM-01120				WORK LAMP-XENON	2			OPT
8	21LM-02061				SWITCH-DIFF LOCK	1			DIFF LOCK
11	21Q4-00070				START KEY ASSY	1	- #0106		STD, SAME
11	21Q4-00071				START KEY ASSY	1	#0107 -	B	STD, SAME
11-1	21N4-10400K				.KEY-START	1			STD, SAME
12	21Q4-00060				START KEY ASSY	1	- #0106		OPT, VARIANT
12	21Q4-00060				START KEY ASSY	1	#0107 -	B	OPT, VARIANT
12-1	21N3-00030				.KEY-START	1			OPT, VARIANT
13	21LM-01950				SWITCH-PILOT CUTOFF	1			
14	21LM-01931				SWITCH -PARKING	1			
18	21LM-02050				SWITCH-REAR WIPER	1			
19	21LM-01961				SWITCH-SET	1			BOOM, BUCKET
20	21LM-01890				SWITCH-DETENT ENABLE	1			
21	21Q4-22140				SWITCH-BEACON	1			BEACON LAMP
R22	21LM-01980				SWITCH-RIDE CONTROL	1			RIDE CONTROL
23	21LM-01991				SWITCH-MIRROR HEAT	1			HEATED MIRROR
25	21LM-02001				SWITCH-ATTACH LOCK	1	#0048 -	-	Q/COUPLER

Item	Part_No	IS	Ord	T	Description	Qty	Serial_No	ITC	Remark
25	21LM-02001				SWITCH-ATTACH LOCK	1	#0048 -	-	Q/COUPLER
26	21LM-02011				SWITCH-ATTACH UNLOCK	1	#0048 -	-	Q/COUPLER
E28	21LM-02041				SWITCH-EM STEER TEST	1			EMER STEER
29	21Q9-20220				SWITCH-REVERSE FAN	1			AUTO REVERSE
30	21E6-10460				COVER	2	-		
30	21E6-10460				COVER	3	#0114 -	A	
31	21LM-10270				DECAL-WORK LOAD	1			
32	21LM-10222				DECAL	1			
34	21LM-03250				ROTARY SWITCH-3POSI	1			
36	21LM-01700				SWITCH-BUTTON	1			
44	21LM-01241				EXT-HARNESS	1			APTC HEATER,OPT
46	S661-260300				CAP-RUBBER	1			STD
47	21M8-01420				SOCKET-POWER	1			DC12V, OPT
49	21LM-07110				LIGHTER-CIGAR	1			
50	21LL-01502				HARNESS-MAIN	1	-		
50	21LL-01504				HARNESS-MAIN	1	#0107 -	B	
50	21LL-01505				HARNESS-MAIN	1	#0129 -	D	
51	21LM-01022				HARNESS-LEVER	1			RCV 1,2-LEVER
52	21LM-01032				HARNESS-LEVER	1	-		FNR 1,2-LEVER
52	21LM-01033				HARNESS-LEVER	1	#0071 -	B	FNR 1,2-LEVER
53	21LM-01043				HARNESS-LEVER	1	-		RCV 2,3-LEVER
53	21LM-01044				HARNESS-LEVER	1	#0228 -	D	RCV 2,3-LEVER
60	S131-051546				SCREW-W/WASHER	10			
61	S037-102022				BOLT-W/WASHER	1			
63	S035-082026				BOLT-W/WASHER	3			
64	S593-000902				CLIP-HARNESS	3			
74	21LM-01640				PLATE	1			RMS

Item	Part_No	IS	Ord	T	Description	Qty	Serial_No	ITC	Remark
74	21LM-01640				PLATE	1			RMS
76	31L7-10220				CLAMP-TUBE	1			
77	21Q8-32211				ANTENNA-SATELLITE	1			RMS(SATELLITE)
78	21LM-01845				PLATE	1			RMS
83	21LM-31200				USB & SOCKET ASSY	1	-		
85	S037-102026				BOLT-W/WASHER	1			RMS
91	21LM-02081				SWITCH-DPF	1	-		
91	21LM-02082				SWITCH DPF	1	#0206 -	B	
92	21LM-01570				EXTENSION-PLUG	1			
93	21LM-39200				SMART KEY KIT	1			SMART KEY ALL
93-1	21LM-33000				.READER-SMART KEY	1			SMART KEY ALL
93-2	21LM-33050				.TAG-SMART KEY	1	-		SMART KEY ALL
93-2	21LM-33051				.TAG-SMART KEY	1	#0052 -	B	SMART KEY ALL
94	21Q6-37300				BUTTON-START	1			SMART+BUTTON
N94-1	21Q6-37310				.CASE-FRONT	1			NOT
N94-2	21Q6-37320				.COVER-SWITCH	1			NOT
N94-3	21Q6-37330				.GUIDE	1			NOT
N94-4	21Q6-37340				.BUTTON-PBA	1			NOT
N94-5	21Q6-37350				.CASE-REAR	1			NOT
N94-6	21Q6-37360				.GASKET	1			NOT
N94-7	21Q6-37370				.CLAMP	1			NOT
95	S141-040142				SCREW-FLAT HD	2			
96	21LM-01191				HARNESS-PTC	1			APTC, FATC
98	21Q6-37400				CONTROLLER-START	1			SMART+BUTTON
99	21LM-02090				SWITCH-AUTO GREASE	1	#0027 -		
101	21Q8-32220				ANTENNA-MOBILE	1	#0107 -		RMS(MOBILE)
N	@				NOT SUPPLIED PARTS	AR			NOT

Item	Part_No	IS	Ord	T	Description	Qty	Serial_No	ITC	Remark
N	@				NOT SUPPLIED PARTS	AR			NOT

CAB ELECTRIC 3

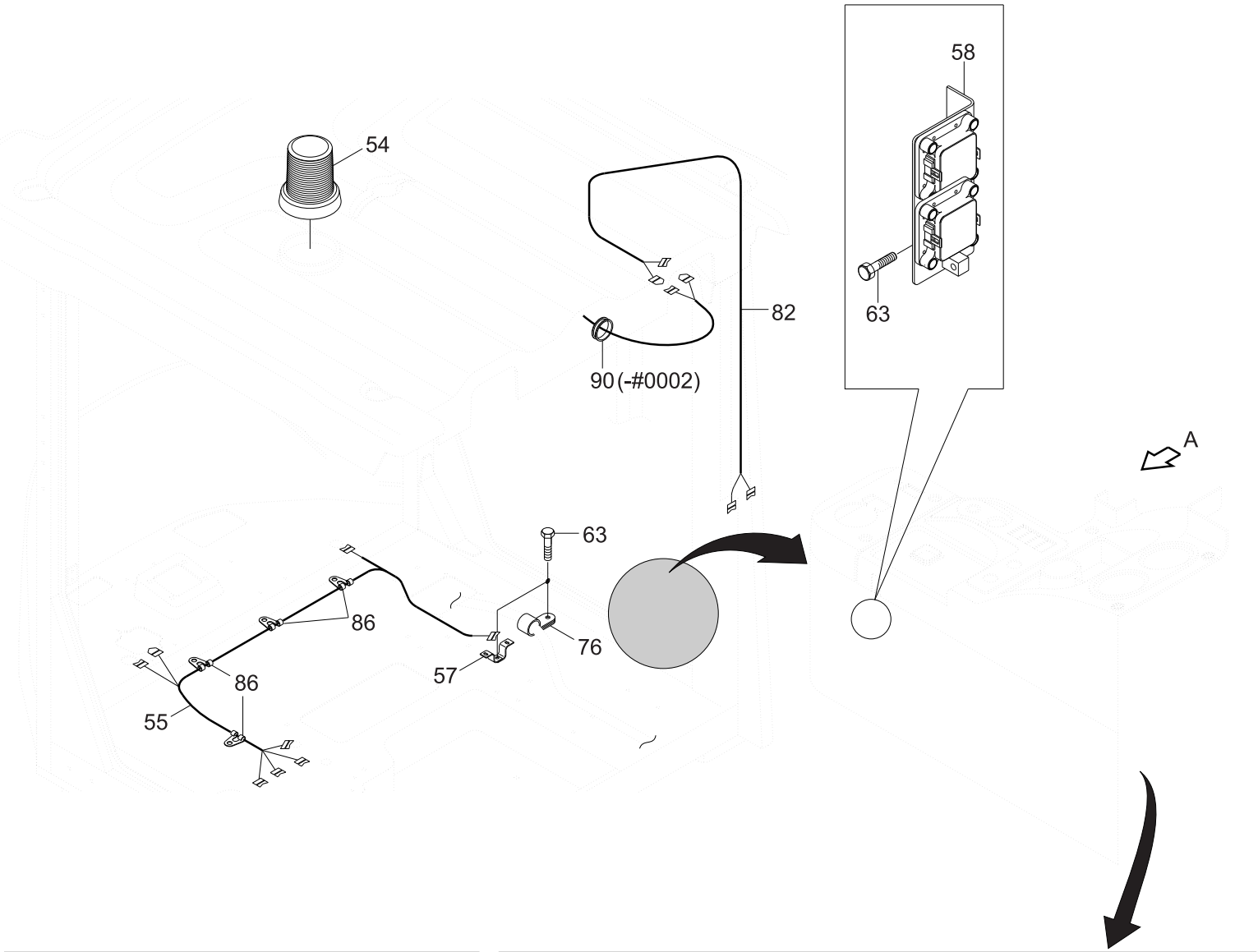

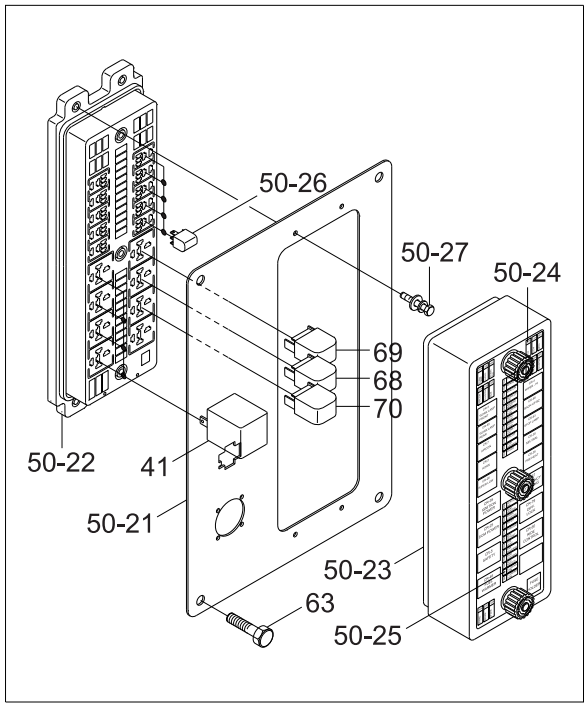

VIEW A

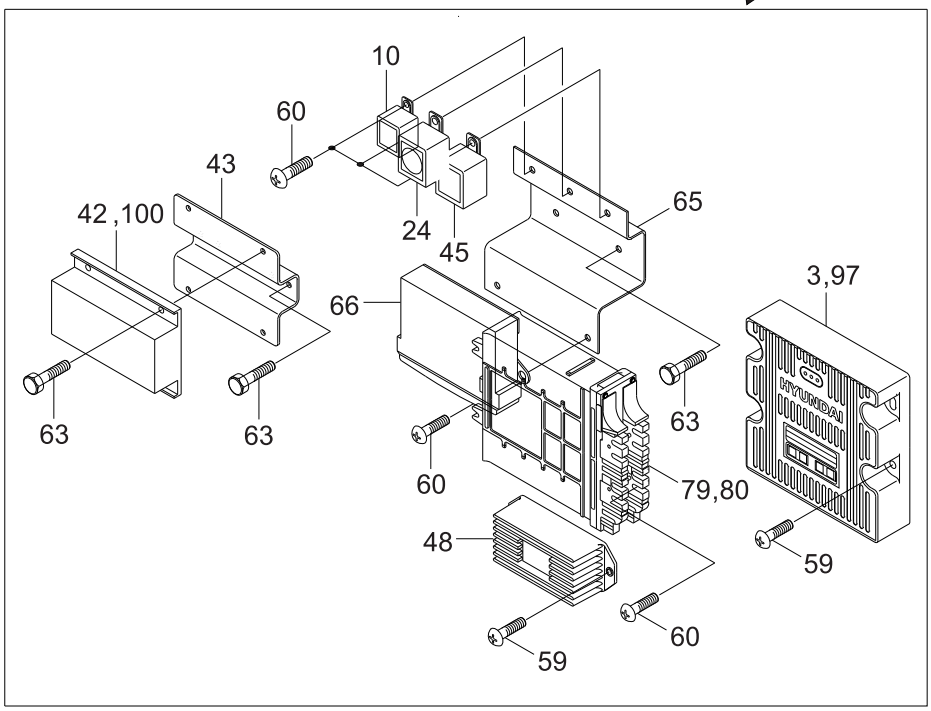

Item	Part_No	IS	Ord	T	Description	Qty	Serial_No	ITC	Remark
3	21LK-33100				MCU	1			HL770-9A
3	21LL-33190				MCU	1			HL770XTD-9A
10	21LB-34140				TIMER-DEFROST	1			HEATED MIRROR
24	21E4-2025				BUZZER-WARNING	1	#0048 -		Q/COUPLER
41	24L1-05100				RELAY-5P	4	-		
41	24L1-05100				RELAY-5P	5	#0021 -	A	
42	21Q8-32202				RMCU(REMOTE CNTL UNIT)	1			RMS(SATELLITE)
43	21LM-01831				PLATE	1			RMS
45	21LM-01600				FLASHER UNIT	1			
48	21Q6-20410				CONVERTER-DC DC	1			DC12V, OPT
50	@				HARNESS-MAIN	1			NOT
50-1	21LL-01620				.FUSE BOX ASSY	1			
50-21	21LM-01630				..PLATE	1			
50-22	21Q7-10910				..BODY-FUSE BOX	1			
N50-2	@				..COVER-FUSE BOX	1			NOT
50-24	21LL-01680				..DECAL	1			
50-25	21LM-01690				..DECAL	1			
50-26	V23074A1002A4				..RELAY-5P	1			
50-27	S035-062026				..BOLT-W/WASHER	1			
54	21LM-01400				BEACON LAMP-MAGNETIC	1	-		BEACON LAMP
54	21WD-01300				BEACON LAMP-MAGNETIC	1	#0230 -	B	BEACON LAMP
55	21LL-01511				HARNESS-BOTTOM	1			
57	21N4-01130				PLATE-CLIP	1			
58	21LM-01502				FLANGE ASSY	1			
59	S132-061546				SCREW-W/WASHER	6			
60	S131-051546				SCREW-W/WASHER	6			
63	S035-082026				BOLT-W/WASHER	8			

Item	Part_No	IS	Ord	T	Description	Qty	Serial_No	ITC	Remark
63	S035-082026				BOLT-W/WASHER	8			
65	21LM-01822				PLATE	1			
N66	31LB-30450				STEER CONTROL UNIT(SCU)	1	- #0020		NOT
66	31LK-31110				STEER CONTROL UNIT(SCU)	1	#0021 -	B	JOYSTICK STEER
68	24L1-05100				RELAY-5P	1			DIFF LOCK
E69	24L1-05100				RELAY-5P	1			EMER STEER
R70	24L1-05100				RELAY-5P	1			RIDE CONTROL
76	31L7-10220				CLAMP-TUBE	1			
79	11LK-00190				TM CONTROL UNIT(TCU)	1			4-SPEED TM
80	11LK-00290				TM CONTROL UNIT(TCU)	1			5-SPEED TM
82	21LM-01560				HARNESS-RMS ANTENNA	1			RMS
86	31L7-10190				CLAMP-TUBE	4			
100	21QA-33701				RMCU(REMOTE CNTL UNIT)	1	#0107 -		RMS(MOBILE)
N	@				NOT SUPPLIED PARTS	AR			NOT

CAB ELECTRIC 4

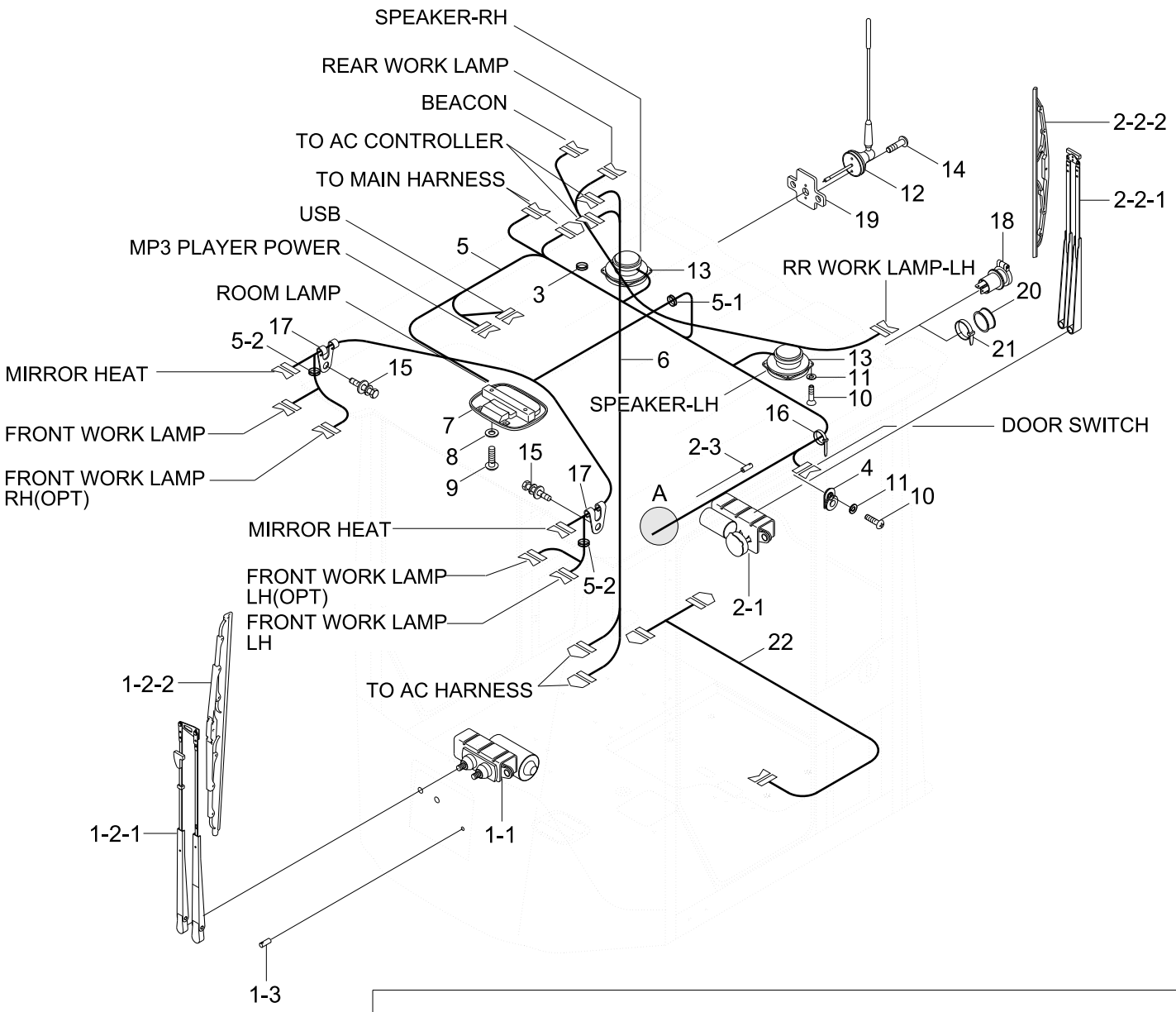

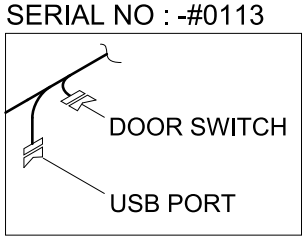

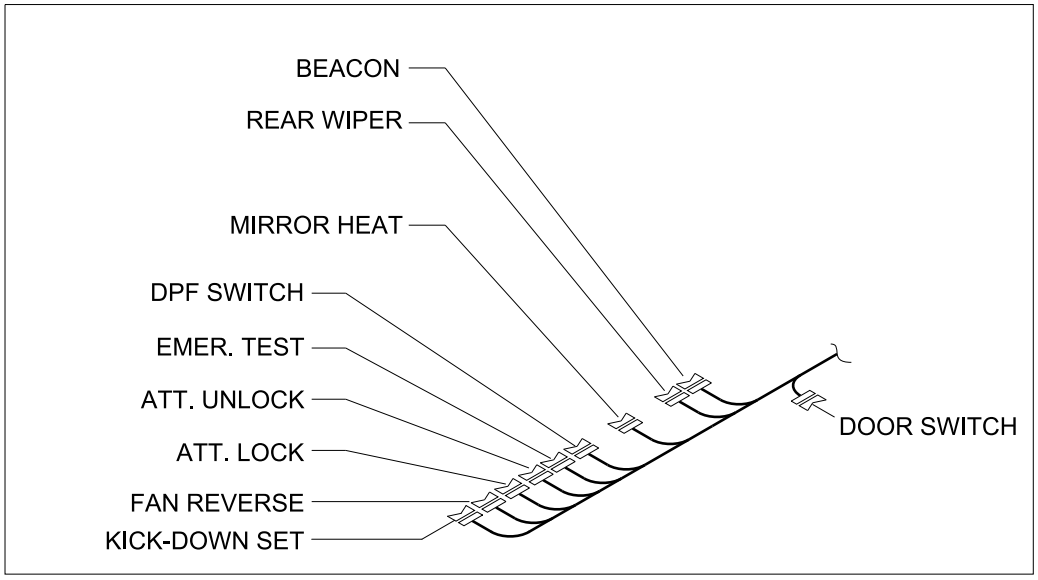

DETAIL A

Item	Part_No	IS	Ord	T	Description	Qty	Serial_No	ITC	Remark
1	21LM-37000				FR WIPER MOTOR KIT ASSY	1	- #0207		
1	21WD-37000				FR WIPER MOTOR KIT ASSY	1	#0208 -	B	
1-1	21LM-37010				.MOTOR-WIPER	1	- #0207		
1-1	21WD-37010				.MOTOR-WIPER	1	#0208 -	B	
1-2	21LM-37020				.WIPER ARM&BLADE ASSY	1			
1-2-1	21LM-37050				..WIPER ARM ASSY	1			
1-2-2	21LM-37060				..WIPER BLADE ASSY	1			
1-3	24L3-41500				.VALVE-WIPER	1			
2	21LM-37100				RR WIPER MOTOR KIT ASSY	1			
2-1	21LM-37110				.MOTOR-WIPER	1			
2-2	21LM-37120				.WIPER ARM&BLADE ASSY	1			
2-2-1	24L3-41200				..WIPER ARM-REAR	1			
2-2-2	21M8-50300				..WIPER BLADE-REAR	1			
2-3	24L3-41500				.VALVE-WIPER	1			
3	S880-125040				GROMMET	1			
4	E123-3022				SWITCH-DOOR	1			
5	21LL-01071				HARNESS-CAB	1	- #0113		
5	21LL-01072				HARNESS-CAB	1	#0114 - #0128	D	
5	21LL-01073				HARNESS CABIN	1	#0129 -	A	
5-1	S880-132060				.GROMMET	1			
5-2	S880-132040				.GROMMET	2			
6	21LM-01091				HARNESS-AIRCON,HEATER	1			
7	21Q4-50101				LAMP-ROOM	1			LED
7-1	21E1-49690				.BULB-ROOM LAMP	1			NOT SHOWN
8	S411-050006				WASHER-SPRING	2			
9	S161-050166				SCREW-CROSS R/ROUND	2			
10	S161-040106				SCREW-CROSS R/ROUND	10			

Item	Part_No	IS	Ord	T	Description	Qty	Serial_No	ITC	Remark
10	S161-040106				SCREW-CROSS R/ROUND	10			
11	S411-040006				WASHER-SPRING	10			
12	21N6-10410				ANTENA	1			
13	21LB-20401				SPEAKER ASSY	2			
14	S161-040126				SCREW-CROSS R/ROUND	2			
15	S035-082026				BOLT-W/WASHER	6			
16	S553-035140				CLAMP-BAND	7			
17	S593-000902				CLIP-HARNESS	6			
18	21LM-01420				SOCKET-POWER	1			BEACON LAMP
19	21N6-10100				PLATE-ANTENNA	1			
20	21U6-07330				CAP-BEACON	1			STD
21	S551-035146				TIE-WIRE	2			STD
22	21LQ-02260				HARNESS-AUTO GREASE	1	#0027 -	-	

FRONT ELECTRIC

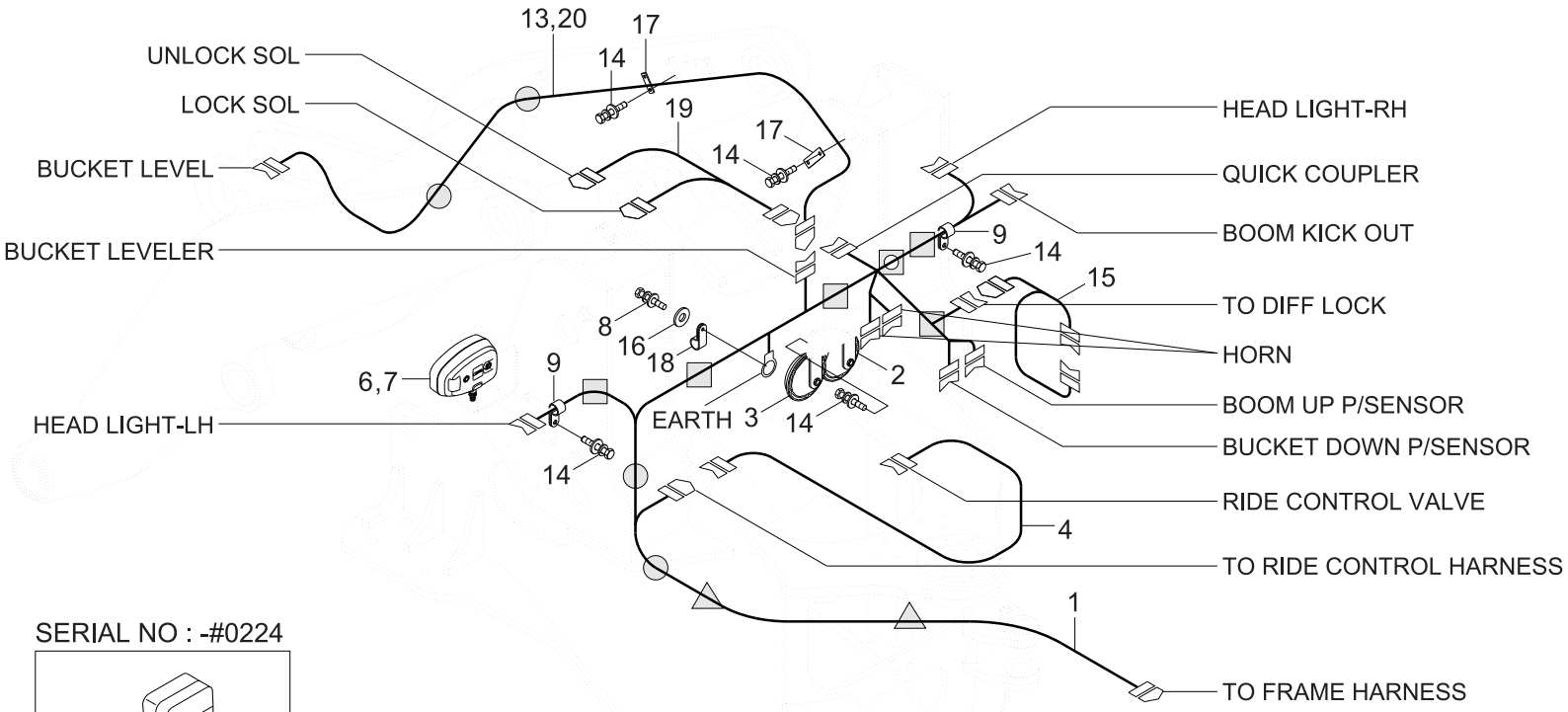

SERIAL NO : -#0224

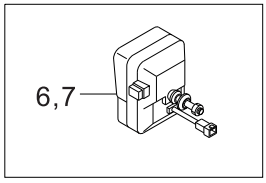

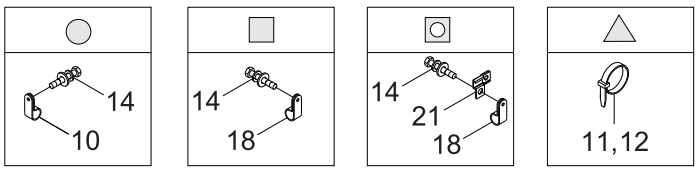

Item	Part_No	IS	Ord	T	Description	Qty	Serial_No	ITC	Remark
1	21LK-02503				HARNESS-FRONT	1	- #0128		
1	21LK-02504				HARNESS-FRONT	1	#0129 -	A	
2	21Q8-10060				HORN-HIGH	1			
3	21Q8-10050				HORN-LOW	1			
R4	21LK-02301				HARNESS-RIDE CONTROL	1			RIDE CONTROL
6	21LM-02220				HEAD LAMP-LH	1	- #0224		
6	21WD-21030				HEAD LAMP-LH	1	#0225 -	D	
6-1	21EK-10250				.BULB-HEAD LAMP	2			NOT SHOWN
6-2	21EK-10131				.BULB	1			NOT SHOWN
6-3	21EK-10290				.BULB-21W	1			NOT SHOWN
7	21LM-02230				HEAD LAMP-RH	1	- #0224		
7	21WD-21130				HEAD LAMP-RH	1	#0225 -	D	
7-1	21EK-10250				.BULB-HEAD LAMP	2			NOT SHOWN
7-2	21EK-10131				.BULB	1			NOT SHOWN
7-3	21EK-10290				.BULB-21W	1			NOT SHOWN
8	S037-102022				BOLT-W/WASHER	1			
9	S543-100002				CLAMP-TUBE	4			
10	31L7-10200				CLAMP-TUBE	6			
11	S552-035146				CLAMP-BAND	5			
12	S554-054300				CLAMP-BAND	5			
13	21LK-10110				HARNESS-EXT,LEVELER	1			HL770-9A
14	S037-102026				BOLT-W/WASHER	15			
15	21LL-02320				HARNESS-EXTENSION	1			DIFF LOCK
16	S431-100002				WASHER-INTERNAL T/LOCK	1			
17	21LM-02411				PLATE	2			
18	31L7-10190				CLAMP-TUBE	6			
19	21LB-34321				HARNESS-EXTENSION	1	#0048 -	-	Q/COUPLER

Item	Part_No	IS	Ord	T	Description	Qty	Serial_No	ITC	Remark
19	21LB-34321				HARNESS-EXTENSION	1	#0048 -	-	Q/COUPLER
20	21LK-10120				HARNESS-EXT,LEVELER	1			HL770XTD-9A
21	25D1-10640				CLIP ASSY	1			

REAR ELECTRIC 1

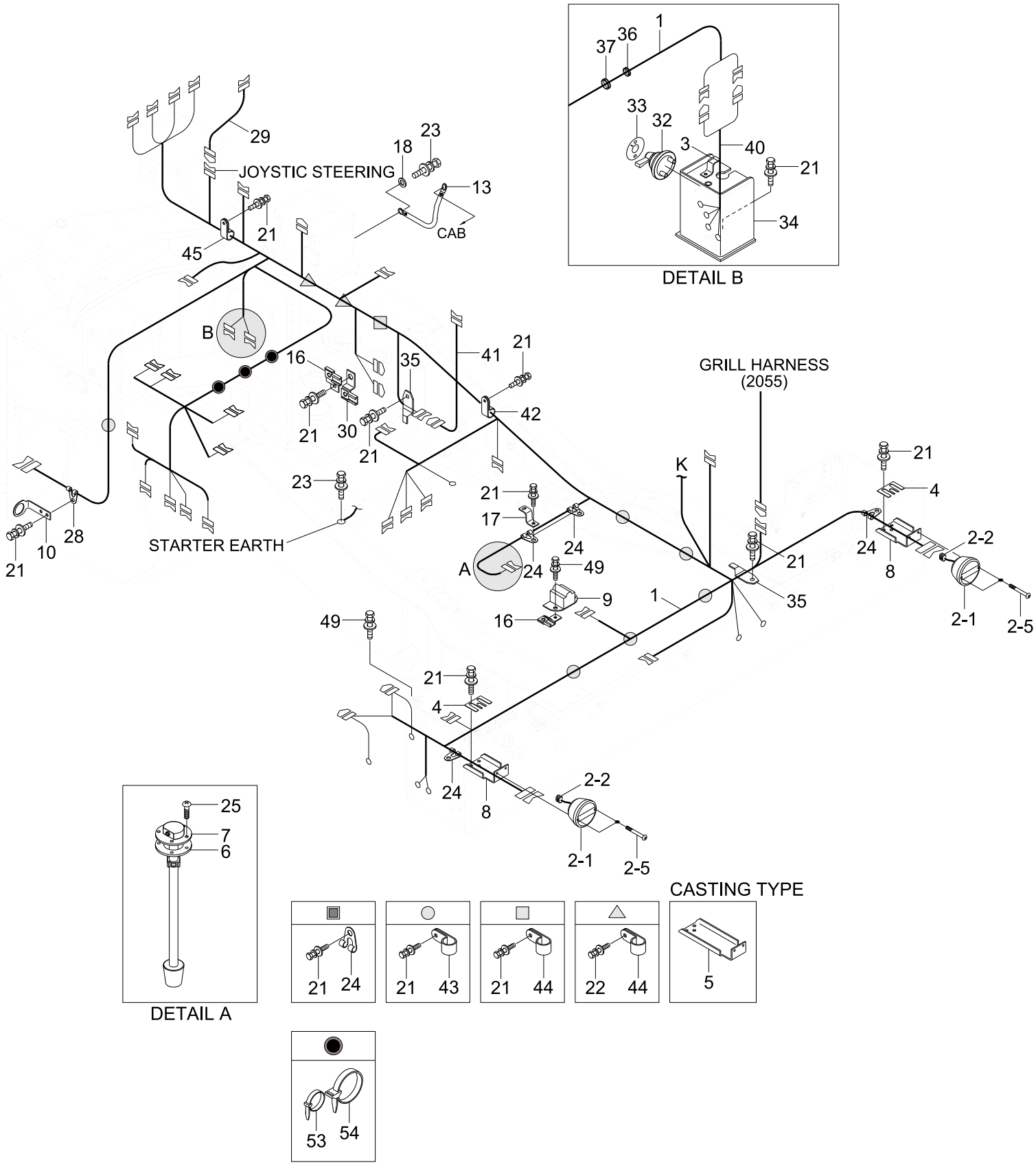

Item	Part_No	IS	Ord	T	Description	Qty	Serial_No	ITC	Remark
1	21LK-03512				HARNESS-FRAME	1	- #0128		
1	21LK-03513				HARNESS-FRAME	1	#0129 -	A	
2	21EK-10411				LAMP-TAIL STOP FLASHER	2			
2-1	21EK-10180				.LAMP-TAIL STOP FLASHER	1			
2-2	21EK-20200				.HARNESS-REAR COMBI	1			
2-3	21EK-10290				.BULB-21W	2			NOT SHOWN
2-4	21EK-10270				.BULB-5W	1			NOT SHOWN
2-5	21LB-51550				.SCREW	2			
3	21E7-0612				PLATE-CONNECTOR	1			
4	21LM-03220				SHIM	2			
5	21LK-03221				PLATE	2	- #0120		HL770XTD-9A
5	21LK-03320				PLATE	2	#0121 -	B	SEE 5050,TYPE2
6	E128-1053				GASKET	1			
7	21LM-00180				FUEL SENDOR	1			
8	21LK-03202				PLATE	2			HL770-9A
9	21N4-46800				BUZZER-BACK	1			
10	21LQ-01522				PLATE	1			
13	21L8-30720				STRAP-EARTH	1			
16	25D1-10640				CLIP ASSY	1			
18	S431-100002				WASHER-INTERNAL T/LOCK	3			
21	S037-102026				BOLT-W/WASHER	29			
23	S037-102022				BOLT-W/WASHER	3			
24	S593-000702				CLIP-HARNESS	10			
25	S161-050156				SCREW-CROSS R/ROUND	5			
28	S593-000902				CLIP-HARNESS	1			
29	21LK-01050				HARNESS-EXTENSION	1			JOYSTICK STEER
30	25D1-10650				CLIP ASSY	1			

Item	Part_No	IS	Ord	T	Description	Qty	Serial_No	ITC	Remark
30	25D1-10650				CLIP ASSY	1			
32	21LM-10500				SWITCH-MASTER	1	- #0005		MASTER SWITCH
32	21LM-10501				SWITCH-MASTER	1	#0006 - #0106	B	MASTER SWITCH
32	21LM-10502				SWITCH-MASTER	1	#0107 -	B	MASTER SWITCH
33	21LD-34180				DECAL-MASTER SWITCH	1	- #0005		MASTER SWITCH
33	21N5-40370				DECAL-MASTER SWITCH	1	#0006 -	B	MASTER SWITCH
34	21LM-05401				PLATE-SWITCH	1			
35	21N5-40340				CLIP-METAL	2			
36	S681-290400				GROMMET	1			
37	S760-090804				GROMMET	1			
40	21LM-10511				HARNESS-EXTENSION	1			MASTER SWITCH
41	21LK-03551				HARNESS-TBAP&DPF	1	- #0019		
41	21LK-03552				HARNESS-TBAP&DPF	1	#0020 -	D	
42	31L7-10190				CLAMP-TUBE	1			
43	31L7-10200				CLAMP-TUBE	7			
44	31L7-10210				CLAMP-TUBE INS	3			
45	31L7-10220				CLAMP-TUBE	1			
49	S035-082026				BOLT-W/WASHER	3			
50	31L7-10350				CLAMP	1			
52	S552-035146				CLAMP-BAND	3	#0206 -		
53	S554-054300				CLAMP-BAND	3	#0206 -		

REAR ELECTRIC 2

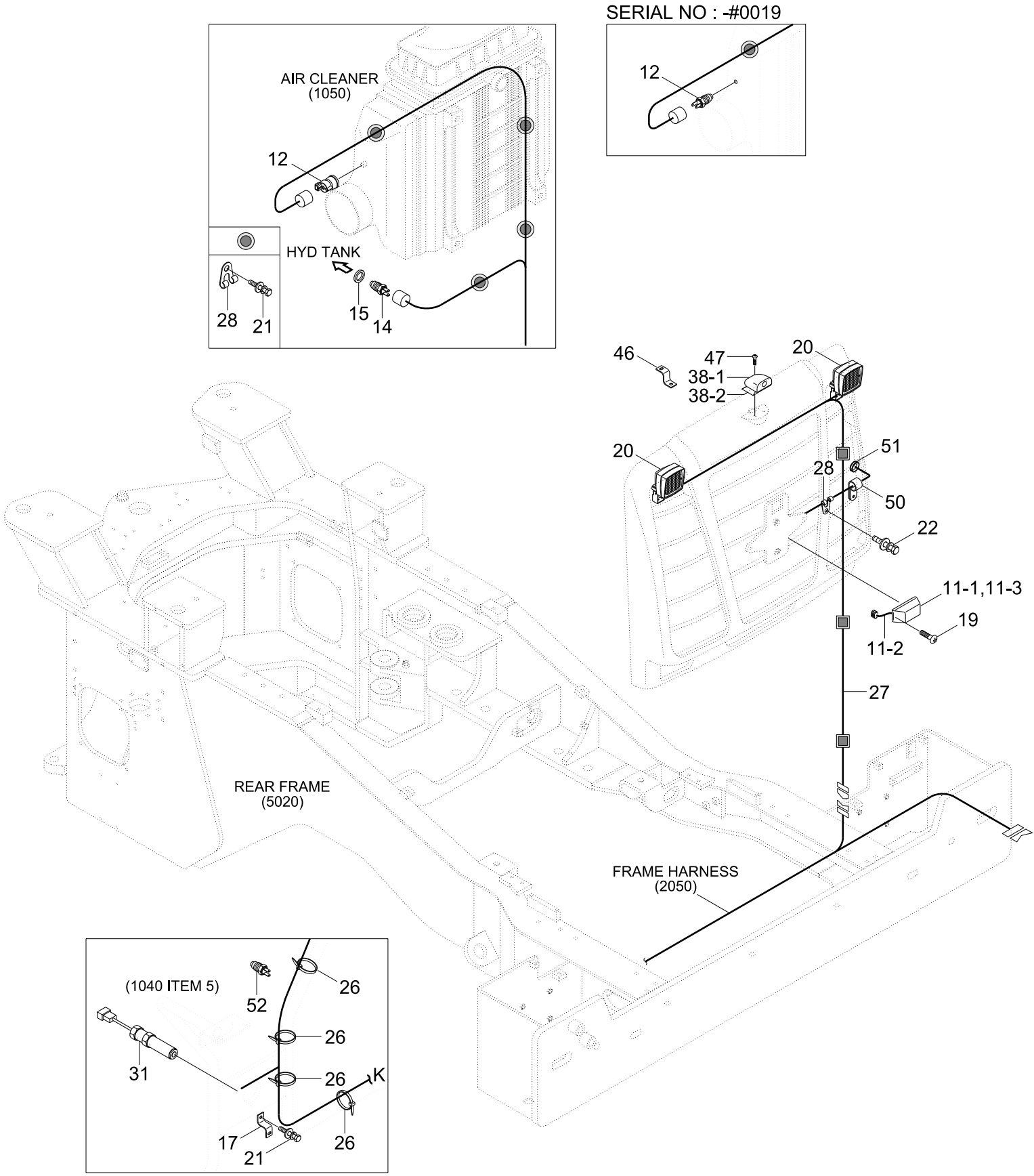

Item	Part_No	IS	Ord	T	Description	Qty	Serial_No	ITC	Remark
11	21LB-34250				LAMP SUB-NUMBER PLATE	1			NUMBER P/LAMP
11-1	21EK-10160				.LAMP-NUMBER PLATE	1			
11-2	21LB-34260				.HARNESS-EXT,NUM/LAMP	1			
11-3	21EK-10260				.BULB-10W	1			NOT SHOWN
12	11FG-20110				SENSOR-AIR CLEANER	1	- #0010		
12	11Q4-21010				INDICATOR	1	#0020 -	D	
14	21EN-40100				SENDER-TEMP	1			HYD OIL
15	21EA-50260				PACKING-TEMP SW	1			
17	21E7-0606				PLATE-CONNECTOR	1			
19	S161-040156				SCREW-CROSS R/ROUND	2			NUMBER P/LAMP
20	21LM-03500				WORK LAMP	2			
21	S037-102026				BOLT-W/WASHER	5			
22	S037-122026				BOLT-W/WASHER	2			
26	S552-035146				CLAMP-BAND	10			
27	21LL-03131				HARNESS-GRILL	1			
28	S593-000902				CLIP-HARNESS	4			
31	21LM-08210				SENSOR-SPEED	1			
38	21LM-39001				REAR VIEW CAMERA	1	- #0051		REAR CAMERA
38	21LM-39002				REAR VIEW CAMERA	1	#0052 -	B	REAR CAMERA
38-1	21LM-38001				.REAR VIEW CAMERA ASSY	1	- #0051		REAR CAMERA
38-1	21LM-38001				.REAR VIEW CAMERA ASSY	1	#0052 -	B	REAR CAMERA
N38-2	21LM-38101				.BRACKET ASSY	1			NOT
46	21N5-40340				CLIP-METAL	1			REAR CAMERA
47	S161-060206				SCREW-CROSS R/ROUND	4			REAR CAMERA
50	31L7-10350				CLAMP	1			
51	S681-190400				GROMMET	1			
52	YUBP-02758				SENSOR-COOLANT LEVEL	1			TORQUE:0.6KG.M

Item	Part_No	IS	Ord	T	Description	Qty	Serial_No	ITC	Remark
52	YUBP-02758				SENSOR-COOLANT LEVEL	1			TORQUE:0.6KG.M
N	@				NOT SUPPLIED PARTS	AR			NOT

ENGINE ELECTRIC

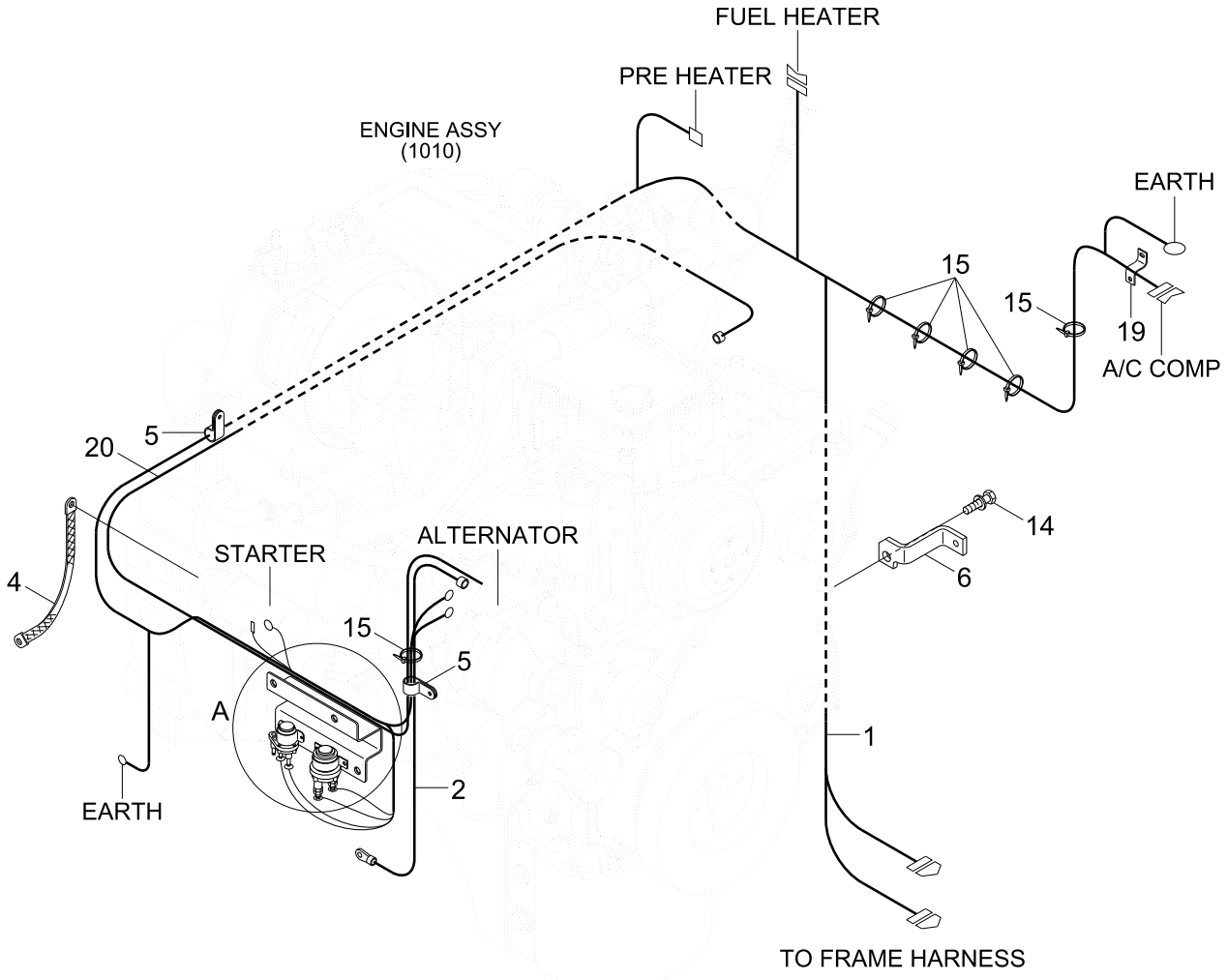

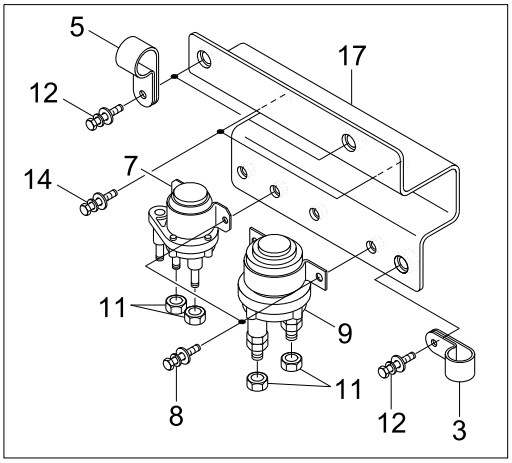

DETAIL A

Item	Part_No	IS	Ord	T	Description	Qty	Serial_No	ITC	Remark
1	21LK-04501				HARNESS-ENGINE	1	-		
1	21LK-04502				HARNESS-ENGINE	1	#0129 -	A	
2	21LB-20412				CABLE(ALT-EARTH)	1			
3	31L7-10350				CLAMP	1			
4	21LB-34720				EARTH STRAP	1			
5	31L7-10200				CLAMP-TUBE	4			
6	21LL-04110				PLATE	1			
7	21N8-42050				RELAY-HEATER	1			
8	S035-061526				BOLT-W/WASHER	4			
9	21N6-30120				RELAY-START	1			
11	S285-06100B				NUT-FLANGED	4			
12	S037-102026				BOLT-W/WASHER	3			
14	S035-081526				BOLT-W/WASHER	3			
15	S552-050203				CLAMP-BAND	8			
17	21LK-04451				PLATE	1			
19	21N4-01130				PLATE-CLIP	1			
20	21LB-80050				HARNESS-EXT	1			DUAL F/WARMER

ANGLE SENSING ELECTRIC

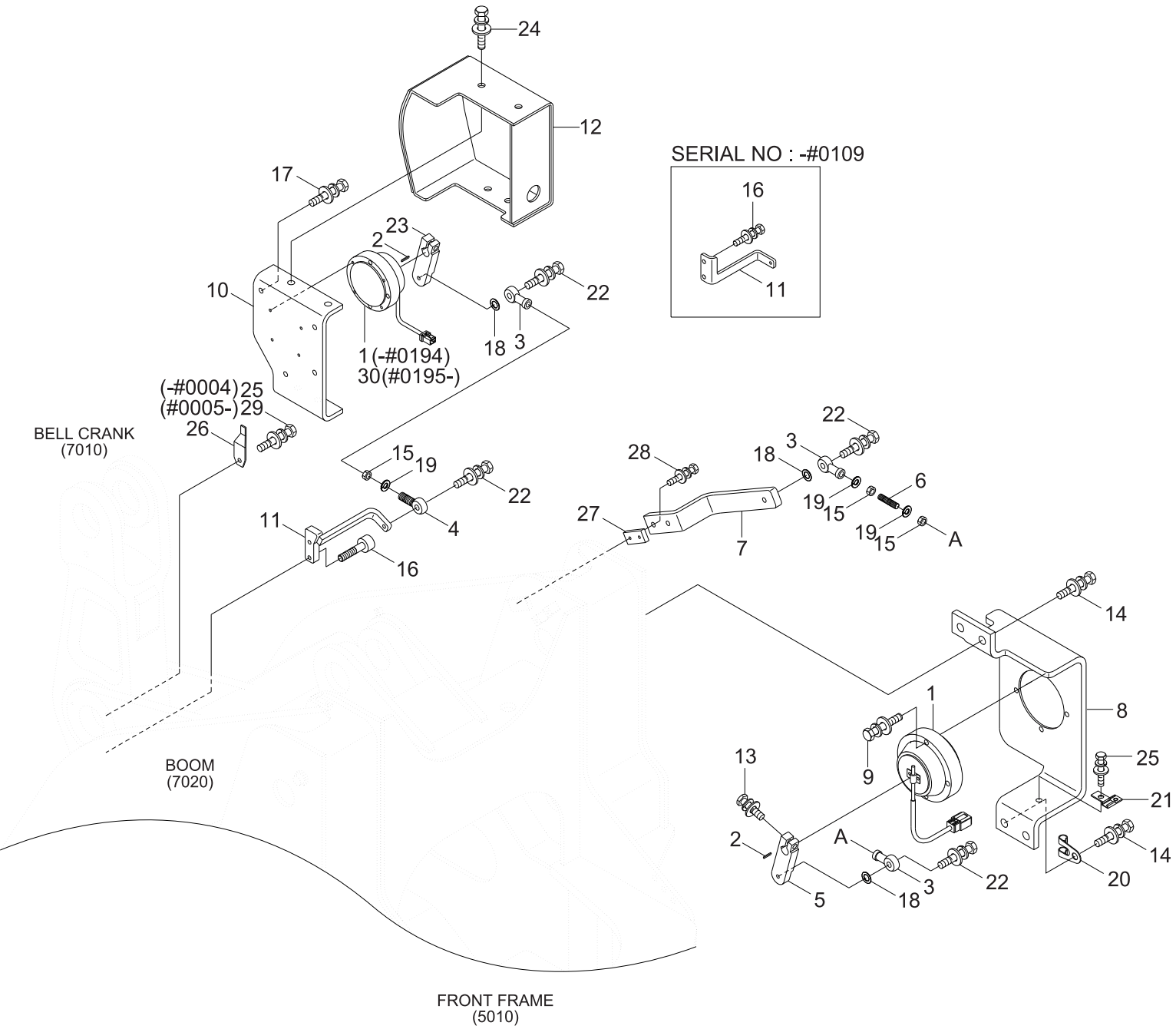

Item	Part_No	IS	Ord	T	Description	Qty	Serial_No	ITC	Remark
1	21LM-33100				POSITION SENSOR	2	- #0194		
1	21LM-33100				POSITION SENSOR	1	#0195 -	A	
2	21LM-08010				KEY-WOODRUFF	2			
3	S923-108000				ROD END	3	- #0004		
3	21LK-80820				ROD END-METRIC	3	#0005 -	B	
4	S921-108000				ROD END	1	- #0004		
4	21LK-80810				ROD END-METRIC	1	#0005 -	B	
5	21LM-08020				LEVER	1			
6	21LM-08030				ROD	1			
7	21LK-08140				PLATE	1			
8	21LM-08052				COVER	1			
9	S109-060256				BOLT-SOCKET	8			
10	21LM-08062				BRACKET	1			
11	21LK-08070				PLATE	1	- #0109		
11	21LK-08072				PLATE	1	#0110 -	B	
12	21LK-08082				COVER	1			
13	S035-062526				BOLT-W/WASHER	2			
14	S037-103026				BOLT-W/WASHER	4			
15	S205-082006				NUT-HEX	3	- #0004		
15	S205-08100B				NUT-HEX	3	#0005 -	B	
16	S035-082026				BOLT-W/WASHER	2	- #0109		
16	S109-080156				BOLT-SOCKET	2	#0110 -	B	
17	S035-082526				BOLT-W/WASHER	3			
18	S403-08200B				WASHER-PLAIN	4			
19	S411-080006				WASHER-SPRING	2			
20	S593-000902				CLIP-HARNESS	1			
21	25D1-10640				CLIP ASSY	1			

Item	Part_No	IS	Ord	T	Description	Qty	Serial_No	ITC	Remark
21	25D1-10640				CLIP ASSY	1			
22	S035-083526				BOLT-W/WASHER	4			
23	21LM-08091				LEVER	1	- #0010		
23	21LM-08092				LEVER	1	#0011 - #0115	B	
23	21LM-08093				LEVER	1	#0116 -	B	
24	S037-102026				BOLT-W/WASHER	4			
25	S035-081526				BOLT-W/WASHER	2	- #0004		
25	S035-081526				BOLT-W/WASHER	1	#0005 -	A	
26	21N5-40340				CLIP-METAL	1			
27	21LM-08130				PLATE	1			
28	S037-103526				BOLT-W/WASHER	2			
29	S037-101526				BOLT-W/WASHER	1	#0005 -		
30	21WD-33100				POSITION SENSOR	1	#0195 -		

BATTERY CABLE ELECTRIC

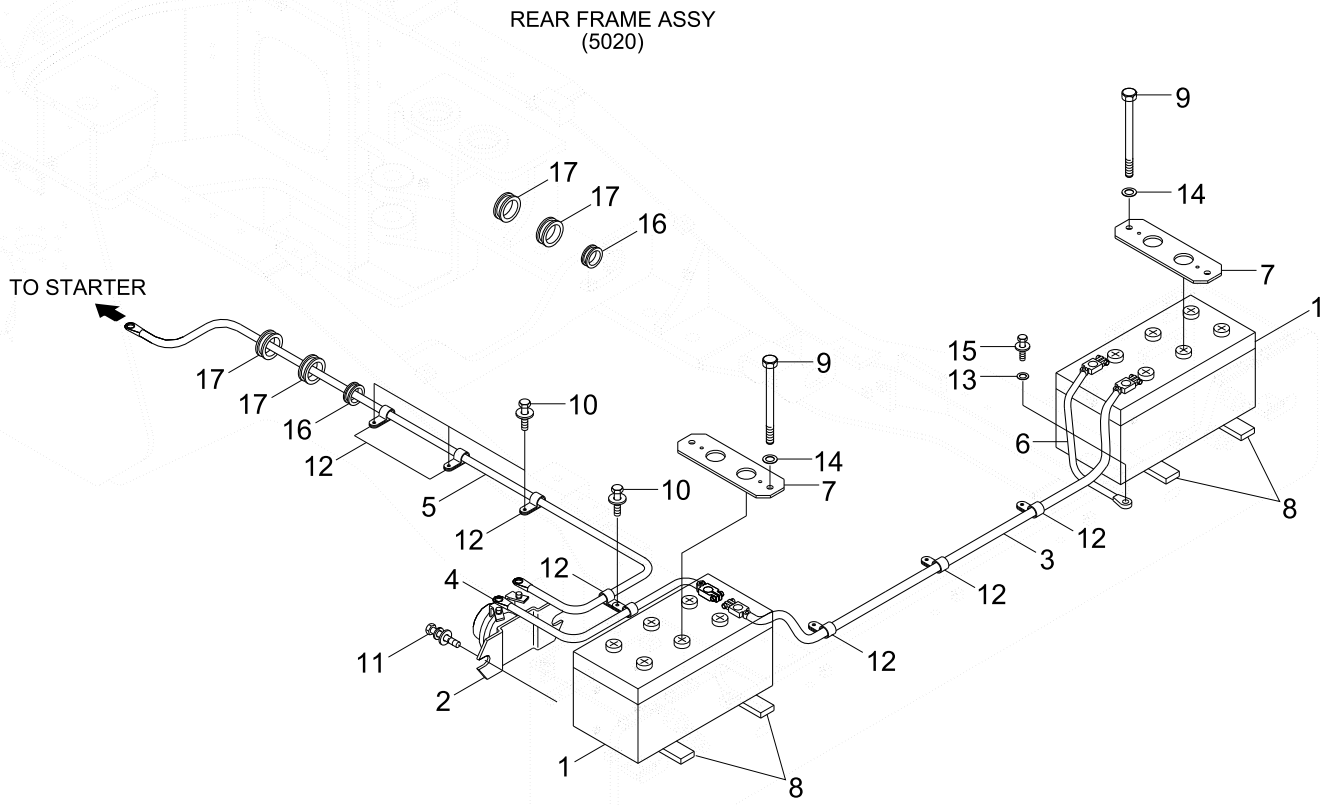

Item	Part_No	IS	Ord	T	Description	Qty	Serial_No	ITC	Remark
1	21L1-1012				BATTERY	2			
2	21QA-70010				RELAY-BATTERY	1			
3	21LK-05530				CABLE(BATT-BATT)	1	- #0010		
3	21LK-05531				CABLE	1	#0011 - #0121	B	
3	21LD-34111				CABLE(BATT-BATT)	1	#0122 -	B	
3	21LK-05531				CABLE	1	#0011 -	B	
4	21LK-05580				CABLE(RELAY-BATT)	1	- #0010		
4	21LK-05581				CABLE	1	#0011 -	B	
5	21LK-01570				CABLE(STARTER-RELAY)	1	- #0010		
5	21LK-01571				CABLE(STARTER-RELAY)	1	#0011 -	B	
6	21LK-05251				CABLE(BATTERY-EARTH)	1	- #0010		
6	21LK-05252				CABLE(BATT-EARTH)	1	#0011 -	B	
7	21LK-05201				PLATE	2			
8	24L1-40360				PAD	4			
9	S017-102306				BOLT-HEX	4			
10	S037-102026				BOLT-W/WASHER	4			
11	S035-083026				BOLT-W/WASHER	2			
12	31L7-10200				CLAMP-TUBE	8			
13	S431-100002				WASHER-INTERNAL T/LOCK	1			
14	S411-100006				WASHER-SPRING	4			
15	S037-102022				BOLT-W/WASHER	1			
16	S760-111200				GROMMET	2			
17	S760-081006				GROMMET	4			

EMERGENCY STEERING ELECTRIC

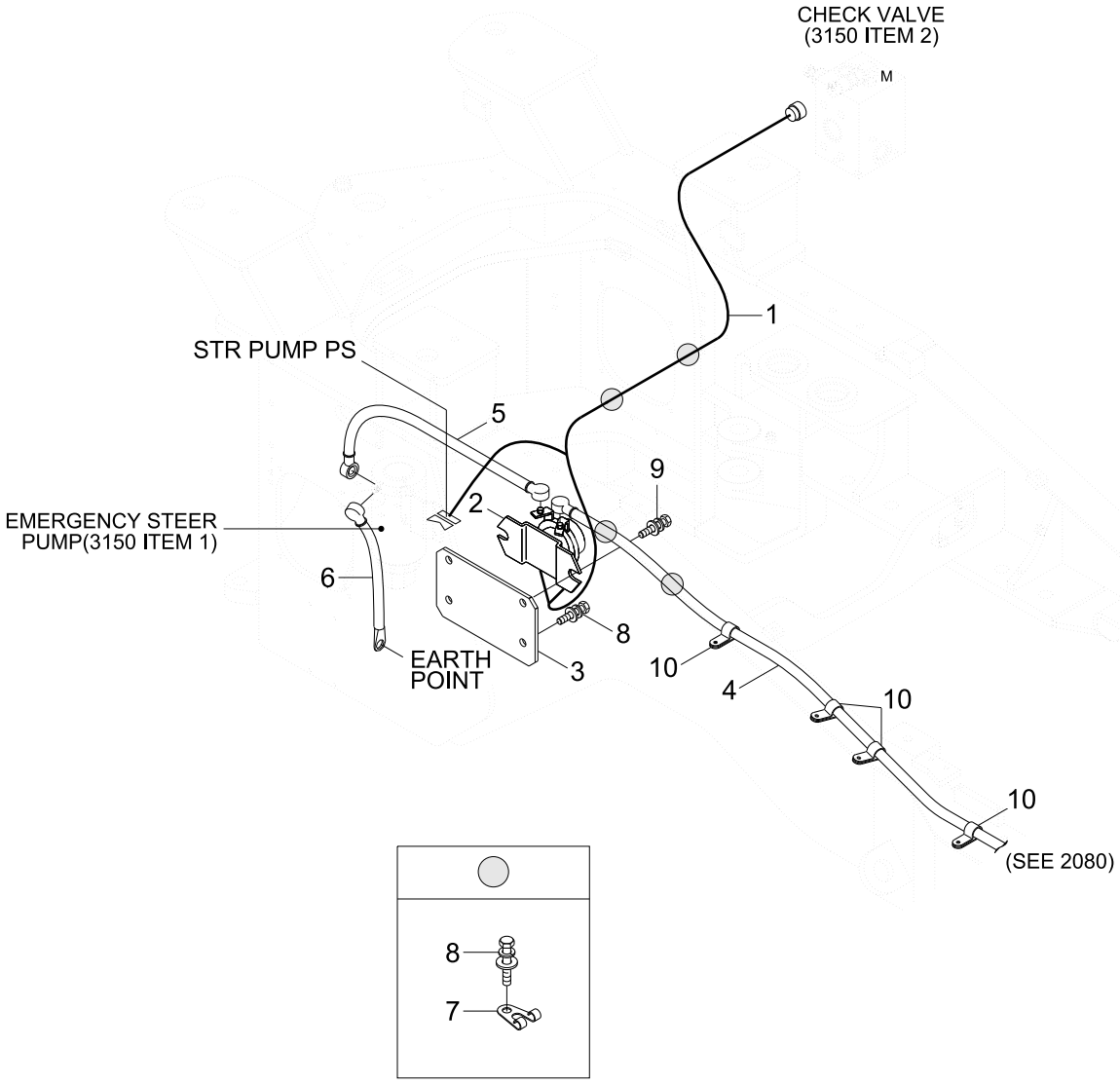

Item	Part_No	IS	Ord	T	Description	Qty	Serial_No	ITC	Remark
E	@				EMER STEERING ELECTRIC	1			NOT
1	21LK-06402				.HARNESS-E/STEERING	1			
2	21QA-70010				.RELAY-BATTERY	1			
3	21LB-40051				.PLATE	1			
4	21LL-07230				.CABLE(RELAY-RELAY)	1	- #0010		
4	21LL-07231				.CABLE(RELAY-RELAY)	1	#0011 -	B	
5	21LH-20261				.CABLE(RELAY-MOTOR)	1	- #0010		
5	21LH-20262				.CABLE(RELAY-MOTOR)	1	#0011 -	B	
6	21LK-06500				.CABLE(MOTOR-EARTH)	1	- #0010		
6	21LK-06501				.CABLE(MOTOR-EARTH)	1	#0011 -	B	
7	31L7-10350				.CLAMP	4			
8	S037-102026				.BOLT-W/WASHER	10			
9	S035-083026				.BOLT-W/WASHER	2			
10	31L7-10200				.CLAMP-TUBE	4			

MAIN HYDRAULIC PIPING 1

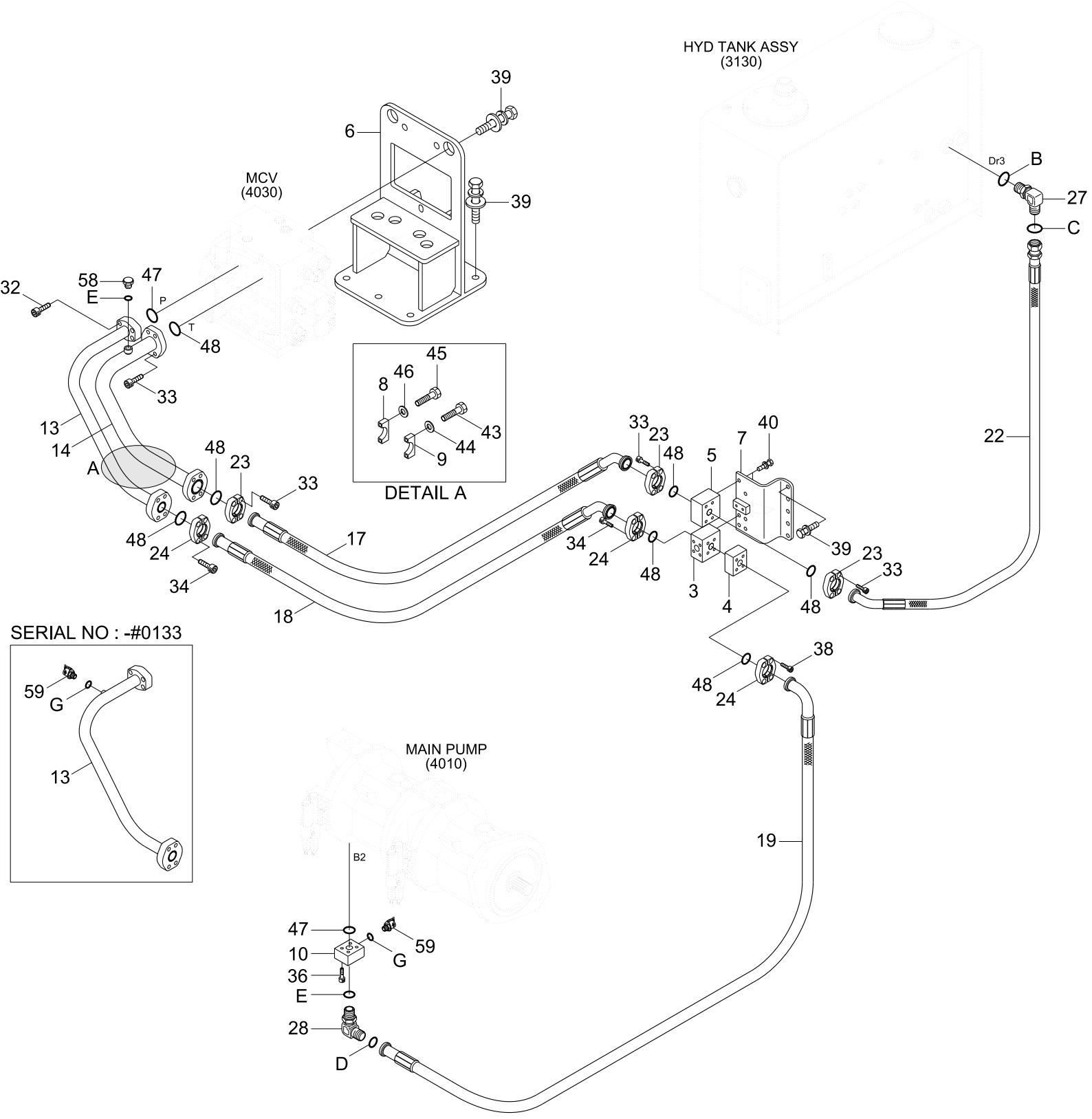

Item	Part_No	IS	Ord	T	Description	Qty	Serial_No	ITC	Remark
3	31LQ-00260				BLOCK	1			
4	31LK-10200				CHECK VALVE-FLANGE	1			
5	31LK-10081				BLOCK	1			
6	31LK-00075				PLATE-MCV MOUNT	1			
7	31LK-00064				PLATE	1			
8	31L7-00240				CLAMP	1			
9	31L7-40260				CLAMP	1			
10	34L3-02510				BLOCK	1			
13	31LK-00044				PIPE WA	1	-		
13	31LK-00140				PIPE WA	1	#0134 -	B	
14	31LK-00104				PIPE WA	1			
17	P690-202330				HOSE ASSY-FLG 0X45	1			
18	P690-207430				HOSE ASSY-FLG 0X45	1			
19	31LK-30311				HOSE ASSY	1			
22	P950-202331				HOSE ASSY-ORFS,FLG	1	-		
22	P953-202331				HOSE ASSY-ORFS,FLG	1	#0206 -	B	
23	P173-200106				FLANGE-HYD,SPLIT	6			
24	P174-200106				FLANGE-SPLIT	6			
27	X520-110006				ELBOW-90,ORFS	1			
28	X520-110005				ELBOW-90,ORFS	1			
32	S109-120406				BOLT-SOCKET	4			
33	S109-100306				BOLT-SOCKET	16			
34	S109-120456				BOLT-SOCKET	8			
36	S109-100556				BOLT-SOCKET	4			
38	S109-120956				BOLT-SOCKET	4			
39	S037-123056				BOLT-W/WASHER	20			
43	S017-100456				BOLT-HEX	2			

Item	Part_No	IS	Ord	T	Description	Qty	Serial_No	ITC	Remark
43	S017-100456				BOLT-HEX	2			
44	S411-100006				WASHER-SPRING	2			
45	S017-120506				BOLT-HEX	2			
46	S411-120006				WASHER-SPRING	2			
47	Y171-024004				O-RING	2			
48	Y171-027004				O-RING	7			
58	P220-110106				PLUG-HEX	1			
59	31EK-11130				COUPLING-SCREW	2	- #0133		
59	31EK-11130				COUPLING-SCREW	1	#0134 -	A	
B	S631-038004				O-RING	1			
C	S621-025001				O-RING	1			
D	S621-021001				O-RING	1			
E	S631-029004				O-RING	2			
G	S631-011004				O-RING	2	- #0133		
G	S631-011004				O-RING	1	#0134 -	A	

MAIN HYDRAULIC PIPING 2

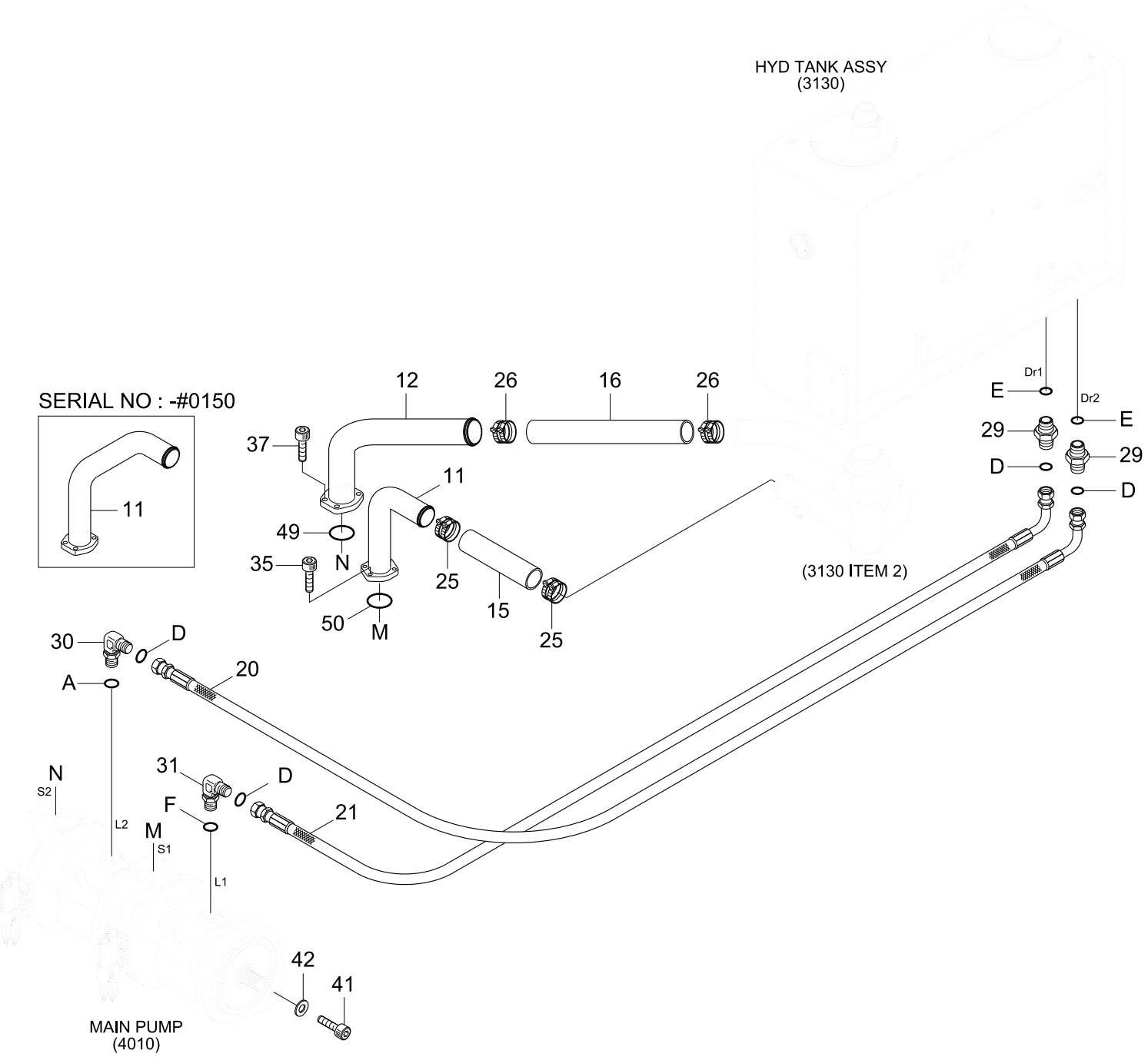

Item	Part_No	IS	Ord	T	Description	Qty	Serial_No	ITC	Remark
11	31LK-00083				PIPE WA	1	- #0150		
11	31LK-00084				PIPE WA	1	#0151 -	D	
12	31LK-00094				PIPE WA	1	- #0150		
12	31LK-00095				PIPE WA	1	#0151 -	D	
15	P760-093040				HOSE-RUBBER	1			
16	P760-083034				HOSE-RUBBER	1	- #0150		
16	P760-083046				HOSE-RUBBER	1	#0151 -	D	
20	P930-162021				HOSE ASSY-ORFS 0X90	1			
21	P930-162017				HOSE ASSY-ORFS 0X90	1			
25	S572-930006				CLAMP-HOSE,WIRE TYPE	4	- #0061		
25	11N6-20250				CLAMP-T/BOLT	4	#0062 -	B	
26	S572-780006				CLAMP-HOSE,WIRE TYPE	4	- #0061		
26	11N6-20230				CLAMP-T-BOLT	4	#0062 -	B	
29	X500-110005				CONNECTOR-ORFS	2			
30	31FQ-20020				ELBOW-90	1			
31	31LB-40370				ELBOW-90,ORFS	1			
35	S109-120356				BOLT-SOCKET	4			
37	S109-120306				BOLT-SOCKET	4			
41	S017-140456				BOLT-HEX	4			
42	S441-140006				WASHER-HARDENED	4			
49	Y172-006004				O-RING	1			
50	Y172-010004				O-RING	1			
A	S611-023001				O-RING	1			
D	S621-021001				O-RING	4			
E	S631-029004				O-RING	2			
F	S611-030001				O-RING	1			

PILOT HYDRAULIC PIPING 1(2-SPOOL)

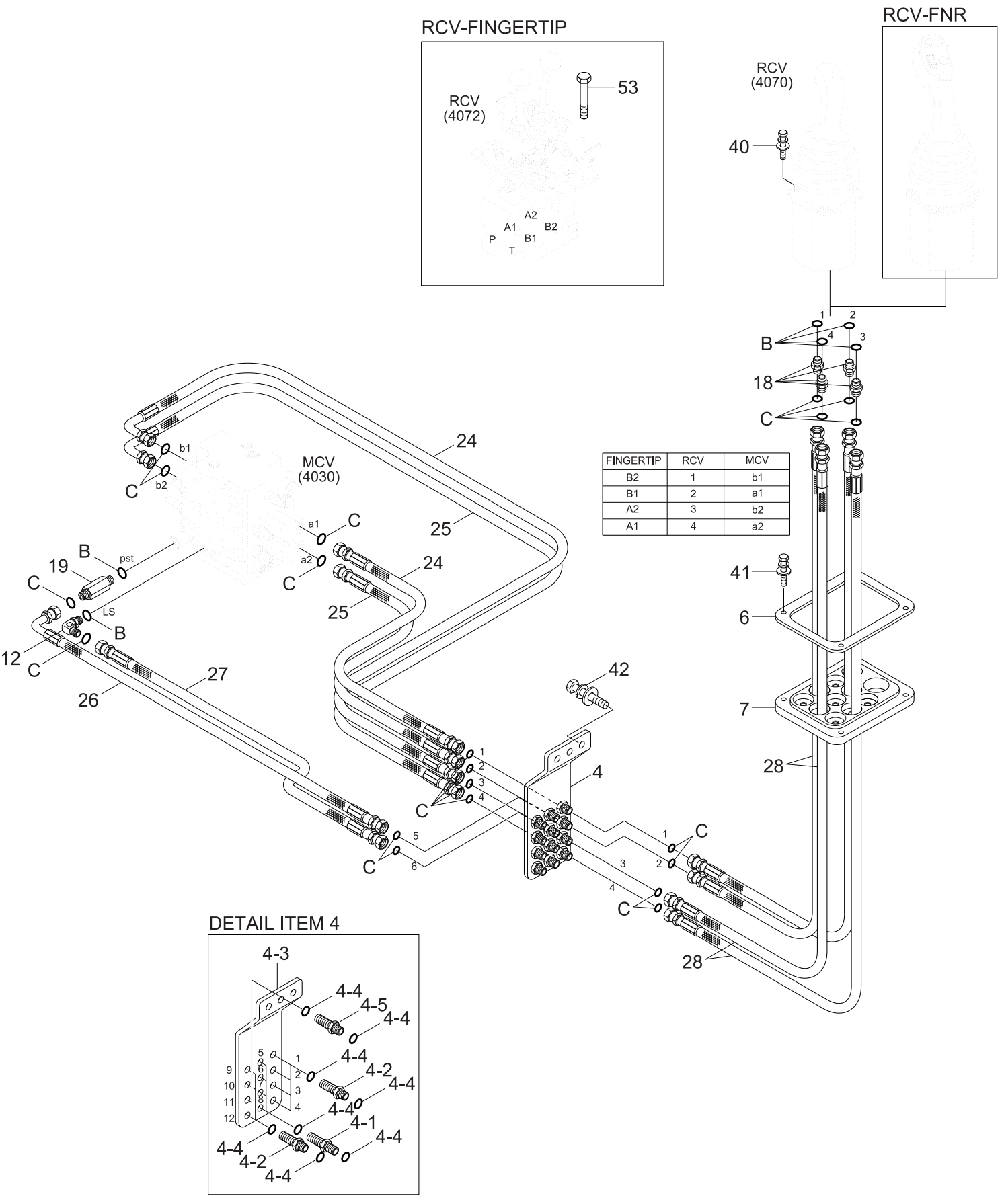

FINGERTIP	RCV	MCV
B2	1	b1
B1	2	a1
A2	3	b2
A1	4	a2

Item	Part_No	IS	Ord	T	Description	Qty	Serial_No	ITC	Remark
4	31LL-10054				TERMINAL ASSY	1			
4-1	31LM-10160				.CONNECTOR-ORFS	4			
4-2	X540-120002				.CONNECTOR-ORFS	7			
4-3	@				.PLATE	1			NOT
4-4	S621-012001				.O-RING	24			
4-5	X540-120003				.CONNECTOR-ORFS	1			
6	31LM-10130				PLATE	1			
7	31LM-10141				RUBBER	1			
12	31FG-70030				ELBOW-90	1			
18	X500-310002				CONNECTOR-ORFS	4			
19	X515-107525				CONNECTOR-LONG,ORFS	1			
24	X400-062012				HOSE ASSY-SYNF ORFS	2			
25	X420-062025				HOSE ASSY-ORFS 0X90	2			
26	X420-062016				HOSE ASSY-ORFS 0X90	1			
27	P910-066015				HOSE ASSY-ORFS 0X0	1			
28	X400-062038				HOSE ASSY-SYNF,ORFS	4			
40	S035-062556				BOLT-W/WASHER	4			
41	S035-063526				BOLT-W/WASHER	4			
42	S037-123556				BOLT-W/WASHER	3			
44	S441-10000B				WASHER-HARDENED	2			
53	S015-060106				BOLT-HEX	4			
B	S611-012001				O-RING	6			
C	S621-012001				O-RING	20			

PILOT HYDRAULIC PIPING 2(2-SPOOL)

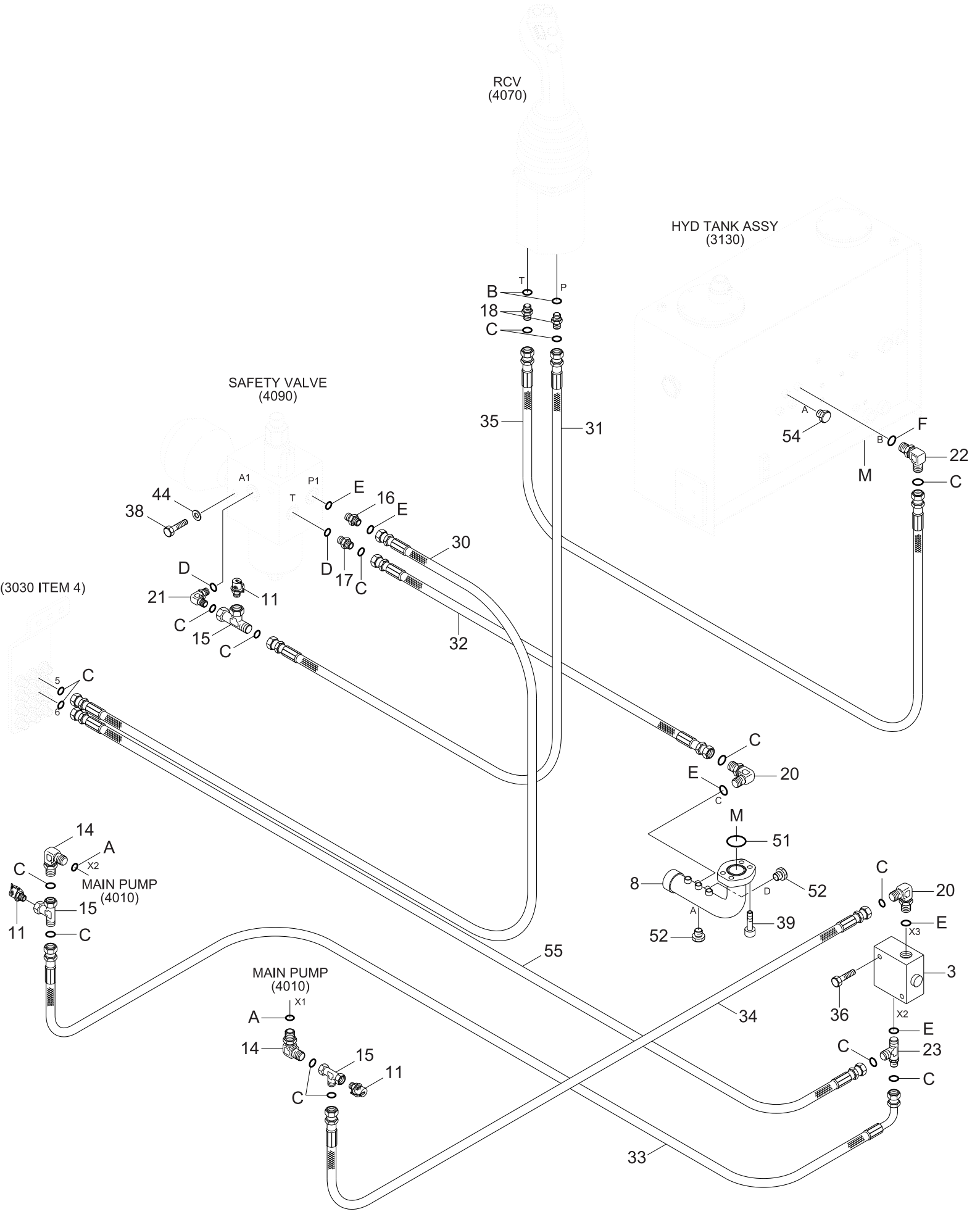

Item	Part_No	IS	Ord	T	Description	Qty	Serial_No	ITC	Remark
3	31LM-10210				SHUTTLE VALVE	1			
8	31LK-10191				PIPE WA	1			
11	31EK-11130				COUPLING-SCREW	3			
14	31LB-40350				ELBOW-90	2			
15	31N6-66090				TEE-TEST	3			
16	X500-110002				CONNECTOR-ORFS	1			
17	X500-110011				CONNECTOR-ORFS	1			
18	X500-310002				CONNECTOR-ORFS	2			
20	X520-110002				ELBOW-90,ORFS	2			
21	X520-110011				ELBOW-90,ORFS	1			
22	X520-110014				ELBOW-90,ORFS	1			
23	X820-065252				TEE-R/TYPE,ORFS	1			
30	X400-062030				HOSE ASSY-SYNF,ORFS	1			
31	X400-062015				HOSE ASSY-SYNF,ORFS	1			
32	X400-062025				HOSE ASSY-SYNF,ORFS	1			
33	P930-066018				HOSE ASSY-ORFS 0X90	1			
34	P910-066014				HOSE ASSY-ORFS 0X0	1			
35	X400-062050				HOSE ASSY-SYNF,ORFS	1			
36	S017-080406				BOLT-HEX	2			
38	S017-101006				BOLT-HEX	2			
39	S109-120306				BOLT-SOCKET	4			
44	S441-10000B				WASHER-HARDENED	2			
51	Y172-003004				O-RING	1			
52	P220-110103				PLUG-HEX	3			
54	P220-110104				PLUG-HEX	1			
55	P910-066030				HOSE ASSY-ORFS 0X0	1			
A	S611-009001				O-RING	2			

Item	Part_No	IS	Ord	T	Description	Qty	Serial_No	ITC	Remark
A	S611-009001				O-RING	2			
B	S611-012001				O-RING	2			
C	S621-012001				O-RING	17			
D	S631-011001				O-RING	5			
E	S631-014001				O-RING	6			
F	S631-018001				O-RING	1			

PILOT HYDRAULIC PIPING(3-SPOOL)

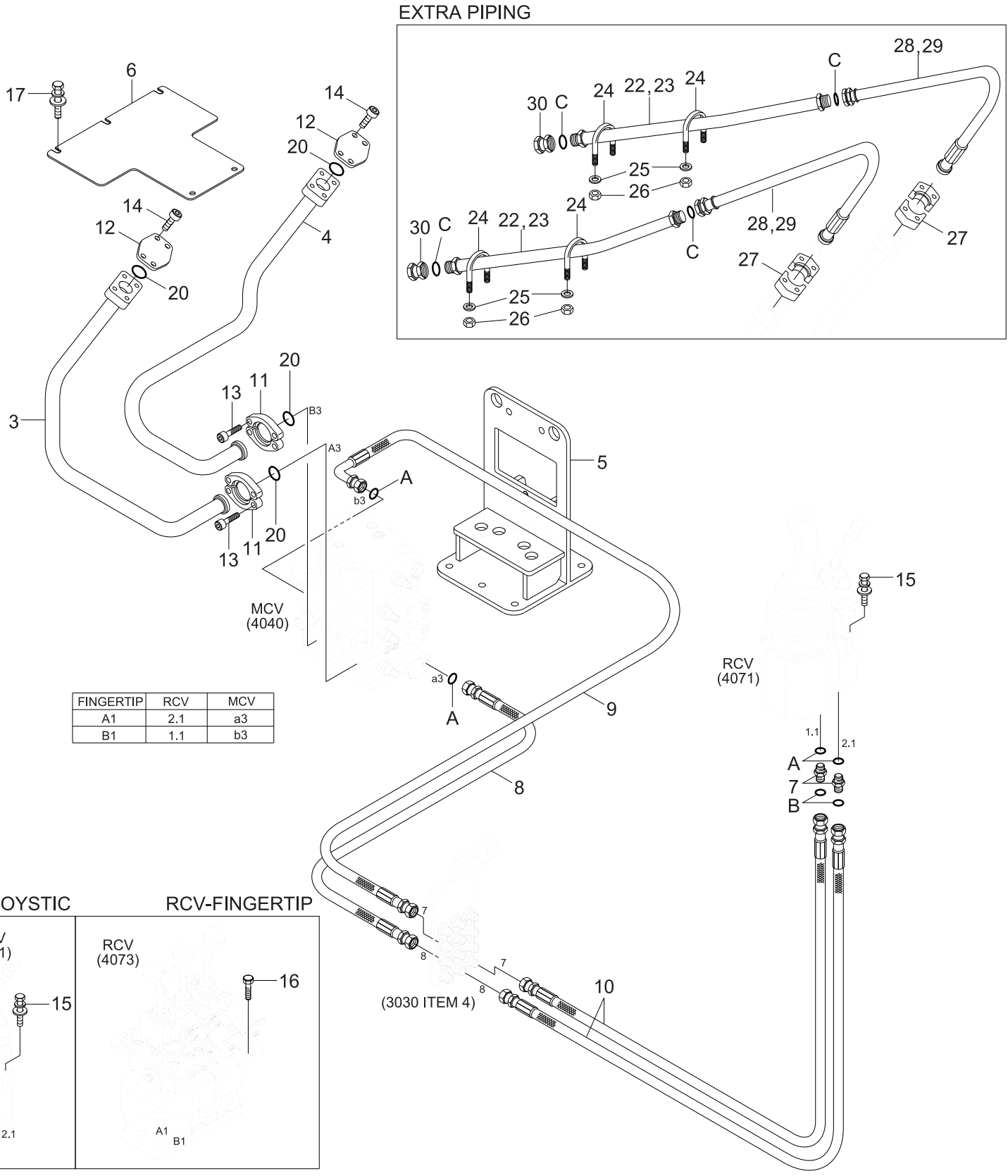

FINGERTIP	RCV	MCV
A1	2.1	a3
B1	1.1	b3

Item	Part_No	IS	Ord	T	Description	Qty	Serial_No	ITC	Remark
3	31LK-20062				PIPE ASSY-LH	1			
4	31LK-20082				PIPE ASSY-RH	1			
5	31LK-90110				PLATE-MCV MOUNT	1			
6	31LK-20041				COVER	1			
7	X500-310002				CONNECTOR-ORFS	2			
8	X400-062012				HOSE ASSY-SYNF,ORFS	1			
9	X420-062023				HOSE ASSY-ORFS 0X90	1			
10	X400-062039				HOSE ASSY-SYNF,ORFS	2			
11	P174-120103				FLANGE-HYD,SPLIT	4			
12	P184-121112				FLANGE-HYD,PLUGING	2			
13	S109-100256				BOLT-SOCKET	8			
14	S109-100306				BOLT-SOCKET	8			
15	S035-081556				BOLT-W/WASHER	2			
16	S015-060106				BOLT-HEX	2			
17	S037-122556				BOLT-W/WASHER	5			
20	Y171-019004				O-RING	4			
22	31LK-90130				PIPE WA	2			E/PIP,HL770-9A
23	31LK-90140				PIPE WA	2			E/P,HL770XTD-9A
24	S071-022730				U-BOLT	4			EXTRA PIP
25	S441-10000B				WASHER-HARDENED	8			EXTRA PIP
26	S275-10000B				NUT-SELF LOCKING	8			EXTRA PIP
27	P174-120102				FLANGE-HYD,SPLIT	4			EXTRA PIP
28	P943-126436				HOSE ASSY-THD 0X0	2	- #0047		E/PIP,HL770-9A
28	P943-126433				HOSE ASSY-THD FIG(0X0)	2	#0048 -	B	E/PIP,HL770-9A
29	P943-126438				HOSE ASSY-THD 0X0	2	- #0047		E/P,HL770XTD-9A
29	P943-126435				HOSE ASSY-THD FIG(0X0)	2	#0048 -	B	E/P,HL770XTD-9A
30	X710-100105				CAP-HYD ORFS	2			EXTRA PIP

Item	Part_No	IS	Ord	T	Description	Qty	Serial_No	ITC	Remark
30	X710-100105				CAP-HYD ORFS	2			EXTRA PIP
A	S621-012001				O-RING	8			
B	S611-012001				O-RING	2			
C	S621-018001				O-RING	4			

ATTACHMENT HYDRAULIC PIPING

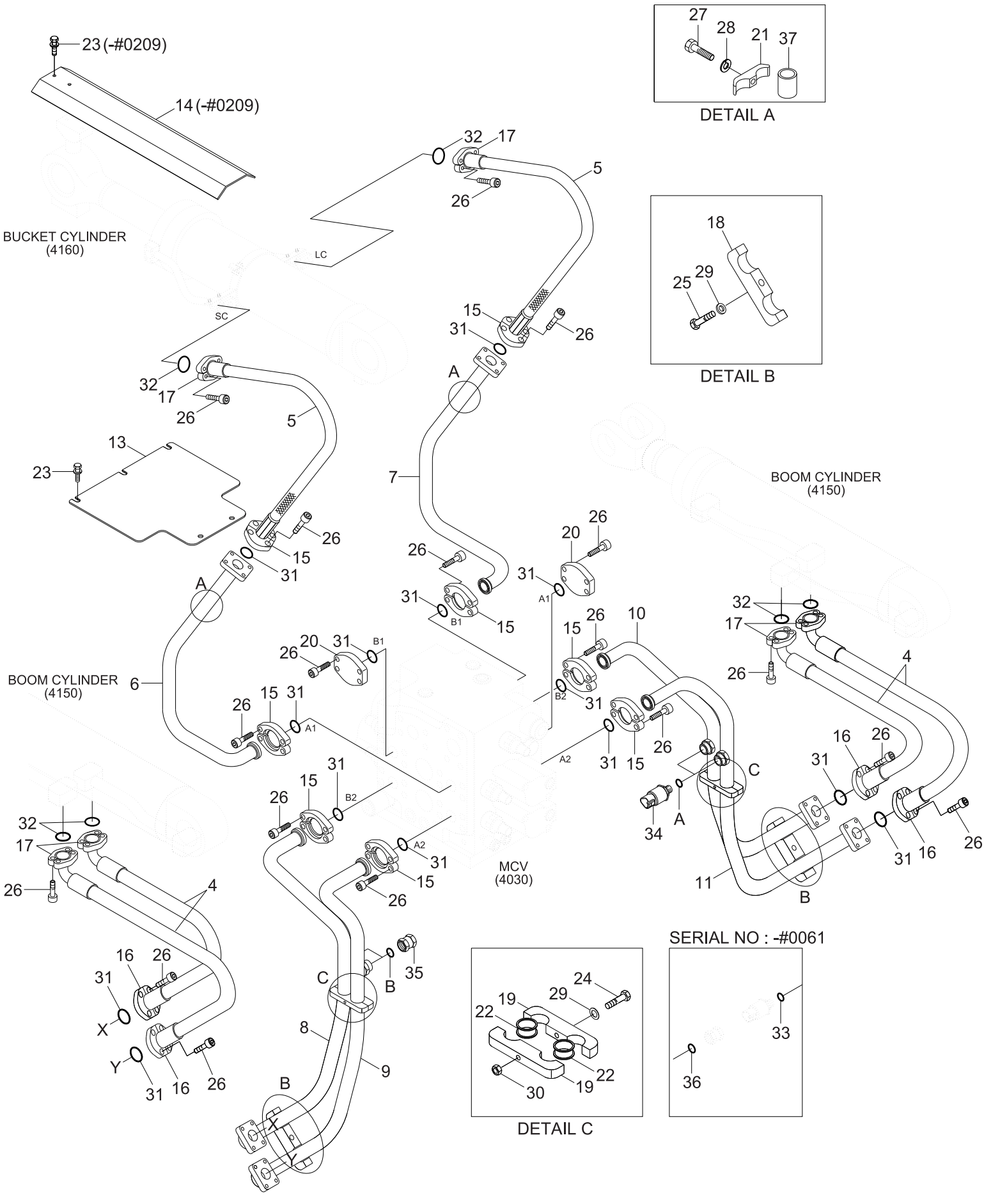

Item	Part_No	IS	Ord	T	Description	Qty	Serial_No	ITC	Remark
4	31LL-20201				HOSE ASSY	4	- #0061		
4	31LL-20201				HOSE ASSY	4	#0062 -	A	
5	31LK-20201				HOSE ASSY	2	- #0061		
5	31LK-20202				HOSE ASSY	2	#0062 -	B	
6	31LK-20052				PIPE ASSY-LH	1			
7	31LK-20072				PIPE ASSY-RH	1			
8	31LK-20092				PIPE ASSY-LH	1			
9	31LK-20102				PIPE ASSY-LH	1			
10	31LK-20113				PIPE ASSY-RH	1			
11	31LK-20123				PIPE ASSY-RH	1			
13	31LK-20141				COVER	1			
14	31LK-20150				COVER	1	- #0209		
15	P174-120103				FLANGE-HYD,SPLIT	16			
16	P173-120102				FLANGE-HYD,SPLIT	8			
17	P173-160104				FLANGE-HYD,SPLIT	12			
18	34L3-00730				CLAMP	2			
19	34L3-00710				CLAMP	4			
20	P184-121112				FLANGE-HYD,PLUGING	2			
21	S582-272272				CLAMP-PIPE	2			
22	S690-027100				GROMMET(FOR ONE LINE)	8			
23	S037-122556				BOLT-W/WASHER	7	- #0209		
23	S037-122556				BOLT-W/WASHER	5	#0210 -	A	
24	S017-120706				BOLT-HEX	2			
25	S017-120556				BOLT-HEX	2			
26	S109-100306				BOLT-SOCKET	80			
27	S017-100556				BOLT-HEX	2			
28	S441-10000B				WASHER-HARDENED	2			

Item	Part_No	IS	Ord	T	Description	Qty	Serial_No	ITC	Remark
28	S441-10000B				WASHER-HARDENED	2			
29	S441-12000B				WASHER-HARDENED	4			
30	S205-12100B				NUT-HEX	2			
31	Y171-019004				O-RING	14			
32	Y171-024004				O-RING	6			
34	31Q4-40800				SENSOR-PRESSURE	2			LOAD SENSING
35	X710-100105				CAP-HYD ORFS	2			
37	31LL-20211				PIPE	2			
A	S631-011004				O-RING	2	#0001 -		
B	S621-018001				O-RING	2	#0001 -		

STEERING HYDRAULIC PIPING 1

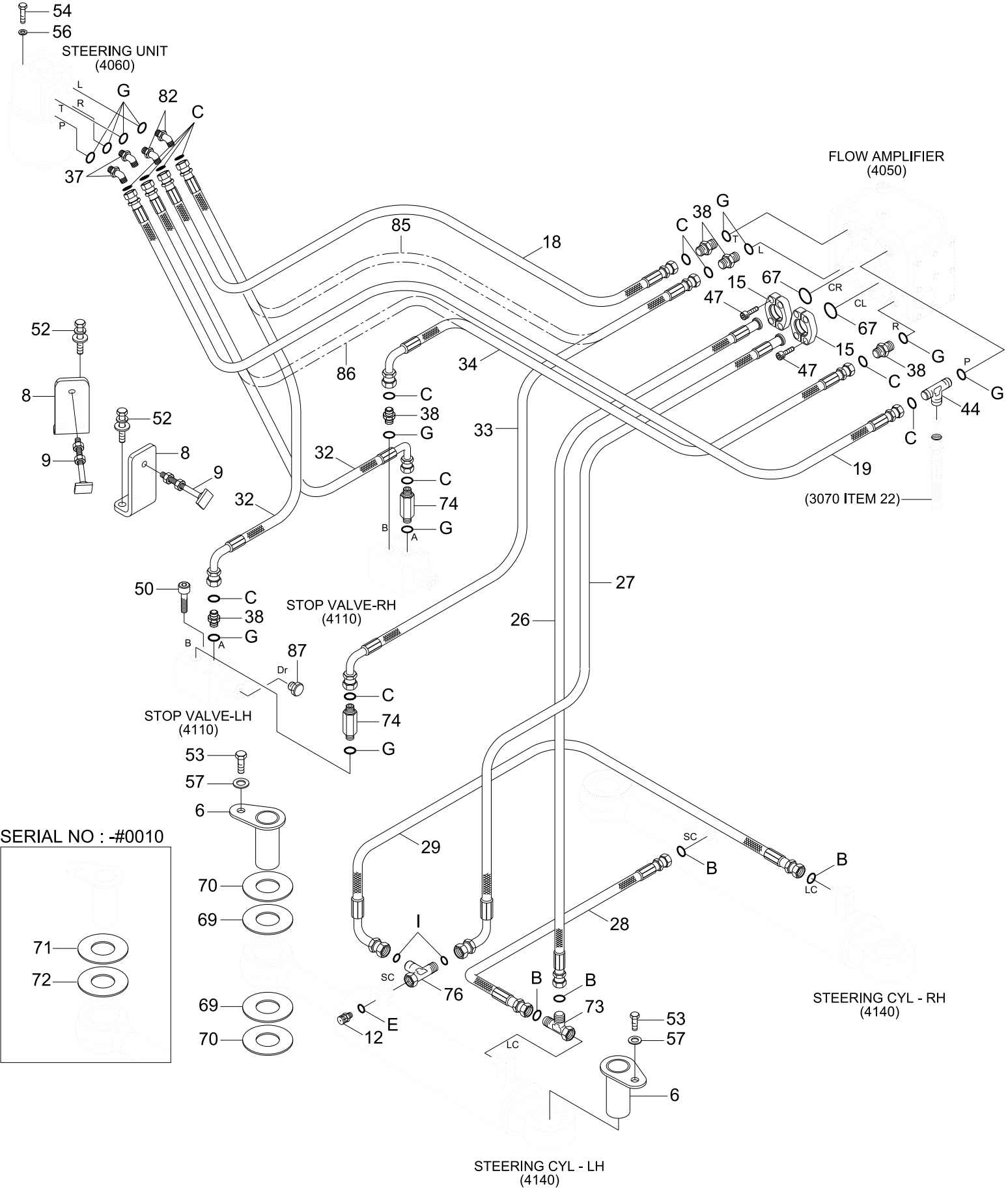

Item	Part_No	IS	Ord	T	Description	Qty	Serial_No	ITC	Remark
6	31LK-30320				PIN WA	4			
8	31LK-30041				PLATE	2			
9	31LK-30170				BOLT-ADJUST	2			
12	31EK-11130				COUPLING-SCREW	2			
15	P173-160104				FLANGE-HYD,SPLIT	4			
18	P910-082025				HOSE ASSY-ORFS 0X0	1			
19	P910-086025				HOSE ASSY-ORFS 0X0	1			
26	31LK-30140				HOSE ASSY-FLG 0X0	1	-		
26	31LK-30141				HOSE ASSY-FLG 0X0	1	#0062 -	B	
27	31LK-30150				HOSE ASSY-THD,FLG	1	-		
27	31LK-30151				HOSE ASSY-THD,FLG	1	#0062 -	B	
28	P910-126021				HOSE ASSY-ORFS 0X0	1			
29	P930-126022				HOSE ASSY-ORFS 0X90	1			
32	P930-086009				HOSE ASSY-ORFS 0X90	2			
33	P930-086022				HOSE ASSY-ORFS 0X90	1			
34	P930-086017				HOSE ASSY-ORFS 0X90	1			
37	X530-110003				ELBOW-45,ORFS	2			
38	X500-110003				CONNECTOR-ORFS	5			
44	X820-085253				TEE-R/TYPE,ORFS	1			
47	S129-060206				BOLT-SOCKET,UNIFIED	8			
50	S109-100706				BOLT-SOCKET	6			
52	S037-122556				BOLT-W/WASHER	4			
53	S017-16020D				BOLT-HEX	4			
54	S017-100856				BOLT-HEX	4			
56	S441-10000B				WASHER-HARDENED	4			
57	64L3-01120				WASHER-HARDENED	4			
67	Y171-024004				O-RING	2			

Item	Part_No	IS	Ord	T	Description	Qty	Serial_No	ITC	Remark
67	Y171-024004				O-RING	2			
69	31L9-30170				SHIM(0.5T)	2	- #0010		
69	31L9-30170				SHIM(0.5T)	3	#0011 -	A	
70	31L9-30180				SHIM(1.0T)	2	- #0010		
70	31L9-30180				SHIM(1.0T)	3	#0011 -	A	
71	31LB-30620				SHIM(0.5T)	2	- #0010		
72	31LB-30630				SHIM(1.0T)	2	- #0010		
73	X840-545454				TEE-R/TYPE,SWIVEL,ORFS	1			
74	X511-108534				CONNECTOR-LONG,ORFS	2			
76	X820-125454				TEE-R/TYPE,ORFS	1			
82	31LB-30130				ELBOW-45	2			
85	P910-086026				HOSE ASSY-ORFS 0X0	1	#0051 -		
86	P910-086028				HOSE ASSY-ORFS 0X0	1	#0051 -		
87	P220-110103				PLUG-HEX	1	#0051 -		
B	S621-018001				O-RING	4			
C	S621-014001				O-RING	12			
E	S631-011004				O-RING	2			
G	S631-018004				O-RING	12			
I	S631-024004				O-RING	2			

STEERING HYDRAULIC PIPING 2

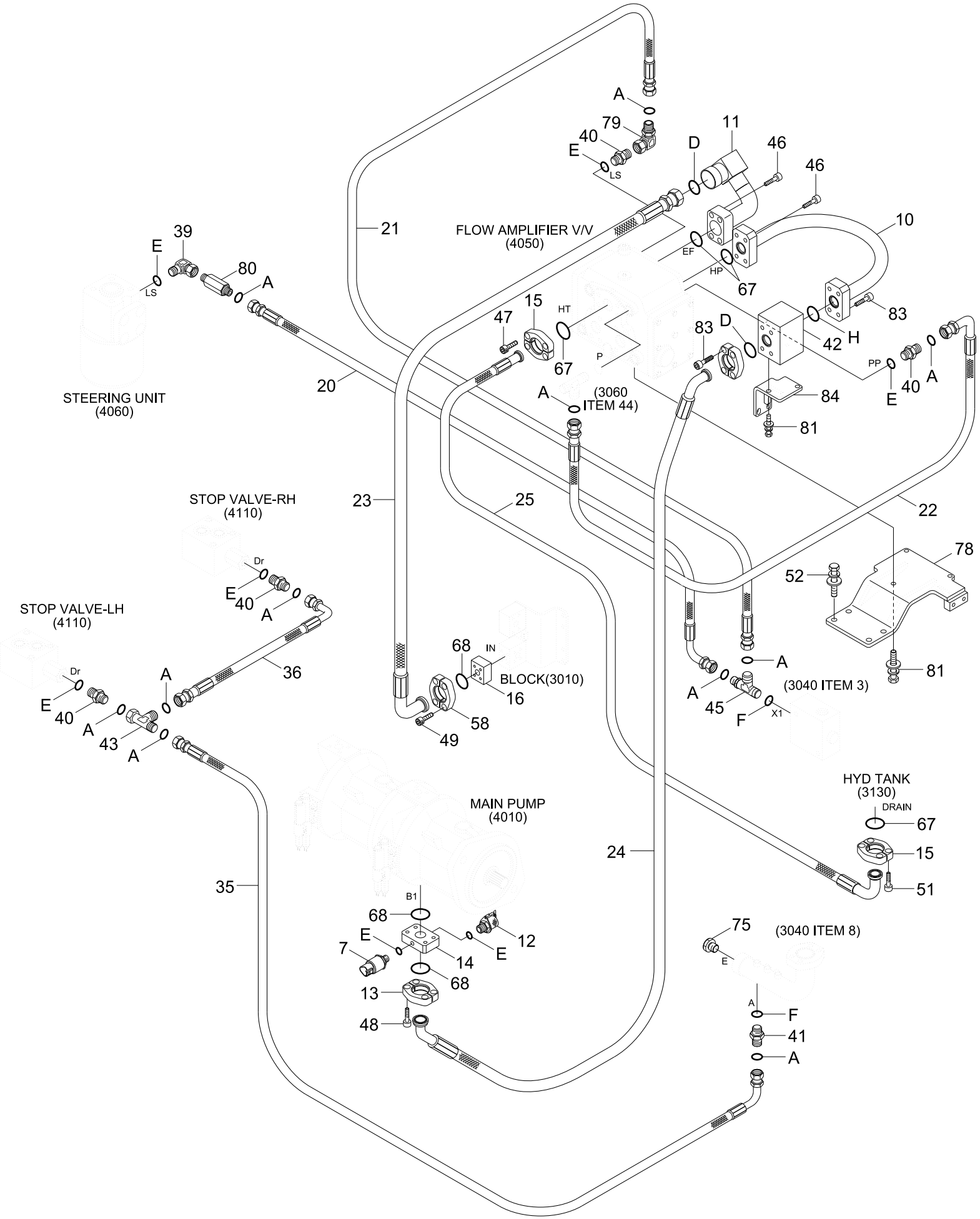

Item	Part_No	IS	Ord	T	Description	Qty	Serial_No	ITC	Remark
7	31Q4-40800				SENSOR-PRESSURE	1			LOAD SENSING
10	31LK-30131				PIPE WA	1			
11	31LK-30080				PIPE WA	1	-		
11	31LK-30081				PIPE WA	1	#0103 -	B	
12	31EK-11130				COUPLING-SCREW	1			
13	31LK-00200				FLANGE-HYD,SPLIT	2			
14	31LK-00510				BLOCK	1			
15	P173-160104				FLANGE-HYD,SPLIT	4			
16	31LK-10200				CHECK VALVE-FLANGE	1			
20	P930-066034				HOSE ASSY-ORFS 0X90	1			
21	P910-066025				HOSE ASSY-ORFS 0X0	1			
22	P930-064009				HOSE ASSY-ORFS 0X90	1			
23	P980-207425				HOSE ASSY-ORFS,FLG	1			
24	31LK-30550				HOSE ASSY-FLG	1			
25	P700-162319				HOSE ASSY-FLG 0X90	1			
35	P930-062025				HOSE ASSY-ORFS 0X90	1			
36	P930-062008				HOSE ASSY-ORFS 0X90	1			
39	31E5-11110				ADAPTER	1			
40	X500-110011				CONNECTOR-ORFS	2			
41	X500-110002				CONNECTOR-ORFS	1			
42	31LK-30330				BLOCK	1			
43	X840-525252				TEE-R/TYPE,SWIVEL,ORFS	1			
45	X820-065252				TEE-R/TYPE,ORFS	1			
46	S129-060286				BOLT-SOCKET,UNIFIED	8			
47	S129-060206				BOLT-SOCKET,UNIFIED	4			
48	S109-140706				BOLT-SOCKET	4			
49	S109-120956				BOLT-SOCKET	4			

Item	Part_No	IS	Ord	T	Description	Qty	Serial_No	ITC	Remark
49	S109-120956				BOLT-SOCKET	4			
51	S109-100306				BOLT-SOCKET	4			
52	S037-122556				BOLT-W/WASHER	4			
56	S441-10000B				WASHER-HARDENED	4			
58	P174-200106				FLANGE-SPLIT	4			
67	Y171-024004				O-RING	4			
68	Y171-027004				O-RING	5			
75	P220-110104				PLUG-HEX	1			
78	31LK-30600				PLATE	1			
79	X850-525200				ELBOW-90,SWIVEL,ORFS	1			
80	X511-104524				CONNECTOR-LONG,ORFS	1			
81	S037-102556				BOLT-W/WASHER	7			
83	S109-120406				BOLT-SOCKET	8			
84	31LK-90220				PLATE	1			
A	S621-012001				O-RING	11			
D	S621-025001				O-RING	2			
E	S631-011004				O-RING	3			
F	S631-014004				O-RING	2			
G	S631-018004				O-RING	1			
H	S631-029004				O-RING	1			

BRAKE HYDRAULIC PIPING 1

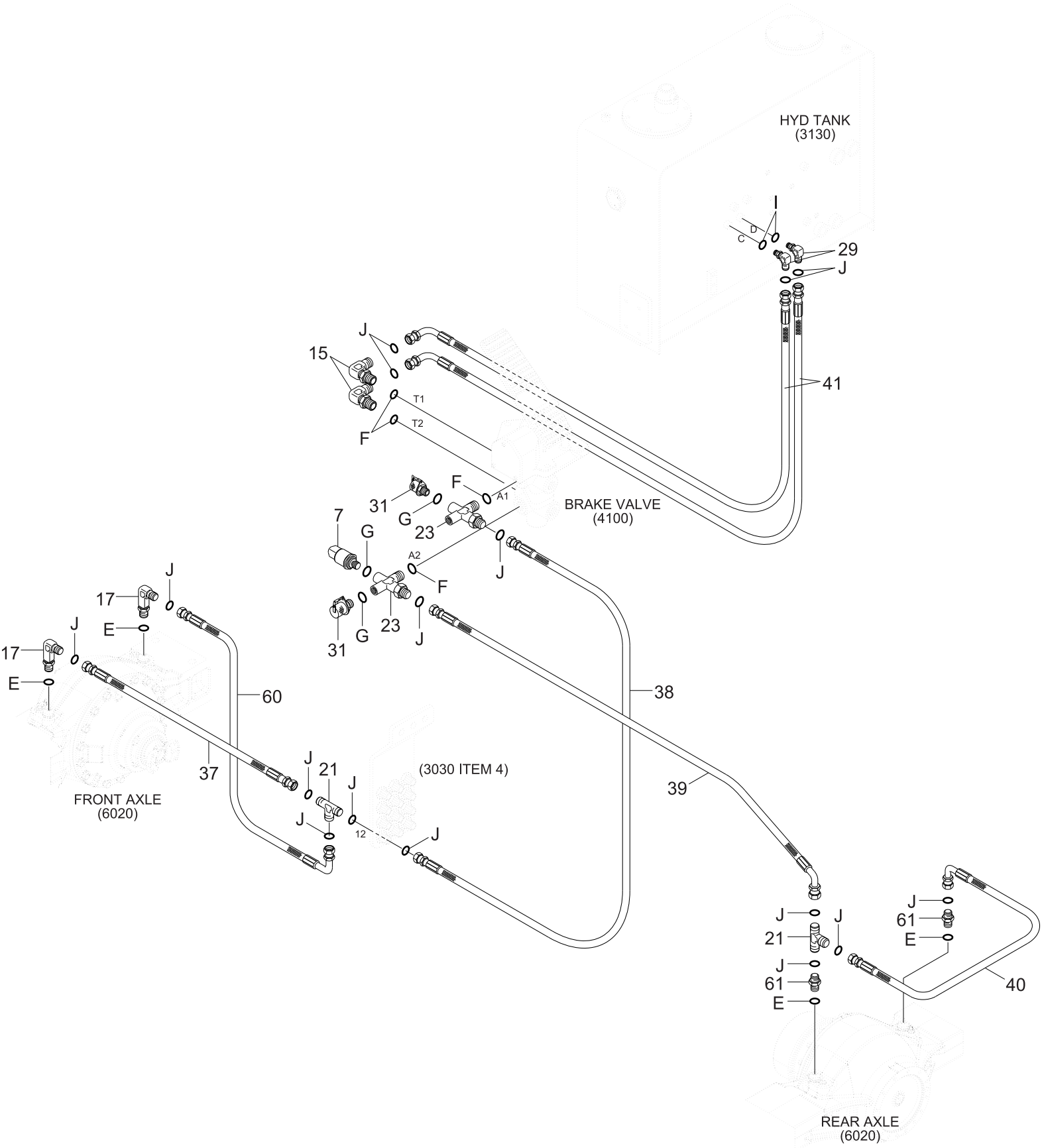

Item	Part_No	IS	Ord	T	Description	Qty	Serial_No	ITC	Remark
7	31Q4-40840				SWITCH-PRESSURE	1			SERVICE BRAKE
15	31FQ-10050				ELBOW-90	2			
17	31LK-40370				ELBOW-90,ORFS	2			
21	X840-535353				TEE-R/TYPE,SWIVEL,ORFS	2			
23	31LM-40160				TEE	1			
29	X520-110003				ELBOW-90,ORFS	2			
31	31EK-11130				COUPLING-SCREW	2			
37	P910-084027				HOSE ASSY-ORFS 0X0	1	- #0061		
37	P910-083027				HOSE ASSY-ORFS 0X0	1	#0062 -	A	
38	P910-084043				HOSE ASSY-ORFS 0X0	1			
39	P923-084048				HOSE ASSY-ORFS 0X45	1	- #0061		
39	P923-083048				HOSE ASSY-ORFS 0X45	1	#0062 -	A	
40	P930-084015				HOSE ASSY-ORFS 0X90	2			
41	P930-082047				HOSE ASSY-ORFS 0X90	2			
60	P930-084028				HOSE ASSY-ORFS 0X90	1			
61	X500-210007				CONNECTOR-ORFS	2			
D	S621-012001				O-RING	10			
E	S611-012001				O-RING	4			
F	S631-011004				O-RING	4			
G	S631-011004				O-RING	3			
I	S631-018004				O-RING	2			
J	S621-014001				O-RING	4			

BRAKE HYDRAULIC PIPING 2

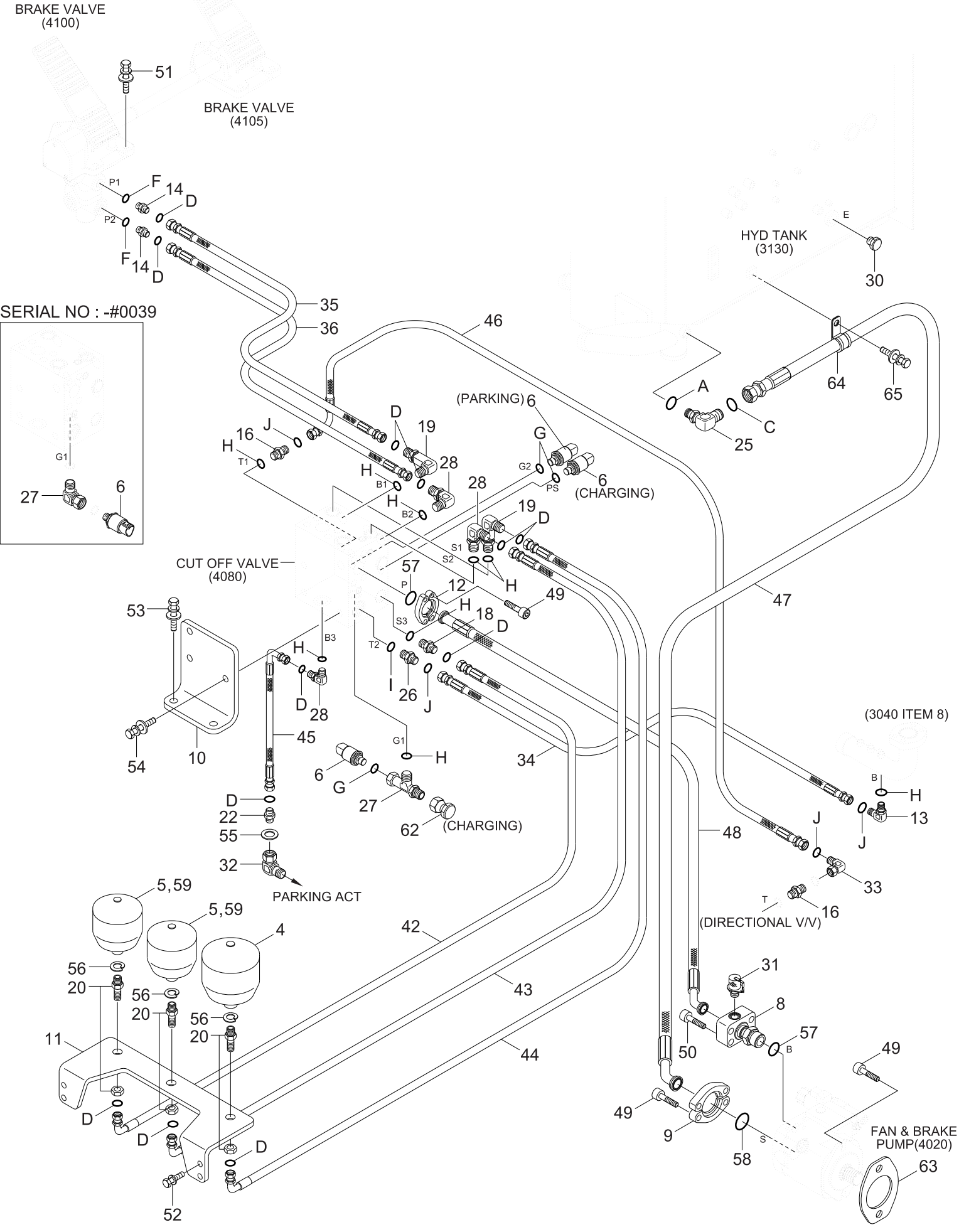

Item	Part_No	IS	Ord	T	Description	Qty	Serial_No	ITC	Remark
4	31LL-40020				ACCUMULATOR	1			
5	81L1-0003				ACCUMULATOR	2			
6	31Q4-40810				SENSOR-PRESSURE	3			
8	31LK-42510				FLANGE WA	1			
9	P173-200106				FLANGE-HYD,SPLIT	2			
10	31LL-42511				PLATE	1			
11	31LK-40112				PLATE	1			
12	P173-120102				FLANGE-HYD,SPLIT	2			
13	X520-110013				ELBOW-90,ORFS	1			
14	31FG-80410				CONNECTOR-ORFS	2			
16	X500-110012				CONNECTOR-ORFS	1	- #0005		
18	X500-110002				CONNECTOR-ORFS	1			
19	31N1-40130				ELBOW-90,LONG,ORFS	2			
20	31LB-40400				CONNECTOR	3			
22	31LH-40110				CONNECTOR-ORFS	1			
25	X520-110019				ELBOW-90,ORFS	1	- #0150		
25	X520-110006				ELBOW-90,ORFS	1	#0151 -	B	
26	X500-110003				CONNECTOR-ORFS	1			
27	31LL-42550				ELBOW-90	1	- #0030		
27	31Q6-30040				TEE-B/TYPE,ORFS	1	#0040 -	B	
28	X520-110002				ELBOW-90,ORFS	2			
30	P220-110106				PLUG-HEX	1	- #0150		
30	P220-110106				PLUG-HEX	2	#0151 - #0157	A	
30	P220-110106				PLUG-HEX	1	#0158 -	A	
31	31EK-11130				COUPLING-SCREW	1			
32	X850-525200				ELBOW-90,SWIVEL,ORFS	1			
33	X850-535300				ELBOW-90,SWIVEL,ORFS	1			

Item	Part_No	IS	Ord	T	Description	Qty	Serial_No	ITC	Remark
33	X850-535300				ELBOW-90,SWIVEL,ORFS	1			
34	P910-082028				HOSE ASSY-ORFS 0X0	1			
35	P910-064007				HOSE ASSY-ORFS 0X0	1			
36	P910-064008				HOSE ASSY-ORFS 0X0	1			
42	P930-064021				HOSE ASSY-ORFS 0X90	1			
43	P930-064023				HOSE ASSY-ORFS 0X90	1			
44	P930-064026				HOSE ASSY-ORFS 0X90	1			
45	P930-064028				HOSE ASSY-ORFS 0X90	1			
25	X520-110006				ELBOW-90,ORFS	1	#0151 -	B	
46	P930-082064				HOSE ASSY-ORFS 0X90	1			
47	P950-202328				HOSE ASSY-ORFS,FLG 0X45	1	- #0150		
47	P950-202333				HOSE ASSY-THD, FLG 0X45	1	#0151 - #0157	B	
47	P950-202335				HOSE ASSY-THD, FLG 0X45	1	#0158 -	B	
48	P970-124349				HOSE ASSY-THD 45X0	1			
49	S109-100306				BOLT-SOCKET	10			
50	S109-100406				BOLT-SOCKET	4			
51	S035-083026				BOLT-W/WASHER	6			
52	S037-123556				BOLT-W/WASHER	4			
30	P220-110106				PLUG-HEX	2	#0151 -	A	
53	S037-122556				BOLT-W/WASHER	2			
54	S035-082556				BOLT-W/WASHER	3			
55	P392-120000				WASHER-COPPER	1			
56	P392-220000				WASHER-COPPER	3			
57	Y171-019004				O-RING	2			
58	Y171-027004				O-RING	1			
59	31LC-80030				ACCUMULATOR	2			SEVERE COLD,OPT
62	X710-100103				CAP-HYD,ORFS	1	#0040 -	-	

Item	Part_No	IS	Ord	T	Description	Qty	Serial_No	ITC	Remark
62	X710-100103				CAP-HYD,ORFS	1	#0040 -	-	
63	154916				GASKET-GEAR PUMP	1	#0062 -	-	
64	31L7-10250				CLAMP-TUBE,INS SINGLE	1	#0158 -		
65	S037-102056				BOLT-W/WASHER	1	#0158 -		
42	P930-064021				HOSE ASSY-ORFS 0X90	1			
43	P930-064023				HOSE ASSY-ORFS 0X90	1			
44	P930-064026				HOSE ASSY-ORFS 0X90	1			
45	P930-064028				HOSE ASSY-ORFS 0X90	1			
46	P930-082064				HOSE ASSY-ORFS 0X90	1			
47	P950-202328				HOSE ASSY-ORFS,FLG	1	-		
47	P950-202333				HOSE ASSY-THD, FLG	1	#0151 -	B	
48	P970-124349				HOSE ASSY-THD 45X0	1			
49	S109-100306				BOLT-SOCKET	10			
50	S109-100406				BOLT-SOCKET	4			
51	S035-083026				BOLT-W/WASHER	6			
52	S037-123556				BOLT-W/WASHER	4			
53	S037-122556				BOLT-W/WASHER	2			
54	S035-082556				BOLT-W/WASHER	3			
55	P392-120000				WASHER-COPPER	1			
56	P392-220000				WASHER-COPPER	3			
57	Y171-019004				O-RING	2			
58	Y171-027004				O-RING	1			
59	31LC-80030				ACCUMULATOR	2			SEVERE COLD,OPT
62	X710-100103				CAP-HYD,ORFS	1	#0040 -	-	
63	154916				GASKET-GEAR PUMP	1	#0062 -	-	
A	Y161-018001				O-RING	1			
C	S631-038004				O-RING	1			

Item	Part_No	IS	Ord	T	Description	Qty	Serial_No	ITC	Remark
C	S631-038004				O-RING	1			
D	S621-012001				O-RING	12			
F	S631-011004				O-RING	2			
G	S631-011004				O-RING	3			
H	S631-014004				O-RING	9			
I	S631-018004				O-RING	1			
J	S621-014001				O-RING	4			

GERASE PIPING(FRONT)

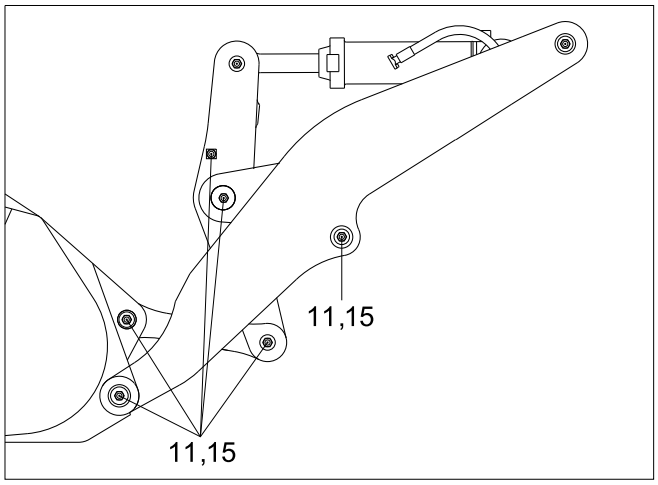

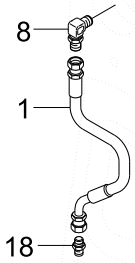

BELL CRANK
(7010)

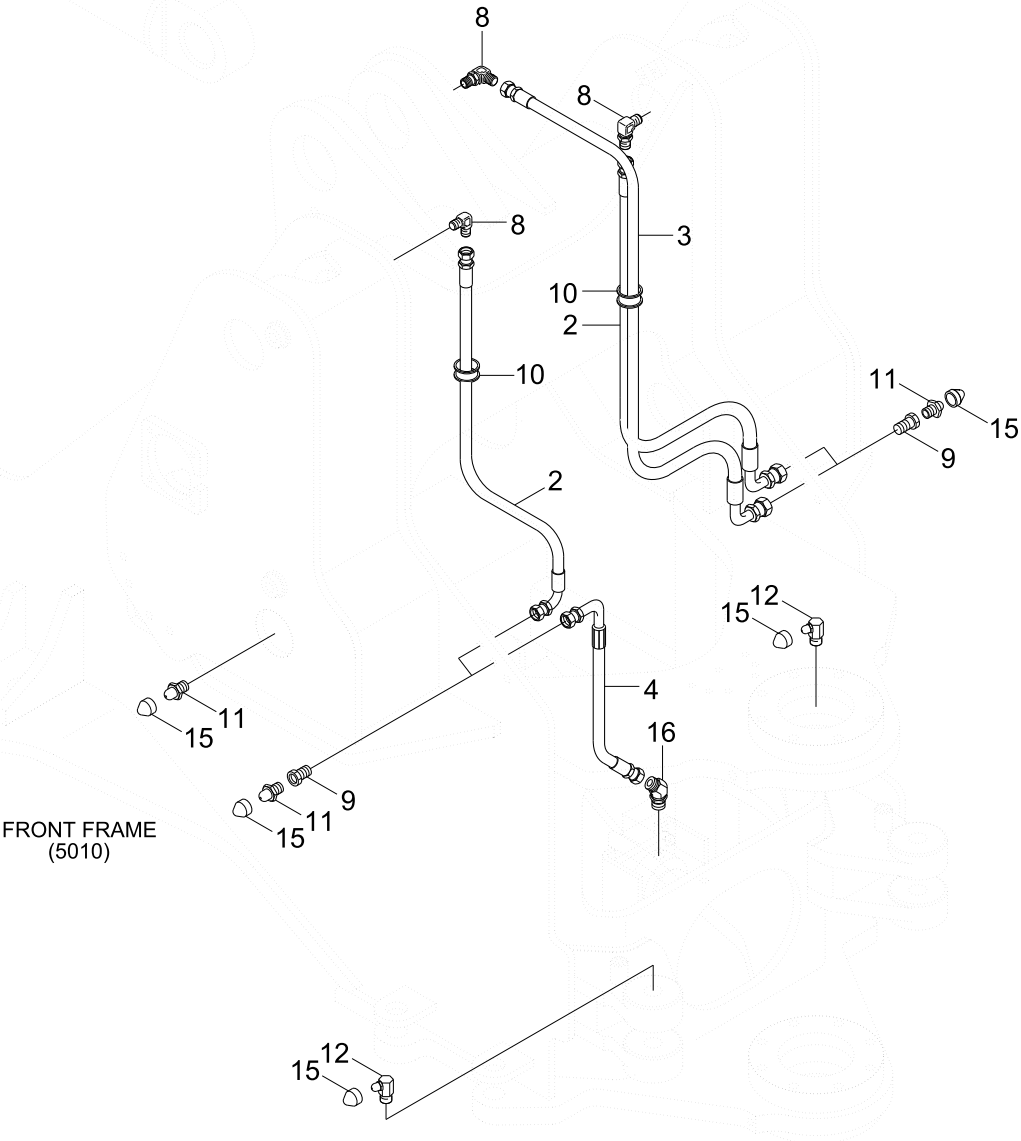

FRONT FRAME
(5010)

Item	Part_No	IS	Ord	T	Description	Qty	Serial_No	ITC	Remark
1	P850-042012				HOSE ASSY-SYN 0X45	1			
2	P860-042025				HOSE ASSY-SYN 0X90	2			
3	P860-042029				HOSE ASSY-SYN 0X90	1			
4	P860-042022				HOSE ASSY-SYN 0X90	1			
8	61L1-3909				ELBOW-90	4			
9	31LB-50020				CONNECTOR	4			
10	S681-411600				GROMMET	2			
11	S651-810002				NIPPLE-GREASE	14			
12	S653-810002				NIPPLE-GREASE	4			
15	S654-000000				CAP-GREASE NIPPLE	18			
16	E231-0207				ELBOW-45	1			
18	P010-430011				CONNECTOR	1			

GREASE PIPING(REAR)

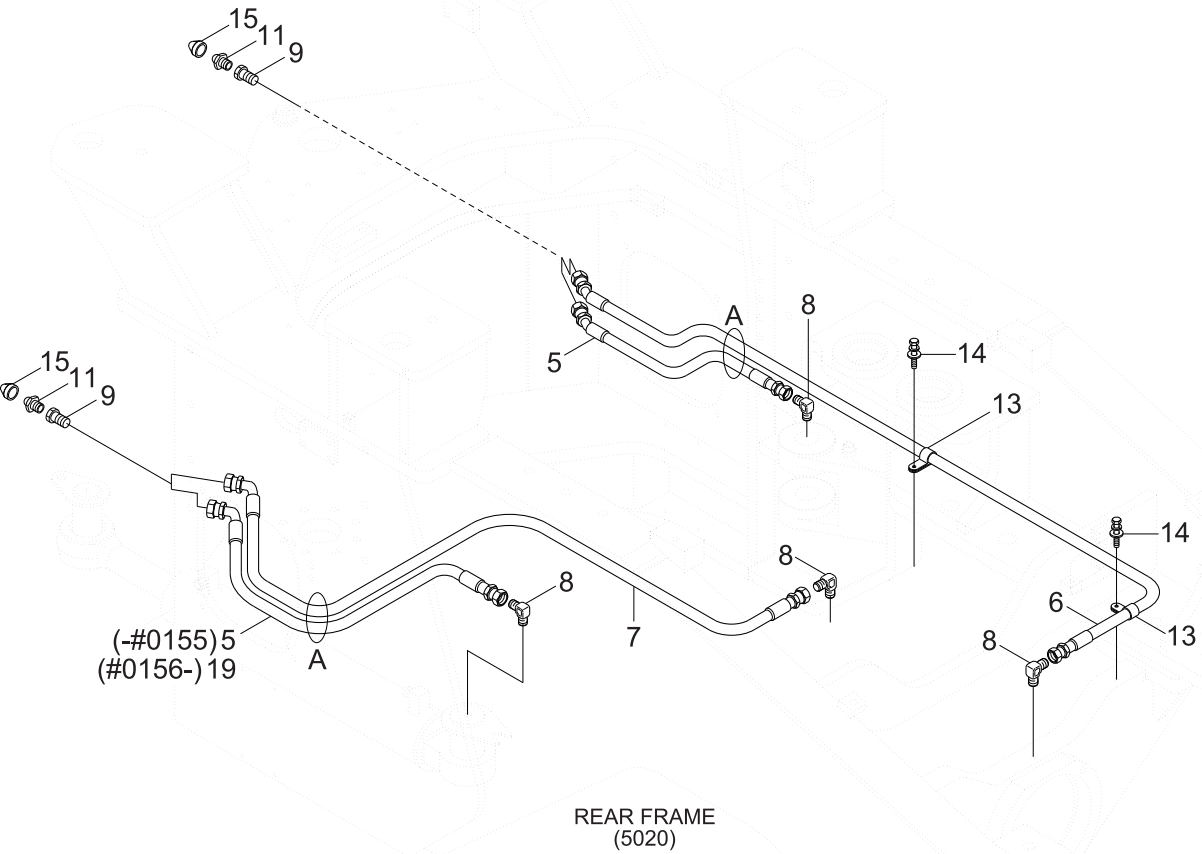

REAR FRAME
(5020)

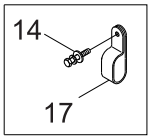

DETAIL A

Item	Part_No	IS	Ord	T	Description	Qty	Serial_No	ITC	Remark
5	P850-042017				HOSE ASSY-SYN 0X45	2	-		
5	P850-042017				HOSE ASSY-SYN 0X45	1	#0156 -	A	
6	P850-042048				HOSE ASSY-SYN 0X45	1			
7	P850-042035				HOSE ASSY-SYN 0X45	1	-		
7	P860-042036				HOSE ASSY-SYN 0X90	1	#0156 -	B	
8	61L1-3909				ELBOW-90	4			
9	31LB-50020				CONNECTOR	4			
5	P850-042017				HOSE ASSY-SYN 0X45	2			
11	S651-810002				NIPPLE-GREASE	4			
13	S543-140002				CLAMP-TUBE	2			
7	P850-042035				HOSE ASSY-SYN 0X45	1			
14	S035-081526				BOLT-W/WASHER	4			
15	S654-000000				CAP-GREASE NIPPLE	4			
17	31L7-50010				CLAMP	2			
19	P860-042018				HOSE ASSY-SYN 0X90	1	#0156 -		
13	S543-140002				CLAMP-TUBE	2			
14	S035-081526				BOLT-W/WASHER	4			
15	S654-000000				CAP-GREASE NIPPLE	4			
17	31L7-50010				CLAMP	2			

HYDRAULIC TANK GROUP

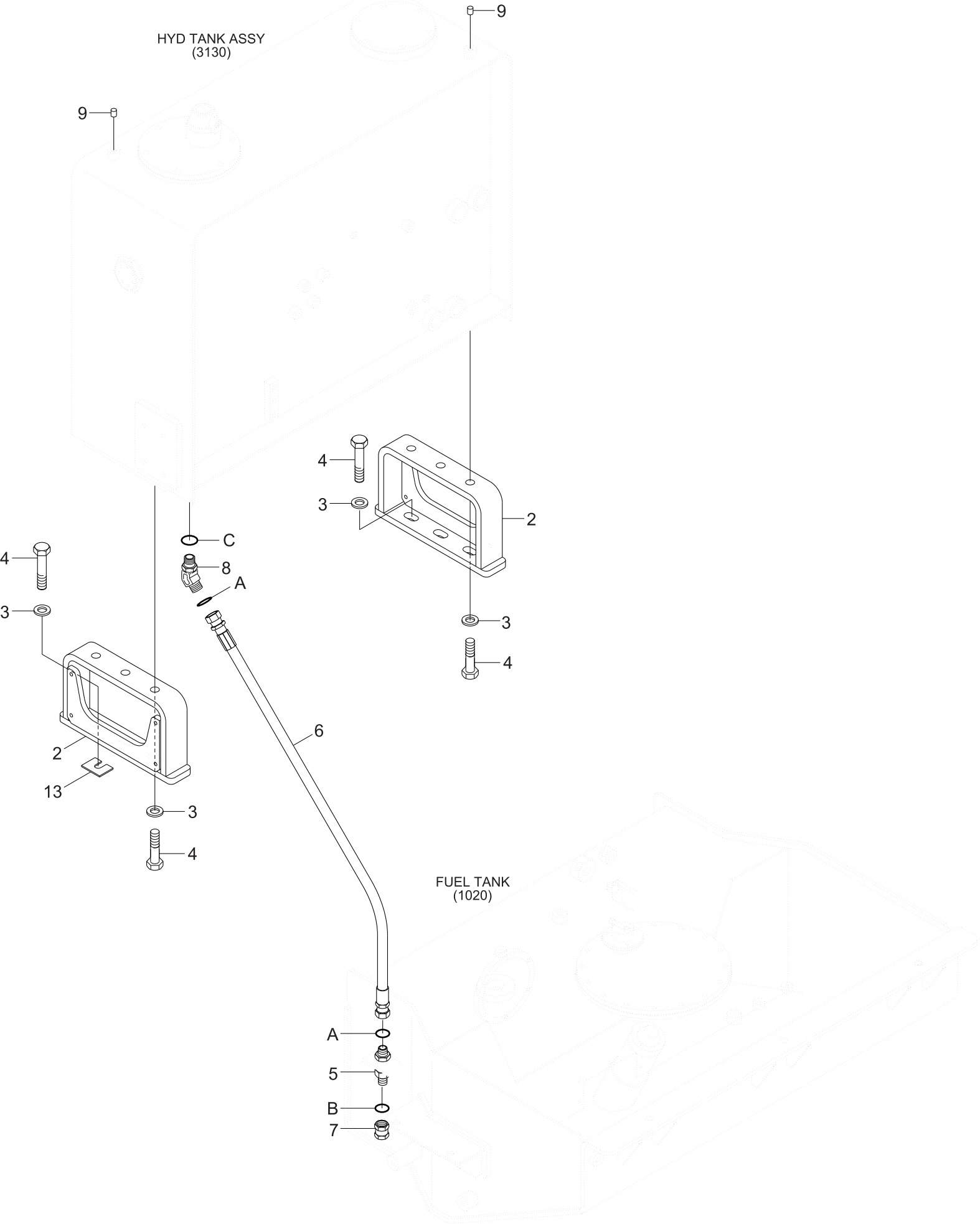

Item	Part_No	IS	Ord	T	Description	Qty	Serial_No	ITC	Remark
2	31LK-60501				BRACKET WA	2			
3	S441-200006				WASHER-HARDENED	12			
4	S017-20050D				BOLT-HEX	12			
5	31LB-60160				CONNECTOR	1			
6	P910-162035				HOSE ASSY-ORFS 0X0	1			
7	X710-100105				CAP-HYD ORFS	1			
8	X530-110005				ELBOW-45,ORFS	1			
9	S981-121500				PLUG	2			
13	31LP-60901				SHIM	6			
A	S621-021001				O-RING	2	#0001 -		
B	S621-018001				O-RING	1	#0001 -		
C	S631-029001				O-RING	1	#0001 -		

HYDRAULIC TANK ASSY

SERIAL NO : -#0157

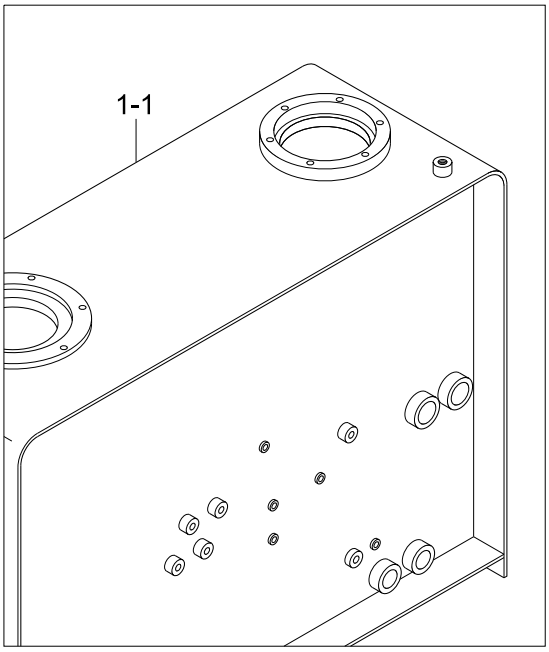

SERIAL NO : -#0150

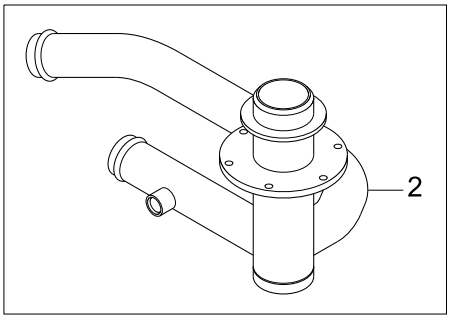

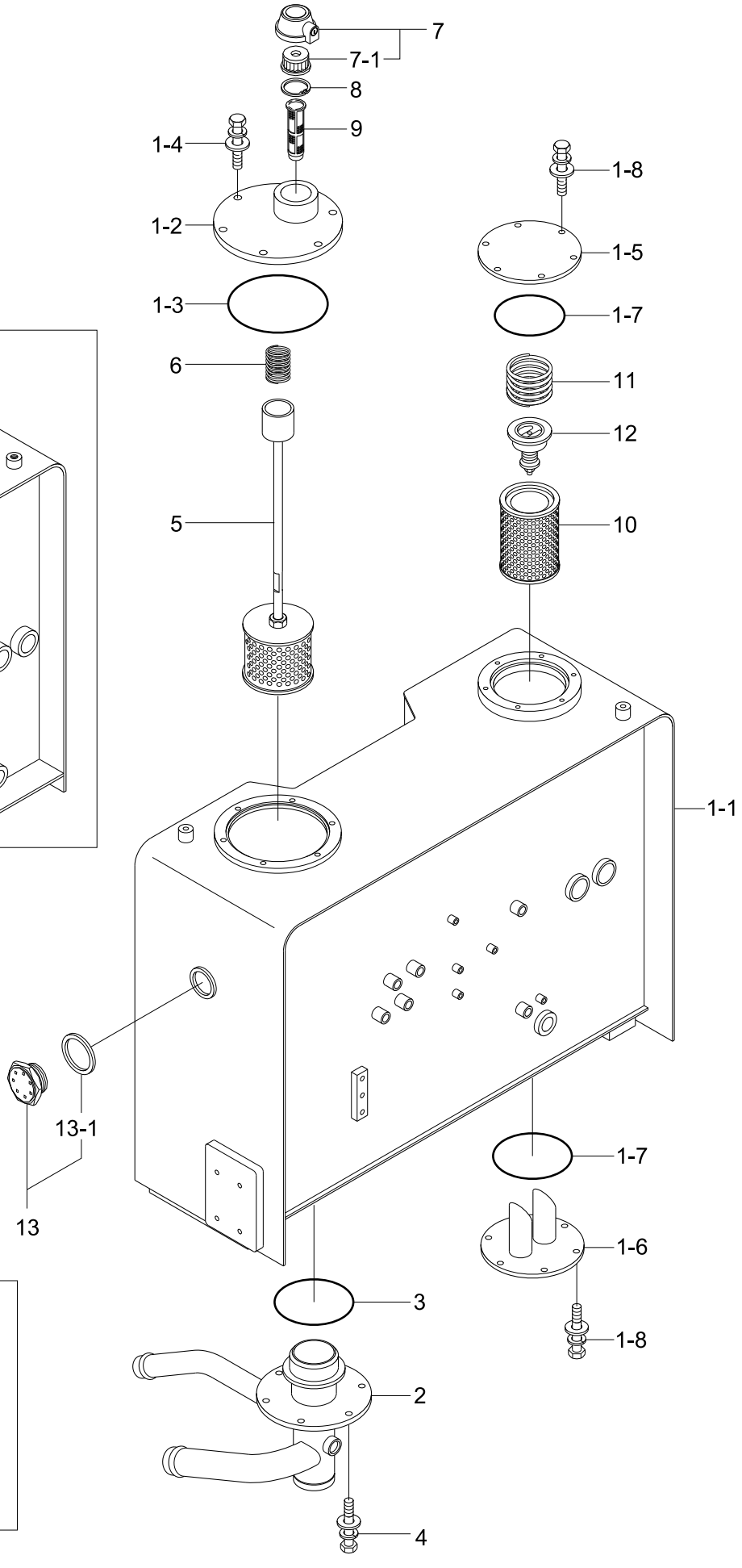

Item	Part_No	IS	Ord	T	Description	Qty	Serial_No	ITC	Remark
N*	31LK-62510				HYD TANK ASSY	1	-		NOT
N*	31LK-62512				HYD TANK ASSY	1	#0151 -	D	NOT
N*	31LK-62510				HYD TANK ASSY	1	-		NOT
N*	31LK-62512				HYD TANK ASSY	1	#0151 -	D	NOT
N*	31LK-62513				HYD TANK ASSY	1	#0158 -	B	NOT
1	31LK-62520				.HYD TANK SUB ASSY	1			
1	31LK-62520				.HYD TANK SUB ASSY	1	-		
1	31LK-62521				.HYD TANK SUB ASSY	1	#0158 -	B	
1-1	31LK-62530				..HYD TANK WA	1	-		
1-1	31LK-62531				..HYD TANK WA	1	#0158 -	B	
1-2	31LQ-01210				..COVER WA	1			
1-3	S632-220001				..O-RING	1			
1-4	S037-102056				..BOLT-W/WASHER	6			
1-5	31E3-4526				..COVER	1			
1-6	31LK-60072				..COVER WA	1			
1-7	S632-165001				..O-RING	2			
1-8	S037-102556				..BOLT-W/WASHER	12			
2	31LK-60152				.PIPE ASSY-SUCTION	1	-		
2	31LK-60155				.PIPE ASSY-SUCTION	1	#0151 -	D	
3	S632-165001				.O-RING	1			
4	S037-102556				.BOLT-W/WASHER	6			
1-1	31LK-62530				..HYD TANK WA	1			
5	31LK-60300				.STRAINER ASSY	1			
6	E131-0594				.SPRING	1			
7	31EH-00040				.AIR BREATHER	1			
7-1	31EH-00480				..ELEMENT-AIR BREATHER	1			
8	S602-065004				.RING-RETAINING	1			

Item	Part_No	IS	Ord	T	Description	Qty	Serial_No	ITC	Remark
8	S602-065004				.RING-RETAINING	1			
9	31EH-00090				.STRAINER	1			
10	31N4-01460				.ELEMENT-RETURN FILTER	1	- #0020		
10	31N4-01461				.ELEMENT-RETURN FILTER	1	#0021 -	B	
11	E131-0220				.SPRING	1			
12	E131-0256				.VALVE-BYPASS	1			
13	31L1-4047				.GAUGE-SIGHT	1			
13-1	P392-360000				..WASHER-COPPER	1			
1-2	31LQ-01210				..COVER WA	1			
1-3	S632-220001				..O-RING	1			
1-4	S037-102056				..BOLT-W/WASHER	6			
1-5	31E3-4526				..COVER	1			
1-6	31LK-60072				..COVER WA	1			
1-7	S632-165001				..O-RING	2			
1-8	S037-102556				..BOLT-W/WASHER	12			
2	31LK-60152				.PIPE ASSY-SUCTION	1	- #0150		
2	31LK-60155				.PIPE ASSY-SUCTION	1	#0151 -	D	
3	S632-165001				.O-RING	1			
4	S037-102556				.BOLT-W/WASHER	6			
5	31LK-60300				.STRAINER ASSY	1			
6	E131-0594				.SPRING	1			
7	31EH-00040				.AIR BREATHER	1			
7-1	31EH-00480				..ELEMENT-AIR BREATHER	1			
8	S602-065004				.RING-RETAINING	1			
9	31EH-00090				.STRAINER	1			
10	31N4-01460				.ELEMENT-RETURN FILTER	1	- #0020		
10	31N4-01461				.ELEMENT-RETURN FILTER	1	#0021 -	B	

Item	Part_No	IS	Ord	T	Description	Qty	Serial_No	ITC	Remark
10	31N4-01461				.ELEMENT-RETURN FILTER	1	#0021 -	B	
11	E131-0220				.SPRING	1			
12	E131-0256				.VALVE-BYPASS	1			
13	31L1-4047				.GAUGE-SIGHT	1			
13-1	P392-360000				..WASHER-COPPER	1			

EMERGENCY STEERING HYD PIPING

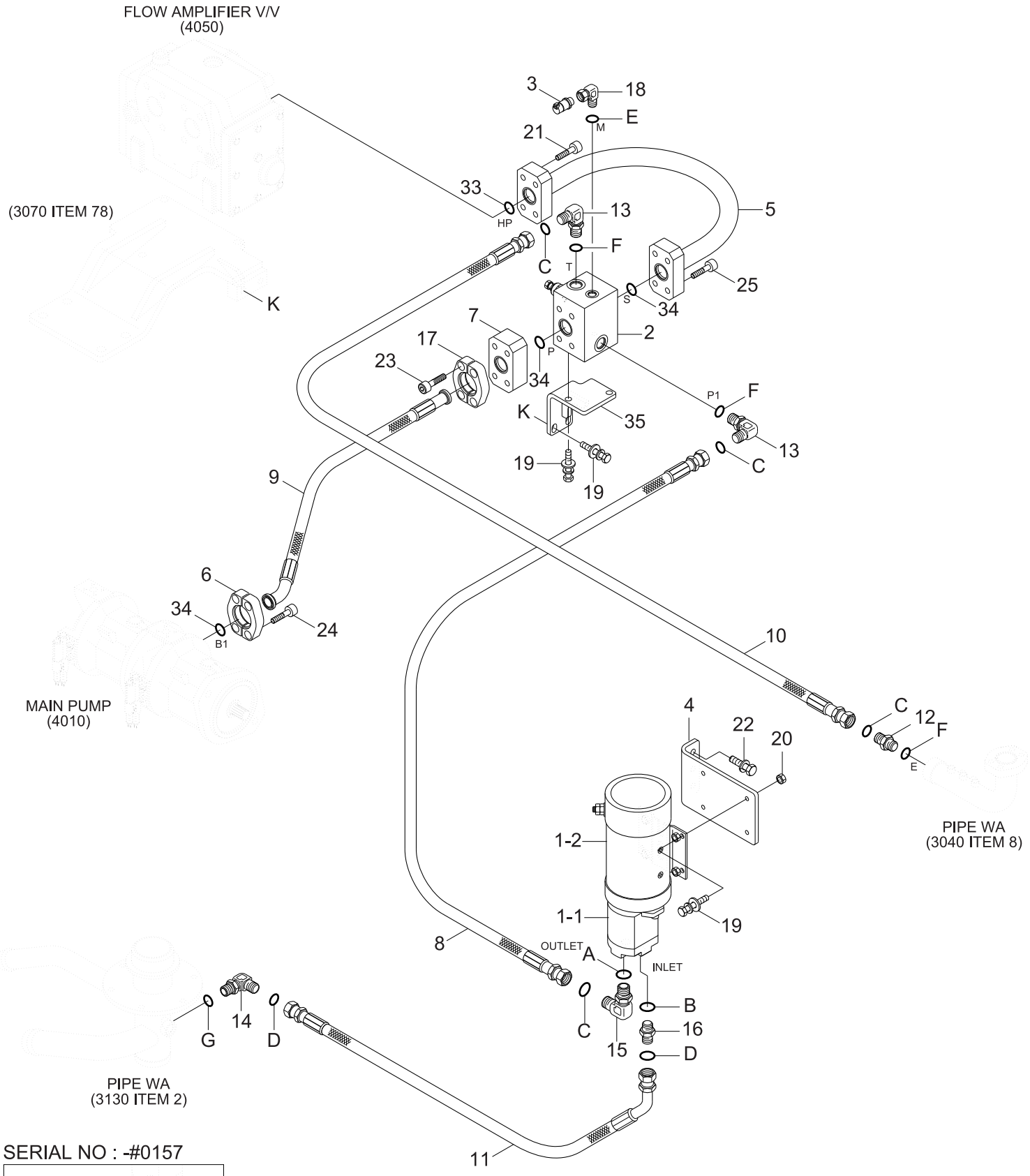

Item	Part_No	IS	Ord	T	Description	Qty	Serial_No	ITC	Remark
N*	30LK-75300				EMERGENCY STEERING KIT	1			NOT
1	31LM-41000				.PUMP & MOTOR ASSY	1			
1-1	31LM-41100				..PUMP ASSY	1	#0001 -		
1-2	31LM-41200				..DC MOTOR ASSY	1	#0001 -		
2	31LK-30201				.CHECK BLOCK	1			
3	31Q4-40800				.SENSOR-PRESSURE	1			E/STEER PUMP
4	31LM-90092				.PLATE	1			
5	31LK-30131				.PIPE WA	1			
6	31LK-00200				.FLANGE-HYD,SPLIT	2			
7	31LK-10200				.CHECK VALVE-FLANGE	1			
8	P910-086033				.HOSE ASSY-ORFS 0X0	1	- #0157		
8	P910-086036				.HOSE ASSY-ORFS 0X0	1	#0158 -	B	
9	31LK-90550				.HOSE ASSY	1			
10	P910-082018				.HOSE ASSY-ORFS 0X0	1			
11	P930-122009				.HOSE ASSY-ORFS 0X90	1	- #0150		
11	P930-122008				.HOSE ASSY-ORFS 0X90	1	#0151 - #0157	B	
11	P920-122009				.HOSE ASSY-ORFS 0X45	1	#0158 -	B	
11	P930-122008				.HOSE ASSY-ORFS 0X90	1	#0151 -	B	
12	X500-110003				.CONNECTOR-ORFS	1			
13	X520-110003				.ELBOW-90,ORFS	2			
14	X520-110004				.ELBOW-90,ORFS	1			
15	31S7-90100				.ELBOW-90	1			
16	31S7-00390				.CONNECTOR	1			
17	P174-200106				.FLANGE-SPLIT	2			
18	31E5-11110				.ADAPTER	1			
19	S037-102556				.BOLT-W/WASHER	8			
20	S205-10100B				.NUT-HEX	4			

Item	Part_No	IS	Ord	T	Description	Qty	Serial_No	ITC	Remark
20	S205-10100B				.NUT-HEX	4			
21	S129-060286				.BOLT-SOCKET,UNIFIED	4			
22	S037-122556				.BOLT-W/WASHER	3			
23	S109-120956				.BOLT-SOCKET	4			
24	S109-140706				.BOLT-SOCKET	4			
25	S109-120406				.BOLT-SOCKET	4			
33	Y171-024004				.O-RING	1			
34	Y171-027004				.O-RING	3			
35	31LK-90220				.PLATE	1			
E	@				.EMER STEERING ELEC	1			NOT
E28	@				.SWITCH-EMER STEER	1			NOT
E69	@				.RELAY-5P	1			NOT
A	S611-019001				O-RING	1			
B	S611-023001				O-RING	1			
C	S621-014001				O-RING	4			
D	S621-018001				O-RING	2			
E	S631-011004				O-RING	1			
F	S631-018004				O-RING	3			
G	S631-024004				O-RING	1			
A	S611-019001				O-RING	1			
B	S611-023001				O-RING	1			
C	S621-014001				O-RING	4			
D	S621-018001				O-RING	2			
E	S631-011004				O-RING	1			
F	S631-018004				O-RING	3			
G	S631-024004				O-RING	1			

RIDE CONTROL HYDRAULIC PIPING

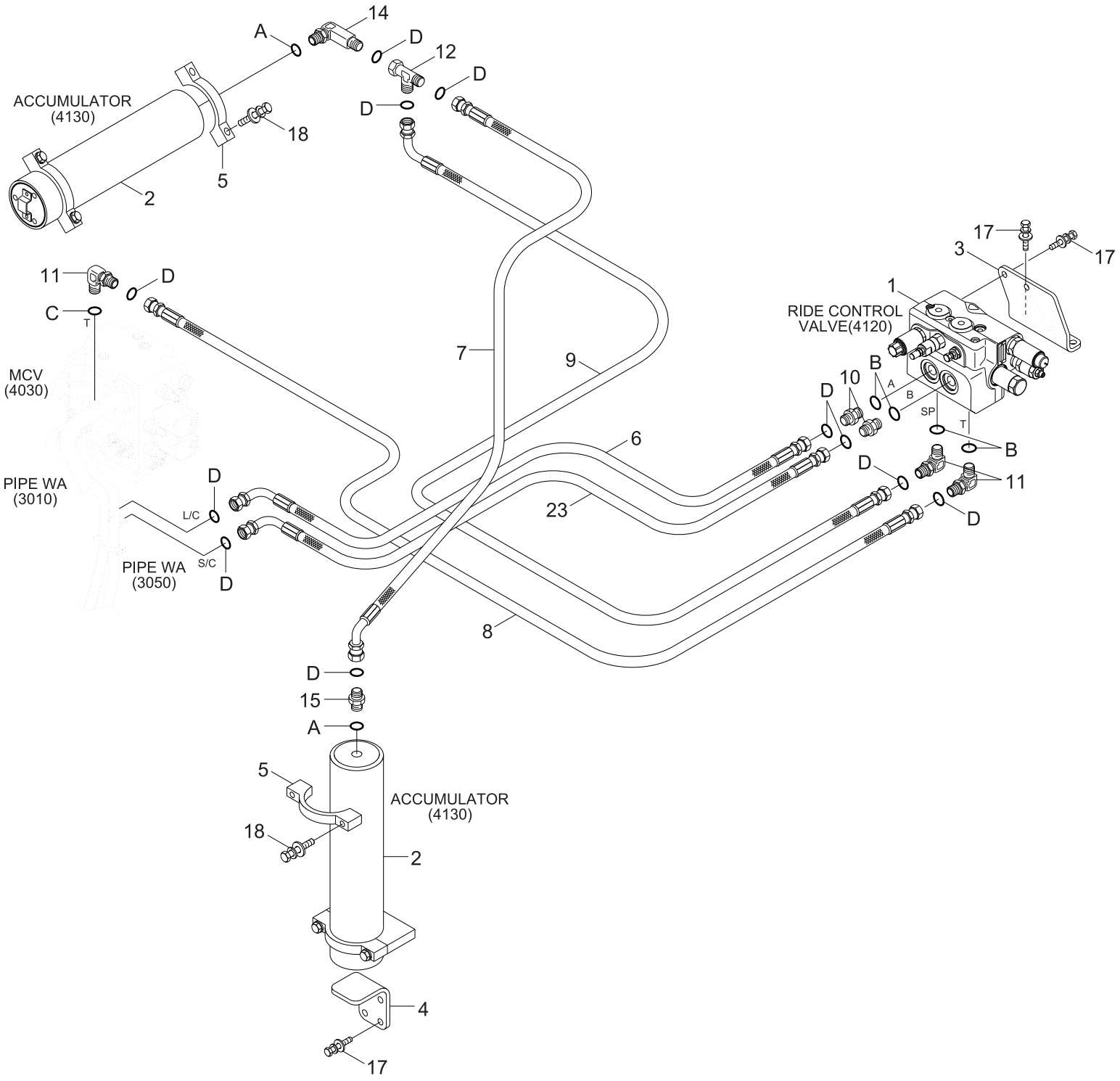

Item	Part_No	IS	Ord	T	Description	Qty	Serial_No	ITC	Remark
*	30LK-85300				RIDE CONTROL KIT	1			
1	@				.RIDE CONTROL VALVE	1			NOT
2	@				.PISTON ACCUMLATOR	2			NOT
3	31LK-91190				.PLATE WA	1			
4	31LK-90060				.PLATE	1			
5	31LM-90051				.CLAMP	4			
6	P930-126016				.HOSE ASSY-ORFS 0X90	1			
7	P920-126017				.HOSE ASSY-ORFS 0X45	1			
8	P910-122013				.HOSE ASSY-ORFS 0X0	1			
9	P930-126023				.HOSE ASSY-ORFS 0X90	1			
10	X500-110019				.CONNECTOR-ORFS	2			
11	X520-110018				.ELBOW-90,ORFS	2			
12	X840-545454				.TEE-R/TYPE,SWIVEL,ORF	1			
14	31LL-90030				.ELBOW-90, ORFS, LONG	1			
15	31S7-00350				.CONNECTOR-LONG	1			
17	S037-123056				.BOLT-W/WASHER	9			
18	S017-120606				.BOLT-HEX	8			
23	P930-126014				.HOSE ASSY-ORFS 0X90	1			
R2-2	@				.DECAL-RIDE CONTROL	1			NOT
R4	@				.HARNESS-RIDE CONTROL	1			NOT
R22	@				.SWITCH-RIDE CONTROL	1			NOT
R70	@				.RELAY	1			NOT
A	S611-030001				O-RING	2			
B	Y161-033001				O-RING	4			
C	S631-029004				O-RING	1			
D	S621-018001				O-RING	10			

JOYSTICK STEERING HYD PIPING

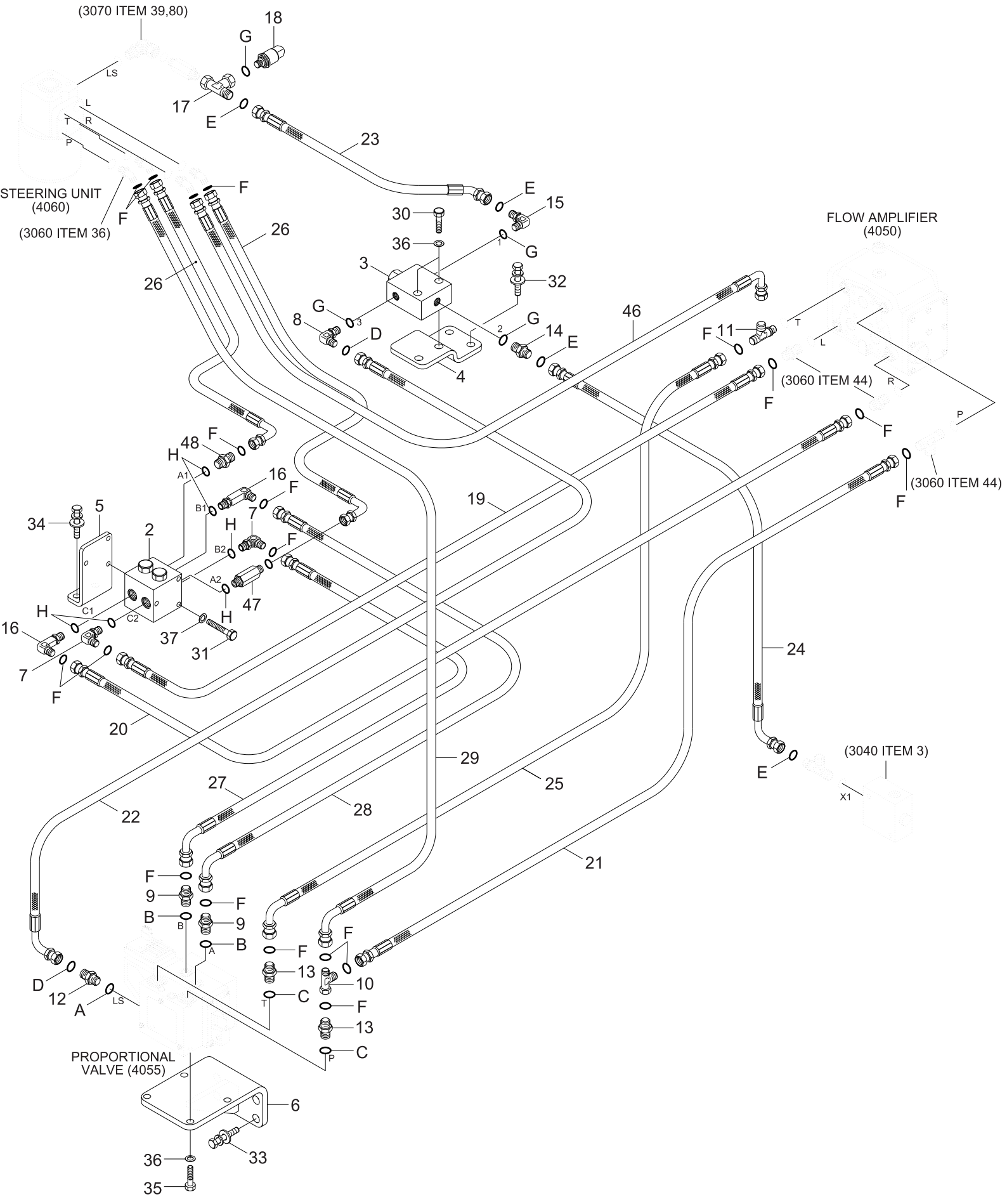

Item	Part_No	IS	Ord	T	Description	Qty	Serial_No	ITC	Remark
2	31LB-30230				SHUTTLE VALVE	1			
3	31LB-30380				VALVE-LS COMPENSATING	1			
4	31LK-30430				PLATE WA	1			
5	31LK-30120				PLATE	1			
6	31LK-30290				PLATE WA	1			
7	X520-110003				ELBOW-90,ORFS	2			
8	X520-110001				ELBOW-90,ORFS	1			
9	31FG-20090				CONNECTOR	2			
10	X840-535353				TEE-R/TYPE,SWIVEL,ORFS	1			
11	X820-085353				TEE-R/TYPE,ORFS	1			
12	31LB-30540				CONNECTOR	1			
13	31FG-20060				CONNECTOR	2			
14	X500-110011				CONNECTOR-ORFS	1			
15	X520-110011				ELBOW-90,ORFS	1			
16	31LB-30260				ELBOW-90	2			
17	31N6-66090				TEE-TEST	1			
18	31Q4-40800				SENSOR-PRESSURE	1			LOAD SENSING
19	P910-086019				HOSE ASSY-ORFS 0X0	1			
20	P910-086020				HOSE ASSY-ORFS 0X0	1			
21	P910-086029				HOSE ASSY-ORFS 0X0	1			
22	P930-046027				HOSE ASSY-ORFS 0X90	1			
23	P930-066015				HOSE ASSY-ORFS 0X90	1			
24	P930-066022				HOSE ASSY-ORFS 0X90	1			
25	P930-082030				HOSE ASSY-ORFS 0X90	1			
26	P930-086011				HOSE ASSY-ORFS 0X90	2			
27	P930-086020				HOSE ASSY-ORFS 0X90	1			
28	P930-086022				HOSE ASSY-ORFS 0X90	1			

Item	Part_No	IS	Ord	T	Description	Qty	Serial_No	ITC	Remark
28	P930-086022				HOSE ASSY-ORFS 0X90	1			
29	P930-086030				HOSE ASSY-ORFS 0X90	1			
30	S015-080556				BOLT-HEX	2			
31	S017-100956				BOLT-HEX	3			
32	S037-102556				BOLT-W/WASHER	2			
33	S037-122556				BOLT-W/WASHER	4			
34	S037-123056				BOLT-W/WASHER	2			
35	S087-050126				BOLT-HEX(UNIFIED)	4			
36	S441-08000B				WASHER-HARDENED	6			
37	S441-10000B				WASHER-HARDENED	3			
46	P930-082025				HOSE ASSY-ORFS 0X90	1			
47	31N8-40200				CONNECTOR-ORFS,LONG	1			
48	X500-110003				CONNECTOR-ORFS	1			
A	S611-011001				O-RING	1			
B	S611-019001				O-RING	2			
C	S611-023001				O-RING	2			
D	S621-011001				O-RING	2			
E	S621-012001				O-RING	5			
F	S621-014001				O-RING	19			
G	S631-011004				O-RING	4			
H	S631-018004				O-RING	7			

QUICK COUPLER PIPING(#0040-)

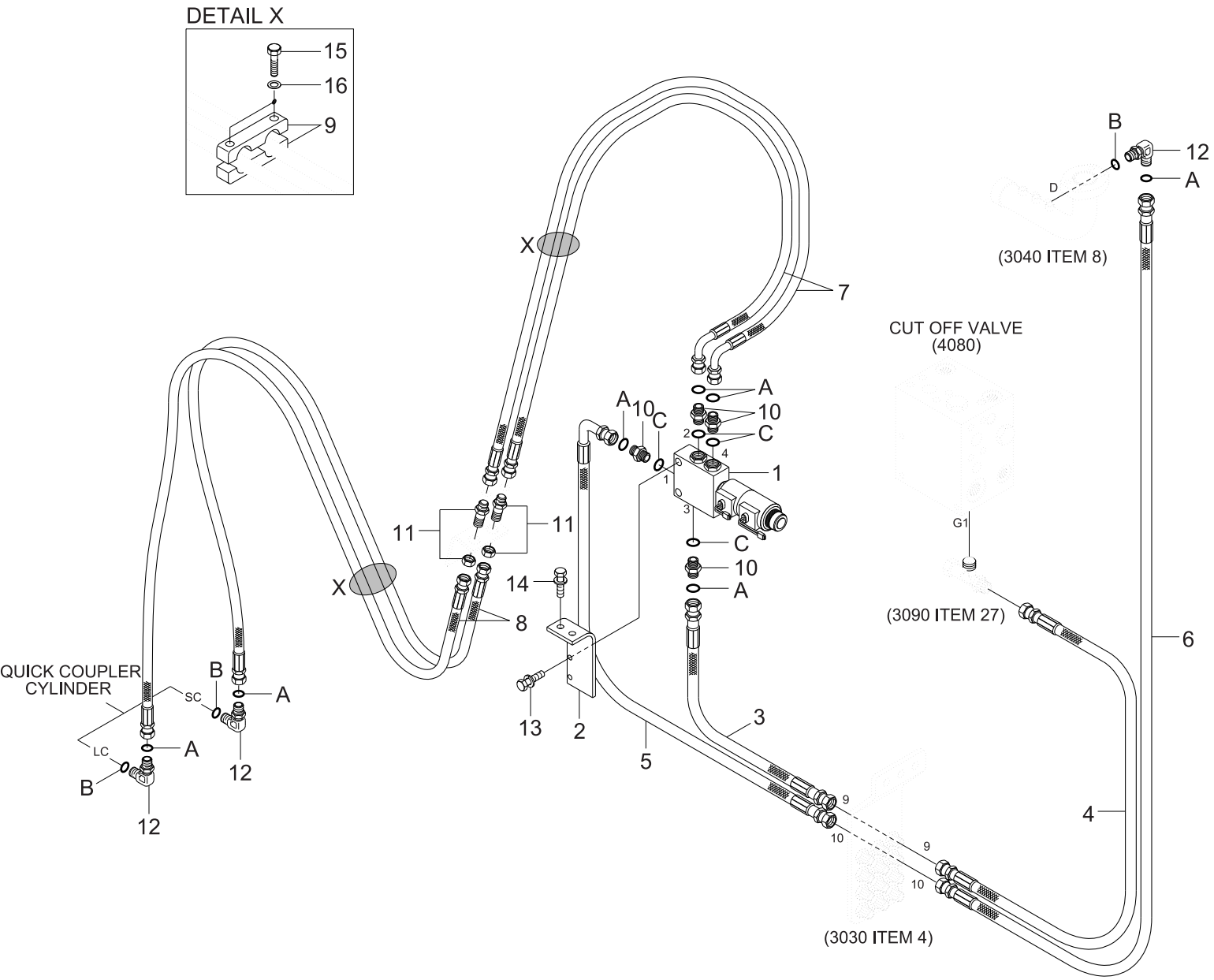

Item	Part_No	IS	Ord	T	Description	Qty	Serial_No	ITC	Remark
1	31LM-20040				SOLENOID VALVE	1			
2	31LL-90830				PLATE	1			
3	P910-064030				HOSE ASSY-ORFS 0X0	1			
4	P910-064018				HOSE ASSY-ORFS 0X0	1			
5	P930-062020				HOSE ASSY-ORFS 0X90	1			
6	P910-062037				HOSE ASSY-ORFS 0X0	1			
7	P930-064066				HOSE ASSY-ORFS 0X90	2			STD.BOOM
7	P930-064076				HOSE ASSY-ORFS 0X90	2	-		XTD.BOOM
7	P930-064071				HOSE	2	#0048 -	B	XTD.BOOM
8	31LF-90260				HOSE ASSY	2	-		
8	31LL-90250				HOSE ASSY	2	#0048 -	B	
9	31LF-90270				CLAMP	4			
10	X500-310002				CONNECTOR-ORFS	4			
11	X540-120002				CONNECTOR-ORFS	2			
12	X520-110002				ELBOW-90,ORFS	3			
13	S037-064556				BOLT-W/WASHER	2			
14	S037-102556				BOLT-W/WASHER	2			
15	S017-120506				BOLT-HEX	4			
16	S441-12000B				WASHER-HARDENED	4			

CENTRAL GREASE LUB SYSTEM

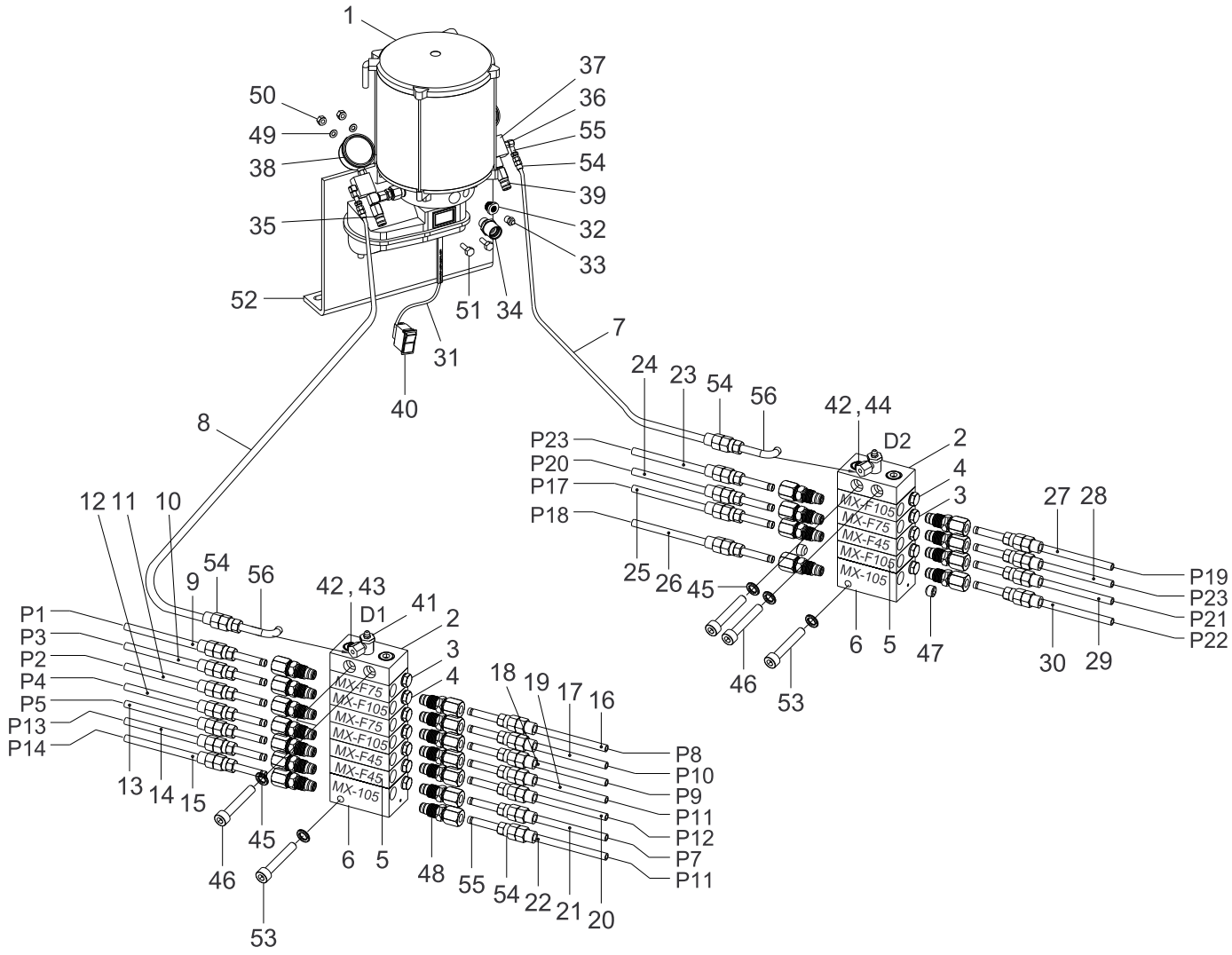

Lubrication Points detail

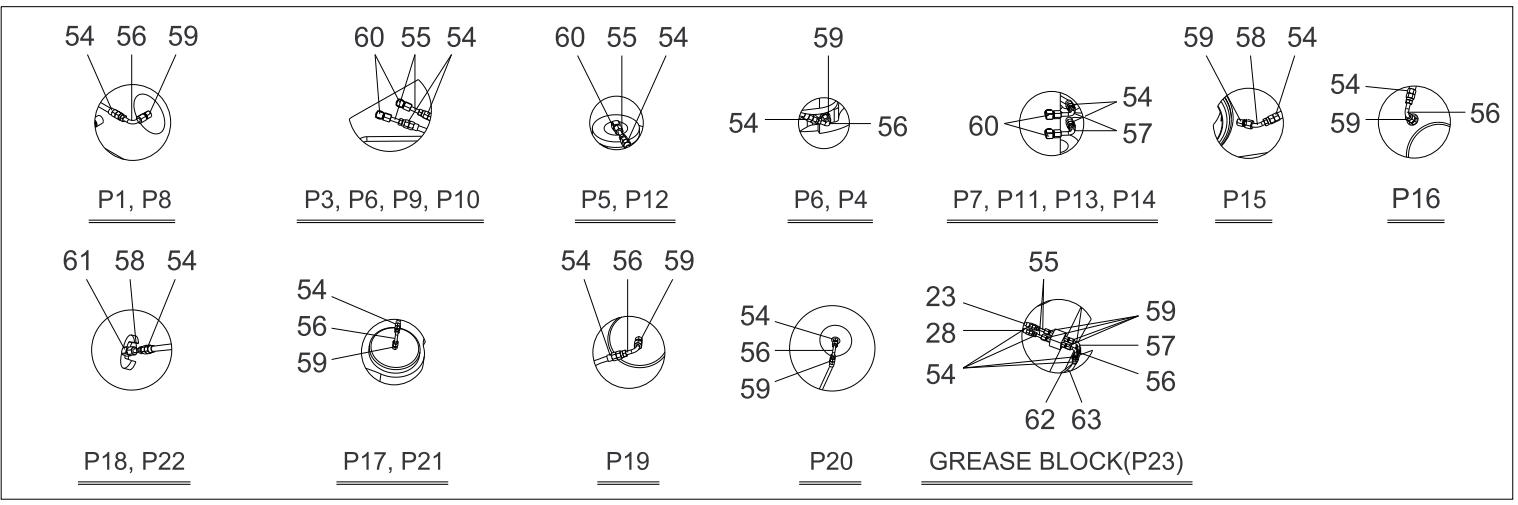

Lubrication Points

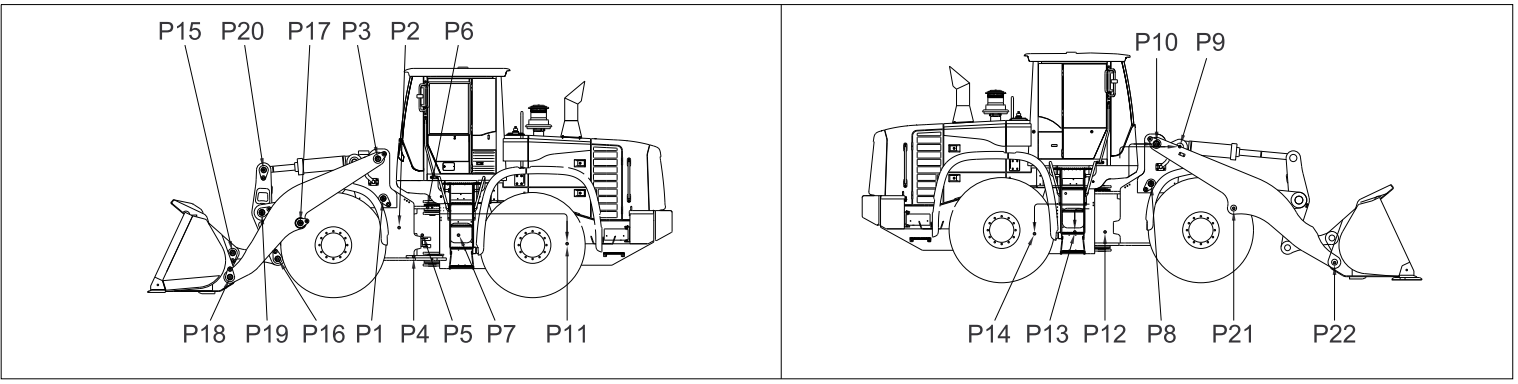

Item	Part_No	IS	Ord	T	Description	Qty	Serial_No	ITC	Remark
1	XKCE-00083				PUMP	1			
2	XKCE-00060				ELEMENT-TOP	2			
3	XKCE-00040	00			ELEMENT-MIDDLE	3			
4	XKCE-00041				ELEMENT-MIDDLE	4			
5	XKCE-00039				ELEMENT-MIDDLE	3			
6	XKCE-00044				ELEMENT-END	2			
7	XKCE-00881				HIGH PRESSURE HOSE	1			
8	XKCE-00882				HIGH PRESSURE HOSE	1			
9	XKCE-00883				HIGH PRESSURE HOSE	1			
10	XKCE-00884				HIGH PRESSURE HOSE	1			
11	XKCE-00885				HIGH PRESSURE HOSE	1			
12	XKCE-00886				HIGH PRESSURE HOSE	1			
13	XKCE-00887				HIGH PRESSURE HOSE	1			
14	XKCE-00888				HIGH PRESSURE HOSE	1			
15	XKCE-00889				HIGH PRESSURE HOSE	1			
16	XKCE-00890				HIGH PRESSURE HOSE	1			
17	XKCE-00891				HIGH PRESSURE HOSE	1			
18	XKCE-00892				HIGH PRESSURE HOSE	1			
19	XKCE-00893				HIGH PRESSURE HOSE	1			
20	XKCE-00894				HIGH PRESSURE HOSE	1			
21	XKCE-00895				HIGH PRESSURE HOSE	1			
22	XKCE-00896				HIGH PRESSURE HOSE	1			
23	XKCE-00897				HIGH PRESSURE HOSE	1			
24	XKCE-00898				HIGH PRESSURE HOSE	1			
25	XKCE-00899				HIGH PRESSURE HOSE	1			
26	XKCE-00900				HIGH PRESSURE HOSE	1			
27	XKCE-00901				HIGH PRESSURE HOSE	1			

Item	Part_No	IS	Ord	T	Description	Qty	Serial_No	ITC	Remark
27	XKCE-00901				HIGH PRESSURE HOSE	1			
28	XKCE-00901				HIGH PRESSURE HOSE	1			
29	XKCE-00903				HIGH PRESSURE HOSE	1			
30	XKCE-00904				HIGH PRESSURE HOSE	1			
31	XKCE-00571				ELECTRIC WIRE	1			
32	XKCE-00572				FILTER	1			
33	XKCE-00196				NIPPLE-GREASE	1			
34	XKCE-00089				CAP-FILLING	1			
35	XKCE-00574				ELEMENT	1			
36	XKCE-00186				ELBOW-TPO, FITTING	2			
37	XKCE-00192				BLOCK-ELEMENT	2			
38	XKCE-00191				PRESSURE GAGUE	2			
39	XKCE-00084				ELEMENT	1			
40	XKCE-00575				SWITCH	1			
41	XKCE-00186				ELBOW-TPO, FITTING	2			
42	XKCE-00034				WASHER-SPRING	4			
43	XKCE-00576				BOLT	2			
44	XKCE-00047				BOLT	2			
45	XKCE-00055				WASHER-SPRING	6			
46	XKCE-00054				BOLT	4			
47	XKCE-00052				BOLT-BLANK	2			
48	XKCE-00051				VALVE-CHECK	22			
49	XKCE-00033				WASHER-SPRING	2			
50	XKCE-00088				NUT	2			
51	XKCE-00577				BOLT	2			
52	XKCE-00578				BRACKET	1			
53	XKCE-00580				BOLT	2			

Item	Part_No	IS	Ord	T	Description	Qty	Serial_No	ITC	Remark
53	XKCE-00580				BOLT	2			
54	XKCE-00187				FERRULE-THEADED	52			
55	XKCE-00194				INSERT-FERRULE	32			
56	XKCE-00193				INSERT-FERRULE	12			
57	XKCE-00195				FERRULE INSERT	5			
58	XKCE-00188				INSERT-FERRULE	3			
59	XKCE-00184				FITTING-STRIGHT	14			
60	XKCE-00183				ELBOW-FITTING	10			
61	XKCE-00199				ELBOW-FITTING	2			
62	XKCE-00905				HIGH PRESSURE HOSE	1			
62	XKCE-00906				HIGH PRESSURE HOSE	1			

CENTRAL GREASE LUB SYSTEM (HIGH LIFT)

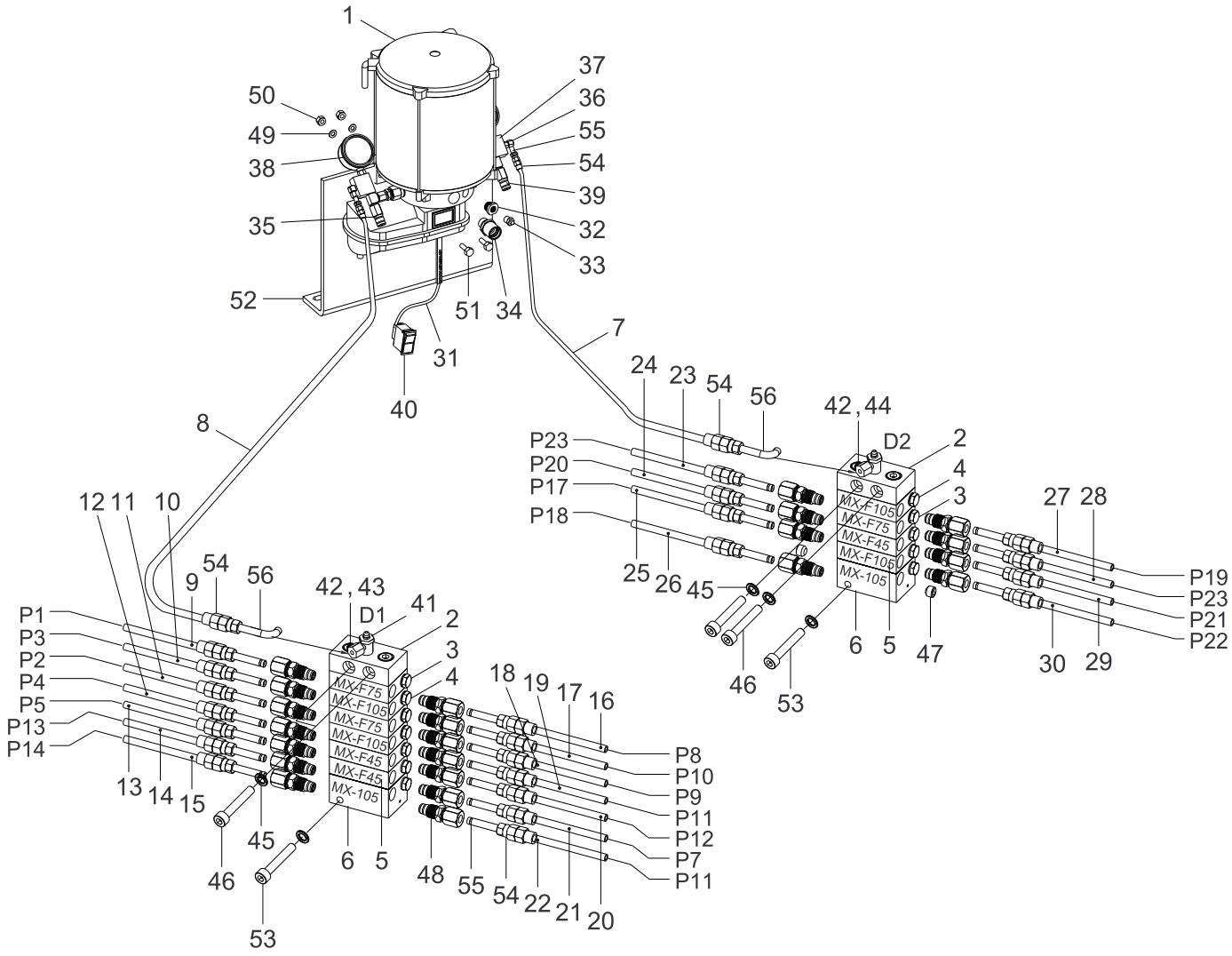

Lubrication Points detail

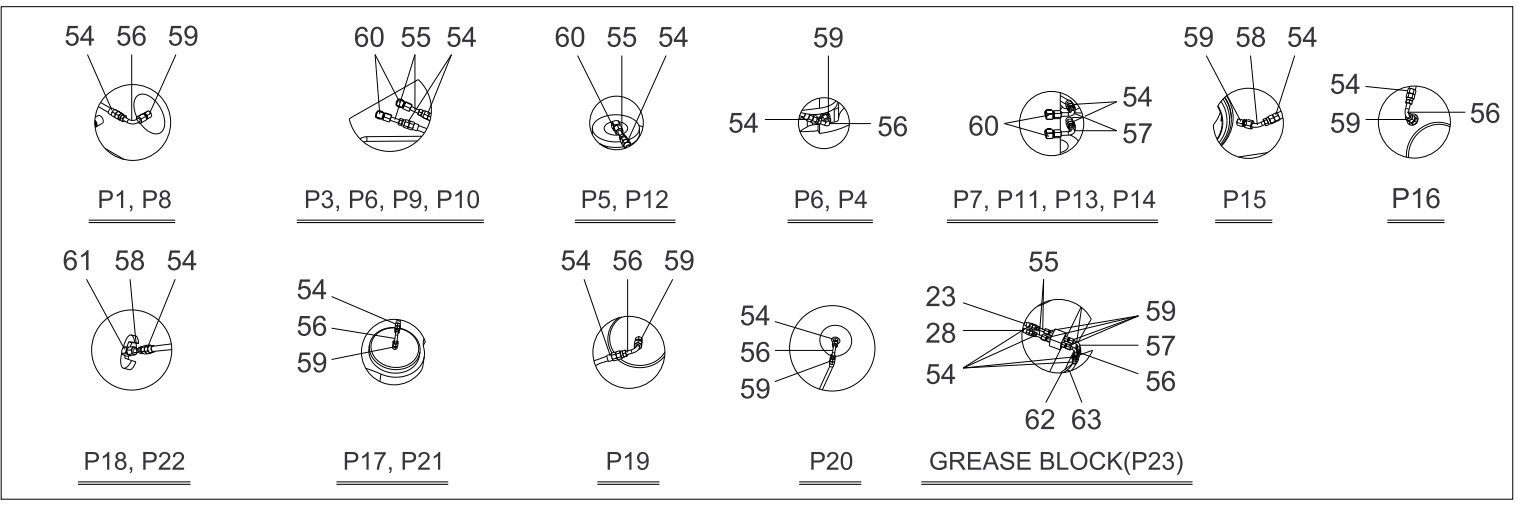

Lubrication Points

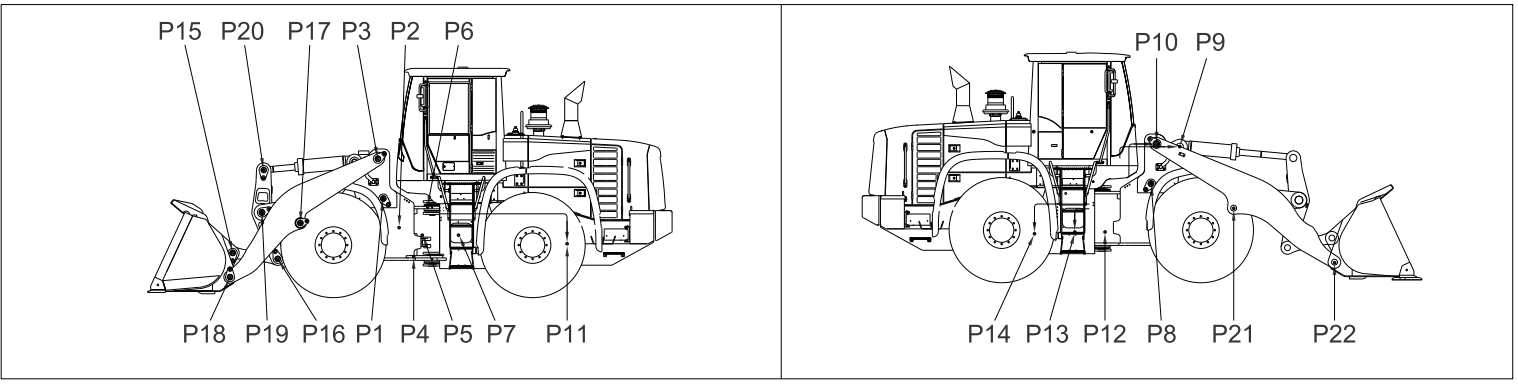

Item	Part_No	IS	Ord	T	Description	Qty	Serial_No	ITC	Remark
1	XKCE-00083				PUMP	1			
2	XKCE-00060				ELEMENT-TOP	2			
3	XKCE-00040				ELEMENT-MIDDLE	3			
4	XKCE-00041				ELEMENT-MIDDLE	4			
5	XKCE-00039				ELEMENT-MIDDLE	3			
6	XKCE-00044				ELEMENT-END	2			
7	XKCE-00907				HIGH PRESSURE HOSE	1			
8	XKCE-00908				HIGH PRESSURE HOSE	1			
9	XKCE-00909				HIGH PRESSURE HOSE	1			
10	XKCE-00910				HIGH PRESSURE HOSE	1			
11	XKCE-00911				HIGH PRESSURE HOSE	1			
12	XKCE-00912				HIGH PRESSURE HOSE	1			
13	XKCE-00913				HIGH PRESSURE HOSE	1			
14	XKCE-00914				HIGH PRESSURE HOSE	1			
15	XKCE-00915				HIGH PRESSURE HOSE	1			
16	XKCE-00916				HIGH PRESSURE HOSE	1			
17	XKCE-00917				HIGH PRESSURE HOSE	1			
18	XKCE-00918				HIGH PRESSURE HOSE	1			
19	XKCE-00919				HIGH PRESSURE HOSE	1			
20	XKCE-00920				HIGH PRESSURE HOSE	1			
21	XKCE-00921				HIGH PRESSURE HOSE	1			
22	XKCE-00922				HIGH PRESSURE HOSE	1			
23	XKCE-00923				HIGH PRESSURE HOSE	1			
24	XKCE-00924				HIGH PRESSURE HOSE	1			
25	XKCE-00925				HIGH PRESSURE HOSE	1			
26	XKCE-00926				HIGH PRESSURE HOSE	1			
27	XKCE-00927				HIGH PRESSURE HOSE	1			

Item	Part_No	IS	Ord	T	Description	Qty	Serial_No	ITC	Remark
27	XKCE-00927				HIGH PRESSURE HOSE	1			
28	XKCE-00928				HIGH PRESSURE HOSE	1			
29	XKCE-00929				HIGH PRESSURE HOSE	1			
30	XKCE-00930				HIGH PRESSURE HOSE	1			
31	XKCE-00571				ELECTRIC WIRE	1			
32	XKCE-00572				FILTER	1			
33	XKCE-00196				NIPPLE-GREASE	1			
34	XKCE-00089				CAP-FILLING	1			
35	XKCE-00574				ELEMENT	1			
36	XKCE-00186				ELBOW-TPO, FITTING	2			
37	XKCE-00192				BLOCK-ELEMENT	2			
38	XKCE-00191				PRESSURE GAGUE	2			
39	XKCE-00084				ELEMENT	1			
40	XKCE-00575				SWITCH	1			
41	XKCE-00186				ELBOW-TPO, FITTING	2			
42	XKCE-00034				WASHER-SPRING	4			
43	XKCE-00576				BOLT	2			
44	XKCE-00047				BOLT	2			
45	XKCE-00055				WASHER-SPRING	6			
46	XKCE-00054				BOLT	4			
47	XKCE-00052				BOLT-BLANK	2			
48	XKCE-00051				VALVE-CHECK	22			
49	XKCE-00033				WASHER-SPRING	2			
50	XKCE-00088				NUT	2			
51	XKCE-00577				BOLT	2			
52	XKCE-00578				BRACKET	1			
53	XKCE-00580				BOLT	2			

Item	Part_No	IS	Ord	T	Description	Qty	Serial_No	ITC	Remark
53	XKCE-00580				BOLT	2			
54	XKCE-00187				FERRULE-THEADED	52			
55	XKCE-00194				INSERT-FERRULE	32			
56	XKCE-00193				INSERT-FERRULE	12			
57	XKCE-00195				FERRULE INSERT	5			
58	XKCE-00188				INSERT-FERRULE	3			
59	XKCE-00184				FITTING-STRIGHT	14			
60	XKCE-00183				ELBOW-FITTING	10			
61	XKCE-00199				ELBOW-FITTING	2			
62	XKCE-00931				HIGH PRESSURE HOSE	1			
63	XKCE-00932				HIGH PRESSURE HOSE	1			

MAIN PUMP(1/2)

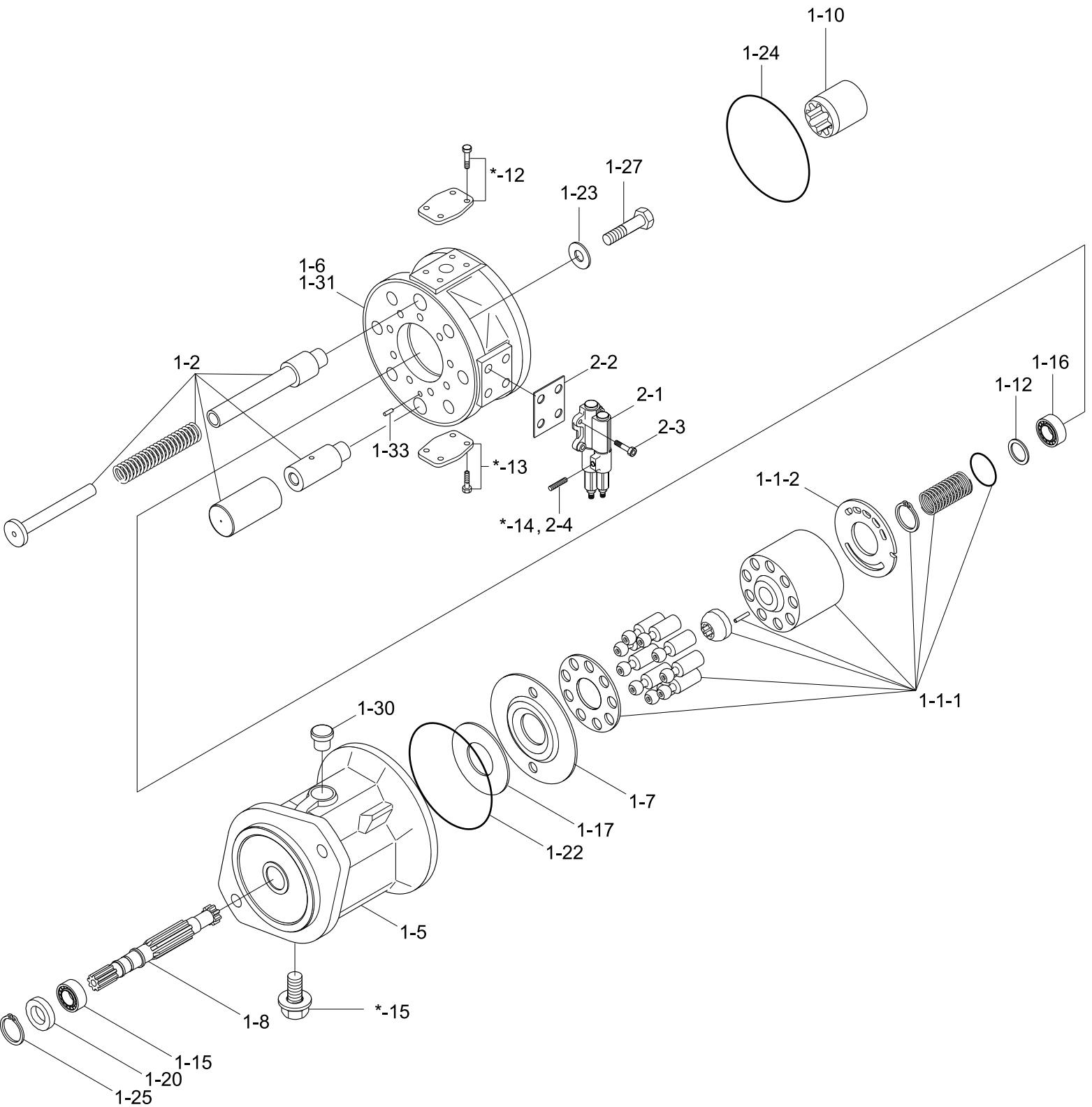
1-10
1-24
*-12
1-27
1-23
1-6
1-31
1-2
2-2
2-1
2-3
1-33
*-13
*-14 , 2-4
1-16
1-12
1-1-2
1-1-1
1-30
1-7
1-17
1-22
1-5
*-15
1-8
1-15
1-20
1-25

Item	Part_No	IS	Ord	T	Description	Qty	Serial_No	ITC	Remark
*	31LK-00010				MAIN PUMP ASSY	1	-		WITH *-1, *-2
*	31LK-00011				MAIN PUMP ASSY	1	#0156 -	A	WITH *-1, *-2
*-1	ZGBP-00154				STEERING PUMP	1			
N*-11	ZGBP-00156				.STEERING PUMP-UNP	1			NOT
N1	ZGBP-00180				..STEER PUMP W/O CON	1			NOT
1-1	ZGBP-00160				...ROTARY GROUP ASSY	1			
N1-1-	ZGBP-00177				....ROTARY GROUP	1			NOT
N1-1-	ZGBP-00178				....CONTROL PLATE	1			NOT
N1-2	ZGBP-00161				...ADJUSTING PIECE	1			NOT
1-5	ZGBP-00162				...PUMP HOUSING	1			
1-6	ZGBP-00163				...PORT PLATE	1			
N1-7	ZGBP-00164				...SWASH PLATE	1			NOT
1-8	ZGBP-00165				...DRIVE SHAFT	1			
1-10	ZGBP-00166				...SPLINED HUB	1			
1-12	ZGBP-00167				...ADJUSTMENT SHIM	1			
1-15	ZGBP-00168				...TAPERED R/BEARING	1			
1-16	ZGBP-00169				...TAPERED R/BEARING	1			
1-17	ZGBP-00170				...BEARING LINER	2			
1-20	ZGBP-00171				...SHAFT SEAL RING	1			
1-22	ZGBP-00172				...O-RING	1			
1-23	ZGBP-00173				...O-RING	4			
1-24	ZGBP-00104				...O-RING	1			
1-25	ZGBP-00174				...V-RING	1			
1-27	ZGBP-00175				...SCREW-SOCKET HEAD	4			
1-30	ZGBP-00176				...LOCKING SCREW	1			
1-31	ZGBP-00031				...DOUBLE BREAK-OFF	1			
1-33	ZGBP-00032				...CYLINDER PIN	1			

Item	Part_No	IS	Ord	T	Description	Qty	Serial_No	ITC	Remark
1-33	ZGBP-00032				...CYLINDER PIN	1			
2	ZGBP-00011				..CONTROL VALVE	1			
2-1	ZGBP-00105				...CONTROL VALVE	1			
2-2	ZGBP-00049				...GASKET	1			
2-3	ZGBP-00050				...SCREW-SOCKET HEAD	4			
2-4	ZGBP-00051				...LOCKING SCREW	1			
*-12	ZGBP-00157				.FLANGE COVER	1			
*-13	ZGBP-00158				.FLANGE COVER	1			
*-14	ZGBP-00008				.SCREW-SEAL	1			
*-15	ZGBP-00159				.SCREW-SEAL	1			
*-2	ZGBP-00155				IMPLEMENT PUMP	1			SEE 4015
N	@				NOT SUPPLIED PARTS	AR			NOT

MAIN PUMP(2/2)

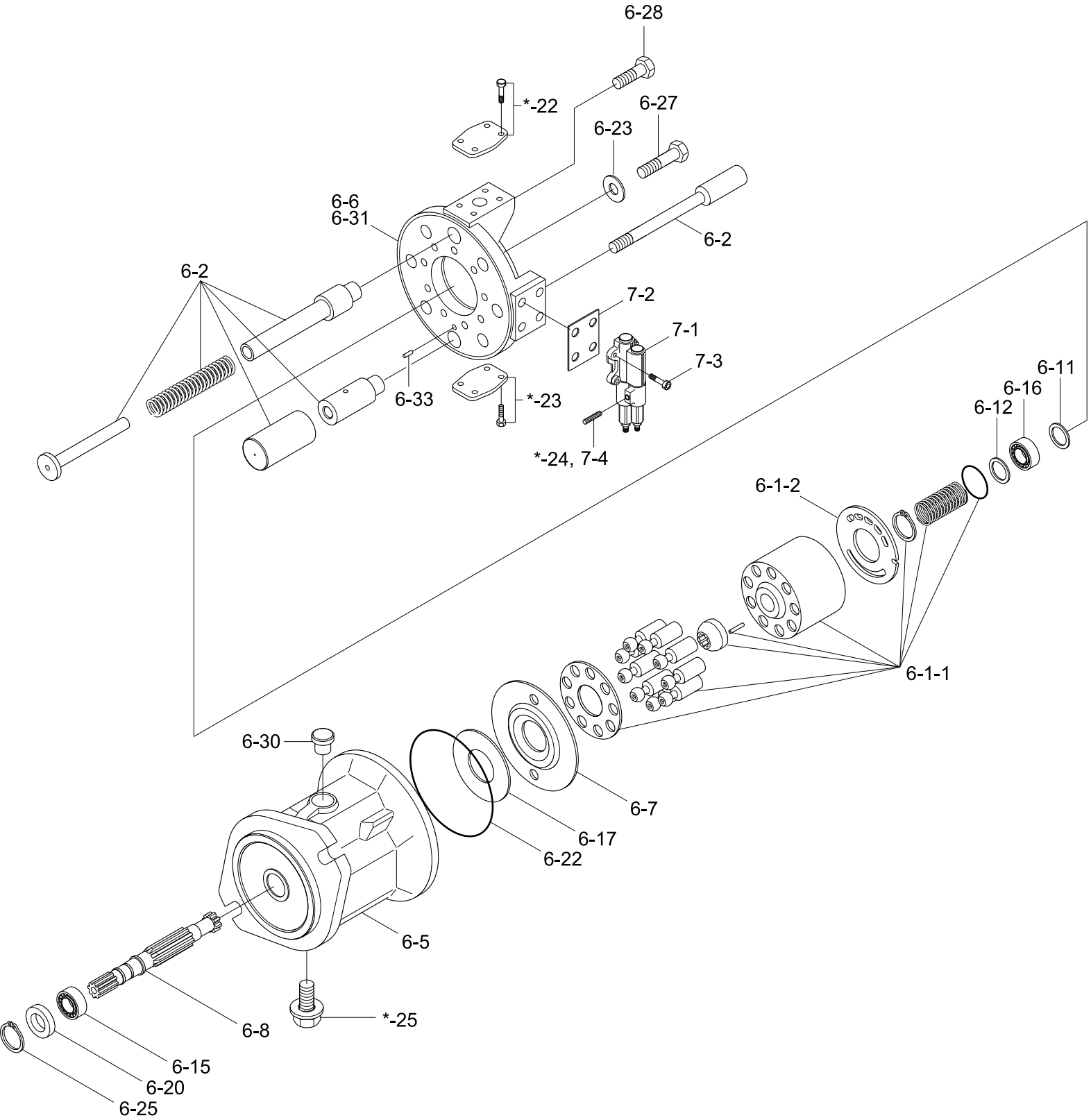
6-28
*-22
6-27
6-23
6-6
6-31
6-2
6-2
7-2
7-1
7-3
6-33
*-23
*-24, 7-4
6-11
6-16
6-12
6-1-2
6-1-1
6-30
6-7
6-17
6-22
6-5
*-25
6-8
6-15
6-20
6-25

Item	Part_No	IS	Ord	T	Description	Qty	Serial_No	ITC	Remark
*	@				MAIN PUMP	1			NOT
*	@				MAIN PUMP	1			NOT
*-2	ZGBP-00182				IMPLEMENT PUMP	1			
N*-21	ZGBP-00184				.IMPLEMENT PUMP-UNP	1			NOT
*-2	ZGBP-00155				IMPLEMENT PUMP	1			
N*-21	ZGBP-00179				.UNPAINTED IMPLEMENT PUMP	1			NOT
N6	ZGBP-00107				..IMP PUMP W/O CON V/V	1			NOT
6-1	ZGBP-00013				...ROTARY GROUP	1			
N6-1-1	ZGBP-00033				....H/SPEED ROTARY GRP	1			NOT
N6-1-2	ZGBP-00034				....CONTROL PLATE	1			NOT
N6-2	ZGBP-00108				...ADJUSTING PIECE	1			NOT
6-5	ZGBP-00015				...PUMP HOUSING	1			
6-6	ZGBP-00109				...PORT PLATE	1			
N6-7	ZGBP-00017				...SWASH PLATE	1			NOT
6-8	ZGBP-00110				...DRIVE SHAFT	1			
N6-11	@				...ADJUSTMENT SHIM	1			NOT
6-12	ZGBP-00020				...ADJUSTMENT SHIM	1			
6-15	ZGBP-00021				...TAPERED R/BEARING	1			
6-16	ZGBP-00022				...TAPERED R/BEARING	1			
6-17	ZGBP-00023				...BEARING LINER	2			
6-20	ZGBP-00024				...SHAFT SEAL RING	1			
6-22	ZGBP-00025				...O-RING	1			
6-23	ZGBP-00026				...O-RING	4			
6-25	ZGBP-00027				...O-RING	1			
6-27	ZGBP-00028				...RETAINING RING	4			
6-28	ZGBP-00029				...SCREW-SOCKET HEAD	1			
6-30	ZGBP-00030				...LOCKING SCREW	1			

Item	Part_No	IS	Ord	T	Description	Qty	Serial_No	ITC	Remark
6-30	ZGBP-00030				...LOCKING SCREW	1			
6-31	ZGBP-00031				...DOUBLE BREAK-OFF PIN	1			
6-33	ZGBP-00032				...CYLINDER PIN	1			
7	ZGBP-00060				..CONTROL VALVE	1			
7-1	ZGBP-00094				...CONTROL VALVE	1			
7-2	ZGBP-00049				...GASKET	1			
7-3	ZGBP-00050				...SCREW-SOCKET HEAD	4			
7-4	ZGBP-00051				...LOCKING SCREW	1			
*-22	ZGBP-00006				.FLANGE COVER-UPPER	1			
*-23	ZGBP-00007				.FLANGE COVER-BOTTOM	1			
*-24	ZGBP-00008				.SCREW-SEAL	1			
*-25	ZGBP-00009				.SCREW-SEAL	1			
N	@				NOT SUPPLIED PARTS	AR			NOT

FAN & BRAKE PUMP

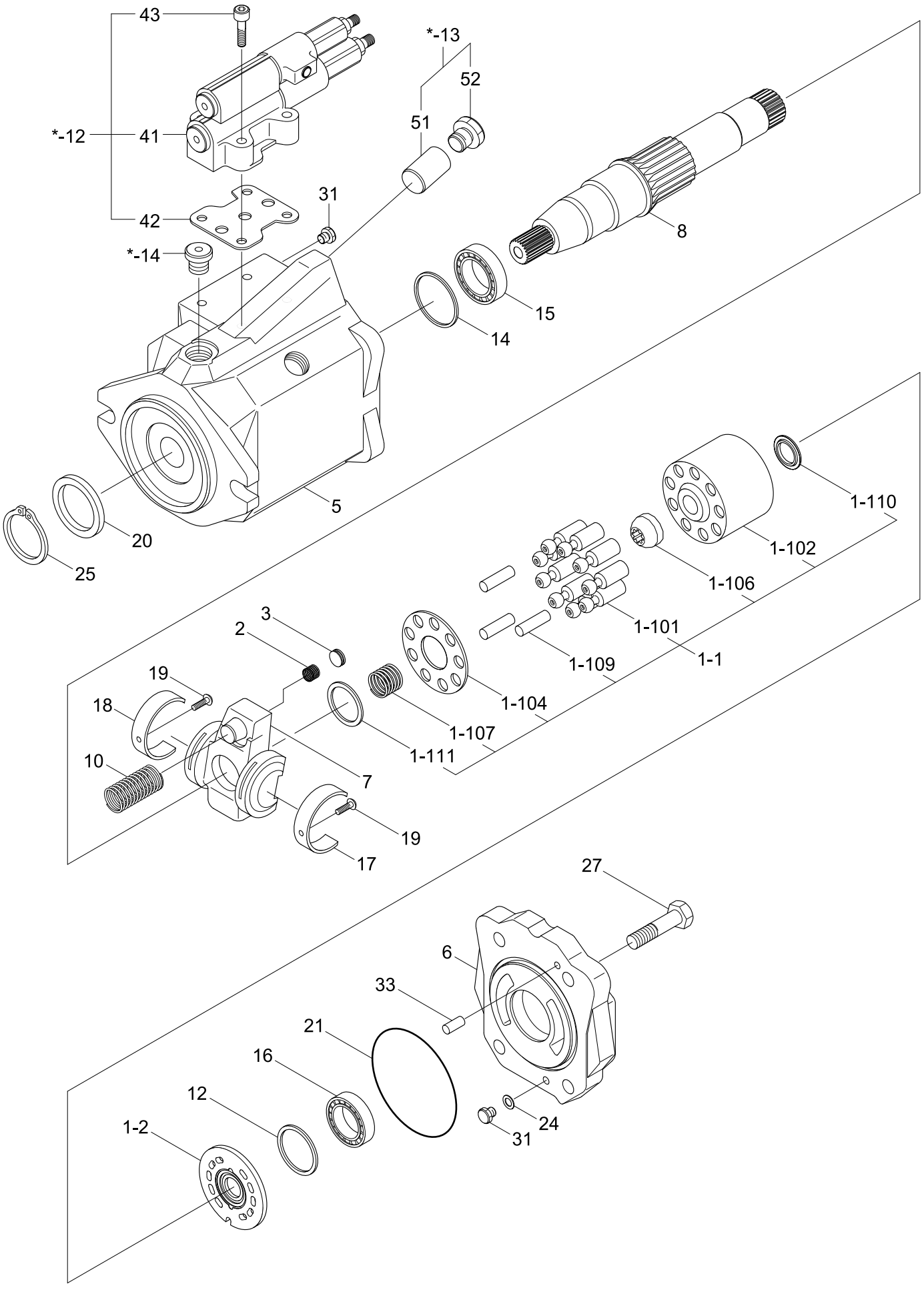

Item	Part_No	IS	Ord	T	Description	Qty	Serial_No	ITC	Remark
*	31LK-40010				FAN & BRAKE PUMP	1			
*-1	ZGBP-00350				PISTON PUMP	1			
N*-11	ZGBP-00351				.PISTON PUMP W/O VALVE	1			NOT
1	ZGBP-00352				..ROTARY GROUP	1			
N1-1	ZGBP-00339				...ROTARY GROUP	1			NOT
N1-10	ZGBP-00341				....PISTON	9			NOT
N1-10	ZGBP-00342				....CYLINDER	1			NOT
N1-10	ZGBP-00343				....RETAINING PLATE	1			NOT
N1-10	ZGBP-00344				....RETAINING BALL	1			NOT
N1-10	ZGBP-00345				....SPRING	1			NOT
N1-10	ZGBP-00315				....PRESSURE PIN	3			NOT
1-110	ZGBP-00346				....V-RING	1			
N1-11	ZGBP-00347				....BACK-UP PLATE	1			NOT
1-2	ZGBP-00356				...CONTROL PLATE	1			
2	ZGBP-00323				..PRESSURE SPRING	1			
3	ZGBP-00324				..STOP	1			
5	ZGBP-00353				..PUMP HOUSING	1			
6	ZGBP-00354				..PORT PLATE	1			
7	ZGBP-00355				..SWASH PLATE	1			
8	ZGBP-00328				..DRIVE SHAFT	1			
10	ZGBP-00329				..SPRING	1			
12	ZGBP-00330				..ADJUSTMENT SHIM	1			
14	ZGBP-00331				..STOP RING	1			
15	ZGBP-00069				..TAPERED ROLLER BEARING	1			
16	ZGBP-00332				..TAPERED ROLLER BEARING	1			
17	ZGBP-00333				..LINER BEARING	1			
18	ZGBP-00334				..LINER BEARING	1			

Item	Part_No	IS	Ord	T	Description	Qty	Serial_No	ITC	Remark
18	ZGBP-00334				..LINER BEARING	1			
19	ZGBP-00231				..SCREW-FLAT HEAD	2			
20	ZGBP-00303				..SHAFT SEAL RING	1			
21	ZGBP-00335				..O-RING	1			
24	ZGBP-00336				..KANTSEAL RING	1			
25	ZGBP-00282				..RETAINING RING	1			
27	ZGBP-00337				..SCREW-SOCKET HEAD	4			
31	ZGBP-00338				..PLUG-DOUBLE BREAK OFF	2			
33	ZGBP-00307				..CYLINDER PIN	1			
*-12	ZGBP-00320				.CONTROL VALVE	1			
41	ZGBP-00348				..CONTROL VALVE	1			
42	ZGBP-00049				..GASKET	1			
43	ZGBP-00050				..SCREW-SOCKET HEAD	4			
*-13	ZGBP-00321				.ADJUSTING PIECE	1			
51	ZGBP-00349				..CONTROL PISTON	1			
52	ZGBP-00220				..LOCKING SCREW	1			
*-14	ZGBP-00284				.LOCKING SCREW	3			

MAIN CONTROL VALVE (1/2, 2-SPOOL)

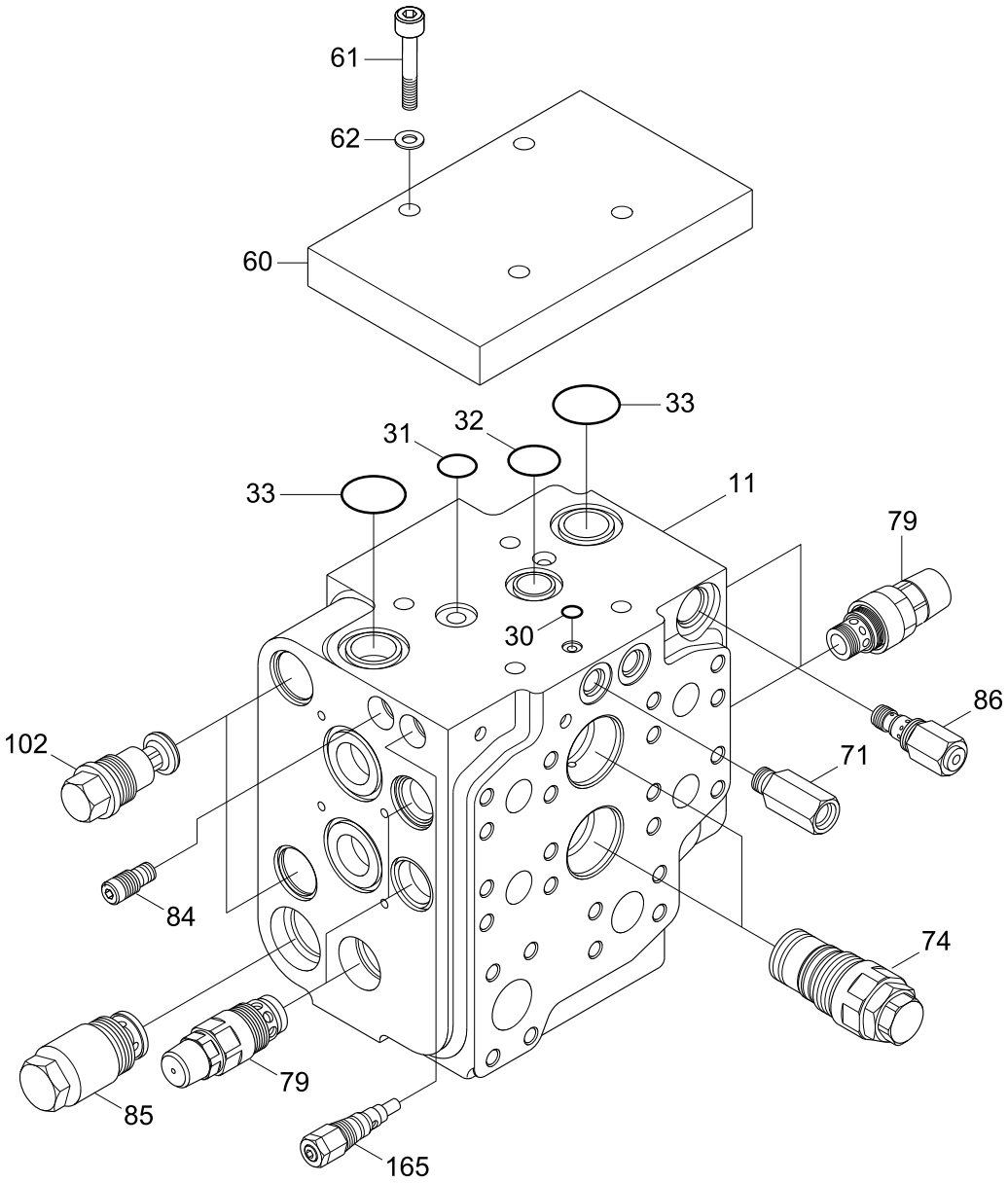

DESCRIPTION	PARTS NO	INCLUDED ITEM
SEAL KIT	ZGAR-00657	30, 31, 32, 33, 34

Item	Part_No	IS	Ord	T	Description	Qty	Serial_No	ITC	Remark
*	31LK-00021				MCV-2 SPOOL	1			SEE 4035
11	@				.HOUSING	1			NOT
K30	@				.O-RING	1			NOT
K31	@				.O-RING	1			NOT
K32	@				.O-RING	1			NOT
K33	@				.O-RING	2			NOT
K34	@				.O-RING	4			NOT
60	ZGAR-00646				.PLATE	1			
61	ZGAR-00647				.BOLT	4			
62	ZGAR-00648				.WASHER	4			
71	ZGAR-00649				.SHUTTLE VALVE	1			
74	ZGAR-00650				.COMPENSATOR VALVE	3			
79	ZGAR-00651				.PRESSURE VALVE	5			
84	ZGAR-00612				.FLOW CONTROL VALVE	1			
85	ZGAR-00659				.PREE CHARGE VALVE	1			
86	ZGAR-00636				.PRESSURE REDUCING VALV	1			
102	ZGAR-00656				.LOCKING SCREW	2			
165	ZGAR-00611				.PRESSURE RELIEF VALVE	1			
K	ZGAR-00657				SEAL KIT	1			SEE ILLUST

MAIN CONTROL VALVE (2/2, 2-SPOOL)

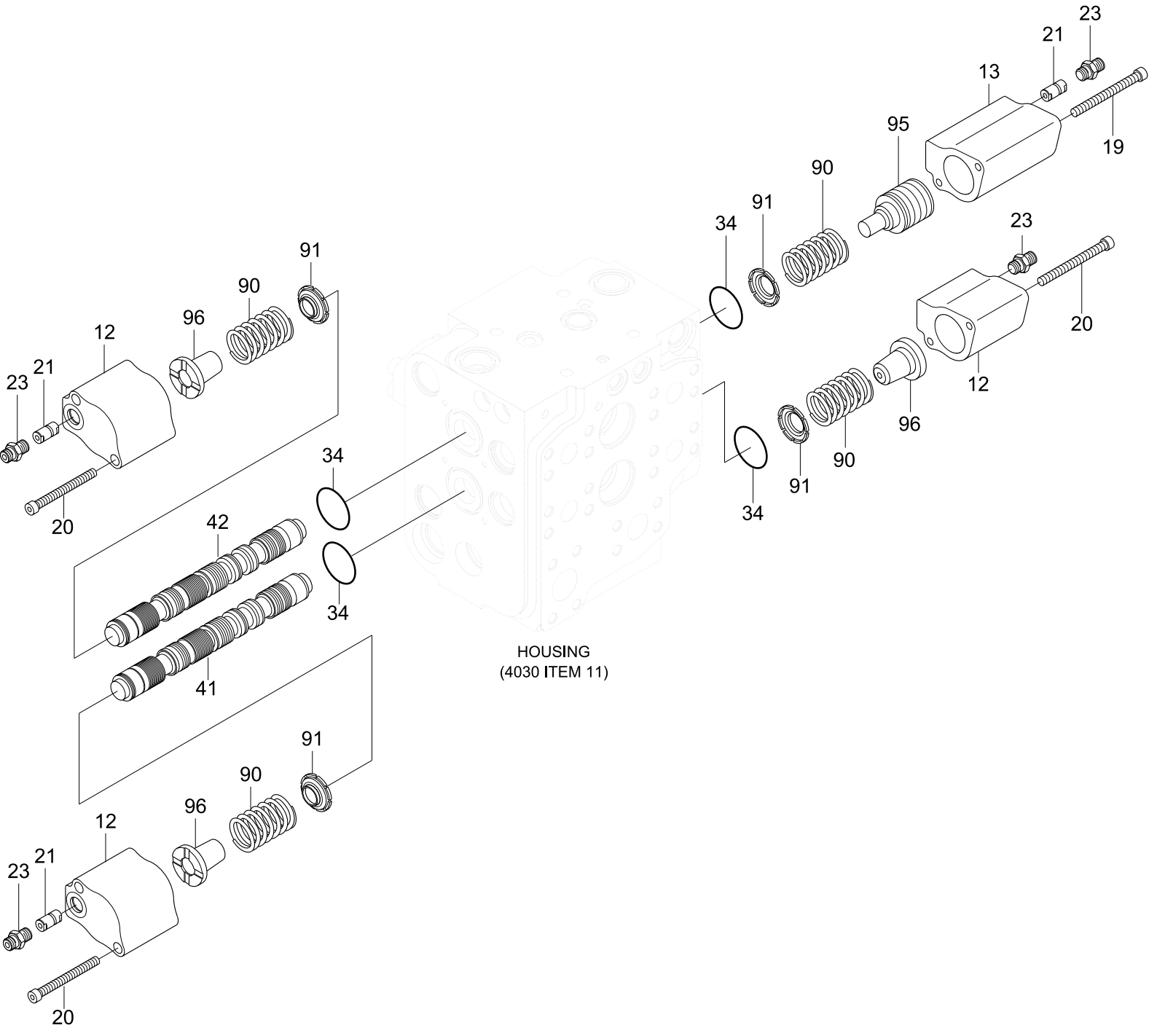

DESCRIPTION	PARTS NO	INCLUDED ITEM
SEAL KIT	ZGAR-00657	30, 31, 32, 33, 34

Item	Part_No	IS	Ord	T	Description	Qty	Serial_No	ITC	Remark
*	@				MCV-2 SPOOL	1			NOT
12	ZGAR-00639				.COVER	3			
13	ZGAR-00640				.COVER	1			
19	ZGAR-00641				.BOLT	2			
20	ZGAR-00642				.BOLT	6			
21	ZGAR-00624				.THROTTLE CHECK VALVE	2			
23	ZGAR-00643				.STEEL PIPE FITTING	4			
K30	@				.O-RING	1			NOT
K31	@				.O-RING	1			NOT
K32	@				.O-RING	1			NOT
K33	@				.O-RING	2			NOT
K34	@				.O-RING	4			NOT
41	ZGAR-00660				.SPOOL	1			
42	ZGAR-00661				.SPOOL	1			
90	ZGAR-00652				.COMPRESSION SPRING	6			
91	ZGAR-00653				.SPRING RETAINER	6			
95	ZGAR-00654				.SPRING RETAINER	1			
96	ZGAR-00655				.SPRING RETAINER	5			
K	ZGAR-00657				SEAL KIT	1			SEE ILLUST

MAIN CONTROL VALVE (1/2, 3-SPOOL)

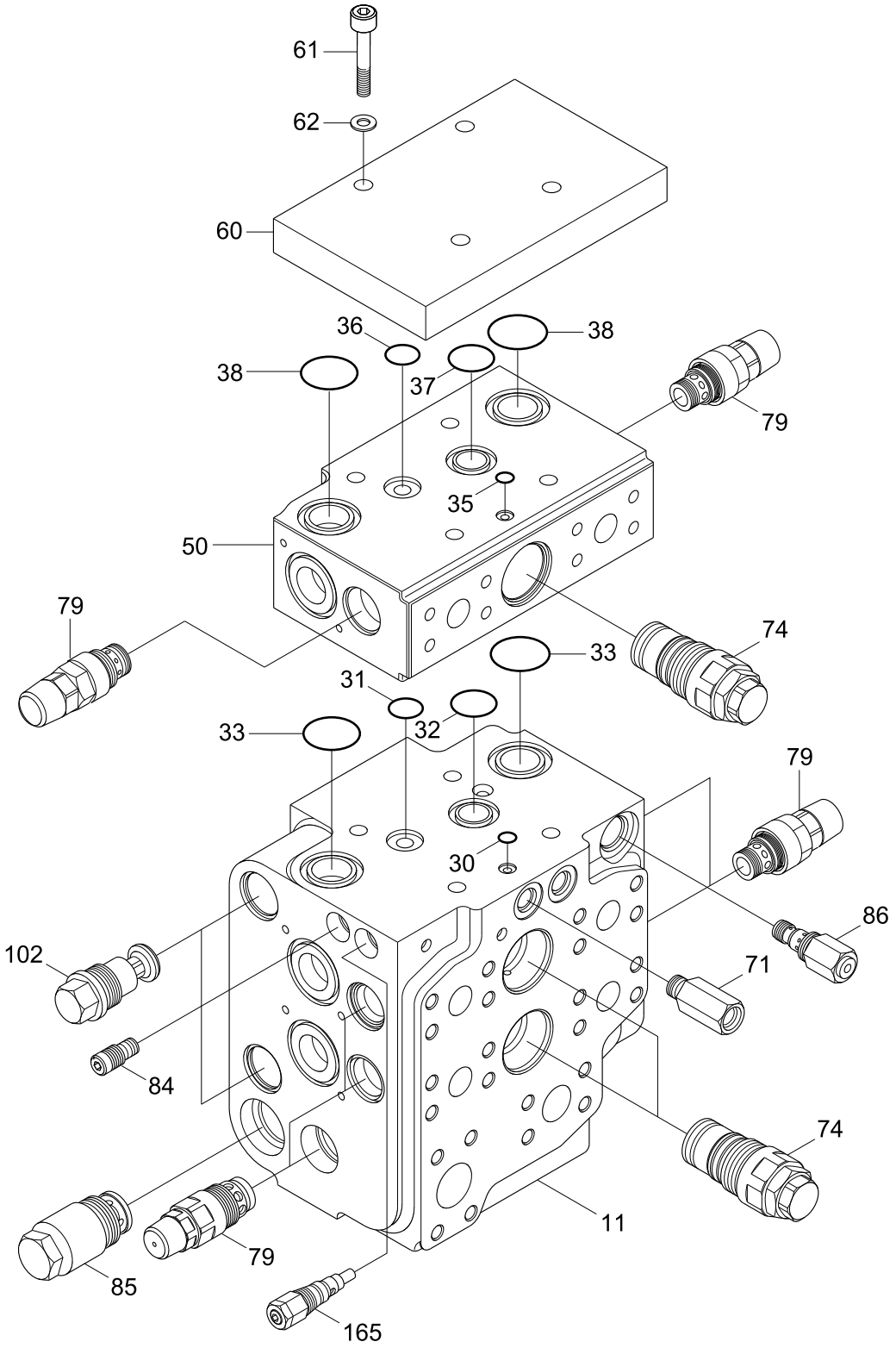

Description	Parts no	Included item
SEAL KIT	ZGAR-00657	30, 31, 32, 33, 34
	ZGAR-00658	35, 36,37, 38, 39

Item	Part_No	IS	Ord	T	Description	Qty	Serial_No	ITC	Remark
*	31LK-00031				MCV-3 SPOOL	1			SEE 4045
11	@				.HOUSING	1			NOT
K30	@				.O-RING	2			NOT
K31	@				.O-RING	1			NOT
K32	@				.O-RING	1			NOT
K33	@				.O-RING	2			NOT
K34	@				.O-RING	4			NOT
K35	@				.O-RING	1			NOT
K36	@				.O-RING	1			NOT
K37	@				.O-RING	1			NOT
K38	@				.O-RING	2			NOT
K39	@				.O-RING	2			NOT
50	@				.HOUSING	1			NOT
60	ZGAR-00646				.PLATE	1			
61	ZGAR-00647				.BOLT	4			
62	ZGAR-00648				.WASHER	4			
71	ZGAR-00649				.SHUTTLE VALVE	1			
74	ZGAR-00650				.COMPENSATOR VALVE	3			
79	ZGAR-00651				.PRESSURE VALVE	7			
84	ZGAR-00612				.FLOW CONTROL VALVE	1			
85	ZGAR-00659				.PREE CHARGE VALVE	1			
86	ZGAR-00636				.PRESSURE REDUCING VLV	1			
102	ZGAR-00656				.LOCKING SCREW	2			
165	ZGAR-00611				.PRESSURE RELIEF VALVE	1			
K	ZGAR-00657				SEAL KIT	1			SEE ILLUST
K	ZGAR-00658				SEAL KIT	1			SEE ILLUST

MAIN CONTROL VALVE (2/2, 3-SPOOL)

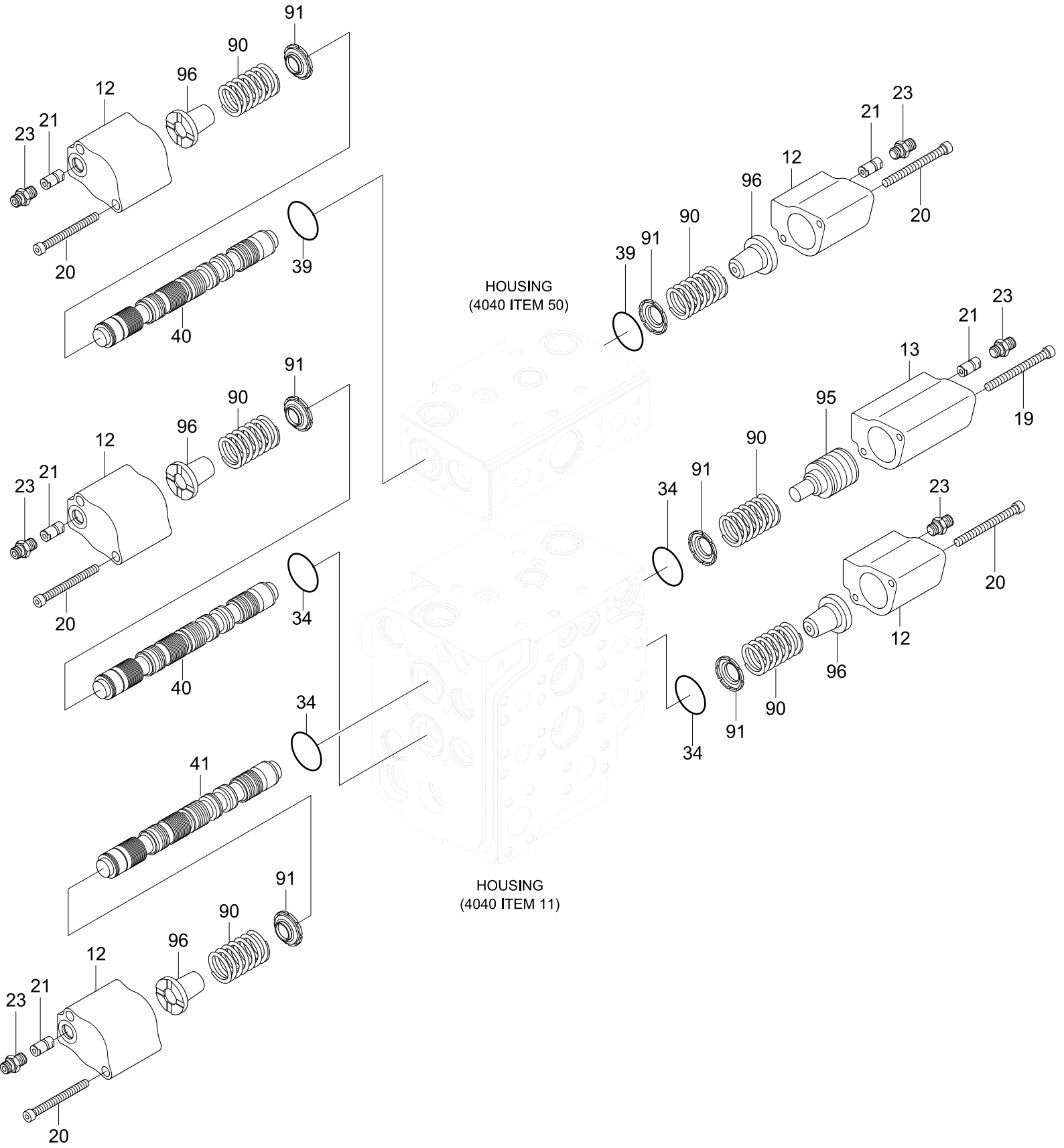

Description	Parts no	Included item
SEAL KIT	ZGAR-00657	30, 31, 32, 33, 34
	ZGAR-00658	35, 36,37, 38, 39

Item	Part_No	IS	Ord	T	Description	Qty	Serial_No	ITC	Remark
*	@				MCV-3 SPOOL	1			NOT
12	ZGAR-00639				.COVER	5			
13	ZGAR-00640				.COVER	1			
19	ZGAR-00641				.BOLT	2			
20	ZGAR-00642				.BOLT	10			
21	ZGAR-00624				.THROTTLE CHECK VALVE	4			
23	ZGAR-00643				.STEEL PIPE FITTING	6			
K30	@				.O-RING	2			NOT
K31	@				.O-RING	1			NOT
K32	@				.O-RING	1			NOT
K33	@				.O-RING	2			NOT
K34	@				.O-RING	4			NOT
K35	@				.O-RING	1			NOT
K36	@				.O-RING	1			NOT
K37	@				.O-RING	1			NOT
K38	@				.O-RING	2			NOT
K39	@				.O-RING	2			NOT
40	ZGAR-00660				.SPOOL	2			
41	ZGAR-00661				.SPOOL	1			
90	ZGAR-00652				.COMPRESSION SPRING	6			
91	ZGAR-00653				.SPRING RETAINER	6			
95	ZGAR-00654				.SPRING RETAINER	1			
96	ZGAR-00655				.SPRING RETAINER	5			
K	ZGAR-00657				SEAL KIT	1			SEE ILLUST
K	ZGAR-00658				SEAL KIT	2			SEE ILLUST

FLOW AMPLIFIER

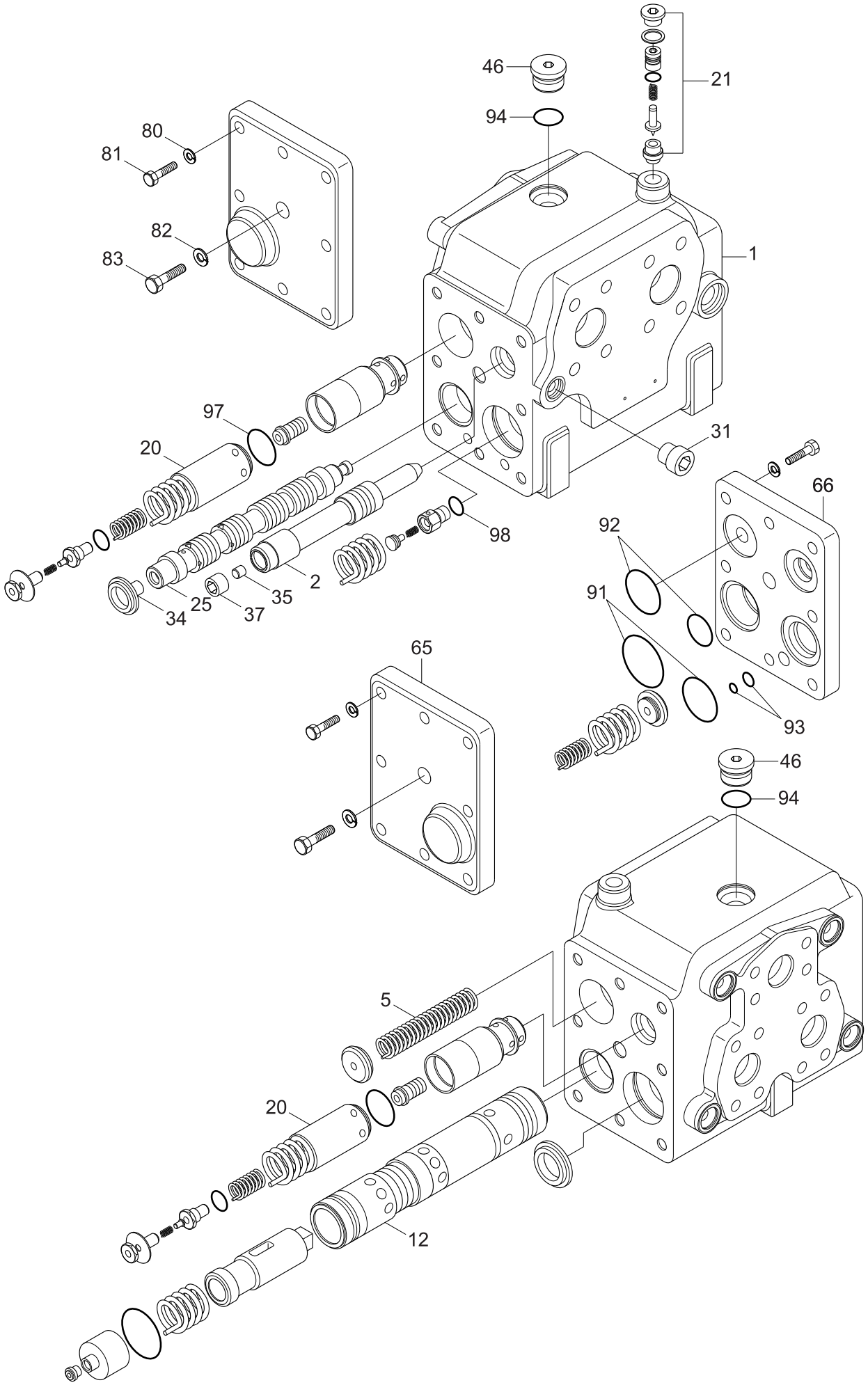

DESCRIPTION	PARTS NO	INCLUDED ITEM
SEAL KIT	YUBS-00045	91 ~ 98

Item	Part_No	IS	Ord	T	Description	Qty	Serial_No	ITC	Remark
*	31LK-31000				FLOW AMPLIFIER	1			
1	@				.VALVE HOUSE	1			NOT
2	@				.PRIORITY SPOOL	1			NOT
5	@				.SPRING	1			NOT
12	@				.AMPLIFIER SPOOL	1			NOT
20	YUBS-00411				.SHOCK-ANTI CAV VALVE	2			
21	YUBS-00410				.REILEF VALVE	1			
25	@				.MAIN DIRECTION VALVE	1			NOT
31	@				.PP ORIFICE	1			NOT
34	@				.DIRECTION ORIFICE	1			NOT
35	@				.DYNAMIC ORIFICE	1			NOT
37	@				.PLUG	1			NOT
46	@				.PLUG	1			NOT
65	@				.END COVER	1			NOT
66	@				.END COVER	1			NOT
80	@				.WASHER	1			NOT
81	@				.SCREW	1			NOT
82	@				.WASHER	1			NOT
83	@				.SCREW	1			NOT
K91	@				.O-RING	4			NOT
K92	@				.O-RING	4			NOT
K93	@				.O-RING	2			NOT
K94	@				.O-RING	1			NOT
K97	@				.O-RING	2			NOT
K98	@				.O-RING	1			NOT
K	YUBS-00045				SEAL KIT	1			SEE ILLUST

PROPORTIONAL VALVE

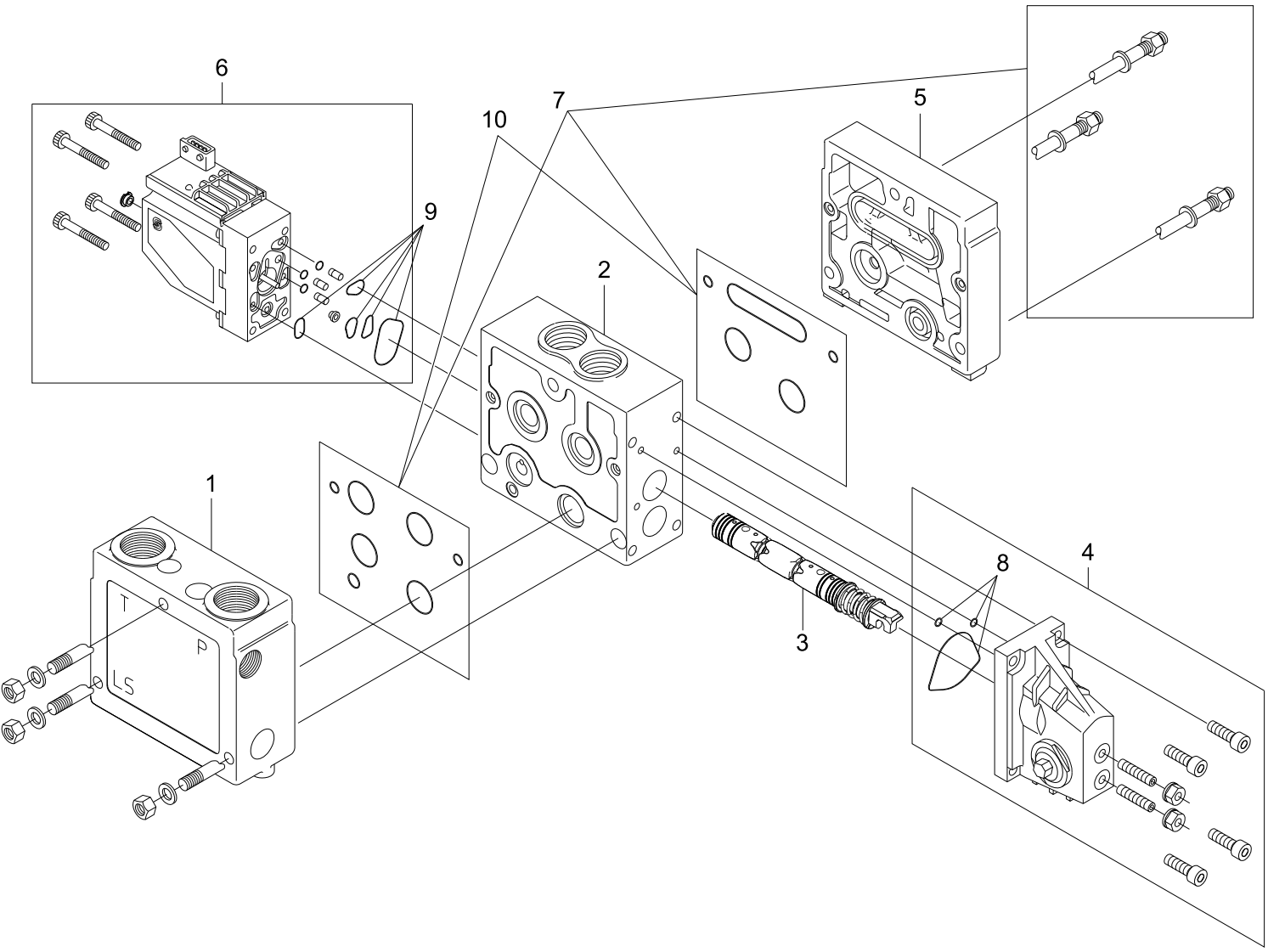

Item	Part_No	IS	Ord	T	Description	Qty	Serial_No	ITC	Remark
*	31LB-30200				PROPORTIONAL VALVE	1			
1	@				.PUMP SIDE MODULE	1			NOT
2	@				.BASIC MODULE	1			NOT
3	@				.SPOOL	1			NOT
4	@				.MECHANICAL ACTUATION	1			NOT
5	@				.END PLATE	1			NOT
6	@				.ELECTRICAL ACTUATION	1			NOT
7	YUBS-00412				.ASSEMBLY KIT	1			
8	YUBS-00413				.SEAL KIT	1			
9	YUBS-00414				.SEAL KIT	1			
10	YUBS-00415				.SEAL KIT	1			

STEERING UNIT

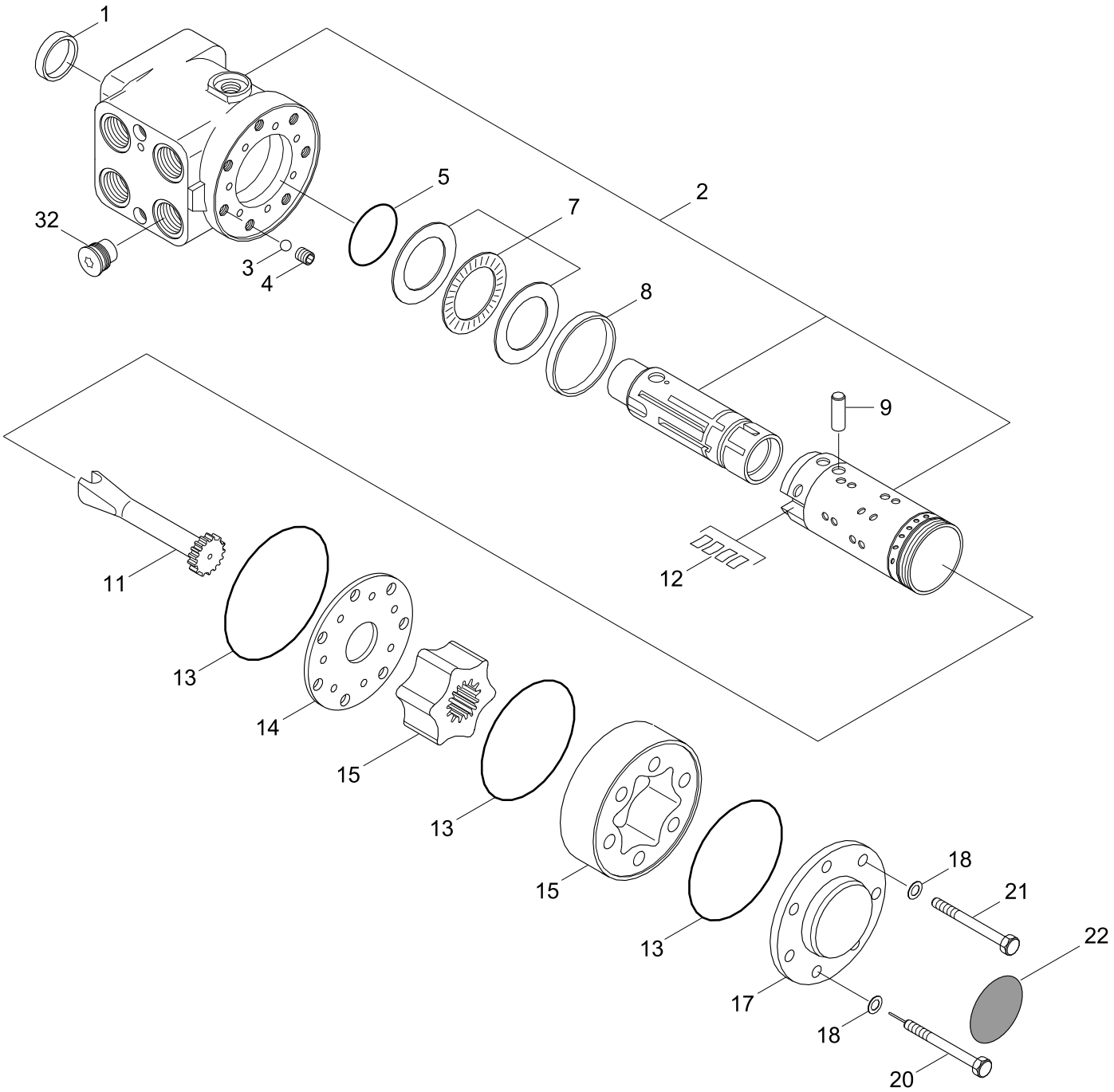

DESCRIPTION	PARTS NO	INCLUDED ITEM
SEAL KIT	YUBS-00019	1, 5, 13, 18

Item	Part_No	IS	Ord	T	Description	Qty	Serial_No	ITC	Remark
*	31LB-30530				STEERING UNIT	1			
K1	@				.SEAL-DUST	1			NOT
N2	@				.HSG,SPOOL,SLEEVE	1			NOT
3	@				.BALL	1			NOT
4	@				.BUSHING-THREAD	1			NOT
K5	@				.O-RING	1			NOT
7	@				.BEARING ASSY	1			NOT
8	@				.RING	1			NOT
9	@				.PIN-CROSS	1			NOT
11	@				.SHAFT-CARDAN	1			NOT
12	@				.SPRING SET	1			NOT
K13	@				.O-RING	1			NOT
14	@				.PLATE-DISTRIBUTOR	1			NOT
15	@				.SET-GEAR WHEEL	1			NOT
17	@				.COVER-END	1			NOT
K18	@				.WASHER	7			NOT
20	@				.SCREW-PIN	1			NOT
21	@				.SCREW	6			NOT
22	@				.NAME PLATE	6			NOT
32	@				.VALVE-CHECK	1			NOT
K	YUBS-00019				SEAL KIT	1			SEE ILLUST
N	@				NOT INDIVIDUALLY SUPPLIED	AR			NOT

REMOTE CONTROL LEVER(2-SPOOL)

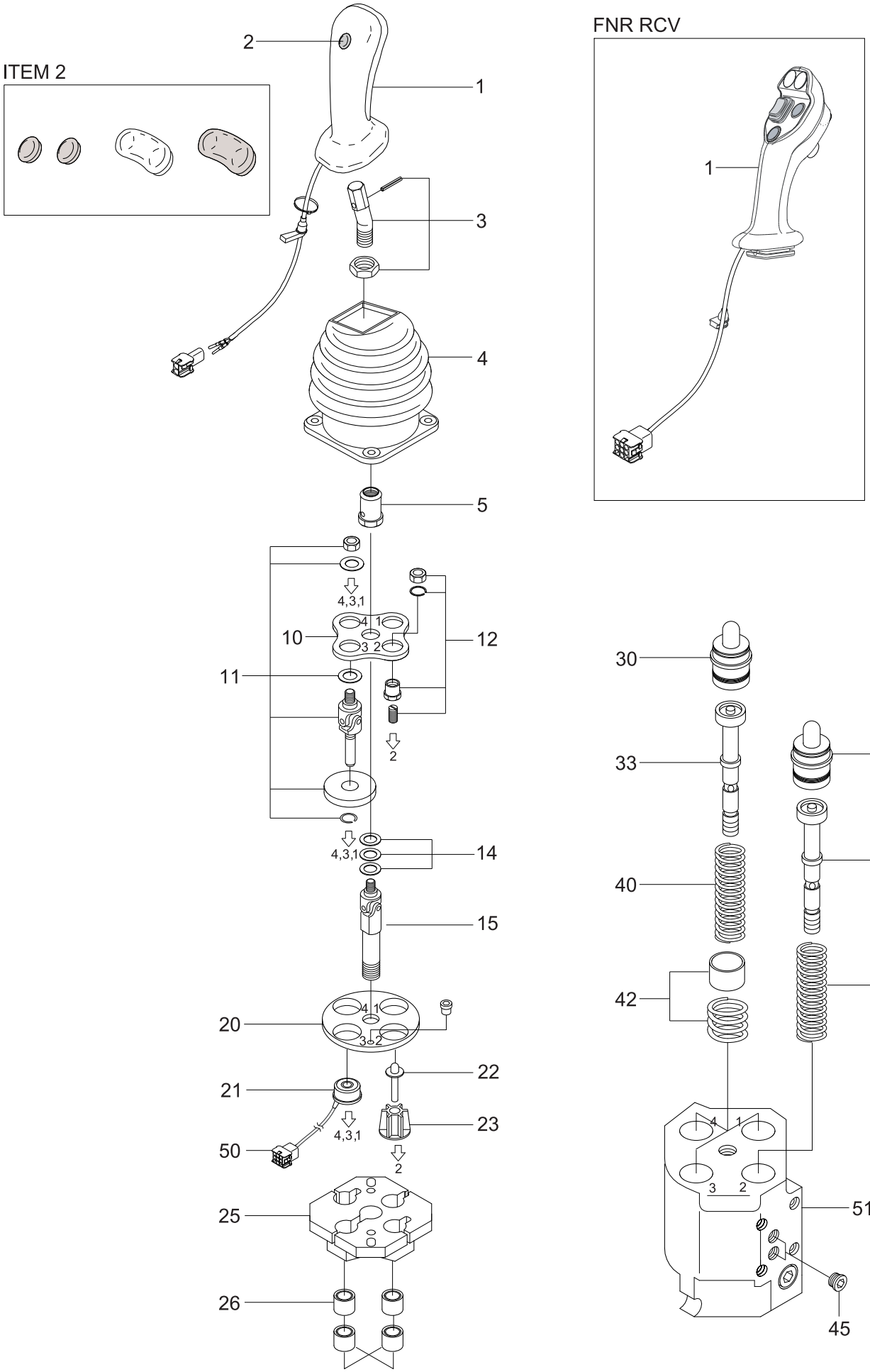

Item	Part_No	IS	Ord	T	Description	Qty	Serial_No	ITC	Remark
*	31LM-10020				RCV LEVER-2 SPOOL	1			STD
*	31LB-05200				RCV FNR LEVER-2 SPOOL	1	- #0107		FNR RCV
*	31LM-05200				RCV FNR LEVER-2 SPOOL	1	#0108 -	B	FNR RCV
1	ZFAB-00092				.HANDLE KIT(EC2000)	1			
1	ZFAB-00093				.HANDLE (EC4000)	1	- #0107		FNR RCV
1	ZFAB-00126				.HANDLE (EC4000)	1	#0108 -	B	FNR RCV
2	ZFAB-00094				.PUSH BUTTON KIT	1			STD ONLY
3	ZFAB-00095				.LEVER KIT	1			
4	ZFAB-00096				.RUBBER BOOT	1			
5	ZFAB-00097				.LOCKING NUT	1			
10	ZFAB-00098				.BRACKET-DETENT CARDAN	1			
11	ZFAB-00099				.DETENT KIT	3			
12	ZFAB-00100				.PLUNGER KIT	1			
14	ZFAB-00101				.SHIM SET(0.1, 0.2, 0.5T)	1			
15	ZFAB-00102				.CARDAN	1			
20	ZFAB-00103				.FLANGE	1			
21	ZFAB-00104				.SOLENOID	3			
22	ZFAB-00105				.PLUNGER-INTERMEDIARY	1			
23	ZFAB-00106				.GUIDE-INTER/PLUNGER	1			
25	ZFAB-00107				.ELECTRIC BRAKET	1			
26	ZFAB-00108				.BUSHING SET	1			
30	ZFAB-00109				.PLUNGER KIT	4			
32	ZFAB-00110				.REGULATING UNIT STD	1			
33	ZFAB-00111				.REGULATING UNIT	3			
40	ZFAB-00112				.SPRING SET-RETURN	4			
42	ZFAB-00113				.PREFEELING POINT KIT	3			
45	ZFAB-00114				.SET OF 2 PLUGS	1			2-SPOOL ONLY

Item	Part_No	IS	Ord	T	Description	Qty	Serial_No	ITC	Remark
45	ZFAB-00114				.SET OF 2 PLUGS	1			2-SPOOL ONLY
50	ZFAB-00115				.AMP CONNECTOR KIT	3			
51	@				.BODY	1			NOT

REMOTE CONTROL LEVER(3-SPOOL)

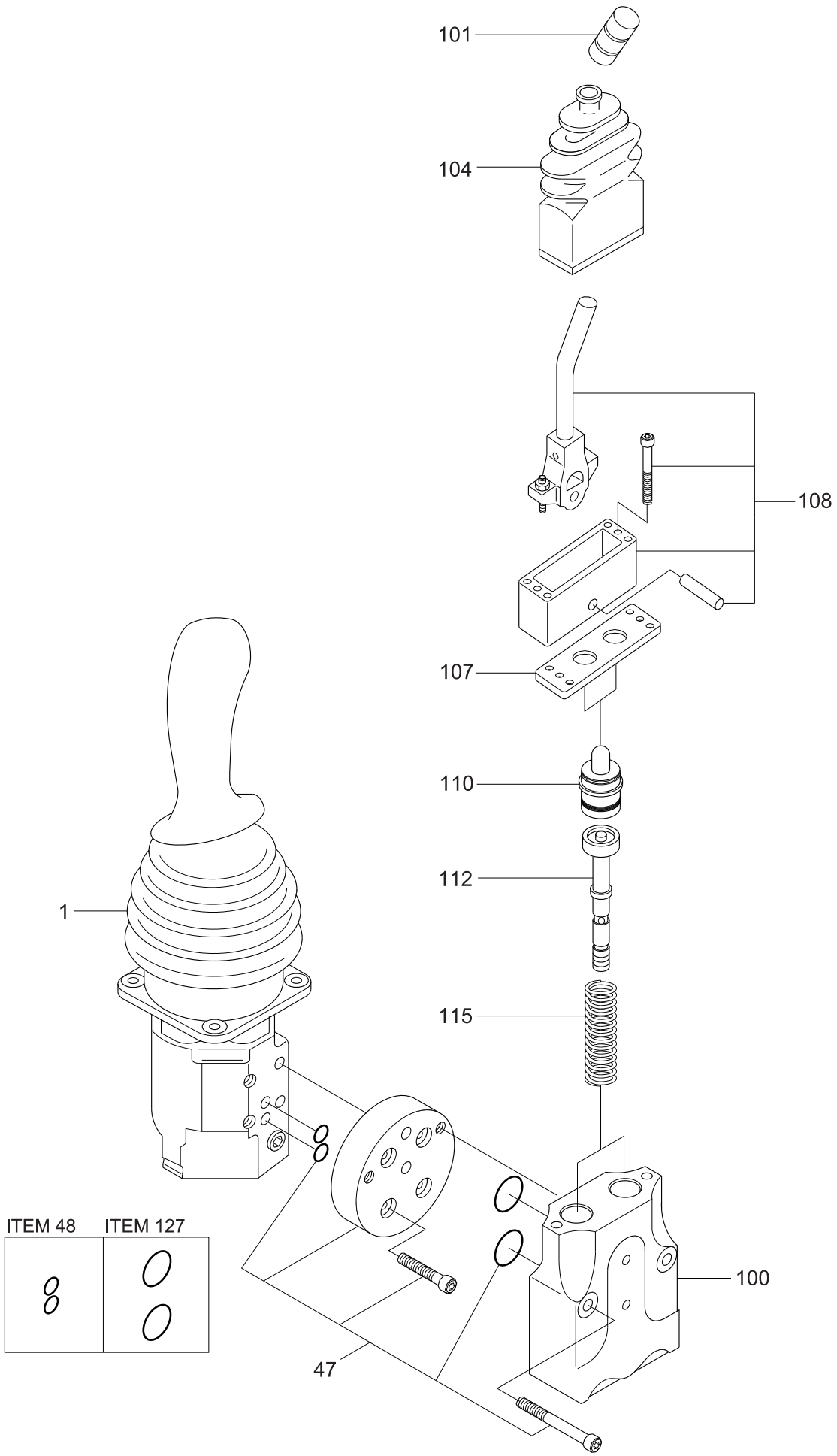

Item	Part_No	IS	Ord	T	Description	Qty	Serial_No	ITC	Remark
N*	31LM-10030				RCV-JOYSTICK-3SPOOL	1			NOT
*	31LB-05300				RCV FNR JOYSTICK-3SPOOL	1	- #0125		FNR RCV
*	31LM-05300				RCV FNR JOYSTICK-3SPOOL	1	#0126 -	D	FNR RCV
N1	@				.RCV LEVER-2SPOOL	1			NOT
2	ZFAB-00059				.RCV LEVER	1			
N10(	@				..BODY	1			NOT
101	ZFAB-00116				..GRIP	1			
104	ZFAB-00117				..RUBBER BOOT	1			
107	ZFAB-00118				..RETAINING PLATE	1			
108	ZFAB-00119				..OPERATION KIT	1			
110	ZFAB-00120				..PLUNGER KIT	1			
112	ZFAB-00121				..REGULATING UNIT	1			
115	ZFAB-00122				..SPRING SET-RETURN	1			
47	ZFAB-00123				.ASSEMBLY KIT	1			
48	ZFAB-00124				.O-RING SET	1			
127	ZFAB-00125				.O-RING SET	1			
N	@				NOT SUPPLIED PARTS	AR			NOT

RCV(FINGERTIP, 2-SPOOL)

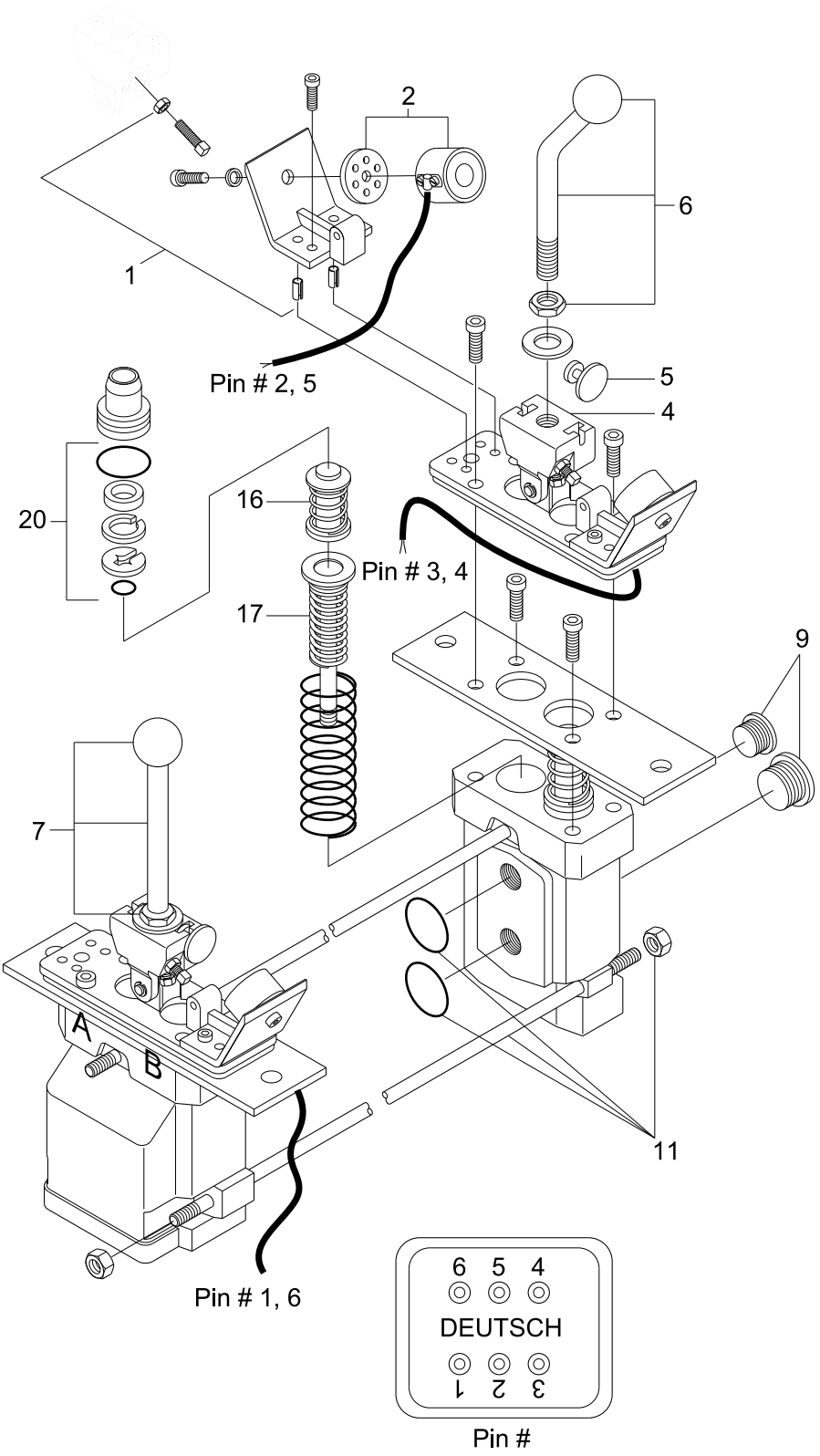

Item	Part_No	IS	Ord	T	Description	Qty	Serial_No	ITC	Remark
*	31LM-10221				RCV-FINGERTIP-2SPOOL	1			
1	YUCT-00003				.BRACKET KIT-MAGNET	3			
2	YUCT-00005				.MAGNET	3			
4	YUCT-00004				.BEARING PLATE	2			
5	YUCT-00006				.ANCHOR PLATE(I/HOLE 8)	2			STD DETENT
5	YUCT-00038				.ANCHOR PLATE(I/HOLE 10)	3			LIGHT DETENT
6	YUCT-00039				.LEVER KIT L3	1			
7	YUCT-00040				.LEVER KIT L4	1			
9	YUCT-00018				.PLUG KIT	1			
11	YUCT-00044				.TIE ROD KIT	3			
16	YUCT-00041				.PUSH PIN	4			
17	YUCT-00042				.SPRING PACK	4			
20	YUCT-00010				.SEAL KIT	4			
K	YUCT-00043				CONNECTOR KIT DEUTSCH	1			

RCV(FINGERTIP, 3-SPOOL)

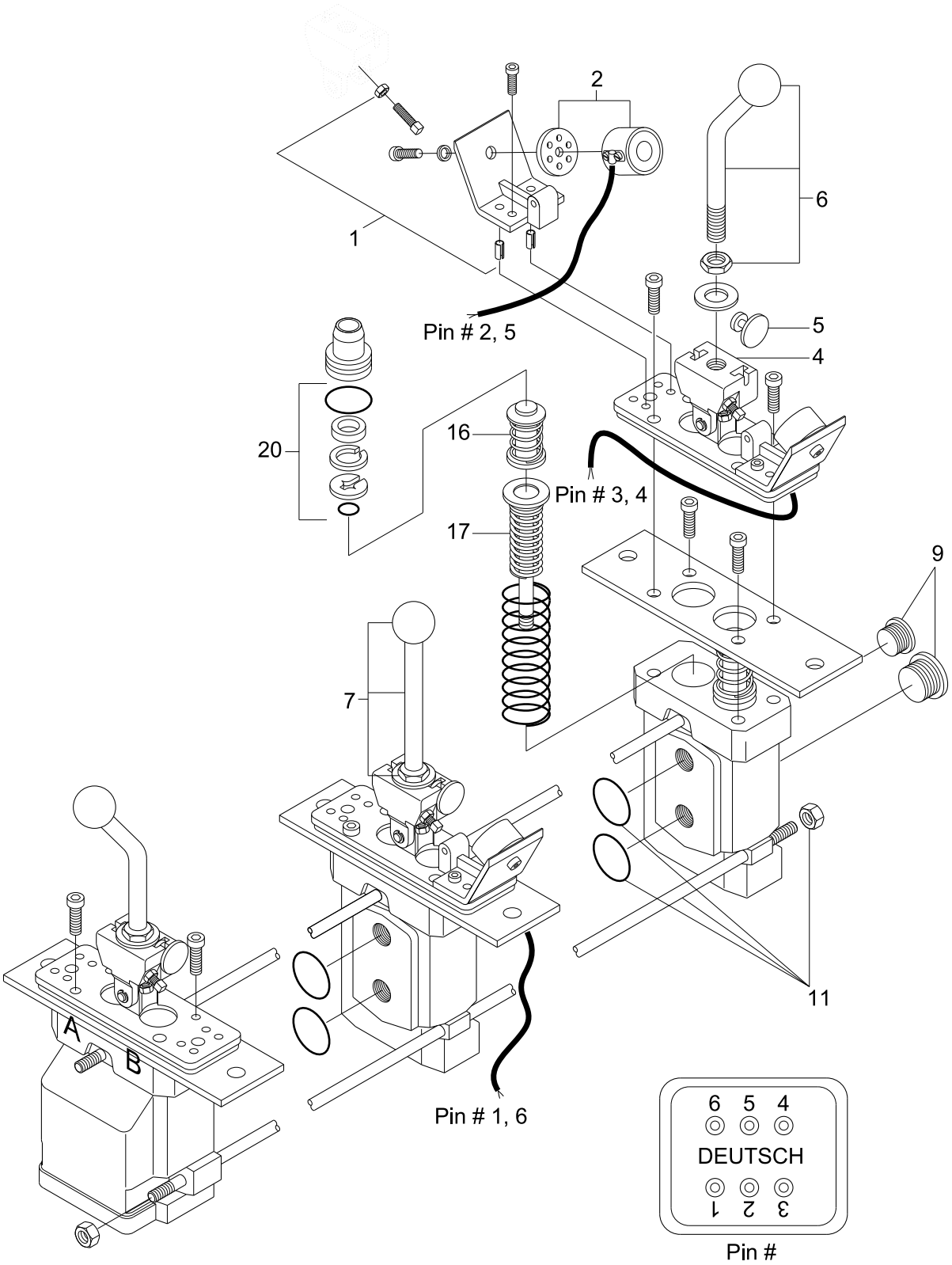

Item	Part_No	IS	Ord	T	Description	Qty	Serial_No	ITC	Remark
*	31LM-10231				RCV-FINGERTIP-3SPOOL	1			
1	YUCT-00003				.BRACKET KIT-MAGNET	3			
2	YUCT-00005				.MAGNET	3			
4	YUCT-00004				.BEARING PLATE	3			STD DETENT
5	YUCT-00006				.ANCHOR PLATE(I/HOLE 8)	3			LIGHT DETENT
5	YUCT-00038				.ANCHOR PLATE(I/HOLE 10)	3			
6	YUCT-00039				.LEVER KIT L3	1			
7	YUCT-00040				.LEVER KIT L4	2			
9	YUCT-00018				.PLUG KIT	1			
11	YUCT-00044				.TIE ROD KIT	3			
16	YUCT-00041				.PUSH PIN	6			
17	YUCT-00042				.SPRING PACK	6			
20	YUCT-00010				.SEAL KIT	6			
K	YUCT-00043				CONNECTOR KIT DEUTSCH	1			

CUT OFF VALVE

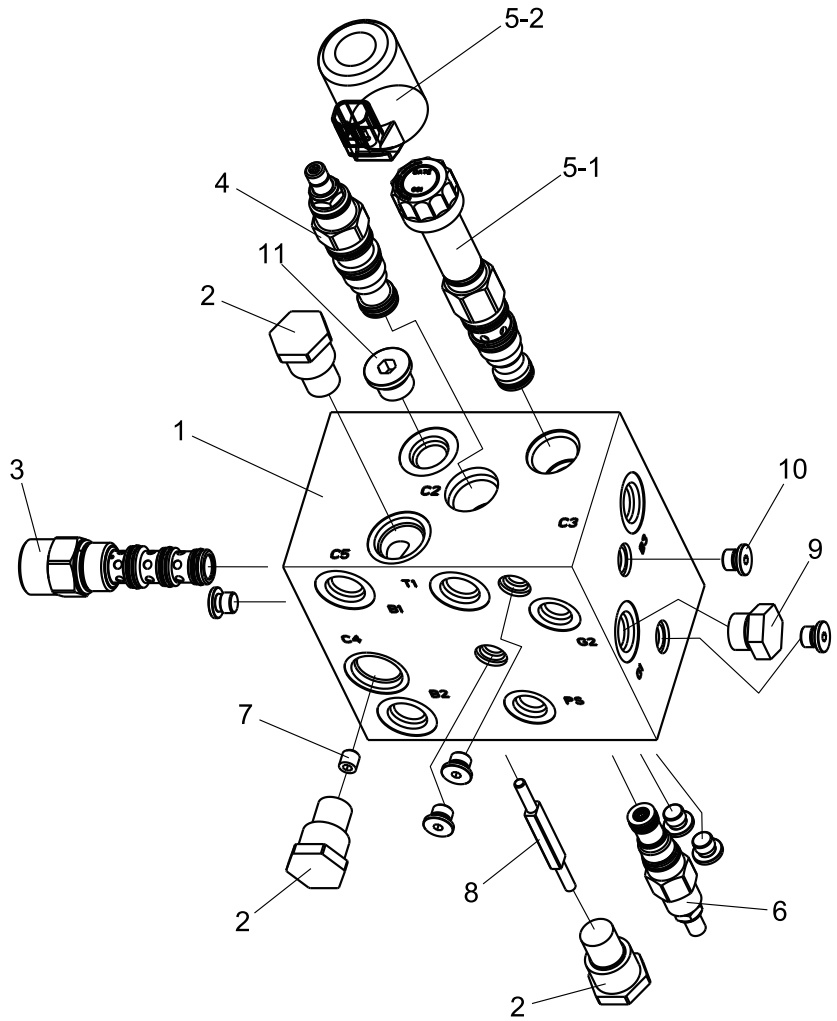

Item	Part_No	IS	Ord	T	Description	Qty	Serial_No	ITC	Remark
*	31LL-40111				CUT OFF VALVE	1			
1	XKBL-00081				.BLOCK	1			
2	XKBL-00052				.CHECK VALVE	3			
3	XKBL-00082				.PRIORITY VALVE	1			
4	XKBL-00022				.VALVE-UNLOAD	1			
5-1	XKBL-00083				..SOLENOID VALVE	1			
5-2	XKBL-00084				..COIL	1			
6	XKBL-00085				.FIXED ORIFICE WITH	1			
7	XKBL-00086				.ORIFICE	1			
8	XKBL-00087				.BAR	1			
9	XKBL-00088				.HEX PLUG	1			
10	XKBL-00089				.WRENCH PLUG	7			
11	XKBL-00090				.WRENCH PLUG	1			

SAFETY VALVE

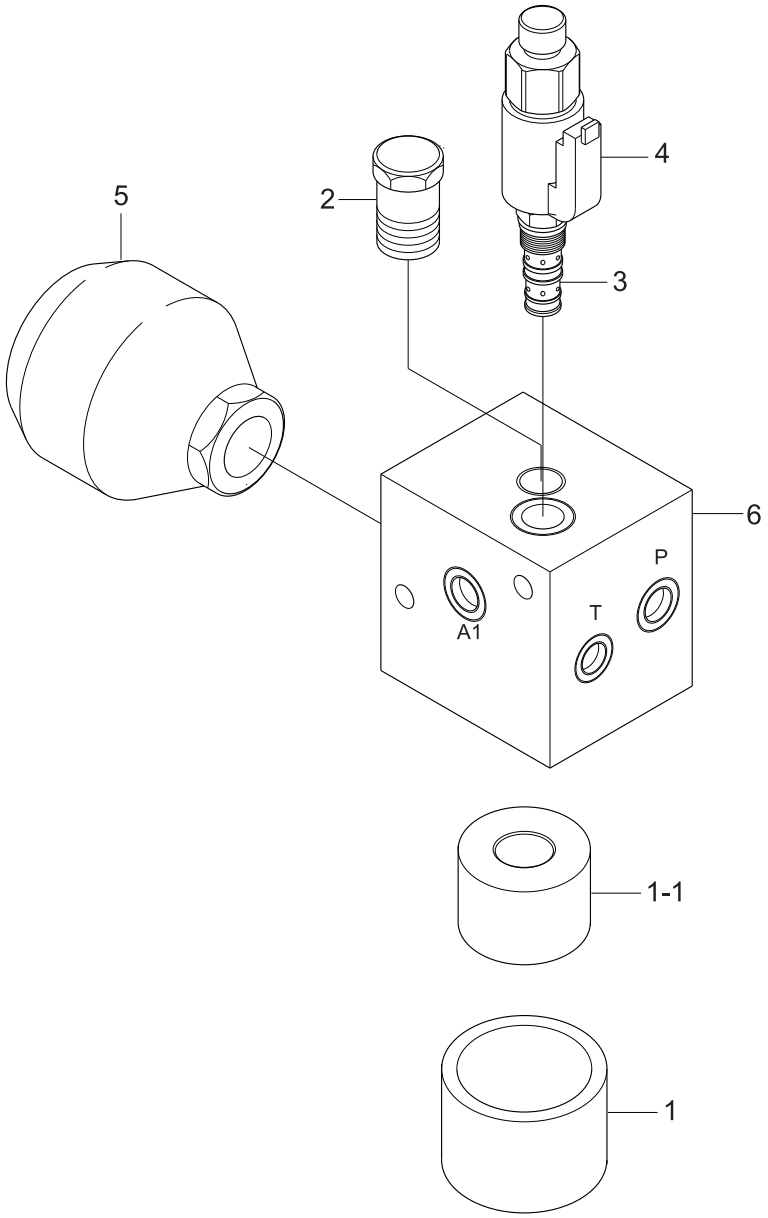

Item	Part_No	IS	Ord	T	Description	Qty	Serial_No	ITC	Remark
*	31LM-10301				SAFETY VALVE	1			
1	ZGAW-00010				.BOWL & ELEMENT SET	1			
1-1	31LM-10310				..FILTER ELEMENT	1			
1-2	ZGAW-00050				..REPAIR SEAL KIT-LPF	1	#0001 -	-	
2	ZGAW-00009				.VALVE-CHECK	1			
3	ZGAW-00006				.CARTRIDGE	1			WITHOUT COIL
4	ZGAW-00008				.COIL	1			
5	ZGAW-00011				.ACCUMULATOR	1			
N6	@				.BLOCK	1			NOT
N	@				NOT SUPPLIED PARTS	AR			NOT

BRAKE VALVE

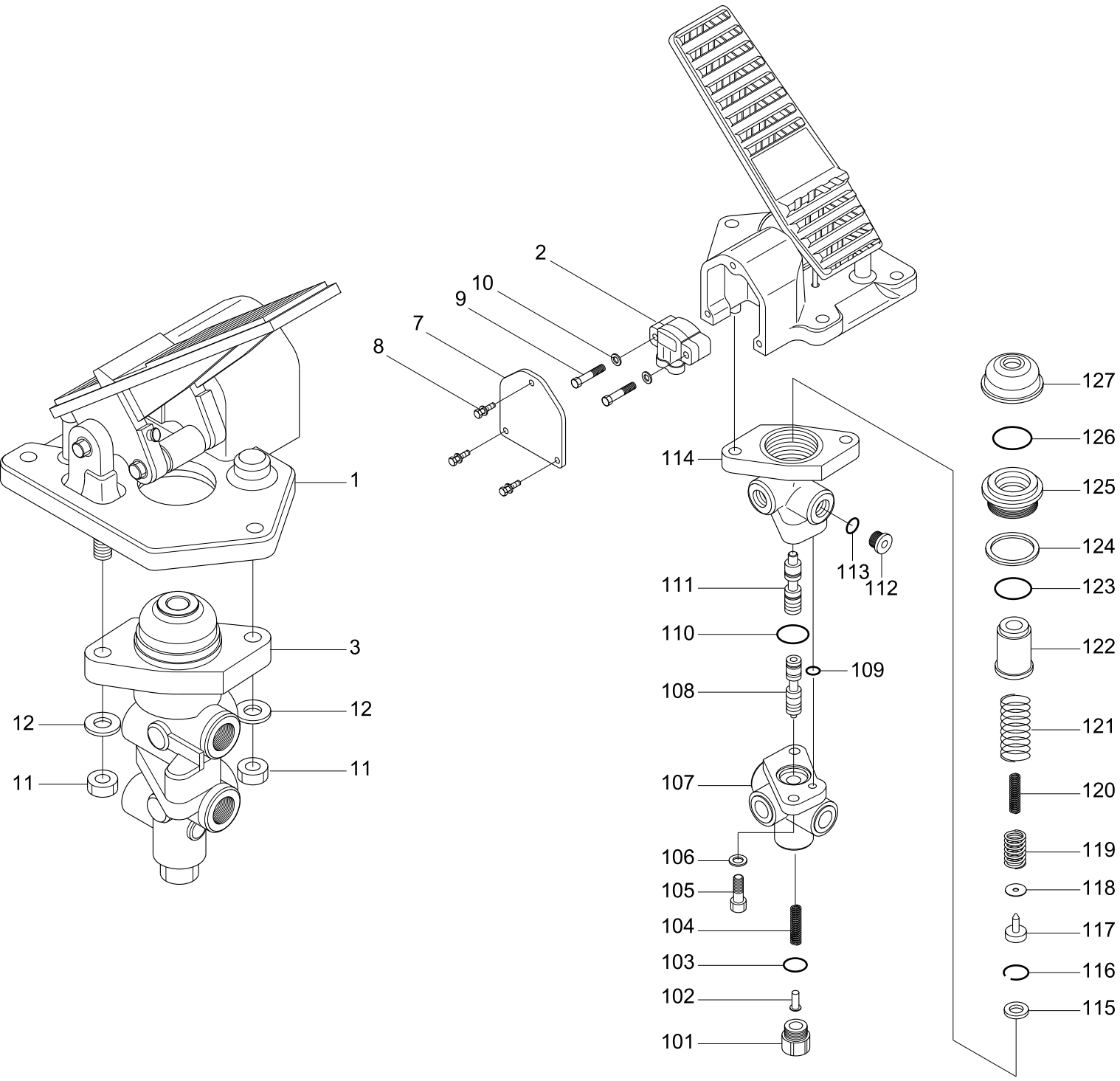

DESCRIPTION	PARTS NO	INCLUDED ITEM
REPAIR KIT	YUCV-00008	103, 109, 110, 113, 123, 124, 126, 127

Item	Part_No	IS	Ord	T	Description	Qty	Serial_No	ITC	Remark
*	31LM-40300				BRAKE VALVE-SINGLE	1	-		
*	31LM-40410				BRAKE VV 1	1	#0027 -	B	
1	YUCV-00001				.PEDAL AND BASED ASSY	1			
2	YUCV-00011				..ANGLE SENSOR	1			
7	@				..COVER	1			NOT
8	@				..SCREW	3			NOT
9	@				..CAP SCREW	2			NOT
10	@				..WASHER	2			NOT
3	YUCV-00004				.VALVE ASSY	1			
101	@				..END PLUG	1			NOT
102	@				..RETAINER	1			NOT
K103	@				..O-RING	1			NOT
104	@				..SPRING	1			NOT
105	@				..CAP SCREW	2			NOT
106	@				..WASHER	1			NOT
107	@				..HOUSING	1			NOT
108	@				..SPOOL	1			NOT
K109	@				..O-RING	1			NOT
K110	@				..O-RING	1			NOT
111	@				..SPOOL	1			NOT
112	@				..PLUG	1			NOT
K113	@				..O-RING	1			NOT
114	@				..HOUSING	1			NOT
115	@				..SPACER	1			NOT
116	@				..RETAINING RING	1			NOT
117	@				..RETAINER	1			NOT
118	@				..SHIM	1			NOT

Item	Part_No	IS	Ord	T	Description	Qty	Serial_No	ITC	Remark
118	@				..SHIM	1			NOT
119	@				..SPRING	1			NOT
120	@				..SPRING	1			NOT
121	@				..SPRING	1			NOT
122	@				..PISTON	1			NOT
K123	@				..RING	1			NOT
K124	@				..O-RING	1			NOT
125	@				..RETAINER	1			NOT
K126	@				..CUP	1			NOT
K127	@				..BOOT	1			NOT
11	@				.NUT	2			NOT
12	@				.WASHER	2			NOT
K	YUCV-00008				REPAIR KIT	1			SEE ILLUST

BRAKE VALVE(DUAL)

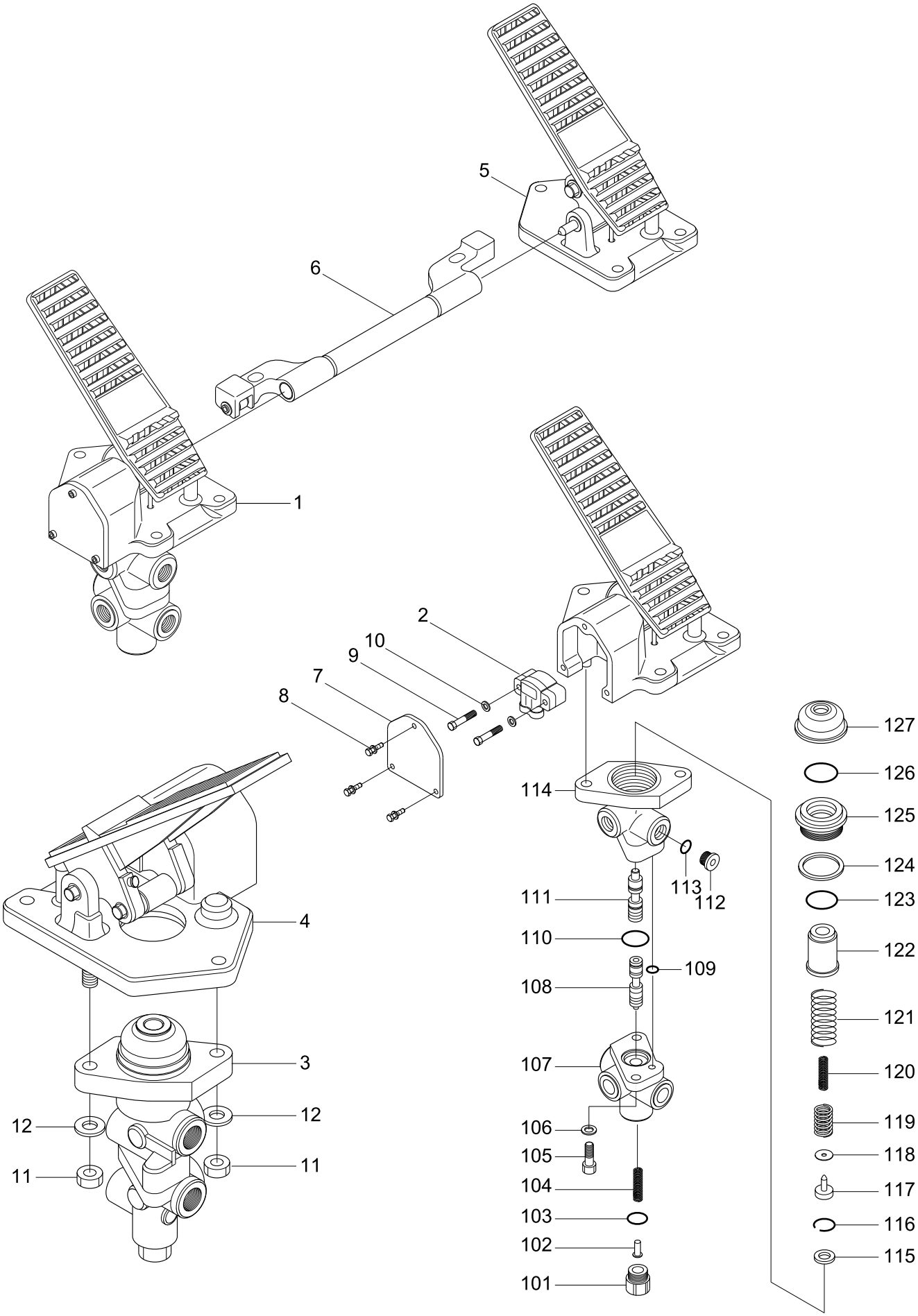

DESCRIPTION	PARTS NO	INCLUDED ITEM
REPAIR KIT	YUCV-00008	103, 109, 110, 113, 123, 124, 126, 127

Item	Part_No	IS	Ord	T	Description	Qty	Serial_No	ITC	Remark
*	31LM-40030				BRAKE VALVE-DUAL	1	- #0026		
*	31LM-40031				BRAKE VALVE-DUAL	1	#0027 -	D	
N1	YUCV-00009				.PEDAL TANDEM VALVE	1			NOT
3	YUCV-00004				..VALVE ASSY	1			
101	@				...END PLUG	1			NOT
102	@				...RETAINER	1			NOT
K103	@				...O-RING	1			NOT
104	@				...SPRING	1			NOT
105	@				...CAP SCREW	2			NOT
106	@				...WASHER	1			NOT
107	@				...HOUSING	1			NOT
108	@				...SPOOL	1			NOT
K109	@				...O-RING	1			NOT
K110	@				...O-RING	1			NOT
111	@				...SPOOL	1			NOT
112	@				...PLUG	1			NOT
K113	@				...O-RING	1			NOT
114	@				...HOUSING	1			NOT
115	@				...SPACER	1			NOT
116	@				...RETAINING RING	1			NOT
117	@				...RETAINER	1			NOT
118	@				...SHIM	1			NOT
119	@				...SPRING	1			NOT
120	@				...SPRING	1			NOT
121	@				...SPRING	1			NOT
122	@				...PISTON	1			NOT
K123	@				...RING	1			NOT

Item	Part_No	IS	Ord	T	Description	Qty	Serial_No	ITC	Remark
K123	@				...RING	1			NOT
K124	@				...O-RING	1			NOT
125	@				...RETAINER	1			NOT
K126	@				...CUP	1			NOT
K127	@				...BOOT	1			NOT
4	YUCV-00005				..LEFT PEDAL & BASED ASSY	1			
N2	YUCV-00011				...ANGLE SENSOR	1			NOT
7	@				...COVER	1			NOT
8	@				...SCREW	1			NOT
9	@				...CAP SCREW	1			NOT
10	@				...WASHER	1			NOT
11	@				..NUT	1			NOT
12	@				..WASHER	1			NOT
5	YUCV-00006				.RH PEDAL & BASED ASSY	1			
6	YUCV-00007				.LEVER ASSEMBLY	1	- #0026		
6	YUCV-00014				.LEVER ASSY	1	#0027 -	D	
K	YUCV-00008				REPAIR KIT	1			SEE ILLUST
N	@				NOT SUPPLIED PARTS	AR			NOT
K	YUCV-00008				REPAIR KIT	1			SEE ILLUST
N	@				NOT SUPPLIED PARTS	AR			NOT

STOP VALVE

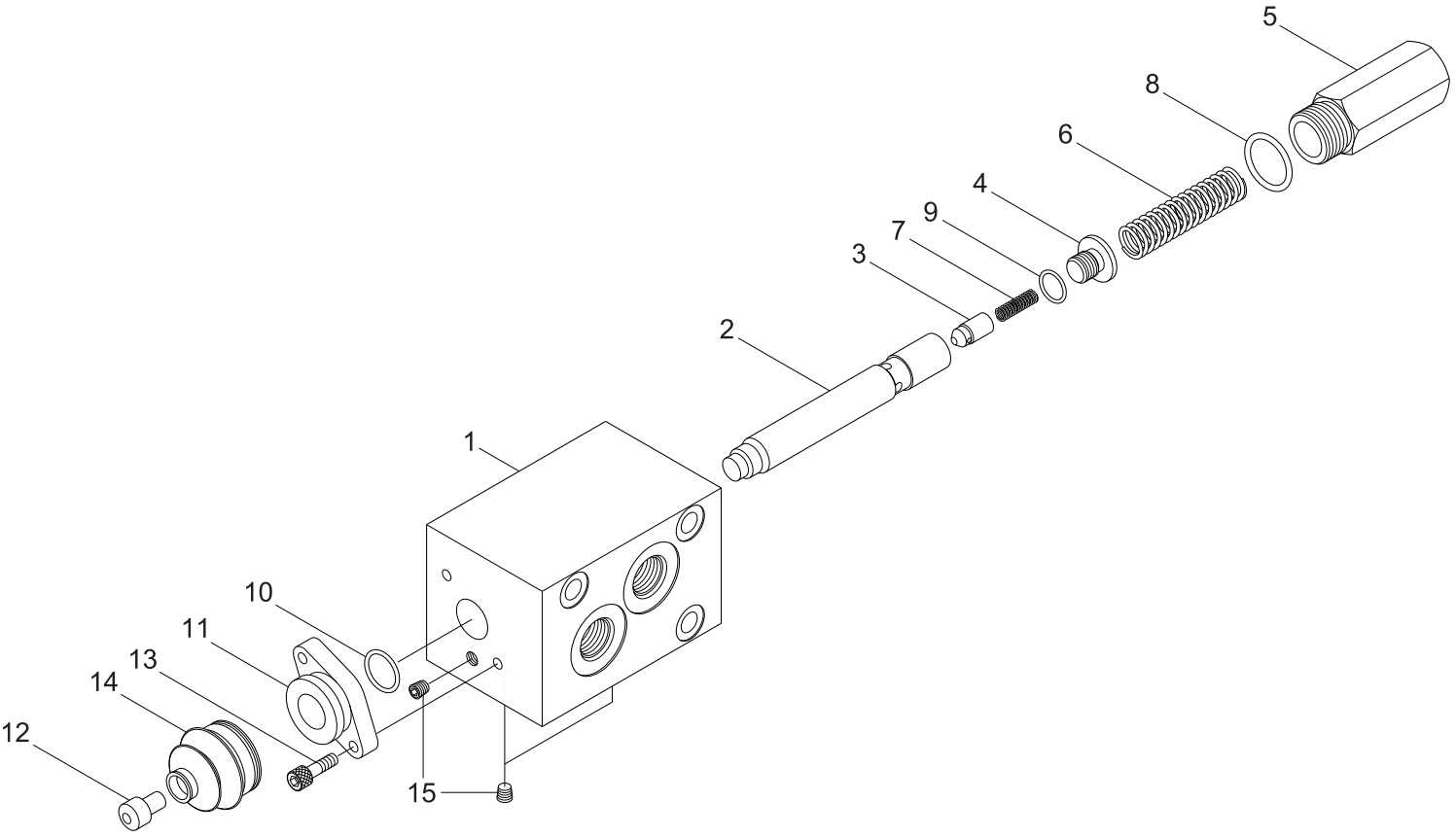

Item	Part_No	IS	Ord	T	Description	Qty	Serial_No	ITC	Remark
*	31LD-30330				STOP VALVE	1			
1	XKCK-00001				.BODY	1			
2	XKCK-00002				.SPOOL	1			
3	XKCK-00003				.POPPET-CHECK	1			
4	XKCK-00004				.PLUG-STOPPER	1			
5	XKCK-00005				.RETURN CAP	1			
6	XKCK-00006				.RETURN SPRING	1			
7	XKCK-00007				.CHECK SPRING	1			
8	XKCK-00008				.O-RING	1			
9	XKCK-00009				.O-RING	1			
10	XKCK-00010				.O-RING	1			
11	XKCK-00011				.BRACKET	1			
12	XKCK-00015				.STOPPER	1			
13	XKCK-00012				.SOCKET BOLT	2			
14	XKCK-00013				.COVER	1			
15	XKCK-00014				.BLIND PLUG	2			

RIDE CONTROL VALVE

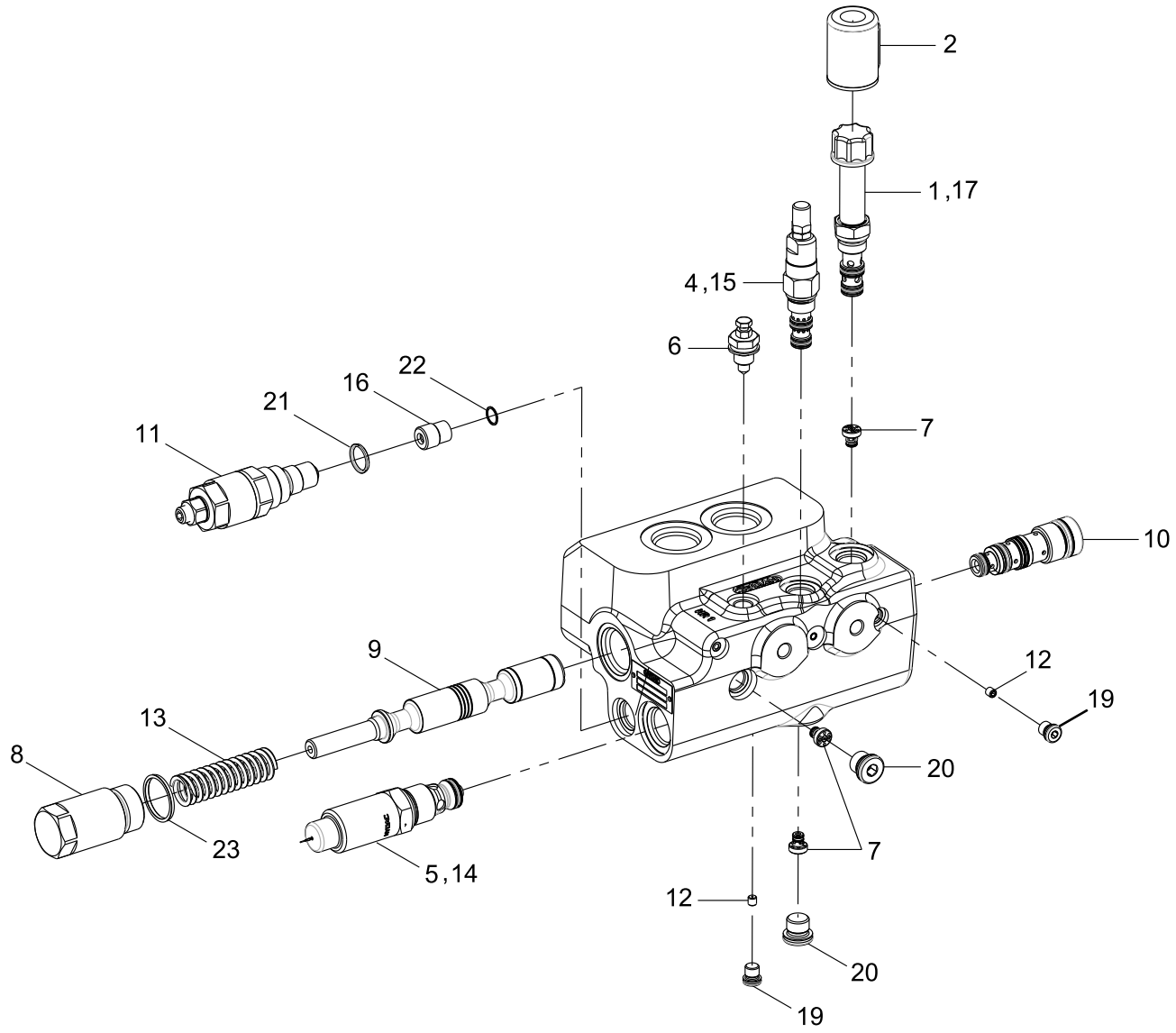

Item	Part_No	IS	Ord	T	Description	Qty	Serial_No	ITC	Remark
*	31LM-91010				RIDE CONTROL V/V ASSY	1			
1	ZGAW-00025				.DIRECTIONAL VALVE	1			
2	ZGAW-00026				.COIL	1			
4	ZGAW-00027				.PRESSURE REDUCING V/V	1			
5	ZGAW-00028				.PRESSURE RELIEF VALVE	1			
6	ZGAW-00029				.MANUAL P/RELIEF LOCK	1			
7	ZGAW-00030				.CHECK VALVE	3			
8	ZGAW-00031				.CAP-SPOOL	1			
9	ZGAW-00032				.MAIN SPOOL	1			
10	ZGAW-00033				.ACC UNLOAD V/V	1			
11	ZGAW-00034				.PRESSURE RELIEF VALVE	1			
12	ZGAW-00035				.ORIFICE	2			
13	ZGAW-00036				.SPRING	1			
14	ZGAW-00037				.SEAL KIT FOR ITEM 3	1			
15	ZGAW-00038				.SEAL KIT FOR ITEM 4	1			
16	ZGAW-00039				.ORIFICE	1			
17	ZGAW-00040				.SEAL KIT FOR ITEM 1	1			
19	@				.PLUG	2			NOT
20	@				.PLUG	2			NOT
21	ZGAW-00044				.O-RING	1			
22	ZGAW-00043				.O-RING	1			
23	ZGAW-00045				.O-RING	1			

ACCUMULATOR

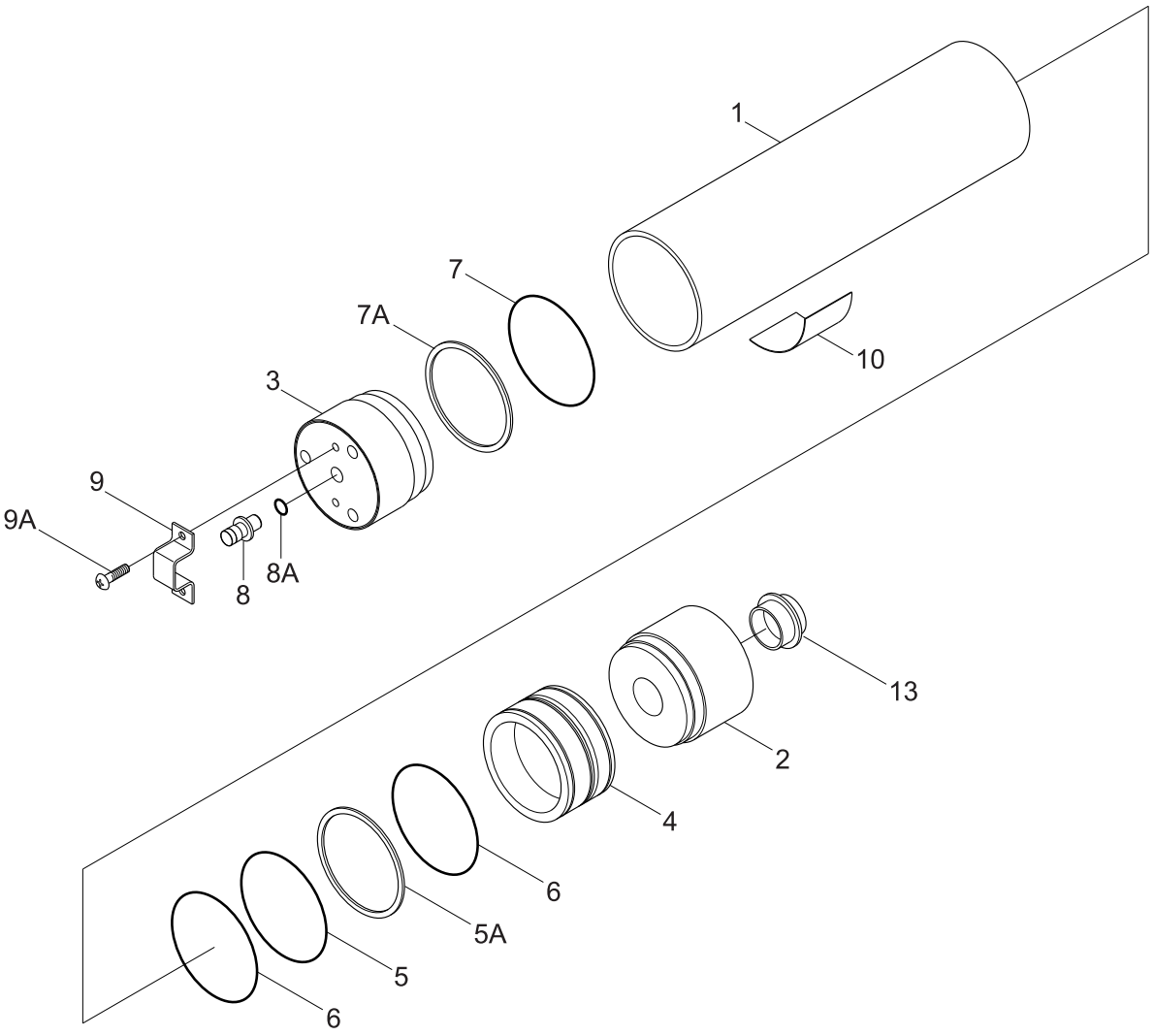

DESCRIPTION	PARTS NO	INCLUDED ITEM
REPAIR KIT	YUCT-00037	5, 5A, 6, 7, 7A, 8A

Item	Part_No	IS	Ord	T	Description	Qty	Serial_No	ITC	Remark
*	31LM-90030				ACCUMULATOR-3L	1			3L
*	31LM-90040				ACCUMULATOR-4L	1			4L
N1	YUCT-00022				.ACCUMULATOR BODY	1			NOT
N1	YUCT-00045				.ACCUMULATOR BODY	1			NOT
N2	YUCT-00023				.HYDRAULIC CAP	1			NOT
N3	YUCT-00024				.GAS CAP	1			NOT
4	YUCT-00025				.PISTON	1			
K5	YUCT-00026				.O-RING	1			
K5A	YUCT-00027				.BACKUP WASHER	2			
K6	YUCT-00028				.RING-PTFE	2			
K7	YUCT-00029				.END SEAL O-RING	2			
K7A	YUCT-00030				.END SEAL BACK-UP	2			
8	YUCT-00031				.GAS VALVE ASSEMBLY	1			
K8A	YUCT-00032				.O-RING - GAS VALVE	1			
9	YUCT-00033				.PROTECTOR-GAS VALVE	1			
9A	YUCT-00034				.SCREW-PROTECTOR	2			
N10	YUCT-00035				.NAME PLATE	1			NOT
13	YUCT-00036				.PORT PROTECTOR	1			
K	YUCT-00037				REPAIR KIT	1			SEE ILLUST
N	@				NOT SUPPLIED PARTS	AR			NOT

STEERING CYLINDER

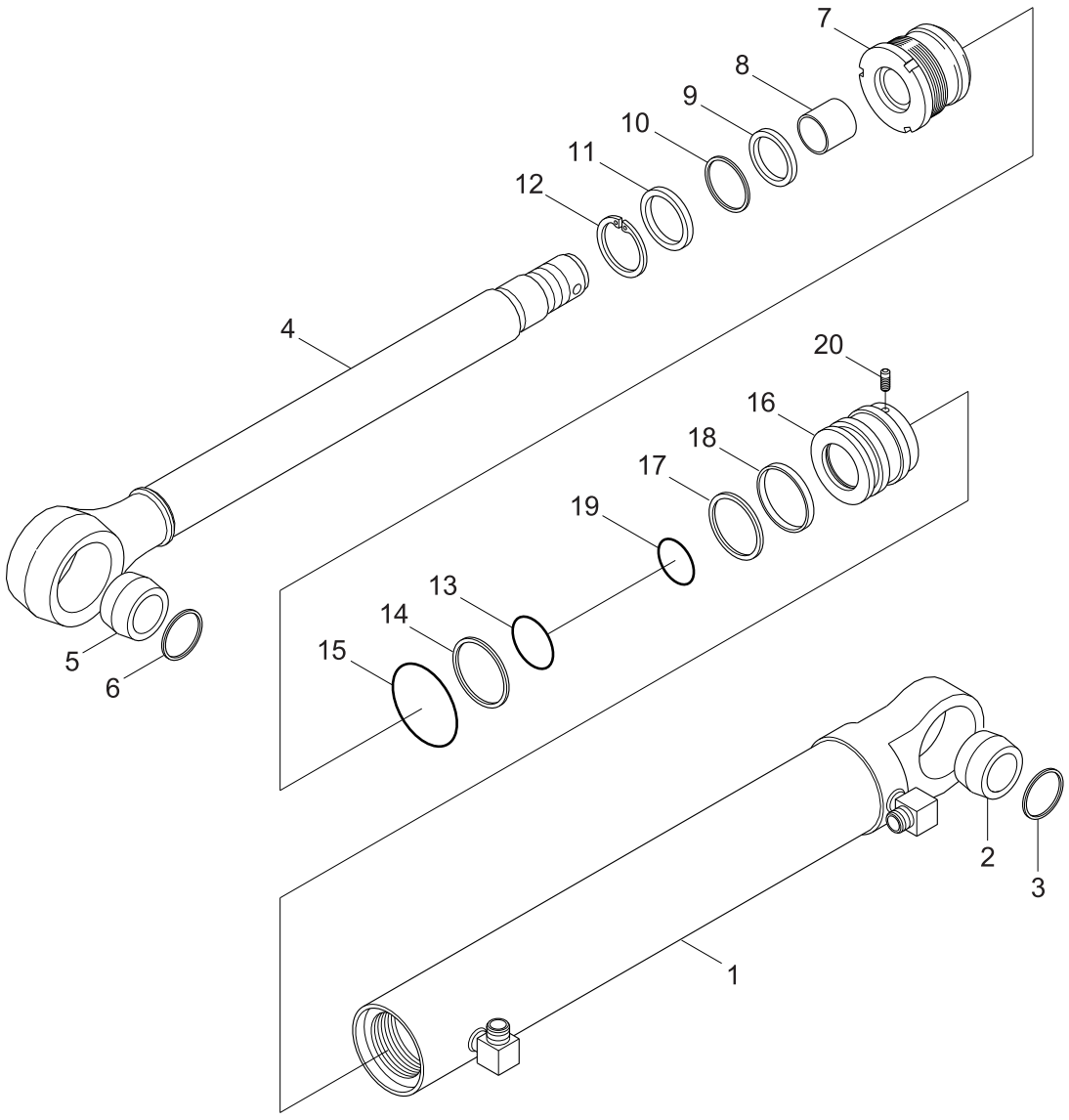

DESCRIPTION	PARTS NO	INCLUDED ITEM
SEAL KIT	XKCD-02687	9~11, 13~15, 17~19

Item	Part_No	IS	Ord	T	Description	Qty	Serial_No	ITC	Remark
*	31LK-30030				STEERING CYLINDER-LH	1			
*	31LK-30020				STEERING CYLINDER-RH	1			
1	XKCD-01531				.TUBE ASSY-LH	1			
1	XKCD-01543				.TUBE ASSY-RH	1			
2	XKCD-01532				.SPHERICAL BEARING	1			
3	XKCD-01533				.RETAINING RING	1			
4	XKCD-01534				.ROD ASSY	1			
5	XKCD-01532				.SPHERICAL BEARING	1			
6	XKCD-01533				.RETAINING RING	1			
7	XKCD-01535				.ROD COVER	1			
8	XKCD-01031				.ROD BUSH	1			
K9	XKCD-01033				.BUFFER SEAL	1			
K10	XKCD-01536				.U-PACKING	1			
K11	XKCD-01035				.DUST SEAL	1			
12	XKCD-00847				.RETAINING RING	1			
K13	XKCD-00974				.O-RING	1			
K14	XKCD-01537				.BACK UP RING	1			
K15	XKCD-01198				.O-RING	1			
16	XKCD-01538				.PISTON	1			
K17	XKCD-01539				.PISTON SEAL	1			
K18	XKCD-01540				.WEAR RING	1			
K19	XKCD-01258				.O-RING	1			
20	XKCD-01205				.SCREW-SET	1			
K	XKCD-02687				SEAL KIT	1			SEE ILLUST

BOOM CYLINDER

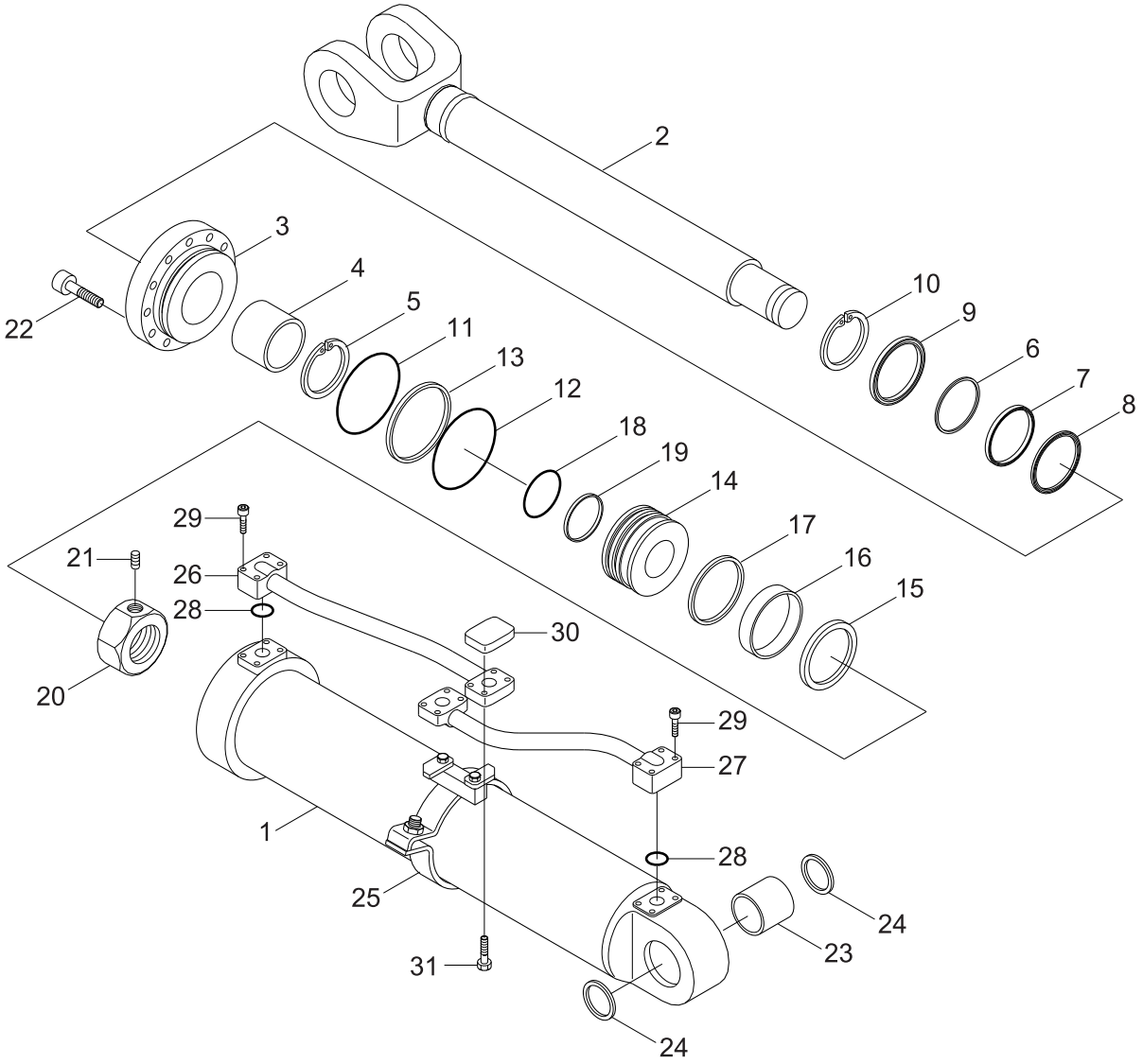

DESCRIPTION	PARTS NO	INCLUDED ITEM
SEAL KIT	31Y2-11420	6~9, 11~13, 15~19, 24, 28

Item	Part_No	IS	Ord	T	Description	Qty	Serial_No	ITC	Remark
*	31LK-20010				BOOM CYLINDER ASSY-LH	1	-		
*	31LK-20011				BOOM CYLINDER ASSY-LH	1	#0123 -	B	
*	31LK-20020				BOOM CYLINDER ASSY-RH	1	-		
*	31LK-20021				BOOM CYLINDER ASSY-RH	1	#0123 -	B	
1	31Y2-11250				.TUBE ASSY	1			
23	31YC-13090				..BUSH-PIN	1			
K24	Y000-100100				..SEAL-DUST,DLI,KPU	2			
2	31Y2-11290				.ROD ASSY	1			
3	31Y2-11330				.GLAND	1			
4	S731-095040				.BUSHING-DU	1			
5	Y191-102000				.RING-SNAP	1			
K6	Y220-095011				.SEAL-ROD	1			
K7	Y180-095020				.RING-BACK UP	1			
K8	Y240-095013				.RING-BUFFER	1			
K9	Y110-095011				.WIPER-DUST	1			
10	Y190-109000				.RING-SNAP	1			
K11	31YC-99H80				.O-RING	1			
K12	S631-150004				.O-RING	1			
K13	31YC-BP150				.RING-BACK UP	1			
14	31Y2-11340				.PISTON	1			
K15	Y450-160000				.SEAL PISTON	1			
K16	Y310-160303				.RING-WEAR	2			
K17	Y440-160000				.RING-DUST	2			
K18	S632-080004				.O-RING	1			
K19	S642-080003				.RING-BACK UP	2			
20	31YC-68090				.NUT-LOCK	1			
21	S114-100164				.SCREW-SET	1			

Item	Part_No	IS	Ord	T	Description	Qty	Serial_No	ITC	Remark
21	S114-100164				.SCREW-SET	1			
22	S109-180704				.BOLT-SOCKET	12			
25	31Y2-11350				.BAND ASSY	1	- #0122		
25	31Y2-11351				.BAND ASSY	1	#0123 -	B	
26	31Y2-11380				.PIPE ASSY-R,LH	1	- #0122		
26	31Y2-11382				.PIPE ASSY-R,LH	1	#0123 -	B	
26	31Y2-11390				.PIPE ASSY-R,RH	2	- #0122		
26	31Y2-11392				.PIPE ASSY-R,RH	2	#0123 -	B	
27	31Y2-11400				.PIPE ASSY-B,LH	1	- #0122		
27	31Y2-11402				.PIPE ASSY-B,LH	1	#0123 -	B	
27	31Y2-11410				.PIPE ASSY-B,RH	8	- #0122		
27	31Y2-11412				.PIPE ASSY-B,RH	8	#0123 -	B	
K28	Y171-024004				.O-RING	2			
29	S107-100554				.BOLT-SOCKET	8	- #0122		
29	S107-100556				.BOLT-SOCKET	8	#0123 -	B	
30	31YC-5A020				.COVER-DUST	8	#0123 -		
31	S011-100152				.BOLT-HEX	8	#0123 -		
K	31Y2-11420				SEAL KIT	1			SEE ILLUST

BUCKET CYLINDER

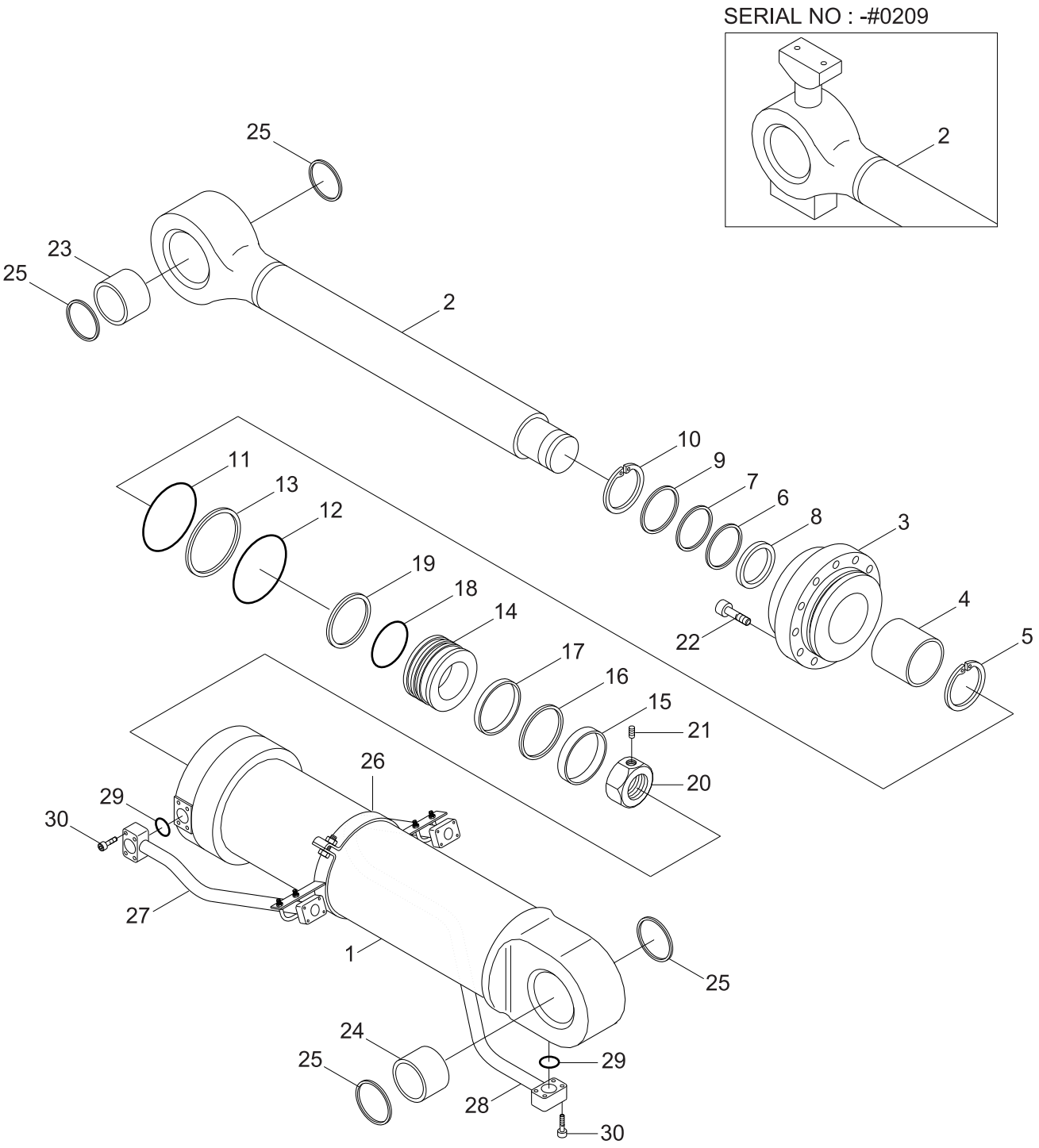

DESCRIPTION	PARTS NO	INCLUDED ITEM
SEAL KIT	31Y2-11590	6~9, 11~13, 15~19, 25, 29

Item	Part_No	IS	Ord	T	Description	Qty	Serial_No	ITC	Remark
*	31LK-20031				BUCKET CYLINDER ASSY	1	- #0040		HL770-9A
*	31LK-20032				BUCKET CYLINDER ASSY	1	#0050 - #0200	B	HL770-9A
*	31LK-20033				BUCKET CYLINDER ASSY	1	#0210 -	D	HL770-9A
*	31LK-20530				BUCKET CYLINDER ASSY	1	- #0040		HL770XTD-9A
*	31LK-20531				BUCKET CYLINDER ASSY	1	#0050 - #0200	B	HL770XTD-9A
*	31LK-20532				BUCKET CYLINDER ASSY	1	#0210 -	D	HL770XTD-9A
1	31Y2-11431				.TUBE ASSY	1	- #0040		
1	31Y2-11432				.TUBE ASSY	1	#0050 -	B	
24	31YC-13140				..BUSHING-PIN	1			
K25	Y000-120100				..SEAL-DUST	2			
2	31Y2-11501				.ROD ASSY	1	- #0200		HL770-9A
2	31Y2-14750				.ROD ASSY	1	#0210 -	D	HL770-9A
2	31Y2-12810				.ROD ASSY	1	- #0200		HL770XTD-9A
2	31Y2-14760				.ROD ASSY	1	#0210 -	D	HL770XTD-9A
23	31YC-13130				..BUSHING-PIN	1			
K25	Y000-120100				..SEAL-DUST	2			
3	31Y2-11520				.GLAND	1	- #0040		
3	31Y2-11521				.GLAND	1	#0050 -	B	
4	S731-095040				.BUSHING-DU	1			
5	Y191-102000				.RING-SNAP	1			
K6	Y220-095011				.SEAL-ROD	1			
K7	Y180-095020				.RING-BACK UP	1			
K8	Y240-095013				.RING-BUFFER	1			
K9	Y110-095011				.WIPER-DUST	1			
10	Y190-109000				.RING-SNAP	1			
K11	31YC-99HA0				.O-RING	1			
K12	S632-170004				.O-RING	1			

Item	Part_No	IS	Ord	T	Description	Qty	Serial_No	ITC	Remark
K12	S632-170004				.O-RING	1			
K13	31YC-BG170				.RING-BACK UP	1			
14	31Y2-11530				.PISTON	1			
K15	Y450-180000				.SEAL-PISTON	1			
K16	Y310-180003				.RING-WEAR	2			
K17	Y440-180100				.RING-DUST	2			
K18	S632-080004				.O-RING	1			
K19	S642-080003				.RING-BACK UP	2			
20	31YC-68090				.NUT-LOCK	1			
21	S114-100164				.SCREW-SET	1			
22	S109-200754				.BOLT-SOCKET	12	-#0040		
22	S109-200754				.BOLT-SOCKET	14	#0050 -	A	
23	31YC-13130				..BUSHING-PIN	1			
24	31YC-13140				..BUSHING-PIN	1			
K25	Y000-120100				..SEAL-DUST	2			
26	31Y2-11540				.BAND ASSY	1	-#0040		
26	31Y2-11541				.BAND ASSY	1	#0050 -	B	
27	31Y2-11571				.PIPE ASSY-R	1	-#0040		
27	31Y2-11572				.PIPE ASSY-R	1	#0050 -	B	
28	31Y2-11581				.PIPE ASSY-B	1	-#0040		
28	31Y2-11582				.PIPE ASSY-B	1	#0050 -	B	
K29	Y171-024004				.O-RING	2			
30	S107-100554				.BOLT-SOCKET	8	-#0040		
30	S107-100556				.BOLT-SOCKET	8	#0050 -	B	
K	31Y2-11590				SEAL KIT	1			SEE ILLUST

FRONT FRAME

SERIAL NO : -#0224

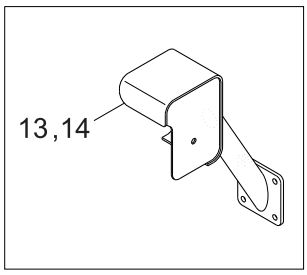

AUTO GREASE

PARTS NO	DESCRIPTION
41LK-20010	STD
41LK-30011	AUTO GREASE
41LK-40010	HEAVY DUTY
41LK-50010	AUTO GREASE, HEAVY DUTY

Item	Part_No	IS	Ord	T	Description	Qty	Serial_No	ITC	Remark
1	41LK-20010				FRONT FRAME WA	1			STD
1	41LK-30011				FRONT FRAME ASSY	1	#0027 -	-	AUTO GREASE
1	41LK-40010				FRONT FRAME ASSY	1	#0027 -	-	HEAVY DUTY
1	41LK-50010				FRONT FRAME ASSY	1	#0027 -	-	AUTO GREASE,HEAVY DUTY
2	41LB-09010				BAR	1			
1	41LK-30011				FRONT FRAME ASSY	1	#0027 -	-	AUTO GREASE
4	41L1-1074				PIN	2			
1	41LK-40010				FRONT FRAME ASSY	1	#0027 -	-	HEAVY DUTY
1	41LK-50010				FRONT FRAME ASSY	1	#0027 -	-	AUTO GREASE,HEAVY DUTY
2	41LB-09010				BAR	1			
3	41LB-09020				PIN-CLEVIS	2			
11	72LK-70012				FENDER ASSY-LH	1			
11	72LK-70022				FENDER ASSY-RH	1			
4	41L1-1074				PIN	2			
5	41LB-29080				STOPPER	2			
6	S037-123056				BOLT-W/WASHER	4			
7	41LB-29070				SHIM(3.0T)	2			
11-4	72LK-70141				.RUBBER PAD	1			
11	72LK-70012				FENDER ASSY-LH	1			
11-5	72LK-70200				.PLATE WA	2			
11	72LK-70022				FENDER ASSY-RH	1			
11-6	72LK-70160				.BRACKET-UPPER	1			
11-1	72LK-70111				.SUPPORT-FENDER	1			
11-7	72LK-70170				.BRACKET-LOW	1			
11-2	72LM-70121				.BRACKET WA	1			
11-8	S037-122556				.BOLT-W/WASHER	16			
11-3	72LK-70131				.FENDER-FRONT	1			

Item	Part_No	IS	Ord	T	Description	Qty	Serial_No	ITC	Remark
11-3	72LK-70131				.FENDER-FRONT	1			
11-9	64L3-01120				.WASHER-HARDENED	4			
11-1(	S037-123556				.BOLT-W/WASHER	4			
11-4	72LK-70141				.RUBBER PAD	1			
13	72LM-70030				LAMP BOX WA-LH	1	-		
11-5	72LK-70200				.PLATE WA	2			
13	72LM-70031				LAMP BOX WA-LH	1	#0109 -	B	
14	72LM-70040				LAMP BOX WA-RH	1	-		
14	72LM-70041				LAMP BOX WA-RH	1	#0109 -	B	
11-6	72LK-70160				.BRACKET-UPPER	1			
15	S037-123056				BOLT-W/WASHER	16			
11-7	72LK-70170				.BRACKET-LOW	1			
11-8	S037-122556				.BOLT-W/WASHER	16			
11-9	64L3-01120				.WASHER-HARDENED	4			
11-1(	S037-123556				.BOLT-W/WASHER	4			
13	72LM-70030				LAMP BOX WA-LH	1	-		
13	72LM-70031				LAMP BOX WA-LH	1	#0109 -	B	
13	72LM-70032				LAMP BOX WA-LH	1	#0225 -	D	
14	72LM-70040				LAMP BOX WA-RH	1	-		
14	72LM-70041				LAMP BOX WA-RH	1	#0109 -	B	
14	72LM-70042				LAMP BOX WA-RH	1	#0225 -	D	
15	S037-123056				BOLT-W/WASHER	16			

REAR FRAME

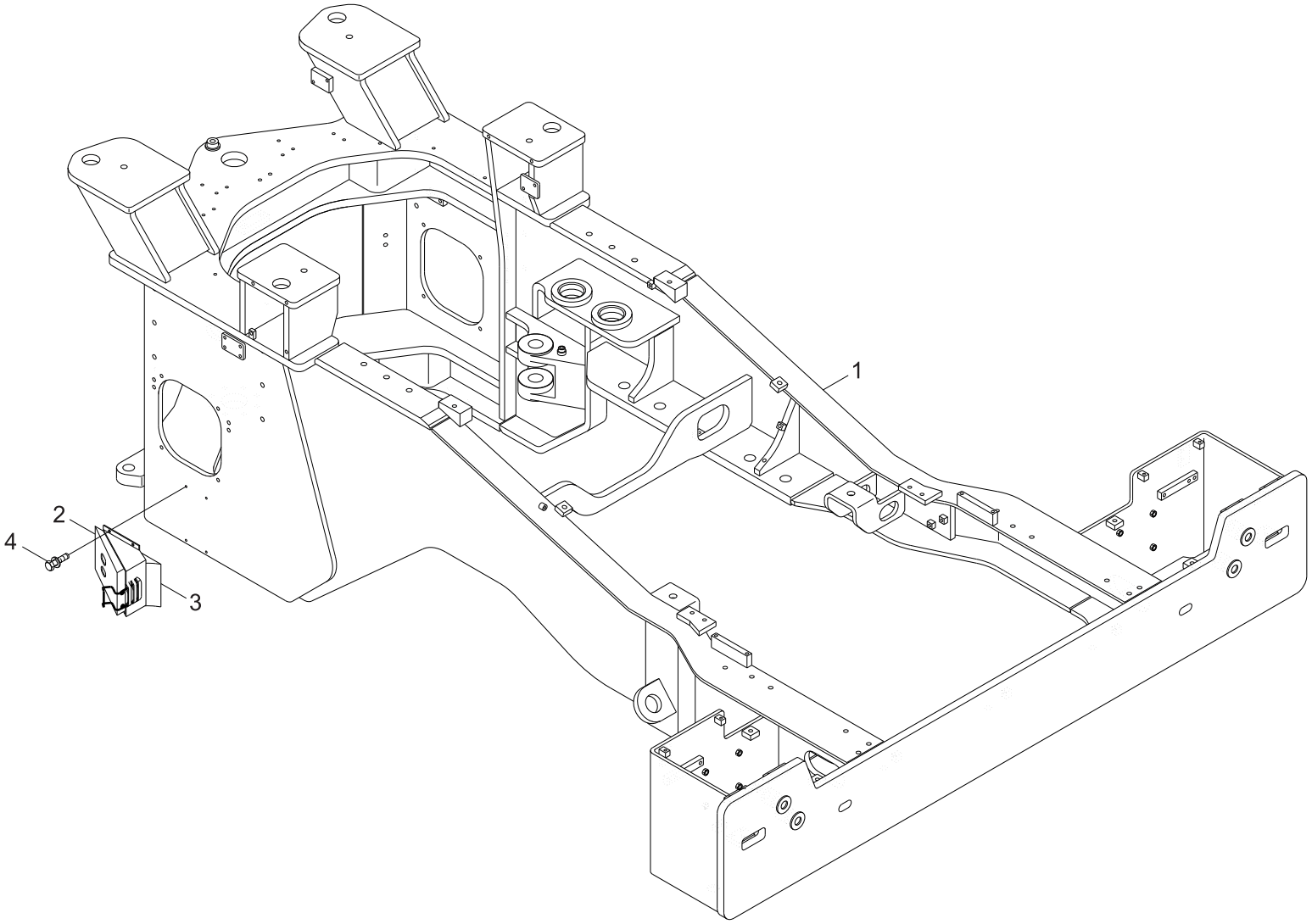

Item	Part_No	IS	Ord	T	Description	Qty	Serial_No	ITC	Remark
1	51LK-20010				REAR FRAME WA	1			
2	71L7-90070				BRACKET ASSY	2			
3	74L3-00012				CHOCK-WHEEL	2			
4	S035-082546				BOLT-W/WASHER	8			

CENTER PIVOT PIN(UPPER)

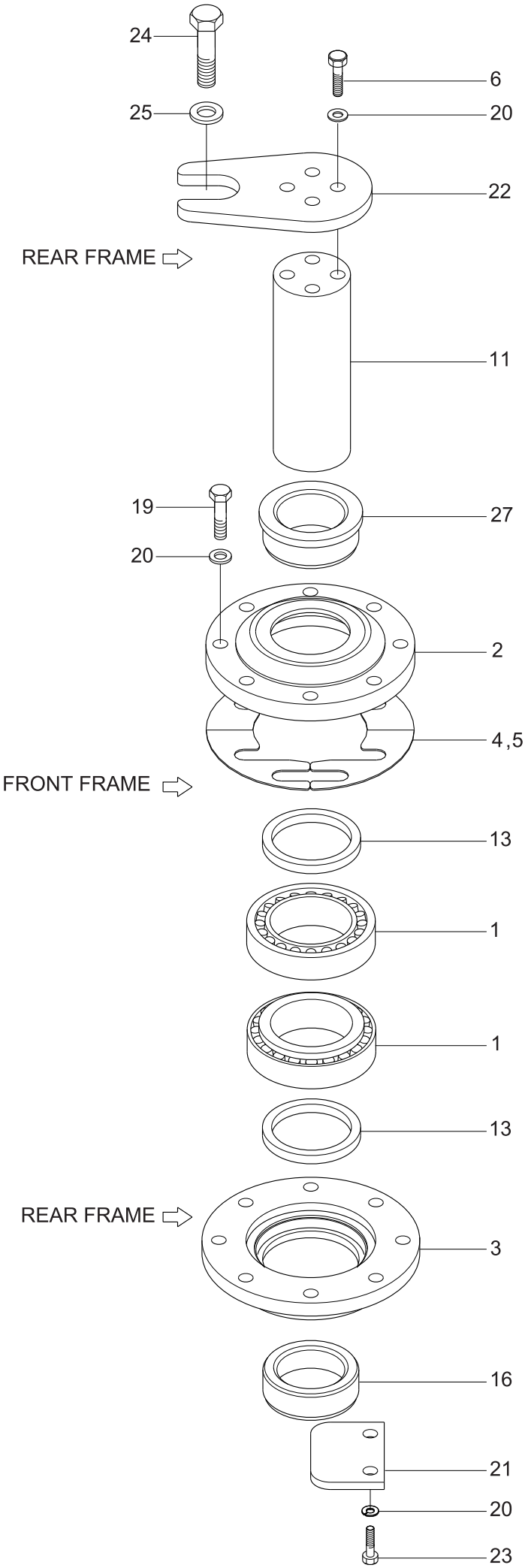

Item	Part_No	IS	Ord	T	Description	Qty	Serial_No	ITC	Remark
1	41LB-10010				BEARING	2			
2	41LL-10020				COVER	1			
3	41LL-10030				COVER	1			
4	41LB-10040				SHIM(0.1T)	2	-		
4	41LB-10040				SHIM(0.1T)	12	#0122 -	A	
5	41LB-10050				SHIM(0.5T)	2	-		
5	41LB-10050				SHIM(0.5T)	6	#0122 -	A	
6	S017-16055D				BOLT-HEX	4			
11	41LL-10111				PIN	1			
13	Y020-090211				SEAL-DUST,DLI,KPU	2			
16	41LB-10160				BUSHING	1			
19	S017-16120D				BOLT-HEX	8			
20	S441-160006				WASHER-HARDENED	14			
21	41LL-10210				PLATE	1			
22	41LL-10220				PLATE	1			
23	S017-16035D				BOLT-HEX	2			
24	S017-20030D				BOLT-HEX	1			
25	61N8-00320-I				WASHER-HARDENED	1			
27	41LL-10230				BUSHING	1			

CENTER PIVOT PIN(LOWER)

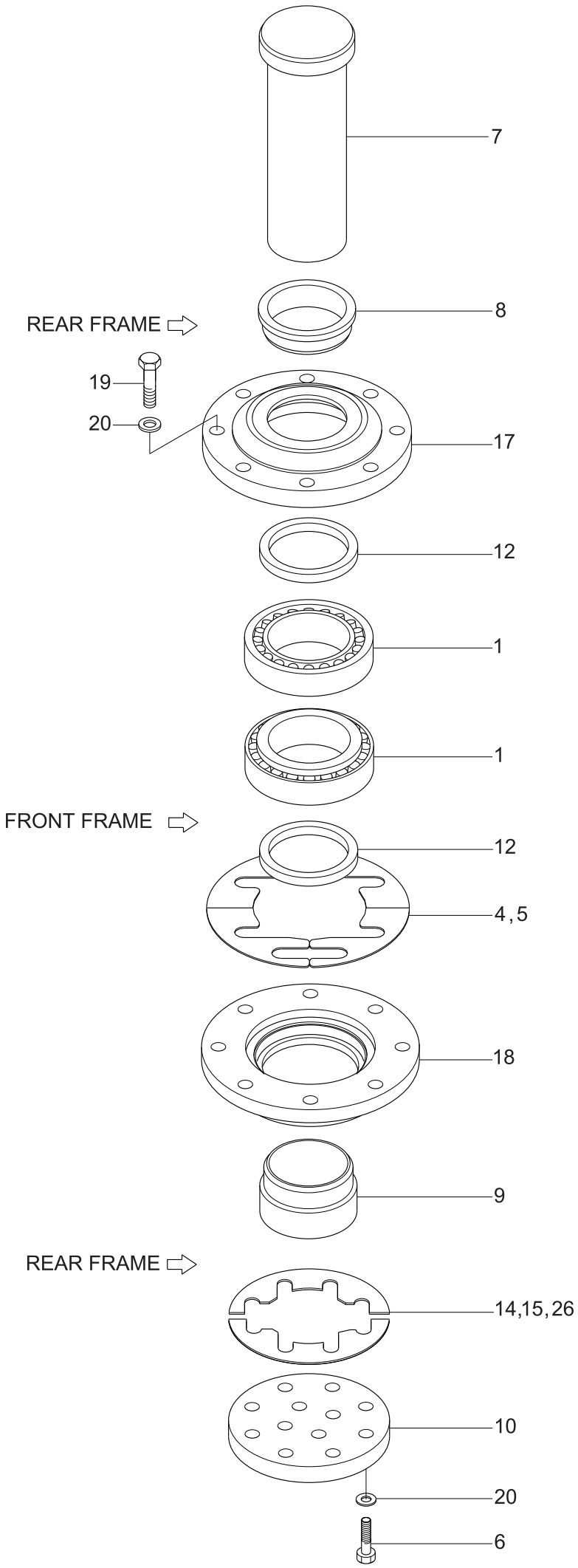

Item	Part_No	IS	Ord	T	Description	Qty	Serial_No	ITC	Remark
1	41LB-10010				BEARING	2			
4	41LB-10040				SHIM(0.1T)	2			
5	41LB-10050				SHIM(0.5T)	2			
6	S017-16055D				BOLT-HEX	12			
7	41LL-10070				PIN	1			
8	41LL-10080				COLLAR	1			
9	41LL-10090				COLLAR	1			
10	41LL-10100				PLATE	1			
12	Y020-110011				SEAL-DUST,DLI,KPU	2			
14	41LL-10140				SHIM(0.1)	2			
15	41LL-10150				SHIM(0.5)	2			
17	41LL-10170				COVER	1			
18	41LL-10180				COVER	1			
19	S017-16120D				BOLT-HEX	8			
20	S441-160006				WASHER-HARDENED	20			
26	41LL-10160				SHIM(2.0T)	2			

COUNTERWEIGHT

SERIAL NO : -#0120
HL770XTD-9A

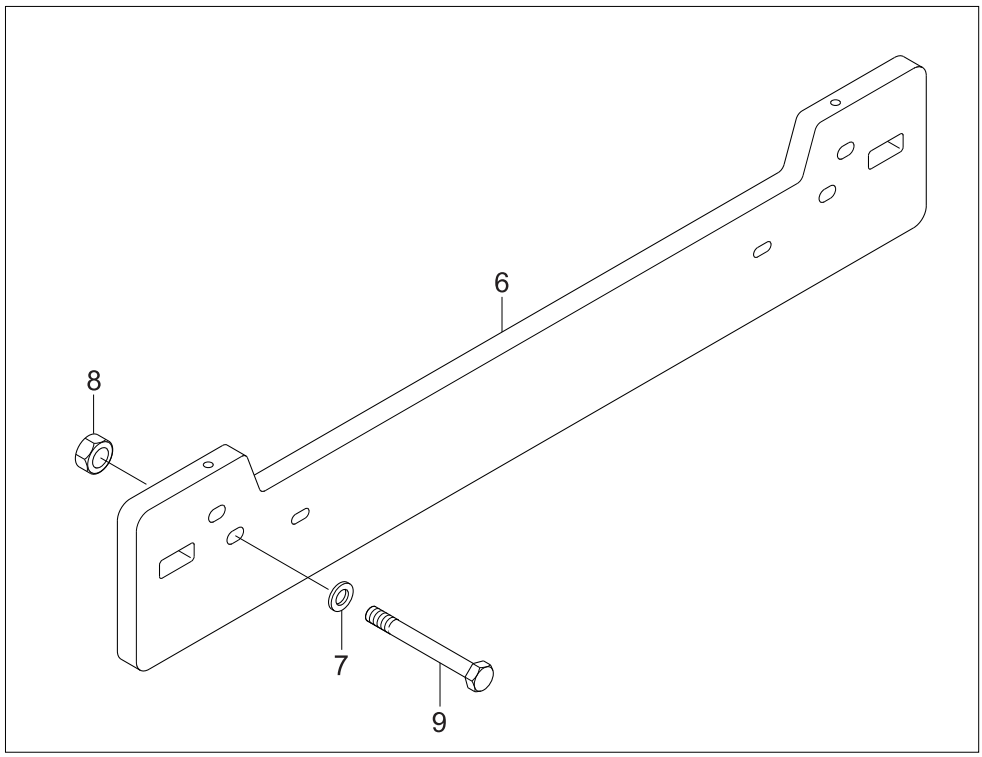

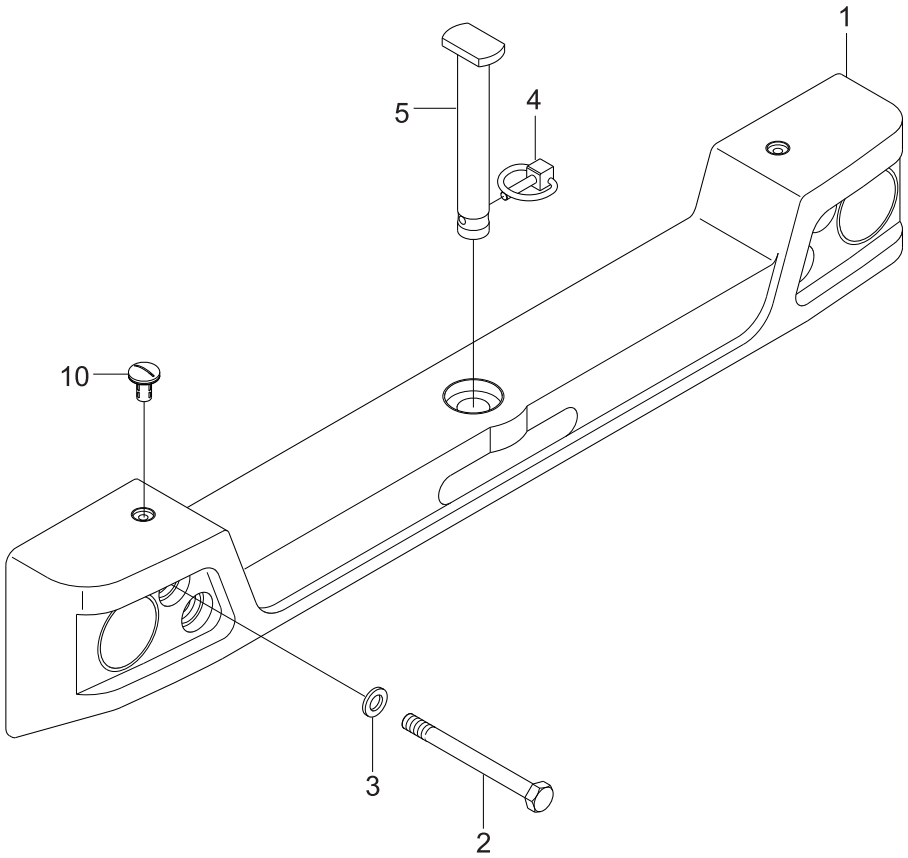

Item	Part_No	IS	Ord	T	Description	Qty	Serial_No	ITC	Remark
1	51LK-10310				COUNTERWEIGHT ASSY	1			HL770-9A
1	51LK-10610				COUNTER WEIGHT ASSY	1	#0121 -		HL770-9A
2	S017-30260D				BOLT-HEX	4			HL770-9A
2	S017-30330D				BOLT-HEX	4	-		HL770XTD-9A
2	S017-30280D				BOLT-HEX	4	#0121 -	B	1750KG, TYPE2
3	S441-300006				WASHER-HARDENED	4			
4	51LP-10090				PIN-LOCK	1			
5	51LK-10051				PIN WA	1			
6	51LK-10330				ADDITIONAL CWT	1	-		HL770XTD-9A
7	S441-240006				WASHER-HARDENED	4	-		HL770XTD-9A
8	S205-24100B				NUT-HEX	2	-		HL770XTD-9A
9	S017-24135D				BOLT-HEX	2	-		HL770XTD-9A
10	51LP-10100				CAP-BOLT	2			

UNDER GUARD(-#0109)

REAR FRAME
(5020)

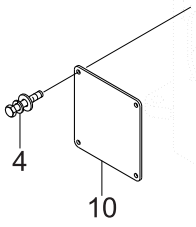

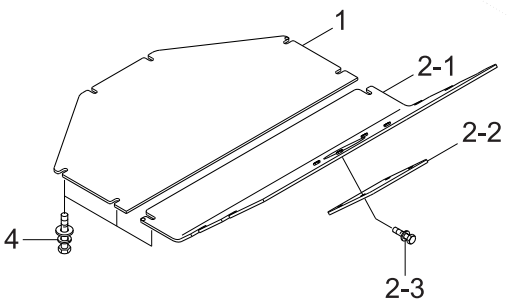

LOW NOISE

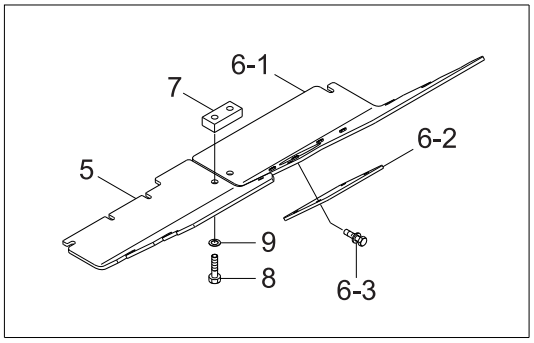

Item	Part_No	IS	Ord	T	Description	Qty	Serial_No	ITC	Remark
1	51LK-90011				PLATE	1			
2	51LK-90120				PLATE ASSY	1			
2-1	51LK-90022				.PLATE WA	1			
2-2	51LL-90030				.PLATE	1			
2-3	S037-123056				.BOLT-W/WASHER	4			
4	S037-123556				BOLT-W/WASHER	8			
5	51LK-91032				PLATE	1			LOW NOISE
6	51LK-91140				PLATE ASSY	1			LOW NOISE
6-1	51LK-91042				.PLATE WA	1			LOW NOISE
6-2	51LL-90030				.PLATE	1			LOW NOISE
6-3	S037-123056				.BOLT-W/WASHER	4			LOW NOISE
7	51LB-91050				TAP PLATE	2			LOW NOISE
8	S017-16045D				BOLT-HEX	16			
9	S441-160006				WASHER-HARDENED	16			
10	51LK-90040				PLATE	2			

UNDER GUARD(#0110-)

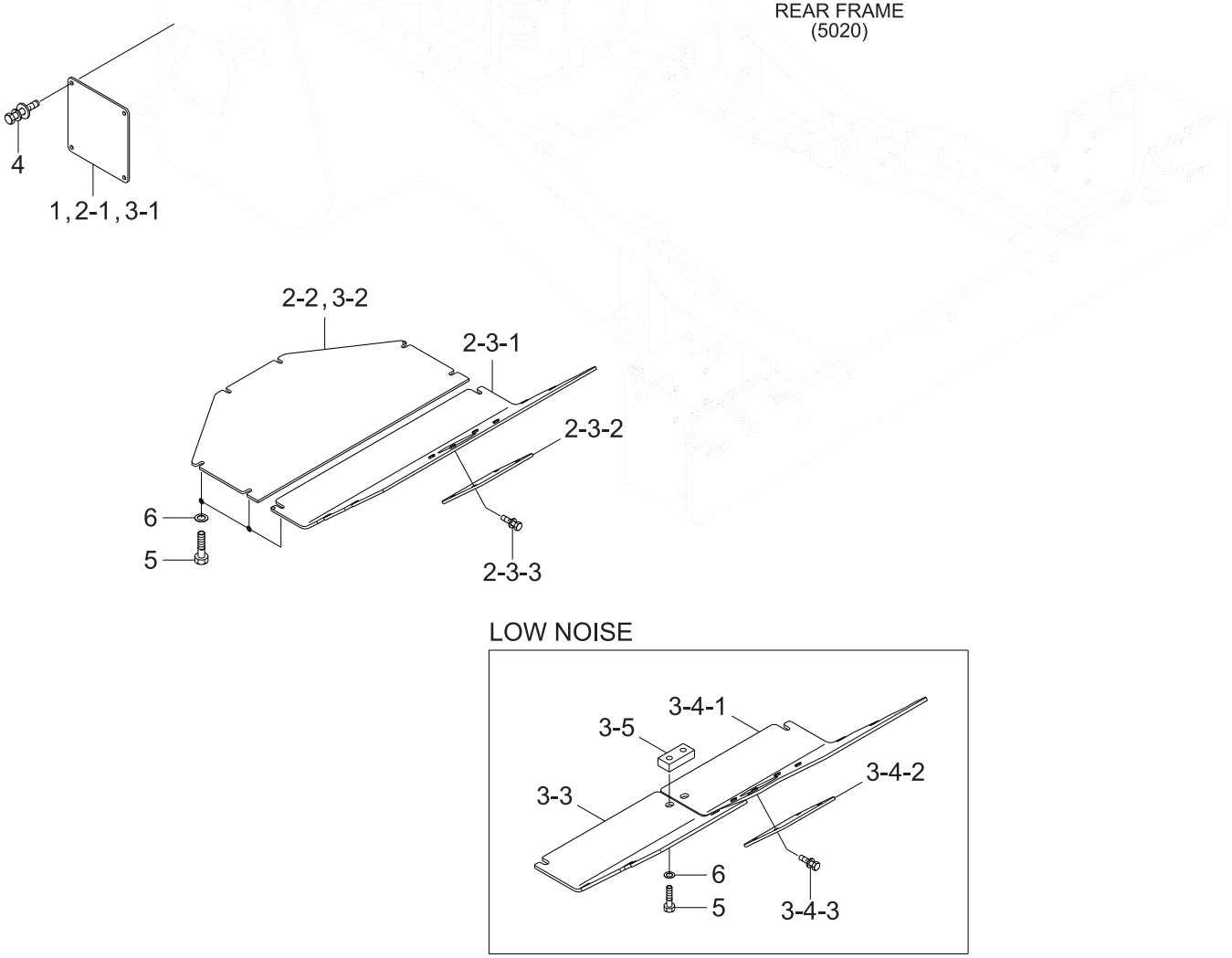

Item	Part_No	IS	Ord	T	Description	Qty	Serial_No	ITC	Remark
1	51LK-90041				PLATE	2			
2	51LK-99100				UNDER GUARD KIT(LU01)	1			
2-1	51LK-90041				.PLATE	2			
2-2	51LK-90012				.PLATE	1			
2-3	51LK-90121				.PLATE ASSY	1			
2-3-1	51LK-90023				..PLATE WA	1			
2-3-2	51LL-90030				..PLATE	1			
2-3-3	S037-123056				..BOLT-W/WASHER	4			
3	51LK-99110				UNDER GUARD KIT(LU01-LN01)	1			LOW NOISE
3-1	51LK-90041				.PLATE	2			
3-2	51LK-90012				.PLATE	1			
3-3	51LK-91033				.PLATE	1			
3-4	51LK-91141				.PLATE ASSY	1			
3-4-1	51LK-91043				..PLATE WA	1			
3-4-2	51LL-90030				..PLATE	1			
3-4-3	S037-123056				..BOLT-W/WASHER	4			
3-5	51LB-91051				.TAP PLATE	2			
4	S037-123556				BOLT-W/WASHER	8			
5	S017-16045D				BOLT-HEX	16			
6	S441-160006				WASHER-HARDENED	16			

CAB MOUNTING

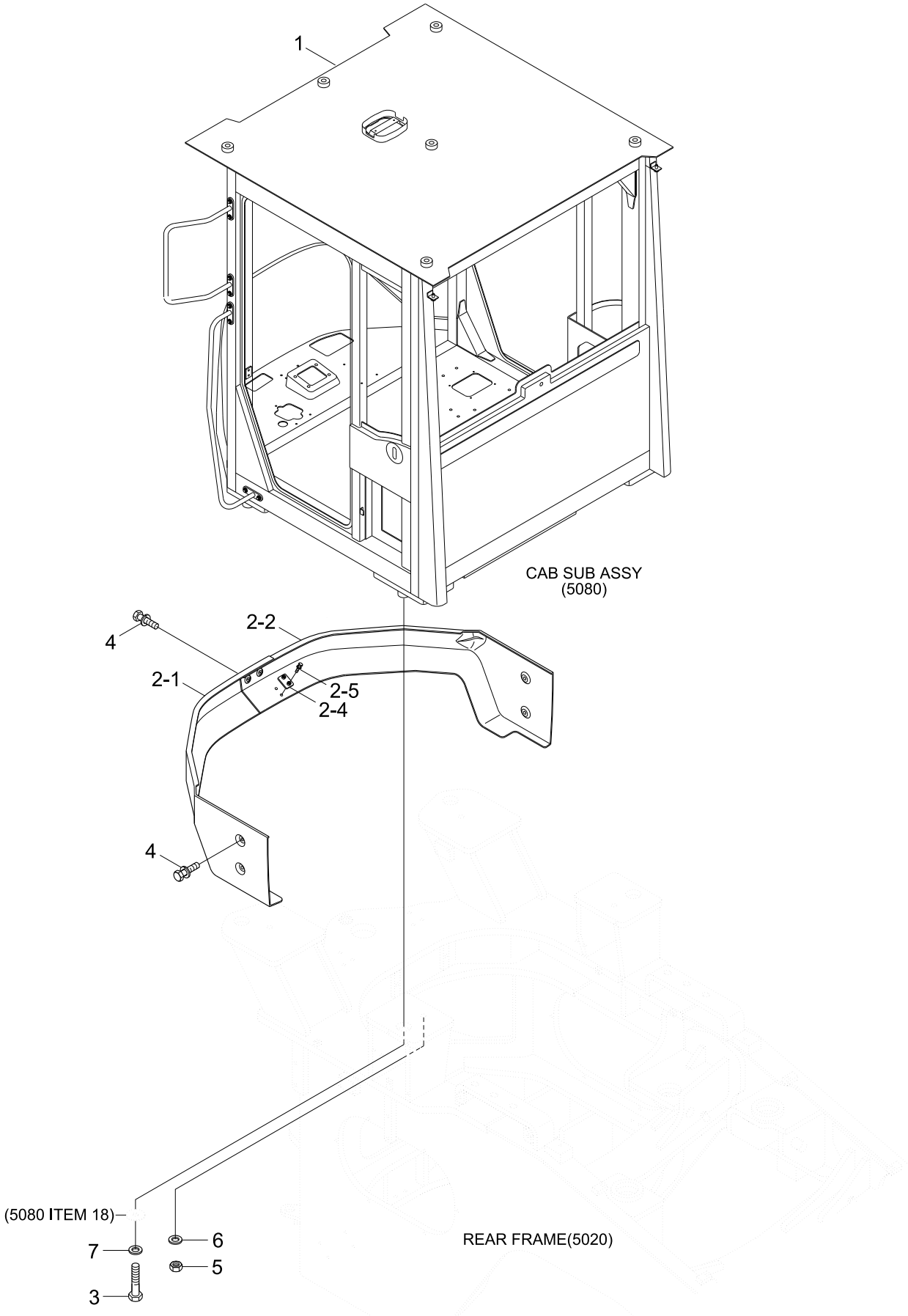

Item	Part_No	IS	Ord	T	Description	Qty	Serial_No	ITC	Remark
1	@				CAB SUB ASSY	1			NOT
2	71LK-01010				CAB LOW COVER ASSY	1			
2-1	71LK-01020				.CAB LOW COVER-FR LH	1			
2-2	71LK-01030				.CAB LOW COVER-FR RH	1			
2-4	71LM-01083				.PLATE	1			
2-5	S037-122526				.BOLT-W/WASHER	2			
3	S017-300606				BOLT-HEX	4			
4	S037-122526				BOLT-W/WASHER	8			
5	S205-16100B				NUT-HEX	4			
6	S441-160006				WASHER-HARDENED	4			
7	S441-300006				WASHER-HARDENED	4			

EXTINGUISHER MOUNTING (OPT)

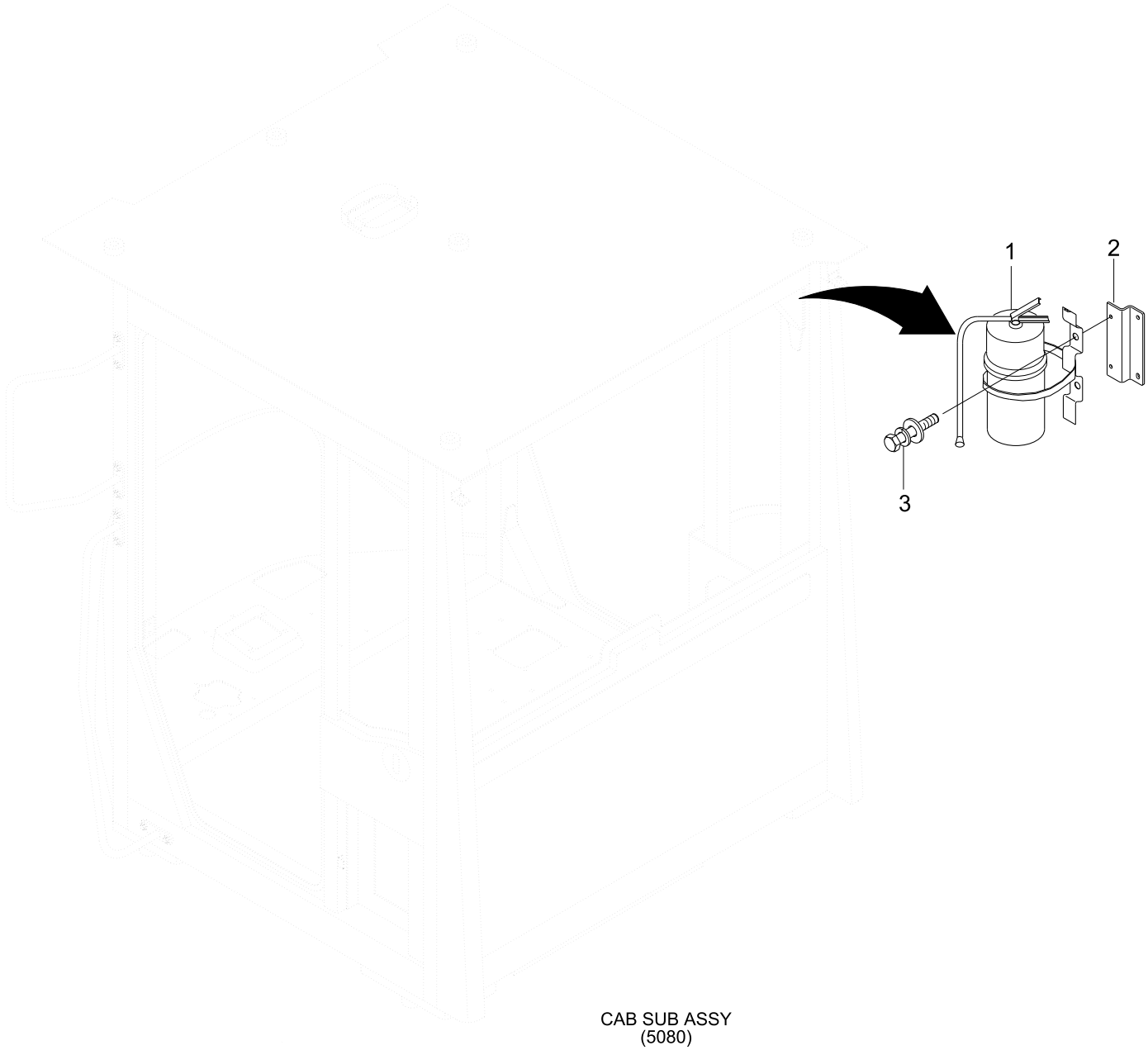

CAB SUB ASSY
(5080)

Item	Part_No	IS	Ord	T	Description	Qty	Serial_No	ITC	Remark
*	71LM-34510				FIRE EXTIGUSH GP	1			
1	91Q4-90100				.EXTINGUISHER-0.7KG	1			
2	71LM-34520				.BRACKET-EXTINGUISHER	1			
3	S035-062026				.BOLT-W/WASHER	4			

CAB OPTION PARTS

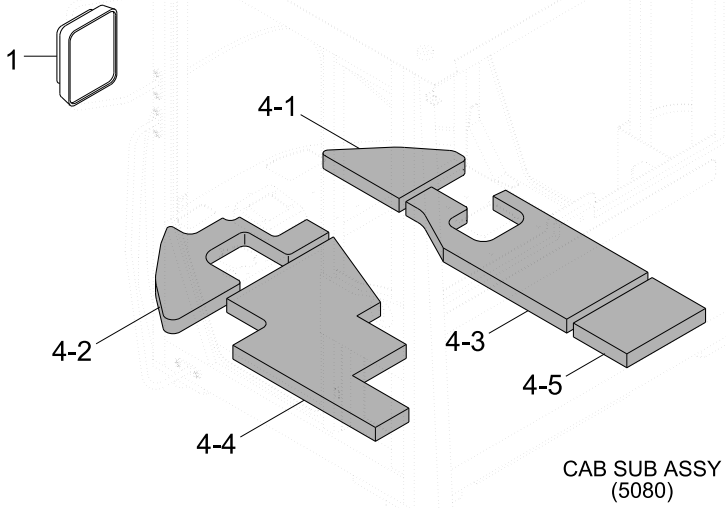

CAB SUB ASSY
(5080)

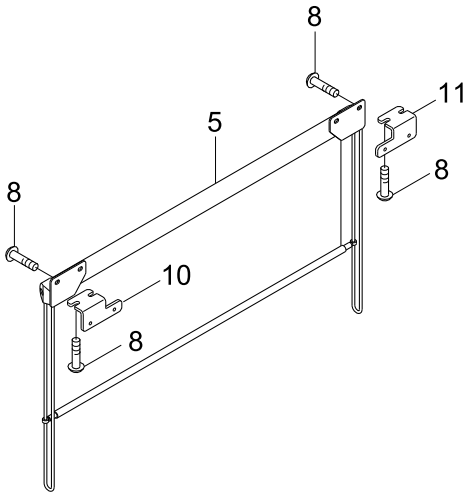

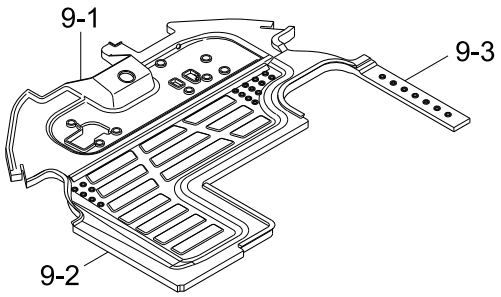

FINGERTIP TYPE	JOYSTICK TYPE
3-SPOOL 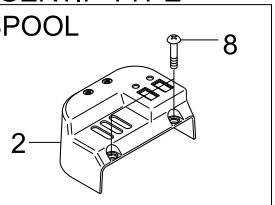	3-SPOOL 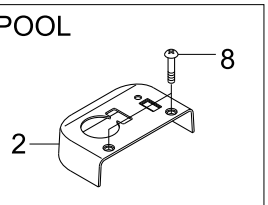
2-SPOOL 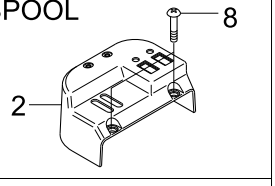	2-SPOOL 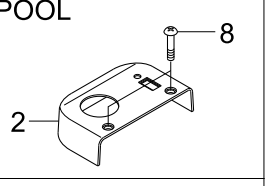
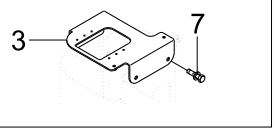	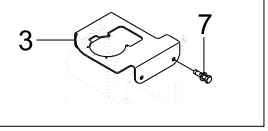

Item	Part_No	IS	Ord	T	Description	Qty	Serial_No	ITC	Remark
1	71LB-00111				MIRROR ASSY-EXT	2			STD
1	71LM-00310				MIRROR ASSY-EXT/HEATED	2			HEATED, OPT
2	71LM-30323				COVER-RCV, JOYSTICK	1			3-SPOOL
2	71LM-30333				COVER-RCV, JOYSTICK	1			2-SPOOL
2	71LM-30343				COVER-RCV, FINGER TIP	1			3-SPOOL
2	71LM-30353				COVER-RCV, FINGER TIP	1			2-SPOOL
3	71LM-23562				SUPPORT-RCV, JOYSTICK	1			JOYSTICK
3	71LM-23582				SUPPORT-RCV, FINGER TIP	1			FINGERTIP
4	71LM-27202				SPONGE	1	- #0113		L/NOISE, 50MM
4	71LM-27310				LOW NOISE INSULATION	1	#0114 -	B	L/NOISE, 80MM
4-1	71LM-27112				.SPONGE-BOTTOM A	1	- #0113		L/NOISE, 50MM
4-1	71LM-27320				.INSULATION-BOTTOM A	1	#0114 -	B	L/NOISE, 80MM
4-2	71LM-27122				.SPONGE-BOTTOM B	1	- #0113		L/NOISE, 50MM
4-2	71LM-27330				.INSULATION-BOTTOM B	1	#0114 -	B	L/NOISE, 80MM
4-3	71LM-27132				.SPONGE-BOTTOM C	1	- #0113		L/NOISE, 50MM
4-3	71LM-27340				.INSULATION-BOTTOM C	1	#0114 -	B	L/NOISE, 80MM
4-4	71LM-27142				.SPONGE-BOTTOM D	1	- #0113		L/NOISE, 50MM
4-4	71LM-27350				.INSULATION-BOTTOM D	1	#0114 -	B	L/NOISE, 80MM
4-5	71LM-27152				.SPONGE-BOTTOM E	1	- #0113		L/NOISE, 50MM
4-5	71LM-27360				.INSULATION-BOTTOM E	1	#0114 -	B	L/NOISE, 80MM
5	71LM-29042				SUN SCREEN	1	- #0049		
5	71LM-29043				SUN SCREEN	1	#0049 -	B	
7	S037-102026				BOLT-W/WASHER	4			
8	S002-060166				SCREW-TRUSHEAD	7			
9	71LM-30513				MAT FLOOR-DUAL	1	- #0013		DUAL BRAKE
9	71LM-30514				MAT FLOOR ASSY-DUAL	1	#0014 -	D	DUAL BRAKE
9	71LM-30550				MAT FLOOR ASSY-SINGLE	1	- #0013		SINGLE BRAKE

Item	Part_No	IS	Ord	T	Description	Qty	Serial_No	ITC	Remark
9	71LM-30550				MAT FLOOR ASSY-SINGLE	1	-		SINGLE BRAKE
9	71LM-30551				MAT FLOOR ASSY-SINGLE	1	#0014 -	D	SINGLE BRAKE
9-1	71LM-30523				.MAT FLOOR-DUAL FRT	1	-		DUAL BRAKE
9-1	71LM-30524				.MAT FLOOR-DUAL FRT	1	#0014 -	D	DUAL BRAKE
9-1	71LM-30560				.MAT FLOOR-DUAL FRT	1	-		SINGLE BRAKE
9-1	71LM-30561				.MAT FLOOR-SINGLE FRT	1	#0014 -	D	SINGLE BRAKE
9-2	71LM-30533				.MAT FLOOR-DUAL RR LH	1			
9-3	71LM-30543				.MAT FLOOR-DUAL RR RH	1			
10	71LM-11680				BRK RR-REAR SCREEN LH	1			
11	71LM-11690				BRK RR-REAR SCREEN RH	1			

CAB SUB ASSY(1/4)

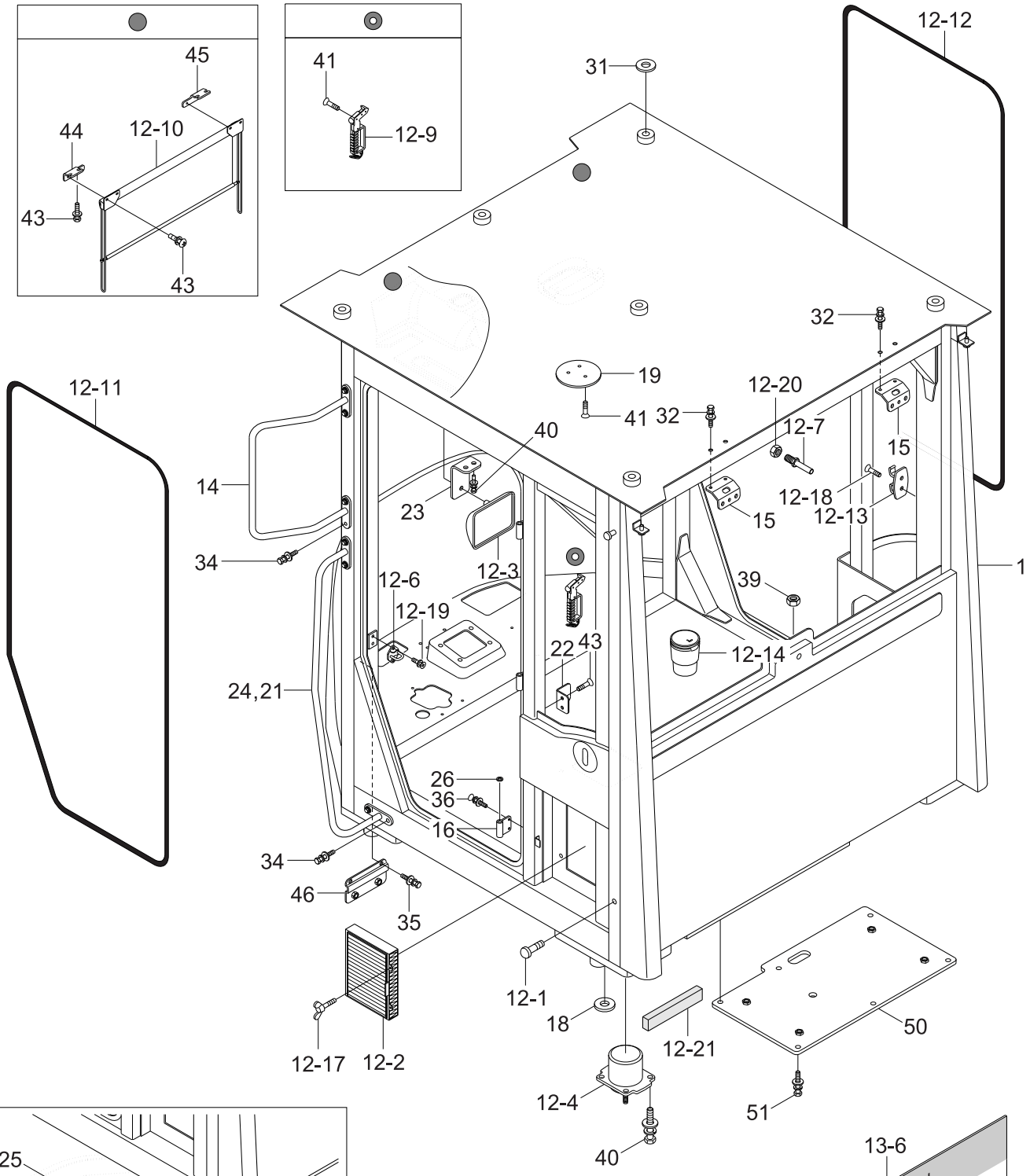

Item	Part_No	IS	Ord	T	Description	Qty	Serial_No	ITC	Remark
*	71LM-10007				CAB SUB ASSY	1	-		SEE 5090~5110
*	71LM-10008				CAB SUB ASSY	1	#0020 -	B	SEE 5090~5110
*	71LM-10009				CAB SUB ASSY	1	#0114 -	B	SEE 5090~5110
*	71LM-10010				CAB SUB ASSY	1	#0122 -	B	SEE 5090~5110
1	71LM-11007				.CAB WA	1	-		
1	71LM-11008				.CAB WA	1	#0014 -	D	
1	71LM-11009				.CAB WA	1	#0020 -	B	
12	71LM-29003				.ACCESSORY KIT	1			
12-1	71EH-13150				..BUMPER-RUBBER	4			
12-2	71LM-00290				..FILTER ASSY	1			
12-3	71LB-01170				..MIRROR-ROOM	1			
12-4	71LG-00031				..VISCOUS MOUNT	4			
12-5	@				..BACK LATCH ASSY-LH	1			NOT
12-6	71LM-21912				..STRIKER-DOOR LATCH	1			
12-7	71LM-22422				..STRIKER-TILT HANDLE	1			
12-8	@				..BACK LATCH ASSY-RH	1			NOT
12-9	71LM-29012				..HAMMER	1			
12-1(	71LM-29042				..SUN SCREEN	1	-		
12-1(	71LM-29043				..SUN SCREEN	1	#0049 -	B	
12-1:	71LM-29112				..WEATHER STRIP	1			
12-1:	71LM-29122				..WEATHER STRIP	1			
12-1:	71N6-02920				..HOOK-COAT	1			
12-1-	71Q6-22410				..ASH-TRAY	1			
12-1(	@				..BOLT-W/WASHER	16			NOT
12-1'	S091-050152				..BOLT-WING	4			
12-1(	S141-040156				..SCREW-FLAT HD	5			
12-1(	S145-080166				..SCREW-FLAT HD	2			

Item	Part_No	IS	Ord	T	Description	Qty	Serial_No	ITC	Remark
12-19	S145-080166				..SCREW-FLAT HD	2			
12-20	S205-10200B				..NUT-HEX	2			
12-21	71LM-29140				..PAD-SCREEN	1			
13	71LM-29502				.DECAL KIT	1			
13-1	91N6-07290				..DECAL-FIRE	1			8020 ITEM 20-9
13-2	91N6-07261				..DECAL-ALTERNATE EXIT	1			8020 ITEM 20-8
13-3	91LB-01340				..DECAL-HAMMER	1			8020 ITEM 20-7
13-4	91LB-01240				..DECAL-ROLL OVER	1			8020 ITEM 20-6
13-5	91LB-01230				..DECAL-MAX H/REACH	1			8020 ITEM 20-5
13-6	91LB-21010				..ADHESIVE SUN SCREEN	1			
14	71LM-01692				.HANDRAIL WA	2			
15	71LM-10012				.BRACKET-ROOF COVER	2			
16	71LM-21422				.HINGE-BODY	6			
17	71LM-28012				.PLATE WA	3			
18	71LM-28022				.SPACER	4			SEE 4070
19	71LM-28052				.PLATE-BEACON LAMP	1			BEACON LAMP
21	71LM-28122				.HANDRAIL-A PILLAR, LH	1			
22	71LM-28132				.STRIKER-CON LH	1			
23	71LM-11282				.SUPPORT WA	2			
24	71LM-28142				.HANDRAIL-A PILLAR,RH	1			
26	74L3-04450				.WASHER-COPPER	6			
31	71LB-01110				.WASHER-ROOF COVER	6			
32	S037-122526				.BOLT-W/WASHER	12			
34	S037-102026				.BOLT-W/WASHER	16			
35	S035-082026				.BOLT-W/WASHER	16			
36	S145-080166				.SCREW-FLAT HD	12			
41	S141-060156				.SCREW-FLAT HD	6			

Item	Part_No	IS	Ord	T	Description	Qty	Serial_No	ITC	Remark
41	S141-060156				.SCREW-FLAT HD	6			
43	S002-060166				.SCREW-TRUSHEAD	14			
44	71LM-11650				.BRACKET-RR SCREEN 1	1			
45	71LM-11660				.BRACKET-RR SCREEN 2	1			
46	71LM-11670				.BRACKET WA-FR COVER	1			
47	41QA-40150				.CAP-HEX	6			
49	71LM-28220				.COVER-PUMP MAINT	1			
50	S037-102056				.BOLT-W/WASHER	6			

CAB SUB ASSY(2/4)

GLASS KIT

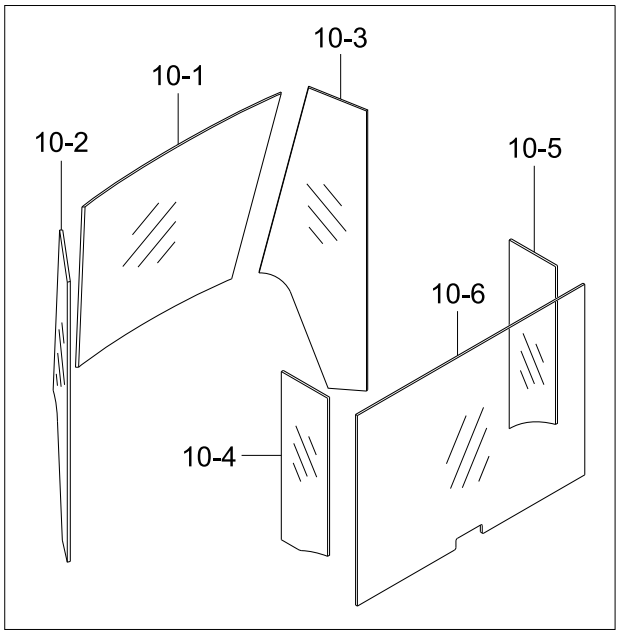

INSULATOR KIT

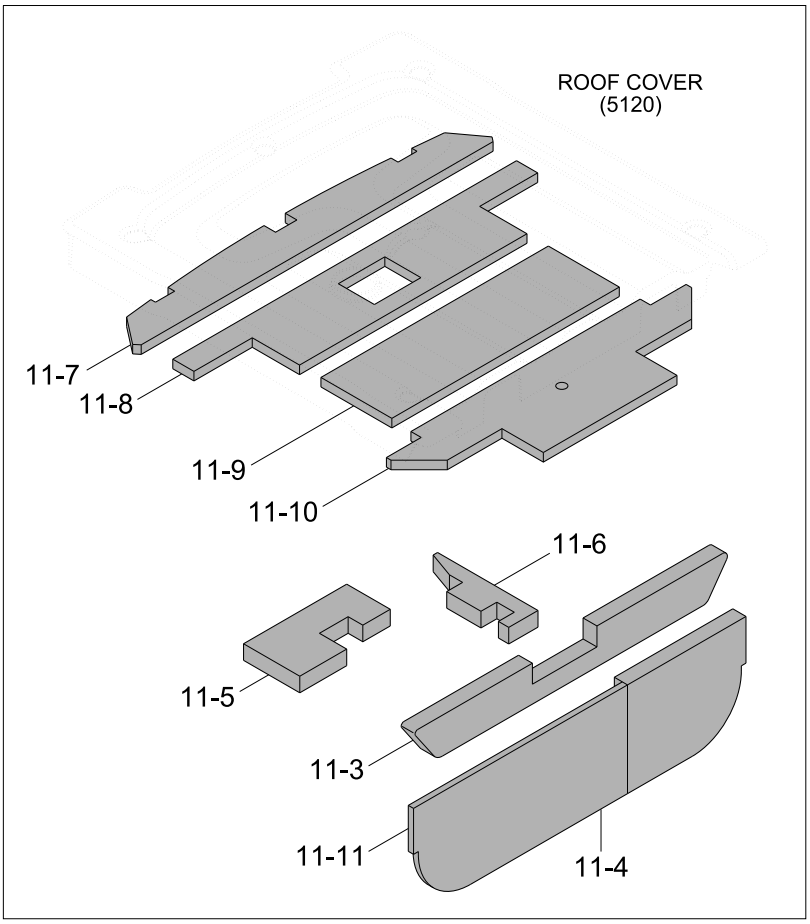

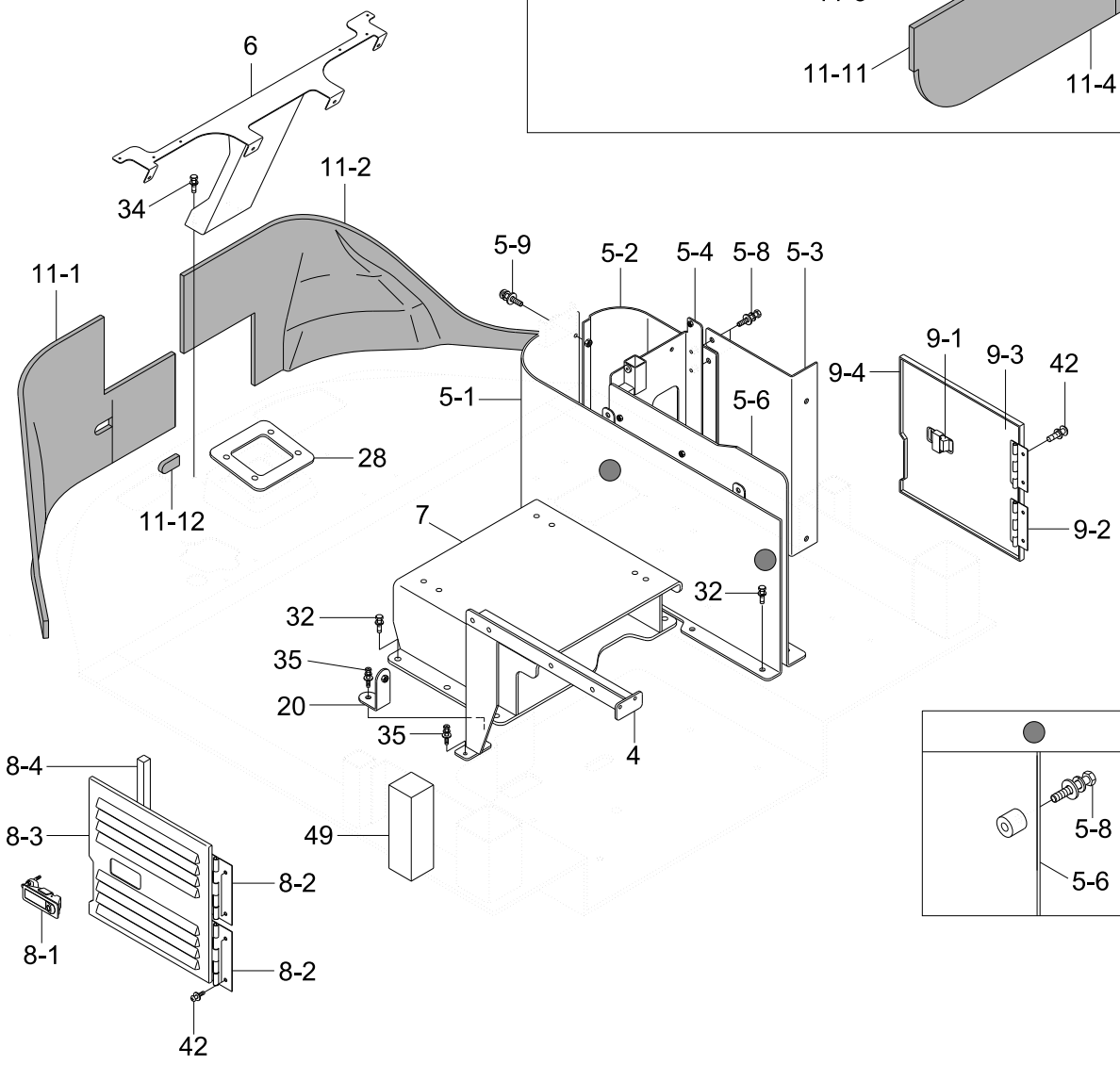

Item	Part_No	IS	Ord	T	Description	Qty	Serial_No	ITC	Remark
*	@				CAB SUB ASSY	1			NOT
4	71LM-23002				.SUPPORT WA-LH CON	1			
5	71LM-23502				.SUPPORT ASSY-RH	1			
5-1	71LM-23512				..SUPPORT-RH, CON MAIN	1			
5-2	71LM-23522				..PANEL-RH, CON FR	1			
5-3	71LM-23532				..PANEL-RH, CON RR	1			
5-4	71LM-23543				..SUPPORT-RH, CON FILTER	1			
5-6	71LM-23592				..SUPPORT-RH, CON FILTER	1			
5-8	S035-082026				..BOLT-W/WASHER	8			
5-9	S002-060166				..SCREW-TRUSHEAD	2			
6	71LM-24002				.SUPPORT ASSY-FRONT	1			
7	71LM-24503				..SEAT BASE WA	4			
8	71LM-25002				.MAINT DOOR ASSY-FILTER	1			
8-1	71LM-01220				.LATCH ASSY	1			
N8-2	71LB-01360				..HINGE-FILTER COVER	2			NOT
N8-3	71LM-25012				..MAINT DOOR-AIR FILTER	1			NOT
8-4	71LM-25022				..RUBBER PAD-AIR FILTER	1			
9	71LM-25502				.MAINT DOOR ASSY-ELEC	1			
9-1	71LM-01220				.LATCH ASSY	1			
N9-2	71LB-01360				..HINGE-FILTER COVER	2			NOT
N9-3	71LM-25512				..PANEL-ELEC COVER	1			NOT
9-4	71LM-25522				.FOAM-ELEC COVER	1			
N10	71LM-26002				.GLASS KIT	1			NOT
10-1	71LM-26012				..WINDSHIELD-MID	1			
10-2	71LM-26022				..WINDSHIELD-LH	1			
10-3	71LM-26032				..WINDSHIELD-RH	1			
10-4	71LM-26042				..GLASS-LH	1			

Item	Part_No	IS	Ord	T	Description	Qty	Serial_No	ITC	Remark
10-4	71LM-26042				..GLASS-LH	1			
10-5	71LM-26052				..GLASS-RH	1			
10-6	71LM-26062				..GLASS-RR	1			
11	71LM-27002				.INSULATOR KIT	1			
11-1	71LM-27012				..SPONGE-FRONT	1			
11-2	71LM-27122				..SPONGE-BOTTOM B	1			
11-3	71LM-27032				..SPONGE-REAR A	1			
11-4	71LM-27042				..SPONGE-REAR B	1			
11-5	71LM-27052				..SPONGE-HVAC, FRONT	1			
11-6	71LM-27062				..SPONGE-HVAC, RH	1			
11-7	71LM-27072				..SPONGE-ROOF A	1			
11-8	71LM-27082				..SPONGE-ROOF B	1			
11-9	71LM-27092				..SPONGE-ROOF C	1			
11-1(	71LM-27102				..SPONGE-ROOF D	1			
11-1:	71LM-27162				..SPONBE-REAR C	1			
11-1:	71LM-27172				..SPONGE-CLAMP FR	1			
20	71LM-28112				.BRACKET-RR,CON LOW	1			
28	71L6-10320				.SHIM(4.0T)	1			
32	S037-122526				.BOLT-W/WASHER	8			
34	S037-102026				.BOLT-W/WASHER	4			
35	S035-082026				.BOLT-W/WASHER	4			
42	S132-051656				.SCREW-W/WASHER	8			
48	71LM-11740				.PAD-C/BOX LH	1			
51	S661-300800				.CAP-RUBBER	1	#0020 -		
N	@				NOT SUPPLIED PARTS	AR			NOT

CAB SUB ASSY(3/4, LH DOOR ASSY)

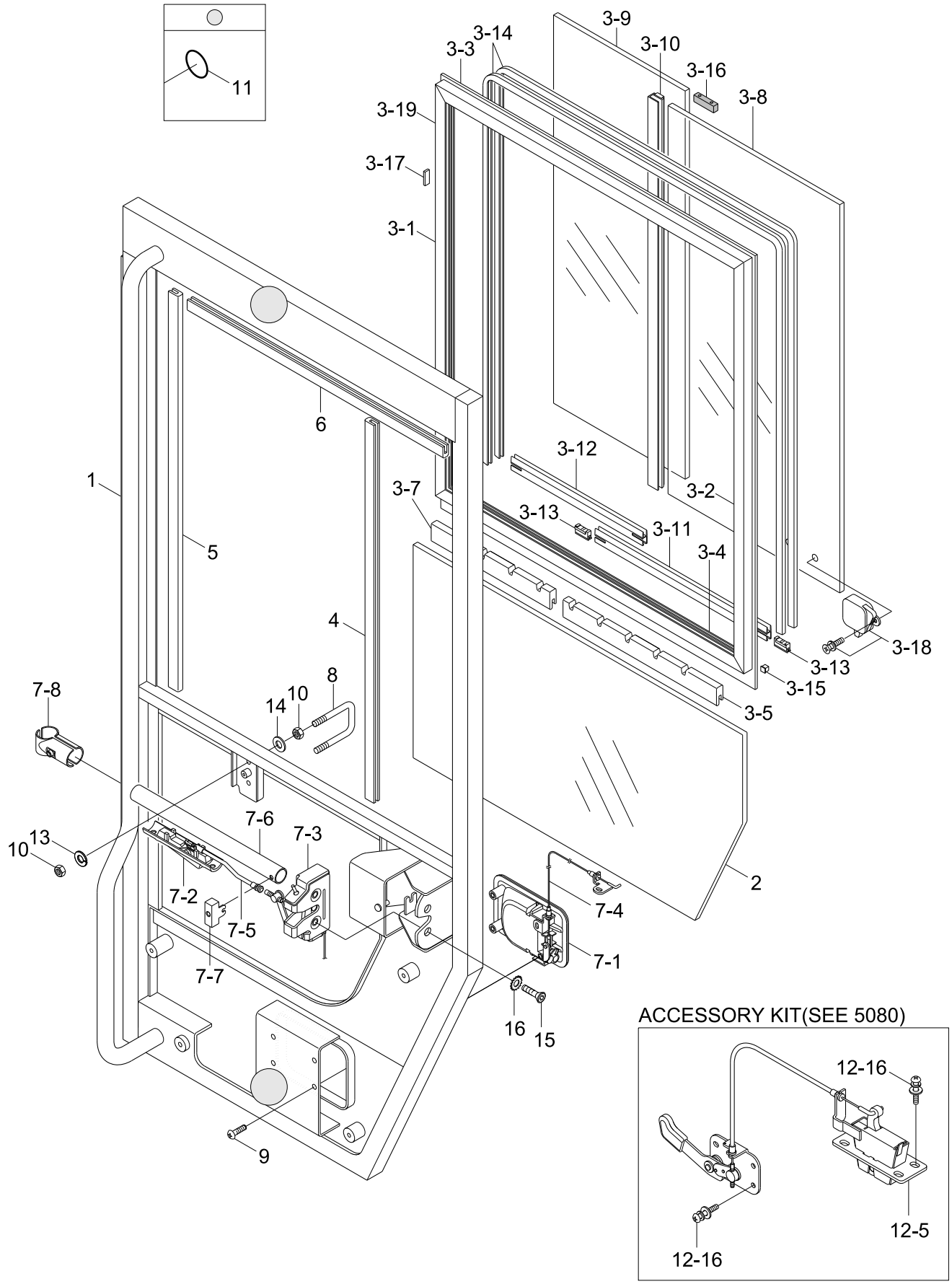

ACCESSORY KIT(SEE 5080)

Item	Part_No	IS	Ord	T	Description	Qty	Serial_No	ITC	Remark
*	@				CAB SUB ASSY	1			NOT
*-1	71LM-21002				.DOOR ASSY-LH	1	-		
*-1	71LM-21003				.DOOR ASSY-LH	1	#0122 -	B	
1	71LM-21012				..DOOR WA-LH	1			
2	71LM-21292				..GLASS-DOOR LH LOW	1			
3	71LM-21313				..SASH ASSY-DOOR LH	1			
N3-1	71LM-21322				...SASH-SIDE FRONT	1			NOT
N3-2	71LM-21332				...SASH-SIDE REAR	1			NOT
N3-3	71LM-21342				...SASH-SIDE TOP	1			NOT
N3-4	71LM-21352				...SASH-LOW	1			NOT
3-5	71LM-21362				...GUIDE-LOCK	1			
3-7	71LM-21442				...GUIDE-LOCK 2	1			
3-8	71LM-21452				...GLASS-SASH	1			
3-9	71LM-21462				...GLASS-SASH SMALL	1			
3-10	71LM-21613				...MOHAIR-CENTER	1			
3-11	71LM-21622				...RAIL-FRONT	1			
3-12	71LM-21632				...RAIL-REAR	1			
3-13	71LM-21642				...SLIDER-RAIL	4			
3-14	71LM-21652				...SEAL-GLASS	2			
3-15	71LM-21662				...SEAL-RAIL GUIDE	1			
3-16	71LM-21672				...STOPPER	2			
3-17	71Q6-03360				...RUBBER	9			
3-18	71Q6-03310				...LOCK ASSY	1			
3-19	71LM-21360				...SASH FRAME WA	1			
4	71LM-21382				..SEAL-SASH SIDE	1			
5	71LM-21382				..SEAL-SASH SIDE	1			
N6	71LM-21392				..SEAL-SASH TOP	1			NOT

Item	Part_No	IS	Ord	T	Description	Qty	Serial_No	ITC	Remark
N6	71LM-21392				..SEAL-SASH TOP	1			NOT
7	71LM-21512				..DOOR LATCH ASSY-LH	1	-		
7	71LM-21513				..DOOR LATCH ASSY-LH	1	#0122 -	B	
7-1	71LM-21522				...HANDLE ASSY-LH	1	-		
7-1	71LM-21523				...HANDLE ASSY-OUT	1	#0122 -	B	
7-2	71LM-21732				...HANDLE ASSY-LH IN	1			
7-3	71LM-21722				...DOOR LATCH-LH	1			
7-4	71LM-21782				...LINKAGE-HANDLE OUT	1			
7-5	71LM-21792				...LINKAGE-HANDLE IN	1			
7-6	71LM-21742				...PIPE-HANDLE IN	1			
7-7	71LM-21532				...BLOCK-HANDRAIL	1			
7-8	71LM-21552				...CLAMP-HANDRAIL	1			
8	71LM-21922				..STRIKER-BACK CATCH,	1			
9	S002-060166				..SCREW-TRUSHEAD	4			
10	S205-10200B				..NUT-HEX	4			
11	17E1-5146				..BUMPER-DOOR	2			
15	71LM-11910				..BOLT-SOCKET FLAT	2	#0001 -		
16	71LM-11920				..WASHER	2	#0001 -		
12	@				.ACCESSORY KIT	1			NOT
12-5	71LM-21812				..BACK LATCH ASSY-LH	1			
12-1	S035-082026				..BOLT-W/WASHER	8			
13	S441-100006				.WASHER-SPRING	2			
14	S403-10100B				.WASHER-PLAIN	2			
N	@				NOT SUPPLIED PARTS	AR			NOT

CAB SUB ASSY(4/4, RH DOOR ASSY)

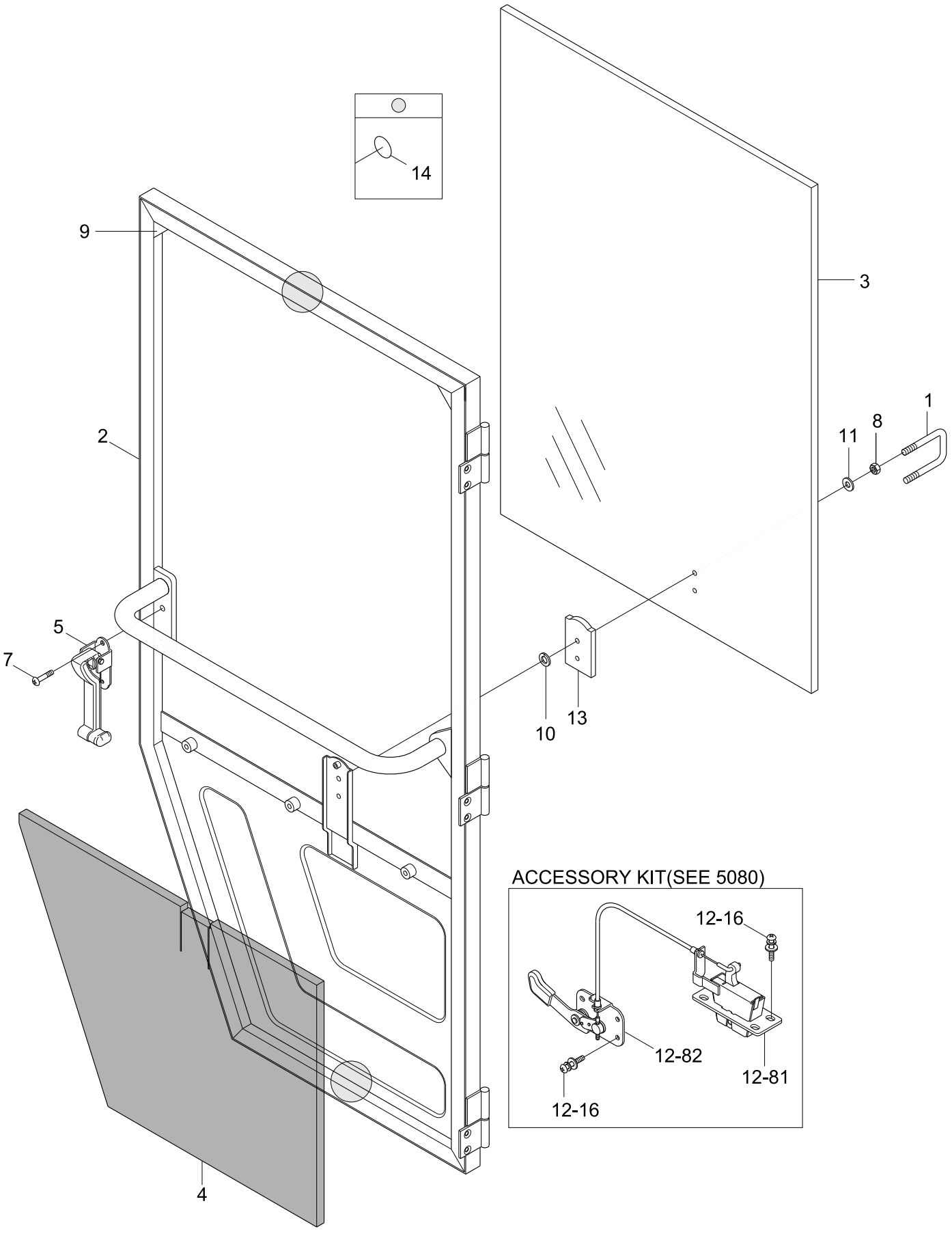

Item	Part_No	IS	Ord	T	Description	Qty	Serial_No	ITC	Remark
*	@				CAB SUB ASSY	1			NOT
*-2	71LM-22002				.DOOR ASSY-RH	1			
1	71LM-21922				..STRIKER-BACK CATCH	1			
2	71LM-22012				..DOOR WA-RH	1			
3	71LM-22312				..GLASS-DOOR RH	1			
4	71LM-22322				..PAD-DOOR RH	1			
5	71LM-22412				..TILT HANDLE ASSY	1			
7	S037-082026				..BOLT-W/WASHER	2			
8	S205-10200B				..NUT-HEX	6			
9	71LM-22330				..GUSSET-DOOR	2			
10	S411-100006				..WASHER-SPRING	2			
11	S403-10100B				..WASHER-PLAIN	2			
13	71LM-22340				..RUBBER SPONGE	1			
14	17E1-5146				..BUMPER-DOOR	2			
12	@				.ACCESSORY KIT	1			NOT
12-8	71LM-22812				..BACK LATCH ASSY-RH	1			
12-8	71LM-22832				...BACK LATCH DOOR-RH	1			
12-8	71LM-22822				...LEVER ASSY-RH	1			
12-1	S035-082026				..BOLT-W/WASHER	8			

CAB INTERIOR 1

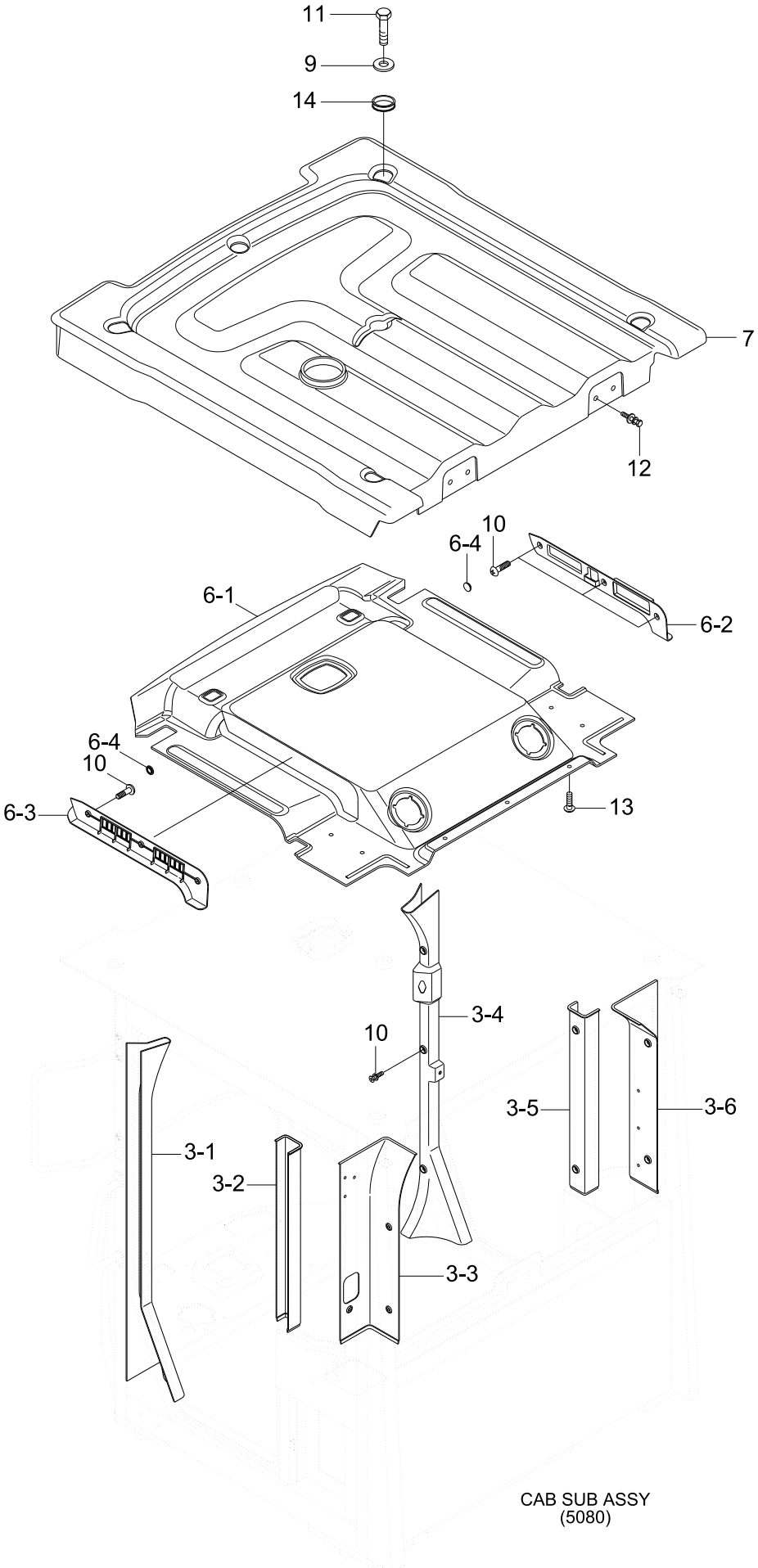

CAB SUB ASSY
(5080)

Item	Part_No	IS	Ord	T	Description	Qty	Serial_No	ITC	Remark
3	71LM-30403				PILLAR TRIM ASSY	1			
3-1	71LM-30413				.PILLAR TRIM-LH A	1			
3-2	71LM-30423				.PILLAR TRIM-LH B	1			
3-3	71LM-30433				.PILLAR TRIM-LH C	1			
3-4	71LM-30463				.PILLAR TRIM-RH A	1			
3-5	71LM-30473				.PILLAR TRIM-RH B	1			
3-6	71LM-30483				.PILLAR TRIM-RH C	1			
6	71LM-30703				HEADLINING ASSY	1			
6-1	71LM-30713				.HEADLINING-BODY	1			
6-2	71LM-30733				.TRIM-HEADLINING RH	1			
6-3	71LM-30723				.TRIM-HEADLINING LH	1			
6-4	71Q6-22760				.CAP-TRIM	6			
7	71LM-30764				ROOF COVER	1			
9	71LB-01110				WASHER-ROOF COVER	6			
10	S002-060166				SCREW-TRUSHEAD	24			
11	S017-20030D				BOLT-HEX	6			
12	S035-082026				BOLT-W/WASHER	4			
13	E171-1310				PLUG-HEADLINER	18			
14	71LB-09220				GROMMET	6			

CAB INTERIOR 2

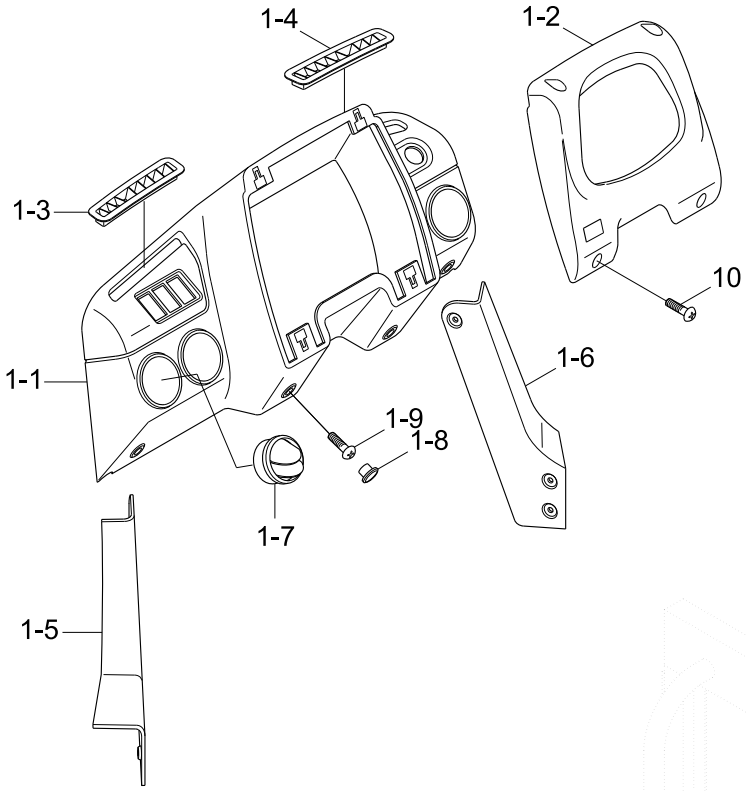

LH DOOR ASSY
(5100)

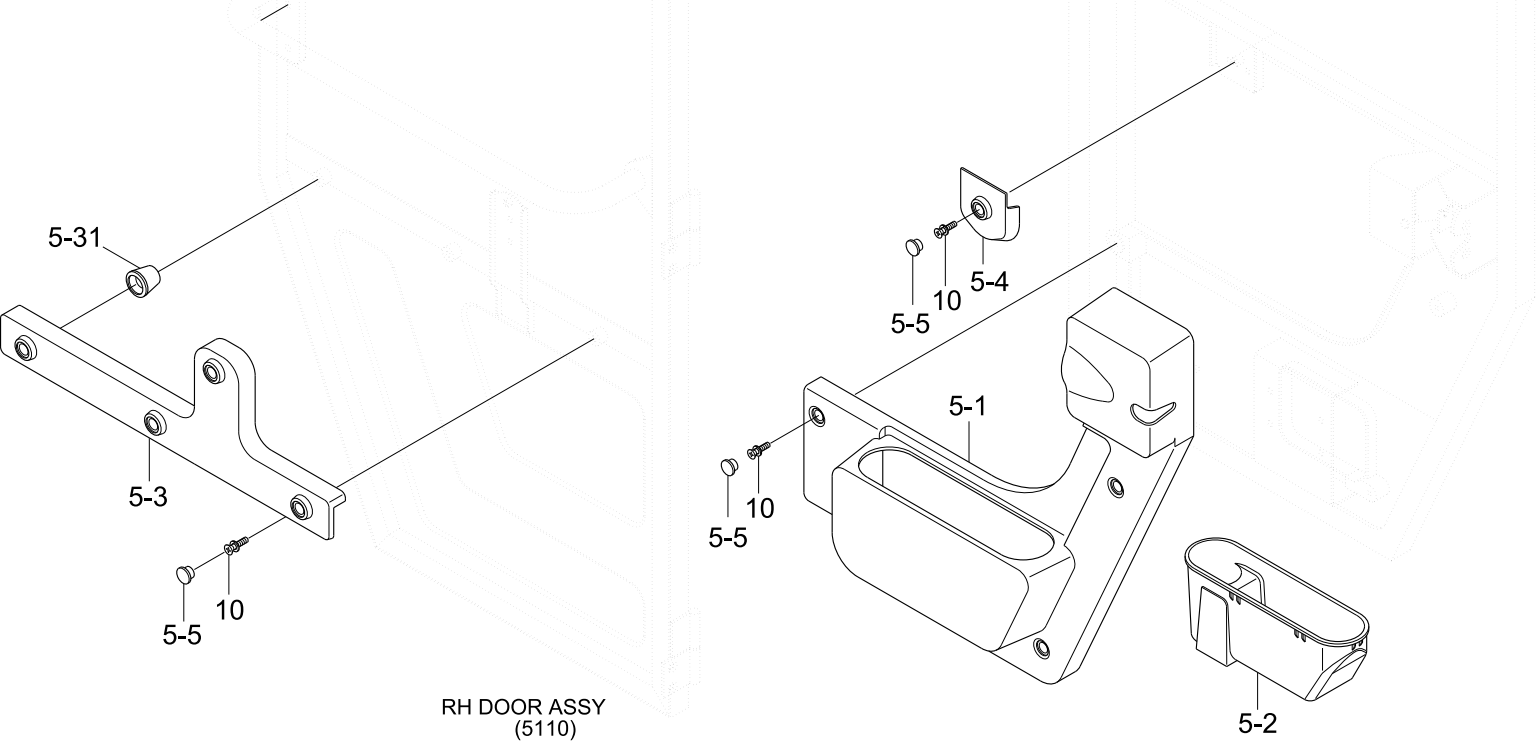

RH DOOR ASSY
(5110)

Item	Part_No	IS	Ord	T	Description	Qty	Serial_No	ITC	Remark
1	71LM-30103				DASHBOARD SUB ASSY	1			
1-1	71LM-30113				.DASHBOARD-BODY	1			
1-2	71LM-30123				.DASHBOARD-CENTER	1			
1-3	71LM-30133				.AIR NOZZLE-DEF LH	1			
1-4	71LM-30143				.AIR NOZZLE-DEF RH	1			
1-5	71LM-30153				.LOWER COVER-LH	1			
1-6	71LM-30163				.LOWER COVER-RH	1			
1-7	71Q6-22400				.NOZZLE-AIR	4			
1-8	71Q6-22760				.CAP-TRIM	4			
1-9	S002-06015B				.SCREW-TRUS HEAD	4			
5	71LM-30603				DOOR TRIM ASSY	1			
5-1	71LM-30613				.DOOR TRIM-BODY	1			
5-2	71LM-30623				.CUP HOLDER-DOOR LH	1			
5-3	71LM-30643				.DOOR TRIM-RH	1			
5-31	71LM-30660				..CAP	4	#0001 -	-	
5-4	71LM-30653				.COVER-BACK STRIKER	1			
5-5	71Q6-22760				.CAP-TRIM	10			
10	S002-060166				SCREW-TRUSHEAD	22			

CAB INTERIOR 3

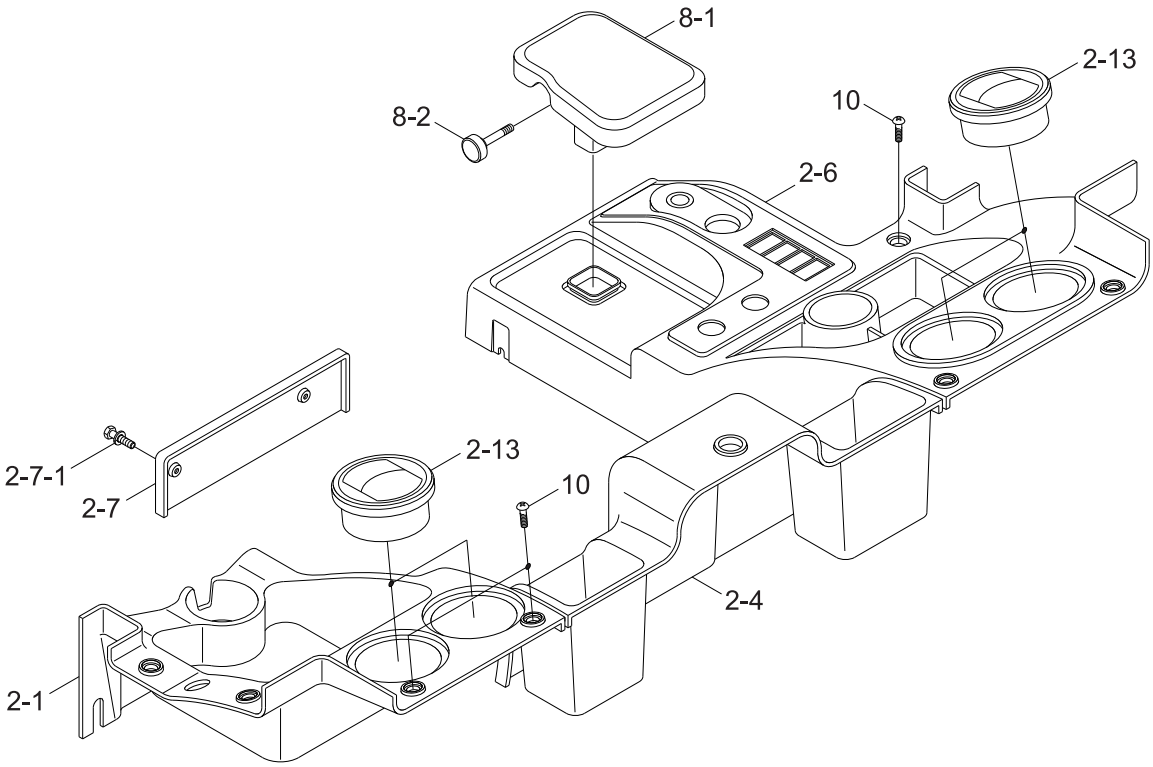

(5075 ITEM 9)

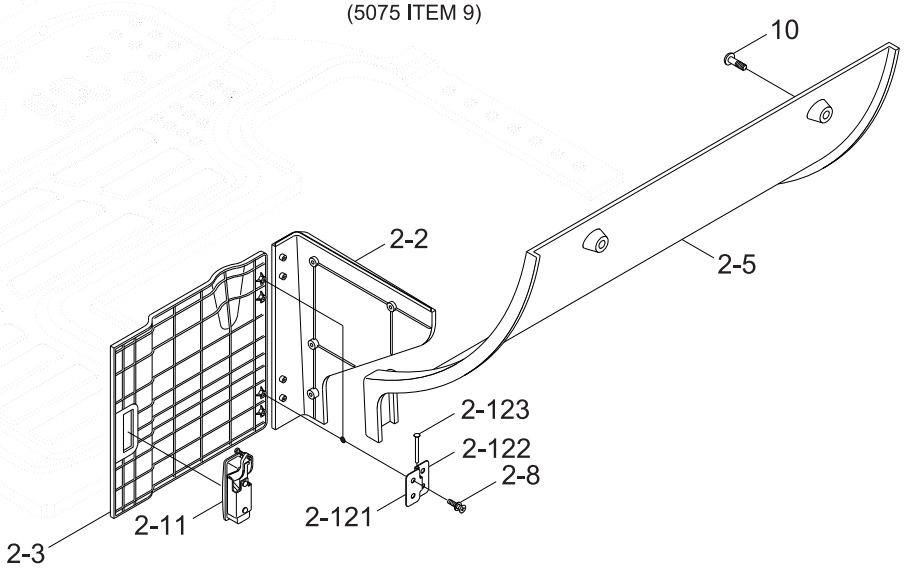

Item	Part_No	IS	Ord	T	Description	Qty	Serial_No	ITC	Remark
2	71LM-30205				CONSOLE BOX ASSY	1	-		
2	71LM-30206				CONSOLE BOX ASSY	1	#0020 -	B	
2-1	71LM-30213				.CONSOLE BOX-LH UP	1	-		
2-1	71LM-30214				.CONSOLE BOX-LH UP	1	#0020 -	B	
2-2	71LM-30223				.CONSOLE BOX-LH SIDE	1			
2-3	71LM-30233				.CONSOLE BOX-LH FRONT	1			
2-4	71LM-30283				.CONSOLE BOX-RR UP	1			
2-5	71LM-30293				.CONSOLE BOX-RR LOW	1			
2-6	71LM-30314				.CONSOLE_BOX-RH RR	1			
2-7	71LM-30363				.COVER-SEAT	1			
2-7-1	71LN-29011				..SCREW-CAP	2			
2-8	S002-06015B				.SCREW-TRUS HEAD	8			
2-11	71LM-01220				.LATCH ASSY	1			
2-12	71LM-30240				.HINGE ASSY	1			
N2-12	71LM-30253				..HINGE-LH CON A	2			NOT
N2-12	71LM-30263				..HINGE-LH CON B	2			NOT
N2-12	71LM-30270				..HINGE PIN	2			NOT
2-13	71Q6-22400				.NOZZLE-AIR	3			
8	71LM-30804				WRIST REST ASSY	1			
8-1	71LM-30940				.KNOB-WRIST REST	1			
N8-2	71LM-30960				.FOAM-WRIST REST	1			NOT
10	S002-060166				SCREW-TRUSHEAD	22			
N	@				NOT SUPPLIED PARTS	AR			NOT

CAB DUCT

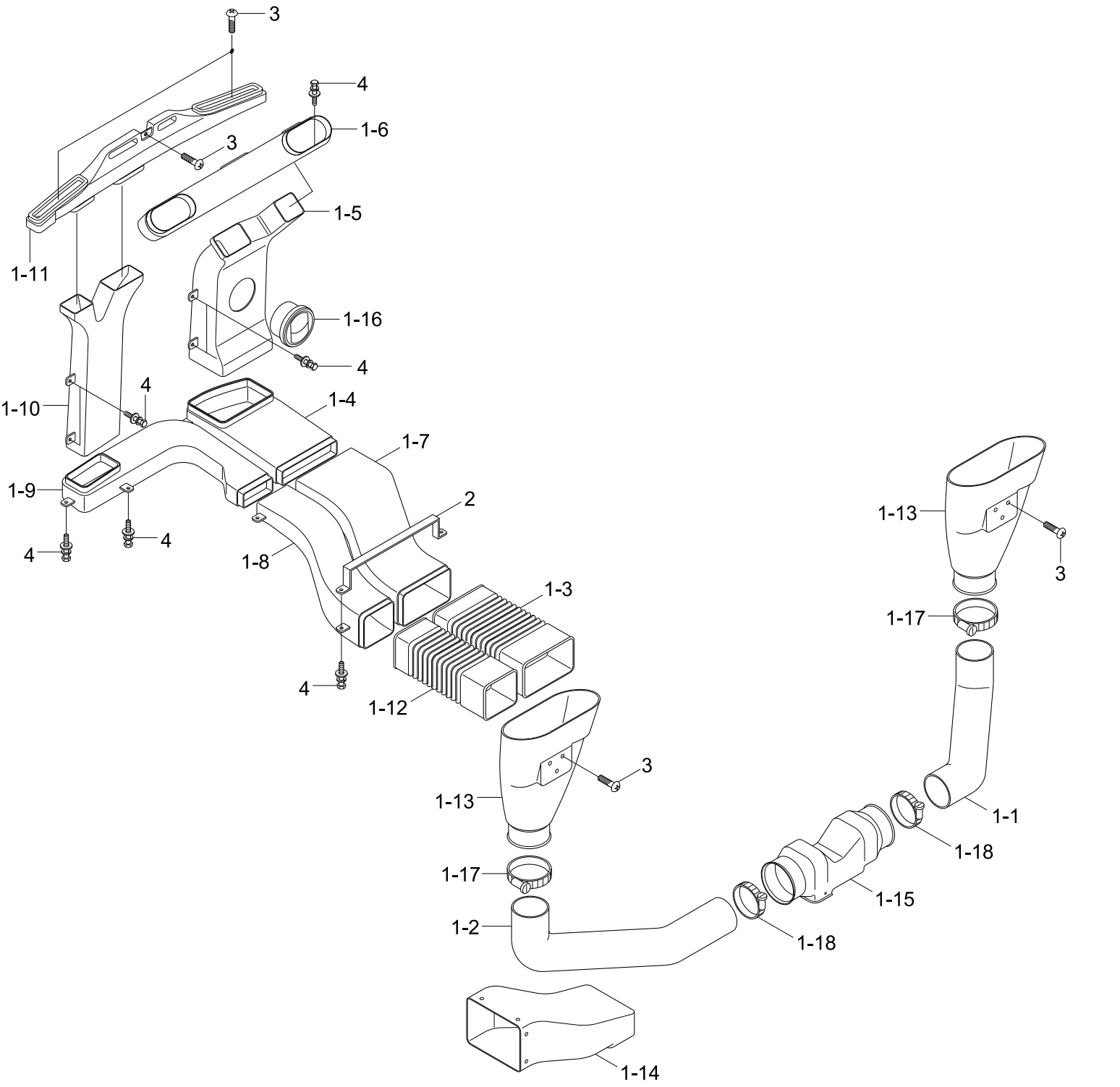
3
4
1-6
3
1-5
1-11
1-16
4
4
1-10
1-4
1-7
1-9
2
4
4
1-8
1-3
4
1-12
1-13
3
1-17
1-2
1-18
1-15
1-14
1-13
3
1-17
1-1
1-18

Item	Part_No	IS	Ord	T	Description	Qty	Serial_No	ITC	Remark
1	71LM-31003				DUCT SUB ASSY	1			
1-1	71LM-28093				.HOSE-RH, DUCT REAR	1			
1-2	71LM-28103				.HOSE-LH, DUCT REAR	1			
1-3	71LM-31113				.DUCT-HUMAN A	1			
1-4	71LM-31123				.DUCT-HUMAN B	1			
1-5	71LM-31134				.DUCT-HUMAN C	1			
1-6	71LM-31143				.DUCT-HUMAN D	1			
1-7	71LM-31153				.DUCT-HUMAN AA	1			
1-8	71LM-31213				.DUCT-DEF A	1			
1-9	71LM-31223				.DUCT-DEF B	1			
1-10	71LM-31234				.DUCT-DEF C	1			
1-11	71LM-31243				.DUCT-DEF D	1			
1-12	71LM-31253				.DUCT-DEF A	1			
1-13	71LM-31313				.DUCT-REAR RH	2			
1-14	71LM-31414				.DUCT-INLET	1			
1-15	71Q6-22280				.DUCT-VENT(1)	1			
1-16	71Q6-22400				.NOZZLE-AIR,REAR	1			
1-17	S520-085000				.CLAMP-HOSE	2			
1-18	S552-102370				.CLAMP-BAND	2			
2	71LM-28182				CLAMP-DUCT	1			
3	S002-060166				SCREW-TRUSHEAD	7			
4	S035-082026				BOLT-W/WASHER	26			

SEAT MOUNTING

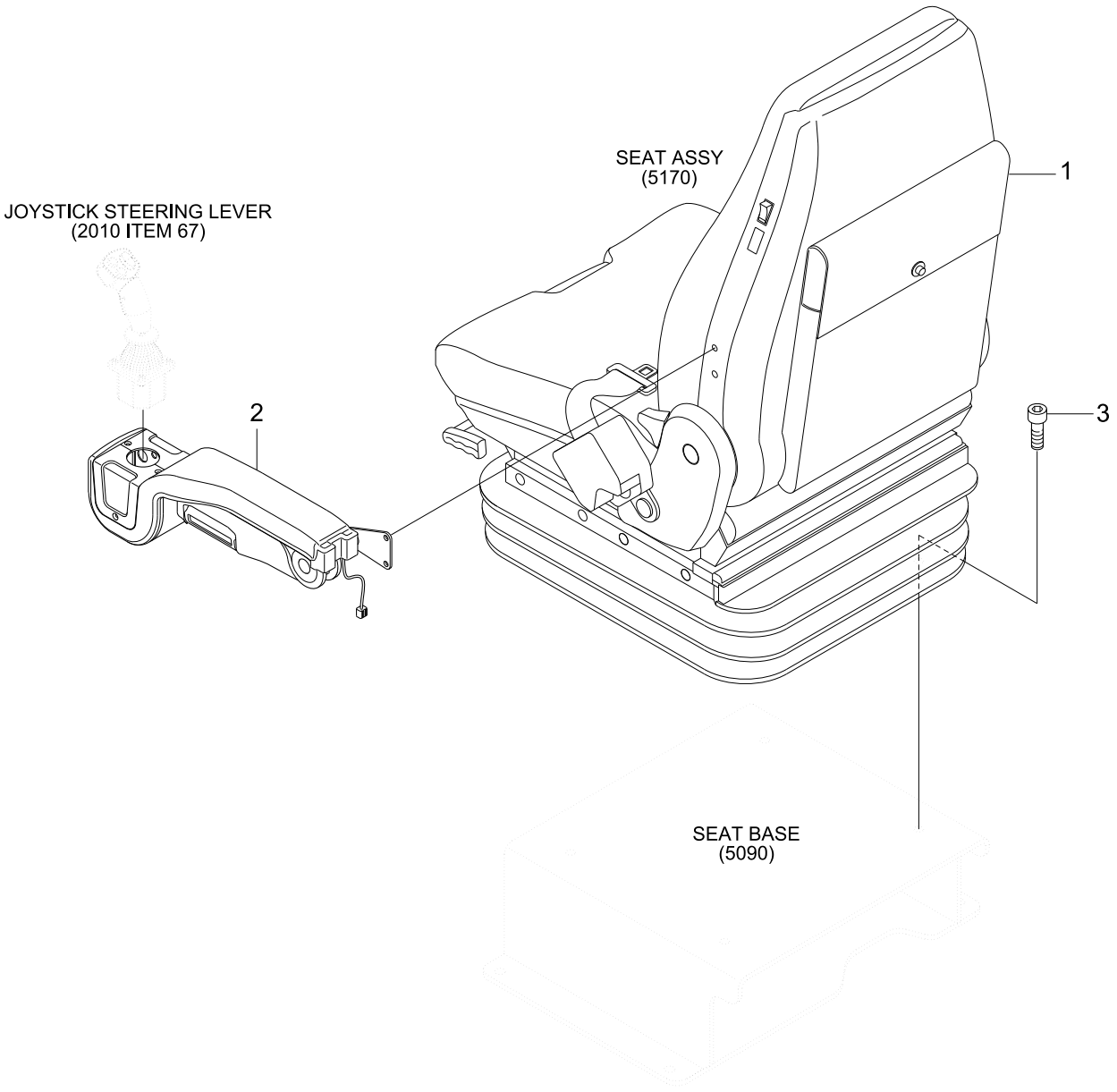

Item	Part_No	IS	Ord	T	Description	Qty	Serial_No	ITC	Remark
1	71LM-33021				SEAT ASSY-MECH HEAT 2"	1			SEE 5172, 5173
1	71LM-33031				SEAT ASSY-MECH 3"	1			SEE 5174, 5175
1	71LM-33041				SEAT ASSY-AIR HEATED 2"	1			SEE 5176, 5177
1	71LM-33211				SEAT ASSY-WOO MECH 2"	1			SEE 5180
1	71LM-33111				SEAT ASSY-KAB MECH 2"	1			SEE 5182
2	71LM-33400				ARMREST ASSY-JOYSTICK	1	- #0113		GRAMMER SEAT
2	71LM-33401				ARMREST ASSY-JOYSTICK	1	#0114 -	B	GRAMMER SEAT
3	S109-080256				BOLT-SOCKET	4			

SEAT(MECHANICAL, HEATED, 2", 1/2)

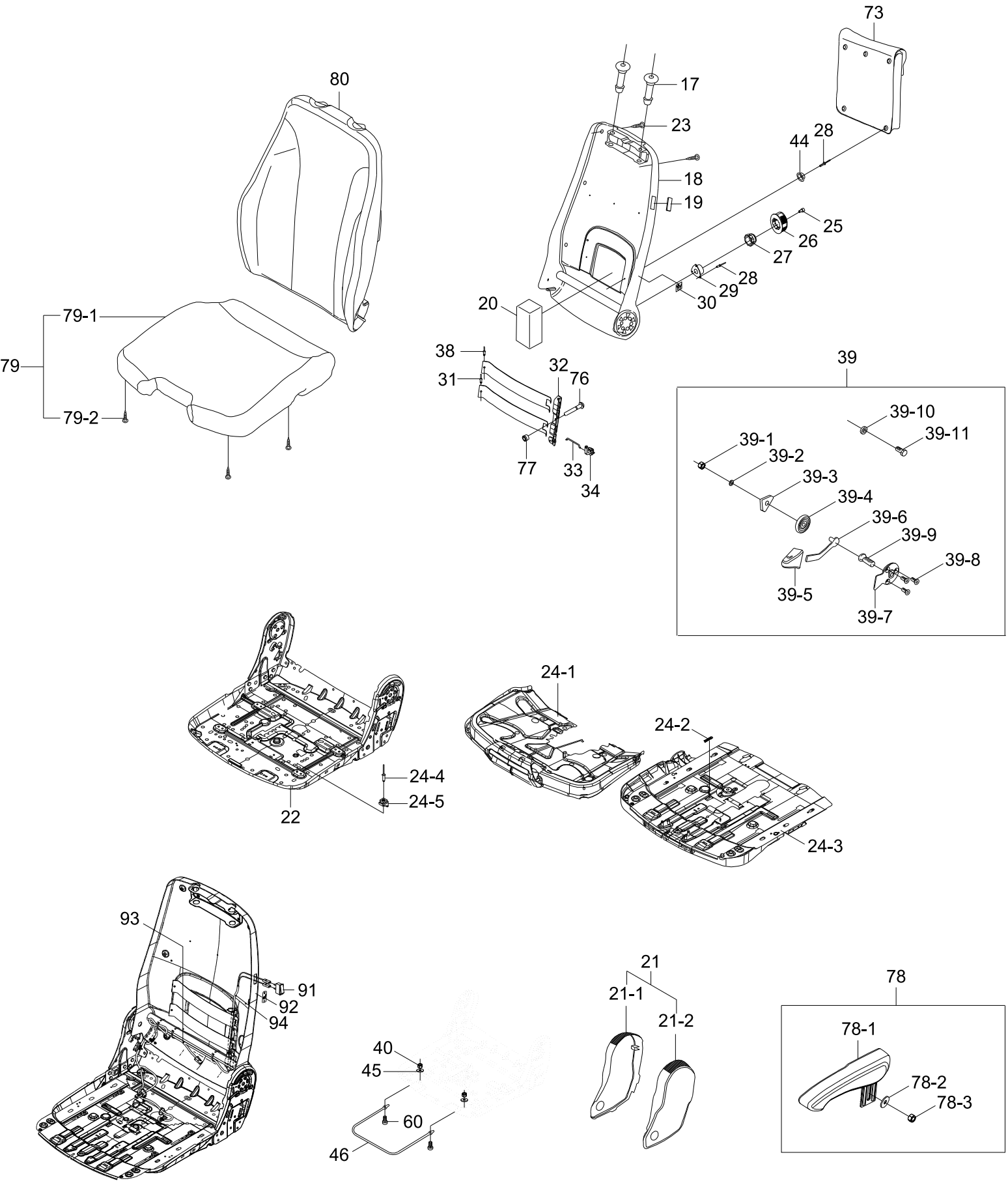

Item	Part_No	IS	Ord	T	Description	Qty	Serial_No	ITC	Remark
*	71LM-33021				SEAT ASSY-MECH HEAT	1			GRAMMER
17	ZGBH-00004				.BUSH	2			
18	ZGBH-00166				.BACKREST-SCR	1			
19	ZGBH-00013				.COVER-PLASTIC	1			
20	ZGBH-00016				.SPONGE	1			
21	ZGBH-00204				.HINGE COVER KIT	1			
21-1	ZGBH-00182				..COVER-RH	1			
21-2	ZGBH-00181				..COVER-LH	1			
22	ZGBH-00110				.SEAT PLATE GS	1			
23	ZGBH-00037				.SCREW-SELF TAPPING	6			
24	ZGBH-00205				.SLIDER KIT	1			
24-1	ZGBH-00038				..ADJUSTMENT-TILTING	1			
24-2	ZGBH-00039				..SPRING	1			
24-3	ZGBH-00114				..ADJUSTMENT-SEAT	1			
24-4	ZGBH-00034				..RIVET	4			
24-5	ZGBH-00035				..PROFILE-GLIDING	4			
25	ZGBH-00055				.SCREW	1			
26	ZGBH-00007				.HANDLE	1			
N27	ZGBH-00008				.WHEEL-TOOLHEAD	1			NOT
28	ZGBH-00010				.RIVET-BLIND	8			
29	ZGBH-00011				.BRAKE-SLING SPRING	1			
30	ZGBH-00012				.STICKER	1			
31	ZGBH-00021				.PLATE	2			
32	ZGBH-00017				.WINKEL	1			
33	ZGBH-00019				.RODS	1			
34	ZGBH-00020				.CARRIER	1			
38	ZGBH-00107				.RIVET	2			

Item	Part_No	IS	Ord	T	Description	Qty	Serial_No	ITC	Remark
38	ZGBH-00107				.RIVET	2			
39	ZGBH-00207				.BACKREST KIT	1			
39-1	ZGBH-00109				..SELF LOCK NUT	1			
39-2	ZGBH-00024				..WASHER-BLACK	1			
39-3	ZGBH-00025				..SPRING HOLDER	1			
39-4	ZGBH-00026				..SPRING-LEG	1			
39-5	ZGBH-00033				..HANDLE	1			
39-6	ZGBH-00027				..LEVER	1			
39-7	ZGBH-00113				..PLATE	1			
39-8	ZGBH-00029				..SCREW	3			
39-9	ZGBH-00112				..SCREW	1			
39-1(	ZGBH-00015				..WASHER	1			
39-1:	ZGBH-00014				..SCREW-HEX HEAD	1			
40	ZGBH-00023				.HEX NUT-BLACK	2			
44	ZGBH-00208				.BALL	5			
45	ZGBH-00015				.WASHER	2			
46	ZGBH-00209				.HANDLE	1			
60	ZGBH-00043				.SCREW-CYLINDRIC HEAD	2			
73	ZGBH-00213				.BOX-LITERATURE	1			
76	ZGBH-00215				.BOLT	1			
77	ZGBH-00216				.SEEGER	1			
78	ZGBH-00217				.ARMREST KIT	1			
78-1	ZGBH-00030				..ARM REST-LH	1			
78-2	ZGBH-00015				..WASHER	1			
78-3	ZGBH-00023				..HEX NUT-BLACK	1			
79	ZGBH-00223				.CUSHION KIT	1			
79-1	ZGBH-00192				..SEAT CUSHION	1			

Item	Part_No	IS	Ord	T	Description	Qty	Serial_No	ITC	Remark
79-1	ZGBH-00192				..SEAT CUSHION	1			
79-2	ZGBH-00037				..SCREW-SELF TAPPING	4			
80	ZGBH-00235				.BACKREST CUSHION	1			
91	ZGBH-00172				.SWITCH-HEATER	1			
92	ZGBH-00173				.STICKER	4			
93	ZGBH-00225				.HARNESS	4			
94	ZGBH-00226				.EXTESION CABLE	2			

SEAT(MECHANICAL, HEATED, 2", 2/2)

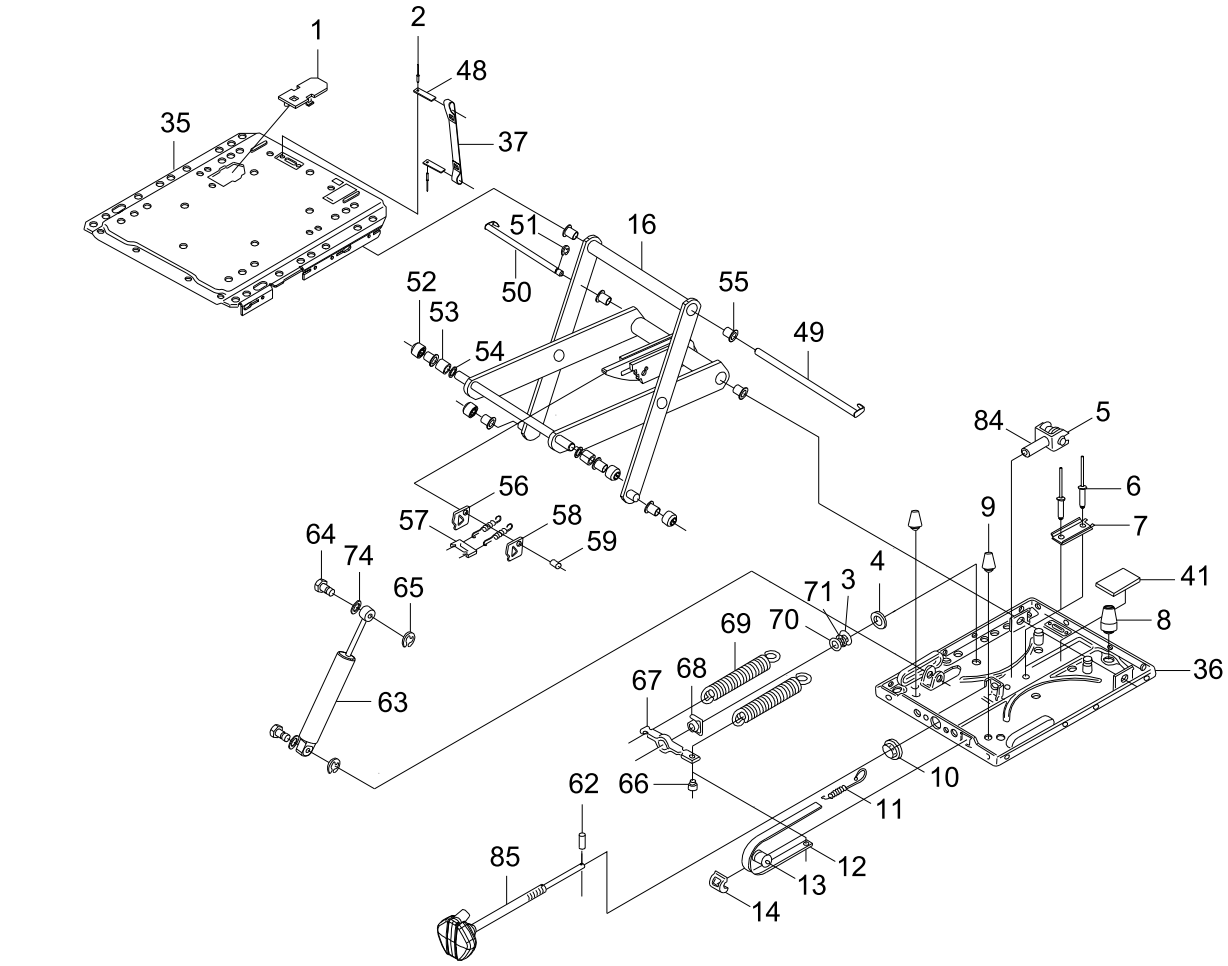

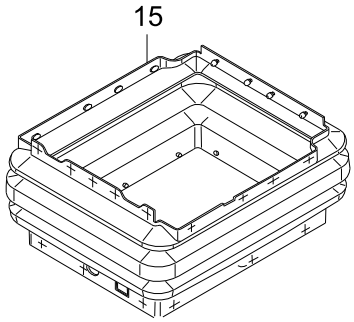

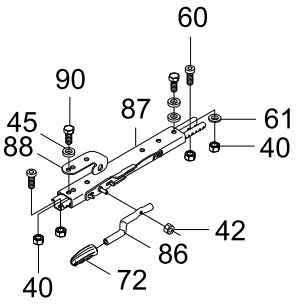

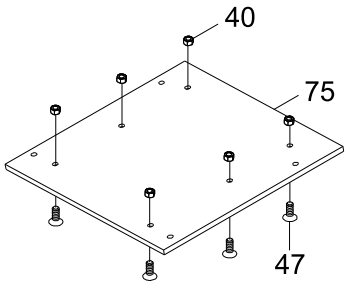

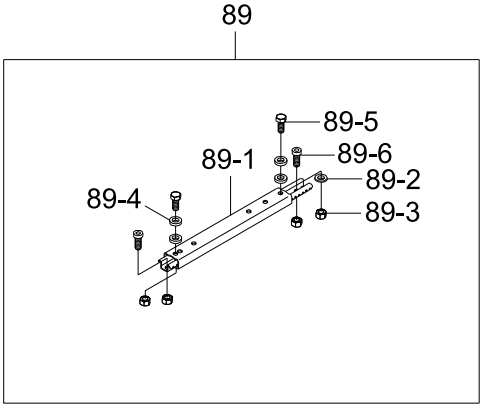

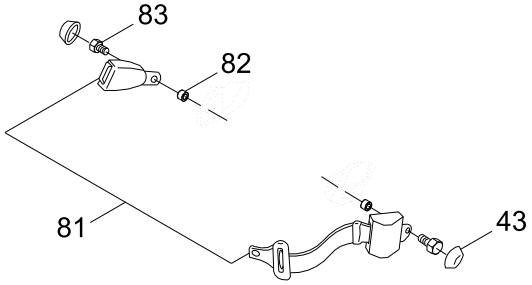

Item	Part_No	IS	Ord	T	Description	Qty	Serial_No	ITC	Remark
*	@				SEAT ASSY	1			NOT
1	ZGBH-00058				.PANEL-TRIM	1			
2	ZGBH-00059				.POP RIVET	2			
3	ZGBH-00085				.WASHER	1			
4	ZGBH-00086				.WASHER-PLASTIC	1			
5	ZGBH-00089				.BEARING-TRIPLE	1			
6	ZGBH-00090				.POP RIVET	2			
7	ZGBH-00197				.U-SHAPED PROFILE	1			
8	ZGBH-00092				.RUBBER	1			
9	ZGBH-00087				.RUBBER	2			
10	ZGBH-00094				.BUSH	1			
11	ZGBH-00095				.SPRING-TENSION	1			
12	ZGBH-00198				.INDICATOR	1			
13	ZGBH-00097				.ROLLER	1			
14	ZGBH-00098				.DEVICE-GUIDING	1			
15	ZGBH-00101				.BELLOWS	1			
N16	ZGBH-00064				.SWING ARM LA	1			NOT
35	ZGBH-00057				.PLATE-UPPER	1			
36	ZGBH-00206				.PLATE-SUSPENSION	1			
37	ZGBH-00195				.BELT-SECONDARY	1			
40	ZGBH-00023				.HEX NUT-BLACK	10			
41	ZGBH-00056				.PLATE-RUBBER	1			
42	ZGBH-00116				.SELF LOCK NUT	1			
43	ZGBH-00050				.COVER	2			
45	ZGBH-00015				.WASHER	3			
47	ZGBH-00168				.SCREW-COUNTERSUNK	6			
48	ZGBH-00060				.PLATE	2			

Item	Part_No	IS	Ord	T	Description	Qty	Serial_No	ITC	Remark
48	ZGBH-00060				.PLATE	2			
49	ZGBH-00210				.BOLT	1			
50	ZGBH-00062				.BOLT	1			
51	ZGBH-00063				.LOCK WASHER	1			
52	ZGBH-00072				.ROLLER	4			
53	ZGBH-00073				.BUSH	2			
54	ZGBH-00071				.WASHER	2			
55	ZGBH-00065				.BUSH-PLASTIC	8			
N56	ZGBH-00069				.PLATE	2			NOT
57	ZGBH-00070				.STRIP-COVER	1			
58	ZGBH-00211				.TENSION SPRING	2			
59	ZGBH-00067				.BOLT	1			
60	ZGBH-00043				.SCREW-CYLINDRIC HEAD	4			
61	ZGBH-00024				.WASHER-BLACK	1			
62	ZGBH-00078				.PIN	1			
63	ZGBH-00212				.ABSORBER	1			
64	ZGBH-00074				.BOLT	2			
65	ZGBH-00075				.LOCK WASHER	2			
66	ZGBH-00079				.INSERT	1			
67	ZGBH-00080				.SPRING BRACKET	1			
68	ZGBH-00081				.FLANGE NUT	1			
69	ZGBH-00082				.SPRING LA	2			
70	ZGBH-00083				.WASHER	1			
71	ZGBH-00084				.BEARING	1			
72	ZGBH-00049				.KNOB-PLASTIC	1			
74	ZGBH-00118				.SPRING WASHER	2			
75	ZGBH-00214				.PLATE-BOTTOM	1			

Item	Part_No	IS	Ord	T	Description	Qty	Serial_No	ITC	Remark
75	ZGBH-00214				.PLATE-BOTTOM	1			
81	ZGBH-00220				.SEATBELT	1			
82	ZGBH-00051				.BUSH	2			
83	ZGBH-00053				.SCREW	2			
84	ZGBH-00088				.GABEL	1			
85	ZGBH-00077				.HANDLE	1			
86	ZGBH-00048				.HANDLE	1			
87	ZGBH-00221				.SLIDE	1			
88	ZGBH-00045				.BRACKET	1			
89	ZGBH-00222				.SLIDE RAIL RH	1			
89-1	ZGBH-00041				..SLIDE RAIL-RH	1			
89-2	ZGBH-00024				..WASHER-BLACK	1			
89-3	ZGBH-00023				..HEX NUT-BLACK	4			
89-4	ZGBH-00015				..WASHER	4			
89-5	ZGBH-00042				..SCREW-HEX HEAD	2			
89-6	ZGBH-00043				..SCREW-CYLINDRIC HEAD	2			
90	ZGBH-00042				.SCREW-HEX HEAD	2			
N	@				NOT SUPPLIED PARTS	AR			NOT

SEAT(MECHANICAL, RETRACT, 3", 1/2)

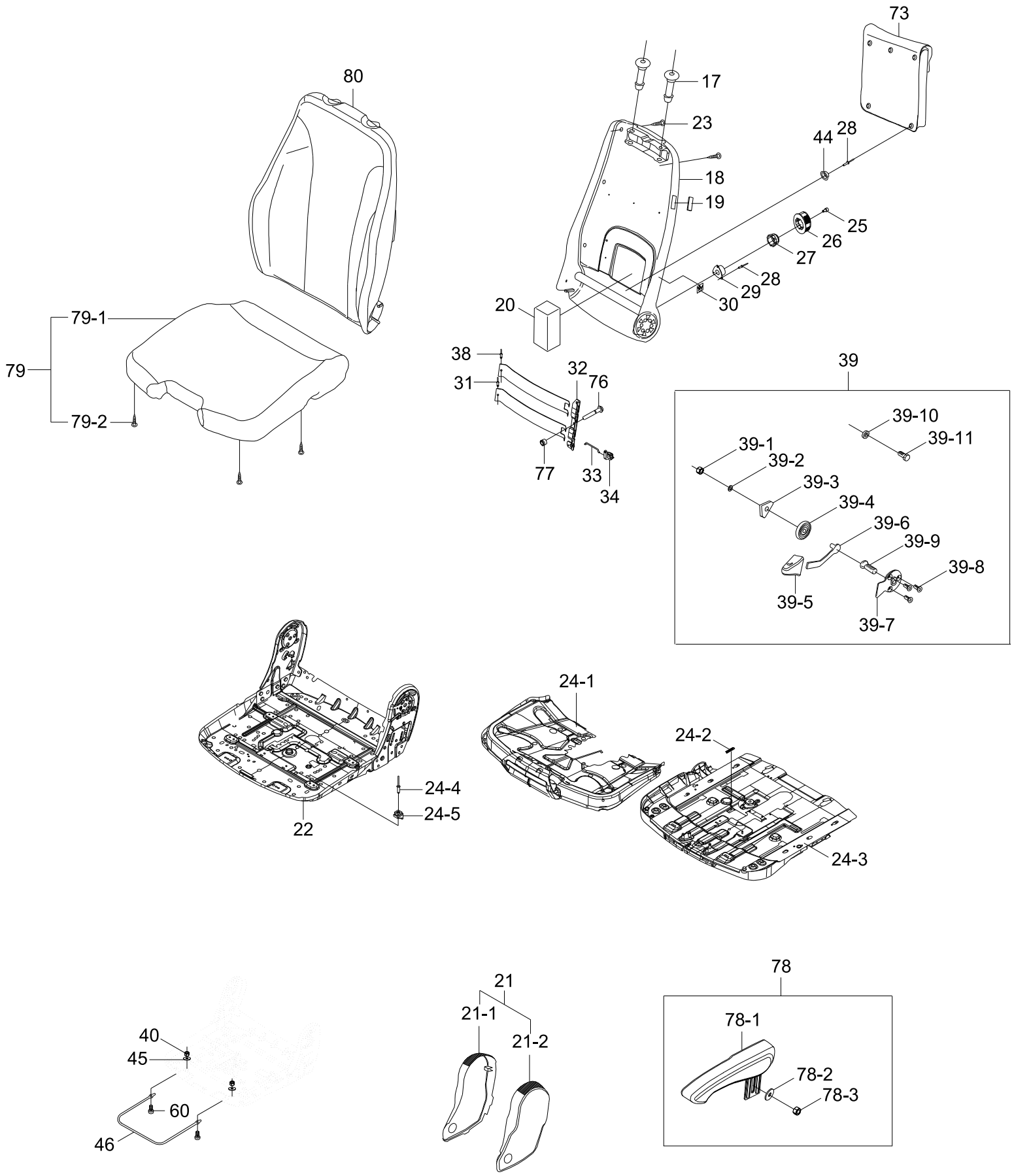

Item	Part_No	IS	Ord	T	Description	Qty	Serial_No	ITC	Remark
*	71LM-33031				SEAT ASSY-MECH 3"	1			GRAMMER
17	ZGBH-00004				.BUSH	2			
18	ZGBH-00166				.BACKREST-SCR	1			
19	ZGBH-00013				.COVER-PLASTIC	1			
20	ZGBH-00016				.SPONGE	1			
21	ZGBH-00204				.HINGE COVER KIT	1			
21-1	ZGBH-00182				..COVER-RH	1			
21-2	ZGBH-00181				..COVER-LH	1			
22	ZGBH-00110				.SEAT PLATE GS	1			
23	ZGBH-00037				.SCREW-SELF TAPPING	6			
24	ZGBH-00205				.SLIDER KIT	1			
24-1	ZGBH-00038				..ADJUSTMENT-TILTING	1			
24-2	ZGBH-00039				..SPRING	1			
24-3	ZGBH-00114				..ADJUSTMENT-SEAT	1			
24-4	ZGBH-00034				..RIVET	4			
24-5	ZGBH-00035				..PROFILE-GLIDING	4			
25	ZGBH-00055				.SCREW	1			
26	ZGBH-00007				.HANDLE	1			
N27	ZGBH-00008				.WHEEL-TOOLHEAD	1			NOT
28	ZGBH-00010				.RIVET-BLIND	8			
29	ZGBH-00011				.BRAKE-SLING SPRING	1			
30	ZGBH-00012				.STICKER	1			
31	ZGBH-00021				.PLATE	2			
32	ZGBH-00017				.WINKEL	1			
33	ZGBH-00019				.RODS	1			
34	ZGBH-00020				.CARRIER	1			
38	ZGBH-00107				.RIVET	2			

Item	Part_No	IS	Ord	T	Description	Qty	Serial_No	ITC	Remark
38	ZGBH-00107				.RIVET	2			
39	ZGBH-00207				.BACKREST KIT	1			
39-1	ZGBH-00109				..SELF LOCK NUT	1			
39-2	ZGBH-00024				..WASHER-BLACK	1			
39-3	ZGBH-00025				..SPRING HOLDER	1			
39-4	ZGBH-00026				..SPRING-LEG	1			
39-5	ZGBH-00033				..HANDLE	1			
39-6	ZGBH-00027				..LEVER	1			
39-7	ZGBH-00113				..PLATE	1			
39-8	ZGBH-00029				..SCREW	3			
39-9	ZGBH-00112				..SCREW	1			
39-1(	ZGBH-00015				..WASHER	1			
39-1:	ZGBH-00014				..SCREW-HEX HEAD	1			
40	ZGBH-00023				.HEX NUT-BLACK	2			
44	ZGBH-00208				.BALL	5			
45	ZGBH-00015				.WASHER	2			
46	ZGBH-00209				.HANDLE	1			
60	ZGBH-00043				.SCREW-CYLINDRIC HEAD	2			
73	ZGBH-00213				.BOX-LITERATURE	1			
76	ZGBH-00215				.BOLT	1			
77	ZGBH-00216				.SEEGER	1			
78	ZGBH-00217				.ARMREST KIT	1			
78-1	ZGBH-00030				..ARM REST-LH	1			
78-2	ZGBH-00015				..WASHER	1			
78-3	ZGBH-00023				..HEX NUT-BLACK	1			
79	ZGBH-00218				.CUSHION KIT	1			
79-1	ZGBH-00189				..CUSHION-SEAT,WHEAT	1			

Item	Part_No	IS	Ord	T	Description	Qty	Serial_No	ITC	Remark
79-1	ZGBH-00189				..CUSHION-SEAT,WHEAT	1			
79-2	ZGBH-00037				..SCREW-SELF TAPPING	4			
80	ZGBH-00219				.CUSHION-BACK	1			
N	@				NOT SUPPLIED PARTS	AR			NOT

SEAT(MECHANICAL, RETRACT, 3", 2/2)

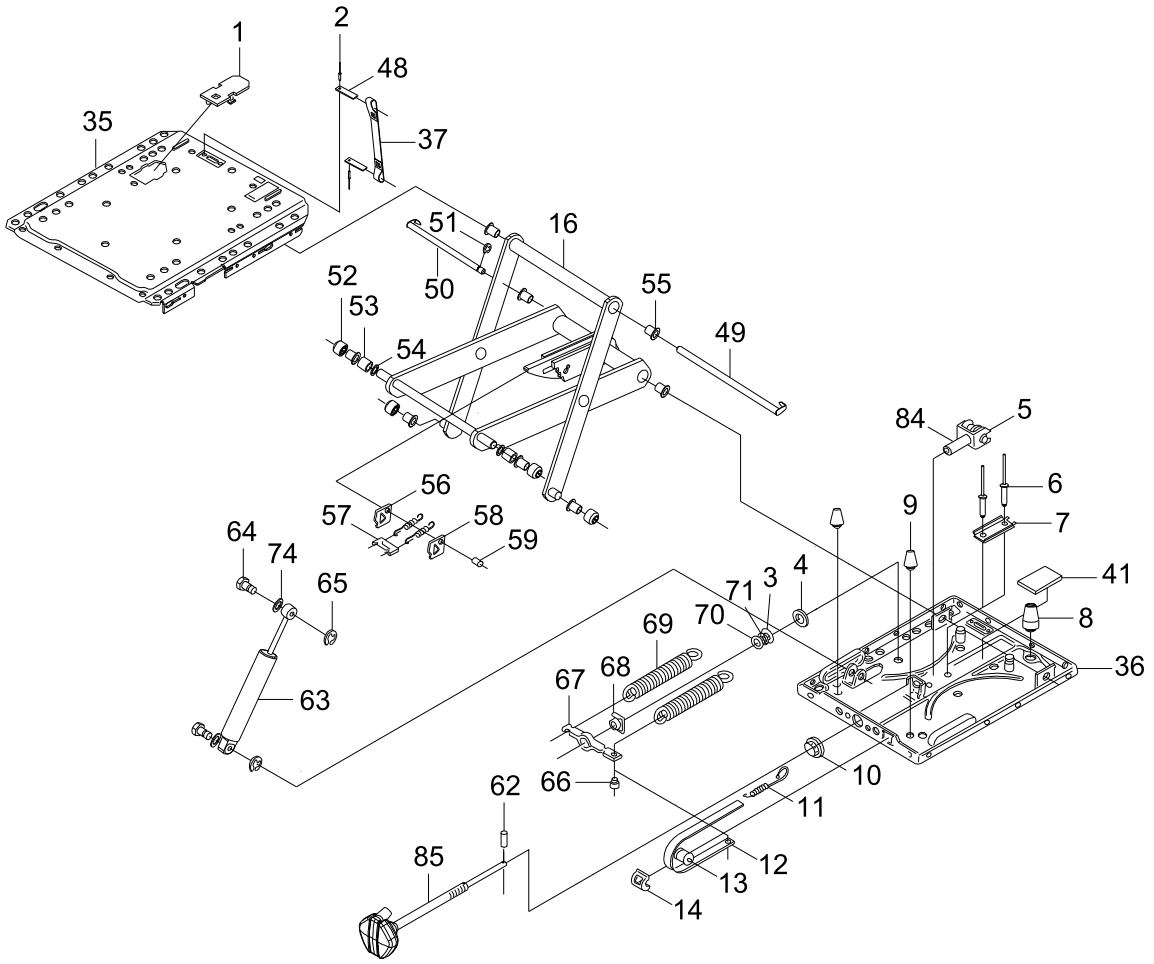

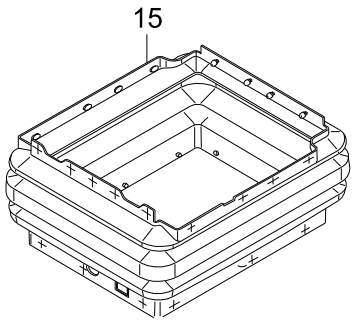

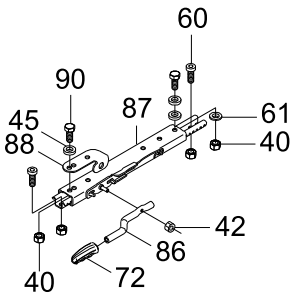

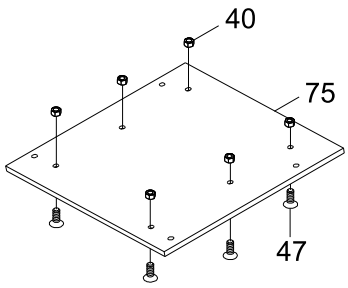

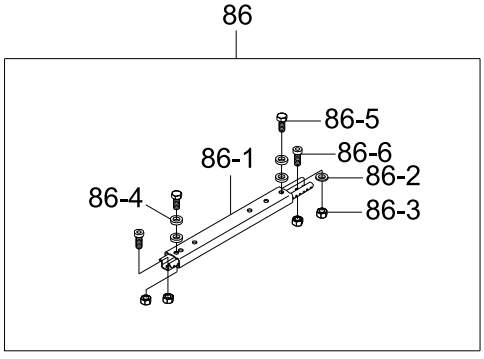

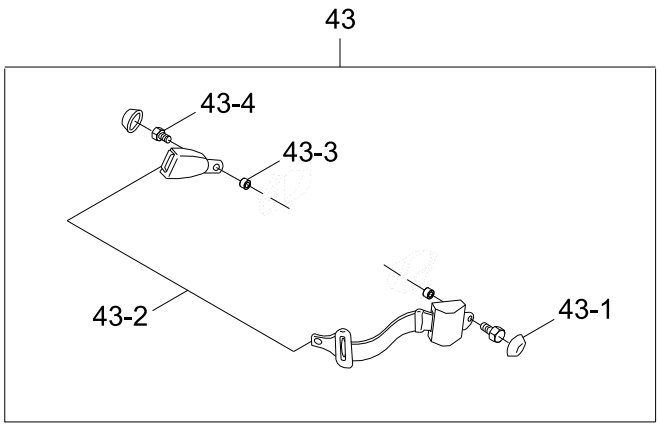

Item	Part_No	IS	Ord	T	Description	Qty	Serial_No	ITC	Remark
*	@				SEAT ASSY	1			NOT
1	ZGBH-00058				.PANEL-TRIM	1			
2	ZGBH-00059				.POP RIVET	2			
3	ZGBH-00085				.WASHER	1			
4	ZGBH-00086				.WASHER-PLASTIC	1			
5	ZGBH-00089				.BEARING-TRIPLE	1			
6	ZGBH-00090				.POP RIVET	2			
7	ZGBH-00197				.U-SHAPED PROFILE	1			
8	ZGBH-00092				.RUBBER	1			
9	ZGBH-00087				.RUBBER	2			
10	ZGBH-00094				.BUSH	1			
11	ZGBH-00095				.SPRING-TENSION	1			
12	ZGBH-00198				.INDICATOR	1			
13	ZGBH-00097				.ROLLER	1			
14	ZGBH-00098				.DEVICE-GUIDING	1			
15	ZGBH-00101				.BELLOWS	1			
N16	ZGBH-00064				.SWING ARM LA	1			NOT
35	ZGBH-00057				.PLATE-UPPER	1			
36	ZGBH-00206				.PLATE-SUSPENSION	1			
37	ZGBH-00195				.BELT-SECONDARY	1			
40	ZGBH-00023				.HEX NUT-BLACK	10			
41	ZGBH-00056				.PLATE-RUBBER	1			
42	ZGBH-00116				.SELF LOCK NUT	1			
43	ZGBH-00227				.SEAT BELT KIT	1			
43-1	ZGBH-00050				..COVER	2			
43-2	ZGBH-00102				..SEAT BELT	1			
43-3	ZGBH-00051				..BUSH	2			

Item	Part_No	IS	Ord	T	Description	Qty	Serial_No	ITC	Remark
43-3	ZGBH-00051				..BUSH	2			
43-4	ZGBH-00053				..SCREW	2			
45	ZGBH-00015				.WASHER	3			
47	ZGBH-00168				.SCREW-COUNTERSUNK	6			
48	ZGBH-00060				.PLATE	2			
49	ZGBH-00210				.BOLT	1			
50	ZGBH-00062				.BOLT	1			
51	ZGBH-00063				.LOCK WASHER	1			
52	ZGBH-00072				.ROLLER	4			
53	ZGBH-00073				.BUSH	2			
54	ZGBH-00071				.WASHER	2			
55	ZGBH-00065				.BUSH-PLASTIC	8			
N56	ZGBH-00069				.PLATE	2			NOT
57	ZGBH-00070				.STRIP-COVER	1			
58	ZGBH-00211				.TENSION SPRING	2			
59	ZGBH-00067				.BOLT	1			
60	ZGBH-00043				.SCREW-CYLINDRIC HEAD	4			
61	ZGBH-00024				.WASHER-BLACK	1			
62	ZGBH-00078				.PIN	1			
63	ZGBH-00212				.ABSORBER	1			
64	ZGBH-00074				.BOLT	2			
65	ZGBH-00075				.LOCK WASHER	2			
66	ZGBH-00079				.INSERT	1			
67	ZGBH-00080				.SPRING BRACKET	1			
68	ZGBH-00081				.FLANGE NUT	1			
69	ZGBH-00082				.SPRING LA	2			
70	ZGBH-00083				.WASHER	1			

Item	Part_No	IS	Ord	T	Description	Qty	Serial_No	ITC	Remark
70	ZGBH-00083				.WASHER	1			
71	ZGBH-00084				.BEARING	1			
72	ZGBH-00049				.KNOB-PLASTIC	1			
74	ZGBH-00118				.SPRING WASHER	2			
75	ZGBH-00214				.PLATE-BOTTOM	1			
81	ZGBH-00088				.GABEL	1			
82	ZGBH-00077				.HANDLE	1			
83	ZGBH-00048				.HANDLE	1			
84	ZGBH-00221				.SLIDE	1			
85	ZGBH-00045				.BRACKET	1			
86	ZGBH-00222				.SLIDE RAIL RH	1			
86-1	ZGBH-00041				..SLIDE RAIL-RH	1			
86-2	ZGBH-00024				..WASHER-BLACK	1			
86-3	ZGBH-00023				..HEX NUT-BLACK	4			
86-4	ZGBH-00015				..WASHER	4			
86-5	ZGBH-00042				..SCREW-HEX HEAD	2			
86-6	ZGBH-00043				..SCREW-CYLINDRIC HEAD	2			
87	ZGBH-00042				.SCREW-HEX HEAD	2			
N	@				NOT SUPPLIED PARTS	AR			NOT

SEAT(AIR, RETRACT, 3", 1/2)

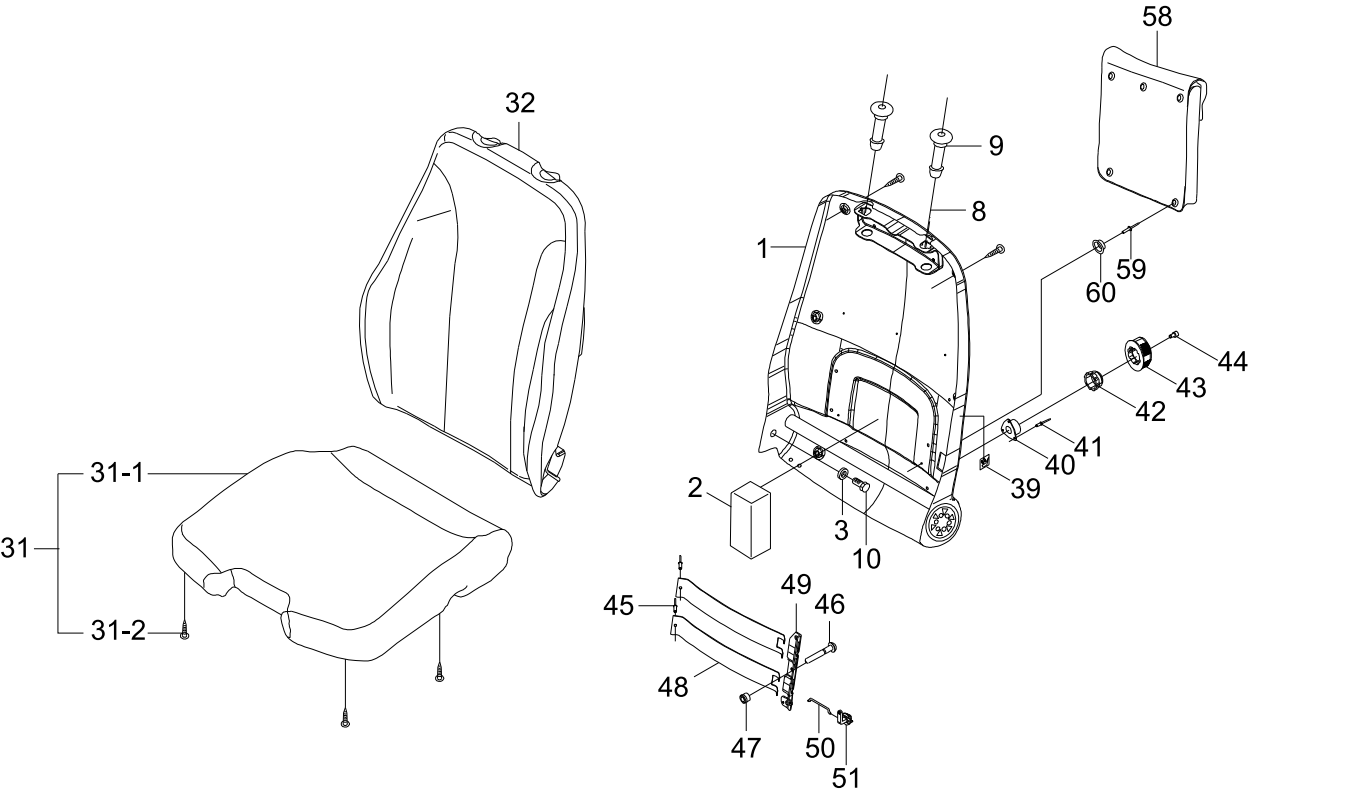

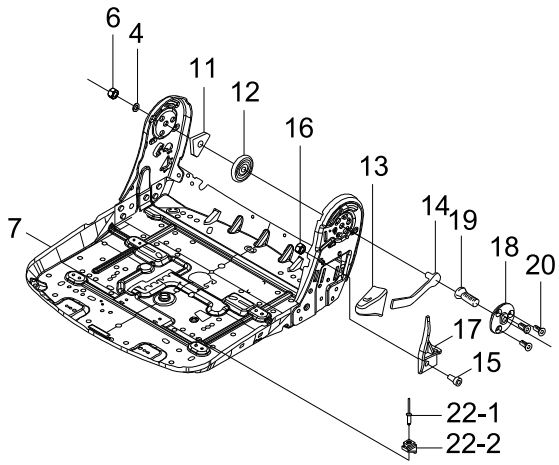

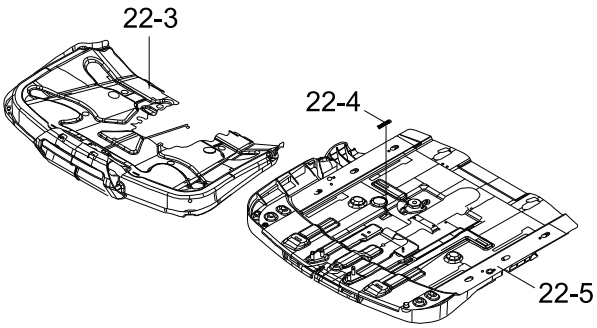

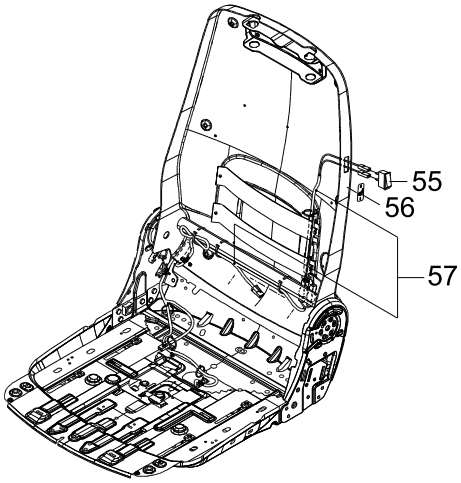

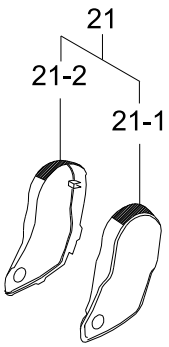

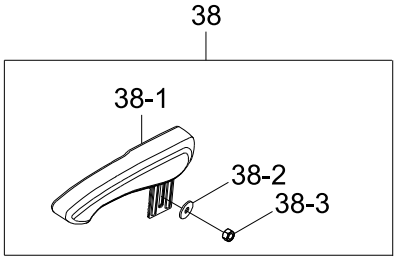

Item	Part_No	IS	Ord	T	Description	Qty	Serial_No	ITC	Remark
*	71LM-33041				SEAT ASSY-AIR HEATED 3"	1			GRAMMER
1	ZGBH-00166				.BACKREST-SCR	1			
2	ZGBH-00016				.SPONGE	1			
3	ZGBH-00015				.WASHER	1			
4	ZGBH-00024				.WASHER-BLACK	1			
6	ZGBH-00109				.SELF LOCK NUT	1			
7	ZGBH-00110				.SEAT PLATE GS	1			
8	ZGBH-00037				.SCREW-SELF TAPPING	6			
9	ZGBH-00004				.BUSH	2			
10	ZGBH-00014				.SCREW-HEX HEAD	1			
11	ZGBH-00025				.SPRING HOLDER	1			
12	ZGBH-00026				.SPRING-LEG	1			
13	ZGBH-00033				.HANDLE	1			
14	ZGBH-00027				.LEVER	1			
15	ZGBH-00228				.SCREW	1			
16	ZGBH-00229				.NUT	1			
17	ZGBH-00234				.RETAINER CABLE	1			
18	ZGBH-00113				.PLATE	1			
19	ZGBH-00112				.SCREW	1			
20	ZGBH-00029				.SCREW	3			
21	ZGBH-00204				.HINGE COVER KIT	1			
21-1	ZGBH-00181				..COVER-LH	1			
21-2	ZGBH-00182				..COVER-RH	1			
22	ZGBH-00205				.SLIDER KIT	1			
22-1	ZGBH-00034				..RIVET	4			
22-2	ZGBH-00035				..PROFILE-GLIDING	4			
22-3	ZGBH-00038				..ADJUSTMENT-TILTING	1			

Item	Part_No	IS	Ord	T	Description	Qty	Serial_No	ITC	Remark
22-3	ZGBH-00038				..ADJUSTMENT-TILTING	1			
22-4	ZGBH-00039				..SPRING	1			
22-5	ZGBH-00114				..ADJUSTMENT-SEAT	1			
31	ZGBH-00223				.CUSHION KIT	1			
31-1	ZGBH-00192				..SEAT CUSHION	1			
31-2	ZGBH-00037				..SCREW-SELF TAPPING	4			
32	ZGBH-00235				.BACKREST CUSHION	1			
38	ZGBH-00217				.ARMREST KIT	1			
38-1	ZGBH-00030				..ARM REST-LH	1			
38-2	ZGBH-00015				..WASHER	1			
38-3	ZGBH-00023				..HEX NUT-BLACK	1			
39	ZGBH-00012				.STICKER	1			
40	ZGBH-00011				.BRAKE-SLING SPRING	1			
41	ZGBH-00010				.RIVET-BLIND	3			
N42	ZGBH-00008				.WHEEL-TOOLHEAD	1			NOT
43	ZGBH-00007				.HANDLE	1			
44	ZGBH-00055				.SCREW	1			
45	ZGBH-00107				.RIVET	2			
46	ZGBH-00215				.BOLT	1			
47	ZGBH-00216				.SEEGER	1			
48	ZGBH-00021				.PLATE	2			
49	ZGBH-00017				.WINKEL	1			
50	ZGBH-00019				.RODS	1			
51	ZGBH-00020				.CARRIER	1			
55	ZGBH-00172				.SWITCH-HEATER	1			
56	ZGBH-00173				.STICKER	1			
57	ZGBH-00231				.HARNESS	1			

Item	Part_No	IS	Ord	T	Description	Qty	Serial_No	ITC	Remark
57	ZGBH-00231				.HARNESS	1			
58	ZGBH-00213				.BOX-LITERATURE	1			
59	ZGBH-00010				.RIVET-BLIND	5			
60	ZGBH-00208				.BALL	5			
N	@				NOT SUPPLIED PARTS	AR			NOT

SEAT(AIR, RETRACT, 3", 2/2)

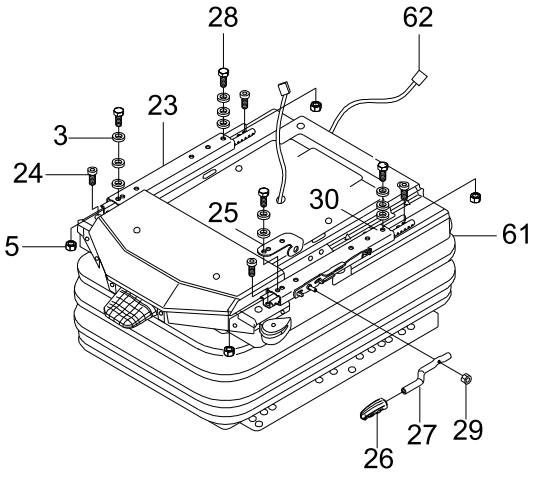

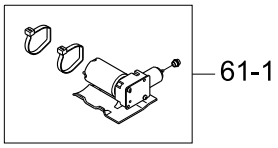

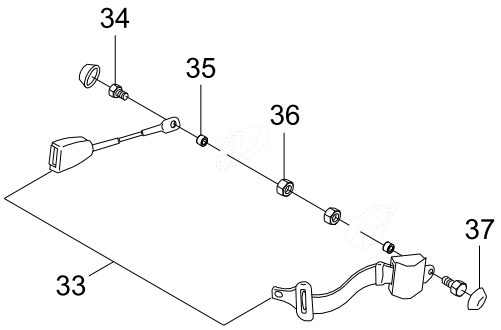

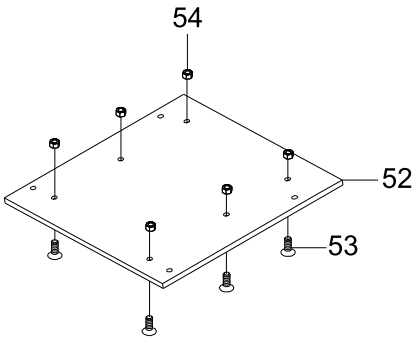

Item	Part_No	IS	Ord	T	Description	Qty	Serial_No	ITC	Remark
*	@				SEAT ASSY	1			NOT
3	ZGBH-00015				.WASHER	11			
5	ZGBH-00023				.NUT-HEX, BLACK	4			
23	ZGBH-00041				.SLIDE RAIL-RH	1			
24	ZGBH-00115				.CYLINDRIC HEAD SCREW	4			
26	ZGBH-00049				.KNOB-PLASTIC	1			
27	ZGBH-00048				.HANDLE	1			
28	ZGBH-00104				.SCREW-HEX HEAD	4			
29	ZGBH-00116				.SELF LOCK NUT	1			
33	ZGBH-00220				.SEATBELT	1			
34	ZGBH-00053				.SCREW	2			
35	ZGBH-00051				.BUSHING	2			
36	ZGBH-00052				.NUT	2			
37	ZGBH-00050				.COVER	2			
52	ZGBH-00214				.PLATE-BOTTOM	1			
53	ZGBH-00168				.SCREW-COUNTERSUNK	6			
54	ZGBH-00023				.NUT-HEX, BLACK	6			
61	ZGBH-00233				.SUSPENSION	1			
61-1	ZGBH-00372				..MOTOR COMPRESSOR	1	#0001 -		
62	ZGBH-00232				.ADAPTER CABLE	1			
61	ZGBH-00233				.SUSPENSION	1			
62	ZGBH-00232				.ADAPTER CABLE	1			

SEAT(MECHANICAL, WOO, 2")

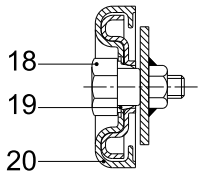

SECTION A-A

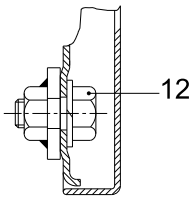

SECTION B-B

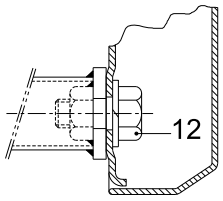

SECTION C-C

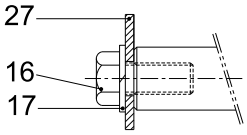

DETAIL D-D

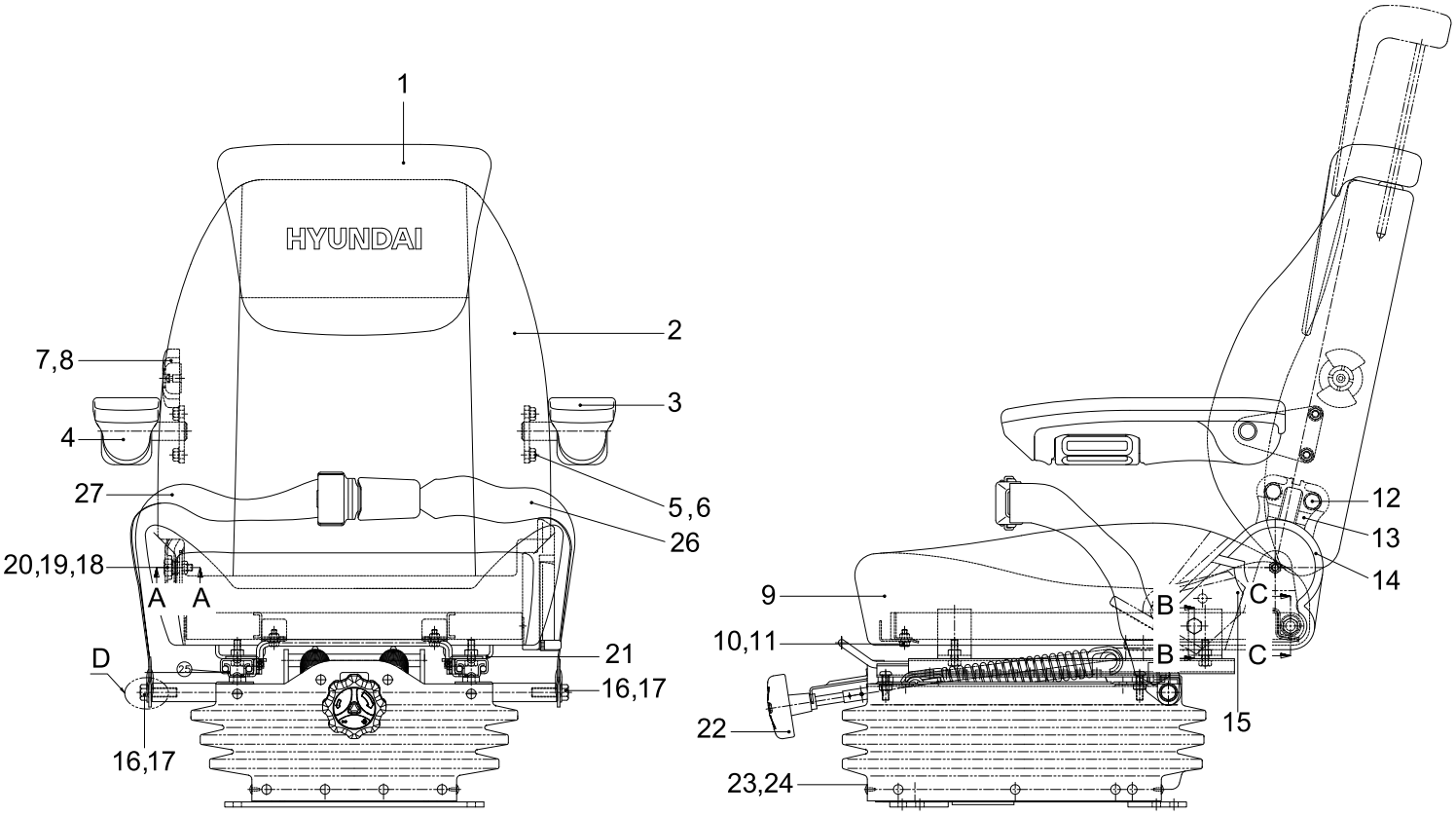

Item	Part_No	IS	Ord	T	Description	Qty	Serial_No	ITC	Remark
*	71LM-33211				SEAT ASSY-WOO MECH 2"	1			
N1	XKCB-00045				.SHOULDER REST ASSY	1			NOT
2	XKCB-00044				.BACKREST ASSY	1			
3	XKCB-00003				.ARM REST ASSY-LH	1			
4	XKCB-00046				.ARMREST ASSY-RH	1			
5	XKCB-00005				.BOLT	8			
6	XKCB-00006				.WASHER-SPRING	8			
7	XKCB-00007				.KNOB ASSY-L/SUPT	1			
8	XKCB-00008				.SCREW-M WITH WASHER	1			
9	XKCB-00009				.CUSHION ASSY	1			
10	XKCB-00010				.BOLT	2			
11	XKCB-00011				.WASHER-SPRING	2			
12	XKCB-00012				.BOLT-W/WASHER	4			
13	XKCB-00013				.RECLINER ASSY	1			
14	XKCB-00014				.COVER-RECLINER	1			
15	XKCB-00015				.KNOB-RECLINER	1			
16	XKCB-00016				.BOLT	2			
17	XKCB-00047				.SPRING WASHER	2			
18	XKCB-00018				.HINGE BOLT	1			
19	XKCB-00019				.BUSH	1			
20	XKCB-00020				.SIDE COVER	1			
21	XKCB-00048				.SEAT SUPPORT ASSY	1			
22	XKCB-00049				.SUSPENSION ASSY	1			
23	XKCB-00050				.DUST COVER	1			
24	XKCB-00029				.FASTENER	29			
25	XKCB-00034				.SLIDER ASSY	1			
26	XKCB-00035				.BELT-BUCKLE	1			

Item	Part_No	IS	Ord	T	Description	Qty	Serial_No	ITC	Remark
26	XKCB-00035				.BELT-BUCKLE	1			
27	XKCB-00036				.BELT-TONGUE	1			

SEAT(MECHANICAL, KAB, 2")

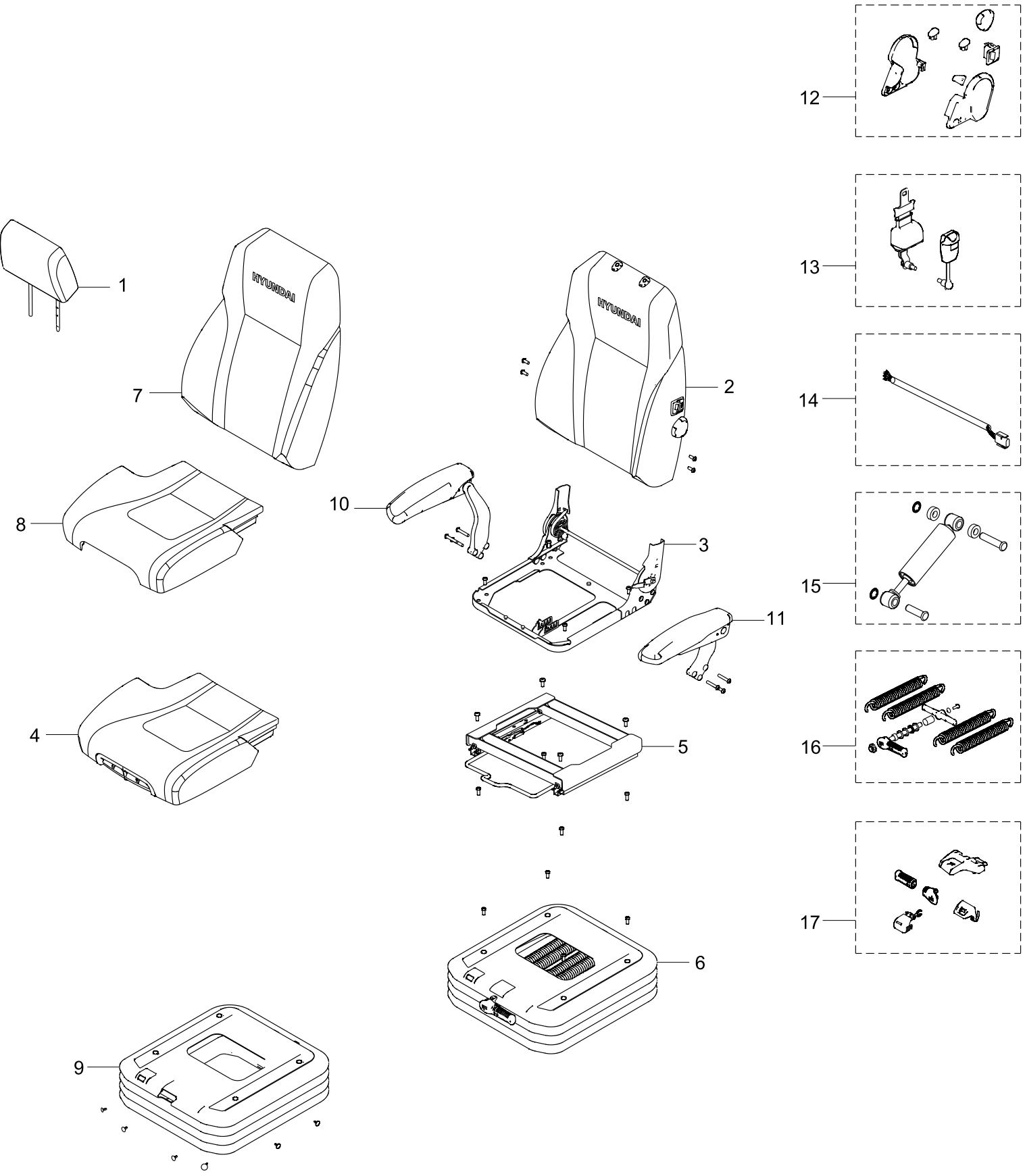

SEAT(MECHANICAL, KAB, 2")

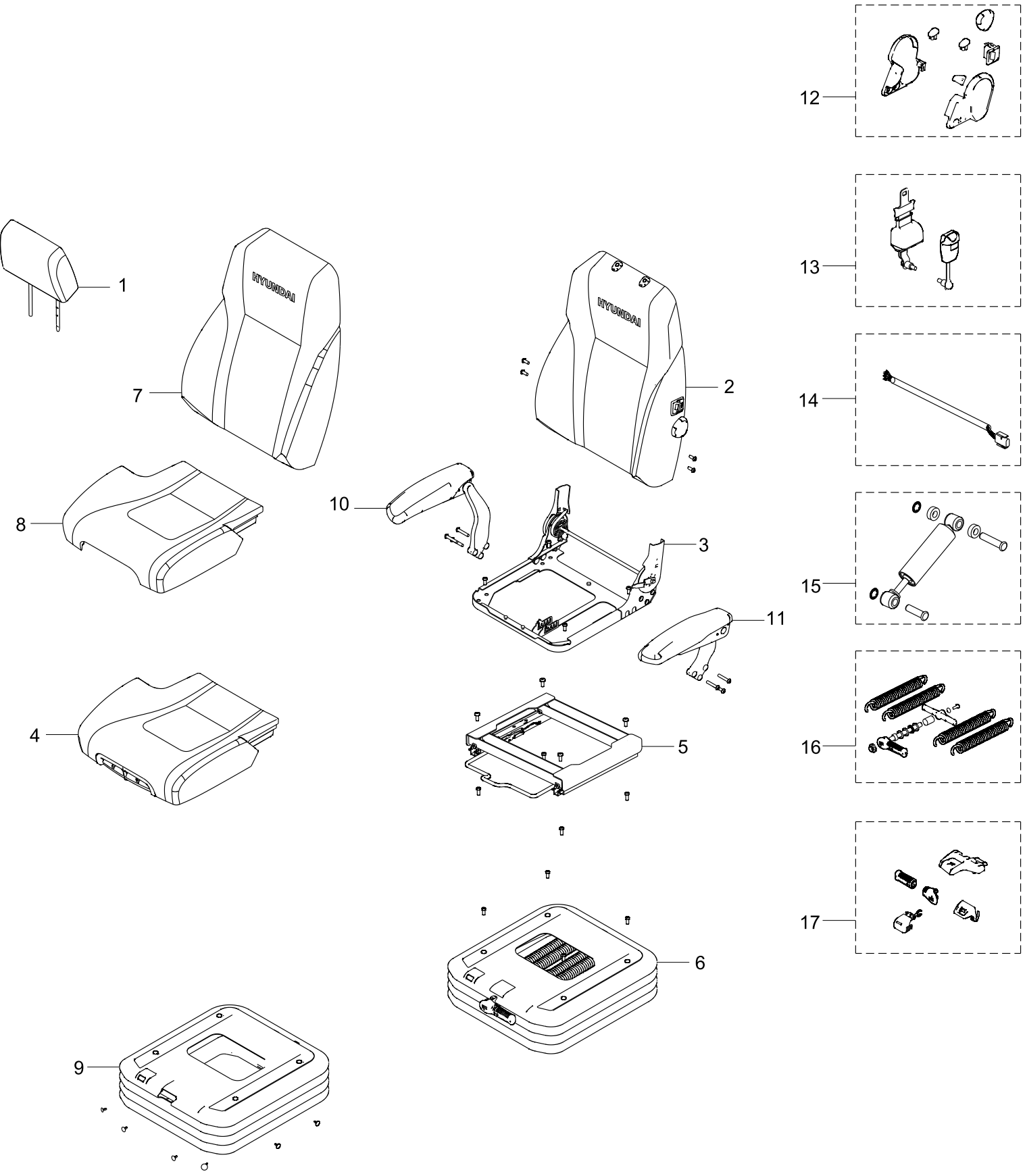

STEERING COLUMN

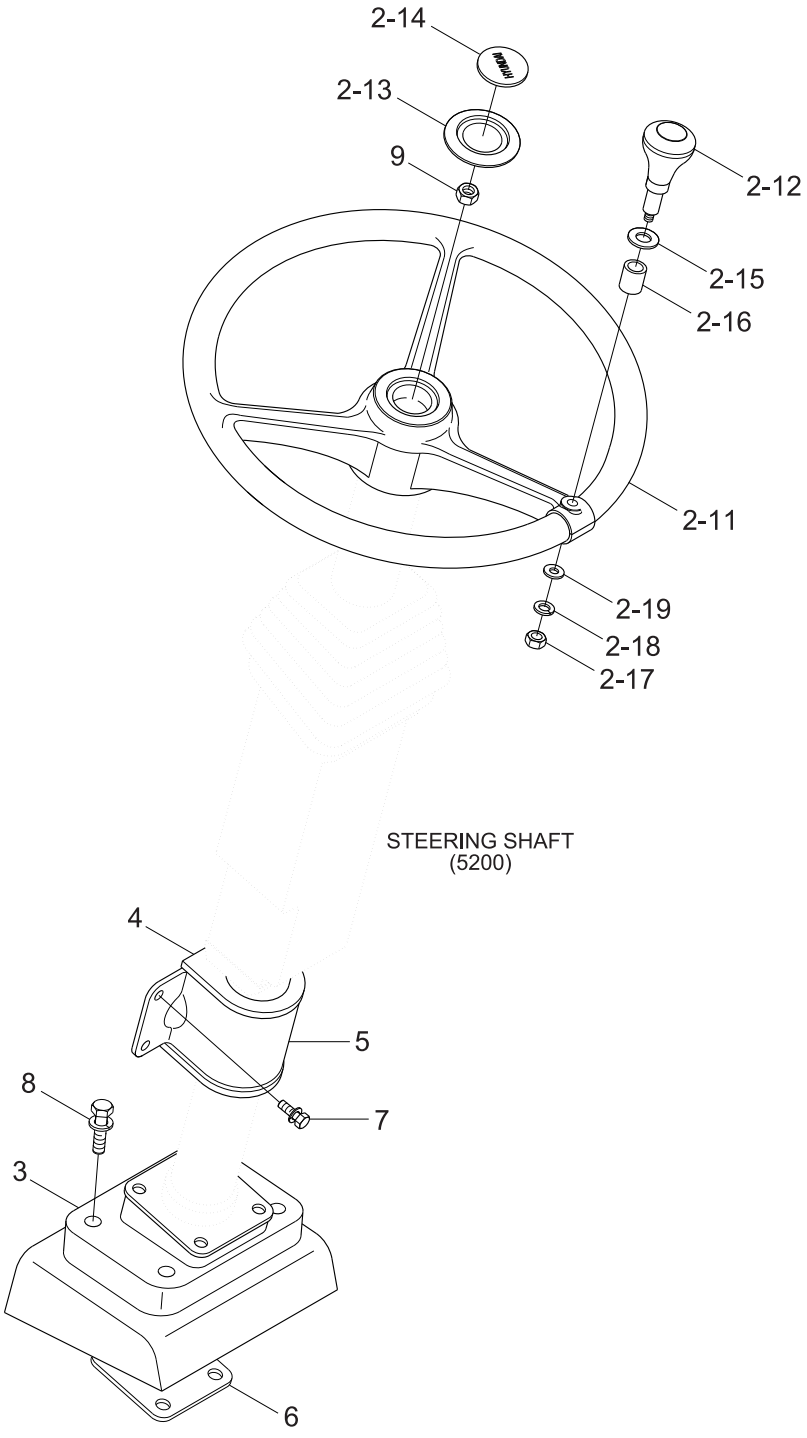

Item	Part_No	IS	Ord	T	Description	Qty	Serial_No	ITC	Remark
2	71AB-30101				STEERING WHEEL ASSY	1			
2-11	71AB-30111				.STEERING WHEEL	1			
2-12	71AB-30120				.KNOB-STEERING WHEEL	1			
2-13	71AB-30130				.CAP-STEERING WHEEL	1			
2-14	71AB-30140				.LOGO-STEERING WHEEL	1			
2-15	71AB-30210				.KNOB-RING	1			
2-16	71AB-30220				.BUSH	1			
2-17	71AB-30230				.NYLON NUT-SPECIAL	1			
2-18	71AB-30240				.SPRING WASHER-SPECIAL	1			
2-19	71AB-30250				.WASHER-SPECIAL	1			
3	71LM-32023				ANCHORAGE-BOTTOM	1			
4	71LM-32013				ANCHORAGE-UP	1			
5	71LM-32052				CLAMP	1			
6	71L6-10320				SHIM(4.0T)	1			
7	S035-082526				BOLT-W/WASHER	4			
8	S037-104526				BOLT-W/WASHER	4			
9	S207-16100B				NUT-HEX	1			

STEERING SHAFT

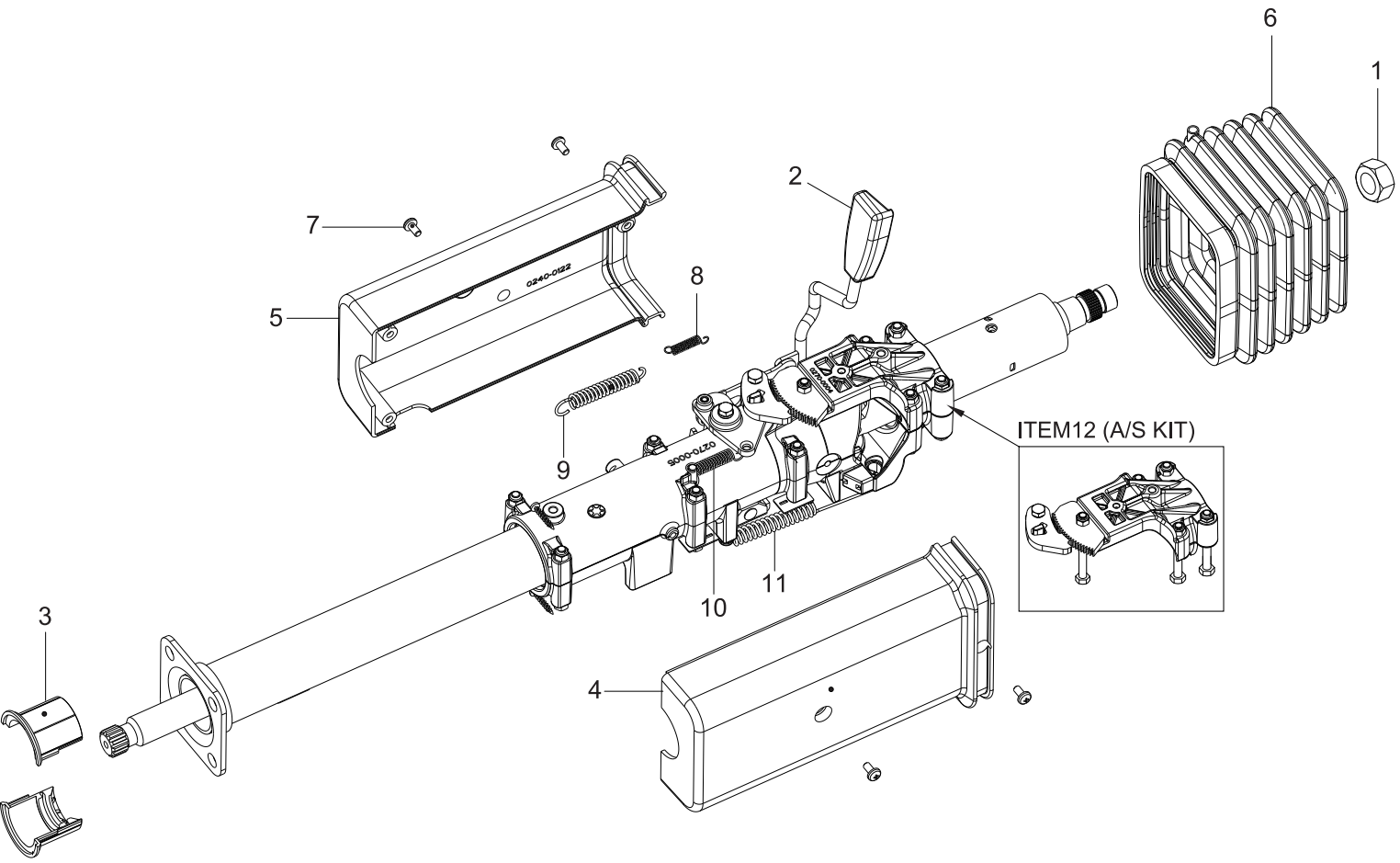

Item	Part_No	IS	Ord	T	Description	Qty	Serial_No	ITC	Remark
*	71LM-32100				STEERING COLUMN-COBO	1	- #0005		
*	71LM-32101				STEERING COLUMN-COBO	1	#0006 -	B	
1	ZTAC-00001				.NUT-UN15589	1			
2	ZTAC-00002				.CONTROL LEVER	1			
3	ZTAC-00003				.LOWER GUIDE	2			
4	ZTAC-00004				.RIGHT CARTER	1			
5	ZTAC-00005				.LEFT CARTER	1			
6	ZTAC-00006				.BELLOWS IN RUBBER	1			
7	ZTAC-00007				.TAPPING SCREW	4			
8	ZTAC-00008				.COIL SPRING	1			
9	ZTAC-00009				.COIL SPRING	1			
10	ZTAC-00010				.COIL SPRING	1	- #0005		
10	ZTAC-00012				.COIL SPRING	1	#0006 -	D	
11	ZTAC-00011				.COIL SPRING	1			
12	ZTAC-00013				.A/S KIT	1	#0001 - #0005		FOR A/S

MUD GUARD

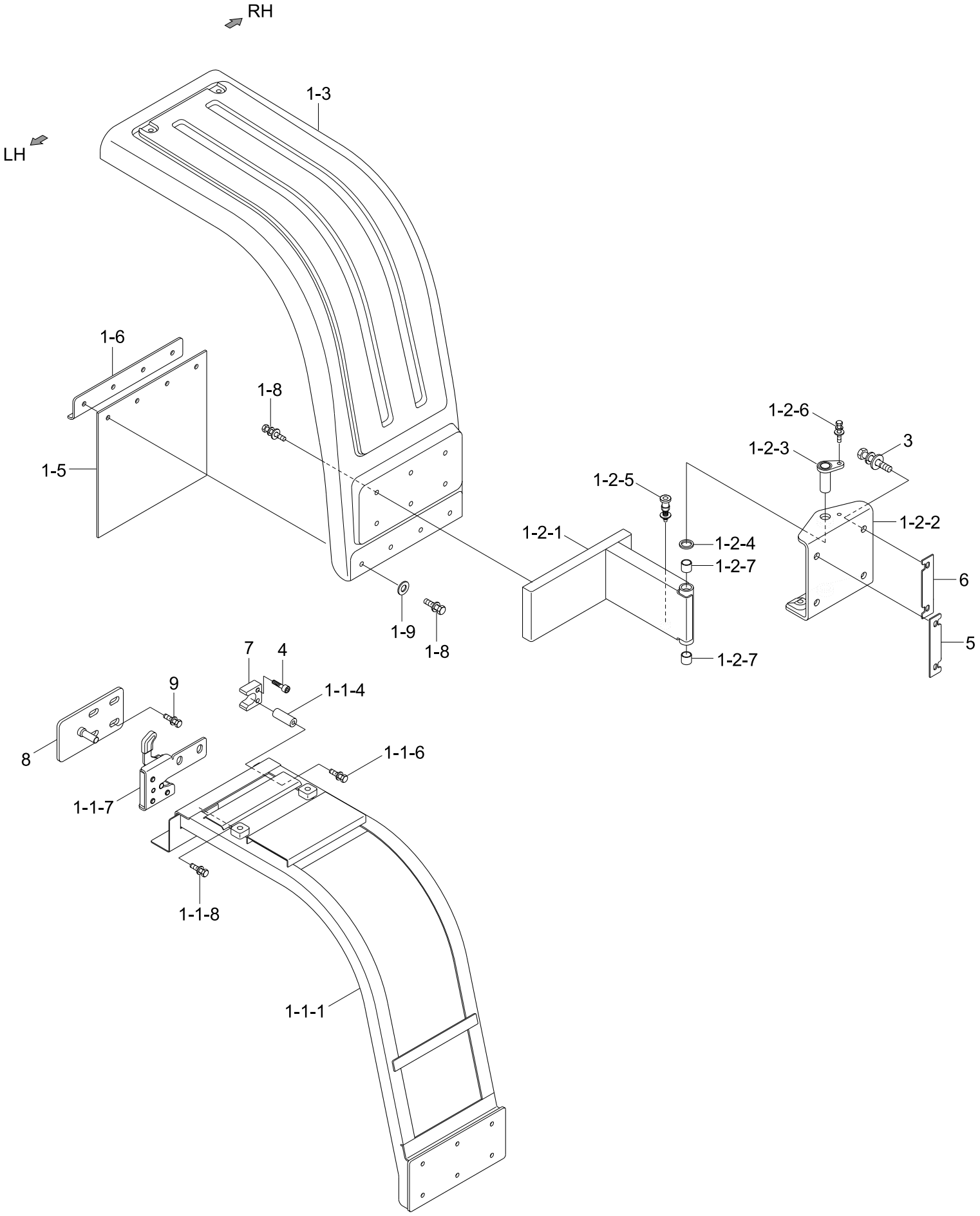
RH
LH
1-3
1-6
1-8
1-5
1-9
1-8
1-2-6
1-2-3
3
1-2-5
1-2-4
1-2-1
1-2-7
1-2-2
6
5
1-2-7
7
4
9
1-1-4
8
1-1-6
1-1-7
1-1-8
1-1-1

Item	Part_No	IS	Ord	T	Description	Qty	Serial_No	ITC	Remark
1	75LK-80011				MUDGUARD ASSY-LH	1			LH
1	75LK-80021				MUDGUARD ASSY-RH	1			RH
1-1	72LK-80113				.SUPPORT ASSY-LH	1			LH
1-1	72LK-80213				.SUPPORT ASSY-RH	1			RH
1-1-1	72LK-80123				..SUPPORT WA-LH	1			LH
1-1-1	72LK-80223				..SUPPORT WA-RH	1			RH
1-1-4	72LM-80172				..STOPPER-INNER	2			
1-1-6	S037-124556				..BOLT-W/WASHER	2			
1-1-7	72LM-80320				..LATCH ASSY-RH	1			
1-1-8	S037-123056				..BOLT-W/WASHER	2			
1-2	75LK-80130				.HINGE ASSY-LH	1			LH
1-2	75LK-80230				.HINGE ASSY-RH	1			RH
1-2-1	75LK-81310				..BRACKET	1			LH
1-2-1	75LK-82310				..BRACKET	1			RH
1-2-2	72LM-81401				..BRACKET WA-LH	1			
1-2-2	72LM-82401				..BRACKET WA-RH	1			
1-2-3	72LM-81440				..PIN WA	1			
1-2-4	72LM-81450				..SPACER	1			
1-2-5	72LM-80160				..PLUNGER	1			
1-2-6	S035-082016				..BOLT-W/WASHER	1			
1-2-7	S731-025015				..BUSHING-DU	2			
1-3	72LK-80181				.MUD GUARD	1			
1-5	72LL-70141				.RUBBER PAD	1			
1-6	72LL-70200				.PLATE WA	1			
1-7	S037-122556				.BOLT-W/WASHER	4			
1-8	S037-123556				.BOLT-W/WASHER	8			
1-9	S392-013060				.SHIM(2.0T)-ROUND	4			

Item	Part_No	IS	Ord	T	Description	Qty	Serial_No	ITC	Remark
1-9	S392-013060				.SHIM(2.0T)-ROUND	4			
3	71Q6-50040				BOLT-W/WASHER	8			
4	S037-103056				BOLT-W/WASHER	4			
5	71LB-82080				SHIM(1.6T)	2			
6	71LB-82070				SHIM(3.0T)	2			
7	72LM-80330				STRIKER WA	2			

LADDER & HANDRAIL (-#0115)

A/S ITEM
SERIAL NO : #0001-

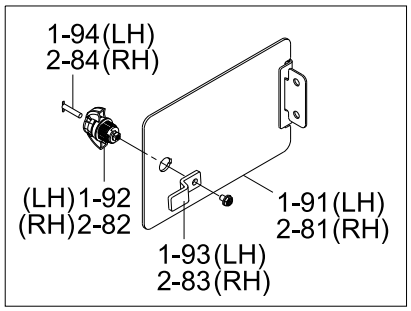

Item	Part_No	IS	Ord	T	Description	Qty	Serial_No	ITC	Remark
1	72LK-60011				LADDER TOTAL ASSY-LH	1	-		
1	72LK-60014				LADDER TOTAL ASSY-LH	1	#0020 -	B	
1-1	71LB-01221				.LATCH ASSY	1	-		
1-1	71FT-55660				.LATCH ASSY	1	#0020 -	B	
1-2	71Q6-41700				.CAP	4			
1-3	72LK-60042				.HANDRAIL WA	1			
1-4	72LK-61010				.COVER-NON SLIP	1			
1-5	72LK-61020				.CHANNEL WA	2			
1-6	72LK-61050				.COVER	1			
1-7	72LK-63000				.LADDER ASSY-LH	1	-		
1-7	72LK-63001				.LADDER ASSY-LH	1	#0020 -	B	
1-7	72LK-63003				.LADDER ASSY-LH	1	#0119 -	B	
1-7-1	71LQ-60130				..STEP	4			
1-7-2	72LH-63150				..RUBBER	2	-		
1-7-2	71WD-50150				..RUBBER PLATE	2	#0119 -	B	SB-I-2014-06.PDF
1-7-3	72LK-63010				..LADDER WA-LH	1	-		
1-7-3	72LK-63012				..LADDER WA-LH	1	#0020 -	B	
1-7-4	72LM-63200				..STEP WA	1			
1-7-5	72LM-63250				..PLATE	4			
1-7-6	S037-103556				..BOLT-W/WASHER	8			
1-7-7	S179-080206				..SCREW-SOCKET RD HD	16			
1-8	72LK-63100				.SUPPORT WA-LADDR,LH	1	-		
1-8	72LK-63103				.SUPPORT WA-LADDR,LH	1	#0020 -	B	
N1-9	72LK-63370				.COVER WA	1			NOT
1-9	72LK-63370T				.COVER ASSY	1	#0001 -	B	SB-I-2014-016.PDF
1-91	72LK-63370T1				..COVER WA	1	#0001 -	D	A/S ITEM
1-92	72LK-63370T3				..LATCH-CAM	1	#0001 -	D	A/S ITEM

Item	Part_No	IS	Ord	T	Description	Qty	Serial_No	ITC	Remark
1-92	72LK-63370T3				..LATCH-CAM	1	#0001 -	D	A/S ITEM
1-93	72LK-63370T4				..CAM	1	#0001 -	D	A/S ITEM
1-94	72LK-63370T5				..LOCK CORE	1	#0001 -	D	A/S ITEM
1-10	74L3-11290				.BUMPER-RUBBER	2	-		
1-10	72LM-61590				.RUBBER-DAMPING	2	#0020 -	B	
1-11	S033-062026				.BOLT-W/WASHER	2			
1-12	S037-122556				.BOLT-W/WASHER	20			
2	72LK-60021				LADDER TOTAL ASSY-RH	1			
2	72LK-60024				LADDER TOTAL ASSY-RH	1	#0020 -	B	
2-1	71LB-01221				.LATCH ASSY	1			
2-2	71Q6-41700				.CAP	4			
2-3	72LK-60032				.HANDRAIL WA	1			
2-4	72LK-61010				.COVER-NON SLIP	1			
2-5	72LK-61060				.COVER	1			
2-6	72LK-61070				.COVER	1			
2-7	72LK-63200				.SUPPORT WA-LADDER,RH	1	-		
2-7	72LK-63203				.SUPPORT WA-LADDER,RH	1	#0020 -	B	
N2-8	72LK-63370				.COVER WA	1			NOT
2-8	72LK-63370T				.COVER ASSY	1	#0001 -	B	A/S ITEM
2-81	72LK-63370T1				..COVER WA	1	#0001 -	D	A/S ITEM
2-82	72LK-63370T3				..LATCH-CAM	1	#0001 -	D	A/S ITEM
2-83	72LK-63370T4				..CAM	1	#0001 -	D	A/S ITEM
2-84	72LK-63370T5				..LOCK CORE	1	#0001 -	D	A/S ITEM
2-9	72LK-64000				.LADDER ASSY-RH	1	-		
2-9	72LK-64002				.LADDER ASSY-RH	1	#0020 -	B	
2-9	72LK-64003				.LADDER ASSY-RH	1	#0119 -	B	
2-9-1	71LQ-60130				..STEP	4			

Item	Part_No	IS	Ord	T	Description	Qty	Serial_No	ITC	Remark
2-9-1	71LQ-60130				..STEP	4			
2-9-2	72LH-63150				..RUBBER	2	- #0119		
2-9-2	71WD-50150				..RUBBER PLATE	2	#0119 -	B	
2-9-1	72LK-64010				..LADDER WA-RH	1	- #0019		
2-9-1	72LK-64012				..LADDER WA-RH	1	#0020 -	B	
2-9-4	72LM-63200				..STEP WA	1			
2-9-5	72LM-63250				..PLATE	4			
2-9-6	S037-103556				..BOLT-W/WASHER	8			
2-9-7	S179-080206				..SCREW-SOCKET RD HD	16			
2-10	74L3-11290				.BUMPER-RUBBER	2			
2-11	S033-062026				.BOLT-W/WASHER	2			
2-12	S037-122556				.BOLT-W/WASHER	18			
7	72LK-60122				HANDRAIL WA-LH/REAR	1	- #0019		LH
7	72LK-60123				HANDRAIL WA-LH/REAR	1	#0020 -	B	LH
7	72LK-60132				HANDRAIL WA-RH/REAR	1	- #0019		RH
7	72LK-60133				HANDRAIL WA-RH/REAR	1	#0020 -	B	RH
16	S017-16035D				BOLT-HEX	12			
18	S037-122556				BOLT-W/WASHER	12			
21	S441-160006				WASHER-HARDENED	12			
N	@				NOT SUPPLIED PARTS	AR			NOT

LADDER & HANDRAIL (#0116-)

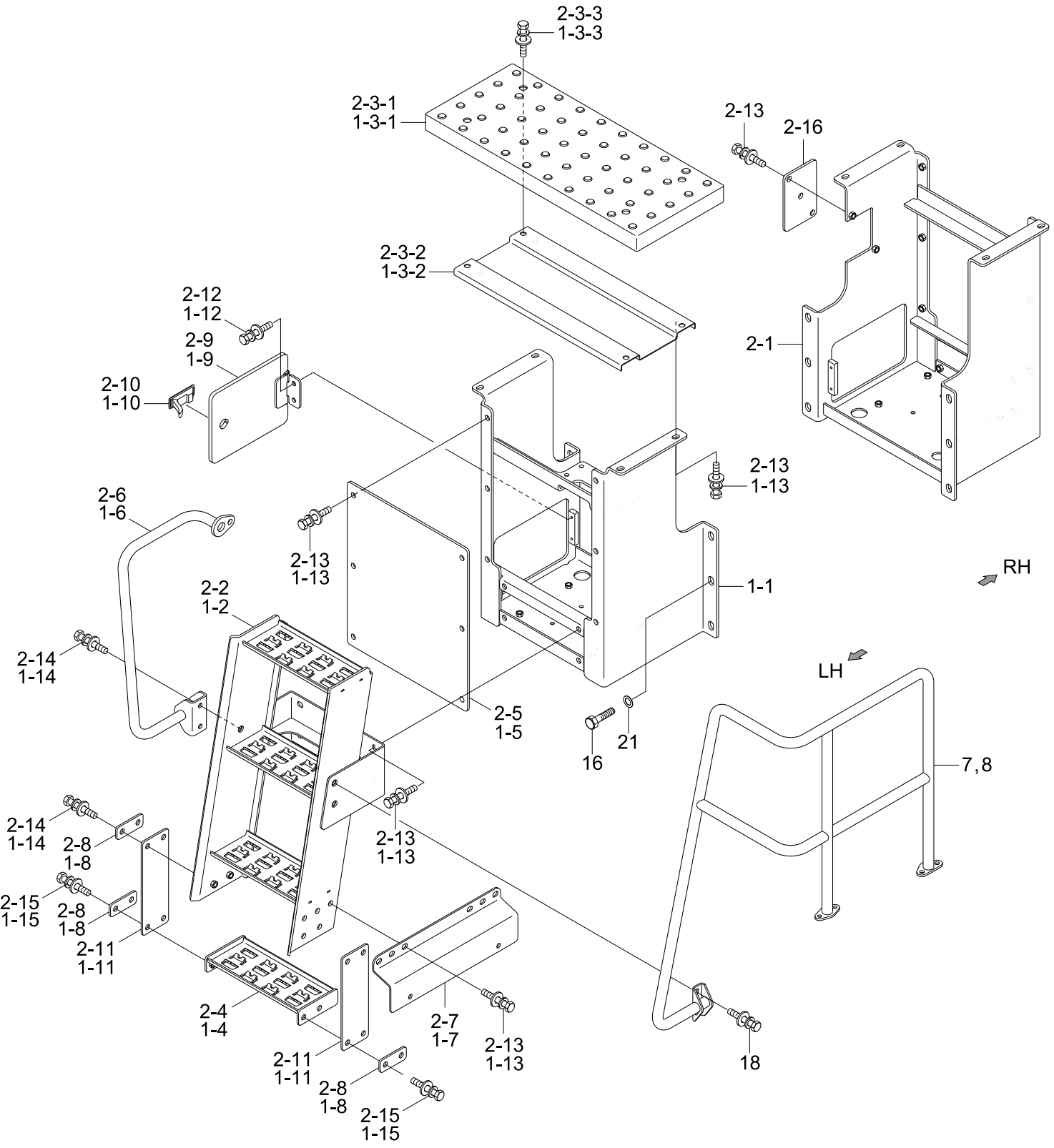

Item	Part_No	IS	Ord	T	Description	Qty	Serial_No	ITC	Remark
1	73LK-60011				LADDER TOTAL ASSY-LH	1			
1-1	73LK-60103				.SUPPORT WA-LH	1			
1-2	73LK-60110				.LADDER WA-LH	1			
1-3	73LK-60121				.COVER-NON SLIP	1			
1-4	73LK-60130				.STEP ASSY	1			
1-5	73LK-60140				.COVER	1			
1-6	73LK-60150				.HANDRAIL WA-LH	1			
1-7	73LK-60160				.CHANNEL	1			
1-8	73LK-60170				.PLATE	4			
1-9	76LL-60191				.COVER WA	1			
1-10	73LK-60270				.LATCH ASSY	1			
1-11	71WD-50150				.RUBBER PLATE	2			
1-12	S037-082056				.BOLT-W/WASHER	2			
1-13	S037-122556				.BOLT-W/WASHER	17			
1-14	S037-123556				.BOLT-W/WASHER	7			
1-15	S037-124056				.BOLT-W/WASHER	4			
2	73LK-60021				LADDER TOTAL ASSY-RH	1			
2-1	73LK-60203				.SUPPORT WA-RH	1			
2-2	73LK-60210				.LADDER WA-RH	1			
2-3	73LK-60121				.COVER-NON SLIP	1			
2-4	73LK-60130				.STEP ASSY	1			
2-5	73LK-60140				.COVER	1			
2-6	73LK-60250				.HANDRAIL WA-RH	1			
2-7	73LK-60160				.CHANNEL	1			
2-8	73LK-60170				.PLATE	4			
2-9	76LL-60191				.COVER WA	1			
2-10	73LK-60270				.LATCH ASSY	1			

Item	Part_No	IS	Ord	T	Description	Qty	Serial_No	ITC	Remark
2-1(	73LK-60270				.LATCH ASSY	1			
2-11	71WD-50150				.RUBBER PLATE	2			
2-12	S037-082056				.BOLT-W/WASHER	2			
2-13	S037-122556				.BOLT-W/WASHER	19			
2-14	S037-123556				.BOLT-W/WASHER	7			
2-15	S037-124056				.BOLT-W/WASHER	4			
2-16	73LK-60180				.COVER	1			
7	73LK-60031				HANDRAIL WA-LH/REAR	1			
8	73LK-60041				HANDRAIL WA-RH/REAR	1			
16	S017-16035D				BOLT-HEX	12			
18	S037-122556				BOLT-W/WASHER	16			
21	S441-160006				WASHER-HARDENED	12			

REAR FENDER & FOOT BOARD

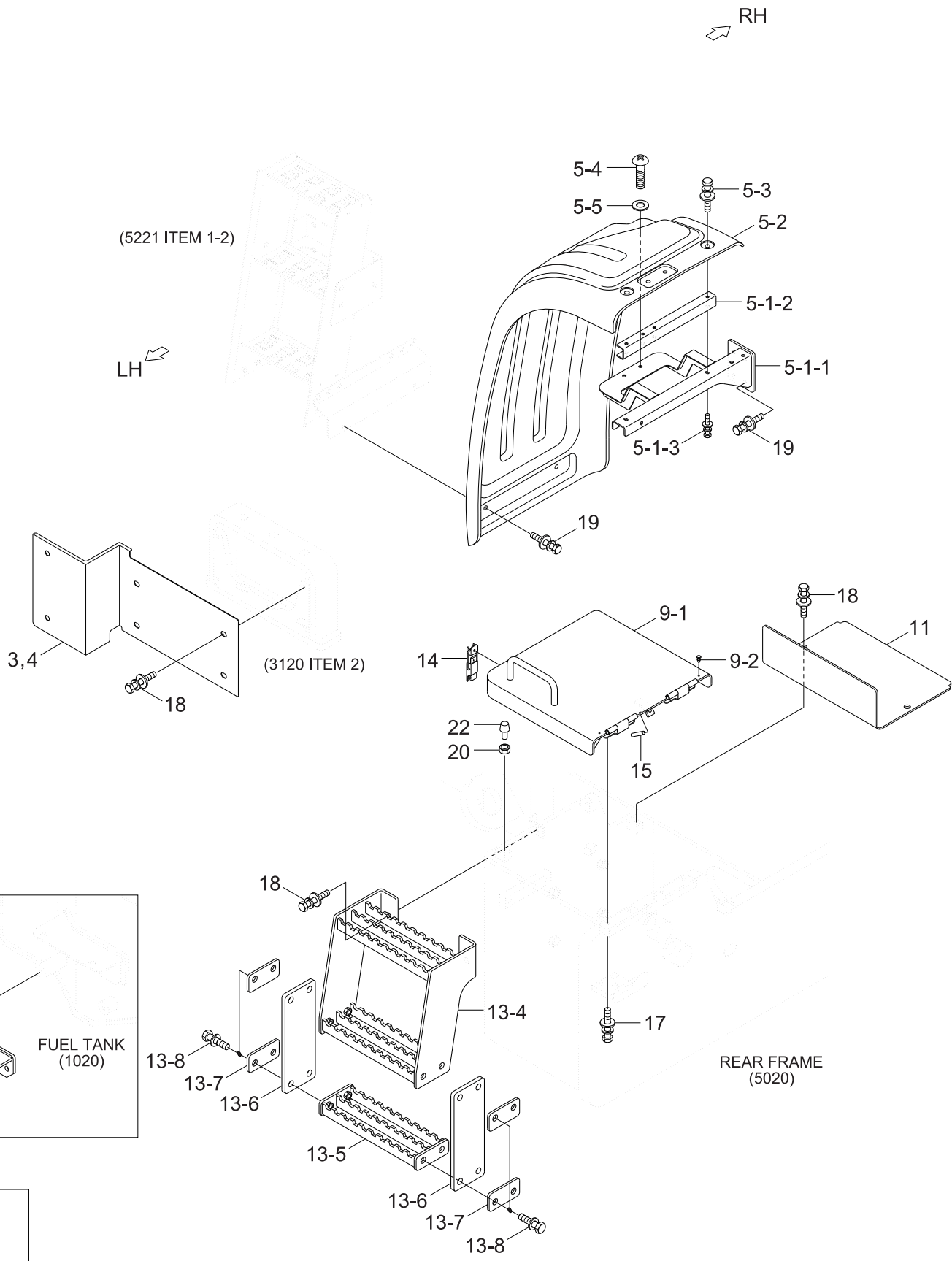

SERIAL NO : -#0019

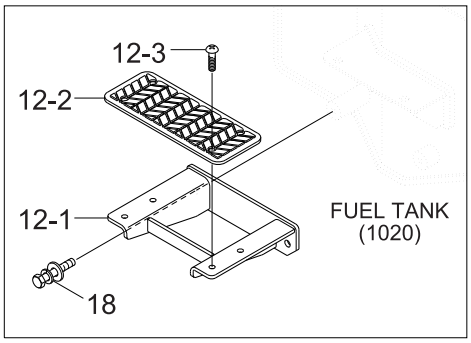

SERIAL NO : -#0019

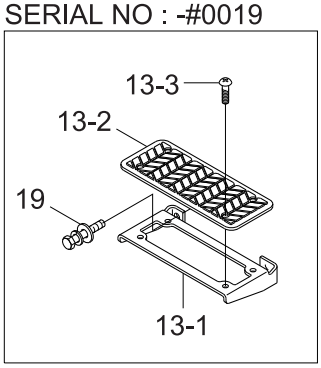

Item	Part_No	IS	Ord	T	Description	Qty	Serial_No	ITC	Remark
3	72LK-60050				COVER-LH	1			
4	72LK-60060				COVER-RH	1			
5	72LK-60072				REAR FENDER ASSY-LH	1			
5	72LK-60082				REAR FENDER ASSY-RH	1			
5-1	72LK-60712				.SUPPORT ASSY-LH	1			
5-1	72LK-60812				.SUPPORT ASSY-RH	1			
5-1-1	72LK-60722				..SUPPORT WA-LH	1			
5-1-1	72LK-60822				..SUPPORT WA-RH	1			
5-1-2	72LK-60732				..SUPPORT WA	1			
5-1-3	S037-123056				..BOLT-W/WASHER	2			
5-2	72LK-60702				.REAR FENDER-LH	1			
5-2	72LK-60802				.REAR FENDER-RH	1			
5-3	S037-123056				.BOLT-W/WASHER	2			
5-4	S179-120256				.SCREW-SOCKET RD HD	1			
5-5	S403-125006				.WASHER-PLAIN	1			
9	75LK-60150				COVER ASSY-BATT,LH	1			
9	75LK-60160				COVER ASSY-BATT,RH	1			
9-1	75LK-61500				.COVER WA-LH	1			
9-1	75LK-61600				.COVER WA-RH	1			
9-2	72LM-61590				.RUBBER-DAMPING	3			
11	75LK-60170				COVER	2			
12	72LK-60230				FOOT BOARD ASSY	2	- #0010		
12-1	72LK-62310				.FOOT PLATE	1	- #0010		
12-2	71LQ-60130				.STEP	1	- #0010		
12-3	S179-080256				.SCREW-SOCKET RD HD	4	- #0010		
13	72LK-60240				FOOT BOARD ASSY	2	- #0010		
13	77LK-60270				STEP ASSY	2	#0020 -	D	

Item	Part_No	IS	Ord	T	Description	Qty	Serial_No	ITC	Remark
13	77LK-60270				STEP ASSY	2	#0020 -	D	
13-1	72LK-62410				.FOOT PLATE	1	-		
13-2	71LQ-60130				.STEP	1	-		
13-3	S179-080256				.SCREW-SOCKET RD HD	4	-		
13-4	77LK-62700				.STEP WA	1	#0020 -	-	
13-5	77LL-62710				.PLATE	1	#0020 -	-	
13-6	72LH-63150				.RUBBER	2	#0020 -	-	
13-6	71WD-50150				.RUBBER PLATE	2	#0119 -	B	
13-7	72LM-63250				.PLATE	4	#0020 -	-	
13-8	S037-103556				.BOLT-W/WASHER	8	#0020 -	-	
14	72LM-60180				LATCH ASSY	2			
15	72LM-60190				PIN	2			
17	S035-082056				BOLT-W/WASHER	8			
18	S037-122556				BOLT-W/WASHER	24			
19	S037-123056				BOLT-W/WASHER	24			
20	S285-10100B				NUT-FLANGED	4			
22	71EH-13150				BUMPER-RUBBER	4			

COWL 1(COOLING ROOM, 1/2)

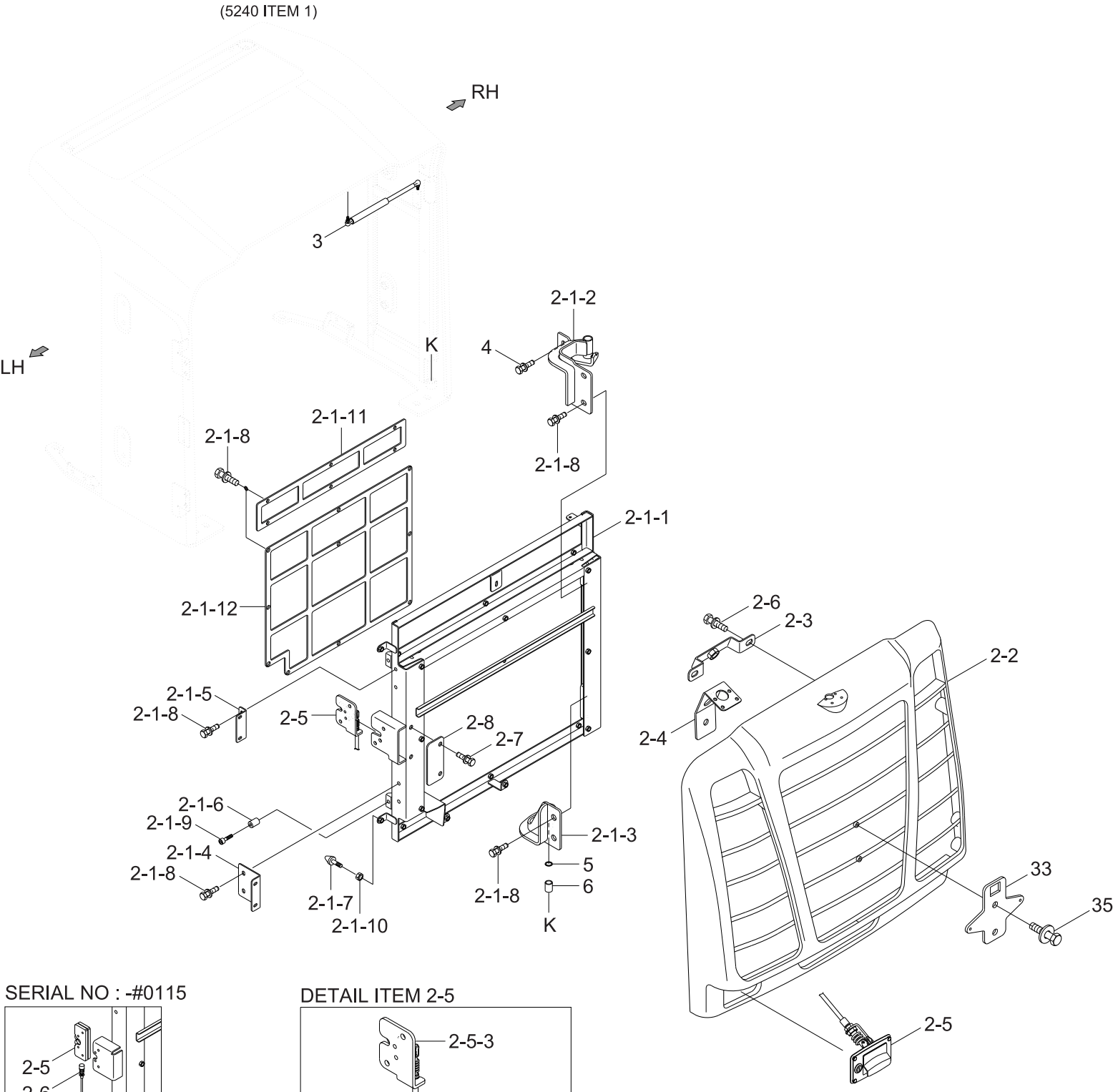

SERIAL NO : -#0115

DETAIL ITEM 2-5

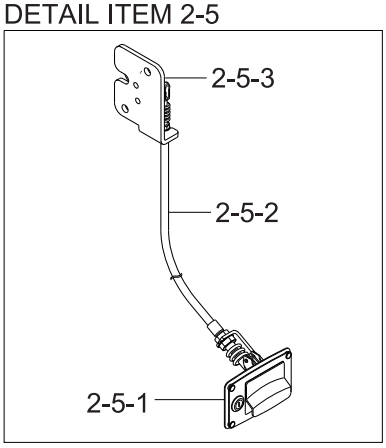

Item	Part_No	IS	Ord	T	Description	Qty	Serial_No	ITC	Remark
*	75LK-40021				COOLING ROOM ASSY	1	-		
*	75LK-40022				COOLING ROOM ASSY	1	#0116 -	A	
*	75LK-40023				COOLING ROOM ASSY	1	#0137 -	B	
*	75LK-40022				COOLING ROOM ASSY	1	#0116 -	A	
*	75LK-40024				COOLING ROOM ASSY	1	#0145 -	A	
*-1	@				.SUPPORT ASSY	1			NOT
2	75LK-40041				..GRILL ASSY	1	-		
2	75LK-40042				..GRILL ASSY	1	#0116 -	A	
2	75LK-40043				..GRILL ASSY	1	#0137 -	B	
2	75LK-40044				..GRILL ASSY	1	#0145 -	B	
2-1	75LK-40062				...DOOR ASSY	1	-		
2-1	75LK-40063				...DOOR ASSY	1	#0116 -	D	
2-1-1	75LK-40603				....DOOR WA	1			
2-1-2	75LK-40611				....HINGE ASSY	1			
2-1-3	75LK-40621				....HINGE ASSY	1			
2-1-4	75LK-40640				....PLATE	2			
2-1-5	75LK-40671				....BRACKET WA	2			
2-1-6	72LM-43211				....BOSS	2			
2-1-7	E171-1178				....RUBBER-BUMPER	2			
2-1-8	S037-123056				....BOLT-W/WASHER	30			
2-1-9	S107-100556				....BOLT-SOCKET	2			
2-1-1(	S285-10100B				....NUT-FLANGED	2			
2-1	75LK-40063				...DOOR ASSY	1	#0116 -	D	
2-1-1	75LK-40680				....SCREEN	1			
2-1-1	75LK-40652				....SCREEN	1			
2-2	72LK-40400				...GRILL ASSY	1			
2-3	72LM-40450				...PLATE WA	1			

Item	Part_No	IS	Ord	T	Description	Qty	Serial_No	ITC	Remark
2-3	72LM-40450				...PLATE WA	1			
2-4	75LL-40660				...BRACKET	1			
2-5	75LK-40050				...LATCH ASSY	1	-		
2-5	75LK-40051				...LATCH ASSY	1	#0116 -	D	
2-5	75LK-40052				...LATCH ASSY	1	#0137 -	B	
2-5	75LK-40053				...LATCH ASSY	1	#0145 -	B	
2-5-1	72LM-40501				....HANDLE ASSY	1	#0116 -		
2-5-1	72LM-40503				....HANDLE ASSY	1	#0137 -	B	
2-5-2	72LM-40521				....CABLE ASSY	1	#0116 -		
2-5-2	72LM-40520				....CABLE ASSY	1	#0137 -	B	
2-5-3	75LM-40511				....LATCH ASSY	1	#0116 -		
2-5-3	75LQ-40512				....LATCH ASSY	1	#0137 -	B	
2-5-3	75LQ-40513				....LATCH ASSY	1	#0145 -	B	
2-6	S037-102056				...BOLT-W/WASHER	12			
2-7	S037-123056				...BOLT-W/WASHER	2			
2-8	75LL-40550				...COVER	2	#0116 -		
3	72LM-40370				..GAS SPRING	1			
4	S037-123056				..BOLT-W/WASHER	2			
5	S391-020035				..SHIM-ROUND(1.0T)	1			
6	S731-020025				..BUSHING-DU	1			
33	72LM-40060				NUMBER PLATE WA	1			
35	S037-122556				BOLT-W/WASHER	2			
2-1-2	75LK-40611				....HINGE ASSY	1			
2-1-3	75LK-40621				....HINGE ASSY	1			
2-1-4	75LK-40640				....PLATE	2			
2-1-5	75LK-40671				....BRACKET WA	2			
2-1-6	72LM-43211				....BOSS	2			

Item	Part_No	IS	Ord	T	Description	Qty	Serial_No	ITC	Remark
2-1-6	72LM-43211				....BOSS	2			
2-1-7	E171-1178				....RUBBER-BUMPER	2			
2-1-8	S037-123056				....BOLT-W/WASHER	30			
2-1-9	S107-100556				....BOLT-SOCKET	2			
2-1-1(	S285-10100B				....NUT-FLANGED	2			
2-1-1:	75LK-40680				....SCREEN	1			
2-1-1:	75LK-40652				....SCREEN	1			
2-2	72LK-40400				...GRILL ASSY	1			
2-3	72LM-40450				...PLATE WA	1			
2-4	75LL-40660				...BRACKET	1			
2-5	75LK-40050				...LATCH ASSY	1	-		
2-5	75LK-40051				...LATCH ASSY	1	#0116 -	D	
2-5-1	72LM-40501				....HANDLE ASSY	1	#0116 -		
2-5-2	75LM-40511				....LATCH ASSY	1	#0116 -		
2-5-3	72LM-40521				....CABLE ASSY	1	#0116 -		
2-6	S037-102056				...BOLT-W/WASHER	12			
2-7	S037-123056				...BOLT-W/WASHER	2			
2-8	75LL-40550				...COVER	2	#0116 -		
3	72LM-40370				..GAS SPRING	1			
4	S037-123056				..BOLT-W/WASHER	2			
5	S391-020035				..SHIM-ROUND(1.0T)	1			
6	S731-020025				..BUSHING-DU	1			
33	72LM-40060				NUMBER PLATE WA	1			
35	S037-122556				BOLT-W/WASHER	2			

COWL 2 (COOLING ROOM, 2/2)

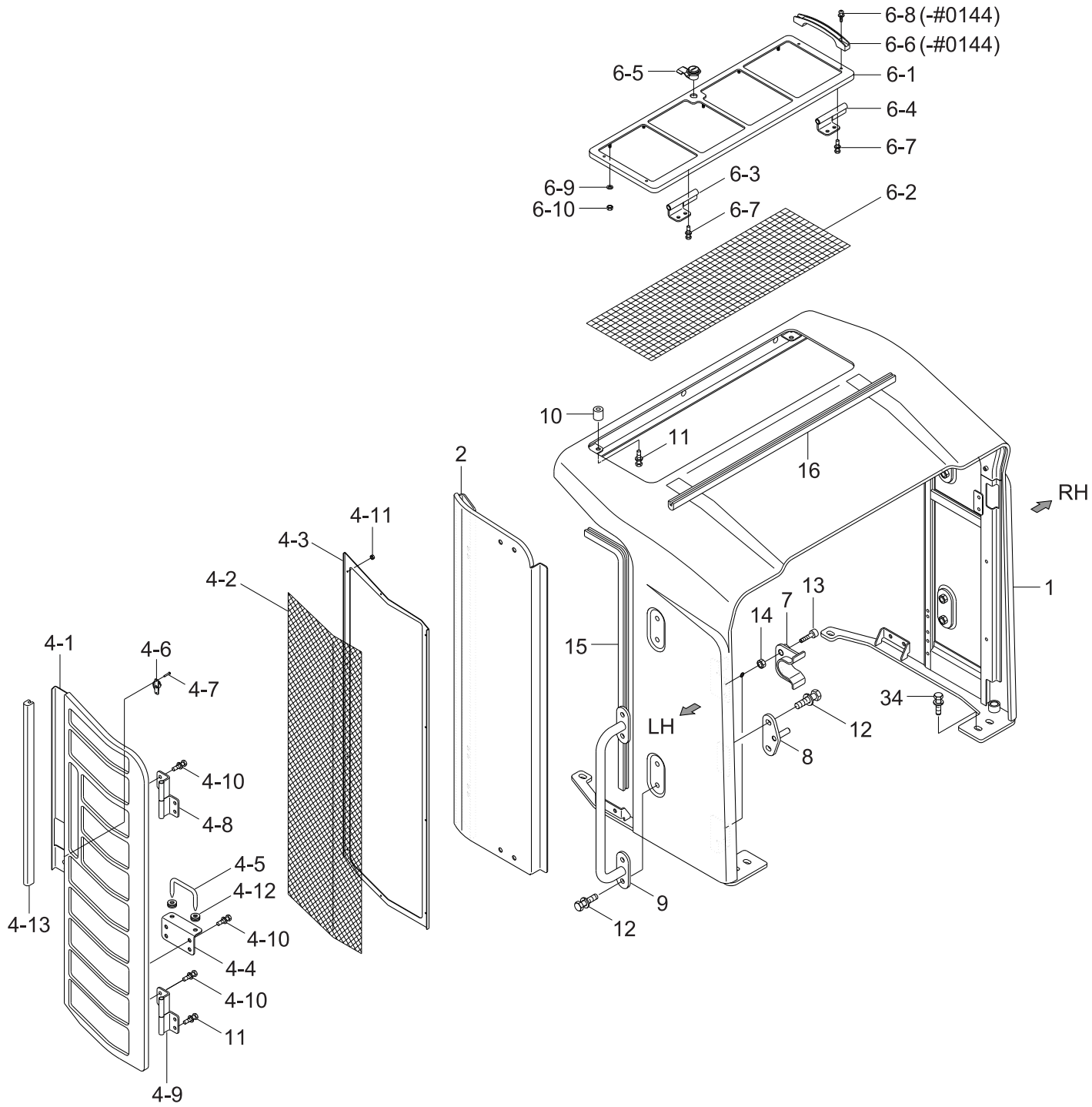

Item	Part_No	IS	Ord	T	Description	Qty	Serial_No	ITC	Remark
*	@				COOLING ROOM ASSY	1			NOT
*-1	75LK-40032				.SUPPORT ASSY	1	-		
*-1	75LK-40033				.SUPPORT ASSY	1	#0116 -	A	
*-1	75LK-40034				.SUPPORT ASSY	1	#0145 -	A	
1	75LK-40202				..COOLING ROOM WA	1			
2	75LK-40210				..COVER WA-LH	1			
2	75LK-40220				..COVER WA-RH	1			
4	75LK-40230				..INLET COVER ASSY-LH	1			
4	75LK-40240				..INLET COVER ASSY-RH	1			
4-1	72LK-42300				...COVER WA-LH	1			
4-1	72LK-42400				...COVER WA-RH	1			
4-2	72LK-42330				...WIRENET	1			
4-3	75LK-42340				...COVER-LH	1			
4-3	75LK-42440				...COVER-RH	1			
4-4	72LM-42360				...PLATE	1			
4-5	72LM-42370				...BAR-LOCK	1			
4-6	72LM-42380				...LATCH	1			
4-7	72LM-42390				...RIVET	2			
4-8	72LM-49010				...HINGE ASSY-LH	1			
4-8	72LM-49020				...HINGE ASSY-RH	1			
4-9	72LM-49030				...HINGE ASSY-LH	1			
4-9	72LM-49040				...HINGE ASSY-RH	1			
4-10	S037-081556				...BOLT-W/WASHER	6			
4-11	S281-041006				...NUT-FLANGED	16			
4-12	S681-100400				...GROMMET	2			
4-13	S791-020060				...GROMMET-PLATE	1			
6	72LM-40250				..INLET COVER	1	-		

Item	Part_No	IS	Ord	T	Description	Qty	Serial_No	ITC	Remark
6	72LM-40250				..INLET COVER ASSY-TOP	1	- #0144		
6	72LM-40253				..INLET COVER ASSY-TOP	1	#0145 -	A	
6-1	72LM-42501				...INLET COVER WA	1	- #0144		
6-1	72LM-42502				...INLET COVER WA	1	#0145 -	A	
6-2	72LM-42530				...WIRENET	1			
6-3	72LM-49020				...HINGE ASSY-RH	1			
6-4	72LM-49030				...HINGE ASSY-LH	1			
6-5	71MH-55600				...KEY-LOCK	1			
6-6	71Q6-02330				...HANDLE	2	- #0144		
6-7	S037-081556				...BOLT-W/WASHER	4			
6-8	S161-050256				...SCREW-CROSS R/ROUND	4	- #0144		
6-9	S403-065006				...WASHER-PLAIN	12			
6-10	S281-041006				...NUT-FLANGED	12			
7	72LM-43111				..STOPPER-A	2	- #0115		
7	72LM-43112				..STOPPER-A	2	#0116 -	A	
8	72LM-40330				..STRIKER WA	1	- #0115		
8	72LM-40331				..STRIKER WA	1	#0116 -	A	
9	72LM-40340				..HANDRAIL WA	2			
10	71U2-50490				..RUBBER-DAMPING	2			
11	S037-082056				..BOLT-W/WASHER	12			
12	S037-123056				..BOLT-W/WASHER	22			
13	S107-120456				..BOLT-SOCKET	4			
14	S285-12100B				..NUT-FLANGED	4			
15	S771-011640				..STRIP-WEATHER	2			
16	S772-018400				..STRIP-WEATHER	1			
34	71Q6-50030				BOLT-W/WASHER	6			

COWL 3(ENGINE ROOM)

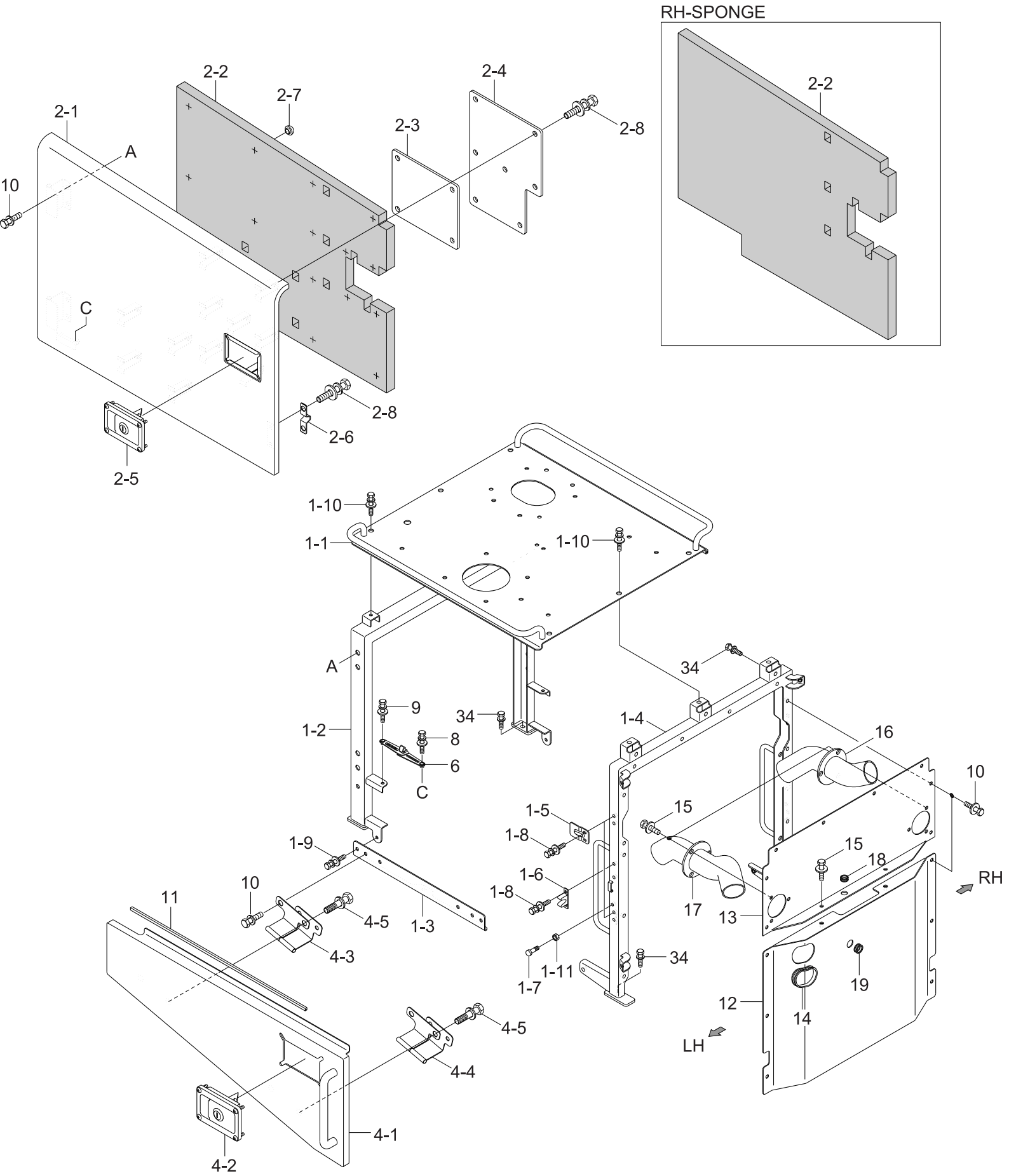

Item	Part_No	IS	Ord	T	Description	Qty	Serial_No	ITC	Remark
*	75LK-40011				ENGINE ROOM ASSY	1	- #0042		
*	75LK-40012				ENGINE ROOM ASSY	1	#0043 - #0103	D	
*	75LK-40000				ENGINE ROOM ASSY	1	#0104 - #0119	D	
*	75LK-40001				ENGINE ROOM ASSY	1	#0120 -	D	
1	75LK-40100				.SUPPORT ASSY	1	- #0042		
1	75LK-40101				.SUPPORT ASSY	1	#0043 - #0119	D	
1	75LK-40102				.SUPPORT ASSY	1	#0120 -	D	
1-1	75LK-40152				..HOOD WA	1	- #0042		
1-1	75LK-40154				..HOOD WA	1	#0041 - #0119	B	
1-1	75LK-40155				..HOOD WA	1	#0120 -	B	
1-1	75LK-40155				..HOOD WA	1	#0120 -	B	
1-1	75LK-49010				..HOOD WA	1	- #0119	-	FOR A/S
1-2	75LK-40160				..SUPPORT-FRONT	1			
1-3	72LK-40170				..BRACKET WA-LH	2			
1-4	75LK-40191				..SUPPORT-MID	1			
1-5	72LM-41000				..PLATE-LOCK	4			
1-6	71Q6-53951				..STOPPER-B	2			
1-7	71EH-13150				..BUMPER-RUBBER	8			
1-8	S037-082056				..BOLT-W/WASHER	12			
1-9	S037-122556				..BOLT-W/WASHER	4			
1-1(	S037-123056				..BOLT-W/WASHER	6	- #0042		
1-1(	S037-123056				..BOLT-W/WASHER	7	#0041 -	A	
1-11	S285-10100B				..NUT-FLANGED	8			
2	75LK-40112				.SIDE DOOR ASSY-LH	1			
2	75LK-40122				.SIDE DOOR ASSY-RH	1			
2-1	75LK-41101				..SIDE DOOR WA-LH	1			
2-1	75LK-41201				..SIDE DOOR WA-RH	1			

Item	Part_No	IS	Ord	T	Description	Qty	Serial_No	ITC	Remark
2-1	75LK-41201				..SIDE DOOR WA-RH	1			
2-2	75LK-41111				..SPONGE-LH	1			
2-2	75LK-41211				..SPONGE-RH	1			
2-3	75LL-41181				..COVER	1			
2-4	75LL-41190				..COVER	1			
2-5	71Q6-52190				..LATCH ASSY	1			
2-6	71Q6-53911				..STOPPER-A	1			
2-7	71EM-51580				..CAP-STUD BOLT	16			
2-8	S037-081556				..BOLT-W/WASHER	13			
4	72LK-40131				.SIDE COVER ASSY-LH	1			
4	72LK-40141				.SIDE COVER ASSY-RH	1			
4-1	72LK-41301				..COVER WA-LH	1			
4-1	72LK-41401				..COVER WA-RH	1			
4-2	71Q6-52190				..LATCH ASSY	1			
4-3	72LM-49050				..HINGE-LH	1			
4-3	72LM-49060				..HINGE-RH	1			
4-4	72LM-49070				..HINGE-LH	1			
4-4	72LM-49080				..HINGE-RH	1			
4-5	S037-122556				..BOLT-W/WASHER	4			
6	71Q6-52180				.STAY ASSY-LH	1			
6	71Q6-53180				.STAY ASSY-RH	1			
8	S037-102556				.BOLT-W/WASHER	2			
9	S037-103556				.BOLT-W/WASHER	2			
10	S037-122556				.BOLT-W/WASHER	16	-		
10	S037-122556				.BOLT-W/WASHER	30	#0104 -	A	
11	S771-001100				.STRIP-WEATHER	2			
12	11LK-35242				SCREEN PLATE WA	1	#0104 -		

Item	Part_No	IS	Ord	T	Description	Qty	Serial_No	ITC	Remark
12	11LK-35242				SCREEN PLATE WA	1	#0104 -		
12	11LK-35243				SCREEN PLATE WA	1	#0197 -	D	
13	11LK-35253				SCREEN PLATE WA	1	#0104 -		
13	11LK-35254				SCREEN PLATE WA	1	#0197 -		
14	S791-020040				GROMMET-PLATE	1	#0104 -		
15	S037-102056				BOLT-W/WASHER	8	#0104 -		
16	11LK-45122				PIPE WA	1	#0104 -		
17	11LK-45112				PIPE WA	1	#0104 -		
18	S681-190400				GROMMET	1	#0104 -		
19	S681-360400				GROMMET	1	#0104 -		
34	71Q6-50030				BOLT-W/WASHER	8			
36	S661-300800				CAP-RUBBER	1	#0041 -	-	

WHEEL RIM & TIRE

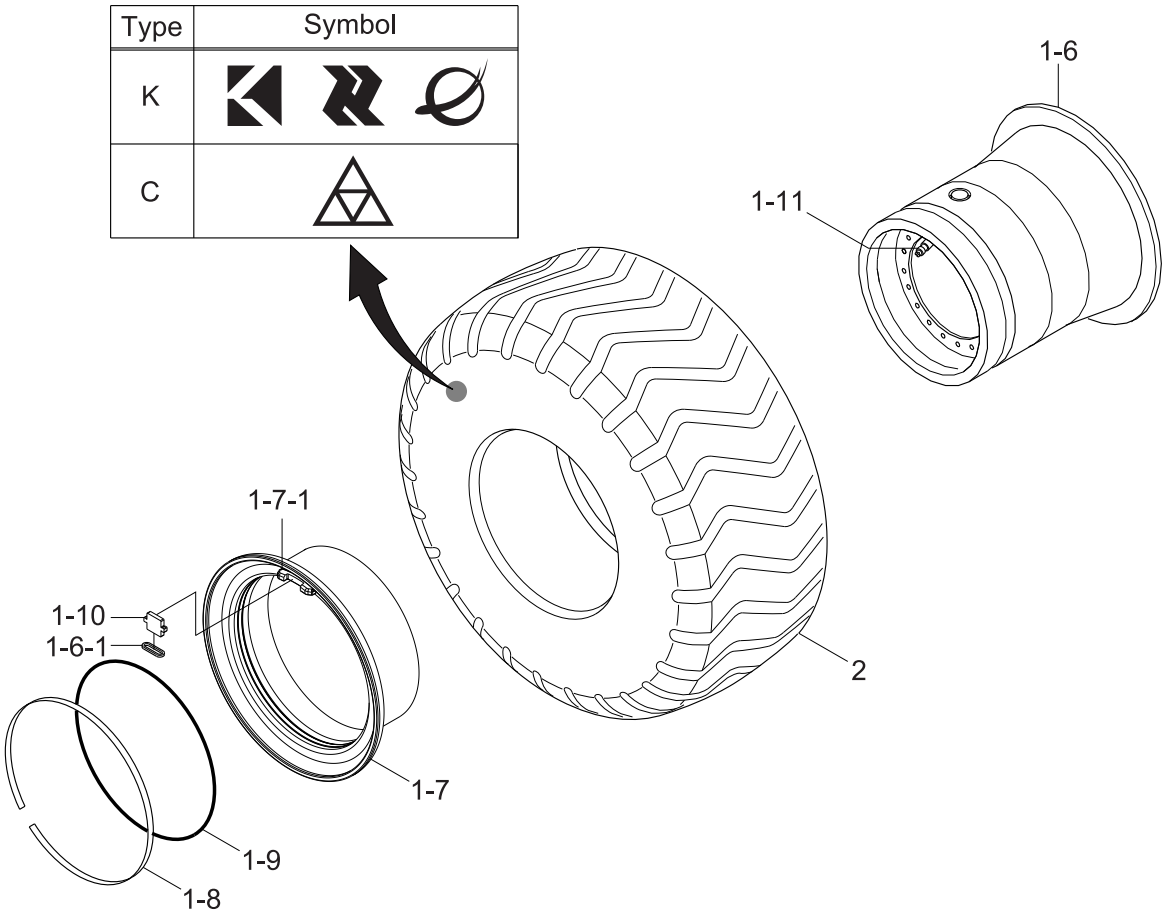

Item	Part_No	IS	Ord	T	Description	Qty	Serial_No	ITC	Remark
*	@				WHEEL & TIRE GROUP	1			NOT
*-1	81LB-42101				WHEEL & TIRE ASSY	4	-		C TYPE
*-1	81LB-42102				WHEEL & TIRE ASSY	4	#0165 -	B	C TYPE
*-1	81LB-42101				WHEEL & TIRE ASSY	4			C TYPE
*-1	81LB-42201				WHEEL & TIRE ASSY	4	-		K TYPE
*-1	81LB-42202				WHEEL & TIRE ASSY	4	#0165 -	B	K TYPE
*-1	81LB-42201				WHEEL & TIRE ASSY	4			K TYPE
*-1	81LB-42901				WHEEL & TIRE ASSY	4	-		RADIAL
*-1	81LB-42902				WHEEL & TIRE ASSY	4	#0165 -	B	RADIAL
*-1	81LB-42901				WHEEL & TIRE ASSY	4			RADIAL
1	81LB-40101				.WHELL RIM WA	1	-		
1	81LB-40102				.WHELL RIM WA	1	#0165 -	B	
1	81LB-40101				.WHELL RIM WA	1			
N1-6	XIAA-00033				..RIM BASE	1			NOT
1-6-1	XIAA-00009				...DRIVER POCKET	1			
1-7	XIAA-00014				..FLANGE-DETACHABLE	1			
1-7-1	XIAA-00010				...DRIVER POCKET	1			
1-8	XIAA-00007				..RING-LOCK	1			
1-9	XIAA-00021				..O-RING	1			
1-10	XIAA-00047				..DRIVER KEY	1			
1-10	XIAA-00047				..DRIVER KEY	1			
1-11	XIAA-00022				..VALVE-AIR	1			
2	82L1-1006C				.TIRE(26.5-25,20PR,L3)	1			C TYPE
2	82L1-1006				.TIRE(26.5-25,20PR,L3)	1			K TYPE
2	81L1-1011C				.TIRE(26.5, R25)	1			RADIAL
*-2	81LB-42301				WHEEL & TIRE ASSY	4	-		OPT, K TYPE
*-2	81LB-42302				WHEEL & TIRE ASSY	4	#0165 -	B	OPT, K TYPE

Item	Part_No	IS	Ord	T	Description	Qty	Serial_No	ITC	Remark
*-2	81LB-42302				WHEEL & TIRE ASSY	4	#0165 -	B	OPT, K TYPE
*-2	81LB-42701				WHEEL & TIRE ASSY	4	-		OPT, C TYPE
*-2	81LB-42702				WHEEL & TIRE ASSY	4	#0165 -	B	OPT, C TYPE
1	81LB-40111				.WHELL RIM WA	1	-		
1	81LB-40112				.WHELL RIM WA	1	#0165 -	B	
N1-6	XIAA-00032				..RIM BASE	1			NOT
1-6-1	XIAA-00009				...DRIVER POCKET	1			
1-7	XIAA-00008				..FLANGE-DETACHABLE	1			
1-7-1	XIAA-00010				...DRIVER POCKET	1			
1-8	XIAA-00007				..RING-LOCK	1			
1-9	XIAA-00021				..O-RING	1			
1-10	XIAA-00047				..DRIVER KEY	1			
1-11	XIAA-00022				..VALVE-AIR	1			
2	81L1-3105				.TIRE(23.5-25,20PR,L3)	1			K TYPE
2	81L1-3105C				.TIRE(23.5-25,20PR,L3)	1			C TYPE
N	81LB-42401				WHEEL & TIRE ASSY	4	-		NOT
N	81LB-42402				WHEEL & TIRE ASSY	4	#0165 -	B	NOT
N	81LB-42401				WHEEL & TIRE ASSY	4			NOT
1	81LB-40101				.WHELL RIM WA	1	-		
1	81LB-40102				.WHELL RIM WA	1	#0165 -	B	
1	81LB-40101				.WHELL RIM WA	1			
N1-6	XIAA-00033				..RIM BASE	1			NOT
1-6-1	XIAA-00009				...DRIVER POCKET	1			
1-7	XIAA-00014				..FLANGE-DETACHABLE	1			
1-7-1	XIAA-00010				...DRIVER POCKET	1			
1-8	XIAA-00007				..RING-LOCK	1			
1-9	XIAA-00021				..O-RING	1			

Item	Part_No	IS	Ord	T	Description	Qty	Serial_No	ITC	Remark
1-9	XIAA-00021				..O-RING	1			
1-10	XIAA-00047				..DRIVER KEY	1			
1-10	XIAA-00047				..DRIVER KEY	1			
1-11	XIAA-00022				..VALVE-AIR	1			
2	84L1-00450				.TIRE(26.5-25	1			K TYPE
*-4	81LB-42501				WHEEL & TIRE ASSY	4	-		OPT
*-4	81LB-42502				WHEEL & TIRE ASSY	4	#0165 -	B	OPT
*-4	81LB-42501				WHEEL & TIRE ASSY	4			OPT
1	81LB-40101				.WHELL RIM WA	1	-		
1	81LB-40102				.WHELL RIM WA	1	#0165 -	B	
1	81LB-40101				.WHELL RIM WA	1			
N1-6	XIAA-00033				..RIM BASE	1			NOT
1-6-1	XIAA-00009				...DRIVER POCKET	1			
1-7	XIAA-00014				..FLANGE-DETACHABLE	1			
1-7-1	XIAA-00010				...DRIVER POCKET	1			
1-8	XIAA-00007				..RING-LOCK	1			
1-9	XIAA-00021				..O-RING	1			
1-10	XIAA-00047				..DRIVER KEY	1			
1-10	XIAA-00047				..DRIVER KEY	1			
1-11	XIAA-00022				..VALVE-AIR	1			
N2	84L1-00290				.TIRE(26.5-25,28PR,L3)	1			NOT
*-5	81LB-42601				WHEEL & TIRE ASSY	1	-		
*-5	81LB-42602				WHEEL & TIRE ASSY	1	#0165 -	B	
*-5	81LB-42601				WHEEL & TIRE ASSY	1			
1	81LB-40101				.WHELL RIM WA	1	-		
1	81LB-40102				.WHELL RIM WA	1	#0165 -	B	
1	81LB-40101				.WHELL RIM WA	1			

Item	Part_No	IS	Ord	T	Description	Qty	Serial_No	ITC	Remark
1	81LB-40101				.WHELL RIM WA	1			
N1-6	XIAA-00033				..RIM BASE	1			NOT
1-6-1	XIAA-00009				...DRIVER POCKET	1			
1-7	XIAA-00008				..FLANGE-DETACHABLE	1			
1-7-1	XIAA-00010				...DRIVER POCKET	1			
1-8	XIAA-00007				..RING-LOCK	1			
1-9	XIAA-00021				..O-RING	1			
1-10	XIAA-00047				..DRIVER KEY	1			
1-10	XIAA-00047				..DRIVER KEY	1			
1-11	XIAA-00022				..VALVE-AIR	1			
2	84L1-00300				.TIRE(26.5-25	1			K TYPE
*-6	81LB-42801				WHEEL & TIRE ASSY	4	-		
*-6	81LB-42802				WHEEL & TIRE ASSY	4	#0165 -	B	
*-6	81LB-42801				WHEEL & TIRE ASSY	4			
1	81LB-40101				.WHELL RIM WA	1	-		
1	81LB-40102				.WHELL RIM WA	1	#0165 -	B	
1	81LB-40101				.WHELL RIM WA	1			
N1-6	XIAA-00033				..RIM BASE	1			NOT
1-6-1	XIAA-00009				...DRIVER POCKET	1			
1-7	XIAA-00014				..FLANGE-DETACHABLE	1			
1-8	XIAA-00007				..RING-LOCK	1			
1-9	XIAA-00021				..O-RING	1			
1-10	XIAA-00047				..DRIVER KEY	1			
1-10	XIAA-00047				..DRIVER KEY	1			
1-11	XIAA-00022				..VALVE-AIR	1			
2	81L1-1011				.TIRE(26.5-25, XHA*)	1			MICHELIN
N	@				NOT SUPPLIED PARTS	AR			NOT

Item	Part_No	IS	Ord	T	Description	Qty	Serial_No	ITC	Remark
N	@				NOT SUPPLIED PARTS	AR			NOT
N	@				NOT SUPPLIED PARTS	AR			NOT

FRONT & REAR AXLE MOUNTING

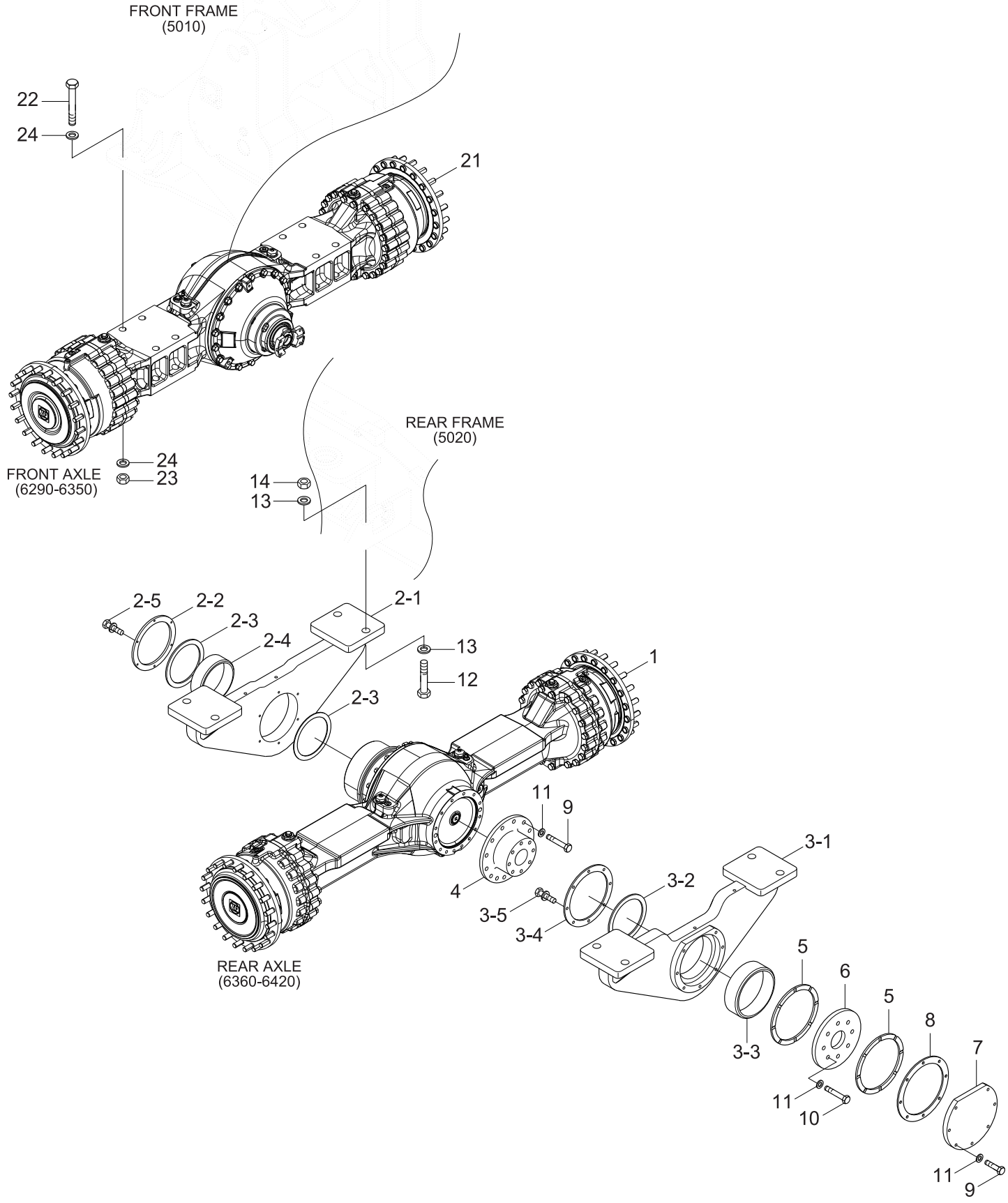

Item	Part_No	IS	Ord	T	Description	Qty	Serial_No	ITC	Remark
1	81LK-20010				REAR AXLE ASSY	1			CONVENTIONAL
1	81LK-20020				REAR AXLE ASSY	1			LIMITED SLIP
2	81LK-20101				SUPPORT ASSY-FRONT	1			
2-1	81LK-20111				.SUPPORT WA-FRONT	1			
2-2	81LB-20120				.COVER	1			
2-3	81LB-20130				.SEAL-DUST(DKIY TYPE)	2			
2-4	81LB-20140				.BUSHING	1			
2-5	S037-102556				.BOLT-W/WASHER	6			
3	81LK-20201				SUPPORT ASSY-REAR	1			
3-1	81LK-20211				.SUPPORT WA-REAR	1			
3-2	S700-190508				.DUST SEAL-DKIY TYPE	1			
3-3	84L1-00680				.BUSHING	1			
3-4	81LB-20280				.COVER	1			
3-5	S035-081556				.BOLT-W/WASHER	8			
4	81LB-20170				SHAFT-AXLE	1			
5	81LB-20241				WASHER-DU THRUST	2			
6	81LB-20250				DISC	1			
7	81LB-20260				COVER	1			
8	81LB-20270				SHIM	2			
9	S017-16050D				BOLT-HEX	21			
10	S017-16045D				BOLT-HEX	8			
11	S441-160006				WASHER-HARDENED	29			
12	S018-361206				BOLT-HEX	8			
13	S441-360006				WASHER-HARDENED	16			
14	S206-361006				NUT-HEX	8			
21	81LK-10010				FRONT AXLE ASSY	1			CONVENTIONAL
21	81LK-10020				FRONT AXLE ASSY	1			LIMITED SLIP

Item	Part_No	IS	Ord	T	Description	Qty	Serial_No	ITC	Remark
21	81LK-10020				FRONT AXLE ASSY	1			LIMITED SLIP
21	81LK-10030				FRONT AXLE ASSY	1			DIFF LOCK
22	S018-333106				BOLT-HEX	8			
23	S206-331006				NUT-HEX	8			
24	S441-330006				WASHER-HARDENED	16			

DRIVE LINES

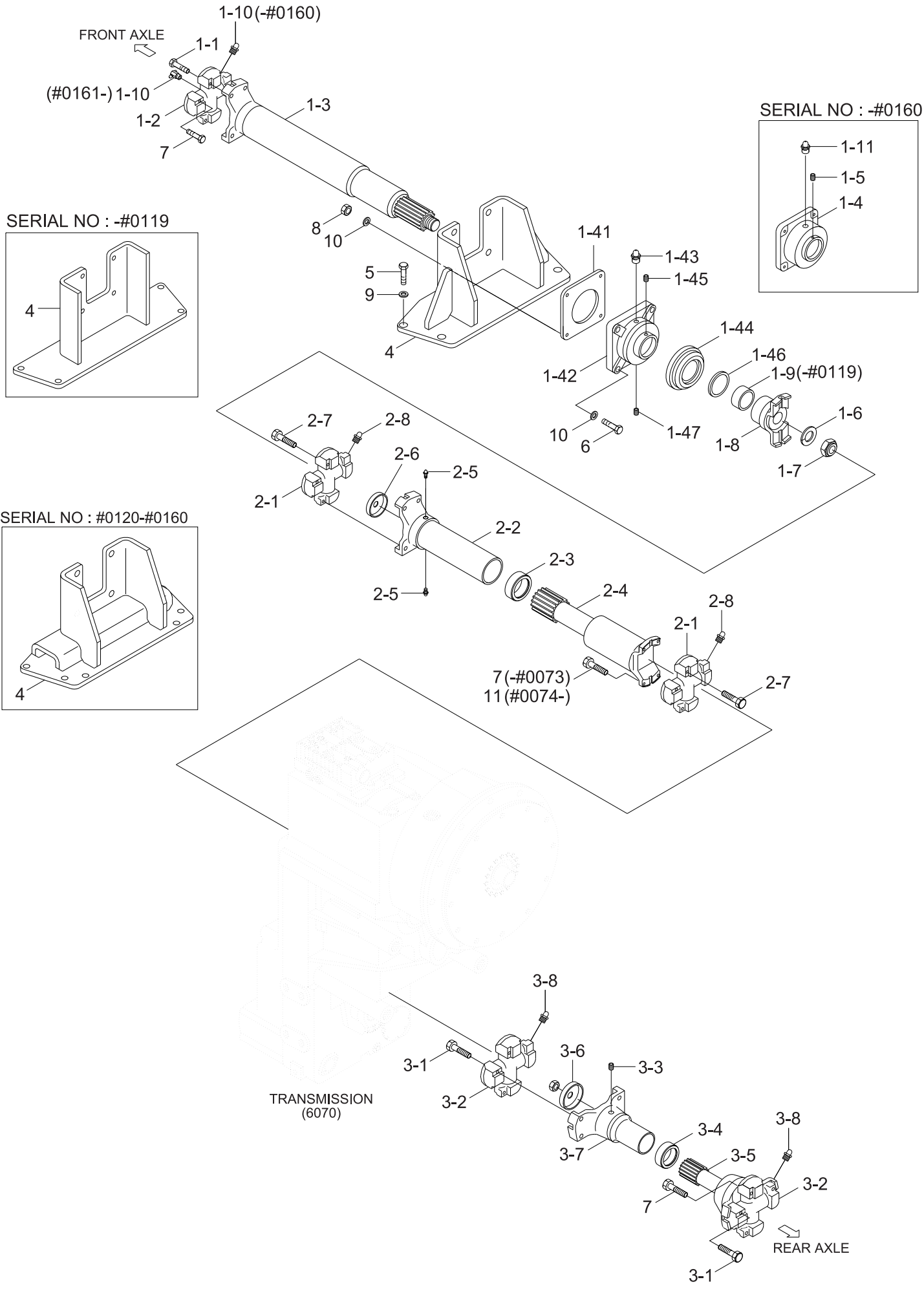
FRONT AXLE
1-10(-#0160)
1-1
(#0161-) 1-10
1-2
7
1-3
8
10
5
9
4
1-41
1-43
1-45
1-44
1-46
1-9(-#0119)
1-42
10
6
1-47
1-8
1-6
1-7
SERIAL NO : -#0160
1-11
1-5
1-4
SERIAL NO : -#0119
4
2-7
2-8
2-6
2-5
2-1
2-2
2-3
2-4
2-5
SERIAL NO : #0120-#0160
4
2-8
2-1
7(-#0073)
11(#0074-)
2-7
TRANSMISSION
(6070)
3-8
3-1
3-6
3-3
3-2
3-4
3-8
3-7
3-5
3-2
7
REAR AXLE
3-1

Item	Part_No	IS	Ord	T	Description	Qty	Serial_No	ITC	Remark
1	81LK-30010				DRIVE SHAFT-FRONT	1	- #0011		
1	81LK-30011				DRIVE SHAFT-FRONT	1	#0012 - #0119	A	
1	81LK-30012				DRIVE SHAFT-FRONT	1	#0120 - #0160	B	SB-S-2014-017.PDF
1	81LK-30013				DRIVE SHAFT-FRONT	1	#0161 -	D	
1-1	103-21UNF85				.BOLT	4			
1-2	100-85C-1				.J/BEARING ASSY	1	- #0011		
1-2	100-8.5C-2				.J/BEARING ASSY	1	#0012 -	A	
1-3	40AF-85C678I				.SHAFT SUB ASSY	1	- #0119		
N1-3	XKCP-00097				.SHAFT SUB ASSY	1	#0120 - #0120		NOT
1-3	XKCP-00117				.SHAFT SUB ASSY	1	#0120 -	D	
1-3	400AF-85C678				.Deleted...	1	#0120 -	D	
1-4	750-UCF313				.F/L BEARING ASSY	1	- #0160		
1-4	XKCP-00120				.FLANGE BEARING ASSY	1	#0161 -	B	
1-41	XKCP-00121				..UCF COVER	1	#0161 -	-	
1-42	750-UCF313				..F/L BEARING ASSY	1	#0161 -	-	
1-42	XKCP-00135				..BEARING-FLANGE	1	#0161 -	B	
1-43	XKCP-00022				..NIPPLE-GREASE	1	#0161 -	-	
1-44	XKCP-00122				..UCF COVER(UP)	1	#0161 -	-	
1-45	710-M10125				..SCREW-SET	2	#0161 -	-	
1-46	XKCP-00123				..RETAINER	2	#0161 -	-	
1-47	910-5206				..AIR-RELIEF VALVE	1	#0161 -	-	
1-5	710-M10125				..SCREW-SET	2			
1-5	710-M10125				.SCREW-SET	2	- #0160	-	
1-6	120-M33				.WASHER	1			
1-7	110-M33				.NUT-LOCK	1			
1-8	220-85C100L				.FLANGE COMPLETE	1	- #0119		
1-8	XKCP-00124				.FLANGE COMPLETE	1	#0120 -	D	

Item	Part_No	IS	Ord	T	Description	Qty	Serial_No	ITC	Remark
1-8	XKCP-00124				.FLANGE COMPLETE	1	#0120 -	D	
1-9	230-5675				.SPACER	1	-	-	
1-10	102-PT4185				.NIPPLE-GREASE	1	#0012 -		
1-11	XKCP-00022				.NIPPLE-GREASE	1	#0120 -	-	
2	81LK-30020				DRIVE SHAFT-CENTER	1	-		
2	81LK-30021				DRIVE SHAFT-CENTER	1	#0012 -	A	
2-1	100-85C-1				.J/BEARING ASSY	2	-		
2-1	100-8.5C-2				.J/BEARING ASSY	2	#0012 -	A	
2-2	220-85C265L				.SLIP YOKE	1			
2-3	810-53JK				.SEAL-JOINT	1			
2-4	40AF-85C1025				.SHAFT SUB ASSY	1	-		
2-4	40AF-85C1048				.SHAFT SUB ASSY	1	#0012 -	A	
2-5	XKCP-00022				.NIPPLE-GREASE	2			
2-6	900-670				.EXPANSION PLUG	1			
2-7	103-21UNF859				.BOLT	8			
2-8	102-PT4185				.NIPPLE-GREASE	2	#0012 -		
3	81LB-01200				DRIVE SHAFT-REAR	1	-		
3	81LB-01201				DRIVE SHAFT-REAR	1	#0012 -	A	
3-1	103-21UNF859				.BOLT	8			
3-2	100-8.5C-1				.J/BEARING ASSY	2	-		
3-2	100-8.5C-2				.J/BEARING ASSY	2	#0012 -	A	
3-3	XKCP-00022				.NIPPLE-GREASE	1			
3-4	810-53JK				.SEAL-JOINT	1			
3-5	300-8.5C155I				.SHAFT-YOKE	1			
3-6	900-670				.EXPANSION PLUG	1			
3-7	200-8.5C115I				.YOKE-SLIP	1			
3-8	102-PT4185				.NIPPLE-GREASE	2	#0012 -		

Item	Part_No	IS	Ord	T	Description	Qty	Serial_No	ITC	Remark
3-8	102-PT4185				.NIPPLE-GREASE	2	#0012 -		
4	81LK-30030				BRACKET WA	1	-		
4	81LK-30031				BRACKET WA	1	#0120 -	B	SB-I-2014-021.PDF
4	81LK-30032				BRACKET WA	1	#0161 -	D	
5	S017-16045D				BOLT-HEX	4	-		
5	S017-16055D				BOLT-HEX	4	#0161 -	B	
6	S017-20070D				BOLT-HEX	4	-		
6	S017-20080D				BOLT-HEX	4	#0161 -	B	
7	S088-080406				BOLT-HEX,UNIFIED	20	-		
7	S088-080406				BOLT-HEX,UNIFIED	16	#0074 -	A	
8	S205-20100B				NUT-HEX	4			
9	S441-160006				WASHER-HARDENED	4			
10	S441-200006				WASHER-HARDENED	8			
11	S088-080366				BOLT-HEX(UNIFIED)	4	#0074 -	B	
N	@				NOT SUPPLIED PARTS	AR			NOT

TRANSMISSION MOUNTING

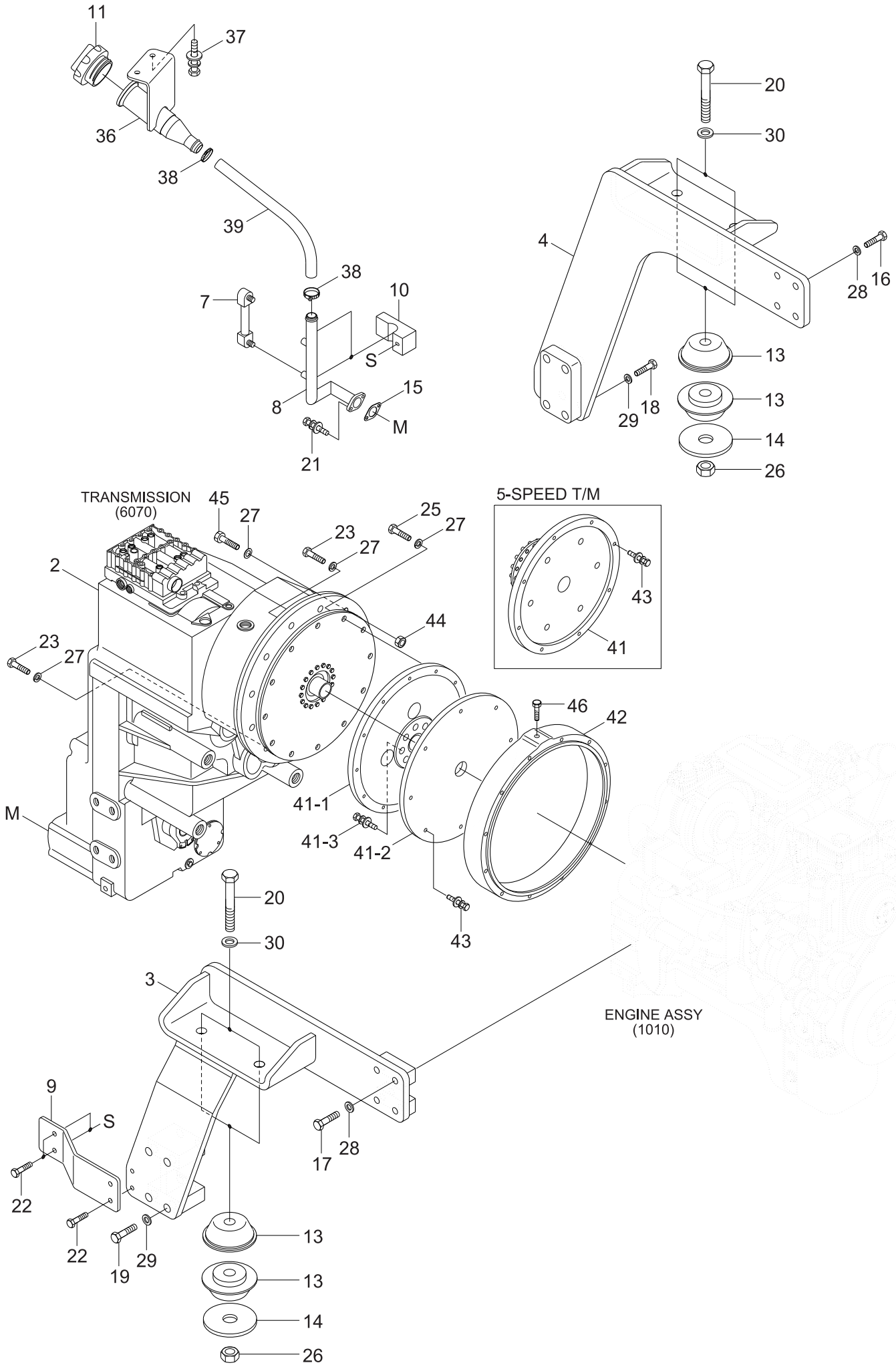

Item	Part_No	IS	Ord	T	Description	Qty	Serial_No	ITC	Remark
2	11LK-00020				TRANSMISSION ASSY	1			4-SPEED
2	11LK-00200				TRANSMISSION ASSY	1			5-SPEED
3	11LK-05030				BRACKET WA-LH	1			
4	11LK-05040				BRACKET WA-RH	1			
7	11LK-00120				LEVEL GAUGE	1			
8	11LK-00252				PIPE WA	1			
9	11LK-00311				PLATE	1			
10	11LB-00120				CLAMP-PIPE	2			
11	11LM-00330				CAP-FILLER	1			
13	11N6-13060				RESILIENT	8			
14	11N8-00060				WASHER	4			
15	12L2-0013				GASKET	1			
16	S017-16055D				BOLT-HEX	4			
17	S017-16090D				BOLT-HEX	4			
18	S017-200856				BOLT-HEX	4			
19	S017-201356				BOLT-HEX	4			
20	S017-241856				BOLT-HEX	4			
21	S035-082546				BOLT-W/WASHER	2			
22	S037-102556				BOLT-W/WASHER	4			
23	S017-101206				BOLT-HEX	5			
25	S087-060126				BOLT-HEX,UNIFIED	12			4-SPEED
26	S205-24100B				NUT-HEX	4			
27	S441-100006				WASHER-SPRING	24			
28	S441-160006				WASHER-HARDENED	8			
29	S441-200006				WASHER-HARDENED	8			
30	S441-240006				WASHER-HARDENED	4			
36	11LK-00280				PIPE WA	1			

Item	Part_No	IS	Ord	T	Description	Qty	Serial_No	ITC	Remark
36	11LK-00280				PIPE WA	1			
37	S037-102056				BOLT-W/WASHER	2			
38	S572-460006				CLAMP-HOSE,WIRE TYPE	2			
39	P760-053059				HOSE-RUBBER LOW	1			
41	11LK-05070				ADAPTER	1			4-SPEED
41-1	11LK-05080				.ADAPTER	1			4-SPEED
41-2	11LK-05090				.ADAPTER	1			4-SPEED
41-3	S037-124056				.BOLT-W/WASHER	8			4-SPEED
41	81LK-30070				COUPLING	1			5-SPEED
42	11LK-05050				HOUSING-SPACER	1			4-SPEED
42	11LK-05060				HOUSING-SPACER	1			5-SPEED
43	S037-104056				BOLT-W/WASHER	8			
44	S205-10100B				NUT-HEX	14			
45	11LK-05100				BOLT-STUD	7			4-SPEED
45	11LL-00500				BOLT-STUD	7			5-SPEED
46	S017-100156				BOLT-HEX	1			

TRANSMISSION COOLING PIPING(4-SPEED)

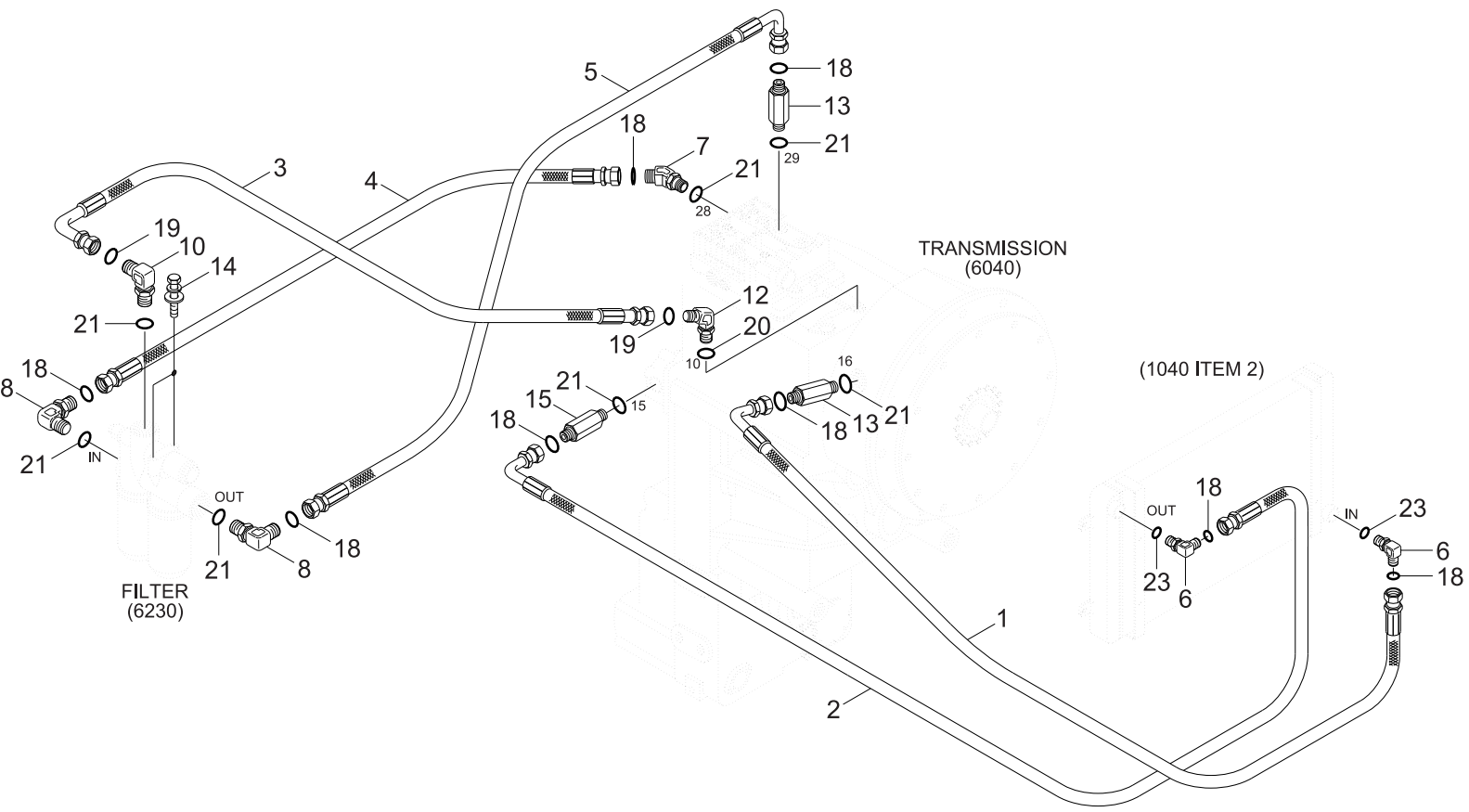

Item	Part_No	IS	Ord	T	Description	Qty	Serial_No	ITC	Remark
1	P933-202072				HOSE ASSY-ORFS 0X90	1			
2	P933-202116				HOSE ASSY-ORFS 0X90	1			
3	P930-122031				HOSE ASSY-ORFS 0X90	1			
4	P910-201023				HOSE ASSY-ORFS 0X0	1			
5	P930-201024				HOSE ASSY-ORFS 0X90	1			
6	X520-110019				ELBOW-90,ORFS	2			
7	81LK-60010				ELBOW-45	1			
8	81LK-60020				ELBOW-90,ORFS	2			
10	81LK-60060				ELBOW-90,ORFS	1			
12	81LK-60080				ELBOW-45,ORFS	1			
13	81LQ-60020				CONNECTOR-LONG,ORFS	2			
14	S037-102556				BOLT-W/WASHER	2			
15	X512-142569				CONNECTOR-LONG,ORFS	1			
18	S621-025001				O-RING	8			
19	S621-018001				O-RING	2			
20	Y161-030001				O-RING	1			
21	Y161-042001				O-RING(METRIC)	7			
23	S631-029001				O-RING	2			

TRANSMISSION COOLING PIPING(5-SPEED)

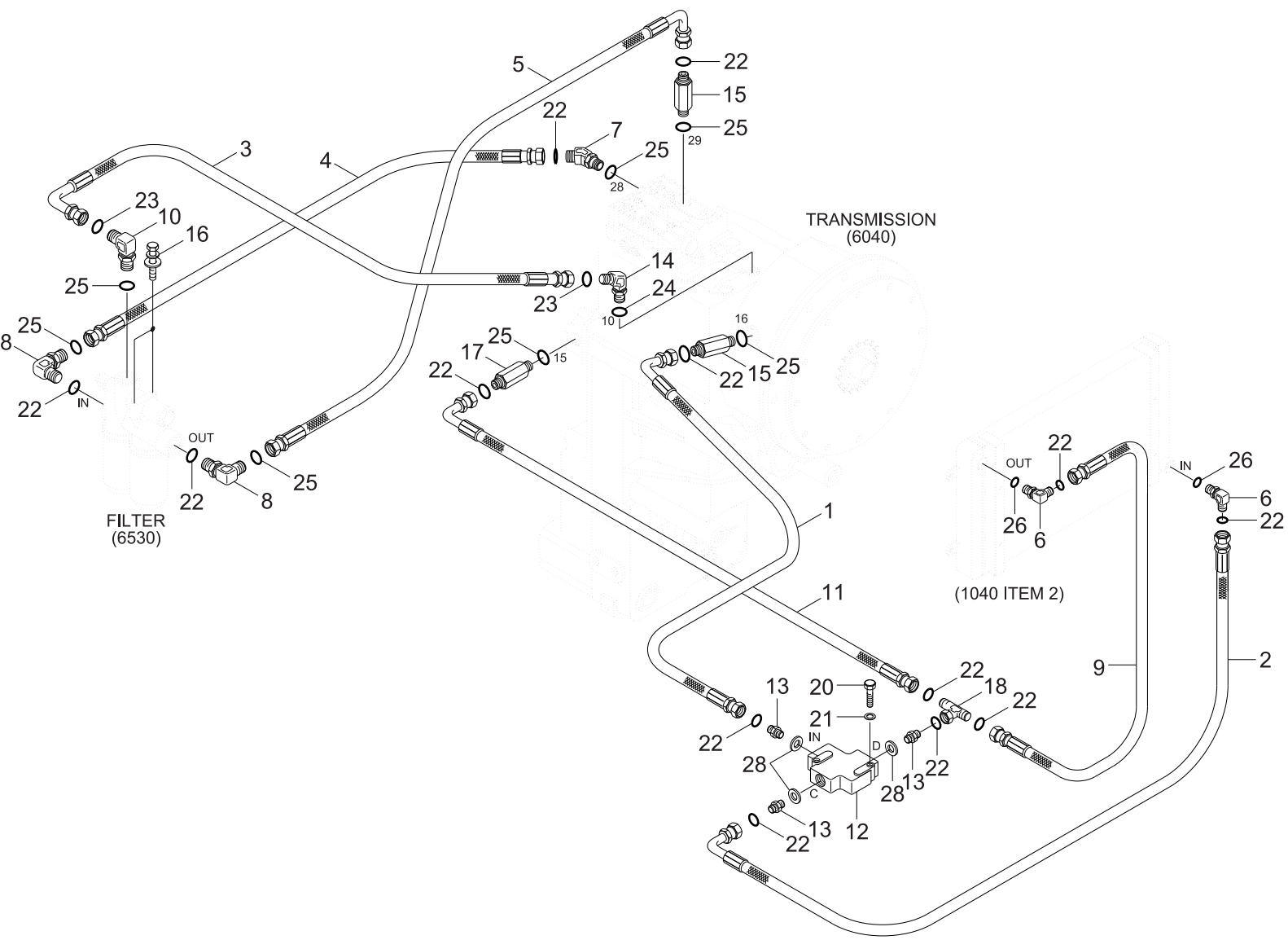

Item	Part_No	IS	Ord	T	Description	Qty	Serial_No	ITC	Remark
1	P933-202037				HOSE ASSY-ORFS 0X90	1			
2	P933-202038				HOSE ASSY-ORFS 0X90	1			
3	P930-122031				HOSE ASSY-ORFS 0X90	1			
4	P910-201023				HOSE ASSY-ORFS 0X0	1			
5	P930-201024				HOSE ASSY-ORFS 0X90	1			
6	X520-110019				ELBOW-90,ORFS	2			
7	81LK-60010				ELBOW-45	1			
8	81LK-60020				ELBOW-90,ORFS	2			
9	P913-202056				HOSE ASSY-ORFS 0X0	1			
10	81LK-60060				ELBOW-90,ORFS	1			
11	P933-202045				HOSE ASSY-ORFS 0X90	1			
12	81LK-60100				THERMOSTAT	1			
13	X500-110006				CONNECTOR-ORFS	3			SB-I-2013-027
14	81LK-60080				ELBOW-45,ORFS	1			
15	81LQ-60020				CONNECTOR-LONG,ORFS	2			
16	S037-102556				BOLT-W/WASHER	2			
17	X512-142569				CONNECTOR-LONG,ORFS	1			
18	81LK-60110				TEE-B/TYPE,SWIVEL,ORFS	1			
20	S015-080756				BOLT-HEX	2			
21	S441-08000B				WASHER-HARDENED	2			
22	S621-025001				O-RING	14			
23	S621-018001				O-RING	2			
24	Y161-030001				O-RING	1			
25	Y161-042001				O-RING(METRIC)	7			
26	S631-029001				O-RING	2			
28	P391-200000				WASHER-COPPER	3			SB-I-2013-027

DIFFERENTIAL LOCK

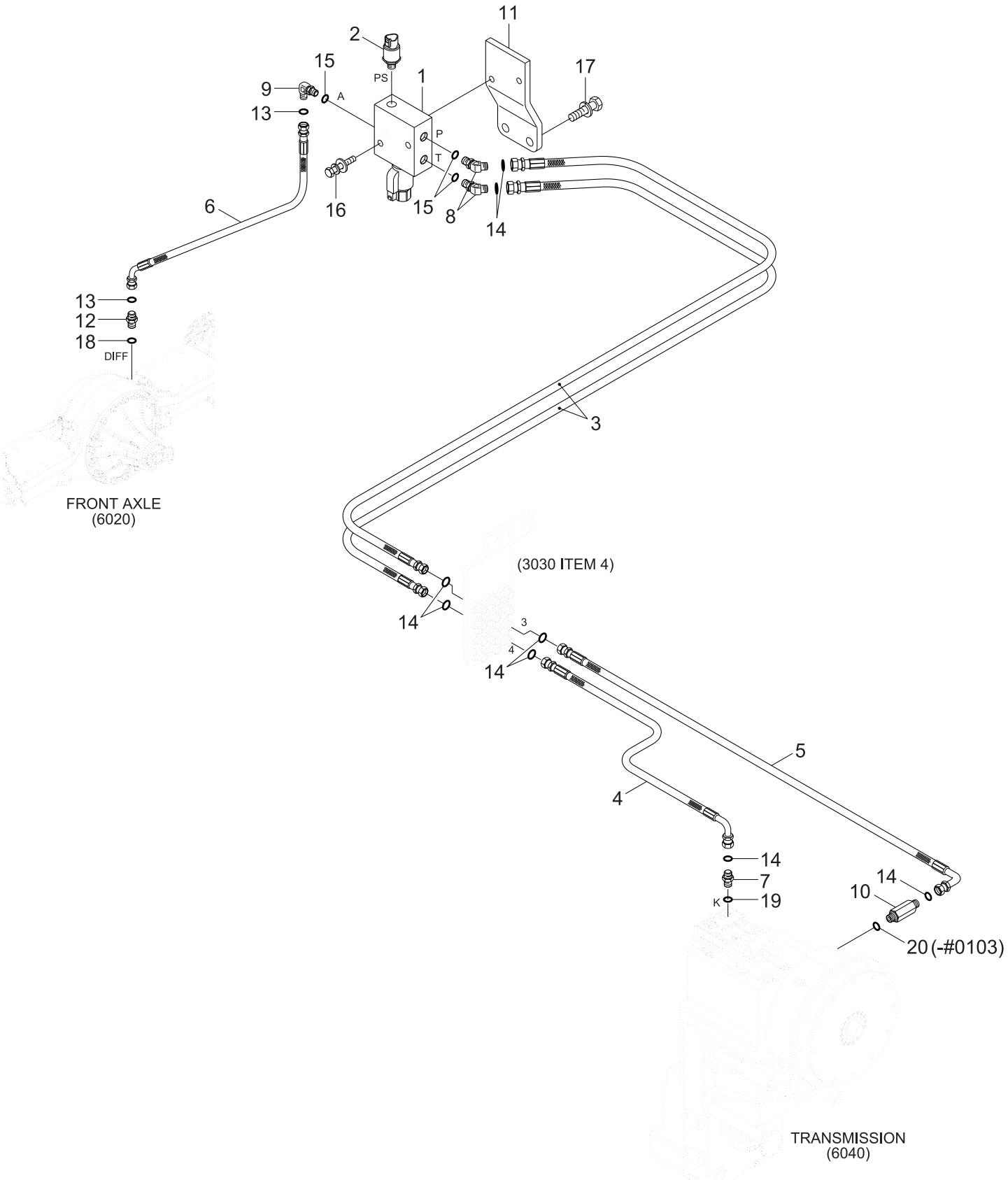

Item	Part_No	IS	Ord	T	Description	Qty	Serial_No	ITC	Remark
1	81LQ-50010				SOLENOID VALVE	1			
2	31Q4-40830				SENSOR-PRESSURE	1			
3	P910-062015				HOSE ASSY-ORFS 0X0	2			
4	P930-062038				HOSE ASSY-ORFS 0X90	1			
5	P933-062034				HOSE ASSY-ORFS 0X90	1			
6	P920-042015				HOSE ASSY-ORFS 0X45	1			
7	81LK-50540				CONNECTOR-ORFS	1			
8	X530-110011				ELBOW-45,ORFS	2			
9	X520-110001				ELBOW-90,ORFS	1			
10	81LK-50511				CONNECTOR-LONG	1			
11	81LL-50030				PLATE	1			
12	X500-210001				CONNECTOR-ORFS	1			
13	S621-011001				O-RING	2			
14	S621-012001				O-RING	8			
15	S631-011004				O-RING	3			
16	S035-084526				BOLT-W/WASHER	2			
17	S037-102556				BOLT-W/WASHER	2			
18	Y161-012001				O-RING	1			
19	Y161-016001				O-RING	1			
20	Y161-026001				O-RING(METRIC)	1	-		

AXLE OIL COOLING GROUP 1

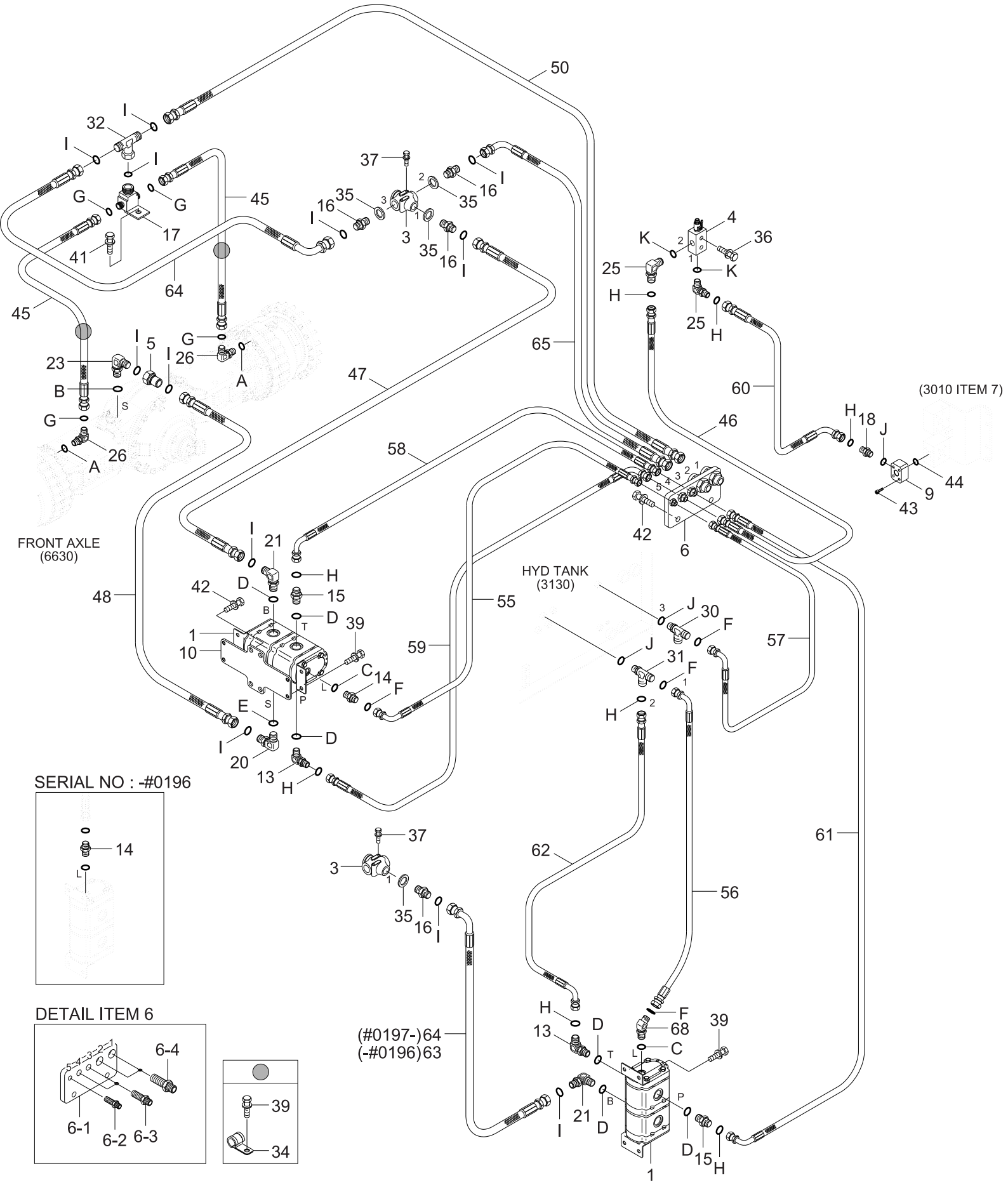

Item	Part_No	IS	Ord	T	Description	Qty	Serial_No	ITC	Remark
1	81LK-00050				MOTOR PUMP ASSY	2			
3	81LK-00070				THERMOSTAT	2			
4	81LK-00061				FLOW CONTROL VALVE	1			
5	81LK-70120				SUCTION PIPE	1			
6	81LL-10100				TERMINAL ASSY	1			
9	81LK-70130				BLOCK-FLANGE	1			
10	81LL-70200				PLATE	1			
13	31LB-40360				ELBOW-90	2			
14	31S7-00750				CONNECTOR	2	-		
14	31S7-00750				CONNECTOR	1	#0197 -	A	
15	31S8-20160				CONNECTOR	2			
16	81LL-70220				CONNECTOR	4			
17	81LQ-70100				CONNECTOR ASSY	1			
18	X500-110012				CONNECTOR-ORFS	1			
20	31LF-30080				ELBOW-90	1			
21	31LG-30100				ELBOW-90	2			
23	81LK-70041				ELBOW-90,ORFS	1			
25	X520-110013				ELBOW-90,ORFS	2			
26	X520-210004				ELBOW-90,ORFS	2			
30	X820-085251				TEE-R/TYPE,ORFS	1			
31	X820-085351				TEE-R/TYPE,ORFS	1			
32	X830-545454				TEE-B/TYPE,SWIVEL,ORFS	1			
34	81L6-40050				CLAMP	2			
35	P392-260000				WASHER-COPPER	4			
36	S035-085526				BOLT-W/WASHER	2			
37	S035-066526				BOLT-W/WASHER	4			
39	S037-102056				BOLT-W/WASHER	10			

Item	Part_No	IS	Ord	T	Description	Qty	Serial_No	ITC	Remark
39	S037-102056				BOLT-W/WASHER	10			
41	S037-122056				BOLT-W/WASHER	1			
42	S037-122556				BOLT-W/WASHER	6			
43	S109-121306				BOLT-SOCKET	4			
44	Y171-027004				O-RING	1			
45	P910-062023				HOSE ASSY-ORFS 0X0	2	-		
45	P913-062023				HOSE ASSY-ORFS 0X0	2	#0132 -	B	
46	P910-082023				HOSE ASSY-ORFS 0X0	1			
47	P910-122010				HOSE ASSY-ORFS 0X0	1			
48	P910-122019				HOSE ASSY-ORFS 0X0	1			
50	P910-122034				HOSE ASSY-ORFS 0X0	1			
55	P930-042008				HOSE ASSY-ORFS 0X90	1			
56	P930-042048				HOSE ASSY-ORFS 0X90	1			
57	P930-042060				HOSE ASSY-ORFS 0X90	1			
58	P930-082010				HOSE ASSY-ORFS 0X90	1			
59	P930-082011				HOSE ASSY-ORFS 0X90	1			
60	P930-086009				HOSE ASSY-ORFS 0X90	1			
61	P930-082032				HOSE ASSY-ORFS 0X90	1			
62	P930-082048				HOSE ASSY-ORFS 0X90	1	-		
62	P910-082048				HOSE ASSY-ORFS 0X0	1	#0197 -	B	
63	P930-122013				HOSE ASSY-ORFS 0X90	1	-	-	
64	P930-122012				HOSE ASSY-ORFS 0X90	1	-		
64	P930-122012				HOSE ASSY-ORFS 0X90	2	#0197 -	B	
65	P930-122019				HOSE ASSY-ORFS 0X90	1			
A	Y161-018001				O-RING	2			
B	Y161-022001				O-RING	1			
C	S611-012001				O-RING	2			

Item	Part_No	IS	Ord	T	Description	Qty	Serial_No	ITC	Remark
C	S611-012001				O-RING	2			
D	S611-019001				O-RING	6			
E	S611-023001				O-RING	1			
F	S621-011001				O-RING	4			
G	S621-012001				O-RING	4			
H	S621-014001				O-RING	8			
I	S621-018001				O-RING	12			
J	S631-018004				O-RING	3			
K	S631-024004				O-RING	2			

AXLE OIL COOLING GROUP 2

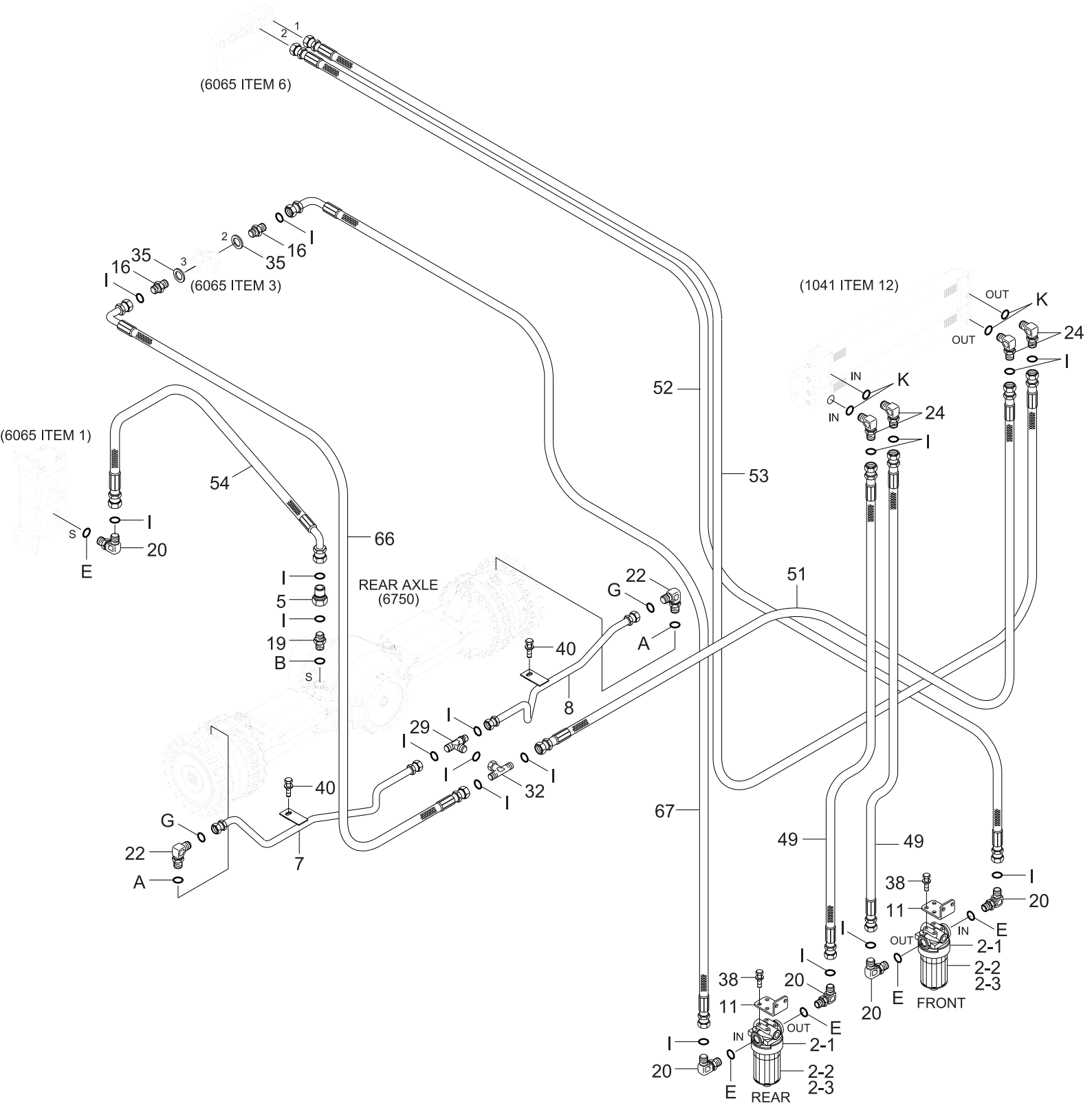

Item	Part_No	IS	Ord	T	Description	Qty	Serial_No	ITC	Remark
2	11LK-30640				FILTER-AXLE COOLING	2			
2-1	ZGAW-00052				.HEAD MFX 100	1	#0135 -	-	
2-2	ZGAW-00053				.ELEMENT	1	#0135 -	-	
2-3	ZGAW-00054				.BOWL	1	#0135 -	-	
5	81LK-70120				SUCTION PIPE	1			
6	81LL-10100				TERMINAL ASSY	1			
7	81LK-70070				PIPE ASSY-LH	1			
8	81LK-70080				PIPE ASSY-RH	1			
11	81LK-70060				PLATE WA	2			
16	81LL-70220				CONNECTOR	2			
19	81LL-70210				CONNECTOR	1			
20	31LF-30080				ELBOW-90	5			
22	81LK-70020				ELBOW-90	2			
24	X520-110004				ELBOW-90,ORFS	4	#0135 -	-	
29	81LQ-70110				TEE	1	#0001 -	-	
32	X830-545454				TEE-B/TYPE,SWIVEL,ORFS	1			
35	P392-260000				WASHER-COPPER	2			
38	S037-102026				BOLT-W/WASHER	12			
40	S037-121556				BOLT-W/WASHER	2			
49	P910-122035				HOSE ASSY-ORFS 0X0	2			
51	P910-122046				HOSE ASSY-ORFS 0X0	1			
52	P910-122066				HOSE ASSY-ORFS 0X0	1			
53	P913-122090				HOSE ASSY-ORFS 0X0	1			
54	P920-122036				HOSE ASSY-ORFS 0X45	1			
66	P930-122046				HOSE ASSY-ORFS 0X90	1			
67	P930-122058				HOSE ASSY-ORFS 0X90	1			
A	Y161-018001				O-RING	2			

Item	Part_No	IS	Ord	T	Description	Qty	Serial_No	ITC	Remark
A	Y161-018001				O-RING	2			
B	Y161-022001				O-RING	1			
E	S611-023001				O-RING	5			
G	S621-012001				O-RING	2			
I	S621-018001				O-RING	18			
K	S631-024004				O-RING	4			

ENGINE CONNECTION(4-SPEED)

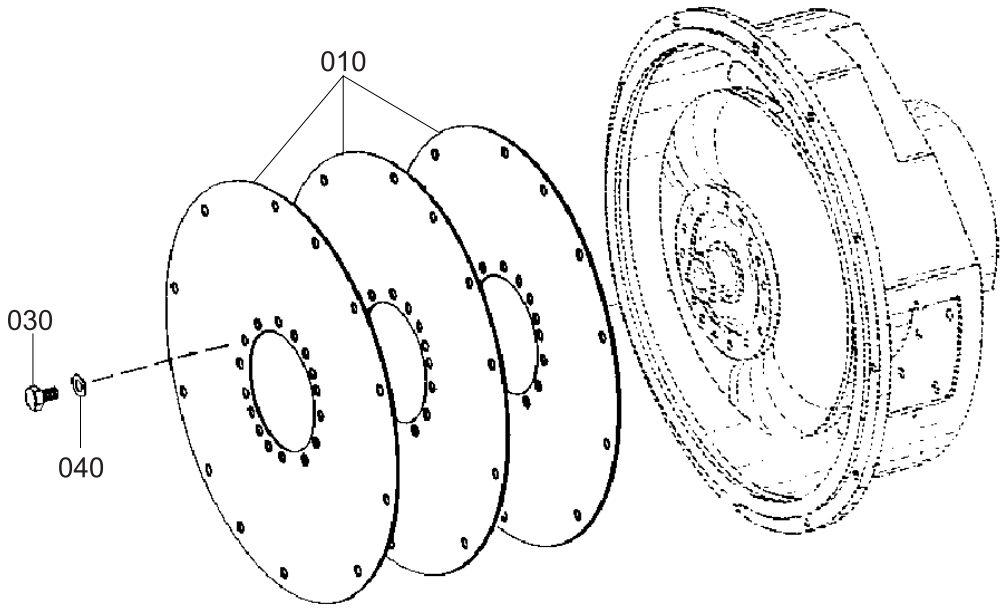

Item	Part_No	IS	Ord	T	Description	Qty	Serial_No	ITC	Remark
010	ZGAQ-00710				DIAPHRAGM	3			
020	ZGAQ-00711				SCREW	16			
030	ZGAQ-00251				WASHER	16			

CONVERTER(4-SPEED)

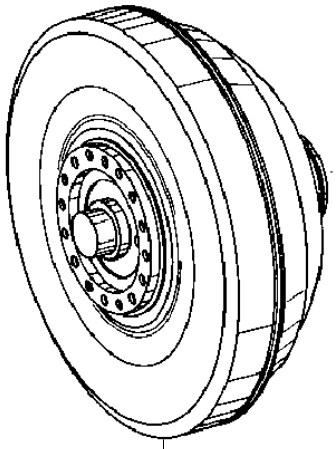

Item	Part_No	IS	Ord	T	Description	Qty	Serial_No	ITC	Remark
010	ZGAQ-03545				CONVERTER	1			

INPUT GROUP(4-SPEED)

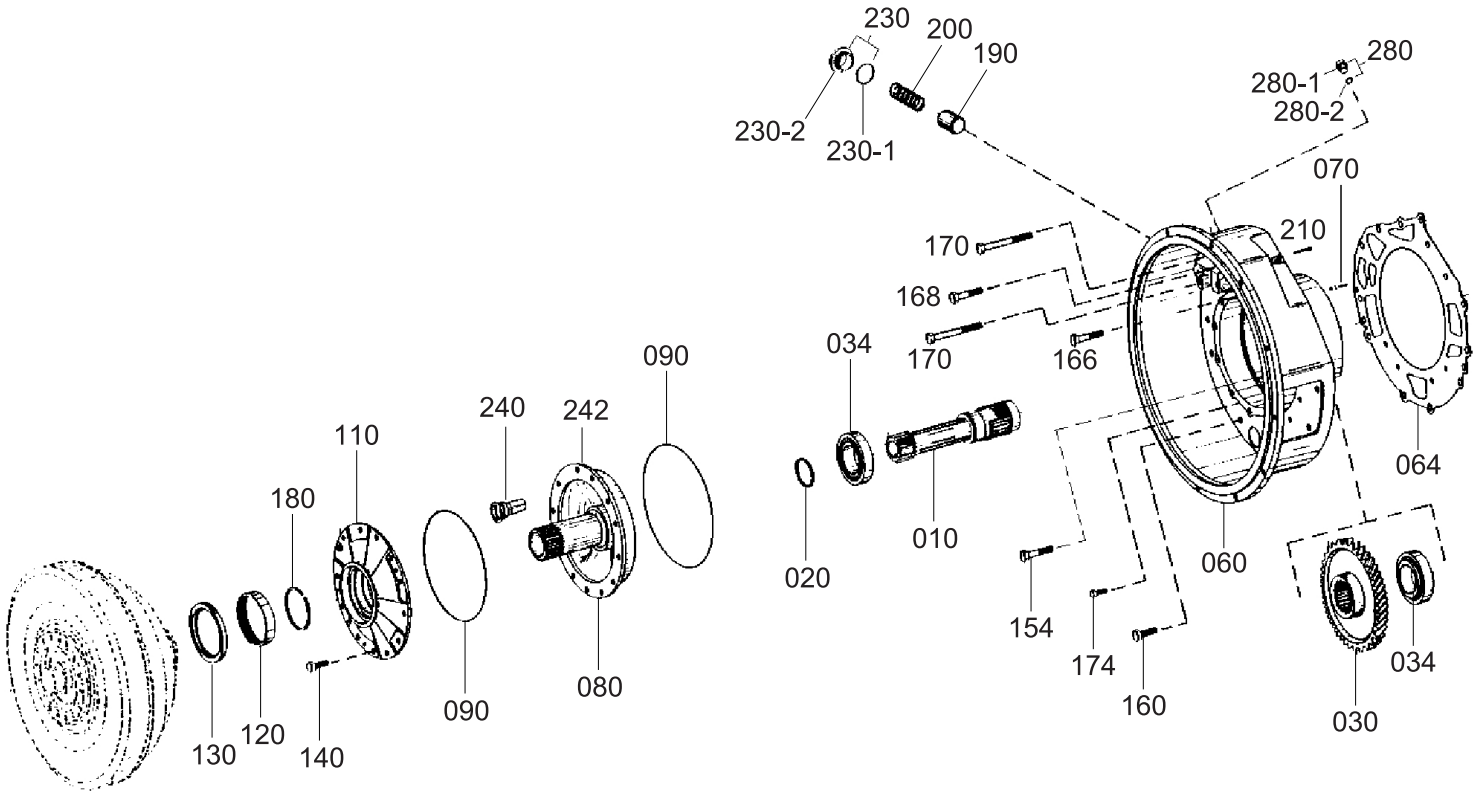

Item	Part_No	IS	Ord	T	Description	Qty	Serial_No	ITC	Remark
010	ZGAQ-00203				SHAFT-INPUT	1			
020	ZGAQ-00204				RING-PISTON	1			
030	ZGAQ-00205				GEAR-HELICAL	1			
034	ZGAQ-00206				BEARING-ROLLER	2			
060	ZGAQ-00713				BELL-CONVERTER	1			
064	ZGAQ-00208				GASKET	1			
070	ZGAQ-00209				PLUG	3			
080	ZGAQ-00211				FLANGE-OIL FEED	1			
090	ZGAQ-01718				O-RING	2			
110	ZGAQ-00213				COVER-BEARING	1			
120	ZGAQ-00214				SLEEVE-NEEDLE	1			
130	ZGAQ-00215				SEAL-SHAFT	1			
140	ZGAQ-00197				SCREW-HEX	12			
154	ZGAQ-00216				SCREW-HEX	2			
160	ZGAQ-00217				SCREW-HEX	10			
166	ZGAQ-00218				SCREW-HEX	1			
168	ZGAQ-00219				SCREW-HEX	1			
170	ZGAQ-00220				SCREW-HEX	1			
174	ZGAQ-01072				SCREW-HEX	4			
180	ZGAQ-00222				RING-PISTON	1			
190	ZGAQ-00223				PISTON	1			
200	ZGAQ-00224				SPRING-COMPRESSION	1			
210	ZGAQ-00225				PIN-SLOT	1			
230	@				PLUG-SCREW	1			NOT
230-1	ZGAQ-00226				.O-RING	1			
230-2	ZGAQ-00227				.PLUG-SCREW	1			
240	ZGAQ-00228				VALVE	1			

Item	Part_No	IS	Ord	T	Description	Qty	Serial_No	ITC	Remark
240	ZGAQ-00228				VALVE	1			
242	ZGAQ-00229				PIN-SLOT	1			
280	@				PLUG-SCREW	1			NOT
280-1	ZGAQ-00230				.PLUG-SCREW	1			
280-2	ZGAQ-00231				.O-RING	1			

CONVERTER BELL COVER(4-SPEED)

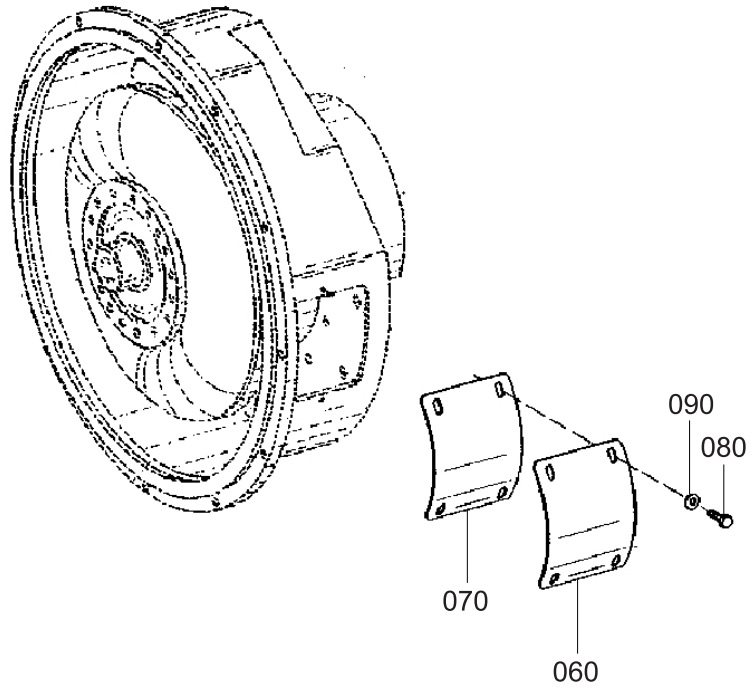

Item	Part_No	IS	Ord	T	Description	Qty	Serial_No	ITC	Remark
060	ZGAQ-00714				PLATE-COVER	1			
070	ZGAQ-03546				PLATE-COVER	1			
080	ZGAQ-00716				SCREW-HEX	4			
090	ZGAQ-00717				WASHER	4			

GEARBOX HOUSING(4-SPEED)

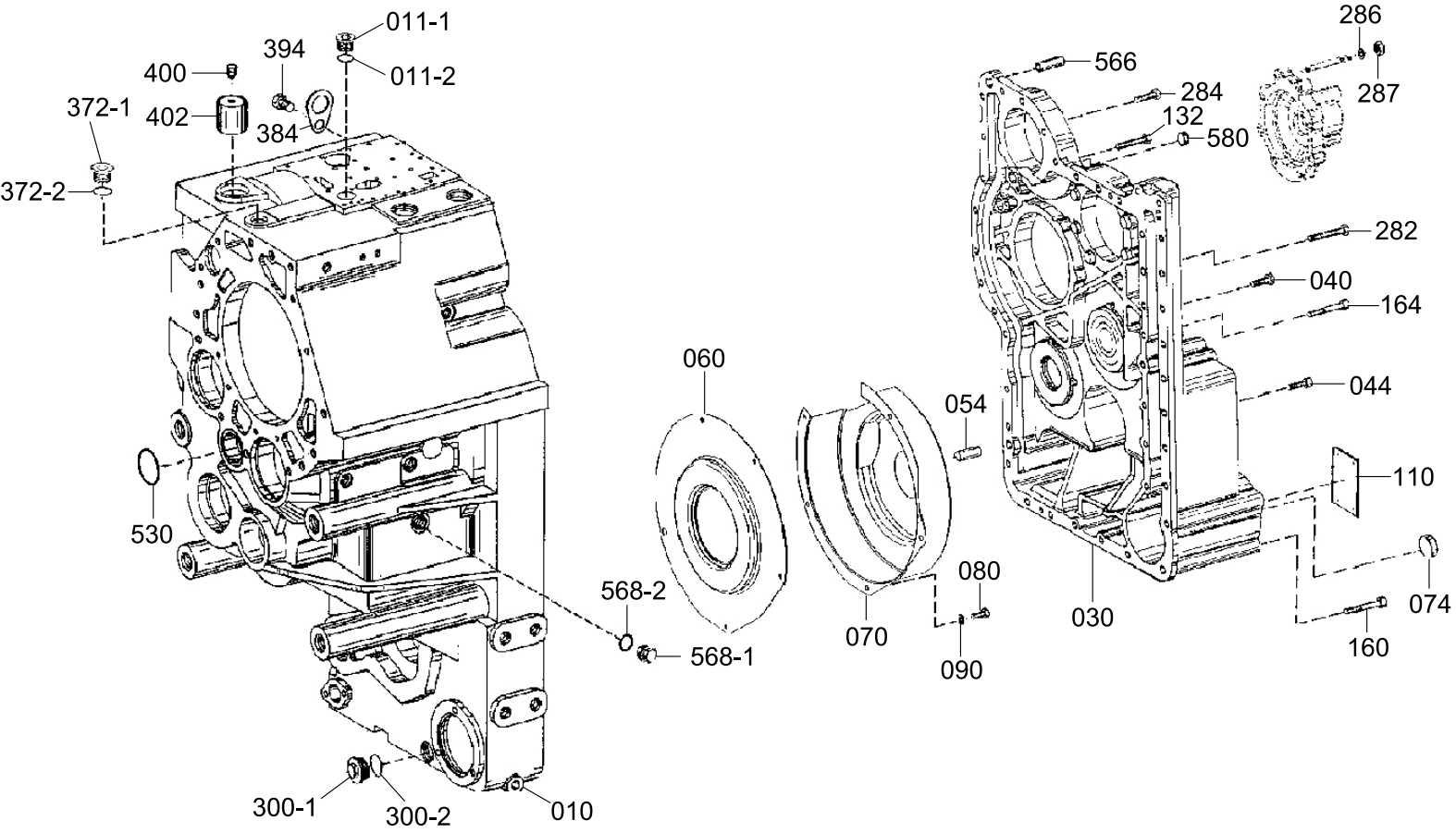

Item	Part_No	IS	Ord	T	Description	Qty	Serial_No	ITC	Remark
010	ZGAQ-00235				HOUSING	1			
011	@				PLUG-SCREW	1			NOT
011-1	ZGAQ-00236				.PLUG-SCREW	1			
011-2	ZGAQ-00237				.O-RING	1			
030	ZGAQ-00238				COVER	1			
040	ZGAQ-00718				SCREW-CAP	12			
044	ZGAQ-00718				SCREW-CAP	2			
054	ZGAQ-00241				PIN-CYLINDER	2			
060	ZGAQ-01522				SHEET-COVER	1			
070	ZGAQ-01523				SHEET-COVER	1			
074	ZGAQ-00244				CAP-SEALING	1			
080	ZGAQ-00719				SCREW-CAP	5			
090	ZGAQ-00245				WASHER	4			
110	ZGAQ-00720				PLATE-TYPE	1			
132	ZGAQ-00721				SCREW-HEX	1			
160	ZGAQ-00722				SCREW-CAP	9			
164	ZGAQ-00250				SCREW-CAP	1			
282	ZGAQ-00723				SCREW-HEX	7			
284	ZGAQ-00724				SCREW-HEX	8			
286	ZGAQ-00251				WASHER	2			
287	ZGAQ-00199				NUT-HEX	2			
300	@				PLUG-SCREW	1			NOT
300-1	ZGAQ-00252				.PLUG-SCREW	1			
300-2	ZGAQ-00253				.O-RING	1			
372	@				PLUG-SCREW	1			NOT
372-1	ZGAQ-00254				.PLUG-SCREW	1			
372-2	ZGAQ-00255				.O-RING	1			

Item	Part_No	IS	Ord	T	Description	Qty	Serial_No	ITC	Remark
372-2	ZGAQ-00255				.O-RING	1			
384	ZGAQ-00256				PLATE-FIXING	2			
394	ZGAQ-00257				SCREW-HEX	1			
400	ZGAQ-00258				BREATHER	1			
402	ZGAQ-00259				POT	1			
530	ZGAQ-00268				O-RING	1			
566	ZGAQ-00264				PIN-SLOT	1			
568	@				PLUG-SCREW	2			NOT
568-1	ZGAQ-00265				.PLUG-SCREW	2			
568-2	ZGAQ-00237				.O-RING	2			
580	ZGAQ-00097				CAP-SEALING	1			

LAYSHAFT(4-SPEED)

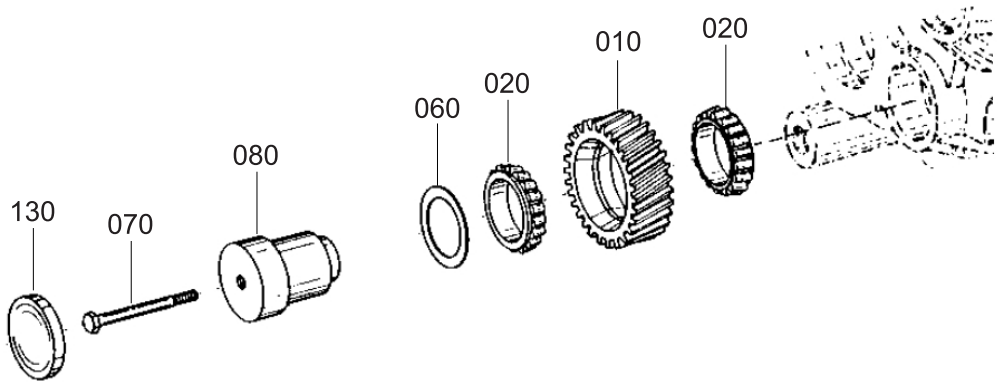

Item	Part_No	IS	Ord	T	Description	Qty	Serial_No	ITC	Remark
010	ZGAQ-01672				GEAR	1			
020	ZGAQ-00271				RING-BEARING,INNER	2			
060	ZGAQ-00272				RING(7.7)	1			
070	ZGAQ-00273				SCREW-HEX	1			
080	ZGAQ-00274				AXLE	1			
130	ZGAQ-00275				COVER	1			

COUPLING GROUP(K1+KV, 4-SPEED)

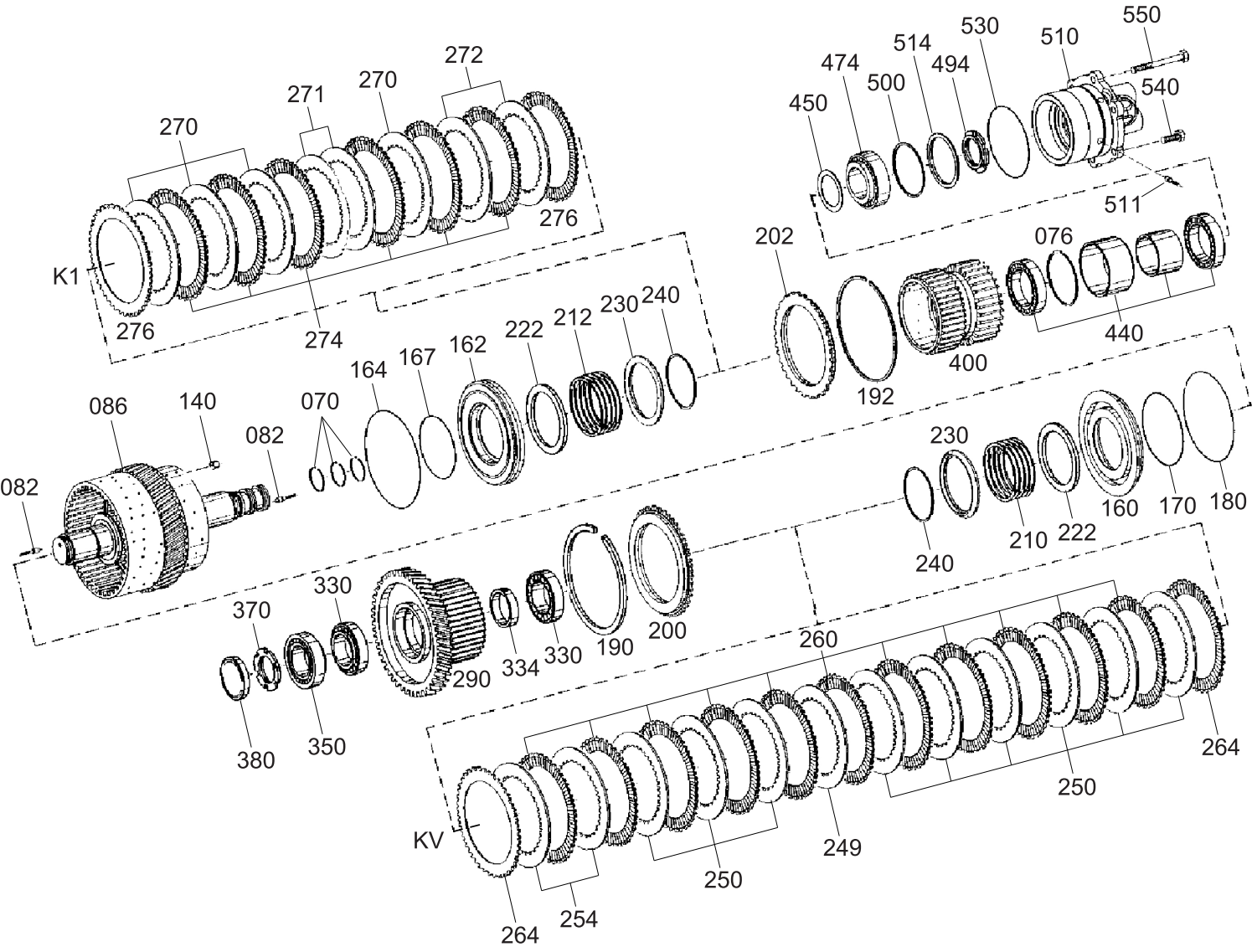

Item	Part_No	IS	Ord	T	Description	Qty	Serial_No	ITC	Remark
070	ZGAQ-00278				RING-PISTON	3			
076	ZGAQ-00279				RING-SNAP	1			
082	ZGAQ-00725				PLUG	3			
086	ZGAQ-00726				CARRIER-DISC	1			
140	ZGAQ-00284				VALVE	2			
160	ZGAQ-00285				PISTON	1			
162	ZGAQ-00286				PISTON	1			
164	ZGAQ-00287				O-RING	1			
167	ZGAQ-00288				O-RING	1			
170	ZGAQ-00289				O-RING	1			
180	ZGAQ-00290				O-RING	1			
190	ZGAQ-00291				RING-SNAP(2.95)	1			
190	ZGAQ-00292				RING-SNAP(2.90)	1			
190	ZGAQ-00293				RING-SNAP(2.85)	1			
190	ZGAQ-00294				RING-SNAP(2.80)	1			
190	ZGAQ-00295				RING-SNAP(2.75)	1			
190	ZGAQ-00296				RING-SNAP(2.70)	1			
190	ZGAQ-00297				RING-SNAP(2.65)	1			
190	ZGAQ-00298				RING-SNAP(2.60)	1			
190	ZGAQ-00299				RING-SNAP(2.55)	1			
190	ZGAQ-00300				RING-SNAP(2.45)	1			
190	ZGAQ-00301				RING-SNAP(2.10)	1			
N19(	ZGAQ-00302				RING-SNAP(2.15)	1			NOT
190	ZGAQ-00303				RING-SNAP(2.25)	1			
190	ZGAQ-00304				RING-SNAP(2.35)	1			
N19(	ZGAQ-00305				RING-SNAP(3.00)	1			NOT
N19(	ZGAQ-00306				RING-SNAP(3.05)	1			NOT

Item	Part_No	IS	Ord	T	Description	Qty	Serial_No	ITC	Remark
N190	ZGAQ-00306				RING-SNAP(3.05)	1			NOT
190	ZGAQ-00307				RING-SNAP(3.10)	1			
192	ZGAQ-00308				RING-SNAP(2.50)	1			
192	ZGAQ-00309				RING-SNAP(2.30)	1			
192	ZGAQ-00310				RING-SNAP(2.40)	1			
192	ZGAQ-00311				RING-SNAP(2.20)	1			
192	ZGAQ-00312				RING-SNAP(2.10)	1			
200	ZGAQ-00313				SHIM-END	1			
202	ZGAQ-00314				SHIM-END	1			
210	ZGAQ-00315				SPRING-COMPRESSION	1			
212	ZGAQ-00316				SPRING-COMPRESSION	1			
222	ZGAQ-00317				WASHER	2			
230	ZGAQ-00318				RING-GUIDE	2			
240	ZGAQ-00319				RING-SNAP	2			
249	ZGAQ-01674				DISC(4.0)-I/CLUTCH	1			
250	ZGAQ-01675				DISC(3.5)-I/CLUTCH	9			
254	ZGAQ-01677				DISC(2.5)-I/CLUTCH	2			
254	ZGAQ-01678				DISC(3.0)-I/CLUTCH	2			
254	ZGAQ-01675				DISC(3.5)-I/CLUTCH	2			
254	ZGAQ-01674				DISC(4.0)-I/CLUTCH	2			
260	ZGAQ-00324				DISC(2.55)-O/CLUTCH	11			
264	ZGAQ-00325				DISC(1.87)-O/CLUTCH	2			
270	ZGAQ-00329				DISC(4.0)-I/CLUTCH	4			
271	ZGAQ-00326				DISC(2.5)-I/CLUTCH	2			
272	ZGAQ-00327				DISC(3.5)-I/CLUTCH	2			
272	ZGAQ-00328				DISC(3.0)-I/CLUTCH	2			
272	ZGAQ-00326				DISC(2.5)-I/CLUTCH	2			

Item	Part_No	IS	Ord	T	Description	Qty	Serial_No	ITC	Remark
272	ZGAQ-00326				DISC(2.5)-I/CLUTCH	2			
272	ZGAQ-00329				DISC(4.0)-I/CLUTCH	2			
274	ZGAQ-00330				DISC-O/CLUTCH	6			
276	ZGAQ-00331				DISC-O/CLUTCH	2			
290	ZGAQ-00727				GEAR-SPUR	1			
330	ZGAQ-00206				BEARING-ROLLER	2			
334	ZGAQ-00728				RING	1			
350	ZGAQ-00206				BEARING-ROLLER	1			
370	ZGAQ-01719				NUT-SLOTTED	1			
380	ZGAQ-00344				COVER	1			
400	ZGAQ-00703				GEAR	1			
440	ZGAQ-00345				BEARING-BALL	1			
450	ZGAQ-00346				WASHER	1			
474	ZGAQ-00347				BEARING-TAPER ROLLER	1			
494	ZGAQ-01719				NUT-SLOTTED	1			
500	ZGAQ-00348				SHIM(2.20T)	1			
500	ZGAQ-00349				SHIM(2.15T)	1			
500	ZGAQ-00350				SHIM(2.10T)	1			
500	ZGAQ-00351				SHIM(2.05T)	1			
500	ZGAQ-00352				SHIM(2.00T)	1			
500	ZGAQ-00353				SHIM(1.95T)	1			
500	ZGAQ-00354				SHIM(1.90T)	1			
500	ZGAQ-00355				SHIM(1.85T)	1			
500	ZGAQ-00356				SHIM(1.80T)	1			
500	ZGAQ-00357				SHIM(1.75T)	1			
500	ZGAQ-00358				SHIM(1.70T)	1			
500	ZGAQ-00359				SHIM(1.65T)	1			

Item	Part_No	IS	Ord	T	Description	Qty	Serial_No	ITC	Remark
500	ZGAQ-00359				SHIM(1.65T)	1			
500	ZGAQ-00360				SHIM(1.60T)	1			
500	ZGAQ-00361				SHIM(1.55T)	1			
500	ZGAQ-00362				SHIM(1.50T)	1			
500	ZGAQ-00363				SHIM(1.45T)	1			
500	ZGAQ-00364				SHIM(1.40T)	1			
500	ZGAQ-00365				SHIM(1.35T)	1			
500	ZGAQ-00366				SHIM(1.30T)	1			
500	ZGAQ-00367				SHIM(1.25T)	1			
500	ZGAQ-00368				SHIM(1.20T)	1			
500	ZGAQ-00369				SHIM(1.15T)	1			
500	ZGAQ-00370				SHIM(1.10T)	1			
500	ZGAQ-00371				SHIM(0.70T)	1			
500	ZGAQ-00372				SHIM(0.75T)	1			
500	ZGAQ-00373				SHIM(0.80T)	1			
500	ZGAQ-00374				SHIM(0.85T)	1			
500	ZGAQ-00375				SHIM(0.90T)	1			
500	ZGAQ-00376				SHIM(0.95T)	1			
500	ZGAQ-00377				SHIM(1.00T)	1			
500	ZGAQ-00378				SHIM(1.05T)	1			
510	ZGAQ-00731				COVER-BEARING	1			
511	ZGAQ-00725				PLUG	2			
514	ZGAQ-00380				RING	1			
530	ZGAQ-00732				O-RING	1			
540	ZGAQ-00382				SCREW-HEX	4			
550	ZGAQ-00383				SCREW-HEX	2			
N	@				NOT SUPPLIED PARTS	AR			NOT

Item	Part_No	IS	Ord	T	Description	Qty	Serial_No	ITC	Remark
N	@				NOT SUPPLIED PARTS	AR			NOT

COUPLING GROUP(K2+KR, 4-SPEED)

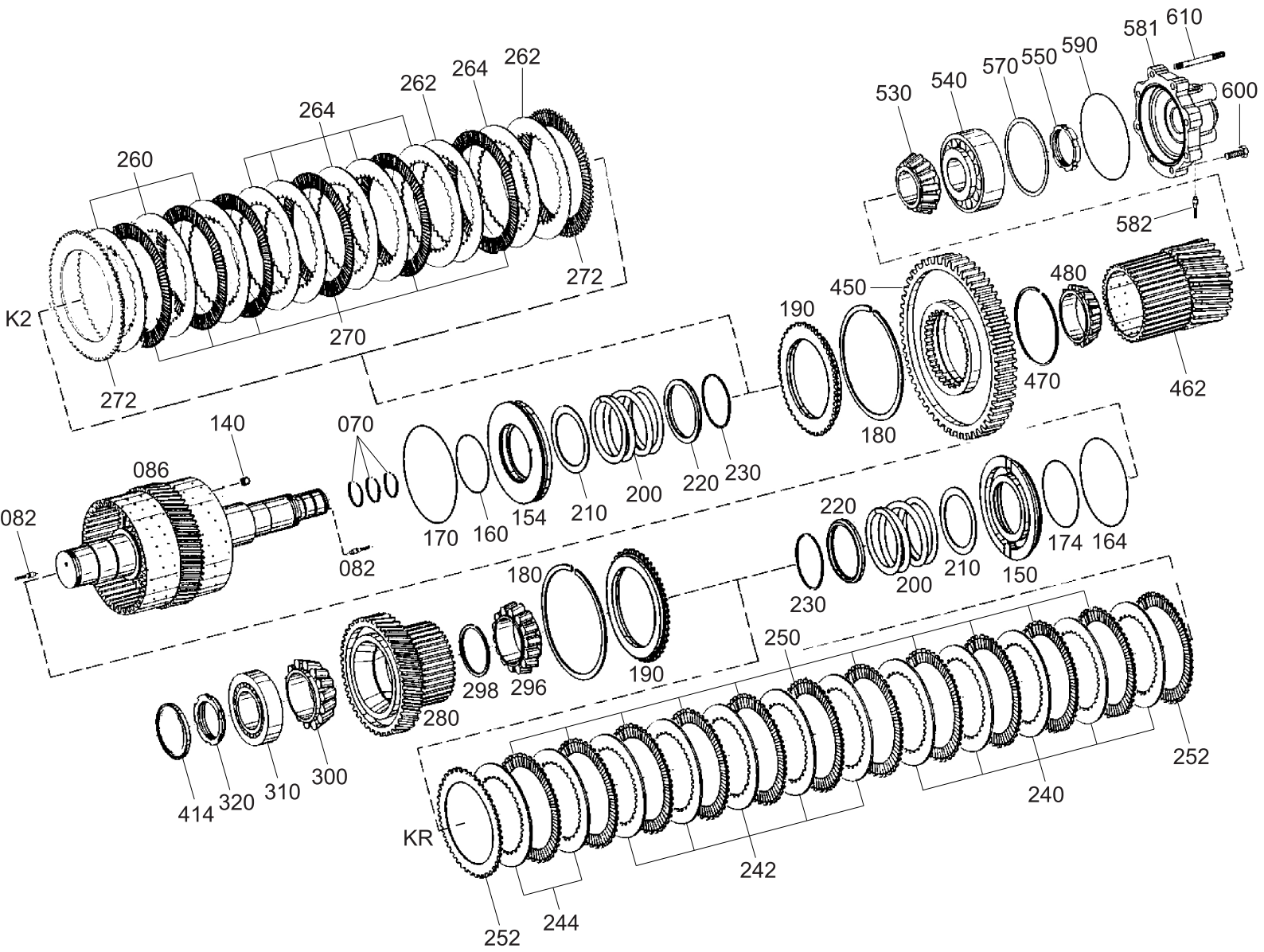

Item	Part_No	IS	Ord	T	Description	Qty	Serial_No	ITC	Remark
070	ZGAQ-00278				RING-PISTON	3			
082	ZGAQ-00725				PLUG	3			
086	ZGAQ-00733				CARRIER-DISC	1			
140	ZGAQ-00284				VALVE	2			
150	ZGAQ-00285				PISTON	1			
154	ZGAQ-00387				PISTON	1			
160	ZGAQ-00388				O-RING	1			
164	ZGAQ-00290				O-RING	1			
170	ZGAQ-00389				O-RING	1			
174	ZGAQ-00289				O-RING	1			
180	ZGAQ-00291				RING-SNAP(2.95)	2			
180	ZGAQ-00292				RING-SNAP(2.90)	2			
180	ZGAQ-00293				RING-SNAP(2.85)	2			
180	ZGAQ-00294				RING-SNAP(2.80)	2			
180	ZGAQ-00295				RING-SNAP(2.75)	2			
180	ZGAQ-00296				RING-SNAP(2.70)	2			
180	ZGAQ-00297				RING-SNAP(2.65)	2			
180	ZGAQ-00298				RING-SNAP(2.60)	2			
180	ZGAQ-00299				RING-SNAP(2.55)	2			
180	ZGAQ-00300				RING-SNAP(2.45)	2			
180	ZGAQ-00301				RING-SNAP(2.10)	2			
N18(	ZGAQ-00302				RING-SNAP(2.15)	2			NOT
180	ZGAQ-00303				RING-SNAP(2.25)	2			
180	ZGAQ-00304				RING-SNAP(2.35)	2			
N18(	ZGAQ-00305				RING-SNAP(3.00)	2			NOT
N18(	ZGAQ-00306				RING-SNAP(3.05)	2			NOT
180	ZGAQ-00307				RING-SNAP(3.10)	2			

Item	Part_No	IS	Ord	T	Description	Qty	Serial_No	ITC	Remark
180	ZGAQ-00307				RING-SNAP(3.10)	2			
190	ZGAQ-00313				SHIM-END	2			
200	ZGAQ-00315				SPRING-COMPRESSION	2			
210	ZGAQ-00317				WASHER	2			
220	ZGAQ-00318				RING-GUIDE	2			
230	ZGAQ-00319				RING-SNAP	2			
240	ZGAQ-01677				DISC(2.5)-I/CLUTCH	5			
242	ZGAQ-01678				DISC(3.0)-I/CLUTCH	5			
244	ZGAQ-01677				DISC(2.5)-I/CLUTCH	2			
244	ZGAQ-01678				DISC(3.0)-I/CLUTCH	2			
250	ZGAQ-00736				DISC-O/CLUTCH	11			
252	ZGAQ-00325				DISC(1.87)-O/CLUTCH	2			
260	ZGAQ-01674				DISC(4.0)-I/CLUTCH	3			
262	ZGAQ-01677				DISC(2.5)-I/CLUTCH	2			
262	ZGAQ-01678				DISC(3.0)-I/CLUTCH	2			
262	ZGAQ-01675				DISC(3.5)-I/CLUTCH	2			
262	ZGAQ-01674				DISC(4.0)-I/CLUTCH	2			
264	ZGAQ-01677				DISC(2.5)-I/CLUTCH	6			
270	ZGAQ-00324				DISC(2.55)-O/CLUTCH	6			
272	ZGAQ-00325				DISC(1.87)-O/CLUTCH	2			
280	ZGAQ-00737				GEAR-SPUR	1			
296	ZGAQ-00738				BEARING-TAPER ROLLER	1			
298	ZGAQ-00739				RING	1			
300	ZGAQ-00740				BEARING-TAPER ROLLER	1			
310	ZGAQ-00400				BEARING-ROLLER	1			
320	ZGAQ-01720				NUT-SLOTTED	1			
414	ZGAQ-00402				COVER	1			

Item	Part_No	IS	Ord	T	Description	Qty	Serial_No	ITC	Remark
414	ZGAQ-00402				COVER	1			
450	ZGAQ-00450				GEAR	1			
462	ZGAQ-00744				GEAR	1			
470	ZGAQ-00403				RING-SNAP	1			
480	ZGAQ-00404				TAPERED R/BEARING	1			
530	ZGAQ-00420				TAPERED R/BEARING	1			
540	ZGAQ-00421				BEARING-ROLLER	1			
550	ZGAQ-01721				NUT-SLOTTED	1			
570	ZGAQ-00423				WASHER(1.0T)	1			
570	ZGAQ-00424				WASHER(1.1T)	1			
570	ZGAQ-00425				WASHER(1.2T)	1			
570	ZGAQ-00426				WASHER(1.3T)	1			
570	ZGAQ-00427				WASHER(1.4T)	1			
570	ZGAQ-00428				WASHER(1.5T)	1			
570	ZGAQ-00429				WASHER(1.6T)	1			
570	ZGAQ-00430				WASHER(1.7T)	1			
570	ZGAQ-00431				WASHER(1.8T)	1			
570	ZGAQ-00432				WASHER(1.9T)	1			
570	ZGAQ-00433				WASHER(2.0T)	1			
570	ZGAQ-00434				WASHER(0.8T)	1			
570	ZGAQ-00435				WASHER(0.9T)	1			
570	ZGAQ-00436				SHIM(0.95T)	1			
570	ZGAQ-00437				SHIM(1.05T)	1			
570	ZGAQ-00438				SHIM(1.15T)	1			
570	ZGAQ-00439				SHIM(1.25T)	1			
570	ZGAQ-00440				SHIM(1.35T)	1			
570	ZGAQ-00441				SHIM(1.45T)	1			

Item	Part_No	IS	Ord	T	Description	Qty	Serial_No	ITC	Remark
570	ZGAQ-00441				SHIM(1.45T)	1			
570	ZGAQ-00442				SHIM(1.55T)	1			
570	ZGAQ-00443				SHIM(1.65T)	1			
570	ZGAQ-00444				SHIM(1.75T)	1			
581	ZGAQ-00746				COVER	1			
582	ZGAQ-00725				PLUG	2			
590	ZGAQ-00446				O-RING	1			
600	ZGAQ-00447				SCREW-HEX	6			
610	ZGAQ-00448				STUD	2			
N	@				NOT SUPPLIED PARTS	AR			NOT

COUPLING GROUP(K3+K4, 4-SPEED)

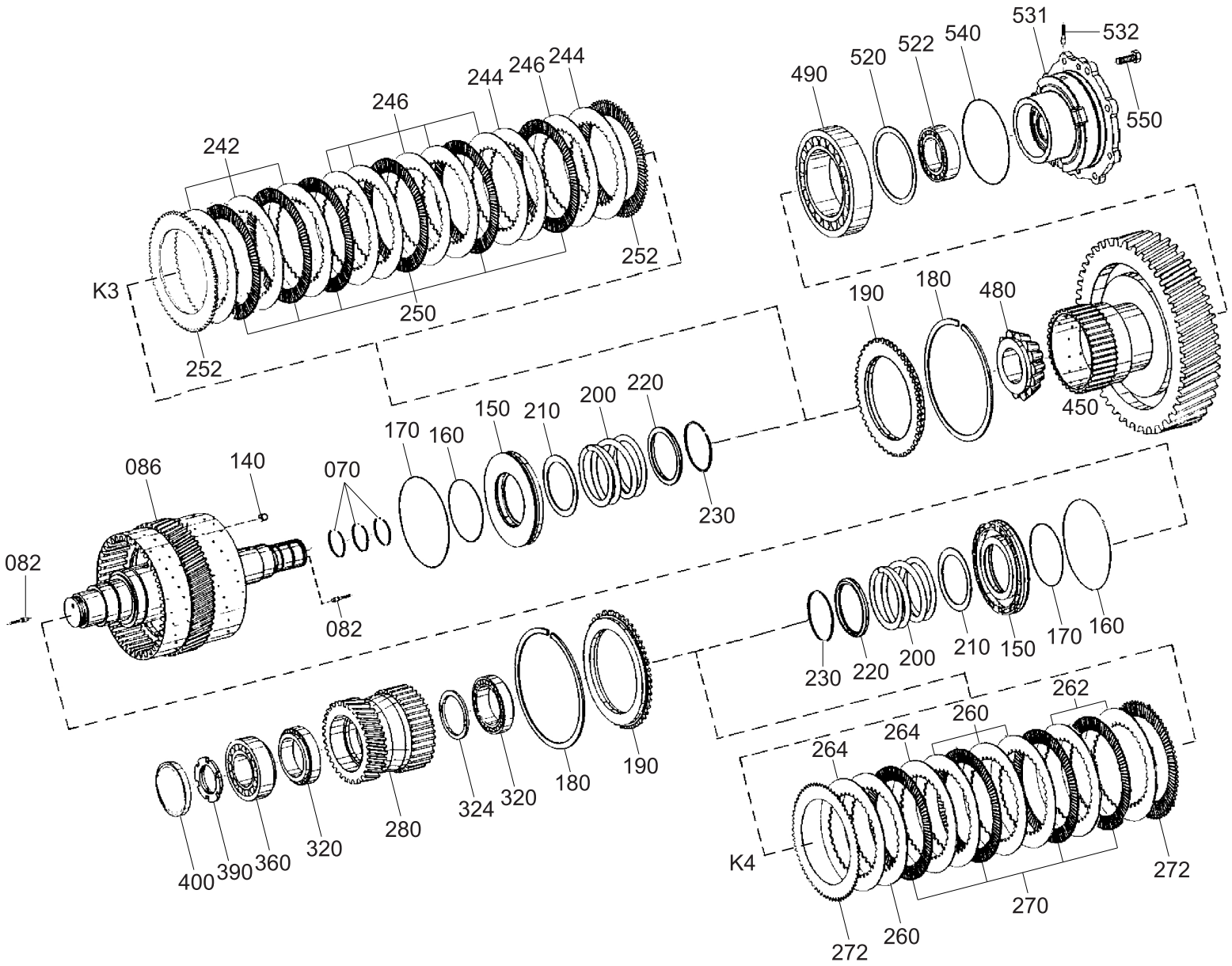

Item	Part_No	IS	Ord	T	Description	Qty	Serial_No	ITC	Remark
070	ZGAQ-00278				RING-PISTON	3			
082	ZGAQ-00725				PLUG	3			
086	ZGAQ-00747				CARRIER-DISC	1			
140	ZGAQ-00284				VALVE	2			
150	ZGAQ-00387				PISTON	2			
160	ZGAQ-00388				O-RING	2			
170	ZGAQ-00389				O-RING	2			
180	ZGAQ-00291				RING-SNAP(2.95)	2			
180	ZGAQ-00292				RING-SNAP(2.90)	2			
180	ZGAQ-00293				RING-SNAP(2.85)	2			
180	ZGAQ-00294				RING-SNAP(2.80)	2			
180	ZGAQ-00295				RING-SNAP(2.75)	2			
180	ZGAQ-00296				RING-SNAP(2.70)	2			
180	ZGAQ-00297				RING-SNAP(2.65)	2			
180	ZGAQ-00298				RING-SNAP(2.60)	2			
180	ZGAQ-00299				RING-SNAP(2.55)	2			
180	ZGAQ-00300				RING-SNAP(2.45)	2			
180	ZGAQ-00301				RING-SNAP(2.10)	2			
N18(	ZGAQ-00302				RING-SNAP(2.15)	2			NOT
180	ZGAQ-00303				RING-SNAP(2.25)	2			
180	ZGAQ-00304				RING-SNAP(2.35)	2			
N18(	ZGAQ-00305				RING-SNAP(3.00)	2			NOT
N18(	ZGAQ-00306				RING-SNAP(3.05)	2			NOT
180	ZGAQ-00307				RING-SNAP(3.10)	2			
190	ZGAQ-00313				SHIM-END	2			
200	ZGAQ-00315				SPRING-COMPRESSION	2			
210	ZGAQ-00317				WASHER	2			

Item	Part_No	IS	Ord	T	Description	Qty	Serial_No	ITC	Remark
210	ZGAQ-00317				WASHER	2			
220	ZGAQ-00318				RING-GUIDE	2			
230	ZGAQ-00319				RING-SNAP	2			
242	ZGAQ-01674				DISC(4.0)-I/CLUTCH	3			
244	ZGAQ-01677				DISC(2.5)-I/CLUTCH	2			
244	ZGAQ-01678				DISC(3.0)-I/CLUTCH	2			
244	ZGAQ-01675				DISC(3.5)-I/CLUTCH	2			
244	ZGAQ-01674				DISC(4.0)-I/CLUTCH	2			
246	ZGAQ-01677				DISC(2.5)-I/CLUTCH	6			
250	ZGAQ-00324				DISC(2.55)-O/CLUTCH	6			
252	ZGAQ-00325				DISC(1.87)-O/CLUTCH	2			
260	ZGAQ-01677				DISC(2.5)-I/CLUTCH	4			
262	ZGAQ-01674				DISC(4.0)-I/CLUTCH	2			
264	ZGAQ-01677				DISC(2.5)-I/CLUTCH	2			
264	ZGAQ-01678				DISC(3.0)-I/CLUTCH	2			
264	ZGAQ-01675				DISC(3.5)-I/CLUTCH	2			
264	ZGAQ-01674				DISC(4.0)-I/CLUTCH	2			
270	ZGAQ-00324				DISC(2.55)-O/CLUTCH	4			
272	ZGAQ-00325				DISC(1.87)-O/CLUTCH	2			
280	ZGAQ-01681				GEAR-HELICAL	1			
320	ZGAQ-00455				TAPERED R/BEARING	2			
324	ZGAQ-01680				WASHER(5.25T)	1			
360	ZGAQ-00457				BEARING-ROLLER	1			
390	ZGAQ-01719				NUT-SLOTTED	1			
400	ZGAQ-00344				COVER	1			
450	ZGAQ-00749				GEAR-SPUR	1			
480	ZGAQ-03547				BEARING-ROLLER	1			

Item	Part_No	IS	Ord	T	Description	Qty	Serial_No	ITC	Remark
480	ZGAQ-03547				BEARING-ROLLER	1			
490	ZGAQ-00459				BEARING-ROLLER	1			
520	ZGAQ-00460				WASHER-SPACING(0.2T)	1			
520	ZGAQ-00461				WASHER-SPACING(0.1T)	1			
520	ZGAQ-00462				WASHER-SPACING(0.5T)	1			
520	ZGAQ-00463				WASHER-SPACING(1.5T)	1			
520	ZGAQ-00464				WASHER-SPACING(1.55T)	1			
520	ZGAQ-00465				WASHER-SPACING(1.6T)	1			
520	ZGAQ-00466				WASHER-SPACING(1.65T)	1			
520	ZGAQ-00467				WASHER-SPACING(1.7T)	1			
520	ZGAQ-00468				WASHER-SPACING(1.75T)	1			
520	ZGAQ-00469				WASHER-SPACING(1.8T)	1			
522	ZGAQ-00470				BEARING-ROLLER	1			
531	ZGAQ-00750				COVER	1			
532	ZGAQ-00725				PLUG	2			
540	ZGAQ-00472				O-RING	1			
550	ZGAQ-00473				SCREW-HEX	8			
N	@				NOT SUPPLIED PARTS	AR			NOT

OUTPUT GROUP(4-SPEED)

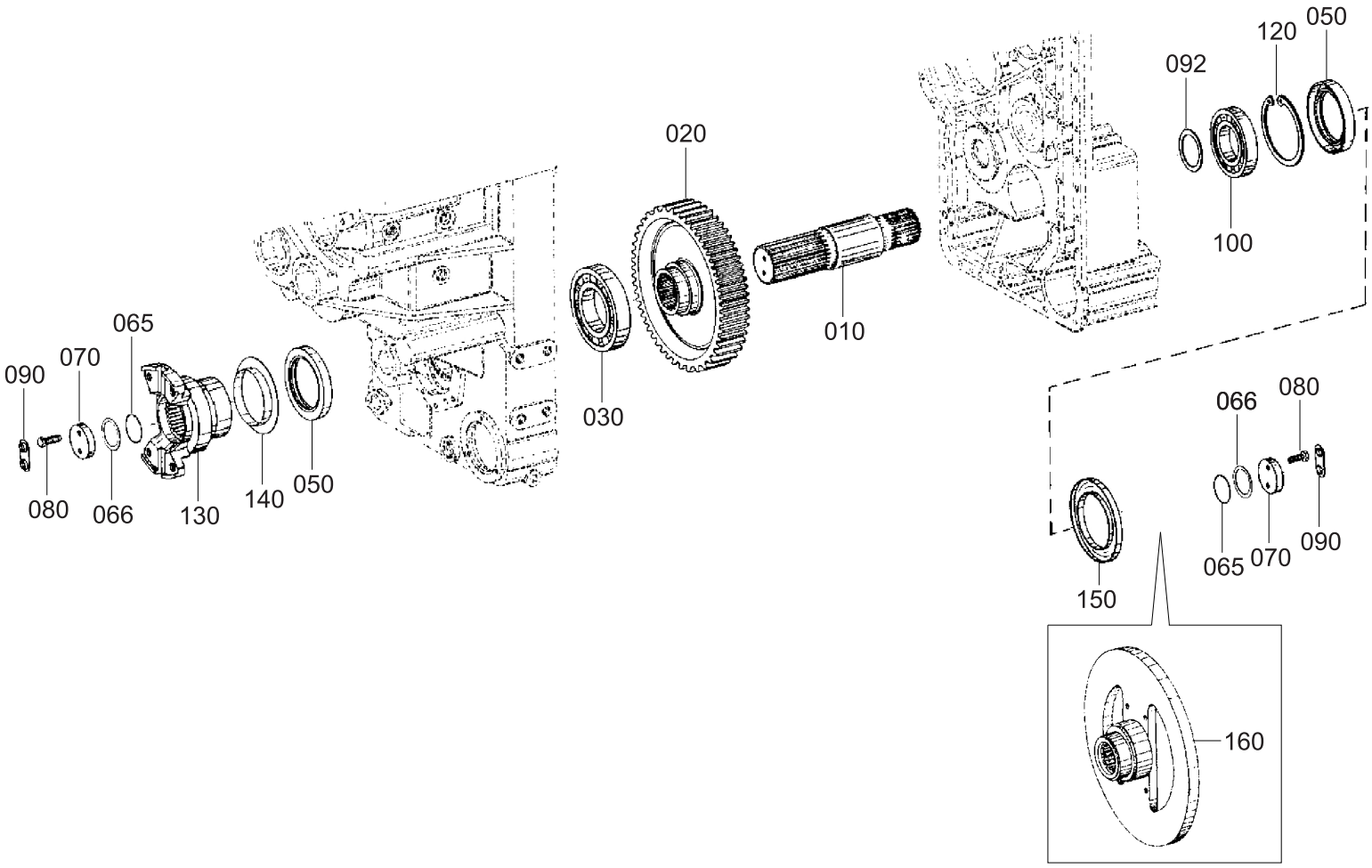

Item	Part_No	IS	Ord	T	Description	Qty	Serial_No	ITC	Remark
010	ZGAQ-00478				SHAFT-OUTPUT	1			
020	ZGAQ-00751				GEAR	1			
030	ZGAQ-00480				BEARING-ROLLER	1			
050	ZGAQ-00481				SEAL-SHAFT	2			
065	ZGAQ-00482				O-RING	2			
066	ZGAQ-00483				WASHER(0.5T)	2			
066	ZGAQ-00484				WASHER(1.0T)	2			
066	ZGAQ-00485				WASHER(1.5T)	2			
066	ZGAQ-00486				WASHER(2.0T)	2			
070	ZGAQ-00487				WASHER(15.5T)	2			
080	ZGAQ-00197				SCREW-HEX	4			
090	ZGAQ-00196				WASHER-TAB	2			
092	ZGAQ-00500				SHIM(1.0T)	1			
092	ZGAQ-00501				SHIM(1.1T)	1			
092	ZGAQ-00502				SHIM(1.2T)	1			
092	ZGAQ-00503				SHIM(1.3T)	1			
092	ZGAQ-00504				SHIM(1.4T)	1			
092	ZGAQ-00505				SHIM(1.5T)	1			
092	ZGAQ-00506				SHIM(1.6T)	1			
092	ZGAQ-00507				SHIM(1.7T)	1			
092	ZGAQ-00508				SHIM(1.8T)	1			
092	ZGAQ-00509				SHIM(1.9T)	1			
092	ZGAQ-00510				SHIM(2.0T)	1			
092	ZGAQ-00511				SHIM(2.5T)	1			
092	ZGAQ-00512				SHIM(3.0T)	1			
092	ZGAQ-00513				SHIM(2.1T)	1			
092	ZGAQ-00514				SHIM(2.2T)	1			

Item	Part_No	IS	Ord	T	Description	Qty	Serial_No	ITC	Remark
092	ZGAQ-00514				SHIM(2.2T)	1			
092	ZGAQ-00515				SHIM(2.3T)	1			
092	ZGAQ-00516				SHIM(2.4T)	1			
100	ZGAQ-00488				BEARING-BALL	1			
120	ZGAQ-00499				RING-RETAINING	1			
130	ZGAQ-00518				FLANGE-OUTPUT	1			
140	ZGAQ-00519				SHEET-PROTECT	1			
150	ZGAQ-00522				SHEET-SCREEN	1			
160	ZGAQ-02801				FLANGE-OUTPUT	1			

POWER TAKE OFF(4-SPEED)

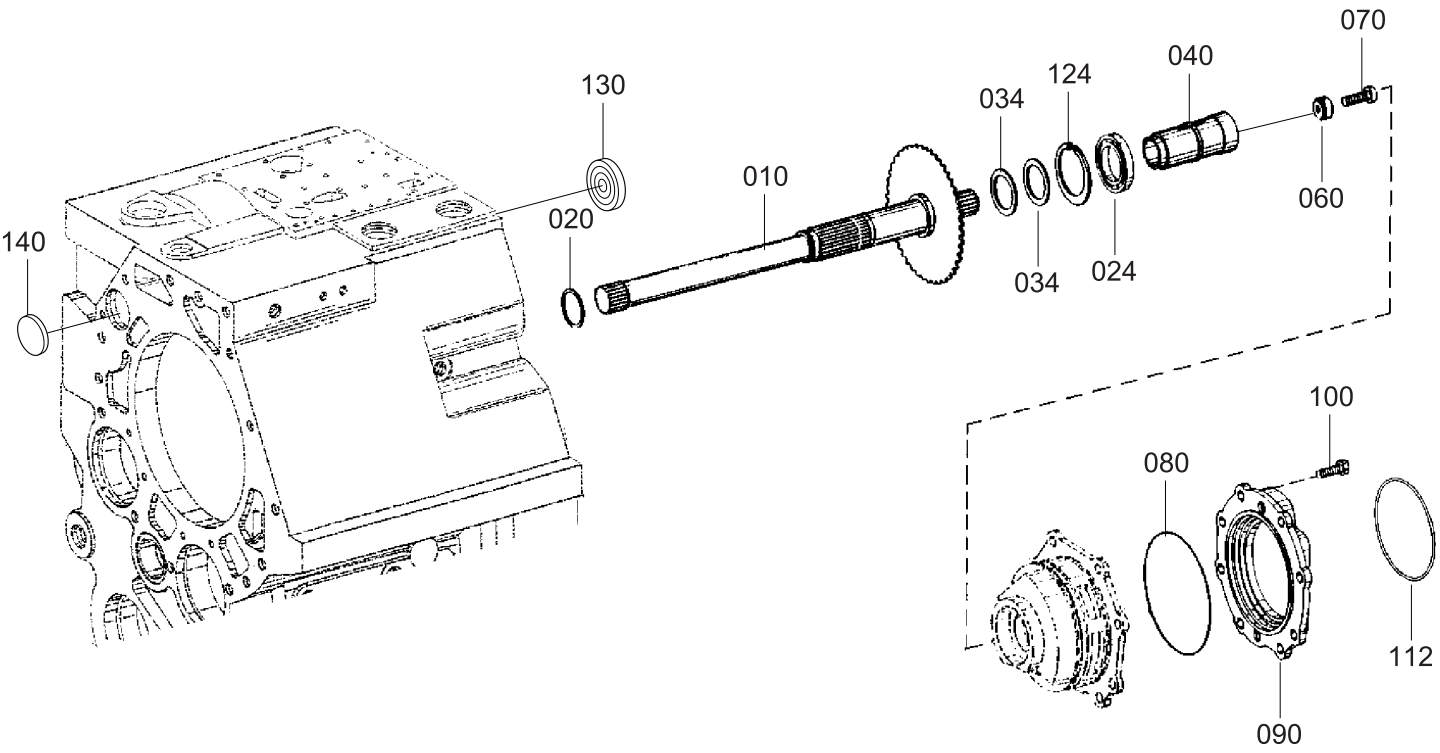

Item	Part_No	IS	Ord	T	Description	Qty	Serial_No	ITC	Remark
010	ZGAQ-00524				SHAFT	1			
020	ZGAQ-00525				RING-PISTON	1			
024	ZGAQ-00752				BEARING-BALL	1			
034	ZGAQ-01683				WASHER(2.0T)	2			
040	ZGAQ-03549				DRIVER	1			
060	ZGAQ-03550				PLATE-CLAMPING	1			
070	ZGAQ-00580				SCREW-CAP	1			
080	ZGAQ-00585				O-RING	1			
090	ZGAQ-03551				FLANGE-PUMP	1			
100	ZGAQ-00587				SCREW-HEX	8			
112	ZGAQ-00597				O-RING	1			
124	ZGAQ-00755				RING-RETAINING	1			
130	ZGAQ-01722				COVER	1			
140	ZGAQ-00267				DISC-SEALING	1			

GEARSHIFT SYSTEM(1/3, 4-SPEED)

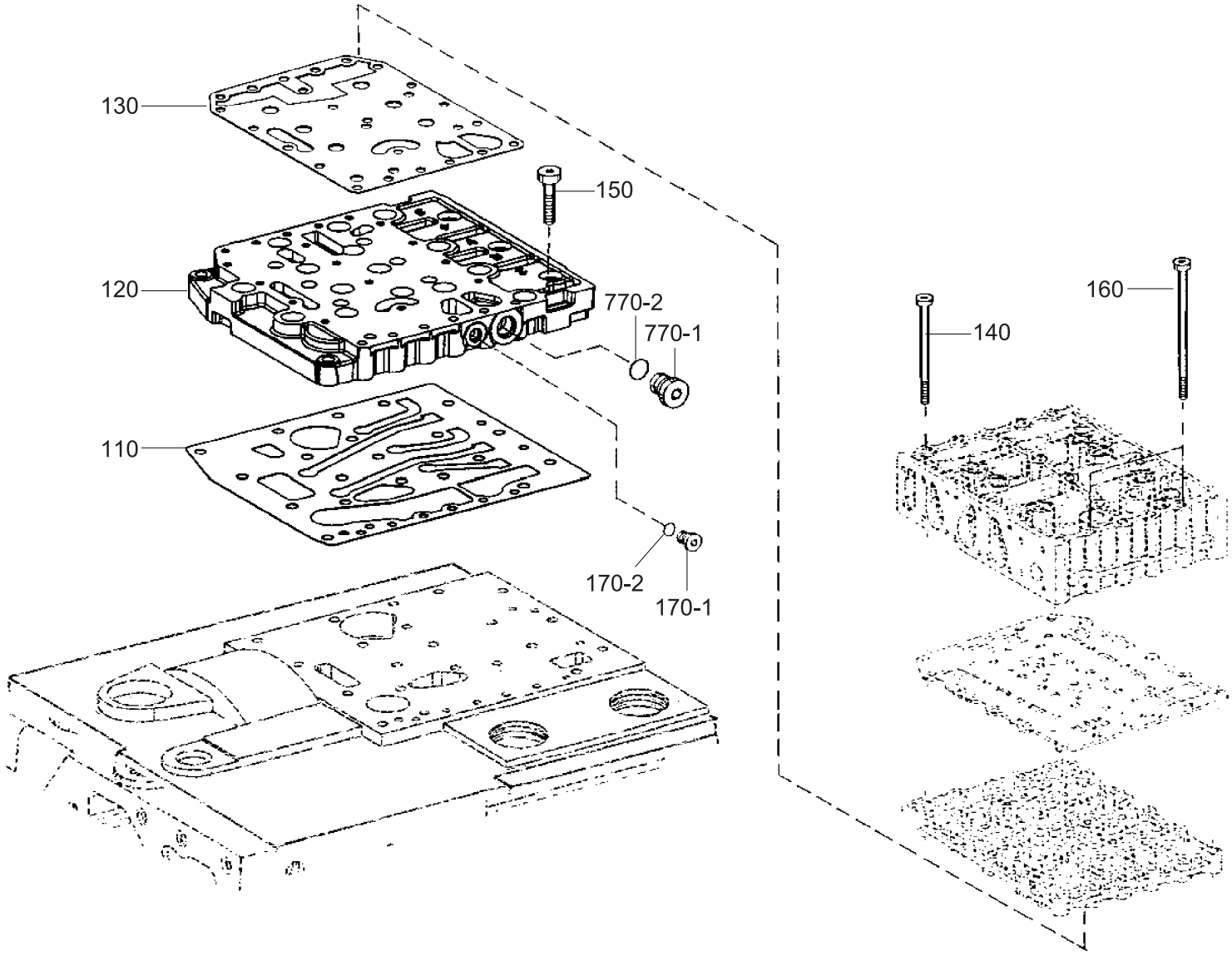

Item	Part_No	IS	Ord	T	Description	Qty	Serial_No	ITC	Remark
110	ZGAQ-00603				GASKET	1			
120	ZGAQ-00605				PLATE-DUCT	1			
130	ZGAQ-00606				GASKET	1			
140	ZGAQ-00608				SCREW-TORX	17			
150	ZGAQ-00609				SCREW-TORX	20			
160	ZGAQ-00611				SCREW-TORX	6			
170-1	ZGAQ-00230				PLUG-SCREW	1			
170-2	ZGAQ-00231				O-RING	1			
770-1	ZGAQ-00613				SCREW-PLUG	1			
770-2	ZGAQ-00614				O-RING	1			

GEARSHIFT SYSTEM(2/3, 4-SPEED)

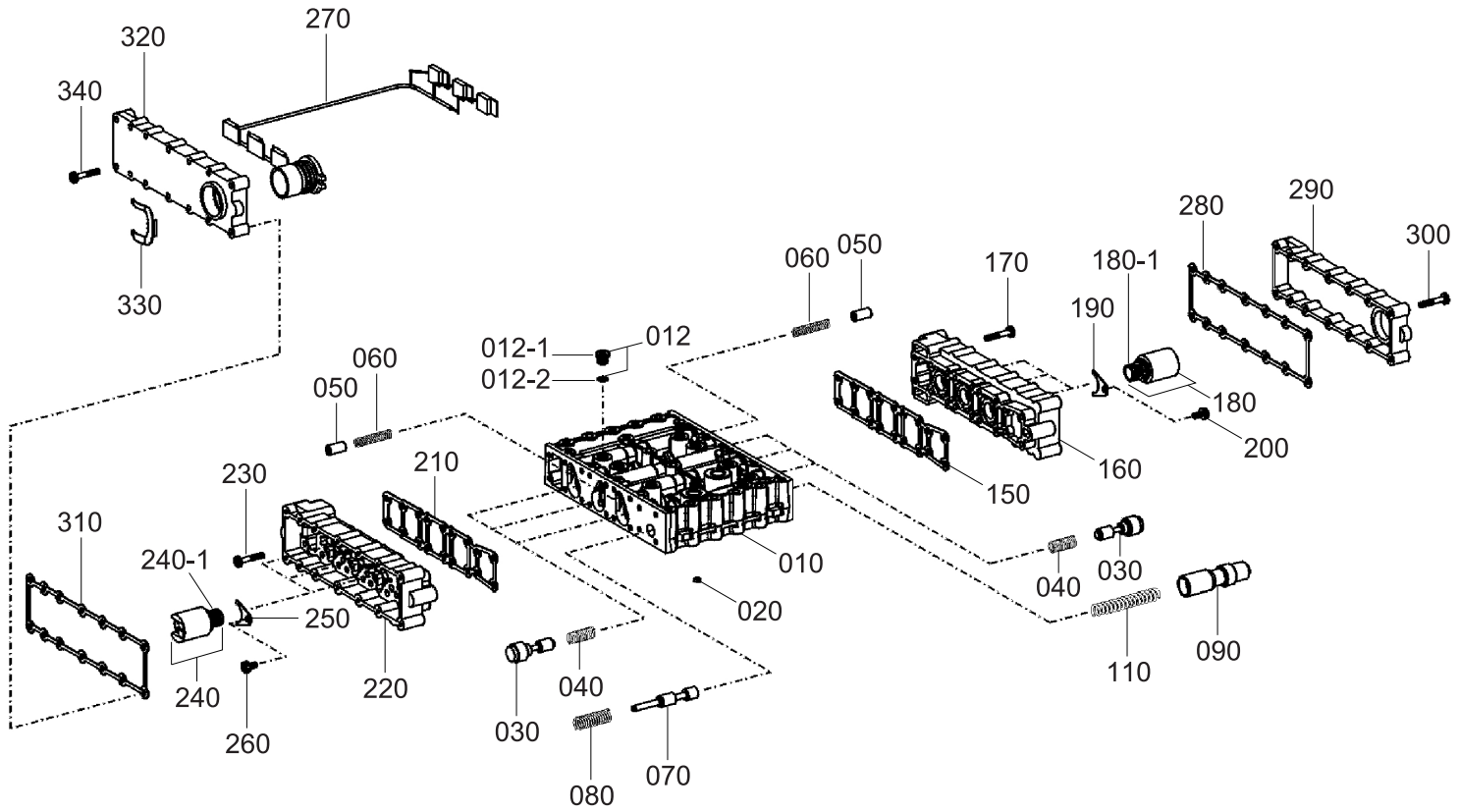

Item	Part_No	IS	Ord	T	Description	Qty	Serial_No	ITC	Remark
010	ZGAQ-02802				BLOCK-VALVE	1			
012	@				PLUG-SCREW	8			NOT
012-1	ZGAQ-00230				.PLUG-SCREW	8			
012-2	ZGAQ-00231				.O-RING	8			
020	ZGAQ-00617				ORIFICE	6			
030	ZGAQ-00618				PISTON	6			
040	ZGAQ-00619				SPRING-COMPRESSION	6			
050	ZGAQ-00620				PISTON	6			
060	ZGAQ-00621				SPRING-COMPRESSION	6			
070	ZGAQ-00622				PISTON	1			
080	ZGAQ-00623				SPRING-COMPRESSION	1			
090	ZGAQ-01455				PISTON-CONTROL	1			
110	ZGAQ-00625				SPRING-COMPRESSION	1			
150	ZGAQ-01578				GASKET	1			
160	ZGAQ-00627				HOUSING	1			
170	ZGAQ-00628				SCREW-TORX	18			
180	ZGAQ-00629				REGULATOR-PRESSURE	3			
180-1	ZGAQ-00630				.O-RING	3			
190	ZGAQ-00631				PLATE-FIXING	3			
200	ZGAQ-00632				SCREW-TORX	3			
210	ZGAQ-01578				GASKET	1			
220	ZGAQ-00627				HOUSING	1			
230	ZGAQ-00628				SCREW-TORX	18			
240	ZGAQ-00629				REGULATOR-PRESSURE	3			
240-1	ZGAQ-00630				.O-RING	3			
250	ZGAQ-00631				PLATE-FIXING	3			
260	ZGAQ-00632				SCREW-TORX	3			

Item	Part_No	IS	Ord	T	Description	Qty	Serial_No	ITC	Remark
260	ZGAQ-00632				SCREW-TORX	3			
270	ZGAQ-00633				HARNESS-WIRING	1			
280	ZGAQ-01725				GASKET	1			
290	ZGAQ-04124				HOUSING-CONN	1			
300	ZGAQ-00628				SCREW-TORX	14			
310	ZGAQ-01725				GASKET	1			
320	ZGAQ-00636				COVER	1			
330	ZGAQ-00637				CLAMP-RETAINING	1			
330	ZGAQ-00637				CLAMP-RETAINING	1			
340	ZGAQ-00628				SCREW-TORX	14			

GEARSHIFT SYSTEM(3/3, 4-SPEED)

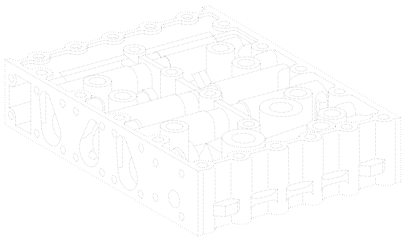

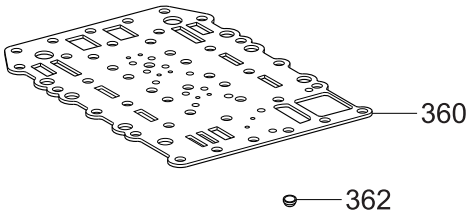

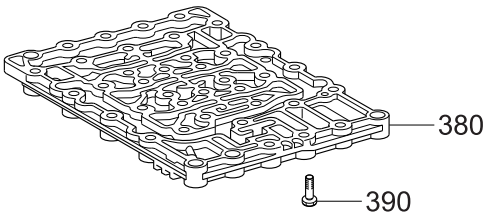

Item	Part_No	IS	Ord	T	Description	Qty	Serial_No	ITC	Remark
360	ZGAQ-02803				PLATE-SEALING	1			
362	ZGAQ-00639				SCREEN	6			
380	ZGAQ-01456				PLATE-DUCT	1			
390	ZGAQ-00641				SCREW-TORX	18			

PRESSURE OIL PUMP(4-SPEED)

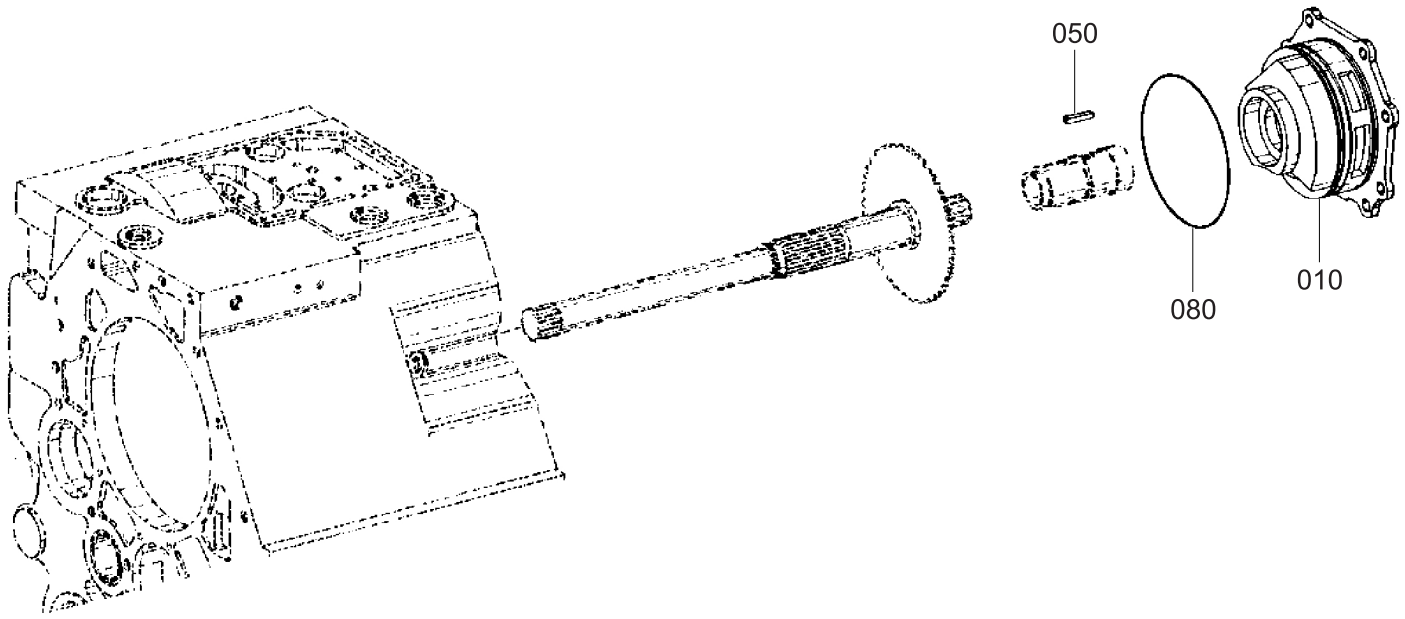

Item	Part_No	IS	Ord	T	Description	Qty	Serial_No	ITC	Remark
010	ZGAQ-01524				PUMP-GEAR	1			
050	ZGAQ-00644				KEY-FITTING	1			
080	ZGAQ-00287				O-RING	1			

SUCTION FILTER(4-SPEED)

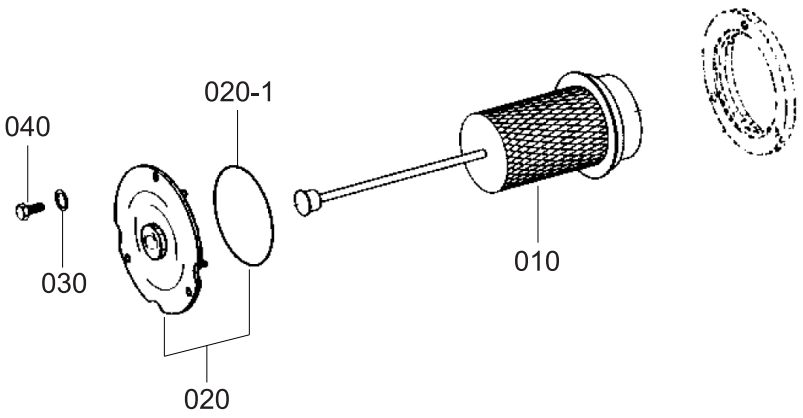

Item	Part_No	IS	Ord	T	Description	Qty	Serial_No	ITC	Remark
010	ZGAQ-01521				SCREEN	1			
020	ZGAQ-00647				COVER	1			
020-1	ZGAQ-00648				.O-RING	1			
030	ZGAQ-00245				WASHER	3			
040	ZGAQ-00649				SCREW-HEX	3			

FILTER(4-SPEED)

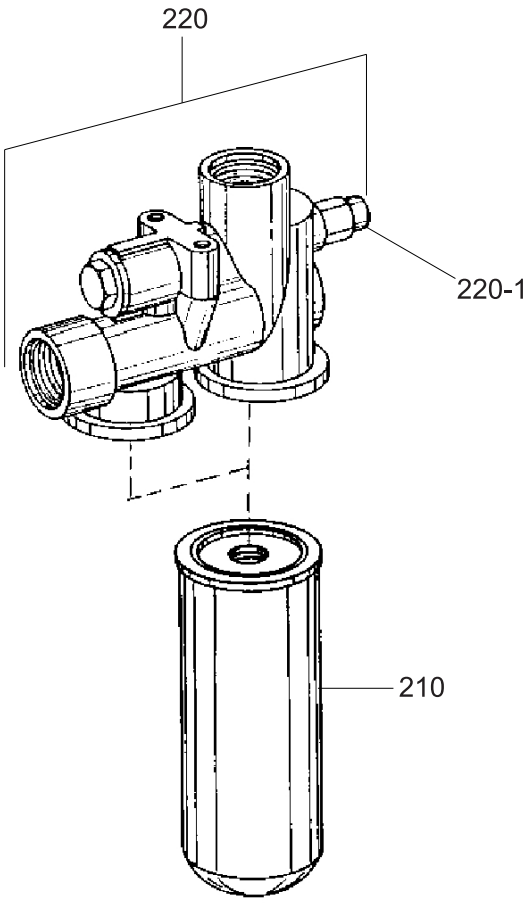

Item	Part_No	IS	Ord	T	Description	Qty	Serial_No	ITC	Remark
210	ZGAQ-02400				FILTER-PRESSURE	2			
220	ZGAQ-01668				HEAD-FILTER	1			
220-1	ZGAQ-00697				.SWITCH-TAPPET	1			

IND TRANSMITTER(4-SPEED)

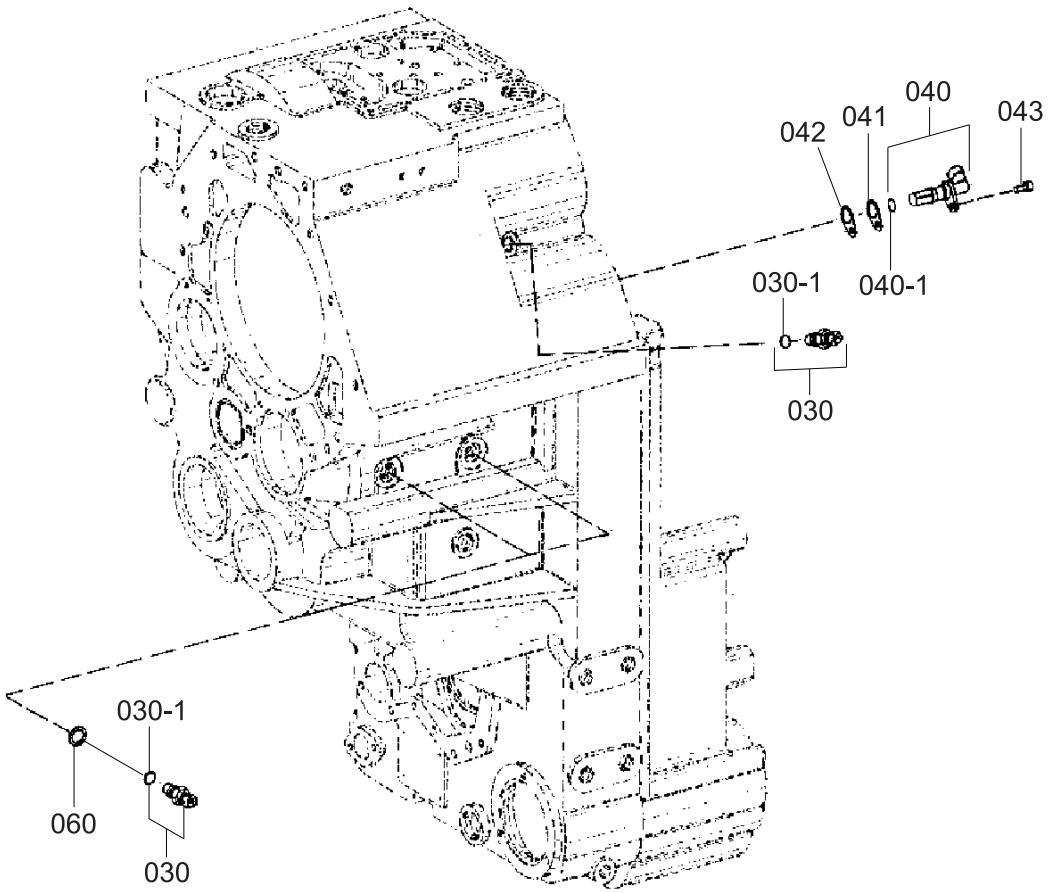

Item	Part_No	IS	Ord	T	Description	Qty	Serial_No	ITC	Remark
030	ZGAQ-00651				TRANSMITTER-INDICATOR	3			
030-1	ZGAQ-01466				.O-RING	3			
040	ZGAQ-00653				TRANSMITTER-SPEED	1			
040-1	ZGAQ-00654				.O-RING	1			
041	ZGAQ-00655				SHEET	1			
042	ZGAQ-00655				SHEET	2			
043	ZGAQ-00656				SCREW-CAP	1			
060	ZGAQ-01690				RING-SHIM(1.5T)	1			
060	ZGAQ-01691				RING-SHIM(1.4T)	1			
060	ZGAQ-01692				RING-SHIM(1.2T)	1			
060	ZGAQ-01693				RING-SHIM(1.0T)	1			

EMERGENCY STEER PUMP(4-SPEED)

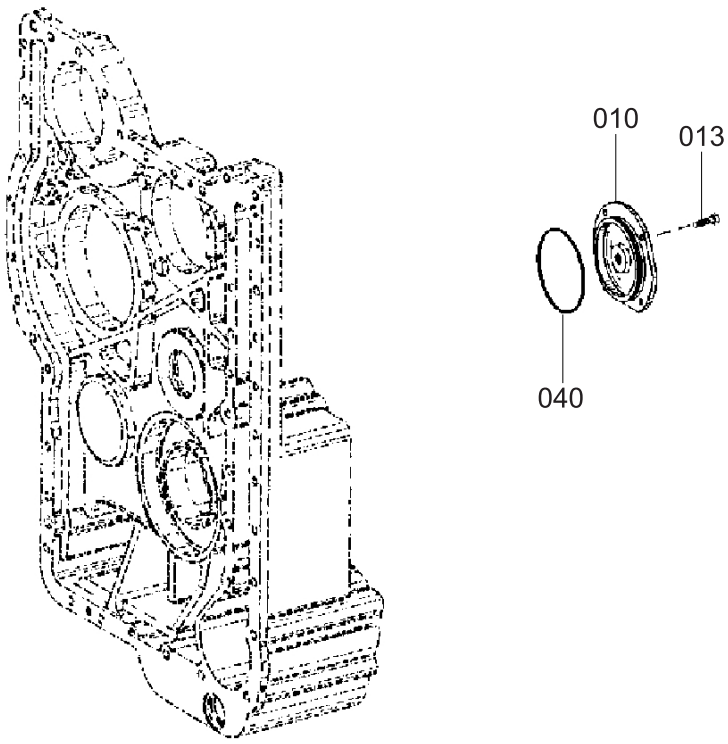

Item	Part_No	IS	Ord	T	Description	Qty	Serial_No	ITC	Remark
010	ZGAQ-00664				COVER	1			
013	ZGAQ-00665				SCREW-HEX	4			
040	ZGAQ-00666				O-RING	1			

TEMPERATURE SENSOR(4-SPEED)

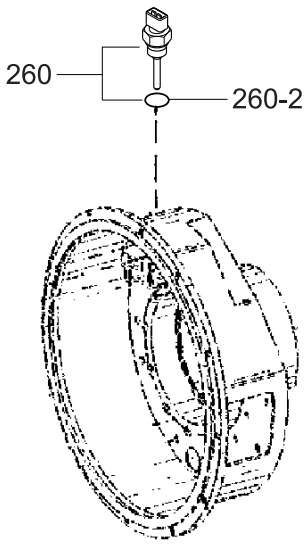

Item	Part_No	IS	Ord	T	Description	Qty	Serial_No	ITC	Remark
260	ZGAQ-01924				SENSOR-TEMP	1			
260-1	ZGAQ-00923				.O-RING	1			

FILLER NECK & DIPSTICK(4-SPEED)

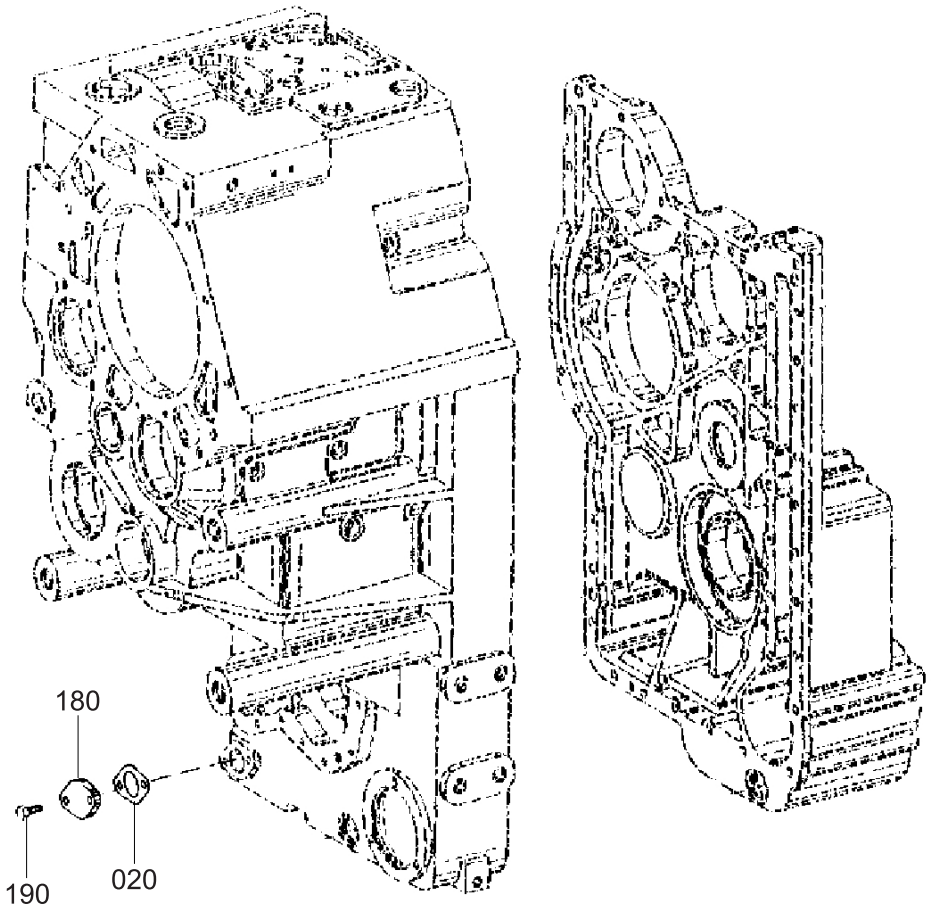

Item	Part_No	IS	Ord	T	Description	Qty	Serial_No	ITC	Remark
020	ZGAQ-00673				GASKET	1			
180	ZGAQ-00674				PLATE-COVER	1			
190	ZGAQ-00027				SCREW-HEX	2			

OIL PIPE(4-SPEED)

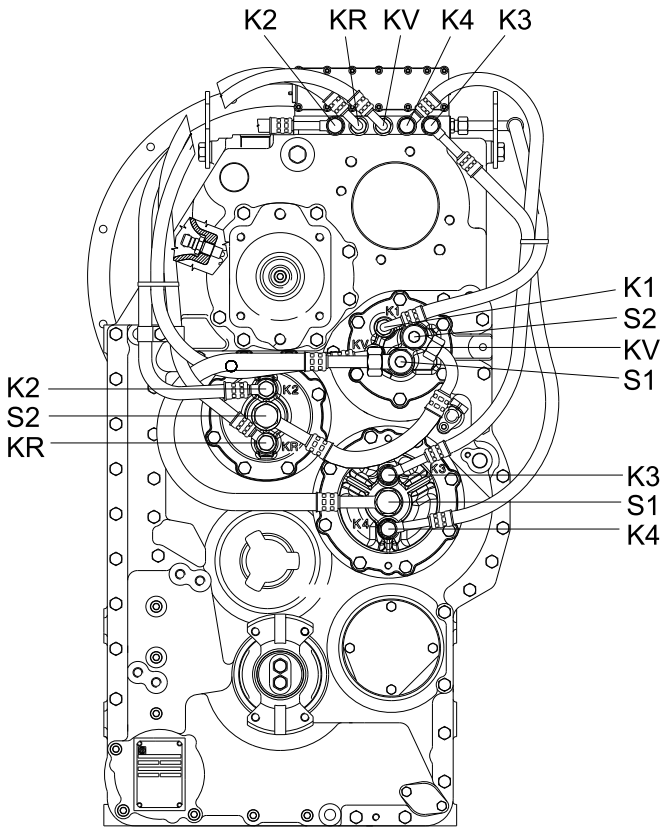

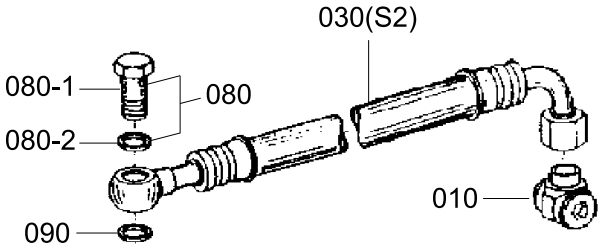

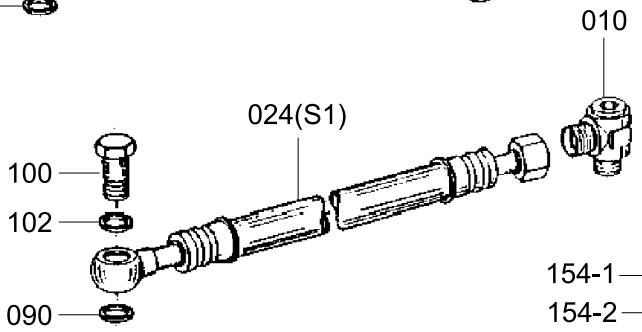

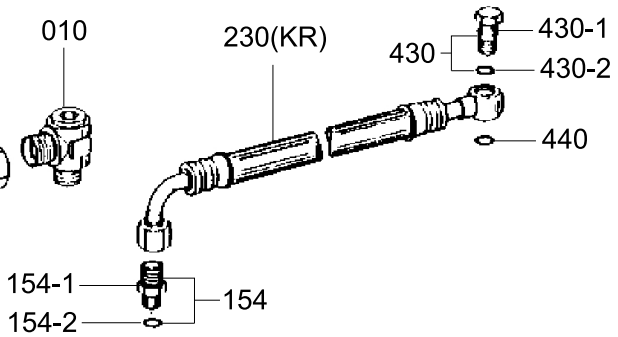

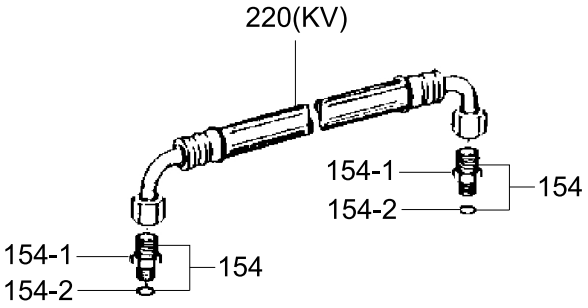

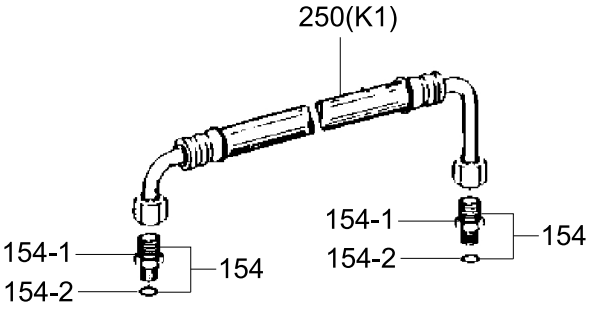

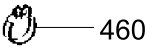

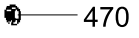

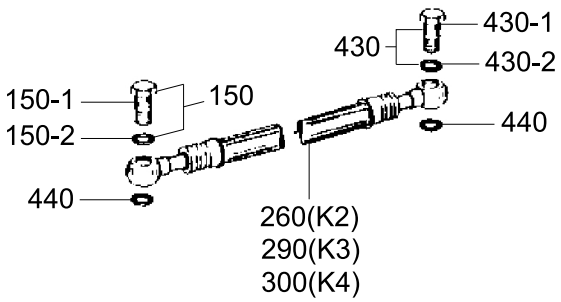

Item	Part_No	IS	Ord	T	Description	Qty	Serial_No	ITC	Remark
010	ZGAQ-00676				UNION-PIPE	2			
024	ZGAQ-00677				PIPE-HOSE	1			
030	ZGAQ-00678				PIPE-HOSE	1			
080	@				SCREW-UNION	1			NOT
080-1	ZGAQ-00679				.SCREW-UNION	1			
080-2	ZGAQ-00680				.O-RING	1			
90	ZGAQ-01699				O-RING	2			
100	ZGAQ-00756				SCREW-UNION	1			
102	ZGAQ-00680				O-RING	2			
150	@				SCREW-UNION	3			NOT
150-1	ZGAQ-00681				.SCREW-UNION	3			
150-2	ZGAQ-00099				.O-RING	3			
154	@				SCREW-IN SLEEVE	5			NOT
154-1	ZGAQ-00682				.SOCKET	5			
154-2	ZGAQ-00099				.O-RING	5			
220	ZGAQ-00683				PIPE-HOSE	1			
230	ZGAQ-00684				PIPE-HOSE	1			
250	ZGAQ-00685				PIPE-HOSE	1			
260	ZGAQ-00686				PIPE-HOSE	1			
290	ZGAQ-00687				PIPE-HOSE	1			
300	ZGAQ-00688				PIPE-HOSE	1			
430	@				SCREW-UNION	4			NOT
430-1	ZGAQ-00689				.SCREW-UNION	4			
430-2	ZGAQ-00099				.O-RING	4			
440	ZGAQ-00690				O-RING	7			
460	ZGAQ-00691				CLAMP-HOSE	2			
470	ZGAQ-00251				WASHER	2			

Item	Part_No	IS	Ord	T	Description	Qty	Serial_No	ITC	Remark
470	ZGAQ-00251				WASHER	2			

PARKING BRAKE(4-SPEED)

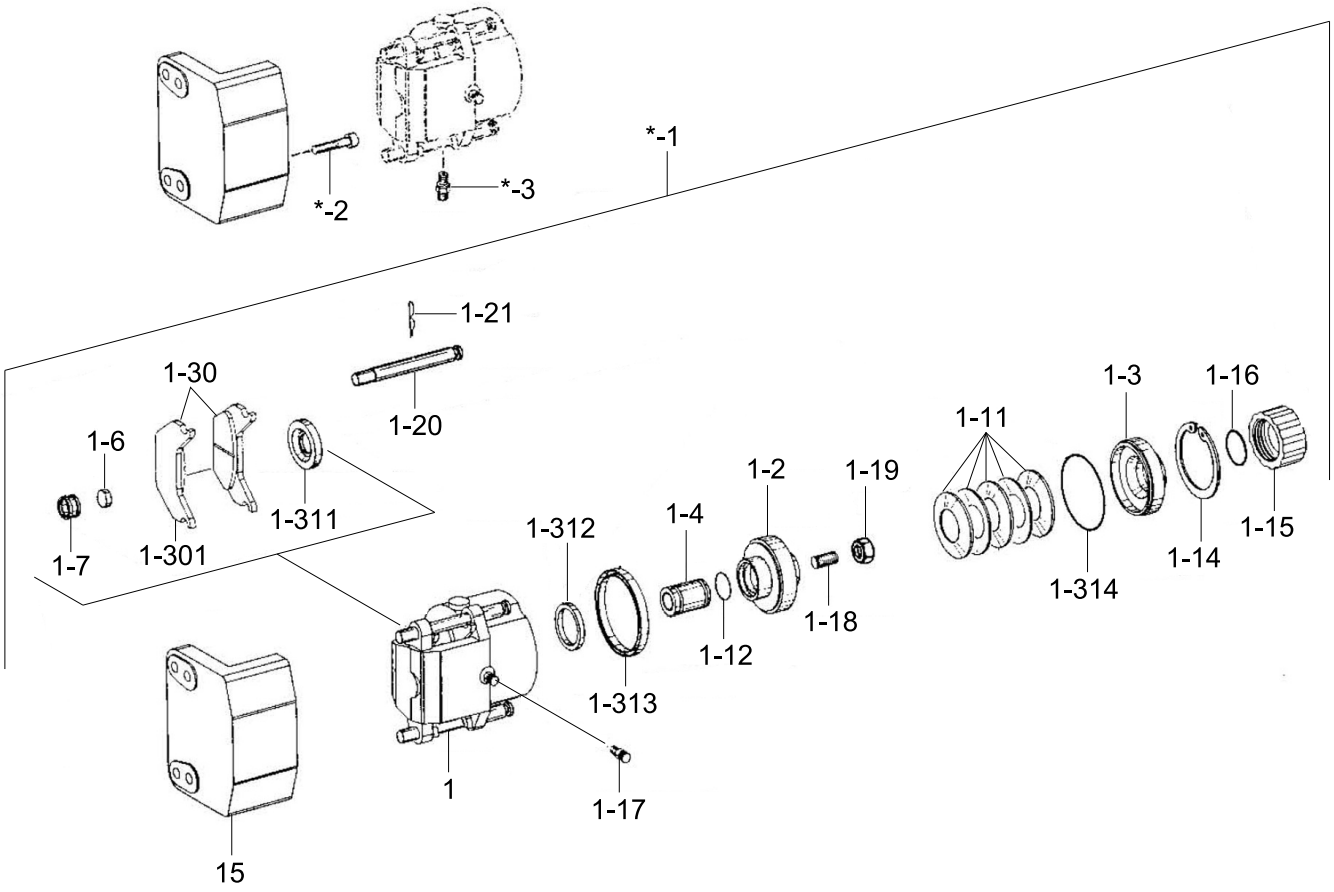

Item	Part_No	IS	Ord	T	Description	Qty	Serial_No	ITC	Remark
*	@				PARKING BRAKE	1			NOT
*-1	ZGAQ-01618				BRAKE	1			
1	ZGAQ-01619				.BRAKE	1			
1-2	ZGAQ-01620				..PISTON	1			
1-3	ZGAQ-01621				..RING-PRESSURE	1			
1-4	ZGAQ-01622				..PIN-PRESSURE	1			
1-6	ZGAQ-01623				..MAGNET	2			
1-7	ZGAQ-01624				..RING-CLEARANCE	2			
1-11	ZGAQ-01625				..SPRING-CUP	5			
1-12	ZGAQ-01626				..O-RING	1			
1-14	ZGAQ-01628				..O-RING	1			
1-15	ZGAQ-01627				..CAP-SCREW	1			
1-16	ZGAQ-01628				..O-RING	1			
1-17	ZGAQ-01629				..BREATHER	1			
1-18	ZGAQ-01630				..SCREW-SET	1			
1-19	ZGAQ-01631				..NUT-HEXAGON	1			
1-20	ZGAQ-01632				..PIN	1			
1-21	ZGAQ-01633				..PIN-SPR COTTER	2			
1-30	ZGAQ-01634				..BEARING LINING KIT	1			
N1-30	ZGAQ-03548				...LINING-BRAKE	2			NOT
1-31	ZGAQ-01635				..SEAL KIT	1			
N1-31	ZGAQ-01636				...CAP-DUST	1			NOT
N1-31	ZGAQ-01637				...U-RING	1			NOT
N1-31	ZGAQ-01638				...U-RING	1			NOT
N1-31	ZGAQ-01639				...O-RING	1			NOT
15	ZGAQ-01640				.PLATE-BRG ANCHOR	1			
*-2	ZGAQ-02806				SCREW-CAP	4			

Item	Part_No	IS	Ord	T	Description	Qty	Serial_No	ITC	Remark
*-2	ZGAQ-02806				SCREW-CAP	4			
*-3	ZGAQ-02807				PIPE UNION	1			
N	@				NOT SUPPLIED PARTS	AR			NOT

CONVERTER(5-SPEED)

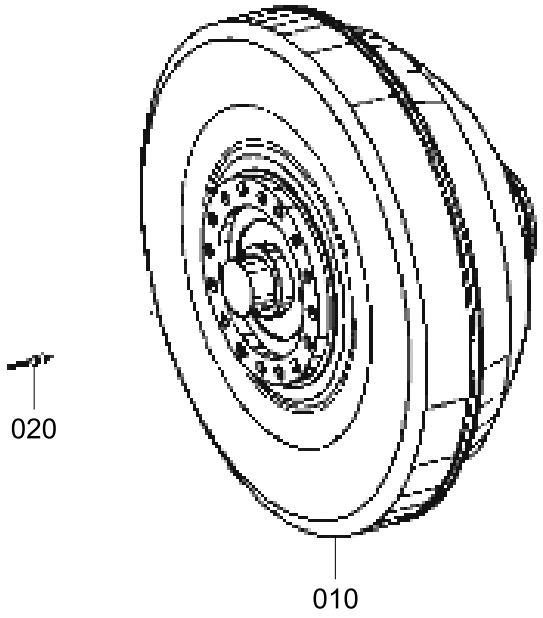

Item	Part_No	IS	Ord	T	Description	Qty	Serial_No	ITC	Remark
010	ZGAQ-04174				CONVERTER	1			
020	ZGAQ-02199				PLUG	1			

INPUT GROUP(5-SPEED)

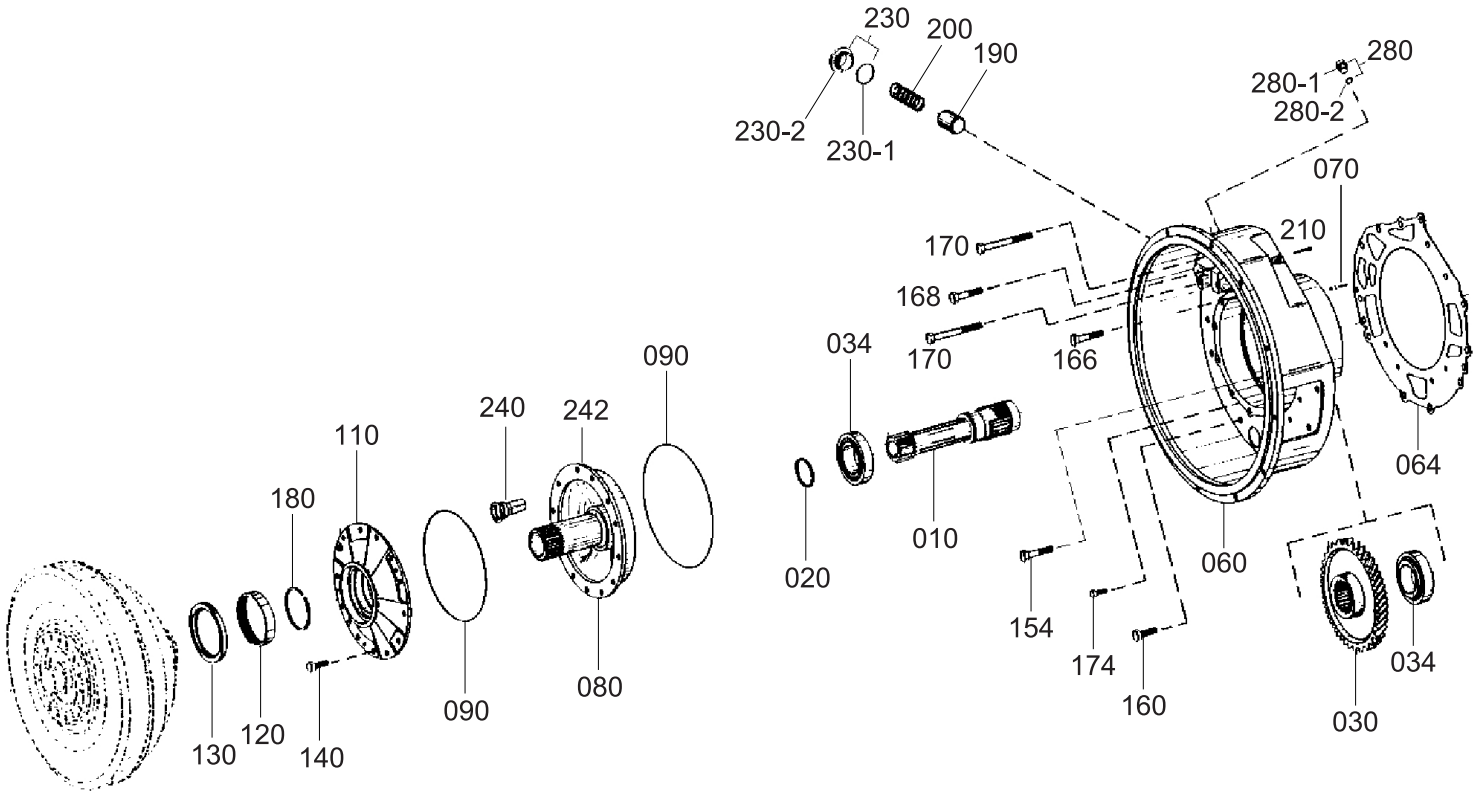

Item	Part_No	IS	Ord	T	Description	Qty	Serial_No	ITC	Remark
010	ZGAQ-04175				SHAFT-INPUT	1			
020	ZGAQ-00204				RING-PISTON	1			
030	ZGAQ-00205				GEAR-HELICAL	1			
034	ZGAQ-00206				BEARING-ROLLER	2			
060	ZGAQ-04176				BELL-CONVERTER	1			
064	ZGAQ-00208				GASKET	1			
070	ZGAQ-00209				PLUG	3			
080	ZGAQ-04177				FLANGE-OIL FEED	1			
090	ZGAQ-01718				O-RING	2			
110	ZGAQ-00213				COVER-BEARING	1			
120	ZGAQ-00214				SLEEVE-NEEDLE	1			
130	ZGAQ-00215				SEAL-SHAFT	1			
140	ZGAQ-00197				SCREW-HEX	12			
154	ZGAQ-04178				SCREW-HEX	2			
160	ZGAQ-00217				SCREW-HEX	10			
166	ZGAQ-00218				SCREW-HEX	1			
168	ZGAQ-00219				SCREW-HEX	1			
170	ZGAQ-00220				SCREW-HEX	1			
174	ZGAQ-01072				SCREW-HEX	4			
180	ZGAQ-00222				RING-PISTON	1			
190	ZGAQ-00223				PISTON	1			
200	ZGAQ-00224				SPRING-COMPRESSION	1			
210	ZGAQ-00225				PIN-SLOT	1			
230	@				PLUG-SCREW	1			NOT
230-1	ZGAQ-00226				.O-RING	1			
230-2	ZGAQ-00227				.PLUG-SCREW	1			
240	ZGAQ-00228				VALVE	1			

Item	Part_No	IS	Ord	T	Description	Qty	Serial_No	ITC	Remark
240	ZGAQ-00228				VALVE	1			
242	ZGAQ-00229				PIN-SLOT	1			
280	@				PLUG-SCREW	1			NOT
280-1	ZGAQ-00230				.PLUG-SCREW	1			
280-2	ZGAQ-00231				.O-RING	1			

CONVERTER BELL COVER(5-SPEED)

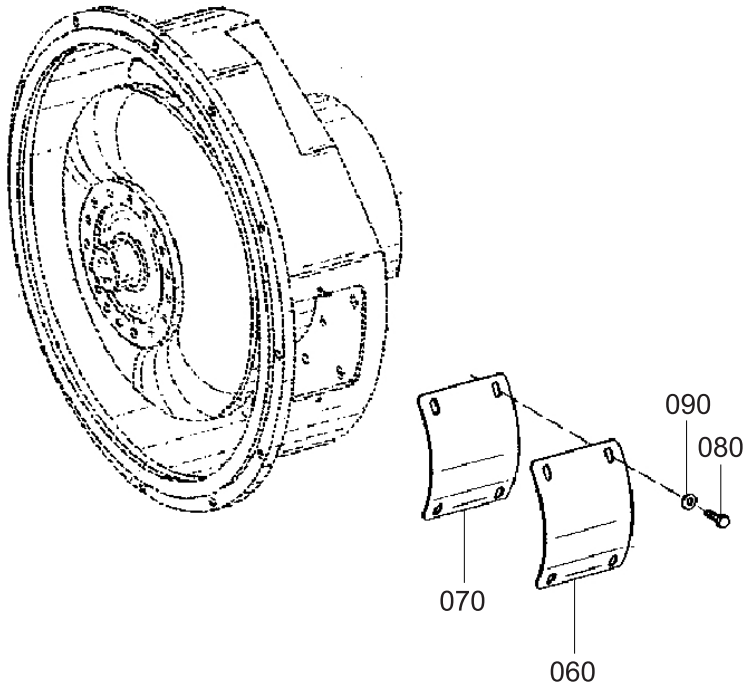

Item	Part_No	IS	Ord	T	Description	Qty	Serial_No	ITC	Remark
060	ZGAQ-00714				PLATE-COVER	1			
070	ZGAQ-03546				PLATE-COVER	1			
080	ZGAQ-00716				SCREW-HEX	4			
090	ZGAQ-00717				WASHER	4			

GEARBOX HOUSING(5-SPEED)

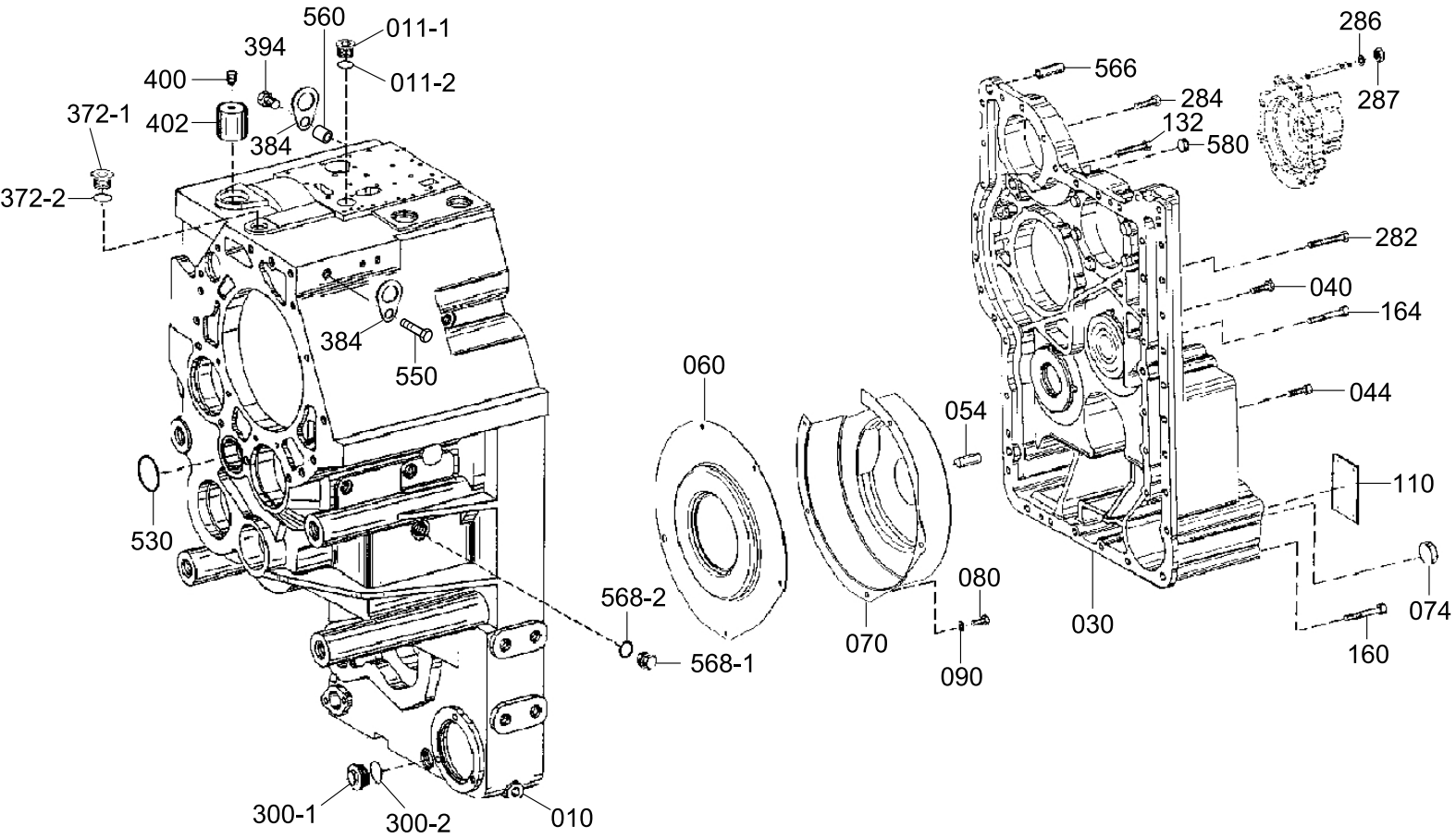

Item	Part_No	IS	Ord	T	Description	Qty	Serial_No	ITC	Remark
010	ZGAQ-00235				HOUSING	1			
011	@				PLUG-SCREW	1			NOT
011-1	ZGAQ-00236				.PLUG-SCREW	1			
011-2	ZGAQ-00237				.O-RING	1			
030	ZGAQ-00238				COVER	1			
040	ZGAQ-00718				SCREW-CAP	12			
044	ZGAQ-00718				SCREW-CAP	2			
054	ZGAQ-00241				PIN-CYLINDER	2			
060	ZGAQ-01522				SHEET-COVER	1			
070	ZGAQ-01523				SHEET-COVER	1			
074	ZGAQ-00244				CAP-SEALING	1			
080	ZGAQ-00719				SCREW-CAP	5			
090	ZGAQ-00245				WASHER	4			
110	ZGAQ-00720				PLATE-TYPE	1			
132	ZGAQ-00721				SCREW-HEX	1			
160	ZGAQ-00722				SCREW-CAP	9			
164	ZGAQ-00250				SCREW-CAP	1			
282	ZGAQ-00723				SCREW-HEX	7			
284	ZGAQ-00724				SCREW-HEX	8			
286	ZGAQ-00251				WASHER	2			
287	ZGAQ-00199				NUT-HEX	2			
300	@				PLUG-SCREW	1			NOT
300-1	ZGAQ-00252				.PLUG-SCREW	1			
300-2	ZGAQ-00253				.O-RING	1			
372	@				PLUG-SCREW	1			NOT
372-1	ZGAQ-00254				.PLUG-SCREW	1			
372-2	ZGAQ-00255				.O-RING	1			

Item	Part_No	IS	Ord	T	Description	Qty	Serial_No	ITC	Remark
372-2	ZGAQ-00255				.O-RING	1			
384	ZGAQ-00256				PLATE-FIXING	2			
394	ZGAQ-04180				SCREW-HEX	1			
400	ZGAQ-00258				BREATHER	1			
402	ZGAQ-00259				POT	1			
530	ZGAQ-00268				O-RING	1			
550	ZGAQ-00257				SCREW-HEX	1			
560	ZGAQ-04179				BUSH-STOP	1			
566	ZGAQ-00264				PIN-SLOT	1			
568	@				PLUG-SCREW	2			NOT
568-1	ZGAQ-00265				.PLUG-SCREW	2			
568-2	ZGAQ-00237				.O-RING	2			
580	ZGAQ-00097				CAP-SEALING	1			

LAYSHAFT(5-SPEED)

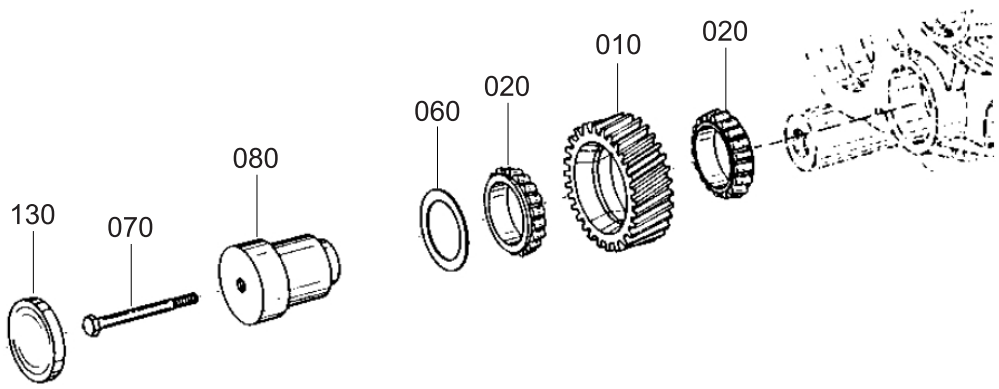

Item	Part_No	IS	Ord	T	Description	Qty	Serial_No	ITC	Remark
010	ZGAQ-01672				GEAR	1			
020	ZGAQ-00271				RING-BEARING,INNER	2			
060	ZGAQ-00272				RING(7.7)	1			
070	ZGAQ-00273				SCREW-HEX	1			
080	ZGAQ-00274				AXLE	1			
130	ZGAQ-00275				COVER	1			

COUPLING GROUP(K1+KV, 5-SPEED)

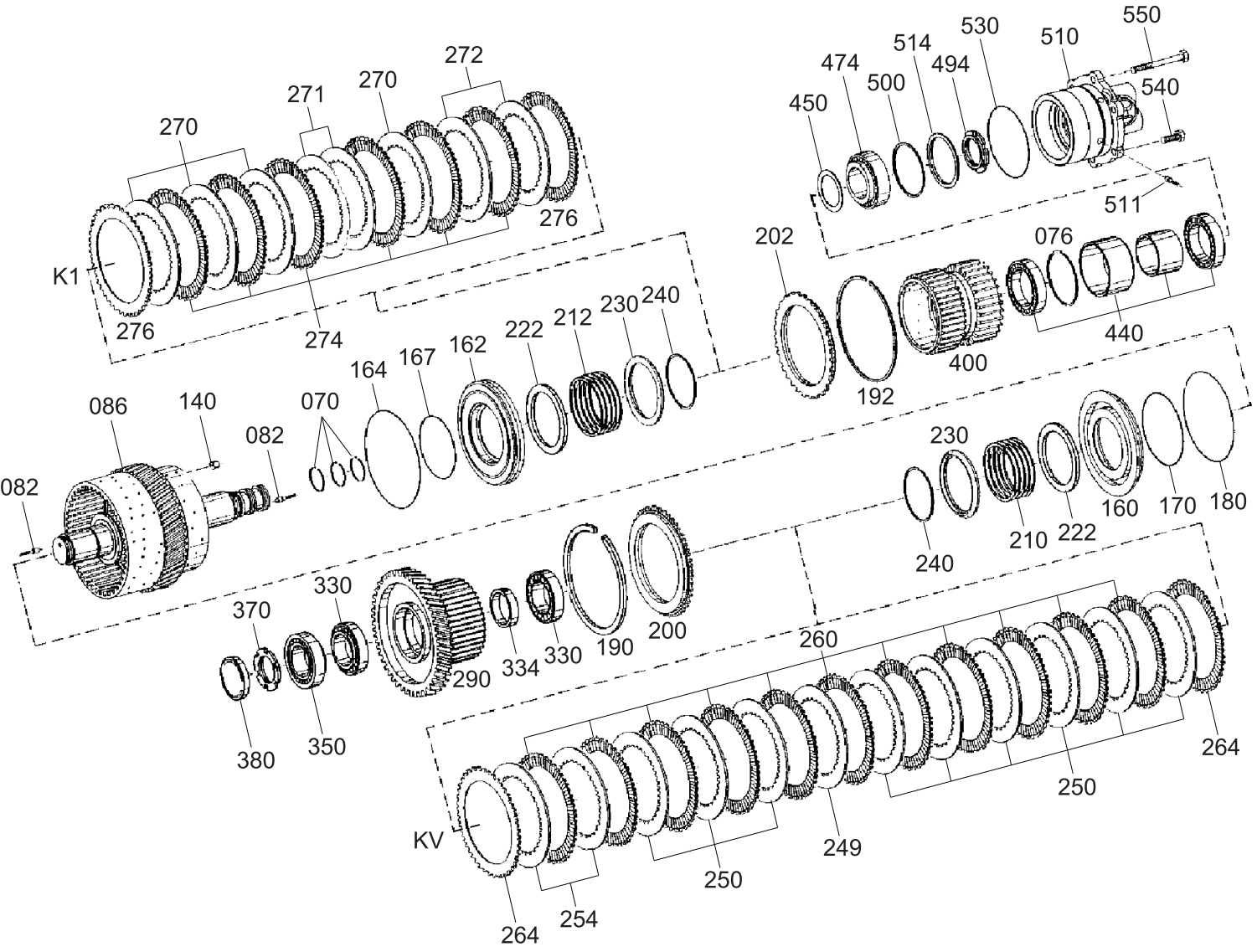

Item	Part_No	IS	Ord	T	Description	Qty	Serial_No	ITC	Remark
070	ZGAQ-00278				RING-PISTON	3			
076	ZGAQ-00279				RING-SNAP	1			
082	ZGAQ-00725				PLUG	3			
086	ZGAQ-00726				CARRIER-DISC	1			
140	ZGAQ-00284				VALVE	2			
160	ZGAQ-00285				PISTON	1			
162	ZGAQ-00286				PISTON	1			
164	ZGAQ-00287				O-RING	1			
167	ZGAQ-00288				O-RING	1			
170	ZGAQ-00289				O-RING	1			
180	ZGAQ-00290				O-RING	1			
190	ZGAQ-00291				RING-SNAP(2.95)	1			
190	ZGAQ-00292				RING-SNAP(2.90)	1			
190	ZGAQ-00293				RING-SNAP(2.85)	1			
190	ZGAQ-00294				RING-SNAP(2.80)	1			
190	ZGAQ-00295				RING-SNAP(2.75)	1			
190	ZGAQ-00296				RING-SNAP(2.70)	1			
190	ZGAQ-00297				RING-SNAP(2.65)	1			
190	ZGAQ-00298				RING-SNAP(2.60)	1			
190	ZGAQ-00299				RING-SNAP(2.55)	1			
190	ZGAQ-00300				RING-SNAP(2.45)	1			
190	ZGAQ-00301				RING-SNAP(2.10)	1			
N19(	ZGAQ-00302				RING-SNAP(2.15)	1			NOT
190	ZGAQ-00303				RING-SNAP(2.25)	1			
190	ZGAQ-00304				RING-SNAP(2.35)	1			
N19(	ZGAQ-00305				RING-SNAP(3.00)	1			NOT
N19(	ZGAQ-00306				RING-SNAP(3.05)	1			NOT

Item	Part_No	IS	Ord	T	Description	Qty	Serial_No	ITC	Remark
N190	ZGAQ-00306				RING-SNAP(3.05)	1			NOT
190	ZGAQ-00307				RING-SNAP(3.10)	1			
192	ZGAQ-00308				RING-SNAP(2.50)	1			
192	ZGAQ-00309				RING-SNAP(2.30)	1			
192	ZGAQ-00310				RING-SNAP(2.40)	1			
192	ZGAQ-00311				RING-SNAP(2.20)	1			
192	ZGAQ-00312				RING-SNAP(2.10)	1			
200	ZGAQ-00313				SHIM-END	1			
202	ZGAQ-00314				SHIM-END	1			
210	ZGAQ-00315				SPRING-COMPRESSION	1			
212	ZGAQ-00316				SPRING-COMPRESSION	1			
222	ZGAQ-00317				WASHER	2			
230	ZGAQ-00318				RING-GUIDE	2			
240	ZGAQ-00319				RING-SNAP	2			
249	ZGAQ-01674				DISC(4.0)-I/CLUTCH	1			
250	ZGAQ-01675				DISC(3.5)-I/CLUTCH	9			
254	ZGAQ-01677				DISC(2.5)-I/CLUTCH	2			
254	ZGAQ-01678				DISC(3.0)-I/CLUTCH	2			
254	ZGAQ-01675				DISC(3.5)-I/CLUTCH	2			
254	ZGAQ-01674				DISC(4.0)-I/CLUTCH	2			
260	ZGAQ-00324				DISC(2.55)-O/CLUTCH	11			
264	ZGAQ-00325				DISC(1.87)-O/CLUTCH	2			
270	ZGAQ-00329				DISC(4.0)-I/CLUTCH	4			
271	ZGAQ-00326				DISC(2.5)-I/CLUTCH	2			
272	ZGAQ-00327				DISC(3.5)-I/CLUTCH	2			
272	ZGAQ-00328				DISC(3.0)-I/CLUTCH	2			
272	ZGAQ-00326				DISC(2.5)-I/CLUTCH	2			

Item	Part_No	IS	Ord	T	Description	Qty	Serial_No	ITC	Remark
272	ZGAQ-00326				DISC(2.5)-I/CLUTCH	2			
272	ZGAQ-00329				DISC(4.0)-I/CLUTCH	2			
274	ZGAQ-00330				DISC-O/CLUTCH	6			
276	ZGAQ-00331				DISC-O/CLUTCH	2			
290	ZGAQ-00727				GEAR-SPUR	1			
330	ZGAQ-00206				BEARING-ROLLER	2			
334	ZGAQ-00728				RING	1			
350	ZGAQ-00206				BEARING-ROLLER	1			
370	ZGAQ-01719				NUT-SLOTTED	1			
380	ZGAQ-00344				COVER	1			
400	ZGAQ-00703				GEAR	1			
440	ZGAQ-00345				BEARING-BALL	1			
450	ZGAQ-00346				WASHER	1			
474	ZGAQ-00347				BEARING-TAPER ROLLER	1			
494	ZGAQ-01719				NUT-SLOTTED	1			
500	ZGAQ-00348				SHIM(2.20T)	1			
500	ZGAQ-00349				SHIM(2.15T)	1			
500	ZGAQ-00350				SHIM(2.10T)	1			
500	ZGAQ-00351				SHIM(2.05T)	1			
500	ZGAQ-00352				SHIM(2.00T)	1			
500	ZGAQ-00353				SHIM(1.95T)	1			
500	ZGAQ-00354				SHIM(1.90T)	1			
500	ZGAQ-00355				SHIM(1.85T)	1			
500	ZGAQ-00356				SHIM(1.80T)	1			
500	ZGAQ-00357				SHIM(1.75T)	1			
500	ZGAQ-00358				SHIM(1.70T)	1			
500	ZGAQ-00359				SHIM(1.65T)	1			

Item	Part_No	IS	Ord	T	Description	Qty	Serial_No	ITC	Remark
500	ZGAQ-00359				SHIM(1.65T)	1			
500	ZGAQ-00360				SHIM(1.60T)	1			
500	ZGAQ-00361				SHIM(1.55T)	1			
500	ZGAQ-00362				SHIM(1.50T)	1			
500	ZGAQ-00363				SHIM(1.45T)	1			
500	ZGAQ-00364				SHIM(1.40T)	1			
500	ZGAQ-00365				SHIM(1.35T)	1			
500	ZGAQ-00366				SHIM(1.30T)	1			
500	ZGAQ-00367				SHIM(1.25T)	1			
500	ZGAQ-00368				SHIM(1.20T)	1			
500	ZGAQ-00369				SHIM(1.15T)	1			
500	ZGAQ-00370				SHIM(1.10T)	1			
500	ZGAQ-00371				SHIM(0.70T)	1			
500	ZGAQ-00372				SHIM(0.75T)	1			
500	ZGAQ-00373				SHIM(0.80T)	1			
500	ZGAQ-00374				SHIM(0.85T)	1			
500	ZGAQ-00375				SHIM(0.90T)	1			
500	ZGAQ-00376				SHIM(0.95T)	1			
500	ZGAQ-00377				SHIM(1.00T)	1			
500	ZGAQ-00378				SHIM(1.05T)	1			
510	ZGAQ-00731				COVER-BEARING	1			
511	ZGAQ-00725				PLUG	2			
514	ZGAQ-00380				RING	1			
530	ZGAQ-00732				O-RING	1			
540	ZGAQ-00382				SCREW-HEX	4			
550	ZGAQ-00383				SCREW-HEX	2			
N	@				NOT SUPPLIED PARTS	AR			NOT

Item	Part_No	IS	Ord	T	Description	Qty	Serial_No	ITC	Remark
N	@				NOT SUPPLIED PARTS	AR			NOT

COUPLING GROUP(K2+KR, 5-SPEED)

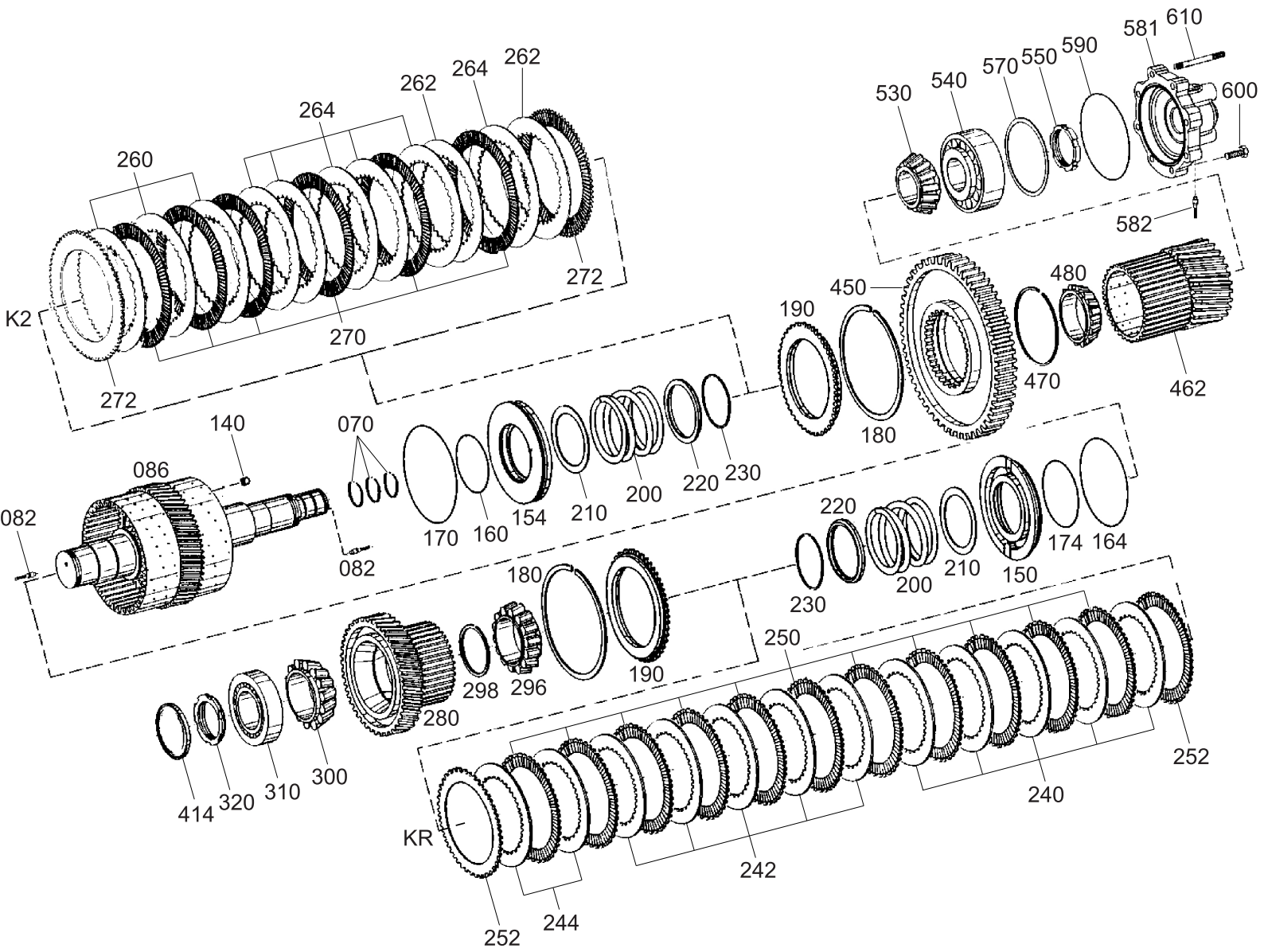

Item	Part_No	IS	Ord	T	Description	Qty	Serial_No	ITC	Remark
070	ZGAQ-00278				RING-PISTON	3			
082	ZGAQ-00725				PLUG	3			
086	ZGAQ-00733				CARRIER-DISC	1			
140	ZGAQ-00284				VALVE	2			
150	ZGAQ-00285				PISTON	1			
154	ZGAQ-00387				PISTON	1			
160	ZGAQ-00388				O-RING	1			
164	ZGAQ-00290				O-RING	1			
170	ZGAQ-00389				O-RING	1			
174	ZGAQ-00289				O-RING	1			
180	ZGAQ-00291				RING-SNAP(2.95)	2			
180	ZGAQ-00292				RING-SNAP(2.90)	2			
180	ZGAQ-00293				RING-SNAP(2.85)	2			
180	ZGAQ-00294				RING-SNAP(2.80)	2			
180	ZGAQ-00295				RING-SNAP(2.75)	2			
180	ZGAQ-00296				RING-SNAP(2.70)	2			
180	ZGAQ-00297				RING-SNAP(2.65)	2			
180	ZGAQ-00298				RING-SNAP(2.60)	2			
180	ZGAQ-00299				RING-SNAP(2.55)	2			
180	ZGAQ-00300				RING-SNAP(2.45)	2			
180	ZGAQ-00301				RING-SNAP(2.10)	2			
N18(	ZGAQ-00302				RING-SNAP(2.15)	2			NOT
180	ZGAQ-00303				RING-SNAP(2.25)	2			
180	ZGAQ-00304				RING-SNAP(2.35)	2			
N18(	ZGAQ-00305				RING-SNAP(3.00)	2			NOT
N18(	ZGAQ-00306				RING-SNAP(3.05)	2			NOT
180	ZGAQ-00307				RING-SNAP(3.10)	2			

Item	Part_No	IS	Ord	T	Description	Qty	Serial_No	ITC	Remark
180	ZGAQ-00307				RING-SNAP(3.10)	2			
190	ZGAQ-00313				SHIM-END	2			
200	ZGAQ-00315				SPRING-COMPRESSION	2			
210	ZGAQ-00317				WASHER	2			
220	ZGAQ-00318				RING-GUIDE	2			
230	ZGAQ-00319				RING-SNAP	2			
240	ZGAQ-01677				DISC(2.5)-I/CLUTCH	5			
242	ZGAQ-01678				DISC(3.0)-I/CLUTCH	5			
244	ZGAQ-01677				DISC(2.5)-I/CLUTCH	2			
244	ZGAQ-01678				DISC(3.0)-I/CLUTCH	2			
250	ZGAQ-00736				DISC-O/CLUTCH	11			
252	ZGAQ-00325				DISC(1.87)-O/CLUTCH	2			
260	ZGAQ-01674				DISC(4.0)-I/CLUTCH	3			
262	ZGAQ-01677				DISC(2.5)-I/CLUTCH	2			
262	ZGAQ-01678				DISC(3.0)-I/CLUTCH	2			
262	ZGAQ-01675				DISC(3.5)-I/CLUTCH	2			
262	ZGAQ-01674				DISC(4.0)-I/CLUTCH	2			
264	ZGAQ-01677				DISC(2.5)-I/CLUTCH	6			
270	ZGAQ-00324				DISC(2.55)-O/CLUTCH	6			
272	ZGAQ-00325				DISC(1.87)-O/CLUTCH	2			
280	ZGAQ-00737				GEAR-SPUR	1			
296	ZGAQ-00738				BEARING-TAPER ROLLER	1			
298	ZGAQ-00739				RING	1			
300	ZGAQ-00740				BEARING-TAPER ROLLER	1			
310	ZGAQ-00400				BEARING-ROLLER	1			
320	ZGAQ-01720				NUT-SLOTTED	1			
414	ZGAQ-00402				COVER	1			

Item	Part_No	IS	Ord	T	Description	Qty	Serial_No	ITC	Remark
414	ZGAQ-00402				COVER	1			
450	ZGAQ-00450				GEAR	1			
462	ZGAQ-00744				GEAR	1			
470	ZGAQ-00403				RING-SNAP	1			
480	ZGAQ-00404				TAPERED R/BEARING	1			
530	ZGAQ-00420				TAPERED R/BEARING	1			
540	ZGAQ-00421				BEARING-ROLLER	1			
550	ZGAQ-01721				NUT-SLOTTED	1			
570	ZGAQ-00423				WASHER(1.0T)	1			
570	ZGAQ-00424				WASHER(1.1T)	1			
570	ZGAQ-00425				WASHER(1.2T)	1			
570	ZGAQ-00426				WASHER(1.3T)	1			
570	ZGAQ-00427				WASHER(1.4T)	1			
570	ZGAQ-00428				WASHER(1.5T)	1			
570	ZGAQ-00429				WASHER(1.6T)	1			
570	ZGAQ-00430				WASHER(1.7T)	1			
570	ZGAQ-00431				WASHER(1.8T)	1			
570	ZGAQ-00432				WASHER(1.9T)	1			
570	ZGAQ-00433				WASHER(2.0T)	1			
570	ZGAQ-00434				WASHER(0.8T)	1			
570	ZGAQ-00435				WASHER(0.9T)	1			
570	ZGAQ-00436				SHIM(0.95T)	1			
570	ZGAQ-00437				SHIM(1.05T)	1			
570	ZGAQ-00438				SHIM(1.15T)	1			
570	ZGAQ-00439				SHIM(1.25T)	1			
570	ZGAQ-00440				SHIM(1.35T)	1			
570	ZGAQ-00441				SHIM(1.45T)	1			

Item	Part_No	IS	Ord	T	Description	Qty	Serial_No	ITC	Remark
570	ZGAQ-00441				SHIM(1.45T)	1			
570	ZGAQ-00442				SHIM(1.55T)	1			
570	ZGAQ-00443				SHIM(1.65T)	1			
570	ZGAQ-00444				SHIM(1.75T)	1			
581	ZGAQ-00746				COVER	1			
582	ZGAQ-00725				PLUG	2			
590	ZGAQ-00446				O-RING	1			
600	ZGAQ-00447				SCREW-HEX	6			
610	ZGAQ-00448				STUD	2			
N	@				NOT SUPPLIED PARTS	AR			NOT

COUPLING GROUP(K3+K4, 4-SPEED)

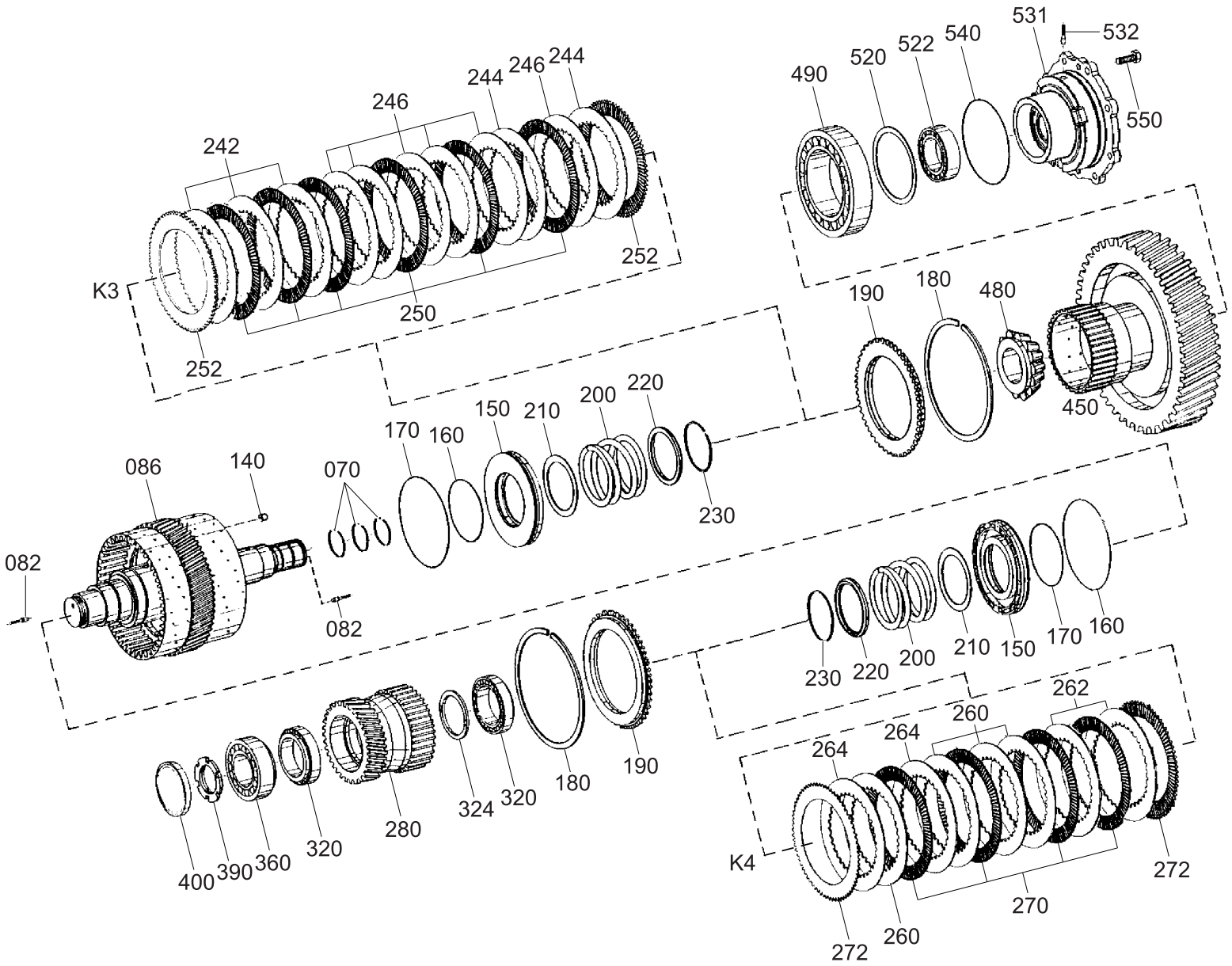

Item	Part_No	IS	Ord	T	Description	Qty	Serial_No	ITC	Remark
010	ZGAQ-03152				SHAFT	1			
020	ZGAQ-00811				STUD	1			
040	ZGAQ-02862				COUPLING	1			
042	ZGAQ-02849				.CARRIER-DISC	1			
052	ZGAQ-00849				.PISTON	1			
060	ZGAQ-00814				.O-RING	1			
070	ZGAQ-00850				.O-RING	1			
072	ZGAQ-00816				.SPRING-CUP	7			
092	ZGAQ-02829				.L-RING	1			
106	ZGAQ-00851				.DISC-CLUTCH,OUTER	1			
110	ZGAQ-00852				.DISC-CLUTCH,OUTER	7			
120	ZGAQ-00853				.CLUTCH DISC-INNER	7			
130	ZGAQ-00854				.SHIM-END	1			
150	ZGAQ-00855				.RING-SNAP(2.1T)	1			
150	ZGAQ-00856				.RING-SNAP(2.25T)	1			
150	ZGAQ-00857				.RING-SNAP(2.4T)	1			
150	ZGAQ-00858				.RING-SNAP(2.55T)	1			
150	ZGAQ-00859				.RING-SNAP(2.7T)	1			
150	ZGAQ-00860				.RING-SNAP(2.85T)	1			
150	ZGAQ-00861				.RING-SNAP(3.00T)	1			
150	ZGAQ-00862				.RING-SNAP(3.15T)	1			
150	ZGAQ-00863				.RING-SNAP(3.30T)	1			
150	ZGAQ-00864				.RING-SNAP(3.45T)	1			
150	ZGAQ-00865				.RING-SNAP(3.60T)	1			
150	ZGAQ-00866				.RING-SNAP(3.75T)	1			
150	ZGAQ-00867				.RING-SNAP(3.90T)	1			
150	ZGAQ-00868				.RING-SNAP(4.05T)	1			

Item	Part_No	IS	Ord	T	Description	Qty	Serial_No	ITC	Remark
150	ZGAQ-00868				.RING-SNAP(4.05T)	1			
150	ZGAQ-00869				.RING-SNAP(4.20T)	1			
160	ZGAQ-00873				IDLER	1			
170	ZGAQ-00824				DISC-RUNNING	2			
190	ZGAQ-00825				CAGE-AXIAL NEEDLE	2			
200	ZGAQ-00826				WASHER-AXIAL	2			
210	ZGAQ-00871				CAGE-NEEDLE	1			
220	ZGAQ-00830				BEARING-ROLLER	1			
230	ZGAQ-00829				BEARING-ROLLER	1			
240	ZGAQ-00831				RING-PISTON	2			

OUTPUT GROUP(5-SPEED)

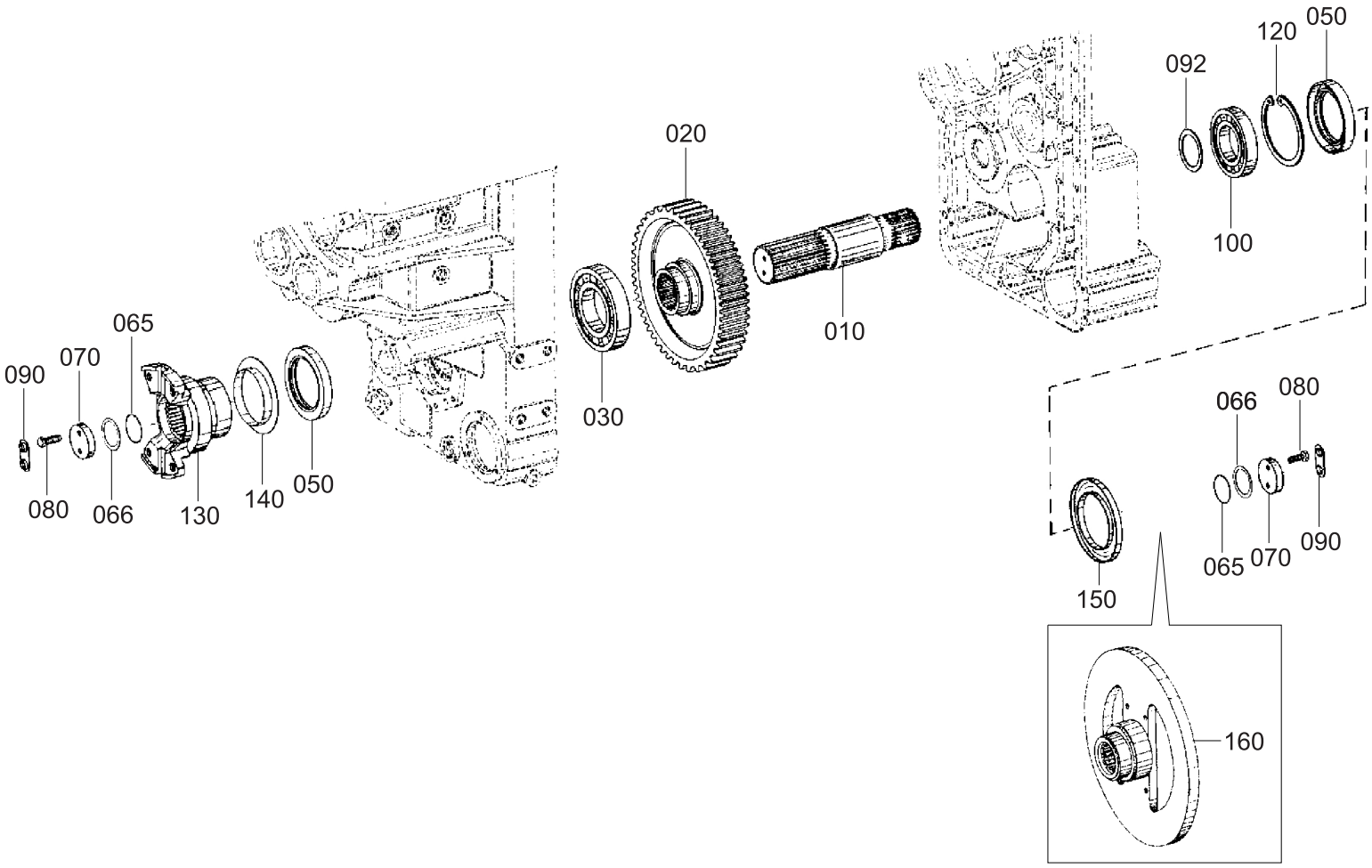

Item	Part_No	IS	Ord	T	Description	Qty	Serial_No	ITC	Remark
010	ZGAQ-00478				SHAFT-OUTPUT	1			
020	ZGAQ-00751				GEAR	1			
030	ZGAQ-00480				BEARING-ROLLER	1			
050	ZGAQ-00481				SEAL-SHAFT	2			
065	ZGAQ-00482				O-RING	2			
066	ZGAQ-00483				WASHER(0.5T)	2			
066	ZGAQ-00484				WASHER(1.0T)	2			
066	ZGAQ-00485				WASHER(1.5T)	2			
066	ZGAQ-00486				WASHER(2.0T)	2			
070	ZGAQ-00487				WASHER(15.5T)	2			
080	ZGAQ-00197				SCREW-HEX	4			
090	ZGAQ-00196				WASHER-TAB	2			
092	ZGAQ-00500				SHIM(1.0T)	1			
092	ZGAQ-00501				SHIM(1.1T)	1			
092	ZGAQ-00502				SHIM(1.2T)	1			
092	ZGAQ-00503				SHIM(1.3T)	1			
092	ZGAQ-00504				SHIM(1.4T)	1			
092	ZGAQ-00505				SHIM(1.5T)	1			
092	ZGAQ-00506				SHIM(1.6T)	1			
092	ZGAQ-00507				SHIM(1.7T)	1			
092	ZGAQ-00508				SHIM(1.8T)	1			
092	ZGAQ-00509				SHIM(1.9T)	1			
092	ZGAQ-00510				SHIM(2.0T)	1			
092	ZGAQ-00511				SHIM(2.5T)	1			
092	ZGAQ-00512				SHIM(3.0T)	1			
092	ZGAQ-00513				SHIM(2.1T)	1			
092	ZGAQ-00514				SHIM(2.2T)	1			

Item	Part_No	IS	Ord	T	Description	Qty	Serial_No	ITC	Remark
092	ZGAQ-00514				SHIM(2.2T)	1			
092	ZGAQ-00515				SHIM(2.3T)	1			
092	ZGAQ-00516				SHIM(2.4T)	1			
100	ZGAQ-00488				BEARING-BALL	1			
120	ZGAQ-00499				RING-RETAINING	1			
130	ZGAQ-00518				FLANGE-OUTPUT	1			
140	ZGAQ-00519				SHEET-PROTECT	1			
150	ZGAQ-00522				SHEET-SCREEN	1			
160	ZGAQ-02801				FLANGE-OUTPUT	1			

POWER TAKE OFF(5-SPEED)

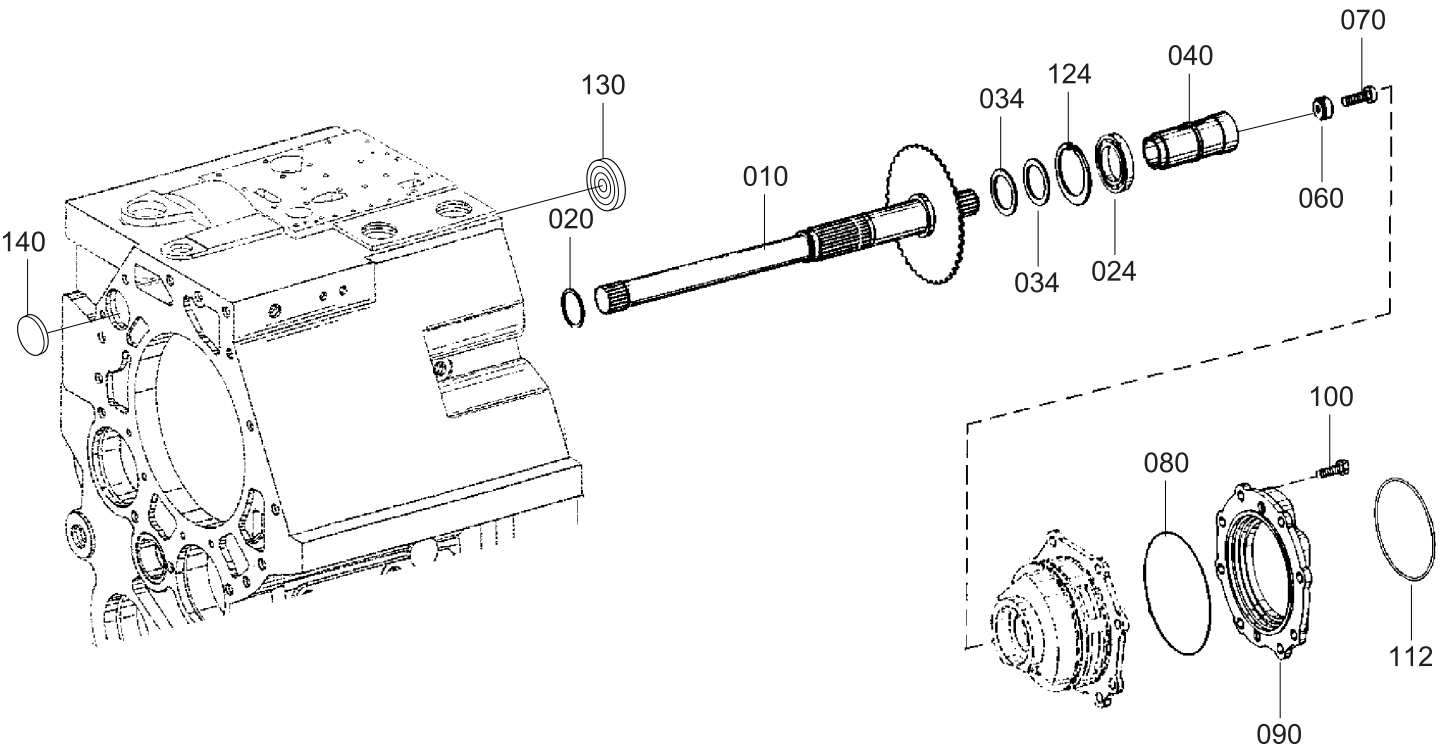

Item	Part_No	IS	Ord	T	Description	Qty	Serial_No	ITC	Remark
010	ZGAQ-04188				SHAFT	1			
020	ZGAQ-00525				RING-PISTON	1			
024	ZGAQ-00752				BEARING-BALL	1			
034	ZGAQ-01683				WASHER(2.0T)	2			
040	ZGAQ-03549				DRIVER	1			
060	ZGAQ-03550				PLATE-CLAMPING	1			
070	ZGAQ-00580				SCREW-CAP	1			
080	ZGAQ-00585				O-RING	1			
090	ZGAQ-03551				FLANGE-PUMP	1			
100	ZGAQ-00587				SCREW-HEX	8			
112	ZGAQ-00597				O-RING	1			
124	ZGAQ-00755				RING-RETAINING	1			
130	ZGAQ-01722				COVER	1			
140	ZGAQ-00267				DISC-SEALING	1			

GEARSHIFT SYSTEM(1/3, 5-SPEED)

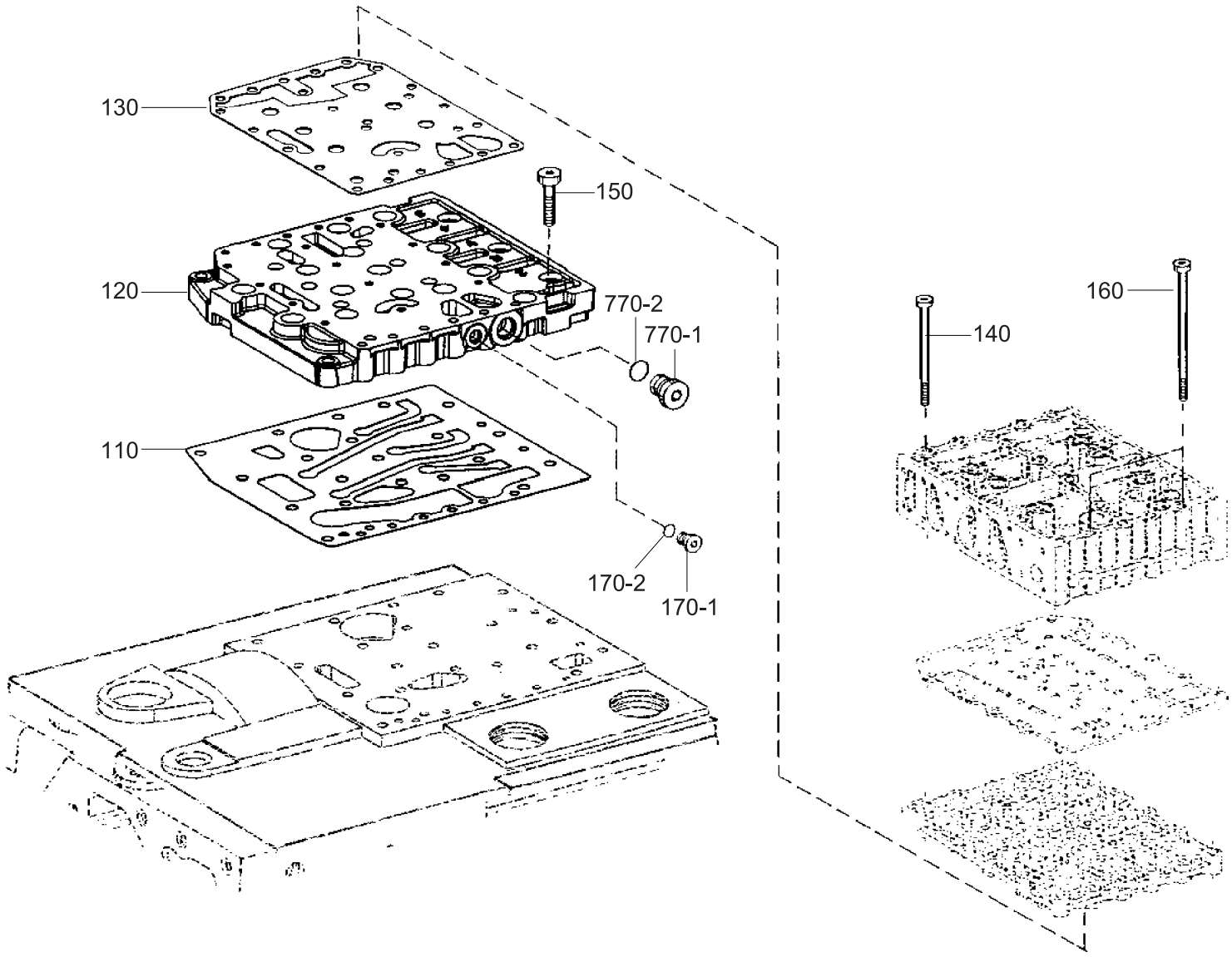

Item	Part_No	IS	Ord	T	Description	Qty	Serial_No	ITC	Remark
110	ZGAQ-00603				GASKET	1			
120	ZGAQ-00605				PLATE-DUCT	1			
130	ZGAQ-00606				GASKET	1			
140	ZGAQ-00608				SCREW-TORX	17			
150	ZGAQ-00609				SCREW-TORX	20			
160	ZGAQ-00611				SCREW-TORX	6			
170-1	ZGAQ-00230				PLUG-SCREW	1			
170-2	ZGAQ-00231				O-RING	1			
770-1	ZGAQ-00613				SCREW-PLUG	1			
770-2	ZGAQ-00614				O-RING	1			

GEAR SHIFT SYSTEM(2/3, 5-SPEED)

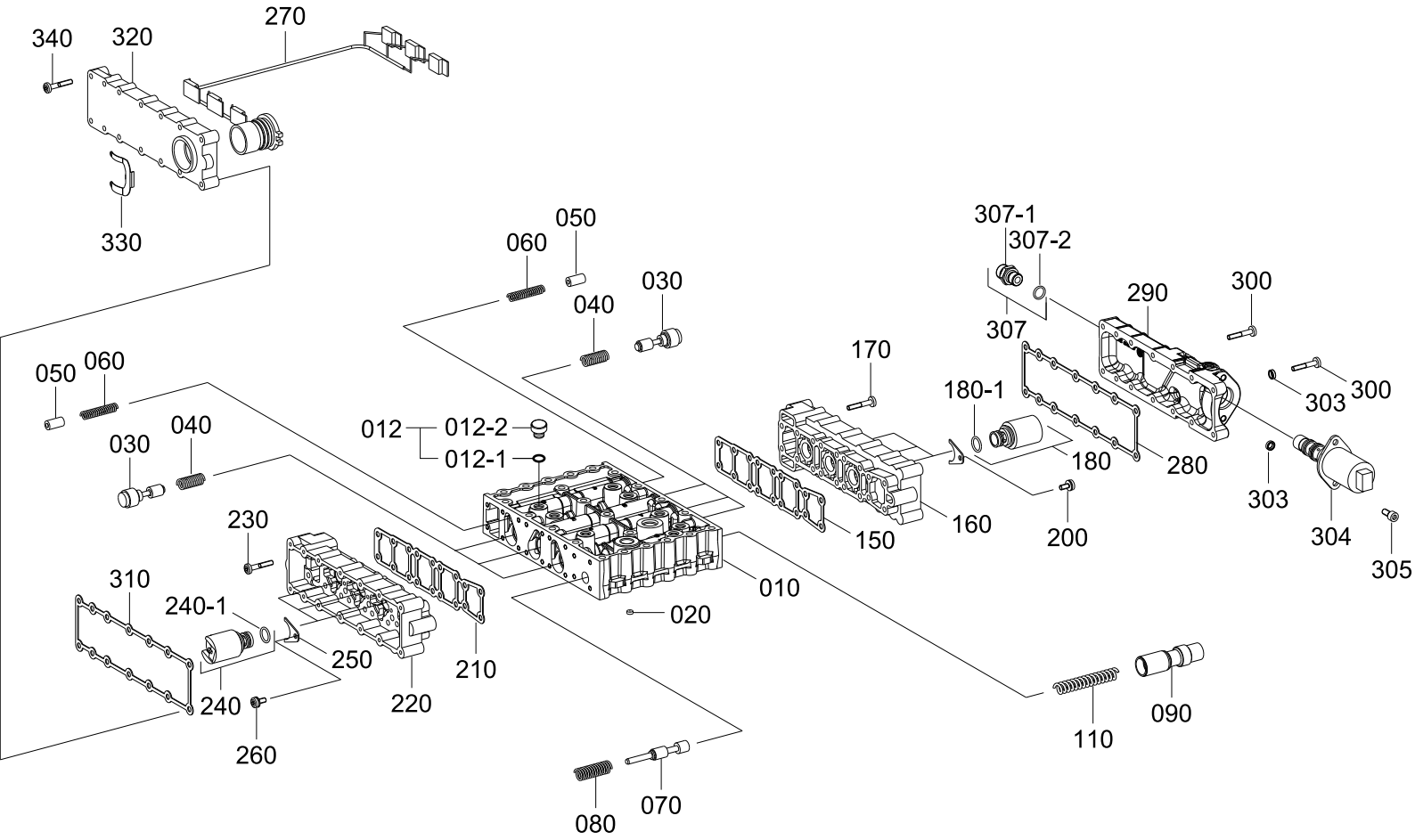

Item	Part_No	IS	Ord	T	Description	Qty	Serial_No	ITC	Remark
010	ZGAQ-04123				VALVE BLOCK	1			
012	@				PLUG-SCREW	8			NOT
012-1	ZGAQ-00230				.PLUG-SCREW	8			
012-2	ZGAQ-00231				.O-RING	8			
020	ZGAQ-00617				ORIFICE	6			
030	ZGAQ-00618				PISTON	6			
040	ZGAQ-00619				SPRING-COMPRESSION	6			
050	ZGAQ-00620				PISTON	6			
060	ZGAQ-00621				SPRING-COMPRESSION	6			
070	ZGAQ-00622				PISTON	1			
080	ZGAQ-00623				SPRING-COMPRESSION	1			
090	ZGAQ-01455				PISTON-CONTROL	1			
110	ZGAQ-00625				SPRING-COMPRESSION	1			
150	ZGAQ-01578				GASKET	1			
160	ZGAQ-00627				HOUSING	1			
170	ZGAQ-00628				SCREW-TORX	18			
180	ZGAQ-00629				REGULATOR-PRESSURE	3			
180-1	ZGAQ-00630				.O-RING	3			
190	ZGAQ-00631				PLATE-FIXING	3			
200	ZGAQ-00632				SCREW-TORX	3			
210	ZGAQ-01578				GASKET	1			
220	ZGAQ-00627				HOUSING	1			
230	ZGAQ-00628				SCREW-TORX	18			
240	ZGAQ-00629				REGULATOR-PRESSURE	3			
240-1	ZGAQ-00630				.O-RING	3			
250	ZGAQ-00631				PLATE-FIXING	3			
260	ZGAQ-00632				SCREW-TORX	3			

Item	Part_No	IS	Ord	T	Description	Qty	Serial_No	ITC	Remark
260	ZGAQ-00632				SCREW-TORX	3			
270	ZGAQ-00633				HARNESS-WIRING	1			
280	ZGAQ-01725				GASKET	1			
290	ZGAQ-04124				HOUSING-CONN	1			
300	ZGAQ-00628				SCREW-TORX	14			
303	ZGAQ-04125				RING	3			
304	ZGAQ-04126				REGULATOR-PRESSURE	1			
305	ZGAQ-04127				SCREW-TORX	2			
307-1	ZGAQ-00970				SCREW-IN SLEEVE	2			
307-2	ZGAQ-00971				O-RING	2			
310	ZGAQ-01725				GASKET	1			
320	ZGAQ-00636				COVER	1			
330	ZGAQ-00637				CLAMP-RETAINING	1			
340	ZGAQ-00628				SCREW-TORX	14			

GEARSHIFT SYSTEM(3/3, 5-SPEED)

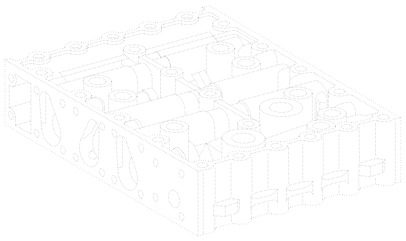

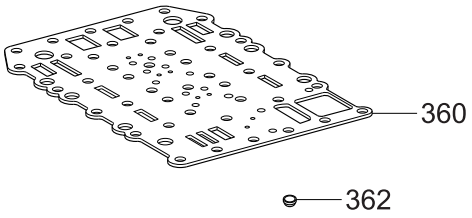

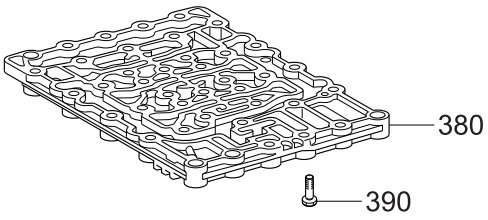

Item	Part_No	IS	Ord	T	Description	Qty	Serial_No	ITC	Remark
360	ZGAQ-02803				PLATE-SEALING	1			
362	ZGAQ-00639				SCREEN	6			
380	ZGAQ-01456				PLATE-DUCT	1			
390	ZGAQ-00641				SCREW-TORX	18			

CONTROL UNIT(5-SPEED)

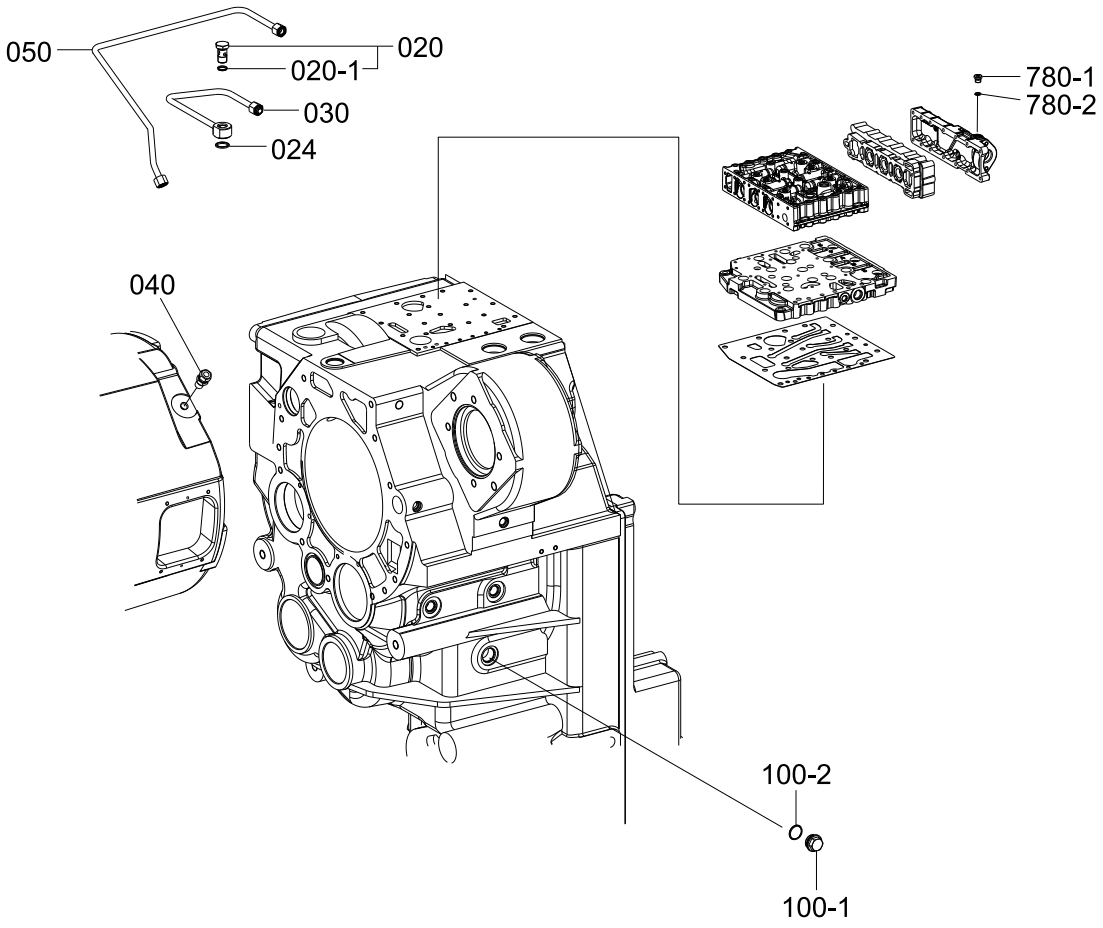

Item	Part_No	IS	Ord	T	Description	Qty	Serial_No	ITC	Remark
020	ZGAQ-04189				UNION SCREW	1			
020-1	ZGAQ-00099				.O-RING	1			
024	ZGAQ-00690				O-RING	1			
030	ZGAQ-04129				PIPE	1			
040	ZGAQ-03631				UNION-PIPE	1			
050	ZGAQ-04190				TUBE LINE	1			
100-1	ZGAQ-00265				PLUG-SCREW	1			
100-2	ZGAQ-00237				O-RING	1			
780-1	ZGAQ-00230				PLUG-SCREW	1			
780-2	ZGAQ-00231				O-RING	1			

PRESSURE OIL PUMP(5-SPEED)

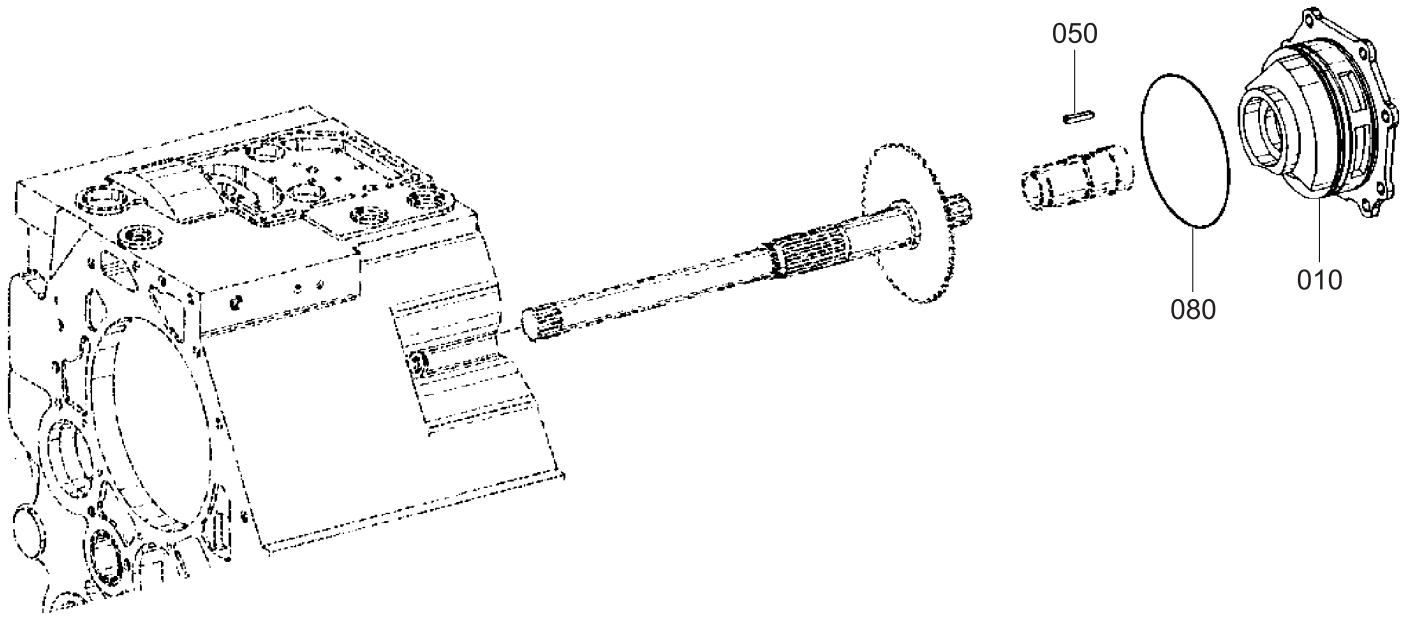

Item	Part_No	IS	Ord	T	Description	Qty	Serial_No	ITC	Remark
010	ZGAQ-01524				PUMP-GEAR	1			
050	ZGAQ-00644				KEY-FITTING	1			
080	ZGAQ-00287				O-RING	1			

SUCTION FILTER(5-SPEED)

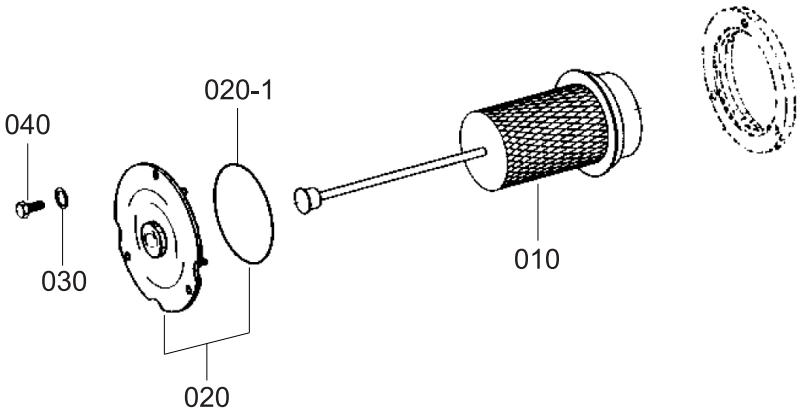

Item	Part_No	IS	Ord	T	Description	Qty	Serial_No	ITC	Remark
010	ZGAQ-01521				SCREEN	1			
020	ZGAQ-00647				COVER	1			
020-1	ZGAQ-00648				.O-RING	1			
030	ZGAQ-00245				WASHER	3			
040	ZGAQ-00649				SCREW-HEX	3			

FILTER(5-SPEED)

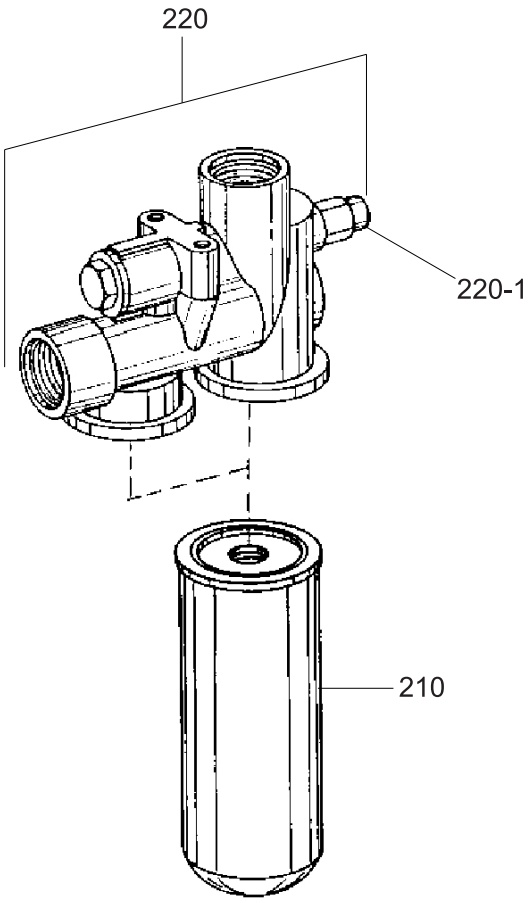

Item	Part_No	IS	Ord	T	Description	Qty	Serial_No	ITC	Remark
210	ZGAQ-02400				FILTER-PRESSURE	2			
220	ZGAQ-01668				HEAD-FILTER	1			
220-1	ZGAQ-00697				.SWITCH-TAPPET	1			

IND TRANSMITTER(5-SPEED)

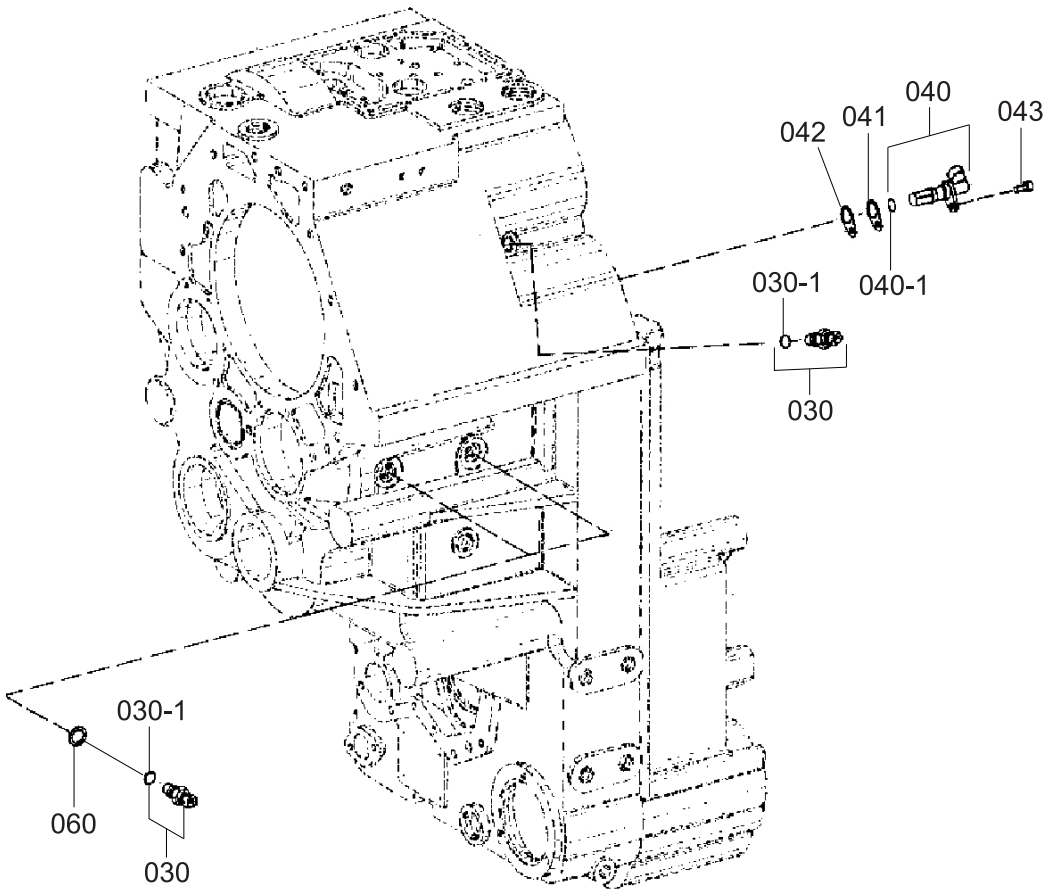

Item	Part_No	IS	Ord	T	Description	Qty	Serial_No	ITC	Remark
030	ZGAQ-00651				TRANSMITTER-INDICATOR	3			
030-1	ZGAQ-01466				.O-RING	3			
040	ZGAQ-00653				TRANSMITTER-SPEED	1			
040-1	ZGAQ-00654				.O-RING	1			
041	ZGAQ-00655				SHEET	1			
042	ZGAQ-00655				SHEET	2			
043	ZGAQ-00656				SCREW-CAP	1			
060	ZGAQ-01690				RING-SHIM(1.5T)	1			
060	ZGAQ-01691				RING-SHIM(1.4T)	1			
060	ZGAQ-01692				RING-SHIM(1.2T)	1			
060	ZGAQ-01693				RING-SHIM(1.0T)	1			

EMERGENCY STEER PUMP(5-SPEED)

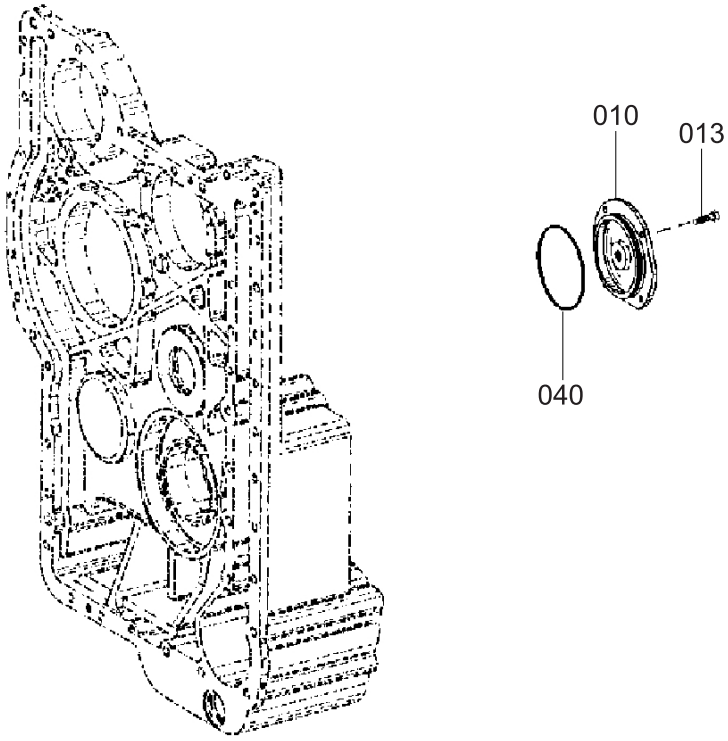

Item	Part_No	IS	Ord	T	Description	Qty	Serial_No	ITC	Remark
010	ZGAQ-00664				COVER	1			
013	ZGAQ-00665				SCREW-HEX	4			
040	ZGAQ-00666				O-RING	1			

TEMPERATURE SENSOR(5-SPEED)

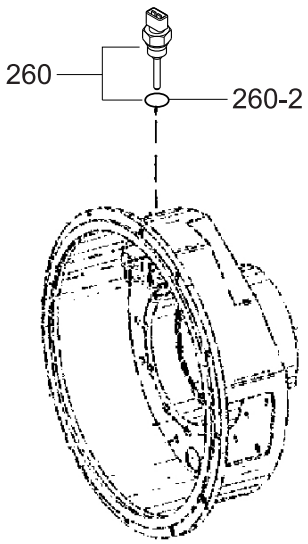

Item	Part_No	IS	Ord	T	Description	Qty	Serial_No	ITC	Remark
260	ZGAQ-01924				SENSOR-TEMP	1			
260-1	ZGAQ-00923				.O-RING	1			

FILLER NECK & DIPSTICK(5-SPEED)

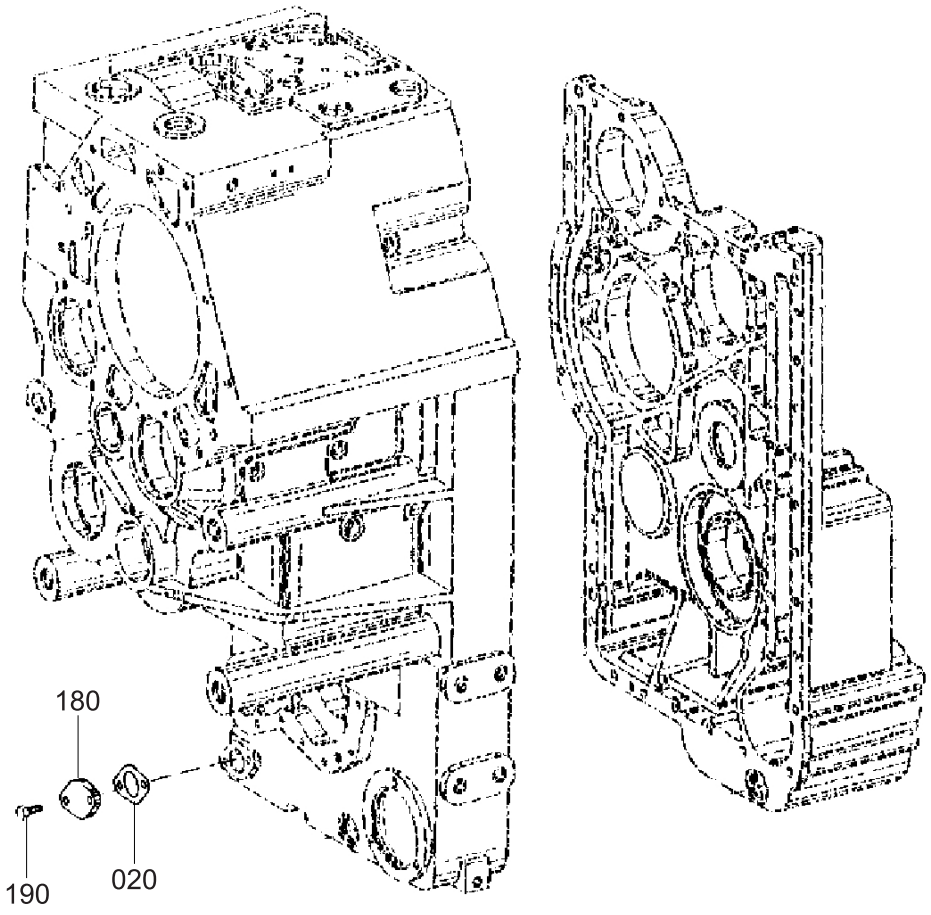

Item	Part_No	IS	Ord	T	Description	Qty	Serial_No	ITC	Remark
020	ZGAQ-00673				GASKET	1			
180	ZGAQ-00674				PLATE-COVER	1			
190	ZGAQ-00027				SCREW-HEX	2			

OIL PIPE(5-SPEED)

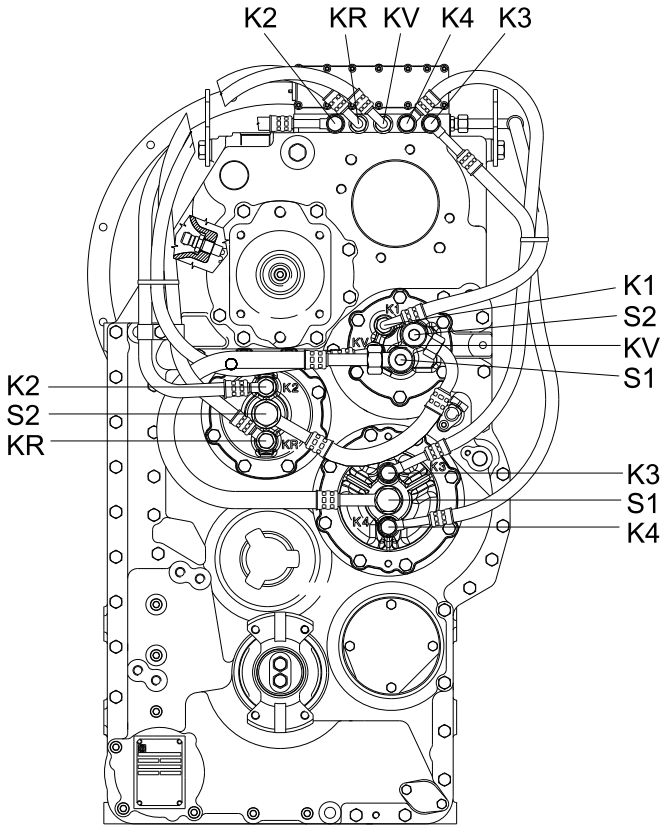

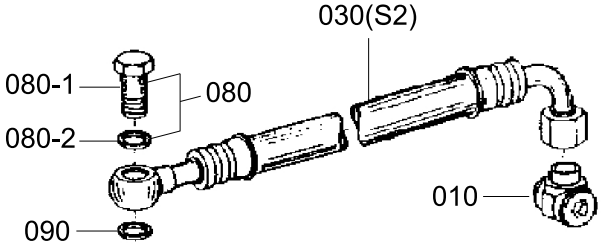

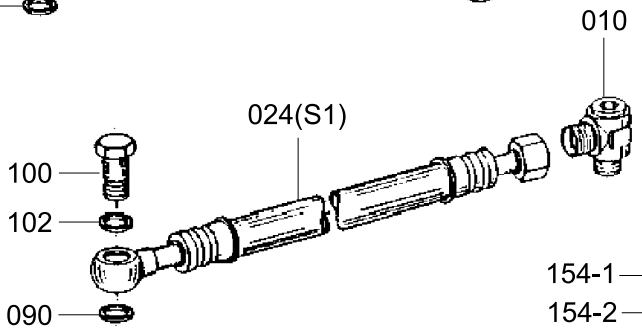

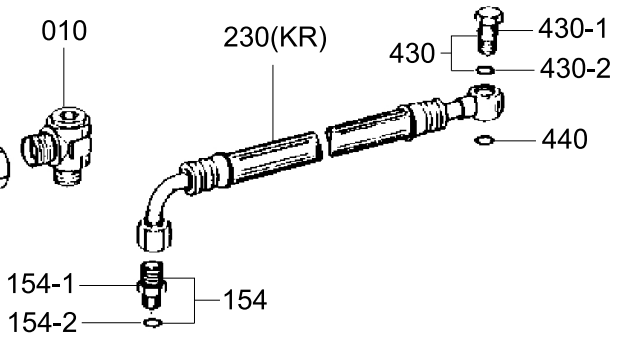

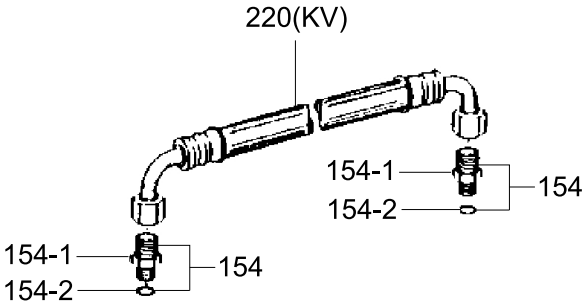

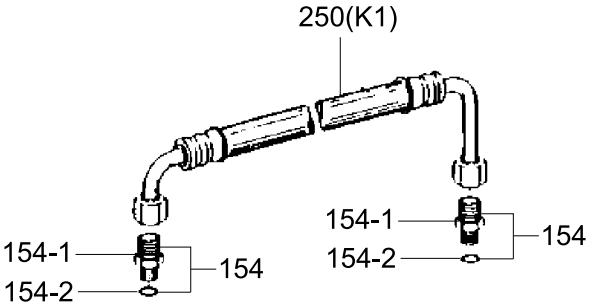

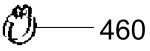

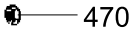

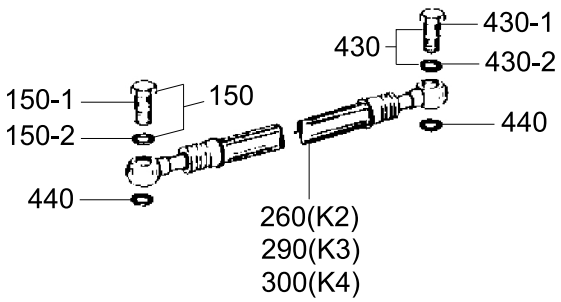

Item	Part_No	IS	Ord	T	Description	Qty	Serial_No	ITC	Remark
010	ZGAQ-00676				UNION-PIPE	2			
024	ZGAQ-03628				PIPE-HOSE	1			
030	ZGAQ-00678				PIPE-HOSE	1			
080	@				SCREW-UNION	1			NOT
080-1	ZGAQ-00679				.SCREW-UNION	1			
080-2	ZGAQ-00680				.O-RING	1			
90	ZGAQ-01699				O-RING	2			
100	ZGAQ-00756				SCREW-UNION	1			
102	ZGAQ-00680				O-RING	2			
150	@				SCREW-UNION	3			NOT
150-1	ZGAQ-00681				.SCREW-UNION	3			
150-2	ZGAQ-00099				.O-RING	3			
154	@				SCREW-IN SLEEVE	5			NOT
154-1	ZGAQ-00682				.SOCKET	5			
154-2	ZGAQ-00099				.O-RING	5			
220	ZGAQ-00683				PIPE-HOSE	1			
230	ZGAQ-00684				PIPE-HOSE	1			
250	ZGAQ-00685				PIPE-HOSE	1			
260	ZGAQ-00686				PIPE-HOSE	1			
290	ZGAQ-00687				PIPE-HOSE	1			
300	ZGAQ-00688				PIPE-HOSE	1			
430	@				SCREW-UNION	4			NOT
430-1	ZGAQ-00689				.SCREW-UNION	4			
430-2	ZGAQ-00099				.O-RING	4			
440	ZGAQ-00690				O-RING	7			
460	ZGAQ-00691				CLAMP-HOSE	2			
470	ZGAQ-00251				WASHER	2			

Item	Part_No	IS	Ord	T	Description	Qty	Serial_No	ITC	Remark
470	ZGAQ-00251				WASHER	2			

PARKING BRAKE(5-SPEED)

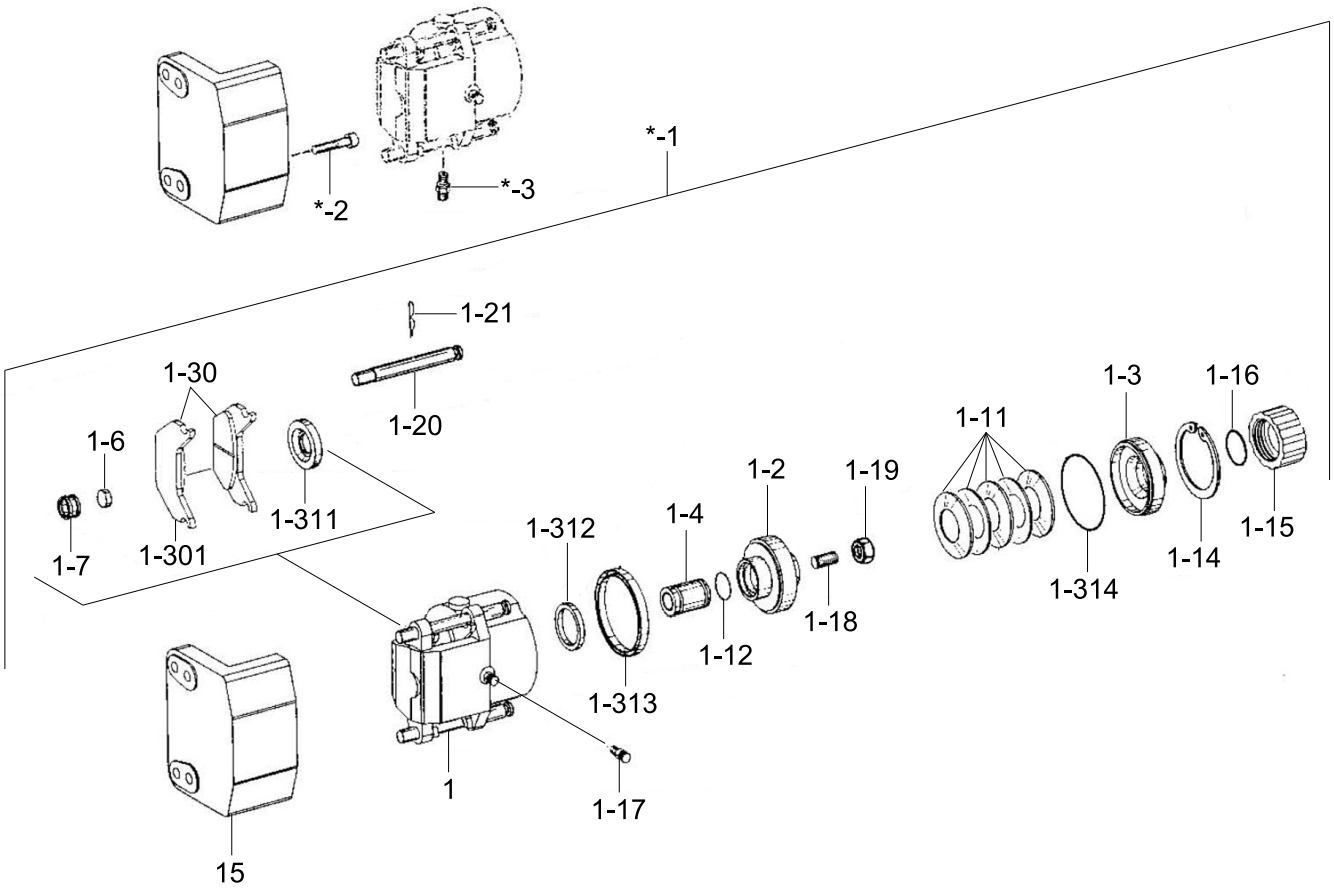

Item	Part_No	IS	Ord	T	Description	Qty	Serial_No	ITC	Remark
*	@				PARKING BRAKE	1			NOT
*-1	ZGAQ-01618				BRAKE	1			
1	ZGAQ-01619				.BRAKE	1			
1-2	ZGAQ-01620				..PISTON	1			
1-3	ZGAQ-01621				..RING-PRESSURE	1			
1-4	ZGAQ-01622				..PIN-PRESSURE	1			
1-6	ZGAQ-01623				..MAGNET	2			
1-7	ZGAQ-01624				..RING-CLEARANCE	2			
1-11	ZGAQ-01625				..SPRING-CUP	5			
1-12	ZGAQ-01626				..O-RING	1			
1-14	ZGAQ-01628				..O-RING	1			
1-15	ZGAQ-01627				..CAP-SCREW	1			
1-16	ZGAQ-01628				..O-RING	1			
1-17	ZGAQ-01629				..BREATHER	1			
1-18	ZGAQ-01630				..SCREW-SET	1			
1-19	ZGAQ-01631				..NUT-HEXAGON	1			
1-20	ZGAQ-01632				..PIN	1			
1-21	ZGAQ-01633				..PIN-SPR COTTER	2			
1-30	ZGAQ-01634				..BEARING LINING KIT	1			
N1-30	ZGAQ-03548				...LINING-BRAKE	2			NOT
1-31	ZGAQ-01635				..SEAL KIT	1			
N1-31	ZGAQ-01636				...CAP-DUST	1			NOT
N1-31	ZGAQ-01637				...U-RING	1			NOT
N1-31	ZGAQ-01638				...U-RING	1			NOT
N1-31	ZGAQ-01639				...O-RING	1			NOT
15	ZGAQ-01640				.PLATE-BRG ANCHOR	1			
*-2	ZGAQ-02806				SCREW-CAP	4			

Item	Part_No	IS	Ord	T	Description	Qty	Serial_No	ITC	Remark
*-2	ZGAQ-02806				SCREW-CAP	4			
*-3	ZGAQ-02807				PIPE UNION	1			
N	@				NOT SUPPLIED PARTS	AR			NOT

FRONT AXLE DRIVE HOUSING

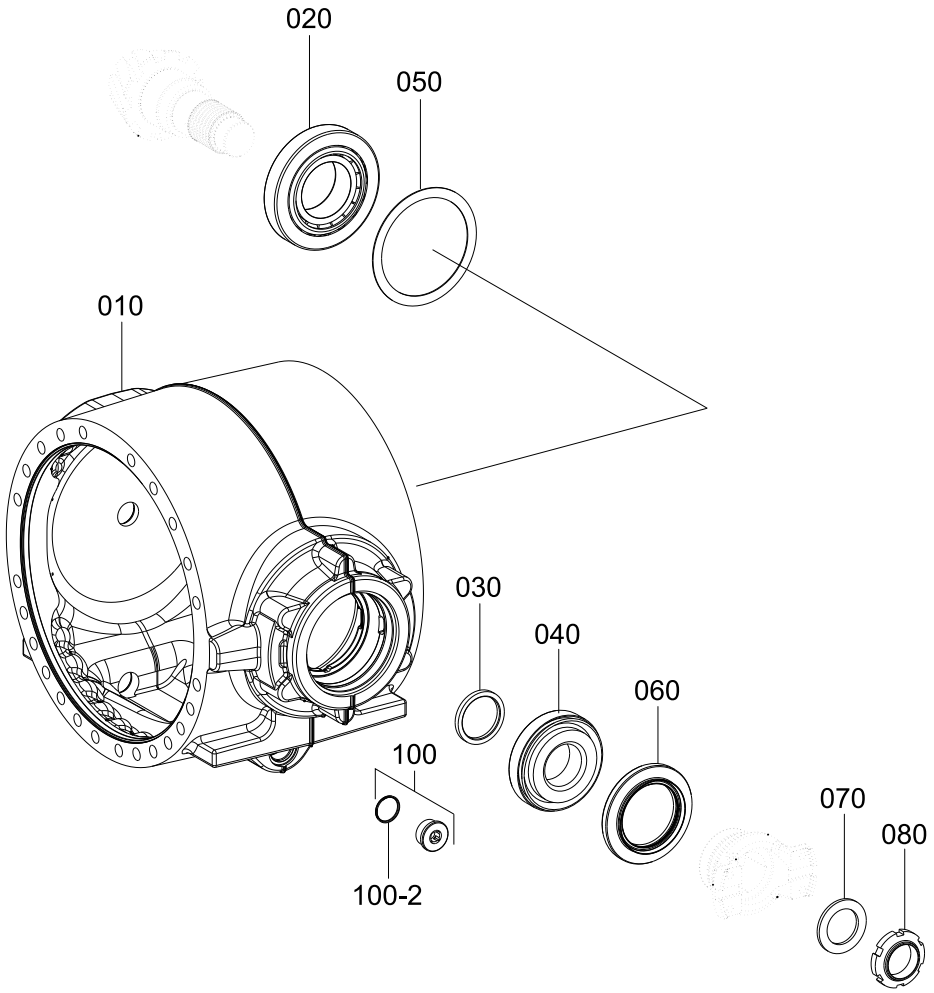

Item	Part_No	IS	Ord	T	Description	Qty	Serial_No	ITC	Remark
010	ZGAQ-04204				HOUSING-DRIVE	1			
020	ZGAQ-04205				BEARING-T/ROLLER	1			
030	ZGAQ-02648				RING-SPACER(7.3T)	1			
030	ZGAQ-02649				RING-SPACER(7.4T)	1			
030	ZGAQ-02650				RING-SPACER(7.5T)	1			
030	ZGAQ-02651				RING-SPACER(7.6T)	1			
030	ZGAQ-02652				RING-SPACER(7.7T)	1			
030	ZGAQ-02653				RING-SPACER(7.9T)	1			
030	ZGAQ-02654				RING-SPACER(8.0T)	1			
030	ZGAQ-02655				RING-SPACER(8.1T)	1			
030	ZGAQ-02656				RING-SPACER(8.2T)	1			
030	ZGAQ-02657				RING-SPACER(8.3T)	1			
030	ZGAQ-02658				RING-SPACER(8.4T)	1			
030	ZGAQ-02659				RING-SPACER(8.5T)	1			
030	ZGAQ-02660				RING-SPACER(8.6T)	1			
030	ZGAQ-02661				RING-SPACER(8.7T)	1			
030	ZGAQ-02662				RING-SPACER(8.8T)	1			
030	ZGAQ-02663				RING-SPACER(8.9T)	1			
030	ZGAQ-02664				RING-SPACER(9.0T)	1			
040	ZGAQ-02725				TAPER ROLLER BEARING	1			
050	ZGAQ-02726				WASHER(1.5)	1			
050	ZGAQ-02727				WASHER(1.3)	1			
050	ZGAQ-02728				WASHER(1.2)	1			
050	ZGAQ-02729				WASHER(1.0)	1			
050	ZGAQ-02730				WASHER(0.9)	1			
050	ZGAQ-02731				WASHER(0.8)	1			
050	ZGAQ-02732				WASHER(0.7)	1			

Item	Part_No	IS	Ord	T	Description	Qty	Serial_No	ITC	Remark
050	ZGAQ-02732				WASHER(0.7)	1			
050	ZGAQ-02733				WASHER(1.1)	1			
050	ZGAQ-02734				WASHER(0.85)	1			
050	ZGAQ-02735				WASHER(0.95)	1			
050	ZGAQ-02736				WASHER(1.05)	1			
050	ZGAQ-02737				WASHER(1.15)	1			
050	ZGAQ-02738				WASHER(1.25)	1			
060	ZGAQ-01598				SEAL-SHAFT	1			
070	ZGAQ-02684				WASHER	1			
080	ZGAQ-01600				NUT-SLOTTED	1			
100	ZGAQ-03581				PLUG-SCREW	2			
100-2	ZGAQ-02192				O-RING	1			

FRONT BEVEL GEAR GROUP

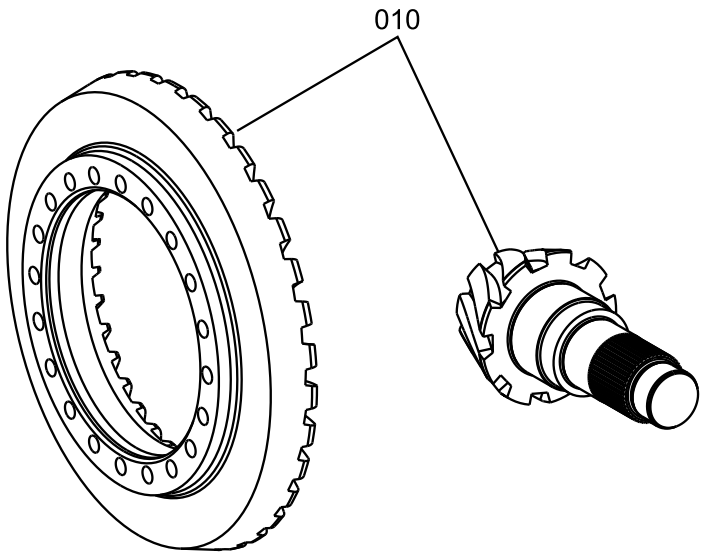

Item	Part_No	IS	Ord	T	Description	Qty	Serial_No	ITC	Remark
010	ZGAQ-04207				BEVEL GEAR SET	1			

FRONT INPUT GROUP

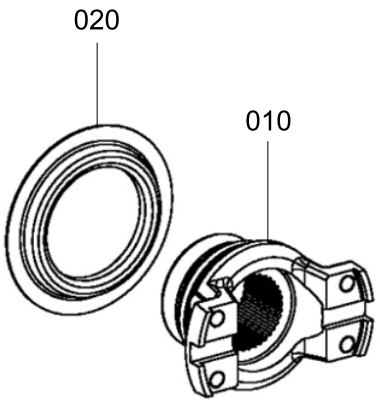

Item	Part_No	IS	Ord	T	Description	Qty	Serial_No	ITC	Remark
010	ZGAQ-02741				INPUT FLANGE	1			
020	ZGAQ-03883				SHIELD-PROTECTIVE	1			

FRONT DIFFERENTIAL GROUP(CONVENTIONAL)

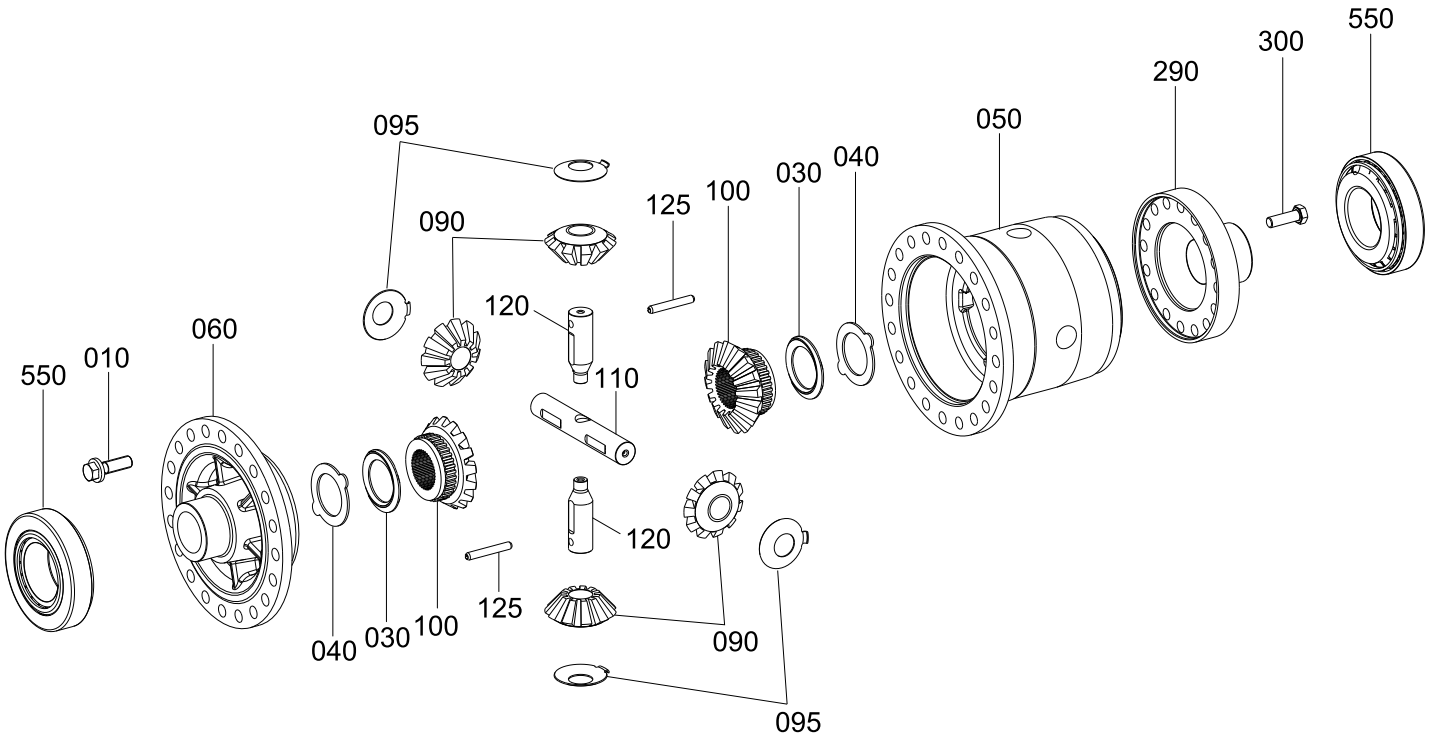

Item	Part_No	IS	Ord	T	Description	Qty	Serial_No	ITC	Remark
*	ZGAQ-04208				DIFFERENTIAL	1			
010	ZGAQ-02563				.SCREW-LOCKING	20			
030	ZGAQ-02691				.WASHER-THRUST	2			
040	ZGAQ-02690				.WASHER-THRUST	2			
050	ZGAQ-04209				.HOUSING-DIFF	1			
060	ZGAQ-04210				.COVER-HOUSING	1			AXLE:-#2446798
060	ZGAQ-04781				.COVER-HOUSING	1		D	AXLE:#2446799-
090	ZGAQ-02702				.DIFF BEVEL GEAR	4			
095	ZGAQ-03887				.WASHER-THRUST	4			
100	ZGAQ-02757				.AXLE BEVEL GEAR	2			
110	ZGAQ-03888				.AXLE-DIFF	1			
120	ZGAQ-03889				.AXLE-DIFF	2			
125	ZGAQ-03890				.PIN-SLOT	2			
290	ZGAQ-04211				.COVER-HOUSING	1			AXLE:-#2446798
290	ZGAQ-04796				.COVER-HOUSING	1		D	AXLE:#2446799-
300	ZGAQ-03892				.BOLT-HEX	16			
550	ZGAQ-04212				.BEARING-T/ROLLER	2			AXLE:-#2446798
550	ZGAQ-04785				.BEARING-TAPER ROLLER	2		D	AXLE:#2446799-

FRONT DIFFERENTIAL GROUP(LIMITED SLIP)

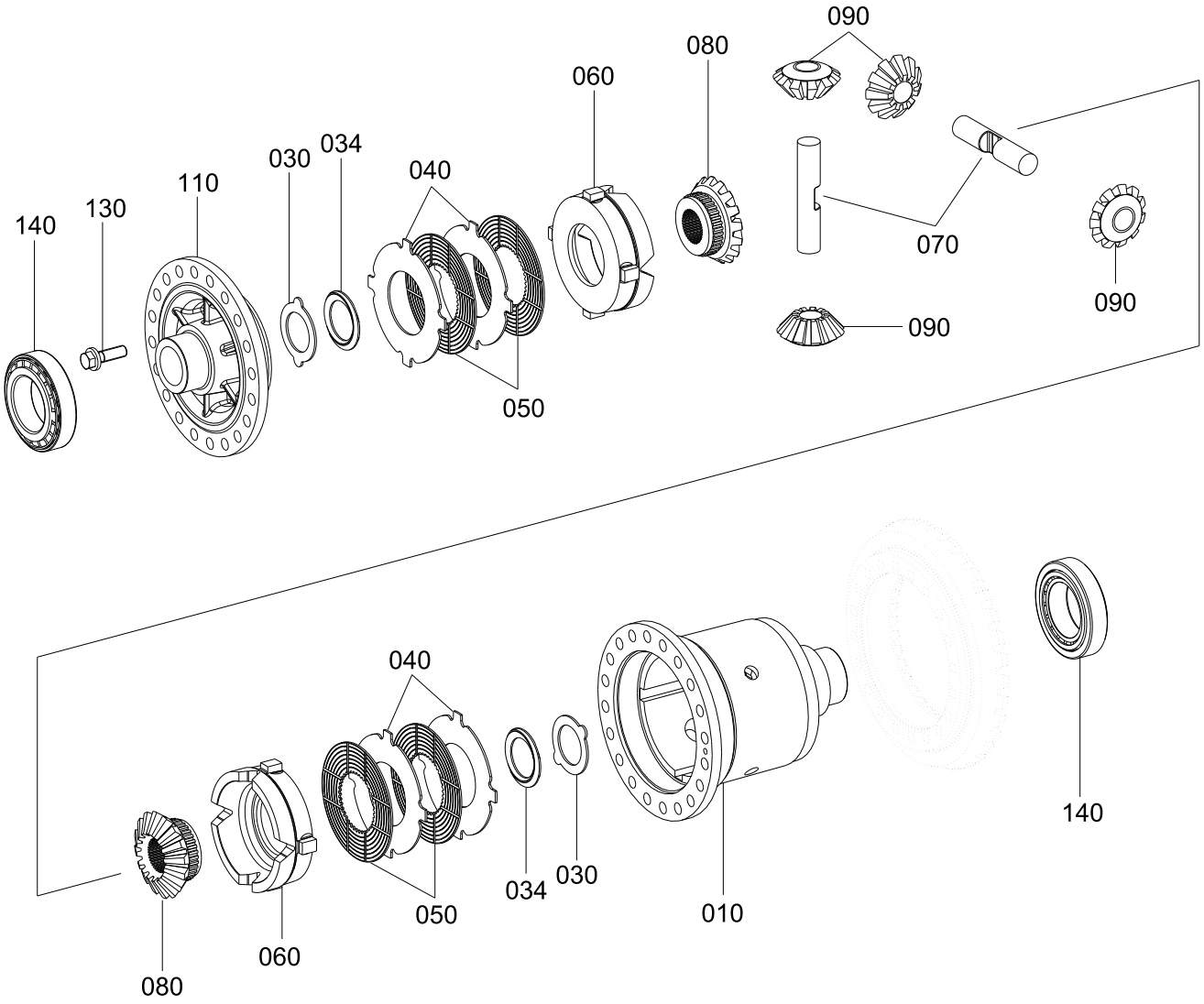

Item	Part_No	IS	Ord	T	Description	Qty	Serial_No	ITC	Remark
*	ZGAQ-04226				DIFF-LIMITED SLIP	1			
010	ZGAQ-04227				.HOUSING-DIFF	1			AXLE:-#2446798
010	ZGAQ-04797				.HOUSING-DIFF	1		D	AXLE:#2446799-
030	ZGAQ-02690				.WASHER-THRUST	2			
034	ZGAQ-02691				.WASHER-THRUST	2			
040	ZGAQ-02692				.DISC-O/CLUTCH(3.0T)	4			
040	ZGAQ-02693				.DISC-O/CLUTCH(2.7T)	AR			
040	ZGAQ-02694				.DISC-O/CLUTCH(2.9T)	AR			
040	ZGAQ-02695				.DISC-O/CLUTCH(3.1T)	AR			
040	ZGAQ-02696				.DISC-O/CLUTCH(3.2T)	AR			
040	ZGAQ-02697				.DISC-O/CLUTCH(3.3T)	AR			
040	ZGAQ-04142				.DISC-O/CLUTCH(3.5T)	AR			
050	ZGAQ-02698				.DISC-I/CLUTCH	4			
060	ZGAQ-04143				.RING-PRESSURE	2			
070	ZGAQ-02700				.DIFF AXLE	2			
080	ZGAQ-02757				.AXLE BEVEL GEAR	2			
090	ZGAQ-02702				.DIFF BEVEL GEAR	4			
110	ZGAQ-04210				.COVER-HOUSING	1			AXLE:-#2446798
110	ZGAQ-04781				.COVER-HOUSING	1		D	AXLE:#2446799-
130	ZGAQ-03892				.BOLT-HEX	20			
140	ZGAQ-04212				.BEARING-T/ROLLER	2			AXLE:-#2446798
140	ZGAQ-04785				.BEARING-TAPER ROLLER	2		D	AXLE:#2446799-

FRONT DIFFERENTIAL GROUP(HYD LOCK)

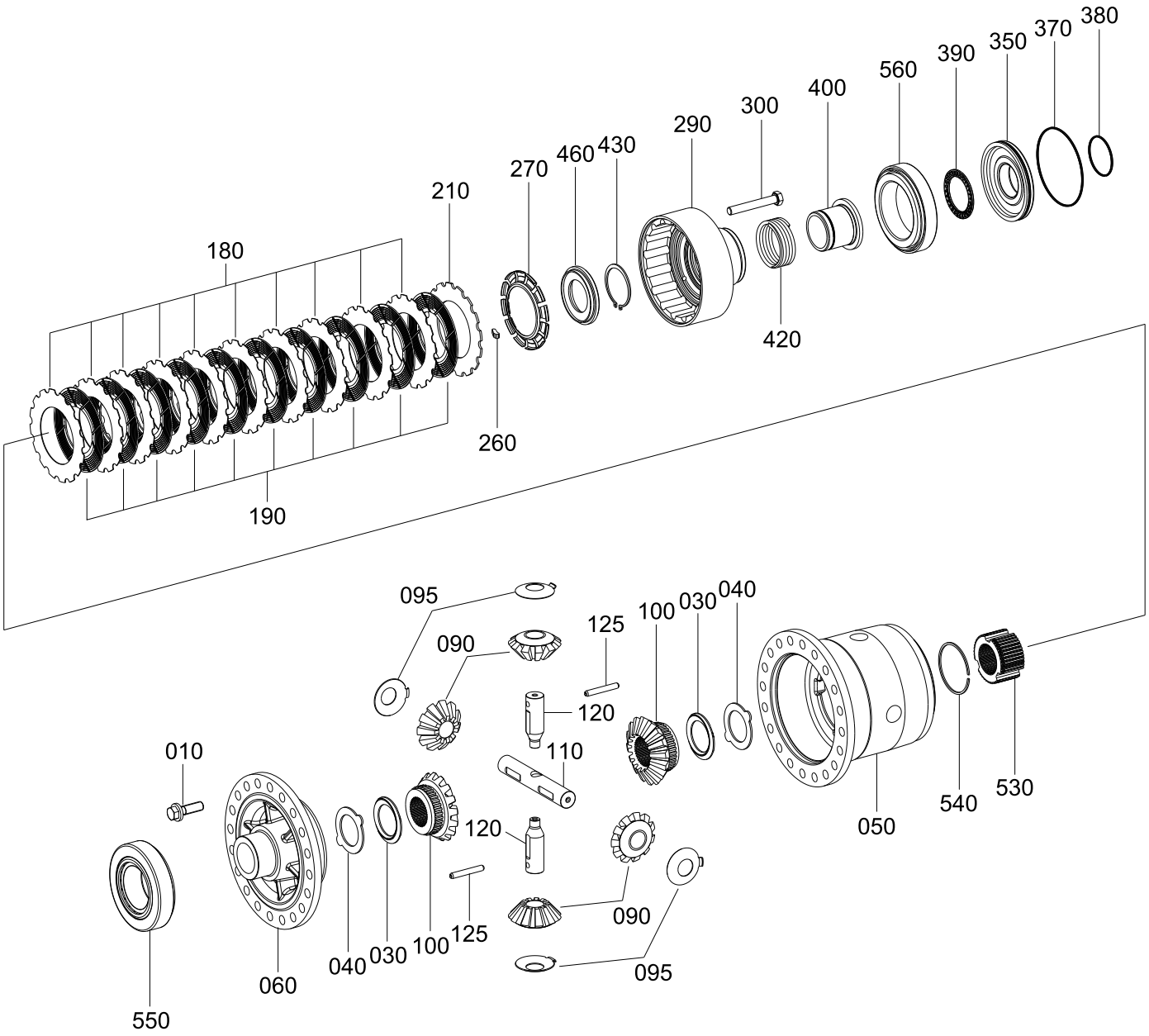

Item	Part_No	IS	Ord	T	Description	Qty	Serial_No	ITC	Remark
*	ZGAQ-04230				DIFFERENTIAL-HYD LOCK	1			
010	ZGAQ-02563				.SCREW-LOCKING	20			
030	ZGAQ-02691				.WASHER-THRUST	2			
040	ZGAQ-02690				.WASHER-THRUST	2			
050	ZGAQ-04209				.HOUSING-DIFF	1			
060	ZGAQ-04210				.COVER-HOUSING	1			
090	ZGAQ-02702				.DIFF BEVEL GEAR	4			
095	ZGAQ-03887				.WASHER-THRUST	4			
100	ZGAQ-02757				.AXLE BEVEL GEAR	2			
110	ZGAQ-03888				.AXLE-DIFF	1			
120	ZGAQ-03889				.AXLE-DIFF	2			
125	ZGAQ-03890				.PIN-SLOT	2			
180	ZGAQ-04145				.DISC-O/CLUTCH(1.2T)	10			
180	ZGAQ-04146				.DISC-O/CLUTCH(1.3T)	10			
180	ZGAQ-04147				.DISC-O/CLUTCH(1.4T)	10			
190	ZGAQ-04148				.DISC-I/CLUTCH	10			
210	ZGAQ-04149				.RING-PRESSURE	1			
260	ZGAQ-04150				.LEVER	12			
270	ZGAQ-04151				.CAGE	1			
N29(	ZGAQ-04152				.COVER-HOUSING	1			NOT
300	ZGAQ-04153				.SCREW-HEX	16			
350	ZGAQ-04154				.PISTON	1			
370	ZGAQ-04155				.O-RING	1			
380	ZGAQ-04156				.O-RING	1			
390	ZGAQ-04157				.CAGE-AXLE ROLLER	1			
400	ZGAQ-04158				.SLEEVE-SLIDING	1			
420	ZGAQ-04159				.SPRING-COMPRESS	1			

Item	Part_No	IS	Ord	T	Description	Qty	Serial_No	ITC	Remark
420	ZGAQ-04159				.SPRING-COMPRESS	1			
430	ZGAQ-04160				.CIRCLIP	1			
460	ZGAQ-04161				.PRESSURE PART	1			
530	ZGAQ-04228				.CARRIER-DISC	1			
540	ZGAQ-04163				.RING-SNAP	1			
550	ZGAQ-04229				.BEARING-TAPER ROLLER	1			
560	ZGAQ-04164				.BEARING-TAPER ROLLER	1			

FRONT AXLE CASING GROUP

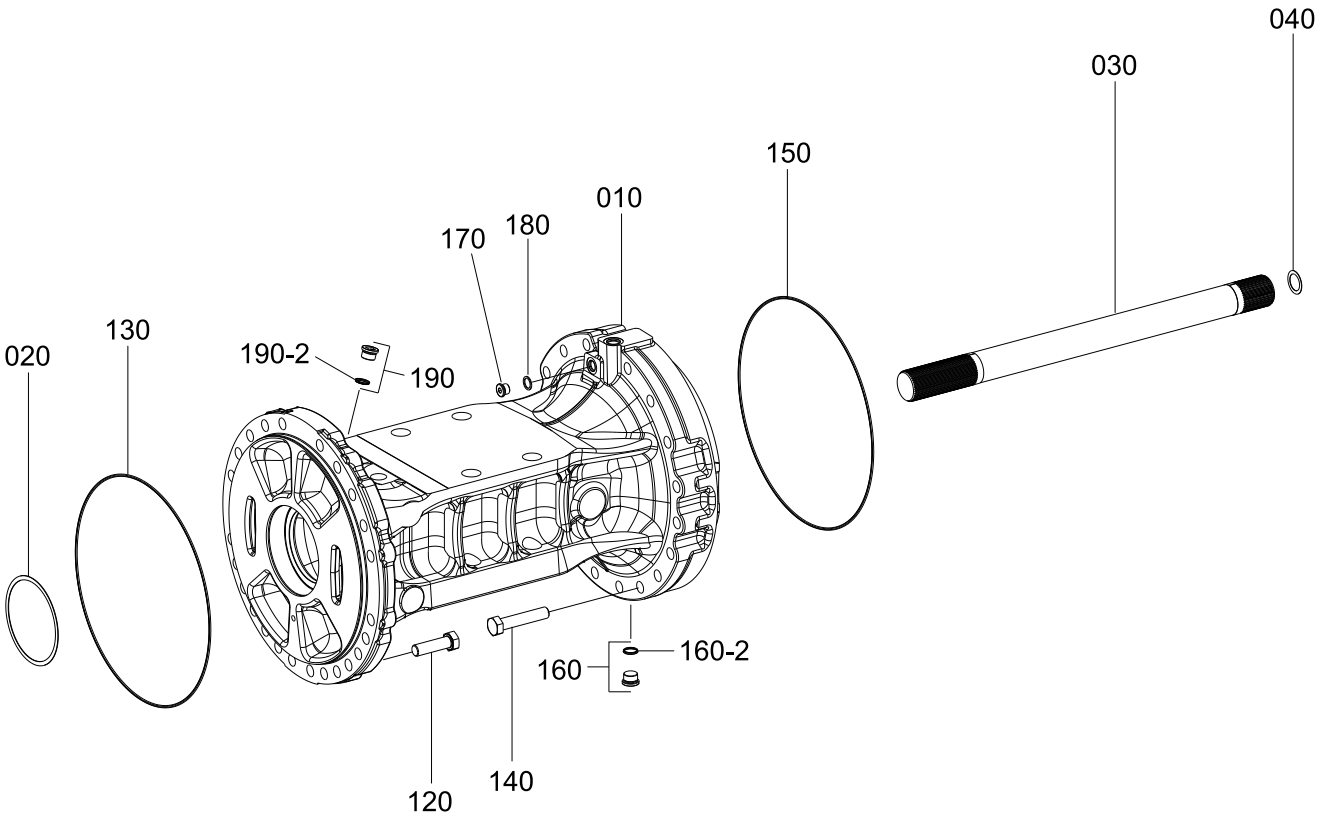

Item	Part_No	IS	Ord	T	Description	Qty	Serial_No	ITC	Remark
*-1	@				CONVENTION&L/SLIP TYPE	1			NOT
010	ZGAQ-04214				BRACKET-AXLE	2			AXLE:-#2446798
010	ZGAQ-04786				BRACKET-AXLE	2		D	AXLE:#2446799-
020	ZGAQ-04167				SHIM(0.8T)	2			AXLE:-#2446798
020	ZGAQ-03896				SHIM(0.8T)	2		D	AXLE:#2446799-
020	ZGAQ-04168				SHIM(0.9T)	2			AXLE:-#2446798
020	ZGAQ-03897				SHIM(0.9T)	2		D	AXLE:#2446799-
020	ZGAQ-04169				SHIM(1.0T)	2			AXLE:-#2446798
020	ZGAQ-03898				SHIM(1.0T)	2		D	AXLE:#2446799-
020	ZGAQ-04170				SHIM(1.1T)	2			AXLE:-#2446798
020	ZGAQ-03899				SHIM(1.1T)	2		D	AXLE:#2446799-
020	ZGAQ-04171				SHIM(1.2T)	2			AXLE:-#2446798
020	ZGAQ-03900				SHIM(1.2T)	2		D	AXLE:#2446799-
030	ZGAQ-04215				SHAFT-STUB	2			
040	ZGAQ-02477				SHIM(0.6T)	2			
040	ZGAQ-02478				SHIM(1.0T)	2			
040	ZGAQ-02479				SHIM(1.6T)	2			
040	ZGAQ-02480				SHIM(2.0T)	2			
040	ZGAQ-02481				SHIM(2.5T)	2			
120	ZGAQ-03902				BOLT-HEX	48			
130	ZGAQ-04216				O-RING	2			
140	ZGAQ-03738				SCREW-HEX	36			
150	ZGAQ-00147				O-RING	2			
N160	ZGAQ-03180				PLUG-SCREW	2			NOT
160-2	ZGAQ-00085				.O-RING	2			
170	ZGAQ-00924				PLUG-SCREW	2			
180	ZGAQ-03774				RING-SEALING	2			

Item	Part_No	IS	Ord	T	Description	Qty	Serial_No	ITC	Remark
180	ZGAQ-03774				RING-SEALING	2			
N190	ZGAQ-03180				PLUG-SCREW	2			NOT
190-2	ZGAQ-00085				.O-RING	2			
*-2	@				HYD LOCK TYPE	1			NOT
010	ZGAQ-04214				BRACKET-AXLE	1			LH:-#2446798
010	ZGAQ-04786				BRACKET-AXLE	1		D	LH:#2446799-
010	ZGAQ-04232				BRACKET-AXLE	1			RH
020	ZGAQ-04167				SHIM(0.8T)	1			AXLE:-#2446798
020	ZGAQ-03896				SHIM(0.8T)	1		D	AXLE:#2446799-
020	ZGAQ-04168				SHIM(0.9T)	1			AXLE:-#2446798
020	ZGAQ-03897				SHIM(0.9T)	1		D	AXLE:#2446799-
020	ZGAQ-04169				SHIM(1.0T)	1			AXLE:-#2446798
020	ZGAQ-03898				SHIM(1.0T)	1		D	AXLE:#2446799-
020	ZGAQ-04170				SHIM(1.1T)	1			AXLE:-#2446798
020	ZGAQ-03899				SHIM(1.1T)	1		D	AXLE:#2446799-
020	ZGAQ-04171				SHIM(1.2T)	1			AXLE:-#2446798
020	ZGAQ-03900				SHIM(1.2T)	1		D	AXLE:#2446799-
030	ZGAQ-04215				SHAFT-STUB	1			
040	ZGAQ-02477				SHIM(0.6T)	2			
040	ZGAQ-02478				SHIM(1.0T)	2			
040	ZGAQ-02479				SHIM(1.6T)	2			
040	ZGAQ-02480				SHIM(2.0T)	2			
040	ZGAQ-02481				SHIM(2.5T)	2			
120	ZGAQ-03902				BOLT-HEX	48			
130	ZGAQ-04216				O-RING	2			
140	ZGAQ-03738				SCREW-HEX	36			
150	ZGAQ-00147				O-RING	2			

Item	Part_No	IS	Ord	T	Description	Qty	Serial_No	ITC	Remark
150	ZGAQ-00147				O-RING	2			
N160	ZGAQ-03180				PLUG-SCREW	2			NOT
160-2	ZGAQ-00085				.O-RING	2			
170	ZGAQ-00924				PLUG-SCREW	2			
180	ZGAQ-03774				RING-SEALING	2			
N190	ZGAQ-03180				PLUG-SCREW	2			NOT
190-2	ZGAQ-00085				.O-RING	2			
N	@				NOT SUPPLIED PARTS	AR			NOT

FRONT OUTPUT GROUP

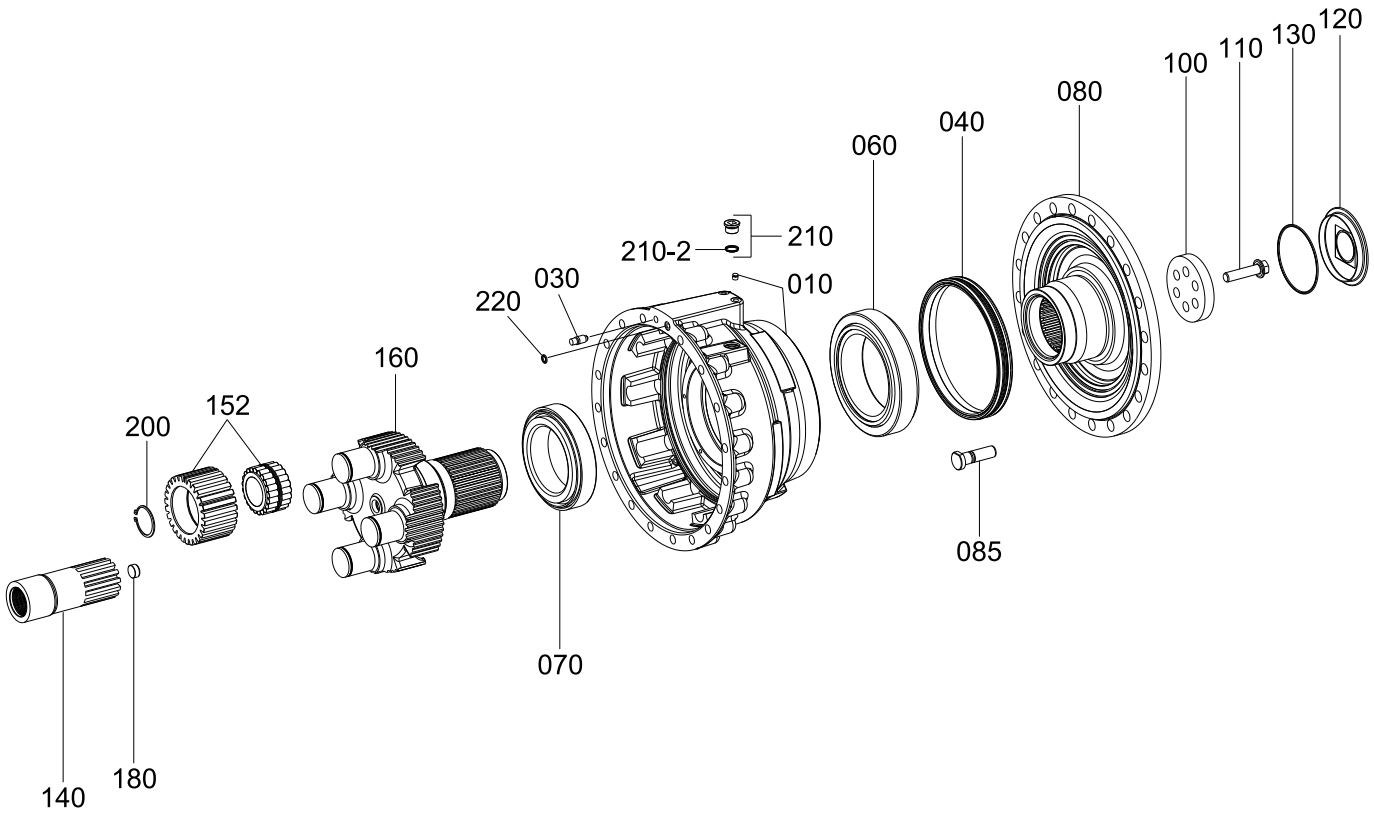

Item	Part_No	IS	Ord	T	Description	Qty	Serial_No	ITC	Remark
*	ZGAQ-04587				OUTPUT WHEEL HUB ASSY	1	#0001 -		
N010	ZGAQ-04219				.HOUSING-BRAKE	2			NOT
030	ZGAQ-02200				.VALVE-VENT	2			
040	ZGAQ-02769				.SLIDE RING SEAL	2			
060	ZGAQ-03743				.TAPER ROLLER BEARING	2			
N070	ZGAQ-03907				.TAPER ROLLER BEARING	2			NOT
070	ZGAQ-04546				.TAPER ROLLER BEARING	2		B	AXLE:#2562892-
N080	ZGAQ-04220				.SHAFT-OUTPUT	2			NOT
080	ZGAQ-04547				.SHAFT-OUTPUT	2		B	AXLE:#2562892-
085	ZGAQ-04136				.BOLT-WHEEL	40			
N100	ZGAQ-04137				.COVER	2			NOT
100	ZGAQ-03909				.COVER	2		B	AXLE:#2562892-
110	ZGAQ-03746				.SCREW-LOCKING	12			
120	ZGAQ-02492				.COVER	2			
130	ZGAQ-00597				.O-RING	2			
140	ZGAQ-04221				.SHAFT-SUN GEAR	2			
152	ZGAQ-04075				.PLANETARY GEAR	8			
160	ZGAQ-04538				.CARRIER-PLANET	2	#0001 -	-	
180	ZGAQ-02498				.BOLT-STOP	2			
200	ZGAQ-02502				.RETAINING RING	8			
N210	ZGAQ-03180				.PLUG-SCREW	2			NOT
210-2	ZGAQ-00085				..O-RING	2			
220	ZGAQ-01538				.O-RING	2			
300	ZGAQ-04587				.OUTPUT WHEEL HUB ASSY	1			
N	@				NOT SUPPLIED PARTS	AR			NOT

FRONT BRAKE GROUP

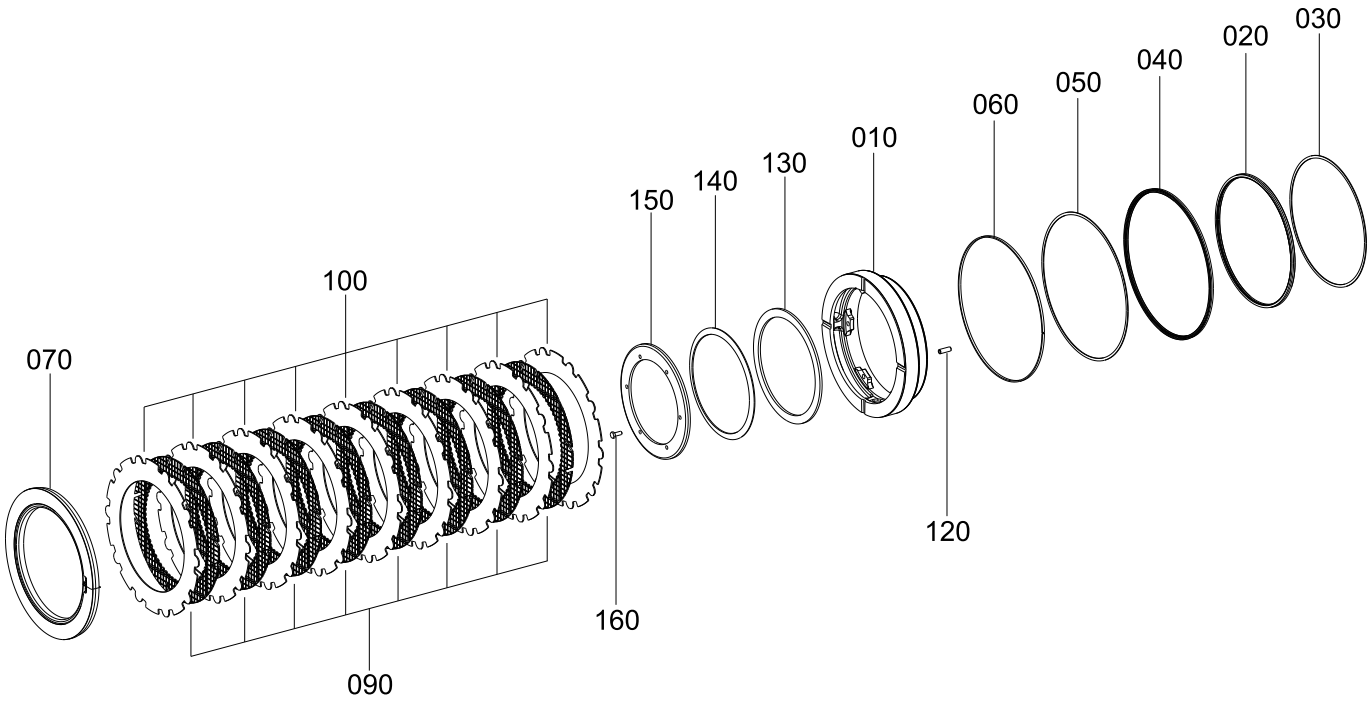

Item	Part_No	IS	Ord	T	Description	Qty	Serial_No	ITC	Remark
010	ZGAQ-03913				PISTON	2			
020	ZGAQ-02506				U-RING	2			
030	ZGAQ-02507				RING-SUPPORT	2			
040	ZGAQ-02508				U-RING	2			
050	ZGAQ-02509				RING-SUPPORT	2			
060	ZGAQ-02510				RING-GUIDE	2			
070	ZGAQ-04139				SHIM-END	2			
090	ZGAQ-02779				INNER CLUTCH DISC	16			
100	ZGAQ-02780				OUTER CLUTCH DISC	18			
120	ZGAQ-02594				SLOT PIN	12			
130	ZGAQ-03915				WASHER	2			
140	ZGAQ-03916				SPRING-CUP	2			
150	ZGAQ-03917				COVER	2			
160	ZGAQ-03771				SCREW-HEX	12			

FRONT AXLE PART GROUP

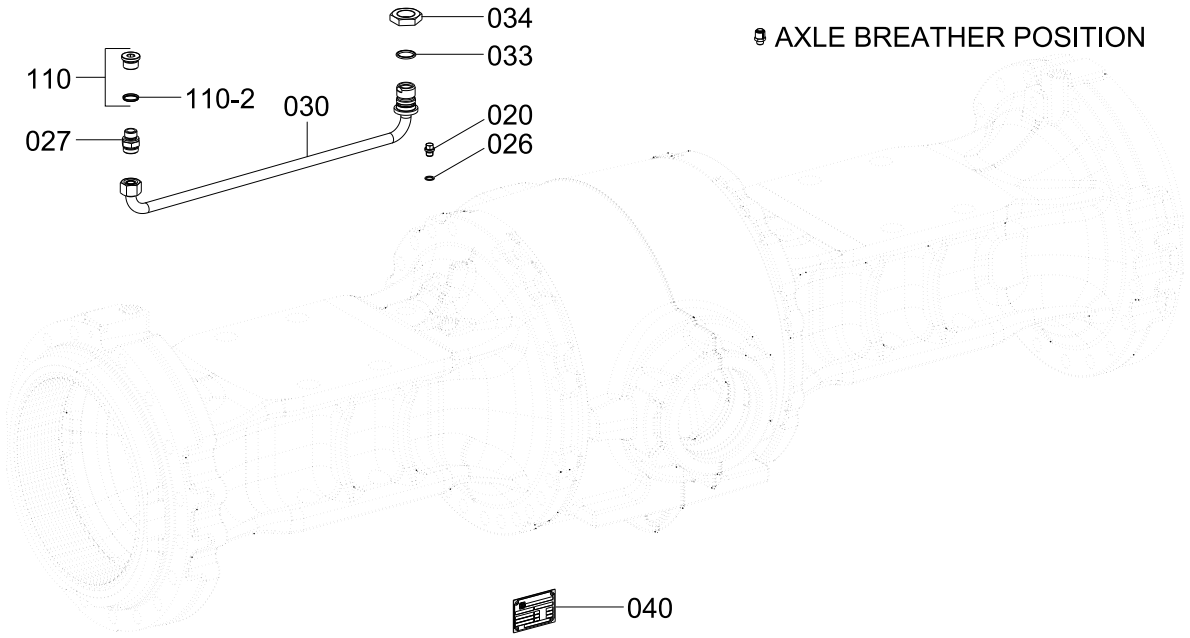

Item	Part_No	IS	Ord	T	Description	Qty	Serial_No	ITC	Remark
020	ZGAQ-01614				PLUG-SCREW	1			
026	ZGAQ-01615				RING-SEALING	1			
027	ZGAQ-03737				SLEEVE-SCREW IN	2			
030	ZGAQ-04225				TUBE-BRAKE	2			
033	ZGAQ-02391				O-RING	2			
034	ZGAQ-02474				NUT-HEX	2			
N110	ZGAQ-03920				PLUG-SCREW	2			NOT
110-2	ZGAQ-00680				.O-RING	1			

REAR AXLE DRIVE HOUSING

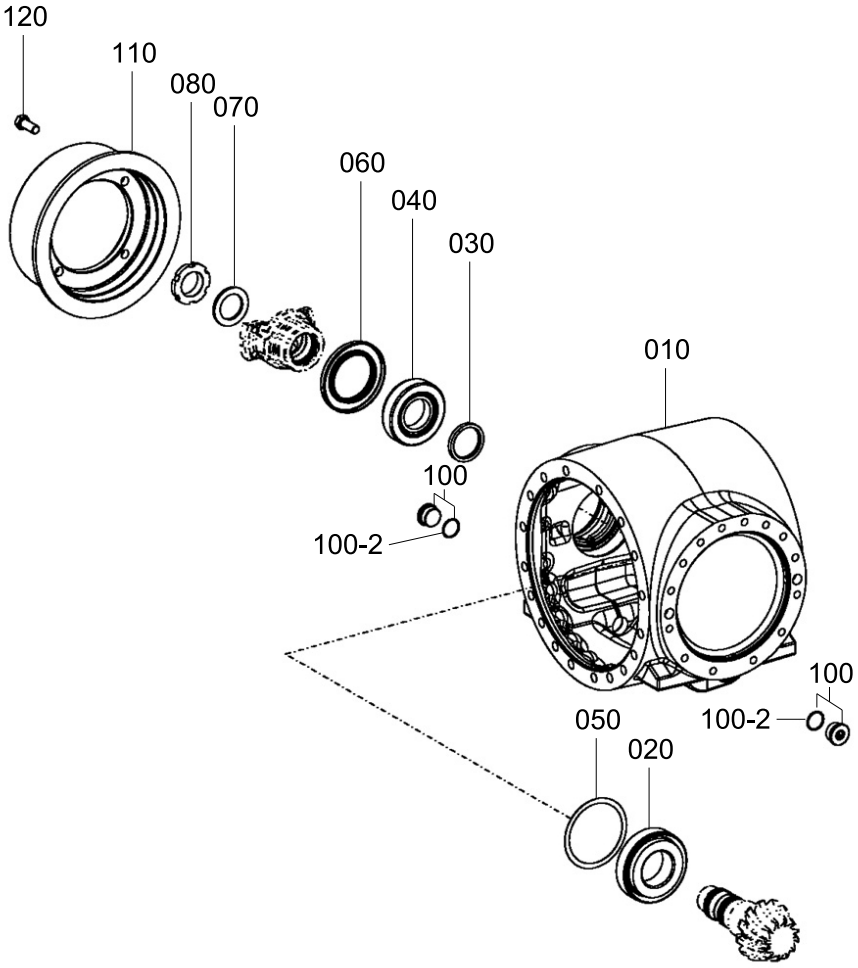

Item	Part_No	IS	Ord	T	Description	Qty	Serial_No	ITC	Remark
010	ZGAQ-03923				AXLE DRIVING HOUSING	1			
020	ZGAQ-02647				BEARING-ROLLER	1			
030	ZGAQ-02648				RING-SPACER(7.3T)	1			
030	ZGAQ-02649				RING-SPACER(7.4T)	1			
030	ZGAQ-02650				RING-SPACER(7.5T)	1			
030	ZGAQ-02651				RING-SPACER(7.6T)	1			
030	ZGAQ-02652				RING-SPACER(7.7T)	1			
030	ZGAQ-02653				RING-SPACER(7.9T)	1			
030	ZGAQ-02654				RING-SPACER(8.0T)	1			
030	ZGAQ-02655				RING-SPACER(8.1T)	1			
030	ZGAQ-02656				RING-SPACER(8.2T)	1			
030	ZGAQ-02657				RING-SPACER(8.3T)	1			
030	ZGAQ-02658				RING-SPACER(8.4T)	1			
030	ZGAQ-02659				RING-SPACER(8.5T)	1			
030	ZGAQ-02660				RING-SPACER(8.6T)	1			
030	ZGAQ-02661				RING-SPACER(8.7T)	1			
030	ZGAQ-02662				RING-SPACER(8.8T)	1			
030	ZGAQ-02663				RING-SPACER(8.9T)	1			
030	ZGAQ-02664				RING-SPACER(9.0T)	1			
040	ZGAQ-03879				BEARING-TAPER ROLLER	1			
050	ZGAQ-02419				WASHER(0.7T)	1			
050	ZGAQ-02420				WASHER(0.8T)	1			
050	ZGAQ-02421				WASHER(0.9T)	1			
050	ZGAQ-02422				WASHER(1.0T)	1			
050	ZGAQ-02423				WASHER(1.1T)	1			
050	ZGAQ-02424				WASHER(1.2T)	1			
050	ZGAQ-02425				WASHER(1.3T)	1			

Item	Part_No	IS	Ord	T	Description	Qty	Serial_No	ITC	Remark
050	ZGAQ-02425				WASHER(1.3T)	1			
050	ZGAQ-02426				WASHER(1.4T)	1			
050	ZGAQ-02427				WASHER(1.5T)	1			
050	ZGAQ-02428				WASHER(0.2T)	1			
050	ZGAQ-02429				WASHER(0.1T)	1			
060	ZGAQ-01598				SEAL-SHAFT	1			
070	ZGAQ-02684				WASHER	1			
080	ZGAQ-01600				NUT-SLOTTED	1			
100	ZGAQ-03581				PLUG-SCREW	2			
100-2	ZGAQ-02192				.O-RING	1			
110	ZGAQ-03924				FLANGE-BEARING	1			
120	ZGAQ-03925				BOLT-HEX	4			

REAR BEVEL GEAR GROUP

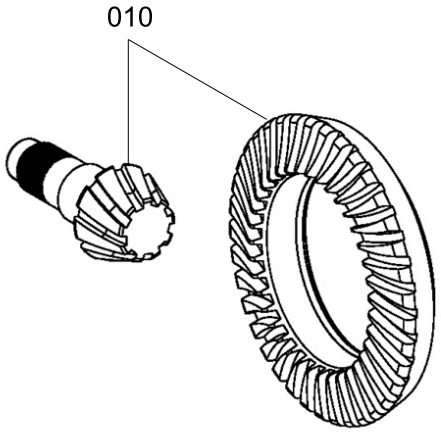

Item	Part_No	IS	Ord	T	Description	Qty	Serial_No	ITC	Remark
010	ZGAQ-04192				BEVEL GEAR SET	1			

REAR INPUT GROUP

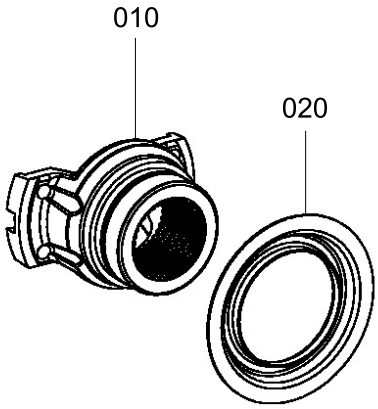

Item	Part_No	IS	Ord	T	Description	Qty	Serial_No	ITC	Remark
010	ZGAQ-02741				INPUT FLANGE	1			
020	ZGAQ-03883				SHIELD-PROTECTIVE	1			

REAR DIFFERENTIAL GROUP(CONVENTIONAL)

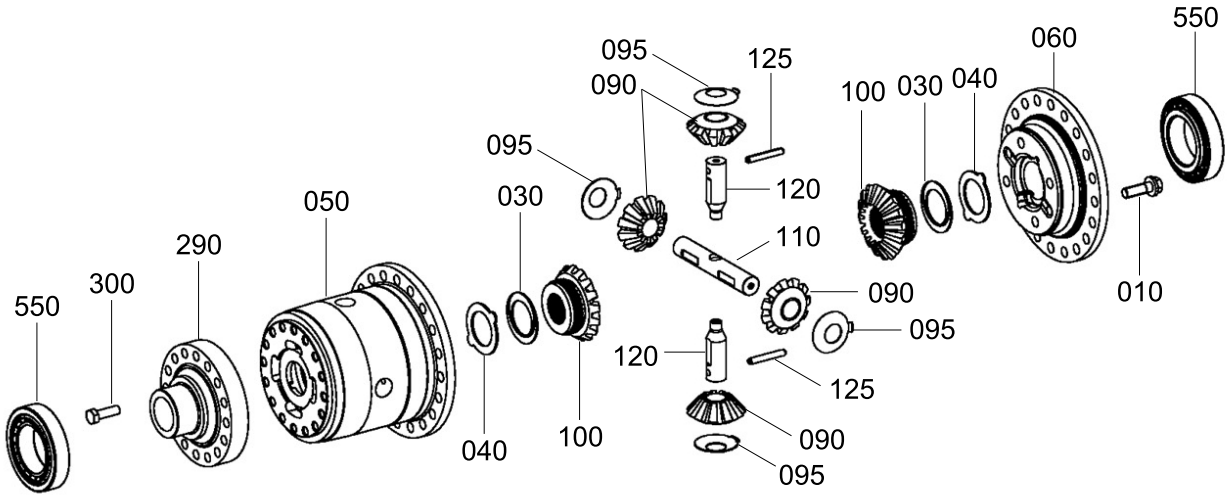

Item	Part_No	IS	Ord	T	Description	Qty	Serial_No	ITC	Remark
*	ZGAQ-03884				DIFFERENTIAL GROUP	1			
010	ZGAQ-02563				.SCREW-LOCKING	20			
030	ZGAQ-02691				.WASHER-THRUST	2			
040	ZGAQ-02690				.WASHER-THRUST	2			
050	ZGAQ-03885				.HOUSING-DIFF	1			
060	ZGAQ-03886				.COVER-HOUSING	1			
090	ZGAQ-02702				.DIFF BEVEL GEAR	4			
095	ZGAQ-03887				.WASHER-THRUST	4			
100	ZGAQ-02701				.AXLE BEVEL GEAR	2			
110	ZGAQ-03888				.AXLE-DIFF	1			
120	ZGAQ-03889				.AXLE-DIFF	2			
125	ZGAQ-03890				.PIN-SLOT	2			
290	ZGAQ-03891				.COVER-HOUSING	1			
300	ZGAQ-03892				.BOLT-HEX	16			
550	ZGAQ-03893				.BEARING-TAPER ROLLER	2			

REAR DIFFERENTIAL GROUP(LIMITED SLIP)

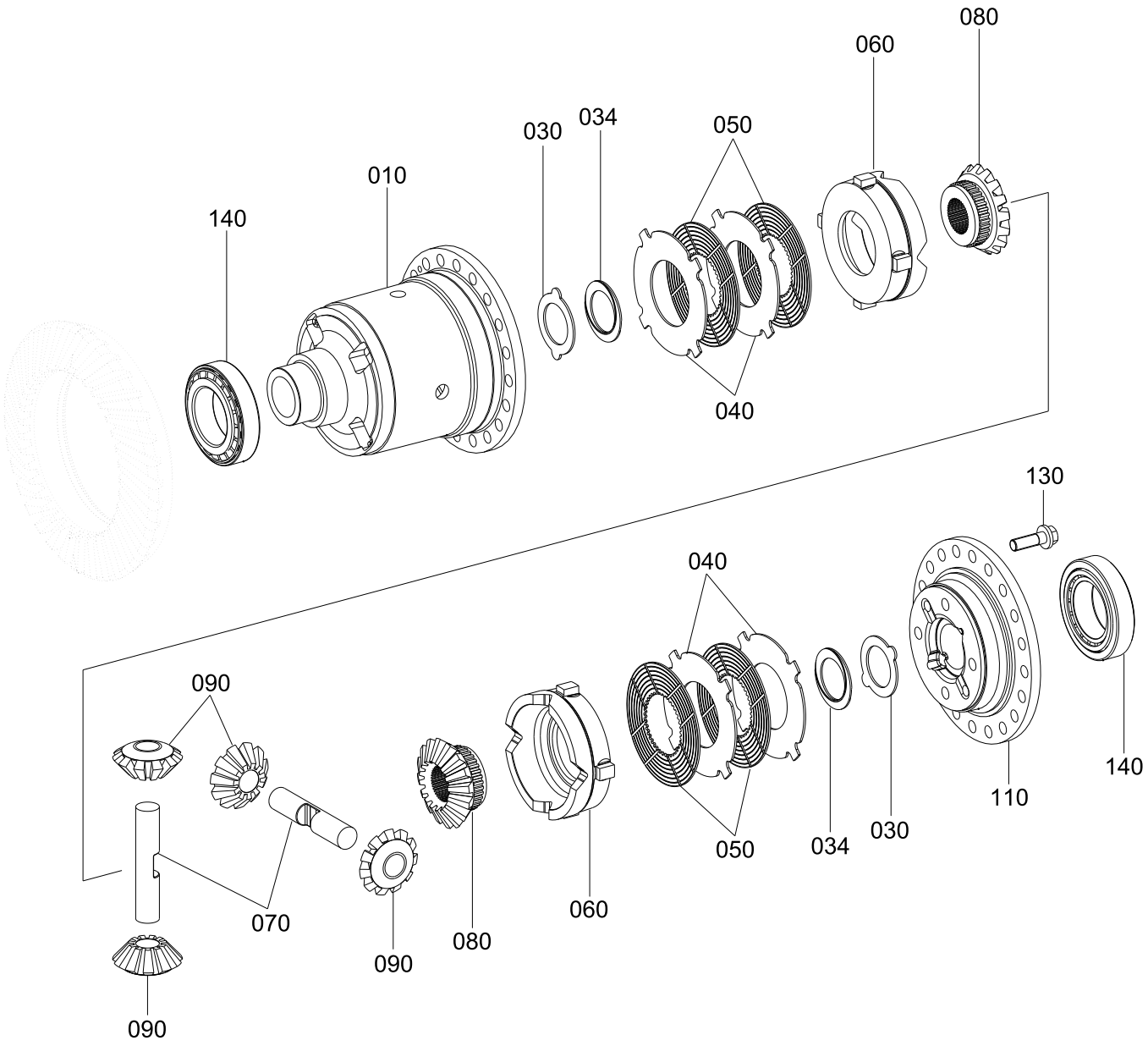

Item	Part_No	IS	Ord	T	Description	Qty	Serial_No	ITC	Remark
*	ZGAQ-04140				.DIFF-LIMITED SLIP	1			
010	ZGAQ-04141				.HOUSING-DIFF	1			
030	ZGAQ-02690				.WASHER-THRUST	2			
034	ZGAQ-02691				.WASHER-THRUST	2			
040	ZGAQ-02692				.DISC-O/CLUTCH(3.0T)	4			
040	ZGAQ-02693				.DISC-O/CLUTCH(2.7T)	AR			
040	ZGAQ-02694				.DISC-O/CLUTCH(2.9T)	AR			
040	ZGAQ-02695				.DISC-O/CLUTCH(3.1T)	AR			
040	ZGAQ-02696				.DISC-O/CLUTCH(3.2T)	AR			
040	ZGAQ-02697				.DISC-O/CLUTCH(3.3T)	AR			
040	ZGAQ-04142				.DISC-O/CLUTCH(3.5T)	AR			
050	ZGAQ-02698				.DISC-I/CLUTCH	4			
060	ZGAQ-04143				.RING-PRESSURE	2			
070	ZGAQ-02700				.DIFF AXLE	2			
080	ZGAQ-02701				.AXLE BEVEL GEAR	2			
090	ZGAQ-02702				.DIFF BEVEL GEAR	4			
110	ZGAQ-03886				.COVER-HOUSING	1			
130	ZGAQ-03892				.BOLT-HEX	20			
140	ZGAQ-03893				.BEARING-TAPER ROLLER	2			

REAR AXLE CASING GROUP

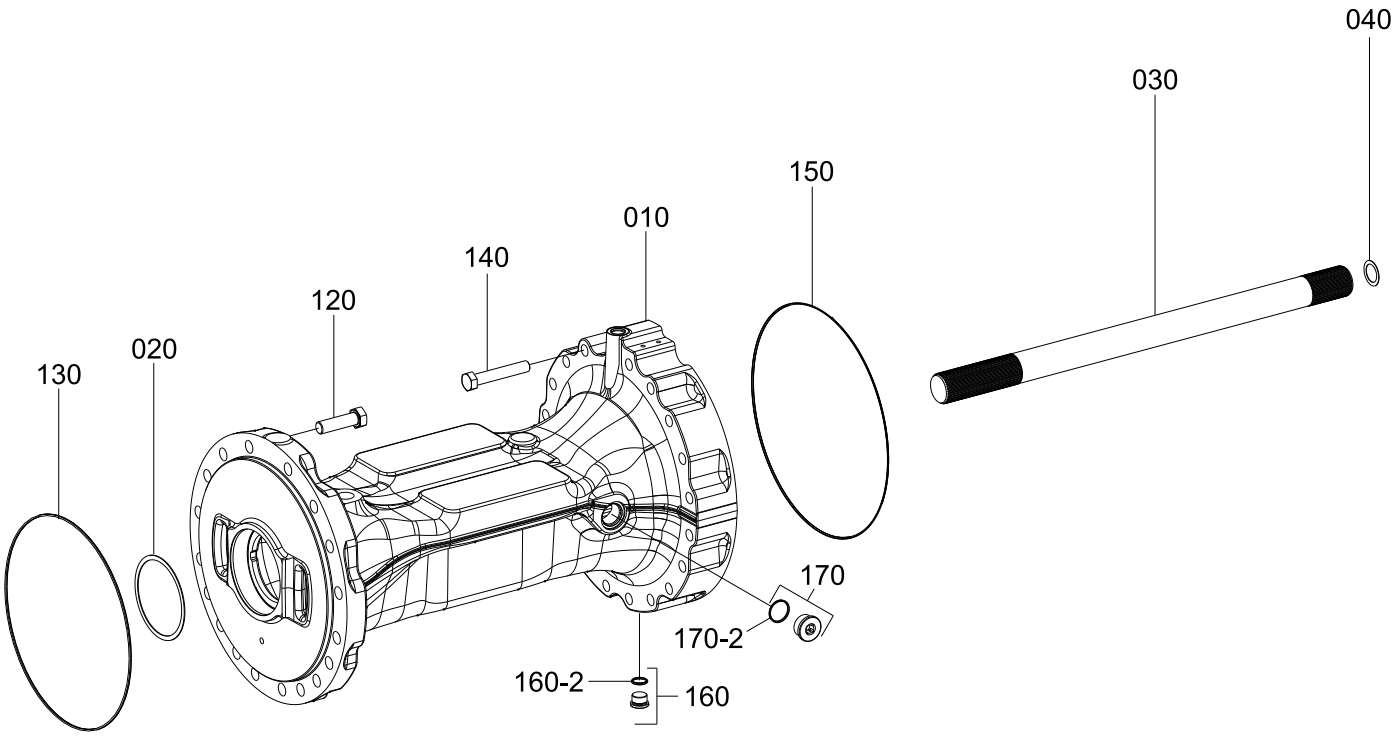

Item	Part_No	IS	Ord	T	Description	Qty	Serial_No	ITC	Remark
010	ZGAQ-04195				BRACKET-AXLE	2			
020	ZGAQ-03896				SHIM(0.8T)	2			
020	ZGAQ-03897				SHIM(0.9T)	2			
020	ZGAQ-03898				SHIM(1.0T)	2			
020	ZGAQ-03899				SHIM(1.1T)	2			
020	ZGAQ-03900				SHIM(1.2T)	2			
030	ZGAQ-04196				SHAFT-STUB	2			
040	ZGAQ-02477				SHIM(0.6T)	2			
040	ZGAQ-02478				SHIM(1.0T)	2			
040	ZGAQ-02479				SHIM(1.6T)	2			
040	ZGAQ-02480				SHIM(2.0T)	2			
040	ZGAQ-02481				SHIM(2.5T)	2			
120	ZGAQ-03902				BOLT-HEX	36			
130	ZGAQ-03903				O-RING	2			
140	ZGAQ-02759				SCREW-HEX	38			
150	ZGAQ-02485				O-RING	2			
N160	ZGAQ-03180				PLUG-SCREW	2			NOT
160-2	ZGAQ-00085				.O-RING	2			
170	ZGAQ-03581				PLUG-SCREW	2			
170-2	ZGAQ-02192				.O-RING	2			

REAR OUTPUT GROUP

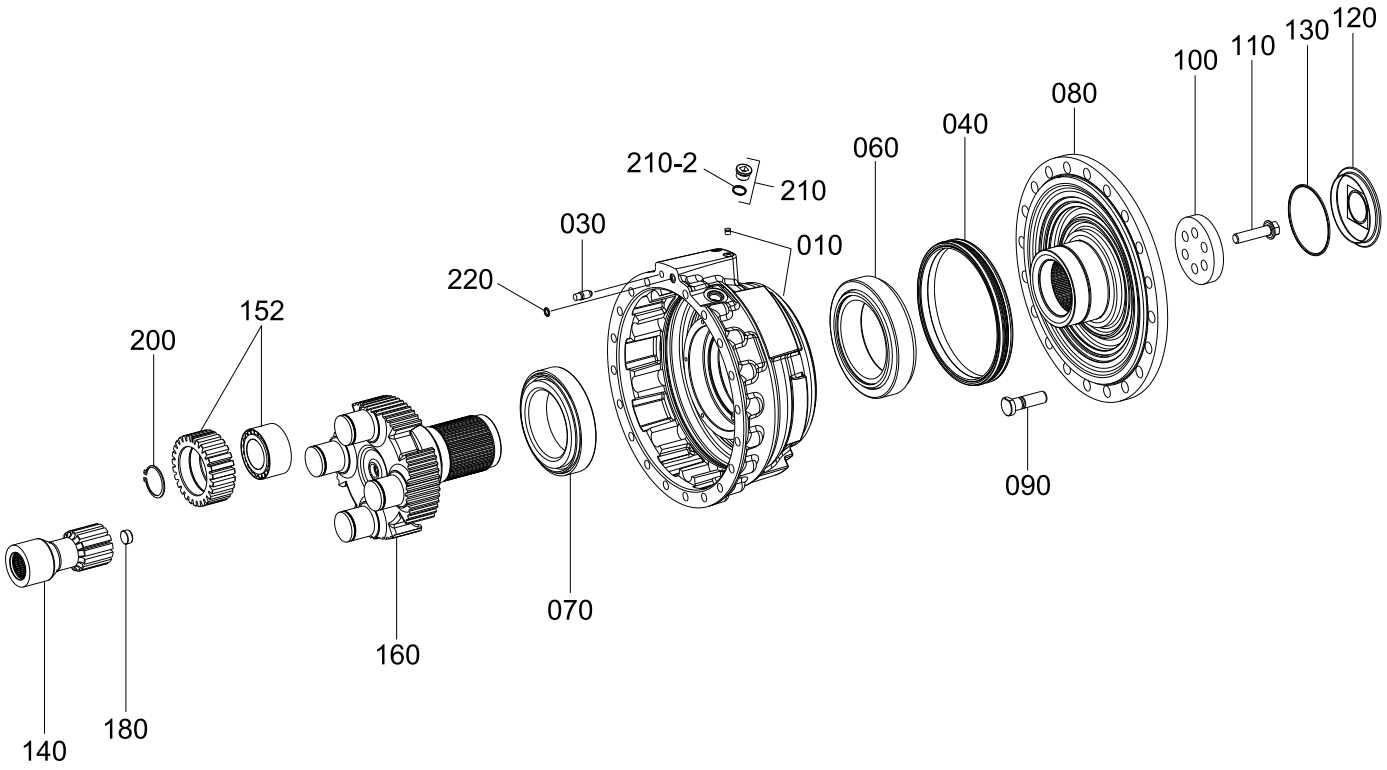

Item	Part_No	IS	Ord	T	Description	Qty	Serial_No	ITC	Remark
*	ZGAQ-04592				OUTPUT WHEEL HUB	1	#0001 -		
010	ZGAQ-04198				.HOUSING-BRAKE	2			
030	ZGAQ-02200				.VALVE-VENT	2			
040	ZGAQ-02769				.SLIDE RING SEAL	2			
060	ZGAQ-02711				.TAPER ROLLER BEARING	2			
N070	ZGAQ-03907				.TAPER ROLLER BEARING	2			NOT
070	ZGAQ-04546				.TAPER ROLLER BEARING	2		B	AXLE:#2562892-
080	ZGAQ-04199				.SHAFT-OUTPUT	2			AXLE:-#3043413
080	ZGAQ-04908				.SHAFT-OUTPUT	2		B	AXLE:#3043414-
085	ZGAQ-04136				.BOLT-WHEEL	40			
N100	ZGAQ-04137				.COVER	2			NOT
100	ZGAQ-03909				.COVER	2		B	AXLE:#2562892-
110	ZGAQ-03746				.SCREW-LOCKING	12			
120	ZGAQ-02492				.COVER	2			
130	ZGAQ-00597				.O-RING	2			
140	ZGAQ-03910				.SHAFT-SUN GEAR	2			
152	ZGAQ-02495				.GEAR-PLANET	8			
160	ZGAQ-04138				.CARRIER-PLANET	2			
180	ZGAQ-02498				.BOLT-STOP	2			
200	ZGAQ-02502				.RETAINING RING	8			
N210	ZGAQ-03180				.PLUG-SCREW	2			NOT
210-2	ZGAQ-00085				..O-RING	2			
220	ZGAQ-01538				.O-RING	2			
N	@				NOT SUPPLIED PARTS	AR			NOT

REAR BRAKE GROUP

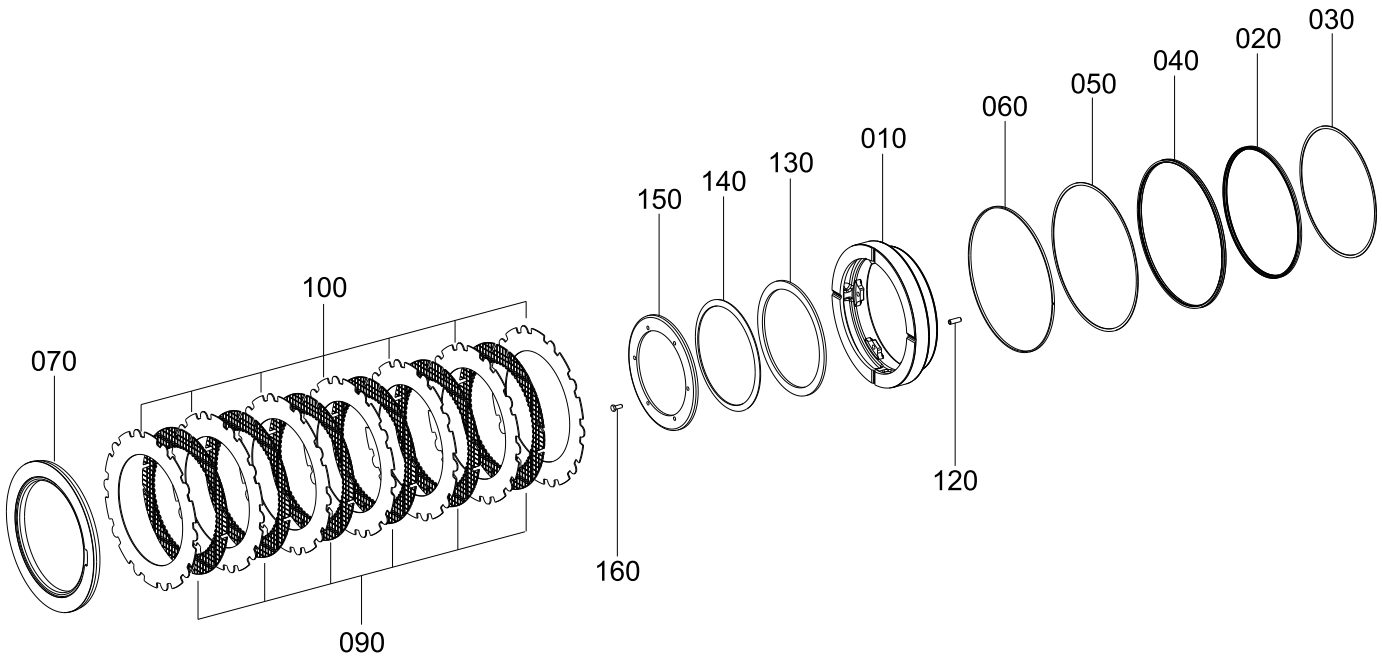

Item	Part_No	IS	Ord	T	Description	Qty	Serial_No	ITC	Remark
010	ZGAQ-03913				PISTON	2			
020	ZGAQ-02506				U-RING	2			
030	ZGAQ-02507				RING-SUPPORT	2			
040	ZGAQ-02508				U-RING	2			
050	ZGAQ-02509				RING-SUPPORT	2			
060	ZGAQ-02510				RING-GUIDE	2			
070	ZGAQ-04139				SHIM-END	2			
090	ZGAQ-02779				INNER CLUTCH DISC	12			
100	ZGAQ-02780				OUTER CLUTCH DISC	14			
120	ZGAQ-02594				SLOT PIN	12			
130	ZGAQ-03915				WASHER	2			
140	ZGAQ-03916				SPRING-CUP	2			
150	ZGAQ-03917				COVER	2			
160	ZGAQ-03771				SCREW-HEX	12			

REAR AXLE PART GROUP

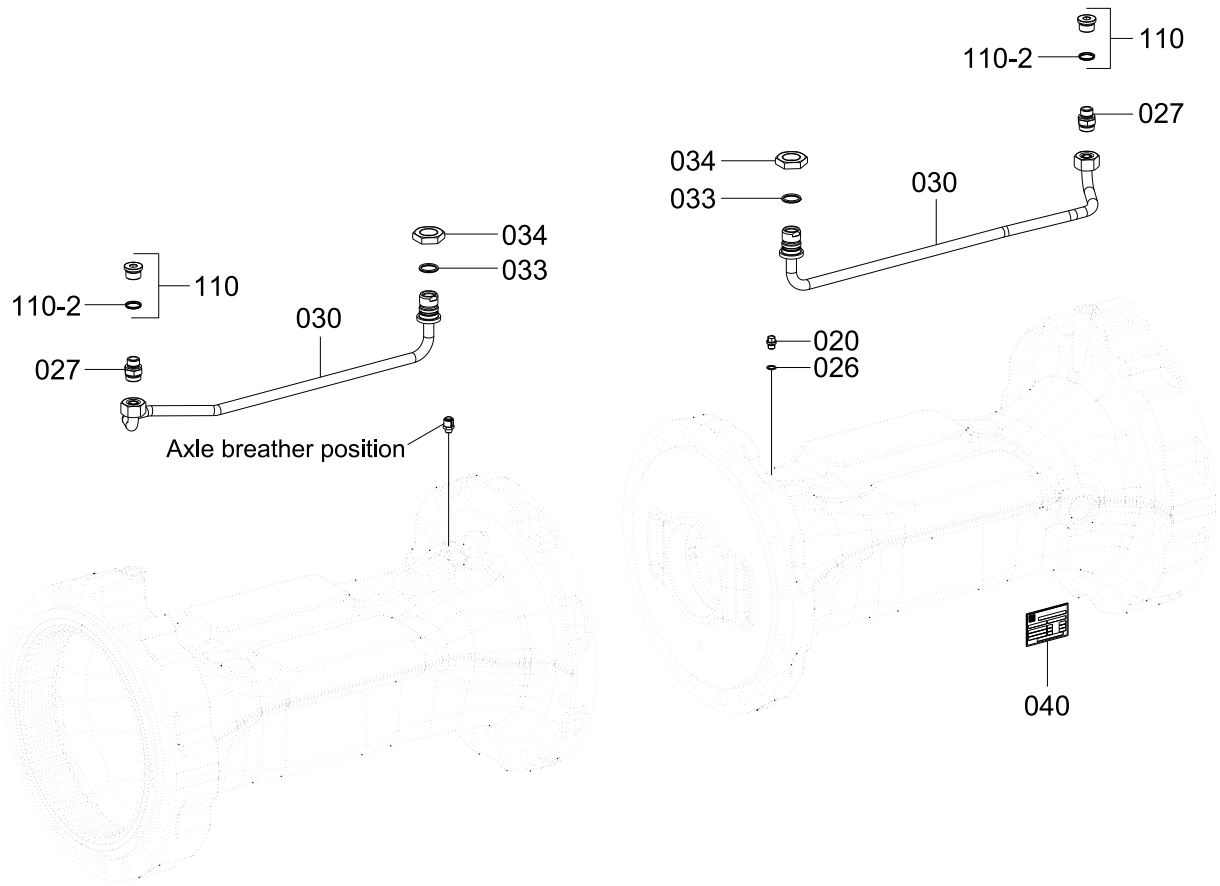

Item	Part_No	IS	Ord	T	Description	Qty	Serial_No	ITC	Remark
020	ZGAQ-01614				PLUG-SCREW	1			
026	ZGAQ-01615				RING-SEALING	1			
027	ZGAQ-03737				SLEEVE-SCREW IN	2			
030	ZGAQ-04202				TUBE-BRAKE	2			
033	ZGAQ-02391				O-RING	2			
034	ZGAQ-02474				NUT-HEX	2			
N110	ZGAQ-03920				PLUG-SCREW	2			NOT
110-2	ZGAQ-00680				.O-RING	1			

BELL CRANK & LINK

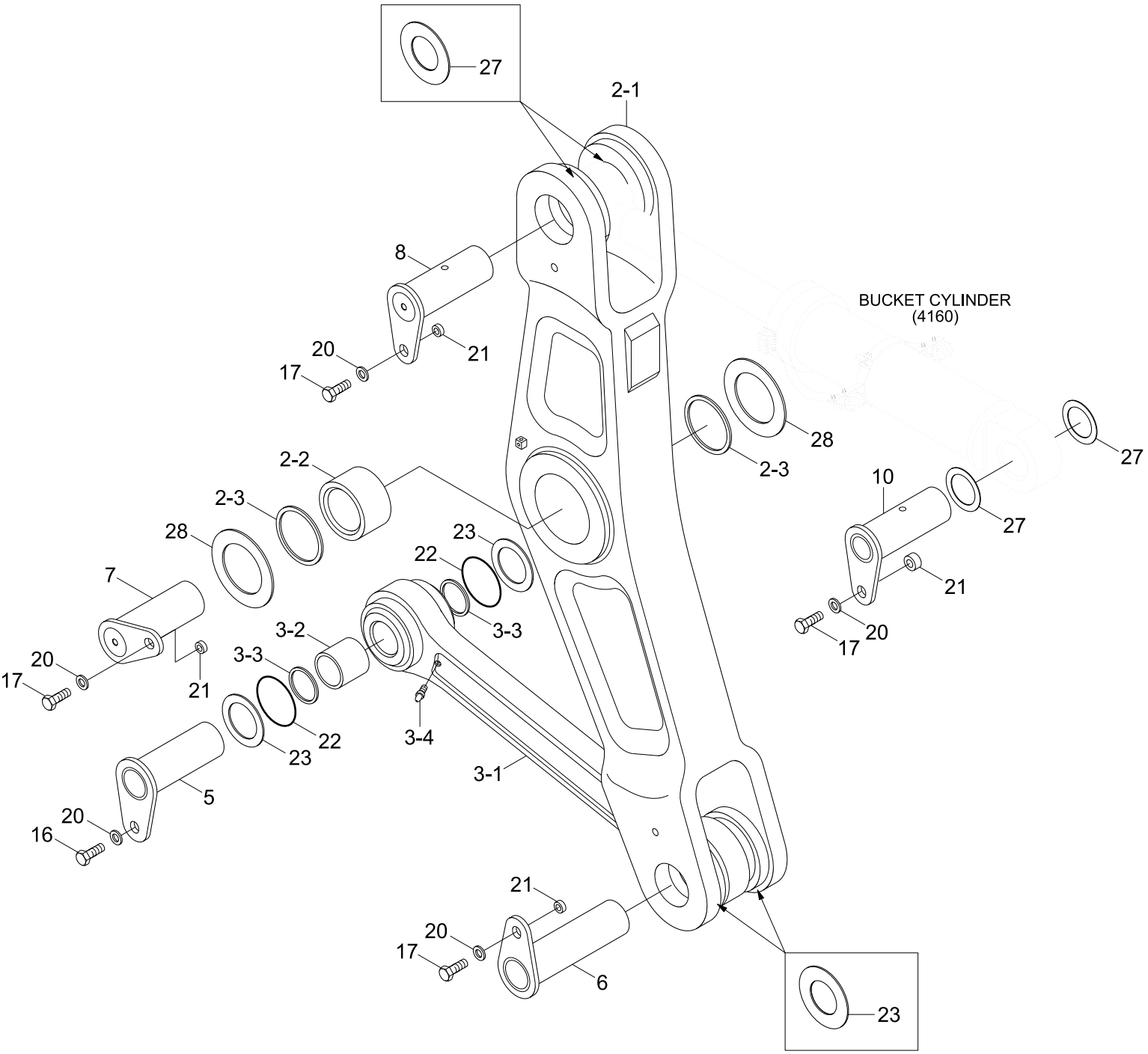

Item	Part_No	IS	Ord	T	Description	Qty	Serial_No	ITC	Remark
2	61LK-10141				BELL CRANK ASSY	1			
2	61LK-10740				BELL CRANK ASSY	1			AUTO GREASE
2-1	61LK-10151				.BELL CRANK	1			
2-1	61LK-10750				.BELL CRANK WA	1			AUTO GREASE
2-2	61LB-10120				.BUSHING	1			
2-3	Y020-130111				.SEAL-DUST,DLI,KPU	2			
3	61LK-10161				LINK ASSY	1			
3	61LK-10760				LINK ASSY	1			AUTO GREASE
N3-1	61LK-10170				.LINK	1			NOT
N3-1	61LK-10770				.LINK WA	1			NOT
3-2	X112-103095				.BUSHING	2			
3-3	Y020-100211				.SEAL-DUST,DLI,KPU	4			
3-4	S651-810002				.NIPPLE-GREASE	2			
5	61LM-16120				PIN WA	1			
6	61LM-16610				PIN WA	1			
7	61LM-16260				PIN WA	1			
8	61LK-10240				PIN WA	1			
10	61LM-16250				PIN WA	1			
16	S017-20025D				BOLT-HEX	1			
17	S017-20050D				BOLT-HEX	4			
20	91E6-60200-D				WASHER-HARDENED	5			
21	61LB-10270				SPACER(O21)	4			
22	61Q6-06540				O-RING	2			
23	S391-100150				SHIM-ROUND(1.0T)	4			
27	S391-120200				SHIM-ROUND(1.0T)	4			
28	S391-130260				SHIM-ROUND(1.0T)	2			
N	@				NOT SUPPLIED PARTS	AR			NOT

Item	Part_No	IS	Ord	T	Description	Qty	Serial_No	ITC	Remark
N	@				NOT SUPPLIED PARTS	AR			NOT

BOOM

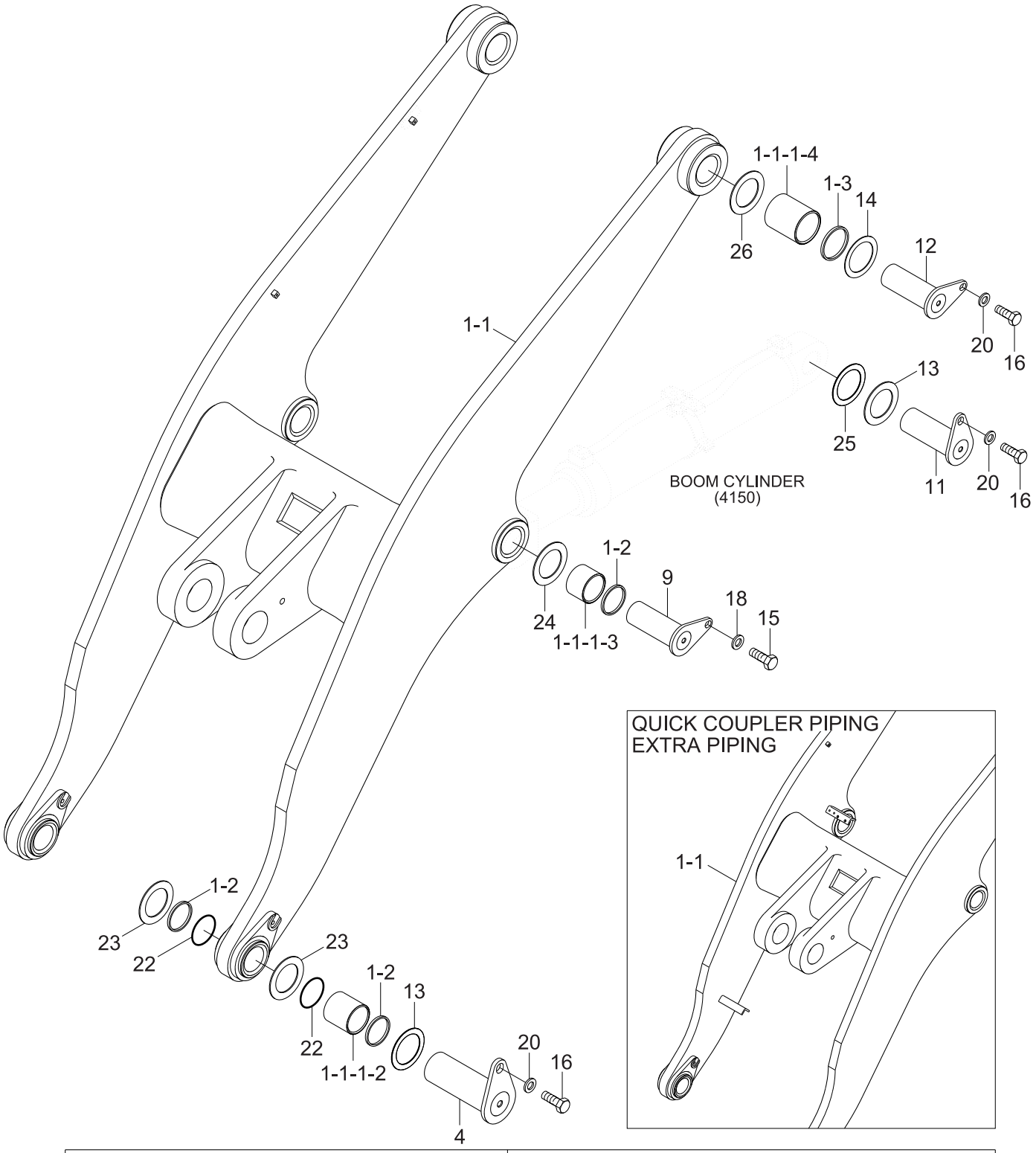

PARTS NO		DESCRIPTION
1	1-1	
61LK-10011	61LK-10021	HL770-9A, STD
61LK-10411	61LK-10421	HL770-9A, Q/COUPLER PIPING
61LK-10512	61LK-10522	HL770-9A, EXTRA PIPING
61LK-10611	61LK-10621	HL770-9A, Q/COUPLER , EXTRA PIPING
61LK-10710	61LK-10720	HL770-9A, AUTO GREASE
61LK-12010	61LK-12020	HL770XTD-9A, STD
61LK-12411	61LK-12421	HL770XTD-9A, Q/COUPLER PIPING
61LK-12512	61LK-12522	HL770XTD-9A, EXTRA PIPING
61LK-12611	61LK-12621	HL770XTD-9A, Q/COUPLER, EXTRA PIPING
61LK-12710	61LK-12720	HL770XTD-9A, AUTO GREASE

Item	Part_No	IS	Ord	T	Description	Qty	Serial_No	ITC	Remark
1	61LK-10011				BOOM ASSY	1			SEE ILLUST
1	61LK-10410				BOOM ASSY	1	- #0047		SEE ILLUST
1	61LK-10411				BOOM ASSY	1	#0048 -	B	SEE ILLUST
1	61LK-10511				BOOM ASSY	1	- #0047		SEE ILLUST
1	61LK-10512				BOOM ASSY	1	#0048 -	B	SEE ILLUST
1	61LK-10610				BOOM ASSY	1	- #0047		SEE ILLUST
1	61LK-10611				BOOM ASSY	1	#0048 -	B	SEE ILLUST
1	61LK-10710				BOOM ASSY	1			SEE ILLUST
1	61LK-12010				BOOM ASSY	1			SEE ILLUST
1	61LK-12410				BOOM ASSY	1	- #0047		SEE ILLUST
1	61LK-12411				BOOM ASSY	1	#0048 -	B	SEE ILLUST
1	61LK-12511				BOOM ASSY	1	- #0047		SEE ILLUST
1	61LK-12512				BOOM ASSY	1	#0048 -	B	SEE ILLUST
1	61LK-12610				BOOM ASSY	1	- #0047		SEE ILLUST
1	61LK-12611				BOOM ASSY	1	#0048 -	B	SEE ILLUST
1	61LK-12710				BOOM ASSY	1	#0041 -	-	SEE ILLUST
1-1	61LK-10021				.BOOM WA	1			SEE ILLUST
1-1	61LK-10420				.BOOM WA	1	- #0047		SEE ILLUST
1-1	61LK-10421				.BOOM WA	1	#0048 -	B	SEE ILLUST
1-1	61LK-10521				.BOOM WA	1	- #0047		SEE ILLUST
1-1	61LK-10522				.BOOM WA	1	#0048 -	B	SEE ILLUST
1-1	61LK-10620				.BOOM WA	1	- #0047		SEE ILLUST
1-1	61LK-10621				.BOOM WA	1	#0048 -	B	SEE ILLUST
1-1	61LK-10720				.BOOM WA	1			SEE ILLUST
1-1	61LK-12020				.BOOM WA	1			SEE ILLUST
1-1	61LK-12420				.BOOM WA	1	- #0047		SEE ILLUST
1-1	61LK-12421				.BOOM WA	1	#0048 -	B	SEE ILLUST

Item	Part_No	IS	Ord	T	Description	Qty	Serial_No	ITC	Remark
1-1	61LK-12421				.BOOM WA	1	#0048 -	B	SEE ILLUST
1-1	61LK-12521				.BOOM WA	1	- #0047		SEE ILLUST
1-1	61LK-12522				.BOOM WA	1	#0048 -	B	SEE ILLUST
1-1	61LK-12620				.BOOM WA	1	- #0047		SEE ILLUST
1-1	61LK-12621				.BOOM WA	1	#0048 -	B	SEE ILLUST
1-1	61LK-12720				.BOOM WA	1	#0041 -	-	SEE ILLUST
1-1-2	61LK-10080				..BUSHING	1			
1-1-3	61LB-10100				..BUSHING	1			
1-1-4	61LB-10111				..BUSHING	1			
1-2	Y020-100211				.SEAL-DUST,DLI,KPU	8			
1-3	Y020-110211				.SEAL-DUST	4			
4	61LM-16110				PIN WA	2			
9	61LM-16140				PIN WA	2			
11	61LM-16620				PIN WA	2			
12	61LM-16660				PIN WA	2			
13	61LM-10250				SPACER-PIN	5			
14	61LM-10260				SPACER-PIN	2			
15	S017-16030D				BOLT-HEX	2			
16	S017-20025D				BOLT-HEX	6			
18	64L3-01120-I				WASHER-HARDENED	2			
20	91E6-60200-I				WASHER-HARDENED	6			
22	61Q6-06540				O-RING	4			
23	S391-100150				SHIM-ROUND(1.0T)	4			
24	S391-100165				SHIM-ROUND(1.0T)	4			
25	S391-100180				SHIM-ROUND(1.0T)	4			
26	S391-110210				SHIM-ROUND(1.0T)	4			

BUCKET(4.2m^3, CUTTING EDGE)

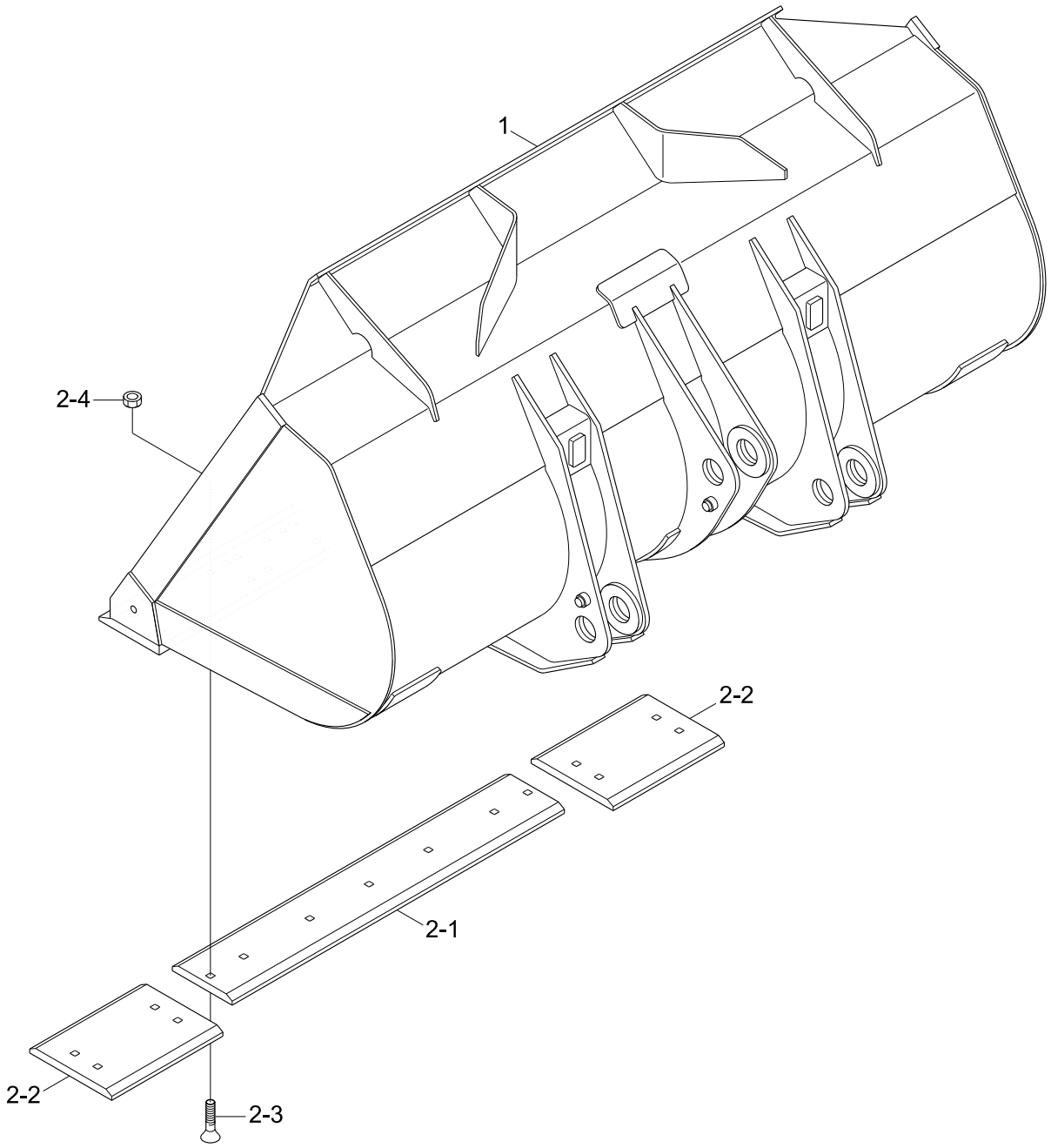

Description	Parts no	Included item
Cutting edge kit	61LK-00910	2-1~2-4

Item	Part_No	IS	Ord	T	Description	Qty	Serial_No	ITC	Remark
*	61LK-00011				BUCKET ASSY(4.2 C/E)	1			
1	61LK-00030				.BUCKET WA	1			
2	61LK-00910				.CUTTING EDGE KIT	1			SEE ILLUST
2-1	61LK-00360				..CUTTING EDGE-CENTER	1			
2-2	61LK-00370				..CUTTING EDGE-SIDE	2			
2-3	61L1-3027	04			..BOLT-TOOTH	15			
2-4	S206-22100B				..NUT-HEX	15			

BUCKET(4.0m^3, TOOTH)

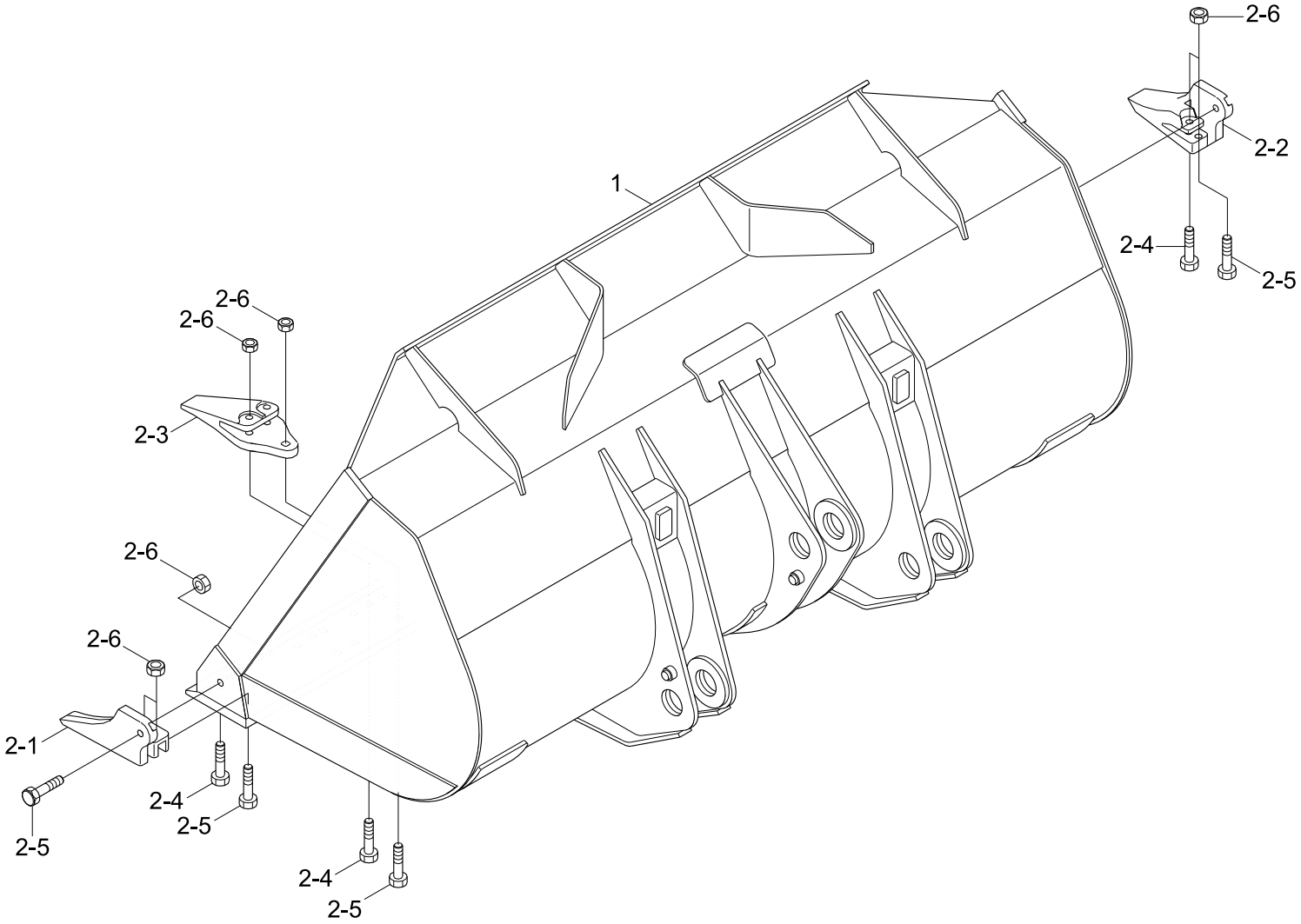

Description	Parts no	Included item
Tooth kit	61LK-00950	2-1~2-6

Item	Part_No	IS	Ord	T	Description	Qty	Serial_No	ITC	Remark
*	61LK-00500				BUCKET ASSY(4.0 1-TOOTH)	1			
1	61LK-00030				.BUCKET WA	1			
2	61LK-00950				.TOOTH KIT(1-PIECE)	1			SEE ILLUST
2-1	61L1-3028GG	05			..TOOTH-SIDE,LH	1			
2-2	61L1-3029GG	05			..TOOTH-SIDE,RH	1			
2-3	61L1-3022GG	05			..TOOTH-CENTER	7			
2-4	61L1-3025	03			..BOLT-TOOTH	16			
2-5	61L1-3027	04			..BOLT-TOOTH	11			
2-6	S206-22100B				..NUT-HEX	27			

BUCKET(4.2m^3, 1-TOOTH, SEGMENT)

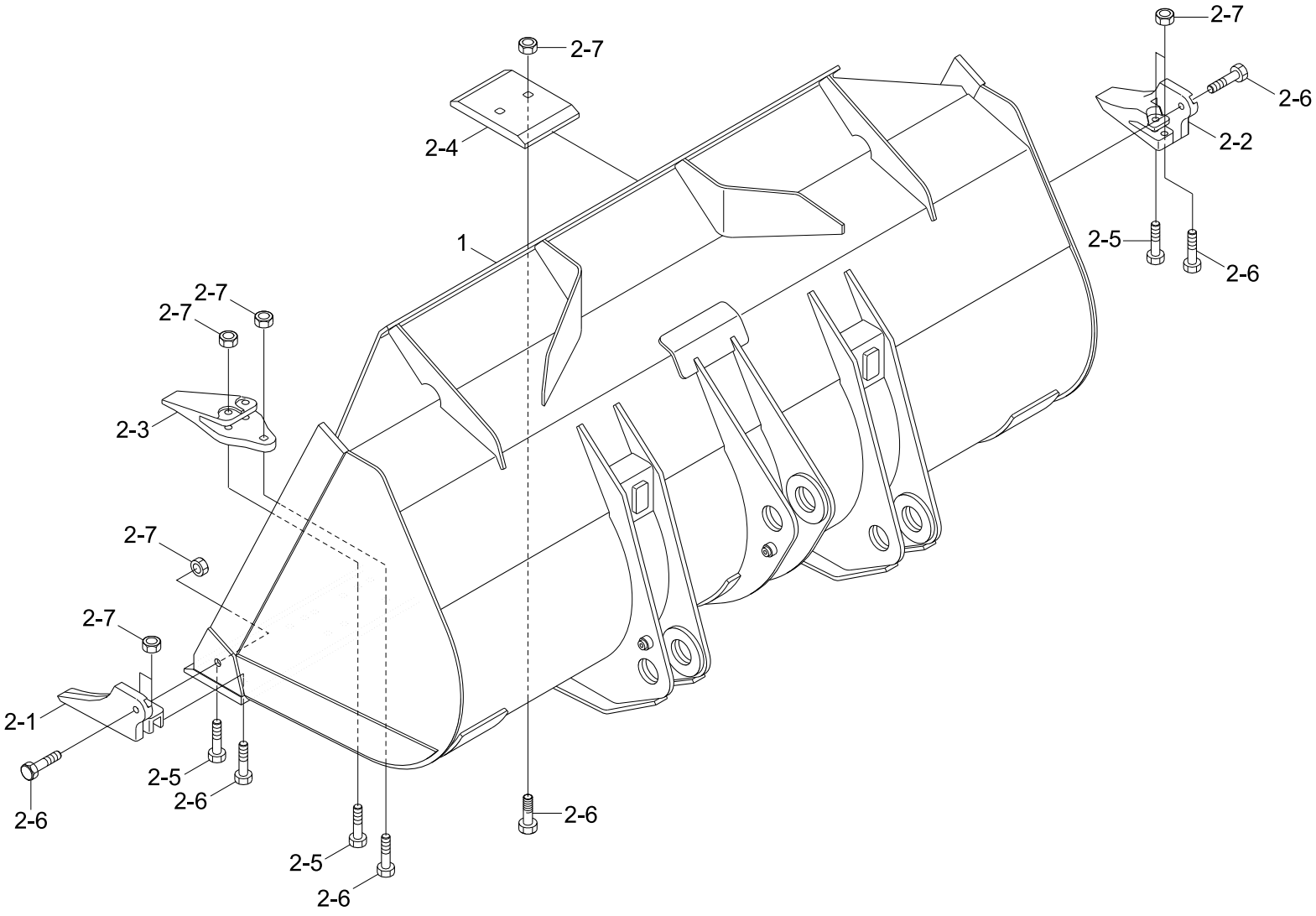

Description	Parts no	Included item
Tooth kit	61LK-00930	2-1~2-7

Item	Part_No	IS	Ord	T	Description	Qty	Serial_No	ITC	Remark
*	61LK-06200				BUCKET ASSY	1			
1	61LK-06220				.BUCKET WA	1			
2	61LK-00930				.TOOTH & SEGMENT KIT	1			
2-1	61L1-3028GG				..TOOTH-SIDE,LH	1			
2-2	61L1-3029GG				..TOOTH-SIDE,RH	1			
2-3	61L1-3022GG				..TOOTH-CENTER	6			
2-4	61LB-06160GG				..SEGMENT	7			
2-5	61L1-3025				..BOLT-TOOTH	14			
2-6	61L1-3027				..BOLT-TOOTH	24			
2-7	S206-22100B				..NUT-HEX	38			

BUCKET(4.0m^3, 2-PIECE TOOTH)

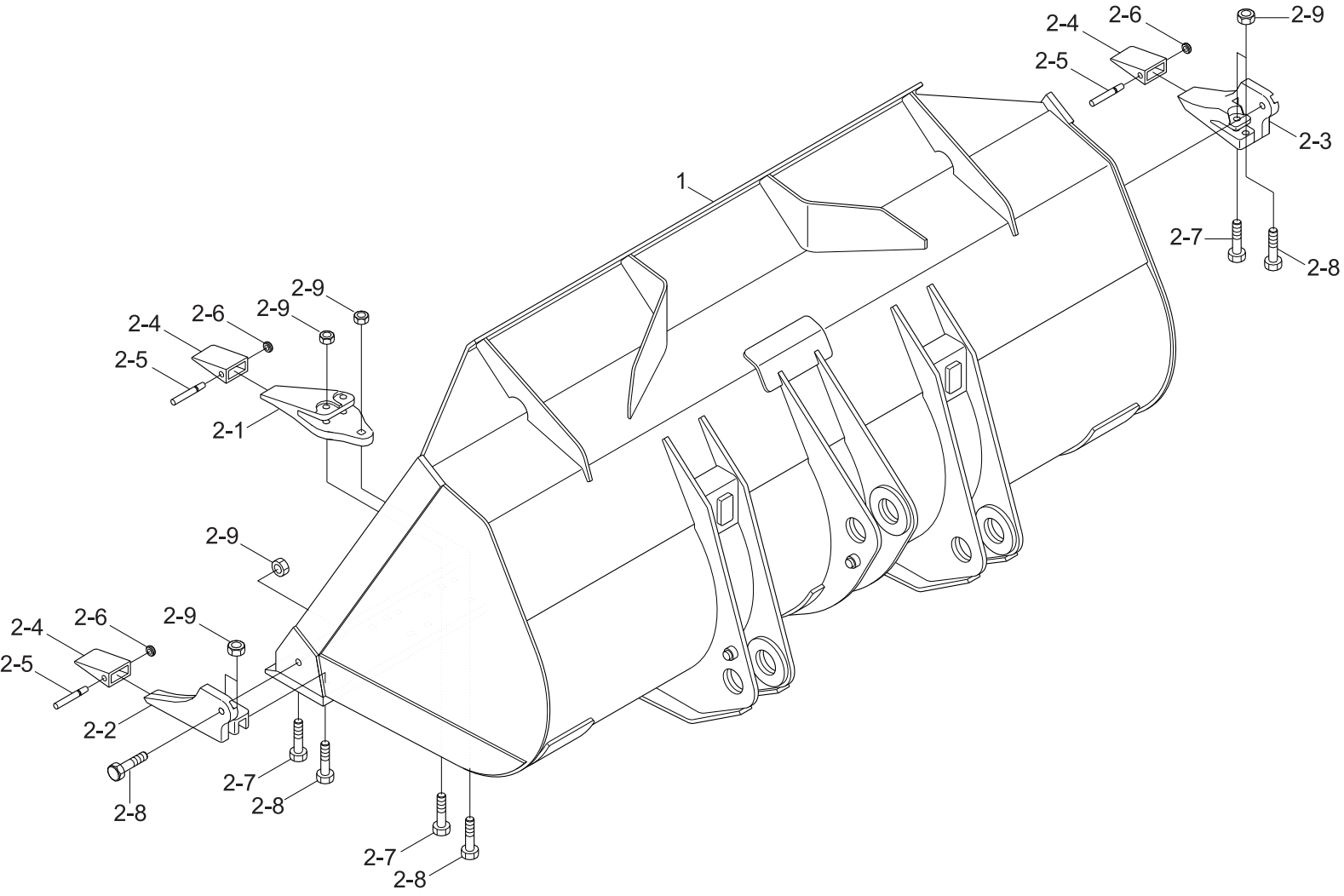

Description	Parts no	Included item
Tooth kit	61LK-00960	2-1~2-9

Item	Part_No	IS	Ord	T	Description	Qty	Serial_No	ITC	Remark
*	61LK-00700				BUCKET ASSY(4.0	1			
1	61LK-00030				.BUCKET WA	1			
2	61LK-00960				.TOOTH KIT(2-PIECE)	1			SEE ILLUST
2-1	64L1-01200GG				..TOOTH	7			
2-2	64L1-01210GG				..TOOTH ADAPTER-LH	1			
2-3	64L1-01220GG				..TOOTH ADAPTER-RH	1			
2-4	61L6-00800GG				..TOOTH POINT	9			
2-5	61L6-00810				..PIN-TOOTH	9			
2-6	61L6-00820				..WASHER-LOCK	9			
2-7	61L1-3025	03			..BOLT-TOOTH	16			
2-8	61L1-3027	04			..BOLT-TOOTH	11			
2-9	S206-22100B				..NUT-HEX	27			

BUCKET(4.2m^3, 2-TOOTH, SEGMENT)

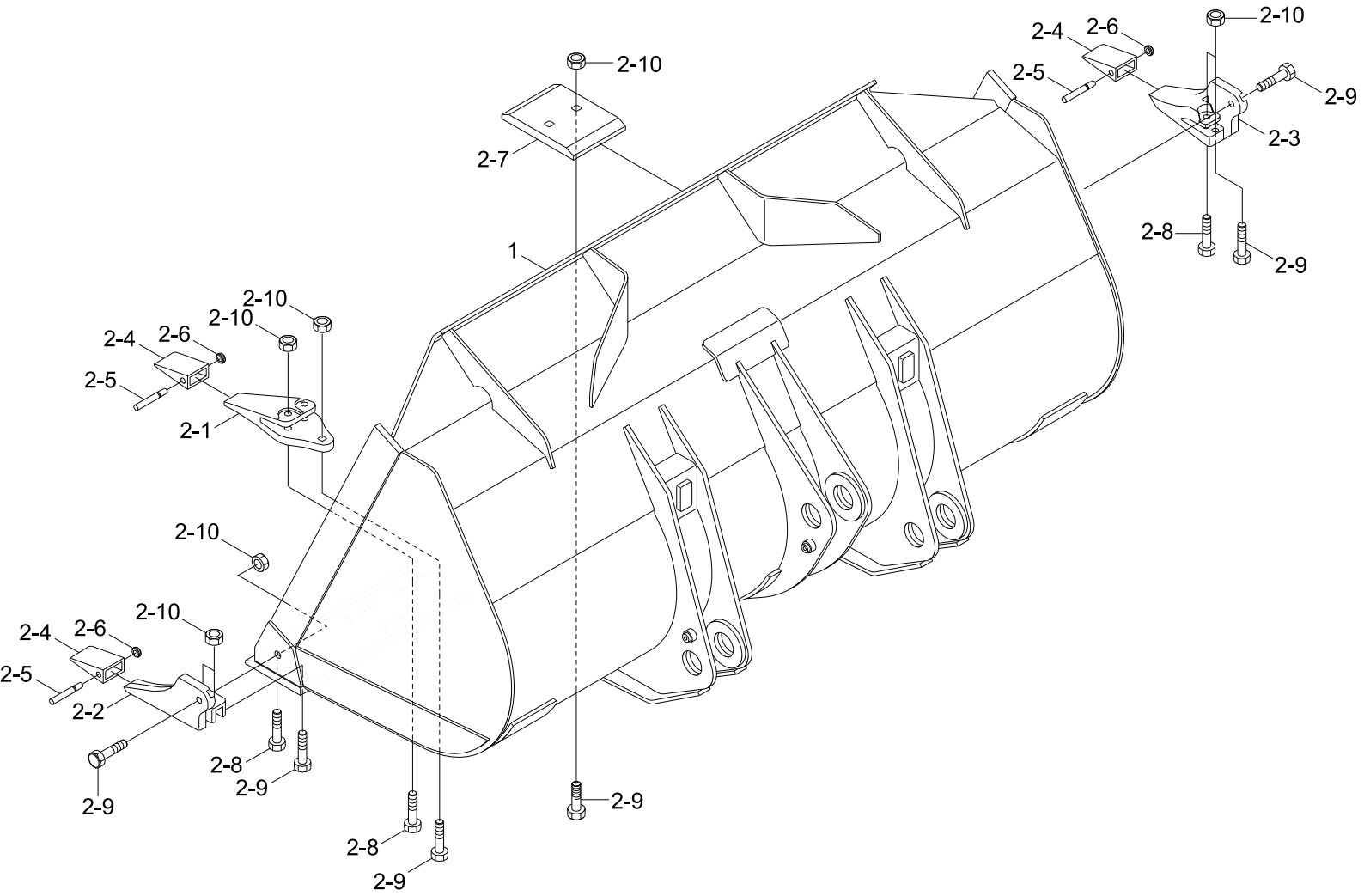

Description	Parts no	Included item
Tooth kit	61LK-00940	2-1~2-10

Item	Part_No	IS	Ord	T	Description	Qty	Serial_No	ITC	Remark
*	61LK-06210				.BUCKET ASSY	1			
1	61LK-06220				.BUCKET WA	1			
2	61LK-00940				..TOOTH & SEGMENT KIT	1			
2-1	64L1-01200GC				..TOOTH ADAPTER-CENTER	6			
2-2	64L1-01210GC				..TOOTH ADAPTER-LH	1			
2-3	64L1-01220GC				..TOOTH ADAPTER-RH	1			
2-4	61L6-00800GC				..TOOTH POINT	8			
2-5	61L6-00810				..PIN-TOOTH	8			
2-6	61L6-00820				..WASHER-LOCK	8			
2-7	61LB-06160GC				..SEGMENT	7			
2-8	61L1-3025				..BOLT-TOOTH	14			
2-9	61L1-3027				..BOLT-TOOTH	24			
2-10	S206-22100B				..NUT-HEX	38			

BUCKET(5.0m^3, TOOTH)

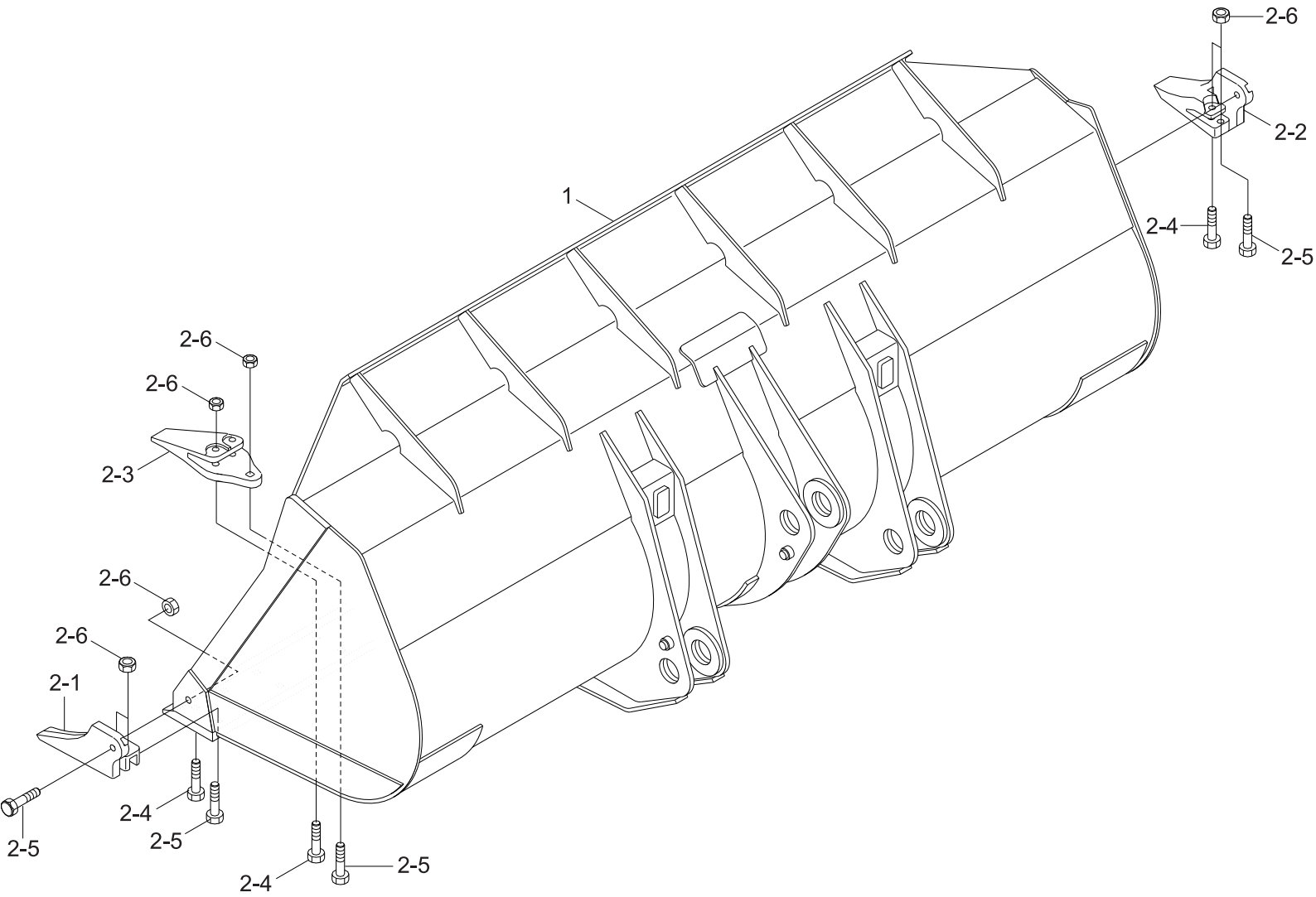

Description	Parts no	Included item
Tooth kit	61LK-00950	2-1~2-6

Item	Part_No	IS	Ord	T	Description	Qty	Serial_No	ITC	Remark
*	61LK-02500				BUCKET ASSY	1			
1	61LK-02010				.BUCKET WA	1			
2	61LK-00950				.TOOTH KIT(1-PIECE)	1			SEE ILLUST
2-1	61L1-3028GG				..TOOTH-SIDE,LH	1			
2-2	61L1-3029GG				..TOOTH-SIDE,RH	1			
2-3	61L1-3022GG				..TOOTH-CENTER	7			
2-4	61L1-3025				..BOLT-TOOTH	16			
2-5	61L1-3027				..BOLT-TOOTH	11			
2-6	S206-22100B				..NUT-HEX	27			

BUCKET(3.7M^3, SPADE NOSE ROCK)

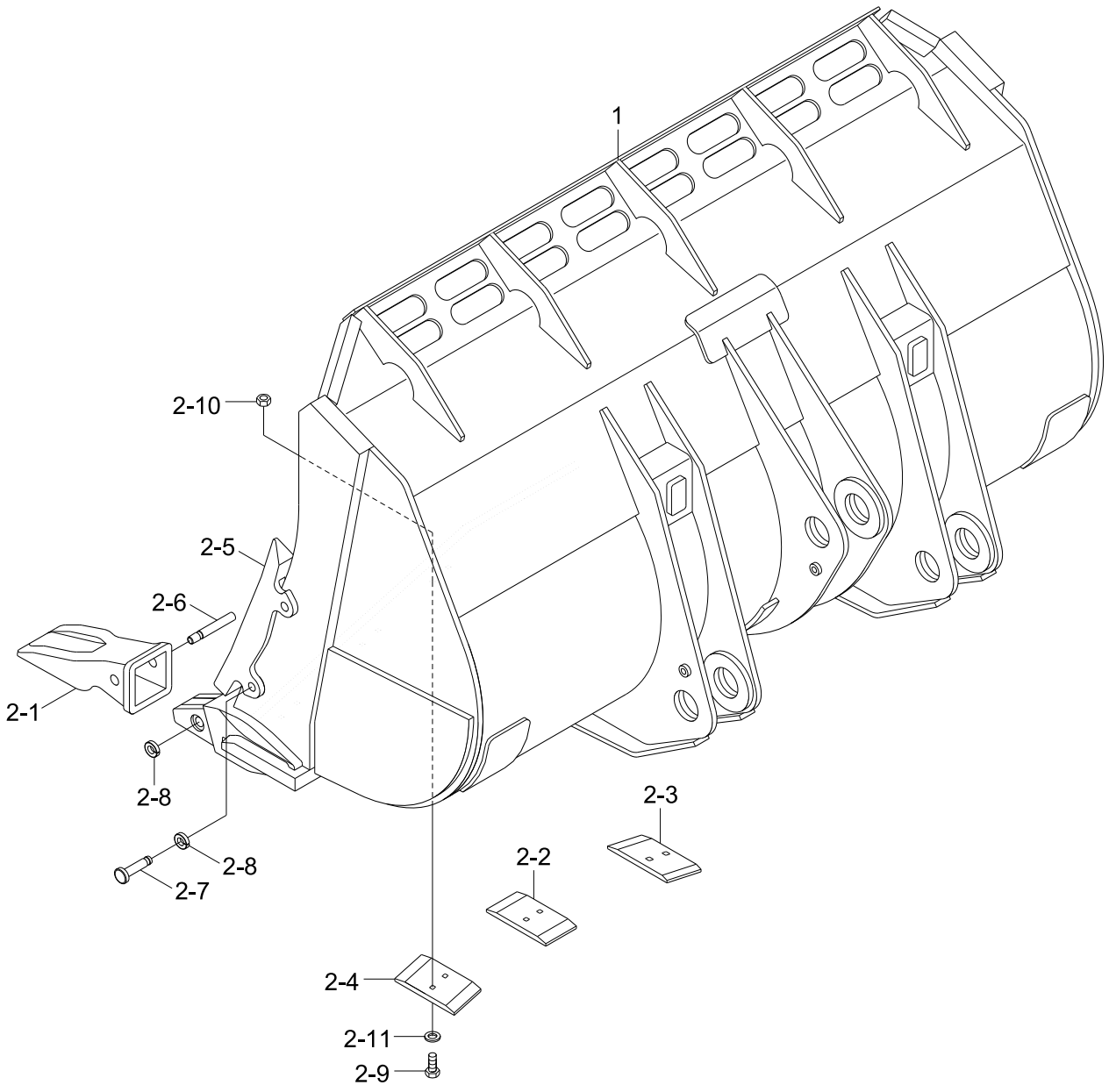

Description	Parts no	Included item
Tooth kit	61LK-06960	2-1~2-11

Item	Part_No	IS	Ord	T	Description	Qty	Serial_No	ITC	Remark
*	61LK-06500				BUCKET ASSY	1			
1	61LK-06510				BUCKET WA	1	- #0050		
1	61LK-06511				BUCKET WA	1	#0051 -	B	
2	61LK-06960				TOOTH KIT	1			SEE ILLUST
2-1	61LH-06830GG				.TOOTH POINT	8			
2-2	61LB-06840GG				.SEGMENT-CENTER	1			
2-3	61LB-06850GG				.SEGMENT-RH	3			
2-4	61LB-06860GG				.SEGMENT-LH	3			
2-5	61LH-06870GG				.VERTICAL PROTECTOR	2			
2-6	61LH-06880				.PIN-TOOTH	8			
2-7	61LH-06890				.PIN-PROTECTOR	2			
2-8	61LH-06900				.WASHER-LOCK	10			
2-9	61L1-3025				.BOLT-TOOTH	14			
2-10	S206-22100B				.NUT-HEX	14			
2-11	S441-220006				.WASHER-HARDENED	14			

TOOLS

1

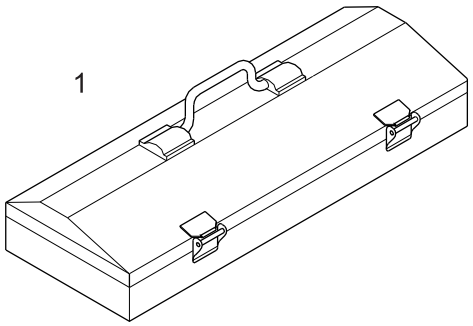

2

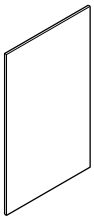

13, 14, 15, 16, 17, 18

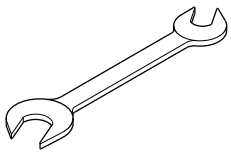

3, 4, 5, 6, 7, 8, 9, 10, 11, 12, 33, 34



22, 23

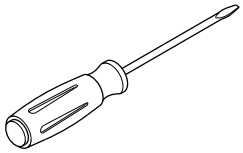

24

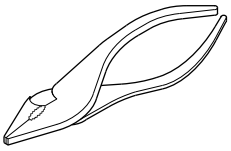

19, 20, 21

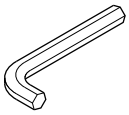

25

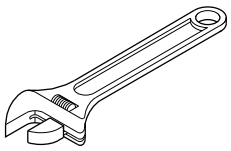

26

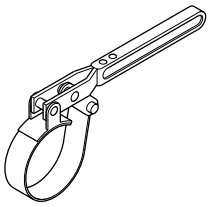

27

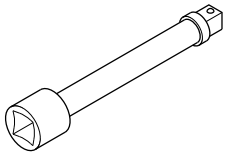

28, 30

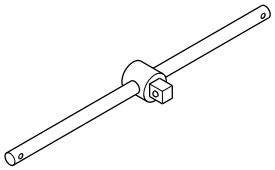

29

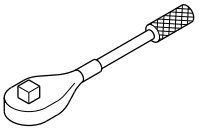

31

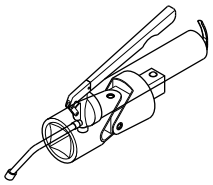

32

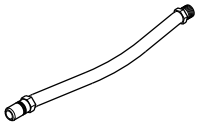

50

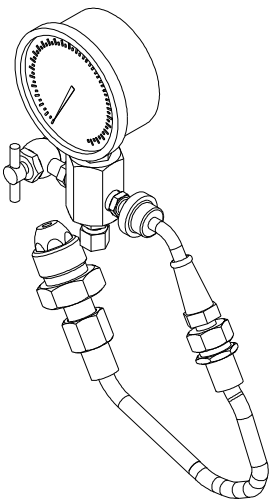

For ride control system
(Accumulator charging & gauging kit)

Item	Part_No	IS	Ord	T	Description	Qty	Serial_No	ITC	Remark
*	92LM-20000				TOOL KIT ASSY	1			
1	91Q6-20110				.TOOL BOX	1			
2	94L1-20100				.TOOL LIST	1			
3	S953-127100				.SOCKET-METRIC	1			10
4	S953-127130				.SOCKET-METRIC	1			13
5	S953-127140				.SOCKET-METRIC	1			14
6	S953-127170				.SOCKET-METRIC	1			17
7	S953-127190				.SOCKET-METRIC	1			19
8	S953-127220				.SOCKET-METRIC	1			22
9	S953-127240				.SOCKET-METRIC	1			24
10	S953-127300				.SOCKET-METRIC	1			30
11	S953-190320				.SOCKET-METRIC	1			32
12	S953-190360				.SOCKET-METRIC	1			36
13	S962-101202				.WRENCH-DOUBLE,10X12	1			10×12
14	S962-131702				.WRENCH-DOUBLE,13X17	1			13×17
15	S962-192202				.WRENCH-DOUBLE,19X22	1			19×22
16	S962-242702				.WRENCH-DOUBLE,24X27	1			24×27
17	S962-303202				.WRENCH-DOUBLE,METRIC	1			30×32
18	S962-364102				.WRENCH-DOUBLE,METRIC	1			36×41
19	S967-040025				.L-WRENCH	1			
20	S967-050028				.L-WRENCH	1			
21	S967-060032				.L-WRENCH	1			
22	S959-081512				.DRIVER(-)	1			
23	S959-081522				.DRIVER(+)	1			
24	S960-150020				.PLIER-SLIP JOINT	1			150MM
25	S963-200024				.WRENCH-ADJ ANGLE	1			200MM
26	E191-2043				.WRENCH-FILTER,300MM	1			300MM

Item	Part_No	IS	Ord	T	Description	Qty	Serial_No	ITC	Remark
26	E191-2043				.WRENCH-FILTER,300MM	1			300MM
27	S955-127075				.BAR-EXTENSION	1			
28	E191-2048				.HANDLE-SLIDING,1/2"X1	1			1/2×10
29	S958-127250				.HANDLE-RATCHET	1			
30	E191-2049				.HANDLE-SLIDING,3/4"X2	1			3/4×20
31	91Q6-20530				.GUN-GREASE,500CC	1			500CC
32	E191-2054				.TIP-HOSE,RUBBER	1			
33	S968-190240				.SOCKET-3/4"X1 1/2"	1			3/4×1 1/2
34	S968-190300				.SOCKET-3/4'X1 7/8"	1			3/4×1 7/8
50	31LM-90100				CHARGE & GAUGE KIT	1			RIDE CONTROL

DECALS(ENGLISH)

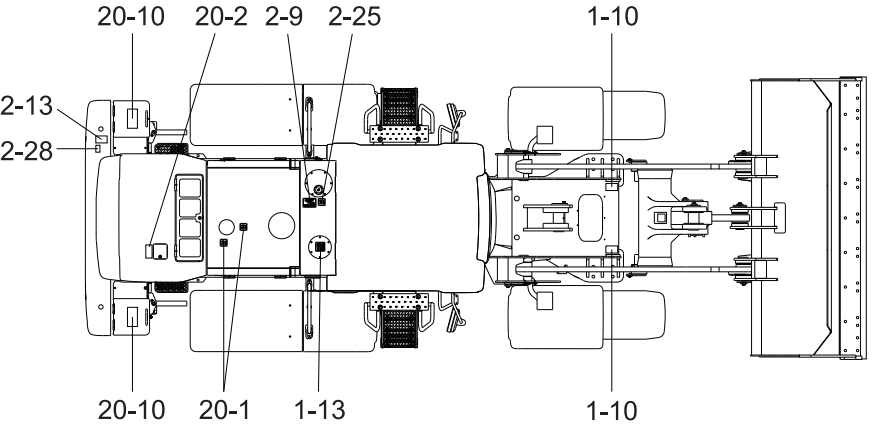

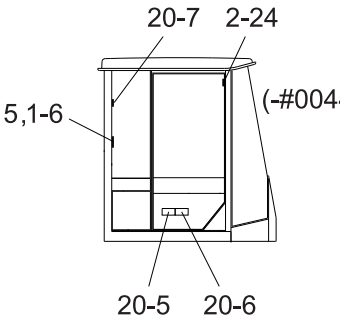

CAB INSIDE - LH

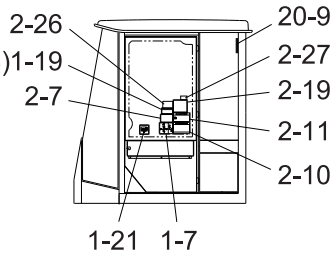

CAB INSIDE - RH

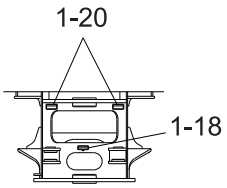

VIEW A

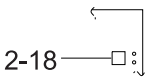

VIEW B

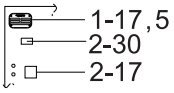

VIEW C

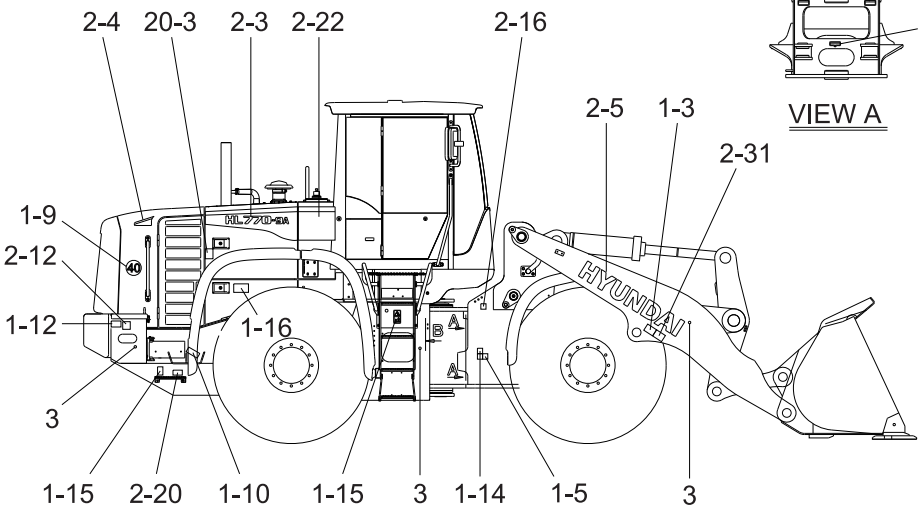

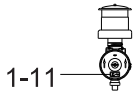

AIR CLEANER

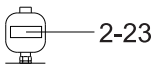

ACCUMULATOR

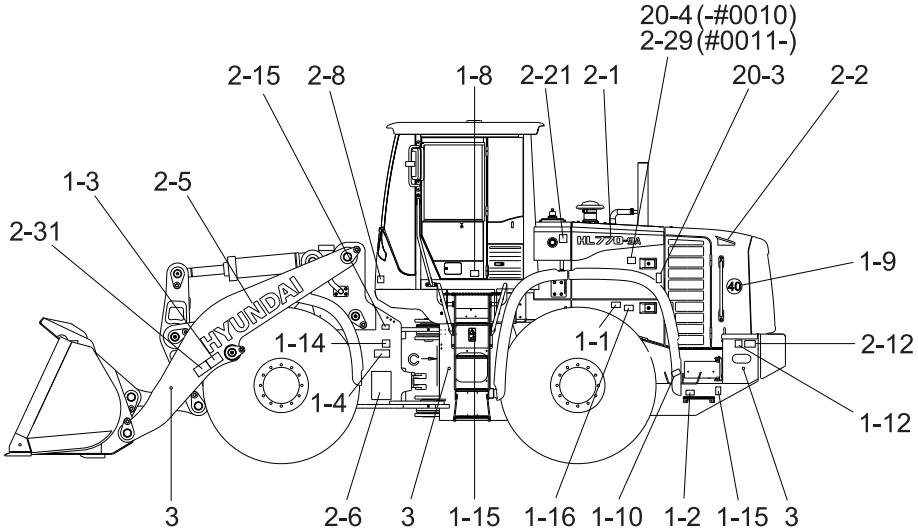

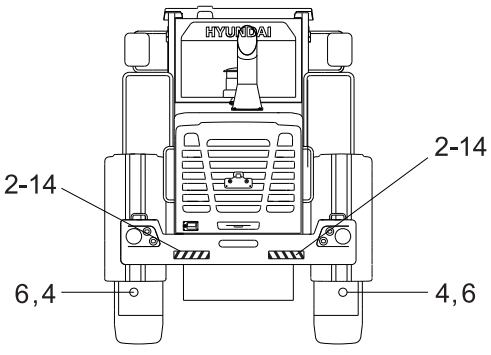

Item	Part_No	IS	Ord	T	Description	Qty	Serial_No	ITC	Remark
1	92LM-00014				DECAL KIT(A)	1	- #0042		
1	92LM-00015				DECAL KIT(A)	1	#0043 - #0044	D	
1	92LM-00016				DECAL KIT(A)	1	#0045 - #0120	D	
1	92LM-00017				DECAL KIT(A)	1	#0121 -	D	
1-1	91LB-01110				.DECAL-START MOTOR	1			
1-2	91LB-01190				.DECAL-DRAIN/REMOTE	1			
1-3	91LB-01210				.DECAL-BUCKET STOPPER	2			
1-4	91LB-01260				.DECAL-STEER WARN/LH	1			
1-5	91LB-01270				.DECAL-STEER WARN/RH	1			
1-6	91LB-01280				.DECAL-ROPS PLATE	1	- #0120		
1-6	91LB-01281				.DECAL-ROPS PLATE	1	#0121 -	D	
1-7	91LM-01300				.DECAL-CNTL IDEOGRAM	1			1-LEVER RCV
1-7	91LM-01310				.DECAL-CNTL IDEOGRAM	1			2-LEVER RCV
1-8	91LB-01320				.DECAL-AIRCON FILTER	1			
1-9	91L7-00360				.DECAL-SPEED LIMIT	2			EUROPE ONLY
1-10	92LB-14000				.DECAL-LIFT & TIE	4			
1-11	91N6-01102				.DECAL-A/CLEANER FILTER	1			
1-12	91N6-02120				.DECAL-BATTERY ACCIDENT	2	- #0042		
1-12	91LM-02120				.DECAL-BATTERY ACCIDENT	2	#0043 -	D	
1-13	91N6-03111				.DECAL-HYD OIL LUB	1			
1-14	91N6-03130				.DECAL-H/PRESS HOSE	2			
1-15	91N6-03140				.DECAL-FALLING	4			
1-16	91N6-07121				.DECAL-SHEARING	2			
1-17	91LM-14110				.PIN PLATE	1			
1-17	91LM-14130				.PIN PLATE	1			EUROPE ONLY
1-18	91LH-01220				.DECAL-GREASE CENTER	1			
1-19	91N6-07390				.DECAL-TURBOCHARGER	1	- #0044		

Item	Part_No	IS	Ord	T	Description	Qty	Serial_No	ITC	Remark
1-19	91N6-07390				.DECAL-TURBOCHARGER	1	-		
R1-2(	91LB-01360				.DECAL-RIDE CONTROL	2			RIDE CONTROL
1-21	91Q6-07260				.DECAL-SAFETY	1			
2	92LK-01602				DECAL KIT(B)	1	-		HL770-9A
2	92LK-01603				DECAL KIT(B)	1	#0004 -	D	HL770-9A
2	92LK-01604				DECAL KIT(B)	1	#0025 -	D	HL770-9A
2	92LK-01606				DECAL KIT(B)	1	#0045 -	D	HL770-9A
2	92LK-01607				DECAL KIT(B)	1	#0056 -	D	HL770-9A
2	92LK-01608				DECAL KIT(B)	1	#0112 -	B	HL770-9A
2	92LK-01609				DECAL KIT(B)	1	#0113 -	D	HL770-9A
2	92LK-01610				DECAL KIT(B)	1	#0121 -	D	HL770-9A
2	92LK-01611				DECAL KIT(B)	1	#0128 -	D	HL770-9A
2	92LK-01702				DECAL KIT(B)	1	-		HL770XTD-9A
2	92LK-01703				DECAL KIT(B)	1	#0004 -	D	HL770XTD-9A
2	92LK-01704				DECAL KIT(B)	1	#0025 -	D	HL770XTD-9A
2	92LK-01706				DECAL KIT(B)	1	#0045 -	D	HL770XTD-9A
2	92LK-01707				DECAL KIT(B)	1	#0056 -	D	HL770XTD-9A
2	92LK-01708				DECAL KIT(B)	1	#0112 -	B	HL770XTD-9A
2	92LK-01709				DECAL KIT(B)	1	#0113 -	D	HL770XTD-9A
2	92LK-01710				DECAL KIT(B)	1	#0121 -	D	HL770XTD-9A
2	92LK-01711				DECAL KIT(B)	1	#0128 -	D	HL770XTD-9A
2-1	92LK-17110				.MODEL NAME-LH/FR	1			HL770-9A
2-1	92LK-17130				.MODEL NAME-LH/FR	1			HL770XTD-9A
2-2	92LK-15170				.MODEL NAME-LH/RR	1			
2-3	92LK-17120				.MODEL NAME-RH/FR	1			HL770-9A
2-3	92LK-17140				.MODEL NAME-RH/FR	1			HL770XTD-9A
2-4	92LK-15180				.MODEL NAME-RH/RR	1			

Item	Part_No	IS	Ord	T	Description	Qty	Serial_No	ITC	Remark
2-4	92LK-15180				.MODEL NAME-RH/RR	1			
2-5	91N6-23120				.DECAL-HYUNDAI LOGO	2			
2	92LK-01602				DECAL KIT(B)	1	- #0003		HL770-9A
2	92LK-01603				DECAL KIT(B)	1	#0004 - #0024	D	HL770-9A
2	92LK-01604				DECAL KIT(B)	1	#0025 - #0044	D	HL770-9A
2	92LK-01606				DECAL KIT(B)	1	#0045 - #0055	D	HL770-9A
2	92LK-01607				DECAL KIT(B)	1	#0056 - #0111	D	HL770-9A
2	92LK-01608				DECAL KIT(B)	1	#0112 - #0119	B	HL770-9A
2	92LK-01609				DECAL KIT(B)	1	#0113 - #0120	D	HL770-9A
2	92LK-01610				DECAL KIT(B)	1	#0121 - #0127	D	HL770-9A
2	92LK-01611				DECAL KIT(B)	1	#0128 - #0144	D	HL770-9A
2	92LK-01612				DECAL KIT(B)	1	#0145 -	D	HL770-9A
2	92LK-01702				DECAL KIT(B)	1	- #0003		HL770XTD-9A
2	92LK-01703				DECAL KIT(B)	1	#0004 - #0024	D	HL770XTD-9A
2	92LK-01704				DECAL KIT(B)	1	#0025 - #0044	D	HL770XTD-9A
2	92LK-01706				DECAL KIT(B)	1	#0045 - #0055	D	HL770XTD-9A
2	92LK-01707				DECAL KIT(B)	1	#0056 - #0111	D	HL770XTD-9A
2	92LK-01708				DECAL KIT(B)	1	#0112 - #0119	B	HL770XTD-9A
2	92LK-01709				DECAL KIT(B)	1	#0113 - #0120	D	HL770XTD-9A
2	92LK-01710				DECAL KIT(B)	1	#0121 - #0127	D	HL770XTD-9A
2	92LK-01711				DECAL KIT(B)	1	#0128 - #0144	D	HL770XTD-9A
2	92LK-01712				DECAL KIT(B)	1	#0145 -	D	HL770XTD-9A
2-7	92LK-70520				.DECAL-SPEC SHEET	1			HL770XTD-9A
2-1	92LK-17110				.MODEL NAME-LH/FR	1			HL770-9A
2-1	92LK-17130				.MODEL NAME-LH/FR	1			HL770XTD-9A
2-2	92LK-15170				.MODEL NAME-LH/RR	1			
2-10	91LM-01250				.DECAL-ROPS CAB	1	#0112 -	B	

Item	Part_No	IS	Ord	T	Description	Qty	Serial_No	ITC	Remark
2-10	91LM-01250				.DECAL-ROPS CAB	1	#0112 -	B	
2-3	92LK-17120				.MODEL NAME-RH/FR	1			HL770-9A
2-3	92LK-17140				.MODEL NAME-RH/FR	1			HL770XTD-9A
2-4	92LK-15180				.MODEL NAME-RH/RR	1			
2-5	91N6-23120				.DECAL-HYUNDAI LOGO	2			
2-14	91LB-01411				.DECAL-K/CLEAR/REFLECT	2	#0112 -	B	
2-6	92LK-70710				.DECAL-S/INSTRUCTION	1	-		
2-6	92LK-70711				.DECAL-S/INSTRUCTION	1	#0011 -	D	
2-6	92LK-70712				.DECAL-S/INSTRUCTION	1	#0045 -	D	
2-6	92LK-70713				.DECAL-S/INSTRUCTION	1	#0056 -	D	
2-6	92LK-70714				.DECAL-S/INSTRUCTION	1	#0113 -	D	
2-6	92LK-70715				.DECAL-S/INSTRUCTION	1	#0121 -	D	
2-6	92LK-70716				.DECAL-S/INSTRUCTION	1	#0128 -	D	
2-7	92LK-70510				.DECAL-SPEC SHEET	1			HL770-9A
2-7	92LK-70520				.DECAL-SPEC SHEET	1			HL770XTD-9A
2-8	91N6-22160				.DECAL-NOISE	1			EUROPE ONLY
2-9	91LB-01130				.DECAL-HYD OIL LEVEL	1			
2-10	91LB-01250				.DECAL-ROPS CAB	1	-		
2-10	91LM-01250				.DECAL-ROPS CAB	1	#0112 -	B	
2-11	91LM-01290				.DECAL-CAUTION E/G	1			
2-12	91LB-01350				.DECAL-ELECTRIC	2			
2-13	91M8-01140				.DECAL-FUELING	1			
2-14	91LB-01410				.DECAL-K/CLEAR/REFLECT	2	-		
2-14	91LB-01411				.DECAL-K/CLEAR/REFLECT	2	#0112 -	B	
2-15	91LB-02110				.DECAL-GREASE(A)	1			
2-16	91LB-02121				.DECAL-GREASE(B)	1			
2-17	91LB-01170				.DECAL-GREASE(C)	1			

Item	Part_No	IS	Ord	T	Description	Qty	Serial_No	ITC	Remark
2-17	91LB-01170				.DECAL-GREASE(C)	1			
2-26	91Q4-07920				.DECAL-WATER SEPARATOR	1	#0045 -	D	
2-18	91LB-01180				.DECAL-GREASE(D)	1			
2-27	91LM-01501				.DECAL-LANGUAGE SELECT	1	#0004 -	D	
2-19	91LB-11170				.DECAL-START PROCEDURE	1			
2-20	91LB-01370				.DECAL-DRAIN/ENGINE	1			
2-21	92LK-15190				.DECAL-LH/HYD TANK	1			
2-22	92LK-15210				.DECAL-RH/HYD TANK	1			
R2-2	91N6-03200				.DECAL-ACCUMULATOR	5			RIDE CONTROL
2-23	91N6-03200				.DECAL-ACCUMULATOR	4			
2-24	92LM-16000				.DECAL-JOYSTICK STEER	1			
2-25	91Q6-03230				.DECAL-FUEL SHUT OFF	1			
2-26	91Q4-07180				.DECAL-WATER SEPARATOR	1	- #0044		
2-26	91Q4-07920				.DECAL-WATER SEPARATOR	1	#0045 -	D	
2-27	91LM-01500				.DECAL-LANGUAGE SELECT	1	- #0003		
2-27	91LM-01501				.DECAL-LANGUAGE SELECT	1	#0004 -	D	
2-28	98Q6-07390				.DECAL-ULT L/SULFUR DIES	1			
2-29	91E1-27110				.DECAL-L/EMISSION ENG	1	#0011 -		
2-30	91LM-01700				.DECAL-T/M OIL SPECK	1	#0025 - #0144		
2-30	91LM-01701				.DECAL-T/M OIL SPECK	1	#0145 -	D	
2-31	91LB-01220				.DECAL-QUICK COUPLER	2	#0145 -		
2-29	91E1-27110				.DECAL-L/EMISSION ENG	1	#0011 -		
2-30	91LM-01700				.DECAL-T/M OIL SPECK	1	#0025 -		
3	21EK-10150				REFLECTOR-SIDE	6			
4	51EK-52990				REFLECTOR-REAR	2			MUD GUARD
5	E171-1246				RIVET	8			
6	S403-05200B				WASHER-PLAIN	2			MUD GUARD

Item	Part_No	IS	Ord	T	Description	Qty	Serial_No	ITC	Remark
6	S403-05200B				WASHER-PLAIN	2			MUD GUARD
20	92LM-00082				DECAL KIT-A/S	1	- #0010		
20	92LM-00083				DECAL KIT-A/S	1	#0011 -	D	
20-1	91N6-01111				.DECAL-TURBO COVER	2			
20-2	91N6-01121				.DECAL-RADIATOR CAP	1			
20-3	91N6-07112				.DECAL-STAY FIX	2			
20-4	91E1-27110				.DECAL-L/EMISSION ENG	1	- #0010		
20-5	91LB-01230				.DECAL-MAX H/REACH	1			
20-6	91LB-01240				.DECAL-ROLL OVER	1			
20-7	91Q6-07280				.DECAL-HAMMER	1			
20-9	91Q6-07290				.DECAL-FIRE EXTINGUISHER	1			
20-1(	91E1-26300				.DECAL-STEP TREAD	2			

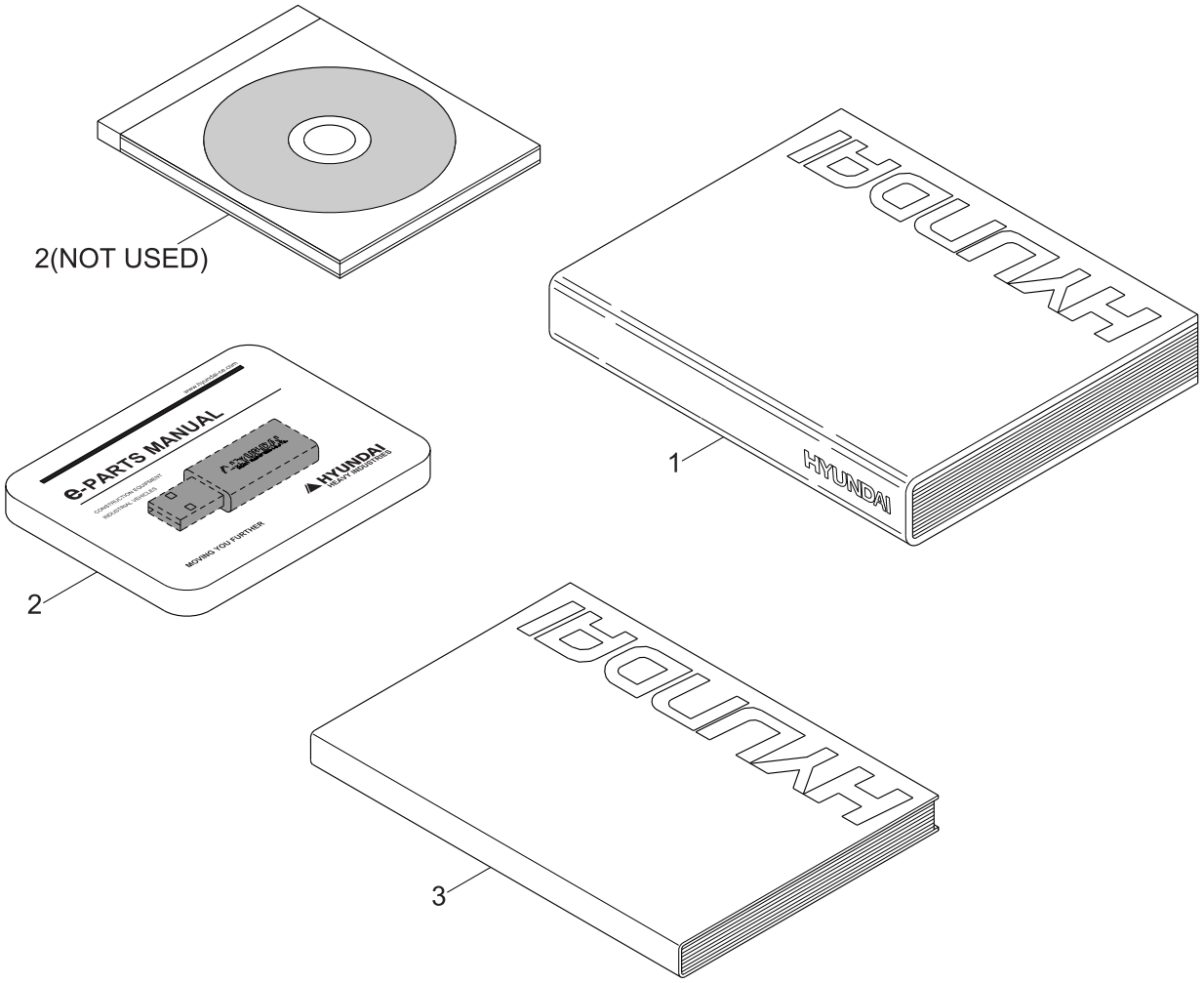
2(NOT USED)
1
HYUNDAI
e-PARTS MANUAL
HYUNDAI
HEAVY INDUSTRIES
MOVING YOU FURTHER
2
3

Item	Part_No	IS	Ord	T	Description	Qty	Serial_No	ITC	Remark
1	91LK-32000				PARTS MANUAL	1			ENGLISH/KOREAN
1	91LK-32010				OPERATORS MANUAL	1			KOREAN
1	91LK-30020				SERVICE MANUAL	1			KOREAN
1	91LK-32000				PARTS MANUAL	1			ENGLISH/KOREAN
1	91LK-32010				OPERATORS MANUAL	1			KOREAN
1	91LK-30020				SERVICE MANUAL	1			KOREAN
1	91LK-32040				OPERATORS MANUAL	1			ENGLISH
1	91LK-32050				SERVICE MANUAL	1			ENGLISH
2	HLCD-30000				CD-PARTS MANUAL	1			NOT USED,LOADER
2	HACD-30000				CD-PARTS MANUAL	1			NOT USED,A/MODEL
2	HLDV-30000				DVD-PARTS MANUAL	1			NOT USED,LOADER
2	HADV-30000				DVD-PARTS MANUAL	1			NOT USED,A/MODEL
2	HAUS-30000				E-PARTS MANUAL(USB)	1			ALL MODEL
2	HLUS-30000				E-PARTS MANUAL(USB)	1			LOADER
3	91E5-30909				RMS MANUAL	1			DEALER
3	91E5-30919				RMS MANUAL	1			USER

HCE-DT KIT

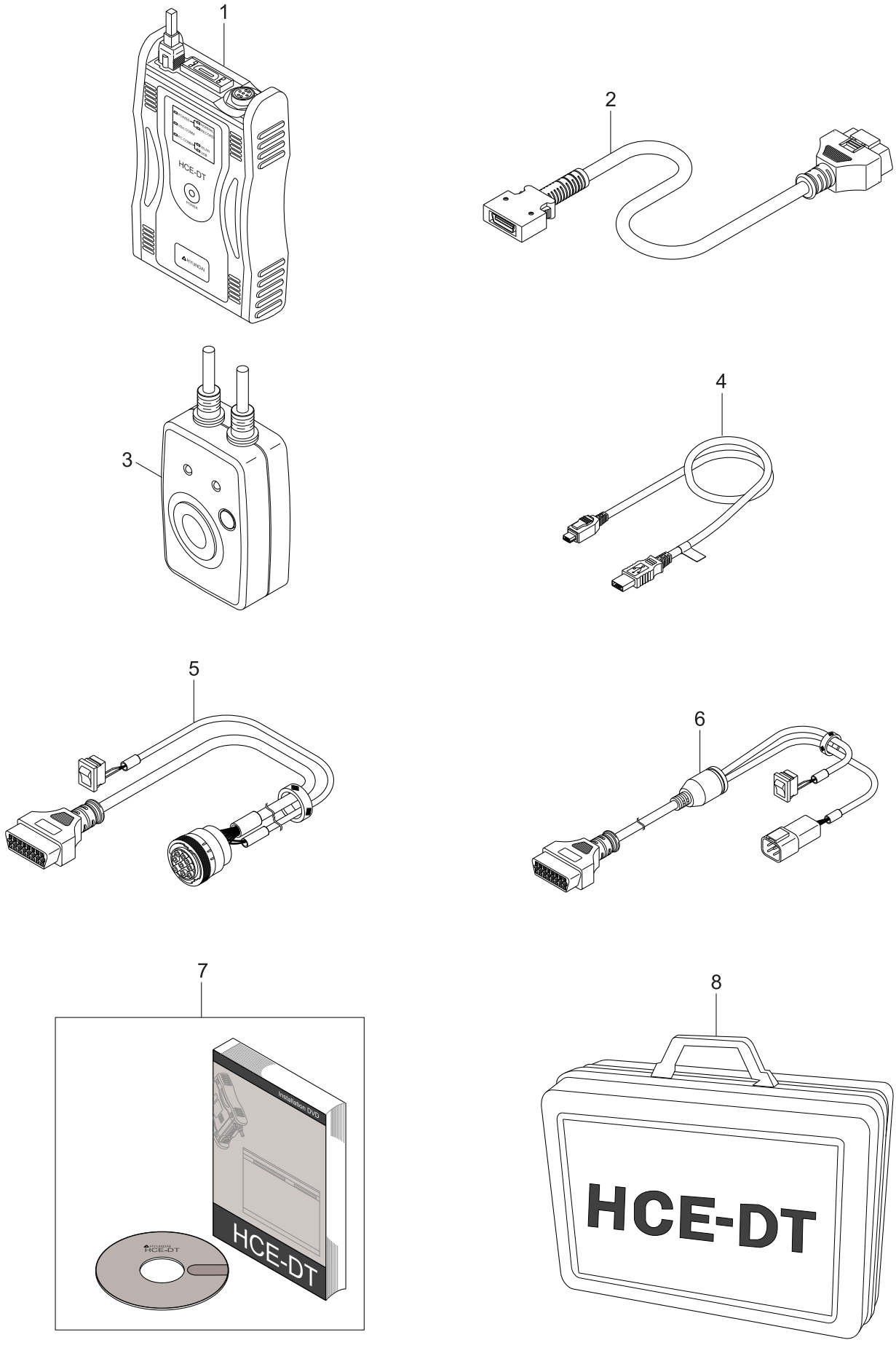

Item	Part_No	IS	Ord	T	Description	Qty	Serial_No	ITC	Remark
*	21QB-32900				HCE-DT KIT	1	#0001 -	-	
1	21QB-32910				.VCI MAIN MODULE	1			
2	21QB-32920				.VCI COMM. CABLE-16P	1			
3	21QB-32930				.POWER & TRIGGER MODULE	1			
4	21QB-32940				.USB CABLE(VCI TO PC)	1			
5	21QB-32950				.MACHINE COMM. CABLE-9P	1			
6	21QB-32960				.MACHINE COMM. CABLE-4P	1			
7	21QB-32970				.CD-INSTALL	1			
8	21QB-32980				.CASE	1			

AGENCY APPROVAL

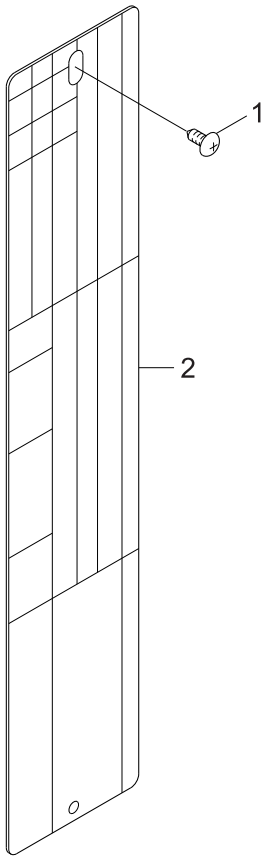

Item	Part_No	IS	Ord	T	Description	Qty	Serial_No	ITC	Remark
1	3908612				SCREW-DRIVE	2			AP9712
2	4989775				DATAPLATE	1			

CYLINDER BLOCK

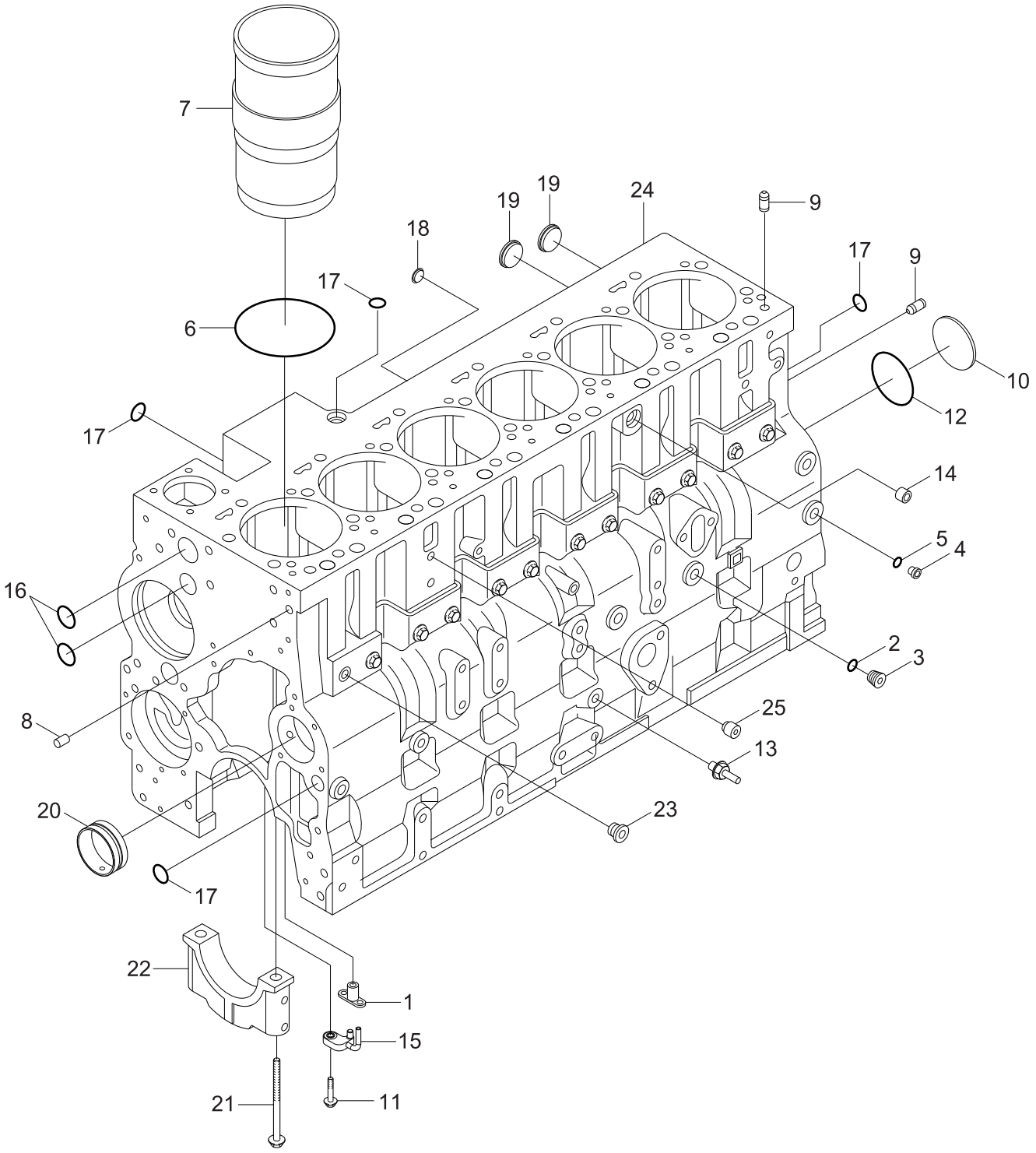

Item	Part_No	IS	Ord	T	Description	Qty	Serial_No	ITC	Remark
1	S923E				COCK-DRAIN	1			BB9293-03
*-1	3678921				PLUG-THREAD	1			
2	3678912				.SEAL/O-RING	1			
N3	3678922				.PLUG-THREAD	1			NOT
*-2	3678923				PLUG-THREAD	6			
N4	3678924				.PLUG-THREAD	1			NOT
5	3678925				.SEAL/O-RING	1			
*-3	3800328				KIT-CYLINDER LINER	6			
6	3907177				.SEAL-RECT RING	1			
N7	3948095				.LINER-CYLINDER	1			NOT
8	3900257				DOWEL-PIN	2			
9	3901846				DOWEL-PIN	2			
10	3901969				PLUG-EXPANSION	1			
11	3909025				SCREW-HEX F/HEAD CAP	6			
12	3926048				SEAL/O-RING	1			
13	3936352				SCREW-HEX F/HEAD CAP	1			
14	4931643				PLUG-PIPE	1			
15	4944337				NOZZLE-PISTON COOLING	6			
N*-4	4993369				BLOCK-CYLINDER	1			NOT
16	143066				.PLUG-EXPANSION	3			
17	3004258				.PLUG-EXPANSION	4			
18	3900956				.PLUG-EXPANSION	3			
19	3905401				.PLUG-EXPANSION	3			
20	3945329				.BUSHING	7			
21	3970810				.SCREW-HEX F/HEAD CAP	14			
22	3970955				.CAP-MAIN BEARING	7			
23	4944725				.GUIDE-TAPPET	12			

Item	Part_No	IS	Ord	T	Description	Qty	Serial_No	ITC	Remark
23	4944725				.GUIDE-TAPPET	12			
N24	4993368				.BLOCK-CYLINDER	1			NOT
25	5273887				SCREW-SOCKET SET	1			
*-5	3924445				SHIM(0.010")				0.25MM O/S
*-6	3924446				SHIM(0.015")				0.38MM O/S
*-7	3924447				SHIM(0.020")				0.50MM O/S
*-8	3924448				SHIM(0.030")				0.75MM O/S
*-9	3924449				SHIM(0.040")				1.00MM O/S
N	@				NOT SUPPLIED PARTS	AR			NOT

CRANKSHAFT AND MAIN BEARING

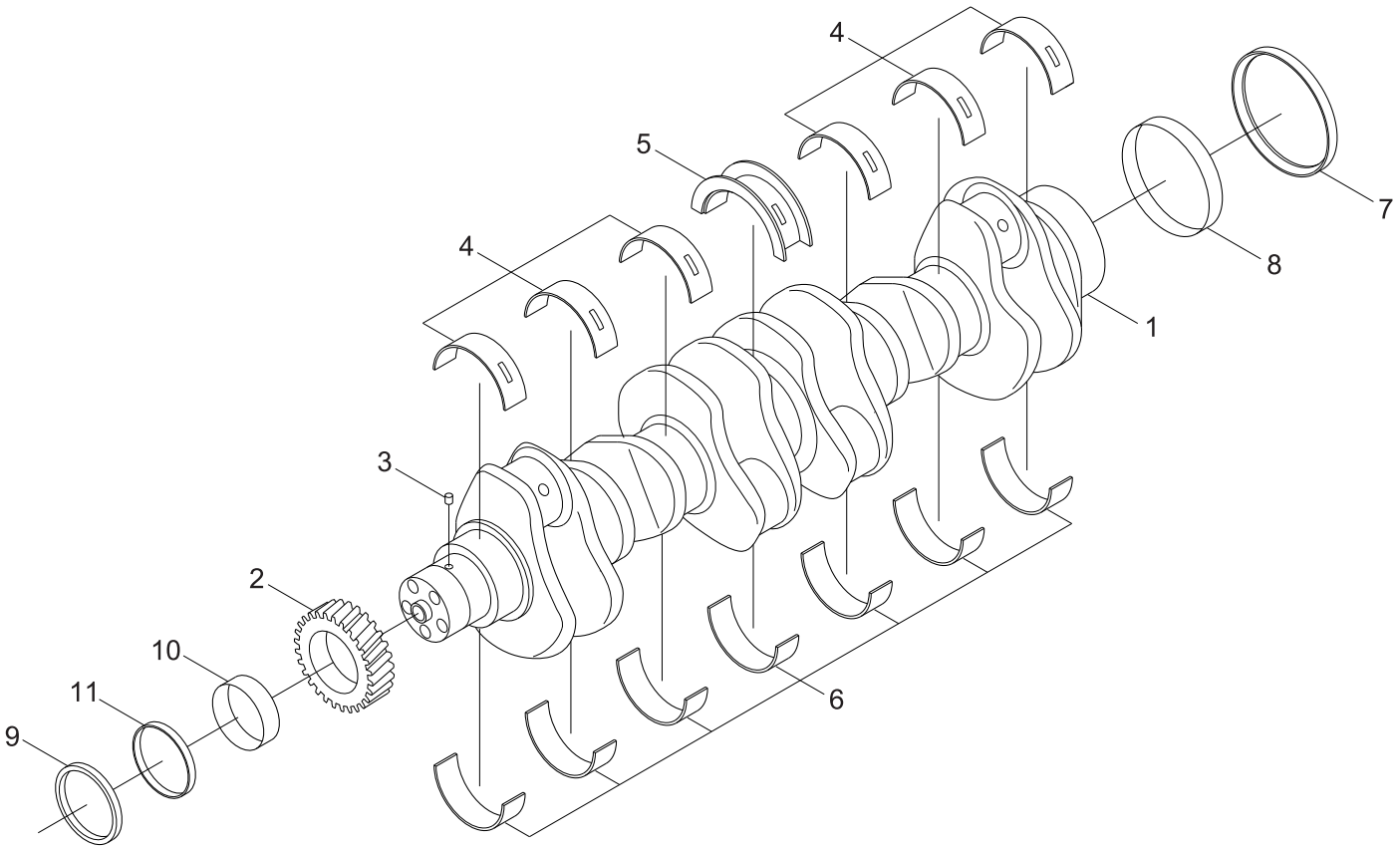

Item	Part_No	IS	Ord	T	Description	Qty	Serial_No	ITC	Remark
N*-1	3965012				CRANKSHAFT ASSY	1			NOT
N1	3965011				.CRANKSHAFT	1			NOT
2	3918776				.GEAR-CRANKSHAFT	1			
3	3904483				.PIN-DOWEL	1			
*-2	3945917				MAIN BEARING SET	1			STD
N4	3944158				.BEARING-MAIN	7			NOT
5	3944163				.BEARING-C/S THRUST	1			STD
N6	3944153				.BEARING-MAIN	6			NOT
*-3	3945918				MAIN BEARING SET	1			0.25MM O/S
N4	3944159				.BEARING-MAIN	7			NOT
5	3944164				.BEARING-C/S THRUST	1			0.25MM O/S
N6	3944154				.BEARING-MAIN	6			NOT
*-4	3945919				MAIN BEARING SET	1			0.50MM O/S
N4	3944160				.BEARING-MAIN	7			NOT
5	3944165				.BEARING-C/S THRUST	1			0.50MM O/S
N6	3944155				.BEARING-MAIN	6			NOT
*-5	3945920				MAIN BEARING SET	1			0.75MM O/S
N4	3944161				.BEARING-MAIN	7			NOT
5	3944166				.BEARING-C/S THRUST	1			0.75MM O/S
N6	3944156				.BEARING-MAIN	6			NOT
*-6	3945921				MAIN BEARING SET	1			1.00MM O/S
N4	3944162				.BEARING-MAIN	7			NOT
5	3944167				.BEARING-C/S THRUST	1			1.00MM O/S
N6	3944157				.BEARING-MAIN	6			NOT
*-7	3926126				KIT-WEAR SLEEVE SEAL RR	1			REAR
N7	3925530				.OIL SEAL	1			NOT
N8	3925532				.SLEEVE-WEAR	1			NOT

Item	Part_No	IS	Ord	T	Description	Qty	Serial_No	ITC	Remark
N8	3925532				.SLEEVE-WEAR	1			NOT
*-8	3925343				KIT-WEAR SLEEVE	1			FRONT
N*-9	3920405				.TOOL-SEAL	1			NOT
N9	3921928				.OIL SEAL	1			NOT
N10	3924986				.SLEEVE-WEAR	1			NOT
N11	3924987				.SHIELD-DUST	1			NOT
	3945926				BEARING-THRUST	1			1.00MM O/S
N*-1	3944153				.BEARING-MAIN	1			NOT
*-12	3944168				.BEARING-C/S THRUST	1			STD JRNL-.25 OS
*-13	3945927				BEARING-THRUST	1			STD
N*-1	3944153				.BEARING-MAIN	1			NOT
*-15	3944169				.BEARING-C/S THRUST	1			SDT JRNL-.5 OS
*-16	3945928				BEARING-THRUST	1			0.50MM O/S
N*-1	3944155				.BEARING-MAIN	1			NOT
N*-1	3944170				.BEARING-C/S THRUST	1			NOT
N	@				NOT SUPPLIED PARTS	AR			NOT

PISTON COOLING NOZZLE

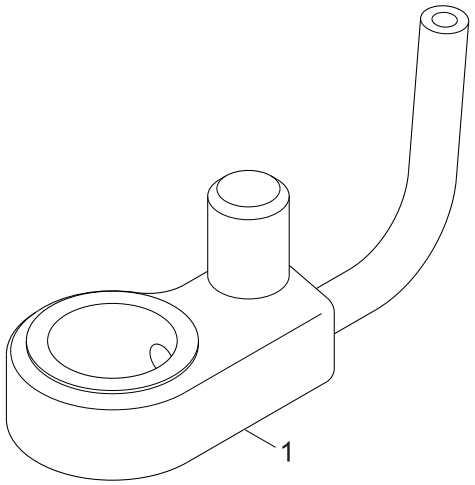

Item	Part_No	IS	Ord	T	Description	Qty	Serial_No	ITC	Remark
1	4944337				NOZZLE-PISTON COOLING	6			BB9293-02

VALVE TAPPET

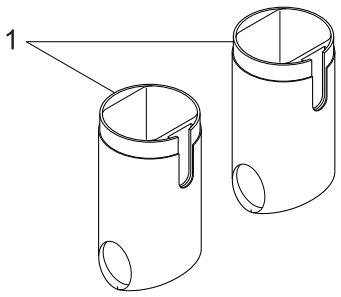

Item	Part_No	IS	Ord	T	Description	Qty	Serial_No	ITC	Remark
1	3965966				TAPPET-VALVE	12			BB9293-02

FRONT GEAR HOUSING

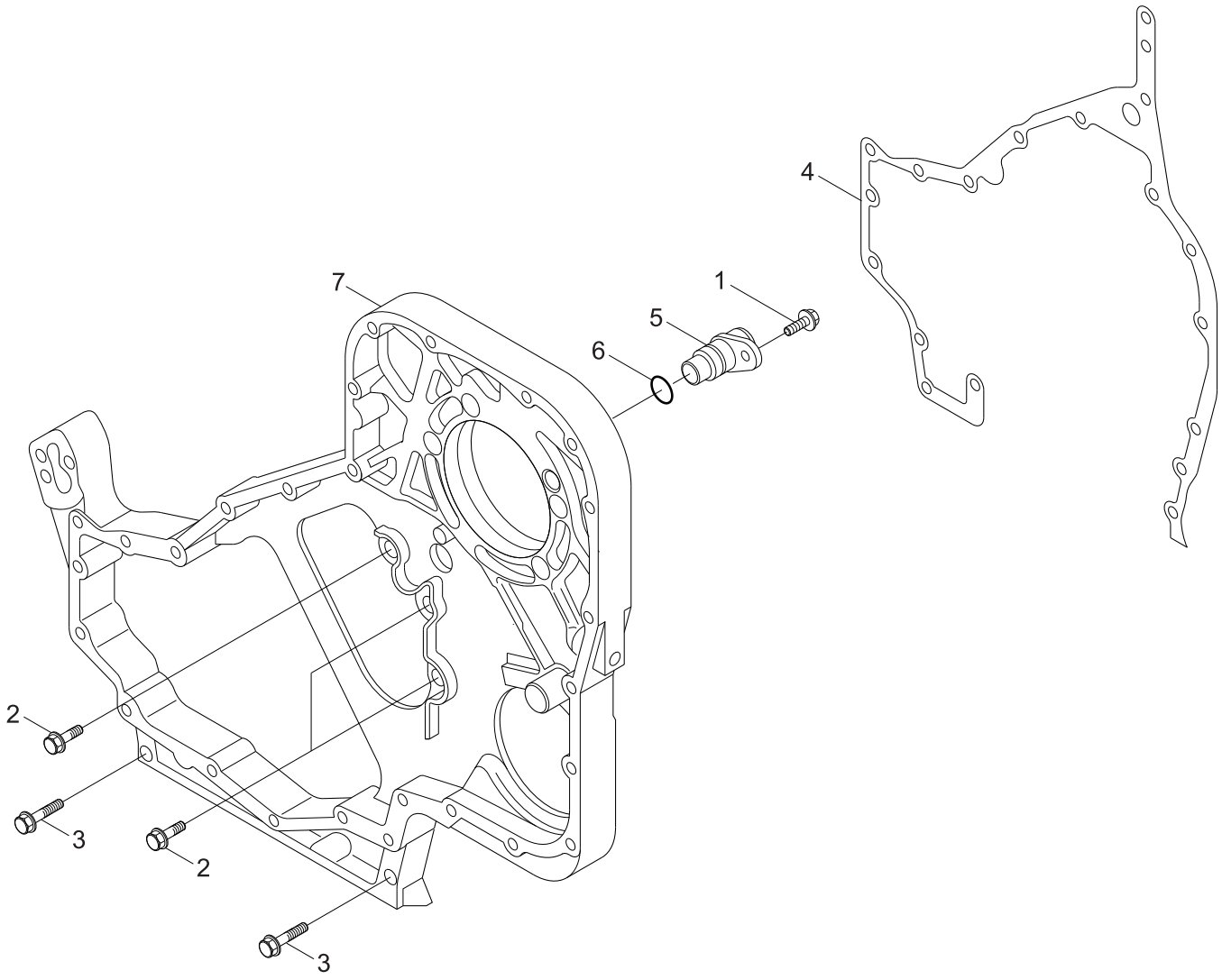

Item	Part_No	IS	Ord	T	Description	Qty	Serial_No	ITC	Remark
1	3913638				SCREW-HEX F/HEAD CAP	1			BB9837-02
2	3926846				SCREW-HEX F/HEAD CAP	3			
3	3943885				SCREW-HEX F/HEAD CAP	2			
4	3944293				GASKET-GEAR HOUSING	1			
*-1	3968702				PLUG-GEAR HOUSING	1			
N5	3968703				.PLUG/O-RING	1			NOT
6	4010643				.SEAL/O-RING	1			
7	4992996				HOUSING-GEAR	1			
N	@				NOT SUPPLIED PARTS	AR			NOT

CRANKCASE BREATHER

NOT USED

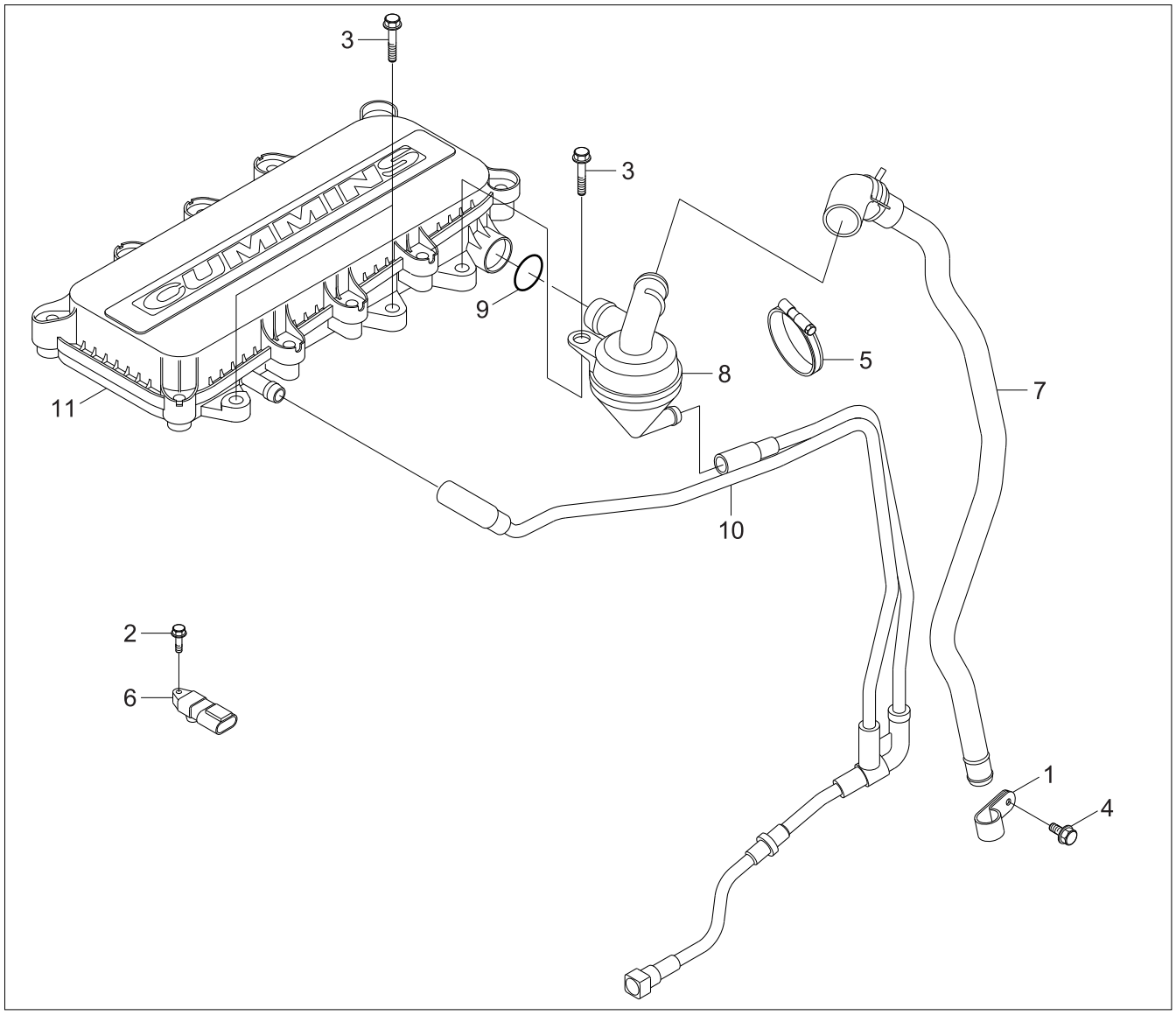

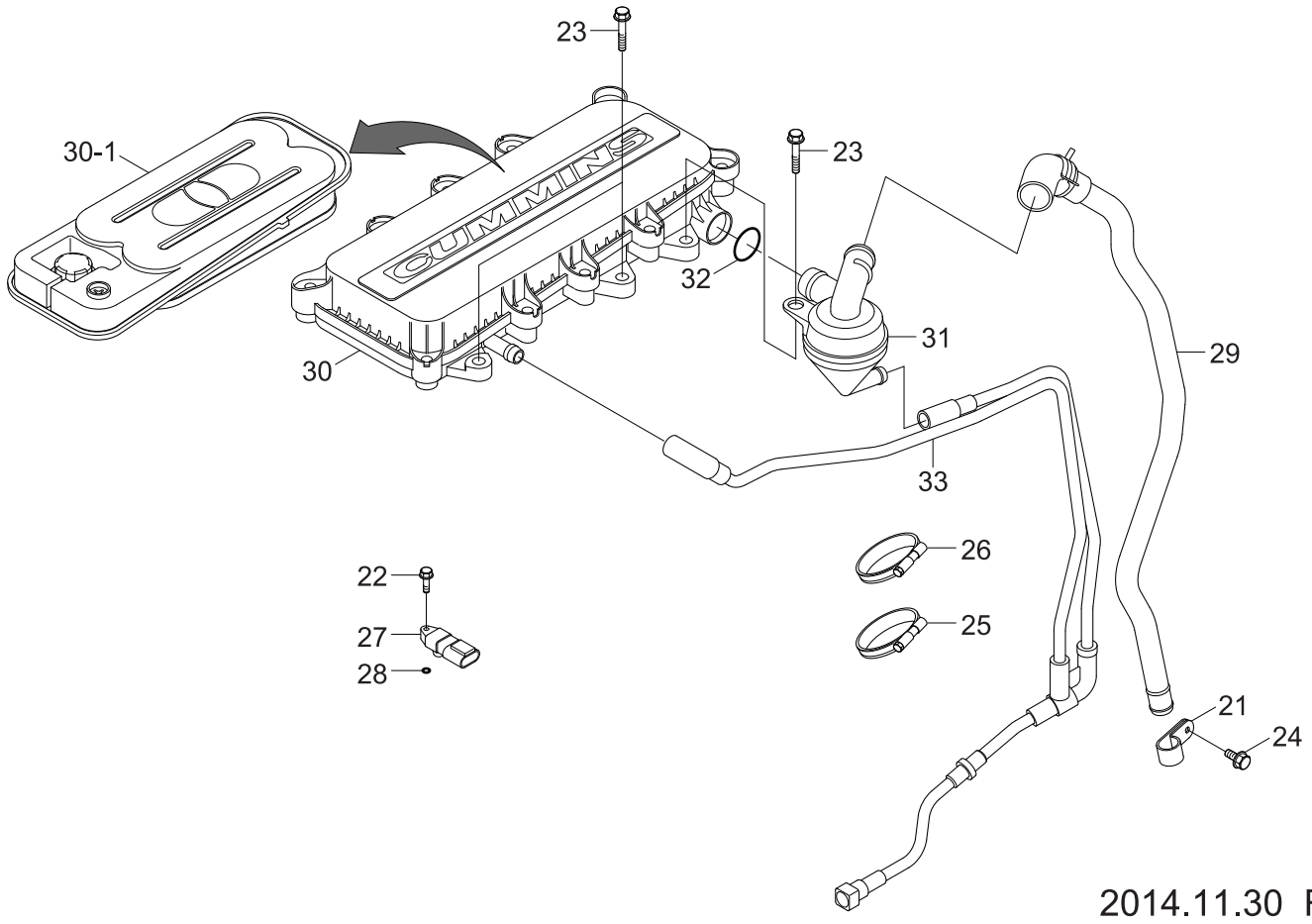

Item	Part_No	IS	Ord	T	Description	Qty	Serial_No	ITC	Remark
1	69911A				CLIP	1	#0001 -		BR9368-02
2	3679118				SCREW-HEX F/HEAD CAP	1	#0001 -		
3	3900632				SCREW-HEX F/HD CAP	6	#0001 -		
4	3925883				SCREW-HEX HD CAP	1	#0001 -		
5	4944734				CLIP-WIRE RETAINING	1	#0001 -		
5	3969959				CLIP-WIRE RETAINING	1	#0001 -		
6	4984575				SENSOR-PRESSURE	1	#0001 -		
7	5255736				TUBE-BREATHER	1	#0001 -		
*-1	5255737				TUBE-BREATHER	1	#0001 -		
N8	4944727				.BREATHER-OIL SEPARATOR	1	#0001 -		NOT
9	5271480				..SEAL, O-RING	1	#0001 -		
N10	5255759				.TUBE-OIL DRAIN	1	#0001 -		NOT
11	5267443				BREATHER-OIL SEPARATOR	1	#0001 -		
N	@				NOT SUPPLIED PARTS	AR			NOT
21	69911A				CLIP	1	#0001 -		BR9368-04
22	3679118				SCREW-HEX F/HEAD CAP	1	#0001 -		
23	3900632				SCREW-HEX F/HD CAP	6	#0001 -		
24	3925883				SCREW-HEX HD CAP	1	#0001 -		
25	3969959				CLIP-WIRE RETAINING	1	#0001 -		
26	4944734				CLIP-WIRE RETAINING	1	#0001 -		
27	4984575				SENSOR-PRESSURE	1	#0001 -		
28	4928592				.SEAL, O-RING	1	#0001 -		
29	5255736				TUBE-BREATHER	1	#0001 -		
30	5267443				BREATHER-OIL SEPARATOR	1	#0001 -		
30-1	12HV-00030				.ELEMENT-C/CASE VENT	1	#0001 -		
*-12	5284074				TUBE-BREATHER	1	#0001 -		
N31	4944727				.BREATHER-OIL SEPARATOR	1	#0001 -		NOT

Item	Part_No	IS	Ord	T	Description	Qty	Serial_No	ITC	Remark
N31	4944727				.BREATHER-OIL SEPARATOR	1	#0001 -		NOT
32	5271480				..SEAL, O-RING	1	#0001 -		
N33	5284073				.TUBE-LUB OIL DRAIN	1	#0001 -		NOT
N	@				NOT SUPPLIED PARTS	AR			NOT

COOLANT HEATER STARTING AID

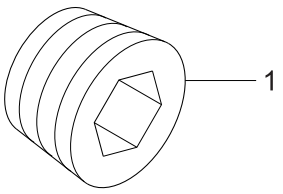

Item	Part_No	IS	Ord	T	Description	Qty	Serial_No	ITC	Remark
1	3008469				PLUG-PIPE	1			CH9066-01

VIBRATION DAMPER

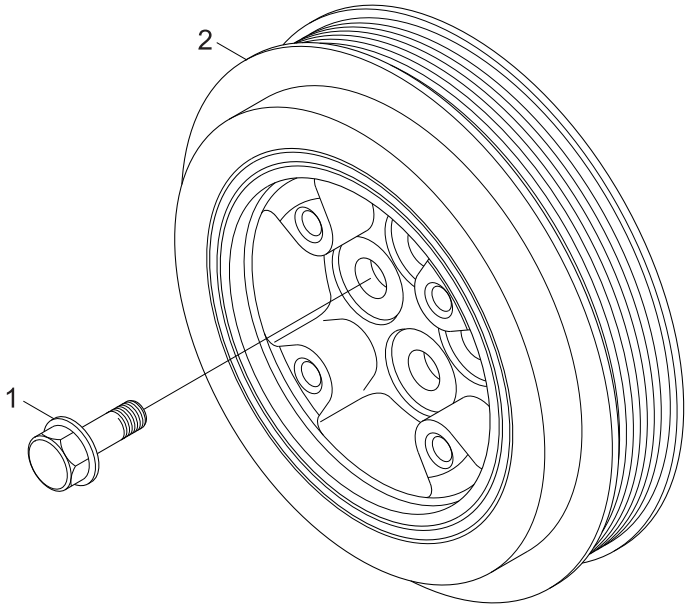

Item	Part_No	IS	Ord	T	Description	Qty	Serial_No	ITC	Remark
1	3906733				SCREW-HEX F/HEAD CAP	5			DA9365
2	5259214				DAMPER-VIBRATION	1			

FR GEAR TRAIN ACC MOUNTING

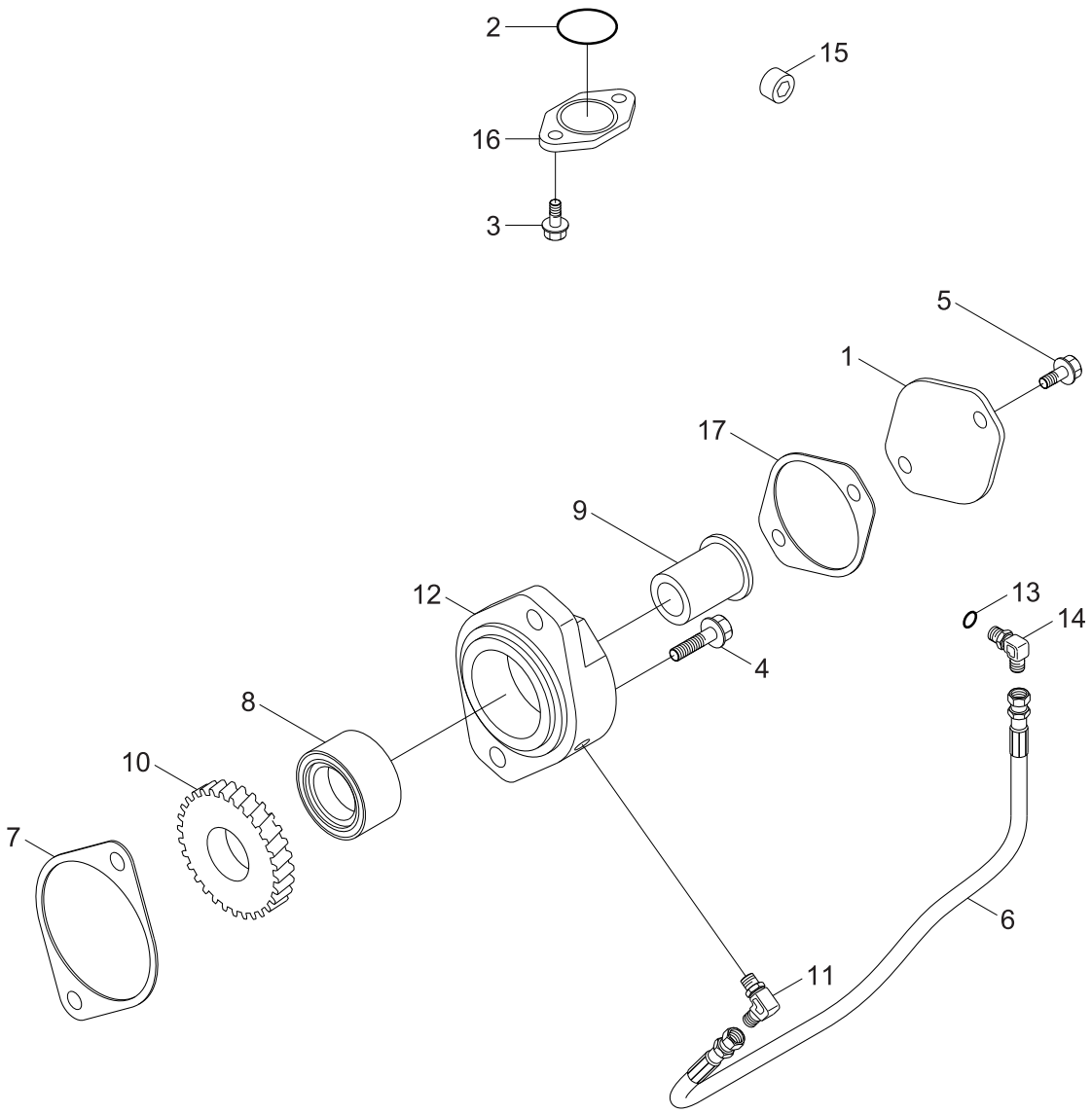

Item	Part_No	IS	Ord	T	Description	Qty	Serial_No	ITC	Remark
1	204048				PLATE-COVER	1			DF9180-01
2	3101215				SEAL-RECTANGULAR RING	1			
3	3900630				SCREW-HEX F/HEAD CAP	2			
4	3900637				SCREW-HEX F/HEAD CAP	2			
5	3903990				SCREW-HEX F/HEAD CAP	2			
6	3916051				HOSE-FLEXIBLE	1			
7	3938655				GASKET-ACC DRIVE CVR	1			
*-1	3939962				ADAPTER-HYD PUMP	1			
8	3935644				.BEARING-ROLLER	1			
9	3935646				.SHAFT-ACCESSORY DRIVE	1			
10	3936138				.GEAR-ACCESSORY DRIVE	1			
11	3939694				.ELBOW-PLAIN UNION	1			
N12	3939958				.ADAPTER-HYD PUMP	1			NOT
*-2	3945212				ELBOW-PLAIN UNION	1			
13	3678925				.SEAL/O-RING	1			
N14	5273653				.ELBOW-PLAIN UNION	1			NOT
15	4931643				PLUG-PIPE	1			
16	4935317				PLATE-COVER	1			
17	4988280				GASKET-HYDRAULIC PUMP	1			
N	@				NOT SUPPLIED PARTS	AR			NOT

DRAIN LOCATION

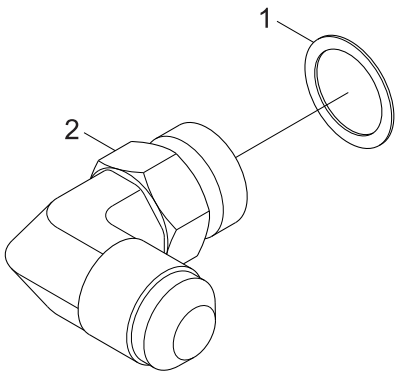

Item	Part_No	IS	Ord	T	Description	Qty	Serial_No	ITC	Remark
*-1	3062138				ELBOW-MALE UNION	1			DL9330
1	3046201				.SEAL/O-RING	1			
2	3062139				.ELBOW-MALE UNION	1			

THERMOSTAT

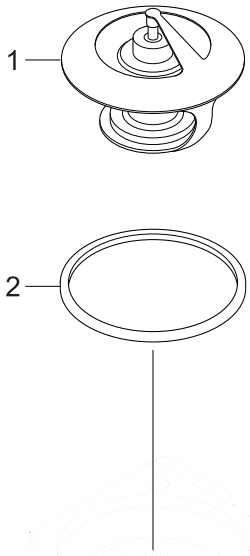

Item	Part_No	IS	Ord	T	Description	Qty	Serial_No	ITC	Remark
*-1	4992231				THERMOSTAT	1			EC9065-01
1	4936967				.SEAL-RING	1			
N2	4992033				.THERMOSTAT	1			NOT
N	@				NOT SUPPLIED PARTS	AR			NOT

ALTERNATOR

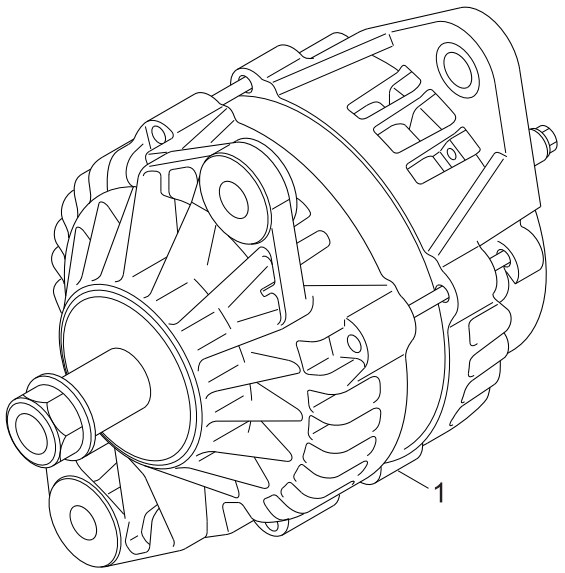

Item	Part_No	IS	Ord	T	Description	Qty	Serial_No	ITC	Remark
1	2874863				ALTERNATOR	1			EE9247-03

ALTERNATOR MOUNTING

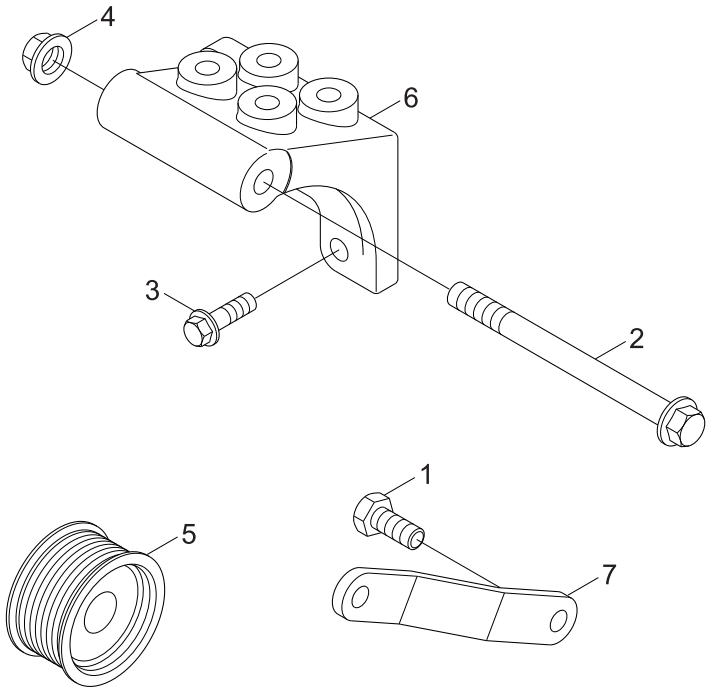

Item	Part_No	IS	Ord	T	Description	Qty	Serial_No	ITC	Remark
1	3052061				SCREW-HEX H/CAP	1			EH97687-01
2	3903105				SCREW-HEX F/HEAD CAP	1			
3	3903112				SCREW-HEX F/HEAD CAP	3			
4	3903210				NUT-HEX FLANGE	1			
5	3965147				PULLEY-ALTERNATOR	1			
6	3976754				BRACE-ALTERNATOR	1			
7	4939538				SUPPORT-ALTERNATOR	1			

EXHAUST RECIRCULATION

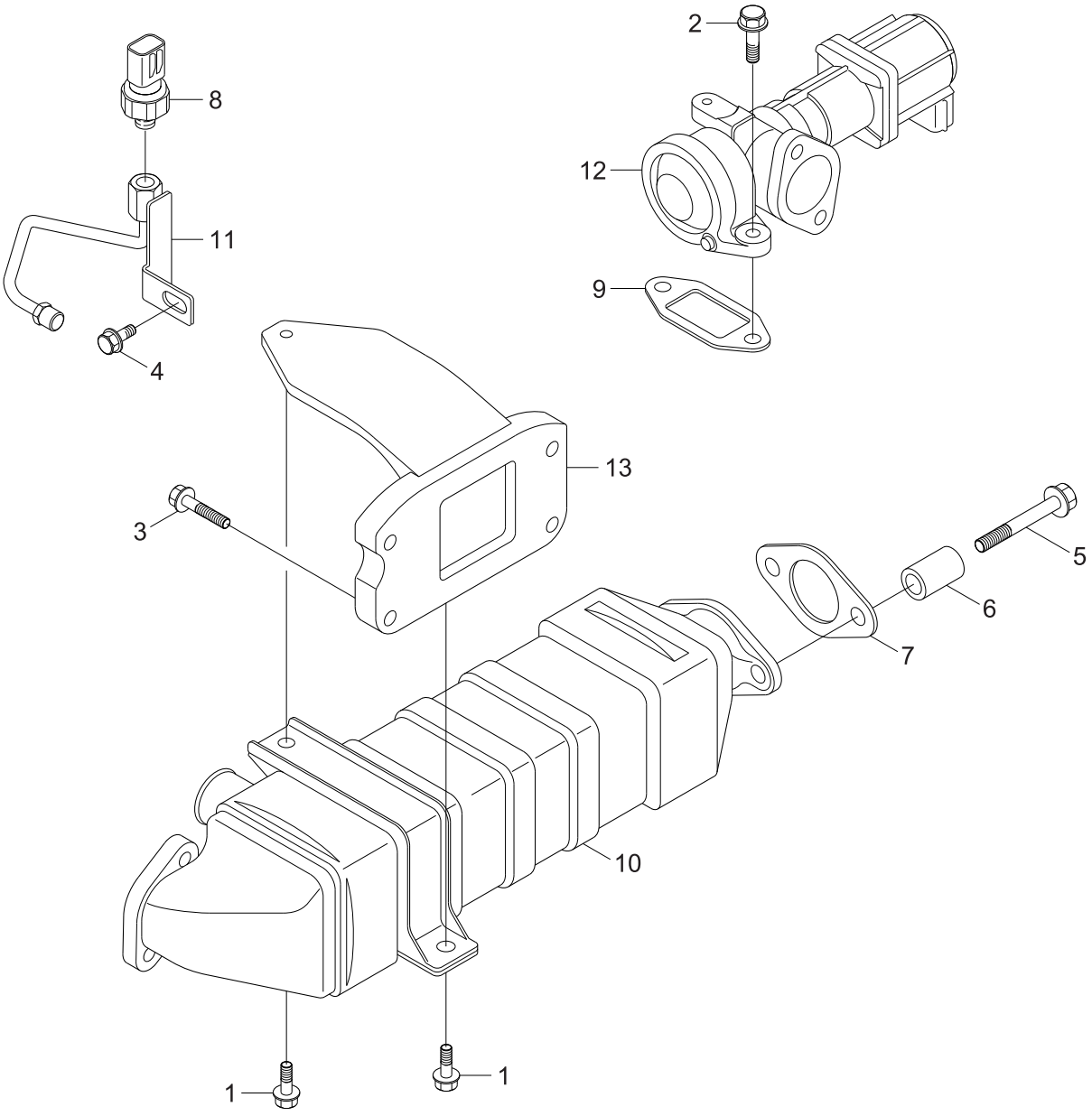

1	3900630		Screw-Hex F/Head Cap	2			ER9131-06	
2	3900631		Screw-Hex F/Head Cap	4				
3	3900632		Screw-Hex F/Head Cap	6				
4	3925883		Screw-Hex F/Head Cap	1				
5	3944593		Screw-Hex F/Head Cap	2				
6	3945252		Spacer-Mounting	2				
7	5266422		Gasket-Exh Manifold	1				
8	4928594		Sensor-Pressure	1			EXHAUST GAS	
9	5253019		Gasket-Egr	1				
N10	5254315		Cooler-Egr	1			NOT SUPPLIED	
11	5256879		Tube-Pressure Sensing	1				
12	4956112		Valve-Exh Gas Rcn Mdl	1				
13	5266802		Support-Egr	1				
*-1	2882045		Kit-Egr Cooler	1				
*-2	3058653		. Seal/O-Ring	3				
*-3	3089392		. Seal/O-Ring	1				
*-4	3678925		. Seal/O-Ring	2				
*-5	4932615		. Gasket-Connection	2				
*-6	5263369		. Cooler-Egr	1				
*-7	5266422		. Gasket-Exh Manifold	1				
N	@		Not Supplied Parts				NOT SUPPLIED	

Print this!

EGR AIR PLUMBING

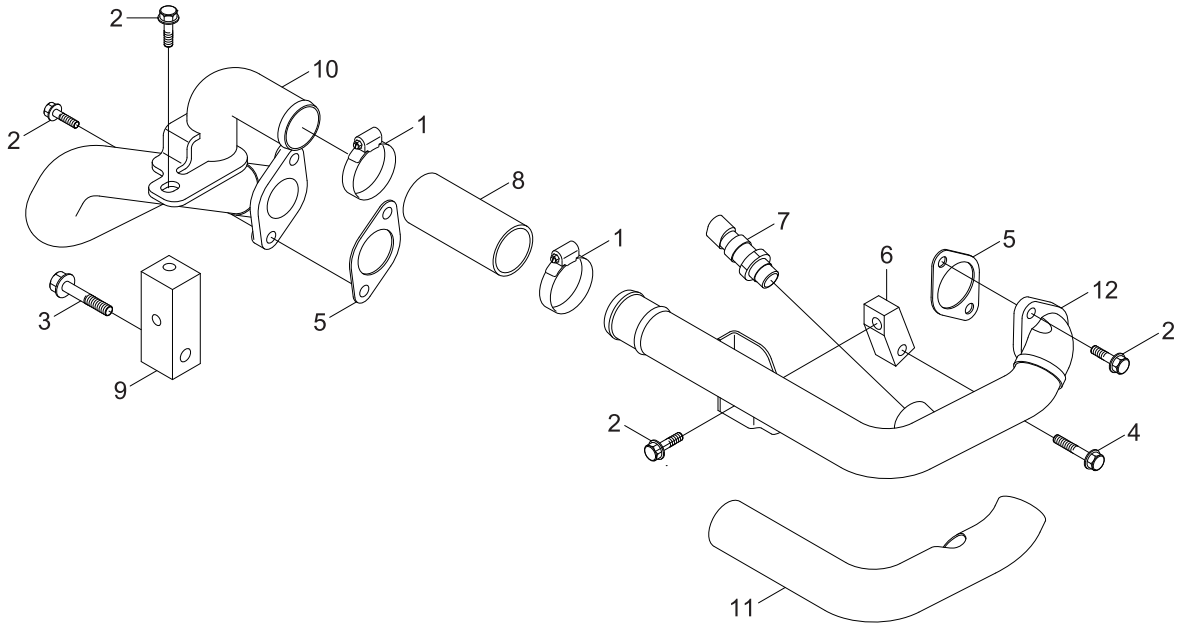

1	3104485		Clamp	2			ER9132-07	
2	3900631		Screw-Hex F/Head Cap	2				
3	3900634		Screw-Hex F/Head Cap	1				
4	3900678		Screw-Hex F/Head Cap	1				
5	4932615		Gasket-Connection	1				
6	4937619		Brace-Tube	1				
7	2872858		Sensor-Exh Gas Temp	1				
8	5270057		Hose-Plain	1				
9	5255908		Brace-Tube	1				
10	5266834		Tube-Air Transfer	1				
*-1	5257498		Tube-Air Transfer	1				
N11	5255826		. Insulation-Tube	1			NOT SUPPLIED	
N12	5257497		. Tube-Air Transfer	1			NOT SUPPLIED	
N	@		Not Supplied Parts				NOT SUPPLIED	

Print this!

EGR WATER PLUMBING

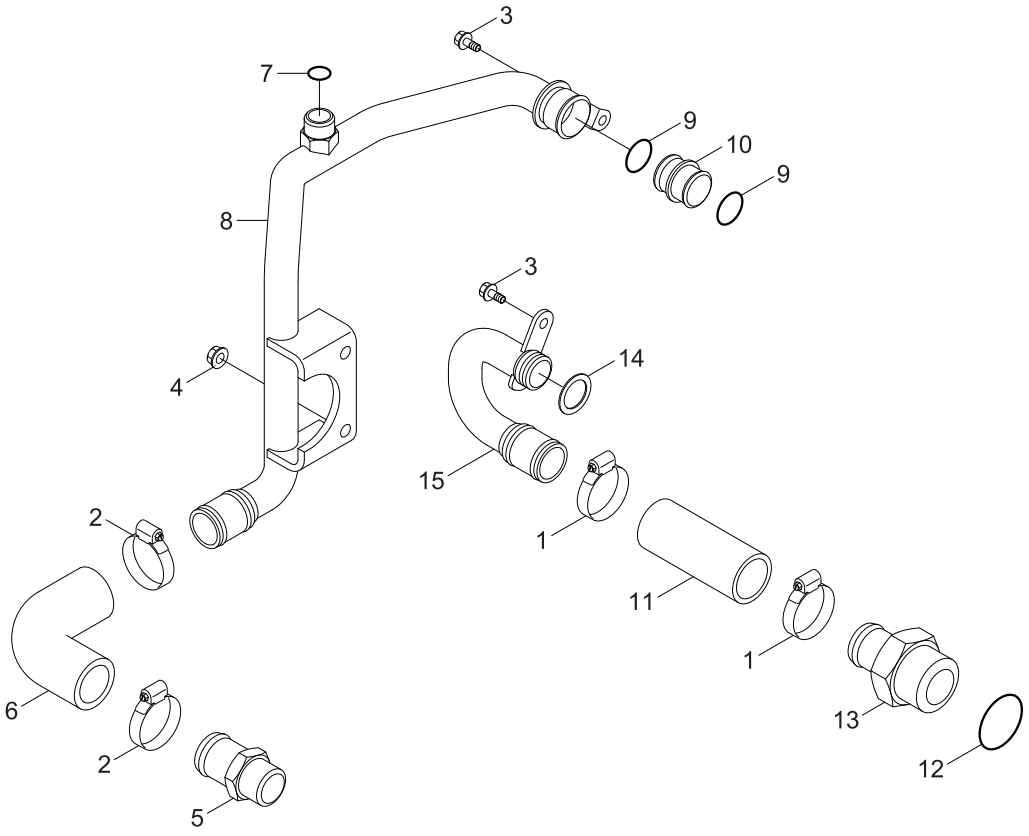

1	3010550		Clamp-Hose	2			ER9134-05	
2	3895734		Clamp-Hose	2				
3	3900626		Screw-Hex F/Head Cap	1				
4	3906216		Nut-Hex Flange	2				
5	4941864		Coupling-Plain Hose	1				
6	5258625		Hose-Molded	1				
*-1	5263663		Tube-Water Outlet	1				
7	3627695		. Seal/O-Ring	1				
N8	5256442		. Tube-Exh Water Outlet	1			NOT SUPPLIED	
*-2	5262364		. Tube-Water Transfer	1				
9	3058653		.. Seal/O-Ring	2				
N10	5262363		.. Tube-Water Transfer	1			NOT SUPPLIED	
11	5268856		Hose-Plain	1				
*-3	5269137		Coupling-Plain Hose	1				
12	3089019		. Seal/O-Ring	1				
N13	5269134		. Coupling-Plain Hose	1			NOT SUPPLIED	
*-4	5283561		Tube-Exh Water Inlet	1				
14	3058653		. Seal/O-Ring	1				
15	5283560		. Tube-Exh Water Inlet	1				
N	@		Not Supplied Parts				NOT SUPPLIED	

Print this!

FAN DRIVE & MOUNTING

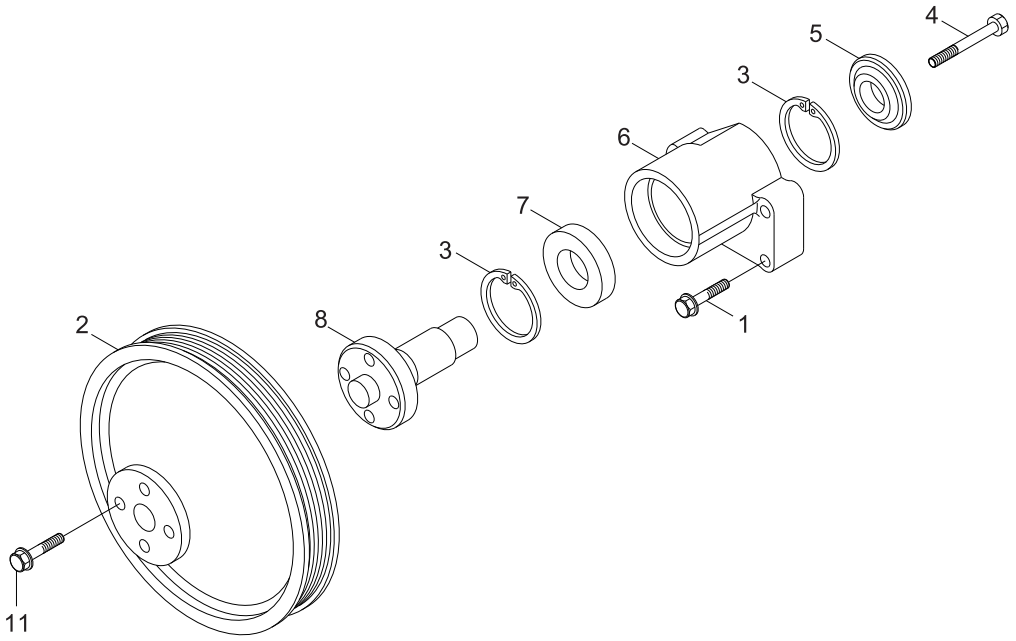

1	3900634		Screw-Hex F/Head Cap	4			FA9938	
2	4943445		Pulley-Fan	1				
*-1	5263529		Support-Fan	1				
3	3035960		. Ring-Retaining	2				
4	3907769		. Screw-H/Head Cap	1				
5	3923044		. Retainer-Fan Hub	1				
N6	3942895		. Support-Fan	1			NOT SUPPLIED	
7	3966844		. Bearing-Roller	1				
8	5272335		. Hub-Fan	1				
11	3902460		Screw-Hex F/Head Cap	4			FA9406	
N	@		Not Supplied Parts				NOT SUPPLIED	

Print this!

FUEL DRAIN PLUMBING

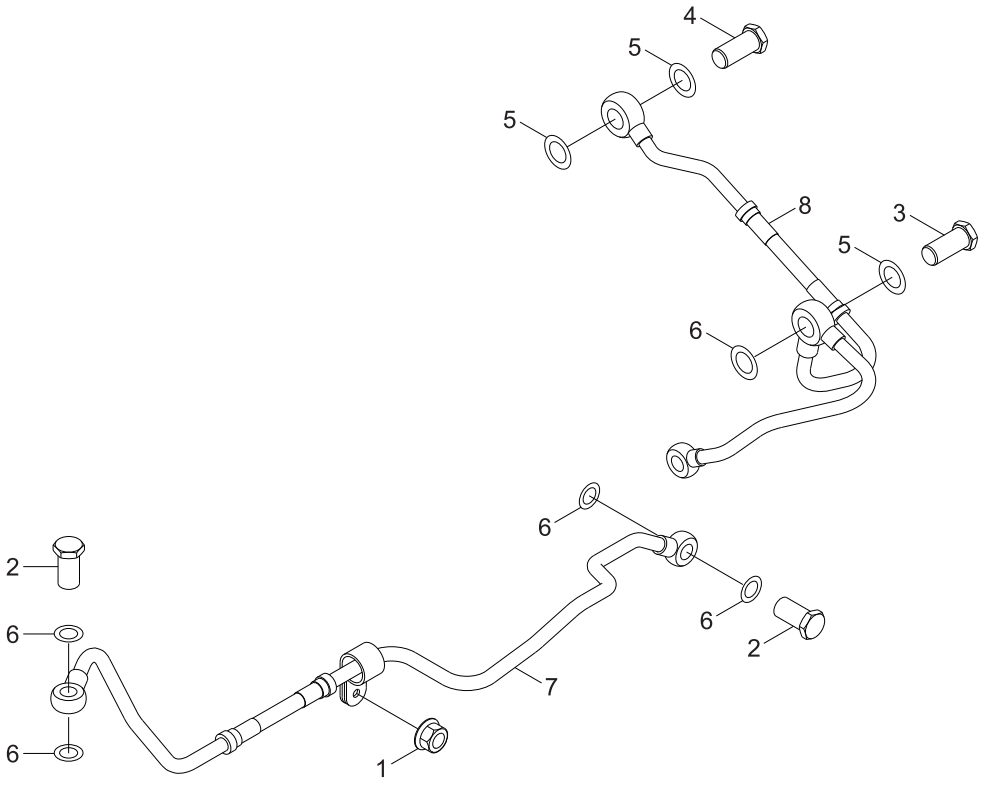

1	3093828		Nut-Hex Flange	1			FD90013-01	
2	3903035		Screw	3				
3	3924725		Screw	1				
4	3957290		Valve-Check	1				
5	3963988		Washer-Sealing	3				
6	3963990		Washer-Sealing	7				
7	4989796		Tube-Fuel Drain	1				
8	5256854		Tube-Fuel Drain	1				

Print this!

FUEL FILTER PLUMBING

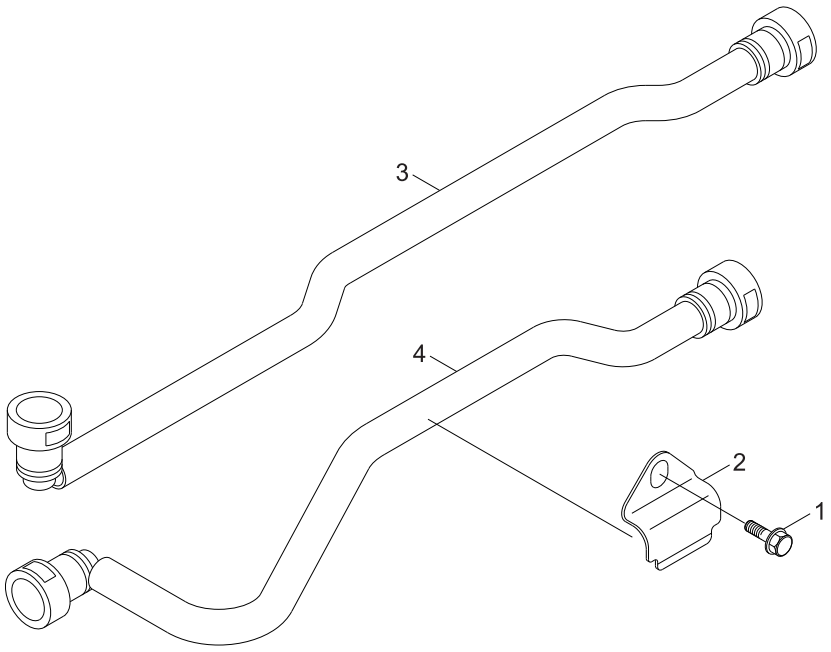

1	3925883		Screw-Hex F/Head Cap	1			FF90125	
2	4988870		Brace-Tube	1				
3	4989798		Tube-Fuel Supply	1				
4	4989797		Tube-Fuel Supply	1				

Print this!

FUEL FILTER LOCATION

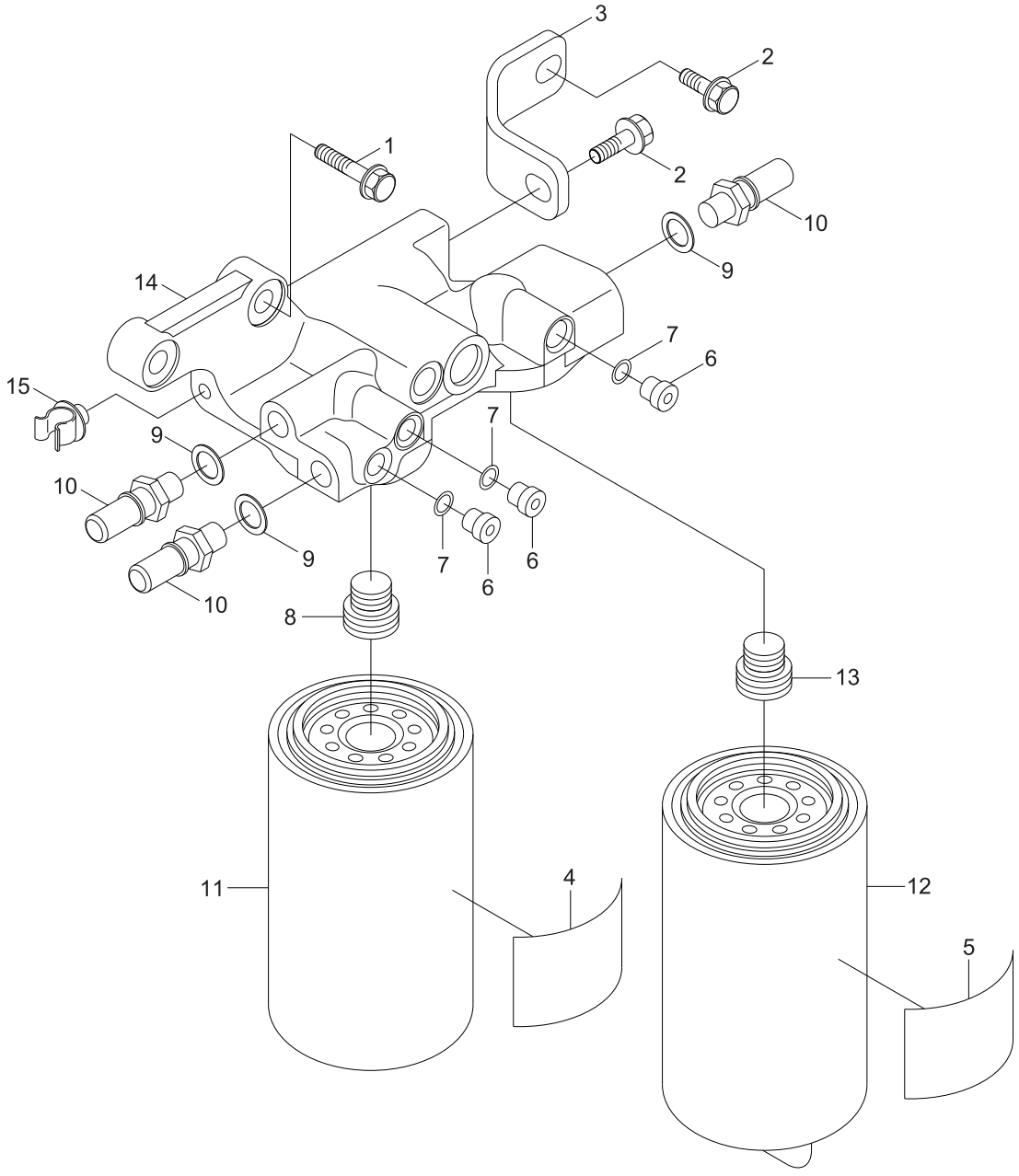

1	3903112		Screw-Hex F/Head Cap	2			FF90128-02	
2	3903990		Screw-Hex F/Head Cap	2				
3	3972834		Brace-Filter	1				
N4	5259800		Decal	1			NOT SUPPLIED	
N5	5259801		Decal	1			NOT SUPPLIED	
*-1	4989791		Head-Fuel Filter	1				
*-2	3678923		. Plug-Thread	3				
N6	3678924		.. Plug-Thread	1			NOT SUPPLIED	
7	3678925		.. Seal/O-Ring	1				
8	3959613		. Adapter-Filter Head	1				
9	3963990		. Washer-Sealing	3				
10	3969822		. Connection-Adapter	3				
11	3973232		. Filter-Fuel	1				
12	3973233		. Filter-Fuel	1				
13	3975405		. Adapter-Filter Head	1				
N14	4992614		. Head-Fuel Filter	1			NOT SUPPLIED	
15	4992615		Clip	1				
N	@		Not Supplied Parts				NOT SUPPLIED	

Print this!

FLYWHEEL HOUSING

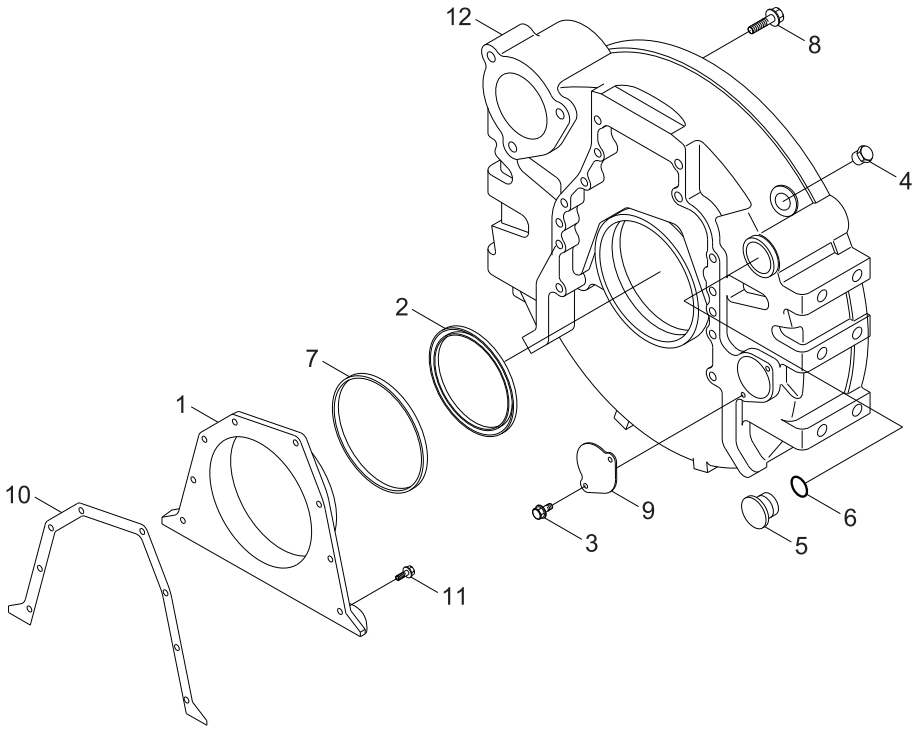

N*-1	5266599		Cover-Rear	1			FH958605	
1	3933384		. Cover-Rear	1				
2	5259499		. Seal-Oil	1				
3	3900225		Screw-Hex Head Cap	2				
4	3904181		Plug-Threaded	1				
5	3910248		Plug/O-Ring	1				
6	3910260		Seal/O-Ring	1				
7	3912473		Seal-Rect Ring	1				
8	3920447		Screw-Hex F/Head Cap	12				
9	3908095		Plate-Cover	1				
10	3939353		Gasket-Rear Cover	1				
11	3991306		Screw-Hex F/Head Cap	8				
12	4929420		Housing-Flywheel	1				

Print this!

FUEL INLET FITTING

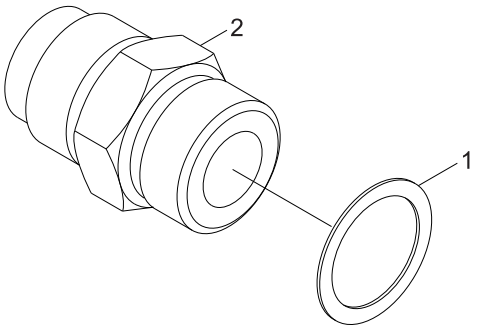

*-1	129866		Union-Male	1			FI9062	
1	3040817		. Seal/O-Ring	1				
N2	3100516		. Union-Male	1			NOT SUPPLIED	
N	@		Not Supplied Parts				NOT SUPPLIED	

Print this!

FUEL PUMP MOUNTING

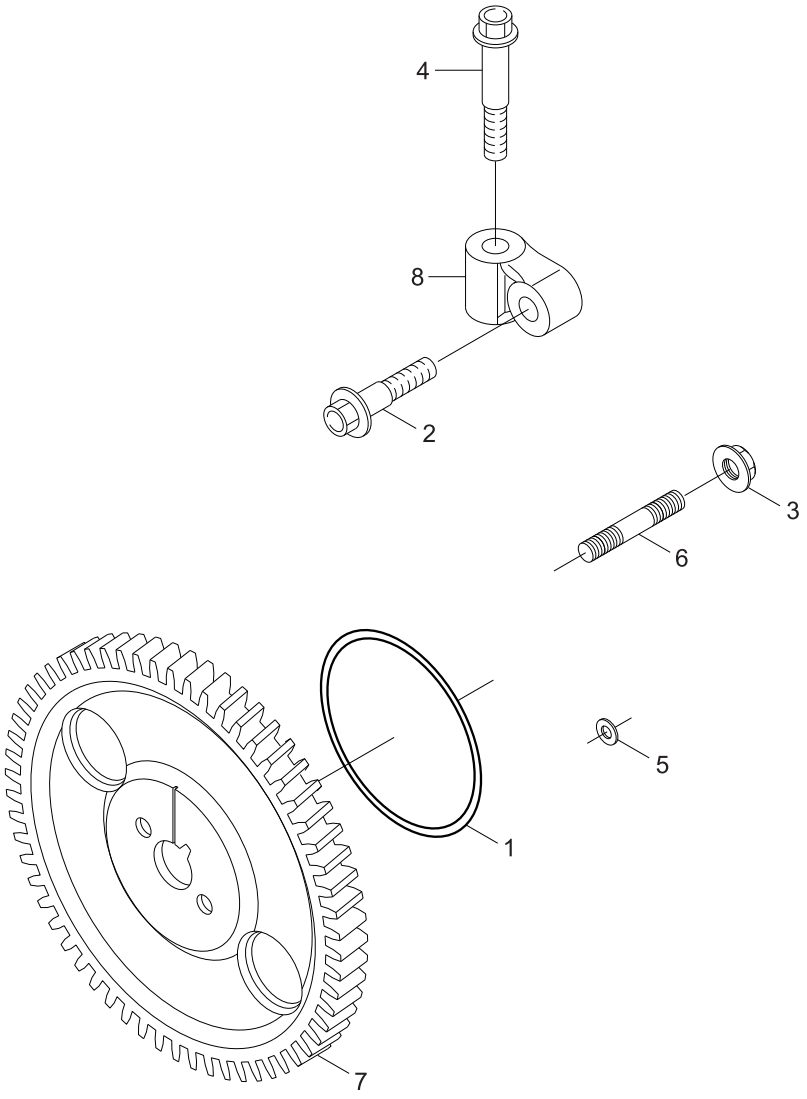

1	3899283		Seal/O-Ring	1			FP90238-02	
2	3902116		Screw-Hex F/Head Cap	1				
3	3902662		Nut-Hex Flange	4				
4	3904446		Screw-Hex F/Head Cap	1				
5	3926722		Seal-Rect Ring	1				
6	3282372		Stud	4				
7	3942764		Gear-Fuel Pump	1				
8	3979337		Support-Fuel Pump	1				

Print this!

FUEL PUMP

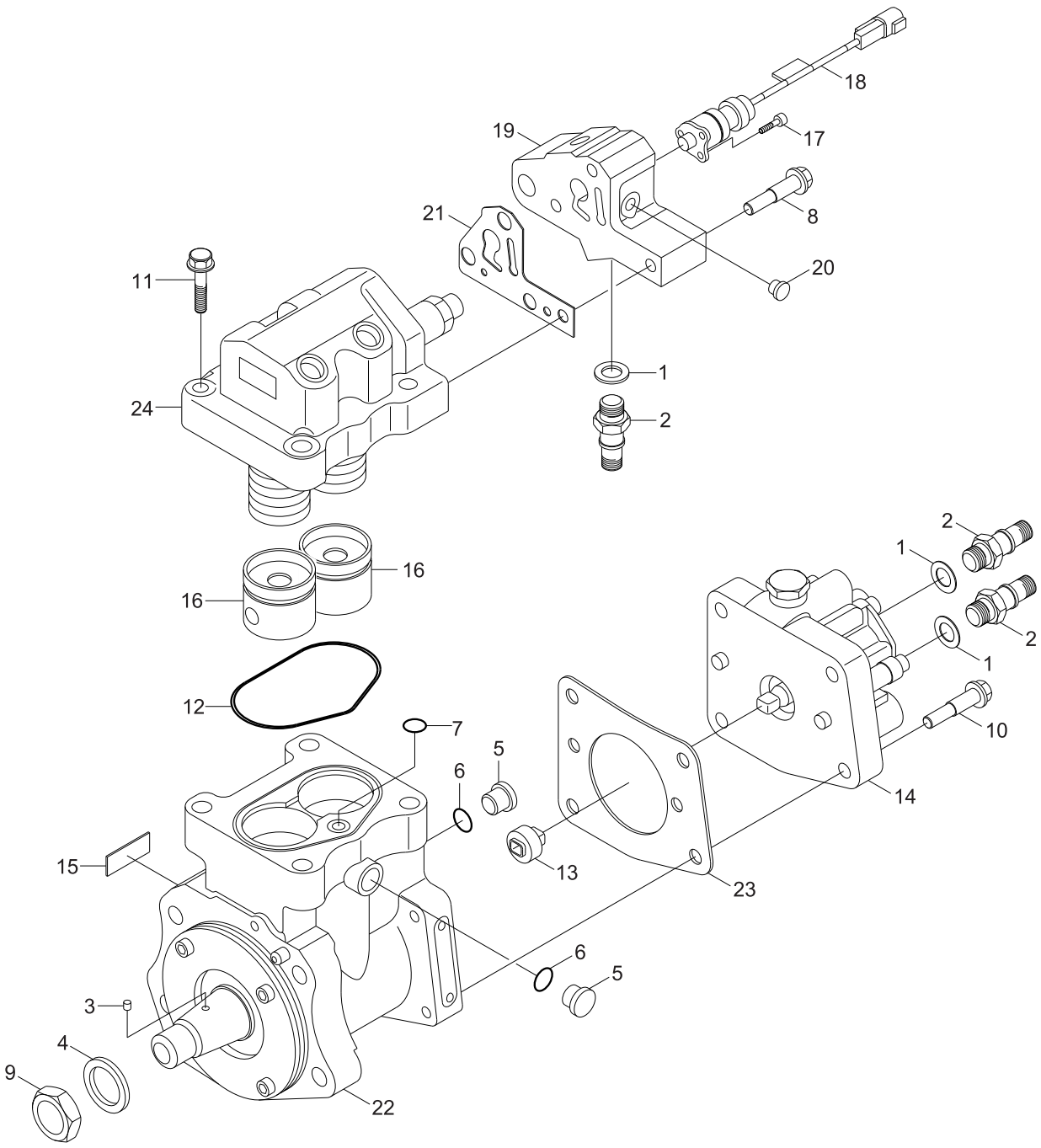

*-1	4954361		Fuel Pump	1			FP90596-02	
1	3963990		. Washer-Sealing	3				
2	3969822		. Connection-Adapter	3				
*-2	4954315NX		. Pump-Fuel	1				
3	3329899		.. Pin-Dowel	1				
4	3330252		.. Washer-Spring	1				
*-3	3678923		.. Plug-Thread	1				
N5	3678924		... Plug-Thread	1			NOT SUPPLIED	
6	3678925		... Seal/O-Ring	1				
7	3867640		.. Seal/O-Ring	1				
8	3909025		.. Screw-Hex F/Head Cap	3				
9	3926593		.. Nut-Hex	1				
10	3928873		.. Screw-Hex F/Head Cap	4				
11	3946085		.. Screw-Twelve P/Cap	4				
12	4010636		.. Seal-F/Pump	1				
13	4061755		.. Hub-Distributor	1				
14	4088866NX		.. Pump-Fuel	1				
N15	4903291		.. Tag-Identification	1			NOT SUPPLIED	
16	4921732		.. Tappet-Pump	2				
*-4	3677005NX		.. Adapter-Fuel Pump	1				
17	4088595		... Screw-Socket Head	3				
18	4903523NX		... Actuator-E/Fuel Cntl	1				
N19	4928533		... Adapter-Fuel Pump	1			NOT SUPPLIED	
20	4928569		... Plug-Threaded	1				
21	4928538		.. Gasket-Fuel Pump	1				
N22	4928570		.. Body-Fuel Pump	1			NOT SUPPLIED	
23	4928575		.. Gasket-Fuel Pump	1				
24	4954314		.. Head-Fuel Pump	1				
N	@		Not Supplied Parts				NOT SUPPLIED	

Print this!

FUEL TRANSFER PUMP

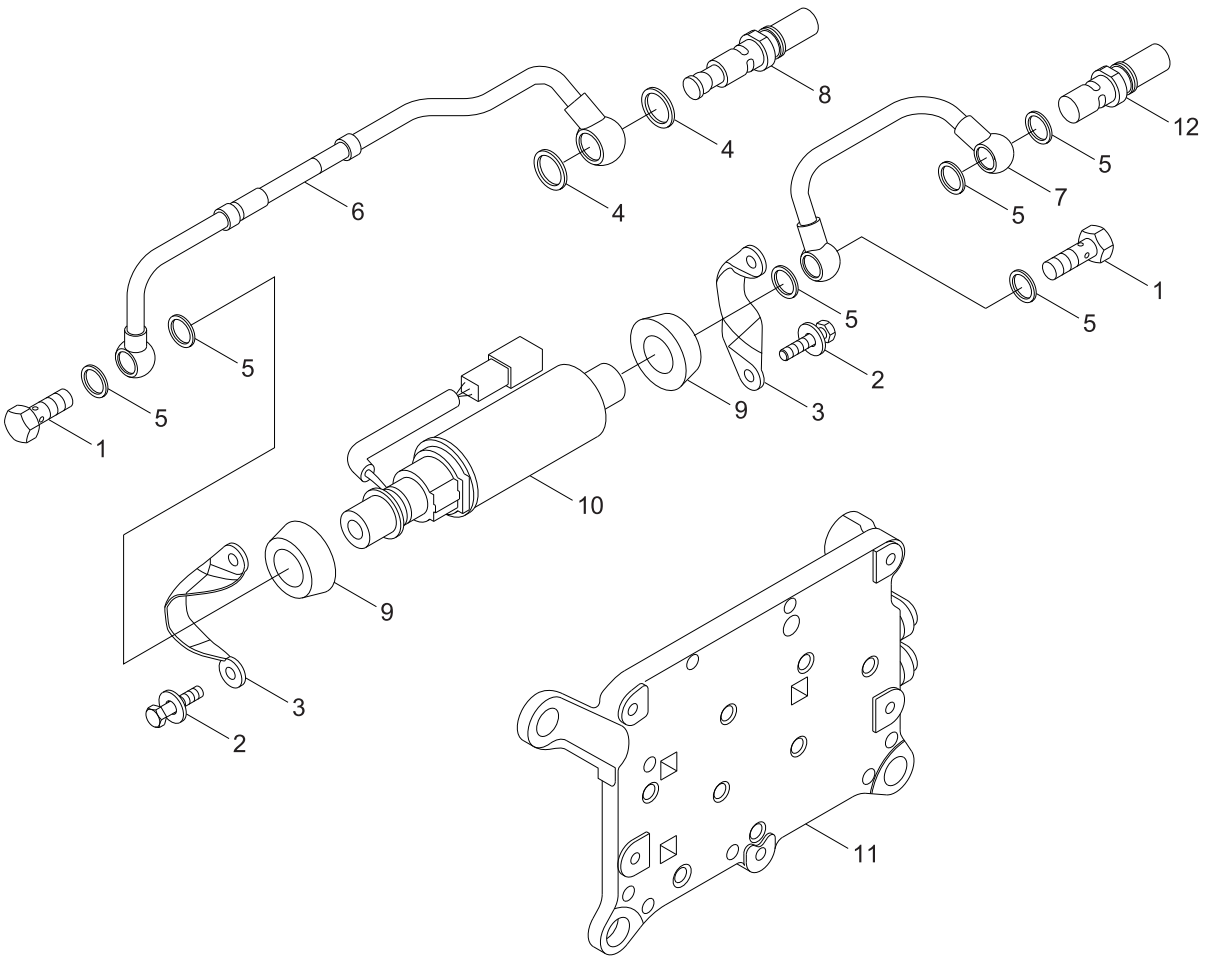

*-1	5260634		Pump-Fuel Transfer	1			FS9990-04	
1	3903035		. Screw	2				
2	3913638		. Screw-Hex F/Head Cap	4				
3	3955110		. Bracket-Transfer Pump	2				
4	3963991		. Washer-Sealing	2				
5	3963990		. Washer-Sealing	6				
6	4935040		. Tube-Fuel Supply	1				
7	3966320		. Tube-Fuel Supply	1				
8	4933571		. Valve-Check	1				
10	5260634		. Pump-Fuel Transfer	1				
9	3955114		.. Isolator-Vibration	2				
11	4997021		. Cooler-Ele Ctl	1				
12	3972088		. Connection-Adapter	1				

Print this!

FLYWHEEL & MOUNTING

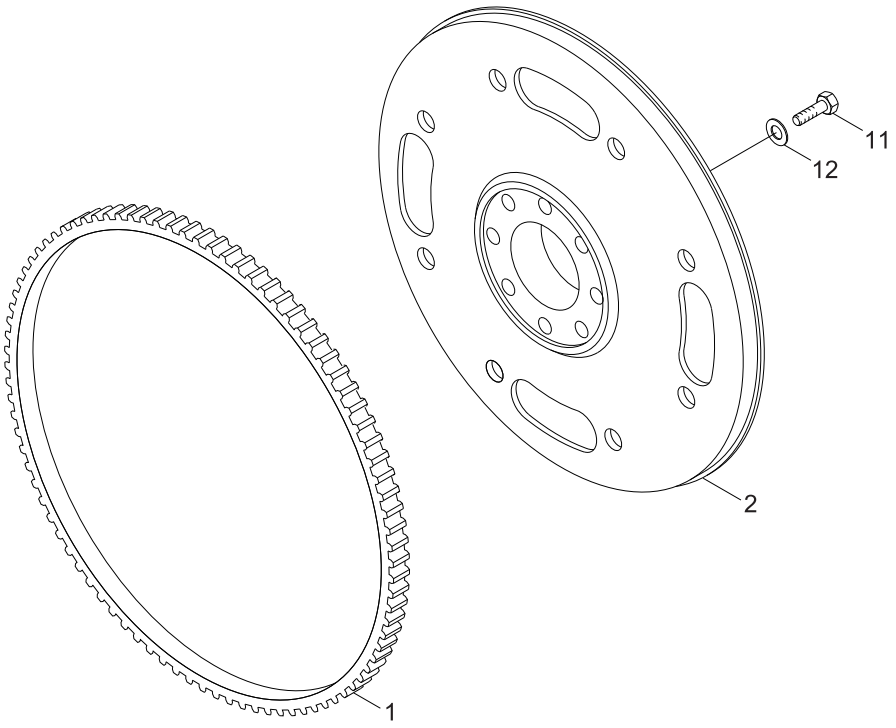

*-1	3931399		Flywheel	1			FW9538	
1	3907308		. Gear-Flywheel Ring	1				
2	3931260		. Flywheel	1				
11	3908181		Screw	8			FW9712	
12	3900269		Washer-Plain	8				

Print this!

FRONT GEAR COVER

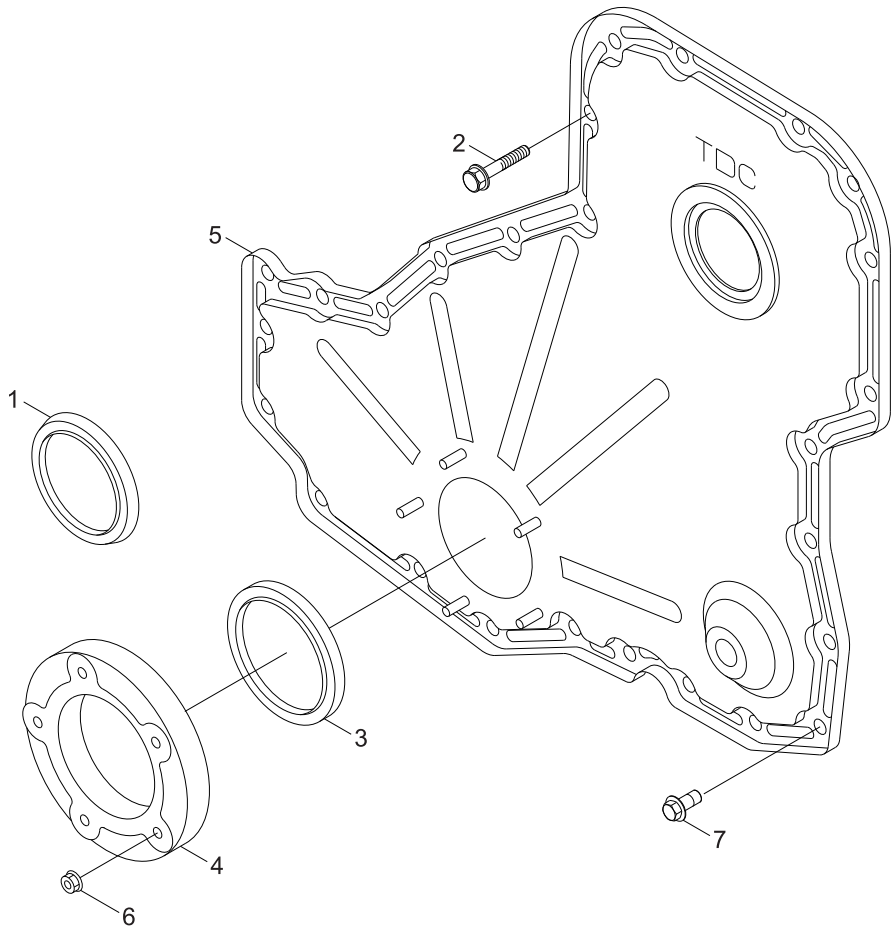

1	3918113		Shield-Dust	1			GG9830-03	
2	3926863		Screw-Hex F/Head Cap	12				
*-1	4024883		Kit-Front Seal	1				
3	4025270		. Kit-Front Seal Service	1				
4	3941786		. Carrier-Seal	1				
5	3958113		Cover-Gear	1				
6	4946714		Nut-Lock	5				
7	5261711		Screw-Twelve Point Cap	11				
N	@		Not Supplied Parts				NOT SUPPLIED	

Print this!

GEAR COVER MOUNTING

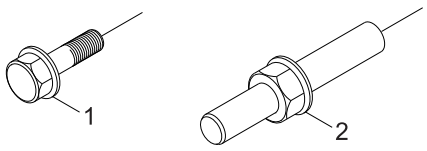

1	5261711		Screw-Twelve Point Cap	2			GG9852-01	
2	5261712		Screw-Twelve Point Cap	1				

Print this!

CAB HEATER PLUMBING

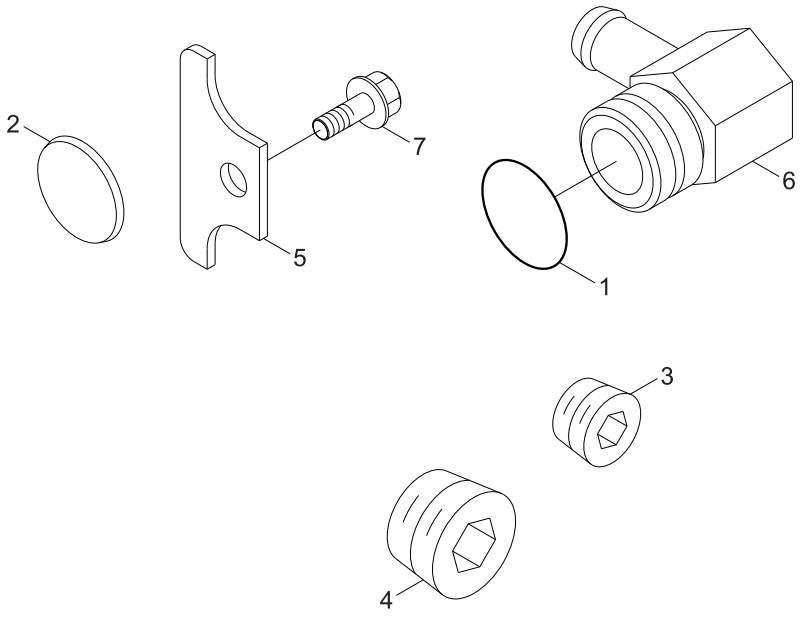

1	145530		Seal/O-Ring	1			HC9085-01	
2	156075		Plug-Expansion	1				
4	3008468		Plug-Pipe	4				
3	4933532		Plug-Pipe	1				
5	3906439		Plate	1				
6	3924571		Connection	1				
7	3925883		Screw-Hex F/Head Cap	1				

Print this!

AIR INTAKE MANIFOLD

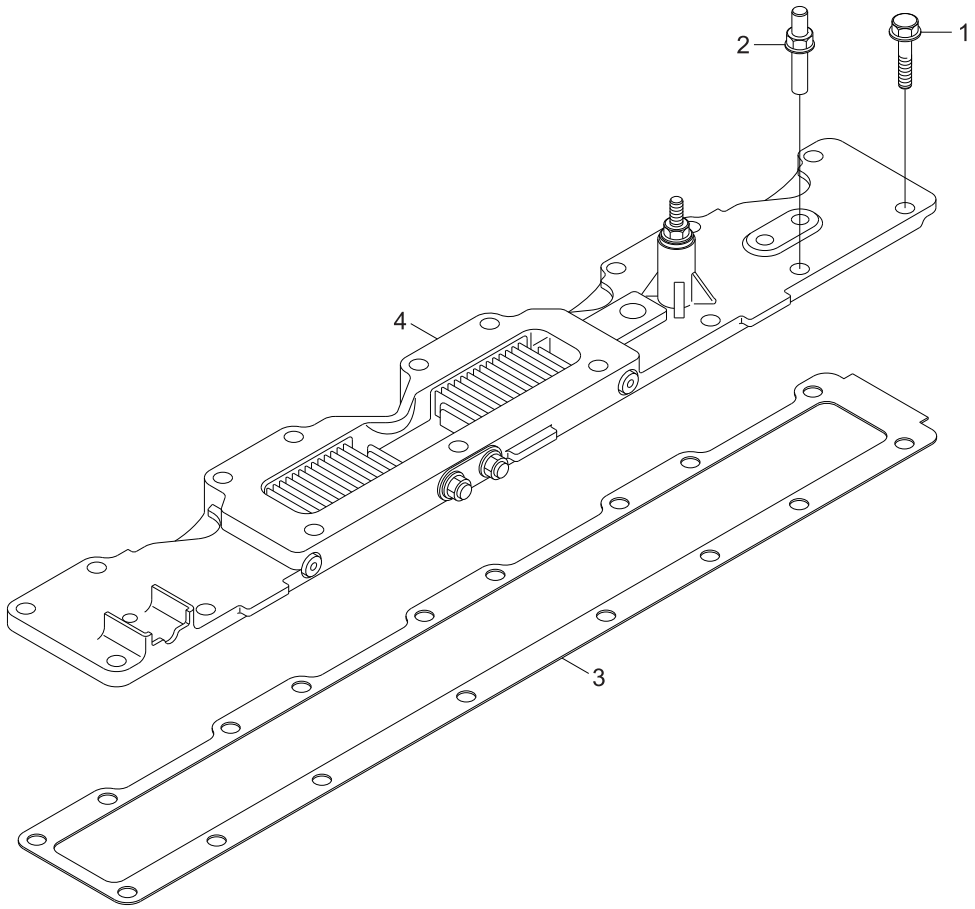

1	3902114		Screw-Hex F/Head Cap	6			IM9104-04	
2	3943995		Screw-Hex F/Head Cap	1				
3	4937032		Gasket-Connection	1				
N4	4941009		Cover-Intake Manifold	1			NOT SUPPLIED	

Print this!

AIR TRANSFER CONNECTION

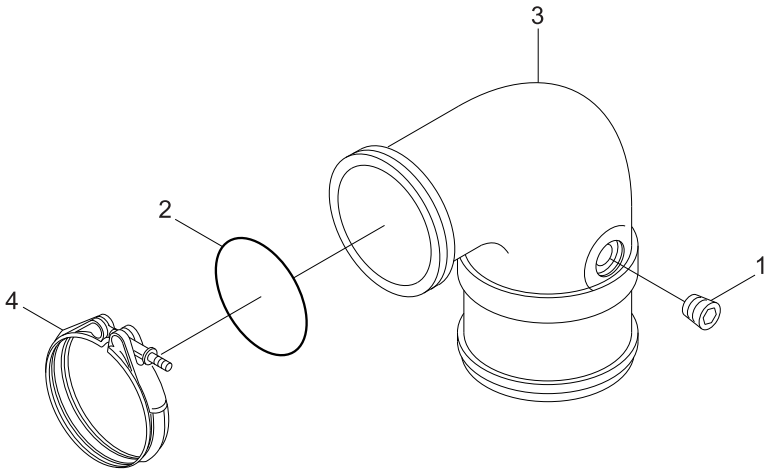

1	3008465		Plug-Pipe	2			IT9048-04	
2	3883284		Seal/O-Ring	1				
3	3883977		Pipe-Air Transfer	1				
4	3972681		Clamp-V Band	1				

Print this!

LIFTING BRACKET MOUNTING

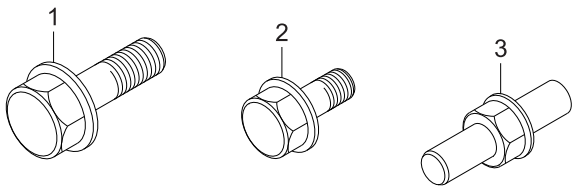

1	3901249		Screw-Hex F/Head Cap	2			LA9119-01	
2	4940240		Screw-Hex F/Head Cap	2				
3	4078617		Screw-Hex F/Head Cap	1				

Print this!

LIFTING BRACKET

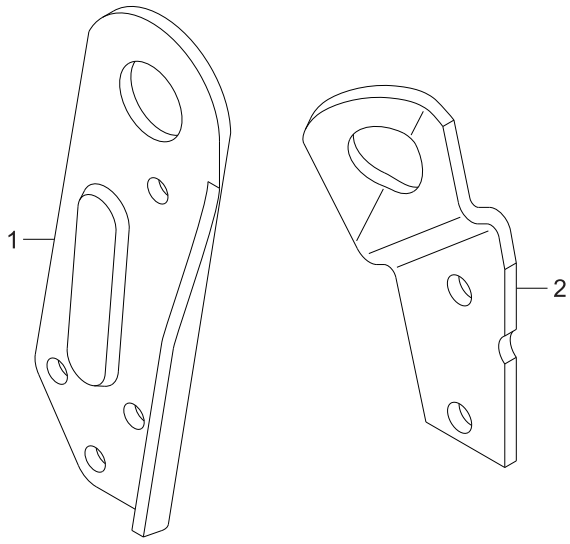

1	4935680		Bracket-Lifting	1			LA9151-02	
2	4983728		Bracket-Lifting	1				

Print this!

ENGINE OIL COOLER

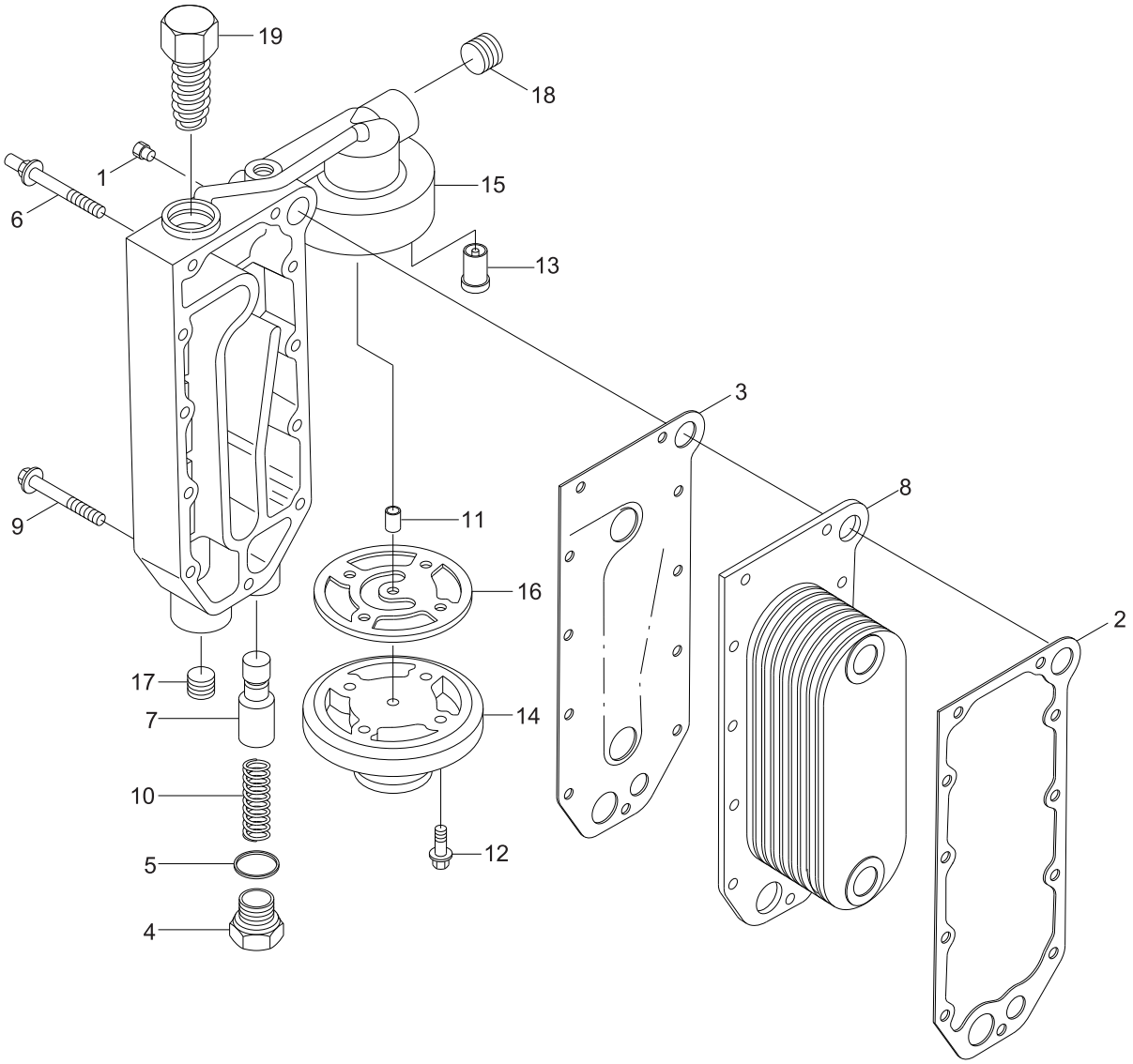

1	3906619		Plug-Pipe	1			LC9333-01	
2	3918174		Gasket	1				
3	3929011		Gasket	1				
*-1	3931084		Plug-Threaded	1				
N4	3930910		. Plug-Threaded	1			NOT SUPPLIED	
5	3930911		. Seal/O-Ring	1				
6	3944874		Screw-Hex F/Head Cap	4				
7	3945967		Plunger-Prs Regular	1				
8	3966365		Core-Cooler	1				
9	3966976		Screw-Hex F/Head Cap	7				
10	3970655		Spring-Compression	1				
*-2	3974326		Head-Lub Oil Filter	1				
11	118227		. Dowel-Ring	1				
12	3907860		. Screw-Hex F/Head Cap	1				
13	3936365		. Valve-Press Relief	1				
N14	3966885		. Head-Lub Oil Filter	1			NOT SUPPLIED	
N15	3974324		. Cover-Lub Oil Cooler	1			NOT SUPPLIED	
16	3992092		. Gasket-Connection	1				
17	4931643		Plug-Pipe	1				
18	4933532		Plug-Pipe	1				
19	5262433		Thermostat	1				
N	@		Not Supplied Parts				NOT SUPPLIED	

Print this!

LUBE OIL FILTER

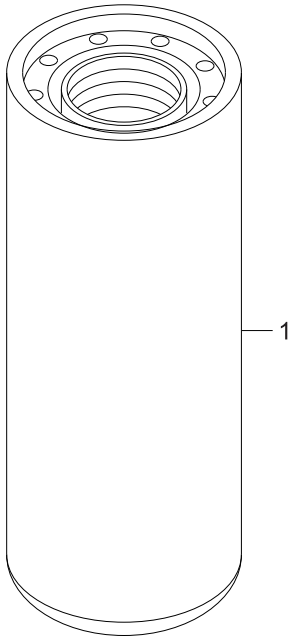

1	3401544		Element-Lub Oil Filter	1			LF9187	

Print this!

OIL LEVEL GAUGE

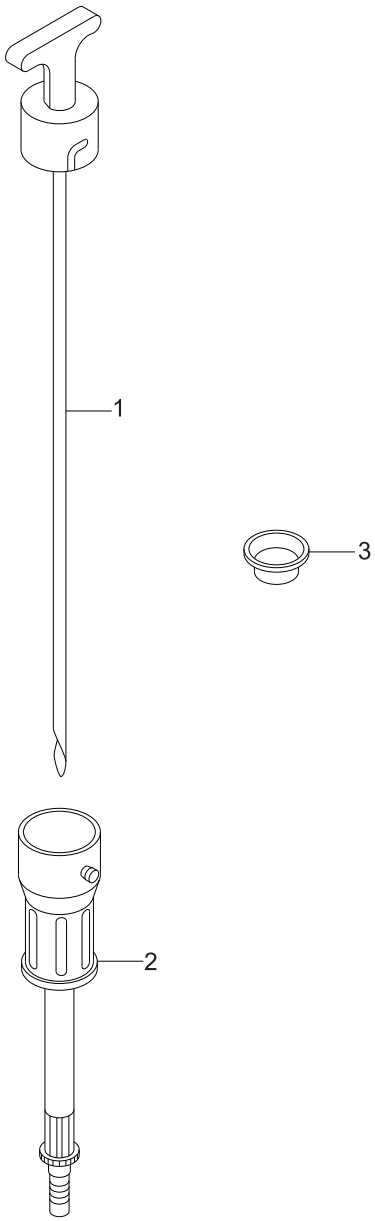

N*-1	3969056		Dipstick	1			LG9897	
1	3969047		. Dipstick	1				
2	3957577		. Tube-Oil Gauge	1				
3	3943808		Plug-Expansion	1				
N	@		Not Supplied Parts				NOT SUPPLIED	

Print this!

LUBE OIL PUMP

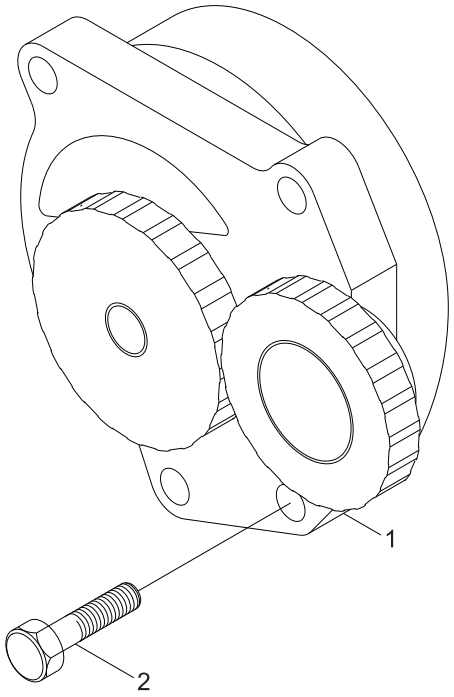

1	3991123		Pump-Lubricating Oil	1			LP9724-01	
2	3900677		Screw-Hex Head Cap	4				

Print this!

OIL FILL ARRANGEMENT

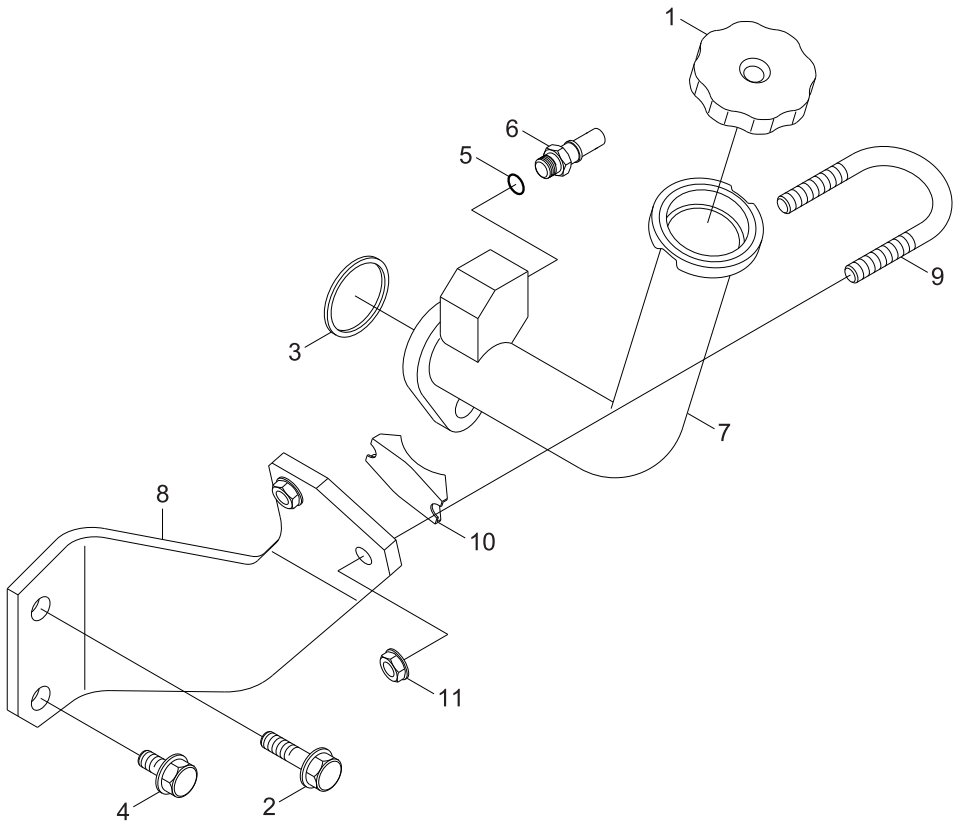

1	3864276		Cap-Filler	1	#0001 -		OB9465	
2	3900637		Screw-Hex Hd Cap	2				
3	3906696		Seal-Rectangular Ring	1				
4	3913372		Screw-Hex Hed Cap	2				
*-1	3965712		Connection-Adapter	1				
5	3036666		. Seal, O-Ring	1				
N6	3968054		. Connection-Adapter	1			NOT SUPPLIED	
7	4937722		Tube-Oil Filler	1				
8	4937723		Brace-Tube	1				
9	4937724		Clamp-U Bolt	1				
10	4937725		Spacer-Mounting	1				
11	4937726		Nut-Hex Flange	2				
N	@		Not Supplied Parts				NOT SUPPLIED	

Print this!

OIL PAN

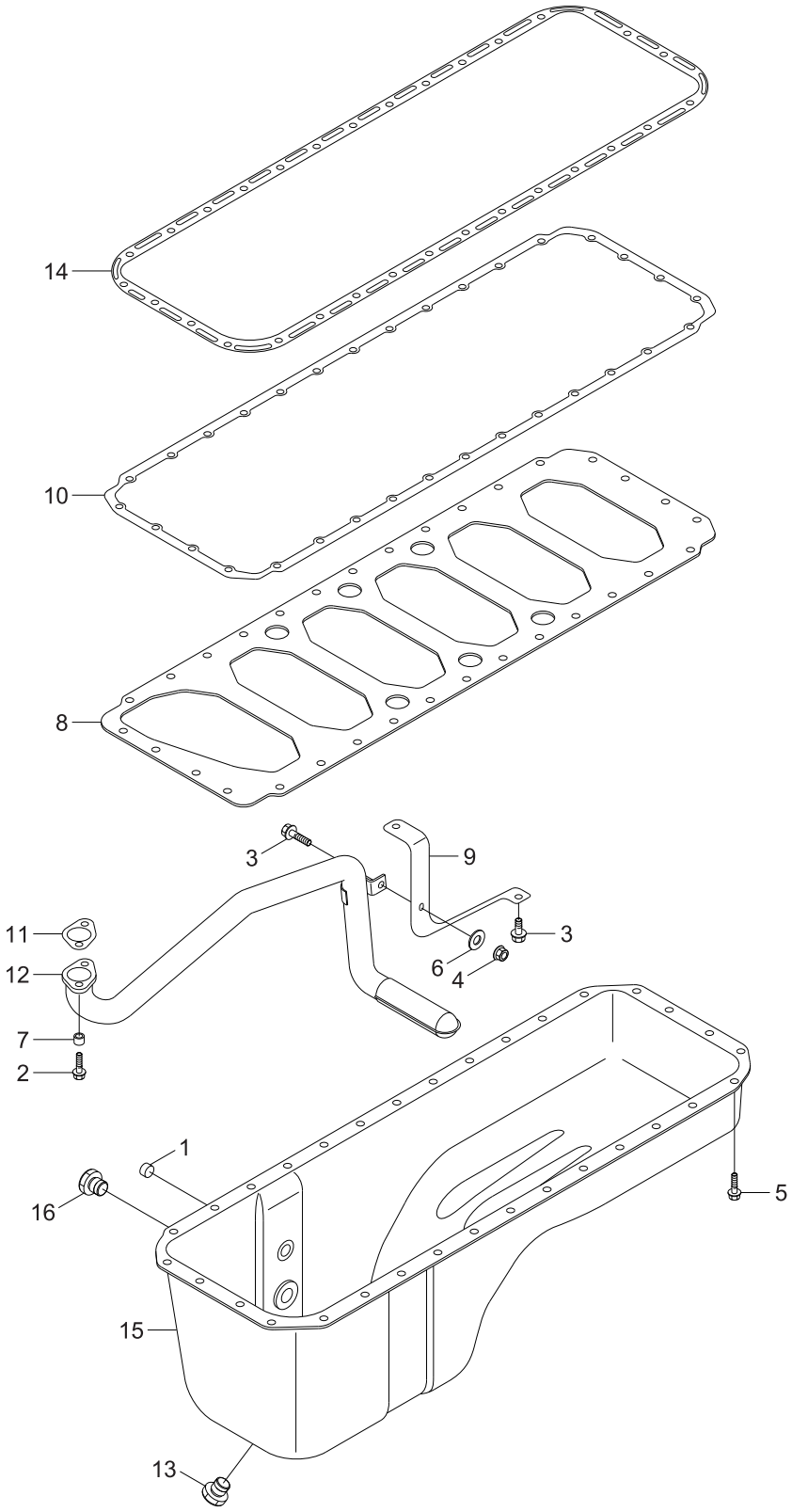

1	3013786		Plug-Pipe	1			OP9612-01	
2	3900628		Screw-Hex F/Head Cap	2				
3	3901865		Screw-Hex F/Head Cap	3				
4	3906216		Nut-Hex Flange	1				
5	3902114		Screw-Hex F/Head Cap	32				
6	3910960		Washer-Plain	1				
7	3926865		Spacer-Mounting	2				
8	3927606		Plate-Cyl Block Stiffen	1				
9	3928737		Brace-Tube	1				
10	3930408		Gasket-Oil Pan	1				
11	3939352		Gasket-Oil Suction	1				
12	3944264		Connection	1				
13	3973071		Plug-Threaded	1				
14	3973509		Gasket-Oil Pan	1				
15	3974294		Pan-Oil	1				
16	4992508		Plug-Threaded	1				

Print this!

ACCESSORY DRIVE PULLEY

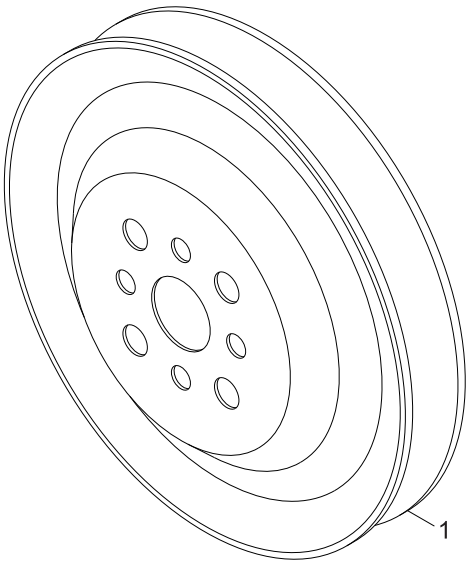

1	3919624		Pulley-Accessory Drv	1			PA9001	

Print this!

ENG CNT MODULE PLUMBING

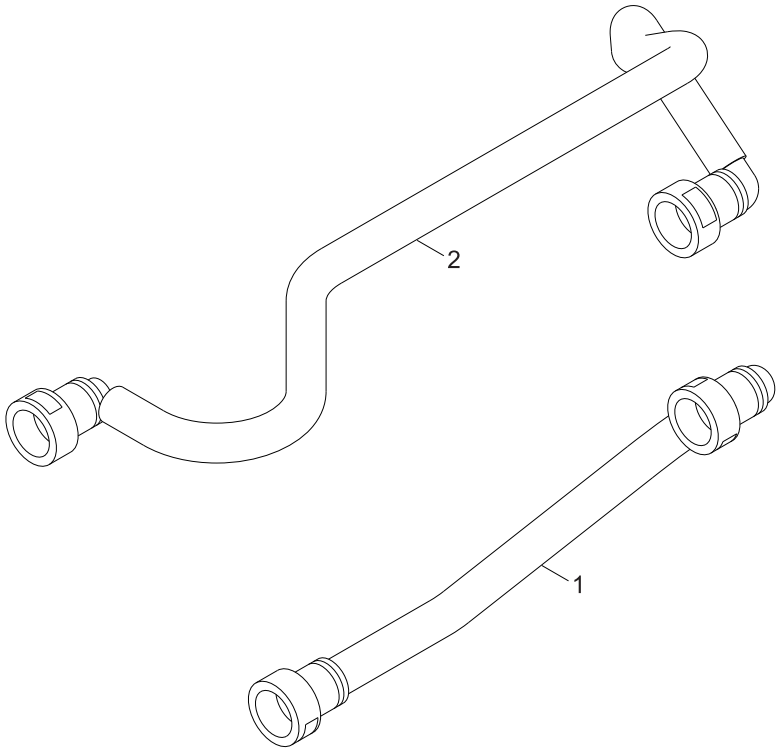

1	3973800		Tube-Fuel Supply	1			PH9266	
2	4989804		Tube-Fuel Supply	1				

Print this!

ENGINE CONTROL MODULE

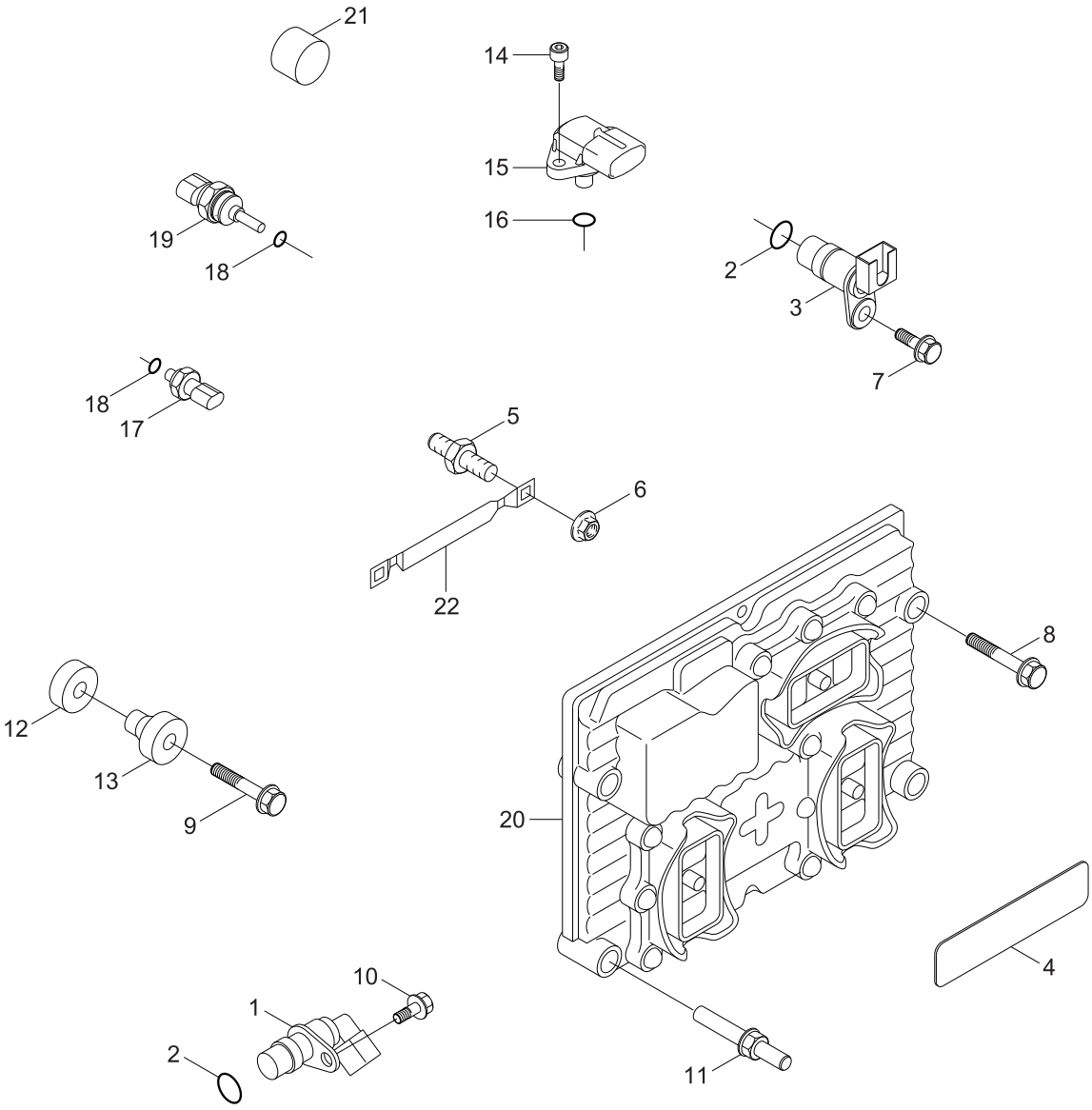

1	2872277		Sensor-Position	1			PH9336	
2	4928599		. Seal/O-Ring	1			CAM OR CRANK	
3	2872279		Sensor-Position	1				
2	4928599		. Seal/O-Ring	1			CAM OR CRANK	
4	3609867		Dataplate	1				
5	3682941		Screw-Hex Head Cap	1				
6	3900589		Nut-Hex Flange	1				
7	3900630		Screw-Hex F/Head Cap	1				
8	3900633		Screw-Hex F/Head Cap	1				
9	3901445		Screw-Captive Washer	4				
10	3913638		Screw-Hex F/Head Cap	1				
11	3944816		Screw-Hex F/Head Cap	3				
12	3955219		Isolator-Vibration	4				
13	3955220		Isolator-Vibration	4				
14	3957849		Screw-Socket Hd Cap	1				
15	4921324		Sensor-Pressure/Temp	1			INTAKE MANIFOLD	
16	4903482		. Seal/O-Ring	1				
*-14	4921517		Sensor-Pressure	1			OIL	
N17	4921518		. Sensor-Oil Pressure	1			NOT SUPPLIED	
18	4010519		. Seal/O-Ring	1				
19	4954905		Sensor-Temperature	1			COOL,OIL,FUEL	
18	4010519		. Seal/O-Ring	1				
20	4993121NX		Ecm	1				
N21	4997641		Masking-Ecm Pin Cap	1			NOT SUPPLIED	
22	5273860		Wire-Ground	1				
N	@		Not Supplied Parts				NOT SUPPLIED	

Print this!

CAMSHAFT

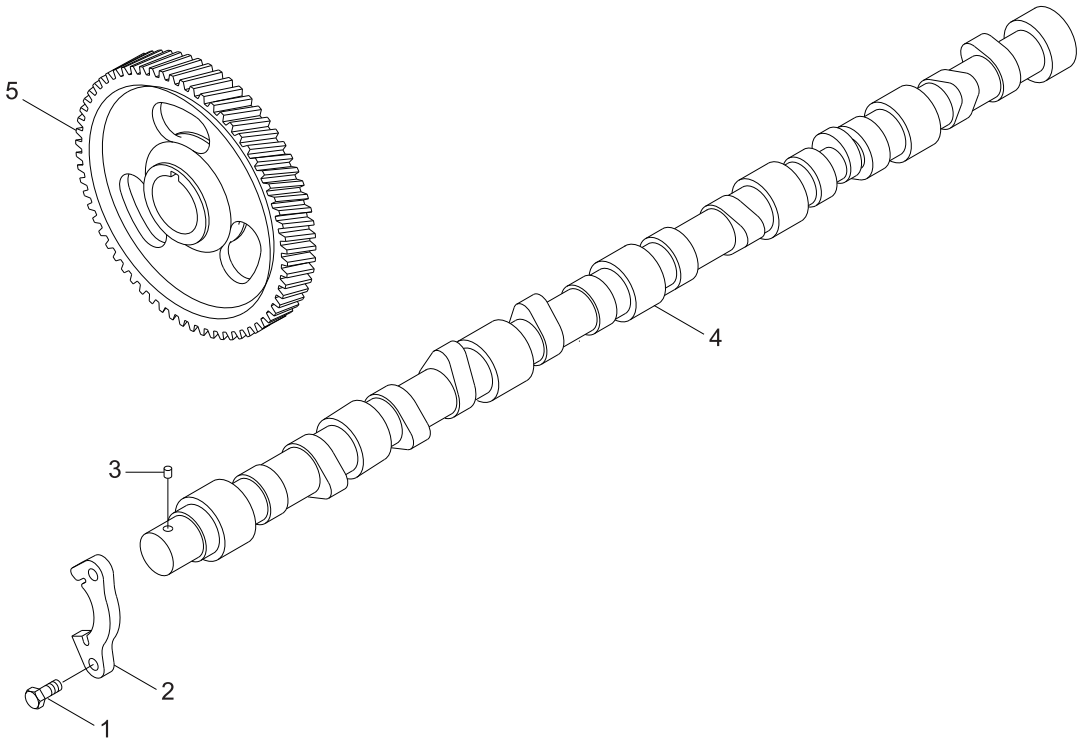

1	3900227		Screw-Hex Head Cap	2			PP43175-01	
2	3944001		Support-C/Shaft Thrust	1				
*-1	3966430		Camshaft	1				
3	2892779		. Pin-Dowel	1				
N4	3966431		. Camshaft	1			NOT SUPPLIED	
5	3950135		Gear-Camshaft	1				
N	@		Not Supplied Parts				NOT SUPPLIED	

Print this!

INJECTOR

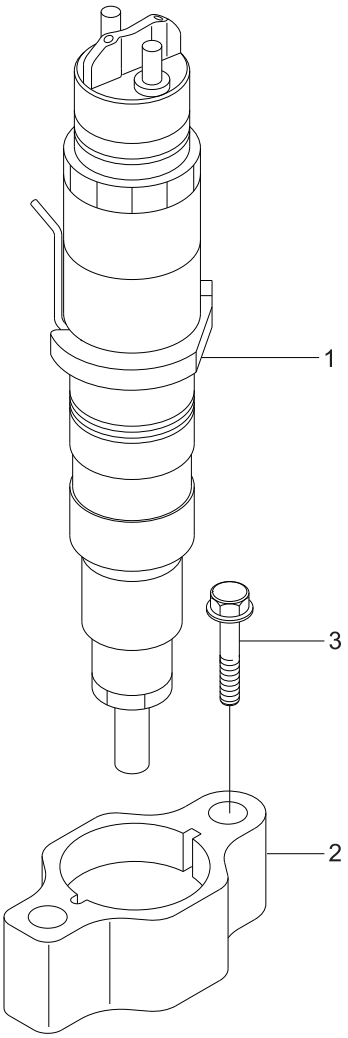

1	2872068NX		Injector	6			PP43175-02	
2	3397506		Screw-Hex F/Head Cap	12				
3	3959045		Clamp-Injector	6				
N	@		Not Supplied Parts				NOT SUPPLIED	

Print this!

CONNECTING ROD AND PISTON

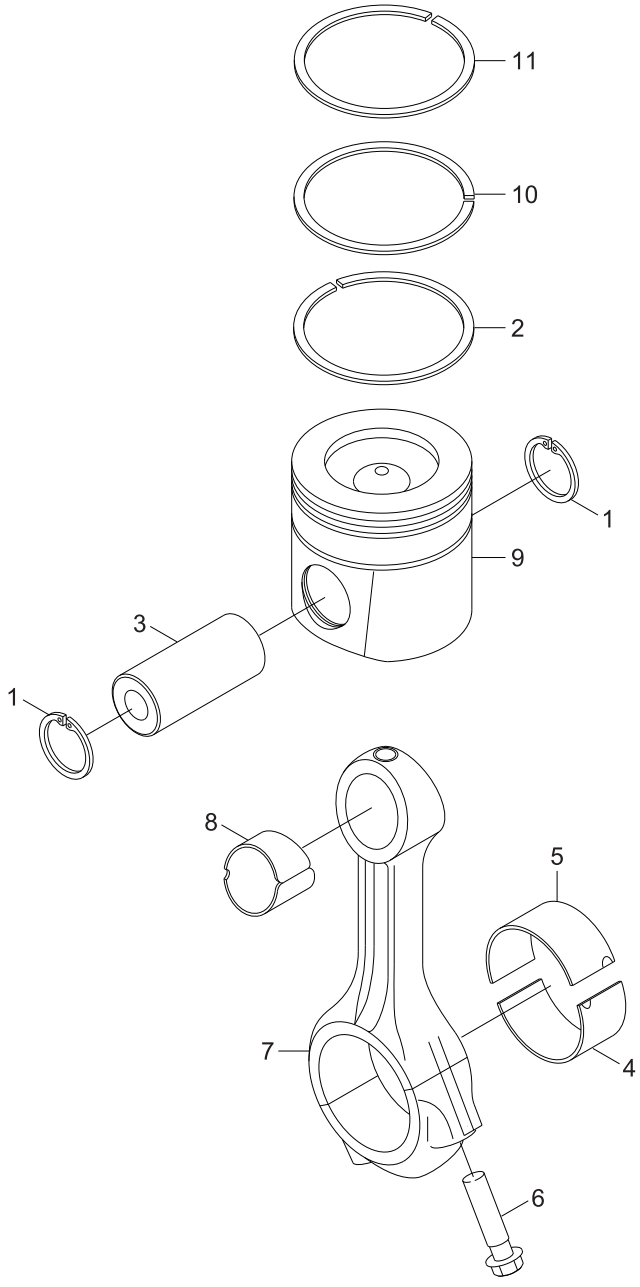

1	3920692		Ring-Retainer	12			PP43175-01	
N2	3921919		Ring-Oil Piston	6			NOT SUPPLIED	
3	3950549		Pin-Piston	6				
4	3950661		Bearing-Conn Rod	6			STD	
5	3966244		Bearing-Conn Rod	6				
*-1	4944670		Rod-Engine Conn	6				
6	3944679		. Screw-Conn Rod Cap	2				
N7	3967347		. Rod-Engine Conn	1			NOT SUPPLIED	
8	4944137		. Bushing	1				
N9	5267522		Piston	6			NOT SUPPLIED	
N10	5267523		Ring-Compression	6			NOT SUPPLIED	
N11	5267662		Ring-Compression	6			NOT SUPPLIED	
*-2	2882043		Set-Piston	1				
*-3	2882042		. Set-Piston Ring	1				
N2	3921919		.. Ring-Oil Piston	1			NOT SUPPLIED	
N10	5267523		.. Ring-Compression	1			NOT SUPPLIED	
N11	5267662		.. Ring-Compression	1			NOT SUPPLIED	
1	3920692		. Ring-Retainer	2				
3	3950549		. Pin-Piston	1				
N9	5267522		. Piston	1			NOT SUPPLIED	

Print this!

CYLINDER HEAD PLUMBING

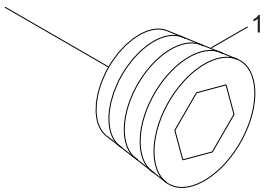

1	4931643		Plug-Pipe	5			PP99351	

Print this!

CYLINDER HEAD

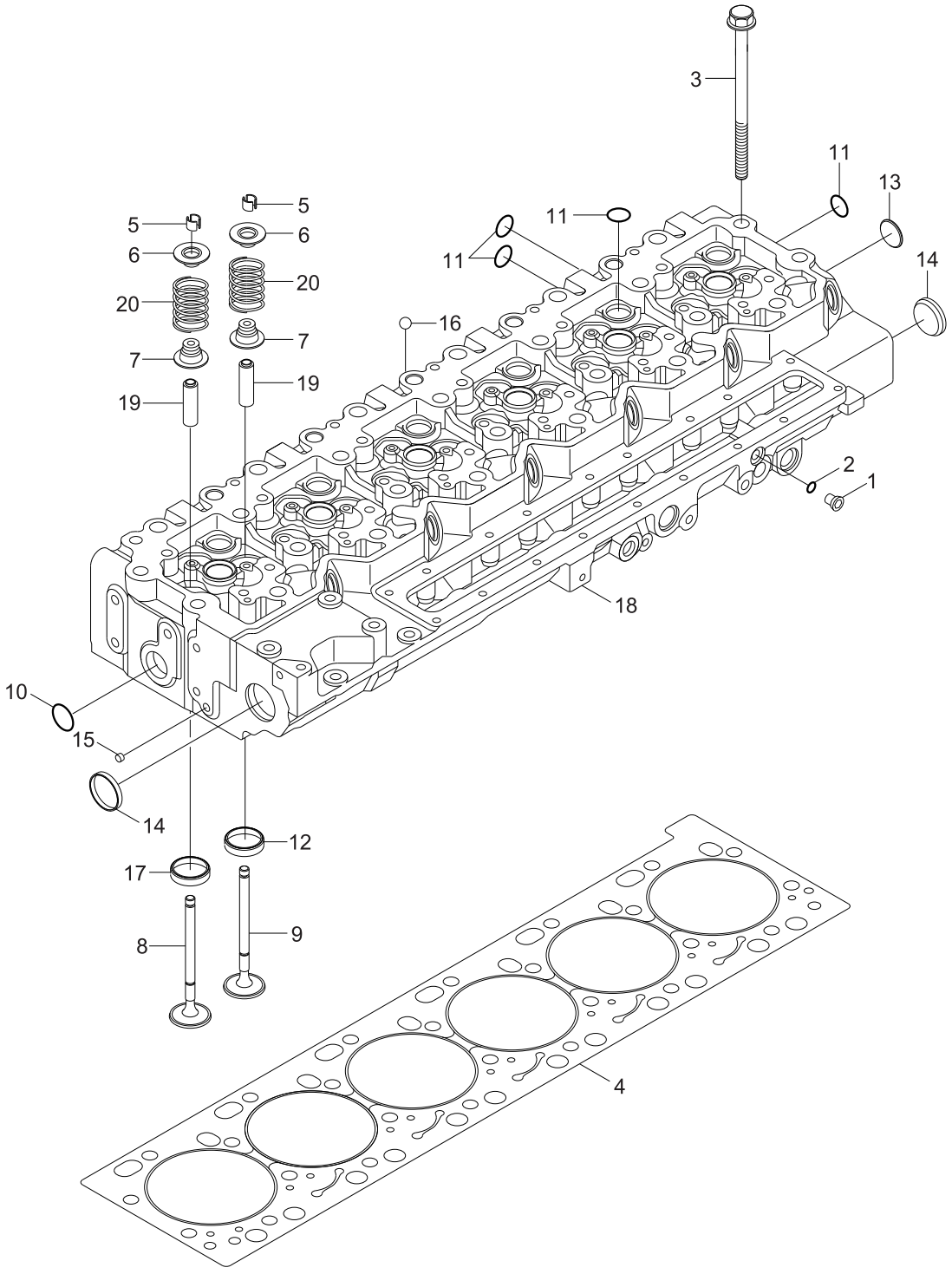

*-1	3678923		Plug-Thread	1			PP99436	
N1	3678924		. Plug-Thread	1			NOT SUPPLIED	
2	3678925		. Seal/O-Ring	1				
3	3960043		Screw-Hex F/Head Cap	26				
4	4981330		Gasket-Cylinder Head	1				
*-2	4989699		Head-Cylinder	1				
5	3900250		. Collet-Valve	48				
6	3944452		. Retainer-Vlv Spring	24				
7	3948578		. Seal-Valve Stem	24				
8	4089762		. Valve-Exhaust	12				
9	4089761		. Valve-Intake	12				
20	4936076		. Spring-Valve	24				
N*-3	4987981		. Head-Cylinder	1			NOT SUPPLIED	
10	3032693		.. Plug-Expansion	2				
11	3920706		.. Plug-Expansion	18				
12	3940152		.. Insert-Valve	12			INTAKE	
13	3945093		.. Plug-Expansion	1				
14	3945094		.. Plug-Expansion	2				
15	3945095		.. Plug-Expansion	6				
16	3945097		.. Plug-Expansion	1				
17	3968074		.. Insert-Valve	12			EXHAUST	
18	4987980		.. Head-Cylinder	1				
19	4934063		.. Guide-Valve Stem	24				
*-4	5259419		Kit-Exhaust Valve	1				
*-5	3900250		. Collet-Valve	2				
N*-6	4981795		. Valve-Exhaust	1			NOT SUPPLIED	
*-7	5259420		Kit-Intake Valve	1				
*-8	3900250		. Collet-Valve	2				
N*-9	4981794		. Valve-Intake	1			NOT SUPPLIED	

Print this!

INJECTOR PLUMBING

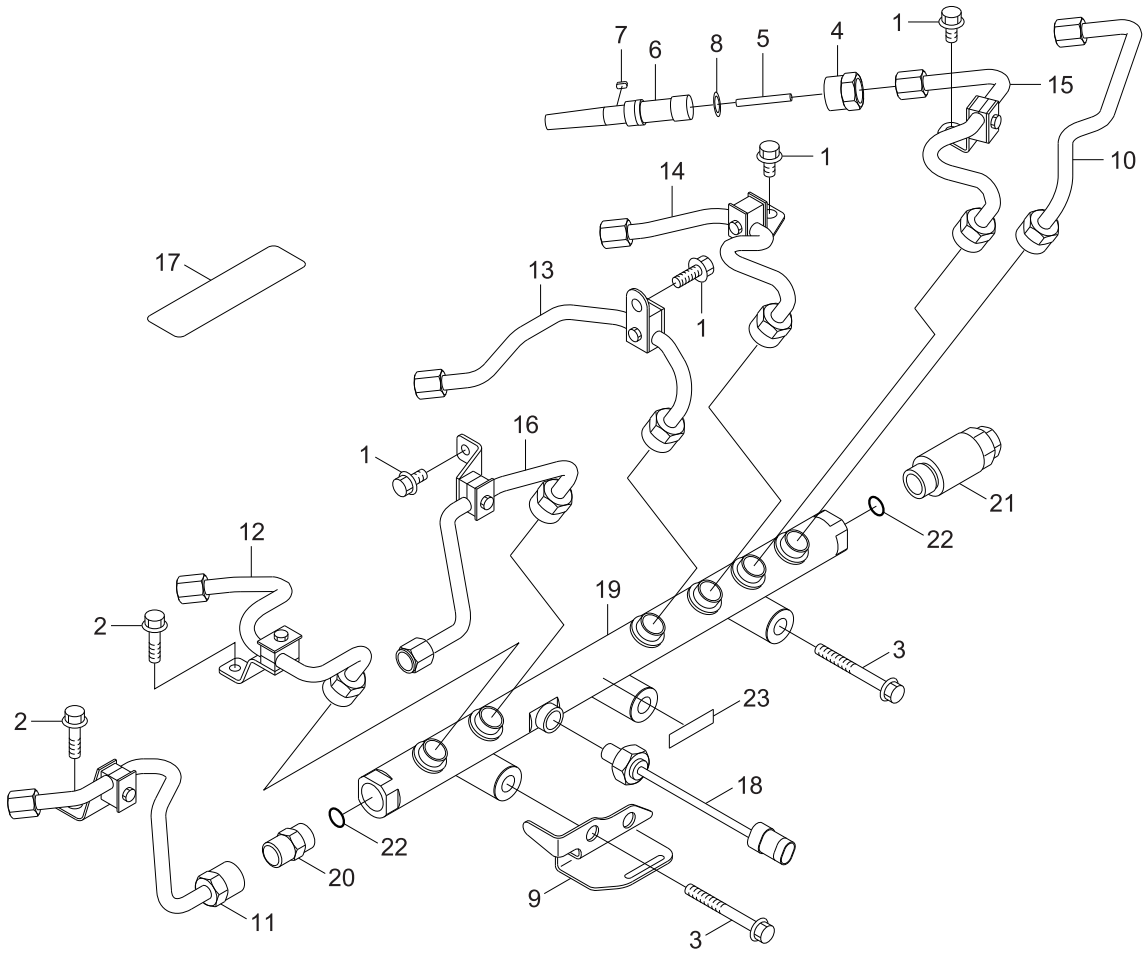

*-1	3920346		Screw-Studded F/Cap	1			PP99453-01	
1	3093923		Screw-Hex Flange Head	2				
2	3902114		Screw-Hex F/Head Cap	2				
3	3904446		Screw-Hex F/Head Cap	2				
4	3946625		Retainer-Inj Fuel Sup	6				
*-2	2872288		Connector-Fuel Supply	6				
N*-3	2872287		. Connector-Fuel Supply	1			NOT SUPPLIED	
N5	4903218		.. Filter-Fuel	1			NOT SUPPLIED	
N6	2872286		.. Connector-Fuel Supply	1			NOT SUPPLIED	
7	4928587		.. Key-Nonrocking	1				
8	4954487		. Seal/O-Ring	1				
9	4989442		Brace-Tube	1				
10	4936196		Tube-Inj Fuel Supply	1			#6 CYLINDER	
11	4937931		Tube-Inj Fuel Supply	1			#1 CYLINDER	
12	4937932		Tube-Inj Fuel Supply	1			#2 CYLINDER	
13	4937933		Tube-Inj Fuel Supply	1			#3 CYLINDER	
14	4937934		Tube-Inj Fuel Supply	1			#4 CYLINDER	
15	4937935		Tube-Inj Fuel Supply	1			#5 CYLINDER	
16	4980581		Tube-Inj Fuel Supply	1			PUMP-RAIL	
17	4939134		Decal	1				
*-4	4954295		Accumulator	1				
18	4954245		. Sensor-Fuel Pressure	1				
N19	4954296		. Accumulator	1			NOT SUPPLIED	
N20	4954312		. Fitting-Fuel	1			NOT SUPPLIED	
21	4954413		. Valve-Pressure Relief	1				
22	4984382		. Washer-Sealing	2				
N23	4984981		. Tag-Identification	1			NOT SUPPLIED	
N	@		Not Supplied Parts				NOT SUPPLIED	

Print this!

TURBOCHARGER

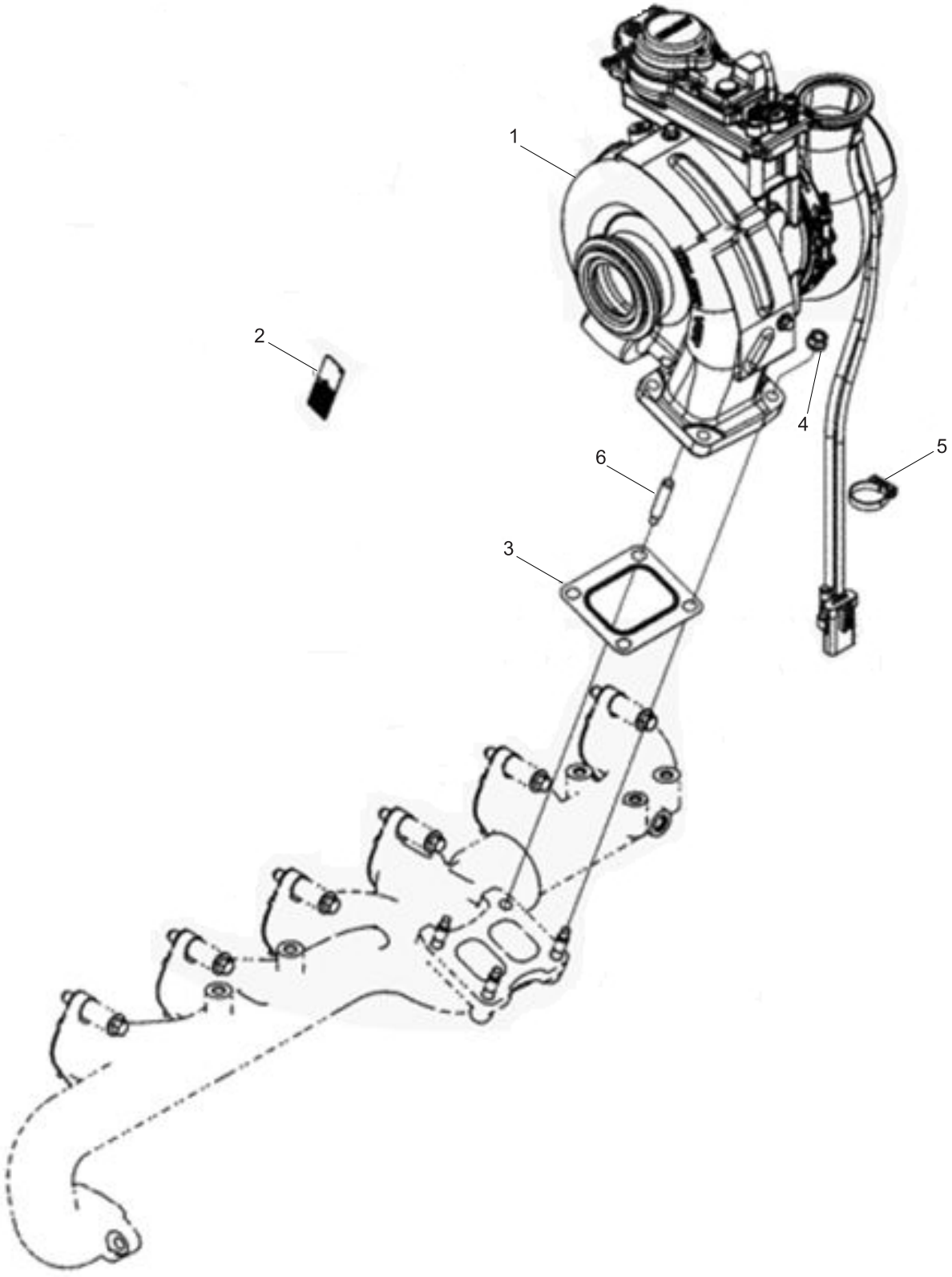

*	2836884		Turbocharger	1			PP99691	
1	2836883		. Turbocharger	1				
N2	3527619		. Dataplate	1			NOT SUPPLIED	
3	3755843		. Gasket-Turbocharger	1				
4	3818824		. Nut-Hex Flange	4				
5	3969959		. Clip-Wire Retaining	1				
6	4920497		. Stud	1				

Print this!

ROCKER LEVER

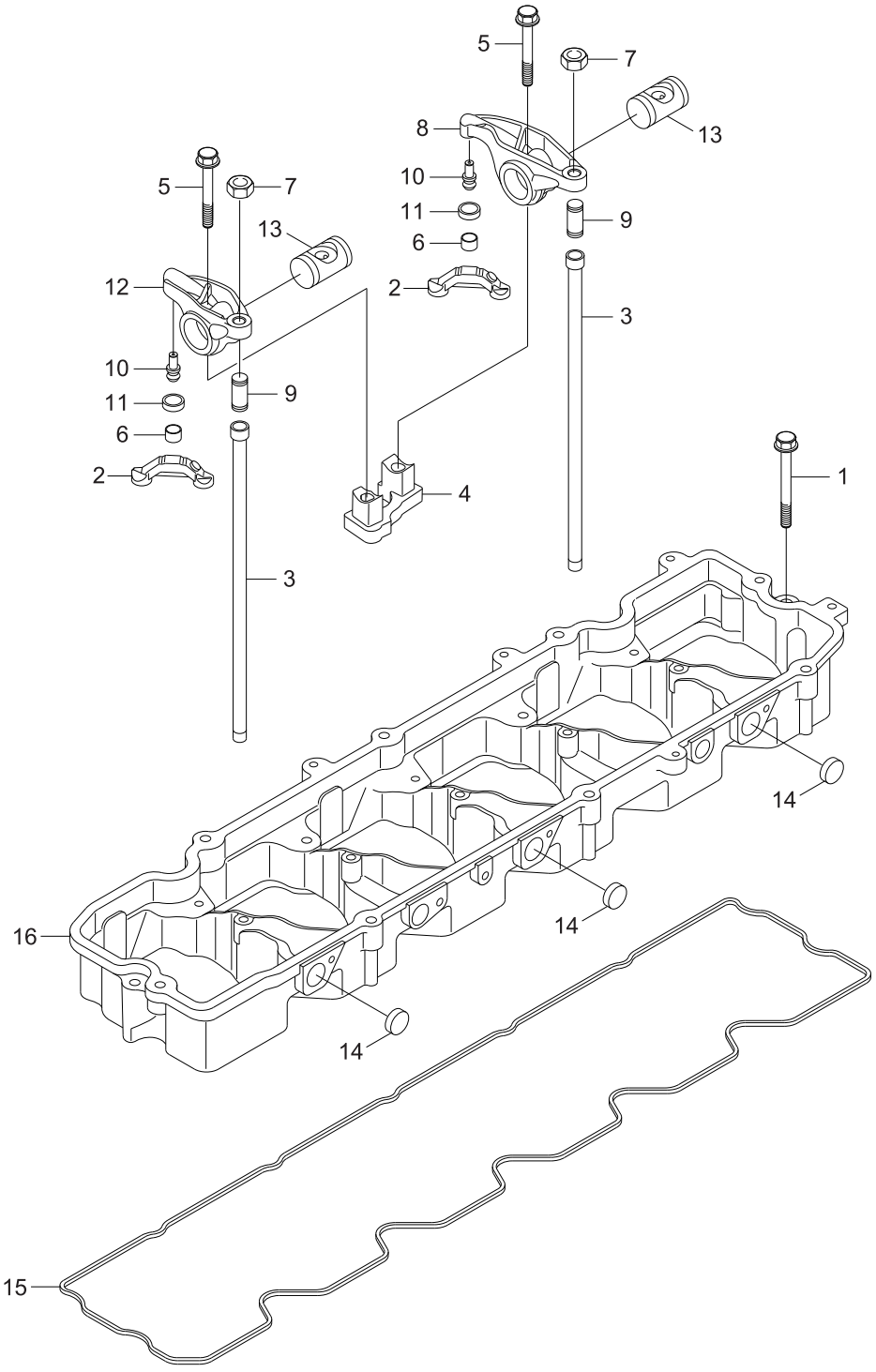

1	3901447		Screw-Hex F/Head Cap	5			RL9777-01	
2	3943445		Crosshead-Valve	12				
3	3964715		Rod-Push	12				
N*-1	3972540		Lever-Rocker	6			NOT SUPPLIED	
4	3941140		. Support-Rocker Lever	1				
5	3943933		. Screw-Hex F/Head Cap	1				
N*-2	3964713		. Lever-Rocker	1			NOT SUPPLIED	
N6	3935945		.. Retainer-Socket	1			NOT SUPPLIED	
N*-3	3964714		.. Lever-Rocker	1			NOT SUPPLIED	
7	203131		... Nut-Heavy Hexagon	1				
N8	3941937		... Lever-Rocker	1			NOT SUPPLIED	
9	3964720		... Screw-R/Lever Adjust	1				
N10	3964721		... Ball-Rocker Lever	1			NOT SUPPLIED	
N11	3964722		.. Socket-Rocker Lever	1			NOT SUPPLIED	
N*-4	3964796		. Lever-Rocker	1			NOT SUPPLIED	
N6	3935945		.. Retainer-Socket	1			NOT SUPPLIED	
N11	3964722		.. Socket-Rocker Lever	1			NOT SUPPLIED	
N*-5	3964797		.. Lever-Rocker	1			NOT SUPPLIED	
7	203131		... Nut-Heavy Hexagon	1				
9	3964720		... Screw-R/Lever Adjust	1				
N10	3964721		... Ball-Rocker Lever	1			NOT SUPPLIED	
N12	3941934		... Lever-Rocker	1			NOT SUPPLIED	
13	3966658		. Shaft-Rocker Lever	2				
14	3920706		Plug-Expansion	3				
15	3966708		Gasket-R/Lever Hsg	1				
16	4934671		Housing-Rocker Lever	1				
N	@		Not Supplied Parts				NOT SUPPLIED	

Print this!

ENGINE COOLANT VENT

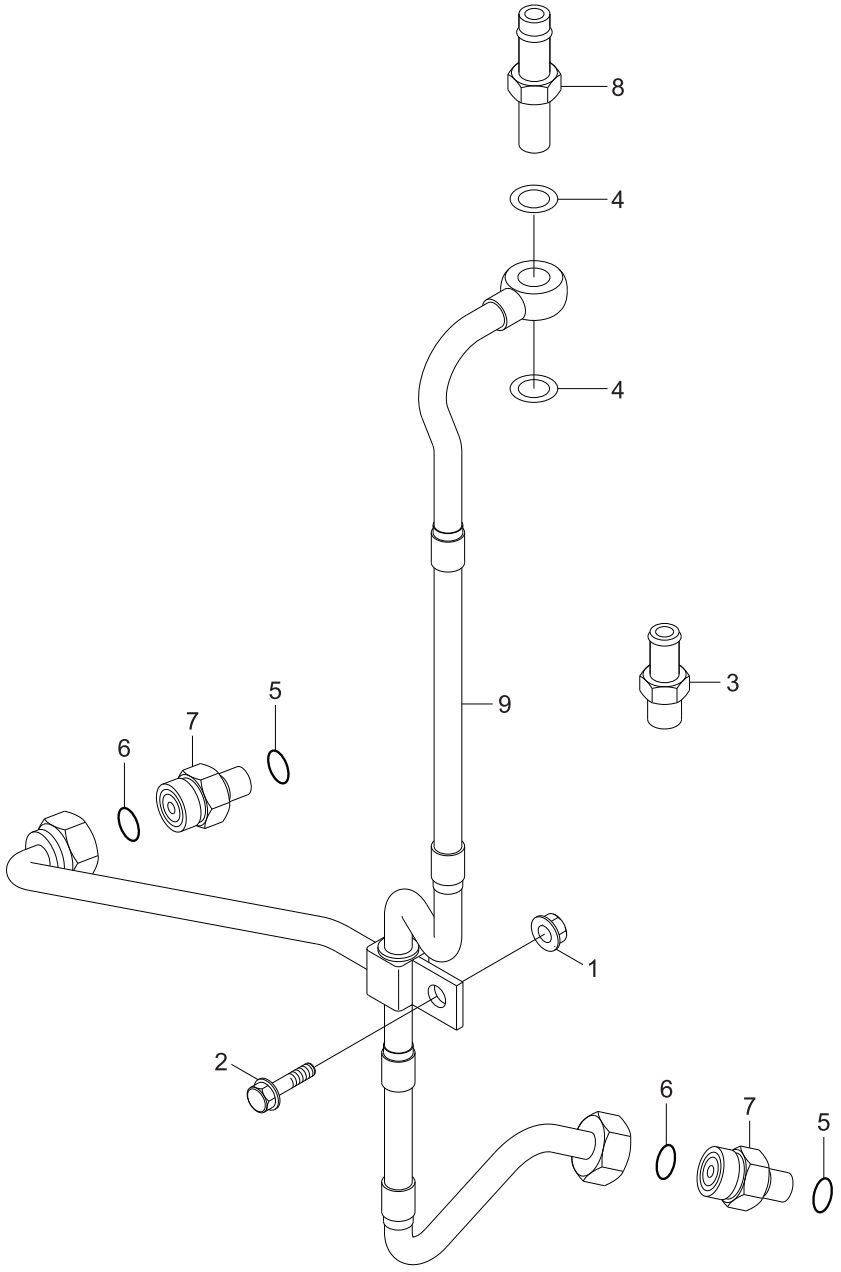

1	3906216		Nut-Hex Flange	1			RP9134-04	
2	3925393		Screw-Hex F/Head Cap	1				
3	3943670		Fitting-Orifice	1				
4	4934278		Washer-Sealing	2				
*-1	5260833		Union-Male	2				
5	3678925		. Seal/O-Ring	1				
6	3922794		. Seal/O-Ring	1				
N7	5260832		. Union-Male	1			NOT SUPPLIED	
8	5266153		Coupling-Plain Hose	1				
9	5267189		Tube-Vent	1				
N	@		Not Supplied Parts				NOT SUPPLIED	

Print this!

STARTING MOTOR

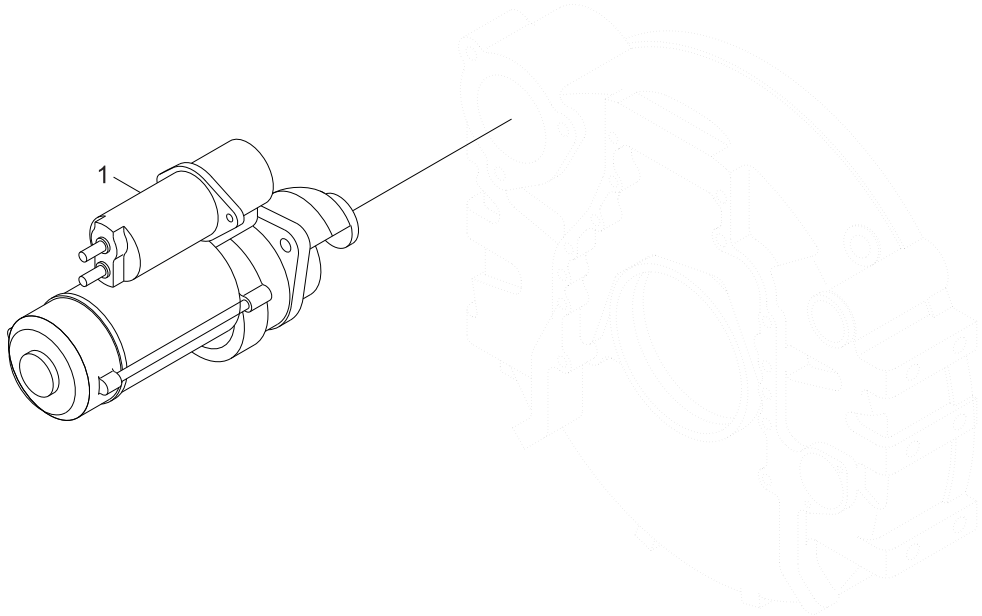

1	4995641		Motor-Starting	1			ST9514	

Print this!

EXHAUST MANIFOLD

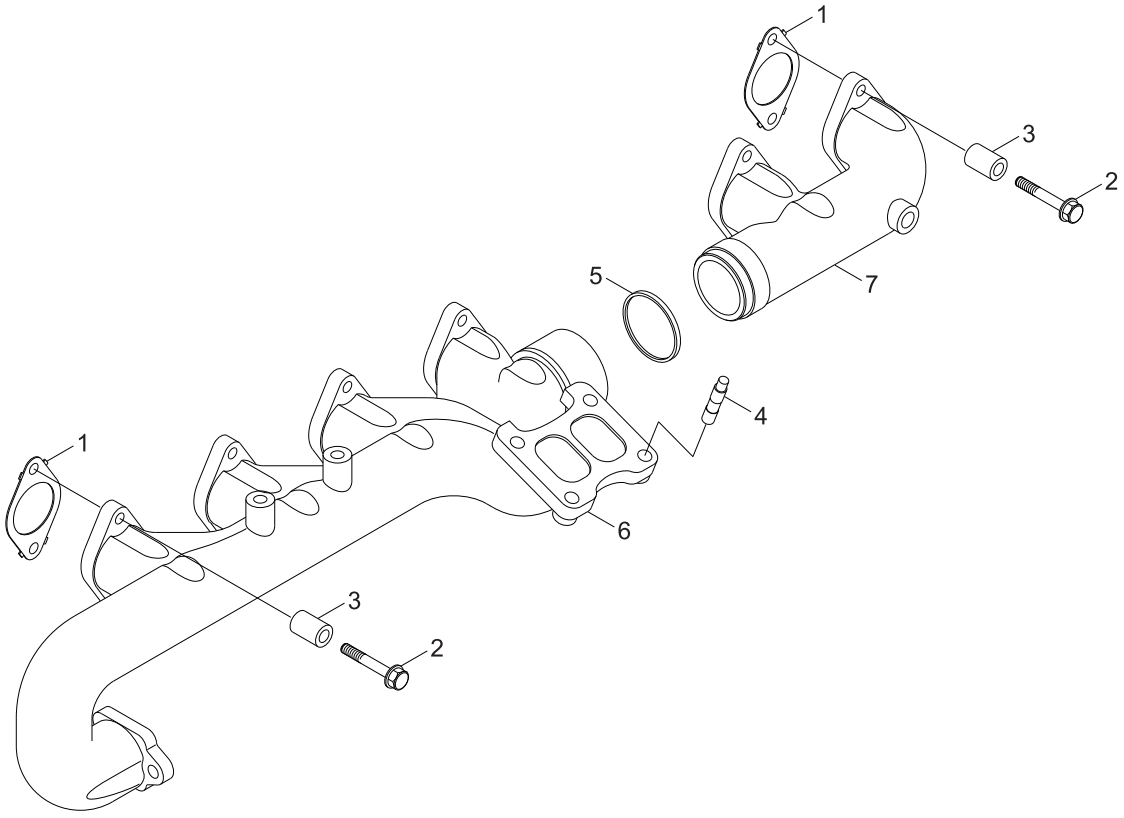

1	3937479		Gasket-Exh Manifold	6			TB91651	
2	3944593		Screw-Hex F/Head Cap	12				
3	3945252		Spacer-Mounting	12				
4	4920497		Stud	3				
*-1	4994285		Manifold-Exhaust	1				
5	3683940		. Seal-Exhaust Manifold	1				
N6	4989806		. Manifold-Exhaust	1			NOT SUPPLIED	
N7	5254333		. Manifold-Exhaust	1			NOT SUPPLIED	

Print this!

TURBOCHARGER PLUMBING

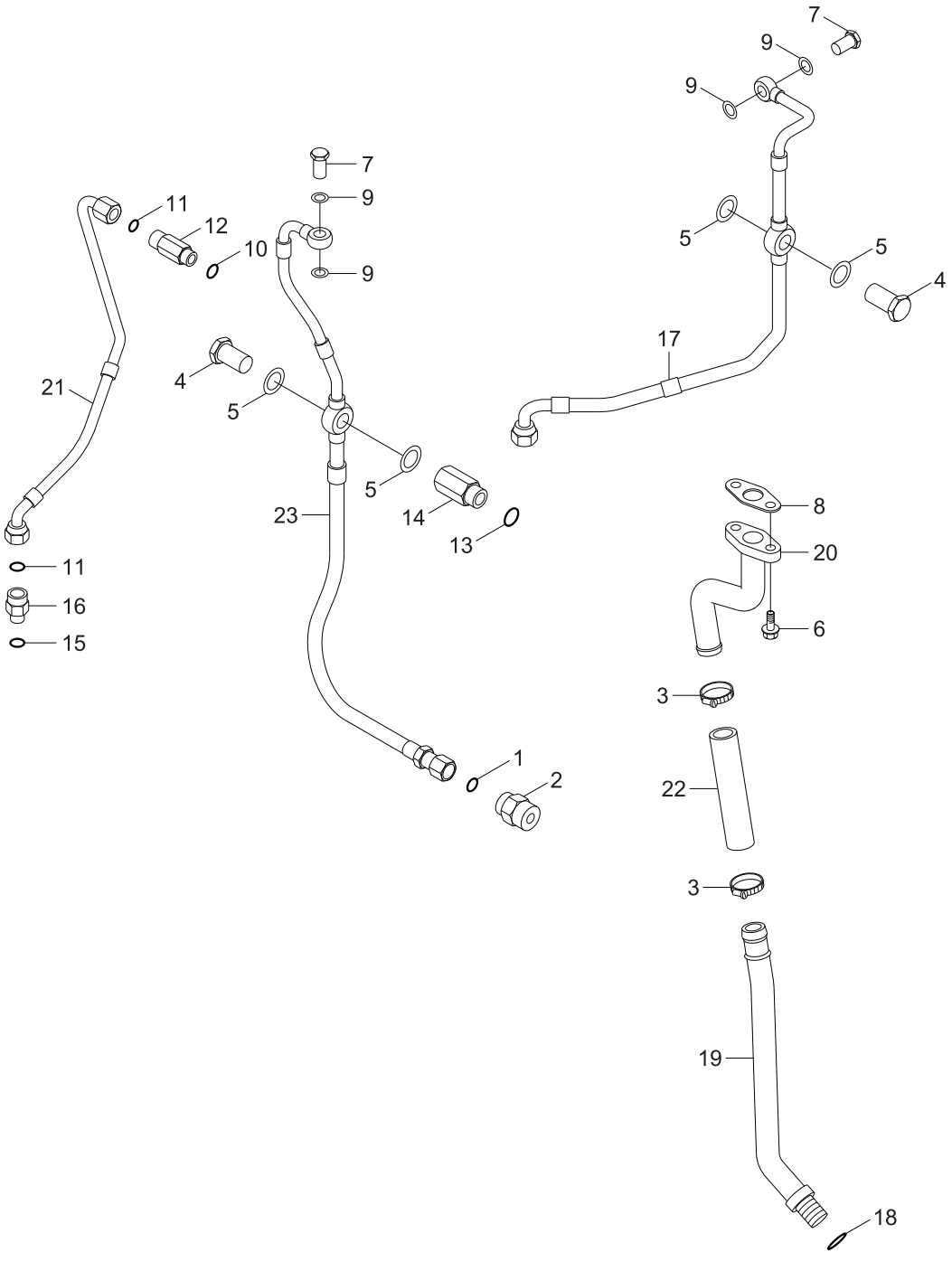

*-1	3095295		Union-Male Adaptor	1			TP97498-01	
1	3627695		. Seal/O-Ring	1				
N2	3627699		. Union-Male	1			NOT SUPPLIED	
3	3600494		Clamp-Hose	2				
4	3684202		Screw-Banjo	2				
5	3684284		Washer	4				
6	3900630		Screw-Hex F/Head Cap	2				
7	3957942		Screw-Banjo	2				
8	4931365		Gasket-Oil Drain	1				
9	4934278		Washer-Sealing	4				
*-2	4938637		Union-Male	1				
10	3678912		. Seal/O-Ring	1				
11	3922794		. Seal/O-Ring	1				
N12	4938638		. Union-Male	1			NOT SUPPLIED	
*-3	4938644		Connector-Female	1				
13	3678786		. Seal/O-Ring	1				
N14	4938643		. Connector-Female	1			NOT SUPPLIED	
*-4	4940183		Union-Male	1				
11	3922794		. Seal/O-Ring	1				
15	3678603		. Seal/O-Ring	1				
N16	4940182		. Union-Male	1			NOT SUPPLIED	
17	5257904		Tube-T/Coolant Drain	1				
*-5	5258634		Tube-Turbo Oil Drain	1				
18	3928624		. Seal/O-Ring	2				
N19	5258629		. Tube-Turbo Oil Drain	1			NOT SUPPLIED	
20	5259232		Tube-Turbo Oil Drain	1				
21	5260527		Tube-Turbo Oil Supply	1				
22	5264680		Hose-Plain	1				
23	5267106		Tube-T/Coolant Supply	1				
N	@		Not Supplied Parts				NOT SUPPLIED	

Print this!

VALVE COVER

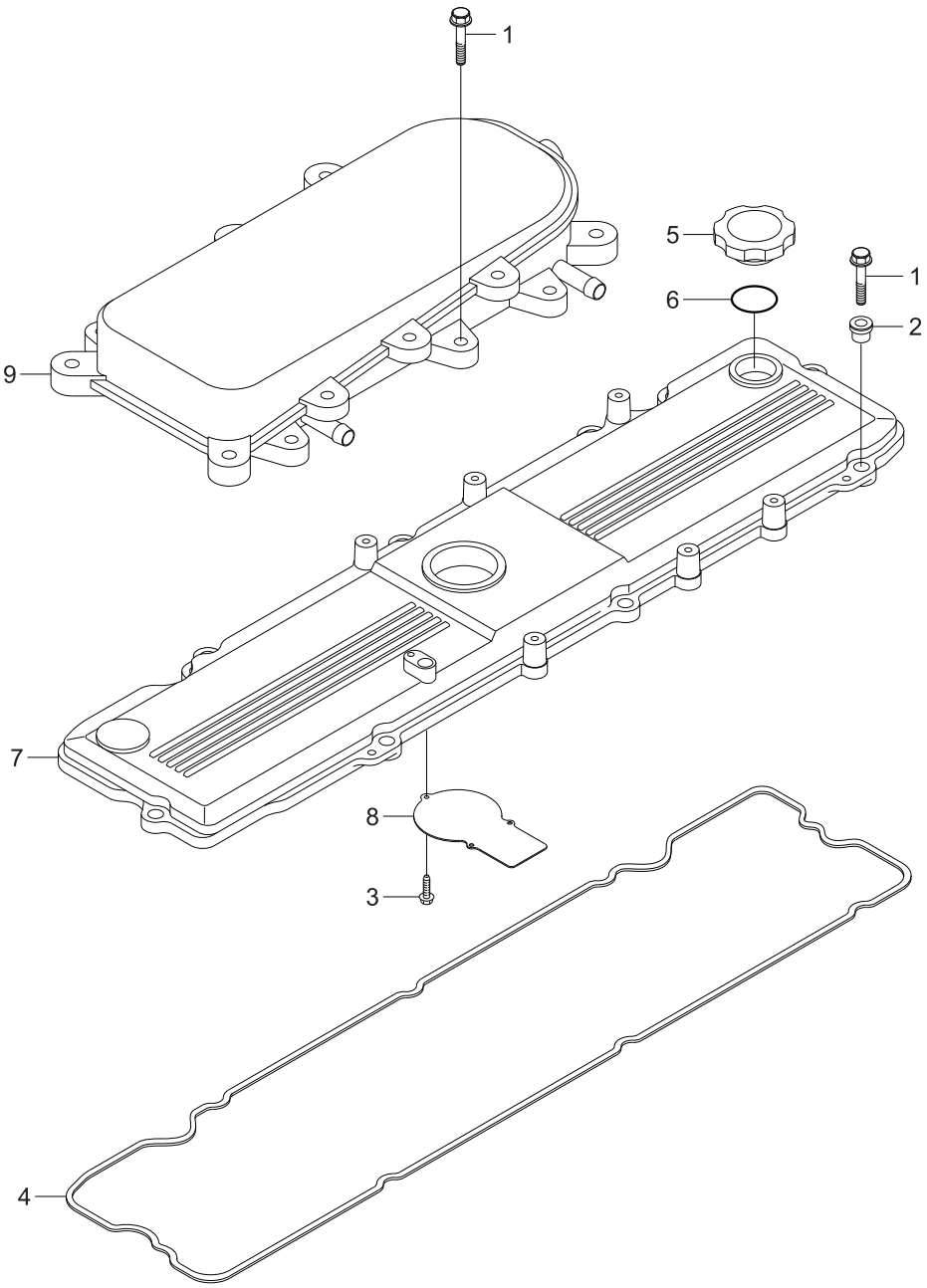

1	3900632		Screw-Hex F/Head Cap	8			VC9461-01	
2	3959799		Isolator-Noise	8				
*-1	5259891		Valve Cover	1				
1	3900632		. Screw-Hex F/Head Cap	5				
3	3931532		. Screw-Self Tap Metal	3				
4	3959798		. Gasket-Valve Cover	1				
*-2	3968202		. Cap-Filler	1				
N5	3968283		.. Cap-Filler	1			NOT SUPPLIED	
6	3973512		.. Seal/O-Ring	1				
7	4937557		. Valve Cover	1				
8	4944414		. Baffle-Breather	1				
9	5267443		. Breather-Oil Separator	1				
N	@		Not Supplied Parts				NOT SUPPLIED	

Print this!

CORROSION RESISTOR(COOLANT FILTER)

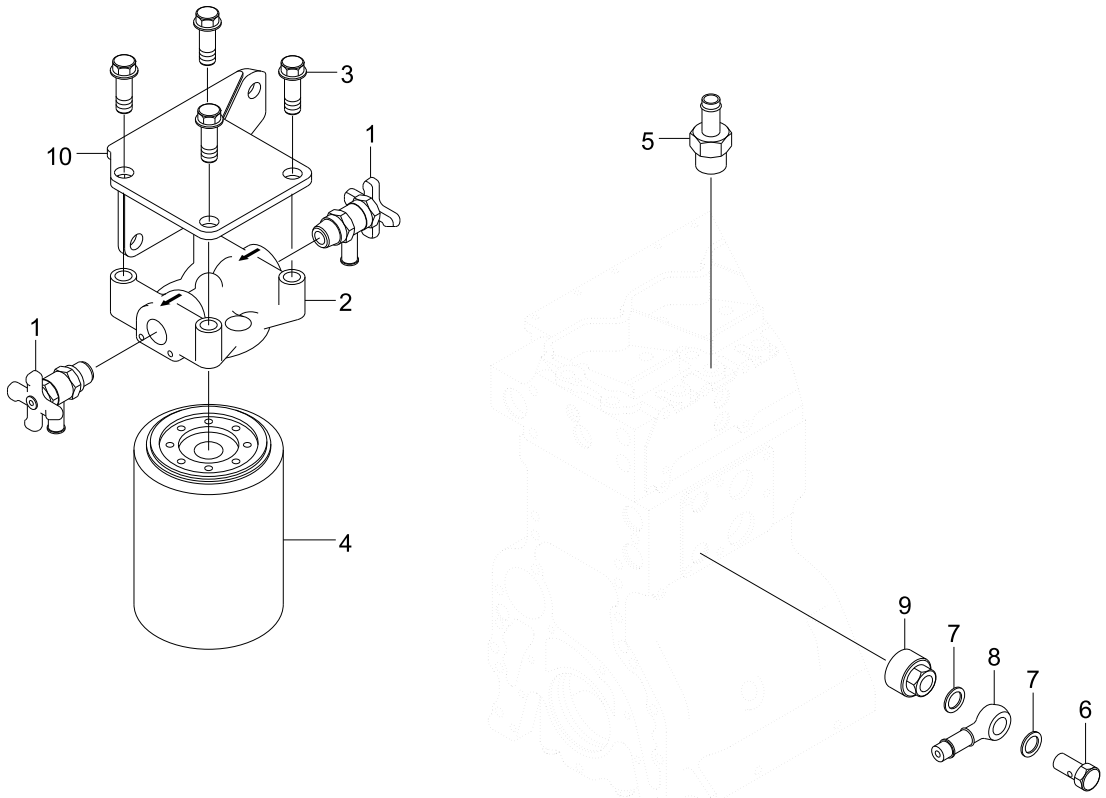

1	179901		Valve-Shutoff	2			WF9142	
2	204163		Head-C/Resistor	1				
3	3010596		Screw-Captive W/Cap	4				
4	3100307		Resistor-Corrosion	1				
5	3354925		Connection-Vent	1				
6	3957942		Screw-Banjo	1				
7	4934278		Washer-Sealing	2				
8	4941313		Connector-Banjo	1				
9	5261067		Connector-Female	1				
10	5283424		Bracket-Filter	1				

Print this!

WATER INLET CONNECTION

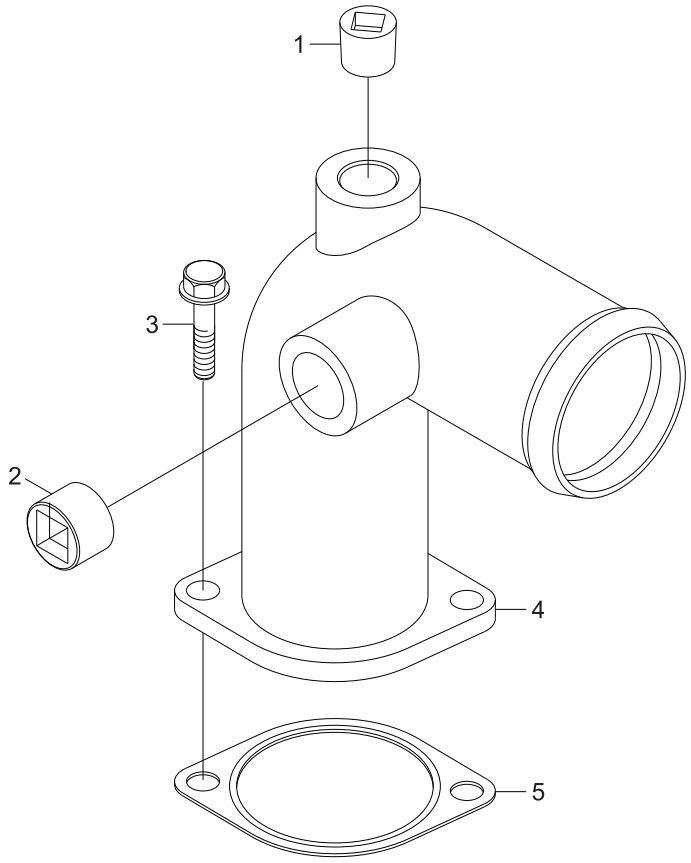

1	4931643		Plug-Pipe	1			WI9198-02	
2	4933532		Plug-Pipe	1				
3	3900630		Screw-Hex F/Head Cap	2				
4	3945111		Connection-Water Inlet	1				
5	3945603		Gasket-Connection	1				

Print this!

WATER OUTLET CONNECTION

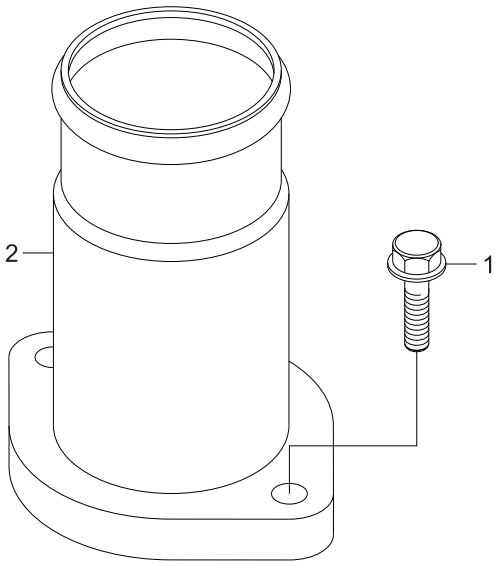

1	3900631		Screw-Hex F/Head Cap	2			WO9119	
2	4946501		Conn-Water Outlet	1				

Print this!

WATER PUMP

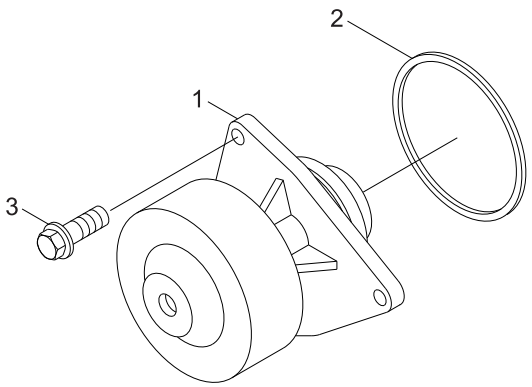

N1	3973115		. Pump-Water	1			NOT SUPPLIED	
2	3940386		. Seal/O-Ring	1				
3	3093730		Screw-Hex F/Head Cap	3				
N	@		Not Supplied Parts				NOT SUPPLIED	

Print this!

WATER PUMP DRIVE

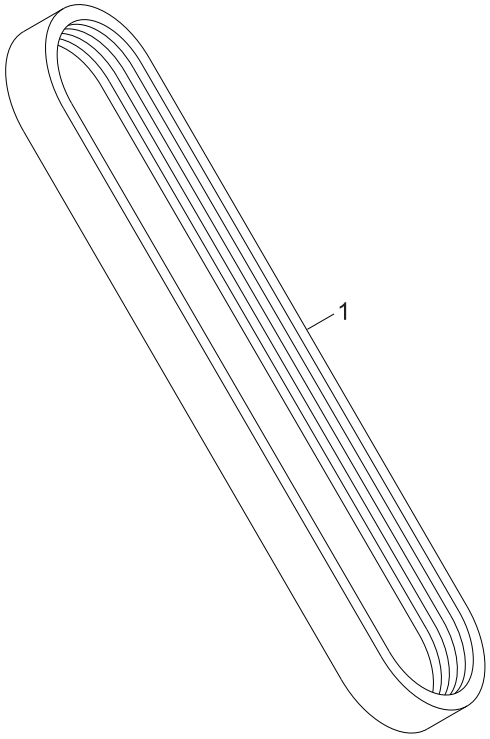

1	3289985		Belt-V Ribbed	1			WP9248	

Print this!

BELT TENSIONER

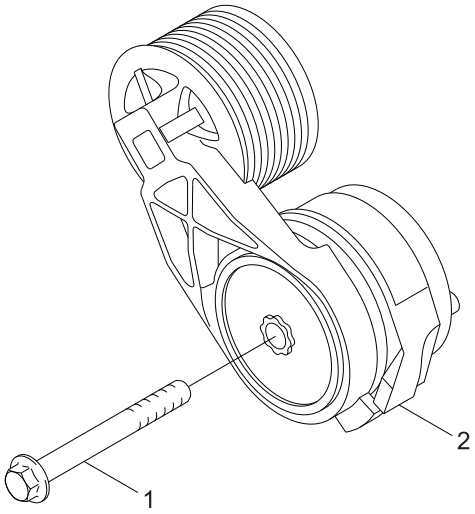

1	3282433		Screw-Hex Flange Head	1			WP9254	
2	3973819		Tensioner-Belt	1				

Print this!

ETR CNT MDL WRG HARNESS

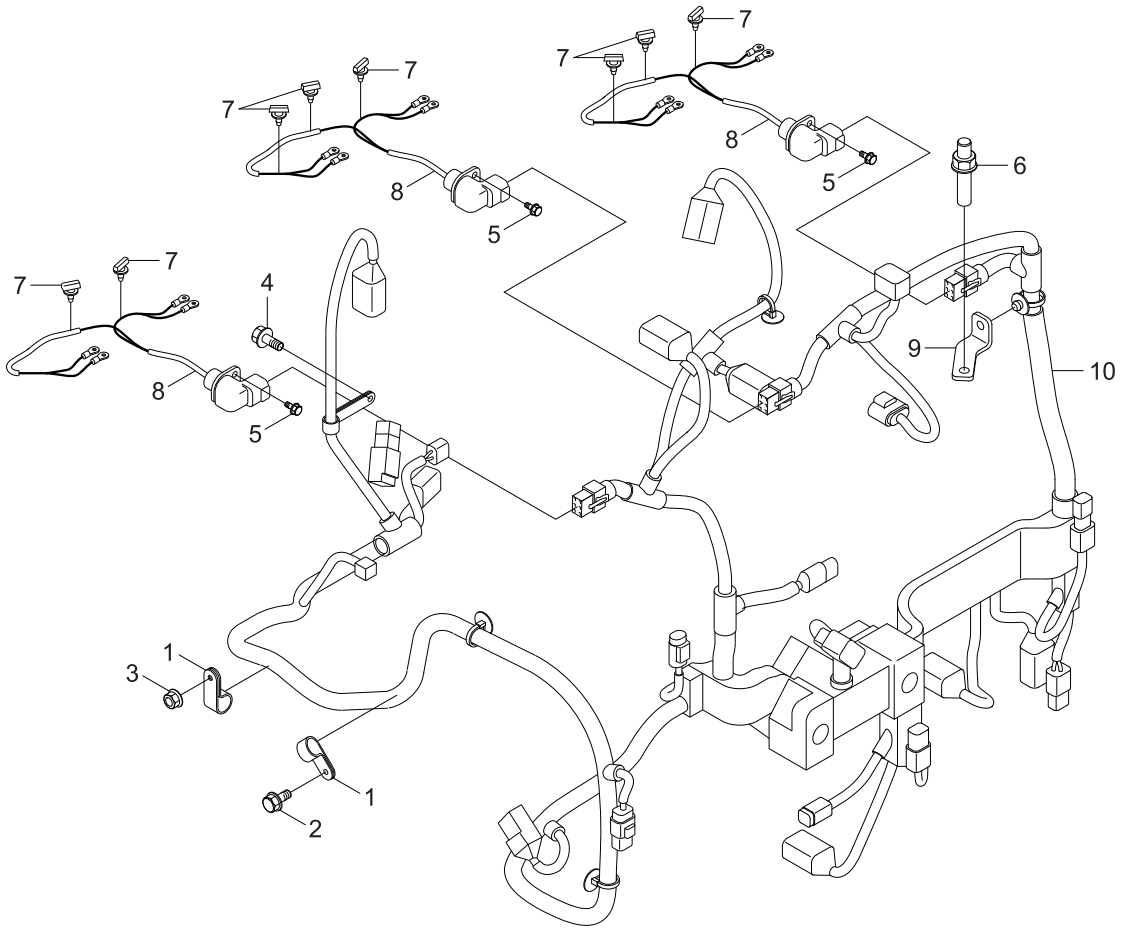

1	202888		Clip	1			WR9497-02	
2	3089384		Screw-Hex F/Head Cap	1				
3	3900589		Nut-Hex Flange	1				
4	3900625		Screw-Hex F/Head Cap	1				
5	3913638		Screw-Hex F/Head Cap	3				
6	3943995		Screw-Hex F/Head Cap	1				
7	3963736		Clip-Wire Retaining	8				
8	4934545		Harness-Wiring	3				
*-1	3931824		. Seal/O-Ring	1				
9	4948373		Bracket-Wiring Retainer	1				
10	5254338		Harness-Ecm Wiring	1				

Print this!

EXHAUST OUTLET CONNECTION

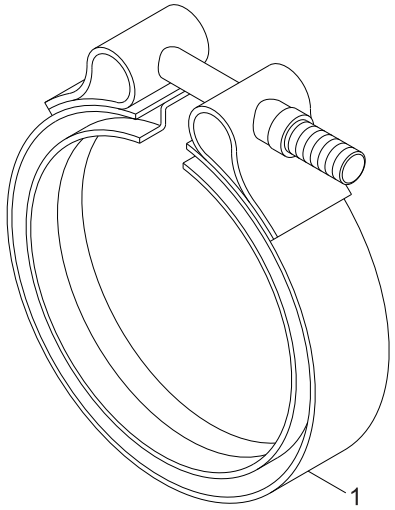

1	102408		Clamp-V Band	1	#0001 -		XS9391	

Print this!