ENGINE MOUNTING

HSL850-7A HYUNDAI

RUTHZIL TRATOR COMERCIAL DE PEÇAS LTDA 11 97083-6812 ROLANDO

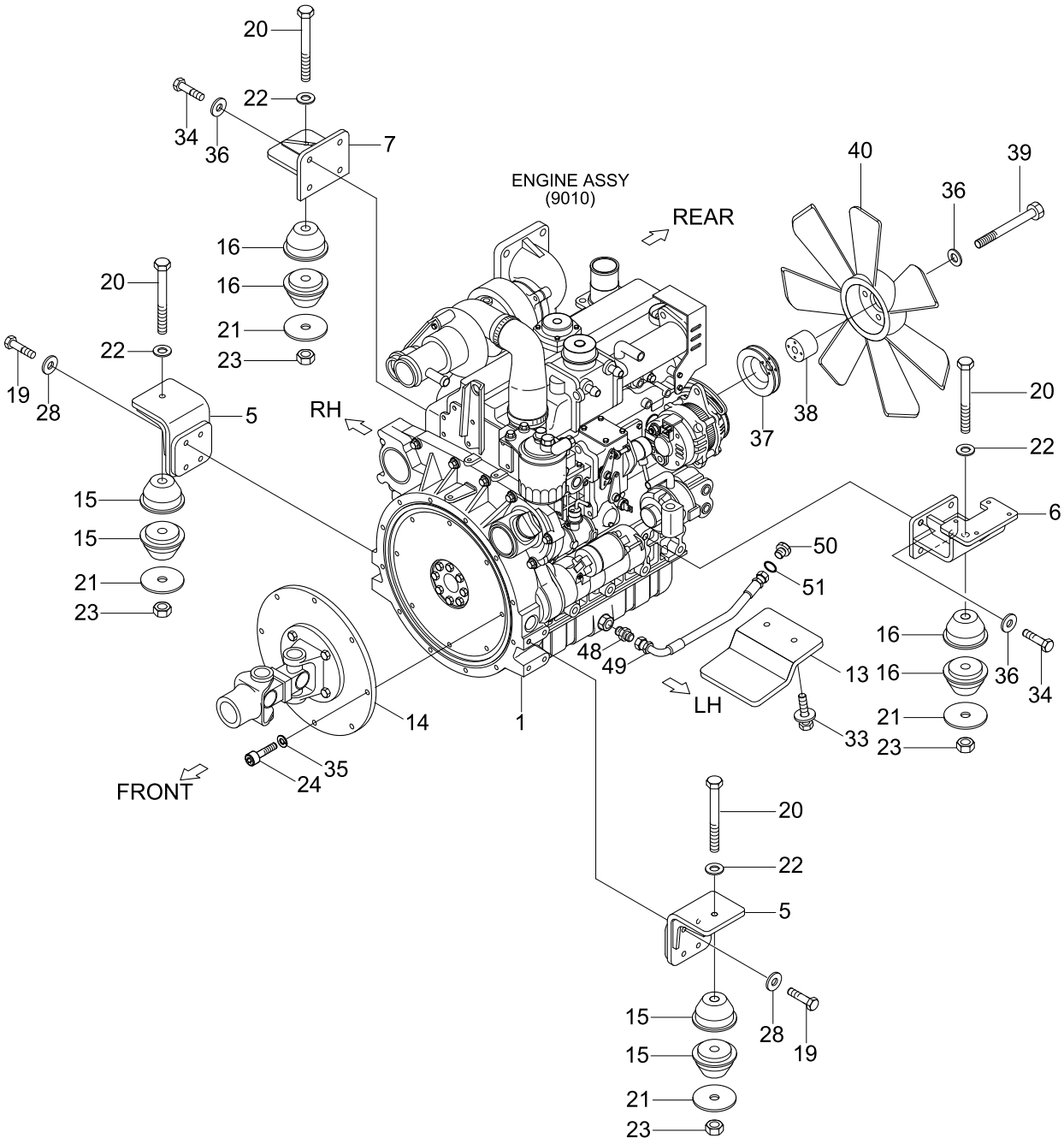

Item	Part_No	IS	Ord	T	Description	Qty	Serial_No	ITC	Remark
1	11SB-00011				ENGINE ASSY	1			
5	11S7-01063				BRACKET WA	2			
6	11S7-01073				BRACKET WA-LH	1	- #0040		
	11S7-01074				BRACKET WA-LH	1	#0041 -	B	
7	11S7-01084				BRACKET WA-RH	1			
13	11S7-00120				COVER	1			
14	11S7-01172				DRIVE SHAFT ASSY	1			
15	11MH-07170				MOUNT-RUBBER	8			
16	11MH-07160				MOUNT-RUBBER	4			
19	S018-120456				BOLT-HEX	8			
20	S017-121156				BOLT-HEX	4			
21	11MH-00230				WASHER-PLATE	4			
22	S441-120006				WASHER-HARDENED	4			
23	S205-12100B				NUT-HEX	4			
24	11S7-01260				BOLT-SOCKET	8			
28	S441-120006				WASHER-HARDENED	8			
33	S037-123056				BOLT-W/WASHER	2			
34	S018-140306				BOLT-HEX	8			
35	S411-100006				WASHER-SPRING	8			
36	S441-140006				WASHER-HARDENED	9			
37	11S7-01210				BELT PULLEY	1			
38	15449-74151				SPACER	1			
39	07154-50655				BOLT	1			
40	11S7-01020				FAN	1			
48	P350-220009				FITTING-BANJO	1			
49	P611-081007				HOSE ASSY-HYD 0X45	1			

Item	Part_No	IS	Ord	T	Description	Qty	Serial_No	ITC	Remark
50	P220-110104				PLUG-HEX	1	- #0003		
	31EM-22100				PLUG	1	#0004 -	B	
51	S631-018004				O-RING	1	- #0003		

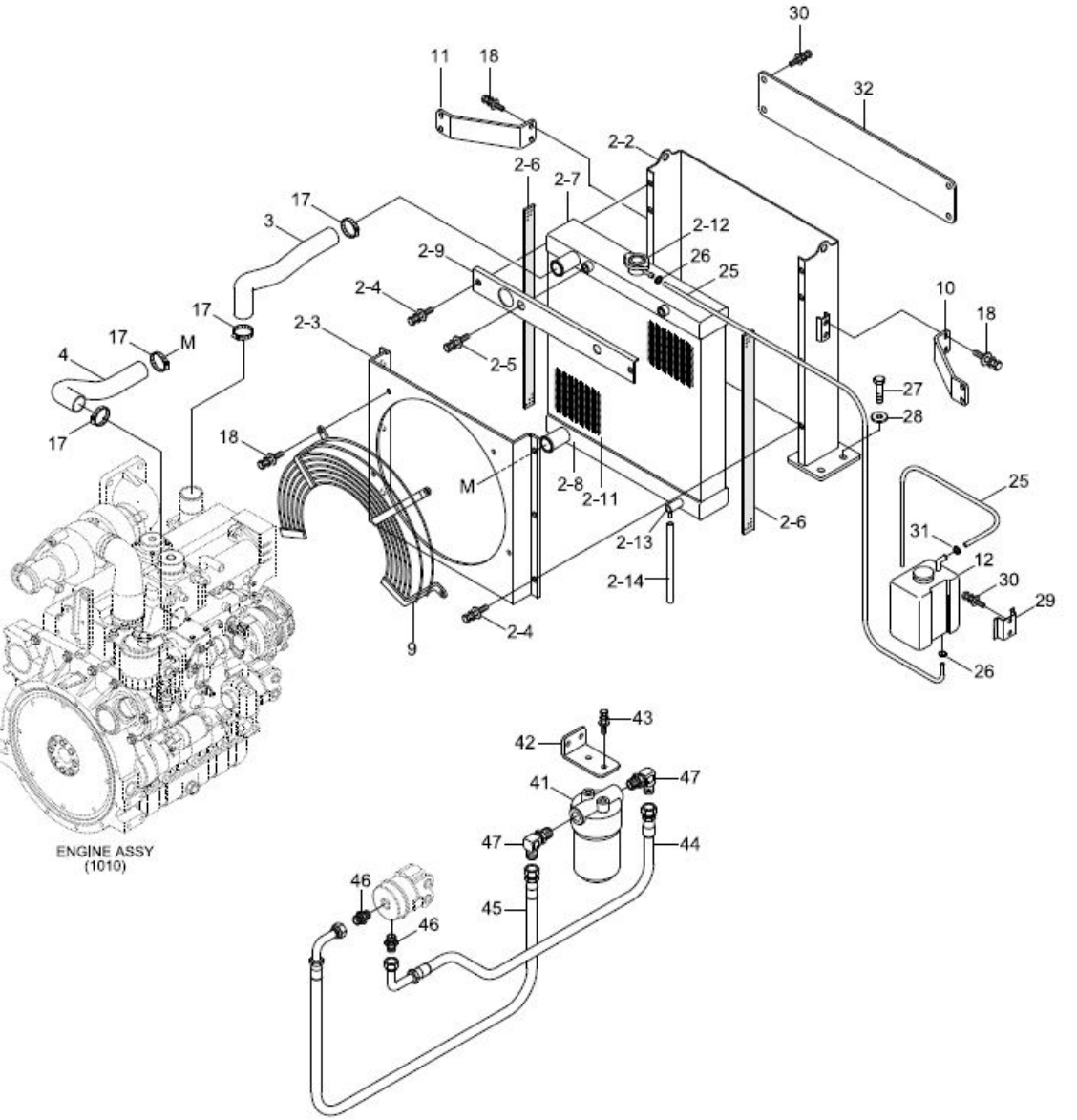
30
32
11
18
2-2
2-6
2-7
17
3
2-12
26
25
2-9
2-4
10
18
17
17
M
4
2-3
2-5
27
28
17
18
M
2-8
2-11
25
2-13
2-6
31
12
2-14
30
29
2-4
9
26
43
42
41
47
47
44
45
46
46
ENGINE ASSY
(1010)

Item	Part_No	IS	Ord	T	Description	Qty	Serial_No	ITC	Remark
2	11S7-30011				RADIATOR TOTAL ASSY	1			
2-1	11S7-30021				RADIATOR ASSY	1			
2-11	11S7-30090				RADIATOR	1			
2-12	11M6-52460				CAP-PRESSURE	1			
2-13	11M9-45080				DRAIN COCK ASSY	1			
2-14	11S7-30100				DRAIN HOSE	1			
2-2	11S7-30031				FRAME ASSY	1			
2-3	11S7-30041				SHROUD ASSY	1			
2-4	S037-082026				BOLT-W/WASHER	8			
2-5	S037-102526				BOLT-W/WASHER	2			
2-6	11S7-30060				SPONGE	1			
2-7	11S7-30070				RAD TOP MTG RUBBER	1			
2-8	11S7-30080				RAD TOP MTG RUBBER	1			
2-9	11S7-30110				COVER PLATE	1			
3	11S7-01040				HOSE-RUBBER	1			
4	11S7-01051				HOSE RUBBER	1			
9	11S7-01152				FAN GUARD WA	1			HEATER
10	11S7-01101				BRACKET-LH	1	- #0084		
	11S7-01102				BRACKET-LH	1	#0085 -	D	
11	11S7-01111				BRACKET-RH	1	- #0084		
	11S7-01112				BRACKET-RH	1	#0085 -	D	
12	11M6-52330				TANK-RESERVOIR	1			
17	S572-480006				CLAMP-HOSE,WIRE TYPE	4			
18	S035-082526				BOLT-W/WASHER	19			
25	11S4-30140				HOSE-OVER FLOW	2			
26	S520-140002				CLAMP-HOSE,SCREW DRIVE	2	- #0040		

Item	Part_No	IS	Ord	T	Description	Qty	Serial_No	ITC	Remark
26	S520-015000				CLAMP-HOSE	2	#0041 -	B	
27	S017-120406				BOLT-HEX	8			
28	S441-120006				WASHER-HARDENED	8			
29	11S7-00130				BRACKET	1			
31	31E7-0316				CLAMP-HOSE	1			
30	S035-081526				BOLT-W/WASHER	8			
32	11S7-00141				COVER	1			
41	1C020-32433				ENGINE OIL FILTER	1			
42	11S7-01201				BRACKET	1	- #0109		
	11S7-01202				BRACKET	1	#0110 -	D	
43	S035-082546				BOLT-W/WASHER	4	- #0109		
	S037-102546				BOLT-W/WASHER	2	#0110 -	D	
44	P623-063021				HOSE ASSY-THD 0X90	1	- #0109		
	P930-063021				HOSE ASSY-ORFS 0X90	1	#0110 -	D	
45	P620-063016				HOSE ASSY-THD 0X90	1			
46	P010-530003				CONNECTOR	2	- #0109		
					CONNECTOR	1	#0110 -	A	
47	P020-110014				ELBOW-90	2	- #0109		
					ELBOW-90	1	#0110 -	A	
52	11S7-01290				FAN GUARD WA	1	#0041 -	-	
53	X500-110002				CONNECTOR-ORFS	1	#0110 -	-	
54	X520-110014				ELBOW-90,ORFS	1	#0110 -	-	AIRCON ONLY

FUEL LINE

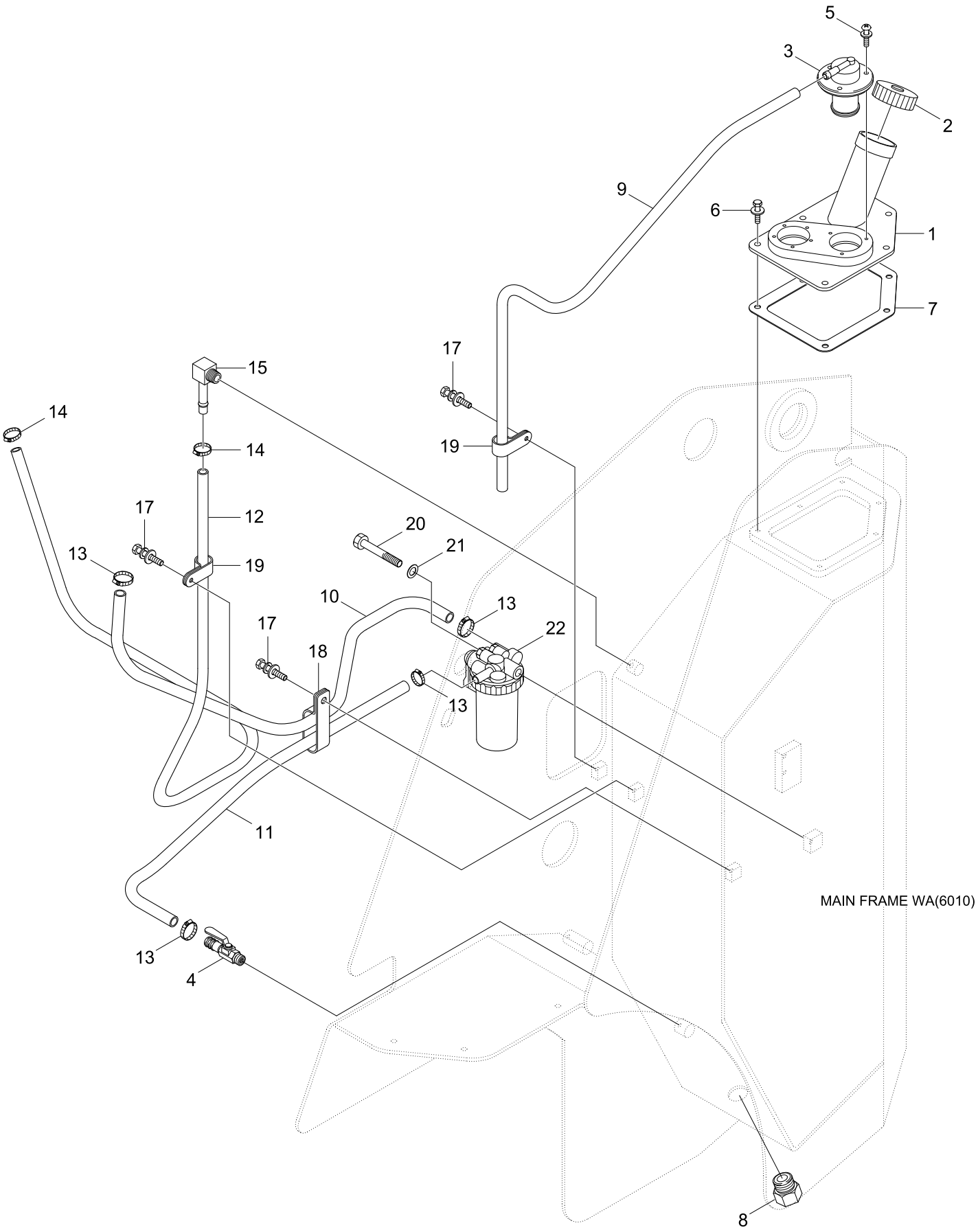
5
3
2
9
6
1
7
17
15
14
19
14
17
12
20
21
13
19
10
13
17
22
18
13
11
13
4
MAIN FRAME WA(6010)
8

Item	Part_No	IS	Ord	T	Description	Qty	Serial_No	ITC	Remark
1	11S7-20061				FILLER NECK WA	1			
2	11S8-20160				CAP-FILLER	1			
3	11FA-50300				FUEL CUT VALVE	1			
4	11S1-0035				SHUT OFF VALVE	1			
5	S131-051546				SCREW-W/WASHER	3			
6	S035-082056				BOLT-W/WASHER	6			
7	11S8-20040				GASKET	1			
8	11S4-00610				PLUG-MAGNETIC	1			
9	11S7-20050				HOSE-FUEL	1			
10	11S7-20010				HOSE-FUEL	1			
11	11S7-20020				HOSE-FUEL	1			
12	11S7-20030				HOSE-FUEL	1			
13	S571-150002				CLAMP-HOSE,WIRE TYPE	4			
14	S520-011000				CLAMP-HOSE	2			
15	11S7-20040				ELBOW-PUSH ON	1			
17	S035-081526				BOLT-W/WASHER	3			
18	S543-260002				CLAMP-TUBE	1			
19	S543-120002				CLAMP-TUBE	2			
20	S015-080706				BOLT-HEX	1			
21	S403-08200B				WASHER-PLAIN	1			
22	15831-43353				SEDIMENTOR ASSY	1			

ENGINE CONTROL

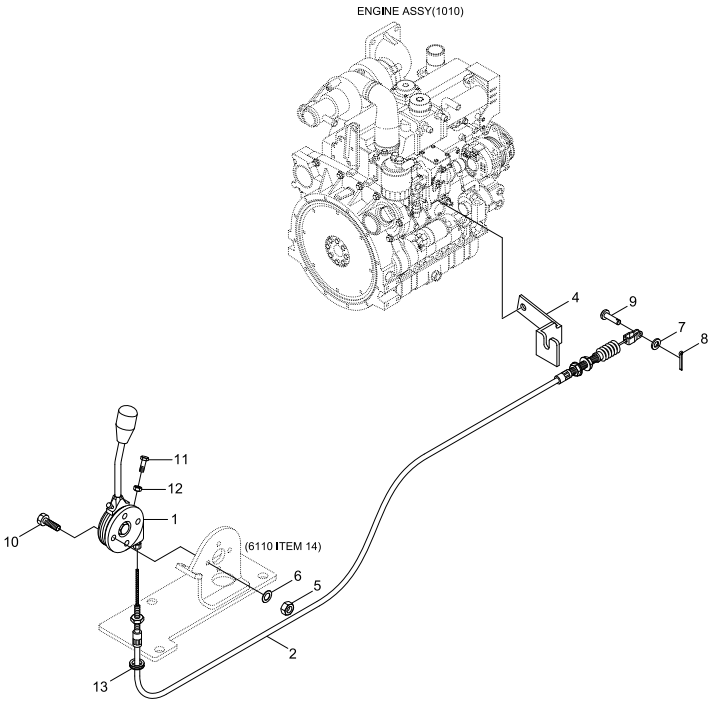



Item	Part_No	IS	Ord	T	Description	Qty	Serial_No	ITC	Remark
1	11S8-10011				LEVER-E/G CONTROL	1			
2	11S7-10011				CABLE-THROTTLE	1			
4	11S7-10030				BRACKET-CABLE	1			
5	S205-08100B				NUT-HEX	4			
6	S403-08200B				WASHER-PLAIN	4			
7	S403-06200B				WASHER-PLAIN	3			
8	S501-060002				PIN-SELF LOCKING	1			
9	S491-060152				PIN-CLEVIS	1			
10	S141-080166				SCREW-FLAT HD	4			
11	S015-050156				BOLT-HEX	1			
12	S205-05100B				NUT-HEX	1			
13	S681-100400				GROMMET	1			

AIR INTAKE SYSTEM

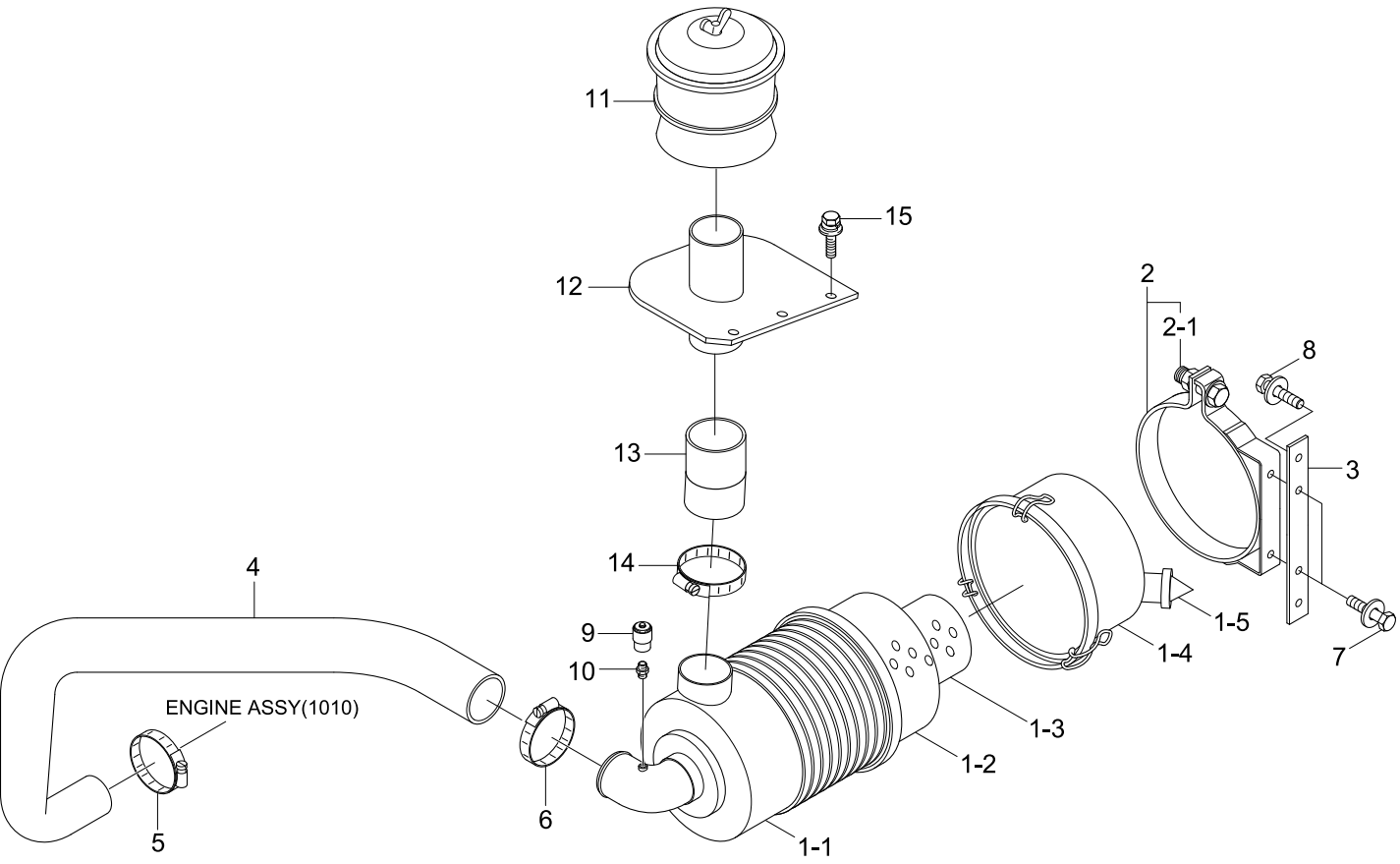

Item	Part_No	IS	Ord	T	Description	Qty	Serial_No	ITC	Remark
1	11S7-40070				AIR CLEANER ASSY	1			
N1-1	11S7-40110				.BODY ASSY	1			NOT
1-2	11S7-40120				.ELEMENT-PRIMARY(OUT)	1			
1-3	11S7-40130				.ELEMENT-SAFETY(IN)	1			
1-4	11S7-40140				.COVER ASSY	1			
1-5	11S7-40150				.VALVE-VACUATOR	1			
2	11S7-40080				CLAMP-A/CLEANER	1			
2-1	S035-084552				.BOLT-W/WASHER	1			
3	11S8-40010				PLATE	1			
4	11S7-41051				HOSE-AIRCLEANER	1			
5	S520-070000				CLAMP-HOSE	1			
6	S520-085000				CLAMP-HOSE	1			
7	S035-082056				BOLT-W/WASHER	2			
8	S037-102556				BOLT-W/WASHER	2			
9	11FG-20110				SENSOR-AIR CLEANER	1			
10	11FQ-20060				ADAPTER	1			
11	11M6-56400				PRECLEANER	1			
12	11S7-40090				PIPE WA	1			
13	11S7-40100				HOSE	1			
14	S520-085000				CLAMP-HOSE	2			
15	S037-102556				BOLT-W/WASHER	3			

EXHAUST SYSTEM

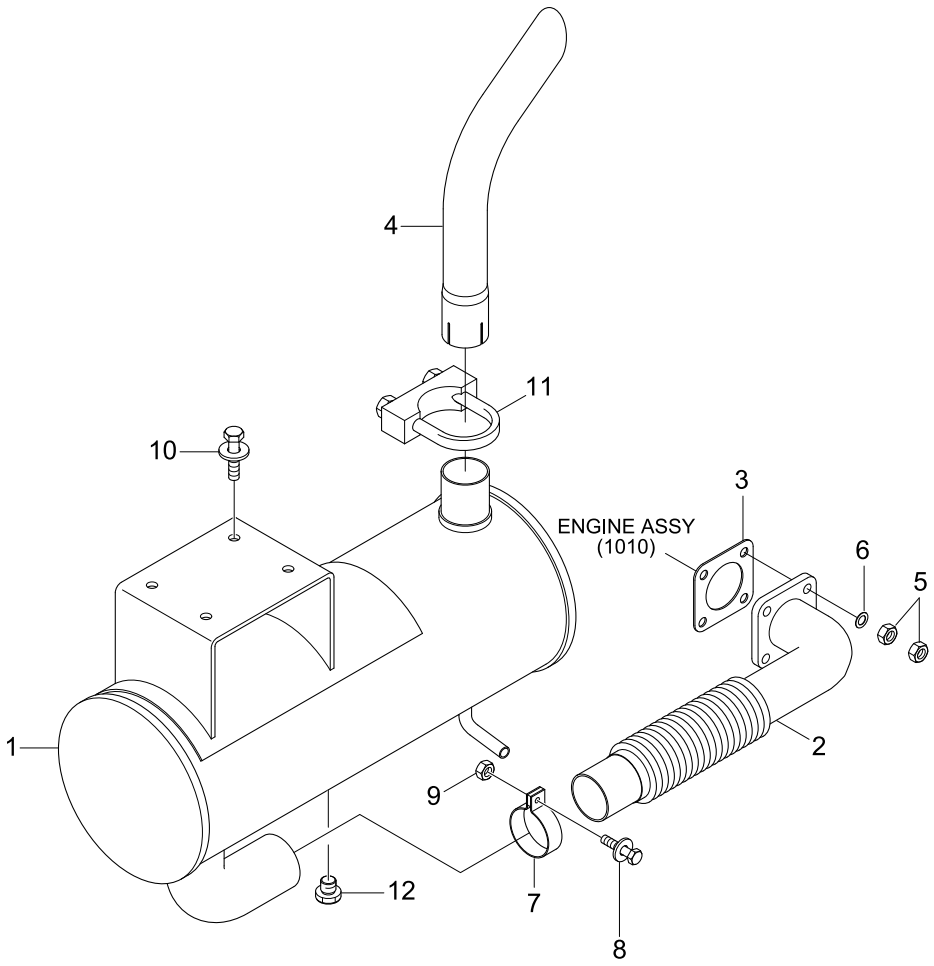

Item	Part_No	IS	Ord	T	Description	Qty	Serial_No	ITC	Remark
1	11S7-50101				MUFFLER WA	1			
2	11S7-50110				PIPE WA	1			
3	19258-12231				GASKET-EXHAUST	1			
4	11S7-50040				PIPE-TAIL	1			
5	S206-10100B				NUT-HEX	8			
6	S441-10000B				WASHER-HARDENED	4			
7	11S7-50030				CLAMP-EXHAUST	1			
8	S037-104056				BOLT-W/WASHER	1			
9	S285-101006				NUT-FLANGED	1			
10	S037-103056				BOLT-W/WASHER	1			
11	S170-510002				U-CLAMP	1			
12	12S4-20140				PLUG-HEX	1			

AIR CONDITIONER & HEATER MOUNTING

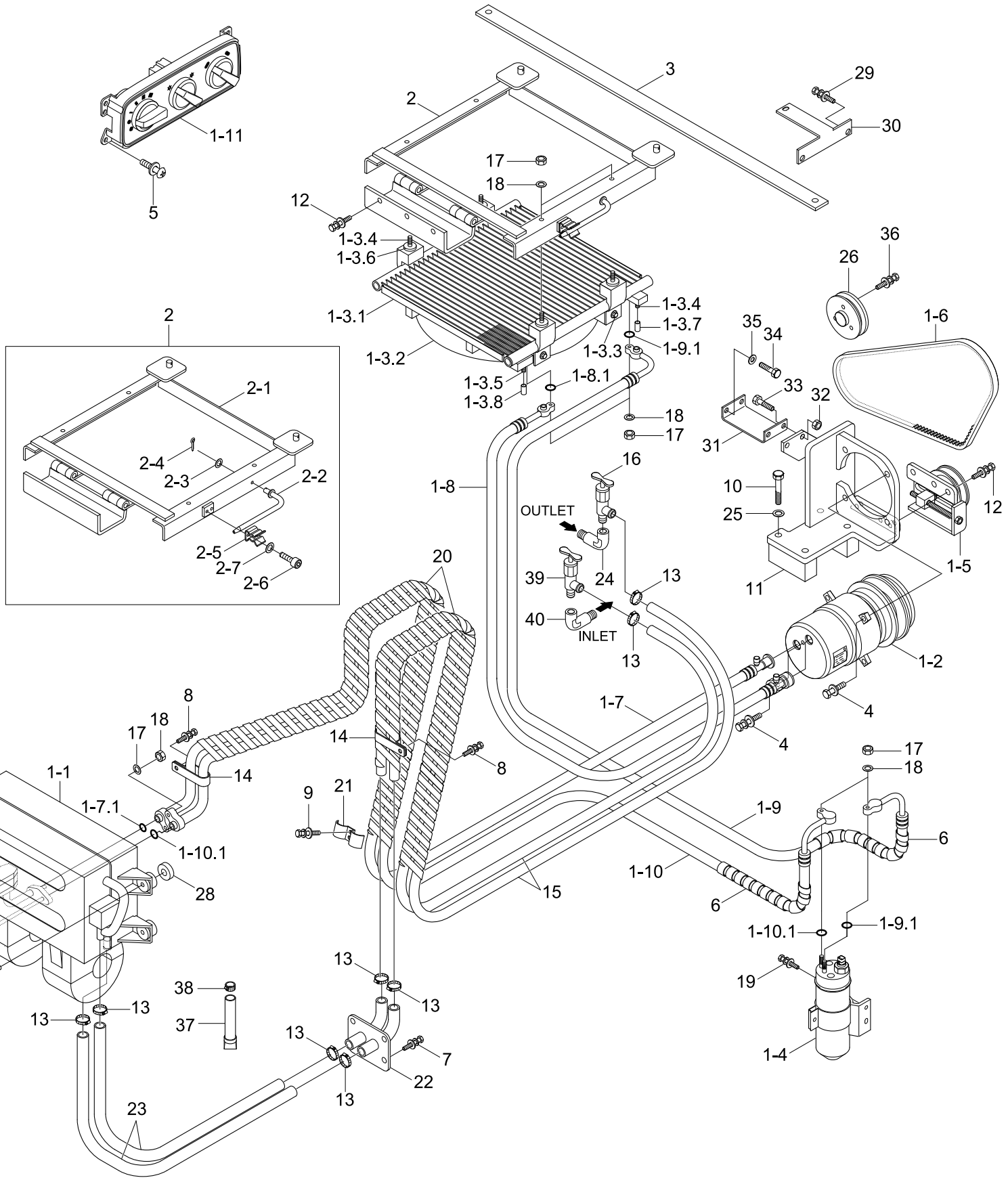

Item	Part_No	IS	Ord	T	Description	Qty	Serial_No	ITC	Remark
1	11S7-91010				AIRCON & HEATER ASSY	1			
1-1	@				.AIRCON & HEATER UNIT	1			NOT
1-2	11M8-90970				.COMPRESSOR ASSY	1			
1-3	11S7-90080				.CONDENSER ASSY	1			
1-3.1	11S7-90350				..CONDENSER UNIT ASSY	1			
1-3.2	11S7-90360				..FAN SHROUD ASSY	1			
1-3.3	11S7-90370				..FLANGE BOLT	4			
1-3.4	11S7-90380				..STUD BOLT	5			
1-3.5	11S7-90390				..STUD BOLT	1			
1-3.6	11S7-90400				..CUSHION	4			
1-3.7	11S7-90410				..CAP-INLET	1			
1-3.8	11S7-90420				..CAP-OUTLET	1			
1-4	11M8-90160				.DRYER-RECEIVER	1			
1-5	11S8-90260				.BKT & T/PULLEY ASSY	1			
1-6	11S8-90270				.V-BELT (A-47")	1			
1-7	11S7-90610				.HOSE-SUCTION	1			
1-7.1	11S7-90490				..O-RING	1			
1-8	11S7-90620				.HOSE-DISCHARGE	1			
1-8.1	11S7-90510				..O-RING	1			
1-9	11S7-90141				.HOSE-LIQUID(A)	1			
1-9.1	11S7-90530				..O-RING	2			
1-10	11S7-90151				.HOSE-LIQUID(B)	1			
1-10.1	11S7-90530				..O-RING	2			
1-11	11S8-90080				.CONTROLLER	1			
2	11S8-90092				BRACKET ASSY-COND	1			
2-1	11S8-90213				.BRACKET WA	1			

Item	Part_No	IS	Ord	T	Description	Qty	Serial_No	ITC	Remark
2-2	11S8-90222				.STAY WA	1			
2-3	S403-101002				.WASHER-PLAIN	1			
2-4	S461-250202				.PIN-SPLIT	1			
2-5	71M5-02440				.HOLDER-ROD	1			
2-6	S015-050102				.BOLT-HEX	2			
2-7	S403-051002				.WASHER-PLAIN	2			
3	11S7-90210				PLATE-CROSS	1			
4	S037-103526				BOLT-W/WASHER	5			
5	S131-051546				SCREW-W/WASHER	4			
6	P753-060040				PROTECT COVER-HOSE	2			
7	S035-081526				BOLT-W/WASHER	4			
8	S037-102026				BOLT-W/WASHER	4			
9	S037-122526				BOLT-W/WASHER	2			
10	S017-100806				BOLT-HEX	4			
11	11S7-90270				BRACKET WA	1	- #0040		
	11S7-90271				BRACKET WA	1	#0041 -	B	
12	S037-102526				BOLT-W/WASHER	6			
13	S572-220006				CLAMP-HOSE,WIRE TYPE	8			
14	31E7-0310				CLAMP-HOSE	2			
15	21M6-56070				HOSE-HEATER	2			
16	E127-3136				VALVE-CUT OFF	1			
17	S205-06100B				NUT-HEX	10			
18	S403-06200B				WASHER-PLAIN	10			
19	S035-061526				BOLT-W/WASHER	2			
20	P753-080032				PROTECT COVER-HOSE	4			
21	31E7-0038				CLAMP	1			

Item	Part_No	IS	Ord	T	Description	Qty	Serial_No	ITC	Remark
22	11S8-90140				BRACKET-HOSE	1			
23	11S7-90660				HOSE-HEATER	2			
24	11S7-90200				ADAPTER-HEATER	1			
25	S441-10000B				WASHER-HARDENED	4			
26	11S7-01162				PULLEY-AIR CON	1			
27	S035-084026				BOLT-W/WASHER	4			
28	11S7-90240				SPACER	4			
29	S037-102526				BOLT-W/WASHER	2			
30	11S7-90250				BRACKET WA	1			
31	11S7-90260				CASE-HVAC,UPPER	1			
32	S205-08100B				NUT-HEX	2			
33	S035-082056				BOLT-W/WASHER	2			
34	S016-080256				BOLT-HEX	2	- #0040		
	S015-080256				BOLT-HEX	2	#0041 -	B	
35	S441-08000B				WASHER-HARDENED	2			
36	S037-124556				BOLT-W/WASHER	3			
37	11S8-90400				HOSE-DRAIN	1			
38	S520-015000				CLAMP-HOSE	1			
39	14L1-01370				VALVE-HEATER	1			
40	21L1-4006				ADAPTER	1			

AIR CONDITIONER & HEATER UNIT

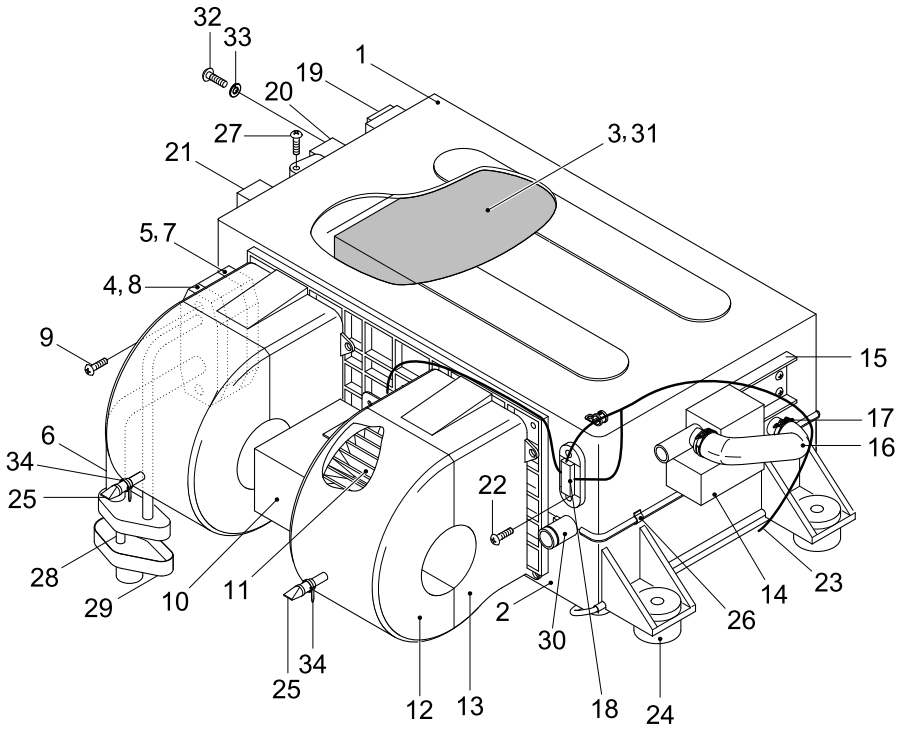

Item	Part_No	IS	Ord	T	Description	Qty	Serial_No	ITC	Remark
*	11S7-90090				AIRCON & HEATER UNIT	1			SEE 1070
1	11S7-90260				.CASE-HVAC,UPPER	1			
2	11M8-90510				.CASE-HVAC,LOWER	1			
3	11M8-90640				.CORE ASSY	1			
4	11M8-90580				.VALVE-EXPANSION	1			
5	11M8-90780				.BRACKET-JOINT	1			
6	11S7-90270				.BRACKET WA	1			
7	11M8-90810				.O-RING	3			
8	11M8-90820				.O-RING	1			
9	11M8-90910				.BOLT	2			
10	11M8-90530				.MOTOR ASSY	1			
11	11M8-90540				.FAN	1			
12	11S7-90280				.BLOWER CASE-UPPERY	1			
13	11M8-90750				.BLOWER CASE-LOWER	1			
14	11M8-90720				.VALVE-WATER	1			
15	11M8-90850				.BRACKET-HEATER VLV	1			
16	11M8-90520				.HOSE-HEATER	1			
17	11M8-90790				.CLAMP-HEATER	2			
18	11M8-90550				.THERMOCON ASSY	1			
19	11M8-90560				.RESISTOR	1			
20	11M8-90590				.RELAY	2			
21	11S7-90290				.VALVE RELAY	1			
22	11M8-90700				.SCREW	14			
23	21S7-02460				.HARNESS-AIRCON	1			
24	11M8-90630				.PAD-RUBBER	4			
25	11S7-90300				.DRAIN HOSE	2			

Item	Part_No	IS	Ord	T	Description	Qty	Serial_No	ITC	Remark
26	11M8-90680				.CLIP	6			
27	11M8-90690				.BOLT-HEX	2			
28	11M8-90710				.BOLT-STUD	2			
N29	11S7-90310				.CAP-COOLER	1			NOT
N30	11S7-90320				.CAP-HEATER	1			NOT
31	11S7-90330				.FILTER	1			
32	11S7-90680				.PH SCREW	1			
33	11S7-90690				.PLAIN WASHER	1			
34	11S7-90700				.STRAP	2			

AIR CONDITIONER MOUNTING

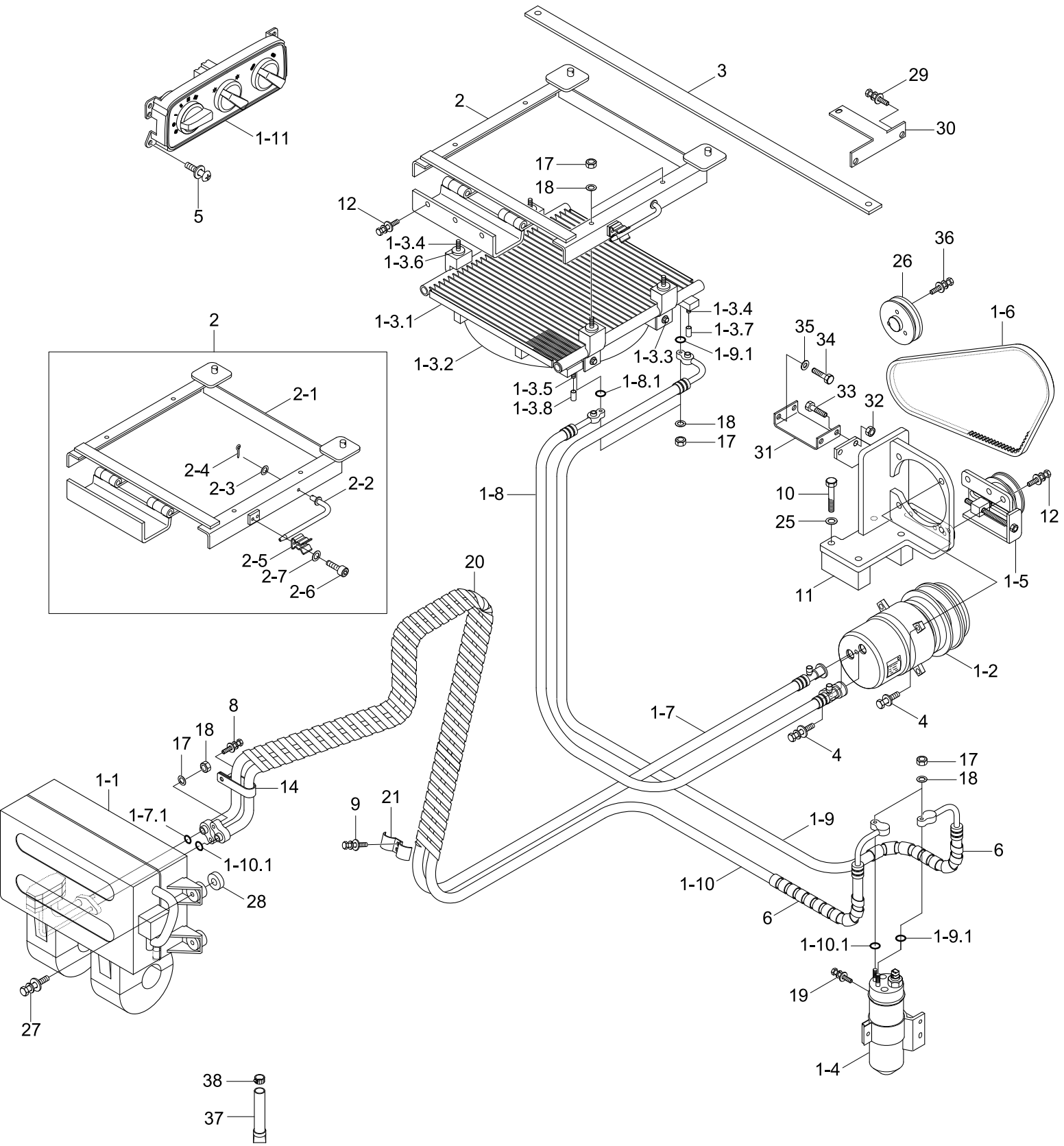

Item	Part_No	IS	Ord	T	Description	Qty	Serial_No	ITC	Remark
1	11S7-91020				AIRCON ASSY	1			
1-1	@				.AIRCON UNIT	1			NOT
1-2	11M8-90970				.COMPRESSOR ASSY	1			
1-3	11S7-90080				.CONDENSER ASSY	1			
1-3.1	11S7-90350				..CONDENSER UNIT ASSY	1			
1-3.2	11S7-90360				..FAN SHROUD ASSY	1			
1-3.3	11S7-90370				..FLANGE BOLT	4			
1-3.4	11S7-90380				..STUD BOLT	5			
1-3.5	11S7-90390				..STUD BOLT	1			
1-3.6	11S7-90400				..CUSHION	4			
1-3.7	11S7-90410				..CAP-INLET	1			
1-3.8	11S7-90420				..CAP-OUTLET	1			
1-4	11M8-90160				.DRYER-RECEIVER	1			
1-5	11S8-90260				.BKT & T/PULLEY ASSY	1			
1-6	11S8-90270				.V-BELT (A-47")	1			
1-7	11S7-90610				.HOSE-SUCTION	1			
1-7.1	11S7-90490				..O-RING	1			
1-8	11S7-90620				.HOSE-DISCHARGE	1			
1-8.1	11S7-90510				..O-RING	1			
1-9	11S7-90141				.HOSE-LIQUID(A)	1			
1-9.1	11S7-90530				..O-RING	2			
1-10	11S7-90151				.HOSE-LIQUID(B)	1			
1-10.1	11S7-90530				..O-RING	2			
1-11	11S8-90080				.CONTROLLER	1			
2	11S8-90092				BRACKET ASSY-COND	1			
2-1	11S8-90213				.BRACKET WA	1			

Item	Part_No	IS	Ord	T	Description	Qty	Serial_No	ITC	Remark
2-2	11S8-90222				.STAY WA	1			
2-3	S403-101002				.WASHER-PLAIN	1			
2-4	S461-250202				.PIN-SPLIT	1			
2-5	71M5-02440				.HOLDER-ROD	1			
2-6	S015-050102				.BOLT-HEX	2			
2-7	S403-051002				.WASHER-PLAIN	2			
3	11S7-90210				PLATE-CROSS	1			
4	S037-103526				BOLT-W/WASHER	5			
5	S131-051546				SCREW-W/WASHER	4			
6	P753-060040				PROTECT COVER-HOSE	2			
7	S035-081526				BOLT-W/WASHER	4			
8	S037-102026				BOLT-W/WASHER	3			
9	S037-122526				BOLT-W/WASHER	2			
10	S017-100806				BOLT-HEX	4			
11	11S7-90270				BRACKET WA	1	- #0040		
	11S7-90271				BRACKET WA	1	#0041 -	B	
12	S037-102526				BOLT-W/WASHER	6			
14	31E7-0310				CLAMP-HOSE	1			
17	S205-06100B				NUT-HEX	10			
18	S403-06200B				WASHER-PLAIN	10			
19	S035-061526				BOLT-W/WASHER	2			
20	P753-080032				PROTECT COVER-HOSE	4			
21	31E7-0038				CLAMP	1			
22	11S8-90140				BRACKET-HOSE	1			
23	11S7-90660				HOSE-HEATER	2			
25	S441-10000B				WASHER-HARDENED	4			

Item	Part_No	IS	Ord	T	Description	Qty	Serial_No	ITC	Remark
26	11S7-01162				PULLEY-AIR CON	1			
27	S035-084026				BOLT-W/WASHER	4			
28	11S7-90240				SPACER	4			
29	S037-102526				BOLT-W/WASHER	2			
30	11S7-90250				BRACKET WA	1			
31	11S7-90260				CASE-HVAC,UPPER	1			
32	S205-08100B				NUT-HEX	2			
33	S035-082056				BOLT-W/WASHER	2			
34	S016-080256				BOLT-HEX	2	- #0040		
	S015-080256				BOLT-HEX	2	#0041 -	B	
35	S441-08000B				WASHER-HARDENED	2			
36	S037-124556				BOLT-W/WASHER	3			
37	11S8-90400				HOSE-DRAIN	1			
38	S520-015000				CLAMP-HOSE	1			

AIR CONDITIONER UNIT

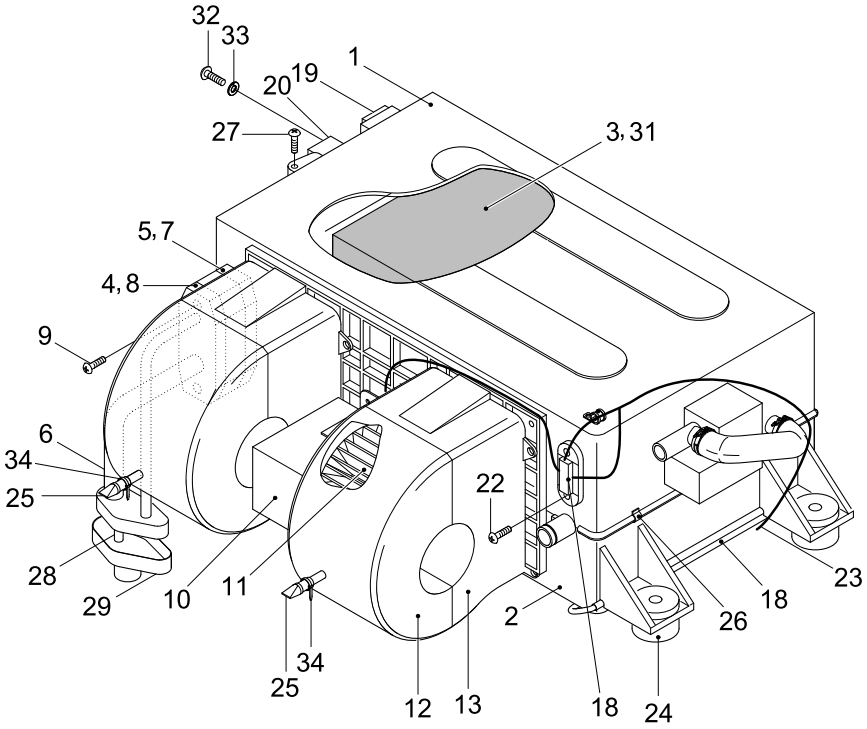

Item	Part_No	IS	Ord	T	Description	Qty	Serial_No	ITC	Remark
*	11S7-90100				AIRCON UNIT	1			SEE 1090
1	11M8-90260				.HOSE-SUCTION	1			
2	11M8-90510				.CASE-HVAC,LOWER	1			
3	11M8-90640				.CORE ASSY	1			
4	11M8-90580				.VALVE-EXPANSION	1			
5	11M8-90780				.BRACKET-JOINT	1			
6	11S7-90270				.BRACKET WA	1			
7	11M8-90810				.O-RING	3			
8	11M8-90820				.O-RING	1			
9	11M8-90910				.BOLT	2			
10	11M8-90530				.MOTOR ASSY	1			
11	11M8-90540				.FAN	1			
12	11S7-90280				.BLOWER CASE-UPPERY	1			
13	11M8-90750				.BLOWER CASE-LOWER	1			
18	11M8-90550				.THERMOCON ASSY	1			
19	11M8-90560				.RESISTOR	1			
20	11M8-90590				.RELAY	2			
22	11M8-90700				.SCREW	10			
23	21S7-02460				.HARNESS-AIRCON	1			
24	11M8-90630				.PAD-RUBBER	4			
25	11S7-90300				.DRAIN HOSE	2			
26	11M8-90680				.CLIP	6			
27	11M8-90690				.BOLT-HEX	2			
28	11M8-90710				.BOLT-STUD	2			
N29	11S7-90310				.CAP-COOLER	1			NOT
31	11S7-90330				.FILTER	1			

Item	Part_No	IS	Ord	T	Description	Qty	Serial_No	ITC	Remark
32	11S7-90680				.PH SCREW	1			
33	11S7-90690				.PLAIN WASHER	1			
34	11S7-90700				.STRAP	2			

HEATER MOUNTING

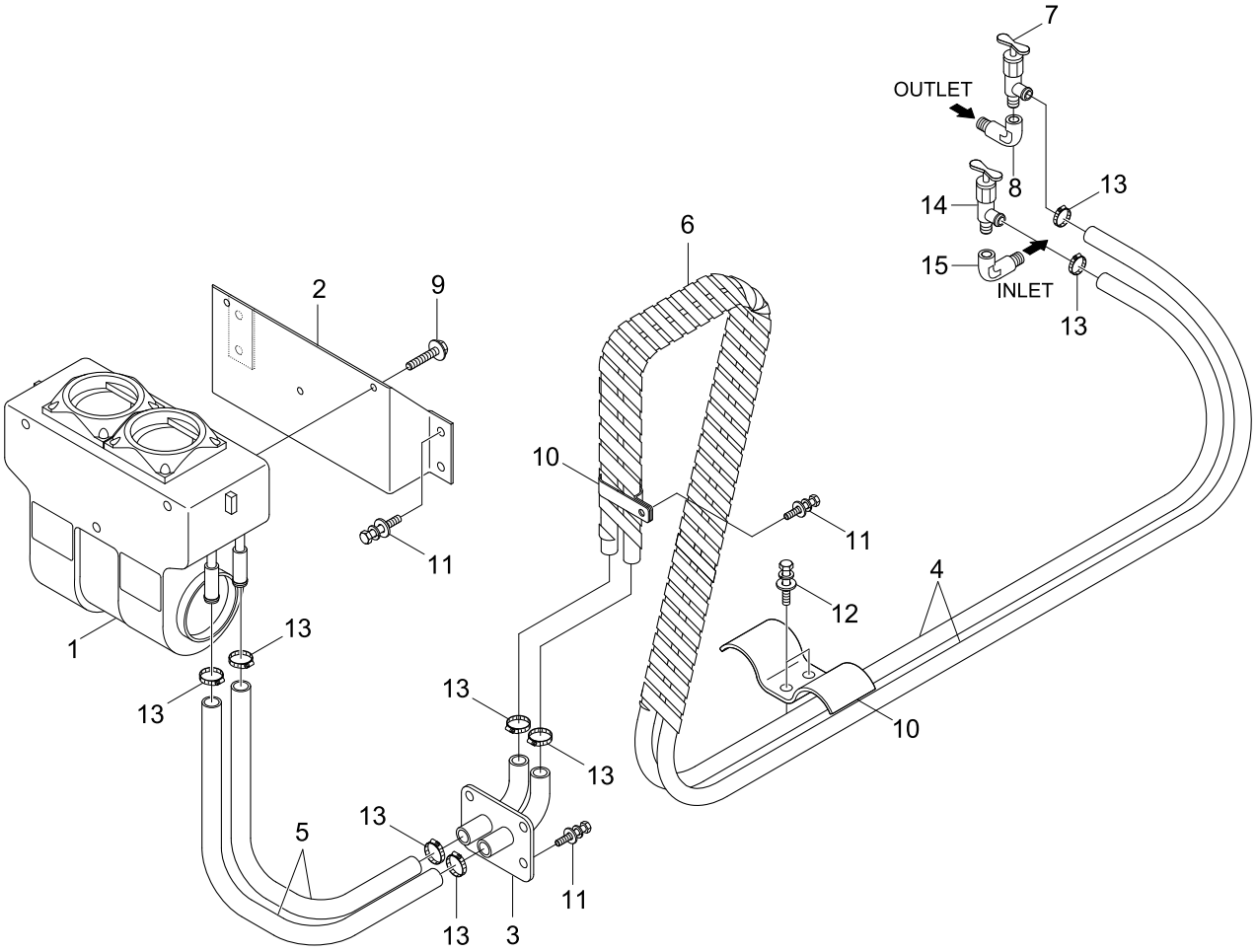

Item	Part_No	IS	Ord	T	Description	Qty	Serial_No	ITC	Remark
1	11S7-90030				HEATER UNIT	1			
2	11S7-90051				BRACKET-HEATER	1			
3	11S8-90140				BRACKET-HOSE	1			
4	11S7-90220				HOSE-HEATER	2			
5	11S8-90150				HOSE-HEATER	2			
6	P753-080032				PROTECT COVER-HOSE	1			
7	E127-3136				VALVE-CUT OFF	2			
8	11S7-90200				ADAPTER-HEATER	1			
9	S151-060206				SCREW-TAPPING	3			
10	31E7-0038				CLAMP	1			
11	S035-082026				BOLT-W/WASHER	9			
12	S037-122526				BOLT-W/WASHER	4			
13	S572-220006				CLAMP-HOSE,WIRE TYPE	8			
14	14L1-01370				VALVE-HEATER	1			
15	21L1-4006				ADAPTER	1			

FRAME ELECTRIC 1

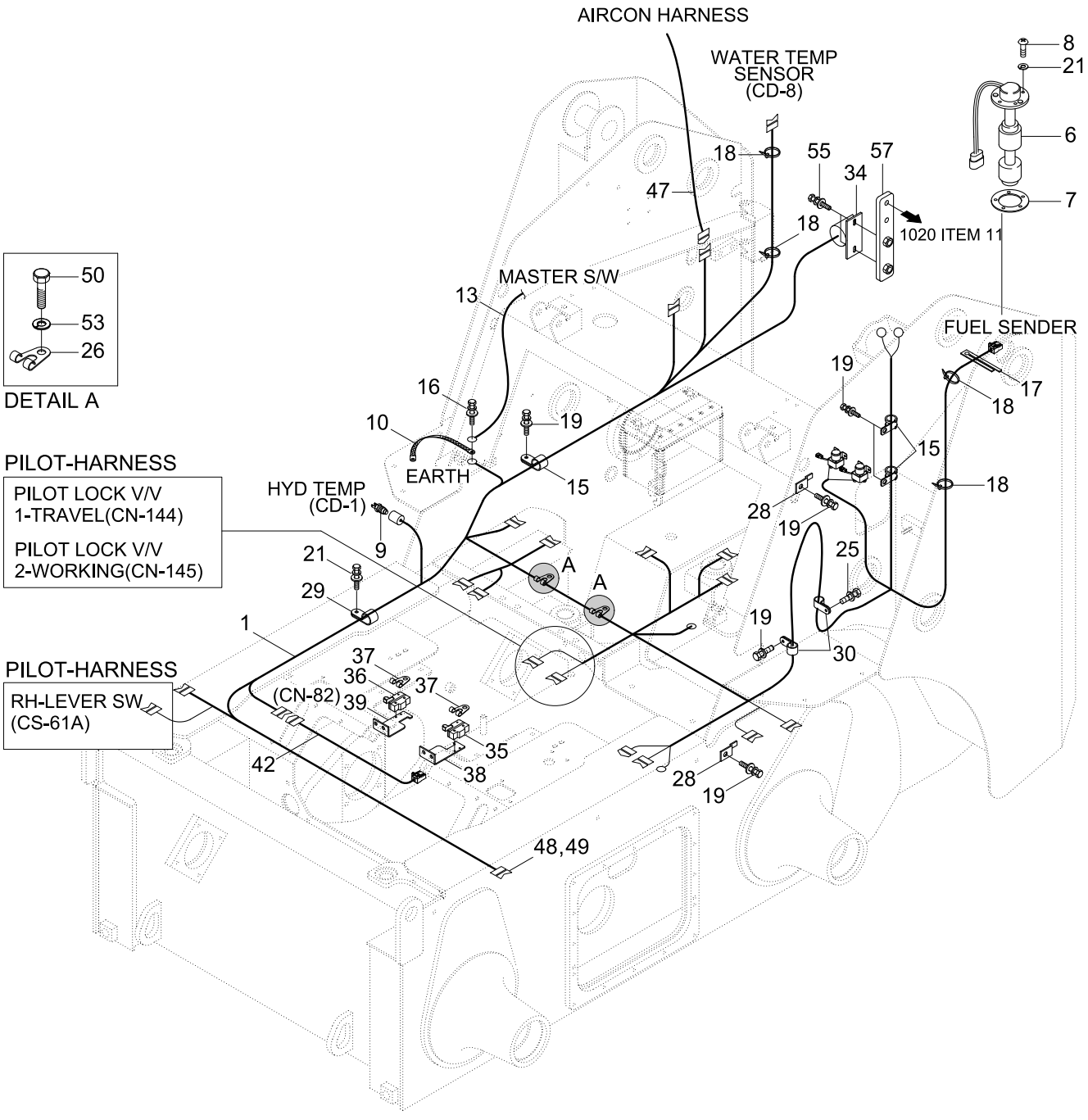

Item	Part_No	IS	Ord	T	Description	Qty	Serial_No	ITC	Remark
1	21S7-30032				HARNESS-FRAME	1			MECHANICAL
	21S7-30051				HARNESS-FRAME	1			PILOT
6	21S7-00182				FUEL SENDER ASSY	1			
7	E128-1053				GASKET	1			
8	S161-050156				SCREW-CROSS R/ROUND	5			
9	21E3-5002				SWITCH-HYD OIL TEMP	1			
10	21EH-30720				STRAP-EARTH	1			
13	21S7-02060				CABLE(MASTER SW-EARTH)	1			EUROPE
15	31L7-10190				CLAMP-TUBE	5			
16	S037-102022				BOLT-W/WASHER	3			EARTH
17	S593-000652				CLIP-HARNESS	1			
18	S552-035146				CLAMP-BAND	5			
19	S037-102526				BOLT-W/WASHER	7			
21	S411-050006				WASHER-SPRING	5			
25	S037-122526				BOLT-W/WASHER	4			
26	21E9-00170				CLIP-HARNESS	2			
28	21E7-0612				PLATE-CONNECTOR	3			
29	S543-100002				CLAMP-TUBE	2			
30	31L7-10210				CLAMP-TUBE,INS	3			
34	21FD-30312				BUZZER-BACK	1			BACK BUZZER
35	21S8-02110				SWITCH ASSY-LH	1			MECH,B/BUZZER
36	21S8-02170				SWITCH ASSY-RH	1			MECH,B/BUZZER
37	S593-000652				CLIP-HARNESS	2			MECH,B/BUZZER
38	21S7-02411				PLATE-LH	1	- #0017		MECH,B/BUZZER
	21S7-34350				PLATE-LH	1	#0018 -	B	MECH,B/BUZZER
39	21S7-02421				PLATE-RH	1	- #0017		MECH,B/BUZZER

Item	Part_No	IS	Ord	T	Description	Qty	Serial_No	ITC	Remark
39	21S7-34360				PLATE-RH	1	#0018 -	B	MECH,B/BUZZER
42	21S8-34140				HARNESS-BACK BUZZER	1			MECHANICAL
47	21S7-34190				HARNESS-AIRCON1	1			MECHANICAL
48	21S8-34780				KIT ASSY(DT04-2P)	1			PILOT
49	21S8-34770				KIT ASSY(DT04-6P)	2			MECHANICAL
50	S018-120206				BOLT-HEX	2			
53	S411-120006				WASHER-SPRING	2			
55	S035-082026				BOLT-W/WASHER	2			
57	21S7-34610				PLATE-BACK BUZZER	1			BACK BUZZER

FRAME ELECTRIC 2

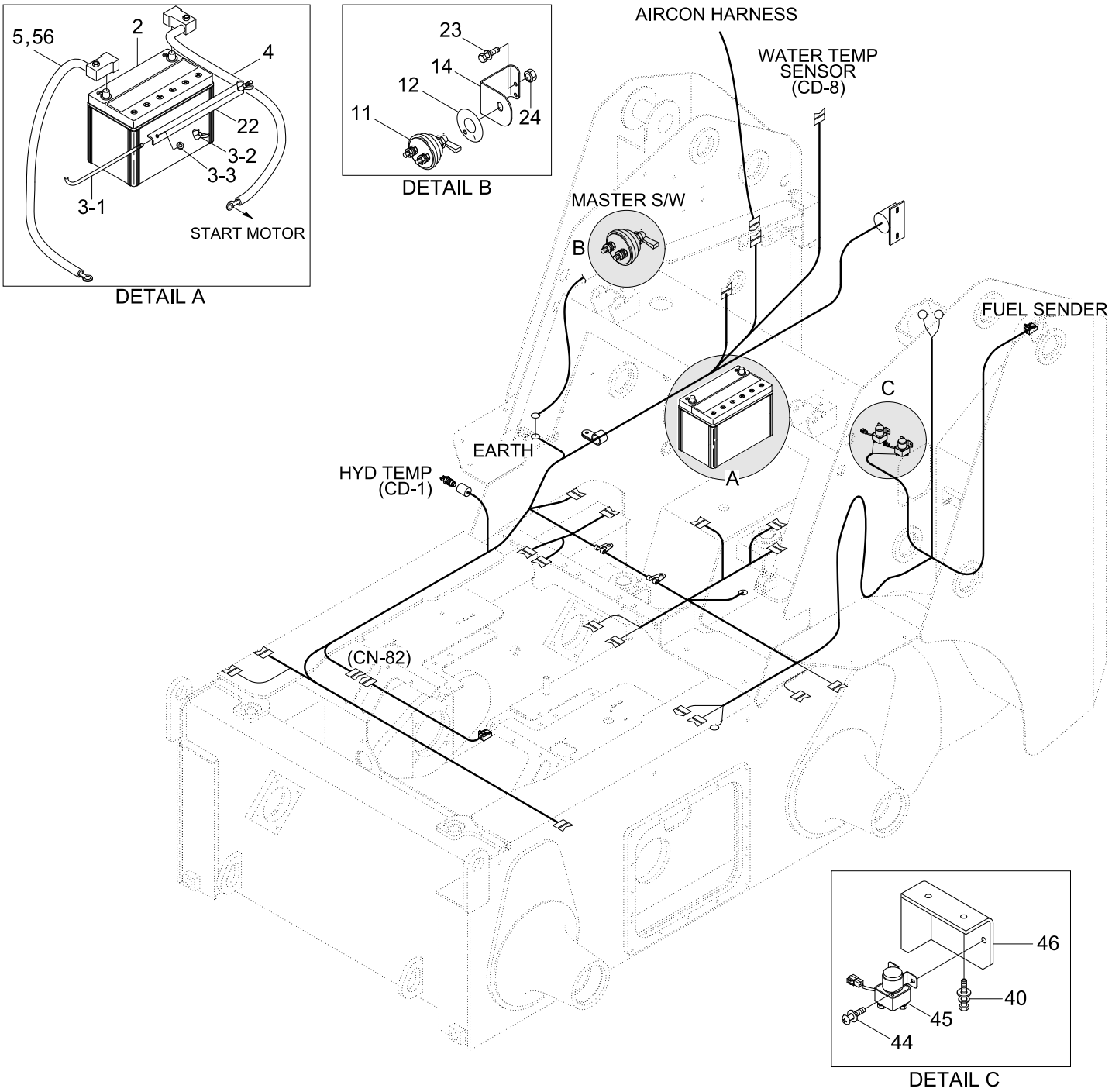

Item	Part_No	IS	Ord	T	Description	Qty	Serial_No	ITC	Remark
2	21S4-01080				BATTERY	1			
3	22S4-01190				BATTERY ROD	2			
3-1	22S4-01290				.THREAD	1			
3-2	S261-06000B				.NUT-WING	1			
3-3	S403-06200B				.WASHER-PLAIN	1			
4	21S7-30040				BATTERY CABLE(+)	1			
5	21S7-02400				BATTERY CABLE(-)	1			EUROPE
11	21L7-10501				SWITCH-MASTER	1			EUROPE
12	21LD-34180				DECAL-MASTER SWITCH	1			EUROPE
14	21S7-03120				PLATE WA	1			EUROPE
22	21S4-01170				CLAMP-BATTERY	1			
23	S035-082026				BOLT-W/WASHER	2			
24	S205-081002				NUT-HEX	2			
40	S035-081526				BOLT-W/WASHER	4			MECH,B/BUZZER
44	S131-051546				SCREW-W/WASHER	2			
45	21M9-00100				RELAY-START	2			
46	21S7-02140				PLATE-COVER	1			
56	21S4-02060				BATTERY CABLE(-)	1			

CAB & CANOPY ELECTRIC 1

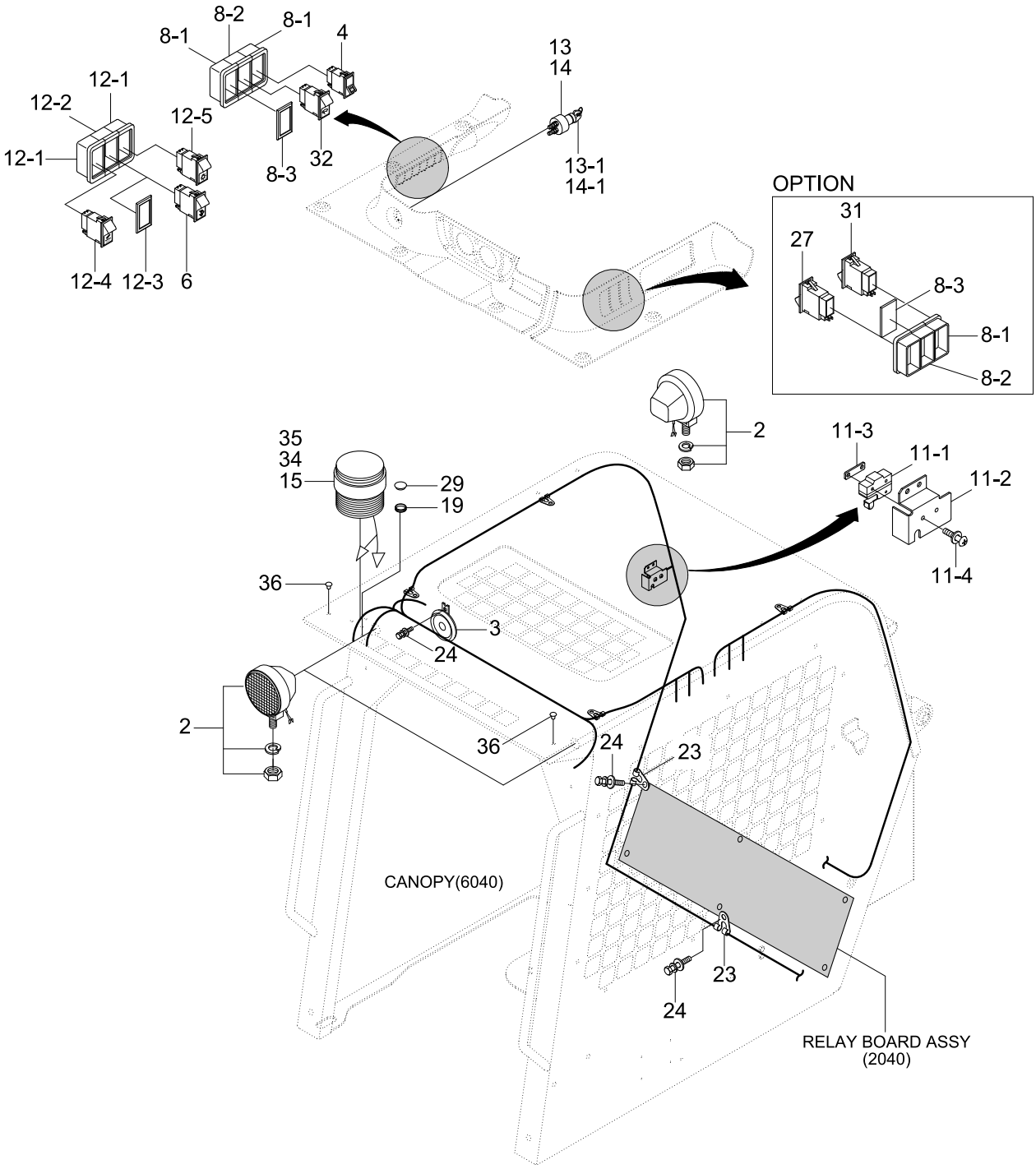

Item	Part_No	IS	Ord	T	Description	Qty	Serial_No	ITC	Remark
2	F12840010				LAMP SUB ASSY-WORK	3			
2-1	S866-120550				.BULB	1			NOT SHOWN
3	21M8-00070				HORN-HIGH	1	- #0109		
	21M8-00071				HORN-HIGH	1	#0110 -	D	
4	21S8-34270				SWITCH-HIGH FLOW	1			HI-FLOW
6	21S8-34160				SWITCH-SELF LEVELING	1			AUTO LEVELING
8	21S7-02170				SWITCH COVER ASSY	2			
8-1	21E6-10680				.PIECE-END	2			
8-2	21E6-10670				.PIECE-INTERMEDIARY	1			
8-3	21E6-10460				.COVER	3			
11	21S7-03300				SWITCH ASSY	1			
11-1	21S8-02120				.SWITCH-MICRO	1			
11-2	21S7-03310				.COVER	1			
11-3	21S8-02140				.PLATE	1			
11-4	S131-043046				.SCREW-W/WASHER	2			
12	21S8-34150				SWITCH ASSY	1			
12-1	21E6-10680				.PIECE-END	2			
12-2	21E6-10670				.PIECE-INTERMEDIARY	1			
12-3	21E6-10460				.COVER	1			
12-4	21S4-01390				.SWITCH-RESET	2			
12-5	21M8-01101				.SWITCH-MAIN LIGHT	1			
13	21N3-00020				SWITCH ASSY-INCL KEY	1			VARIANT
13-1	21N3-00030				.KEY-START	1			
14	21N4-10400				SWITCH ASSY-INCL KEY	1			SAME
14-1	21N4-10400K				.KEY-START	1			
15	F23842010				STROBE LAMP-RED	1			BEACON LAMP

Item	Part_No	IS	Ord	T	Description	Qty	Serial_No	ITC	Remark
15-1	21FG-10850				.GLOBE-RED	1			NOT SHOWN
19	S681-100400				GROMMET	1			
23	S593-000902				CLIP-HARNESS	4			
24	S035-081526				BOLT-W/WASHER	4			
27	21S1-31600				SWITCH-BEACON	1			BEACON LAMP
29	S661-150300				CAP-RUBBER	1			W/OUT BEACON
31	21S4-09040				SWITCH-HEATER	1			HEATER
32	21S7-02230				SWITCH-WIPER	1			CAB TYPE
34	21FG-10810				STROBE LAMP-AMBER	1			BEACON LAMP
34-1	21FG-10860				.GLOBE-AMBER	1			NOT SHOWN
35	21FG-10820				STROBE LAMP-BLUE	1			BEACON LAMP
35-1	21FG-10870				.GLOBE-BLUE	1			NOT SHOWN
36	S661-120300				CAP-RUBBER	2			

HSL850-7A

CAB & CANOPY ELECTRIC 2

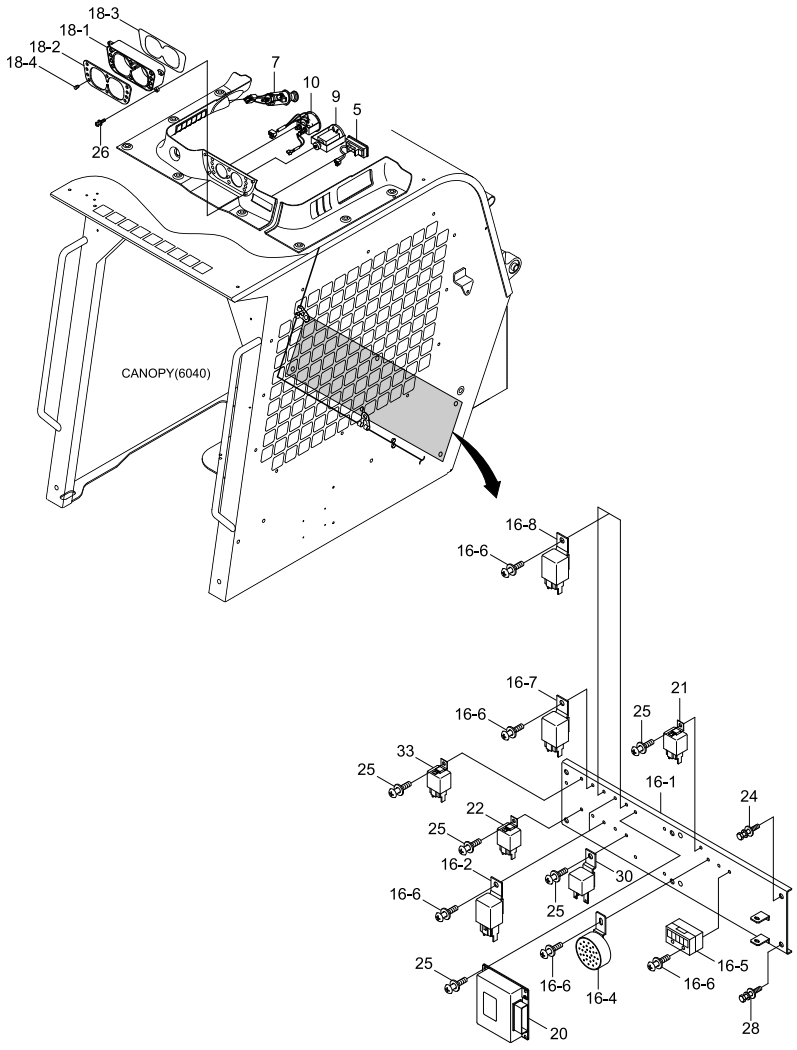

Item	Part_No	IS	Ord	T	Description	Qty	Serial_No	ITC	Remark
5	21S4-01070				ROOM LAMP ASSY	1			
7	21S4-01110				LIGHTER-CIGAR	1			
9	21N4-11070				HOUR METER ASSY	1			
10	21S1-30230				FUEL METER ASSY	1			
16	21S8-34210				RELAY BOARD ASSY	1			
16-1	21S8-34220				.PLATE-RELAY	1			
16-2	21E3-0011				.RELAY	2			
16-4	21S4-09120				.AUDIBLE ALARM ASSY	1			
16-5	21S4-01040				.FUSE BOX ASSY	1			
16-6	S131-051546				.SCREW-W/WASHER	8			
16-7	21E3-0025				.RELAY	1			
16-8	21S7-00110				.RELAY-POWER	2			
18	21S8-34250				WARNING INDICATOR ASSY	1			
18-1	21S7-02310				.CASE	1			
18-2	@				.PCB	1			NOT
18-3	21S8-34260				.DECAL	1			
18-4	21M6-53210				.LAMP ASSY	10			
20	21S7-30103				CONTROL UNIT	1			
21	21E3-0011				RELAY	1			HIGH FLOW
22	21E3-0011				RELAY	1			BACK BUZZER
24	S035-081526				BOLT-W/WASHER	5			
25	S131-051546				SCREW-W/WASHER	7			
26	S131-043046				SCREW-W/WASHER	4			
28	S035-081522				BOLT-W/WASHER	1			EARTH
30	21E3-0011				RELAY	1			
33	21S7-00110				RELAY-POWER	1			AIRCON&HEATER

CAB & CANOPY SUB ELECTRIC

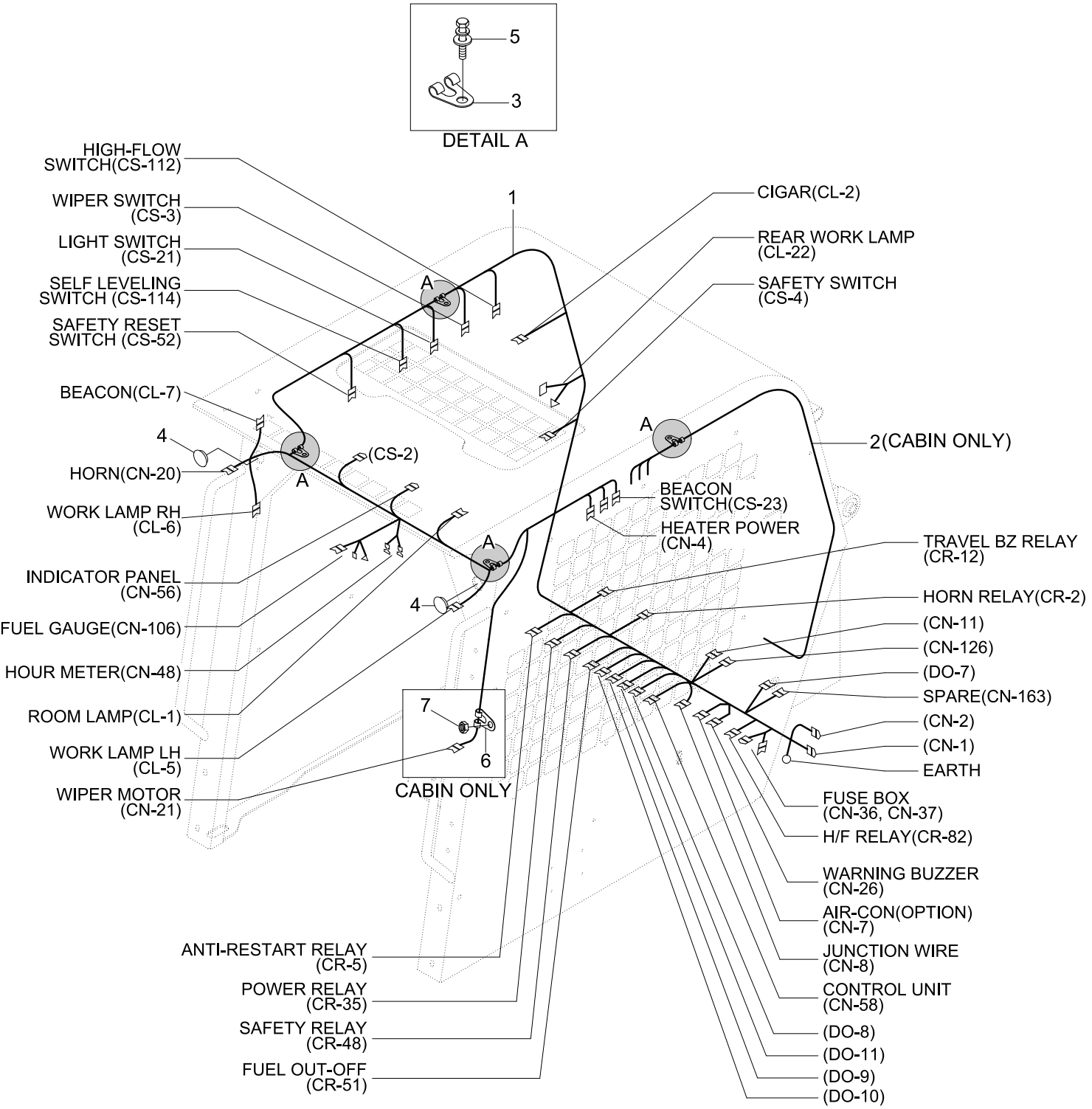

Item	Part_No	IS	Ord	T	Description	Qty	Serial_No	ITC	Remark
*	20S8-30210				ELEC CANOPY SUB GROUP	1			CANOPY TYPE
	20S8-30220				ELEC CABIN SUB GROUP	1			CAB TYPE
1	21S8-30011				.HARNESS-MAIN	1	- #0109		
	21S8-30012				.HARNESS-MAIN	1	#0110 -	D	
2	21S7-02441				.HARNESS-AIRCON,HEATER	1			CAB TYPE
3	S593-000752				.CLIP-HARNESS	4			
4	71S4-70100				.CAP-RUBBER	2			
5	S035-081526				.BOLT-W/WASHER	4			
6	S593-000902				.CLIP-HARNESS	1			CAB TYPE
7	S205-10100B				.NUT-HEX	1			CAB TYPE

CAB & CANOPY SUB ELECTRIC 2 (LOW CAB)

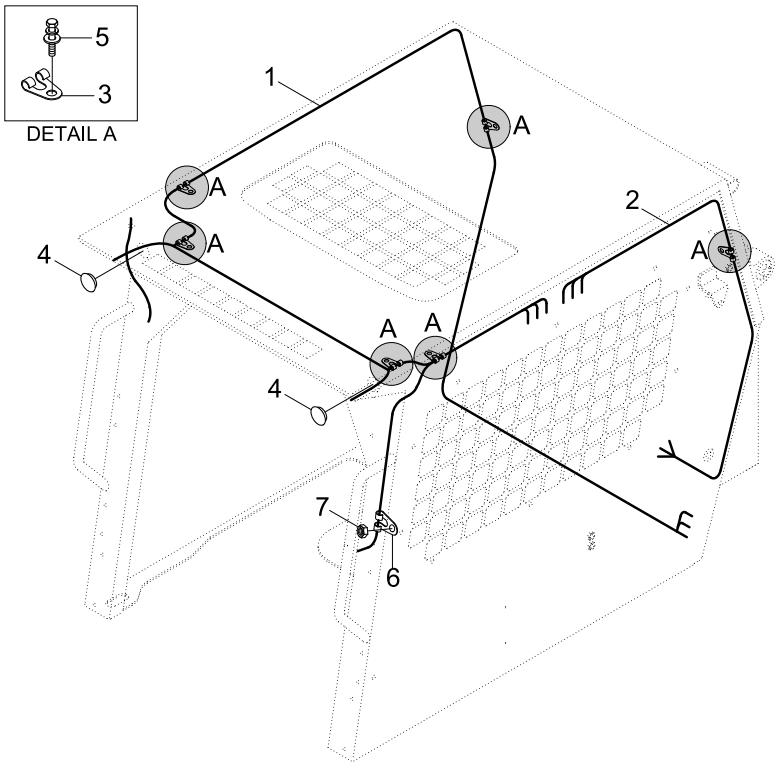

Item	Part_No	IS	Ord	T	Description	Qty	Serial_No	ITC	Remark
1	21S8-02224				HARNESS-MAIN(LOW CAB)	1			
2	21S7-02441				HARNESS-AIRCON,HEATER	1			
3	S593-000752				CLIP-HARNESS	6			
4	71S4-70100				CAP-RUBBER	2			
5	S035-081522				BOLT-W/WASHER	6			
6	S593-000902				CLIP-HARNESS	1			
7	S205-101002				NUT-HEX	1			

MAIN HYDRAULIC PIPING 1(MECHANICAL)

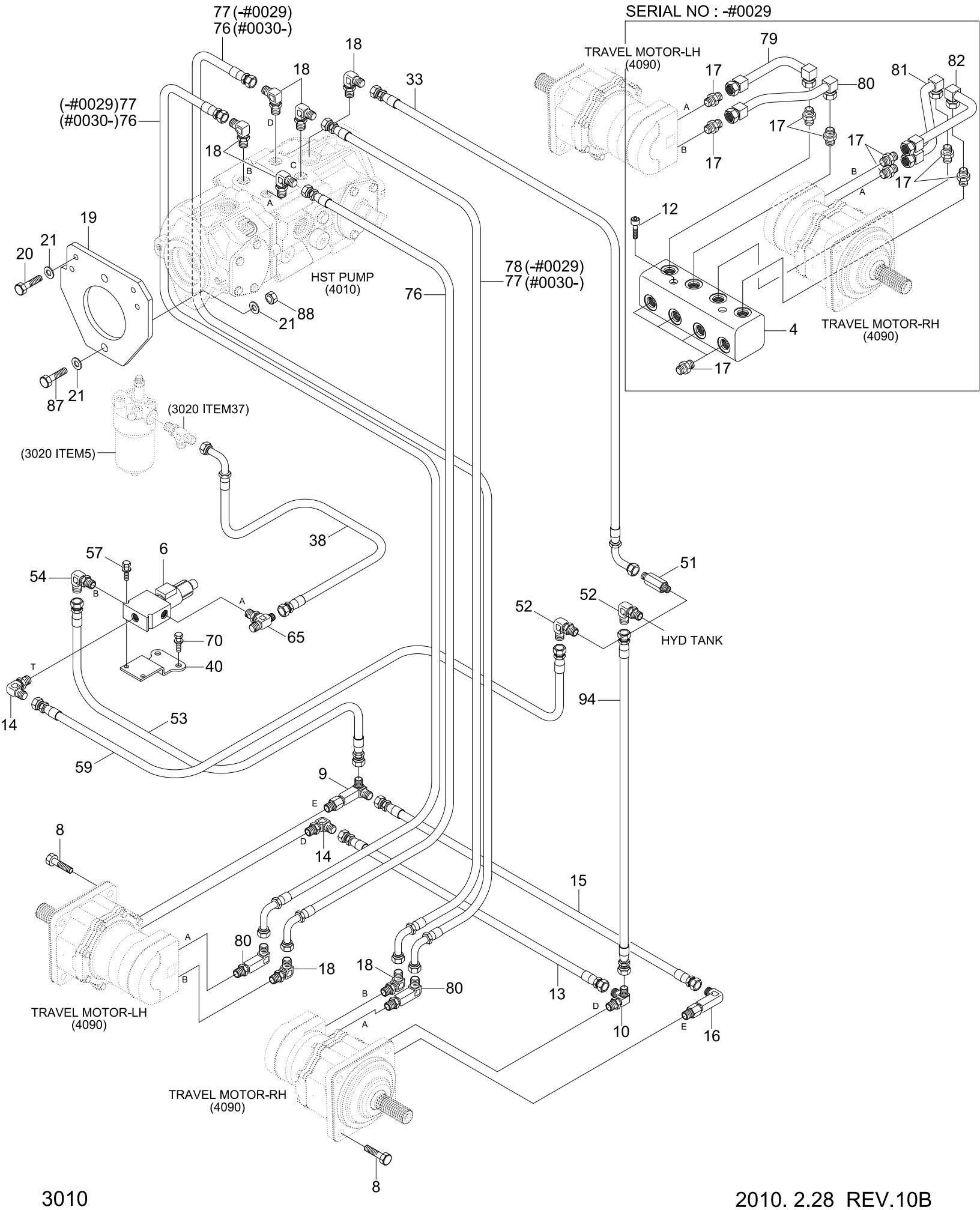

Item	Part_No	IS	Ord	T	Description	Qty	Serial_No	ITC	Remark
4	31S8-00650				PLATE-PORT	1			
					PLATE-PORT	1	- #0029	-	
6	31S7-42000				SOLENOID VALVE-PARKING	1			
8	S018-16045D				BOLT-HEX	8			
9	31S8-00511				ELBOW-90	1			
10	31S8-00520				TEE	1			
12	S107-100456				BOLT-SOCKET	2			
					BOLT-SOCKET	2	- #0028	-	
13	P913-062012				HOSE ASSY	1	- #0030		
	P933-062018				HOSE ASSY-ORFS 0X90	1	#0031 -	D	
14	31FG-80400				ELBOW-90	2	- #0030		
					ELBOW-90	1	#0031 -	A	
15	P913-042013				HOSE ASSY-ORFS 0X0	1	- #0029		
	P913-042014				HOSE ASSY-ORFS 0X0	1	#0030 - #0030	D	
	P933-042020				HOSE ASSY-ORFS 0X90	1	#0031 -	D	
16	31S8-00531				ELBOW-90,LONG	1	- #0030		
	X500-310001				CONNECTOR-ORFS	1	#0031 -	D	
17	X500-310004				CONNECTOR-ORFS	12			
					CONNECTOR-ORFS	12	- #0029	-	
18	31LF-30080				ELBOW-90	5	- #0029		
					ELBOW-90	7	#0030 -	A	
19	31S8-00560				PLATE WA	1			
20	S017-120306				BOLT-HEX	4			
21	S441-12000B				WASHER-HARDENED	8	- #0030		
					WASHER-HARDENED	8	#0031 -	A	
33	P933-122046				HOSE ASSY-ORFS 0X90	1	- #0029		

Item	Part_No	IS	Ord	T	Description	Qty	Serial_No	ITC	Remark
33	P933-122040				HOSE ASSY-ORFS 0X90	1	#0030 -	D	
38	P930-081010				HOSE ASSY	1			
40	31S8-00612				BRACKET	1			
51	31S7-00420				CONNECTOR-LONG	1			
52	X520-110011				ELBOW-90,ORFS	2			
53	P923-042016				HOSE ASSY-ORFS 0X45	1	- #0029		
	P923-042020				HOSE ASSY-ORFS 0X45	1	#0030 -	D	
54	X520-310001				ELBOW-90,ORFS	1			
55	S037-123056				BOLT-W/WASHER	2			
57	S015-060456				BOLT-HEX	2			
59	P913-062020				HOSE ASSY-ORFS 0X0	1	- #0029		
	P913-062023				HOSE ASSY-ORFS 0X0	1	#0030 -	D	
65	31S8-00640				TEE	1			
76	31S8-10211				HOSE ASSY	1	- #0029		
					HOSE ASSY	3	#0030 -	A	
77	P930-126017				HOSE ASSY-ORFS 0X90	2	- #0029		
	31S8-10300				HOSE ASSY	1	#0030 -	D	
78	31S7-10200				HOSE ASSY	1			
					HOSE ASSY	1	- #0029	-	
79	31S7-01060				TUBE	1			
					TUBE	1	- #0029	-	
80	31S7-01070				TUBE	1	- #0029		
	31S7-00470				ELBOW-90	1	#0030 -	D	
81	31S7-01081				TUBE	1			
					TUBE	1	- #0029	-	
82	31S7-01091				TUBE	1			

Item	Part_No	IS	Ord	T	Description	Qty	Serial_No	ITC	Remark
82	31S7-01091				TUBE	1	- #0029	-	
87	S037-125056				BOLT-W/WASHER	2	- #0030		
	S017-140456				BOLT-HEX	2	#0031 -	D	
88	S275-12000B				NUT-SELF LOCKING	2	- #0030		
	S275-14000B				NUT-SELF LOCKING	2	#0031 -	D	
94	P930-062030				HOSE ASSY-ORFS 0X90	1			
104	X500-310002				CONNECTOR-ORFS	1	#0031 -	-	

MAIN HYDRAULIC PIPING 2(MECHANICAL)

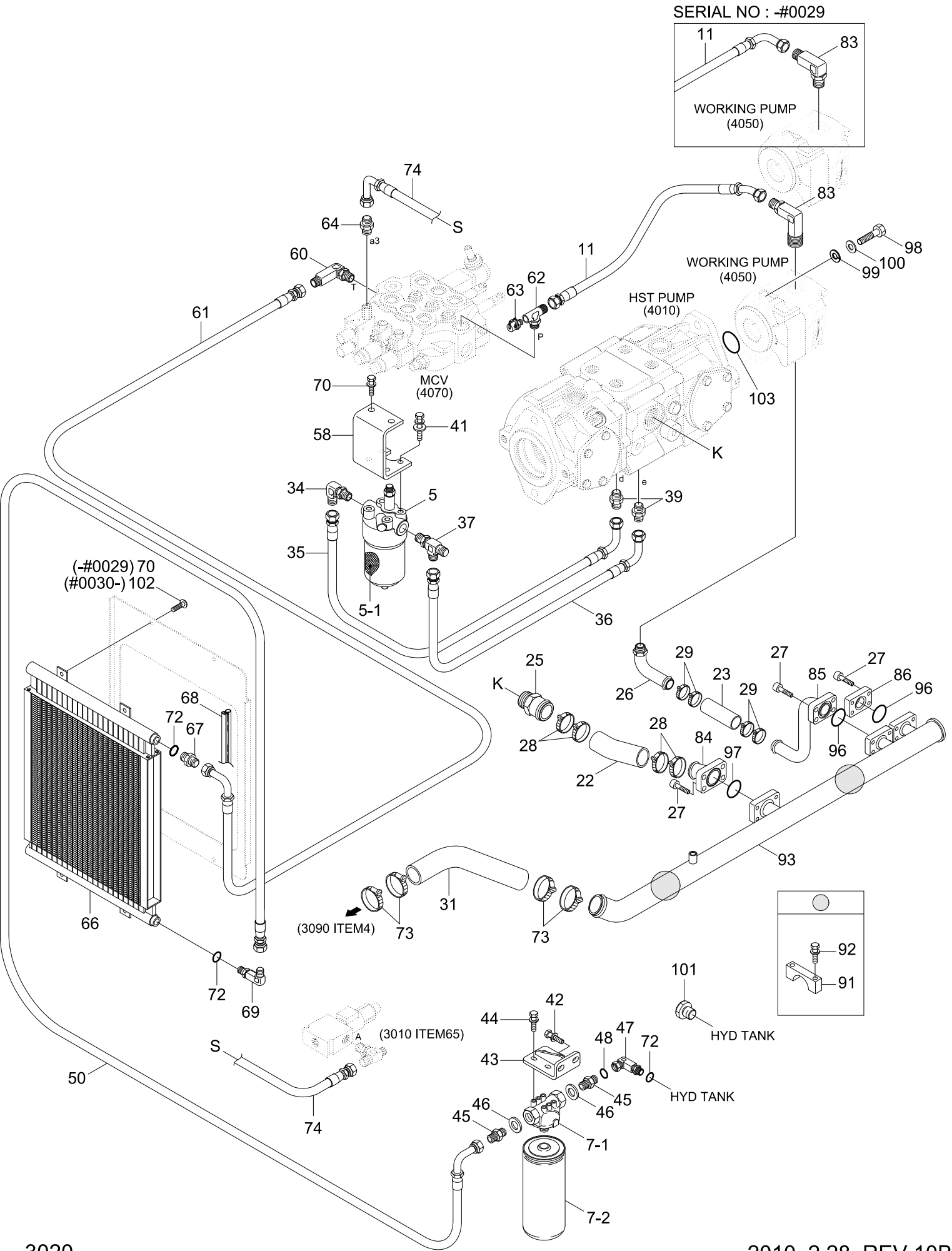

Item	Part_No	IS	Ord	T	Description	Qty	Serial_No	ITC	Remark
5	31S7-02020				FILTER ASSY	1			
5-1	31LM-40090				.ELEMENT	1			
7	31S7-00060				RETURN FILTER ASSY	1			
7-1	31S7-00160				.HEAD-RETURN FILTER	1			
7-2	31S7-00170				.ELEMENT	1			
11	P930-124011				HOSE ASSY-ORFS 0X90	1	- #0029		
	P923-124029				HOSE ASSY-ORFS 0X45	1	#0030 -	D	
22	31S7-00990				HOSE-RUBBER LOW	1			
23	P760-052021				HOSE-RUBBER LOW	1	- #0029		
	P760-052025				HOSE-RUBBER	1	#0030 - #0176	D	
	P760-052021				HOSE-RUBBER LOW	1	#0177 -	D	
25	31S8-00670				CONNECTOR-HOSE	1			
26	31S8-00580				CONNECTOR-HOSE	1	- #0176		
	31S8-00810				CONNECTOR-HOSE	1	#0177 -	D	
27	S107-100406				BOLT-SOCKET	12			
28	S572-470006				CLAMP-HOSE,WIRE TYPE	4			
29	S572-570006				CLAMP-HOSE,WIRE TYPE	4			
31	31S8-00801				HOSE-SUCTION	1			
34	31FQ-10050				ELBOW-90	1			
35	P933-082026				HOSE ASSY-ORFS 0X90	1			
36	P933-082025				HOSE ASSY-ORFS 0X90	1			
37	31S8-10600				TEE-RUN TYPE	1			
39	31S8-20160				CONNECTOR	2			
41	S037-102056				BOLT-W/WASHER	4			
42	S037-122556				BOLT-W/WASHER	2			
43	31S7-00790				PLATE WA	1			

Item	Part_No	IS	Ord	T	Description	Qty	Serial_No	ITC	Remark
44	S035-082056				BOLT-W/WASHER	4			
46	P391-200000				WASHER-COPPER	2			
45	X500-120020				CONNECTOR-ORFS	2			
46	P391-200000				WASHER-COPPER	2			
47	31S7-00770				ELBOW-90	1			
48	S631-029004				O-RING	1			
50	P933-162064				HOSE ASSY-ORFS 0X90	1			
55	S037-123056				BOLT-W/WASHER	2			
58	31S8-00621				PLATE WA	1			
60	31S7-00660				ELBOW-90,LONG	1			
61	P933-122046				HOSE ASSY-ORFS 0X90	1			
62	31S7-00530				ELBOW-90	1			
63	31EK-11130				COUPLING-SCREW	1			
64	31FG-10020				ELBOW-90	1			
66	31S7-01000				HYD OIL COOLER	1			
67	31S7-00390				CONNECTOR	1			
68	S771-018300				WEATHER STRIP	1			
69	31S7-00780				ELBOW-90	1			
70	S037-103556				BOLT-W/WASHER	4			
72	S621-021001				O-RING	3			
73	S572-640006				CLAMP-HOSE,WIRE TYPE	4			
74	P930-044020				HOSE ASSY-ORFS 0X90	1	- #0029		
	P913-044020				HOSE ASSY-ORFS 0X0	1	#0030 -	D	
83	31S8-00770				ELBOW-90	1	- #0029		
	31S8-10900				ELBOW-90,LONG	1	#0030 -	D	
84	31S8-00780				TUBE-SUCTION	1			

Item	Part_No	IS	Ord	T	Description	Qty	Serial_No	ITC	Remark
85	31S8-00790				TUBE-SUCTION	1	- #0176		
	31S7-00940				SUCTION TUBE	1	#0177 -	D	
86	P183-161112				FLANGE-PLUGING SQUARE	1			
91	34L4-01120				CLAMP	2			
92	S037-124556				BOLT-W/WASHER	2			
93	31S8-01082				SUCTION PIPE	1			
95	S037-123556				BOLT-W/WASHER	2			
96	Y171-024004				O-RING	2			
97	Y171-027004				O-RING	1			
98	81S1-0021				BOLT-HEX	2			
99	81S1-0022				WASHER-SPRING	2			
100	81S1-0023				WASHER-PLAIN	2			
101	P220-110103				PLUG-HEX	1			
102	S179-100356				SCREW-SOCKET RD HD	4			
103	31S8-00900				O-RING	1	#0030 -	-	

MAIN HYDRAULIC PIPING 1(PILOT)

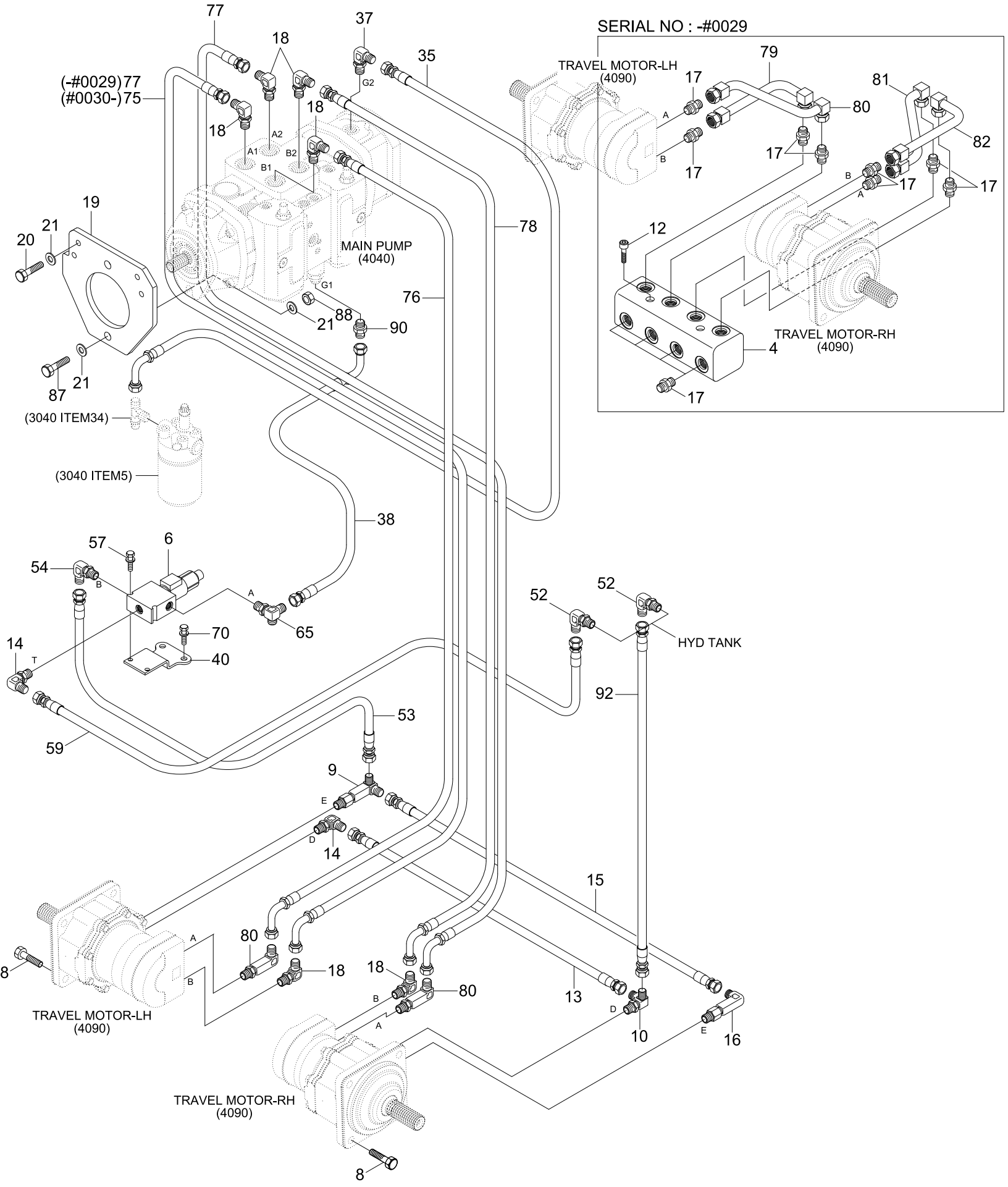

Item	Part_No	IS	Ord	T	Description	Qty	Serial_No	ITC	Remark
4	31S8-00651				PLATE-PORT	1			
					PLATE-PORT	1	- #0029	-	
6	31S7-42000				SOLENOID VALVE-PARKING	1			
8	S018-16045D				BOLT-HEX	8			
9	31S8-00511				ELBOW-90	1			
10	31S8-00520				TEE	1			
12	S109-100456				BOLT-SOCKET	2	- #0029	-	
13	P913-062012				HOSE ASSY	1	- #0030		
	P933-062018				HOSE ASSY-ORFS 0X90	1	#0031 -	D	
14	31FG-80400				ELBOW-90	2	- #0030		
					ELBOW-90	1	#0031 -	A	
15	P913-042013				HOSE ASSY-ORFS 0X0	1	- #0030		
	P933-042020				HOSE ASSY-ORFS 0X90	1	#0031 -	D	
16	31S8-00531				ELBOW-90,LONG	1	- #0030		
	X500-310001				CONNECTOR-ORFS	1	#0031 -	D	
17	X500-310004				CONNECTOR-ORFS	6			
					CONNECTOR-ORFS	6	- #0029	-	
18	31LF-30080				ELBOW-90	4	- #0029		
					ELBOW-90	6	#0030 - #0030	A	
					ELBOW-90	7	#0031 -	A	
19	31S8-00560				PLATE WA	1			
20	S017-120306				BOLT-HEX	4			
21	S441-12000B				WASHER-HARDENED	8	- #0030		
					WASHER-HARDENED	6	#0031 -	A	
35	P913-082020				HOSE ASSY	1			
37	31FQ-10050				ELBOW-90	1			

Item	Part_No	IS	Ord	T	Description	Qty	Serial_No	ITC	Remark
38	P930-062012				HOSE ASSY-ORFS 0X90	1			
40	31S8-00612				BRACKET	1			
52	X520-110011				ELBOW-90,ORFS	2			
53	P923-041016				HOSE ASSY-ORFS 0X45	1			
54	X520-310001				ELBOW-90,ORFS	1			
55	S037-123056				BOLT-W/WASHER	2			
57	S035-064526				BOLT-W/WASHER	2			
59	P913-062020				HOSE ASSY-ORFS 0X0	1			
65	31S8-10061				TEE-RUN TYPE	1			
75	P930-126019				HOSE ASSY-ORFS 0X90	1	#0030 -	-	
76	31S8-10211				HOSE ASSY	1	- #0029		
	31S8-10300				HOSE ASSY	1	#0030 - #0030	D	
	31S8-10211				HOSE ASSY	1	#0031 -	D	
77	P930-126017				HOSE ASSY-ORFS 0X90	2	- #0029		
	P930-126020				HOSE ASSY-ORFS 0X90	1	#0030 -	D	
78	31S7-10200				HOSE ASSY	1	- #0029	-	
79	31S7-10100				TUBE	1	- #0029	-	
80	31S7-10110				TUBE	1	- #0029		
	31S8-10700				ELBOW-90,LONG	1	#0030 -	D	
81	31S7-01081				TUBE	1	- #0029	-	
82	31S7-01091				TUBE	1	- #0029	-	
87	S037-125056				BOLT-W/WASHER	2	- #0030		
	S017-140556				BOLT-HEX	2	#0031 -	D	
88	S275-12000B				NUT-SELF LOCKING	2	- #0030		
	S275-14000B				NUT-SELF LOCKING	2	#0031 -	D	
89	S441-140006				WASHER-HARDENED	4			

Item	Part_No	IS	Ord	T	Description	Qty	Serial_No	ITC	Remark
90	X500-310002				CONNECTOR-ORFS	1			
92	P923-062030				HOSE ASSY-ORFS 0X45	1			
101	X500-310002				CONNECTOR-ORFS	1	#0031 -	-	

MAIN HYDRAULIC PIPING 2(PILOT)

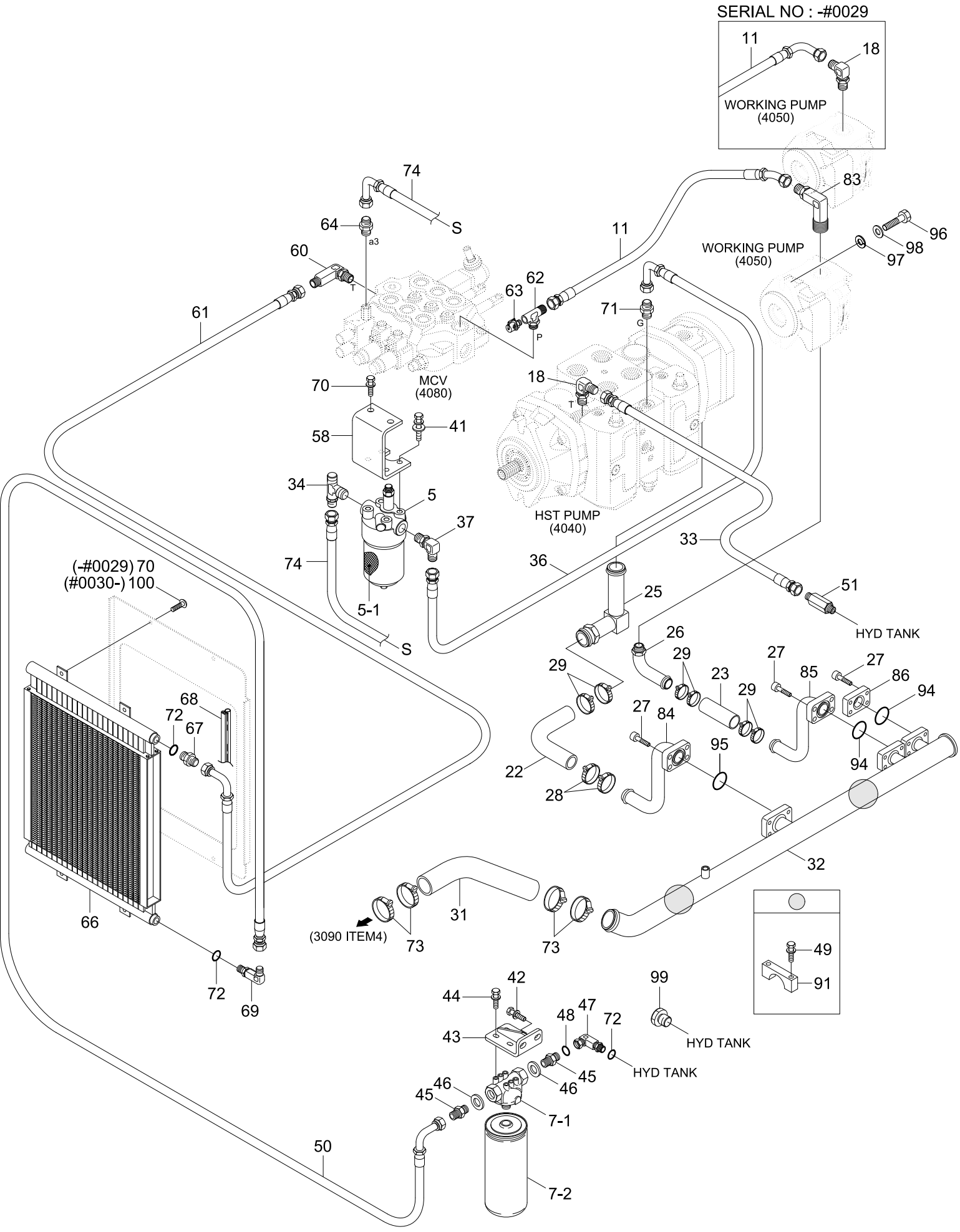

Item	Part_No	IS	Ord	T	Description	Qty	Serial_No	ITC	Remark
5	31S7-02020				FILTER ASSY	1			
5-1	31LM-40090				.ELEMENT	1			
7	31S7-00060				RETURN FILTER ASSY	1			
7-1	31S7-00160				.HEAD-RETURN FILTER	1			
7-2	31S7-00170				.ELEMENT	1			
11	P930-124011				HOSE ASSY-ORFS 0X90	1	- #0029		
	P923-124029				HOSE ASSY-ORFS 0X45	1	#0030 - #0077	D	
	P923-124014				HOSE ASSY	1	#0078 -	B	
18	31LF-30080				ELBOW-90	2	- #0029		
					ELBOW-90	1	#0030 -	A	
22	31S7-10030				HOSE-RUBBER LOW	1			
23	P760-052021				HOSE-RUBBER LOW	1			
25	31S8-10031				CONNECTOR-HOSE	1			
26	31S8-00810				CONNECTOR-HOSE	1			
27	S017-100406				BOLT-HEX	12			
28	S572-470006				CLAMP-HOSE,WIRE TYPE	2			
29	S572-570006				CLAMP-HOSE,WIRE TYPE	6			
31	31S8-00801				HOSE-SUCTION	1			
32	31S8-01082				SUCTION PIPE	1			
33	P933-122032				HOSE ASSY-ORFS 0X90	1			
34	31S7-10150				TEE-RUN TYPE	1			
36	P933-082018				HOSE ASSY-ORFS 0X90	1			
37	31FQ-10050				ELBOW-90	1			
41	S037-102056				BOLT-W/WASHER	4			
42	S037-122556				BOLT-W/WASHER	2			
43	31S7-00790				PLATE WA	1			

Item	Part_No	IS	Ord	T	Description	Qty	Serial_No	ITC	Remark
44	S035-082056				BOLT-W/WASHER	4			
45	X500-120020				CONNECTOR-ORFS	2			
46	P391-200000				WASHER-COPPER	2			
47	31S7-00770				ELBOW-90	1			
48	S631-029004				O-RING	1			
49	S037-124556				BOLT-W/WASHER	4			
50	P933-162064				HOSE ASSY-ORFS 0X90	1			
51	31S7-00420				CONNECTOR-LONG	1			
55	S037-123056				BOLT-W/WASHER	2			
58	31S8-00621				PLATE WA	1			
60	31S7-00660				ELBOW-90,LONG	1			
61	P933-122046				HOSE ASSY-ORFS 0X90	1			
62	31S7-00530				ELBOW-90	1			
63	31EK-11130				COUPLING-SCREW	1			
64	X500-310001				CONNECTOR-ORFS	1			
66	31S7-01000				HYD OIL COOLER	1			
67	31S7-00390				CONNECTOR	1			
68	S771-018300				WEATHER STRIP	1			
69	31S7-00780				ELBOW-90	1			
70	S037-103556				BOLT-W/WASHER	4			
71	S037-103556				BOLT-W/WASHER	4			
	X500-310003				CONNECTOR-ORFS	1			
72	S621-021001				O-RING	3			
73	S572-640006				CLAMP-HOSE,WIRE TYPE	4			
74	P933-044020				HOSE ASSY-ORFS 0X90	1			
83	31S8-10900				ELBOW-90,LONG	1	#0030 -	-	

Item	Part_No	IS	Ord	T	Description	Qty	Serial_No	ITC	Remark
84	31S7-10040				PIPE-SUCTION	1			
85	31S7-10051				PIPE-SUCTION	1			
86	P183-162112				FLANGE-PLUGING SQUARE	1			
91	34L4-01120				CLAMP	2			
93	Y171-027004				O-RING	1			
94	Y171-024004				O-RING	2			
95	Y171-027004				O-RING	1			
96	81S1-0021				BOLT-HEX	2			
97	81S1-0022				WASHER-SPRING	2			
98	81S1-0023				WASHER-PLAIN	2			
99	P220-110103				PLUG-HEX	1			
100	S179-100356				SCREW-SOCKET RD HD	4	#0030 -	-	

ATTACHMENT HYDRAULIC PIPING 1

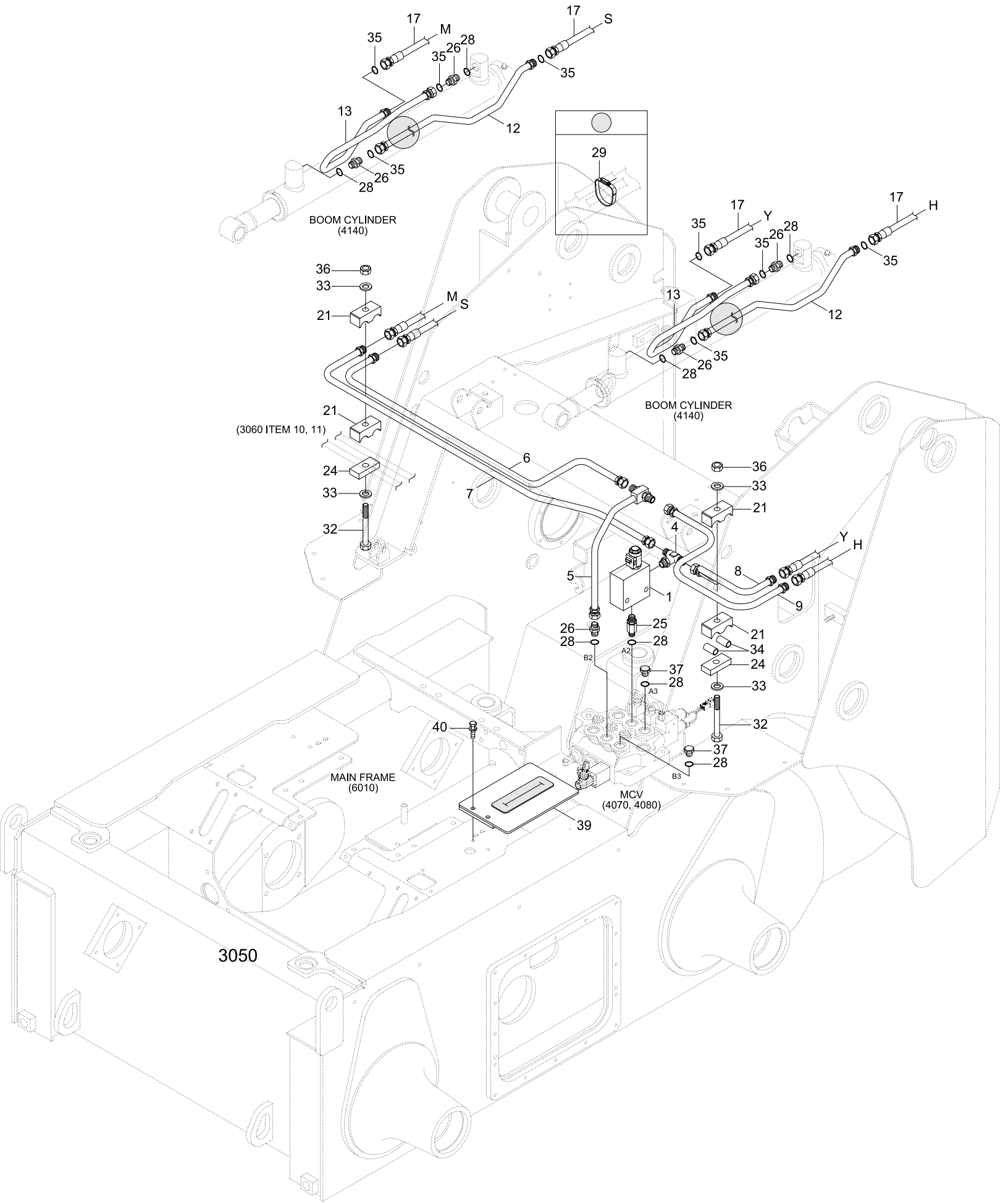

Item	Part_No	IS	Ord	T	Description	Qty	Serial_No	ITC	Remark
1	31S7-22060				SAFETY SOLENOID VALVE	1			
4	31S8-20581				TEE	1			
5	31S7-20511				TUBE WA	1			AUTO LEVELING
6	31S7-20521				TUBE WA	1			
7	31S7-20531				TUBE WA	1			
8	31S7-20541				TUBE WA	1			
9	31S7-20550				TUBE WA	1			
12	31S7-20102				TUBE WA	2			
13	31S7-20112				TUBE WA	2			
17	P913-084013				HOSE ASSY-ORFS 0X0	4			
21	31S5-10170				CLAMP-TUBE	4			
24	31S4-10861				BLOCK-TUBE	2			
25	31S8-20571				CONNECTOR-LONG	1			
26	31S8-20160				CONNECTOR	5			
28	S611-019001				O-RING	8			
					O-RING	2			W/OUT AUX HYD
29	S520-095000				CLAMP-HOSE	2			
32	S017-100806				BOLT-HEX	2			
33	S441-10000B				WASHER-HARDENED	4			
34	31S7-20230				SPACER	2			W/OUT AUX HYD
35	S621-014001				O-RING	8			
36	S205-10100B				NUT-HEX	2			
37	P220-310104				PLUG-HEX	2			W/OUT AUX HYD
39	31S7-20602				PLATE WA	1	- #0077		
	31S7-20603				PLATE WA	1	#0078 - #0163	B	
	31S7-20604				PLATE WA	1	#0164 -	B	

Item	Part_No	IS	Ord	T	Description	Qty	Serial_No	ITC	Remark
40	S037-103556				BOLT-W/WASHER	2			

ATTACHMENT HYDRAULIC PIPING 2

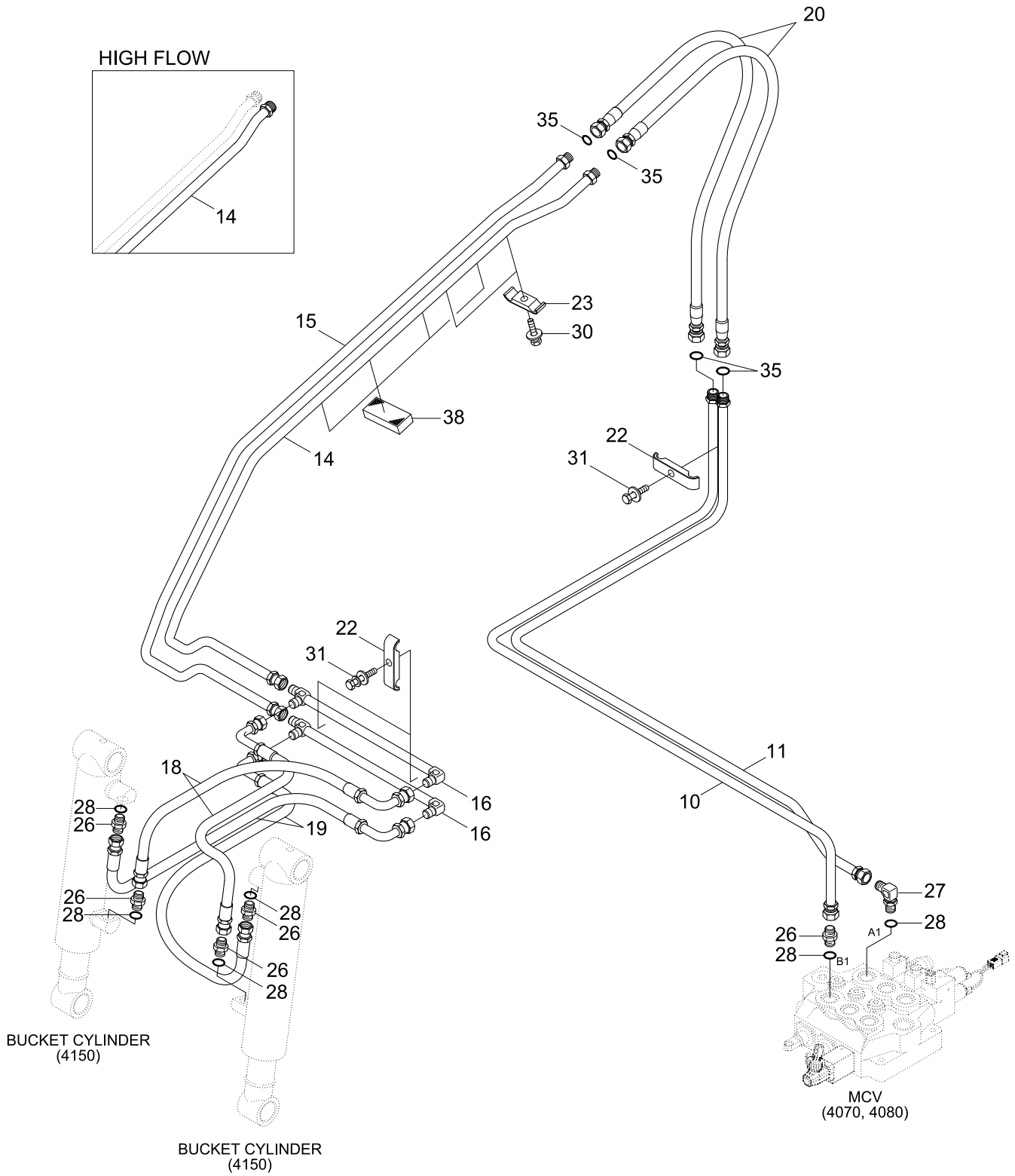

Item	Part_No	IS	Ord	T	Description	Qty	Serial_No	ITC	Remark
10	31S7-20560				TUBE WA	1			
11	31S7-20570				TUBE WA	1			
14	31S7-20580				TUBE WA	1			HIGH FLOW
	31S7-20121				TUBE WA	1			
15	31S7-20131				TUBE WA	1			
16	31S7-20141				TUBE WA	2			
18	31S7-20200				HOSE ASSY	2			
19	P923-084016				HOSE ASSY-ORFS 0X45	2			
20	P913-084015				HOSE ASSY-ORFS 0X0	2			
22	31S4-10851				CLAMP-TUBE	3			
23	31S4-10881				CLAMP-TUBE	4			
26	31S8-20160				CONNECTOR	5			
27	31S8-90100				ELBOW-90	1			
28	S611-019001				O-RING	6			
					O-RING	2			W/OUT AUX HYD
30	S035-082056				BOLT-W/WASHER	3			
31	S035-083026				BOLT-W/WASHER	3			
35	S621-014001				O-RING	4			
38	71F7-23210				RUBBER PAD	4			

JOYSTICK STEERING PIPING(PILOT)

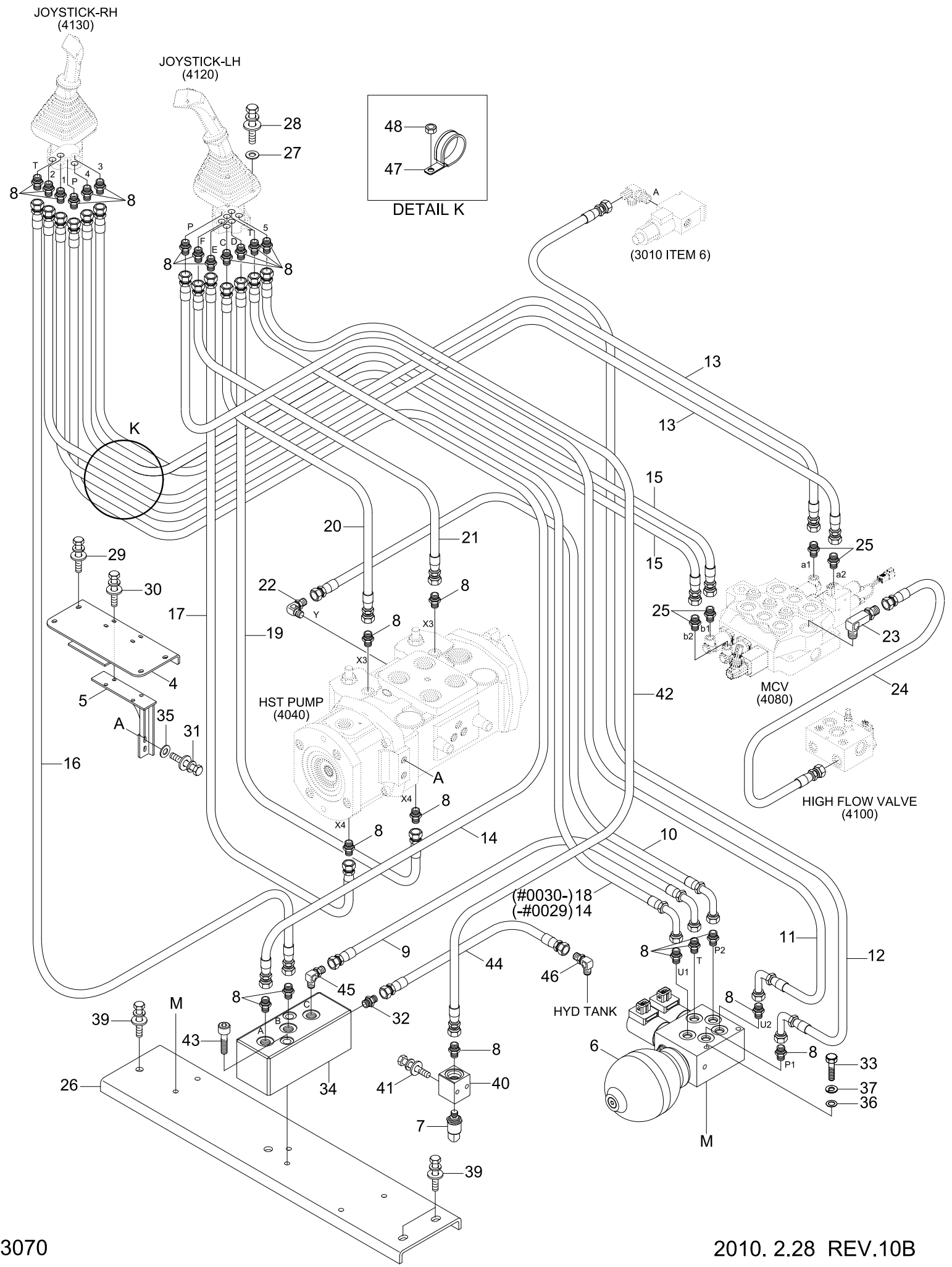

Item	Part_No	IS	Ord	T	Description	Qty	Serial_No	ITC	Remark
4	31S7-10172				PLATE WA	1	- #0163		
	31S7-10173				PLATE WA	1	#0164 -	B	
5	31S7-10180				BRACKET WA	1			
6	31S7-12030				PILOT LOCK VALVE	1			
7	31Q4-40560				SWITCH-PRESSURE	1			
8	X500-310001				CONNECTOR-ORFS	25			
9	P930-041008				HOSE ASSY-ORFS 0X90	1			
10	P933-042006				HOSE ASSY-ORFS 0X90	1			
11	P933-041030				HOSE ASSY-ORFS 0X90	1			
12	P930-041022				HOSE ASSY-ORFS 0X90	1			
13	P933-041040				HOSE ASSY-ORFS 0X90	2			
14	P933-041037				HOSE ASSY-ORFS 0X90	2	- #0029		
					HOSE ASSY-ORFS 0X90	1	#0030 -	A	
15	P913-041039				HOSE ASSY-ORFS 0X0	2			
16	P933-041036				HOSE ASSY-ORFS 0X90	1			
17	P933-041022				HOSE ASSY-ORFS 0X90	1			
18	P933-042023				HOSE ASSY-ORFS 0X90	1	#0030 -	-	
19	P933-041017				HOSE ASSY-ORFS 0X90	1			
20	P933-041021				HOSE ASSY-ORFS 0X90	1			
21	P933-042020				HOSE ASSY-ORFS 0X90	1			
22	X520-310001				ELBOW-90,ORFS	3			
23	31S7-00660				ELBOW-90,LONG	1	- #0144	-	
24	P923-124024				HOSE ASSY-ORFS 0X45	1	- #0144	-	
25	31S7-00750				CONNECTOR	2			
26	31S7-90711				BRACKET WA	1			FENDER
27	31M6-51061				SHIM(3.2T)	2			

Item	Part_No	IS	Ord	T	Description	Qty	Serial_No	ITC	Remark
28	S035-061526				BOLT-W/WASHER	8			
29	S037-102556				BOLT-W/WASHER	4			
30	S035-082556				BOLT-W/WASHER	8			
31	S035-082056				BOLT-W/WASHER	2	- #0029		
	S087-050126				BOLT-HEX(UNIFIED)	2	#0030 -	D	
32	31S8-20160				CONNECTOR	2			
33	S015-060656				BOLT-HEX	2			
34	31S8-10091				PLATE-HUB	1			
35	S403-08200B				WASHER-PLAIN	2	#0030 -	-	
36	S403-06200B				WASHER-PLAIN	2			
37	S441-06000B				WASHER-HARDENED	2			
39	S037-122556				BOLT-W/WASHER	4			
40	31S8-10100				PLATE-PORT	1			
41	S035-064526				BOLT-W/WASHER	2			
42	P913-041008				HOSE ASSY-ORFS 0X0	1			
43	S017-080606				BOLT-HEX	2			
44	P913-081025				HOSE ASSY-ORFS 0X0	1			
45	31FG-10020				ELBOW-90	1			
46	31FQ-20100				ELBOW-90	1			
47	31E7-0310				CLAMP-HOSE	1			
48	S275-10000B				NUT-SELF LOCKING	1			

AUXILIARY HYDRAULIC PIPING(OPTION)

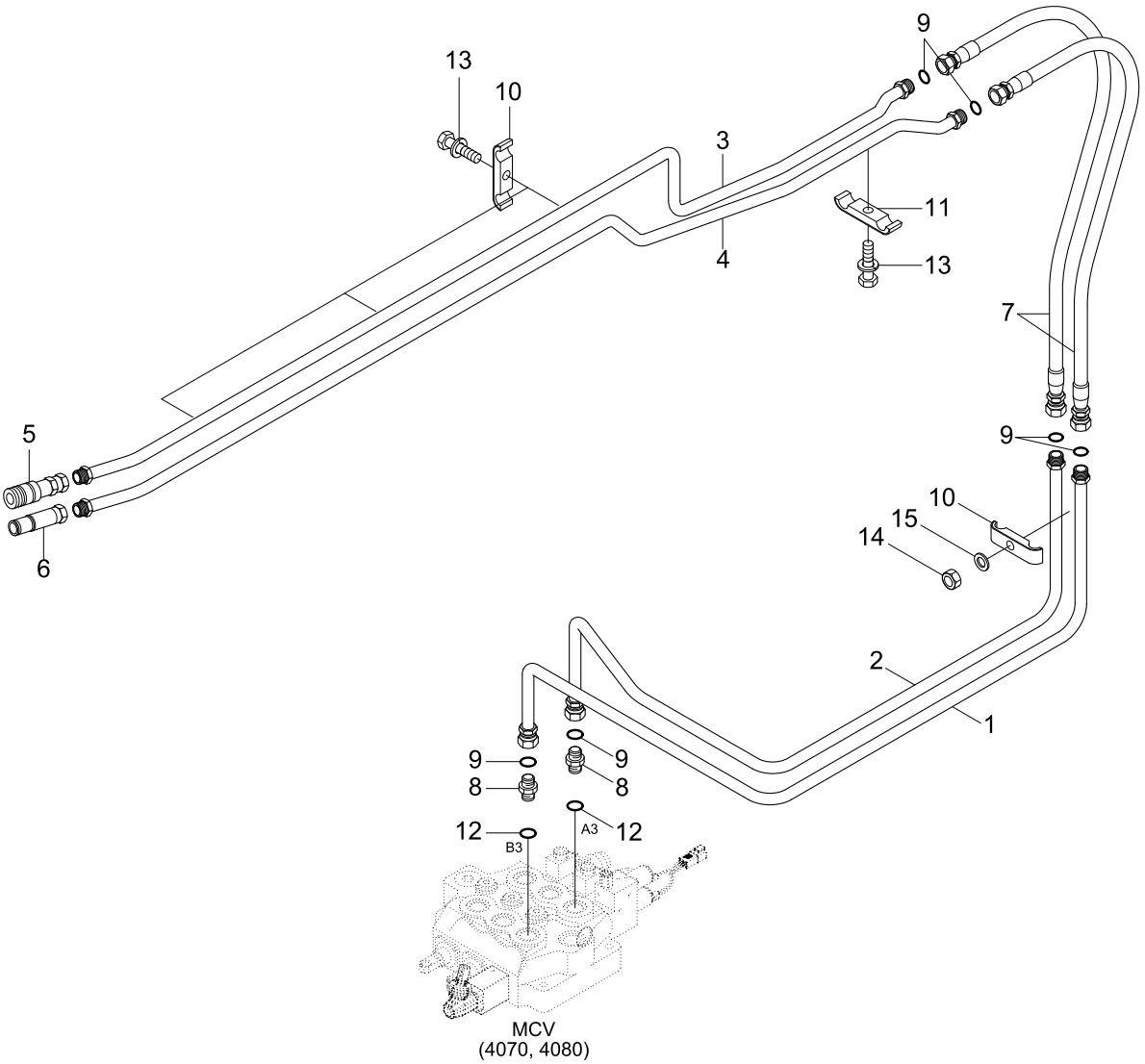

Item	Part_No	IS	Ord	T	Description	Qty	Serial_No	ITC	Remark
1	31S7-90511				TUBE WA	1			
2	31S7-90521				TUBE WA	1			
3	31S7-90031				TUBE WA	1			
4	31S7-90041				TUBE WA	1			
5	31S4-10920				COUPLER-QUICK(FEMALE)	1			
6	31S4-10930				COUPLER-QUICK(MALE)	1			
7	P913-084015				HOSE ASSY-ORFS 0X0	2			
8	31S8-20160				CONNECTOR	2			
9	S621-014001				O-RING	6			
10	31S4-10851				CLAMP-TUBE	4			
11	31S4-10881				CLAMP-TUBE	1			
12	S611-019001				O-RING	2			
13	S035-082052				BOLT-W/WASHER	4			
14	S275-08000B				NUT-SELF LOCKING	1			
15	S441-08000B				WASHER-HARDENED	1			

HYDRAULIC TANK ACCESSORY

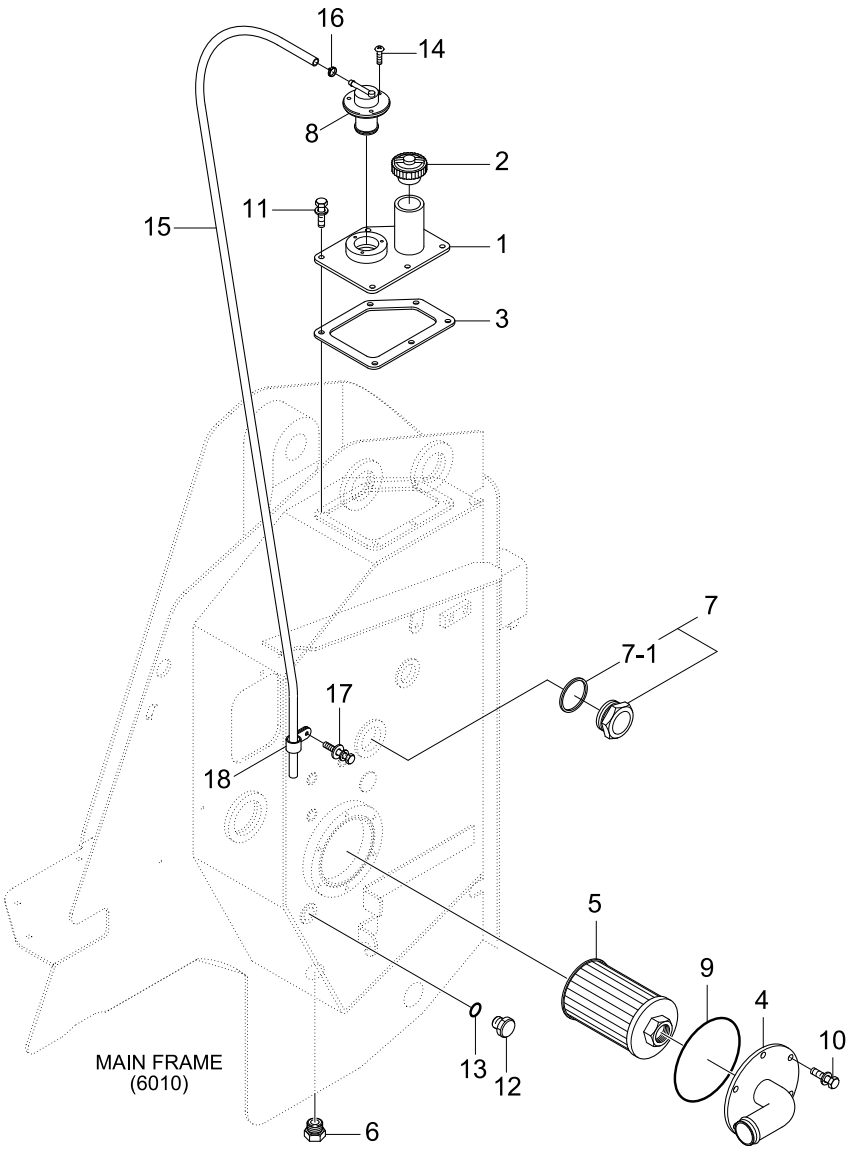

Item	Part_No	IS	Ord	T	Description	Qty	Serial_No	ITC	Remark
1	31S7-40082				FILLER NECK WA	1			
2	11S2-00180				CAP-FILLER	1			
3	31S8-40030				GASKET	1			
4	31S7-40100				PIPE WA	1			
5	31S7-40050				SUCTION STRAINER	1			
6	11S4-00610				PLUG-MAGNETIC	1			
7	31L1-4047				GAUGE-SIGHT	1			
7-1	P392-360000				.WASHER-COPPER	1			
8	11FA-50300				FUEL CUT VALVE	1			
9	S632-140001				O-RING	1			
10	S037-102056				BOLT-W/WASHER	6			
11	S035-082056				BOLT-W/WASHER	6			
12	P220-310105				PLUG-HEX	1			
13	S611-023001				O-RING	1			
14	S131-05154V				SCREW-W/WASHER	3			
15	11S4-00561				HOSE	1			
16	S571-140002				CLAMP-HOSE,WIRE TYPE	1			
17	S035-081526				BOLT-W/WASHER	1			
18	S552-051546				CLAMP-BAND	1			

SELF LEVELING HYD PIPING(OPTION)

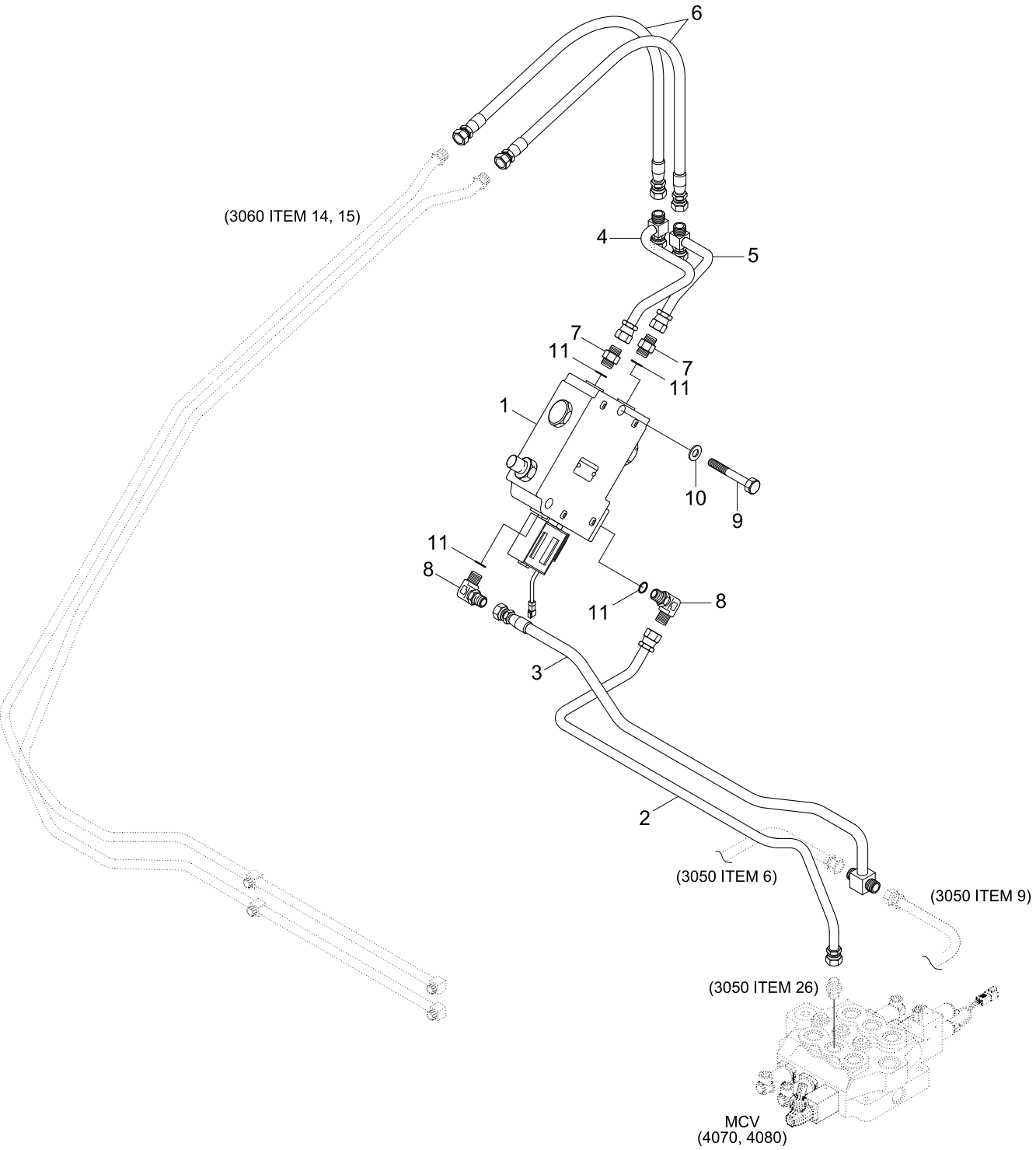

Item	Part_No	IS	Ord	T	Description	Qty	Serial_No	ITC	Remark
1	31S7-22030				SELF LEVELLING VALVE	1			
2	31S7-90150				TUBE WA	1			
3	31S7-90611				TUBE WA	1			
4	31S7-90621				TUBE WA	1			
5	31S7-90630				TUBE WA	1			
6	P913-084014				HOSE ASSY-ORFS 0X0	2			
7	31S8-20160				CONNECTOR	2			
8	31S8-90100				ELBOW-90	2			
9	S015-080606				BOLT-HEX	2			
10	S441-08000B				WASHER-HARDENED	2			
11	S611-019001				O-RING	4			

HIGH FLOW HYD PIPING(OPTION)

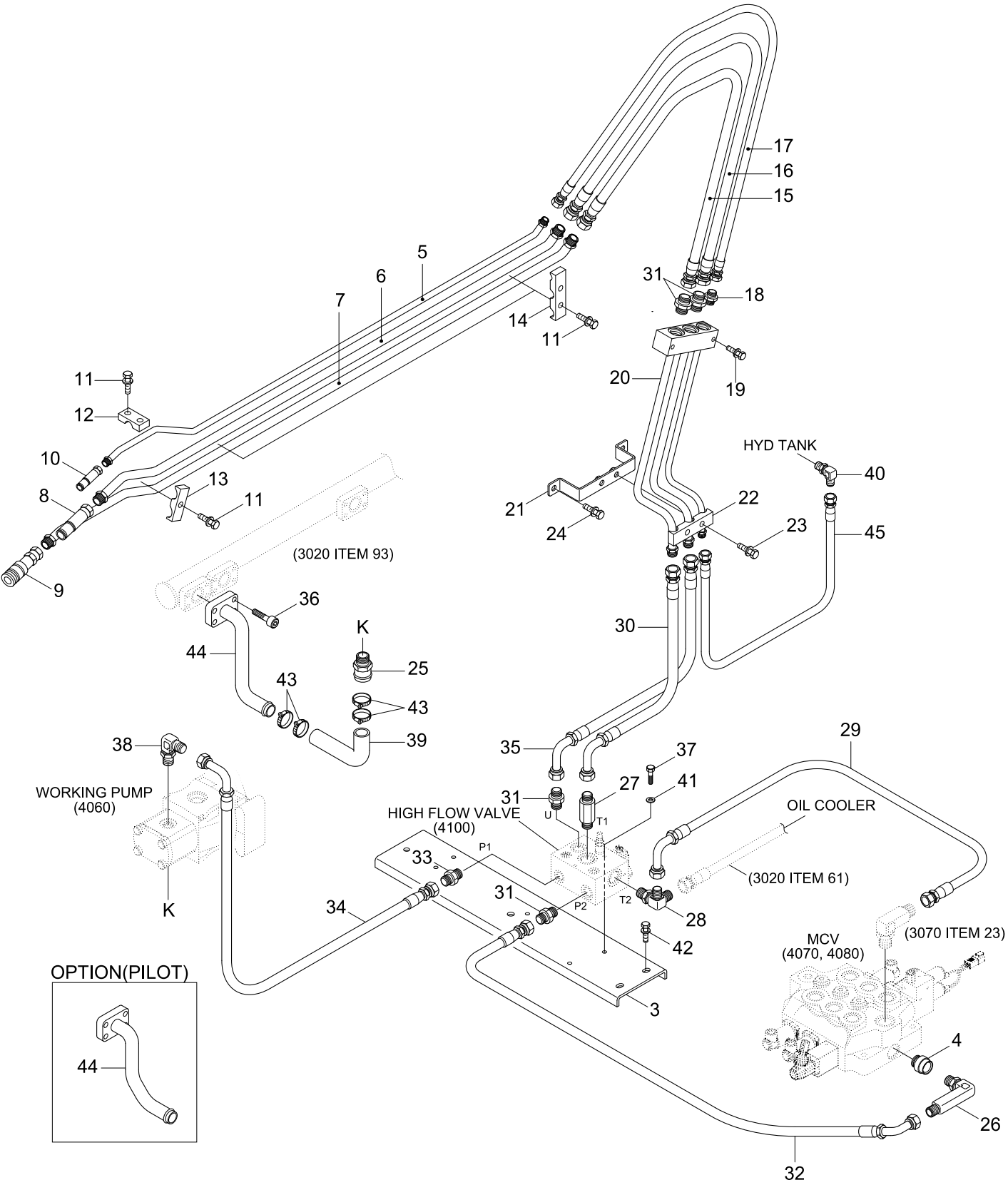

Item	Part_No	IS	Ord	T	Description	Qty	Serial_No	ITC	Remark
3	31S7-90711				BRACKET WA	1			
4	31S5-00130				POWER BEYOND SLEEVE	1			
5	31S8-90850				TUBE WA	1			
6	31S8-90860				TUBE WA	1			
7	31S8-90870				TUBE WA	1			
8	31S5-10930				COUPLER-QUICK(MALE)	1			
9	31S5-10920				COUPLER-QUICK(FEMALE)	1			
10	31S4-10930				COUPLER-QUICK(MALE)	1			
11	S037-103056				BOLT-W/WASHER	6			
12	31S8-90880				CLAMP-TUBE	1			
13	31S8-90890				CLAMP-TUBE	1			
14	31S8-90900				CLAMP-TUBE	2			
15	P913-124019				HOSE ASSY-ORFS 0X0	1			
16	P913-124022				HOSE ASSY-THD 0X0	1			
17	P913-084025				HOSE ASSY-ORFS 0X0	1			
18	X500-310003				CONNECTOR-ORFS	1			
19	S037-103556				BOLT-W/WASHER	2			
20	31S7-90910				TUBE PLATE WA	1			
21	31S7-90920				CLAMP BRACKET	1			
22	31S8-90931				CLAMP	1			
23	S037-105056				BOLT-W/WASHER	2			
24	S037-121556				BOLT-W/WASHER	2			
25	31S8-91100				CONNECTOR-HSOE	1			
26	31S7-00660				ELBOW-90	1			
27	31S7-00350				CONNECTOR-LONG	1			
28	31S8-90820				TEE-RUN TYPE	1			

Item	Part_No	IS	Ord	T	Description	Qty	Serial_No	ITC	Remark
29	P933-124020				HOSE ASSY-ORFS 0X90	1			
30	P913-124037				HOSE ASSY-ORFS 0X0	1			
31	X500-310004				CONNECTOR-ORFS	4			
32	P913-124015				HOSE ASSY-ORFS 0X0	1			
33	X500-310003				CONNECTOR-ORFS	1			
34	P923-086015				HOSE ASSY-ORFS 0X45	1			
35	P933-124036				HOSE ASSY-ORFS 0X90	1			
36	S107-100406				BOLT-SOCKET	1			
37	S017-080956				BOLT-HEX	2			
38	31S8-90100				ELBOW-90	1			
39	31S7-91000				HOSE-RUBBER,LOW	1			
40	X520-110011				ELBOW-90,ORFS	1			
41	S403-082006				WASHER-PLAIN	2			
42	S037-122556				BOLT-W/WASHER	4			
43	S572-570006				CLAMP-HOSE,WIRE TYPE	4			
44	31S8-91011				TUBE-SUCTION	1			PILOT
	31S8-91021				TUBE-SUCTION	1			MECHANICAL
45	P913-062018				HOSE ASSY	1			

HAND CONTROL(MECHANICAL)

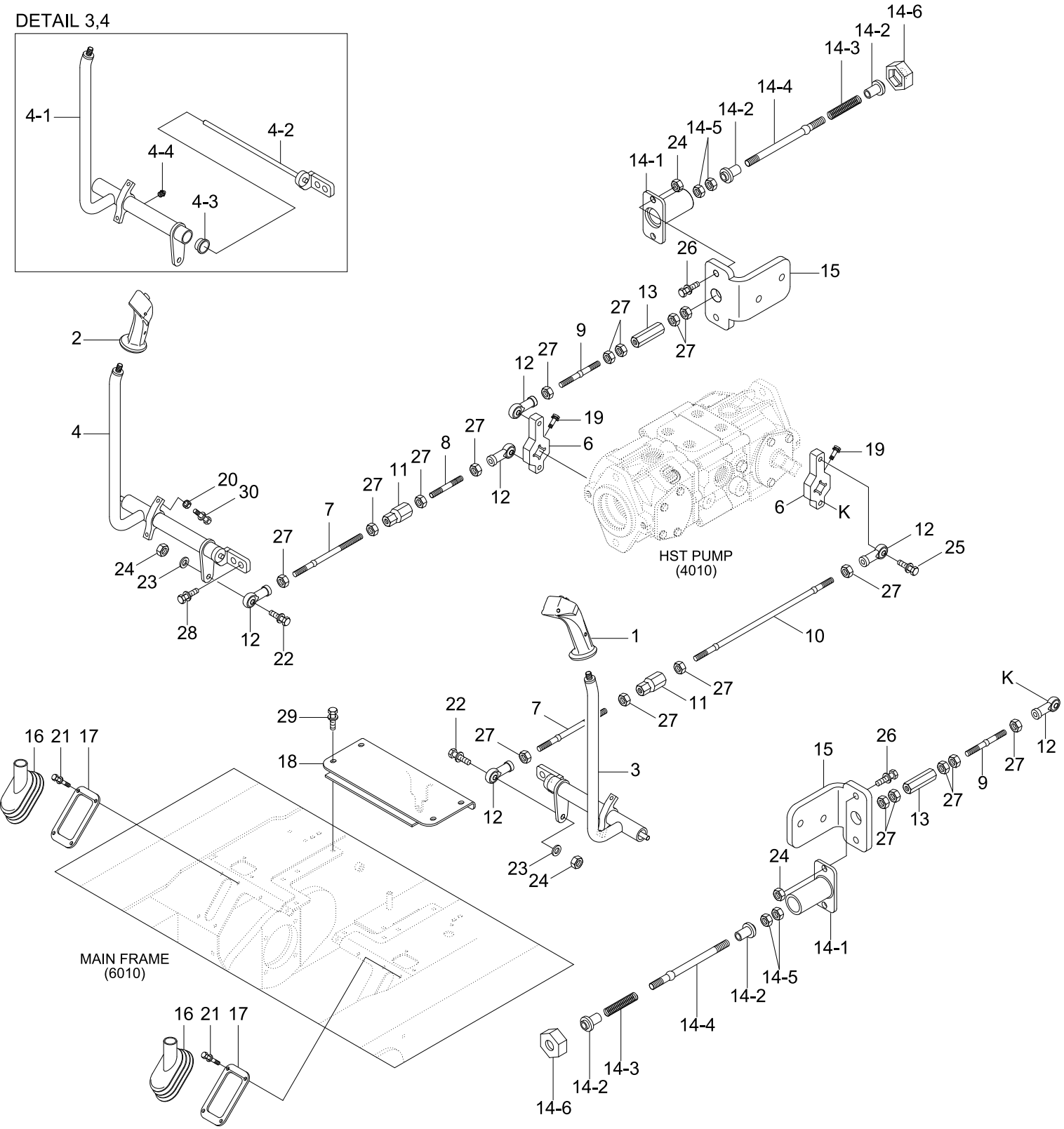

Item	Part_No	IS	Ord	T	Description	Qty	Serial_No	ITC	Remark
1	31S7-12040				KNOB-LH	1			
2	31S7-12050				KNOB-RH	1			
3	81S7-00611				HAND LEVER ASSY-LH	1	- #0029		
	81S7-00612				HAND LEVER ASSY-LH	1	#0030 - #0030	D	
	81S8-00502				HAND LEVER ASSY-LH	1	#0031 - #0084	D	
	81S7-00612				HAND LEVER ASSY-LH	1	#0085 -	B	
4	81S7-00621				HAND LEVER ASSY-RH	1	- #0029		
	81S7-00622				HAND LEVER ASSY-RH	1	#0030 - #0030	D	
	81S8-00512				HAND LEVER ASSY-RH	1	#0031 - #0084	D	
	81S7-00622				HAND LEVER ASSY-RH	1	#0085 -	B	
6	81S7-00671				BRACKET	2	- #0029		
	81S7-00672				BRACKET	2	#0030 - #0030	D	
	81S7-00690				BRACKET	2	#0031 - #0084	D	
	81S7-00691				BRACKET	2	#0085 -	B	
7	81S7-00651				ROD	2			
8	81S8-00581				ROD	1			
9	81S8-00590				ROD	2			
10	81S8-00600				ROD	1			
11	81S7-00161				ADJUST LINK	2			
12	S923-110000				ROD END-METRIC	6			
13	81S8-00610				ADJUST LINK	2			
14	82S4-00050				SPRING BOLT ASSY	2	- #0029		
	81S8-01050				SPRING BOLT ASSY	2	#0030 - #0030	D	
	81S8-01051				SPRING BOLT ASSY	2	#0031 -	D	
14-1	82S4-00160				.HOUSING WA	1			
14-2	81S5-00192				.SPACER	2	- #0030		

Item	Part_No	IS	Ord	T	Description	Qty	Serial_No	ITC	Remark
14-2	81S5-00193				.SPACER	2	#0031 -	D	
14-3	81S4-00200				.SPRING	1			
14-4	82S4-00210				.BOLT-ROD	1			
14-5	S255-10100B				.NUT-MINI HEX	2			
14-6	81S5-00240				.CAP-HEX	1			
15	81S8-00621				BRACKET	2	- #0030		
	81S8-01620				BRACKET	2	#0031 -	D	
16	81S1-0006				RUBBER BOOT	2			
17	81S8-00630				PLATE-BOOT	2			
18	81S7-00662				PLATE WA	1	- #0163		
	81S8-00663				PLATE WA	1	#0164 -	B	
19	S035-082526				BOLT-W/WASHER	4	- #0030		
	S109-080406				BOLT-SOCKET	4	#0031 -	D	
20	S205-08100B				NUT-HEX	4			
21	S035-062556				BOLT-W/WASHER	8			
22	S037-104056				BOLT-W/WASHER	2			
23	S441-10000B				WASHER-HARDENED	2			
24	S275-10000B				NUT-SELF LOCKING	10			
25	S037-105056				BOLT-W/WASHER	4			
26	S037-103556				BOLT-W/WASHER	4			
27	S205-10100B				NUT-HEX	18			
28	S035-082556				BOLT-W/WASHER	4	- #0030		
	S037-102556				BOLT-W/WASHER	4	#0031 -	D	
29	S037-123056				BOLT-W/WASHER	4			
30	S035-086056				BOLT-W/WASHER	4			

FOOT CONTROL(MECHANICAL)

DETAIL 3

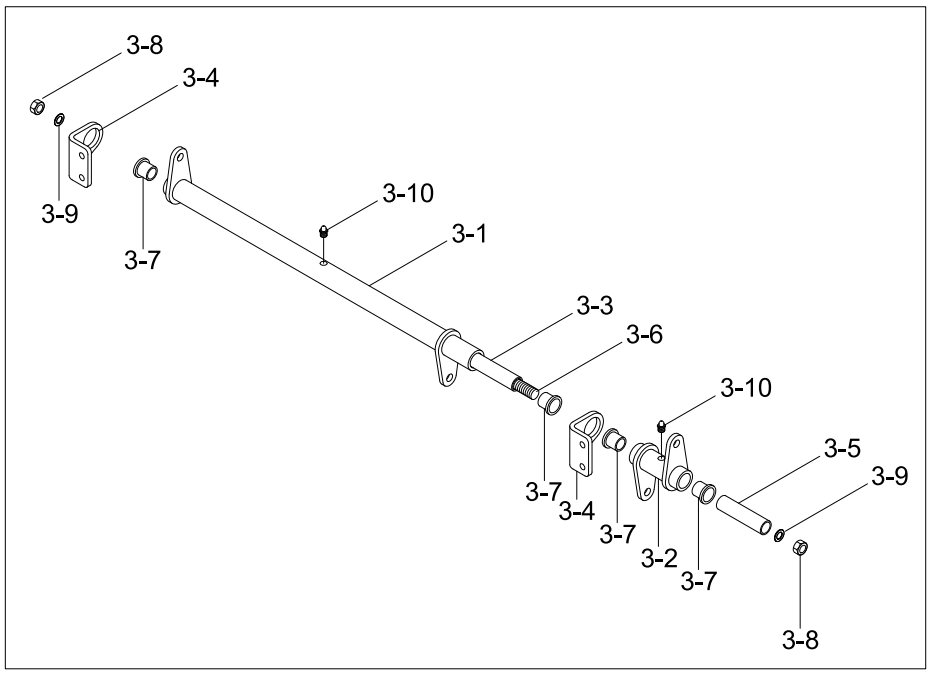

SERIAL NO : -#0029

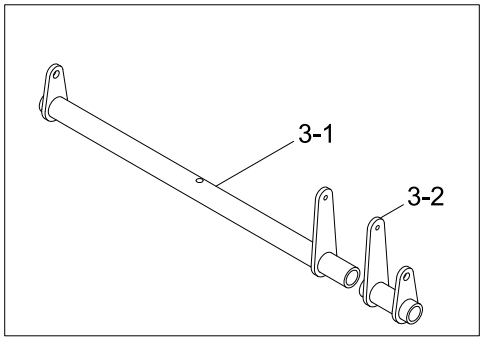

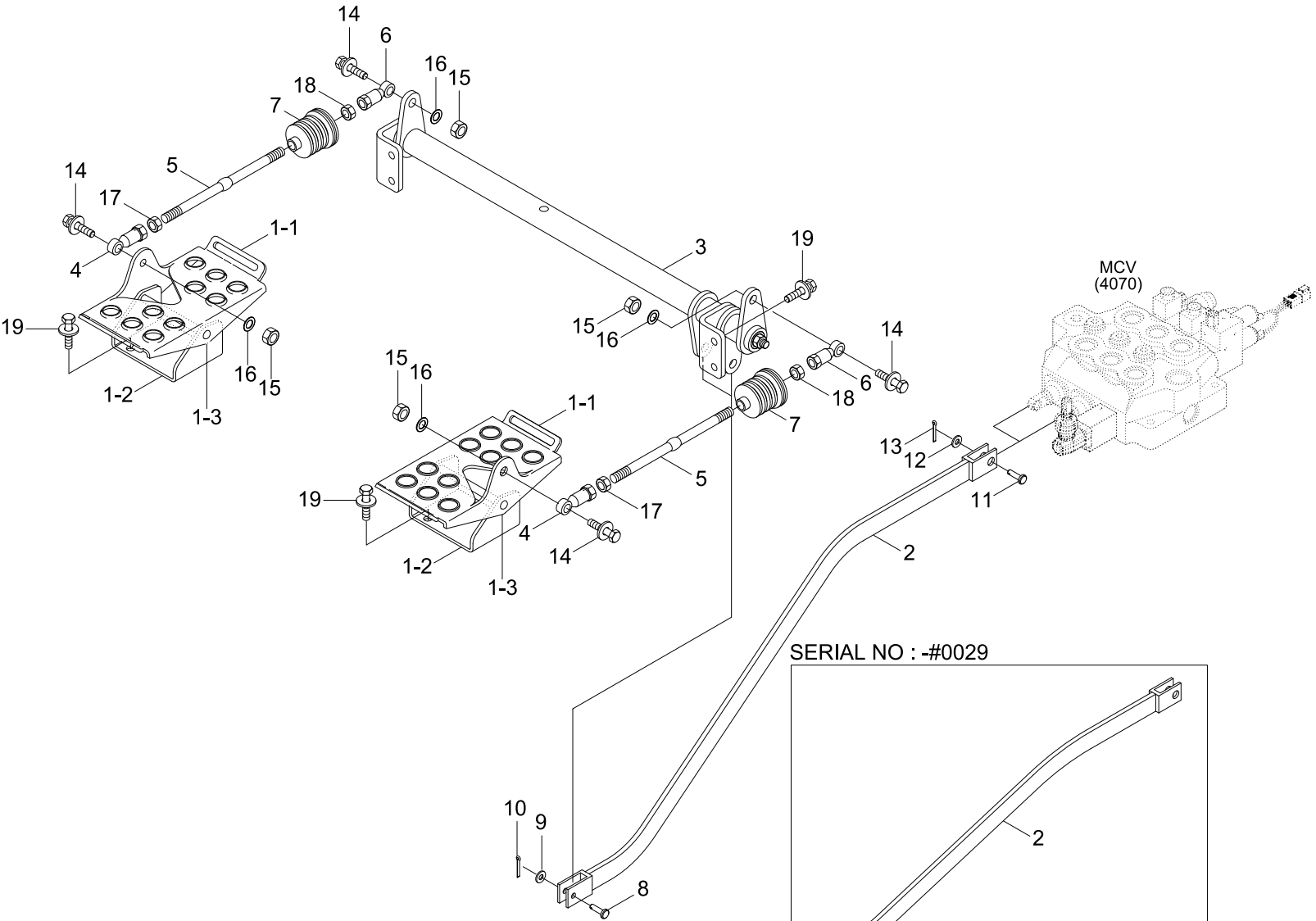

SERIAL NO : -#0029

Item	Part_No	IS	Ord	T	Description	Qty	Serial_No	ITC	Remark
1	81S4-10090				PEDAL ASSY	2			
1-1	81S4-10190				.PDEAL	1			
1-2	81S4-10200				.BRACKET-PEDAL	1			
1-3	S491-101402				.PIN-CLEVIS	1			
2	81S7-10510				LINK WA	2	- #0029		
	81S7-10511				LINK ROD WA	2	#0030 -	D	
3	81S7-10520				LINK ASSY	1	- #0029		
	81S7-10521				LINK ASSY	1	#0030 -	D	
3-1	81S7-10530				.LINK WA	1	- #0029		
	81S7-10531				.LINK WA	1	#0030 -	D	
3-2	81S8-00840				.LINK WA	1	- #0029		
	81S8-00841				.LINK WA	1	#0030 -	D	
3-3	81S7-10540				.SPACER	1			
3-4	81S7-00330				.BRACKET-HINGE	2			
3-5	81S7-00350				.SPACER	1			
3-6	81S7-10550				.HINGE BOLT	1			
3-7	41S1-2029				.BUSHING-NYLON	4			
3-8	S275-10000B				.NUT-SELF LOCKING	2			
3-9	S441-10000B				.WASHER-HARDENED	2			
3-10	S651-810002				.NIPPLE-GREASE	2			
4	S923-210000				ROD END-METRIC	2			
5	81S4-10100				ROD	2			
6	S923-110000				ROD END-METRIC	2			
7	81S4-10170				BOOT-RUBBER	2			
8	S491-060222				PIN-CLEVIS	2	- #0029		
	S491-060282				PIN-CLEVIS	2	#0030 -	D	

Item	Part_No	IS	Ord	T	Description	Qty	Serial_No	ITC	Remark
9	S403-06100B				WASHER-PLAIN	2			
10	S501-060002				PIN-SELF LOCKING	2			
11	S491-100282				PIN-CLEVIS	2			
12	S403-10200B				WASHER-PLAIN	2			
13	S501-100002				PIN-SELF LOCKING	2			
14	S037-104056				BOLT-W/WASHER	4			
15	S275-10000B				NUT-SELF LOCKING	4			
16	S441-10000B				WASHER-HARDENED	4			
17	81S1-0051-DA				NUT-HEX,LEFT THREAD	2			
18	S205-10100B				NUT-HEX	2			
19	S037-102556				BOLT-W/WASHER	8			

AUXILIARY MOUNTING CONTROL(OPTION)

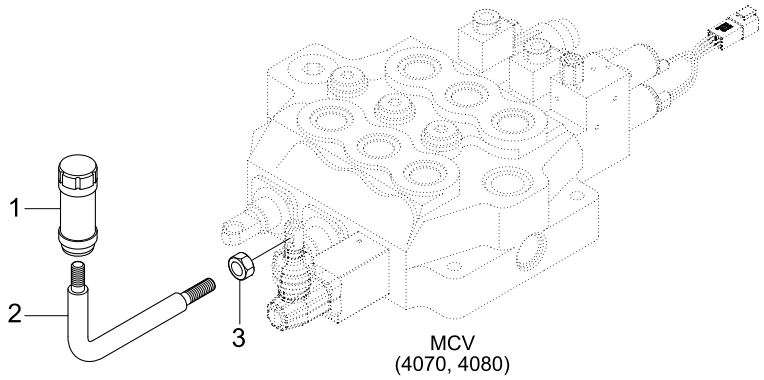

Item	Part_No	IS	Ord	T	Description	Qty	Serial_No	ITC	Remark
1	31FS-40070				KNOB	1			
2	81S7-30210				ROD	1			
3	S205-101006				NUT-HEX	1			

HST PUMP(1/3, MECHANICAL)

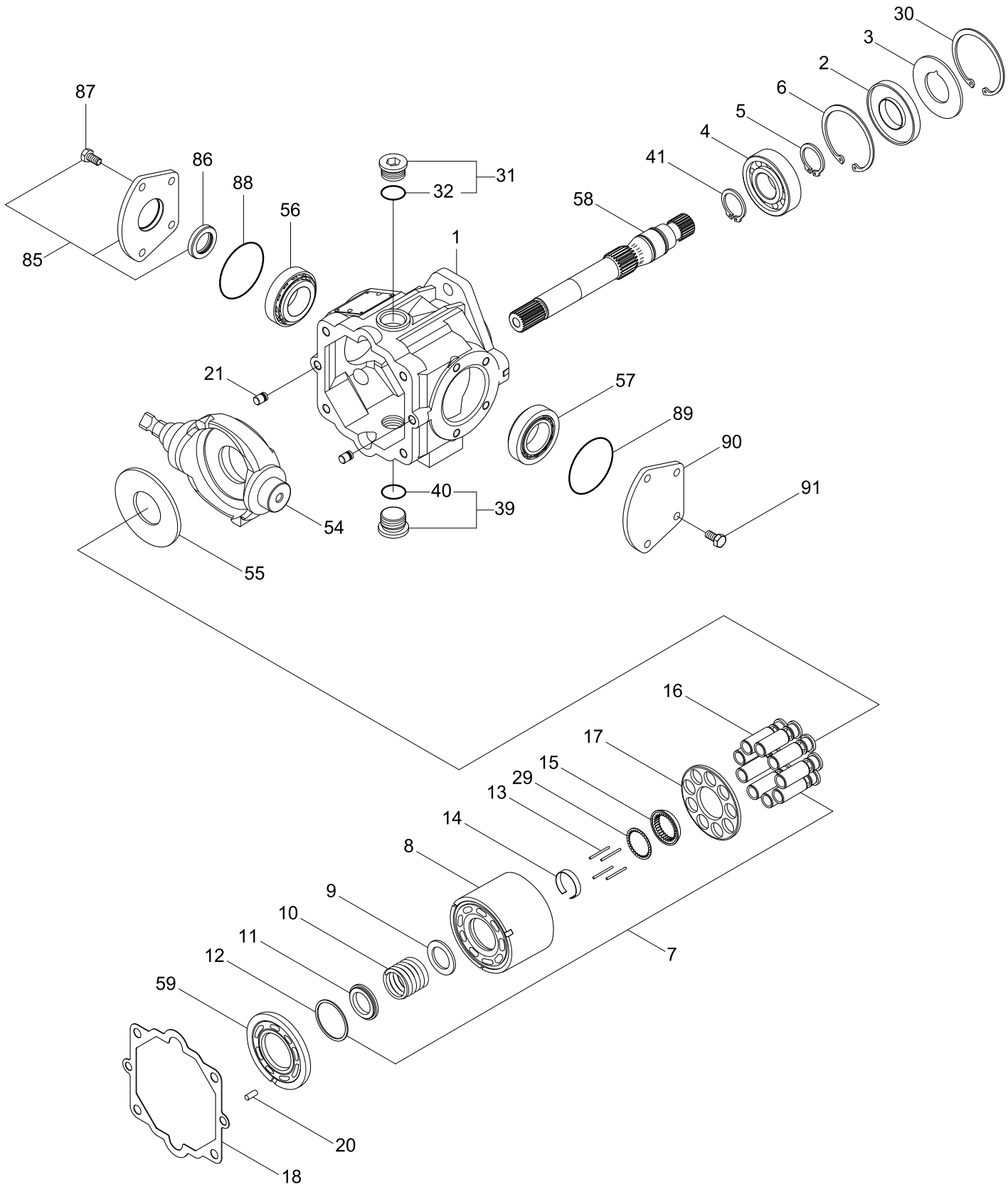

Description	Parts no	Included item
Overhaul seal kit	YUBS-00409	2, 18, 24, 26, 32, 34, 38, 40.46, 52, 65, 66, 70, 77, 78, 79, 83, 84, 86, 88, 90, 100, 104, 112, 114

Item	Part_No	IS	Ord	T	Description	Qty	Serial_No	ITC	Remark
*	31S7-02000				HST PUMP-MECHANICAL	1			SEE 4020, 4030
1	YUBS-00346				.FRONT PUMP HOUSING	1			
K2	YUBS-00347				.LIP SEAL	1			
3	YUBS-00348				.WASHER-SUPPORT	1			
4	YUBS-00196				.BALL BEARING	1			
5	YUBS-00198				.RING	1			
6	YUBS-00199				.PIN	1			
7	YUBS-00349				.CYLINDER BLOCK KIT	1			
8	YUBS-00350				..CYLINDER BLOCK	2			
9	YUBS-00351				..WASHER	1			
10	YUBS-00352				..CYLINDER BLOCK SPRING	1			
11	YUBS-00353				..WASHER	1			
12	YUBS-00236				..RETAINING RING	1			
13	YUBS-00354				..DOWNPIN-SLIPPER HOLD	4			
14	YUBS-00355				..RETAINING RING	1			
15	YUBS-00356				..GUIDE-SLIPPER RETAINER	1			
16	YUBS-00357				..PISTON ASSY	8			
17	YUBS-00358				..RETAINER-SLIPPER	1			
K18	YUBS-00359				.GASKET-END CAP	1			
20	YUBS-00361				.SPRING PIN	1			
21	YUBS-00362				.PIN	2			
29	YUBS-00367				.WASHER-THRUST	1			
30	YUBS-00197				.RETAINING RING	1			
31	YUBS-00364				.PLUG	1			
K32	YUBS-00145				..O-RING	1			
35	YUBS-00364				.PLUG	1			

Item	Part_No	IS	Ord	T	Description	Qty	Serial_No	ITC	Remark
K36	YUBS-00145				..O-RING	1			
41	YUBS-00198				.RING	1			
54	YUBS-00368				.PLATE-SWASH	1			
55	YUBS-00369				.PLATE-THRUT	1			
56	YUBS-00370				.TAPER ROLLER BEARING	1			
57	YUBS-00370				.TAPER ROLLER BEARING	1			
58	YUBS-00371				.FRONT SHAFT	1			
59	YUBS-00416				.FRONT VALVE PLATE-RH	1	#0001 -	-	
85	YUBS-00395				.TRUNNION COVER ASSY	1			
K86	YUBS-00396				..LIP SEAL	1			
87	YUBS-00397				..SCREW-HEX HEAD	4			
K88	YUBS-00398				.O-RING	1			
89	YUBS-00399				.TRUNNION COVER	1			
K90	YUBS-00398				.O-RING	4			
91	YUBS-00397				.SCREW-HEX HEAD	4			
K	YUBS-00409				OVERHAUL SEAL KIT	1			SEE ILLUST
54	YUBS-00368				.PLATE-SWASH	1			
55	YUBS-00369				.PLATE-THRUT	1			
56	YUBS-00370				.TAPER ROLLER BEARING	1			
57	YUBS-00370				.TAPER ROLLER BEARING	1			
58	YUBS-00371				.FRONT SHAFT	1			
59	YUBS-00372				.FRONT VALVE PLATE-RH	1			
85	YUBS-00395				.TRUNNION COVER ASSY	1			
K86	YUBS-00396				..LIP SEAL	1			
87	YUBS-00397				..SCREW-HEX HEAD	4			
K88	YUBS-00398				.O-RING	1			

Item	Part_No	IS	Ord	T	Description	Qty	Serial_No	ITC	Remark
89	YUBS-00399				.TRUNNION COVER	1			
K90	YUBS-00398				.O-RING	4			
91	YUBS-00397				.SCREW-HEX HEAD	4			
K	YUBS-00409				OVERHAUL SEAL KIT	1			SEE ILLUST

HST PUMP(2/3, MECHANICAL)

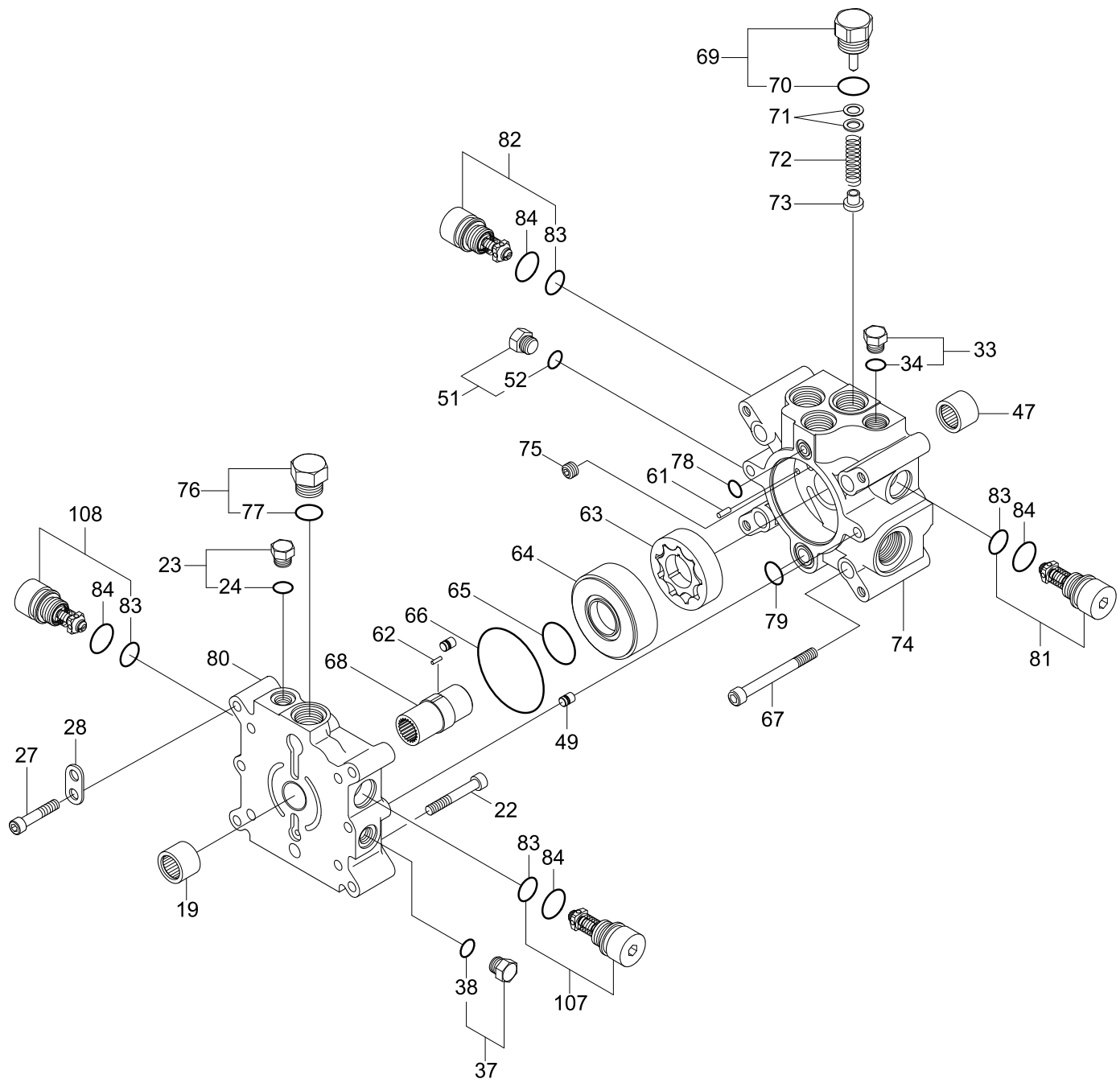

Description	Parts no	Included item
Overhaul seal kit	YUBS-00409	2, 18, 24, 26, 32, 34, 38, 40.46, 52, 65, 66, 70, 77, 78, 79, 83, 84, 86, 88, 90, 100, 104, 112, 114

Item	Part_No	IS	Ord	T	Description	Qty	Serial_No	ITC	Remark
*	@				HST PUMP-MECHANICAL	1			NOT
19	YUBS-00360				.NEEDLE BEARING	1			
22	YUBS-00363				.SCREW-SOCKET HEAD	4			
23	YUBS-00155				.PLUG	1			
K24	YUBS-00156				..O-RING	1			
27	YUBS-00365				.SCREW	4			
28	YUBS-00366				.LIFTING BRACKET	1			
33	YUBS-00155				.PLUG	1			
K34	YUBS-00156				..O-RING	1			
37	YUBS-00155				.PLUG	1			
K38	YUBS-00156				..O-RING	1			
47	YUBS-00360				.NEEDLE BEARING	1			
49	YUBS-00362				.PIN	1			
51	YUBS-00155				.PLUG	1			
K52	YUBS-00156				..O-RING	1			
61	YUBS-00374				.PIN	1			
62	YUBS-00375				.PIN	1			
63	YUBS-00376				.GEROTOR	1			
64	YUBS-00377				.SPACER	1			
K65	YUBS-00378				.O-RING	1			
K66	YUBS-00379				.O-RING	1			
67	YUBS-00380				.SCREW-SOCKET HEAD	4			
68	YUBS-00381				.COUPLING	1			
69	YUBS-00382				.PLUG-CHARGE RELIEF	1			
K70	YUBS-00138				..O-RING	1			
71	YUBS-00383				.SHIM KIT	1			

Item	Part_No	IS	Ord	T	Description	Qty	Serial_No	ITC	Remark
72	YUBS-00384				.SPRING	1			
73	YUBS-00385				.POPPET-CHARGE RELIEF	1			
74	YUBS-00386				.END CAP	1			
75	YUBS-00387				.PIPE PLUG	1			
76	YUBS-00388				.PLUG	1			
K77	YUBS-00138				..O-RING	1			
K78	YUBS-00389				.O-RING	1			
K79	YUBS-00390				.O-RING	1			
80	YUBS-00391				.END CAP	1			
81	YUBS-00392				.SCR VALVE-280 BAR	1			
K83	YUBS-00393				..O-RING	1			
K84	YUBS-00394				..O-RING	1			
82	YUBS-00392				.SCR VALVE-280 BAR	1			
K83	YUBS-00393				..O-RING	1			
K84	YUBS-00394				..O-RING	1			
107	YUBS-00392				.SCR VALVE-280 BAR	1			
K83	YUBS-00393				..O-RING	1			
K84	YUBS-00394				..O-RING	1			
108	YUBS-00392				.SCR VALVE-280 BAR	1			
K83	YUBS-00393				..O-RING	1			
K84	YUBS-00394				..O-RING	1			
K	YUBS-00409				OVERHAUL SEAL KIT	1			SEE ILLUST

HST PUMP(3/3, MECHANICAL)

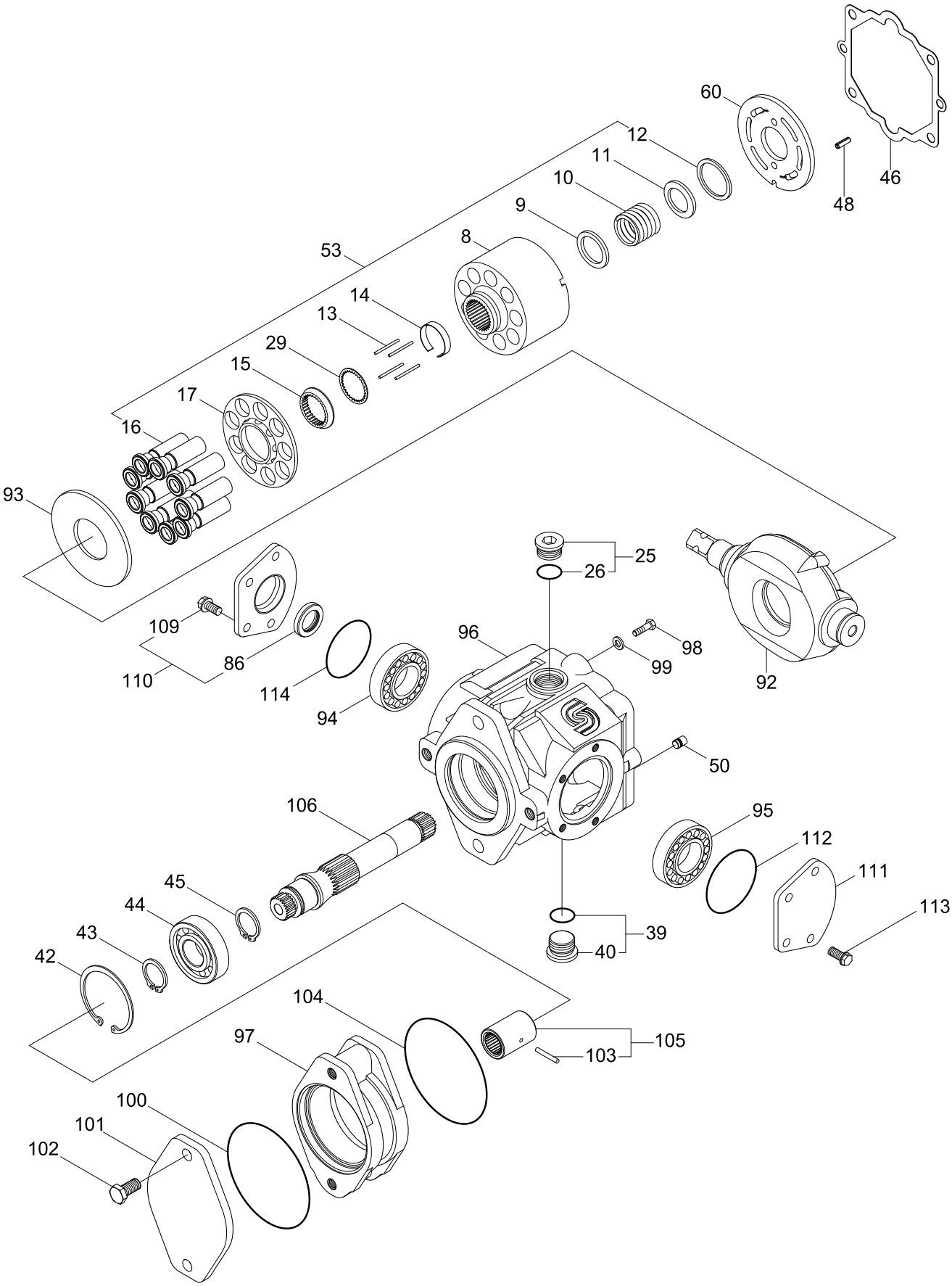

Description	Parts no	Included item
Overhaul seal kit	YUBS-00409	2, 18, 24, 26, 32, 34, 38, 40.46, 52, 65, 66, 70, 77, 78, 79, 83, 84, 86, 88, 90, 100, 104, 112, 114

Item	Part_No	IS	Ord	T	Description	Qty	Serial_No	ITC	Remark
*	@				HST PUMP-MECHANICAL	1			NOT
53	YUBS-00349				.CYLINDER BLOCK KIT	1			
8	YUBS-00350				..CYLINDER BLOCK	1			
9	YUBS-00351				..WASHER	1			
10	YUBS-00352				..CYLINDER BLOCK SPRING	1			
11	YUBS-00353				..WASHER	1			
12	YUBS-00236				..RETAINING RING	1			
13	YUBS-00354				..DOWNPIN-SLIPPER HOLD	4			
14	YUBS-00355				..RETAINING RING	1			
15	YUBS-00356				..GUIDE-SLIPPER RETAINER	1			
16	YUBS-00357				..PISTON ASSY	8			
17	YUBS-00358				..RETAINER-SLIPPER	1			
29	YUBS-00367				..WASHER-THRUST	1			
25	YUBS-00364				.PLUG	1			
K26	YUBS-00145				..O-RING	1			
39	YUBS-00364				.PLUG	1			
K40	YUBS-00145				..O-RING	1			
42	YUBS-00197				.RETAINING RING	1			
43	YUBS-00198				.RING	1			
44	YUBS-00196				.BALL BEARING	1			
45	YUBS-00198				.RING	1			
K46	YUBS-00359				.GASKET-END CAP	1			
48	YUBS-00361				.SPRING PIN	1			
50	YUBS-00362				.PIN	2			
60	YUBS-00417				.REAR VALVE PLATE-LH	1	#0001 -	-	
92	YUBS-00368				.PLATE-SWASH	1			

Item	Part_No	IS	Ord	T	Description	Qty	Serial_No	ITC	Remark
93	YUBS-00369				.PLATE-THRUT	1			
94	YUBS-00370				.TAPER ROLLER BEARING	1			
95	YUBS-00370				.TAPER ROLLER BEARING	1			
96	YUBS-00346				.FRONT PUMP HOUSING	1			
97	YUBS-00400				.FLANGE ADAPTER	1			
N98	YUBS-00401				.SCREW-SPECIAL	2			NOT
99	YUBS-00402				.WASHER	2			
K100	YUBS-00403				.B PAD SEAL	1			
101	YUBS-00404				.FLANGE COVER	1			
N102	YUBS-00401				.SCREW-SPECIAL	2			NOT
K104	YUBS-00406				.O-RING	1			
105	YUBS-00407				.COUPLING ASSEMBLY	1			
103	YUBS-00405				..PIN	1			
106	YUBS-00408				.REAR SHAFT	1			
110	YUBS-00395				.TRUNNION COVER ASSY	1			
K86	YUBS-00396				..LIP SEAL	1			
109	YUBS-00397				..SCREW-HEX HEAD	4			
111	YUBS-00399				.TRUNNION COVER	1			
K112	YUBS-00398				.O-RING	1			
113	YUBS-00397				.SCREW-HEX HEAD	4			
K114	YUBS-00398				.O-RING	1			
K	YUBS-00409				OVERHAUL SEAL KIT	1			SEE ILLUST
48	YUBS-00361				.SPRING PIN	1			
50	YUBS-00362				.PIN	2			
60	YUBS-00373				.REAR VALVE PLATE, LH	1			
92	YUBS-00368				.PLATE-SWASH	1			

Item	Part_No	IS	Ord	T	Description	Qty	Serial_No	ITC	Remark
93	YUBS-00369				.PLATE-THRUT	1			
94	YUBS-00370				.TAPER ROLLER BEARING	1			
95	YUBS-00370				.TAPER ROLLER BEARING	1			
96	YUBS-00346				.FRONT PUMP HOUSING	1			
97	YUBS-00400				.FLANGE ADAPTER	1			
N98	YUBS-00401				.SCREW-SPECIAL	2			NOT
99	YUBS-00402				.WASHER	2			
K100	YUBS-00403				.B PAD SEAL	1			
101	YUBS-00404				.FLANGE COVER	1			
N102	YUBS-00401				.SCREW-SPECIAL	2			NOT
K104	YUBS-00406				.O-RING	1			
105	YUBS-00407				.COUPLING ASSEMBLY	1			
103	YUBS-00405				..PIN	1			
106	YUBS-00408				.REAR SHAFT	1			
110	YUBS-00395				.TRUNNION COVER ASSY	1			
K86	YUBS-00396				..LIP SEAL	1			
109	YUBS-00397				..SCREW-HEX HEAD	4			
111	YUBS-00399				.TRUNNION COVER	1			
K112	YUBS-00398				.O-RING	1			
113	YUBS-00397				.SCREW-HEX HEAD	4			
K114	YUBS-00398				.O-RING	1			
K	YUBS-00409				OVERHAUL SEAL KIT	1			SEE ILLUST

MAIN PUMP(PILOT)

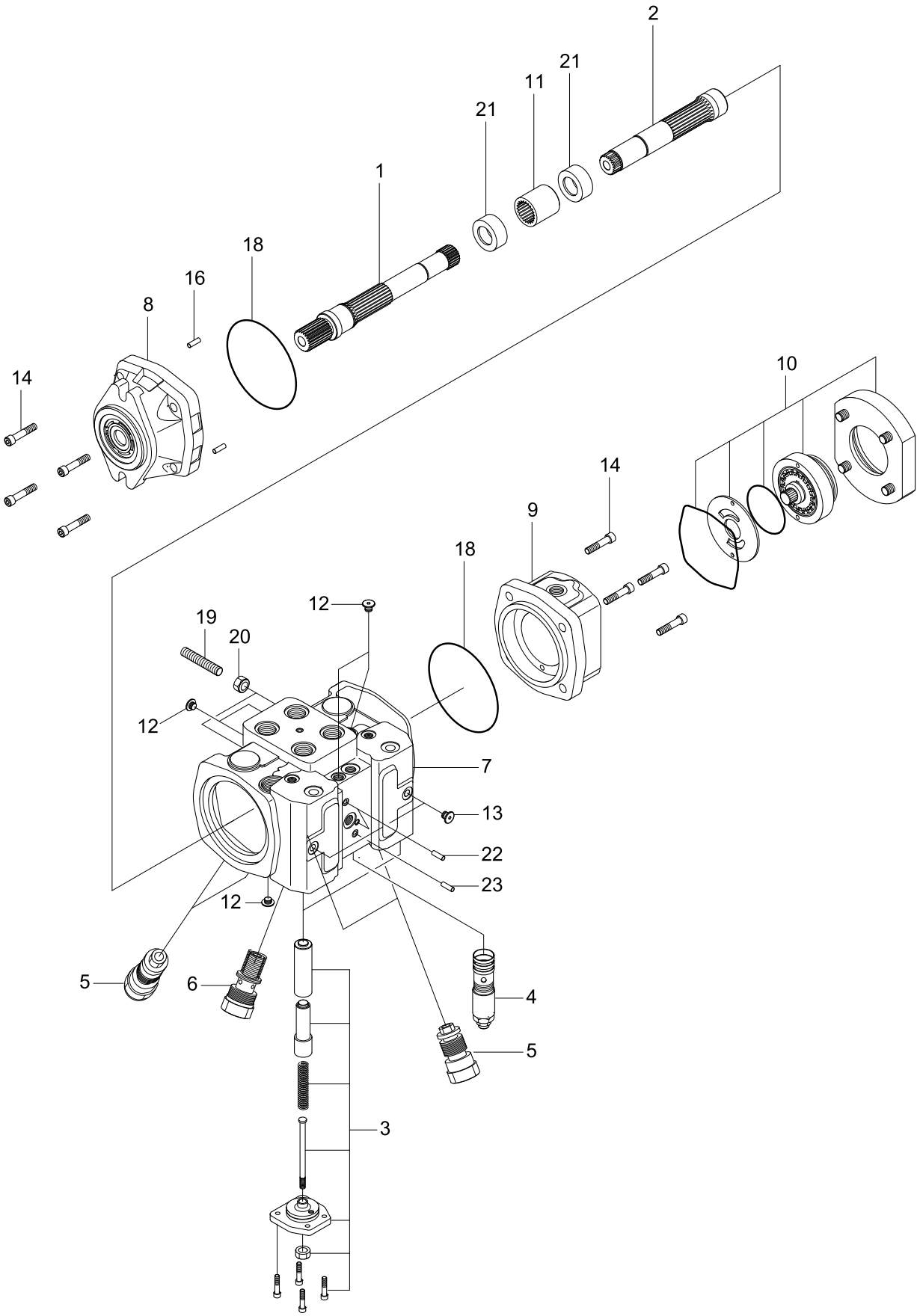

Item	Part_No	IS	Ord	T	Description	Qty	Serial_No	ITC	Remark
*	31S7-02050				HST PUMP-PILOT	1			
1	XKCM-00025				.ROTARY GROUP	1			
1-1	XKCM-00032				..ROTARY GROUP	1			
1-12	XKCM-00033				..CRADLE	1			
1-13	XKCM-00034				..SLIDE RING	1			
1-14	XKCM-00035				..DRIVE SHAFT	1			
1-26	XKCM-00036				..BEARING LINER	1			
1-31	XKCM-00037				..PLAIN ROLLER BEARING	1			
1-32	XKCM-00038				..CRADLE BEARING ASSY	1			
1-36	XKCM-00039				..RETAINING RING	1			
1-37	ZGBP-00174				..V-RING	1			
1-38	XKCM-00040				..SHAFT SEAL RING	1			
3	XKCM-00027				.CONTROL-HYDRAULIC	2			
6	XKCM-00004				.CONTROL CARTRIDGE	1			WITH ORIFICE
7	XKCM-00005				.PRESSURE RELIEF VALVE	4			
8	XKCM-00006				.PRESSURE RELIEF VALVE	1			
10	XKCM-00028				.PUMP HOUSING	1			
11	XKCM-00029				.BEARING FLANGE	1			
14	XKCM-00031				.INTERNAL GEAR PUMP	1			
14-1	XKCM-00043				..FLANGE-INTERMEDIATE	1			
14-5	XKCM-00044				..COUPLING-THROUGH DRIVE	1			
14-6	XKCM-00045				..INTERNAL GEAR PUMP	1			
14-8	XKCM-00046				..SHAFT KEY	1			
14-9	XKCM-00047				..SNAP RING	1			
14-10	XKCM-00048				..SOCKET HEAD SCREW	4			
14-12	XKCM-00049				..O-RING	1			

Item	Part_No	IS	Ord	T	Description	Qty	Serial_No	ITC	Remark
14-13	XKCM-00050				..O-RING	1			
14-19	XKCM-00017				..O-RING	1			
14-21	XKCM-00051				..CYLINDER PIN	1			
16	XKCM-00011				.COUPLING-THROUGH DRIVE	1			
21	XKCM-00012				.LOCKING SCREW	6			
22	XKCM-00013				.LOCKING SCREW	2			
30	XKCM-00014				.SOCKET HEAD SCREW	4			
32	XKCM-00016				.CYLINDER PIN	2			
43	XKCM-00018				.O-RING	1			
46	XKCM-00019				.ECCENTRIC SCREW	2			
47	XKCM-00020				.SEAL LOCK NUT	2			
49	XKCM-00021				.ROLLER BEARING-PLAIN	2			

HST PUMP(2/2, PILOT)

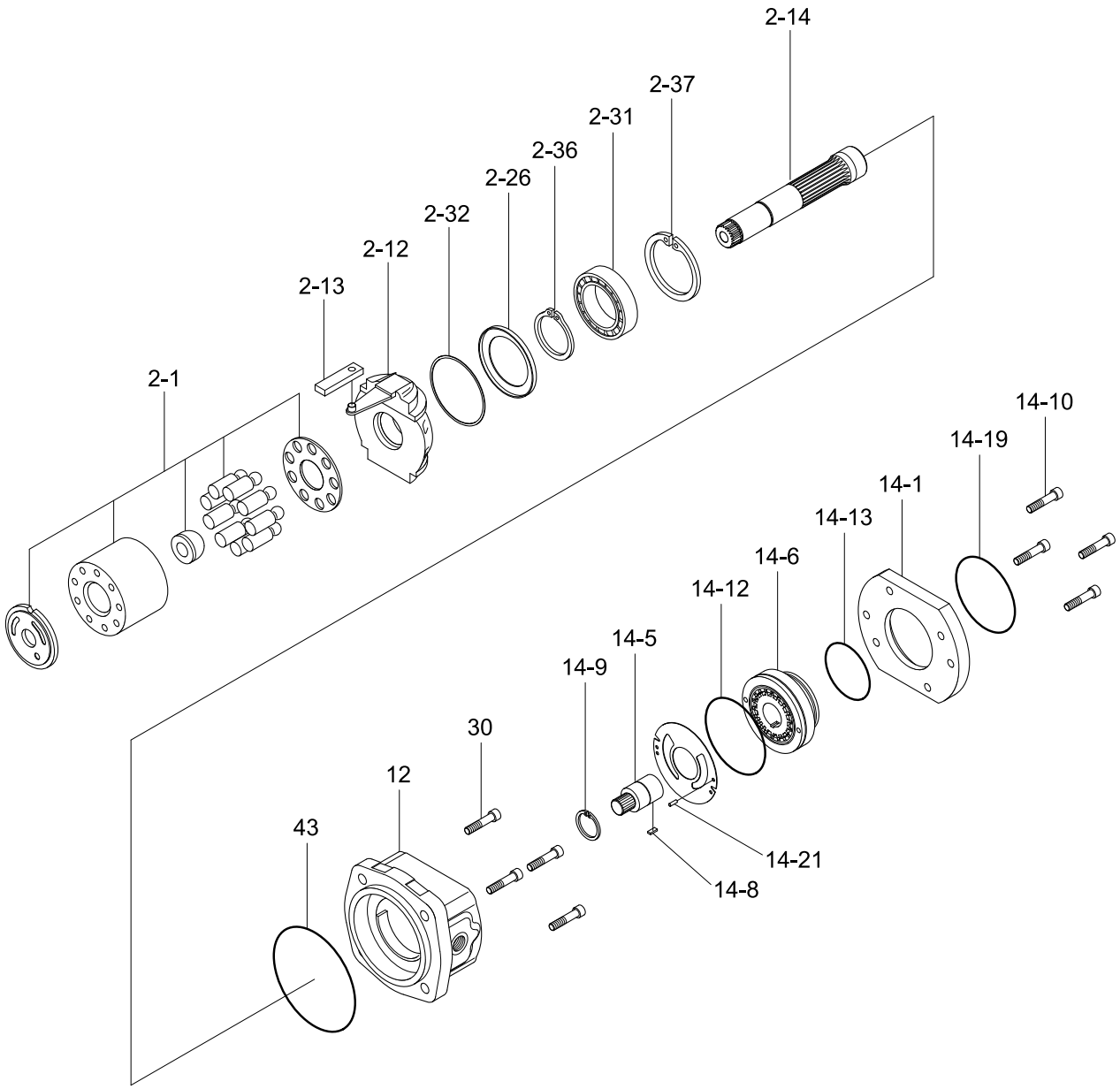

Item	Part_No	IS	Ord	T	Description	Qty	Serial_No	ITC	Remark
*	@				HST PUMP-PILOT	1			NOT
2	XKCM-00026				.ROTARY GROUP	1			
2-1	XKCM-00041				..ROTARY GROUP	1			
2-12	XKCM-00033				..CRADLE	1			
2-13	XKCM-00034				..SLIDE RING	1			
2-14	XKCM-00042				..DRIVE SHAFT	1			
2-26	XKCM-00036				..BEARING LINER	1			
2-31	XKCM-00037				..PLAIN ROLLER BEARING	1			
2-32	XKCM-00038				..CRADLE BEARING ASSY	1			
2-36	XKCM-00039				..RETAINING RING	1			
2-37	ZGBP-00174				..V-RING	1			
12	XKCM-00030				.BEARING FLANGE	1			
14	XKCM-00031				.INTERNAL GEAR PUMP	1			
14-1	XKCM-00043				..FLANGE-INTERMEDIATE	1			
14-5	XKCM-00044				..COUPLING-THROUGH DRIVE	1			
14-6	XKCM-00045				..INTERNAL GEAR PUMP	1			
14-8	XKCM-00046				..SHAFT KEY	1			
14-9	XKCM-00047				..SNAP RING	1			
14-10	XKCM-00048				..SOCKET HEAD SCREW	4			
14-12	XKCM-00049				..O-RING	1			
14-13	XKCM-00050				..O-RING	1			
14-19	XKCM-00017				..O-RING	1			
14-21	XKCM-00051				..CYLINDER PIN	1			
30	XKCM-00014				.SOCKET HEAD SCREW	8			
43	XKCM-00018				.O-RING	2			

WORKING PUMP(STD)

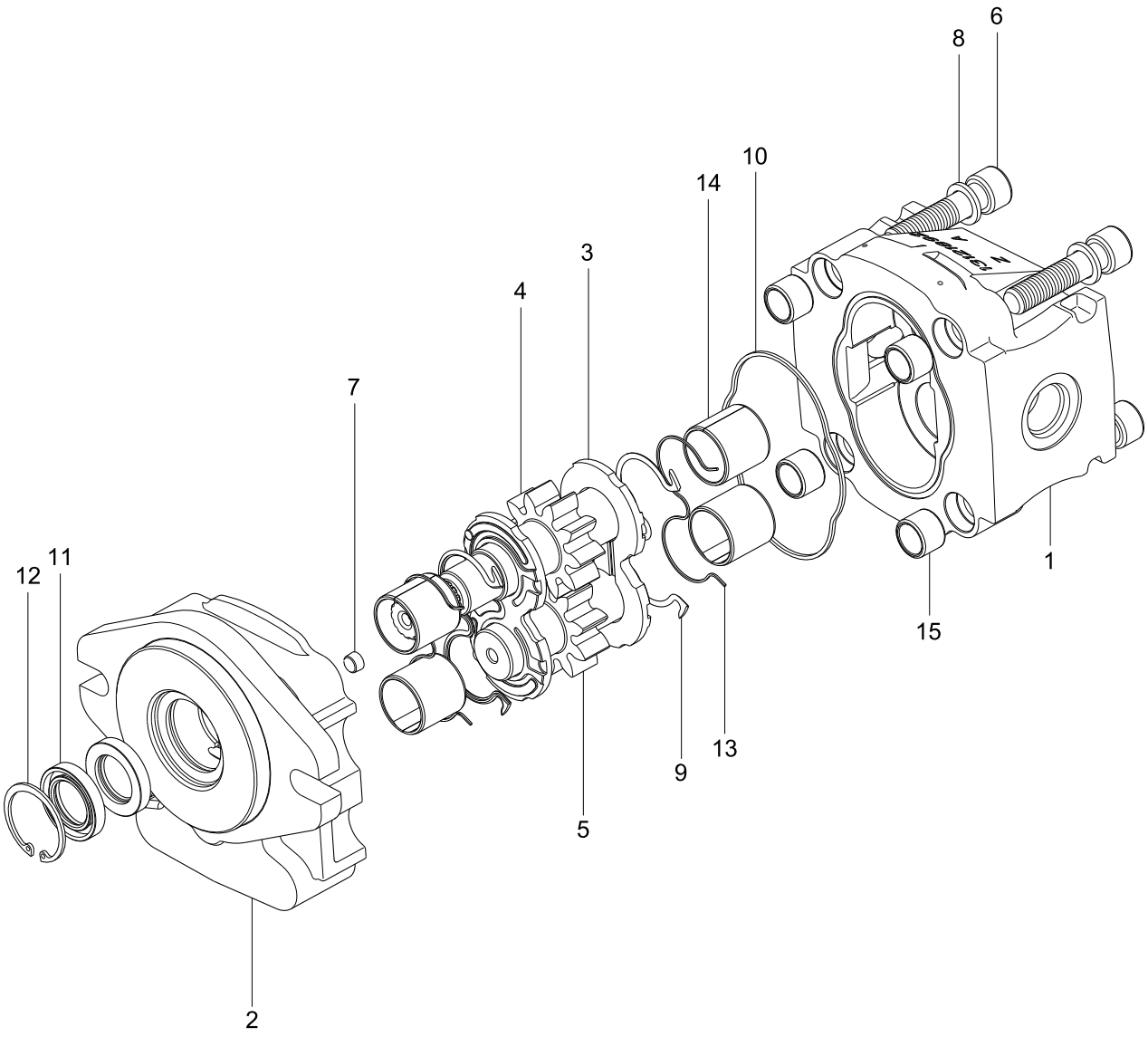

Item	Part_No	IS	Ord	T	Description	Qty	Serial_No	ITC	Remark
*	31S7-22000				GEAR PUMP-WORKING	1			STD
1	ZTAW-00211				.BODY	1			
2	ZTAW-00212				.FRONT COVER	1			
3	ZTAW-00032				.PLATE-THRUST	2			
4	ZTAW-00213				.DRIVE SHAFT	1			
5	ZTAW-00214				.GEAR-DRIVEN	1			
6	ZTAW-00215				.SCREW	4			
7	ZTAW-00013				.SCREW-GRUB	1			
8	ZTAW-00038				.WASHER	4			
9	ZTAW-00039				.SEAL	2			
10	ZTAW-00040				.SEAL	1			
11	ZTAW-00041				.SEAL-SHAFT	2			
12	ZTAW-00042				.RING	1			
13	ZTAW-00043				.RING	2			
14	ZTAW-00044				.BEARING-SLEEVE	4			
15	ZTAW-00028				.BUSHING-STEEL	4			

WORKING PUMP(TANDEM)

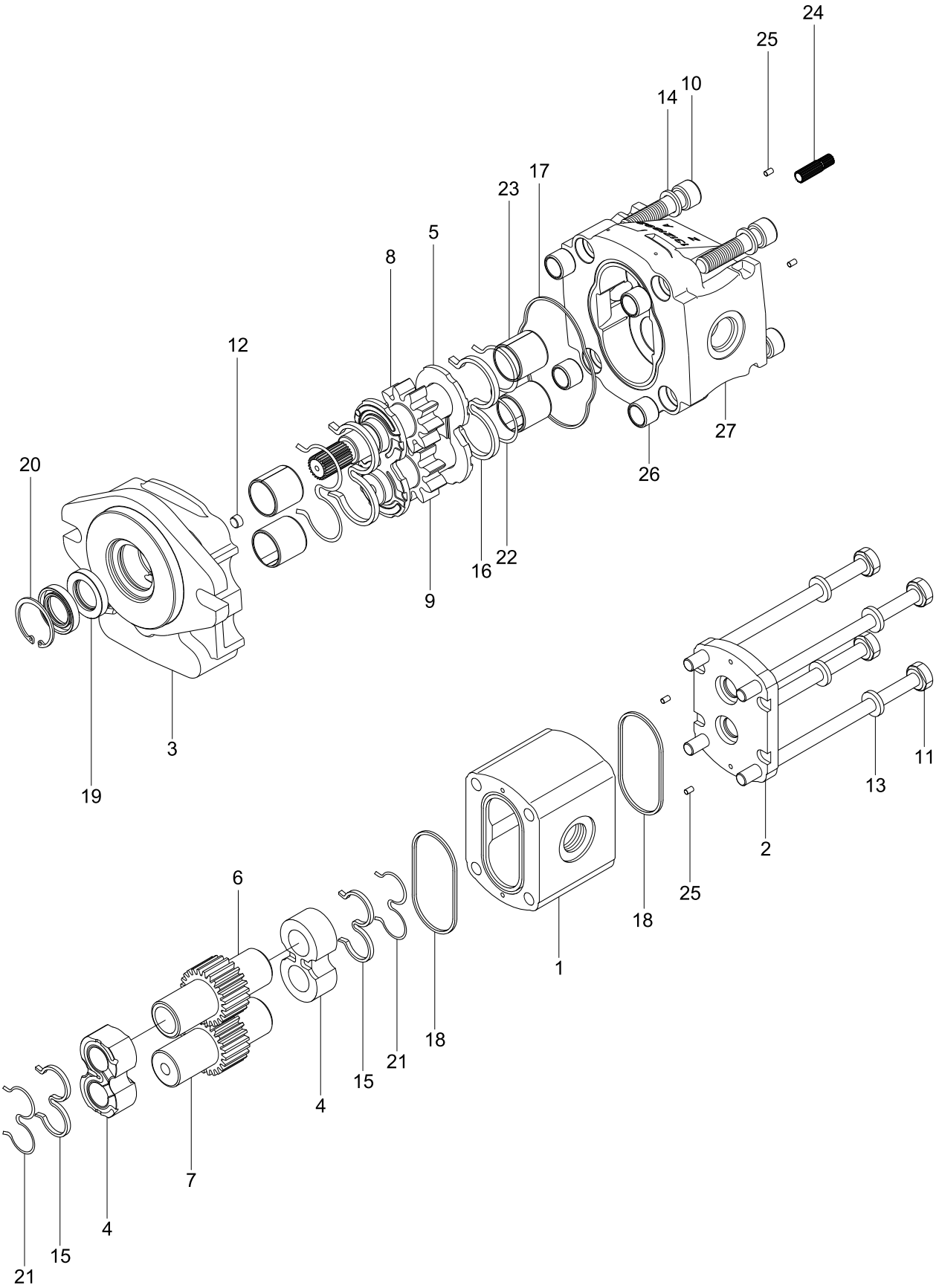

Item	Part_No	IS	Ord	T	Description	Qty	Serial_No	ITC	Remark
*	31S7-22010				GEAR PUMP-HIGH FLOW	1			HIGH FLOW
1	ZTAW-00216				.BODY	1			
2	ZTAW-00003				.COVER-REAR	1			
3	ZTAW-00212				.FRONT COVER	1			
4	ZTAW-00217				.PLATE-THRUST	2			
5	ZTAW-00032				.PLATE-THRUST	2			
6	ZTAW-00218				.GEAR-DRIVE	1			
7	ZTAW-00219				.GEAR-DRIVEN	1			
8	ZTAW-00213				.DRIVE SHAFT	1			
9	ZTAW-00214				.GEAR-DRIVEN	1			
10	ZTAW-00220				.SCREW	4			
11	ZTAW-00221				.SCREW	4			
12	ZTAW-00013				.SCREW-GRUB	1			
13	ZTAW-00014				.WASHER	4			
14	ZTAW-00222				.WASHER	4			
15	ZTAW-00223				.SEAL	2			
16	ZTAW-00039				.SEAL	2			
17	ZTAW-00040				.SEAL	1			
18	ZTAW-00122				.SEAL	2			
19	ZTAW-00041				.SEAL-SHAFT	2			
20	ZTAW-00042				.RING	1			
21	ZTAW-00224				.RING-ANTIEXTRUSION	2			
22	ZTAW-00043				.RING	2			
23	ZTAW-00044				.BEARING-SLEEVE	4			
24	ZTAW-00225				.HUB	1			
25	ZTAW-00027				.PIN-DOWEL	4			

Item	Part_No	IS	Ord	T	Description	Qty	Serial_No	ITC	Remark
26	ZTAW-00028				.BUSHING-STEEL	4			
27	ZTAW-00226				.GEAR HOUSING	1			

MAIN CONTROL VALVE(MECHANICAL)

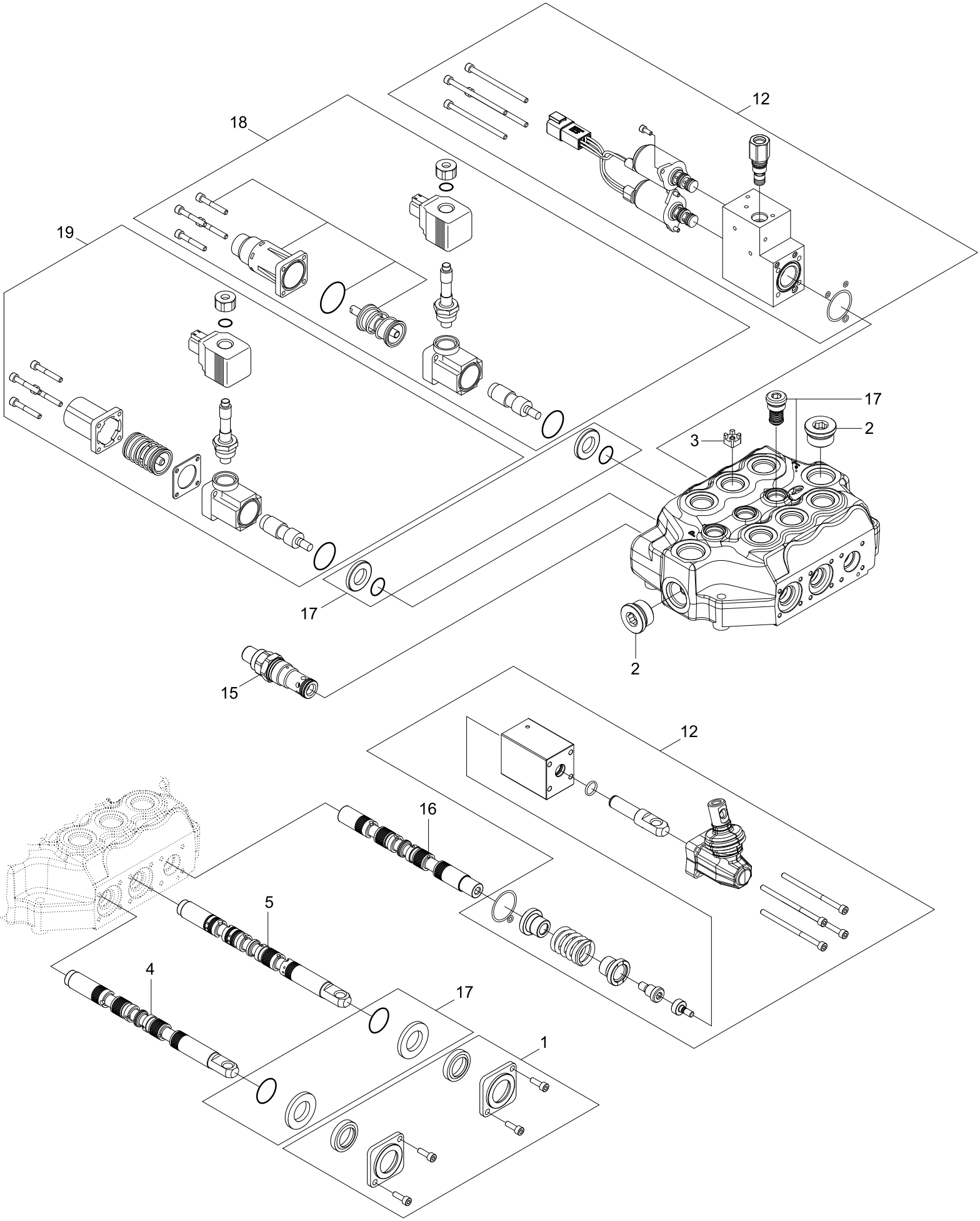

Item	Part_No	IS	Ord	T	Description	Qty	Serial_No	ITC	Remark
*	31S7-22020				MCV-STD	1			MECHANICAL
1	ZTAL-00013				.FLANGE KIT	1			
2	ZTAL-00016				.PLUG	2			
3	ZTAL-00017				.ORIFICE	1			
4	ZTAL-00018				.SPOOL-BUCKET	1			
5	ZTAL-00019				.SPOOL-BOOM	1			
12	ZTAL-00243				.EH CONTROL KIT	1			
15	ZTAL-00246				.MAIN RELIEF VALVE	1			
16	ZTAL-00247				.SPOOL	1			
17	ZTAL-00248				.BODY KIT	1			
18	ZTAL-00249				.MANUAL CONTROL KIT	1			
19	ZTAL-00250				.MANUAL CONTROL KIT	1			

MAIN CONTROL VALVE(PILOT)

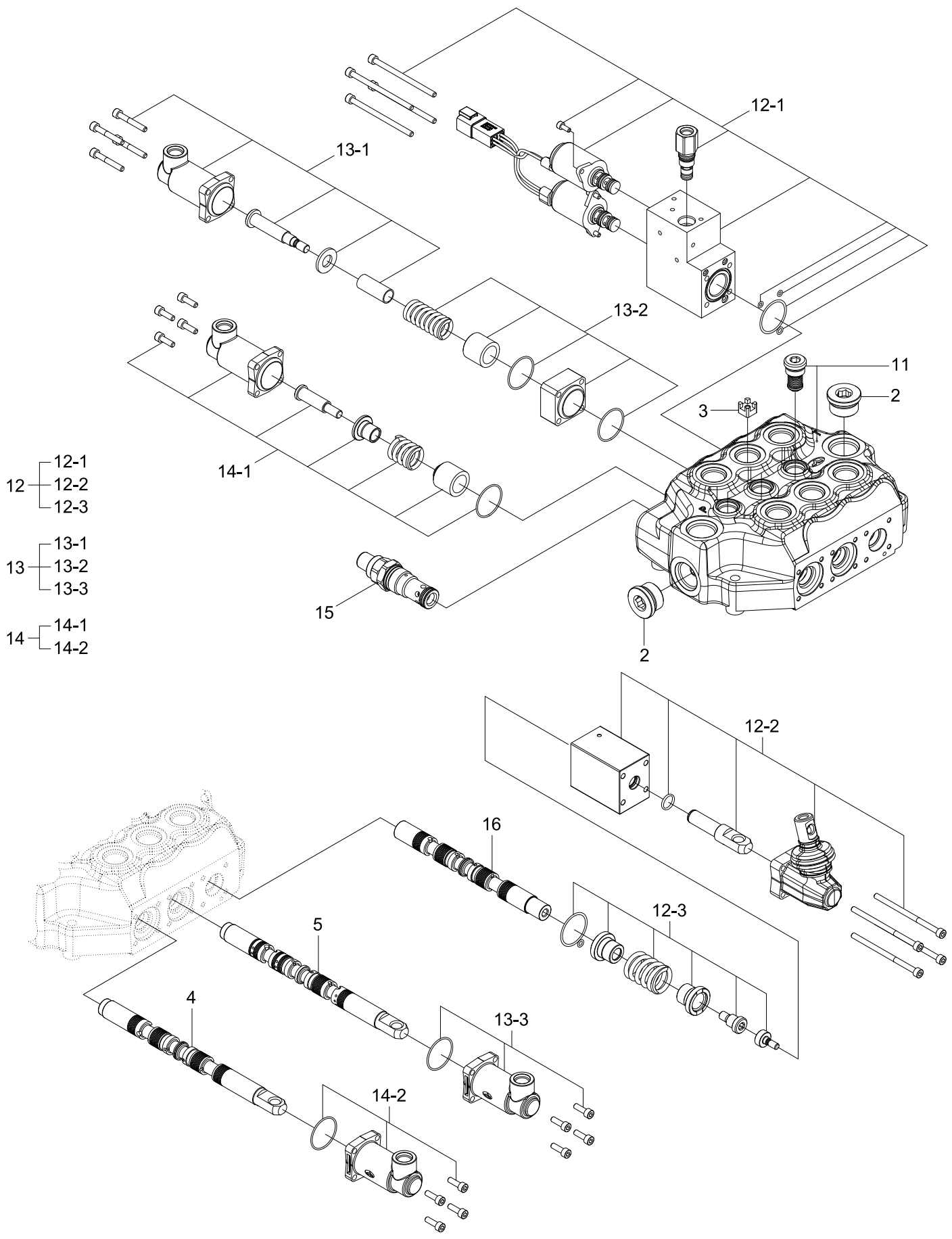

Item	Part_No	IS	Ord	T	Description	Qty	Serial_No	ITC	Remark
*	31S7-22100				MCV-OPT	1			PILOT
2	ZTAL-00016				.PLUG	2			
3	ZTAL-00017				.ORIFICE	1			
4	ZTAL-00018				.SPOOL-BUCKET	1			
5	ZTAL-00019				.SPOOL-BOOM	1			
11	ZTAL-00242				.BODY KIT	1			
12	ZTAL-00243				.EH CONTROL KIT	1			
13	ZTAL-00244				.PILOT CONTROL KIT	1			
14	ZTAL-00245				.PILOT CONTROL KIT	1			
15	ZTAL-00246				.MAIN RELIEF VALVE	1			
16	ZTAL-00247				.SPOOL	1			

TRAVEL MOTOR

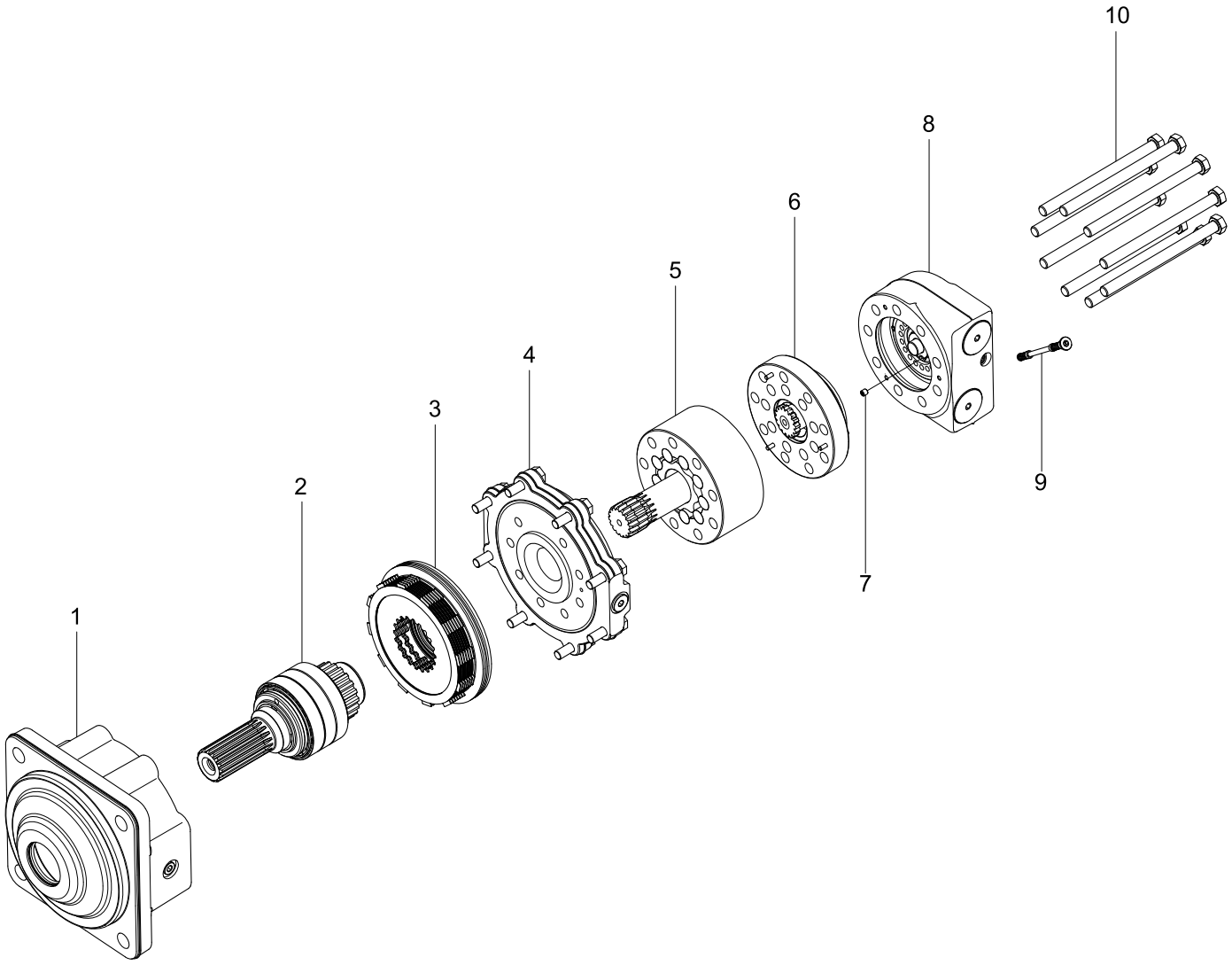

Item	Part_No	IS	Ord	T	Description	Qty	Serial_No	ITC	Remark
*	31S7-02010				TRAVEL MOTOR	2			
1	YUBS-00345				.MOUNTING FLANGE	1			
2	YUBS-00344				.SHAFT	1			
3	YUBS-00343				.BRAKE	1			
4	YUBS-00342				.FLANGE-MOTOR	1			
5	YUBS-00341				.GEAR SET	1			
6	YUBS-00340				.VALVE	1			
7	YUBS-00339				.FLOW R	1			
8	YUBS-00338				.COVER-END	1			
9	YUBS-00337				.FLUSHING VALVE	1			
10	YUBS-00336				.BOLT	9			

HIGH FLOW VALVE(OPTION)

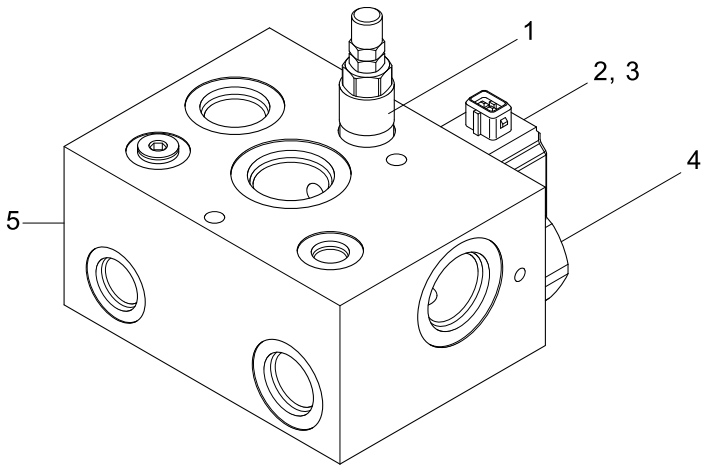

Item	Part_No	IS	Ord	T	Description	Qty	Serial_No	ITC	Remark
*	31S7-22040				HIGH FLOW VALVE	1			
1	ZTAL-00212				.RELIEF VALVE	1			
2	ZTAL-00211				.SOLENOID VALVE	1			
3	ZTAL-00210				.COIL	1			
4	ZTAL-00209				.LOGIC VALVE	2			
N5	ZTAL-00208				.BLOCK	1			NOT

PILOT LOCK VALVE(PILOT)

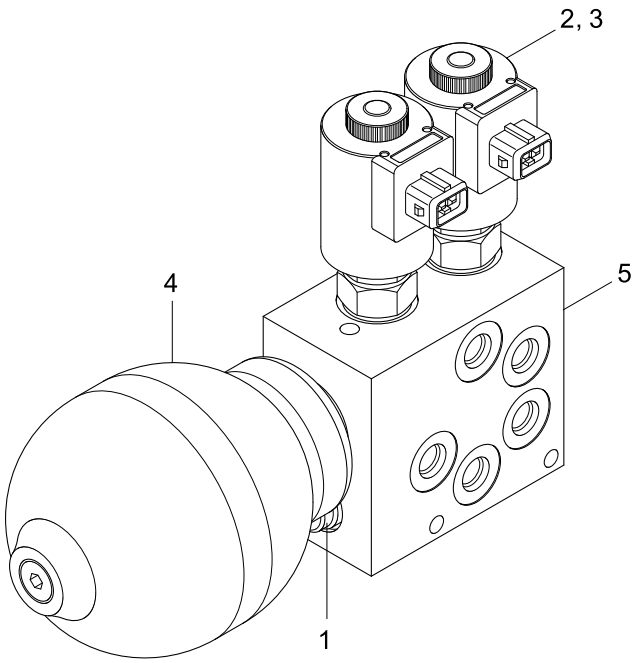

Item	Part_No	IS	Ord	T	Description	Qty	Serial_No	ITC	Remark
*	31S7-12030				PILOT LOCK VALVE	1			
1	ZTAL-00217				.CHECK VALVE	1			
2	ZTAL-00216				.SOLENOID VALVE	2			
3	ZTAL-00215				.COIL	2			
4	ZTAL-00214				.ACCUMULATOR	1			
N5	ZTAL-00213				.BLOCK	1			NOT

JOYSTICK-LH(PILOT)

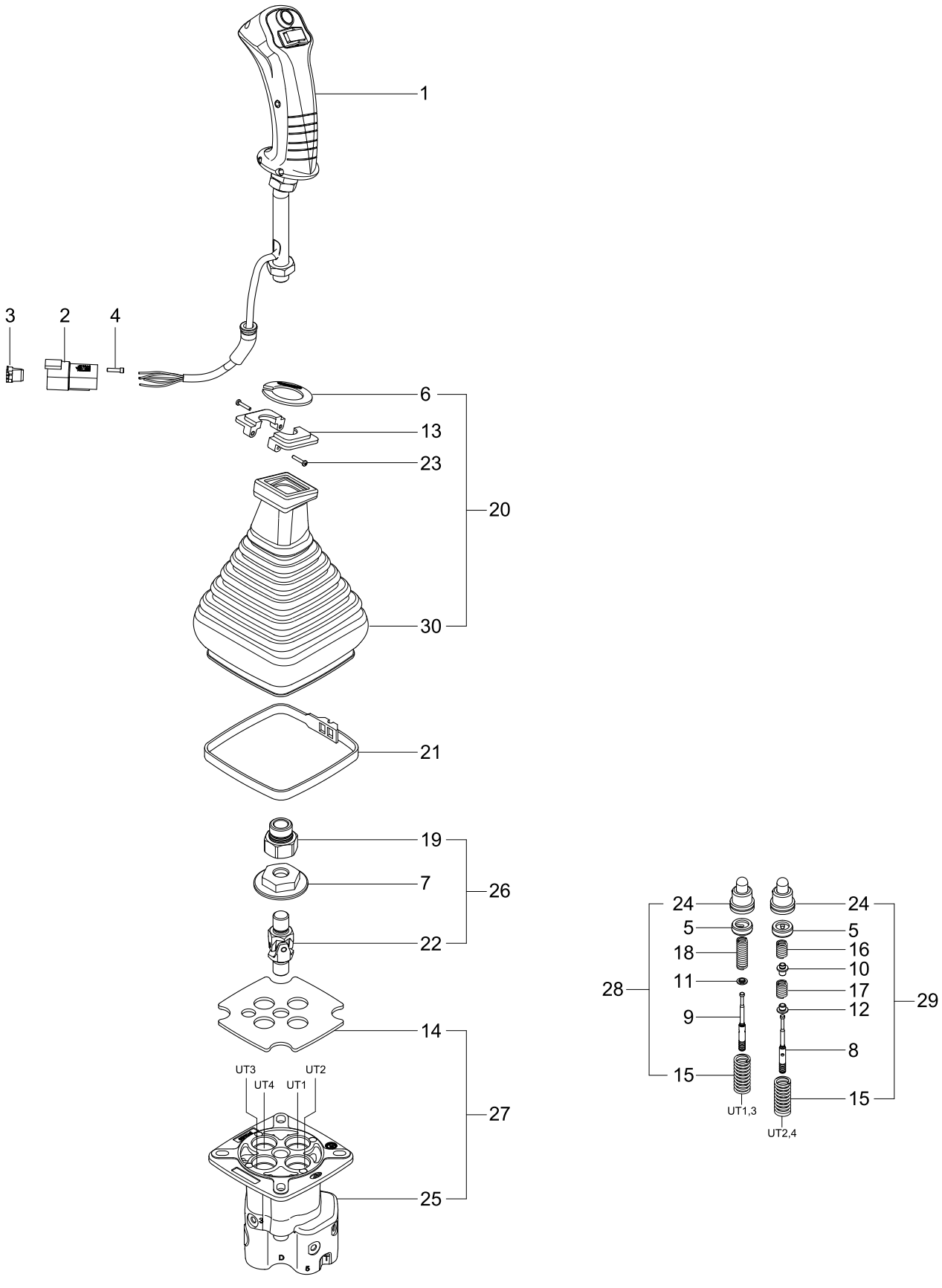

Item	Part_No	IS	Ord	T	Description	Qty	Serial_No	ITC	Remark
*	31S7-12010				RCV-LH(TRAVEL)	1			
1	ZTAL-00218				.HANDLE	1			
2	ZTAL-00220				.DEUTSCH CONNECTOR	1			
3	ZTAL-00219				.DEUTSCH SECOND LOCKS	1			
4	ZTAL-00221				.SEALING PLUG	1			
20	ZTAL-00222				.BELLOWS KIT	1			
6	@				..RING	1			NOT
13	@				..FLANGE	2			NOT
30	@				..BELLOWS KIT	1			NOT
23	@				..SCREW	1			NOT
21	ZTAL-00223				.PLASTIC BAND	1			
26	ZTAL-00224				.JOINT KIT	1			
7	@				..SELECTOR RING	1			NOT
19	@				..JOINT	1			NOT
22	@				..JOINT	1			NOT
27	ZTAL-00225				.BODY KIT	1			
14	@				..FLANGE	1			NOT
25	@				..BODY KIT	1			NOT
28	ZTAL-00226				.SPOOL KIT	2			
5	@				..RING	2			NOT
9	@				..DOCKING ROD	2			NOT
11	@				..SPRING GUIDE BUSHING	2			NOT
15	@				..RETURN SPRING	2			NOT
18	@				..REACTION SPRING	2			NOT
24	@				..PLUNGER KIT	2			NOT
29	ZTAL-00227				.SPOOL KIT	2			

Item	Part_No	IS	Ord	T	Description	Qty	Serial_No	ITC	Remark
5	@				..RING	2			NOT
8	@				..DOCKING ROD	2			NOT
10	@				..BUSHING	2			NOT
12	@				..BUSHING	2			NOT
15	@				..RETURN SPRING	2			NOT
16	@				..REACTION SPRING	2			NOT
17	@				..SPRING	2			NOT
24	@				..PLUNGER KIT	2			NOT

JOYSTICK-RH(PILOT)

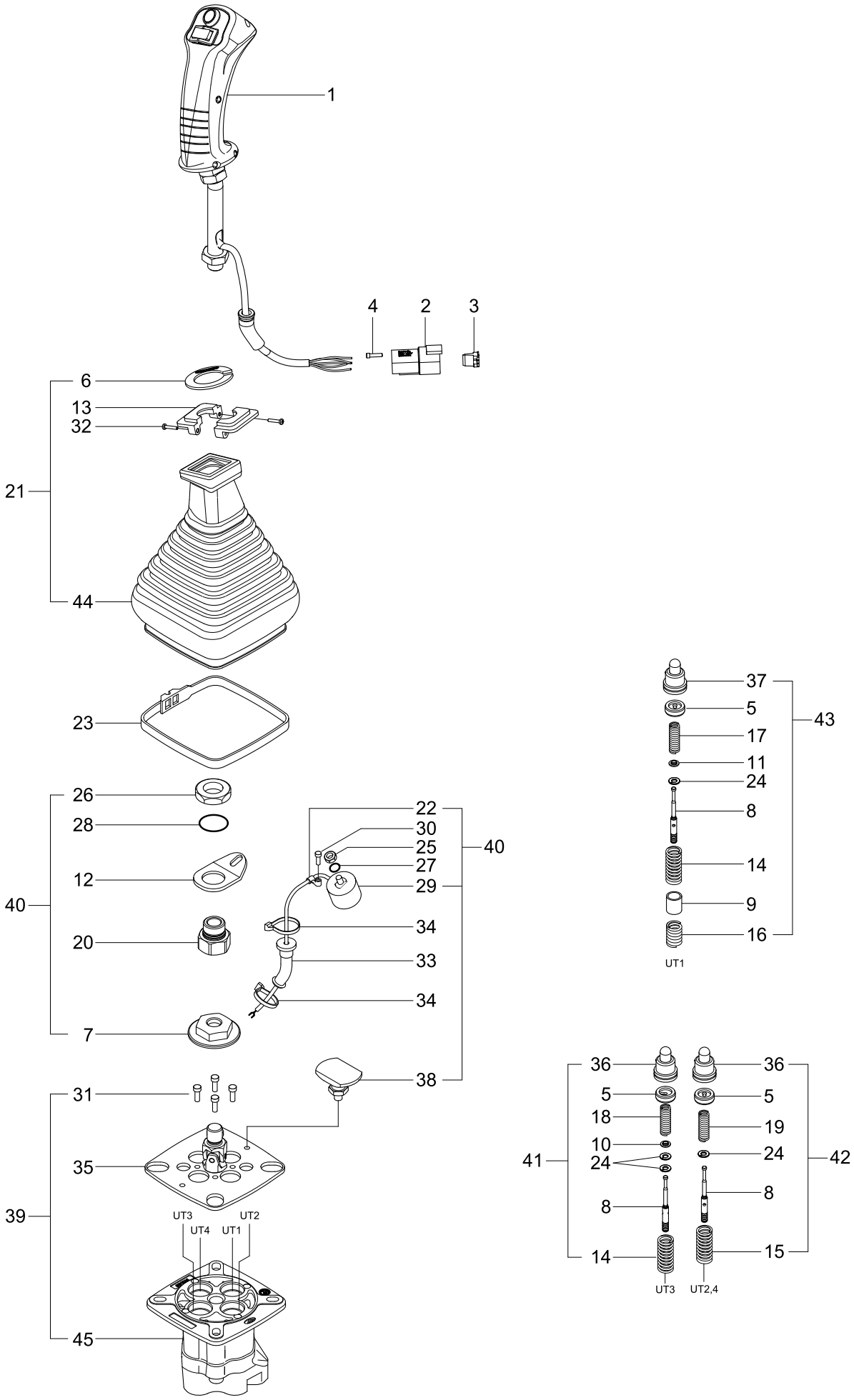

Item	Part_No	IS	Ord	T	Description	Qty	Serial_No	ITC	Remark
*	31S7-12020				RCV-RH(WORKING)	1			
1	ZTAL-00228				.HANDLE	1			
2	ZTAL-00220				.DEUTSCH CONNECTOR	1			
3	ZTAL-00219				.DEUTSCH SECOND LOCKS	1			
4	ZTAL-00221				.SEALING PLUG	1			
21	ZTAL-00222				.BELLOWS KIT	1			
6	@				..RING	1			NOT
13	@				..FLANGE	2			NOT
32	@				..SCREW	2			NOT
44	@				..BELLOWS KIT	1			NOT
23	ZTAL-00223				.PLASTIC BAND	1			
39	ZTAL-00230				.BODY KIT	1			
31	@				..SCREW	4			NOT
35	@				..FLANGE	1			NOT
45	@				..BODY	1			NOT
40	ZTAL-00229				.JOINT KIT	1			
7	@				..SELECTOR RING	1			NOT
12	@				..FLANGE	1			NOT
20	@				..JOINT	1			NOT
22	@				..WRAPPER	1			NOT
25	@				..NUT	1			NOT
26	@				..NUT	1			NOT
27	@				..WASHER	1			NOT
28	@				..WASHER	1			NOT
29	@				..ELECTROMAGNET	1			NOT
30	@				..SCREW	1			NOT

Item	Part_No	IS	Ord	T	Description	Qty	Serial_No	ITC	Remark
33	@				..CABLE PASSING	1			NOT
34	@				..WRAPPER	2			NOT
38	@				..PLATE KIT	1			NOT
41	ZTAL-00231				.SPOOL KIT	1			
5	@				..SPRING GUIDE RING	1			NOT
8	@				..DOCKING ROD	1			NOT
10	@				..BUSHING	1			NOT
14	@				..RETURN SPRING	1			NOT
18	@				..REACTION SPRING	1			NOT
24	@				..SEEGER RING	2			NOT
36	@				..PLUNGER KIT	1			NOT
42	ZTAL-00232				.SPOOL KIT	2			
5	@				..SPRING GUIDE RING	2			NOT
8	@				..DOCKING ROD	2			NOT
15	@				..RETURN SPRING	2			NOT
19	@				..SPRING	2			NOT
24	@				..SEEGER RING	2			NOT
36	@				..PLUNGER KIT	2			NOT
43	ZTAL-00233				.SPOOL KIT	1			
5	@				..SPRING GUIDE RING	1			NOT
8	@				..DOCKING ROD	1			NOT
9	@				..BUSHING	1			NOT
11	@				..CURVE BUSHING	1			NOT
14	@				..RETURN SPRING	1			NOT
16	@				..SPRING	1			NOT
17	@				..REACTION SPRING	1			NOT

Item	Part_No	IS	Ord	T	Description	Qty	Serial_No	ITC	Remark
24	@				..SEEGER RING	1			NOT
37	@				..PLUNGER KIT	1			NOT

BOOM CYLINDER

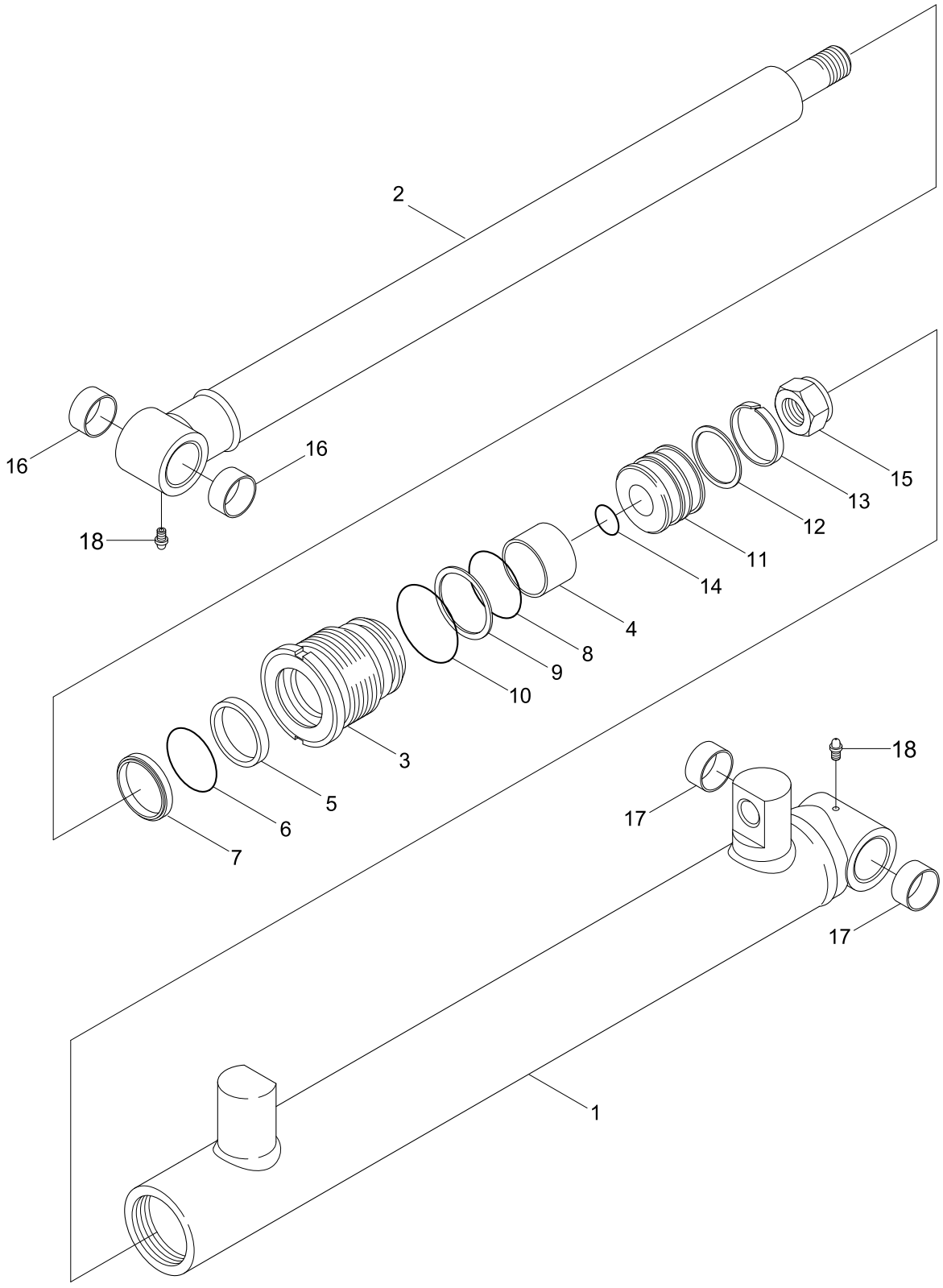

Description	Parts no	Included item
Boom cylinder seal kit	31Y2-04640	5~10, 12~14

Item	Part_No	IS	Ord	T	Description	Qty	Serial_No	ITC	Remark
*	31S7-20010				CYLINDER ASSY	1			
1	31Y2-04530				.TUBE ASSY	1			
2	31Y2-04590				.ROD ASSY	1			
3	31Y2-04620				.GLAND	1			
4	S731-040030				.BUSHING-DU	1			
K5	Y200-040011				.SEAL-ROD	1			
K6	Y180-040020				.RING-BACK UP	1			
K7	Y120-040011				.WIPER-DUST	1			
K8	S631-053004				.O-RING	1			
K9	S641-053003				.RING-BACK UP	1			
K10	S632-065004				.O-RING	1			
11	31Y2-04630				.PISTON	1			
K12	Y410-063000				.SEAL-PISTON	1			
K13	Y310-063000				.RING-WEAR	2			
K14	S631-032004				.O-RING	1			
15	31YC-65220				.NUT	1			
16	S731-030020				.BUSHING-DU	2			
17	S731-030030				.BUSHING-DU	2			
18	S651-810002				.NIPPLE-GREASE	2			
K	31Y2-04640				SEAL KIT	1			SEE ILLUST

BUCKET CYLINDER

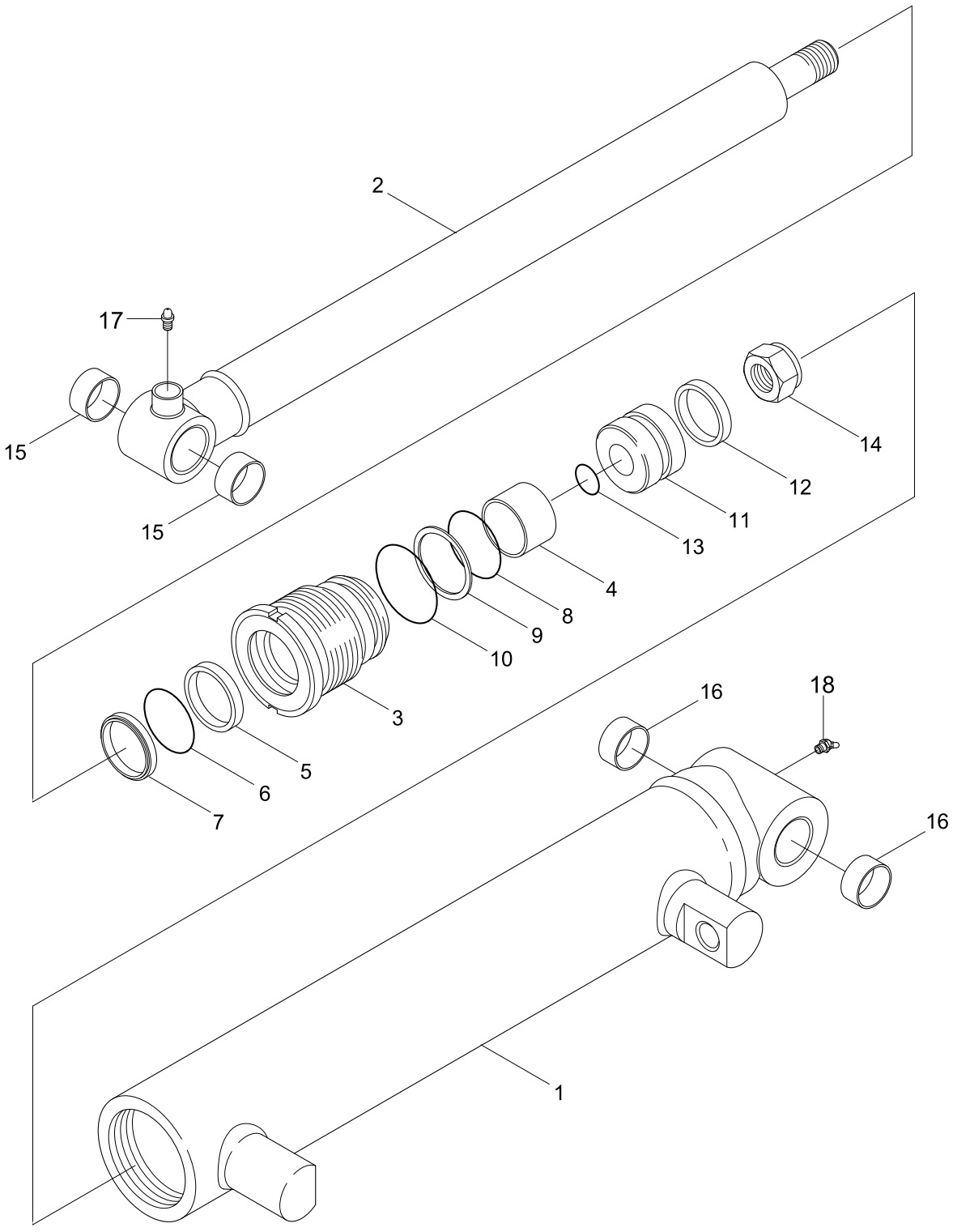

Description	Parts no	Included item
Bucket cylinder seal kit	31Y2-04751	5~10, 12, 13

Item	Part_No	IS	Ord	T	Description	Qty	Serial_No	ITC	Remark
*	31S7-20021				CYLINDER ASSY	1			
1	31Y2-04652				.TUBE ASSY	1			
2	31Y2-09641				.ROD ASSY	1			
3	31Y2-04731				.GLAND	1			
4	S731-040030				.BUSHING-DU	1			
K5	Y200-040011				.SEAL-ROD	1			
K6	Y180-040020				.RING-BACK UP	1			
K7	Y120-040011				.WIPER-DUST	1			
K8	S632-070004				.O-RING	1			
9	S642-070003				.RING-BACK UP	1			
K10	S632-075004				.O-RING	1			
11	31Y2-04741				.PISTON	1			
K12	Y410-075000				.SEAL-PISTON	1			
K13	S631-040004				.O-RING	1			
14	31YC-65220				.NUT	1			
15	S731-030025				.BUSHING-DU	2			
16	S731-030040				.BUSHING-DU	2			
17	S651-810002				.NIPPLE-GREASE	1			
18	S652-810002				.NIPPLE-GREASE	1			
K	31Y2-04751				SEAL KIT	1			SEE ILLUST

MP BUCKET CYLINDER(4 IN 1)

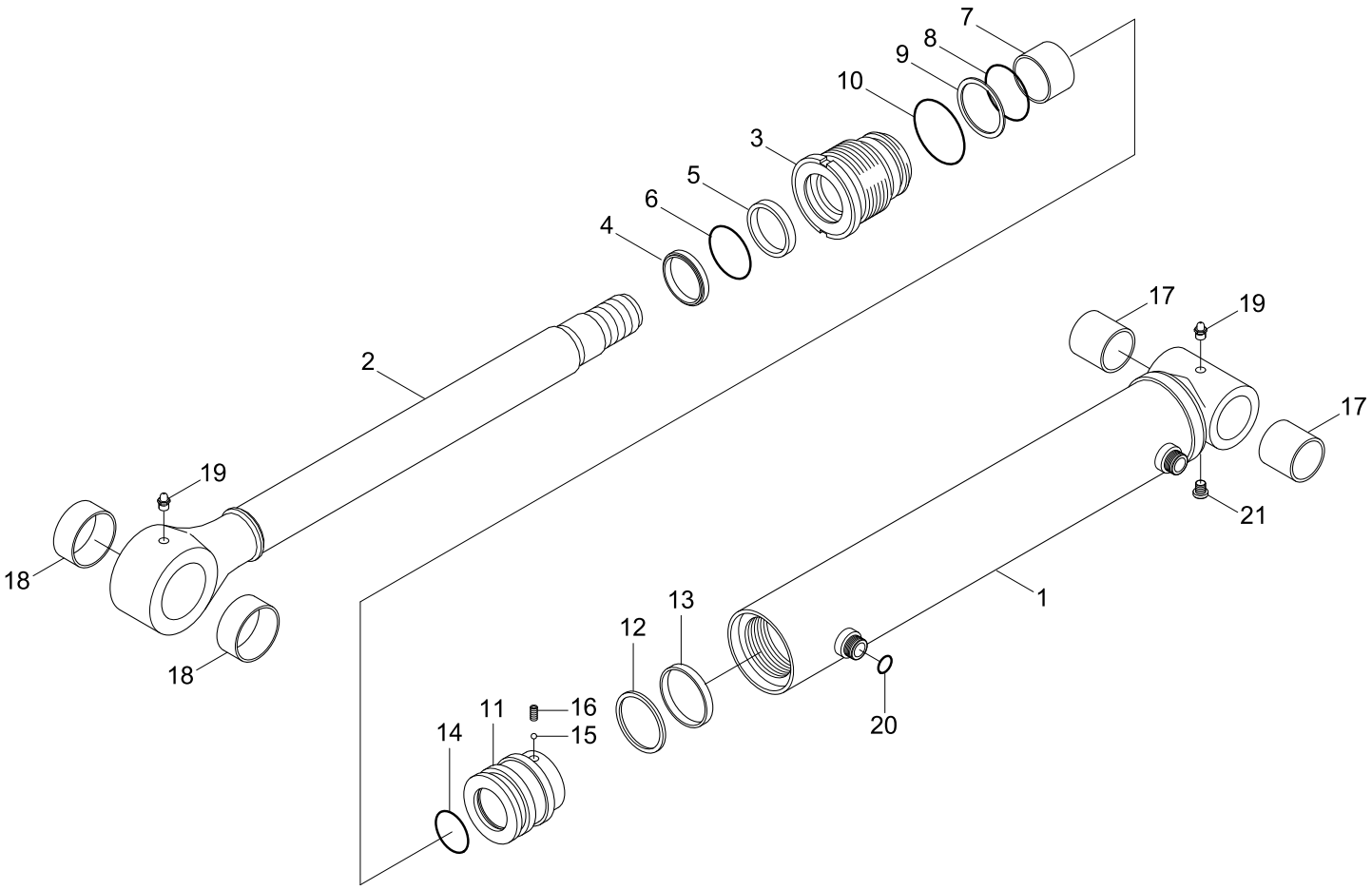

Description	Parts no	Included item
Bucket cylinder seal kit	XKCC-00365	4~6, 8~10, 12~14, 20

Item	Part_No	IS	Ord	T	Description	Qty	Serial_No	ITC	Remark
*	61S7-07010				CYLINDER ASSY-LH	1			
	61S7-07020				CYLINDER ASSY-RH	1			
1	XKCC-00348				.TUBE ASSY	1			
2	XKCC-00366				.ROD ASSY	1			
3	31Y2-10010				.GLAND	1			
K4	5564-40400				.WIPER-DUST	1			
K5	5563-10400				.SEAL-ROD	1			
K6	XKCC-00116				.BACK UP RING	1			
7	XKCC-00114				.DU BUSH	1			
K8	XKCC-00120				.O-RING	1			
K9	XKCC-00121				.RING-BACK UP	1			
K10	XKCC-00122				.O-RING	1			
11	XKCC-00357				.PISTON	1			
K12	XKCC-00358				.PISTON SEAL	1			
K13	XKCC-00359				.WEAR RING	1			
K14	XKCC-00360				.O-RING	1			
15	XKCC-00361				.STEEL BALL	1			
16	XKCC-00362				.SET SCREW	1			
17	XKCC-00363				.DRY BEARING	2			
18	XKCC-00364				.DRY BEARING	2			
19	XKCC-00069				.NIPPLE-GREASE	2			
K20	XKCC-00038				.O-RING	2			
21	XKCD-00960				.DUST CAP	1			
K	XKCC-00365				SEAL KIT	1			SEE ILLUST

POWER TRAIN

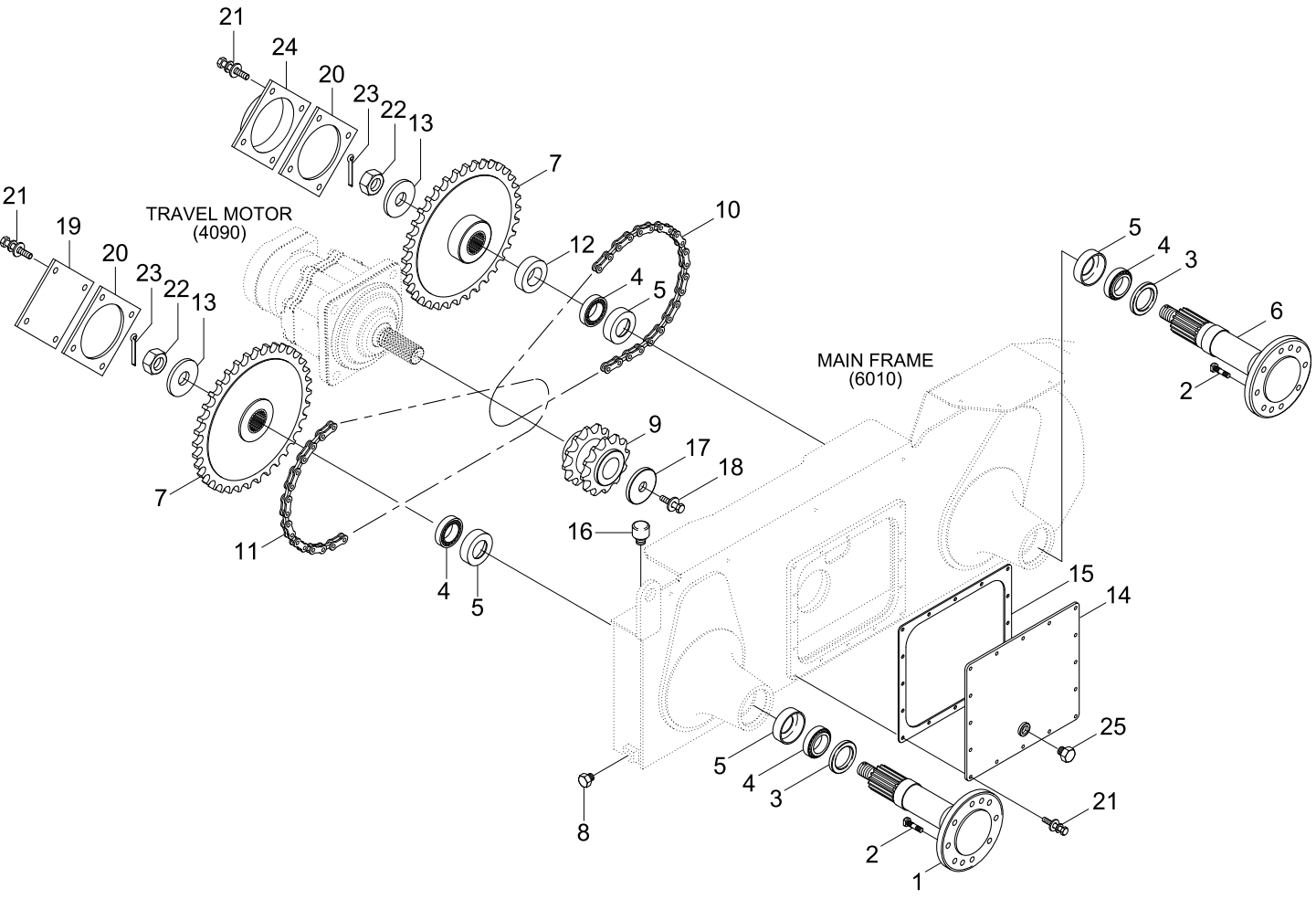
21
24
20
23
22
13
7
21
19
20
23
22
13
TRAVEL MOTOR
(4090)
12
10
4
5
MAIN FRAME
(6010)
5
4
3
6
2
9
17
18
7
16
11
4
5
15
14
25
5
4
3
21
8
2
1

Item	Part_No	IS	Ord	T	Description	Qty	Serial_No	ITC	Remark
1	81S5-20022HN				AXLE SHAFT-FRONT	2			
2	81S5-20031				BOLT-WHEEL	32			
3	81S5-20040				SEAL	4			
4	81S5-20051				BEARING-T/ROLLER	8			
N5	81S5-20061				CUP-T/R BEARING	8			NOT
6	81S5-20072HN				AXLE SHAFT-REAR	2			
7	81S7-10010				SPROCKET-FRONT	4			
8	81S1-2015				PLUG-HEX	4			
9	81S7-21030				SPROCKET-CENTER	2			
10	81S7-26010				CHAIN ASSY(56LINK)	2			
10-1	YUAE-00001				.CONNECTING LINK KIT	1			NOT SHOWN
11	81S5-20120				CHAIN ASSY(58LINK)	2			
11-1	YUAE-00001				.CONNECTING LINK KIT	1			NOT SHOWN
12	81S5-20131				SPACER-REAR SPROCKET	2			
13	81S5-20140				WASHER	4			
14	81S7-21010				COVER WA	2	- #0040		
	81S7-21011				COVER WA	2	#0041 -	A	
15	81S8-20070				GASKET	2			
16	81FA-32300				AIR BREATHER	2			
17	81S8-20080				WASHER-SPECIAL	2			
18	S037-123056				BOLT-W/WASHER	2			
19	81S1-2023				COVER	2			
20	81S1-2029				GASKET	4			
21	S035-082026				BOLT-W/WASHER	48			
22	S226-36000B				NUT-SLOTTED	4			
23	S461-500502				PIN-SPLIT	4			

Item	Part_No	IS	Ord	T	Description	Qty	Serial_No	ITC	Remark
24	81S7-21020				COVER WA	2			
25	81S1-2015				PLUG-HEX	2			

WHEEL & TIRE

STD(12x16.5-12PR)

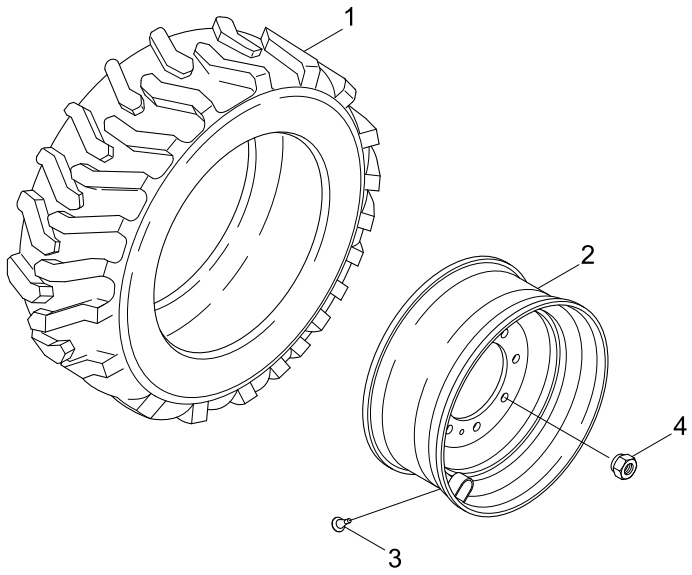

OPT(8025x16-16PR)

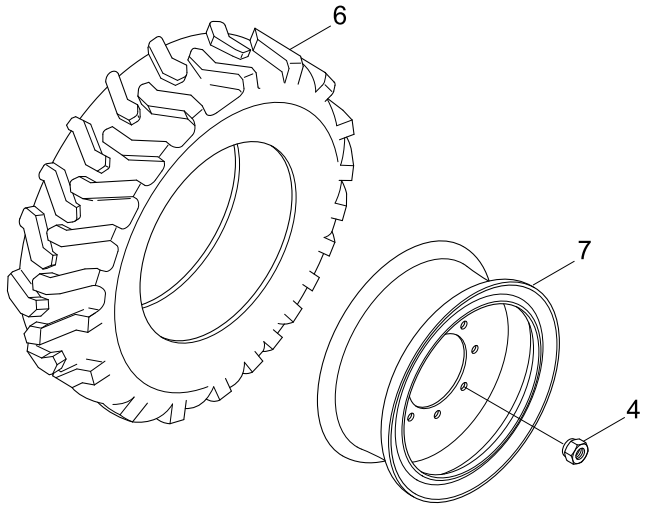

OPT(CUSHION TIRE, 8.25x15)

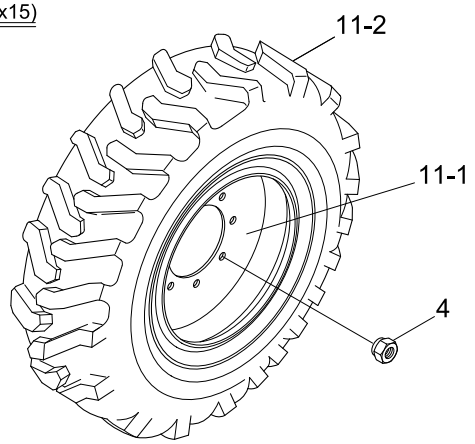

Item	Part_No	IS	Ord	T	Description	Qty	Serial_No	ITC	Remark
*	80S7-40100				WHEEL & TIRE	4			
1	81M5-00070				.TIRE(12X16.5-12PR)	4			
2	81S5-40031				.WHEEL RIM	4			
3	81S1-4004				.VALVE-RIM	4			
4	81S5-40040-DA				.NUT-WHEEL	32			
*	80S7-40300				WHEEL & TIRE	1			
6	82S4-42020				.TIRE SUB(8.25X16-16PR)	4			
6-1	82S4-42040				..TIRE	1			
6-2	82S4-42050				..TUBE & VALVE	1			
6-3	82S4-42060				..FLAP	1			
7	82S5-42030				.WHEEL RIM	4			
4	81S5-40040				.NUT-WHEEL	32			
*	80S7-40400				WHEEL & TIRE	4			
11	82S5-42100				.WHEEL & TIRE ASSY	4			
11-1	82S5-42090				..WHEEL RIM ASSY	1			
11-2	J05896400				..CUSHION TIRE(8.25X15)	1			
4	81S5-40040				.NUT-WHEEL	32			

MAIN FRAME & REAR DOOR

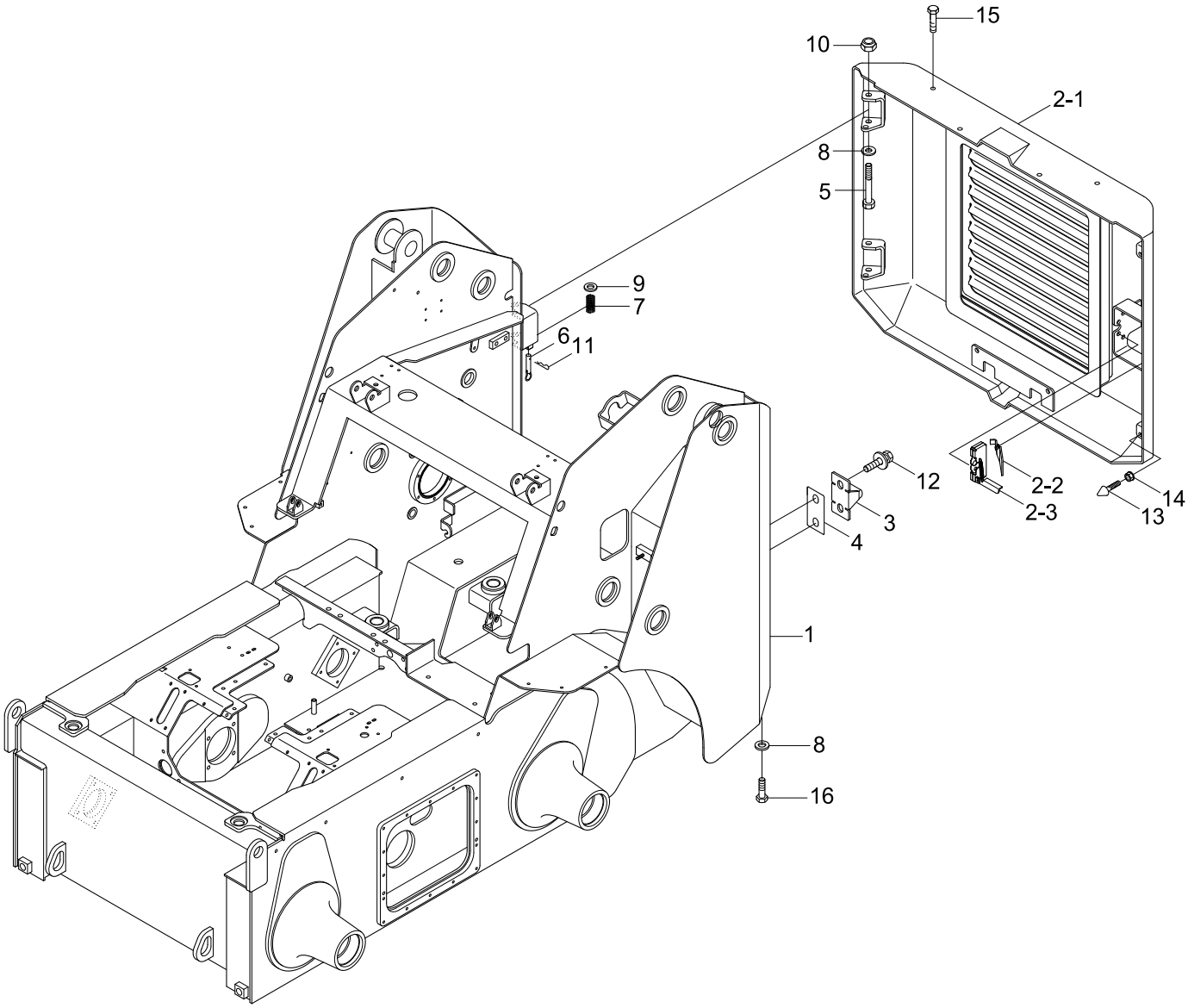

Item	Part_No	IS	Ord	T	Description	Qty	Serial_No	ITC	Remark
1	41S7-10011				MAIN FRAME WA	1			
2	71S7-52012				REAR DOOR ASSY	1			
2-1	71S7-52102				.REAR DOOR WA	1			
2-2	71S7-50131				.LOCK ASSY	1			
2-3	71LF-80300				.LATCH ASSY	1			
3	71S7-50021				STRIKER WA	1			
4	71S7-50030				SHIM	1			
5	71S7-50040-DA				BOLT-HINGE	2			
6	FBC0900600				LOCK PIN	1			
7	FBC0900610-01				SPRING	1			
8	S441-160006				WASHER-HARDENED	4			
9	S403-122006				WASHER-PLAIN	1			
10	S275-160006				NUT-SELF LOCKING	2			
11	S501-120006				PIN-SELF LOCKING	1			
12	S037-123556				BOLT-W/WASHER	2			
13	E171-1178				RUBBER-BUMPER	2			
14	S285-101006				NUT-FLANGED	2			
15	S017-160406				BOLT-HEX	2			
16	S017-120206				BOLT-HEX	2			
17	71S7-52200				PROTECTOR-REAR	1	#0200 -	-	OPT, GRILL
18	S037-123056				BOLT-W/WASHER	6	#0200 -	-	OPT, GRILL

ENGINE COVER

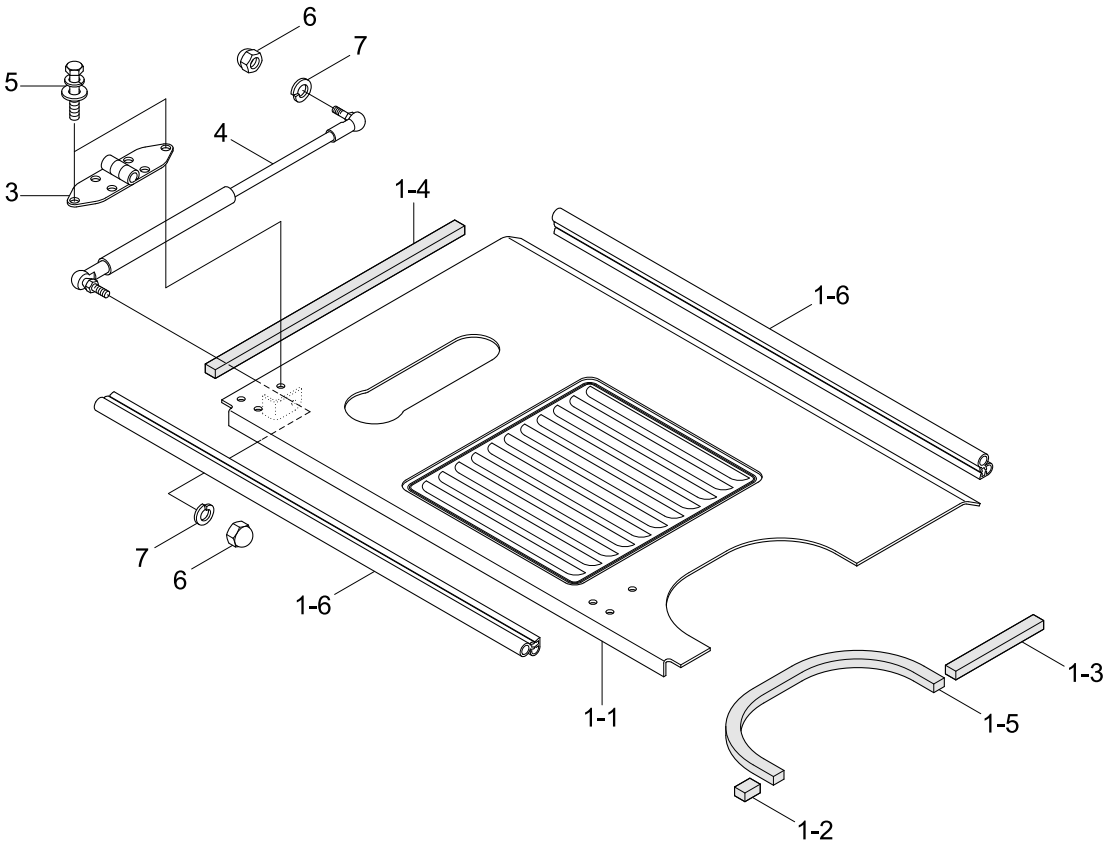

WITHOUT PRECLEANER

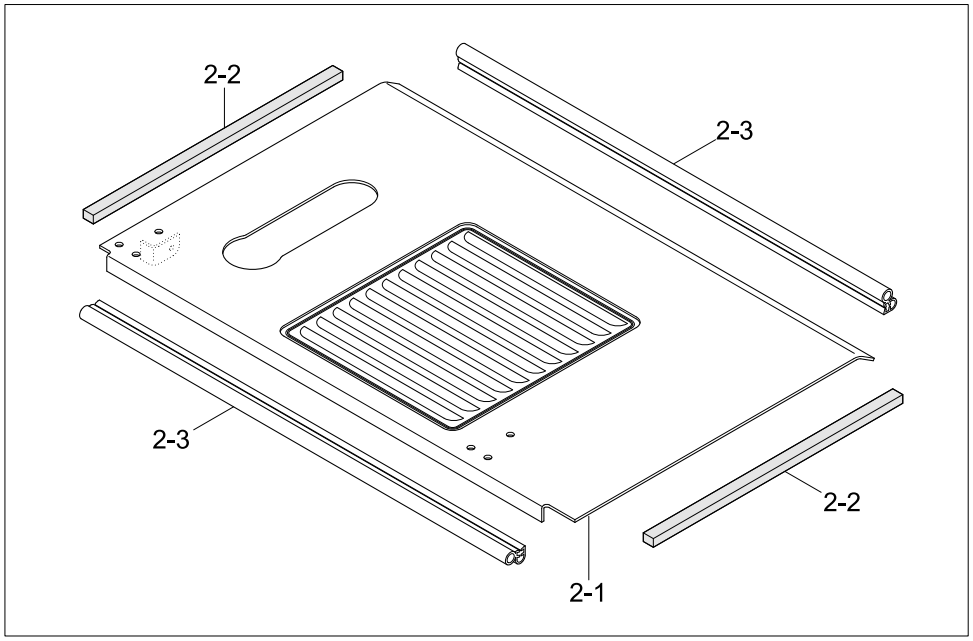

Item	Part_No	IS	Ord	T	Description	Qty	Serial_No	ITC	Remark
1	71S7-40310				COVER ASSY	1	- #0011		PRECLEANER
	71S7-40311				COVER ASSY	1	#0012 -	B	PRECLEANER
1-1	71S7-43110				.COVER WA	1	- #0011		
	71S7-43111				.COVER WA	1	#0012 -	B	
1-2	71S7-40060				.RUBBER PAD	1			
1-3	71S7-40070				.RUBBER PAD	1			
1-4	71S7-41080				.RUBBER PAD	1			
1-5	71S7-40091				.RUBBER PAD	1			
1-6	S771-007850				.WEATHER STRIP	2			
2	71S7-40320				COVER ASSY	1	- #0011		W/O PRECLEANER
	71S7-40321				COVER ASSY	1	#0012 -	B	W/O PRECLEANER
2-1	71S7-43210				.COVER WA	1	- #0011		
	71S7-43211				.COVER WA	1	#0012 -	B	
2-2	71S7-41080				.RUBBER PAD	2			
2-3	S771-007890				.WEATHER STRIP	2			
3	41S1-2018				HINGE	2			
4	41S5-20350				GAS SPRING ASSY	1			
5	S035-082026				BOLT-W/WASHER	12			
6	S295-080006				CAP NUT-DOMED	2			
7	S411-080006				WASHER-SPRING	2			
8	71S7-44910				PLATE-LICENSE	1	#0012 -	-	
9	S285-08100B				NUT-FLANGED	2	#0012 -	-	

FENDER & MIRROR

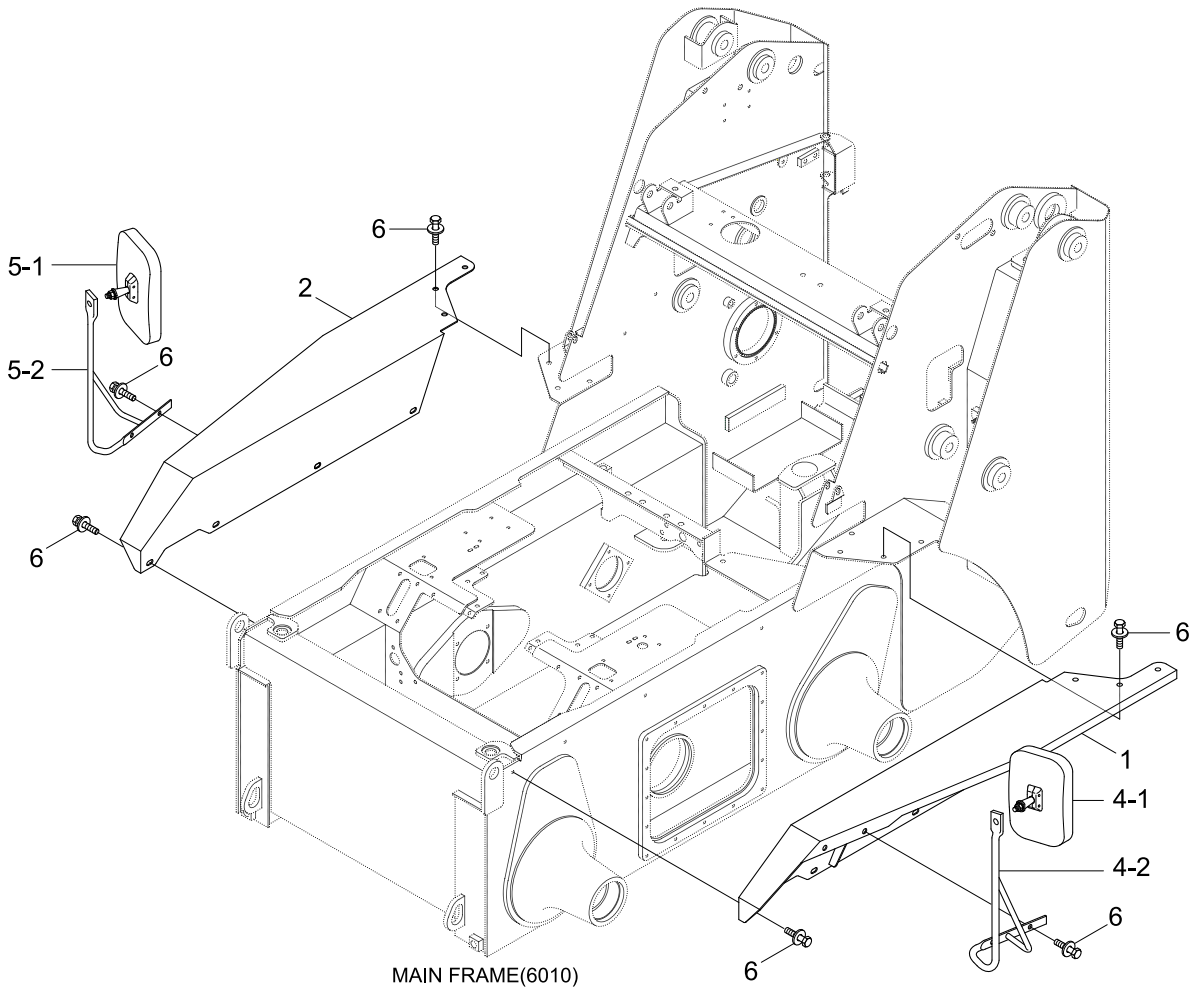

Item	Part_No	IS	Ord	T	Description	Qty	Serial_No	ITC	Remark
1	71S7-60011				FENDER-LH	1			
2	71S7-60021				FENDER-RH	1			
4	71S7-60110				MIRROR ASSY-LH	1			
4-1	71FG-30220				.MIRROR-BACK	1			
4-2	71S7-60130				.STAY WA-LH	1			
5	71S7-60120				MIRROR ASSY-RH	1			
5-1	71FG-30220				.MIRROR-BACK	1			
5-2	71S7-60140				.STAY WA-RH	1			
6	S037-102556				BOLT-W/WASHER	18			

CAB & CANOPY 1

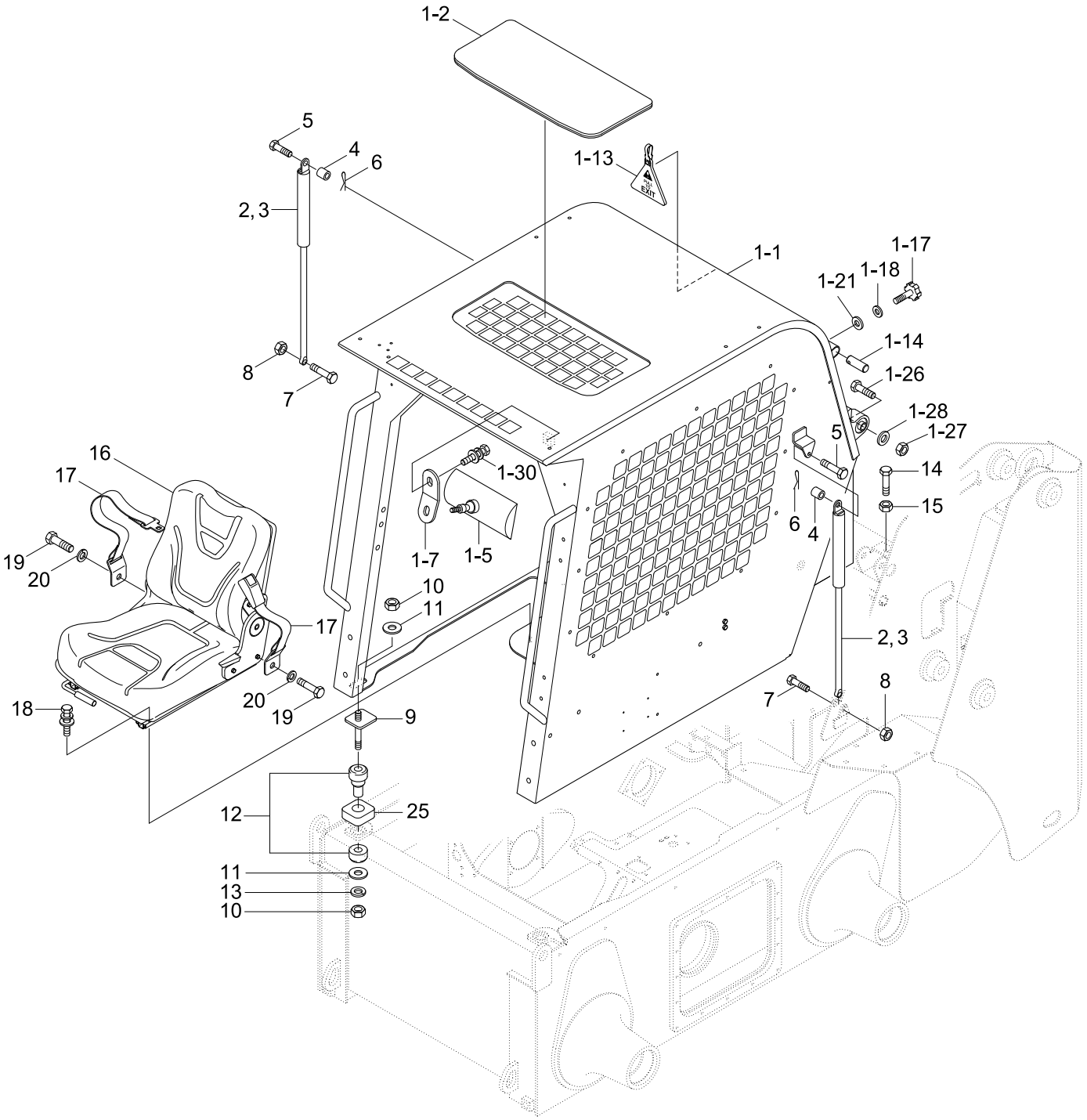

MAIN FRAME
(6010)

Item	Part_No	IS	Ord	T	Description	Qty	Serial_No	ITC	Remark
1	71S8-10112				CAB ASSY	1	- #0130		CAB(6050~80)
	71S8-10113				CABIN ASSY	1	#0131 - #0163	B	CAB(6050~80)
	71S8-10114				CABIN ASSY	1	#0164 - #0185	B	CAB(6050~80)
	71S8-10115				CABIN ASSY	1	#0186 -	B	CAB(6050~80)
	71S8-10212				CANOPY ASSY	1	- #0130		CANOPY(6050)
	71S8-10213				CANOPY ASSY	1	#0131 - #0163	B	CANOPY(6050)
	71S8-10214				CANOPY ASSY	1	#0164 -	B	CANOPY(6050)
1-1	71S8-10221				.CANOPY WA	1	- #0130		
	71S8-10222				.CANOPY WA	1	#0131 -	B	
1-2	71S7-00692				.COVER(PC)	1			
1-5	71L1-3377				.MIRROR-ROOM	1			
1-7	71S4-10870				.BRACKET	1			
1-13	71S4-10670				.TAG-EXIT	1			
1-14	71S4-10700				.PIN-LOCK	1			
1-17	61S1-1008				.BOLT ASSY-SPECIAL	1			
1-18	61S1-1036				.PACKING-RUBBER	1			
1-21	S403-08200B				.WASHER-PLAIN	1			
1-26	S017-18105D				.BOLT-HEX	2			
1-27	S275-18000B				.NUT-SELF LOCKING	2			
1-28	S403-182006				.WASHER-PLAIN	2			
1-30	S033-081526				.BOLT-W/WASHER	1			
2	71S4-10530				GAS SPRING-LOCK TYPE	1			CANOPY
3	71S4-10540				GAS SPRING-NON LOCK	1			CANOPY
	71S4-20571				GAS SPRING	2			CAB
4	71S4-10710				SPACER	2			CANOPY
	72S4-10710				NYLON BUSH	2			CAB

Item	Part_No	IS	Ord	T	Description	Qty	Serial_No	ITC	Remark
5	11S4-30060				BOLT-SPECIAL	2			
6	S501-080006				PIN-SELF LOCKING	2			
7	S017-100506				BOLT-HEX	2			
8	S275-10000B				NUT-SELF LOCKING	2			
9	71S4-10581				SUPPORT WA-BOLT	2			
10	S205-12100B				NUT-HEX	4			
11	11S1-3017				WASHER-SPECIAL	4			
12	11S1-3016				RUBBER-MOUNT	2			
13	S411-120006				WASHER-SPRING	2			
14	S017-16055D				BOLT-HEX	2			
15	S205-16300B				NUT-HEX	2			
16	71S4-10501				SEAT ASSY-SEARS/2"	1			
	72S4-10500				SEAT ASY-WITHOUT BELT	1			KOREA ONLY
	71S7-10500				SEAT ASSY-SEARS/3"	1			
	71S7-10510				SEAT ASSY-WOO/2"	1			KOREA ONLY
	71S8-10500				SEAT ASSY-SUSPENSION/2"	1	#0131 -	-	EXPORT ONLY
17	71S4-10760				SEAT BELT	1			
18	S105-080156				BOLT-SOCKET	4			
19	S087-080206				BOLT-HEX,UNIFIED	2			
20	S441-12000B				WASHER-HARDENED	2			
21	71S8-10500				SEAT ASSY-SUSPENSION/2"	1	#0131 -	-	EXPORT ONLY
25	71S7-00950				RUBBER PAD	2			CAB

CAB & CANOPY 1(LOWER CAB)

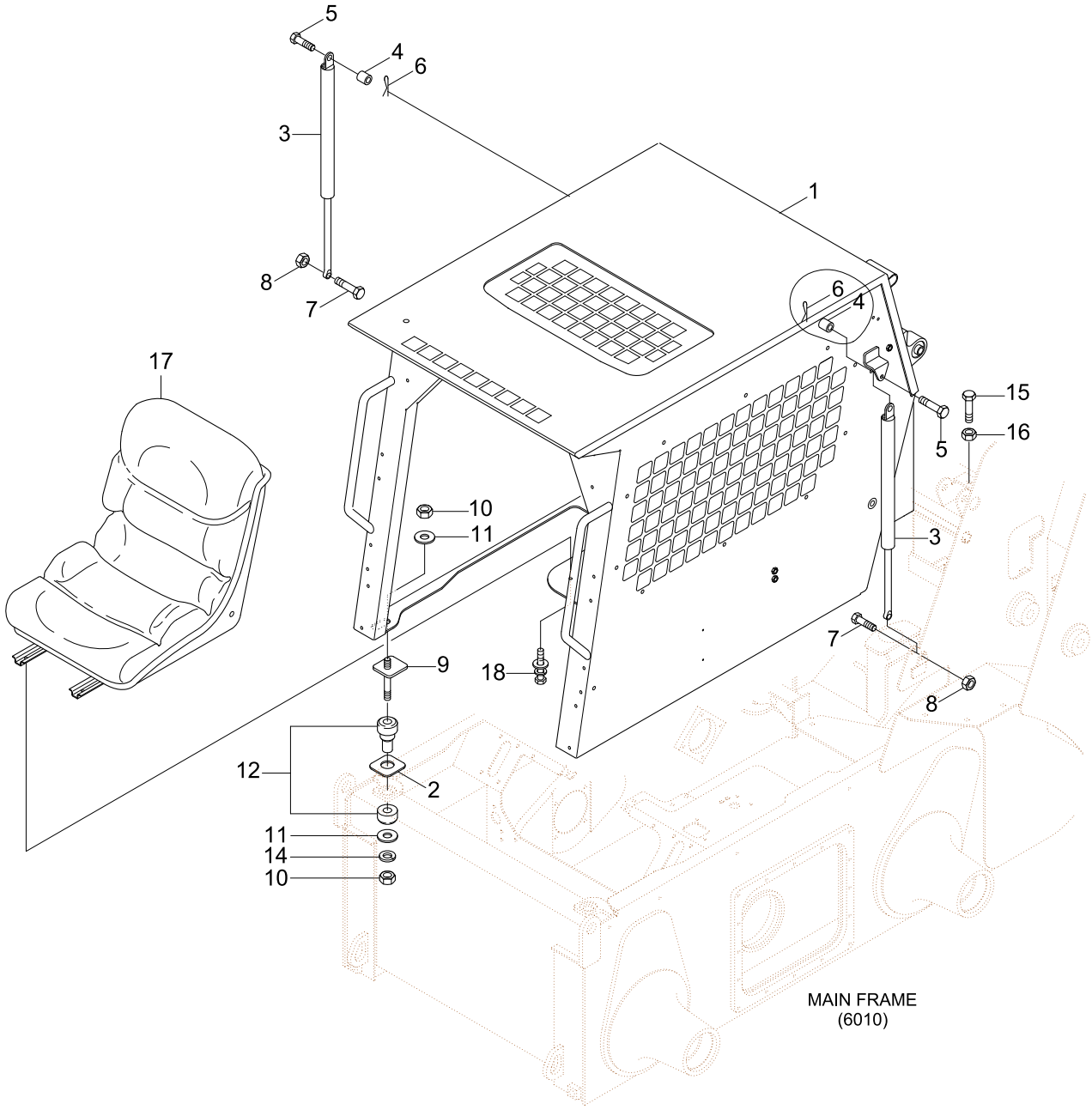

Item	Part_No	IS	Ord	T	Description	Qty	Serial_No	ITC	Remark
1	72S8-00400				CABIN ASSY	1			
2	71S7-00950				RUBBER PAD	2			
3	71S4-20571				GAS SPRING	2			
4	72S4-10710				NYLON BUSH	2			
5	11S4-30060				BOLT-SPECIAL	2			
6	S501-080006				PIN-SELF LOCKING	2			
7	S017-100506				BOLT-HEX	2			
8	S275-10000B				NUT-SELF LOCKING	2			
9	71S4-10581				SUPPORT WA-BOLT	2			
10	S205-12100B				NUT-HEX	4			
11	11S1-3017				WASHER-SPECIAL	4			
12	11S1-3016				RUBBER-MOUNT	2			
14	S411-120006				WASHER-SPRING	2			
15	S017-16055D				BOLT-HEX	2			
16	S205-16300B				NUT-HEX	2			
17	71S7-20410				SEAT ASSY-NONRAIL	1			
18	S132-083526				SCREW-W/WASHER	4			

CAB & CANOPY 2

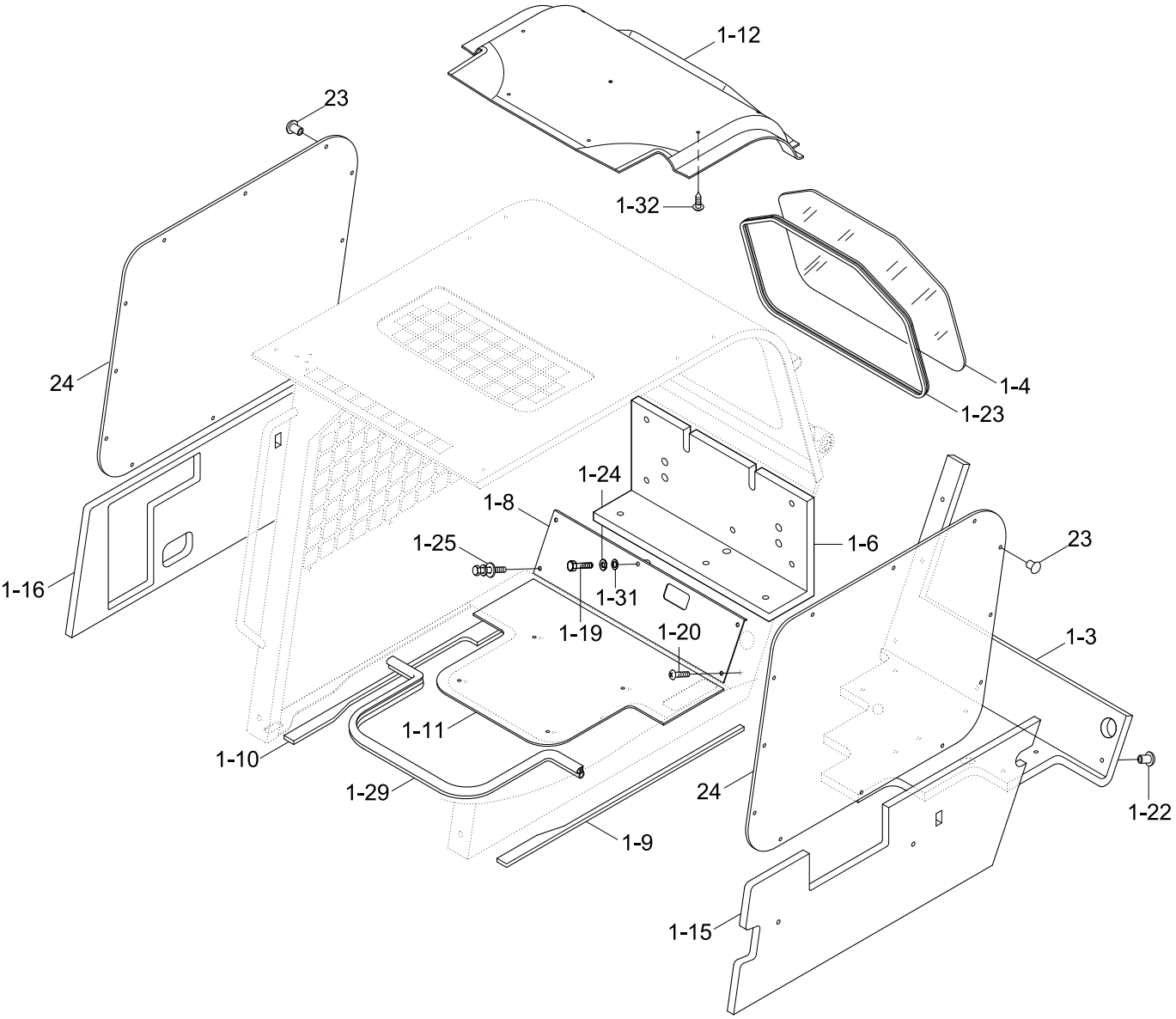
1-12
23
1-32
1-4
1-23
24
1-24
1-8
1-25
1-6
23
1-16
1-31
1-19
1-20
1-3
1-11
1-10
1-29
24
1-22
1-9
1-15

Item	Part_No	IS	Ord	T	Description	Qty	Serial_No	ITC	Remark
1	@				CAB ASSY	1			NOT
					CANOPY ASSY	1			NOT
1-3	71S7-00201				.INSULATION	1			
1-4	71S7-00250				.GLASS-REAR	1			
1-6	71S8-10300				.INSULATION	1			CAB
	71S7-00380				.INSULATION-REAR	1			CANOPY
1-8	71S8-10231				.COVER WA	1			
1-9	71S8-10310				.STRIP-LH	1			
1-10	71S7-00230				.STRIP-RH	1			
1-11	71S7-00211				.INSULATION	1			
1-12	71S7-00310				.HEADLINING	1			
1-15	71S8-10290				.INSULATOR-LH	1			
1-16	71S8-10280				.INSULATOR-RH	1			
1-19	S017-080606				.BOLT-HEX	1			
1-20	S161-050256				.SCREW-CROSS R/ROUND	12			
1-22	71EM-51580				.CAP-STUD BOLT	12			
1-23	S781-119702				.SEAL-GLASS	1			
1-24	S411-080006				.WASHER-SPRING	2			
1-25	S035-081526				.BOLT-W/WASHER	8			
1-29	S771-012000				.WEATHER STRIP	1			
1-31	S403-08000B				.WASHER-PLAIN	2			
1-32	E171-1310				.PLUG-HEADLINER	10			
*	@				.ELECTRIC SUB ASSY	1			NOT
23	71S4-10830				RIVET-SCREW	26			CANOPY
24	71S4-10790				ACRYL-SIDE	2			CANOPY

CAB & CANOPY 2(LOWER CAB)

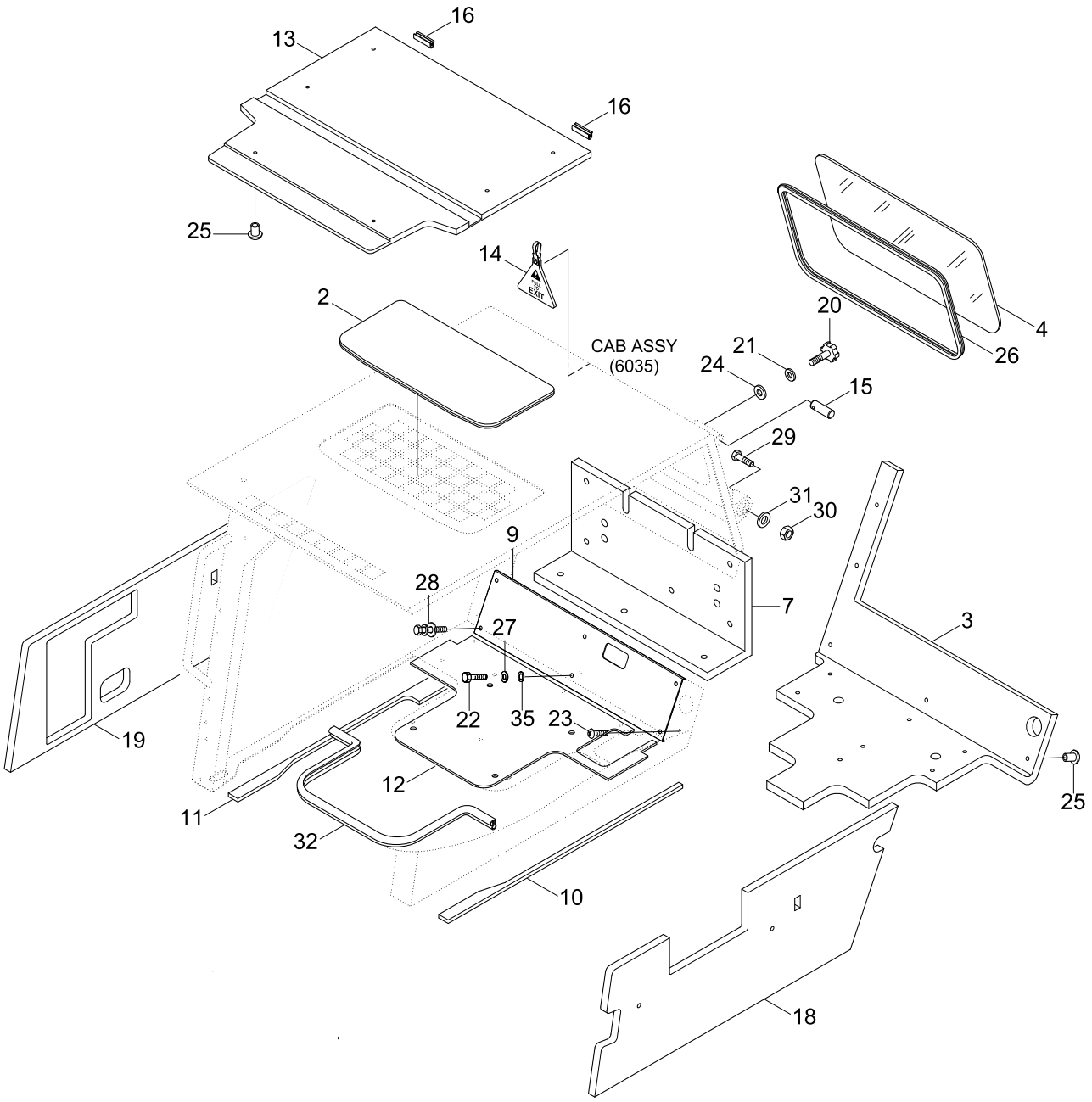

Item	Part_No	IS	Ord	T	Description	Qty	Serial_No	ITC	Remark
2	71S7-00692				COVER(PC)	1			
3	72S8-00220				INSULATION-SEAT UPR	1			
4	72S7-00250				GLASS-REAR	1			
7	71S7-00271				INSULATION-REAR	1			
9	71S8-10231				COVER WA	1			
10	71S8-10310				STRIP-LH	1			
11	71S7-00230				STRIP-RH	1			
12	72S8-00210				INSULATION-SEAT LWR	1			
13	72S7-00310				INSULATOR-ROOF	1			
14	71S4-10670				TAG-EXIT	1			
15	71S4-10700				PIN-LOCK	1			
16	72S7-00200				SEAL	2			
18	71S8-10290				INSULATOR-LH	1			
19	71S8-10280				INSULATOR-RH	1			
20	61S1-1008				BOLT ASSY-SPECIAL	1			
21	61S1-1036				PACKING-RUBBER	1			
22	S017-080606				BOLT-HEX	1			
23	S161-050256				SCREW-CROSS R/ROUND	12			
24	S403-08200B				WASHER-PLAIN	1			
25	71EM-51580				CAP-STUD BOLT	21			
26	S781-114502				SEAL-GLASS	1			
27	S411-080006				WASHER-SPRING	2			
28	S035-081526				BOLT-W/WASHER	8			
29	S017-18105D				BOLT-HEX	2			
30	S275-18000B				NUT-SELF LOCKING	2			
31	S403-182006				WASHER-PLAIN	2			

Item	Part_No	IS	Ord	T	Description	Qty	Serial_No	ITC	Remark
32	S771-012000				WEATHER STRIP	1			
35	S403-08000B				WASHER-PLAIN	2			

CAB SIDE DOOR

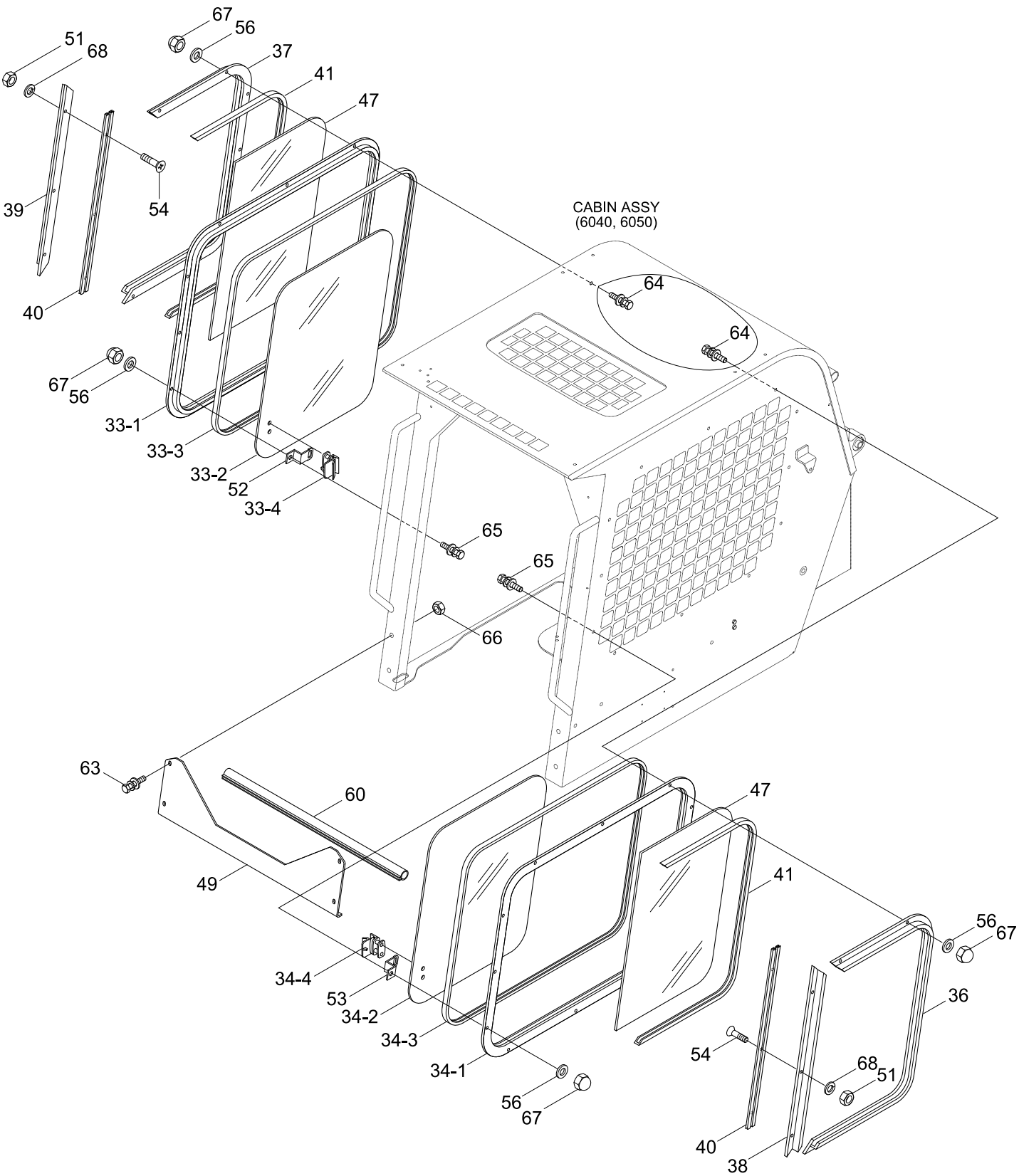

Item	Part_No	IS	Ord	T	Description	Qty	Serial_No	ITC	Remark
*	@				CAB ASSY	1			NOT
33	71S7-00750				.SIDE DOOR SUB ASSY-RH	1			
33-1	71S4-20100				..SASH-RH	1			
33-2	71S7-00770				..GLASS-SIDE	1			
33-3	71S4-20240				..SEAL	1			
33-4	71E1-5226				..LOCK ASSY	1			
34	71S7-00760				.SIDE DOOR SUB ASSY-LH	1			
34-1	71S4-20200				..SASH-LH	1			
34-2	71S7-00770				..GLASS-SIDE	1			
34-3	71S4-20240				..SEAL	1			
34-4	71E1-5226				..LOCK ASSY	1			
36	71S4-20040				.SASH-LH	1	- #0185		
	71S4-20041				.SASH-LH	1	#0186 -	B	
37	71S4-20050				.SASH-RH	1	- #0185		
	71S4-20051				.SASH-RH	1	#0186 -	B	
38	71S4-20060				.SASH-LH	1			
39	71S4-20070				.SASH-RH	1			
40	71S7-01010				.SASH-WITH SEAL	2			
41	71S4-20090				.SEAL	1			
47	71S4-20160				.GLASS-SIDE	2			
49	71S7-00350				.SHIELD-FRONT	1			
51	S205-05100B				.NUT-HEX	6			
52	71S4-20530				.HOOK-RH	1			
53	71S4-20540				.HOOK-LH	1			
54	S141-050206				.SCREW-FLAT HD	6			
56	S403-08200B				.WASHER-PLAIN	24			

Item	Part_No	IS	Ord	T	Description	Qty	Serial_No	ITC	Remark
60	S771-008100				.WEATHER STRIP	1			
63	S037-102026				.BOLT-W/WASHER	4			
64	S035-082526				.BOLT-W/WASHER	14			
65	S035-082026				.BOLT-W/WASHER	10			
66	S205-10100B				.NUT-HEX	4			
67	S295-08000B				.CAP NUT-DOMED	24			
68	S411-050006				.WASHER-SPRING	6			

CAB SIDE DOOR(LOWER CAB)

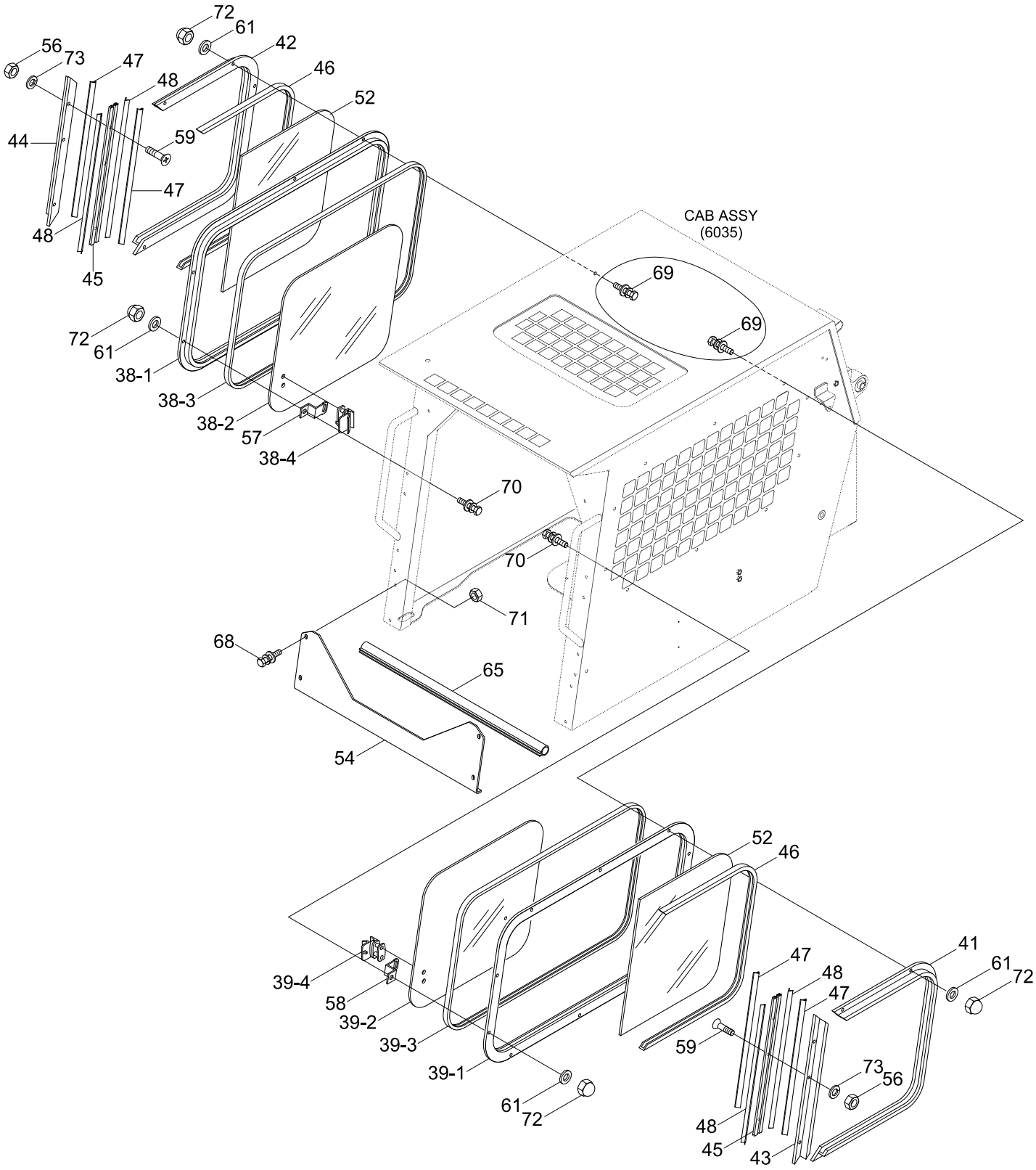

Item	Part_No	IS	Ord	T	Description	Qty	Serial_No	ITC	Remark
38	72S7-00750				SIDE DOOR SUB ASSY-RH	1			
38-1	72S7-20100				.SASH-RH	1			
38-2	72S7-00770				.GLASS-SIDE	1			
38-3	72S7-20240				.SEAL	1			
38-4	71E1-5226				.LOCK ASSY	1			
39	72S7-00760				SIDE DOOR SUB ASSY-LH	1			
39-1	72S7-20200				.SASH-LH	1			
39-2	72S7-00770				.GLASS-SIDE	1			
39-3	72S7-20240				.SEAL	1			
39-4	71E1-5226				.LOCK ASSY	1			
41	72S7-20040				SASH-LH	1			
42	72S7-20050				SASH-RH	1			
43	72S7-20060				SASH-CENTER/LH	1			
44	72S7-20070				SASH-CENTER/RH	1			
45	72S7-20080				SASH-CENTER	2			
46	72S7-20090				SEAL	1			
47	72S7-20110				SEAL	4			
48	72S7-20120				SEAL	4			
52	72S7-20160				GLASS-SIDE	2			
54	71S7-00350				SHIELD-FRONT	1			
56	S205-05100B				NUT-HEX	6			
57	71S4-20530				HOOK-RH	1			
58	71S4-20540				HOOK-LH	1			
59	S141-050206				SCREW-FLAT HD	6			
61	S403-08200B				WASHER-PLAIN	34			
65	S771-008100				WEATHER STRIP	1			

Item	Part_No	IS	Ord	T	Description	Qty	Serial_No	ITC	Remark
68	S037-102026				BOLT-W/WASHER	4			
69	S035-082526				BOLT-W/WASHER	14			
70	S035-082026				BOLT-W/WASHER	10			
71	S205-10100B				NUT-HEX	4			
72	S295-08000B				CAP NUT-DOMED	24			
73	S411-050006				WASHER-SPRING	6			

CAB FRONT 1

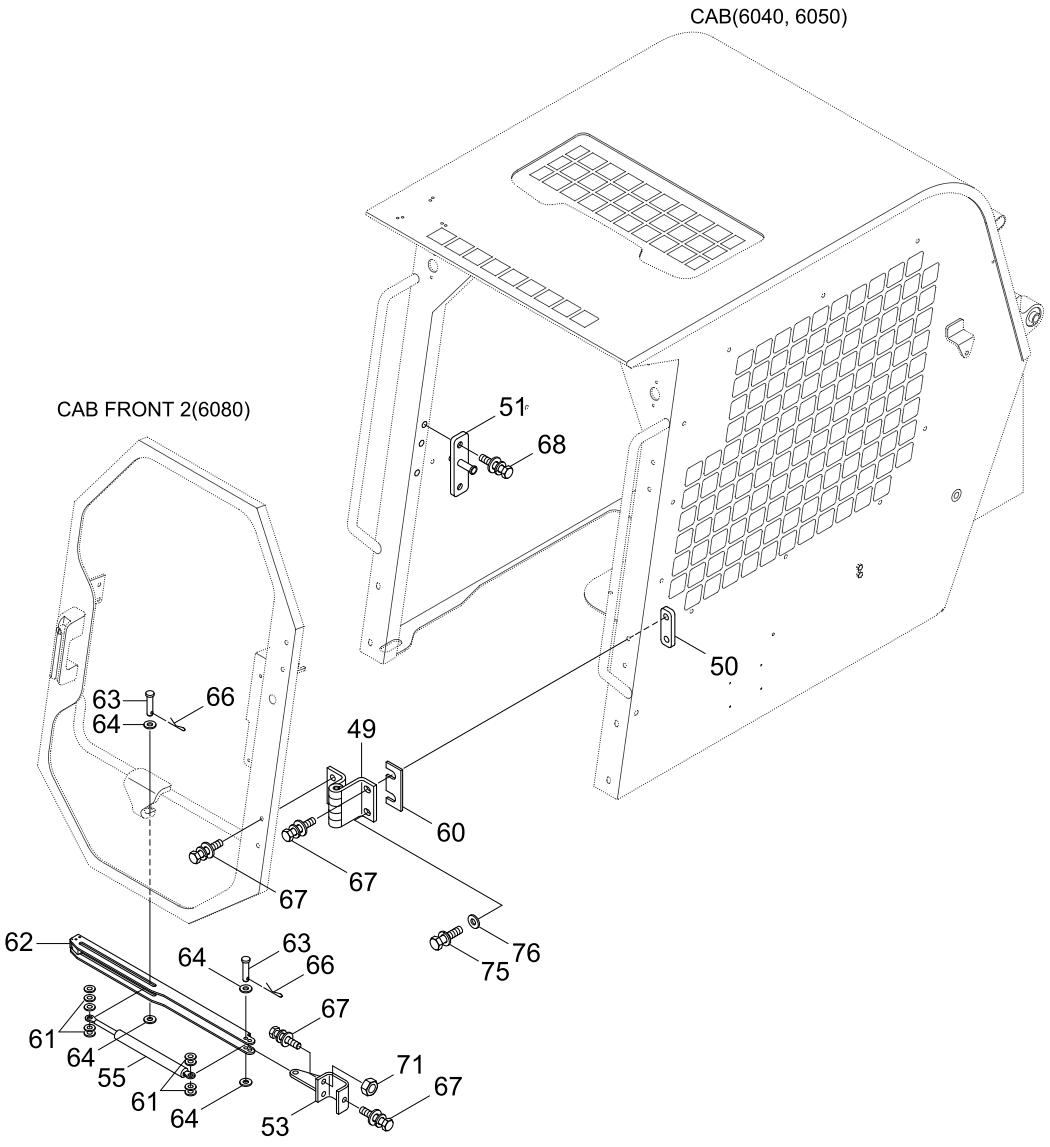
CAB(6040, 6050)
CAB FRONT 2(6080)
51
68
50
63
64
66
49
60
67
67
62
63
64
66
67
61
64
55
61
64
71
67
53
76
75

Item	Part_No	IS	Ord	T	Description	Qty	Serial_No	ITC	Remark
*	@				CAB ASSY	1			NOT
44	71S4-20131				.HINGE	2			
45	71S4-20140				.PLATE-TAP	2			
46	71S4-20150				.BRACKET-DOOR LOCK	1			
48	71S7-00890				.BRACKET-STAY	1			
50	71S7-00900				.GAS SPRING	1			
55	71S4-20580				.SHIM	4			
56	S403-08200B				.WASHER-PLAIN	10			
57	71S7-00910				.STAY ASSY	1			
58	71L7-01681				.PIN	2			
59	71L7-01770				.WASHER-TEFRON	4			
61	S501-100002				.PIN-SELF LOCKING	2			
62	S037-102526				.BOLT-W/WASHER	15			
63	S037-102026				.BOLT-W/WASHER	2			
66	S205-10100B				.NUT-HEX	4			
70	S037-104016				.BOLT-W/WASHER	1			
71	S403-10200B				.WASHER-PLAIN	1			

CAB FRONT 1(LOWER CAB)

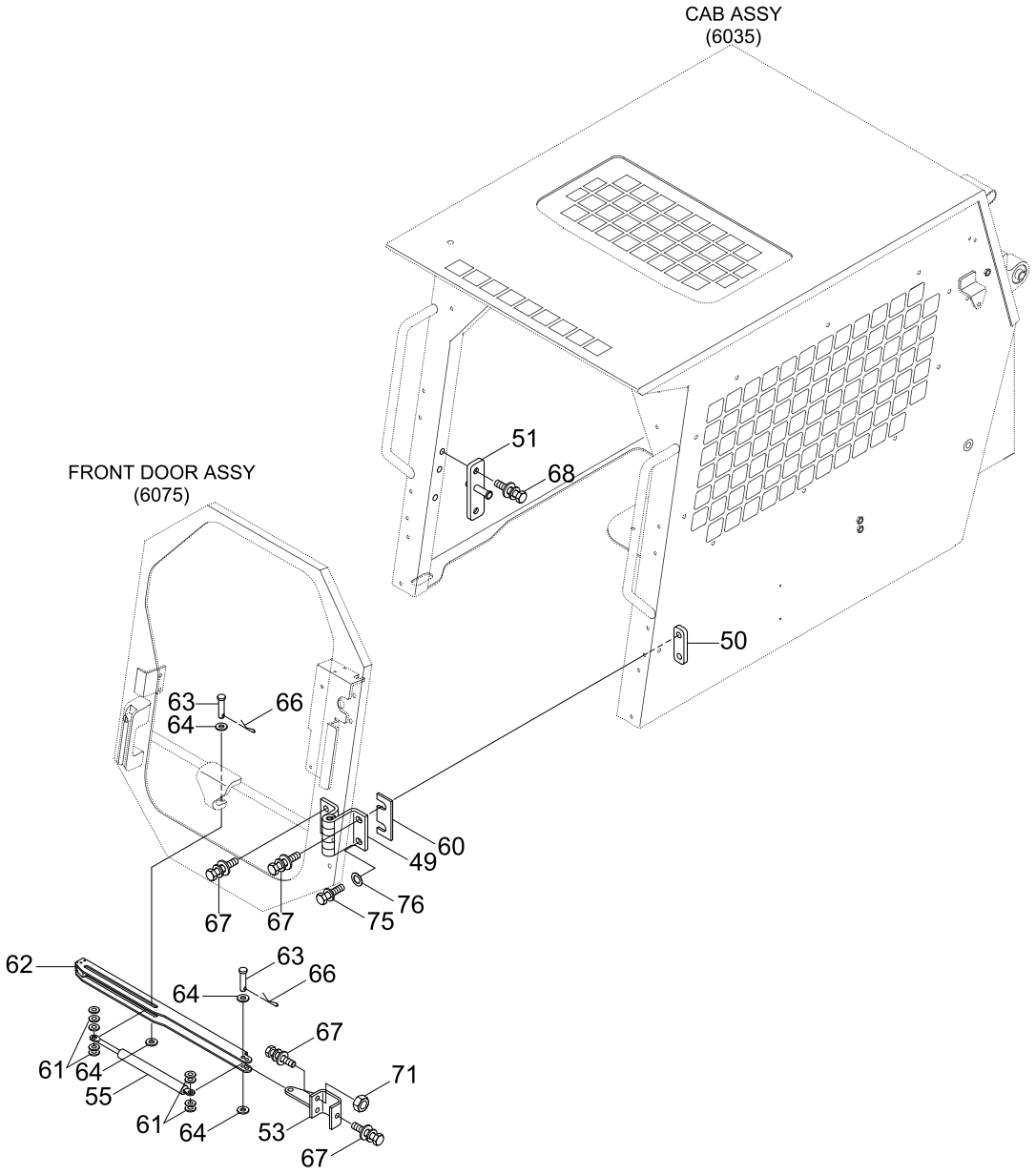

Item	Part_No	IS	Ord	T	Description	Qty	Serial_No	ITC	Remark
49	71S4-20131				HINGE	2			
50	71S4-20140				PLATE-TAP	2			
51	71S4-20150				BRACKET-DOOR LOCK	1			
53	71S7-00890				BRACKET-STAY	1			
55	71S7-00900				GAS SPRING	1			
60	71S4-20580				SHIM	4			
61	S403-08200B				WASHER-PLAIN	10			
62	71S7-00910				STAY ASSY	1			
63	71L7-01681				PIN	2			
64	71L7-01770				WASHER-TEFRON	4			
66	S501-100002				PIN-SELF LOCKING	2			
67	S037-102526				BOLT-W/WASHER	15			
68	S037-102026				BOLT-W/WASHER	2			
71	S205-10100B				NUT-HEX	4			
75	S037-104016				BOLT-W/WASHER	1			
76	S403-10200B				WASHER-PLAIN	1			

CAB FRONT 2

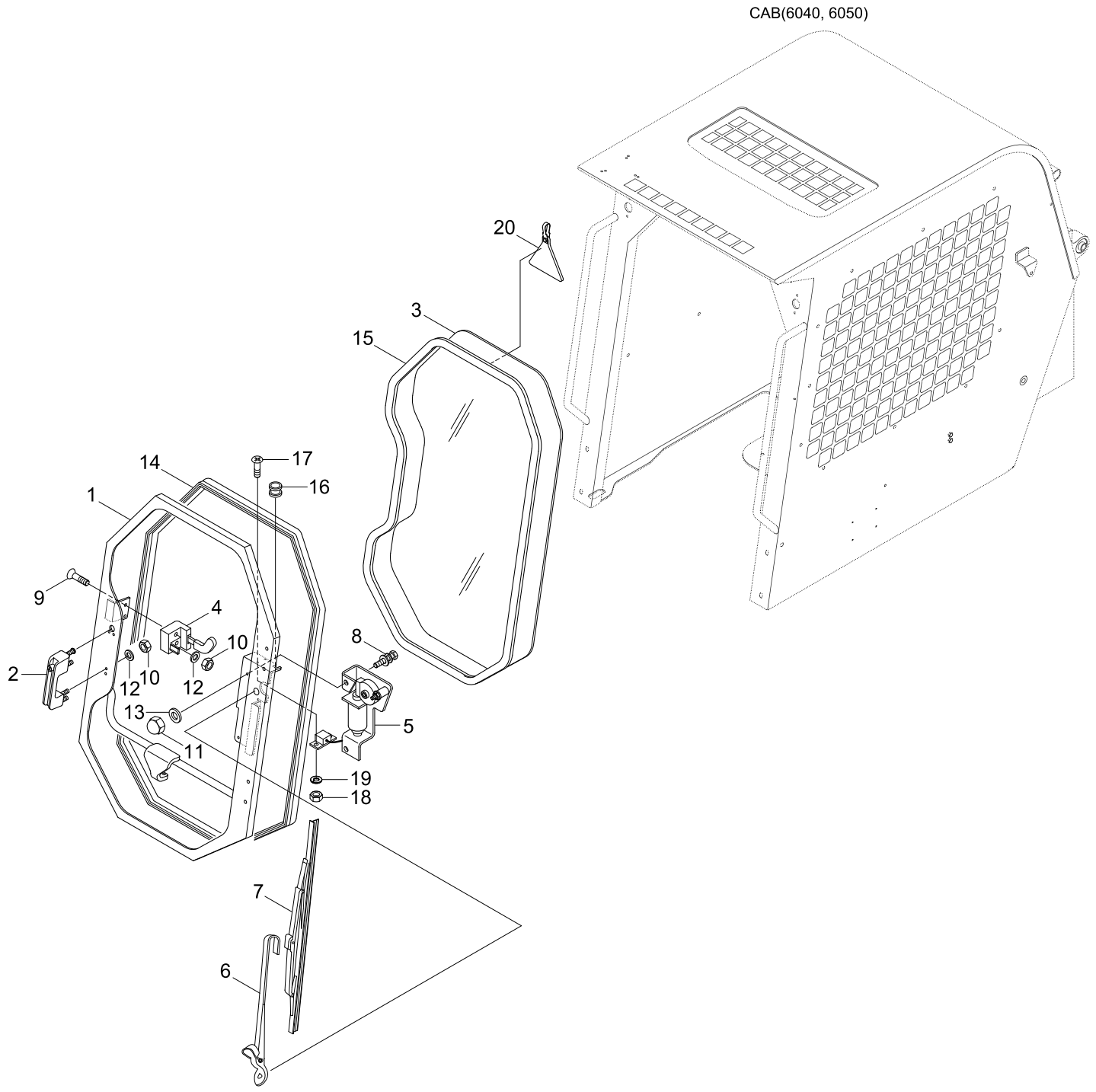

Item	Part_No	IS	Ord	T	Description	Qty	Serial_No	ITC	Remark
*	@				CAB ASSY	1			NOT
*-1	71S7-00320				.FRONT DOOR SUB ASSY	1			
1	71S7-00330				..FRONT DOOR WA	1			
2	71S4-20260				..HANDLE	1			
3	71S7-00360				..GLASS-FRONT	1			
4	72FA-12100				..DOOR LATCH-LH	1			
5	21M5-30310				..MOTOR-WIPER	1			
	21M7-30310				..MOTOR-WIPER	1			
6	21S4-09080				..ARM-WIPER	1			
7	21S4-09090				..BLADE-WIPER	1			
8	S035-081526				..BOLT-W/WASHER	2			
9	S141-060406				..SCREW-FLAT HD	2			
10	S275-06000B				..NUT-SELF LOCKING	2			
11	S295-080002				..CAP NUT-DOMED	2			
12	S403-06200B				..WASHER-PLAIN	2			
13	S411-080006				..WASHER-SPRING	2			
14	S772-031300				..WEATHER STRIP	1			
15	S781-231002				..SEAL-GLASS	1			
16	S681-100400				..GROMMET	1			
17	S151-040106				..SCREW-TAPPING	2			
18	S205-04100B				..NUT-HEX	2			
19	S411-040006				..WASHER-SPRING	2			
20	71S4-10670				..TAG-EXIT	1			

CAB FRONT 2(LOWER CAB)

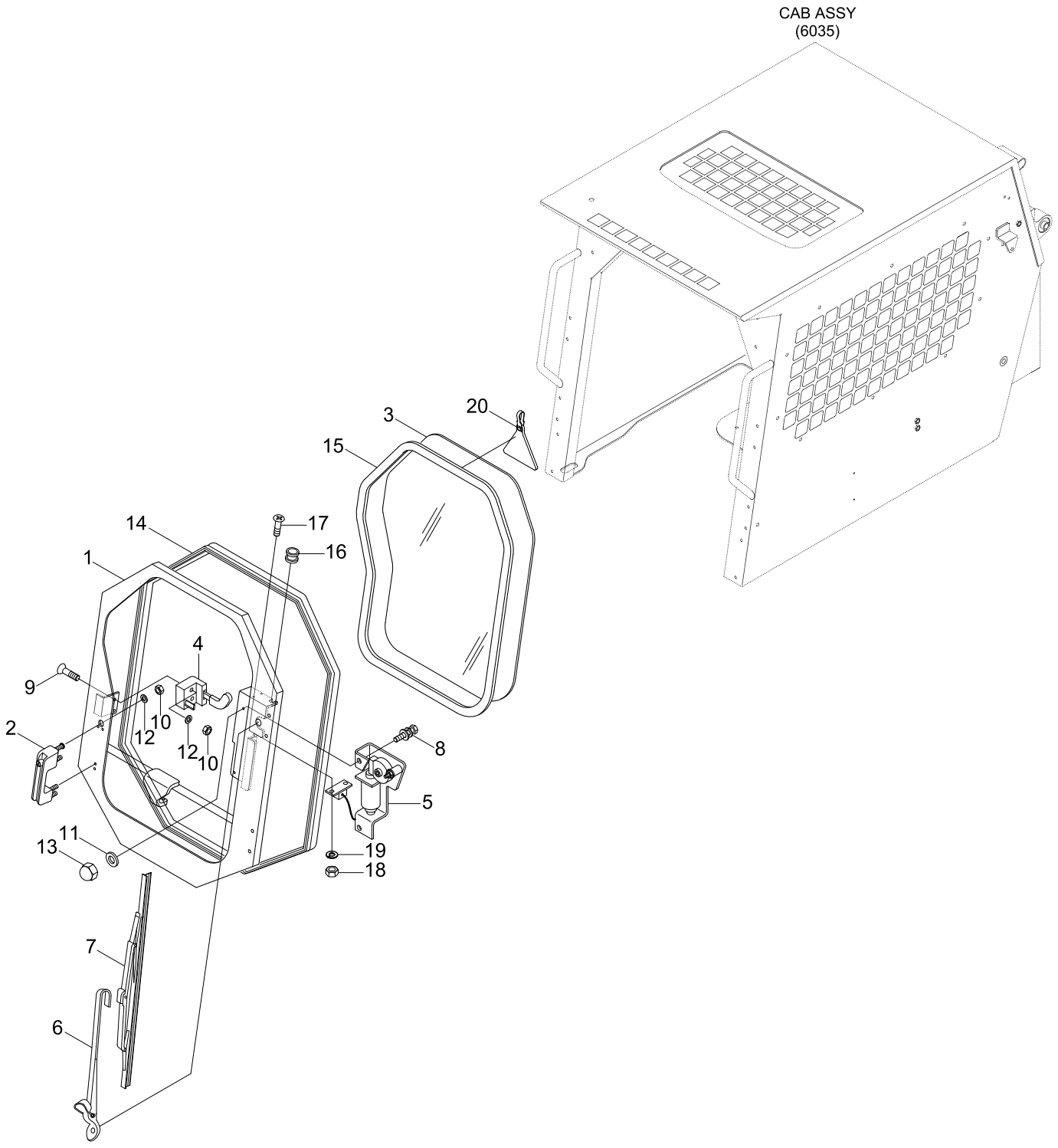

Item	Part_No	IS	Ord	T	Description	Qty	Serial_No	ITC	Remark
*	72S7-00320				FRONT DOOR SUB ASSY	1			
1	72S7-00330				.FRONT DOOR WA	1			
2	71S4-20260				.HANDLE	1			
3	72S7-00360				.GLASS-FRONT	1			
4	72FA-12100				.DOOR LATCH,LH	1			
5	21M7-30310				.MOTOR-WIPER	1			
6	71S1-6018				.WIPER ARM	1			
7	21A1-1004				.BLADE-WIPER	1			
8	S035-081526				.BOLT-W/WASHER	2			
9	S141-060406				.SCREW-FLAT HD	2			
10	S275-06000B				.NUT-SELF LOCKING	2			
11	S295-080002				.CAP NUT-DOMED	2			
12	S403-06200B				.WASHER-PLAIN	2			
13	S411-080006				.WASHER-SPRING	2			
14	S772-028000				.WEATHER STRIP	1			
15	S781-225002				.SEAL-GLASS	1			
16	S681-100400				.GROMMET	1			
17	S151-040106				.SCREW-TAPPING	2			
18	S205-04100B				.NUT-HEX	2			
19	S411-040006				.WASHER-SPRING	2			
20	71S4-10670				.TAG-EXIT	1			

SEAT BAR

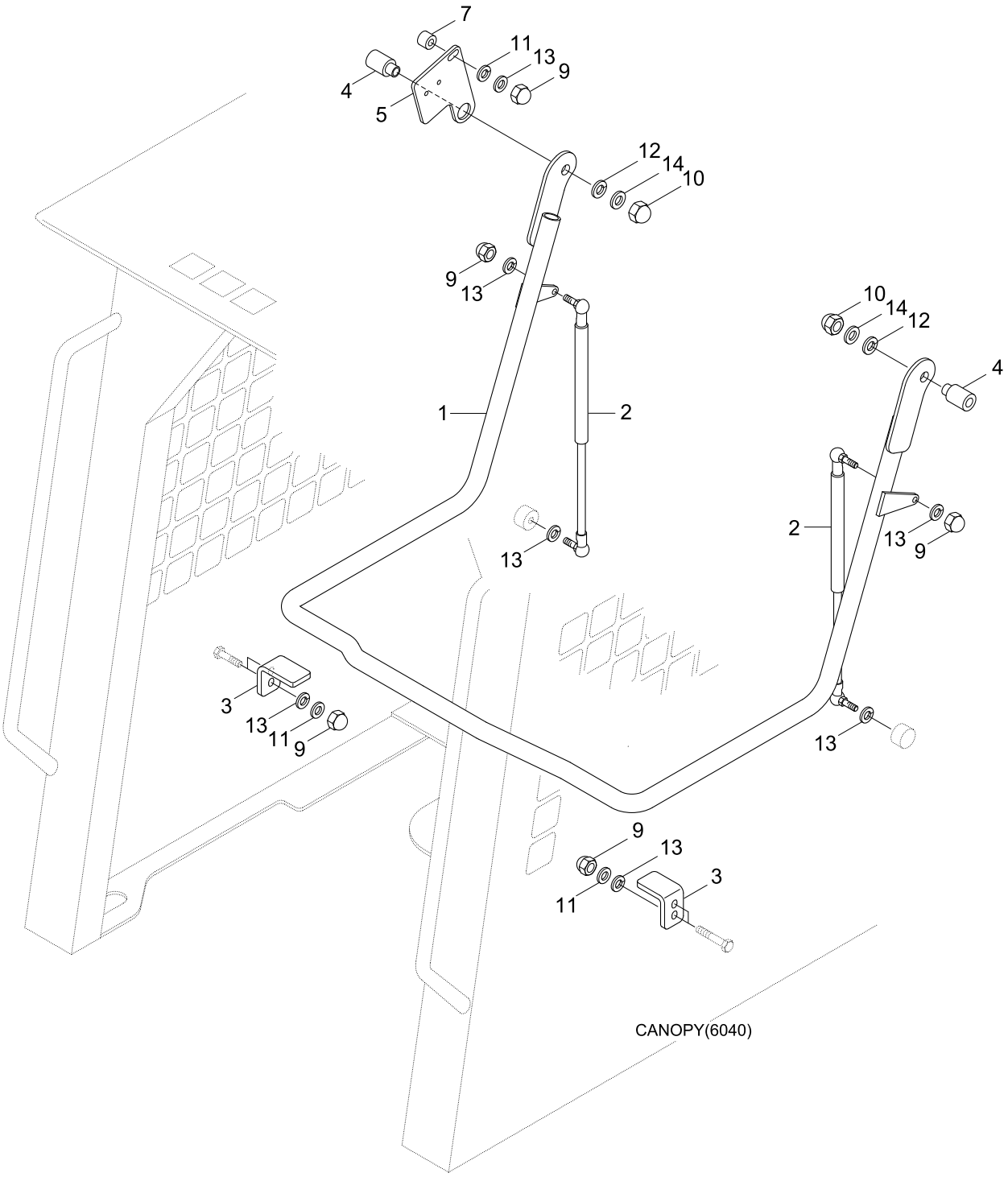
7
11
13
9
4
5
12
14
10
9
13
1
2
13
10
14
12
4
2
13
9
3
13
11
9
13
9
11
3
CANOPY(6040)

Item	Part_No	IS	Ord	T	Description	Qty	Serial_No	ITC	Remark
1	71S7-00400				SEAT BAR ASSY	1			
1-1	71S7-00410				.TUBE-SEAT BAR	1			NOT SHOWN
2	71S4-70031				GAS SPRING	2			
3	71S4-70040				PLATE	2			
4	71S4-70051				SPACER	2			
5	71S7-00420				FLAT-S/W MTG	1			
7	71S4-70080				SPACER	1			
9	S295-080006				CAP NUT-DOMED	7			
10	S295-120006				CAP NUT-DOMED	2			
11	S403-08200B				WASHER-PLAIN	7			
12	S403-12200B				WASHER-PLAIN	2			
13	S411-080006				WASHER-SPRING	9			
14	S411-120006				WASHER-SPRING	2			

GUARD(FOOT REST)

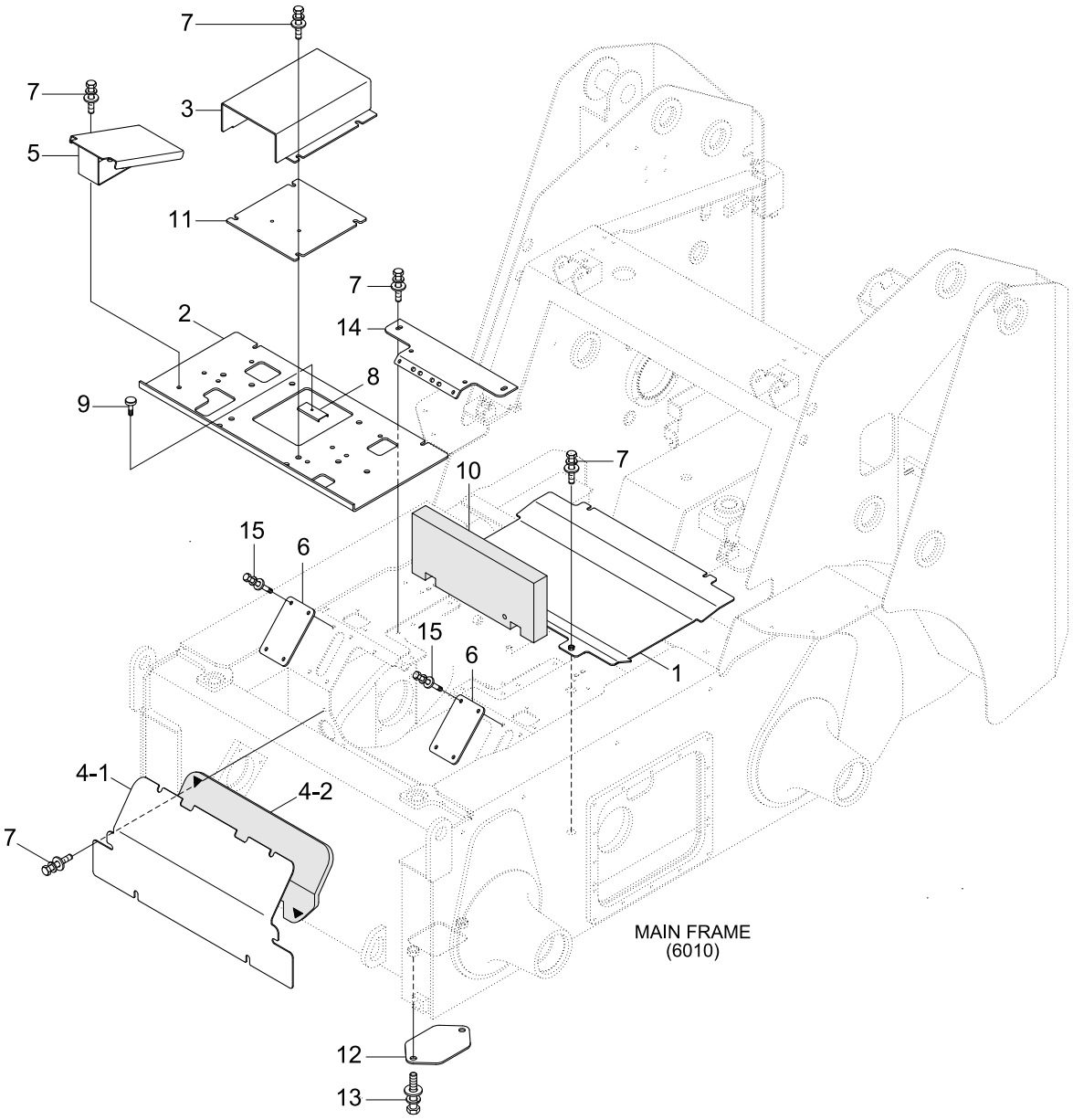

Item	Part_No	IS	Ord	T	Description	Qty	Serial_No	ITC	Remark
1	51S7-30011				UNDER COVER	1	- #0030		
	51S7-30012				UNDER COVER	1	#0031 -	B	
2	51S7-30030				BRACKET-PEDAL	1			
3	81S4-10180				PLATE-STEP	1			
4	51S7-30251				COVER	1			
4-1	51S7-90140				.COVER	1			
4-2	51S7-30130				.SPONGE	1			
5	51S7-10060				FOOT REST	2			
6	51S8-30170				PLATE	2			
7	S037-102526				BOLT-W/WASHER	30			
8	51S7-10090				COVER WA	1			
9	61S1-1008				BOLT ASSY-SPECIAL	1			
10	51S7-10120				SPONGE	1			
11	51S8-20010				BRACKET-REST	1			
12	51S7-10160				COVER	1			
13	S035-082026				BOLT-W/WASHER	2			
14	51S7-30021				UNDER COVER	1			
15	S035-062026				BOLT-W/WASHER	8			

GUARD(FOOT PEDAL)

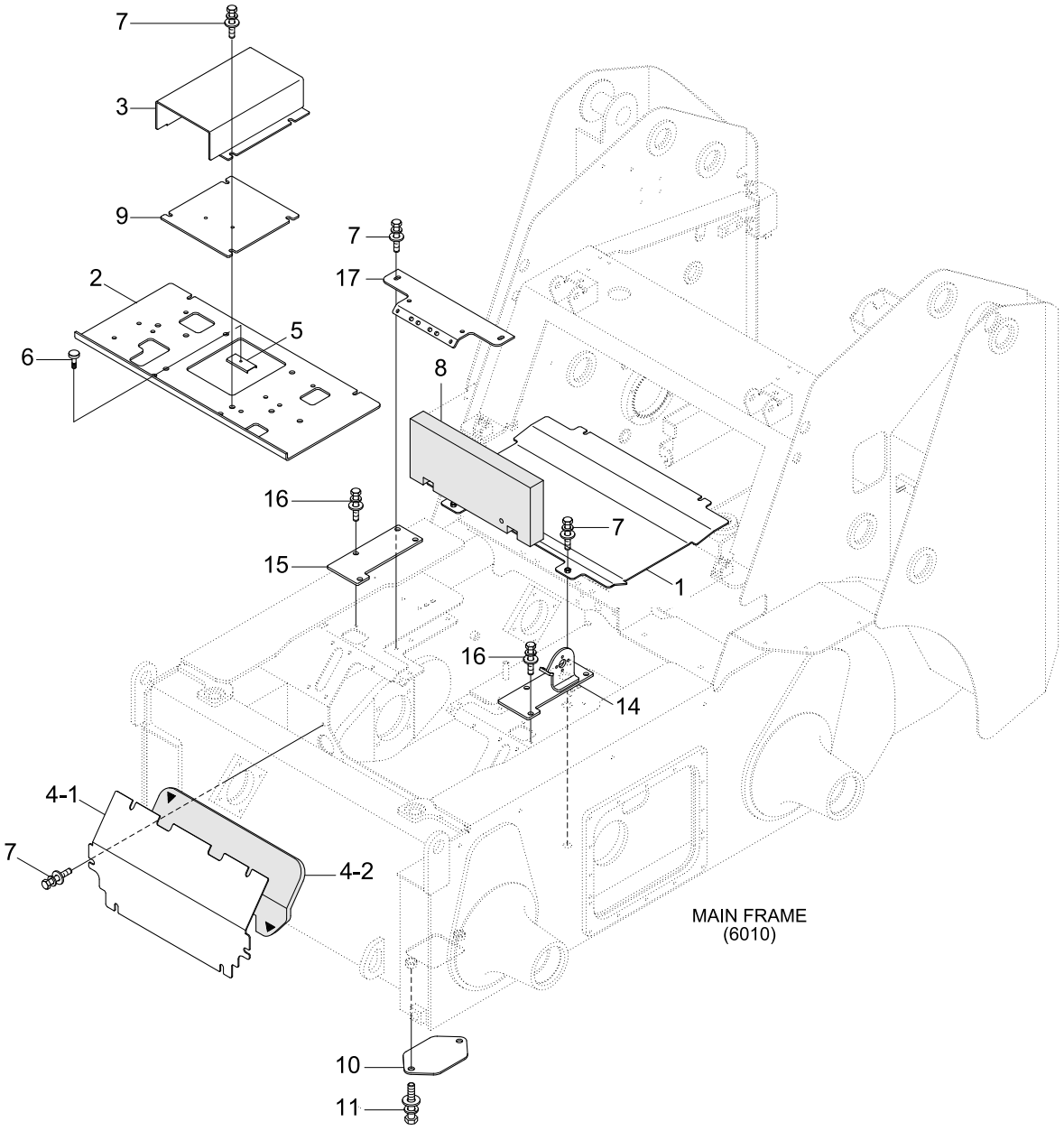

Item	Part_No	IS	Ord	T	Description	Qty	Serial_No	ITC	Remark
1	51S7-30011				UNDER COVER	1	- #0030		
	51S7-30012				UNDER COVER	1	#0031 -	B	
2	51S7-30030				BRACKET-PEDAL	1			
3	81S4-10180				PLATE-STEP	1			
4	51S7-30241				COVER	1			
4-1	51S8-30141				.COVER	1			
4-2	51S7-30130				.SPONGE	1			
5	51S7-10090				COVER WA	1			
6	61S1-1008				BOLT ASSY-SPECIAL	1			
7	S037-102526				BOLT-W/WASHER	30			
8	51S7-10120				SPONGE	1			
9	51S8-20010				BRACKET-REST	1			
10	51S7-10160				COVER	1			
11	S035-082026				BOLT-W/WASHER	2			
14	51S8-30180				PLATE	1			
15	51S8-30190				PLATE	1			
16	S037-103526				BOLT-W/WASHER	8			
17	51S7-30021				UNDER COVER	1			

CONSOLE BOX(CAB)

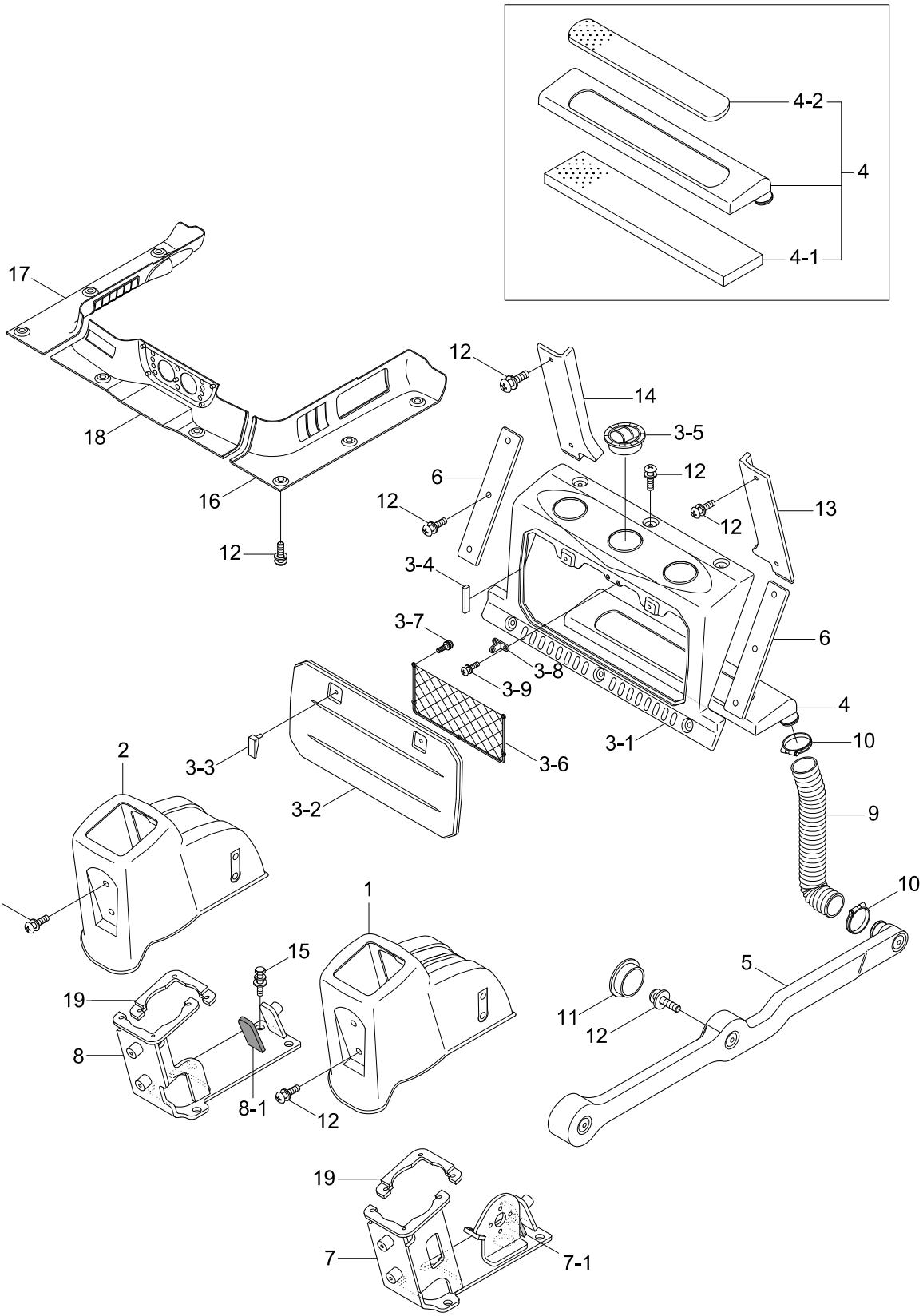

Item	Part_No	IS	Ord	T	Description	Qty	Serial_No	ITC	Remark
1	71S8-20110				CONSOLE BOX-LH	1			
2	71S8-20120				CONSOLE BOX-RH	1			
3	71S8-10330				COVER ASSY-REAR	1			
3-1	71S7-20141				.COVER-REAR	1			
3-2	71S7-20151				.DOOR-REAR	1			
3-3	71EM-20150				.LATCH ASSY	2			
3-4	71S7-20221				.PAD-RUBBER	4			
3-5	71N6-03300				.AIR VENT	3			
3-6	71M8-20880				.NET ASSY	1			
3-7	S151-040156				.SCREW-TAPPING	2			
3-8	71S7-20350				.PLATE WA	1			
3-9	S132-061526				.SCREW-W/WASHER	2			
4	71S7-20161				DUCT-AICON	1			
4-1	71S7-20291				.SPONGE	1			
4-2	71S7-20301				.SPONGE	1			
5	71S7-20171				DUCT-SIDE	1			
6	71S7-20311				COVER-REAR/SIDE	2			
7	71S7-21014				SUPPORT WA-LH	1	- #0163		
	71S7-21015				SUPPORT WA-LH	1	#0164 -	B	
7-1	71S7-20360				.FOAM-SPONGE	1			
7-2	71S7-20361				.FOAM-SPONGE	1	#0164 -	-	
8	71S7-21023				SUPPORT WA-RH	1	- #0163		
	71S7-21024				SUPPORT WA-RH	1	#0164 -	B	
8-1	71S7-20360				.FOAM-SPONGE	1			
8-2	71S7-20361				.FOAM-SPONGE	1	#0164 -	-	
9	71S7-20211				HOSE-DEFROSTER	1			

Item	Part_No	IS	Ord	T	Description	Qty	Serial_No	ITC	Remark
10	S520-055000				CLAMP-HOSE	2			
11	71N6-03300				AIR VENT	2			
12	S132-081526				SCREW-W/WASHER	37			
13	71S7-20321				COVER-HEAD/LH	1			
14	71S7-20331				COVER-HEAD/RH	1			
15	S035-102526				BOLT-W/WASHER	8			
16	71S7-20241				DASHBOARD-LH	1			
17	71S7-20251				DASHBOARD-RH	1			
18	71S7-20262				DASHBOARD-CENTER	1			
19	71S7-21030				PLATE WA	1			

CONSOLE BOX(LOWER CAB)

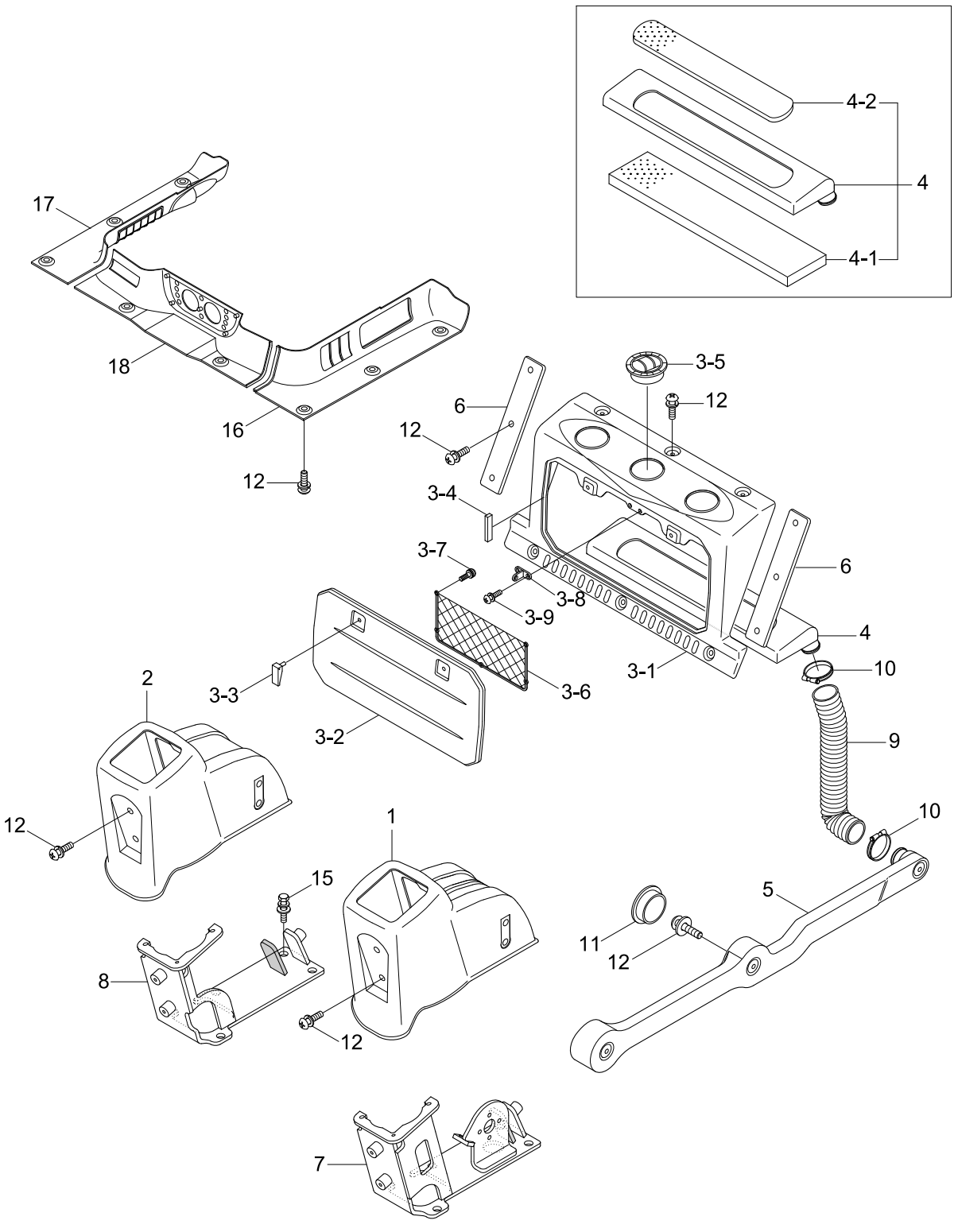

Item	Part_No	IS	Ord	T	Description	Qty	Serial_No	ITC	Remark
1	71S8-20110				CONSOLE BOX-LH	1			
2	71S8-20120				CONSOLE BOX-RH	1			
3	71S8-10330				COVER ASSY-REAR	1			
3-1	71S7-20141				.COVER-REAR	1			
	S132-061526				.SCREW-W/WASHER	2			
3-2	71S7-20151				.DOOR-REAR	1			
3-3	71EM-20150				.LATCH ASSY	2			
3-4	71S7-20221				.PAD-RUBBER	4			
3-5	71N6-03300				.AIR VENT	3			
3-6	71M8-20880				.NET ASSY	1			
3-7	S151-040156				.SCREW-TAPPING	2			
3-8	71S7-20350				.PLATE WA	1			
3-9	S132-061526				.SCREW-W/WASHER	2			
4	71S7-20161				DUCT-AICON	1			
4-1	71S7-20291				.SPONGE	1			
4-2	71S7-20301				.SPONGE	1			
5	71S7-20171				DUCT-SIDE	1			
6	71S7-20311				COVER-REAR/SIDE	2			
7	71S7-21014				SUPPORT W.A.-LH	1			
8	71S7-21023				SUPPORT WA-RH	1			
9	71S7-20211				HOSE-DEFROSTER	1			
10	S520-055000				CLAMP-HOSE	2			
11	71N6-03300				AIR VENT	2			
12	S132-081526				SCREW-W/WASHER	27			
15	S035-102526				BOLT-W/WASHER	8			
16	71S7-20241				DASHBOARD-LH	1			

Item	Part_No	IS	Ord	T	Description	Qty	Serial_No	ITC	Remark
17	71S7-20251				DASHBOARD-RH	1			
18	71S7-20262				DASHBOARD-CENTER	1			

CONSOLE BOX(CANOPY)

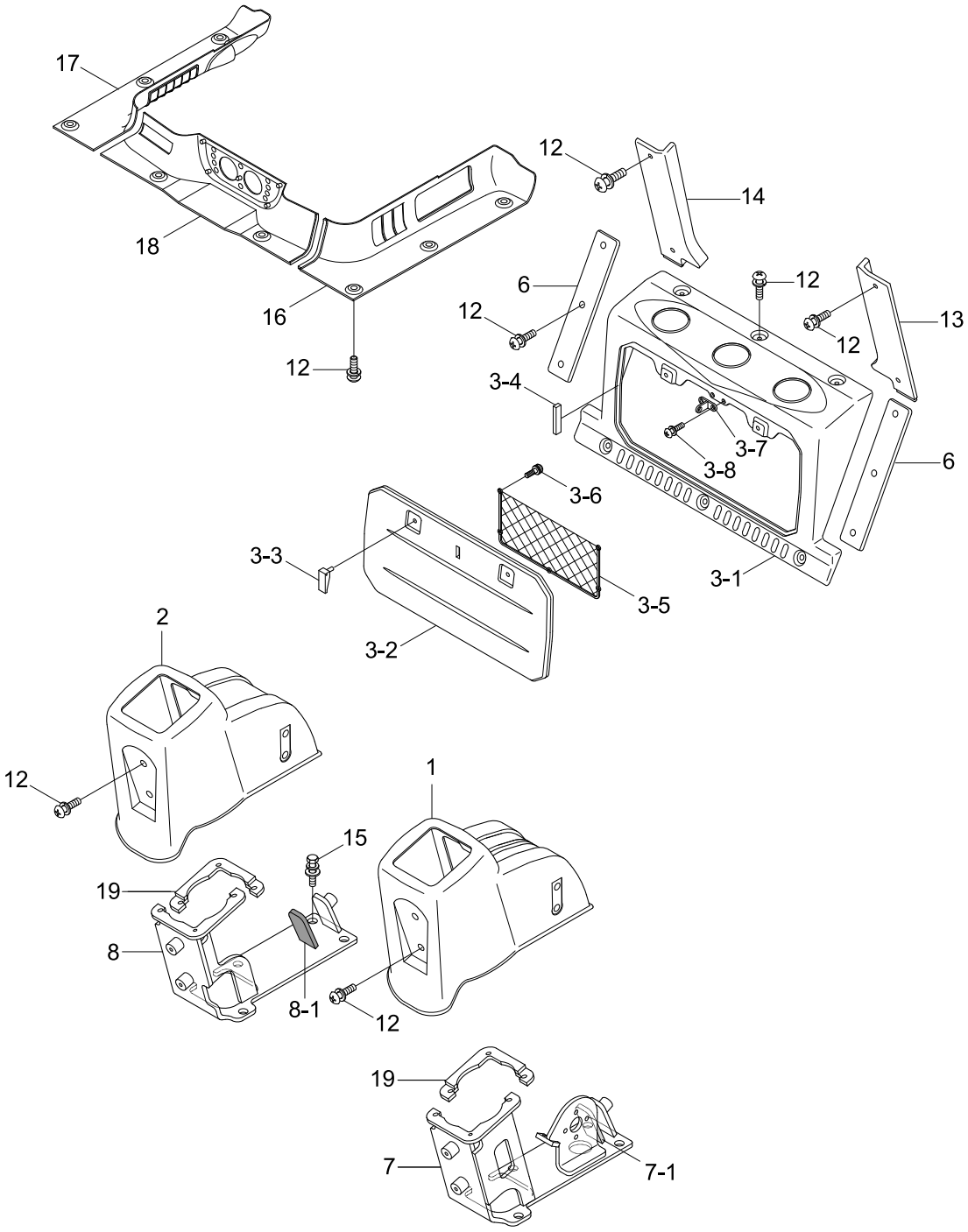

Item	Part_No	IS	Ord	T	Description	Qty	Serial_No	ITC	Remark
1	71S8-20110				CONSOLE BOX-LH	1			
2	71S8-20120				CONSOLE BOX-RH	1			
3	71S7-20340				COVER ASSY-REAR	1			
3-1	71S7-20141				.COVER-REAR	1			
3-2	71S7-20151				.DOOR-REAR	1			
3-3	71EM-20150				.LATCH ASSY	2			
3-4	71S7-20221				.PAD-RUBBER	4			
3-5	71M8-20880				.NET ASSY	1			
3-6	S151-040156				.SCREW-TAPPING	2			
3-7	71S7-20350				.PLATE WA	1			
3-8	S132-061526				.SCREW-W/WASHER	2			
6	71S7-20311				COVER-REAR/SIDE	1			
7	71S7-21014				SUPPORT WA-LH	1	- #0163		
	71S7-21015				SUPPORT WA-LH	1	#0164 -	B	
7-1	71S7-20360				.FOAM-SPONGE	1			
7-2	71S7-20361				.FOAM-SPONGE	1	#0164 -	-	
8	71S7-21023				SUPPORT WA-RH	1	- #0163		
	71S7-21024				SUPPORT WA-RH	1	#0164 -	B	
8-1	71S7-20360				.FOAM-SPONGE	1			
8-2	71S7-20361				.FOAM-SPONGE	1	#0164 -	-	
12	S132-081526				SCREW-W/WASHER	37			
13	71S7-20321				COVER-HEAD/LH	1			
14	71S7-20331				COVER-HEAD/RH	1			
15	S035-102526				BOLT-W/WASHER	8			
16	71S7-20241				DASHBOARD-LH	1			
17	71S7-20251				DASHBOARD-RH	1			

Item	Part_No	IS	Ord	T	Description	Qty	Serial_No	ITC	Remark
18	71S7-20262				DASHBOARD-CENTER	1			
19	71S7-21030				PLATE WA	1			

QUICK COUPLER

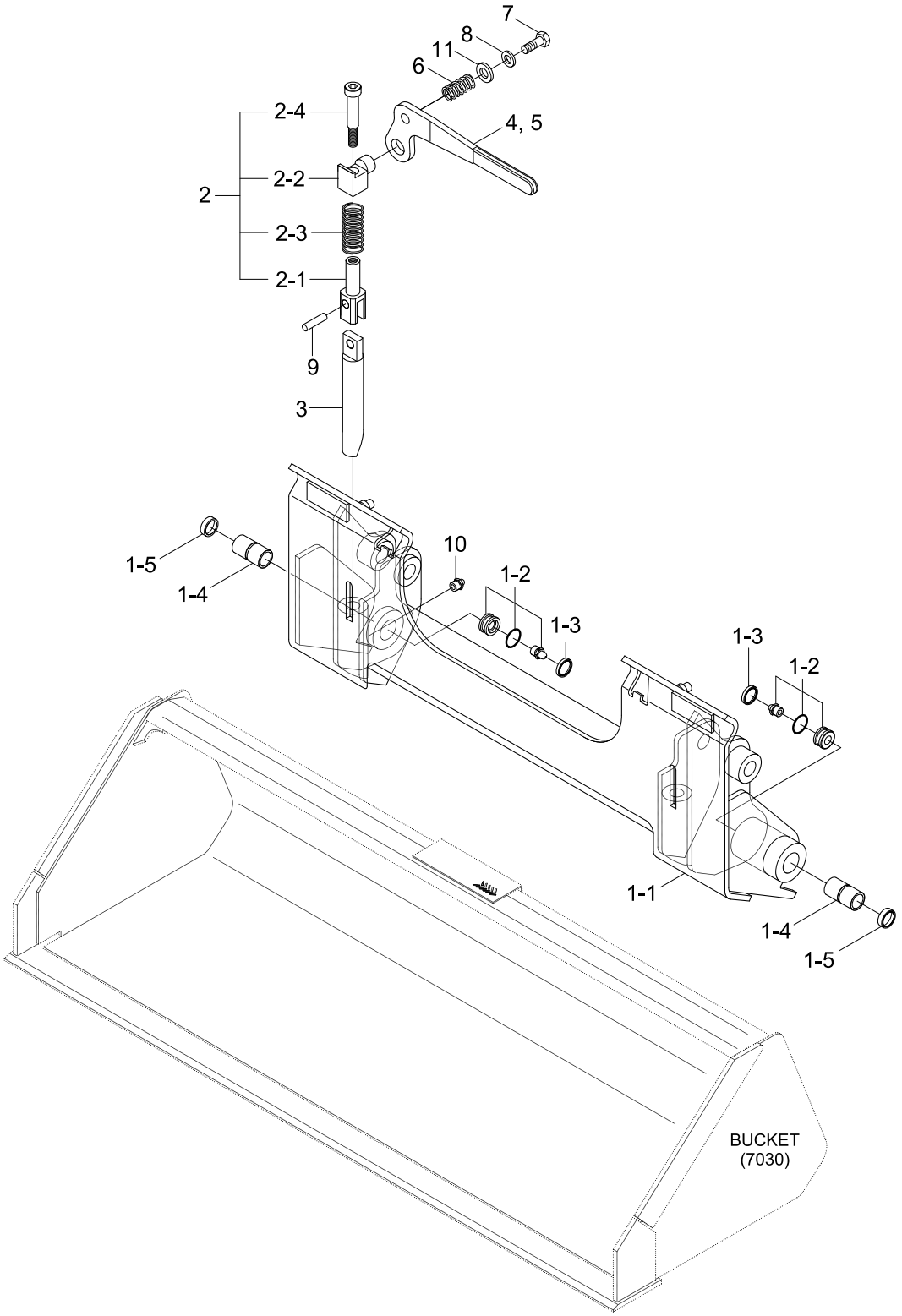

Item	Part_No	IS	Ord	T	Description	Qty	Serial_No	ITC	Remark
*	61S7-90015				QUICK COUPLER ASSY	1			
1	61S7-90024				.QUICK COUPLER SUB ASSY	1			
1-1	61S7-90034				..QUICK COUPLER WA	1			
1-2	61S5-00381				..PLUG ASSY	2			
1-3	S602-040004				..RING-RETAINING	2			
1-4	X122-401070				..BUSHING	2			
1-5	S700-040104				..DUST SEAL-DKIY TYPE	2			
2	61S5-00710				.ADJUSTER ASSY	2			
2-1	61S5-00790				..CLEVIS-DOUBLE	1			
2-2	61S5-00800				..BLOCK	1			
2-3	61S5-00810				..SPRING	1			
2-4	61S5-00820				..BOLT	1			
3	61S7-90170				.PIN	2			
4	61S5-00750HN				.HAND LEVER-RH	1			
5	61S5-00760HN				.HAND LEVER-LH	1			
6	61S5-00771				.SPRING	2			
7	S017-100656				.BOLT-HEX	2			
8	S403-142006				.WASHER-PLAIN	2			
9	S472-920504				.PIN-SPRING	2			
10	S651-810002				.NIPPLE-GREASE	2			
11	S403-10200B				.WASHER-PLAIN	2			

BOOM

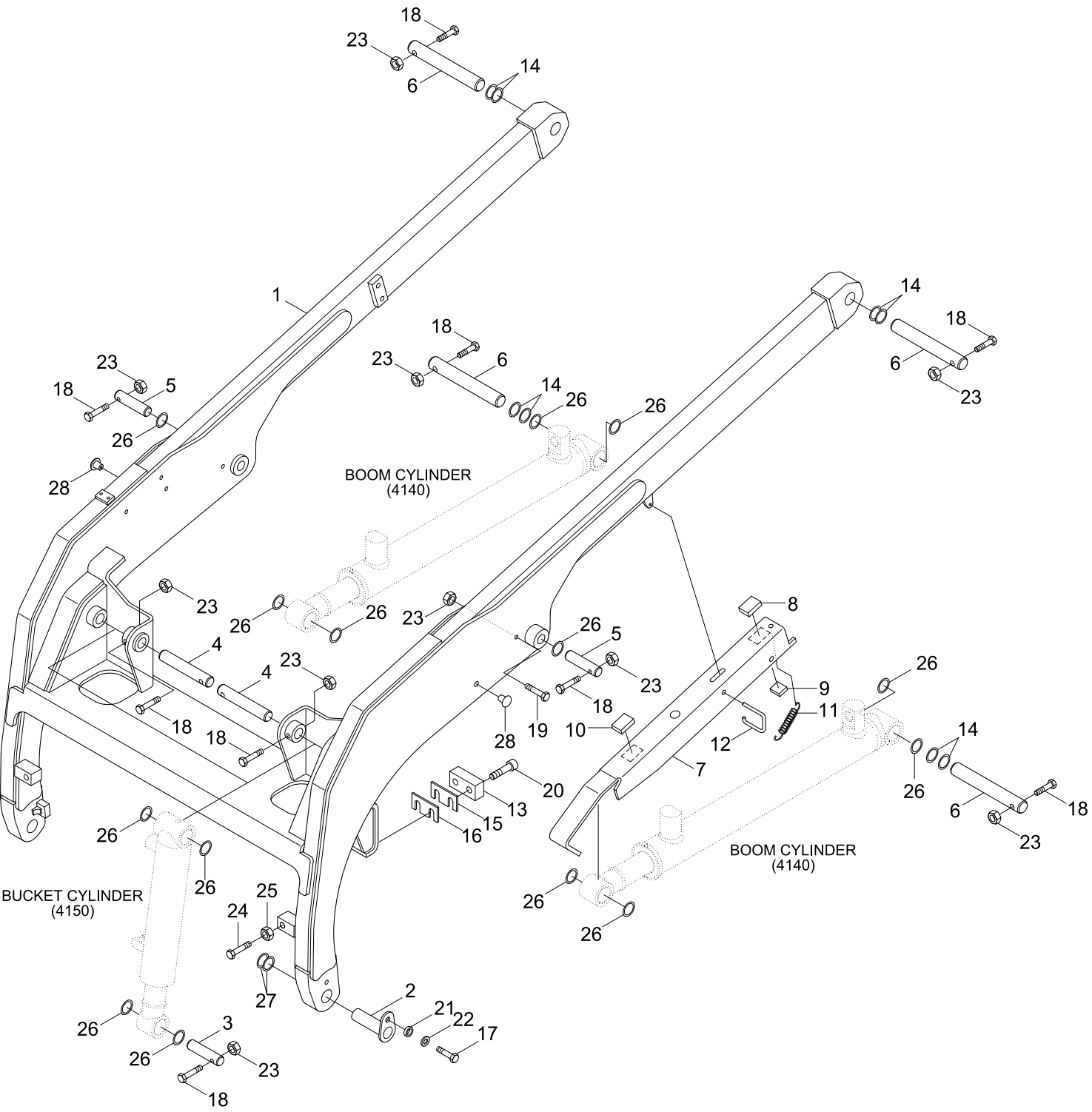
BOOM CYLINDER
(4140)
BUCKET CYLINDER
(4150)
BOOM CYLINDER
(4140)

Item	Part_No	IS	Ord	T	Description	Qty	Serial_No	ITC	Remark
1	61S7-12011				BOOM WA	1			
2	61S7-10230				PIN WA	2			
3	61S7-10250				PIN	2			
4	61S7-10290				PIN	2			
5	61S7-10270				PIN	2			
6	61S7-10282				PIN	4			
7	61S5-10070				BRACKET-BOOM LOCK	1			
8	62S4-10450				PAD-RUBBER	1			STD
	61S4-10080				PAD-RUBBER	1			AUXILIARY HYD
9	61S4-10400				PAD-RUBBER	1			
10	61S4-10450				PAD-RUBBER	1			
11	61S4-10380				SPRING	1			
12	61S5-10450				PIN	1			
13	61S4-00300				STOPPER	2			
14	S391-030060				SHIM-ROUND(0.5T)	8			
15	61S4-10090				SHIM(1.0T)	8			
16	61S4-10100				SHIM(0.5T)	2			
17	S017-16035D				BOLT-HEX	2			
18	S017-100756				BOLT-HEX	10			
19	S017-100856				BOLT-HEX	1			
20	S109-100256				BOLT-SOCKET	4			
21	61LF-10280				SPACER	2			
22	64L3-01120-DA				WASHER-HARDENED	2			
23	S275-10000B				NUT-SELF LOCKING	12			
24	S017-16040D				BOLT-HEX	2			
25	S205-16100B				NUT-HEX	2			

Item	Part_No	IS	Ord	T	Description	Qty	Serial_No	ITC	Remark
26	S391-030055				SHIM-ROUND(1.0T)	16			
27	S391-040080				SHIM-ROUND(1.0T)	4			
28	41M5-80030				CAP	2			

BUCKET

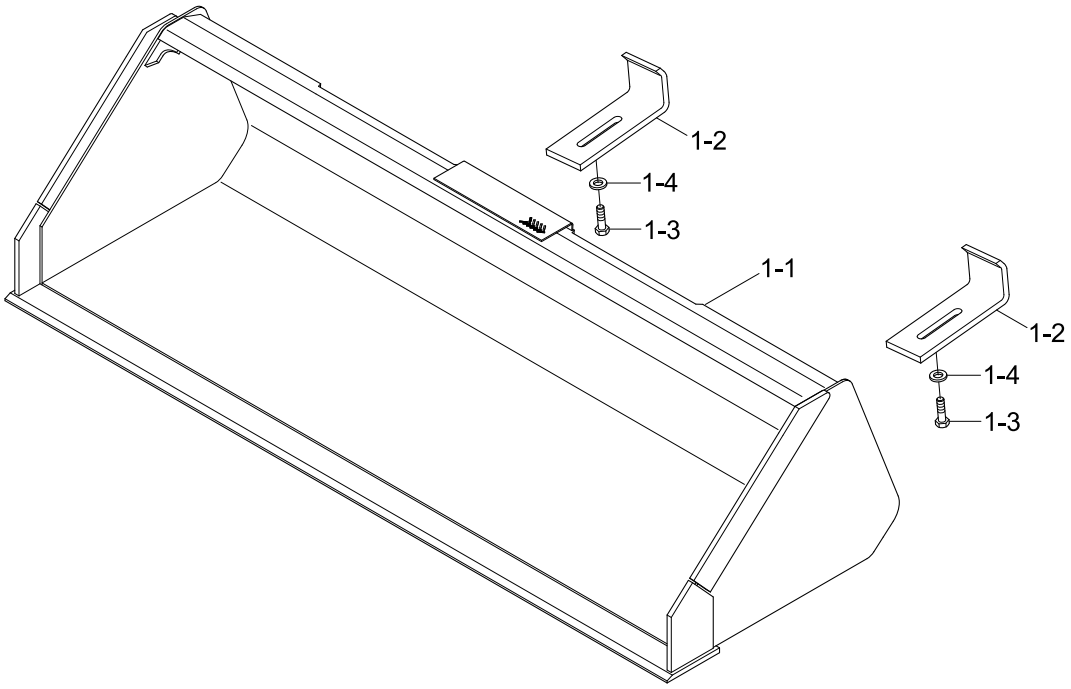

Item	Part_No	IS	Ord	T	Description	Qty	Serial_No	ITC	Remark
1	61S7-30081				BUCKET ASSY(0.37?)	1			
1-1	61S7-30012				.BUCKET WA(0.37?)	1			
1-2	61S7-30070				.PLATE-LOCK	2			
1-3	S017-100306				.BOLT-HEX	2			
1-4	S403-10200B				.WASHER-PLAIN	2			

MP BUCKET ASSY(4 IN 1)

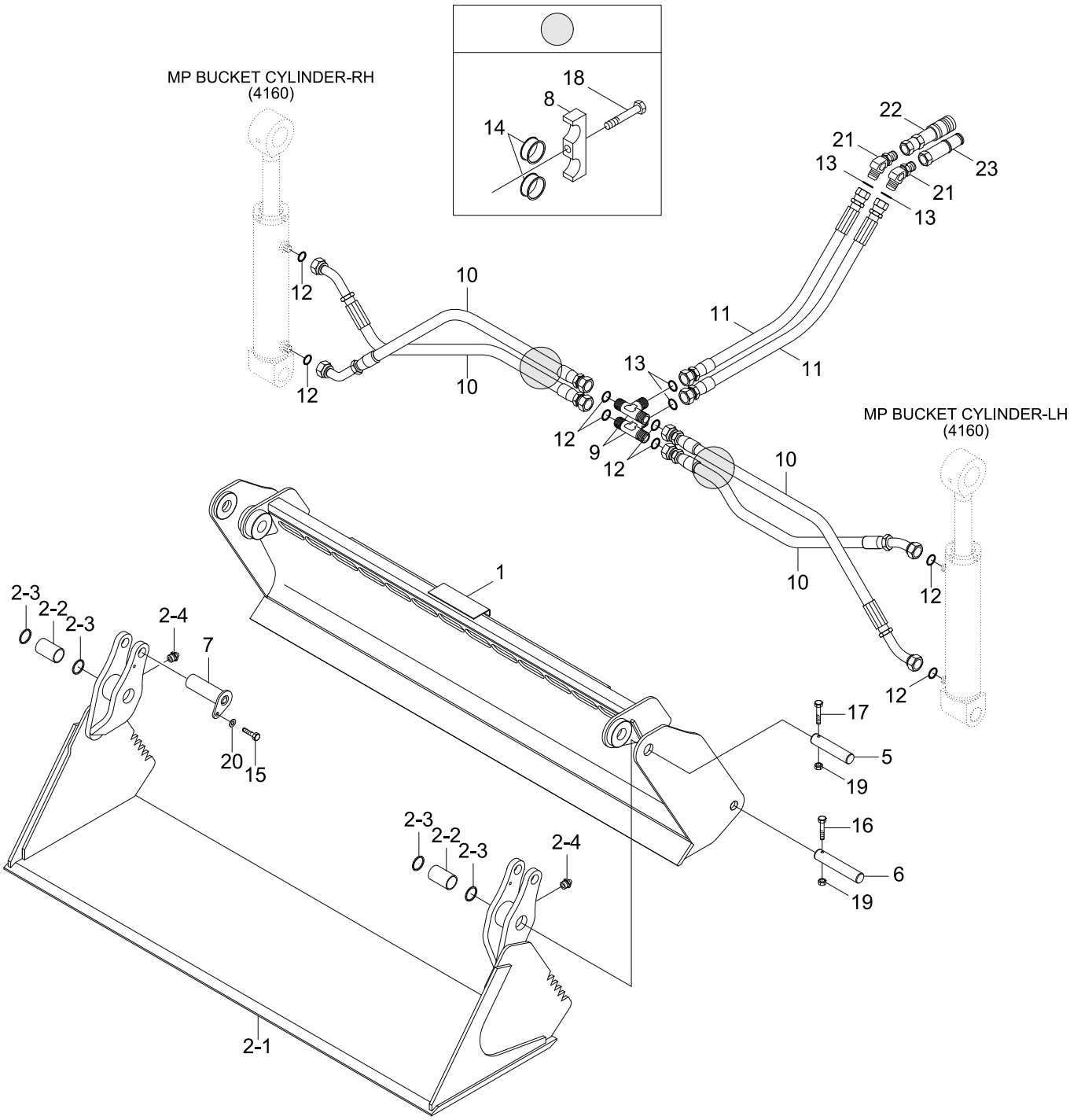

Item	Part_No	IS	Ord	T	Description	Qty	Serial_No	ITC	Remark
*	61S7-07000				BUCKET ASSY-MP	1			
1	61S7-07101				.BUCKET WA-REAR	1			
2	61S7-07501				.BUCKET SUB ASSY-FRONT	1			
2-1	61S7-07512				..BUCKET WA-FRONT	1			
2-2	X112-401085				..BUSHING	2			
2-3	S700-040104				..DUST SEAL-DKIY TYPE	4			
2-4	S652-810002				..NIPPLE-GREASE	2			
5	61S7-07030				.PIN	2			
6	61S7-07040				.PIN	2			
7	61S7-07050				.PIN WA	2			
8	61S7-07060				.CLAMP-HOSE	2			
9	61S7-07070				.TEE	2			
10	P920-064017				.HOSE ASSY-ORFS 0X45	4			
11	P924-084026				.HOSE ASSY	2			
12	S621-012001				.O-RING	8			
13	S621-014001				.O-RING	4			
14	S690-018100				.GROMMET(FOR ONE LINE)	4			
15	S017-100256				.BOLT-HEX	2			
16	S017-100756				.BOLT-HEX	2			
17	S017-101056				.BOLT-HEX	2			
18	S015-080406				.BOLT-HEX	2			
19	S275-10000B				.NUT-SELF LOCKING	4			
20	S403-10000B				.WASHER-PLAIN	2			
21	X530-430004				.ELBOW-45,ORFS	2			
22	31S4-10920				.COUPLER-QUICK(FEMALE)	1			
23	31S4-10930				.COUPLER-QUICK(MALE)	1			

PALLET FORK

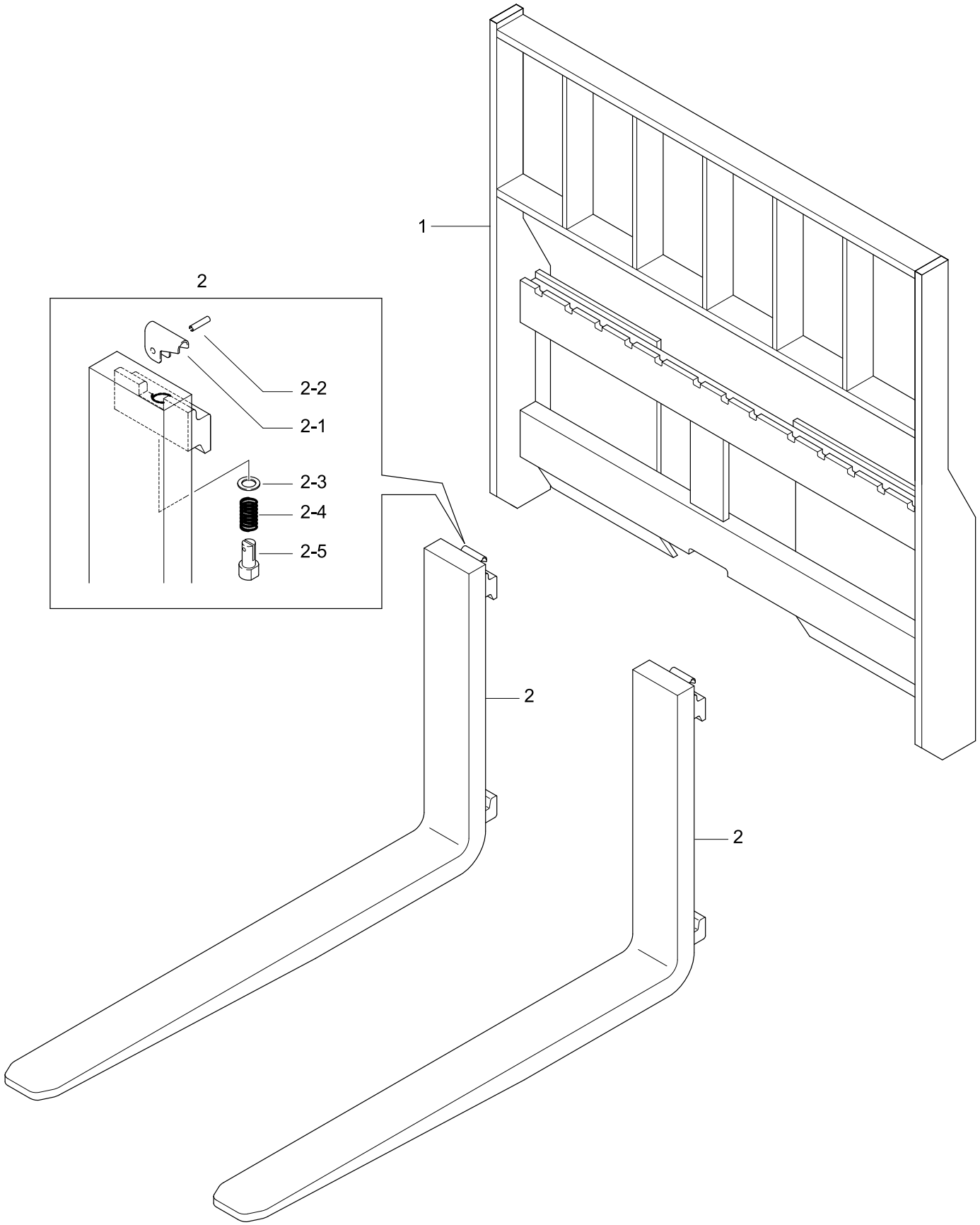

Item	Part_No	IS	Ord	T	Description	Qty	Serial_No	ITC	Remark
*	62S1-4000				PALLET FORK INSTALL	1			
1	62S1-40012				FORK BACKREST WA	1			
2	F173796-02				FORK ASSY(1050)	2			
N2-1	1074000				.KNOB	1			NOT
N2-2	1074100				.SPRING PIN	1			NOT
2-3	1074200				.WASHER	1			
2-4	1074300				.COIL SPRING	1			
N2-5	1073900				.KEEPER PIN	1			NOT
N	@				NOT SUPPLIED PARTS	AR			NOT

TOOLS

1

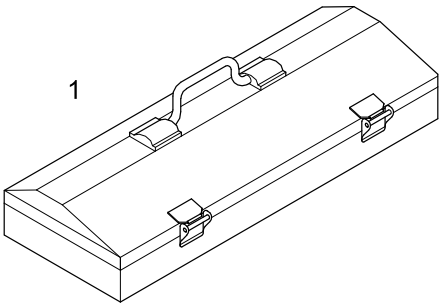

6

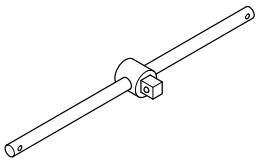

13

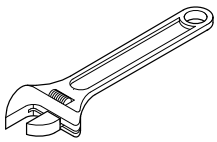

2

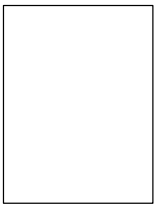

7, 8

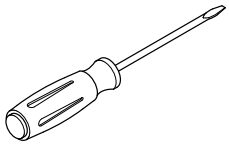

14



3

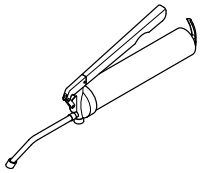

9

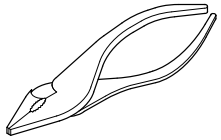

15

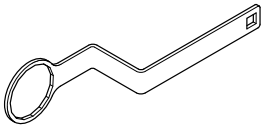

4

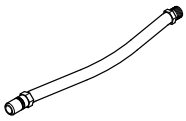

10, 11

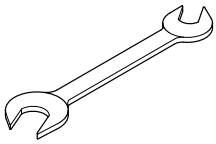

16

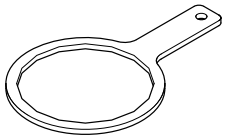

5

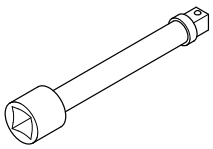

12

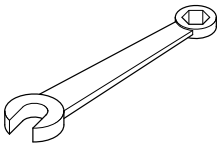

17

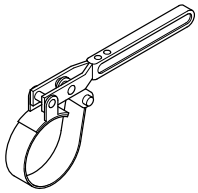

Item	Part_No	IS	Ord	T	Description	Qty	Serial_No	ITC	Remark
*	91S8-20000				TOOL KIT ASSY	1			
1	E191-2000				.TOOL BOX	1			
2	91S8-20010				.TOOL LIST	1			
3	91Q6-20530				.GUN-GREASE,500CC	1			
4	E191-2054				.TIP-HOSE,RUBBER	1			
5	S955-190200				.BAR-EXTENSION	1			
6	S957-190500				.HANDLE-SLIDING	1			
7	S959-061012				.DRIVER-SCREW	1			
8	S959-061022				.DRIVER-SCREW	1			
9	S960-150020				.PLIER-SLIP JOINT	1			
10	S962-101202				.WRENCH-DOUBLE,10X12	1			
11	S962-141702				.WRENCH-DOUBLE,14X17	1			
12	S962-190003				.WRENCH-COMBINATION	1			
13	S963-250029				.WRENCH-ADJ ANGLE10"	1			
14	S953-190270				.SOCKET-3/4"X27MM	1			
15	91S8-20110				.WRENCH-FILTER(ID93)	1			
16	E191-2043				.WRENCH-FILTER,300MM	1			
17	XJAU-00639				OIL FILTER WRENCH	1			

DECALS(ENGLISH)

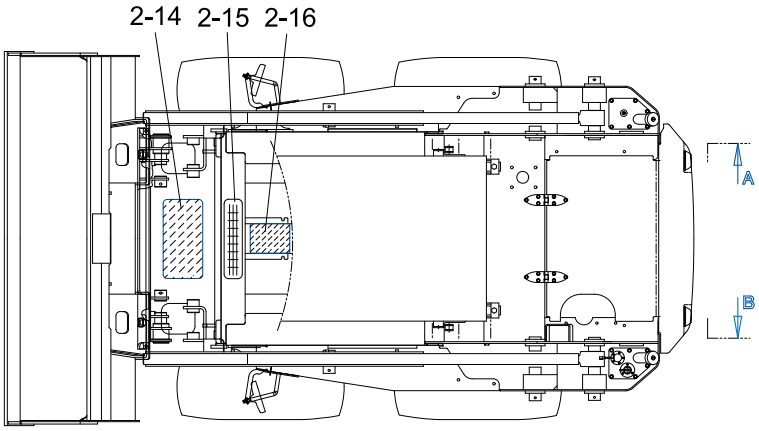

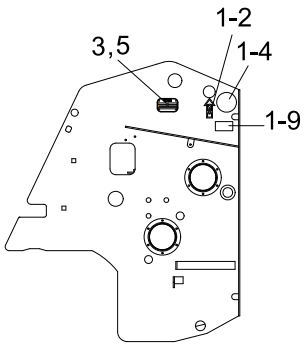

VIEW A
(HYD. TANK)

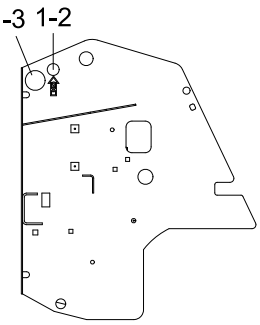

VIEW B
(FUEL TANK)

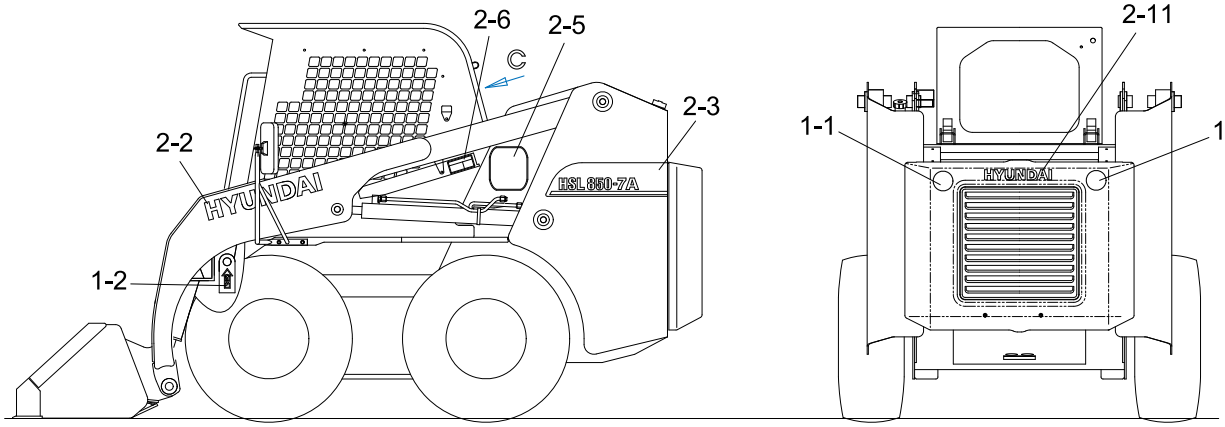

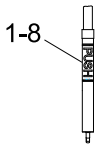

GAS SPRING-LH

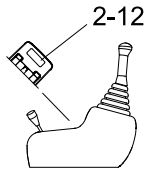

CONSOLE BOX-LH

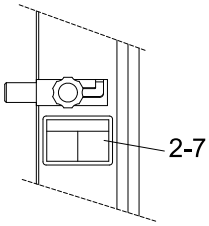

VIEW C
(CANOPY OUTSIDE-LH)

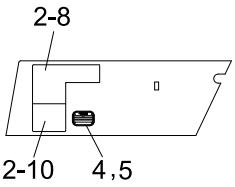

CANOPY INSIDE - RH

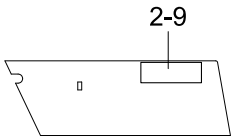

CANOPY INSIDE - LH

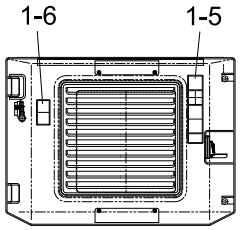

REAR DOOR-INSIDE

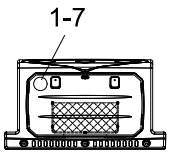

AIR CON COVER-INSIDE

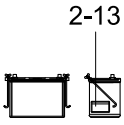

REAR DOOR INSIDE-RH

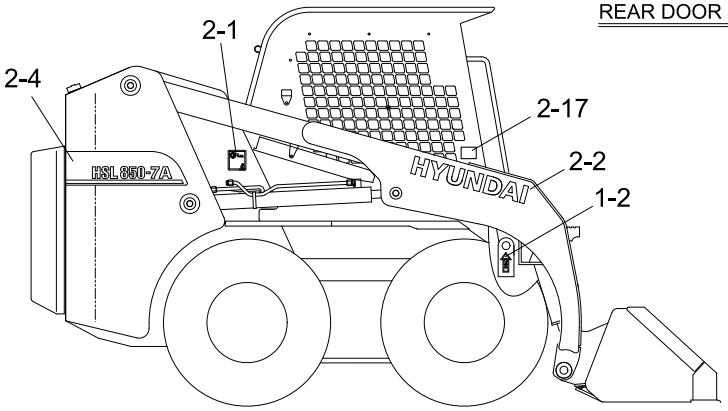

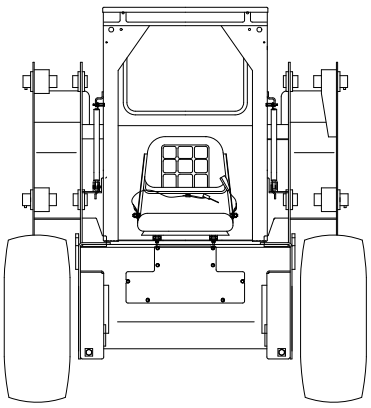

Item	Part_No	IS	Ord	T	Description	Qty	Serial_No	ITC	Remark
1	92S8-00012				DECAL KIT(A)	1			
1-1	91M8-04020				.REFLECTING	2			
1-2	91E1-29080				.SLINGING IDEOGRAM	4			
1-3	91S8-04010				.DECAL-FUELING	1			
1-4	91S8-04020				.DECAL-HYD OIL	1			
1-5	91M8-07110				.DECAL-CAUTION,ENG	1			
1-6	91S8-07020				.DECAL-STAY	1			
1-7	91S8-07030				.DECAL-MANUAL BOX	1			
1-8	91S4-00700				.DECAL-PUSH	1			
1-9	91Q6-03230				.DECAL-FUEL SHUT OFF	1			
2	92S7-00102				DECAL KIT(B)	1			
2-1	91N6-22110				.DECAL-NOISE LEVEL/LWA	1			EUROPE
2-2	91N6-23040				.DECAL-HYUNDAI LOGO	2			
2-3	91S7-17230				.MODEL NAME-LH	1			
2-4	91S7-17240				.MODEL NAME-RH	1			
2-5	91S7-10710				.SERVICE INSTRUCTION	1			
2-6	91S8-06020				.DECAL-BOOM LOCK	1			
2-7	91S8-07040				.DECAL-CANOPY LOCK	1			
2-8	91S8-07160				.GENERAL WARNING(A)	1			
2-9	91S8-07181				.DECAL-IDEOGRAM(B)	1			MECHANICAL
	91S8-07170				.DECAL-IDEOGRAM(A)	1			PILOT
2-10	91S8-07080				.GENERAL WARNING(B)	1			
2-11	91N6-26020				.DECAL-HYUNDAI LOGO	1			
2-12	91S8-07120				.DECAL-ENGINE C/LEVER	1			
2-13	91S8-01350				.DECAL-ECM CONNECTOR	1			
2-14	91S4-00110				.SAFETY WORK	1			

Item	Part_No	IS	Ord	T	Description	Qty	Serial_No	ITC	Remark
2-15	91S4-00120				.DECAL-SAFETY WORK	1			
2-16	91S1-00770				.SAFETY WORK	1			
2-17	91Q4-07180				.DECAL-WATER SEPARATOR	1			
3	91E1-14110				DECAL-PIN PLATE	1	- #0129		
	91LM-14110				DECAL-PIN PLATE	1	#0130 -	D	
	91E1-14130				DECAL-PIN PLATE	1	- #0129		EUROPE
	91LM-14130				DECAL-PIN PLATE	1	#0130 -	D	EUROPE
4	91LB-01280				DECAL-ROPS PLATE	1			
5	501904907				RIVET	8			

DECALS(KOREA)

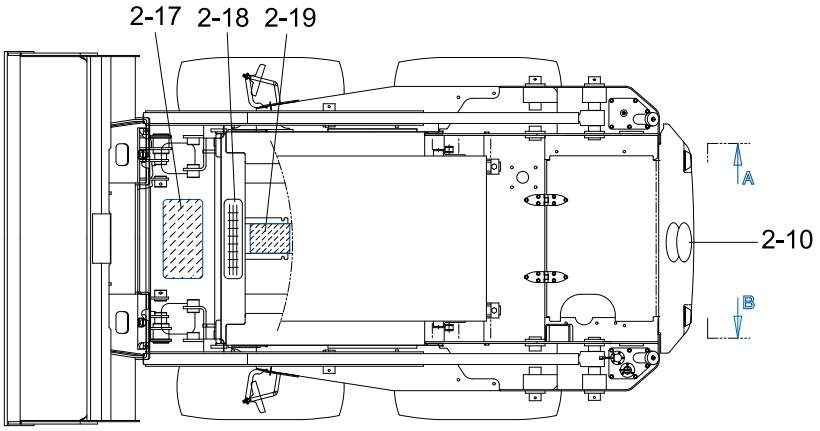

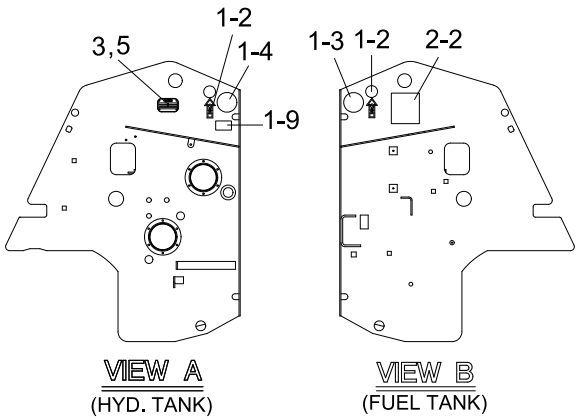

VIEW A
(HYD. TANK)

VIEW B
(FUEL TANK)

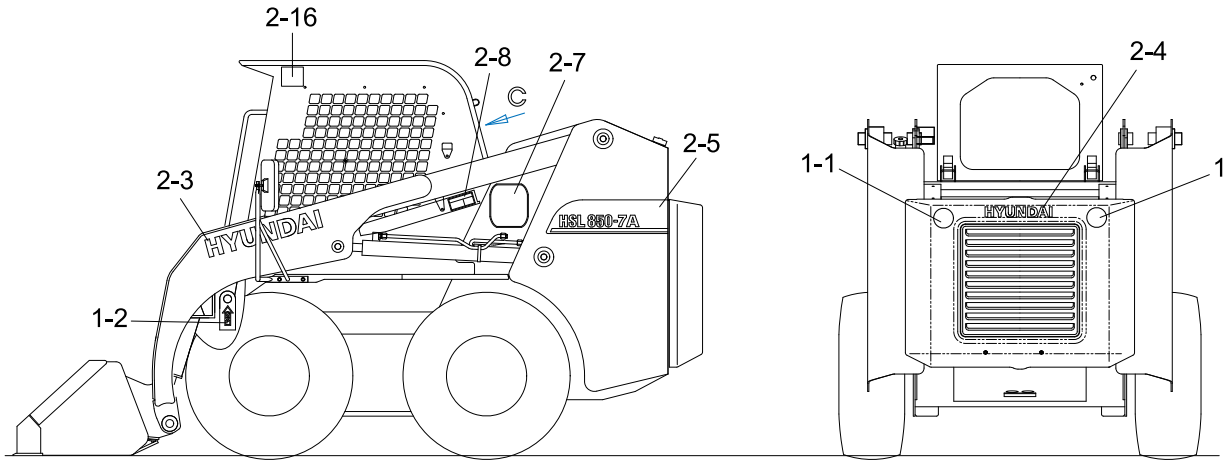

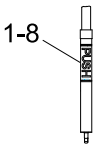

GAS SPRING-LH

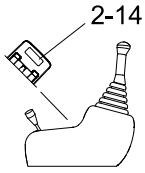

CONSOLE BOX-LH

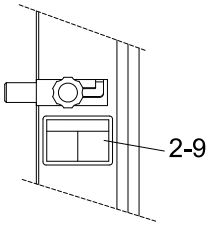

VIEW C
(CANOPY OUTSIDE-LH)

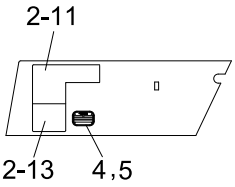

CANOPY INSIDE - RH

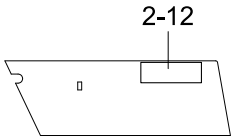

CANOPY INSIDE - LH

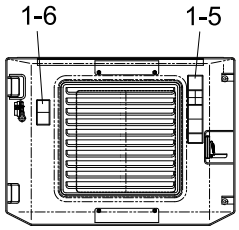

REAR DOOR-INSIDE

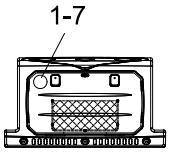

AIR CON COVER-INSIDE

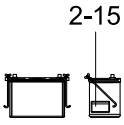

REAR DOOR INSIDE-RH

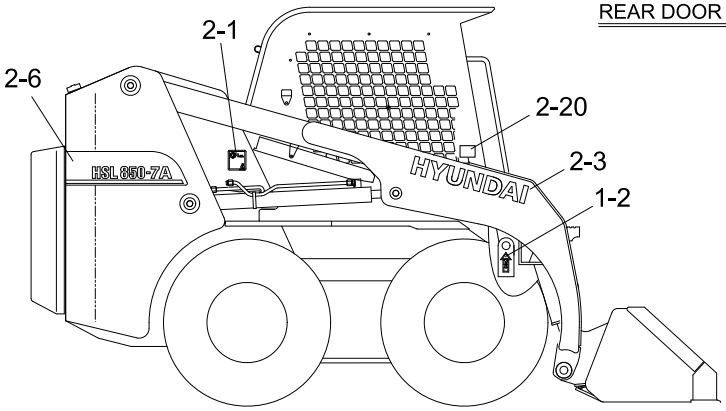

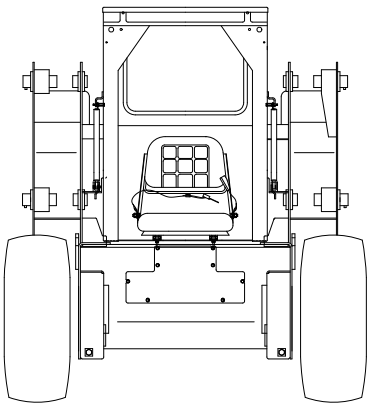

Item	Part_No	IS	Ord	T	Description	Qty	Serial_No	ITC	Remark
1	92S8-00012				DECAL KIT(A)	1			
1-1	91M8-04020				.REFLECTING	2			
1-2	91E1-29080				.SLINGING IDEOGRAM	4			
1-3	91S8-04010				.DECAL-FUELING	1			
1-4	91S8-04020				.DECAL-HYD OIL	1			
1-5	91M8-07110				.DECAL-CAUTION,ENG	1			
1-6	91S8-07020				.DECAL-STAY	1			
1-7	91S8-07030				.DECAL-MANUAL BOX	1			
1-8	91S4-00700				.DECAL-PUSH	1			
1-9	91Q6-03230				.DECAL-FUEL SHUT OFF	1			
2	92S7-00202				DECAL KIT(B)	1			
2-1	91S7-27410				.EMISSION CERTIFICATION	1			
2-2	91S7-18100				.SPECIFICATION SHEET	1			
2-3	91N6-23040				.DECAL-HYUNDAI LOGO	2			
2-4	91N6-26020				.DECAL-HYUNDAI LOGO	1			
2-5	91S7-17230				.MODEL NAME-LH	1			
2-6	91S7-17240				.MODEL NAME-RH	1			
2-7	91S7-60710				.SERVICE INSTRUCTION	1			
2-8	91S8-06030				.DECAL-BOOM LOCK	1			
2-9	91S8-07050				.DECAL-CANOPY LOCK	1			
2-10	91S9-00065				.PLATE-KEEP OUT	1			
2-11	91S8-07260				.DECAL-WARNING(A)	1			
2-12	91S8-07200				.DECAL-IDEOGRAM(B)	1			MECHANICAL
	91S8-07190				.DECAL-IDEOGRAM(A)	1			PILOT
2-13	91S8-07090				.GENERAL WARNING(B)	1			
2-14	91S8-07130				.DECAL-ENGINE C/LEVER	1			

Item	Part_No	IS	Ord	T	Description	Qty	Serial_No	ITC	Remark
2-15	91S8-06350				.DECAL-ECM CONNECTOR	1			
2-16	91N6-22110				.DECAL-NOISE LEVEL/LWA	1			
2-17	91S4-00110				.SAFETY WORK	1			
2-18	91S4-00120				.DECAL-SAFETY WORK	1			
2-19	91S1-00770				.SAFETY WORK	1			
2-20	91Q4-07170				.DECAL-WATER SEPARATOR	1			
3	91E1-14110				DECAL-PIN PLATE	1	- #0129		
	91LM-14110				DECAL-PIN PLATE	1	#0130 -	D	
4	91LB-01280				DECAL-ROPS PLATE	1			
5	501904907				RIVET	8			

MANUALS

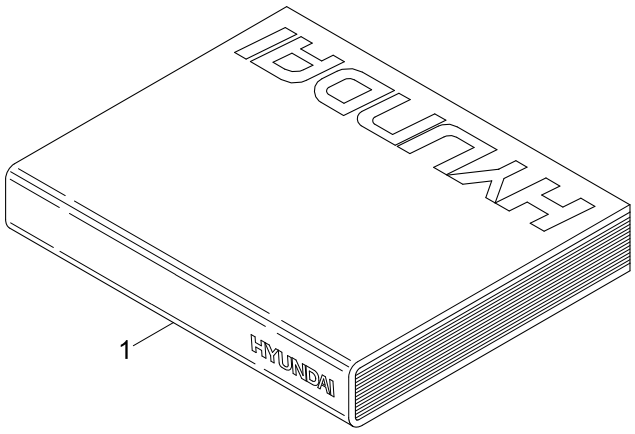

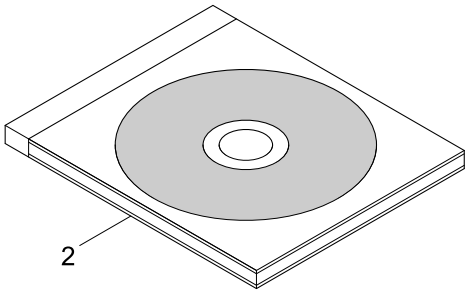

Item	Part_No	IS	Ord	T	Description	Qty	Serial_No	ITC	Remark
1	91S7-31000				PARTS MANUAL	1			ENGLISH/KOREAN
	91S7-31010				OPERATORS MANUAL	1			KOREAN
	91S7-31020				SERVICE MANUAL	1			KOREAN
	91S7-31040				OPERATORS MANUAL	1			ENGLISH
	91S7-31050				SERVICE MANUAL	1			ENGLISH
3	HLCD-30000				CD-PARTS MANUAL	1			LOADER/CRANE
	HACD-30000				CD-PARTS MANUAL	1			ALL MODEL
	HLDV-30000				DVD-PARTS MANUAL	1			LOADER/CRANE
	HADV-30000				DVD-PARTS MANUAL	1			ALL MODEL

CRANKCASE

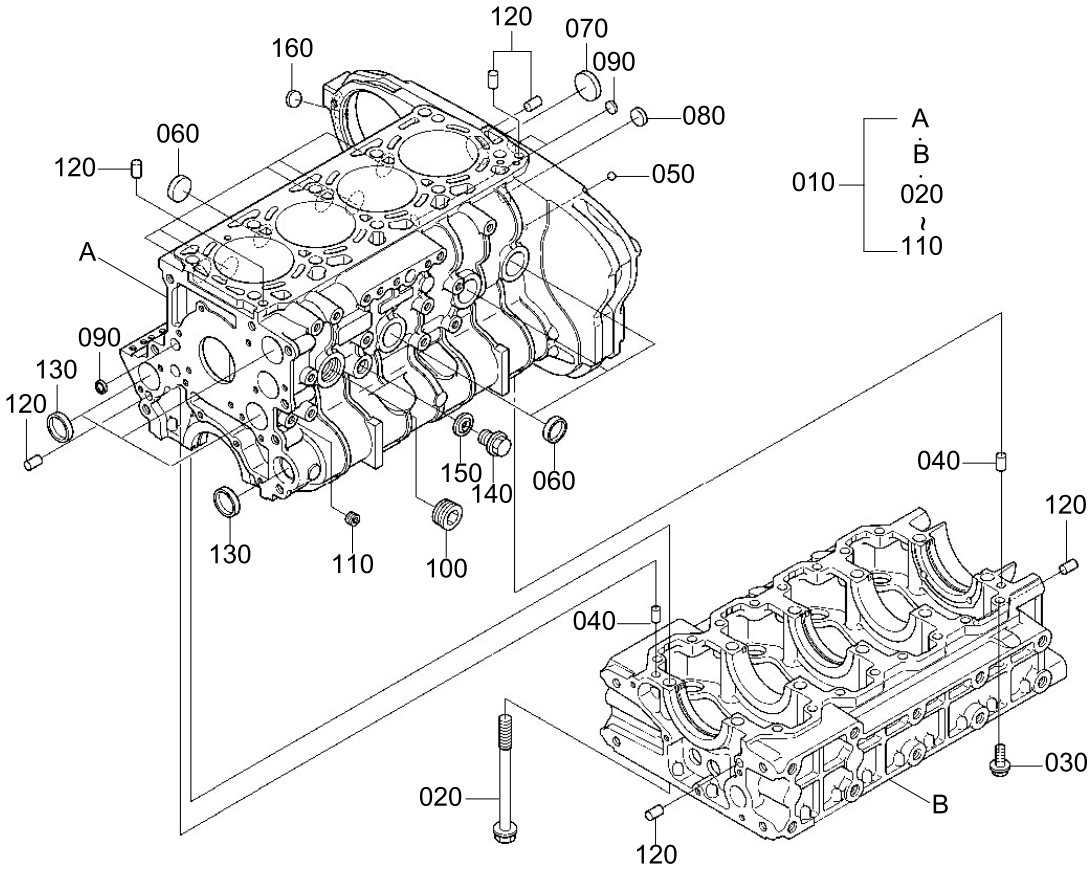
120
070
160
090
080
060
120
050
A
010
A
B
020
110
090
130
120
150
140
060
130
110
100
040
120
040
030
020
B
120

Item	Part_No	IS	Ord	T	Description	Qty	Serial_No	ITC	Remark
010	XJBR-01621				CRANKCASE ASSY	1			
020	XJBR-01193				.BOLT	10			
030	XJBR-01194				.BOLT-FLANGE	16			
040	XJBR-00180				.PIN-STRAIGHT	2			
050	XJBR-00208				.BALL	1			
060	XJBR-01195				.SEALING CAP	9			
070	XJBR-00886				.SEALING CAP	1			
080	XJBR-01196				.SEALING CAP	1			
090	XJBR-00238				.CAP-SEALING	3			
100	XJBR-01197				.PLUG	1			
110	XJBR-00864				.PLUG	1			
120	XJBR-00180				PIN-STRAIGHT	6			
130	XJBR-00886				SEALING CAP	4			
140	XJBR-00188				PLUG	1			
150	XJBR-00189				GASKET	1			
160	XJBR-00666				CAP-SEALING	1			

OIL PAN

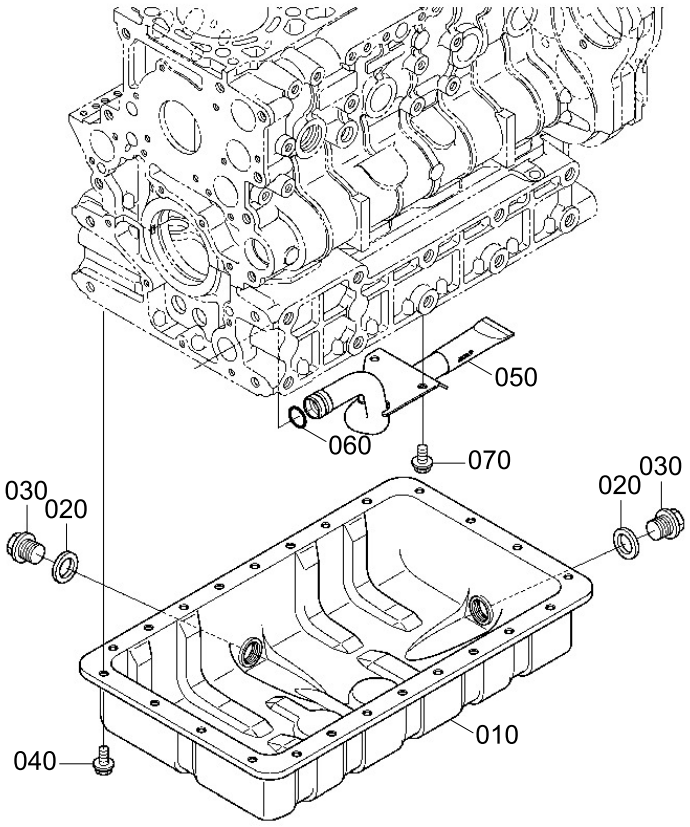

Item	Part_No	IS	Ord	T	Description	Qty	Serial_No	ITC	Remark
010	XJBR-01622				OIL PAN	1			
020	XJBR-01623				GASKET	2			
030	XJBR-00879				DRAIN PLUG	2			
040	XJBR-01202				FLANGE BOLT	24			
050	XJBR-01624				OIL FILTER	1			
060	XJBR-01204				O-RING	1			
070	XJBR-01202				FLANGE BOLT	2			

DIPSTICK AND GUIDE

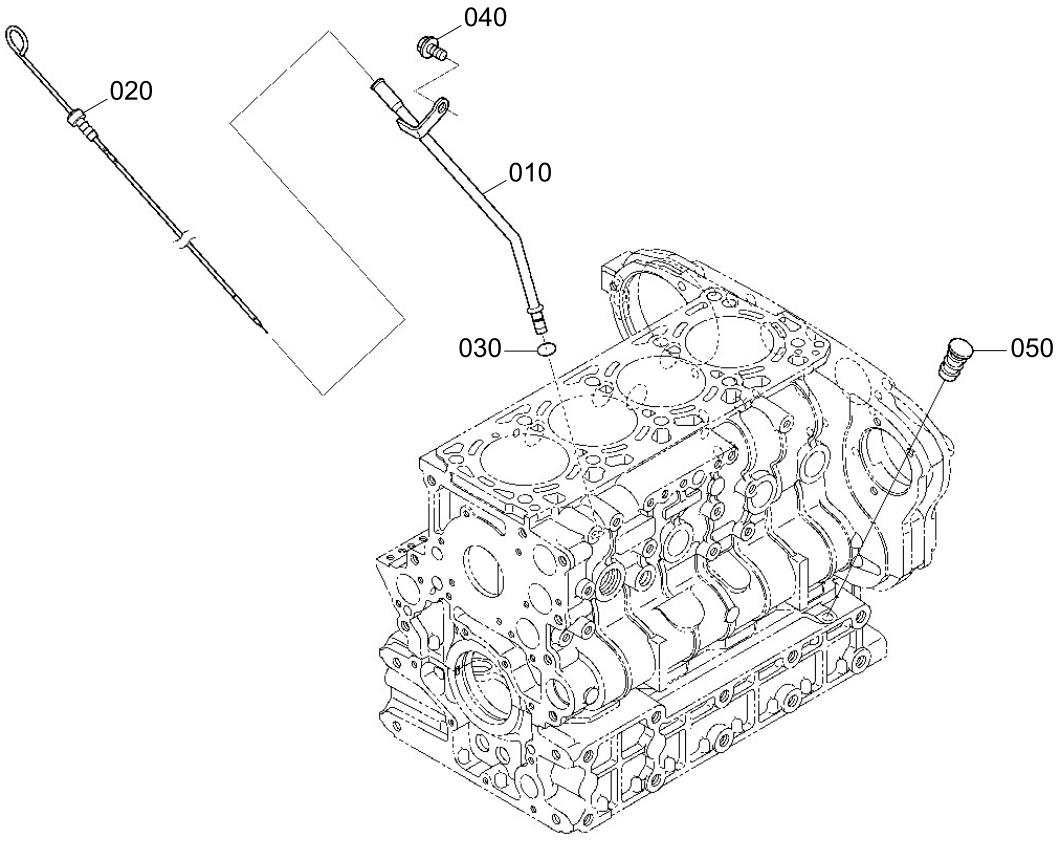

Item	Part_No	IS	Ord	T	Description	Qty	Serial_No	ITC	Remark
010	XJBR-01625				GUIDE-OIL GAUGE	1			
020	XJBR-01626				OIL GAUGE	1			
030	XJBR-00249				O-RING	1			
040	XJBR-00200				FLANGE BOLT	1			
050	XJBR-00924				PLUG-OIL GAUGE	1			

CYLINDER HEAD

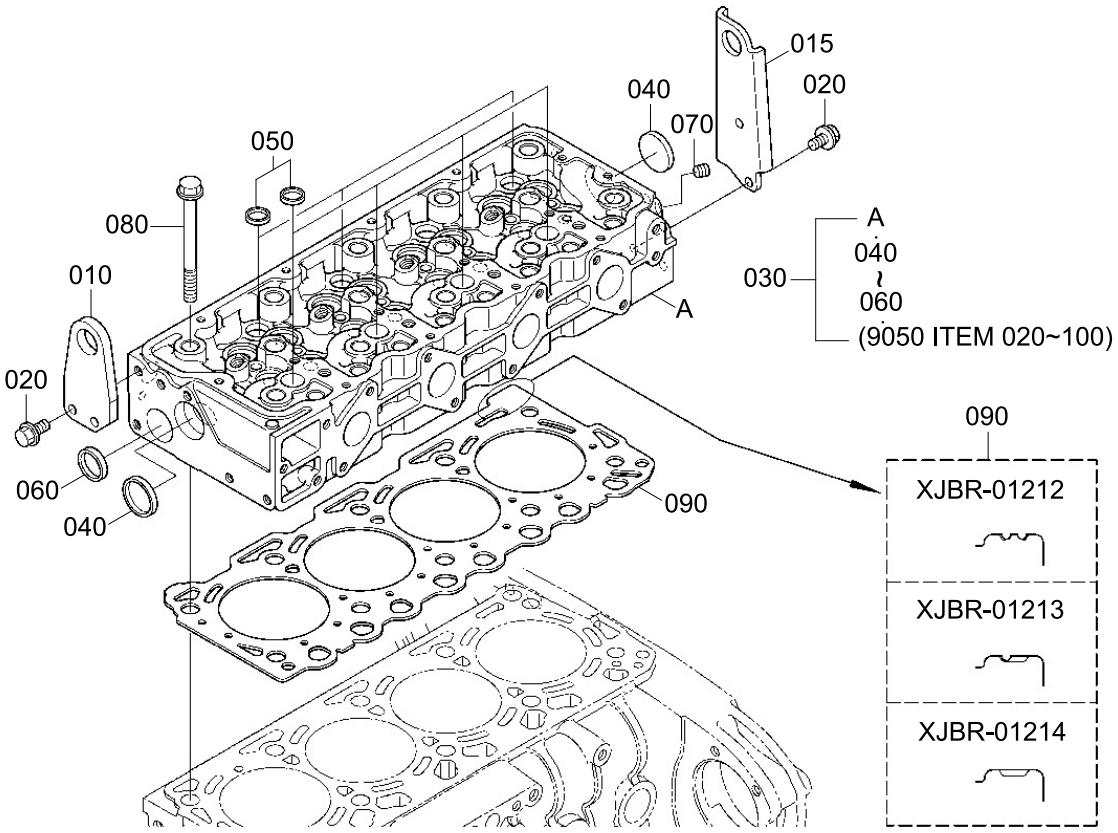

Item	Part_No	IS	Ord	T	Description	Qty	Serial_No	ITC	Remark
010	XJBR-01627				HOOK-ENGINE	1			
015	XJBR-01628				HOOK-ENGINE	1			
020	XJBR-01210				FLANGE BOLT	4			
030	XJBR-01211				CYLINDER HEAD ASSY	1			
040	XJBR-00886				.SEALING CAP	2			
050	XJBR-01196				.SEALING CAP	8			
060	XJBR-01195				.SEALING CAP	1			
070	XJBR-00864				PLUG	1			
080	XJBR-01193				BOLT	10			
090	XJBR-01212				GASKET-CYLINDER HEAD	1			STD, 2 NOTCH
	XJBR-01213				GASKET-CYLINDER HEAD	1			1 NOTCH
	XJBR-01214				GASKET-CYLINDER HEAD	1			NO NOTCH

INLET VALVE AND EXHAUST VALVE

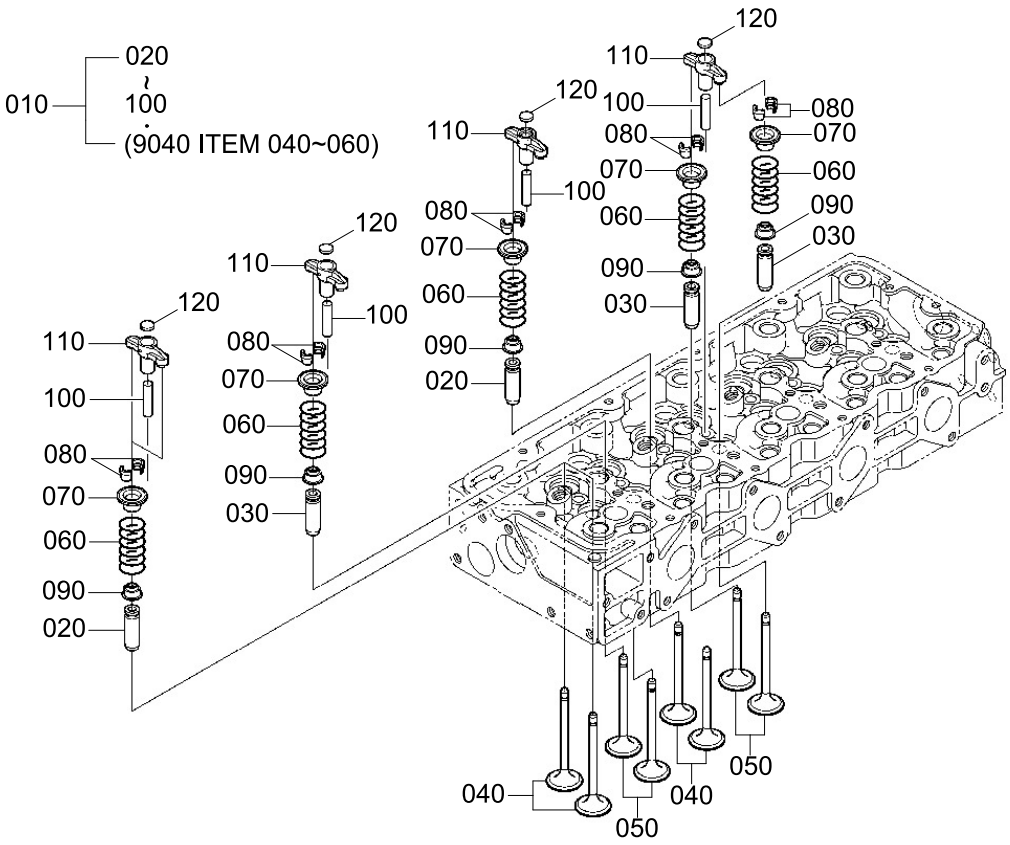

Item	Part_No	IS	Ord	T	Description	Qty	Serial_No	ITC	Remark
010	XJBR-01211				CYLINDER HEAD ASSY	1			
020	XJBR-01217				.GUIDE-INLET VALVE	8			
030	XJBR-01218				.GUIDE-EXHAUST VALVE	8			
040	XJBR-01219				.INLET VALVE	8			
050	XJBR-01220				.EXHAUST VALVE	8			
060	XJBR-01221				.SPRING VALVE	16			
070	XJBR-01222				.RETAINER-SPRING	16			
080	XJBR-01629				.COLLET-VALVE SPRING	16			
090	XJBR-01224				.SEAL-VALVE STEM	16			
100	XJBR-01225				.SHAFT-VALVE	8			
110	XJBR-01226				ARM-VALVE BRIGE	8			
120	XJBR-01630				PAD	8			

ROCKER ARM SHAFT

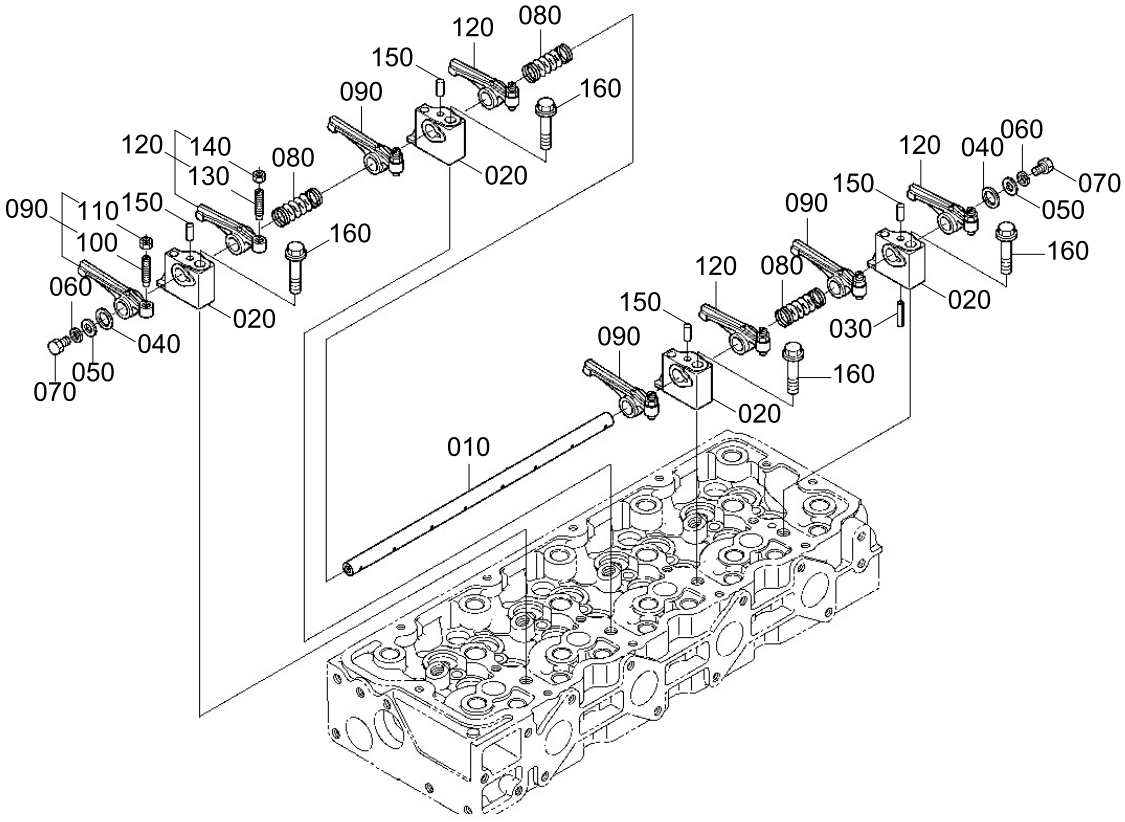

Item	Part_No	IS	Ord	T	Description	Qty	Serial_No	ITC	Remark
010	XJBR-01228				SHAFT-ROCKER ARM	1			
020	XJBR-01229				BRACKET-ROCKER ARM	4			
030	XJBR-01230				PIN-SPRING	1			
040	XJBR-01231				WASHER	2			
050	XJBR-00646				WASHER-PLAIN	2			
060	XJBR-00648				SPRING WASHER	2			
070	XJBR-00629				BOLT	2			
080	XJBR-01232				SPRING-ROCKER ARM	3			
090	XJBR-01233				ROCKER ARM-INLET ASSY	4			
100	XJBR-01182				.SCREW-ADJUSTING	4			
110	XJBR-01183				.NUT	4			
120	XJBR-01234				ROCKER ARM-EXH ASSY	4			
130	XJBR-01182				.SCREW-ADJUSTING	4			
140	XJBR-01183				.NUT	4			
150	XJBR-01235				PIN-STRAIGHT	4			
160	XJBR-01236				FLANGE BOLT	4			

HEAD COVER

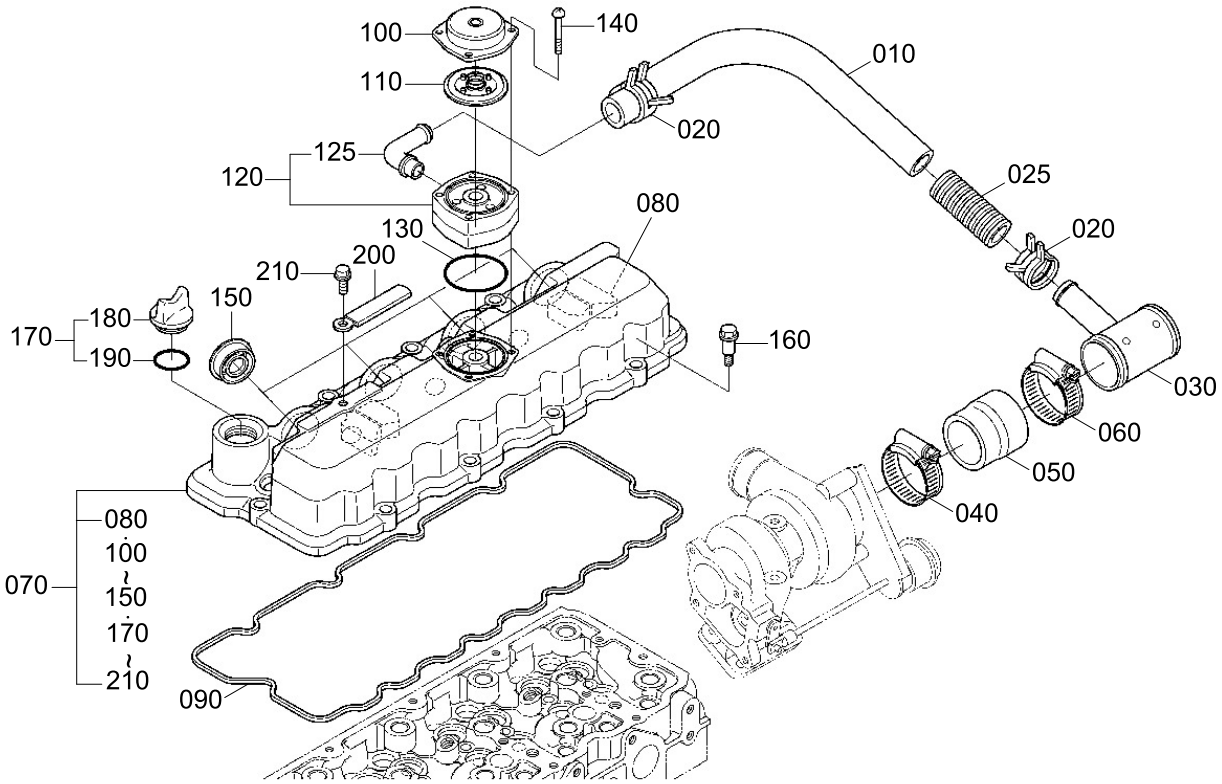
100
140
110
010
020
125
120
025
080
020
130
210
200
150
180
170
190
160
030
060
050
040
080
100
150
170
210
070
090

Item	Part_No	IS	Ord	T	Description	Qty	Serial_No	ITC	Remark
010	XJBR-01237				TUBE-BREATHER	1			
020	XJBR-00675				CLAMP-HOSE	2			
025	XJBR-01631				TUBE-PIPE	1			
030	XJBR-01239				VALVE-BREATHER	1			
040	XJBR-01632				CLAMP-HOSE	1			
050	XJBR-01240				HOSE-BREATHER	1			
060	XJBR-01632				CLAMP-HOSE	1			
070	XJBR-01633				COVER-CYL HEAD ASSY	1			
080	XJBR-01243				.ELEMENT-BREATHER	4			
100	XJBR-00916				.BREATHER COVER	1			
110	XJBR-00917				.BREATHER VALVE	1			
120	XJBR-01245				.SPACER ASSY	1			
125	XJBR-01634				..JOINT-BREATHER	1			
130	XJBR-01246				.O-RING, BREATHER	1			
140	XJBR-01247				.SCREW-PAN-HEAD	4			
150	XJBR-01248				.SEAL-INJECTION PIPE	4			
170	XJBR-01249				.PLUG-OIL FILLER ASSY	1			
180	XJBR-01250				..PLUG-OIL FILLER	1			
190	XJBR-00241				..O-RING	1			
200	XJBR-01251				.CLAMP-CORD	1			
210	XJBR-00636				.FLANGE BOLT	1			
090	XJBR-01244				GASKET-HEAD COVER	1			
160	XJBR-00919				BOLT	10			

FRONT COVER

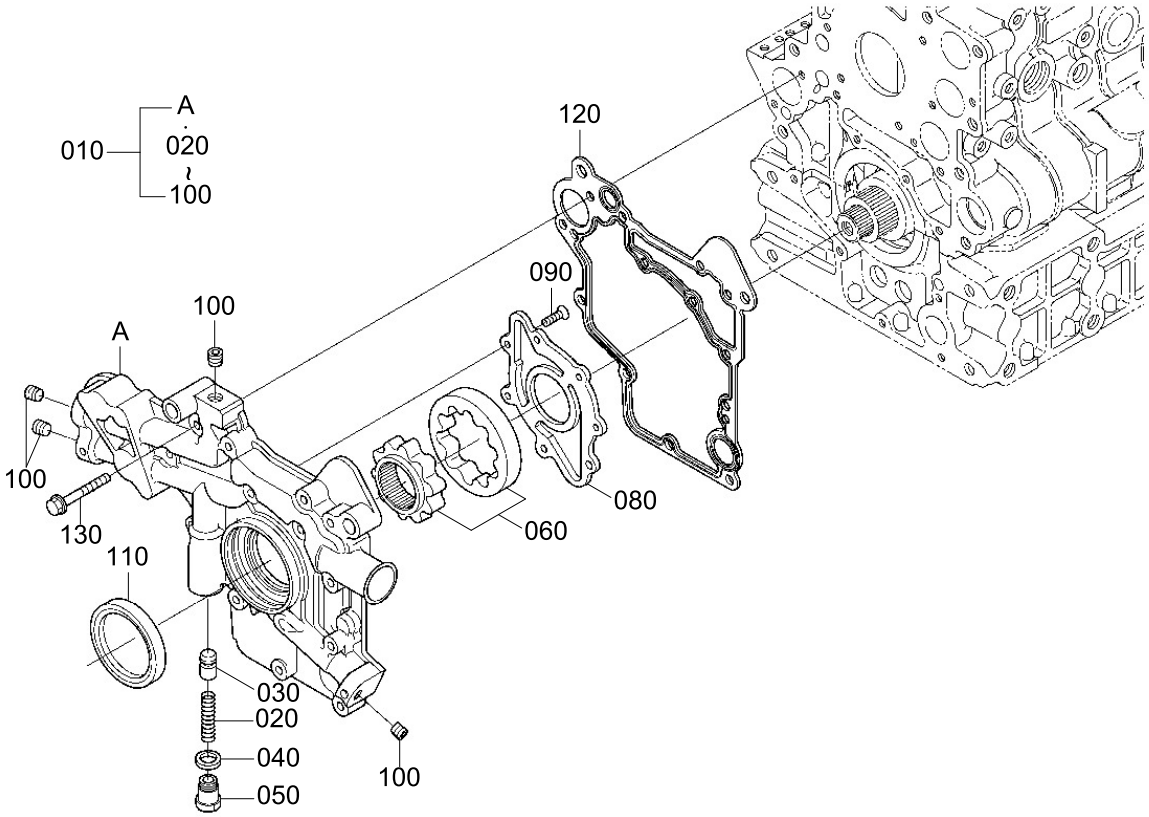
A
010
020
100
120
090
100
A
100
130
110
080
060
030
020
040
050
100

Item	Part_No	IS	Ord	T	Description	Qty	Serial_No	ITC	Remark
010	XJBR-01635				COVER-FRONT ASSY	1			
020	XJBR-01636				.SPRING	1			
030	XJBR-01254				.RELIEF VALVE	1			
040	XJBR-00880				.GASKET	1			
050	XJBR-01637				.PLUG	1			
060	XJBR-01256				.ROTOR-OIL PUMP ASSY	1			
080	XJBR-01257				.COVER-OIL PUMP	1			
090	XJBR-00220				.SCREW-CSK HD	7			
100	XJBR-01258				.PLUG	4			
110	XJBR-01259				OIL SEAL	1			
120	XJBR-01260				GASKET-FRONT COVER	1			
130	XJBR-01639				FLANGE BOLT	13			

PISTON AND CRANKSHAFT

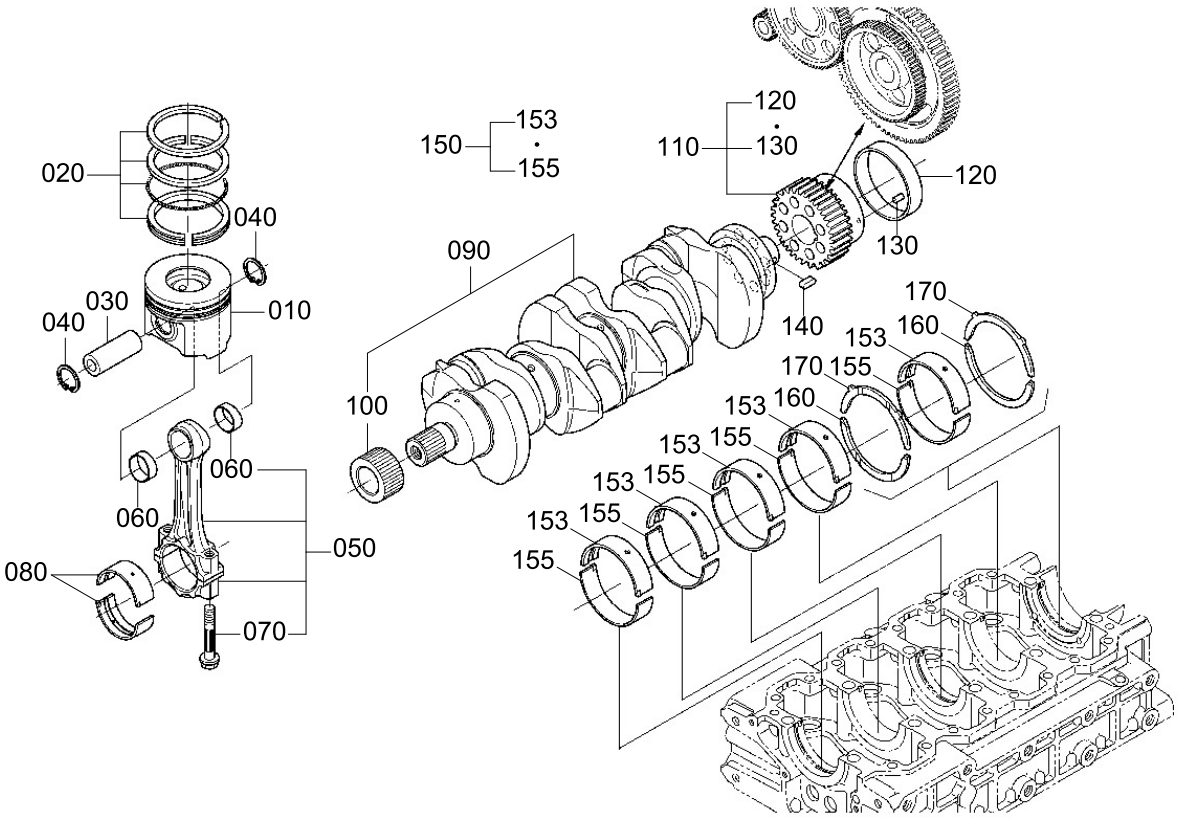

Item	Part_No	IS	Ord	T	Description	Qty	Serial_No	ITC	Remark
010	XJBR-01640				PISTON	4			(05)STD
	XJBR-01641				PISTON	4			(05)+0.5MM
	XJBR-01642				PISTON	4			(00)STD
	XJBR-01643				PISTON	4			(00)+0.50MM
	XJBR-01644				PISTON	4			(10)STD
	XJBR-01645				PISTON	4			(10)+0.5MM
020	XJBR-01267				PISTON RING ASSY	4			STD
	XJBR-01268				PISTON RING ASSY	4			+0.5MM
030	XJBR-01269				PIN-PISTON	4			
040	XJBR-01270				CIRCLIP-INTERNAL	8			
050	XJBR-01646				ROD-CONNECTING ASSY	4			
060	XJBR-01272				.BUSH-PISTON PIN	8			
070	XJBR-01273				.BOLT-CONNECTING ROD	8			
080	XJBR-01274				METAL-CRANKPIN	4			STD/BLUE
	XJBR-01275				METAL-CRANKPIN	4			STD
	XJBR-01276				METAL-CRANKPIN	4			-0.2MM/GREEN
	XJBR-01277				METAL-CRANKPIN	4			-0.4MM/RED
090	XJBR-01278				CRANKSHAFT	1			
100	XJBR-01279				.GEAR-OIL PUMP DRIVE	1			
110	XJBR-01648				GEAR-CRANKSHAFT ASSY	1			
120	XJBR-01281				.SLEEVE-CRANKSHAFT	1			
130	XJBR-00660				.PIN-STRAIGHT	1			
140	XJBR-01649				KEY-STRAIGHT	1			
150	XJBR-01650				KIT METAL-CRANKSHAFT	5			
	XJBR-01651				KIT METAL-CRANKSHAFT	5			-0.20MM
	XJBR-01652				KIT METAL-CRANKSHAFT	5			-0.40MM

Item	Part_No	IS	Ord	T	Description	Qty	Serial_No	ITC	Remark
153	XJBR-01283				.METAL-CRANKSHAFT	5			-0.20MM
	XJBR-01284				.METAL-CRANKSHAFT	5			-0.40MM
155	XJBR-01286				.METAL-CRANKSHAFT	5			-0.20MM
	XJBR-01287				.METAL-CRANKSHAFT	5			-0.40MM
160	XJBR-01288				METAL-SIDE	2			STD
	XJBR-01289				METAL-SIDE	2			+0.20MM
	XJBR-01290				METAL-SIDE	2			+0.40MM
170	XJBR-01291				METAL-SIDE	2			STD
	XJBR-01292				METAL-SIDE	2			+0.20MM
	XJBR-01293				METAL-SIDE	2			+0.40MM

CAMSHAFT AND IDLE GEAR SHAFT

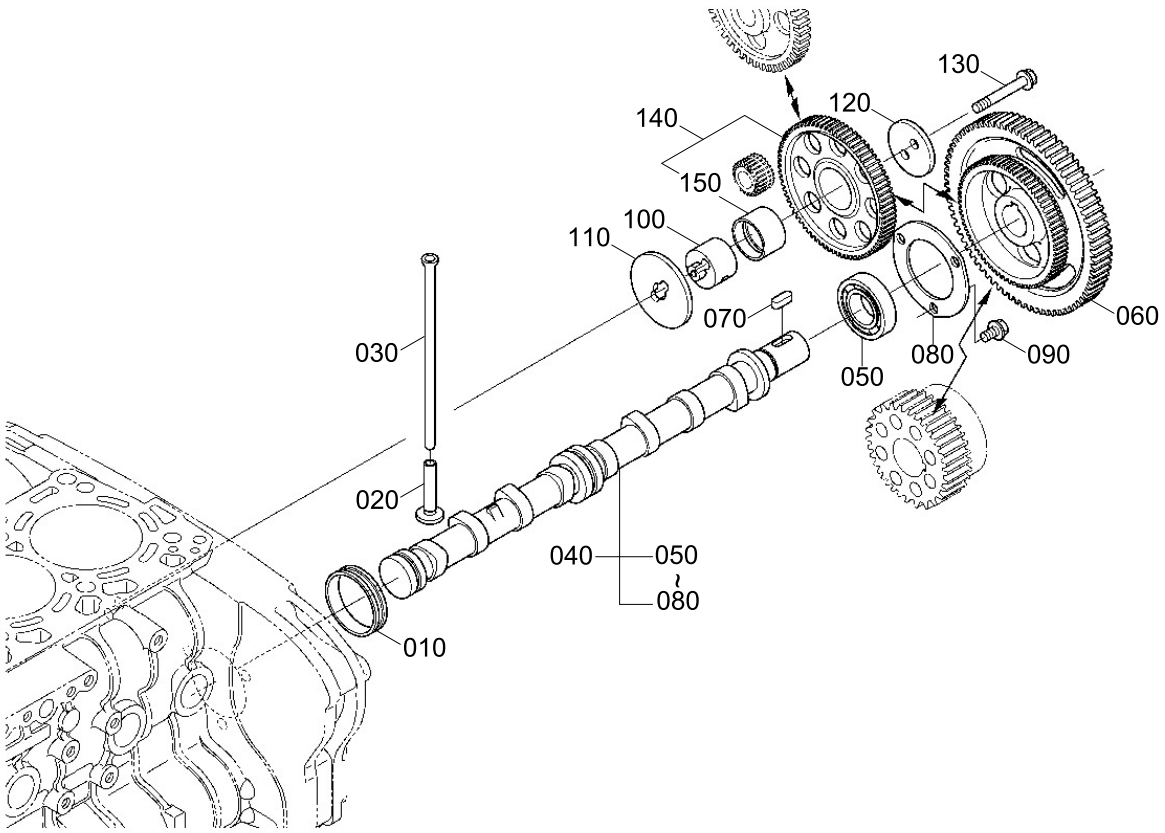

Item	Part_No	IS	Ord	T	Description	Qty	Serial_No	ITC	Remark
010	XJBR-01299				COVER-CAMSHAFT	1			
020	XJBR-01300				TAPPET	8			
030	XJBR-01301				PUSH-ROD	8			
040	XJBR-01653				CAMSHAFT ASSY	1			
050	XJBR-01654				.BALL BEARING	1			
060	XJBR-01655				.CAM GEAR	1			
070	XJBR-00665				.KEY-FEATHER	1			
080	XJBR-01306				.STOPPER-CAMSHAFT	1			
090	XJBR-01202				FLANGE BOLT	3			
100	XJBR-01307				SHAFT-IDLE GEAR	1			
110	XJBR-01308				COLLAR-IDLE GEAR	1			
120	XJBR-01309				COLLAR-IDLE GEAR	1			
130	XJBR-01310				FLANGE BOLT	2			
140	XJBR-01311				IDLE GEAR	1			
150	XJBR-01312				.BUSH-IDLE GEAR	1			

FLYWHEEL

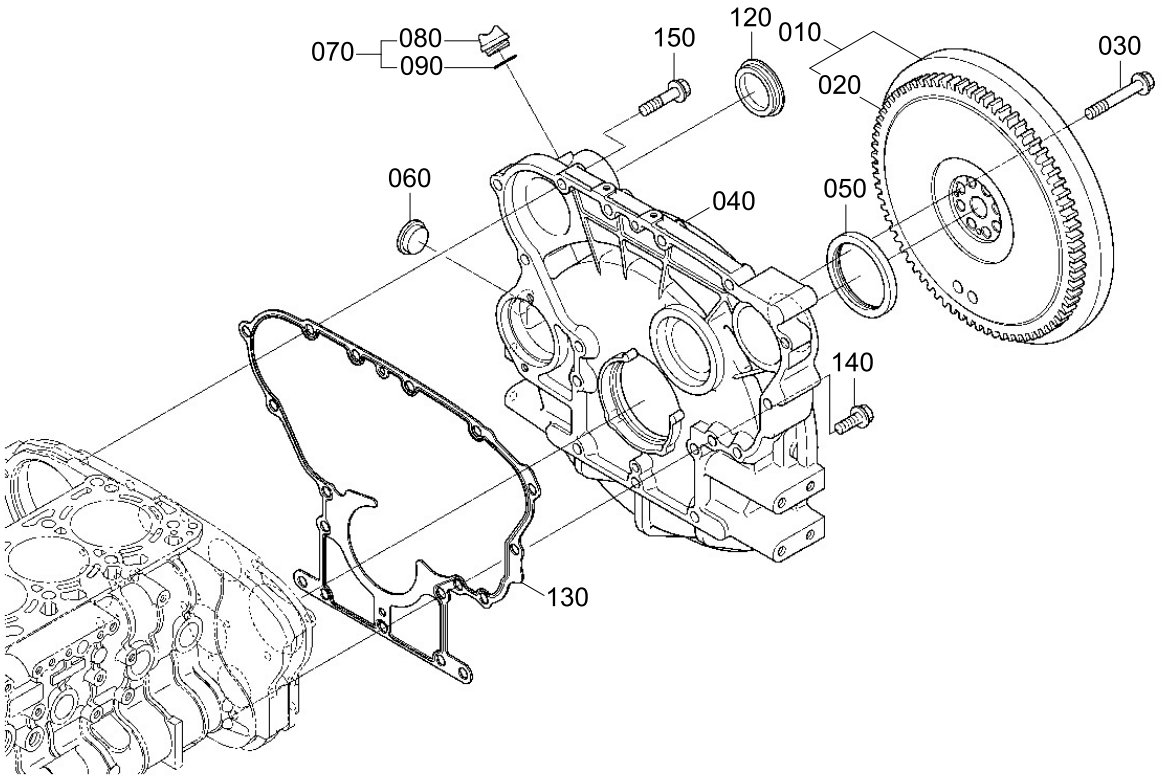

Item	Part_No	IS	Ord	T	Description	Qty	Serial_No	ITC	Remark
010	XJBR-01313				FLYWHEEL	1			
020	XJBR-01314				.RING GEAR	1			
030	XJBR-01315				BOLT-FLYWHEEL	8			
040	XJBR-01658				HOUSING-FLYWHEEL	1			
050	XJBR-01317				OIL SEAL	1			
060	XJBR-01318				COVER	1			
070	XJBR-01249				PLUG-OIL FILLER ASSY	1			
080	XJBR-01250				.PLUG-OIL FILLER	1			
090	XJBR-00241				.O-RING	1			
120	XJBR-01323				PLUG	1			
130	XJBR-01319				GASKET-HOUSING	1			
140	XJBR-01671				FLANGE BOLT	8			
150	XJBR-01321				FLANGE BOLT	8			

INJECTION PUMP UNIT

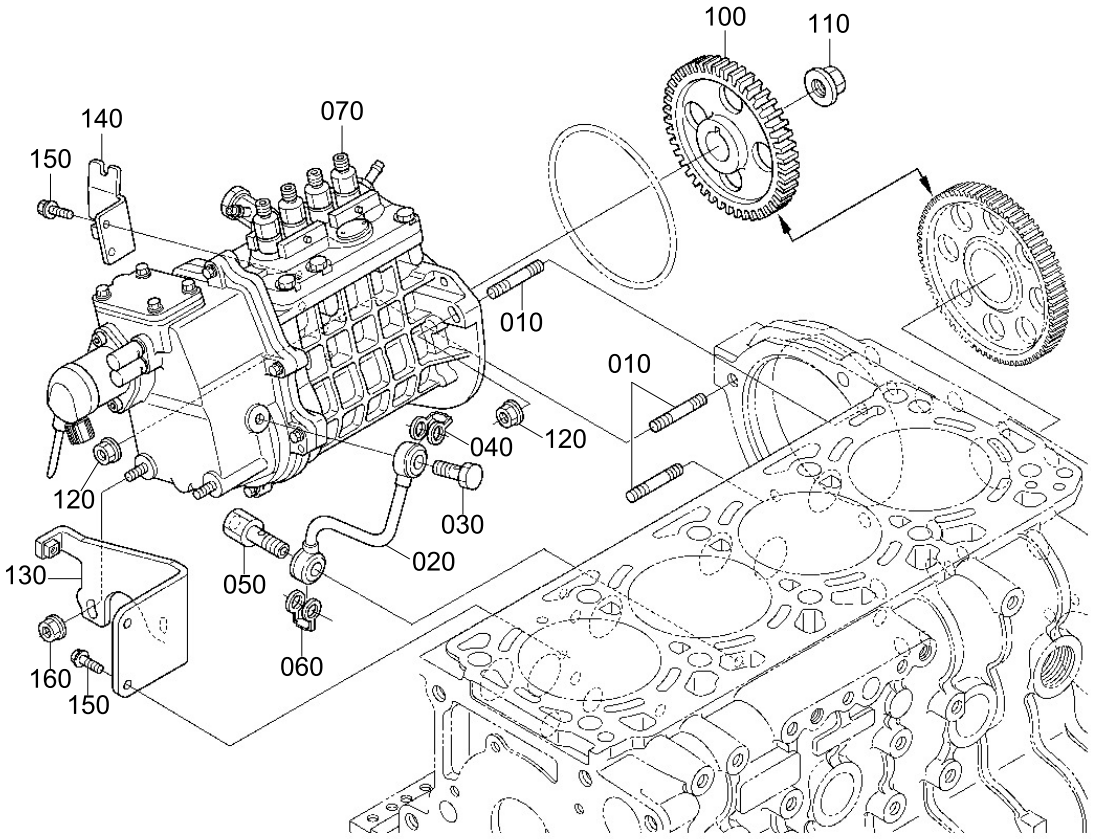

Item	Part_No	IS	Ord	T	Description	Qty	Serial_No	ITC	Remark
010	XJBR-01672				STUD	3			
020	XJBR-01327				PIPE-IP OIL	1			
030	XJBR-01328				BOLT-EYE JOINT	1			
040	XJBR-01329				GASKET	1			
050	XJBR-01330				BOLT-JOINT	1			
060	XJBR-01331				GASKET	1			
070	XJBR-01673				INJECTION PUMP KIT	1			
100	XJBR-01674				GEAR-INJECTION PUMP	1			
110	XJBR-01335				NUT-INJECTION PUMP GEAR	1			
120	XJBR-00203				FLANGE NUT	3			
130	XJBR-01336				BRACKET-INJECTION PUMP	1			
140	XJBR-01675				BRACKET-ACCEL CABLE	1			
150	XJBR-00200				FLANGE BOLT	4			
160	XJBR-00203				FLANGE NUT	2			

INJECTION PUMP HOUSING

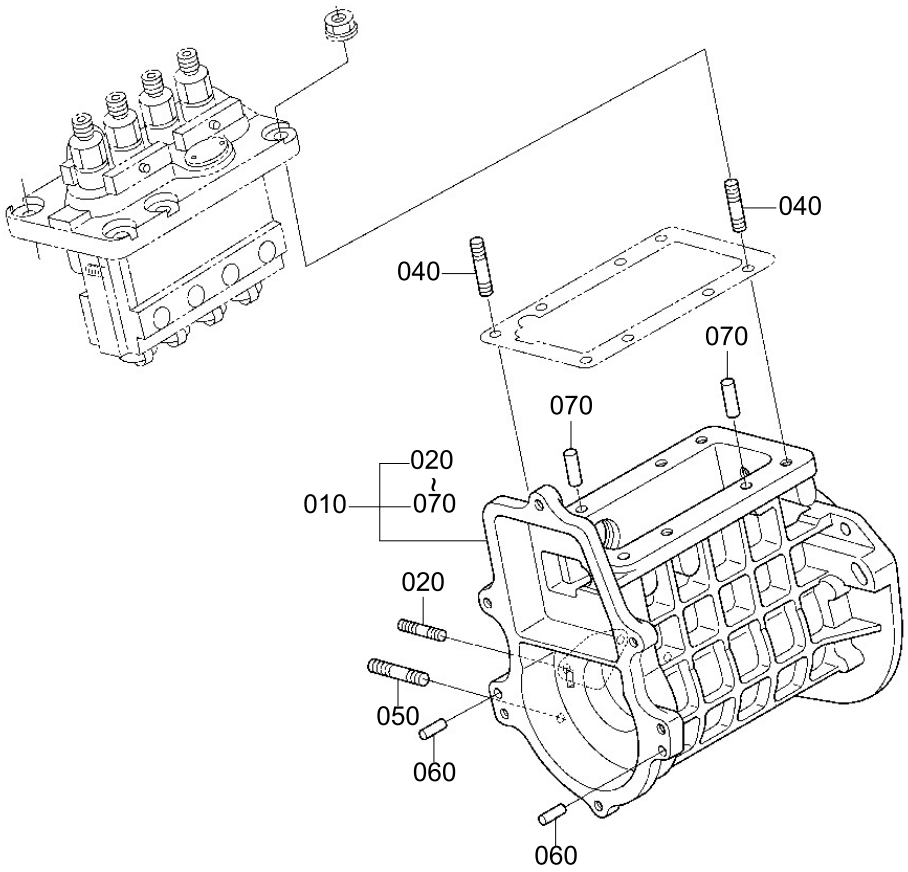

Item	Part_No	IS	Ord	T	Description	Qty	Serial_No	ITC	Remark
010	XJBR-01676				I/P HOUSING ASSY	1			
020	XJBR-01341				.STUD	2			
040	XJBR-01027				.STUD	2			
050	XJBR-01677				.STUD	2			
060	XJBR-00429				.PIN-STRAIGHT	2			
070	XJBR-00426				.PIN-STRAIGHT	2			

INJECTION PUMP

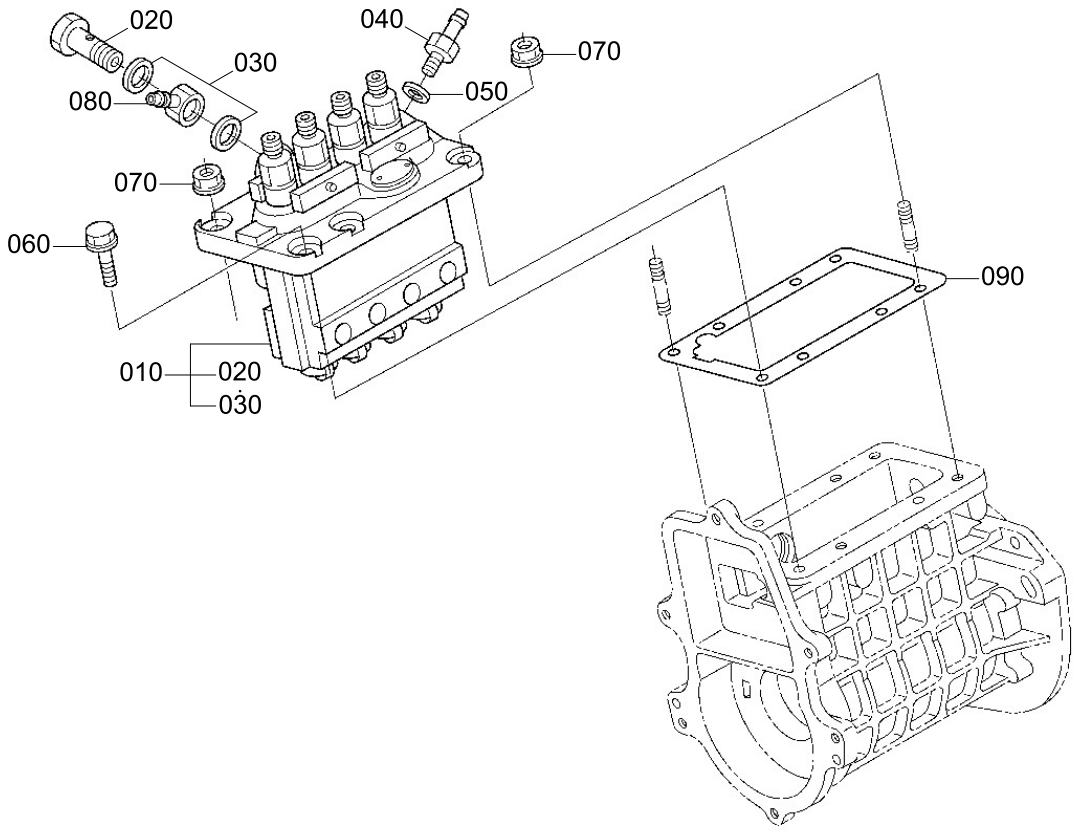

Item	Part_No	IS	Ord	T	Description	Qty	Serial_No	ITC	Remark
010	XJBR-01344				PUMP-INJECTION ASSY	1			
020	XJBR-01678				.JOINT BOLT	1			
030	XJBR-01032				.GASKET	2			
040	XJBR-01345				SCREW-AIR BREEDER	1			
050	XJBR-00873				GASKET	1			
060	XJBR-00307				FLANGE BOLT	4			
070	XJBR-00203				FLANGE NUT	2			
080	XJBR-01028				JOINT-EYE	1			
090	XJBR-01026				SHIM(0.350T)-INJECT PUMP	1			

FUEL PUMP

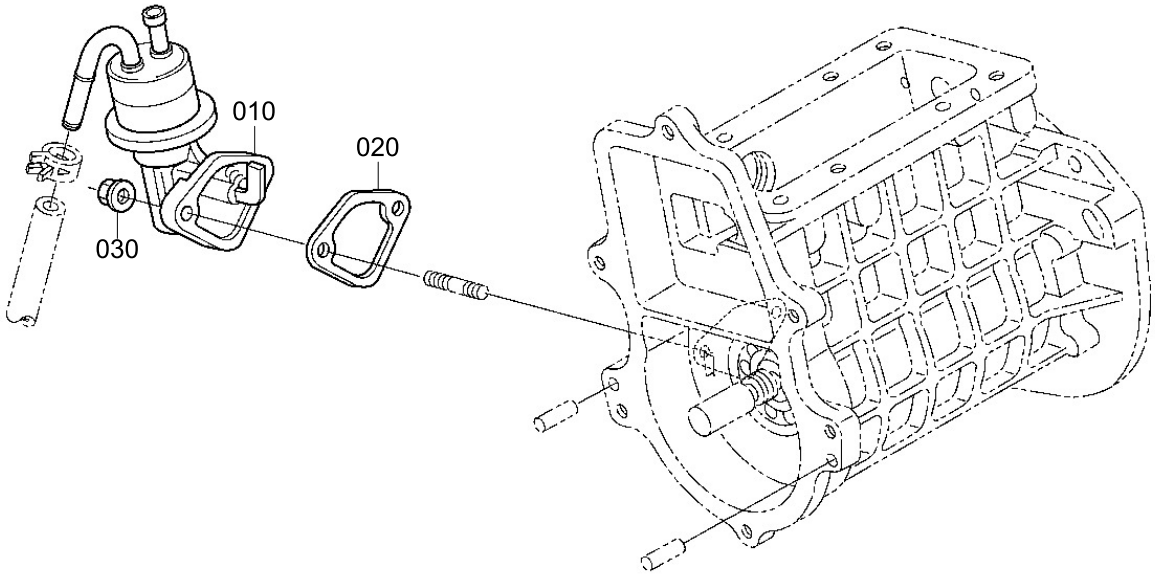

Item	Part_No	IS	Ord	T	Description	Qty	Serial_No	ITC	Remark
010	XJBR-01659				FUEL PUMP ASSY	1			
020	XJBR-01347				GASKET-FUEL PUMP	1			
030	XJBR-00479				FLANGE NUT	2			

FUEL CAMSHAFT

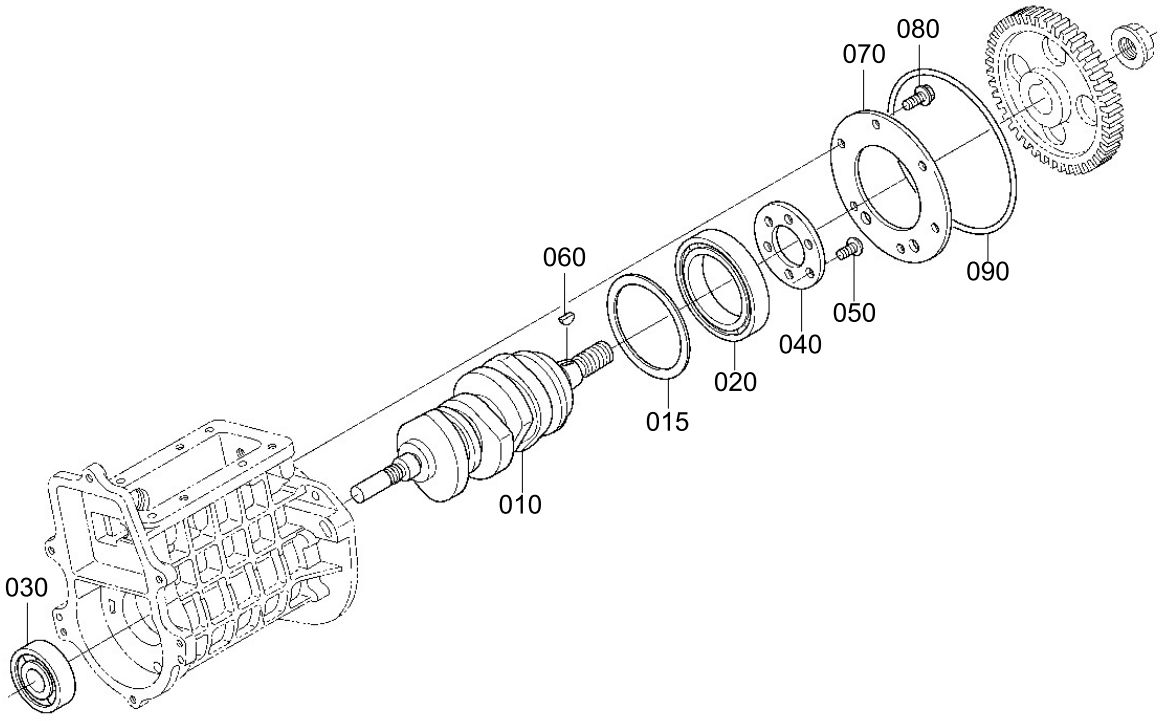

Item	Part_No	IS	Ord	T	Description	Qty	Serial_No	ITC	Remark
010	XJBR-01348				CAMSHAFT-FUEL	1			
015	XJBR-01660				COLLAR-F/CAM BEARING	1			
020	XJBR-01661				BALL BEARING	1			
030	XJBR-01350				BALL BEARING	1			
040	XJBR-01351				STOPPER	1			
050	XJBR-01352				SCREW	6			
060	XJBR-01353				WOODRUFF KEY	1			
070	XJBR-01662				STOPPER-FUEL C/SHAFT	1			
080	XJBR-01355				FLANGE BOLT	6			
090	XJBR-01333				GASKET-INJECTION PUMP	1			

GOVERNOR

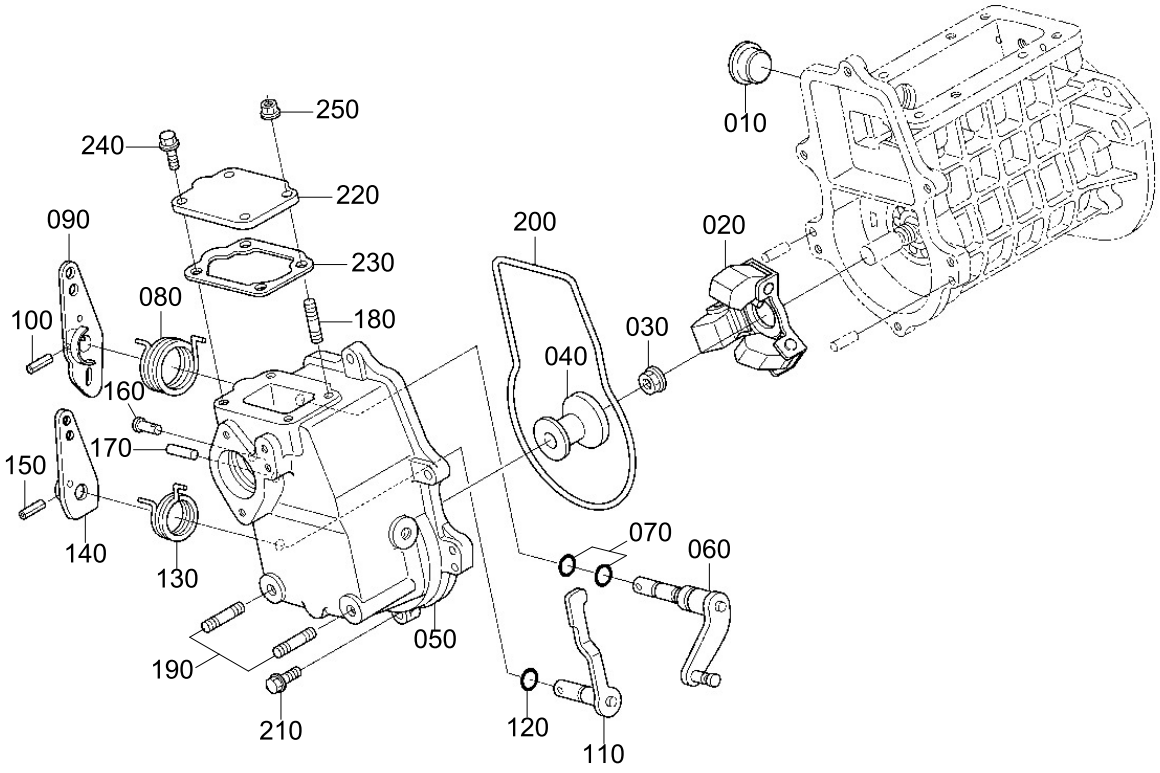
250
240
220
090
230
080
180
100
160
170
150
140
130
190
210
050
200
040
030
020
010
070
060
120
110

Item	Part_No	IS	Ord	T	Description	Qty	Serial_No	ITC	Remark
010	XJBR-01356				COVER-GOVERNOR ROD	1			
020	XJBR-01357				WEIGHT-GOVERNOR ASSY	1			
030	XJBR-00314				FLANGE NUT	1			
040	XJBR-01358				SLEEVE-GOVERNOR	1			
050	XJBR-01663				HOUSING-GOVERNOR	1			
060	XJBR-01360				LEVER ASSY	1			
070	XJBR-00326				O-RING	2			
080	XJBR-01361				SPRING	1			
090	XJBR-01664				LEVER-SPEED CONTROL	1			
100	XJBR-00324				SPRING PIN	1			
110	XJBR-01363				ENG STOP LEVER ASSY	1			
120	XJBR-00326				O-RING	1			
130	XJBR-01364				SPRING-RETURN	1			
140	XJBR-01665				LEVER-ENGINE STOP	1			
150	XJBR-00324				SPRING PIN	1			
160	XJBR-01366				PIN-START SPRING	1			
170	XJBR-01367				PIN-STRAIGHT	1			
180	XJBR-01368				STUD	1			
190	XJBR-00455				STUD	2			
200	XJBR-01369				GASKET-GOV HOUSING	1			
210	XJBR-00457				FLANGE BOLT	6			
220	XJBR-01370				COVER-BOOST HOUSING	1			
230	XJBR-01020				GASKET-PLATE	1			
240	XJBR-01355				FLANGE BOLT	3			
250	XJBR-00479				FLANGE NUT	1			

FORK LEVER (GOVERNOR)

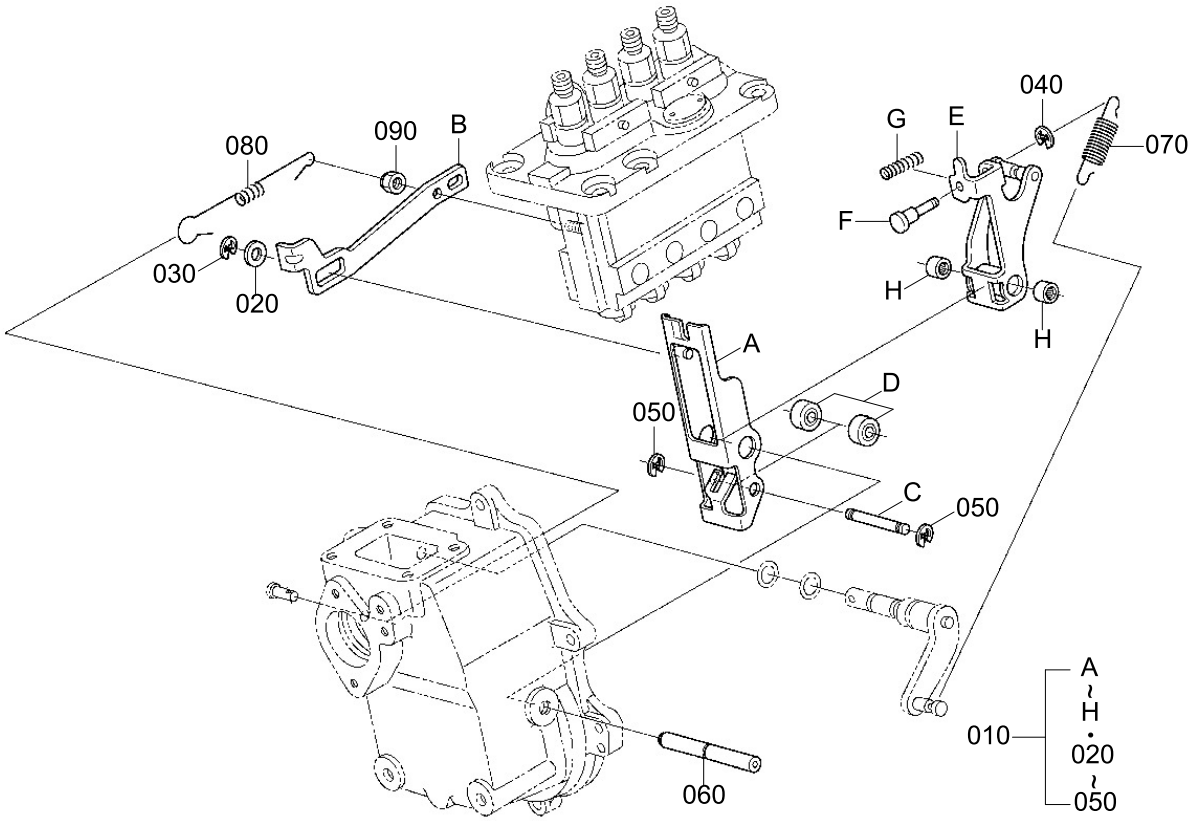

Item	Part_No	IS	Ord	T	Description	Qty	Serial_No	ITC	Remark
010	XJBR-01666				FORK LEVER ASSY	1			
020	XJBR-00447				.WASHER-PLAIN	1			
030	XJBR-00448				.CIRCLIP-EXTERNAL	1			
040	XJBR-00450				.CIRCLIP-EXTERNAL	1			
050	XJBR-00449				.CIRCLIP-EXTERNAL	2			
060	XJBR-01667				SHAFT-FORK LEVER	1			
070	XJBR-01668				SPRING-GOVERNOR	1			
080	XJBR-01374				SPRING-START	1			
090	XJBR-01375				LOCK NUT	1			

RESTRICTION ADJUSTING BOLT

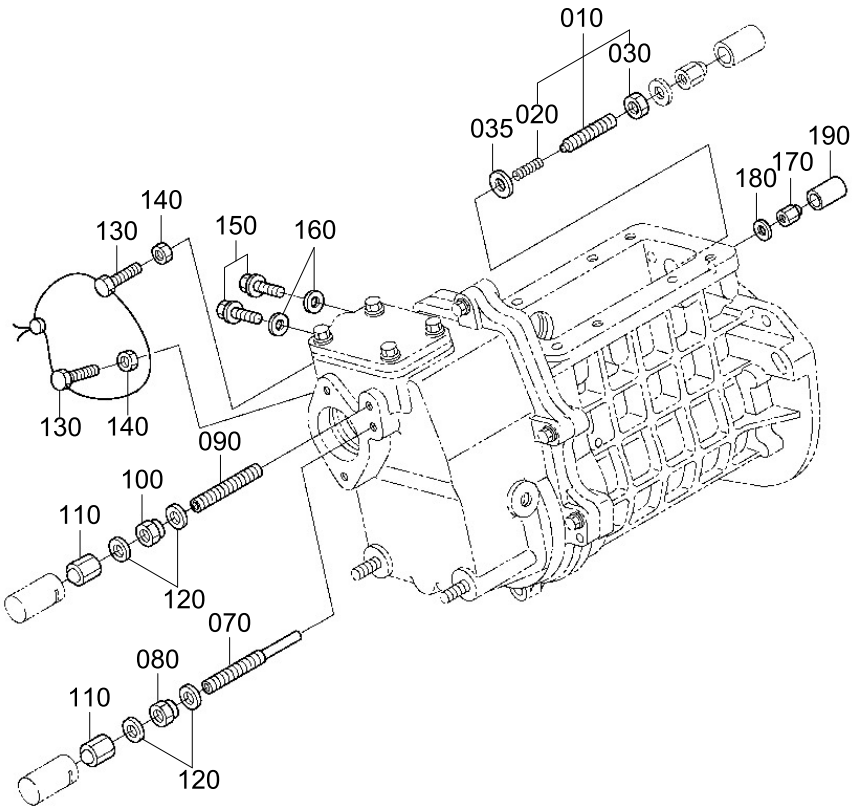

Item	Part_No	IS	Ord	T	Description	Qty	Serial_No	ITC	Remark
010	XJBR-01669				ADJUSTMENT BOLT ASSY	1			
020	XJBR-01670				.SPRING	1			
030	XJBR-01377				.NUT	1			
035	XJBR-00873				GASKET	1			
070	XJBR-01380				ADJUSTING BOLT	1			
080	XJBR-01381				LOCK NUT	1			
090	XJBR-01680				ADJUSTING BOLT	1			
100	XJBR-01381				LOCK NUT	1			
110	XJBR-01047				NUT	2			
120	XJBR-01046				GASKET	4			
130	XJBR-01681				BOLT-IDLING ADJUST	2			
140	XJBR-00334				NUT	2			
150	XJBR-00200				FLANGE BOLT	2			
160	XJBR-00873				GASKET	2			
170	XJBR-01338				NUT	1			
180	XJBR-00873				GASKET	1			
190	XJBR-01339				CAP	1			

STARTER (COMPONENT PARTS)

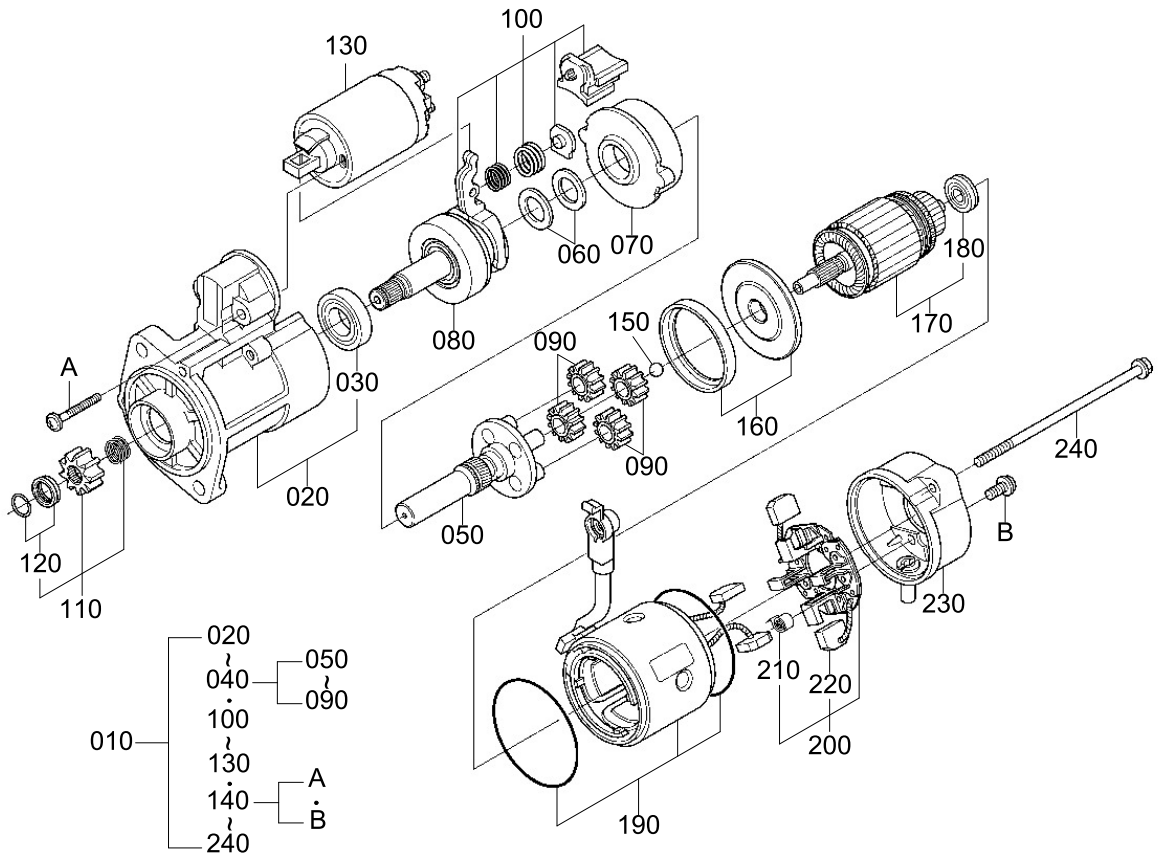

Item	Part_No	IS	Ord	T	Description	Qty	Serial_No	ITC	Remark
010	XJBR-01436				STARTER ASSY	1			
020	XJBR-01437				.BRACKET-FRONT ASSY	1			
030	XJBR-01438				..SET-BEARING	1			
040	XJBR-01439				.SHAFT-CLUTCH ASSY	1			
050	XJBR-01440				..SHAFT-GEAR ASSY	1			
060	XJBR-01441				..SET-WASHER	1			
070	XJBR-01442				..SET-INTERNAL GEAR	1			
080	XJBR-01443				..CLUTCH-OVER RUNNING	1			
090	XJBR-01444				..GEAR ASSY	4			
100	XJBR-01445				.LEVER-SET ASSY	1			
110	XJBR-01446				..SET-PINION	1			
120	XJBR-01447				..SET-STOPPER	1			
130	XJBR-01448				.SWITCH-MAGNETIC ASSY	1			
140	XJBR-01449				.SET SCREW	1			
150	XJBR-01450				.BALL	1			
160	XJBR-01451				.PACKING SET	1			
170	XJBR-01452				.ARMATURE ASSY	1			
180	XJBR-01453				.BEARING	1			
190	XJBR-01454				.YOKE ASSY	1			
200	XJBR-01455				.HOLDER-BRUSH ASSY	1			
210	XJBR-01456				..BRUSH-SPRING	4			
220	XJBR-01457				..BRUSH	2			
230	XJBR-01458				.BRACKET-REAR ASSY	1			
240	XJBR-01459				.SET-BOLT	1			

STARTER (COMPONENT PARTS)

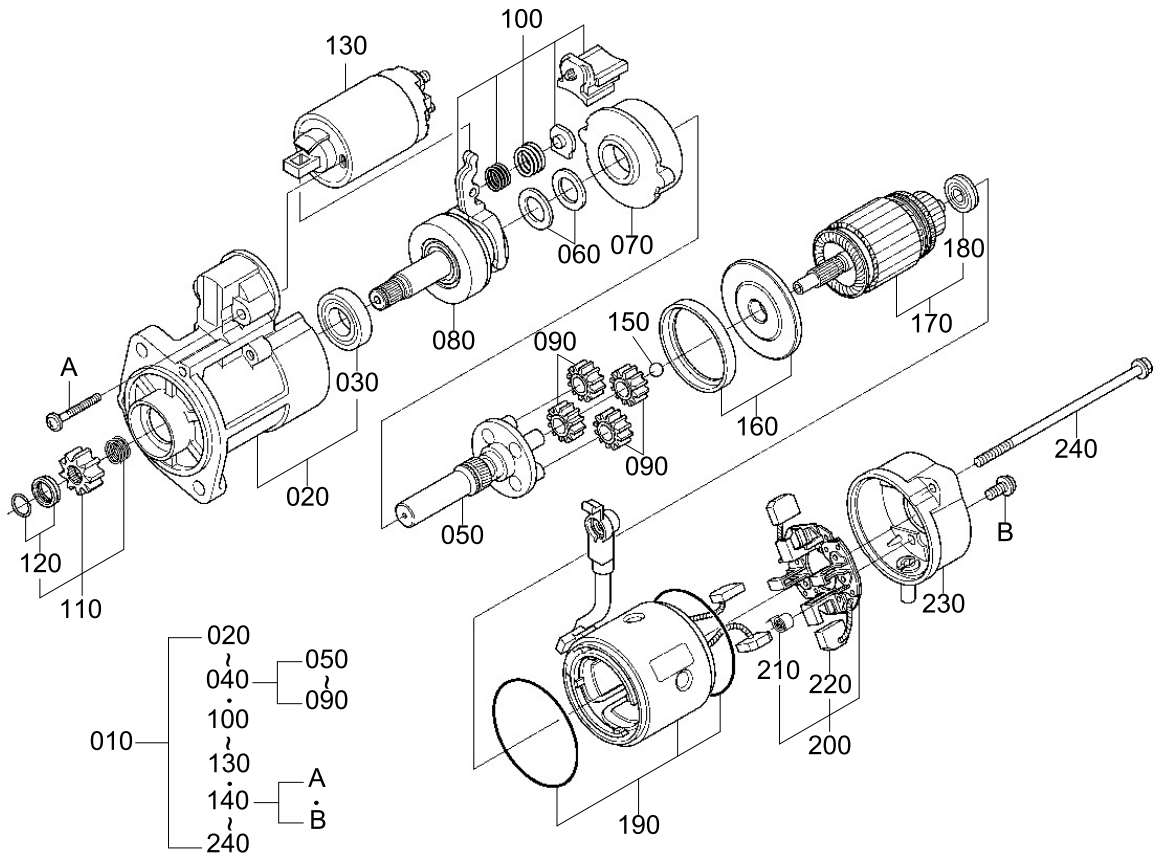

Item	Part_No	IS	Ord	T	Description	Qty	Serial_No	ITC	Remark
010	XJBR-01436				STARTER ASSY	1			
020	XJBR-01437				.BRACKET-FRONT ASSY	1			
030	XJBR-01438				..SET-BEARING	1			
040	XJBR-01439				.SHAFT-CLUTCH ASSY	1			
050	XJBR-01440				..SHAFT-GEAR ASSY	1			
060	XJBR-01441				..SET-WASHER	1			
070	XJBR-01442				..SET-INTERNAL GEAR	1			
080	XJBR-01443				..CLUTCH-OVER RUNNING	1			
090	XJBR-01444				..GEAR ASSY	4			
100	XJBR-01445				.LEVER-SET ASSY	1			
110	XJBR-01446				..SET-PINION	1			
120	XJBR-01447				..SET-STOPPER	1			
130	XJBR-01448				.SWITCH-MAGNETIC ASSY	1			
140	XJBR-01449				.SET SCREW	1			
150	XJBR-01450				.BALL	1			
160	XJBR-01451				.PACKING SET	1			
170	XJBR-01452				.ARMATURE ASSY	1			
180	XJBR-01453				.BEARING	1			
190	XJBR-01454				.YOKE ASSY	1			
200	XJBR-01455				.HOLDER-BRUSH ASSY	1			
210	XJBR-01456				..BRUSH-SPRING	4			
220	XJBR-01457				..BRUSH	2			
230	XJBR-01458				.BRACKET-REAR ASSY	1			
240	XJBR-01459				.SET-BOLT	1			

FUEL FILTER

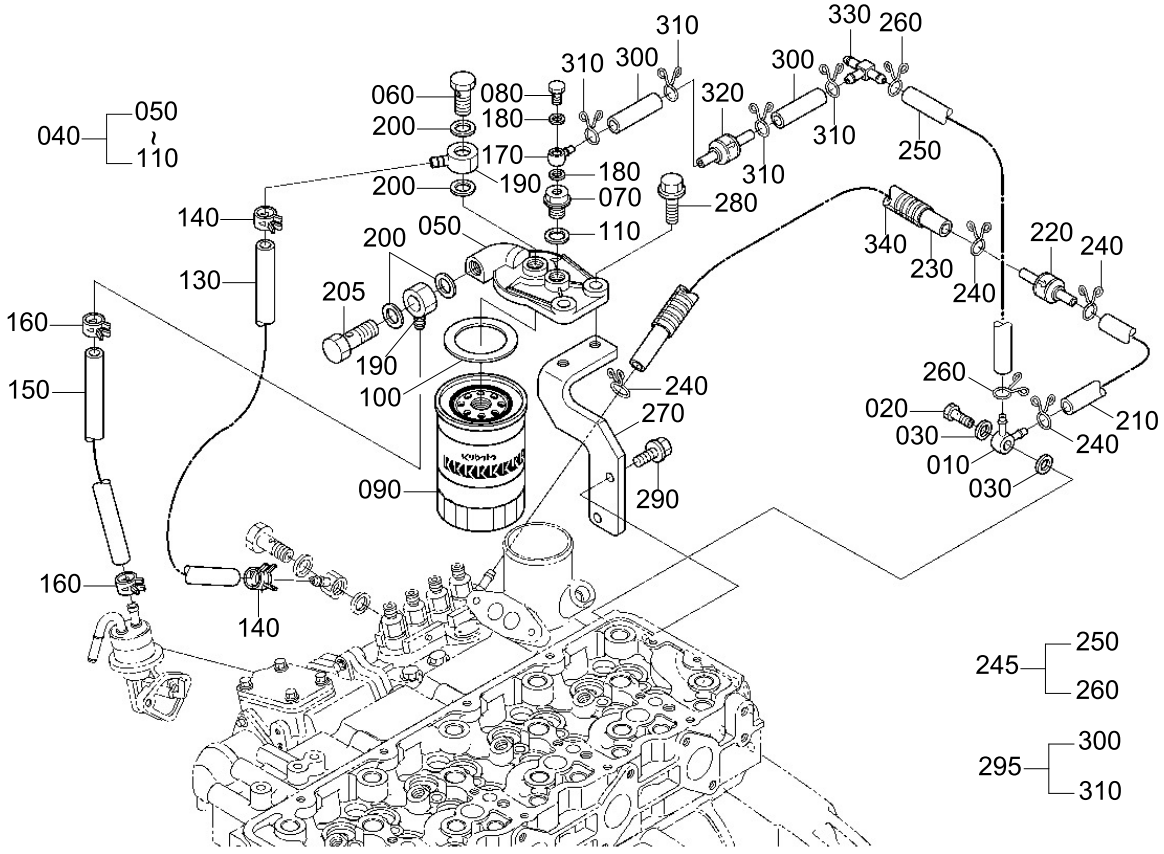
040
050
~
110
060
080
200
180
170
190
200
180
070
110
280
310
310
300
320
300
330
260
310
250
340
230
240
220
240
140
130
160
150
160
140
200
050
205
190
100
090
240
270
290
260
020
030
010
030
210
240
245
250
260
295
300
310

Item	Part_No	IS	Ord	T	Description	Qty	Serial_No	ITC	Remark
010	XJBR-01682				JOINT	1			
020	XJBR-01385				BOLT-EYE JOINT	1			
030	XJBR-00873				GASKET	2			
040	XJBR-01386				FUEL FILTER ASSY	1			
050	XJBR-01387				.COVER	1			
060	XJBR-01388				.BOLT-JOINT	1			
070	XJBR-01683				.CONNECTOR	1			
080	XJBR-01684				.CONNECTOR	1			
090	XJBR-01610				.ELEMENT- FUEL FILTER	1			
100	XJBR-01392				.GASKET	1			
110	XJBR-01393				.GASKET	1			
130	XJBR-01394				FUEL TUBE	1			
140	XJBR-01395				CLIP-PIPE	2			
150	XJBR-01396				FUEL TUBE	1			
160	XJBR-01395				CLIP-PIPE	2			
170	XJBR-01685				JOINT	1			
180	XJBR-00873				GASKET	2			
190	XJBR-01397				JOINT-EYE	2			
200	XJBR-01393				GASKET	4			
205	XJBR-01388				BOLT-JOINT	1			
210	XJBT-00447				FUEL TUBE	1			
220	XJBR-01399				FUEL CHECK VALVE	1			
230	XJBR-01687				FUEL TUBE	1			
240	XJBR-01054				CLIP-PIPE	4			
245	XJBR-01688				PIPE ASSY-OVER FLOW	1			
250	XJBT-00444				.FUEL TUBE	1			

Item	Part_No	IS	Ord	T	Description	Qty	Serial_No	ITC	Remark
260	XJBR-01054				.CLIP-PIPE	2			
270	XJBR-01690				BRACKET-FUEL FILTER	1			
280	XJBR-01691				FLANGE BOLT	2			
290	XJBR-00585				FLANGE BOLT	2			
295	XJBR-01692				PIPE ASSY-OVER FLOW	2			
300	XJBR-01400				.FUEL TUBE	2			
310	XJBR-01054				.CLIP-PIPE	4			
320	XJBR-01399				FUEL CHECK VALVE	1			
330	XJBR-01693				JOINT-T-PIPE	1			
340	XJBR-01694				TUBE-PIPE	1			

NOZZLE HOLDER AND GLOW PLUG

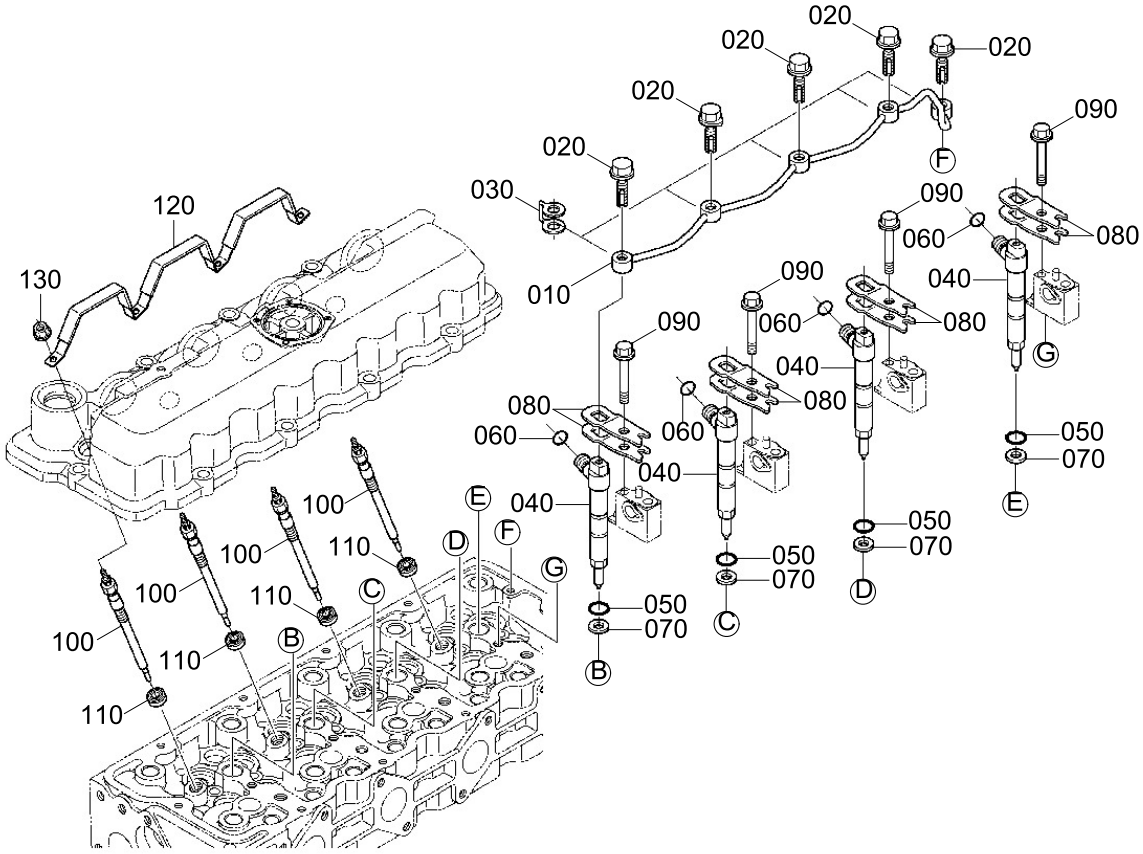

Item	Part_No	IS	Ord	T	Description	Qty	Serial_No	ITC	Remark
010	XJBR-01403				PIPE-COVER FLOW ASSY	1			
020	XJBR-01404				BOLT-EYE JOINT	5			
030	XJBR-01061				GASKET	5			
040	XJBR-01695				HOLDER ASSY-NOZZLE	4			
050	XJBR-01406				O-RING	4			
060	XJBR-01407				O-RING	4			
070	XJBR-01058				GASKET	4			
080	XJBR-01408				CLAMP-INJ NOZZLE	8			
090	XJBR-01409				FLANGE BOLT	4			
100	XJBR-01410				GLOW PLUG	4			
110	XJBR-01411				SEAL-GLOW PLUG	4			
120	XJBR-01412				CORD-GLOW PLUG	1			
130	XJBR-00363				FLANGE NUT	4			

INJECTION PIPE

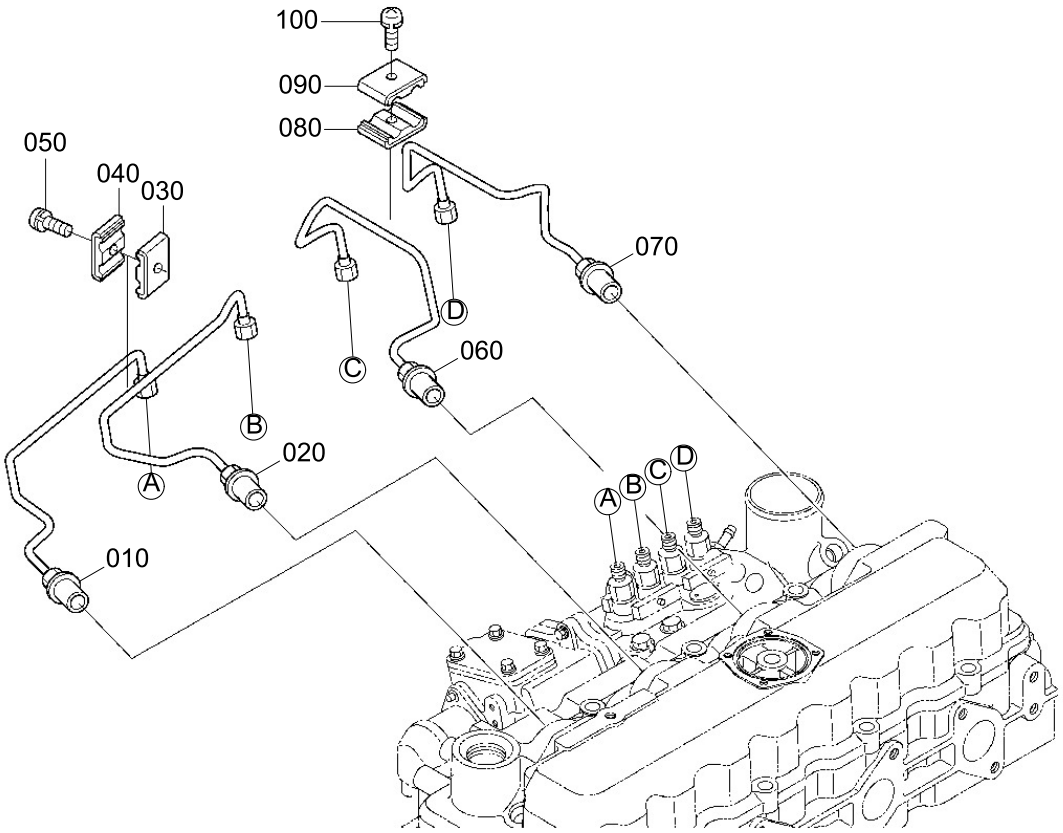

Item	Part_No	IS	Ord	T	Description	Qty	Serial_No	ITC	Remark
010	XJBR-01413				PIPE-INJECTION	1			
020	XJBR-01414				PIPE-INJECTION	1			
030	XJBR-01066				CLAMP-PIPE	1			
040	XJBR-01067				CLAMP-PIPE	1			
050	XJBR-00358				SCREW-WITH WASHER	1			
060	XJBR-01415				PIPE-INJECTION	1			
070	XJBR-01416				PIPE-INJECTION	1			
080	XJBR-01066				CLAMP-PIPE	1			
090	XJBR-01067				CLAMP-PIPE	1			
100	XJBR-00358				SCREW-WITH WASHER	1			

DYNAMO AND PULLEY

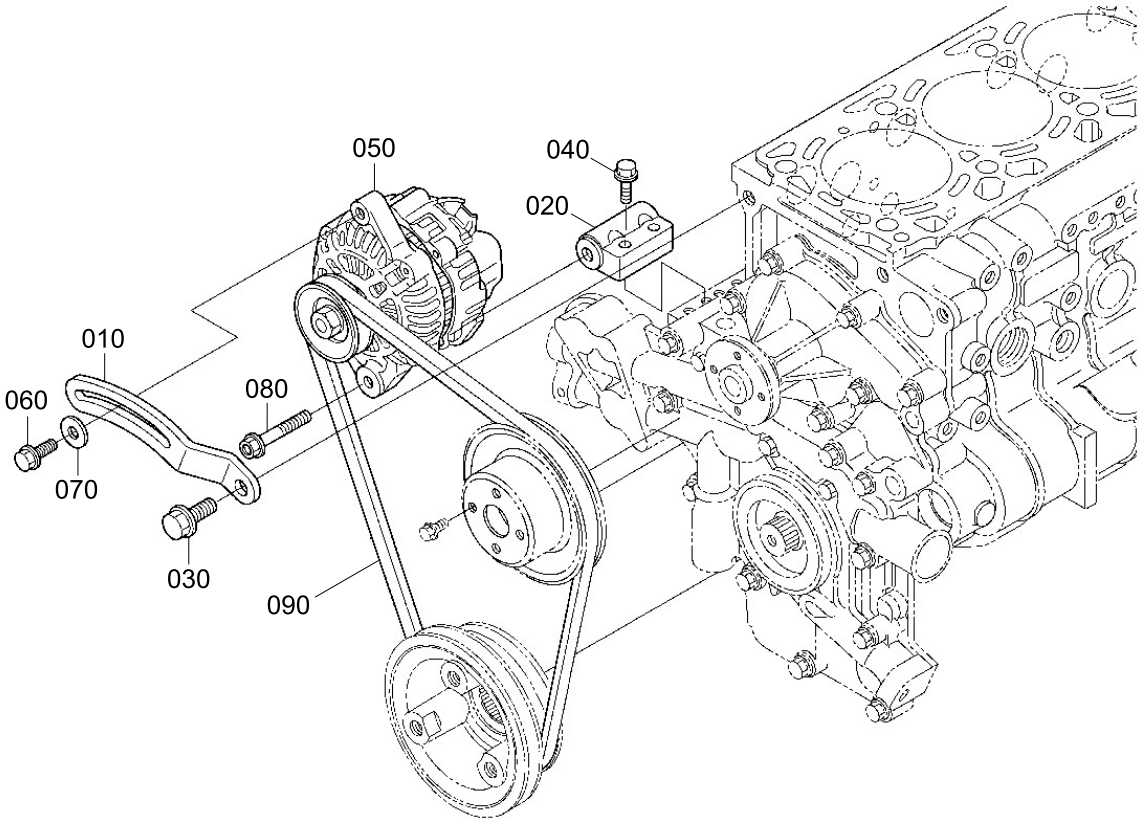

Item	Part_No	IS	Ord	T	Description	Qty	Serial_No	ITC	Remark
010	XJBR-01417				STAY-DYNAMO	1			
020	XJBR-01418				SUPPORT-DYNAMO	1			
030	XJBR-01200				FLANGE BOLT	1			
040	XJBR-01419				FLANGE BOLT	2			
050	XJBR-01420				DYNAMO ASSY	1			
060	XJBR-00307				FLANGE BOLT	1			
070	XJBR-00493				WASHER-PLAIN	1			
080	XJBR-01421				FLANGE BOLT	1			
090	XJBR-01482				V-BELT	1			

DYNAMO (COMPONENT PARTS)

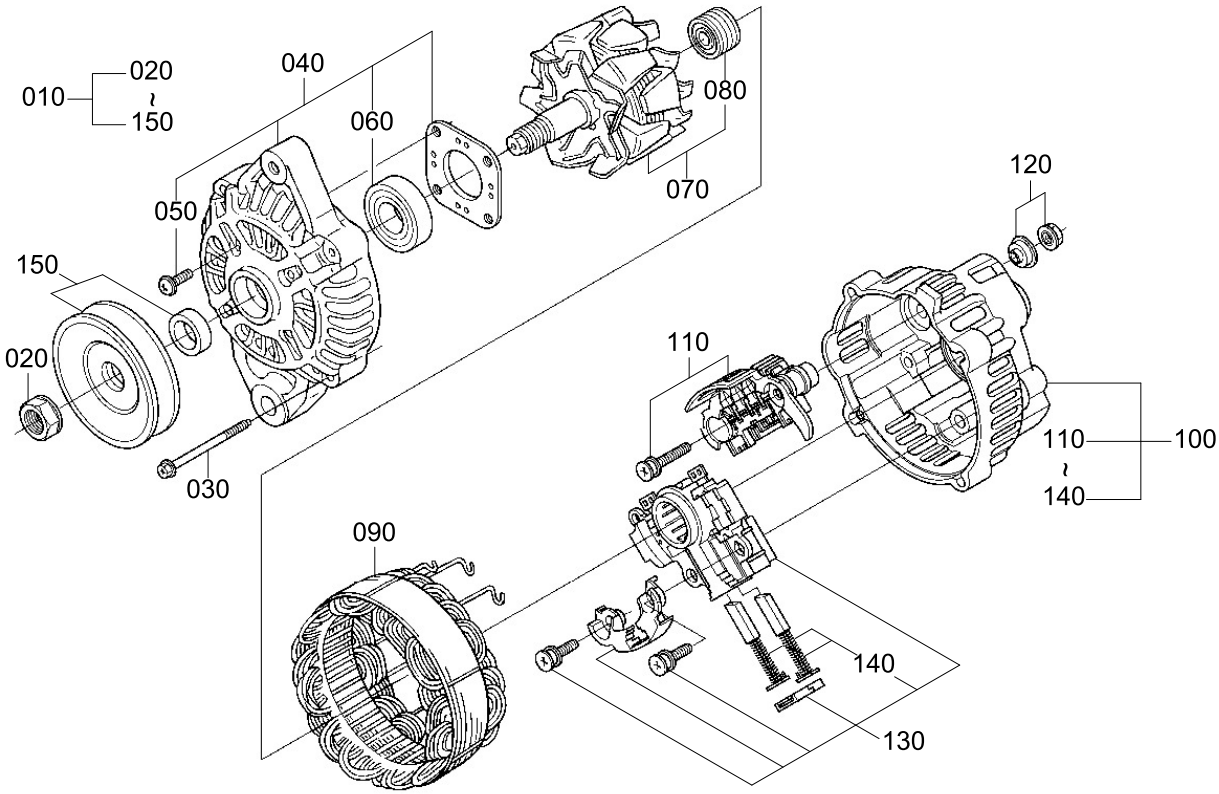

Item	Part_No	IS	Ord	T	Description	Qty	Serial_No	ITC	Remark
010	XJBR-01420				DYNAMO ASSY	1			
020	XJBR-01422				.NUT	1			
030	XJBR-01423				.BOLT SET	1			
040	XJBR-01426				.BRACKET-FRONT ASSY	1			
050	XJBR-01427				..BOLT SET	1			
060	XJBR-01428				..BEARING	1			
070	XJBR-01424				.ROTOR ASSY	1			
080	XJBR-01425				..BEARING	1			
090	XJBR-01429				.STATOR ASSY	1			
100	XJBR-01430				.BRACKET-REAR ASSY	1			
110	XJBR-01431				..RECTIFIER ASSY	1			
120	XJBR-01432				..NUT SET	1			
130	XJBR-01433				..REGULATOR SET	1			
140	XJBR-01434				...BRUSH SET	1			
150	XJBR-01435				.PULLEY ASSY	1			

STARTER

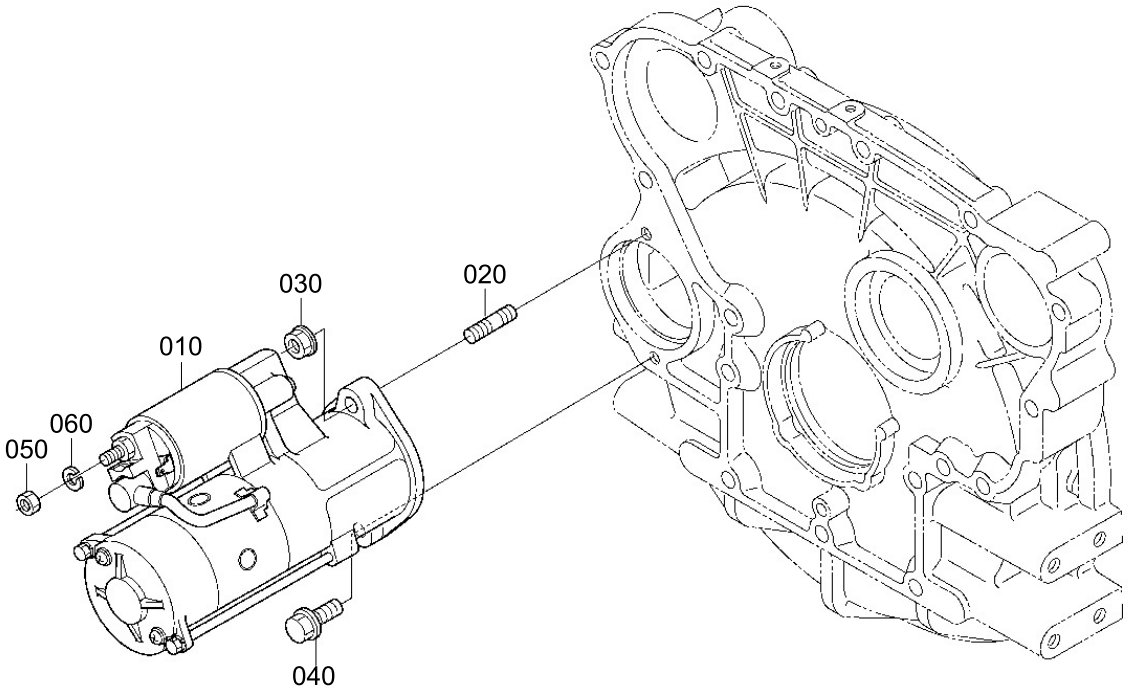

Item	Part_No	IS	Ord	T	Description	Qty	Serial_No	ITC	Remark
010	XJBR-01436				STARTER ASSY	1			
020	XJBR-00514				FLANGE BOLT	1			
030	XJBR-00515				STUD	1			
040	XJBR-01697				FLANGE NUT	1			
050	XJBR-00639				NUT	1			
060	XJBR-00648				SPRING WASHER	1			

STOP SOLENOID

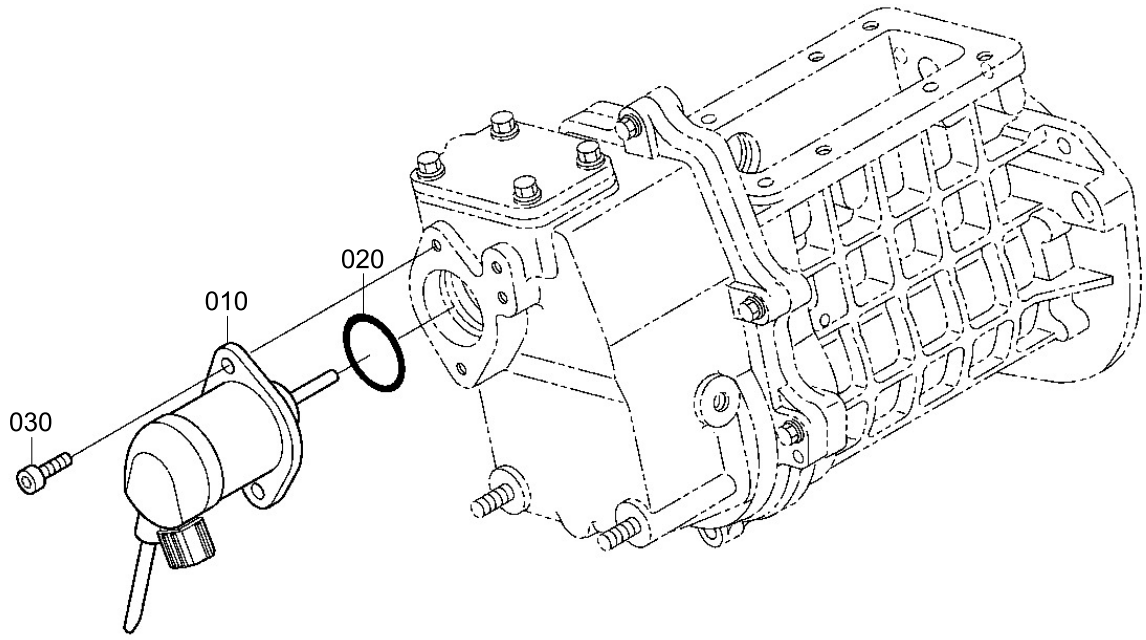

Item	Part_No	IS	Ord	T	Description	Qty	Serial_No	ITC	Remark
010	XJBR-01460				SOLENOID ASSY	1			
020	XJBR-00653				O-RING	1			
030	XJBR-01461				HEX SOCKET BOLT	2			

OIL SWITCH

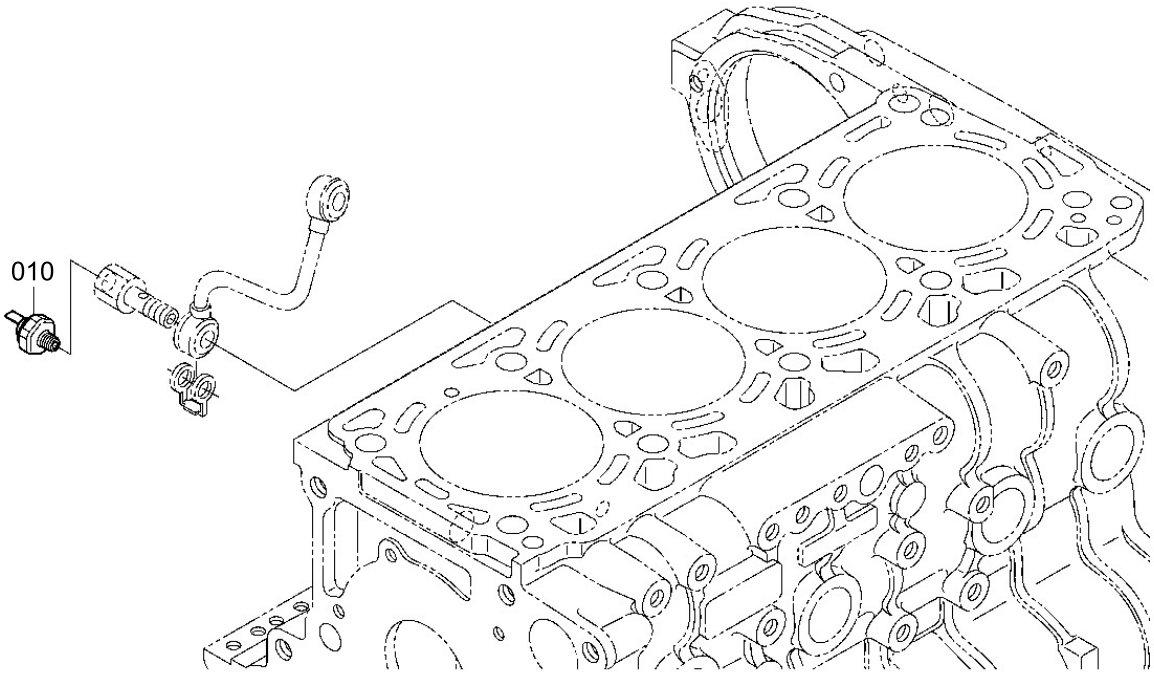

Item	Part_No	IS	Ord	T	Description	Qty	Serial_No	ITC	Remark
010	XJBR-01462				OIL SWITCH	1			

WATER FLANGE AND THERMOSTAT

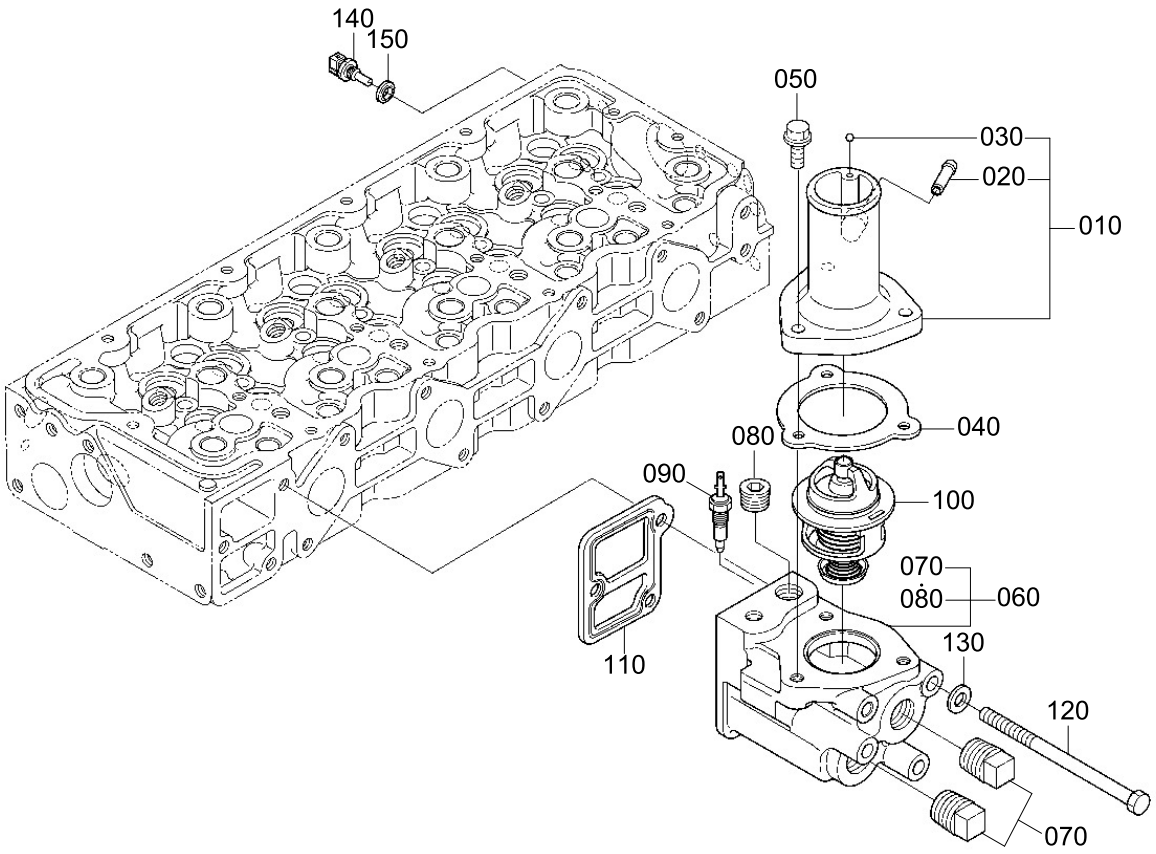

Item	Part_No	IS	Ord	T	Description	Qty	Serial_No	ITC	Remark
010	XJBR-01463				COVER-THERMOSTAT	1			
020	XJBR-01464				.JOINT-PIPE	1			
030	XJBR-00670				.BALL	1			
040	XJBR-01698				GASKET	1			
050	XJBR-00307				FLANGE BOLT	3			
060	XJBR-01699				WATER FLANGE	1			
070	XJBR-01700				.PLUG	2			
080	XJBR-00900				.PLUG	1			
090	XJBR-01470				THERMOSTAT ASSY	1			
100	XJBR-01148				THERMOSWITCH ASSY	1			
110	XJBR-01471				GASKET-WATER FLANGE	1			
120	XJBR-01472				BOLT	3			
130	XJBR-00643				WASHER-PLAIN	3			
140	XJBR-01605				SENSOR-THERMO	1			
150	XJBR-01542				WASHER-WITH RUBBER	1			

WATER PUMP

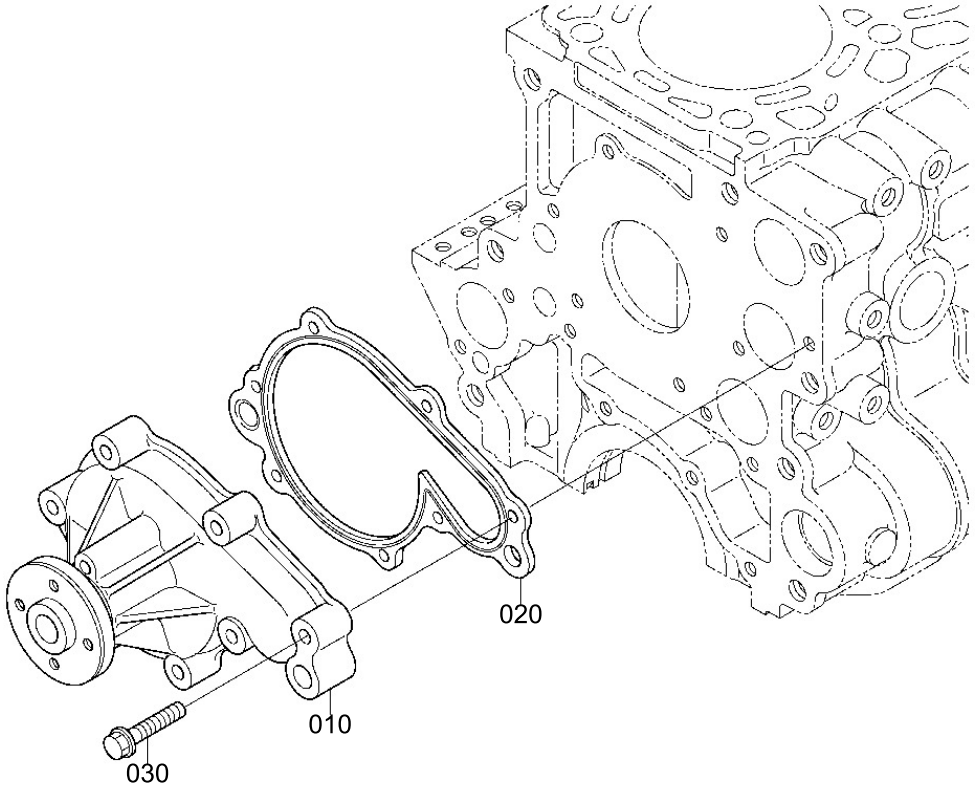

Item	Part_No	IS	Ord	T	Description	Qty	Serial_No	ITC	Remark
010	XJBR-01701				WATER PUMP ASSY	1			
020	XJBR-01474				GASKET-WATER PUMP	1			
030	XJBR-00556				FLANGE BOLT	7			

WATER PIPE

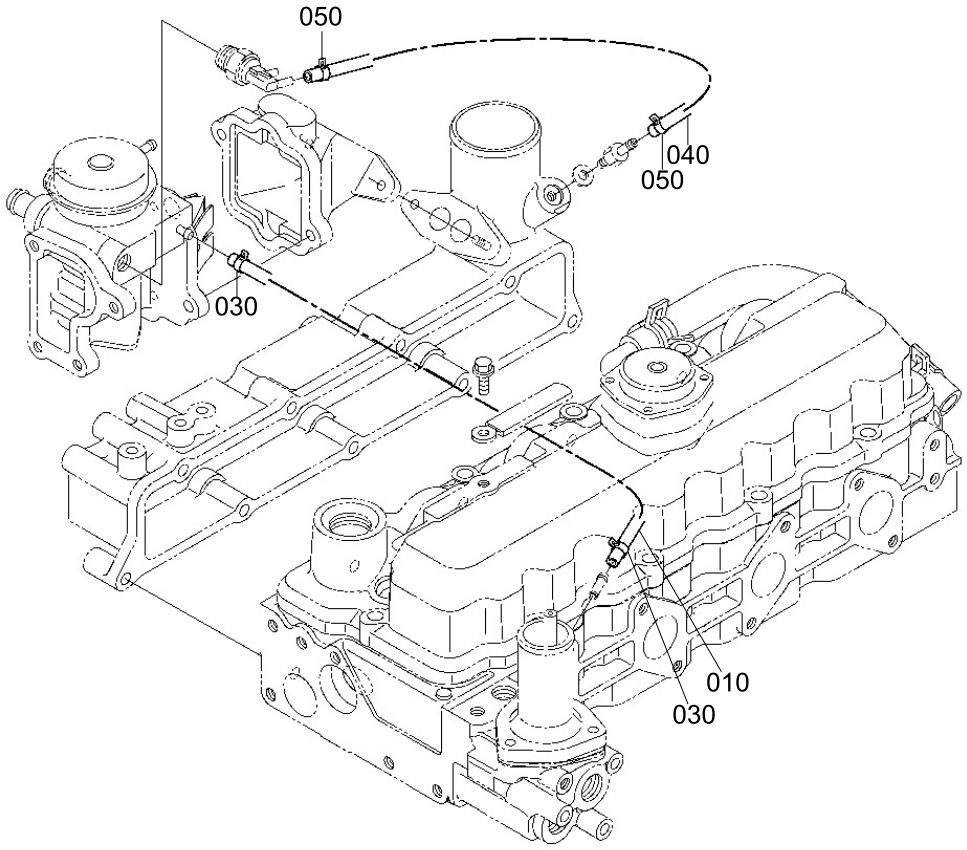

Item	Part_No	IS	Ord	T	Description	Qty	Serial_No	ITC	Remark
010	XJBR-01475				PIPE-EGR ASSY	1			
030	XJBR-01477				CLAMP-HOSE	2			
040	XJBR-01702				PIPE-BOOST	1			
050	XJBR-01479				BAND-PIPE	2			
060	XJBR-01764				CLAMP-PIPE	1			

FAN AND PULLEY

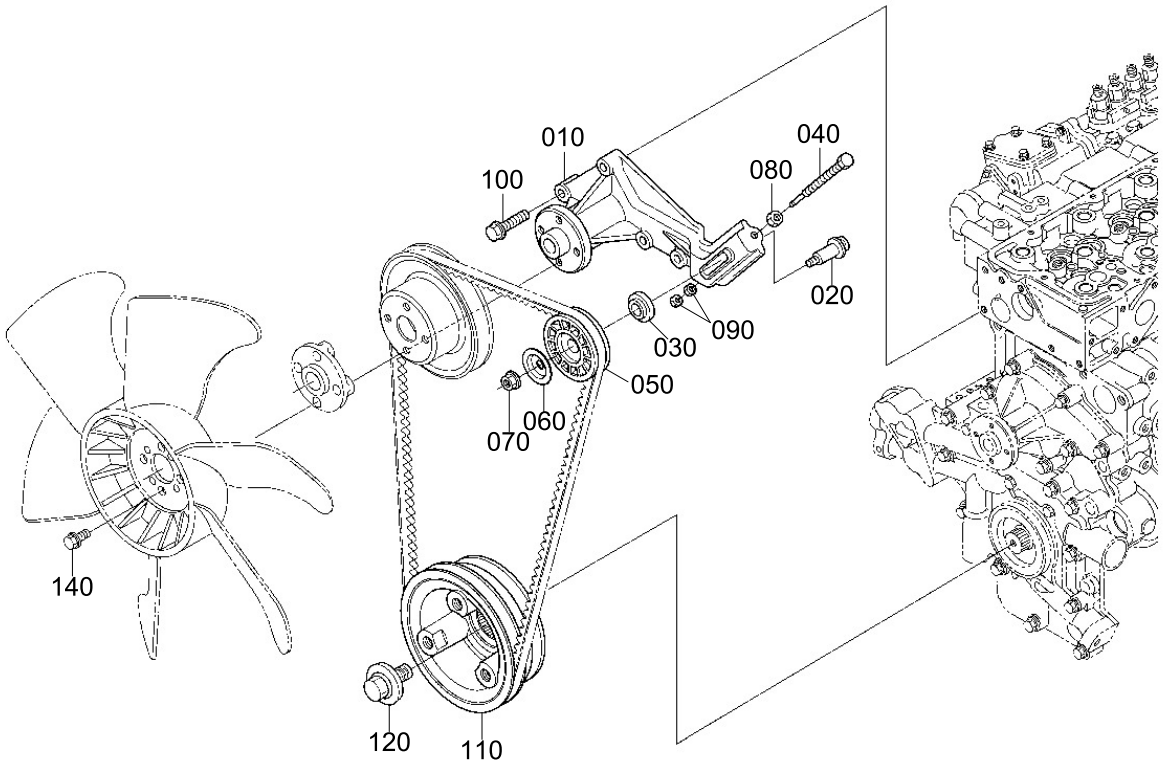

Item	Part_No	IS	Ord	T	Description	Qty	Serial_No	ITC	Remark
010	XJBR-01703				BRACKET-FAN	1			
020	XJBR-01704				SHAFT-TENSION PULLEY	1			
030	XJBR-01705				COLLAR-TENSION PULLEY	1			
040	XJBR-01706				BOLT	1			
050	XJBR-01707				PULLEY-TENSION	1			
060	XJBR-01708				COVER-TENSION PULLEY	1			
070	XJBR-01697				FLANGE NUT	1			
080	XJBR-00639				NUT	1			
090	XJBR-01709				NUT	2			
100	XJBR-00556				FLANGE BOLT	4			
110	XJBR-01710				PULLEY-FAN DRIVE	1			
120	XJBR-01711				BOLT	1			
140	XJBR-01503				FLANGE BOLT	4			

INLET MANIFOLD

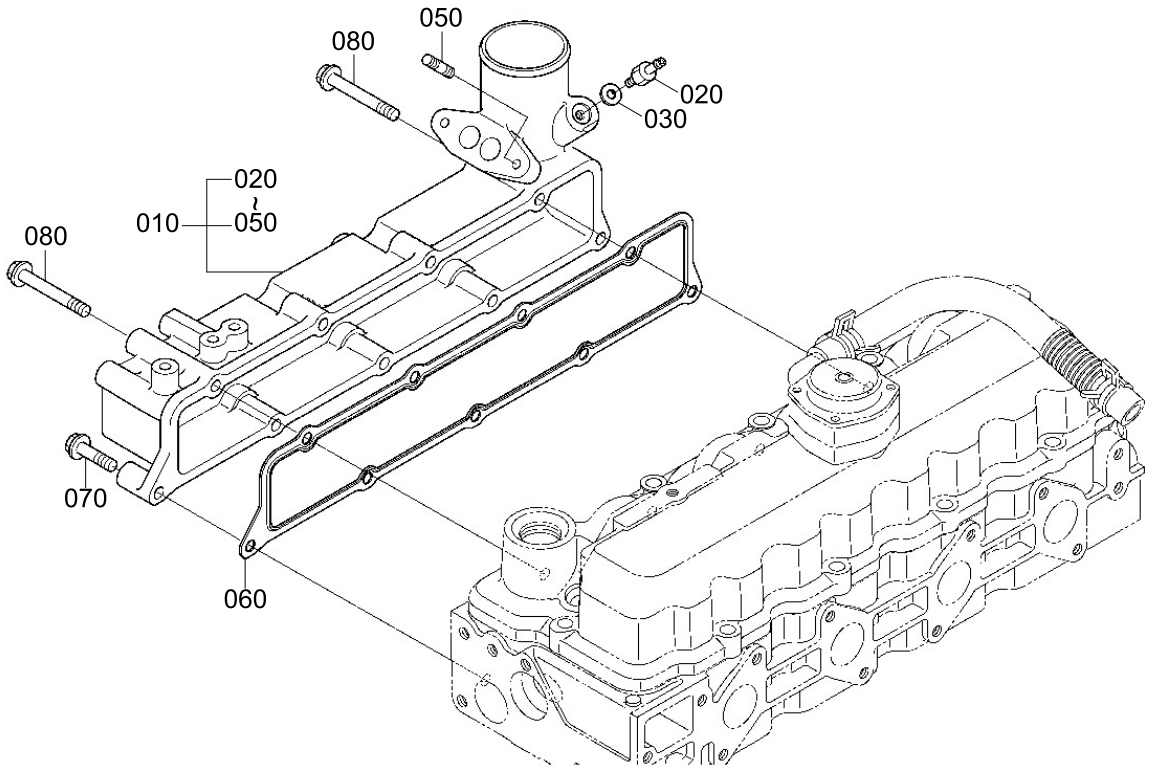

Item	Part_No	IS	Ord	T	Description	Qty	Serial_No	ITC	Remark
010	XJBR-01712				INLET MANIFOLD ASSY	1			
020	XJBR-01488				.SCREW-AIR BLEEDER	1			
030	XJBR-01046				.GASKET	1			
050	XJBR-01713				.STUD	2			
060	XJBR-01491				GASKET-INLET MANIFOLD	1			
070	XJBR-00556				FLANGE BOLT	7			
080	XJBR-01492				FLANGE BOLT	2			

EXHAUST MANIFOLD

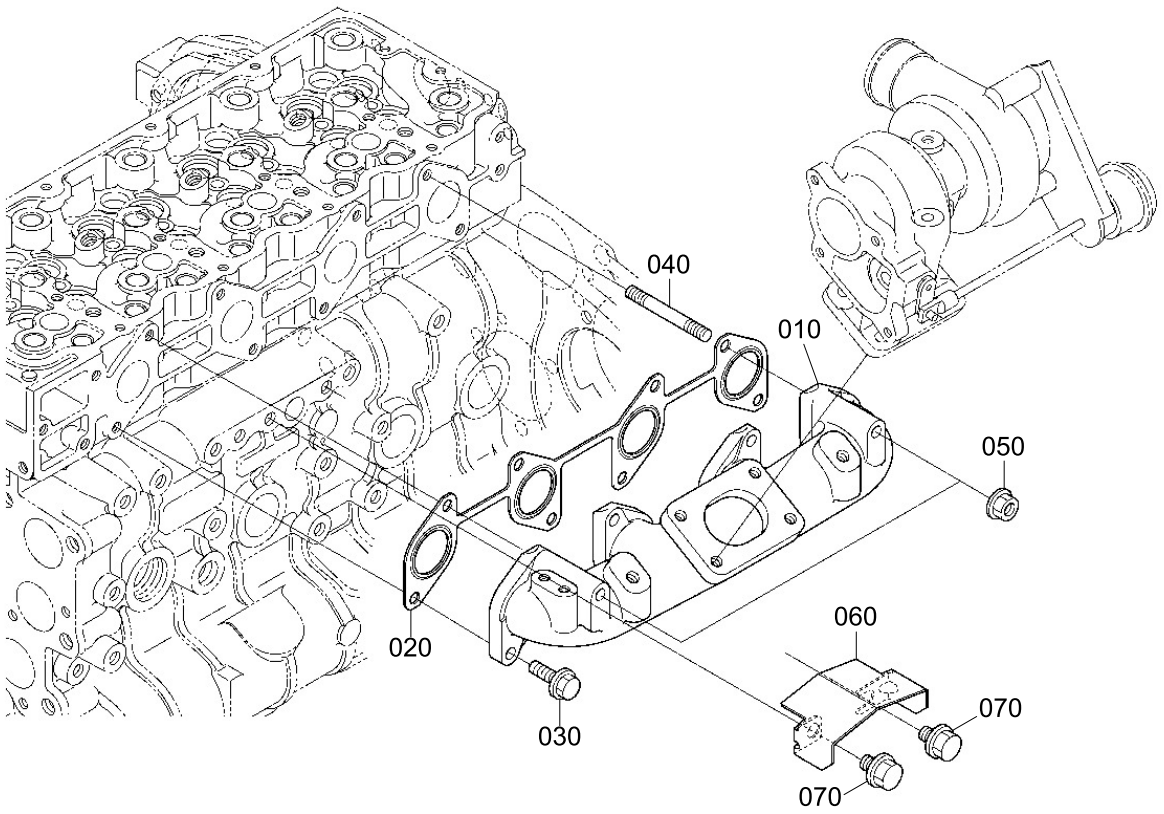

Item	Part_No	IS	Ord	T	Description	Qty	Serial_No	ITC	Remark
010	XJBR-01493				MANIFOLD-EXHAUST	1			
020	XJBR-01494				GASKET-EXH MANIFOLD	1			
030	XJBR-01714				FLANGE BOLT	6			
040	XJBR-01715				STUD	2			
050	XJBR-00203				FLANGE NUT	2			
060	XJBR-01716				SHIELD-EXH MANIFOLD	1			
070	XJBR-01497				FLANGE BOLT	2			

EGR VALVE

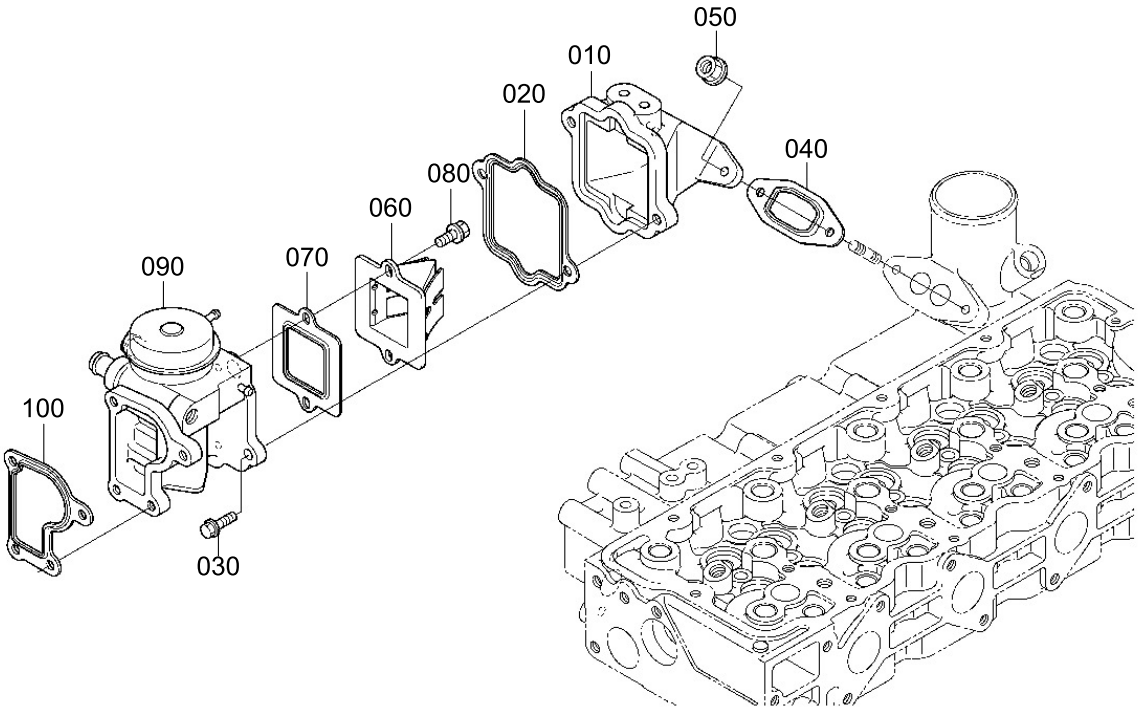

Item	Part_No	IS	Ord	T	Description	Qty	Serial_No	ITC	Remark
010	XJBR-01717				HOUSING	1			
020	XJBR-01499				GASKET-EGR VALVE	1			
030	XJBR-00585				FLANGE BOLT	2			
040	XJBR-01500				GASKET-INLET	1			
050	XJBR-00203				FLANGE NUT	2			
060	XJBR-01501				LEAD VALVE	1			
070	XJBR-01502				GASKET-REED VALVE	1			
080	XJBR-01503				FLANGE BOLT	2			
090	XJBR-01718				VALVE ASSY-EGR	1			
100	XJBR-01505				GASKET-EGR VALVE	1			

EGR COOLER

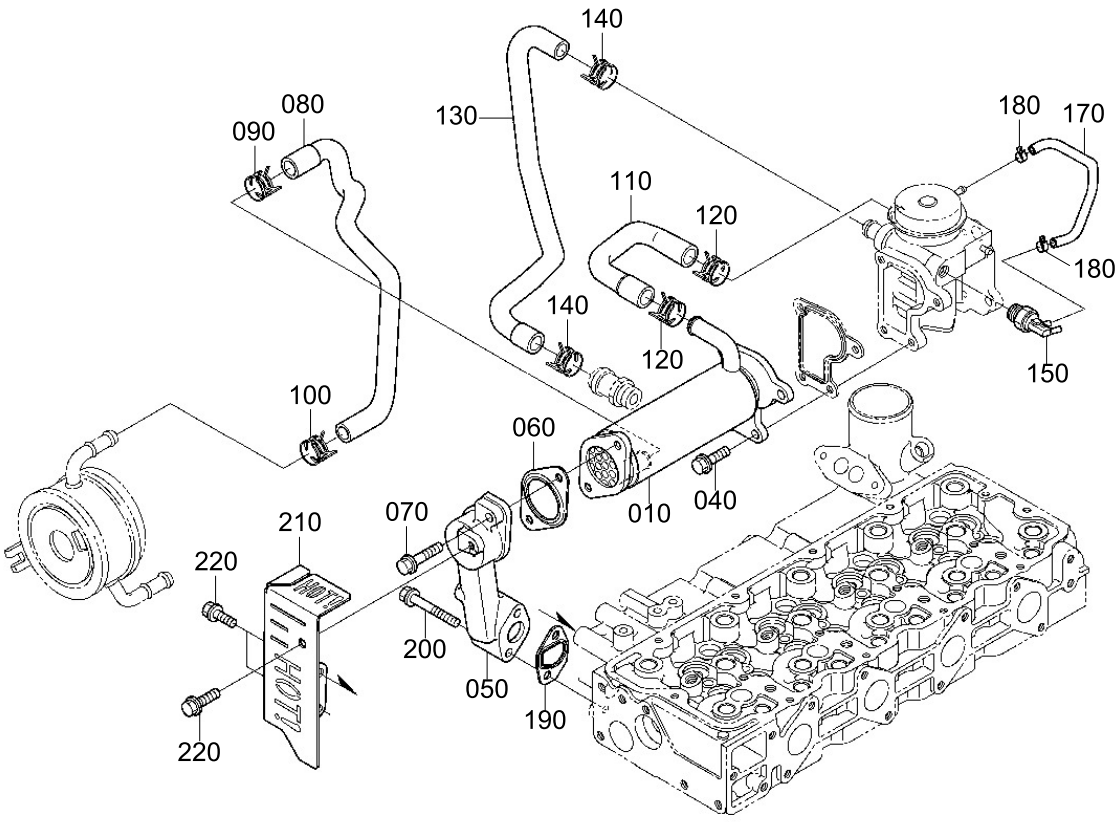
140
130
080
090
180
170
110
120
180
140
120
150
100
060
010
040
070
210
220
200
050
190
220

Item	Part_No	IS	Ord	T	Description	Qty	Serial_No	ITC	Remark
010	XJBR-01506				COOLER-EGR ASSY	1			
040	XJBR-00585				FLANGE BOLT	4			
050	XJBR-01719				BASE-EGR	1			
060	XJBR-01508				GASKET-EGR COOLER	1			
070	XJBR-00307				FLANGE BOLT	2			
080	XJBR-01509				WATER PIPE	1			
090	XJBR-00540				CLAMP-HOSE	1			
100	XJBR-00675				CLAMP-HOSE	1			
110	XJBR-01720				PIPE-WATER	1			
120	XJBR-01155				CLAMP-HOSE	2			
130	XJBR-01511				PIPE-WATER	1			
140	XJBR-00540				CLAMP-HOSE	2			
150	XJBR-01512				VALVE-THERMO	1			
170	XJBR-01721				PIPE-BOOST	1			
180	XJBR-01479				BAND-PIPE	2			
190	XJBR-01514				GASKET-EGR BASE	1			
200	XJBR-00548				FLANGE BOLT	2			
210	XJBR-01515				COVER-BASE	1			
220	XJBR-01210				FLANGE BOLT	3			

TURBO CHARGER

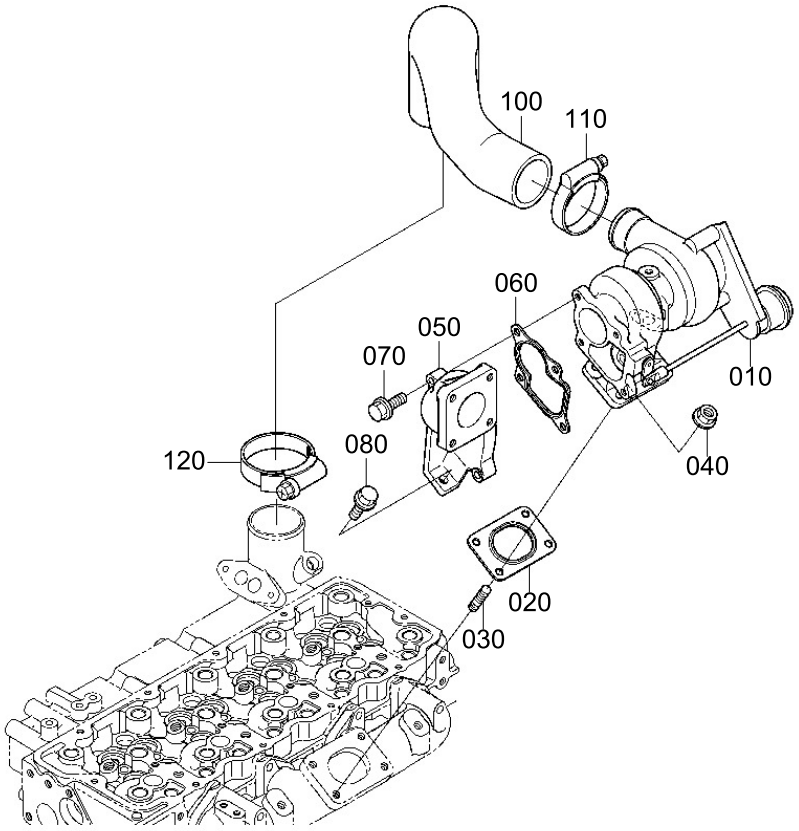

Item	Part_No	IS	Ord	T	Description	Qty	Serial_No	ITC	Remark
010	XJBR-01722				TURBO CHARGER ASSY	1			
020	XJBR-01723				GASKET	1			
030	XJBR-01724				STUD	4			
040	XJBR-00203				FLANGE NUT	4			
050	XJBR-01725				FLANGE-MUFFLER	1			
060	XJBR-01726				GASKET	1			
070	XJBR-01727				FLANGE BOLT	4			
080	XJBR-01728				BOLT	1			
100	XJBR-01729				HOSE-INLET	1			
110	XJBR-01632				CLAMP-HOSE	1			
120	XJBR-01730				CLAMP-HOSE	1			

OIL PIPE

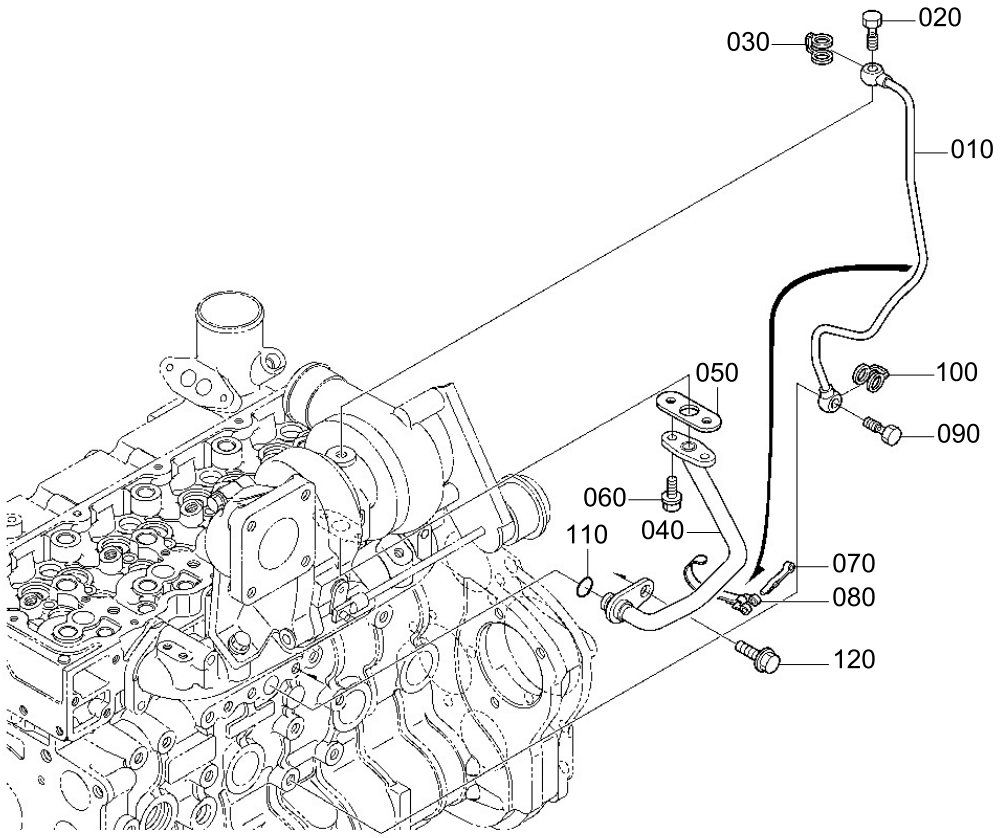

Item	Part_No	IS	Ord	T	Description	Qty	Serial_No	ITC	Remark
010	XJBR-01731				OIL PIPE	1			
020	XJBR-01328				BOLT-EYE JOINT	1			
030	XJBR-01527				GASKET	1			
040	XJBR-01732				OIL PIPE	1			
050	XJBR-01733				GASKET	1			
060	XJBR-01355				FLANGE BOLT	2			
070	XJBR-01530				PIN-BAND	1			
080	XJBR-01531				CLAMP-PIPE	1			
090	XJBR-01734				BOLT-EYE JOINT	1			
100	XJBR-01735				GASKET	1			
110	XJBR-01736				O-RING	1			
120	XJBR-01497				FLANGE BOLT	1			

OIL COOLER

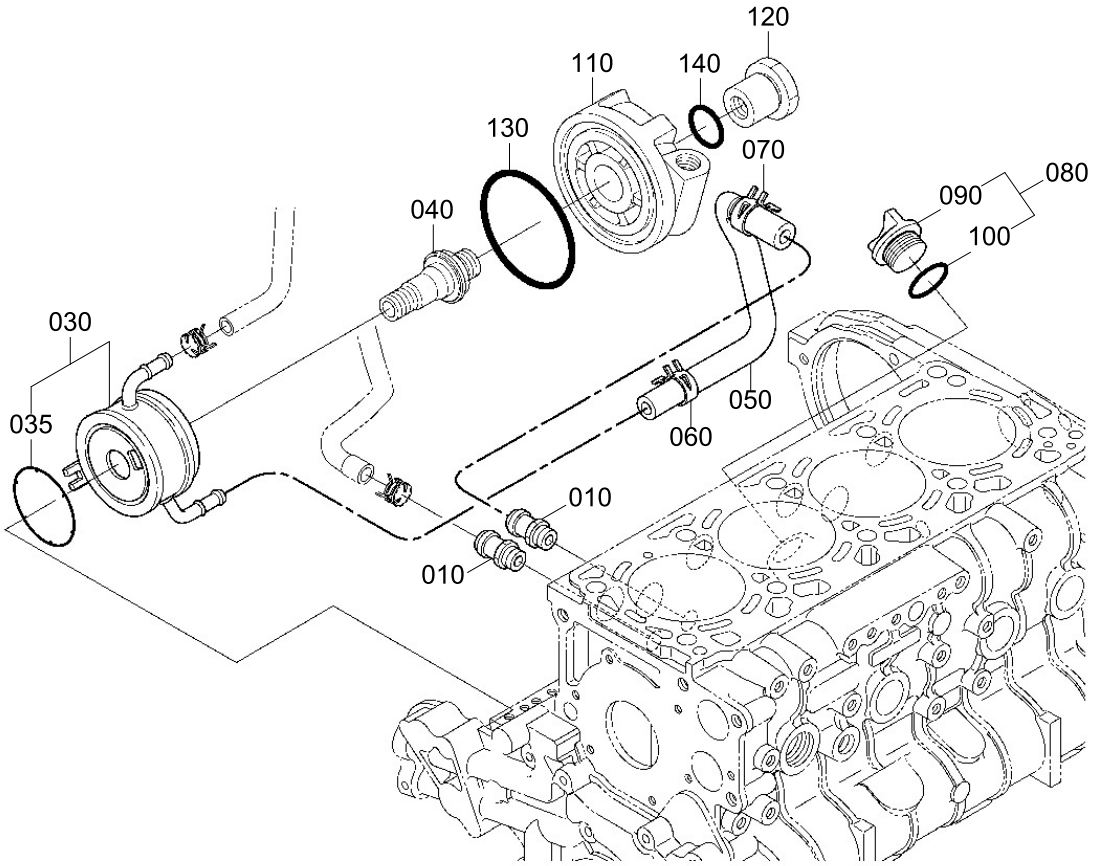

Item	Part_No	IS	Ord	T	Description	Qty	Serial_No	ITC	Remark
010	XJBR-01533				JOINT-WATER PIPE	2			
030	XJBR-01535				OIL COOLER ASSY	1			
035	XJBR-01536				.O-RING	1			
040	XJBR-01737				JOINT-OIL COOLER	1			
050	XJBR-01538				PIPE-OIL COOLER	1			
060	XJBR-00675				CLAMP-HOSE	1			
070	XJBR-00540				CLAMP-HOSE	1			
080	XJBR-01249				PLUG-OIL FILLER ASSY	1			
090	XJBR-01250				.PLUG-OIL FILLER	1			
100	XJBR-00241				.O-RING	1			
110	XJBR-01738				ADAPTER-OIL FILTER	1			
120	XJBR-01739				PLUG-OIL FILTER	1			
130	XJBR-01740				O-RING	1			
140	XJBR-01741				O-RING	1			

ACCESSORIES AND SERVICE PARTS

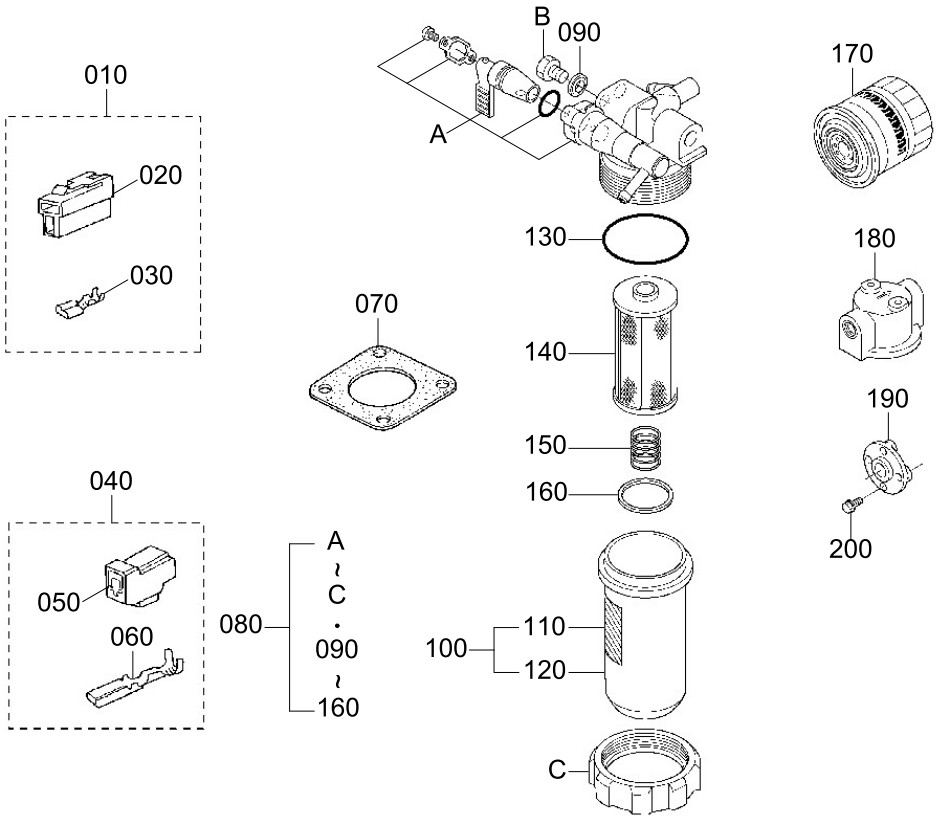

Item	Part_No	IS	Ord	T	Description	Qty	Serial_No	ITC	Remark
010	XJBR-01742				COUPLER ASSY	1			
020	XJBR-01743				.CONNECTOR	1			
030	XJBR-01084				.TERMINAL	2			
040	XJBR-01092				COUPLER ASSY	1			
050	XJBR-01093				.CONNECTOR	1			
060	XJBR-01094				.TERMINAL	2			
070	XJBR-01744				GASKET-MUFFLER NA	1			
080	XJBR-01612				SEPARATOR ASSY	1			
090	XJBR-01613				.GASKET	1			
100	XJBR-01614				.FILTER CUP ASSY	1			
110	XJBR-01616				..FILTER CUP	1			
120	XJBR-01615				..LABEL-SEPARATOR	1			
130	XJBR-01617				.O-RING	1			
140	XJBR-01618				.ELEMENT	1			
150	XJBR-01619				.SPRING-RETURN	1			
160	XJBR-01620				.FLOAT	1			
170	XJBR-01534				.CARTRIDGE-OIL FILTER	1			
180	XJBR-01745				.BASE-OIL FILTER	1			
190	XJBR-01746				.COLLAR-FAN	2			
200	XJBT-00808				.FLANGE BOLT	4			

LABEL AND OPERATOR'S MANUAL

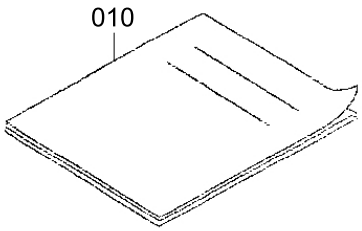

Item	Part_No	IS	Ord	T	Description	Qty	Serial_No	ITC	Remark
010	XJBR-01748				OPERATOR'S-MANUAL	1			

UPPER GASKET KIT (OPTION)

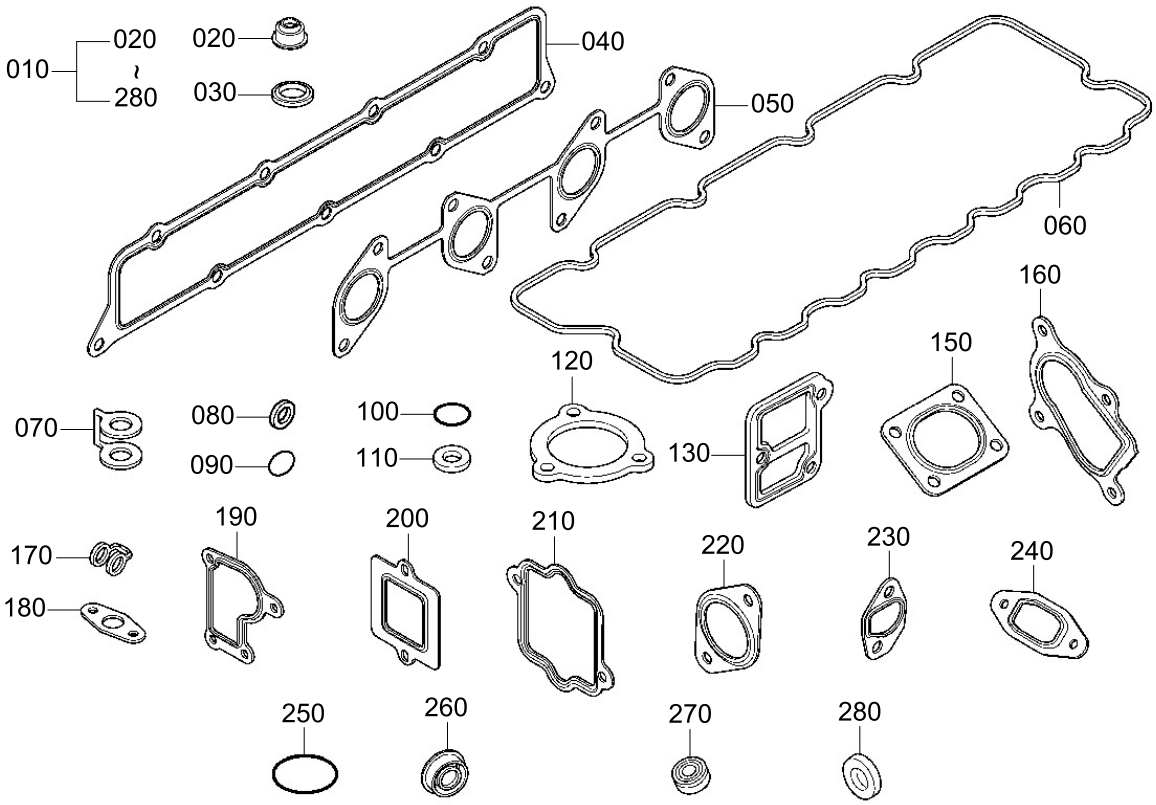

Item	Part_No	IS	Ord	T	Description	Qty	Serial_No	ITC	Remark
010	XJBR-01749				KIT GASKET-UPPER	1			
020	XJBR-01224				.SEAL-VALVE STEM	16			
030	XJBR-01542				.WASHER-WITH RUBBER	1			
040	XJBR-01491				.GASKET-INLET MANIFOLD	1			
050	XJBR-01494				.GASKET-EXH MANIFOLD	1			
060	XJBR-01244				.GASKET-HEAD COVER	1			
070	XJBR-01061				.GASKET	5			
080	XJBR-00873				.GASKET	4			
090	XJBR-01406				.O-RING	4			
100	XJBR-01407				.O-RING	4			
110	XJBR-01058				.GASKET	4			
120	XJBR-01698				.GASKET	1			
130	XJBR-01471				.GASKET-WATER FLANGE	1			
150	XJBR-01723				.GASKET	1			
160	XJBR-01726				.GASKET	1			
170	XJBR-01527				.GASKET	1			
180	XJBR-01733				.GASKET	1			
190	XJBR-01505				.GASKET-EGR VALVE	1			
200	XJBR-01502				.GASKET-REED VALVE	1			
210	XJBR-01499				.GASKET-EGR VALVE	1			
220	XJBR-01508				.GASKET-EGR COOLER	1			
230	XJBR-01514				.GASKET-EGR BASE	1			
240	XJBR-01500				.GASKET-INLET	1			
250	XJBR-01246				.O-RING, BREATHER	1			
260	XJBR-01248				.SEAL-INJECTION PIPE	4			
270	XJBR-01411				.SEAL-GLOW PLUG	4			

Item	Part_No	IS	Ord	T	Description	Qty	Serial_No	ITC	Remark
280	XJBR-01046				.GASKET	1			

LOWER GASKET KIT (OPTION)

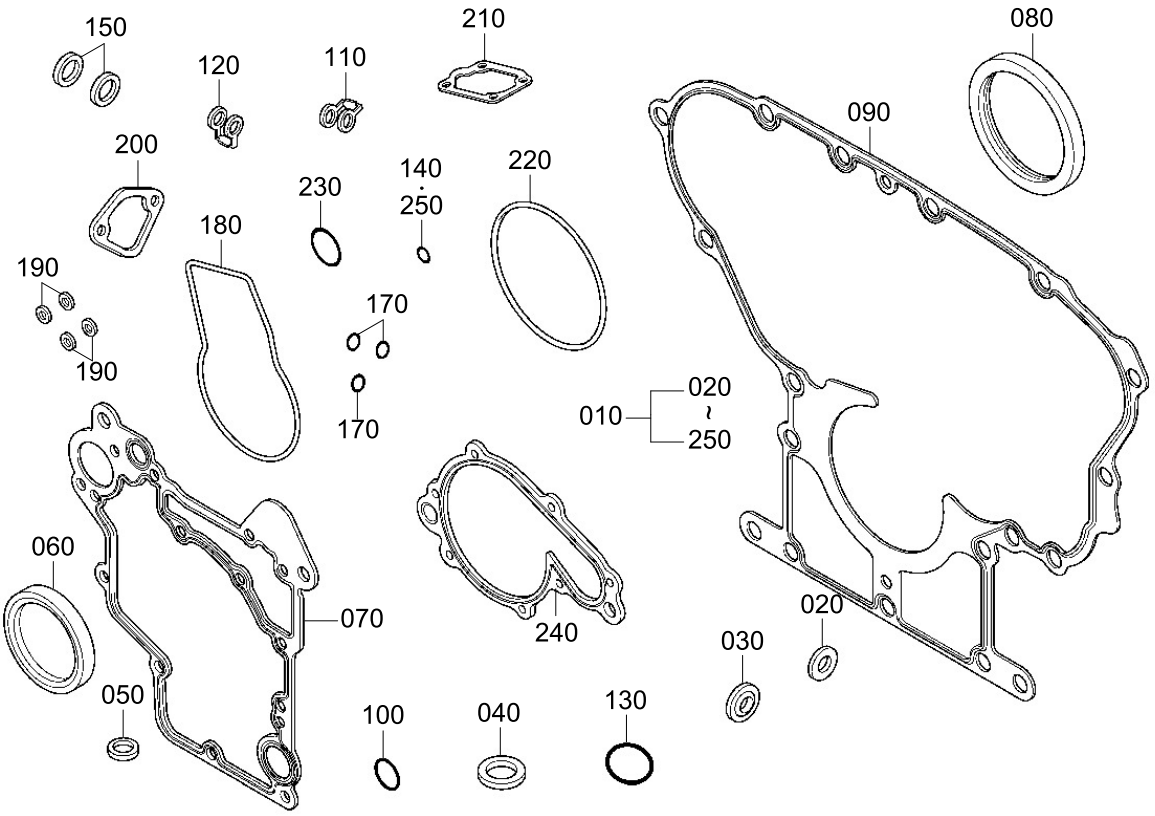

Item	Part_No	IS	Ord	T	Description	Qty	Serial_No	ITC	Remark
010	XJBR-01750				KIT GASKET-LOWER	1			
020	XJBR-00873				.GASKET	5			
030	XJBR-00189				.GASKET	1			
040	XJBR-01623				.GASKET	2			
050	XJBR-00880				.GASKET	1			
060	XJBR-01259				.OIL SEAL	1			
070	XJBR-01260				.GASKET-FRONT COVER	1			
080	XJBR-01317				.OIL SEAL	1			
090	XJBR-01319				.GASKET-HOUSING	1			
100	XJBR-01204				.O-RING	1			
110	XJBR-01329				.GASKET	1			
120	XJBR-01331				.GASKET	2			
130	XJBR-00241				.O-RING	1			
140	XJBR-01379				.O-RING	1			
150	XJBR-01032				.GASKET	2			
170	XJBR-00326				.O-RING	3			
180	XJBR-01369				.GASKET-GOV HOUSING	1			
190	XJBR-01046				.GASKET	4			
200	XJBR-01347				.GASKET-FUEL PUMP	1			
210	XJBR-01020				.GASKET-PLATE	1			
220	XJBR-01333				.GASKET-INJECTION PUMP	1			
230	XJBR-00653				.O-RING	1			
240	XJBR-01474				.GASKET-WATER PUMP	1			
250	XJBR-01736				.O-RING	1			

METAL KIT (OPTION)

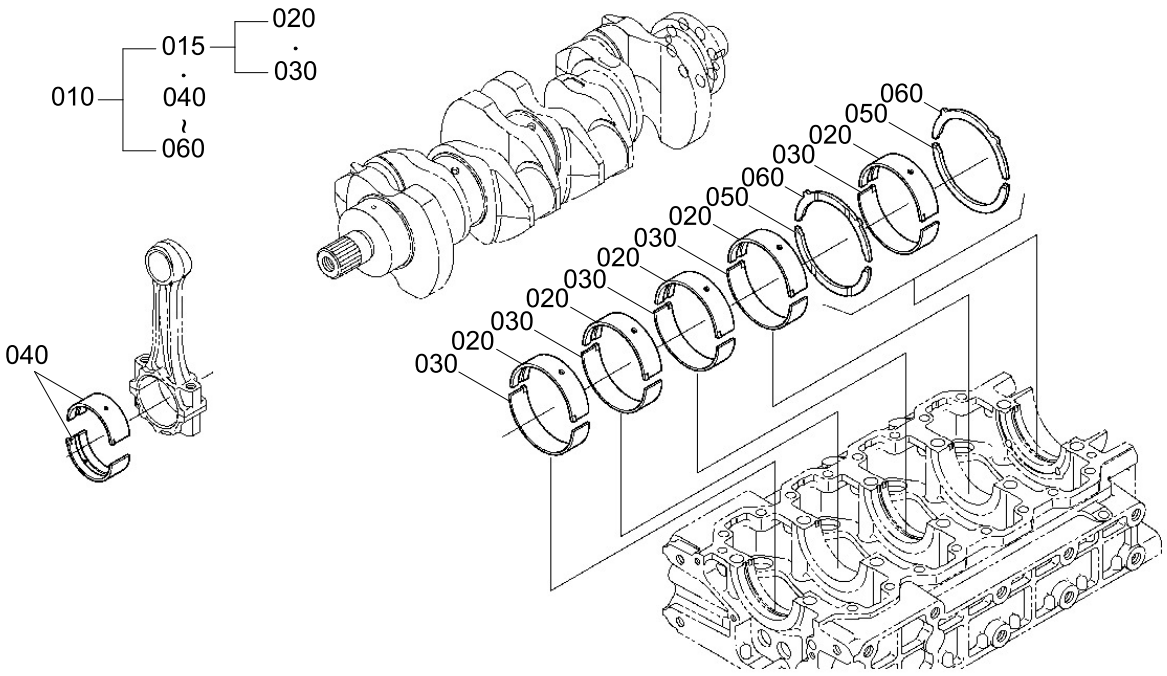

Item	Part_No	IS	Ord	T	Description	Qty	Serial_No	ITC	Remark
010	XJBR-01751				KIT METAL-ENGINE	1			STD
	XJBR-01752				KIT METAL-ENGINE	1			-0.20/+0.20MM
	XJBR-01753				KIT METAL-ENGINE	1			-0.40/+0.40MM
015	XJBR-01650				.KIT METAL-CRANKSHAFT	5			STD
	XJBR-01651				.KIT METAL-CRANKSHAFT	5			-0.20MM
	XJBR-01652				.KIT METAL-CRANKSHAFT	5			-0.40MM
020	XJBR-01282				..METAL-CRANKSHAFT	5			STD
	XJBR-01283				..METAL-CRANKSHAFT	5			-0.20MM
	XJBR-01284				..METAL-CRANKSHAFT	5			-0.40MM
030	XJBR-01285				..METAL-CRANKSHAFT	5			STD
	XJBR-01286				..METAL-CRANKSHAFT	5			-0.20MM
	XJBR-01287				..METAL-CRANKSHAFT	5			-0.40MM
040	XJBR-01275				.METAL-CRANKPIN	8			STD/SET
	XJBR-01276				.METAL-CRANKPIN	8			-0.20MM/SET
	XJBR-01277				.METAL-CRANKPIN	8			-0.40MM/SET
050	XJBR-01288				.METAL-SIDE	2			STD
	XJBR-01289				.METAL-SIDE	2			+0.20MM
	XJBR-01290				.METAL-SIDE	2			+0.40MM
060	XJBR-01291				.METAL-SIDE	2			STD
	XJBR-01292				.METAL-SIDE	2			+0.20MM
	XJBR-01293				.METAL-SIDE	2			+0.40MM

PISTON KIT (OPTION)

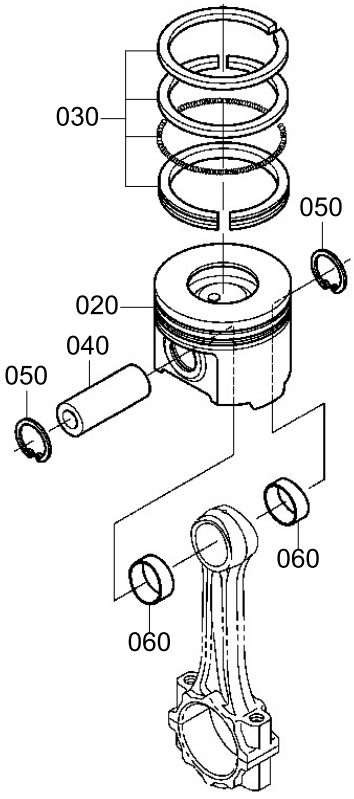

010 — 020 ~ 060

Item	Part_No	IS	Ord	T	Description	Qty	Serial_No	ITC	Remark
010	XJBR-01754				PISTON KIT	4			STD
	XJBR-01755				PISTON KIT	4			+0.50MM
	XJBR-01756				PISTON KIT	4			(05)STD
	XJBR-01757				PISTON KIT	4			(00)STD
	XJBR-01758				PISTON KIT	4			(05)+0.50MM
	XJBR-01759				PISTON KIT	4			(00)+0.50MM
020	XJBR-01640				.PISTON	4			(05)STD
	XJBR-01641				.PISTON	4			(05)+0.50MM
	XJBR-01642				.PISTON	4			(10)STD
	XJBR-01643				.PISTON	4			(00)+0.50MM
	XJBR-01644				.PISTON	4			(10)STD
	XJBR-01645				.PISTON	4			(10)+0.50MM
030	XJBR-01267				.PISTON RING ASSY	4			STD
	XJBR-01268				.PISTON RING ASSY	4			+0.50MM
040	XJBR-01269				.PIN-PISTON	4			
050	XJBR-01270				.CIRCLIP-INTERNAL	8			
060	XJBR-01647				.BUSH-PISTON PIN	8			