RUTHZIL TRATOR COMERCIAL DE PEÇAS LTDA 11 97083-6812 ROLANDO CITRANGULO

RUTHZIL TRATOR COMERCIAL DE PEÇAS LTDA 11 97083-6812 ROLANDO CITRANGULO

# Instruction manual

## Operating & Maintenance

OUTUBRO 2013

**ICA250-IN8EN1.pdf**

**Vibratory roller**
**CA2500/2800/3500/4000**

**Engine**
**Cummins 4BT 3.9 102C**

**Serial number**
**10000127x0E001375 -**
(Carraro bakaxel)

DYNAPAC




Translation of original instruction

*Reservation for changes*
*Printed in India*

EN

# Table of Contents


Introduction ..... 1
The machine ..... 1
Intended use ..... 1
Warning symbols ..... 1
Safety information ..... 1
General ..... 2
Safety - General instructions ..... 3
Safety - when operating ..... 5
Slopes ..... 5
Driving near edges ..... 6
Special instructions ..... 7
Standard lubricants and other recommended oils and fluids ..... 7
Higher ambient temperatures, above +40°C (104°F) ..... 7
Temperatures ..... 7
High pressure cleaning ..... 7
Fire fighting ..... 7
Roll Over Protective Structure (ROPS), ROPS approved cab ..... 8
Battery handling ..... 8
Jump starting ..... 9
Technical specifications ..... 11
Vibrations - Operator station ..... 11
Noise level ..... 11
Dimensions, side view ..... 12
Dimensions, top view ..... 13
Weights and volumes ..... 13
Working capacity ..... 14
General ..... 14
Hydraulic system ..... 15
ROPS - bolts ..... 15
Tightening torque ..... 16

Machine description ..... 17
Identification ..... 17
Product identification number on the frame ..... 17
Machine plate ..... 17
Explanation of 17PIN serial number ..... 18
Engine plates ..... 18
Decals ..... 19
Location - decals ..... 19
Safety decals ..... 20
Info decals ..... 22
Instrument/Controls ..... 23
Locations - Instruments and controls ..... 23
Locations - Control panel and controls ..... 24
Function description ..... 25
Controls in the cab ..... 27
Function description of instruments and controls in the cab ..... 28
Electrical system ..... 29
Main fuses ..... 29
Relays ..... 30
Fuses ..... 31
Fuses, battery disconnector/fuse box (Cab) ..... 31
Fuses and relay in cab heater box (Optional) ..... 32
Fuses in heater box ..... 32
Relay in heater box ..... 32
Operation ..... 33
Before starting ..... 33
Master switch - Switching on ..... 33
Driver seat (Std.) - Adjustment ..... 33
Driver seat (Option)- Adjustment ..... 34
Instruments and lamps - Checking ..... 34

Operator position ... 35
View ... 35
Interlock ... 36
Starting ... 36
Start of diesel motor ... 36
Operating ... 38
Operating the roller ... 38
Vibration ... 39
Vibration On/Off ... 39
Vibration - Activation ... 39
Braking ... 40
Normal braking ... 40
Emergency braking ... 40
Switching off ... 41
Parking ... 41
Master switch ... 41
Chocking the drums ... 42
Long-term parking ... 43
Engine ... 43
Battery ... 43
Air cleaner, exhaust pipe ... 43
Fuel tank ... 43
Hydraulic reservoir ... 43
Steering cylinder, hinges, etc. ... 44
Hoods, tarpaulin ... 44
Tires (All-weather) ... 44
Miscellaneous ... 45
Lifting ... 45
Locking the articulation ... 45
Lifting the roller ... 45

Unlocking the articulation ..... 46
Towing/Recovering ..... 46
Alternative 1 ..... 46
Short distance towing with the engine running ..... 46
Alternative 2 ..... 47
Towing short distances when the engine is inoperative ..... 47
Rear axle brake ..... 47
Releasing the parking brake in the drum ..... 48
Towing the roller ..... 49
Re-activating the rear axle brake ..... 50
Roller prepared for transport ..... 50
Operating instructions - Summary ..... 51
Preventive maintenance ..... 53
Acceptance and delivery inspection ..... 53
Warranty ..... 53
Maintenance - Lubricants and symbols ..... 55
Maintenance symbols ..... 56
Maintenance - Maintenance schedule ..... 57
Service and maintenance points ..... 57
General ..... 57
Every 10 hours of operation (Daily) ..... 58
After the FIRST 50 hours of operation ..... 58
Every 50 hours of operation (Weekly) ..... 59
Every 250 hours of operation (Monthly) ..... 59
Every 500 hours of operation (Every three months) ..... 60
Every 1000 hours of operation (Every six months) ..... 60
Every 2000 hours of operation (Yearly) ..... 60
Maintenance, 10h ..... 61
Scrapers - Check, adjustment ..... 61
Steel scrapers (Optional) ..... 62

Scrapers, Pad-drum ..... 62
Soften scrapers (Optional) ..... 63
Air circulation - Check ..... 63
Coolant level - Check ..... 64
Diesel engine  Check oil level ..... 65
Fuel tank - Filling ..... 65
Hydraulic reservoir - Check fluid level ..... 66
Brakes - Check ..... 66
Steering cylinder - Lubrication ..... 67
Maintenance - 50h ..... 69
Air cleaner
Checking - Change the main air filter ..... 69
Backup filter - Change ..... 70
Air cleaner
- Cleaning ..... 70
Articulation - Lubrication ..... 71
Steering joint - Lubrication ..... 71
Tires - Air pressure - Wheel nuts - Tightening ..... 72
Automatic Climate Control (Optional) - Inspection ..... 72
Maintenance - 250h ..... 75
Rear axle differential - Check oil level ..... 75
Rear axle transmission box - Check oil level ..... 76
Rear axle planetary gears - Check oil level ..... 76
Drum - Checking the oil level ..... 77
Radiator - Check/Cleaning ..... 77
Bolted joints - Checking tightening torque ..... 78
Rubber elements and fastening screws - Check ..... 78
Diesel engine - Oil and Filter change ..... 79
Battery - Check electrolyte level ..... 79
Battery cell ..... 80

Air conditioning (Optional)
- Inspection ... 80
Maintenance - 500h ... 81
Bleeder filter - Inspection/Cleaning ... 81
Fuel pre-filter - Replacement ... 82
Maintenance - 1000h ... 83
Hydraulic fluid filter - Replacement ... 83
Hydraulic fluid reservoir - Draining ... 84
Fuel tank - Drainage ... 85
Rear axle differential - Oil change ... 86
Rear axle transmission - Oil change ... 87
Rear axle's planetary gears - Draining the oil ... 87
Rear axle's planetary gears - Oil change - Oil filling ... 88
Air conditioning (Optional)
Fresh air filter - Change ... 88
Maintenance - 2000h ... 89
Hydraulic reservoir - Changing the fluid ... 89
Drum - Oil change ... 90
Steering hitch - Check ... 90
Controls - Lubrication ... 91
Automatic Climate Control (Optional)
- Overhaul ... 91
Drying filter - Check ... 92
Compressor - Check (Optional) ... 93

# Introduction

## The machine

CA250 is one of Dynapac's medium-heavy soil compaction rollers. It is available in STD and D versions.

## Intended use

All types of base courses and subbase courses can be compacted deeper and the interchangeable drums, D to PD, and vice versa, facilitate even greater variety in the range of application.

The cab and safety-related accessories are described in this manual. Other accessories, such as compaction meter, tachograph and field computer, are described in separate instructions.

## Warning symbols

***WARNING ! Marks a danger or a hazardous procedure that can result in life threatening or serious injury if the warning is ignored.***

CAUTION ! Marks a danger or hazardous procedure that can result in damage to the machine or property if the warning is ignored.

## Safety information

***It is recommended to at least train operators in handling and daily maintenance of the machine in accordance with the instruction manual. Passengers are not allowed on the machine, and you must sit in the seat when operating the machine.***

***The safety manual supplied with the machine must be read by all roller operators. Always follow the safety instructions. Do not remove the manual from the machine.***

***We recommend that the operator reads the safety instructions in this manual carefully. Always follow the safety instructions. Ensure that this manual is always easily accessible.***

***Read the entire manual before starting the machine and before carrying out any maintenance.***

***Replace immediately the instruction manuals if lost, damaged or unreadable.***

***Ensure good ventilation (extraction of air by fan) where the engine is run indoors.***

## General

This manual contains instructions for machine operation and maintenance.

The machine must be correctly maintained for maximal performance.

The machine should be kept clean so that any leakages, loose bolts and loose connections are discovered at as early a point in time as possible.

Inspect the machine every day, before starting. Inspect the entire machine so that any leakages or other faults are detected.

Check the ground under the machine. Leakages are more easily detected on the ground than on the machine itself.

THINK ENVIRONMENT ! Do not release oil, fuel and other environmentally hazardous substances into the environment. Always send used filters, drain oil and fuel remnants to environmentally correct disposal.

This manual contains instructions for periodic maintenance normally carried out by the operator.

Additional instructions for the engine can be found in the manufactuer's engine manual.

# Safety - General instructions

**(Also read the safety manual)**

1. **The operator must be familiar with the contents of the OPERATION section before starting the roller.**
2. **Ensure that all instructions in the MAINTENANCE section are followed.**
3. **Only trained and/or experienced operators are to operate the roller. Passengers are not permitted on the roller. Remain seated at all times when operating the roller.**
4. **Never use the roller if it is in need of adjustment or repair.**
5. **Only mount and dismount the roller when it is stationary. Use the intended grips and rails. Always use the three-point grip (both feet and one hand, or one foot and both hands) when mounting or dismounting the machine. Never jump down from the machine.**
6. **The ROPS (Roll Over Protective Structure) should always be used when the machine is operated on unsafe ground.**
7. **Drive slowly in sharp bends.**
8. **Avoid driving across slopes. Drive straight up or straight down the slope.**
9. **When driving close to edges, ditches or holes, make sure that at least 2/3 of the drum width is on previously compacted material (solid surface).**
10. **Make sure that there are no obstacles in the direction of travel, on the ground, in front of or behind the roller, or overhead.**
11. **Drive particularly carefully on uneven ground.**
12. **Use the safety equipment provided. The seat belt must be worn on machines fitted with ROPS/ROPS-cab.**
13. **Keep the roller clean. Clean any dirt or grease that accumulates on the operator platform immediately. Keep all signs and decals clean and legible.**
14. **Safety measures before refueling:**
    **- Stop the engine**
    **- Do not smoke.**
    **- No naked flames in the vicinity of the roller.**
    **- Earth the filling equipment nozzle to the tank opening to avoid sparks.**
15. **Before repairs or service:**
    **- Chock the drums/wheels and under the strike-off blade.**
    **- Lock the articulation if necessary**

16. **Hearing protection is recommended if the noise level exceeds 85 dB(A). The noise level can vary depending on the equipment on the machine and the surface the machine is being used on.**

17. **Do not make any changes or modifications to the roller that could affect safety. Changes are only to be made after written approval has been given by Dynapac.**

18. **Avoid using the roller before the hydraulic fluid has reached its normal working temperature. Braking distances can be longer than normal when the fluid is cold. See instructions in the STOP section.**

19. **For your own protection always wear:**
    **- helmet**
    **- working boots with steel toecaps**
    **- ear protectors**
    **- reflecting clothing/high visibility jacket**
    **- working gloves**

## Safety - when operating

***Prevent persons from entering or remaining in the danger area, i.e. a distance of at least 7 m (23 ft) in all directions from operating machines. The operator may allow a person to remain in the danger area, but should then observe caution and operate the machine only when the person is visible or has given clear indications of where he or she is.***

### Slopes

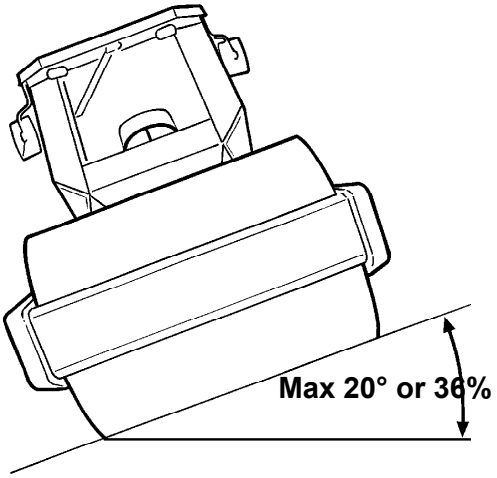


*Fig. Operating on slopes*

This angle has been measured on a hard, flat surface with the machine stationary.

The steering angle was zero, the vibration was switched OFF and all tanks were full.

Always take into consideration that loose ground, steering the machine, vibration on, machine speed across the ground and raising the center of gravity can all cause the machine to topple at smaller slope angles than those specified here.

***To exit the cab in an emergency, release the hammer on the rear right post and break the rear window.***

***It is recommended that ROPS (Roll Over Protective Structure) or a ROPS-approved cab is always used when driving on slopes or unsafe ground. Always wear a seat belt.***

***Where possible, avoid driving across slopes. Drive instead straight up and down sloping ground.***

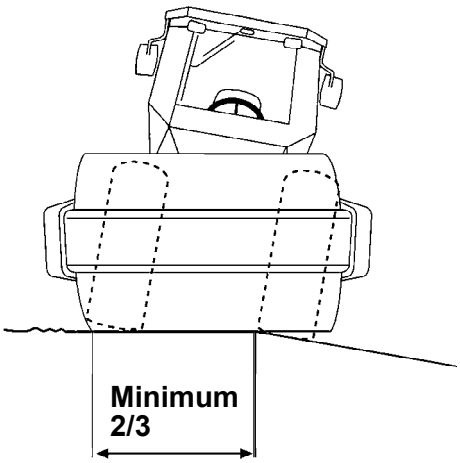


*Fig. Position of drum when driving near an edge*

## Driving near edges

When driving near an edge, minimum 2/3 of the drum width must be on solid ground.

***Keep in mind that the machine's center of gravity moves outwards when steering. For example, the center of gravity moves to the right when you steer to the left.***

# Special instructions

## Standard lubricants and other recommended oils and fluids

Before leaving the factory, the systems and components are filled with the oils and fluids specified in the lubricant specification. These are suitable for ambient temperatures in the range -15°C to +40°C (5°F - 105°F).

## Higher ambient temperatures, above +40°C (104°F)

For operation of the machine at higher ambient temperatures, however maximum +50°C (122°F), the following recommendations apply:

The diesel engine can be run at this temperature using normal oil. However, the following fluids must be used for other components:

Hydraulic system - mineral oil Shell Tellus S2V100 or similar.

## Temperatures

The temperature limits apply to standard versions of rollers.

Rollers equipped with additional equipment, such as noise suppression, may need to be more carefully monitored in the higher temperature ranges.

## High pressure cleaning

Do not spray water directly onto electrical components or the instrument panels.

Place a plastic bag over the fuel filler cap and secure with a rubber band. This is to avoid high pressure water entering the vent hole in the filler cap. This could cause malfunctions, such as the blocking of filters.



Never aim the water jet directly at the fuel tank cap. This is particularly important when using a high-pressure cleaner.

## Fire fighting

If the machine catches fire, use an ABC-class powder fire extinguisher.

A BE-class carbon dioxide fire extinguisher can also be used.

## Roll Over Protective Structure (ROPS), ROPS approved cab



***If the machine is fitted with a Roll Over Protective Structure (ROPS, or ROPS approved cab) never carry out any welding or drilling in the structure or cab.***



***Never attempt to repair a damaged ROPS structure or cab. These must be replaced with new ROPS structure or cabs.***

## Battery handling



***When removing batteries, always disconnect the negative cable first.***



***When fitting batteries, always connect the positive cable first.***



Dispose of old batteries in an environmentally friendly way. Batteries contain toxic lead.



Do not use a quick-charger for charging the battery. This may shorten battery life.

## Jump starting

***Do not connect the negative cable to the negative terminal on the dead battery. A spark can ignite the oxy-hydrogen gas formed around the battery.***

***Check that the battery used for jump starting has the same voltage as the dead battery.***

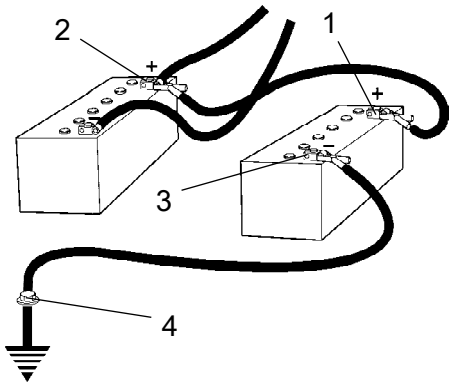


***Fig. Jump starting***

Turn the ignition and all power consuming equipment off. Switch off the engine on the machine which is providing jump start power.

First connect the jump start battery's positive terminal (1) to the flat battery's positive terminal (2).Then connect the jump start battery's negative terminal (3) to, for example, a bolt (4) or the lifting eye on the machine with the flat battery.

Start the engine on the power providing machine. Let it run for a while. Now try to start the other machine. Disconnect the cables in the reverse order.

# Technical specifications

## Vibrations - Operator station

**(ISO 2631)**

| **The vibration levels are measured in accordance with the operational cycle described in EU directive 2000/14/EC on machines equipped for the EU market, with vibration switched on, on soft polymer material and with the operator's seat in the transport position.** |
|---|
| Measured whole-body vibrations are below the action value of 0.5 m/s² as specified in Directive 2002/44/EC. (Limit is 1.15 m/s²) |
| Measured hand/arm vibrations also were below the action level of 2.5 m/s² specified in the same directive. (Limit is 5 m/s²) |

## Noise level

**The noise level is measured in accordance with the operational cycle described in EU directive 2000/14/EC on machines equipped for the EU market, on soft polymer material with vibration switched on and the operator's seat in the transport position.**

| | |
|---|---|
| Guaranteed sound power level, $L_{wA}$ | 107 dB (A) |
| Sound pressure level at the operator's ear (platform), $L_{pA}$ | 90 ±3 dB (A) |
| Sound pressure level at the operator's ear (cab), $L_{pA}$ | 85 ±3 dB (A) |

**During operation the above values may differ because of the actual operational conditions.**

## Dimensions, side view

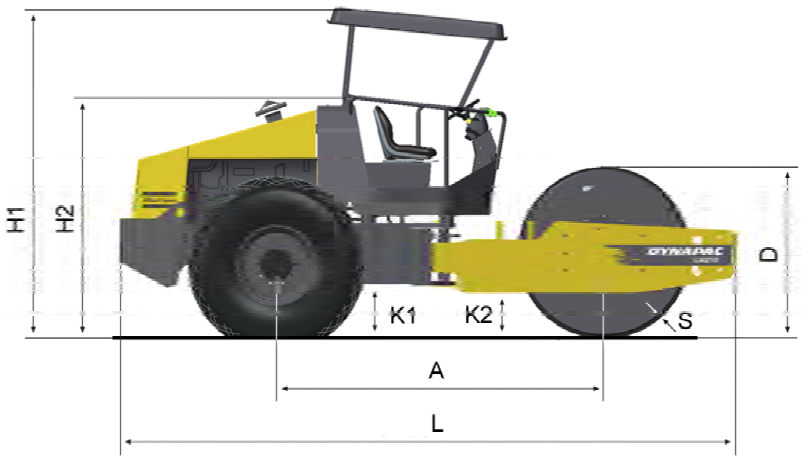


| | Dimensions | mm | in |
|---|---|---|---|
| A | Wheelbase, drum and wheel | 2879 | 113,3 |
| L | Length, standard equipped roller | 5550 | 218,5 |
| H1 | Height, with ROPS (STD, D) | 2952 | 116,2 |
| H1 | Height, with cab (STD, D) | 2952 | 116,2 |
| H2 | Height, without ROPS/cab (STD, D) | 2190 | 86,2 |
| D | Diameter, drum | 1523 | 60 |
| S | Thickness, drum sweep, nominal | 25 | 0,98 |
| K1 | Clearance, tractor frame | 453 | 17,8 |
| K2 | Clearance, drum frame (STD, D) | 400 | 15,7 |

## Dimensions, top view

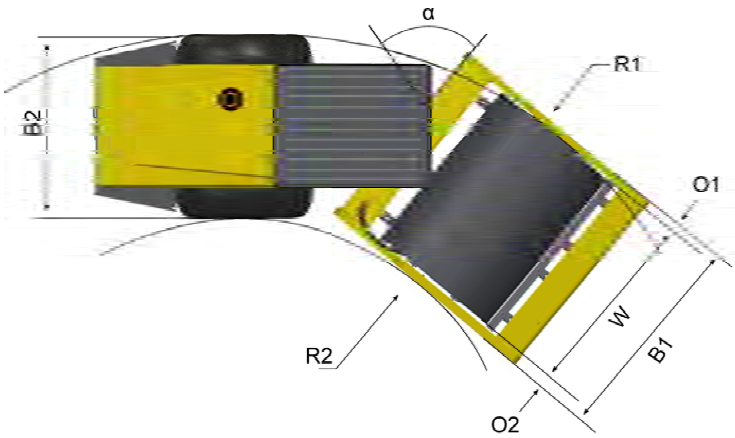


| | Dimensions | mm | in |
|---|---|---|---|
| B | Width, standard equipped roller | 2384 | 93,9 |
| O 1 | Overhang, left frame side | 127 | 5,0 |
| O 2 | Overhang, right frame side | 127 | 5,0 |
| R 1 | Turn radius, external | 5400 | 212,6 |
| R 2 | Turn radius, internal | 3100 | 122 |
| W 1 | Width, tractor section | 2130 | 83,9 |
| W 2 | Width, drum | 2130 | 83.9 |
| α | Steering angle | ± 38° | |

## Weights and volumes

### Weights

| | | |
|---|---|---|
| Service weight (STD) | 9700 kg | 21 390 lbs |
| Service weight (D) | 9900 kg | 21 830 lbs |

### Fluid volumes

| | | |
|---|---|---|
| Fuel tank | 250 liters | 66 gal |

## Working capacity

### Compaction data

| | | |
|---|---|---|
| Static linear load (STD) | 25,3 kg/cm | 141,7 pli |
| Static linear load (D) | 26,3 kg/cm | 147,3 pli |
| Amplitude, high (STD, D) | 1,7 mm | 0,066 in |
| Amplitude, low (STD, D) | 0,8 mm | 0,031 in |
| Vibration frequency, high amplitude (STD, D) | 33 Hz | 1980 vpm |
| Vibration frequency, low amplitude (STD, D) | 33 Hz | 1980 vpm |
| Centrifugal force, high amplitude (STD, D) | 246 kN | 55,35 lb |
| Centrifugal force, low amplitude (STD, D) | 119 kN | 26,77 lb |

## General

### Engine

| | | |
|---|---|---|
| Manufacturer/Model | Cummins 4BT 3.9C | Water cooled turbo diesel |
| Power (SAE J1995) | 76 kW | 103 hp |
| Engine speed | 2300 rpm | |

### Electrical system

| | |
|---|---|
| Battery | 12V 150Ah |
| Alternator | 12V 55A |
| Fuses | See the Electrical system section - fuses |

| Tire | Tire dimensions | Tire pressure |
|---|---|---|
| Std-type | 23.1 x 26.0 8 ply | 110 kPa (1.1 kp/cm) (16 psi) |
| Tractor type | 23.1 x 26.0 12 ply | 110 kPa (1.1 kp/cm) (16 psi) |

***The tires can be optionally filled with fluid, (extra weight up to 500 kg/tire) (1102 lbs/tire). When servicing, bear this extra weight in mind.***

## Hydraulic system

| Opening pressure | MPa |
|---|---|
| Drive system | 38,0 |
| Supply system | 2.0 |
| Vibration system | 32,5 |
| Control systems | 17,5 |
| Brake release | 1,4 |

## ROPS - bolts

| | |
|---|---|
| Bolt dimensions : | M24 (PN 4700904562) |
| Strength class : | 10.9 |
| Tightening torque : | 800 Nm (Dacromet treated) |

ROPS-bolts which are to be torque tightened must be dry.

## Tightening torque

Tightening torque in Nm (lbf.ft) for oiled or dry bolts tightened with a torque wrench.

**Metric coarse screw thread, bright galvanized (fzb):**

**STRENGTH CLASS:**

| M - thread | 8.8, Oiled | 8.8, Dry | 10.9, Oiled | 10.9, Dry | 12.9, Oiled | 12.9, Dry |
|---|---|---|---|---|---|---|
| **M6** | 8,4 | 9,4 | 12 | 13,4 | 14,6 | 16,3 |
| **M8** | 21 | 23 | 28 | 32 | 34 | 38 |
| **M10** | 40 | 45 | 56 | 62 | 68 | 76 |
| **M12** | 70 | 78 | 98 | 110 | 117 | 131 |
| **M14** | 110 | 123 | 156 | 174 | 187 | 208 |
| **M16** | 169 | 190 | 240 | 270 | 290 | 320 |
| **M20** | 330 | 370 | 470 | 520 | 560 | 620 |
| **M22** | 446 | 497 | 626 | 699 | 752 | 839 |
| **M24** | 570 | 640 | 800 | 900 | 960 | 1080 |
| **M30** | 1130 | 1260 | 1580 | 1770 | 1900 | 2100 |

**Metric coarse thread, zinc-treated (Dacromet/GEOMET):**

**STRENGTH CLASS:**

| M - thread | 10.9, Oiled | 10.9, Dry | 12.9, Oiled | 12.9, Dry |
|---|---|---|---|---|
| **M6** | 12,0 | 15,0 | 14,6 | 18,3 |
| **M8** | 28 | 36 | 34 | 43 |
| **M10** | 56 | 70 | 68 | 86 |
| **M12** | 98 | 124 | 117 | 147 |
| **M14** | 156 | 196 | 187 | 234 |
| **M16** | 240 | 304 | 290 | 360 |
| **M20** | 470 | 585 | 560 | 698 |
| **M22** | 626 | 786 | 752 | 944 |
| **M24** | 800 | 1010 | 960 | 1215 |
| **M30** | 1580 | 1990 | 1900 | 2360 |

# Machine description

## Identification

### Product identification number on the frame

The machine PIN (product identification number) (1) is punched on the right edge of the front frame or the upper edge of the right frameside.

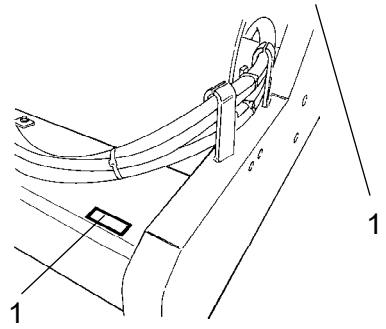


*Fig. Front frame*
*1. PIN*

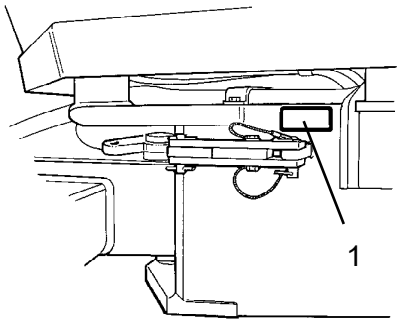


*Fig. Operator platform*
*1. Machine plate*

### Machine plate

The machine type plate (1) is attached to the front left side of the frame, beside the steering joint.

The plate specifies the manufacturers name and address, the type of machine, the PIN product identification number (serial number), operating weight, engine power and year of manufacture. (If the machine is supplied to outside the EU, there are no CE markings and in some cases no year of manufacture.)

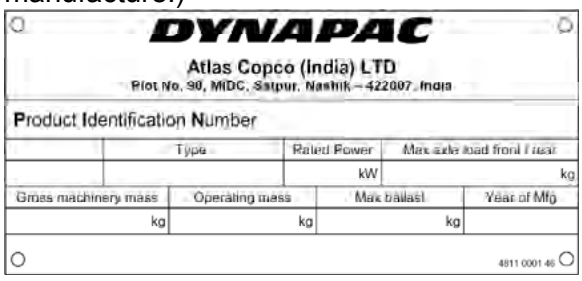
DYNAPAC

Atlas Copco (India) LTD

Plot No. 90, MIDC, Satpur, Nashik – 422007, India

| Product Identification Number | | | |
|---|---|---|---|
| | Type | Rated Power | Max axle load front / rear |
| | | kW | kg |
| Gmas machinery mass | Operating mass | Max ballast | Year of Mfg |
| kg | kg | kg | |

4811 0001 46

*Fig. Machine plate*

**Please state the machine's PIN when ordering spares.**

| | | | | | |
|---|---|---|---|---|---|
| 100 | 00123 | V | 0 | A | 123456 |
| A | B | C | D | E | F |

## Explanation of 17PIN serial number

A= Manufacturer

B= Family/Model

C= Check letter

D= No coding

E= Production unit

F= Serial number

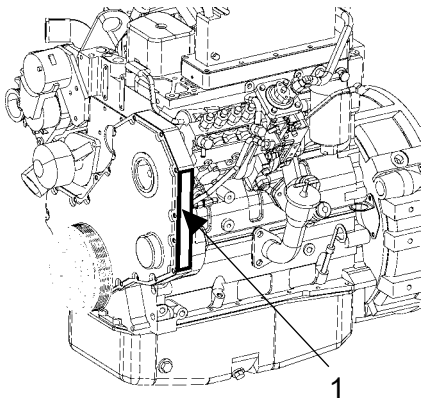


***Fig. Engine***
***1. Type plate***

## Engine plates

The engine plate (1) is affixed to the right side of the engine.

The plate specifies the type of engine, its serial number and the engine specification.

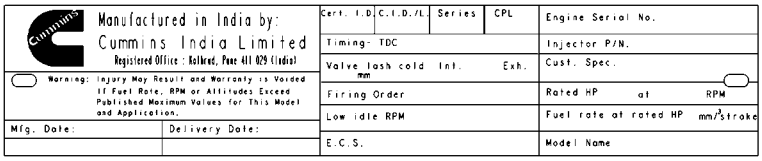


***Fig. Type plate***

Please specify the engine serial number when ordering spares. Refer also to the engine manual.

# Decals

## Location - decals

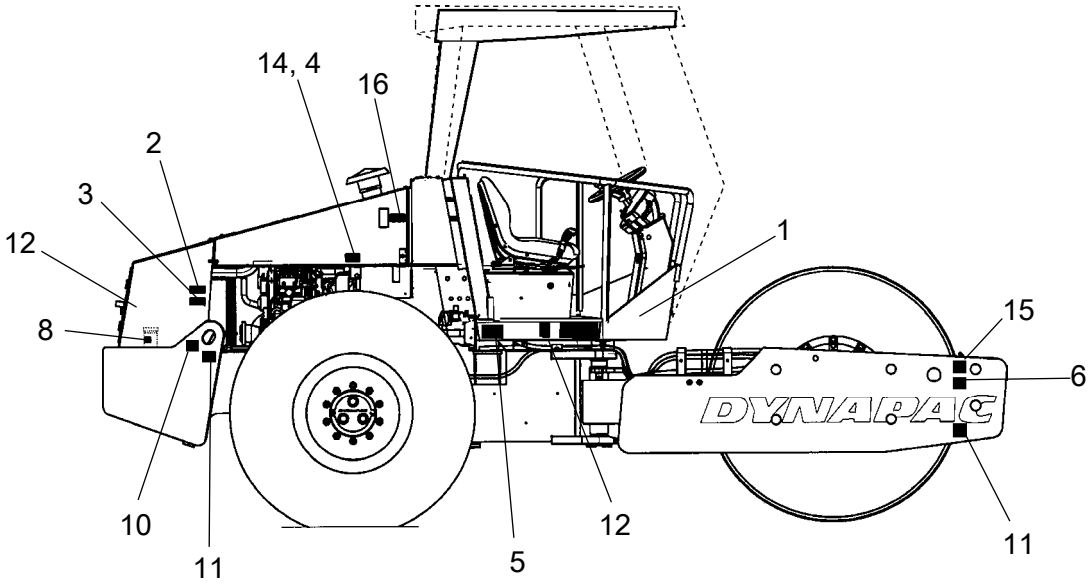


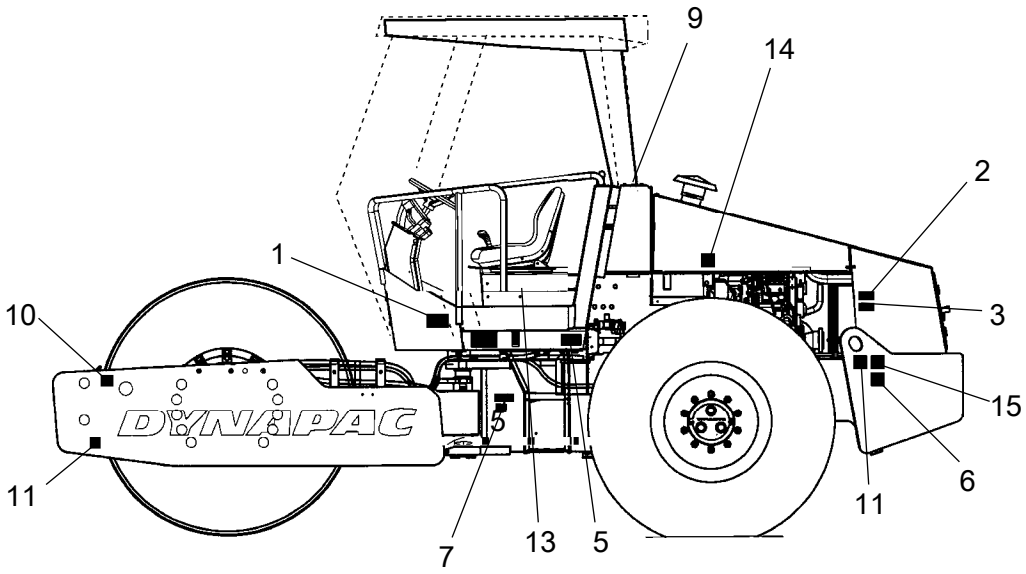


1. Warning, Crush zone
2. Warning, Rotating engine components
3. Warning, Hot surfaces
4. Warning, Ballasted tire.
5. Warning, Read instructions manual
6. Warning, locking
7. Product sign
8. Diesel fuel
9. Hydraulic fluid/Biohydraulic fluid
10. Lifting point
11. Fixing point
12. Master switch
13. Handbook compartment
14. Tire pressure
15. Hoisting plate
16. Hydraulic fluid/Biohydraulic

## Safety decals

Always make sure that all safety decals are completely legible, and remove dirt or order new decals if they have become illegible. Use the part number specified on each decal.

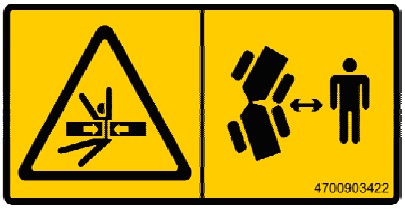


**4700903422**
**Warning - Crush zone, articulation/drum.**

**Maintain a safe distance from the crush zone.**
*(Two crush zones on machines fitted with pivotal steering)*

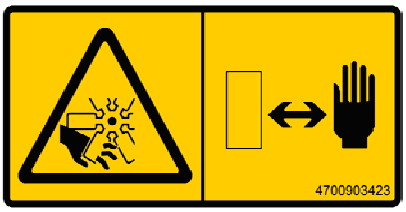


**4700903423**
**Warning - Rotating engine components.**

**Keep your hands at a safe distance from the danger zone.**

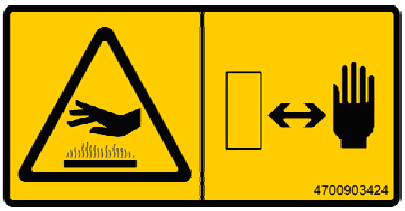


**4700903424**
**Warning - Hot surfaces in the engine compartment.**

**Keep your hands at a safe distance from the danger zone.**

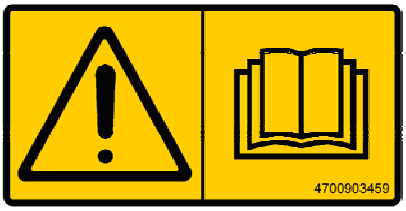


**4700903459**
**Warning - Instruction manual**

**The operator must read the safety, operation and maintenance instructions before operating the machine.**




**4700908229**
**Warning - Risk of crushing**

**The articulation must be locked when lifting.**

**Read the instruction manual.**

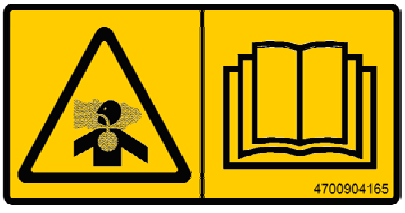


**4700904165**
**Warning - Toxic gas (option, ACC)**

**Read the instruction manual.**

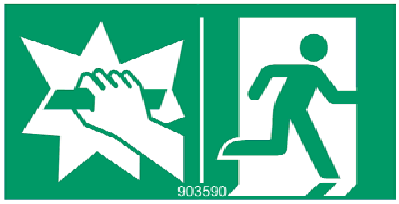


**4700903590**
**-Emergency exit**

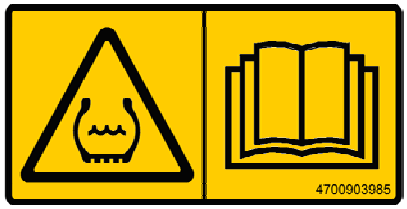


**4700903985**
**Warning - Ballasted tire.**

Read the instruction manual.

## Info decals

**Coolant**

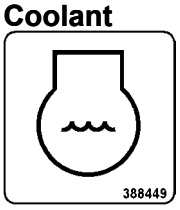


**Diesel fuel**




**Lifting point**




**Hoisting plate**

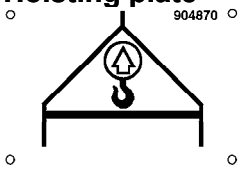


**Handbook compartment**

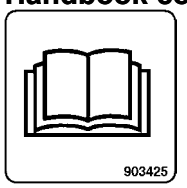


**Master switch**

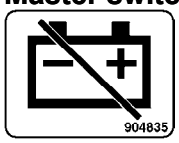


**Hydraulic fluid**

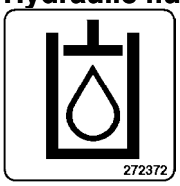


**Tire pressure**

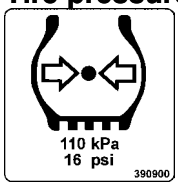


**Securing point**

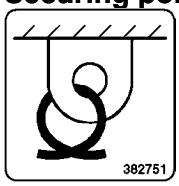


**Hydraulic fluid level**

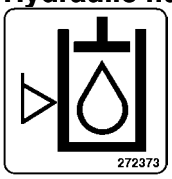


**Noise power level**

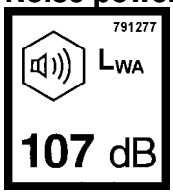

# Instrument/Controls

## Locations - Instruments and controls

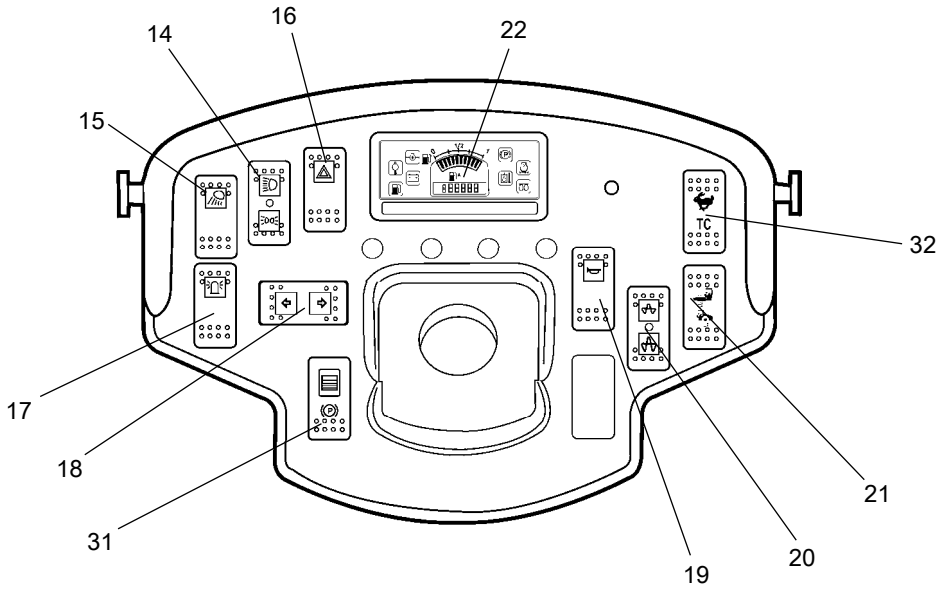


*Fig. Instruments and control panel*

| | |
|---|---|
| 14. | Driving lights, Low beam |
| 15. | Driving lights, High beam |
| 16. | Hazard flashers |
| 17. | Hazard beacon |
| 18. | Direction indicators |
| 19. | Horn |
| 20. | Vibration On/Off, Amplitude High/Low |
| 21. | Anti spin forward/equal share/back |
| 22. | Control panel |
| 31. | Parking brake On/Off |
| 32. | Transport mode/Traction control (Optionr) |

## Locations - Control panel and controls

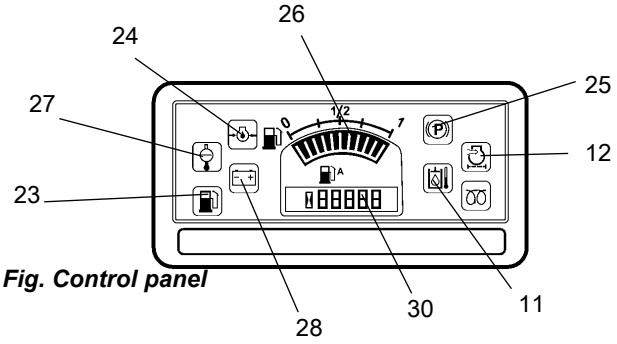


*Fig. Control panel*

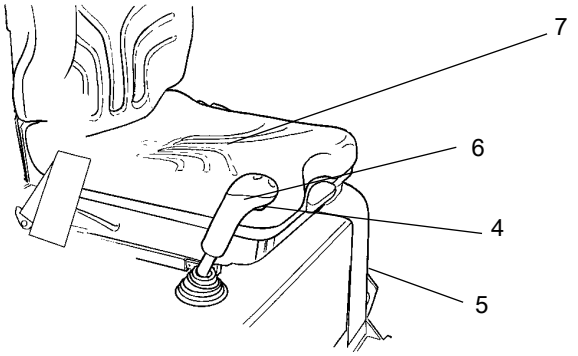


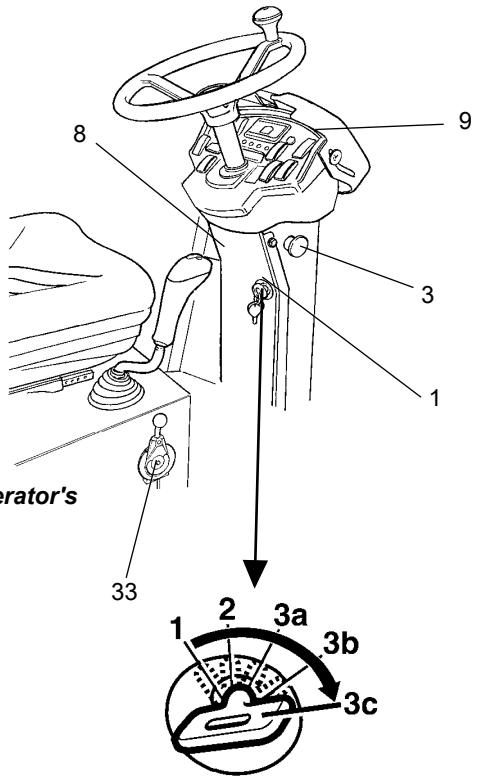


*Fig. Operator's station*

*Fig. Operator position*

| | | | |
|---|---|---|---|
| 1 | Starter switch | 23 | Low fuel level |
| 3 | Emergency stop | 24 | Oil pressure, diesel engine |
| 4 | Vibration ON/OFF | 25 | Parking brake |
| 5 | Handbook compartment | 26 | Fuel level |
| 6 | Forward/Back control | 27 | Water temperature, diesel engine |
| 7 | Seat switch | 28 | Battery/charging |
| 8 | Fuse box | 30 | Hourmeter |
| 9 | Instrument guard | 33 | Engine speed control |
| 11 | Hydraulic temperature | | |
| 12 | Air filter | | |

## Function description

| No | Designation | Symbol | Function |
|---|---|---|---|
| 1. | Starter switch | | Positions 1-2: Shut off position, key can be removed.<br>Position 3a: All instruments and electric controls are supplied with power.<br>Position 3c: Starter motor activation. |
| 3. | Emergency stop |  | When pressed, the emergency stop is activated. The brake is applied and the engine stops. Brace yourself for a sudden stop. |
| 4. | Vibration On/Off. Switch |  | When the circuit breaker is pressed in and released the vibrations are connected up. Press again and the vibrations are disconnected. High or low amplitude must first be chosen on the instrument panel. |
| 5. | Handbook compartment |  | Pull up and open the top of the compartment for access to handbooks. |
| 6. | Forward/Reverse lever | | The lever must be in neutral to start the diesel engine. The engine cannot be started if the lever is in any other position.<br>The forward/reverse lever controls both the roller's driving direction and speed. When the lever is moved forward, the roller moves forward etc.<br>The roller's speed is proportional to the distance the lever is from the neutral position. The further the lever is from the neutral position, the higher the speed. |
| 7. | Seat switch | | Remain seated at all times when operating the roller. If the operator stands up during operation, a buzzer sounds. After 3 seconds the brakes are activated and the engine stops. |
| 8. | Fuse box (on control column) |  | Contains fuses for the electrical system. See under the heading ‘Electrical system’ for a description of fuse functions. |
| 9. | Instrument cover |  | Lowered over the instrument plate to protect the instruments from the weather and sabotage. Lockable |
| 11. | Temperature gauge, hydraulic fluid. |  | Shows hydraulic fluid temperature.<br>Normal temperature range is 65°-80°C (149°-176°F).<br>Stop the engine if the gauge shows a temperature of more than 85°C (185°F). Locate the fault. |
| 12. | Warning lamp, air filter |  | If the lamp comes on while the engine is running at full speed, the air filter must be cleaned or replaced. |
| 14. | Driving lights, low beam, switch (Optional) |  | When depressed, the driving lights low beam are on. |
| 15. | Driving lights, high beam, switch (Optional) |  | When depressed, the driving lights high beam are on. |
| 16. | Hazard warning lights, switch (Optional) |  | Where depressed, the hazard warning lights are on |

| No | Designation | Symbol | Function |
|---|---|---|---|
| 17. | Hazard beacon, switch (Optional) |  | Where depressed, the hazard beacon is on |
| 18. | Direction indicators, switch (Optional) |  | When depressed to the left, the left direction indicators are on etc. In the middle position the function is shut off. |
| 19. | Horn, switch |  | Press to sound the horn. |
| 20. | Amplitude High/Low, Vibration On |  | Low Amplitude Activate the vibration together with the circuit breaker on forward/back control. |
| | |  | Vibration switched off. |
| | |  | Amplitude, high Activate the vibration together with the circuit breaker on forward/back control. |
| 21. | Anti spin Forward/Equal share/Back (Optional) |  | Roller spinning symbol = less distribution of power to the roller. |
| | | | Mid position = Equal distribution of power forward/back. |
| | |  | Wheel spinning symbol =Less distribution of power to the roller. |
| 22. | Control panel |  | |
| 23. | Warning lamp, low fuel level |  | This lamp lights when the fuel level in the diesel tank is too low. |
| 24. | Warning lamp, oil pressure |  | This lamp lights if the lubricating pressure in the engine is too low. Stop the engine immediately and locate the fault. |
| 25. | Warning lamp, parking brake |  | The lamp lights when the parking brake is activated. |
| 26. | Fuel level |  | Shows the fuel level in the diesel tank. |
| 27. | Warning lamp, water temperature |  | The light comes on if the water temperature is too high. |
| 28. | Warning lamp, battery charging |  | If the lamp lights while the engine is running the alternator is not charging. Stop the engine and locate the fault. |
| 30. | Hourmeter |  | Shows the number of hours the engine has run. |
| 31. | Parking brake On/Off, switch |  | Push in to activate the parking brake, the machine stops with the engine running. **Always use the parking brake when the machine is stationary on a sloping surface.** |
| 32. | Transport mode/Traction control (Optional) |  | Transport mode. |
| | | TC | Traction control mode (TC): Activate this function together with the power distribution selector switch. |
| 33. | Engine speed control |  | Turn the lever backwards and release it into the groove to set engine speed to operating speed. To select idling speed, move the lever to forward end position. |

## Controls in the cab

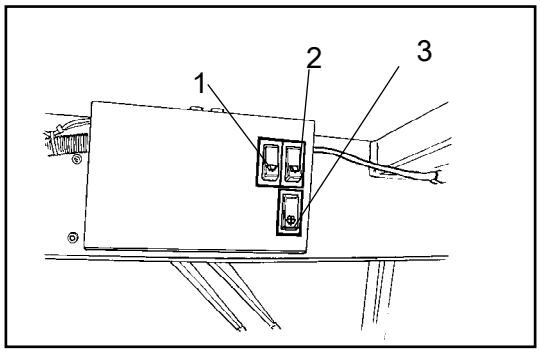


*Fig. Cab roof, front*
*1. Front wiper*
*2. Rear wiper (Optional)*
*3. Front and rear windshield washers*

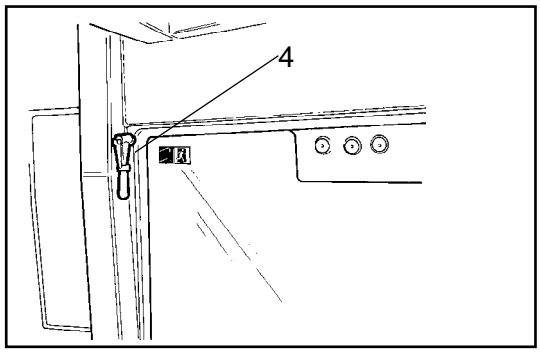


*Fig. Cab roof, rear*
*4. Hammer for emergency escape*

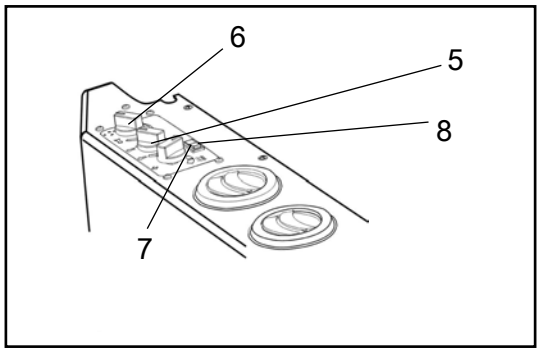


*Fig. Cab right side. Heater (Option)*
*5 .Control, temperature*
*6. Control, cirkulation*
*7. Control, fan*
*8. Switch, AC (Option)*

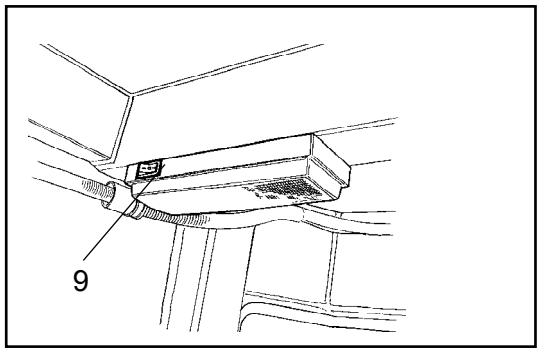


*Fig. Cab, rear*
*9. Switch, cab lighting (Optional)*

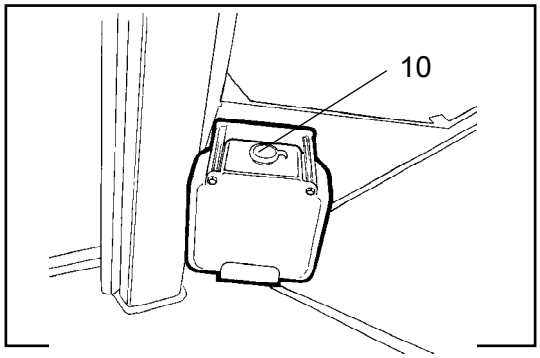


*Fig. Cab, left side*
*10. Windscreen washer fluid container (Optional)*

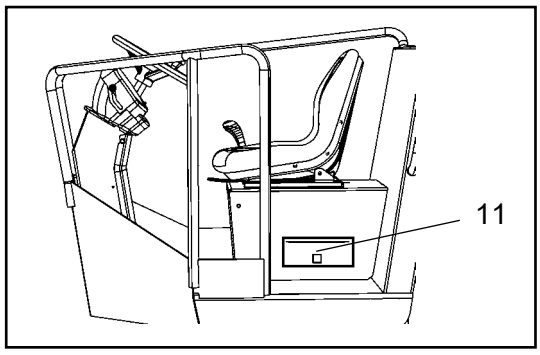


*Fig. Cabin driving compartment*
*11. Manual compartment*

## Function description of instruments and controls in the cab

| No | Designation | Symbol | Function |
|---|---|---|---|
| 1 | Front wiper, switch |  | Press to operate the front screen wiper. |
| 2 | Rear wiper, switch (Optional) |  | Press to operate the rear screen wiper. |
| 3 | Front and rear window screen washers, switch |  | Press at the top to spray the windshield. |
| | |  | Press at the bottom to spray the rear windshield. |
| 4 | Hammer for emergency exit | 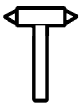 | To escape from the cab in an emergency, release the hammer and break the **REAR** window. |
| 5 | Control, temperature (Optional) |  | In the left position, the heating is OFF.In the right position, maximum heating. |
| 6 | Control, circulation (Optional) | | In the left position, the circulation is OFF. In the right position, maximum circulation |
| 7 | Control, fan (Optional) |  | In the left position, the fan is OFF. In the right position, maximum fan. |
| 8 | AC, switch (Optinal) | | |
| 9 | Cab lighting, switch (Optional) |  | Push in to turn on cab lighting |
| 10 | Windscreen wiper fluid container (Optional) | | Fill with screenwash as required. |
| 11 | Handbook compartment |  | Stowage space for safety manual and instruction books. |

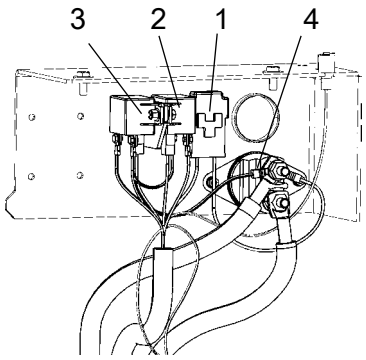


*Fig. Engine house*
*1. Main fuse*
*2. Fuel solenoid relay*
*3. Starter relay*
*4. Master switch*

# Electrical system

## Main fuses

The main fuse (1) is placed by the battery disconnector (4). The fuse is of the flat pin type. The fuel solenoid relay (2) and the starter relay (3) are also fitted here.

Main fuse 40A (Orange)

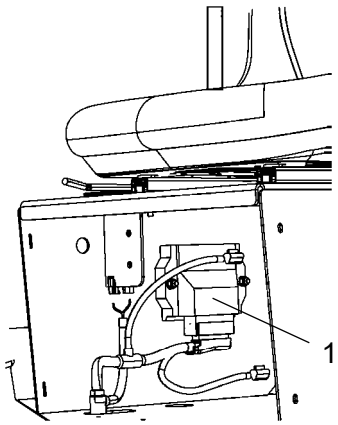


*Fig. Driving compartment*
*1 Control unit (ECU)*

Control unit (ECU:n) 1 is places behind the front hatch under the driver seat.

This control unit runs the electrical driving system, vibration, start-stop, among other things.

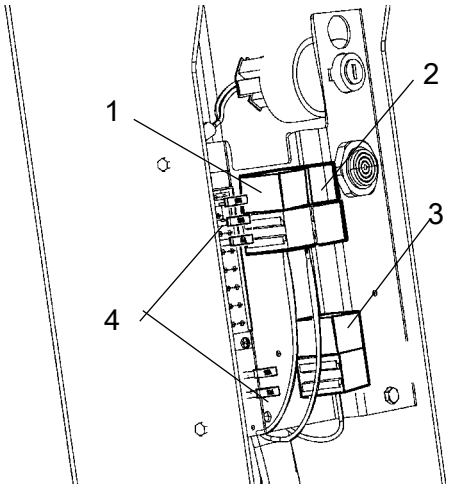


*Fig. Control column*
*1. Flasher relay*
*2. Stop light relay*
*3. Working lights relay*
*4. Fuse boxes*

## Relays

| | | |
|---|---|---|
| *1.* | *k7* | *Direction indicators* |
| *2.* | *K6* | *Stop lights* |
| *3.* | | *Working lights* |

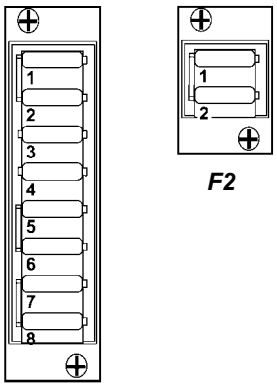


*Fig. Fuses boxes.*

## Fuses

The figure shows the position of the fuses.

The table below gives fuse amperage and function. All fuses are flat pin fuses.

The machine is equipped with a 12V electrical system and an AC alternator.

### Fuses in boxes F1

| | | | | | |
|---|---|---|---|---|---|
| 1. | Emergency stop, ECU, reversing alarm, neutral position, seat switch, vibration | 15A | 5. | High/Low speed | 10A |
| 2. | Horn, buzzer, control panel | 10A | 6. | Windshield wipers cabin | 10A |
| 3. | Reserve | | 7. | Compaction meter | 10A |
| 4. | Rotating hazard beacon | 10A | 8. | Indicators, warning indicators, cab interior lightning | 10A |

### Fuses in boxes F2

| | | |
|---|---|---|
| 1. | Working lights | 20A |
| 2. | Traffic lights: headlight, navigation light, braking lights, number plate illumination | 20A |

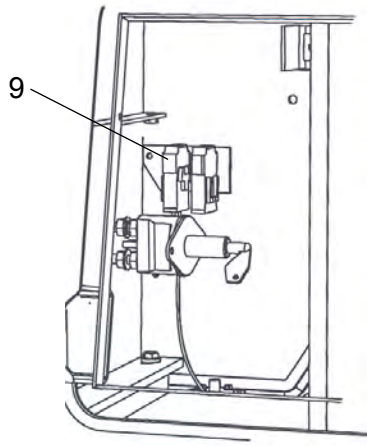


*Fig. Battery disconnector/fuse box in cooler compartment.*
*9. Fuse*

## Fuses, battery disconnector/fuse box (Cab)

To access the fuse (9), remove the front of the battery disconnector/fuse box by unscrewing the screws. Pull off the top of the fuse holder to see the fuse.

9 50 A Main fuse for cab

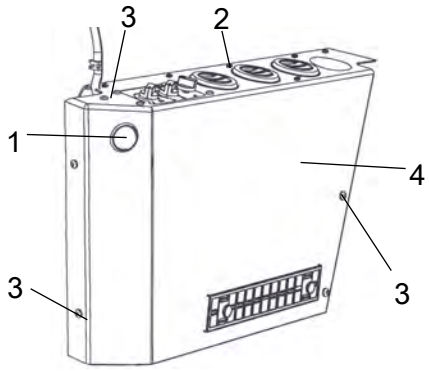


*Fig. Heater box in cab.*
*1. Plug*
*2. Screws (x5)*
*3. Screws (x9)*
*4. Cover*

## Fuses and relay in cab heater box (Optional)

To access the fuses (x2) in the heater box, release the plug (1)

The relay in the heater box is accessed by releasing the screws (2) and (3) on the top of the cover, and the screws (3) on the front of the cover, after which the cover (4) can be lifted off the heater box.

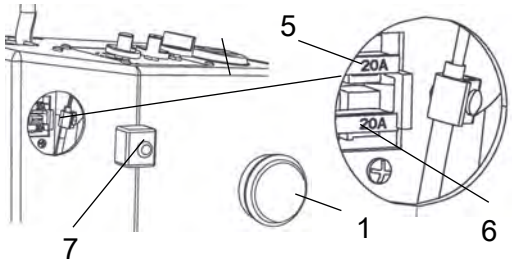


*Fig. Heater box in cab.*
*1. Plug*
*5. Fuse (x1)*
*6. Fuse (x1)*
*7. Cover for fuse box*

## Fuses in heater box

To access the fuses (x2) in the heater box, release the plug (1). Unscrew the cover (7) on the fuse box.

| | | |
|---|---|---|
| 5. | 20 A | Fan |
| 6. | 20 A | AC (Optional) |

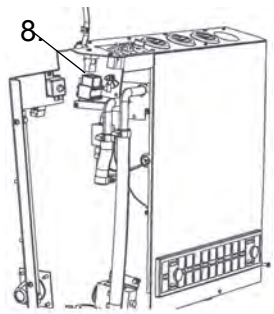


*Fig. Heater box in cab.*
*8. Relay 12V*

## Relay in heater box

To access the relay (8) (x1) in the heater box: Unscrew the screws (2) and (3) on the top of the cover, and the screws (3) on the front of the cover. The cover (4) can now be lifted off the heater box.

# Operation

## Before starting

### Master switch - Switching on

Remember to carry out daily maintenance. Refer to the maintenance instructions.

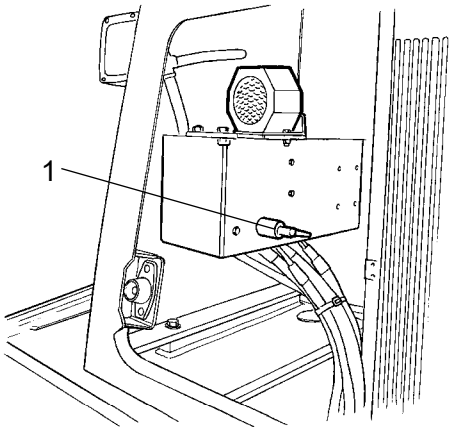


*Fig. Engine house*
*1. Battery disconnection switch*

The master switch is located in the engine compartment. Open the engine cover and set the key (1) to the ON position. The entire roller is now supplied with power.

***The engine hood must be unlocked when operating, so that the battery can be quickly disconnected if necessary.***

### Driver seat (Std.) - Adjustment

Adjust the operator’s seat so that the position is comfortable and so that the controls are within easy reach.

The seat can be adjusted lengthways (1).

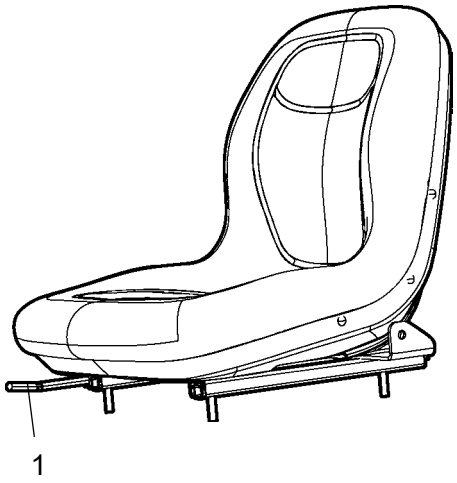


*Fig. Operator's seat*
*1. Length adjustment*

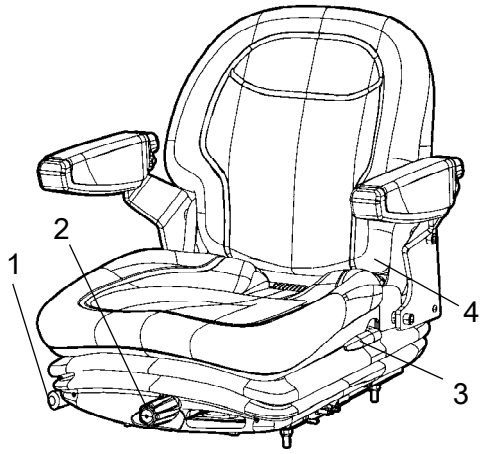


*Fig. Driver seat*
*1. Lock lever - Length adjustment*
*2. Weight adjustment*
*3. Back support angle*
*4. Seat belt*

## Driver seat (Option)- Adjustment

Adjust the operator's seat so that the position is comfortable and so that the controls are within easy reach.

The seat can be adjusted as follows.

- Length adjustment (1)
- Weight adjustment (2)
- Back support angle (3)

***Always make sure that the seat is secure before beginning operation.***

***Do not forget to use the seat belt (4).***

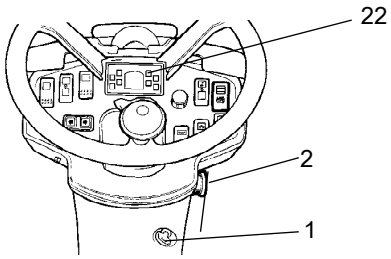


*Fig. Instrument panel*
*1. Starter switch*
*2. Emergency stop*
*22. Warning panel*

## Instruments and lamps - Checking

***Make sure that the emergency stop (2) is pulled out. When the roller is in neutral or there is no load on the operator seat, the automatic brake function is engaged.***

Pull out the emergency stop (2).

Turn the switch (1) to position 3a.

Check that the warning lamps in the warning panel (22) come on.

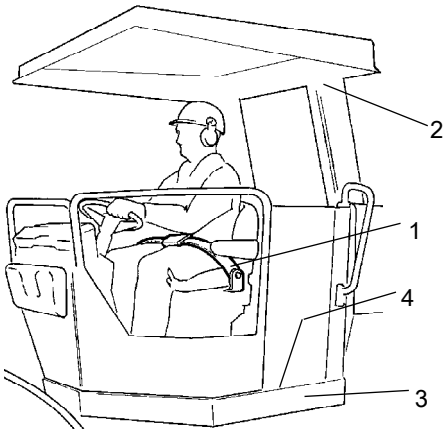


*Fig. Operator's station*
*1. Seat belt*
*2. ROPS*
*3. Rubber element*
*4. Anti-slip*

## Operator position

If a ROPS (2) (Roll Over Protective Structure) or a cab is fitted to the roller, always wear the seat belt (1) provided and wear a protective helmet.

***Replace the seat belt (1) if it shows signs of wear or has been subjected to high levels of force.***

Check that rubber elements (3) on the platform are intact. Worn elements will impair comfort.

***Ensure that the anti-slip (4) on the platform is in good condition. Replace where anti-slip friction is poor.***

***If the machine is fitted with a cab, make sure that the door is closed when in motion.***

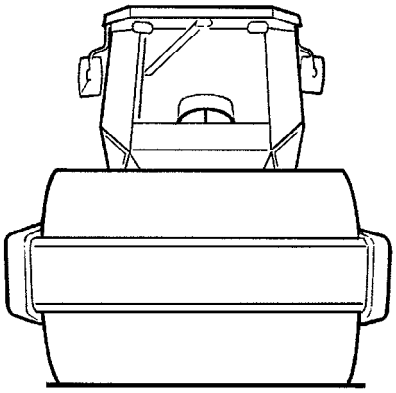

*Fig. view*

## View

Before starting, make sure that the view forwards and backwards is unobstructed.

All cab windows should be clean and the rear view mirrors should be correctly adjusted.

### Interlock

The roller is equipped with Interlock.

The engine switches off 4 seconds after the operator rises from the seat.

The engine stops whether the forward/reverse lever is in the neutral or the drive position.

The engine does not stop if the parking brake is activated.

***Sit down for all operations!***

## Starting

### Start of diesel motor

Make sure that the emergency stop (3) is pulled out.

Make sure that the parking brake switch (31) is activated.

Set the forward/reverse lever (6) in neutral. The engine can only be started when the lever is in neutral.

Turn the vibration switch (20) to the Off position (position O).

At normal/high environmental temperature, set engine speed control (33) at the position for idle running (forward end position).

Turn switching starter(1) to position 3c. As soon as the motor has started, let the starting switch go.

Do not run the starter motor for too long. If the engine does not start, wait a minute or so before trying again.

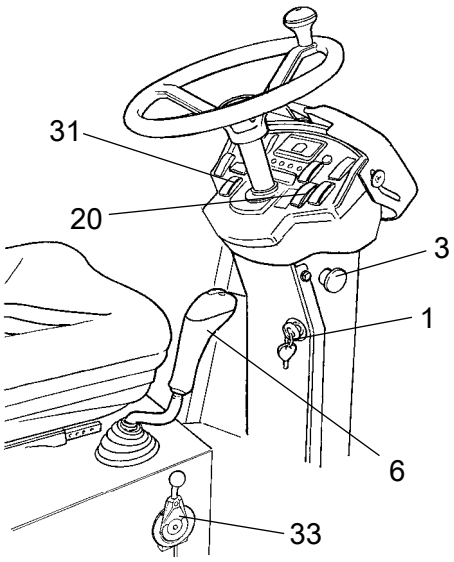


***Fig. Control panel***
***1. Ignition starter switch***
***3. Emergency shut down***
***6. Forward/Back regulator***
***20. Vibration switch***
***31. Parking brake switch***
***33. Engine speed control***

Idle the engine for a few minutes until it is warm, longer if the ambient temperature is below +10 °C (50 °F)

At temperatures below 0°C (32°F) the diesel engine and hydraulic system should be warmed up for at least 15 minutes.

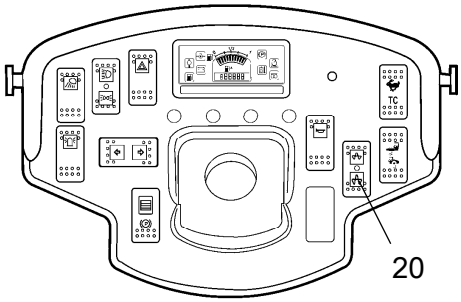


*Fig. Instrument panel*
*20. Vibration switch*

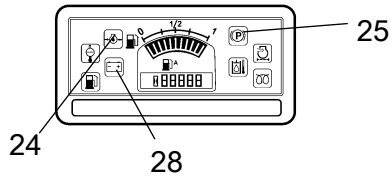


*Fig. Control panel*
*28. Charging lamp*
*24. Oil pressure lamp*
*25. Brake lamp*

Check while warming the engine that the warning lamps for the oil pressure (24) and charging (28) go out.

The warning lamp (25) should remain on.

***When starting and driving a machine that is cold, remember that the hydraulic fluid is also cold and that braking distances can be longer than normal until the machine reaches the working temperature.***

***Ensure that there is good ventilation (air extraction) if the engine is run indoors. Risk of carbon monoxide poisoning.***

# Operating

## Operating the roller

***Under no circumstances is the machine to be operated from the ground. The operator must be seated inside the machine during all operation.***

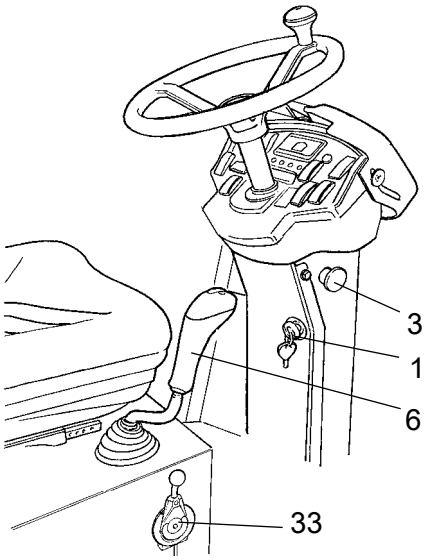


***Fig. Control panel***
***1. Ignition starter switch***
***3. Emergency shut down***
***6. Forward/Back regulator***
***33. Engine speed control***

Pull back the engine speed control (33) until it locks in the operational position.

Check that the steering is working correctly by turning the steering wheel once to the right and once to the left while the roller is stationary.

***Make sure that the area in front of and behind the roller is clear.***

Carefully move the forward/reverse lever (6) forwards or backwards, depending on which direction of travel is required.

The speed increases as the lever is moved away from the neutral position.

The speed should always be controlled by using the forward/reverse lever, and never by changing the engine speed.

***Test the emergency stop by pressing the emergency stop button (3) while the roller is moving slowly forward. Brace yourself for a sudden stop. The engine will be switched off and the brakes activated.***

Check while driving that the warning lamps have not gone on.

***If the engine is overheated or if the oil pressure is to low then the buzzer sounds for 10 seconds and the engine shuts off. Brace your self for a sudden stop.***

# Vibration

## Vibration On/Off

Activation/deactivation of the vibration is selected with the switch (20).

The operator must activate the vibration via the switch (4) on the underside of the forward/reverse handle. See illustration below.

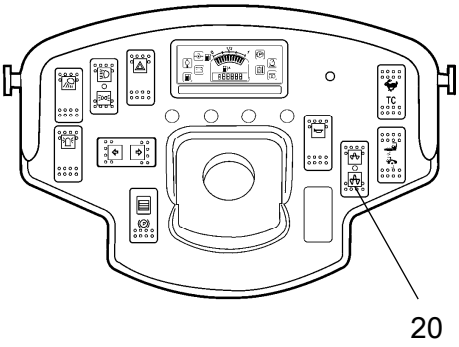


***Fig. Instrument panel***
***20. Vibration switch.***

## Vibration - Activation

Never activate vibration when the roller is stationary. This can damage both the surface and the machine.

Engage and disengage vibration using the switch (4) on the underside of the forward/reverse lever.

Vibration can only be engaged at low and high speed.

Always switch off vibration before the roller comes to a standstill.

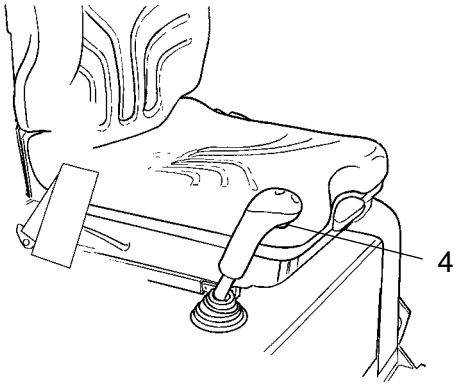


***Fig. Forward/Reverse lever***
***4. Switch, vibration On/Off***

# Braking

## Normal braking

Press the switch (4) to switch off the vibration.

Move the forward/reverse lever (6) to the neutral position to stop the roller.

Turn the engine speed control (33) forward to idling position.

Set the parkering brake switch (31) in the On position.

***Always use the parking brake (31) when the machine is stationary on a sloping surface.***

***When starting and driving a machine that is cold, remember that the hydraulic fluid is also cold and that braking distances can be longer than normal until the machine reaches the working temperature.***

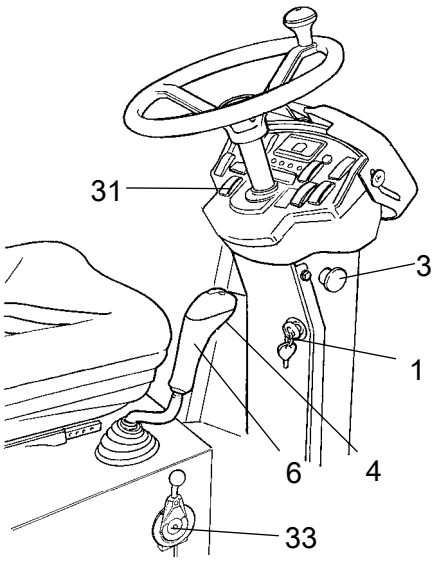


***Fig. Control panel***
***1. Key***
***3. Emergency shut down***
***4. Vibration On/Off.***
***6. Forward/Back regulator***
***31. Parking brake starting switch***
***33. Engine speed control***

## Emergency braking

Braking is normally activated using the forward/reverse lever. The hydrostatic transmission brakes the roller when the lever is moved towards the neutral position.

There is also a brake in the drum motor and rear axle that acts as an emergency brake during operation.

***For emergency braking, press the emergency stop (3), hold the steering wheel firmly and be prepared for a sudden stop. The brakes are applied and the engine stops.***

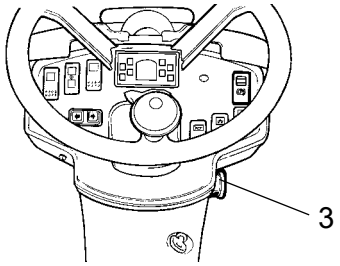


***Fig. Instrument panel***
***3. Emergency stop***

After emergency braking, return the forward/reverse lever to neutral position and pull out the emergency stop (3). When the roller is fitted with an Interlock it is necessary to sit down in the driver seat to restart the engine.

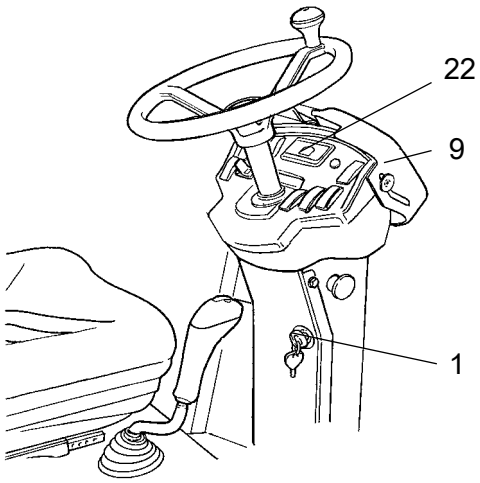


*Fig. Instrument panel*
*1. Starter switch*
*9. Instrument guard*
*22. Panel for warning lamps*

### Switching off

Check instruments and warning lamps to see if any faults are indicated. Switch off all lights and other electrical functions.

Turn the starter switch (1) to the left to switched off position 1. At the end of the shift, lower the instrument cover (22) and lock it.

## Parking

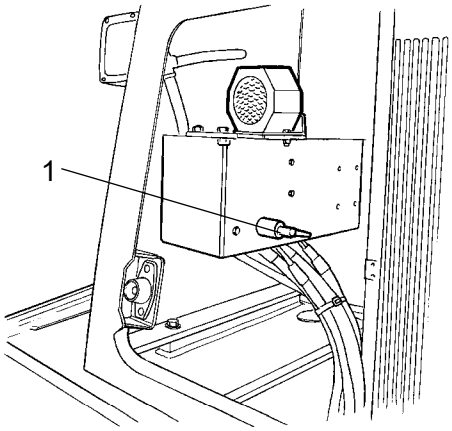


*Fig. Engine compartment*
*1. Master switch*

### Master switch

Before leaving the roller for the day, switch the master switch (1) to the disconnected position and remove the key.

This will prevent battery discharging and will also make it difficult for unauthorized persons to start and operate the machine. Also lock the engine hood.

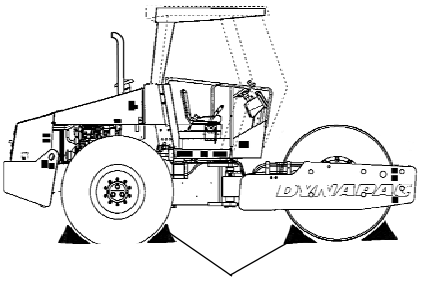


*Fig. Arrangement*
*1. Chock*

## Chocking the drums

***Never disembark from the machine when the is engine running, unless the reserve/parking brake knob is depressed.***

***Make sure that the roller is parked in a safe place with respect to other road users. Chock the drums if the roller is parked on sloping ground.***

Keep in mind that there is a risk of freezing during the winter. Fill the engine cooling system and the screenwash bottle in the cab with suitable anti-freeze mixtures. See also the maintenance instructions.

## Long-term parking

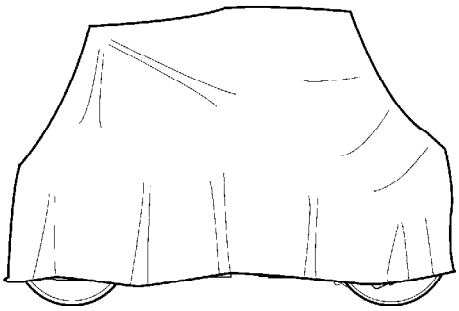

*Fig. Roller weather protection*

The following instructions should be followed when long term parking (more than one month).

These measures apply when parking for a period of up to 6 months.

Before re-commissioning the roller, the points marked with an asterisk * must be returned to the pre-storage state.

Wash the machine and touch up the paint finish to avoid rusting.

Treat exposed parts with anti-rust agent, lubricate the machine thoroughly and apply grease to unpainted surfaces.

### Engine

* Refer to the manufacturer’s instructions in the engine manual that is supplied with the roller.

### Battery

* Remove the battery from the machine. Clean the battery, check that the electrolyte level is correct (see under the heading 'Every 50 hours of operation') and trickle-charge the battery once a month.

### Air cleaner, exhaust pipe

* Cover the air cleaner (see under the heading 'Every 50 hours of operation' or 'Every 1000 hours of operation') or its opening with plastic or tape. Also cover the exhaust pipe opening. This is to avoid moisture entering the engine.

### Fuel tank

Fill the fuel tank completely full to prevent condensation.

### Hydraulic reservoir

Fill the hydraulic reservoir to the uppermost level mark (see under the heading ‘Every 10 hours of operation.’)

### Steering cylinder, hinges, etc.

Lubricate the articulation bearing with grease (see under the heading "Every 50 hours of operation").

Grease the steering cylinder piston with conservation grease.

Grease the hinges on the doors to the engine compartment and the cab. Grease both ends of the forward/reverse control (bright parts) (see under the heading 'Every 500 hours of operation').

### Hoods, tarpaulin

* Lower the instrument cover over the instrument panel.

* Cover the entire roller with a tarpaulin. A gap must be left between the tarpaulin and the ground.

* If possible, store the roller indoors and ideally in a building where the temperature is constant.

### Tires (All-weather)

Check that tire pressure is 110 kPa (1.1 kp/cm 2 ), (16 psi).

# Miscellaneous

## Lifting

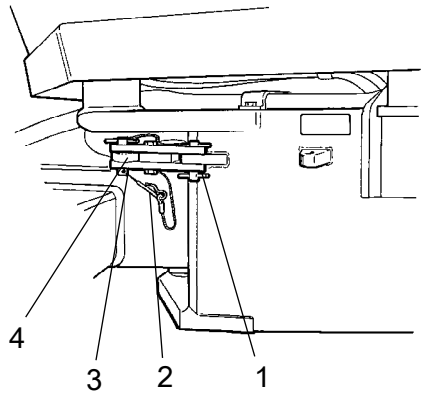


*Fig. Articulation in the locked position*
*1. Locking arm*
*2. Locking pin*
*3. Locking stud*
*4. Locking lug*

### Locking the articulation

***Articulation must be locked to prevent inadvertent turning before lifting the roller.***

Turn the steering wheel to the straight ahead position. Push in the emergency/parking brake knob.

Pull out the lowermost locking pin (2), which has a a wire attached. Pull up the locking dowel (3) which also has a wire attached.

Fold out the locking arm (1) and secure it to the upper locking lug (4) on steering joint.

Fit the locking stub (3) in the holes through the locking arm (1) and locking lug (4) and secure the stud in position with the locking pin (2).

Weight: refer to the hoisting plate on the roller

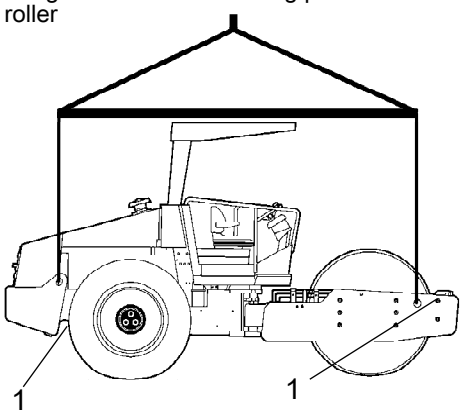


*Fig. Roller prepared for lifting*
*1. Hoisting plate*

### Lifting the roller

***The machine's gross weight is specified on the hoisting plate (1). Refer also to the Technical specifications.***

Lifting equipment such as chains, steel wires, straps and lifting hooks must be dimensioned in accordance with the relevant safety regulations for the lifting equipment.

***Stand well clear of the hoisted machine! Make sure that the lifting hooks are properly secured.***

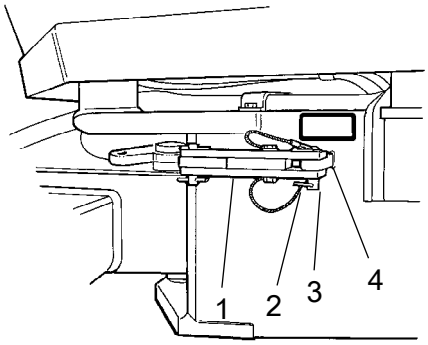


*Fig. Articulation in the open position*
*1. Locking arm*
*2. Locking pin*
*3. Locking stud*
*4. Locking lug*

### Unlocking the articulation

Remember to unlock the articulation before operating.

Fold the locking arm (1) back and secure it in the locking lug (4) with the locking stud (3). Insert the lowermost locking pin (2) fitted with a wire, to secure the locking stud (3). The locking lug (4) is located on the tractor frame.

## Towing/Recovering

The roller can be moved up to 300 meters (330 yards) using the instructions below.

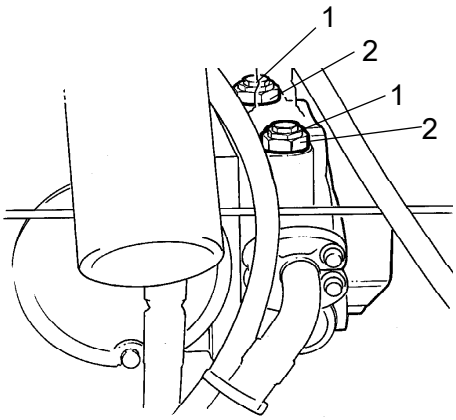


*Fig. Propulsion pump*
*1. Towing valve*
*2. Locknut*

### Alternative 1

### Short distance towing with the engine running

***Depress the emergency/parking brake knob and temporarily shut off the engine. Chock the drums to prevent the roller from moving***

Turn both towing valves (1) (middle hexagonal nut) three turns counter clockwise, while holding the multifunction valve (2) (lowermost hexagonal nut) in place. The valves are placed on the forward drive pump.

Start the engine and allow it to idle.

The roller can now be towed and can also be steered if the steering system is otherwise functioning.

## Alternative 2

## Towing short distances when the engine is inoperative

First release both towing valves as per alternative 1.

***Chock the drums to prevent the roller from moving when the brakes are mechanically disengaged.***

## Rear axle brake

On both sides remove the lock screws (1)

Screw in the brake release bolts (3), 1/2 turn at a time, in sequence (A, B, C) until the torque drops off sharply (4-5 turns).

Clear the area of any personnel before removing the stop blocks on the drum and two wheels, and then tow the machine to a safe location.

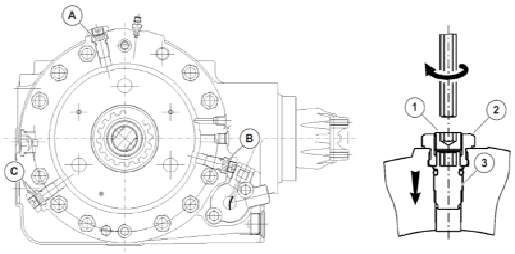


***Fig. Rear axle***
***1. Lock screw***
***2. Loch nut***
***3. Brake release screw***

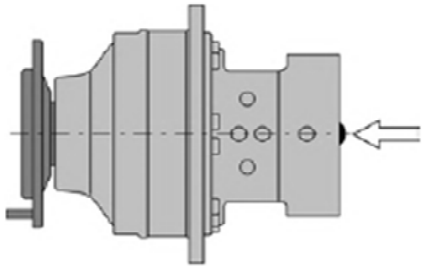

*Fig. Drum motor*

## Releasing the parking brake in the drum

| | | |
|---|---|---|
| 1 | 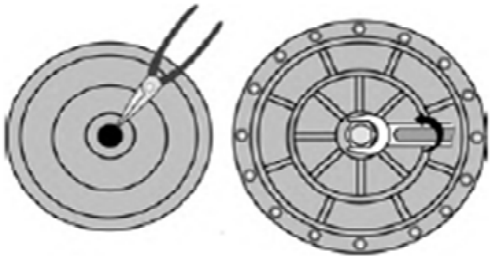 | Remove and dispose of the rubber plug from the brake protector.<br>Loosen the metallic plug. |
| 2 | 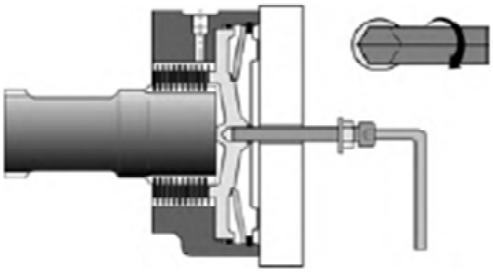 | Use a screw fitted with a nut and washer.<br>Tighten to the bottom of the threading into the piston without blocking the screw. |
| 3 | 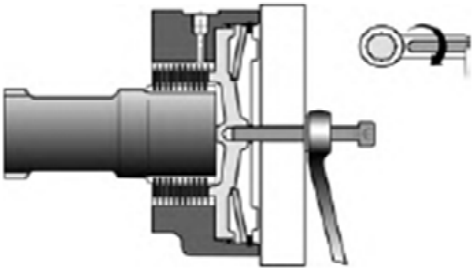 | Then tighten the nut until the motor shaft turns freely, while holding the screw. |

The brake is now disengaged and the machine can be towed.

Reset the drum motor brake after towing.

## Towing the roller

***When towing/recovering, the roller must be braked by the towing vehicle. A towing bar must be used as the roller has no brakes.***

The roller must be towed slowly, max. 3 km/h (2 mph) and only towed short distances, max. 300 m (330 yards).

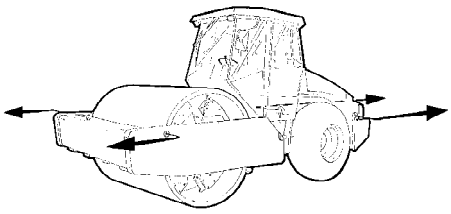

***Fig.Towing***

When towing/retrieving a machine, the towing device must be connected to both lifting holes. The pulling force must act longitudinally on the machine as shown in the figure. Maximum gross pulling force 185 kN (41590 lbf).

Restore the items for towing according to alternative 1 or 2 on the preceding pages.

## Re-activating the rear axle brake

***Chock the drum and wheels to prevent the roller from moving when the brakes are mechanically disengaged.***

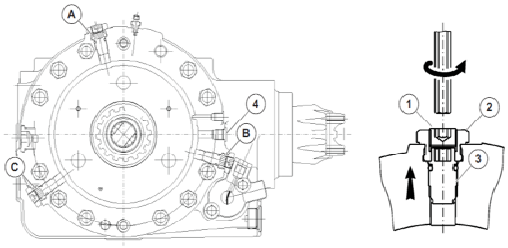


*Fig. Rear axle*
*1. Lock screw*
*2. Locknut*
*3. Brake release bolt*
*4. Brake port (rear axle)*

Apply pressure (13 bar) into the parking brake ports (4).

Remove the lock screws (1) and unscrew all the brake release screws (3) on both sides until the end of stroke has been reached.
**NOTE!**Do not move the lock nuts (2).

Release the pressure at the parking brake ports (4).

Apply sealant on the lock screws (1) and refit the lock nuts (2).

Hold the lock nuts (2) and tighten the screws (1) with torque (140Nm). The same procedure on both sides of the rear axle

The parking brakes should now be re-activated and the wheels are locked.

Clear the area of any personnel and that the parking brakes work properly before removing the stop blocks from drum and wheels.

Remove any warning tags from the ignition key and from the steering wheel.

## Roller prepared for transport

***Lock the articulation before lifting and transporting. Follow the instructions under the relevant heading.***

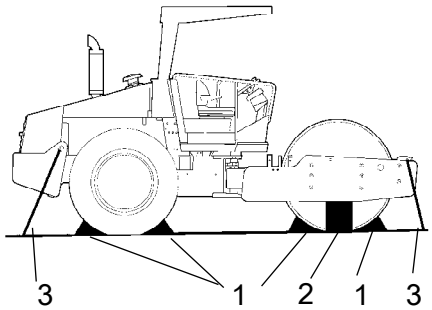


*Fig. Transport*
*1. Chock*
*2. Block up*
*3. Lashing wire*

Chock the drums (1) and secure the chocks to the transport vehicle.

Block up under the drum frame (2), to avoid overload on the rubber suspension of the drum when lashing.

Clamp down the roller with lashing strap at all four corners; decals (3) indicate the fixing points.

Remember to return the articulation to its unlocked position before starting the roller.

# Operating instructions - Summary



1. **Follow the SAFETY INSTRUCTIONS specified in the Safety Manual.**

2. Make sure that all instructions in the MAINTENANCE section are followed.

3. Turn the master switch to the ON position.

4. Move the forward/reverse lever to the NEUTRAL position.

5. Set the switch for Manual/Automatic vibration to the 0 position.

6. Set the engine speed control to idle.

7. Start the engine and allow it to warm up.

8. Set the engine speed control to the operating position.

9. Set the emergency/parking brake knob in the pulled-out position.



10. **Drive the roller. Operate the forward/reverse lever with care.**



11. **Test the brakes. Remember that the braking distance will be longer if the roller is cold.**

12. Use vibration only when the roller is in motion.



13. **IN AN EMERGENCY:**
    **- Push in the EMERGENCY/PARKING BRAKE KNOB**
    **- Hold the steering wheel firmly.**
    **- Brace yourself for a sudden stop.**

14. When parking:
    - Push in the reserve/parking brake knob.
    - Stop the engine and chock the drum and wheels.

15. When lifting: - Refer to the relevant section in the Instruction Manual.

16. When towing: - Refer to the relevant section in the Instruction Manual.

17. When transporting: - Refer to the relevant section in the Instruction Manual.

18. When recovering - Refer to the relevant section in the Instruction Manual.

# Preventive maintenance

Complete maintenance is necessary for the machine to function satisfactorily and at the lowest possible cost.

The Maintenance section includes the periodic maintenance that must be carried out on the machine.

The recommended maintenance intervals assume that the machine is used in a normal environment and working conditions.

## Acceptance and delivery inspection

The machine is tested and adjusted before it leaves the factory.

On arrival, before delivery to the customer, delivery inspection must be conducted as per the check list in the warranty document.

Any transport damage must be immediately reported to the transport company.

## Warranty

The warranty is only valid if the stiplulated delivery inspection and the separate service inspection have been completed as per the warranty document, and when the machine has been registered for starting under the warranty.

The warranty is not valid if damage has been caused by inadequate service, incorrect use of the machine, the use of lubricants and hydraulic fluids other than those specified in the manual, or if any other adjustments have been made without the requisite authorisation.

# Maintenance - Lubricants and symbols

## Fluid volumes

| | | |
|---|---|---|
| Rear axle (Carraro) | | |
| - Differential | 14,5 ±0,5 | liter |
| - Planet gear | 1,3 ±0,1 | liters/side |
| - Transmission box | 0,5 ±0,1 | liters |
| Drum | 15 | liter |
| Hydraulic reservoir | 52 | liters |
| Oil in hydraulic system | 23 | liters |
| Lubrication oil, diesel engine | 11 | liter |
| Coolant, diesel engine | 24 | liter |

Always use high-quality lubricants and the amounts recommended. Too much grease or oil can cause overheating, resulting in rapid wear.

| | | | |
|---|---|---|---|
| ENGINE OIL | Air temperature -15°C - +50°C (5°F-122°F) | **AtlasCopco Engine 100**, API CH-4 or equivalent. | P/N 5580020624 (5 liters), P/N 5501522700 (20 liters) |
| HYDRAULIC FLUID | Air temperature -15°C - +50°C (5°F-122°F) | **AtlasCopco Hydraulic 300** or equivalent. | P/N 9106230330 (20 liters), P/N 9106230331 (209 liters) |
| | Air temperature over +40°C (104°F) | Shell Tellus S2 V100 or equivalent. | |
| BIOLOGICAL HYDRAULIC FLUID<br>Bio-Hydr. | When it leaves the factory, the machine may be filled with biologically degradable fluid. The same type of fluid must be used when changing or topping up. | BP BIOHYD SE-S 46 | |
| BIOLOGICAL HYDRAULIC FLUID, PANOLIN | Air temperature -10°C - +35°C (14°F-95°F)<br>When it leaves the factory, the machine may be filled with biologically degradable fluid. The same type of fluid must be used when changing or topping up. | PANOLIN HLP Synth 46 (www.panolin.com) | |
| DRUM OIL | Air temperature -15°C - +40°C (5°F-104°F) | **AtlasCopco Drum Oil 1000** | P/N 4812156456 (5 liters) |
| GREASE | | Shell Retinax LX2 or equivalent. | **Dynapac Grease** (0.4kg), P/N 4812030095 |
| GREASE | | SKF LGHB2 (NLGI-Klass 2) or eqvivalent for the steering hitch. | **Dynapac Grease** (0.4kg), P/N 4812030096 |

| | | | |
|---|---|---|---|
| FUEL | See engine manual. | - | - |
| TRANSMISSION OIL | | **AtlasCopco Engine 100**, API GL-4 or equivalent | P/N 5501527800 (20 liters) |
| COOLANT | Anti-freeze protection down to about -37°C (-34.6°F) | GlycoShell/Carcoolant 774C or equivalent, (mixed 50/50 with water) | |

Other fuel and lubricants are required when operating in areas with extremely high or extremely low ambient temperatures. See the 'Special instructions' chapter, or consult Dynapac.

## Maintenance symbols

| | | | |
|---|---|---|---|
|  | Engine, oil level |  | Tyre pressure |
|  | Engine, oil filter |  | Air filter |
|  | Hydraulic reservoir, level |  | Battery |
|  | Hydraulic fluid, filter |  | Recycling |
|  | Transmission, oil level |  | Fuel filter |
|  | Drum, oil level |  | Coolant, level |
|  | Oil for lubrication | | |

# Maintenance - Maintenance schedule

## Service and maintenance points

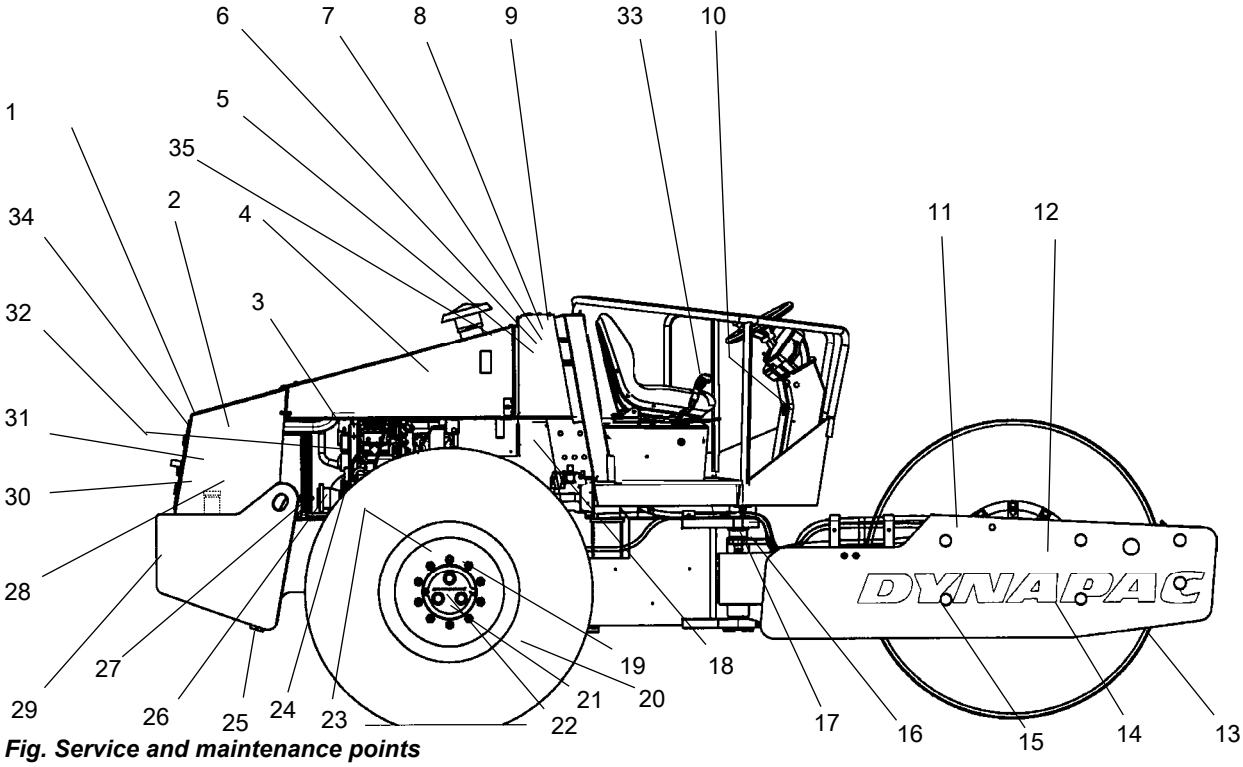


*Fig. Service and maintenance points*

1. Cooler grille
2. Fuel filter, fuel prefilter
3. Oil level, diesel engine
4. Air filter
5. Hydraulic reservoir, sight glass
6. Bleeder filter
7. Hydraulic fluid filter, x1
8. Draining, hydraulic fluid reservoir
9. Hydraulic fluid, filling
10. Fuse box
11. Drum oil, filling
12. Drum gearbox
13. Scrapers
14. Drum oil, level plug
15. Shock absorbers and attachment screws
16. Steering joint
17. Steering cylinders, x2
18. Flywheel casing, hydraulic pumps
19. Wheel-nuts
20. Tires, air pressure
21. Rear axle, differential
22. Rear axle, planetary gears, x2
23. Rear axle suspension, 2 sides
24. Oil filter, diesel engine
25. Draining, fuel tank
26. Diesel engine suspension, x4
27. Feed pump, fuel
28. Diesel engine, filling
29. Battery
30. Cooler
31. Hydraulic fluid cooler
32. Drive belts, cooling, alternator
33. Forward/Reverse lever
34. Engine hood, hinge
35. Cooling liquid level, diesel motor

## General

Periodic maintenance should be carried out after the number of hours specified. Use the daily, weekly etc. periods where number of hours cannot be used.

Remove all dirt before filling, when checking oils and fuel and when lubricating using oil or grease.

The manufacturer's instructions found in the engine manual also apply.

### Every 10 hours of operation (Daily)

Refer to the contents to find the page number of the sections referred to !

| Pos. in fig | Action | Comment |
|---|---|---|
| | **Before starting up for the first time on that day** | |
| 13 | Check the scraper setting | |
| 1 | Check for free circulation of cooling air | |
| 35 | Check coolant level | Refer to the engine manual |
| 3 | Check the engine oil level | Refer to the engine manual |
| 28 | Refuel | |
| 5 | Check the hydraulic reservoir level | |
| | Test the brakes | |
| 17 | Grease the steering cylinder bearings | |

### After the FIRST 50 hours of operation

Refer to the contents to find the page number of the sections referred to !

| Pos. in fig | Action | Comment |
|---|---|---|
| 2 | Change the engine oil and oil filter | Refer to the engine manual |
| 3 | Change the fuel filter | Refer to the engine manual |
| 8 | Change the hydraulic fluid filter | |
| 21 | Change oil in rear axle differential | |
| 22 | Change oil in the rear axle planetary gearing | |

## Every 50 hours of operation (Weekly)

Refer to the contents to find the page number of the sections referred to!

| Pos. in fig | Action | Comment |
|---|---|---|
| | Check that hoses and couplings are not leaking | |
| 4 | Inspect/clean the filter element in the air cleaner | Replace as required |
| 16 | Lubricate the articulation | |
| 17 | Check that the guiding cylinders are tight | |
| 19 | Check the wheel-nuts are tightened | |
| 20 | Check the tire pressure | |
| | Check the air conditioning | Optional |

## Every 250 hours of operation (Monthly)

Refer to the contents to find the page number of the sections referred to !

| Pos. in fig | Action | Comment |
|---|---|---|
| 22 | Check oil level in rear axle/planetary gearing | |
| 14 | Check oil level in the drum | |
| 31 | Clean the coolers | |
| 19 | Check the bolted joints | The above applies to new or reconditioned components only |
| 23 | Check the bolted joints | The above applies to new or reconditioned components only |
| 15 | Check rubber elements and bolted joints | |
| 24 | Change the engine oil and oil filter | Refer to the engine manual |
| 29 | Check battery | |
| | Check the AC | Optional |

### Every 500 hours of operation (Every three months)

Refer to the contents to find the page number of the sections referred to !

| Pos. in fig | Action | Comment |
|---|---|---|
| 2 | Replace the fuel filter | Refer to the engine manual |
| 2 | Clean the fuel pre-filter. | |
| 6 | Check bleeder filter on hydraulic reservoir | |

### Every 1000 hours of operation (Every six months)

Refer to the contents to find the page number of the sections referred to !

| Pos. in fig | Action | Comment |
|---|---|---|
| 4 | Replace the air cleaner's main filter and backup filter | |
| 7 | Change the hydraulic fluid filter | |
| 8 | Drain the condensate from hydraulic reservoir | |
| 25 | Drain condensate from fuel tank | |
| 21 | Change oil in rear axle differential | |
| 22 | Change oil in the rear axle planetary gearing | |
| | Check engine valve clearances | Refer to the engine manual |
| 32 | Check belt tension for drive system | Refer to the engine manual |

### Every 2000 hours of operation (Yearly)

Refer to the contents to find the page number of the sections referred to !

| Pos. in fig | Action | Comment |
|---|---|---|
| 8, 9 | Change the hydraulic fluid | |
| 11 | Change the oil in the drum | |
| 33 | Lubricate the Forward/Reverse lever | |
| | Overhaul air conditioning | Optional |

# Maintenance, 10h

***Park the roller on a level surface.***
***When checking and making adjustments, the engine should be switched off and the emergency/parking brake should be applied, if not otherwise specified.***

***Ensure that there is good ventilation (air extraction) if the engine is run indoors. Risk of carbon monoxide poisoning.***

## Scrapers - Check, adjustment

It is important to consider movement of the drum when the machine turns, i.e., the scrapers can be damaged or wear of the drum may increase if adjustment is made closer than the values stated.

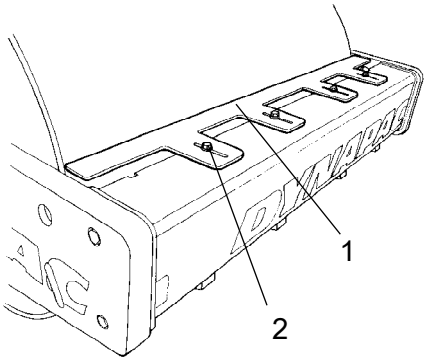


***Fig. Skrapers***
***1. Skraper blades***
***2. Screws (4)***

If necessary, adjust distance to the drum as follows:

Undo the screws (2) on the scraper attachment.

Then adjust the scraper blade (1) to 20 mm from the drum.

Tighten the screws (2).

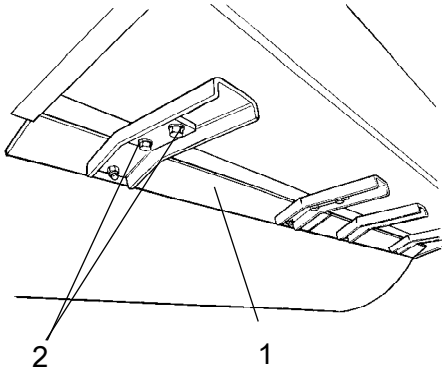


*Fig. Scrapers*
*1. Scraper blades (x4)*
*2. Screws*

## Steel scrapers (Optional)

If necessary, adjust distance to the drum as follows:

Undo the screws (2) on the scraper attachment.

Then adjust the scraper blade (1) to 20 mm from the drum.

Tighten the screws (2).

Repeat the procedure for the other scraper blades (x4).

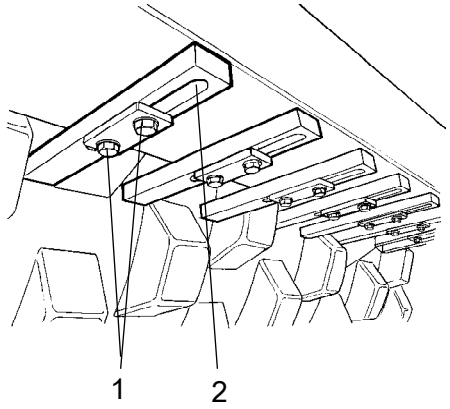


*Fig. Scrapers*
*1. Screws*
*2. Scraper teeth (x18)*

## Scrapers, Pad-drum

Undo the screws (1), then adjust each scraper tooth (2) to 25 mm (1.0 in) between scraper tooth and drum.

Center each scraper tooth (2) between the pads.

Tighten the screws (1).

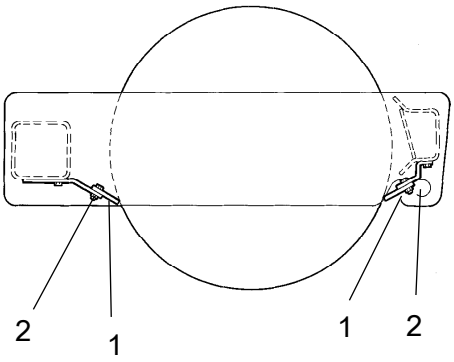


*Fig. Scrapers*
*1. Scraper blade*
*2. Screws*

## Soften scrapers (Optional)

Loosen the screws (2).

Then, adjust the scraper blade (1) so that it lightly touches the drum.

Tighten the screws (2).

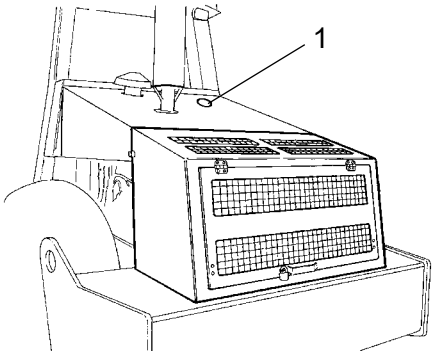


*Fig. Cooler grille*
*1. Filler cap, coolant*

## Air circulation - Check

Ensure that the diesel engine has free circulation of cooling air through the vents in the hood.

***Observe extreme caution if the filler cap must be opened when the engine is hot. NOTE, the engine must be switched off. Wear protective gloves and goggles.***



## Coolant level - Check

Cooling liquid holder is placed up beside the hydraulic oil tank and is seen easiest from the right side of the roller.

The filler cap (2) is accessible from the top of the engine hood.

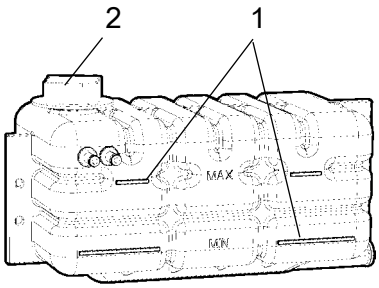


*Fig. Coolant container*
*1. Level mark in coolant container (min/max markings)*
*2. Filler cap*

Check the coolant level with the engine stopped and cold.

Check that the coolant level is between the max/min markings (1).

Make sure that cooling air flows freely through the protective grille to the engine.

***The coolant is hot and under pressure at working temperature and the escaping steam can cause serious scalding. Open the filler cap carefully to release the pressure. Wear protective goggles and protective gloves.***

Fill with a mixture of 50% water and 50% antifreeze. See instructions for lubricant and symbols.

## Diesel engine  Check oil level

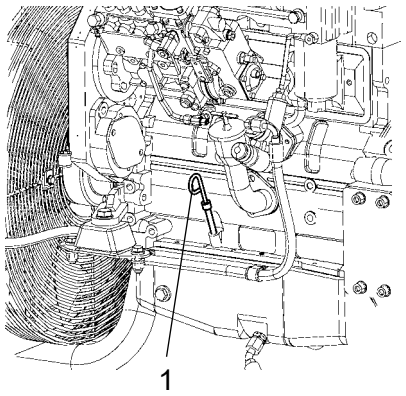


*Fig. Engine compartment*
*1. Dipstick*

***Take care not to touch any hot parts of the engine or the radiator when removing the dipstick. Risk for burns.***

The dipstick is located on the engine's right side.

Pull up the dipstick (1) and check that the oil level is between the upper and lower marks. For further details, refer to the engine's instruction manual.

## Fuel tank - Filling

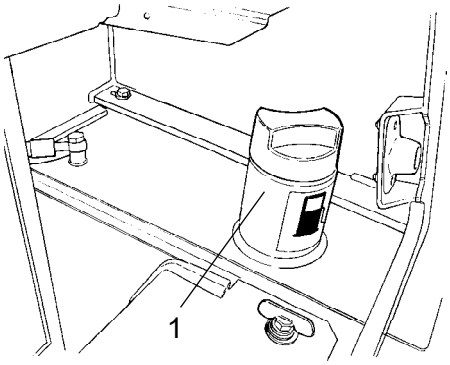


*Fig. Filling with fuel*
*1.  Filler pipe*

Refuel daily with diesel fuel up to the lower edge of the filler pipe (1). Follow the engine manufacturer's specification with regard to the quality of diesel fuel.

***Stop the diesel engine. Short-circuit (press) the filler gun against a non-insulated part of the roller before filling, and against the filler pipe (1) while filling.***

***Never refuel while the engine is running. Do not smoke and avoid spilling fuel.***

**The tank holds 250 liters of fuel.**

## Hydraulic reservoir - Check fluid level

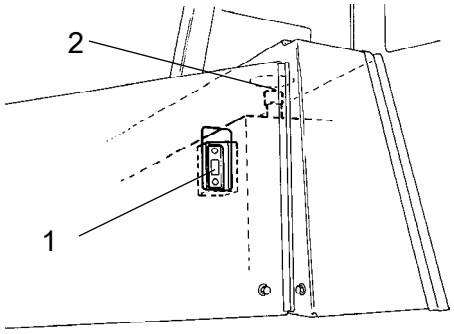


*Fig. Sight glass hydraulic reservoir*
*1. Sight glass*

The sight glass is located on the right-hand side of the roller behind the operator's seat.

Place the roller on a flat surface and check the fluid level in the sight glass (1). If the level is too low, top up with the type of hydraulic fluid specified in the lubricant specification.

## Brakes - Check

***Check operation of the brakes as follows:***

### Checking the emergency stop

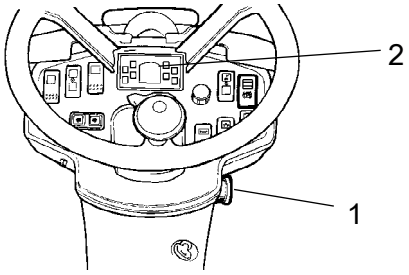


*Fig. Instrument panel*
*1. Emergency stop*
*2. Parking brake lamp*

Drive the roller slowly forward. Hold the steering wheel firmly and brace yourself for a sudden stop.

Press the emergency stop (1). The roller will stop abruptly and the engine will be switched off.

After testing the brakes, set the forward/reverse lever in neutral.

Pull out the emergency stop (1). Start the engine.

The roller is now ready for operation.

***Refer also to the section in the manual on operation.***

## Brakes - Check

***Check operation of the brakes as follows:***

### Checking the parking brake

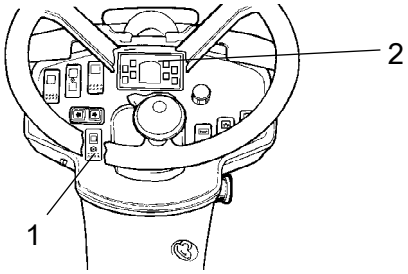


***Fig. Instrument panel***
***1. Parkering brake switch***
***2. Parkering brake lamp***

Drive the roller slowly forward. Hold the steering wheel firmly and brace yourself for a sudden stop.

Push in the parking brake switch (1). The roller should stop immediately with the engine running.

After testing the brakes, set the forward/reverse lever in neutral.

Reset the parkering brake switch (1).

The roller is now ready for operation.

***Refer also to the section in the manual on operation.***

## Steering cylinder - Lubrication

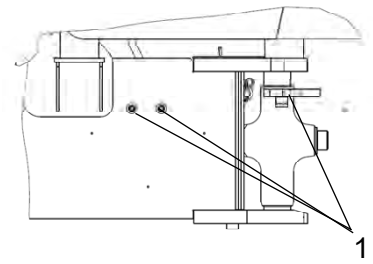


***Fig. Tractor frame/Steering hitch***
***1. Grease nipples***

Wipe off any dirt and grease from the nipples.

Grease each nipple (1) with three strokes of a hand-operated grease gun.

Leave a small amount of grease on the nipples following lubrication to prevent dirt from penetrating in.

Use grease as per the lubricant specification.

# Maintenance - 50h

***Park the roller on a level surface.***
***When checking and making adjustments, the engine should be switched off and the emergency/parking brake should be applied, if not otherwise specified.***

***Ensure that there is good ventilation (air extraction) if the engine is run indoors. Risk of carbon monoxide poisoning.***

## Air cleaner

### Checking - Change the main air filter

Change the air cleaner main filter when the warning lamp on the control panel comes on when the engine is running at maximum speed.

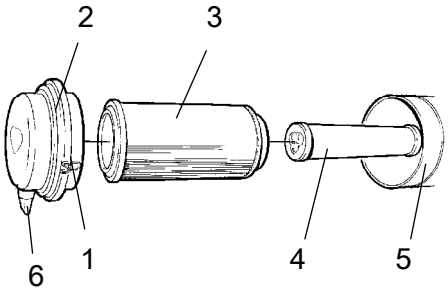


***Fig. Air cleaner***
***1. Clips***
***2. Cover***
***3. Main filter***
***4. Backup filter***
***5. Filter housing***
***6. Dust valve***

Release the clips (1), pull off the cover (2), and pull out the main filter (3).

Do not remove the backup filter (4).

Clean the air cleaner if necessary, see section Air cleaner - Cleaning.

When replacing the main filter (3), insert a new filter and refit the air cleaner in the reverse order.

Check the condition of the dust valve (6); replace if necessary.

When refitting the cover, make sure that the dust valve is positioned downwards.

## Backup filter - Change

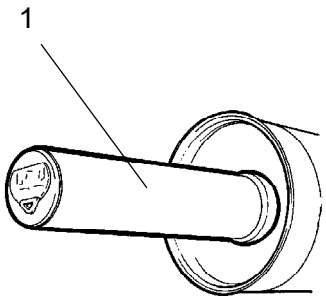


*Fig. Air filter*
*1. Backup filter*

Change the backup filter with a new filter after every third replacement of the main filter.

To change the backup filter (1), pull the old filter out of its holder, insert a new filter and reassemble the air cleaner in the reverse order.

Clean the air cleaner if necessary, see section Air cleaner - Cleaning.

## Air cleaner - Cleaning

Wipe clean the inside of the cover (2) and the filter housing (5). See the previous illustration.

Wipe clean on both sides of the outlet pipe.

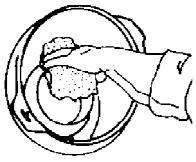

Inner edge of outlet pipe.

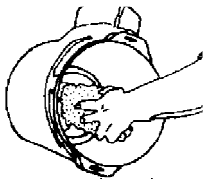

Outer edge of outlet pipe.

Wipe also both surfaces for the outlet pipe; see adjacent figure.

Check that the hose clamps between the filter housing and the suction hose are tight and that the hoses are intact. Inspect the entire hose system, all the way to the engine.

## Articulation - Lubrication

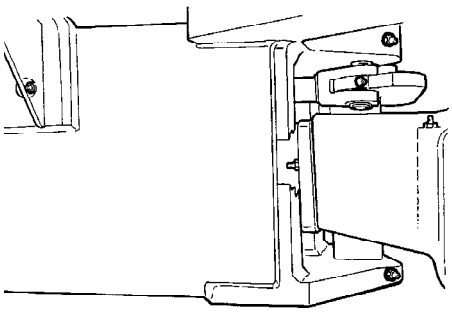

*Fig. Steering hitch right side*

***Do not allow anyone to remain in the vicinity of the steering joint when the engine is running. Risk of being crushed when the steering is operated. Press the emergency/parking brake knob before lubricating.***

Turn the steering wheel fully to the left to gain access to all the steering system's lubricating nipples (4) on the right-hand side of the machine.

Use grease as per the lubricant specification

## Steering joint - Lubrication

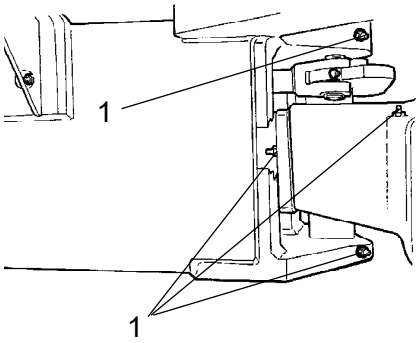


*Fig. Articulation, right side*
*1. Lubricating nipples, articulation (4 pcs)*

Wipe off any dirt and grease from the nipples.

Grease each nipple (1) with five strokes of a hand-operated grease gun. Make sure that grease penetrates into the bearings.

If grease does not penetrate the bearings, it may be necessary to relieve the articulation joint with a jack while repeating the greasing process.

## Tires - Air pressure - Wheel nuts - Tightening

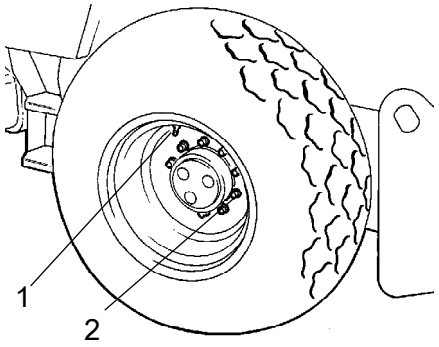


*Fig. Wheels*
*1. Air valve*
*2. Wheel nut*

Check the tire pressures using a pressure gauge.

If the tires are filled with fluid, the air valve (1) must be in the "12 o'clock" position during pumping.

Recommended pressure: See Technical Specifications.

Check the tire pressure.

When changing the tires it is important that both of them have the same rolling radius. This is necessary to ensure proper functioning of the anti-slip in the rear axle.

Check the tightening torque of the wheel nuts (2) at 630 Nm (465 lbf.ft).

Check both wheels and all nuts. (This only applies to a new machine or newly fitted wheels).

***Check the safety manual that accompanies the roller before filling the tires with air.***

## Automatic Climate Control (Optional) - Inspection

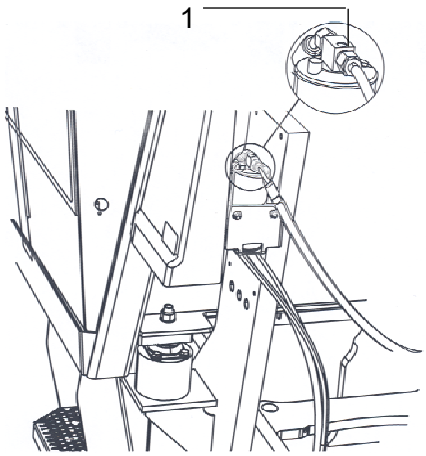


*Fig. Drying filter*
*1. Sight glass*

The system described in this manual is type ACC (Automatic Climate Control).

***Never work under the roller when the engine is running. Park the roller on a level surface, chock the wheels and depress the parking brake control.***

The filter is located on the left side of the engine compartment´s front edge

With the unit in operation, open the engine hood and check using the sight glass (1) that bubbles are not visible on the drying filter.

The filter is located on the left side of the engine compartment's front edge. If bubbles are visible through the sight glass, it is a sign that the refrigerant level is too low. If so, stop the unit. The unit may be damaged if it is run with insufficient refrigerant.

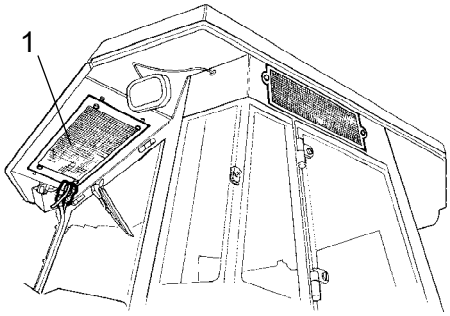


***Fig. Cab***
***1. Condensor element***

Where cooling capacity is markedly reduced, clean the condensor element (1) located on the rear edge of the cab. Also clean the cooling unit in the cab. See under the heading 2000 hours, automatic climate control - overhaul.

# Maintenance - 250h

***Park the roller on a level surface.***
***When checking and making adjustments, the engine should be switched off and the emergency/parking brake should be applied, if not otherwise specified.***

***Ensure that there is good ventilation (air extraction) if the engine is run indoors. Risk of carbon monoxide poisoning.***

## Rear axle differential - Check oil level

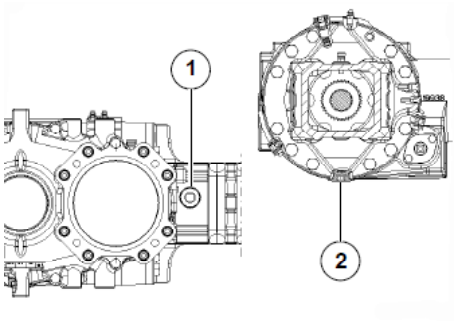


***Fig. Check level - differential housing***
***1. Level/Filler plug***

***Never work under the roller when the engine is running. Park on a level surface. Block the wheels securely.***

Wipe clean and remove the level plug (1) and check that the oil level reaches the lower edge of the plug hole. Top up with oil to the right level if the level is low. Use transmission oil, see lubricant specification.

Clean and refit the plug.

## Rear axle transmission box - Check oil level

***Never work under the roller when the engine is running. Park on a level surface. Block the wheels securely.***

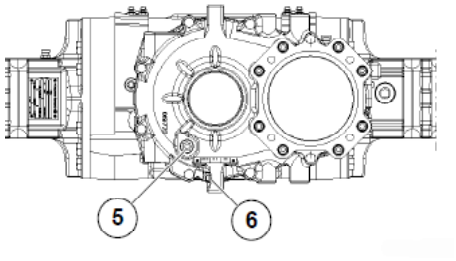


*Fig. Level check - transmission box*
*5. Level/Filler plug*
*6. Drain plug*

Wipe clean and remove the level plug (5) and check that the oil level reaches the lower edge of the plug hole. Top up with oil to the right level if the level is low. Use transmission oil, see lubricant specification.

Clean and refit the plug.

## Rear axle planetary gears - Check oil level

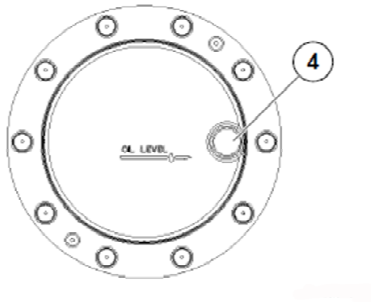


*Fig. Level check - planetary gear, std*
*4. Level/Filler plug*

Position the roller with the plug in the planetary gear (4) in the "3 o'clock" position.

Wipe clean and remove the level plug (4) and check that the oil level reaches the lower edge of the plug hole. Top off with oil to the right level if the level is low. Use transmission oil. See lubrication specification.

Clean and refit the plug.

Check the fluid level in the same way on the rear axle's other planetary gear.



## Drum - Checking the oil level

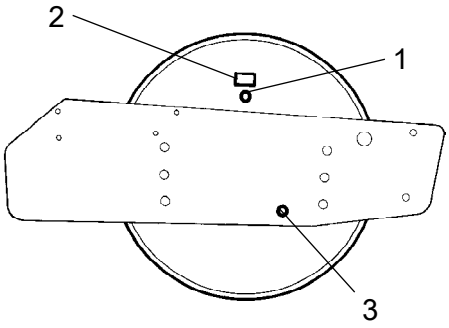


*Fig. Roller, right-hand side*
*1. Filler plug*
*2. Number plate*
*3. Sight glass*

Place the roller on a level surface so that the filler plug (1) and the drum's number plate (2) are visible on the right side of the drum.

The oil level should now reach the sight glass (3).

If necessary, remove the filler plug (1) and fill to halfway up the sight glass.

Clean any metal residue from the magnetic filler plug (1) before reinstalling it.

See the lubrication specification for the correct oil grade.

Do not overfill with oil - risk for overheating.

## Radiator - Check/Cleaning

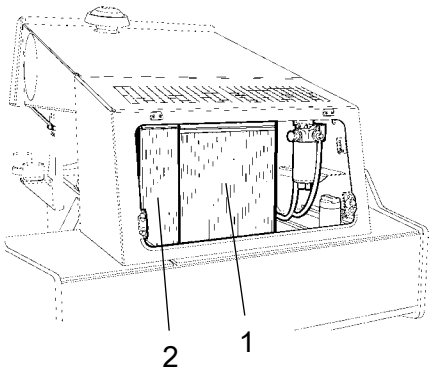


*Fig. Engine compartment*
*1. Water cooler*
*2. Hydraulic fluid cooler*

Check that air can pass unobstructed through the radiators (1) and (2).

Clean a dirty radiator using compressed air or a high-pressure water jet.

Blow air or direct water through the cooler in the opposite direction to that of the cooling air.

Be careful when using a high-pressure washer - do not place the nozzle too close to the radiator.

***Wear protective goggles when working with compressed air or high-pressure water jets.***

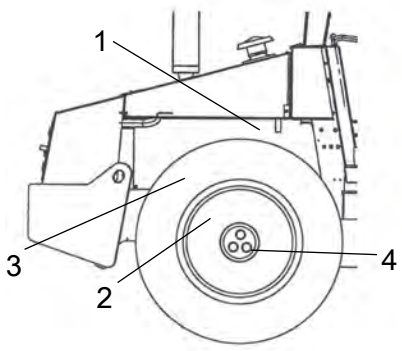


*Fig. Right side of machine*
*1. Steering pump*
*2. Rear axle*
*3. Engine suspension*
*4. Wheel nuts*

## Bolted joints - Checking tightening torque

Steering pump to diesel engine (1) 55 Nm, lightly oiled

Rear axle suspension (2) 330 Nm (243 lbf.ft), oiled.

Engine suspension (3). Check that all the M12 bolts (x20) are tightened, 70 Nm, and lightly oiled.

Wheel nuts (4). Check that all nuts are tightened, 630 Nm oiled.

(The above applies to new or replaced components only).

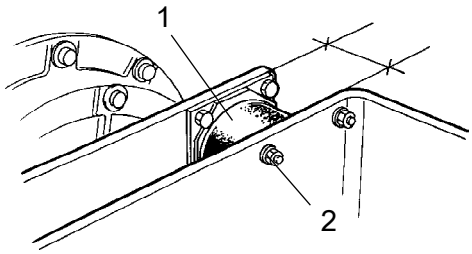


*Fig. Drum, vibration side*
*1. Rubber element*
*2. Fastening screws*

## Rubber elements and fastening screws - Check

Check all rubber elements (1), replace all of the elements if more than 25% of them on one side of the drum are cracked deeper than 10-15 mm (0.4-0.6 in).

Check using a knife blade or pointed object.

Check also that the screw fasteners (2) are tightened.

## Diesel engine - Oil and Filter change

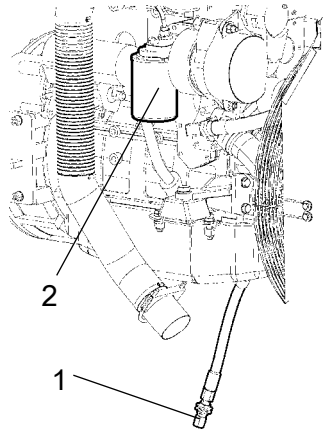


*Fig. Left side of engine*
*1. Drain plug*
*2. Oil filter*

***Take great care when draining warm fluid and oil. Wear protective gloves and goggles.***

The oil drain plug (1) is most easily accessible from the bottom of the engine and is located attached to a hose on the rear axle.. Drain the oil when the engine is warm. Place a receptacle that holds at least 15 liters (4 gal) under the drain plug.

Replace the engine oil filter (2) at the same time. Refer to the engine manual.

Deliver the drained oil and filter to environmentally correct handling.

## Battery - Check electrolyte level

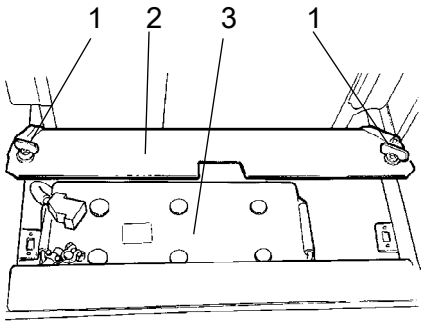


*Fig. Battery shelf*
*1. Quick-screws*
*2. Battery cover*
*3. Battery*

***Never use a naked flame when checking the battery as the electrolyte emits explosive gas while the alternator is charging.***

Open the engine cover and undo the quick-release screws (1).

Raise the battery cover (2).

Wipe the top of the battery.

***Wear safety goggles. The battery contains corrosive acid. Rinse with water if electrolyte comes into contact with the body.***

## Battery cell

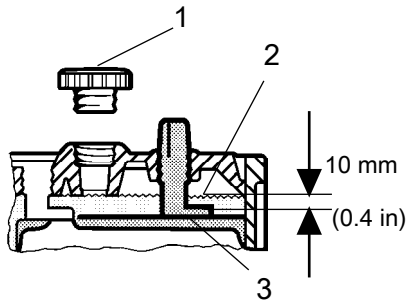


*Fig. Electrolyte level in battery*
*1. Cell cap*
*2. Electrolyte level*
*3. Plate*

Take off the cell caps (1) and make sure that electrolyte (2) is about 10 mm (0.4 in) above the plates (3). Check the level of all cells. Top off with distilled water to the right level if the level is low.

If the ambient temperature is below freezing, run the engine for a while before topping off with distilled water. Otherwise the electrolyte might freeze.

Make sure that ventilation holes in the cell cover are not clogged, then put the cover back on.

The cable shoes should be clean and well tightened. Clean corroded cable shoes and grease them with acid-free Vaseline.

Always disconnect the negative cable first when disconnecting the battery. When connecting the battery, always connect the positive cable first.

Discard used batteries wisely. Batteries contain lead, which is harmful to the environment.

***Before doing any electric welding on the machine, disconnect the battery ground cable and then all electrical connections to the alternator.***

## Air conditioning (Optional) - Inspection

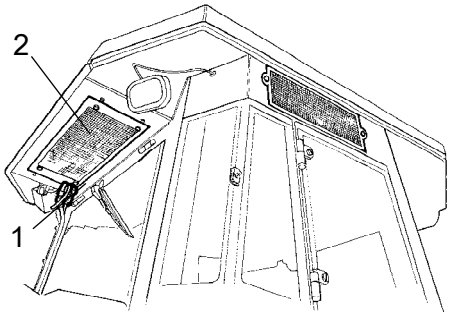


*Fig. Air conditioning*
*1. Refrigerant hoses*
*2. Condensor element*

Inspect refrigerant hoses and connections and make sure that there are no signs of an oil film that can indicate a refrigerant leakage.

# Maintenance - 500h

***Park the roller on a level surface. When checking and making adjustments, the engine should be switched off and the emergency/parking brake should be applied, if not otherwise specified.***

***Ensure that there is good ventilation (air extraction) if the engine is run indoors. Risk of carbon monoxide poisoning.***

## Bleeder filter - Inspection/Cleaning

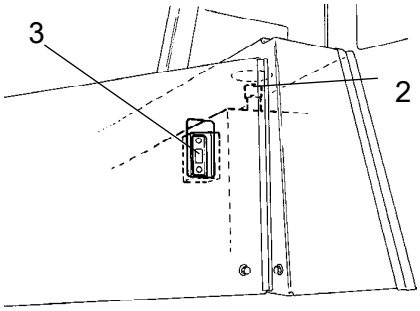


***Fig. Hydraulic reservoir***
***2. Filler cap/Air filter***
***3. Sight glass***

If passage in either direction is blocked, clean the filter with a little diesel oil and blow through with compressed air until the block is removed, or replace the cap with a new one.

***Always wear protective goggles when working with compressed air.***

Check that the bleeder filter (2) is not clogged. Air should be able to pass through the cap unobstructed in both directions.

Start the engine and check that there is no leakage of hydraulic fluid from the filter. Check level of fluid in the sight glass (3) and top up as required.

## Fuel pre-filter - Replacement

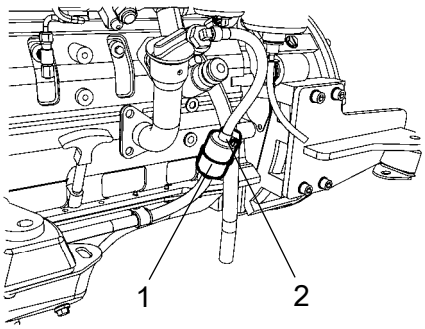


*Fig. Engine compartment*
*1. Fuel prefilter*
*2. Hose clamps (2 pcs.)*

***Ensure good ventilation (air extraction) if the diesel engine is run indoors. Risk of carbon monoxide poisoning.***

Loosen the hose clamps (2) and remove the pre-filter (1). Fit the new filter, taking care to fit in the direction of flow.

Discard the pre-filter (1) in a safe manner, its of expendable type and can not be cleaned.

Start the engine and check that the pre-filter does not leak.

# Maintenance - 1000h

***Park the roller on a level surface.***
***When checking and making adjustments, the engine should be switched off and the emergency/parking brake should be applied, if not otherwise specified.***

***Ensure that there is good ventilation (air extraction) if the engine is run indoors. Risk of carbon monoxide poisoning.***

## Hydraulic fluid filter - Replacement

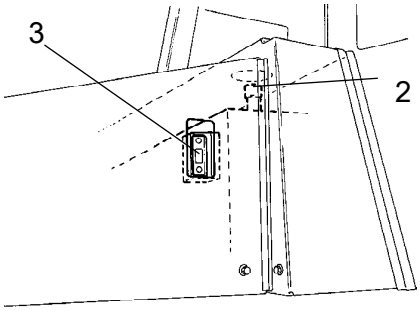


***Fig. Hydraulic reservoir***
***2. Filler cap***
***3. Sight glass***

Undo the cover/bleeder filter (2) on top of the reservoir so that over-pressure inside the reservoir can be eliminated.

Check that the bleeder filter (2) is not clogged, air must flow through the cap in both directions.

If passage in either direction is blocked, clean the filter with a little diesel oil and blow through with compressed air until the block is removed, or replace the cap with a new one.

***Wear protective goggles when working with compressed air.***

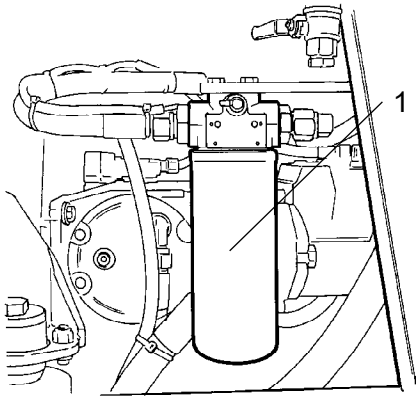


***Fig. Engine compartment***
***1. Hydraulic fluid filter (x1)***

Carefully clean round the hydraulic filter.

Remove the filter (1) and hand in to an environment-friendly waste disposal station. This is a disposable filter and cannot be cleaned.

Make sure that the old seal is not left on the filter head. Leakage will otherwise occur between the new and old seal.

Thoroughly clean the sealing surfaces on the filter head.

Apply a thin coat of fresh hydraulic fluid to the seal on the new filter. Screw tight the filter by hand.

First tighten the filter until its seal is in contact with the filter attachment. Then turn an additional half revolution. Do not tighten the filter too hard as this could damage the seal.

Start the engine and check that there is no leakage of hydraulic fluid from the filter. Check level of fluid in the sight glass (3) and top up as required.

## Hydraulic fluid reservoir - Draining

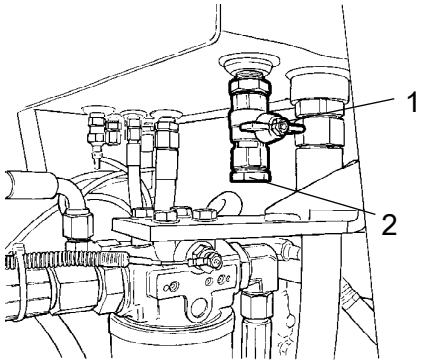


*Fig. Hydraulic reservoir, bottom*
*1. Drainage tap*
*2. Plug*

Condensate in the hydraulic reservoir is drained via the plug (2).

Drainage must be performed when the roller has been stationary for an extended period, e.g. after being stationary overnight.

Drain as follows:

- Remove the plug (2).

- Place a container under the tap. - Open the tap (1). Drain off any condensate.

- Close the drainage tap and refit the plug.

Save the condensate and hydraulic fluid and hand it in to an environment-friendly waste disposal station.

## Fuel tank - Drainage

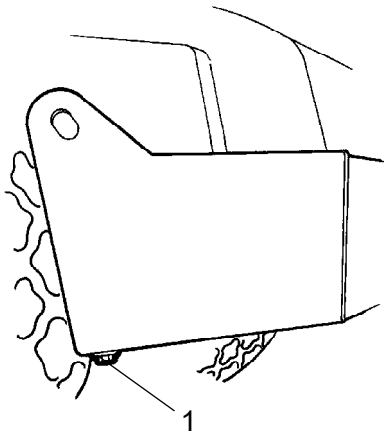


*Fig. Fuel tank*
*1. Drainage plug*

Water and sediment in the fuel tank are removed via the drainage plug (1) in the bottom of the fuel tank.

Be very careful during draining. Do not drop the plug or else all the fuel will flow out.

Drainage must be performed when the roller has been stationary for an extended period, e.g. after being stationary overnight. The fuel level should be as low as possible.

The roller should preferably have been standing with this side slightly lower, so that water and sediment have gathered near the drainage plug (1).

Save the condensate and sediment and hand it in to an environment-friendly waste disposal station.

Drain as follows:

- Place a container under the plug (1).
- Remove the plug (1).
- Drain out the condensate and sediment until only pure fuel emerges at the plug.
- Screw in the plug again.

## Rear axle differential - Oil change

***Never work under the roller when the engine is running. Park on a level surface. Block the wheels securely.***

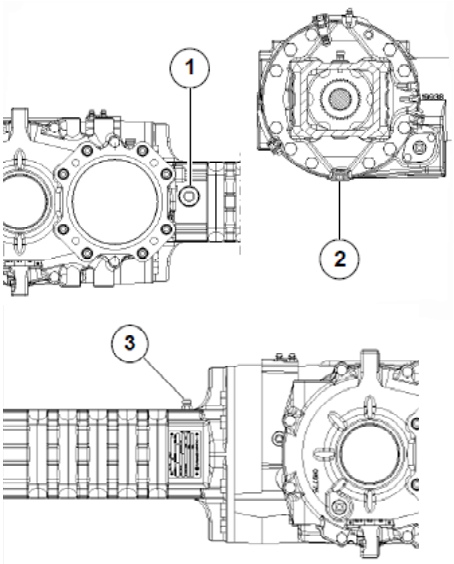


***Fig. Differential - Draining***
***1. Level/Filler plug***
***2. Drain plugs***
***3. Breather***

Before draining the oil, use the breather (3) to release possible internal pressure.

Wipe clean and remove one of the two level/filler plugs (1) and the drain plug (2) and drain the oil into a suitable receptacle. The volume is approximately 15 liters (16 qts).

Save the oil and hand in to an environment-friendly waste disposal station.

Clean and refit the drainage plug (2) and tighten with torque (60Nm)

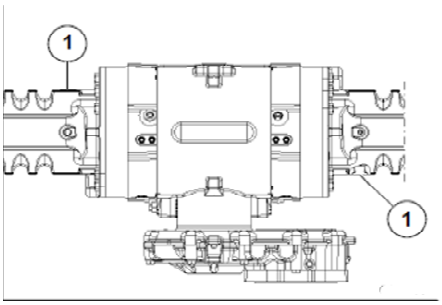


***Fig. Differential - filling***
***1. Level/Filler plugs***

Fill with fresh oil in the level/filler hole until the oil level reaches the lower edge of the plug hole. Use transmission oil, see lubricant specification.

Note that it takes a while for the oil to be distributed in the axle. Do not fill the entire volume at once.

Refit the level/filler plug (1) and tighten with torque (25Nm).

## Rear axle transmission - Oil change

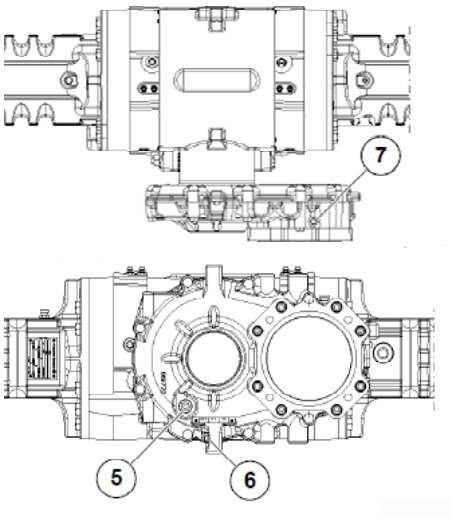


*Fig. Rear axle - draining*
*5. Level/Filler plug*
*6. Drain plug*
*7. Breather*

Before draining the oil, use the breather (7) to release possible internal pressure.

Wipe clean and remove one of the two level/filler plugs (5) and the drain plug (6) and drain the oil into a suitable receptacle. The volume is approximately 1 liter (1.1 qts).

Save the oil and hand in to an environment-friendly waste disposal station.

Clean and refit the drainage plug (6) and tighten with torque (60Nm).

Fill with fresh oil in the level/filler hole until the oil level reaches the lower edge of the plug hole. Use transmission oil, see lubricant specification.

Use transmission oil, see lubricant specification.

Refit the level/filler plug (5) and tighten with torque (60Nm).

## Rear axle's planetary gears - Draining the oil

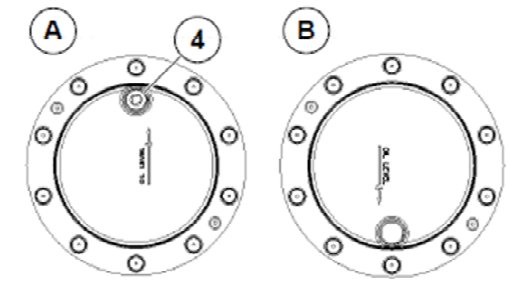


*Fig. Oil drain - planet gear*
*4. Level/Filler plug*

Before draining the oil rotate the wheel so that the plug (4) is at the highest positions (pos.A) and partially unscrew the plug to release possible pressure.

Then rotate the wheel so that the plug (4) is at its lowest position (pos.B).

Wipe clean and remove the plug (4) and drain the oil into a receptacle. The volume is approx. 2 liters (2.1 qts).

Save the oil and hand in to an environment-friendly waste disposal station.

## Rear axle's planetary gears - Oil change - Oil filling

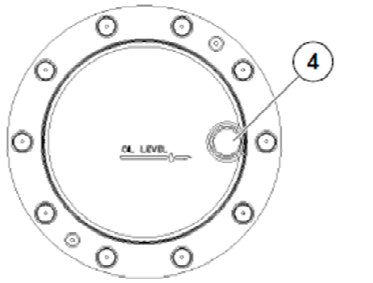


*Fig. Oil filling - planet gear*
*4. Level/Filler plug*

Set the roller so that the plug (4) in the planetary gear is at "3 o' clock".

Wipe clean and remove the plug (4).

Fill with oil to the lower edge of the level hole. Use transmission oil. See lubrication specification.

Clean and refit the plug (4).

Fill with oil in the same way as for the rear axle's second planetary gear.

## Air conditioning (Optional)
## Fresh air filter - Change

***Use a step ladder to reach the filter (1). The filter can also be accessed via the right cab window.***

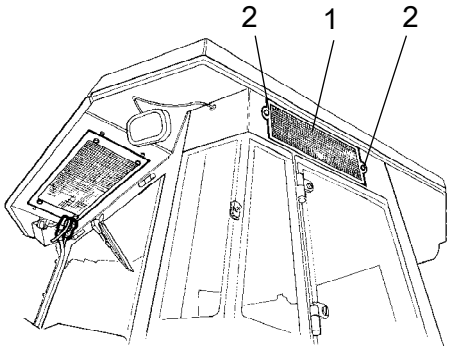


*Fig. Cab*
*1. Fresh air filter*
*2. Screw (x2)*

Loosen the two screws (2) on the cab's right side. Take down the whole holder and remove the filter insert.

Replace with a new filter.

It may be necessary to change the filter more often if the machine is working in a dusty environment.

# Maintenance - 2000h

***Park the roller on a level surface.***
***When checking and making adjustments, the engine should be switched off and the emergency/parking brake should be applied, if not otherwise specified.***

***Ensure that there is good ventilation (air extraction) if the engine is run indoors. Risk of carbon monoxide poisoning.***

## Hydraulic reservoir - Changing the fluid

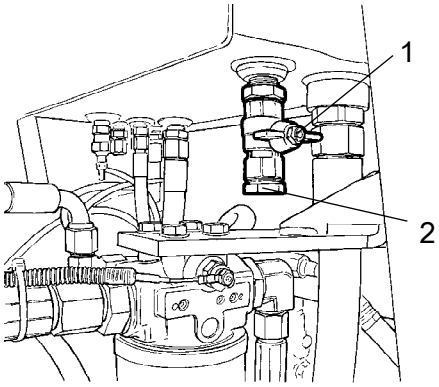


***Fig. Hydraulic reservoir, bottom***
***1. Stop cock (3/4")***
***2. Plug***

***Observe care when draining the hydraulic fluid. Wear protective gloves and goggles.***

Place a receptacle that holds at least 60 liters (15.9 gal)) beside the roller.

Unscrew the drain plug (2).

Open the stock cock and allow the oil to run through a hose to the drainage receptacle.

Refit the plug.

Deliver the drained fluid to environmentally correct handling.

Fill with fresh hydraulic fluid. Refer to the lubricants specification for grade information.

Change the hydraulic fluid filter as described under the heading 'Every 1000 hours of operation'.

Start the engine and operate the hydraulic functions. Check the level in the reservoir and top off as required.

## Drum - Oil change

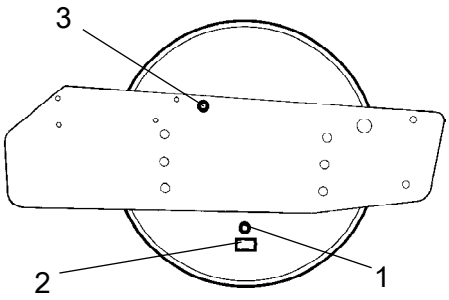


*Fig. Roller, right-hand side*
*1. Drain/Filler plug*
*2. Number plate*
*3. Sight glass*

Place the roller on a level surface so that the drain plug (1) is straight down. Position a container that holds 15 liters under the plug.

Save the oil and dispose of it in an approved manner.

Clean and remove the drain plug (1). Allow all of the oil to drain off. Fill with oil according to "Drum - Checking the oil level."

***Take great care when draining warm fluids and oils. Wear protective gloves and goggles.***

## Steering hitch - Check

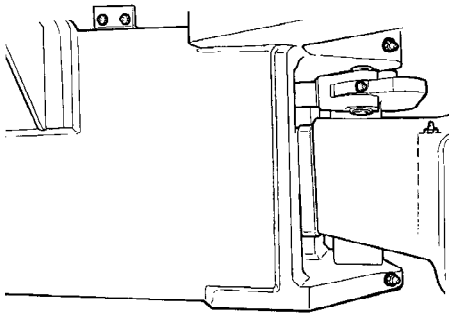

*Fig. Steering hitch*

Inspect the steering hitch to detect any damage or cracks.

Check and tighten any loose bolts.

Check also for any stiffness and play.

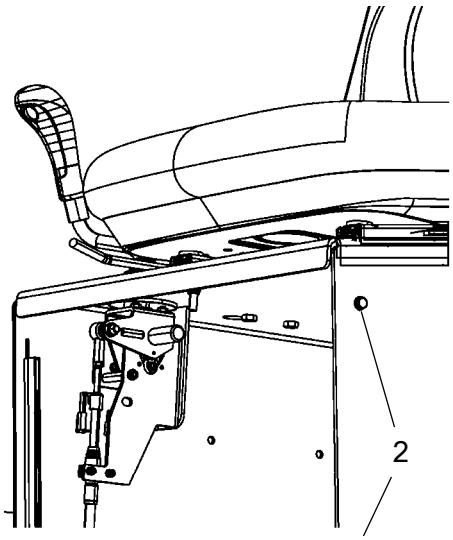


*Fig. F/B control*
*2. Screws*

## Controls - Lubrication

Grease Forward/Back- throttle mechanical mechanism. Take away the outer hatch down below the seat by loosening the screws (2). Grease the workings with oil.

Refit the hatch.

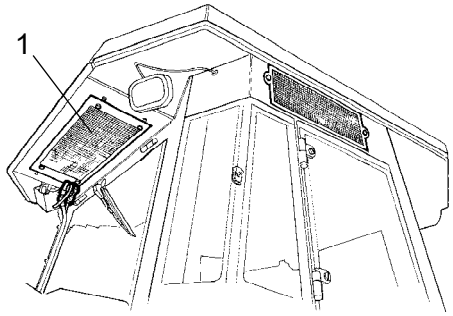


*Fig. Cab*
*1. Condensor element*

## Automatic Climate Control (Optional) - Overhaul

Regular inspection and maintenance are necessary to ensure satisfactory long-term operation.

Clean all dust from the condenser element (1) using compressed air. Blow from above downwards.

The air jet can damage the element flanges if it is too powerful.

***Wear protective goggles when working with compressed air.***

Inspect the condenser element attachment.

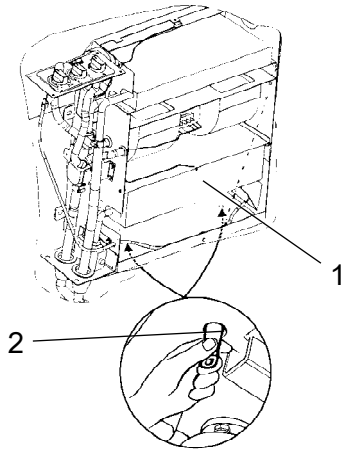


*Fig. Automatic climate control*
*1. Cooling element*
*2. Drain valve (x2).*

Clean all dust from the cooling unit and the cooling element (1) using compressed air.

Check the system hoses for chafing. Make sure that drainage from the cooling unit is unobstructed so that no condensation accumulates inside the unit.

Drain by pinching the valves (2)

## Drying filter - Check

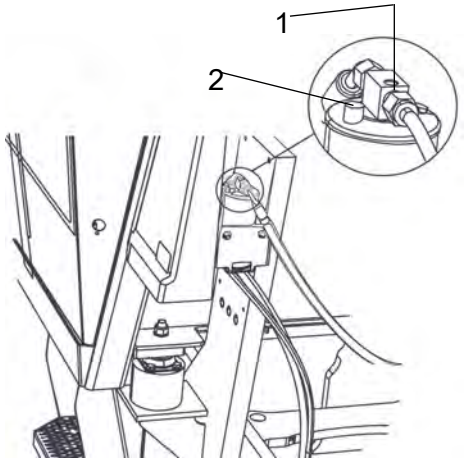


*Fig. Drying filter in engine compartment*
*1. Sight glass*
*2. Moisture indicator*

The drying filter is located on the left side of engine compartment´s front edge.

With the unit in operation, open the engine hood and check using the sight glass (1) that bubbles are not visible on the drying filter. If bubbles are visible through the sight glass, it is a sign that the refrigerant level is too low. If so, stop the unit. The unit may be damaged if it is run with insufficient refrigerant.

Check the moisture indicator (2). It should be blue. If it is beige, the dryer cartridge should be changed by an authorized service company.

***The compressor will be damaged if the unit is run with too little refrigerant.***

***Do not disconnect or undo the hose couplings.***

***The cooling system is pressurized. Incorrect handling can result in serious personal injury.***

***The system contains pressurized refrigerant. It is forbidden to release refrigerants into the atmosphere. Work on the refrigerant circuit is only to be carriedd out by authorized companies.***

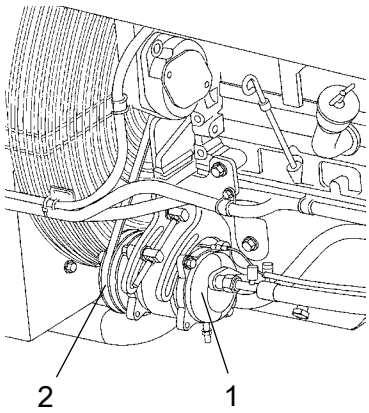


*Fig. Engine compartment*
*1. Compressor*
*2. Drive belt*

## Compressor - Check (Optional)

Inspect the attachment of the compressor (1).

The unit should, if possible, be run at least five minutes every week to ensure the lubrication of the gaskets and compressor in the system.

Check the V-belt (2) for any physical damage or cracks.

The air conditioning unit should not be run when the outdoor temperature is below 0 C, other than for the above.