RUTHZIL TRATOR COMERCIAL DE PEÇAS LTDA 11 97083-6812 ROLANDO

PARTS MANUAL

HYSTER

J1.60XMT-2.00XMT (J160)

CUSTOMER EDITION

HYSTER

1556469
02/2004

©2004 Hyster Company

SECTIONS

1 FRAME
2 ELECTRICAL SYSTEM
3 DRIVE UNIT
4 STEERING SYSTEM
5 BRAKE/ACCELERATOR SYSTEM
6 HYDRAULIC SYSTEM
7 MAST-TWO STAGE LIMITED FREE-LIFT
8 MAST-THREE STAGE FULL FREE-LIFT
9 MAST-TWO STAGE FULL FREE-LIFT
10 OPTIONS
11 NUMERICAL INDEX

This Parts Manual is divided into 11 major sections which are listed above. Quick reference to these sections can be made by placing the right thumb on the tab of the desired section, bending the book back and thumbing the pages to the corresponding tab.

TABLE OF CONTENTS

DESCRIPTION **PAGE**

A

ACCELERATOR ASSEMBLY 5-2
ACCELERATOR PEDAL 5-4

B

BACKUP ALARM 10-2
BATTERY COMPARTMENT AND COVERS 1-2
BATTERY CONNECTOR
  DIN 2-2
  NON-DIN 2-4
BATTERY SLIDER AND RETAINER 1-6
BATTERY SPACER 10-4
BRAKE ASSEMBLY 5-6

C

CARRIAGE
  THREE STAGE FULL FREE-LIFT 8-2
  TWO STAGE FULL FREE-LIFT 9-2
  TWO STAGE LIMITED FREE-LIFT 7-2
CONTACTOR PANEL 2-6
COUNTERWEIGHT 1-8

D

DASH DISPLAY 2-8
DC CONVERTER
  36/48 VOLT TO 12 VOLT 10-6
  PREMIUM 10-8
DECAL AND PLATE LOCATION 1-10
DRIVE TIRE AND WHEEL ASSEMBLY
  SOLID PNEUMATIC 3-2
DRIVE UNIT 3-4

E

ELECTRO-HYDRAULIC AUXILIARY VALVE SECTION 6-2
ELECTRO-HYDRAULIC CONTROL 2-10
ELECTRO-HYDRAULIC CONTROL VALVE 6-4
ELECTRO-HYDRAULIC LEVERS 6-6
ELECTRO-HYDRAULIC MAIN CONTROL VALVE SECTION 6-22
ELECTRO-HYDRAULIC TILT VALVE SECTION 6-26
EMERGENCY STOP 2-12

F

FLOOR PLATES 1-12
FORKS 1-14
FREE LIFT
  THREE STAGE FULL FREE-LIFT 8-4
  TWO STAGE FULL FREE-LIFT 9-4
FREE LIFT CYLINDER
  THREE STAGE FULL FREE-LIFT 8-6
FRONT LIGHT 10-10

©2004 HYSTER COMPANY

TABLE OF CONTENTS (Continued)

DESCRIPTION	PAGE
G	
GEAR PUMP	4-2
H	
HAND PUMP	4-4
HANDLEVER	6-8
HEADER HOSE	
THREE STAGE FULL FREE-LIFT	8-8
TWO STAGE FULL FREE-LIFT	9-6
TWO STAGE LIMITED FREE-LIFT	7-4
HYDRAULIC GEAR PUMP	6-10
HYDRAULIC HOSE AND FITTINGS	
ELECTRO	6-12
MANUAL	6-14
HYDRAULIC PUMP MOTOR	6-16
HYDRAULIC TANK ASSEMBLY	6-18
HYDRAULIC VALVE AND ATTACHING PARTS	
MANUAL	6-20
I	
INNER MAST	
THREE STAGE FULL FREE-LIFT	8-12
TWO STAGE FULL FREE-LIFT	9-8
TWO STAGE LIMITED FREE-LIFT	7-6
INTEGRAL SIDE-SHIFT CARRIAGE	
THREE STAGE FULL FREE-LIFT	8-14
TWO STAGE FULL FREE-LIFT	9-10
TWO STAGE LIMITED FREE-LIFT	7-8
INTEGRAL SIDESHIFT	
HYDRAULIC HOSES	10-12
INTERFACE CABLE	10-13
INTERMEDIATE MAST	
THREE STAGE FULL FREE-LIFT	8-16
L	
LOAD BACKREST EXTENSION	1-16
M	
MAIN LIFT ASSEMBLY	
THREE STAGE FULL FREE-LIFT	8-18
TWO STAGE FULL FREE-LIFT	9-12
TWO STAGE LIMITED FREE-LIFT	7-10
MAIN LIFT CYLINDER	
LEFT HAND	
TWO STAGE FULL FREE-LIFT	9-14
RIGHT HAND	
TWO STAGE FULL FREE-LIFT	9-16
THREE STAGE FULL FREE-LIFT	8-22
TWO STAGE LIMITED FREE-LIFT	7-12
MAIN WIRE HARNESS	2-14
MANUAL CONTROL VALVE	6-24

©2004 HYSTER COMPANY

TABLE OF CONTENTS (Continued)

DESCRIPTION **PAGE**

M (continued)

MASTER CYLINDER 5-8

O

OUTER MAST
THREE STAGE FULL FREE-LIFT 8-24
TWO STAGE FULL FREE-LIFT 9-18
TWO STAGE LIMITED FREE-LIFT 7-14
OVERHEAD GUARD 1-18

P

PARKING BRAKE 5-10

S

SEAT 1-20
SHIFT LEVER 4-6
SIDE-SHIFT CYLINDER 7-16
STATIC STRAP 1-22
STEER AXLE 4-8
STEER COLUMN 4-12
STEER PUMP AND MOTOR 4-16
STEER TIRE AND WHEEL ASSEMBLY
SOLID PNEUMATIC 4-18

T

TAIL LIGHT 10-14
TILT CYLINDER
THREE STAGE FULL FREE-LIFT 8-26
TILT CYLINDER ATTACHING PARTS
THREE STAGE FULL FREE-LIFT 8-28
TRACTION CONTROLLER
CONTACTOR HYDRAULIC 2-18
TRANSISTOR/PREMIUM 2-20
TRACTION MOTOR 3-6
TRANSMISSION 3-8

W

WORK LIGHT 10-16
WORK LIGHT/STROBE COMBINATION 10-18

©2004 HYSTER COMPANY

ABBREVIATIONS QUICK REFERENCE SHEET

Listed below are abbreviations used in parts manuals to denote the following expressions:

TERM	DEFINITION
Amp	Amperes
AR	As Required
BDI	Battery Discharge Indicators
BWI	Brush Wear Indicator
CE	Communicator End
CRE	Corrosive Environment
D/B	Date Break
dbA	Decibel "A" Scale
DE	Drive End
ECH	Empty Container Handler
ECH-3	Empty Container Handler - 3 High Stacking
ECH-4	Empty Container Handler - 4 High Stacking
ECH-5	Empty Container Handler - 5 High Stacking
ECH-6	Empty Container Handler - 6 High Stacking
ECH-7	Empty Container Handler - 7 High Stacking
ECM	Electronic Control Module
ECN	Engineering Change Notice
EEPROM	Electrically Erasable Programmable Read Only Memory
EPROM	Electrically Programmable Read Only Memory

TERM	DEFINITION
FRE	Freezer Environment
in.	inches
LPG	Liquefied Petroleum Gas
MAP	Manifold Absolute Pressure
mm	millimeters
MSTS	Microprocessor Spark Timing System
NPT	National Pipe Threads
O/S	Oversize
PTO	Power Take Off
RPM	Revolutions per Minute
S/N	Serial Number
TMM	Truck Management Module
UL Type D	Diesel-Powered Safety Rating
UL Type DS	Diesel-Powered Safety Rating
UL Type E	Battery-Powered Safety Rating
UL Type EE	Battery-Powered Safety Rating
UL Type ES	Battery-Powered Safety Rating
UL Type G	Gasoline-Powered Safety Rating
UL Type GS	Gasoline-Powered Safety Rating
UL Type LP	Gas-Powered Safety Rating
UL Type LPS	LP Gas-Powered Safety Rating
U/S	Undersize
UL	Underwriters Laboratory
V	Volts

©2004 HYSTER COMPANY

HOW TO USE THE ILLUSTRATED PARTS MANUAL

This parts manual describes and illustrates assemblies, subassemblies, and detail parts needed for service replacement.

The different constructions are indicated by keys and footnotes. The callouts correspond to descriptions found on the next page.

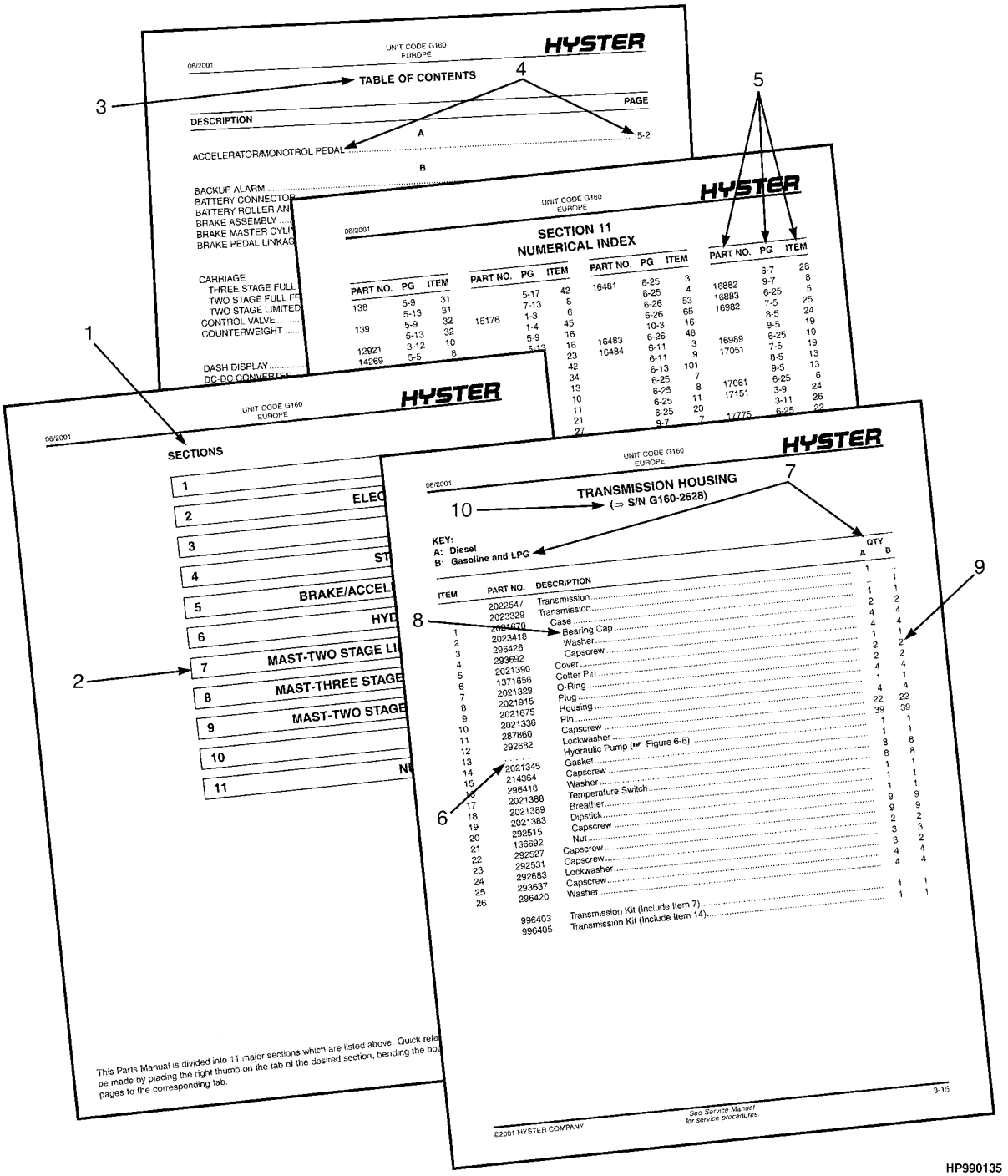

HOW TO FIND THE DESIRED PART NUMBER

WHEN THE PART NUMBER AND THE NEXT HIGHER ASSEMBLY IS NOT KNOWN:

1. Determine the function and application of the part required. Turn to the Sections Page. Choose the general area of reference most likely to include the part.

2. Turn to the section you chose. Use the Section Table of Contents to determine the assembly which would normally contain the part required. Then locate the part on the assembly breakdown page.

WHEN THE PART NUMBER IS NOT KNOWN AND THE NEXT HIGHER ASSEMBLY IS KNOWN:

3. Determine the assembly the required part is used on. Turn to the Table of Contents on Page i.

4. Locate the assembly the required part is used on and turn to the page indicated for that assembly. Then locate the part on the assembly breakdown page.

WHEN THE PART NUMBER IS KNOWN:

5. Use the Numerical Index on Page 11-1 to find the part number. Turn to the page listed and locate the part as indicated by the item number.

GENERAL:

The assembly breakdowns include part numbers, descriptions, quantities required, keys and footnotes to help in selecting correct parts.

6. Five periods in the PART NO. column (. . . . .) indicate that the part is either *Not Serviced Separately* or there is a reference to another figure. A figure reference is denoted by a pointing hand followed by a figure number in the DESCRIPTION column (☞Figure 10)

7. Keys are used to show two or more similar assemblies, RH and LH assembly parts, etc. Select the appropriate key, "A", "B", "C", "D", or "E" and the corresponding quantity column to find the required parts. Two periods in the QTY column (..) indicate that the part is not used for that assembly.

8. Indented descriptions under the DESCRIPTION column are used to indicate assemblies and subparts of assemblies. In the example on the previous page, *BEARING CAP* (Item 2) is a subpart of the major assembly *CASE*.

9. Quantities shown are for one assembly. The quantities of the subpart *BEARING CAP* are indicated as two and two. This means two per *CASE* assembly.

10. Serial number breaks identify the most current parts information and are shown as follows:
    ⇒ S/N D001H-2628
    Indicates last serial number affected.
    S/N D001H-2629 ⇒
    Indicates the first serial number affected.
    S/N D001H-1553 ⇔ S/N D001H-3291
    Indicates a range of serial numbers affected.

    ECN numbers for pending serial numbers are shown to allow for the inclusion of the most current parts information and are identified as follows:
    ⇒ S/N Pending Per ECN 63243
    Indicates a pending serial number for last unit affected.
    S/N Pending Per ECN 63243 ⇒
    Indicates a pending serial number for first unit affected.

    Date breaks are used to indicate when a change occurred but a subsequent serial number break was not recorded. This is an arbitrary date usually based on the ECN release and are identified as follows:
    ⇒ D/B 3/00
    Indicates that a change occurred sometime within that month for the item affected.
    D/B 3/00 ⇒
    Indicates that a change occurred sometime within that month for the item affected.
    D/B 3/00 ⇔ D/B 4/00
    Indicates a range of production dates of the item affected.

    Contact your local dealer for Hyster lift trucks for serial number information for items with a ECN or a date break.

ORDERING PARTS:

When ordering replacement parts, give the unit serial number, part number, name of part and quantity required.

For any further information on parts, service, or ordering, consult your local dealer for Hyster lift trucks.

©2004 HYSTER COMPANY

IDENTIFICATION OF TRUCK SERIAL NUMBERS

X	OOO	X	OOOO	X
(1)	(2)	(3)	(4)	(5)

(1) and (2) The first letter and three numbers indicate the truck unit code.

(3) The second letter indicates the plant of manufacture.

(4) The four or five digit number indicates the production sequence number of the truck.

(5) The final letter indicates the year of manufacture starting with "A" in 1957 and 1980. The letters "I", "O", and "Q" will not be used.

For pending serial numbers contact your local dealer for Hyster lift trucks.

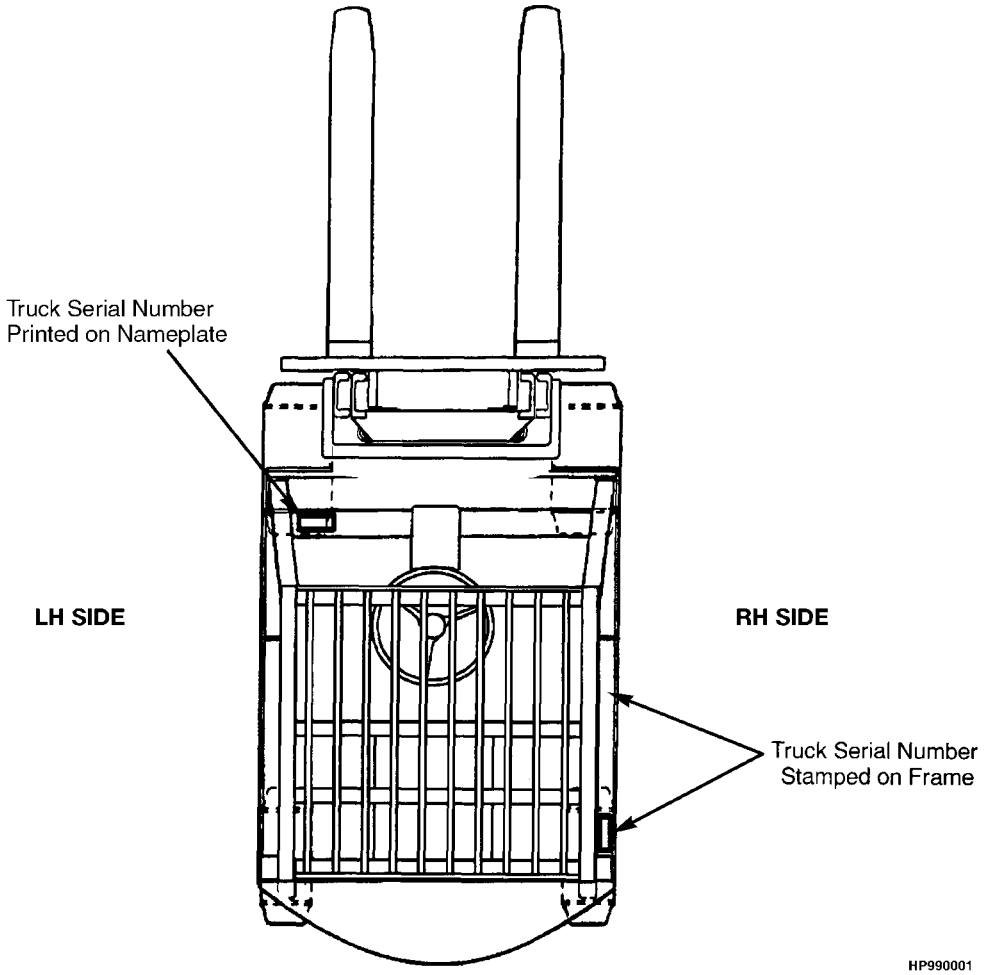

Parts referred to in this book as right or left hand parts are in accordance with the illustration above.

PUBLICATIONS

Every new lift truck is provided with an OPERATING MANUAL. This manual has information that the operator must know for inspection and operation of the lift truck.

SERVICE MAINTENANCE MANUALS, which provide service and overhaul procedures, and PARTS MANUALS with complete replacement part identification, are available at a nominal fee from your Hyster dealer to assist users in effectively maintaining Hyster lift trucks in a safe, useful condition. See the list below for information on ordering specific publications for this model lift truck.

PUBLICATION	HYSTER PART NUMBER
Operating Manual	1556470
Service Manual (Complete)	1554640
Parts Manual	1556469

©2004 HYSTER COMPANY

1 FRAME

SECTION 1
FRAME

DESCRIPTION	PAGE
BATTERY COMPARTMENT AND COVERS	1-2
BATTERY SLIDER AND RETAINER	1-6
COUNTERWEIGHT	1-8
DECAL AND PLATE LOCATION	1-10
FLOOR PLATES	1-12
FORKS	1-14
LOAD BACKREST EXTENSION	1-16
OVERHEAD GUARD	1-18
SEAT	1-20
STATIC STRAP	1-22

©2004 HYSTER COMPANY

BATTERY COMPARTMENT AND COVERS (Figure 1-1)

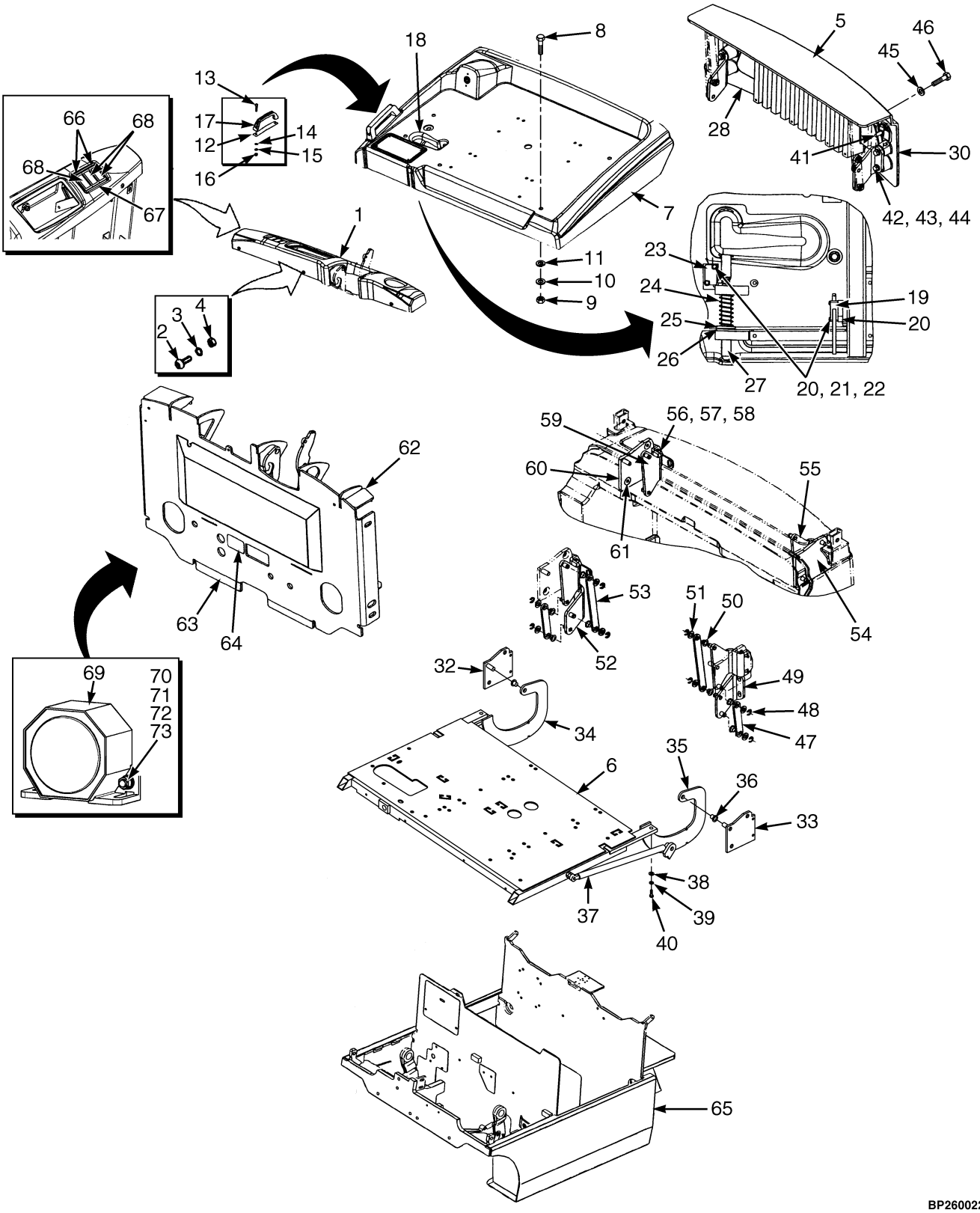

©2004 HYSTER COMPANY

BATTERY COMPARTMENT AND COVERS

ITEM	PART NO.	DESCRIPTION	QTY
1	1528851	Cowl Cover	1
2	302048	Screw	5
3	320156	Washer	5
4	136687	Nut	5
5	1527262	Cover	1
6	1523615	Frame (1290 mm)	1
6	1523614	Frame (1385 mm)	1
6	1526650	Frame (1495 mm)	1
7	1521321	Battery Cover (1290 mm)	1
7	1521405	Battery Cover (1385 mm)	1
7	1521406	Battery Cover (1495 mm)	1
8	369242	Capscrew	5
9	239503	Nut	5
10	320158	Washer	5
11	292681	Lockwasher	5
12	1523623	Backing Plate	1
13	292502	Capscrew	2
14	320156	Washer	2
15	292680	Lockwasher	2
16	136687	Nut	2
17	362030	Handle	1
18	1530955	Latch Handle	1
19	1533890	Microswitch	1
20	1536299	Standoff	4
21	302231	Screw	4
22	221852	Lockwasher	4
23	2037379	Switch	1
24	2307799	Spring	1
25	320161	Washer	1
26	182118	Retaining Ring	1
27	1528869	Pin	1
28	1541774	Seal Strip	1
29	1541775	Seal Strip	1
30	1541777	Seal Strip	2
31	1541778	Seal Strip	1
32	1527299	Bracket Weldment (RH)	1
33	1527304	Bracket Weldment (LH)	1
34	1525750	Bracket (RH)	1
35	1525751	Bracket (LH)	1
36	2310972	Bearing	2
37	1553456	Gas Spring	1
38	320158	Washer	4
39	292681	Lockwasher	4
40	287851	Capscrew	4
41	269200	Nut	2
42	320159	Washer	4
43	292682	Lockwasher	4
44	293629	Capscrew	4
45	15176	Washer	2
46	2311598	Screw	2
47	1527296	Short Arm	2

©2004 HYSTER COMPANY

BATTERY COMPARTMENT AND COVERS

ITEM		PART NO.	DESCRIPTION	QTY
48		182118	Retaining Ring	8
49		1527327	Bracket Weldment (LH)	1
50		2056115	Bearing	8
51		320161	Washer	8
52		1527326	Bracket Weldment (RH)	1
53		1527297	Long Arm	2
54		1527304	Bracket Weldment (LH)	1
55		1527330	Bracket Weldment (LH)	1
56		320157	Washer	4
57		293613	Capscrew	4
58		292681	Lockwasher	4
59		1527329	Bracket Weldment (RH)	1
60		1527299	Bracket Weldment (RH)	1
61		296252	Bolt	4
62		1519095	Cowl	1
63		1554624	Seal Strip	2
64		1554625	Seal Strip	1
65		1560099	Frame (1290 mm)	1
65		1525348	Frame (1385 mm)	1
65		1525349	Frame (1495 mm)	1
65	**a**	1560101	Frame (Optional)	1
65	**b**	1525351	Frame (Optional)	1
66		1382311	Panel	2
67		1382312	Panel	1
68		1382313	Cover	3
69		1483422	Horn	1
70		320156	Washer	2
71		292680	Lockwasher	2
72		136687	Nut	2
73		2062875	Capscrew	2

FOOTNOTES:
a 1290 mm - Side Removal
b 1385 mm - Side Removal

See Service Manual for service procedures.
©2004 HYSTER COMPANY

NOTES

BATTERY SLIDER AND RETAINER (Figure 1-2)

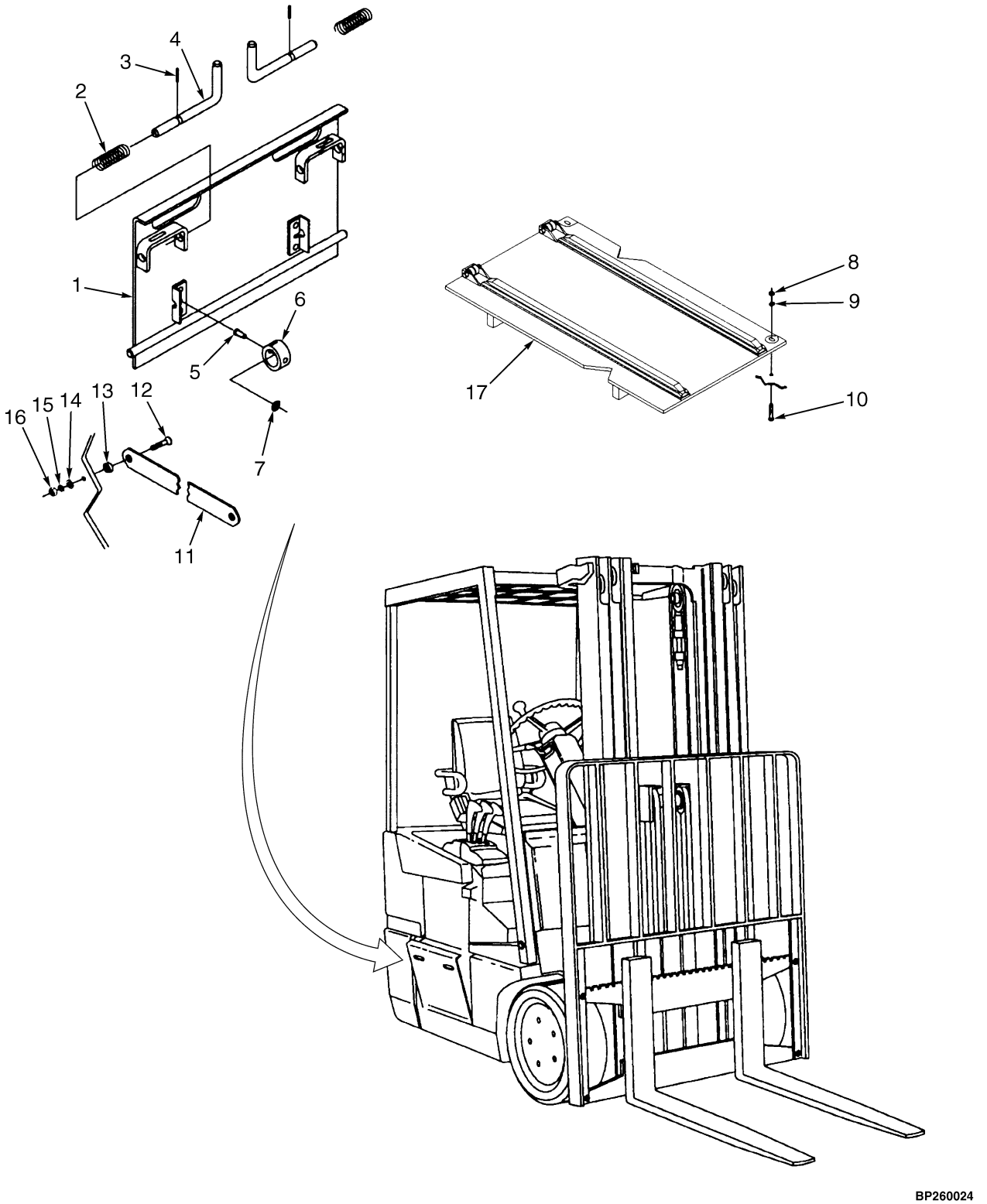

©2004 HYSTER COMPANY

BATTERY SLIDER AND RETAINER

ITEM		PART NO.	DESCRIPTION	QTY
1	**a**	2014602	Side Panel Assembly	1
1		2014599	Side Plate	1
1	**b**	2014603	Side Panel Assembly	1
1		2014600	Side Plate	1
2		2307799	Spring	2
3		19890	Roll Pin	2
4		2307965	Lock Pin	2
5		167218	Rod End Pin	2
6		2309362	Radial Bumper	2
7		2307542	Retainer	2
8		136692	Nut	2
9		292682	Lockwasher	2
10		292519	Capscrew	2
11		1532511	Plate	1
12		296247	Screw	2
13		361973	Spacer	10
14		320159	Washer	2
15		292682	Lockwasher	2
16		136692	Nut	2
17		2053940	Slide Platform (3,000 lb. Capacity Truck)	1
17		2053941	Slide Platform (3,500 lb. Capacity Truck)	1

FOOTNOTES:

a 1290 mm Wheel Base

b 1385 mm Wheel Base

©2004 HYSTER COMPANY

COUNTERWEIGHT (Figure 1-3)

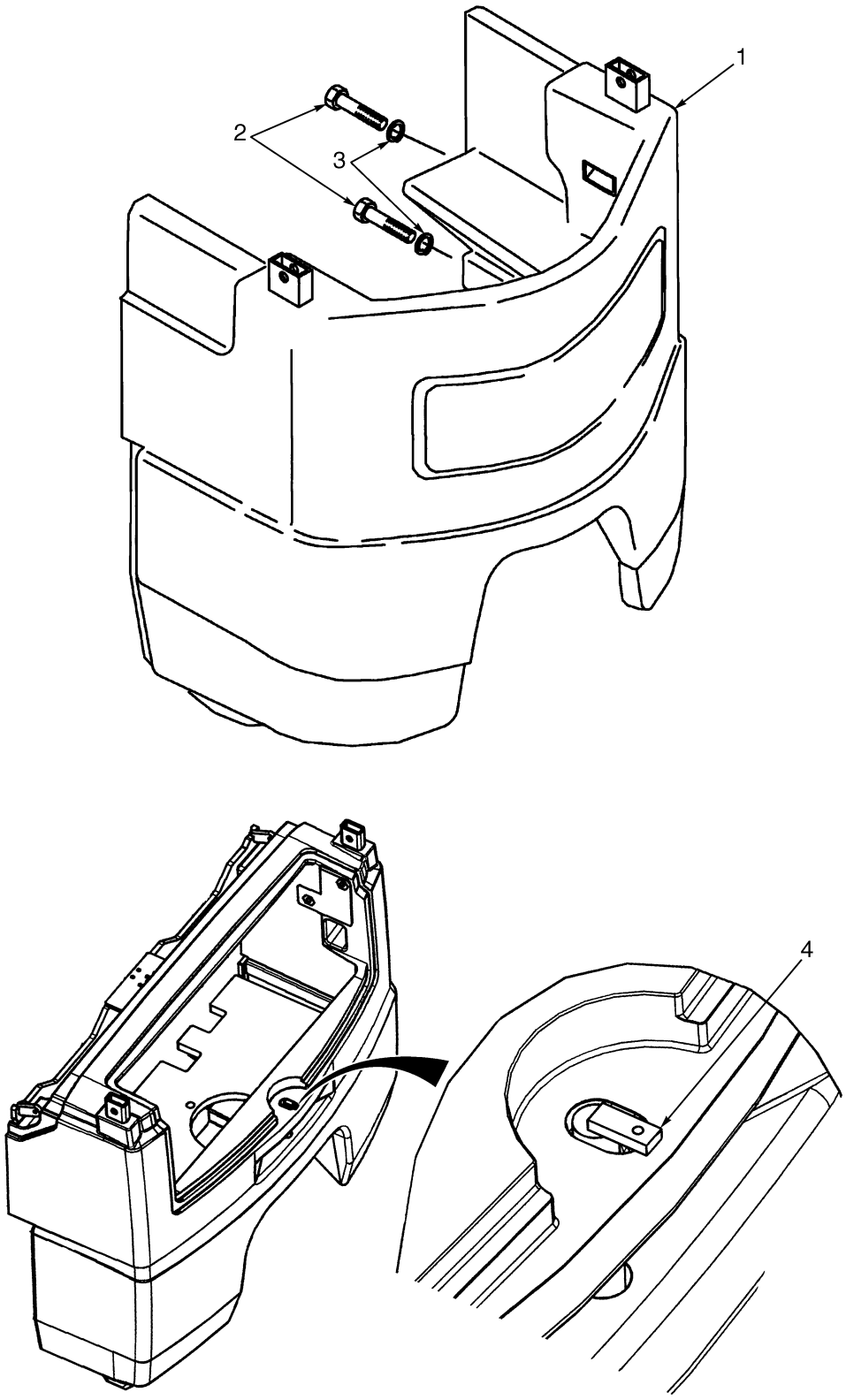

©2004 HYSTER COMPANY

COUNTERWEIGHT

ITEM	PART NO.	DESCRIPTION	QTY
1	1529150	Counterweight	1
2	293706	Capscrew	4
3	296431	Washer	4
4	1527974	Tow Pin	1

©2004 HYSTER COMPANY

DECAL AND PLATE LOCATION (Figure 1-4)

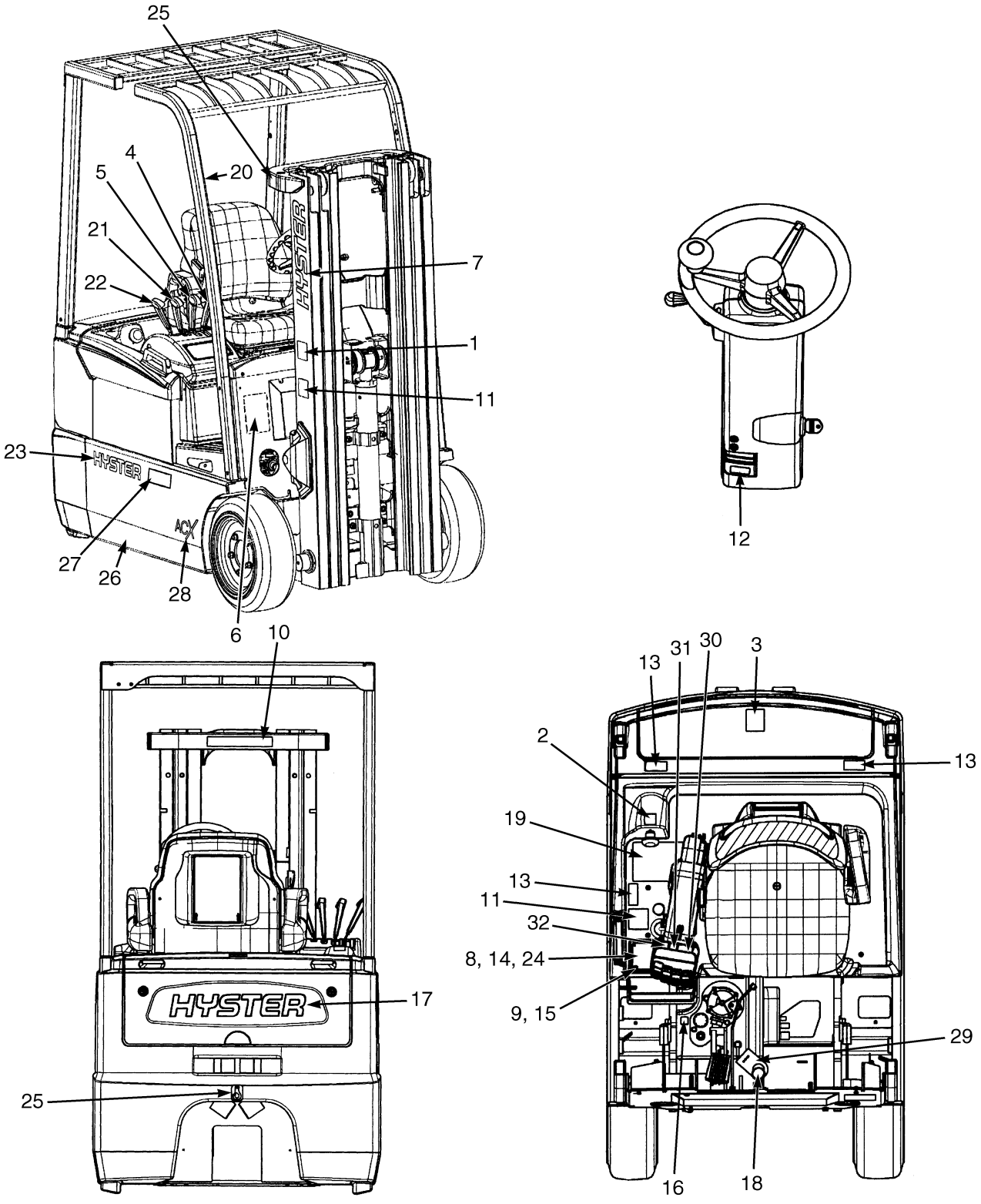

BP120066

©2004 HYSTER COMPANY

DECAL AND PLATE LOCATION

ITEM		PART NO.	DESCRIPTION	QTY
1		1339830	Label (Mast Warning)	2
2		2049939	Label (Battery Disconnect)	1
3		1339828	Label (No Riders)	1
4		1538033	Label (Lift)	1
5		1538034	Label (Tilt)	1
6		320037	Label (Patent Plate)	1
7		1339672	Label (Hyster)	2
8		1471618	Label (Nameplate)	1
8	**a**	. . . . .	Nameplate	1
8		238950	Label (Incomplete Truck)	1
9		170658	Rivet	4
10		1343276	Label (Mast Warning)	1
11	**b**	1339832	Label (Pinch Point)	2
12		2303178	Label (Tilt Column)	1
13	**c**	2304044	Label (Pinch Point)	2
14		389688	Cover	1
15		15140	Washer	4
16		1385099	Label (Hydraulic Oil Fill)	1
17		1544266	Label (Hyster)	1
18		2068406	Label (Brake System Fluid)	1
18		2068407	Label (Brake System Fluid) (Freezer)	1
19		1366725	Label (Operator Warning)	1
20		1359588	Label (Operator Restraint)	2
21		1538036	Label (Sideshift)	1
22		1538037	Label (Auxiliary)	1
23		1529042	Label (Hyster)	2
23		1339674	Label (Hyster) (Optional)	2
24		1560157	Label (Hyster)	1
25		316448	Label (Lifting Eye)	1
26		1339832	Label (Pinch Point)	1
26		2013578	Strip	2
27		2015059	Label (Model 1.60)	2
27		2015060	Label (Model 1.80)	2
27		1339667	Label (Model 2.00)	2
28		1539387	Label (ACX)	2
29		2068404	Label (Brake System Fluid Tag)	1
29		2068405	Label (Brake System Fluid Tag) (Freezer)	1
30		1356137	Label (Lift and Tilt)	1
31		370258	Label (Auxiliary Function - Side-Shift)	1
32		370259	Label (Auxiliary Function - Fork Spreader)	1

FOOTNOTES:

a Contact your dealer

b Only uses 1 for Manual Hydraulics

c Only uses one for Manual Hydraulics

©2004 HYSTER COMPANY

FLOOR PLATES (Figure 1-5)

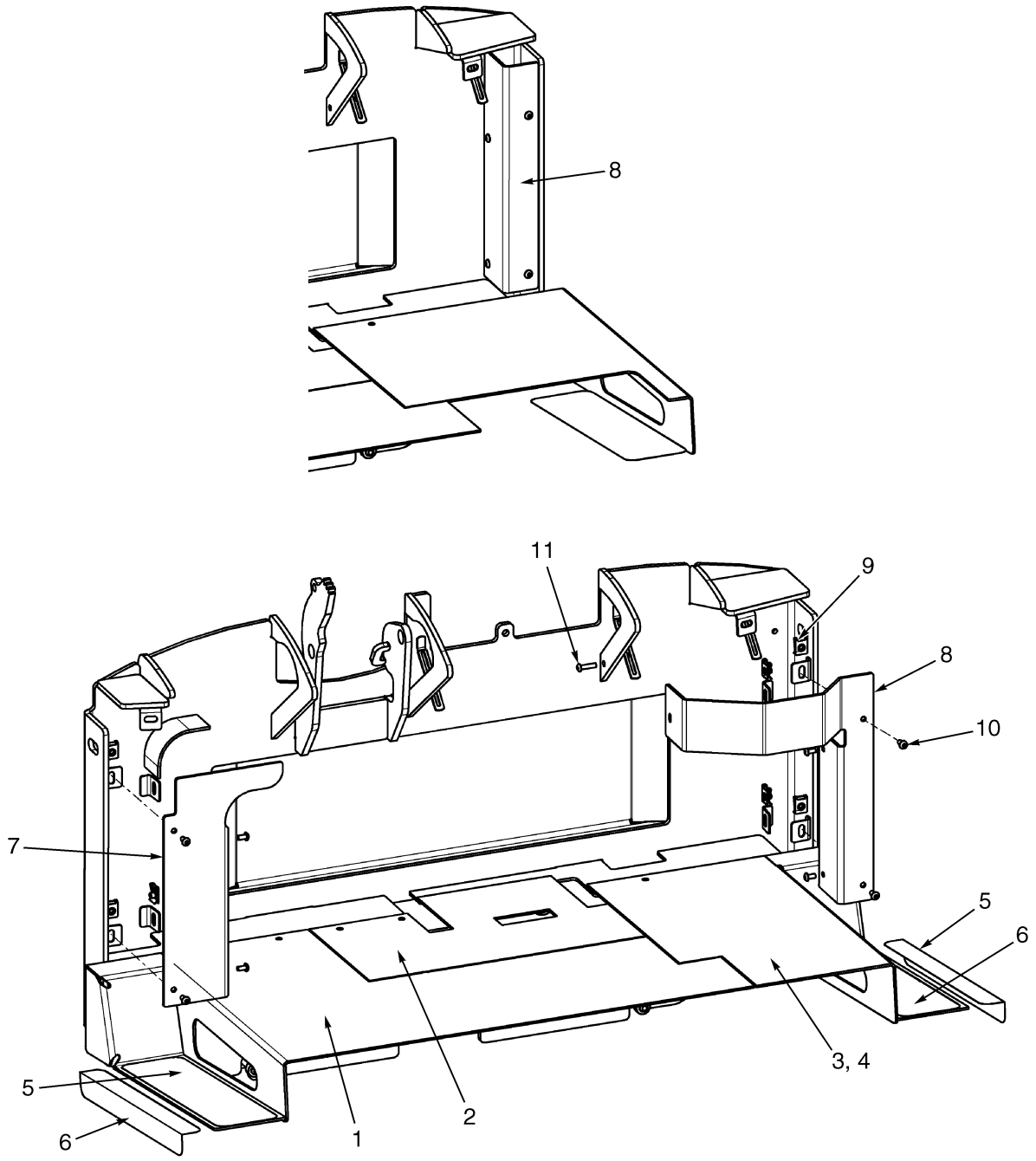

BP000191

©2004 HYSTER COMPANY

FLOOR PLATES

KEY:
A: Electric Valve
B: Manual Valve

ITEM	PART NO.	DESCRIPTION	QTY A	QTY B
1	2062267	Floor Plate (LH)	1	1
2	2062264	Floor Plate (Center)	1	1
3	2062266	Floor Plate (RH)	..	1
4	2062265	Floor Plate (RH) (With Step)	1	..
5	2062560	Anti-Slip Pad	2	1
6	2309317	Anti-Slip Pad	2	1
7	1550531	Hose Cover	1	1
8	1528551	Harness Cover	1	..
8	1551236	Harness Cover	..	1
9	1364542	Clip Nut	9	9
10	2062718	Capscrew	8	8
11	2066709	Capscrew	1	..
a	2059533	Floor Mat	..	1
a	2059534	Floor Mat	1	..

FOOTNOTES:
a Not Illustrated

FORKS (Figure 1-6)

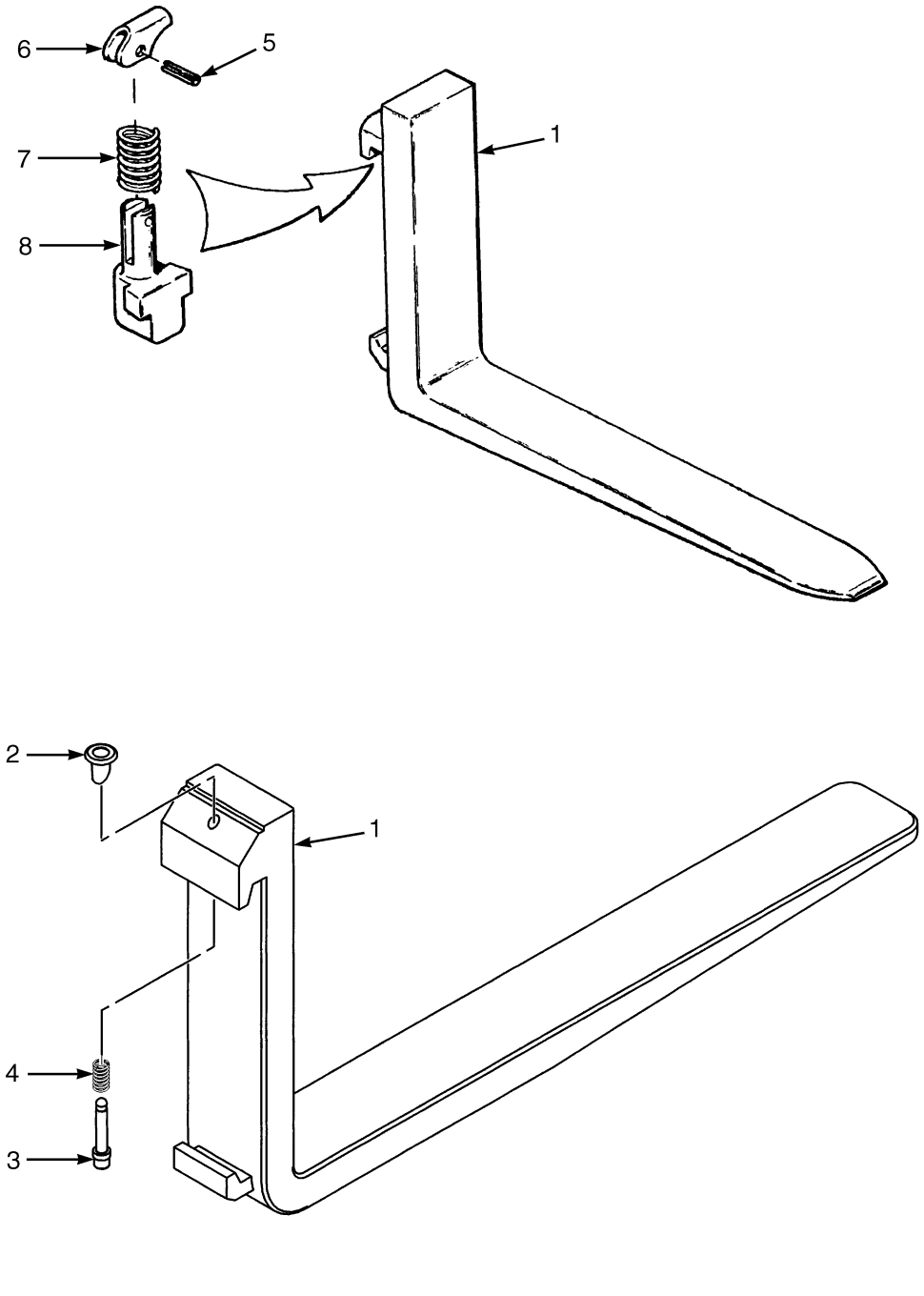

©2004 HYSTER COMPANY

FORKS

ITEM	PART NO.	DESCRIPTION	QTY
1	1327021	Fork (991 mm) (80 x 40 x 1000)	2
1	1327022	Fork (1092 mm) (80 x 40 x 1100)	2
1	1327023	Fork (1194 mm) (80 x 40 x 1200)	2
1	1333043	Fork (991 mm) (100 x 40 x 1000)	2
1	1333044	Fork (1092 mm) (100 x 40 x 1100)	2
1	1333045	Fork (1194 mm) (100 x 40 x 1200)	2
2	1523732	Knob	1
3	1523733	Pin	1
4	1500782	Spring	1
5	302450	Pin	1
6	1378763	Latch	1
7	1378762	Spring	1
8	1378760	Pin	1
	1378765	Latch Kit (Includes Items 5-8)	1
a	1523734	Retainer Pin	1

FOOTNOTES:
a Not Illustrated

LOAD BACKREST EXTENSION (Figure 1-7)

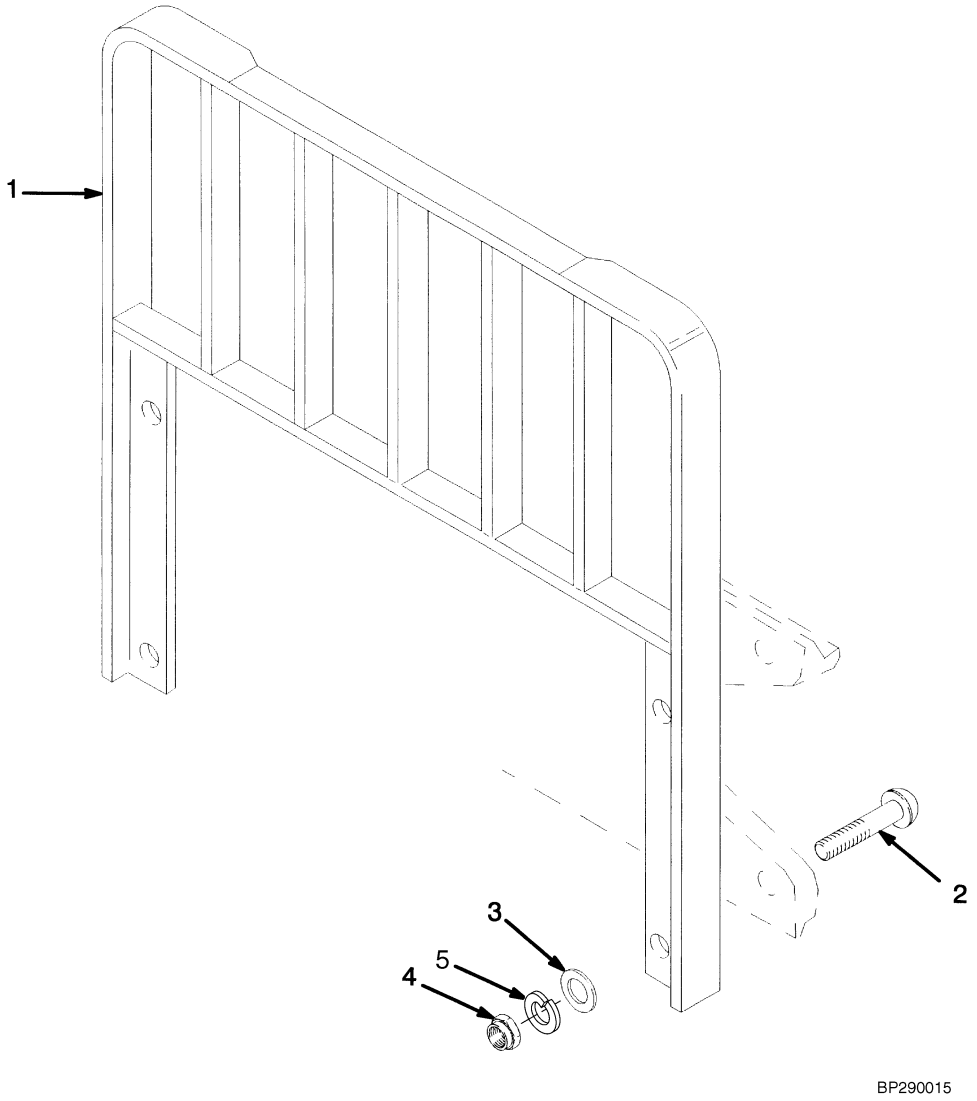

©2004 HYSTER COMPANY

LOAD BACKREST EXTENSION

ITEM	PART NO.	DESCRIPTION	QTY
1	1349446	Load Backrest Extension (965 mm)	1
2	1353533	Capscrew	4
3	221771	Washer	4
3	296423	Washer (Optional)	4
4	292656	Nut	4
5	292683	Lockwasher	4

©2004 HYSTER COMPANY

OVERHEAD GUARD (Figure 1-8)

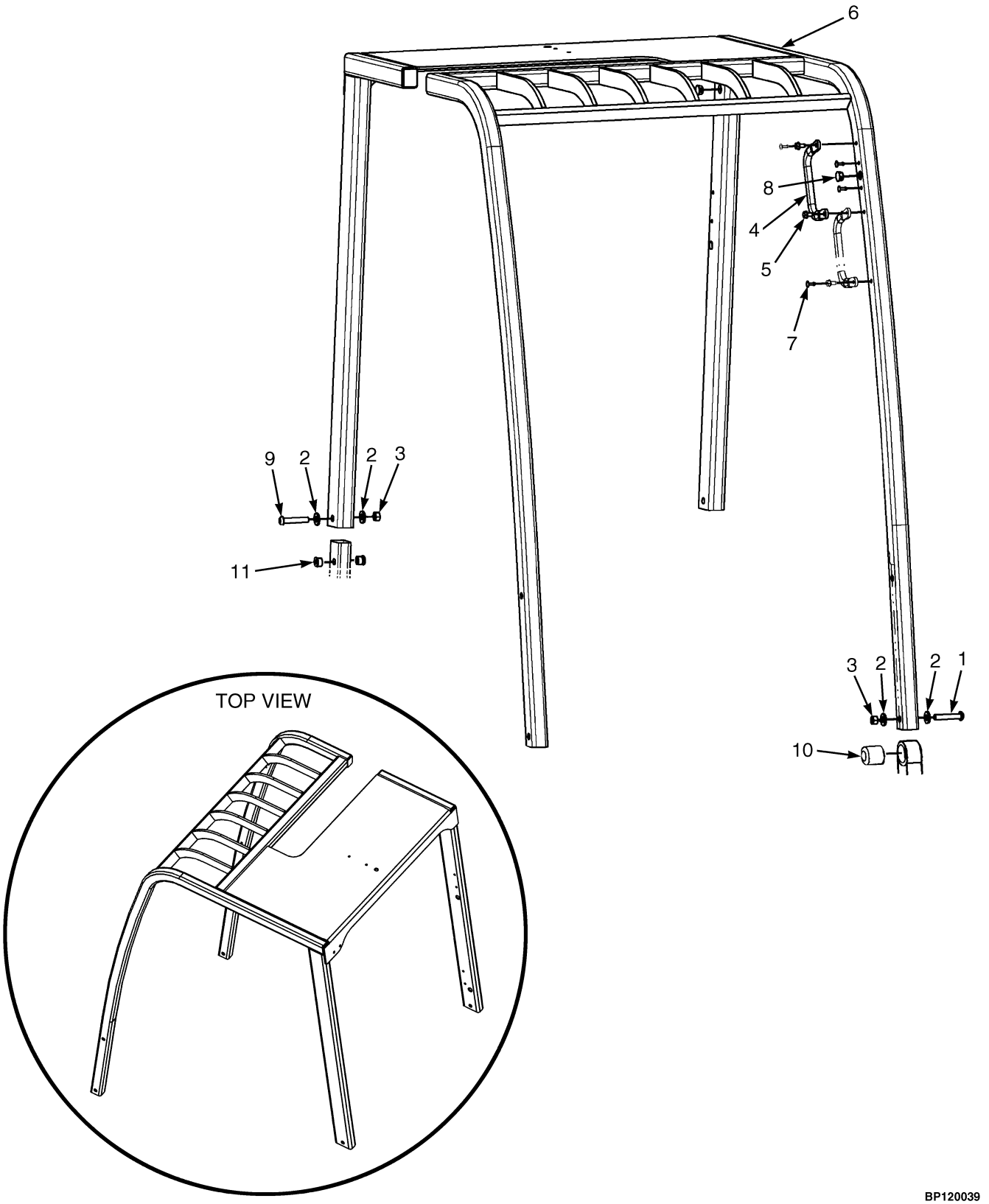

©2004 HYSTER COMPANY

OVERHEAD GUARD

ITEM	PART NO.	DESCRIPTION	QTY
1	2034347	Capscrew	4
2	320162	Washer	12
3	216877	Nut	6
4	1343647	Handle	1
5	316678	Screw	2
6	1534632	Overhead Guard (1290 mm)	1
6	1534633	Overhead Guard (1385 mm)	1
6	1534634	Overhead Guard (1495 mm)	1
7	1363916	Plug	13
8	1363917	Plug	7
9	2034348	Capscrew	2
10	1553963	Bushing	2
11	1554932	Bushing	4

©2004 HYSTER COMPANY

SEAT (Figure 1-9)

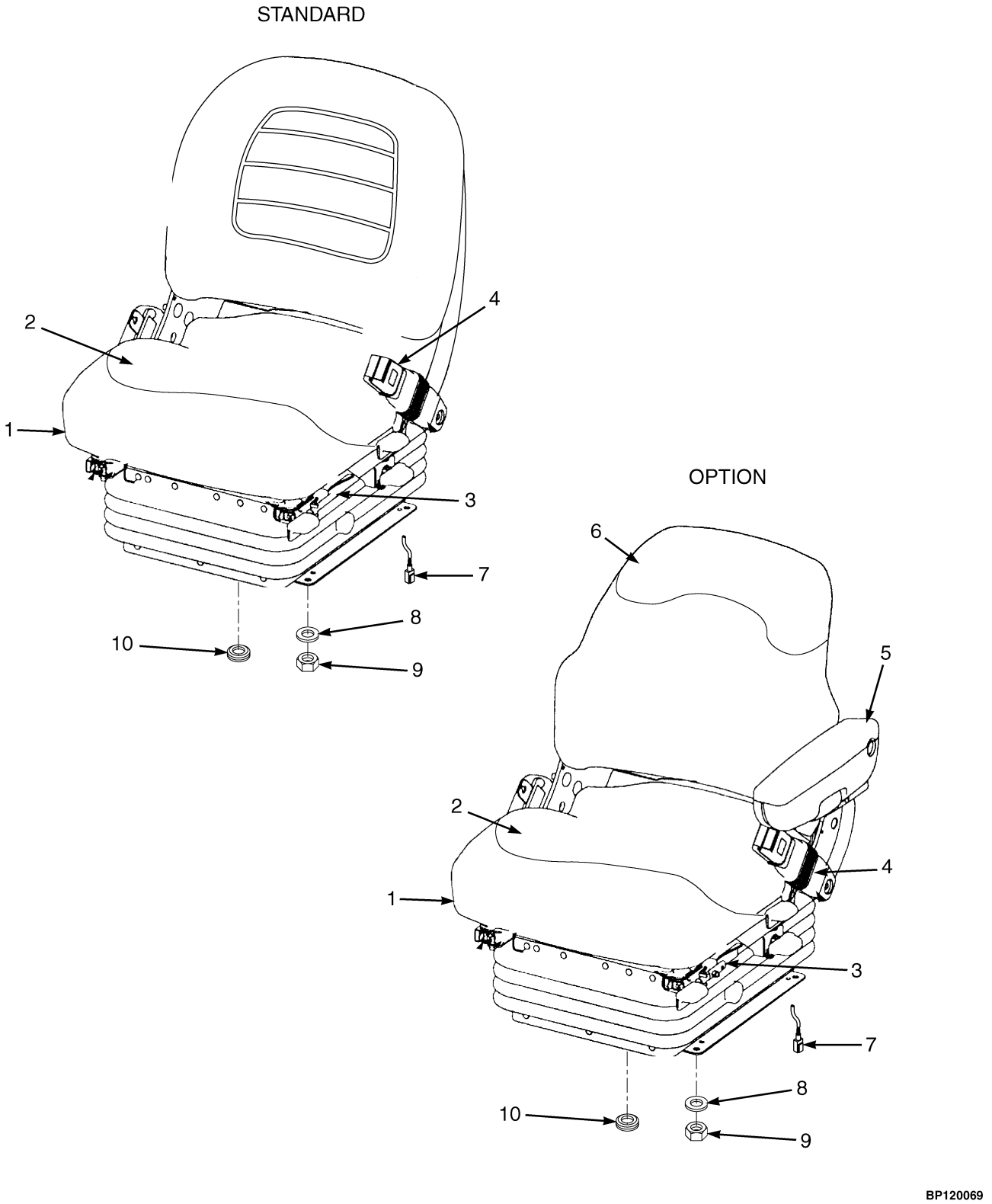

©2004 HYSTER COMPANY

SEAT

KEY:
A: Full Suspension (Vinyl with Arm)
B: Full Suspension (Cloth With Arm)
C: Non-Suspension
D: Full Suspension (Cloth)
E: Full Suspension (Vinyl)

ITEM	PART NO.	DESCRIPTION	QTY A	B	C	D	E
1	1563192	Seat (Vinyl) (Standard)	..	..	1	..	..
1	1563193	Seat (Cloth) (Option)	..	..	1	..	..
1	1540035	Seat (Option)	1	..	..	..	..
1	1540036	Seat (Option)	..	1	..	..	..
1	1562666	Seat (Option)	..	..	..	1	..
1	1562665	Seat (Option)	..	..	..	..	1
2	1563207	Seat Cushion	1	1	..	1	1
2	1563351	Cushion	..	..	1	..	..
3	1563209	Slide	1	1	..	1	1
3	1563218	Slide	..	..	1	..	..
4	1563212	Seat Belt	1	1	1	1	1
5	1563230	Arm (LH)	1	1	..	1	1
6	1470152	Back Cushion (Vinyl)	1	..	..	..	1
6	1470153	Back Cushion (Fabric)	..	1	..	1	..
6	1563222	Cushion	..	..	1	..	..
7	1563350	Harness	1	1	..	..	..
7	1563353	Harness	..	..	1	1	1
8	320157	Washer	4	4	4	4	4
9	302400	Locknut	4	4	4	4	4
10	392238	Grommet	1	1	1	1	1
a	1563208	Sensor	1	1	..	1	1
a	1563215	Sensor	..	..	1	..	..
a	1563210	Foam Cap	1	1	..	..	..
a	1563211	Knob	1	1	..	..	..
a	1467529	Suspension Spring Kit	1	1	..	1	1
a	1483828	Shock Absorber	1	1	..	1	1
a	1563231	Arm (RH)	..	..	..	1	1
a	1389343	Spacer	..	..	2	..	..
a	287831	Capscrew	..	..	4	..	..

FOOTNOTES:
a Not Illustrated

©2004 HYSTER COMPANY

STATIC STRAP (Figure 1-10)

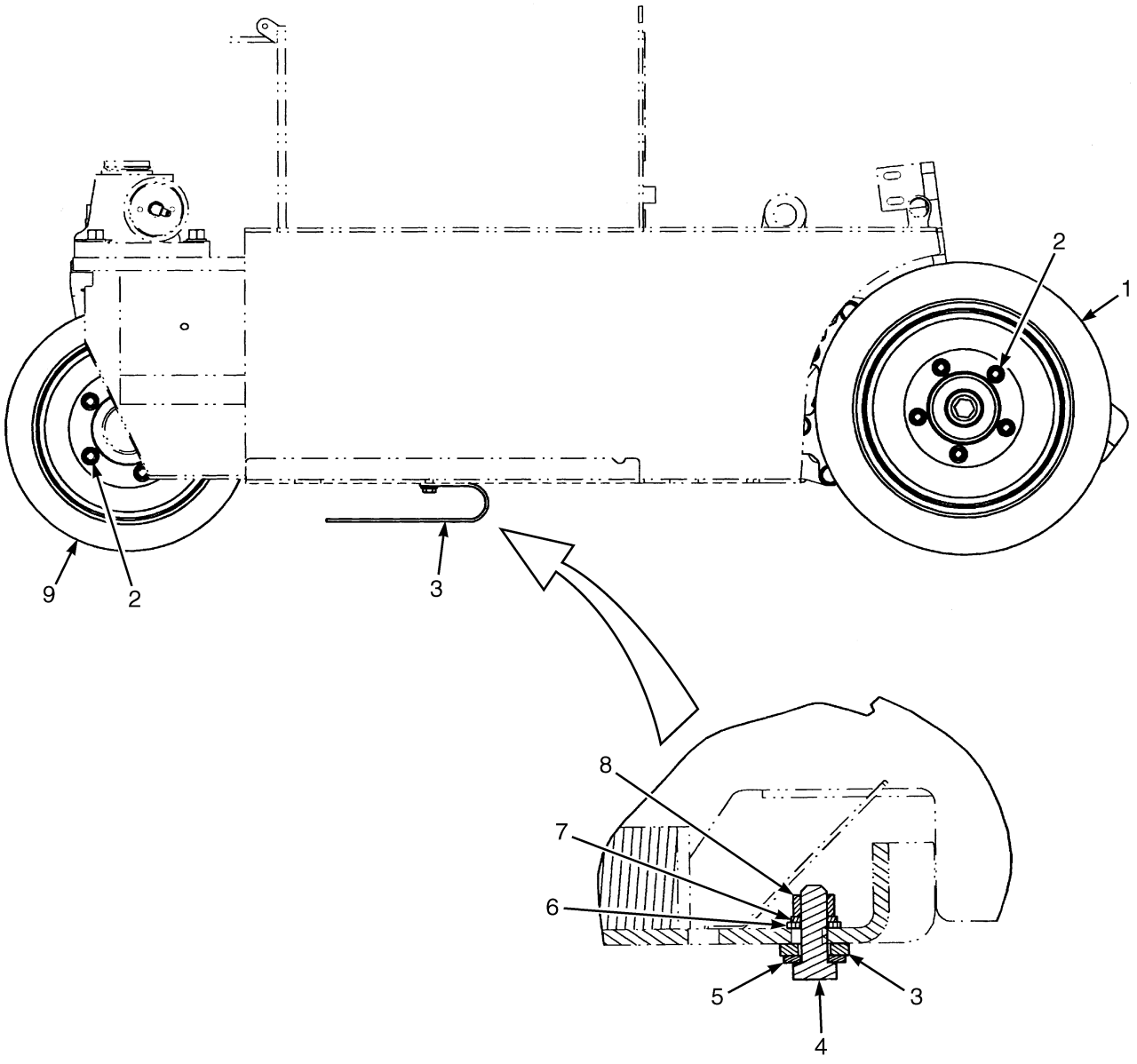

BP120070

©2004 HYSTER COMPANY

STATIC STRAP

ITEM	PART NO.	DESCRIPTION	QTY
1	. . . . .	Drive Tire and Wheel Assembly (☞ Figure 3-1)	2
2	302977	Nut	5
3	216895	Static Strap	1
4	287860	Capscrew	1
5	320160	Washer	1
6	320159	Washer	1
7	292682	Lockwasher	1
8	136692	Nut	1
9	. . . . .	Steer Tire and Wheel Assembly (☞ Figure 4-7)	2

©2004 HYSTER COMPANY

NOTES

2 ELECTRICAL SYSTEM

SECTION 2
ELECTRICAL SYSTEM

DESCRIPTION	PAGE
BATTERY CONNECTOR	
DIN	2-2
NON-DIN	2-4
CONTACTOR PANEL	2-6
DASH DISPLAY	2-8
ELECTRO-HYDRAULIC CONTROL	2-10
EMERGENCY STOP	2-12
MAIN WIRE HARNESS	2-14
TRACTION CONTROLLER	
CONTACTOR HYDRAULIC	2-18
TRANSISTOR/PREMIUM	2-20

©2004 HYSTER COMPANY

BATTERY CONNECTOR (Figure 2-1)
DIN

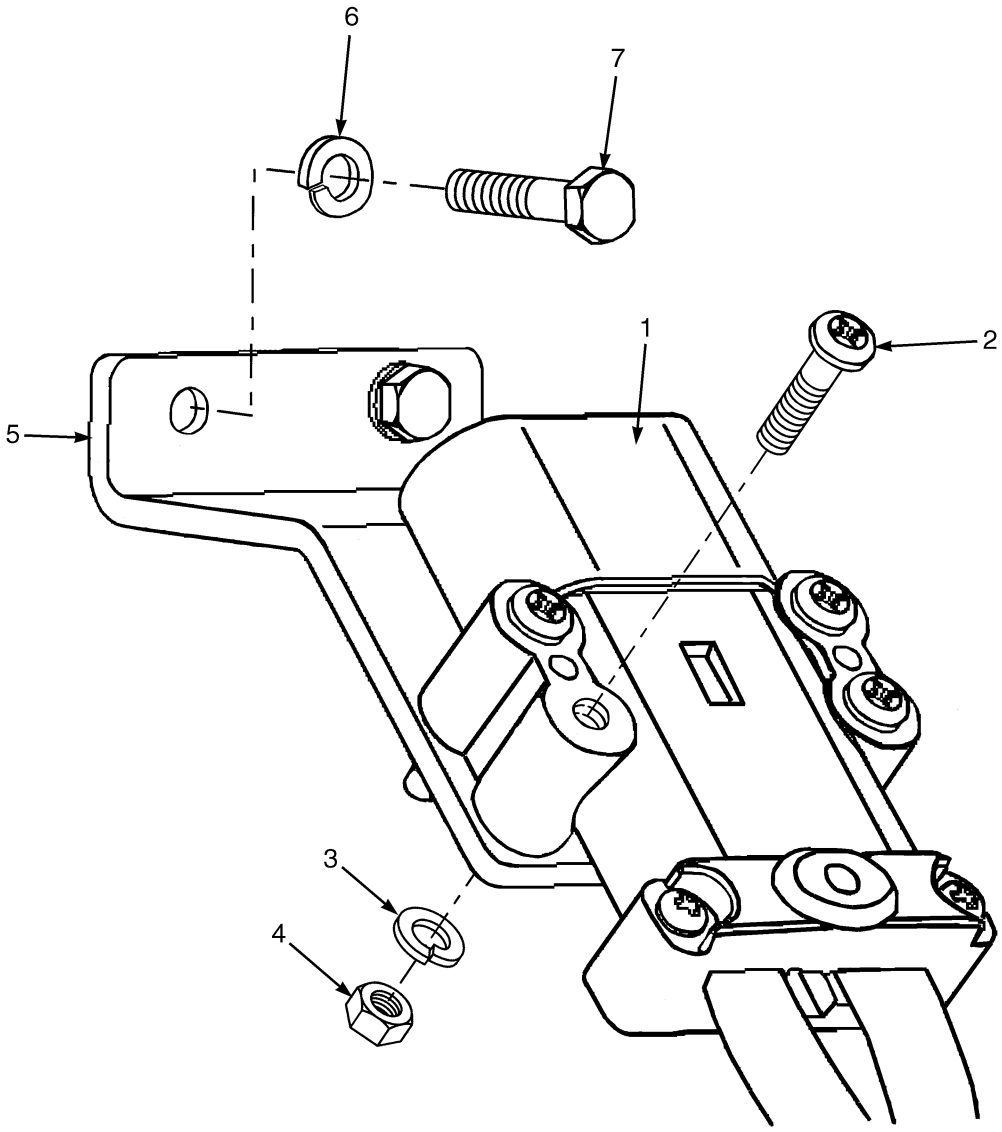

BP080169

©2004 HYSTER COMPANY

BATTERY CONNECTOR
DIN

ITEM	PART NO.	DESCRIPTION	QTY
1	1541453	Battery Connector (48V)	1
1	2031026	Connector	1
1	190811	Cable	AR
1	2308995	Terminal	2
2	302054	Screw	4
3	292680	Lockwasher	4
4	136687	Nut	4
5	1564043	Plate	1
6	292681	Lockwasher	2
7	136681	Capscrew	2

©2004 HYSTER COMPANY

BATTERY CONNECTOR (Figure 2-2)
NON-DIN

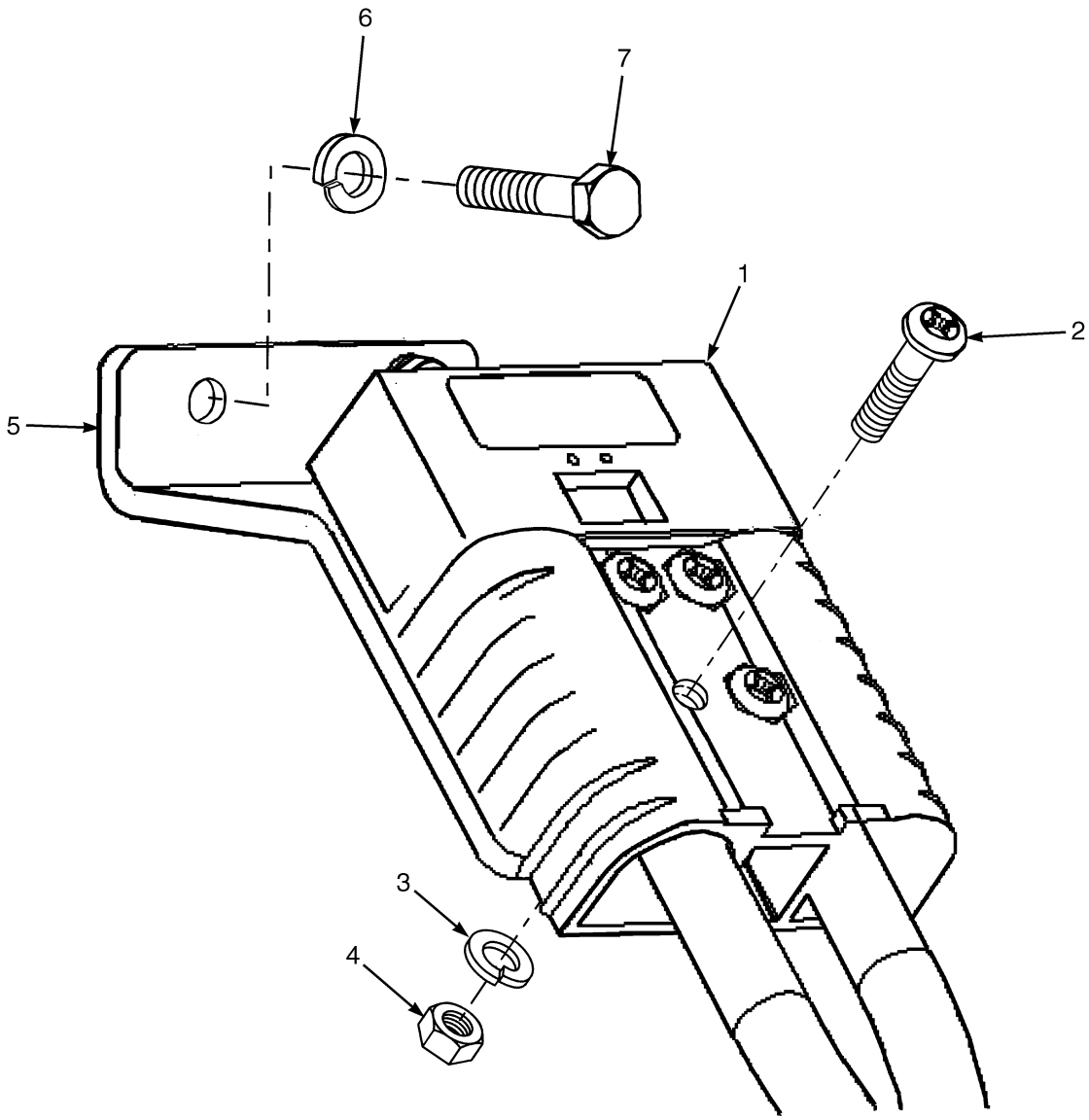

BP080168

©2004 HYSTER COMPANY

BATTERY CONNECTOR
NON-DIN

ITEM	PART NO.	DESCRIPTION	QTY
1	1541451	Battery Connector (48V)	1
1	378383	Connector	1
1	190811	Cable	AR
1	2308995	Terminal	2
2	302053	Screw	4
3	292680	Lockwasher	4
4	136687	Nut	4
5	1564043	Plate	1
6	292681	Lockwasher	2
7	136681	Capscrew	2

©2004 HYSTER COMPANY

CONTACTOR PANEL (Figure 2-3)

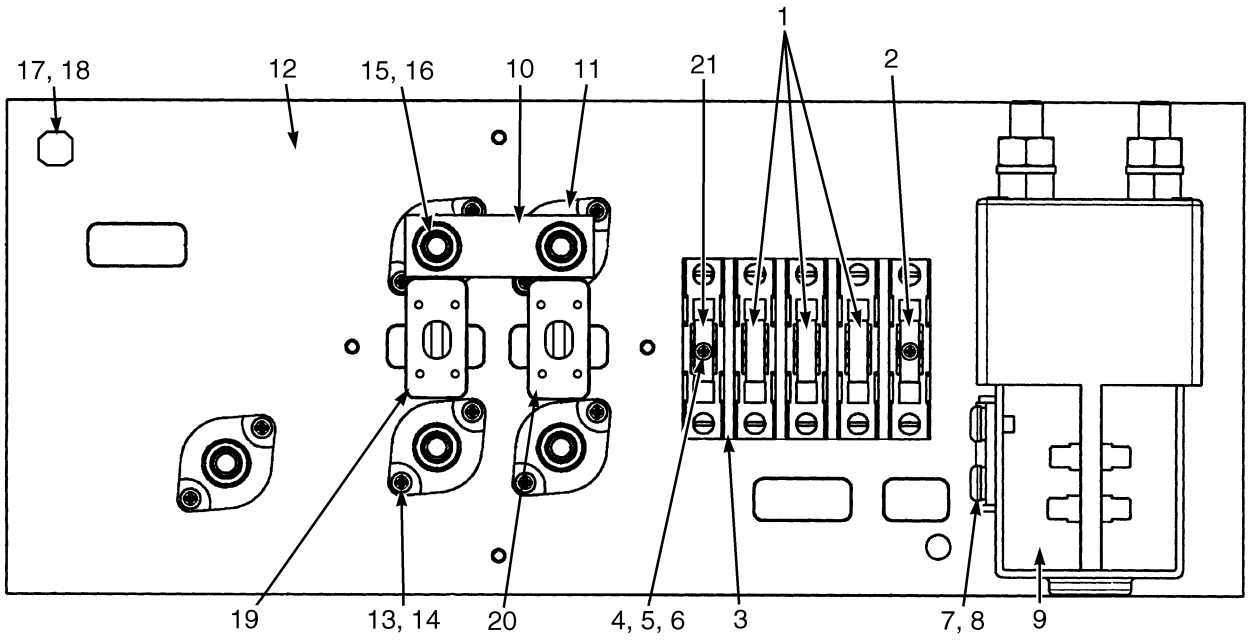

Contactor Hydraulics

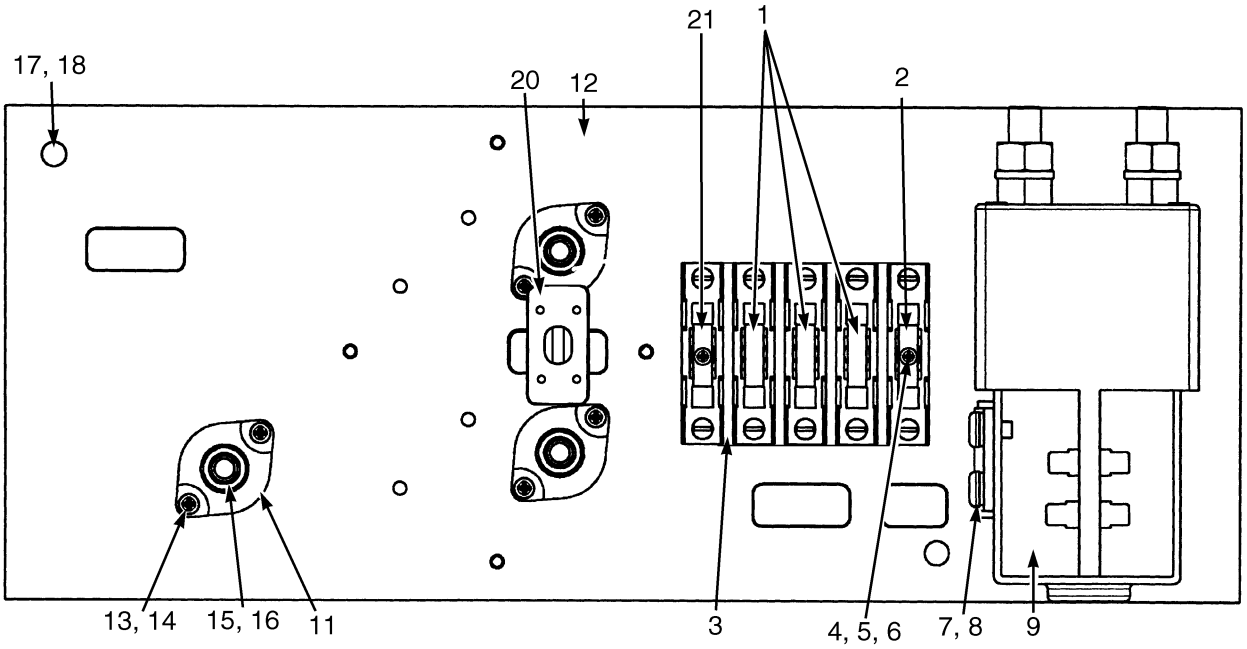

Transistor Hydraulics

BP080195

©2004 HYSTER COMPANY

CONTACTOR PANEL

KEY:
A: Contactor Hydraulics
B: Transistor/Premium Hydraulics

ITEM	PART NO.	DESCRIPTION	QTY A	QTY B
	1529243	Contactor Panel	1	..
	1529244	Contactor Panel	..	1
1	1500263	Fuse (5 Amp)	3	3
2	1562874	Fuse (20 Amp)	1	1
3	1456085	Fuse Holder	1	1
4	2302461	Screw	2	2
5	1356209	Lockwasher	2	2
6	2307803	Washer	2	2
7	2303821	Screw	2	2
8	2304170	Washer	2	2
9	1545108	Contactor	1	1
9	383977	Screw	2	2
9	1562878	Cover	1	1
9	2034484	Contactor (Fixed)	2	2
9	2035396	Contactor (Moving)	1	1
9	1562879	Return Spring	1	1
9	383981	Base	1	1
9	383979	Plunger	1	1
9	1500360	Coil and Frame	1	1
9	2034488	End Cap	1	1
10	2307031	Buss Bar	1	..
11	1454478	Terminal Post	5	3
12	1547627	Baseplate	1	1
13	1545111	Washer	10	6
14	302020	Screw	10	6
15	2305577	Nut	5	3
16	1356204	Lockwasher	5	3
17	292680	Lockwasher	4	4
18	292500	Capscrew	4	4
19	325810	Fuse (500 Amp)	1	..
20	380689	Fuse (60 Amp)	1	1
21	1374793	Fuse (10 Amp)	1	1

©2004 HYSTER COMPANY

DASH DISPLAY (Figure 2-4)

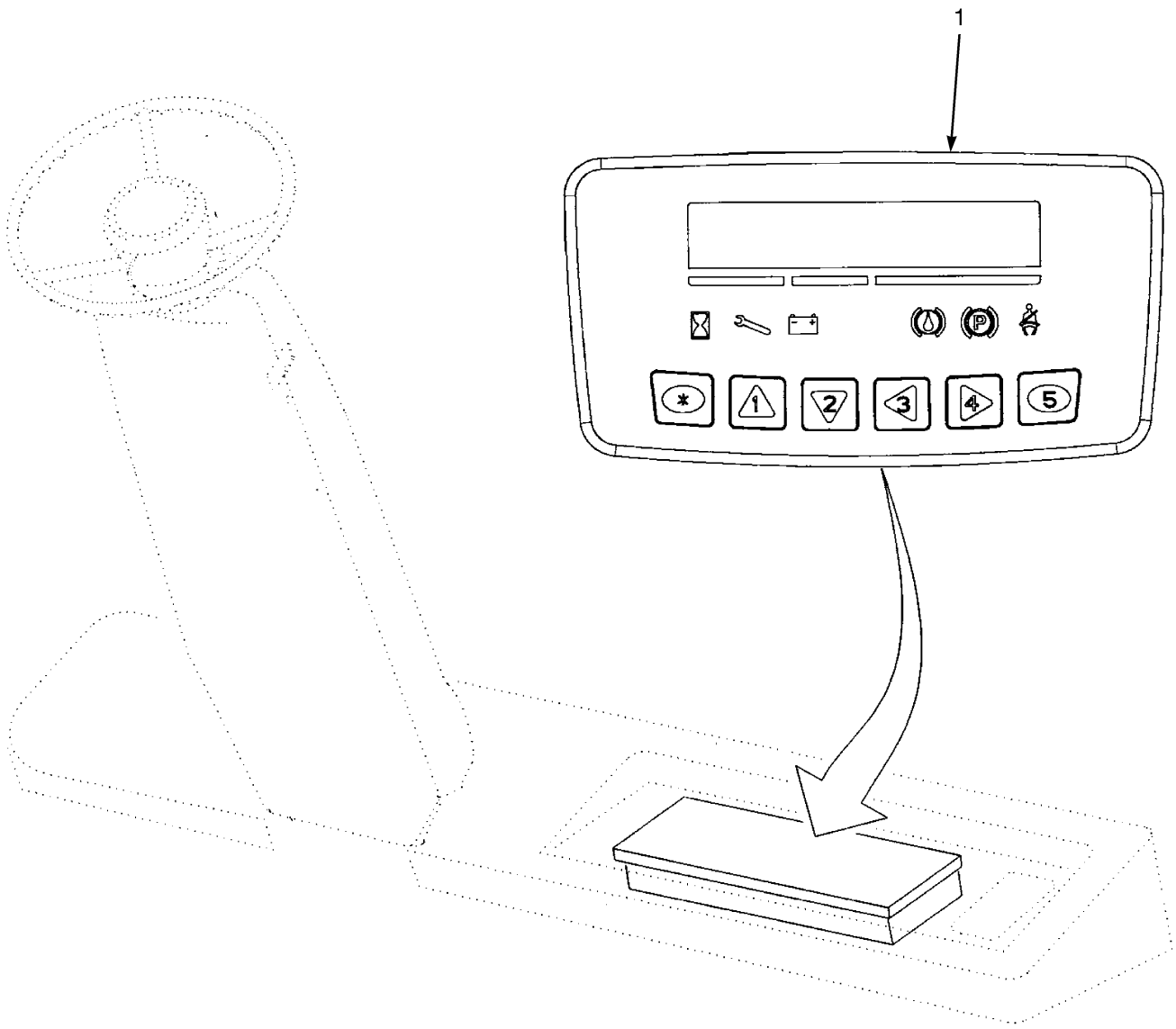

BP080176

©2004 HYSTER COMPANY

DASH DISPLAY

ITEM	PART NO.	DESCRIPTION	QTY
1	1525767	Dash Display (Premium)	1
1	1538447	Dash Display (Standard)	1
1	1542513	Dash Display (Standard Freezer)	1
1	1542514	Dash Display (Premium Freezer)	1

©2004 HYSTER COMPANY

ELECTRO-HYDRAULIC CONTROL (Figure 2-5)

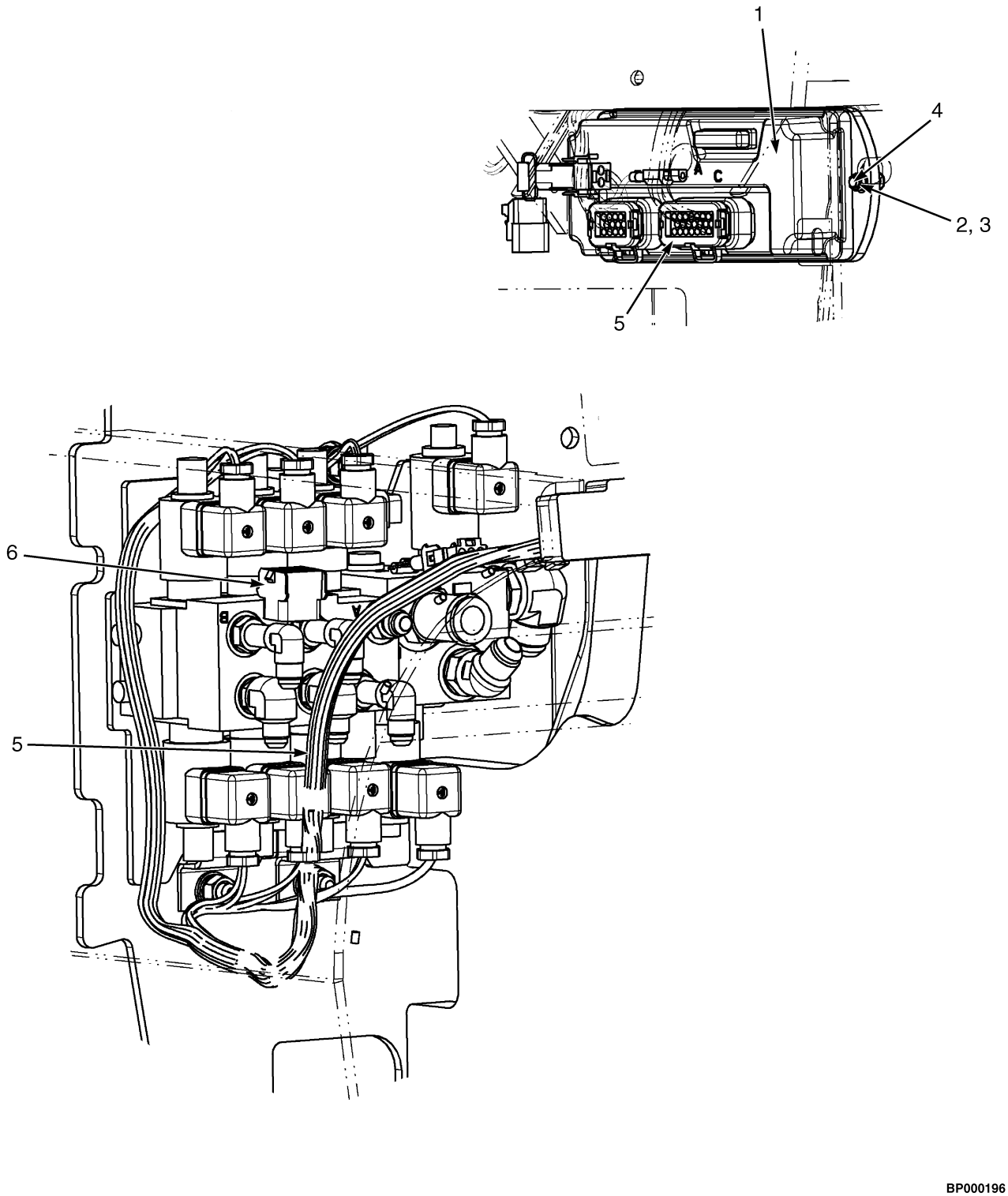

BP000196

©2004 HYSTER COMPANY

ELECTRO-HYDRAULIC CONTROL

KEY:
A: Three Function Premium
B: Three Function Premium with Interlock
C: Four Function Premium
D: Four Function Premium with Interlock

ITEM	PART NO.	DESCRIPTION	QTY A	QTY B	QTY C	QTY D
1	1525760	Valve Controller	1	1	1	1
2	292679	Lockwasher	2	2	2	2
3	2056600	Nut	2	2	2	2
4	2066709	Capscrew	2	2	2	2
5	2068817	Wire Harness	1	1	..	..
5	2068818	Wire Harness	..	..	1	1
6	2062743	Jumper Assembly	1	1	1	1

©2004 HYSTER COMPANY

EMERGENCY STOP (Figure 2-6)

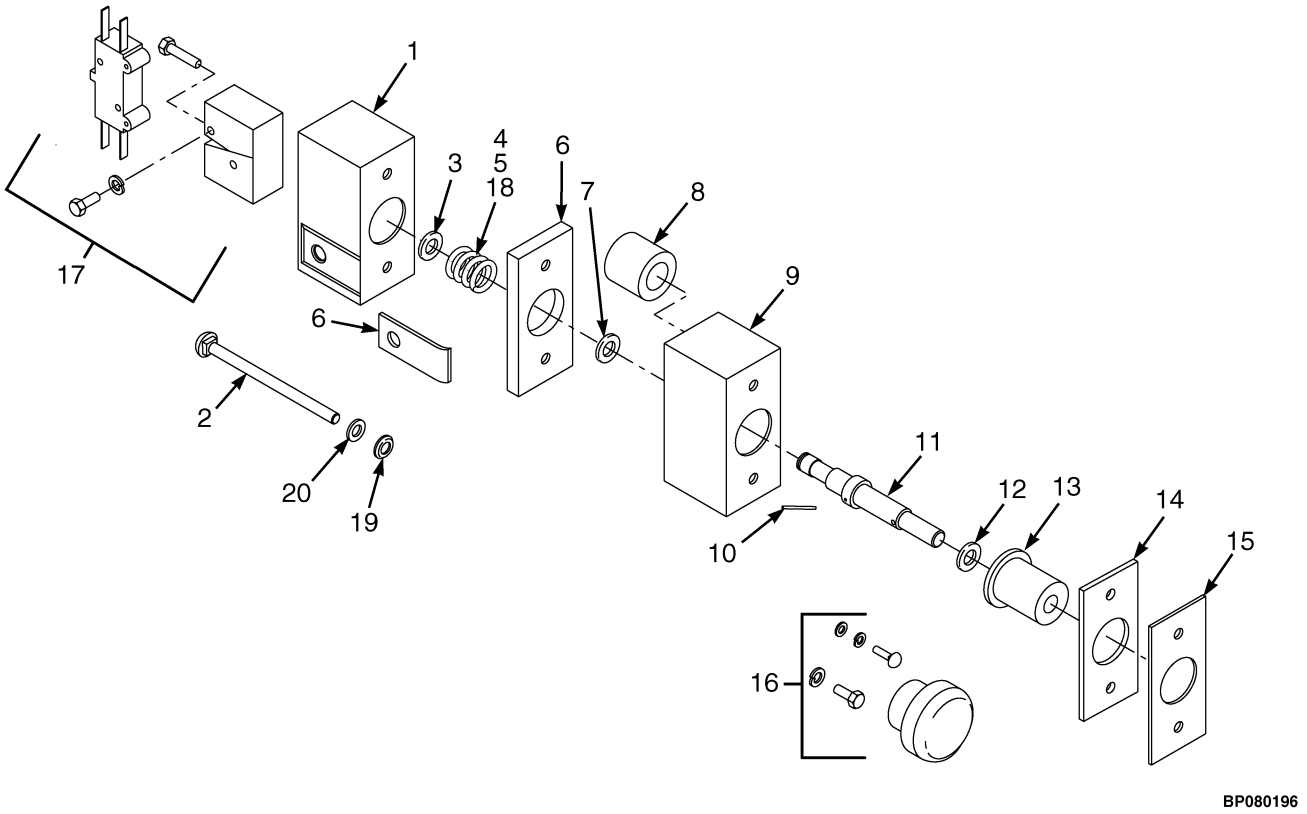

©2004 HYSTER COMPANY

EMERGENCY STOP

ITEM	PART NO.	DESCRIPTION	QTY
	1540616	Emergency Stop Switch ("E")	1
1	1545115	Top Cover Assembly	1
2	1545117	Screw	2
3	1545118	Circup	1
4	1545120	Insulator (Black)	1
5	1545121	Spring (Contact)	1
6	1545122	Contact Kit	1
7	1545123	Washer	1
8	1545124	Dust Shield	2
9	1545125	Housing	1
10	1545126	Spring (Actuator)	2
11	1545127	Shaft	1
12	1545128	O-Ring	1
13	1545129	Guide	1
14	1545130	Backplate	1
15	1545131	Gasket	1
16	1545132	Hardware Kit	1
17	1545133	Auxiliary Contact Kit	1
18	1545134	Insulator (White)	1
19	1547685	Bushing	2
20	2304572	Washer	2

©2004 HYSTER COMPANY

MAIN WIRE HARNESS (Figure 2-7)

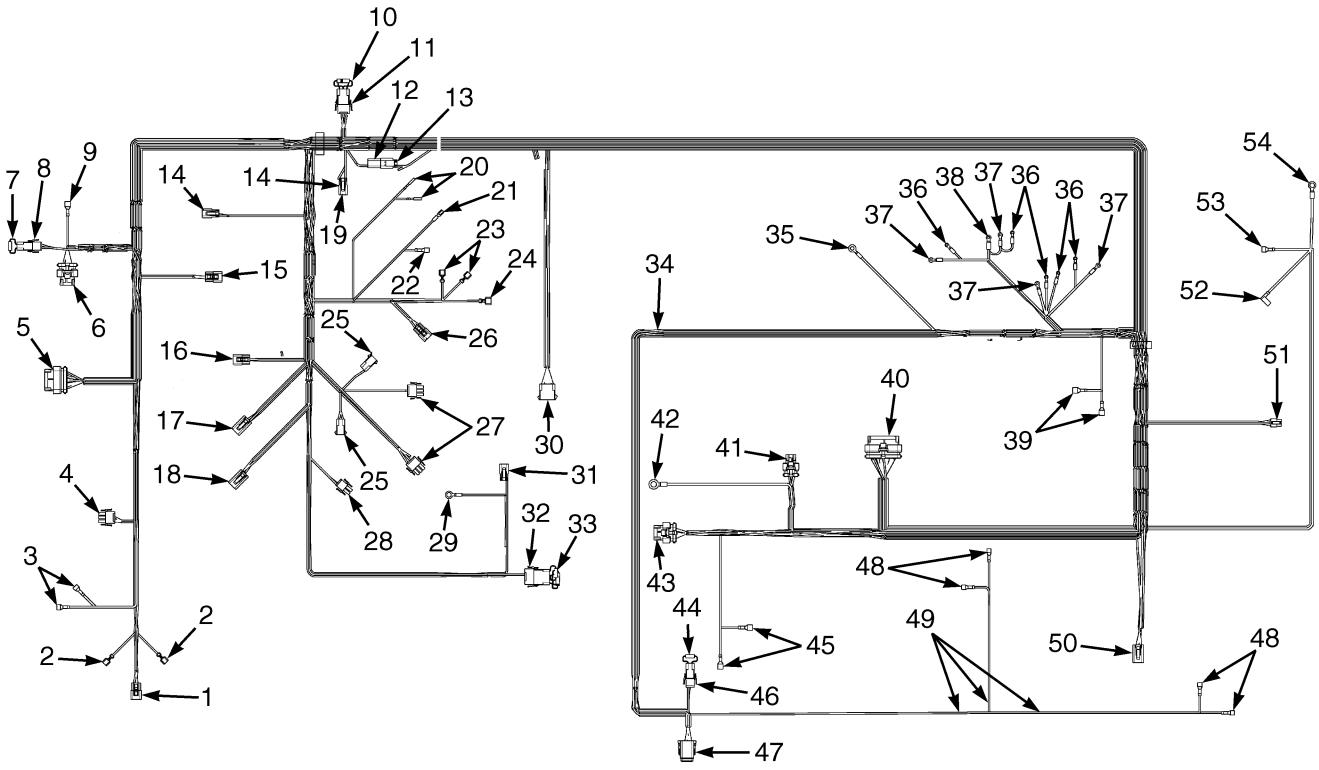

BP080212

©2004 HYSTER COMPANY

MAIN WIRE HARNESS

ITEM	PART NO.	DESCRIPTION	QTY
	2056352	Wire Harness	1
1	1484397	Housing (Socket)	1
1	1463194	Secondary Lock	1
1	1330438	Socket	3
2	1306270	Electrical Fitting	2
3	1310142	Blade	2
4	2308915	Plug	1
4	381413	Socket	3
4	2044992	Interface Seal	1
4	2044998	Amp Wire Seal	1
5	2068741	Plug	6
5	2035275	Connector	1
5	2035276	Socket	17
6	2068741	Plug	8
6	2056244	Electrical Connector	1
6	2035276	Socket	6
7	2060666	Resistor	1
8	2307413	Connector	1
8	381413	Socket	2
8	2047820	Wire Seal	1
8	2047819	Amp Interface Seal	1
9	2305754	Terminal	1
10	2066313	Diode Assembly	1
11	2308915	Plug	1
11	381413	Socket	3
11	2044992	Interface Seal	1
11	2044998	Amp Wire Seal	1
12	1493465	Connector	1
12	1330414	Secondary Lock	1
12	1330437	Pin	2
13	1490242	Housing (Socket)	1
13	1490243	Secondary Lock	1
13	1330438	Socket	2
14	1490242	Housing (Socket)	2
14	1490243	Secondary Lock	2
14	1330438	Socket	4
15	1484397	Housing (Socket)	1
15	1532664	Secondary Lock	1
15	1330438	Socket	3
15	1351682	End Cap	1
16	1484397	Housing (Socket)	1
16	1463194	Secondary Lock	1
16	1330438	Socket	3
17	1493430	Housing	1
17	1529052	Secondary Lock	1
17	1330438	Socket	2
17	1330434	Terminal	4
18	1493430	Housing	1
18	1529052	Secondary Lock	1
18	1330438	Socket	2
18	1330434	Terminal	4

©2004 HYSTER COMPANY

MAIN WIRE HARNESS

ITEM	PART NO.	DESCRIPTION	QTY
19	1351681	End Cap	1
20	2062873	Electrical Fitting	2
21	2007554	Terminal	1
22	248196	Fitting	1
22	222523	Heat Shrink Tube	1
23	1306270	Electrical Fitting	2
24	1306271	Electrical Fitting	1
25	2308118	Connector	2
25	1305672	Pin	4
25	2047820	Wire Seal	2
26	1484397	Housing (Socket)	1
26	1463194	Secondary Lock	1
26	1330438	Socket	3
27	2308915	Plug	2
27	381413	Socket	6
27	2044992	Interface Seal	2
27	2044998	Amp Wire Seal	2
28	2307413	Connector	1
28	381413	Socket	2
28	2047820	Wire Seal	1
28	2047819	Amp Interface Seal	1
29	2043953	Terminal Ring	1
30	1369412	Cap	1
30	2069412	Wire Seal	1
30	1305672	Pin	12
31	1490242	Housing (Socket)	1
31	1490243	Secondary Lock	1
31	1330438	Socket	2
32	2037543	Plug	1
32	2044997	Connector	1
32	2045003	Connector	1
32	381413	Socket	4
33	1547602	Wire Harness	1
34	2068745	Tube	AR
35	2062871	Terminal Wire	1
36	2303345	Terminal (Ring)	5
37	1369410	Terminal Wire	4
38	2069413	Terminal Ring	1
39	2305754	Terminal	2
40	2068741	Plug	1
40	2056243	Connector	1
40	2035276	Socket	34
41	2068741	Plug	4
41	2069414	Connector and Cable Assembly	1
41	2035276	Socket	4
42	2311380	Terminal Wire	1
43	2068741	Plug	7
43	2056244	Electrical Connector	1
43	2035276	Socket	7
44	2060666	Resistor	1
45	2305754	Terminal	2
46	2307413	Connector	1

©2004 HYSTER COMPANY

MAIN WIRE HARNESS

ITEM	PART NO.	DESCRIPTION	QTY
46	381413	Socket	2
46	2047820	Wire Seal	1
46	2047819	Amp Interface Seal	1
47	1541991	Connector	1
47	1541992	Connector	1
47	1463139	Terminal	8
48	2037545	Terminal	4
49	2034482	Tubing	AR
50	1493430	Housing	1
50	1529052	Secondary Lock	1
50	1330438	Socket	4
50	1363886	Socket	2
50	1351683	Connector	1
51	2037544	Connector	1
51	2309579	Socket (Molex)	3
52	2069415	Terminal Wire	1
53	1310142	Blade	1
54	2049309	Wire Terminal	1

©2004 HYSTER COMPANY

TRACTION CONTROLLER (Figure 2-8)
CONTACTOR HYDRAULIC

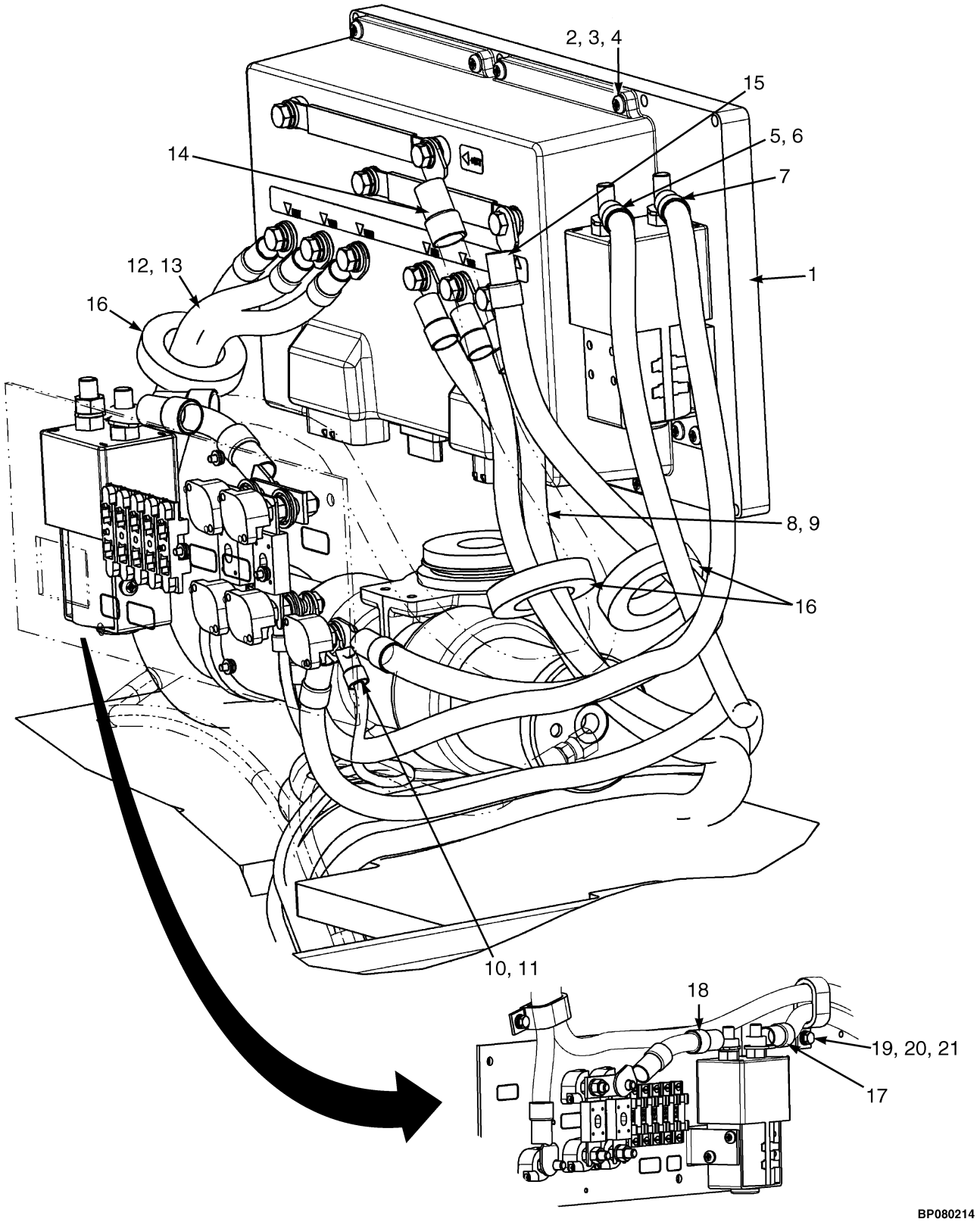

©2004 HYSTER COMPANY

TRACTION CONTROLLER
CONTACTOR HYDRAULIC

KEY:
A: 1290 mm/1385 mm Wheel Base
B: 1495 mm Wheel Base

ITEM	PART NO.	DESCRIPTION	QTY A	QTY B
1	2055624	Traction Controller	1	1
1	1539327	Software	1	1
1	1555987	Contactor	1	1
2	320156	Washer	8	8
3	292680	Lockwasher	8	8
4	293799	Capscrew	8	8
5	2062006	Power Cable Assembly	1	..
6	2062360	Power Cable Assembly	..	1
7	2062005	Power Cable	1	1
8	2056878	Power Cable Assembly	1	..
9	2062351	Power Cable Assembly	..	1
10	2056880	Power Cable Assembly	1	..
11	2062361	Power Cable Assembly	..	1
12	2056852	Power Cable Assembly	1	..
13	2062350	Power Cable Assembly	..	1
14	2062022	Power Cable Assembly	1	1
15	2062023	Power Cable Assembly	1	1
16	1564241	Ferrite	3	3
17	2062024	Power Cable	1	1
18	2062025	Power Cable	1	1
19	320156	Washer	2	2
20	292680	Lockwasher	2	2
21	292500	Capscrew	2	2
a	2060507	Wire Harness	1	1

FOOTNOTES:
a Not Illustrated

TRACTION CONTROLLER (Figure 2-9)
TRANSISTOR/PREMIUM

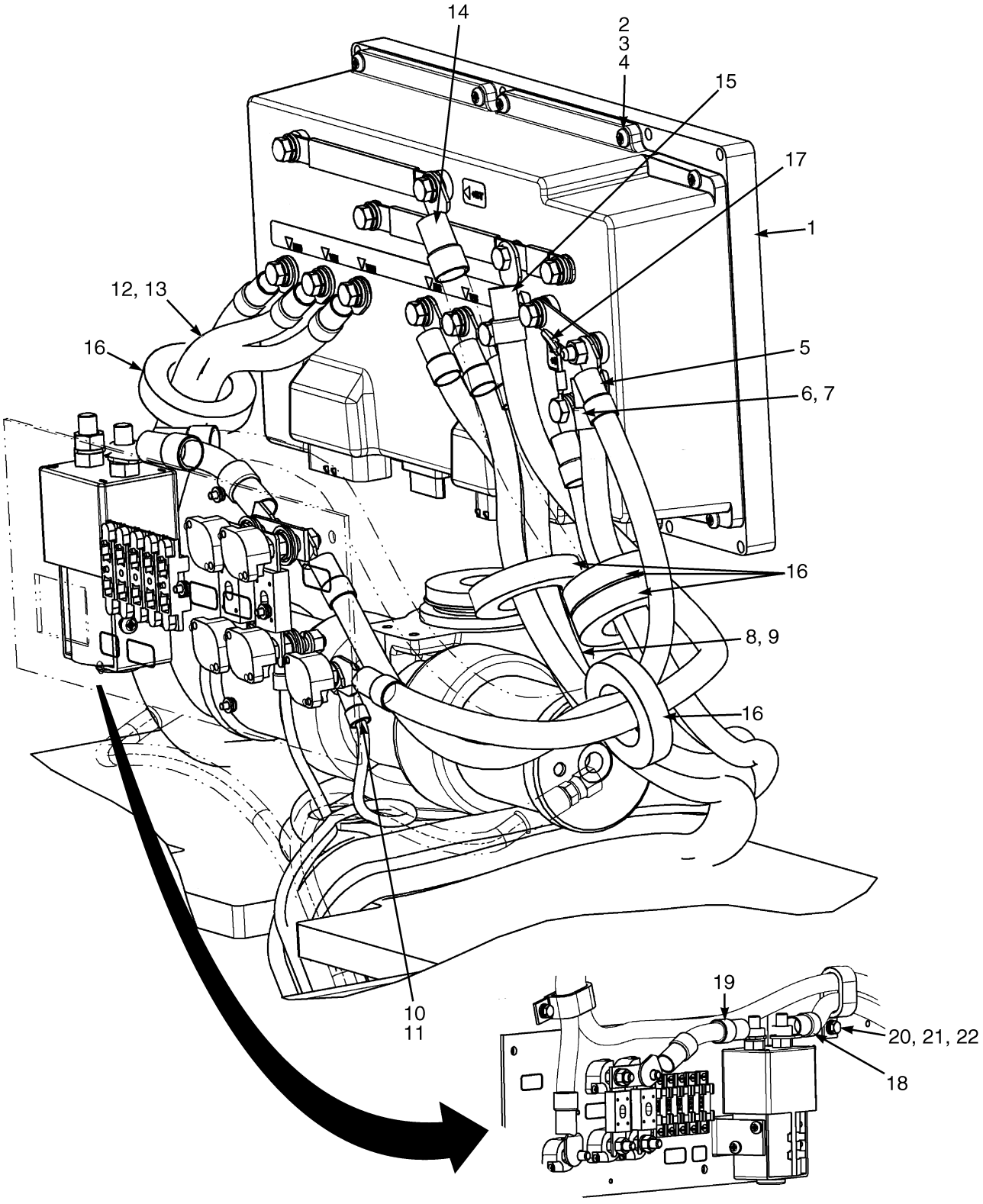

©2004 HYSTER COMPANY

TRACTION CONTROLLER
TRANSISTOR/PREMIUM

KEY:
A: 1290 mm/1385 mm Wheel Base
B: 1495 mm Wheel Base

ITEM	PART NO.	DESCRIPTION	QTY A	QTY B
1	2055625	Traction Controller	1	1
	1539328	Software	1	1
2	320156	Washer	8	8
3	292680	Lockwasher	8	8
4	293799	Capscrew	8	8
5	2062009	Power Cable	1	1
6	2062006	Power Cable Assembly	1	..
7	2062360	Power Cable Assembly	..	1
8	2056878	Power Cable Assembly	1	..
9	2062351	Power Cable Assembly	..	1
10	2056880	Power Cable Assembly	1	..
11	2062361	Power Cable Assembly	..	1
12	2056852	Power Cable Assembly	1	..
13	2062350	Power Cable Assembly	..	1
14	2062022	Power Cable Assembly	1	1
15	2062023	Power Cable Assembly	1	1
16	1564241	Ferrite	5	5
17	1564205	Capacitor	1	1
18	2062024	Power Cable	1	1
19	2062025	Power Cable	1	1
20	320156	Washer	2	2
21	292680	Lockwasher	2	2
22	292500	Capscrew	2	2
a	2060510	Wire Harness	1	1
a	2060511	Wire Harness	1	1
a	2068817	Wire Harness (Three Function)	1	1
a	2068818	Wire Harness (Four Function)	1	1

FOOTNOTES:
a Not Illustrated

©2004 HYSTER COMPANY

NOTES

3 DRIVE UNIT

SECTION 3
DRIVE UNIT

DESCRIPTION **PAGE**

DRIVE TIRE AND WHEEL ASSEMBLY
SOLID PNEUMATIC 3-2
DRIVE UNIT 3-4
TRACTION MOTOR 3-6
TRANSMISSION 3-8

©2004 HYSTER COMPANY

DRIVE TIRE AND WHEEL ASSEMBLY (Figure 3-1)
SOLID PNEUMATIC

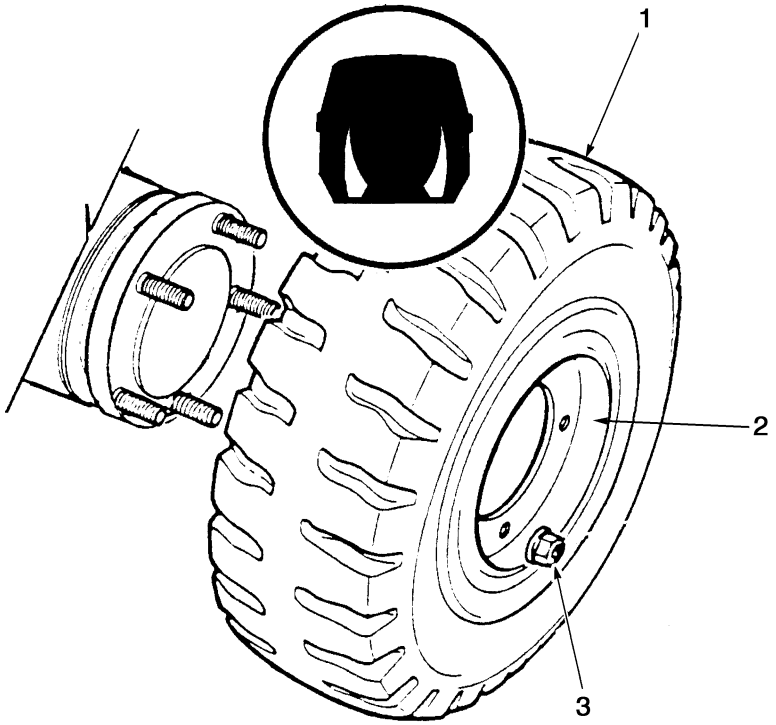

BP260021

KEY:
A: 3000-3500 lbs.
B: 4000 lbs.

ITEM	PART NO.	DESCRIPTION	QTY A	QTY B
	1539497	Tire and Wheel Assembly	2	..
	1539490	Tire and Wheel Assembly	..	2
1	2035601	Tire (18 x 7 x 8)	1	..
1	2035605	Tire (200 x 50 x 10)	..	1
2	2036125	Wheel (18 x 7 x 8)	1	..
2	2036126	Wheel (200 x 50 x 10)	..	1
3	302977	Nut	5	5

©2004 HYSTER COMPANY

NOTES

DRIVE UNIT (Figure 3-2)

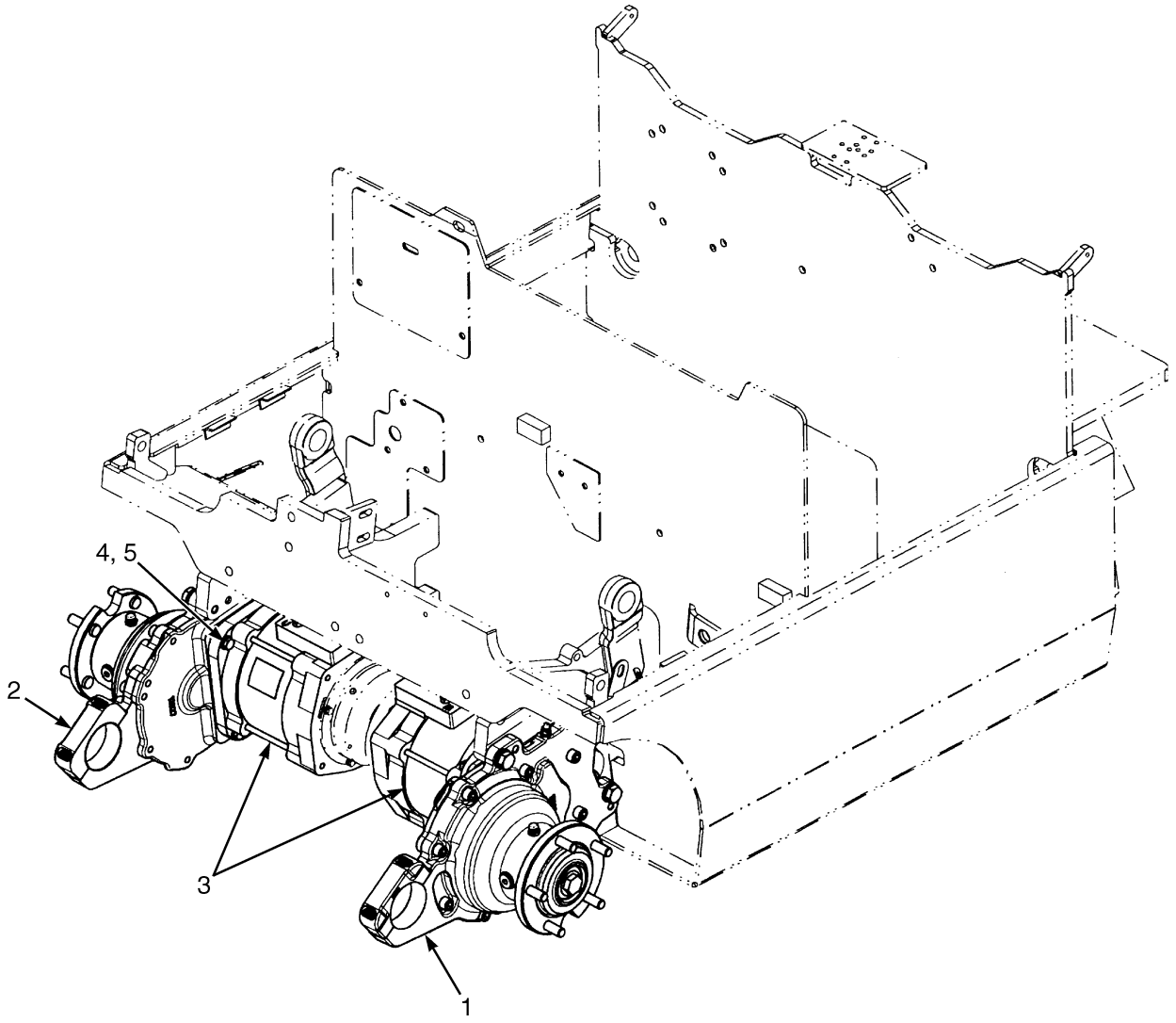

BP240033

©2004 HYSTER COMPANY

DRIVE UNIT

ITEM	PART NO.	DESCRIPTION	QTY
1	2061746	Drive Unit (LH) (☞ Figure 3-4)	1
2	2061747	Drive Unit (RH) (☞ Figure 3-4)	1
3	2063091	Traction Motor (48V) (☞ Figure 3-3)	2
4	296420	Washer	8
5	293630	Capscrew	8
ab	2056878	Power Cable Assembly (LH)	1
ab	2056852	Power Cable Assembly (RH)	1
ac	2062351	Power Cable Assembly (LH)	1
ac	2062350	Power Cable Assembly (RH)	1

FOOTNOTES:

a Not Illustrated
b Used on 1290 and 1385 mm
c Used on 1495 mm

©2004 HYSTER COMPANY

TRACTION MOTOR (Figure 3-3)

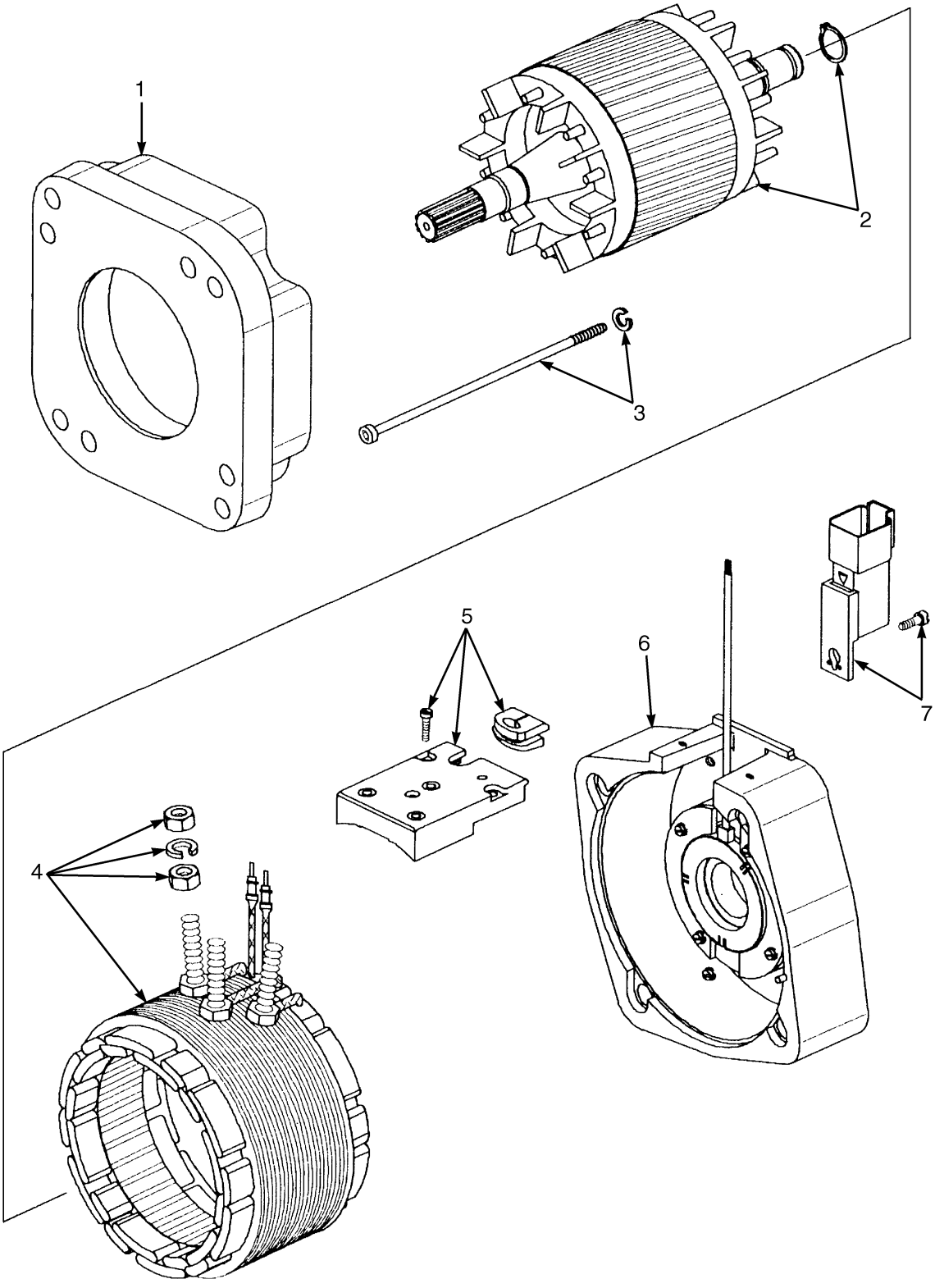

©2004 HYSTER COMPANY

TRACTION MOTOR

ITEM	PART NO.	DESCRIPTION	QTY
	2063091	Traction Motor (☞ Figure 3-2)	1
1	1564559	Drive End Bracket	1
2	1564560	Armature	1
3	1564561	Bolt	1
4	1564562	Stator	1
5	1564592	Connection Plate	1
6	1564593	Bracket	1
7	1564594	Connector	1

©2004 HYSTER COMPANY

TRANSMISSION (Figure 3-4)

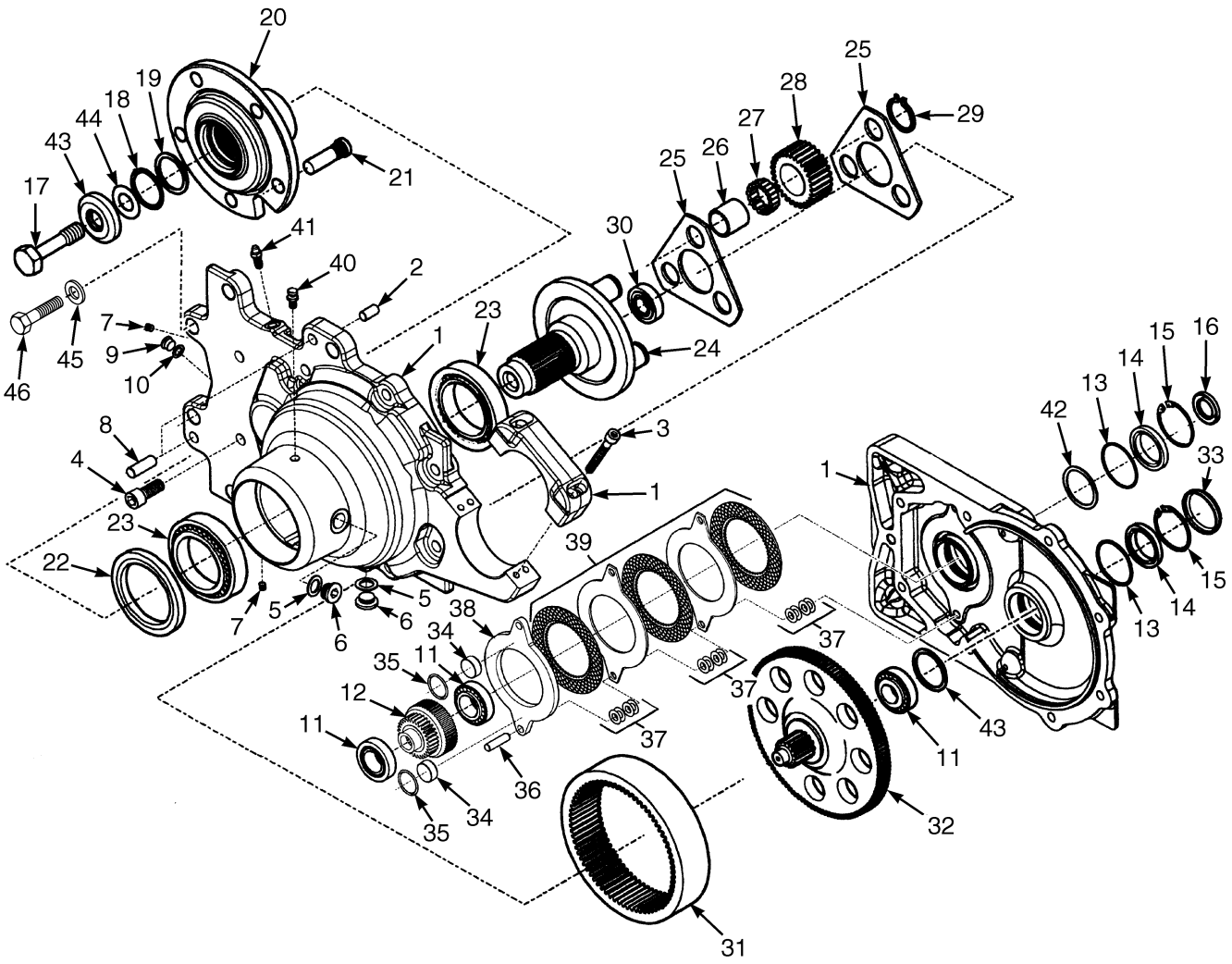

©2004 HYSTER COMPANY

TRANSMISSION

KEY:
A: Left
B: Right

ITEM	PART NO.	DESCRIPTION	QTY A	QTY B
	2061746	Drive Unit (Left) (☞ Figure 3-2)	1	..
	2061747	Drive Unit (Right) (☞ Figure 3-2)	..	1
1	1561561	Housing Assembly (Left)	1	..
1	1557381	Housing Assembly (Right)	..	1
2	1557382	Pin	1	1
3	1557393	Bolt	4	4
4	1557396	Bolt	8	8
5	1497282	Oil Fill Gasket	2	2
6	1497280	Oil Fill Plug	2	2
7	1557394	Plug	2	2
8	1557395	Pin	2	2
9	1557397	Plug	1	1
10	1557398	Washer	1	1
11	1557399	Bearing	3	3
12	1557400	Gear Assembly	1	1
13	1557404	O-Ring	2	2
14	1557405	Spacer	2	2
15	1557406	Snap Ring	2	2
16	1557407	Seal Ring	1	1
17	1557435	Bolt	1	1
18	1557441	O-Ring	1	1
19	1557442	Washer	1	1
20	1557443	Output Shaft	1	1
21	1533937	Bolt	5	5
22	1557444	Seal Ring	1	1
23	1557445	Bearing	2	2
24	1557446	Carrier	1	1
25	1557447	Washer	2	2
26	1557448	Ring	3	3
27	1557449	Bearing	3	3
28	1557450	Gear	3	3
29	1557451	Snap Ring	3	3
30	1557452	Bearing	1	1
31	1557454	Gear	1	1
32	1557455	Pinion	1	1
33	1557467	Plug	1	1
34	1557470	Piston	2	2
35	1557471	O-Ring	2	2
36	1557472	Pin	2	2
37	1557474	Washer	24	24
38	1557475	Backing Plate	1	1
39	1557480	Brake Assembly	1	1
40	1557392	Breather	1	1
41	1557383	Breather	1	1
42	1557401	Shim (0,05 mm)	AR	..
42	1557402	Shim (0,10 mm)	AR	..

©2004 HYSTER COMPANY

TRANSMISSION

ITEM	PART NO.	DESCRIPTION	QTY A	QTY B
42	1557403	Shim (0,30 mm)	AR	..
43	1557436	Washer	1	1
44	1557437	Shim (0,05 mm)	AR	..
44	1557438	Shim (0,10 mm)	AR	..
44	1557439	Shim (0,30 mm)	AR	..
44	1557440	Shim (0,50 mm)	AR	..
45	296426	Washer (Hardened)	5	5
46	293685	Capscrew	5	5
a	302977	Nut	5	5

FOOTNOTES:
a Not Illustrated

See Service Manual for service procedures.
©2004 HYSTER COMPANY

4 STEERING SYSTEM

SECTION 4
STEERING SYSTEM

DESCRIPTION	PAGE
GEAR PUMP	4-2
HAND PUMP	4-4
SHIFT LEVER	4-6
STEER AXLE	4-8
STEER COLUMN	4-12
STEER PUMP AND MOTOR	4-16
STEER TIRE AND WHEEL ASSEMBLY	
SOLID PNEUMATIC	4-18

©2004 HYSTER COMPANY

GEAR PUMP (Figure 4-1)

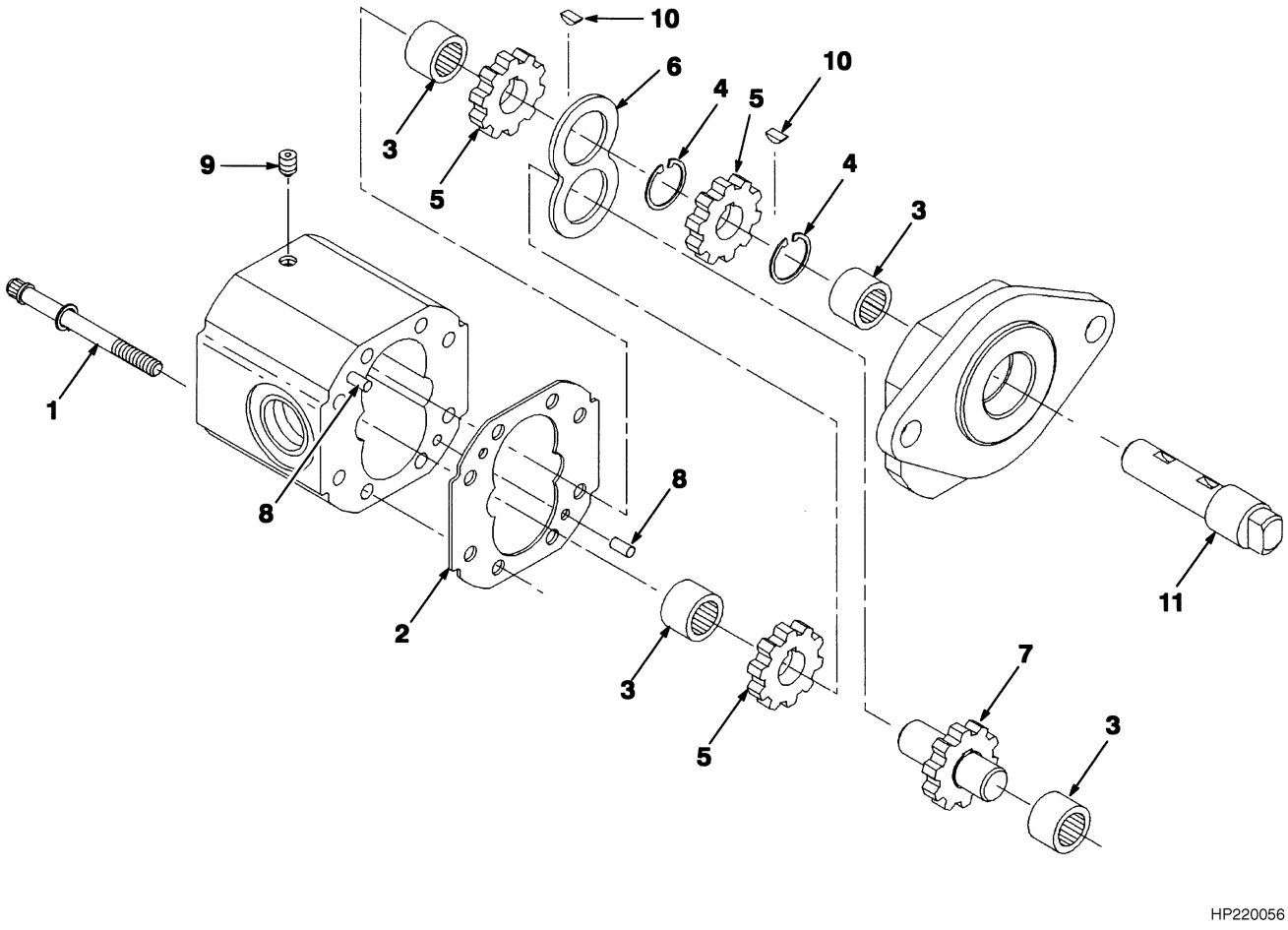

HP220056

©2004 HYSTER COMPANY

GEAR PUMP

ITEM		PART NO.	DESCRIPTION	QTY
		2033614	Gear Pump	1
1		1452459	Screw	8
2		2034266	Gasket Kit	1
3		354669	Needle Bearing	4
4		358072	Snap Ring	2
5		358069	Gear	3
6		. . . . .	Spacer Plate	1
7		2034265	Idler Shaft Kit	1
8		354671	Pin	2
9		358076	Plug	1
10		358073	Key	2
11		1309877	Shaft	1
	a	1322446	Plug (Plastic)	1
	a	1322447	Plug (Plastic)	1
	a	1322448	Plug (Steel)	1

FOOTNOTES:
a Not Illustrated

HAND PUMP (Figure 4-2)

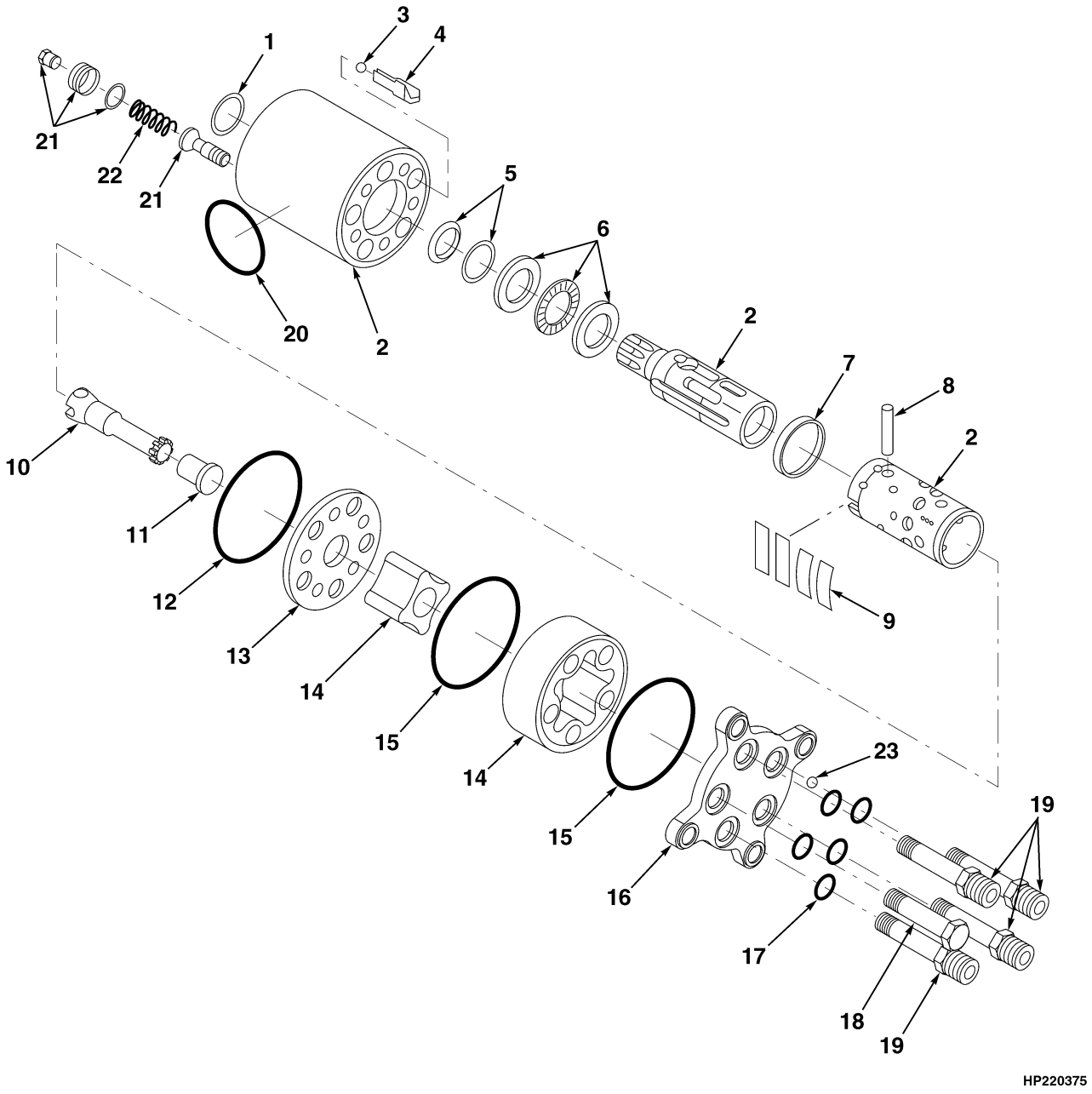

©2004 HYSTER COMPANY

HAND PUMP

ITEM	PART NO.	DESCRIPTION	QTY
	1462468	Hand Pump	1
1	1467390	Dust Seal	1
2	. . . . .	Housing	1
3	1355335	Ball	1
4	1451696	Stop	1
5	. . . . .	Dust Ring Seal	1
5	1467424	Shaft Seal	1
6	1451697	Bearing Assembly	1
7	1455770	Ring	1
8	1451698	Pin	1
9	1455771	Spring Set	1
10	. . . . .	Shaft	1
11	1467426	Spacer	1
12	. . . . .	O-Ring	1
13	1451703	Plate	1
14	1467391	Gear Set	1
15	. . . . .	O-Ring	2
16	1455773	Cover	1
17	. . . . .	O-Ring	5
17	1467425	O-Ring	1
18	1467392	Screw	1
19	1467428	Screw	4
20	. . . . .	Nameplate	1
21	1455776	Relief Valve	1
22	1455779	Spring	1
23	1451707	Ball	1
	1467430	Seal Kit (Includes Items 1, 5, 12, 15, 17)	1

©2004 HYSTER COMPANY

SHIFT LEVER (Figure 4-3)

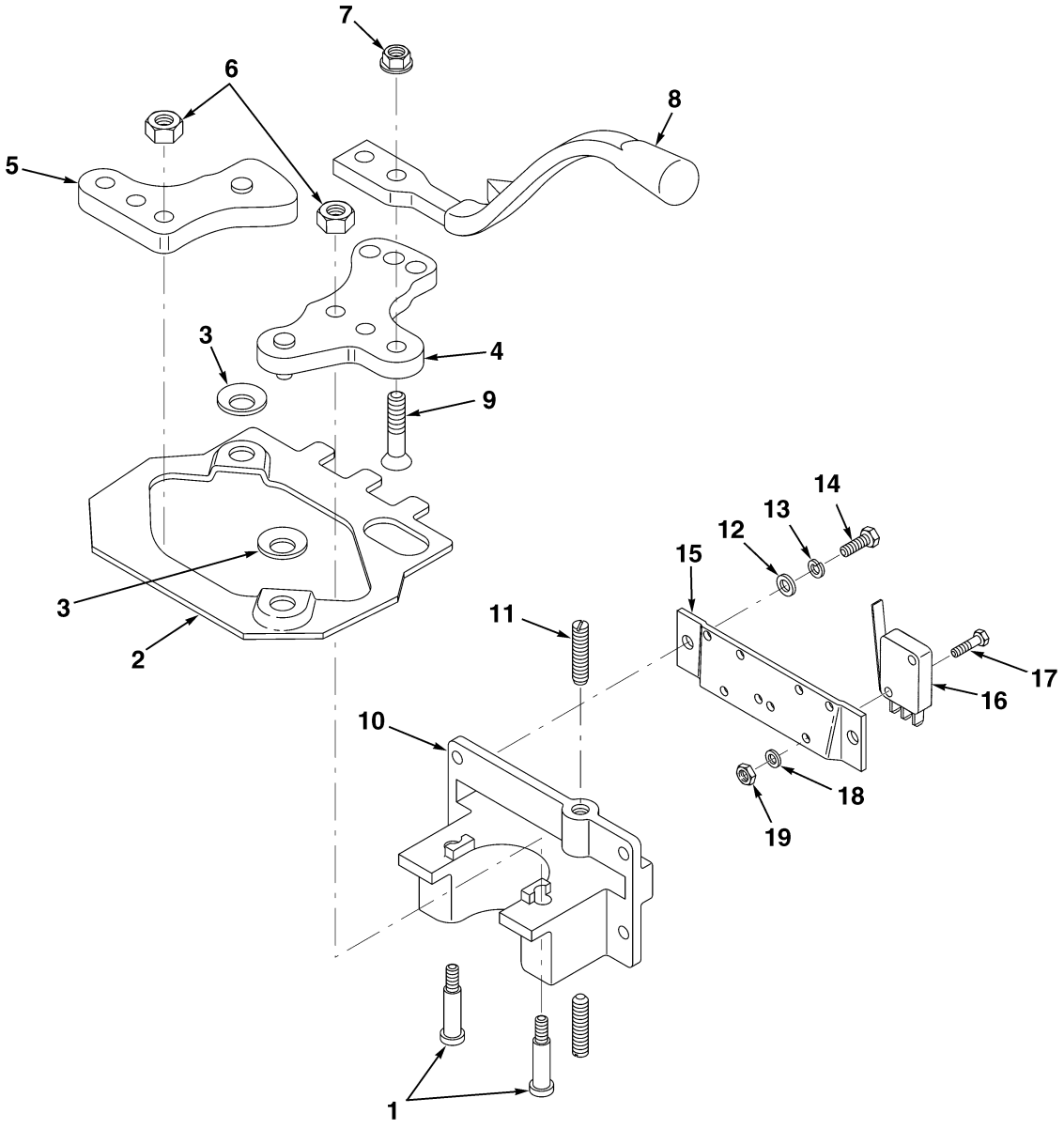

HP220213

©2004 HYSTER COMPANY

SHIFT LEVER

ITEM	PART NO.	DESCRIPTION	QTY
	1347004	Shift Lever Assembly	1
1	1343594	Bolt	2
2	1343578	Link	1
3	1354300	Washer	2
4	1343579	Crank	1
5	1343598	Crank	1
6	136687	Nut	2
7	302398	Locknut	4
8	1343593	Shift Lever	1
9	296205	Capscrew	4
10	1343577	Base	1
11	1491830	Spring Plunger	2
12	320156	Washer	4
13	292680	Lockwasher	4
14	292501	Capscrew	4
15	1343595	Plate	1
16	1498406	Switch	2
17	220426	Screw	4
18	53162	Lockwasher	4
19	16865	Nut	4

©2004 HYSTER COMPANY

STEER AXLE (Figure 4-4)

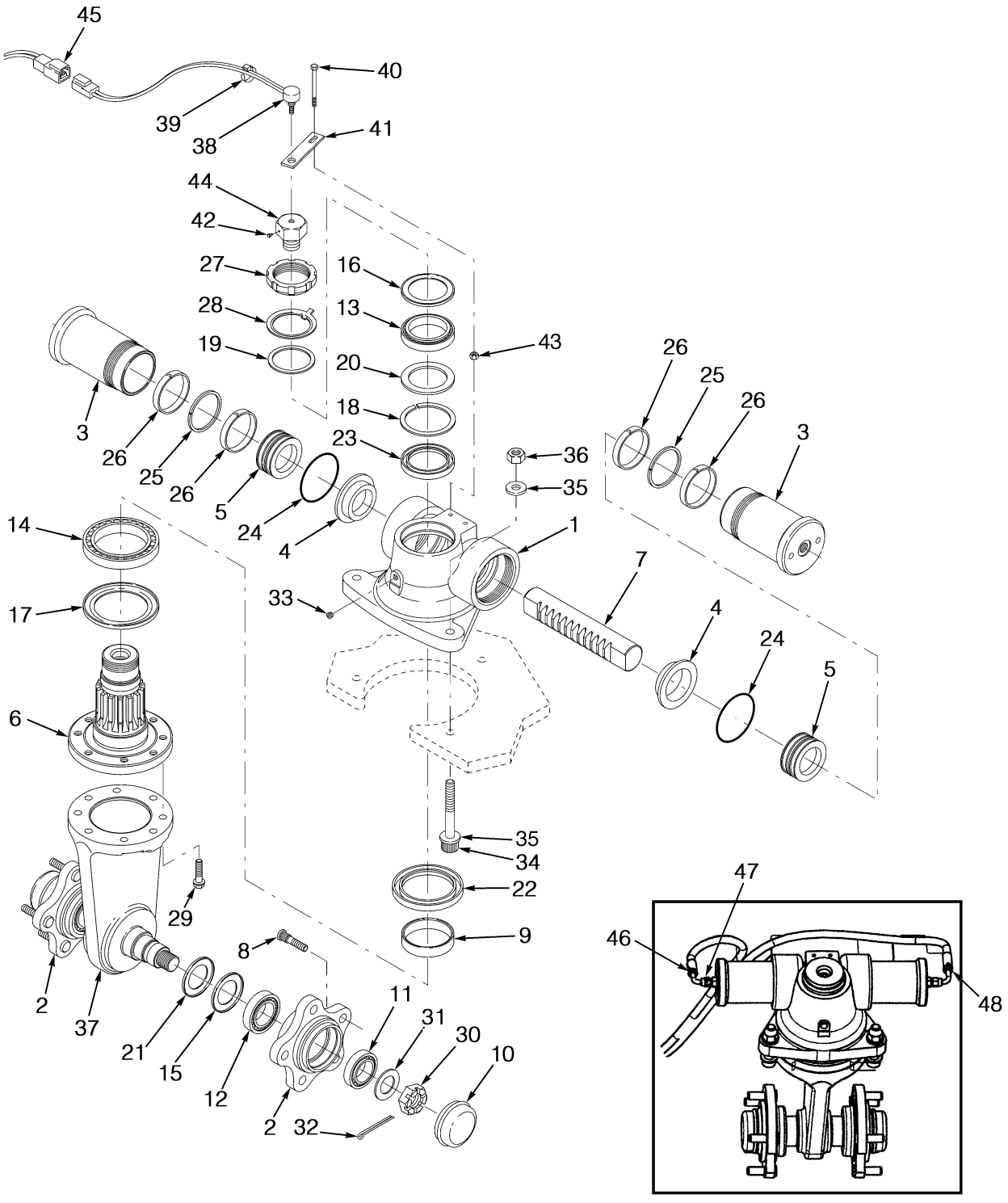

BP220039

©2004 HYSTER COMPANY

STEER AXLE

ITEM	PART NO.	DESCRIPTION	QTY
	1494373	Hydraulic Steer Unit	1
1	1465784	Housing	1
2	1495390	Wheel Hub	2
3	1465787	Cylinder	2
4	1495391	Bushing	2
5	1465792	Piston	2
6	1465793	Shaft	1
7	1465794	Gear Rack	1
8	1465795	Wheel Stud	10
9	1465796	Bushing	1
10	1465797	Bearing Cover	2
11	1465800	Bearing	2
12	1465801	Bearing	2
13	1465813	Bearing	1
14	1465814	Bearing	1
15	1495395	Seal Ring	2
16	1465817	Seal	1
17	1465818	Seal	1
18	1465819	Safety Ring	1
19	1465820	Shim	1
20	1465821	Shim	2
20	1465822	Shim	1
20	1495394	Shim	1
21	1495392	Ring	2
22	1465824	Shaft Seal	1
23	1465823	Shaft Seal	1
24	1465825	O-Ring	2
25	1465826	Compact Seal	2
26	1465827	Guide Ring	4
27	1465828	Nut	1
28	1465829	Washer	1
29	1471650	Screw	8
30	1495397	Nut	2
31	1495398	Seal	2
32	1495399	Split Pin	2
33	1465834	Plug Screw	1
34	1462527	Bolt	3
35	296426	Washer (Hardened)	6
36	1462528	Nut	3
37	1495389	Yoke	1
37	1495388	Wheel Shaft	1
38	2034281	Potentiometer	1
39	2004005	Strap Clamp	AR
40	292507	Capscrew	1
41	1339396	Bracket	1
42	1508484	Set Screw	1
43	136687	Nut	1
44	1528189	Fitting	1
45	2056352	Wire Harness (Main)	1
46	1521399	Hose Assembly (2642 mm)	1
46	1521400	Hose Assembly (2743 mm)	1

©2004 HYSTER COMPANY

STEER AXLE

ITEM	PART NO.	DESCRIPTION	QTY
46	1521401	Hose Assembly (2845 mm)	1
47	222399	Fitting	2
48	1521402	Hose Assembly (2820 mm)	1
48	1521403	Hose Assembly (2921 mm)	1
48	1521404	Hose Assembly (3023 mm)	1
a	259665	Guard	7
a	1495393	Nameplate	1
a	1471658	Pin	2
a	1495400	Plastic Cover	2
	1497558	Axle Seal Kit (Includes Items 15, 21)	1
	1475400	Axle Seal Kit (Includes Items 9, 16-17, 22-23, 33)	1
	1475399	Cylinder Seal Kit (Includes Items 24-26)	1

FOOTNOTES:
a Not Illustrated

©2004 HYSTER COMPANY

NOTES

STEER COLUMN (Figure 4-5)

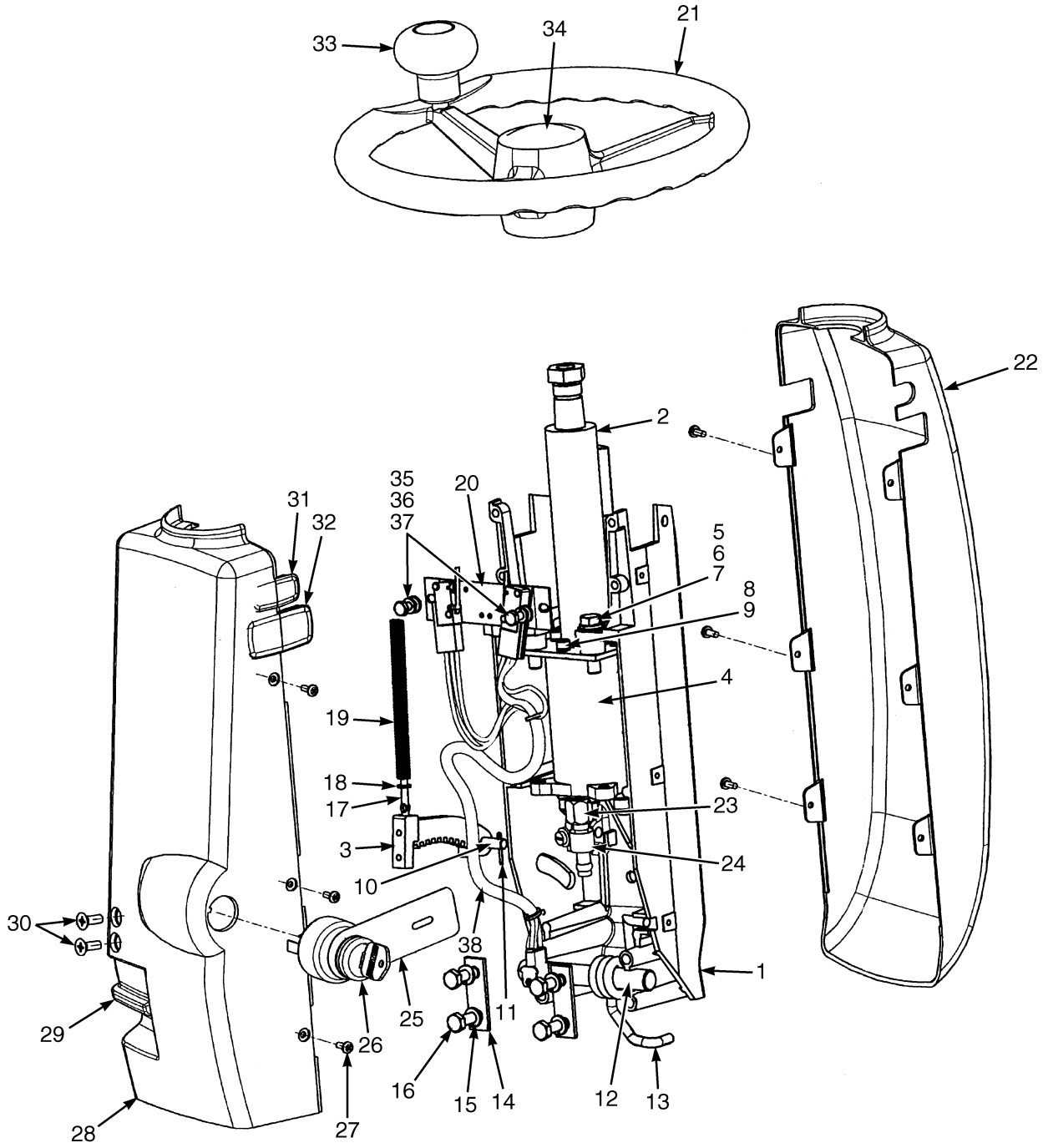

BP220040

©2004 HYSTER COMPANY

STEER COLUMN

ITEM		PART NO.	DESCRIPTION	QTY
		1520733	Steer Column (Monotrol)	1
		1520731	Steer Column (With Levers)	1
1		1343573	Bracket	1
2		2045129	Steering Column	1
3		1364271	Latch	1
4		1462468	Hand Pump (☞ Figure 4-2)	1
5		15134	Washer	4
6		15156	Lockwasher	4
7		16815	Capscrew	4
8		293779	Lockwasher	4
9		293762	Capscrew	4
10		1343607	Pin	1
11		15212	Cotter Pin	1
12		1335987	Shaft	1
13		1378600	Spring	1
14		1335967	Plate	2
15		292681	Lockwasher	4
16		136749	Capscrew	4
17		1343572	Rod	1
18		320155	Washer	1
19		1343537	Spring	1
20		1347004	Shift Lever Assembly (With Levers) (☞ Figure 4-3)	1
21		1329250	Steering Wheel (356 mm)	1
21	**b**	1539289	Steering Wheel (305 mm)	1
22		1520270	Cover (Upper)	1
23		2306145	Tube	1
24		166857	Clamp	2
25		1520609	Static Ground Patch	1
26		379902	Ignition Switch	1
27		1337196	Screw	6
28		1520271	Cover (Lower)	1
29		1343574	Latch Knob	1
30		296472	Screw	2
31		1376743	Plug	1
32		1343597	Plug	2
33	**b**	895468	Knob	1
34		1450503	Horn Button	1
34	**c**	1539290	Horn Button	1
35		320156	Washer	4
36		292680	Lockwasher	4
37		292501	Capscrew	4
38		1510874	Wire Harness	1
	a	1530681	Hose (2540 mm)	1
	a	1528191	Hose (1270 mm)	1
	a	1347314	Insulated Clamp	2
	a	136985	Capscrew	1
	a	320159	Washer	1
	a	292682	Lockwasher	1

©2004 HYSTER COMPANY

STEER COLUMN

ITEM	PART NO.	DESCRIPTION	QTY
a	1379488	Nut	1
a	2067410	Jumper Assembly	1

FOOTNOTES:
a Not Illustrated
b Optional
c Used with optional 305 mm steer wheel

©2004 HYSTER COMPANY

NOTES

STEER PUMP AND MOTOR (Figure 4-6)

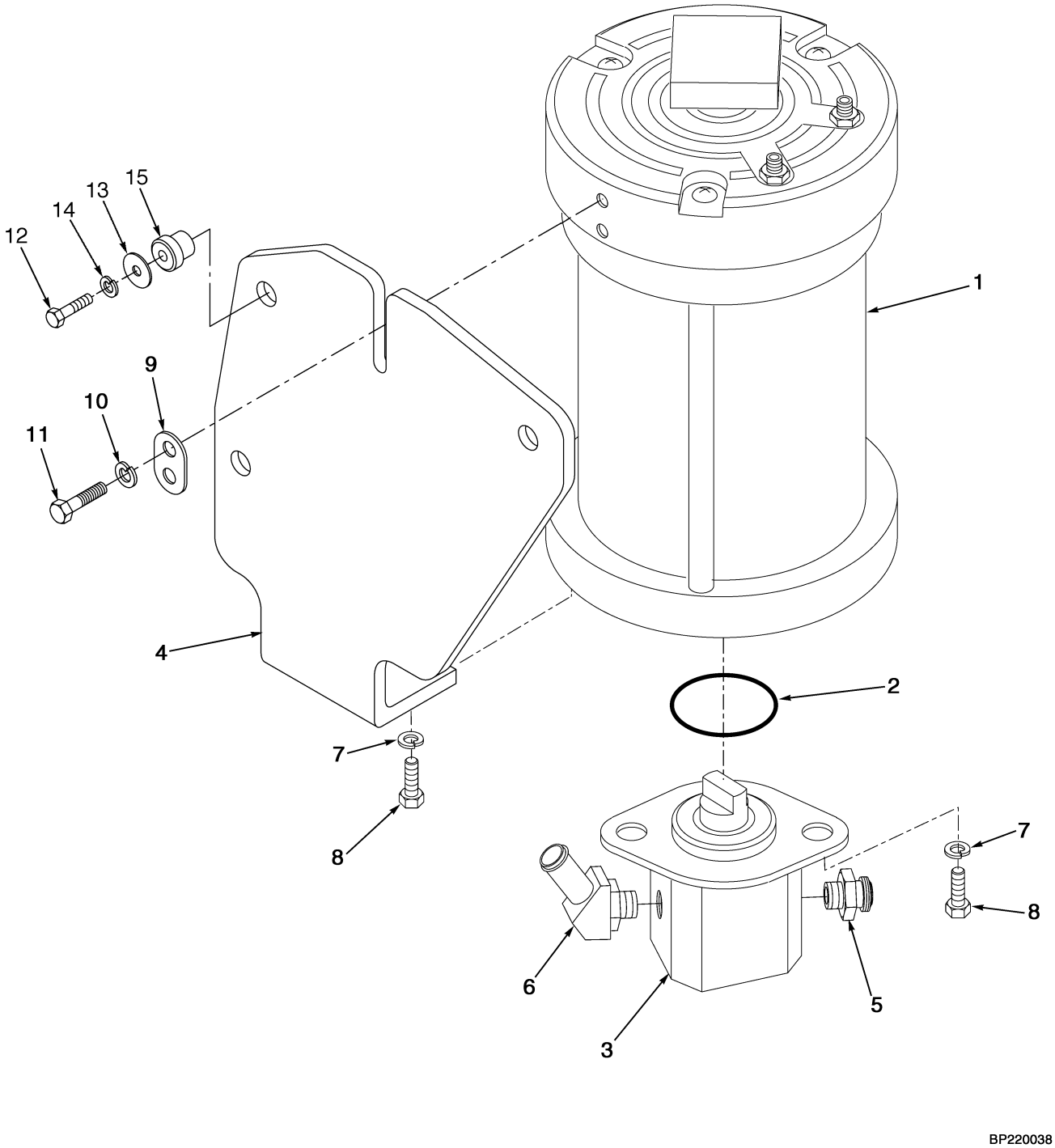

©2004 HYSTER COMPANY

STEER PUMP AND MOTOR

ITEM	PART NO.	DESCRIPTION	QTY
1	2048105	Steer Motor (48V)	1
2	39362	O-Ring	1
3	2033614	Gear Pump (☞ Figure 4-1)	1
4	1545227	Weldment	1
5	16745	Fitting	1
6	222504	Fitting	1
7	292681	Lockwasher	4
8	293613	Capscrew	4
9	1545522	Spacer	1
10	292679	Lockwasher	2
11	302244	Screw	2
12	214364	Capscrew	3
13	320158	Washer	3
14	292681	Lockwasher	3
15	317594	Grommet	3
a	2066967	Hose	1
a	130845	Clamp	2

FOOTNOTES:
a Not Illustrated

STEER TIRE AND WHEEL ASSEMBLY (Figure 4-7)
SOLID PNEUMATIC

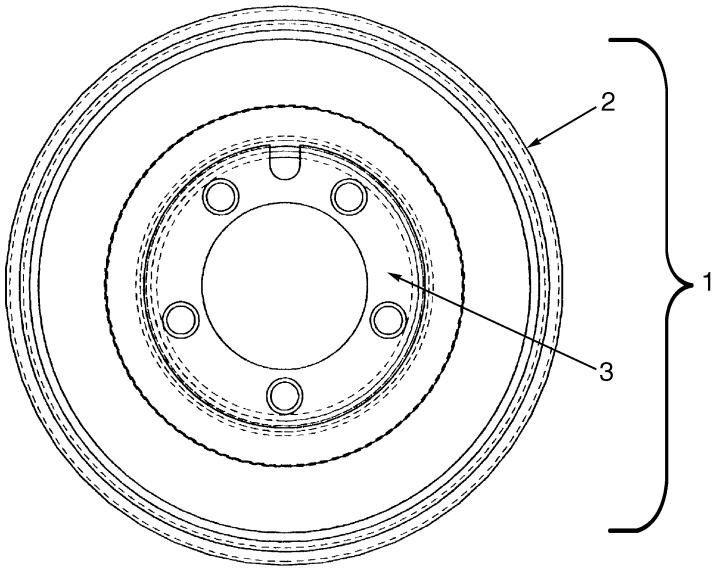

BP220017

ITEM		PART NO.	DESCRIPTION	QTY
		1523995	Tire and Wheel Assembly	2
1		2054827	Tire	1
2	**a**	. . . . .	Wheel Weldment	1

FOOTNOTES:
a Not Serviced Separately

©2004 HYSTER COMPANY

5 BRAKE/ACCELERATOR SYSTEM

SECTION 5
BRAKE/ACCELERATOR SYSTEM

DESCRIPTION **PAGE**

ACCELERATOR ASSEMBLY 5-2
ACCELERATOR PEDAL..... 5-4
BRAKE ASSEMBLY 5-6
MASTER CYLINDER 5-8
PARKING BRAKE..... 5-10

©2004 HYSTER COMPANY

ACCELERATOR ASSEMBLY (Figure 5-1)

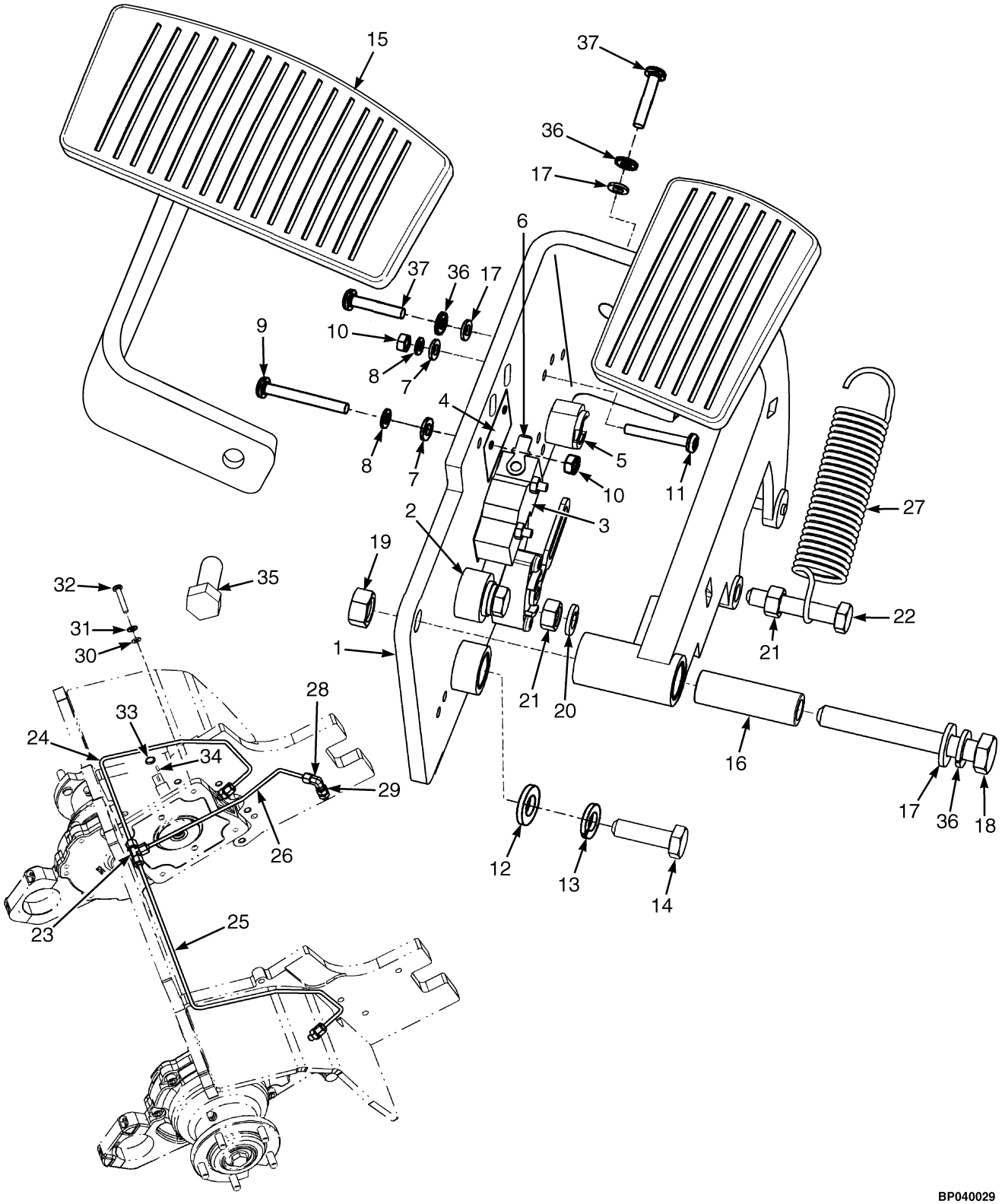

©2004 HYSTER COMPANY

ACCELERATOR ASSEMBLY

ITEM	PART NO.	DESCRIPTION	QTY
	2066719	Accelerator Assembly	1
1	2053601	Accelerator Weldment	1
2	1364281	Stop	2
3	1335110	Switch	1
4	915474	Insulator	1
5	1354990	Sensor	1
6	325799	Electrical Connector	1
7	320154	Washer	4
8	292678	Lockwasher	4
9	302027	Screw	2
10	292667	Nut	4
11	302026	Screw	2
12	320157	Washer	4
13	292681	Lockwasher	4
14	176640	Capscrew	2
15	1343624	Pad	1
16	1340985	Tube	1
17	320159	Washer	7
18	292522	Capscrew	1
19	136692	Nut	5
20	292681	Lockwasher	1
21	239503	Nut	2
22	214364	Capscrew	1
23	1522424	O-Ring	1
24	1528707	Hydraulic Tube (RH)	1
25	1528708	Hydraulic Tube (LH)	1
26	1528709	Hydraulic Tube (Brake Line)	1
27	1340989	Spring	1
28	1486770	Fitting	1
29	1486737	Fitting	3
30	136985	Capscrew	2
31	292682	Lockwasher	2
32	292515	Capscrew	4
a	2062742	Jumper Assembly	1

FOOTNOTES:
a Not Illustrated

ACCELERATOR PEDAL (Figure 5-2)

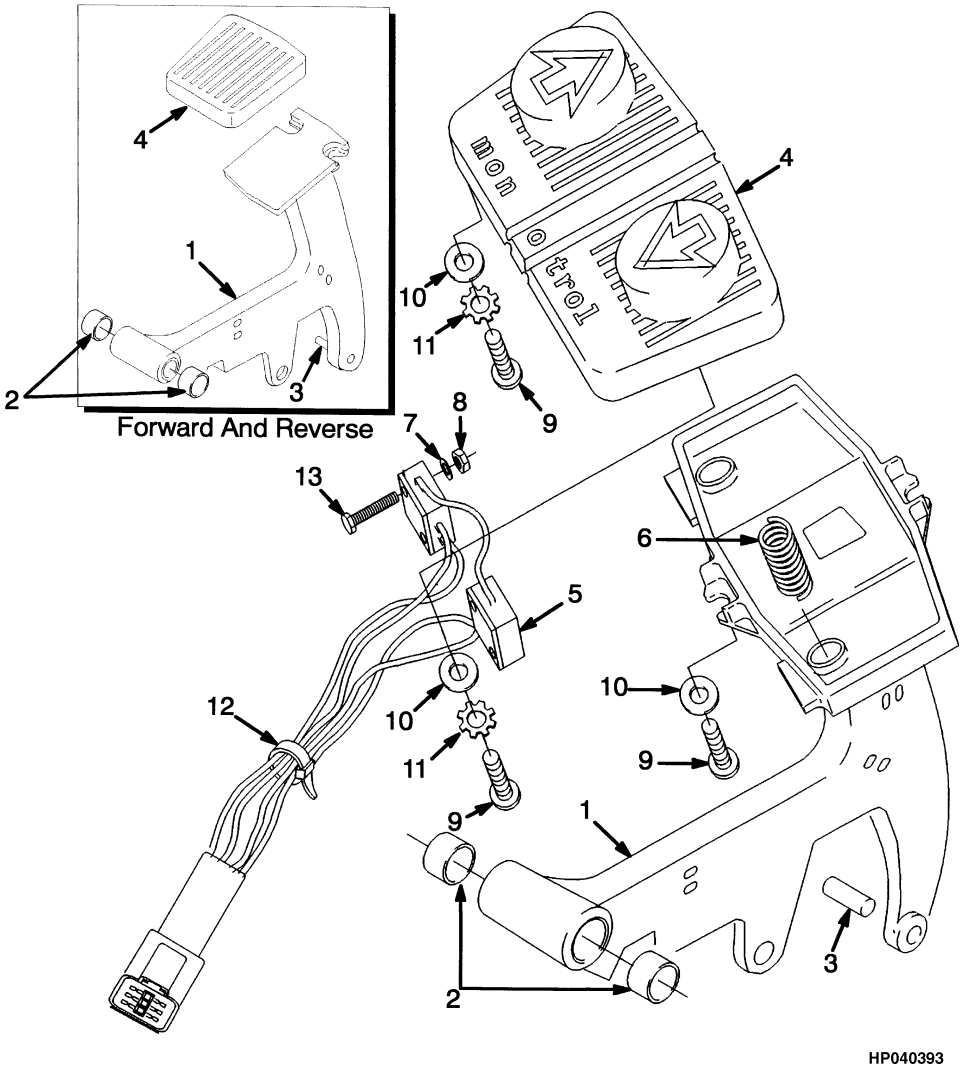

©2004 HYSTER COMPANY

ACCELERATOR PEDAL

KEY:
A: Monotrol Pedal
B: Forward/Reverse

ITEM	PART NO.	DESCRIPTION	QTY A	QTY B
	1340988	Accelerator Pedal	..	1
	1377414	Accelerator Pedal	1	..
1	1340975	Pedal	1	..
1	1340976	Pedal	..	1
2	368618	Bushing	2	2
3	310436	Pin	1	1
4	1340470	Pad	1	..
4	352885	Pad	..	1
5	1475250	Switch Assembly	1	..
6	325699	Spring	2	..
7	53162	Lockwasher	4	..
8	16865	Nut	4	..
9	16708	Screw	4	..
10	15931	Lockwasher	4	..
11	362036	Washer	2	..
12	114312	Strap Clamp	3	..
13	220428	Capscrew	4	..

©2004 HYSTER COMPANY

BRAKE ASSEMBLY (Figure 5-3)

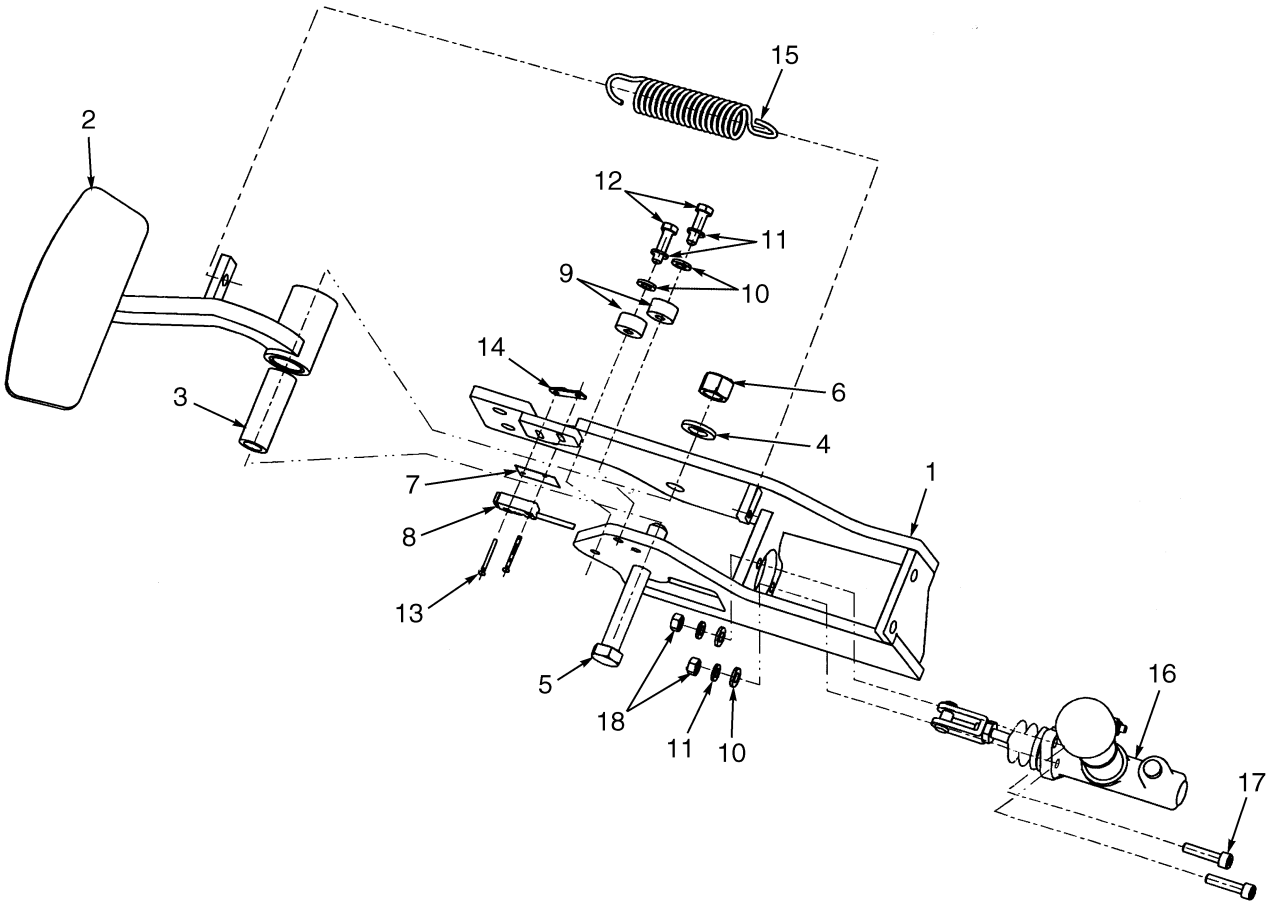

BP040030

©2004 HYSTER COMPANY

BRAKE ASSEMBLY

ITEM	PART NO.	DESCRIPTION	QTY
	1548469	Brake Assembly	1
1	1548462	Brake Weldment	1
2	1548473	Brake Pedal	1
3	1548475	Tube	1
4	320165	Washer	1
5	292573	Capscrew	1
6	316828	Nut	1
7	374160	Insulator	1
8	1539854	Brake Switch Assembly	1
9	1364281	Stop	2
10	320157	Washer	4
11	292681	Lockwasher	4
12	176640	Capscrew	2
13	220281	Screw	2
14	2309196	Nut Plate Assembly	1
15	1340998	Spring	1
16	2060613	Master Cylinder (☞ Figure 5-4)	1
17	296013	Capscrew	2
18	239503	Nut	2

©2004 HYSTER COMPANY

MASTER CYLINDER (Figure 5-4)

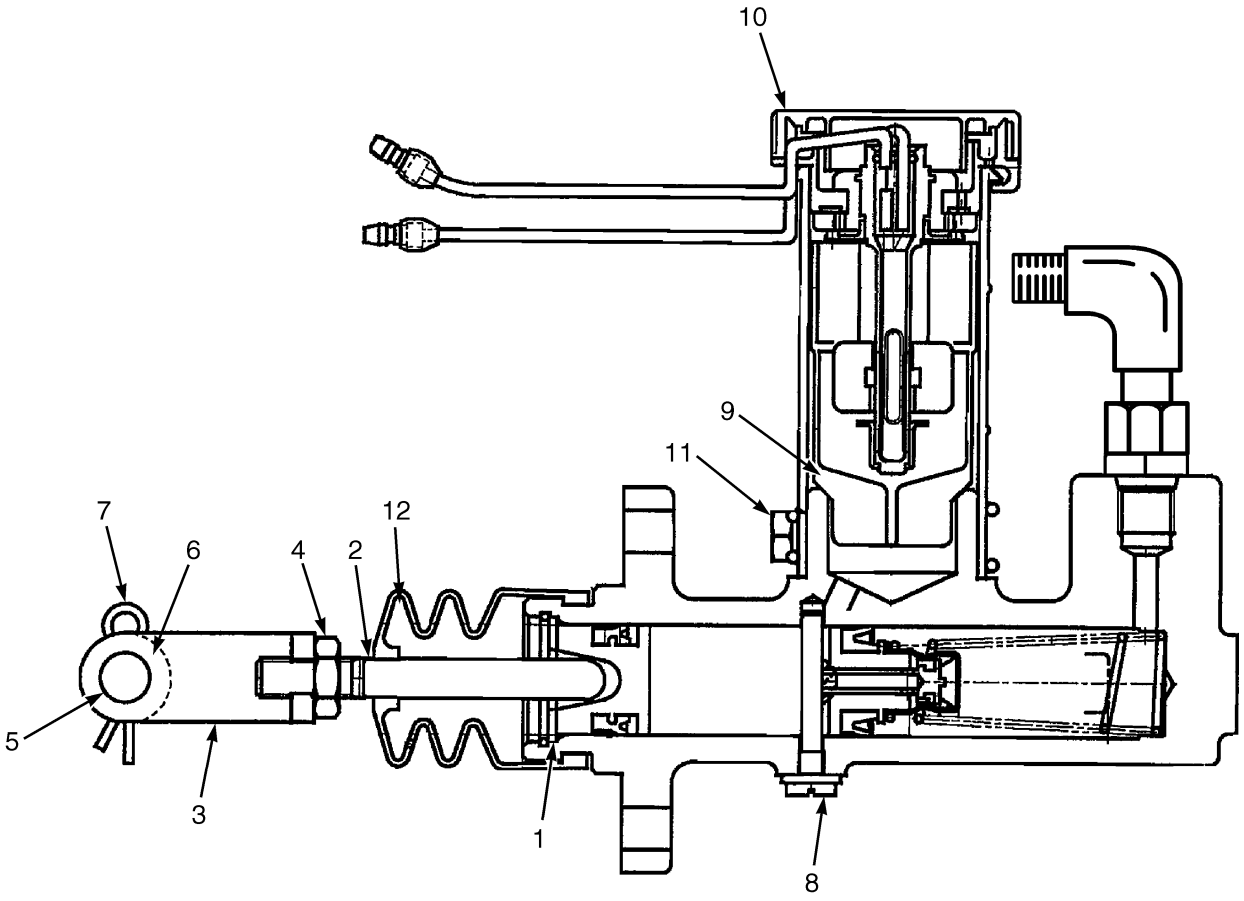

BP040032

©2004 HYSTER COMPANY

MASTER CYLINDER

ITEM	PART NO.	DESCRIPTION	QTY
	2060613	Master Cylinder	1
1	1556261	Stop Plate	1
2	1556262	Push Rod	1
3	1556263	Yoke	1
4	1556264	Nut	1
5	1556265	Pin	1
6	1556266	Washer	1
7	1556267	Snap Pin	1
8	1556268	Stop Pin	1
9	1556269	Filter	1
10	1556270	Indicator	1
11	1556271	Clamp	1
12	1556397	Boot	1
a	1556500	Repair Kit	1

FOOTNOTES:

a Not Illustrated

PARKING BRAKE (Figure 5-5)

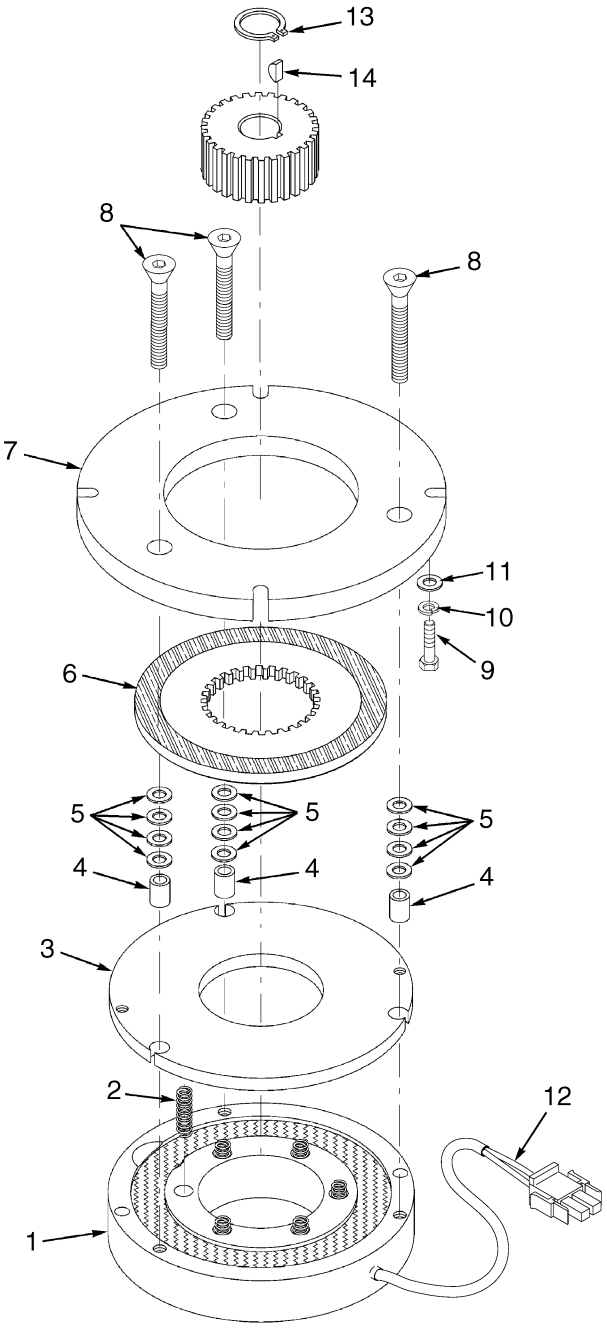

BP040033

©2004 HYSTER COMPANY

PARKING BRAKE

ITEM		PART NO.	DESCRIPTION	QTY
		2053881	Brake	1
1	**a**	. . . . .	Brake Coil	1
2	**a**	. . . . .	Spring	6
3	**a**	. . . . .	Pressure Plate	1
4	**a**	. . . . .	Spacer	3
5	**a**	. . . . .	Shim	12
6	**a**	. . . . .	Friction Disk	1
7	**a**	. . . . .	Mounting Plate	1
8	**a**	. . . . .	Screw	3
9	**a**	. . . . .	Capscrew	4
10	**a**	. . . . .	Lockwasher	4
11	**a**	. . . . .	Washer	4
12	**a**	. . . . .	Wiring Harness	1
13		58929	Snap Ring	2
14		32033	Key	2

FOOTNOTES:
a Not Serviced Separately

©2004 HYSTER COMPANY

NOTES

6 HYDRAULIC SYSTEM

SECTION 6
HYDRAULIC SYSTEM

DESCRIPTION	PAGE
ELECTRO-HYDRAULIC AUXILIARY VALVE SECTION	6-2
ELECTRO-HYDRAULIC CONTROL VALVE	6-4
ELECTRO-HYDRAULIC LEVERS	6-6
ELECTRO-HYDRAULIC MAIN CONTROL VALVE SECTION	6-22
ELECTRO-HYDRAULIC TILT VALVE SECTION	6-26
HANDLEVER	6-8
HYDRAULIC GEAR PUMP	6-10
HYDRAULIC HOSE AND FITTINGS	
ELECTRO	6-12
MANUAL	6-14
HYDRAULIC PUMP MOTOR	6-16
HYDRAULIC TANK ASSEMBLY	6-18
HYDRAULIC VALVE AND ATTACHING PARTS	
MANUAL	6-20
MANUAL CONTROL VALVE	6-24

©2004 HYSTER COMPANY

ELECTRO-HYDRAULIC AUXILIARY VALVE SECTION (Figure 6-1)

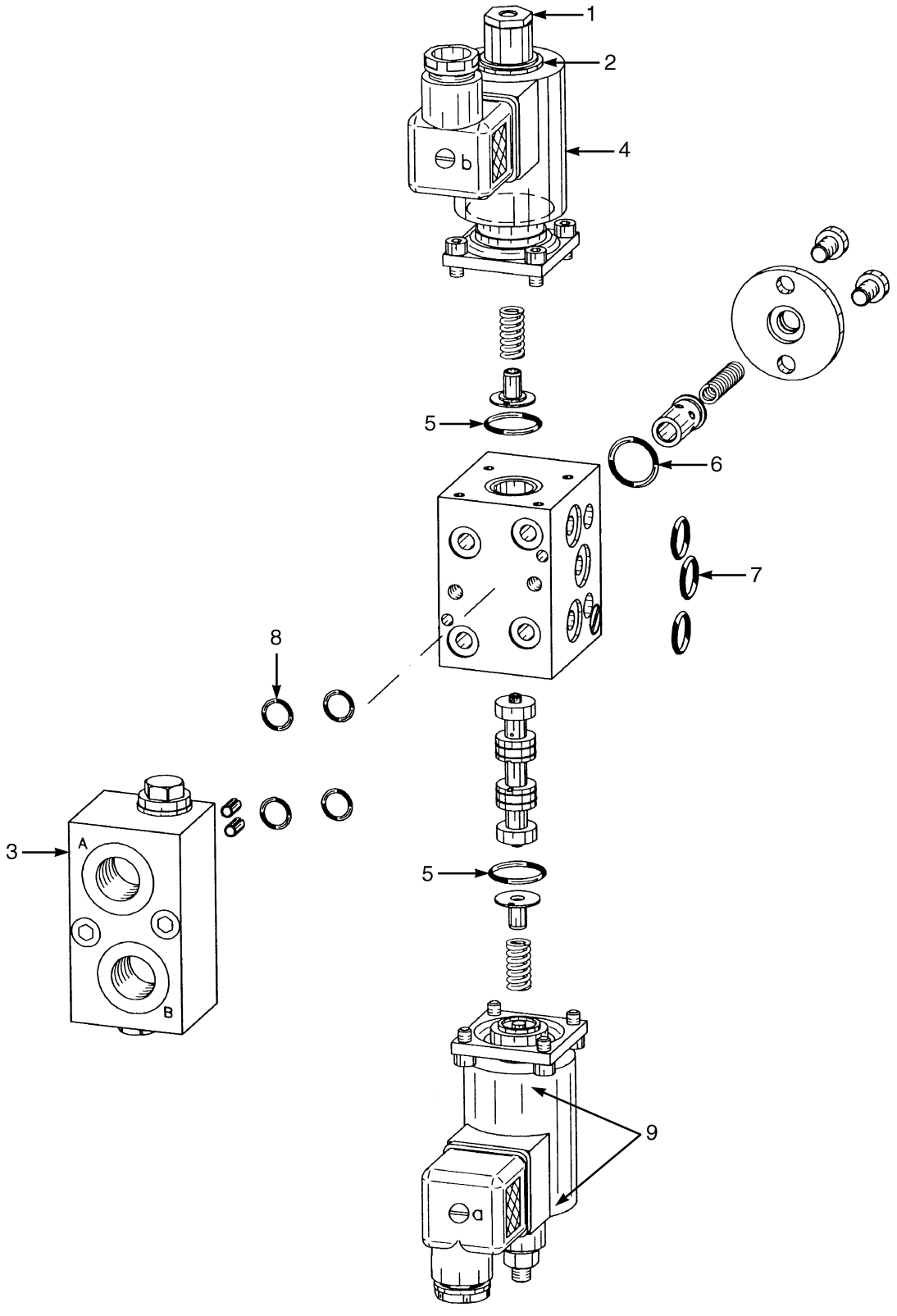

©2004 HYSTER COMPANY

ELECTRO-HYDRAULIC AUXILIARY VALVE SECTION

ITEM		PART NO.	DESCRIPTION	QTY
1		1558094	Valve Section	1
2		1556590	Actuator	1
3		1556596	Block	1
4	**b**	. . . . .	Solenoid Coil	2
5		1557186	O-Ring	2
6		1546684	O-Ring	1
7		1546686	O-Ring	3
8		1557189	O-Ring	4
9		1557190	O-Ring	4
	a	1557191	O-Ring	2
		1544781	Seal Kit (Includes Items 5-10)	1

FOOTNOTES:
a Not Illustrated
b Not Serviced Separately

©2004 HYSTER COMPANY

ELECTRO-HYDRAULIC CONTROL VALVE (Figure 6-2)

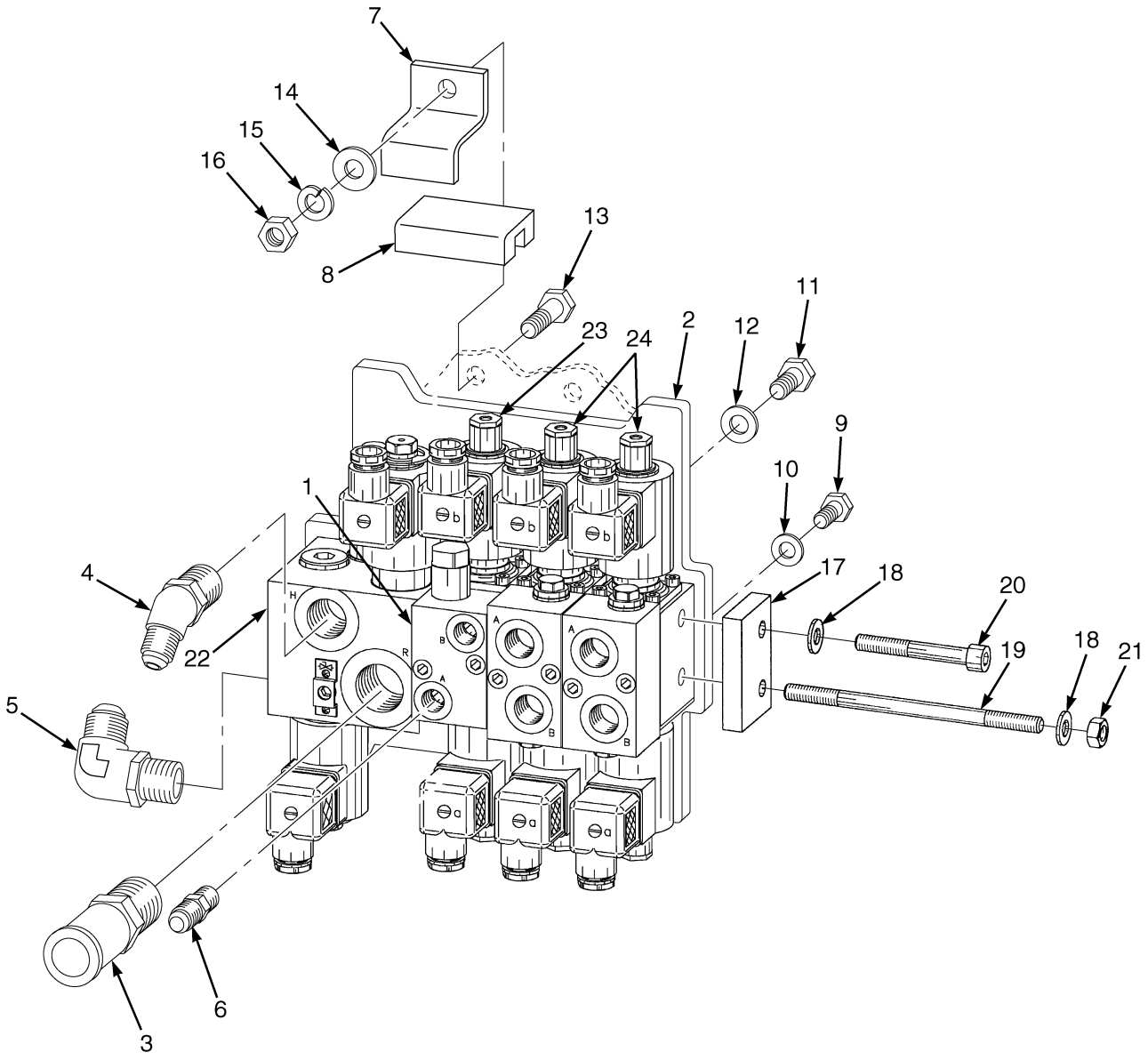

©2004 HYSTER COMPANY

ELECTRO-HYDRAULIC CONTROL VALVE

KEY:
A: Three Function
B: Four Function

ITEM	PART NO.	DESCRIPTION	QTY A	QTY B
1	2062060	Electro-Hydraulic Control Valve	1	..
1	2062061	Electro-Hydraulic Control Valve	..	1
1	2062067	Plate	1	..
2	2062068	Plate	..	1
3	98599	Fitting	1	1
4	201752	Fitting	1	1
5	16560	Fitting	1	1
6	16540	Fitting	1	1
7	324972	Bracket	3	3
8	325056	Channel (Rubber)	3	3
9	287817	Capscrew	1	1
10	320156	Washer	1	1
11	287851	Capscrew	2	2
12	320158	Washer	2	2
13	287854	Capscrew	3	3
14	320159	Washer	3	3
15	292682	Lockwasher	3	3
16	136692	Nut	3	3
17	2798897	Plate	1	1
18	1546568	Washer	2	2
19	1546572	Tension Rod	..	2
20	1546570	Screw	2	..
21	1546573	Nut	..	2
22	1556587	Connection Block	1	1
23	1556589	Valve Section	1	1
24	1558094	Valve Section	1	2
a	1544781	Seal Kit	1	1

FOOTNOTES:
a Not Illustrated

©2004 HYSTER COMPANY

ELECTRO-HYDRAULIC LEVERS (Figure 6-3)

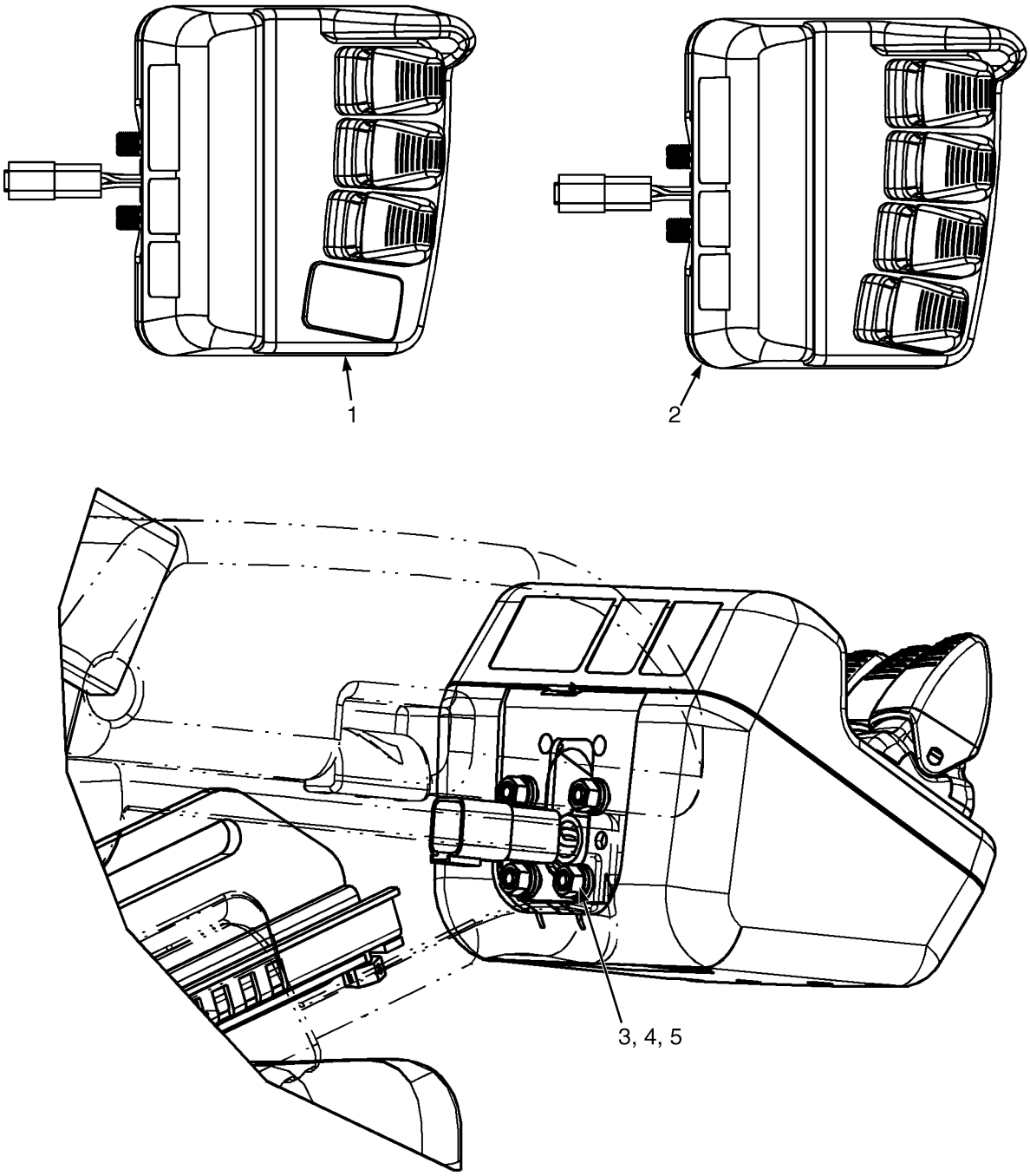

BP150083

©2004 HYSTER COMPANY

ELECTRO-HYDRAULIC LEVERS

ITEM	PART NO.	DESCRIPTION	QTY
1	2061994	Control Handle (Three Function)	1
1	1553671	Software	1
1	1555731	Kit	3
1	2065094	Control Handle (Three Function Clamping)	1
1	1553671	Software	1
2	136687	Nut	4
2	2061995	Control Handle (Four Function)	1
2	1553671	Software	1
2	1555731	Kit	4
2	2065095	Control Handle (Four Function Clamping)	1
2	1553671	Software	1
3	292680	Lockwasher	4
4	320156	Washer	4

©2004 HYSTER COMPANY

HANDLEVER (Figure 6-4)

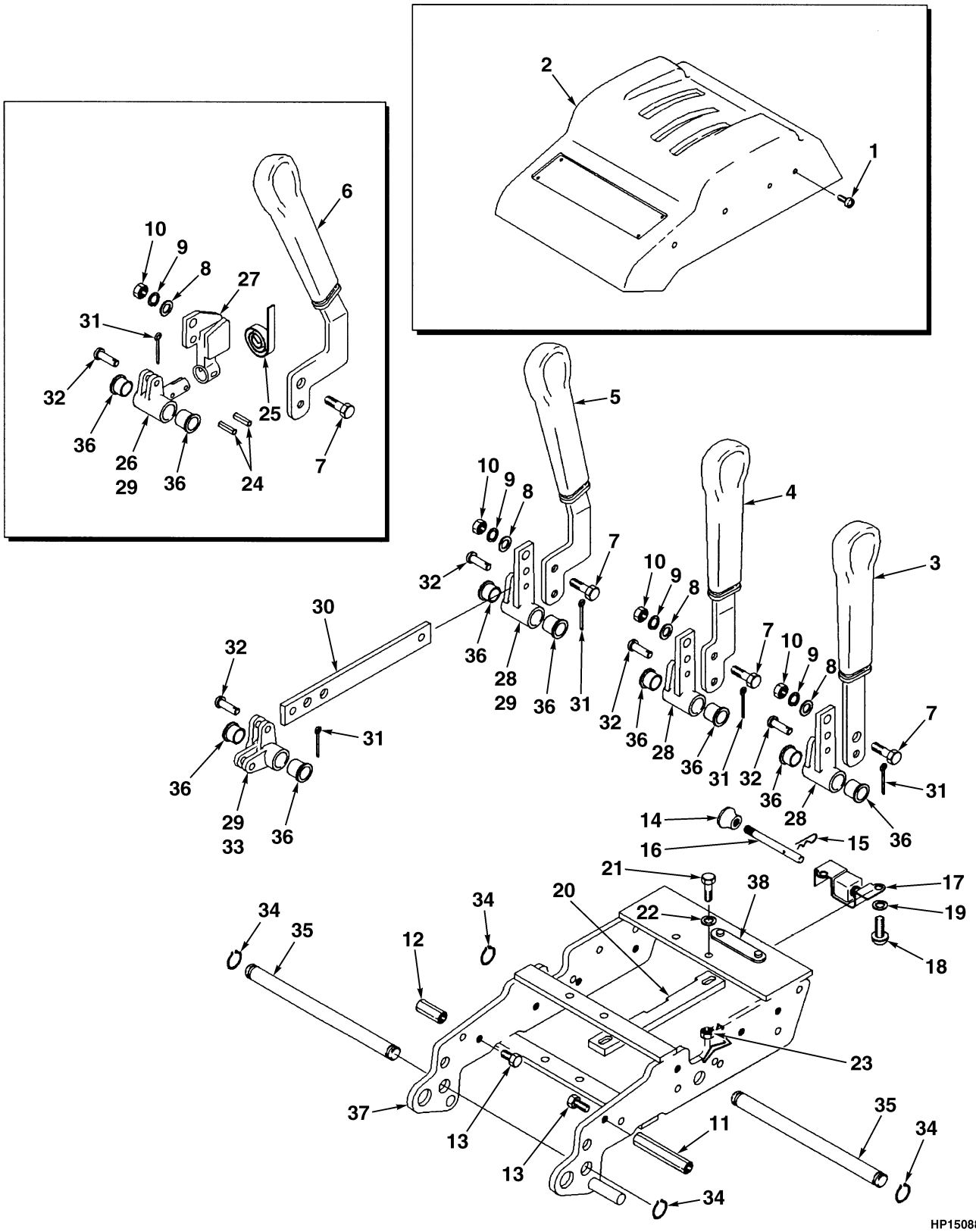

©2004 HYSTER COMPANY

HANDLEVER

ITEM	PART NO.	DESCRIPTION	QTY
1	1330574	Capscrew	8
2	1529139	Cover (Upper)	1
3	2065362	Handlever (Lift)	1
4	2065363	Handlever (Tilt)	1
5	2065364	Handlever (Aux 1)	1
6	2065365	Handlever (Last Function)	1
7	292501	Capscrew	4
8	320156	Washer	2
9	292680	Lockwasher	4
10	136687	Nut	4
11	2062064	Spacer	4
12	2306052	Spacer	4
13	287817	Capscrew	8
14	2303365	Knob	1
15	15200	Cotter Pin	1
16	2308059	Rod	1
17	2305669	Latch	1
18	296153	Capscrew	2
19	293778	Washer	2
20	2302179	Strap	2
21	292501	Capscrew	2
22	320156	Washer	2
23	302399	Nut	2
24	19979	Pin	2
25	175861	Spring	1
26	2309570	Crank	1
27	2304767	Pivot	1
28	2304087	Crank	2
29	2307513	Spacer	4
30	2303898	Link	4
31	15200	Cotter Pin	4
32	2013239	Pin	4
33	2309978	Rocker Arm	2
34	307253	Snap Ring	4
35	2311392	Pivot Pin	2
36	2310972	Bearing	8
37	1547231	Frame	1
38	1510861	Nut Plate Assembly	1

©2004 HYSTER COMPANY

HYDRAULIC GEAR PUMP (Figure 6-5)

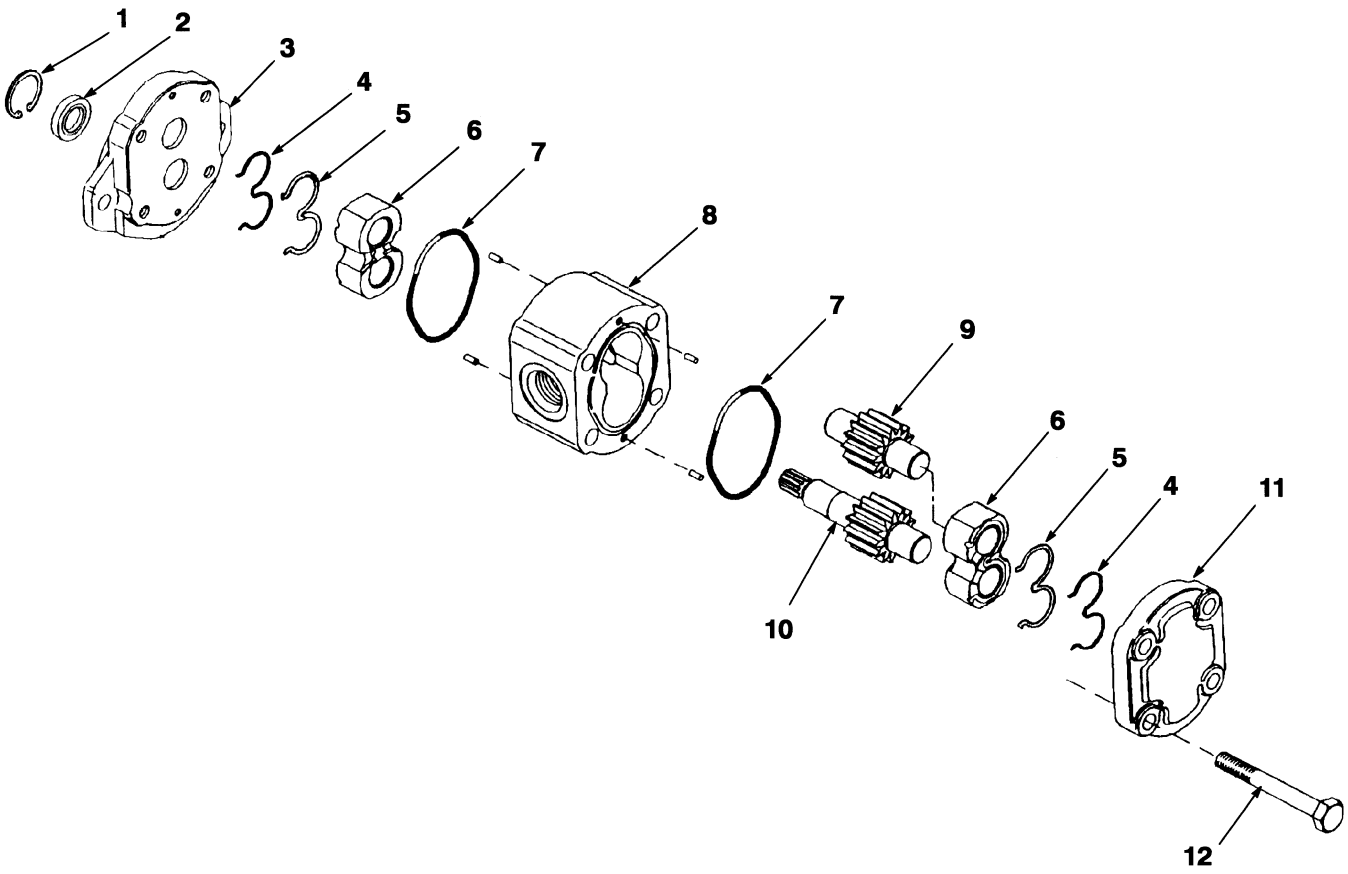

©2004 HYSTER COMPANY

HYDRAULIC GEAR PUMP

KEY:
A: 24 Volt
B: 36 Volt

ITEM		PART NO.	DESCRIPTION	QTY A	QTY B
		2069006	Gear Pump	..	1
1		2303239	Retaining Ring	1	1
2		1371741	Seal	1	1
3		. . . . .	Flange	1	1
4		1371744	Back-Up Ring	4	4
5		1371743	Seal	4	4
6		. . . . .	Bushing	2	2
7		2052235	O-Ring	2	2
8		. . . . .	Pump Body	1	1
9		. . . . .	Idler Gear	1	1
10		. . . . .	Drive Gear	1	1
11		. . . . .	Cover	1	1
12		. . . . .	Bolt	4	..
12		. . . . .	Bolt	..	4
	ab	1460539	O-Ring	2	2
		1371746	Seal Kit (Includes Items 1-2, 4-5, 7)	1	1

FOOTNOTES:
a Included in Seal Kit 1371746
b Not Illustrated

©2004 HYSTER COMPANY

HYDRAULIC HOSE AND FITTINGS (Figure 6-6)
ELECTRO

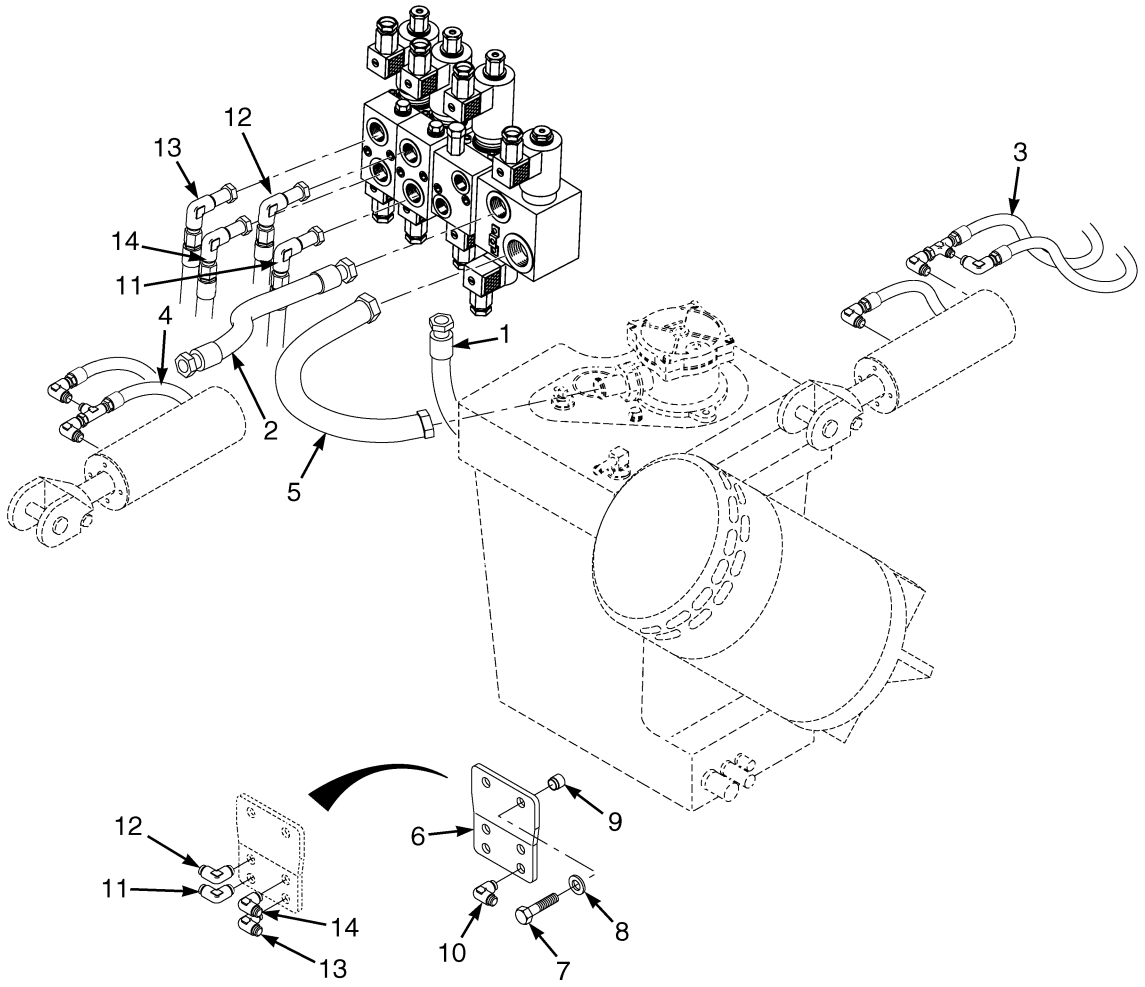

BP140034

©2004 HYSTER COMPANY

HYDRAULIC HOSE AND FITTINGS
ELECTRO

KEY:
A: Two Function
B: Three Function
C: Four Function

ITEM	PART NO.	DESCRIPTION	QTY A	QTY B	QTY C
1	2061806	Hose Assembly	1	1	1
2	1563712	Hose Assembly	1	1	1
3	2068750	Hose Assembly	1	1	1
4	2062827	Hose Assembly	1	1	1
5	1526744	Hose	1	1	1
6	1520416	Plate	..	1	1
7	292515	Capscrew	..	2	2
8	320159	Washer	..	2	2
9	2307638	Fastener	..	2	2
10	16457	Fitting	..	2	4
11	2068747	Hose Assembly	..	1	1
12	2068746	Hose Assembly	..	1	1
13	2068749	Hose Assembly	..	..	1
14	2068748	Hose Assembly	..	..	1

©2004 HYSTER COMPANY

HYDRAULIC HOSE AND FITTINGS (Figure 6-7)
MANUAL

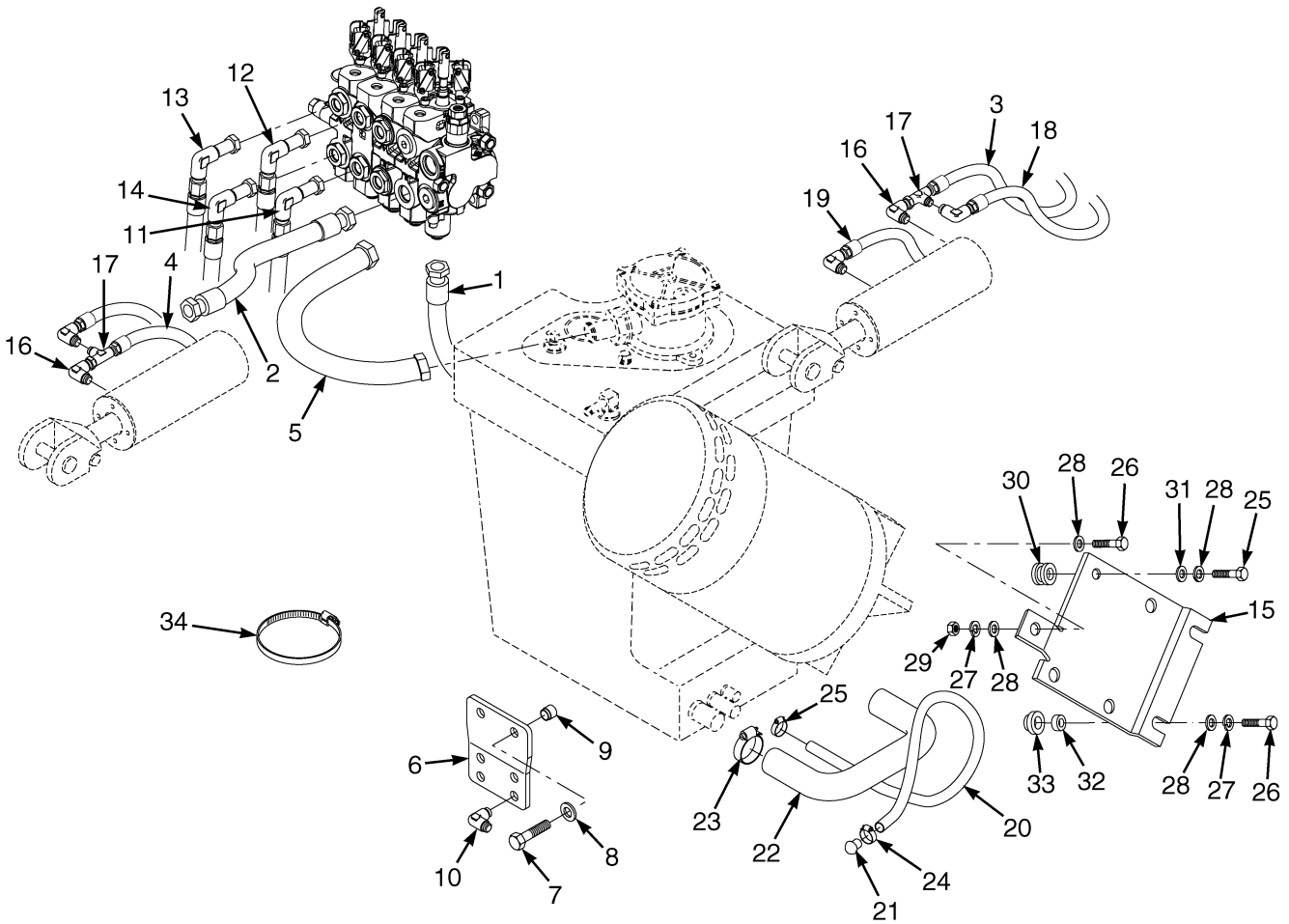

©2004 HYSTER COMPANY

HYDRAULIC HOSE AND FITTINGS
MANUAL

KEY:
A: Two Function
B: Three Function
C: Four Function

ITEM	PART NO.	DESCRIPTION	QTY A	QTY B	QTY C
1	2061805	Hose Assembly	1	1	1
2	2068717	Hose Assembly	1	1	1
3	2062824	Hose Assembly	1	1	1
4	2062825	Hose Assembly	1	1	1
5	2061808	Hose	1	1	1
6	1520416	Plate	..	1	1
7	292515	Capscrew	..	2	2
8	320159	Washer	..	2	2
9	2307638	Fastener	..	2	2
10	16457	Fitting	..	2	4
11	2068747	Hose Assembly	..	1	1
12	2068746	Hose Assembly	..	1	1
13	2068749	Hose Assembly	..	..	1
14	2068748	Hose Assembly	..	..	1
15	2065755	Hoist Motor Bracket	1	1	1
16	16556	Fitting	4	4	4
17	17059	Fitting	2	2	2
18	2062822	Hose Assembly	1	1	1
19	2062823	Hose Assembly	1	1	1
20	1460672	Hose	1	1	1
21	16679	Rivet	1	1	1
22	1526656	Hose	1	1	1
23	127045	Clamp	4	4	4
24	166857	Clamp	2	2	2
25	292515	Capscrew	4	4	4
26	292519	Capscrew	3	3	3
27	292682	Lockwasher	3	3	3
28	320159	Washer	8	8	8
29	136692	Nut	1	1	1
30	317594	Grommet	4	4	4
31	1356113	Washer	4	4	4
32	1548223	Spacer	1	1	1
33	1548225	Bracket Weldment	1	1	1
34	129563	Strap Clamp	AR	AR	AR
35 **a**	178119	Clamp	1	1	1
36 **a**	287851	Capscrew	1	1	1
37 **a**	136749	Capscrew	1	1	1
38 **a**	292681	Lockwasher	2	2	2
39 **a**	320157	Washer	2	2	2
40 **a**	239503	Nut	1	1	1

FOOTNOTES:
a Not Illustrated

©2004 HYSTER COMPANY

HYDRAULIC PUMP MOTOR (Figure 6-8)

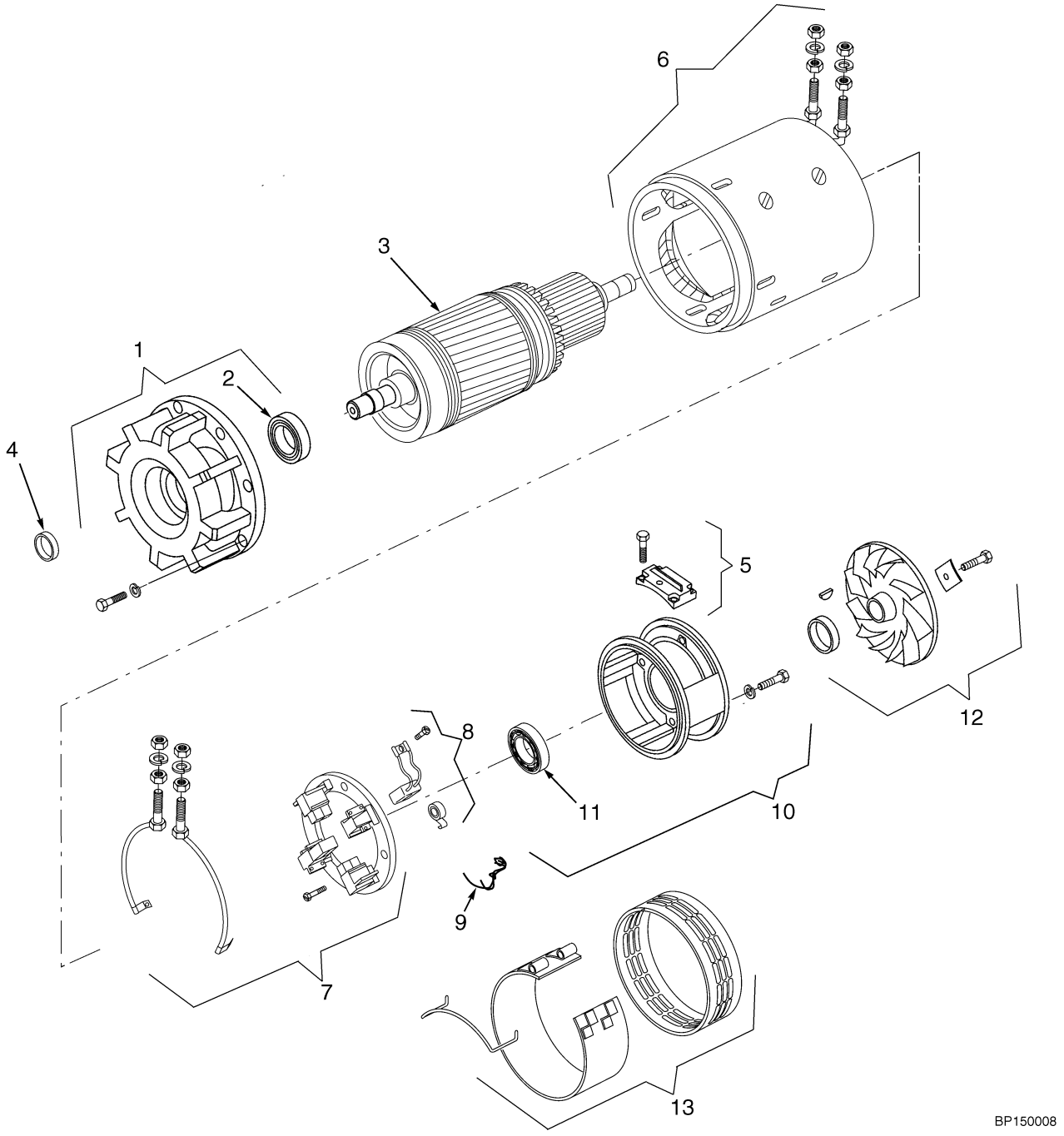

©2004 HYSTER COMPANY

HYDRAULIC PUMP MOTOR

ITEM	PART NO.	DESCRIPTION	QTY
	2065366	Hydraulic Pump Motor	1
1	1502724	Bracket	1
2	1502725	Bearing	1
3	1502726	Armature	1
4	1502727	Gasket	1
5	1502728	Plate	1
6	1564327	Stator	1
7	1502730	Brush Holder	1
8	1502731	Brush (with Spring)	1
9	1564328	Thermal Protector	1
10	1502733	Commutator	1
11	1500182	Bearing	1
12	1502735	Fan	1
13	1502736	Cover	1

©2004 HYSTER COMPANY

HYDRAULIC TANK ASSEMBLY (Figure 6-9)

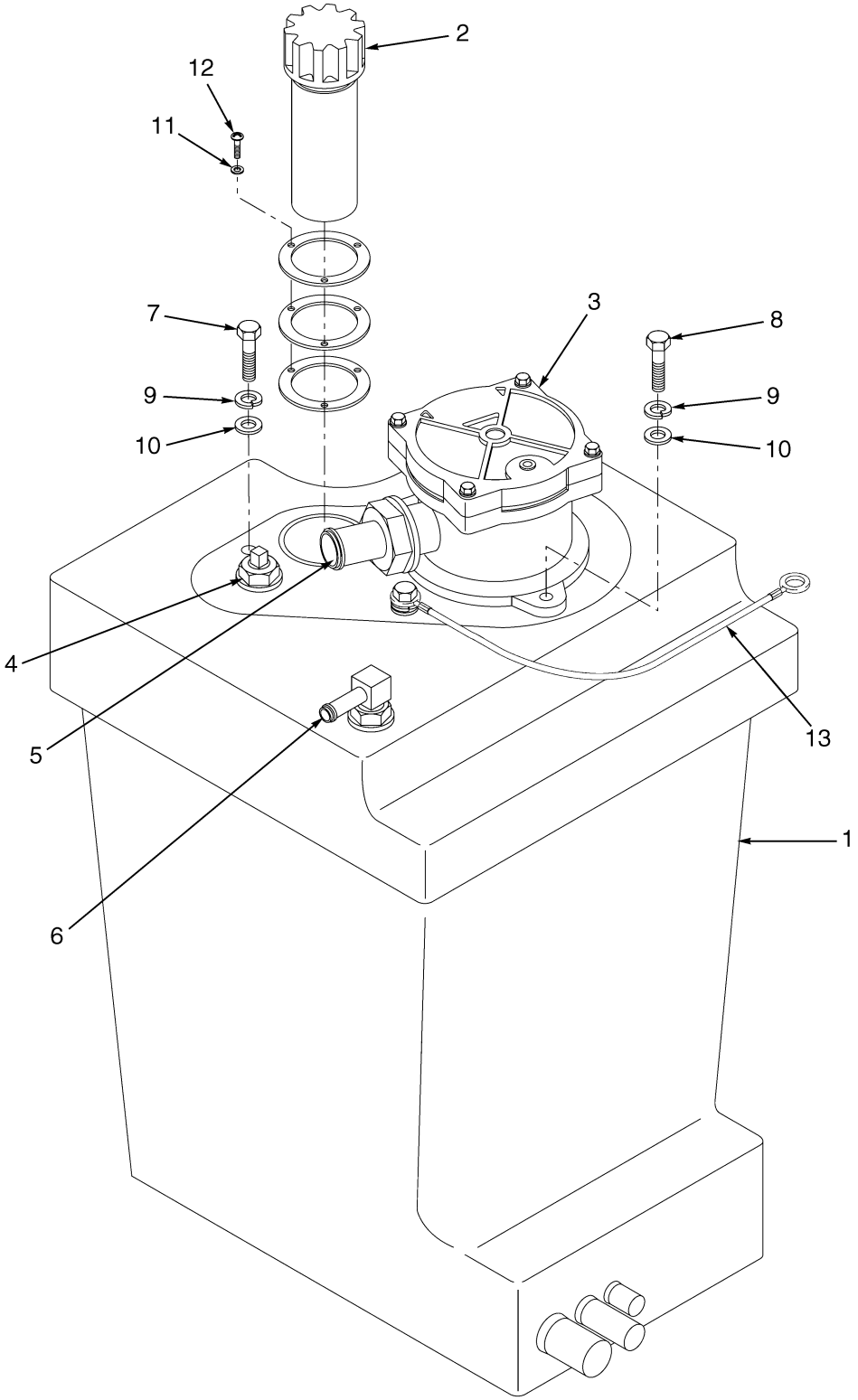

BP150067

©2004 HYSTER COMPANY

HYDRAULIC TANK ASSEMBLY

ITEM	PART NO.	DESCRIPTION	QTY
1	2054280	Hydraulic Tank	1
2	2059683	Breather	1
3	2042698	Hydraulic Oil Filter Assembly	1
4	1532304	Switch Assembly	1
5	88195	Fitting	1
6	17221	Fitting	1
7	287851	Capscrew	2
8	136749	Capscrew	2
9	292681	Lockwasher	4
10	320157	Washer	4
11	292679	Lockwasher	3
12	16655	Capscrew	3
13	2068733	Ground Wire	1

©2004 HYSTER COMPANY

HYDRAULIC VALVE AND ATTACHING PARTS (Figure 6-10)
MANUAL

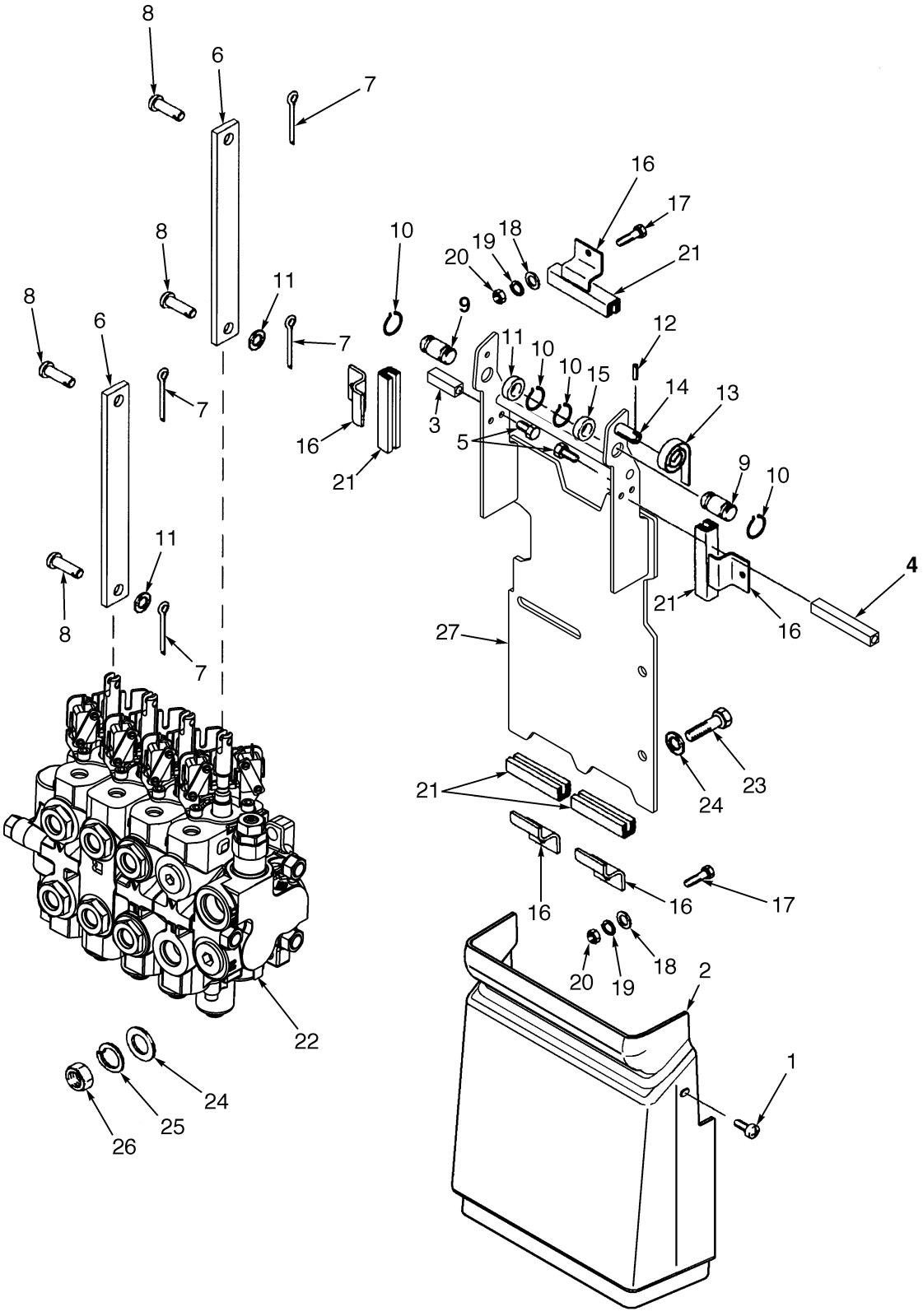

©2004 HYSTER COMPANY

HYDRAULIC VALVE AND ATTACHING PARTS
MANUAL

ITEM	PART NO.	DESCRIPTION	QTY
1	1330574	Capscrew	2
2	1529140	Lower Cover	1
3	2311384	Standoff	1
4	2062063	Standoff	1
5	287817	Capscrew	2
6	1520417	Link	2
7	15200	Cotter Pin	4
8	2013239	Pin	4
9	2303498	Pin	2
10	58903	Snap Ring	4
11	2307900	Shim	AR
12	19979	Pin	1
13	175861	Spring	1
14	2307042	Pin	1
15	2303162	Spacer	2
16	324972	Bracket	5
17	287854	Capscrew	1
18	320159	Washer	1
19	292682	Lockwasher	1
20	136692	Nut	1
21	325056	Channel (Rubber)	5
22	2062057	Control Valve (Three Spool Valve)	1
22	2062058	Control Valve (Four Spool Valve)	1
23	287860	Capscrew	1
24	320159	Washer	1
25	292682	Lockwasher	1
26	136692	Nut	1
27	2062072	Bracket Weldment	1

©2004 HYSTER COMPANY

ELECTRO-HYDRAULIC MAIN CONTROL VALVE SECTION (Figure 6-11)

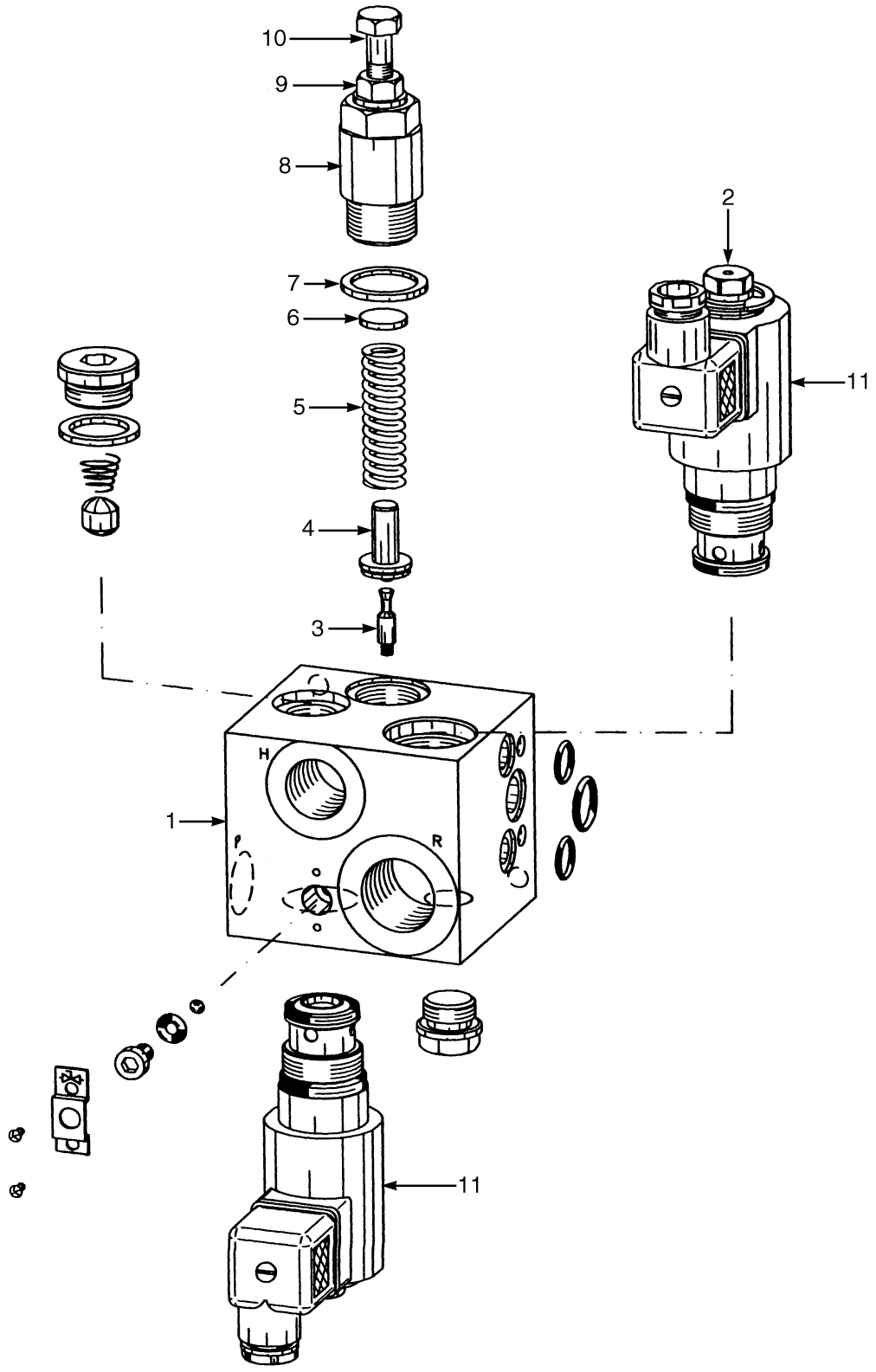

BP140036

©2004 HYSTER COMPANY

ELECTRO-HYDRAULIC MAIN CONTROL VALVE SECTION

ITEM		PART NO.	DESCRIPTION	QTY
1		1556587	Connection Block	1
2		1544349	Valve	1
3		1544327	Piston	1
4		1544344	Spring Guide	1
5		1544345	Spring	1
6		1544346	Disc	1
7	**a**	. . . . .	Seal Ring	1
8		1544347	Screw	1
9	**a**	. . . . .	Seal	1
10	**a**	. . . . .	Screw	1
11		1544349	Valve	2

FOOTNOTES:
a Not Serviced Separately

MANUAL CONTROL VALVE (Figure 6-12)

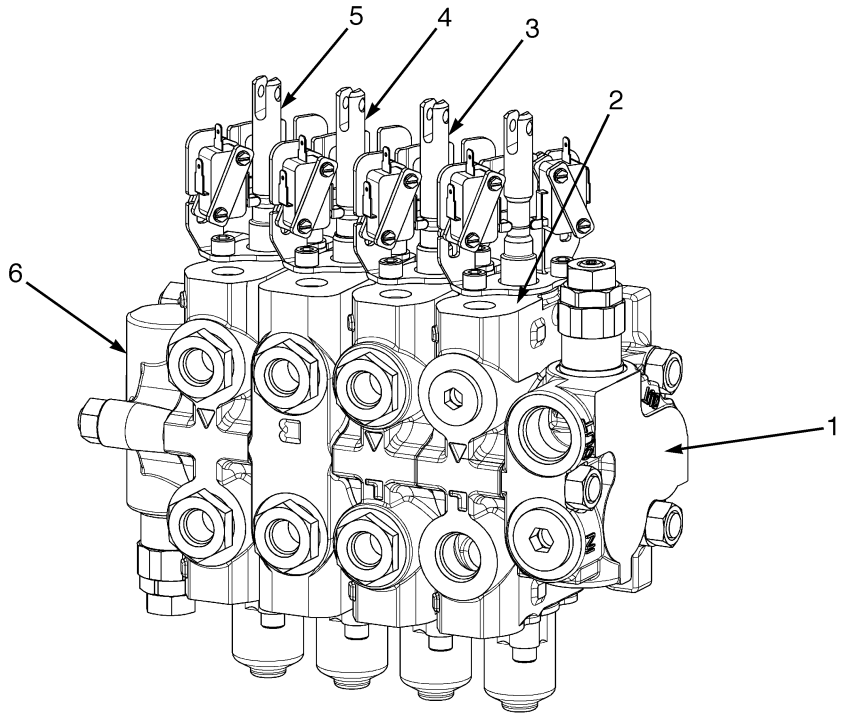

BP140023

©2004 HYSTER COMPANY

MANUAL CONTROL VALVE

ITEM	PART NO.	DESCRIPTION	QTY
	2062057	Control Valve (Three Spool Valve)	1
	2062058	Control Valve (Four Spool Valve)	1
1	1547585	Inlet Section	1
2	1551544	Lift Section	1
3	1551545	Tilt Section	1
4	1551546	Auxiliary One Section (Three and Four Function)	1
5	1551547	Auxiliary Two Section (Four Function)	1
6	1547586	Outlet Section	1
a	2046006	Manifold (Three Function)	1
a	1554622	Switch and Bracket Kit (Lift Section)	1
a	1554623	Switch and Bracket Kit (Tilt/Auxiliary Section)	1
a	1557699	Seal Kit	1

FOOTNOTES:

a Not Illustrated

©2004 HYSTER COMPANY

ELECTRO-HYDRAULIC TILT VALVE SECTION (Figure 6-13)

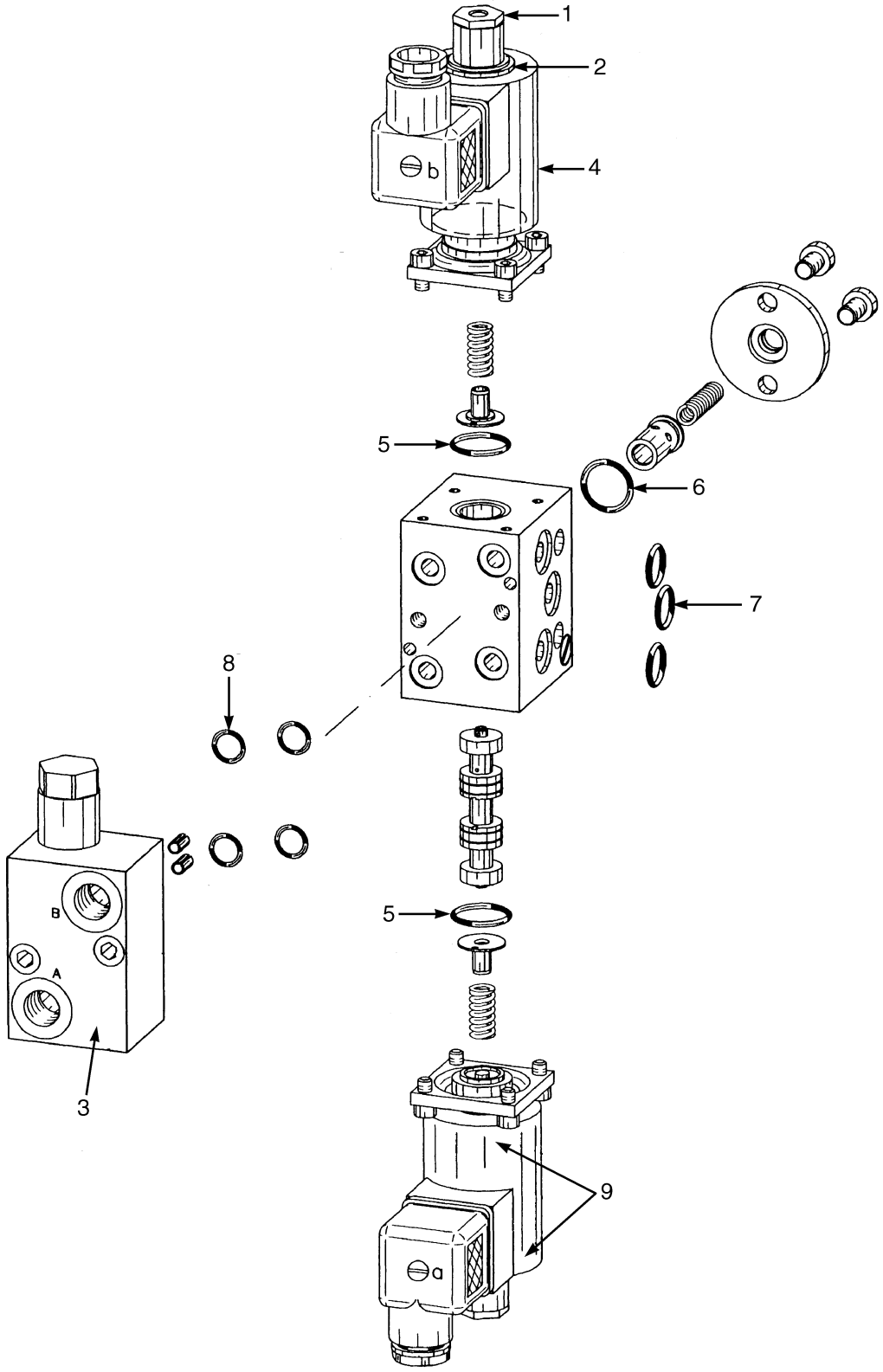

©2004 HYSTER COMPANY

ELECTRO-HYDRAULIC TILT VALVE SECTION

ITEM		PART NO.	DESCRIPTION	QTY
1		1556589	Valve Section	1
2		1556590	Actuator	1
3		1544364	Block	1
4	**b**	. . . . .	Solenoid Coil	2
5		1557186	O-Ring	2
6		1546684	O-Ring	1
7		1546686	O-Ring	3
8		1557189	O-Ring	4
9		1557190	O-Ring	4
	a	1557191	O-Ring	2
		1544781	Seal Kit (Includes Items 5-10)	1

FOOTNOTES:
a Not Illustrated
b Not Serviced Separately

NOTES

7 MAST-TWO STAGE LIMITED FREE-LIFT

SECTION 7
MAST-TWO STAGE LIMITED FREE-LIFT

DESCRIPTION **PAGE**

CARRIAGE
TWO STAGE LIMITED FREE-LIFT 7-2
HEADER HOSE
TWO STAGE LIMITED FREE-LIFT 7-4
INNER MAST
TWO STAGE LIMITED FREE-LIFT 7-6
INTEGRAL SIDE-SHIFT CARRIAGE
TWO STAGE LIMITED FREE-LIFT 7-8
MAIN LIFT ASSEMBLY
TWO STAGE LIMITED FREE-LIFT 7-10
MAIN LIFT CYLINDER
TWO STAGE LIMITED FREE-LIFT 7-12
OUTER MAST
TWO STAGE LIMITED FREE-LIFT 7-14
SIDE-SHIFT CYLINDER 7-16

©2004 HYSTER COMPANY

CARRIAGE (Figure 7-1)
TWO STAGE LIMITED FREE-LIFT

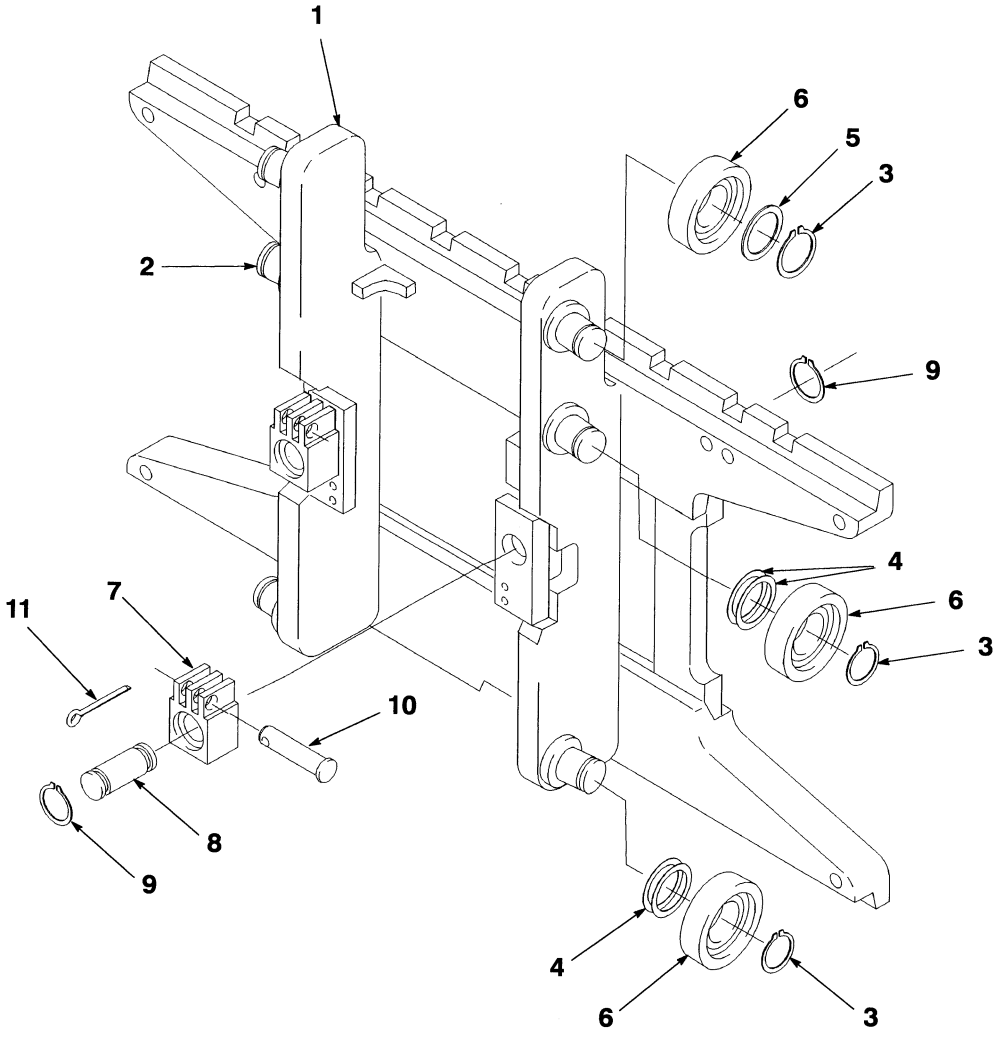

ITEM	PART NO.	DESCRIPTION	QTY
	2055495	Carriage	1
1	1526274	Frame	1
2	1345216	Stubshaft	6
3	58901	Snap Ring	6
3	1374797	Snap Ring (Optional)	6
4	129387	Shim (0,508 mm)	AR
5	366115	Spacer	2
6	1353192	Load Roller	6
6	1333399	Load Roller (Optional)	6
6	1393132	Load Roller (Optional)	6
7	1369345	Chain Anchor (Dual Hole)	2
7	1504010	Chain Anchor (Single Hole) (Optional)	2
8	1353408	Pin	2
9	131358	Snap Ring	4
10	1514866	Pin	2
11	15211	Cotter Pin	2

©2004 HYSTER COMPANY

NOTES

HEADER HOSE (Figure 7-2)
TWO STAGE LIMITED FREE-LIFT

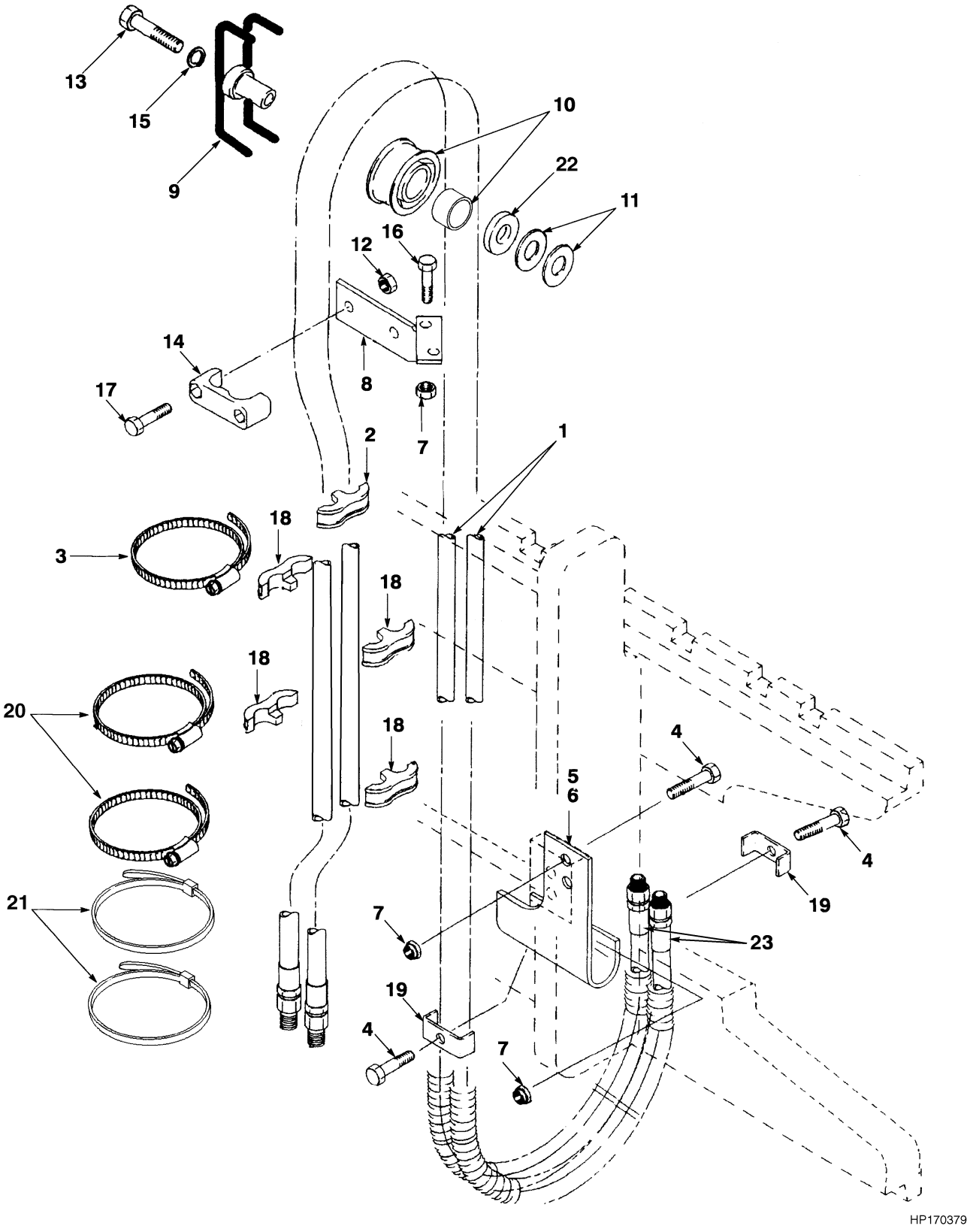

©2004 HYSTER COMPANY

HEADER HOSE
TWO STAGE LIMITED FREE-LIFT

ITEM	DESCRIPTION 1 2 3 4	LIFT HEIGHT TO BOTTOM OF FORKS		
	Mast Group Number	A661 3292	A661 3792	A661 4292
1	Hose	1564626	1564631	1564636

KEY:
A: Three Function
B: Four Function

ITEM		PART NO.	DESCRIPTION	QTY A	QTY B
1	**b**	. . . . .	Hose	2	4
2	**a**	1360508	Clamp	1	2
3	**a**	1353530	Clamp	4	8
4		292508	Capscrew	4	4
5		1345412	Bracket (RH)	1	..
6		1345413	Bracket (LH)	..	1
7		313828	Nut	6	6
8		1363486	Bracket	1	1
9		1360548	Stubshaft	1	1
10		1494017	Sheave	1	1
11		1345190	Washer	2	2
12		313805	Nut	2	2
13		292533	Capscrew	1	1
14		1360386	Clamp	1	1
15		292683	Lockwasher	1	1
16		136704	Capscrew	2	2
17		292502	Capscrew	2	2
18		1360507	Clamp	2	2
19		1345348	Clamp	2	2
20		1360507	Clamp	2	4
21		1375574	Strap	2	2
22		1360549	Spacer	1	1
23		16693	Fitting	2	2

FOOTNOTES:
a 149 in., 157 in., and 168 in. Lifts
b Refer to Table

©2004 HYSTER COMPANY

INNER MAST (Figure 7-3)
TWO STAGE LIMITED FREE-LIFT

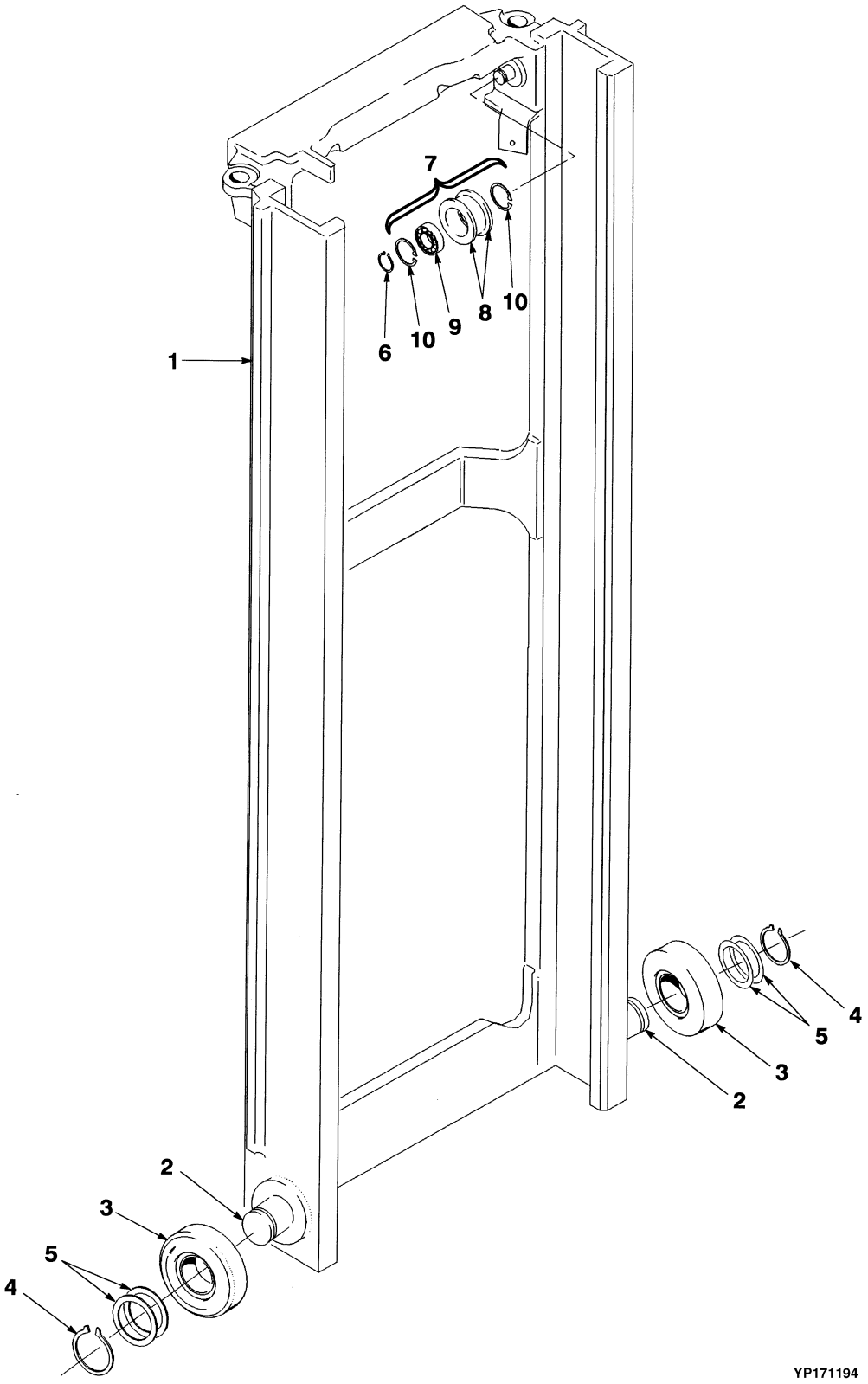

©2004 HYSTER COMPANY

INNER MAST
TWO STAGE LIMITED FREE-LIFT

ITEM	DESCRIPTION 1 2 3 4	LIFT HEIGHT TO BOTTOM OF FORKS		
	Mast Group Number	**A661 3292**	**A661 3792**	**A661 4292**
	Mast Assembly	2055751	2055756	2055758
1	Inner Mast	1348459	1348464	1348469

ITEM		PART NO.	DESCRIPTION	QTY
	a	. . . . .	Mast Assembly	1
1	**a**	. . . . .	Inner Mast	1
2		1345216	Stubshaft	2
3		1353192	Load Roller	2
4		58901	Snap Ring	2
5		129387	Shim (0,508 mm)	AR
6		304526	Snap Ring	2
7		1379685	Chain Sheave Assembly	2
8		1378698	Sheave	1
9		1378699	Bearing	1
10		37752	Snap Ring	2

FOOTNOTES:
a Refer to Table

©2004 HYSTER COMPANY

INTEGRAL SIDE-SHIFT CARRIAGE (Figure 7-4)
TWO STAGE LIMITED FREE-LIFT

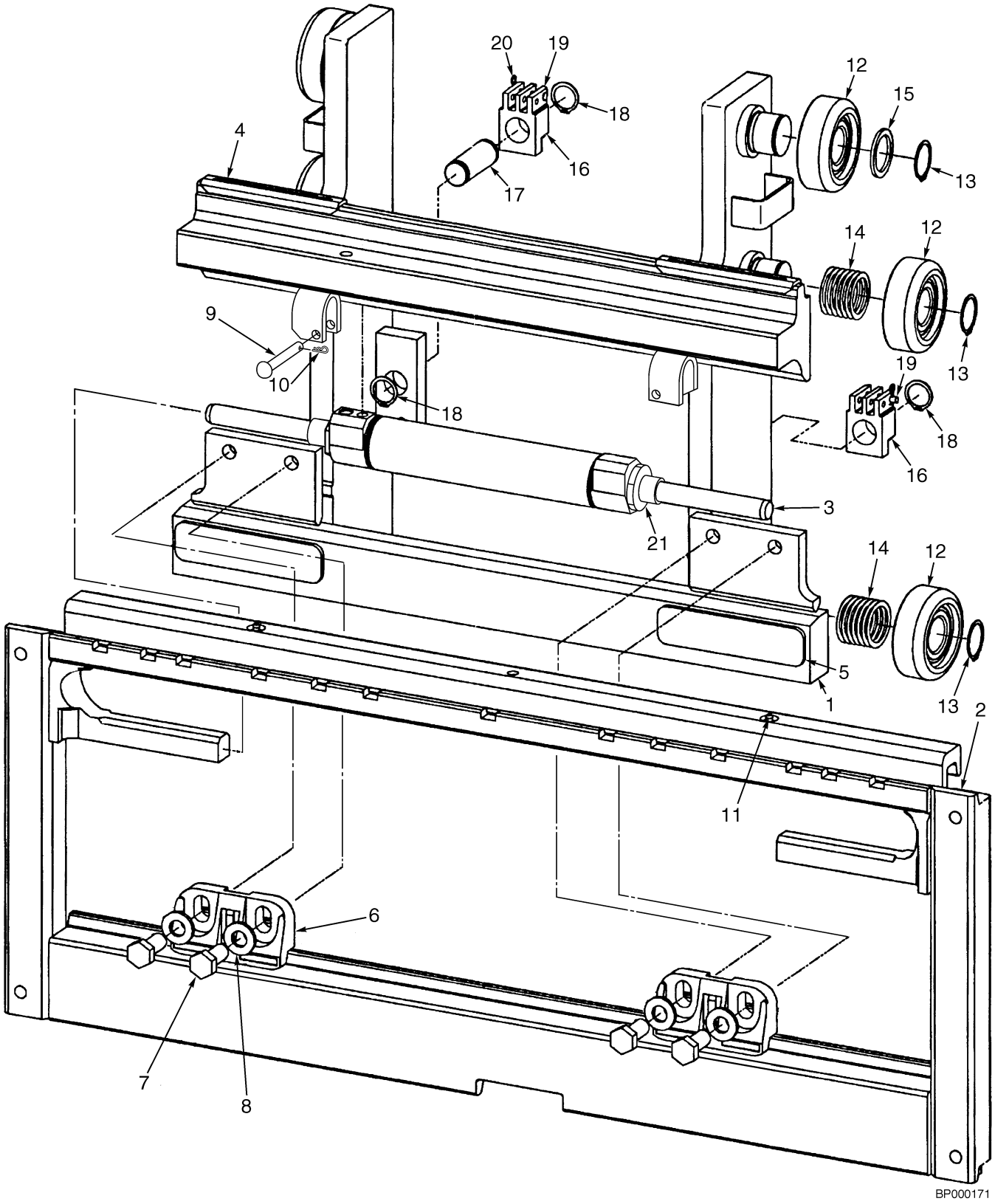

©2004 HYSTER COMPANY

INTEGRAL SIDE-SHIFT CARRIAGE
TWO STAGE LIMITED FREE-LIFT

ITEM	PART NO.	DESCRIPTION	QTY
	2056867	Side-Shift Carriage	1
1	1529598	Frame (Inner)	1
2	1489010	Frame (965 mm) (Outer)	1
3	2043528	Cylinder Assembly	1
4	2043531	Bearing (Upper)	2
5	2043533	Bearing (Lower)	2
6	2043530	Hook (Lower)	2
7	226458	Capscrew	4
8	296426	Washer (Hardened)	4
9	1401746	Pin	2
10	18832	Cotter Pin	2
11	16041	Lube Fitting	2
12	1353192	Load Roller	6
12	1333399	Load Roller (Optional)	6
12	1393132	Load Roller (Optional)	6
13	58901	Snap Ring	6
13	1374797	Snap Ring (Optional)	6
14	129387	Shim (0,508 mm)	28
15	366115	Spacer	2
16	1369345	Chain Anchor (Dual Hole)	2
16	1504010	Chain Anchor (Single Hole) (Optional)	2
17	1353408	Pin	2
18	131358	Snap Ring	4
19	1514866	Pin	2
20	15211	Cotter Pin	2
21	1498326	Shim	AR

©2004 HYSTER COMPANY

MAIN LIFT ASSEMBLY (Figure 7-5)
TWO STAGE LIMITED FREE-LIFT

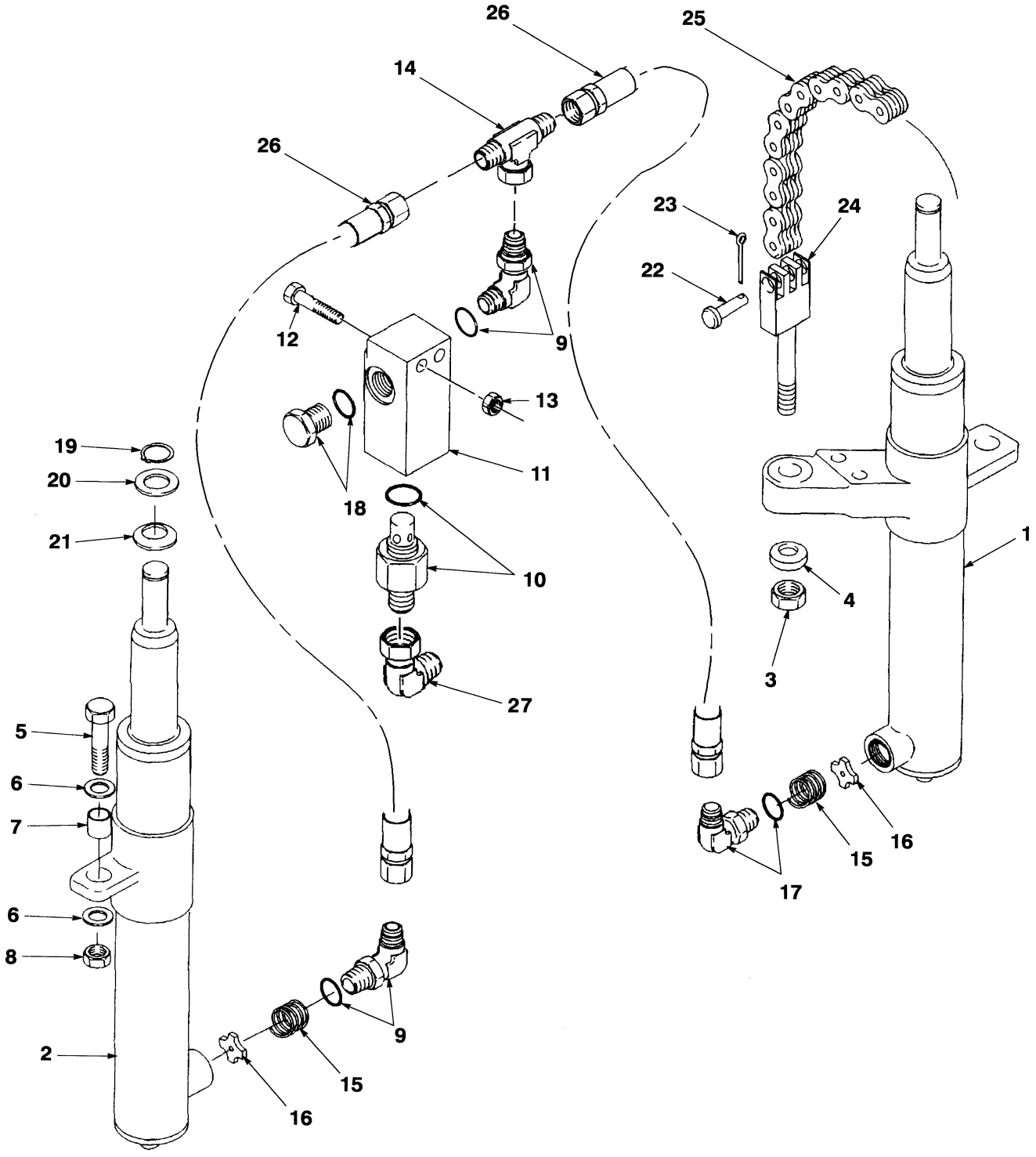

©2004 HYSTER COMPANY

MAIN LIFT ASSEMBLY
TWO STAGE LIMITED FREE-LIFT

ITEM	DESCRIPTION 1 2 3 4	LIFT HEIGHT TO BOTTOM OF FORKS		
	Mast Group Number	**A661 3292**	**A661 3792**	**A661 4292**
	Mast Assembly	2055751	2055756	2055758
25	Chain	135634	177352	336391

ITEM		PART NO.	DESCRIPTION	QTY
	a	. . . . .	Mast Assembly	1
1		. . . . .	Lift Cylinder (LH)	1
2		. . . . .	Lift Cylinder (RH)	1
3		60137	Nut	2
4		296426	Washer (Hardened)	2
5		292532	Capscrew	2
6		296422	Washer	4
7		323090	Spacer	2
8		300937	Nut	2
9		16560	Fitting	2
9		16485	O-Ring	1
10		16982	O-Ring	1
10		323061	Control Valve	1
11		1333392	Housing	1
11		1379687	Housing (Optional)	1
12		292509	Capscrew	2
13		313828	Nut	2
14		17051	Fitting	1
15		120938	Spring	1
16		323160	Washer	1
17		189595	Fitting	1
17		16485	O-Ring	1
18		14603	Fitting (Optional)	1
18		16486	O-Ring (Optional)	1
19		131358	Snap Ring	2
20		1333382	Washer	2
21		1354915	Washer	AR
21		1354917	Washer	AR
21		1354916	Washer	AR
22		1514866	Pin	2
23		15211	Cotter Pin	2
24		1369357	Chain Anchor	2
25	**a**	. . . . .	Chain	2
26		1376101	Hose	2
26		1376100	Hose	2
27		16882	Fitting	1

FOOTNOTES:
a Refer to Table

©2004 HYSTER COMPANY

MAIN LIFT CYLINDER (Figure 7-6)
TWO STAGE LIMITED FREE-LIFT

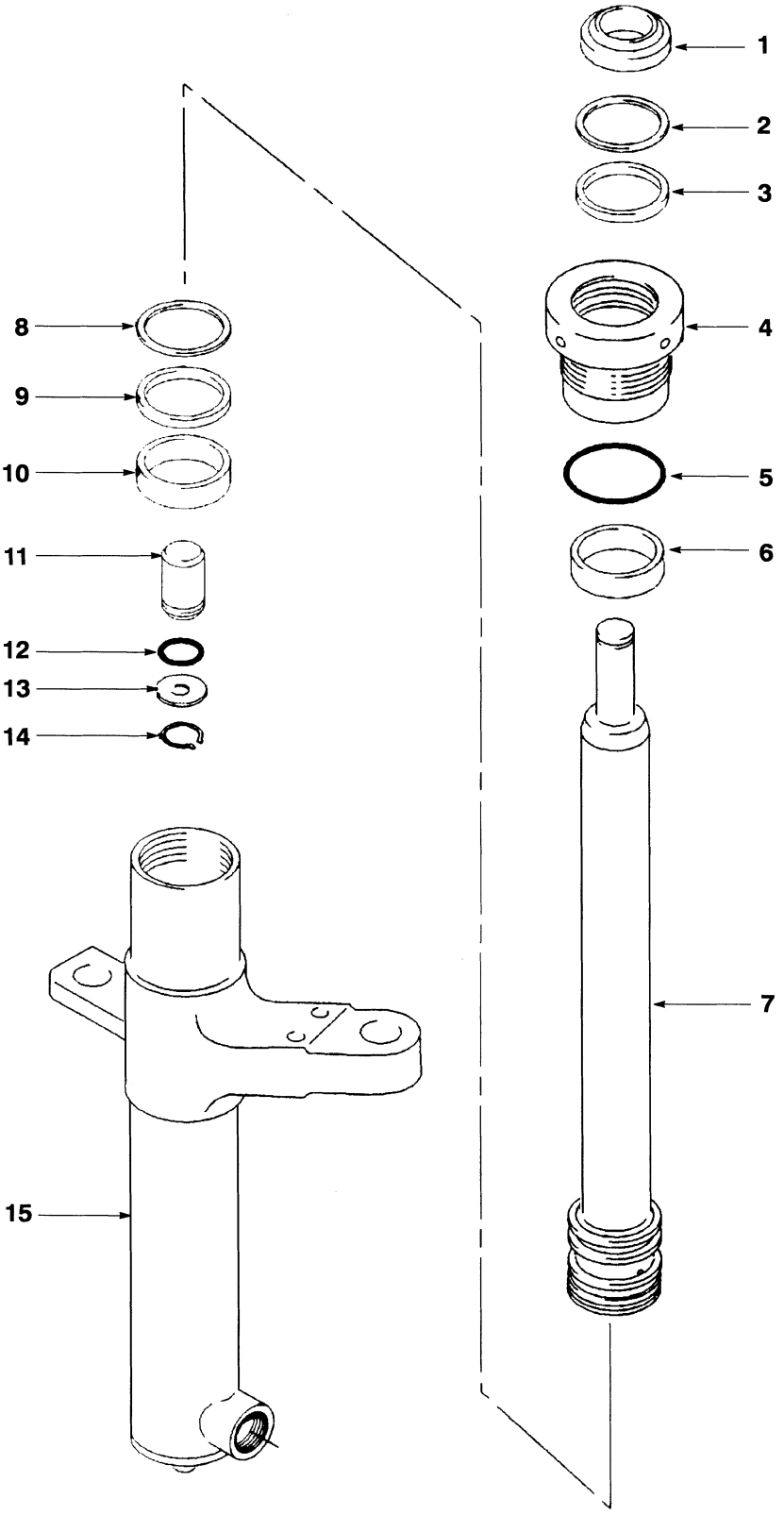

©2004 HYSTER COMPANY

MAIN LIFT CYLINDER
TWO STAGE LIMITED FREE-LIFT

LEFT HAND

ITEM	DESCRIPTION 1 2 3 4	LIFT HEIGHT TO BOTTOM OF FORKS		
	Mast Group Number	A661 3292	A661 3792	A661 4292
	Lift Cylinder	1361372	1362527	1362557
7	Rod	1361374	1362529	1362559
15	Shell	1361373	1362528	1362558

RIGHT HAND

ITEM	DESCRIPTION 1 2 3 4	LIFT HEIGHT TO BOTTOM OF FORKS		
	Mast Group Number	A661 3292	A661 3792	A661 4292
	Lift Cylinder	1361376	1362531	1362561
7	Rod	1361374	1362529	1362559
15	Shell	1361377	1362532	1362562

ITEM		PART NO.	DESCRIPTION	QTY
	b	. . . . .	Lift Cylinder	1
1		1319668	Wiper Ring	1
2		322824	Back-Up Ring	1
3		1381095	Rod Seal	1
4		1371653	Gland	1
5		55407	O-Ring	1
6		322902	Wear Ring	1
7	**b**	. . . . .	Rod	1
8		322824	Back-Up Ring	1
9		330692	Seal	1
10		1362871	Wear Ring	1
11		257913	Check Valve	1
12		39348	O-Ring	1
13		297531	Washer	1
13		637635	Washer	1
14		187388	Snap Ring (Optional)	1
15	**b**	. . . . .	Shell	1
	a	1355189	Spacer	1
		1360140	Seal Kit (Includes Items 1-6, 8-9)	1

FOOTNOTES:
a Not Illustrated
b Refer to Table

OUTER MAST (Figure 7-7)
TWO STAGE LIMITED FREE-LIFT

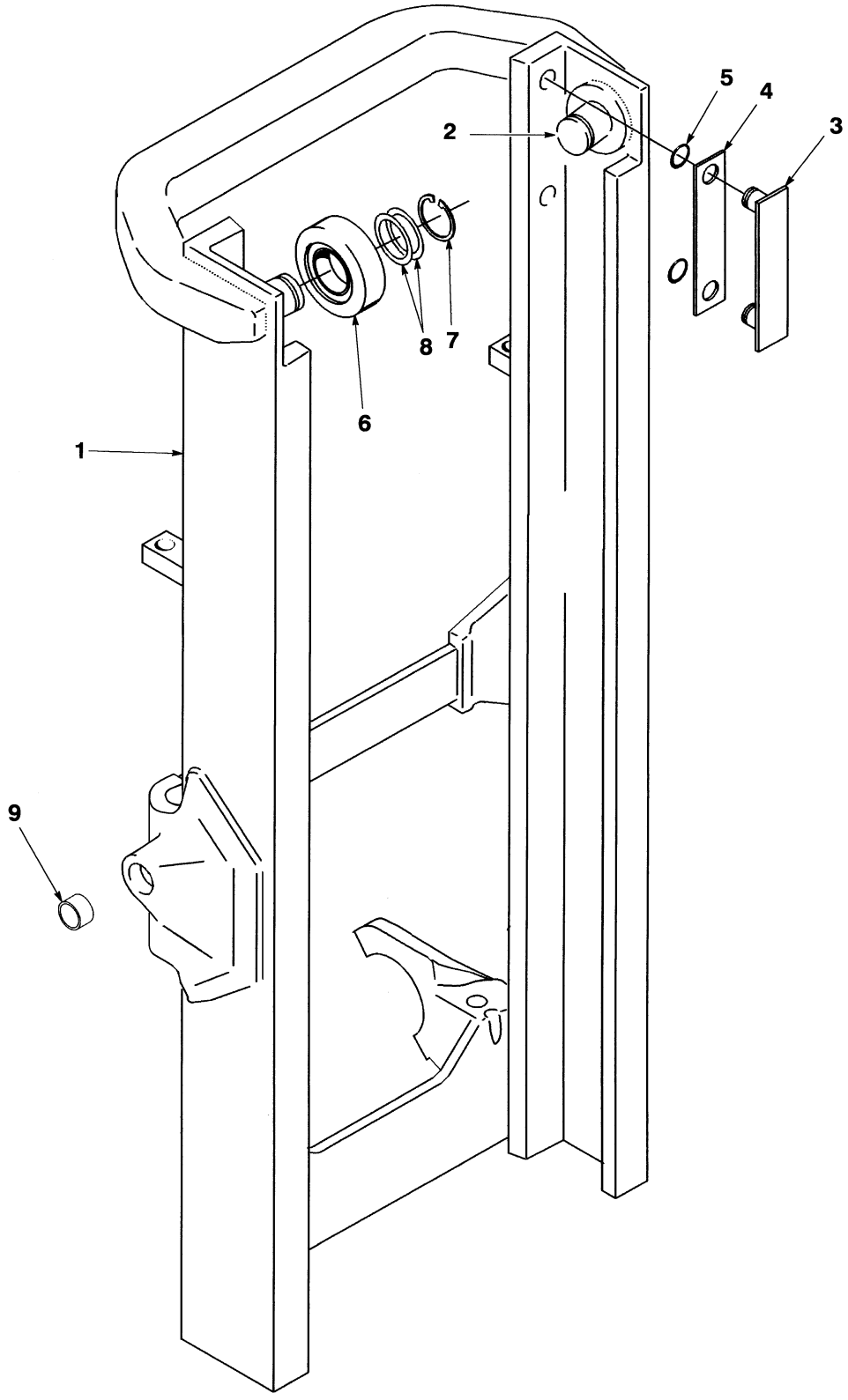

©2004 HYSTER COMPANY

OUTER MAST
TWO STAGE LIMITED FREE-LIFT

ITEM	DESCRIPTION 1 2 3 4	LIFT HEIGHT TO BOTTOM OF FORKS		
	Mast Group Number	**A661 3292**	**A661 3792**	**A661 4292**
	Mast Assembly	2055751	2055756	2055758
1	Outer Mast	1526872	1526877	1526883

ITEM	PART NO.	DESCRIPTION	QTY
	a	Mast Assembly	1
1	**a**	Outer Mast	1
2	1345216	Stubshaft	2
3	215212	Bearing Strip	2
4	131716	Shim (0,508 mm)	4
5	104506	O-Ring	4
6	1353192	Load Roller	2
6	1333399	Load Roller	2
6	1393132	Load Roller	2
7	58901	Snap Ring	2
8	129387	Shim (0,508 mm)	AR
9	1348185	Bushing	2

FOOTNOTES:
a Refer to Table

©2004 HYSTER COMPANY

SIDE-SHIFT CYLINDER (Figure 7-8)

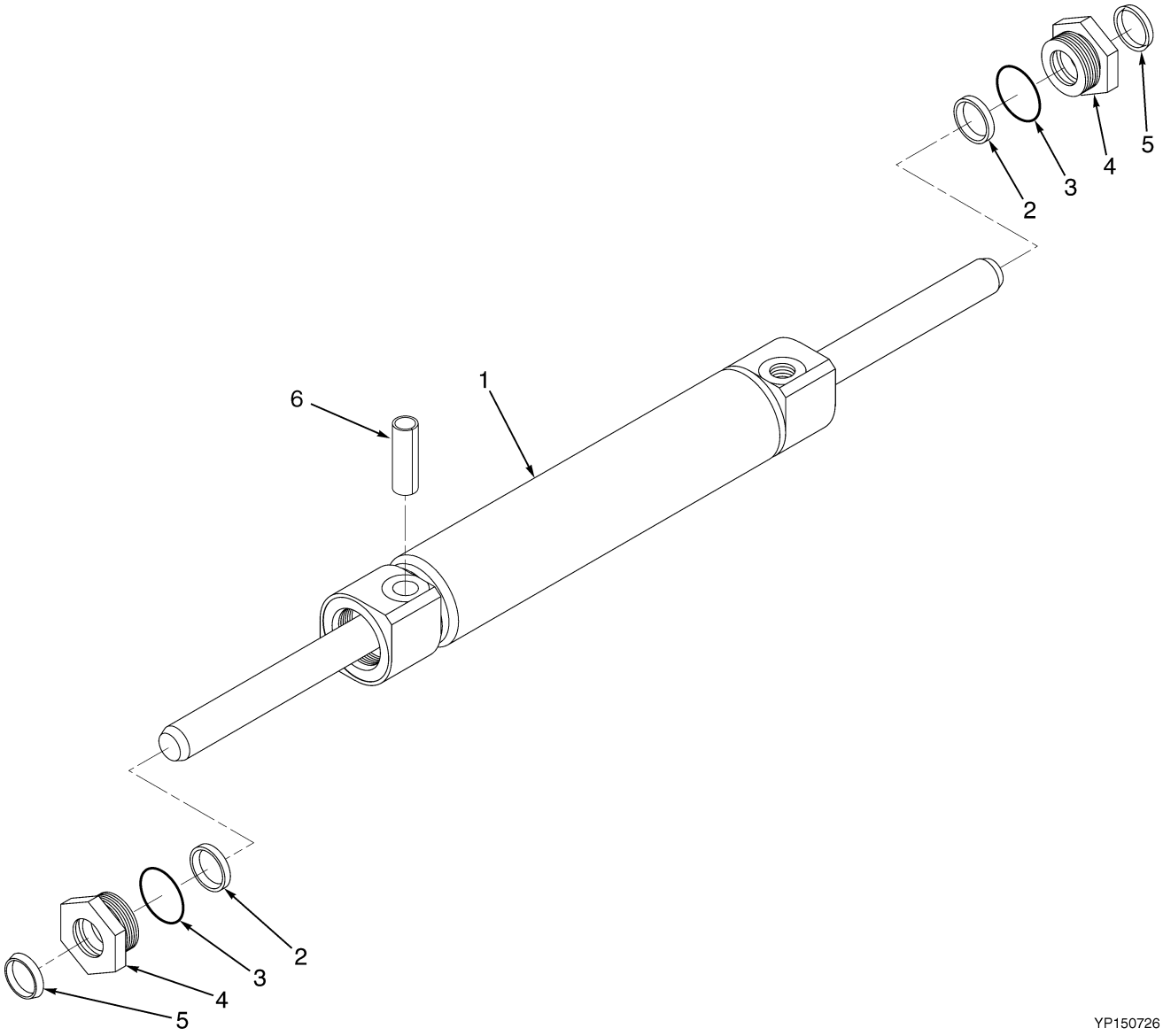

YP150726

ITEM	PART NO.	DESCRIPTION	QTY
	2043528	Cylinder Assembly	1
1	1489016	Cylinder	1
2	1489037	Rod Seal	2
3	1489035	O-Ring	2
4	1498325	Retainer	2
5	1489039	Rod Wiper	2
6	302487	Pin	1
	1503096	Seal Kit (Includes Items 2-3, 5)	1

©2004 HYSTER COMPANY

8 MAST-THREE STAGE FULL FREE-LIFT

SECTION 8
MAST-THREE STAGE FULL FREE-LIFT

DESCRIPTION **PAGE**

CARRIAGE
THREE STAGE FULL FREE-LIFT 8-2
FREE LIFT
THREE STAGE FULL FREE-LIFT 8-4
FREE LIFT CYLINDER
THREE STAGE FULL FREE-LIFT 8-6
HEADER HOSE
THREE STAGE FULL FREE-LIFT 8-8
INNER MAST
THREE STAGE FULL FREE-LIFT 8-12
INTEGRAL SIDE-SHIFT CARRIAGE
THREE STAGE FULL FREE-LIFT 8-14
INTERMEDIATE MAST
THREE STAGE FULL FREE-LIFT 8-16
MAIN LIFT ASSEMBLY
THREE STAGE FULL FREE-LIFT 8-18
MAIN LIFT CYLINDER
THREE STAGE FULL FREE-LIFT 8-22
OUTER MAST
THREE STAGE FULL FREE-LIFT 8-24
TILT CYLINDER
THREE STAGE FULL FREE-LIFT 8-26
TILT CYLINDER ATTACHING PARTS
THREE STAGE FULL FREE-LIFT 8-28

©2004 HYSTER COMPANY

CARRIAGE (Figure 8-1)
THREE STAGE FULL FREE-LIFT

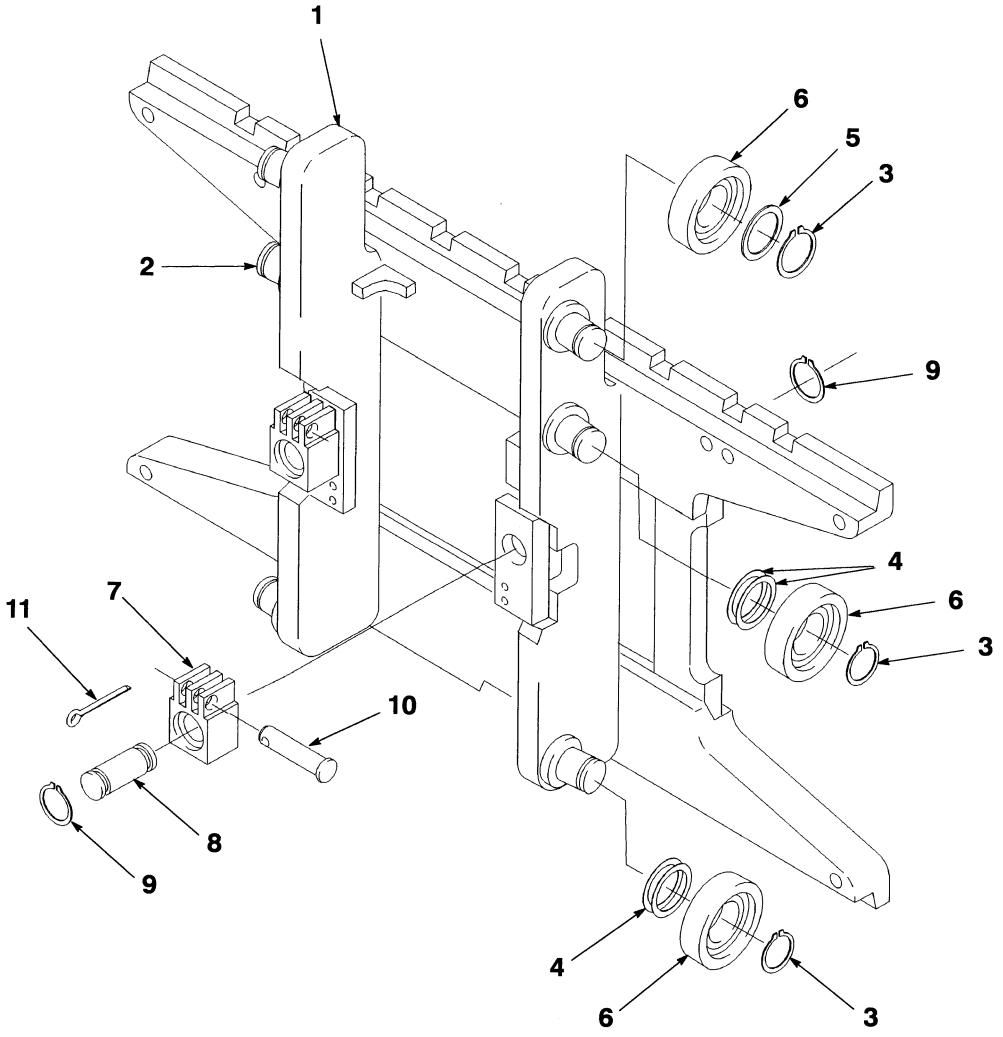

ITEM	PART NO.	DESCRIPTION	QTY
	2055493	Carriage	1
1	1526275	Frame	1
2	1345216	Stubshaft	6
3	58901	Snap Ring	6
3	1374797	Snap Ring (Optional)	6
4	129387	Shim (0,508 mm)	AR
5	366115	Spacer	2
6	1363272	Load Roller	6
6	1393142	Load Roller (Optional)	6
7	1369345	Chain Anchor (Dual Hole)	2
7	1504010	Chain Anchor (Single Hole) (Optional)	2
8	1353408	Pin	2
9	131358	Snap Ring	4
10	1514866	Pin	2
11	15211	Cotter Pin	2

©2004 HYSTER COMPANY

NOTES

FREE LIFT (Figure 8-2)
THREE STAGE FULL FREE-LIFT

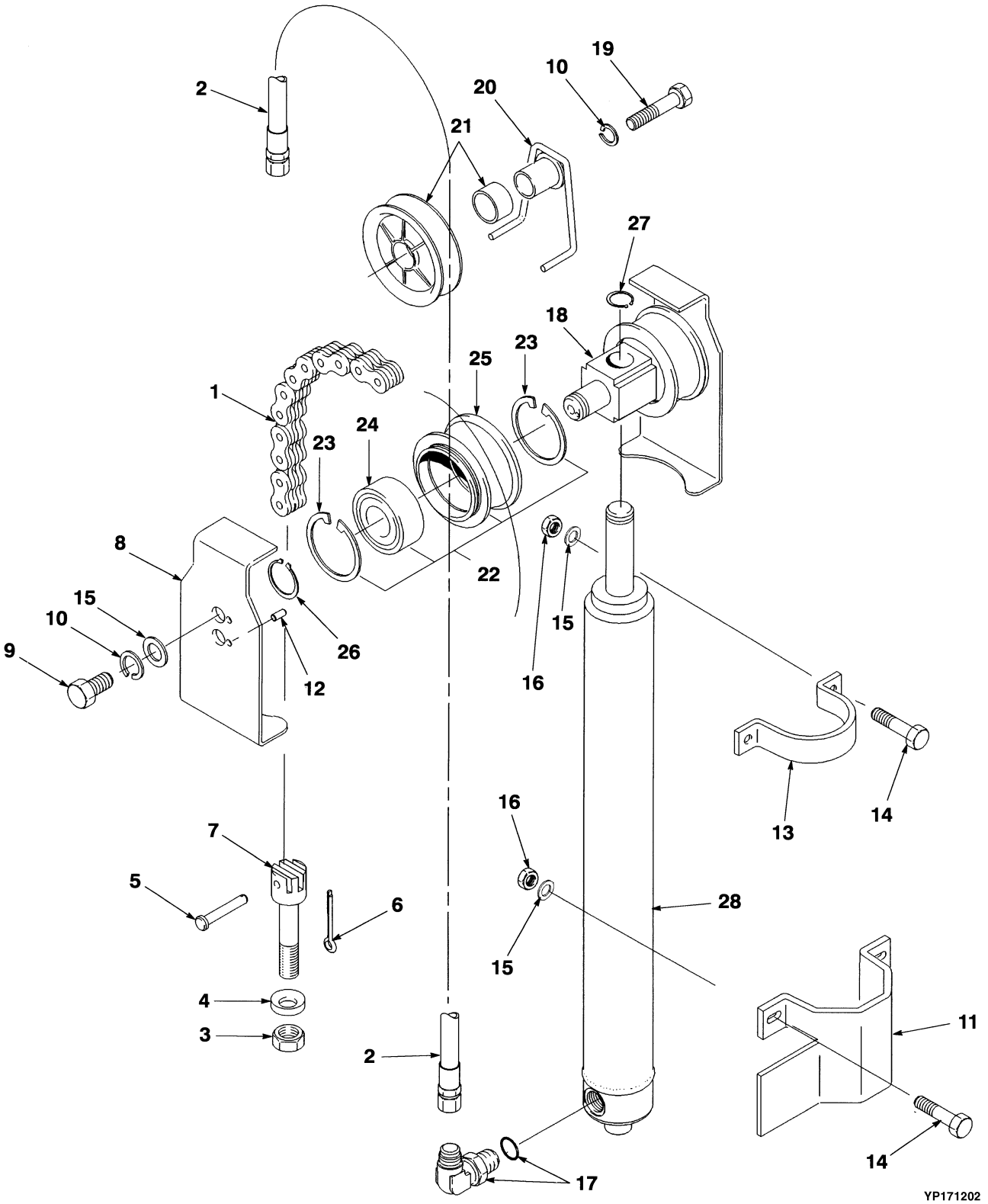

©2004 HYSTER COMPANY

FREE LIFT
THREE STAGE FULL FREE-LIFT

ITEM	DESCRIPTION 1 2 3 4	LIFT HEIGHT TO BOTTOM OF FORKS			
	Mast Group Number	A662 4460	A662 4760	A662 4910	A662 5510
	Mast Assembly	2055834	2055836	2055837	2055841
1	Chain	231082	231083	231084	88436
2	Hose	1363306	1363308	1363309	1363313

ITEM	PART NO.	DESCRIPTION	QTY
	a	Mast Assembly	1
1	**a**	Chain	2
2	**a**	Hose	1
3	60137	Nut	2
4	296426	Washer (Hardened)	2
5	1514866	Pin	2
6	15211	Cotter Pin	2
7	1369357	Chain Anchor	2
8	1395285	Chain Guard	2
9	292527	Capscrew	2
10	. . . . .	Lockwasher	3
11	1353547	Bracket	1
12	302461	Pin	2
13	1489972	Bracket	1
14	292528	Capscrew	4
15	320161	Washer	6
16	300937	Nut	4
17	1379496	Valve	1
18	1337905	Crosshead	1
19	292533	Capscrew	1
20	1360534	Stubshaft	1
21	1343989	Hose Sheave	1
21	1354901	Bushing	1
22	1379685	Chain Sheave Assembly	2
23	37752	Snap Ring	2
24	1378699	Bearing	1
25	1378698	Sheave	1
26	304526	Snap Ring	2
27	131358	Snap Ring	1
28	. . . . .	Free Lift Cylinder	1

FOOTNOTES:
a Refer to Table

FREE LIFT CYLINDER (Figure 8-3)
THREE STAGE FULL FREE-LIFT

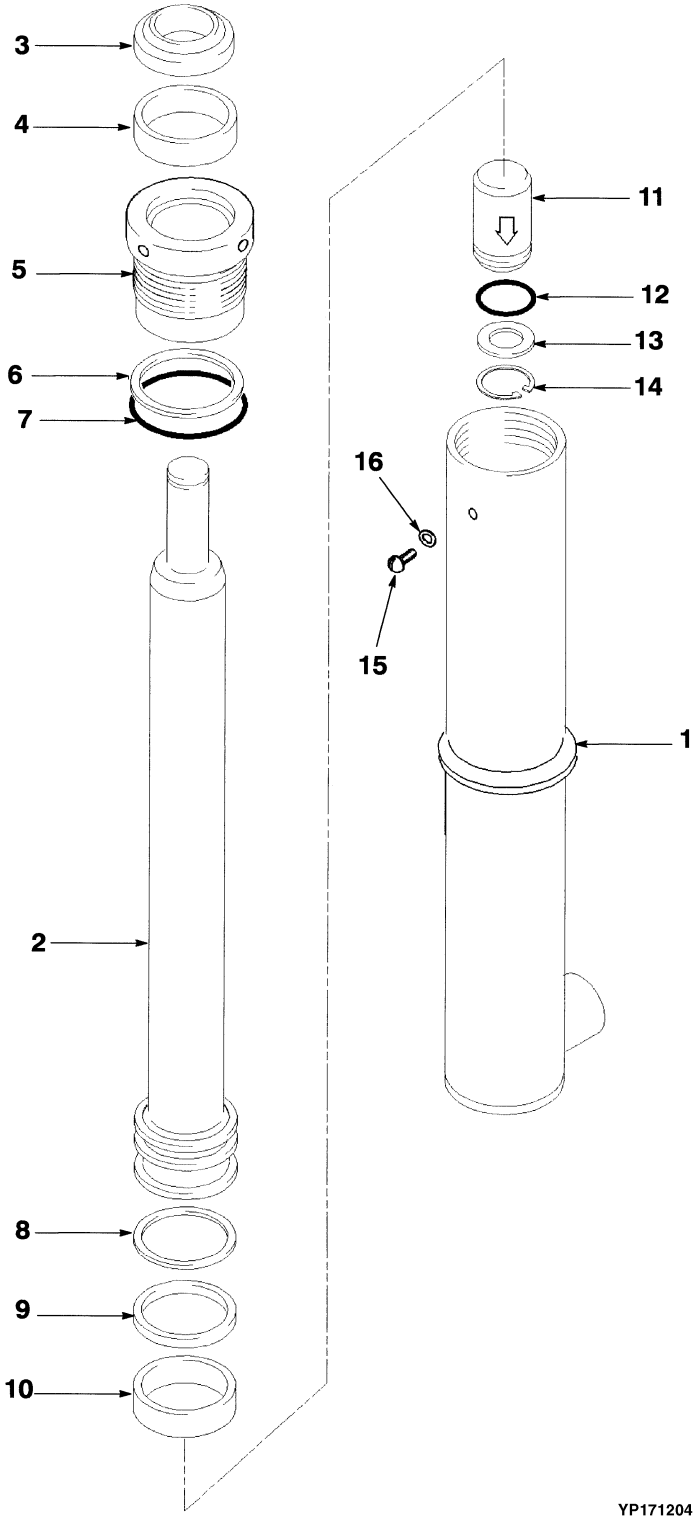

©2004 HYSTER COMPANY

FREE LIFT CYLINDER
THREE STAGE FULL FREE-LIFT

ITEM	DESCRIPTION 1 2 3 4	LIFT HEIGHT TO BOTTOM OF FORKS			
	Mast Group Number	**A662 4460**	**A662 4760**	**A662 4910**	**A662 5510**
	Cylinder Group Number	**8601906**	**8601908**	**8601909**	**8601914**
	Lift Cylinder	1362886	1362888	1362889	1362894
1	Shell	1362923	1362925	1362926	1362931
2	Rod	1362960	1362962	1362963	1362968

ITEM	PART NO.	DESCRIPTION	QTY
	a	Lift Cylinder	1
1	**a**	Shell	1
2	**a**	Rod	1
3	2013099	Wiper	1
4	1358970	Seal	1
5	1362880	Gland	1
6	147973	Back-Up Ring	1
7	55146	O-Ring	1
8	2013089	Back-Up Ring	1
9	201829	Rod Seal	1
10	1362881	Wear Ring	1
11	257913	Check Valve	1
12	190580	O-Ring	1
13	297531	Washer	1
14	187388	Snap Ring	1
15	1361302	Screw	1
16	190887	Seal	1
	1360141	Seal Kit (Includes Items 3-4, 6-10, 12, 16)	1

FOOTNOTES:
a Refer to Table

HEADER HOSE (Figure 8-4)
THREE STAGE FULL FREE-LIFT

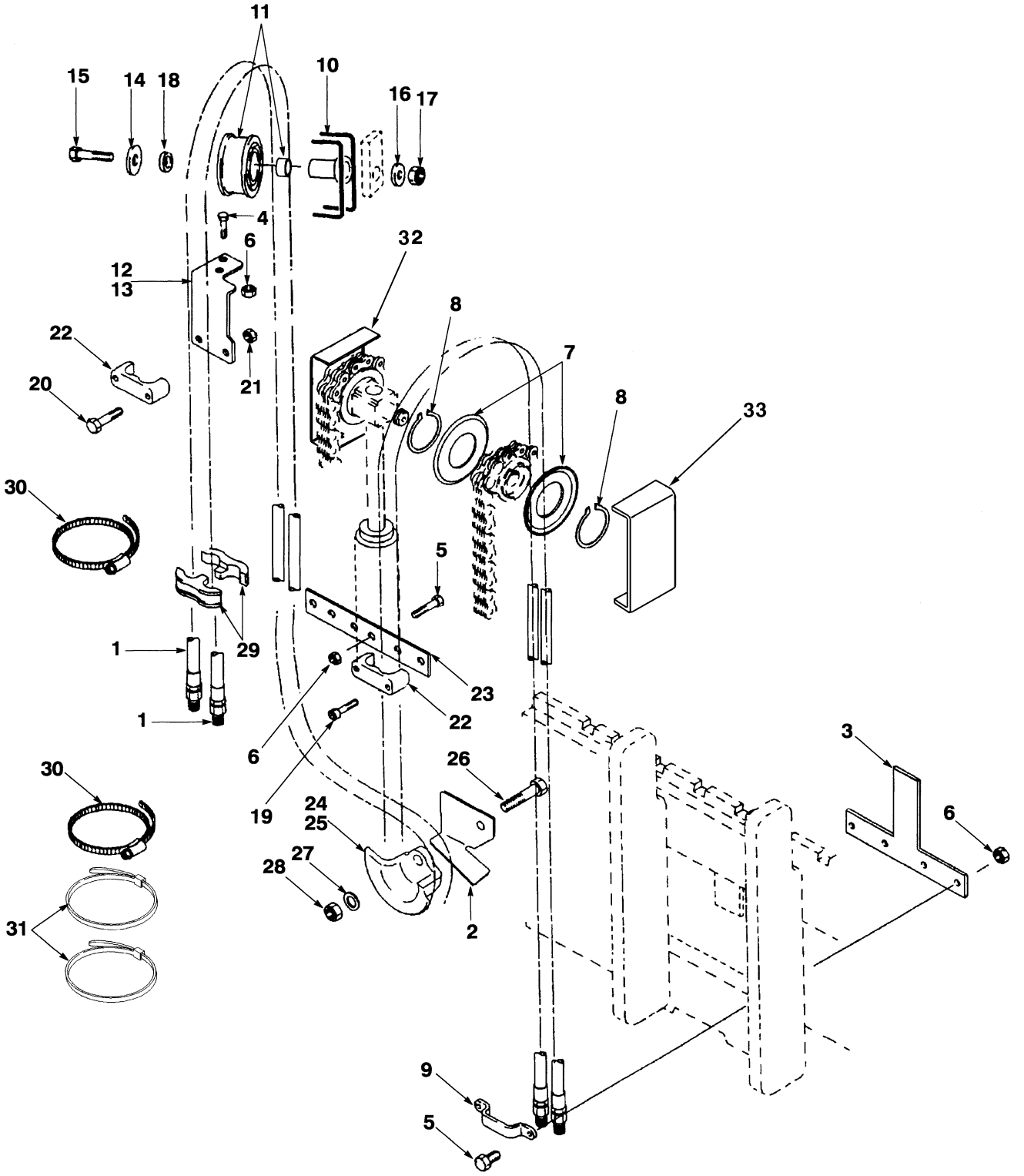

©2004 HYSTER COMPANY

HEADER HOSE
THREE STAGE FULL FREE-LIFT

ITEM	DESCRIPTION 1 2 3 4	LIFT HEIGHT TO BOTTOM OF FORKS			
	Mast Group Number	A662 4460	A662 4760	A662 4910	A662 5510
	Cylinder Group Number	0	0	0	0
1	Hose	1547115	1547117	1547118	1547122

KEY:
A: Three Function
B: Four Function

ITEM		PART NO.	DESCRIPTION	QTY A	QTY B
1	**a**	. . . . .	Hose	2	4
2		1363253	Bracket (RH)	1	1
2		1363256	Bracket (LH)	..	1
3		. . . . .	Bracket	1	1
4		136704	Capscrew	2	4
5		136749	Capscrew	6	12
6		313828	Nut	6	12
7		1345199	Hose Guide	2	4
8		1345204	Snap Ring	2	4
9		1369333	Clamp	1	2
10		1396406	Stubshaft	1	2
11		1494017	Sheave	1	2
11		. . . . .	Bushing	1	1
12		1381598	Bracket (RH)	1	1
13		1381599	Bracket (LH)	..	1
14		1345190	Washer	2	2
15		292533	Capscrew	2	2
16		320161	Washer	1	2
17		300937	Nut	2	2
18		1360549	Spacer	1	2
19		293795	Capscrew	4	4
20		293795	Capscrew	2	4
21		313805	Nut	2	4
22		1360386	Clamp	2	4
23		1353464	Plate	1	1
24		1348247	Hose Guide	1	1
25		1348246	Hose Guide	..	1
26		292521	Capscrew	1	2
27		320160	Washer	2	4
28		316826	Nut	1	2
29		1353530	Clamp	4	8
30		1360507	Clamp	2	4
31		1375574	Strap	2	4

©2004 HYSTER COMPANY

HEADER HOSE
THREE STAGE FULL FREE-LIFT

ITEM	PART NO.	DESCRIPTION	QTY A	QTY B
32	1395292	Bracket (LH)	..	1
33	1395291	Bracket (RH)	1	1

FOOTNOTES:
a Refer to Table

©2004 HYSTER COMPANY

NOTES

INNER MAST (Figure 8-5)
THREE STAGE FULL FREE-LIFT

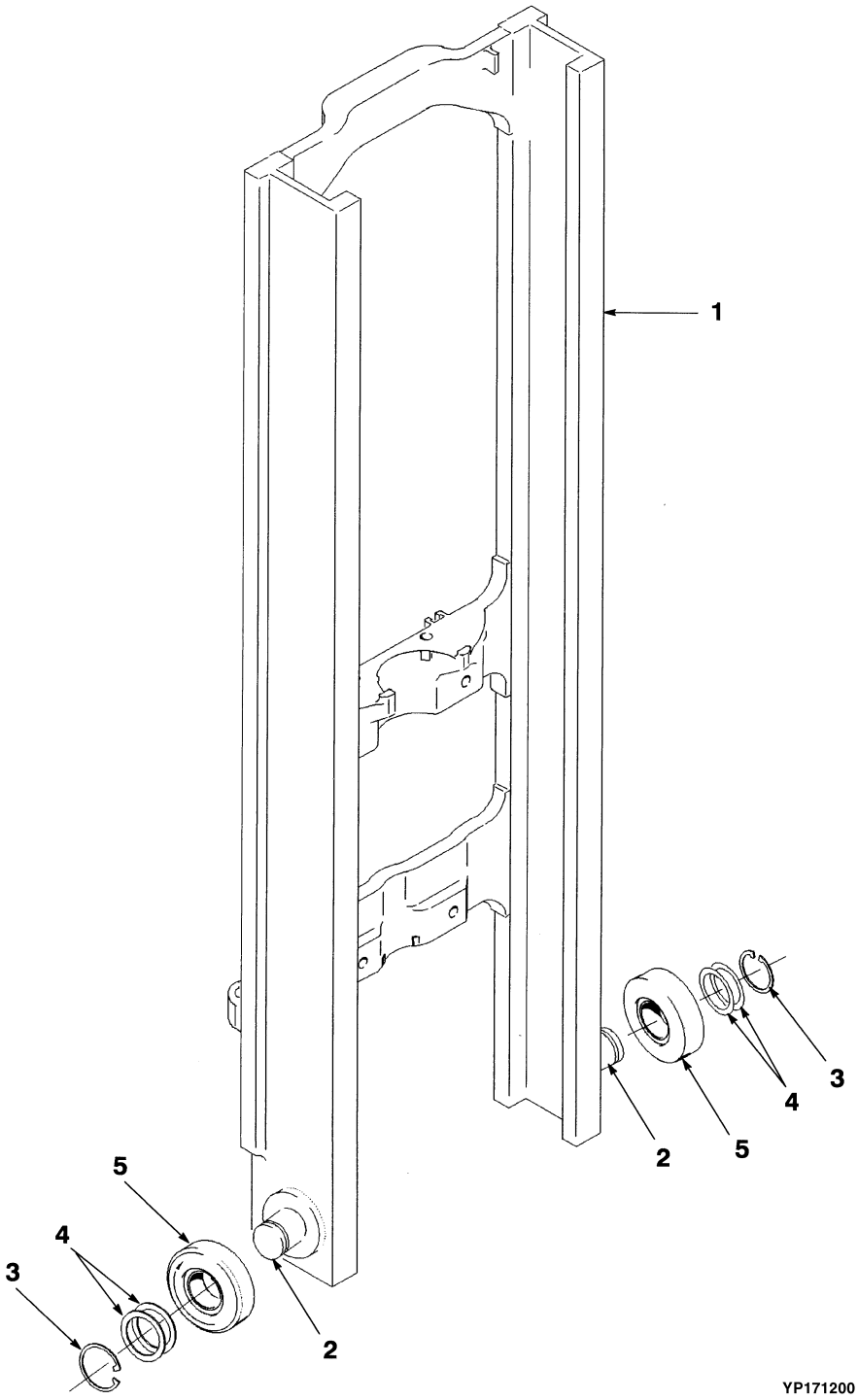

©2004 HYSTER COMPANY

INNER MAST
THREE STAGE FULL FREE-LIFT

ITEM	DESCRIPTION 1 2 3 4	LIFT HEIGHT TO BOTTOM OF FORKS			
	Mast Group Number	**A662 4460**	**A662 4760**	**A662 4910**	**A662 5510**
	Mast Assembly	2055834	2055836	2055837	2055841
1	Inner Mast	1352806	1352808	1352809	1352813

ITEM	PART NO.	DESCRIPTION	QTY
	a	Mast Assembly	1
1	**a**	Inner Mast	1
2	1345264	Stubshaft	2
3	58901	Snap Ring	2
4	129387	Shim (0,508 mm)	AR
5	1353192	Load Roller	2

FOOTNOTES:
a Refer to Table

INTEGRAL SIDE-SHIFT CARRIAGE (Figure 8-6)
THREE STAGE FULL FREE-LIFT

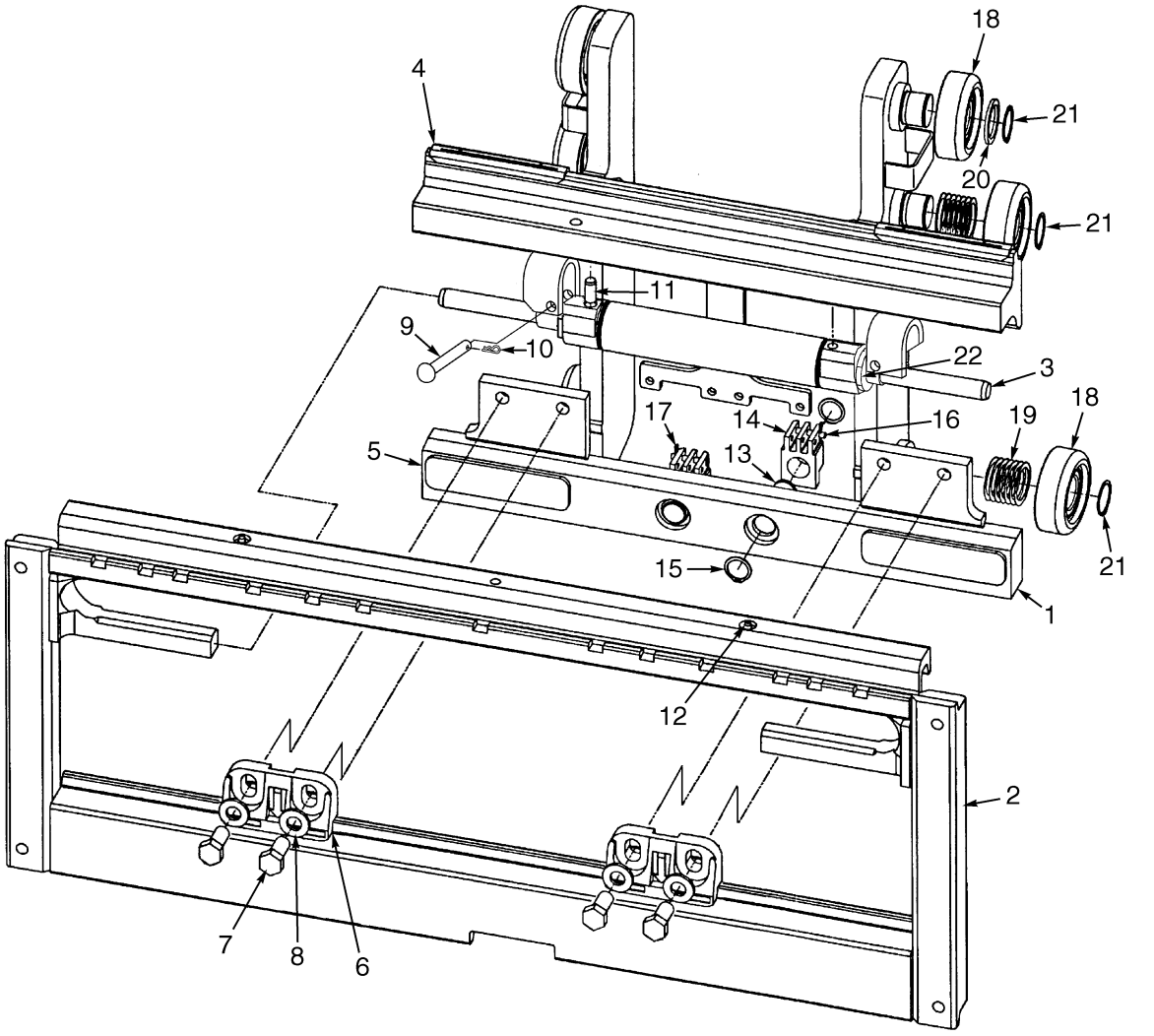

BP000001

©2004 HYSTER COMPANY

INTEGRAL SIDE-SHIFT CARRIAGE
THREE STAGE FULL FREE-LIFT

ITEM	PART NO.	DESCRIPTION	QTY
	2056866	Side-Shift Carriage	1
1	1529596	Frame (Inner)	1
2	1489010	Frame (965 mm) (Outer)	1
3	2043528	Cylinder Assembly	1
4	2043531	Bearing (Upper)	2
5	2043533	Bearing (Lower)	2
6	2043530	Hook (Lower)	2
7	226458	Capscrew	4
8	296426	Washer (Hardened)	4
9	1401746	Pin	2
10	18832	Cotter Pin	2
11	16041	Lube Fitting	2
12	317735	Pin	2
13	1369345	Chain Anchor (Dual Hole)	2
13	1504010	Chain Anchor (Single Hole) (Optional)	2
14	131358	Snap Ring	4
15	1514866	Pin	2
16	15211	Cotter Pin	2
17	1363272	Load Roller	6
17	1393142	Load Roller (Optional)	6
18	129387	Shim (0,508 mm)	28
19	366115	Spacer	2
20	58901	Snap Ring	6
20	1374797	Snap Ring (Optional)	6
21	1498326	Shim	AR

©2004 HYSTER COMPANY

INTERMEDIATE MAST (Figure 8-7)
THREE STAGE FULL FREE-LIFT

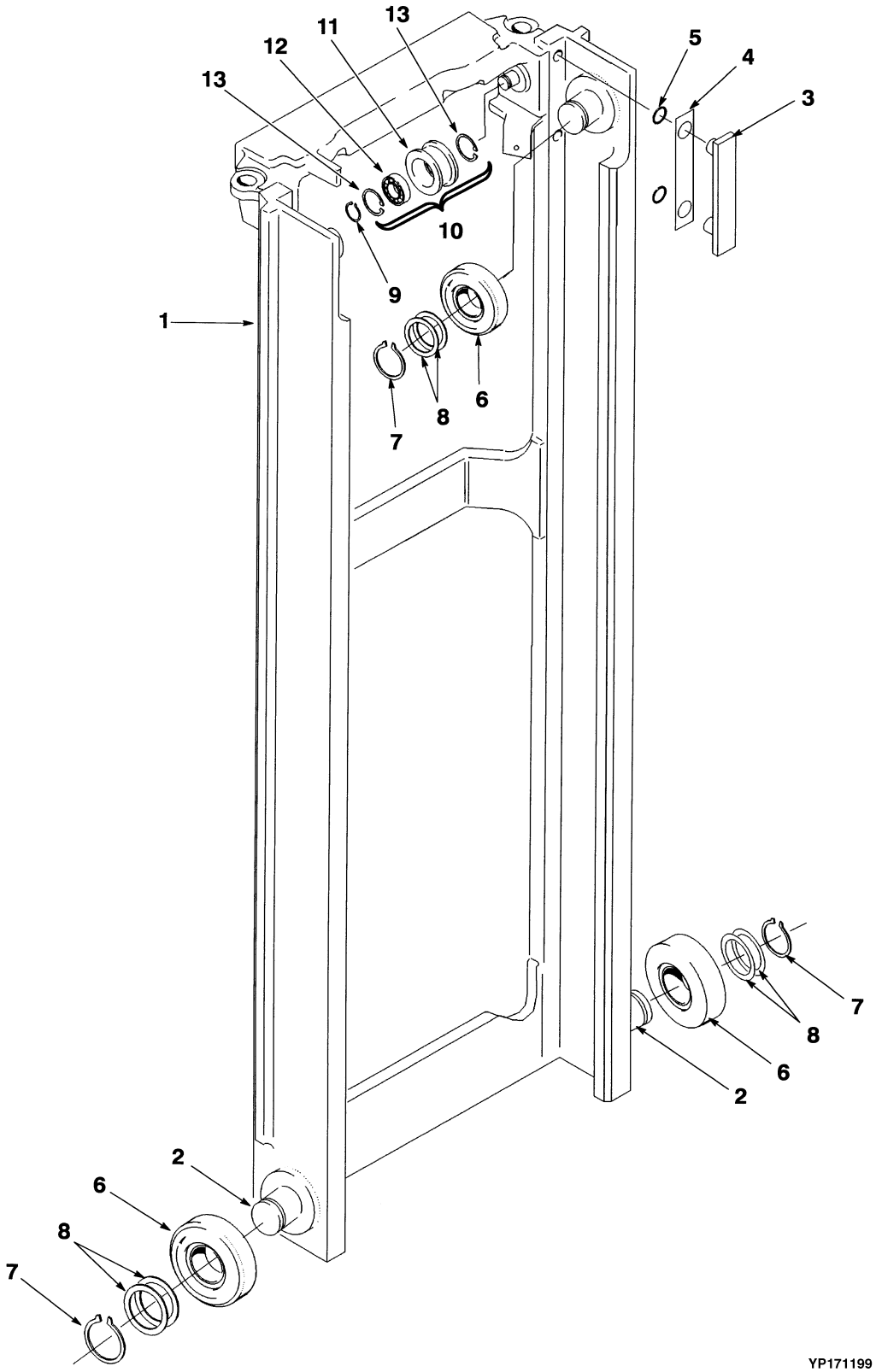

©2004 HYSTER COMPANY

INTERMEDIATE MAST
THREE STAGE FULL FREE-LIFT

ITEM	DESCRIPTION 1 2 3 4	LIFT HEIGHT TO BOTTOM OF FORKS			
	Mast Group Number	**A662 4460**	**A662 4760**	**A662 4910**	**A662 5510**
	Mast Assembly	2055834	2055836	2055837	2055841
1	Intermediate Mast	1353006	1353008	1353009	1353013

ITEM		PART NO.	DESCRIPTION	QTY
	a	. . . . .	Mast Assembly	1
1	**a**	. . . . .	Intermediate Mast	1
2		1345264	Stubshaft	4
3		215212	Bearing Strip	2
4		131716	Shim (0,508 mm)	4
5		104506	O-Ring	4
6		1353191	Load Roller	4
7		58901	Snap Ring	4
8		129387	Shim (0,508 mm)	AR
9		230518	Plug	2
10		1379685	Chain Sheave Assembly	2
11		1378698	Sheave	1
12		1378699	Bearing	1
13		37752	Snap Ring	2

FOOTNOTES:
a Refer to Table

MAIN LIFT ASSEMBLY (Figure 8-8)
THREE STAGE FULL FREE-LIFT

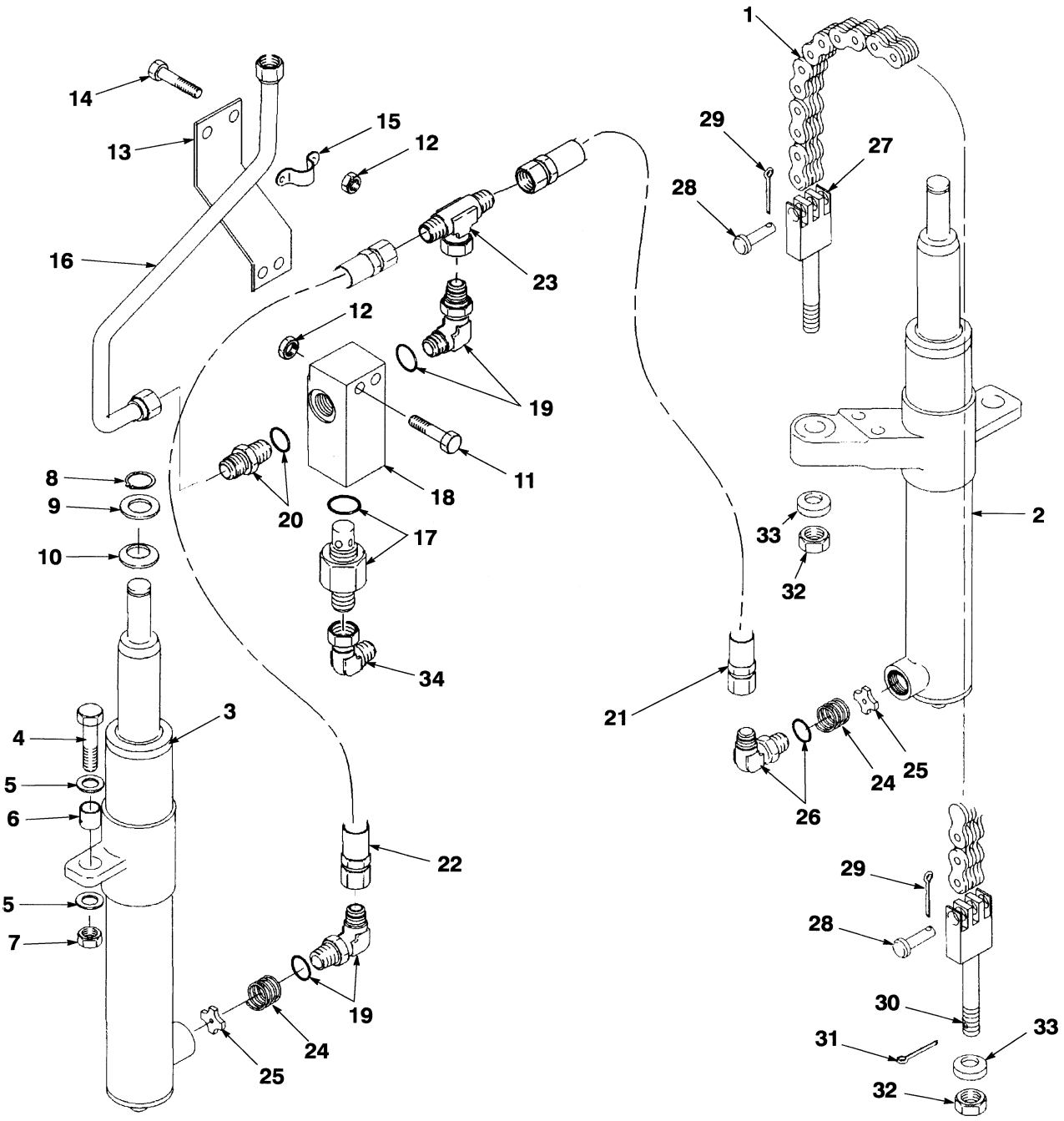

©2004 HYSTER COMPANY

MAIN LIFT ASSEMBLY
THREE STAGE FULL FREE-LIFT

ITEM	DESCRIPTION 1 2 3 4	LIFT HEIGHT TO BOTTOM OF FORKS			
	Mast Group Number	A662 4460	A662 4760	A662 4910	A662 5510
	Mast Assembly	2055834	2055836	2055837	2055841
1	Chain	164474	88441	135634	177352

ITEM		PART NO.	DESCRIPTION	QTY
	a	. . . . .	Mast Assembly	1
1	**a**	. . . . .	Chain	2
2		. . . . .	Lift Cylinder (LH)	1
3		. . . . .	Lift Cylinder (RH)	1
4		292531	Capscrew	2
5		296422	Washer	4
6		323090	Spacer	2
7		300937	Nut	2
8		131358	Snap Ring	2
9		1333382	Washer	2
10		1354915	Washer (0,254 mm)	AR
10		1354916	Washer (0,762 mm)	AR
10		1354917	Washer (1,524 mm)	AR
11		136681	Capscrew	2
12		313828	Nut	4
13		1363250	Plate	1
14		287851	Capscrew	2
15		1363251	Clamp	1
16		1353399	Tube	1
17		323061	Control Valve	1
17		16982	O-Ring	1
18		1333392	Housing	1
19		16560	Fitting	2
19		16485	O-Ring	1
20		16543	Fitting	1
20		16486	O-Ring	1
21		1376100	Hose	1
22		1376101	Hose	1
23		17051	Fitting	1
24		120938	Spring	2
25		323160	Washer	2
26		189595	Fitting	2
26		16485	O-Ring	1
27		1369357	Chain Anchor	2
28		1514866	Pin	4
29		15211	Cotter Pin	4
30		1365140	Chain Anchor	2
31		15223	Cotter Pin	2
32		60137	Nut	4

©2004 HYSTER COMPANY

MAIN LIFT ASSEMBLY
THREE STAGE FULL FREE-LIFT

ITEM	PART NO.	DESCRIPTION	QTY
33	296426	Washer (Hardened)	4
34	16882	Fitting	1

FOOTNOTES:
a Refer to Table

©2004 HYSTER COMPANY

NOTES

MAIN LIFT CYLINDER (Figure 8-9)
THREE STAGE FULL FREE-LIFT

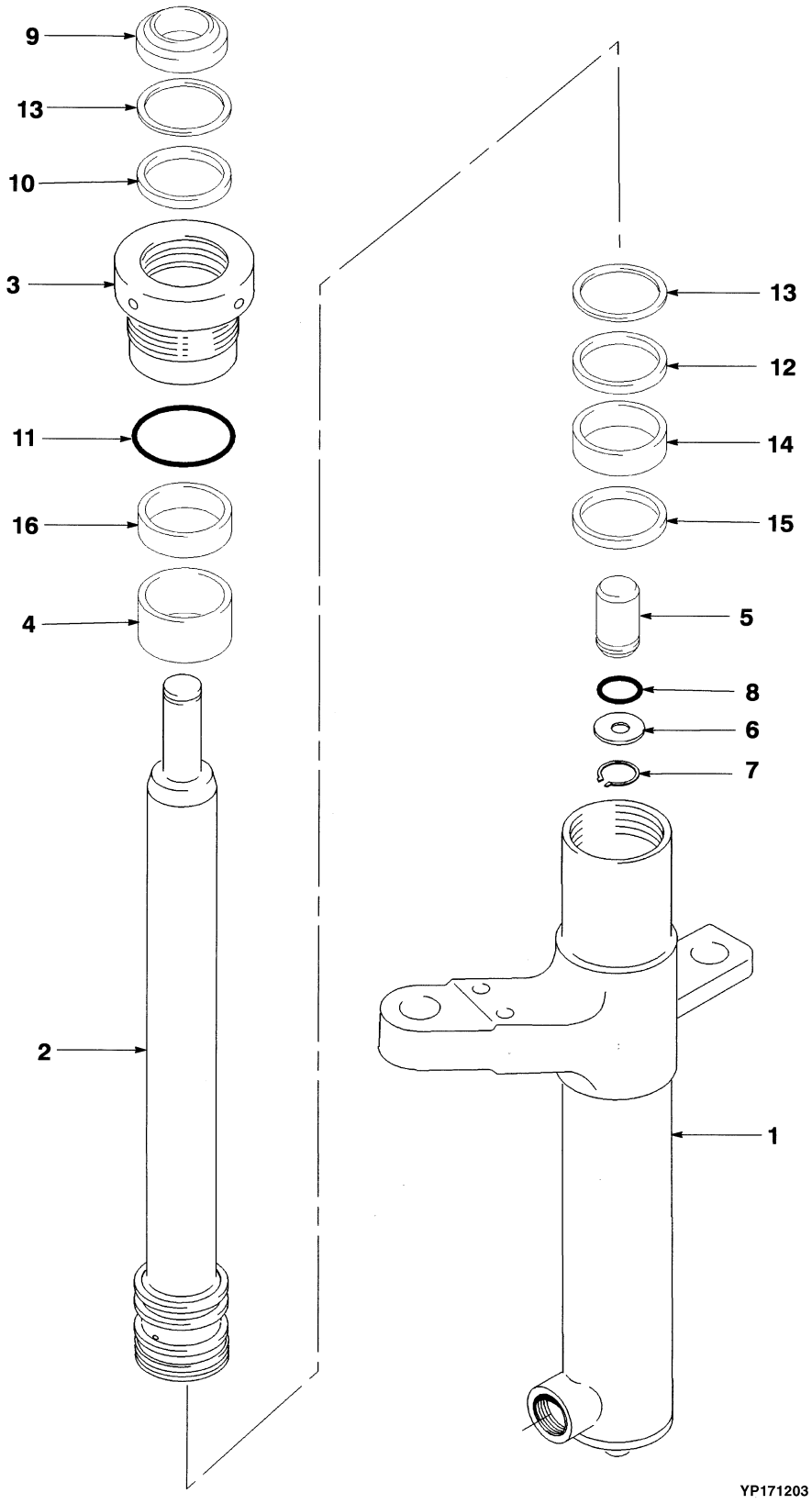

©2004 HYSTER COMPANY

MAIN LIFT CYLINDER
THREE STAGE FULL FREE-LIFT

LEFT HAND

ITEM	DESCRIPTION 1 2 3 4	LIFT HEIGHT TO BOTTOM OF FORKS			
	Mast Group Number	**A662 4460**	**A662 4760**	**A662 4910**	**A662 5510**
	Cylinder Group Number	**8601706**	**8601708**	**8601709**	**8601713**
	Lift Cylinder	1362702	1362715	1362721	1362745
1	Shell	1362703	1362716	1362722	1366057
2	Rod	1362704	1362717	1362723	1362746

RIGHT HAND

ITEM	DESCRIPTION 1 2 3 4	LIFT HEIGHT TO BOTTOM OF FORKS			
	Mast Group Number	**A662 4460**	**A662 4760**	**A662 4910**	**A662 5510**
	Cylinder Group Number	**8601756**	**8601758**	**8601759**	**8601763**
	Lift Cylinder	1362706	1362719	1362725	1362749
1	Shell	1362713	1362726	1362732	1362756
2	Rod	1362704	1362717	1362723	1362746

ITEM	PART NO.	DESCRIPTION	QTY
	a	Lift Cylinder	1
1	**a**	Shell	1
2	**a**	Rod	1
3	1371653	Gland	1
4	1355610	Spacer	1
5	257913	Check Valve	1
6	297531	Washer	1
7	187388	Snap Ring	1
8	190580	O-Ring	1
9	1319668	Wiper Ring	1
10	1381095	Rod Seal	1
11	55407	O-Ring	1
12	330692	Seal	1
13	322824	Back-Up Ring	2
14	1362871	Wear Ring	1
15	1362875	Piston Ring	1
16	322902	Wear Ring	1
	1360139	Seal Kit (Includes Items 8-15)	1

FOOTNOTES:
a Refer to Table

OUTER MAST (Figure 8-10)
THREE STAGE FULL FREE-LIFT

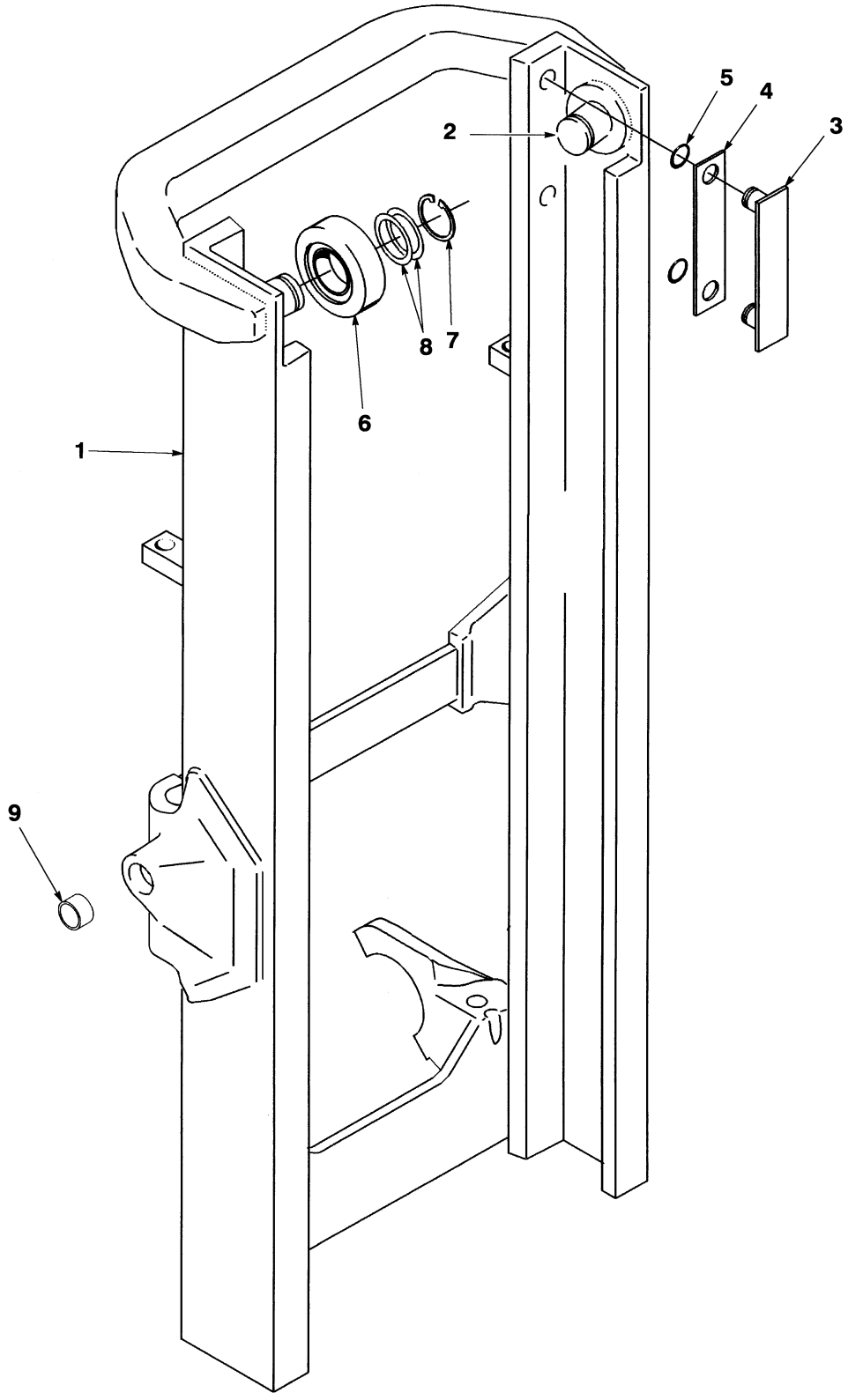

©2004 HYSTER COMPANY

OUTER MAST
THREE STAGE FULL FREE-LIFT

ITEM	DESCRIPTION 1 2 3 4	LIFT HEIGHT TO BOTTOM OF FORKS			
	Mast Group Number	A662 4460	A662 4760	A662 4910	A662 5510
	Mast Assembly	2055834	2055836	2055837	2055841
1	Outer Mast	1526869	1526871	1526872	1526877

ITEM	PART NO.	DESCRIPTION	QTY
	a	Mast Assembly	1
1	**a**	Outer Mast	1
2	1345264	Stubshaft	2
3	215212	Bearing Strip	2
4	131716	Shim (0,508 mm)	4
5	104506	O-Ring	4
6	1353192	Load Roller	2
7	58901	Snap Ring	2
8	129387	Shim (0,508 mm)	AR
9	1348185	Bushing	2

FOOTNOTES:
a Refer to Table

©2004 HYSTER COMPANY

TILT CYLINDER (Figure 8-11)
THREE STAGE FULL FREE-LIFT

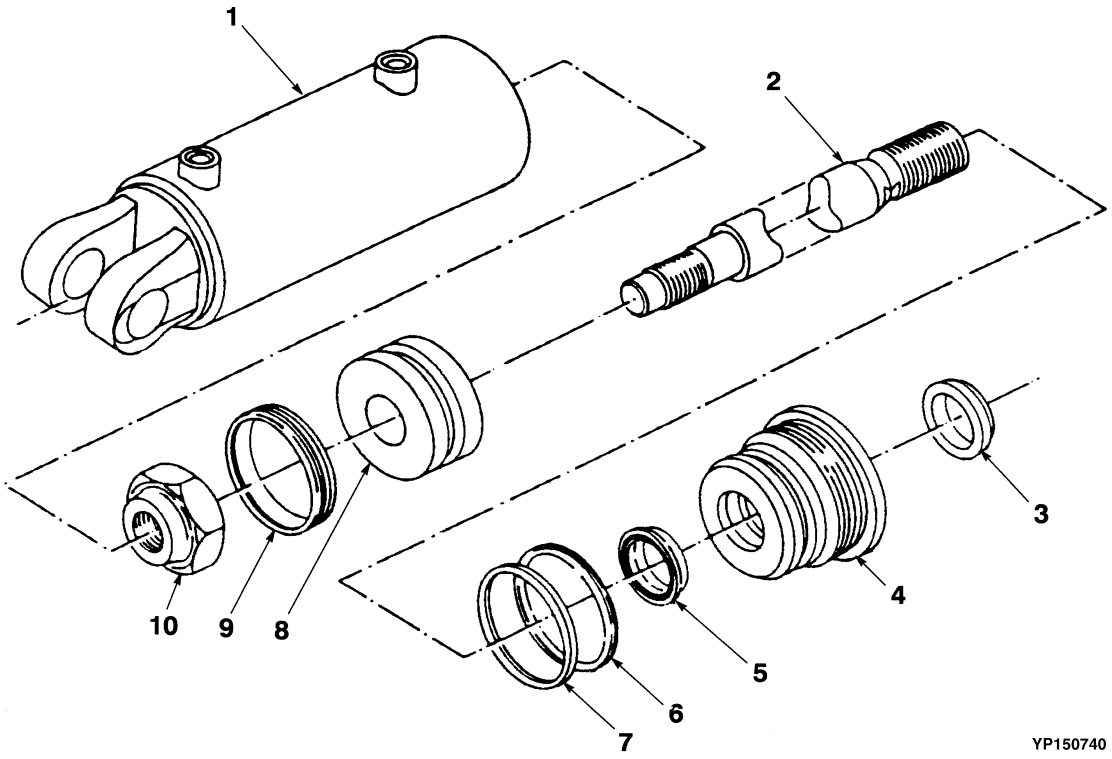

©2004 HYSTER COMPANY

TILT CYLINDER
THREE STAGE FULL FREE-LIFT

KEY:
A: 5° Forward Tilt/7° Back Tilt
B: 10° Forward Tilt/5° Back Tilt
C: 5° Forward Tilt/5° Back Tilt

ITEM	PART NO.	DESCRIPTION	QTY A	QTY B	QTY C
	2054598	Tilt Cylinder (Group No. 8603391)	..	2	..
	2054599	Tilt Cylinder (Group No. 8604718)	2	..	..
	2054600	Tilt Cylinder (Group No. 8604719)	..	..	2
1	2302899	Nut	1	1	1
2	. . . . .	Seal	1	1	1
3	2308174	Piston	1	1	1
4	2307659	Piston Rod	1	..	..
4	2311444	Piston Rod	..	1	..
4	2050282	Piston Rod	..	..	1
5	2054601	Tube	1	..	1
5	2054602	Tube	..	1	..
6	. . . . .	Seal	1	1	1
7	. . . . .	O-Ring	1	1	1
8	. . . . .	Back-up Ring	1	1	1
9	2047064	Gland	1	1	1
10	. . . . .	Wiper Ring	1	1	1
a	39374	O-Ring	1	1	1
	1494719	Seal Kit (Includes Items 2, 6-8, 10)	1	1	1

FOOTNOTES:
a Not Illustrated

©2004 HYSTER COMPANY

TILT CYLINDER ATTACHING PARTS (Figure 8-12)
THREE STAGE FULL FREE-LIFT

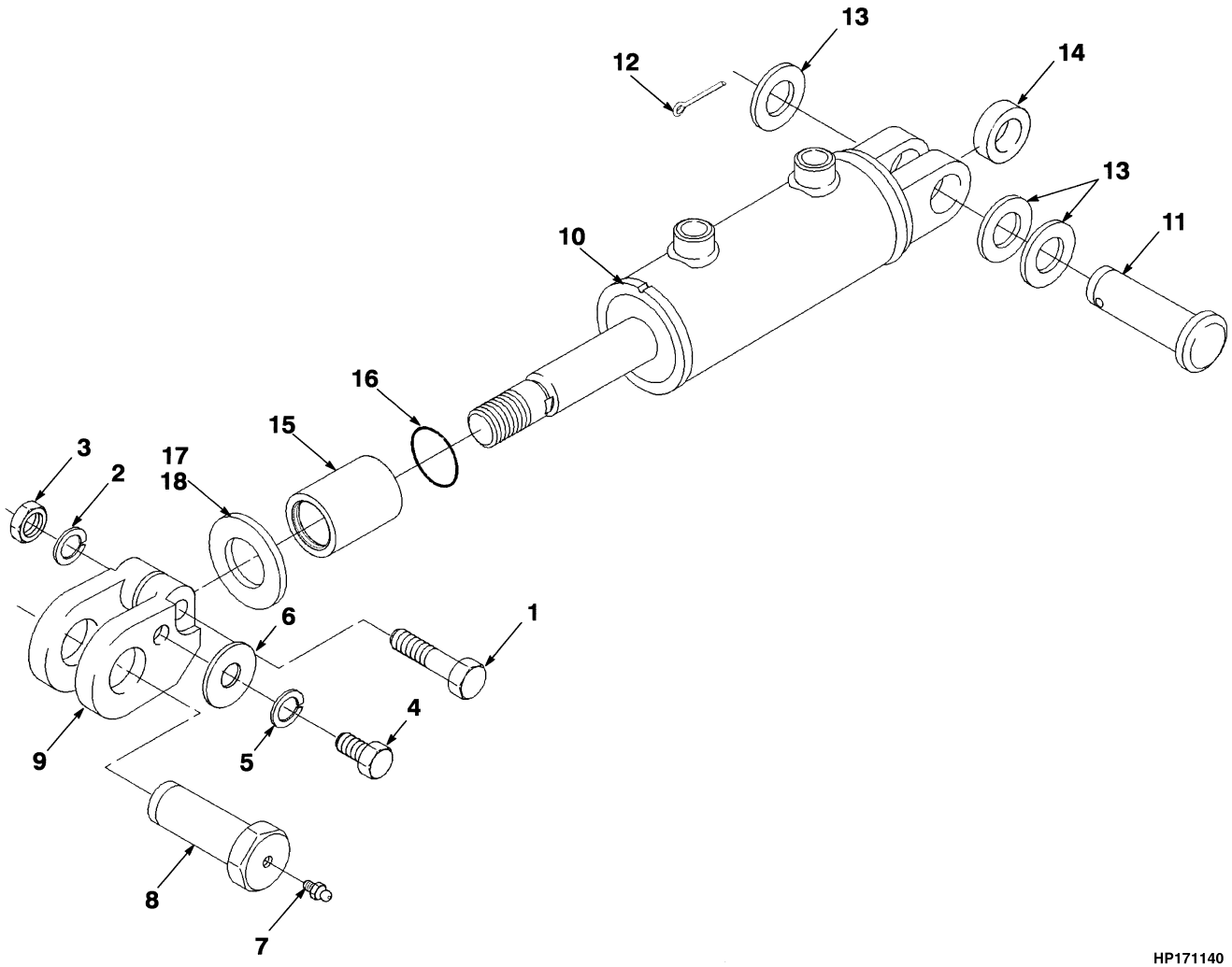

©2004 HYSTER COMPANY

TILT CYLINDER ATTACHING PARTS
THREE STAGE FULL FREE-LIFT

ITEM	PART NO.	DESCRIPTION	QTY
1	293651	Capscrew	2
2	292683	Lockwasher	2
3	292656	Nut	2
4	292514	Capscrew	2
5	292682	Lockwasher	2
6	1371287	Washer	2
7	16001	Lube Fitting	2
8	1348187	Rod End Pin	2
9	1363260	Rod End	1
9	1363261	Rod End	1
10	2054598	Tilt Cylinder (Group No. 8603391)	1
10	2054599	Tilt Cylinder (Group No. 8604718)	1
10	2054600	Tilt Cylinder (Group No. 8604719)	1
11	1371526	Rod End Pin	2
11	16001	Lube Fitting	2
12	15236	Cotter Pin	2
13	197069	Washer	6
14	300982	Bushing	2
15	1523880	Spacer	2
16	15865	O-Ring	2
17	1523879	Shim	2
a	1523877	Bushing	2

FOOTNOTES:
a Not Illustrated

NOTES

9 MAST-TWO STAGE FULL FREE-LIFT

SECTION 9
MAST-TWO STAGE FULL FREE-LIFT

DESCRIPTION **PAGE**

CARRIAGE
TWO STAGE FULL FREE-LIFT 9-2
FREE LIFT
TWO STAGE FULL FREE-LIFT 9-4
HEADER HOSE
TWO STAGE FULL FREE-LIFT 9-6
INNER MAST
TWO STAGE FULL FREE-LIFT 9-8
INTEGRAL SIDE-SHIFT CARRIAGE
TWO STAGE FULL FREE-LIFT 9-10
MAIN LIFT ASSEMBLY
TWO STAGE FULL FREE-LIFT 9-12
MAIN LIFT CYLINDER
LEFT HAND
TWO STAGE FULL FREE-LIFT 9-14
RIGHT HAND
TWO STAGE FULL FREE-LIFT 9-16
OUTER MAST
TWO STAGE FULL FREE-LIFT 9-18

©2004 HYSTER COMPANY

CARRIAGE (Figure 9-1)
TWO STAGE FULL FREE-LIFT

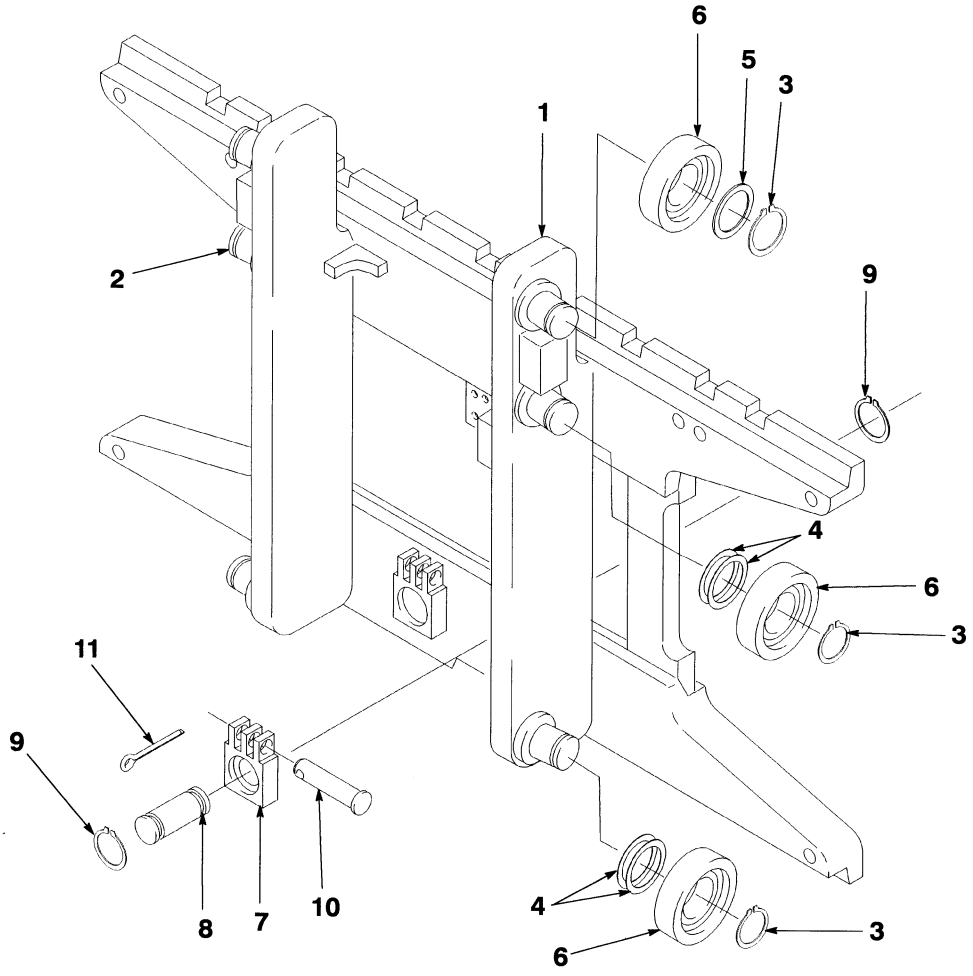

YP171212

ITEM	PART NO.	DESCRIPTION	QTY
	2055494	Carriage	1
1	1526276	Frame	1
2	1345216	Stubshaft	6
3	58901	Snap Ring	6
3	1374797	Snap Ring (Optional)	6
4	129387	Shim (0,508 mm)	AR
5	366115	Spacer	2
6	1353192	Load Roller	6
6	1333399	Load Roller (Optional)	6
6	1393132	Load Roller (Optional)	6
7	1369345	Chain Anchor (Dual Hole)	2
7	1504010	Chain Anchor (Single Hole) (Optional)	2
8	1353408	Pin	2
9	131358	Snap Ring	4
10	1514866	Pin	2
11	15211	Cotter Pin	2

©2004 HYSTER COMPANY

NOTES

FREE LIFT (Figure 9-2)
TWO STAGE FULL FREE-LIFT

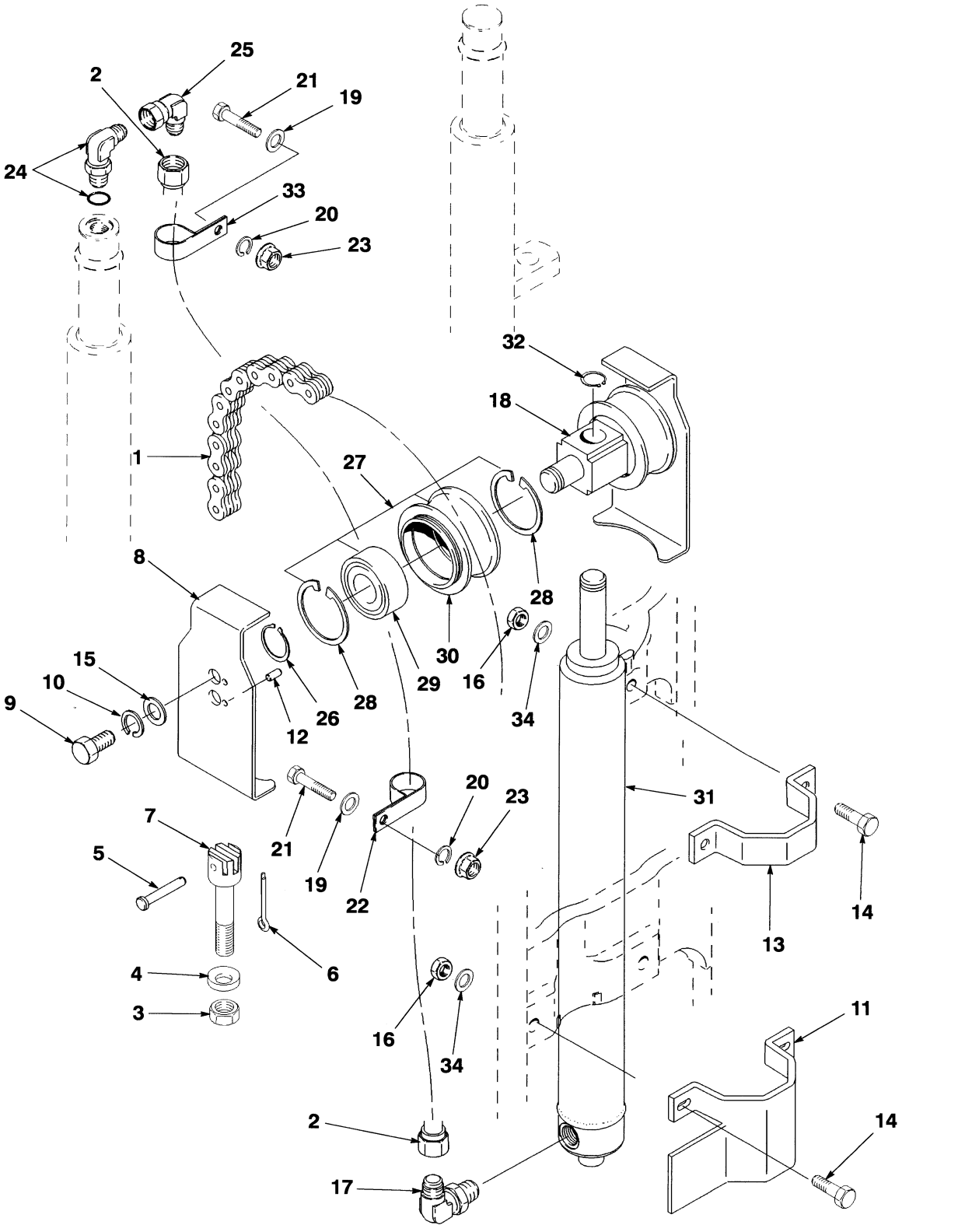

©2004 HYSTER COMPANY

FREE LIFT
TWO STAGE FULL FREE-LIFT

ITEM	PART NO.	DESCRIPTION	QTY
	2055885	Mast Assembly	1
1	231083	Chain	2
2	1365308	Hose	1
3	60137	Nut	2
4	296426	Washer (Hardened)	2
5	1514866	Pin	2
6	15211	Cotter Pin	2
7	1369357	Chain Anchor	2
8	1395285	Chain Guard	2
9	132860	Capscrew	2
10	292683	Lockwasher	2
11	1353546	Bracket	1
12	302461	Pin	2
13	1489972	Bracket	1
14	292528	Capscrew	4
15	320161	Washer	2
16	300937	Nut	4
17	1379496	Valve	1
17	16485	O-Ring	1
18	1378690	Crosshead	1
19	320158	Washer	2
20	. . . . .	Lockwasher	2
21	132861	Capscrew	2
22	178119	Clamp	1
23	239503	Nut	2
24	1380035	Fitting	1
24	16484	O-Ring	1
25	16882	Fitting	1
26	304526	Snap Ring	2
27	1379682	Chain Sheave Assembly	2
28	37752	Snap Ring	2
29	1378699	Bearing	1
30	1378692	Sheave	1
31	1362888	Lift Cylinder	1
32	131358	Snap Ring	1
33	166112	Clamp	1
34	296422	Washer	4

©2004 HYSTER COMPANY

HEADER HOSE (Figure 9-3)
TWO STAGE FULL FREE-LIFT

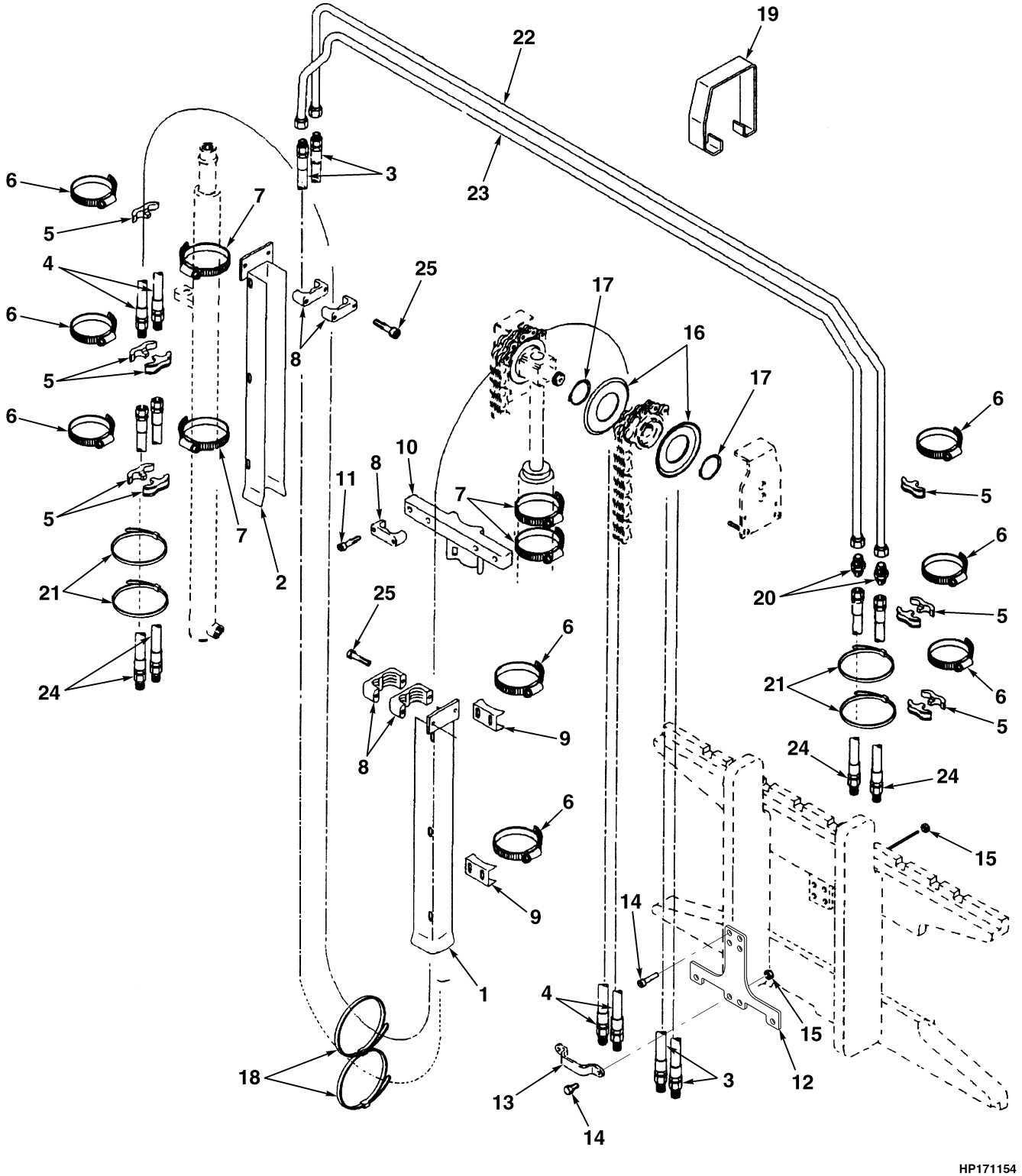

©2004 HYSTER COMPANY

HEADER HOSE
TWO STAGE FULL FREE-LIFT

KEY:
A: Three-Function
B: Four-Function

ITEM	PART NO.	DESCRIPTION	QTY A	QTY B
1	1365504	Channel	1	1
2	1365516	Channel	1	1
3	1345573	Hose	2	..
4	1345576	Hose	..	2
5	1353530	Clamp	5	5
6	1360508	Clamp	4	4
7	1360507	Clamp	8	3
8	1360386	Clamp	3	3
9	1345423	Clamp	2	2
10	1354918	Bracket	1	1
11	293795	Capscrew	4	2
12	. . . . .	Bracket	1	1
13	1369333	Clamp	1	1
14	136749	Capscrew	2	2
15	313828	Nut	2	2
16	1345199	Hose Guide	2	2
17	1345204	Snap Ring	2	2
18	2004005	Strap Clamp	1	2
19	1365061	Clip	1	1
20	14692	Fitting	2	2
21	1375574	Strap	2	4
22	1353638	Tube	1	1
23	1353668	Tube	1	1
24	365115	Hose	2	4
25	293799	Capscrew	..	4

©2004 HYSTER COMPANY

INNER MAST (Figure 9-4)
TWO STAGE FULL FREE-LIFT

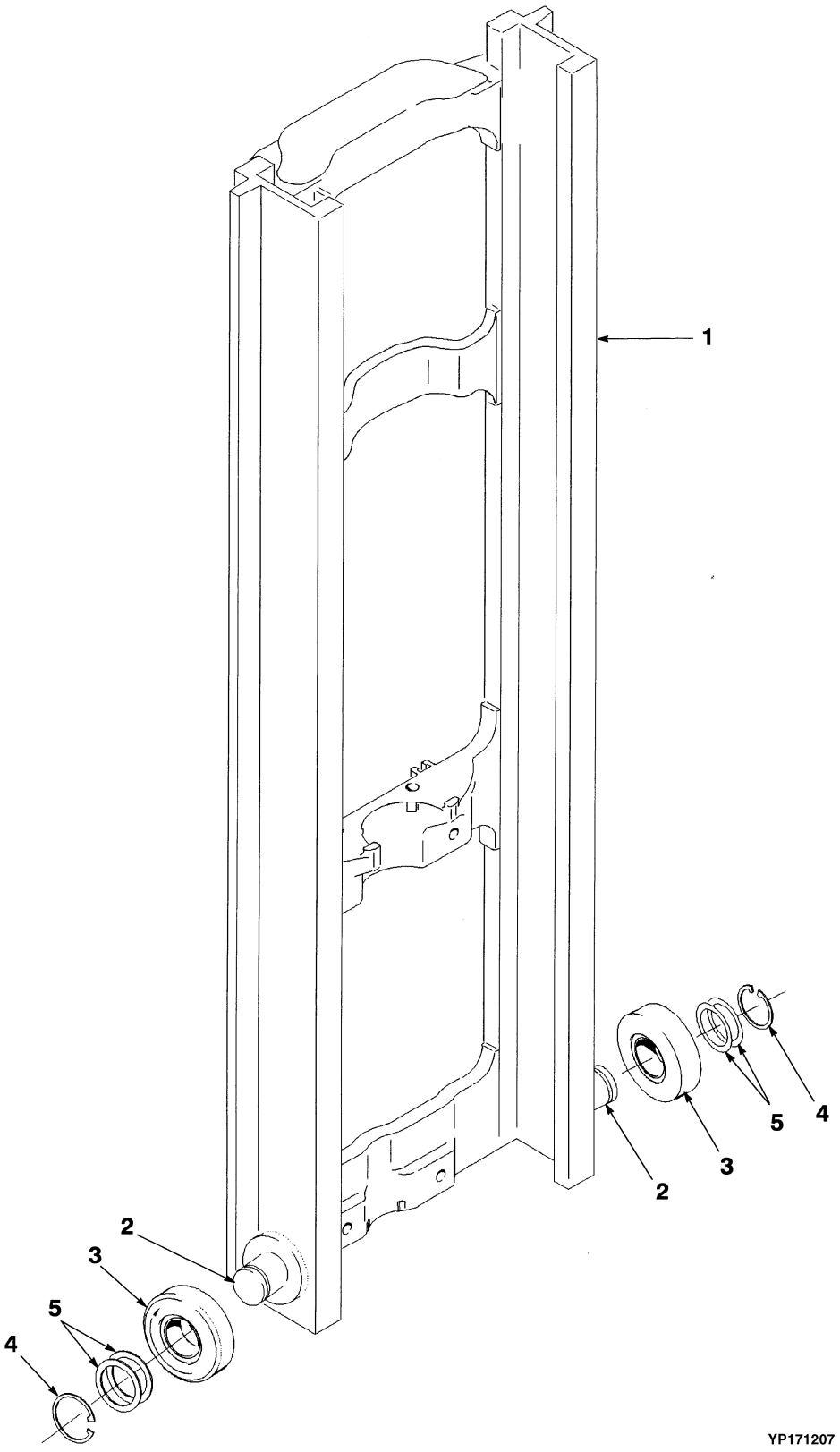

©2004 HYSTER COMPANY

INNER MAST
TWO STAGE FULL FREE-LIFT

ITEM	PART NO.	DESCRIPTION	QTY
	2055885	Mast Assembly	1
1	1352908	Inner Mast	1
2	1345264	Stubshaft	2
3	1353192	Load Roller	2
4	58901	Snap Ring	2
5	129387	Shim (0,508 mm)	AR

©2004 HYSTER COMPANY

INTEGRAL SIDE-SHIFT CARRIAGE (Figure 9-5)
TWO STAGE FULL FREE-LIFT

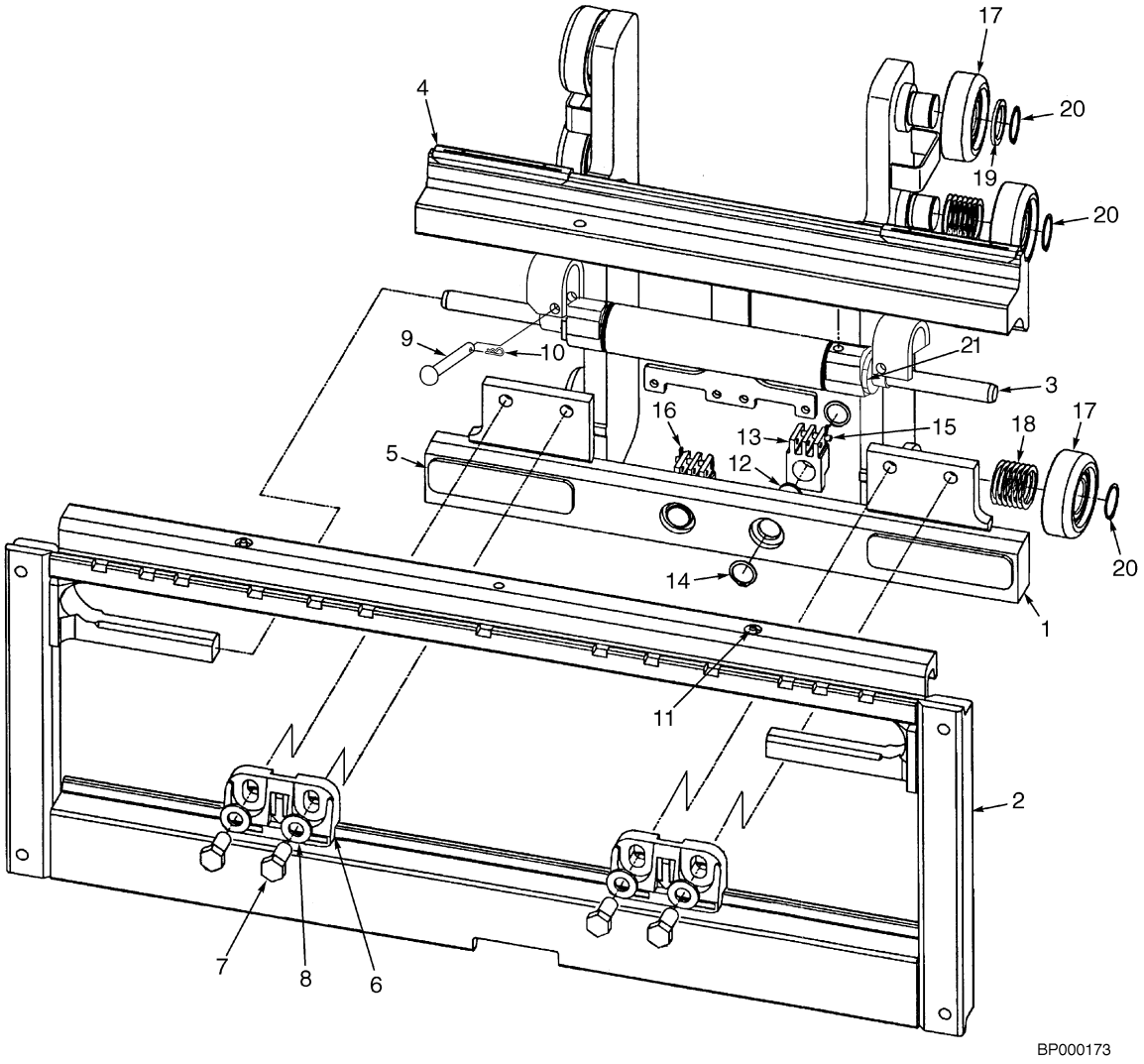

©2004 HYSTER COMPANY

INTEGRAL SIDE-SHIFT CARRIAGE
TWO STAGE FULL FREE-LIFT

ITEM	PART NO.	DESCRIPTION	QTY
	2056865	Side-Shift Carriage	1
1	1529600	Frame (Inner)	1
2	1489010	Frame (965 mm) (Outer)	1
3	2043528	Cylinder Assembly	1
4	2043531	Bearing (Upper)	2
5	2043533	Bearing (Lower)	2
6	2043530	Hook (Lower)	2
7	226458	Capscrew	4
8	296426	Washer (Hardened)	4
9	1401746	Pin	2
10	18832	Cotter Pin	2
11	16041	Lube Fitting	2
12	317735	Pin	2
13	1369345	Chain Anchor (Dual Hole)	2
13	1504010	Chain Anchor (Single Hole) (Optional)	2
14	131358	Snap Ring	4
15	1514866	Pin	2
16	15211	Cotter Pin	2
17	1353192	Load Roller	6
17	1333399	Load Roller (Optional)	6
17	1393132	Load Roller (Optional)	6
18	129387	Shim (0,508 mm)	28
19	366115	Spacer	2
20	58901	Snap Ring	6
20	1374797	Snap Ring (Optional)	6
21	1498326	Shim	AR

©2004 HYSTER COMPANY

MAIN LIFT ASSEMBLY (Figure 9-6)
TWO STAGE FULL FREE-LIFT

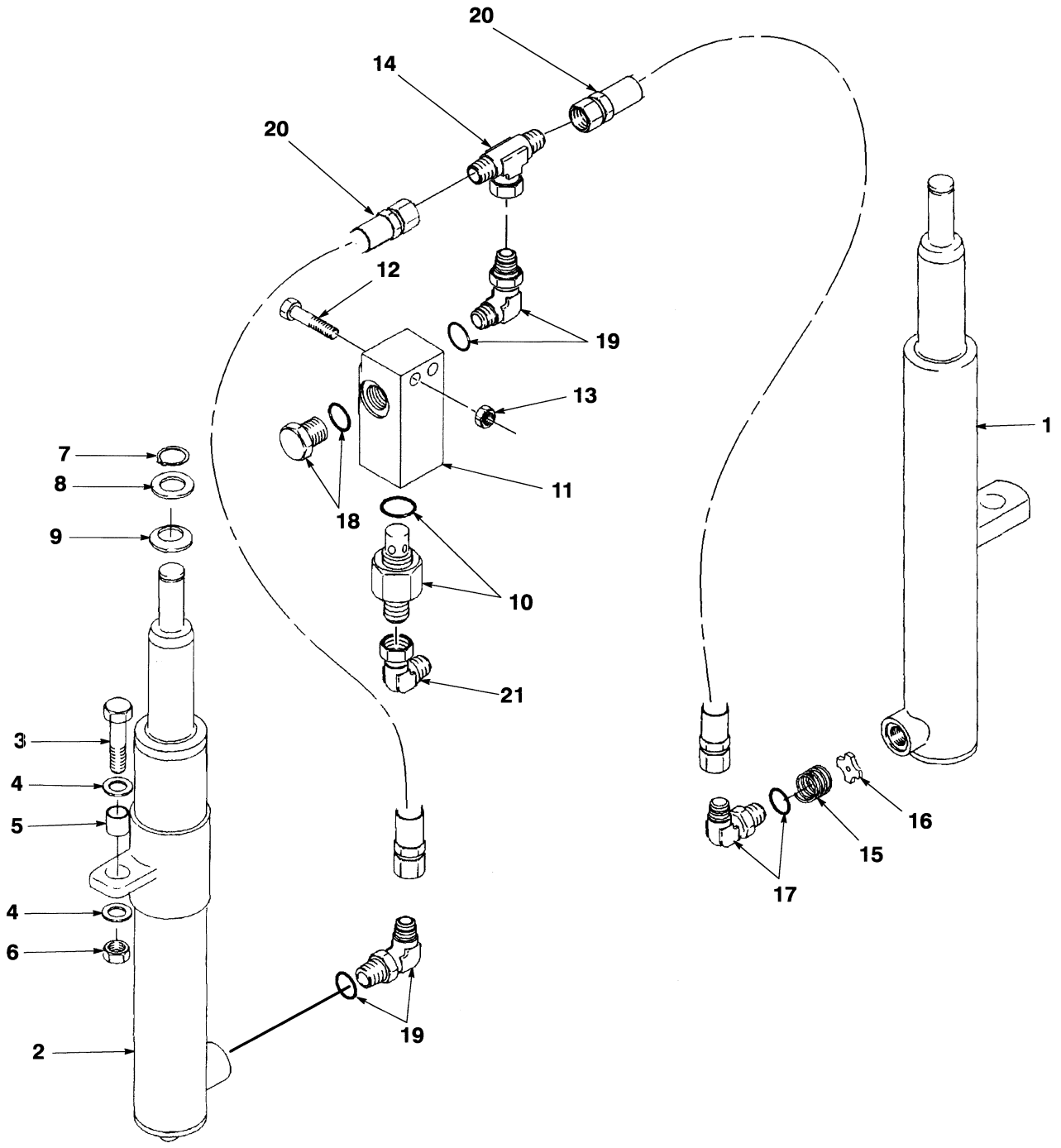

YP170097

©2004 HYSTER COMPANY

MAIN LIFT ASSEMBLY
TWO STAGE FULL FREE-LIFT

ITEM	PART NO.	DESCRIPTION	QTY
1	. . . . .	Lift Cylinder (LH)	1
2	. . . . .	Lift Cylinder (RH)	1
3	292532	Capscrew	2
4	296422	Washer	4
5	323090	Spacer	2
6	300937	Nut	2
7	131358	Snap Ring	2
8	1333382	Washer	2
9	1354915	Washer	AR
9	1354916	Washer	AR
9	1354917	Washer	AR
10	323061	Control Valve	1
10	16982	O-Ring	1
11	1379687	Housing	1
11	1333392	Housing (Optional)	1
12	292509	Capscrew	2
13	313828	Nut	2
14	17051	Fitting	1
15	120938	Spring	1
16	323160	Washer	1
17	189595	Fitting	1
17	16485	O-Ring	1
18	14603	Fitting (Optional)	1
18	16486	O-Ring (Optional)	1
19	16560	Fitting	2
19	16485	O-Ring	1
20	1376100	Hose	1
20	1376101	Hose	1
21	16882	Fitting	1

©2004 HYSTER COMPANY

MAIN LIFT CYLINDER (Figure 9-7)
LEFT HAND
TWO STAGE FULL FREE-LIFT

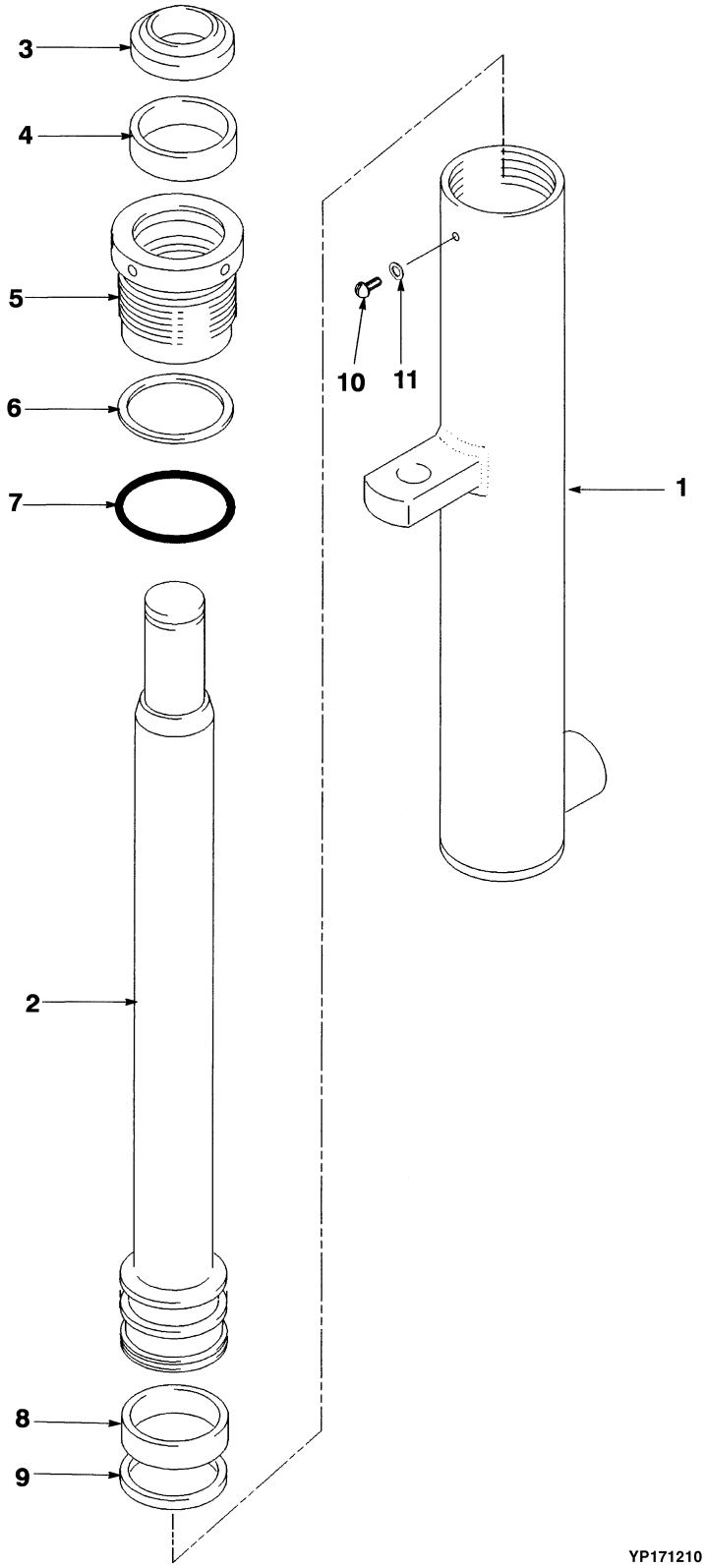

©2004 HYSTER COMPANY

MAIN LIFT CYLINDER
LEFT HAND
TWO STAGE FULL FREE-LIFT

ITEM	PART NO.	DESCRIPTION	QTY
	2046367	Lift Cylinder	1
1	1365607	Shell	1
2	1365666	Rod	1
3	1310369	Wiper Ring	1
4	1381082	Seal	1
5	1498116	Gland	1
6	132834	Back-Up Ring	1
7	55407	O-Ring	1
8	1374802	Wear Ring	1
9	1362875	Piston Ring	1
10	295649	Screw	1
11	190887	Seal	1
	1498115	Seal Kit (Includes Items 3-4, 6-8, 11)	1

©2004 HYSTER COMPANY

MAIN LIFT CYLINDER (Figure 9-8)
RIGHT HAND
TWO STAGE FULL FREE-LIFT

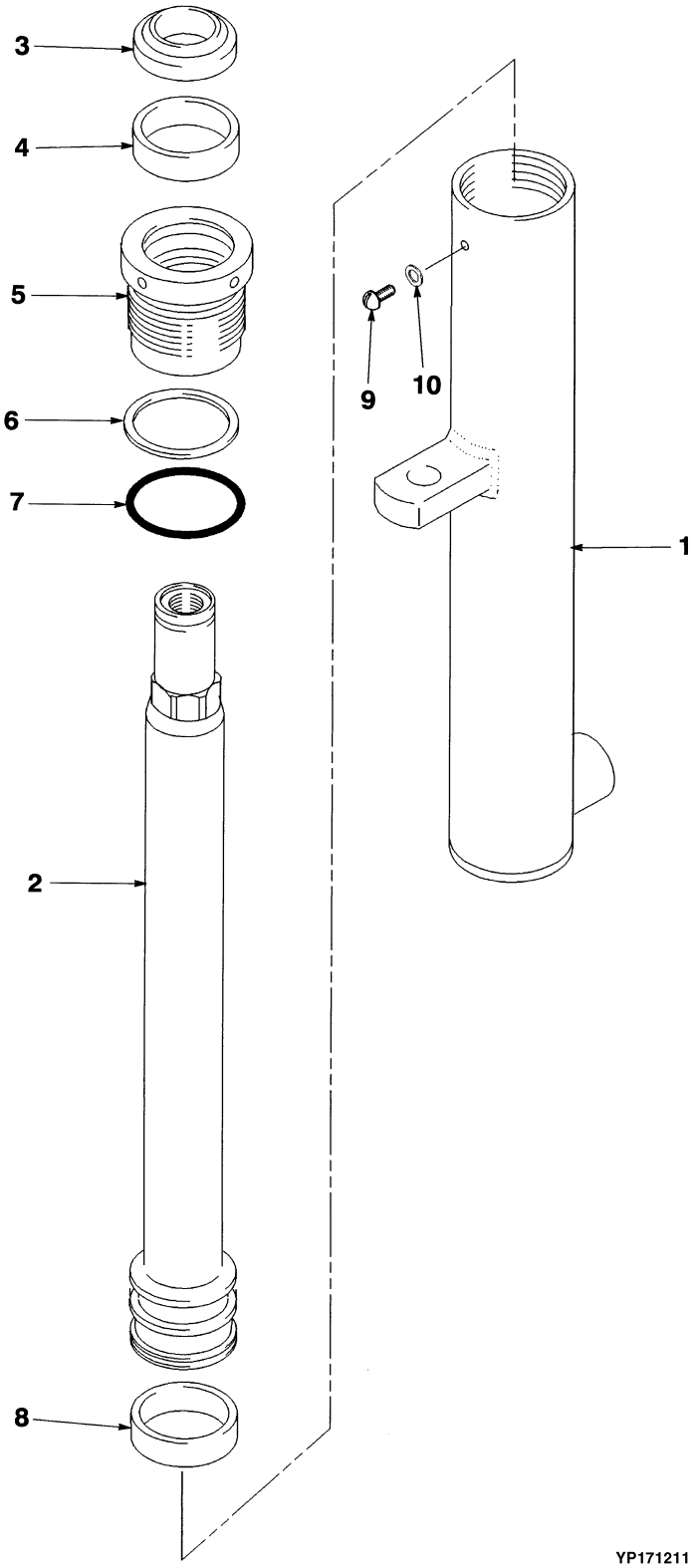

©2004 HYSTER COMPANY

MAIN LIFT CYLINDER
RIGHT HAND
TWO STAGE FULL FREE-LIFT

ITEM	PART NO.	DESCRIPTION	QTY
	2046336	Lift Cylinder	1
1	1365607	Shell	1
2	1365637	Rod	1
3	1310369	Wiper Ring	1
4	1381082	Seal	1
5	1498116	Gland	1
6	132834	Back-Up Ring	1
7	55407	O-Ring	1
8	1362871	Wear Ring	1
9	295649	Screw	1
10	190887	Seal	1
	1498115	Seal Kit (Includes Items 3-4, 6-7, 10)	1

©2004 HYSTER COMPANY

OUTER MAST (Figure 9-9)
TWO STAGE FULL FREE-LIFT

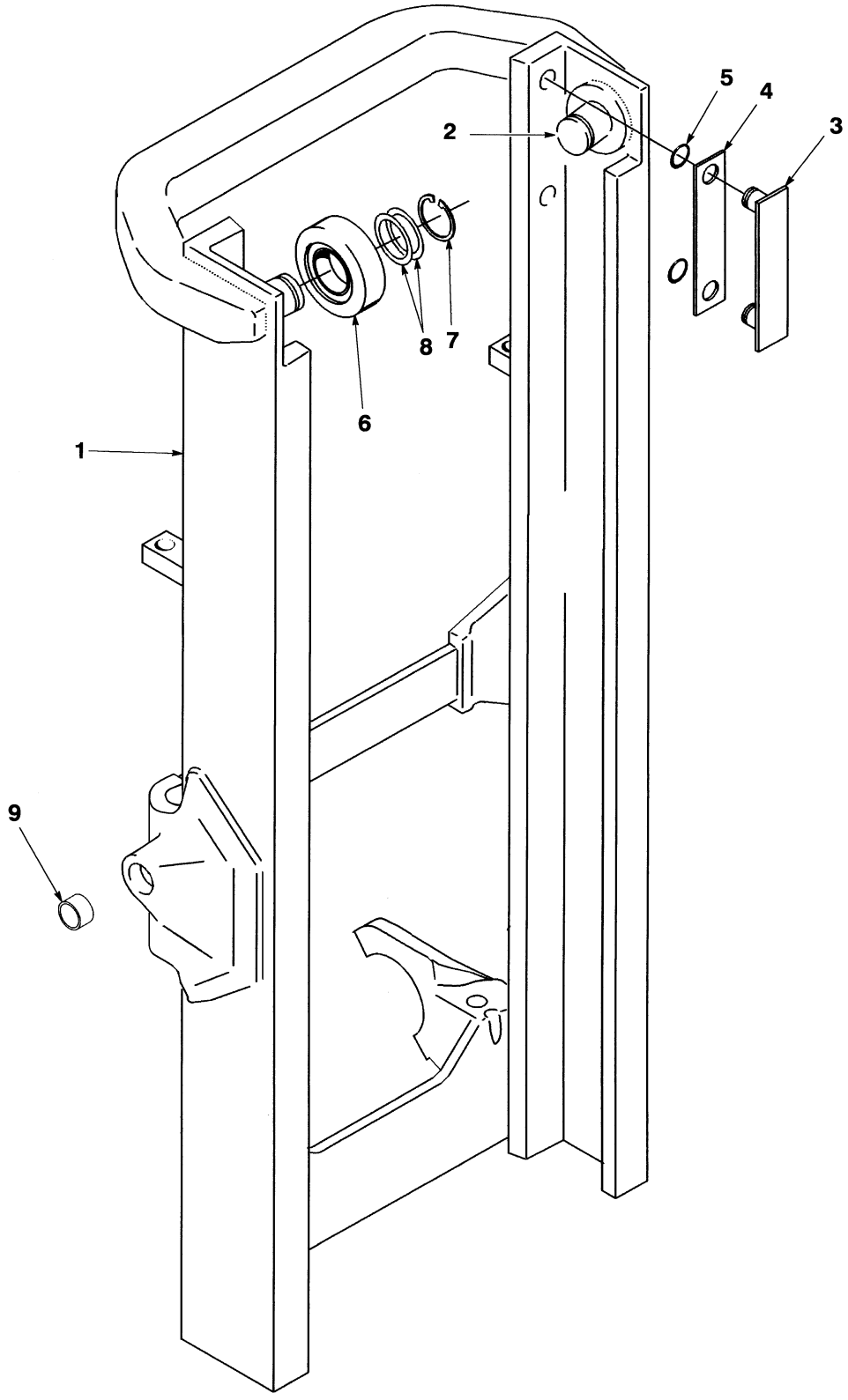

©2004 HYSTER COMPANY

OUTER MAST
TWO STAGE FULL FREE-LIFT

ITEM	PART NO.	DESCRIPTION	QTY
	2055885	Mast Assembly	1
1	1526871	Outer Mast	1
2	1345264	Stubshaft	2
3	215212	Bearing Strip	2
4	131716	Shim (0,508 mm)	4
5	104506	O-Ring	4
6	1353191	Load Roller	2
7	58901	Snap Ring	2
8	129387	Shim (0,508 mm)	AR
9	1348185	Bushing	2

©2004 HYSTER COMPANY

NOTES

10 OPTIONS

SECTION 10
OPTIONS

DESCRIPTION	PAGE
BACKUP ALARM	10-2
BATTERY SPACER	10-4
DC CONVERTER	
36/48 VOLT TO 12 VOLT	10-6
PREMIUM	10-8
FRONT LIGHT	10-10
INTEGRAL SIDESHIFT	
HYDRAULIC HOSES	10-12
INTERFACE CABLE	10-13
TAIL LIGHT	10-14
WORK LIGHT	10-16
WORK LIGHT/STROBE COMBINATION	10-18

©2004 HYSTER COMPANY

BACKUP ALARM (Figure 10-1)

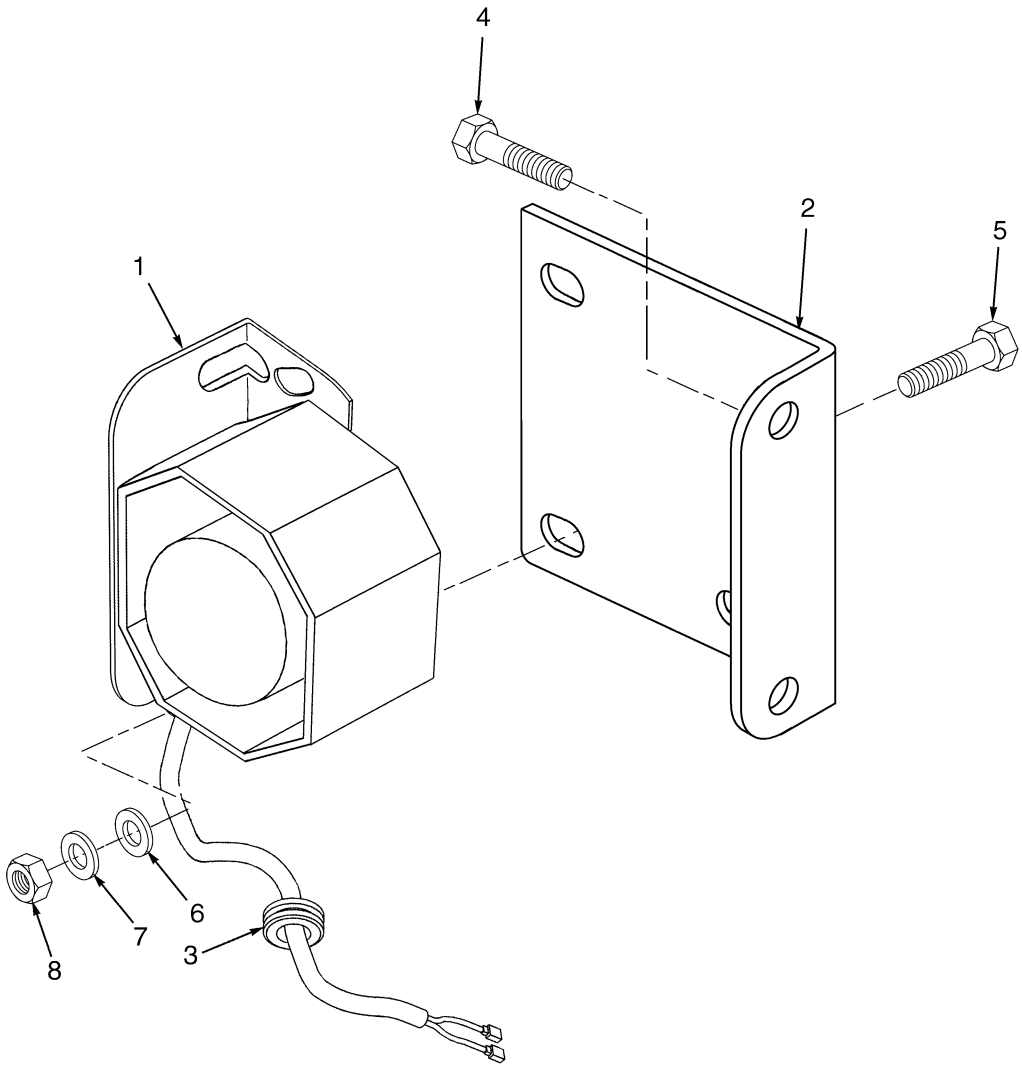

BP000194

©2004 HYSTER COMPANY

BACKUP ALARM

ITEM	PART NO.	DESCRIPTION	QTY
1	2066700	Audible Alarm	1
2	1557145	Bracket	1
3	1367645	Grommet	1
4	316678	Screw	2
5	292501	Capscrew	2
6	320156	Washer	2
7	292680	Lockwasher	2
8	136687	Nut	2

©2004 HYSTER COMPANY

BATTERY SPACER (Figure 10-2)

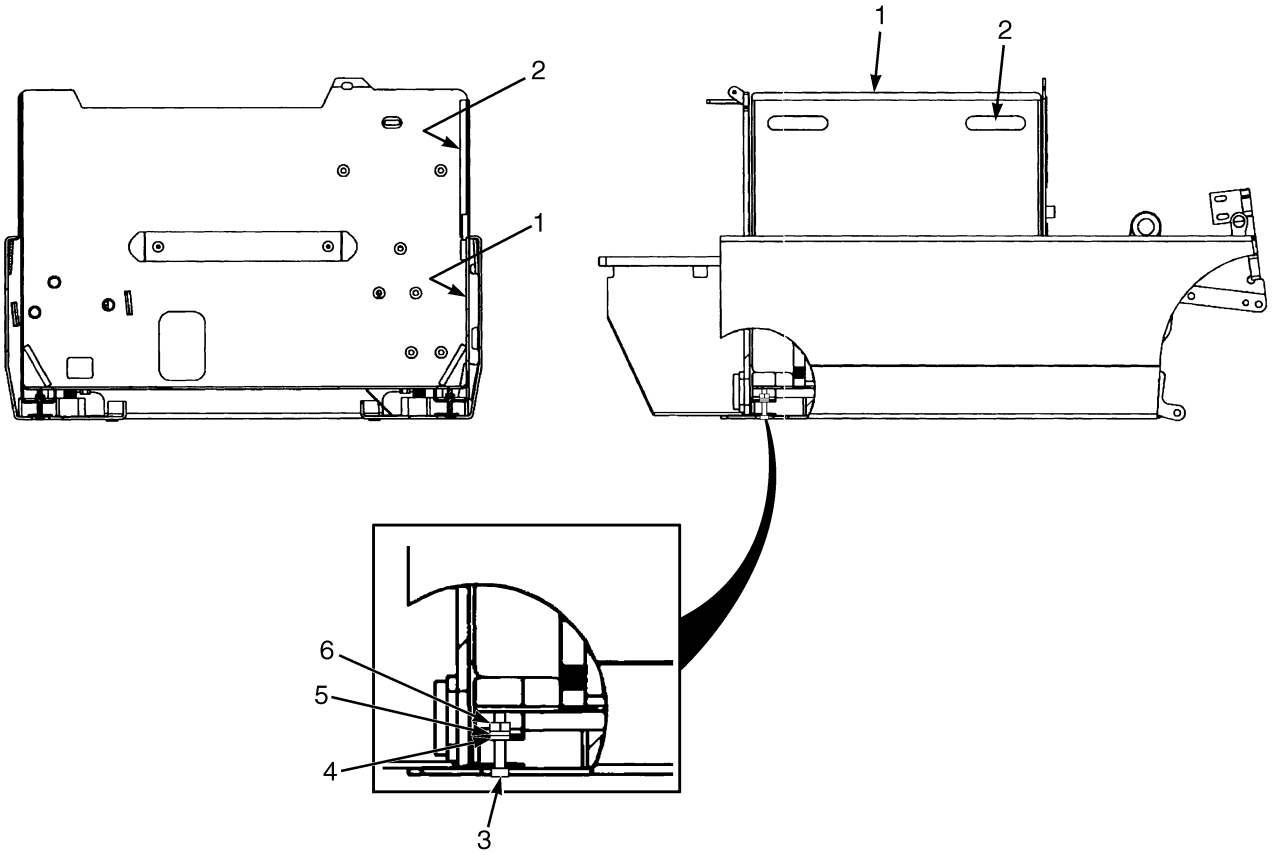

BP120067

©2004 HYSTER COMPANY

BATTERY SPACER

ITEM	PART NO.	DESCRIPTION	QTY
1	1545299	Battery Tray (1.6T)	1
1	1545300	Battery Tray (1.8T)	1
1	1545301	Battery Tray (2.0T)	1
2	1545303	Door Weldment (1.6T)	1
2	1545304	Door Weldment (1.8 and 2.0T)	1
3	292519	Capscrew	2
4	320159	Washer	2
5	292682	Lockwasher	2
6	136692	Nut	2

©2004 HYSTER COMPANY

DC CONVERTER (Figure 10-3)
36/48 VOLT TO 12 VOLT

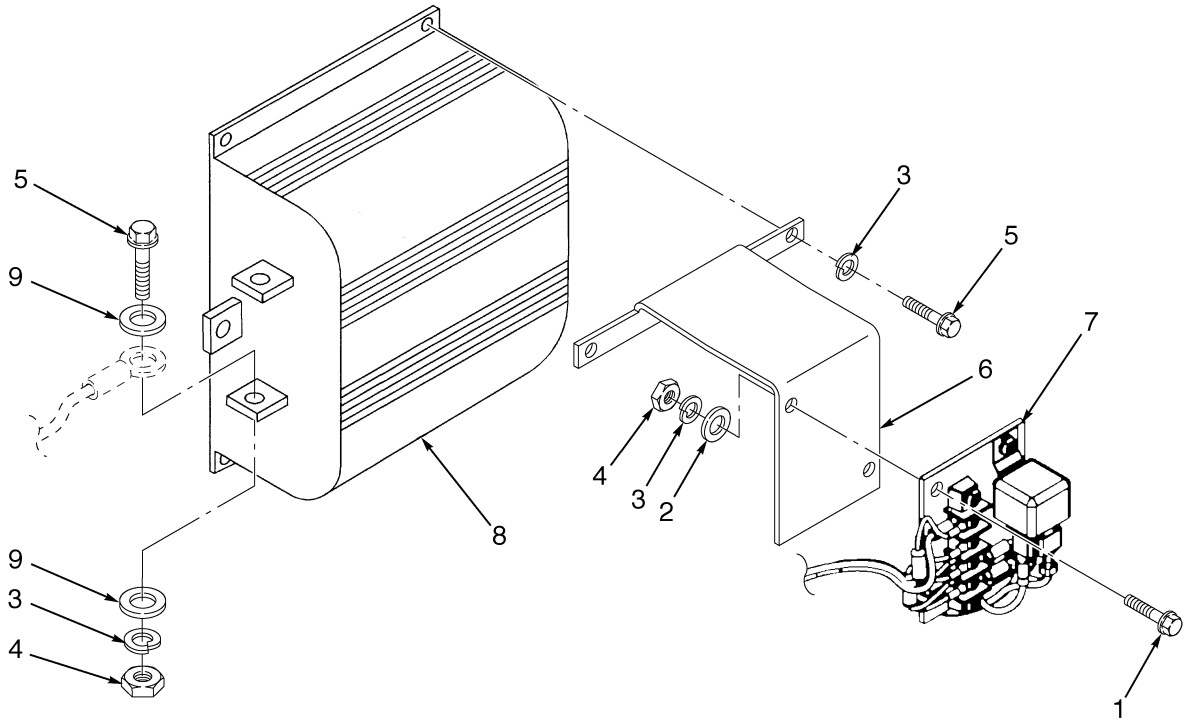

BP000160

©2004 HYSTER COMPANY

DC CONVERTER
36/48 VOLT TO 12 VOLT

ITEM	PART NO.	DESCRIPTION	QTY
1	292500	Capscrew	2
2	320156	Washer	2
3	292680	Lockwasher	9
4	136687	Nut	5
5	292501	Capscrew	7
6	2037359	Mounting Bracket	1
7	2306436	Panel Assembly	1
8	1390575	DC Converter	1
9	15127	Washer	6

©2004 HYSTER COMPANY

DC CONVERTER (Figure 10-4)
PREMIUM

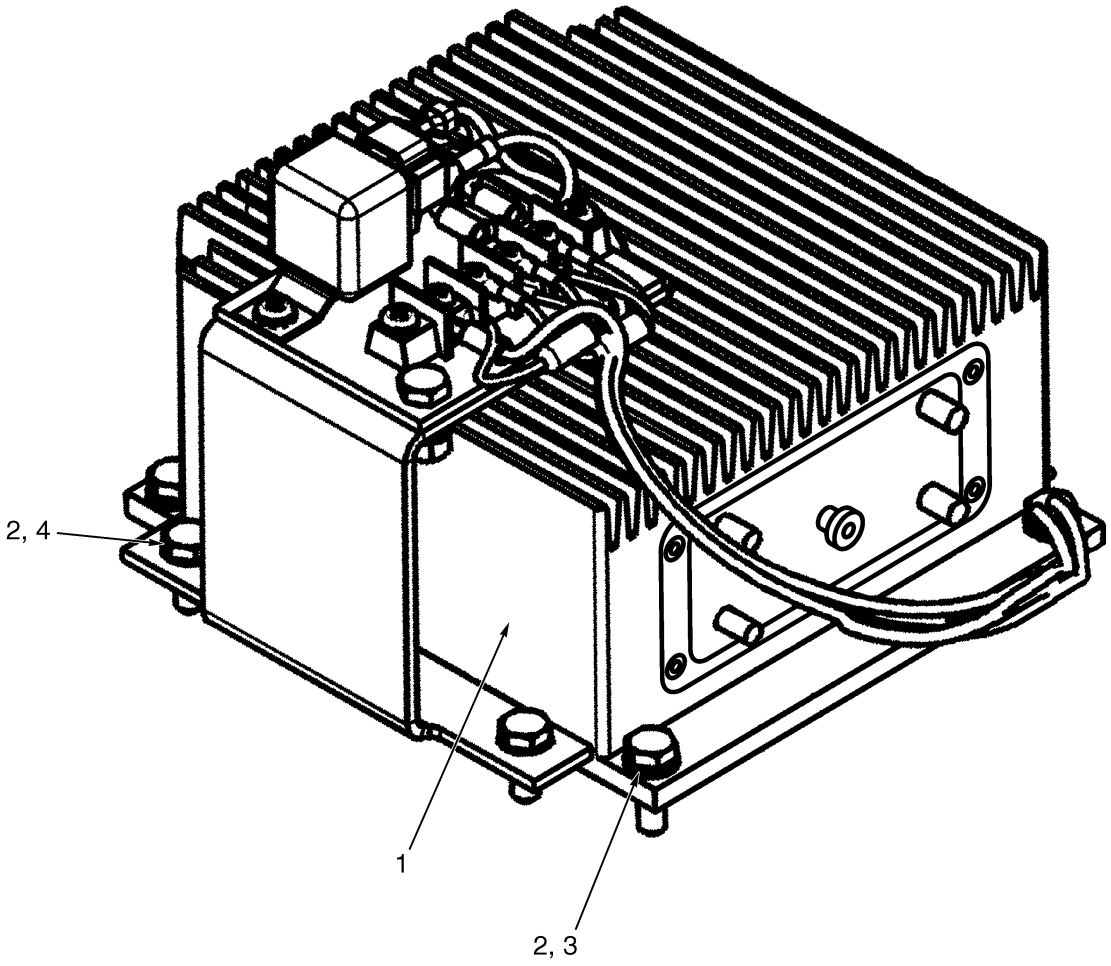

BP000158

©2004 HYSTER COMPANY

DC CONVERTER
PREMIUM

ITEM	PART NO.	DESCRIPTION	QTY
1	1383195	DC Converter (48V)	1
2	292680	Lockwasher	6
3	292501	Capscrew	4
4	292500	Capscrew	2

©2004 HYSTER COMPANY

FRONT LIGHT (Figure 10-5)

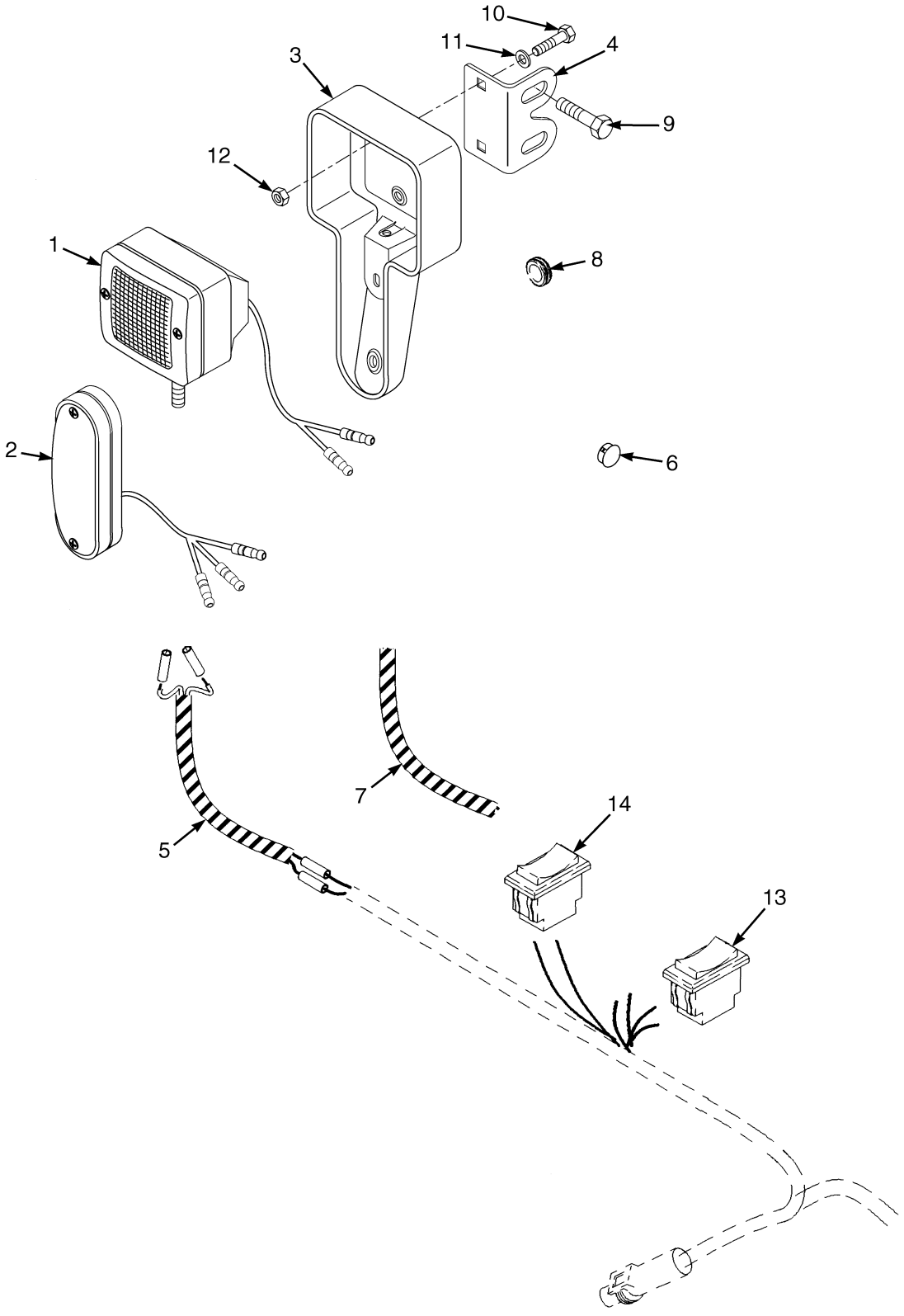

©2004 HYSTER COMPANY

FRONT LIGHT

ITEM	PART NO.	DESCRIPTION	QTY
1	1554873	Worklight	2
2	1554874	Indicator Light	2
3	1518987	Guard (Light)	2
4	1557147	Bracket (Front Light)	2
5	2067319	Harness (Front Light)	2
6	1534697	Plug	2
7	1531326	Conduit	2
8	1367645	Grommet	6
9	316678	Screw	4
10	2060639	Bolt	4
11	1476421	Washer	4
12	316834	Nut	4
13	1382302	Switch	1
14	1382305	Switch	1

©2004 HYSTER COMPANY

INTEGRAL SIDESHIFT (Figure 10-6)
HYDRAULIC HOSES

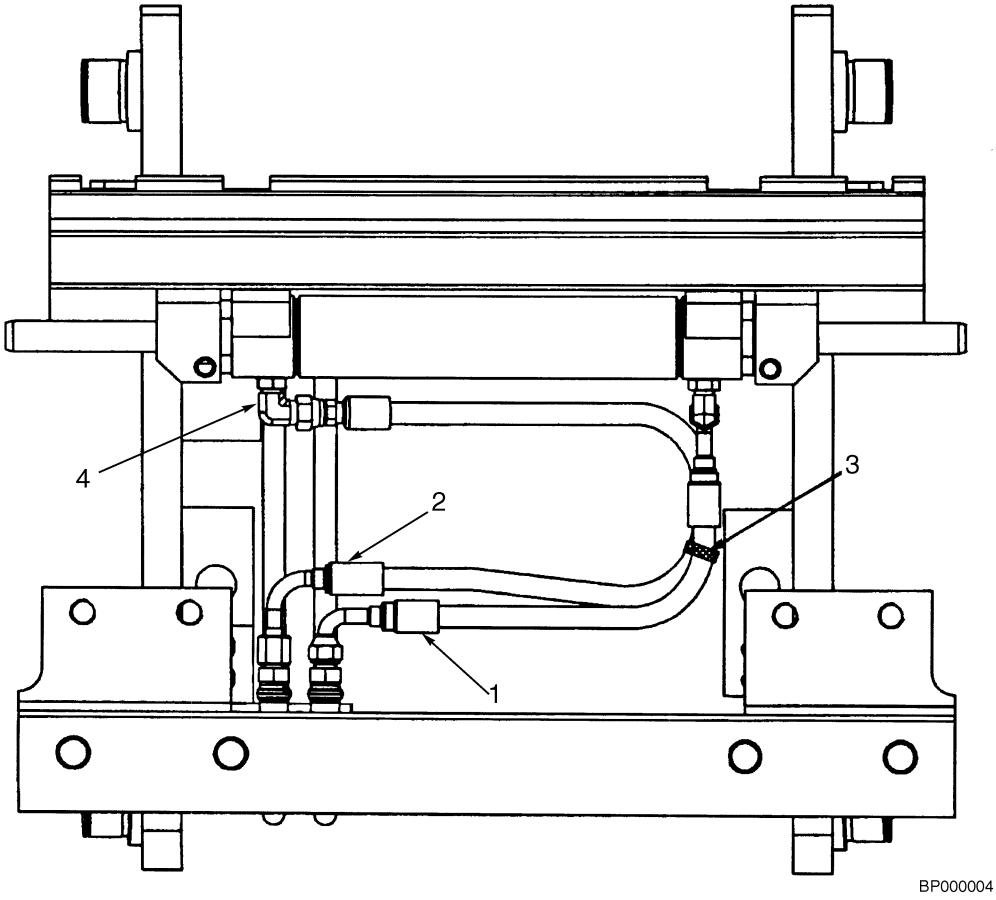

KEY:
A: Two Stage Limited Free-Lift
B: Three Stage Full Free-Lift
C: Two Stage Full Free-Lift

ITEM	PART NO.	DESCRIPTION	QTY A	QTY B	QTY C
1	1503480	Hose	..	1	..
1	1503481	Hose	..	..	1
1	1503477	Hose	1	..	..
2	1503474	Hose	..	1	..
2	1489050	Hose	1	..	1
3	114312	Strap Clamp	1	1	1
4	16558	Fitting	2	2	2
4	16483	O-Ring	2	2	2

©2004 HYSTER COMPANY

INTERFACE CABLE (Figure 10-7)

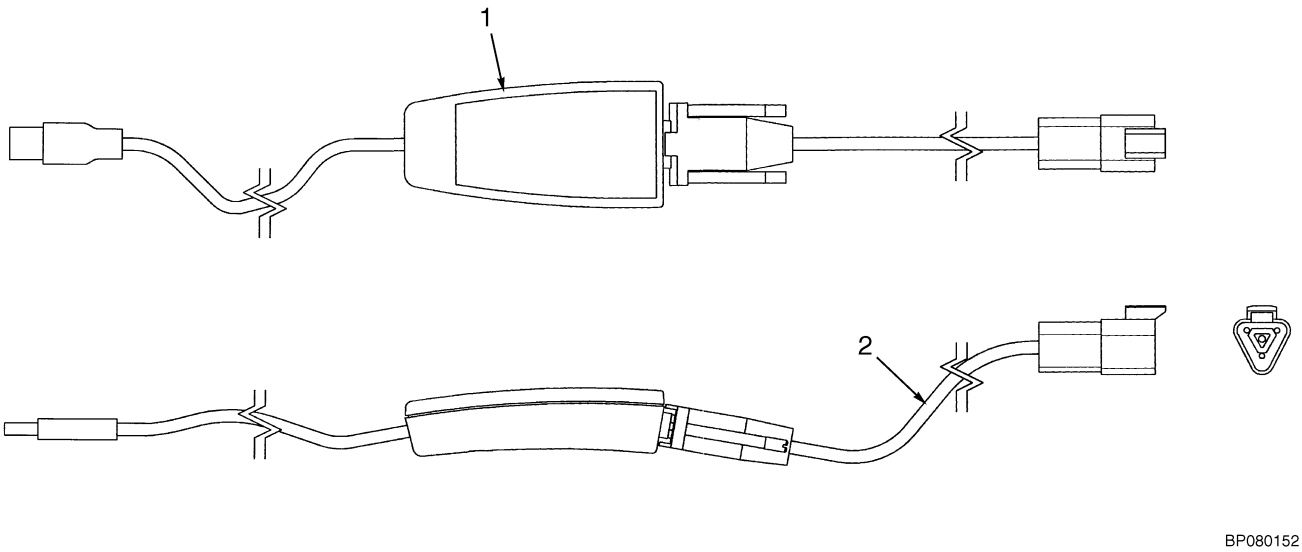

BP080152

ITEM	PART NO.	DESCRIPTION	QTY
	1534010	Interface Cable	1
1	1532578	Interface Cable Adapter	1
2	1534009	Wire Harness	1
2	1532663	Connector	1
	a 1539240	Service Software	1
	a 1542542	Service Software Data	1

FOOTNOTES:

a Not Illustrated

TAIL LIGHT (Figure 10-8)

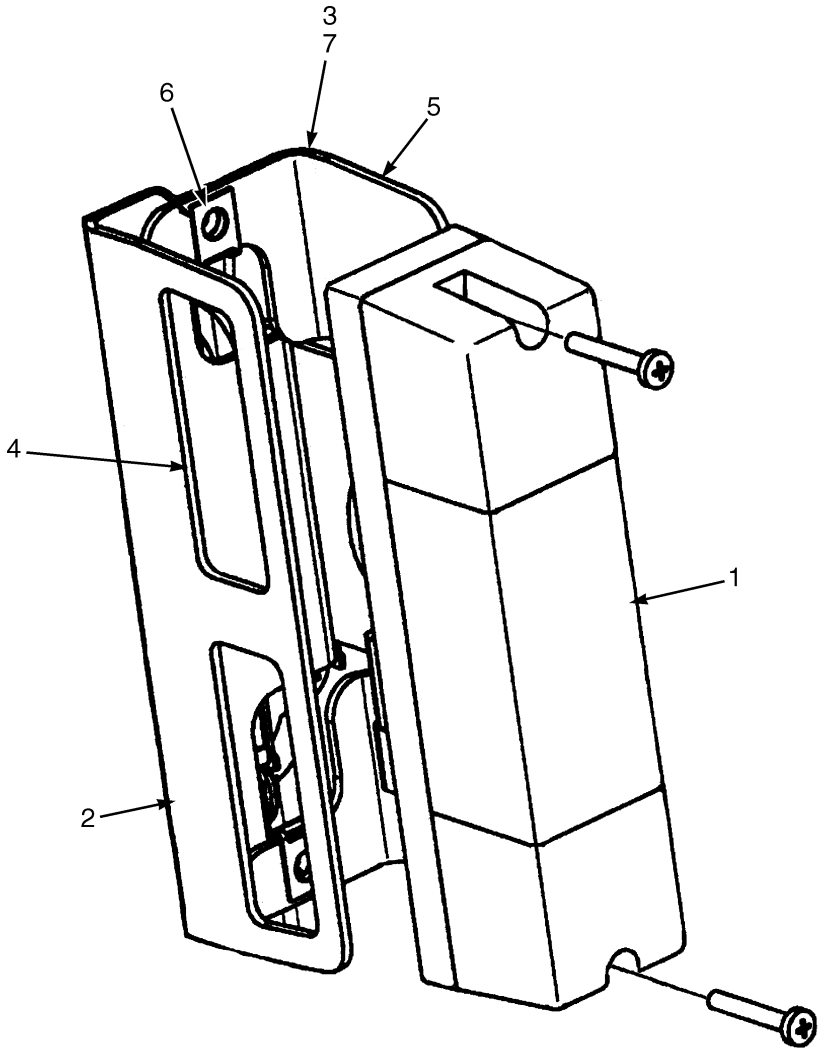

BP000214

©2004 HYSTER COMPANY

TAIL LIGHT

ITEM		PART NO.	DESCRIPTION	QTY
1		2303953	Tail Light	2
2		1505178	Wire Harness	2
3		2036284	Spacer	4
4		1379615	Plate	2
5		1379616	Plate	2
6		1364542	Clip Nut	4
7	**a**	1339779	Screw	4

FOOTNOTES:

a Not Illustrated

WORK LIGHT (Figure 10-9)

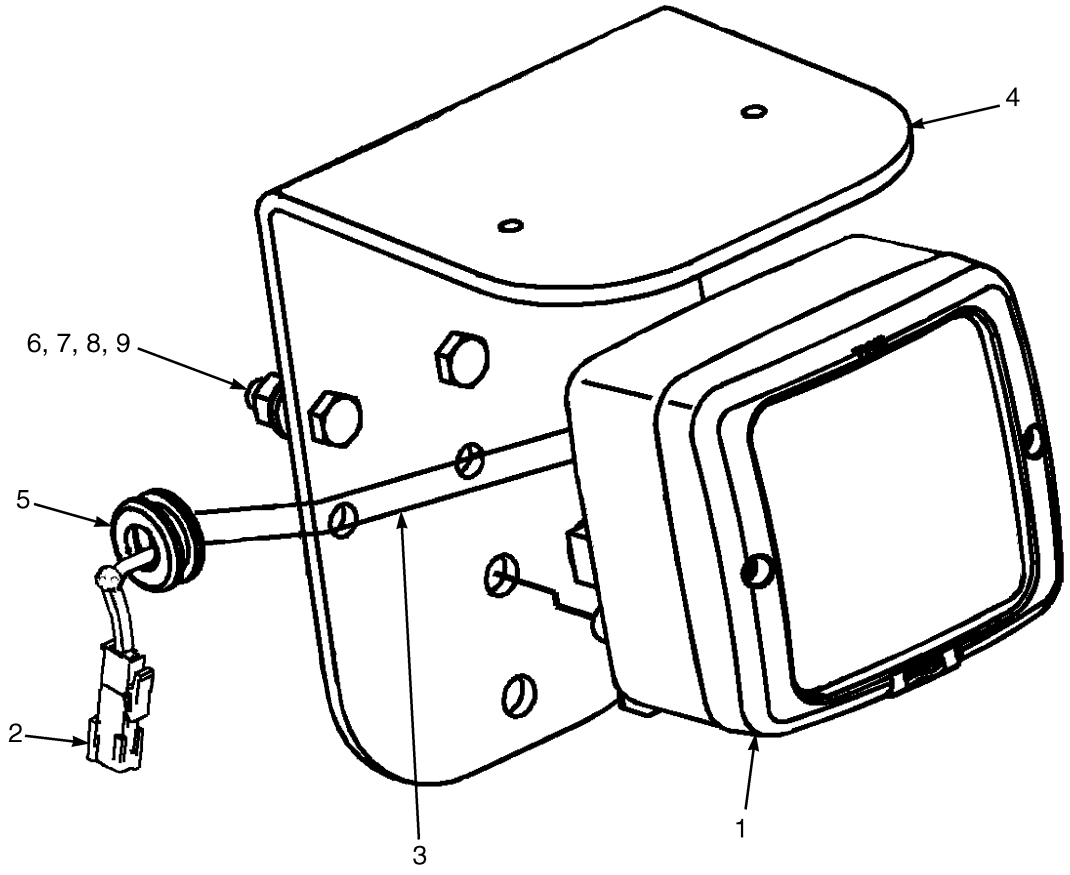

BP000215

©2004 HYSTER COMPANY

WORK LIGHT

ITEM	PART NO.	DESCRIPTION	QTY
1	1554873	Worklight	1
2	2067321	Harness (Rear Work Light)	1
3	878959	Hose Guard	AR
4	1557146	Bracket	1
5	1367645	Grommet	1
6	176640	Capscrew	2
7	320157	Washer	2
8	292681	Lockwasher	2
9	239503	Nut	2

©2004 HYSTER COMPANY

WORK LIGHT/STROBE COMBINATION (Figure 10-10)

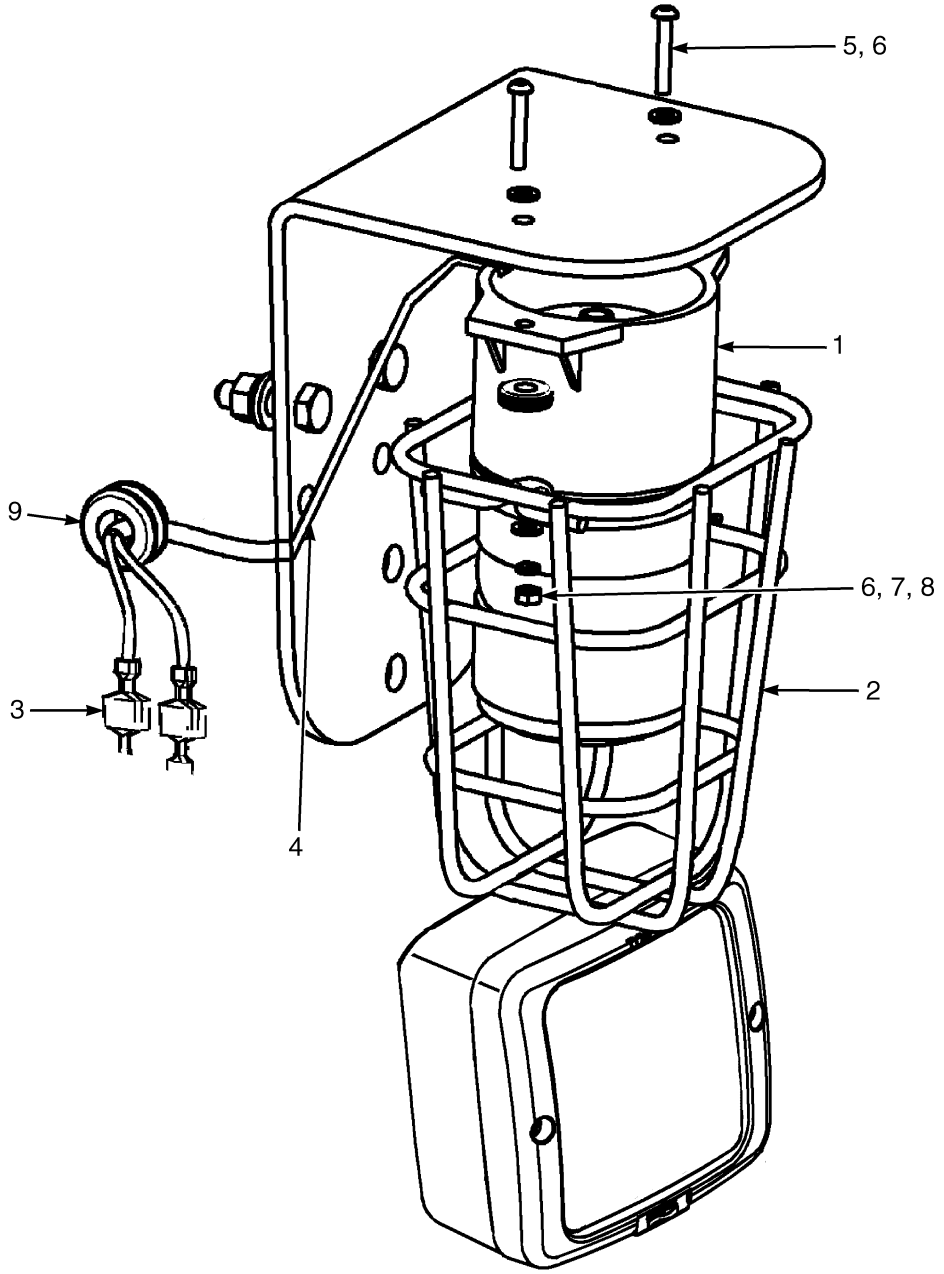

BP000197

©2004 HYSTER COMPANY

WORK LIGHT/STROBE COMBINATION

ITEM	PART NO.	DESCRIPTION	QTY
1	1382130	Strobe Light	1
1	1526082	Lens (Amber)	1
1	1309775	Bulb	1
2	1302024	Guard	1
3	1364588	Wire Harness (Light)	1
4	878959	Hose Guard	AR
5	302250	Screw	2
6	320155	Washer	4
7	293778	Washer	2
8	292668	Nut	2
9	1367645	Grommet	1

©2004 HYSTER COMPANY

NOTES

11 NUMERICAL INDEX

SECTION 11
NUMERICAL INDEX

PART NO.	PG	ITEM
14603	7-11	18
	9-13	18
14692	9-7	20
15127	10-7	9
15134	4-13	5
15140	1-11	15
15156	4-13	6
15176	1-3	45
15200	6-9	15
	6-9	31
	6-21	7
15211	7-2	11
	7-9	20
	7-11	23
	8-2	11
	8-5	6
	8-15	16
	8-19	29
	9-2	11
	9-5	6
	9-11	16
15212	4-13	11
15223	8-19	31
15236	8-29	12
15865	8-29	16
15931	5-5	10
16001	8-29	7
	8-29	11
16041	7-9	11
	8-15	11
	9-11	11
16457	6-13	10
	6-15	10
16483	10-12	4
16484	9-5	24
16485	7-11	9
	7-11	17
	8-19	19
	8-19	26
	9-5	17
	9-13	17
	9-13	19
16486	7-11	18
	8-19	20
	9-13	18
16540	6-5	6
16543	8-19	20
16556	6-15	16
16558	10-12	4
16560	6-5	5
	7-11	9
	8-19	19
	9-13	19
16655	6-19	12
16679	6-15	21
16693	7-5	23
16708	5-5	9
16745	4-17	5
16815	4-13	7
16865	4-7	19
	5-5	8
16882	7-11	27
	8-20	34
	9-5	25
	9-13	21
16982	7-11	10
	8-19	17
	9-13	10
17051	7-11	14
	8-19	23
	9-13	14
17059	6-15	17
17221	6-19	6
18832	7-9	10
	8-15	10
	9-11	10
19890	1-7	3
19979	6-9	24
	6-21	12
32033	5-11	14
37752	7-7	10
	8-5	23
	8-17	13
	9-5	28
39348	7-13	12
39362	4-17	2
39374	8-27	11
53162	4-7	18
	5-5	7
55146	8-7	7
55407	7-13	5
	8-23	11
	9-15	7
	9-17	7
58901	7-2	3
	7-7	4
	7-9	13
	7-15	7
	8-2	3
	8-13	3
	8-15	20
	8-17	7
	8-25	7
	9-2	3
	9-9	4
	9-11	20
	9-19	7
58903	6-21	10
58929	5-11	13
60137	7-11	3
	8-5	3
	8-19	32
	9-5	3
88195	6-19	5
88436	8-5	1
88441	8-19	1
98599	6-5	3
104506	7-15	5
	8-17	5
	8-25	5
	9-19	5
114312	5-5	12
	10-12	3
120938	7-11	15
	8-19	24
	9-13	15
127045	6-15	23
129387	7-2	4
	7-7	5
	7-9	14
	7-15	8
	8-2	4
	8-13	4
	8-15	18
	8-17	8
	8-25	8
	9-2	4
	9-9	5
	9-11	18
	9-19	8
129563	6-15	34
130845	4-17	17
131358	7-2	9
	7-9	18
	7-11	19
	8-2	9
	8-5	27
	8-15	14
	8-19	8
	9-2	9
	9-5	32
	9-11	14
	9-13	7
131716	7-15	4
	8-17	4
	8-25	4
	9-19	4
132834	9-15	6
	9-17	6
132860	9-5	9
132861	9-5	21
135634	7-11	25
	8-19	1
136681	2-3	7
	2-5	7
	8-19	11
136687	1-3	4
	1-3	16
	1-4	72
	2-3	4
	2-5	4
	4-7	6
	4-9	43
	6-7	2
	6-9	10
	10-3	8
	10-7	4
136692	1-7	8
	1-7	16
	1-23	8
	5-3	19
	6-5	16
	6-15	29
	6-21	20
	6-21	26
	10-5	6
136704	7-5	16
	8-9	4
136749	4-13	16
	6-15	37
	6-19	8
	8-9	5
	9-7	14
136985	4-13	42
	5-3	30
147973	8-7	6
164474	8-19	1
166112	9-5	33
166857	4-13	24
	6-15	24
167218	1-7	5
170658	1-11	9
175861	6-9	25
	6-21	13
176640	5-3	14
	5-7	12
	10-17	6
177352	7-11	25

©2004 HYSTER COMPANY

NUMERICAL INDEX (Continued)

PART NO.	PG	ITEM
	8-19	1
178119	6-15	35
	9-5	22
182118	1-3	26
	1-3	48
187388	7-13	14
	8-7	14
	8-23	7
189595	7-11	17
	8-19	26
	9-13	17
190580	8-7	12
	8-23	8
190811	2-3	1
	2-5	1
190887	8-7	16
	9-15	11
	9-17	10
197069	8-29	13
201752	6-5	4
201829	8-7	9
214364	4-17	12
	5-3	22
215212	7-15	3
	8-17	3
	8-25	3
	9-19	3
216877	1-19	3
216895	1-23	3
220281	5-7	13
220426	4-7	17
220428	5-5	13
221771	1-17	3
221852	1-3	22
222399	4-10	47
222504	4-17	6
222523	2-16	22
226458	7-9	7
	8-15	7
	9-11	7
230518	8-17	9
231082	8-5	1
231083	8-5	1
	9-5	1
231084	8-5	1
238950	1-11	8
239503	1-3	9
	5-3	21
	5-7	18
	6-15	40
	9-5	23
	10-17	9
248196	2-16	22
257913	7-13	11
	8-7	11
	8-23	5
259665	4-10	49
269200	1-3	41
287817	6-5	9
	6-9	13
	6-21	5
287831	1-21	19
287851	1-3	40
	6-5	11
	6-15	36
	6-19	7
	8-19	14
287854	6-5	13
	6-21	17
287860	1-23	4
	6-21	23
292500	2-7	18
	2-19	21
	2-21	22
	10-7	1
	10-9	4
292501	4-7	14
	4-13	37
	6-9	7
	6-9	21
	10-3	5
	10-7	5
	10-9	3
292502	1-3	13
	7-5	17
292507	4-9	40
292508	7-5	4
292509	7-11	12
	9-13	12
292514	8-29	4
292515	5-3	32
	6-13	7
	6-15	7
	6-15	25
292519	1-7	10
	6-15	26
	10-5	3
292521	8-9	26
292522	5-3	18
292527	8-5	9
292528	8-5	14
	9-5	14
292531	8-19	4
292532	7-11	5
	9-13	3
292533	7-5	13
	8-5	19
	8-9	15
292573	5-7	5
292656	1-17	4
	8-29	3
292667	5-3	10
292668	10-19	8
292678	5-3	8
292679	2-11	2
	4-17	10
	6-19	11
292680	1-3	15
	1-4	71
	2-3	3
	2-5	3
	2-7	17
	2-19	3
	2-19	20
	2-21	3
	2-21	21
	4-7	13
	4-13	36
	6-7	3
	6-9	9
	10-3	7
	10-7	3
	10-9	2
292681	1-3	11
	1-3	39
	1-4	58
	2-3	6
	2-5	6
	4-13	15
	4-17	7
	4-17	14
	5-3	13
	5-3	20
	5-7	11
	6-15	38
	6-19	9
	10-17	8
292682	1-3	43
	1-7	9
	1-7	15
	1-23	7
	4-13	44
	5-3	31
	6-5	15
	6-15	27
	6-21	19
	6-21	25
	8-29	5
	10-5	5
292683	1-17	5
	7-5	15
	8-29	2
	9-5	10
293613	1-4	57
	4-17	8
293629	1-3	44
293630	3-5	5
293651	8-29	1
293685	3-10	46
293706	1-9	2
293762	4-13	9
293778	6-9	19
	10-19	7
293779	4-13	8
293795	8-9	19
	8-9	20
	9-7	11
293799	2-19	4
	2-21	4
	9-7	25
295649	9-15	10
	9-17	9
296013	5-7	17
296153	6-9	18
296205	4-7	9
296247	1-7	12
296252	1-4	61
296420	3-5	4
296422	7-11	6
	8-19	5
	9-5	34
	9-13	4
296423	1-17	3
296426	3-10	45
	4-9	35
	7-9	8
	7-11	4
	8-5	4
	8-15	8
	8-19	33
	9-5	4
	9-11	8
296431	1-9	3
296472	4-13	30
297531	7-13	13
	8-7	13
	8-23	6
300937	7-11	8

See Service Manual for service procedures.
©2004 HYSTER COMPANY

NUMERICAL INDEX (Continued)

PART NO.	PG	ITEM
	8-5	16
	8-9	17
	8-19	7
	9-5	16
	9-13	6
300982	8-29	14
302020	2-7	14
302026	5-3	11
302027	5-3	9
302048	1-3	2
302053	2-5	2
302054	2-3	2
302231	1-3	21
302244	4-17	11
302250	10-19	5
302398	4-7	7
302399	6-9	23
302400	1-21	9
302450	1-15	5
302461	8-5	12
	9-5	12
302487	7-16	6
302977	1-23	2
	3-2	3
	3-10	47
304526	7-7	6
	8-5	26
	9-5	26
307253	6-9	34
310436	5-5	3
313805	7-5	12
	8-9	21
313828	7-5	7
	7-11	13
	8-9	6
	8-19	12
	9-7	15
	9-13	13
316448	1-11	25
316678	1-19	5
	10-3	4
	10-11	9
316826	8-9	28
316828	5-7	6
316834	10-11	12
317594	4-17	15
	6-15	30
317735	8-15	12
	9-11	12
320037	1-11	6
320154	5-3	7
320155	4-13	18
	10-19	6
320156	1-3	3
	1-3	14
	1-4	70
	2-19	2
	2-19	19
	2-21	2
	2-21	20
	4-7	12
	4-13	35
	6-5	10
	6-7	4
	6-9	8
	6-9	22
	10-3	6
	10-7	2
320157	1-4	56
	1-21	8
	5-3	12
	5-7	10
	6-15	39
	6-19	10
	10-17	7
320158	1-3	10
	1-3	38
	4-17	13
	6-5	12
	9-5	19
320159	1-3	42
	1-7	14
	1-23	6
	4-13	43
	5-3	17
	6-5	14
	6-13	8
	6-15	8
	6-15	28
	6-21	18
	6-21	24
	10-5	4
320160	1-23	5
	8-9	27
320161	1-3	25
	1-4	51
	8-5	15
	8-9	16
	9-5	15
320162	1-19	2
320165	5-7	4
322824	7-13	2
	7-13	8
	8-23	13
322902	7-13	6
	8-23	16
323061	7-11	10
	8-19	17
	9-13	10
323090	7-11	7
	8-19	6
	9-13	5
323160	7-11	16
	8-19	25
	9-13	16
324972	6-5	7
	6-21	16
325056	6-5	8
	6-21	21
325699	5-5	6
325799	5-3	6
325810	2-7	19
330692	7-13	9
	8-23	12
336391	7-11	25
352885	5-5	4
354669	4-3	3
354671	4-3	8
358069	4-3	5
358072	4-3	4
358073	4-3	10
358076	4-3	9
361973	1-7	13
362030	1-3	17
362036	5-5	11
365115	9-7	24
366115	7-2	5
	7-9	15
	8-2	5
	8-15	19
	9-2	5
	9-11	19
368618	5-5	2
369242	1-3	8
370258	1-11	31
370259	1-11	32
374160	5-7	7
378383	2-5	1
379902	4-13	26
380689	2-7	20
381413	2-15	4
	2-15	8
	2-15	11
	2-16	27
	2-16	28
	2-16	32
	2-16	46
383977	2-7	9
383979	2-7	9
383981	2-7	9
389688	1-11	14
392238	1-21	10
637635	7-13	13
878959	10-17	3
	10-19	4
895468	4-13	33
915474	5-3	4
1302024	10-19	2
1305672	2-16	25
	2-16	30
1306270	2-15	2
	2-16	23
1306271	2-16	24
1309775	10-19	1
1309877	4-3	11
1310142	2-15	3
	2-17	53
1310369	9-15	3
	9-17	3
1319668	7-13	1
	8-23	9
1322446	4-3	12
1322447	4-3	13
1322448	4-3	14
1327021	1-15	1
1327022	1-15	1
1327023	1-15	1
1329250	4-13	21
1330414	2-15	12
1330434	2-15	17
	2-15	18
1330437	2-15	12
1330438	2-15	1
	2-15	13
	2-15	14
	2-15	15
	2-15	16
	2-15	17
	2-15	18
	2-16	26
	2-16	31
	2-17	50
1330574	6-9	1
	6-21	1
1333043	1-15	1
1333044	1-15	1
1333045	1-15	1
1333382	7-11	20

©2004 HYSTER COMPANY

NUMERICAL INDEX (Continued)

PART NO.	PG	ITEM
	8-19	9
	9-13	8
1333392	7-11	11
	8-19	18
	9-13	11
1333399	7-2	6
	7-9	12
	7-15	6
	9-2	6
	9-11	17
1335110	5-3	3
1335967	4-13	14
1335987	4-13	12
1337196	4-13	27
1337905	8-5	18
1339396	4-9	41
1339667	1-11	27
1339672	1-11	7
1339674	1-11	23
1339779	10-15	7
1339828	1-11	3
1339830	1-11	1
1339832	1-11	11
	1-11	26
1340470	5-5	4
1340975	5-5	1
1340976	5-5	1
1340985	5-3	16
1340988	5-5	
1340989	5-3	27
1340998	5-7	15
1343276	1-11	10
1343537	4-13	19
1343572	4-13	17
1343573	4-13	1
1343574	4-13	29
1343577	4-7	10
1343578	4-7	2
1343579	4-7	4
1343593	4-7	8
1343594	4-7	1
1343595	4-7	15
1343597	4-13	32
1343598	4-7	5
1343607	4-13	10
1343624	5-3	15
1343647	1-19	4
1343989	8-5	21
1345190	7-5	11
	8-9	14
1345199	8-9	7
	9-7	16
1345204	8-9	8
	9-7	17
1345216	7-2	2
	7-7	2
	7-15	2
	8-2	2
	9-2	2
1345264	8-13	2
	8-17	2
	8-25	2
	9-9	2
	9-19	2
1345348	7-5	19
1345412	7-5	5
1345413	7-5	6
1345423	9-7	9
1345573	9-7	3
1345576	9-7	4
1347004	4-7	
	4-13	20
1347314	4-13	41
1348185	7-15	9
	8-25	9
	9-19	9
1348187	8-29	8
1348246	8-9	25
1348247	8-9	24
1348459	7-7	1
1348464	7-7	1
1348469	7-7	1
1349446	1-17	1
1351681	2-15	19
1351682	2-15	15
1351683	2-17	50
1352806	8-13	1
1352808	8-13	1
1352809	8-13	1
1352813	8-13	1
1352908	9-9	1
1353006	8-17	1
1353008	8-17	1
1353009	8-17	1
1353013	8-17	1
1353191	8-17	6
	9-19	6
1353192	7-2	6
	7-7	3
	7-9	12
	7-15	6
	8-13	5
	8-25	6
	9-2	6
	9-9	3
	9-11	17
1353399	8-19	16
1353408	7-2	8
	7-9	17
	8-2	8
	9-2	8
1353464	8-9	23
1353530	7-5	3
	8-9	29
	9-7	5
1353533	1-17	2
1353546	9-5	11
1353547	8-5	11
1353638	9-7	22
1353668	9-7	23
1354300	4-7	3
1354901	8-5	21
1354915	7-11	21
	8-19	10
	9-13	9
1354916	7-11	21
	8-19	10
	9-13	9
1354917	7-11	21
	8-19	10
	9-13	9
1354918	9-7	10
1354990	5-3	5
1355189	7-13	16
1355335	4-5	3
1355610	8-23	4
1356113	6-15	31
1356137	1-11	30
1356204	2-7	16
1356209	2-7	5
1358970	8-7	4
1359588	1-11	20
1360139	8-23	17
1360140	7-13	17
1360141	8-7	17
1360386	7-5	14
	8-9	22
	9-7	8
1360507	7-5	18
	7-5	20
	8-9	30
	9-7	7
1360508	7-5	2
	9-7	6
1360534	8-5	20
1360548	7-5	9
1360549	7-5	22
	8-9	18
1361302	8-7	15
1361372	7-13	
1361373	7-13	15
1361374	7-13	7
1361376	7-13	
1361377	7-13	15
1362527	7-13	
1362528	7-13	15
1362529	7-13	7
1362531	7-13	
1362532	7-13	15
1362557	7-13	
1362558	7-13	15
1362559	7-13	7
1362561	7-13	
1362562	7-13	15
1362702	8-23	
1362703	8-23	1
1362704	8-23	2
1362706	8-23	
1362713	8-23	1
1362715	8-23	
1362716	8-23	1
1362717	8-23	2
1362719	8-23	
1362721	8-23	
1362722	8-23	1
1362723	8-23	2
1362725	8-23	
1362726	8-23	1
1362732	8-23	1
1362745	8-23	
1362746	8-23	2
1362749	8-23	
1362756	8-23	1
1362871	7-13	10
	8-23	14
	9-17	8
1362875	8-23	15
	9-15	9
1362880	8-7	5
1362881	8-7	10
1362886	8-7	
1362888	8-7	
	9-5	31
1362889	8-7	
1362894	8-7	
1362923	8-7	1
1362925	8-7	1
1362926	8-7	1

©2004 HYSTER COMPANY

NUMERICAL INDEX (Continued)

PART NO.	PG	ITEM
1362931	8-7	1
1362960	8-7	2
1362962	8-7	2
1362963	8-7	2
1362968	8-7	2
1363250	8-19	13
1363251	8-19	15
1363253	8-9	2
1363256	8-9	2
1363260	8-29	9
1363261	8-29	9
1363272	8-2	6
	8-15	17
1363306	8-5	2
1363308	8-5	2
1363309	8-5	2
1363313	8-5	2
1363486	7-5	8
1363886	2-17	50
1363916	1-19	7
1363917	1-19	8
1364271	4-13	3
1364281	5-3	2
	5-7	9
1364542	1-13	9
	10-15	6
1364588	10-19	3
1365061	9-7	19
1365140	8-19	30
1365308	9-5	2
1365504	9-7	1
1365516	9-7	2
1365607	9-15	1
	9-17	1
1365637	9-17	2
1365666	9-15	2
1366057	8-23	1
1366725	1-11	19
1367645	10-3	3
	10-11	8
	10-17	5
	10-19	9
1369333	8-9	9
	9-7	13
1369345	7-2	7
	7-9	16
	8-2	7
	8-15	13
	9-2	7
	9-11	13
1369357	7-11	24
	8-5	7
	8-19	27
	9-5	7
1369410	2-16	37
1369412	2-16	30
1371287	8-29	6
1371526	8-29	11
1371653	7-13	4
	8-23	3
1371741	6-11	2
1371743	6-11	5
1371744	6-11	4
1371746	6-11	13
1374793	2-7	21
1374797	7-2	3
	7-9	13
	8-2	3
	8-15	20
	9-2	3
	9-11	20
1374802	9-15	8
1375574	7-5	21
	8-9	31
	9-7	21
1376100	7-11	26
	8-19	21
	9-13	20
1376101	7-11	26
	8-19	22
	9-13	20
1376743	4-13	31
1377414	5-5	
1378600	4-13	13
1378690	9-5	18
1378692	9-5	30
1378698	7-7	8
	8-5	25
	8-17	11
1378699	7-7	9
	8-5	24
	8-17	12
	9-5	29
1378760	1-15	8
1378762	1-15	7
1378763	1-15	6
1378765	1-15	9
1379488	4-13	45
1379496	8-5	17
	9-5	17
1379615	10-15	4
1379616	10-15	5
1379682	9-5	27
1379685	7-7	7
1379687	7-11	11
	9-13	11
1380035	9-5	24
1381082	9-15	4
	9-17	4
1381095	7-13	3
	8-23	10
1381598	8-9	12
1381599	8-9	13
1382130	10-19	1
1382302	10-11	13
1382305	10-11	14
1382311	1-4	66
1382312	1-4	67
1382313	1-4	68
1383195	10-9	1
1385099	1-11	16
1389343	1-21	18
1390575	10-7	8
1393132	7-2	6
	7-9	12
	7-15	6
	9-2	6
	9-11	17
1393142	8-2	6
	8-15	17
1395285	8-5	8
	9-5	8
1395291	8-10	33
1395292	8-9	32
1396406	8-9	10
1401746	7-9	9
	8-15	9
	9-11	9
1450503	4-13	34
1451696	4-5	4
1451697	4-5	6
1451698	4-5	8
1451703	4-5	13
1451707	4-5	23
1452459	4-3	1
1454478	2-7	11
1455770	4-5	7
1455771	4-5	9
1455773	4-5	16
1455776	4-5	21
1455779	4-5	22
1456085	2-7	3
1460539	6-11	13
1460672	6-15	20
1462468	4-5	
	4-13	4
1462527	4-9	34
1462528	4-9	36
1463139	2-17	47
1463194	2-15	1
	2-15	16
	2-16	26
1465784	4-9	1
1465787	4-9	3
1465792	4-9	5
1465793	4-9	6
1465794	4-9	7
1465795	4-9	8
1465796	4-9	9
1465797	4-9	10
1465800	4-9	11
1465801	4-9	12
1465813	4-9	13
1465814	4-9	14
1465817	4-9	16
1465818	4-9	17
1465819	4-9	18
1465820	4-9	19
1465821	4-9	20
1465822	4-9	20
1465823	4-9	23
1465824	4-9	22
1465825	4-9	24
1465826	4-9	25
1465827	4-9	26
1465828	4-9	27
1465829	4-9	28
1465834	4-9	33
1467390	4-5	1
1467391	4-5	14
1467392	4-5	18
1467424	4-5	5
1467425	4-5	17
1467426	4-5	11
1467428	4-5	19
1467430	4-5	24
1467529	1-21	15
1470152	1-21	6
1470153	1-21	6
1471618	1-11	8
1471650	4-9	29
1471658	4-10	51
1475250	5-5	5
1475399	4-10	55
1475400	4-10	54
1476421	10-11	11

©2004 HYSTER COMPANY

NUMERICAL INDEX (Continued)

PART NO.	PG	ITEM
1483422	1-4	69
1483828	1-21	16
1484397	2-15	1
	2-15	15
	2-15	16
	2-16	26
1486737	5-3	29
1486770	5-3	28
1489010	7-9	2
	8-15	2
	9-11	2
1489016	7-16	1
1489035	7-16	3
1489037	7-16	2
1489039	7-16	5
1489050	10-12	2
1489972	8-5	13
	9-5	13
1490242	2-15	13
	2-15	14
	2-16	31
1490243	2-15	13
	2-15	14
	2-16	31
1491830	4-7	11
1493430	2-15	17
	2-15	18
	2-17	50
1493465	2-15	12
1494017	7-5	10
	8-9	11
1494373	4-9	
1494719	8-27	11
1495388	4-9	37
1495389	4-9	37
1495390	4-9	2
1495391	4-9	4
1495392	4-9	21
1495393	4-10	50
1495394	4-9	20
1495395	4-9	15
1495397	4-9	30
1495398	4-9	31
1495399	4-9	32
1495400	4-10	52
1497280	3-9	6
1497282	3-9	5
1497558	4-10	53
1498115	9-15	12
	9-17	11
1498116	9-15	5
	9-17	5
1498325	7-16	4
1498326	7-9	21
	8-15	21
	9-11	21
1498406	4-7	16
1500182	6-17	11
1500263	2-7	1
1500360	2-7	9
1500782	1-15	4
1502724	6-17	1
1502725	6-17	2
1502726	6-17	3
1502727	6-17	4
1502728	6-17	5
1502730	6-17	7
1502731	6-17	8
1502733	6-17	10
1502735	6-17	12
1502736	6-17	13
1503096	7-16	7
1503474	10-12	2
1503477	10-12	1
1503480	10-12	1
1503481	10-12	1
1504010	7-2	7
	7-9	16
	8-2	7
	8-15	13
	9-2	7
	9-11	13
1505178	10-15	2
1508484	4-9	42
1510861	6-9	38
1510874	4-13	38
1514866	7-2	10
	7-9	19
	7-11	22
	8-2	10
	8-5	5
	8-15	15
	8-19	28
	9-2	10
	9-5	5
	9-11	15
1518987	10-11	3
1519095	1-4	62
1520270	4-13	22
1520271	4-13	28
1520416	6-13	6
	6-15	6
1520417	6-21	6
1520609	4-13	25
1520731	4-13	
1520733	4-13	
1521321	1-3	7
1521399	4-9	46
1521400	4-9	46
1521401	4-9	46
1521402	4-10	48
1521403	4-10	48
1521404	4-10	48
1521405	1-3	7
1521406	1-3	7
1522424	5-3	23
1523614	1-3	6
1523615	1-3	6
1523623	1-3	12
1523732	1-15	2
1523733	1-15	3
1523734	1-15	10
1523877	8-29	20
1523879	8-29	17
1523880	8-29	15
1523995	4-18	
1525348	1-4	65
1525349	1-4	65
1525351	1-4	65
1525750	1-3	34
1525751	1-3	35
1525760	2-11	1
1525767	2-9	1
1526082	10-19	1
1526274	7-2	1
1526275	8-2	1
1526276	9-2	1
1526650	1-3	6
1526656	6-15	22
1526744	6-13	5
1526869	8-25	1
1526871	8-25	1
	9-19	1
1526872	7-15	1
	8-25	1
1526877	7-15	1
	8-25	1
1526883	7-15	1
1527262	1-3	5
1527296	1-3	47
1527297	1-4	53
1527299	1-3	32
	1-4	60
1527304	1-3	33
	1-4	54
1527326	1-4	52
1527327	1-4	49
1527329	1-4	59
1527330	1-4	55
1527974	1-9	4
1528189	4-9	44
1528191	4-13	40
1528551	1-13	8
1528707	5-3	24
1528708	5-3	25
1528709	5-3	26
1528851	1-3	1
1528869	1-3	27
1529042	1-11	23
1529052	2-15	17
	2-15	18
	2-17	50
1529139	6-9	2
1529140	6-21	2
1529150	1-9	1
1529243	2-7	
1529244	2-7	
1529596	8-15	1
1529598	7-9	1
1529600	9-11	1
1530681	4-13	39
1530955	1-3	18
1531326	10-11	7
1532304	6-19	4
1532511	1-7	11
1532578	10-13	1
1532663	10-13	2
1532664	2-15	15
1533890	1-3	19
1533937	3-9	21
1534009	10-13	2
1534010	10-13	
1534632	1-19	6
1534633	1-19	6
1534634	1-19	6
1534697	10-11	6
1536299	1-3	20
1538033	1-11	4
1538034	1-11	5
1538036	1-11	21
1538037	1-11	22
1538447	2-9	1
1539240	10-13	3
1539289	4-13	21
1539290	4-13	34
1539327	2-19	1
1539328	2-21	1
1539387	1-11	28

See Service Manual for service procedures.
©2004 HYSTER COMPANY

NUMERICAL INDEX (Continued)

PART NO.	PG	ITEM
1539490	3-2	
1539497	3-2	
1539854	5-7	8
1540035	1-21	1
1540036	1-21	1
1540616	2-13	
1541451	2-5	1
1541453	2-3	1
1541774	1-3	28
1541775	1-3	29
1541777	1-3	30
1541778	1-3	31
1541991	2-17	47
1541992	2-17	47
1542513	2-9	1
1542514	2-9	1
1542542	10-13	4
1544266	1-11	17
1544327	6-23	3
1544344	6-23	4
1544345	6-23	5
1544346	6-23	6
1544347	6-23	8
1544349	6-23	2
	6-23	11
1544364	6-27	3
1544781	6-3	11
	6-5	25
	6-27	11
1545108	2-7	9
1545111	2-7	13
1545115	2-13	1
1545117	2-13	2
1545118	2-13	3
1545120	2-13	4
1545121	2-13	5
1545122	2-13	6
1545123	2-13	7
1545124	2-13	8
1545125	2-13	9
1545126	2-13	10
1545127	2-13	11
1545128	2-13	12
1545129	2-13	13
1545130	2-13	14
1545131	2-13	15
1545132	2-13	16
1545133	2-13	17
1545134	2-13	18
1545227	4-17	4
1545299	10-5	1
1545300	10-5	1
1545301	10-5	1
1545303	10-5	2
1545304	10-5	2
1545522	4-17	9
1546568	6-5	18
1546570	6-5	20
1546572	6-5	19
1546573	6-5	21
1546684	6-3	6
	6-27	6
1546686	6-3	7
	6-27	7
1547115	8-9	1
1547117	8-9	1
1547118	8-9	1
1547122	8-9	1
1547231	6-9	37
1547585	6-25	1
1547586	6-25	6
1547602	2-16	33
1547627	2-7	12
1547685	2-13	19
1548223	6-15	32
1548225	6-15	33
1548462	5-7	1
1548469	5-7	
1548473	5-7	2
1548475	5-7	3
1550531	1-13	7
1551236	1-13	8
1551544	6-25	2
1551545	6-25	3
1551546	6-25	4
1551547	6-25	5
1553456	1-3	37
1553671	6-7	1
	6-7	1
	6-7	2
	6-7	2
1553963	1-19	10
1554622	6-25	8
1554623	6-25	9
1554624	1-4	63
1554625	1-4	64
1554873	10-11	1
	10-17	1
1554874	10-11	2
1554932	1-19	11
1555731	6-7	1
	6-7	2
1555987	2-19	1
1556261	5-9	1
1556262	5-9	2
1556263	5-9	3
1556264	5-9	4
1556265	5-9	5
1556266	5-9	6
1556267	5-9	7
1556268	5-9	8
1556269	5-9	9
1556270	5-9	10
1556271	5-9	11
1556397	5-9	12
1556500	5-9	13
1556587	6-5	22
	6-23	1
1556589	6-5	23
	6-27	1
1556590	6-3	2
	6-27	2
1556596	6-3	3
1557145	10-3	2
1557146	10-17	4
1557147	10-11	4
1557186	6-3	5
	6-27	5
1557189	6-3	8
	6-27	8
1557190	6-3	9
	6-27	9
1557191	6-3	10
	6-27	10
1557381	3-9	1
1557382	3-9	2
1557383	3-9	41
1557392	3-9	40
1557393	3-9	3
1557394	3-9	7
1557395	3-9	8
1557396	3-9	4
1557397	3-9	9
1557398	3-9	10
1557399	3-9	11
1557400	3-9	12
1557401	3-9	42
1557402	3-9	42
1557403	3-9	42
1557404	3-9	13
1557405	3-9	14
1557406	3-9	15
1557407	3-9	16
1557435	3-9	17
1557436	3-10	43
1557437	3-10	44
1557438	3-10	44
1557439	3-10	44
1557440	3-10	44
1557441	3-9	18
1557442	3-9	19
1557443	3-9	20
1557444	3-9	22
1557445	3-9	23
1557446	3-9	24
1557447	3-9	25
1557448	3-9	26
1557449	3-9	27
1557450	3-9	28
1557451	3-9	29
1557452	3-9	30
1557454	3-9	31
1557455	3-9	32
1557467	3-9	33
1557470	3-9	34
1557471	3-9	35
1557472	3-9	36
1557474	3-9	37
1557475	3-9	38
1557480	3-9	39
1557699	6-25	10
1558094	6-3	1
	6-5	24
1560099	1-4	65
1560101	1-4	65
1560157	1-11	24
1561561	3-9	1
1562665	1-21	1
1562666	1-21	1
1562874	2-7	2
1562878	2-7	9
1562879	2-7	9
1563192	1-21	1
1563193	1-21	1
1563207	1-21	2
1563208	1-21	11
1563209	1-21	3
1563210	1-21	13
1563211	1-21	14
1563212	1-21	4
1563215	1-21	12
1563218	1-21	3
1563222	1-21	6
1563230	1-21	5
1563231	1-21	17
1563350	1-21	7
1563351	1-21	2
1563353	1-21	7

©2004 HYSTER COMPANY

NUMERICAL INDEX (Continued)

PART NO.	PG	ITEM
1563712	6-13	2
1564043	2-3	5
	2-5	5
1564205	2-21	17
1564241	2-19	16
	2-21	16
1564327	6-17	6
1564328	6-17	9
1564559	3-7	1
1564560	3-7	2
1564561	3-7	3
1564562	3-7	4
1564592	3-7	5
1564593	3-7	6
1564594	3-7	7
1564626	7-5	1
1564631	7-5	1
1564636	7-5	1
2004005	4-9	39
	9-7	18
2007554	2-16	21
2013089	8-7	8
2013099	8-7	3
2013239	6-9	32
	6-21	8
2013578	1-11	26
2014599	1-7	1
2014600	1-7	1
2014602	1-7	1
2014603	1-7	1
2015059	1-11	27
2015060	1-11	27
2031026	2-3	1
2033614	4-3	
	4-17	3
2034265	4-3	7
2034266	4-3	2
2034281	4-9	38
2034347	1-19	1
2034348	1-19	9
2034482	2-17	49
2034484	2-7	9
2034488	2-7	9
2035275	2-15	5
2035276	2-15	5
	2-15	6
	2-16	40
	2-16	41
	2-16	43
2035396	2-7	9
2035601	3-2	1
2035605	3-2	1
2036125	3-2	2
2036126	3-2	2
2036284	10-15	3
2037359	10-7	6
2037379	1-3	23
2037543	2-16	32
2037544	2-17	51
2037545	2-17	48
2042698	6-19	3
2043528	7-9	3
	7-16	
	8-15	3
	9-11	3
2043530	7-9	6
	8-15	6
	9-11	6
2043531	7-9	4
	8-15	4
	9-11	4
2043533	7-9	5
	8-15	5
	9-11	5
2043953	2-16	29
2044992	2-15	4
	2-15	11
	2-16	27
2044997	2-16	32
2044998	2-15	4
	2-15	11
	2-16	27
2045003	2-16	32
2045129	4-13	2
2046006	6-25	7
2046336	9-17	
2046367	9-15	
2047064	8-27	9
2047819	2-15	8
	2-16	28
	2-17	46
2047820	2-15	8
	2-16	25
	2-16	28
	2-17	46
2048105	4-17	1
2049309	2-17	54
2049939	1-11	2
2050282	8-27	4
2052235	6-11	7
2053601	5-3	1
2053881	5-11	
2053940	1-7	17
2053941	1-7	17
2054280	6-19	1
2054598	8-27	
	8-29	10
2054599	8-27	
	8-29	10
2054600	8-27	
	8-29	10
2054601	8-27	5
2054602	8-27	5
2054827	4-18	1
2055493	8-2	
2055494	9-2	
2055495	7-2	
2055624	2-19	1
2055625	2-21	1
2055751	7-7	
	7-11	
	7-15	
2055756	7-7	
	7-11	
	7-15	
2055758	7-7	
	7-11	
	7-15	
2055834	8-5	
	8-13	
	8-17	
	8-19	
	8-25	
2055836	8-5	
	8-13	
	8-17	
	8-19	
	8-25	
2055837	8-5	
	8-13	
	8-17	
	8-19	
	8-25	
2055841	8-5	
	8-13	
	8-17	
	8-19	
	8-25	
2055885	9-5	
	9-9	
	9-19	
2056115	1-4	50
2056243	2-16	40
2056244	2-15	6
	2-16	43
2056352	2-15	
	4-9	45
2056600	2-11	3
2056852	2-19	12
	2-21	12
	3-5	7
2056865	9-11	
2056866	8-15	
2056867	7-9	
2056878	2-19	8
	2-21	8
	3-5	6
2056880	2-19	10
	2-21	10
2059533	1-13	12
2059534	1-13	13
2059683	6-19	2
2060507	2-19	22
2060510	2-21	23
2060511	2-21	24
2060613	5-7	16
	5-9	
2060639	10-11	10
2060666	2-15	7
	2-16	44
2061746	3-5	1
	3-9	
2061747	3-5	2
	3-9	
2061805	6-15	1
2061806	6-13	1
2061808	6-15	5
2061994	6-7	1
2061995	6-7	2
2062005	2-19	7
2062006	2-19	5
	2-21	6
2062009	2-21	5
2062022	2-19	14
	2-21	14
2062023	2-19	15
	2-21	15
2062024	2-19	17
	2-21	18
2062025	2-19	18
	2-21	19
2062057	6-21	22
	6-25	
2062058	6-21	22
	6-25	
2062060	6-5	1
2062061	6-5	1
2062063	6-21	4

See Service Manual for service procedures.
©2004 HYSTER COMPANY

NUMERICAL INDEX (Continued)

PART NO.	PG	ITEM
2062064	6-9	11
2062067	6-5	1
2062068	6-5	2
2062072	6-21	27
2062264	1-13	2
2062265	1-13	4
2062266	1-13	3
2062267	1-13	1
2062350	2-19	13
	2-21	13
	3-5	9
2062351	2-19	9
	2-21	9
	3-5	8
2062360	2-19	6
	2-21	7
2062361	2-19	11
	2-21	11
2062560	1-13	5
2062718	1-13	10
2062742	5-3	33
2062743	2-11	6
2062822	6-15	18
2062823	6-15	19
2062824	6-15	3
2062825	6-15	4
2062827	6-13	4
2062871	2-16	35
2062873	2-16	20
2062875	1-4	73
2063091	3-5	3
	3-7	
2065094	6-7	1
2065095	6-7	2
2065362	6-9	3
2065363	6-9	4
2065364	6-9	5
2065365	6-9	6
2065366	6-17	
2065755	6-15	15
2066313	2-15	10
2066700	10-3	1
2066709	1-13	11
	2-11	4
2066719	5-3	
2066967	4-17	16
2067319	10-11	5
2067321	10-17	2
2067410	4-14	46
2068404	1-11	29
2068405	1-11	29
2068406	1-11	18
2068407	1-11	18
2068717	6-15	2
2068733	6-19	13
2068741	2-15	5
	2-15	6
	2-16	40
	2-16	41
	2-16	43
2068745	2-16	34
2068746	6-13	12
	6-15	12
2068747	6-13	11
	6-15	11
2068748	6-13	14
	6-15	14
2068749	6-13	13
	6-15	13
2068750	6-13	3
2068817	2-11	5
	2-21	25
2068818	2-11	5
	2-21	26
2069006	6-11	
2069412	2-16	30
2069413	2-16	38
2069414	2-16	41
2069415	2-17	52
2302179	6-9	20
2302461	2-7	4
2302899	8-27	1
2303162	6-21	15
2303178	1-11	12
2303239	6-11	1
2303345	2-16	36
2303365	6-9	14
2303498	6-21	9
2303821	2-7	7
2303898	6-9	30
2303953	10-15	1
2304044	1-11	13
2304087	6-9	28
2304170	2-7	8
2304572	2-13	20
2304767	6-9	27
2305577	2-7	15
2305669	6-9	17
2305754	2-15	9
	2-16	39
	2-16	45
2306052	6-9	12
2306145	4-13	23
2306436	10-7	7
2307031	2-7	10
2307042	6-21	14
2307413	2-15	8
	2-16	28
	2-16	46
2307513	6-9	29
2307542	1-7	7
2307638	6-13	9
	6-15	9
2307659	8-27	4
2307799	1-3	24
	1-7	2
2307803	2-7	6
2307900	6-21	11
2307965	1-7	4
2308059	6-9	16
2308118	2-16	25
2308174	8-27	3
2308915	2-15	4
	2-15	11
	2-16	27
2308995	2-3	1
	2-5	1
2309196	5-7	14
2309317	1-13	6
2309362	1-7	6
2309570	6-9	26
2309579	2-17	51
2309978	6-9	33
2310972	1-3	36
	6-9	36
2311380	2-16	42
2311384	6-21	3
2311392	6-9	35
2311444	8-27	4
2311598	1-3	46
2798897	6-5	17

©2004 HYSTER COMPANY

NOTES

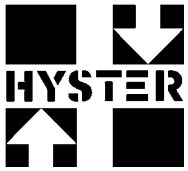
HYSTER