RUTHZIL TRATOR COMERCIAL DE PEÇAS LTDA 11 97083-6812 ROLANDO

HYSTER

PARTS MANUAL

J50Z, J40Z, J60Z, J65Z (A416)

CUSTOMER EDITION

HYSTER

1534730
10/2003

©2003 Hyster Company

SECTIONS

1 FRAME
2 ELECTRICAL SYSTEM
3 DRIVE UNIT
4 STEERING SYSTEM
5 BRAKE/ACCELERATOR SYSTEM
6 HYDRAULIC SYSTEM
7 MAST-TWO STAGE LIMITED FREE-LIFT
8 MAST-THREE STAGE FULL FREE-LIFT
9 MAST-TWO STAGE FULL FREE-LIFT
10 OPTIONS
11 NUMERICAL INDEX

This Parts Manual is divided into 11 major sections which are listed above. Quick reference to these sections can be made by placing the right thumb on the tab of the desired section, bending the book back and thumbing the pages to the corresponding tab.

TABLE OF CONTENTS

DESCRIPTION	PAGE
A	
ACCELERATOR	5-14
ACCELERATOR PEDAL	
MONOTROL	5-16
AUDIBLE ALARM	10-14
B	
BRAKE	5-10
BRAKE AND BACK-UP LIGHT	10-8
BRAKE PEDAL LINKAGE	5-2
C	
CONTACTOR	
LINE	2-12
POWER STEERING	2-14
CONTACTOR PANEL	
CONTACTOR AND TRANSISTOR HYDRAULIC	2-10
CONTACTOR HYDRAULIC	2-16
CONTROL PANEL	
CONTACTOR HYDRAULIC	2-8
TRANSISTOR HYDRAULIC	2-6
CONTROL VALVE	
FOUR FUNCTION	6-26
THREE FUNCTION	6-22
CONTROL VALVE ATTACHING PARTS	6-16
COUNTERWEIGHT	1-10
COVERS	1-4
D	
DASH DISPLAY	2-4
DC CONVERTER	10-17
DRIVE AXLE	3-2
DRIVE MOTOR MOUNT	6-4
DRIVE TIRE AND WHEEL	3-12
E	
ELECTRICAL	2-2
F	
FORK	1-18
FRAME	1-2
FREE-LIFT	
THREE STAGE FULL FREE-LIFT	8-12
TWO STAGE FULL FREE-LIFT	9-8
FREE-LIFT CYLINDER	
THREE STAGE FULL FREE-LIFT	8-20
TWO STAGE FULL FREE-LIFT	9-14

©2003 HYSTER COMPANY

TABLE OF CONTENTS (Continued)

DESCRIPTION	PAGE
G	
GEAR PUMP	4-12
OPTIONAL	4-14
H	
HAND LEVER	6-18
HEAD LIGHTS	10-10
HEADER HOSE	
THREE STAGE FULL FREE-LIFT	8-26
TWO STAGE FULL FREE-LIFT	9-18
TWO STAGE LIMITED FREE-LIFT	7-16
HOOD	1-6
HYDRAULIC	6-2
HYDRAULIC PUMP	
19 CC PUMP - LOW NOISE	
OPTIONAL	6-10
19 CC SINGLE GEAR PUMP	6-8
HYDRAULIC PUMP MOTOR	
72/80 VOLT A/C	6-12
72/80 VOLT D/C	6-14
HYDRAULIC TANK	6-30
I	
INNER MAST	
THREE STAGE FULL FREE-LIFT	8-6
TWO STAGE FULL FREE-LIFT	9-4
TWO STAGE LIMITED FREE-LIFT	7-4
INTERFACE CABLE	10-16
INTERMEDIATE MAST	
THREE STAGE FULL FREE-LIFT	8-4
L	
LABELS AND DECALS	1-20
LIFT	
TWO STAGE LIMITED FREE-LIFT	7-6
LIFT CYLINDER	
TWO STAGE LIMITED FREE-LIFT	
J40-50Z	7-9
J60-65Z	7-11
LOAD BACKREST EXTENSION	1-16
M	
MAIN CYLINDER	
THREE STAGE FULL FREE-LIFT	8-16
TWO STAGE FULL FREE-LIFT	
LEFT HAND	9-11
RIGHT HAND	9-12
MAIN LIFT	
THREE STAGE FULL FREE-LIFT	8-8
TWO STAGE FULL FREE-LIFT	9-6
MAST INSTALLATION	6-32

©2003 HYSTER COMPANY

TABLE OF CONTENTS (Continued)

DESCRIPTION	PAGE
M (continued)	
MASTER CYLINDER	5-8
N	
NON-SUSPENSION SEAT	1-12
O	
OUTER MAST	
THREE STAGE FULL FREE-LIFT	8-2
TWO STAGE FULL FREE-LIFT	9-2
TWO STAGE LIMITED FREE-LIFT	7-2
OVERHEAD GUARD	1-8
P	
PARK BRAKE LEVER	
ACTUATED	5-4
S	
SHIFT LEVER	4-4
SIDE-SHIFT CARRIAGE	
CLASS II	10-2
CLASS III	10-4
SIDE-SHIFT CYLINDER	10-6
SIX ROLLER CARRIAGE	
THREE STAGE FULL FREE-LIFT	8-24
TWO STAGE FULL FREE-LIFT	9-16
TWO STAGE LIMITED FREE-LIFT	7-14
STEERING AXLE	4-16
STEERING CONTROL UNIT	4-6
STEERING CYLINDER	4-10
STEERING HYDRAULIC	4-8
STEERING POD	4-2
STEERING TIRE AND WHEEL	4-18
STROBE LIGHT	10-12
SUSPENSION SEAT	1-14
T	
TILT CYLINDER	6-6
TRACTION MOTOR	
A/C	3-10
TRANSMISSION AND DIFFERENTIAL	3-6
W	
WIRE HARNESS	
FORWARD/REVERSE LEVER	2-20
MAIN	2-18

©2003 HYSTER COMPANY

ABBREVIATIONS QUICK REFERENCE SHEET

Listed below are abbreviations used in parts manuals to denote the following expressions:

TERM	DEFINITION
Amp	Amperes
AR	As Required
BDI	Battery Discharge Indicators
BWI	Brush Wear Indicator
CE	Communicator End
CRE	Corrosive Environment
D/B	Date Break
dbA	Decibel "A" Scale
DE	Drive End
ECH	Empty Container Handler
ECH-3	Empty Container Handler - 3 High Stacking
ECH-4	Empty Container Handler - 4 High Stacking
ECH-5	Empty Container Handler - 5 High Stacking
ECH-6	Empty Container Handler - 6 High Stacking
ECH-7	Empty Container Handler - 7 High Stacking
ECM	Electronic Control Module
ECN	Engineering Change Notice
EEPROM	Electrically Erasable Programmable Read Only Memory
EPROM	Electrically Programmable Read Only Memory

TERM	DEFINITION
FRE	Freezer Environment
in.	inches
LPG	Liquefied Petroleum Gas
MAP	Manifold Absolute Pressure
mm	millimeters
MSTS	Microprocessor Spark Timing System
NPT	National Pipe Threads
O/S	Oversize
PTO	Power Take Off
RPM	Revolutions per Minute
S/N	Serial Number
TMM	Truck Management Module
UL Type D	Diesel-Powered Safety Rating
UL Type DS	Diesel-Powered Safety Rating
UL Type E	Battery-Powered Safety Rating
UL Type EE	Battery-Powered Safety Rating
UL Type ES	Battery-Powered Safety Rating
UL Type G	Gasoline-Powered Safety Rating
UL Type GS	Gasoline-Powered Safety Rating
UL Type LP	Gas-Powered Safety Rating
UL Type LPS	LP Gas-Powered Safety Rating
U/S	Undersize
UL	Underwriters Laboratory
V	Volts

©2003 HYSTER COMPANY

HOW TO USE THE ILLUSTRATED PARTS MANUAL

This parts manual describes and illustrates assemblies, subassemblies, and detail parts needed for service replacement.

The different constructions are indicated by keys and footnotes. The callouts correspond to descriptions found on the next page.

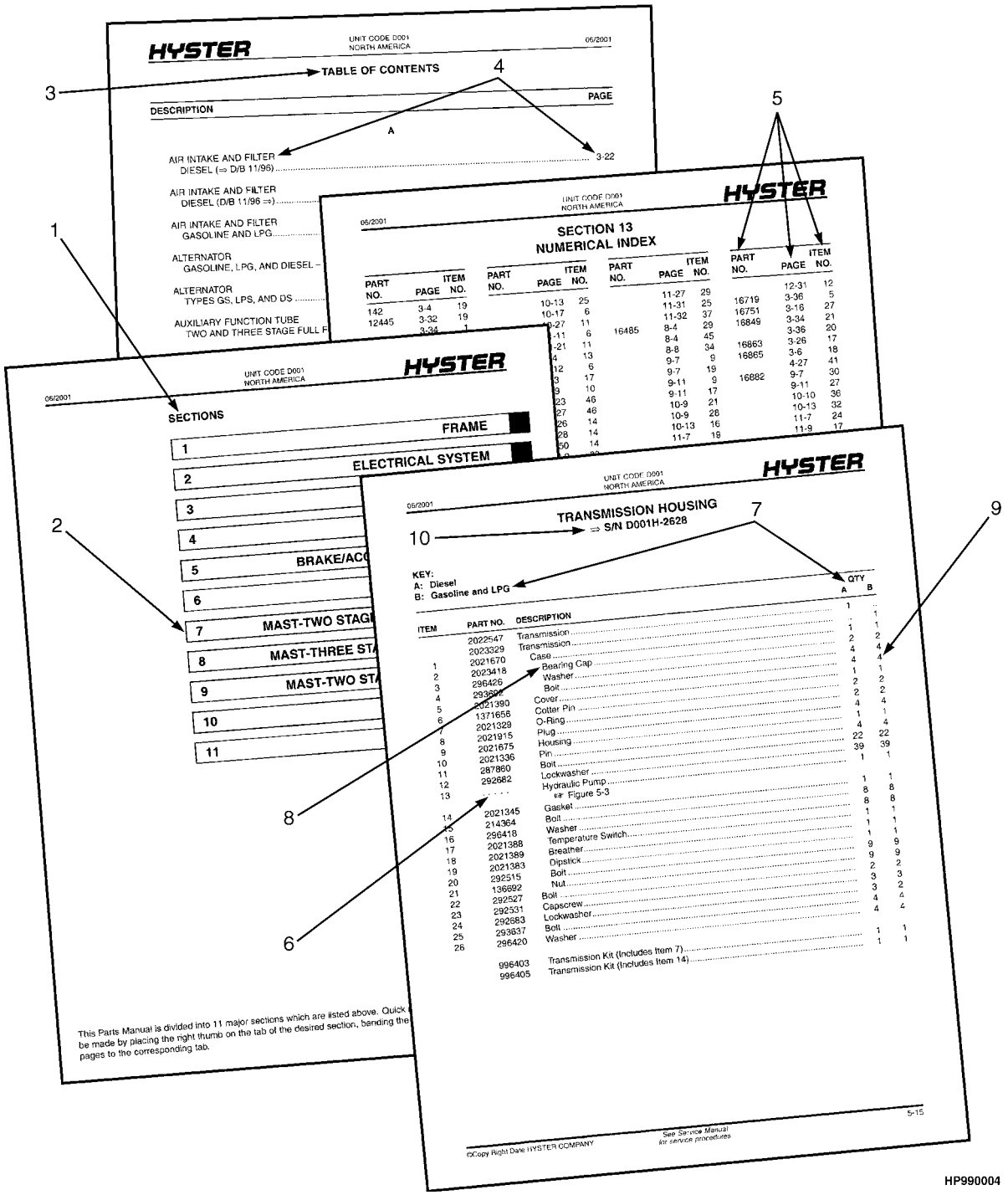

HOW TO FIND THE DESIRED PART NUMBER

WHEN THE PART NUMBER AND THE NEXT HIGHER ASSEMBLY IS NOT KNOWN:

1. Determine the function and application of the part required. Turn to the Sections Page. Choose the general area of reference most likely to include the part.

2. Turn to the section you chose. Use the Section Table of Contents to determine the assembly which would normally contain the part required. Then locate the part on the assembly breakdown page.

WHEN THE PART NUMBER IS NOT KNOWN AND THE NEXT HIGHER ASSEMBLY IS KNOWN:

3. Determine the assembly the required part is used on. Turn to the Table of Contents on Page i.

4. Locate the assembly the required part is used on and turn to the page indicated for that assembly. Then locate the part on the assembly breakdown page.

WHEN THE PART NUMBER IS KNOWN:

5. Use the Numerical Index on Page 11-1 to find the part number. Turn to the page listed and locate the part as indicated by the item number.

GENERAL:

The assembly breakdowns include part numbers, descriptions, quantities required, keys and footnotes to help in selecting correct parts.

6. Five periods in the PART NO. column (. . . . .) indicate that the part is either *Not Serviced Separately* or there is a reference to another figure. A figure reference is denoted by a pointing hand followed by a figure number in the DESCRIPTION column (☞Figure 10)

7. Keys are used to show two or more similar assemblies, RH and LH assembly parts, etc. Select the appropriate key, "A", "B", "C", "D", or "E" and the corresponding quantity column to find the required parts. Two periods in the QTY column (..) indicate that the part is not used for that assembly.

8. Indented descriptions under the DESCRIPTION column are used to indicate assemblies and subparts of assemblies. In the example on the previous page, *BEARING CAP* (Item 2) is a subpart of the major assembly *CASE*.

9. Quantities shown are for one assembly. The quantities of the subpart *BEARING CAP* are indicated as two and two. This means two per *CASE* assembly.

10. Serial number breaks identify the most current parts information and are shown as follows:
    ⇒ S/N D001H-2628
    Indicates last serial number affected.
    S/N D001H-2629 ⇒
    Indicates the first serial number affected.
    S/N D001H-1553 ⇔ S/N D001H-3291
    Indicates a range of serial numbers affected.

    ECN numbers for pending serial numbers are shown to allow for the inclusion of the most current parts information and are identified as follows:
    ⇒ S/N Pending Per ECN 63243
    Indicates a pending serial number for last unit affected.
    S/N Pending Per ECN 63243 ⇒
    Indicates a pending serial number for first unit affected.

    Date breaks are used to indicate when a change occurred but a subsequent serial number break was not recorded. This is an arbitrary date usually based on the ECN release and are identified as follows:
    ⇒ D/B 3/00
    Indicates that a change occurred sometime within that month for the item affected.
    D/B 3/00 ⇒
    Indicates that a change occurred sometime within that month for the item affected.
    D/B 3/00 ⇔ D/B 4/00
    Indicates a range of production dates of the item affected.

    Contact your local dealer for Hyster lift trucks for serial number information for items with a ECN or a date break.

ORDERING PARTS:

When ordering replacement parts, give the unit serial number, part number, name of part and quantity required.

For any further information on parts, service, or ordering, consult your local dealer for Hyster lift trucks.

©2003 HYSTER COMPANY

IDENTIFICATION OF TRUCK SERIAL NUMBERS

X	OOO	X	OOOO	X
(1)	(2)	(3)	(4)	(5)

(1) and (2) The first letter and three numbers indicate the truck unit code.

(3) The second letter indicates the plant of manufacture.

(4) The four or five digit number indicates the production sequence number of the truck.

(5) The final letter indicates the year of manufacture starting with "A" in 1957 and 1980. The letters "I", "O", and "Q" will not be used.

For pending serial numbers contact your local dealer for Hyster lift trucks.

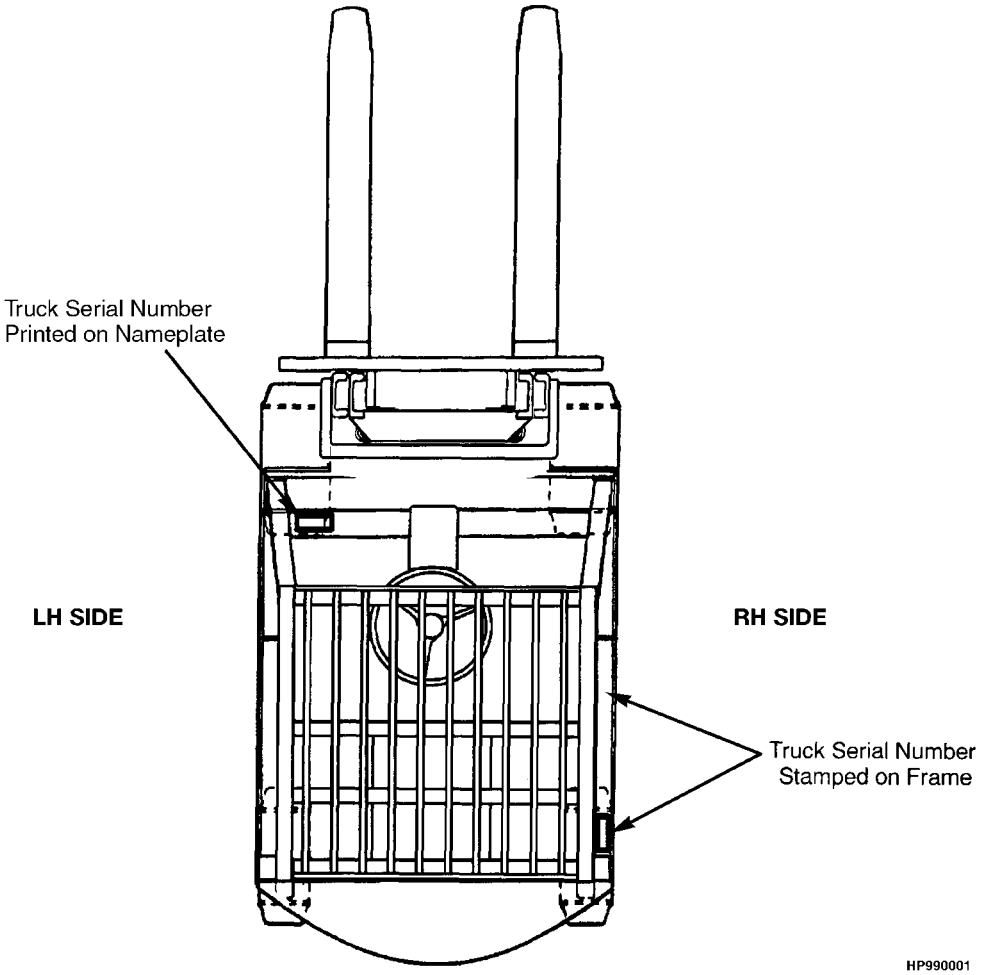

Parts referred to in this book as right or left hand parts are in accordance with the illustration above.

IDENTIFICATION OF MAST SERIAL NUMBERS

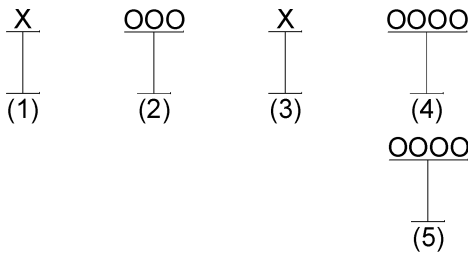

(1) and (2) The first letter and number indicates the mast unit code.

(3) The second letter indicates the plant of manufacture.

(4) The four or five digit number indicates the production sequence number of the mast.

(5) Carriage travel in millimeters stamped just below the serial number.

Mast Group identification consists of mast unit code (1) and (2) plus carriage travel (5).

For pending production sequence numbers contact your local dealer for Hyster lift trucks.

LIFT EQUIPMENT IDENTIFICATION

1. Fork part number, capacity rating, plant code letter, and date of manufacture are stamped approximately six inches below the top of most forks.

2. The carriage group number is stamped on the right hand side of the top crossmember (pin type) or on the back of the right hand end of the bottom crossmember (hook type). A date code has two letters in line with or below the carriage group number.

3. The mast identification number has a unit code, a letter indicating the plant of manufacture, and a serial number. Underneath the production sequence number is a four digit number that indicates the carriage travel in millimeters.

4. Tilt and lift cylinder group numbers are stamped on the cylinder shell.

   Always refer to the group, serial, or part number when ordering service parts.

   Modification of masts and carriages by SPED (Special Products Engineering Department) are identified by a model prefix code beginning with the letter "S". contact your dealer for Hyster lift trucks for information on these assemblies.

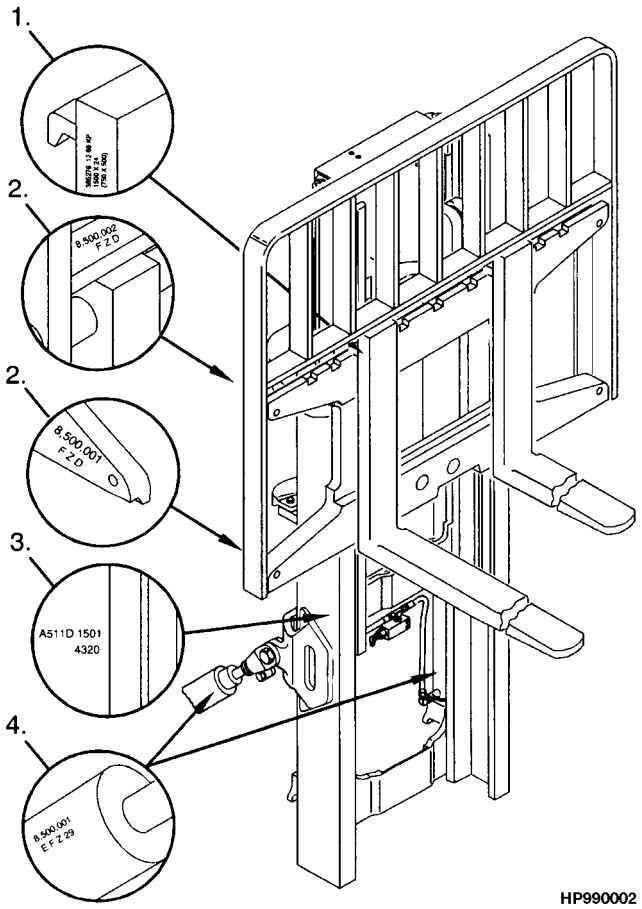

©2003 HYSTER COMPANY

IDENTIFICATION OF ATTACHMENT AND SIDE-SHIFT CARRIAGE SERIAL NUMBERS

X OOO X OOOO

(1) (2) (3) (4)

(1) and (2) The first letter and three numbers indicate the attachment unit code.

(3) The second letter indicates the plant of manufacture.

(4) The four or five digit number indicates the production sequence number.

For pending production sequence numbers contact your local dealer for Hyster lift trucks.

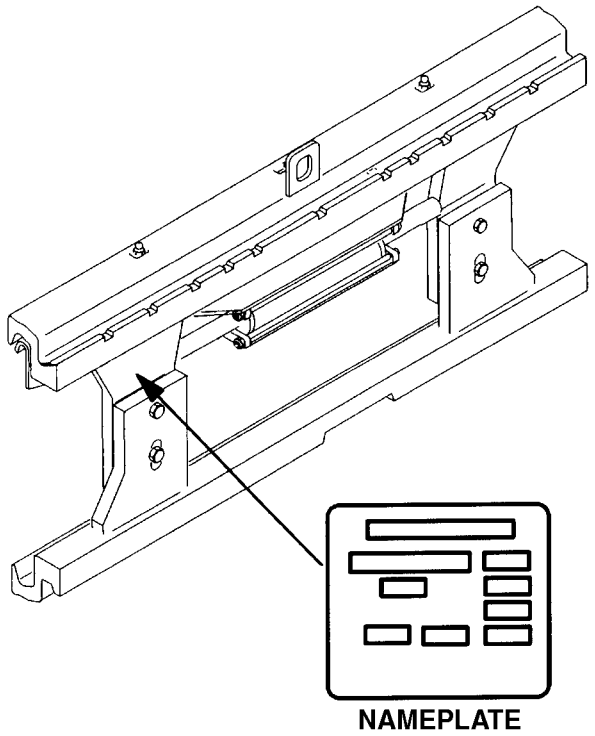

Side-shift carriages and attachments have nameplates. Use the serial number found on the nameplate to identify the attachment.

Always refer to the group, serial, or part number when ordering service parts.

Modifications of attachments and side-shift carriages by SPED (Special Products Engineering Department) are identified by a model prefix code beginning with the letter "S". Contact your dealer for Hyster lift trucks for information on these assemblies.

©2003 HYSTER COMPANY

PUBLICATIONS

Every new lift truck is provided with an OPERATING MANUAL. This manual has information that the operator must know for inspection and operation of the lift truck.

SERVICE MAINTENANCE MANUALS, which provide service and overhaul procedures, and PARTS MANUALS with complete replacement part identification, are available at a nominal fee from your Hyster dealer to assist users in effectively maintaining Hyster lift trucks in a safe, useful condition. See the list below for information on ordering specific publications for this model lift truck.

PUBLICATION	HYSTER PART NUMBER
Operating Manual	1534729
Service Manual (Complete)	1534731
Parts Manual	1534730

©2003 HYSTER COMPANY

1 FRAME

SECTION 1
FRAME

DESCRIPTION	PAGE
COUNTERWEIGHT	1-10
COVERS	1-4
FORK	1-18
FRAME	1-2
HOOD	1-6
LABELS AND DECALS	1-20
LOAD BACKREST EXTENSION	1-16
NON-SUSPENSION SEAT	1-12
OVERHEAD GUARD	1-8
SUSPENSION SEAT	1-14

©2003 HYSTER COMPANY

FRAME (Figure 1-1)

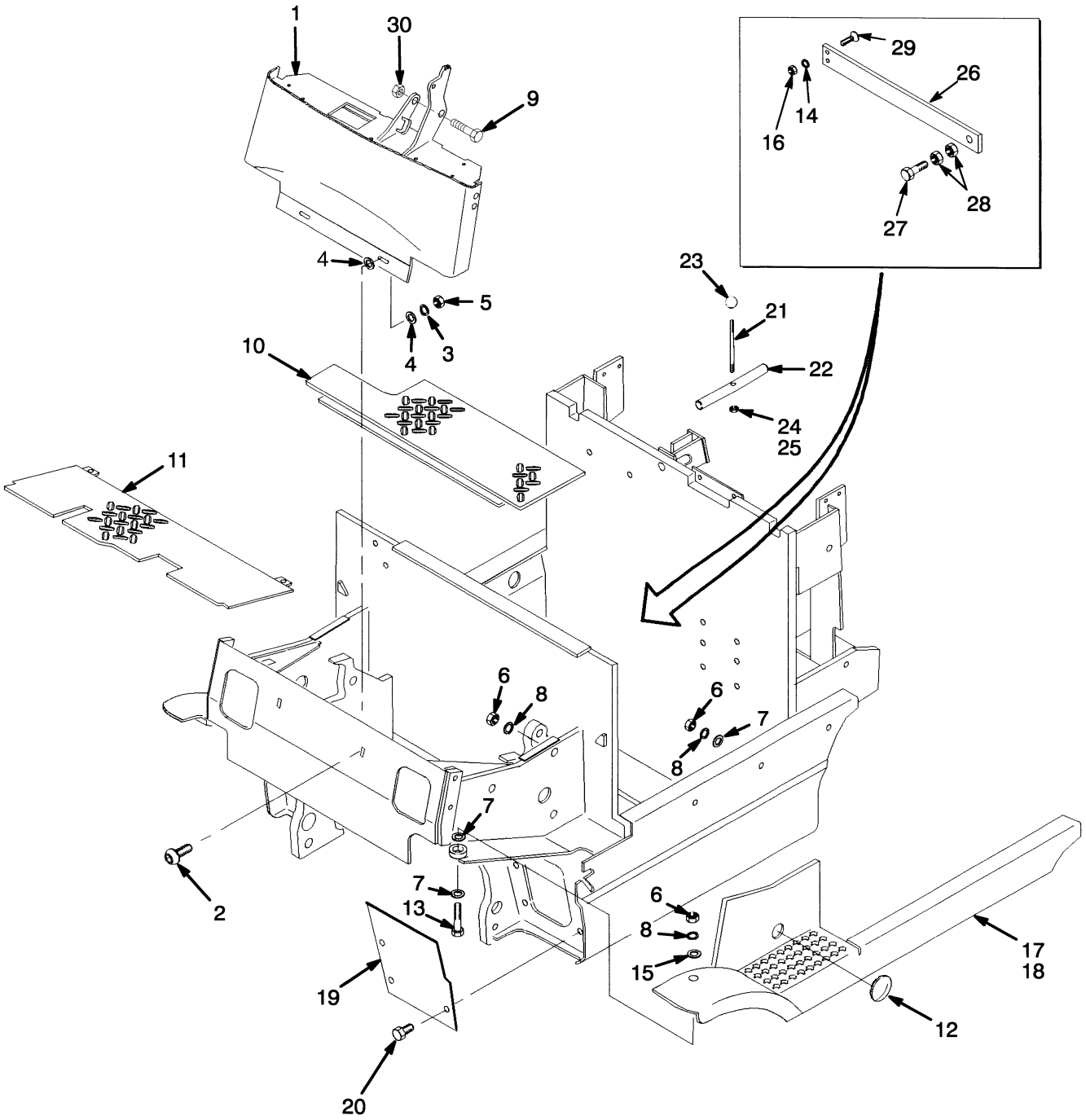

HP120681

©2003 HYSTER COMPANY

FRAME

ITEM		PART NO.	DESCRIPTION	QTY
1		1461197	Cowl	1
2		17105	Bolt	2
3		15156	Lockwasher	2
4		221767	Washer	4
5		15056	Nut	2
6		136692	Nut	12
7		320160	Washer	16
8		292682	Lockwasher	12
9		18494	Capscrew	1
10		1385122	Floorplate	1
10		878220	Floormat	1
11		1380562	Floorplate	1
12		1350231	Plug	2
13		292519	Capscrew	2
14		292681	Lockwasher	2
15		296421	Washer	2
16		239503	Nut	2
17	**a**	1364498	Step (28.23 in. Battery Compartment) (LH)	1
17	**a**	1364499	Step (33.90 in. Battery Compartment) (LH)	1
17	**b**	1364552	Step (28.23 in. Battery Compartment) (LH)	1
17	**b**	1364553	Step (33.90 in. Battery Compartment) (LH)	1
18	**a**	1364555	Step (28.23 in. Battery Compartment) (RH)	1
18	**a**	1364556	Step (33.90 in. Battery Compartment) (RH)	1
18	**b**	1364557	Step (28.23 in. Battery Compartment) (RH)	1
18	**b**	1364558	Step (33.90 in. Battery Compartment) (RH)	1
19		1378906	Plate	2
20		316678	Screw	6
21		1377420	Rod	1
22		1377421	Pin	1
23		1380449	Knob	1
24		296128	Nut	1
25		264134	Sealant	AR
26		1379304	Plate	1
27		1379324	Capscrew	1
28		296136	Nut	2
29		296227	Capscrew	2
30		169874	Nut	1

FOOTNOTES:
a Standard Tread
b Wide Tread

©2003 HYSTER COMPANY

COVERS (Figure 1-2)

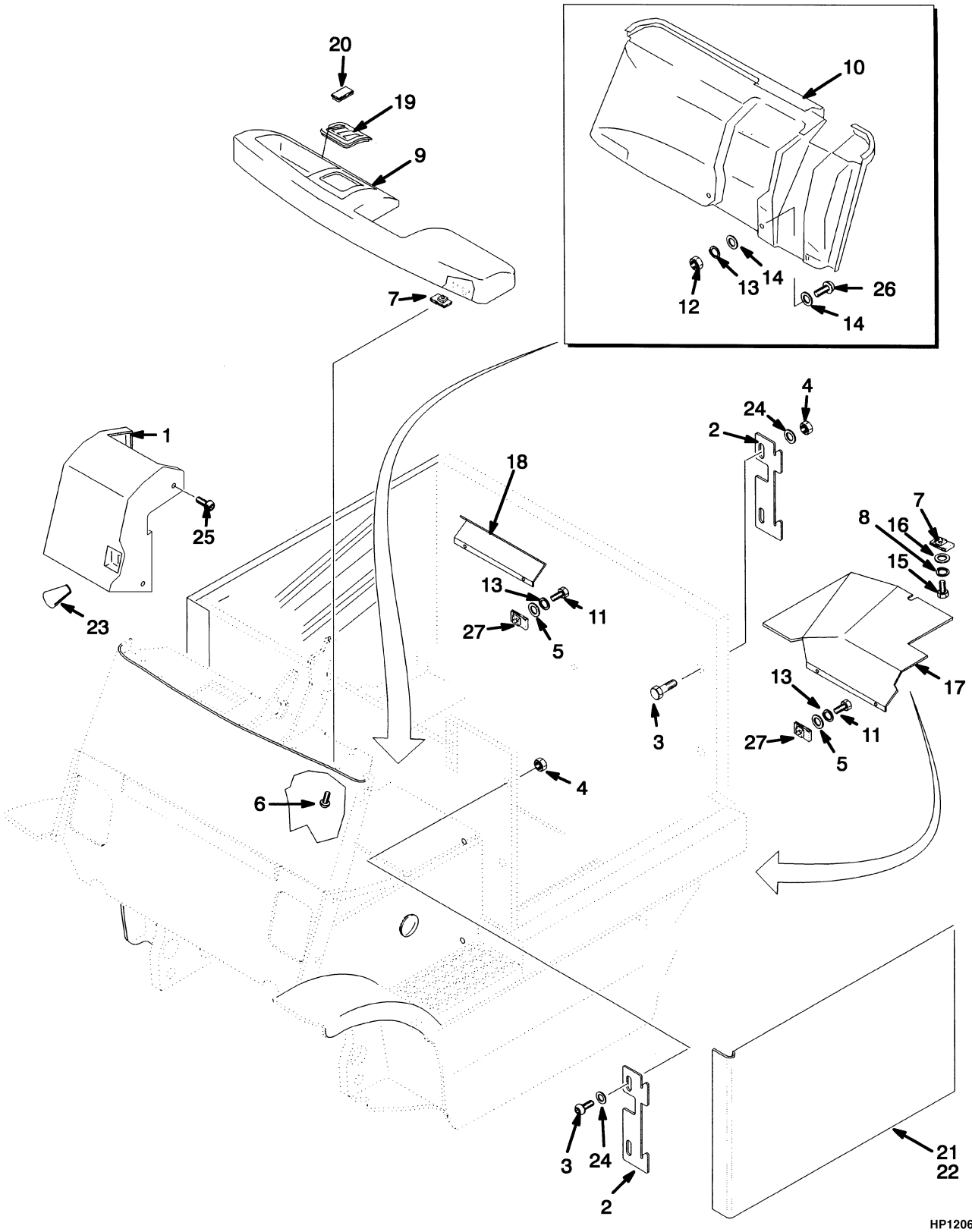

©2003 HYSTER COMPANY

COVERS

ITEM	PART NO.	DESCRIPTION	QTY
1	1478886	Cover	1
2	878542	Plate	4
3	136749	Capscrew	4
4	313828	Nut	8
5	320158	Washer	4
6	296159	Capscrew	12
7	325182	Nut	13
8	292680	Lockwasher	1
9	1461070	Dash	1
10	1461198	Liner	1
11	296157	Capscrew	12
12	239503	Nut	6
13	292681	Lockwasher	10
14	320157	Washer	12
15	292501	Capscrew	1
16	197068	Washer	1
17	1383170	Cover (LH)	1
18	1383173	Cover (RH)	1
19	1382311	Panel (End)	2
19	1382312	Panel (Center)	1
20	1382313	Cover (With Lights)	2
20	1382313	Cover (Without Lights)	3
21	1531125	Cover (28.23 in. Battery Compartment) (LH)	1
21	1531126	Cover (33.90 in. Battery Compartment) (LH)	1
22	1531128	Cover (28.23 in. Battery Compartment) (RH)	1
22	1531129	Cover (33.90 in. Battery Compartment) (RH)	1
23	1377483	Knob	1
24	296419	Washer	8
25	369242	Capscrew	6
26	296167	Capscrew	2
27	1350282	Nut	4

©2003 HYSTER COMPANY

HOOD (Figure 1-3)

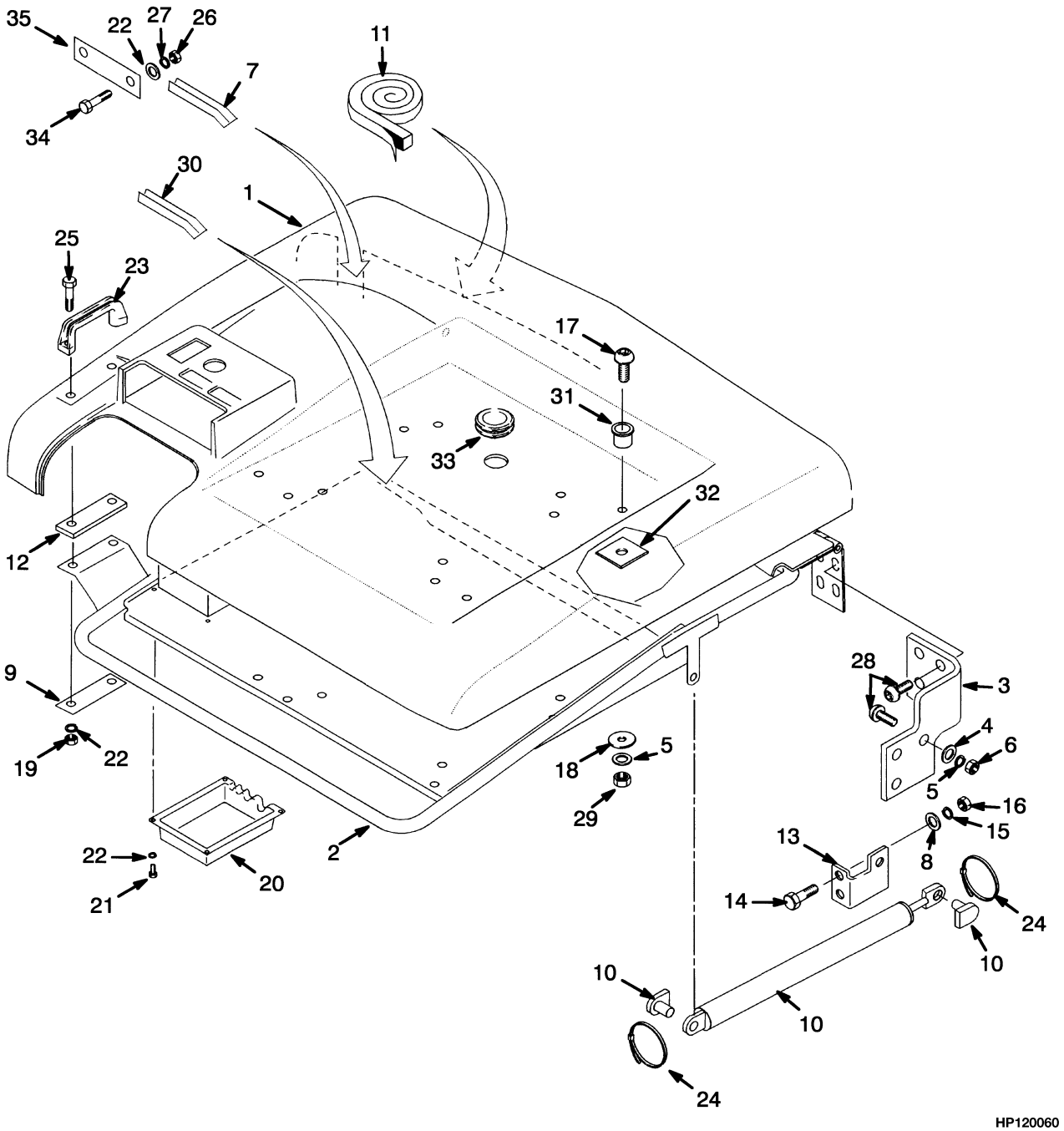

©2003 HYSTER COMPANY

HOOD

KEY:
A: 717 mm Battery Compartment
B: 861 mm Battery Compartment

ITEM	PART NO.	DESCRIPTION	QTY A	QTY B
1	1486243	Hood	1	..
1	1486244	Hood	..	1
2	1388358	Frame	1	..
2	1388359	Frame	..	1
3	1383738	Plate (RH)	1	1
3	1383739	Plate (LH)	1	1
4	320159	Washer	12	12
5	292682	Lockwasher	12	12
6	136692	Nut	12	12
7	388752	Trim	AR	AR
8	320157	Washer	7	7
9	1364971	Plate	1	1
9	2310622	Plate (Optional)	1	1
10	1383718	Gas Spring	2	..
10	1383719	Gas Spring	..	2
11	288762	Tape (Foam)	AR	AR
12	878240	Spacer	1	1
13	1383740	Bracket	2	2
14	136749	Capscrew	4	4
15	292681	Lockwasher	4	4
16	239503	Nut	4	4
17	296168	Capscrew	3	3
18	15177	Washer	3	3
19	313805	Nut	2	2
20	1364627	Cover	1	1
21	1367837	Screw	4	4
22	320156	Washer	8	8
23	362030	Handle	1	1
24	114312	Strap Clamp	4	4
25	287816	Capscrew	2	2
26	136687	Nut	2	2
27	292680	Lockwasher	2	2
28	1380371	Bolt	9	9
28	1533695	Bolt (RH)	3	3
29	313828	Nut	3	3
30	1383175	Edge Trim	AR	AR
31	1383754	Washer	3	3
32	1383680	Spacer	3	3
33	1359587	Grommet	1	1
34	292501	Capscrew	2	2
35	1383755	Plate	1	1

©2003 HYSTER COMPANY

OVERHEAD GUARD (Figure 1-4)

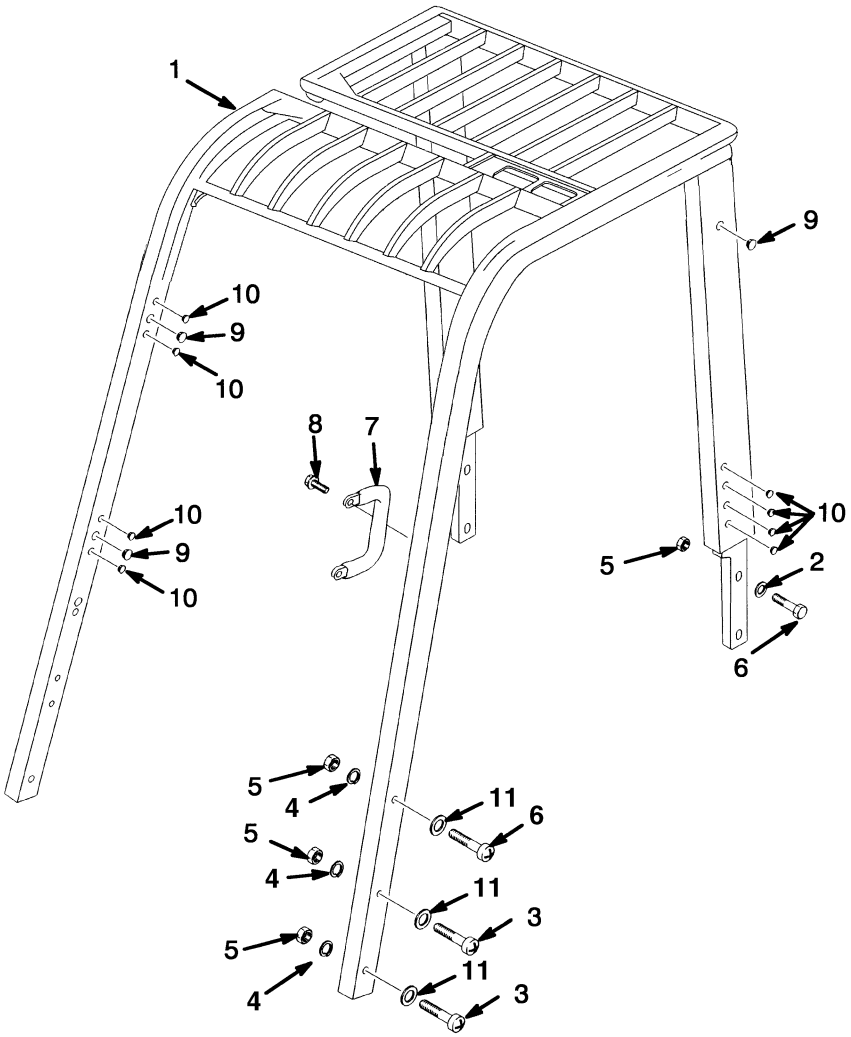

HP120678

©2003 HYSTER COMPANY

OVERHEAD GUARD

KEY:
A: 28.23 in. Battery Compartment
B: 33.90 in. Battery Compartment

ITEM	PART NO.	DESCRIPTION	QTY A	QTY B
1	1531389	Overhead Guard	1	..
1	1531390	Overhead Guard	..	1
2	320161	Washer	4	4
3	293649	Capscrew	4	4
4	292683	Lockwasher	6	6
5	1390182	Nut	10	10
6	293647	Capscrew	6	6
7	1343647	Handle	1	1
8	329067	Screw	2	2
9	1363917	Plug	5	5
10	1363916	Plug	14	14
11	296423	Washer	6	6

©2003 HYSTER COMPANY

COUNTERWEIGHT (Figure 1-5)

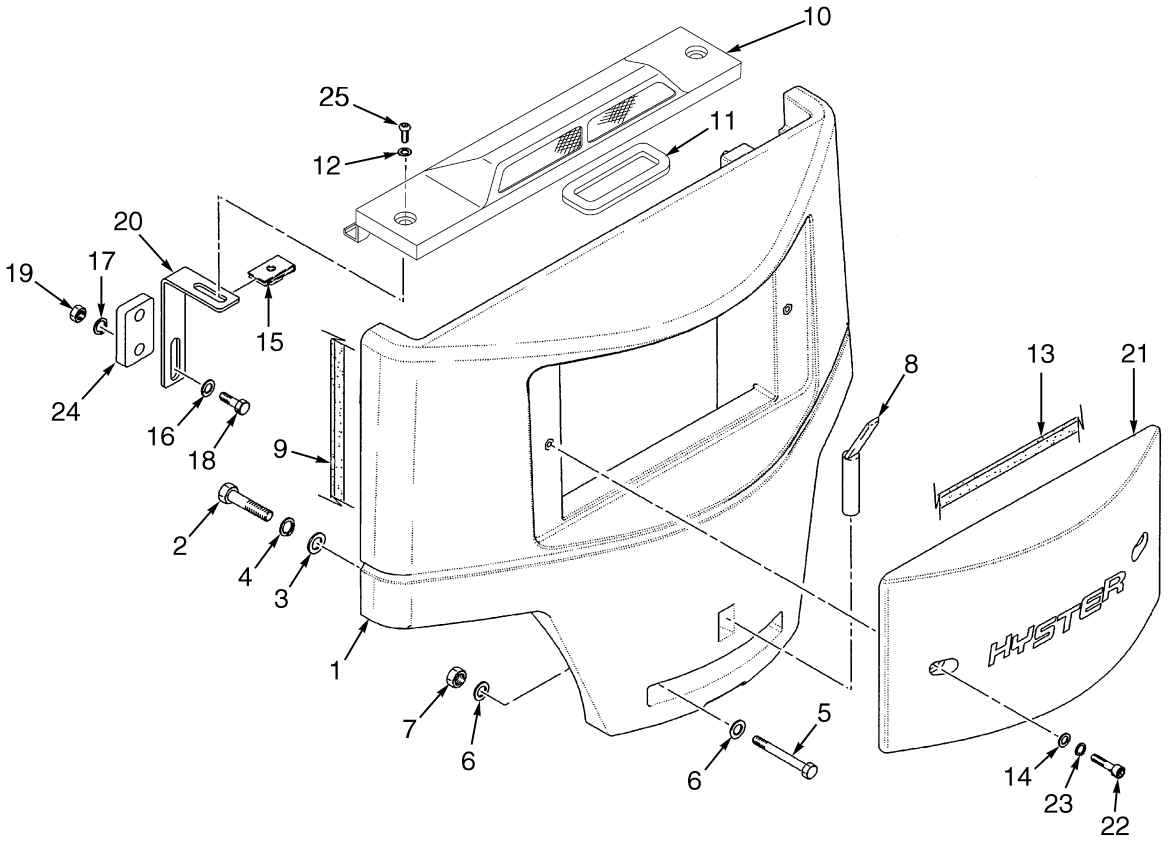

HP120689

©2003 HYSTER COMPANY

COUNTERWEIGHT

ITEM	PART NO.	DESCRIPTION	QTY
1	1460391	Counterweight	1
2	292584	Capscrew	2
3	296430	Washer	2
4	292687	Lockwasher	2
5	292534	Capscrew	2
6	320162	Washer	4
7	300937	Nut	2
8	326347	Tow Pin	1
9	261165	Tape (Foam)	AR
10	1543367	Cover Assembly	1
11	1545168	Seal	1
12	320160	Washer	2
13	326003	Tape	AR
14	15134	Washer	2
15	269200	Nut	2
16	320157	Washer	4
17	292681	Lockwasher	4
18	293617	Capscrew	4
19	239503	Nut	4
20	1461187	Bracket	2
21	1340460	Cover	1
22	46698	Capscrew	2
23	15156	Lockwasher	2
24	1466505	Spacer (LH)	1
25	18738	Capscrew	2

©2003 HYSTER COMPANY

NON-SUSPENSION SEAT (Figure 1-6)

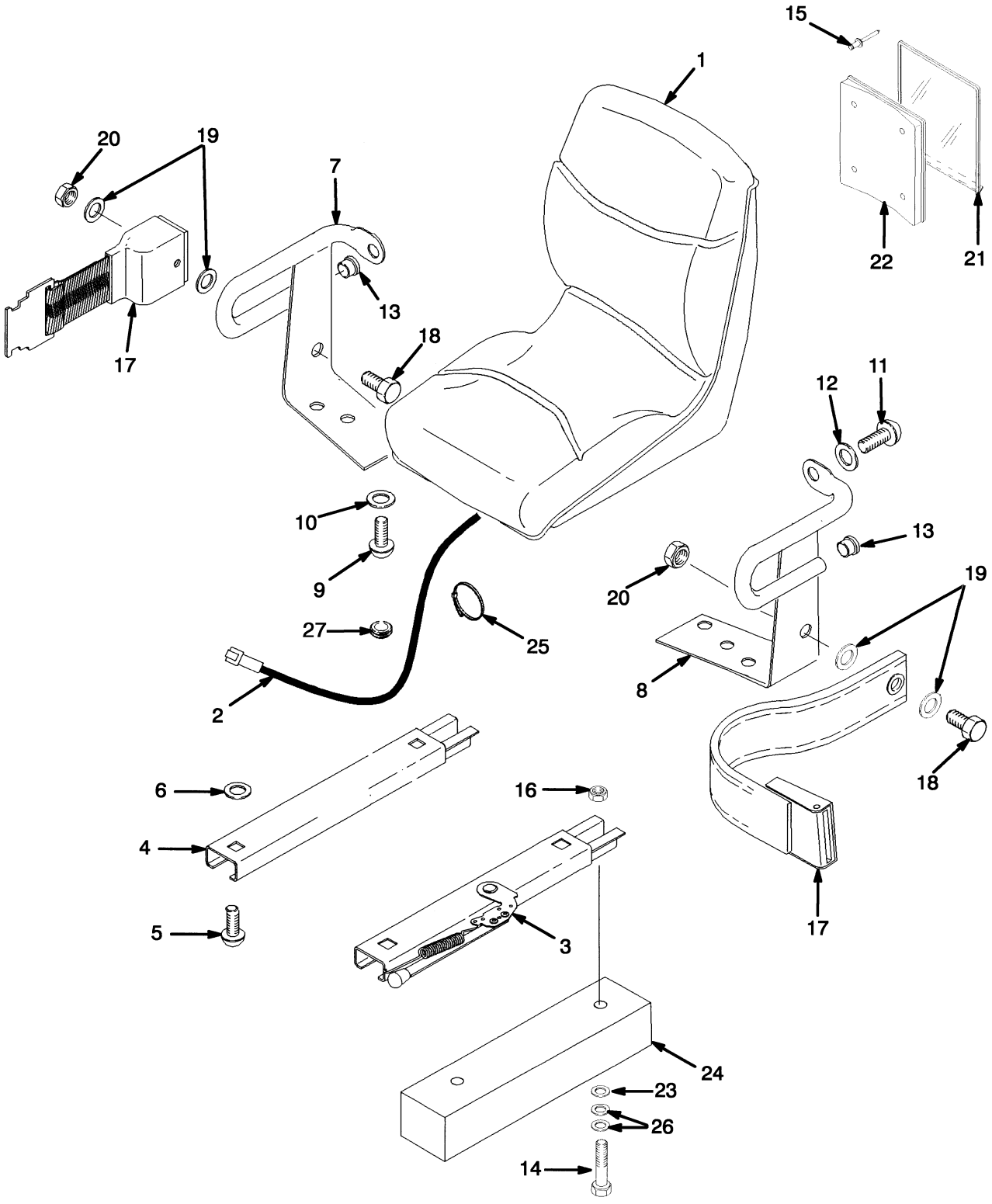

©2003 HYSTER COMPANY

NON-SUSPENSION SEAT

ITEM	PART NO.	DESCRIPTION	QTY
	1364377	Seat Assembly	1
1	1351473	Seat	1
2	1354140	Switch Assembly	1
3	1340171	Seat Rail (LH)	1
4	1340172	Seat Rail (RH) (RH)	1
5	18727	Capscrew	4
6	221733	Washer	6
7	1306585	Hip Restraint (RH)	1
8	1306588	Hip Restraint (LH)	1
9	18727	Capscrew	4
10	18515	Washer	4
11	379197	Capscrew	2
12	379198	Washer	2
13	364854	Plug	2
14	18518	Capscrew	4
15	16899	Rivet	4
16	222665	Nut	4
17	1374750	Seat Belt	1
18	379199	Capscrew	2
19	379697	Washer	4
20	379698	Nut	2
21	335991	Cover	1
22	335989	Base	1
23	878236	Spacer	4
24	1389343	Spacer	2
25	114312	Strap Clamp	2
26	18515	Washer	4
27	1359587	Grommet	1

©2003 HYSTER COMPANY

SUSPENSION SEAT (Figure 1-7)

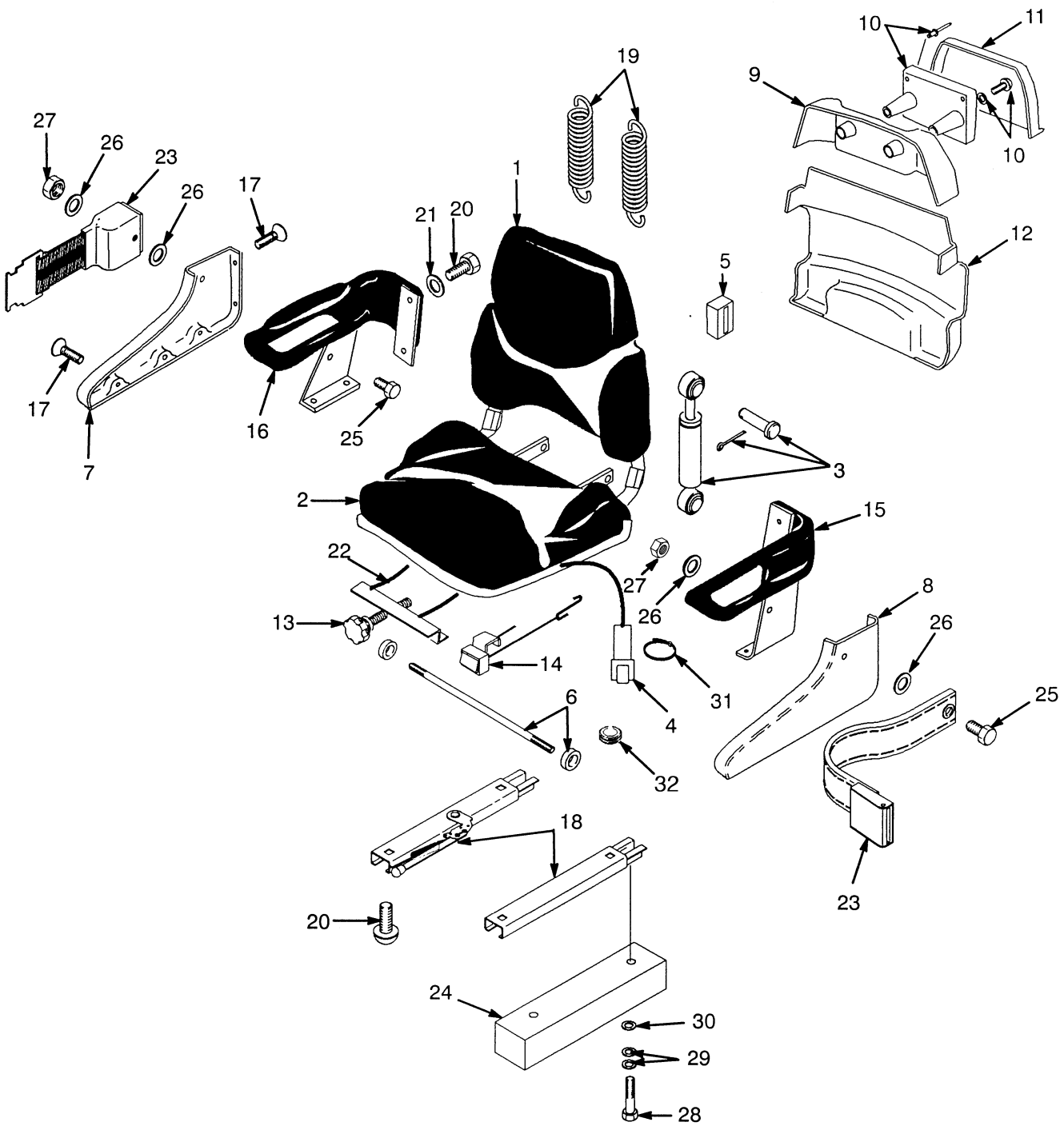

HP260026

©2003 HYSTER COMPANY

SUSPENSION SEAT

KEY:
A: Fabric Cover
B: Vinyl Cover

ITEM	PART NO.	DESCRIPTION	QTY A	QTY B
	1376681	Seat Assembly	1	..
	1376677	Seat Assembly	..	1
1	1382113	Back Cushion	1	..
1	1382111	Back Cushion	..	1
2	1382114	Seat Cushion	1	..
2	1382112	Seat Cushion	..	1
3	1362049	Shock Absorber Kit	1	1
4	1354140	Switch Assembly	1	1
4	1330409	Connector	1	1
4	1330414	Secondary Lock	1	1
4	1330433	Pin	2	2
5	1362052	Block	1	1
6	1362053	Shaft and Bearing Kit (Kit)	1	1
7	1392496	Cover (RH)	1	1
8	1392495	Cover (LH)	1	1
9	1374188	Cover	1	1
10	1362058	Holder Kit	1	1
11	1374190	Cover	1	1
12	1360872	Cover	1	1
13	1362061	Knob Kit (Kit)	1	1
14	1362062	Tape Kit (Kit)	1	1
15	1362063	Hip Restraint (LH)	1	1
16	1362064	Hip Restraint (RH)	1	1
17	1362065	Hardware Kit	1	1
18	1459112	Slide Rail Kit	1	1
19	1367137	Suspension Spring Kit	1	1
20	. . . . .	Capscrew	8	8
21	. . . . .	Washer	8	8
22	1378307	Suspension Cable Kit	1	1
23	1374750	Seat Belt	1	1
24	1389343	Spacer	2	2
25	379199	Capscrew	2	2
26	379697	Washer	4	4
27	379698	Nut	2	2
28	18518	Capscrew	4	4
29	18515	Washer	8	8
30	878236	Spacer	4	4
31	114312	Strap Clamp	2	2
32	1359587	Grommet	1	1

©2003 HYSTER COMPANY

LOAD BACKREST EXTENSION (Figure 1-8)

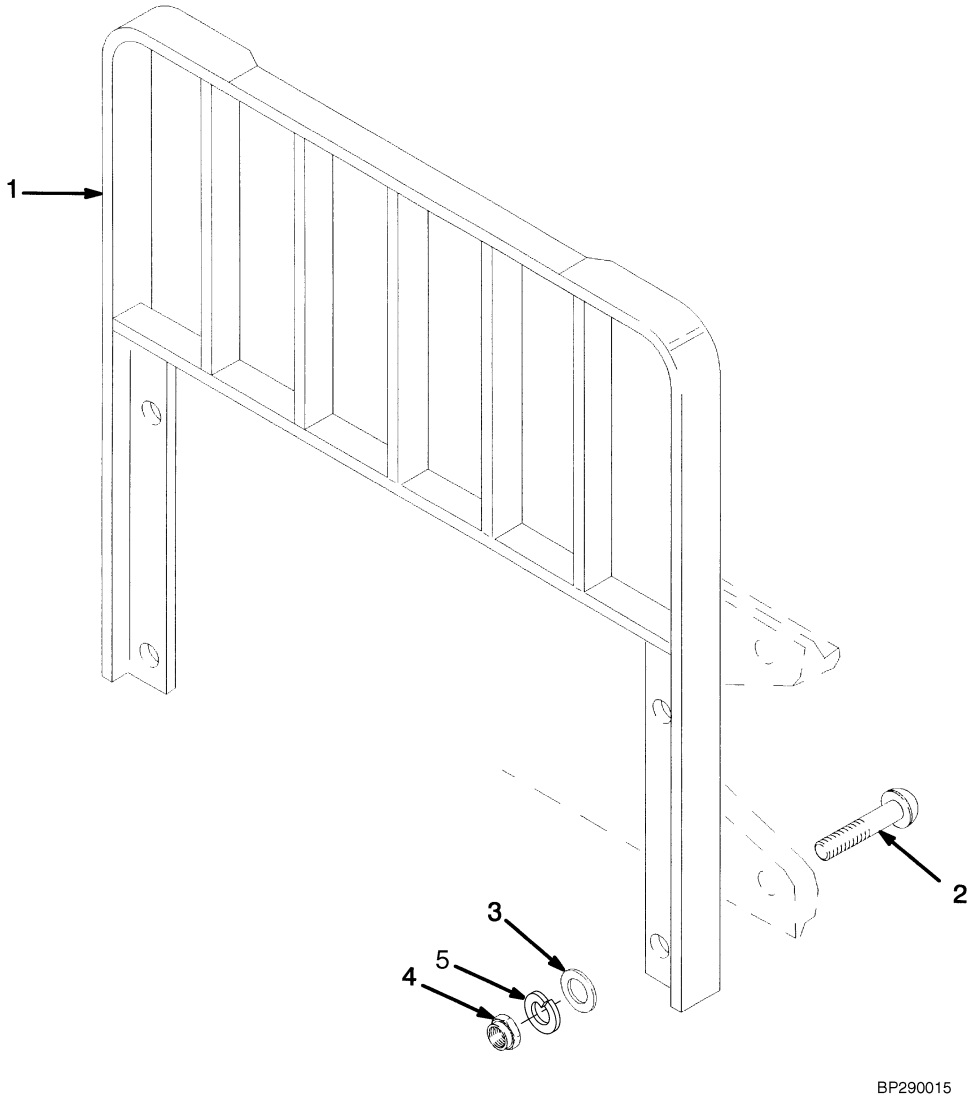

©2003 HYSTER COMPANY

LOAD BACKREST EXTENSION

KEY:
A: J40-50Z
B: J60-65Z

ITEM		PART NO.	DESCRIPTION	QTY A	QTY B
1		1349446	Load Backrest Extension	1	..
1		1363816	Load Backrest Extension (38 in.)	..	1
1	**a**	1363817	Load Backrest Extension (38 in.)	..	1
2		1343990	Capscrew	4	4
3		221771	Washer	4	4
3		296423	Washer (Optional)	4	4
4		292656	Nut	4	4
5		292683	Lockwasher	4	4

FOOTNOTES:
a For Polished Forks with Full Bottom Taper

©2003 HYSTER COMPANY

FORK (Figure 1-9)

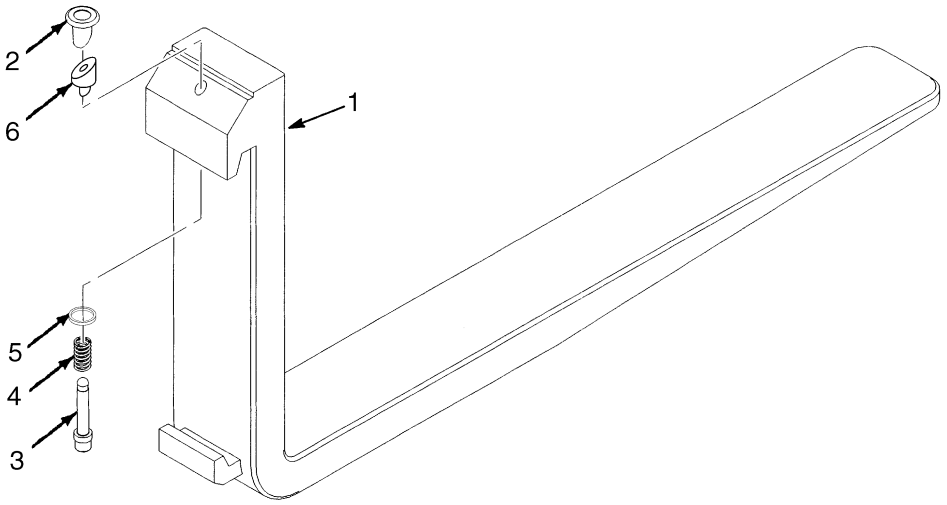

BP290003

KEY:
A: J40-50Z Standard Taper
B: J40-50Z Full Bottom Taper
C: J60-65Z Standard Taper
D: J60-65Z Full Bottom Taper

ITEM		PART NO.	DESCRIPTION	QTY A	B	C	D
1	**a**	384211	Fork (36 in.)	2	..	..	..
1	**a**	384213	Fork (42 in.)	2	..	..	..
1	**a**	384214	Fork (48 in.)	2	..	..	..
1	**a**	384215	Fork (54 in.)	2	..	..	..
1	**a**	384216	Fork (60 in.)	2	..	..	..
1	**b**	1338087	Fork (36 in.)	..	2	..	..
1	**b**	1338088	Fork (42 in.)	..	2	..	..
1	**b**	1338089	Fork (48 in.)	..	2	..	..
1	**c**	367419	Fork (36 in.)	..	..	2	..
1	**c**	367420	Fork (42 in.)	..	..	2	..
1	**c**	367421	Fork (48 in.)	..	..	2	..
1	**c**	367422	Fork (54 in.)	..	..	2	..
1	**c**	367423	Fork (60 in.)	..	..	2	..
1	**c**	367424	Fork (72 in.)	..	..	2	..
1	**d**	1338097	Fork (42 in.)	..	..	..	2
1	**d**	1338098	Fork (48 in.)	..	..	..	2
1	**d**	1332745	Fork (54 in.)	..	..	..	2
2		1523732	Knob	1	1	1	1
3		1523733	Pin	1	1	..	..
3		1523737	Pin	..	..	1	1
4		1500782	Spring	1	1	..	..
4		1500784	Spring	..	..	1	1
5		1477166	Washer	1	1	1	1
6		1477167	Wedge	1	1	..	..

©2003 HYSTER COMPANY

FORK

ITEM	PART NO.	DESCRIPTION	QTY A	QTY B	QTY C	QTY D
6	1477237	Wedge	..	..	1	1
7	1523734	Retainer Pin	1	1	1	1
	1523735	Latch Kit (Class II) (Includes Item)	2	2	..	..
	1523739	Latch Kit (Class III) (Includes Item)	..	..	2	2

FOOTNOTES:

a 100 mm x 40 mm
b 125 mm x 40 mm
c 125 mm x 50 mm
d 180 mm x 45 mm

©2003 HYSTER COMPANY

LABELS AND DECALS (Figure 1-10)

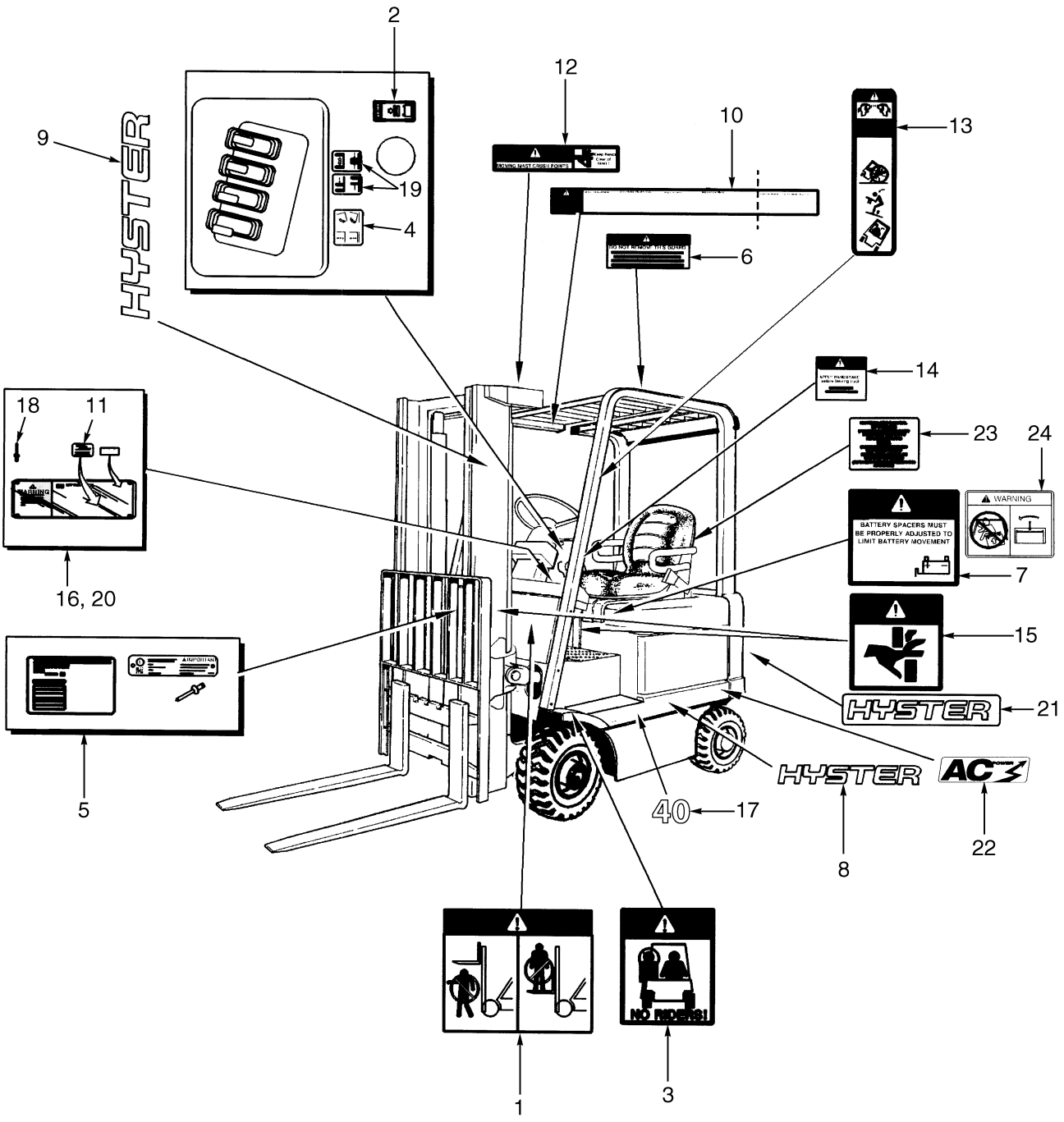

HP120691

©2003 HYSTER COMPANY

LABELS AND DECALS

ITEM		PART NO.	DESCRIPTION	QTY
1		1338178	Label (Mast Warning)	2
2		2049938	Label (Battery Disconnect)	1
3		1330920	Label (No Riders)	2
4		369573	Label (Lift/Tilt)	1
5	**a**	. . . . .	Label (US Patents and Trademarks)	2
6		1335147	Label (Overhead Guard)	1
7		1330924	Label (Battery Spacer)	1
8		1339674	Label (Hyster)	2
9		1339672	Label (Hyster)	2
10		1335142	Label (Operator Warning)	1
11		1335137	Nameplate (Tag)	1
12		1330919	Label (Mast Warning)	1
13		1330917	Label (Operator Restraint)	2
14	**c**	1335146	Label (Park Brake Warning)	1
14	**b**	2309799	Label (Parking Brake)	1
15		1335129	Label (Pinch Point)	2
16	**a**	. . . . .	Nameplate	1
17		1354342	Label (Model 40)	2
17		1354155	Label (Model 50)	2
17		1354159	Label (Model 60)	2
17		1354343	Label (Model 65)	2
18		170658	Rivet	4
19		370258	Label (Auxiliary Function - Side-Shift)	1
19		370259	Label (Auxiliary Function - Fork Spreader)	1
20		389688	Cover	1
21		893523	Label (Hyster)	1
22		1548187	Label-AC	2
23		1328205	Label (Operator Manual)	1
24		2044700	Label (Battery Restraint)	1

FOOTNOTES:

a Contact Your Local Hyster Dealer
b With Park Brake Alarm
c Without Parking Brake Alarm

©2003 HYSTER COMPANY

NOTES

2 ELECTRICAL SYSTEM

SECTION 2
ELECTRICAL SYSTEM

DESCRIPTION	PAGE
CONTACTOR	
LINE	2-12
POWER STEERING	2-14
CONTACTOR PANEL	
CONTACTOR AND TRANSISTOR HYDRAULIC	2-10
CONTACTOR HYDRAULIC	2-16
CONTROL PANEL	
CONTACTOR HYDRAULIC	2-8
TRANSISTOR HYDRAULIC	2-6
DASH DISPLAY	2-4
ELECTRICAL	2-2
WIRE HARNESS	
FORWARD/REVERSE LEVER	2-20
MAIN	2-18

©2003 HYSTER COMPANY

ELECTRICAL (Figure 2-1)

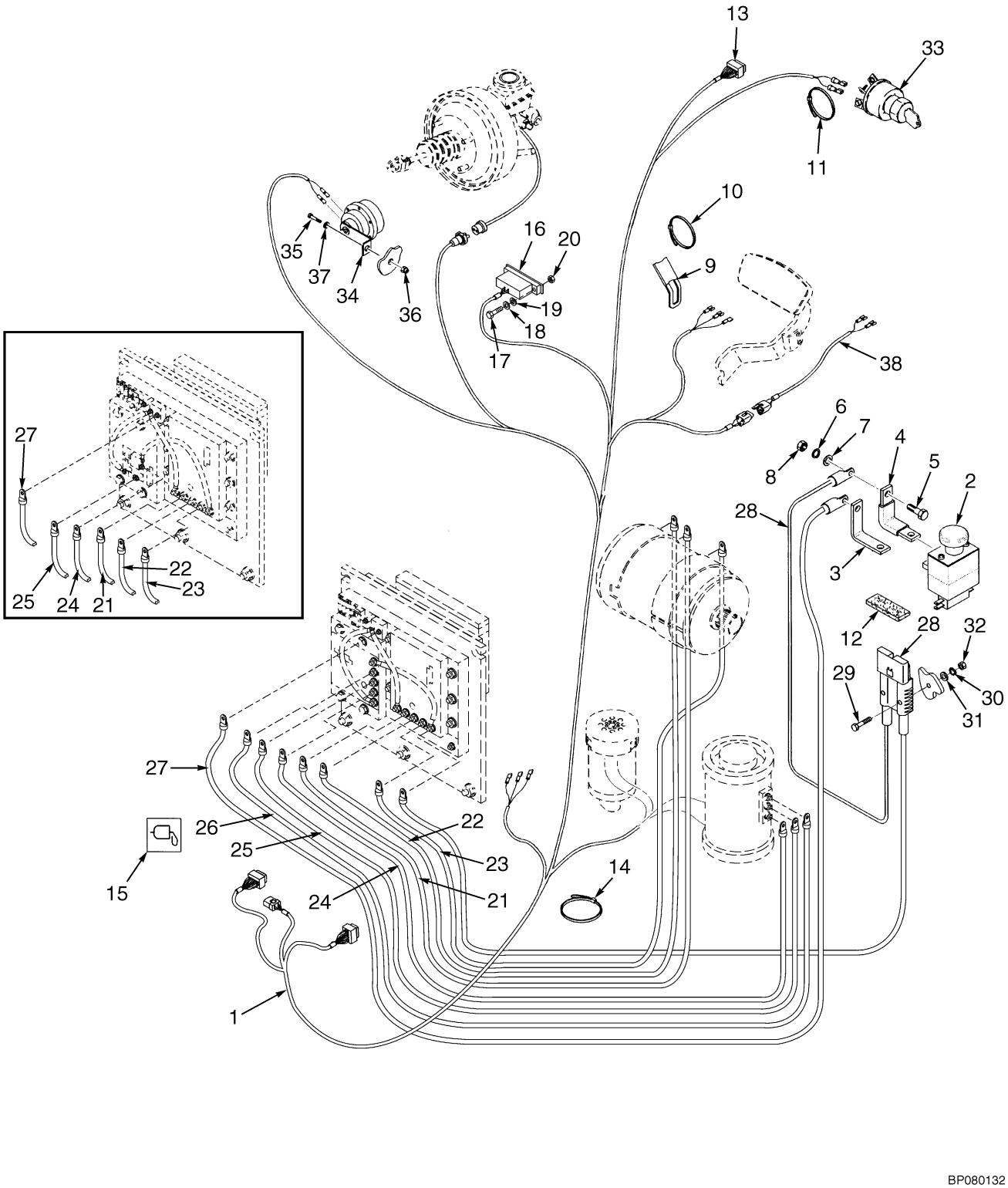

BP080132

©2003 HYSTER COMPANY

ELECTRICAL

ITEM	PART NO.	DESCRIPTION	QTY
1	2060697	Wire Harness (Main) (☞ Figure 2-9)	1
2	1521548	Switch (E-Stop)	1
3	1379305	Bus Bar	1
4	1380431	Bus Bar	1
5	136749	Capscrew	2
6	292681	Lockwasher	2
7	320157	Washer	2
8	239503	Nut	2
9	1350914	Strap	1
10	2004005	Strap Clamp	6
11	114312	Strap Clamp	1
12	288762	Tape (Rubber)	AR
13	1351682	Connector	1
14	129563	Strap Clamp	4
15	1463849	Grease	AR
16	1364633	Terminal Block	1
17	302232	Screw	2
18	1377379	Washer	2
19	292676	Lockwasher	2
20	292665	Nut	2
21	1524460	Power Cable	1
22	1524461	Power Cable	1
23	1524462	Power Cable	1
24	1524463	Power Cable (72/80 V AC Pump)	1
24	1529000	Power Cable (Contactor Hydraulic)	1
25	1524464	Power Cable (72/80 V AC Pump)	1
25	1529001	Power Cable (Contactor Hydraulic)	1
26	1524465	Power Cable	1
27	1524467	Power Cable	1
28	1524444	Battery Connector Assembly (SB-72 Volt)	1
28	378385	Connector (SB-72 Volt)	1
28	1357262	Cable	AR
28	190810	Cable	AR
28	1524445	Battery Connector Assembly (SB-80 Volt)	1
28	378386	Connector (SB-80 Volt)	1
28	1357262	Cable	AR
28	190810	Cable	AR
29	292505	Capscrew	2
30	292680	Lockwasher	2
31	320156	Washer	2
32	136687	Nut	2
33	379902	Ignition Switch	1
33	1337197	Key	1
34	2037166	Horn	1
35	136749	Capscrew	1
36	313828	Nut	1
37	320158	Washer	1
38	2046756	Wire Harness (Forward/Reverse Lever) (☞ Figure 2-10)	1

©2003 HYSTER COMPANY

DASH DISPLAY (Figure 2-2)

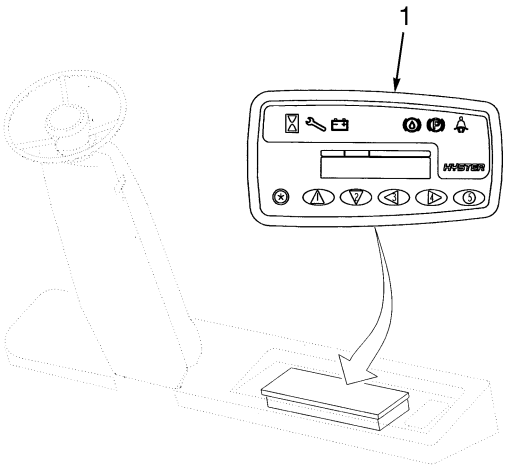

HP081337

ITEM	PART NO.	DESCRIPTION	QTY
1	1525718	Dash Display (Standard)	1
1	1516977	Dash Display (Premium)	1

©2003 HYSTER COMPANY

NOTES

CONTROL PANEL (Figure 2-3)
TRANSISTOR HYDRAULIC

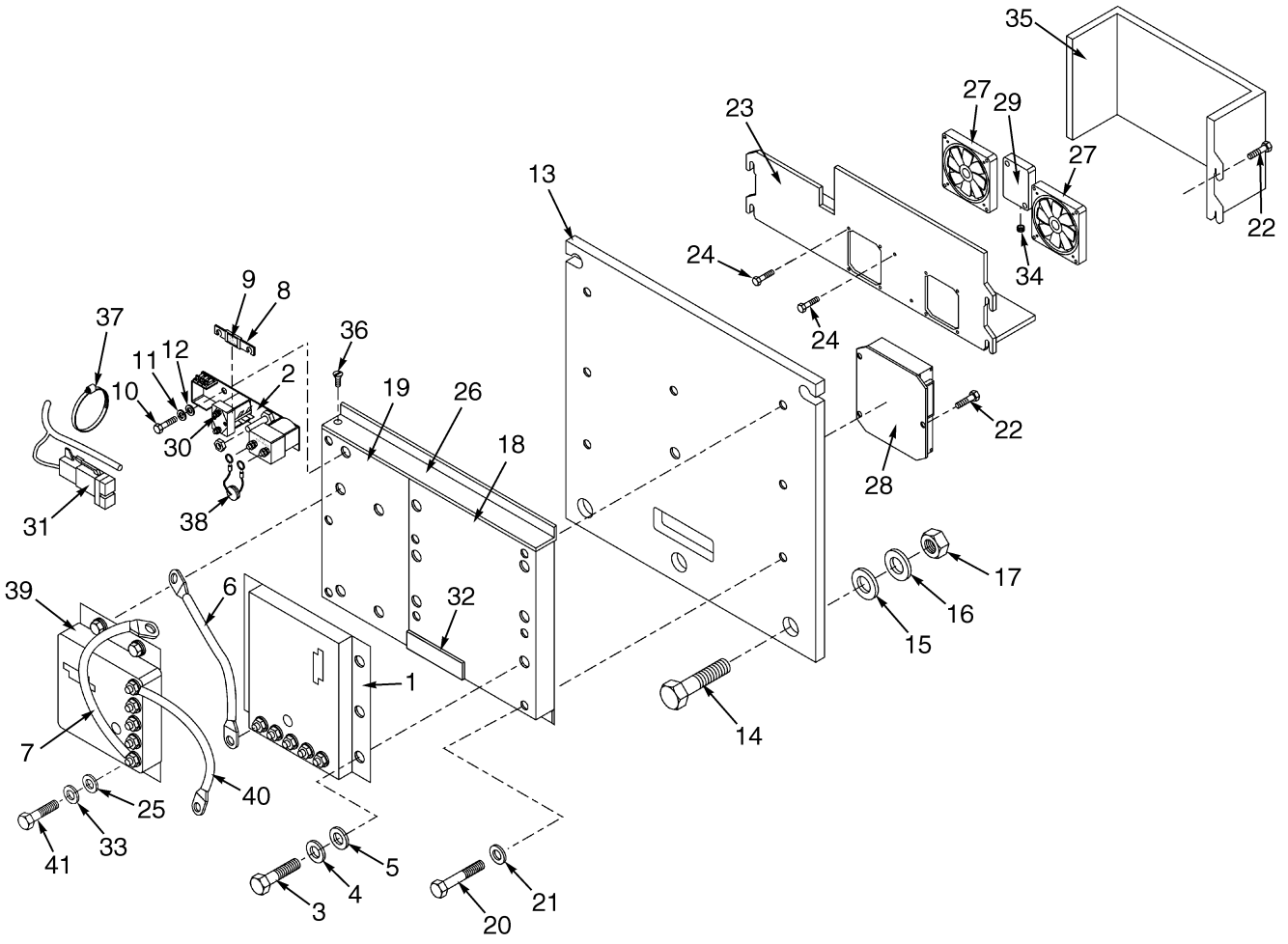

BP080166

©2003 HYSTER COMPANY

CONTROL PANEL
TRANSISTOR HYDRAULIC

ITEM	PART NO.	DESCRIPTION	QTY
1	1513160	Controller (A/C)	1
2	1513953	Contactor Panel (☞ Figure 2-5)	1
3	296027	Capscrew	6
4	320159	Washer	6
5	293781	Washer	6
6	1514057	Power Cable	1
7	1514072	Power Cable	1
8	1364262	Fuse (40 Amp)	1
9	1364270	Label (Fuse-40 Amp)	1
10	136681	Capscrew	2
11	320157	Washer	2
12	292681	Lockwasher	2
13	1474723	Mounting Plate (Control Panel)	1
14	292531	Capscrew	3
15	320161	Washer	3
16	292683	Lockwasher	3
17	216877	Nut	3
18	1519056	Heat Sink	1
19	1519058	Heat Sink	1
20	296001	Capscrew	8
21	293779	Lockwasher	8
22	1527877	Screw	8
23	1524401	Mounting Plate (Fan)	1
24	1531867	Screw	10
25	293781	Washer	2
26	893751	Cover (Heat Sink)	1
27	1522075	Fan	2
28	1512410	Controller	1
29	2054685	Power Supply	1
30	198956	Washer	2
31	1520933	Suppression Module	1
32	1545061	Guard	1
33	320159	Washer	2
34	1367639	Grommet	1
35	1523818	Cover Plate (Fan)	1
36	296472	Screw	10
37	114312	Strap Clamp	1
38	1525921	Thermistor Assembly	1
39	1513161	Controller (Pump)	1
40	1514074	Power Cable	1
41	296027	Capscrew	2

©2003 HYSTER COMPANY

CONTROL PANEL (Figure 2-4)
CONTACTOR HYDRAULIC

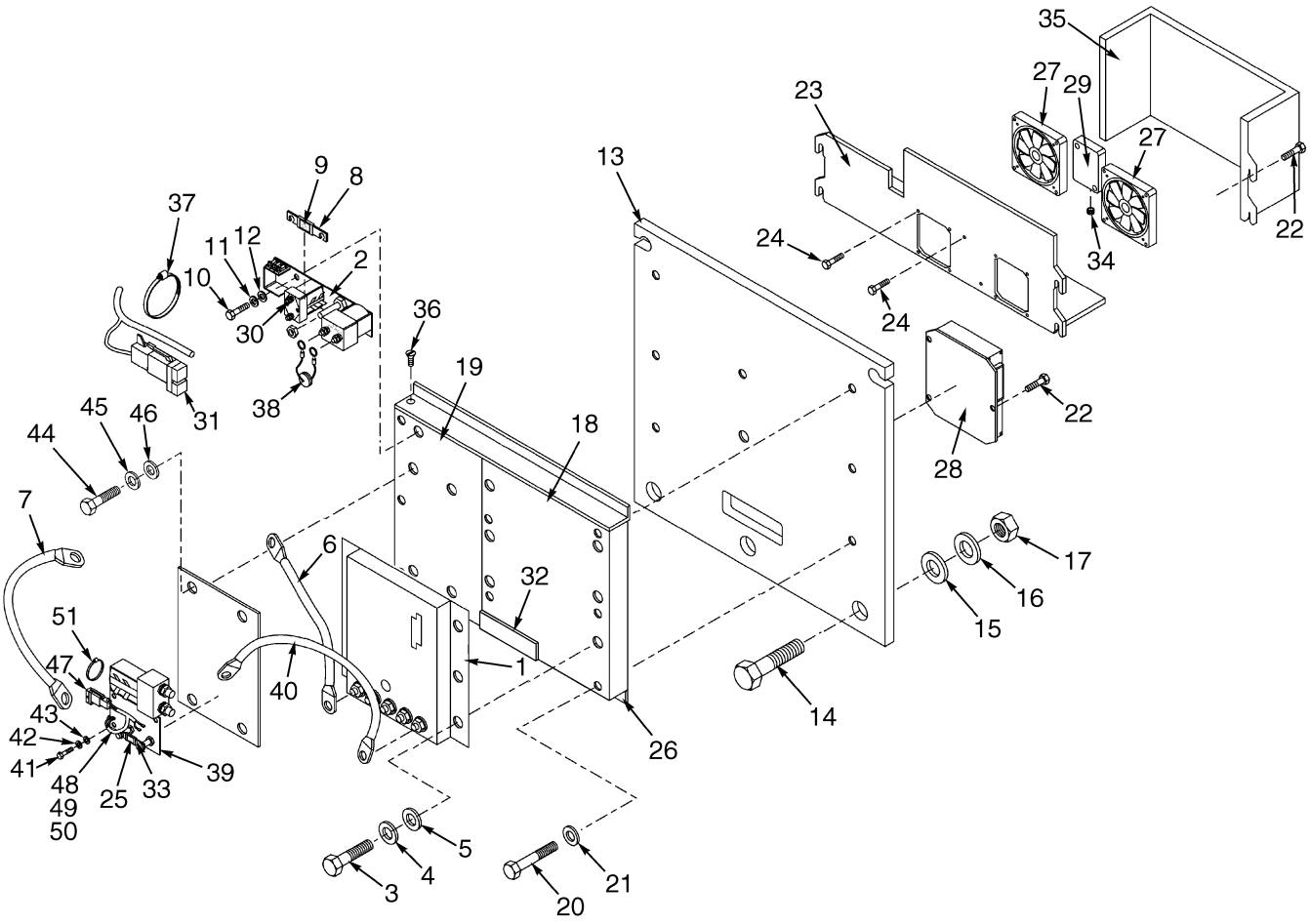

BP080165

©2003 HYSTER COMPANY

CONTROL PANEL
CONTACTOR HYDRAULIC

ITEM	PART NO.	DESCRIPTION	QTY
1	1513160	Controller (A/C)	1
2	1513953	Contactor Panel (☞ Figure 2-5)	1
3	296027	Capscrew	6
4	320159	Washer	6
5	293781	Washer	6
6	1514057	Power Cable	1
7	1514072	Power Cable	1
8	1364262	Fuse (40 Amp)	1
9	1364270	Label (Fuse-40 Amp)	1
10	136681	Capscrew	2
11	320157	Washer	2
12	292681	Lockwasher	2
13	1474723	Mounting Plate (Control Panel)	1
14	292531	Capscrew	3
15	320161	Washer	3
16	292683	Lockwasher	3
17	216877	Nut	3
18	1519056	Heat Sink	1
19	1519058	Heat Sink	1
20	296001	Capscrew	8
21	293779	Lockwasher	8
22	1527877	Screw	8
23	1524401	Mounting Plate (Fan)	1
24	1531867	Screw	10
25	359819	Label (Fuse-325 Amp)	1
26	893751	Cover (Heat Sink)	1
27	1522075	Fan	2
28	1512410	Controller	1
29	2054685	Power Supply	1
30	198956	Washer	2
31	1520933	Suppression Module	1
32	1545061	Guard	1
33	325809	Fuse (325 Amp)	1
34	1367639	Grommet	1
35	1523818	Cover Plate (Fan)	1
36	296472	Screw	10
37	114312	Strap Clamp	1
38	1525921	Thermistor Assembly	1
39	1513954	Contactor Panel Assembly (☞ Figure 2-8)	1
40	1514076	Power Cable	1
41	136681	Capscrew	2
42	320157	Washer	2
43	292681	Lockwasher	2
44	292513	Capscrew	4
45	320159	Washer	4
46	292682	Lockwasher	4
47	1520933	Suppression Module	1
48	2056631	Wire Harness (Pump Controller)	1
49	1330421	Connector	1
50	1330427	Secondary Lock	1
51	273775	Strap Clamp	1

©2003 HYSTER COMPANY

CONTACTOR PANEL (Figure 2-5)
CONTACTOR AND TRANSISTOR HYDRAULIC

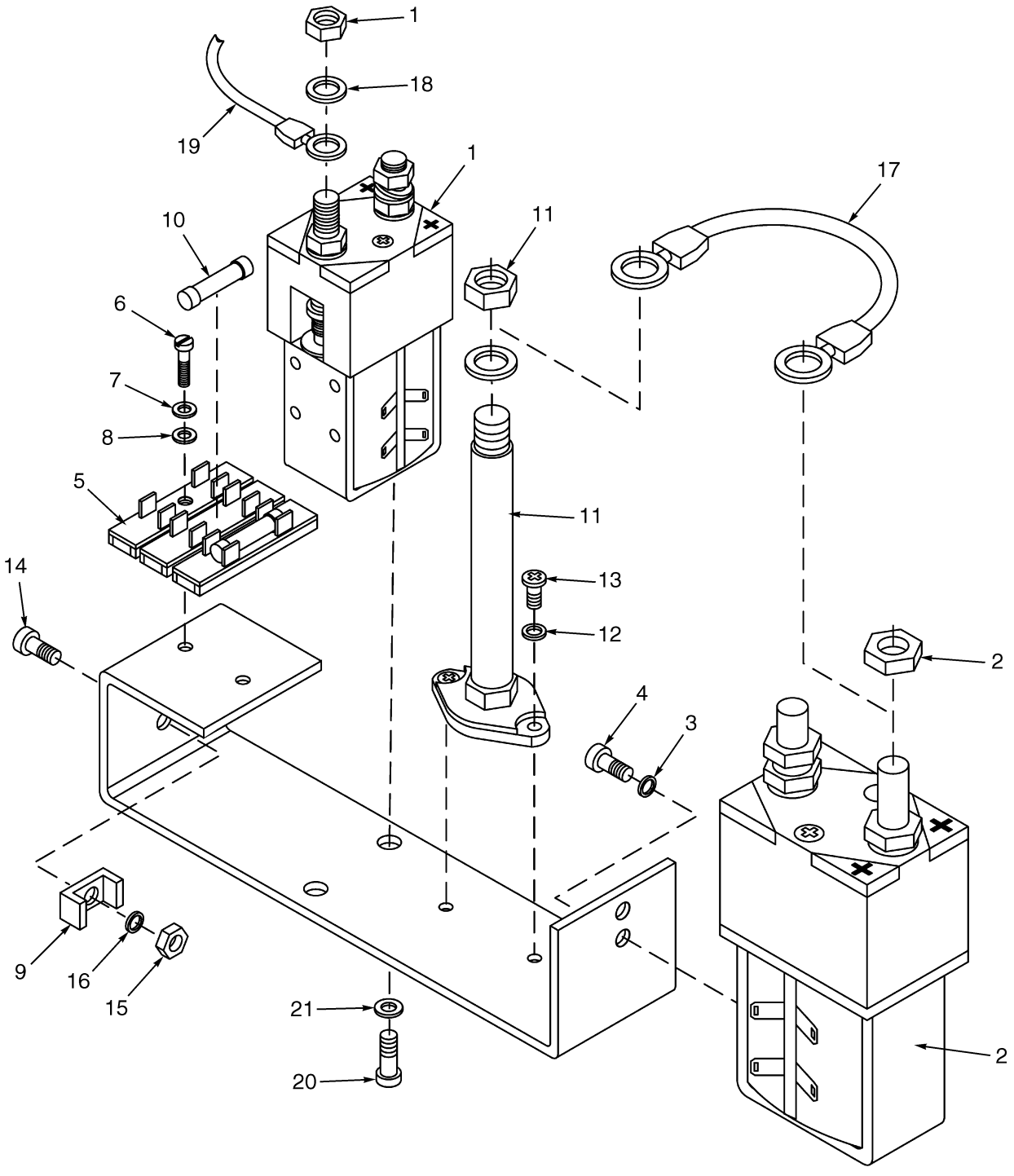

©2003 HYSTER COMPANY

CONTACTOR PANEL
CONTACTOR AND TRANSISTOR HYDRAULIC

ITEM	PART NO.	DESCRIPTION	QTY
	1513953	Contactor Panel	1
1	1345956	Contactor (Power Steering) (☞ Figure 2-7)	1
2	1528967	Contactor (Line) (☞ Figure 2-6)	1
3	2304170	Washer	1
4	2303821	Screw	2
5	2308759	Fuse Holder	2
6	2302461	Screw	1
7	1356209	Lockwasher	2
8	2307803	Washer	2
9	1528993	Clip	2
10	1454484	Fuse (15 Amp)	1
11	1528992	Terminal (Post)	3
12	2305855	Washer	1
13	1500318	Screw	2
14	302033	Screw	2
15	2056600	Nut	1
16	2304572	Washer	1
17	1528991	Wire Assembly	1
18	1356211	Washer	1
19	1528990	Wire Assembly	1
20	2303801	Screw	1
21	2303249	Lockwasher	2

©2003 HYSTER COMPANY

CONTACTOR (Figure 2-6)
LINE

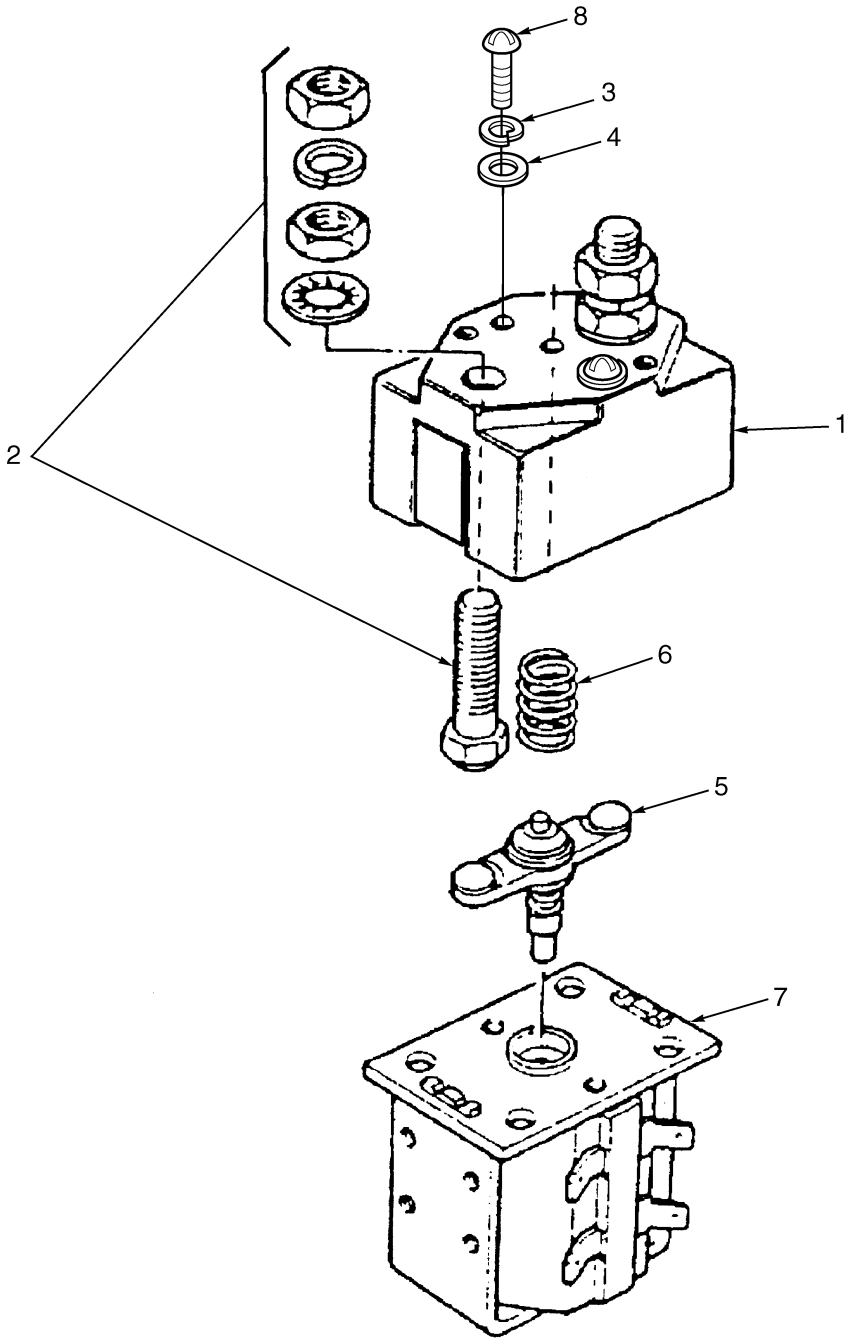

BP080143

©2003 HYSTER COMPANY

CONTACTOR
LINE

ITEM	PART NO.	DESCRIPTION	QTY
	1528967	Contactor	1
1	1532764	Cover Assembly	2
2	1553429	Contactor Assembly	2
3	275672	Washer	2
4	2304572	Washer	2
5	1532765	Moving Contact Assembly	1
6	1495699	Return Spring	1
7	1532768	Coil Assembly	1
7	1454122	End Cap	1
8	302040	Screw	2
	1532766	Contactor Kit (Includes Items 1-2, 5-6)	1

©2003 HYSTER COMPANY

CONTACTOR (Figure 2-7)
POWER STEERING

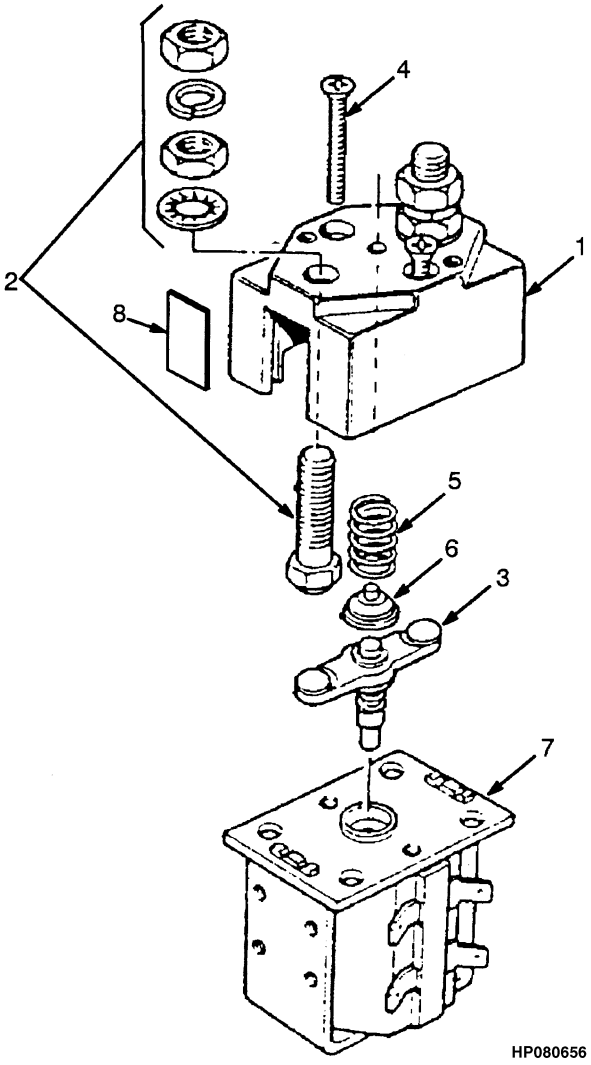

©2003 HYSTER COMPANY

CONTACTOR
POWER STEERING

ITEM	PART NO.	DESCRIPTION	QTY
	1345956	Contactor	1
1	384398	Cover (Top)	1
2	378547	Contact (Fixed)	1
3	383984	Contact (Moving)	1
4	379522	Screw	2
5	1335615	Spring	1
6	379524	Insulator (Return)	1
7	1335614	Coil Assembly	1
8	1345915	Dust Shield	1
	1345908	Contactor Kit (Includes Items 2-3)	1

©2003 HYSTER COMPANY

CONTACTOR PANEL (Figure 2-8)
CONTACTOR HYDRAULIC

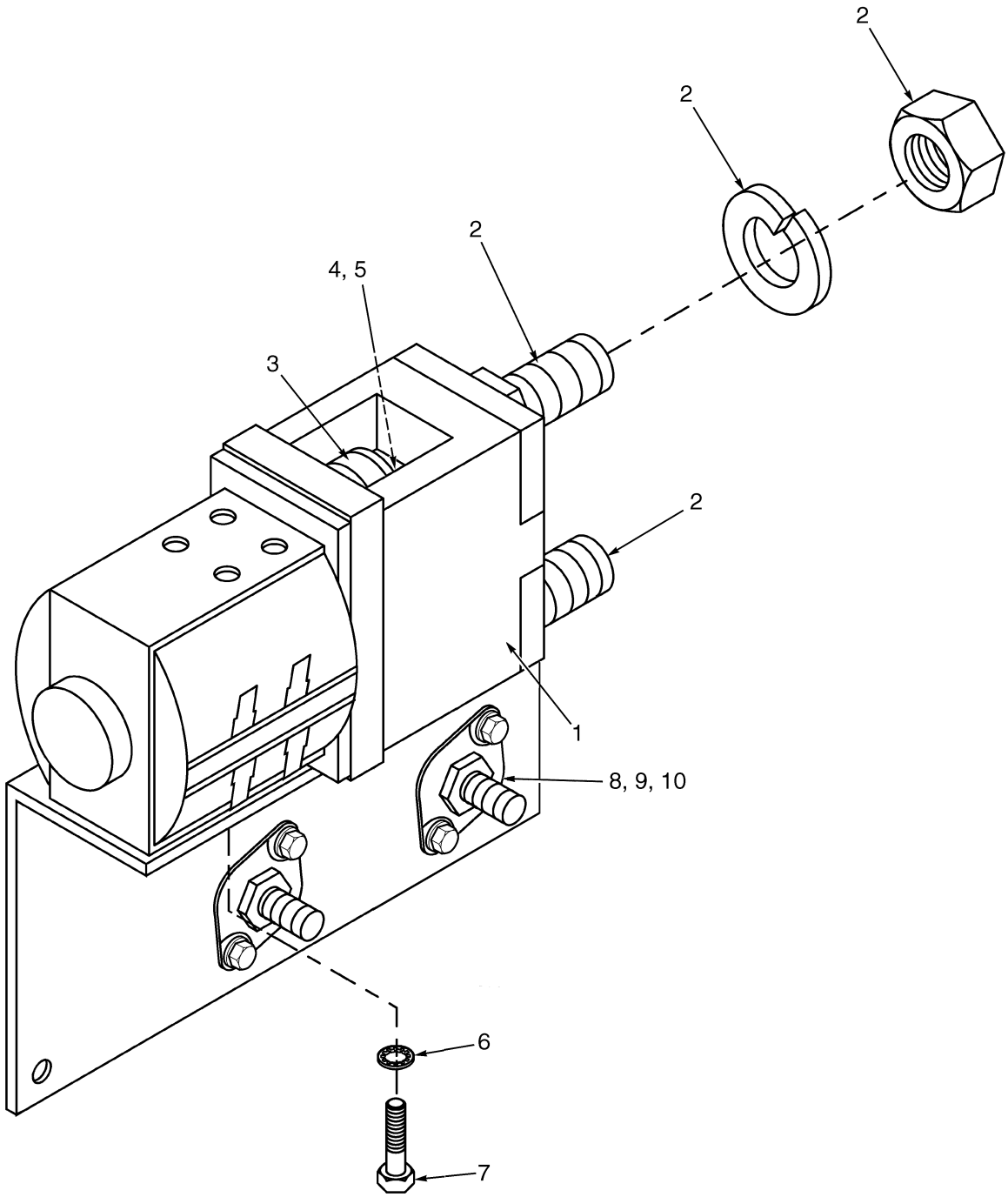

BP080153

©2003 HYSTER COMPANY

CONTACTOR PANEL
CONTACTOR HYDRAULIC

ITEM	PART NO.	DESCRIPTION	QTY
	1513954	Contactor Panel Assembly	1
1	1528995	Contactor	1
2	2034484	Contactor (Fixed)	2
3	2035396	Contactor (Moving)	1
4	383979	Plunger	1
5	1528998	Spring	1
6	2304170	Washer	2
7	2303821	Screw	2
8	1528997	Terminal	1
9	2305855	Washer	2
10	1500318	Screw	2
	1528996	Contactor Kit (Includes Items 2-5)	1

©2003 HYSTER COMPANY

WIRE HARNESS (Figure 2-9)
MAIN

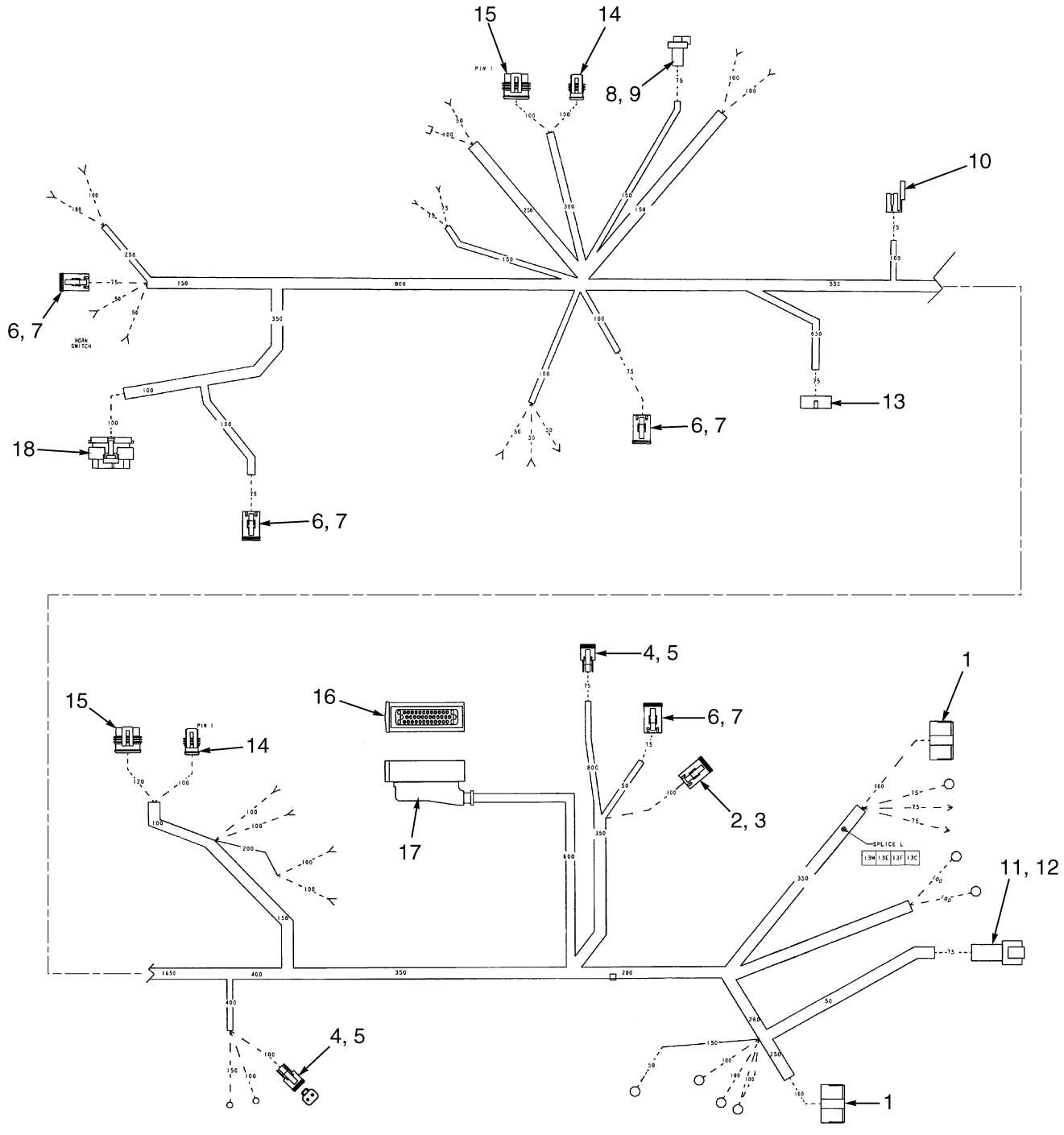

BP080135

©2003 HYSTER COMPANY

WIRE HARNESS
MAIN

ITEM	PART NO.	DESCRIPTION	QTY
	2060697	Wire Harness	1
1	2043885	Connector	2
2	1330421	Connector	1
3	1330427	Secondary Lock	1
4	1330419	Connector	2
5	1330424	Secondary Lock	2
6	1330420	Connector	4
7	1330426	Secondary Lock	4
8	1351070	Connector	1
9	1351076	Seal	1
10	1352564	Pin	1
11	1330412	Connector	1
12	1330417	Lock	1
13	2303758	Connector	1
14	1508206	Connector	2
15	1508211	Connector	2
16	1508212	Connector	1
16	1525561	Seal	1
17	1524541	Cover	1
18	2046547	Plug	1

©2003 HYSTER COMPANY

WIRE HARNESS (Figure 2-10)
FORWARD/REVERSE LEVER

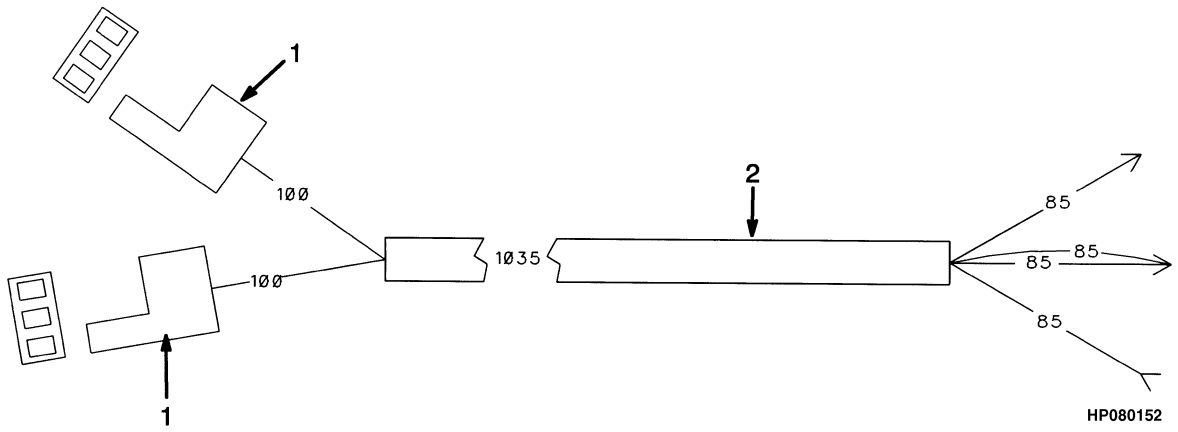

ITEM	PART NO.	DESCRIPTION	QTY
	2046756	Wire Harness	1
1	1352563	Connector	2
2	381919	Conduit	AR

©2003 HYSTER COMPANY

3 DRIVE UNIT

SECTION 3
DRIVE UNIT

DESCRIPTION **PAGE**

DRIVE AXLE 3-2
DRIVE TIRE AND WHEEL 3-12
TRACTION MOTOR
A/C 3-10
TRANSMISSION AND DIFFERENTIAL 3-6

©2003 HYSTER COMPANY

DRIVE AXLE (Figure 3-1)

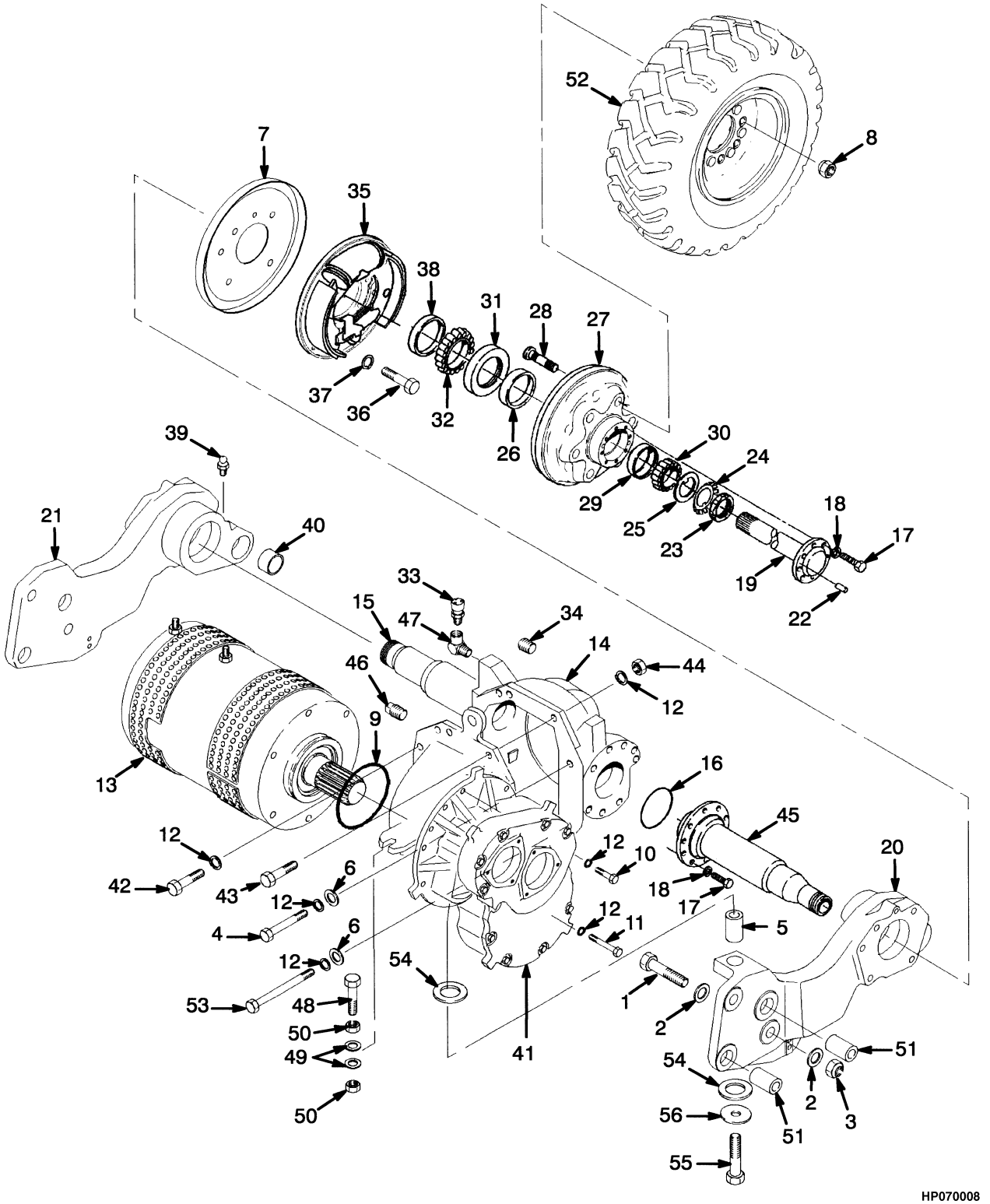

©2003 HYSTER COMPANY

DRIVE AXLE

ITEM	PART NO.	DESCRIPTION	QTY
1	1317267	Capscrew	8
2	366713	Washer	8
3	366715	Nut	4
4	292525	Capscrew	1
5	1377439	Spacer	1
6	320159	Washer	2
7	1310598	Shield	2
8	60949	Lug Nut	12
9	57597	O-Ring	1
10	287860	Capscrew	6
11	292525	Capscrew	1
12	292682	Lockwasher	15
13	2055731	Traction Motor (72/80 Volt) (☞ Figure 3-3)	1
14	1351926	Axle Housing	1
15	1351927	Spindle (LH)	1
16	39714	O-Ring	2
17	293646	Capscrew	32
18	292683	Lockwasher	32
19	324863	Axle Shaft	2
20	1364986	Hanger (RH)	1
21	1340966	Hanger (LH)	1
22	305769	Dowel Pin	4
23	33657	Locknut	2
24	145978	Lockwasher	2
25	85885	Washer	2
26	325568	Oil Seal	2
27	1340807	Brake Drum	2
28	118714	Stud	12
29	264893	Bearing Cup	2
30	264892	Bearing Cone	2
31	30076	Bearing Cup	2
32	230443	Bearing Cone	2
33	21420	Plug	1
34	15315	Fitting	1
35	1456277	Brake Assembly (LH) (☞ Figure 5-4)	1
35	1456276	Brake Assembly (RH) (☞ Figure 5-4)	1
36	221617	Capscrew	6
37	1320607	Washer	6
38	1354997	Oil Seal	2
39	16001	Lube Fitting	2
40	1333385	Bushing	2
41	1364993	Transmission Assembly (☞ Figure 3-2)	1
42	136985	Capscrew	4
43	292516	Capscrew	2
44	136692	Nut	2
45	1340761	Spindle (RH)	1
46	15290	Fitting	1
47	16151	Fitting	1
48	1364997	Capscrew	1
49	320162	Washer	2
50	216877	Nut	2

©2003 HYSTER COMPANY

DRIVE AXLE

ITEM	PART NO.	DESCRIPTION	QTY
51	1340409	Pin	4
52	. . . . .	Tire Assembly (☞ Figure 3-4)	2
52	. . . . .	Radial Tire Assembly (☞ Figure 3-4)	2
53	136862	Capscrew	1
54	1377440	Isolator	2
55	292568	Capscrew	1
56	1377441	Washer	1

©2003 HYSTER COMPANY

NOTES

TRANSMISSION AND DIFFERENTIAL (Figure 3-2)

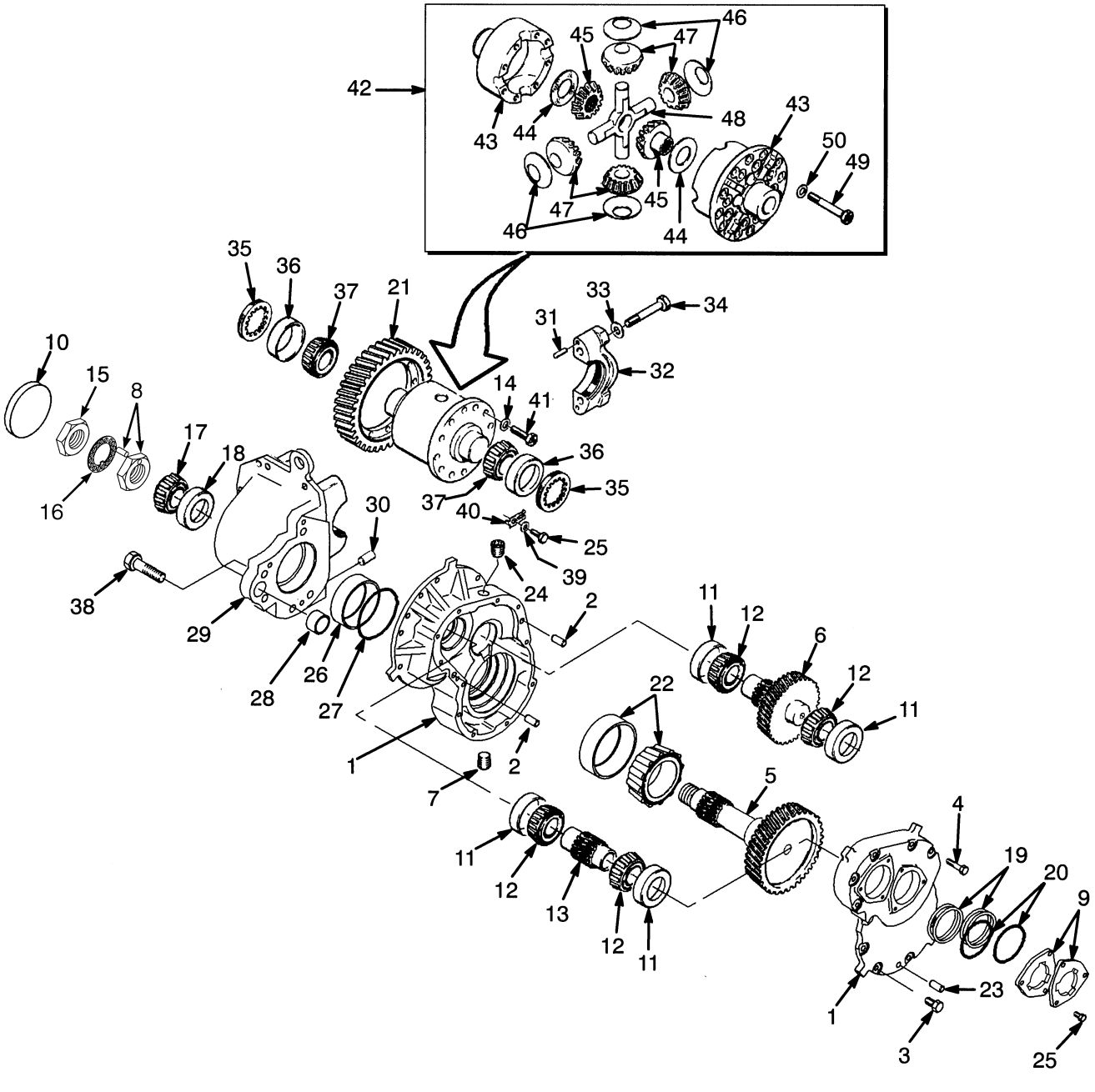

©2003 HYSTER COMPANY

TRANSMISSION AND DIFFERENTIAL

ITEM	PART NO.	DESCRIPTION	QTY
	1364993	Transmission Assembly	1
1	1364988	Transmission Case	1
1	1364982	Housing (Inner)	1
1	1364984	Housing (Outer)	1
2	334481	Dowel Pin	2
3	287860	Capscrew	5
4	292521	Capscrew	6
5	1364977	Gear	1
6	1364976	Gear	1
7	15290	Fitting	1
8	1378909	Locknut and Pin	1
8	1378907	Nut	1
8	222696	Pin	1
9	1340968	Bearing Cap	2
10	1340974	Plug	1
11	183614	Bearing Cup	4
12	183615	Bearing Cone	4
13	1364975	Pinion	1
14	334580	Washer	12
15	1378907	Nut	1
16	1378908	Lockwasher	1
17	361676	Bearing Cone	1
18	361675	Bearing Cup	1
19	1364121	Shim (0.005 in.)	AR
19	1364120	Shim (0.007 in.)	AR
19	1364119	Shim (0.020 in.)	AR
20	39371	O-Ring	2
21	1364978	Gear (Drive)	1
22	1364998	Bearing Set	1
23	334481	Dowel Pin	2
24	15315	Fitting	1
25	287851	Capscrew	8
26	30076	Bearing Cup	1
27	15887	O-Ring	1
28	1377405	Pin	1
29	1364990	Differential Carrier Assembly	1
30	334481	Dowel Pin	3
31	234038	Dowel Pin	4
32	334418	Bearing Cap	2
33	193164	Washer	4
34	221588	Capscrew	4
35	334456	Nut	2
36	264893	Bearing Cup	2
37	334590	Bearing Cone	2
38	293632	Capscrew	5
39	292681	Lockwasher	2
40	334447	Lock Plate	2
41	92942	Bolt	12
42	1383475	Differential	1
43	1383478	Housing	1
44	1383457	Washer	2

©2003 HYSTER COMPANY

TRANSMISSION AND DIFFERENTIAL

ITEM	PART NO.	DESCRIPTION	QTY
45	1383480	Side Gear	2
46	1383482	Washer	4
47	1383481	Pinion Gear	4
48	1383483	Spider (Two Piece)	2
49	221521	Capscrew	8
50	261379	Washer	8

©2003 HYSTER COMPANY

NOTES

TRACTION MOTOR (Figure 3-3)
A/C

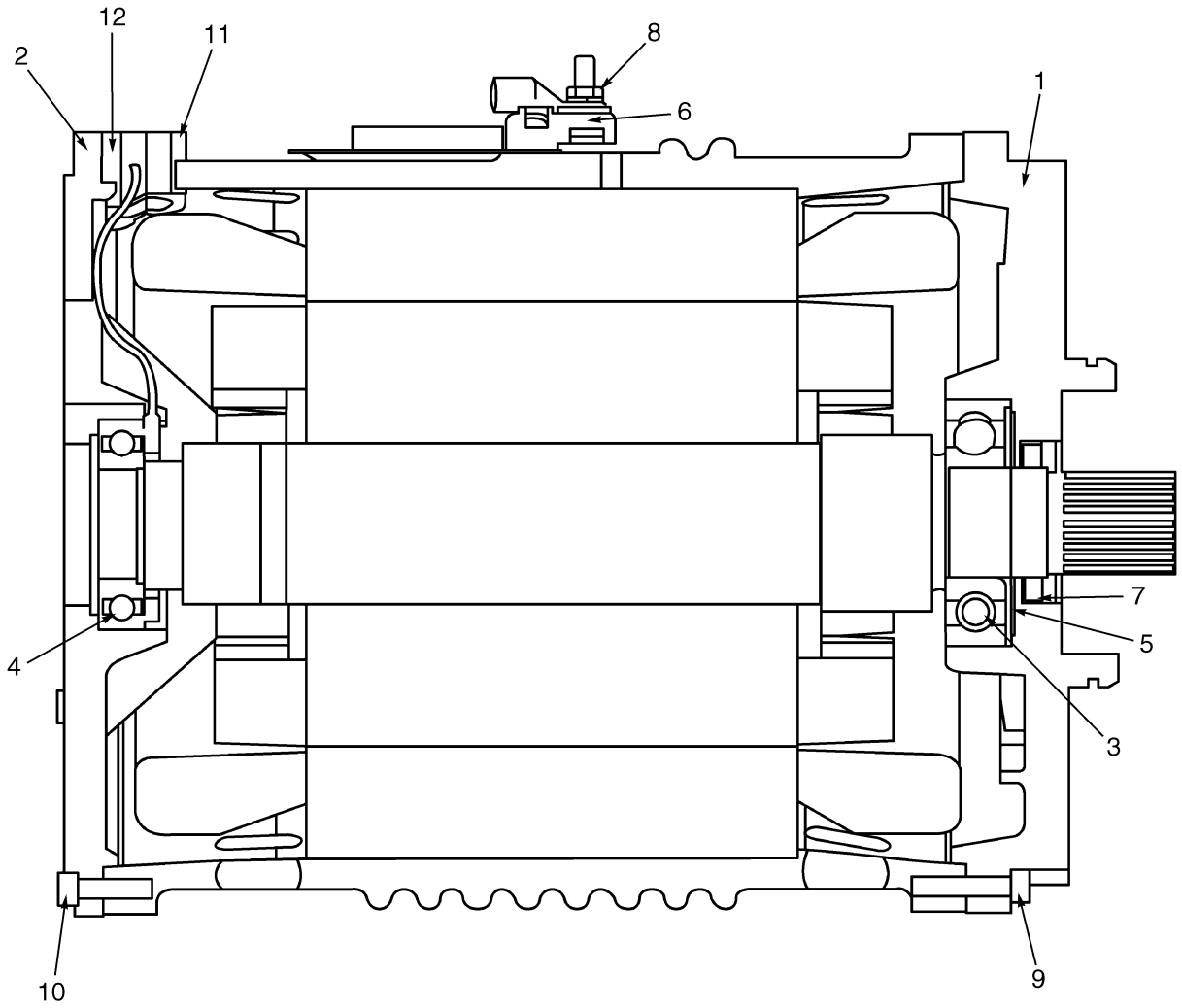

BP070000

©2003 HYSTER COMPANY

TRACTION MOTOR
A/C

ITEM		PART NO.	DESCRIPTION	QTY
		2055731	Traction Motor (72/80 Volt) (A/C)	1
1		1530562	End Head (DE)	1
2		1530563	End Head (NDE)	1
3		1530564	Ball Bearing (DE)	1
4		1530565	Ball Bearing (NDE)	1
5		1530566	Spring Washer	1
6		1530567	Terminal Block	1
7		1530568	Seal	1
8		239503	Nut	3
9		296014	Capscrew	6
10		296012	Capscrew	6
11		1530569	Seal	1
12		1530570	Seal	1
13	**a**	1555789	Band Enclosure Kit	1

FOOTNOTES:
a For "EE" Option

DRIVE TIRE AND WHEEL (Figure 3-4)

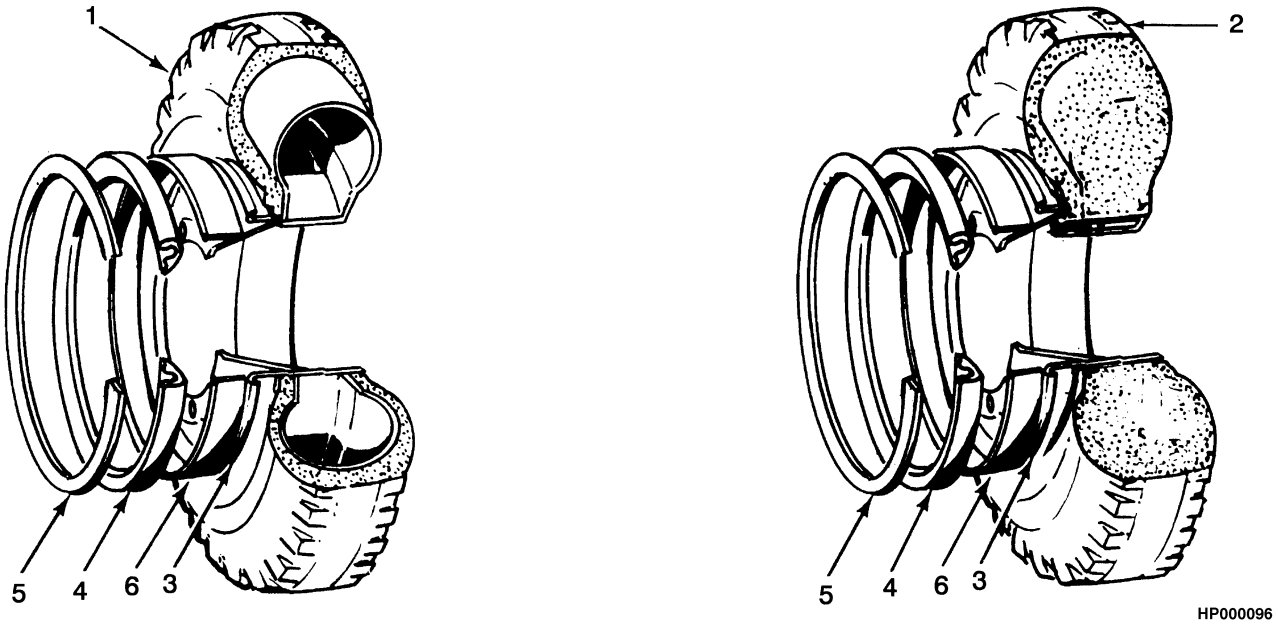

KEY:
A: Standard Tread 23x10-12
B: Wide Tread 23x10-12
C: Standard Radial 250/60-12
D: Wide Radial 250/60-12

ITEM	PART NO.	DESCRIPTION	QTY A	B	C	D
1	355392	Tire Assembly	2	2	..	..
1	1383634	Tire Assembly (Optional)	2	2	..	..
1	355395	Tube	1	1	..	..
1	1505194	Radial Tire Assembly	..	..	2	2
1	1505203	Tube	..	..	1	1
1	1376007	Washer (Valve Stem)	..	..	1	1
1	1505206	Radial Tire Assembly (Optional)	..	..	2	2
1	1505209	Tubeless Bead Seal (Optional)	..	..	1	1
1	1471922	Tubeless Bead Seal Valve (Optional)	..	..	1	1
2	355391	Tire	1	1	..	..
2	1505197	Tire	..	..	1	1
3	355390	Wheel Assembly	2	..	2	..
3	362679	Wheel Assembly	..	2	..	2
4	355386	Side Ring	1	1	1	1
5	355385	Lock Ring	1	1	1	1
6	355384	Shoulder Ring	1	1	1	1

©2003 HYSTER COMPANY

4 STEERING SYSTEM

SECTION 4
STEERING SYSTEM

DESCRIPTION	PAGE
GEAR PUMP	4-12
OPTIONAL	4-14
SHIFT LEVER	4-4
STEERING AXLE	4-16
STEERING CONTROL UNIT	4-6
STEERING CYLINDER	4-10
STEERING HYDRAULIC	4-8
STEERING POD	4-2
STEERING TIRE AND WHEEL	4-18

©2003 HYSTER COMPANY

STEERING POD (Figure 4-1)

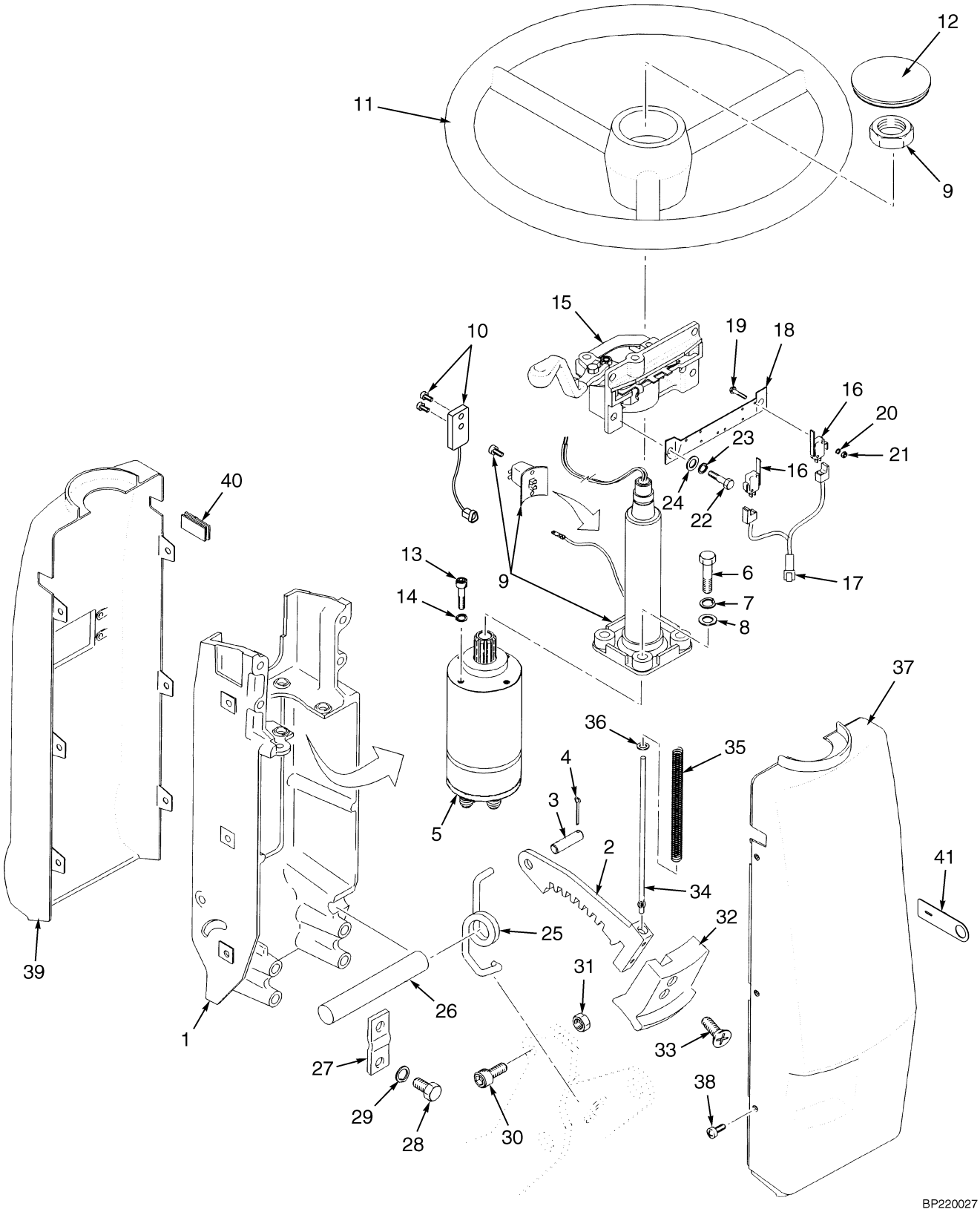

©2003 HYSTER COMPANY

STEERING POD

ITEM	PART NO.	DESCRIPTION	QTY
	1531104	Steering Column Assembly (Monotrol Pedal)	1
	1531105	Steering Column Assembly (Forward/Reverse Lever)	1
1	1343573	Bracket	1
2	1364271	Latch	1
3	1343607	Pin	1
4	15212	Cotter Pin	1
5	1453539	Steering Control Unit (☞ Figure 4-3)	1
6	16815	Capscrew	4
7	15156	Lockwasher	4
8	15134	Washer	4
9	2045129	Steering Column	1
9	1391205	Horn Contact Kit	1
9	1391206	Screw	2
9	345423	Nut	1
10	1504125	Sensor	1
11	1329250	Steering Wheel	1
12	1450503	Horn Button	1
13	293762	Capscrew	4
14	293779	Lockwasher	4
15	1347004	Shift Lever Assembly (Forward/Reverse) (☞ Figure 4-2)	1
16	1498406	Switch (Forward/Reverse)	2
17	2046756	Wire Harness (Forward/Reverse)	1
18	1343595	Plate (Forward/Reverse)	1
19	220426	Screw (Forward/Reverse)	4
20	53162	Lockwasher (Forward/Reverse)	4
21	16865	Nut (Forward/Reverse)	4
22	292501	Capscrew (Forward/Reverse)	4
23	292680	Lockwasher (Forward/Reverse)	4
24	320156	Washer (Forward/Reverse)	4
25	1378600	Spring	1
26	1335987	Shaft	1
27	1335967	Plate	2
28	136749	Capscrew	4
29	292681	Lockwasher	4
30	296010	Capscrew	1
31	302400	Locknut	1
32	1343574	Latch Knob	1
33	296215	Capscrew	2
34	1343572	Rod	1
35	1343537	Spring	1
36	320155	Washer	1
37	1397864	Cover (Lower)	1
38	1337196	Screw	6
39	1397863	Cover (Upper)	1
40	1376743	Plug (Without Turn Signal)	1
41	1520609	Static Ground Patch	1

©2003 HYSTER COMPANY

SHIFT LEVER (Figure 4-2)

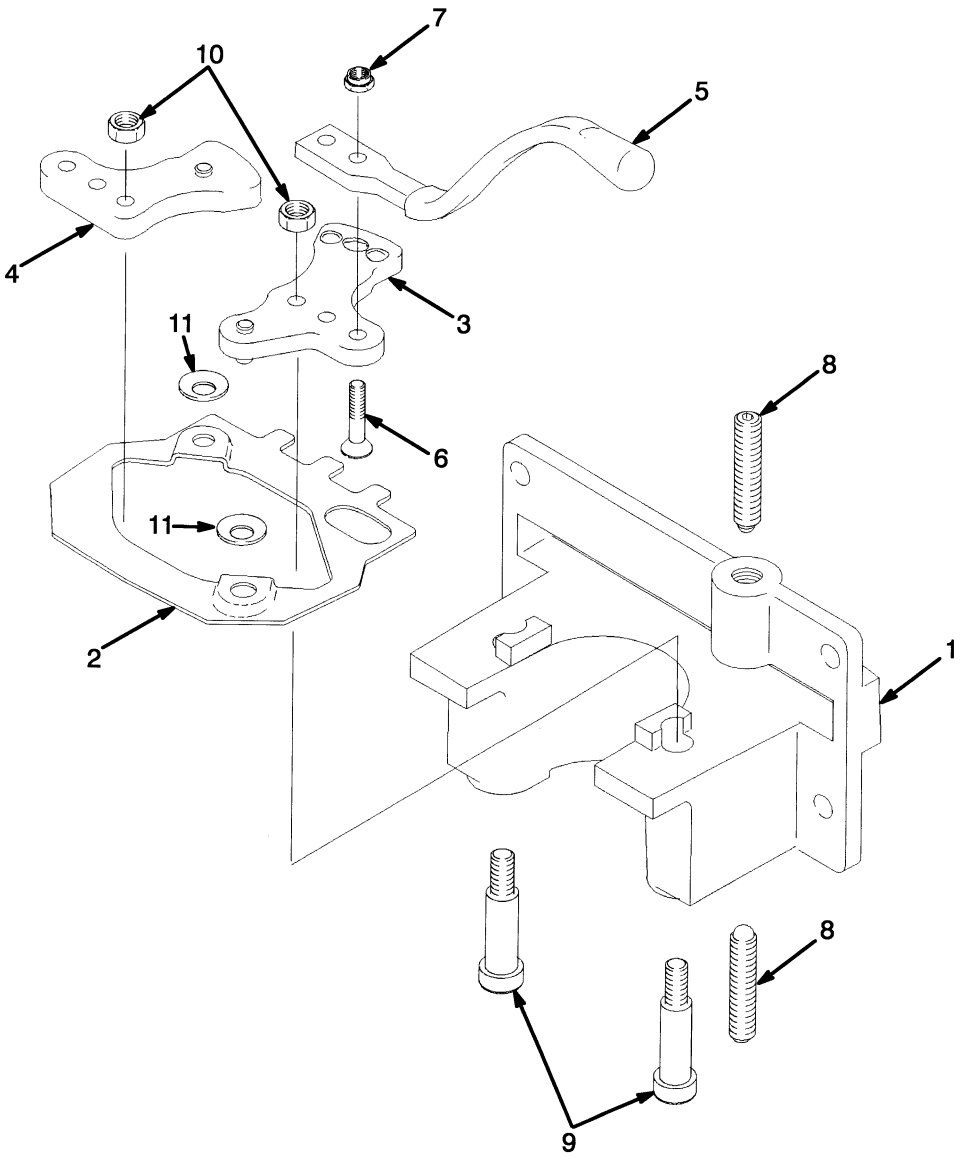

©2003 HYSTER COMPANY

SHIFT LEVER

ITEM	PART NO.	DESCRIPTION	QTY
	1347004	Shift Lever Assembly	1
1	1343577	Base	1
2	1343578	Link	1
3	1343579	Crank	1
4	1343598	Crank	1
5	1343593	Shift Lever	1
6	296205	Capscrew	2
7	302398	Locknut	2
8	1491830	Spring Plunger	2
9	1343594	Bolt	2
10	136687	Nut	2
11	1354300	Washer	4

©2003 HYSTER COMPANY

STEERING CONTROL UNIT (Figure 4-3)

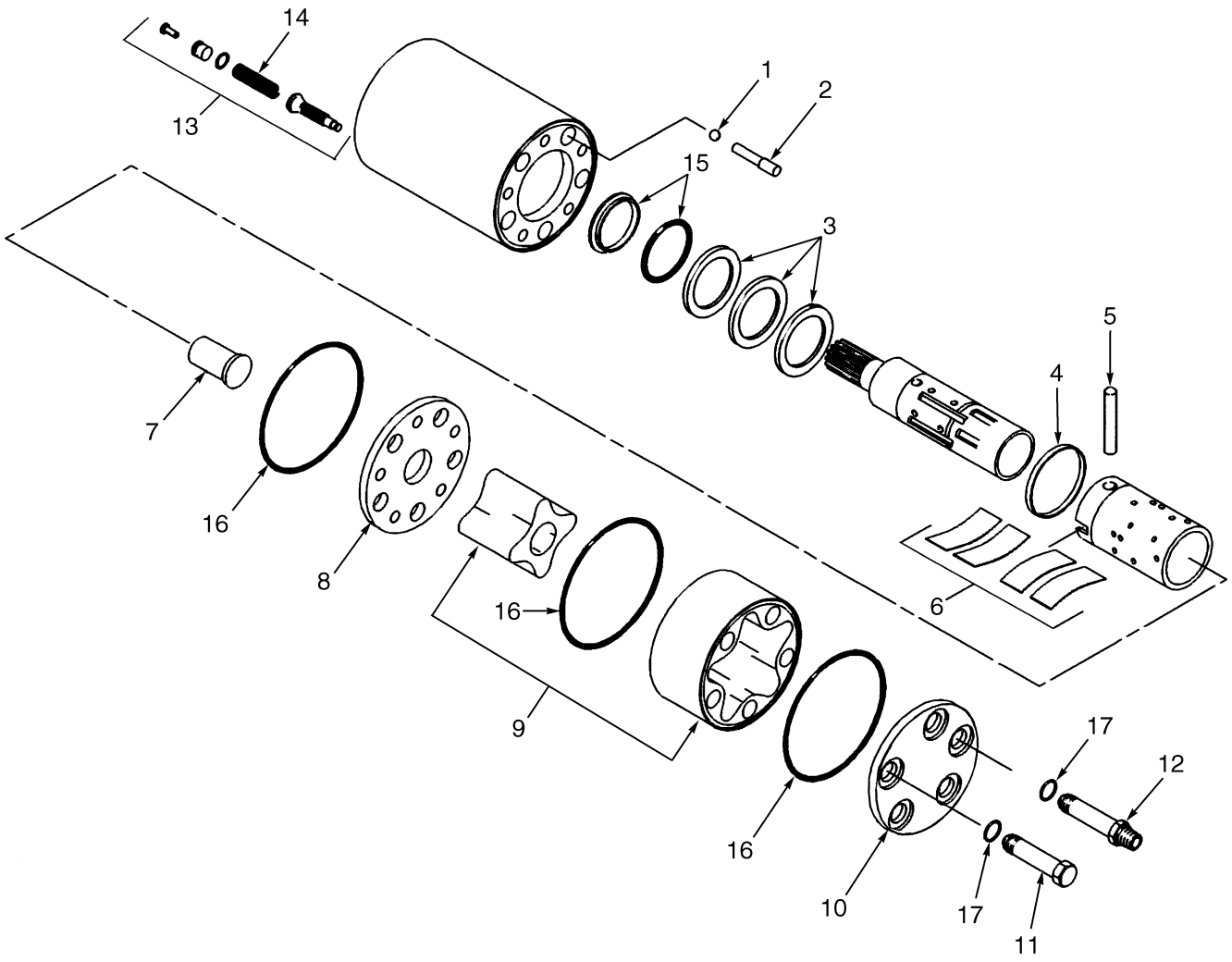

BP220023

©2003 HYSTER COMPANY

STEERING CONTROL UNIT

ITEM	PART NO.	DESCRIPTION	QTY
	1453539	Steering Control Unit	1
1	1355335	Ball	1
2	1455769	Stop	1
3	1451697	Bearing Assembly	1
4	1455770	Ring	1
5	1451698	Pin	1
6	1455771	Spring Set	1
7	1455772	Spacer	1
8	1451703	Plate	1
9	1451704	Gear Set	1
10	1455773	Cover	1
11	1455774	Screw	1
12	1455775	Screw	4
13	1455776	Relief Valve	1
14	1455779	Spring	1
15	. . . . .	Dust Seal	1
16	. . . . .	O-Ring	3
17	. . . . .	O-Ring	5
	1467430	Seal Kit (Includes Items 15-17)	1

©2003 HYSTER COMPANY

STEERING HYDRAULIC (Figure 4-4)

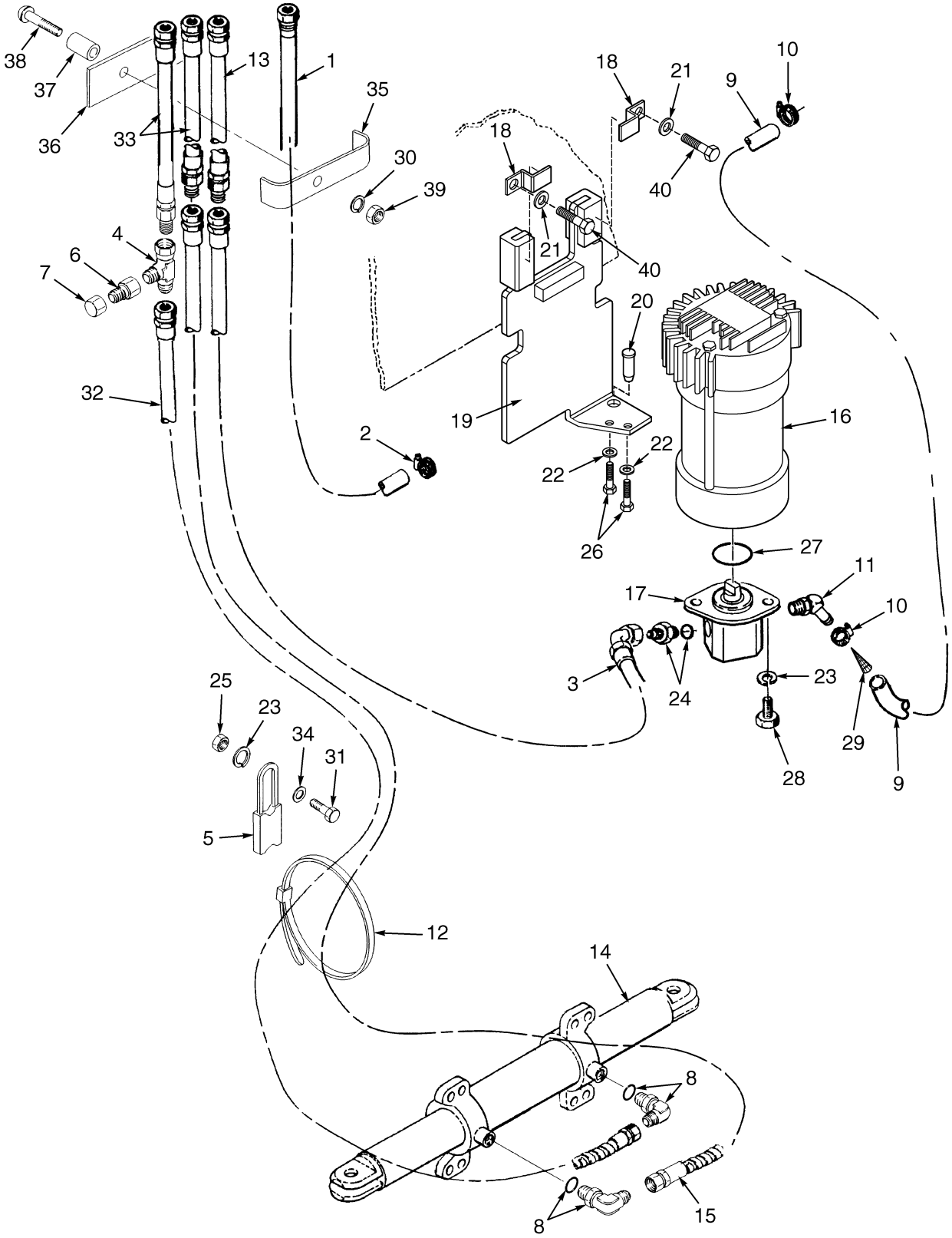

BP220029

©2003 HYSTER COMPANY

STEERING HYDRAULIC

ITEM	PART NO.	DESCRIPTION	QTY
1	355405	Hose	1
2	166857	Clamp	1
3	1375572	Hose (28.23 in. Battery Compartment)	1
3	1375563	Hose (33.90 in. Battery Compartment)	1
4	17061	Fitting	1
5	1356947	Strap	1
6	17776	Fitting	1
7	16923	Fitting	1
8	16558	Fitting	2
8	16483	O-Ring	1
9	1529520	Hose	1
10	130845	Clamp	3
11	222512	Fitting	1
12	273775	Strap Clamp	1
13	117095	Hose	1
14	1321174	Steer Cylinder (☞ Figure 4-5)	1
15	149565	Hose (28.23 in. Battery Compartment)	1
15	278561	Hose (33.90 in. Battery Compartment)	1
16	2056678	Steering Motor	1
17	2033614	Gear Pump (☞ Figure 4-6)	1
18	324972	Bracket	2
19	893752	Bracket	1
20	2061620	Pin	1
21	292682	Lockwasher	2
22	320158	Washer	2
23	292681	Lockwasher	4
24	16541	Fitting	1
24	16484	O-Ring	1
25	239503	Nut	1
26	287805	Capscrew	2
27	39362	O-Ring	1
28	136681	Capscrew	2
29	1302007	Screen	1
30	15155	Lockwasher	1
31	176640	Capscrew	1
32	1375571	Hose (28.23 in. Battery Compartment)	1
32	612806	Hose (33.90 in. Battery Compartment)	1
33	878111	Hose	2
34	320157	Washer	2
35	1378922	Plate	1
36	1378914	Plate	1
37	1378921	Pipe	1
38	1194215	Capscrew	1
39	15055	Nut	1
40	292508	Capscrew	2

©2003 HYSTER COMPANY

STEERING CYLINDER (Figure 4-5)

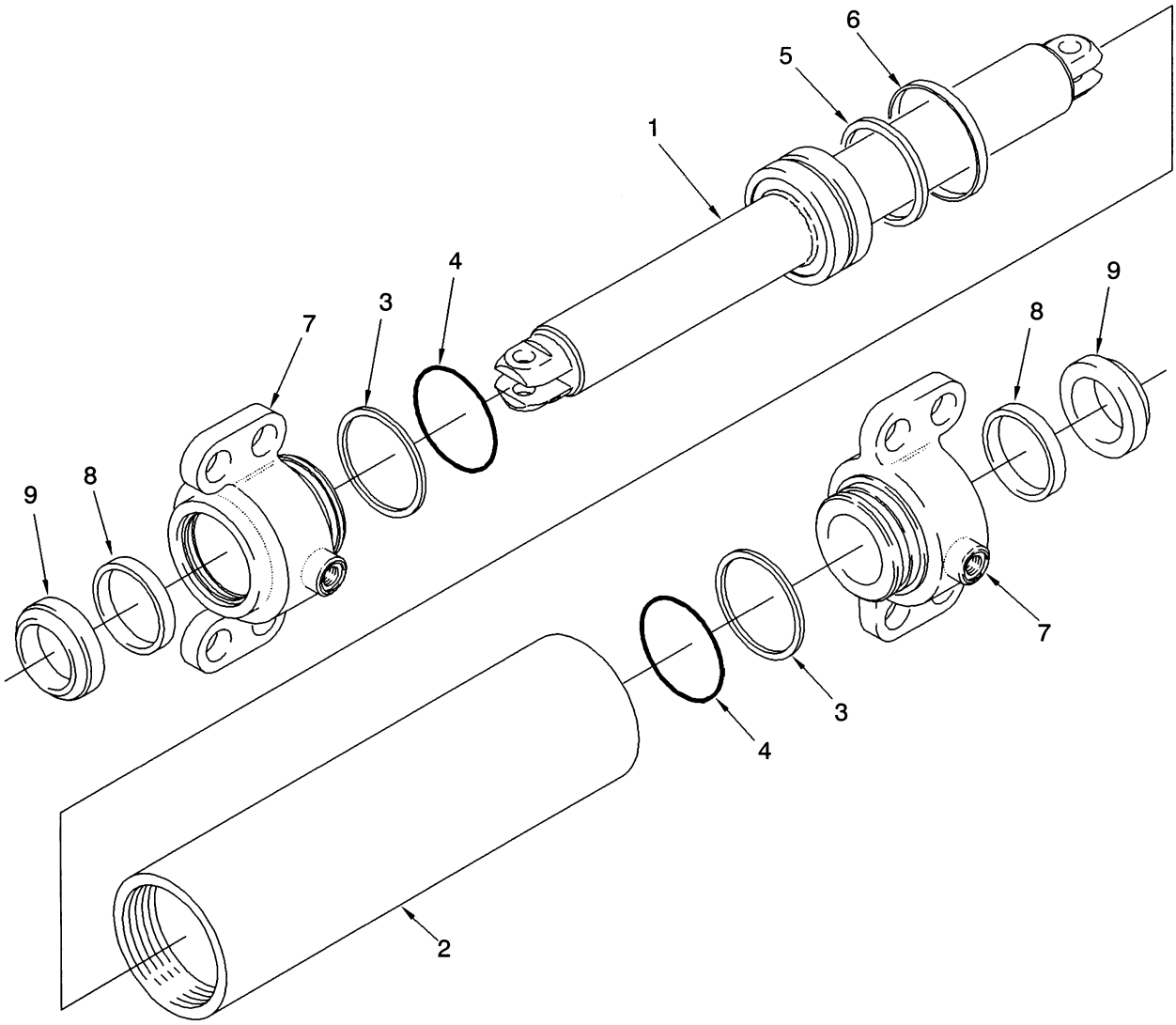

HP070058

ITEM	PART NO.	DESCRIPTION	QTY
	1321174	Steer Cylinder	1
1	375634	Piston Rod	1
2	375635	Shell	1
3	147973	Back-Up Ring	2
4	130825	O-Ring	2
5	46388	O-Ring	1
6	2044371	Piston Seal	1
7	1321149	End Cap	2
8	210183	Seal	2
9	203071	Rod Wiper	2
	1501413	Seal Kit (Includes Items 3-6, 8-9)	1

©2003 HYSTER COMPANY

NOTES

GEAR PUMP (Figure 4-6)

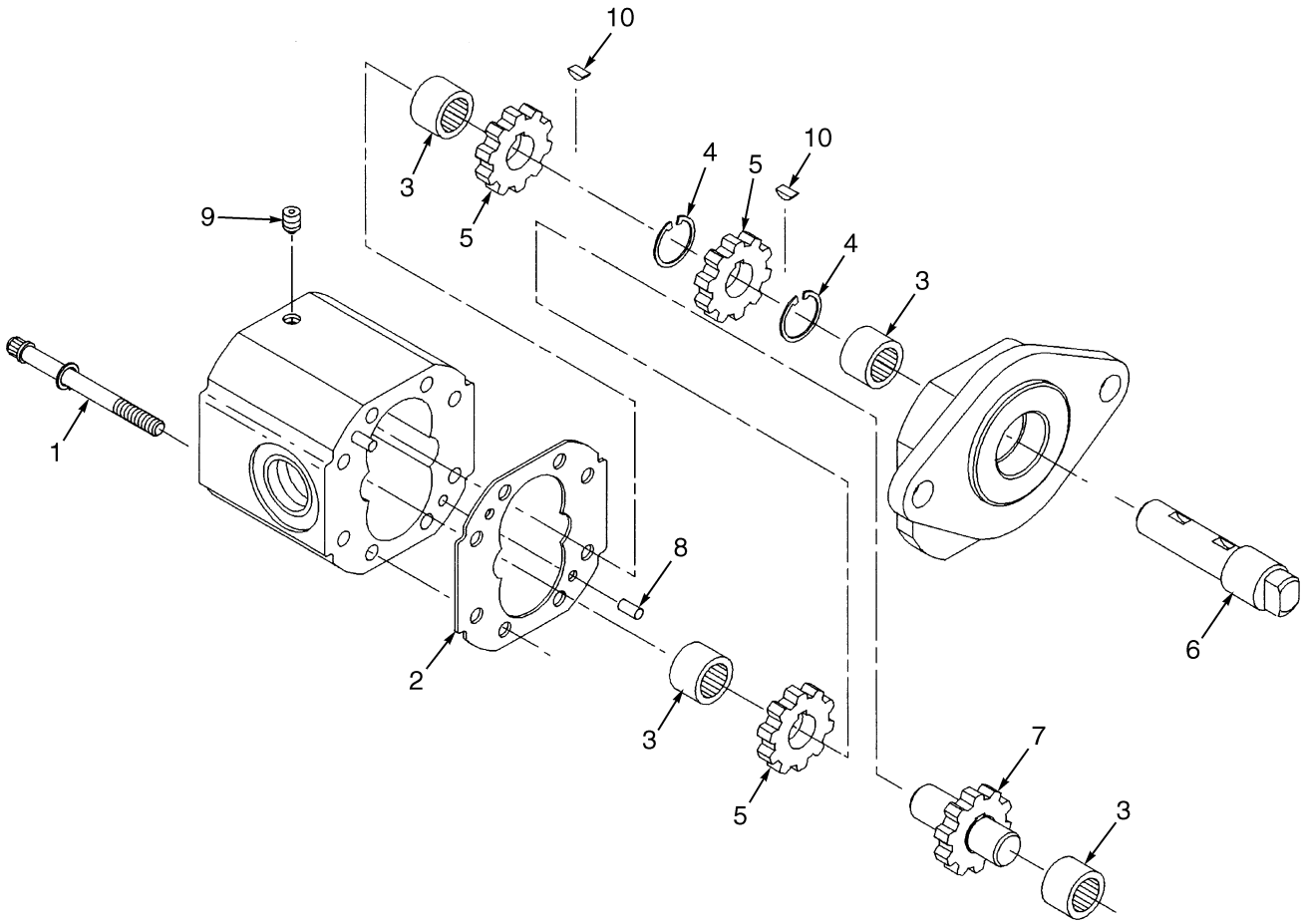

BP220030

©2003 HYSTER COMPANY

GEAR PUMP

ITEM	PART NO.	DESCRIPTION	QTY
	a 2033614	Gear Pump	1
1	1452459	Screw	8
2	2034266	Gasket Kit	1
3	354669	Needle Bearing	4
4	358072	Snap Ring	2
5	358069	Gear	3
6	1309877	Shaft	1
7	2034265	Idler Shaft Kit	1
8	354671	Pin	2
9	358076	Plug	1
10	358073	Key	2

FOOTNOTES:

a Gear Pump 2043078 Optional.

©2003 HYSTER COMPANY

GEAR PUMP (Figure 4-7)
OPTIONAL

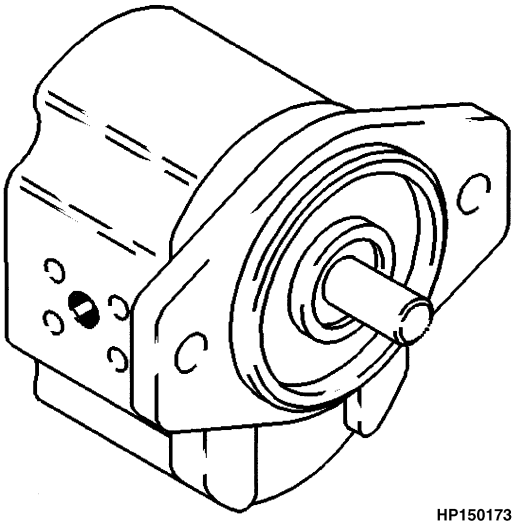

HP150173

ITEM	PART NO.	DESCRIPTION	QTY
	2042515	Gear Pump	1
	384383	Seal Kit	1
	1489349	Shaft Seal	1
	39387	O-Ring	1

©2003 HYSTER COMPANY

NOTES

STEERING AXLE (Figure 4-8)

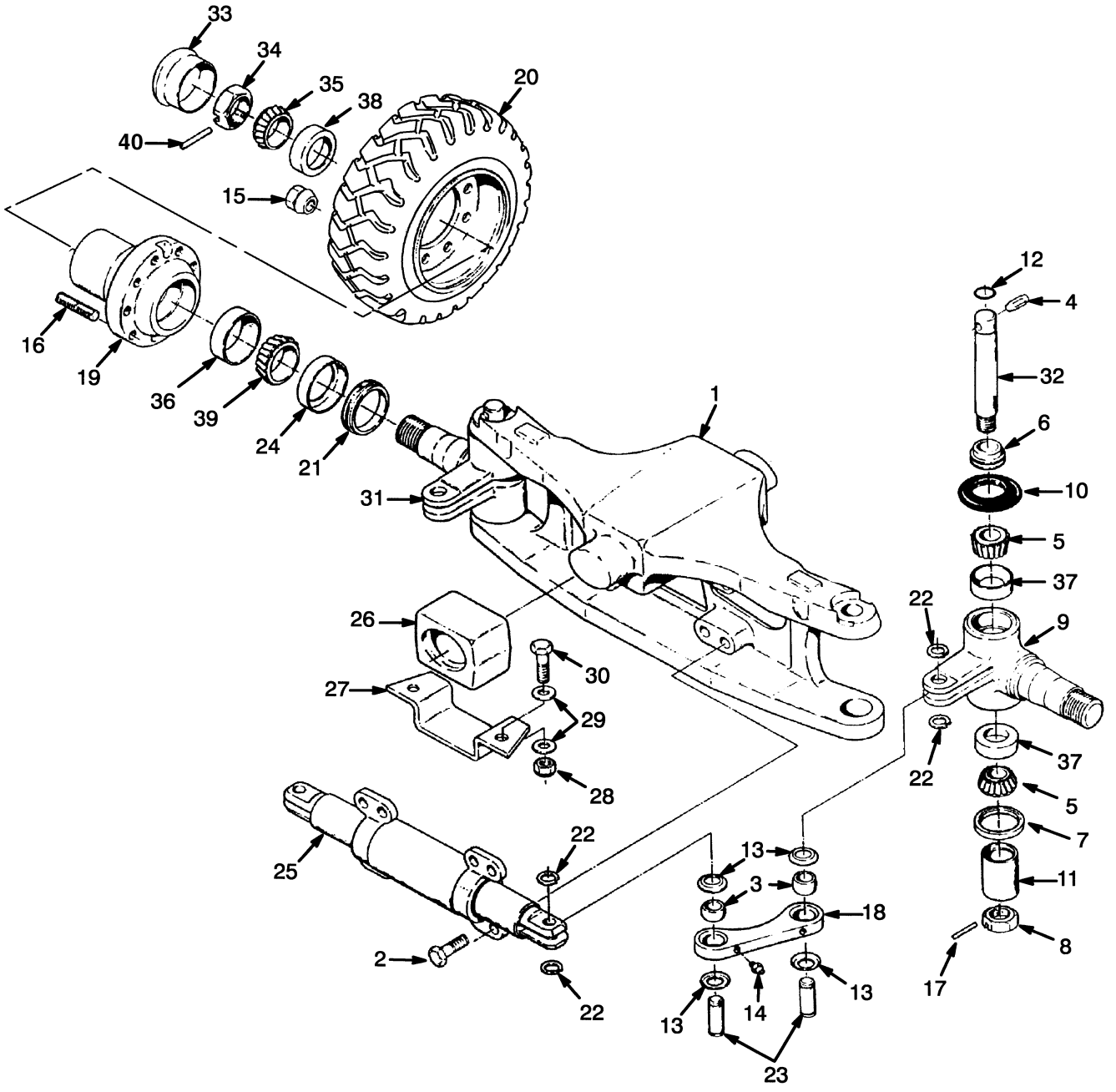

HP220206

©2003 HYSTER COMPANY

STEERING AXLE

ITEM		PART NO.	DESCRIPTION	QTY
1		1334718	Steering Axle	1
2		293686	Capscrew	8
3		300751	Bushing	4
4		226986	Pin	2
5		156195	Bearing Cone	4
6		300767	Spacer	2
7		98525	Oil Seal	2
8		249289	Nut	2
9		1315425	Spindle (RH)	1
10		264973	Seal	2
11		300766	Sleeve	2
12		39352	O-Ring	2
13		300752	Washer	8
14		13957	Lube Fitting	6
15		302977	Nut	20
16	**a**	339529	Wheel Stud	20
17		15225	Cotter Pin	2
18		381298	Tie Rod	2
19		300738	Hub	2
20		. . . . .	Tire Assembly (☞ Figure 4-9)	2
21		44542	Oil Seal	2
22		58903	Snap Ring	8
23		326498	Pin	4
24		164639	Wear Sleeve	2
25		1321174	Steer Cylinder (☞ Figure 4-5)	1
26		324864	Mount	2
27		324858	Plate	2
27		1334723	Plate (Optional)	2
28		300937	Nut	4
29		320161	Washer	8
30		293648	Capscrew	4
31		1310599	Spindle (LH)	1
32		300765	King Pin	2
33		69029	Hub Cap	2
34		1383777	Nut	2
35		317076	Bearing Cone	2
36		163970	Bearing Cup	2
37		156194	Bearing Cup	4
38		317075	Bearing Cup	2
39		30273	Bearing Cone	2
40		15227	Cotter Pin	2

FOOTNOTES:

a Use Adhesive 264134 As Required

©2003 HYSTER COMPANY

STEERING TIRE AND WHEEL (Figure 4-9)

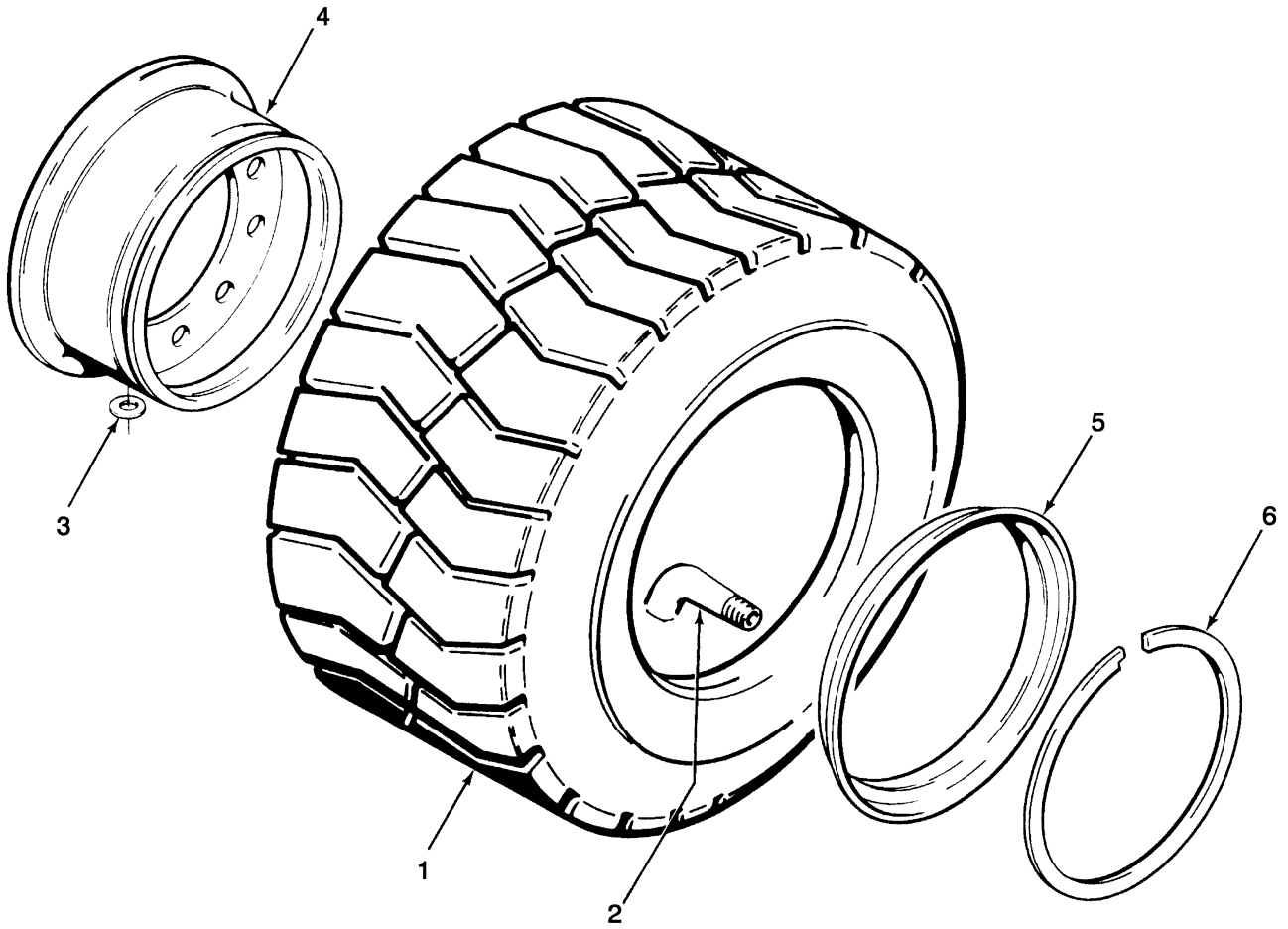

©2003 HYSTER COMPANY

STEERING TIRE AND WHEEL

KEY:
A: 18x7x8 Pneumatic
B: 18x7x8 Solid Pneumatic-Shaped
C: 18x7x8 Pneumatic Radial

ITEM		PART NO.	DESCRIPTION	QTY A	QTY B	QTY C
1		336083	Tire Assembly	..	2	..
1		1383636	Tire Assembly (Optional)	2	..	..
1		1505195	Radial Tire Assembly	..	..	2
1		1505198	Tire	..	..	1
1		1505207	Radial Tire Assembly (Optional Tubeless)	..	..	2
1		1471922	Tubeless Bead Seal Valve (Optional)	..	..	1
1		1505210	Tubeless Bead Seal (Optional)	..	..	1
1		260463	Tire Assembly	1	..	..
2		260278	Tube	1	..	..
2		1505204	Tube	..	..	1
3		15135	Washer	AR	..	..
3		15180	Washer (Optional)	AR	..	..
3		1376007	Washer (Valve Stem)	..	..	1
4	**a**	326279	Wheel Assembly	2	2	2
4	**a**	326278	Wheel Assembly (Optional)	2	2	2
4		326282	Wheel	1	1	1
5		336382	Side Ring	1	1	1
5	**b**	260094	Side Ring	1	1	1
6		336383	Lock Ring	1	1	1
6	**b**	333737	Lock Ring	1	1	1

FOOTNOTES:
a Identify by Part Number Stamped on Rim
b Use with Wheel 326278

©2003 HYSTER COMPANY

NOTES

5 BRAKE/ACCELERATOR SYSTEM

SECTION 5
BRAKE/ACCELERATOR SYSTEM

DESCRIPTION	PAGE
ACCELERATOR	5-14
ACCELERATOR PEDAL MONOTROL	5-16
BRAKE	5-10
BRAKE PEDAL LINKAGE	5-2
MASTER CYLINDER	5-8
PARK BRAKE LEVER ACTUATED	5-4

©2003 HYSTER COMPANY

BRAKE PEDAL LINKAGE (Figure 5-1)

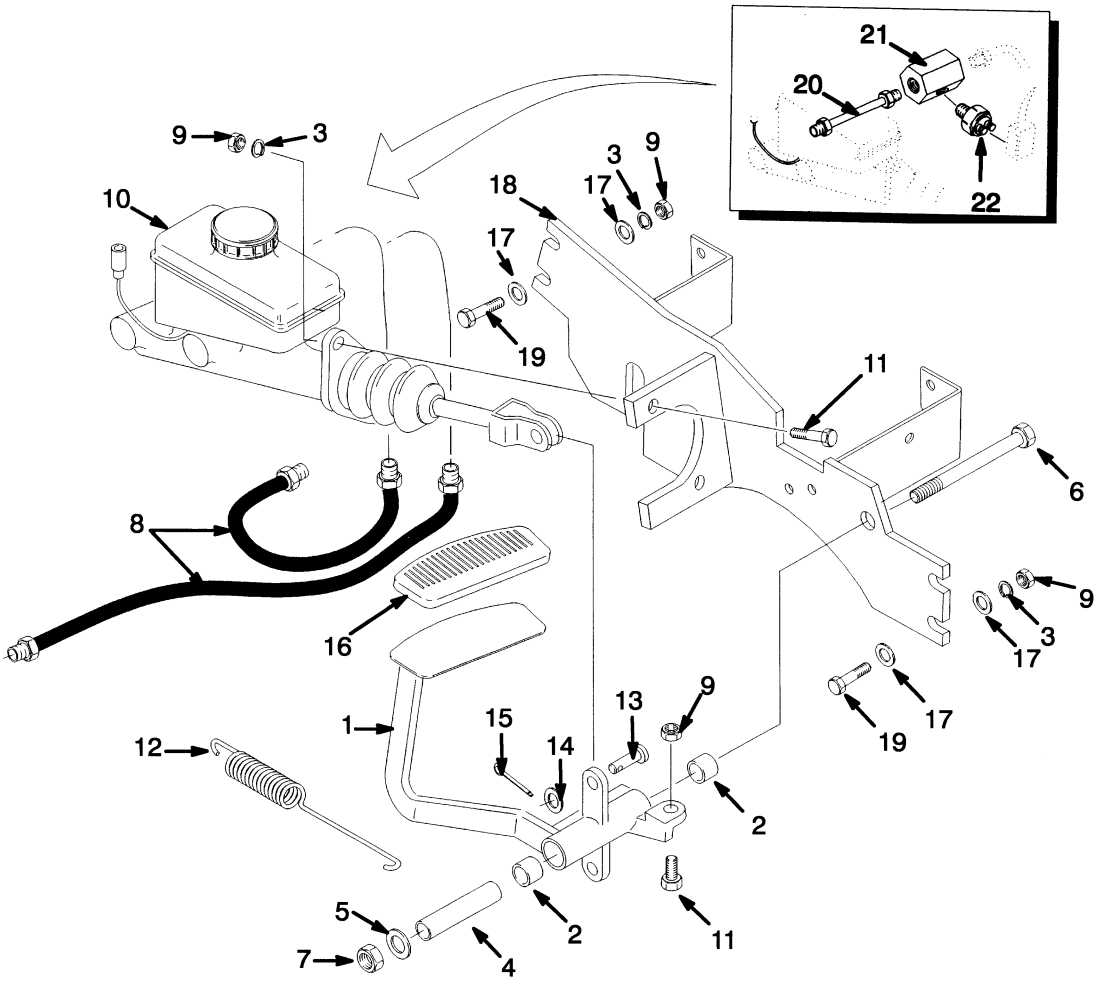

BP040013

©2003 HYSTER COMPANY

BRAKE PEDAL LINKAGE

ITEM	PART NO.	DESCRIPTION	QTY
1	1380563	Brake Pedal Assembly	1
2	66359	Bushing	2
3	292682	Lockwasher	6
4	1340979	Tube	1
5	15180	Washer	1
6	292576	Capscrew	1
7	316828	Nut	1
8	1383716	Hose	2
9	136692	Nut	7
10	1347048	Master Cylinder (☞ Figure 5-3)	1
11	287860	Capscrew	3
12	1364169	Spring	1
13	142	Pin	1
14	296420	Washer	2
15	15212	Cotter Pin	1
16	1343630	Pad	1
17	320160	Washer	4
18	1520309	Bracket	1
19	292515	Capscrew	4
20	878827	Tube	1
21	878845	Fitting	1
22	1517939	Pressure Switch	1

©2003 HYSTER COMPANY

PARK BRAKE LEVER (Figure 5-2)
ACTUATED

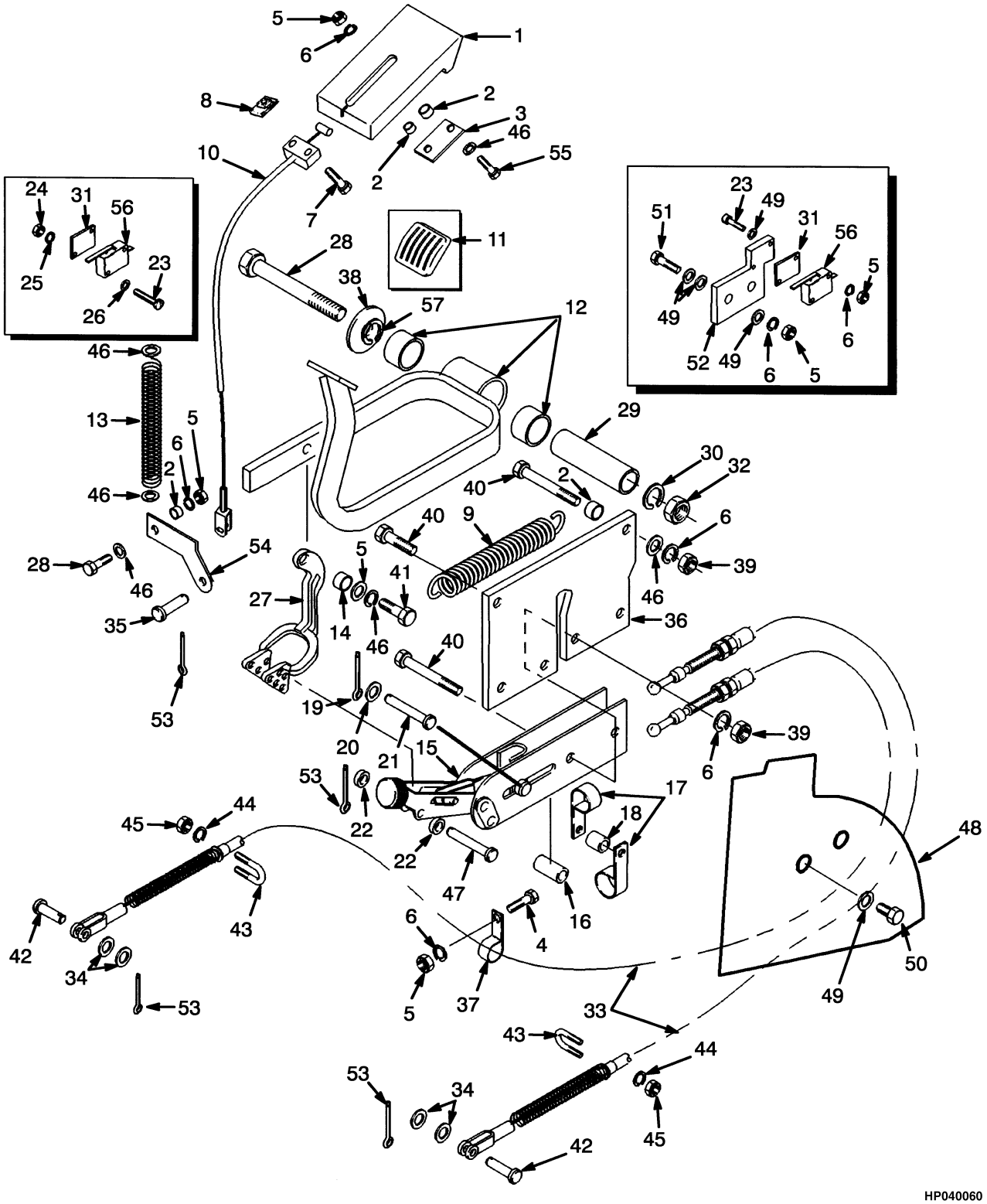

©2003 HYSTER COMPANY

PARK BRAKE LEVER
ACTUATED

ITEM	PART NO.	DESCRIPTION	QTY
1	1340692	Handle	1
2	1364154	Spacer	4
3	1340693	Plate	1
4	136749	Capscrew	3
5	239503	Nut	7
6	292681	Lockwasher	12
7	292502	Capscrew	2
8	325182	Nut	2
9	1364454	Spring	1
10	1377660	Cable	1
11	182115	Pad	1
12	1364646	Pedal Assembly	1
12	66359	Bushing	2
13	1340685	Spring	1
14	376505	Spacer	1
15	1383192	Park Brake Lever	1
16	1330998	Spacer	1
17	1331002	Clamp	2
18	1330999	Spacer	1
19	15211	Cotter Pin	1
20	1331005	Washer	1
21	1333572	Pin	1
22	1375036	Spacer	2
23	220428	Capscrew	2
24	16865	Nut	2
25	53162	Lockwasher	2
26	197064	Washer	2
27	1379474	Link	2
28	292574	Capscrew	1
29	1364453	Tube	1
30	15180	Washer	1
31	374160	Insulator	1
32	316828	Nut	1
33	1379332	Cable (LH)	1
33	1379333	Cable (RH)	1
34	320159	Washer	4
35	203325	Rod End Pin	1
36	1364475	Bracket	1
37	173246	Clamp	2
38	1333382	Washer	1
39	292654	Nut	4
40	293619	Capscrew	4
41	293615	Capscrew	1
42	142	Pin	2
43	281605	Bolt	2
44	15155	Lockwasher	4
45	15055	Nut	4
46	320157	Washer	10
47	1379309	Pin	1
48	1379334	Shield	1
49	320158	Washer	8

©2003 HYSTER COMPANY

PARK BRAKE LEVER
ACTUATED

ITEM	PART NO.	DESCRIPTION	QTY
50	316678	Screw	2
51	214364	Capscrew	2
52	1383177	Plate	1
53	15212	Cotter Pin	4
54	1379308	Plate	1
55	296168	Capscrew	2
56	374159	Switch (Brake)	1
57	292685	Lockwasher	1

©2003 HYSTER COMPANY

NOTES

MASTER CYLINDER (Figure 5-3)

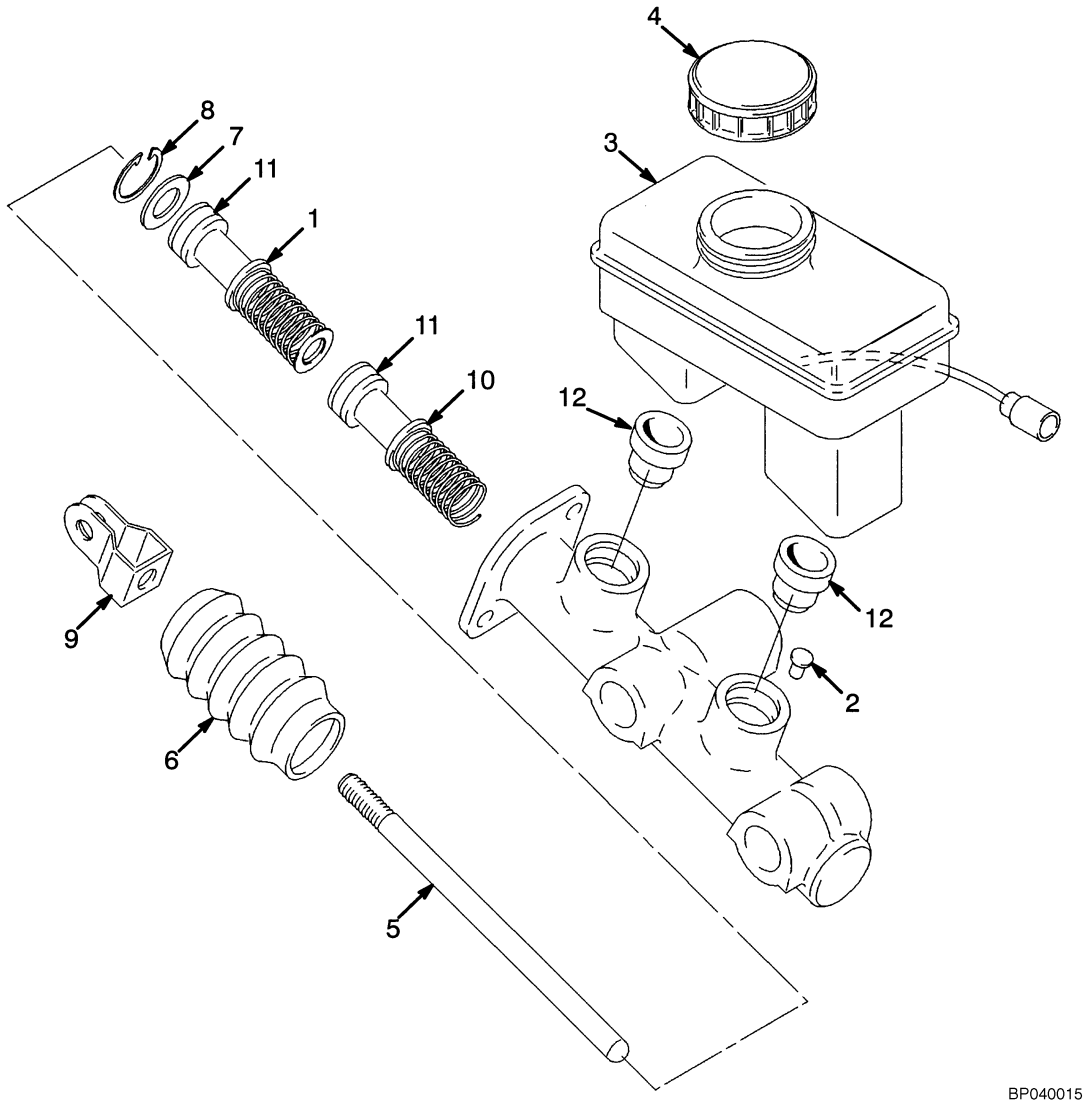

©2003 HYSTER COMPANY

MASTER CYLINDER

ITEM	PART NO.	DESCRIPTION	QTY
	1347048	Master Cylinder	1
1	1357197	Piston	1
2	1324029	Pin	1
3	1357199	Reservoir	1
4	1324048	Cap	1
5	1357201	Rod	1
6	1324040	Cover	1
7	1324041	Washer	1
8	1324042	Snap Ring	1
9	1324035	Clevis	1
10	1357196	Piston	1
11	. . . . .	Seal	2
12	. . . . .	Seal	2
	1355305	Seal Kit (Includes Items 11-12)	1

©2003 HYSTER COMPANY

BRAKE (Figure 5-4)

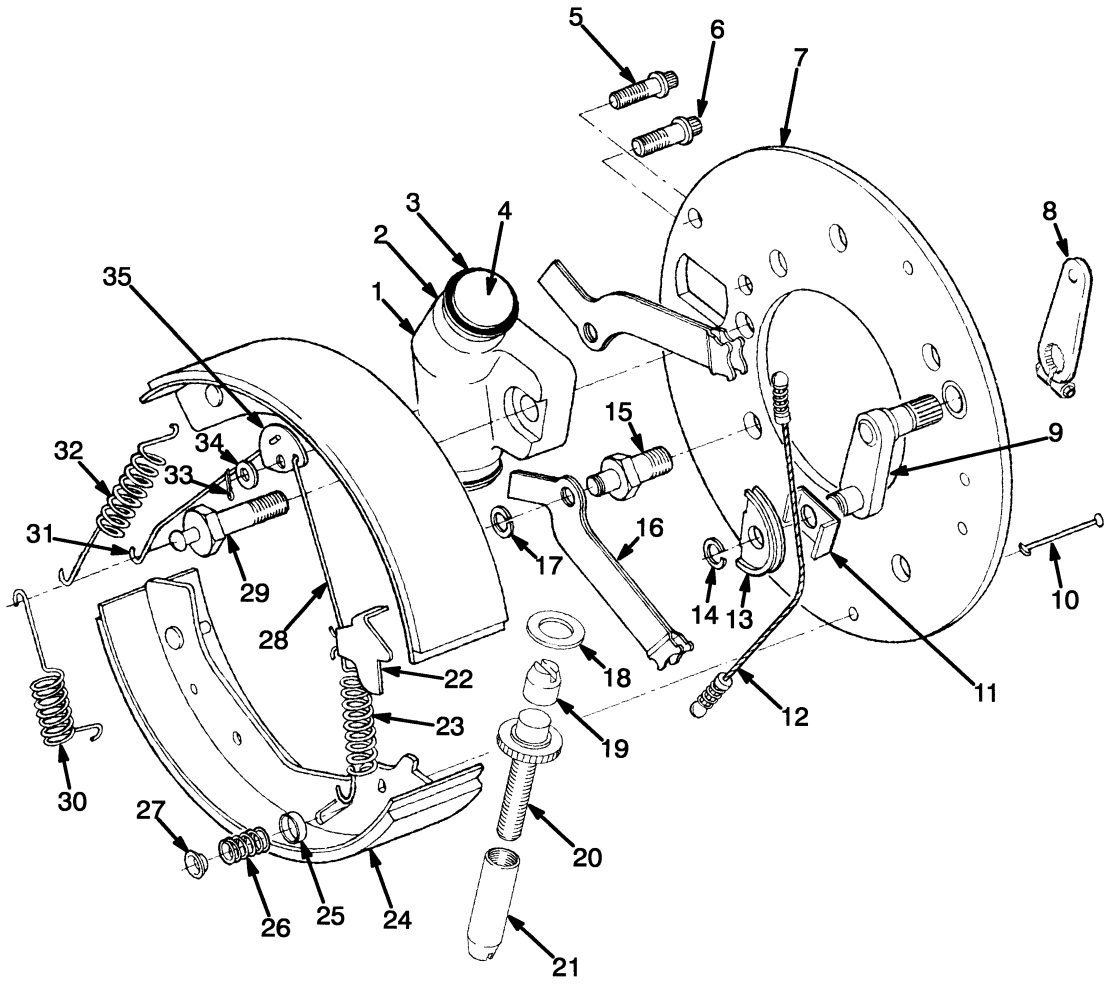

BP040016

©2003 HYSTER COMPANY

BRAKE

KEY:
A: Left Hand
B: Right Hand

ITEM	PART NO.	DESCRIPTION	QTY A	QTY B
	1456277	Brake Assembly	1	..
	1456276	Brake Assembly	..	1
1	1358218	Wheel Cylinder Assembly	1	1
1	1358220	Spring	1	1
2	197518	Spring	2	2
3	. . . . .	Cup	2	2
4	. . . . .	Cover	2	2
5	197523	Bolt	2	2
6	197524	Bolt	2	2
7	359005	Plate	1	..
7	359004	Plate	..	1
8	359002	Lever Assembly	1	1
8	15005	Nut	1	1
8	15155	Lockwasher	1	1
8	18510	Capscrew	1	1
9	1327252	Lever	1	1
10	38014	Pin	2	2
11	1358222	Retainer	1	1
12	1358221	Cable	1	1
13	198433	Sheave	1	1
14	190930	Snap Ring	1	1
15	1327256	Bolt	2	2
16	198429	Lever	2	2
17	198435	Snap Ring	2	2
18	. . . . .	Washer	1	1
19	. . . . .	Socket	1	1
20	. . . . .	Screw	1	1
21	. . . . .	Nut	1	1
22	197526	Lever	1	..
22	197550	Lever	..	1
23	1327253	Spring	1	1
24	1363007	Shoe and Lining Kit	1	1
24	348525	Pin	2	2
25	197531	Cup	2	2
26	197530	Spring	2	2
27	350381	Cup	2	2
28	1327254	Link	1	1
29	1327255	Bolt	1	1
30	197527	Spring	1	1
31	1327400	Link	1	..
31	1327401	Link	..	1
32	197528	Spring	1	1
33	221877	Cotter Pin	1	1
34	197534	Washer	1	1
35	197535	Lever	1	1

©2003 HYSTER COMPANY

BRAKE

ITEM	PART NO.	DESCRIPTION	QTY A	QTY B
	1358219	Wheel Cylinder Kit (Includes Items 1, 3-4)	1	1
	1450502	Adjuster Kit (Includes Items 18-21)	1	..
	1450501	Adjuster Kit (Includes Items 18-21)	..	1

©2003 HYSTER COMPANY

NOTES

ACCELERATOR (Figure 5-5)

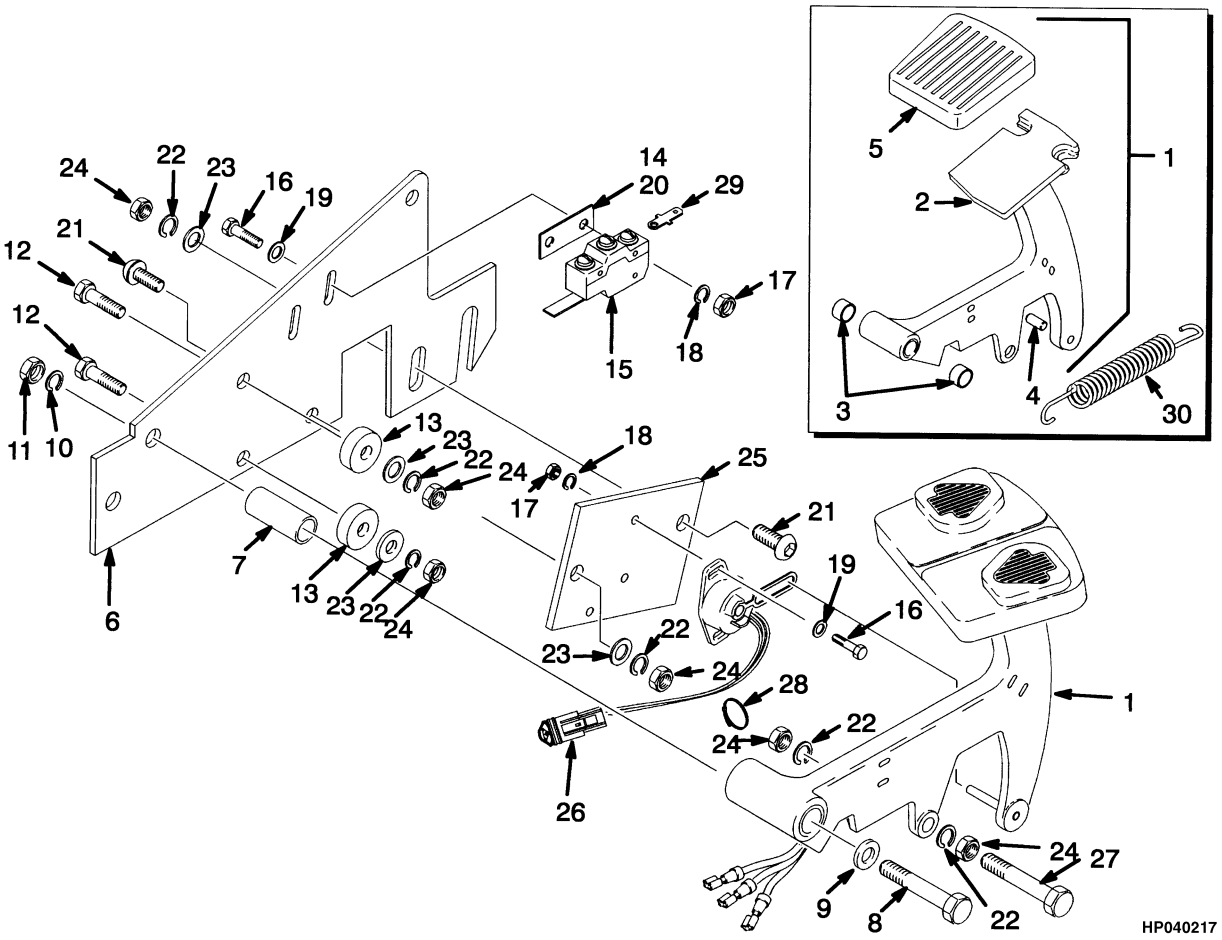

©2003 HYSTER COMPANY

ACCELERATOR

ITEM		PART NO.	DESCRIPTION	QTY
1	**b**	1377414	Accelerator Pedal (☞ Figure 5-6)	1
1	**a**	1340988	Accelerator Pedal	1
2	**a**	1340976	Pedal	1
3	**a**	368618	Bushing	2
4	**a**	310436	Pin	1
5	**a**	352885	Pad	1
6		1340983	Bracket	1
7		1340985	Tube	1
8		292521	Capscrew	1
9		320159	Washer	2
10		292682	Lockwasher	2
11		136692	Nut	2
12		176640	Capscrew	1
13		1364281	Stop	2
14		251099	Adhesive	AR
15		1335110	Switch (Accelerator Control)	1
16		220312	Screw	4
17		15039	Nut	4
18		15163	Lockwasher	4
19		197066	Washer	4
20		915474	Insulator	1
21		296166	Capscrew	2
22		292681	Lockwasher	5
23		320157	Washer	3
24		239503	Nut	6
25		1340984	Plate	1
26		1354990	Sensor	1
27		214364	Capscrew	1
28		114312	Strap Clamp	1
29		325799	Electrical Connector	1
30		1340989	Spring	1

FOOTNOTES:
a Forward and Reverse Lever
b Monotrol Pedal

©2003 HYSTER COMPANY

ACCELERATOR PEDAL (Figure 5-6)
MONOTROL

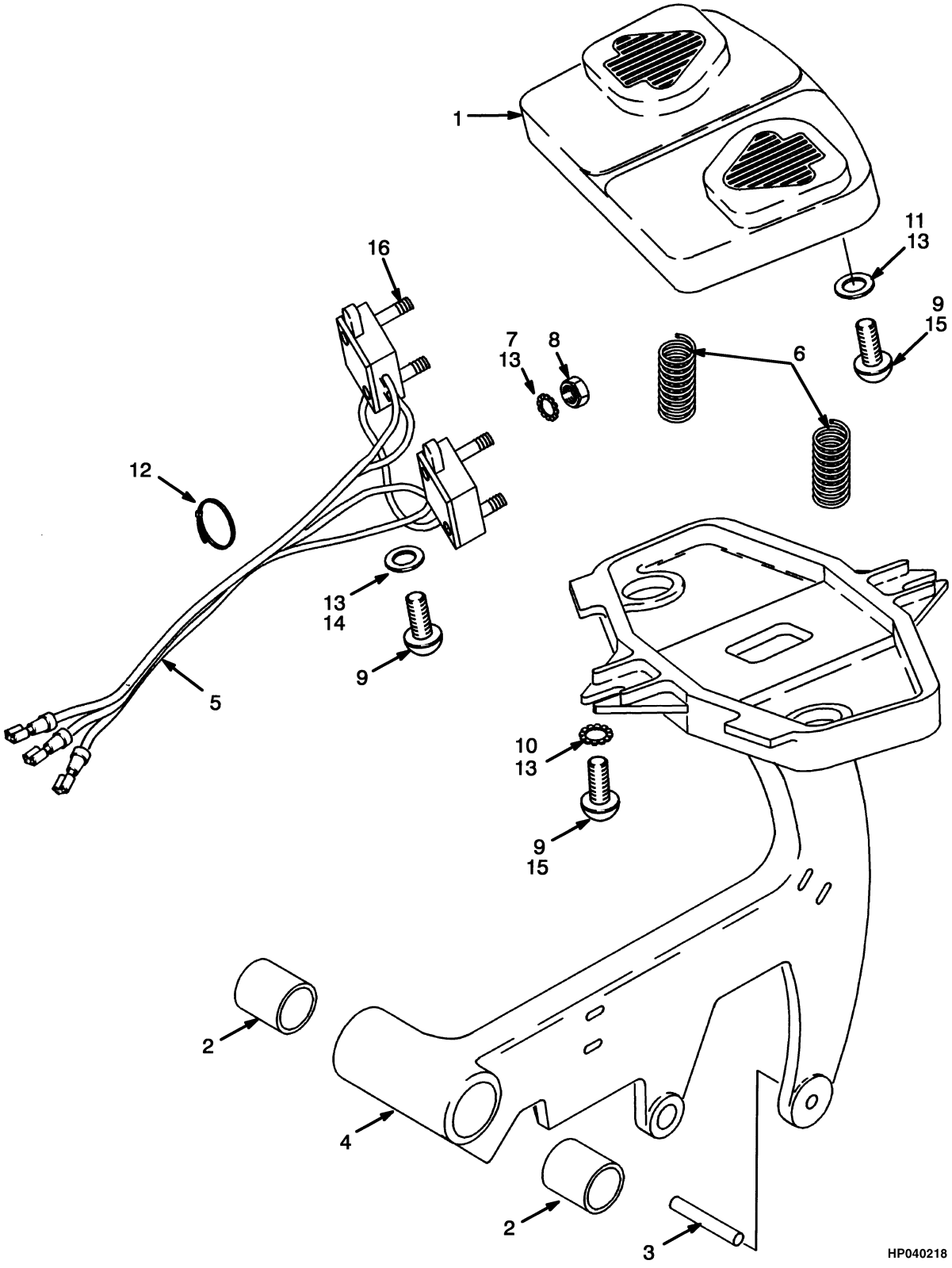

©2003 HYSTER COMPANY

ACCELERATOR PEDAL
MONOTROL

ITEM	PART NO.	DESCRIPTION	QTY
	1377414	Accelerator Pedal	1
1	1340470	Pad	1
2	368618	Bushing	2
3	310436	Pin	1
4	1340975	Pedal	1
5	1475250	Switch Assembly	1
6	325699	Spring	2
7	53162	Lockwasher	4
8	16865	Nut	4
9	16708	Screw	6
10	15931	Lockwasher	4
11	362036	Washer	2
12	114312	Strap Clamp	3
13	360387	Sealant	AR
14	1306621	Washer	2
15	16708	Screw	4
16	220428	Capscrew	4

©2003 HYSTER COMPANY

NOTES

6 HYDRAULIC SYSTEM

SECTION 6
HYDRAULIC SYSTEM

DESCRIPTION **PAGE**

CONTROL VALVE
FOUR FUNCTION 6-26
THREE FUNCTION 6-22
CONTROL VALVE ATTACHING PARTS 6-16
DRIVE MOTOR MOUNT 6-4
HAND LEVER 6-18
HYDRAULIC 6-2
HYDRAULIC PUMP
19 CC PUMP - LOW NOISE
OPTIONAL 6-10
19 CC SINGLE GEAR PUMP 6-8
HYDRAULIC PUMP MOTOR
72/80 VOLT A/C 6-12
72/80 VOLT D/C 6-14
HYDRAULIC TANK 6-30
MAST INSTALLATION 6-32
TILT CYLINDER 6-6

©2003 HYSTER COMPANY

HYDRAULIC (Figure 6-1)

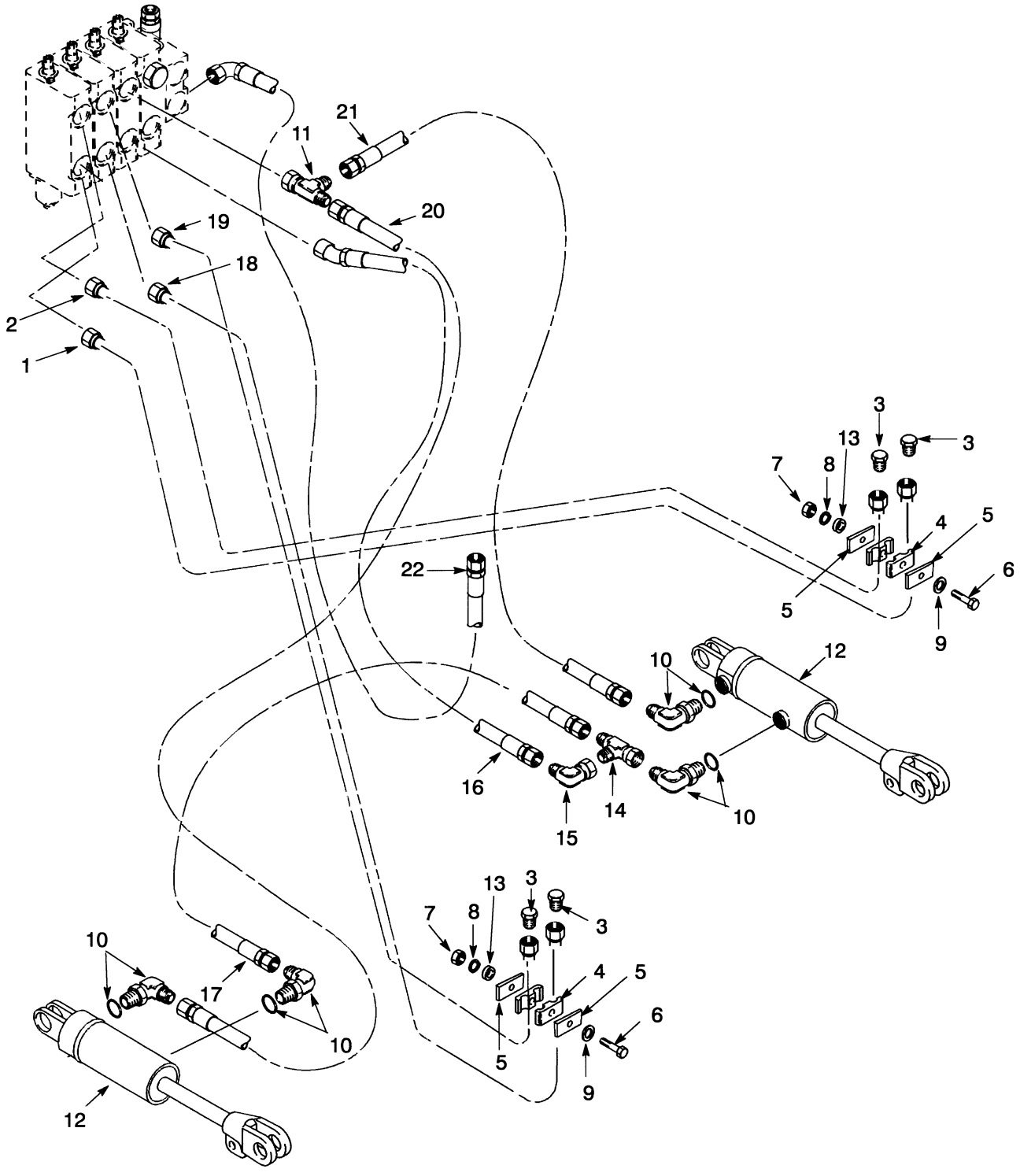

BP150049

©2003 HYSTER COMPANY

HYDRAULIC

KEY:
A: Three Function
B: Four Function

ITEM		PART NO.	DESCRIPTION	QTY A	QTY B
1		1380437	Tube	..	1
2		1380438	Tube	..	1
3		17321	Fitting	2	4
4		1359620	Clamp	2	4
5		1361142	Plate	2	4
6		136704	Capscrew	1	2
7		239503	Nut	1	2
8		292681	Lockwasher	1	2
9		320157	Washer	1	2
10		16556	Fitting	4	4
10		16481	O-Ring	1	1
11		17061	Fitting	1	1
12	**bc**	1366081	Tilt Cylinder (☞ Figure 6-3)	2	2
12	**a**	1366085	Tilt Cylinder (☞ Figure 6-3)	2	2
13		97882	Spacer	1	2
14		17059	Fitting	1	1
15		16987	Fitting	1	1
16		878245	Hose	1	1
17		878242	Hose	1	1
18		1380561	Tube	1	..
19		1380560	Tube	1	..
20		878243	Hose	1	1
21		878244	Hose	1	1
22		355405	Hose	1	1

FOOTNOTES:
a 10° Forward, 5° Back
b 5 ° Forward, 8° Back
c 5° Forward, 5° Back

DRIVE MOTOR MOUNT (Figure 6-2)

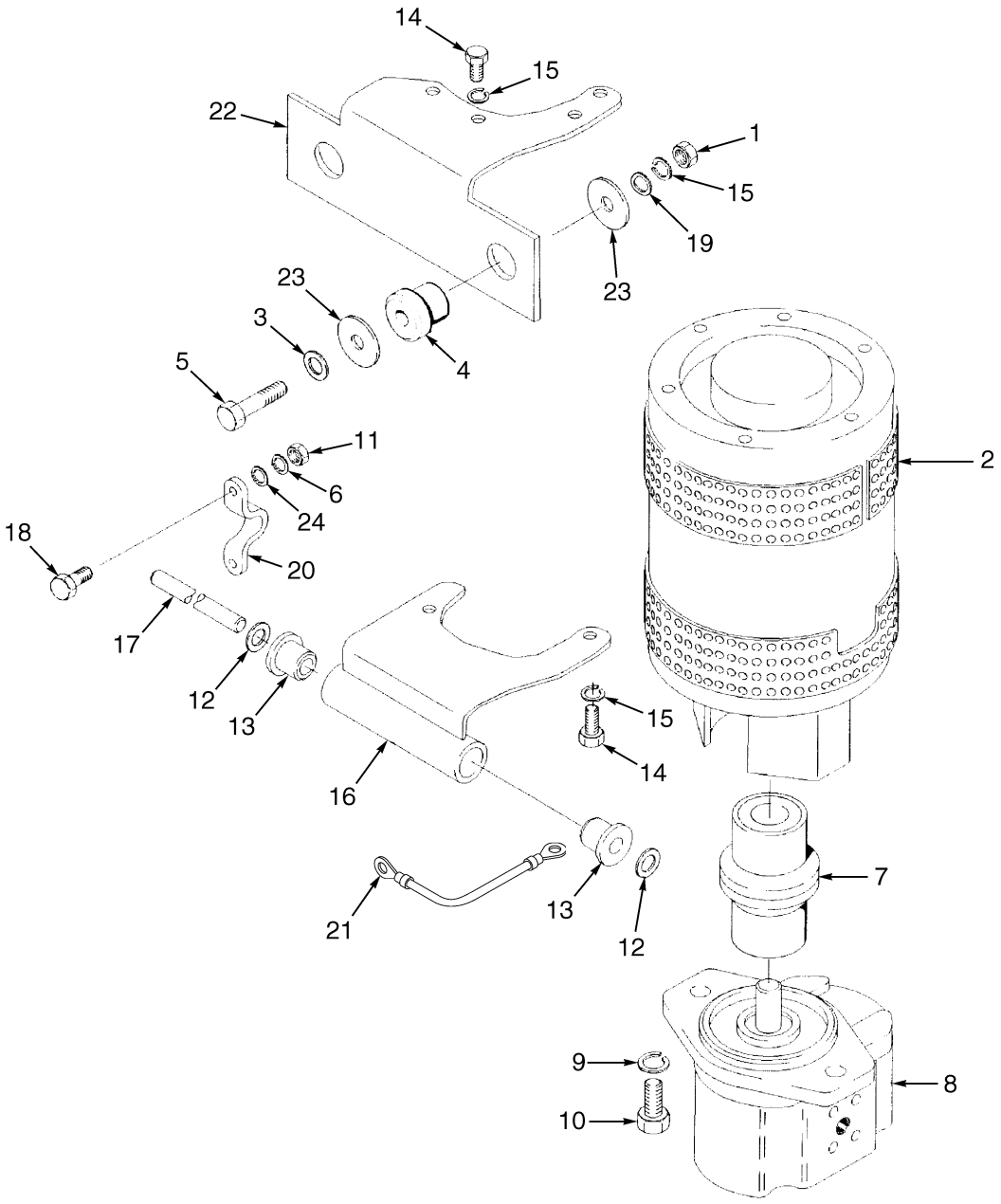

BP150056

©2003 HYSTER COMPANY

DRIVE MOTOR MOUNT

ITEM	PART NO.	DESCRIPTION	QTY
1	239503	Nut	2
2	2055490	Hydraulic Motor (AC) (☞ Figure 6-6)	1
2	2036240	Hydraulic Motor (D/C with BWI) (☞ Figure 6-7)	1
3	320158	Washer	2
4	317594	Mount	2
5	293617	Capscrew	2
6	292682	Lockwasher	4
7	1453260	Coupler	1
8	1343827	Hydraulic Pump (☞ Figure 6-4)	1
8	2036668	Hydraulic Pump (Low Noise) (☞ Figure 6-5)	1
9	15156	Lockwasher	4
10	16828	Capscrew	2
11	136692	Nut	4
12	15178	Washer	2
13	373875	Grommet	2
14	136681	Capscrew	6
15	292681	Lockwasher	6
16	1375540	Bracket	1
17	325058	Rod	1
18	292515	Capscrew	4
19	320157	Washer	2
20	355374	Clamp	2
21	1351150	Wire Harness	1
22	1379475	Plate	1
23	119969	Washer	4
24	296420	Washer	1
25	**a** 1510058	Key	2

FOOTNOTES:
a Not Illustrated

TILT CYLINDER (Figure 6-3)

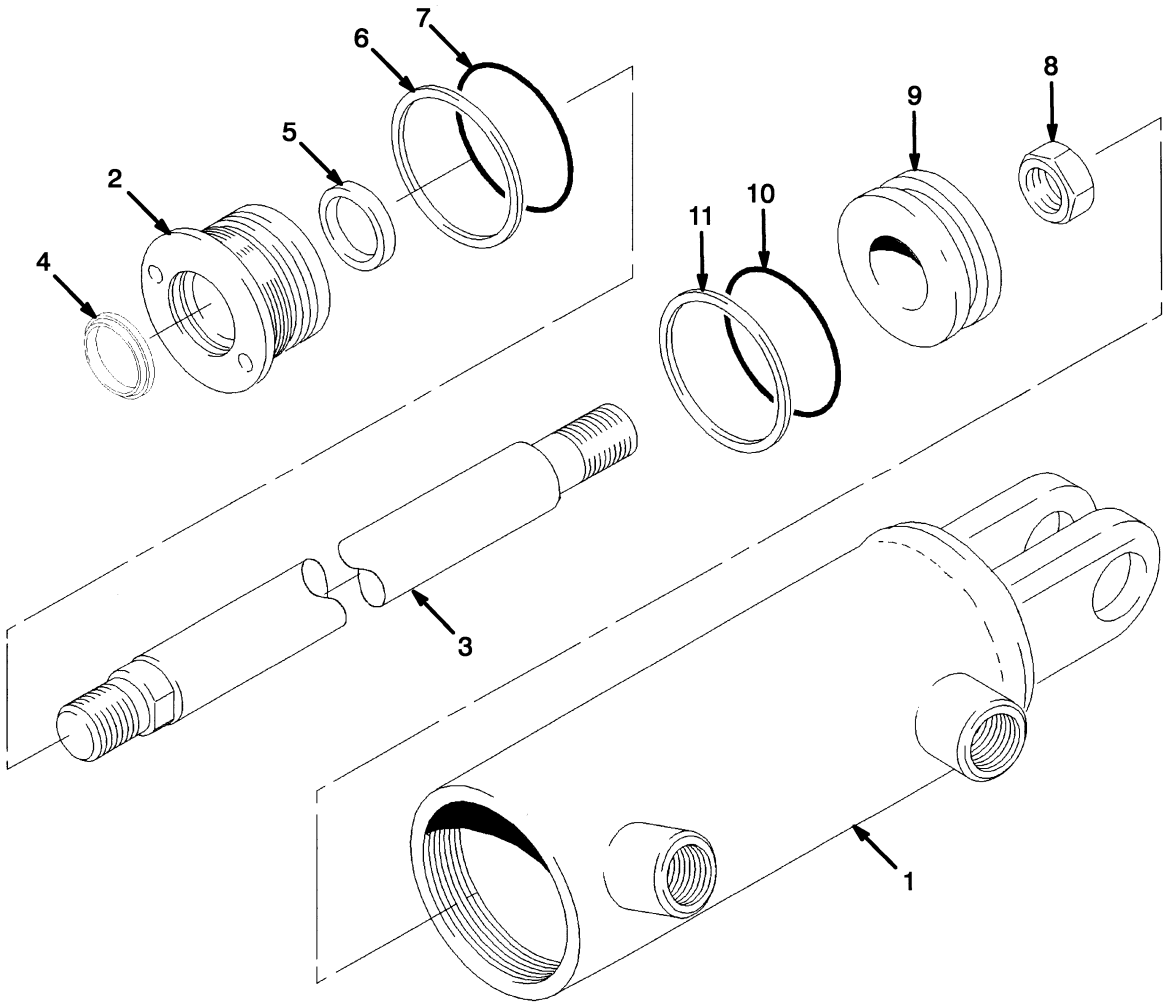

HP150121

©2003 HYSTER COMPANY

TILT CYLINDER

KEY:
A: 5° Forward/8° Back, 5° Forward/5° Back
B: 10° Forward/5° Back

ITEM	PART NO.	DESCRIPTION	QTY A	QTY B
	1366081	Tilt Cylinder	1	..
	1366085	Tilt Cylinder	..	1
1	1366083	Tube	1	..
1	1366086	Tube	..	1
2	1338744	Gland	1	1
3	1366082	Rod	1	..
3	1338740	Rod	..	1
4	1383062	Wiper Ring	1	1
5	1381082	Seal	1	1
6	154375	Back-Up Ring	1	1
7	46388	O-Ring	1	1
8	2302899	Nut	1	1
9	1338741	Piston	1	1
10	59583	O-Ring	1	1
11	2044370	Seal (Piston)	1	1
	1492644	Seal Kit (Includes Items 4-7, 11)	1	1

©2003 HYSTER COMPANY

HYDRAULIC PUMP (Figure 6-4)
19 CC SINGLE GEAR PUMP

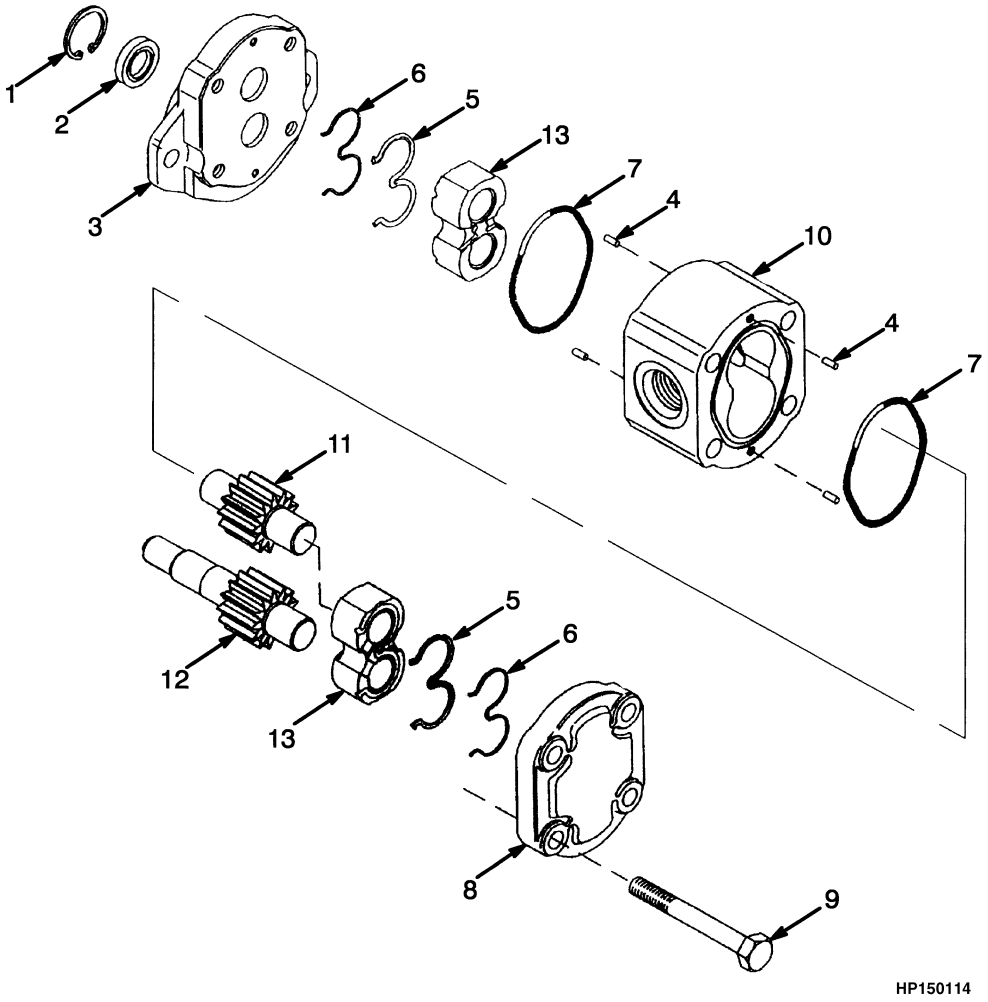

©2003 HYSTER COMPANY

HYDRAULIC PUMP
19 CC SINGLE GEAR PUMP

ITEM		PART NO.	DESCRIPTION	QTY
		1343827	Hydraulic Pump	1
1		2303239	Retaining Ring	1
2		. . . . .	Seal	2
3		1377253	Flange	1
4		2309481	Pin	4
5		. . . . .	Seal	2
6		. . . . .	Back-Up Ring	2
7		. . . . .	O-Ring	2
8		1376425	Cover	1
9		1377254	Bolt	4
10		. . . . .	Housing	1
11		. . . . .	Idler Gear	1
12		. . . . .	Drive Gear	1
13		. . . . .	Bearing Block	2
14	**a**	1510058	Key	1
		1376427	Flange Kit (Includes Items 1-2, 4)	1
		1377252	Flange Kit (Includes Items 1-4)	1
		1371746	Seal Kit (Includes Items 2, 5-7)	1

FOOTNOTES:
a Not Illustrated

HYDRAULIC PUMP (Figure 6-5)
19 CC PUMP - LOW NOISE
OPTIONAL

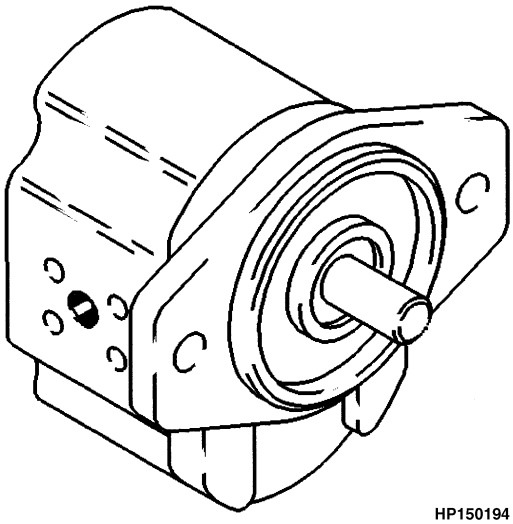

HP150194

ITEM	PART NO.	DESCRIPTION	QTY
	2036668	Hydraulic Pump (Low Noise)	1

©2003 HYSTER COMPANY

NOTES

HYDRAULIC PUMP MOTOR (Figure 6-6)
72/80 VOLT A/C

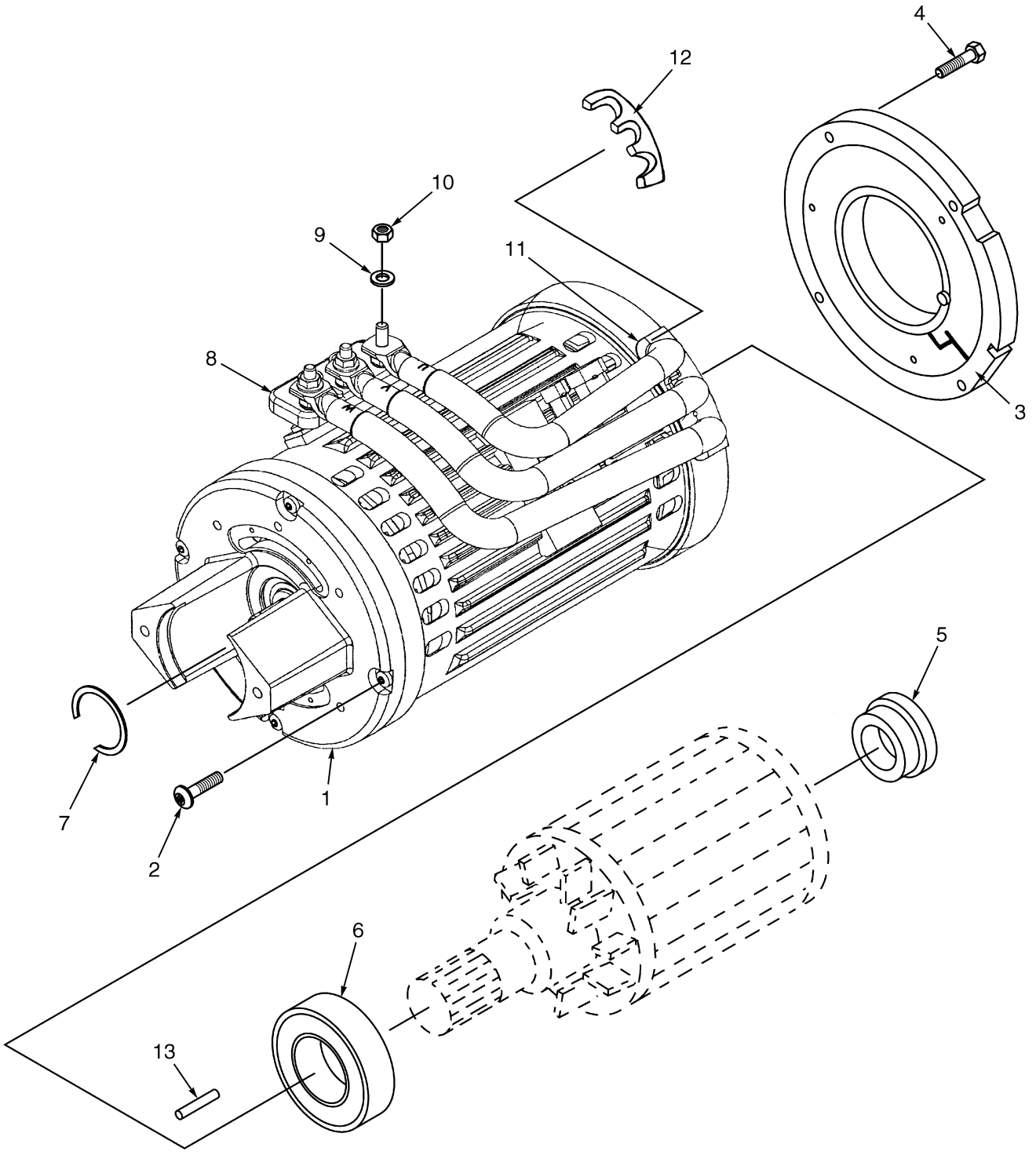

©2003 HYSTER COMPANY

HYDRAULIC PUMP MOTOR
72/80 VOLT A/C

ITEM		PART NO.	DESCRIPTION	QTY
		2055490	Hydraulic Motor	1
1		1530571	End Head (DE)	1
2		296161	Capscrew	4
3		1530572	End Head (NDE)	1
4		296160	Capscrew	4
5		1530573	Ball Bearing Sensor (NDE)	1
6		1530574	Ball Bearing (DE)	1
7		1530575	Spring Washer	1
8		1530576	Terminal Block	1
9		293780	Lockwasher	3
10		239503	Nut	6
11		1530577	Seal	1
12		1530578	Seal	1
13		7882	Key	1
14	**a**	1555791	Motor Band Kit	1

FOOTNOTES:
a "EE" Option

©2003 HYSTER COMPANY

HYDRAULIC PUMP MOTOR (Figure 6-7)
72/80 VOLT D/C

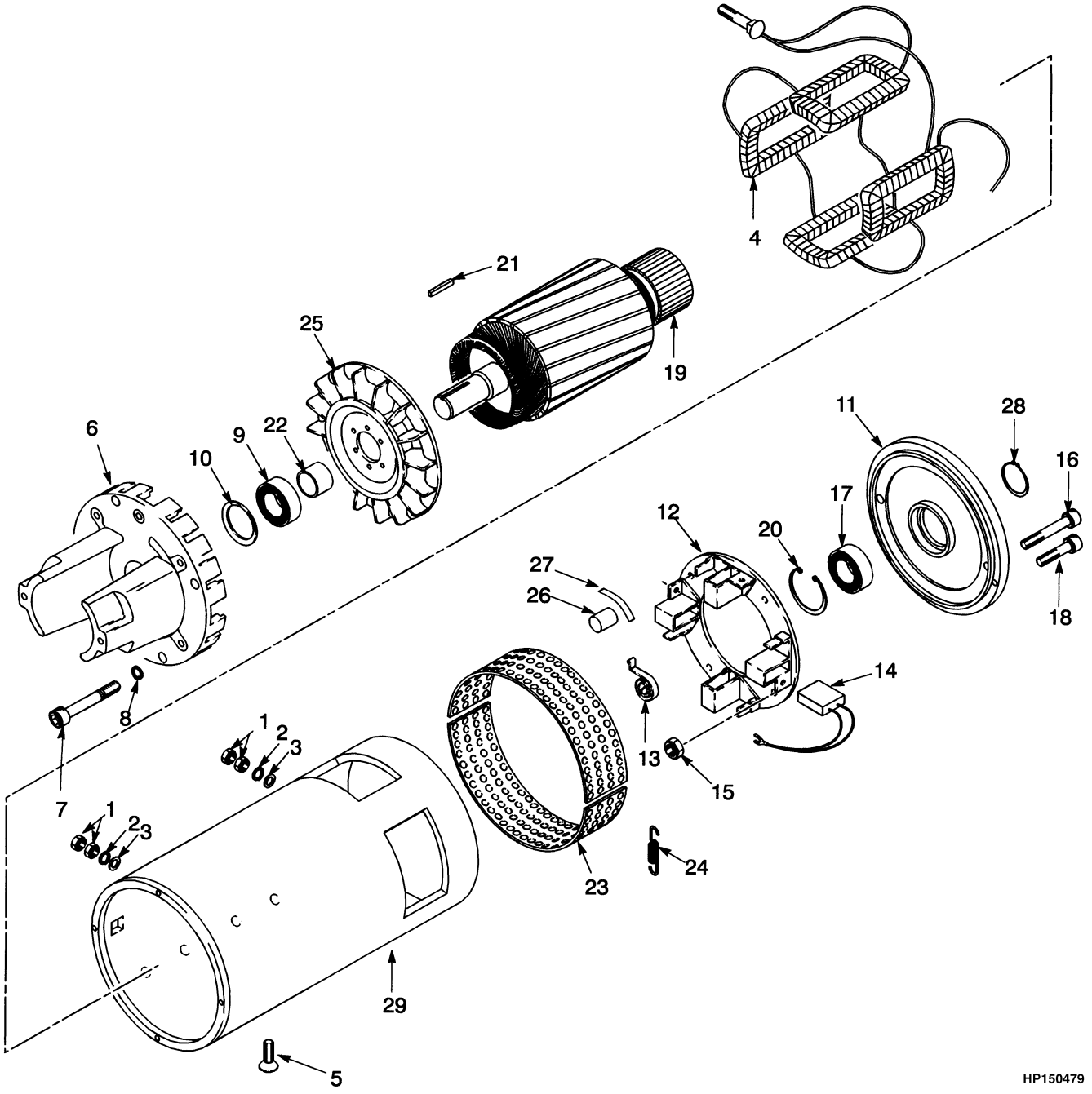

©2003 HYSTER COMPANY

HYDRAULIC PUMP MOTOR
72/80 VOLT D/C

ITEM	PART NO.	DESCRIPTION	QTY
a	2036240	Hydraulic Motor	1
1	296128	Nut	4
2	296419	Washer	6
3	388049	Washer	2
4	1462066	Field Coil	1
5	296321	Capscrew	12
6	1462064	End Head	1
7	1462090	Screw	4
8	388048	Washer	14
9	1462067	Ball Bearing	1
10	1462091	Washer	1
11	1462068	End Head (Commutator)	1
12	1462070	Brush Plate	1
13	1462098	Brush Spring	8
14	1462096	Brush	4
15	1462092	Nut	2
16	293797	Capscrew	2
17	124631	Ball Bearing	1
18	293795	Capscrew	8
19	1462082	Armature	1
20	1462083	Snap Ring	2
21	1462084	Key	1
22	1462085	Ring	1
23	1462086	Band	1
24	1453337	Spring	1
25	1462087	Fan	1
26	1462071	Sensor	1
27	1462072	Spring	1
28	1462077	Snap Ring	1

FOOTNOTES:
a With Brush Wear Indicators

CONTROL VALVE ATTACHING PARTS (Figure 6-8)

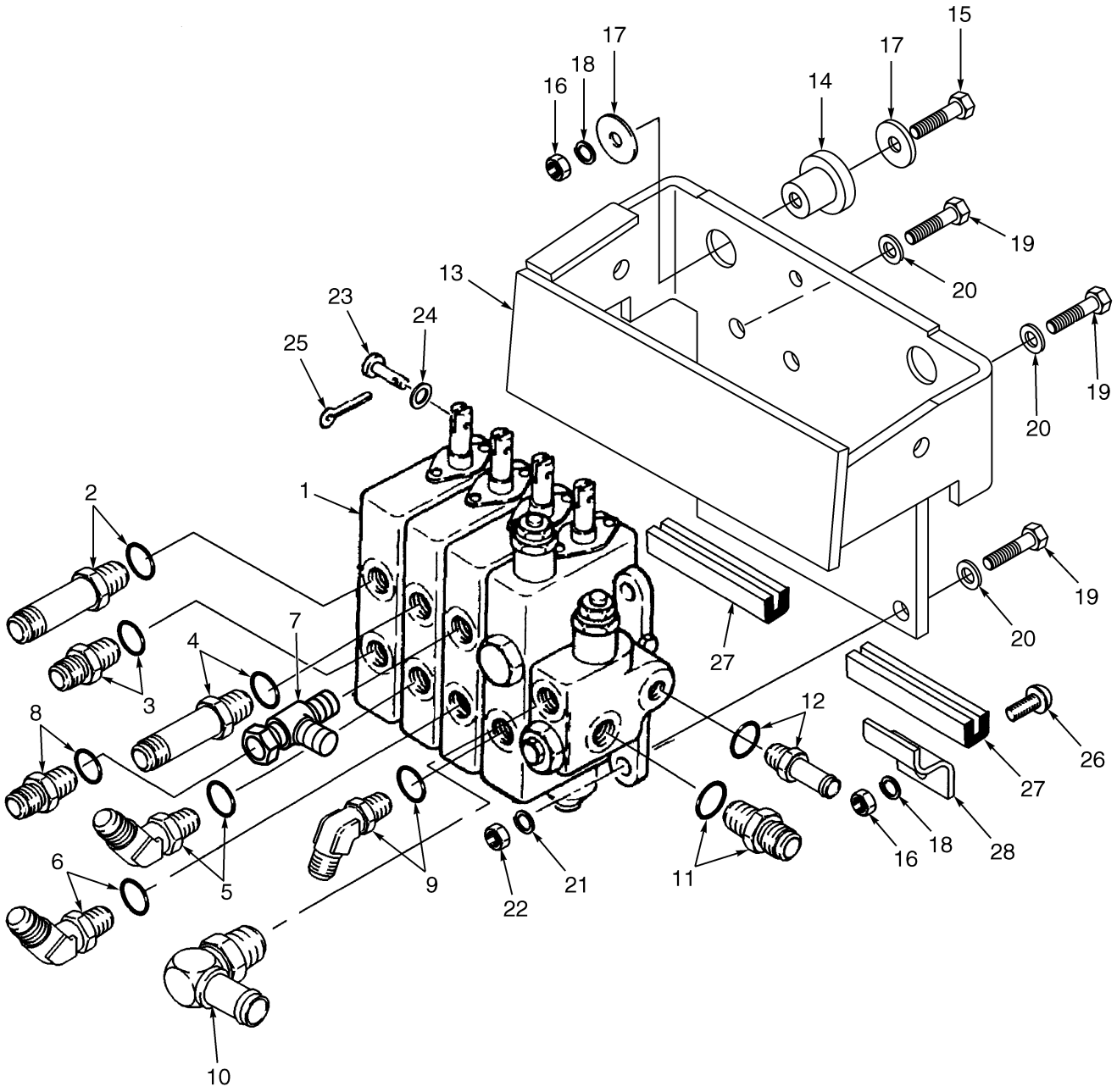

BP140014

©2003 HYSTER COMPANY

CONTROL VALVE ATTACHING PARTS

KEY:
A: Three Function
B: Four Function

ITEM	PART NO.	DESCRIPTION	QTY A	QTY B
1	1340672	Hydraulic Control Valve (☞ Figure 6-10)	1	..
1	1340673	Hydraulic Control Valve (☞ Figure 6-11)	..	1
2	16550	Fitting	..	1
2	16484	O-Ring	..	1
3	16541	Fitting	..	1
3	16484	O-Ring	..	1
4	16550	Fitting	1	..
4	16484	O-Ring	1	..
5	16568	Fitting	1	..
5	16484	O-Ring	1	..
6	17196	Fitting	1	1
6	16483	O-Ring	1	1
7	17061	Fitting	1	1
8	16745	Fitting	1	1
8	16483	O-Ring	1	1
9	134680	Fitting	1	1
9	16485	O-Ring	1	1
10	181957	Fitting	1	1
10	16485	O-Ring	1	1
11	16542	Fitting	1	1
11	16485	O-Ring	1	1
12	222492	Fitting	1	1
12	16483	O-Ring	1	1
13	1478885	Bracket	1	1
14	317594	Mount	2	2
15	296176	Capscrew	2	2
16	136692	Nut	4	4
17	1356113	Washer	4	4
18	292682	Lockwasher	4	4
19	136749	Capscrew	3	3
20	320157	Washer	3	3
21	292681	Lockwasher	3	3
22	239503	Nut	2	2
23	1340703	Pin	3	4
24	15172	Washer	3	4
25	15211	Cotter Pin	3	4
26	296174	Capscrew	2	2
27	325056	Channel (Rubber)	2	2
28	324972	Bracket	2	2

©2003 HYSTER COMPANY

HAND LEVER (Figure 6-9)

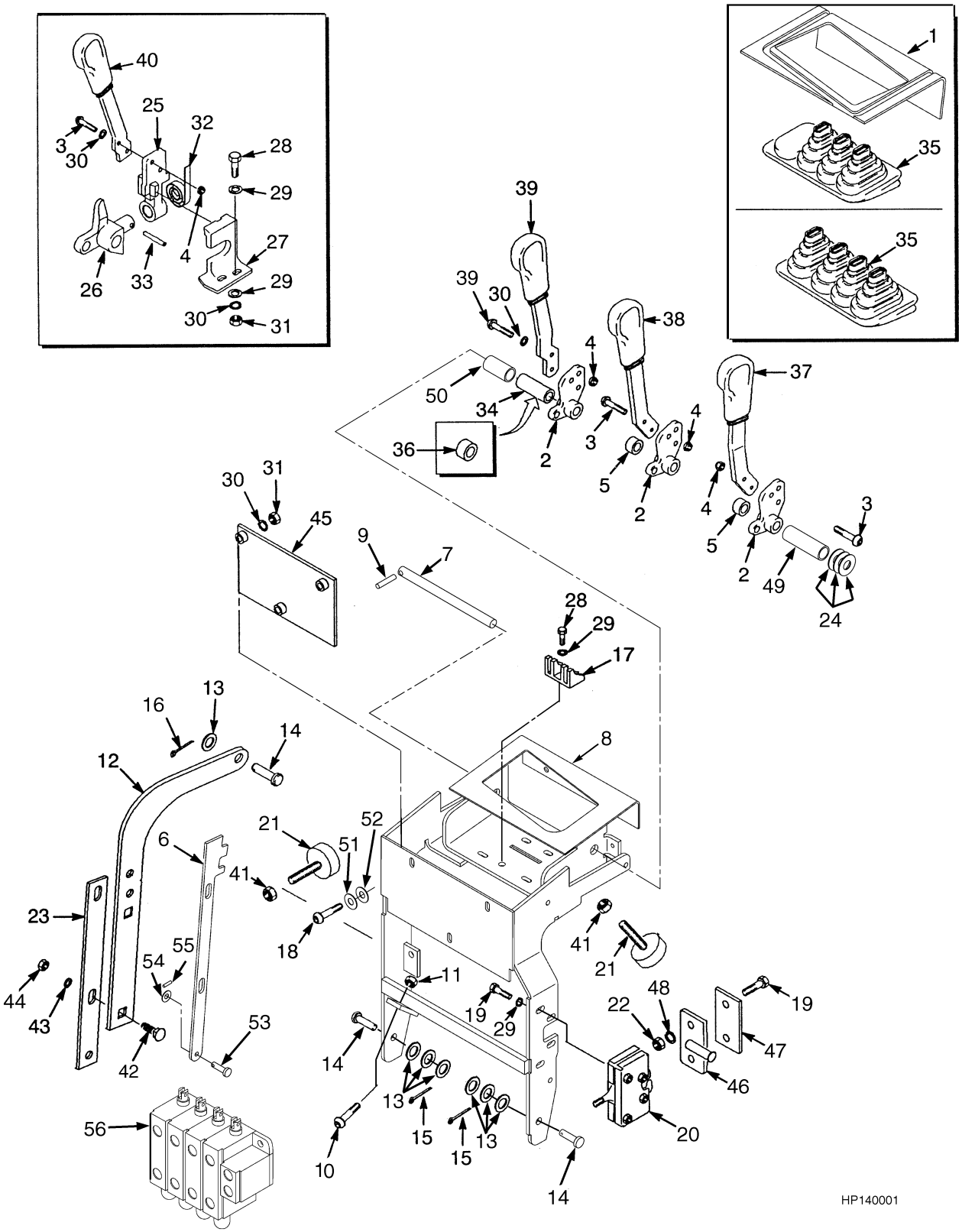

©2003 HYSTER COMPANY

HAND LEVER

KEY:
A: Three Function Without Detent Levers
B: Three Function With Detent Levers
C: Four Function With Detent Levers

ITEM	PART NO.	DESCRIPTION	QTY A	QTY B	QTY C
1	1482311	Cover	1	1	1
2	1340366	Crank	1	2	3
3	296158	Capscrew	2	2	2
4	313805	Nut	6	4	6
5	1503378	Spacer	2	1	2
6	1383728	Plate (Lower Link)	1	1	1
7	1509092	Pin	1	1	1
8	1478875	Support	1	1	1
9	15235	Pin	1	1	1
10	287851	Capscrew	1	1	1
11	239503	Nut	4	4	4
12	1385725	Plate (Upper Link)	3	3	4
13	221767	Washer	9	9	10
14	1340702	Pin	5	5	6
15	15223	Cotter Pin	2	2	2
16	15222	Cotter Pin	3	3	4
17	1362330	Guide	1	1	1
18	132861	Capscrew	3	3	3
19	287816	Capscrew	9	9	9
20	1377478	Latch	1	1	1
21	1347088	Stop Screw	2	2	2
22	136687	Nut	5	5	5
23	1383727	Plate (Lower Link)	1	1	2
24	1516800	Shim (0.060 in.)	AR	AR	AR
24	1516799	Shim (0.031 in.)	AR	AR	AR
24	1516801	Shim (0.010 in.)	AR	AR	AR
25	1340364	Hand Lever	..	1	1
26	1340422	Crank	..	1	1
27	1370728	Lock	..	1	1
28	287816	Capscrew	2	2	2
29	320156	Washer	9	13	13
30	292680	Lockwasher	5	9	9
31	136687	Nut	..	2	2
32	175861	Spring	..	1	1
33	19979	Pin	..	1	1
34	1364920	Spacer	1	1	..
35	1339799	Boot	1	1	..
35	1339636	Boot	..	..	1
36	1364240	Spacer	..	..	1
37	1340652	Hand Lever (Hoist) (Hoist)	1	1	1
38	1340653	Hand Lever (Tilt) (Tilt)	1	1	1
39	1340654	Hand Lever (Three Function)	1	..	1
40	1340655	Hand Lever (Four Function)	..	1	1
41	15001	Nut	4	4	4
42	222596	Bolt	6	6	8
43	15923	Lockwasher	6	6	8

©2003 HYSTER COMPANY

HAND LEVER

ITEM	PART NO.	DESCRIPTION	QTY A	QTY B	QTY C
44	15054	Nut	6	6	8
45	1364232	Printed Circuit Board	1	1	1
46	1337148	Striker Plate	1	1	1
47	1364970	Plate	1	1	1
48	292682	Lockwasher	2	2	2
49	1509094	Spacer	1	1	1
50	1509093	Spacer	1	1	1
51	320157	Washer	2	2	2
52	292681	Lockwasher	3	3	3
53	1340703	Pin	3	3	4
54	15172	Washer	3	3	4
55	15211	Cotter Pin	3	3	4
56	1340672	Hydraulic Control Valve (Three Function) (☞ Figure 6-10)	1	1	..
56	1340673	Hydraulic Control Valve (Four Function) (☞ Figure 6-11)	..	..	1

©2003 HYSTER COMPANY

NOTES

CONTROL VALVE (Figure 6-10)
THREE FUNCTION

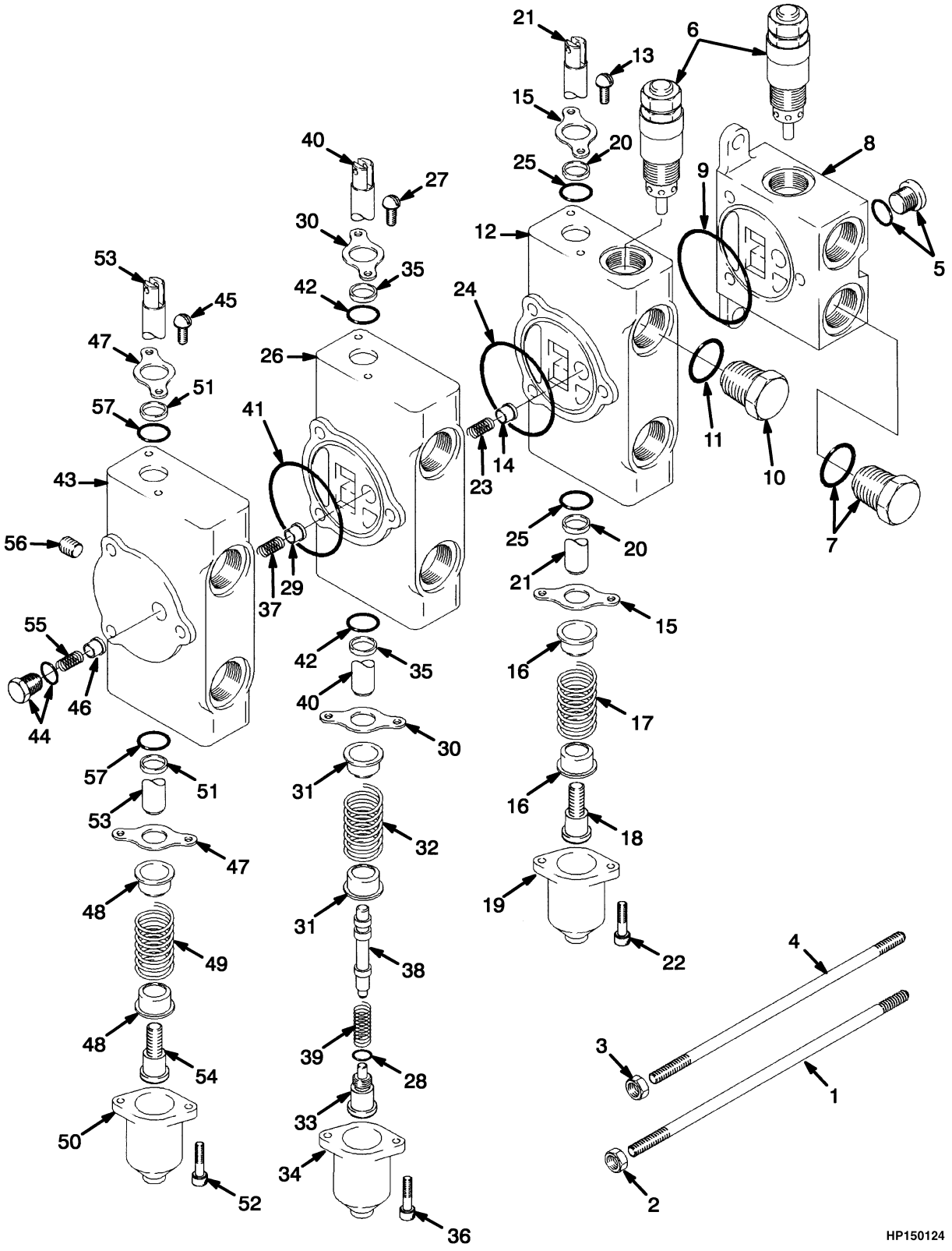

©2003 HYSTER COMPANY

CONTROL VALVE
THREE FUNCTION

ITEM	PART NO.	DESCRIPTION	QTY
	1340672	Hydraulic Control Valve (With Relief Valve)	1
1	1374141	Rod	1
2	188534	Nut	2
3	15055	Nut	4
4	1374142	Rod	2
5	14591	Fitting	1
5	16481	O-Ring	1
6	378424	Relief Valve	2
6	1309419	Seal Kit	1
7	188486	Plug	1
7	16485	O-Ring	1
8	353883	Inlet Section	1
8	. . . . .	Housing	1
9	57664	O-Ring	1
10	199524	Plug	1
11	16484	O-Ring	1
12	1374135	Spool Section (Lift)	1
12	. . . . .	Housing	1
13	16706	Screw	2
14	205120	Poppet	1
15	205121	Seal Plate	2
16	188516	Spring Seat	2
17	385855	Spring	1
18	188518	Spool End	1
19	188519	Cap	1
20	205122	Wiper	2
21	. . . . .	Spool	1
22	12949	Capscrew	2
23	205123	Spring	1
24	57664	O-Ring	1
25	1357361	O-Ring	2
26	1374136	Spool Section (Tilt)	1
26	. . . . .	Housing	1
27	16706	Screw	2
28	16480	O-Ring	1
29	205120	Poppet	1
30	205121	Seal Plate	2
31	320289	Spring Seat	2
32	385855	Spring	1
33	320291	Spool End	1
34	188519	Cap	1
35	205122	Wiper	2
36	12949	Capscrew	2
37	205123	Spring	1
38	352055	Piston	1
39	341462	Spring	1
40	. . . . .	Spool	1
41	57664	O-Ring	1
42	1357361	O-Ring	2
43	1374138	Spool Section (Auxiliary)	1
43	. . . . .	Housing	1

©2003 HYSTER COMPANY

CONTROL VALVE
THREE FUNCTION

ITEM	PART NO.	DESCRIPTION	QTY
44	1309421	Plug	1
44	1309875	O-Ring	1
45	16706	Screw	2
46	1309420	Poppet	1
47	205121	Seal Plate	2
48	188516	Spring Seat	2
49	385855	Spring	1
50	188519	Cap	1
51	205122	Wiper	2
52	12949	Capscrew	2
53	. . . . .	Spool	1
54	188518	Spool End	1
55	1309422	Spring	1
56	15483	Fitting	1
57	1357361	O-Ring	2
	1374144	Tie Rod Kit (Includes Items 1-4)	1

©2003 HYSTER COMPANY

NOTES

CONTROL VALVE (Figure 6-11)
FOUR FUNCTION

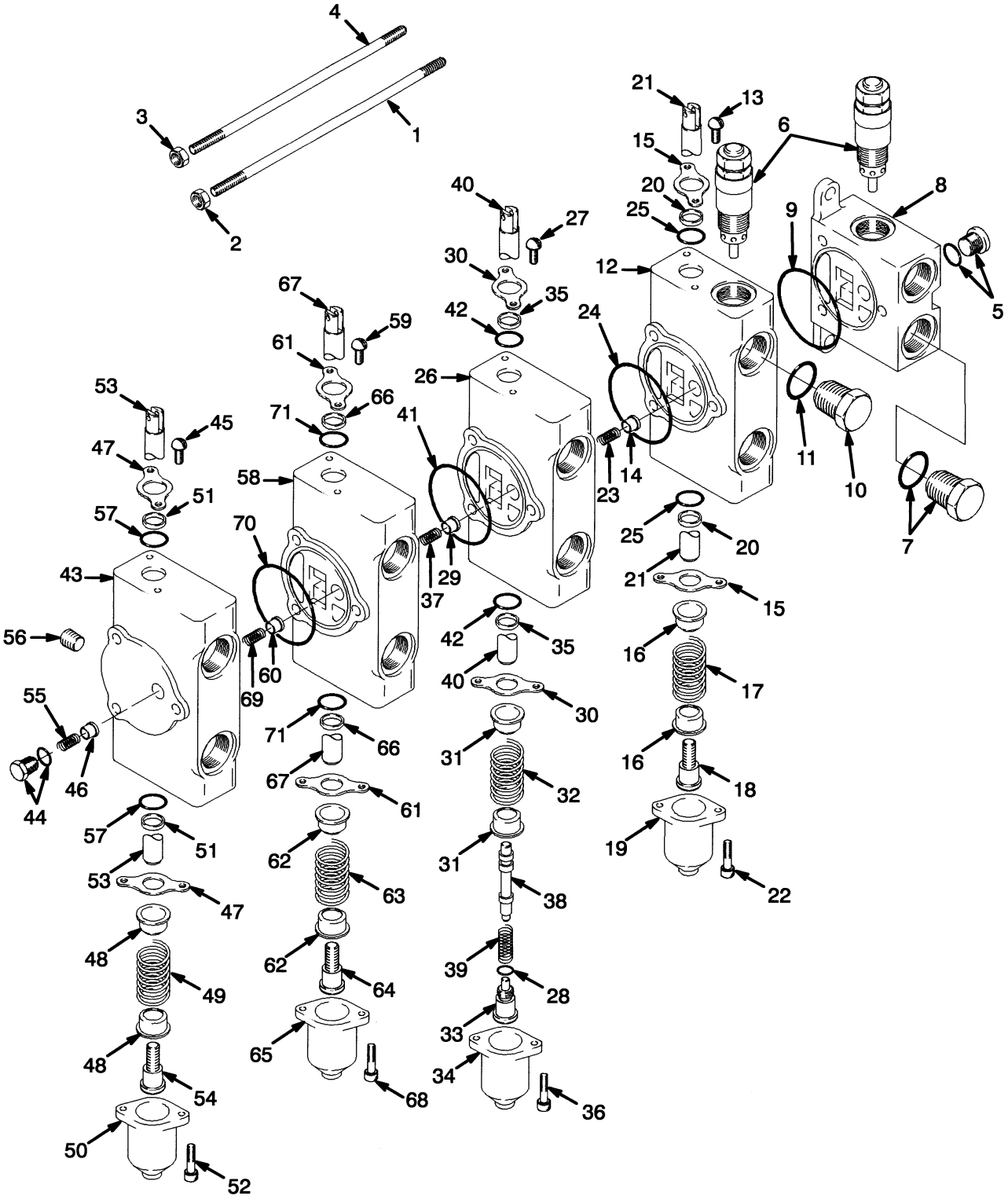

HP150125

©2003 HYSTER COMPANY

CONTROL VALVE
FOUR FUNCTION

ITEM	PART NO.	DESCRIPTION	QTY
	1340673	Hydraulic Control Valve	1
1	1461719	Rod	1
2	188534	Nut	2
3	15055	Nut	4
4	1374148	Rod	2
5	14591	Fitting	1
5	16481	O-Ring	1
6	378424	Relief Valve	2
6	1309419	Seal Kit	1
7	188486	Plug	1
7	16485	O-Ring	1
8	353883	Inlet Section	1
8	. . . . .	Housing	1
9	57664	O-Ring	1
10	199524	Plug	1
11	16484	O-Ring	1
12	1374135	Spool Section (Lift)	1
12	. . . . .	Housing	1
13	16706	Screw	2
14	205120	Poppet	1
15	205121	Seal Plate	2
16	188516	Spring Seat	2
17	385855	Spring	1
18	188518	Spool End	1
19	188519	Cap	1
20	205122	Wiper	2
21	. . . . .	Spool	1
22	12949	Capscrew	2
23	205123	Spring	1
24	57664	O-Ring	1
25	1357361	O-Ring	2
26	1374136	Spool Section (Tilt)	1
26	. . . . .	Housing	1
27	16706	Screw	2
28	16480	O-Ring	1
29	205120	Poppet	1
30	205121	Seal Plate	2
31	320289	Spring Seat	2
32	385855	Spring	1
33	320291	Spool End	1
34	188519	Cap	1
35	205122	Wiper	2
36	12949	Capscrew	2
37	205123	Spring	1
38	352055	Piston	1
39	341462	Spring	1
40	. . . . .	Spool	1
41	57664	O-Ring	1
42	1357361	O-Ring	2
43	1374138	Spool Section (Auxiliary)	1
43	. . . . .	Housing	1

©2003 HYSTER COMPANY

CONTROL VALVE
FOUR FUNCTION

ITEM	PART NO.	DESCRIPTION	QTY
44	1309421	Plug	1
44	1309875	O-Ring	1
45	16706	Screw	2
46	1309420	Poppet	1
47	205121	Seal Plate	2
48	188516	Spring Seat	2
49	385855	Spring	1
50	188519	Cap	1
51	205122	Wiper	2
52	12949	Capscrew	2
53	. . . . .	Spool	1
54	188518	Spool End	1
55	1309422	Spring	1
56	15483	Fitting	1
57	1357361	O-Ring	2
58	1374145	Spool Section	1
58	. . . . .	Housing	1
59	16706	Screw	2
60	205120	Poppet	1
61	205121	Seal Plate	2
62	188516	Spring Seat	2
63	385855	Spring	1
64	188518	Spool End	1
65	188519	Cap	1
66	205122	Wiper	2
67	. . . . .	Spool	1
68	12949	Capscrew	2
69	205123	Spring	1
70	57664	O-Ring	1
71	1357361	O-Ring	2
	1374147	Tie Rod Kit (Includes Items 1-4)	1

©2003 HYSTER COMPANY

NOTES

HYDRAULIC TANK (Figure 6-12)

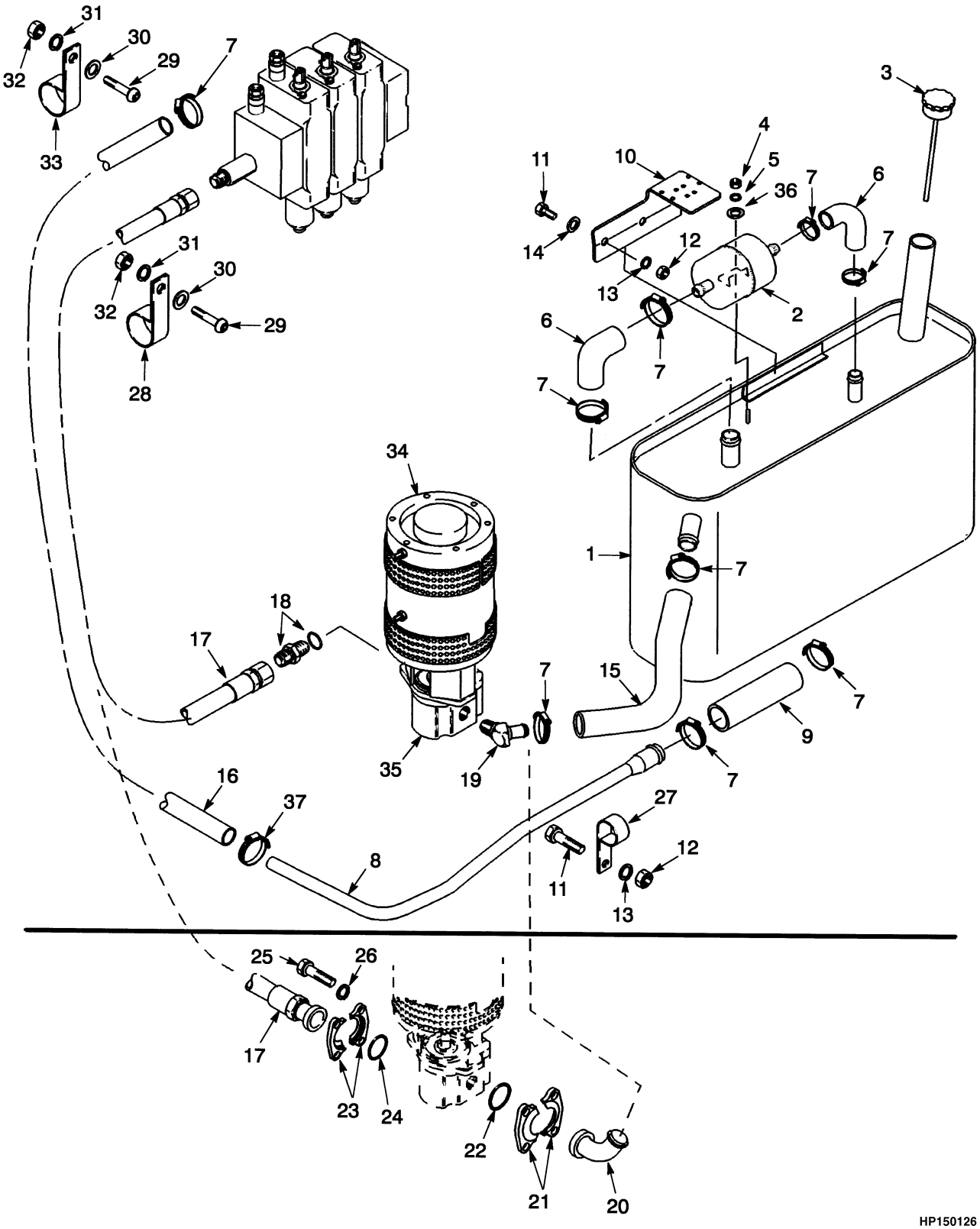

©2003 HYSTER COMPANY

HYDRAULIC TANK

ITEM		PART NO.	DESCRIPTION	QTY
1		1375566	Hydraulic Tank	1
2		1337159	Filter	1
3		1364163	Dipstick (Filler Cap)	1
4		136687	Nut	2
5		292680	Lockwasher	2
6		1375567	Hose	2
7		127045	Clamp	9
8		1375568	Tube	1
9		309169	Hose	1
10		1375569	Plate	1
11		176640	Capscrew	3
12		239503	Nut	3
13		292681	Lockwasher	3
14		320158	Washer	2
15		1375565	Hose	1
16	**a**	156510	Hose	1
16	**b**	121112	Hose	1
17	**a**	1375573	Hose	1
17	**b**	1375564	Hose	1
18		16542	Fitting	1
18		16485	O-Ring	1
19	**d**	16541	Fitting	1
20	**d**	222564	Fitting	1
21	**d**	190757	Fitting	2
22	**d**	15866	O-Ring	1
23	**d**	160266	Fitting	2
24	**d**	61056	O-Ring	1
25	**d**	136985	Capscrew	8
26	**d**	292682	Lockwasher	8
27		1379598	Clamp	1
28		198678	Clamp	1
29		220023	Bolt	2
30		15134	Washer	2
31		15156	Lockwasher	2
32		15056	Nut	2
33		329835	Clamp	1
34		2055490	Hydraulic Motor (A/C) (☞ Figure 6-6)	1
34		2036240	Hydraulic Motor (D/C) (☞ Figure 6-7)	1
35		1343827	Hydraulic Pump (☞ Figure 6-4)	1
35		2036668	Hydraulic Pump (Low Noise) (☞ Figure 6-5)	1
36		197068	Washer	2
37		130845	Clamp	1
38	**c**	1510058	Key	2

FOOTNOTES:

a 717 mm Battery Compartment
b 861 mm Battery Compartment
c Not Illustrated
d With 19cc pump

©2003 HYSTER COMPANY

MAST INSTALLATION (Figure 6-13)

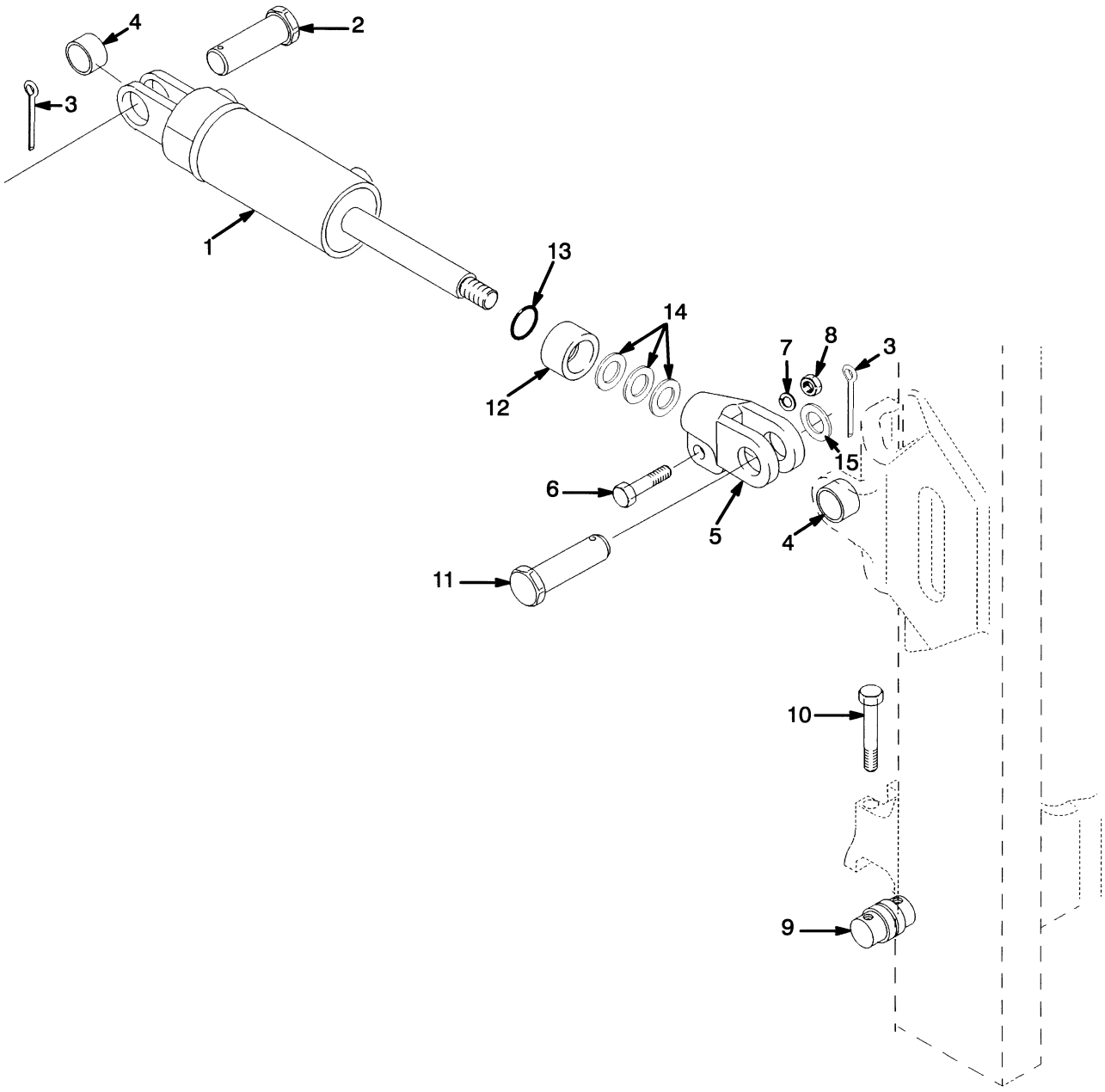

©2003 HYSTER COMPANY

MAST INSTALLATION

ITEM		PART NO.	DESCRIPTION	QTY
1	**bc**	1366081	Tilt Cylinder (☞ Figure 6-3)	2
1	**a**	1366085	Tilt Cylinder (☞ Figure 6-3)	2
2		308117	Rod End Pin	2
3		15236	Cotter Pin	4
4		300982	Bushing	4
5		1340891	Rod End	2
6		293650	Capscrew	2
7		292683	Lockwasher	2
8		292656	Nut	2
9		1376424	Pin	2
10		1376423	Capscrew	4
11		1345354	Rod End Pin	2
12	**b**	1375580	Spacer	2
13	**b**	55434	O-Ring	2
14	**b**	1325119	Shim (0.030 in.)	AR
14	**b**	134675	Shim (0.060 in.)	AR
15		1495881	Washer	4

FOOTNOTES:
a 10° Forward/5° Back
b 5° Forward/5° Back
c 5° Forward/8° Back

©2003 HYSTER COMPANY

NOTES

7 MAST-TWO STAGE LIMITED FREE-LIFT

SECTION 7
MAST-TWO STAGE LIMITED FREE-LIFT

DESCRIPTION **PAGE**

HEADER HOSE
TWO STAGE LIMITED FREE-LIFT 7-16
INNER MAST
TWO STAGE LIMITED FREE-LIFT 7-4
LIFT
TWO STAGE LIMITED FREE-LIFT 7-6
LIFT CYLINDER
TWO STAGE LIMITED FREE-LIFT
J40-50Z 7-9
J60-65Z 7-11
OUTER MAST
TWO STAGE LIMITED FREE-LIFT 7-2
SIX ROLLER CARRIAGE
TWO STAGE LIMITED FREE-LIFT 7-14

©2003 HYSTER COMPANY

OUTER MAST (Figure 7-1)
TWO STAGE LIMITED FREE-LIFT

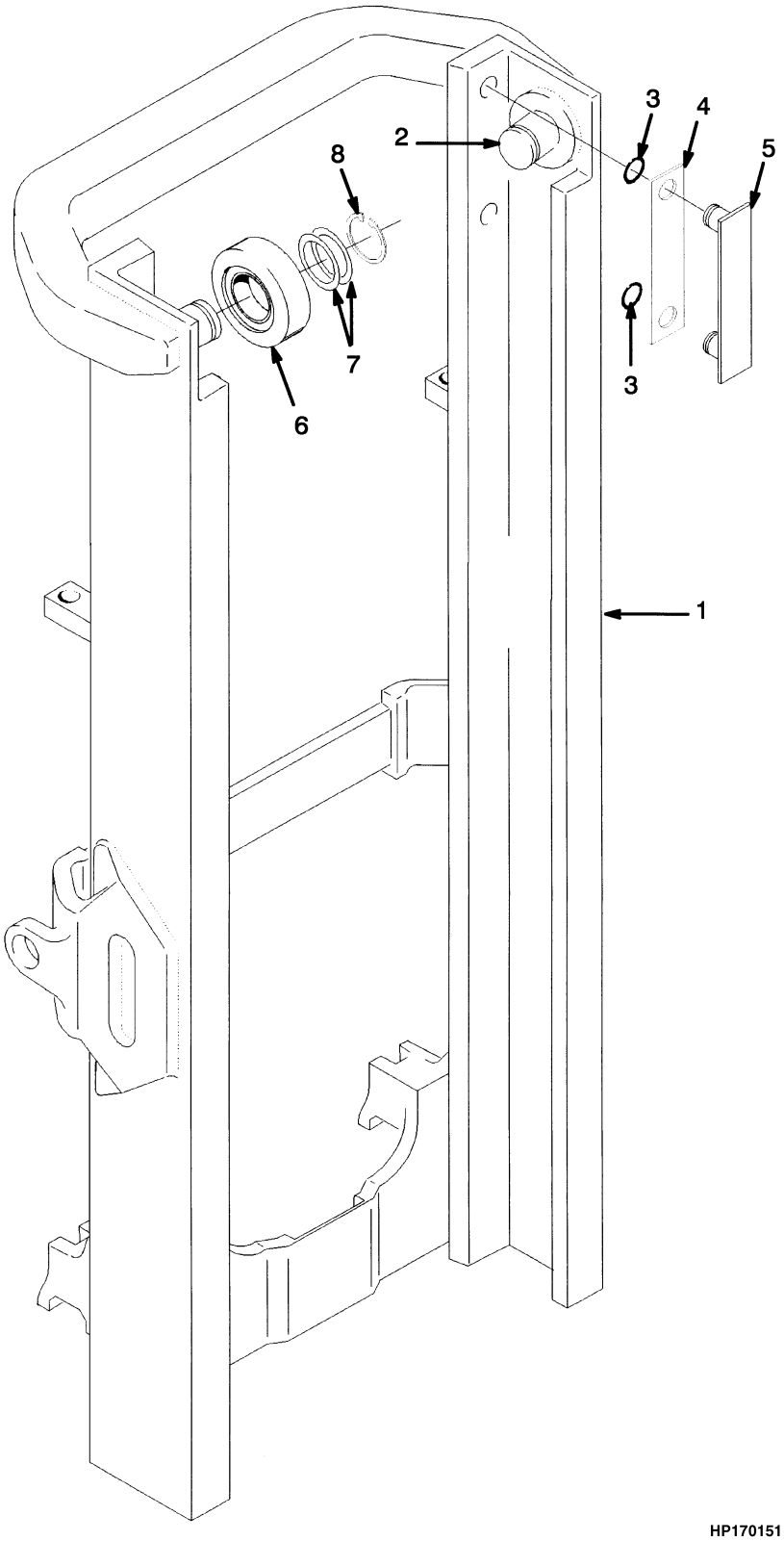

©2003 HYSTER COMPANY

OUTER MAST
TWO STAGE LIMITED FREE-LIFT

J40-50Z

ITEM	DESCRIPTION 1 2 3 4	LIFT HEIGHT TO BOTTOM OF FORKS		
		2992 mm (117.8 in.)	3292 mm (129.6 in.)	3792 mm (149.3 in.)
	Mast Group Number	B507 2992	B507 3292	B507 3792
1	Outer Mast	1341005	1341008	1341013

J60-65Z

ITEM	DESCRIPTION 1 2 3 4	LIFT HEIGHT TO BOTTOM OF FORKS	
		3159 mm (124.4 in.)	3659 mm (144.1 in.)
	Mast Group Number	B562 3159	B562 3659
1	Outer Mast	1341008	1341013

ITEM		PART NO.	DESCRIPTION	QTY
1	**a**	. . . . .	Outer Mast	1
2		1345216	Stubshaft	2
3		104506	O-Ring	4
4		131716	Shim (0.020 in.)	4
5		215211	Bearing Strip	2
6		1333396	Load Roller	2
7		129387	Shim (0.020 in.)	AR
8		58901	Snap Ring	2

FOOTNOTES:
a Refer to Table

INNER MAST (Figure 7-2)
TWO STAGE LIMITED FREE-LIFT

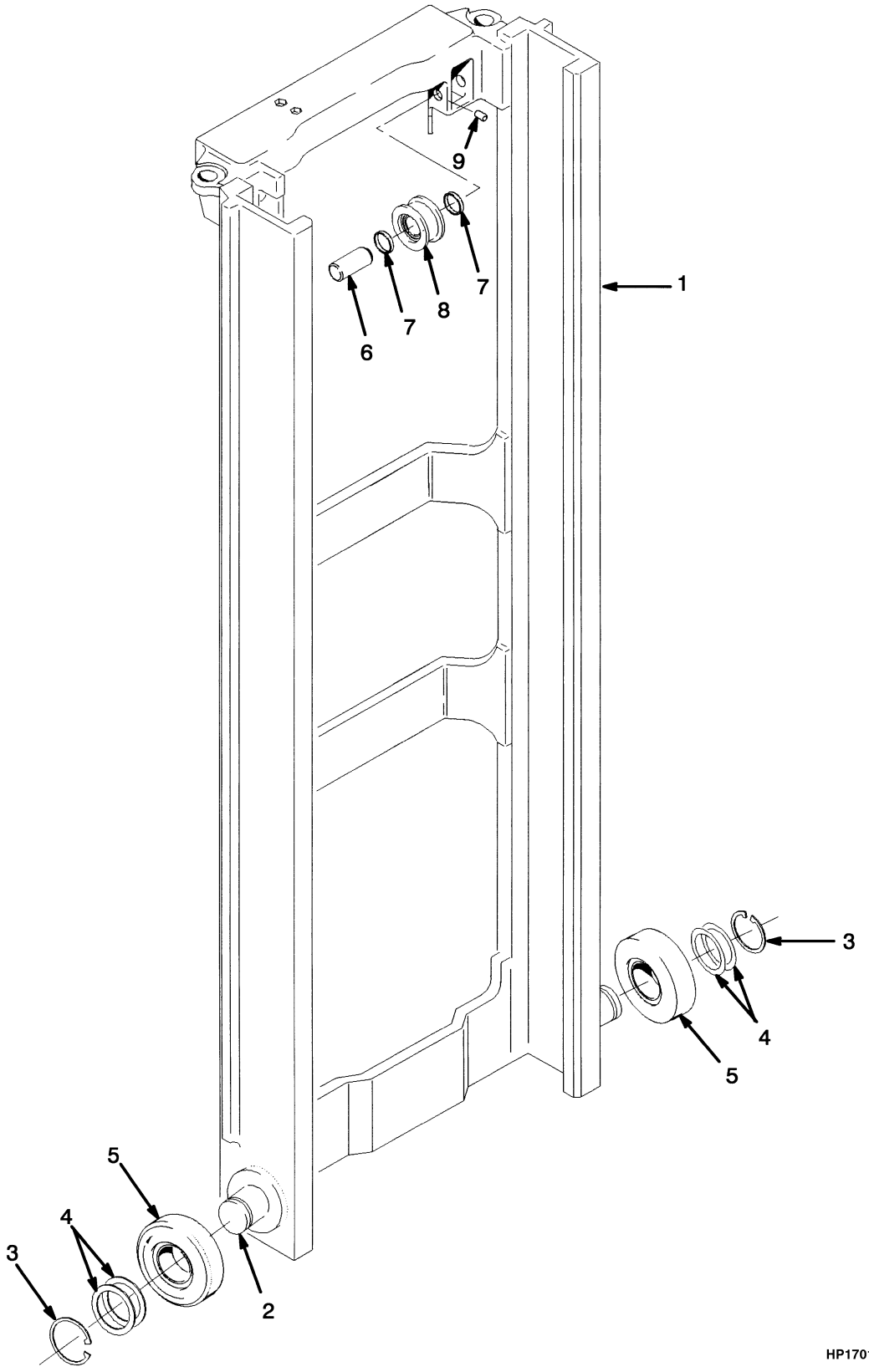

©2003 HYSTER COMPANY

INNER MAST
TWO STAGE LIMITED FREE-LIFT

J40-50Z

ITEM	DESCRIPTION 1 2 3 4	LIFT HEIGHT TO BOTTOM OF FORKS		
		2992 mm (117.8 in.)	3292 mm (129.6 in.)	3792 mm (149.3 in.)
	Mast Group Number	B507 2992	B507 3292	B507 3792
1	Inner Mast	1341210	1341213	1341218

J60-65Z

ITEM	DESCRIPTION 1 2 3 4	LIFT HEIGHT TO BOTTOM OF FORKS	
		3159 mm (124.4 in.)	3659 mm (144.1 in.)
	Mast Group Number	B562 3159	B562 3659
1	Inner Mast	1341213	1341218

ITEM	PART NO.	DESCRIPTION	QTY
1	**a**	Inner Mast	1
2	1345216	Stubshaft	2
3	58901	Snap Ring	2
4	129387	Shim (0.020 in.)	AR
5	1333396	Load Roller	2
6	1368656	Pin	2
7	1378691	Spacer	4
8	1379685	Chain Sheave Assembly	2
8	1378698	Sheave	1
8	1378699	Bearing	1
8	37752	Snap Ring	2
9	302462	Pin	2

FOOTNOTES:
a Refer to Table

©2003 HYSTER COMPANY

LIFT (Figure 7-3)
TWO STAGE LIMITED FREE-LIFT

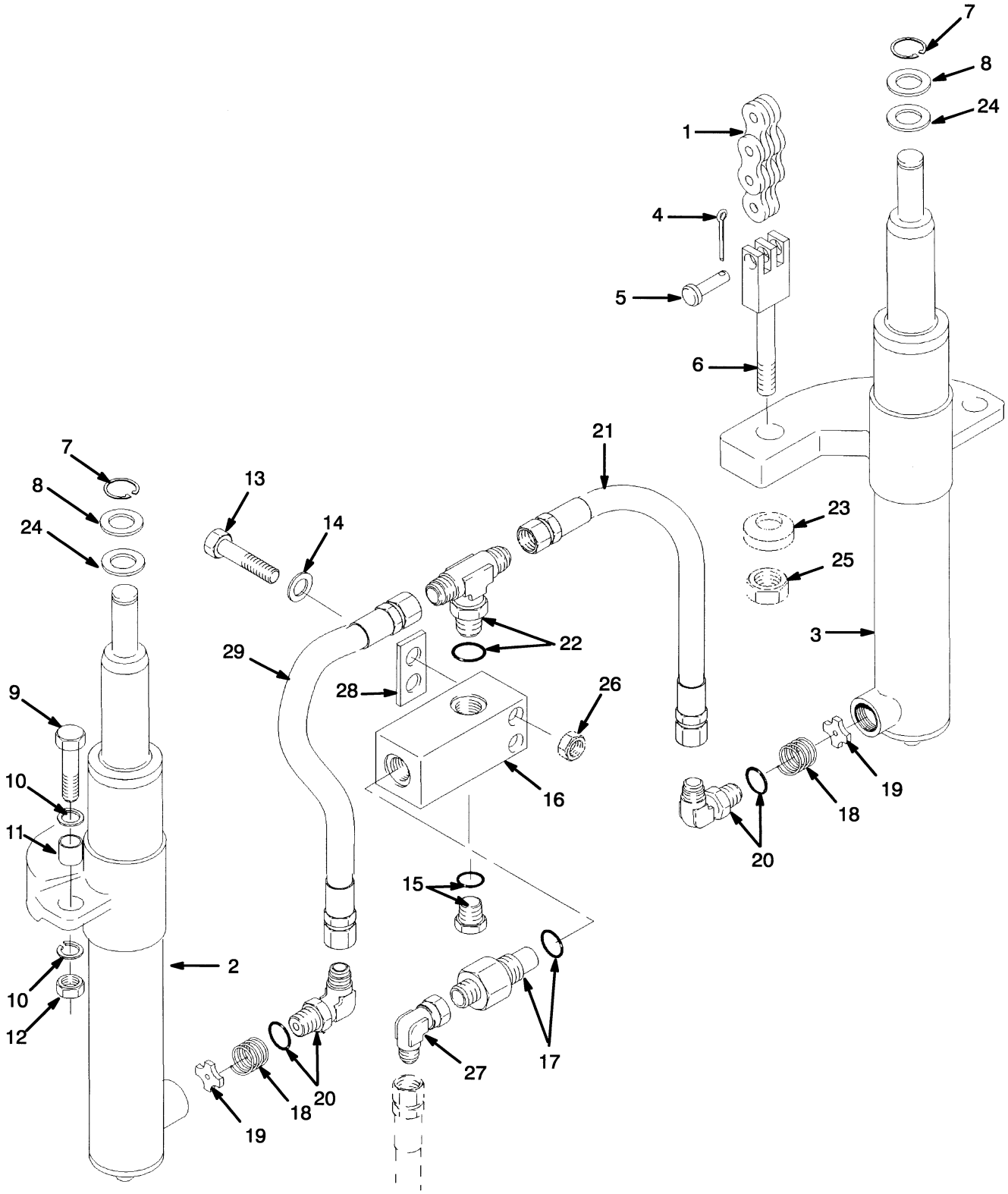

©2003 HYSTER COMPANY

LIFT
TWO STAGE LIMITED FREE-LIFT

J40-50Z

ITEM	DESCRIPTION 1 2 3 4	LIFT HEIGHT TO BOTTOM OF FORKS		
		2992 mm (117.8 in.)	3292 mm (129.6 in.)	3792 mm (149.3 in.)
	Mast Group Number	B507 2992	B507 3292	B507 3792
1	Chain	180057	223389	1301870

J60-65Z

ITEM	DESCRIPTION 1 2 3 4	LIFT HEIGHT TO BOTTOM OF FORKS	
		3159 mm (124.4 in.)	3659 mm (144.1 in.)
	Mast Group Number	B562 3159	B562 3659
1	Chain	1342383	1342393

ITEM		PART NO.	DESCRIPTION	QTY
1	**c**	. . . . .	Chain	2
2		. . . . .	Cylinder (RH) (☞ Figure 7-4, ☞ Figure 7-5)	1
3		. . . . .	Cylinder (LH) (☞ Figure 7-4, ☞ Figure 7-5)	1
4		15211	Cotter Pin	2
5		1514866	Pin	2
6	**a**	1369357	Chain Anchor	2
6	**b**	1369356	Chain Anchor	2
7		131358	Snap Ring	2
8		1333382	Washer (0.060 in.)	2
9		292532	Capscrew	2
10		296422	Washer	4
11		323090	Spacer	2
12		300937	Nut	2
13		136704	Capscrew	2
14		320157	Washer	2
15		14603	Fitting	1
15		16486	O-Ring	1
16		1379687	Housing	1
16		1333392	Housing (Optional)	1
17	**a**	2309766	Control Valve (Lowering)	1
17	**b**	316306	Control Valve (Lowering)	1
17		16982	O-Ring	1
18		337179	Spring	2
19		357749	Washer	2
20		189595	Fitting	2
20		16485	O-Ring	1
21		1345403	Hose	1
22		16578	Fitting	1
22		16485	O-Ring	1
23		296426	Washer (Hardened)	2
24	**d**	1354915	Washer (0.010 in.)	AR

©2003 HYSTER COMPANY

LIFT
TWO STAGE LIMITED FREE-LIFT

ITEM		PART NO.	DESCRIPTION	QTY
24	**d**	1354916	Washer (0.030 in.)	AR
24	**d**	1354917	Washer (0.060 in.)	AR
25		60137	Nut	2
26		313828	Nut	2
27		16882	Fitting	1
28		1354913	Spacer	1
29		1462551	Hose	1

FOOTNOTES:
a J40-50Z
b J60-65Z
c Refer to Table
d Used with Item 8 Between Cylinder Rod and Inner Mast as Required

©2003 HYSTER COMPANY

LIFT CYLINDER (Figure 7-4)
TWO STAGE LIMITED FREE-LIFT
J40-50Z

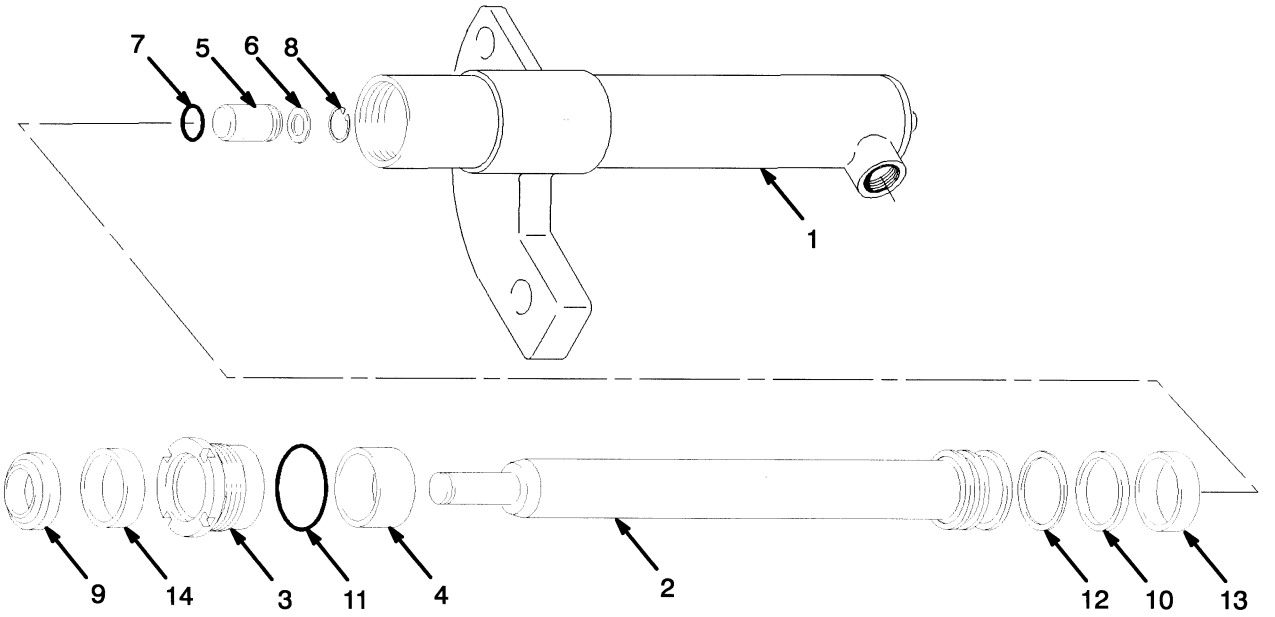

LEFT HAND

ITEM	DESCRIPTION 1 2 3 4	LIFT HEIGHT TO BOTTOM OF FORKS		
		2992 mm (117.8 in.)	3292 mm (129.6 in.)	3792 mm (149.3 in.)
	Mast Group Number	**B507 2992**	**B507 3292**	**B507 3792**
	Cylinder Group Number	**8600006**	**8600009**	**8600014**
	Lift Cylinder	1341432	1341435	1341440
1	Shell	1355145	1355157	1355177
2	Rod	1355146	1355158	1355178

LIFT CYLINDER
TWO STAGE LIMITED FREE-LIFT
J40-50Z

RIGHT HAND

ITEM	DESCRIPTION 1 2 3 4	LIFT HEIGHT TO BOTTOM OF FORKS		
		2992 mm (117.8 in.)	3292 mm (129.6 in.)	3792 mm (149.3 in.)
	Mast Group Number	B507 2992	B507 3292	B507 3792
	Cylinder Group Number	8600056	8600059	8600064
	Lift Cylinder	1341395	1341398	1341403
1	Shell	1355148	1355160	1355180
2	Rod	1355146	1355158	1355178

ITEM	PART NO.	DESCRIPTION	QTY
	a	Lift Cylinder	1
1	**a**	Shell	1
2	**a**	Rod	1
3	1355127	Gland	1
4	1355221	Spacer	1
5	257913	Check Valve	1
6	297531	Washer	1
6	637635	Washer (Optional)	1
7	39348	O-Ring	1
8	187388	Snap Ring	1
9	1319668	Wiper Ring	1
10	2013075	Seal	1
11	92861	O-Ring	1
12	638246	Back-Up Ring	1
13	1356750	Wear Ring	1
	1355276	Seal Kit (Includes Items 7, 10-13)	1
17	1356749	Rod Seal	1
	1355277	Seal Kit (Includes Items 7, 9-13, 17)	1

FOOTNOTES:
a Refer to Table

©2003 HYSTER COMPANY

LIFT CYLINDER (Figure 7-5)
TWO STAGE LIMITED FREE-LIFT
J60-65Z

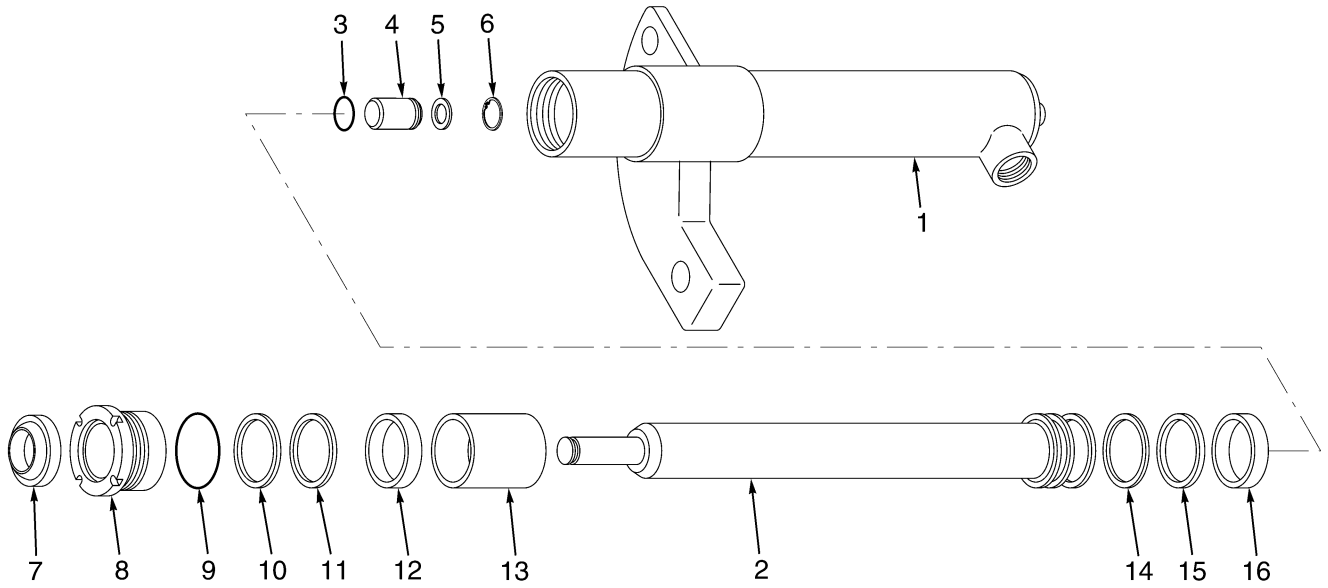

BP170002

LEFT HAND

ITEM	DESCRIPTION 1 2 3 4	LIFT HEIGHT TO BOTTOM OF FORKS	
		3159 mm (124.4 in.)	3659 mm (144.1 in.)
	Mast Group Number	B562 3159	B562 3659
	Cylinder Group Number	8510409	8510414
	Lift Cylinder	2046174	2046179
1	Shell	1355366	1355390
2	Rod	1355367	1355391

LIFT CYLINDER
TWO STAGE LIMITED FREE-LIFT
J60-65Z

RIGHT HAND

ITEM	DESCRIPTION 1 2 3 4	LIFT HEIGHT TO BOTTOM OF FORKS	
		3159 mm (124.4 in.)	3659 mm (144.1 in.)
	Mast Group Number	B562 3159	B562 3659
	Cylinder Group Number	8510459	8510464
	Lift Cylinder	2046193	2046198
1	Shell	1355369	1355393
2	Rod	1355367	1355391

ITEM		PART NO.	DESCRIPTION	QTY
	a	. . . . .	Lift Cylinder	1
1	**a**	. . . . .	Shell	1
2	**a**	. . . . .	Rod	1
3		39348	O-Ring	1
4		257913	Check Valve	1
5		297531	Washer	1
6		187388	Snap Ring	1
7		1319668	Wiper Ring	1
8		1380879	Gland	1
9		59229	O-Ring	1
10		322824	Back-Up Ring	1
11		1381095	Rod Seal	1
12		322902	Wear Ring	1
13		2046163	Spacer	1
14		335012	Back-Up Ring	1
15		334156	Seal	1
16		1356751	Wear Ring	1
		1499111	Seal Kit (Includes Items 3, 6-7, 9-12, 14-16)	1
		1355411	Seal Kit (Includes Items 3, 9, 11, 14-16)	1

FOOTNOTES:
a Refer to Table

©2003 HYSTER COMPANY

NOTES

SIX ROLLER CARRIAGE (Figure 7-6)
TWO STAGE LIMITED FREE-LIFT

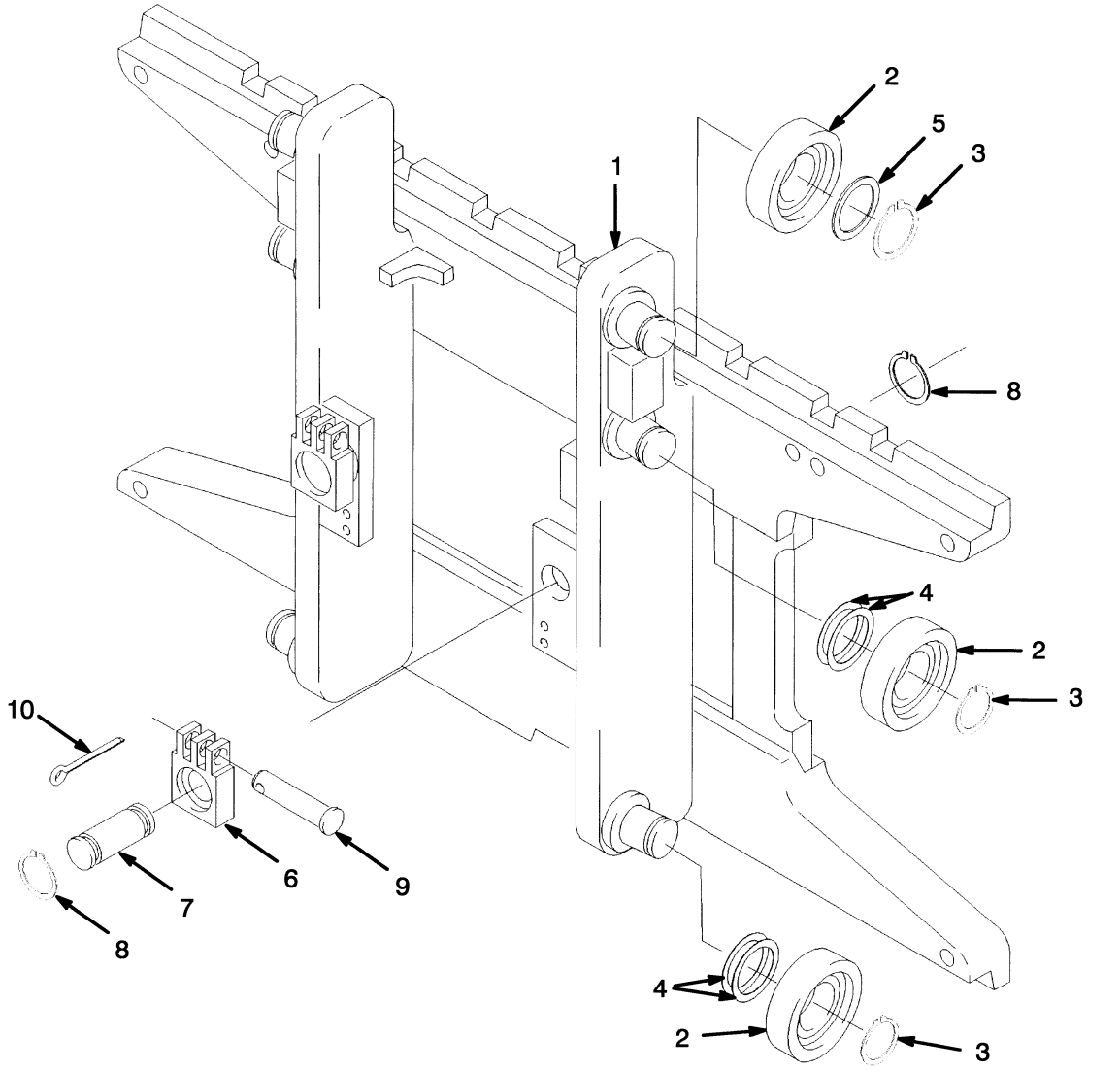

HP170157

©2003 HYSTER COMPANY

SIX ROLLER CARRIAGE
TWO STAGE LIMITED FREE-LIFT

KEY:
A: J40-50Z
B: J60-65Z

ITEM	PART NO.	DESCRIPTION	QTY A	QTY B
	1371662	Carriage Assembly	1	..
	1371663	Carriage Assembly	..	1
1	1359325	Frame	1	..
1	1359326	Frame	..	1
2	1345219	Load Roller	6	6
3	12891	Snap Ring	6	6
4	1345263	Shim (0.020 in.)	AR	AR
5	366116	Spacer	2	2
6	1369345	Chain Anchor (Dual Hole)	2	..
6	1504009	Chain Anchor (Single Hole) (Optional)	2	..
6	1369344	Chain Anchor (Dual Hole)	..	2
6	1504011	Chain Anchor (Single Hole) (Optional)	..	2
7	1345352	Pin	2	2
8	131358	Snap Ring	4	4
9	1514866	Pin	2	2
10	15211	Cotter Pin	2	2

©2003 HYSTER COMPANY

HEADER HOSE (Figure 7-7)
TWO STAGE LIMITED FREE-LIFT

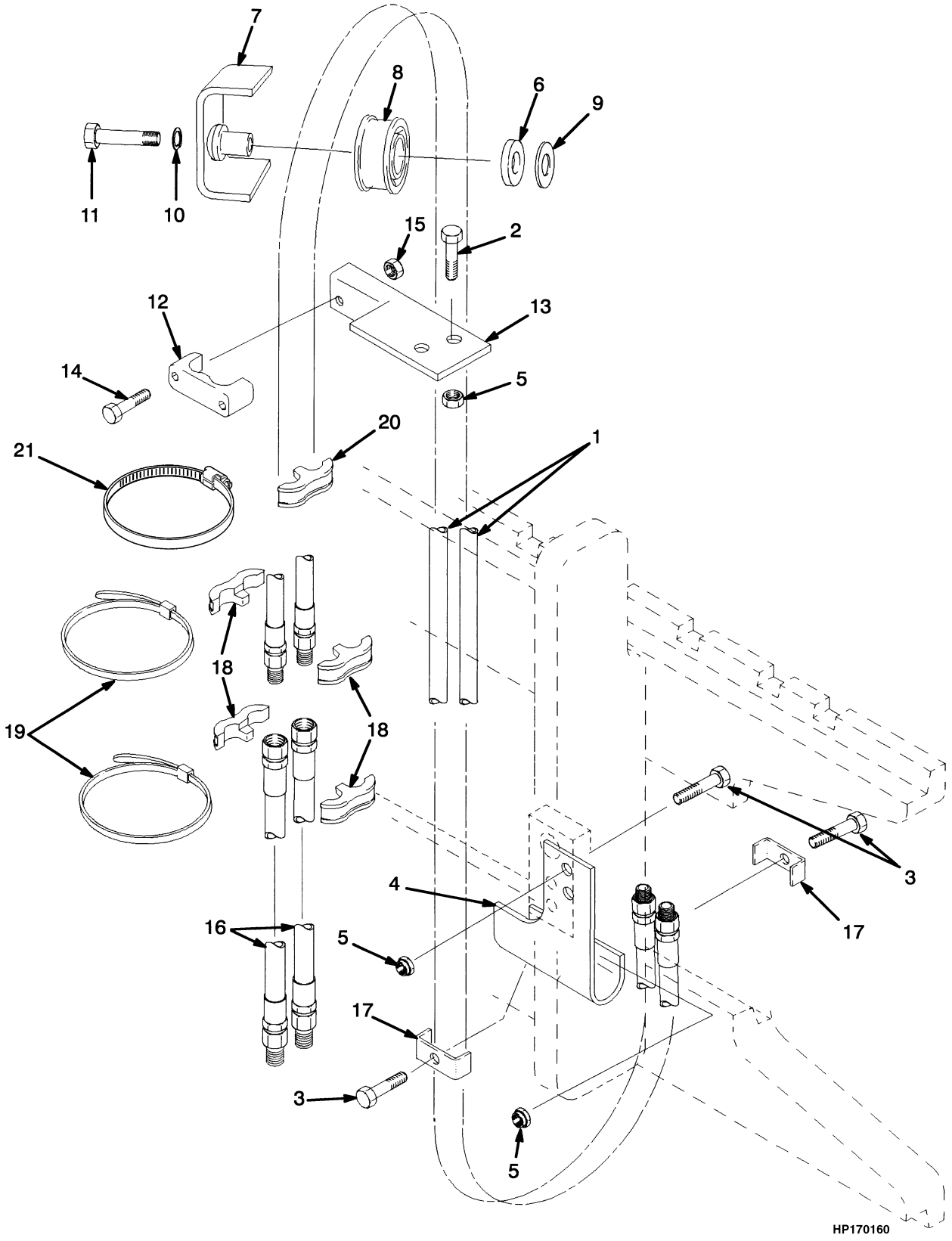

©2003 HYSTER COMPANY

HEADER HOSE
TWO STAGE LIMITED FREE-LIFT

J40-50Z

ITEM	DESCRIPTION 1 2 3 4	LIFT HEIGHT TO BOTTOM OF FORKS				
		2992 mm (117.8 in.)	3292 mm (129.6 in.)	3792 mm (149.3 in.)	4292 mm (169.0 in.)	4792 mm (188.7 in.)
	Mast Group Number	B507 2992	B507 3292	B507 3792	B507 4292	B507 4792
1	Hose	1368312	1369605	1398509	----	----
20	Clamp	----	----	1353530	1353530	1353530
21	Clamp	----	----	1360507	1360507	1360507

J60-65Z

ITEM	DESCRIPTION 1 2 3 4	LIFT HEIGHT TO BOTTOM OF FORKS				
		2859 mm (112.6 in.)	3159 mm (124.4 in.)	3659 mm (144.1 in.)	4159 mm (163.7 in.)	4659 mm (183.4 in.)
	Mast Group Number	B562 2859	B562 3159	B562 3659	B562 4159	B562 4659
1	Hose	1368312	1369605	1398509	----	----
20	Clamp	----	----	1353530	1353530	1353530
21	Clamp	----	----	1360507	1360507	1360507

KEY:
A: Three Function
B: Four Function

ITEM	PART NO.	DESCRIPTION	QTY A	QTY B
1	a	Hose	2	4
2	136704	Capscrew	2	4
3	292508	Capscrew	4	8
4	1345412	Bracket (RH)	1	1
4	1345413	Bracket (LH)	..	1
5	313828	Nut	6	12
6	1360549	Spacer	1	2
7	1360548	Stubshaft	1	2
8	1494017	Sheave	1	2
9	1345190	Washer	1	2
10	292683	Lockwasher	1	2
11	292533	Capscrew	1	2
12	1360386	Clamp	1	2
13	1354919	Bracket (RH)	1	1
13	1354921	Bracket (LH)	..	1
14	292502	Capscrew	2	4
15	313805	Nut	4	4
16	1354922	Hose (RH)	2	2
16	1354904	Hose (LH)	..	2
17	1345348	Clamp	2	4
18	1353530	Clamp	4	8

©2003 HYSTER COMPANY

HEADER HOSE
TWO STAGE LIMITED FREE-LIFT

ITEM		PART NO.	DESCRIPTION	QTY A	QTY B
19		1360529	Strap Clamp	2	4
20	**a**	. . . . .	Clamp	1	2
21	**a**	. . . . .	Strap Clamp	1	2

FOOTNOTES:
a Refer to Table

©2003 HYSTER COMPANY

8 MAST-THREE STAGE FULL FREE-LIFT

SECTION 8
MAST-THREE STAGE FULL FREE-LIFT

DESCRIPTION	PAGE
FREE-LIFT	
THREE STAGE FULL FREE-LIFT	8-12
FREE-LIFT CYLINDER	
THREE STAGE FULL FREE-LIFT	8-20
HEADER HOSE	
THREE STAGE FULL FREE-LIFT	8-26
INNER MAST	
THREE STAGE FULL FREE-LIFT	8-6
INTERMEDIATE MAST	
THREE STAGE FULL FREE-LIFT	8-4
MAIN CYLINDER	
THREE STAGE FULL FREE-LIFT	8-16
MAIN LIFT	
THREE STAGE FULL FREE-LIFT	8-8
OUTER MAST	
THREE STAGE FULL FREE-LIFT	8-2
SIX ROLLER CARRIAGE	
THREE STAGE FULL FREE-LIFT	8-24

©2003 HYSTER COMPANY

OUTER MAST (Figure 8-1)
THREE STAGE FULL FREE-LIFT

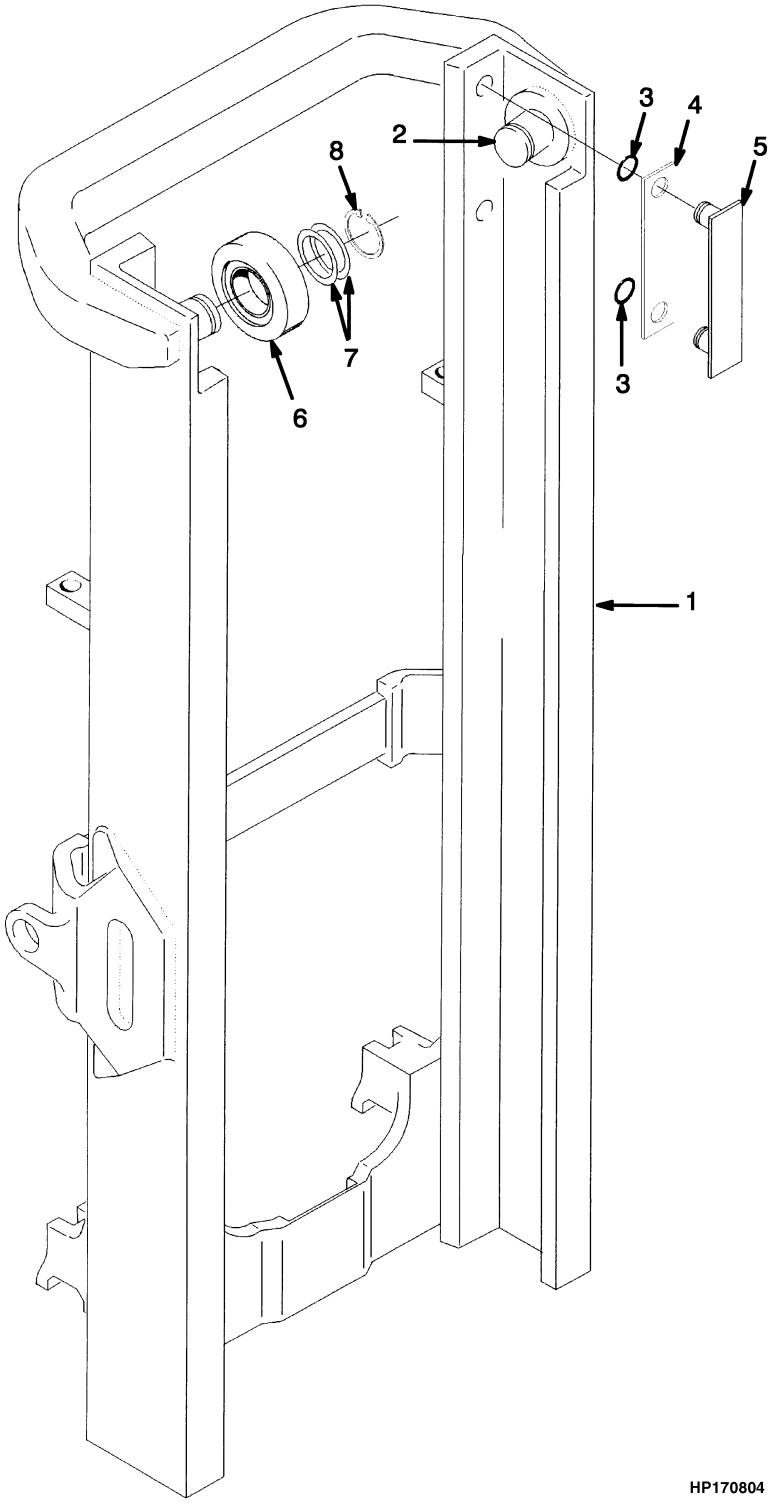

©2003 HYSTER COMPANY

OUTER MAST
THREE STAGE FULL FREE-LIFT

J40-50Z

ITEM	DESCRIPTION 1 2 3 4	LIFT HEIGHT TO BOTTOM OF FORKS		
		4310 mm (169.7 in.)	4760 mm (187.4 in.)	5510 mm (216.9 in.)
	Mast Group Number	B508 4310	B508 4760	B508 5510
1	Outer Mast	1341004	1341007	1341013

J60-65Z

ITEM	DESCRIPTION 1 2 3 4	LIFT HEIGHT TO BOTTOM OF FORKS			
		4118 mm (162.1 in.)	4568 mm (179.8 in.)	4868 mm (191.7 in.)	5318 mm (209.4 in.)
	Mast Group Number	B563 4118	B563 4568	B563 4868	B563 5318
1	Outer Mast	1341004	1341007	1341010	1341013

ITEM		PART NO.	DESCRIPTION	QTY
1	**a**	. . . . .	Outer Mast	1
2		1345216	Stubshaft	2
3		104506	O-Ring	4
4		131716	Shim (0.020 in.)	4
5		215211	Bearing Strip	2
6		1333396	Load Roller	2
7		129387	Shim (0.020 in.)	AR
8		58901	Snap Ring	2

FOOTNOTES:
a Refer to Table

©2003 HYSTER COMPANY

INTERMEDIATE MAST (Figure 8-2)
THREE STAGE FULL FREE-LIFT

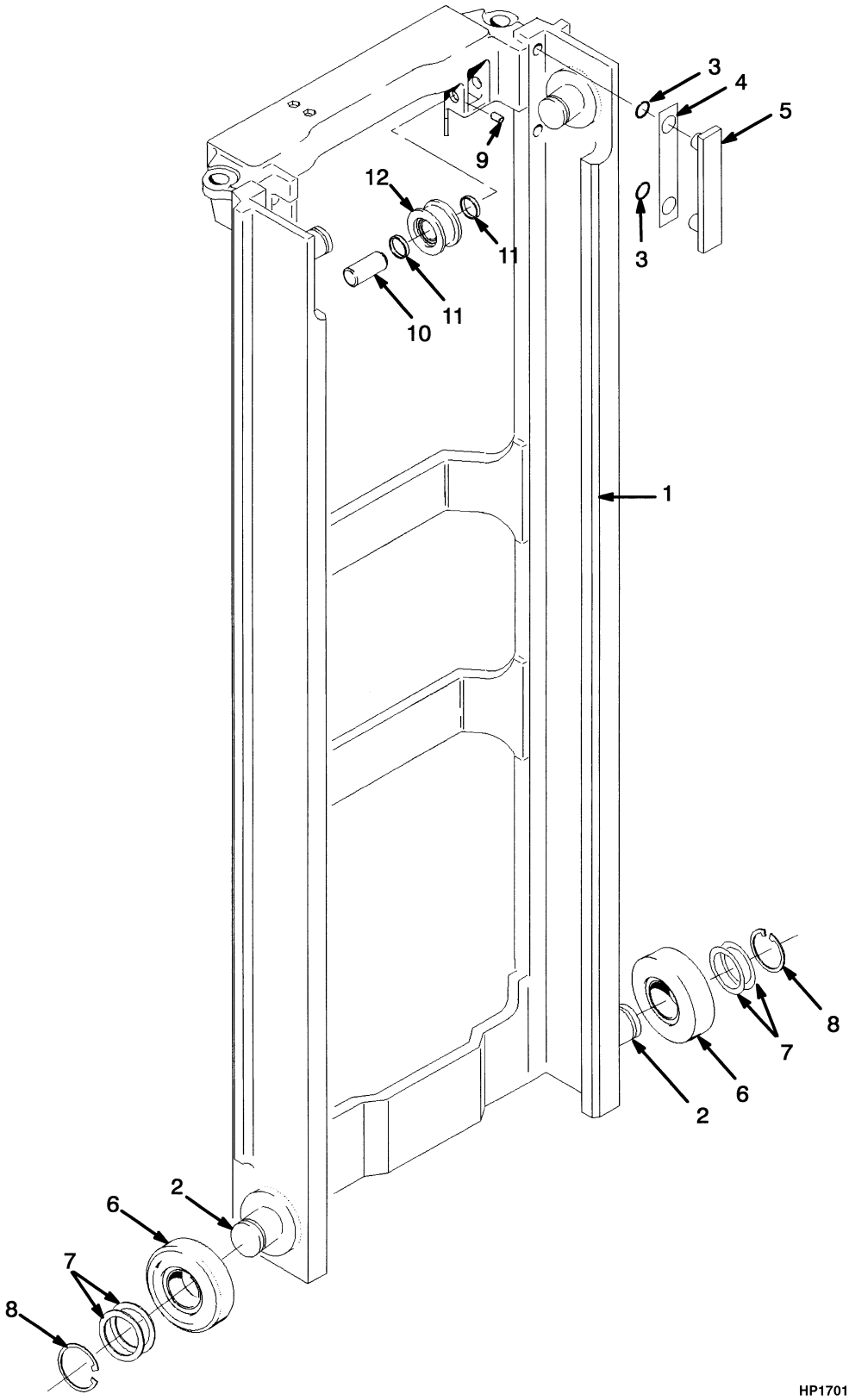

©2003 HYSTER COMPANY

INTERMEDIATE MAST
THREE STAGE FULL FREE-LIFT

J40-50Z

ITEM	DESCRIPTION 1 2 3 4	LIFT HEIGHT TO BOTTOM OF FORKS		
		4310 mm (169.7 in.)	4760 mm (187.4 in.)	5510 mm (216.9 in.)
	Mast Group Number	B508 4310	B508 4760	B508 5510
1	Intermediate Mast	1341714	1341717	1341722

J60-65Z

ITEM	DESCRIPTION 1 2 3 4	LIFT HEIGHT TO BOTTOM OF FORKS			
		4118 mm (162.1 in.)	4568 mm (179.8 in.)	4868 mm (191.7 in.)	5318 mm (209.4 in.)
	Mast Group Number	B563 4118	B563 4568	B563 4868	B563 5318
1	Intermediate Mast	1341714	1341717	1341719	1341722

ITEM	PART NO.	DESCRIPTION	QTY
1	**a**	Intermediate Mast	1
2	1345216	Stubshaft	4
3	104506	O-Ring	4
4	131716	Shim (0.020 in.)	AR
5	215211	Bearing Strip	2
6	1333396	Load Roller	4
7	129387	Shim (0.020 in.)	AR
8	58901	Snap Ring	4
9	302462	Pin	2
10	1368656	Pin	2
11	1378691	Spacer	4
12	1379685	Chain Sheave Assembly	2
12	1378698	Sheave	1
12	37752	Snap Ring	2
12	1378699	Bearing	1

FOOTNOTES:
a Refer to Table

©2003 HYSTER COMPANY

INNER MAST (Figure 8-3)
THREE STAGE FULL FREE-LIFT

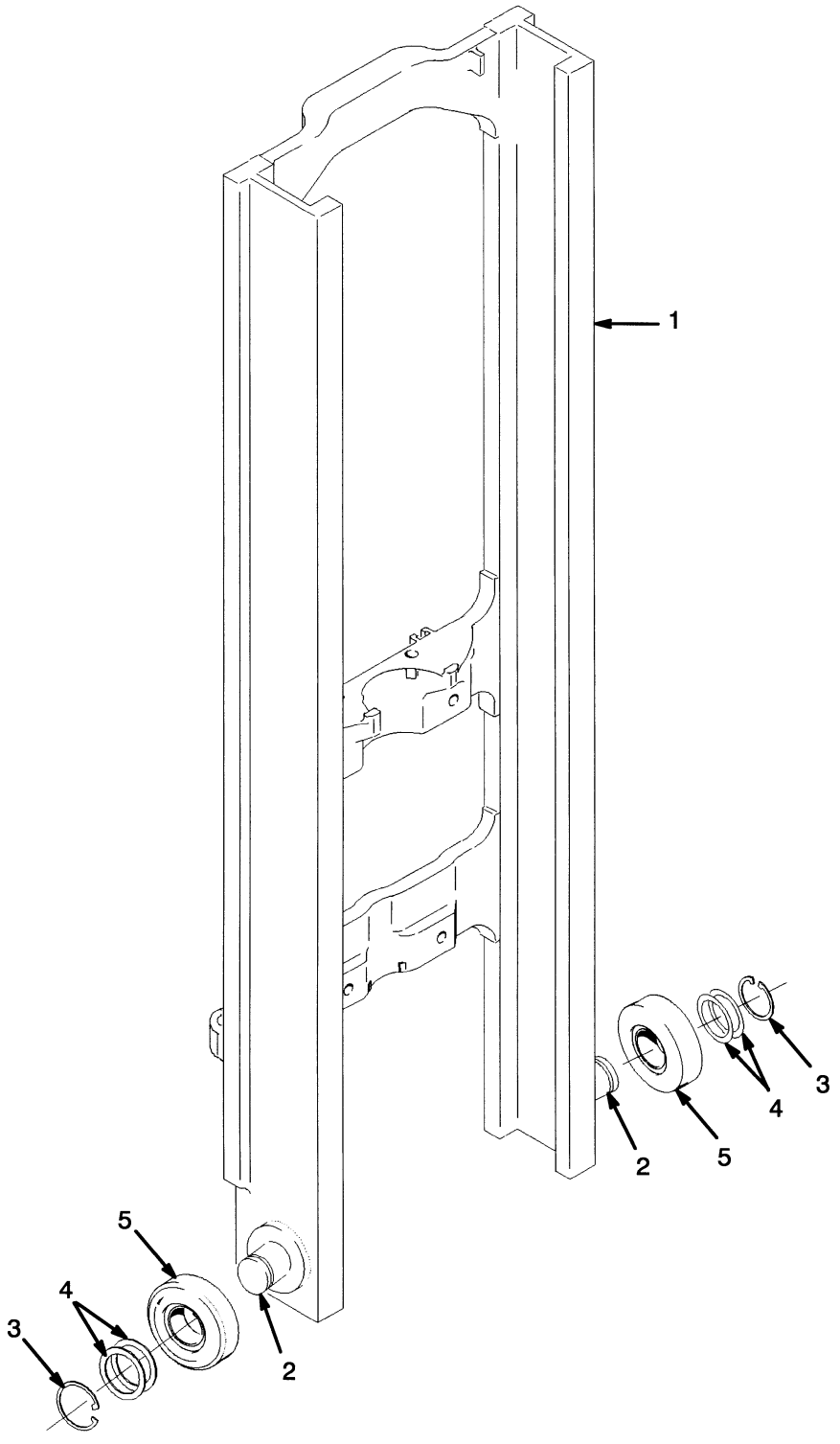

©2003 HYSTER COMPANY

INNER MAST
THREE STAGE FULL FREE-LIFT

J40-50Z

ITEM	DESCRIPTION 1 2 3 4	LIFT HEIGHT TO BOTTOM OF FORKS		
		4310 mm (169.7 in.)	4760 mm (187.4 in.)	5510 mm (216.9 in.)
	Mast Group Number	B508 4310	B508 4760	B508 5510
1	Inner Mast	1381354	1381357	1381362

J60-65Z

ITEM	DESCRIPTION 1 2 3 4	LIFT HEIGHT TO BOTTOM OF FORKS			
		4118 mm (162.1 in.)	4568 mm (179.8 in.)	4868 mm (191.7 in.)	5318 mm (209.4 in.)
	Mast Group Number	B563 4118	B563 4568	B563 4868	B563 5318
1	Inner Mast	1381354	1381357	1381359	1381362

ITEM		PART NO.	DESCRIPTION	QTY
1	**a**	. . . . .	Inner Mast	1
2		1345216	Stubshaft	2
3		58901	Snap Ring	2
4		129387	Shim (0.020 in.)	AR
5		1333396	Load Roller	2

FOOTNOTES:
a Refer to Table

MAIN LIFT (Figure 8-4)
THREE STAGE FULL FREE-LIFT

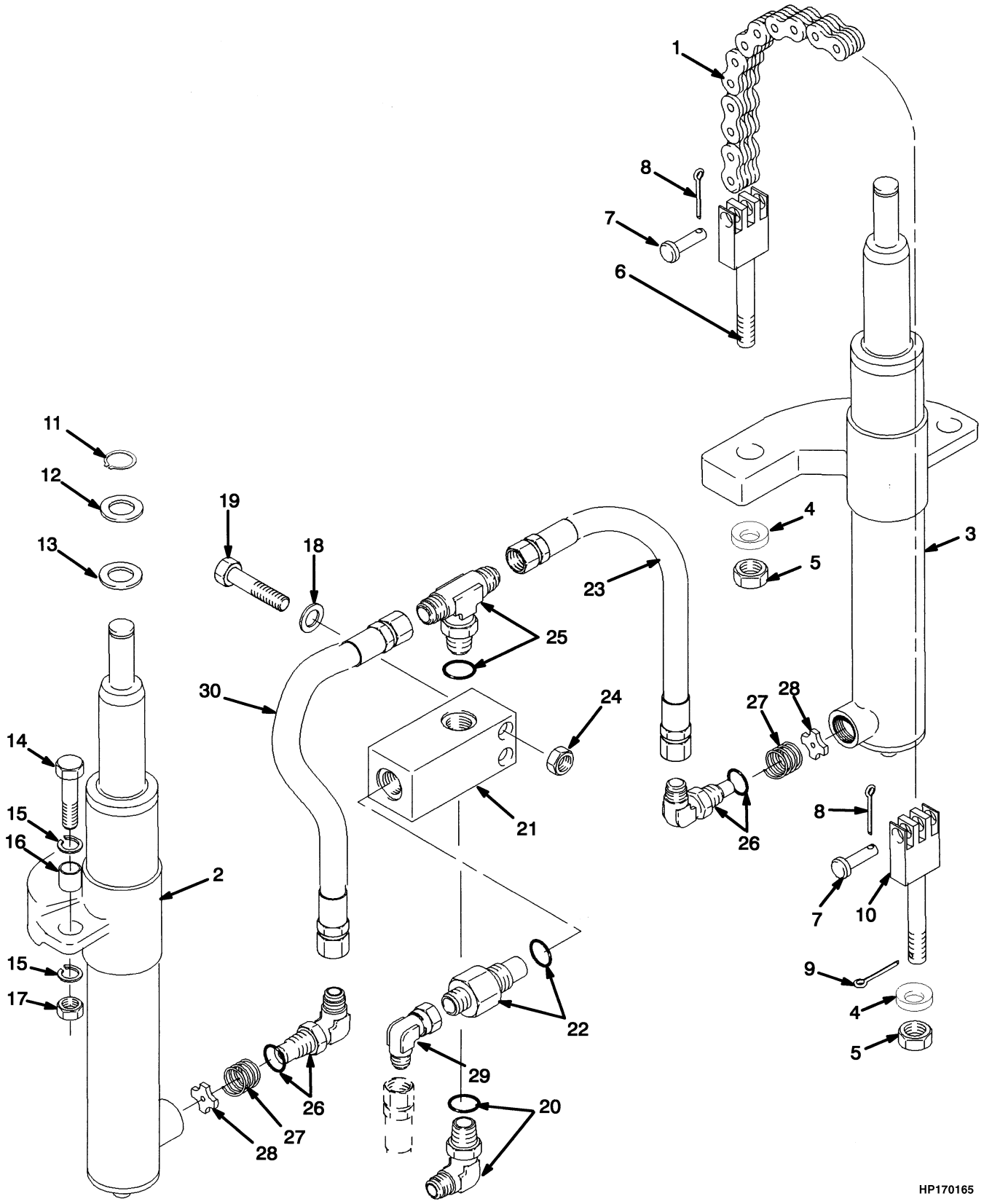

©2003 HYSTER COMPANY

MAIN LIFT
THREE STAGE FULL FREE-LIFT

J40-50Z

ITEM	DESCRIPTION 1 2 3 4	LIFT HEIGHT TO BOTTOM OF FORKS		
		4310 mm (169.7 in.)	4760 mm (187.4 in.)	5510 mm (216.9 in.)
	Mast Group Number	B508 4310	B508 4760	B508 5510
1	Chain	182343	135634	135588

J60-65Z

ITEM	DESCRIPTION 1 2 3 4	LIFT HEIGHT TO BOTTOM OF FORKS			
		4118 mm (162.1 in.)	4568 mm (179.8 in.)	4868 mm (191.7 in.)	5318 mm (209.4 in.)
	Mast Group Number	B563 4118	B563 4568	B563 4868	B563 5318
1	Chain	1342120	1342123	1342126	1342129

ITEM		PART NO.	DESCRIPTION	QTY
1	**c**	. . . . .	Chain	2
2		. . . . .	Cylinder (RH) (☞ Figure 8-6)	1
3		. . . . .	Cylinder (LH) (☞ Figure 8-6)	1
4		296426	Washer (Hardened)	4
5		60137	Nut	4
6	**a**	1369357	Chain Anchor	2
6	**b**	1369356	Chain Anchor	2
7		1514866	Pin	4
8		15211	Cotter Pin	4
9		15223	Cotter Pin	2
10	**a**	1365140	Chain Anchor	2
10	**b**	1333329	Chain Anchor	2
11		131358	Snap Ring	2
12		1333382	Washer	2
13		1354915	Washer	AR
13		1354916	Washer	AR
13		1354917	Washer	AR
14		292532	Capscrew	2
15		296422	Washer	4
16		323090	Spacer	2
17		300937	Nut	2
18		320157	Washer	2
19		214364	Capscrew	2
20		184761	Fitting	1
20		16486	O-Ring	1
21		1333392	Housing	1
22	**a**	2309766	Control Valve (Lowering)	1
22	**b**	316306	Control Valve (Lowering)	1
22		16982	O-Ring	1
23		1345403	Hose	1
24		313828	Nut	2

©2003 HYSTER COMPANY

MAIN LIFT
THREE STAGE FULL FREE-LIFT

ITEM	PART NO.	DESCRIPTION	QTY
25	16578	Fitting	1
25	16485	O-Ring	1
26	189595	Fitting	2
26	16485	O-Ring	1
27	337179	Spring	2
28	357749	Washer	2
29	16882	Fitting	1
30	1462551	Hose	1

FOOTNOTES:
a J40-50Z
b J60-65Z
c Refer to Table

©2003 HYSTER COMPANY

NOTES

FREE-LIFT (Figure 8-5)
THREE STAGE FULL FREE-LIFT

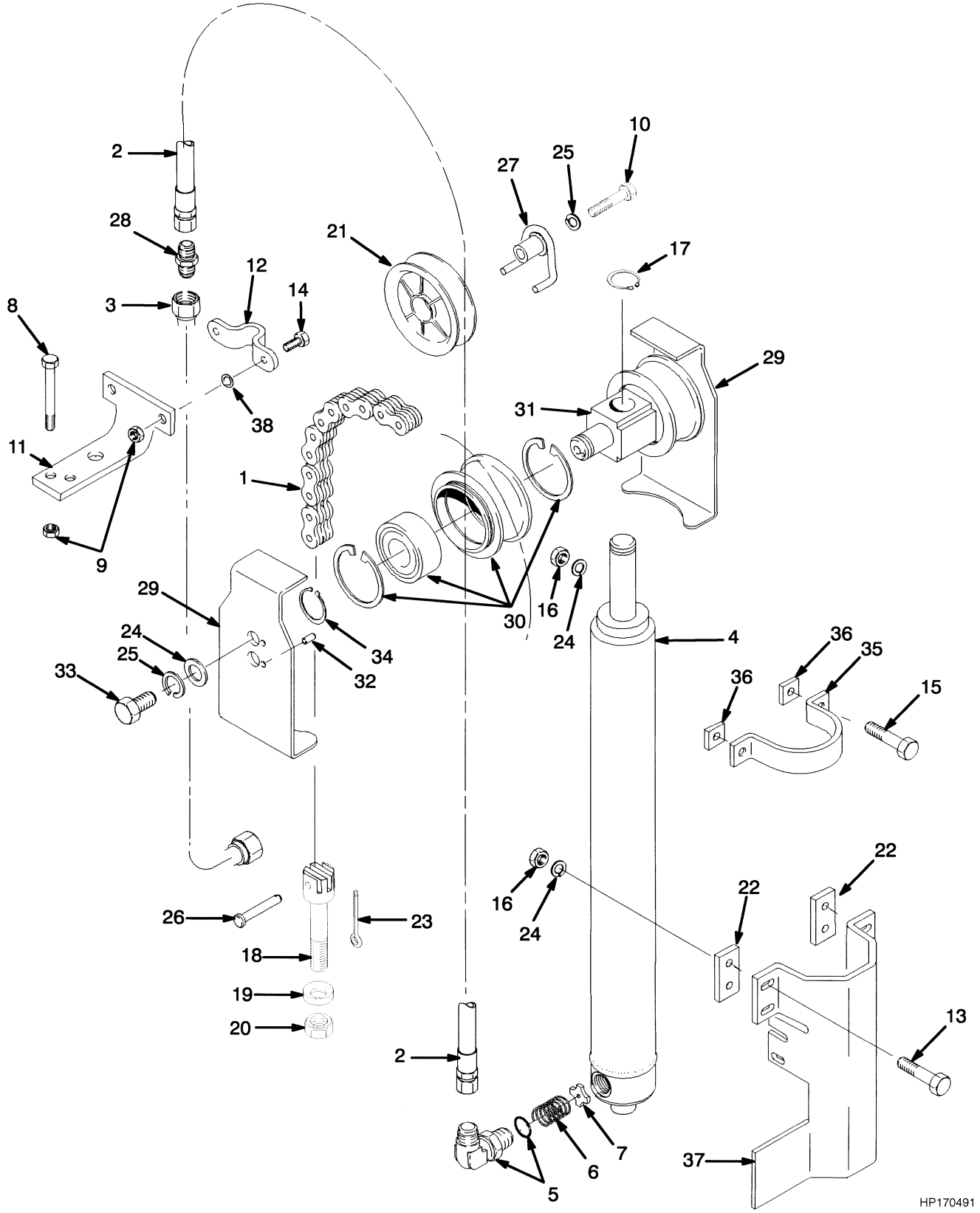

©2003 HYSTER COMPANY

FREE-LIFT
THREE STAGE FULL FREE-LIFT

J40-50Z

ITEM	DESCRIPTION 1 2 3 4	LIFT HEIGHT TO BOTTOM OF FORKS		
		4310 mm (169.7 in.)	4760 mm (187.4 in.)	5510 mm (216.9 in.)
	Mast Group Number	B508 4310	B508 4760	B508 5510
1	Chain	180074	180177	164474
2	Hose	1342407	1342410	1342415
3	Tube	1345359	1345362	1345367

J60-65Z

ITEM	DESCRIPTION 1 2 3 4	LIFT HEIGHT TO BOTTOM OF FORKS			
		4118 mm (162.1 in.)	4568 mm (179.8 in.)	4868 mm (191.7 in.)	5318 mm (209.4 in.)
	Mast Group Number	B563 4118	B563 4568	B563 4868	B563 5318
1	Chain	1342391	1369328	1342118	1342381
2	Hose	1342407	1342410	1342412	1342415
3	Tube	1345359	1345362	1345364	1345367

ITEM		PART NO.	DESCRIPTION	QTY
1	**c**	. . . . .	Chain	2
2	**c**	. . . . .	Hose	1
3	**c**	. . . . .	Tube	1
4		. . . . .	Free-Lift Cylinder	1
5		238637	Fitting	1
5		16485	O-Ring	1
6		154355	Spring	1
7		356505	Washer	1
8		136704	Capscrew	2
9		313828	Nut	3
10		292532	Capscrew	1
11		1362390	Bracket	1
12		1345401	Clamp	1
13		287837	Capscrew	4
14		136749	Capscrew	1
15	**a**	292529	Capscrew	2
15	**b**	292530	Capscrew	2
16		300937	Nut	6
17		131358	Snap Ring	1
18	**a**	1369357	Chain Anchor	2
18	**b**	1369356	Chain Anchor	2
19		296426	Washer (Hardened)	2
20		60137	Nut	2
21		1343989	Sheave	1
22	**b**	1354903	Spacer	2
23		15211	Cotter Pin	2

©2003 HYSTER COMPANY

FREE-LIFT
THREE STAGE FULL FREE-LIFT

ITEM		PART NO.	DESCRIPTION	QTY
24		320161	Washer	8
25		292683	Lockwasher	3
26		1514866	Pin	2
27		1360534	Stubshaft	1
28		17635	Fitting	1
29		1395285	Chain Guard	2
30	**a**	1379682	Chain Sheave Assembly	2
30	**b**	1379683	Chain Sheave Assembly	2
30	**a**	1378692	Sheave	1
30	**b**	1378693	Sheave	1
30		37752	Snap Ring	2
30		1378699	Bearing	1
31		1378690	Crosshead	1
32		302461	Pin	2
33		132860	Capscrew	2
34		304526	Snap Ring	2
35		1465504	Clamp	1
36	**b**	1354902	Spacer	2
37		1354962	Bracket	1
38		325616	Spacer	AR

FOOTNOTES:
a J40-50Z
b J60-65Z
c Refer to Table

©2003 HYSTER COMPANY

NOTES

MAIN CYLINDER (Figure 8-6)
THREE STAGE FULL FREE-LIFT

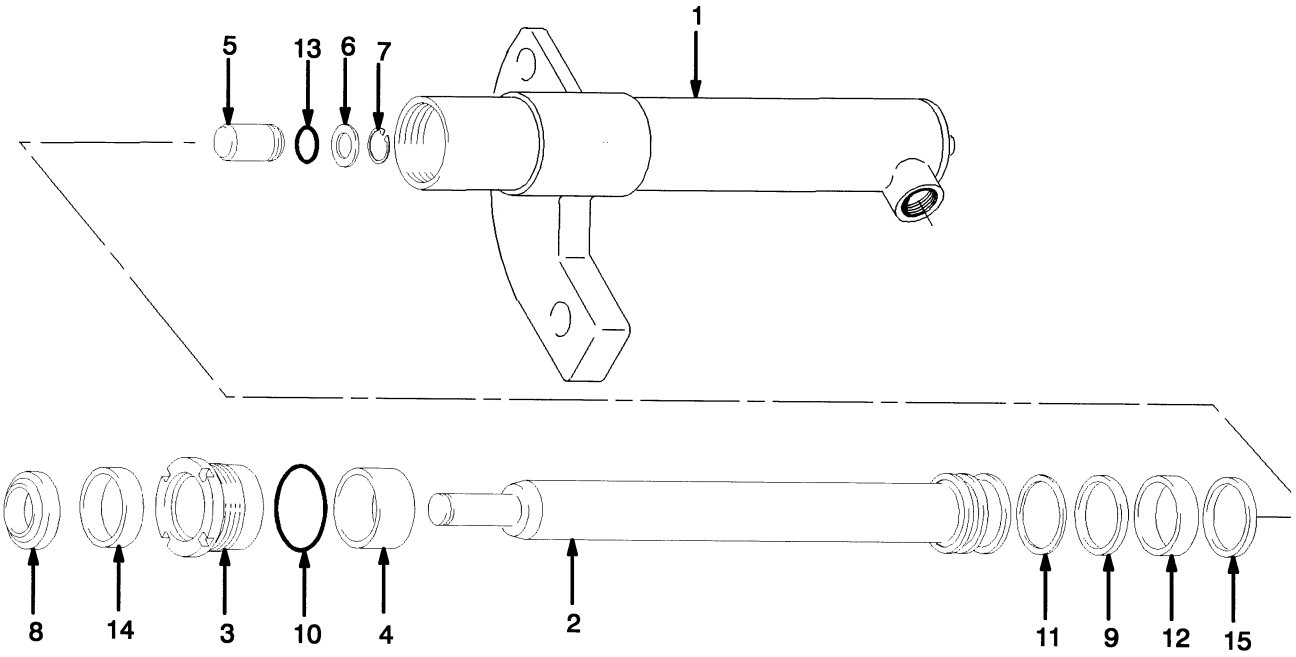

HP170167

©2003 HYSTER COMPANY

MAIN CYLINDER
THREE STAGE FULL FREE-LIFT

J40-50Z (LEFT HAND)

ITEM	DESCRIPTION 1 2 3 4	LIFT HEIGHT TO BOTTOM OF FORKS		
		4310 mm (169.7 in.)	4760 mm (187.4 in.)	5510 mm (216.9 in.)
	Mast Group Number	**B508 4310**	**B508 4760**	**B508 5510**
	Cylinder Group Number	**8600405**	**8600408**	**8600413**
	Lift Cylinder	1341542	1341578	1341583
1	Shell	1355589	1355598	1355619
2	Rod	1355587	1355599	1355620

J40-50Z (RIGHT HAND)

ITEM	DESCRIPTION 1 2 3 4	LIFT HEIGHT TO BOTTOM OF FORKS		
		4310 mm (169.7 in.)	4760 mm (187.4 in.)	5510 mm (216.9 in.)
	Mast Group Number	**B508 4310**	**B508 4760**	**B508 5510**
	Cylinder Group Number	**8600455**	**8600458**	**8600463**
	Lift Cylinder	1341542	1341545	1341550
1	Shell	1355589	1355601	1355622
2	Rod	1355587	1355599	1355620

J60-65Z (LEFT HAND)

ITEM	DESCRIPTION 1 2 3 4	LIFT HEIGHT TO BOTTOM OF FORKS			
		4118 mm (162.1 in.)	4568 mm (179.8 in.)	4868 mm (191.7 in.)	5318 mm (209.4 in.)
	Mast Group Number	**B563 4118**	**B563 4568**	**B563 4868**	**B563 5318**
	Cylinder Group Number	**8600505**	**8600508**	**8600510**	**8600513**
	Lift Cylinder	1341641	1341644	1341646	1341649
1	Shell	1355728	1355740	1355748	1355757
2	Rod	1355729	1355741	1355749	1355758

©2003 HYSTER COMPANY

MAIN CYLINDER
THREE STAGE FULL FREE-LIFT

J60-65Z (RIGHT HAND)

ITEM	DESCRIPTION 1 2 3 4	LIFT HEIGHT TO BOTTOM OF FORKS			
		4118 mm (162.1 in.)	4568 mm (179.8 in.)	4868 mm (191.7 in.)	5318 mm (209.4 in.)
	Mast Group Number	B563 4118	B563 4568	B563 4868	B563 5318
	Cylinder Group Number	8600555	8600558	8600560	8600563
	Lift Cylinder	1341608	1341611	1341613	1341616
1	Shell	1355731	1355743	1355752	1355760
2	Rod	1355729	1355741	1355749	1355758

KEY:
A: J40-50Z
B: J60-65Z

ITEM		PART NO.	DESCRIPTION	QTY A	QTY B
	a	. . . . .	Lift Cylinder	1	1
1	**a**	. . . . .	Shell	1	1
2	**a**	. . . . .	Rod	1	1
3		1355496	Gland	1	..
3		1355713	Gland	..	1
4		1355610	Spacer (5510 mm)	1	..
4		1355711	Spacer (4118 mm, 4568 mm)	..	1
4		1355751	Spacer (4868 mm, 5318 mm)	..	1
5		257913	Check Valve	1	1
6		297531	Washer	1	1
7		187388	Snap Ring	1	1
8		1319668	Wiper Ring	1	1
9		2013075	Seal	1	..
9		334156	Seal	..	1
10		59229	O-Ring	..	1
10		92861	O-Ring	1	..
11		335012	Back-Up Ring	..	1
11		638246	Back-Up Ring	1	..
12		1356750	Wear Ring	1	..
12		1356751	Wear Ring	..	1
13		39348	O-Ring	1	1
14		1381095	Rod Seal	1	1
15		1356748	Piston Ring	..	1
15		1360127	Piston Ring	1	..
		1355497	Seal Kit (Includes Items 8-15)	1	..
		1355714	Seal Kit (Includes Items 8-15)	..	1

FOOTNOTES:
a Refer to Table

©2003 HYSTER COMPANY

NOTES

FREE-LIFT CYLINDER (Figure 8-7)
THREE STAGE FULL FREE-LIFT

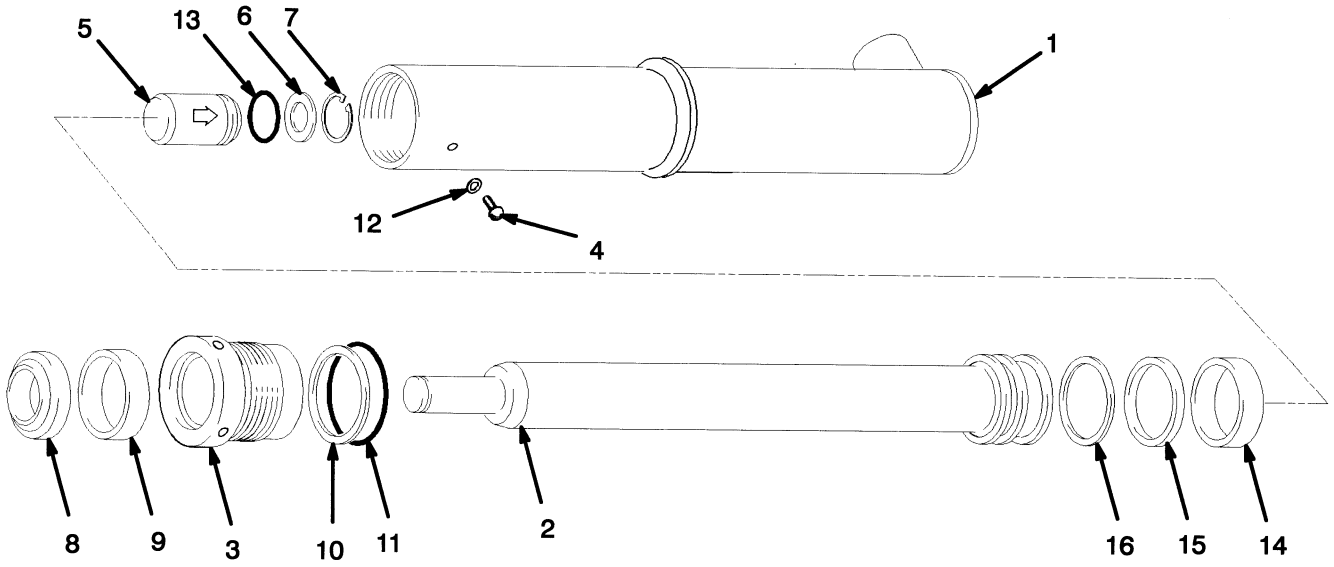

HP170168

©2003 HYSTER COMPANY

FREE-LIFT CYLINDER
THREE STAGE FULL FREE-LIFT

J40-50Z

ITEM	DESCRIPTION 1 2 3 4	LIFT HEIGHT TO BOTTOM OF FORKS		
		4310 mm (169.7 in.)	4760 mm (187.4 in.)	5510 mm (216.9 in.)
	Mast Group Number	**B508 4310**	**B508 4760**	**B508 5510**
	Cylinder Group Number	**8514556**	**8514559**	**8514565**
	Lift Cylinder	2053795	2053796	2053799
1	Shell	2058210	2058213	2058219
2	Rod	1356560	1356569	1356587

J60-65Z

ITEM	DESCRIPTION 1 2 3 4	LIFT HEIGHT TO BOTTOM OF FORKS			
		4118 mm (162.1 in.)	4568 mm (179.8 in.)	4868 mm (191.7 in.)	5318 mm (209.4 in.)
	Mast Group Number	**B563 4118**	**B563 4568**	**B563 4868**	**B563 5318**
	Cylinder Group Number	**8514507**	**8514510**	**8514513**	**8514516**
	Lift Cylinder	2053770	2053771	2053773	2053775
1	Shell	2063690	2309353	2063692	2062693
2	Rod	1356682	1356691	1356065	1356074

KEY:
A: J40-50Z
B: J60-65Z

ITEM	PART NO.	DESCRIPTION	QTY A	QTY B
	a	Lift Cylinder	1	1
1	**a**	Shell	1	1
2	**a**	Rod	1	1
3	1356292	Gland	1	..
3	1356661	Gland	..	1
4	1361302	Screw	1	1
5	257913	Check Valve	1	1
6	297531	Washer	1	1
7	187388	Snap Ring	1	1
8	2013099	Wiper	1	1
9	1358970	Seal	1	1
10	147973	Back-Up Ring	1	..
10	164840	Back-Up Ring	..	1
11	90263	O-Ring	1	..
11	15880	O-Ring	..	1
12	190887	Seal	1	1
13	39348	O-Ring	1	1

©2003 HYSTER COMPANY

FREE-LIFT CYLINDER
THREE STAGE FULL FREE-LIFT

ITEM	PART NO.	DESCRIPTION	QTY A	QTY B
14	1358972	Wear Ring	1	..
14	636941	Wear Ring	..	1
15	2013088	Seal	1	..
15	309062	Seal	..	1
16	2013089	Back-Up Ring	1	..
16	637565	Back-Up Ring	..	1
	1358969	Seal Kit (Includes Items 8-16)	1	..
	1356662	Seal Kit (Includes Items 8-16)	..	1

FOOTNOTES:
a Refer to Table

©2003 HYSTER COMPANY

NOTES

SIX ROLLER CARRIAGE (Figure 8-8)
THREE STAGE FULL FREE-LIFT

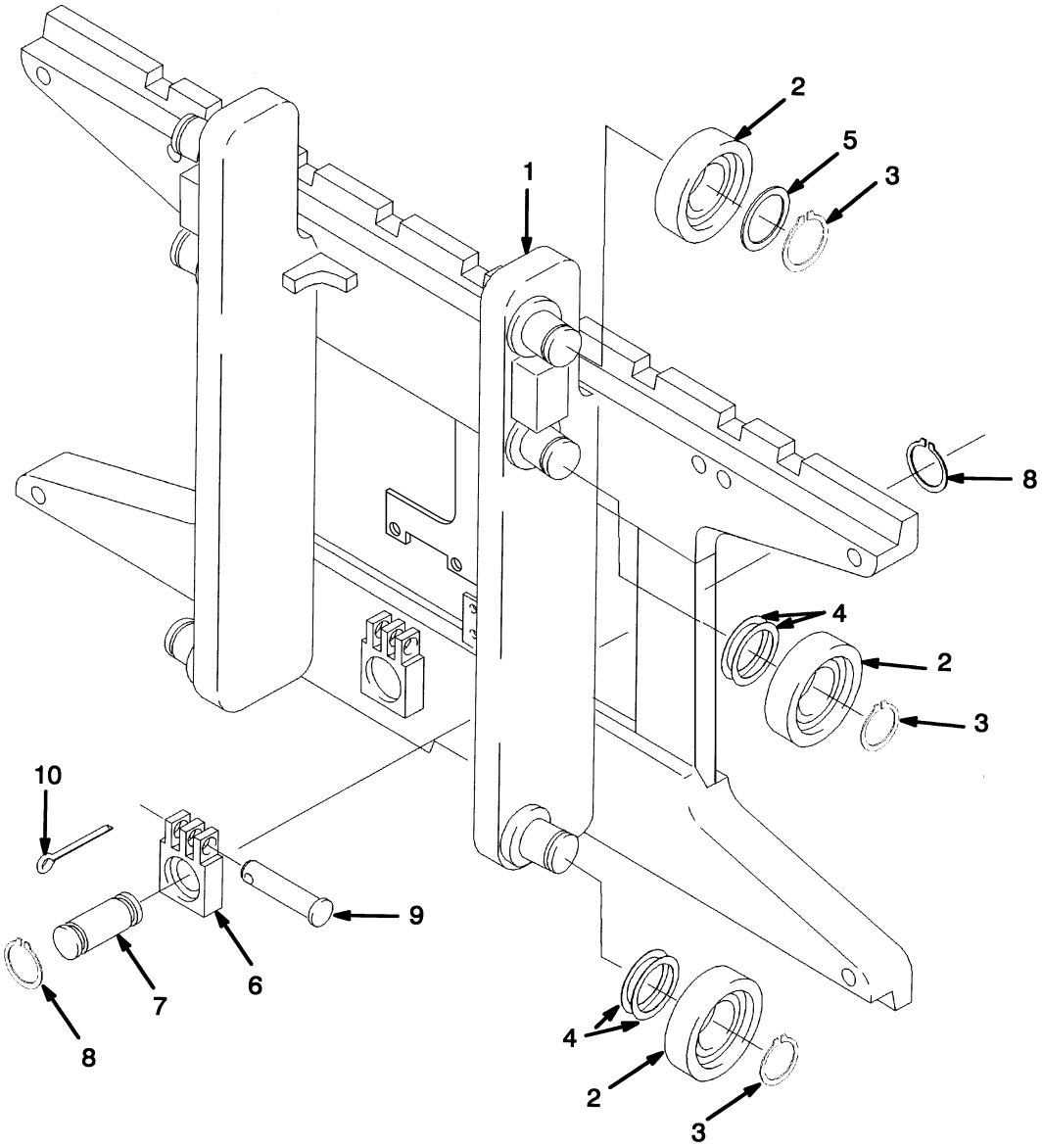

HP170506

©2003 HYSTER COMPANY

SIX ROLLER CARRIAGE
THREE STAGE FULL FREE-LIFT

KEY:
A: J40-50Z
B: J60Z

ITEM	PART NO.	DESCRIPTION	QTY A	QTY B
	1379461	Carriage Assembly (977 mm)	1	..
	1379462	Carriage Assembly (977 mm)	..	1
1	1381562	Frame (977 mm)	1	..
1	1381563	Frame (977 mm)	..	1
2	1333399	Load Roller	6	6
3	58901	Snap Ring	6	..
4	129387	Shim (0.020 in.)	AR	AR
5	366115	Spacer	2	2
6	1369345	Chain Anchor (Dual Hole)	2	..
6	1369344	Chain Anchor (Dual Hole)	..	2
6	1504010	Chain Anchor (Single Hole) (Optional)	2	..
6	1504012	Chain Anchor (Single Hole) (Optional)	..	2
7	317735	Pin	2	2
8	131358	Snap Ring	4	4
9	1514866	Pin	2	2
10	15211	Cotter Pin	2	2

©2003 HYSTER COMPANY

HEADER HOSE (Figure 8-9)
THREE STAGE FULL FREE-LIFT

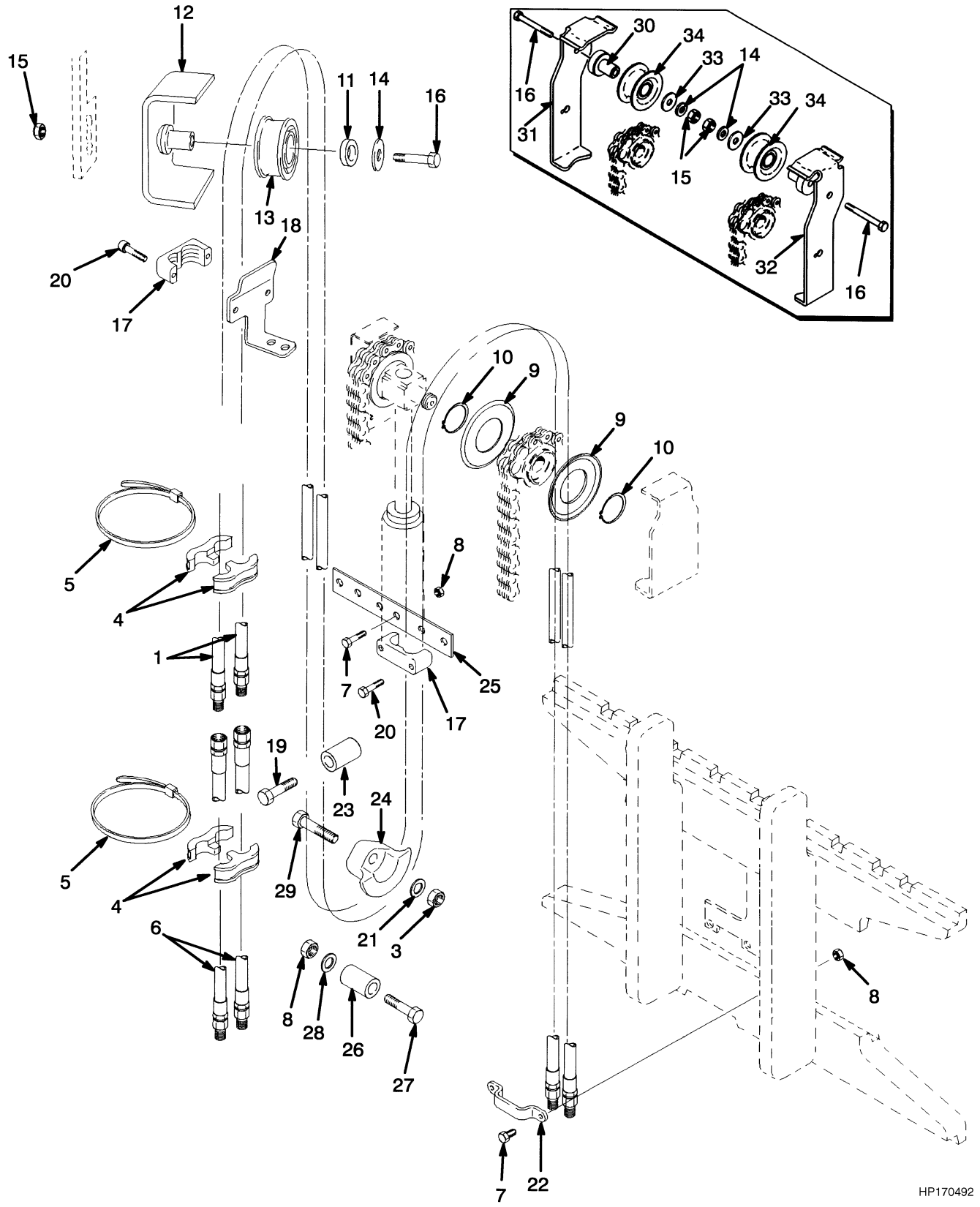

©2003 HYSTER COMPANY

HEADER HOSE
THREE STAGE FULL FREE-LIFT

J40-50Z

ITEM	DESCRIPTION 1 2 3 4	LIFT HEIGHT TO BOTTOM OF FORKS		
		4310 mm (169.7 in.)	4760 mm (187.4 in.)	5510 mm (216.9 in.)
	Mast Group Number	B508 4310	B508 4760	B508 5510
1	Hose	1376127	1345581	1376163

J60-65Z

ITEM	DESCRIPTION 1 2 3 4	LIFT HEIGHT TO BOTTOM OF FORKS			
		4118 mm (162.1 in.)	4568 mm (179.8 in.)	4868 mm (191.7 in.)	5318 mm (209.4 in.)
	Mast Group Number	B563 4118	B563 4568	B563 4868	B563 5318
1	Hose	1376127	1345581	1368446	1376163

KEY:
A: Three Function
B: Four Function

ITEM	PART NO.	DESCRIPTION	QTY A	QTY B
1	**a**	Hose	2	4
2	1494017	Sheave	1	2
3	316826	Nut	1	2
4	1353530	Clamp	4	8
5	1360507	Clamp	2	4
6	1376133	Hose	2	4
7	136749	Capscrew	8	10
8	313828	Nut	9	12
9	1345199	Hose Guide	2	4
10	1345204	Snap Ring	2	4
11	1360549	Spacer	1	2
12	1362387	Stubshaft	1	2
13	1494017	Sheave	1	2
14	1345190	Washer	1	2
15	1390182	Nut	1	2
16	292533	Capscrew	1	2
17	1360386	Clamp	1	2
18	1354906	Bracket (RH)	1	1
18	1354907	Bracket (LH)	..	1
19	292534	Capscrew	1	2
20	293795	Capscrew	4	8
21	320160	Washer	1	2
22	1369333	Clamp	1	2
23	1360538	Tube	1	2
24	1348246	Hose Guide (RH)	1	1
24	1348247	Hose Guide (LH)	..	1

©2003 HYSTER COMPANY

HEADER HOSE
THREE STAGE FULL FREE-LIFT

ITEM	PART NO.	DESCRIPTION	QTY A	QTY B
25	1353464	Plate	1	1
26	1354961	Restraint	1	2
27	214364	Capscrew	1	2
28	320158	Washer	1	2
29	287860	Capscrew	1	2
30	1396406	Stubshaft	1	2
31	1395291	Bracket (RH)	1	1
32	1395292	Bracket (LH)	..	1
33	320171	Washer	1	2
34	1494017	Sheave	2	2

FOOTNOTES:
a Refer to Table

©2003 HYSTER COMPANY

9 MAST-TWO STAGE FULL FREE-LIFT

SECTION 9
MAST-TWO STAGE FULL FREE-LIFT

DESCRIPTION **PAGE**

FREE-LIFT
TWO STAGE FULL FREE-LIFT 9-8
FREE-LIFT CYLINDER
TWO STAGE FULL FREE-LIFT 9-14
HEADER HOSE
TWO STAGE FULL FREE-LIFT 9-18
INNER MAST
TWO STAGE FULL FREE-LIFT 9-4
MAIN CYLINDER
TWO STAGE FULL FREE-LIFT
LEFT HAND 9-11
RIGHT HAND 9-12
MAIN LIFT
TWO STAGE FULL FREE-LIFT 9-6
OUTER MAST
TWO STAGE FULL FREE-LIFT 9-2
SIX ROLLER CARRIAGE
TWO STAGE FULL FREE-LIFT 9-16

©2003 HYSTER COMPANY

OUTER MAST (Figure 9-1)
TWO STAGE FULL FREE-LIFT

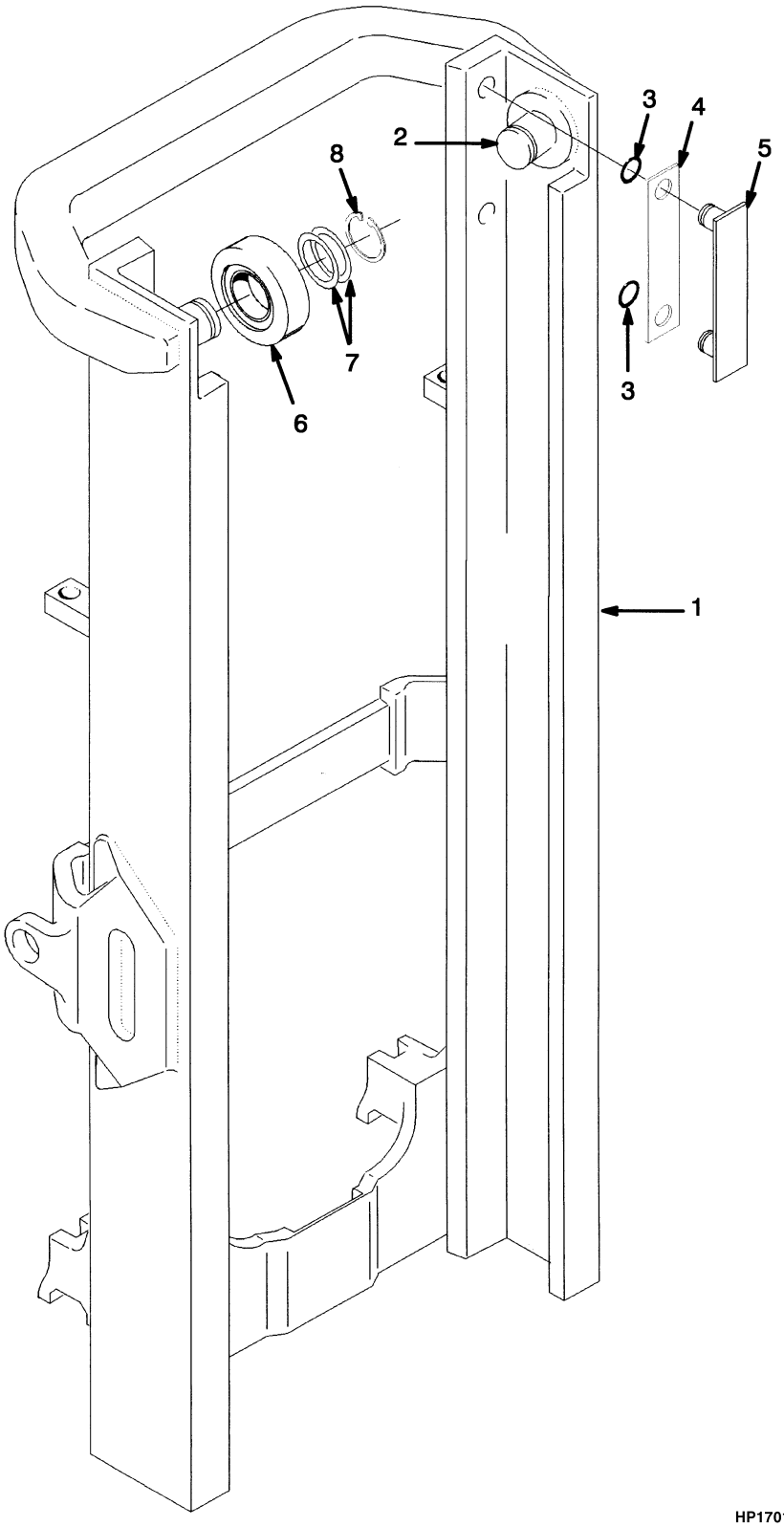

©2003 HYSTER COMPANY

OUTER MAST
TWO STAGE FULL FREE-LIFT

ITEM		PART NO.	DESCRIPTION	QTY
1	**a**	1341005	Outer Mast (B509-2962-116.6 in.)	1
1	**a**	1341008	Outer Mast (B509-3262-128.4 in.)	1
1	**b**	1341008	Outer Mast (B564-3160-124.4 in.)	1
2		1345216	Stubshaft	2
3		104506	O-Ring	4
4		131716	Shim (0.020 in.)	4
5		215211	Bearing Strip	2
6		1333396	Load Roller	2
7		129387	Shim (0.020 in.)	AR
8		58901	Snap Ring	2

FOOTNOTES:
a J40-50Z
b J60-65Z

©2003 HYSTER COMPANY

INNER MAST (Figure 9-2)
TWO STAGE FULL FREE-LIFT

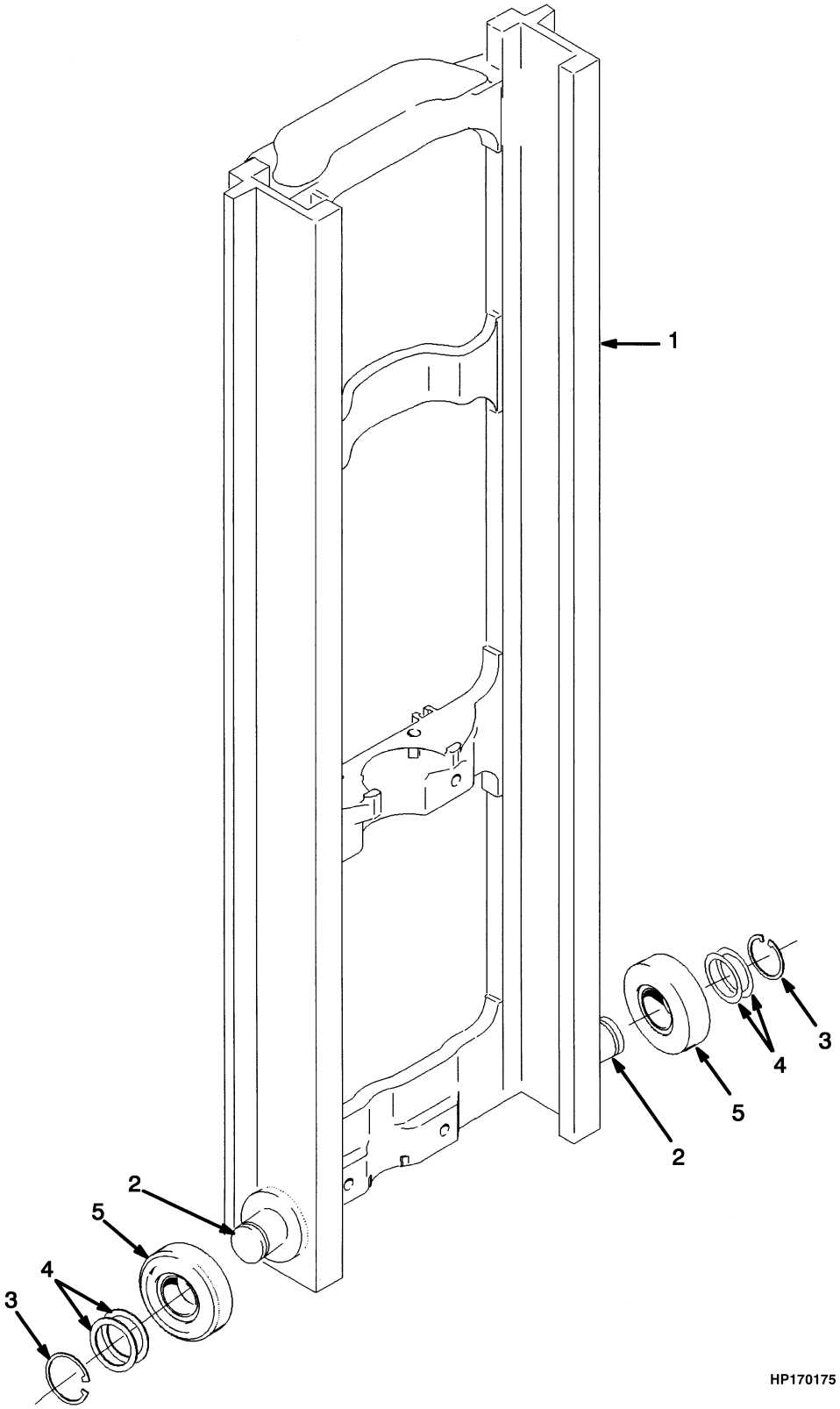

©2003 HYSTER COMPANY

INNER MAST
TWO STAGE FULL FREE-LIFT

ITEM		PART NO.	DESCRIPTION	QTY
1	**a**	1342474	Inner Mast (B509-2962-116.6 in.)	1
1	**a**	1342477	Inner Mast (B509-3262-128.4 in.)	1
1	**b**	1342477	Inner Mast (B564-3160-124.4 in.)	1
2		1345216	Stubshaft	2
3		58901	Snap Ring	2
4		129387	Shim (0.020 in.)	AR
5		1333396	Load Roller	2

FOOTNOTES:
a J40-50Z
b J60-65Z

©2003 HYSTER COMPANY

MAIN LIFT (Figure 9-3)
TWO STAGE FULL FREE-LIFT

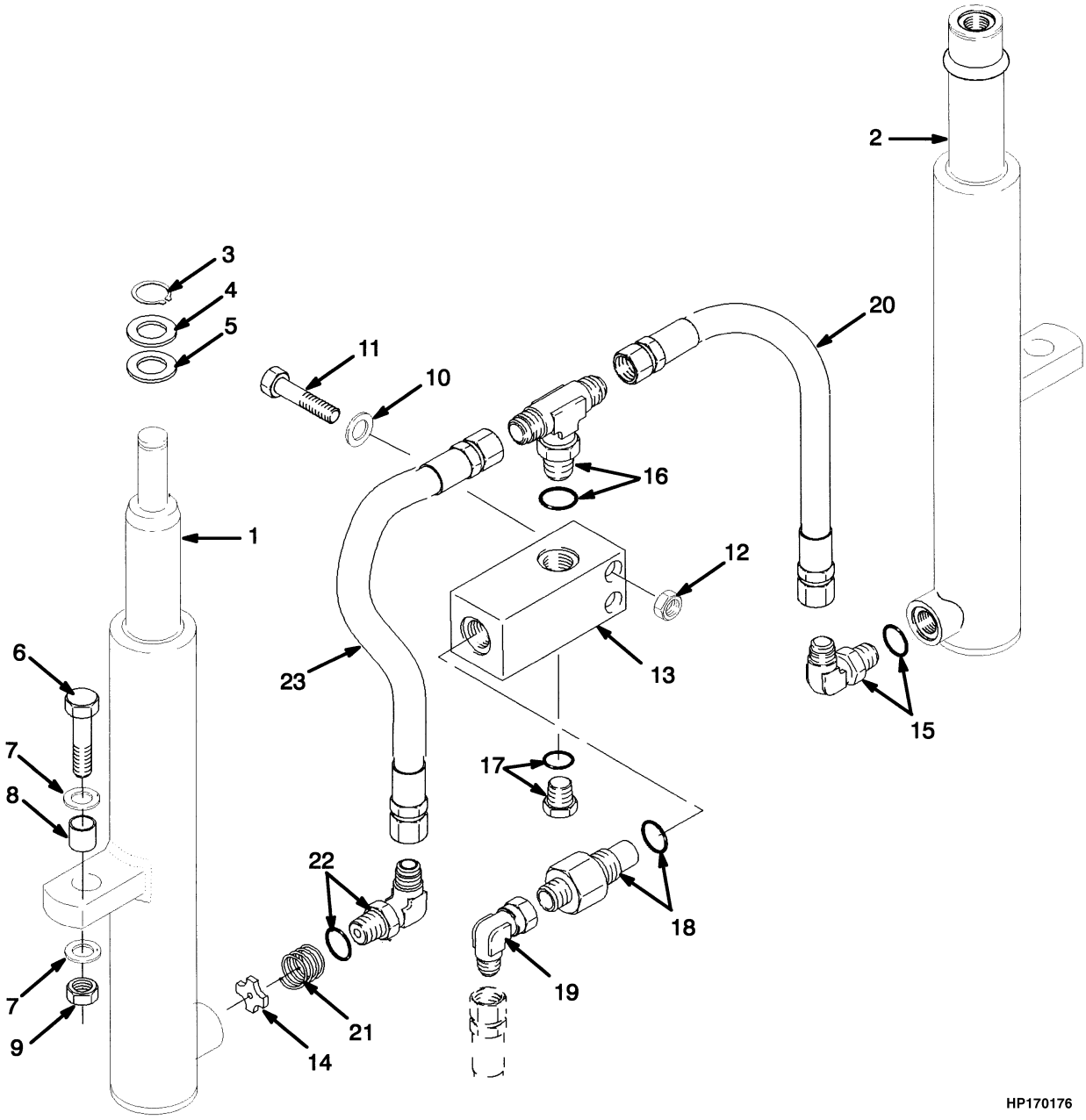

©2003 HYSTER COMPANY

MAIN LIFT
TWO STAGE FULL FREE-LIFT

ITEM	PART NO.	DESCRIPTION	QTY
1	. . . . .	Cylinder (RH) (☞ Figure 9-6)	1
2	. . . . .	Cylinder (LH) (☞ Figure 9-5)	1
3	131358	Snap Ring	1
4	1333382	Washer (0.060 in.)	1
5	1354915	Washer (0.010 in.)	AR
5	1354916	Washer (0.030 in.)	AR
5	1354917	Washer (0.060 in.)	AR
6	292532	Capscrew	2
7	296422	Washer	4
8	323090	Spacer	2
9	300937	Nut	2
10	320157	Washer	2
11	214364	Capscrew	2
12	313828	Nut	2
13	1379687	Housing	1
13	1333392	Housing (Optional)	1
14	357749	Washer	1
15	16560	Fitting	1
15	16485	O-Ring	1
16	16578	Fitting	1
16	16485	O-Ring	1
17	14603	Fitting	1
17	16486	O-Ring	1
18	2309766	Control Valve (Lowering) (J40-50Z)	1
18	316306	Control Valve (Lowering) (J60-65Z)	1
18	16982	O-Ring	1
19	16882	Fitting	1
20	1345403	Hose	1
21	337179	Spring	1
22	189595	Fitting	1
22	16485	O-Ring	1
23	1462551	Hose	1

©2003 HYSTER COMPANY

FREE-LIFT (Figure 9-4)
TWO STAGE FULL FREE-LIFT

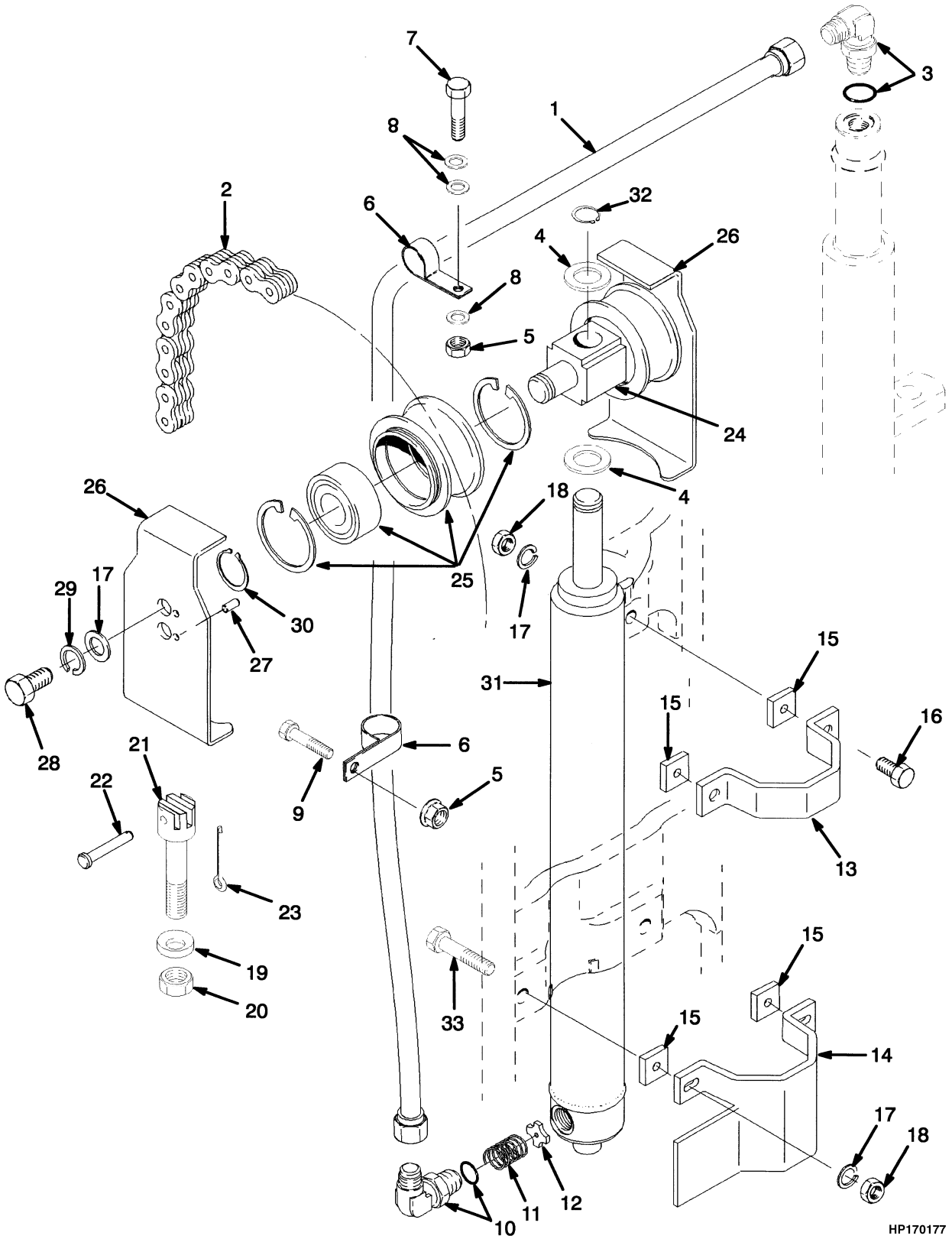

©2003 HYSTER COMPANY

FREE-LIFT
TWO STAGE FULL FREE-LIFT

KEY:
A: J40-50Z
B: J60-65Z

ITEM		PART NO.	DESCRIPTION	QTY A	QTY B
1	**bc**	1345314	Tube	1	1
1	**a**	1345311	Tube	1	..
2	**a**	180074	Chain	2	..
2	**b**	180177	Chain	2	..
2	**c**	1342376	Chain	..	2
3		1380036	Fitting	1	1
3		16485	O-Ring	1	1
4		1362433	Spacer	AR	AR
5		316826	Nut	2	2
6		178119	Clamp	2	2
7		296028	Capscrew	1	1
8		320159	Washer	3	3
9		136985	Capscrew	1	1
10		1354956	Fitting	1	1
10		16485	O-Ring	1	1
11		154355	Spring	1	1
12		356505	Washer	1	1
13		1465504	Clamp	1	1
14		1354967	Bracket	1	1
15		1354902	Spacer	..	4
16		292529	Capscrew	2	..
16		292530	Capscrew	..	2
17		320161	Washer	6	6
18		300937	Nut	4	4
19		296426	Washer (Hardened)	2	2
20		60137	Nut	2	2
21		1369357	Chain Anchor	2	..
21		1369356	Chain Anchor	..	2
22		1514866	Pin	2	2
23		15211	Cotter Pin	2	2
24		1378690	Crosshead	1	1
25		1379682	Chain Sheave Assembly	2	..
25		1379683	Chain Sheave Assembly	..	2
25		1378692	Sheave	1	..
25		1378693	Sheave	..	1
25		37752	Snap Ring	2	2
25		1378699	Bearing	1	1
26		1395285	Chain Guard	2	2
27		302461	Pin	2	2
28		292526	Capscrew	2	2
29		292683	Lockwasher	2	2
30		304526	Snap Ring	2	2
31		. . . . .	Free-Lift Cylinder (☞ Figure 9-7)	1	1

©2003 HYSTER COMPANY

FREE-LIFT
TWO STAGE FULL FREE-LIFT

ITEM	PART NO.	DESCRIPTION	QTY A	QTY B
32	131358	Snap Ring	1	1
33	287837	Capscrew	2	2

FOOTNOTES:
a B509-2962-116.6 in.
b B509-3262-128.4 in.
c B564-3160-124.4 in.

©2003 HYSTER COMPANY

MAIN CYLINDER (Figure 9-5)
TWO STAGE FULL FREE-LIFT
LEFT HAND

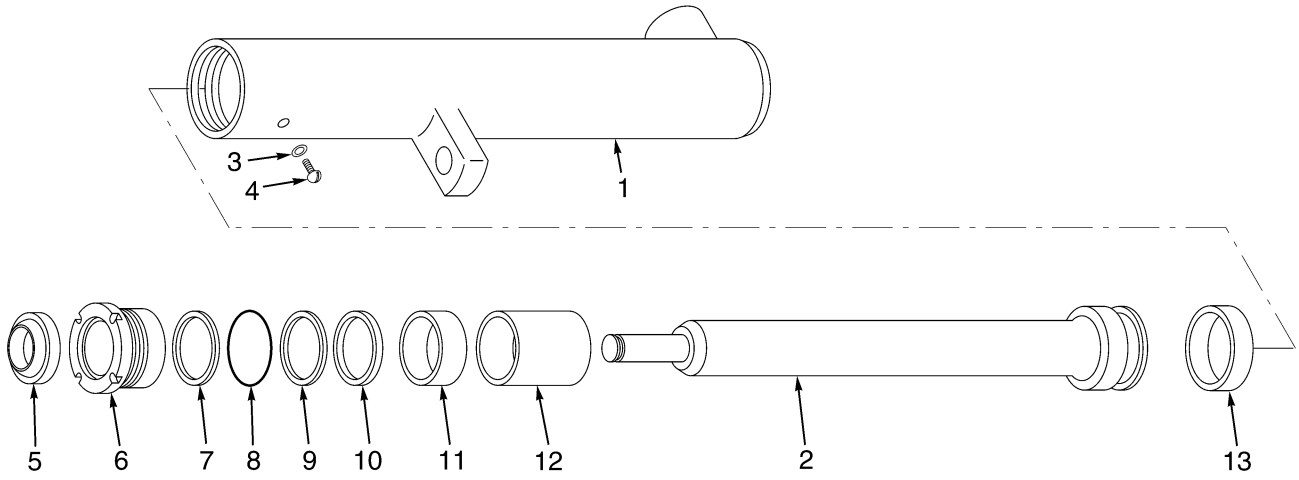

KEY:
A: J40-50Z
B: J60-65Z

ITEM		PART NO.	DESCRIPTION	QTY A	QTY B
	a	2045776	Main Lift Cylinder (Group Number 8509506)	1	..
	b	2045705	Main Lift Cylinder (Group Number 8509509)	1	..
	c	2045750	Main Lift Cylinder (Group Number 8509559)	..	1
1	**a**	1355910	Shell	1	..
1	**bc**	1355928	Shell	1	1
2	**a**	1355911	Rod	1	..
2	**bc**	1355929	Rod	1	1
3		190887	Seal	1	1
4		295649	Screw	1	1
5		1319668	Wiper Ring	1	1
6		1380879	Gland	1	1
7		147972	Back-Up Ring	1	1
8		59229	O-Ring	1	1
9		322824	Back-Up Ring	1	1
10		1381095	Rod Seal	1	1
11		322902	Wear Ring	1	1
12		2046715	Spacer	..	1
13		1356747	Wear Ring	1	1
		1496922	Seal Kit (Includes Items 3, 5, 7-11, 13)	1	1

FOOTNOTES:
a B509-2962-116.6 in.
b B509-3262-128.4 in.
c B564-3160-124.4 in.

MAIN CYLINDER (Figure 9-6)
TWO STAGE FULL FREE-LIFT
RIGHT HAND

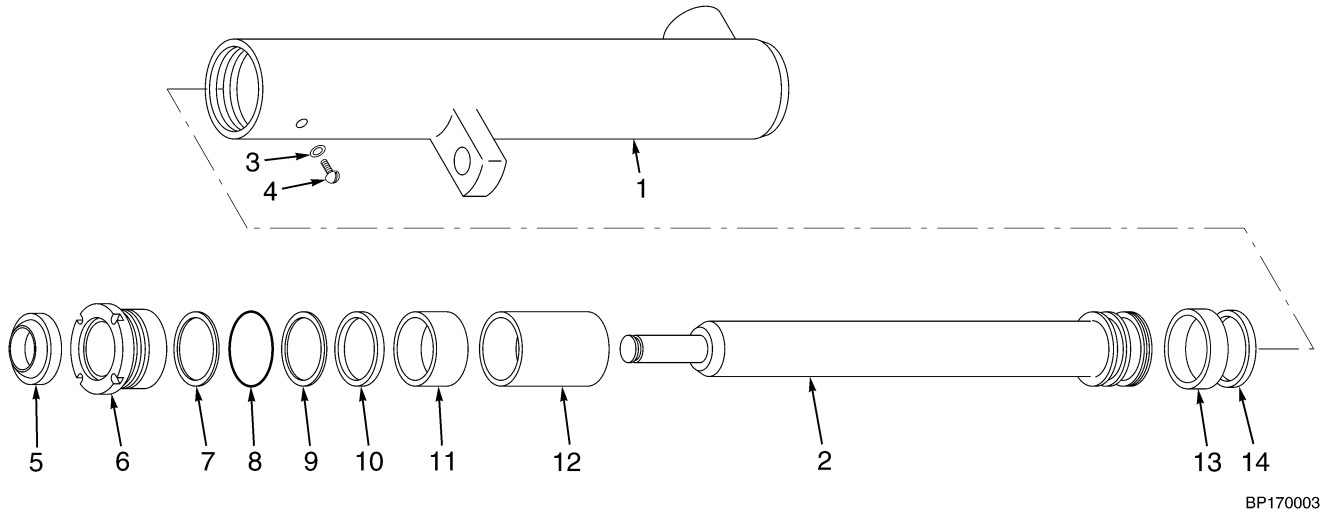

KEY:
A: J40-50Z
B: J60-65Z

ITEM		PART NO.	DESCRIPTION	QTY A	QTY B
	a	2045869	Main Lift Cylinder (Group Number 8509606)	1	..
	b	2045795	Main Lift Cylinder (Group Number 8509609)	1	..
	c	2045844	Main Lift Cylinder (Group Number 8509659)	..	1
1	**a**	1356783	Shell	1	..
1	**bc**	1356786	Shell	1	1
2	**a**	1358937	Rod	1	..
2	**bc**	1358940	Rod	1	1
3		190887	Seal	1	1
4		295649	Screw	1	1
5		1319668	Wiper Ring	1	1
6		1380879	Gland	1	1
7		147972	Back-Up Ring	1	1
8		59229	O-Ring	1	1
9		322824	Back-Up Ring	1	1
10		1381095	Rod Seal	1	1
11		322902	Wear Ring	1	1
12		2046715	Spacer	..	1
13		1356747	Wear Ring	1	1
14		1356748	Piston Ring	1	1
		1496922	Seal Kit (Includes Items 3, 5, 7-11, 13-14)	1	1

FOOTNOTES:
a B509-2962-116.6 in.
b B509-3262-128.4 in.
c B564-3160-124.4 in.

©2003 HYSTER COMPANY

NOTES

FREE-LIFT CYLINDER (Figure 9-7)
TWO STAGE FULL FREE-LIFT

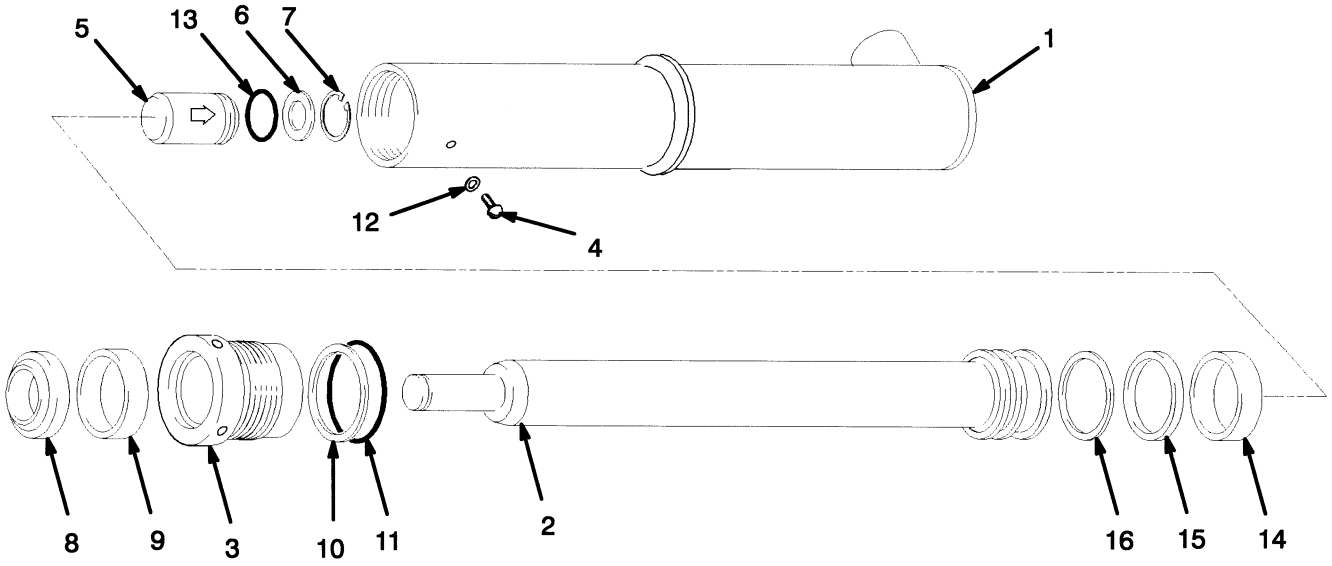

HP170180

©2003 HYSTER COMPANY

FREE-LIFT CYLINDER
TWO STAGE FULL FREE-LIFT

KEY:
A: J40-50Z
B: J60-65Z

ITEM		PART NO.	DESCRIPTION	QTY A	QTY B
	a	2053795	Lift Cylinder (Group Number 8514556)	1	..
	b	2053796	Lift Cylinder (Group Number 8514559)	1	..
	c	2061868	Lift Cylinder (Group Number 8514509)	..	1
1	**a**	2058210	Shell	1	..
1	**b**	2058213	Shell	1	..
1	**c**	2058253	Shell	..	1
2	**a**	1356566	Rod	1	..
2	**b**	1356569	Rod	1	..
2	**c**	1356688	Rod	..	1
3		1356292	Gland	1	..
3		1356661	Gland	..	1
4		1361302	Screw	1	1
5		257913	Check Valve	1	1
6		297531	Washer	1	1
7		187388	Snap Ring	1	1
8		2013099	Wiper	1	1
9		1358970	Seal	1	1
10		147973	Back-Up Ring	1	..
10		164840	Back-Up Ring	..	1
11		90263	O-Ring	1	..
11		15880	O-Ring	..	1
12		190887	Seal	1	1
13		39348	O-Ring	1	1
14		1358972	Wear Ring	1	..
14		636941	Wear Ring	..	1
15		2013088	Seal	1	..
15		309062	Seal	..	1
16		2013089	Back-Up Ring	1	..
16		637565	Back-Up Ring	..	1
		1358969	Seal Kit (Includes Items 8-16)	1	..
		1356662	Seal Kit (Includes Items 8-16)	..	1

FOOTNOTES:
a B509-2962-116.6 in.
b B509-3262-128.4 in.
c B564-3160-124.4 in.

©2003 HYSTER COMPANY

SIX ROLLER CARRIAGE (Figure 9-8)
TWO STAGE FULL FREE-LIFT

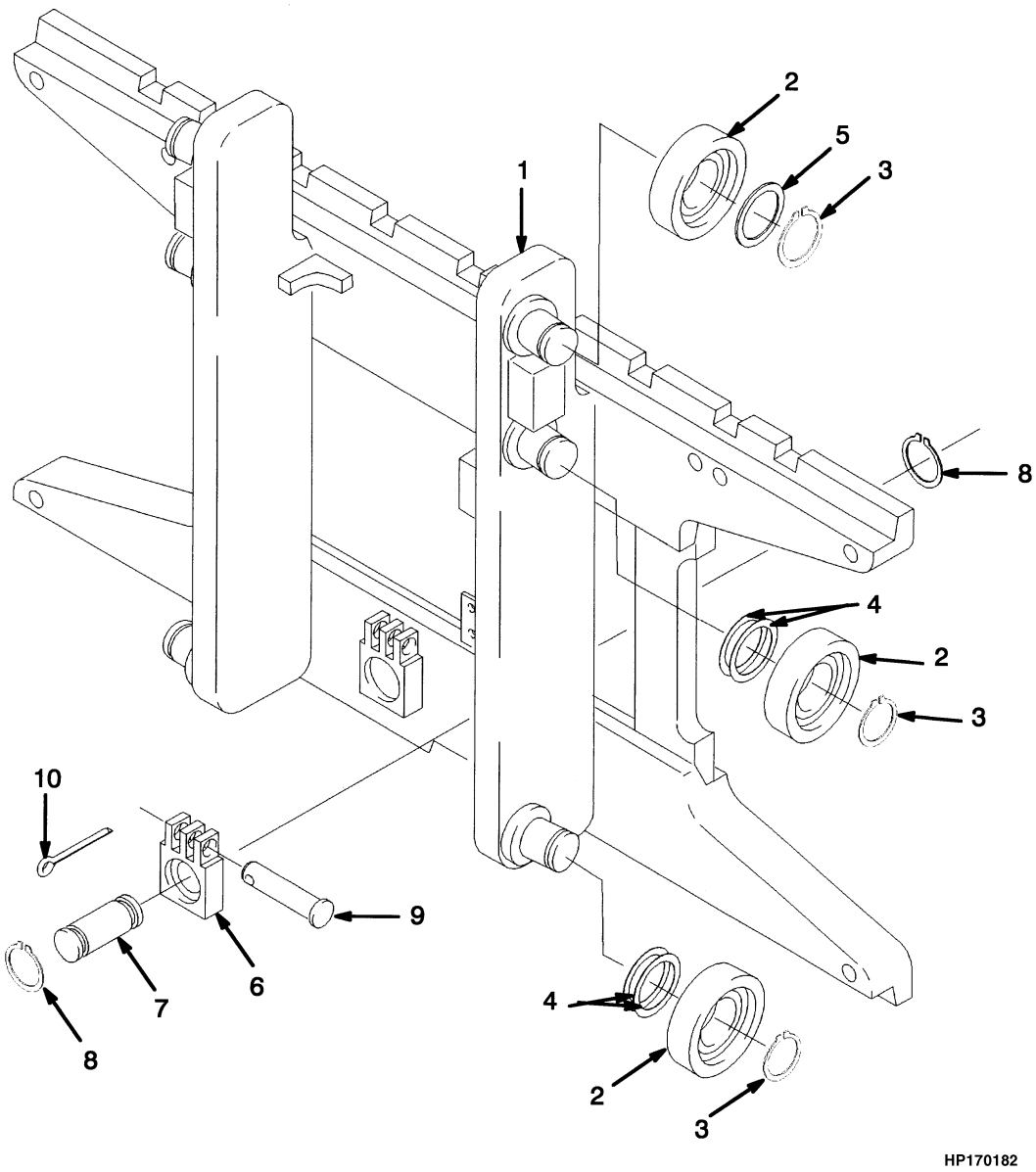

©2003 HYSTER COMPANY

SIX ROLLER CARRIAGE
TWO STAGE FULL FREE-LIFT

KEY:
A: J40-50Z
B: J60-65Z

ITEM	PART NO.	DESCRIPTION	QTY A	QTY B
	1371660	Carriage Assembly	1	..
	1371661	Carriage Assembly	..	1
1	1359245	Frame	1	..
1	1359246	Frame	..	1
2	1345219	Load Roller	6	6
3	12891	Snap Ring	6	6
4	1345263	Shim (0.020 in.)	AR	AR
5	366116	Spacer	2	2
6	1369345	Chain Anchor (Dual Hole)	2	..
6	1504010	Chain Anchor (Single Hole) (Optional)	2	..
6	1369344	Chain Anchor (Dual Hole)	..	2
6	1504012	Chain Anchor (Single Hole) (Optional)	..	2
7	317735	Pin	2	2
8	131358	Snap Ring	4	4
9	1514866	Pin	2	2
10	15211	Cotter Pin	2	2

©2003 HYSTER COMPANY

HEADER HOSE (Figure 9-9)
TWO STAGE FULL FREE-LIFT

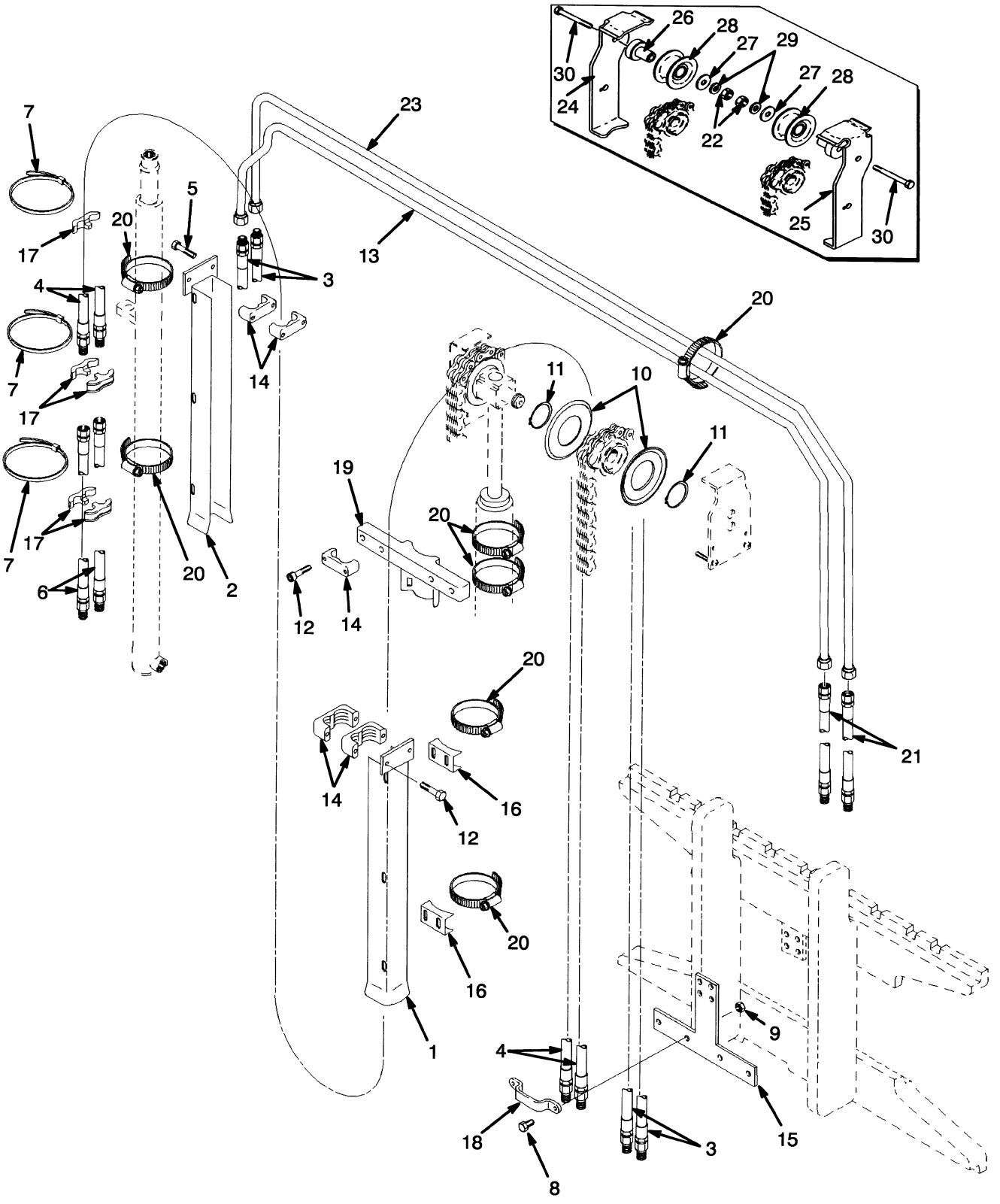

©2003 HYSTER COMPANY

HEADER HOSE
TWO STAGE FULL FREE-LIFT

KEY:
A: Three Function
B: Four Function

ITEM	PART NO.	DESCRIPTION	QTY A	QTY B
1	1365502	Channel (3160 mm, 3262 mm)	1	1
1	1365500	Channel (2962 mm)	1	1
2	1365517	Channel (3160 mm, 3262 mm)	1	1
2	1365514	Channel (2962 mm)	1	1
3	1368400	Hose (3160 mm, 3262 mm)	2	2
3	1345571	Hose (2962 mm)	2	2
4	1376120	Hose (3160 mm, 3262 mm)	2	2
4	1368442	Hose (2962 mm)	2	2
5	296000	Capscrew	..	4
6	1539697	Hose	..	2
7	1360507	Clamp	5	8
8	136749	Capscrew	6	8
9	313828	Nut	6	8
10	1345199	Hose Guide	2	4
11	1345204	Snap Ring	2	4
12	293796	Capscrew	6	8
13	1360364	Tube (3160 mm, 3262 mm)	1	1
13	1360361	Tube (2962 mm)	1	1
14	1360386	Clamp	3	6
15	1381771	Bracket	1	..
15	1381772	Bracket	..	1
16	1345423	Clamp	2	2
17	1353530	Clamp	5	10
18	1369333	Clamp	1	2
19	1354918	Bracket	1	1
20	1360508	Clamp	5	5
21	1539697	Hose	2	2
22	300937	Nut	1	2
23	1360334	Tube (3160 mm, 3262 mm)	1	1
23	1360331	Tube (2962 mm)	1	1
24	1395291	Bracket (RH)	1	1
25	1395292	Bracket (LH)	..	1
26	1396406	Stubshaft	1	2
27	320171	Washer	1	2
28	1494017	Sheave	1	2
29	1345190	Washer	1	2
30	292533	Capscrew	1	2

©2003 HYSTER COMPANY

NOTES

10 OPTIONS

SECTION 10
OPTIONS

DESCRIPTION	PAGE
AUDIBLE ALARM	10-14
BRAKE AND BACK-UP LIGHT	10-8
DC CONVERTER	10-17
HEAD LIGHTS	10-10
INTERFACE CABLE	10-16
SIDE-SHIFT CARRIAGE	
CLASS II	10-2
CLASS III	10-4
SIDE-SHIFT CYLINDER	10-6
STROBE LIGHT	10-12

©2003 HYSTER COMPANY

SIDE-SHIFT CARRIAGE (Figure 10-1)
CLASS II

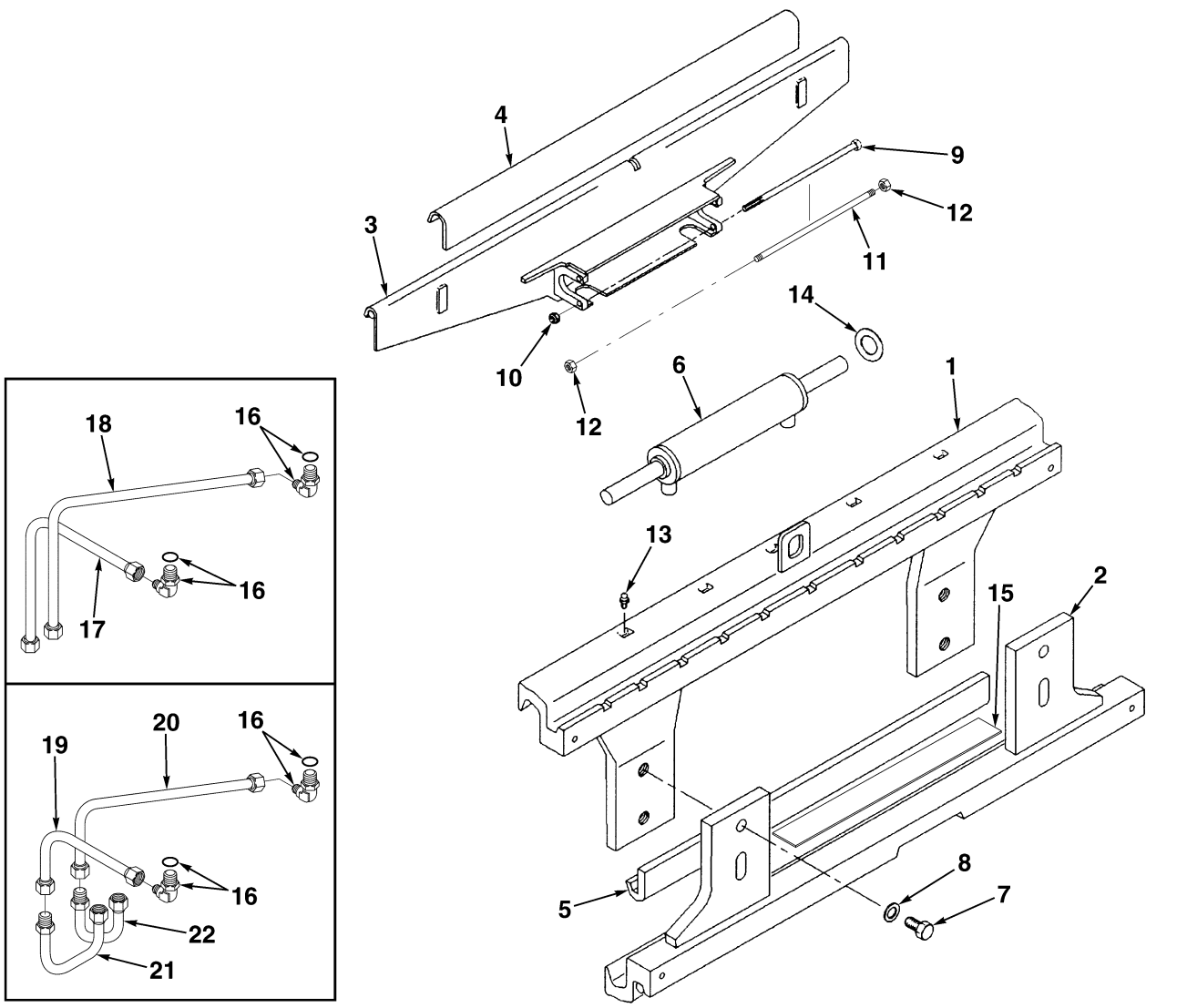

©2003 HYSTER COMPANY

SIDE-SHIFT CARRIAGE
CLASS II

KEY:
A: Two Stage Limited Free-Lift
B: Two Stage and Three Stage Full Free-Lift

ITEM	PART NO.	DESCRIPTION	QTY A	QTY B
	1399039	Side-Shift Carriage (38 in.)	1	1
1	1355533	Apron (38 in.) (Top)	1	1
2	1378053	Apron (38 in.) (Lower)	1	1
3	1399004	Support (38 in.)	1	1
4	1396458	Bearing (Top)	1	1
5	1378063	Bearing (Lower)	1	1
6	1360125	Side-Shift Cylinder (J40-50Z) (☞ Figure 10-3)	1	1
6	1360126	Side-Shift Cylinder (J60-65Z) (☞ Figure 10-3)	1	1
7	293704	Capscrew	4	4
8	296431	Washer	4	4
9	1371289	Capscrew	2	2
10	313828	Nut	2	2
11	1358809	Rod (Optional)	2	2
12	313828	Nut (Optional)	4	4
13	16041	Lube Fitting	3	3
14	1358821	Shim (0.020 in.)	AR	AR
15	1396429	Shim (38 in.) (Lower Bearing)	AR	AR
16	239784	Fitting	2	2
16	16481	O-Ring	1	1
17	1369360	Tube Assembly	1	..
17	14489	Fitting	2	..
17	222358	Fitting	2	..
18	1369361	Tube Assembly	1	..
18	14489	Fitting	2	..
18	222358	Fitting	2	..
19	1390365	Hose	..	1
20	1390366	Hose	..	1
21	1381765	Tube Assembly	..	1
21	14489	Fitting	..	2
21	222358	Fitting	..	2
22	1381766	Tube Assembly	..	1
22	14489	Fitting	..	2
22	222358	Fitting	..	2

©2003 HYSTER COMPANY

SIDE-SHIFT CARRIAGE (Figure 10-2)
CLASS III

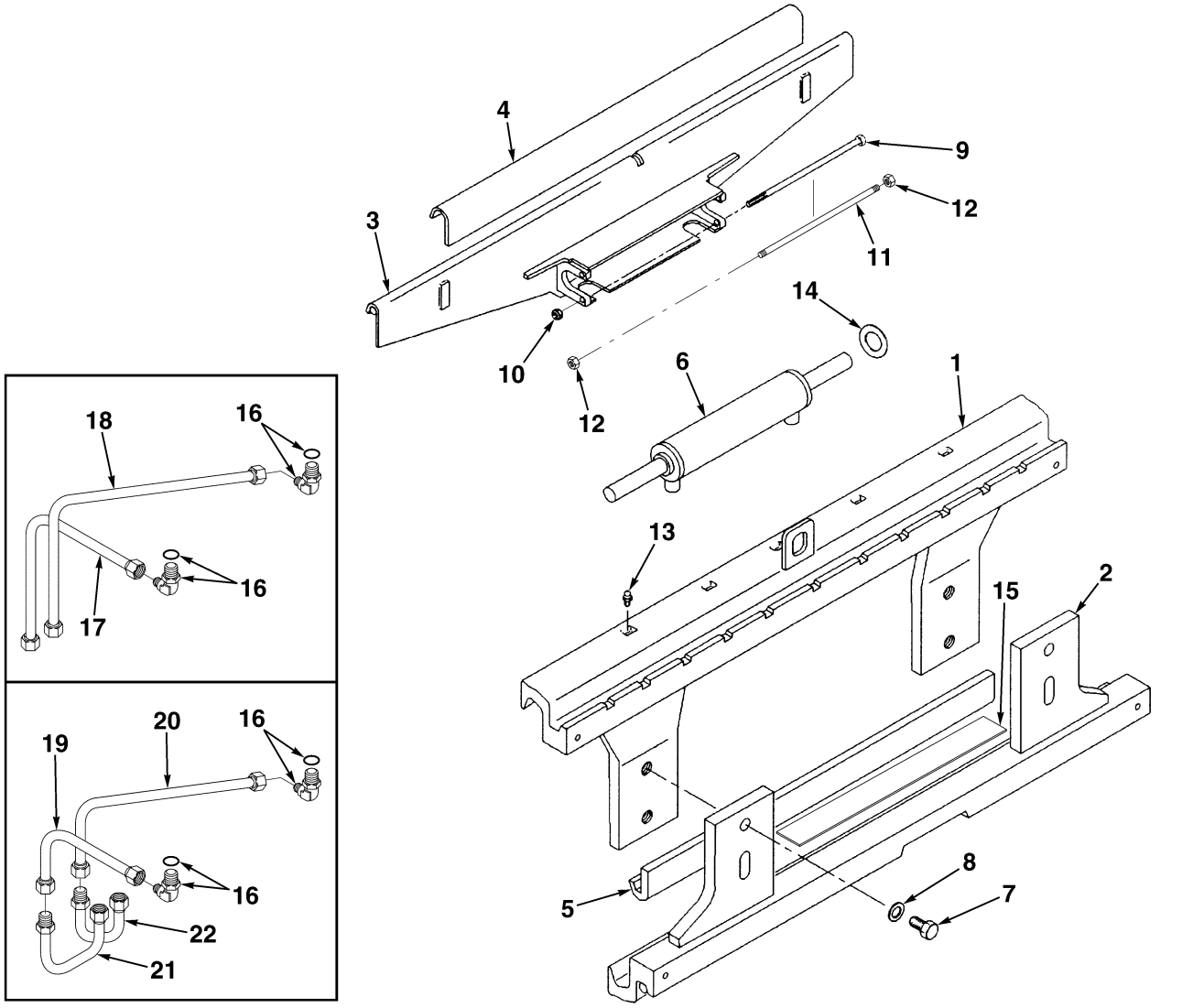

©2003 HYSTER COMPANY

SIDE-SHIFT CARRIAGE
CLASS III

KEY:
A: Two Stage Limited Free-Lift
B: Two Stage and Three Stage Full Free-Lift

ITEM	PART NO.	DESCRIPTION	QTY A	QTY B
	1399046	Side-Shift Carriage (38 in.)	1	1
1	1360273	Apron (38 in.) (Top)	1	1
2	1378071	Apron (38 in.) (Lower)	1	1
3	1399022	Support (38 in.)	1	1
4	1396471	Bearing (Top)	1	1
5	1378081	Bearing (Lower)	1	1
6	1360125	Side-Shift Cylinder (J40-50Z) (☞ Figure 10-3)	1	1
6	1360126	Side-Shift Cylinder (J60-65Z) (☞ Figure 10-3)	1	1
7	1360229	Capscrew	4	4
8	296435	Washer	4	4
9	1371289	Capscrew	2	2
10	313828	Nut	2	2
11	1358809	Rod (Optional)	2	2
12	313828	Nut (Optional)	4	4
13	16041	Lube Fitting	3	3
14	1358821	Shim (0.020 in.)	AR	AR
15	1396429	Shim (38 in.) (Lower Bearing)	AR	AR
16	239784	Fitting	2	2
16	16481	O-Ring	1	1
17	1369362	Tube Assembly	1	..
17	14489	Fitting	2	..
17	222358	Fitting	2	..
18	1369363	Tube Assembly	1	..
18	14489	Fitting	2	..
18	222358	Fitting	2	..
19	1390365	Hose	..	1
20	1390366	Hose	..	1
21	1381765	Tube Assembly	..	1
21	14489	Fitting	..	2
21	222358	Fitting	..	2
22	1381766	Tube Assembly	..	1
22	14489	Fitting	..	2
22	222358	Fitting	..	2

©2003 HYSTER COMPANY

SIDE-SHIFT CYLINDER (Figure 10-3)

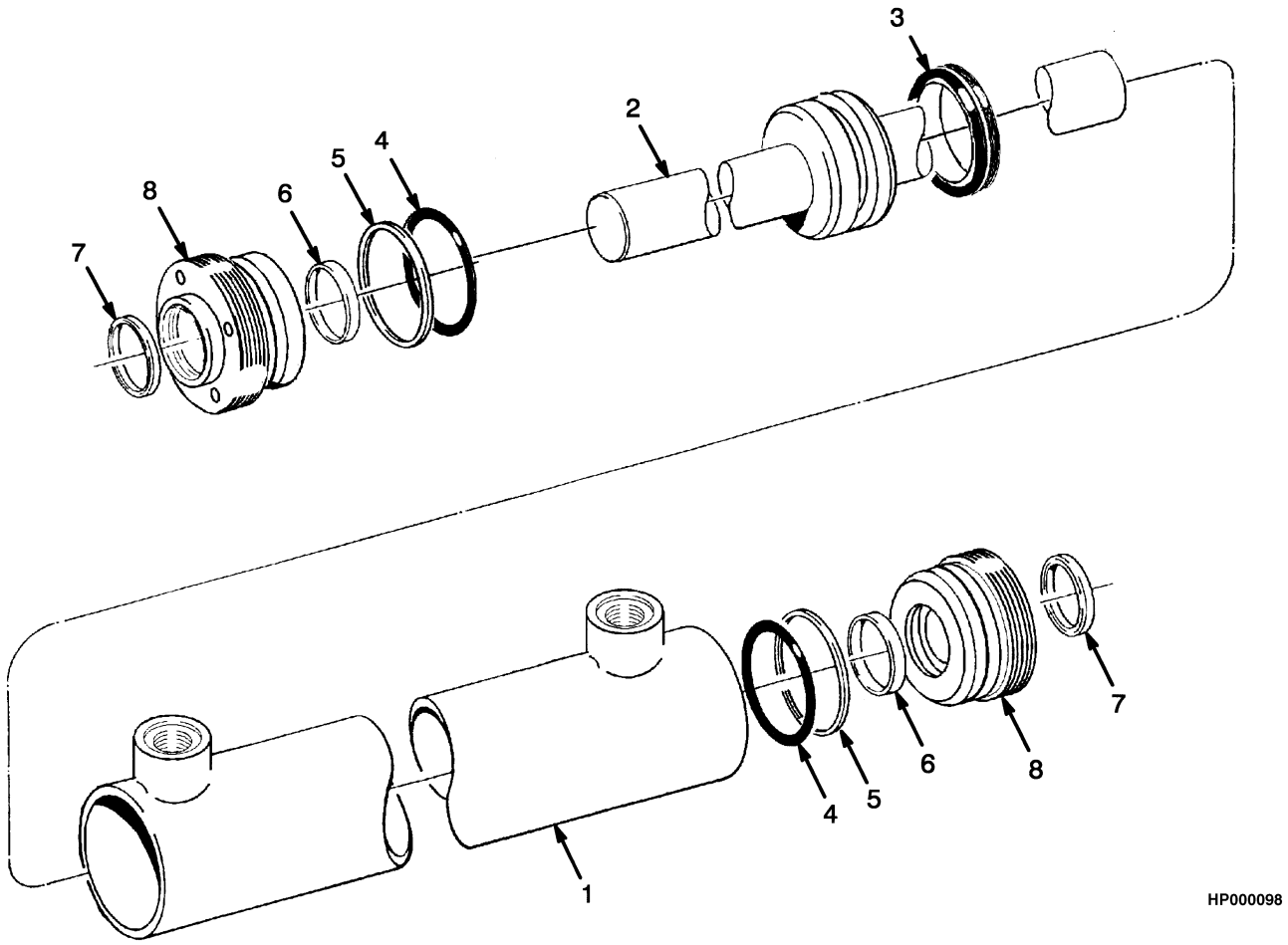

©2003 HYSTER COMPANY

SIDE-SHIFT CYLINDER

KEY:
A: J40-50Z
B: J60-65Z

ITEM	PART NO.	DESCRIPTION	QTY A	QTY B
	1360125	Side-Shift Cylinder	1	..
	1360126	Side-Shift Cylinder	..	1
1	2311471	Tube	1	..
1	2304345	Shell	..	1
2	2309719	Rod	1	..
2	2303634	Rod	..	1
3	2306755	Seal	1	..
3	1351184	Seal	..	1
4	55407	O-Ring	2	..
4	59229	O-Ring	..	2
5	153919	Back-Up Ring	2	..
5	615130	Back-Up Ring	..	2
6	294643	Seal	2	2
7	636851	Wiper Ring	2	2
8	2310768	Gland	2	..
8	2306283	Gland	..	2
	2311624	Seal Kit (Includes Items 4-7)	1	1
	2307647	Seal Kit (Includes Items 4-7)	1	1

©2003 HYSTER COMPANY

BRAKE AND BACK-UP LIGHT (Figure 10-4)

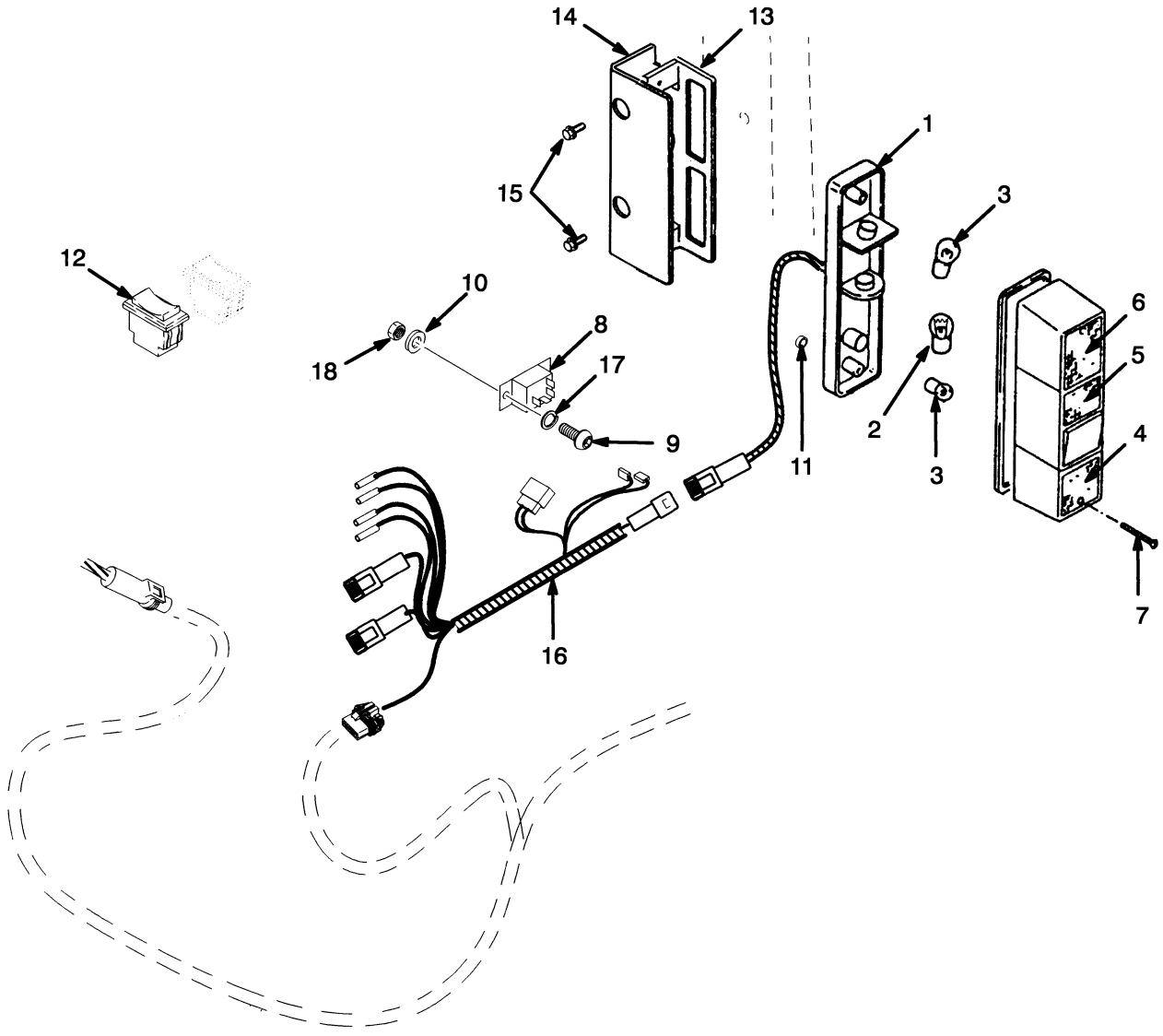

HP000446

©2003 HYSTER COMPANY

BRAKE AND BACK-UP LIGHT

ITEM	PART NO.	DESCRIPTION	QTY
1	1364541	Brake and Back-Up Light	2
2	264007	Bulb	1
3	1302258	Bulb	2
4	1376439	Lens (Clear) (Bottom)	1
5	1376440	Lens (Red) (Center)	1
6	1376441	Lens (Red) (Top)	1
7	1376446	Screw	2
8	1525827	Relay (24 Volt)	1
9	220289	Screw	2
10	197065	Washer	2
11	1364542	Clip Nut	4
12	1382302	Switch (Rear)	1
13	1379615	Plate	1
14	1379616	Plate	1
15	316678	Screw	4
16	2036274	Wire Harness (Relay)	1
17	15151	Lockwasher	2
18	15049	Nut	2

©2003 HYSTER COMPANY

HEAD LIGHTS (Figure 10-5)

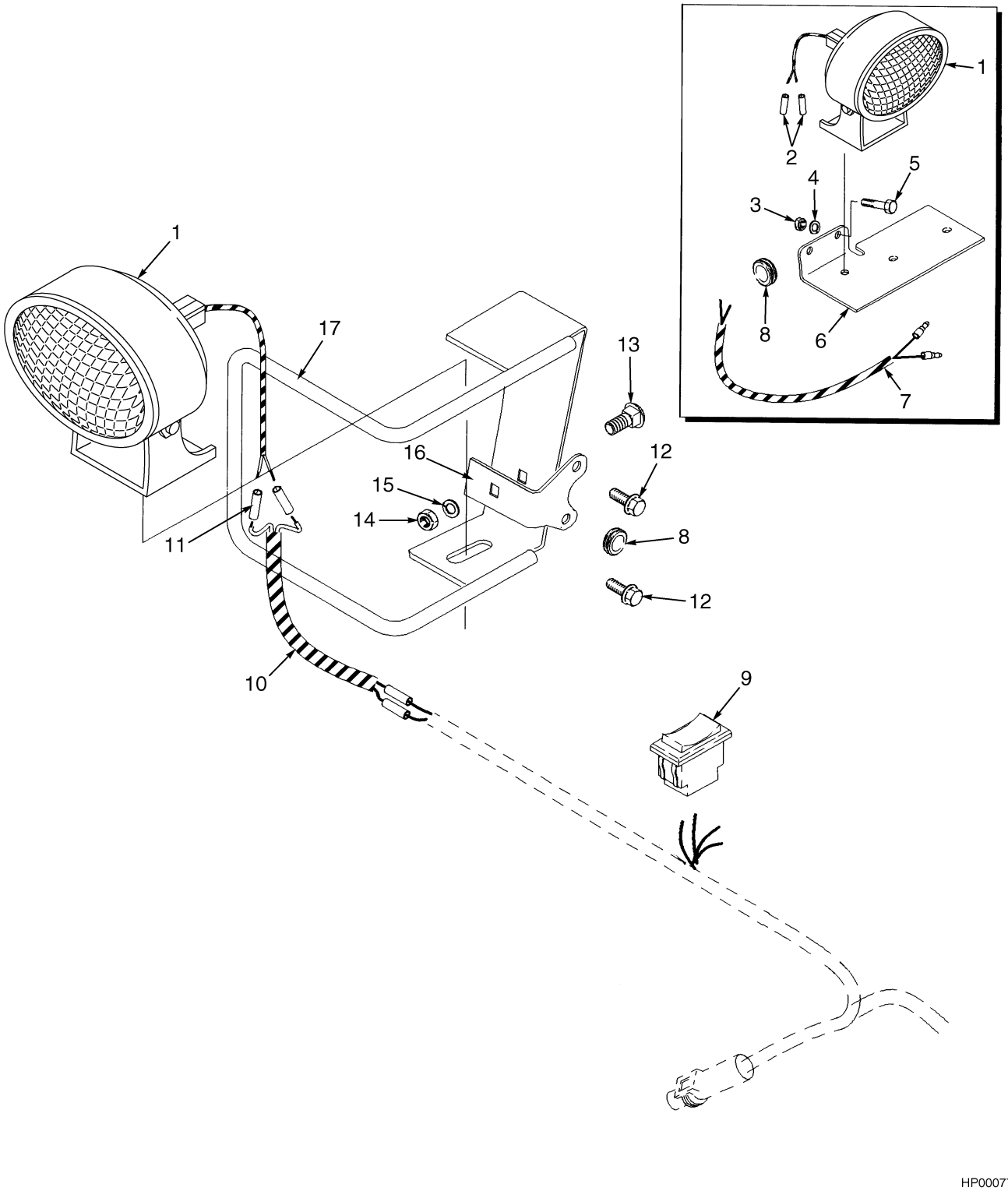

HP000774

©2003 HYSTER COMPANY

HEAD LIGHTS

ITEM	PART NO.	DESCRIPTION	QTY
1	1531981	Headlight (12 Volt)	3
2	1306270	Electrical Fitting	2
3	239503	Nut	2
4	292681	Lockwasher	2
5	176640	Capscrew	2
6	1537683	Plate	1
7	1364589	Wire Harness (Light) (Rear)	1
8	1367645	Grommet	5
9	1382303	Switch (Rear Light)	1
10	1539889	Wire Harness (Headlight)	2
11	1324307	Electrical Fitting	4
12	316678	Screw	4
13	1375168	Bolt	2
14	316835	Nut	2
15	296418	Washer	2
16	878185	Plate	2
17	1375171	Bracket (RH)	1
17	1375172	Bracket (LH)	1

©2003 HYSTER COMPANY

STROBE LIGHT (Figure 10-6)

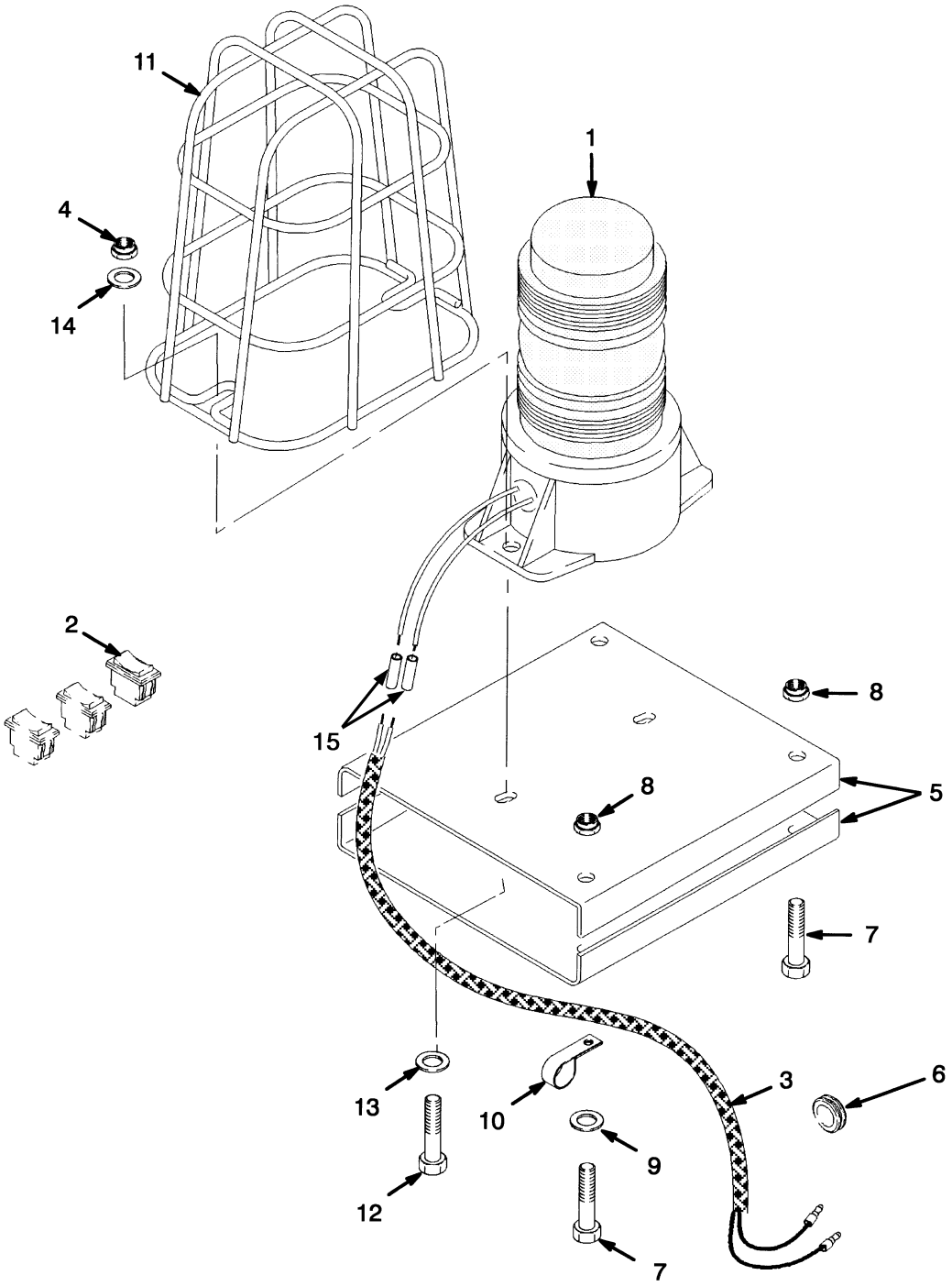

©2003 HYSTER COMPANY

STROBE LIGHT

ITEM	PART NO.	DESCRIPTION	QTY
1	1382130	Strobe Light	1
1	1526082	Lens (Amber)	1
1	1309775	Bulb	1
2	1382305	Switch	1
3	1364588	Wire Harness (Light)	1
4	15052	Nut	2
5	1364548	Bracket	2
6	1367645	Grommet	1
7	136704	Capscrew	4
8	313828	Nut	4
9	320157	Washer	1
10	164488	Clamp	1
11	1302024	Guard	1
12	220504	Screw	2
13	197067	Washer	4
14	15152	Lockwasher	2
15	1306271	Electrical Fitting	2

©2003 HYSTER COMPANY

AUDIBLE ALARM (Figure 10-7)

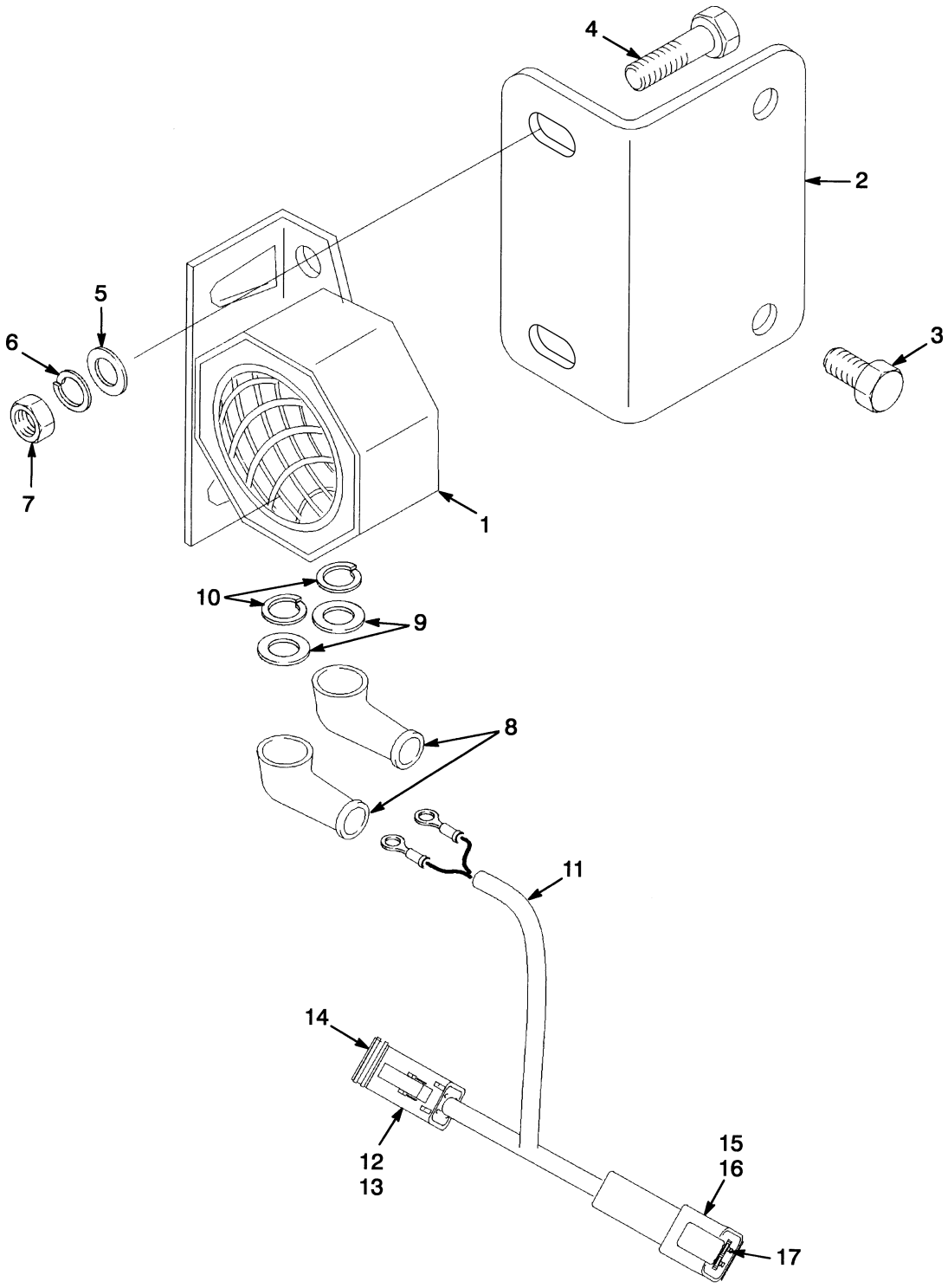

HP000460

©2003 HYSTER COMPANY

AUDIBLE ALARM

ITEM		PART NO.	DESCRIPTION	QTY
1		1350733	Alarm (87 dbA)	1
2		1528488	Plate (87 dBA)	1
3		316678	Screw	2
4		292501	Capscrew	2
5		320156	Washer	2
6		292680	Lockwasher	2
7		136687	Nut	2
8		190383	Boot	2
9		197066	Washer	2
10		15163	Lockwasher	2
11		1379637	Wire Harness	1
11	**a**	1535412	Jumper Plug (Not Illustrated)	1
12		1330411	Connector (Tail Light)	1
13		1330416	Lock (Tail Light)	1
14		1330437	Pin	4
15		1330421	Connector (Chassis Wire Harness)	1
16		1330427	Secondary Lock	1
17		1330438	Socket	4

FOOTNOTES:
a Without DC Converter

©2003 HYSTER COMPANY

INTERFACE CABLE (Figure 10-8)

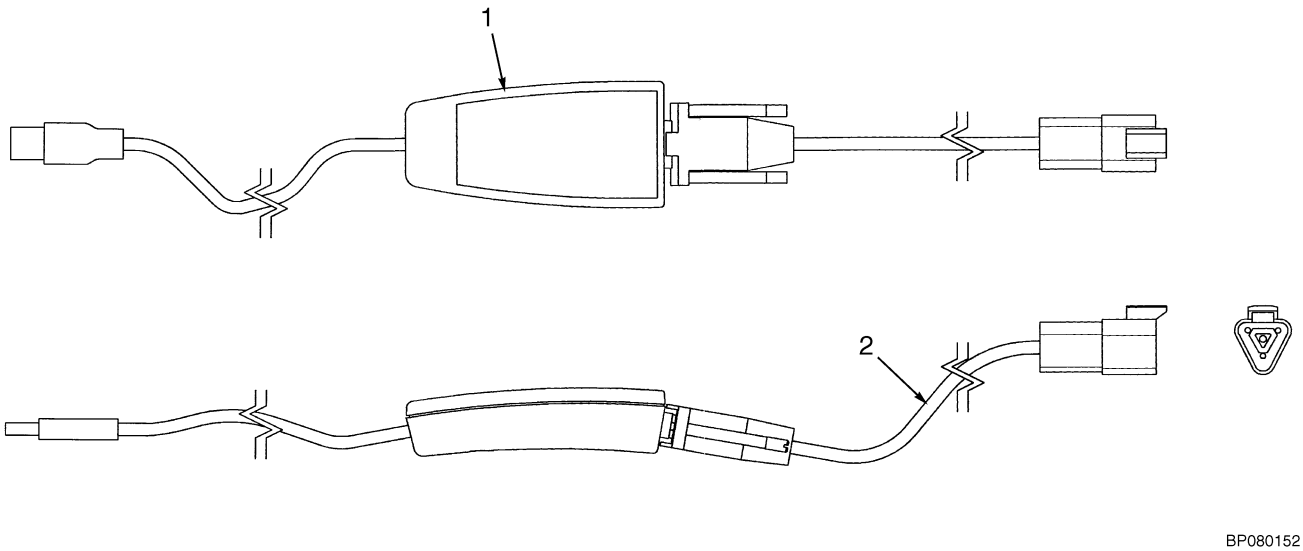

BP080152

ITEM	PART NO.	DESCRIPTION	QTY
	1534010	Interface Cable	1
1	1532578	Interface Cable Adapter	1
2	1534009	Wire Harness	1
2	1502706	Receptacle	1
2	1502707	Clamp	1
2	1502708	Screw	1
2	1330410	Connector	1
2	1532663	Connector	1
2	1463138	Terminal	3
2	381919	Conduit	AR
3	1539240	Service Software (Not Illustrated)	1
4	1542542	Service Software Data (Not Illustrated)	1

©2003 HYSTER COMPANY

DC CONVERTER (Figure 10-9)

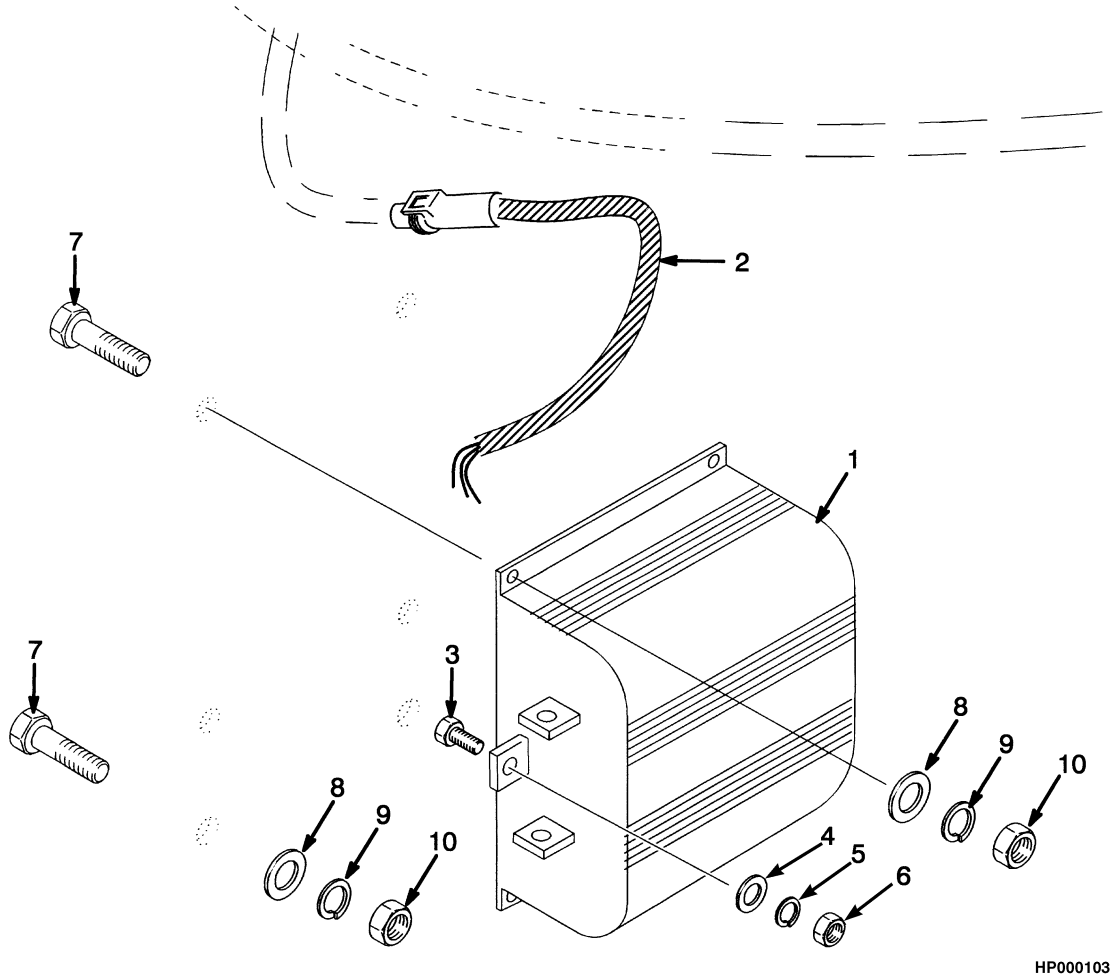

ITEM	PART NO.	DESCRIPTION	QTY
1	1452327	Power Converter	1
2	2036274	Wire Harness (Relay)	1
3	136681	Capscrew	3
4	320158	Washer	3
5	292681	Lockwasher	3
6	239503	Nut	3
7	18471	Capscrew	4
8	197068	Washer	4
9	15154	Lockwasher	4
10	15054	Nut	4

NOTES

11 NUMERICAL INDEX

SECTION 11
NUMERICAL INDEX

PART NO.	PG	ITEM
142	5-3	13
	5-5	42
7882	6-13	13
12891	7-15	3
	9-17	3
12949	6-23	22
	6-23	36
	6-24	52
	6-27	22
	6-27	36
	6-28	52
	6-28	68
13957	4-17	14
14489	10-3	17
	10-3	18
	10-3	21
	10-3	22
	10-5	17
	10-5	18
	10-5	21
	10-5	22
14591	6-23	5
	6-27	5
14603	7-7	15
	9-7	17
15001	6-19	41
15005	5-11	8
15039	5-15	17
15049	10-9	18
15052	10-13	4
15054	6-19	44
	10-17	10
15055	4-9	39
	5-5	45
	6-23	3
	6-27	3
15056	1-3	5
	6-31	32
15134	1-11	14
	4-3	8
	6-31	30
15135	4-19	3
15151	10-9	17
15152	10-13	14
15154	10-17	9
15155	4-9	30
	5-5	44
	5-11	8
15156	1-3	3
	1-11	23
	4-3	7
	6-5	9
	6-31	31
15163	5-15	18
	10-15	10
15172	6-17	24
	6-20	54
15177	1-7	18
15178	6-5	12
15180	4-19	3
	5-3	5
	5-5	30
15211	5-5	19
	6-17	25
	6-20	55
	7-7	4
	7-15	10
	8-9	8
	8-13	23
	8-25	10
	9-9	23
	9-17	10
15212	4-3	4
	5-3	15
	5-6	53
15222	6-19	16
15223	6-19	15
	8-9	9
15225	4-17	17
15227	4-17	40
15235	6-19	9
15236	6-33	3
15290	3-3	46
	3-7	7
15315	3-3	34
	3-7	24
15483	6-24	56
	6-28	56
15866	6-31	22
15880	8-21	11
	9-15	11
15887	3-7	27
15923	6-19	43
15931	5-17	10
16001	3-3	39
16041	10-3	13
	10-5	13
16151	3-3	47
16480	6-23	28
	6-27	28
16481	6-3	10
	6-23	5
	6-27	5
	10-3	16
	10-5	16
16483	4-9	8
	6-17	6
	6-17	8
	6-17	12
16484	4-9	24
	6-17	2
	6-17	3
	6-17	4
	6-17	5
	6-23	11
	6-27	11
16485	6-17	9
	6-17	10
	6-17	11
	6-23	7
	6-27	7
	6-31	18
	7-7	20
	7-7	22
	8-10	25
	8-10	26
	8-13	5
	9-7	15
	9-7	16
	9-7	22
	9-9	3
	9-9	10
16486	7-7	15
	8-9	20
	9-7	17
16541	4-9	24
	6-17	3
	6-31	19
16542	6-17	11
	6-31	18
16550	6-17	2
	6-17	4
16556	6-3	10
16558	4-9	8
16560	9-7	15
16568	6-17	5
16578	7-7	22
	8-9	25
	9-7	16
16706	6-23	13
	6-23	27
	6-24	45
	6-27	13
	6-27	27
	6-28	45
	6-28	59
16708	5-17	9
	5-17	15
16745	6-17	8
16815	4-3	6
16828	6-5	10
16865	4-3	21
	5-5	24
	5-17	8
16882	7-8	27
	8-10	29
	9-7	19
16899	1-13	15
16923	4-9	7
16982	7-7	17
	8-9	22
	9-7	18
16987	6-3	15
17059	6-3	14
17061	4-9	4
	6-3	11
	6-17	7
17105	1-3	2
17196	6-17	6
17321	6-3	3
17635	8-14	28
17776	4-9	6
18471	10-17	7
18494	1-3	9
18510	5-11	8
18515	1-13	10
	1-13	26
	1-15	29
18518	1-13	14
	1-15	28
18727	1-13	5
	1-13	9
18738	1-11	25
19979	6-19	33
21420	3-3	33
30076	3-3	31
	3-7	26
30273	4-17	39
33657	3-3	23
37752	7-5	8
	8-5	12
	8-14	30
	9-9	25
38014	5-11	10
39348	7-10	7
	7-12	3
	8-18	13
	8-21	13

©2003 HYSTER COMPANY

See Service Manual for service procedures.

NUMERICAL INDEX (Continued)

PART NO.	PG	ITEM
	9-15	13
39352	4-17	12
39362	4-9	27
39371	3-7	20
39387	4-14	
39714	3-3	16
44542	4-17	21
46388	4-10	5
	6-7	7
46698	1-11	22
53162	4-3	20
	5-5	25
	5-17	7
55407	10-7	4
55434	6-33	13
57597	3-3	9
57664	6-23	9
	6-23	24
	6-23	41
	6-27	9
	6-27	24
	6-27	41
	6-28	70
58901	7-3	8
	7-5	3
	8-3	8
	8-5	8
	8-7	3
	8-25	3
	9-3	8
	9-5	3
58903	4-17	22
59229	7-12	9
	8-18	10
	9-11	8
	9-12	8
	10-7	4
59583	6-7	10
60137	7-8	25
	8-9	5
	8-13	20
	9-9	20
60949	3-3	8
61056	6-31	24
66359	5-3	2
	5-5	12
69029	4-17	33
85885	3-3	25
90263	8-21	11
	9-15	11
92861	7-10	11
	8-18	10
92942	3-7	41
97882	6-3	13
98525	4-17	7
104506	7-3	3
	8-3	3
	8-5	3
	9-3	3
114312	1-7	24
	1-13	25
	1-15	31
	2-3	11
	2-7	37
	2-9	37
	5-15	28
	5-17	12
117095	4-9	13
118714	3-3	28
119969	6-5	23
121112	6-31	16
124631	6-15	17
127045	6-31	7
129387	7-3	7
	7-5	4
	8-3	7
	8-5	7
	8-7	4
	8-25	4
	9-3	7
	9-5	4
129563	2-3	14
130825	4-10	4
130845	4-9	10
	6-31	37
131358	7-7	7
	7-15	8
	8-9	11
	8-13	17
	8-25	8
	9-7	3
	9-9	32
	9-17	8
131716	7-3	4
	8-3	4
	8-5	4
	9-3	4
132860	8-14	33
132861	6-19	18
134675	6-33	14
134680	6-17	9
135588	8-9	1
135634	8-9	1
136681	2-7	10
	2-9	10
	2-9	41
	4-9	28
	6-5	14
	10-17	3
136687	1-7	26
	2-3	32
	4-5	10
	6-19	22
	6-19	31
	6-31	4
	10-15	7
136692	1-3	6
	1-7	6
	3-3	44
	5-3	9
	5-15	11
	6-5	11
	6-17	16
136704	6-3	6
	7-7	13
	7-17	2
	8-13	8
	10-13	7
136749	1-5	3
	1-7	14
	2-3	5
	2-3	35
	4-3	28
	5-5	4
	6-17	19
	8-13	14
	8-27	7
	9-19	8
136862	3-4	53
136985	3-3	42
	6-31	25
	9-9	9
145978	3-3	24
147972	9-11	7
	9-12	7
147973	4-10	3
	8-21	10
	9-15	10
149565	4-9	15
153919	10-7	5
154355	8-13	6
	9-9	11
154375	6-7	6
156194	4-17	37
156195	4-17	5
156510	6-31	16
160266	6-31	23
163970	4-17	36
164474	8-13	1
164488	10-13	10
164639	4-17	24
164840	8-21	10
	9-15	10
166857	4-9	2
169874	1-3	30
170658	1-21	18
173246	5-5	37
175861	6-19	32
176640	4-9	31
	5-15	12
	6-31	11
	10-11	5
178119	9-9	6
180057	7-7	1
180074	8-13	1
	9-9	2
180177	8-13	1
	9-9	2
181957	6-17	10
182115	5-5	11
182343	8-9	1
183614	3-7	11
183615	3-7	12
184761	8-9	20
187388	7-10	8
	7-12	6
	8-18	7
	8-21	7
	9-15	7
188486	6-23	7
	6-27	7
188516	6-23	16
	6-24	48
	6-27	16
	6-28	48
	6-28	62
188518	6-23	18
	6-24	54
	6-27	18
	6-28	54
	6-28	64
188519	6-23	19
	6-23	34
	6-24	50
	6-27	19
	6-27	34
	6-28	50
	6-28	65

©2003 HYSTER COMPANY

NUMERICAL INDEX (Continued)

PART NO.	PG	ITEM
188534	6-23	2
	6-27	2
189595	7-7	20
	8-10	26
	9-7	22
190383	10-15	8
190757	6-31	21
190810	2-3	28
	2-3	28
190887	8-21	12
	9-11	3
	9-12	3
	9-15	12
190930	5-11	14
193164	3-7	33
197064	5-5	26
197065	10-9	10
197066	5-15	19
	10-15	9
197067	10-13	13
197068	1-5	16
	6-31	36
	10-17	8
197518	5-11	2
197523	5-11	5
197524	5-11	6
197526	5-11	22
197527	5-11	30
197528	5-11	32
197530	5-11	26
197531	5-11	25
197534	5-11	34
197535	5-11	35
197550	5-11	22
198429	5-11	16
198433	5-11	13
198435	5-11	17
198678	6-31	28
198956	2-7	30
	2-9	30
199524	6-23	10
	6-27	10
203071	4-10	9
203325	5-5	35
205120	6-23	14
	6-23	29
	6-27	14
	6-27	29
	6-28	60
205121	6-23	15
	6-23	30
	6-24	47
	6-27	15
	6-27	30
	6-28	47
	6-28	61
205122	6-23	20
	6-23	35
	6-24	51
	6-27	20
	6-27	35
	6-28	51
	6-28	66
205123	6-23	23
	6-23	37
	6-27	23
	6-27	37
	6-28	69
210183	4-10	8
214364	5-6	51
	5-15	27
	8-9	19
	8-28	27
	9-7	11
215211	7-3	5
	8-3	5
	8-5	5
	9-3	5
216877	2-7	17
	2-9	17
	3-3	50
220023	6-31	29
220289	10-9	9
220312	5-15	16
220426	4-3	19
220428	5-5	23
	5-17	16
220504	10-13	12
221521	3-8	49
221588	3-7	34
221617	3-3	36
221733	1-13	6
221767	1-3	4
	6-19	13
221771	1-17	3
221877	5-11	33
222358	10-3	17
	10-3	18
	10-3	21
	10-3	22
	10-5	17
	10-5	18
	10-5	21
	10-5	22
222492	6-17	12
222512	4-9	11
222564	6-31	20
222596	6-19	42
222665	1-13	16
222696	3-7	8
223389	7-7	1
226986	4-17	4
230443	3-3	32
234038	3-7	31
238637	8-13	5
239503	1-3	16
	1-5	12
	1-7	16
	1-11	19
	2-3	8
	3-11	8
	4-9	25
	5-5	5
	5-15	24
	6-3	7
	6-5	1
	6-13	10
	6-17	22
	6-19	11
	6-31	12
	10-11	3
	10-17	6
239784	10-3	16
	10-5	16
249289	4-17	8
251099	5-15	14
257913	7-10	5
	7-12	4
	8-18	5
	8-21	5
	9-15	5
260094	4-19	5
260278	4-19	2
260463	4-19	1
261165	1-11	9
261379	3-8	50
264007	10-9	2
264134	1-3	25
264892	3-3	30
264893	3-3	29
	3-7	36
264973	4-17	10
269200	1-11	15
273775	2-9	51
	4-9	12
275672	2-13	3
278561	4-9	15
281605	5-5	43
287805	4-9	26
287816	1-7	25
	6-19	19
	6-19	28
287837	8-13	13
	9-10	33
287851	3-7	25
	6-19	10
287860	3-3	10
	3-7	3
	5-3	11
	8-28	29
288762	1-7	11
	2-3	12
292501	1-5	15
	1-7	34
	4-3	22
	10-15	4
292502	5-5	7
	7-17	14
292505	2-3	29
292508	4-9	40
	7-17	3
292513	2-9	44
292515	5-3	19
	6-5	18
292516	3-3	43
292519	1-3	13
292521	3-7	4
	5-15	8
292525	3-3	4
	3-3	11
292526	9-9	28
292529	8-13	15
	9-9	16
292530	8-13	15
	9-9	16
292531	2-7	14
	2-9	14
292532	7-7	9
	8-9	14
	8-13	10
	9-7	6
292533	7-17	11
	8-27	16
	9-19	30
292534	1-11	5
	8-27	19
292568	3-4	55
292574	5-5	28

NUMERICAL INDEX (Continued)

PART NO.	PG	ITEM
292576	5-3	6
292584	1-11	2
292654	5-5	39
292656	1-17	4
	6-33	8
292665	2-3	20
292676	2-3	19
292680	1-5	8
	1-7	27
	2-3	30
	4-3	23
	6-19	30
	6-31	5
	10-15	6
292681	1-3	14
	1-5	13
	1-7	15
	1-11	17
	2-3	6
	2-7	12
	2-9	12
	2-9	43
	3-7	39
	4-3	29
	4-9	23
	5-5	6
	5-15	22
	6-3	8
	6-5	15
	6-17	21
	6-20	52
	6-31	13
	10-11	4
	10-17	5
292682	1-3	8
	1-7	5
	2-9	46
	3-3	12
	4-9	21
	5-3	3
	5-15	10
	6-5	6
	6-17	18
	6-20	48
	6-31	26
292683	1-9	4
	1-17	5
	2-7	16
	2-9	16
	3-3	18
	6-33	7
	7-17	10
	8-14	25
	9-9	29
292685	5-6	57
292687	1-11	4
293615	5-5	41
293617	1-11	18
	6-5	5
293619	5-5	40
293632	3-7	38
293646	3-3	17
293647	1-9	6
293648	4-17	30
293649	1-9	3
293650	6-33	6
293686	4-17	2
293704	10-3	7
293762	4-3	13
293779	2-7	21
	2-9	21
	4-3	14
293780	6-13	9
293781	2-7	5
	2-7	25
	2-9	5
293795	6-15	18
	8-27	20
293796	9-19	12
293797	6-15	16
294643	10-7	6
295649	9-11	4
	9-12	4
296000	9-19	5
296001	2-7	20
	2-9	20
296010	4-3	30
296012	3-11	10
296014	3-11	9
296027	2-7	3
	2-7	41
	2-9	3
296028	9-9	7
296128	1-3	24
	6-15	1
296136	1-3	28
296157	1-5	11
296158	6-19	3
296159	1-5	6
296160	6-13	4
296161	6-13	2
296166	5-15	21
296167	1-5	26
296168	1-7	17
	5-6	55
296174	6-17	26
296176	6-17	15
296205	4-5	6
296215	4-3	33
296227	1-3	29
296321	6-15	5
296418	10-11	15
296419	1-5	24
	6-15	2
296420	5-3	14
	6-5	24
296421	1-3	15
296422	7-7	10
	8-9	15
	9-7	7
296423	1-9	11
	1-17	3
296426	7-7	23
	8-9	4
	8-13	19
	9-9	19
296430	1-11	3
296431	10-3	8
296435	10-5	8
296472	2-7	36
	2-9	36
297531	7-10	6
	7-12	5
	8-18	6
	8-21	6
	9-15	6
300738	4-17	19
300751	4-17	3
300752	4-17	13
300765	4-17	32
300766	4-17	11
300767	4-17	6
300937	1-11	7
	4-17	28
	7-7	12
	8-9	17
	8-13	16
	9-7	9
	9-9	18
	9-19	22
300982	6-33	4
302033	2-11	14
302040	2-13	8
302232	2-3	17
302398	4-5	7
302400	4-3	31
302461	8-14	32
	9-9	27
302462	7-5	9
	8-5	9
302977	4-17	15
304526	8-14	34
	9-9	30
305769	3-3	22
308117	6-33	2
309062	8-22	15
	9-15	15
309169	6-31	9
310436	5-15	4
	5-17	3
313805	1-7	19
	6-19	4
	7-17	15
313828	1-5	4
	1-7	29
	2-3	36
	7-8	26
	7-17	5
	8-9	24
	8-13	9
	8-27	8
	9-7	12
	9-19	9
	10-3	10
	10-3	12
	10-5	10
	10-5	12
	10-13	8
316306	7-7	17
	8-9	22
	9-7	18
316678	1-3	20
	5-5	50
	10-9	15
	10-11	12
	10-15	3
316826	8-27	3
	9-9	5
316828	5-3	7
	5-5	32
316835	10-11	14
317075	4-17	38
317076	4-17	35
317594	6-5	4
	6-17	14
317735	8-25	7
	9-17	7
320155	4-3	36

See Service Manual for service procedures.
©2003 HYSTER COMPANY

NUMERICAL INDEX (Continued)

PART NO.	PG	ITEM
320156	1-7	22
	2-3	31
	4-3	24
	6-19	29
	10-15	5
320157	1-5	14
	1-7	8
	1-11	16
	2-3	7
	2-7	11
	2-9	11
	2-9	42
	4-9	34
	5-5	46
	5-15	23
	6-3	9
	6-5	19
	6-17	20
	6-20	51
	7-7	14
	8-9	18
	9-7	10
	10-13	9
320158	1-5	5
	2-3	37
	4-9	22
	5-5	49
	6-5	3
	6-31	14
	8-28	28
	10-17	4
320159	1-7	4
	2-7	4
	2-7	33
	2-9	4
	2-9	45
	3-3	6
	5-5	34
	5-15	9
	9-9	8
320160	1-3	7
	1-11	12
	5-3	17
	8-27	21
320161	1-9	2
	2-7	15
	2-9	15
	4-17	29
	8-13	24
	9-9	17
320162	1-11	6
	3-3	49
320171	8-28	33
	9-19	27
320289	6-23	31
	6-27	31
320291	6-23	33
	6-27	33
322824	7-12	10
	9-11	9
	9-12	9
322902	7-12	12
	9-11	11
	9-12	11
323090	7-7	11
	8-9	16
	9-7	8
324858	4-17	27
324863	3-3	19
324864	4-17	26
324972	4-9	18
	6-17	28
325056	6-17	27
325058	6-5	17
325182	1-5	7
	5-5	8
325568	3-3	26
325616	8-14	38
325699	5-17	6
325799	5-15	29
325809	2-9	33
326003	1-11	13
326278	4-19	4
326279	4-19	4
326282	4-19	4
326347	1-11	8
326498	4-17	23
329067	1-9	8
329835	6-31	33
333737	4-19	6
334156	7-12	15
	8-18	9
334418	3-7	32
334447	3-7	40
334456	3-7	35
334481	3-7	2
	3-7	23
	3-7	30
334580	3-7	14
334590	3-7	37
335012	7-12	14
	8-18	11
335989	1-13	22
335991	1-13	21
336083	4-19	1
336382	4-19	5
336383	4-19	6
337179	7-7	18
	8-10	27
	9-7	21
339529	4-17	16
341462	6-23	39
	6-27	39
345423	4-3	9
348525	5-11	24
350381	5-11	27
352055	6-23	38
	6-27	38
352885	5-15	5
353883	6-23	8
	6-27	8
354669	4-13	3
354671	4-13	8
355374	6-5	20
355384	3-12	6
355385	3-12	5
355386	3-12	4
355390	3-12	3
355391	3-12	2
355392	3-12	1
355395	3-12	1
355405	4-9	1
	6-3	22
356505	8-13	7
	9-9	12
357749	7-7	19
	8-10	28
	9-7	14
358069	4-13	5
358072	4-13	4
358073	4-13	10
358076	4-13	9
359002	5-11	8
359004	5-11	7
359005	5-11	7
359819	2-9	25
360387	5-17	13
361675	3-7	18
361676	3-7	17
362030	1-7	23
362036	5-17	11
362679	3-12	3
364854	1-13	13
366115	8-25	5
366116	7-15	5
	9-17	5
366713	3-3	2
366715	3-3	3
367419	1-18	1
367420	1-18	1
367421	1-18	1
367422	1-18	1
367423	1-18	1
367424	1-18	1
368618	5-15	3
	5-17	2
369242	1-5	25
369573	1-21	4
370258	1-21	19
370259	1-21	19
373875	6-5	13
374159	5-6	56
374160	5-5	31
375634	4-10	1
375635	4-10	2
376505	5-5	14
378385	2-3	28
378386	2-3	28
378424	6-23	6
	6-27	6
378547	2-15	2
379197	1-13	11
379198	1-13	12
379199	1-13	18
	1-15	25
379522	2-15	4
379524	2-15	6
379697	1-13	19
	1-15	26
379698	1-13	20
	1-15	27
379902	2-3	33
381298	4-17	18
381919	2-20	2
	10-16	2
383979	2-17	4
383984	2-15	3
384211	1-18	1
384213	1-18	1
384214	1-18	1
384215	1-18	1
384216	1-18	1
384383	4-14	
384398	2-15	1
385855	6-23	17
	6-23	32
	6-24	49
	6-27	17

©2003 HYSTER COMPANY

NUMERICAL INDEX (Continued)

PART NO.	PG	ITEM
	6-27	32
	6-28	49
	6-28	63
388048	6-15	8
388049	6-15	3
388752	1-7	7
389688	1-21	20
612806	4-9	32
615130	10-7	5
636851	10-7	7
636941	8-22	14
	9-15	14
637565	8-22	16
	9-15	16
637635	7-10	6
638246	7-10	12
	8-18	11
878111	4-9	33
878185	10-11	16
878220	1-3	10
878236	1-13	23
	1-15	30
878240	1-7	12
878242	6-3	17
878243	6-3	20
878244	6-3	21
878245	6-3	16
878542	1-5	2
878827	5-3	20
878845	5-3	21
893523	1-21	21
893751	2-7	26
	2-9	26
893752	4-9	19
915474	5-15	20
1194215	4-9	38
1301870	7-7	1
1302007	4-9	29
1302024	10-13	11
1302258	10-9	3
1306270	10-11	2
1306271	10-13	15
1306585	1-13	7
1306588	1-13	8
1306621	5-17	14
1309419	6-23	6
	6-27	6
1309420	6-24	46
	6-28	46
1309421	6-23	44
	6-27	44
1309422	6-24	55
	6-28	55
1309775	10-13	1
1309875	6-24	44
	6-28	44
1309877	4-13	6
1310598	3-3	7
1310599	4-17	31
1315425	4-17	9
1317267	3-3	1
1319668	7-10	9
	7-12	7
	8-18	8
	9-11	5
	9-12	5
1320607	3-3	37
1321149	4-10	7
1321174	4-9	14
	4-10	
	4-17	25
1324029	5-9	2
1324035	5-9	9
1324040	5-9	6
1324041	5-9	7
1324042	5-9	8
1324048	5-9	4
1324307	10-11	11
1325119	6-33	14
1327252	5-11	9
1327253	5-11	23
1327254	5-11	28
1327255	5-11	29
1327256	5-11	15
1327400	5-11	31
1327401	5-11	31
1328205	1-21	23
1329250	4-3	11
1330409	1-15	4
1330410	10-16	2
1330411	10-15	12
1330412	2-19	11
1330414	1-15	4
1330416	10-15	13
1330417	2-19	12
1330419	2-19	4
1330420	2-19	6
1330421	2-9	49
	2-19	2
	10-15	15
1330424	2-19	5
1330426	2-19	7
1330427	2-9	50
	2-19	3
1330433	1-15	4
1330437	10-15	14
1330438	10-15	17
1330917	1-21	13
1330919	1-21	12
1330920	1-21	3
1330924	1-21	7
1330998	5-5	16
1330999	5-5	18
1331002	5-5	17
1331005	5-5	20
1332745	1-18	1
1333329	8-9	10
1333382	5-5	38
	7-7	8
	8-9	12
	9-7	4
1333385	3-3	40
1333392	7-7	16
	8-9	21
	9-7	13
1333396	7-3	6
	7-5	5
	8-3	6
	8-5	6
	8-7	5
	9-3	6
	9-5	5
1333399	8-25	2
1333572	5-5	21
1334718	4-17	1
1334723	4-17	27
1335110	5-15	15
1335129	1-21	15
1335137	1-21	11
1335142	1-21	10
1335146	1-21	14
1335147	1-21	6
1335614	2-15	7
1335615	2-15	5
1335967	4-3	27
1335987	4-3	26
1337148	6-20	46
1337159	6-31	2
1337196	4-3	38
1337197	2-3	33
1338087	1-18	1
1338088	1-18	1
1338089	1-18	1
1338097	1-18	1
1338098	1-18	1
1338178	1-21	1
1338740	6-7	3
1338741	6-7	9
1338744	6-7	2
1339636	6-19	35
1339672	1-21	9
1339674	1-21	8
1339799	6-19	35
1340171	1-13	3
1340172	1-13	4
1340364	6-19	25
1340366	6-19	2
1340409	3-3	51
1340422	6-19	26
1340460	1-11	21
1340470	5-17	1
1340652	6-19	37
1340653	6-19	38
1340654	6-19	39
1340655	6-19	40
1340672	6-17	1
	6-20	56
	6-23	
1340673	6-17	1
	6-20	56
	6-27	
1340685	5-5	13
1340692	5-5	1
1340693	5-5	3
1340702	6-19	14
1340703	6-17	23
	6-20	53
1340761	3-3	45
1340807	3-3	27
1340891	6-33	5
1340966	3-3	21
1340968	3-7	9
1340974	3-7	10
1340975	5-17	4
1340976	5-15	2
1340979	5-3	4
1340983	5-15	6
1340984	5-15	25
1340985	5-15	7
1340988	5-15	1
1340989	5-15	30
1341004	8-3	1
1341005	7-3	1
	9-3	1
1341007	8-3	1
1341008	7-3	1
	9-3	1

See Service Manual for service procedures.
©2003 HYSTER COMPANY

NUMERICAL INDEX (Continued)

PART NO.	PG	ITEM
	9-3	1
1341010	8-3	1
1341013	7-3	1
	8-3	1
1341210	7-5	1
1341213	7-5	1
1341218	7-5	1
1341395	7-10	
1341398	7-10	
1341403	7-10	
1341432	7-10	
1341435	7-10	
1341440	7-10	
1341542	8-18	
1341545	8-18	
1341550	8-18	
1341578	8-18	
1341583	8-18	
1341608	8-18	
1341611	8-18	
1341613	8-18	
1341616	8-18	
1341641	8-18	
1341644	8-18	
1341646	8-18	
1341649	8-18	
1341714	8-5	1
1341717	8-5	1
1341719	8-5	1
1341722	8-5	1
1342118	8-13	1
1342120	8-9	1
1342123	8-9	1
1342126	8-9	1
1342129	8-9	1
1342376	9-9	2
1342381	8-13	1
1342383	7-7	1
1342391	8-13	1
1342393	7-7	1
1342407	8-13	2
1342410	8-13	2
1342412	8-13	2
1342415	8-13	2
1342474	9-5	1
1342477	9-5	1
	9-5	1
1343537	4-3	35
1343572	4-3	34
1343573	4-3	1
1343574	4-3	32
1343577	4-5	1
1343578	4-5	2
1343579	4-5	3
1343593	4-5	5
1343594	4-5	9
1343595	4-3	18
1343598	4-5	4
1343607	4-3	3
1343630	5-3	16
1343647	1-9	7
1343827	6-5	8
	6-9	
	6-31	35
1343989	8-13	21
1343990	1-17	2
1345190	7-17	9
	8-27	14
	9-19	29
1345199	8-27	9
	9-19	10
1345204	8-27	10
	9-19	11
1345216	7-3	2
	7-5	2
	8-3	2
	8-5	2
	8-7	2
	9-3	2
	9-5	2
1345219	7-15	2
	9-17	2
1345263	7-15	4
	9-17	4
1345311	9-9	1
1345314	9-9	1
1345348	7-17	17
1345352	7-15	7
1345354	6-33	11
1345359	8-13	3
1345362	8-13	3
1345364	8-13	3
1345367	8-13	3
1345401	8-13	12
1345403	7-7	21
	8-9	23
	9-7	20
1345412	7-17	4
1345413	7-17	4
1345423	9-19	16
1345571	9-19	3
1345581	8-27	1
1345908	2-15	9
1345915	2-15	8
1345956	2-11	1
	2-15	
1347004	4-3	15
	4-5	
1347048	5-3	10
	5-9	
1347088	6-19	21
1348246	8-27	24
1348247	8-27	24
1349446	1-17	1
1350231	1-3	12
1350282	1-5	27
1350733	10-15	1
1350914	2-3	9
1351070	2-19	8
1351076	2-19	9
1351150	6-5	21
1351184	10-7	3
1351473	1-13	1
1351682	2-3	13
1351926	3-3	14
1351927	3-3	15
1352563	2-20	1
1352564	2-19	10
1353464	8-27	25
1353530	7-18	20
	7-17	18
	8-27	4
	9-19	17
1354140	1-13	2
	1-15	4
1354155	1-21	17
1354159	1-21	17
1354300	4-5	11
1354342	1-21	17
1354343	1-21	17
1354902	8-14	36
	9-9	15
1354903	8-13	22
1354904	7-17	16
1354906	8-27	18
1354907	8-27	18
1354913	7-8	28
1354915	7-7	24
	8-9	13
	9-7	5
1354916	7-7	24
	8-9	13
	9-7	5
1354917	7-8	24
	8-9	13
	9-7	5
1354918	9-19	19
1354919	7-17	13
1354921	7-17	13
1354922	7-17	16
1354956	9-9	10
1354961	8-28	26
1354962	8-14	37
1354967	9-9	14
1354990	5-15	26
1354997	3-3	38
1355127	7-10	3
1355145	7-10	1
1355146	7-10	2
1355148	7-10	1
1355157	7-10	1
1355158	7-10	2
1355160	7-10	1
1355177	7-10	1
1355178	7-10	2
1355180	7-10	1
1355221	7-10	4
1355276	7-10	17
1355277	7-10	18
1355305	5-9	14
1355335	4-7	1
1355366	7-12	1
1355367	7-12	2
1355369	7-12	1
1355390	7-12	1
1355391	7-12	2
1355393	7-12	1
1355411	7-12	51
1355496	8-18	3
1355497	8-18	16
1355533	10-3	1
1355587	8-18	2
1355589	8-18	1
1355598	8-18	1
1355599	8-18	2
1355601	8-18	1
1355610	8-18	4
1355619	8-18	1
1355620	8-18	2
1355622	8-18	1
1355711	8-18	4
1355713	8-18	3
1355714	8-18	17
1355728	8-18	1
1355729	8-18	2
1355731	8-18	1
1355740	8-18	1
1355741	8-18	2

©2003 HYSTER COMPANY

NUMERICAL INDEX (Continued)

PART NO.	PG	ITEM
1355743	8-18	1
1355748	8-18	1
1355749	8-18	2
1355751	8-18	4
1355752	8-18	1
1355757	8-18	1
1355758	8-18	2
1355760	8-18	1
1355910	9-11	1
1355911	9-11	2
1355928	9-11	1
1355929	9-11	2
1356065	8-21	2
1356074	8-21	2
1356113	6-17	17
1356209	2-11	7
1356211	2-11	18
1356292	8-21	3
	9-15	3
1356560	8-21	2
1356566	9-15	2
1356569	8-21	2
	9-15	2
1356587	8-21	2
1356661	8-21	3
	9-15	3
1356662	8-22	19
	9-15	17
1356682	8-21	2
1356688	9-15	2
1356691	8-21	2
1356747	9-11	13
	9-12	13
1356748	8-18	15
	9-12	14
1356749	7-10	17
1356750	7-10	13
	8-18	12
1356751	7-12	16
	8-18	12
1356783	9-12	1
1356786	9-12	1
1356947	4-9	5
1357196	5-9	10
1357197	5-9	1
1357199	5-9	3
1357201	5-9	5
1357262	2-3	28
	2-3	28
1357361	6-23	25
	6-23	42
	6-24	57
	6-27	25
	6-27	42
	6-28	57
	6-28	71
1358218	5-11	1
1358219	5-11	36
1358220	5-11	1
1358221	5-11	12
1358222	5-11	11
1358809	10-3	11
	10-5	11
1358821	10-3	14
	10-5	14
1358937	9-12	2
1358940	9-12	2
1358969	8-22	18
	9-15	17
1358970	8-21	9
	9-15	9
1358972	8-21	14
	9-15	14
1359245	9-17	1
1359246	9-17	1
1359325	7-15	1
1359326	7-15	1
1359587	1-7	33
	1-13	27
	1-15	32
1359620	6-3	4
1360125	10-3	6
	10-5	6
	10-7	
1360126	10-3	6
	10-5	6
	10-7	
1360127	8-18	15
1360229	10-5	7
1360273	10-5	1
1360331	9-19	23
1360334	9-19	23
1360361	9-19	13
1360364	9-19	13
1360386	7-17	12
	8-27	17
	9-19	14
1360507	7-18	21
	8-27	5
	9-19	7
1360508	9-19	20
1360529	7-17	19
1360534	8-14	27
1360538	8-27	23
1360548	7-17	7
1360549	7-17	6
	8-27	11
1360872	1-15	12
1361142	6-3	5
1361302	8-21	4
	9-15	4
1362049	1-15	3
1362052	1-15	5
1362053	1-15	6
1362058	1-15	10
1362061	1-15	13
1362062	1-15	14
1362063	1-15	15
1362064	1-15	16
1362065	1-15	17
1362330	6-19	17
1362387	8-27	12
1362390	8-13	11
1362433	9-9	4
1363007	5-11	24
1363816	1-17	1
1363817	1-17	1
1363916	1-9	10
1363917	1-9	9
1364119	3-7	19
1364120	3-7	19
1364121	3-7	19
1364154	5-5	2
1364163	6-31	3
1364169	5-3	12
1364232	6-20	45
1364240	6-19	36
1364262	2-7	8
	2-9	8
1364270	2-7	9
	2-9	9
1364271	4-3	2
1364281	5-15	13
1364377	1-13	
1364453	5-5	29
1364454	5-5	9
1364475	5-5	36
1364498	1-3	17
1364499	1-3	17
1364541	10-9	1
1364542	10-9	11
1364548	10-13	5
1364552	1-3	17
1364553	1-3	17
1364555	1-3	18
1364556	1-3	18
1364557	1-3	18
1364558	1-3	18
1364588	10-13	3
1364589	10-11	7
1364627	1-7	20
1364633	2-3	16
1364646	5-5	12
1364920	6-19	34
1364970	6-20	47
1364971	1-7	9
1364975	3-7	13
1364976	3-7	6
1364977	3-7	5
1364978	3-7	21
1364982	3-7	1
1364984	3-7	1
1364986	3-3	20
1364988	3-7	1
1364990	3-7	29
1364993	3-3	41
	3-7	
1364997	3-3	48
1364998	3-7	22
1365140	8-9	10
1365500	9-19	1
1365502	9-19	1
1365514	9-19	2
1365517	9-19	2
1366081	6-3	12
	6-7	
	6-33	1
1366082	6-7	3
1366083	6-7	1
1366085	6-3	12
	6-7	
	6-33	1
1366086	6-7	1
1367137	1-15	19
1367639	2-7	34
	2-9	34
1367645	10-11	8
	10-13	6
1367837	1-7	21
1368312	7-17	1
1368400	9-19	3
1368442	9-19	4
1368446	8-27	1
1368656	7-5	6
	8-5	10
1369328	8-13	1
1369333	8-27	22
	9-19	18

See Service Manual for service procedures.
©2003 HYSTER COMPANY

NUMERICAL INDEX (Continued)

PART NO.	PG	ITEM
1369344	7-15	6
	8-25	6
	9-17	6
1369345	7-15	6
	8-25	6
	9-17	6
1369356	7-7	6
	8-9	6
	8-13	18
	9-9	21
1369357	7-7	6
	8-9	6
	8-13	18
	9-9	21
1369360	10-3	17
1369361	10-3	18
1369362	10-5	17
1369363	10-5	18
1369605	7-17	1
1370728	6-19	27
1371289	10-3	9
	10-5	9
1371660	9-17	
1371661	9-17	
1371662	7-15	
1371663	7-15	
1371746	6-9	17
1374135	6-23	12
	6-27	12
1374136	6-23	26
	6-27	26
1374138	6-23	43
	6-27	43
1374141	6-23	1
1374142	6-23	4
1374144	6-24	58
1374145	6-28	58
1374147	6-28	72
1374148	6-27	4
1374188	1-15	9
1374190	1-15	11
1374750	1-13	17
	1-15	23
1375036	5-5	22
1375168	10-11	13
1375171	10-11	17
1375172	10-11	17
1375540	6-5	16
1375563	4-9	3
1375564	6-31	17
1375565	6-31	15
1375566	6-31	1
1375567	6-31	6
1375568	6-31	8
1375569	6-31	10
1375571	4-9	32
1375572	4-9	3
1375573	6-31	17
1375580	6-33	12
1376007	3-12	1
	4-19	3
1376120	9-19	4
1376127	8-27	1
1376133	8-27	6
1376163	8-27	1
1376423	6-33	10
1376424	6-33	9
1376425	6-9	8
1376427	6-9	15
1376439	10-9	4
1376440	10-9	5
1376441	10-9	6
1376446	10-9	7
1376677	1-15	
1376681	1-15	
1376743	4-3	40
1377252	6-9	16
1377253	6-9	3
1377254	6-9	9
1377379	2-3	18
1377405	3-7	28
1377414	5-15	1
	5-17	
1377420	1-3	21
1377421	1-3	22
1377439	3-3	5
1377440	3-4	54
1377441	3-4	56
1377478	6-19	20
1377483	1-5	23
1377660	5-5	10
1378053	10-3	2
1378063	10-3	5
1378071	10-5	2
1378081	10-5	5
1378307	1-15	22
1378600	4-3	25
1378690	8-14	31
	9-9	24
1378691	7-5	7
	8-5	11
1378692	8-14	30
	9-9	25
1378693	8-14	30
	9-9	25
1378698	7-5	8
	8-5	12
1378699	7-5	8
	8-5	12
	8-14	30
	9-9	25
1378906	1-3	19
1378907	3-7	8
	3-7	15
1378908	3-7	16
1378909	3-7	8
1378914	4-9	36
1378921	4-9	37
1378922	4-9	35
1379304	1-3	26
1379305	2-3	3
1379308	5-6	54
1379309	5-5	47
1379324	1-3	27
1379332	5-5	33
1379333	5-5	33
1379334	5-5	48
1379461	8-25	
1379462	8-25	
1379474	5-5	27
1379475	6-5	22
1379598	6-31	27
1379615	10-9	13
1379616	10-9	14
1379637	10-15	11
1379682	8-14	30
	9-9	25
1379683	8-14	30
	9-9	25
1379685	7-5	8
	8-5	12
1379687	7-7	16
	9-7	13
1380036	9-9	3
1380371	1-7	28
1380431	2-3	4
1380437	6-3	1
1380438	6-3	2
1380449	1-3	23
1380560	6-3	19
1380561	6-3	18
1380562	1-3	11
1380563	5-3	1
1380879	7-12	8
	9-11	6
	9-12	6
1381082	6-7	5
1381095	7-12	11
	8-18	14
	9-11	10
	9-12	10
1381354	8-7	1
1381357	8-7	1
1381359	8-7	1
1381362	8-7	1
1381562	8-25	1
1381563	8-25	1
1381765	10-3	21
	10-5	21
1381766	10-3	22
	10-5	22
1381771	9-19	15
1381772	9-19	15
1382111	1-15	1
1382112	1-15	2
1382113	1-15	1
1382114	1-15	2
1382130	10-13	1
1382302	10-9	12
1382303	10-11	9
1382305	10-13	2
1382311	1-5	19
1382312	1-5	19
1382313	1-5	20
	1-5	20
1383062	6-7	4
1383170	1-5	17
1383173	1-5	18
1383175	1-7	30
1383177	5-6	52
1383192	5-5	15
1383457	3-7	44
1383475	3-7	42
1383478	3-7	43
1383480	3-7	45
1383481	3-8	47
1383482	3-8	46
1383483	3-8	48
1383634	3-12	1
1383636	4-19	1
1383680	1-7	32
1383716	5-3	8
1383718	1-7	10
1383719	1-7	10
1383727	6-19	23
1383728	6-19	6
1383738	1-7	3
1383739	1-7	3

©2003 HYSTER COMPANY

NUMERICAL INDEX (Continued)

PART NO.	PG	ITEM
1383740	1-7	13
1383754	1-7	31
1383755	1-7	35
1383777	4-17	34
1385122	1-3	10
1385725	6-19	12
1388358	1-7	2
1388359	1-7	2
1389343	1-13	24
	1-15	24
1390182	1-9	5
	8-27	15
1390365	10-3	19
	10-5	19
1390366	10-3	20
	10-5	20
1391205	4-3	9
1391206	4-3	9
1392495	1-15	8
1392496	1-15	7
1395285	8-14	29
	9-9	26
1395291	8-28	31
	9-19	24
1395292	8-28	32
	9-19	25
1396406	8-28	30
	9-19	26
1396429	10-3	15
	10-5	15
1396458	10-3	4
1396471	10-5	4
1397863	4-3	39
1397864	4-3	37
1398509	7-17	1
1399004	10-3	3
1399022	10-5	3
1399039	10-3	
1399046	10-5	
1450501	5-12	38
1450502	5-12	37
1450503	4-3	12
1451697	4-7	3
1451698	4-7	5
1451703	4-7	8
1451704	4-7	9
1452327	10-17	1
1452459	4-13	1
1453260	6-5	7
1453337	6-15	24
1453539	4-3	5
	4-7	
1454122	2-13	7
1454484	2-11	10
1455769	4-7	2
1455770	4-7	4
1455771	4-7	6
1455772	4-7	7
1455773	4-7	10
1455774	4-7	11
1455775	4-7	12
1455776	4-7	13
1455779	4-7	14
1456276	3-3	35
	5-11	
1456277	3-3	35
	5-11	
1459112	1-15	18
1460391	1-11	1
1461070	1-5	9
1461187	1-11	20
1461197	1-3	1
1461198	1-5	10
1461719	6-27	1
1462064	6-15	6
1462066	6-15	4
1462067	6-15	9
1462068	6-15	11
1462070	6-15	12
1462071	6-15	26
1462072	6-15	27
1462077	6-15	28
1462082	6-15	19
1462083	6-15	20
1462084	6-15	21
1462085	6-15	22
1462086	6-15	23
1462087	6-15	25
1462090	6-15	7
1462091	6-15	10
1462092	6-15	15
1462096	6-15	14
1462098	6-15	13
1462551	7-8	29
	8-10	30
	9-7	23
1463138	10-16	2
1463849	2-3	15
1465504	8-14	35
	9-9	13
1466505	1-11	24
1467430	4-7	18
1471922	3-12	1
	4-19	1
1474723	2-7	13
	2-9	13
1475250	5-17	5
1477166	1-18	5
1477167	1-18	6
1477237	1-18	6
1478875	6-19	8
1478885	6-17	13
1478886	1-5	1
1482311	6-19	1
1486243	1-7	1
1486244	1-7	1
1489349	4-14	
1491830	4-5	8
1492644	6-7	12
1494017	7-17	8
	8-27	2
	8-27	13
	8-28	34
	9-19	28
1495699	2-13	6
1495881	6-33	15
1496922	9-11	14
	9-12	15
1498406	4-3	16
1499111	7-12	50
1500318	2-11	13
	2-17	10
1500782	1-18	4
1500784	1-18	4
1501413	4-10	12
1502706	10-16	2
1502707	10-16	2
1502708	10-16	2
1503378	6-19	5
1504009	7-15	6
1504010	8-25	6
	9-17	6
1504011	7-15	6
1504012	8-25	6
	9-17	6
1504125	4-3	10
1505194	3-12	1
1505195	4-19	1
1505197	3-12	2
1505198	4-19	1
1505203	3-12	1
1505204	4-19	2
1505206	3-12	1
1505207	4-19	1
1505209	3-12	1
1505210	4-19	1
1508206	2-19	14
1508211	2-19	15
1508212	2-19	16
1509092	6-19	7
1509093	6-20	50
1509094	6-20	49
1510058	6-5	25
	6-9	14
	6-31	38
1512410	2-7	28
	2-9	28
1513160	2-7	1
	2-9	1
1513161	2-7	39
1513953	2-7	2
	2-9	2
	2-11	
1513954	2-9	39
	2-17	
1514057	2-7	6
	2-9	6
1514072	2-7	7
	2-9	7
1514074	2-7	40
1514076	2-9	40
1514866	7-7	5
	7-15	9
	8-9	7
	8-14	26
	8-25	9
	9-9	22
	9-17	9
1516799	6-19	24
1516800	6-19	24
1516801	6-19	24
1516977	2-4	1
1517939	5-3	22
1519056	2-7	18
	2-9	18
1519058	2-7	19
	2-9	19
1520309	5-3	18
1520609	4-3	41
1520933	2-7	31
	2-9	31
	2-9	47
1521548	2-3	2
1522075	2-7	27
	2-9	27
1523732	1-18	2
1523733	1-18	3
1523734	1-19	7

See Service Manual for service procedures.
©2003 HYSTER COMPANY

NUMERICAL INDEX (Continued)

PART NO.	PG	ITEM
1523735	1-19	8
1523737	1-18	3
1523739	1-19	8
1523818	2-7	35
	2-9	35
1524401	2-7	23
	2-9	23
1524444	2-3	28
1524445	2-3	28
1524460	2-3	21
1524461	2-3	22
1524462	2-3	23
1524463	2-3	24
1524464	2-3	25
1524465	2-3	26
1524467	2-3	27
1524541	2-19	17
1525561	2-19	16
1525718	2-4	1
1525827	10-9	8
1525921	2-7	38
	2-9	38
1526082	10-13	1
1527877	2-7	22
	2-9	22
1528488	10-15	2
1528967	2-11	2
	2-13	
1528990	2-11	19
1528991	2-11	17
1528992	2-11	11
1528993	2-11	9
1528995	2-17	1
1528996	2-17	11
1528997	2-17	8
1528998	2-17	5
1529000	2-3	24
1529001	2-3	25
1529520	4-9	9
1530562	3-11	1
1530563	3-11	2
1530564	3-11	3
1530565	3-11	4
1530566	3-11	5
1530567	3-11	6
1530568	3-11	7
1530569	3-11	11
1530570	3-11	12
1530571	6-13	1
1530572	6-13	3
1530573	6-13	5
1530574	6-13	6
1530575	6-13	7
1530576	6-13	8
1530577	6-13	11
1530578	6-13	12
1531104	4-3	
1531105	4-3	
1531125	1-5	21
1531126	1-5	21
1531128	1-5	22
1531129	1-5	22
1531389	1-9	1
1531390	1-9	1
1531867	2-7	24
	2-9	24
1531981	10-11	1
1532578	10-16	1
1532663	10-16	2
1532764	2-13	1
1532765	2-13	5
1532766	2-13	9
1532768	2-13	7
1533695	1-7	28
1534009	10-16	2
1534010	10-16	
1535412	10-15	11
1537683	10-11	6
1539240	10-16	3
1539697	9-19	6
	9-19	21
1539889	10-11	10
1542542	10-16	4
1543367	1-11	10
1545061	2-7	32
	2-9	32
1545168	1-11	11
1548187	1-21	22
1553429	2-13	2
1555789	3-11	13
1555791	6-13	14
2004005	2-3	10
2013075	7-10	10
	8-18	9
2013088	8-22	15
	9-15	15
2013089	8-22	16
	9-15	16
2013099	8-21	8
	9-15	8
2033614	4-9	17
	4-13	
2034265	4-13	7
2034266	4-13	2
2034484	2-17	2
2035396	2-17	3
2036240	6-5	2
	6-15	
	6-31	34
2036274	10-9	16
	10-17	2
2036668	6-5	8
	6-10	
	6-31	35
2037166	2-3	34
2042515	4-14	
2043885	2-19	1
2044370	6-7	11
2044371	4-10	6
2044700	1-21	24
2045129	4-3	9
2045705	9-11	
2045750	9-11	
2045776	9-11	
2045795	9-12	
2045844	9-12	
2045869	9-12	
2046163	7-12	13
2046174	7-12	
2046179	7-12	
2046193	7-12	
2046198	7-12	
2046547	2-19	18
2046715	9-11	12
	9-12	12
2046756	2-3	38
	2-20	
	4-3	17
2049938	1-21	2
2053770	8-21	
2053771	8-21	
2053773	8-21	
2053775	8-21	
2053795	8-21	
	9-15	
2053796	8-21	
	9-15	
2053799	8-21	
2054685	2-7	29
	2-9	29
2055490	6-5	2
	6-13	
	6-31	34
2055731	3-3	13
	3-11	
2056600	2-11	15
2056631	2-9	48
2056678	4-9	16
2058210	8-21	1
	9-15	1
2058213	8-21	1
	9-15	1
2058219	8-21	1
2058253	9-15	1
2060697	2-3	1
	2-19	
2061620	4-9	20
2061868	9-15	
2062693	8-21	1
2063690	8-21	1
2063692	8-21	1
2302461	2-11	6
2302899	6-7	8
2303239	6-9	1
2303249	2-11	21
2303634	10-7	2
2303758	2-19	13
2303801	2-11	20
2303821	2-11	4
	2-17	7
2304170	2-11	3
	2-17	6
2304345	10-7	1
2304572	2-11	16
	2-13	4
2305855	2-11	12
	2-17	9
2306283	10-7	8
2306755	10-7	3
2307647	10-7	11
2307803	2-11	8
2308759	2-11	5
2309353	8-21	1
2309481	6-9	4
2309719	10-7	2
2309766	7-7	17
	8-9	22
	9-7	18
2309799	1-21	14
2310622	1-7	9
2310768	10-7	8
2311471	10-7	1
2311624	10-7	10

©2003 HYSTER COMPANY

NOTES

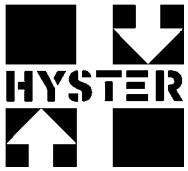
HYSTER