E-23

RUTHZIL TRATOR COMERCIAL DE PEÇAS LTDA 11 97083-6812 ROLANDO CITRANGULO

Parts Book

JCB

JS140

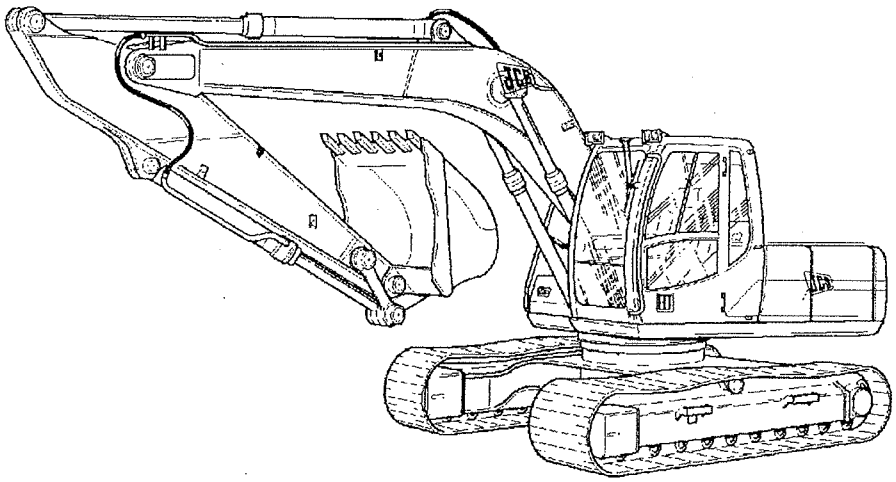

JS 140

TRACKED EXCAVATOR

Part No. : 550/43202/ 3

ISSUE DATE : JULY 2010

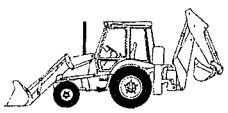
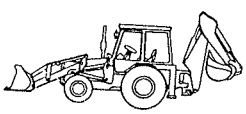
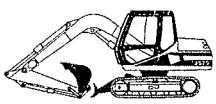
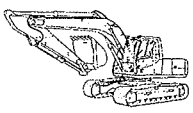

A product of Hardwork

JCB INDIA LTD.

MODEL JS 140
CRAWLER EXCAVATOR
PARTS BOOK
MACHINE NO. - 1318000

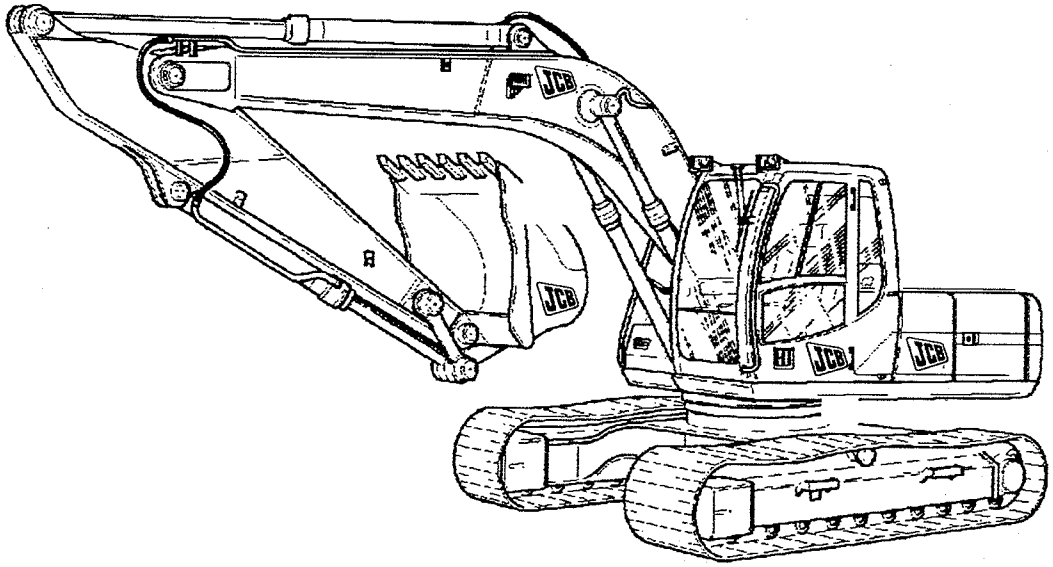

PART NO. / ISSUE NO. : 550 / 43202 / 3

INDEX

ATTACHMENTS — A

BODYWORK, CAB, LOADER END — B

ELECTRICS-MACHINE, CAB & ENGINE — C

CONTROLS-MACHINE, ENGINE — D

HYDRAULICS & AIR — E

TRACK/SLEW GEARBOX — F

TRACK & RUNNING GEAR, UNDERCARRIAGE — J

ENGINE — T

LIGHTS — L

PARTS LOCATION PROCEDURE

- REFER TO MACHINE DATE PLATE
  1 Machine Serial No.
  2 Engine Serial No.
  3 Gearbox Serial No.
  4 Torque Converter Serial No.
  5 Axle Serial No.

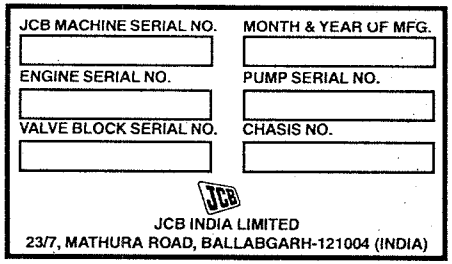

- SELECT SECTION

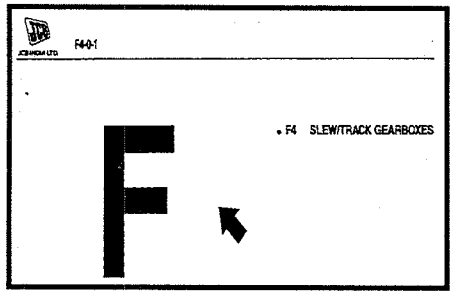

- REFER TO INDEX

F - TRACK/SLEW GEARBOX	
SLEW/TRACK GEARBOXES	F4
GEARBOX, ASSEMBLY & SPROCKET	F4-1-1
GEARBOX, TRACK	F4-2-1
MOTOR, SWING	F4-3-1
GEARBOX, SWING	F4-4-1

- LOCATE ITEM

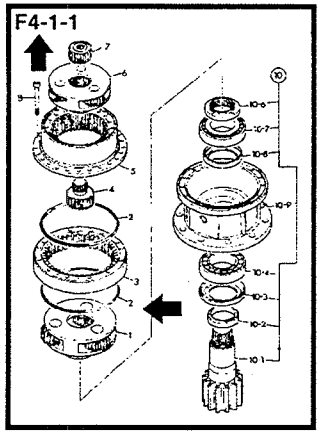

All item Nos. within a box or attached to another line are part of a assembly

PARTS ORDERING PROCEDURE

- MACHINE MODEL NO. AND SERIAL NO. _____

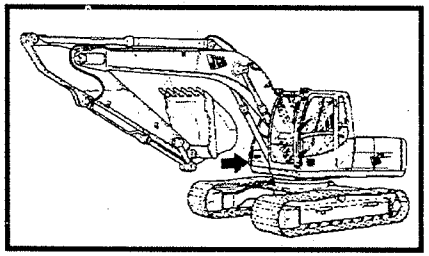

- PAGE REFERENCE NO._____

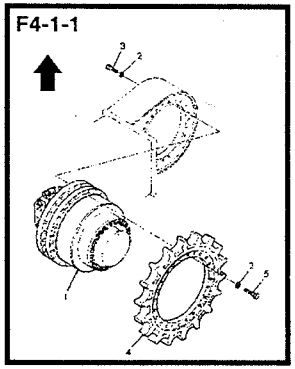

- ILLUSTRATION ITEM NO._____

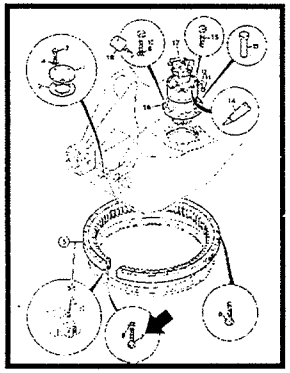

The purpose of this book is to assist the operator in ordering parts quickly and easily from a JCB Dealer. The index at the beginning of each section MUST be used with referecnce to the machine type and seial number, to find the correct page for the part required.

JCB INDIA LTD.

PART NO. / ISSUE NO. : 550 / 43202 / 3

ISSUE DATE : JULY 2010

TITLE	PAGE NO.
A - ATTACHMENTS	
BUCKETS	**A2**
BUCKET, WIDE, (0.63) CUBIC METRES	A2-1-5
BUCKET, WIDE, (0.72) CUBIC METRES	A2-1-6
BUCKET, WIDE, (0.80) CUBIC METRES	A2-1-7
ROCKER ASSEMBLY	**A3**
ROCKBREAKER, ASSEMBLY	A3-1-1
ROCKBREAKER, ASSEMBLY	A3-1-1
HOUSING, ROCKBREAKER	A3-2-1
RIPPER TOOTH	A3-3-1
CHAIN, 850 HD T/G	A3-6-1
CHAIN, TENSIONING 600 mm, 700 mm	A3-7-1
FIRE EXTINGUISHER	A3-8-1
B - BODYWORK, CAB, EXCAVATOR END, REFURBISHMENT	
BODYWORK/FRAME	**B1**
MAINFRAME, REVOLVING	B1-1-1
COVERS, LOWER, MAINFRAME	B1-2-1
COVER UNDER	B1-2-2
TANK, HYDRAULIC	B1-3-1
TANK, DIESEL FUEL	B1-4-1
COWLINGS, ENGINE COVER	B1-5-1
GRILLES, ENGINE, COWLING	B1-5-2
FRAME WORK	B1-5-10
COWLINGS, ENGINE, BULKHEAD	B1-5-11
DOOR, COWLINGS AND MOUNTINGS	B1-5-12
COWLINGS, TOOLBOX & HANDRAIL	B1-5-30
TOOL BOX ASSEMBLY	B1-5-31
COUNTER WEIGHT REAR	B1-6-1
CAB	**B2**
CAB	B2-1-1
FRONT SCREEN	B2-1-10
FRONT WIPER, & CAB COMPONENTS	B2-1-20
CAB, MOUNTING FASTENERS	B2-1-30
CAB DOOR COMPONENTS	B2-2-1
SEAT	B2-3-1
CONSOLE CAB CONTROL, LEFT HAND & RIGHT HAND, FIXED CONSOLE	B2-4-1
CAB REAR PANELS	B2-8-1
FLOOR COMPONENTS, LEVER ISOLATOR	B2-10-1
DIRECT GLAZING, REPLACEMENT MATERIAL	B2-18-1
EXCAVATOR END	**B3**
BOOM	B3-1-1
DIPPER 2.1M HD	B3-2-1
TIPPING LINK & LINKAGE	B3-5-1
EXCAVATOR, SHIMS	B3-12-1

JCB INDIA LTD.

PART NO. / ISSUE NO. : 550 / 43202 / 3
ISSUE DATE : JULY 2010

TITLE	PAGE NO.
REFURBISHMENTS	**B5**
DECALS, MACHINE	B5-1-1
DECALS, WARNING	B5-2-1
LABELS	B5-2-3
TOOLS	B5-3-1
C - ELECTRICS-MACHINE CAB & ENGINE	
ELECTRICS, MAIN MACHINE	**C1**
ELECTRICS, MACHINE	C1-1-1
ELECTRICS, CAB	C1-2-1
BATTERY INSTALLATION, 24 VOLT	C1-3-1
LIGHT, WORKING, TOOLBOX	C1-4-1
LIGHT, WORKING, CAB & REAR	C1-4-10
PUMP, DIESEL, REFUELING (OPTIONAL)	C1-5-1
G. A. HORN	C1-6-1
ELECTRICS, ENGINE	**C2**
ELECTRICAL EQUIPMENT	C2-1-1
ALTERNATOR	C2-5-1
MOTOR, STARTING	C2-5-2
ELECTRICS, CAB	**C3**
SWITCH PANEL, SIDE CONSOLE, RIGHT HAND	C3-2-1
MONITORING SYSTEM	C3-3-1
FUSE & RELAYS	C3-4-1
KIT, GAS CHARGING	C3-5-1
GAS, BOTTLE	C3-6-1
PRESSURE, METER, KIT	C3-7-1
D - CONTROLS-MACHINE, ENGINE	
CONTROLS, MACHINE	**D1**
CONTROLS, EXCAVATOR, CAB	D1-1-1
CONTROLS, ENGINE	**D2**
ENGINE CONTROLS	D2-1-1
CONTROLS, EXCAVATOR, CAB	D2-2-1
E - HYDRAULICS, PUMP, VALVES & RAM	
HOSE & PIPEWORK	**E1**
CIRCUIT, PUMP SUCTION	E1-1-1
GA PRESSURE LINES	E1-2-1
CIRCUIT, NEUTRAL, RETURN & OIL COOLER	E1-3-1
CIRCUIT, TRACTION LINE	E1-4-1
CIRCUIT, TRACK, UNDERCARRIAGE	E1-5-1
CIRCUIT, SWING	E1-6-1
CIRCUIT, DRAIN LINE	E1-7-1
CIRCUIT, PLEXUS, HYDRAULIC, FILTER	E1-8-1
HAMMER, REVERSE FRAME	E1-17-1
CIRCUIT, ARM, BREAKER/AUXILLARY	E1-18-1
CIRCUIT, BOOM, HAMMER	E1-19-1
CIRCUIT, BOOM, RAMS, MAINFRAME	E1-20-1
CIRCUIT, DIPPER & BUCKET MAINFRAME	E1-21-1

JCB INDIA LTD.

PART NO. / ISSUE NO. : 550 / 43202 / 3

ISSUE DATE : JULY 2010

TITLE	PAGE NO.
CIRCUIT, DIPPER RAM, MONOBOOM	E1-22-1
CIRCUIT, BUCKET RAM	E1-23-1
CIRCUIT, HYDRAULIC COMPONENTS, LAYOUT, REVOLVING FRAME	E1-50-1
CIRCUIT, VALVE, TRACK CONTROL	E1-61-1
CIRCUIT, VALVE, LH CONTROLLER	E1-63-1
CIRCUIT, TANK MANIFOLD	E1-69-1
CIRCUIT, PILOT LINE, MAIN CONTROL VALVE	E1-70-1
PILOT, PRESSURE HOSES	E1-70-2
SOLENOID VALVE, 3 STATION FROM 1318454	E1-70-3
CIRCUIT, RETURN LINE, PILOT PRESSURE, MAIN CONTROL VALVE	E1-71-1
CIRCUIT, CHECK VALVE	E1-72-1
PUMP/MOTOR & PUMP DRIVE	**E2**
PUMP, PISTON, MAIN HYD., DRIVE GROUP	E2-1-1
MOTOR, SWING	E2-7-1
VALVES & HYDRAULIC FILTERS	**E3**
VALVE, ASSEMBLY & MOUNTING	E3-1-1
VALVE, CONTROL, COMPONENTS FIG 1	E3-2-1
VALVE, TRACK CONTROL, HAND AND FOOT	E3-7-1
COUPLING, ROTARY YUKEN	E3-14-1
LUBRICANTS & FILTERS	E3-15-1
RAM	**E4**
CIRCUIT BOOM RAM (RH), PIPE WORK	E4-1-1
CIRCUIT BOOM RAM (LH), PIPE WORK	E4-1-1
CIRCUIT DIPPER RAM ASSY., PIPE WORK	E4-2-1
CIRCUIT BUCKET CYLINDER, PIPE WORK	E4-3-1
F - TRACK/SLEW GEARBOX	
SLEW/TRACK GEARBOXES	**F4**
GEARBOX ASSY. & SPROCKET STAND. BUILD	F4-1-1
GEARBOX, TRACK TRASMITAL	F4-2-1
TRACK MOTOR & GEAR BOX (TRASMITAL)	F4-2-2
TRACK MOTOR & GEAR BOX (NABTESCO)	F4-2-3
GEARBOX, SWING	F4-4-1
GEARBOX, SWING	F4-8-1
J - TRACK & RUNNING GEAR, UNDERCARRIAGE	
TRACK, GEAR/UNDERCARRIAGE	**J1**
UNDER CARRIAGE	J1-1-2
IDLER WHEEL BERCO	J1-2-1
RECOIL & IDLER ASSY. STANDARD TRACK	J1-2-2
TRACK BOTTOM TENGL	J1-3-1
ROLLER, TRACK TOP TENGL	J1-4-1
TRACK CHAIN, 44 LINK TENGL	J1-5-1
TRACK GROUP 44 SECTION TENGL	J1-5-2
RECOIL UNIT	J1-6-1

JCB INDIA LTD.

PART NO. / ISSUE NO. : 550 / 43202 / 3

ISSUE DATE : JULY 2010

TITLE	PAGE NO.
T - ENGINE	
ENGINE BLOCK & SUB-ASSEMBLIES	**T1**
ENGINE COMPLETE	T1-1-1
COVER, CAM FOLLOWER	T1-3-1
FAN ENGINE	T1-5-1
DRIVE, ALTERNATOR	T1-5-2
COVER, FRONT GEAR	T1-6-1
HOUSING, FLYWHEEL	T1-7-1
ENGINE MOUNTINGS	T1-8-1
CYLINDER HEAD & SUB-ASSEMBLIES	**T2**
MOUNTING, CYLINDER HEAD	T2-1-1
COVER, VALVE	T2-3-1
COVER, CYLINDER BLOCK	T2-3-2
INDUCTION & EXHAUST SYSTEM	**T3**
FILTER, AIR	T3-3-1
ARRANGEMENT TURBOCHARGER	T3-3-2
EXHAUST SYSTEM	T3-4-1
SYSTEM COOLING	**T4**
PUMP, WATER COOLING	T4-1-1
CONNECTION, WATER INLET	T4-1-2
CONNECTION, WATER OUTLET	T4-2-1
HOUSING, THERMOSTAT	T4-2-2
THERMOSTAT DRIVE	T4-2-3
CONNECTION, WATER OUTLET	T4-2-4
RADIATOR, FITTINGS & MOUNTINGS	T4-3-1
RADIATOR OIL COLLER ASSY.	T4-4-1
SYSTEM, LUBRICATION	**T5**
COLLER, ENGINE OIL	T5-5-1
SYSTEM, FUEL	**T6**
ACCESSORIES, FUEL SYSTEM	T6-2-1
PLUMBING, FUEL SYSTEM	T6-2-2
PLUMBING, FUEL FILTER SYSTEM	T6-2-3
PUMP, FUEL TRANSFER SYSTEM	T6-2-4
INJECTORS, FUEL	T6-2-5
FUEL LINES - FUEL TANK TO ENGINE	T6-4-1
FUEL LINES	T6-4-2
FILTERS, FUEL	T6-7-1
EQUIPMENT, AUXILIARY	**T7**
TURBOCHARGER DRIVE	T7-1-2
PLUMBING, TURBOCHARGER	T7-2-1
L - LIGHTS	
WORKING LIGHTS ADDITIONAL	**L1**
WORKING LIGHTS ADDITIONAL	L1-1-1

A

• A2 BUCKETS
A3 ROCKER ASSEMBLY

A2-1-5 BUCKET, WIDE, (0.63) CUBIC METRES

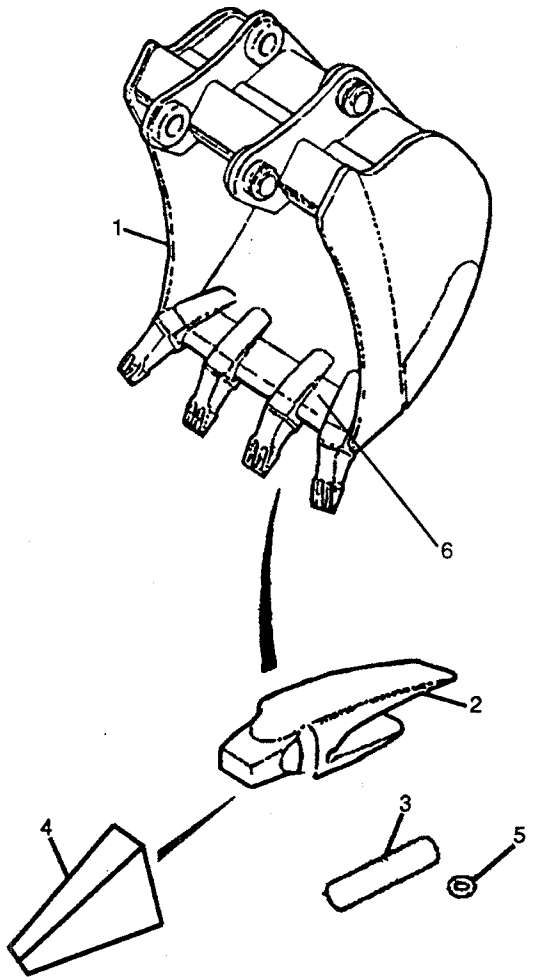

ITEM	PART NO.	CHANGE NO.	DESCRIPTION	REMARKS	QTY.
1	229/01247		Bucket		1
2	229/01301		Adaptor, tooth		4
3	229/01303		Pin, locking,		4
4	229/01302		Tooth		4
5	229/01304		Washer		4
6	332/P1400		Toe plate		1

A2-1-6 BUCKET, WIDE, (0.72) CUBIC METRES

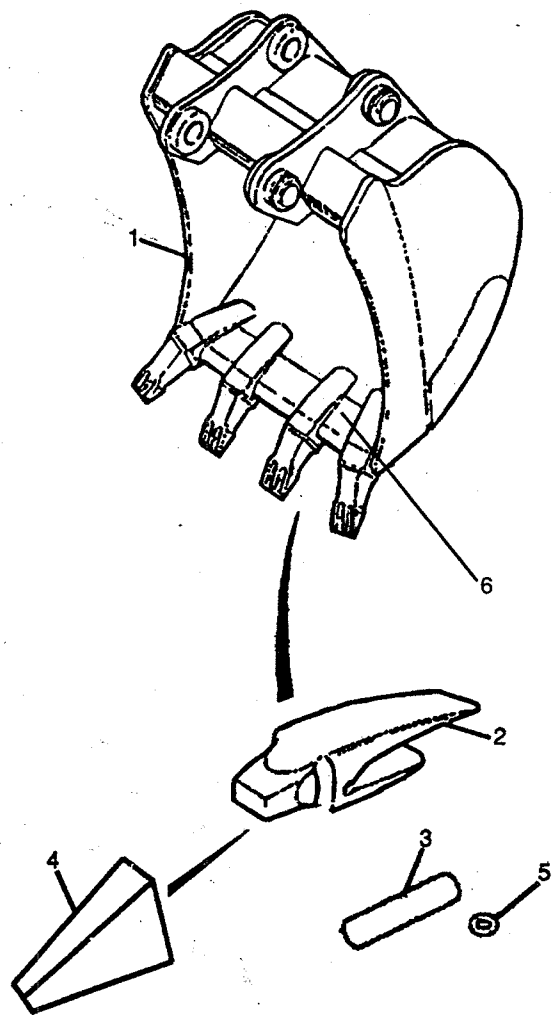

ITEM	PART NO.	CHANGE NO.	DESCRIPTION	REMARKS	QTY.
1	229/01248		Bucket		1
2	229/01301		Adaptor, tooth		5
3	229/01303		Pin, locking,		5
4	229/01302		Tooth		5
5	229/01304		Washer		5
6	332/P1417		Toe Plate		1

A2-1-7 BUCKET, WIDE, (0.80) CUBIC METRES

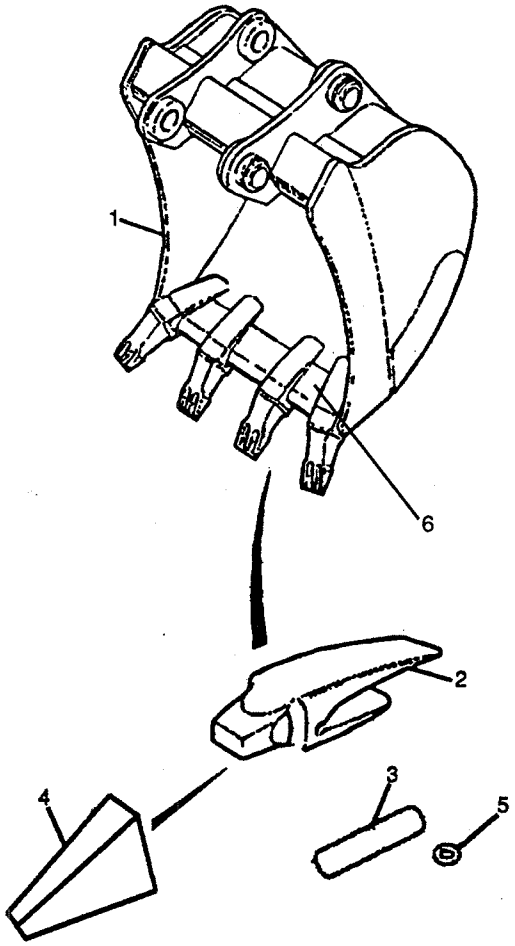

ITEM	PART NO.	CHANGE NO.	DESCRIPTION	REMARKS	QTY.
1	229/01249		Bucket 0.8		1
2	229/01301		Adapter, tooth		5
3	229/01303		Pin, locking,		5
4	229/01302		Tooth		5
5	229/01304		Washer		5
6	332/P1409		Toe Plate		1

A

A2 BUCKETS
• A3 ROCKER ASSEMBLY

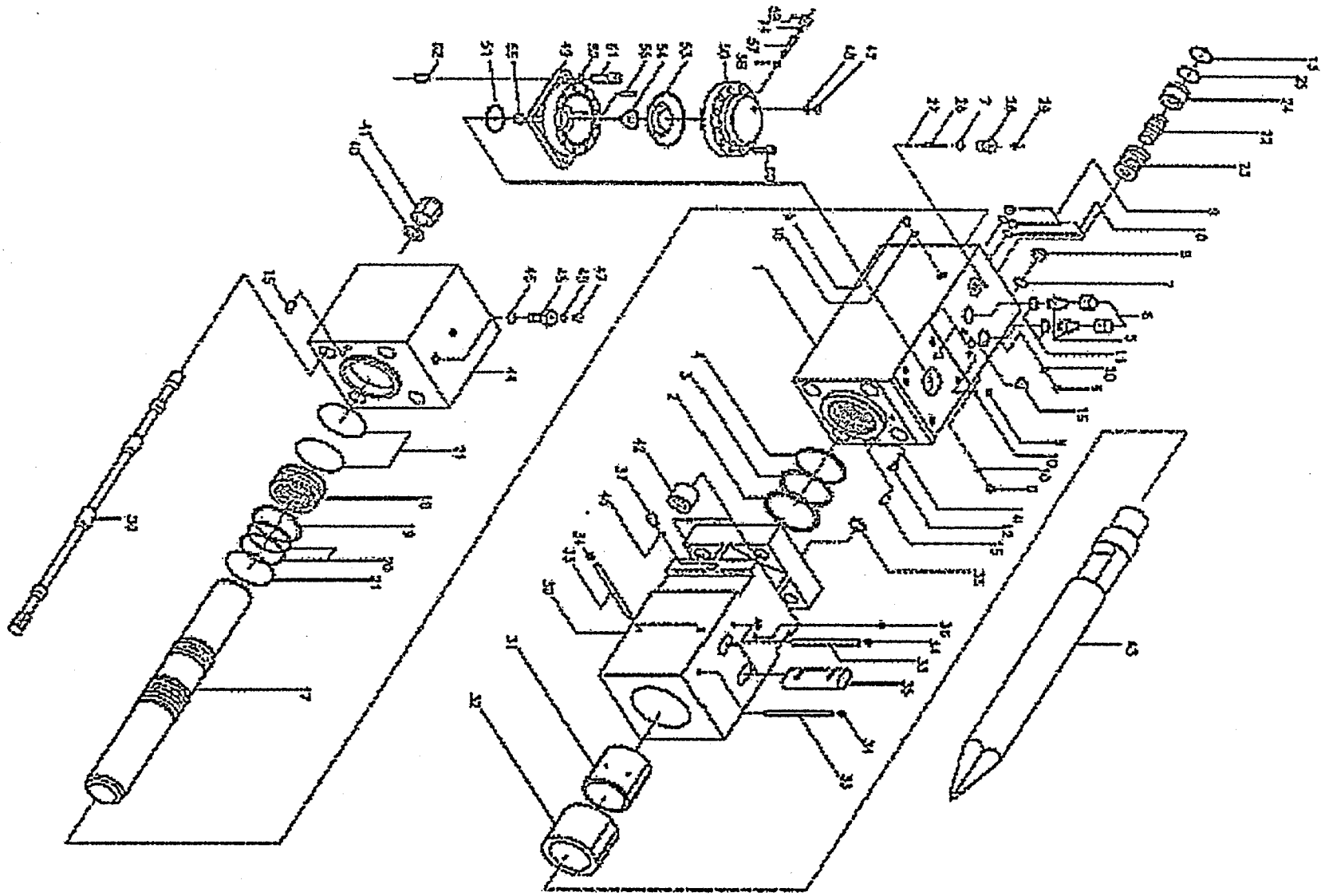

ITEM	PART NO.	CHANGE NO.	DESCRIPTION	REMARKS	QTY.
A	980/A1702		Rockbreaker Kit		1
	332/P1156		Hammer Circuit		1
	332/Y7846		Kit Powercell Assy.		
			Powercell Assy.		1
1	332/Y3144		Cylinder		1
2	332/Y7847		Seal Dust		1
3	332/Y7848		Packing U		1
4	332/Y7849		Buffer-ring		1
5	331/67366		Adapter		2
6	332/A2281		Plate Joystick Gaiter		2
7	332/Y7851		O-Ring		2
8	332/Y7852		RO Plug		1
9	331/67264		Plug		9
10	331/67265		Plug		9
11	332/Y7854		O Ring		2
12	331/67262		Plug		1
13	332/Y7855		O-Ring		1
14	331/67263		O-Ring		2
15	332/Y7856		Pin Holding		2
16	331/A2291		Elbow		1
17	332/Y7857		Piston		1
18	331/A2291		Elbow		1
19	332/Y7859		Gas Seal		1
20	332/Y7860		Step Seal		2
21	332/Y7861		O-Ring		3
	332/Y7862		Kit Valve Set		1

ITEM	PART NO.	CHANGE NO.	DESCRIPTION	REMARKS	QTY.
22	NSP		None Serviced Part		1
23	NSP		None Serviced Part		1
24	NSP		None Serviced Part		1
25	NSP		None Serviced Part		1
	332/Y7863		Kit Adjuster Set		1
26	NSP		None Serviced Part		1
27	331/67288		O Ring		1
28	NSP		None Serviced Part		1
29	NSP		None Serviced Part		1
30	332/Y7864		Front Head		1
31	332/Y7865		Round Bush		1
32	332/Y7866		Front Cover		1
33	332/Y7867		Stopper Pin		4
34	331/67297		Pin Plug Rubber		4
35	332/Y7868		Chisel Pin		2
36	331/67299		Plug Hollow		1
37	331/37301		Top Plate		1
38	332/Y7869		O Ring		1
	332/Y7870		Set Through Bolt		4
39	NSP		None Serviced Part		4
40	NSP		None Serviced Part		4
41	NSP		None Serviced Part		4
42	NSP		None Serviced Part		4
43	332/Y7871		Tool Moil		1
	550/43781		Tool Pyramid		
	550/43782		Tool Chisel		1

ITEM	PART NO.	CHANGE NO.	DESCRIPTION	REMARKS	QTY.
	332/Y7872		Chisel Tool Transver		1
	332/Y7873		Tool Blunt		1
44	332/Y7874		Back Head		1
	331/67315		Kit Gas Valve		1
45	331/67316		Valve		1
46	331/67318		O Ring		2
47	331/67319		Valve Cap		2
48	331/67320		O Ring		2
	332/Y7875		Set Accumulator		1
49	NSP		None Serviced Part		1
50	NSP		None Serviced Part		1
51	NSP		None Serviced Part		1
52	331/67327		Ring Back Up		4
53	332/Y7876		Diaphragm		1
	331/67330		Kit Poppet Valve		1
54	331/67331		Poppet Valve		1
55	331/67337		Poppet Valve Nut		1
56	331/67338		Pin Knock		1
	331/67339		Kit Needle Valve		1
57	331/67340		Pin Needle		1
58	331/67341		O Ring Spare		1
59	331/67342		Needle Cap		1
60	332/Y7877		Socket Bolt		12
61	331/67344		Bolt		4
62	331/67345		Insert Helicoil		4
	332/Y7878		Complete Seal Kit		1

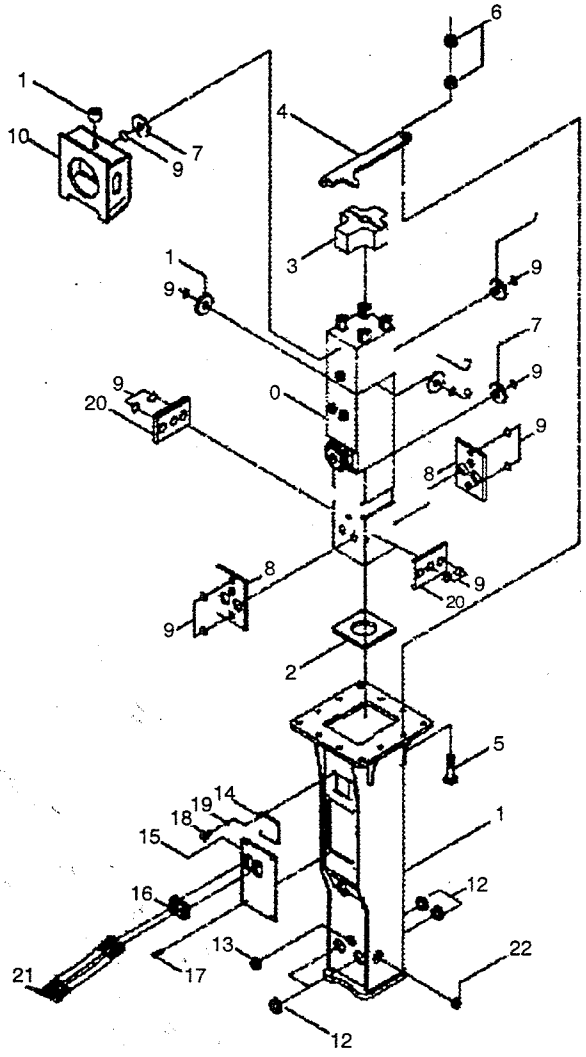

ITEM	PART NO.	CHANGE NO.	DESCRIPTION	REMARKS	QTY.
1	332/Y7879		Bracket		1
2	332/Y7880		Bottom Damper		1
3	332/Y7881		Upper Damper		1
4	NSP		None Serviced Part		1
5	NSP		None Serviced Part		2
6	NSP		None Serviced Part		4
7	332/Y7882		Pad Mc		5
8	332/Y7884		Pad Mc		2
9	332/Y7885		Pad Mc		2
10	332/Y7823		O Ring		18
11	332/Y7886		Head Plate		1
12	331/67356		Damper Head		2
13	331/67657		Profile		4
14	332/Y7829		Rubber Cover		4
15	332/Y7887		Auto Grease Cover		1
16	332/Y7888		Mc Cover		1
17	331/67361		Hose Cover		2
18	331/67362		Bolt		4
19	332/Y7889		Side Hose Cover		2
20	331/67364		Bolt		4
21	331/67365		Washer		4

A3-2-1 HOUSING, ROCKBREAKER

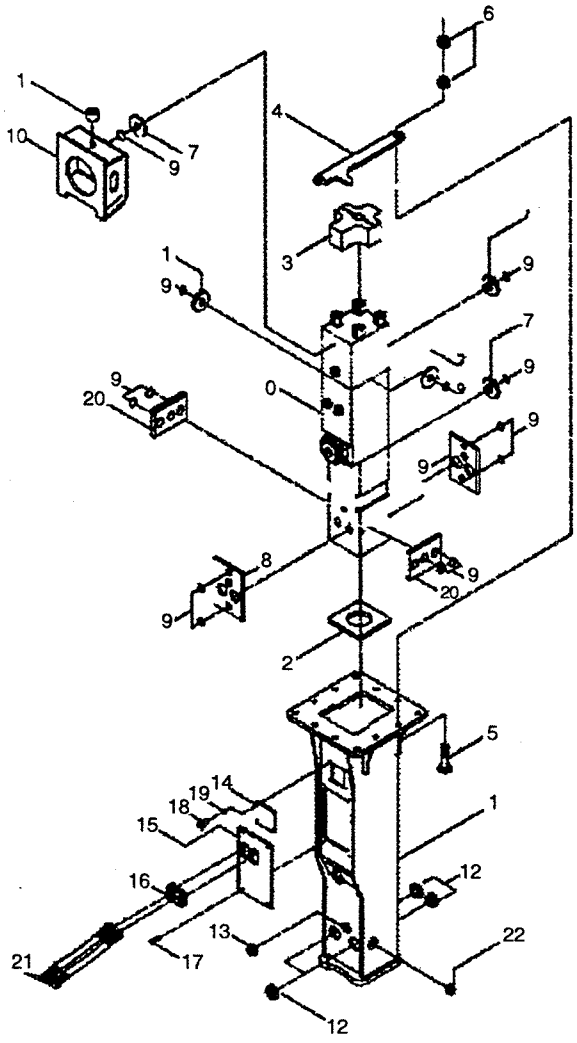

ITEM	PART NO.	CHANGE NO.	DESCRIPTION	REMARKS	QTY.
22	332/Y7890		Grease Complete Auto		1
23	332/Y7891		Bolt Sus Wrench		4
24	332/Y7892		Sus Washer		4
25	332/Y7893		Hose Grease		1
26	625/80002		Hose		2

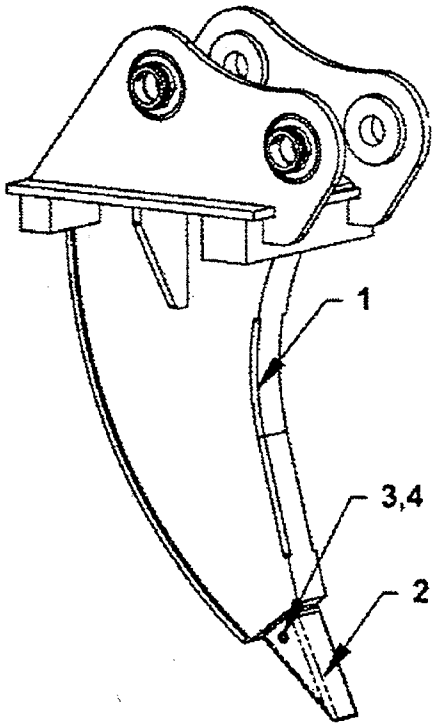

ITEM	PART NO.	CHANGE NO.	DESCRIPTION	REMARKS	QTY.
1	332/P1615		Tooth - Ripper		1
2	980/84766		Tooth Tip Long		1
3	980/84768		Washer		1
4	980/84767		Pin Locking		1

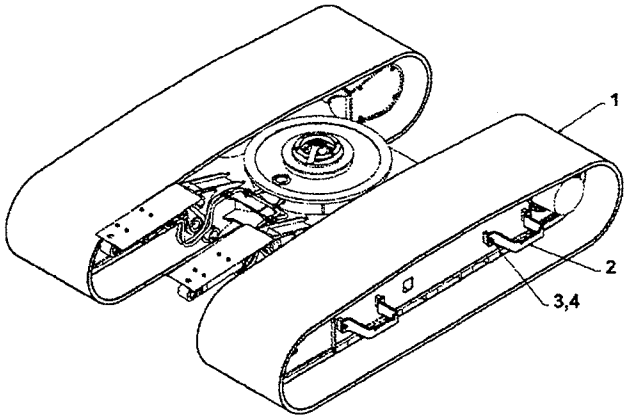

ITEM	PART NO.	CHANGE NO.	DESCRIPTION	REMARKS	QTY.
1	331/22316		Chain Track Assembly 850mm H/D Grouser		2
2	331/40797		Step Bracket 230mm Offset		4
3	1316/3713D		Bolt M16 x 55mm		8
4	Jhp0043		Washer M16		8

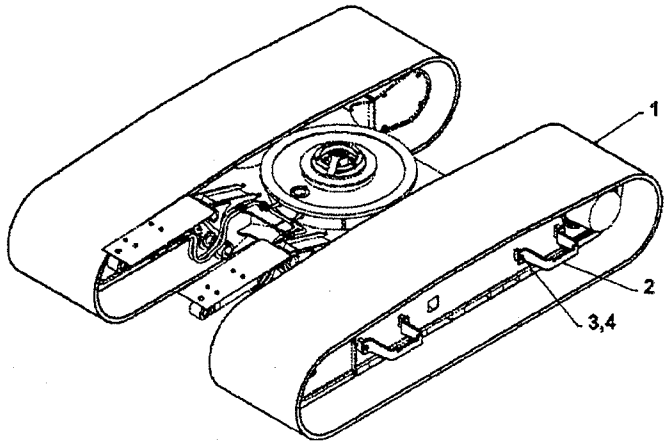

ITEM	PART NO.	CHANGE NO.	DESCRIPTION	REMARKS	QTY.
1	332/P1115		Track Shoes 600mm		1
1	332/P1116		Track	Shoes 700mm	1
2	331/40764		Step Bracket 80mm Offset 600mm		1
2	331/40796		Step Bracket 120mm Offset 700mm		1
3	1316/3713Z		Bolt M16 x 55		1
4	JHP0043		Washer M16		1

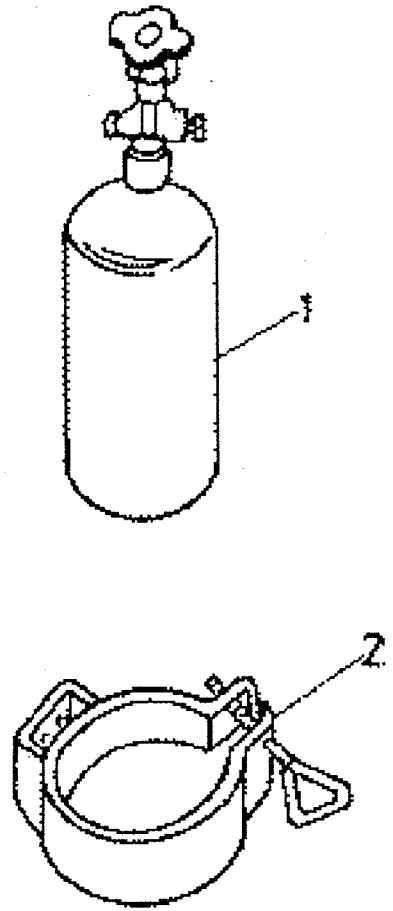

ITEM	PART NO.	CHANGE NO.	DESCRIPTION	REMARKS	QTY.
1	730/03601		Extinguisher Fire		1
2	730/03602		Band		1
3	826/01103		Nut Rivet, M8 Open Ended		2
4	1420/0007Z		Washer Plain M8		2
5	1315/0308Z		Screw M8 x 30		2

B

- B1 BODYWORK/FRAME
- B2 CAB
- B3 EXCAVATOR END
- B5 REFURBISHMENTS

JCB INDIA LTD.

B1-1-1 MAINFRAME, REVOLVING

ISSUE - 2

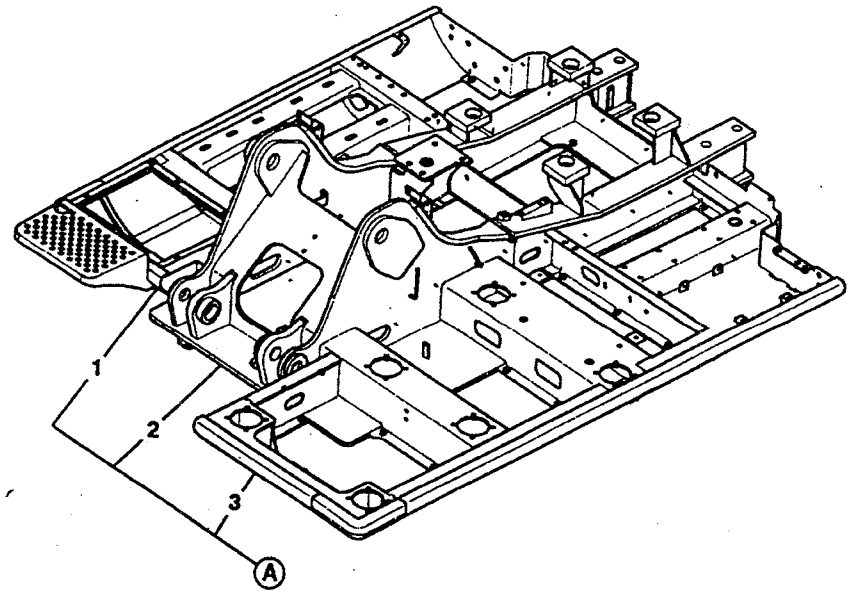

ITEM	PART NO.	CHANGE NO.	DESCRIPTION	REMARKS	QTY.
0A	335/04589		Frame, revolving		1
	332/P4594			1318247 onwards	
1	331/45713		Platform, right hand side		1
2	229/01058		Frame, revolving A&E		1
3	229/01057		Platform, left hand side		1

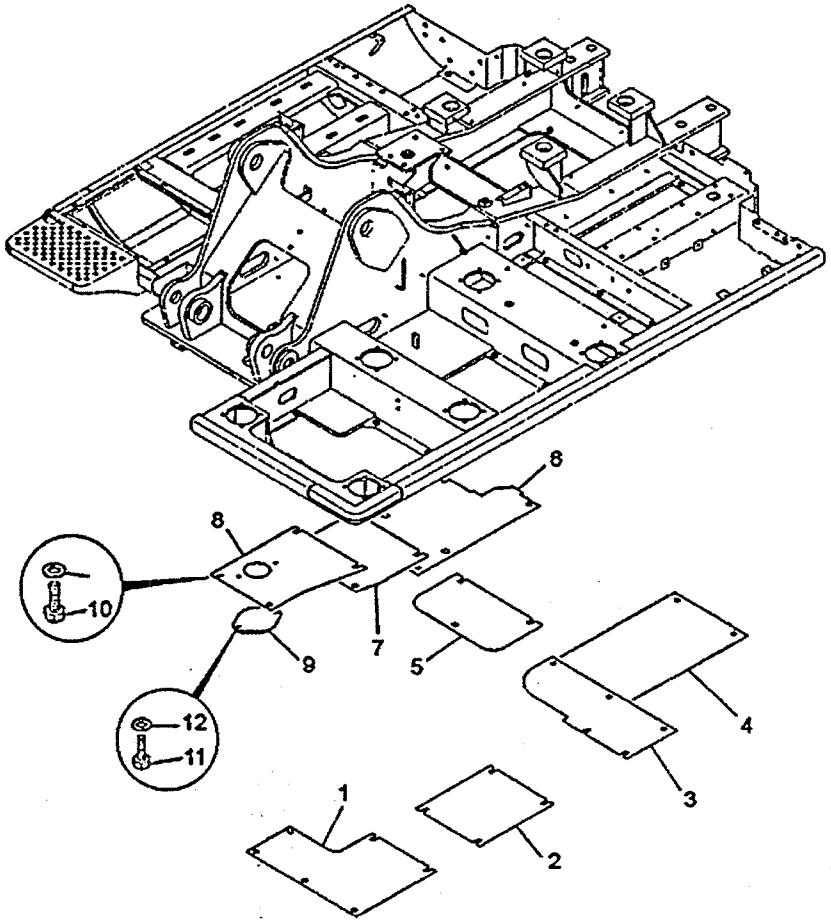

ITEM	PART NO.	CHANGE NO.	DESCRIPTION	REMARKS	QTY.
1	331/35462		Cover, under, cub front		1
2	331/35464		Cover, under, cub rear		1
3	331/30004		Cover, under, radiator assembly		1
4	229/01360		Cover, under, pump bay		1
5	331/31977		Cover, under, hyd & fuel tanks		1
6	331/31978		Cover, under, access panel	attached to item 5	1
7	JRB0113		Cover, under, center		1
9	1316/0509Z		Bolt	used to attach at cover	29
10	1316/0405Z		Screw, M10 x M20	attach access panel to item 5	2
11	1420/0008Z		Washer, Plain	used with item 10	2
12	JHP0049		Washer		27

JCB INDIA LTD.

B1-2-2 COVER UNDER

ISSUE - 1

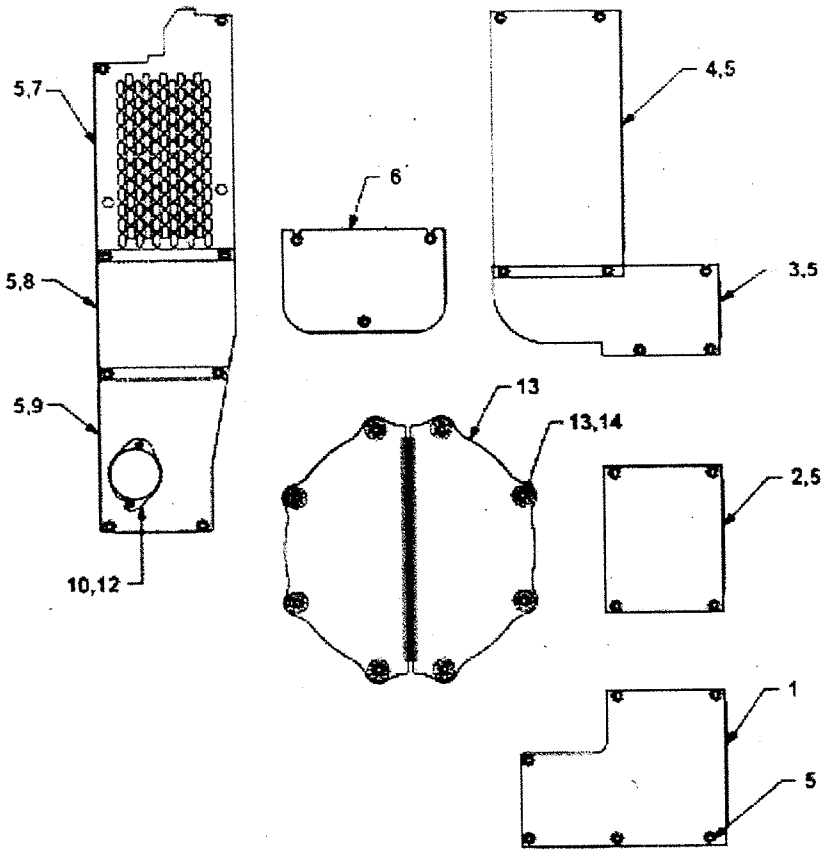

ITEM	PART NO.	CHANGE NO.	DESCRIPTION	REMARKS	QTY.
1	331/40751		Cover Under		1
2	331/32198		Cover Under		1
3	331/32199		Cover Under		1
4	331/32200		Cover Under		1
5	KHN1398		Bolt		28
6	331/32201		Cover Under		1
7	331/66010		Under Cover Pump Bay		1
8	331/32205		Cover Under		1
9	331/32204		Cover Under		1
10	1420/0008d		Washer M10		2
11	1316/0405d		Screw M10 X 20		2
12	331/31978		Cover Under Access Panel		1
13	Kra0814		Cover Under		2
14	1316/0510d		Screw		8
15	1411/0005d		Washer		8

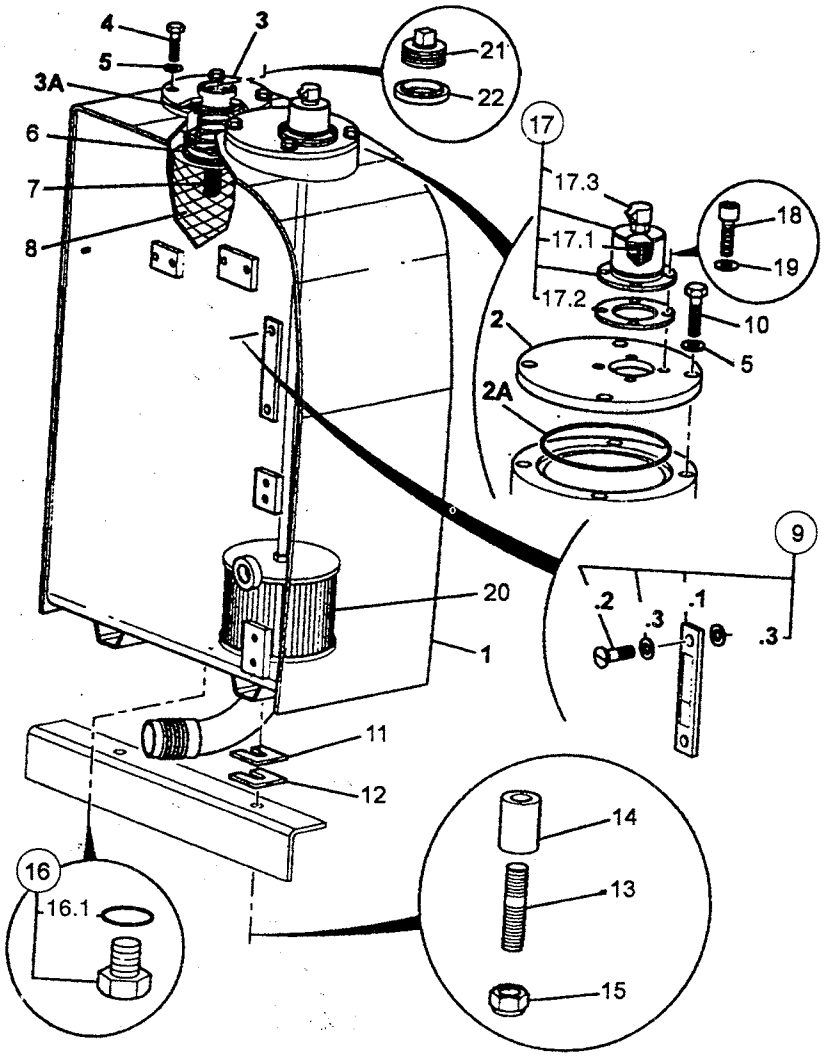

ITEM	PART NO.	CHANGE NO.	DESCRIPTION	REMARKS	QTY.
1	215/12878		Tank, hydraulic		1
2	KNJ1822		Cover		1
2A	CSP0161		'O' Ring	For item 2	1
3	JNJO326		Cover		1
3A	BLA2717		'O' Ring	For item 3	1
4	1316/0405Z		Bolt	For item 3	4
5	JHP0046		Washer, M10	For item 4 and 11	8
6	KNJ1601		Spring, compression	For return filter	1
7	KRJ1600		Value, filter relief		1
8	32/925185		Filter, return, flushing only	Only fitted for flushing, Max 100 hours only.	1
9	JHH0119		Gauge	C/W banjo bolts seals	1
9.1	NSP		: None serviced part		1
9.2	KHJ0815		: Bolt		2
9.3	KHJ0816		: Seal, washer		4
10	1316/0408Z		Setscrew	For item 2	4
11	KHH0040		Shim, plate T=0.03"		4
12	KHH0137		Shim, plate		4
13	826/11113		Stud, threaded M16x93	Into Hyd Tank base	2
13A	1316/3716D		Bolt		2
14	JSJ0042		Spacer	For item 14	4

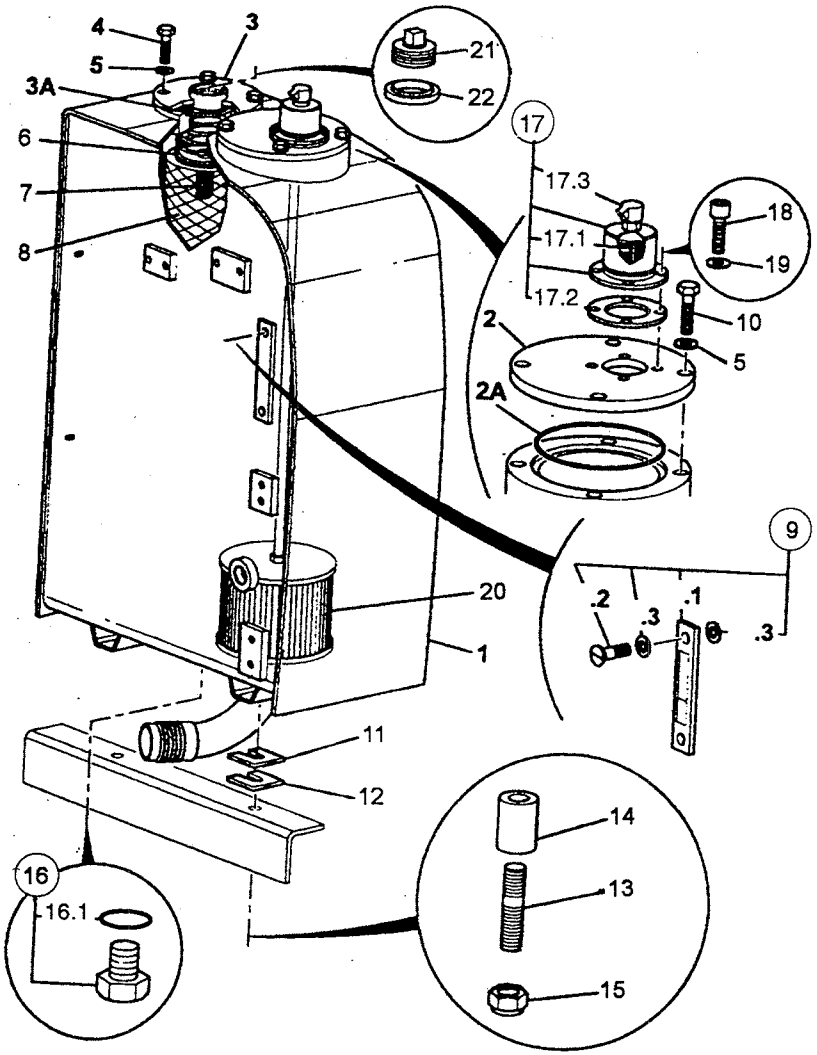

ITEM	PART NO.	CHANGE NO.	DESCRIPTION	REMARKS	QTY.
15	1371/0603Z		Nut, M16	For item 14	4
16	BRJ1286		Plug	Hyd Tank drain	1
16 01	UBJ0158		: 'O' Ring	For item 17	1
17	32/925693		Breather, air	For item 2	1
01	KRJ3461		: Element	For item 18	1
02	KRJ3463		: Packing	For item 18	1
03	KHJ0992		: Nut	For item 18	1
18	I 391/3203Z		Cap screw	Secures item 18	4
19	1420/0006Z		Washer, M6	For item 19	4
20	32/925359		Strainer, assembly	Inside tank	1
21	JHH0082		Plug	For item 3	1
22	1406/0029		Seal, Dowty	For item 22	1
23	JHP0134		Label, hyd tank vent	Venting instructions	1
24	JHP0043		Washer, M16	For item 15	4

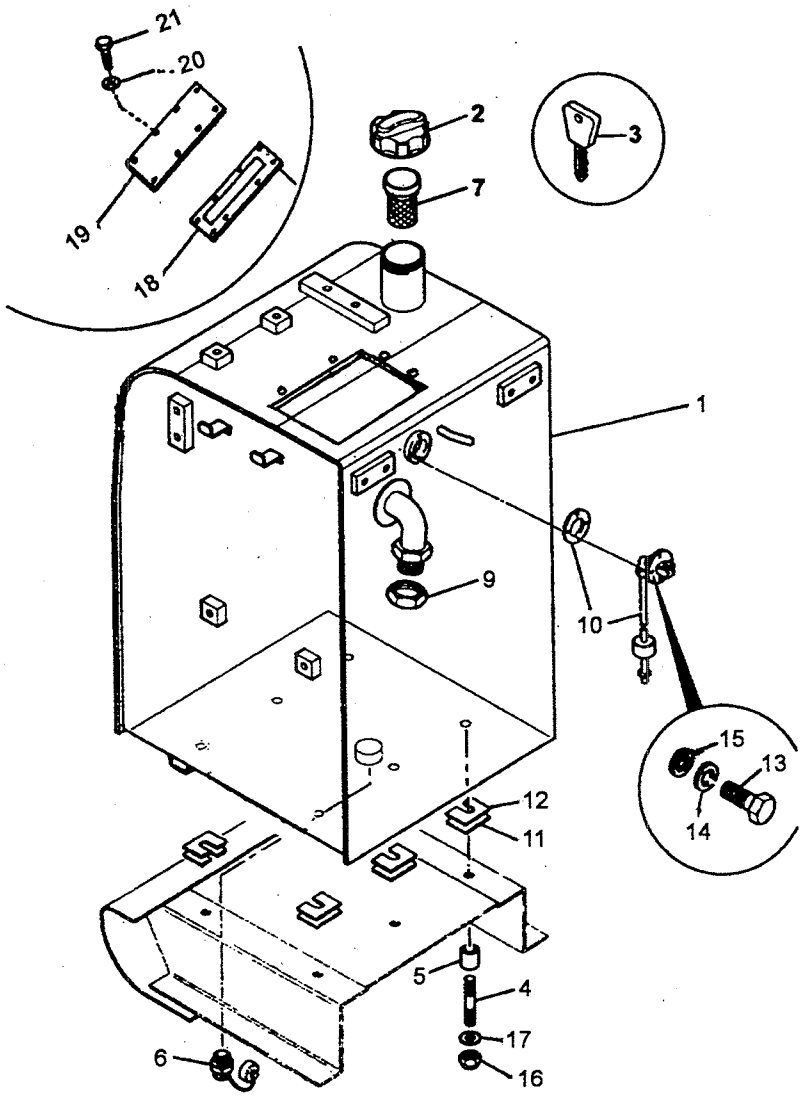

ITEM	PART NO.	CHANGE NO.	DESCRIPTION	REMARKS	QTY.
1	229/02722		Tank, fuel		1
	332/P4418				1
2	331/31152		: Cap filter with lock		
	331/33064		: Cap filter with lock	1318237 onwards ▸	
3	701/45501		: Key, Door/Ignition		1
4	826/11113		Stud, threaded M16X93	Secures tank	6
5	JSJ10042		Spacer	For item 4	6
06	32/925428		Plug, drain valve	Fit to tank bottom	1
7	JRH0083		Filter	Fit in filter neck	1
8	JHH0120		Gauge, diesel fuel level	Fit to tank	1
8 01	NSP		: Non serviced part		1
8 02	NSP		: Non serviced part		1
8 03	NSP		: Non serviced part		4
9	331/42586		Blank, AX, Cap ¾"	For stub pipe	1
10	716/30142		Sender, fuel level, with gasket	For into tank	1
11	KHH0040		Shim, plate, T=0.03"	For item 4	2
12	KHH0137		Shim, plate	For item 4	2
13	1316/0103		Screw	Secures fuel sensor	4
14	1420/0005Z		Washer, M5	For item 13	4
15	JHC0001		Gasket, sealant, liquid packing		A/R
16	1371/0603Z		Nut, M16		6
17	JHP0043		Washer, M16	For item 16	6
18	229/00605		Gasket		1
	332/P5027		Gasket	1319237 onwards	1
19	229/00606		Inspection cover		1
20	1420/0007Z		Washer		8
21	1316/0305Z		Bolt		8

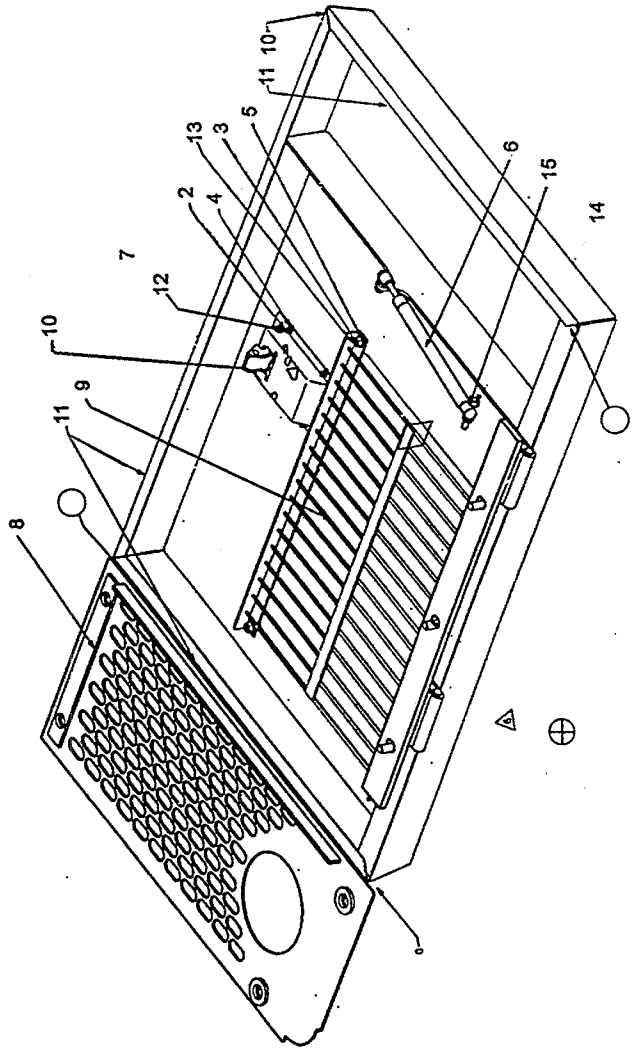

ITEM	PART NO.	CHANGE NO.	DESCRIPTION	REMARKS	QTY.
1	1316/0508Z		Screw M12x30		3
2	1370/0003Z		Nuts M5		4
3	1370/0201Z		Nut M8 STD.		4
4	1420/0005Z		Washer plain M5		4
5	1420/0007Z		M8 Plain washer		6
6	331/34453		Gas strut		1
7	229/01626		WA Engine cover		1
8	229/02550		WA Silencer grill		1
9	229/02354		WA Engine hood grill		1
10	826/11245		Door paddle latch		1
11	904/20274		Seal bonnet	Metres	2.4
12	1315/0101Z		Screw M5		4
13	1315/0303Z		Screw M8		4
14	1371/0201Z		Nut M8 STD.		2
15	1420/0009Z		Washer		7

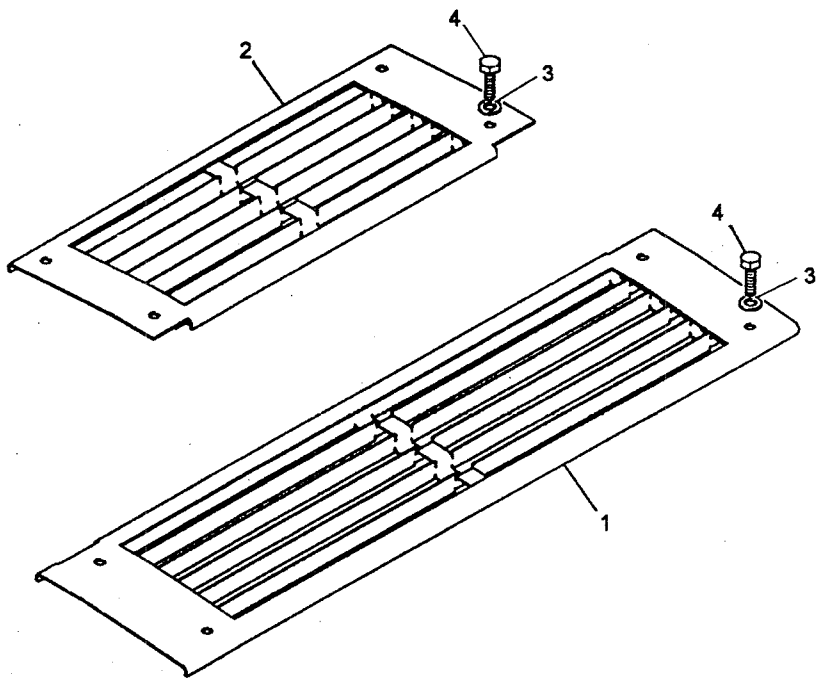

ITEM	PART NO.	CHANGE NO.	DESCRIPTION	REMARKS	QTY.
1	229/02407		Grille, left hand		1
2	229/02408		Grille, right hand		1
3	1420/0009Z		Washer, Plain M12	For item 4	8
4	1316/0508Z		Screw	Secures item No. 1 and 2	8

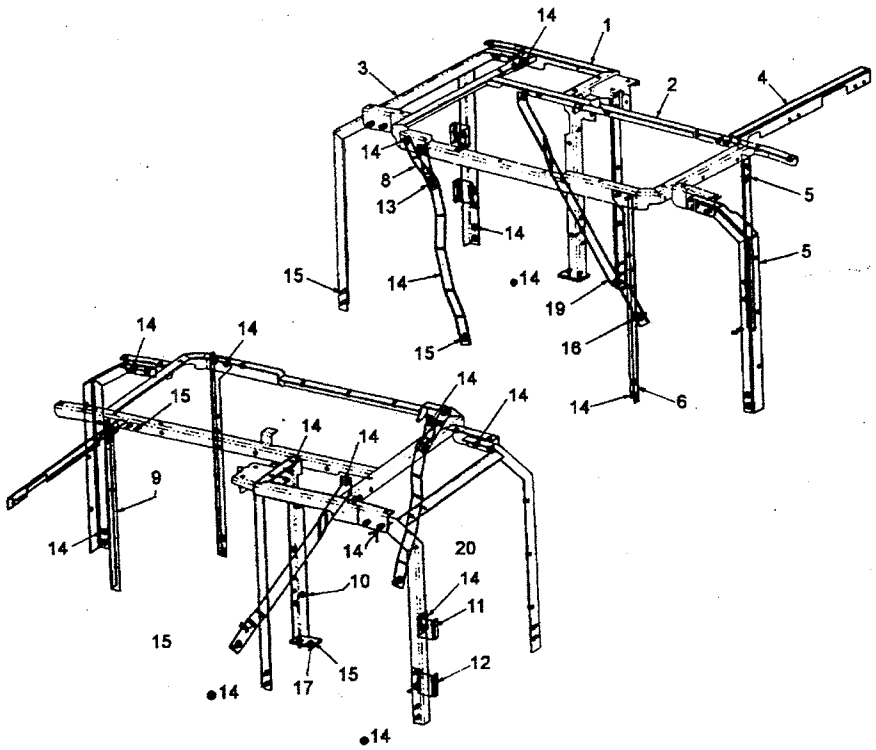

ITEM	PART NO.	CHANGE NO.	DESCRIPTION	REMARKS	QTY.
1	335/08196		WA Frame work cab rear		1
2	335/13929		WA House frame top center		1
3	335/05187		WA Door support LH		1
4	331/34065		Frame work upper tank rail		1
5	331/32577		Door mounting post LH		1
6	331/33762		Frame work house		1
7	331/34629		Radiator stay		1
8	331/34601		Bracket radiator		1
9	331/34078		Frame work tank side		1
10	331/39468		Bracket 90M deg with U bolt		1
11	331/35105		Door catch bracket LH		1
12	331/35115		Dovetail mounting bracket		1
13	1316/0507Z		M12x25 set screw		1
14	1316/0508Z		Set screw		30
15	1316/0509Z		Set screw		9
16	1316/0511Z		Set pin M12x45		1
17	1411/0005Z		Washer ½" medium		41
18	331/66671		Radiator stay		1
19	331/20637		Spacer block		1

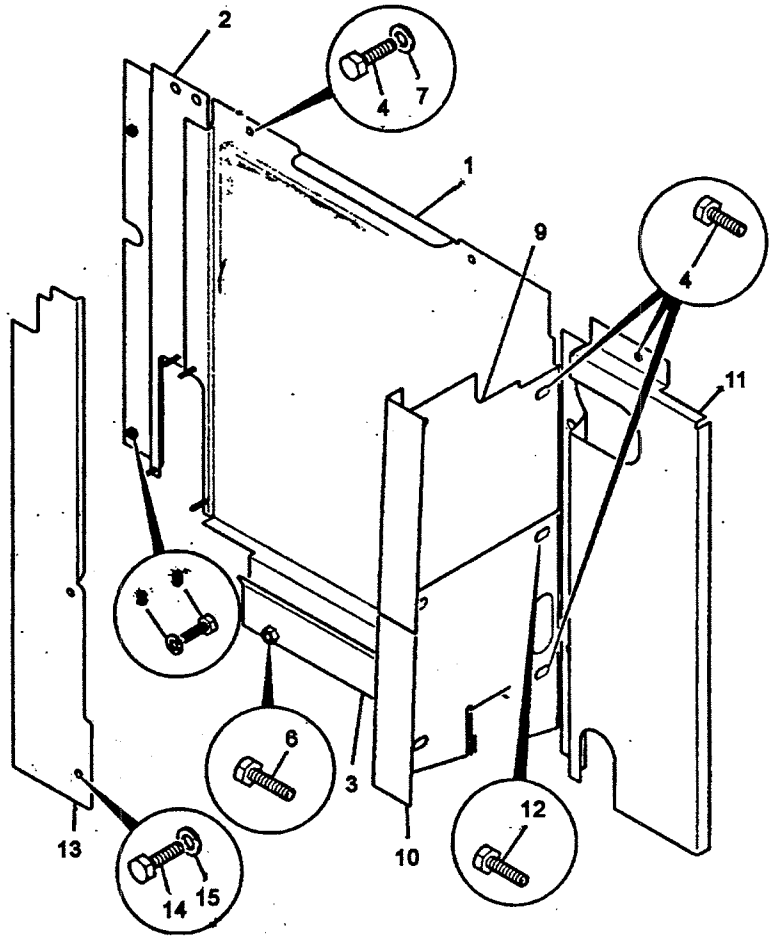

ITEM	PART NO.	CHANGE NO.	DESCRIPTION	REMARKS	QTY.
1	331/35908		Plate, bulkhead		1
2	231/48227		Plate, bulkhead		1
3	331/35939		Plate, retainer		1
4	1316/0507Z		Screw, set pin		9
5	1316/0305Z		Screw, set		2
6	1316/0509Z		Bolt, grade 12.9		2
7	1420/0009Z		Washer, M12		15
8	1420/0007Z		Washer, M8 plain		2
9	331/45628		Plate, bulkhead, cab, rear upper		1
10	331/43018		Plate, bulkhead, rear cab		1
11	331/41821		Plate, bulkhead, radiator		1
12	1316/0508Z		Screw		2
13	331/35991		Plate, infill		1
14	1315/0507DZ		Setscrew		2
15	1420/0009DZ		Washer, M12		2
16	KAR0152		Grommet		2

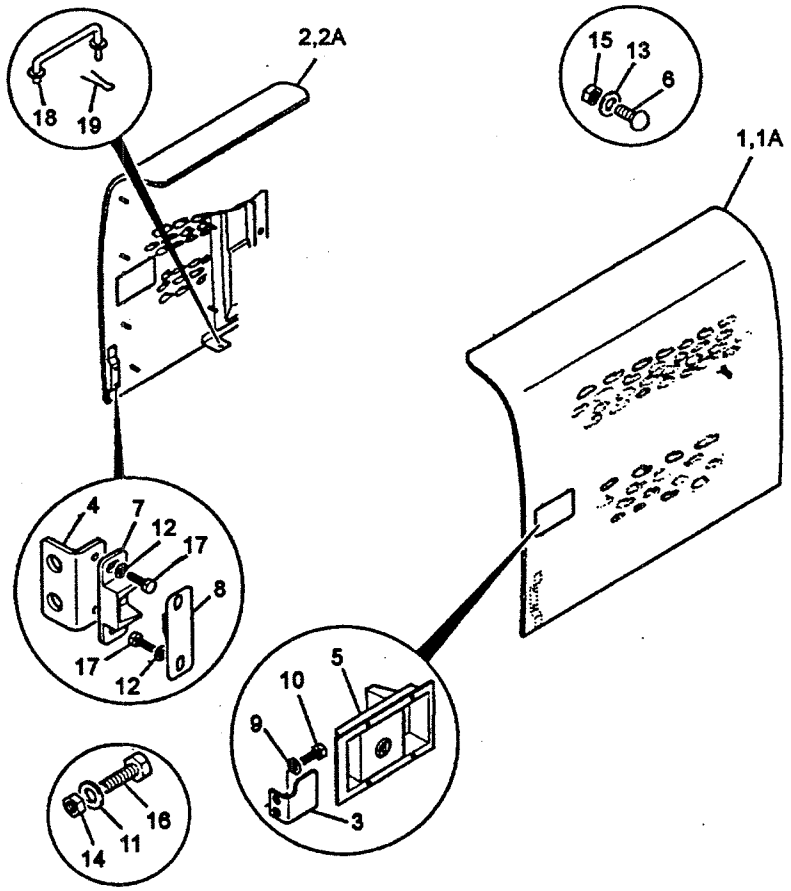

ITEM	PART NO.	CHANGE NO.	DESCRIPTION	REMARKS	QTY.
1	331/66013		Door, Assembly LH, behind cab		1
1A	KRN1497		Hinge		2
2	331/66015		Door, Assembly RH, pump bay		1
2A	KRN1497		Hinge		2
3	331/34370		Bracket, door latch		1
4	331/34382		Bracket, door buffer		1
5	826/11027		Latch, paddle		2
6	KHN1395		Stop, rubber		2
7	KRN0363		Bracket		2
8	KRN0364		Stop		2
9	1420/0009Z		Washer, Plain M12		6
10	1316/0508Z		Screw		6
11	1420/0008Z		Washer, Plain M10		4
12	1420/0006Z		Washer, M6		8
13	1420/0005Z		Washer, M5		8
14	1370/0301Z		Nut		2
15	1370/0001Z		Nut, M5-8		8
16	1316/0405Z		Screw, M10x20		4
17	1316/0203Z		Screw		8
18	KRN1482		Stay		2
19	KRJ1588		Pin		2
20	331/40104		Seal, Foam		1

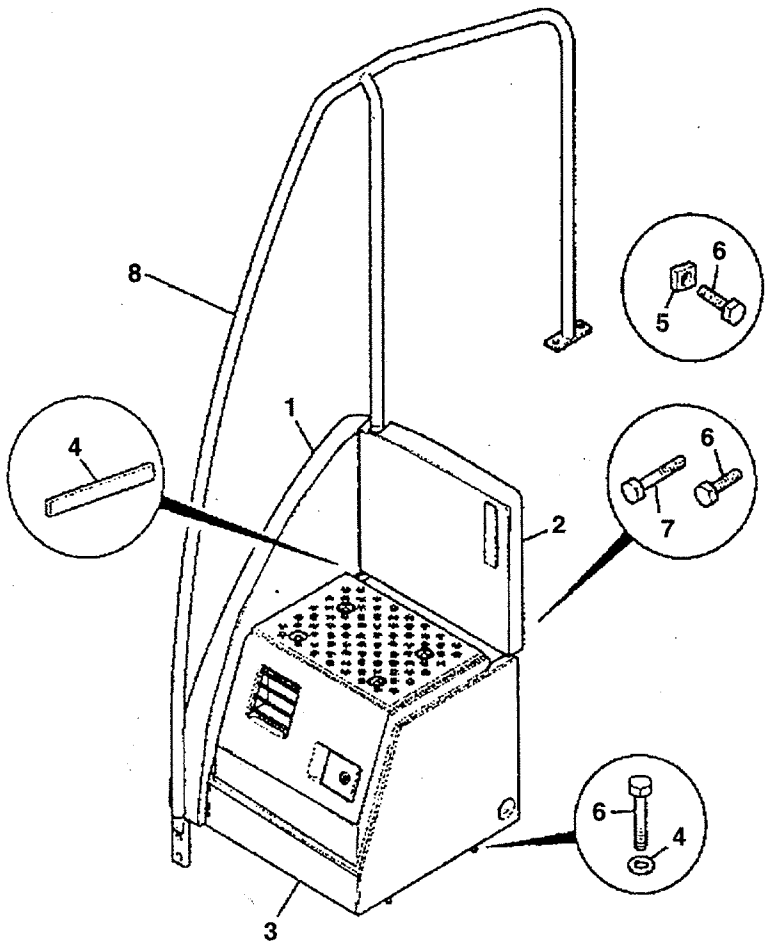

ITEM	PART NO.	CHANGE NO.	DESCRIPTION	REMARKS	QTY.
1	229/01205		Tool Box Side RH Fabrication		1
2	229/01199		Support Side Skin		2
3	229/01140		Tool Box Assembly		1
4	1420/0009Z		Washer Plain-M12		10
5	1316/0510Z		Screw HEX HD-M12x40		2
6	1316/0509Z		Screw HEX HD-M12x25		6
7	1316/0505Z		Screw HEX HD-M12x20		2
8	335/12623		Hand Rail	1318000 Onwards	1

JCB INDIA LTD.

B1-5-31 TOOL BOX ASSEMBLY

ISSUE - 1

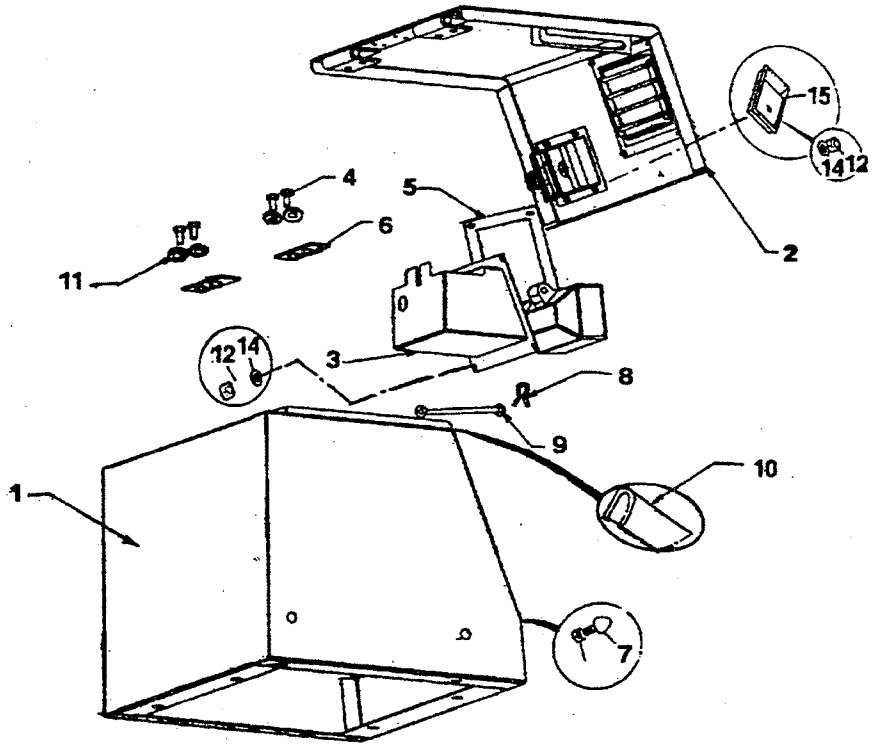

ITEM	PART NO.	CHANGE NO.	DESCRIPTION	REMARKS	QTY.
1	229/01150		Tool Box WA		1
2	229/01141		GA Tool Box LID		1
3	229/01138		WA Light Box		1
4	1318/0405Z		Set Screw M10x20		4
5	229/01203		Gasket		1
6	331/34946		Hinge Packer		2
7	KHN1395		Stopper : Rubber		2
8	KRJ1588		Pin : Hair Clip		2
9	KRN1418		Stay		1
10	KSN0939		Cushion : Rubber		1
11	1420/0008Z		Plain Washer M10		4
12	1370/0001Z		Plain Nut M5		8
14	1420/0005Z		Plain Washer		8
15	826/11027		Paddle Latch		1

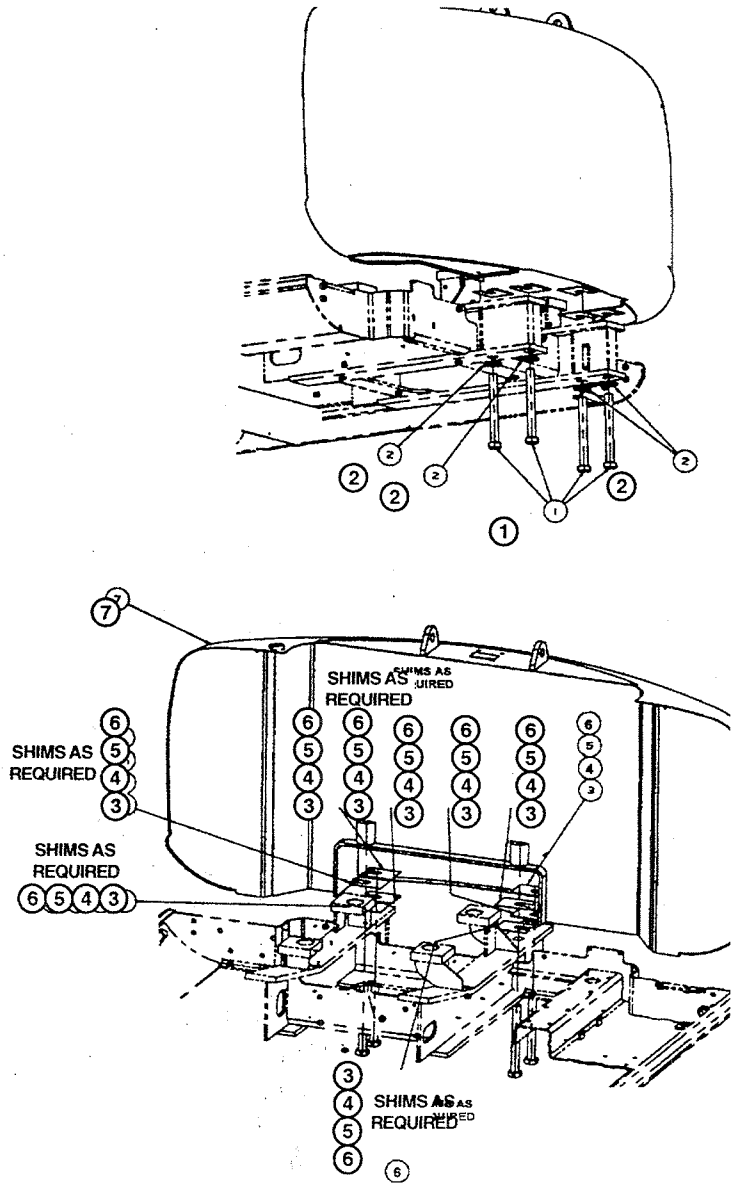

ITEM	PART NO.	CHANGE NO.	DESCRIPTION	REMARKS	QTY.
1	KBB0445		Bolt spl.		4
2	KHB0063		Washer		4
3	KRB0736		Shim; Plate		2
4	KRB0737		Shim; Plate		2
5	KRB0738		Shim; Plate		2
6	KRB0739		Shim; Plate		1
7	331/48616		CWT JS130T2 3000 kg		1

B

B1 BODYWORK/FRAME
• B2 CAB
B3 EXCAVATOR END
B5 REFURBISHMENTS

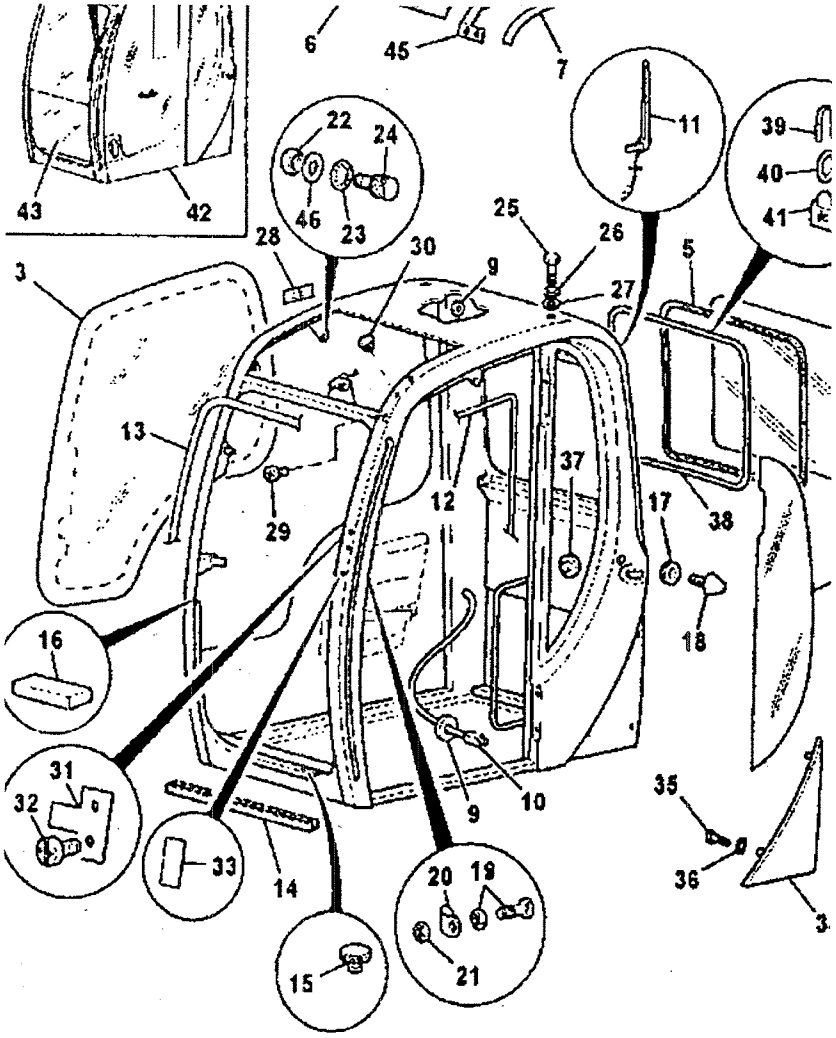

ITEM	PART NO.	CHANGE NO.	DESCRIPTION	REMARKS	QTY.
1	229/01236		Cab, operators, as bought in		1
2	827/80219		Glass, cab l/hand rear, TIM CAB		1
3	827/80217		Glass, cab r/hand, TIM CAB		1
4	827/80218		Glass, cab rear, TIM CAB		1
5	331/36329		Seal		1
6	331/36330		Screen, Top opening		1
7	331/36331		Seal		2
8	331/36332		Seal		2
9	6900/0592		Grommet		3
10	229/01224		Harness, cab		1
11	2410/1104		Aerial, Grommet		1
12	331/36333		Seal, 3850 lg		1
13	6900/0532		Seal		1
14	6900/0531		Seal		1
15	6900/0597		Grommet		2
16	6900/0997		Spacer, rubber		2
17	6900/0563		Washer		1
18	6900/0562		Stopper		1
19	331/36334		Striker		1
20	331/36335		Guard		1
21	331/36336		Nut		1
22	6900/0571		Nut		4
23	331/37332		Washer		2
24	6900/0548		Striker, lower		4
25	6900/0566		Screw		4

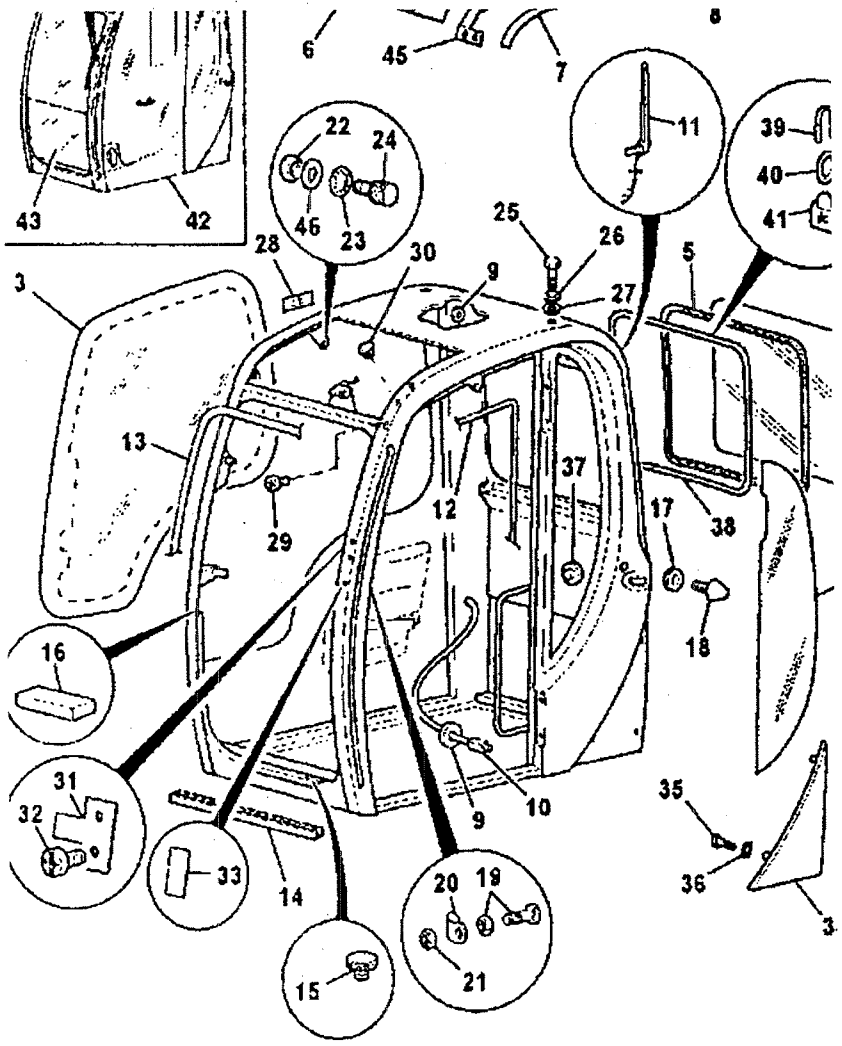

ITEM	PART NO.	CHANGE NO.	DESCRIPTION	REMARKS	QTY.
26	6900/0567		Washer		4
27	6900/0568		Washer, fiber		4
33	331/36377		Adhesive		1
34	331/36343		Cover, rear		1
35	1315/0303Z		Bolt M8 x 16		3
36	6900/0570		Washer		3
37	6900/0555		Plug		2
38	331/36374		Strip,locking		1
39	331/36375		Bracket, ring		1
40	331/36376		Ring		1
42			'See Remark'	cab door See frame B2-2-1	1
43			'See Remark'	Front screen see frame B2-1-10	1
44			'See Remark'	Wiper motor see frame B2-1-20	1
46	6900/0569		Washer		2
47	229/01134		Side Wall Panel		1
48	823/00516		M6 Plastic Washer		6
49	826/01519		Screw M6X 30		6

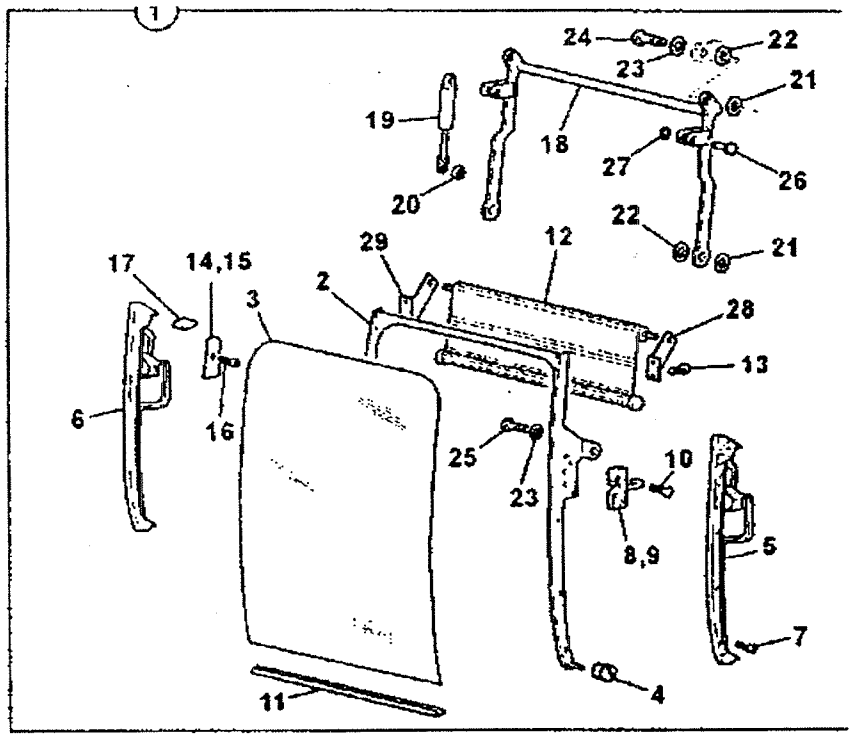

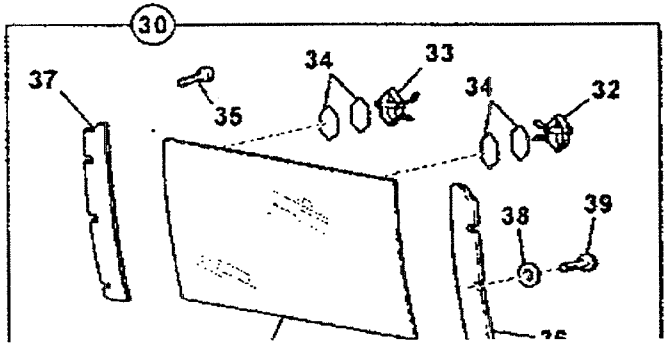

ITEM	PART NO.	CHANGE NO.	DESCRIPTION	REMARKS	QTY.
1	331/36363		Windscreen, assembly		1
2	331/36366		Frame, window		1
3	JHN0178		Glass		1
4	6900/0513		Roller		1
5	6900/0688		Slide, left hand, gray		1
6	6900/0689		Slide, right hand, grey		1
7	6900/0616		Screw		16
8	331/36367		Latch, left hand		1
9	331/36368		Latch, right hand		1
10	6900/0619		Screw		8
11	6900/0508		Seal, plastic		1
12	6900/0621		Screen, sun		1
13	6900/0995		Screw		4
14	6900/0622		Cover, left hand		1
15	1430/1204		Cover, right hand		1
16	6900/0616		Screw		2
17	331/36369		Stop foam		2
18	331/36370		Arm		1
19	331/36371		Spring, air		2
20	1370/0203Z		Nut		4
21	331/36372		Spacer		4
22	331/36373		Washer		4
23	6900/0569		Washer		4
24	1315/0305Z		Screw		2
25	1315/0303Z		Bolt, M8 x 16		2
26	*331/37335		Pin, pivot		2

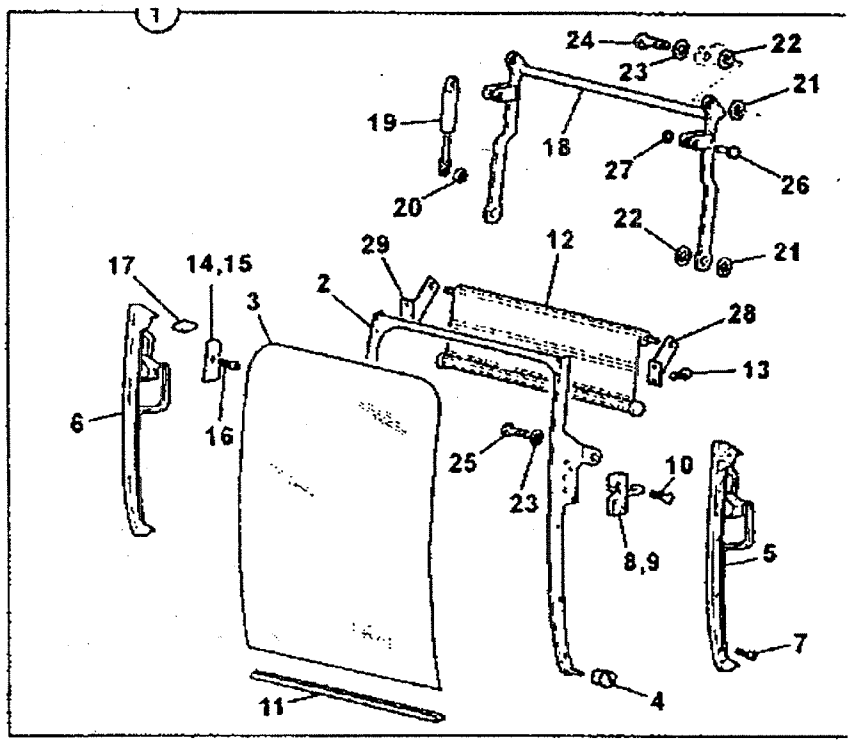

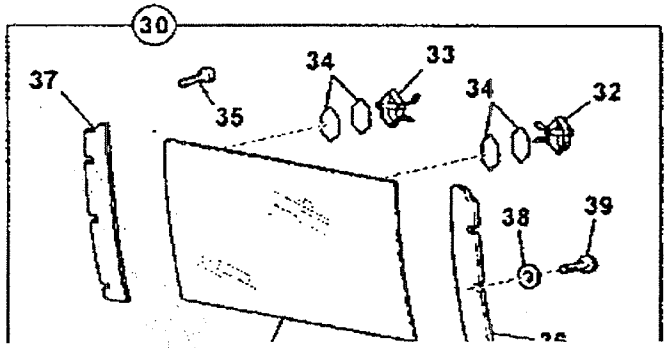

ITEM	PART NO.	CHANGE NO.	DESCRIPTION	REMARKS	QTY.
28	331/37329		Bracket, sun visor, left hand side		1
29	331/37330		Brackel, sun visor, right hand side		1
30	6900/0983		Glass, complete, lower front		1
31	JHN0141		Glass, lower		1
32	6900/0984		Latch, left hand		1
33	6900/0985		Latch, right hand		1
34	6900/0986		Spacer		4
35	6900/0987		Screw		4
36	6900/0685		Slide, left hand, black		1
37	6900/0686		Slide, fight hand, black		1
38	6900/0640		Washer		6
39	6900/0560		Screw		6

B2-1-20 FRONT WIPER, & CAB COMPONENTS

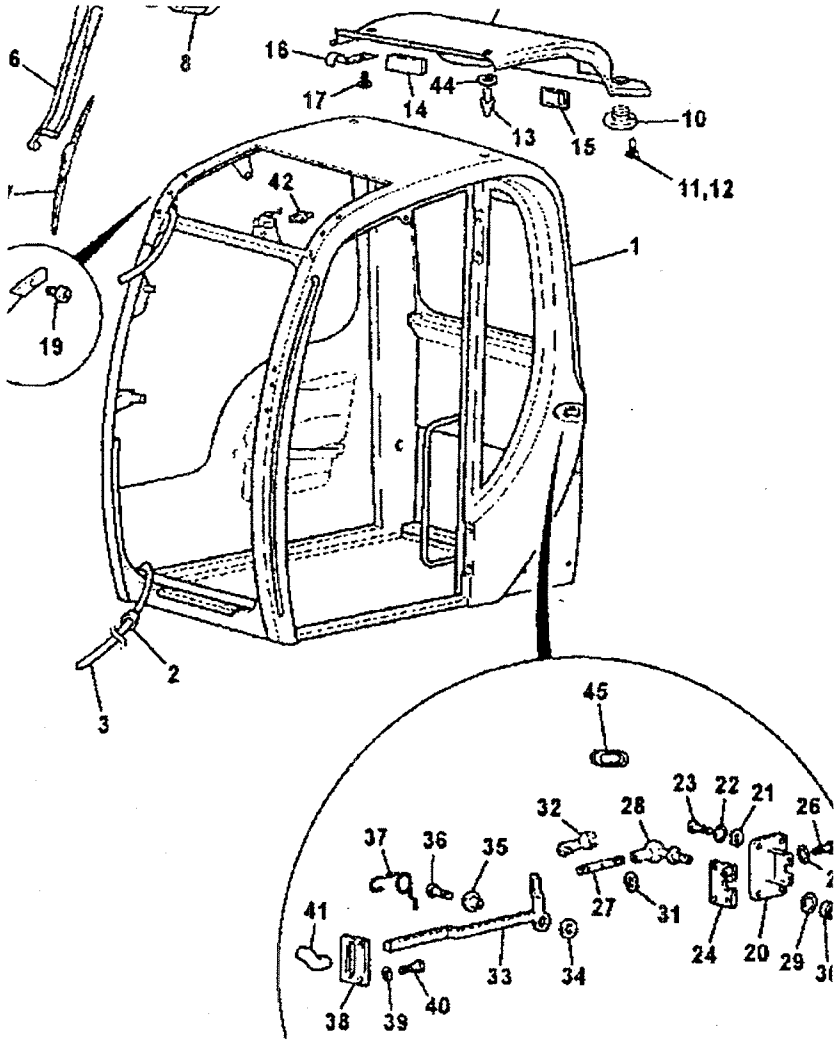

ITEM	PART NO.	CHANGE NO.	DESCRIPTION	REMARKS	QTY.
1			'See Remark'	See frame B2-1-1	1
2					
3					
4	6900/0554		Screw		2
5	714/40267		Motor, wiper		1
6	714/40266		Arm, wiper		1
7	6900/0634		Blade, wiper		1
8	331/36342		Cover, wiper motor		1
9	229/01196		Trim, roof panel		1
10	229/01230		Speaker		2
11	826/11108		Screw		8
12	821/10267		Clip		8
13	331/19926		Stop,cab roof		2
14	717/06800		Cover Radio Blank		1
15	696/01536		Light, roof		1
16	331/36356		Hook		2
17	6900/0554		Screw		4
18	331/36357		Plate		2
19	6900/0554		Screw		2
20	6900/0544		Cover		1
21	6900/0569		Washer		4
22	6900/0609		Washer		4
23	1315/0307Z		Screw		4
24	6900/0543		Latch		1
25	1420/0006Z		Washer		4
26	1315/0207Z		Screw		4

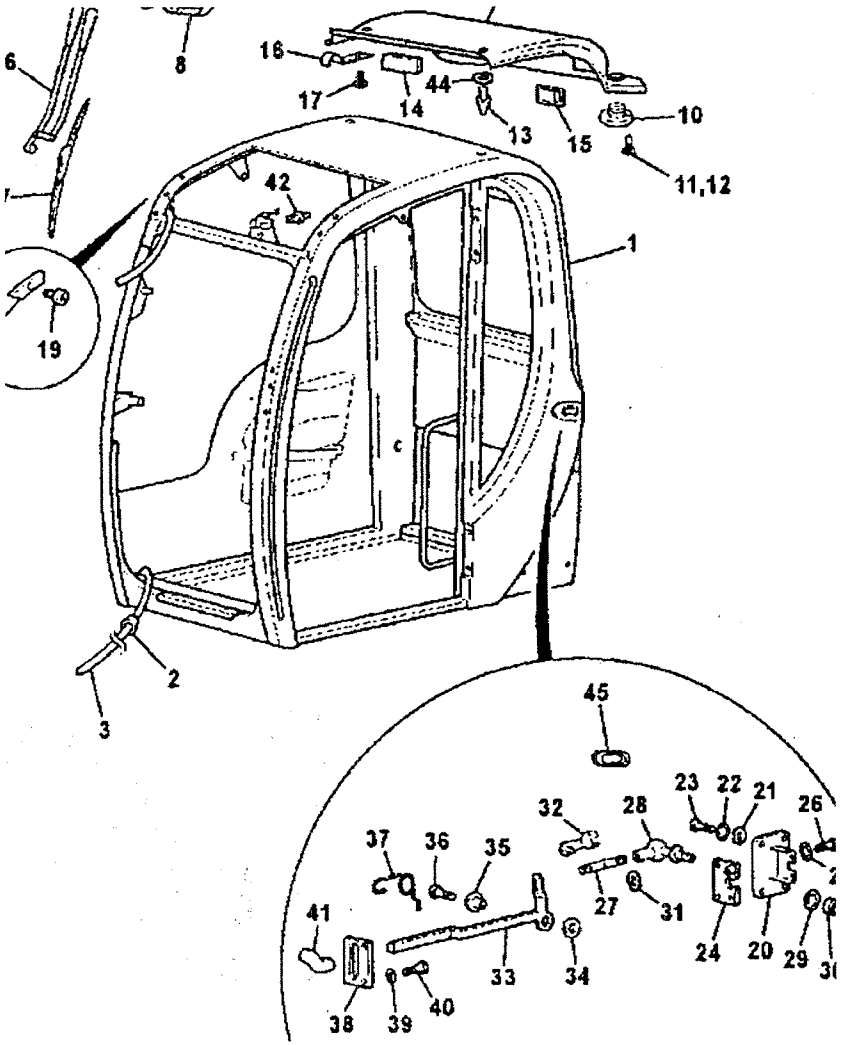

ITEM	PART NO.	CHANGE NO.	DESCRIPTION	REMARKS	QTY.
27	331/36359		Rod, axle		1
28	6900/0627		Joint, ball		1
29	6900/0637		Washer		1
30	1370/0101Z		Nut		1
31	6900/0652		Grommet		1
32	6900/0523		Clip, axle		1
33	331/36360		Lever		1
34	6900/0605		Spacer, plastic		1
35	6900/0604		Spacer		1
36	6900/0603		Screw		1
37	6900/0606		Spring		1
38	6900/0541		Guide		1
39	6900/0550		Washer		2
40	6900/0601		Screw		2
41	331/19929		Knob		1
42					
43					
44	*331/37333		Washer, foam		1
45	331/37334		Grommet		1
46	696/01369		Cabin Fan 24V		1
47	696/01512		Bracket Fan Mounting		1
48	229/00623		Retaining Plate		

B2-1-30 CAB, MOUNTING FASTENERS

ITEM	PART NO.	CHANGE NO.	DESCRIPTION	REMARKS	QTY.
1					
2	1316/3514		Bolt, hex head		4
3	1316/3516		Bolt		2
4					
5					
6	1371/0401		Nut		2

Illustration Not Available at Time of Publication

B2-2-1 CAB DOOR COMPONENTS

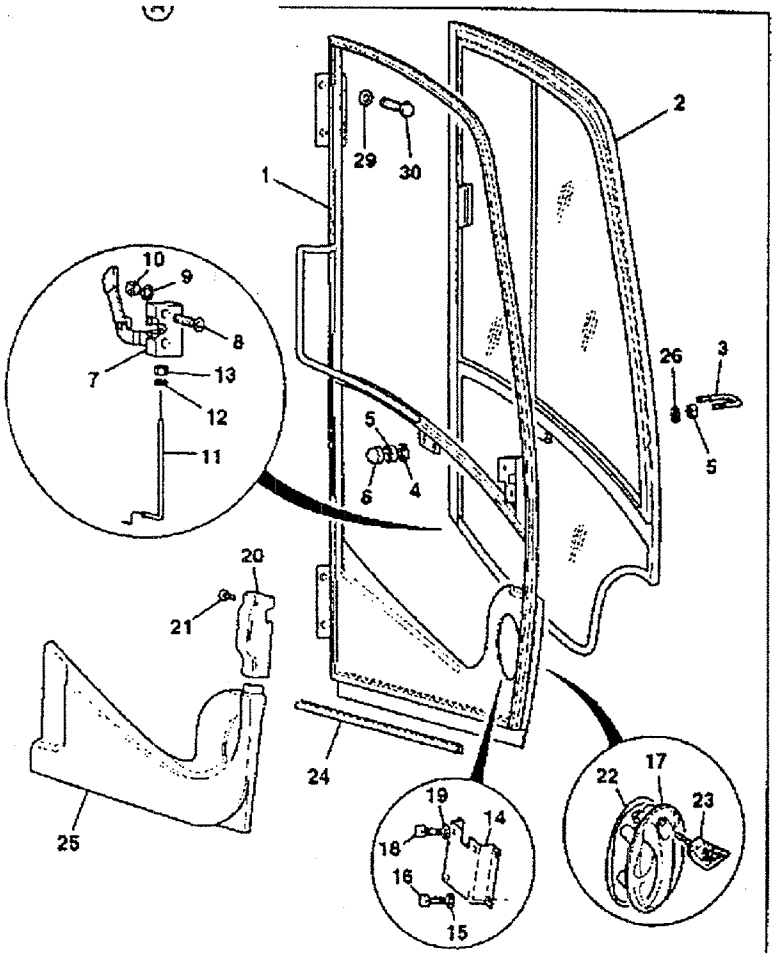

ITEM	PART NO.	CHANGE NO.	DESCRIPTION	REMARKS	QTY.
0A	331/36354		Door, assembly, JX cab		1
1	331/36358		Door, cab door, cab door frame		1
2	827/80220		Glass, Door Lower		1
2 01	827/80221		Glass, door sliding		1
2 02	331/36362		Handle, Window handle assemb, JS cab		1
2 03	331/36364		Striker, Window striker JS cab		1 3
2 04	331/36365		Screw		1
3	331/36378		Hook, door lock back		1
4	6900/0644		Washer		2
5	1370/0301Z		Nut		4
6	331/36379		Cap, Cap,nut, Door lock back		2
7	331/36380		Lock, door		1
8	993/99703		Screw, countersunk head		2
9	6900/0570		Washer		2
10	6900/0571		Nut		2
11	331/36381		Rod, lock		1
12	1420/0004Z		Washer, lock rod		1
13	1370/9403Z		Nut, safety		1
14	331/36384		Bracket, support handle		1
15	1420/0006Z		Waaher		4
16	1315/0203Z		Screw, handle support		4
17	331/36386		Handle, cab door		1
18	1315/0203Z		Screw, handle support		4

B2-2-1 CAB DOOR COMPONENTS

ISSUE - 1

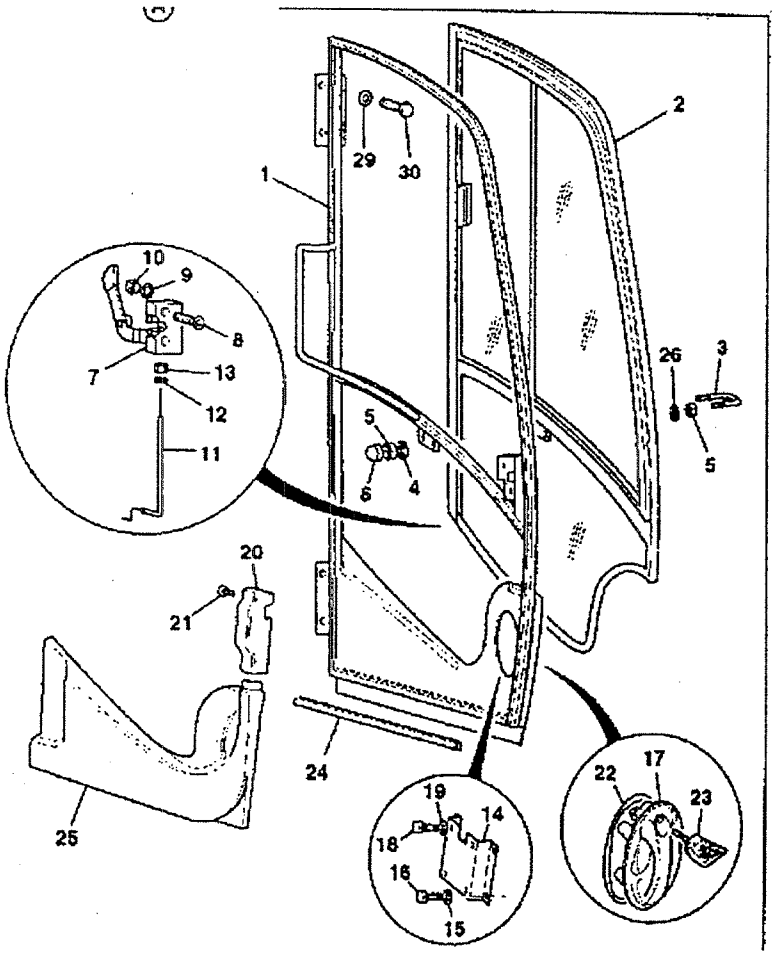

ITEM	PART NO.	CHANGE NO.	DESCRIPTION	REMARKS	QTY.
19	1420/0006Z		Washer		4
20	331/36389		Cover, lock		1
21	6900/0616		Screw		2
22	331/36390		Seal, handle		1
23	701/45501		Key, Door/Ignition, Ref 14657		1
24	331/36393		Seal, door lower		1
25	331/36394		Cover, inside door		1
26	331/36387		Screw, support handle		2
29	6900/0992		Washer		4
30	331/36392		Seal, door bottom		4

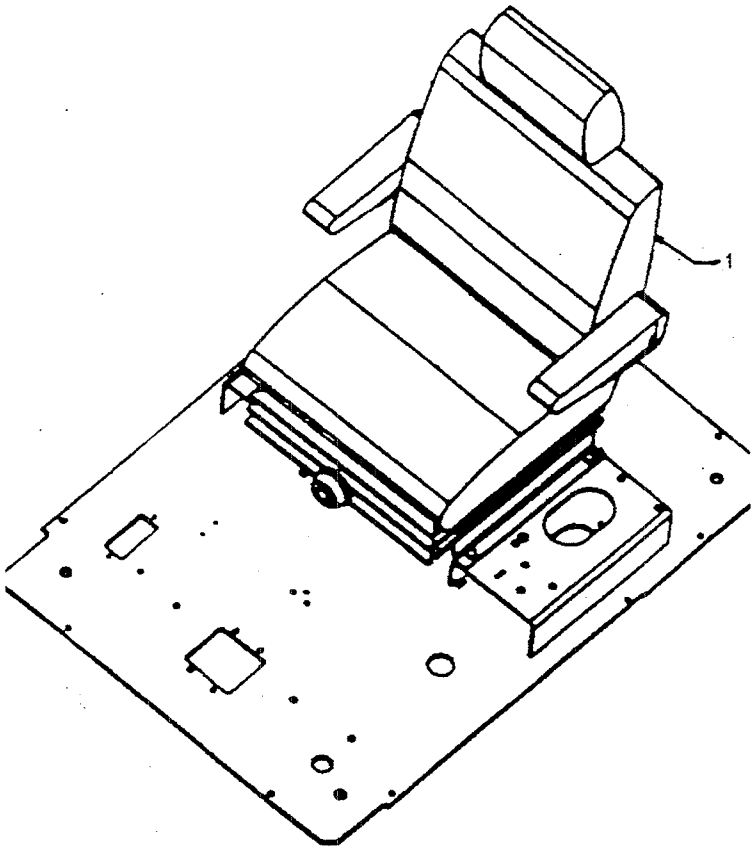

ITEM	PART NO.	CHANGE NO.	DESCRIPTION	REMARKS	QTY.
1	229/01653		Suspension Seat		1
2	1315/0407Z		Bolt M10x20		1
3	JHP0045		Washer Spring M10		1

B2-4-1 CONSOLE CAB CONTROLS, LH & RH, FIXED CONSOLE

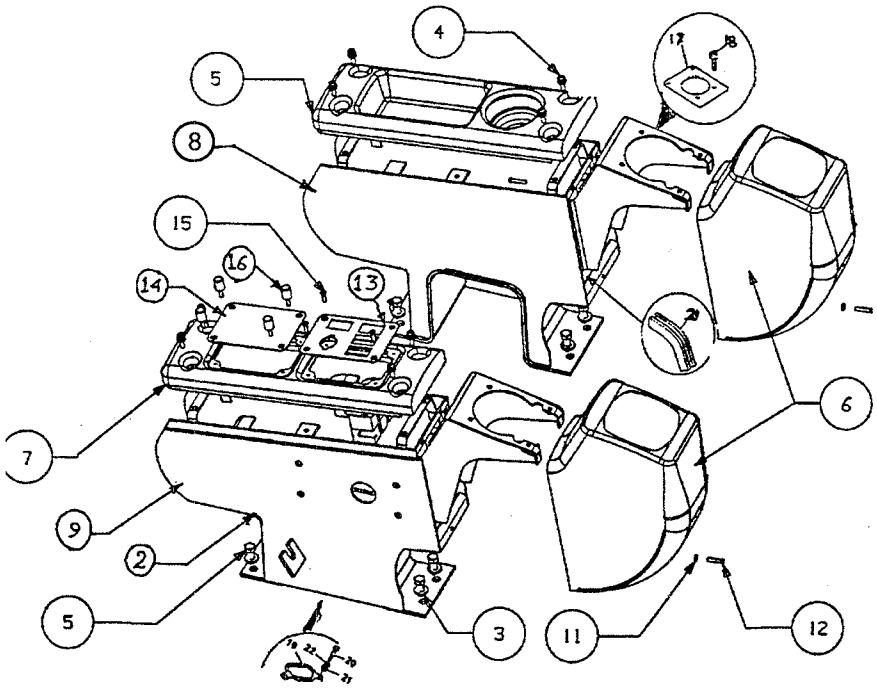

ITEM	PART NO.	CHANGE NO.	DESCRIPTION	REMARKS	QTY.
1	JHP0111		Edging Strip		4
2	JHP0046		Washer		8
3	826/01519		Screw Pan Head M6x16		8
4	1391/3407Z		Bolt Socket Head M10x25		8
5	229/01169		LH Console Cover		1
6	229/01137		Console Cover		2
7	229/01170		Console Top Panel RH		1
8	229/01180		Framework Support LH (Dog)		1
9	229/01181		Framework Support RH (Dog)		1
10	1420/0005Z		Washer M5		3
11	826/01518		Screw M5x20		3
12	229/01135		Switch Plate		1
13	229/01136		Box Fuse Cover		1
14	229/01128		Countersunk Screw		4
15	826/01570		Thumb Screw		4
16	331/18592		Plate, mounting, control valve		1
17	KHJ0947		Guide		1
18	KHR0737		Screw, Pan Head		4
19	1316/0303Z		Screw		4
20	1420/0007Z		Washer, Plain		4

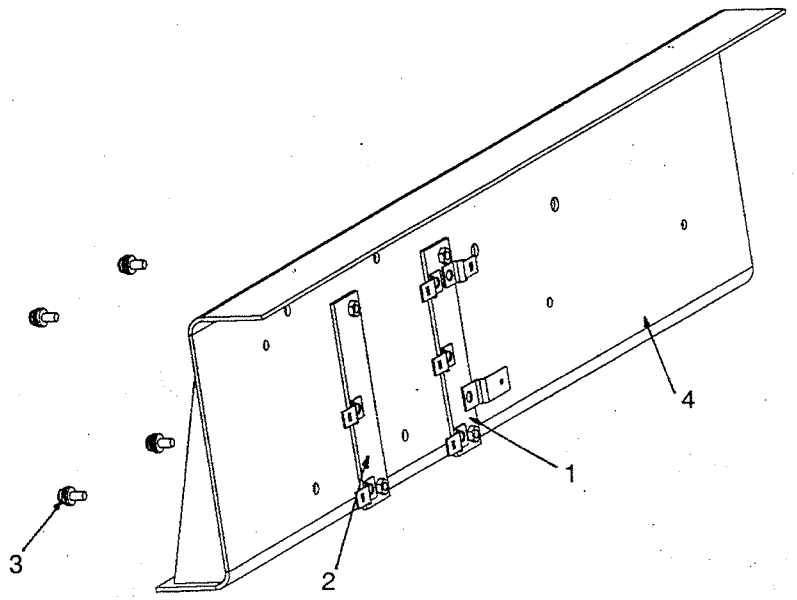

ITEM	PART NO.	CHANGE NO.	DESCRIPTION	REMARKS	QTY.
1	229/01539		Harness Clamping Plate RH		1
2	229/01657		Harness Clamping Plate LH		1
3	KHR0737		Screw M6		4
4	229/01519		Tool Plate		1
5	1370/0102		Nut M6		1
6	264/34901		Clip		1
7	826/01519		Screw M6		1

B2-10-1 FLOOR COMPONENTS, LEVER ISOLATOR

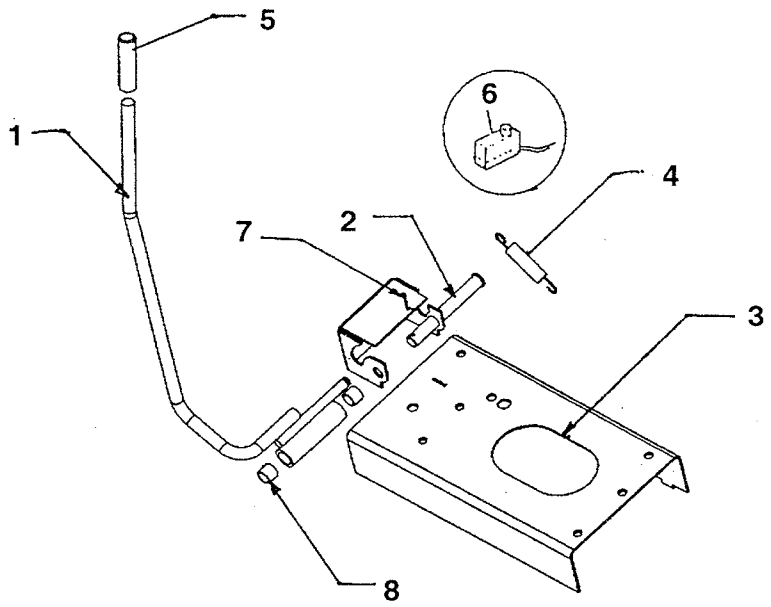

ITEM	PART NO.	CHANGE NO.	DESCRIPTION	REMARKS	QTY.
1	229/00070		Lever, Lock		1
2	JHN0211		Spindle		1
3	JHH0074		Edging Strip		2
4	KHN1436		Spring : Tension		1
5	KHN1542		Cap : Vinyl		1
6	229/00385		Limit Switch		1
7	2103/0709		R Clip		1
8	831/00063		Self Lubricating Bearing		2

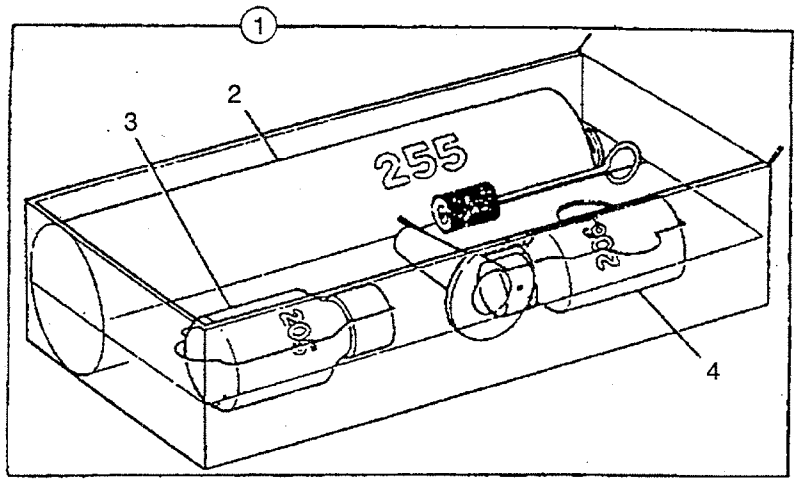

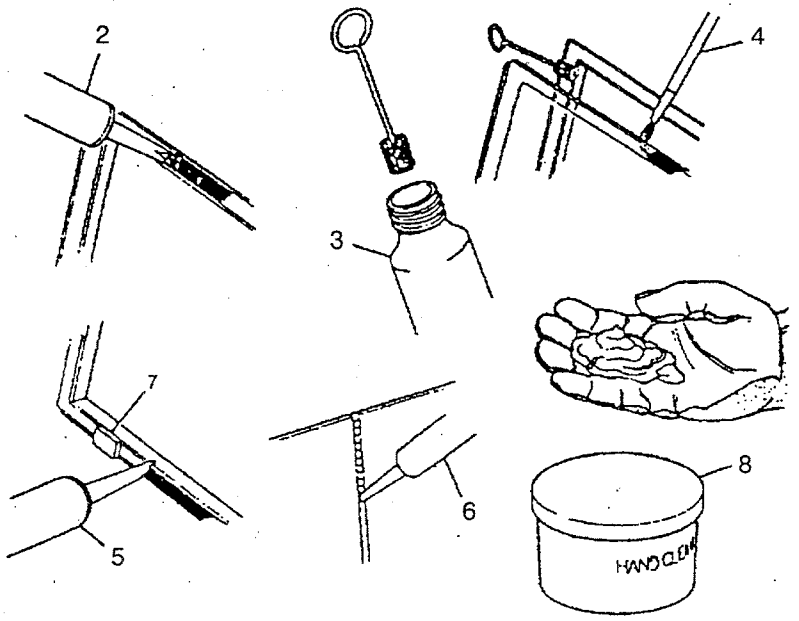

ITEM	PART NO.	CHANGE NO.	DESCRIPTION	REMARKS	QTY.
1			Adhessive, kit JCB ultrafast, glazing	S.P.N.	1
2	646/05321		:Adhessive, JCB ultrafast, 310ml cartridge	see foot note	A/R
3	646/05325		:Cleaner, active wiper 205, 30ml		A/R
4	646/05323		:Paint, black primer 206J, 30ml	Black ceramic ink band around glass border	A/R
	646/05324		:Paint, black primer 206J, 200gm		A/R
5	646/05321		Sealant, black acylic 221, 310ml cartridge		A/R
6	4102/0933		Sealant, DP2205 clear, Silicone		A/R
7	926/15500		Spacer, block		A/R
8	4104/1310		Cleaner, hand, polyulethane, 454gm/1lb		A/R

B

B1 BODYWORK/FRAME
B2 CAB
• B3 EXCAVATOR END
B5 REFURBISHMENTS

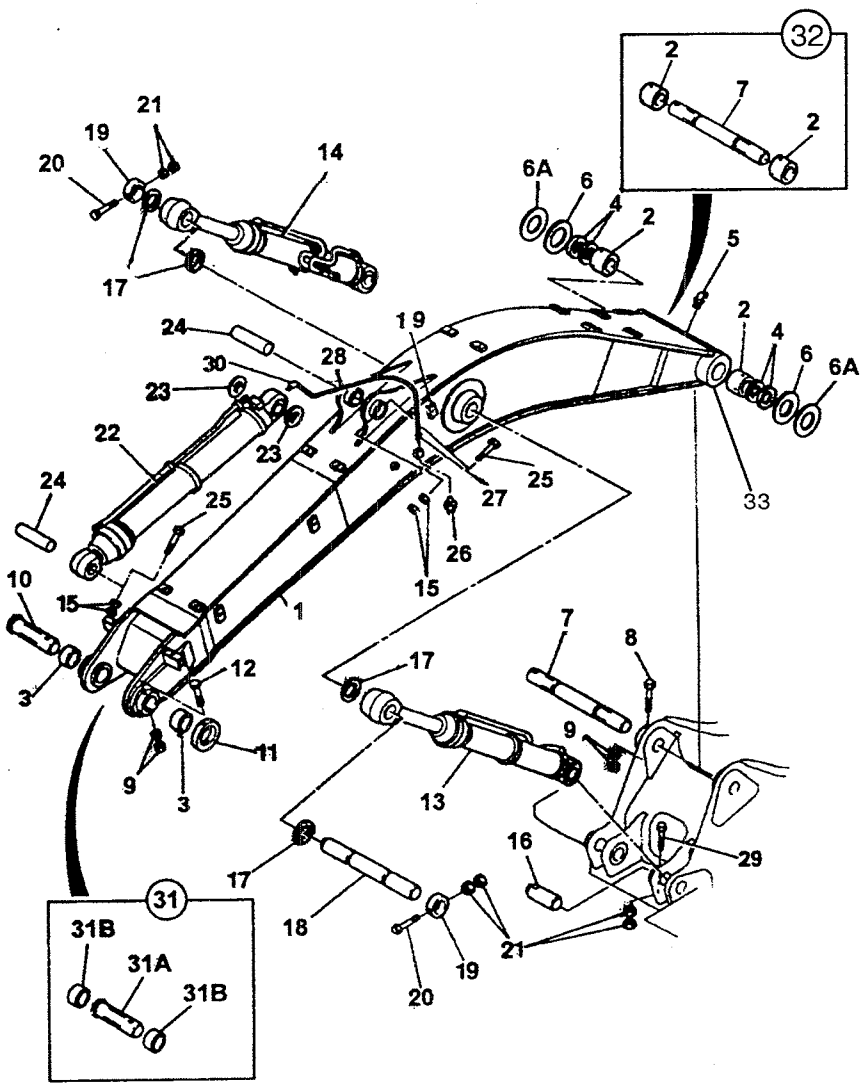

ITEM	PART NO.	CHANGE NO.	DESCRIPTION	REMARKS	QTY.
1	550/43483		Boom, Mono, WA JS 130 T2		1
2	831/10305		Bush	Boom to mainframe	2
3	JNV1577		Bush, steel	Boom, dipper pivot	2
4	KHV0100		Seal dust	With item 2	4
5	JHP0037		Nipple, grease, straight		3
6	KNV0534		Shim, plate, 1.2mm thick	Boom to mainframe	2
6A	JNV1414		Shim, 0.8mm thick	Boom to mainframe	2
7	811/90468		Pin, pivot	Boom to mainframe	1
8	6009/3825Z		Bolt	For item 7	1
9	173R020VZ		Nut	For items 8 and 12	4
10	811/90376		Pin, pivot, JS130 arm to boom	Boom to dipper pivot	1
11	KNV0473		Collar, set	Boom to dipper pivot	1
12	6009/3827Z		Bolt	Secures item 10	1
13	229/01509		Boom cylinder RH		1
14	229/01510		Boom cylinder LH		1
15	173R016VZ		Nut	For item 25	4
16	KNV0488		Pin, atl	Boom ram to main-frame	2
17	KNV0696		Shim, plate, 1.2mm thick	Boom ram to boom pivot	4
18	KNV0486		Pin, atl	Boom ram to boom pivot	1
19	KNV0487		Ring, lock	Secures item 18	2
20	6009/3724Z		Bolt	Secures item 19	2
21	173R016VZ		Nut	For item 20 and 29	8
22	229/01511		Arm cylinder		1
23	KNV0539		Shim, plate	For item 24	2
24	KNV0756		Pin, atl	Dipper ram dipper end	1

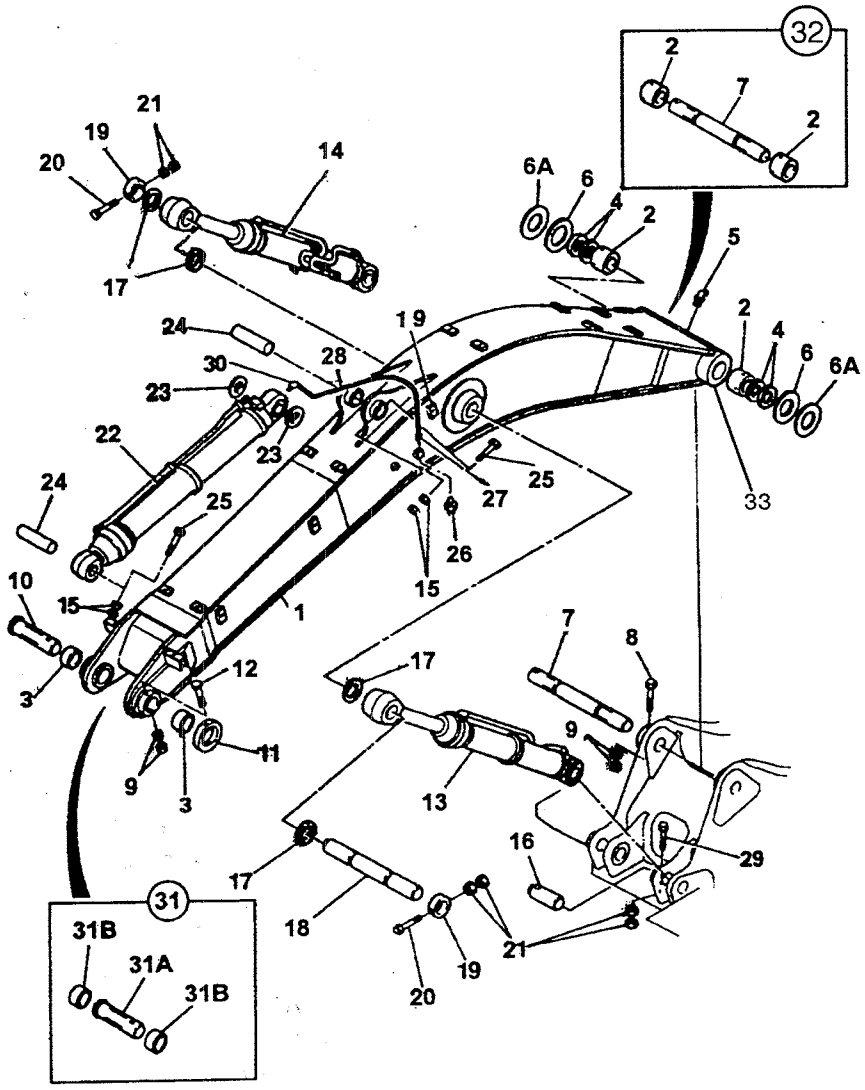

ITEM	PART NO.	CHANGE NO.	DESCRIPTION	REMARKS	QTY.
24	KNV0756		Pin, atl	2.1M and 2.5M dipper eye end	1
25	6009/3724Z		Bolt	Secures item 24	2
26	JHP0037		Nipple, grease, straight	Dipper ram greasing	1
27	UJF0045		Connector	For dipper greasing	2
28	KMV0932		Hose, nylon	For dipper ram greasing	1
29	6009/3723Z		Bolt	For item 16	2
30	BLP1188		Adaptor	Item 28 to dipper ram	1
31	998/10856		Kit-pin and bush, JS130 Arm to boom	Pivot pin kit Boom/ Dipper	1 1
31A	811/90376		: Pin, pivot, JS130 arm to boom		1
31B	831/10304		: Bush		2
32	998/10857		Kit pin & bush	Boom to main frame	1
32A	811/90468		Pin pivot		1
32B	831/10305		Bush		2
33	JNV0871		Boom foot boss		1

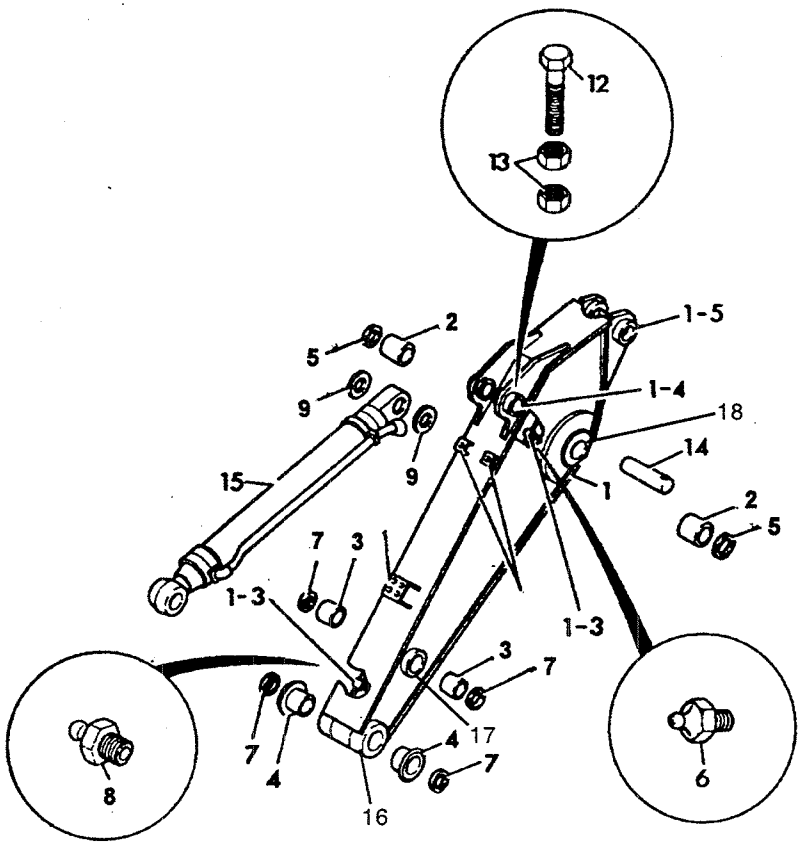

ITEM	PART NO.	CHANGE NO.	DESCRIPTION	REMARKS	QTY.
1	550/43771		2.1 H.D. Dipper		1
2	831/10304		Bush		2
3	JLV1796		Bush, steel		2
4✓	JNV1579		Bush, steel		2
5	KHV0100		Seal, dust		2
6	JHP0037		Nipple, grease, straight		1
7✓	KHV0098		Seal, dust		4
8	JHP0037		Nipple, grease, straight		1
9	KNV0538		Shim, plate, 1.2m thick		4
12	6009/3723Z		Bolt		1
13	173R016VZ		Nut		2
14	KNV0490		Pin, attachment		1
15	229/01512		Bucket, cylinder		1
16✓	JNV0905		Boss		1
17	JNV0906		Boss		1
18	331/13670		Boss		1

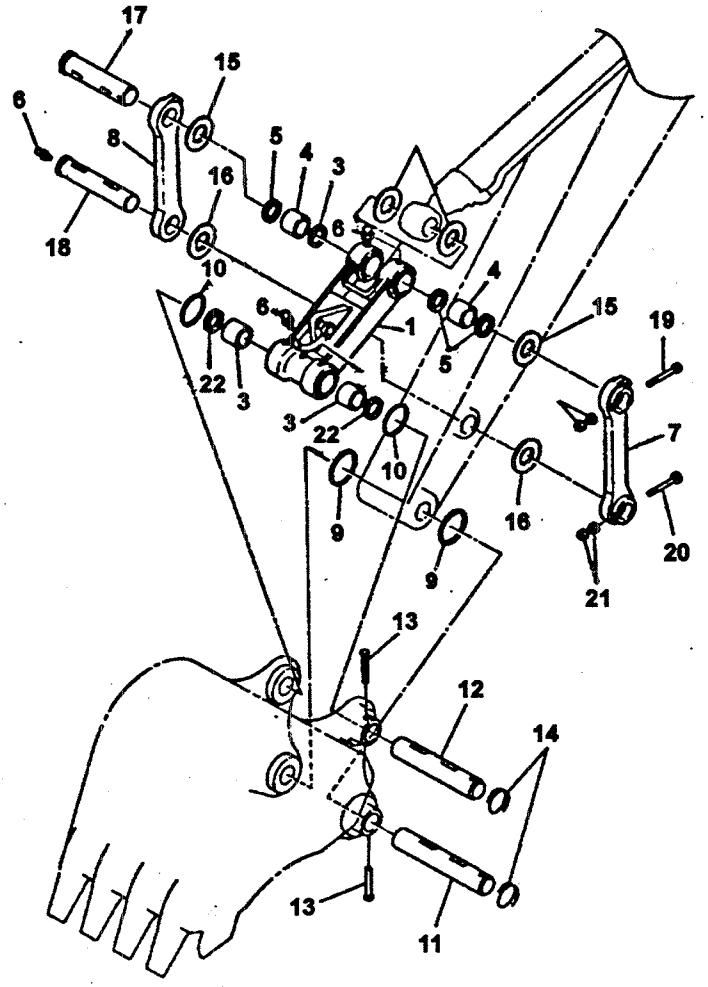

ITEM	PART NO.	CHANGE NO.	DESCRIPTION	REMARKS	QTY.
1	JG0NV411		Link, bucket	No lift	1
1	JG0NV412		Link, bucket		1
3	JNV1580		Bush, steel		2
4	JNV1580		Bush, steel		2
5	KHV0098		Seal, dust		4
6	JHP0037		Nipple, grease, straight		4
7	JNV1402		Link, arm, left hand		1
8	JNV1403		Link, arm, right hand		1
9	KHV0114		'O' Ring		2
10	KHV0111		'O' Ring		2
11	JNV0087		Pin, pivot		1
12	JNV0088		Pin, pivot		1
13	KNV0464		Pin, special		2
14	KAV0743		Ring		2
15	BHV1034		Shim, plate, 1.2m thick		2
16	BHV1034		Shim. plate, 1.2m thick		2
17	KNV0484		Pin, attachment		1
18	KNV0485		Pin, attachment		1
19	6009/3724Z		Bolt		2
20	6009/3724Z		Bolt		2
21	173R016VZ		Nut		4
22	KHV0098		Seal, dust		2
23	JNP0042		Decal, SWT, 1000kg.		2

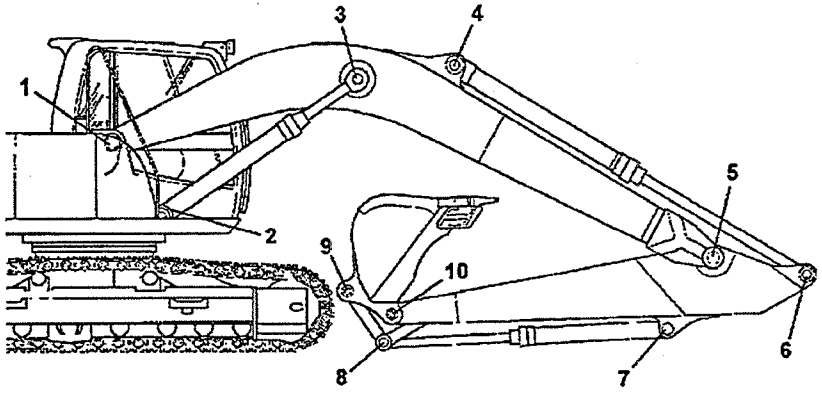

ITEM	PART NO.	CHANGE NO.	DESCRIPTION	REMARKS	QTY.
1	JNV1414		Shim, 0.8mm thick	0.8mm thickness	A/R
1	JNV0534		Shim, plate, 1.2mm thick	1.2mm thickness	A/R
2	KNV0696		Shim, plate, 1.2mm thick		A/R
3	KNV0696		Shim, plate, 1.2mm thick		A/R
4	KNV0539		Shim, plate		A/R
5	JNV1414		Shim, 0.8mm thick	0.8mm thickness	A/R
5	KNV0534		Shim, plate, 1.2mm thick	1.2mm thickness	A/R
6			'See Remark'	Not able to shim	1
7	KNV0538		Shim, plate, 1.2mm thick		A/R
8	BHV1034		Shim, plate, 1.2mm thick		A/R
9	BHV1034		Shim, plate, 1.2mm thick		A/R
10	BHV1034		Shim, plate, 1.2mm thick		A/R
11	BHV1034		Shim, plate, 1.2mm thick		A/R

B

B1 BODYWORK/FRAME
B2 CAB
B3 EXCAVATOR END
• B5 REFURBISHMENTS

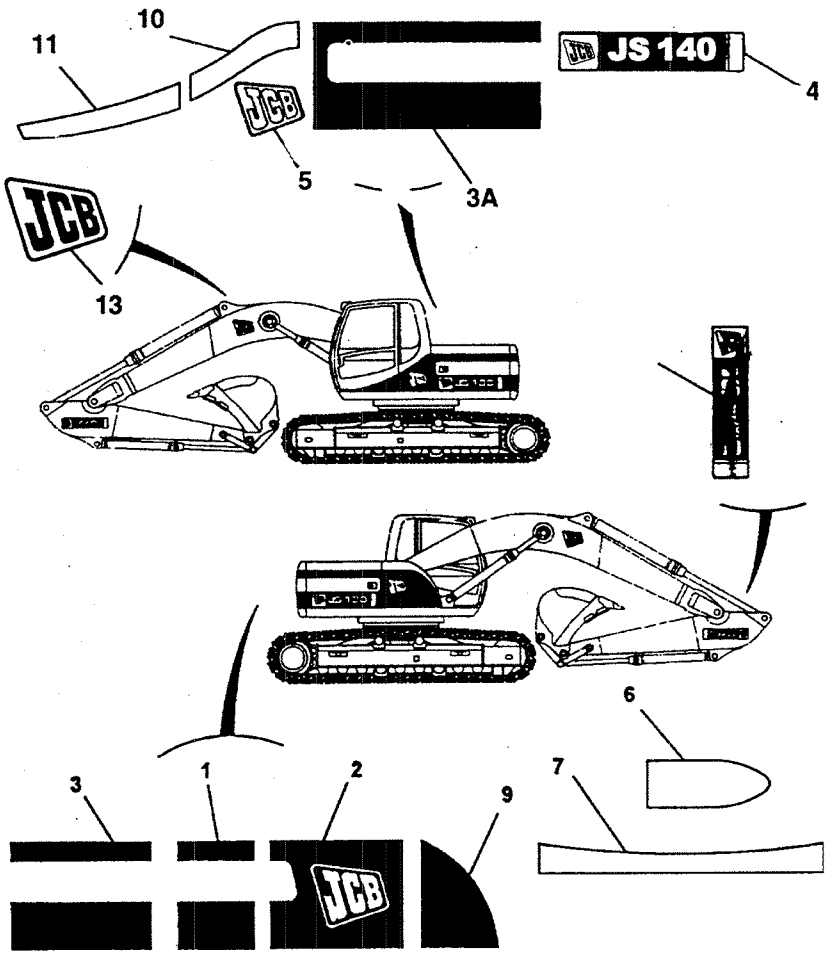

ITEM	PART NO.	CHANGE NO.	DESCRIPTION	REMARKS	QTY.
1	817/19289		Decal, Hyd tank stripe,		1
2	817/19295		Decal, Fuel tank		1
3	817/19288		Decal, Pump, bay(RH) door,		1
3A	817/19290		Decal, Eng bay(LH) door,		1
4	817/20907		Decal, Doors JS 140		2
5	817/17441		Decal, Counterweight		1
6	817/18765		Decal, Strip, Counterweight		2
7	817/18761		Decal, cab, under front window		1
9	229/01383		Decal, toolbox		1
10	817/18763		Decal, cab side		1
11	817/18762		Decal, cab, door		1
12	817/20986		Decal, Arm, JS140		2
13	817/17422		Decal, JCB Insignia (Black), Boom		2

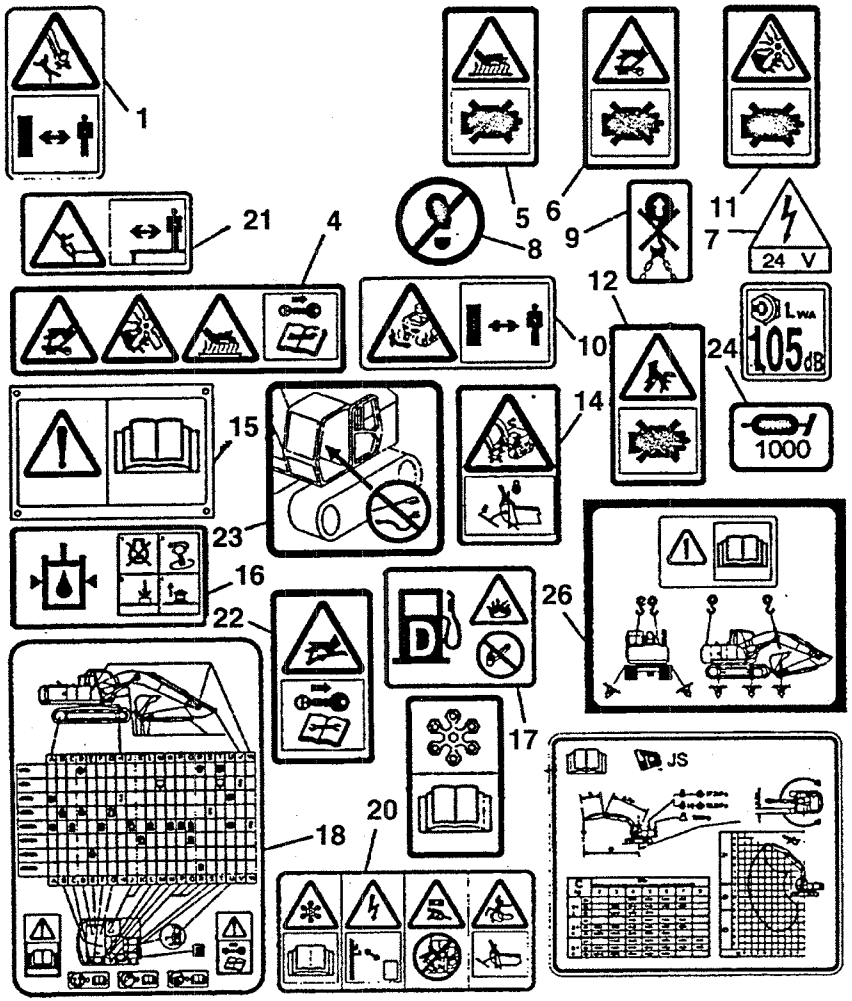

ITEM	PART NO.	CHANGE NO.	DESCRIPTION	REMARKS	QTY.
			Decal, WARNING, Arm Bucket KEEP CLEAR		
4	817/18535		Decal, WARNING, coolant pressure		1
5	817/18536		Decal, WARNING, Hot surfaces		1
6	817/18537		Decal, WARNING, High pressure & hot		1
7	817/18538		Decal, WARNING, Rotating parts		1
8	817/18566		Decal, WARNING, NO Step		1
10	817/18528		Decal, WARNING, KEEP CLEAR		1
11	817/02370		Decal, warning 24 volt		1
13	JHP0111		Label, NO wash, cab		1
15	817/18541		Decal, WARNING PRODUCT LIABILITY		1
17	817/18727		Label, warning		1
18	229/01289		Decal, LUBRICATION CHART, NON LANGUAGE		1

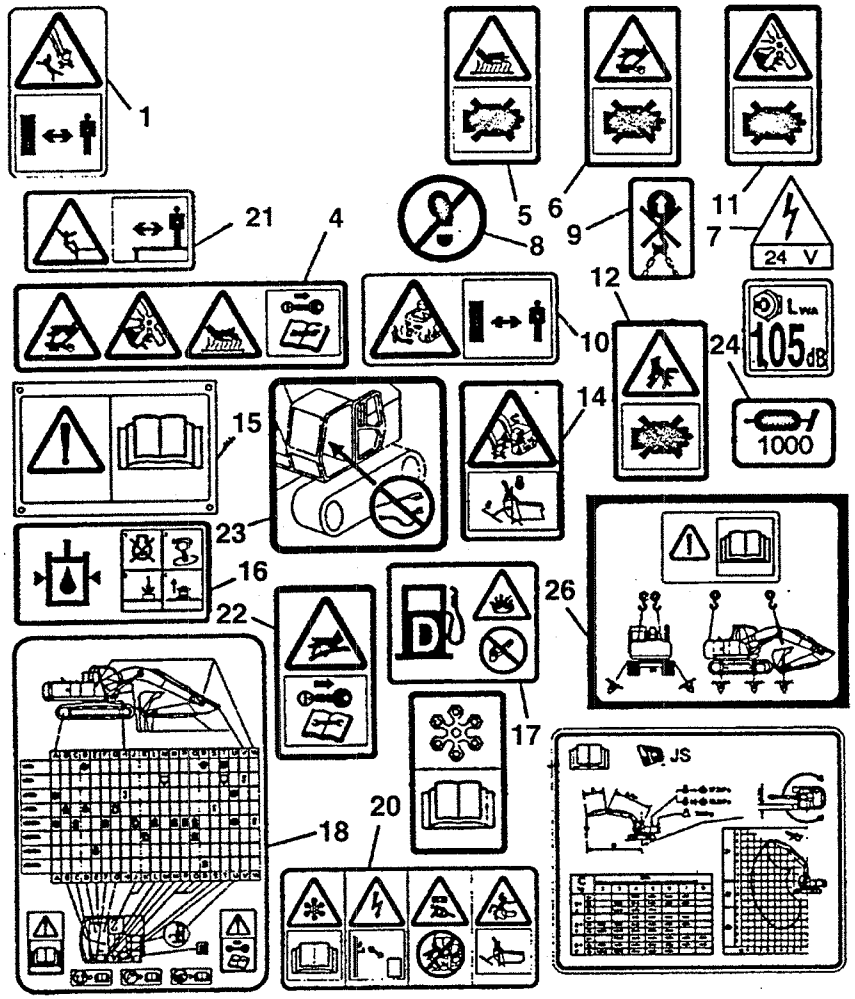

ITEM	PART NO.	CHANGE NO.	DESCRIPTION	REMARKS	QTY.
19	817/18802		Decal, LIFTING CHART, JS200		1
20	817/18529		Decal, WARNING, CAB SIGH		1
21	817/18531		Decal, WARNING, KEEP CLEAR		1
22	817/18532		Decal, WARNING, SIGN HP Hose		1
24	817/19074		Label, Lubrication, 1000 Hours		4
26	817/19558	to S/N	Decal, lift and tie-down		1

Illustration Not Available at Time of Publication

ITEM	PART NO.	CHANGE NO.	DESCRIPTION	REMARKS	QTY.
1			Label, engine oil, 02/801481		
2			Label, Fuel Flier		
3	817/18848		Label, return oil		1
4	817/18849		Label, pilot kilter, KBJ1691		1
5	817/19305		Label, plexus filter, 32/925140		1
6			Label, hammer return		
7			Label-Distilled water		

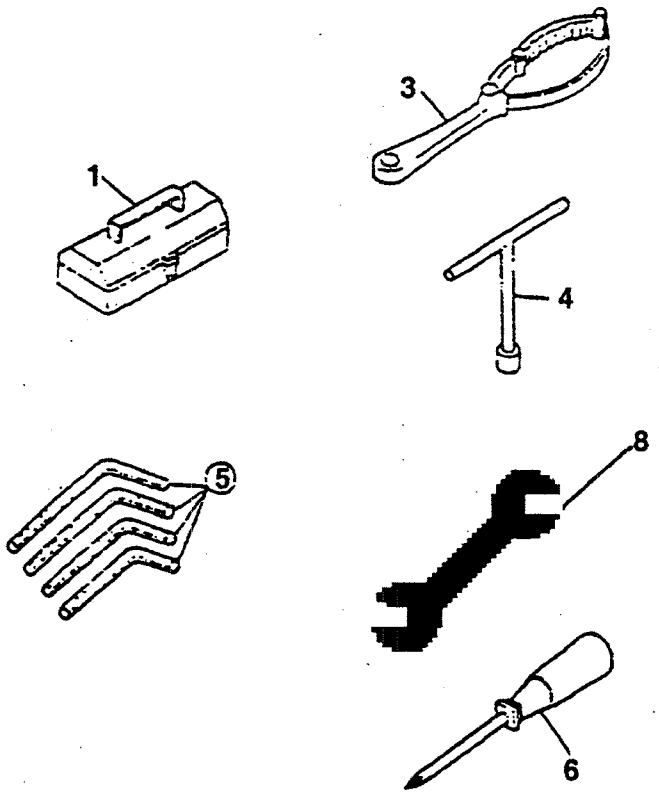

ITEM	PART NO.	CHANGE NO.	DESCRIPTION	REMARKS	QTY.
1	130/99510		Tool Bag		1
3	229/01545		Tool, filter wrench		1
4	JHP0068		Spanner, box 10 mmx11 mm		1
5	JRP0086		Key, allen, 5mm		1
	40/301594		Key, allen, 6mm		1
	130/14053		Key, allen, 8mm		1
	JRP0087		Key, allen, 10mm		1
6	JHP0069		Tool, screw driver, pozidrive		1
	JHP0070		Tool, screw driver, pozidrive		1
7	40/301494		Grease bucket		1
8	130/14011		D.E. Spanner		1
	130/14012		D.E. Spanner		1
	130/14013		D.E. Spanner		1
	130/14014		D.E. Spanner		1
	130/99557		D.E. Spanner		1
	130/14015		D.E. Spanner		1
	130/99560		Ring Spanner		1
	130/995555		D.E. Spanner		1

C

- C1 ELECTRICS, MAIN MACHINE
- C2 ELECTRICS, ENGINE
- C3 ELECTRICS, CAB

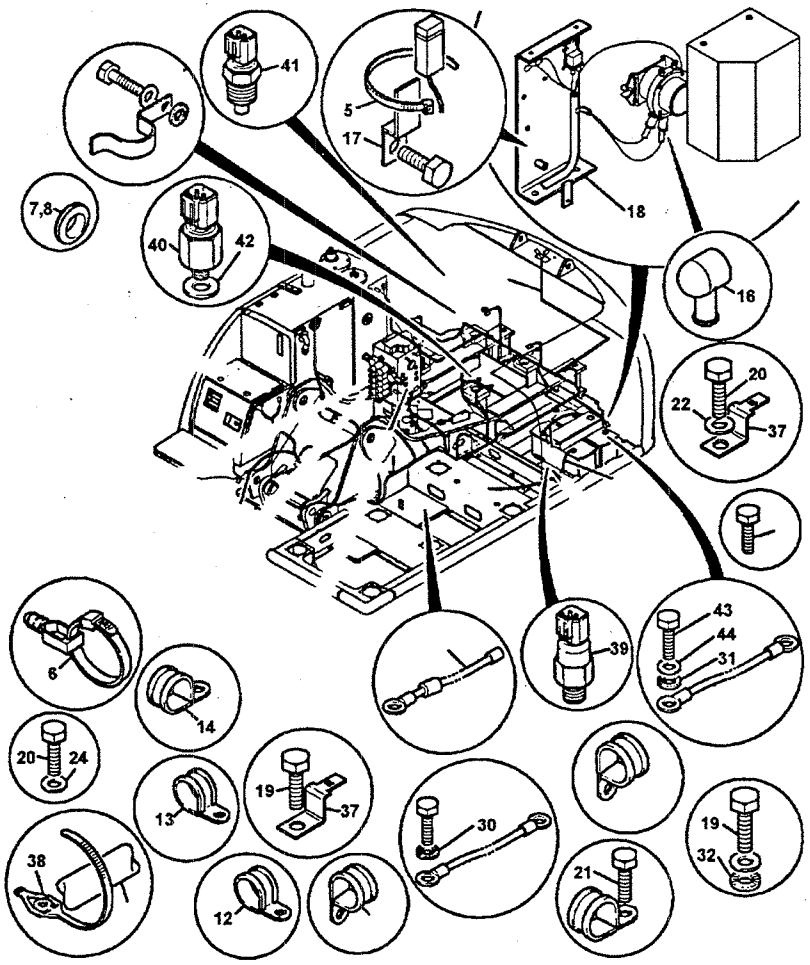

ITEM	PART NO.	CHANGE NO.	DESCRIPTION	REMARKS	QTY.
1	696/01921		Cable Battery Relay		1
2	229/00602		Battery Cable-Link		1
3	718/06500		Battery Cable-Negative		1
4	718/20213		Battery Cable		1
5	826/01144		Band Harness (See KHH0142)		8
6	001/00233		Band Harness (See KHH0142)		29
7	KAR0152		Rubber; Grommet (See KAR0151)		1
8	KAR0576		Rubber; Grommet		1
9	KHH0142		Band; Harness		14
10	KHR0319		Clamp; SPL		7
11	KHR0737		Screw Pan HD M6x16 (See KHR0611)		17
12	KHR1407		Clamp; SPL		1
13	KHR1444		Clamp		2
14	KHR1445		Clamp; SPL		3
16	KHR1716		Cap; Terminal		2
17	KHR1957		Clip		1
18	KRR1078		Bracket Special		1
1	KHH0266		Boss; SPL (See KHH0145)		1
19	1316/0301Z		Screw M8x12		1
20	1316/0305Z		Screw; M8x20		3

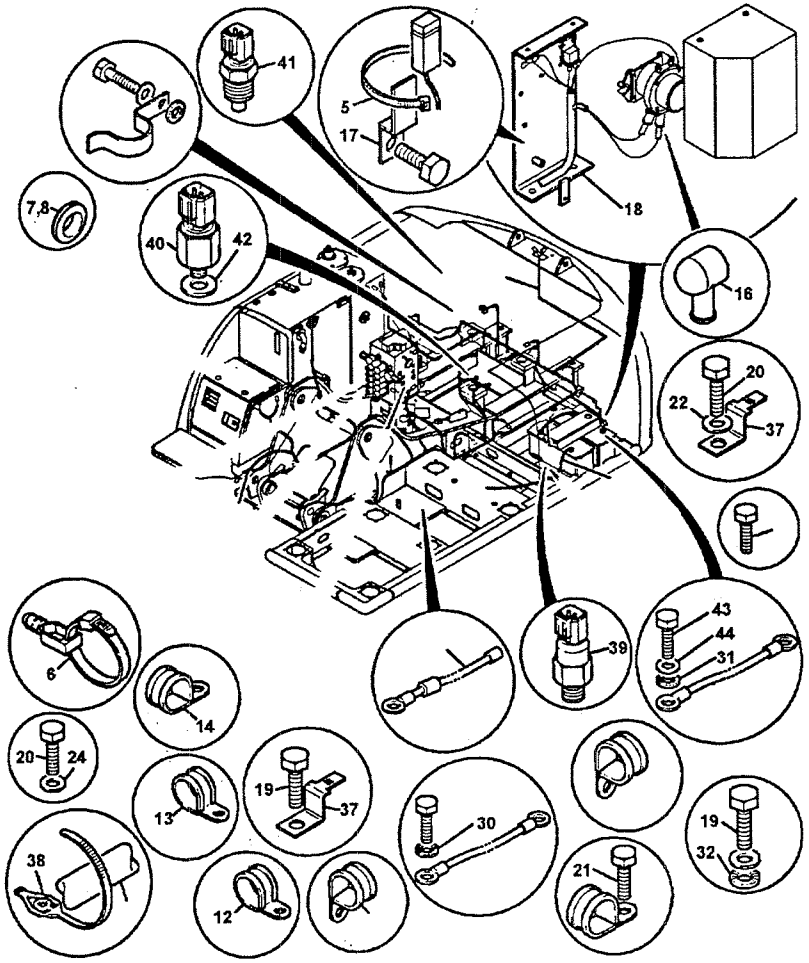

ITEM	PART NO.	CHANGE NO.	DESCRIPTION	REMARKS	QTY.
21	1316/0405Z		Screw M10x20		1
22	1316/0507Z		Set Pin		2
23	229/01377		Adaptor M/F 1/2" NPTF/M16		1
24	1420/0007Z		Washer Plain M8		4
25	1420/0008Z		Washer Plain M10		1
26	1420/0009Z		Washer Plain M12		2
27	1425/0007Z		Washer Spring M8		4.
28	1425/0008Z		Washer Spring M10		2
29	1425/0009Z		Washer Spring M12		2
30	186-0106ZZ		Washer; Toothed		3
31	186-0108ZZ		Washer; Toothed		1
32	186-0110ZZ		Washer, Toothed		1
33	186-112ZZ		Washer; Toothed		1
34	6012/0298Z		Screw; Pin HD Recess M6x8		7
35	716/30205		Battery Relay		1
36	229/02696 332/P1385	To 1318301 From 1318302	Harness Main Harness Main		1
37	821/00367		Clip		1
38	826/01347		Cable Tie Push On		41
39	701/80327		Engine Oil Pressure Switch		1
40	701/80328		Temperature Switch		2
41	40/302723		Temp Sensor		1
42	1406/0018		Dowty Seal		2
43	1316/0105Z		Screw M5x20		1
44	1420/0005Z		Washer M5		1
45	1370/0001		Nut M5		1

Illustration Not Available at Time of Publication

ITEM	PART NO.	CHANGE NO.	DESCRIPTION	REMARKS	QTY.
1	JHP0046		Washer		1
2	JHR0128		Bolt		2
3	KHR0611		Screw, pan head		4
4	1316/0305Z		Bolt, high tensile		4
5	1316/0405Z		Screw, M10 x 20		1
6	1316/9403Z		Screw, M4 X 16		4
7	1420/0004Z		Washer, M4		4
8	1420/0007Z		Washer, plain		4
9	6063/0008Z		Washer, starlock		1
10	242/00290		Tie, panel fixin cable		4
11					
12					
13					
14					
15					
16					
17					
18					
19					
20					
21					
22					
23					
24	229/01523		Counter weight light harness		1
25	229/02697		Harness, Fascia		1

Illustration Not Available at Time of Publication

ITEM	PART NO.	CHANGE NO.	DESCRIPTION	REMARKS	QTY.
26	229/02695 333/P6341	To 1318540 From 1318541	Harness, cab Harness, cab		1
29	728/28300		Unit Electronic control, Tracked / Wheeled		1
30	TBA		Unit Software, ECU 1		1
31	826/01519		Capscrew, socket head		3
32	1420/0006Z		Washer, Plain		3
33	229/01226		Fuse Box MTG. Clip		

C1-3-1 BATTERY INSTALLATION, 24 VOLT

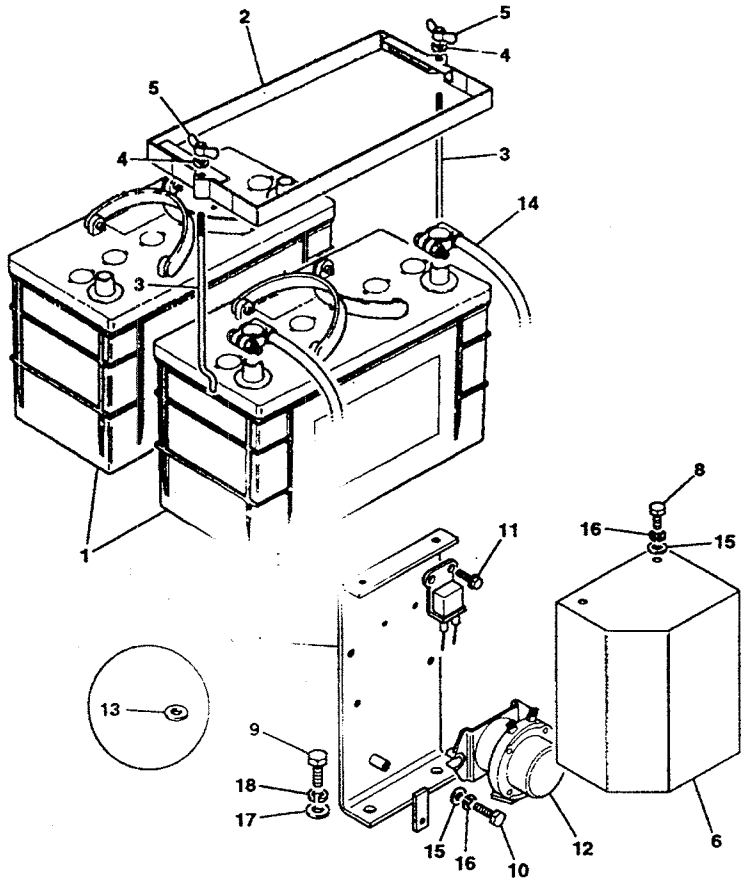

ITEM	PART NO.	CHANGE NO.	DESCRIPTION	REMARKS	QTY.
1	696/01626		Battery MHD99		2
2	332/P0932		Clamp Battery	1318000 onwards	1
3	331/39213		Rod, tie, battery		2
4	1420/0006Z		Washer Plain		6
5	1370/0101Z		Nut, plain		4
6	335/06138		Cover, relay		1
7	335/07259		Bracket, battery relay		1
8	1315/0301Z		Setscrew		3
9	1315/0508Z		Setscrew		2
10	1315/0307Z		Setscrew, M8x25		3
11	1315/0201Z		Screw, set M6x12		4
12	716/30205		Relay, battery		1
13	1420/0009Z		Washer, M12		2
14	718/06500		Cable Battery (-VE)		1
15	1420/0007Z		Washer, M8 plain		6
16	1425/0007Z		Washer, spring		5
17	1420/0008Z		Washer, Plain M10		2
18	1425/0008Z		Washer, Spring M10		2
19	718/20231		Cable Battery +VE		1
20	229/00602		Cable Battery Link		1
21	696/01921		Cable Battery Relay		1
22	KHR1407		Clamp		2

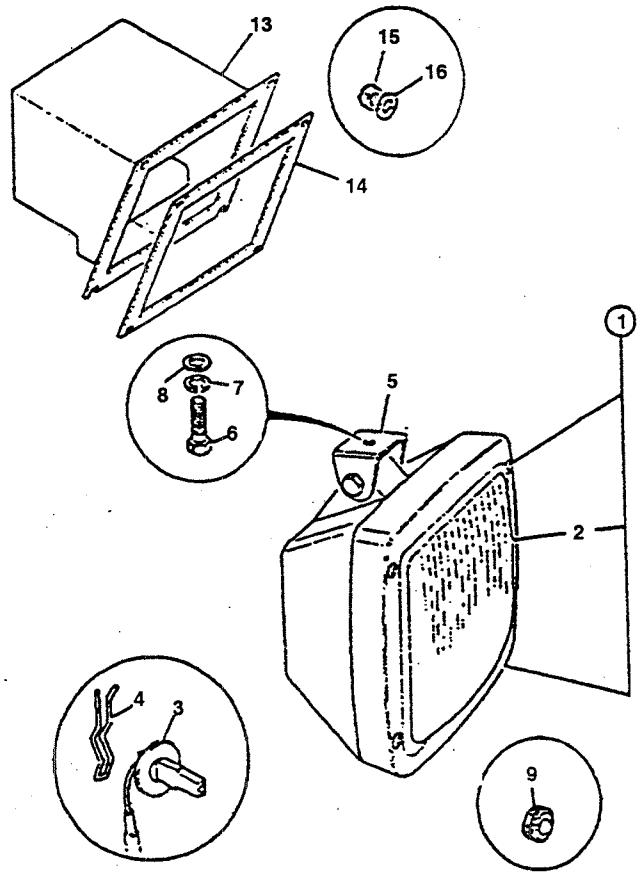

ITEM	PART NO.	CHANGE NO.	DESCRIPTION	REMARKS	QTY.
1	229/00595		Light Working		1
2	NSP		None serviced part		1
3	720/20032		Bulb, 12V-55W H3		1
4	700/10103		Spring		1
5	123/06305		Bracket		1
6	1316/0305Z		Bolt, high tensile		1
7	1420/0007Z		washer, plain		1
8	1370/0201Z		Nut, M8		1
10					
11					
12					
13	229/01138		Box, work light		1
14	229/01203		Gasket		1
15	1370/0001Z		Nut, M5-8		4
16	1420/0005Z		Washer, M5		4

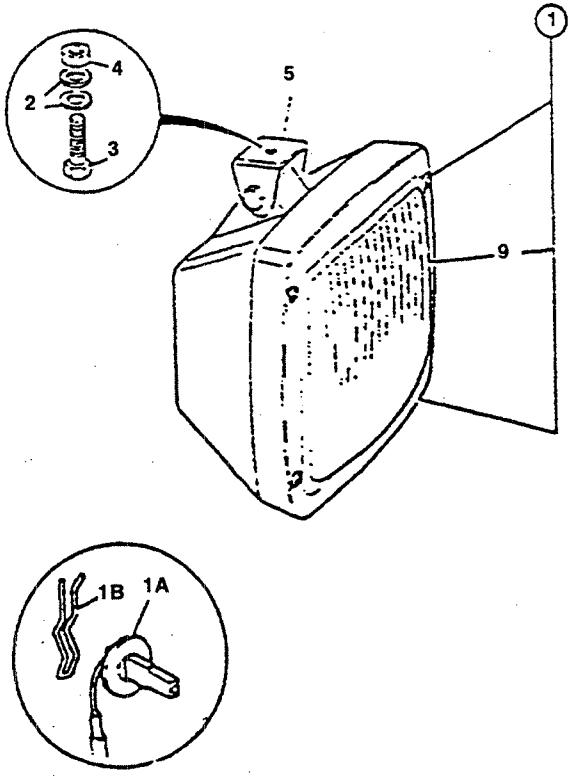

ITEM	PART NO.	CHANGE NO.	DESCRIPTION	REMARKS	QTY.
1	229/00595		Light, assembly		3
1A	720/20032		Bulb, H3 24v 70w		1
1B	700/10103		Spring		1
2	1420/0007Z		Washer, plain		6
3	1315/0305Z		Bolt		3
4	1371/0202Z		Nut		3
5	123/06305		Bracket		3
10	KHH0142		Tie, harness retainer		3
11			See Remark	Not fitted	
12	331/36877		Bracket, right hand light		1
13	331/36878		Bracket, left hand light		1
14			See Remark	Not fitted	
15			See Remark	Not fitted	
16					
17	646/04474		Housing, connector		2
18	821/00410		Clip, pipe		2
19	*1315/0305Z		Bolt		2
20	*1420/0007Z		Washer, plain		2
21	1316/0505Z		Screw		4
22	1420/0009Z		Washer		4

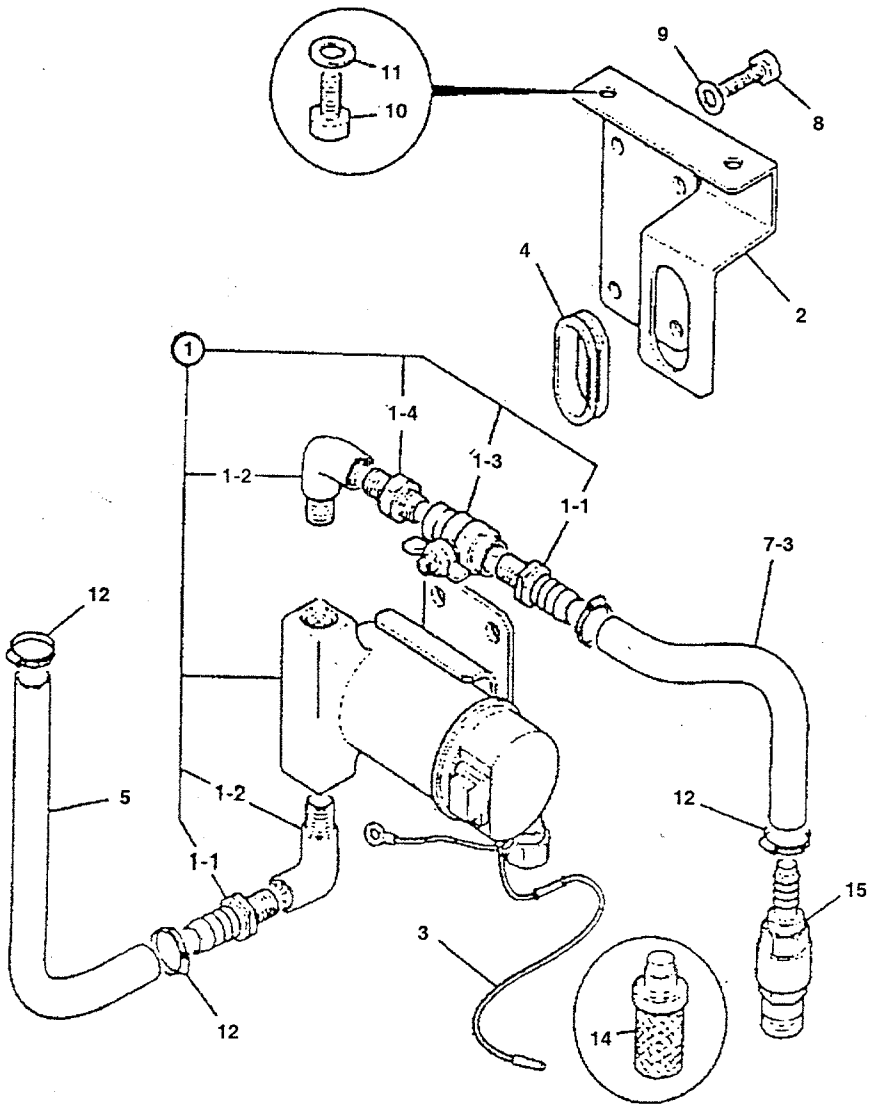

ITEM	PART NO.	CHANGE NO.	DESCRIPTION	REMARKS	QTY.
1	229/02617		Pump, refueling		1
1 03	928/50250		Valve, ball		1
1 04	1604/0006		Adapter, 3/4" BSP M/M		1
2	331/P1315		Bracket, refueling pump		1
3	721/11430		Harness, earth ink, refueling pump		1
4	KHN1260		Grommet, rubber		1
5	JRH0012		Hose		1
7	JSR0006		Hose		1
8	1316/0507Z		Screw		4
9	1420/0009Z		Washer		4
10	1316/0403Z		Screw		2
11	1420/0008Z		Washer, Plan		2
12	2201/0007		Clip, jublee		4
13	JHH0009		Hose, 3500mm long		1
14	JHH0071		Valve, non return		1
15	215/11319		Straner, assembly		1

C1-6-1 G.A. HORN

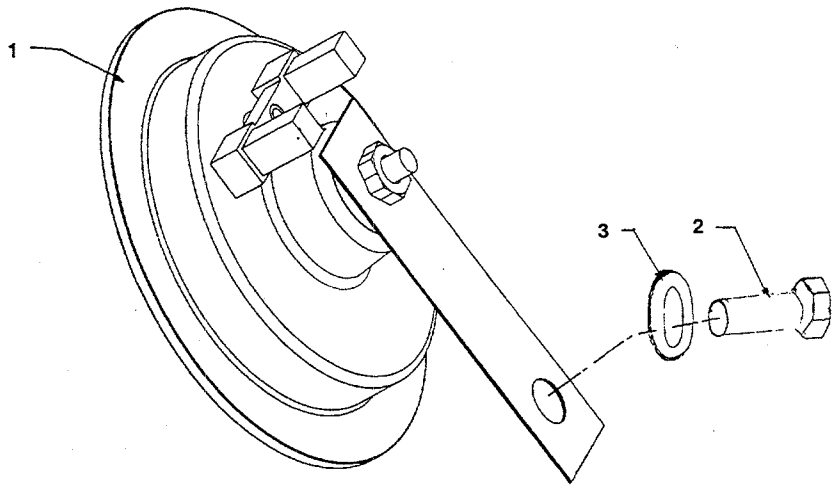

ITEM	PART NO.	CHANGE NO.	DESCRIPTION	REMARKS	QTY.
1	229/01242		Horn		1
2	1316/0305Z		Bolt high tensile		1
3	1425/0007Z		Washer, spring		1

C

C1 ELECTRICS, MAIN MACHINE
• C2 ELECTRICS, ENGINE
C3 ELECTRICS, CAB

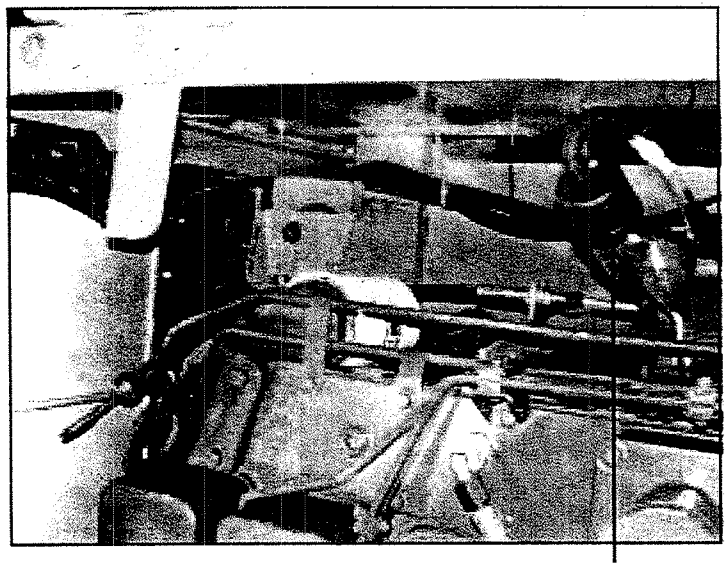

Coil Electrical - 332/Y5122

ITEM	PART NO.	CHANGE NO.	DESCRIPTION	REMARKS	QTY.
1	332/Y5122		Coil Electrical		1

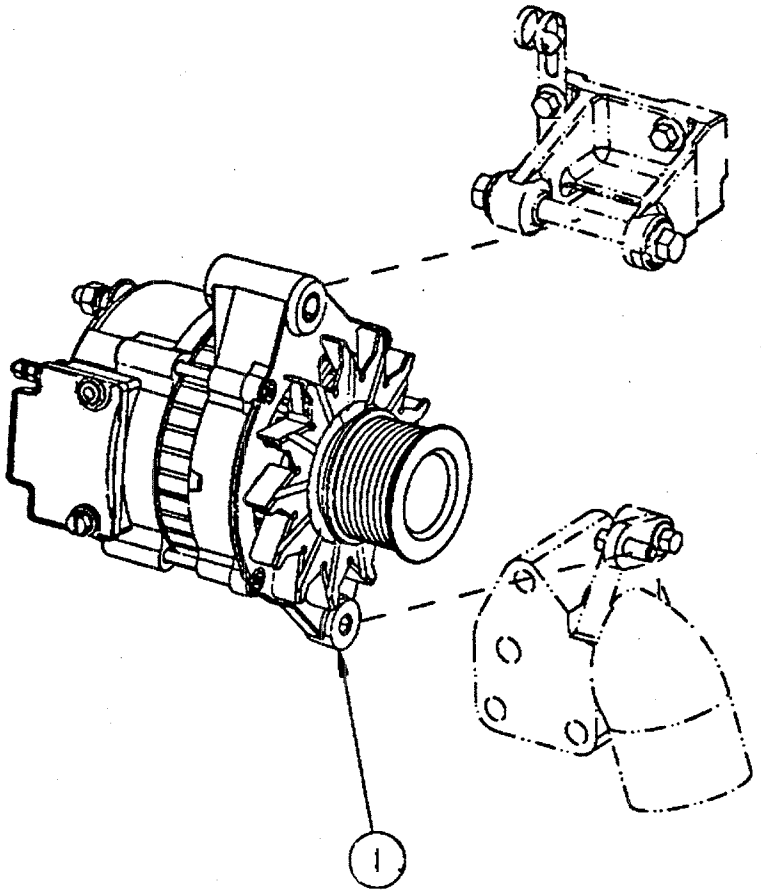

ITEM	PART NO.	CHANGE NO.	DESCRIPTION	REMARKS	QTY.
1.	332/Y3323		Alternator		1

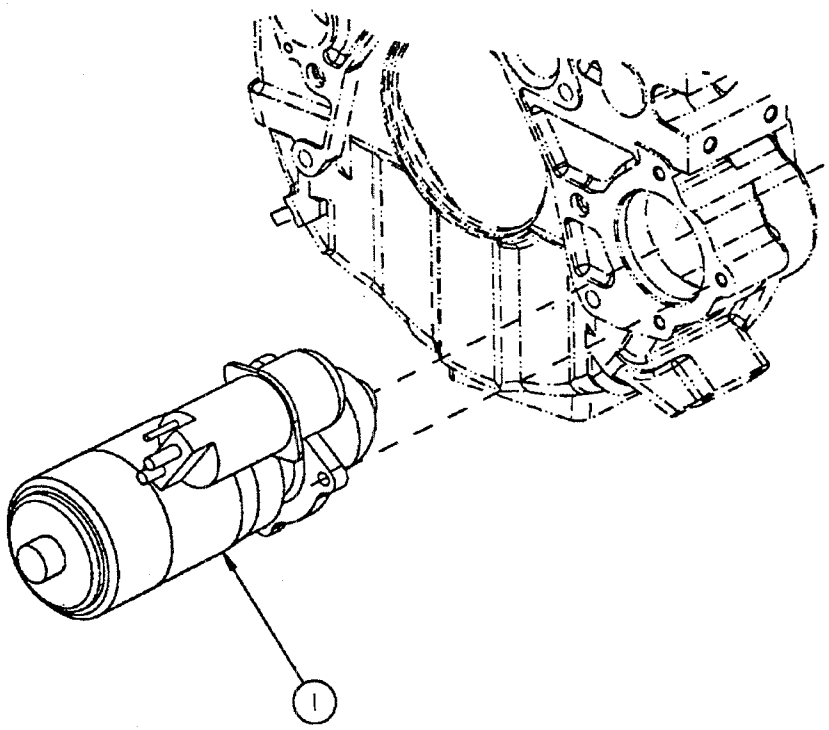

ITEM	PART NO.	CHANGE NO.	DESCRIPTION	REMARKS	QTY.
1	332/Y3346		Motor, Starting	24V (7M 14)	1

C

C1 ELECTRICS, MAIN MACHINE
C2 ELECTRICS, ENGINE
• C3 ELECTRICS, CAB

C3-2-1 SWITCH PANEL, SIDE CONSOLE, RIGHT HAND

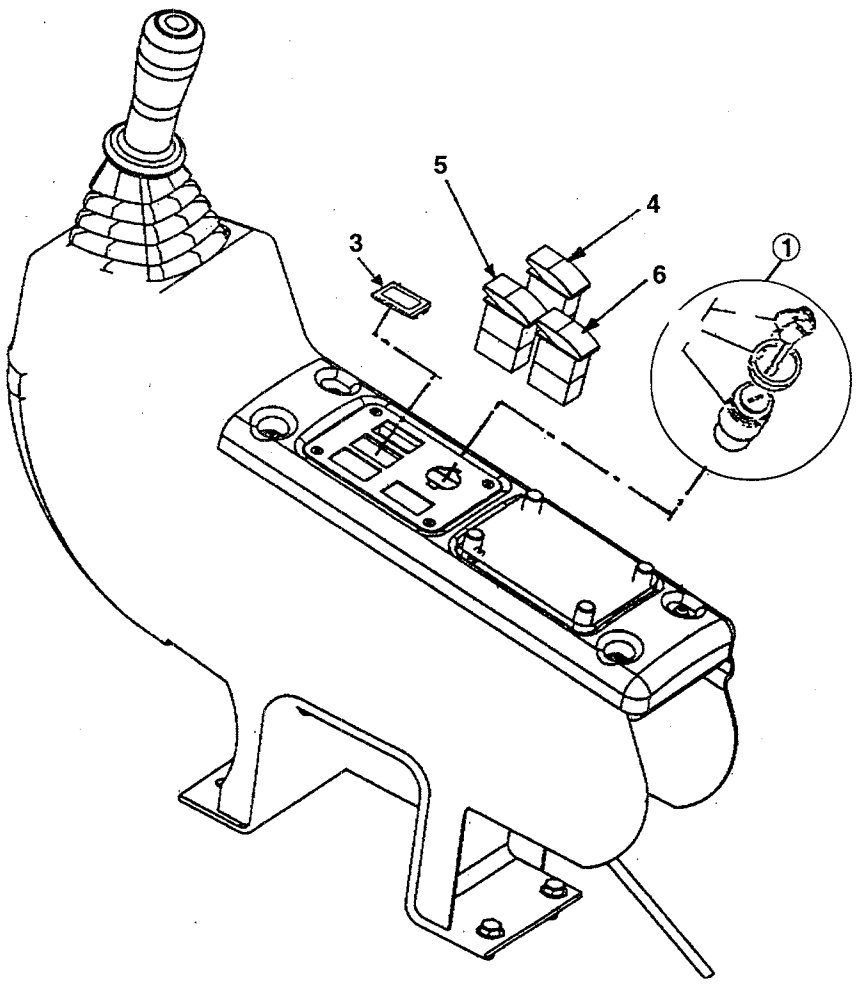

ITEM	PART NO.	CHANGE NO.	DESCRIPTION	REMARKS	QTY.
1	701/80184		Switch, ignition		1
3	701/60010		Blank		1
4	229/01520		Work Lamp S/W		1
5	229/01521		Servo ISO S/W		1
6	229/01522		Swing Lock S/W		1
	701/60034		Switch Panel 24V		1
	701/58809		Switch Cap-Swing Lock		1

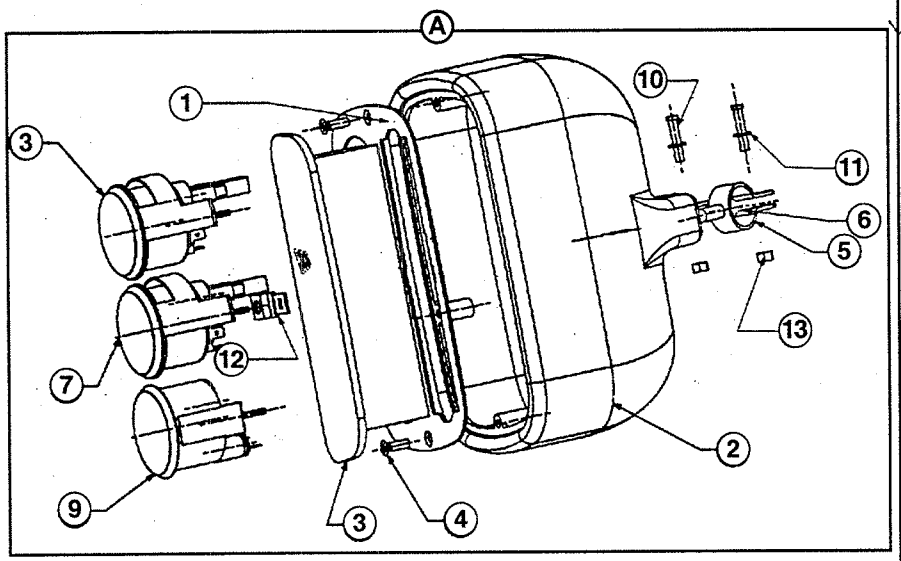

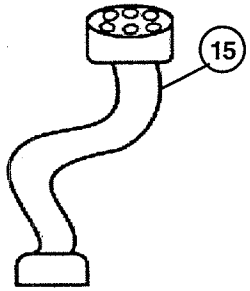

ITEM	PART NO.	CHANGE NO.	DESCRIPTION	REMARKS	QTY.
1	229/01125		Panel Plate		1
2	229/01126		Facia Panel Moulding		1
3	229/01127		Warning Cluster		1
4	229/01128		Countersunk Screw		3
5	229/01129		Mounting Clamp		2
6	229/01130		Bush		2
7	229/01131		Fuel Gauge		1
8	229/01132		Hour Meter Gauge		1
9	229/01133		Temp Gauge		1
10	826/01518		Screw M5		3
11	1420/0005		Washer M5		3
12	264/34901		Clip		1
13	1370/0001		Nut M5		2
14	KHR1446		PCLIP(SEE KHR 1441)		1
15	229/02697		Monitor cluster harness		1

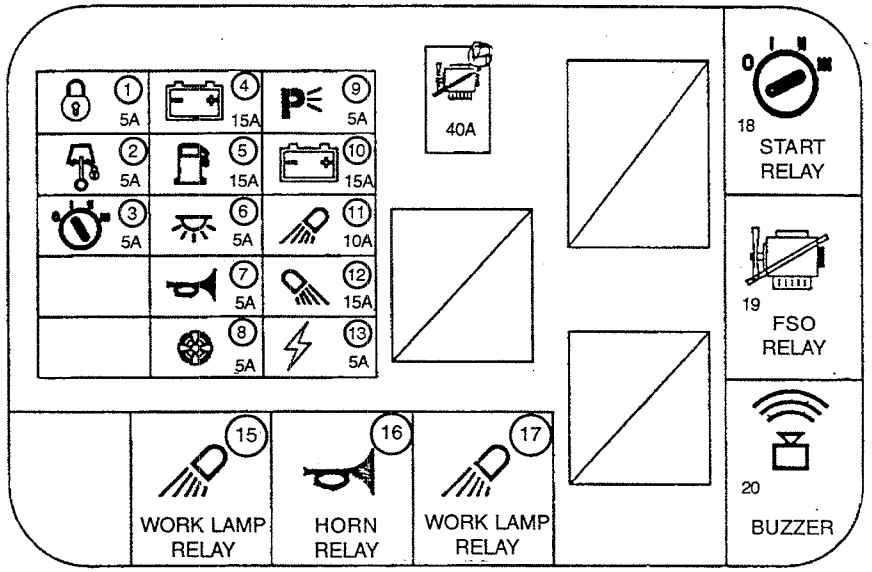

ITEM	PART NO.	CHANGE NO.	DESCRIPTION	REMARKS	QTY.
1	550/42858		Fuse 5A		1
2	550/42858		Fuse 5A		1
3	550/42858		Fuse 5A		1
4	550/42857		Fuse 15A		1
5	332/46273		Fuse 20A		1
6	550/42858		Fuse 5A		1
7	550/42858		Fuse 5A		1
8	550/42858		Fuse 5A		1
9	550/42858		Fuse 5A		1
10	550/42857		Fuse 15A		1
11	550/42856		Fuse 10A		1
12	550/42857		Fuse 15A		1
13	550/42715		Fuse 60A		1
14	550/42758		Fuse 40A		1
15	229/01389		Relay N/O		1
16	229/01389		Relay N/O		1
17	229/01389		Relay N/O		1
18	696/01479		Relay		1
19	696/01480		Relay		1
20	696/01487		Buzzer		2
21	332/P6037		Fuse Box Decal		1

C3-5-1 KIT, GAS CHARGING

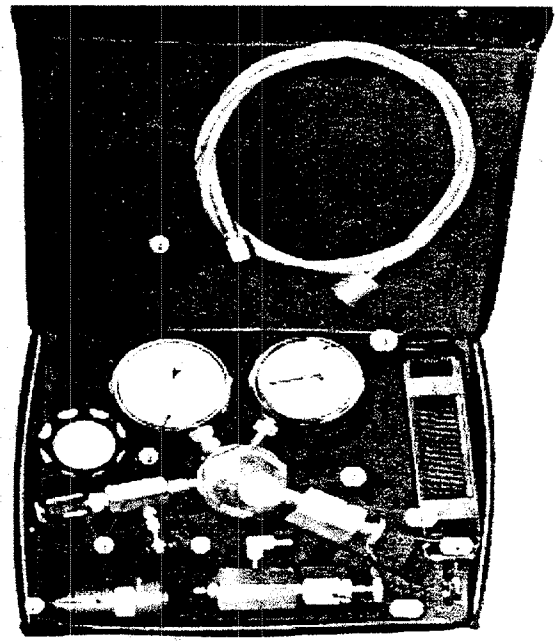

ITEM	PART NO.	CHANGE NO.	DESCRIPTION	REMARKS	QTY.
1	332/A3308		Regulator		1
2	332/A3309		Meter Pressure, 100 Bar		1
3	332/A2632		Meter Pressure, 250 Bar		1
4	332/A2578		Hose Gas		1
5	332/A2577		Adaptor Gas Charging		1
6	332/A3310		Adaptor Pneumatic		1
7	332/A3311		Coupling		1
8	332/A3312		Nut		1
9	332/A3313		Ring		1
10	332/A3314		Valve Drain		1

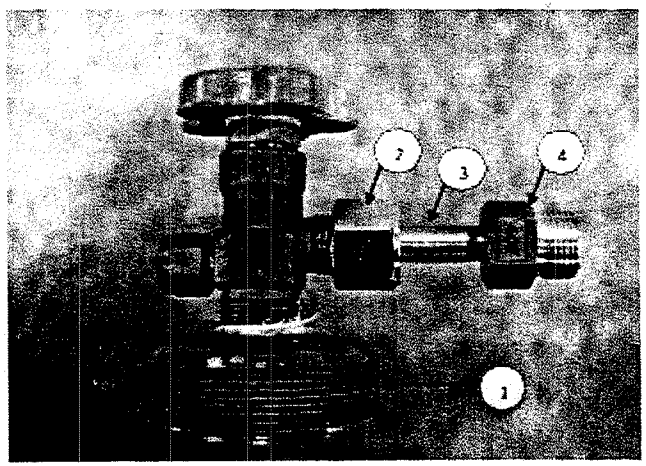

ITEM	PART NO.	CHANGE NO.	DESCRIPTION	REMARKS	QTY.
1	332/Y3280		Bottle Nitrogen Gas Bottle Nitrogen Gas Bottle		1
2	TBA		Part Number Not Yet Known		1
3	TBA		Part Number Not Yet Known		1
4	892/01196		Adaptor		1
5	332/A2636		Bottle Gas Bottle (Nitrogen Gas Bottle (Nitrogen		1
6	332/Y7841		Bottle Gas Bottle Gas Bottle		1
7	892/01194		Tool Nitrogen Cylinder 2L		1

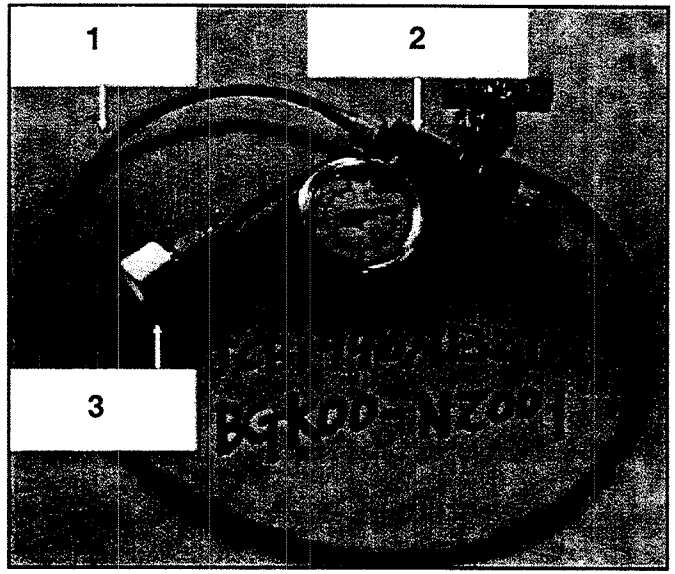

ITEM	PART NO.	CHANGE NO.	DESCRIPTION	REMARKS	QTY.
1	332/A2578		Hose Gas		1
3	332/A2577		Adaptor Gas Charging		1

D

- D1 CONTROLS MACHINE
- D2 CONTROLS, ENGINE

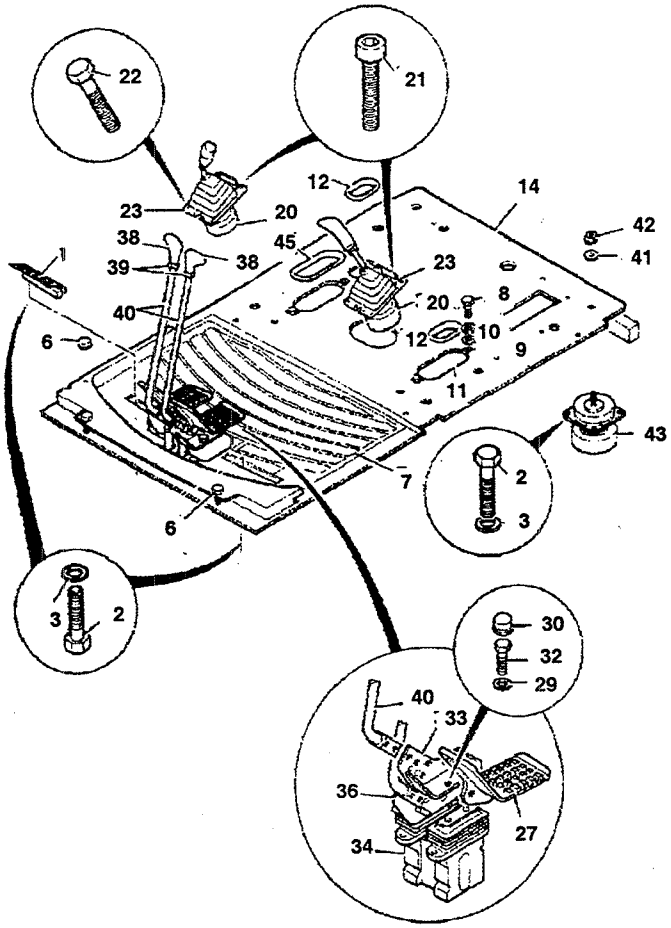

ITEM	PART NO.	CHANGE NO.	DESCRIPTION	REMARKS	QTY.
1	1316/0407Z		Bolt, high strength		4
1A	229/01658		Footrest - LH		1
1B	JBN0013		Footrest - RH		1
1C	1315/0409Z		Screw Miox 35		4
2	1316/0408Z		Screw		24
3	JHP0046		Washer		28
6	KHJ0769		Cap, spl		3
7	229/01239		Mat, cab floor		1
8	1316/0305Z		Bolt, high tensile		4
9	1420/0007Z		Washer, plain		4
10	1425/0007Z		Washer, spring		4
11	KHJ0947		Guide		2
12	KHJ0948		Grommet	with 30mm hole	1
14	885/14014		Plate, cab floor		1
20	25/222892		Valve, hand control, right hand	Right hand controller E3-6-1 for components	1
	25/222891		Valve, hand control, left hand	Left hand controller E3-6-1 for components	1
21	1391/3210Z		Capscrew		4
22	KHR0737		Screw, pan head		4
23	331/18592		Plate, mounting, control valve		2
27	229/01533		Pedal, foot left track	Left hand pedal	1
	229/01534		Pedal, foot right track	Right hand pedal	1
29	1420/0008Z		Washer, Plain		4
30	KHJ0768		Cap, spl		4
32	1316/0403Z		Screw		4

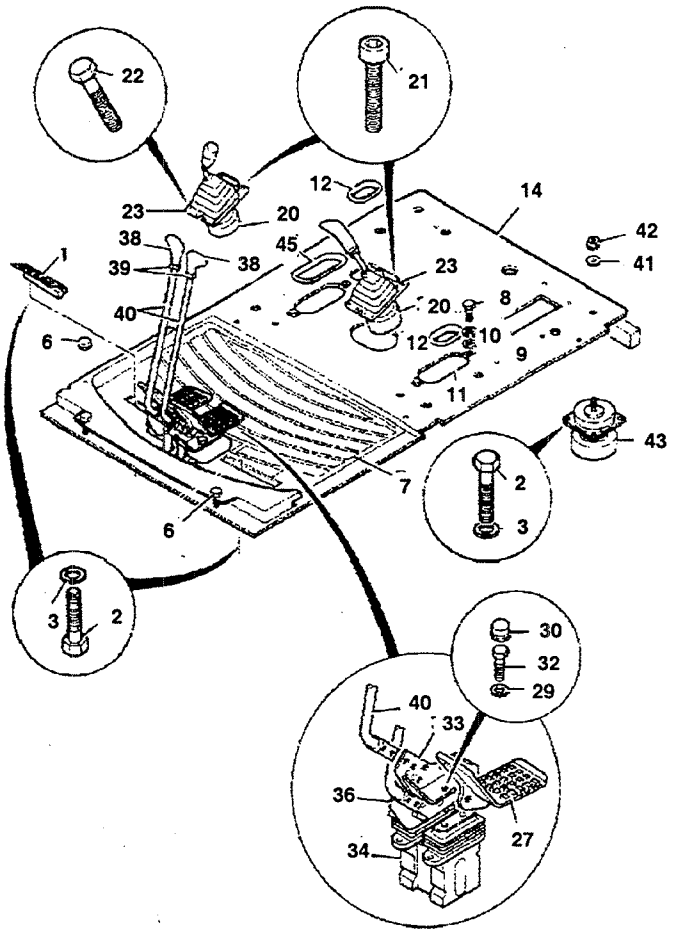

ITEM	PART NO.	CHANGE NO.	DESCRIPTION	REMARKS	QTY.
34	KSJ2465		Valve, remote control	See frame E3-7-2 for components	1
38	331/35578		Knob, track level, c/w clear cap		2
39			See Remark	not used on the assembly	1
40	229/01526		Lever, left hand track	left hand lever	1
	229/01527		Lever, right hand track	right hand lever	1
41	KHN0243		Washer, special		6
42	KHN0268		Nut, U		6
43	KHJ1211		Rubber, mount		6
45	KHJ0950		Grommet		2
48	817/18824		Decal, track lever		2
51	1391/3208Z		Screw, cap		4
52	1420/0006		Washer, special M6		4
53	1316/0405Z		Screw, M10 x 20		4
54	826/10611		Screw, c/sunk socket head, M8 x 30		4
55	JHP0080		Washer		4

D

D1 CONTROLS MACHINE

• D2 CONTROLS, ENGINE

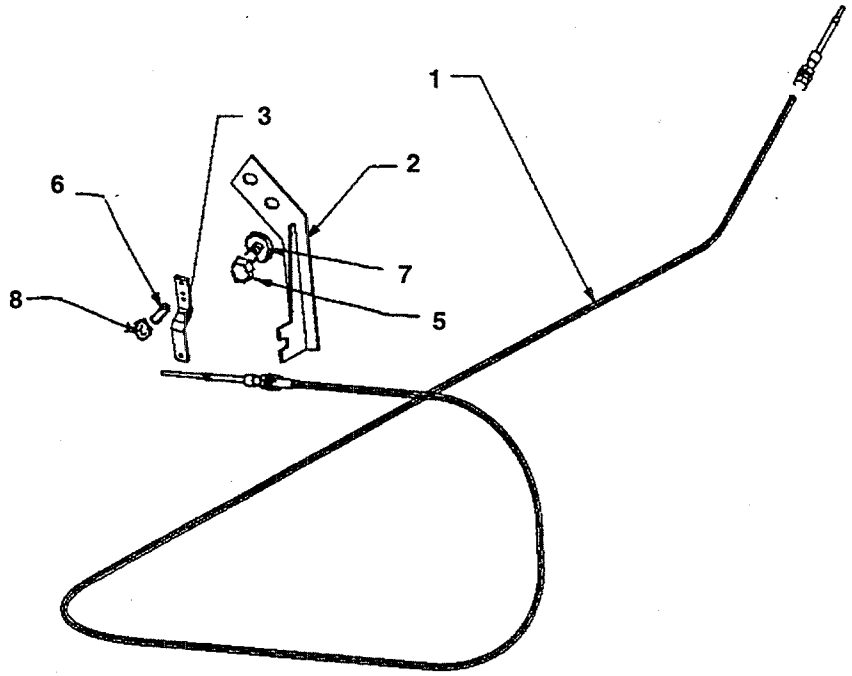

ITEM	PART NO.	CHANGE NO.	DESCRIPTION	REMARKS	QTY.
1	229/02401		Cable Throttle Control		1
2	696/02051		Cable Mounting Bracket		1
3	229/01209		Lever Bracket		1
5	1316/0507Z		Screw M12x25		2
6	1315/0201Z		Screw M6x12		2
7	1411/0005Z		Washer 1/2"		2
8	1425/0006Z		Washer Locking		2

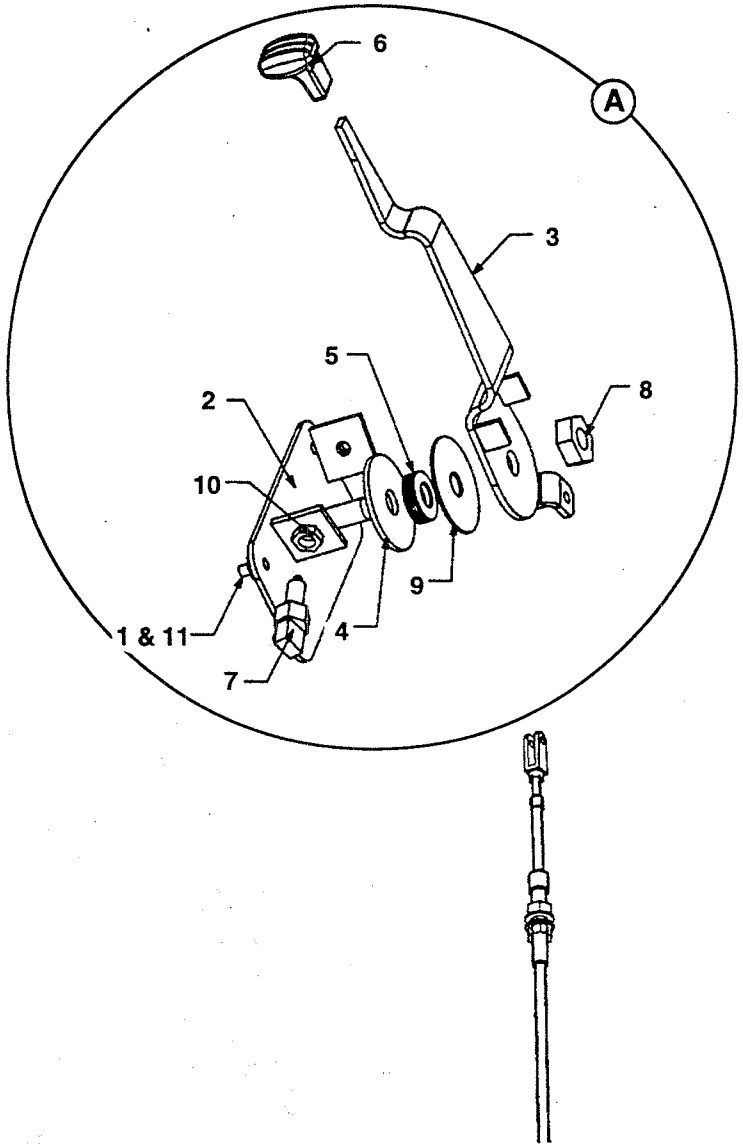

ITEM	PART NO.	CHANGE NO.	DESCRIPTION	REMARKS	QTY.
A	229/01197		G.A. hand throttle (except item no. 7)		1
1	1370/0201Z		Nut M8		4
2	229/01349		Mounting Plate-WA		1
3	229/01350		Lever		1
4	229/01351		Liner Washer		1
5	229/01353		Disk Spring Washer		3
6	229/01661		Knob		1
7	701/42000		Brake lamp switch		1
8	1370/0603Z		Nut M16		1
9	229/01382		Steel washer		1
10	1340/0402Z		Thin Nut M12		2
11	1420/0007Z		Washer M8		4
12	1370/0402Z		Thin Nut		1

E

• E1 HOSE & PIPEWORK
E2 PUMP/MOTOR & PUMP DRIVE
E3 VALVES & HYDRAULIC FILTERS
E4 RAMS

E1-1-1 CIRCUIT, PUMP SUCTION

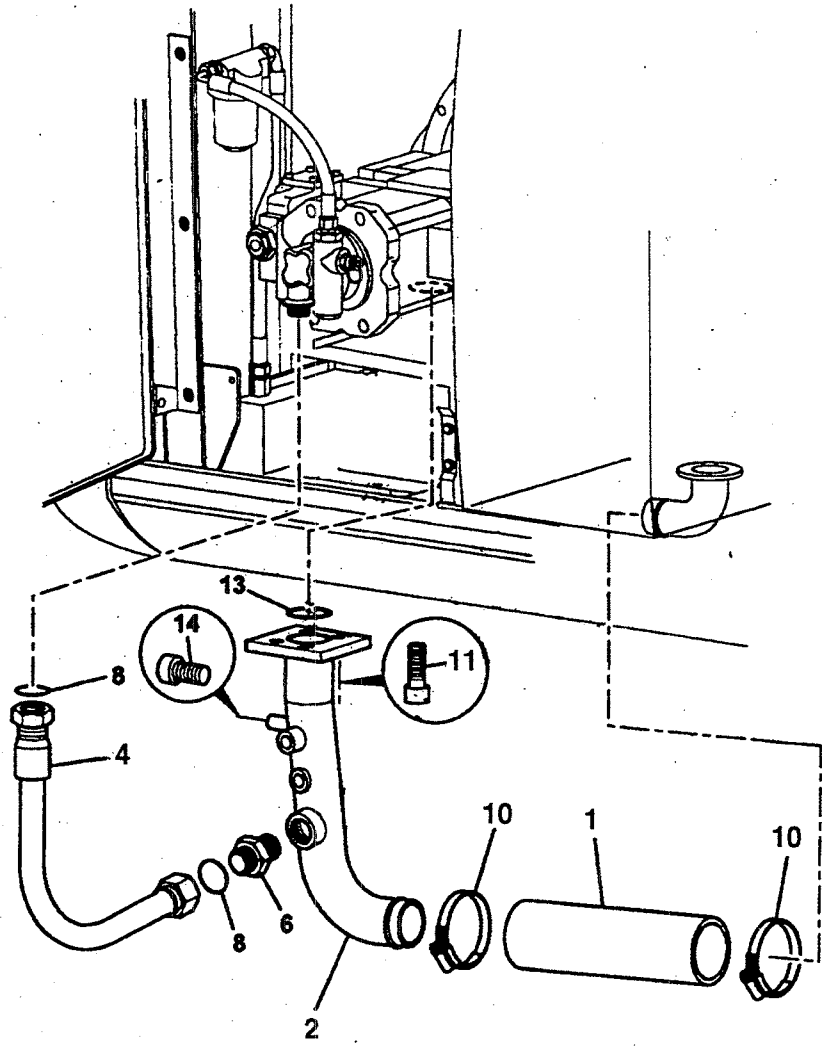

ITEM	PART NO.	CHANGE NO.	DESCRIPTION	REMARKS	QTY.
1	834/10668		Hose, Suction	Hyd. tank to pump	1
2	830/13939		Pipe, suction		1
4	KNJ1821		Hose, hyd. (l=470)	Item 2 to pump	1
6	KNJ0605		Adapter, 3/4" x 3/4"	To item 2 for item 4	1
8	828/10307		O Ring		2
10	821/10379		Clip worm drive, 60mm-80mm		4
11	1391/3508Z		Capscrew, M12x30	Item 2 to pump	4
13	BRA0127		'O' Ring	Item 2 to pump	1
14	1391/3202Z		Capscrew M6 x 12mm	To boss on item 2	1

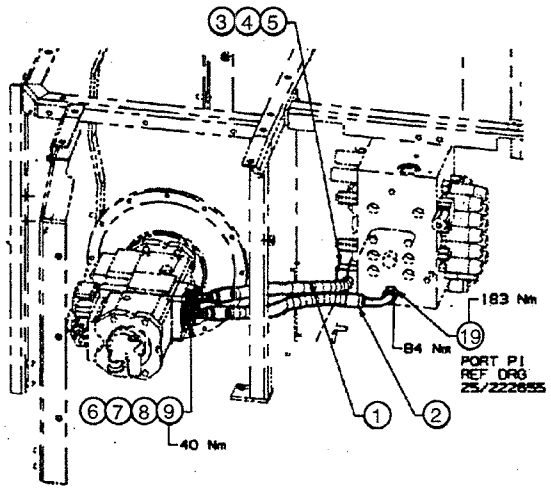

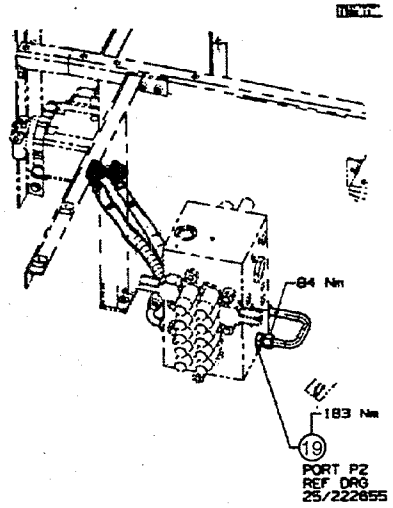

ITEM	PART NO.	CHANGE NO.	DESCRIPTION	REMARKS	QTY.
1	627/10484		Hose; hyd. 780LG 3/4" 135 SA (P1)		1
2	332/P1483		3/4" BSP 90x135 SAE62 (P2) Hose		1
3	1316/3418Z		Bolt; M10x80		1
4	1420/0008Z		Plain washer M10		1
5	903/20749		Hose clamp dia 32mm		1
6	2400/0205		'O' Ring		2
7	KRJ0963		Flange; split		4
8	JHP0046		Washer M10		8
9	1391/3409Z		Cap screen M10x35		8
10	KNJ0605		Adapter; hose (P1)		2

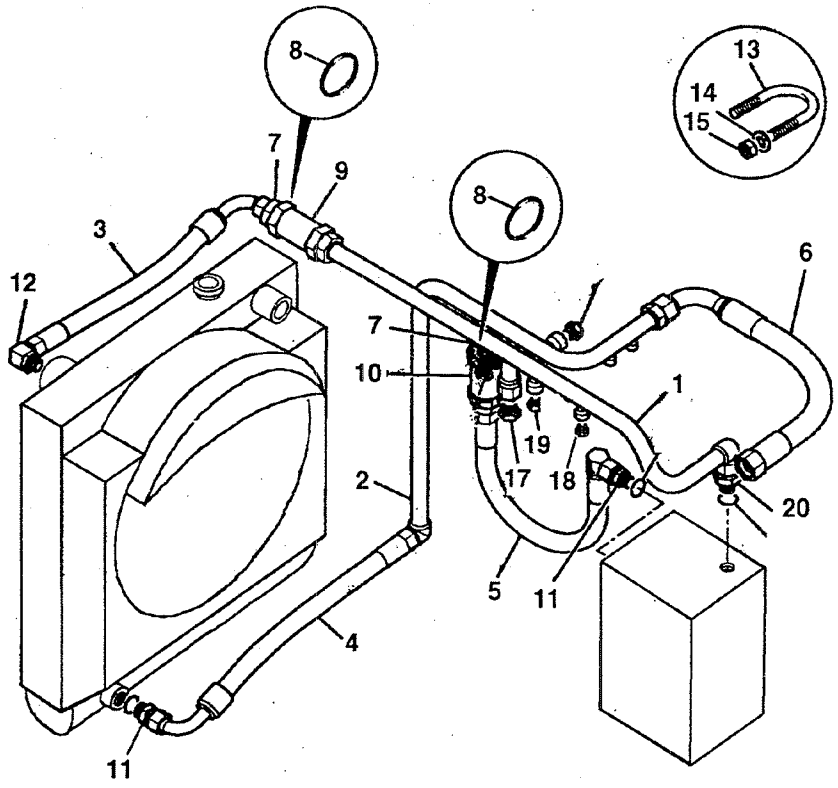

ITEM	PART NO.	CHANGE NO.	DESCRIPTION	REMARKS	QTY.
1	229/02724		Pipe, valve to cooler (in)		1
2	666/40041		Pipe, cooler to tank (out)		1
3	627/10353		Hose, 1" BSP ST-90 680mm LG	To cooler top	1
4	627/10354		Hose, 1" BSP ST-90 730mm LG	From cooler bottom	1
5	649/51160		Hose, 1" BSP x 715mm long	Relilef valve to v/block	1
6	627/10259		Hose	From cooler pipe to Hyd. tank	1
7	816/90693		Adapter	For item 10+9	2
8	828/10307		'O' Ring	For item 9 and 10	2
9	25/222139		Valve, relief 1 bar	To cooler	1
10	25/222140		Valve, relief 3 bar	From cooler	1
11	KNJ0606		Adapter	For V/block and cooler	2
12	KHJ0345		Adapter, elbow	To cooler top	1
13	KNJ0718		Bolt, u	Secures steel pipes	4
14	JHP0046		Washer, M10	For item 13	8
15	1371/0303Z		Nut	For item 13	6
17	G8/7		Plug	To return pipe	1
18	KHJ0363	to SEP-2004	Plug	For cooler feed pipe	1
19	BRJ0190		Plug	For cooler feed pipe	1
20	816/13121		Adapter	For V/block	1
21			'See Remark'	Not required	0
22			'See Remark'	Not required	0
23			'See Remark'	For hydraulic oil cooler See R4-4-1	1 1

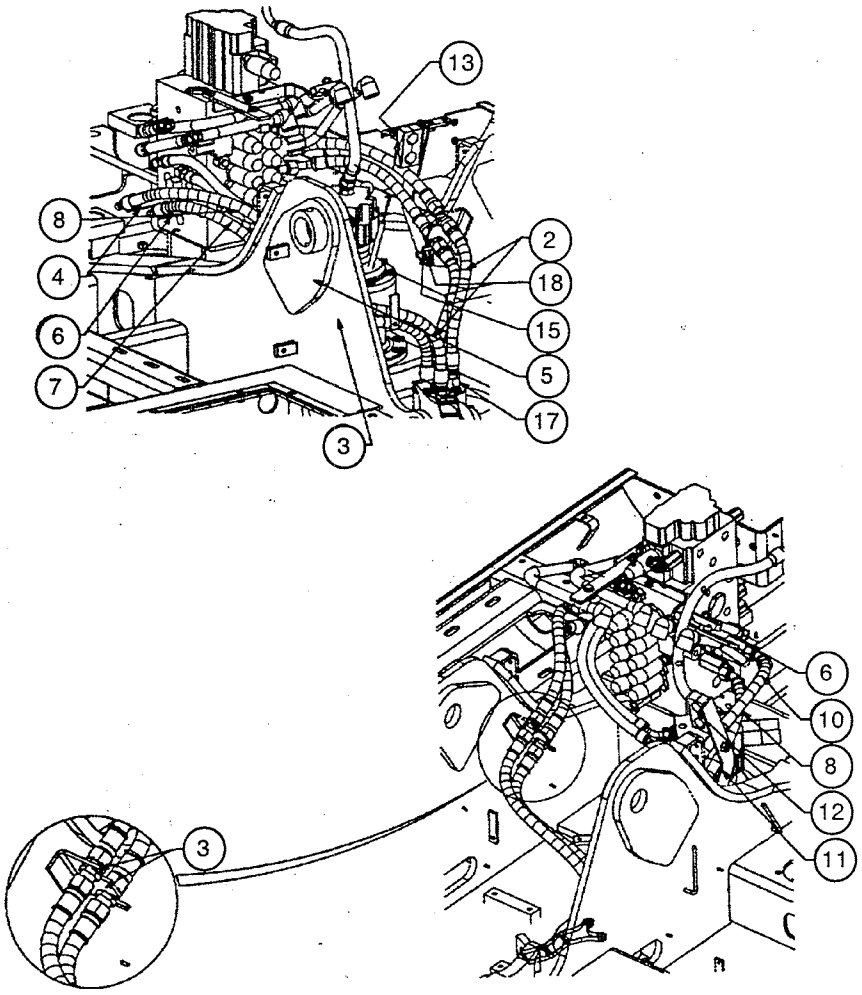

ITEM	PART NO.	CHANGE NO.	DESCRIPTION	REMARKS	QTY.
1	816/10034		Adapter		4
2	JNJ0062		Hose; hyd high pressure		2
3	JLJ0299		Hose; hyd		1
4	KNJ0702		Adapter (Stud)		1
5	JBV0515		Hose		1
6	JHJ0080		Adapter		3
7	627/10379		Hose; 3/4" BSP ST/ANG		1
8	JNV0233		Hose		1
9	627/10574		Hose 3/4" ST-3/4" 135-53		1
10	627/10575		Hose 3/4" ST-3/4" 135-53		1
11	331/45197		Bracket : travel & boom L1		1
12	821/00270		Clamp		1
13	821/00271		Clamp plate		1
15	1316/0507D		M12x25 set screw		1
16	1420/0009D		Plain washer M12		1
17	KNJ1936		Socket C/W O.R.		

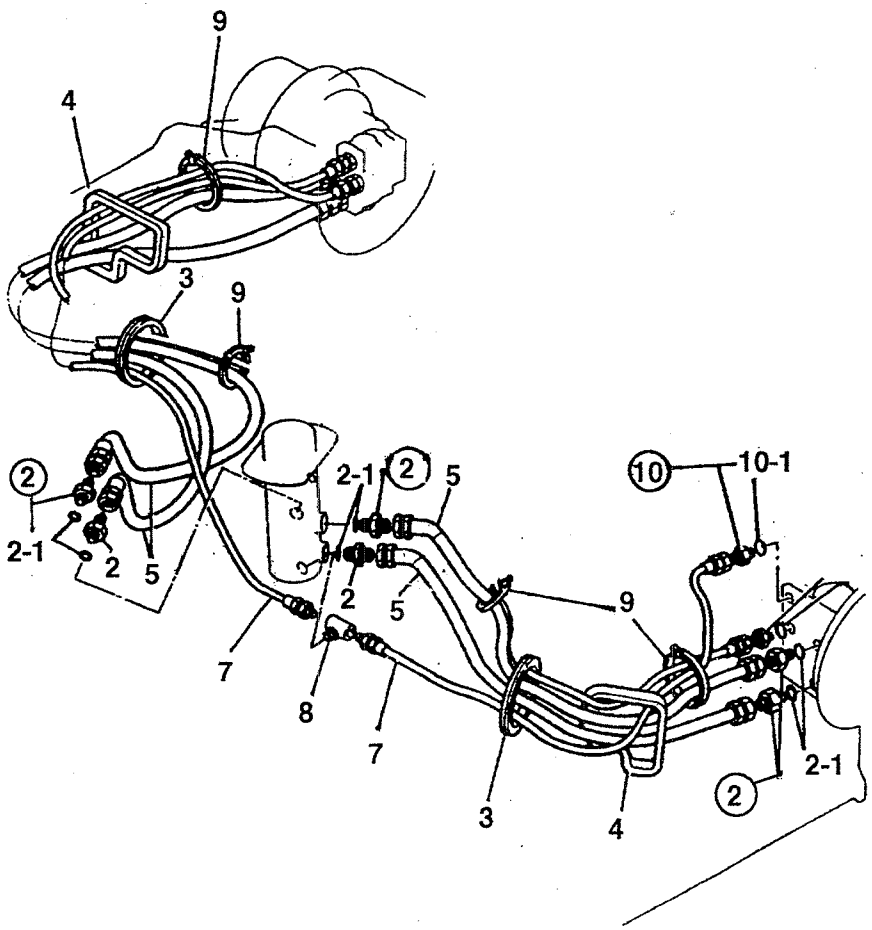

ITEM	PART NO.	CHANGE NO.	DESCRIPTION	REMARKS	QTY.
2	KNJ0605		Adapter		8
2 01	UBJ0158		: O Ring		1
3	KNA0358		Cushion, rubber		2
4	KNA0588		Cushion, rubber, 395mm long		2
5	624/80025		Hose		4
7	KNA0362		Hose		2
8	KRA0789		Adapter, tee		1
9	KRA0017	Superseded	Tie, harness retainer		8
10	KNJ0604		Adapter, 1/2" M/M		2
10 01	UBJ0157		: O Ring		1

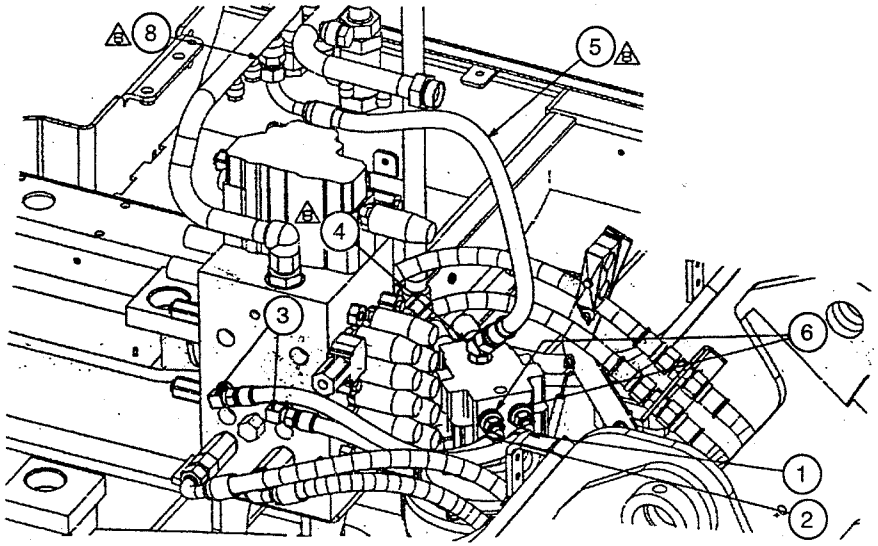

ITEM	PART NO.	CHANGE NO.	DESCRIPTION	REMARKS	QTY.
1	627/10362		1/2" ST-135 Hose 750 LG		1
2	627/10363		1/2" ST-135 Hose 600 LG		1
3	KHJ0343		Elbow		2
4	KHJ0351		Elbow		1
5	635/80037		Hose 3/4"-850-ST-90		1
6	ANV0071		Nipple		2
8	KNJ0605		Adapter; hose		1

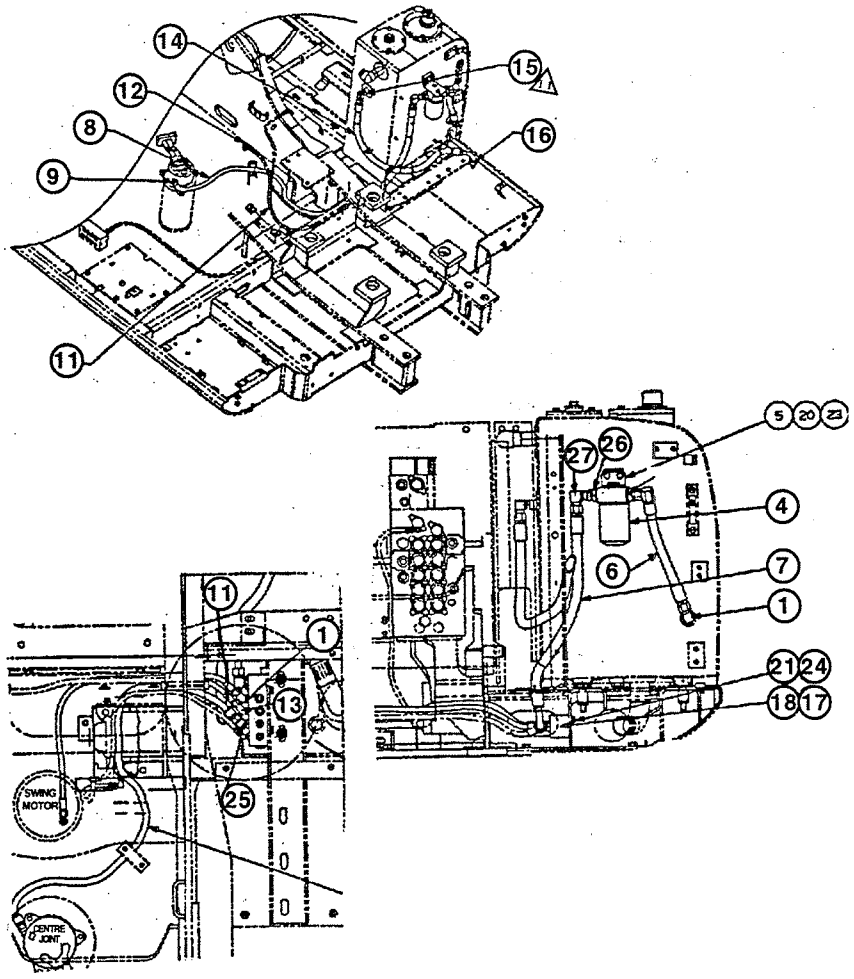

ITEM	PART NO.	CHANGE NO.	DESCRIPTION	REMARKS	QTY.
1	KHJ0344		Adapter, elbow		2
4	KNJ0287		Filter, hydraulic with head		1
4 01	KNJ0288		: Element, oil, filter		1
5	331/45615		Bracket		1
6	627/10433		Hose		1
7	627/10003		Hose		1
8	CEJ0531		Hose		1
9	BMA0342		Adapter		1
11	KNJ1115		Hose		1
12	KHJ0342		Adapter, elbow		1
13	KHJ0343		Elbow		1
14	JLV0249		Hose		1
15	32/925573		Adapter, elbow		1
16	JHJ0063		Adapter		1
17	BRJ0190		Plug		1
18	331/27235		Manifold		1
20	1420/0008D		Washer, M10		4
21	1420/0009Z		Washer, plain M12		2
23	1316/0405D		Bolt		4
24	1316/0507Z		Screw, M12x30		2
25	KHJ0350		Elbow		1
26	MPV2193		Adapter		2
27	JHJ0119		Adapter		2

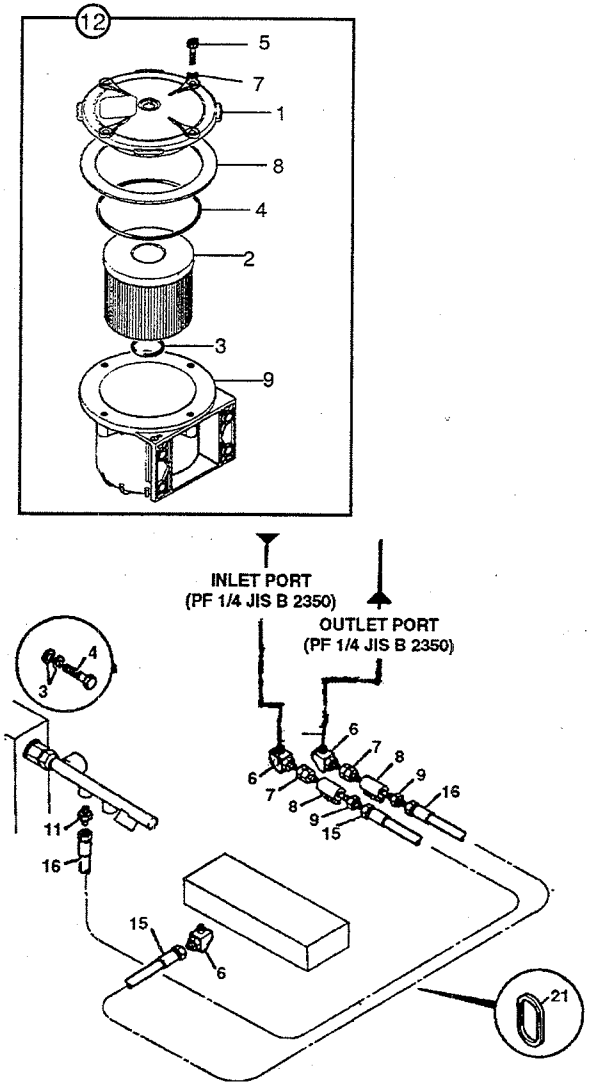

ITEM	PART NO.	CHANGE NO.	DESCRIPTION	REMARKS	QTY.
3	JHP0046		Washer, M10		4
4	1316/3410D		Bolt		4
6	KHJ0341		Adapter, elbow		3
7	C4E7327		Adapter		2
8	KHJ0897		Tap, drain		2
9	1609/0002		Adapter		2
11	KAJ2176		Adapter		1
12	332/J8132		Filter Plexus	1318238 onwards	1
12.1	332/C1504		Cover		1
12.2	:32/925164		Element filter bypass plexus	1318500 onwards	1
12.3	:828/10081		O ring		1
12.4	:332/C1496		O ring		1
12.5	332/C1499		Socket head screw		4
12.7	:823/10201		Washer M8, st, steel		4
12.8	:332/C1503		Seal		1
12.9	NSP		None serviced part housing		1
15	KSJ0968	Superseded	Hose, nylon, blue		1
16	JRA0283		Hose		1
21	KHH0143		Band, harness retainer		2

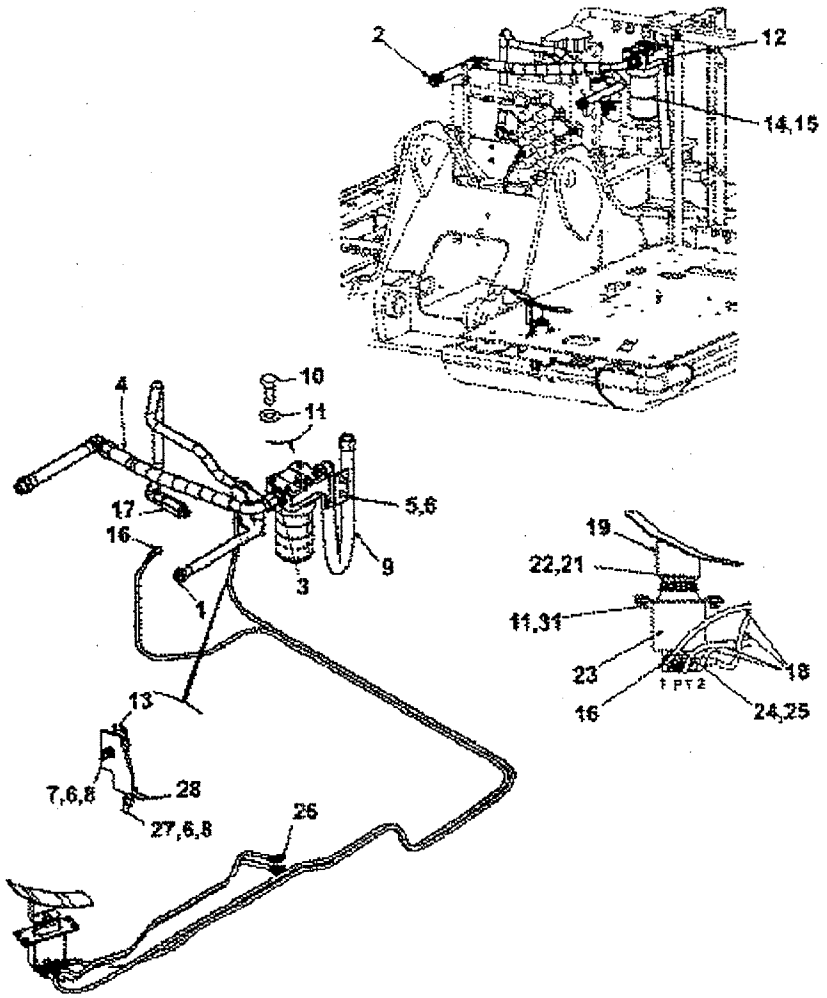

ITEM	PART NO.	CHANGE NO.	DESCRIPTION	REMARKS	QTY.
1	830/12204		Pipe Hammer Feed		1
2	830/12205		Pipe Hammer Return		1
3	KNJ0606		Adapter		2
4	627/10098		Hose		1
5	1315/0509Z		Screw M12 X 35mm		2
6	1420/0009Z		Washer Plain M12		4
7	1316/3515Z		Bolt		1
8	1370/0403Z		Nut M12		2
9	649/51160		Hose 1"BSP X 715mm Long		1
10	1315/0301Z		Screw Hex Head M8 X 12		4
11	1420/0007Z		Washer Plain M8		8
12	331/42682		Bracket Return Filter		1
13	KRV0548		Clamp		1
14	32/925602		Filter Return		1
15	817/19304		Decal Filter Hammer, Auxiliary		1
16	KHJ0341		Adapter Elbow 1/4 X 1/4		4
17	JHJ0080		Adapter		1
18	340/00367		Hose Kit - Hammer PI JS130 Auto		1
19	333/P2403		WA Foot Pedal Rhs WA Foot Pedal RHS		1
20	1316/0403Z		Screw		2
21	1315/0103Z		Screw		2
22	1420/0005Z		Washer M5		2
23	332/P5720		Foot Valve Hammer Foot Valve Hammer		1

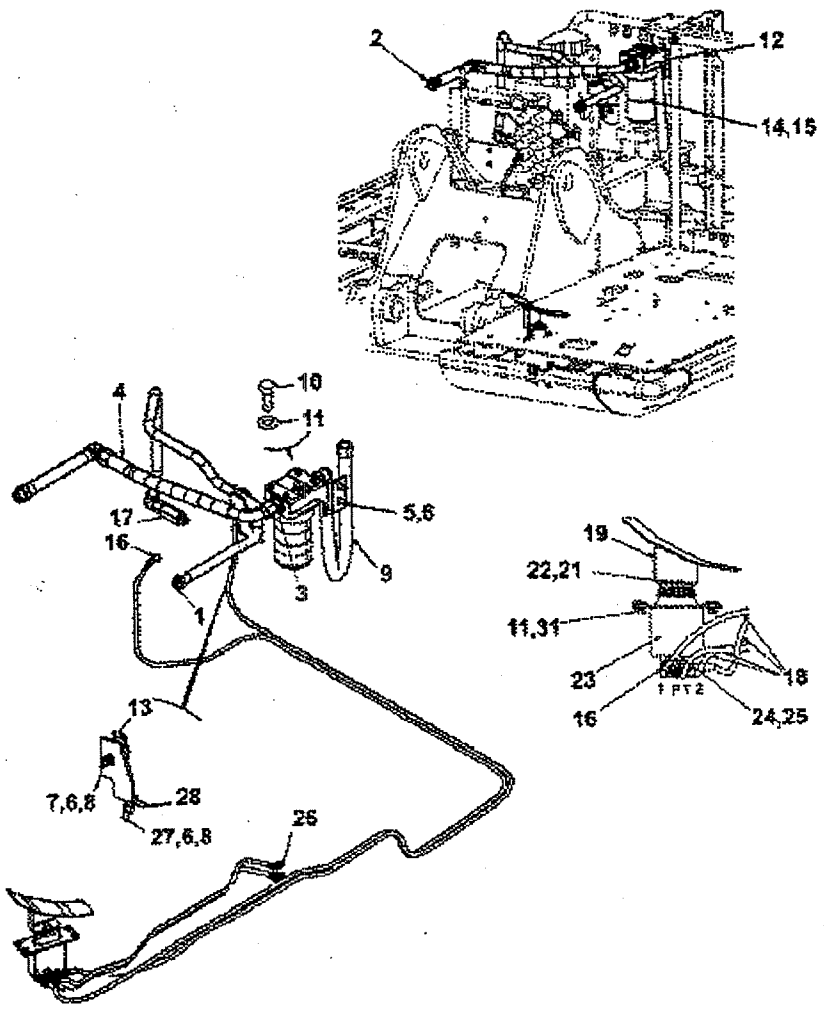

ITEM	PART NO.	CHANGE NO.	DESCRIPTION	REMARKS	QTY.
24	KNJ0758		Adapter		2
25	816/00464		Adapter Elbow - Male/Female		2
26	KHJ0348		Adapter Elbow		2
27	1316/3512Z		Bolt M12x50		1
28	331/44237		Bracket Hammer Pipe Mounting		1
31	1316/0305Z		Bolt High Tensile		4

E1-18-1 CIRCUIT, ARM, BREAKER/AUXILLARY

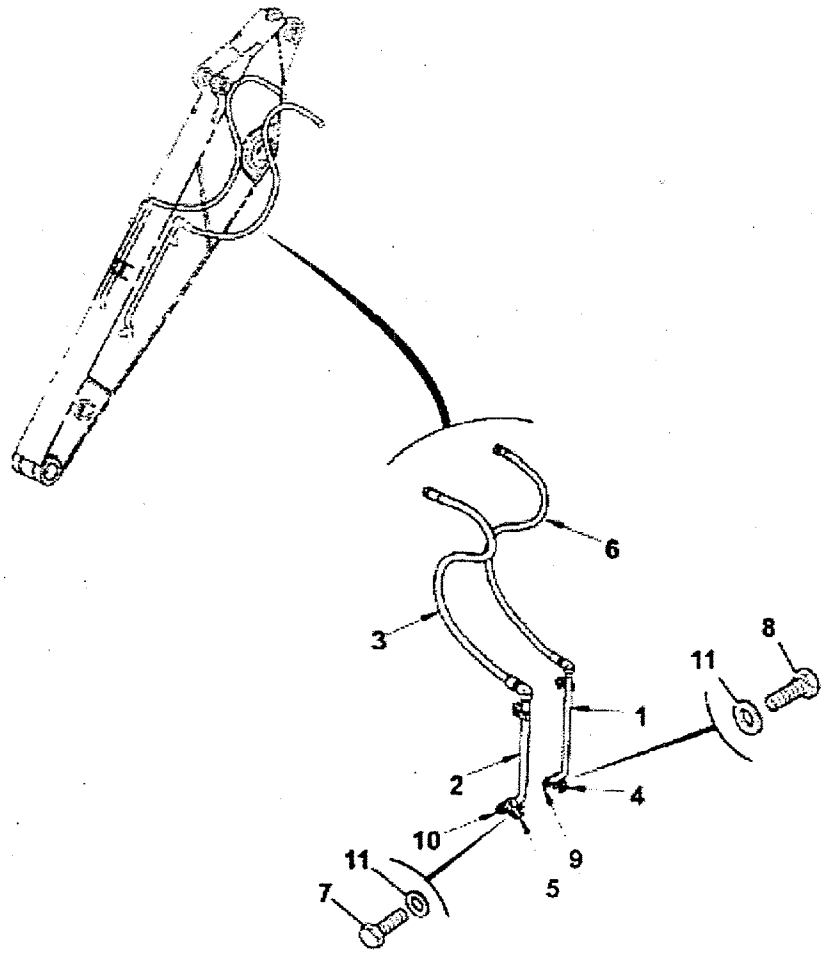

ITEM	PART NO.	CHANGE NO.	DESCRIPTION	REMARKS	QTY.
1	JNV1506		Pipe Hammer Feed		1
2	JNV1507		Pipe Hammer Return		1
3	JNV1529		Hose		1
4	JRJ0349		Clamp Pipe		2
5	KRV0548		Clamp		2
6	KRV0975		Hose Hydraulic		1
7	1316/3514Z		Bolt		2
8	1316/3516Z		Bolt		2
9	816/00193		Cap Blanking 1"BSP Steel		1
10	816/00196		Cap Blanking 3/4"BSP Steel		1
11	823/00394		Washer Schnorr Heavy Duty M12		4

E1-19-1 CIRCUIT, BOOM, HAMMER

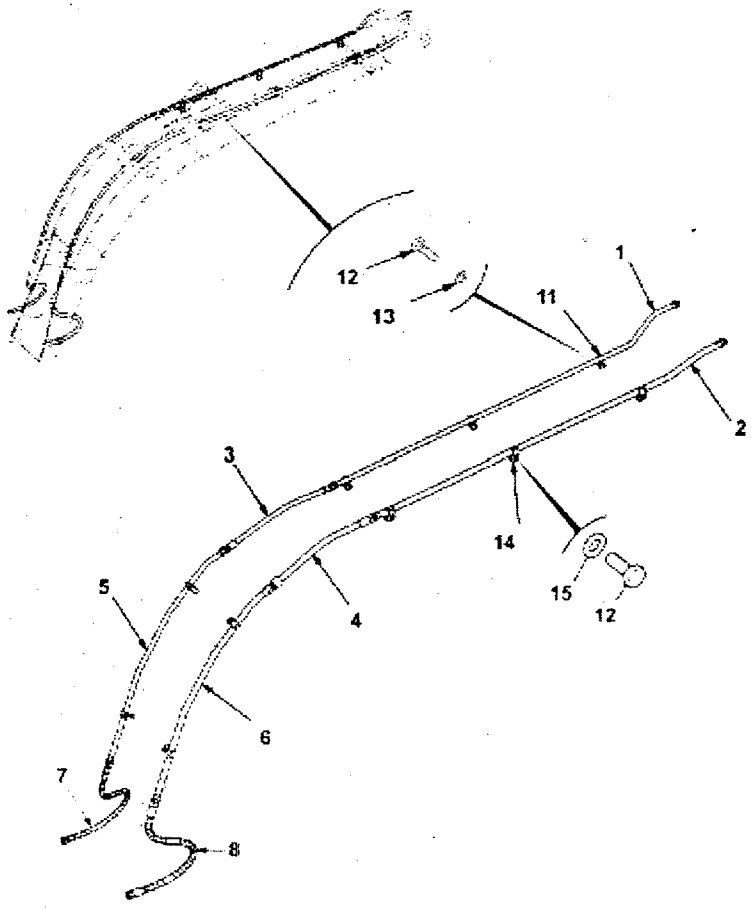

ITEM	PART NO.	CHANGE NO.	DESCRIPTION	REMARKS	QTY.
1	JNV1333		Pipe 2401mm Feed		1
2	JNV1152		Pipe 2407mm Return		1
3	JLJ0444		Hose 740mm		1
4	JNV1566		Hose		1
5	830/12139		Pipe Hammer Feed 1335mm		1
6	830/12138		Pipe Hammer Return 1350mm		1
7	627/10365		Hose 1000mm 3/4"		1
8	627/10364		Hose 1000mm 1"		1
11	KRV0548		Clamp		5
12	823/00394		Washer Schnorr Heavy Duty M12		10
13	1316/3514D		Bolt M12 X 60		6
14	JRJ0349		Clamp Pipe		5
15	1316/3516D		Bolt M12 X 70		5
18	KSV0282		Clamp Pipe		1

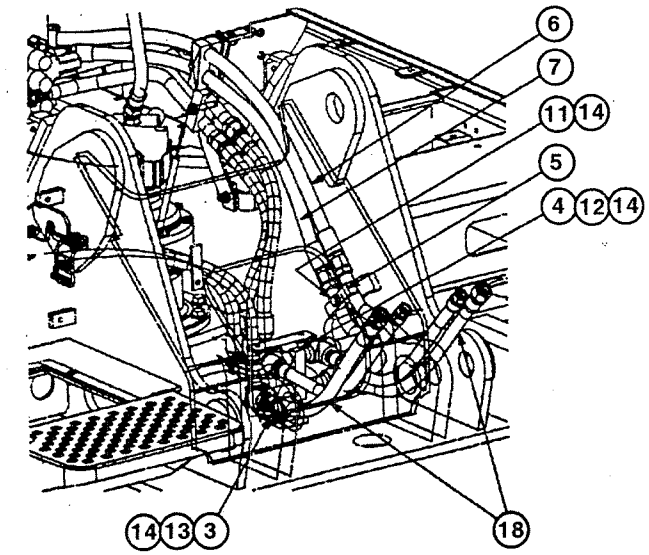

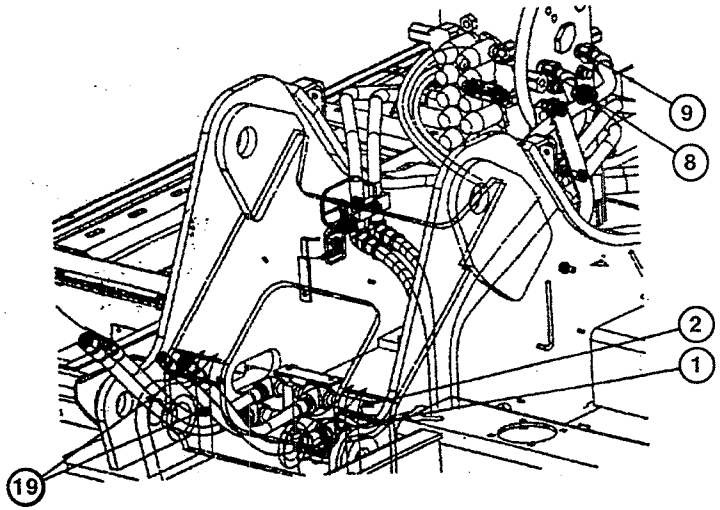

ITEM	PART NO.	CHANGE NO.	DESCRIPTION	REMARKS	QTY.
1	830/11410		Pipe, assy, boom raise		1
2	830/12084		Pipe, assy, boom lower		1
3	331/45068		Bracket, manifold		1
4	JNV0566		Clamp, pipe clamp	Secures items 1 and 2 (front)	1
5	821/10303		Clamp, pipe 3/4 x 3/4	Secures items 1 and 2 (side)	1
6	627/10352		Hose	Item 9 to item 2	1
7	627/10351		Hose	Item 8 to item 1	1
8	KNJ0605		Adapter	Item 7 to V/block	1
9	JHJ0063		Adapter	Item 6 to V/block	1
11	1316/0514D		Bolt, M12 x 60mm	Secures item 5	1
12	1316/0511D		Bolt, M12 x 45mm	Secures item 4	1
13	1316/0505D		Bolt, M12 x 20mm	Secures item 3	2
14	1420/0009Z		Washer, plain M12	For items 11, 12, 13	4
18	KNJ1920		Hose, hyd. (l=640)		2
19	KNJ1919		Hose, hyd. (l=640)		2

E1-21-1 CIRCUIT, DIPPER & BUCKET MAINFRAME

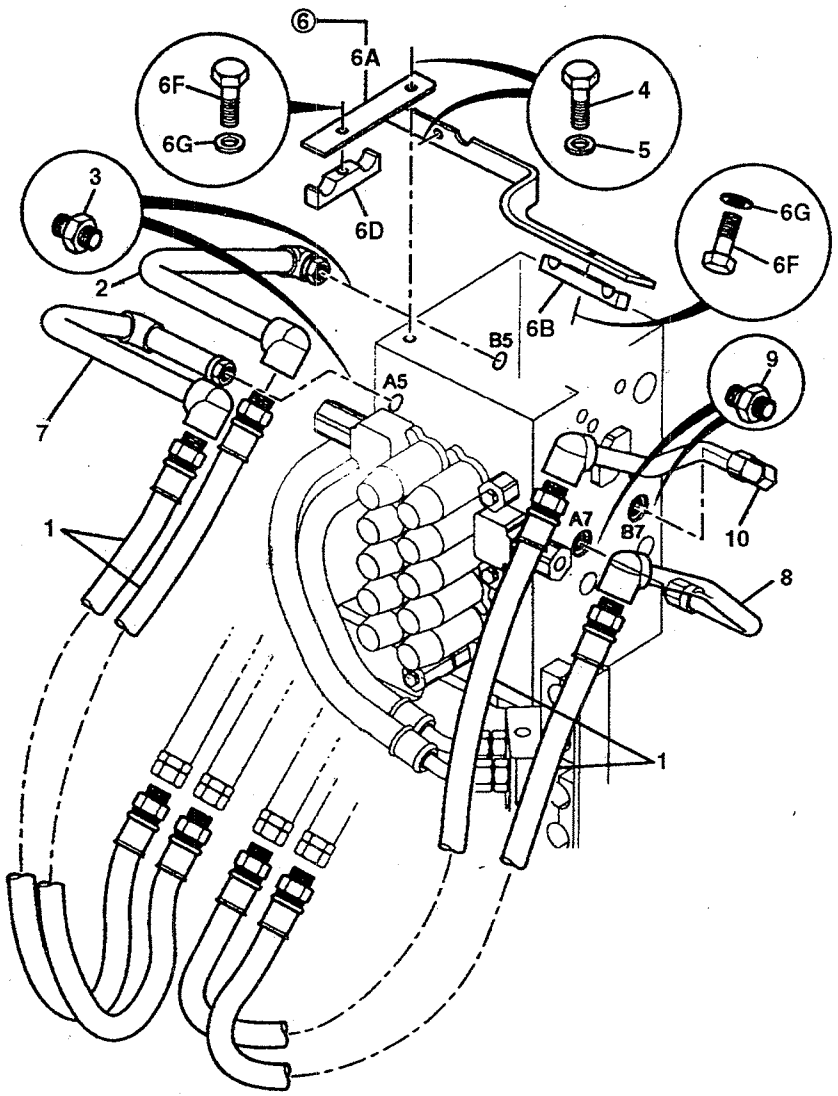

ITEM	PART NO.	CHANGE NO.	DESCRIPTION	REMARKS	QTY.
1	JNV1455 JLJ0444	Upto 1318375 From 1318376	Hose Hose		4
2	830/11449		Tube, assy. dipper head side	V/block to hose	1
3	KNJ0605		Adapter	V/block to pipe assy.	2
4	1316/3405Z		Bolt, M10 x 20	Secures item 6 to	1
			V/block		
5	1420/0008Z		Washer, plain M10	For item 4	2
6	NSP		None serviced part	Supports pipework	1
6A	335/07071	to 21-01-05	Bracket, pipe		1
6A	335/08182		Bracket, pipe extension,		1
			arm and bucket line		
6B	821/10301	to 21-01-05	Clamp, block		1
6B	JNV1036		Clamp, pipe		1
6D	JNV0566		Clamp, pipe clamp		1
6F	1316/3512D		Bolt, M12 x 50	Secures items 2	2
				and 4	
6F	1316/3514D		Bolt		2
6G	JHP0042		Washer, plain	For item 6F	2
6H	1370/0401D		Nut, M12		1
7	830/13089		Tube, assy., dipper and side		1
8	830/12207		Pipe, bucket ram head side		1
9	KNJ0604		Adapter, 1/2" MM	Items 8 and 10 to	2
				V/block	
10	830/12206		Pipe, bucket ram and side		1

E1-22-1 CIRCUIT, DIPPER RAM, MONOBOOM

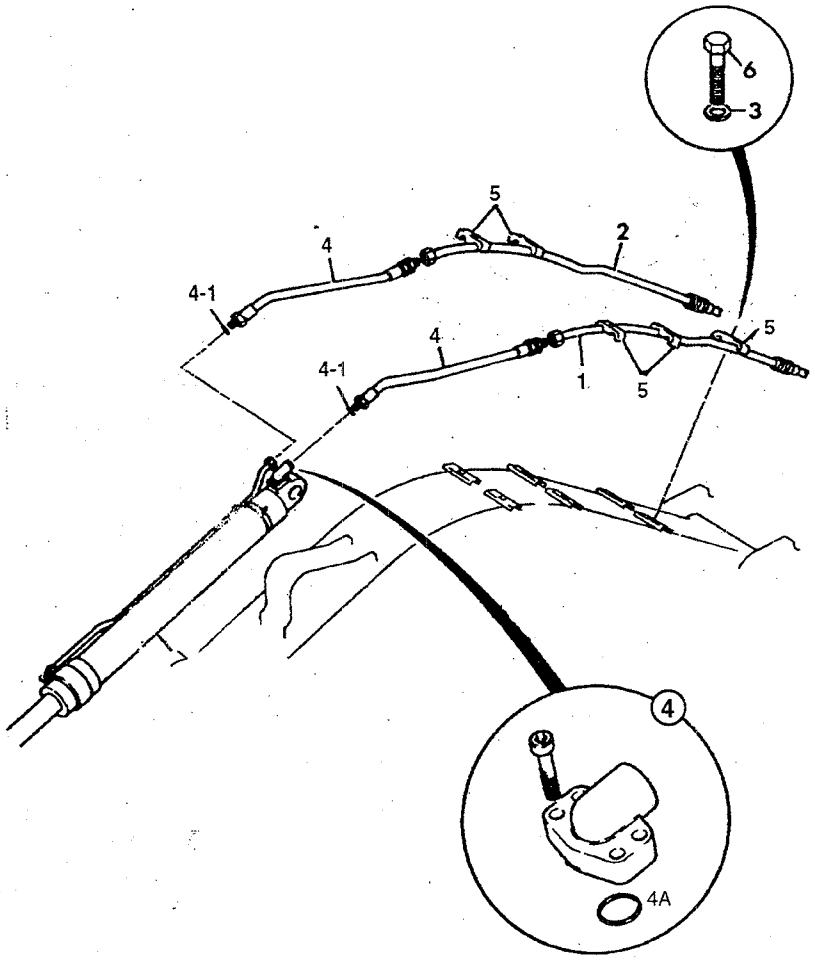

ITEM	PART NO.	CHANGE NO.	DESCRIPTION	REMARKS	QTY.
1	830/11426 332/P6475	To 1318375 From 1318376	Pipe, assy, dipper ram feed Pipe, assy, dipper ram feed	Head side	1
2	830/11427 332/P6474	To 1318375 From 1318376	Pipe, assy, dipper ram feed Pipe, assy, dipper ram feed	Rod side	1
3	823/00409		Washer, special	For item 6	6
4	JLV0143		Hose	Items 1 and 2 to ram	2
4A	UBJ0158		: "O" Ring	1 each end of item 4	1
5	KRV1200		Clamp, pipe	Secures items 1 and 2	6
6	1316/3716Z		Bolt	Secures item 5	6
7	229/01511		Arm counter JS140		1

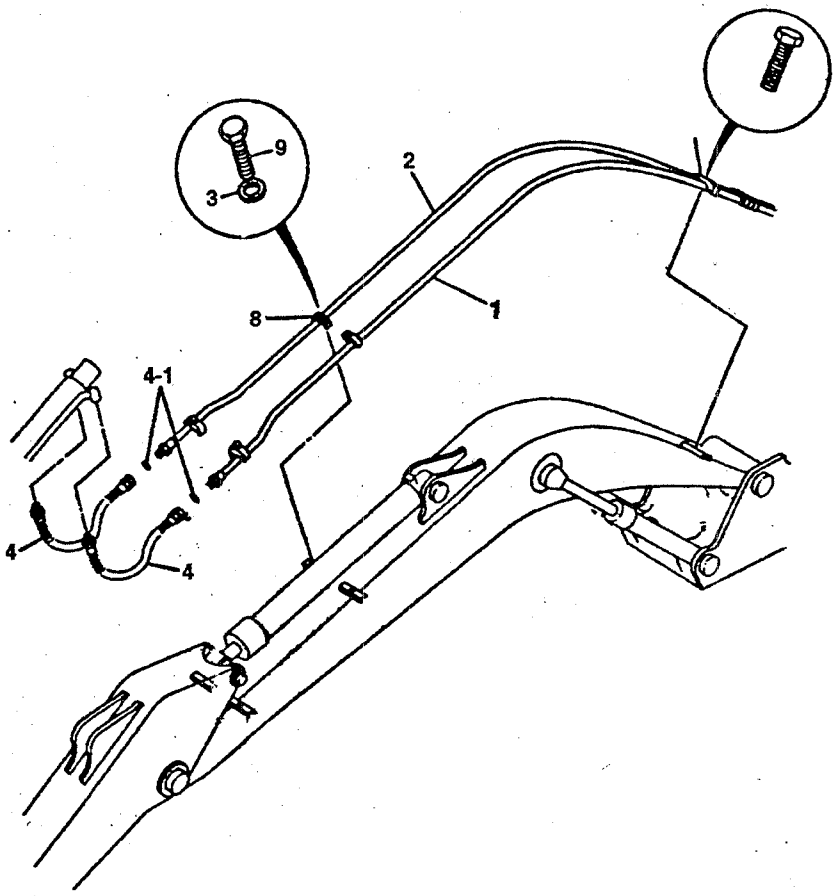

ITEM	PART NO.	CHANGE NO.	DESCRIPTION	REMARKS	QTY.
1	830/11429 332/P6480	From 1318375 To 1318376	Pipe, bucket ram rod side Pipe, bucket ram rod side		1
2	830/11428 332/P6479	From 1318375 To 1318376	Pipe bucket ram head side Pipe bucket ram head side		1
3	823/00394		Washer, special		4
4	JNV1164		Hose, hydraulic, L=1400	2.1M dipper	2
	KNV0816		Hose, hydraulic	2.5M dipper	2
4 01	UBJ0158		: "O" Ring		1
8	KRV0548		Clamp		4
9	1316/3514D		Bolt		4

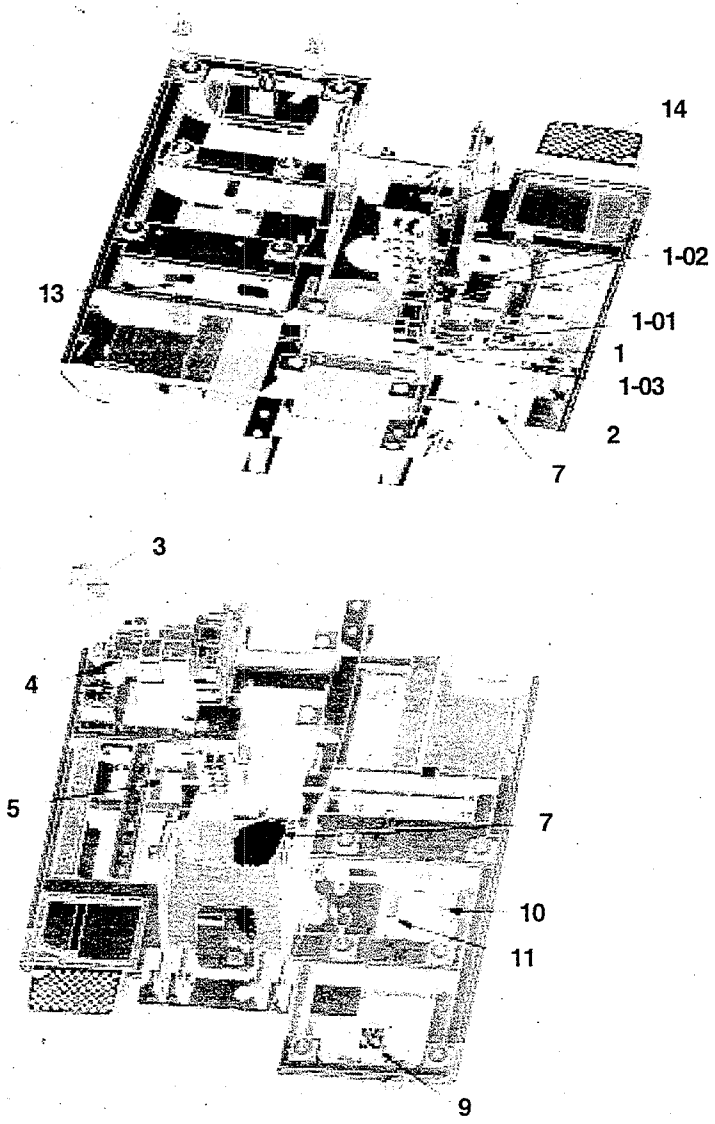

ITEM	PART NO.	CHANGE NO.	DESCRIPTION	REMARKS	QTY.
1	229/02546		Pump, assembly, complete, with mounting flange		1
1 01	229/01505		Pump, main only		1
1 02	229/01525		Mounting, flange		1
1 03	1316/07112		Capscrew		4
2	332/J8132		Filter, plexus assy. with body		1
3	32/925214		Filter, assembly, servo		1
4	KNJ0287		Filter, hydraulic		1
5	331/27235		Manifold		1
6	229/01003 333/P1847		Solenoid, valve assembly Solenoid, valve assembly	For adapters & hoses see E1-67-1	1
7	20/925360		Motor, swing & gear box		1
8	229/01008		Coupling, rotary		1
9	KSJ2465		Valve, remote control		1
10	25/222891		Valve, hand control, left hand	For adapters & hoses see E1-62-1	1
11	KNJ1933		Manifold	For adapters & hoses see E1-68-1	1
12	25/222892		Valve, hand control, right hand	For adapters & hoses see E1-63-1	1
13	229/01004 332/P7607	To 1318392 From 1318393	Check Valve Check Valve		1
14	229/01507		Valve, main control	For adapters & hoses see E1-70-1 & E1-71-1	1

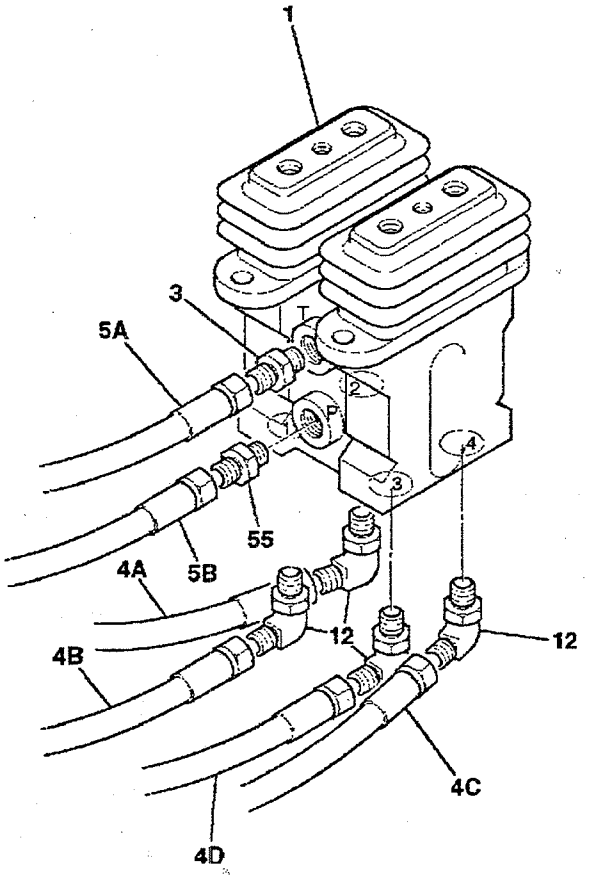

ITEM	PART NO.	CHANGE NO.	DESCRIPTION	REMARKS	QTY.
1	KSJ2465		Valve, remote control		1
3	KNJ0758		Adapter		1
4A	KTJ0810		Hose nylon	port 2 to main control valve port P1	1
4B	JRJ0079		Hose	port 1 to main control valve port P1	1
4C	627/10071		Hose	port 3 to main control valve port Pa6	1
4D	KTJ0678		Hose	port 4 to main control valve port P6	1
5A	KTJ0907		Hose	port T to manifold port T5	1
5B	KTJ0907		Hose	port P to manifold 1 port P5	
12	KHJ0341		Adapter, elbow		4
55	CNA0584		Adapter		1

E1-63-1 CIRCUIT, VALVE, LH CONTROLLER

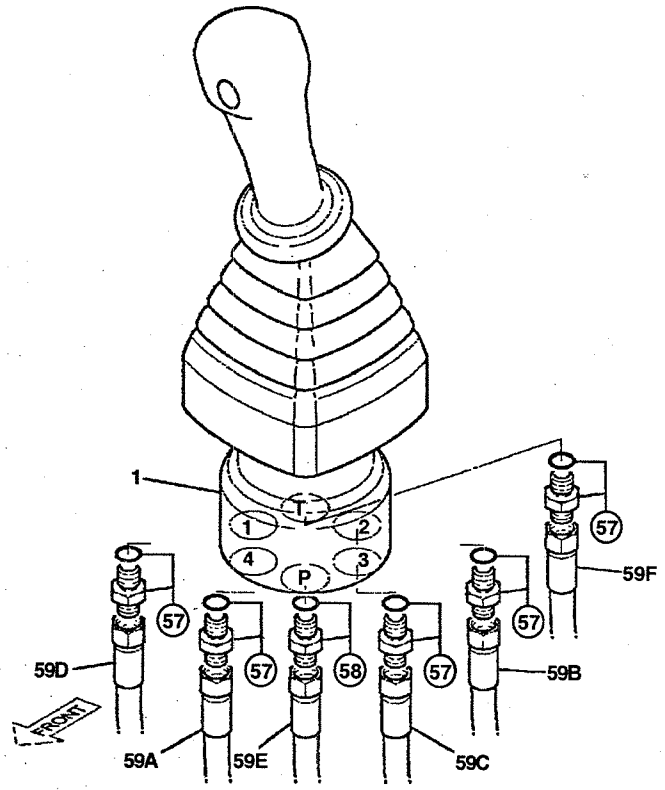

ITEM	PART NO.	CHANGE NO.	DESCRIPTION	REMARKS	QTY.
1	25/222892		Valve, hand control, right hand		1
57	1620/0003		Adapter		5
57 01	2401/0505		O Ring		1
58	JHJ0168		Adapter, filtered		1
58 01	2401/0505		O Ring		1
59A	JRJ0119		Hose red	port 4 to check valve port B1	1
59B	JRJ0117		Hose blue	port 2 to check valve port B2	1
59C	KNJ1133		Hose green	port 3 to main valve port Pa7 bucket ram	1
59D	627/10076		Hose yellow	port 1 to main valva port Pb7 bucket ram	1
59E	KSJ1871		Hose white	port P to manifold port P2	1
59F	KSJ1871		Hose clear	port T to manifold port T2	1

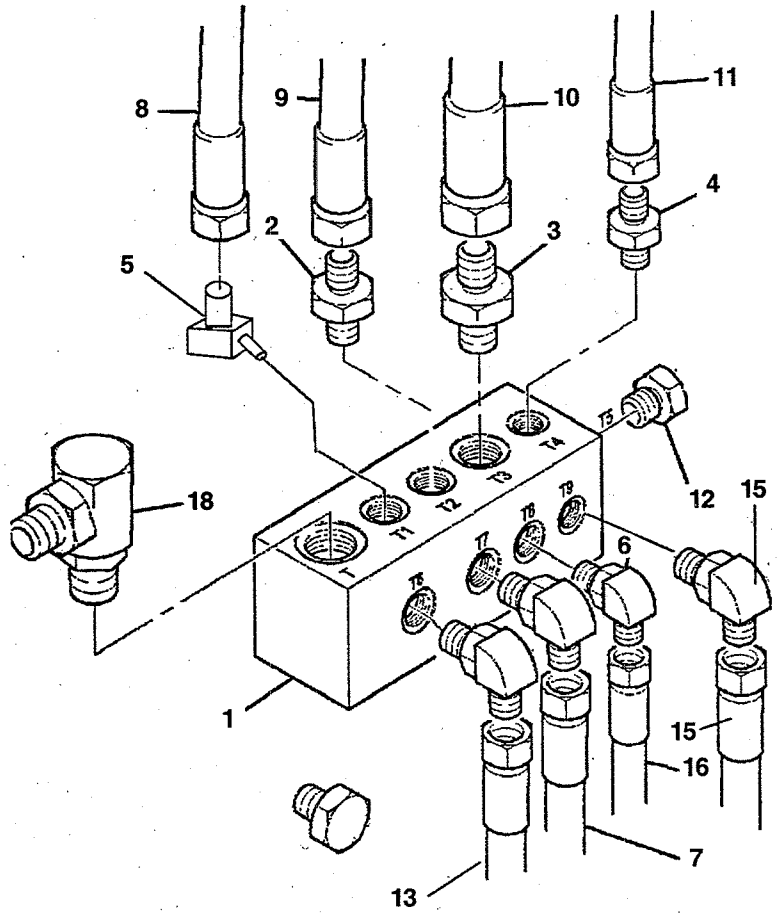

ITEM	PART NO.	CHANGE NO.	DESCRIPTION	REMARKS	QTY.
1	331/27235		Manifold		1
2	KNJ0759		Adapter		2
3	KNJ0604		Adapter, 1/2" M/M		1
4	KNJ0758		Adapter		1
5	KHJ0342		Adapter, elbow		2
6	KHJ0342		Adapter, elbow		1
7	JRJ0135		Hose	Port T to solenoid valve port T2	1
8	JRJ0100		Hose, white, blue	Port T1 to cab manifold port T1	1
9	KNJ1115		Hose, hyd, (L=1750)	Port T2 to swing motor port T	1
10	KNA0362		Hose	Port T3 to rotary coupling port T	1
11	KTJ1133		Hose, nylon	Port T4 to main control valve port Dr3	1
12	BRJ0190		Adapter	Port T5	2
13	JLV0262		Hose	Port T8 to main control valve port Dr4	13
14	KHJ0344		Adapter, elbow		1
15	KHJ0341		Elbow		2
16	KNJ1112		Hose	Port T6 to main control value port Pb4	1
17	KAJ3248		Hose	Port T9 to plexus port	1

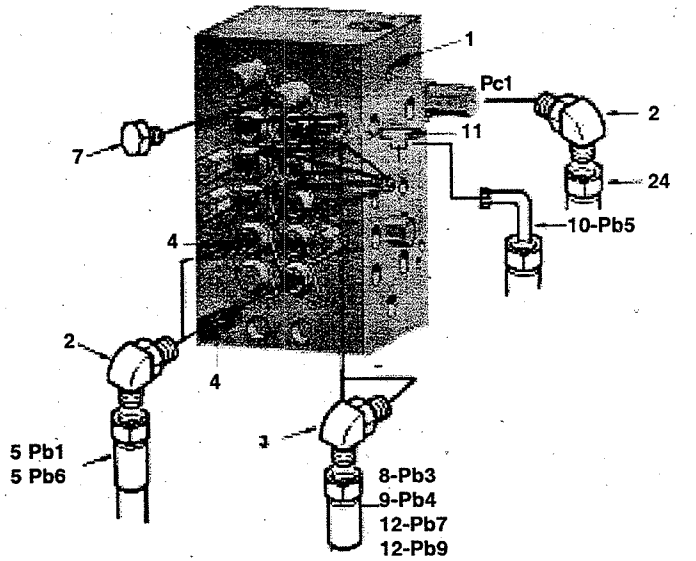

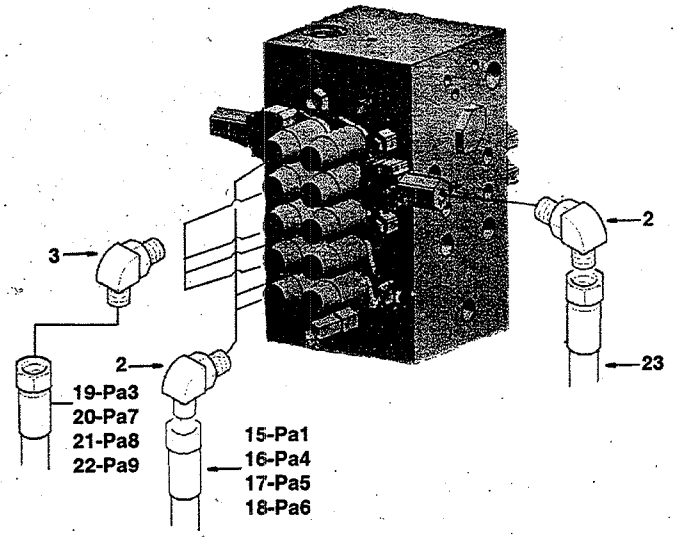

ITEM	PART NO.	CHANGE NO.	DESCRIPTION	REMARKS	QTY.
1	229/01507		Valve, main control		1
2	KHJ0341		Adapter, elbow		8
3	KRJ3560		Elbow		9
4	KHJ0894		Adapter		5+1
5	KTJ0810		Hose	Port Pa1,Pb6 Trees valve port 2 & 4	2
6	KTJ0678		Hose, nylon	Port Pb6 1 to Trees valve port 4	1
7	KHJ0363		Plug	Pc3 main gauge valve	1
8	KNJ1133		Hose	Joystick port 3 to main valve Pb3	1
9	KNJ1112		Hose	Pb4 main valve to manifold	1
10	KNJ1231		Hose	Port Pb5 to 33 check valve	1
11	KHJ0869		Tee	Pb5, MCV	1
12	627/10076		Hose nylon	Pb7 to port1 RHS joystick	1
13	KNJ1113		Hose nylon	Pb8 MCV to check valve	1
14	KNJ1115		Hose	Pa9 MCV to check valve	1
15	JRJ0079		Hose	Pb9, Pa5 to travel pedal port 1	1

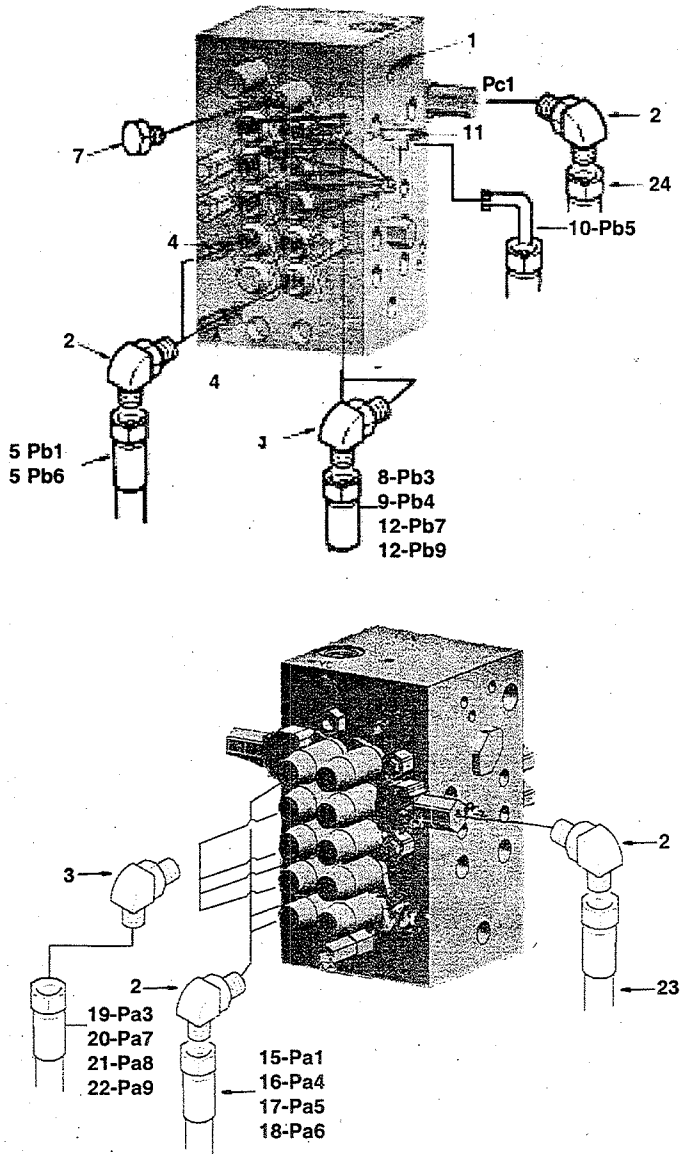

ITEM	PART NO.	CHANGE NO.	DESCRIPTION	REMARKS	QTY.
16	JNJ0399		Hose, nylon, red	MCV Pa4 check valve A2	1
17	627/10060		Hose gray, gray	MCV Pa5 check valve B4	1
18	627/10071		Hose, 3_8 str-str	MCV Pa6 to Travel Pedal Port 1	1
19	KNJ1133		Hose nylon	MCV Pa3 to LMS joystick port	1
20	KNJ1133		Hose, blue	MCV Pa7 to RH Joystick port	1
21	KRJ4133		Hose nylon, red	MCV Pa8 to check valve A2	1
22	JRJ0124		Hose, nylon, green	MCV Pa9 to check valve A4	1
23	627/10060		Hose, nylon	MCV Pc2 to check valve B1	1

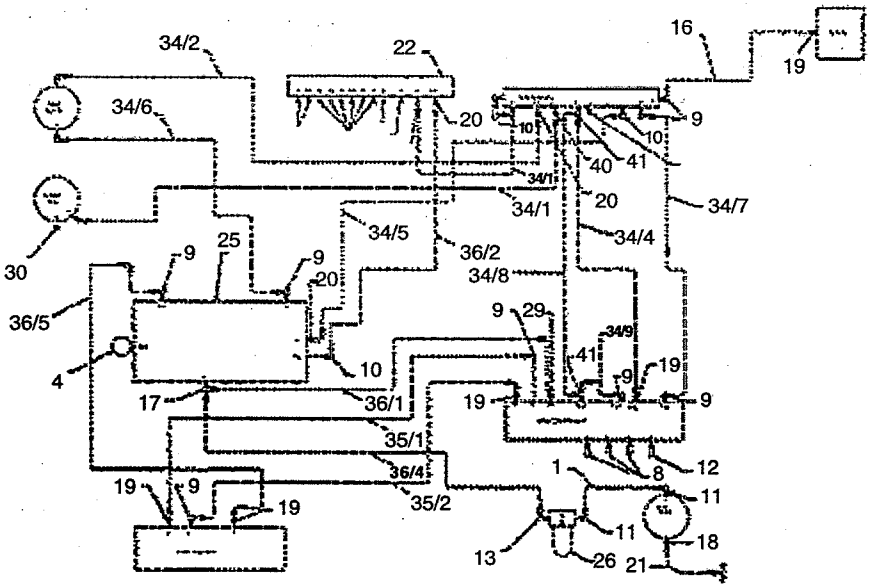

ITEM	PART NO.	CHANGE NO.	DESCRIPTION	REMARKS	QTY.
1	333/P6952	From 1318540	Hose - 08 Bsp Mp 470		1
2	BLH0487		Bolt		2
3	332/U9813	From 1318454	Adapter M18 X 1/2"		1
4	JHJ0050	To 1318453	Accumulator		1
4	333/P1906	From 1318454	Accumulator -0.35L		1
5	JHP0044		Washer		2
6	229/02406		Bracket Plexus		1
7	229/02539		Solenoid Mounting		1
8	KHJ0363		Plug		10
9	KHJ0341		Adapter Elbow 1/4 X 1/4		8
10	KHJ0342		Adapter Elbow 3/8 X 3/8		3
11	KHJ0343		Adapter Elbow 1/2 X 1/2		2
12	BRJ1545		Plug		4
13	KHJ0641		Adapter Elbow		1
14	BRJ0190		Plug		1
16	KAJ3248		Hose Nylon		1
17	KHJ0973		Adapter Tee		1
18	KNJ0605		Adapter Straight		1
19	KNJ0758		Adapter		5
20	KNJ0759		Adapter		4
21	KNJ1821		Hose Hyd (L=470)		1
22	KNJ1933		Manifold		1
23	KRN0081		Spacer		2
24	1315/3218Z		Bolt		2

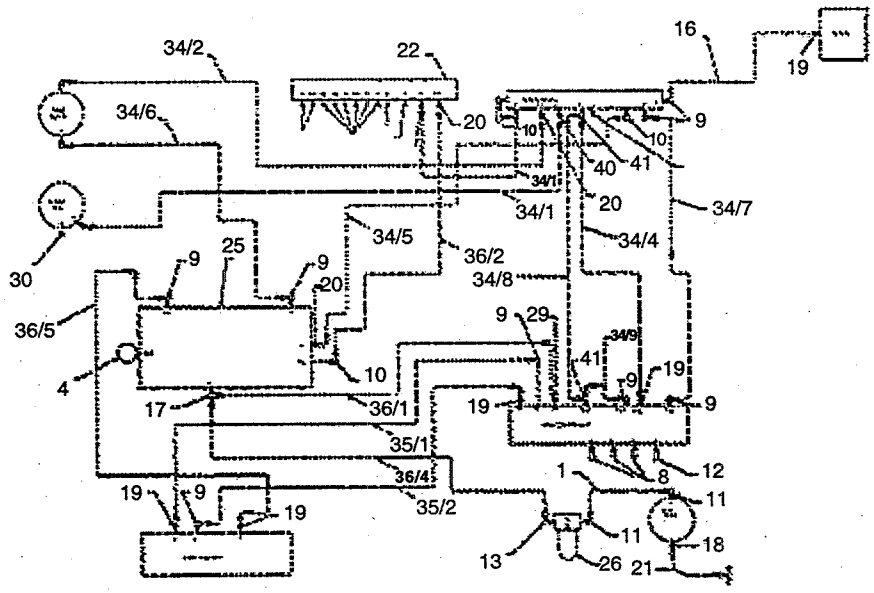

ITEM	PART NO.	CHANGE NO.	DESCRIPTION	REMARKS	QTY.
25	229/01003	To 1318453	Solenoid Valve Assembly		1
25	333/P1847	From 1318454	Solenoid 3 Station		1
26	32/925214		Filter Assembly, Servo Element Only = KBJ1691A		1
27	331/27941		Bracket Return Line Filter		1
29	KHJ0348		Adapter Elbow		1
30	229/01358		Plug - Taper 3/8		1
31	229/01359		Plug Taper- 1/4		1
32	1316/0405Z		Screw M10 X 20		12
33	1420/0008Z		Washer Plain M10		12
34	229/02653		Hose Kit - Tank Manifold		1
34/1	JRJ0100		Hose White, Blue		1
34/2	KNJ1115		Hose 3/8" 1300mm 180/180		1
34/3	KNA0362		Hose		1
34/4	KTJ1133		Hose Nylon		1
34/5	JRJ0135		Hose 3/8" 1300mm 180/90		1
34/6	KNJ1112		Hose Nylon		1
34/7	KAJ3248		Hose Nylon		1
34/8	JNV0329		Hose 1/4" BSP St-90 1200mm		1
34/9	229/00433		Hose 1/4"		1
35	229/02654		Hose Kit - Pump Assy		1
35/1	KNA0363		Hose Nylon		1
35/2	JNJ0540		Hose		1
36	229/02655		Hose Kit - Solenoid Valve		1

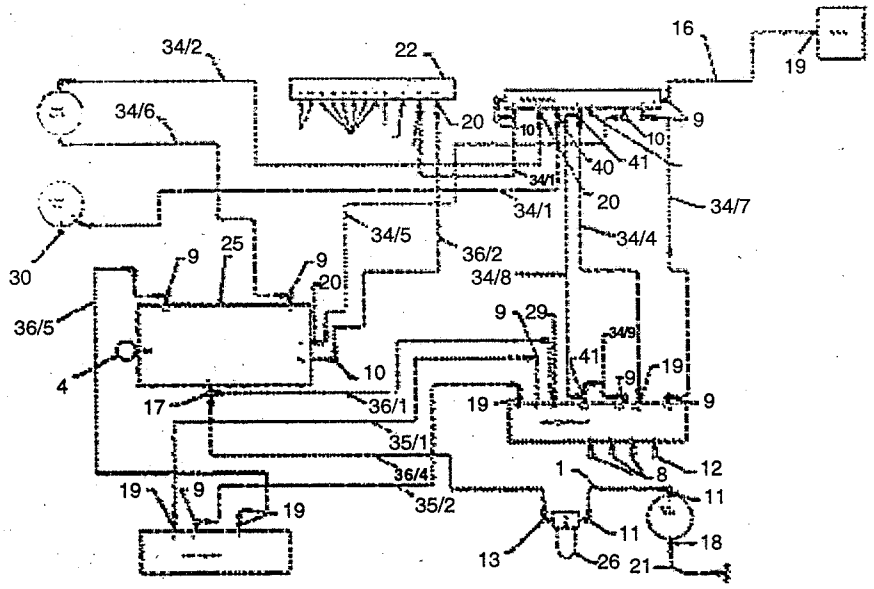

ITEM	PART NO.	CHANGE NO.	DESCRIPTION	REMARKS	QTY.
36/1	KTJ1133		Hose Nylon		1
36/2	KRJ3566		Hose		1
36/4	KNJ1109	To 1318348	Hose 3/8" 1000mm 180/180		1
36/4	JNJ0178	From 1318349	Hose Nylon, Red		1
36/5	KNJ1697		Hose 1/4" 700mm 180/90		1
36/6	KSJ0968		Hose Nylon		1
38	1420/0009Z		Washer Plain M12		2
39	1316/0407Z		Bolt High Strength		2
40	KNJ0604		Adapter 1/2" M/M		1
41	Khj0869		Adapter Tee		2
42	1406/0017	From 1318454	Seal		1
43	1406/0018	From 1318454	Seal Bonded 1/2" BSP		1

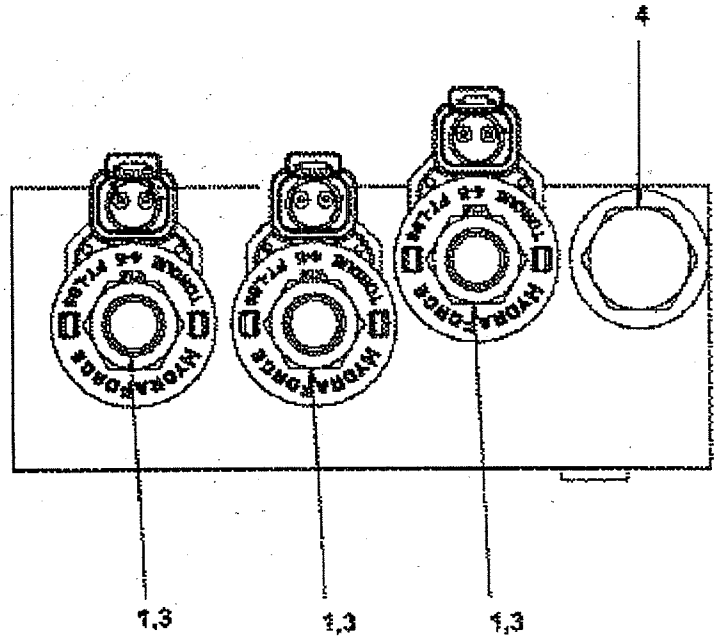

ITEM	PART NO.	CHANGE NO.	DESCRIPTION	REMARKS	QTY.
1	332/Y7913		Solenoid Solenoid Valve Solenoid Valve		3
2	332/Y7916		Kit Seal Kit Seal Kit		1
3	332/Y7914		Coil Coil For Solenoid Coil For Solenoid		3
4	332/Y7917		Valve Check Valve CV1 Check Valve CV1		1
5	332/Y7918		Kit Seal Kit Seal Kit		1

E1-71-1 CIRCUIT, RETURN LINE, PILOT PRESSURE, MAIN CONTROL VALVE

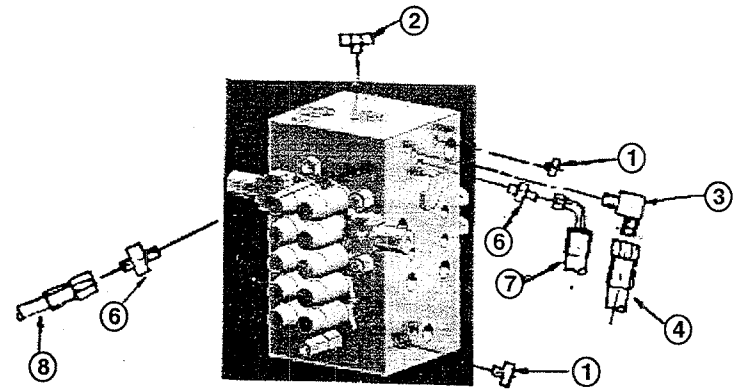

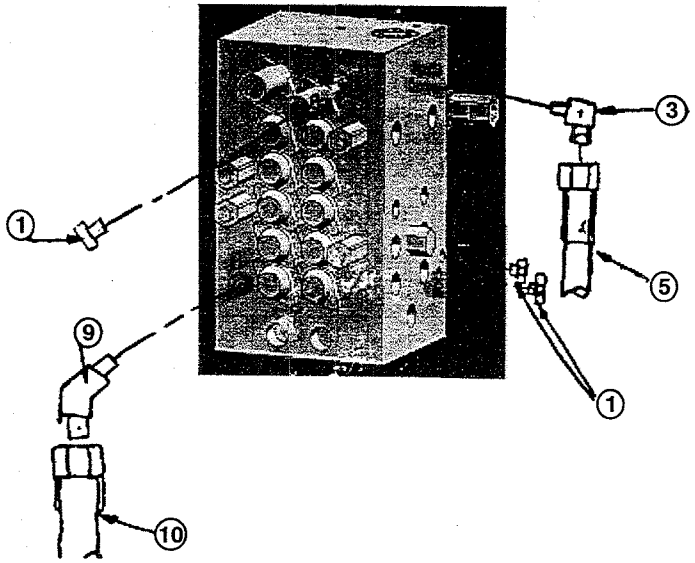

ITEM	PART NO.	CHANGE NO.	DESCRIPTION	REMARKS	QTY.
1	KHJ0363		Plug		5
2	BRJ1545		Plug		1
3	KHJ0341		Adapter, elbow		1
4	KAJ3248		Hose	Port Pcc to tank manifold port T8	1
5	KNA0363		Hose	Port Psi Pump to port P+2	1
6	KNJ0758		Adapter		2
7	JNJ0540		Hose	Port Ps2 to pump PT1	1
8	KTJ1133		Hose	Port Dr tank main port T4	1
9	KHJ0348		Elbow 45°	Port Pp	
10	KTJ1133		Hose	Port Pp to sol. value A	1

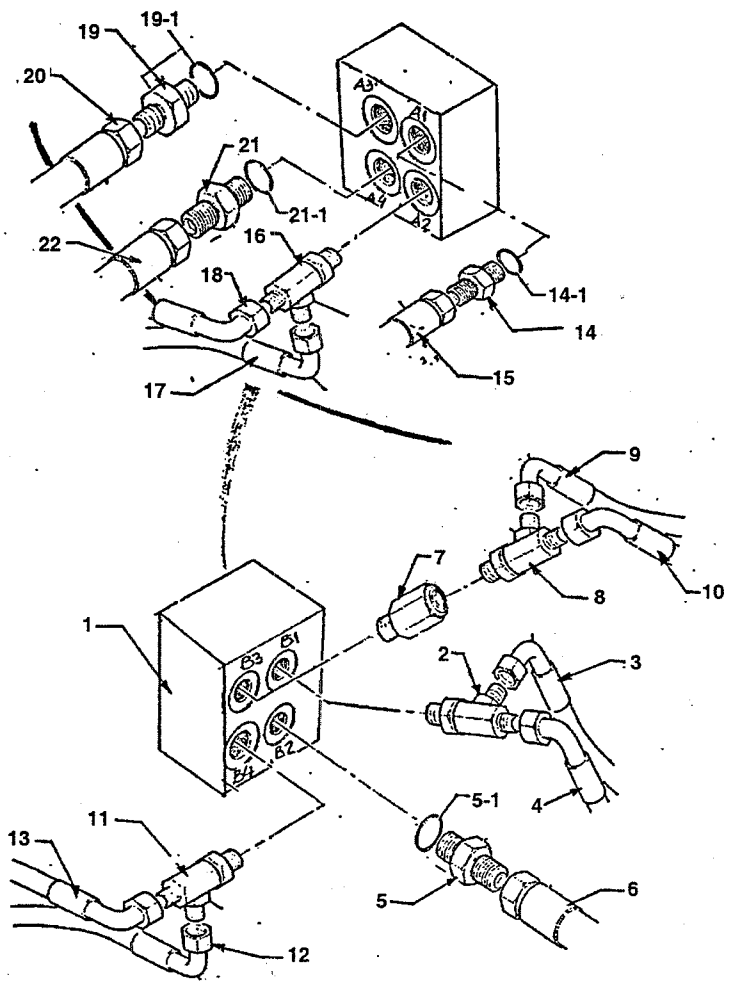

ITEM	PART NO.	CHANGE NO.	DESCRIPTION	REMARKS	QTY.
1	229/01004 332/P7607	To 1318392 From 1318393	Check Valve Check Valve		1 1
2	KHJ0973		Tee Adaptor		1
3	JNJ0399		Hose		1
4	JRJ0119		Hose		1
5	KNJ0759		Adaptor		1
5.1	BRP0007		O-Ring		1
6	KNJ1072		Hose		1
7	229/01354		Adaptor		1
8	KHJ0973		Tee Adaptor		1
9	627/10060		Hose		1
10	JRJ0123		Hose		1
11	KHJ0973		Tee Adaptor		1
12	627/10060		Hose		1
13	JRJ0124		Hose		1
14	KNJ0759		Adaptor		1
14.1	BRP0007		O-Ring		1
15	KNJ1113		Hose		1
16	JNJ0399		Tee Adaptor		1
17	627/10060		Hose		1
18	KRJ4133		Hose		1
19	KNJ0759		Adaptor		1
19.1	BRP0007		O-Ring		1
20	KNJ1115		Hose		1
21	KNJ0759		Adaptor		1
21.1	BPR0007		O-Ring		1
22	JRJ0124		Hose		1

E

E1 HOSE & PIPEWORK
• E2 PUMP/MOTOR & PUMP DRIVE
E3 VALVES & HYDRAULIC FILTERS
E4 RAMS

E2-1-1 PUMP, PISTON, MAIN HYDRAULIC, DRIVE GROUP

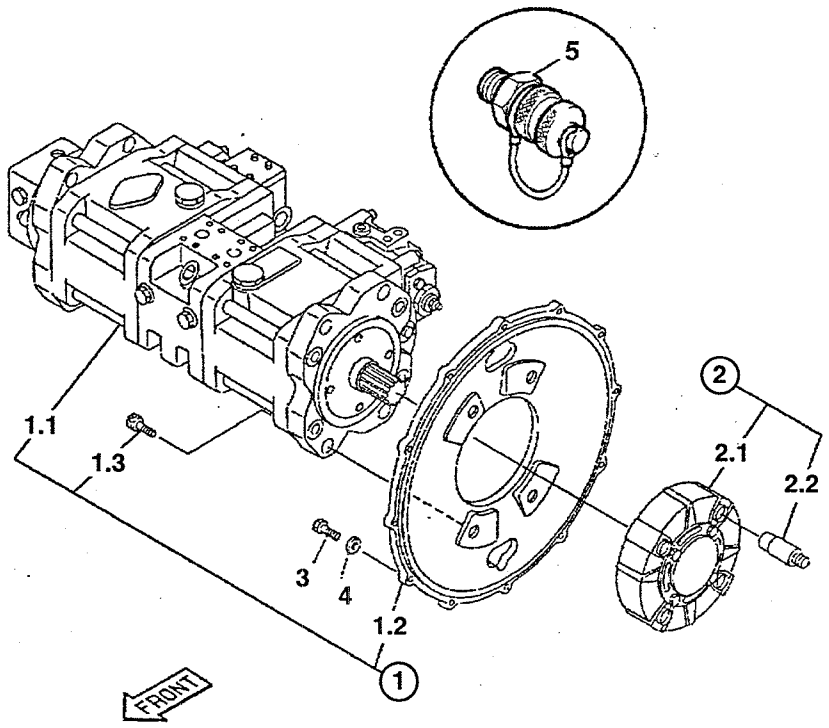

ITEM	PART NO.	CHANGE NO.	DESCRIPTION	REMARKS	QTY.
1			Pump, assembly complete, with mounting flange		1
1 01	229/01505		Pump, main		1
1 02	229/01525		Mouting, flange		1
1 03	1391/3711Z		Cap screw		4
2	331/25063		Coupling, pump drive		1
2 01			Coupling, rubber		1
2 02			Pin, special		4
3	1316/0409Z		Bolt		8
4	JHP0046		Washer		8
5	45/920152		Male coupling ¼" BSP		3

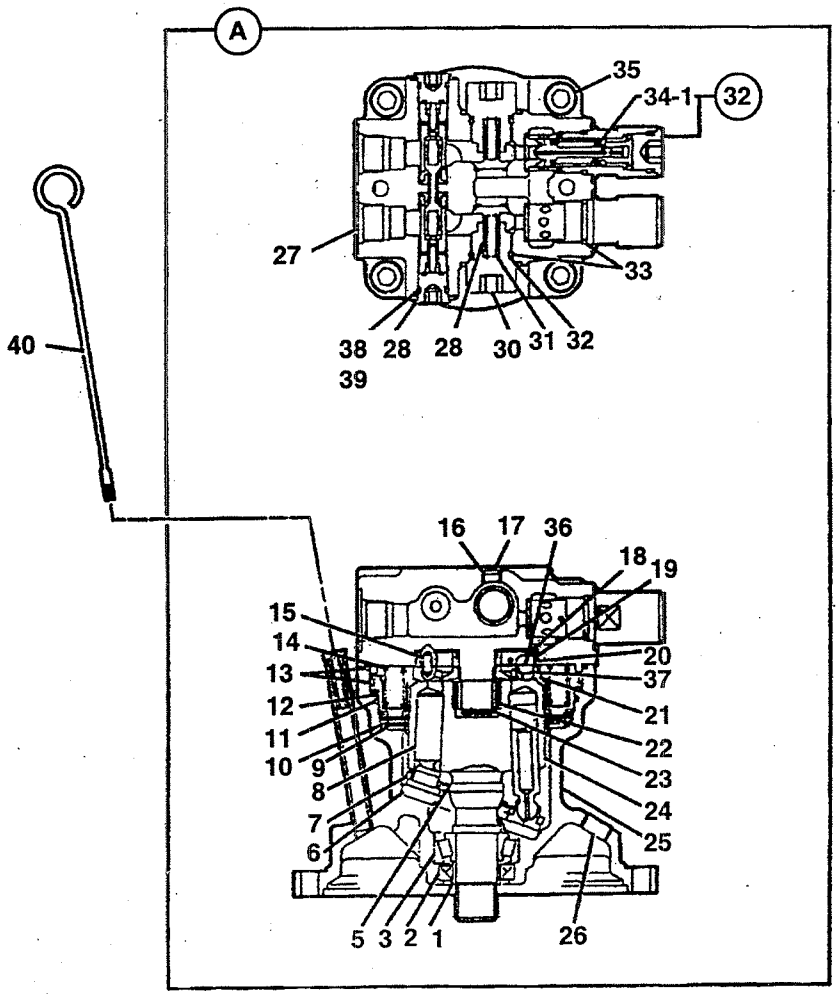

ITEM	PART NO.	CHANGE NO.	DESCRIPTION	REMARKS	QTY.
00A	LNM0434		Motor, assembly, swing		1
01	LPM0120		:Ring, inner		1
02	LAM0063		:Seal, oil		1
03	LTM0207		:bearing, roller, taper		1
05	LZM0336		:Spring		1
06	LPM0119		:Cam, plate		1
07	LZM0337		:Plate, return		1
08	NSP		:None serviced part		9
09	LZM0346		:Plate, lining		2
10	LZM0345		:Plate		2
11	LBQ5255		:O Ring		1
12	LPM0113		:Piston		1
13	LBQ5257		:O Ring		2
14	LSM0073		:Spring		14
15	LMM0471		:Pin, parallel		2
16	LBQ0112		:O Ring		3
17	LZC0076		:Plug, blanking		3
18	LSM0133		:Spring, belleville		4
19	LPM0109		:Ring		4
20	LKM0104		:Bush		4
21	LZM0333		:Plate, balance		1

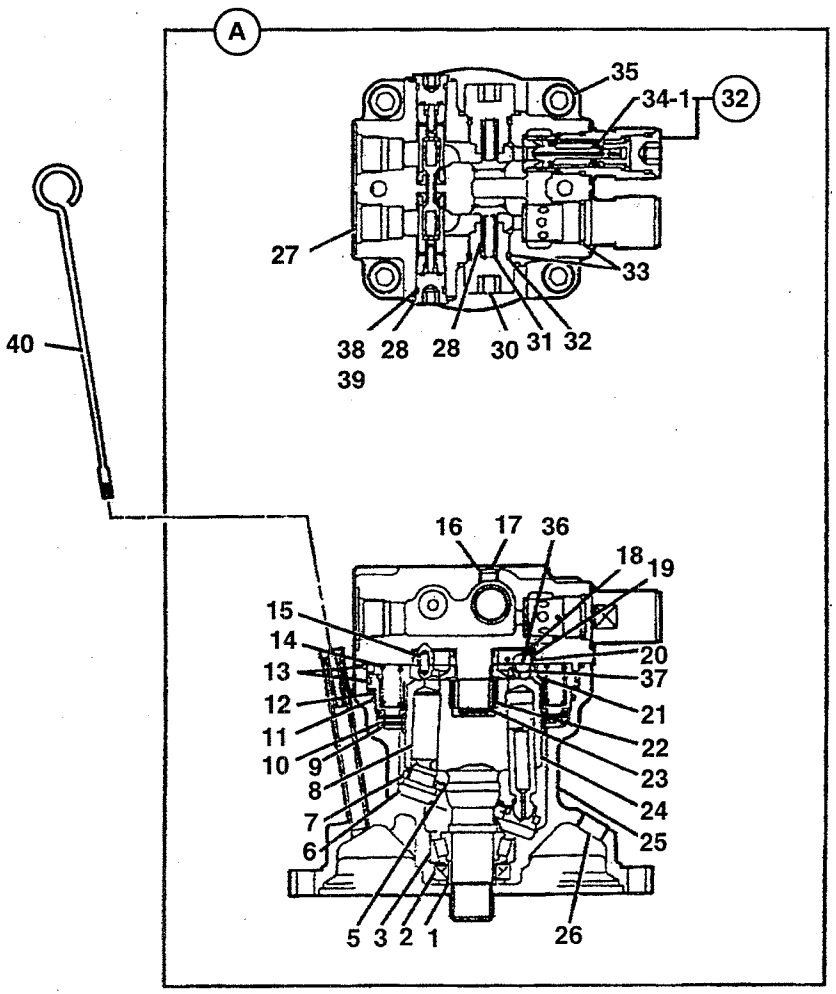

ITEM	PART NO.	CHANGE NO.	DESCRIPTION	REMARKS	QTY.
22	LTM0208		:Bearing, needle		1
23	LMM0547		:Ring, snap		1
24	NSP		:None serviced part		1
25	NSP		:None serviced part		1
26	UBJ0384		:Plug		1
27	NSP		:None serviced part		1
28	LNM0428		:Valve, bypass assembly		2
29	LPM0052		:Valve, check		2
30	LZM0191		:Cap		2
31	LSM0075		:Spring		2
32	LBB0262		:Ring, back-up		2
33	LBQ0262		:O Ring		4
34	LNM0431		Valve, relief assembly		2
34 01	LMC0102	Superseded	::Kit-shim, relief valve		1
34 01	LQM0021		::Shim		1
35	LUM0158		:Bolt, hex. socket head		4
36	LPM0118		:Piston		2
37	LPM0110		:Ring		2
38	LBQ0182		:O Ring		2
39	LBB0182		:Ring, back-up		2
40	LLM0059		Gauge, level		1

E

E1 HOSE & PIPEWORK
E2 PUMP/MOTOR & PUMP DRIVE
• E3 VALVES & HYDRAULIC FILTERS
E4 RAMS

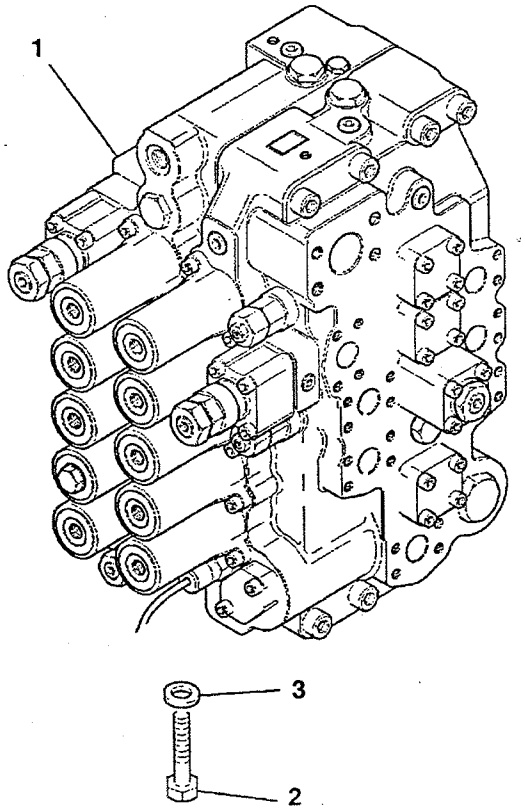

ITEM	PART NO.	CHANGE NO.	DESCRIPTION	REMARKS	QTY.
1	229/01507		Valve, main control		1
2	1316/0711Z		Screw		4
3	JHP0043		Washer		4

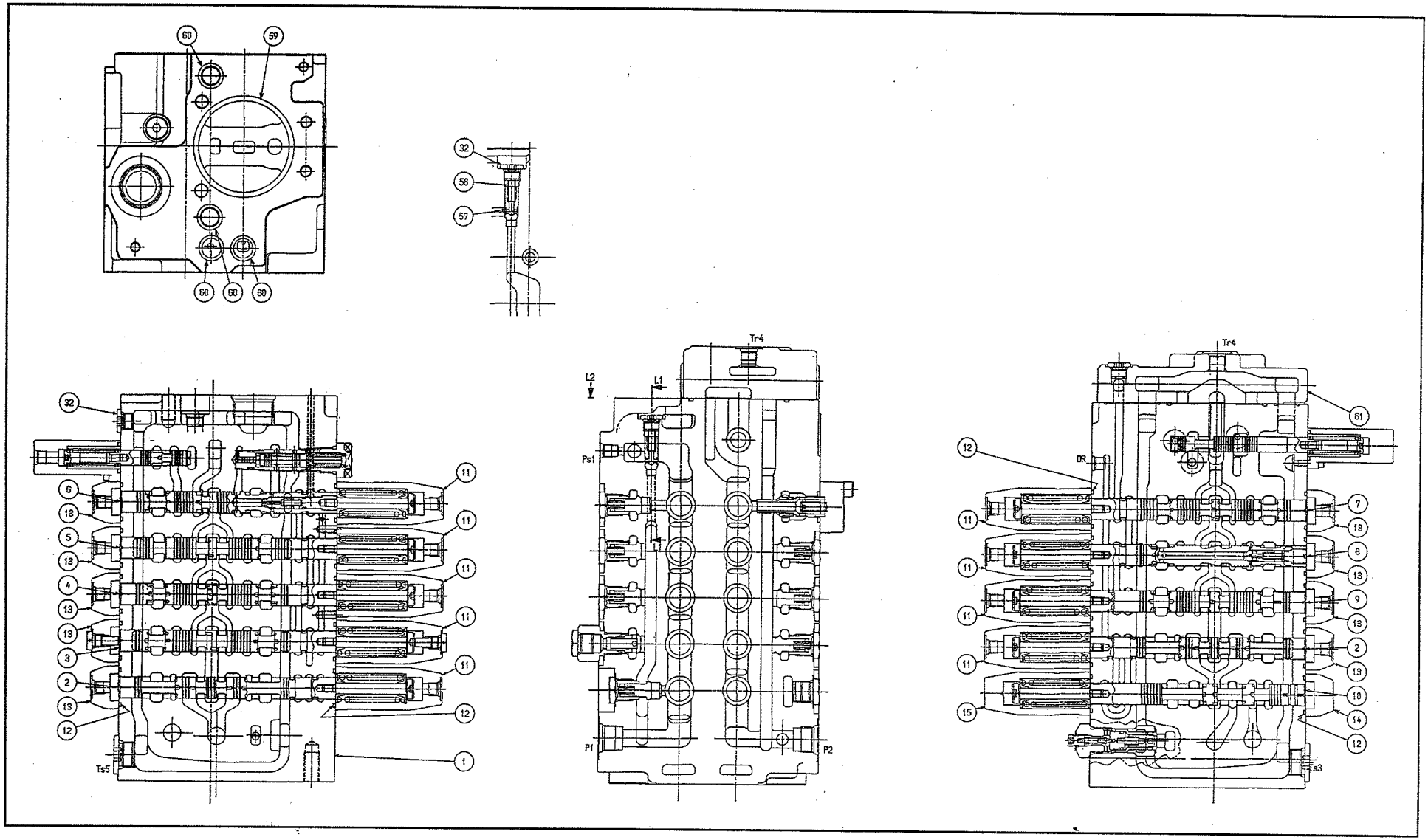
60
59
60
60
60
32
58
57
32
6
13
5
13
4
13
13
3
2
13
12
11
11
11
11
11
12
1
Ts5
Tr4
L2
L1
Ps1
P1
P2
Tr4
61
12
DR
11
11
11
11
15
7
13
8
13
9
13
2
13
10
14
12
Ts3

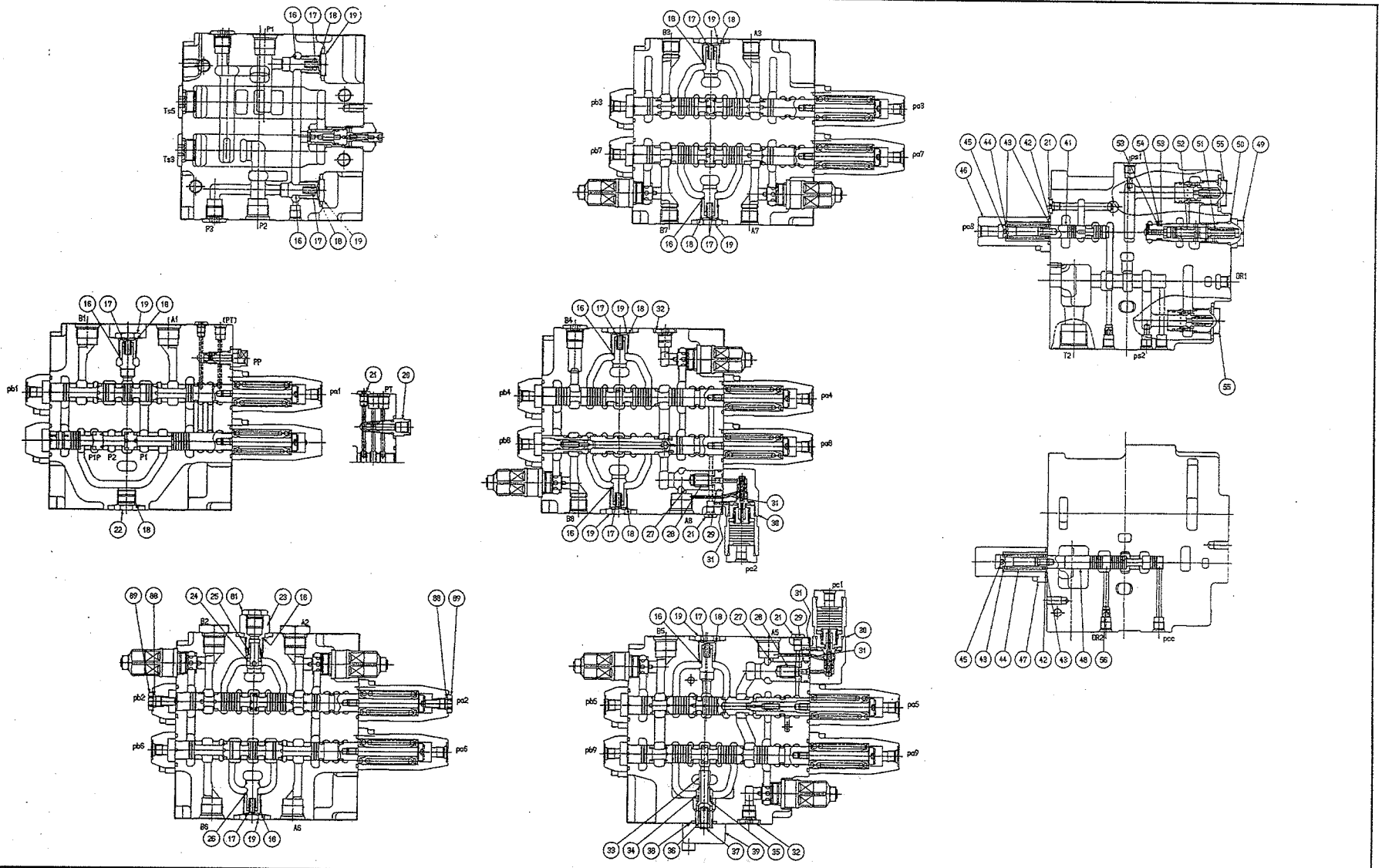

E3-2-1 VALVE, CONTROL, COMPONENTS FIG 1

ISSUE - 2

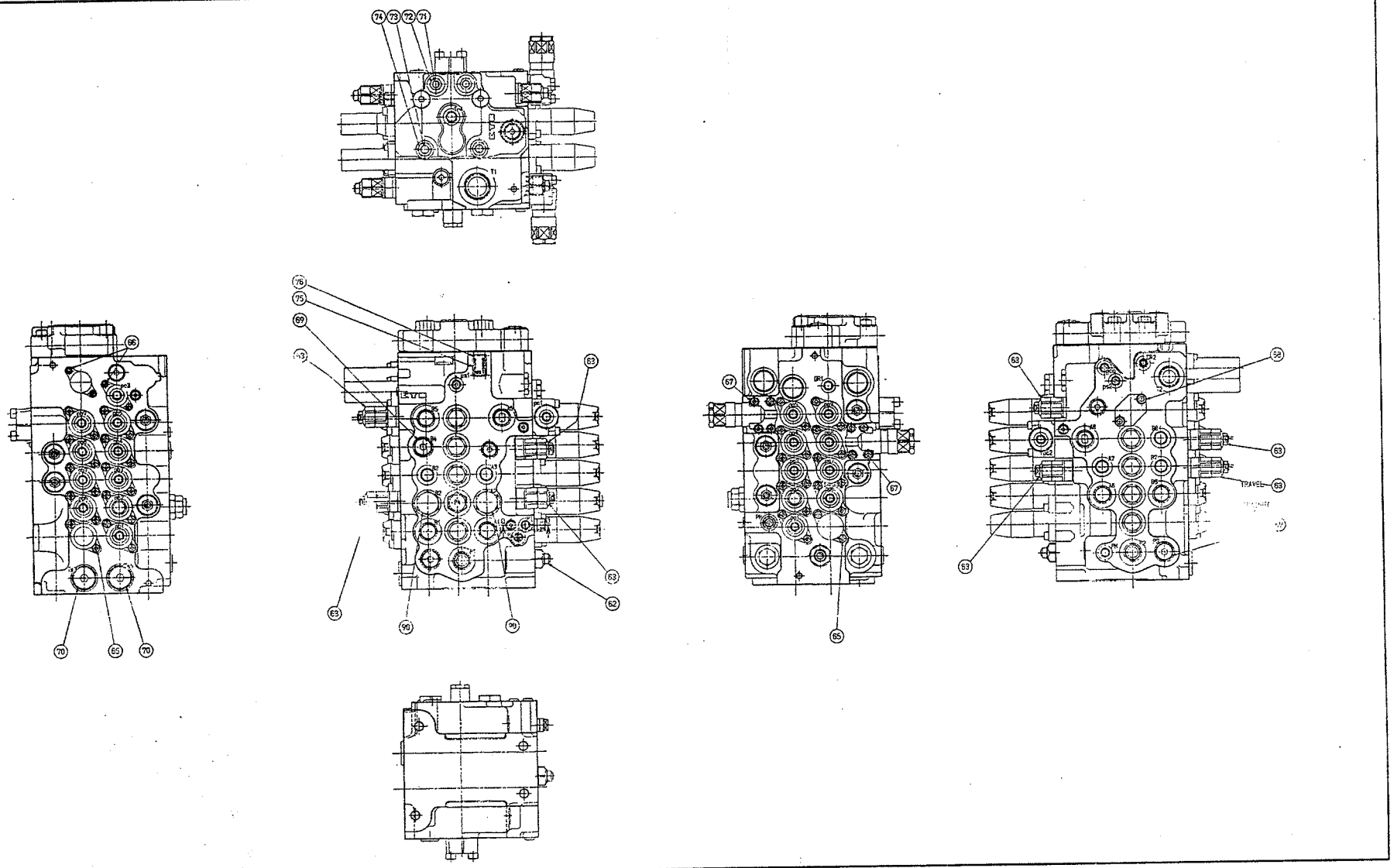

E3-2-1 VALVE, CONTROL, COMPONENTS FIG 1

ITEM	PART NO.	CHANGE NO.	DESCRIPTION	REMARKS	QTY.
1	N.S.P		Valve housing		1
2	N.S.P		Spool Assy.		2
3	N.S.P		Spool Assy.		1
4	N.S.P		Spool Assy.		1
5	25/222750		Spool Assy.		1
6	N.S.P		Spool Assy.		1
7	N.S.P		Spool Assy.		1
8	N.S.P		Spool Assy.		1
9	N.S.P		Spool Assy.		1
10	N.S.P		Spool Assy.		1
11	25/222321		Cap		9
12	25/222320		O ring		20
13	25/222322		Cap		9
14	25/222323		Cap		1
15	25/222324		Cap		1
16	25/222325		Poppet		8
17	25/221678		Spring		9
18	25/221686		O ring		11
19	25/221685		Plug		9
20	25/222327		Plug Assy.		1
21	25/222328		Plug Assy.		4
22	25/222329		Plug		1
23	25/222330		Plug		1
24	25/222331		Poppet		1

ITEM	PART NO.	CHANGE NO.	DESCRIPTION	REMARKS	QTY.
25	25/222326		Spring		1
26	25/222326		Poppet		1
27	25/222332		Poppet		2
28	25/222334		Spring		2
29	25/222335		Spacer assy.		2
30	25/222336		Anti Drift Valve assy		2
31	25/221781		O ring		4
32	25/221690		Plug Assy.		4
33	25/222337		Sleeve		1
34	25/222338		Poppet		1
35	25/222339		Spring		1
36	25/222340		Poppet		1
37	25/222341		Spring		1
38	25/221689		O ring		1
39	25/222342		Flange		1
41	N.S.P		Spool		1
42	25/221767		O ring		2
43	25/221635		Spring Seat		4
44	25/221765		Spring		2
45	25/221766		Spool End		2
46	25/222343		Cap		1
47	25/222344		Cap		1
48	N.S.P		Spool		1
49	25/222345		Plug		1

ITEM	PART NO.	CHANGE NO.	DESCRIPTION	REMARKS	QTY.
50	25/221769		O ring		1
51	25/222346		Spring		1
52	N.S.P		Spool Assy.		1
53	25/222347		BU Ring		2
54	25/221772		O ring		1
55	25/222348		Relief valve assy.		2
56	25/221790		Orifice Plug		1
57	25/221774		Poppet		1
58	25/221775		Spring		1
59	25/222349		O ring		1
60	25/221700		O ring		4
61	25/222350		Outlet assy.		1
62	25/222351		Kit Relief valve		1
63	25/222354		Kit Relief valve		7
64	25/222353		Kit Relief valve		1
65	25/222355		Socket head bolt		40
66	25/222356		Socket head bolt		4
67	25/222357		Socket head bolt		8
68	25/222358		Socket head bolt		2
69	25/221692		Plug Assy.		2
70	25/221693		Plug Assy.		2
71	25/222359		Tie Rod		2
72	25/222360		Nut		2
73	25/222361		Tie Rod		2

ITEM	PART NO.	CHANGE NO.	DESCRIPTION	REMARKS	QTY.
74	25/222362		Nut		2
75	N.S.P		Name plate		1
76	N.S.P		Drive screw		2
81	TBA		Plug Assy.		1
88	25/222366		O ring		2
89	25/221804		Plug		2
90	TBA		Plug Assy.		2

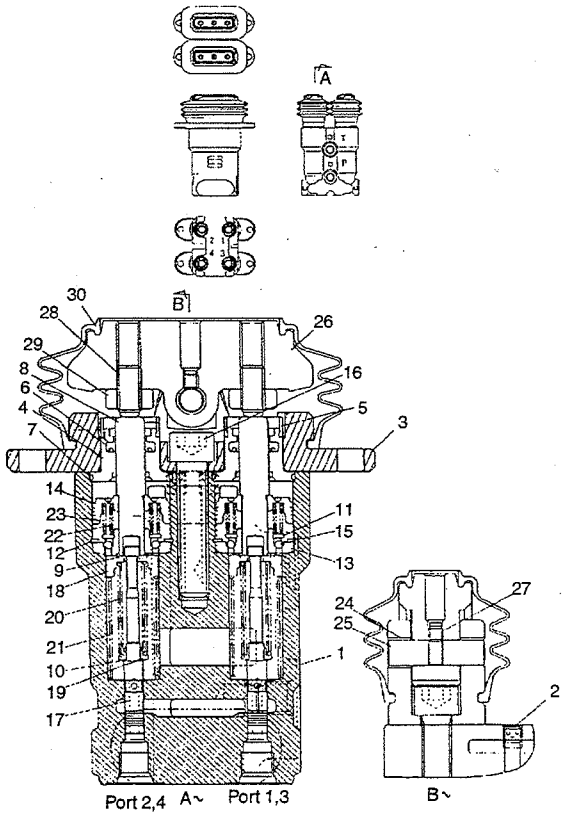

ITEM	PART NO.	CHANGE NO.	DESCRIPTION	REMARKS	QTY.
0	KSJ2465		Valve, remote control		1
1	LWC0003		Case		1
2	LLP0114		Plug		2
3	LZC0158		Cover		2
4	LLC0128		Plug		4
5	LWC0004		Cap, grease		4
6	LEC0025		Seal		4
7	LBQ5025		O Ring		4
8	LPC0213		Rod, push		4
9	LUC0107		Washer		8
10	LUC0106		Washer		4
11	LSC0237		Seat, spring		4
12	LMC0107		Retainer		4
13	LKC0005		Bush		4
14	LPC0203		Piston		4
15	LPC0204		Ball		12
16	6004/3513		Capscrew		2
17	LPC0205		Spool		4
18	LSC0238		Seat, spring		4
19	LUC0104		Washer		4
20	LSC0236		Spring		4
21	LSC0214		Spring		4
22	LSC0239		Spring		4
23	LSC0240		Spring		4
24	LKC0001		Bush		4
25	LJC0003		Shaft, cam		2

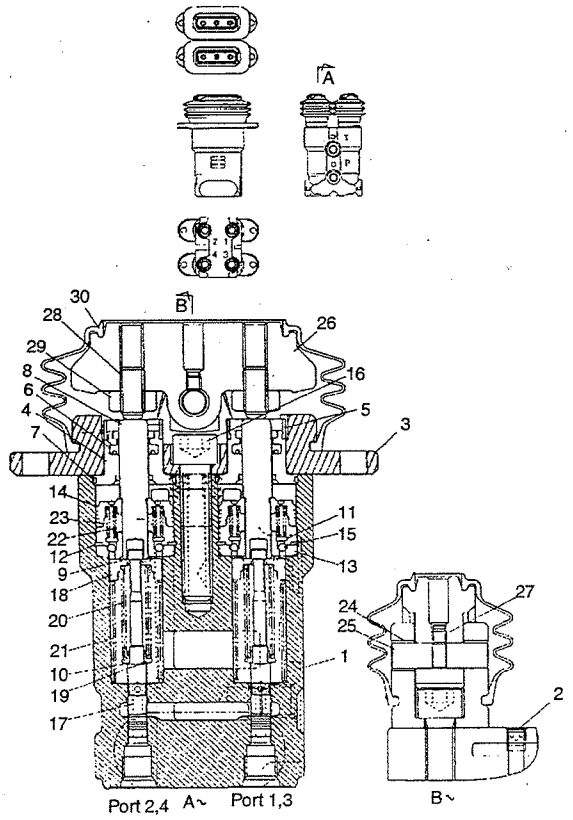

ITEM	PART NO.	CHANGE NO.	DESCRIPTION	REMARKS	QTY.
26	LMC0085		Cam		2
27	LLC0118		Screw		2
28	LUC0102		Bolt		4
29	LUC0101		Nut, lock		4
30	LCC0014		Gaiter, rubber bellows		2
31	LQC0034		Kit casing	Includes items 1 and 17	1
32	LQC0035		Kit-seal, 1	Includes items 6 and 7	1

E3-14-1 COUPLING, ROTARY YUKEN

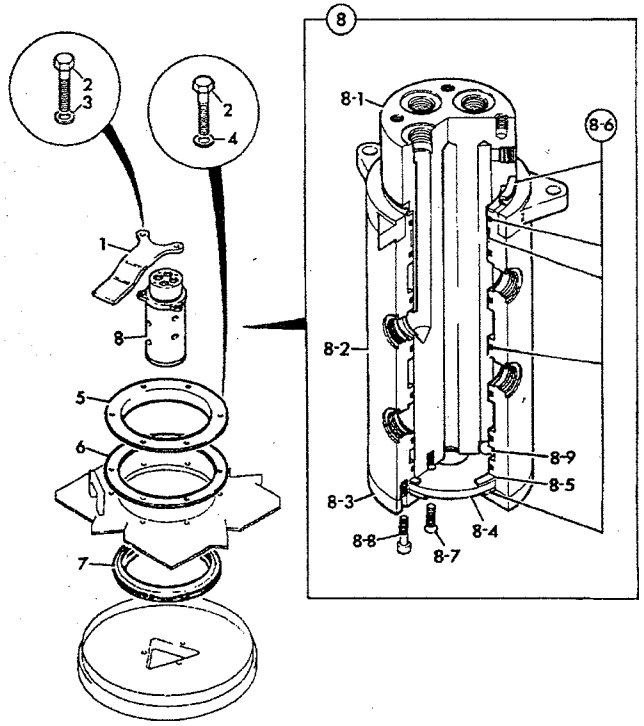

ITEM	PART NO.	CHANGE NO.	DESCRIPTION	REMARKS	QTY.
1	229/01729		Bracket, stop		1
2	1316/0508Z		Screw		12
3	JHP0042		Washer, plain		6
4	1406/0011		Seal, bonded		6
5	KRA0999		Retainer seal		1
6	KRA1000		Gasket, rubber		1
7	904/20126		Ring, seal		1
8	229/01008		Coupling, rolary yuken		1
8 01	NSP		Plug		1
8 02	NSP		Housing		1
8 03	NSP		Cover		1
8 04	NSP		Cover		1
8 05	NSP		Ring guide axial		2
8 06	550/43174		Kit, seals		1
8 07	NSP		Screw, countersunk		4
8 08	NSP		Capscrew, M8 x 20		6
8 09	NSP		Ball, expander		1

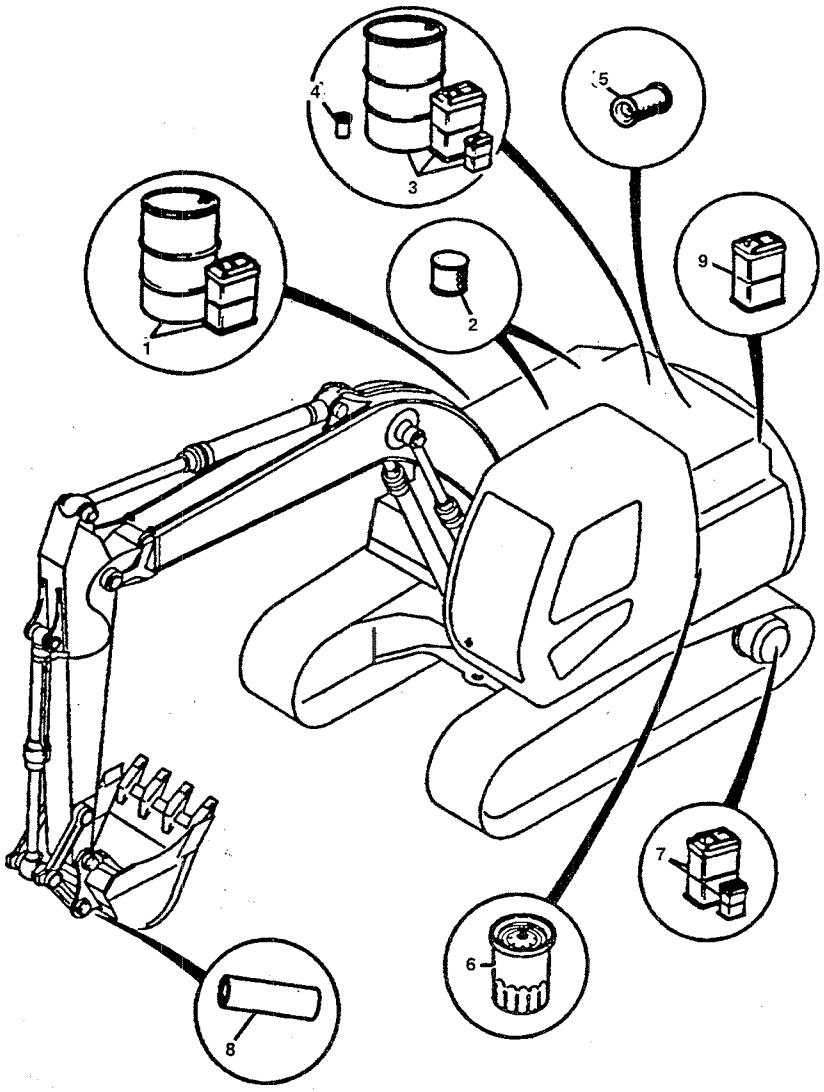

ITEM	PART NO.	CHANGE NO.	DESCRIPTION	REMARKS	QTY.
02	32/925185		Filter, return, flushing only Plexus	Only fitted for flushing Max 100 hours only.	1
02	BLA2717		O Ring		1
02	32/925964		Element, filter bypass, Plexus		1
02	828/10124		O Ring	For 32/925164	2
02	828/10081		O Ring	For 32/925164	1
02	KBJ1691A	KBJ1691	Element, servo, filter	Servo filter	1
02	KHJ1032		O Ring	For KBJ1691	1
02	KNJ0287	KBJ1691	Element, oil, filter	Drain line	1

E

E1 HOSE & PIPEWORK
E2 PUMP/MOTOR & PUMP DRIVE
E3 VALVES & HYDRAULIC FILTERS
• E4 RAMS

E4-1-1 CIRCUIT BOOM RAM (RH), PIPE WORK

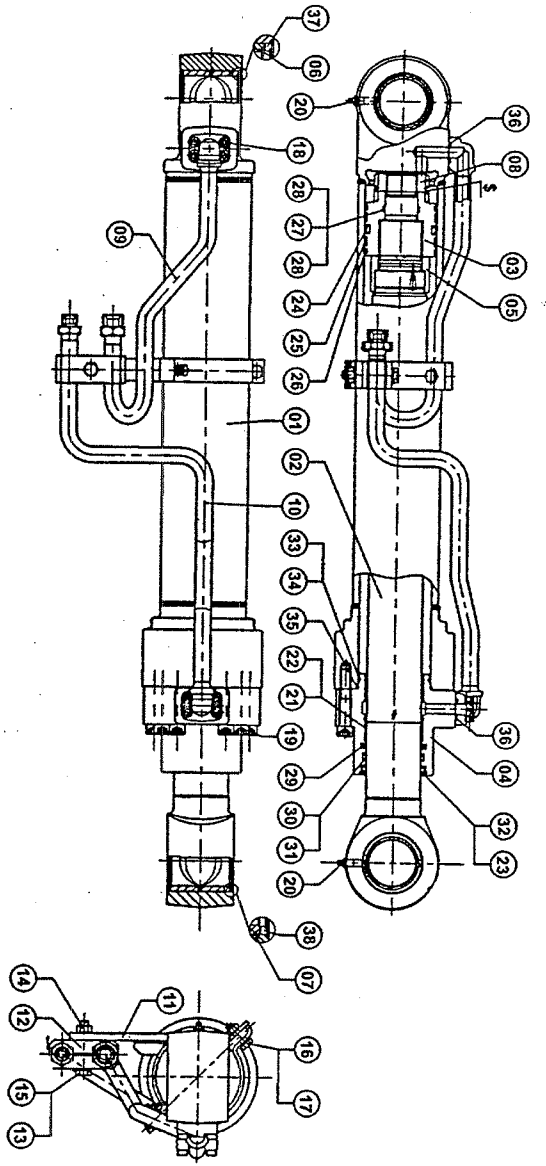

ITEM	PART NO.	CHANGE NO.	DESCRIPTION	REMARKS	QTY.
1	550/43362		Piston Rod S/A		1
2	550/43365		Tube S/A		1
3	550/43343		Piston		1
4	550/43346		H.E. Cover		1
5	550/43349		H.E. Cushioning Bush		1
6	550/43351		Bush		1
7	550/43353		Bush		1
8	550/43356		Piston Rod Nut		1
9	550/43372		Pipe S/A		1
10	550/43373		Pipe S/A		1
11	550/43369		Clamp S/A		1
12	550/43360		Clamp		2
13	550/43327		Hex. Hd. Bolt		1
14	550/43331		Hex. Nut.		1
15	550/43332		Spring Washer		1
16	550/41125		Hex. Hd. Bolt		2
17	550/41158		Washer		2
18	550/41126		Hex. Soc. Hd, Cop Screw		8
19	550/43329		Hex. Hd. Bolt		12
20	550/30046		Grease Nipple		1
21	550/43336		Bimetal Bush		2
22	550/43341		Snap Ring		1
23	550/30108		Snap Ring		1

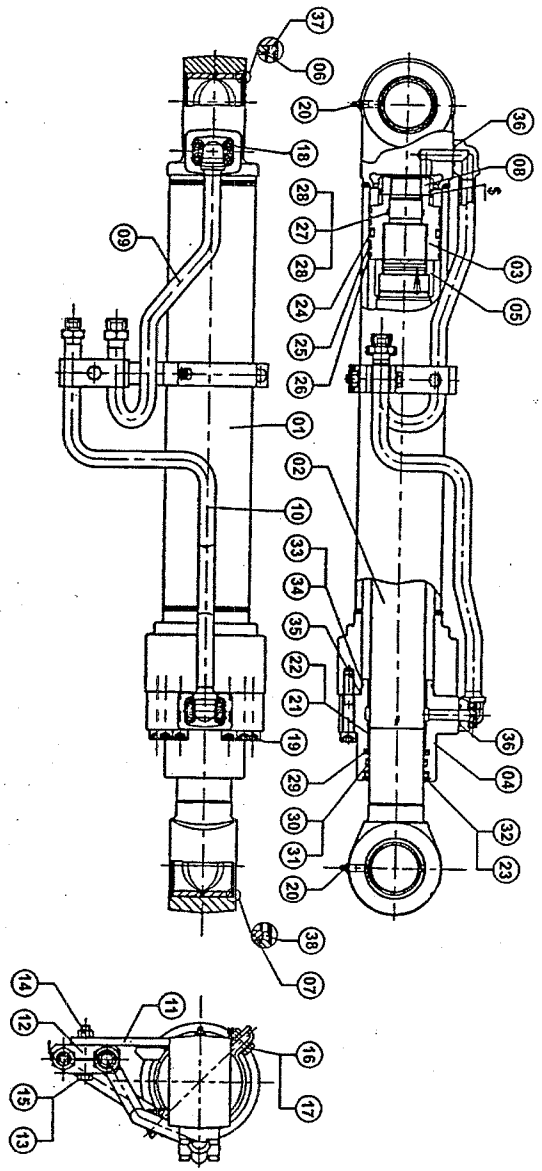

ITEM	PART NO.	CHANGE NO.	DESCRIPTION	REMARKS	QTY.
24	NSP		Piston Seal		1
25	NSP		Piston Brg.		2
26	NSP		Piston Brg.		1
27	NSP		Std. O-Ring (Piston)		1
28	NSP		Back up Ring (Piston)		2
29	NSP		Rod Seal		1
30	NSP		Rod Seal		1
31	NSP		Back-Up Ring (Rod Seal)		1
32	NSP		Wiper		1
33	NSP		STD. O-Ring (HEC)		1
34	NSP		Back-Up Ring (HEC)		1
35	NSP		STD. O-Ring (Tube CHMF)		1
36	NSP		STD. O-Ring (ELBOW)		1
37	NSP		Wiper		2
38	NSP		Wiper		2
39	550/43377		Seal Kit		1
40	229/01509		Boom Ram (RH) Assy.		1

E4-2-1 CIRCUIT DIPPER RAM ASSY., PIPE WORK

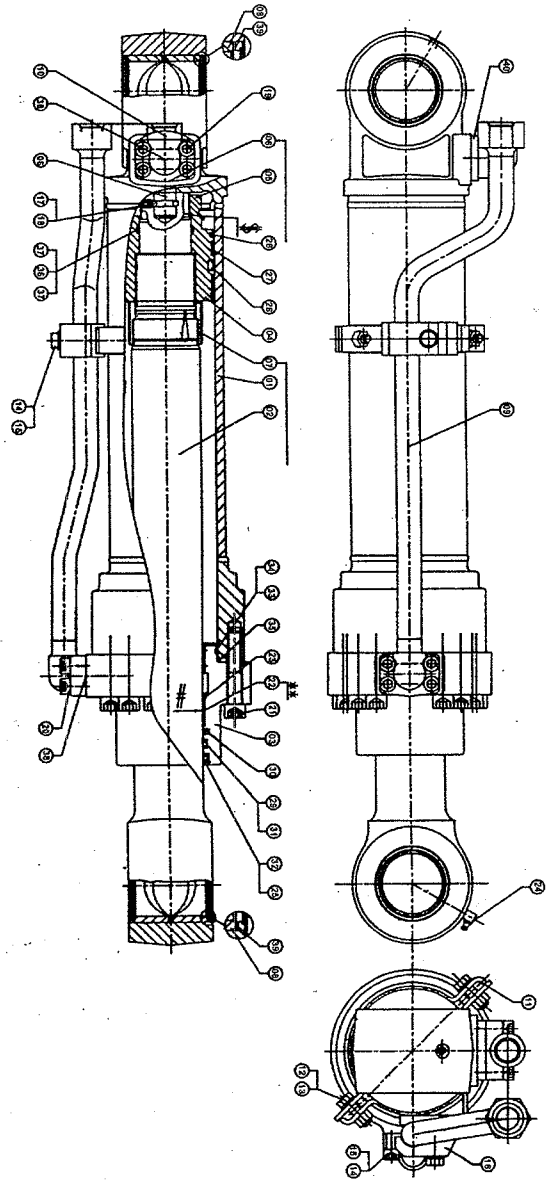

ITEM	PART NO.	CHANGE NO.	DESCRIPTION	REMARKS	QTY.
01	550/43366		Tube S/A		1
02	550/43363		Piston Rod S/A		1
03	550/43347		H.E. Cover		1
04	550/43344		Piston		1
05	550/43357		Piston Rod Nut		1
06	550/41930		C.E. Cush. Bush		1
07	550/43350		H.E. Cush. Bush		1
08	550/43355		Bush		2
09	550/43375		Pipe S/A		1
10	550/43358		Port		1
11	550/43370		Clamp S/A		1
12	41913		Hex. HD. Bolt		2
13	550/41150		Washer		2
14	550/41917		Machined Washer		1
15	550/41912		Hex. HD. Bolt		1
16	550/41939		Clamp		1
17	550/43334		Challoy Steel Ball		12
18			Hex. Soc. Set Screw		1
19	550/43328		Hex. Soc. Hd. Cap Screw		4
20	550/41913		Hex. Soc. HD. Cap Screw		4
21	550/41915		Hex. Soc. HD. Cap Screw		12
22	550/43337		Bimetal Bush		1
23	550/43339		Snap Ring (Clip)		1
24	550/41135		Grease Nipple		1
25	550/41918		Snap Ring		1

E4-2-1 CIRCUIT DIPPER RAM ASSY., PIPE WORK

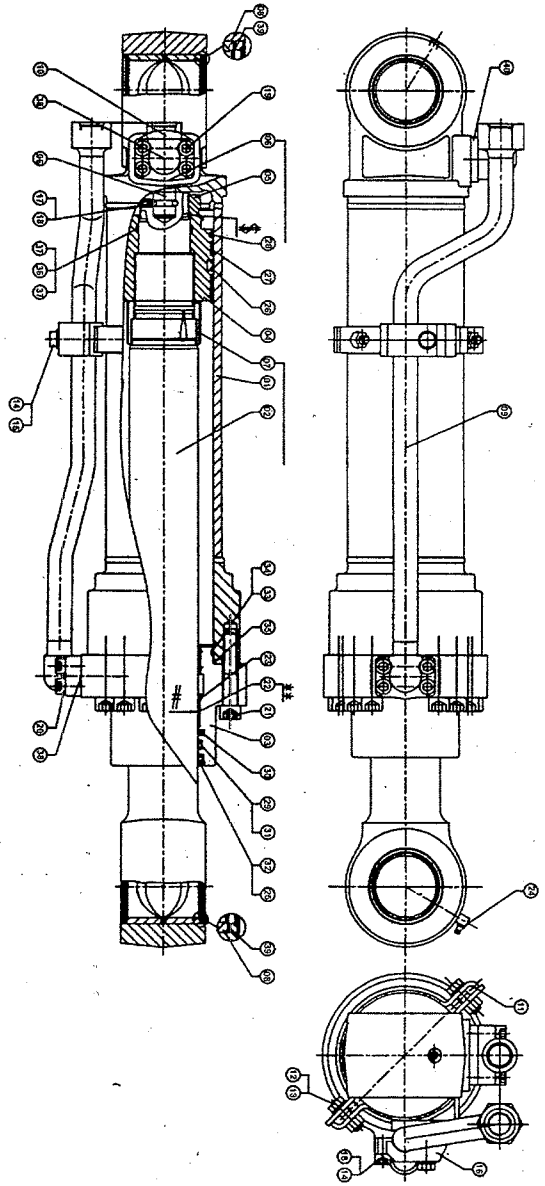

ITEM	PART NO.	CHANGE NO.	DESCRIPTION	REMARKS	QTY.
26	NSP		Piston Seal		1
27	NSP		Piston BRG		1
28	NSP		Piston Bearing		2
29	NSP		Rod Seal		1
30	NSP		Rod Seal		1
31	NSP		Back-up Ring (Rod Seal)		1
32	NSP		Wiper		1
33	NSP		Back-up Ring (Hec)		1
34	NSP		STD. O-Ring (HEC)		1
35	NSP		STD. O-Ring (Tube CHMF)		1
36	NSP		STD. O-Ring (Piston)		1
37	NSP		Back Up Ring (Piston)		2
38	NSP		STD. O-Ring (Elbow)		2
39	NSP		Wiper		4
40	NSP		Plate		1
41	550/43376		Seal Kit		1
42	229/01511		Dipper Ram Assy.		1

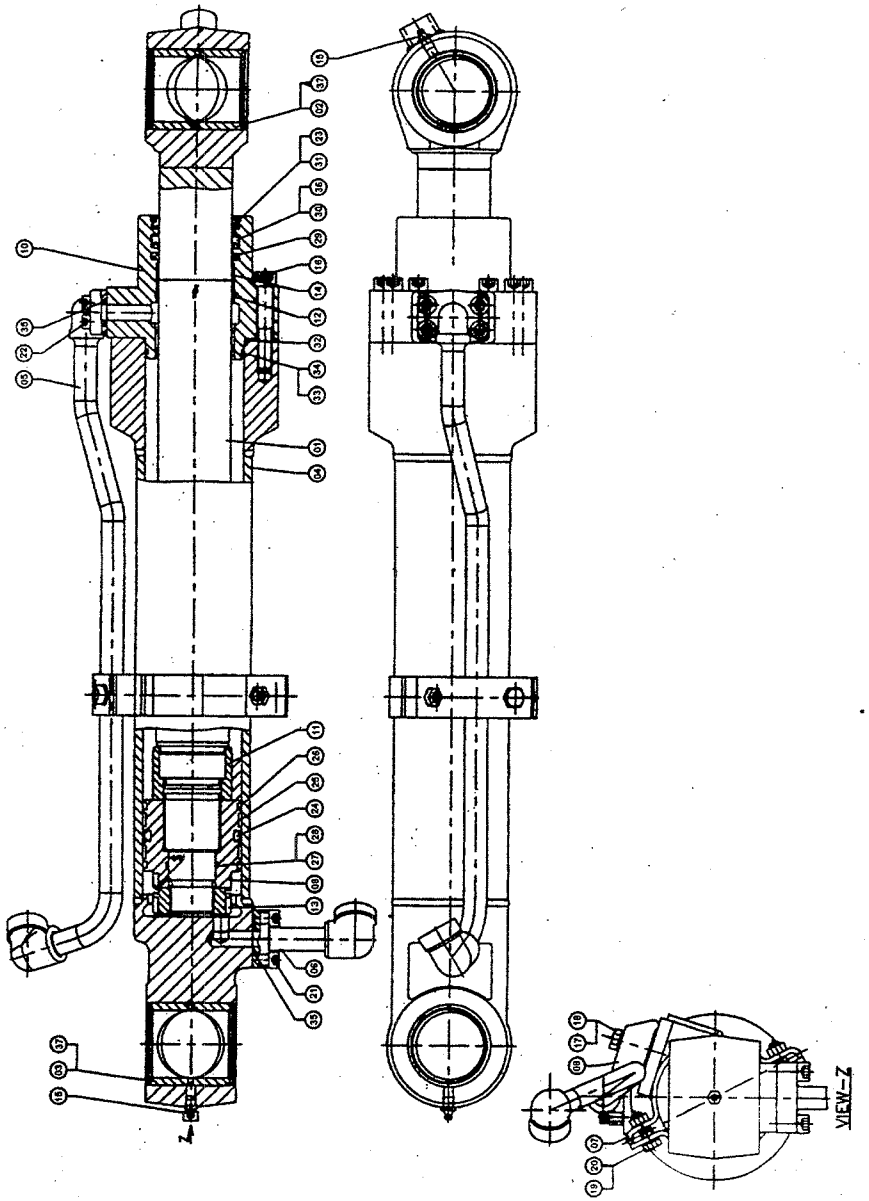

ITEM	PART NO.	CHANGE NO.	DESCRIPTION	REMARKS	QTY.
1	550/43361		Piston Rod S/A		1
2	550/43354A		Bush		1
3	550/43352A		Bush		1
4	550/43364		Tube S/A		1
5	550/43371		Pipe S/A		1
6	550/43367		Port A		1
7	550/43368		Clamp S/A		1
8	550/43359		Clamp		1
9	550/43342		Piston		1
10	550/43345		H.E. Cover		1
11	550/43348		H.E. Cushioning Bush		1
12	550/43340		Snap Ring (Clip)		1
13	550/43356		Piston Rod Nut		1
14	550/43335		Bimetal Bush		1
15	550/30046		Grease Nipple		2
16	550/43329		Hex. Soc. Hd, Cop Screw		12
17	550/43332		Hex. Hd. Bolt		1
18	550/43333		Spring Washer		1
19	NSP		Hex. Hd. Bolt		2
20	550/43332		Spring Washer		2
21	550/41126		Hex. soc. hd. cap screw		4
22	550/41913		Hex. soc. hd. cap screw		4
23	550/43338		Snap Ring		1

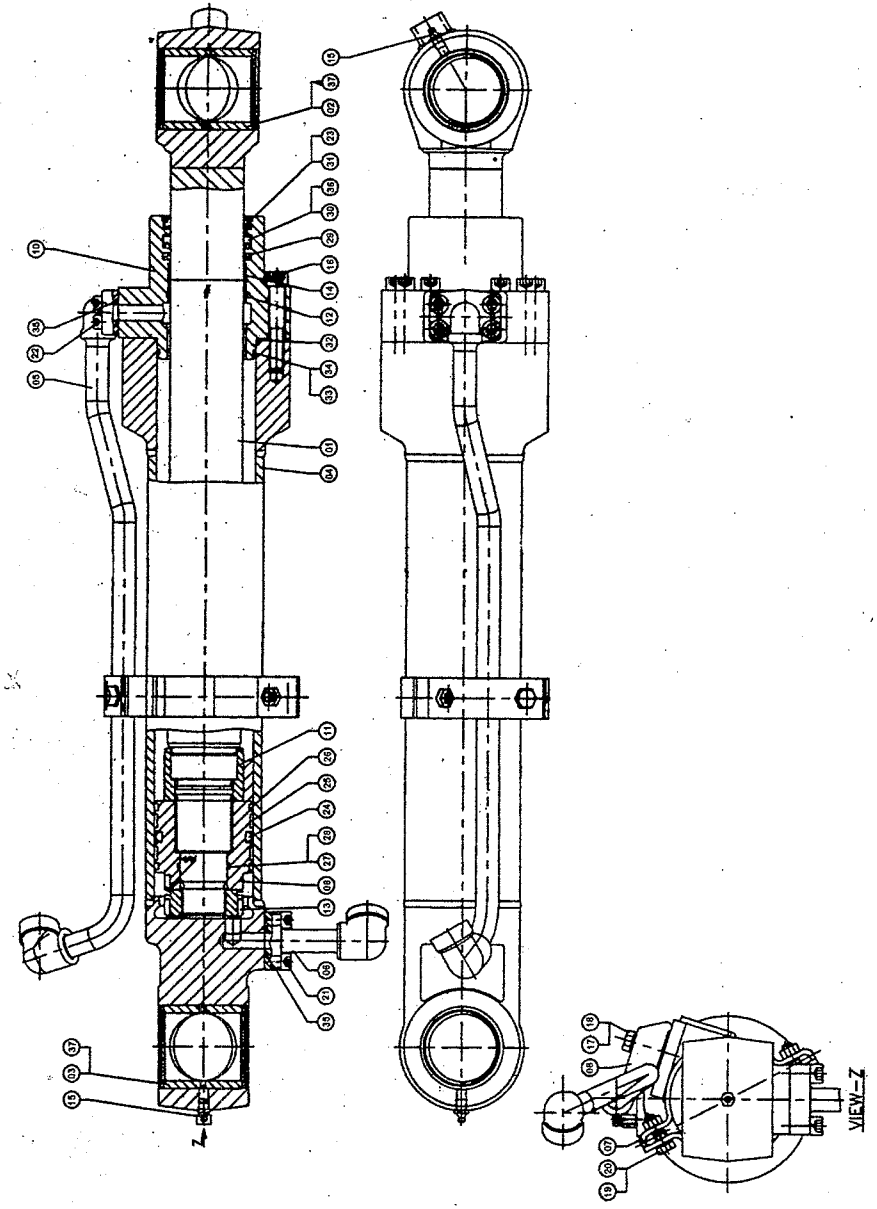

ITEM	PART NO.	CHANGE NO.	DESCRIPTION	REMARKS	QTY.
24	NSP		Piston Seal		1
25	NSP		Piston Bearing		2
26	NSP		Piston Bearing		2
27	NSP		Standard O-ring		1
28	NSP		Back up Ring		1
29	NSP		Rod Seal		1
30	NSP		Rod Seal		1
31	NSP		Wiper		1
32	NSP		Standard O-Ring		1
33	NSP		O-Ring		1
34	NSP		Backup Ring		1
35	NSP		Standard O-Ring		2
36	NSP		Back-up Ring		1
37	NSP		Wiper		4
38	550/43378		Seal Kit		1
39	229/01512		Bucket Ram Assy.		1

F

- F4 SLEW/TRACK GEARBOXES

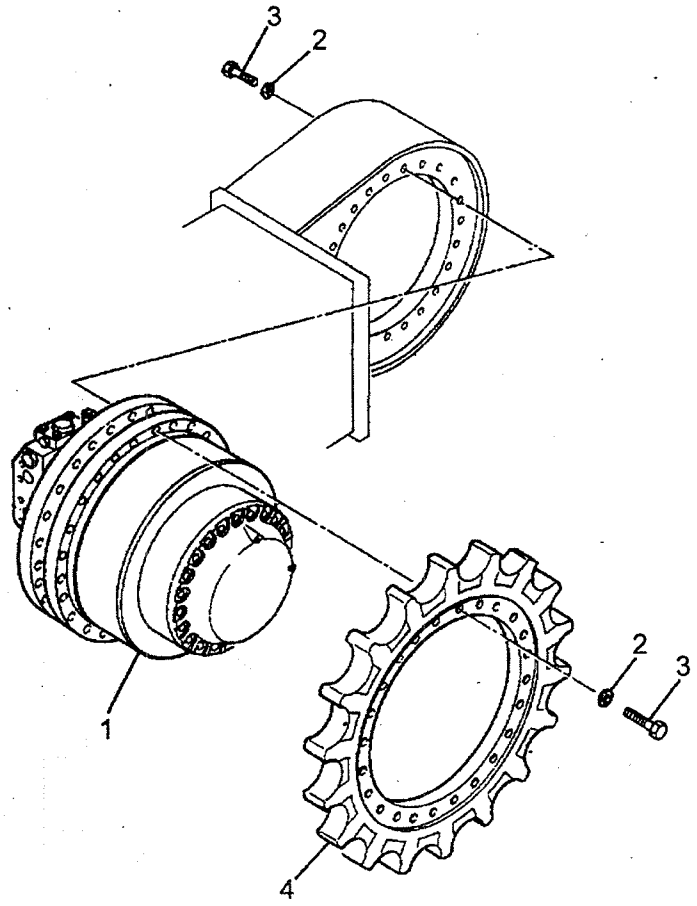

ITEM	PART NO.	CHANGE NO.	DESCRIPTION	REMARKS	QTY.
1	229/01506		Motor & track Gearbox assembly (TRASMITAL)	Upto 1318038, 1318060-1318074	2
	229/02682		Motor & track Gearbox assembly (NABTESCO)	1318039-1318059, 1318075 onwards	2
2	JHP0043		Washer M16		76
3	1316/3713Z		Bolt		76
4	331/65043		Sprocket for Trasmital Gearbox	Upto 1318038, 1318060-1318074	2
5✓	229/02543		Sprocket for (NABTESCO)	1318039-1318059, 1318075 onwards	2

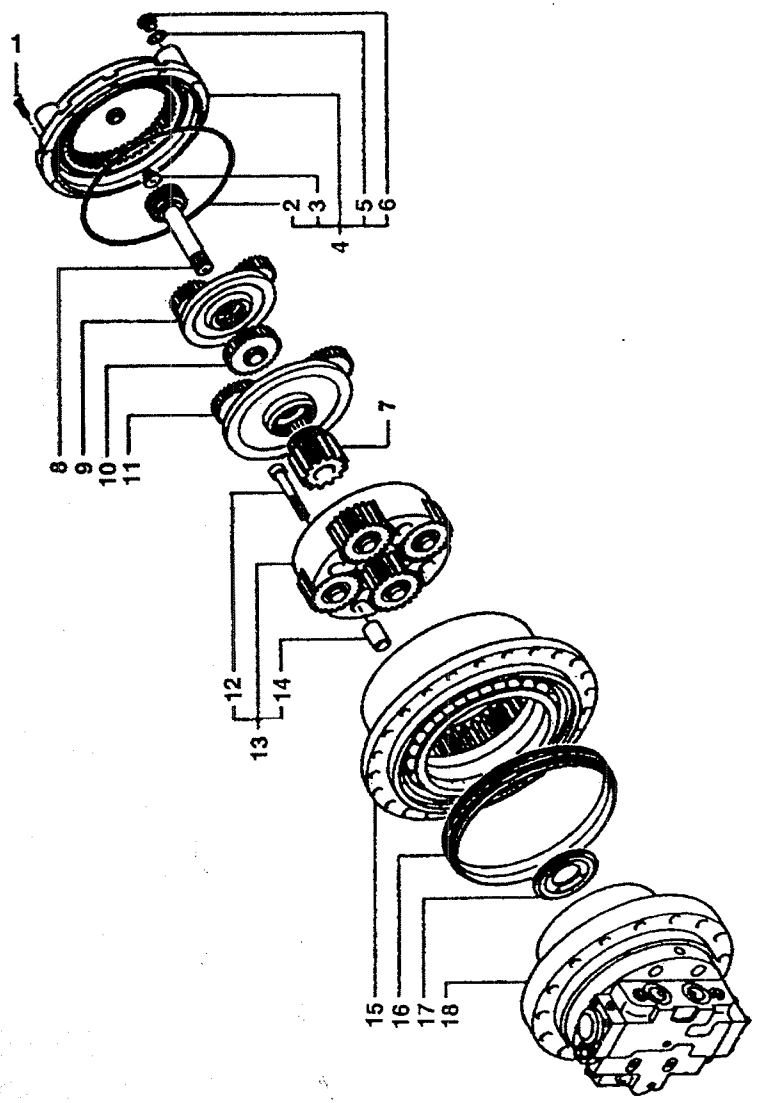

ITEM	PART NO.	CHANGE NO.	DESCRIPTION	REMARKS	QTY.
1	550/43204		Screw		10
2	550/43205		O-Ring		1
3	550/43206		Pad		1
4	550/43207		Cover Assembly		1
5	550/43208		Washer		2
6	550/43209		Oil Breather Plug		2
7	550/43210		Sun Gear		1
8	550/43211		Sun Gear		1
9	550/43212		1st Red. Assembly		1
10	550/43213		Sun Gear		1
11	550/43214		2nd Red. Assembly		1
12	550/43215		Screw		4
13	550/43216		3rd, Red. Assembly		1
14	550/43217		Bush		4
15	550/43218		Housing + Bearing		1
16	550/43219		Lifetime seal		1
17	550/43220		Spacer		1
18	550/43221		Hydraulic Motor		1

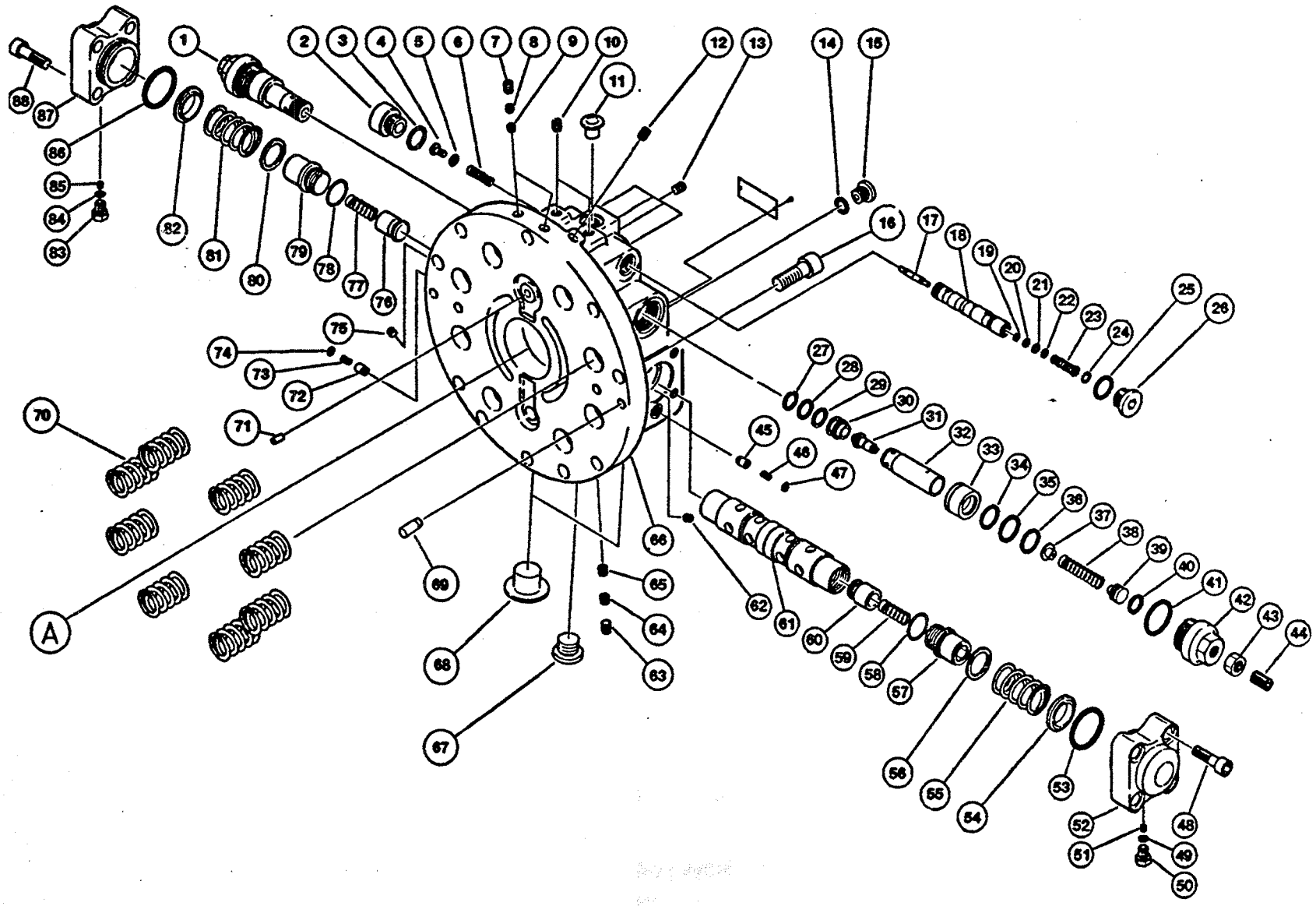
1
2
3
4
5
6
7
8
9
10
11
12
13
14
15
16
17
18
19
20
21
22
23
24
25
26
27
28
29
30
31
32
33
34
35
36
37
38
39
40
41
42
43
44
45
46
47
48
49
50
51
52
53
54
55
56
57
58
59
60
61
62
63
64
65
66
67
68
69
70
71
72
73
74
75
76
77
78
79
80
81
82
83
84
85
86
87
88
A

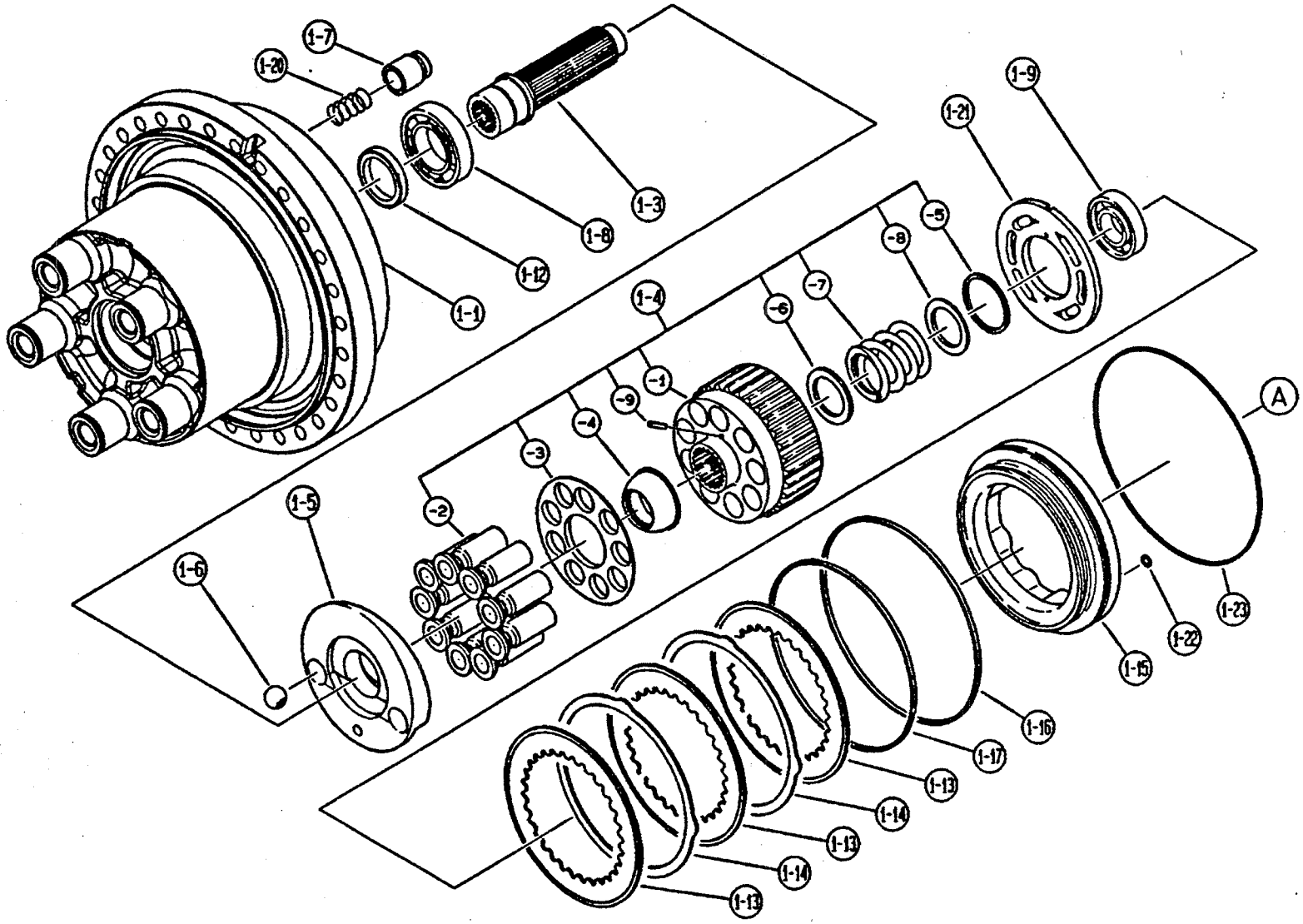
1-7
1-20
1-3
1-8
1-12
1-1
1-9
1-21
1-5
1-8
1-7
1-6
1-4
1-1
1-9
1-4
1-3
1-2
1-5
1-6
A
1-23
1-22
1-15
1-16
1-17
1-13
1-14
1-13
1-14
1-13

ITEM	PART NO.	CHANGE NO.	DESCRIPTION	REMARKS	QTY.
A	550/43221		Hyd. Motor		
	550/43223		Kit Base Plate		
	550/43224		Kit Valve Assy.	Contains item no. 27 to 44	
	550/43225		Plunger Assy.	Contains item no. 51 to 61, 76 to 88	
	550/43226		Orifice Assy.	Contains item no. 17 to 26	
	550/43227		Plug Assy.	Contains item no. 2 to 6	
1	550/43228		Relief Valve Assy.		
	550/43229		Cylinder Block Assy.	Contains items 1-4	
	550/43230		Swash Plate Assy.	Contains items 1-5 & 1-6	
	550/43231		Motor Shaft Assy.	Contains items 1-3	
	550/43232		Motor Seal Ring	Contains items 1-23	
	550/43233		Bearing Assy.	Contains items 1-8 & 1-9	
	550/43234		Brake Assy.	Contains items 1-13 to 1-17	
	550/43235		Seal Kit		

F4-2-3 TRACK MOTOR & GEAR BOX (NABTESCO)

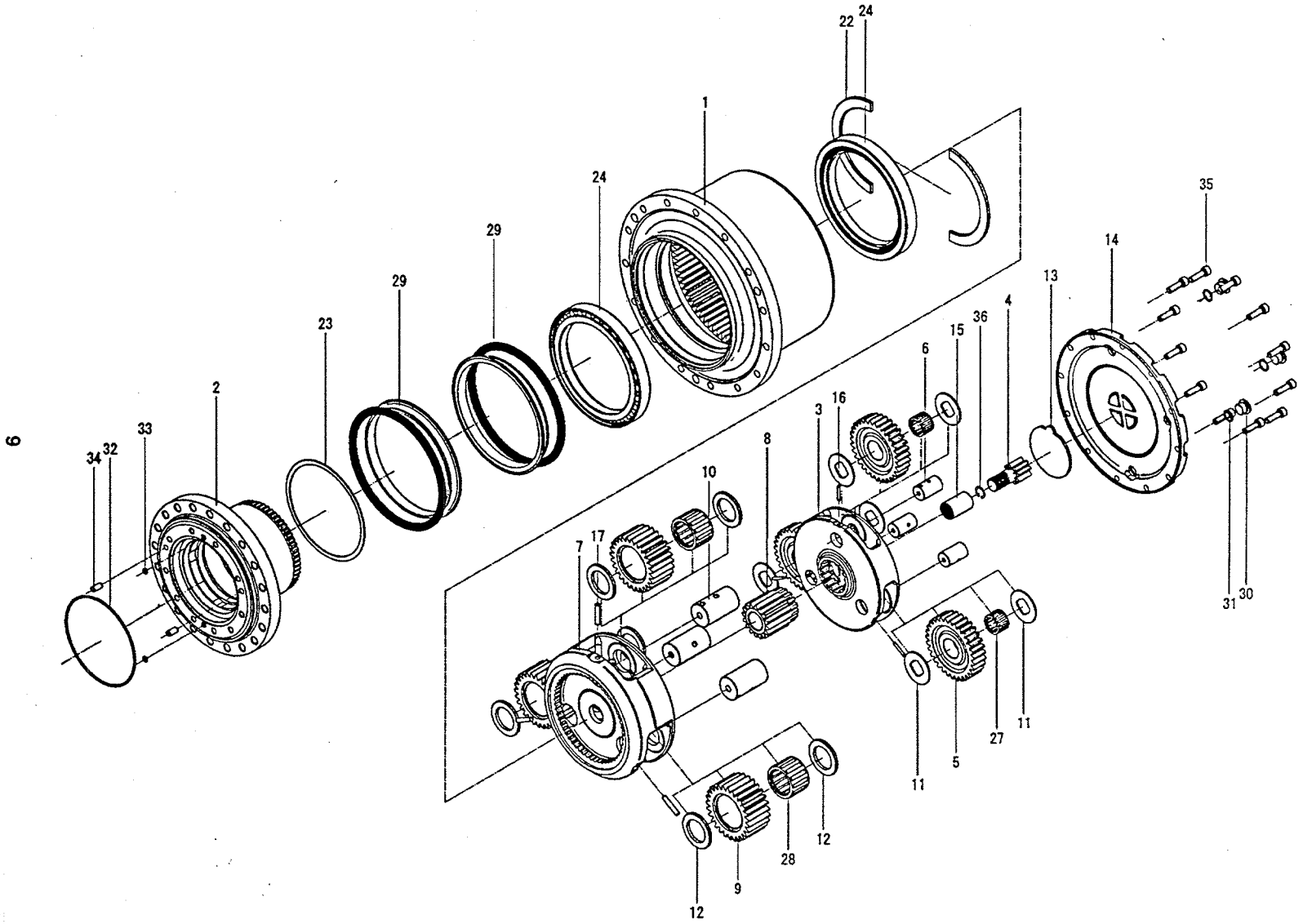

F4-2-3 TRACK MOTOR & GEAR BOX (NABTESCO)

ITEM	PART NO.	CHANGE NO.	DESCRIPTION	REMARKS	QTY.
1	Hub				
2	Spindle		Spindle		1
3	N.S.P		Carrier (1)		1
4	550/43498		Sun gear (1)		1
5	N.S.P		Planetary gear (1)		3
6	N.S.P		Carrier pin (1)		3
7	N.S.P		Carrier (2)		1
8	550/43499		Sun gear (2)		1
9	N.S.P		Planetary gear (2)		3
10	N.S.P		Carrier pin (2)		3
11	N.S.P		Thrust washer (1)		6
12	N.S.P		Thrust washer (2)		6
13	550/43532		Thrust plate		1
14	550/43501		Cover		1
15	550/43502		Coupling		1
16	N.S.P		Parallel pin (1)		3
17	550/43584		Parallel pin (2)		3
22	550/43546		Lock washer		2
23	550/43503		Shim		1
24	550/43547		Angular bali bearing		2
27	N.S.P		Needle roller bearing		3
28	0		Needle roller bearing		3
29	N.S.P		Floating seal		2
30	550/43570		Plug		3
31	550/43592		O ring		3
32	550/43556		O ring		1
33	550/43580		O ring		2
34	550/43577		Parallel pin		2
35	550/43591		Hex.Socket bolt		12
36	550/43538		Snap ring for hole		1

ITEM	PART NO.	CHANGE NO.	DESCRIPTION	REMARKS	QTY.
102	550/43506		Shaft		1
103	550/43507		Swash plate		1
104	550/43508		Cylinder block		1
105	N.S.P		Piston		1
106	N.S.P		Shoe		1
107	550/43510		Retainer plate		1
108	550/43511		Thrust ball		1
109	550/43512		Timing plate		1
110	550/43555		Washer		2
112	550/43513		Piston		1
113	550/43589		Spring		10
114	550/43514		Spring		1
115	550/43569		Friction plate		3
116	550/43578		Mating plate		4
132	550/43561		Oil seal		1
135	550/43544		O ring		1
139	550/43548		O ring		1
145	550/43539		Snap ring		1
149	550/43536		Ball bearing		1
150	550/43537		Ball bearing		1
151	550/43574		Needle roller		3
167	550/43549		Pivot		2
171	550/43577		Parallel pin		2
201	N.S.P		Valve seat		1
202	N.S.P		Valve		1
203	N.S.P		Sleeve		1
204	N.S.P		Collar		1
205	N.S.P		Plug		1
206	N.S.P		Spring		1
207	550/43575		O ring		1

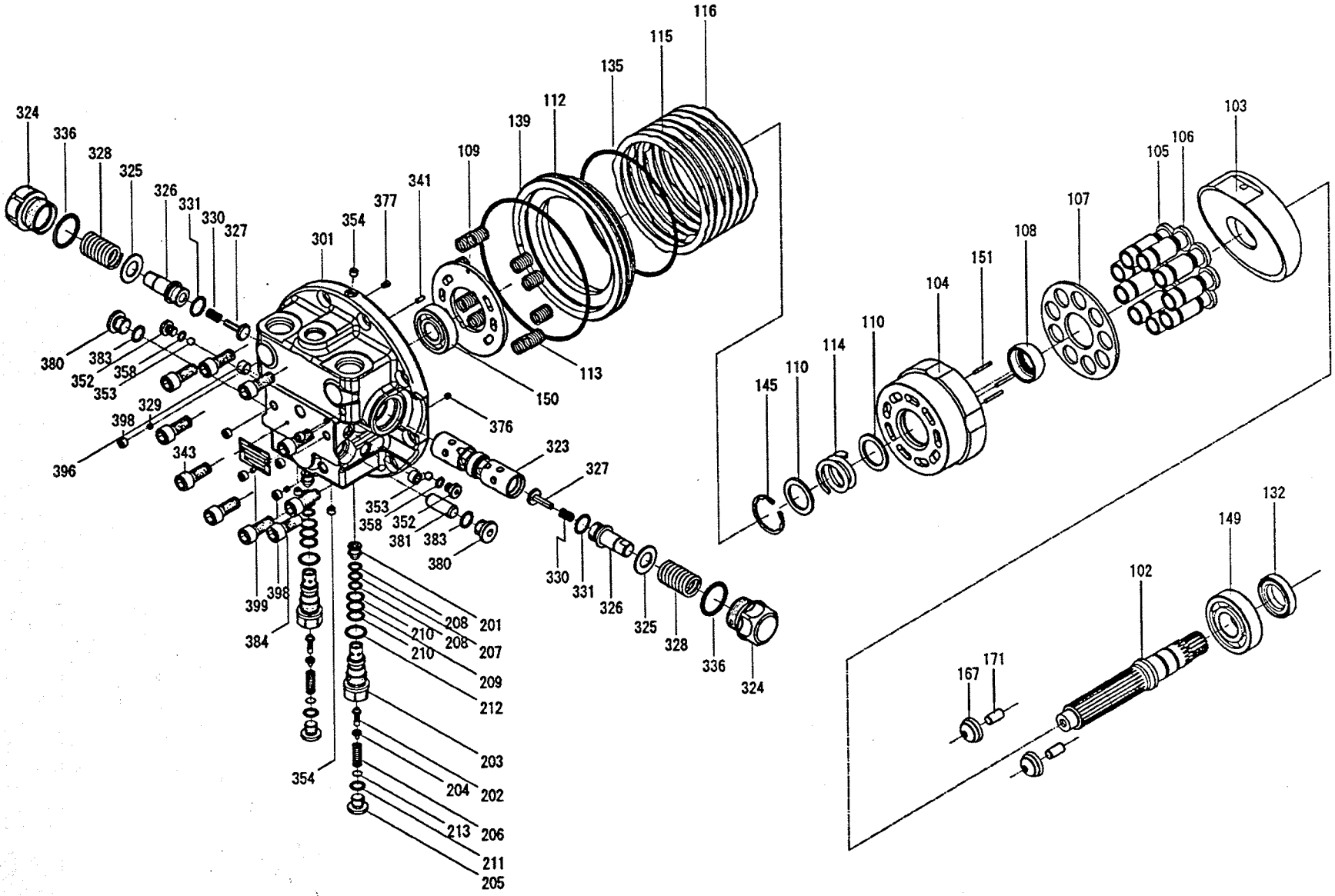
116
115
135
112
139
109
341
377
354
301
324
336
328
325
326
331
330
327
380
383
358
352
353
329
398
396
343
150
113
376
323
327
330
331
326
325
328
336
324
353
358
352
381
383
380
399
398
384
208
201
210
208
207
210
209
212
203
204
202
213
206
211
205
354
103
106
105
107
108
151
104
110
114
110
145
102
149
132
167
171

ITEM	PART NO.	CHANGE NO.	DESCRIPTION	REMARKS	QTY.
208	550/43586		Back up ring		2
209	550/43587		O ring		1
210	550/43582		Back up ring		2
211	550/43586		O ring		1
212	550/43592		O ring		1
213	N.S.P		Shim		1
301	N.S.P		Rear flange		1
323	N.S.P		Spool		1
324	550/43540		Plug		2
325	550/43551		Washer		2
326	N.S.P		Plug		2
327	N.S.P		Valve		2
328	550/43541		Spring		2
329	550/43560		Orifice		2
330	N.S.P		Spring		2
331	550/43592		O ring		2
336	550/43542		O ring		2
341	550/43535		Parallel pin		1
343	550/43590		Hex. Socket bolt		10
352	550/43542		Plug		2
353	550/43558		Steel ball		2
354	550/43573		Hex. Socket plug		3
357			Plug		1
358	550/43581		O ring		2
377	550/43534		Filter		1
380	550/43554		Plug		2
381	550/43587		Piston		1
383	550/43587		O ring		2
384	550/43559		Orifice		2
396	550/43557		Hex. Socket plug		2

ITEM	PART NO.	CHANGE NO.	DESCRIPTION	REMARKS	QTY.
398	550/43585		Hex. Socket plug		6
399	550/43535		Name plate		1
	1		Hub		1
	550/43504		Carrier assy(1)		1
	550/43505		Carrier assy (2)		1
	550/43572		Floating seal kit		1
	550/43530		Rear flange assy		1
	550/43531		Rear flange kit Spool assy		1
1	550/43524		Cylinder & piston kit		1
	N.S.P		Piston kit		1
	N.S.P		Piston assy		9
	550/43550		Relief assy		2

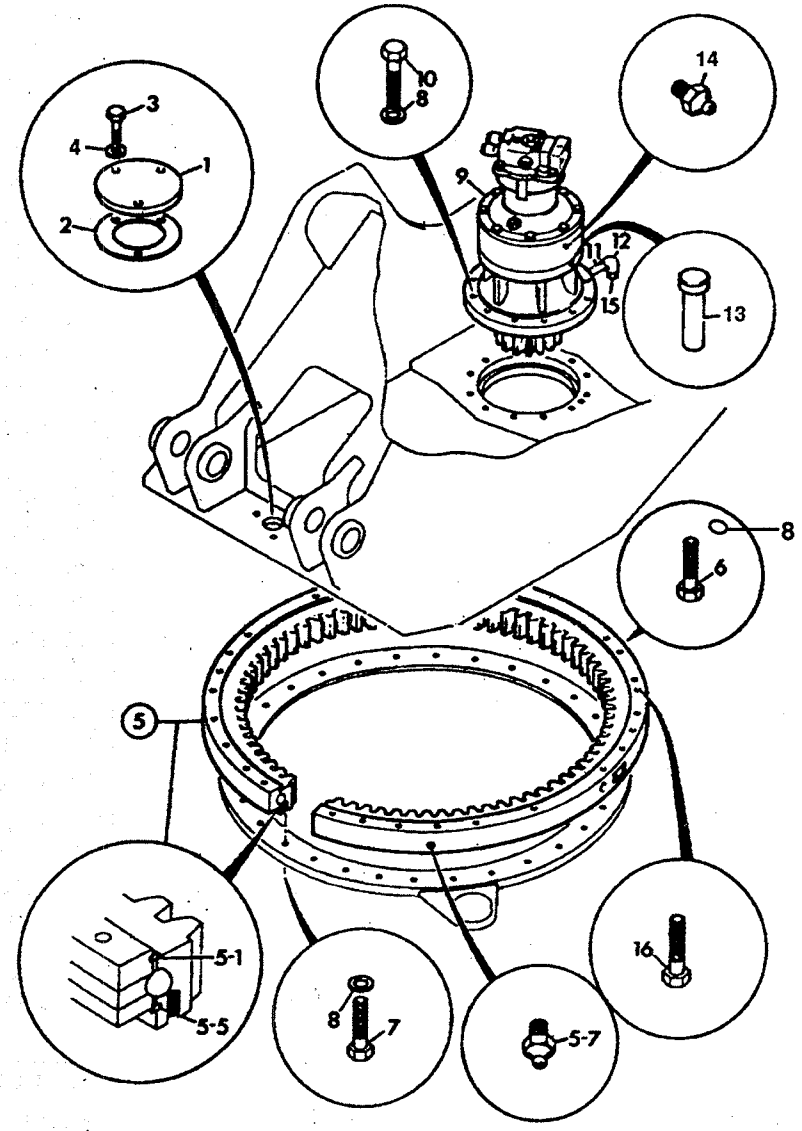

ITEM	PART NO.	CHANGE NO.	DESCRIPTION	REMARKS	QTY.
1	KRB0681		Plate, cover	Fo mainframe	1
2	KRB0682		Paking, cork	For item I	1
3	1316/0505Z		Screw, M12x20	Secures items 1 & 2	3
4	1425/0009Z		Washer, Spring M12	For item 3	3
5	JNB0146		Ring, slew		1
05 01	KNB0373		Ring, seal		1
05 05	KNB0374		Ring, seal		1
05 07	JHP0037		Nipple, grease, staight	For item 5	1
06	1316/3718Z		Bolt, M16x80	Secures item 5	28
	332/P6829	From 1318325	Bolt, M16x80		28
07	1316/3713Z		Bolt, M16x55	Secures item 5	36
08	JHP0043		Washer, M16		64
09	20/925360		Swing, motor and gearbox assy.	For components see	1
10	1316/3714Z		Bolt	Secures item 9	9
11	KNC0054		Pipe		1
12	C4E3606		Adapter, elbow		1
13	KNC0007		Pin, headed		1
14	JHP0037		Nipple, grease. straight		1
15	KNB0571		Plug		1
16	KNB0571		Bolt, dowel, M16x80		1
21	331/28915		Pin, swing locking		1

F4-4-1 GEARBOX, SWING

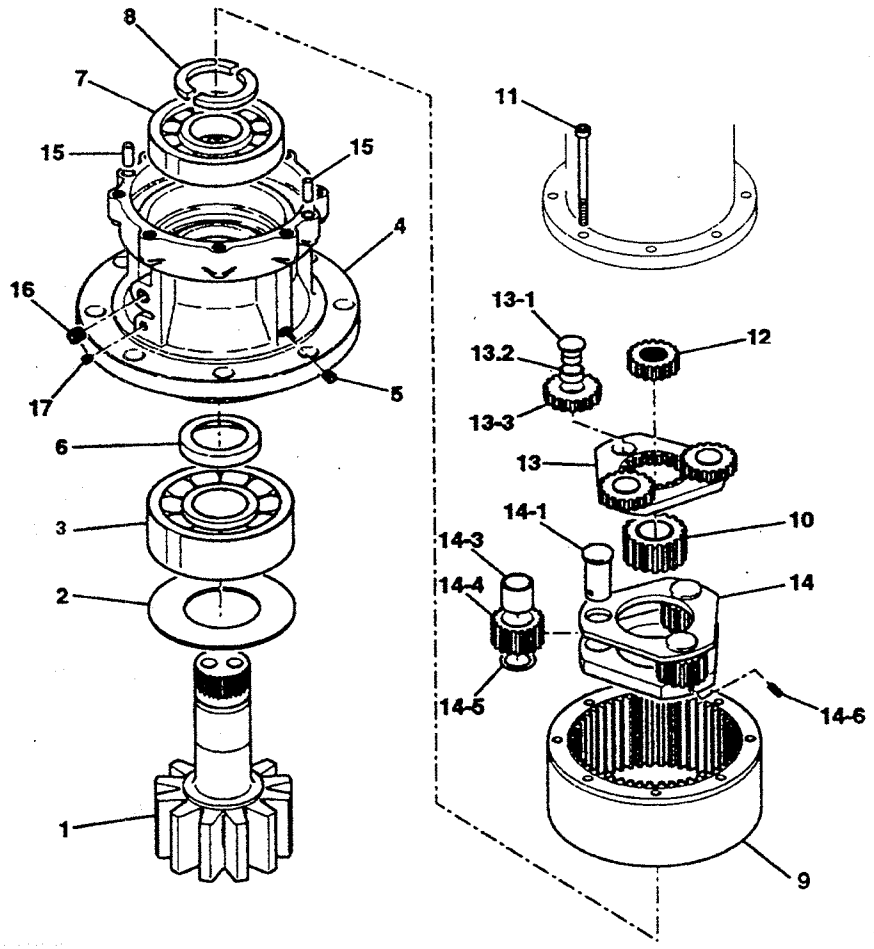

ITEM	PART NO.	CHANGE NO.	DESCRIPTION	REMARKS	QTY.
00A	20/925360		Gearbox, swing with motor		1
01	20/951207		Shaft, pinion		1
02	20/951208		Plate		1
03	20/951209		Bearing, tapered roller		1
04	20/951210		Casting, gear		1
05	20/950406		Plug		1
06	20/951211		Seal, oil		1
07	20/951212		Bearing, tapered roller		1
08	20/951213		Collar		2
09	20/951215		Gear, ring		1
10	20/951216		Gear, spur		1
11	20/951217		Capscrew		8
12	20/951218		Gear, sun		1
13	459/10165		Gear, planet assembly		1
13 01	NSP		None serviced part	only available as part part of item 13	3
13 02	NSP		None serivced part	only available as part part of item 13	3
13 03	NSP		None serivced part	only available as part part of item 13	3
14	20/951219		Gear, planet assembly		1
14 01	20/951220		Shaft		3
14 03	20/951221		Bush		3
14 04	20/951222		Gear		3
14 05	20/951223		Plate, thrust		3
14 06	20/951224		Pin, spring		3
15	20/951225		Pin, parallel		2
16	20/950442		Plug		1
17	20/980443		Plug		1

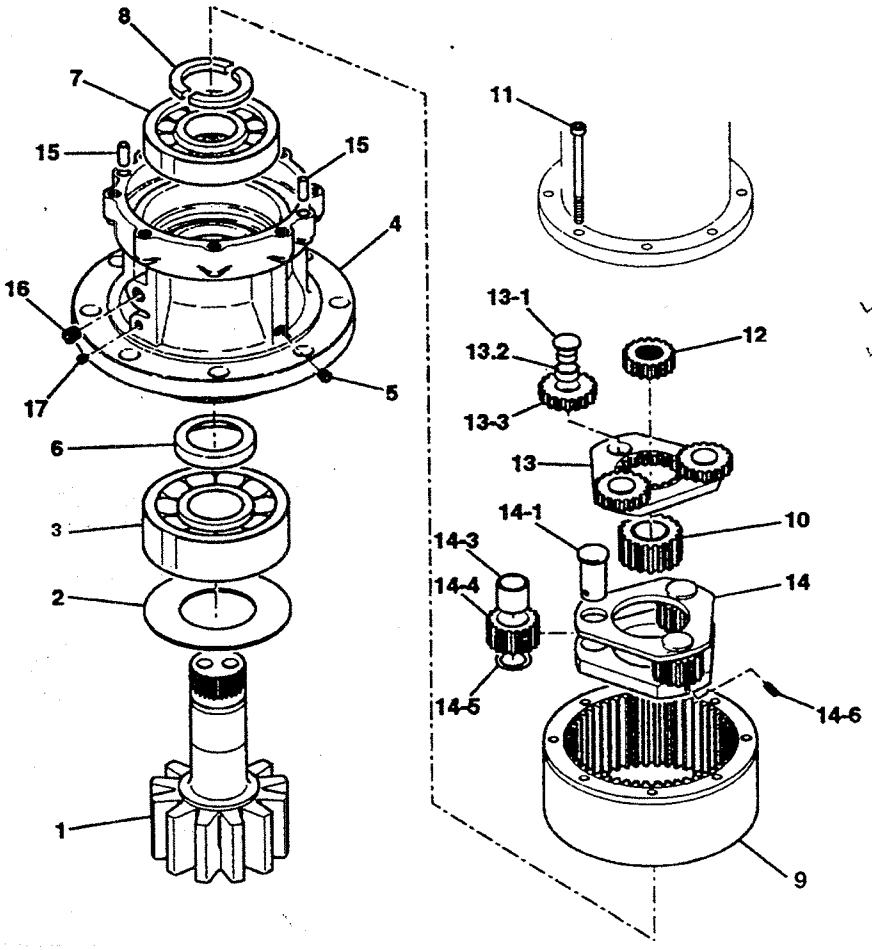

ITEM	PART NO.	CHANGE NO.	DESCRIPTION	REMARKS	QTY.
A	20/925360		Gearbox Swing Motor Assy		1
B	LNO0104		Gearbox Swing		1
1	20/951207		Shaft Pinion		1
2	20/951208		Plate		1
3	20/951209		Bearing Tapered Roller		1
4	20/951210		Casing Gear		1
5	20/950406		Plug		1
6	20/951211		Seal Oil		1
7	20/951212		Bearing Tapered Roller		1
8	20/951213		Collar T = 7.15		2
8A	332/Y4044		Collar Collar 6.85 Collar 6.85		1
8B	332/Y4045		Collar Collar 6.95 Collar 6.95		1
8C	332/Y4046		Collar Collar 7.05 Collar 7.05		1
9	20/951215		Gear Ring		1
10	20/951216		Gear Spur		1
11	20/951217		Capscrew		8
12	20/951218		Gear Sun		1
13	459/10165		Gear Planet Assembly		1
13-1	NSP		None Serviced Part		3
13-2	NSP		None Serviced Part		3
13-3	NSP		None Serviced Part		3
14	20/951219		Gear Planet Assembly		1
14-1	20/951220		Shaft		3
14-3	20/951221		Bush		3
14-4	20/951222		Gear		3

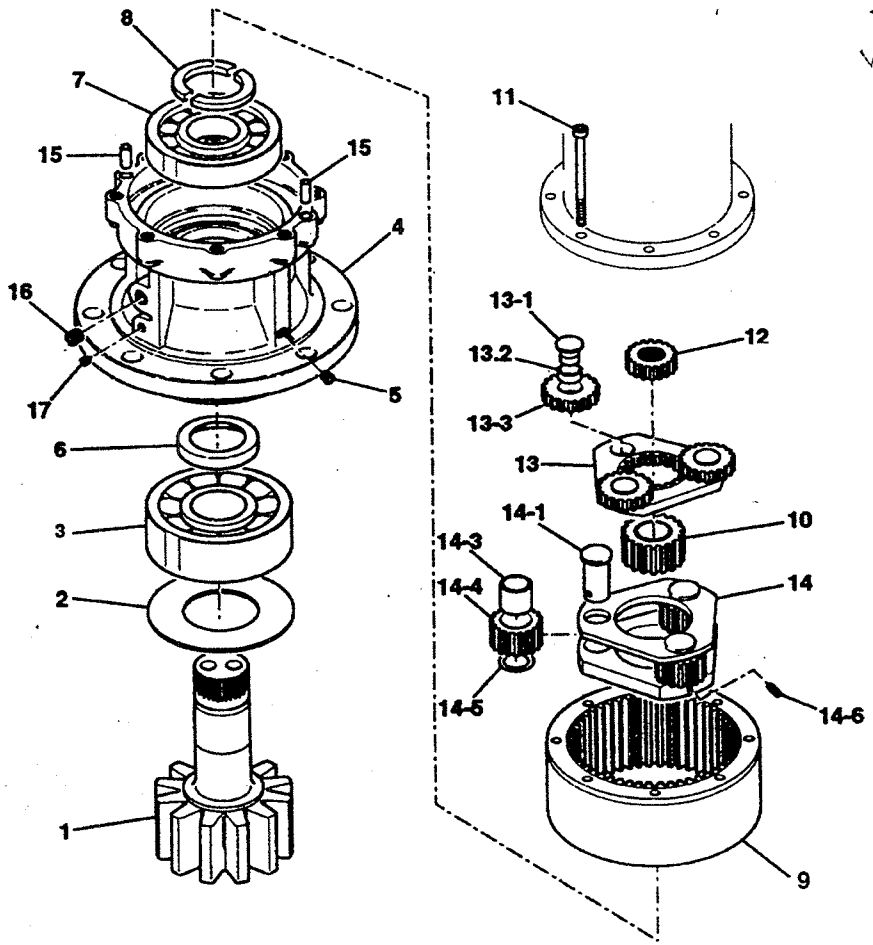

ITEM	PART NO.	CHANGE NO.	DESCRIPTION	REMARKS	QTY.
14-5	20/951223		Plate Thrust		3
14-6	20/951224		Pin Spring		3
15	20/951225		Pin Parallel		2
16	20/950442		Plug		1
17	20/980443		Plug Plug		1

J

- J1 TRACK, GEAR/ UNDERCARRIAGE

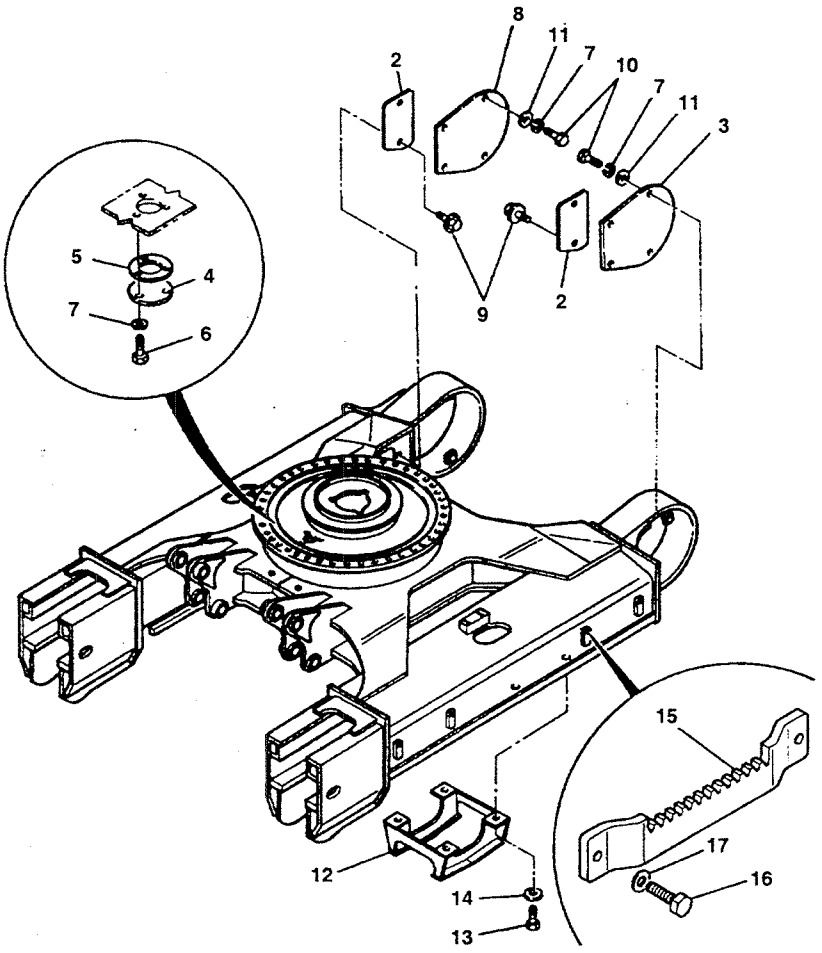

ITEM	PART NO.	CHANGE NO.	DESCRIPTION	REMARKS	QTY.
01	229/02705		Undercarriage		1
01 01	JNA0204		Block, top roller	Welded to under carraige side plate 1 side	2
02	KNA0531		Cover		2
03	JNA0318		Cover, Motor		1
04	KRB0681		Plate. cover		1
05	KRB0682		Packing, cork	For item 4	1
06	1316/0505D		Bolt, M12x20mm	Secures item 5	3
07	1425/0009D		Washer, M12 spring	For M12 fasteners	11
08	JNA0318		Cover, Motor		0
09	1315/0507D		Setscrew	Secures item 2	4
10	1316/0509D		Bolt, grade 12.9	Secures item 3	8
11	JHP0042		Washer, plain	For item 10	8
12 ✓	331/22435		Guide, track	Round leading edge	4
13 ✓	1316/0711Z		Screw	Secures item 12	16
14 ✓	JHP0043		Washer, M16	For item 13	16
15	331/40764		Step, bracket	To suit 600mm track plate	4
15	331/40796		Step, bracket	To suit 850 mm track	4
16	1316/3713Z		Bolt, M16x55		8
17	JHP0043		Washer, M16		8

J1-2-1 IDLER WHEEL BERCO

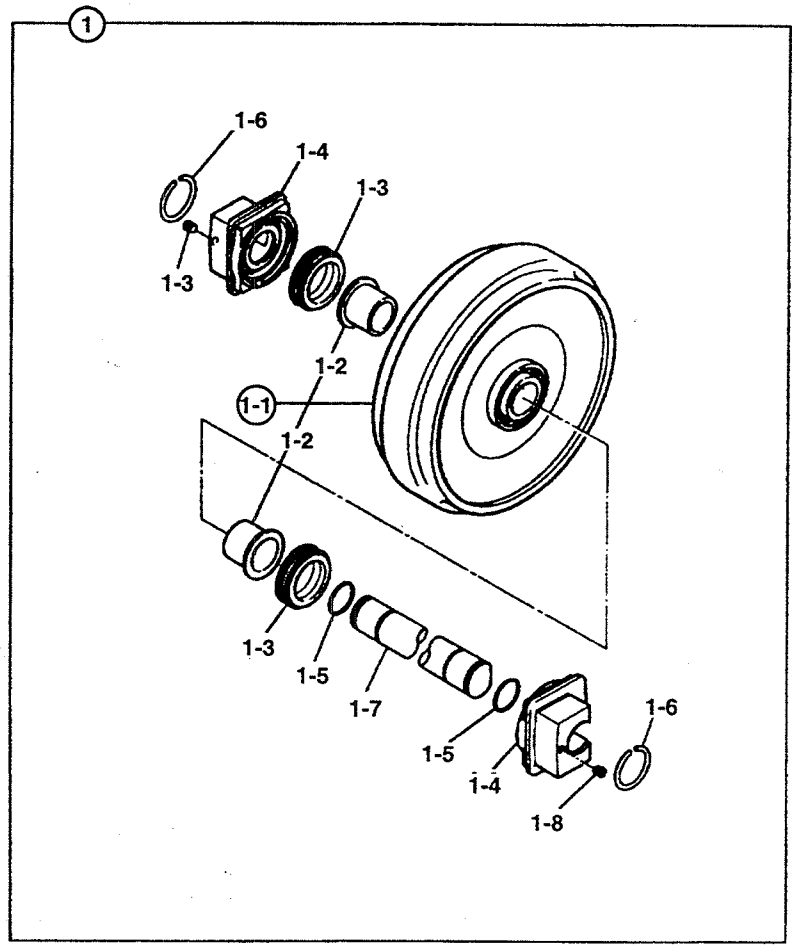

ITEM	PART NO.	CHANGE NO.	DESCRIPTION	REMARKS	QTY.
01	JNA0223		Wheel, idler assembly		1
01 01	JNA0226		Roller idler		1
01 02	JNA0230		Bush		2
01 03	JNA0227		Kit-seal		2
01 04	JNA0231		Hub		2
01 05	JNA0232		O Ring		2
01 06	JNA0235		Ring, snap		2
01 07	JNA0229		Shaft, idler		1
01 08	JRA0226		Plug		1
01 09	JRA0227		O Ring		1

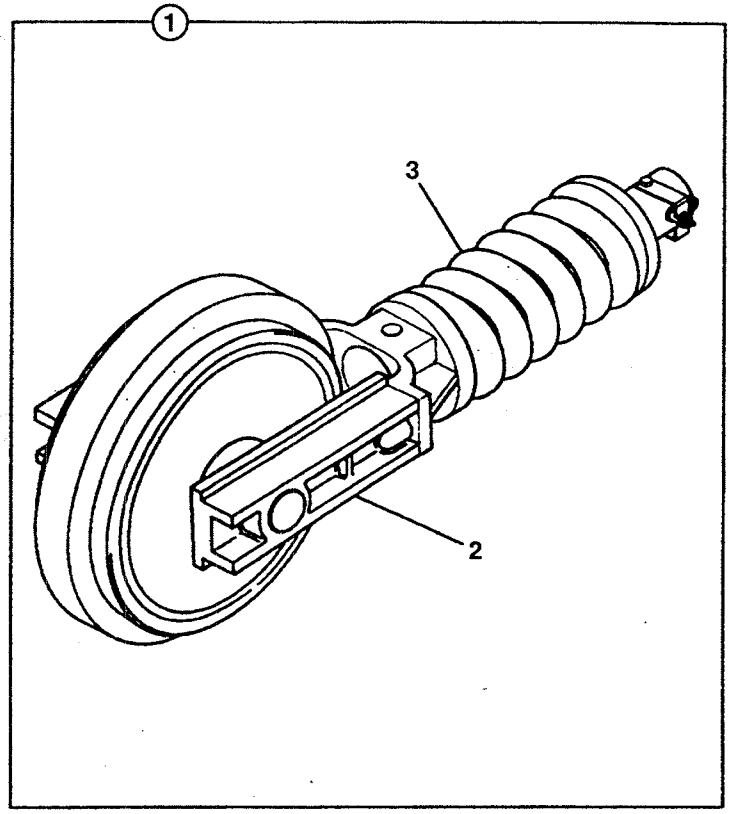

ITEM	PART NO.	CHANGE NO.	DESCRIPTION	REMARKS	QTY.
01	JNA0222		Spring, recoil and tension. c/w idler assemby.		2
02	JNA0223		Wheel, idler, assemby.		1
03	JNA0224		Yoke, spring and fork as sembly.		1

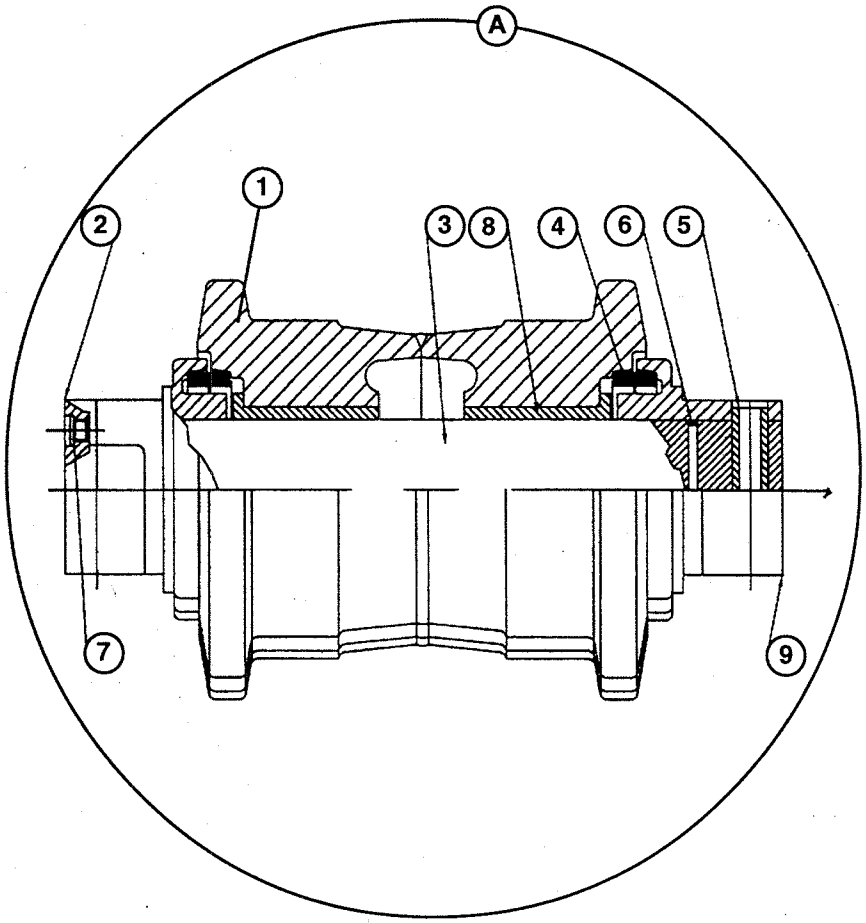

ITEM	PART NO.	CHANGE NO.	DESCRIPTION	REMARKS	QTY.
A	331/65039		Roller Assy.		1
1	550/43296		Roller Shell		1
2	550/43297		Roller end coller-plug side		1
3	550/43298		Roller shaft		1
4	550/42317		Seal Group		2
5	550/43300		Solid Dowel		2
6	550/42318		Seal O - Ring (Shaft)		2
7	550/42289		Plug		1
8	550/42323		Bronze Bushing		2
9					245 cc

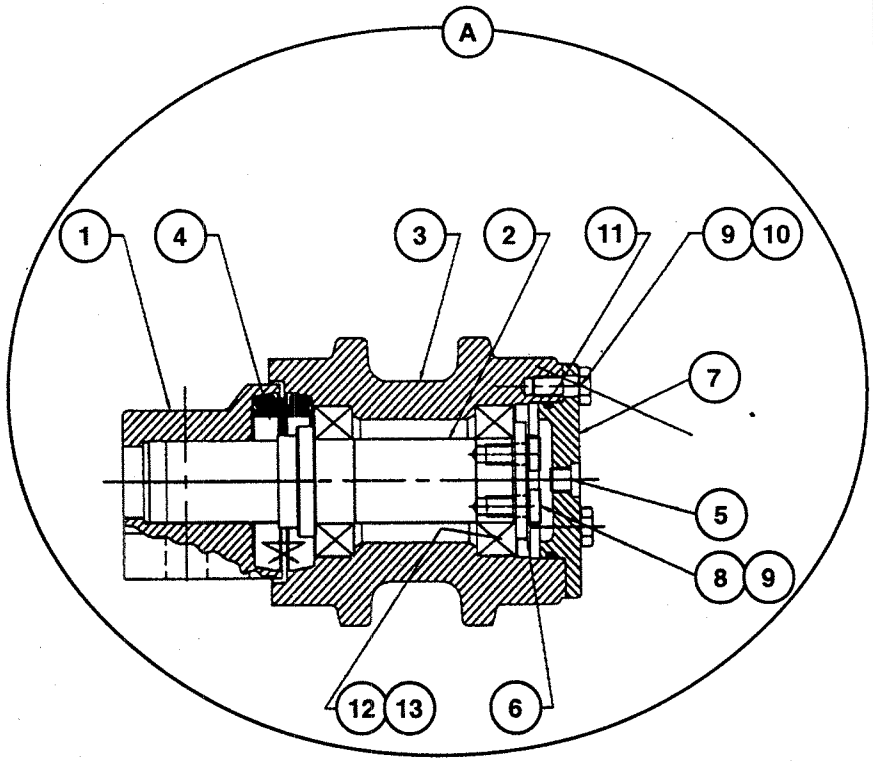

ITEM	PART NO.	CHANGE NO.	DESCRIPTION	REMARKS	QTY.
A	229/01083		Carrier Roller		
1	550/42815		Carrier Roller Bracket		1
2	550/42794		Carrier Roller Shaft		1
3	550/42793		Carrier Roller Shell		1
4	550/42774		Seal Group		1
5	550/42775		Plug - Taper		1
6	550/42795		Plate		1
7	550/42780		Carrier Roller Cover		1
8	550/42777		Lock - Plate		1
9	550/42776		Bolt Hex.		5
10	550/42769		Washer Spring		3
11	550/42796		Seal O ring		1
12	550/42797		Cone - Tapered Roller BRG.		2
13	550/42798		Cup-Tapered Roller BRG.		2

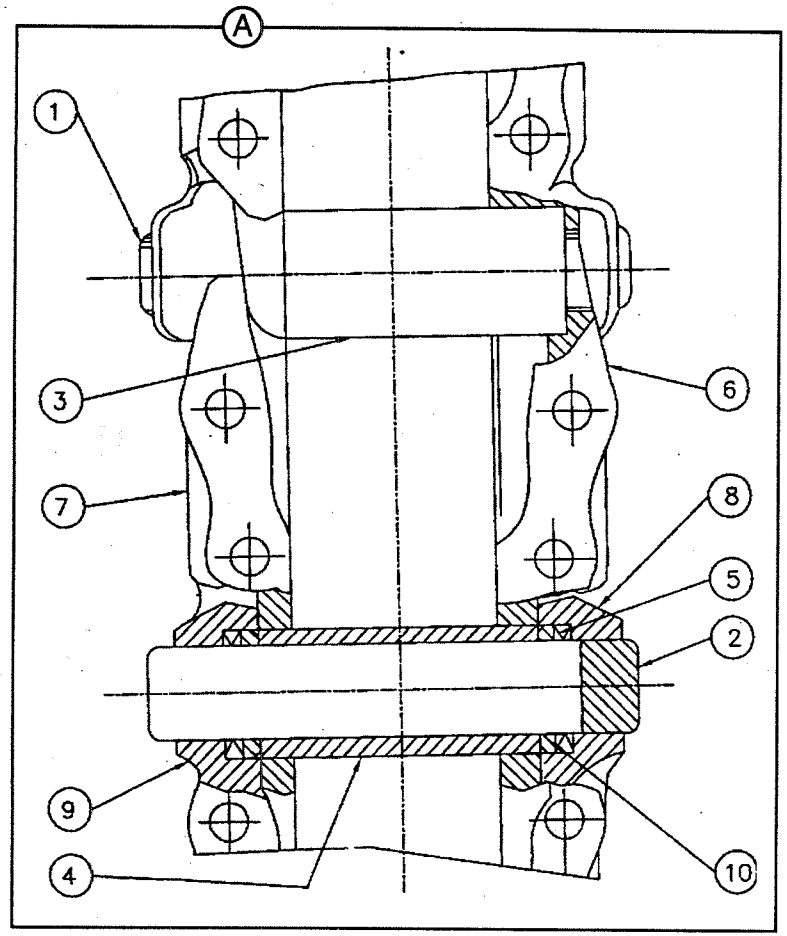

ITEM	PART NO.	CHANGE NO.	DESCRIPTION	REMARKS	QTY.
A	550/43317		Track Link Assy.		1
1	550/43244		Track Pin- Reg		43
2	550/43245		Track Pin- Master		1
3	550/43242		Track Bushing		43
4	550/43243		Track Bushing Master		1
5	550/43247		Cone Seal Washer		176
6	550/43238		Track Link(RH)		43
7	550/43239		Track Link(LH)		43
8	550/43240		Track Link Master(RH)		1
9	550/43241		Track Link Master(LH)		1
10	550/43246		Track Spacer		2

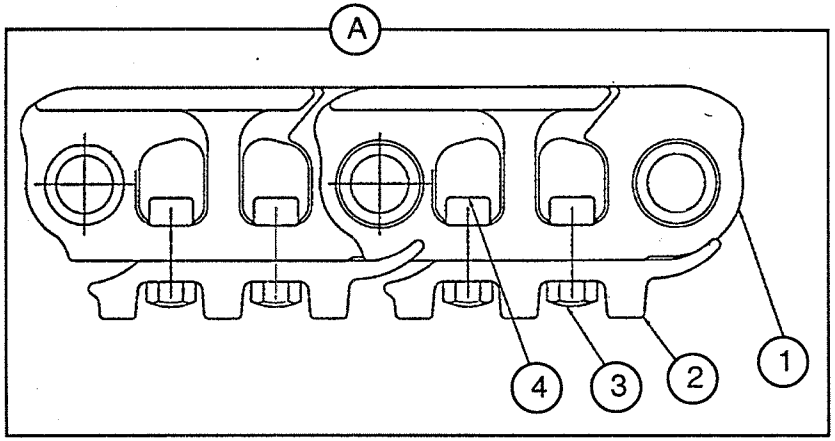

ITEM	PART NO.	CHANGE NO.	DESCRIPTION	REMARKS	QTY.
A	331/65041		Track Group 44 Section 500mm Shoe		1
1	550/43317		Track Link Assy.		1
2	550/43318		Track Shoe - Reg.		44
3	550/43319		Track Bolt		176
4	550/43320		Track Nut		176

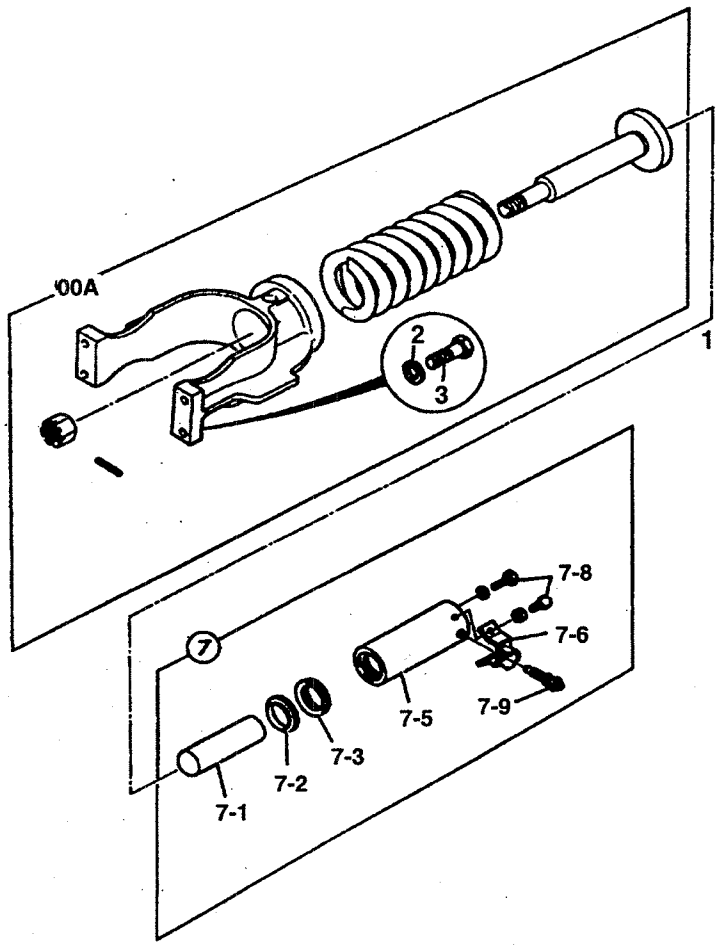

ITEM	PART NO.	CHANGE NO.	DESCRIPTION	REMARKS	QTY.
00A	JNA0224		Yoke, Spring and fork assembly		1
2	KHN0297		Washer, high, strength		12
3	1316/3712Z		Bolt		12
7	JNA0225		Cylinder		1
7.1 √	JNA0237		Rod		1
7.2 √	JNA0239		Seal		1
7.3 √	JNA0238		Ring		1
7.5	JNA0236		Cylinder		1
7.6	JNA0240		Bracket		1
7.8	1316/0403Z		Screw		2
7.9 √	JRA0233		Valve, check		1

T

- T1 ENGINE BLOCK & SUB-ASSEMBLIES
- T2 CYLINDER HEAD & SUB-ASSEMBLIES
- T3 INDUCTION & EXHAUST SYSTEMS
- T4 SYSTEM, COOLING
- T5 SYSTEM, LUBRICATION
- T6 SYSTEM, FUEL
- T7 EQUIPMENT, AUXILIARY
- T8 GASKET SETS

T1-1-1 ENGINE COMPLETE

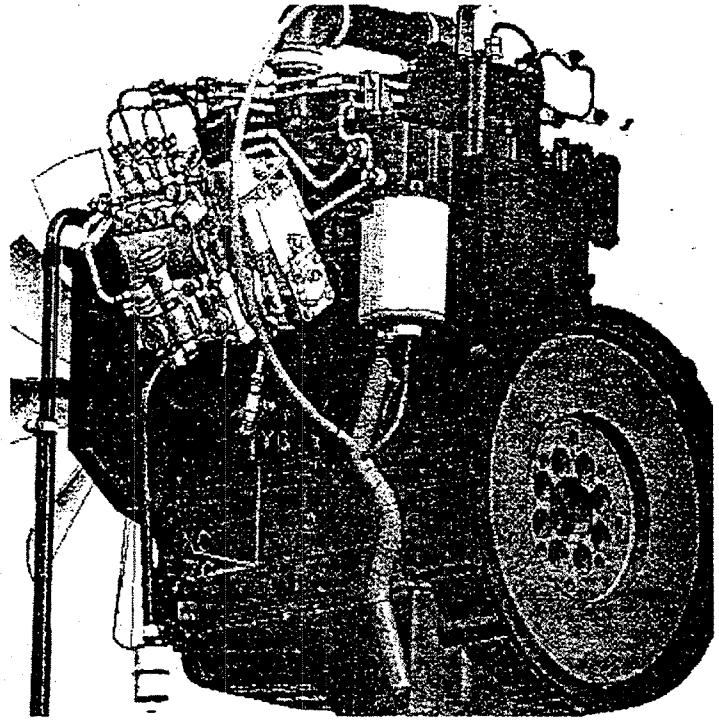

ITEM	PART NO.	CHANGE NO.	DESCRIPTION	REMARKS	QTY.
1	229/01504		Engine, complete		1

T1-3-1 COVER, CAM FOLLOWER

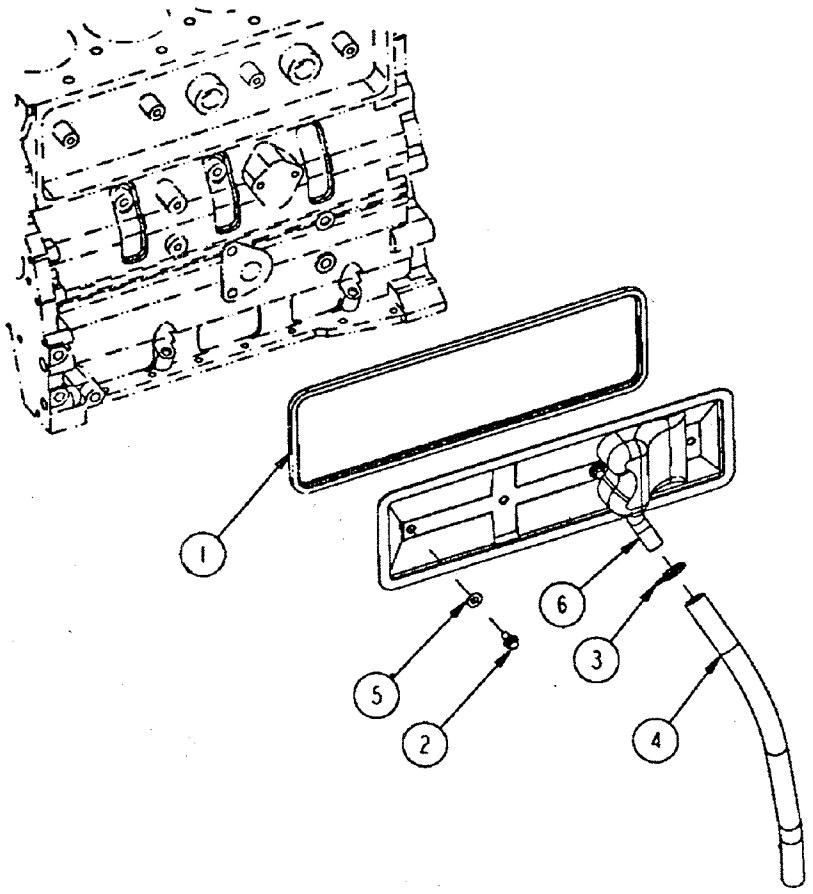

ITEM	PART NO.	CHANGE NO.	DESCRIPTION	REMARKS	QTY.
1	332/Y3333		Gasket, Push Rod Cover		1
2	NSP		Screw, Hex Feange Head Cap	M8×1.25×16	2
3	NSP		Clamp, Spring Hose		1
4	NSP		Hose Plain		1
5	NSP		Seal, Grommet		1
6	NSP		Cover, Push Rod		1

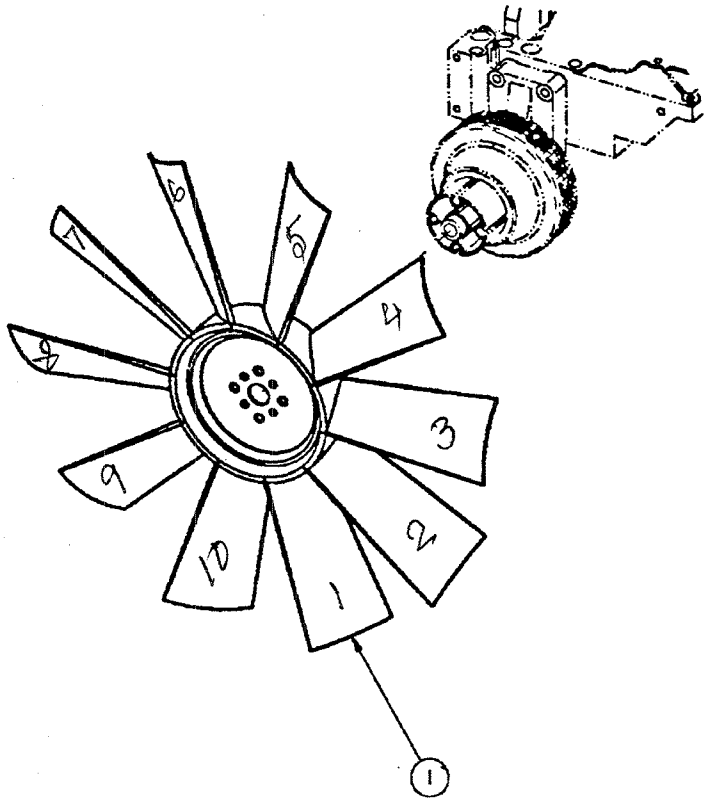

ITEM	PART NO.	CHANGE NO.	DESCRIPTION	REMARKS	QTY.
1	332/Y3356		Fan, Engine	22" Fixed Fan.	1

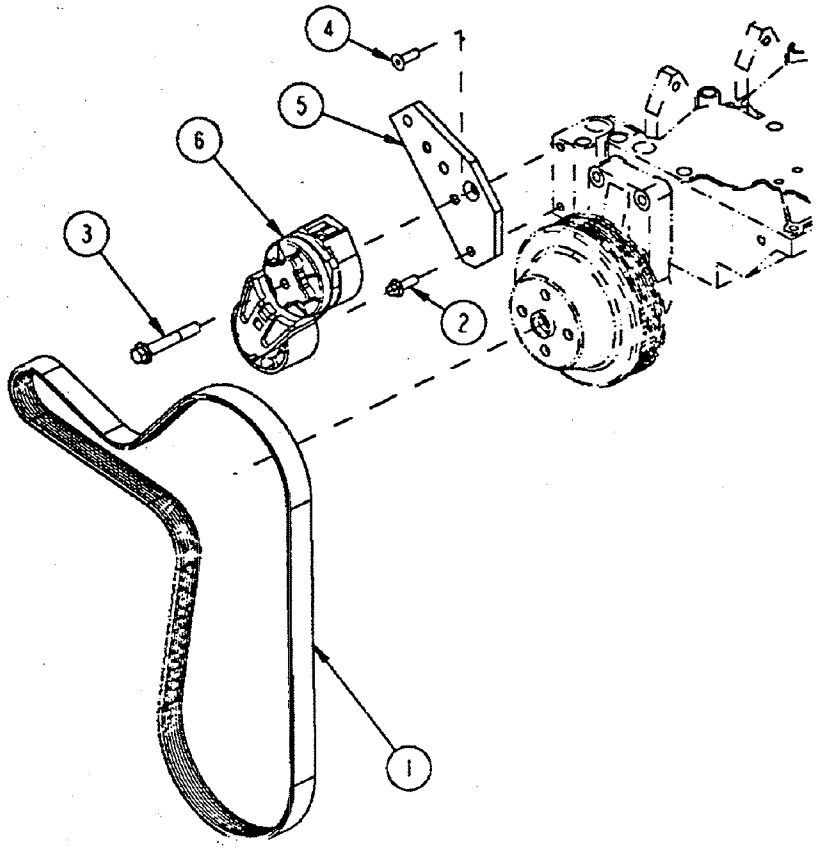

ITEM	PART NO.	CHANGE NO.	DESCRIPTION	REMARKS	QTY.
1	NSP		Screw, Hex Flange Head Cap		1
2	NSP		Bracket, Belt Tensioner		1
3	332/Y3344		Tensioner, Belt		1
4	NSP		Screw, Flat Head Cap	M8×1.25×25	2
5	332/Y7124		Belt, V Ribbed		1

T1-6-1 COVER, FRONT GEAR

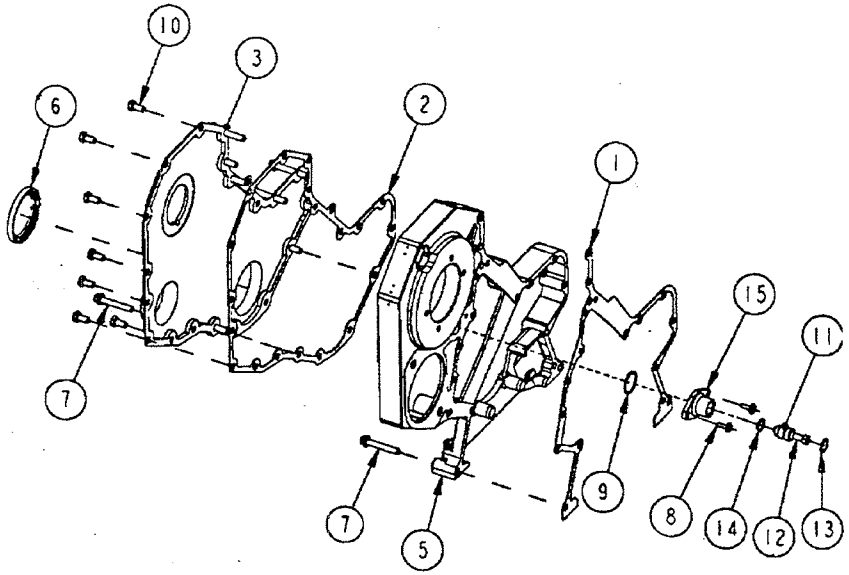

ITEM	PART NO.	CHANGE NO.	DESCRIPTION	REMARKS	QTY.
1	NSP		Gasket, Gear Housing	Family : B Series	1
2	332/Y5362		Gasket, Gear Cover		1
3	NSP		Cover, Gear	Assembly of 4 & 6	1
5	NSP		Housing, Gear		1
6	332/Y3341		Seal Oil		1
7	NSP		Screw, Hex Flange Head Cap	M8x1.25x50	11
8	NSP		Screw, Round Head Cap	M5x0.80x17	2
9	NSP		Seal, Rectangular Ring		1
10	NSP		Screw, Hex Flange Head Cap	M8x1.25x16	16
11	NSP		Housing, Timing Pin	Not Serviceable.	
12	NSP		Pin, Timing		1
13	NSP		Ring, Retaining		1
14	NSP		Seal, O Ring		1
15	NSP		Housing, Timing Pin		1

T1-7-1 HOUSING, FLYWHEEL

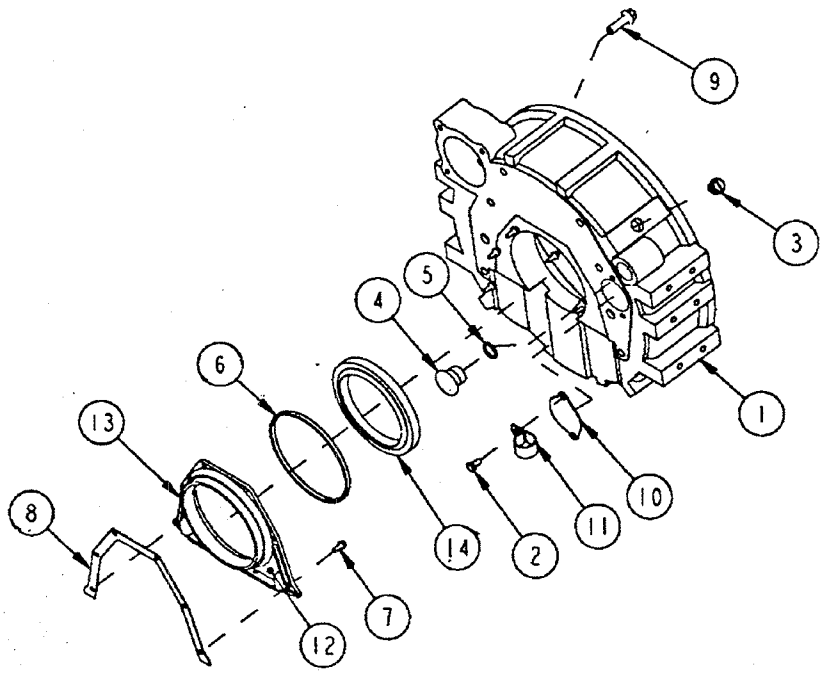

ITEM	PART NO.	CHANGE NO.	DESCRIPTION	REMARKS	QTY.
1	NSP		Housing, Flywheel		1
2	NSP		Screw, Hexagon Head Cap	M8×1.25×16	2
3	NSP		Plug, Threaded		1
4	NSP		Plug, O Ring		1
5	NSP		Seal, O Ring		1
6	332/Y5115		Seal, Rectangular Ring		1
7	NSP		Screw, Hex Flange Head Cap	M6×1.00×16	6
8	332/Y5116		Gasket, Rear Cover		1
9	NSP		Screw, Hex Flange Head Cap	M12×1.75×40	8
10	NSP		Plate, Cover		1
11	NSP		Clip		1
12	NSP		Cover, Rear		1
13	NSP		Cover, Rear		1
14	332/Y5117		Seal, Oil		1

T1-8-1 ENGINE MOUNTINGS

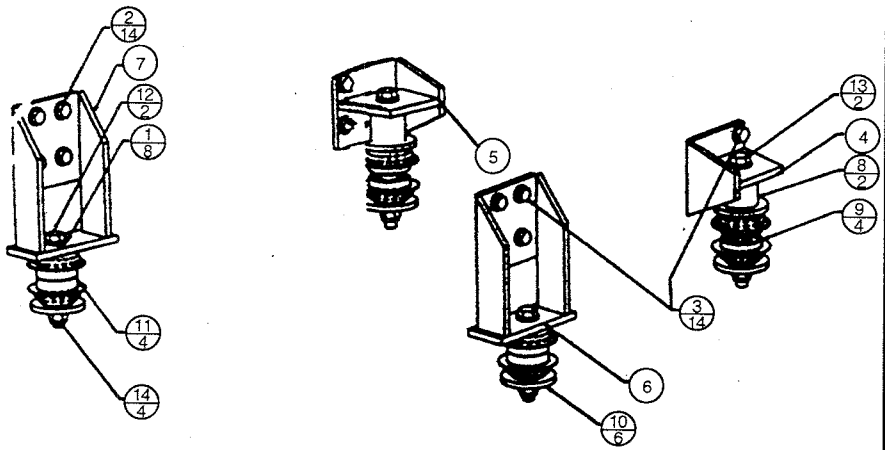

ITEM	PART NO.	CHANGE NO.	DESCRIPTION	REMARKS	QTY.
1	JHP0043		Washer High ST		8
2	JHP0042		Washer High ST		14
3	1316/0509Z		Bolt, High STRE		14
4 ▬	229/01540		Engine MTG front RH ▬		1
5 ▬	229/01541		Engine MTG front LH		1
6 ▬	229/01542		Engine MTG rear RH		1
7 ▬	229/01543		Engine MTG rear LH		1
8	229/01544		Spacer MTG Frt.		2
9	KNH0528		Rubber, Elastic ▬		4
10	KNH0589		Plate		6
11	KRH0781		Rubber, Elastic ▬		4
12	1316/3723Z		Bolt M16x130		2
13	1316/3729Z		Bolt M16 x 190		2
14	1371/0603Z		Nut		4
15	4101/0500		Loctite 262		0

T

- T1 ENGINE BLOCK & SUB-ASSEMBLIES
- • T2 CYLINDER HEAD & SUB-ASSEMBLIES
- T3 INDUCTION & EXHAUST SYSTEMS
- T4 SYSTEM, COOLING
- T5 SYSTEM, LUBRICATION
- T6 SYSTEM, FUEL
- T7 EQUIPMENT, AUXILIARY
- T8 GASKET SETS

T2-1-1 MOUNTING, CYLINDER HEAD

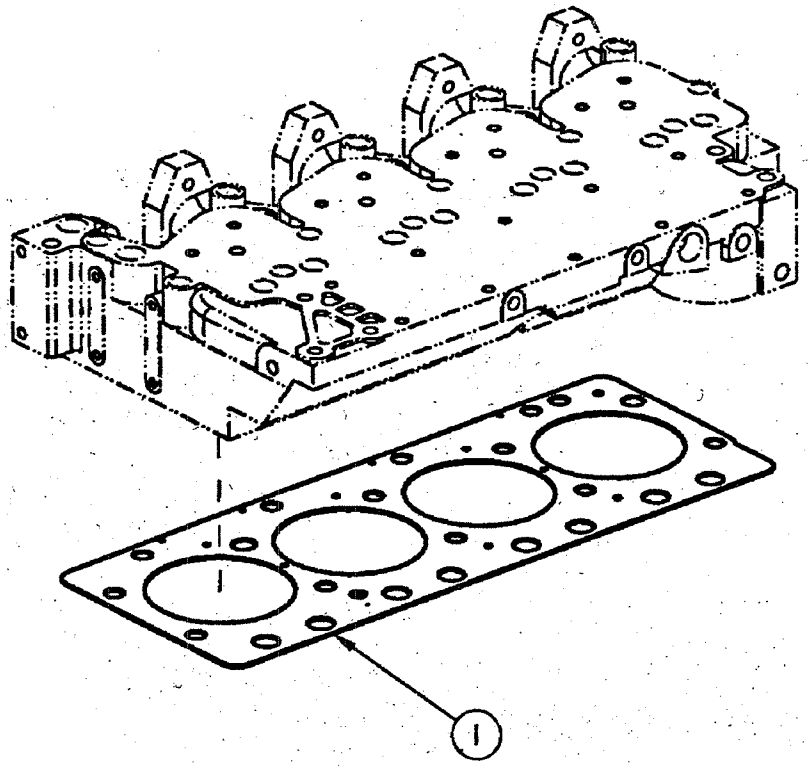

ITEM	PART NO.	CHANGE NO.	DESCRIPTION	REMARKS	QTY.
1	332/Y3867		Gasket, Cylinder Head		1

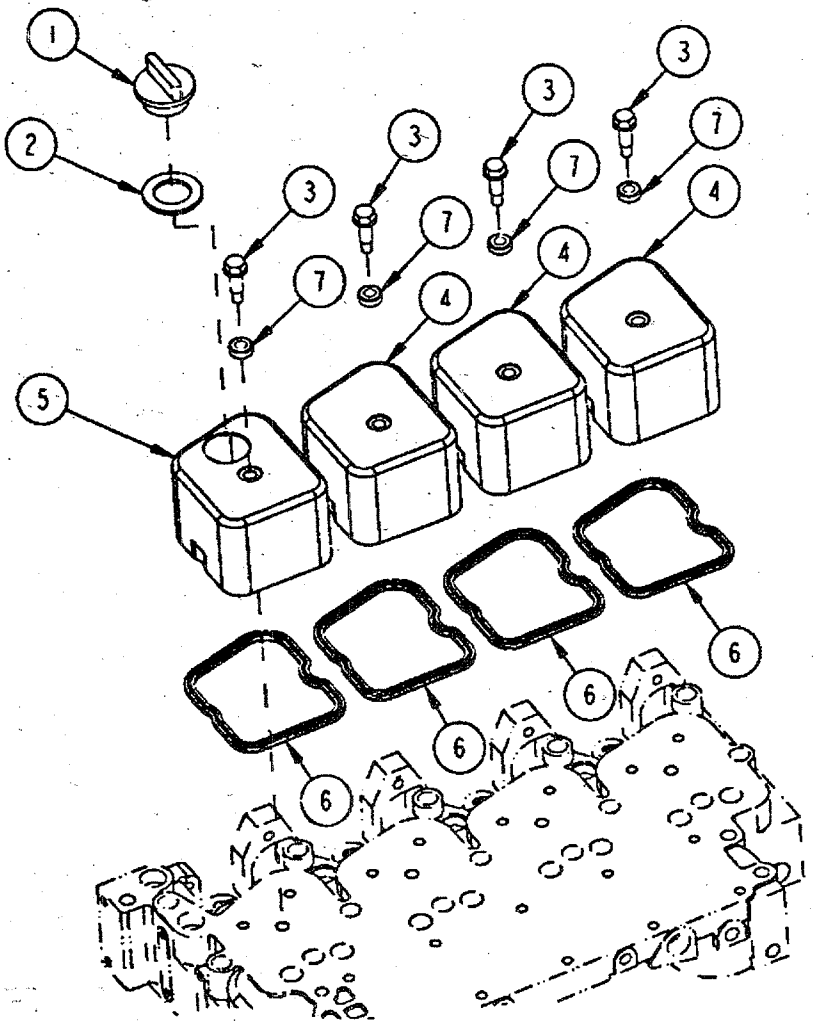

ITEM	PART NO.	CHANGE NO.	DESCRIPTION	REMARKS	QTY.
1	NSP		Cap, Filler		1
2	NSP		Seal, Rectangular		1
3	NSP		Screw, Hex Flange	M8x1.25x21	6
4	NSP		Valve, Cover		5
5	NSP		Cover, Valve		1
6	332/Y3300		Gasket, Valve Cover		6
7	332/Y5363		Isolator, Noise		6

T2-3-2 COVER, CYLINDER BLOCK

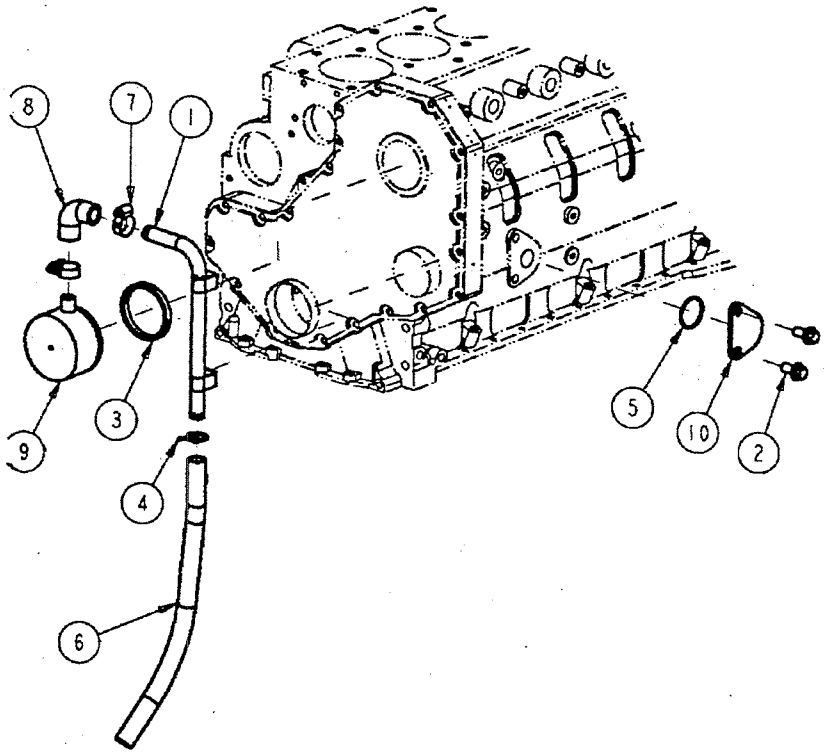

ITEM	PART NO.	CHANGE NO.	DESCRIPTION	REMARKS	QTY.
1	NSP		Tube, Breather		1
2	NSP		Screw, Hex Flange Head Cap	M12x1.75x25	2
3	NSP		Seal, Rectangular Ring		1
4	NSP		Clamp, Spring Hose		1
5	NSP		Seal, O Ring		1
6	NSP		Hose, Plain		1
7	NSP		Clamp, Hose		2
8	NSP		Hose, Elbow		1
9	332/Y3335		Breather, Crankcase		1
10	NSP		Plate, Cover		1

T

T1 ENGINE BLOCK & SUB-ASSEMBLIES

T2 CYLINDER HEAD & SUB-ASSEMBLIES

• T3 INDUCTION & EXHAUST SYSTEMS

T4 SYSTEM, COOLING

T5 SYSTEM, LUBRICATION

T6 SYSTEM, FUEL

T7 EQUIPMENT, AUXILIARY

T8 GASKET SETS

T3-3-1 FILTER, AIR

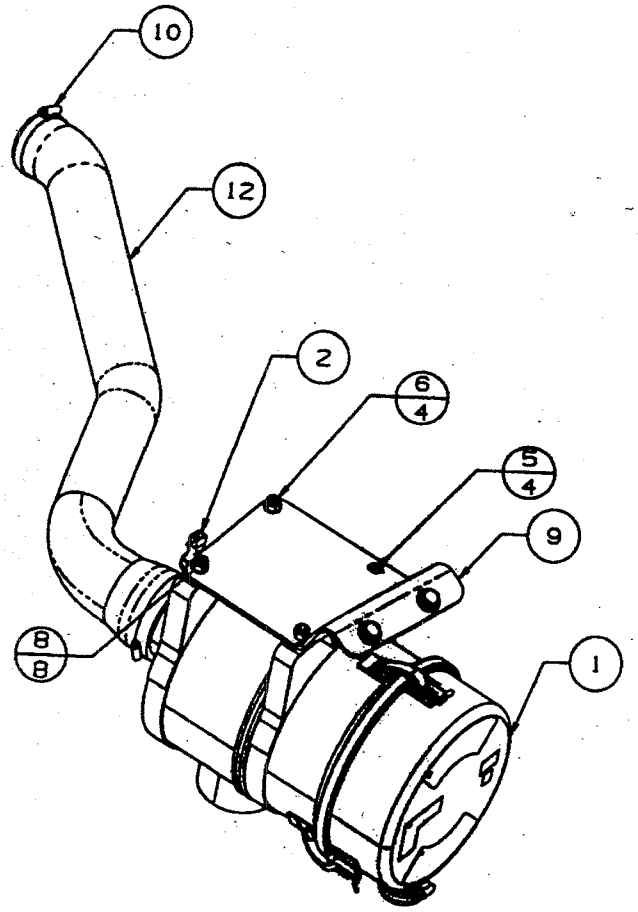

ITEM	PART NO.	CHANGE NO.	DESCRIPTION	REMARKS	QTY.
1	229/01637		Air Cleaner		1
1A	332/Y3301		Element outer		1
1B	332/Y3318		Element inner		1
2	701/36500		Service Switch (Vacuum Sensor)		1
3	229/01528		Adaptor		1
4	1316/0508Z		Set Screw		2
5	1316/0407Z		Screw M12		4
6	1370/0303Z		Nut M8 Lock		4
7	1411/0005Z		1/2" Medium Washer		2
8	1420/0008Z		M8 Plain Washer		8
9	229/02405		Air Cleaner Mounting Bracket		1
10	2201/0014	To 1318317	Worm Drive Clip		1
	332/P8537	From 1318318	T Bold - Clamp		1
11	2201/0016	To 1318317	Worm Drive Clip		1
.	229/1001556	From 1318318	T Bolt - Clamp		
12	229/01635		Induction Hose		1

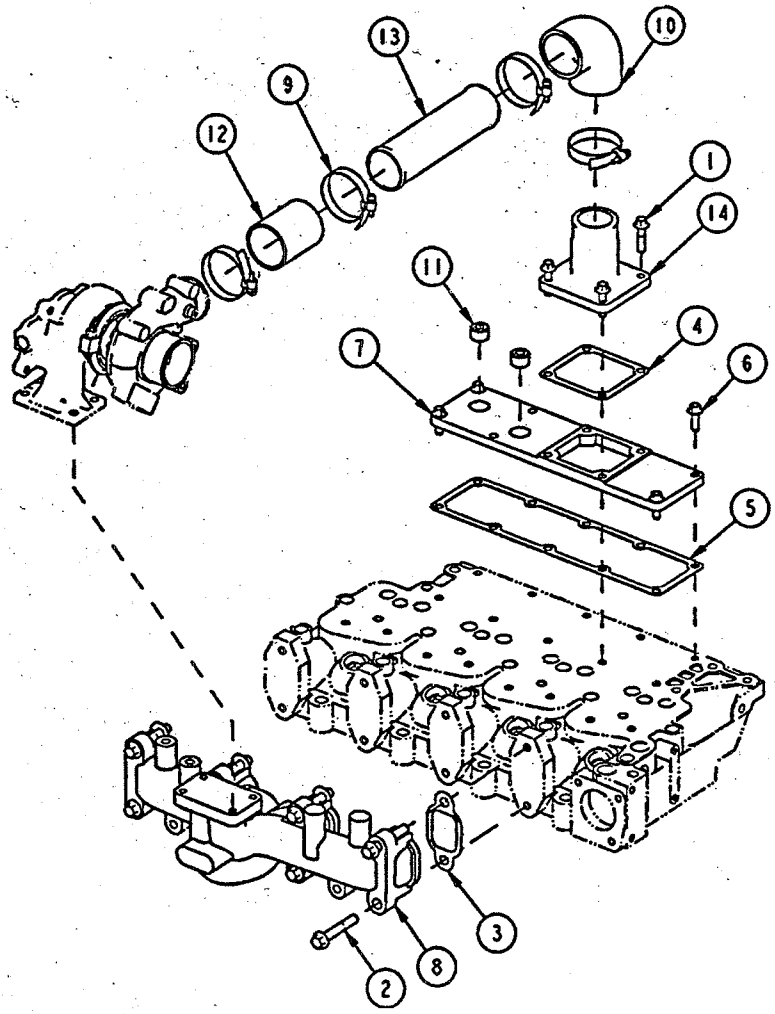

ITEM	PART NO.	CHANGE NO.	DESCRIPTION	REMARKS	QTY.
1	NSP		Screw, hex flange head cap	M8×1.25×35	4
2	NSP		Screw, hex flange head cap	M10×1.5×65	8
3	332/Y3286		Gasket, exhaust manifold		4
4	332/Y3328		Gasket, connection		1
5	332/Y5358		Gasket, intake manifold cover		1
6	NSP		Screw, hex flange head cap	M8×1.25×25	4
7	NSP		Cover, intake manifold		1
8	NSP		Manifold, exhaust		1
9	332/Y3292		Clamp, hose		4
10	332/Y3327		Hose, elbow		1
11	NSP		Plug pipe	½-14 NPTF	2
12	NSP		Hose plain		1
13	NSP		Tube air		1
14	NSP		Connection, air intake		1

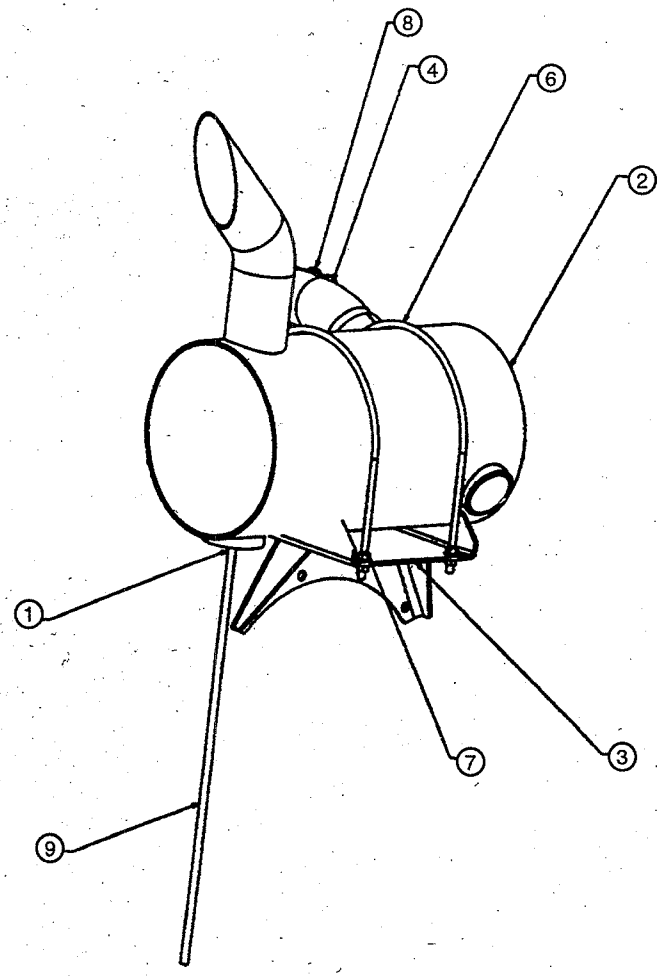

ITEM	PART NO.	CHANGE NO.	DESCRIPTION	REMARKS	QTY.
1	2201/0001		Clip, Jubilee 8		1
2	229/01630		Exhaust Silencer		1
3	229/01632		Bracket, Muffler		1
4	229/01633		Pipe, Turbo Exh.		1
5	4101/0500		Loctite 262		0
6	826/10713		Silencer Clamp		2
7	826/01787		Nut		8
8	1391/3305		Screw		4
9	JHH0053		Tube Teflon Drain		1

T

T1 ENGINE BLOCK & SUB-ASSEMBLIES

T2 CYLINDER HEAD & SUB-ASSEMBLIES

T3 INDUCTION & EXHAUST SYSTEMS

• T4 SYSTEM, COOLING

T5 SYSTEM, LUBRICATION

T6 SYSTEM, FUEL

T7 EQUIPMENT, AUXILIARY

T8 GASKET SETS

T4-1-1 PUMP, WATER COOLING

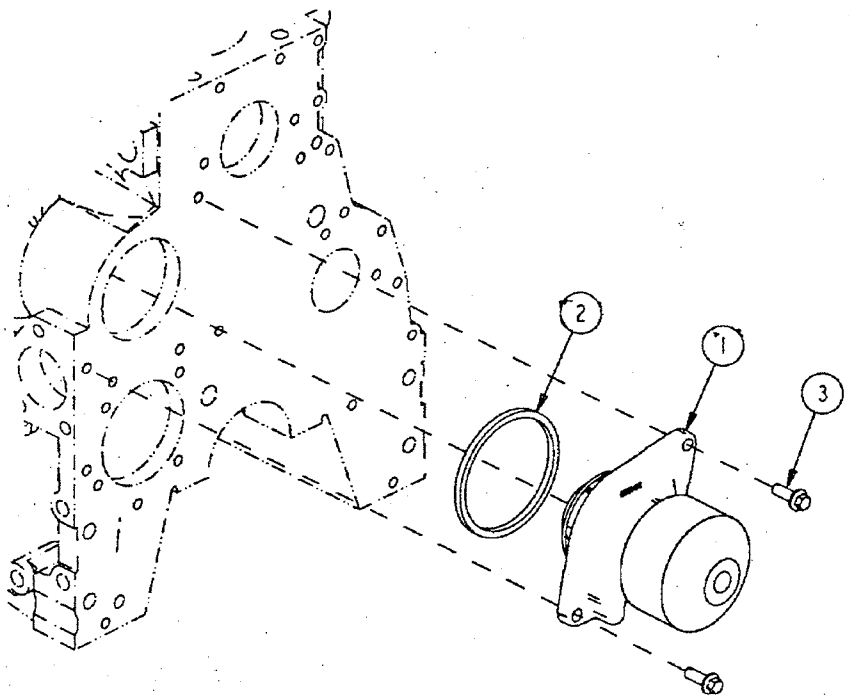

ITEM	PART NO.	CHANGE NO.	DESCRIPTION	REMARKS	QTY.
1	332/Y3313		Pump, Water		1
2	332/Y3295		Seal, Rectangular Ring		1
3	NSP		Screw, Hex Flange Head Cap	MB×1.25×22	2

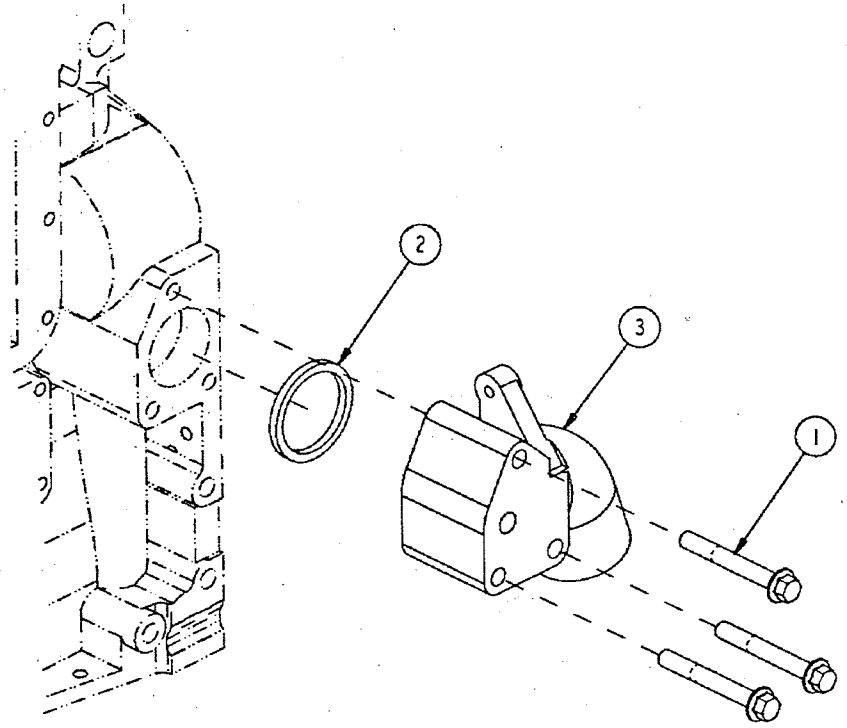

ITEM	PART NO.	CHANGE NO.	DESCRIPTION	REMARKS	QTY.
1	NSP		Screw, Hex Flange Head Cap	M10×1.50×75	3
2	332/Y3322		Seal, Rectangular Ring		1
3	NSP		Connection, Water Inlet		1

T4-2-1 CONNECTION, WATER OUTLET

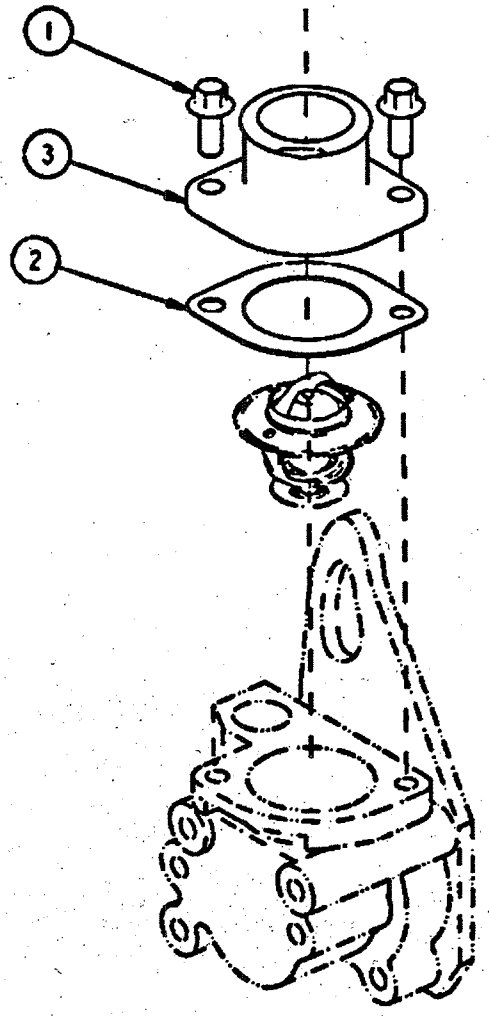

ITEM	PART NO.	CHANGE NO.	DESCRIPTION	REMARKS	QTY.
1	NSP		Screw, Hex Flange Head Cap	M8×1.25×20	2
2	332/Y5361		Gasket, Connection		1
3	NSP		Connection, Water Outlet	All. Part 4080781	1

T4-2-2 HOUSING, THERMOSTAT

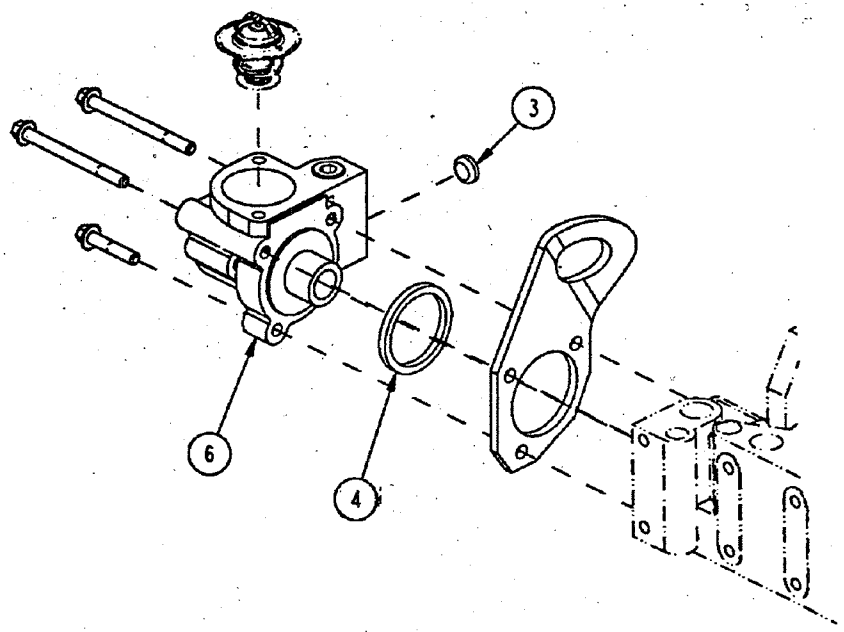

ITEM	PART NO.	CHANGE NO.	DESCRIPTION	REMARKS	QTY.
1	NSP		Bracket, Lifting		1
2	NSP		Screw, Hex Flange Head Cap	M8×1.25×40	1
3	NSP		Plug, Expansion		1
4	332/Y3322		Seal, Rectangular Ring		1
5	NSP		Screw, Hex Flange	M8×1.25×90	2
6	NSP		Housing, Thermostat		1
7	NSP		Plug Pipe	½" NPTF	1

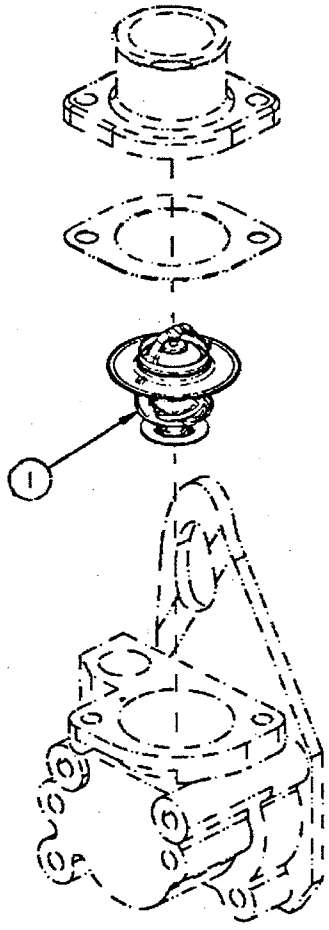

ITEM	PART NO.	CHANGE NO.	DESCRIPTION	REMARKS	QTY.
1	332/Y3293		Thermostat		1

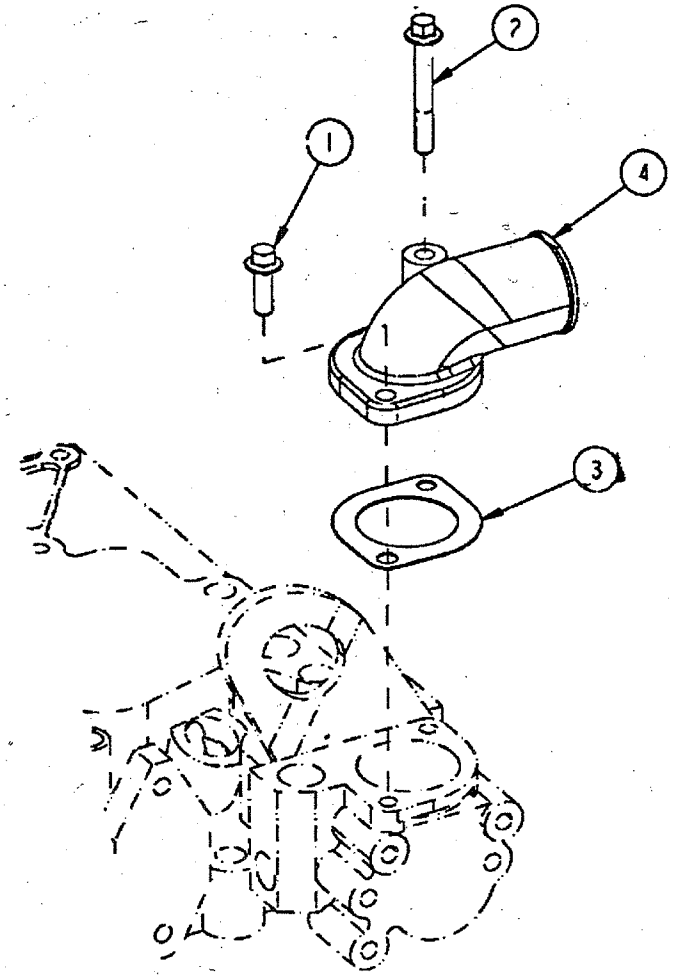

ITEM	PART NO.	CHANGE NO.	DESCRIPTION	REMARKS	QTY.
1	NSP		Screw, Hex Flange Head Cap	M8×1.25×25	1
2	NSP		Screw, Hex Flange Head Cap	M8×1.25×60	1
3	332/Y5361		Gasket, Connection		1
4	NSP		Connection, Water Outlet		1

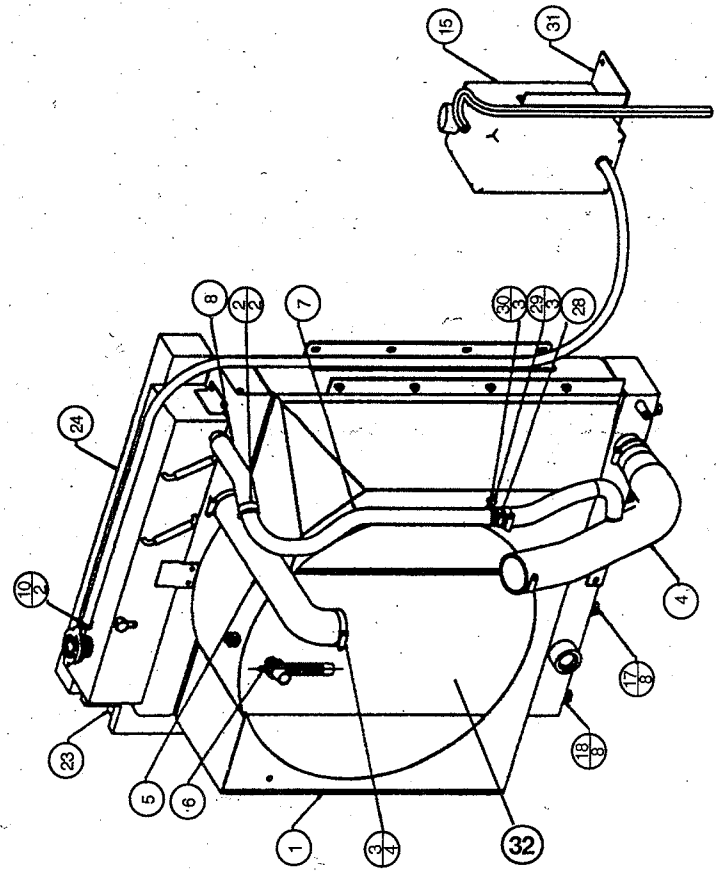

ITEM	PART NO.	CHANGE NO.	DESCRIPTION	REMARKS	QTY.
1	229/01530		Radiator Assy. JS140		1
2	2201/0009		Worm Drive Clip		2
3	2201/0012		Worm Drive Clip		4
4	229/02335		Bottom Radiator Hose		1
5	229/02547		Top Radiator Hose		1
6	229/01671		Tee Adaptor		1
7	229/02336		Make up line Hose		1
8	229/02334		Make up line Hose		1
9	JHH0039		Hose Vent Line		1
10	2201/0003		Worm Drive Clip		2
11	826/01144		Band Harness		4
12	4101/0500		Locking Fluid		99
13	826/01347		Cable Tie		1
14	229/01118		Venting Adaptor		1
15	331/13929		Radiator Top Up Bottle		1
16	2201/0001		Worm Drive Clip		2
17	1315/0507Z		Screw M12 x 25		8
18	1420/0009Z		Washer M12		8
19	JHH0125		Tube PVC		1
20	JSR0018		Tube Corrugated		1
21	KHH0258		Hose Rubber		1
22	331/67150		Sealing Plate		1
23	331/67148		Sealing Foam Side		1
24	331/67149		Sealing Foam Top		1
25	229/01118		Venting Adaptor		1
26	1316/0305Z		Screw M8x20		4
27	1420/0007Z		Washer M8		4
28	KHR1408		P Clip (KHR1325)		1
29	1315/0203Z		Screw M6		3
30	1420/0006Z		Washer M6		3
31	331/66675		WA Bottle Mounting Bracket		1
32	332/46222		Radiator		1
33	332/46223		Cooler		

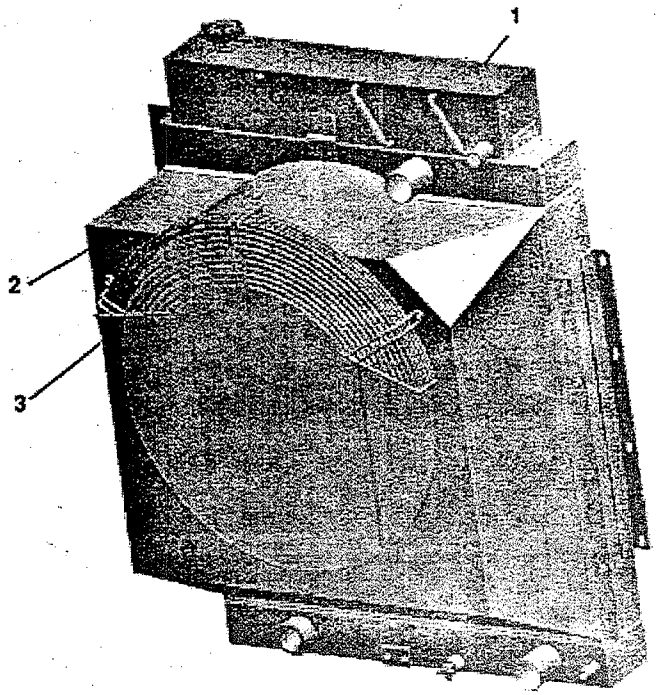

ITEM	PART NO.	CHANGE NO.	DESCRIPTION	REMARKS	QTY.
1	229/01530		Radiator Assy.		1
2			Cowling, Cowling Fan		1
3			Guard, Fan		1

T

T1 ENGINE BLOCK & SUB-ASSEMBLIES

T2 CYLINDER HEAD & SUB-ASSEMBLIES

T3 INDUCTION & EXHAUST SYSTEMS

T4 SYSTEM, COOLING

• T5 SYSTEM, LUBRICATION

T6 SYSTEM, FUEL

T7 EQUIPMENT, AUXILIARY

T8 GASKET SETS

T5-5-1 COLLER, ENGINE OIL

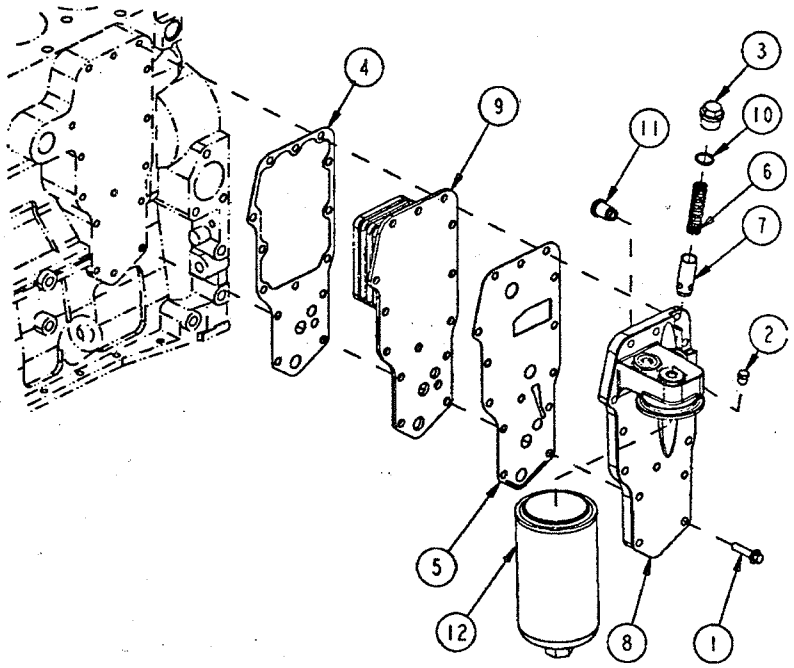

ITEM	PART NO.	CHANGE NO.	DESCRIPTION	REMARKS	QTY.
1	NSP		Screw, Hex Flange Head cap	M8×1.25×35	14
2	NSP		Plug, Pipe	1/8 NPT	1
3	NSP		Plug, Threaded		1
4	332/Y3304		Gasket, Oil Cooler		1
5	332/Y5360		Gasket, Filter Head		1
6	NSP		Spring, Compression		1
7	NSP		Plunger, Pressure		1
8	NSP		Head, Lube oil filter		1
9	332/Y3321		Core, Cooler		1
10	NSP		Seal, O Ring		1
11	NSP		Valve Bypass		1
12	332/Y3268		Cartridge, Lube Oil Filter		1

T

T1 ENGINE BLOCK & SUB-ASSEMBLIES

T2 CYLINDER HEAD & SUB-ASSEMBLIES

T3 INDUCTION & EXHAUST SYSTEMS

T4 SYSTEM, COOLING

T5 SYSTEM, LUBRICATION

• T6 SYSTEM, FUEL

T7 EQUIPMENT, AUXILIARY

T8 GASKET SETS

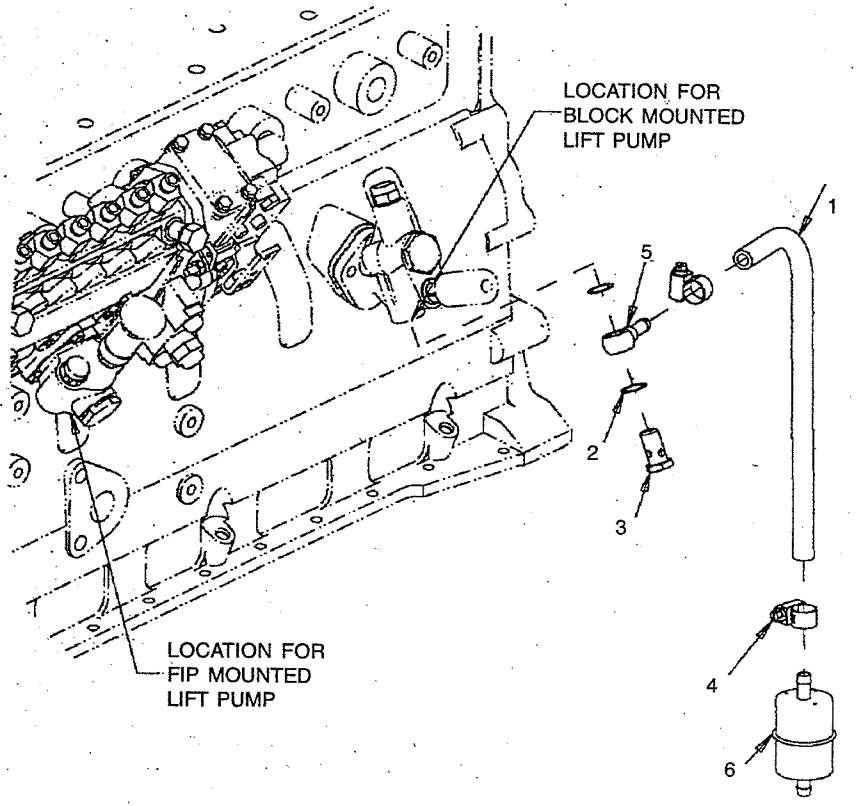

ITEM	PART NO.	CHANGE NO.	DESCRIPTION	REMARKS	QTY.
1	NSP		Hose, Plain		1
2	NSP		Washer, Sealing		2
3	332/Y5355		Screw, Banjo Connector	M14x1.5x26	1
4	332/Y5356		Clamp, Hose		2
5	332/Y3297		Banjo Connector		1
6	332/Y3299		Strainer, Fuel	11 Dia. Outlet.	1

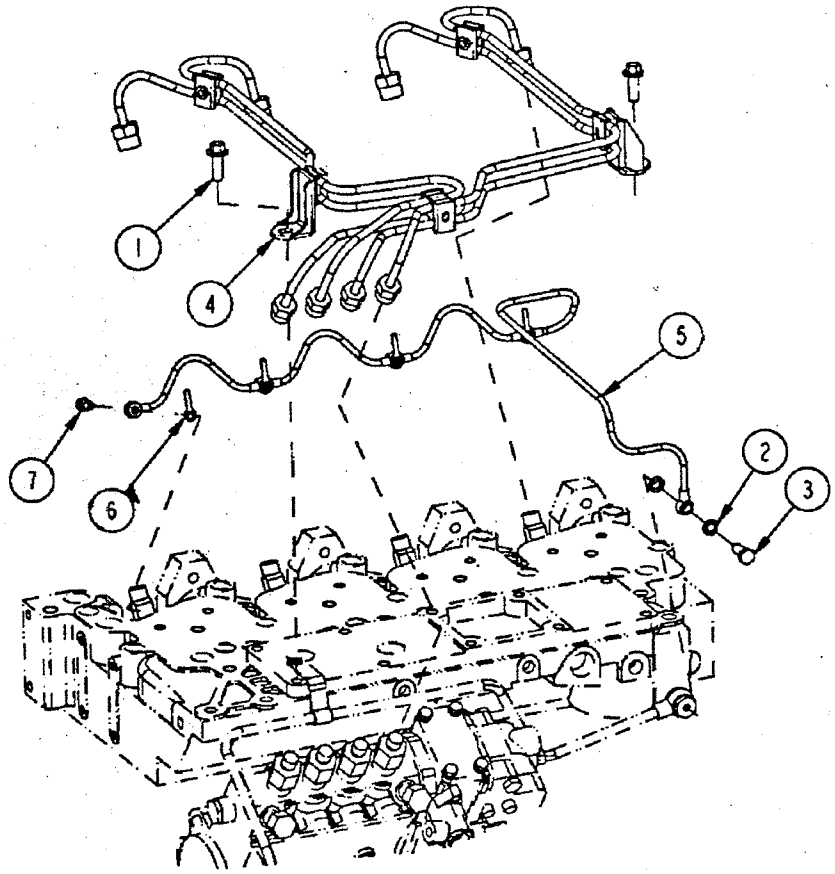

ITEM	PART NO.	CHANGE NO.	DESCRIPTION	REMARKS	QTY.
1	NSP		Screw, Hex Flange Head Cap		2
2	NSP		Washer, Sealing	8 mm	2
3	NSP		Valve, Check	M8×1.25×17.5	1
4	NSP		Tube, Injector Fuel Supply		1
5	332/Y3357		Manifold, Fuel		1
6	332/Y5365		Seal, Banjo Connector		4
7	NSP		Screw, Captive Washer Cap		4

T6-2-3 PLUMBING, FUEL FILTER SYSTEM

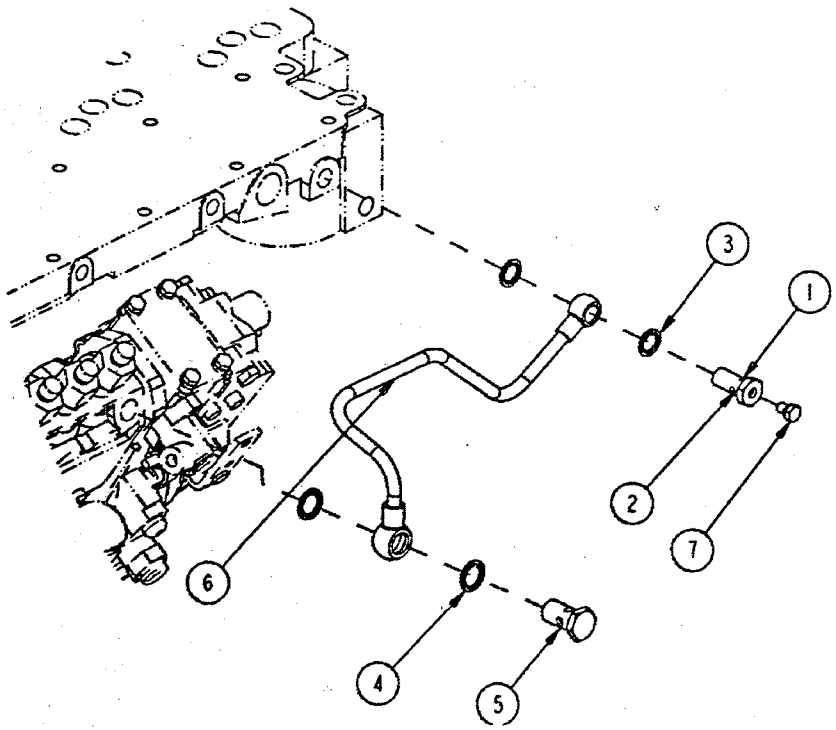

ITEM	PART NO.	CHANGE NO.	DESCRIPTION	REMARKS	QTY.
1	NSP		Screw, Banjo Connector		1
2	NSP		Screw, Banjo C		1
3	NSP		Washer, Sealing		2
4	NSP		Washer, Sealing		2
5	NSP		Screw, Banjo Connector	M14x1.5x26	1
6	332/Y3566		Tube, Fuel Supply		1
7	NSP		Screw, Captive		1

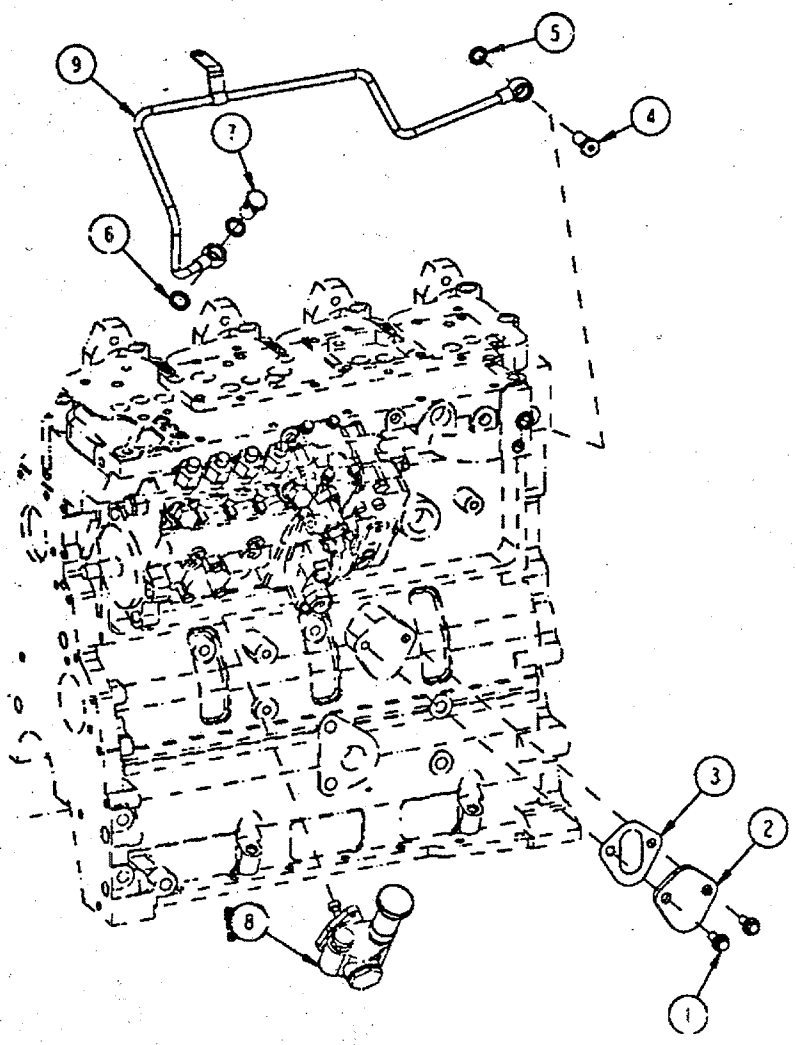

ITEM	PART NO.	CHANGE NO.	DESCRIPTION	REMARKS	QTY.
1	NSP		Screw, Hex Flange Head Cap		2
2	NSP		Plate, Cover		1
3	NSP		Gasket, Cover Plate		1
4	NSP		Screw, Banjo Connection	M12x1.50x24	1
5	NSP		Washer, Sealing		2
6	NSP		Washer, Sealing		2
7	NSP		Screw, Banjo Connector	M14x1.50x26	1
8	332/Y3343		Pump, Fuel Transfer		1
9	NSP		Tube, Fuel Supply		1

JCB INDIA LTD.

NUMERICAL INDEX - JS 140

PART NO.	FIGURE NO.	ITEM NO.	PART NO.	FIGURE NO.	ITEM NO.	PART NO.	FIGURE NO.	ITEM NO.	PART NO.	FIGURE NO.	ITEM NO.
0	F4-2-3	28	1315/0203Z	T4-3-1	29	1316/0305Z	D1-1-1	8	1316/0508Z	B1-5-10	14
1	F4-2-3		1315/0205	T6-4-2	14	1316/0305Z	T4-3-1	26	1316/0508Z	B1-5-11	12
41913	E4-2-1	12	1315/0207Z	B2-1-20	26	1316/0305Z	E1-17-1	31	1316/0508Z	B1-5-12	10
*1315/0305Z	C1-4-10	19	1315/0301Z	C1-3-1	8	1316/0403Z	C1-5-1	10	1316/0508Z	E3-14-1	2
*1420/0007Z	C1-4-10	20	1315/0301Z	E1-17-1	10	1316/0403Z	D1-1-1	32	1316/0508Z	T3-3-1	4
*331/37333	B2-1-20	44	1315/0303Z	B1-5-1	13	1316/0403Z	J1-6-1	7.8	1316/0508Z	T6-4-2	19
*331/37335	B2-1-10	26	1315/0303Z	B2-1-1	35	1316/0403Z	E1-17-1	20	1316/0509D	J1-1-2	10
:32/925164	E1-8-1	12.2	1315/0303Z	B2-1-10	25	1316/0405D	E1-7-1	23	1316/0509Z	B1-2-1	9
:332/C1496	E1-8-1	12.4	1315/0305Z	B2-1-10	24	1316/0405D	B1-2-2	11	1316/0509Z	B1-5-10	15
:332/C1503	E1-8-1	12.8	1315/0305Z	C1-4-10	3	1316/0405Z	B1-2-1	10	1316/0509Z	B1-5-11	6
:823/10201	E1-8-1	12.7	1315/0307Z	B2-1-20	23	1316/0405Z	B1-5-12	16	1316/0509Z	B1-5-30	6
:828/10081	E1-8-1	12.3	1315/0307Z	C1-3-1	10	1316/0405Z	C1-1-1	21	1316/0509Z	T1-8-1	3
001/00233	C1-1-1	6	1315/0308	A3-8-1	5	1316/0405Z	C1-2-1	5	1316/0510D	B1-2-2	14
001/00233	T6-4-2	5	1315/0407Z	B2-3-1	2	1316/0405Z	D1-1-1	53	1316/0510Z	B1-5-30	5
03/305076	T6-4-2	23	1315/0409Z	D1-1-1	1C	1316/0405Z	E1-70-2	32	1316/0511D	E1-20-1	12
03/305077	T6-4-2	24	1315/0409Z	T6-4-2	13	1316/0407Z	D1-1-1	1	1316/0511Z	B1-5-10	16
123/06305	C1-4-1	5	1315/0507D	J1-1-2	9	1316/0407Z	E1-70-2	39	1316/0514D	E1-20-1	11
123/06305	C1-4-10	5	1315/0507DZ	B1-5-11	14	1316/0407Z	T3-3-1	5	1316/07112	E1-50-1	1 03
130/14011	B5-3-1	8	1315/0507Z	T4-3-1	17	1316/0408Z	D1-1-1	2	1316/0711Z	E3-1-1	2
130/14012	B5-3-1		1315/0508Z	C1-3-1	9	1316/0409Z	E2-1-1	3	1316/0711Z	J1-1-2	13
130/14013	B5-3-1		1315/0509Z	E1-17-1	5	1316/0505D	E1-20-1	13	1316/3405Z	E1-21-1	4
130/14014	B5-3-1		1315/0509Z	T6-4-2	29	1316/0505D	J1-1-2	6	1316/3410D	E1-8-1	4
130/14015	B5-3-1		1315/3218Z	E1-70-2	24	1316/0505Z	B1-5-30	7	1316/3418Z	E1-2-1	3
130/14053	B5-3-1		1316/0103	B1-4-1	13	1316/0505Z	C1-4-10	21	1316/3512D	E1-21-1	6F
130/99510	B5-3-1	1	1316/0105Z	C1-1-1	43	1316/0505Z	F4-3-1	3	1316/3512Z	E1-17-1	27
130/995555	B5-3-1		1316/0203Z	B1-5-12	17	1316/0507D	E1-4-1	15	1316/3514	B2-1-30	2
130/99557	B5-3-1		1316/0301Z	C1-1-1	19	1316/0507Z	B1-5-10	13	1316/3514D	E1-21-1	6F
130/99560	B5-3-1		1316/0303Z	B2-4-1	19	1316/0507Z	B1-5-11	4	1316/3514D	E1-23-1	9
1315/0101Z	B1-5-1	12	1316/0305Z	B1-4-1	21	1316/0507Z	C1-1-1	22	1316/3514D	E1-19-1	13
1315/0103Z	E1-17-1	21	1316/0305Z	B1-5-11	5	1316/0507Z	C1-5-1	8	1316/3514Z	E1-18-1	7
1315/0201Z	C1-3-1	11	1316/0305Z	C1-1-1	20	1316/0507Z	D2-1-1	5	1316/3515Z	E1-17-1	7
1315/0201Z	D2-1-1	6	1316/0305Z	C1-2-1	4	1316/0507Z	E1-7-1	24	1316/3516	B2-1-30	3
1315/0203Z	B2-2-1	16	1316/0305Z	C1-4-1	6	1316/0508Z	B1-5-1	1	1316/3516D	E1-19-1	15
1315/0203Z	B2-2-1	18	1316/0305Z	C1-6-1	2	1316/0508Z	B1-5-2	4	1316/3516Z	E1-18-1	8

JCB INDIA LTD.

NUMERICAL INDEX - JS 140

PART NO.	FIGURE NO.	ITEM NO.	PART NO.	FIGURE NO.	ITEM NO.	PART NO.	FIGURE NO.	ITEM NO.	PART NO.	FIGURE NO.	ITEM NO.
1316/3712Z	J1-6-1	3	1370/0402Z	D2-2-1	12	1420/0005Z	B1-5-31	14	1420/0008Z	C1-1-1	25
1316/3713D	A3-6-1	3	1370/0403Z	E1-17-1	8	1420/0005Z	B2-4-1	10	1420/0008Z	C1-3-1	17
1316/3713Z	F4-1-1	3	1370/0603Z	D2-2-1	8	1420/0005Z	C1-1-1	44	1420/0008Z	C1-5-1	11
1316/3713Z	F4-3-1	7	1370/9403Z	B2-2-1	13	1420/0005Z	C1-4-1	16	1420/0008Z	D1-1-1	29
1316/3713Z	J1-1-2	16	1371/0201Z	B1-5-1	14	1420/0005Z	E1-17-1	22	1420/0008Z	E1-2-1	4
1316/3713Z	A3-7-1	3	1371/0202Z	C1-4-10	4	1420/0006	D1-1-1	52	1420/0008Z	E1-21-1	5
1316/3714Z	F4-3-1	10	1371/0303Z	E1-3-1	15	1420/0006Z	B1-3-1	19	1420/0008Z	T3-3-1	8
1316/3716Z	E1-22-1	6	1371/0401	B2-1-30	6	1420/0006Z	B1-5-12	12	1420/0008Z	T6-4-2	12
1316/3718Z	F4-3-1	6	1371/0603Z	B1-3-1	15	1420/0006Z	B2-1-20	25	1420/0008Z	E1-70-2	33
1316/3723Z	T1-8-1	12	1371/0603Z	B1-4-1	16	1420/0006Z	B2-2-1	15	1420/0009D	E1-4-1	16
1316/3729Z	T1-8-1	13	1371/0603Z	T1-8-1	14	1420/0006Z	B2-2-1	19	1420/0009DZ	B1-5-11	15
1316/9403Z	C1-2-1	6	1391/3202Z	E1-1-1	14	1420/0006Z	C1-2-1	32	1420/0009Z	B1-5-1	15
1318/0405Z	B1-5-31	4	1391/3208Z	D1-1-1	51	1420/0006Z	C1-3-1	4	1420/0009Z	B1-5-2	3
1340/0402Z	D2-2-1	10	1391/3210Z	D1-1-1	21	1420/0006Z	T4-3-1	30	1420/0009Z	B1-5-11	7
1370/0001	C1-1-1	45	1391/3305	T3-4-1	8	1420/0006Z	T6-4-2	16	1420/0009Z	B1-5-12	9
1370/0001	C3-3-1	13	1391/3407Z	B2-4-1	4	1420/0007Z	B1-4-1	20	1420/0009Z	B1-5-30	4
1370/0001Z	B1-5-12	15	1391/3409Z	E1-2-1	9	1420/0007Z	B1-5-1	5	1420/0009Z	C1-1-1	26
1370/0001Z	B1-5-31	12	1391/3508Z	E1-1-1	11	1420/0007Z	B1-5-11	8	1420/0009Z	C1-3-1	13
1370/0001Z	C1-4-1	15	1391/3711Z	E2-1-1	1 03	1420/0007Z	B2-4-1	20	1420/0009Z	C1-4-10	22
1370/0003Z	B1-5-1	2	1406/0011	E3-14-1	4	1420/0007Z	C1-1-1	24	1420/0009Z	C1-5-1	9
1370/0101Z	B2-1-20	30	1406/0017	E1-70-2	42	1420/0007Z	C1-2-1	8	1420/0009Z	E1-7-1	21
1370/0101Z	C1-3-1	5	1406/0018	C1-1-1	42	1420/0007Z	C1-3-1	15	1420/0009Z	E1-20-1	14
1370/0102	B2-8-1	5	1406/0018	E1-70-2	43	1420/0007Z	C1-4-1	7	1420/0009Z	E1-70-2	38
1370/0103Z	T6-4-2	15	1406/0029	B1-3-1	22	1420/0007Z	C1-4-10	2	1420/0009Z	T4-3-1	18
1370/0201Z	B1-5-1	3	1411/0005D	B1-2-2	15	1420/0007Z	D1-1-1	9	1420/0009Z	T6-4-2	17
1370/0201Z	C1-4-1	8	1411/0005Z	B1-5-10	17	1420/0007Z	D2-2-1	11	1420/0009Z	E1-17-1	6
1370/0201Z	D2-2-1	1	1411/0005Z	D2-1-1	7	1420/0007Z	T4-3-1	27	1425/0006Z	D2-1-1	8
1370/0203Z	B2-1-10	20	1411/0005Z	T3-3-1	7	1420/0007Z	A3-8-1	4	1425/0007Z	C1-1-1	27
1370/0301Z	B1-5-12	14	1420/0004Z	B2-2-1	12	1420/0007Z	E1-17-1	11	1425/0007Z	C1-3-1	16
1370/0301Z	B2-2-1	5	1420/0004Z	C1-2-1	7	1420/0008D	E1-7-1	20	1425/0007Z	C1-6-1	3
1370/0303Z	T3-3-1	6	1420/0005	C3-3-1	11	1420/0008D	B1-2-2	10	1425/0007Z	D1-1-1	10
1370/0303Z	T6-4-2	11	1420/0005Z	B1-4-1	14	1420/0008Z	B1-2-1	11	1425/0008Z	C1-1-1	28
1370/0401D	E1-21-1	6H	1420/0005Z	B1-5-1	4	1420/0008Z	B1-5-12	11	1425/0008Z	C1-3-1	18
1370/0401Z	T6-4-2	18	1420/0005Z	B1-5-12	13	1420/0008Z	B1-5-31	11	1425/0009D	J1-1-2	7

JCB INDIA LTD.

NUMERICAL INDEX - JS 140

PART NO.	FIGURE NO.	ITEM NO.	PART NO.	FIGURE NO.	ITEM NO.	PART NO.	FIGURE NO.	ITEM NO.	PART NO.	FIGURE NO.	ITEM NO.
1425/0009Z	C1-1-1	29	20/951212	F4-8-1	7	2201/0007	C1-5-1	12	229/01132	C3-3-1	8
1425/0009Z	F4-3-1	4	20/951213	F4-4-1	8	2201/0009	T4-3-1	2	229/01133	C3-3-1	9
1430/1204	B2-1-10	15	20/951213	F4-8-1	8	2201/0012	T4-3-1	3	229/01134	B2-1-1	47
1604/0006	C1-5-1	1 04	20/951215	F4-4-1	9	2201/0014	T3-3-1	10	229/01135	B2-4-1	12
1609/0002	E1-8-1	9	20/951215	F4-8-1	9	2201/0016	T3-3-1	11	229/01136	B2-4-1	13
1620/0003	E1-63-1	57	20/951216	F4-4-1	10	229/00070	B2-10-1	1	229/01137	B2-4-1	6
173R016VZ	B3-1-1	15	20/951216	F4-8-1	10	229/00385	B2-10-1	6	229/01138	B1-5-31	3
173R016VZ	B3-1-1	21	20/951217	F4-4-1	11	229/00433	E1-70-2	34/9	229/01138	C1-4-1	13
173R016VZ	B3-2-1	13	20/951217	F4-8-1	11	229/00595	C1-4-1	1	229/01140	B1-5-30	3
173R016VZ	B3-5-1	21	20/951218	F4-4-1	12	229/00595	C1-4-10	1	229/01141	B1-5-31	2
173R020VZ	B3-1-1	9	20/951218	F4-8-1	12	229/00602	C1-1-1	2	229/01150	B1-5-31	1
186-0106ZZ	C1-1-1	30	20/951219	F4-4-1	14	229/00602	C1-3-1	20	229/01169	B2-4-1	5
186-0108ZZ	C1-1-1	31	20/951219	F4-8-1	14	229/00605	B1-4-1	18	229/01170	B2-4-1	7
186-0110ZZ	C1-1-1	32	20/951220	F4-4-1	14 01	229/00606	B1-4-1	19	229/01180	B2-4-1	8
186-112ZZ	C1-1-1	33	20/951220	F4-8-1	14-1	229/00623	B2-1-20	48	229/01181	B2-4-1	9
20/925360	E1-50-1	7	20/951221	F4-4-1	14 03	229/01003	E1-50-1	6	229/01196	B2-1-20	9
20/925360	F4-3-1	9	20/951221	F4-8-1	14-3	229/01003	E1-70-2	25	229/01197	D2-2-1	A
20/925360	F4-4-1	00A	20/951222	F4-4-1	14 04	229/01004	E1-50-1	13	229/01199	B1-5-30	2
20/925360	F4-8-1	A	20/951222	F4-8-1	14-4	229/01004	E1-72-1	1	229/01203	B1-5-31	5
20/950406	F4-4-1	5	20/951223	F4-4-1	14 05	229/01008	E1-50-1	8	229/01203	C1-4-1	14
20/950406	F4-8-1	5	20/951223	F4-8-1	14-5	229/01008	E3-14-1	8	229/01205	B1-5-30	1
20/950442	F4-4-1	16	20/951224	F4-4-1	14 06	229/01057	B1-1-1	3	229/01209	D2-1-1	3
20/950442	F4-8-1	16	20/951224	F4-8-1	14-6	229/01058	B1-1-1	2	229/01224	B2-1-1	10
20/951207	F4-4-1	1	20/951225	F4-4-1	15	229/01083	J1-4-1	A	229/01226	C1-2-1	33
20/951207	F4-8-1	1	20/951225	F4-8-1	15	229/01118	T4-3-1	14	229/01230	B2-1-20	10
20/951208	F4-4-1	2	20/980443	F4-4-1	17	229/01118	T4-3-1	25	229/01236	B2-1-1	1
20/951208	F4-8-1	2	20/980443	F4-8-1	17	229/01125	C3-3-1	1	229/01239	D1-1-1	7
20/951209	F4-4-1	3	2103/0709	B2-10-1	7	229/01126	C3-3-1	2	229/01242	C1-6-1	1
20/951209	F4-8-1	3	215/11319	C1-5-1	15	229/01127	C3-3-1	3	229/01247	A2-1-5	1
20/951210	F4-4-1	4	2201/0001	T3-4-1	1	229/01128	B2-4-1	14	229/01248	A2-1-6	1
20/951210	F4-8-1	4	2201/0001	T4-3-1	16	229/01128	C3-3-1	4	229/01249	A2-1-7	1
20/951211	F4-4-1	6	2201/0001	T6-4-1	2	229/01129	C3-3-1	5	229/01289	B5-2-1	18
20/951211	F4-8-1	6	2201/0001	T6-4-2	8	229/01130	C3-3-1	6	229/01301	A2-1-5	2
20/951212	F4-4-1	7	2201/0003	T4-3-1	10	229/01131	C3-3-1	7	229/01301	A2-1-6	2

JCB INDIA LTD.

NUMERICAL INDEX - JS 140

PART NO.	FIGURE NO.	ITEM NO.	PART NO.	FIGURE NO.	ITEM NO.	PART NO.	FIGURE NO.	ITEM NO.	PART NO.	FIGURE NO.	ITEM NO.
229/01301	A2-1-7	2	229/01511	B3-1-1	22	229/01658	D1-1-1	1A	2400/0205	E1-2-1	6
229/01302	A2-1-5	4	229/01511	E1-22-1	7	229/01661	D2-2-1	6	2401/0505	E1-63-1	57 01
229/01302	A2-1-6	4	229/01511	E4-2-1	42	229/01671	T4-3-1	6	2401/0505	E1-63-1	58 01
229/01302	A2-1-7	4	229/01512	B3-2-1	15	229/01729	E3-14-1	1	2410/1104	B2-1-1	11
229/01303	A2-1-5	3	229/01512	E4-3-1	39	229/02334	T4-3-1	8	242/00290	C1-2-1	10
229/01303	A2-1-6	3	229/01519	B2-8-1	4	229/02335	T4-3-1	4	25/221635	E3-2-1	43
229/01303	A2-1-7	3	229/01520	C3-2-1	4	229/02336	T4-3-1	7	25/221678	E3-2-1	17
229/01304	A2-1-5	5	229/01521	C3-2-1	5	229/02354	B1-5-1	9	25/221685	E3-2-1	19
229/01304	A2-1-6	5	229/01522	C3-2-1	6	229/02401	D2-1-1	1	25/221686	E3-2-1	18
229/01304	A2-1-7	5	229/01523	C1-2-1	24	229/02405	T3-3-1	9	25/221689	E3-2-1	38
229/01349	D2-2-1	2	229/01525	E1-50-1	1 02	229/02406	E1-70-2	6	25/221690	E3-2-1	32
229/01350	D2-2-1	3	229/01525	E2-1-1	1 02	229/02407	B1-5-2	1	25/221692	E3-2-1	69
229/01351	D2-2-1	4	229/01526	D1-1-1	40	229/02408	B1-5-2	2	25/221693	E3-2-1	70
229/01353	D2-2-1	5	229/01527	D1-1-1		229/02539	E1-70-2	7	25/221700	E3-2-1	60
229/01354	E1-72-1	7	229/01528	T3-3-1	3	229/02543	F4-1-1	5	25/221765	E3-2-1	44
229/01358	E1-70-2	30	229/01530	T4-3-1	1	229/02546	E1-50-1	1	25/221766	E3-2-1	45
229/01359	E1-70-2	31	229/01530	T4-4-1	1	229/02547	T4-3-1	5	25/221767	E3-2-1	42
229/01360	B1-2-1	4	229/01533	D1-1-1	27	229/02550	B1-5-1	8	25/221769	E3-2-1	50
229/01377	C1-1-1	23	229/01534	D1-1-1		229/02567	T6-4-2	28	25/221772	E3-2-1	54
229/01382	D2-2-1	9	229/01539	B2-8-1	1	229/02573	T6-4-2	28	25/221774	E3-2-1	57
229/01383	B5-1-1	9	229/01540	T1-8-1	4	229/02617	C1-5-1	1	25/221775	E3-2-1	58
229/01389	C3-4-1	15	229/01541	T1-8-1	5	229/02653	E1-70-2	34	25/221781	E3-2-1	31
229/01389	C3-4-1	16	229/01542	T1-8-1	6	229/02654	E1-70-2	35	25/221790	E3-2-1	56
229/01389	C3-4-1	17	229/01543	T1-8-1	7	229/02655	E1-70-2	36	25/221804	E3-2-1	89
229/01504	T1-1-1	1	229/01544	T1-8-1	8	229/02682	F4-1-1		25/222139	E1-3-1	9
229/01505	E1-50-1	1 01	229/01545	B5-3-1	3	229/02695	C1-2-1	26	25/222140	E1-3-1	10
229/01505	E2-1-1	1 01	229/01626	B1-5-1	7	229/02696	C1-1-1	36	25/222320	E3-2-1	12
229/01506	F4-1-1	1	229/01630	T3-4-1	2	229/02697	C1-2-1	25	25/222321	E3-2-1	11
229/01507	E1-50-1	14	229/01632	T3-4-1	3	229/02697	C3-3-1	15	25/222322	E3-2-1	13
229/01507	E1-70-1	1	229/01633	T3-4-1	4	229/02705	J1-1-2	1	25/222323	E3-2-1	14
229/01507	E3-1-1	1	229/01635	T3-3-1	12	229/02722	B1-4-1	1	25/222324	E3-2-1	15
229/01509	B3-1-1	13	229/01637	T3-3-1	1	229/02724	E1-3-1	1	25/222325	E3-2-1	16
229/01509	E4-1-1	40	229/01653	B2-3-1	1	229/1001556	T3-3-1		25/222326	E3-2-1	25
229/01510	B3-1-1	14	229/01657	B2-8-1	2	231/48227	B1-5-11	2	25/222326	E3-2-1	26

JCB INDIA LTD.

NUMERICAL INDEX - JS 140

PART NO.	FIGURE NO.	ITEM NO.	PART NO.	FIGURE NO.	ITEM NO.	PART NO.	FIGURE NO.	ITEM NO.	PART NO.	FIGURE NO.	ITEM NO.
25/222327	E3-2-1	20	25/222366	E3-2-1	88	331/31152	B1-4-1	2	331/36334	B2-1-1	19
25/222328	E3-2-1	21	25/222750	E3-2-1	5	331/31977	B1-2-1	5	331/36335	B2-1-1	20
25/222329	E3-2-1	22	25/222891	D1-1-1		331/31978	B1-2-1	6	331/36336	B2-1-1	21
25/222330	E3-2-1	23	25/222891	E1-50-1	10	331/31978	B1-2-2	12	331/36342	B2-1-20	8
25/222331	E3-2-1	24	25/222892	D1-1-1	20	331/32198	B1-2-2	2	331/36343	B2-1-1	34
25/222332	E3-2-1	27	25/222892	E1-50-1	12	331/32199	B1-2-2	3	331/36354	B2-2-1	0A
25/222334	E3-2-1	28	25/222892	E1-63-1	1	331/32200	B1-2-2	4	331/36356	B2-1-20	16
25/222335	E3-2-1	29	264/34901	B2-8-1	6	331/32201	B1-2-2	6	331/36357	B2-1-20	18
25/222336	E3-2-1	30	264/34901	C3-3-1	12	331/32204	B1-2-2	9	331/36358	B2-2-1	1
25/222337	E3-2-1	33	32/925185	E3-15-1	2	331/32205	B1-2-2	8	331/36359	B2-1-20	27
25/222338	E3-2-1	34	32/925214	E1-50-1	3	331/32577	B1-5-10	5	331/36360	B2-1-20	33
25/222339	E3-2-1	35	32/925214	E1-70-2	26	331/33064	B1-4-1		331/36362	B2-2-1	2 02
25/222340	E3-2-1	36	32/925359	B1-3-1	20	331/33762	B1-5-10	6	331/36363	B2-1-10	1
25/222341	E3-2-1	37	32/925428	B1-4-1	6	331/34065	B1-5-10	4	331/36364	B2-2-1	2 03
25/222342	E3-2-1	39	32/925573	E1-7-1	15	331/34078	B1-5-10	9	331/36365	B2-2-1	2 04
25/222343	E3-2-1	46	32/925602	E1-17-1	14	331/34370	B1-5-12	3	331/36366	B2-1-10	2
25/222344	E3-2-1	47	32/925693	B1-3-1	17	331/34382	B1-5-12	4	331/36367	B2-1-10	8
25/222345	E3-2-1	49	32/925964	E3-15-1	2	331/34453	B1-5-1	6	331/36368	B2-1-10	9
25/222346	E3-2-1	51	331/13670	B3-2-1	18	331/34601	B1-5-10	8	331/36369	B2-1-10	17
25/222347	E3-2-1	53	331/13929	T4-3-1	15	331/34629	B1-5-10	7	331/36370	B2-1-10	18
25/222348	E3-2-1	55	331/18592	B2-4-1	16	331/34946	B1-5-31	6	331/36371	B2-1-10	19
25/222349	E3-2-1	59	331/18592	D1-1-1	23	331/35105	B1-5-10	11	331/36372	B2-1-10	21
25/222350	E3-2-1	61	331/19926	B2-1-20	13	331/35115	B1-5-10	12	331/36373	B2-1-10	22
25/222351	E3-2-1	62	331/19929	B2-1-20	41	331/35462	B1-2-1	1	331/36374	B2-1-1	38
25/222353	E3-2-1	64	331/20637	B1-5-10	19	331/35464	B1-2-1	2	331/36375	B2-1-1	39
25/222354	E3-2-1	63	331/22316	A3-6-1	1	331/35578	D1-1-1	38	331/36376	B2-1-1	40
25/222355	E3-2-1	65	331/22435	J1-1-2	12	331/35908	B1-5-11	1	331/36377	B2-1-1	33
25/222356	E3-2-1	66	331/25063	E2-1-1	2	331/35939	B1-5-11	3	331/36378	B2-2-1	3
25/222357	E3-2-1	67	331/27235	E1-7-1	18	331/35991	B1-5-11	13	331/36379	B2-2-1	6
25/222358	E3-2-1	68	331/27235	E1-50-1	5	331/36329	B2-1-1	5	331/36380	B2-2-1	7
25/222359	E3-2-1	71	331/27235	E1-69-1	1	331/36330	B2-1-1	6	331/36381	B2-2-1	11
25/222360	E3-2-1	72	331/27941	E1-70-2	27	331/36331	B2-1-1	7	331/36384	B2-2-1	14
25/222361	E3-2-1	73	331/28915	F4-3-1	21	331/36332	B2-1-1	8	331/36386	B2-2-1	17
25/222362	E3-2-1	74	331/30004	B1-2-1	3	331/36333	B2-1-1	12	331/36387	B2-2-1	26

JCB INDIA LTD.

NUMERICAL INDEX - JS 140

PART NO.	FIGURE NO.	ITEM NO.	PART NO.	FIGURE NO.	ITEM NO.	PART NO.	FIGURE NO.	ITEM NO.	PART NO.	FIGURE NO.	ITEM NO.
331/36389	B2-2-1	20	331/65043	F4-1-1	4	331/67362	A3-2-1	18	332/P1385	C1-1-1	
331/36390	B2-2-1	22	331/66010	B1-2-2	7	331/67364	A3-2-1	20	332/P1400	A2-1-5	6
331/36392	B2-2-1	30	331/66013	B1-5-12	1	331/67365	A3-2-1	21	332/P1409	A2-1-7	6
331/36393	B2-2-1	24	331/66015	B1-5-12	2	331/67366	A3-1-1	5	332/P1417	A2-1-6	6
331/36394	B2-2-1	25	331/66671	B1-5-10	18	331/67657	A3-2-1	13	332/P1483	E1-2-1	2
331/36877	C1-4-10	12	331/66675	T4-3-1	31	331/A2291	A3-1-1	16	332/P1615	A3-3-1	1
331/36878	C1-4-10	13	331/67148	T4-3-1	23	331/A2291	A3-1-1	18	332/P4418	B1-4-1	
331/37301	A3-1-1	37	331/67149	T4-3-1	24	331/P1315	C1-5-1	2	332/P4594	B1-1-1	
331/37329	B2-1-10	28	331/67150	T4-3-1	22	332/46222	T4-3-1	32	332/P5027	B1-4-1	
331/37330	B2-1-10	29	331/67262	A3-1-1	12	332/46223	T4-3-1	33	332/P5720	E1-17-1	23
331/37332	B2-1-1	23	331/67263	A3-1-1	14	332/46273	C3-4-1	5	332/P6037	C3-4-1	21
331/37334	B2-1-20	45	331/67264	A3-1-1	9	332/A2281	A3-1-1	6	332/P6474	E1-22-1	
331/39213	C1-3-1	3	331/67265	A3-1-1	10	332/A2577	C3-5-1	5	332/P6475	E1-22-1	
331/39468	B1-5-10	10	331/67288	A3-1-1	27	332/A2577	C3-7-1	3	332/P6479	E1-23-1	
331/40104	B1-5-12	20	331/67297	A3-1-1	34	332/A2578	C3-5-1	4	332/P6480	E1-23-1	
331/40751	B1-2-2	1	331/67299	A3-1-1	36	332/A2578	C3-7-1	1	332/P6829	F4-3-1	
331/40764	J1-1-2	15	331/67315	A3-1-1		332/A2632	C3-5-1	3	332/P7607	E1-50-1	
331/40764	A3-7-1	2	331/67316	A3-1-1	45	332/A2636	C3-6-1	5	332/P7607	E1-72-1	
331/40796	J1-1-2	15	331/67318	A3-1-1	46	332/A3308	C3-5-1	1	332/P8061	T6-4-2	25
331/40796	A3-7-1	2	331/67319	A3-1-1	47	332/A3309	C3-5-1	2	332/P8062	T6-4-2	22
331/40797	A3-6-1	2	331/67320	A3-1-1	48	332/A3310	C3-5-1	6	332/P8069	T6-4-2	21
331/41821	B1-5-11	11	331/67327	A3-1-1	52	332/A3311	C3-5-1	7	332/P8537	T3-3-1	
331/42586	B1-4-1	9	331/67330	A3-1-1		332/A3312	C3-5-1	8	332/U9813	E1-70-2	3
331/42682	E1-17-1	12	331/67331	A3-1-1	54	332/A3313	C3-5-1	9	332/Y3144	A3-1-1	1
331/43018	B1-5-11	10	331/67337	A3-1-1	55	332/A3314	C3-5-1	10	332/Y3163	T6-7-1	9
331/44237	E1-17-1	28	331/67338	A3-1-1	56	332/C1499	E1-8-1	12.5	332/Y3268	T5-5-1	12
331/45068	E1-20-1	3	331/67339	A3-1-1		332/C1504	E1-8-1	12.1	332/Y3269	T6-7-1	8
331/45197	E1-4-1	11	331/67340	A3-1-1	57	332/J8132	E1-8-1	12	332/Y3272	T6-2-5	2
331/45615	E1-7-1	5	331/67341	A3-1-1	58	332/J8132	E1-50-1	2	332/Y3273	T6-2-5	1
331/45628	B1-5-11	9	331/67342	A3-1-1	59	332/P0559	T6-4-2	10	332/Y3280	C3-6-1	1
331/45713	B1-1-1	1	331/67344	A3-1-1	61	332/P0932	C1-3-1	2	332/Y3286	T3-3-2	3
331/48616	B1-6-1	7	331/67345	A3-1-1	62	332/P1115	A3-7-1	1	332/Y3292	T3-3-2	9
331/65039	J1-3-1	A	331/67356	A3-2-1	12	332/P1116	A3-7-1	1	332/Y3293	T4-2-3	1
331/65041	J1-5-2	A	331/67361	A3-2-1	17	332/P1156	A3-1-1		332/Y3295	T4-1-1	2

JCB INDIA LTD.

NUMERICAL INDEX - JS 140

PART NO.	FIGURE NO.	ITEM NO.	PART NO.	FIGURE NO.	ITEM NO.	PART NO.	FIGURE NO.	ITEM NO.	PART NO.	FIGURE NO.	ITEM NO.
332/Y3297	T6-2-1	5	332/Y5356	T6-2-1	4	332/Y7867	A3-1-1	33	333/P2403	E1-17-1	19
332/Y3299	T6-2-1	6	332/Y5358	T3-3-2	5	332/Y7868	A3-1-1	35	333/P6341	C1-2-1	
332/Y3300	T2-3-1	6	332/Y5360	T5-5-1	5	332/Y7869	A3-1-1	38	333/P6952	E1-70-2	1
332/Y3301	T3-3-1	1A	332/Y5361	T4-2-1	2	332/Y7870	A3-1-1		335/04589	B1-1-1	0A
332/Y3304	T5-5-1	4	332/Y5361	T4-2-4	3	332/Y7871	A3-1-1	43	335/05187	B1-5-10	3
332/Y3313	T4-1-1	1	332/Y5362	T1-6-1	2	332/Y7872	A3-1-1		335/06138	C1-3-1	6
332/Y3318	T3-3-1	1B	332/Y5363	T2-3-1	7	332/Y7873	A3-1-1		335/07071	E1-21-1	6A
332/Y3319	T7-1-2	2	332/Y5364	T6-7-1	3	332/Y7874	A3-1-1	44	335/07259	C1-3-1	7
332/Y3320	T7-1-2	5	332/Y5365	T6-2-2	6	332/Y7875	A3-1-1		335/08182	E1-21-1	6A
332/Y3321	T5-5-1	9	332/Y5367	T7-2-1	4	332/Y7876	A3-1-1	53	335/08196	B1-5-10	1
332/Y3322	T4-1-2	2	332/Y5368	T7-2-1	7	332/Y7877	A3-1-1	60	335/12623	B1-5-30	8
332/Y3322	T4-2-2	4	332/Y5369	T7-1-2	3	332/Y7878	A3-1-1		335/13929	B1-5-10	2
332/Y3323	C2-5-1	1	332/Y7124	T1-5-2	5	332/Y7879	A3-2-1	1	340/00367	E1-17-1	18
332/Y3327	T3-3-2	10	332/Y7823	A3-2-1	10	332/Y7880	A3-2-1	2	40/301494	B5-3-1	7
332/Y3328	T3-3-2	4	332/Y7829	A3-2-1	14	332/Y7881	A3-2-1	3	40/301594	B5-3-1	
332/Y3333	T1-3-1	1	332/Y7841	C3-6-1	6	332/Y7882	A3-2-1	7	40/302723	C1-1-1	41
332/Y3335	T2-3-2	9	332/Y7846	A3-1-1		332/Y7884	A3-2-1	8	4101/0500	T1-8-1	15
332/Y3341	T1-6-1	6	332/Y7847	A3-1-1	2	332/Y7885	A3-2-1	9	4101/0500	T3-4-1	5
332/Y3343	T6-2-4	8	332/Y7848	A3-1-1	3	332/Y7886	A3-2-1	11	4101/0500	T4-3-1	12
332/Y3344	T1-5-2	3	332/Y7849	A3-1-1	4	332/Y7887	A3-2-1	15	4102/0933	B2-18-1	6
332/Y3346	C2-5-2	1	332/Y7851	A3-1-1	7	332/Y7888	A3-2-1	16	4102/2700	T6-4-2	6
332/Y3355	T7-1-2	4	332/Y7852	A3-1-1	8	332/Y7889	A3-2-1	19	4104/1310	B2-18-1	8
332/Y3356	T1-5-1	1	332/Y7854	A3-1-1	11	332/Y7890	A3-2-1	22	45/920152	E2-1-1	5
332/Y3357	T6-2-2	5	332/Y7855	A3-1-1	13	332/Y7891	A3-2-1	23	459/10165	F4-4-1	13
332/Y3566	T6-2-3	6	332/Y7856	A3-1-1	15	332/Y7892	A3-2-1	24	459/10165	F4-8-1	13
332/Y3867	T2-1-1	1	332/Y7857	A3-1-1	17	332/Y7893	A3-2-1	25	550/30046	E4-1-1	20
332/Y4044	F4-8-1	8A	332/Y7859	A3-1-1	19	332/Y7913	E1-70-3	1	550/30046	E4-3-1	15
332/Y4045	F4-8-1	8B	332/Y7860	A3-1-1	20	332/Y7914	E1-70-3	3	550/30108	E4-1-1	23
332/Y4046	F4-8-1	8C	332/Y7861	A3-1-1	21	332/Y7916	E1-70-3	2	550/41125	E4-1-1	16
332/Y5115	T1-7-1	6	332/Y7862	A3-1-1		332/Y7917	E1-70-3	4	550/41126	E4-1-1	18
332/Y5116	T1-7-1	8	332/Y7863	A3-1-1		332/Y7918	E1-70-3	5	550/41126	E4-3-1	21
332/Y5117	T1-7-1	14	332/Y7864	A3-1-1	30	333/P1847	E1-50-1		550/41135	E4-2-1	24
332/Y5122	C2-1-1	1	332/Y7865	A3-1-1	31	333/P1847	E1-70-2	25	550/41150	E4-2-1	13
332/Y5355	T6-2-1	3	332/Y7866	A3-1-1	32	333/P1906	E1-70-2	4	550/41158	E4-1-1	17

JCB INDIA LTD.

NUMERICAL INDEX - JS 140

PART NO.	FIGURE NO.	ITEM NO.	PART NO.	FIGURE NO.	ITEM NO.	PART NO.	FIGURE NO.	ITEM NO.	PART NO.	FIGURE NO.	ITEM NO.
550/41912	E4-2-1	15	550/42858	C3-4-1	6	550/43233	F4-2-2		550/43337	E4-2-1	22
550/41913	E4-2-1	20	550/42858	C3-4-1	7	550/43234	F4-2-2		550/43338	E4-3-1	23
550/41913	E4-3-1	22	550/42858	C3-4-1	8	550/43235	F4-2-2		550/43339	E4-2-1	23
550/41915	E4-2-1	21	550/42858	C3-4-1	9	550/43238	J1-5-1	6	550/43340	E4-3-1	12
550/41917	E4-2-1	14	550/43174	E3-14-1	8 06	550/43239	J1-5-1	7	550/43341	E4-1-1	22
550/41918	E4-2-1	25	550/43204	F4-2-1	1	550/43240	J1-5-1	8	550/43342	E4-3-1	9
550/41930	E4-2-1	6	550/43205	F4-2-1	2	550/43241	J1-5-1	9	550/43343	E4-1-1	3
550/41939	E4-2-1	16	550/43206	F4-2-1	3	550/43242	J1-5-1	3	550/43344	E4-2-1	4
550/42289	J1-3-1	7	550/43207	F4-2-1	4	550/43243	J1-5-1	4	550/43345	E4-3-1	10
550/42317	J1-3-1	4	550/43208	F4-2-1	5	550/43244	J1-5-1	1	550/43346	E4-1-1	4
550/42318	J1-3-1	6	550/43209	F4-2-1	6	550/43245	J1-5-1	2	550/43347	E4-2-1	3
550/42323	J1-3-1	8	550/43210	F4-2-1	7	550/43246	J1-5-1	10	550/43348	E4-3-1	11
550/42715	C3-4-1	13	550/43211	F4-2-1	8	550/43247	J1-5-1	5	550/43349	E4-1-1	5
550/42758	C3-4-1	14	550/43212	F4-2-1	9	550/43296	J1-3-1	1	550/43350	E4-2-1	7
550/42769	J1-4-1	10	550/43213	F4-2-1	10	550/43297	J1-3-1	2	550/43351	E4-1-1	6
550/42774	J1-4-1	4	550/43214	F4-2-1	11	550/43298	J1-3-1	3	550/43352A	E4-3-1	3
550/42775	J1-4-1	5	550/43215	F4-2-1	12	550/43300	J1-3-1	5	550/43353	E4-1-1	7
550/42776	J1-4-1	9	550/43216	F4-2-1	13	550/43317	J1-5-1	A	550/43354A	E4-3-1	2
550/42777	J1-4-1	8	550/43217	F4-2-1	14	550/43317	J1-5-2	1	550/43355	E4-2-1	8
550/42780	J1-4-1	7	550/43218	F4-2-1	15	550/43318	J1-5-2	2	550/43356	E4-1-1	8
550/42793	J1-4-1	3	550/43219	F4-2-1	16	550/43319	J1-5-2	3	550/43356	E4-3-1	13
550/42794	J1-4-1	2	550/43220	F4-2-1	17	550/43320	J1-5-2	4	550/43357	E4-2-1	5
550/42795	J1-4-1	6	550/43221	F4-2-1	18	550/43327	E4-1-1	13	550/43358	E4-2-1	10
550/42796	J1-4-1	11	550/43221	F4-2-2	A	550/43328	E4-2-1	19	550/43359	E4-3-1	8
550/42797	J1-4-1	12	550/43223	F4-2-2		550/43329	E4-1-1	19	550/43360	E4-1-1	12
550/42798	J1-4-1	13	550/43224	F4-2-2		550/43329	E4-3-1	16	550/43361	E4-3-1	1
550/42815	J1-4-1	1	550/43225	F4-2-2		550/43331	E4-1-1	14	550/43362	E4-1-1	1
550/42856	C3-4-1	11	550/43226	F4-2-2		550/43332	E4-1-1	15	550/43363	E4-2-1	2
550/42857	C3-4-1	4	550/43227	F4-2-2		550/43332	E4-3-1	17	550/43364	E4-3-1	4
550/42857	C3-4-1	10	550/43228	F4-2-2	1	550/43332	E4-3-1	20	550/43365	E4-1-1	2
550/42857	C3-4-1	12	550/43229	F4-2-2		550/43333	E4-3-1	18	550/43366	E4-2-1	1
550/42858	C3-4-1	1	550/43230	F4-2-2		550/43334	E4-2-1	17	550/43367	E4-3-1	6
550/42858	C3-4-1	2	550/43231	F4-2-2		550/43335	E4-3-1	14	550/43368	E4-3-1	7
550/42858	C3-4-1	3	550/43232	F4-2-2		550/43336	E4-1-1	21	550/43369	E4-1-1	11

JCB INDIA LTD.

NUMERICAL INDEX - JS 140

PART NO.	FIGURE NO.	ITEM NO.	PART NO.	FIGURE NO.	ITEM NO.	PART NO.	FIGURE NO.	ITEM NO.	PART NO.	FIGURE NO.	ITEM NO.
550/43370	E4-2-1	11	550/43539	F4-2-3	145	550/43586	F4-2-3	208	627/10071	E1-70-1	18
550/43371	E4-3-1	5	550/43540	F4-2-3	324	550/43586	F4-2-3	211	627/10076	E1-63-1	59D
550/43372	E4-1-1	9	550/43541	F4-2-3	328	550/43587	F4-2-3	209	627/10076	E1-70-1	12
550/43373	E4-1-1	10	550/43542	F4-2-3	336	550/43587	F4-2-3	381	627/10098	E1-17-1	4
550/43375	E4-2-1	9	550/43542	F4-2-3	352	550/43587	F4-2-3	383	627/10259	E1-3-1	6
550/43376	E4-2-1	41	550/43544	F4-2-3	135	550/43589	F4-2-3	113	627/10351	E1-20-1	7
550/43377	E4-1-1	39	550/43546	F4-2-3	22	550/43590	F4-2-3	343	627/10352	E1-20-1	6
550/43378	E4-3-1	38	550/43547	F4-2-3	24	550/43591	F4-2-3	35	627/10353	E1-3-1	3
550/43483	B3-1-1	1	550/43548	F4-2-3	139	550/43592	F4-2-3	31	627/10354	E1-3-1	4
550/43498	F4-2-3	4	550/43549	F4-2-3	167	550/43592	F4-2-3	212	627/10362	E1-6-1	1
550/43499	F4-2-3	8	550/43550	F4-2-3		550/43592	F4-2-3	331	627/10363	E1-6-1	2
550/43501	F4-2-3	14	550/43551	F4-2-3	325	550/43771	B3-2-1	1	627/10364	E1-19-1	8
550/43502	F4-2-3	15	550/43554	F4-2-3	380	550/43781	A3-1-1		627/10365	E1-19-1	7
550/43503	F4-2-3	23	550/43555	F4-2-3	110	550/43782	A3-1-1		627/10379	E1-4-1	7
550/43504	F4-2-3		550/43556	F4-2-3	32	6004/3513	E3-7-1	16	627/10433	E1-7-1	6
550/43505	F4-2-3		550/43557	F4-2-3	396	6009/3723Z	B3-1-1	29	627/10484	E1-2-1	1
550/43506	F4-2-3	102	550/43558	F4-2-3	353	6009/3723Z	B3-2-1	12	627/10574	E1-4-1	9
550/43507	F4-2-3	103	550/43559	F4-2-3	384	6009/3724Z	B3-1-1	20	627/10575	E1-4-1	10
550/43508	F4-2-3	104	550/43560	F4-2-3	329	6009/3724Z	B3-1-1	25	635/80037	E1-6-1	5
550/43510	F4-2-3	107	550/43561	F4-2-3	132	6009/3724Z	B3-5-1	19	646/04474	C1-4-10	17
550/43511	F4-2-3	108	550/43569	F4-2-3	115	6009/3724Z	B3-5-1	20	646/05321	B2-18-1	2
550/43512	F4-2-3	109	550/43570	F4-2-3	30	6009/3825Z	B3-1-1	8	646/05321	B2-18-1	5
550/43513	F4-2-3	112	550/43572	F4-2-3		6009/3827Z	B3-1-1	12	646/05323	B2-18-1	4
550/43514	F4-2-3	114	550/43573	F4-2-3	354	6012/0298Z	C1-1-1	34	646/05324	B2-18-1	
550/43524	F4-2-3	1	550/43574	F4-2-3	151	6063/0008Z	C1-2-1	9	646/05325	B2-18-1	3
550/43530	F4-2-3		550/43575	F4-2-3	207	624/80025	E1-5-1	5	649/51160	E1-3-1	5
550/43531	F4-2-3		550/43577	F4-2-3	34	625/80002	A3-2-1	26	649/51160	E1-17-1	9
550/43532	F4-2-3	13	550/43577	F4-2-3	171	627/10003	E1-7-1	7	666/40041	E1-3-1	2
550/43534	F4-2-3	377	550/43578	F4-2-3	116	627/10060	E1-70-1	17	6900/0508	B2-1-10	11
550/43535	F4-2-3	341	550/43580	F4-2-3	33	627/10060	E1-70-1	23	6900/0513	B2-1-10	4
550/43535	F4-2-3	399	550/43581	F4-2-3	358	627/10060	E1-72-1	9	6900/0523	B2-1-20	32
550/43536	F4-2-3	149	550/43582	F4-2-3	210	627/10060	E1-72-1	12	6900/0531	B2-1-1	14
550/43537	F4-2-3	150	550/43584	F4-2-3	17	627/10060	E1-72-1	17	6900/0532	B2-1-1	13
550/43538	F4-2-3	36	550/43585	F4-2-3	398	627/10071	E1-61-1	4C	6900/0541	B2-1-20	38

JCB INDIA LTD.

NUMERICAL INDEX - JS 140

PART NO.	FIGURE NO.	ITEM NO.	PART NO.	FIGURE NO.	ITEM NO.	PART NO.	FIGURE NO.	ITEM NO.	PART NO.	FIGURE NO.	ITEM NO.
6900/0543	B2-1-20	24	6900/0622	B2-1-10	14	701/45501	B1-4-1	3	817/02370	B5-2-1	11
6900/0544	B2-1-20	20	6900/0627	B2-1-20	28	701/45501	B2-2-1	23	817/17422	B5-1-1	13
6900/0548	B2-1-1	24	6900/0634	B2-1-20	7	701/58809	C3-2-1		817/17441	B5-1-1	5
6900/0550	B2-1-20	39	6900/0637	B2-1-20	29	701/60010	C3-2-1	3	817/18528	B5-2-1	10
6900/0554	B2-1-20	4	6900/0640	B2-1-10	38	701/60034	C3-2-1		817/18529	B5-2-1	20
6900/0554	B2-1-20	17	6900/0644	B2-2-1	4	701/80184	C3-2-1	1	817/18531	B5-2-1	21
6900/0554	B2-1-20	19	6900/0652	B2-1-20	31	701/80327	C1-1-1	39	817/18532	B5-2-1	22
6900/0555	B2-1-1	37	6900/0685	B2-1-10	36	701/80328	C1-1-1	40	817/18535	B5-2-1	4
6900/0560	B2-1-10	39	6900/0686	B2-1-10	37	714/40266	B2-1-20	6	817/18536	B5-2-1	5
6900/0562	B2-1-1	18	6900/0688	B2-1-10	5	714/40267	B2-1-20	5	817/18537	B5-2-1	6
6900/0563	B2-1-1	17	6900/0689	B2-1-10	6	716/30142	B1-4-1	10	817/18538	B5-2-1	7
6900/0566	B2-1-1	25	6900/0983	B2-1-10	30	716/30205	C1-1-1	35	817/18541	B5-2-1	15
6900/0567	B2-1-1	26	6900/0984	B2-1-10	32	716/30205	C1-3-1	12	817/18566	B5-2-1	8
6900/0568	B2-1-1	27	6900/0985	B2-1-10	33	717/06800	B2-1-20	14	817/18727	B5-2-1	17
6900/0569	B2-1-1	46	6900/0986	B2-1-10	34	718/06500	C1-1-1	3	817/18761	B5-1-1	7
6900/0569	B2-1-10	23	6900/0987	B2-1-10	35	718/06500	C1-3-1	14	817/18762	B5-1-1	11
6900/0569	B2-1-20	21	6900/0992	B2-2-1	29	718/20213	C1-1-1	4	817/18763	B5-1-1	10
6900/0570	B2-1-1	36	6900/0995	B2-1-10	13	718/20231	C1-3-1	19	817/18765	B5-1-1	6
6900/0570	B2-2-1	9	6900/0997	B2-1-1	16	720/20032	C1-4-1	3	817/18802	B5-2-1	19
6900/0571	B2-1-1	22	696/01264	T6-4-2	26	720/20032	C1-4-10	1A	817/18824	D1-1-1	48
6900/0571	B2-2-1	10	696/01369	B2-1-20	46	721/11430	C1-5-1	3	817/18848	B5-2-3	3
6900/0592	B2-1-1	9	696/01479	C3-4-1	18	728/28300	C1-2-1	29	817/18849	B5-2-3	4
6900/0597	B2-1-1	15	696/01480	C3-4-1	19	730/03601	A3-8-1	1	817/19074	B5-2-1	24
6900/0601	B2-1-20	40	696/01487	C3-4-1	20	730/03602	A3-8-1	2	817/19288	B5-1-1	3
6900/0603	B2-1-20	36	696/01512	B2-1-20	47	811/90376	B3-1-1	10	817/19289	B5-1-1	1
6900/0604	B2-1-20	35	696/01536	B2-1-20	15	811/90376	B3-1-1	31A	817/19290	B5-1-1	3A
6900/0605	B2-1-20	34	696/01626	C1-3-1	1	811/90468	B3-1-1	7	817/19295	B5-1-1	2
6900/0606	B2-1-20	37	696/01921	C1-1-1	1	811/90468	B3-1-1	32A	817/19304	E1-17-1	15
6900/0609	B2-1-20	22	696/01921	C1-3-1	21	816/00193	E1-18-1	9	817/19305	B5-2-3	5
6900/0616	B2-1-10	7	696/02051	D2-1-1	2	816/00196	E1-18-1	10	817/19558	B5-2-1	26
6900/0616	B2-1-10	16	700/10103	C1-4-1	4	816/00464	E1-17-1	25	817/20907	B5-1-1	4
6900/0616	B2-2-1	21	700/10103	C1-4-10	1B	816/10034	E1-4-1	1	817/20986	B5-1-1	12
6900/0619	B2-1-10	10	701/36500	T3-3-1	2	816/13121	E1-3-1	20	821/00270	E1-4-1	12
6900/0621	B2-1-10	12	701/42000	D2-2-1	7	816/90693	E1-3-1	7	821/00271	E1-4-1	13

JCB INDIA LTD.

NUMERICAL INDEX - JS 140

PART NO.	FIGURE NO.	ITEM NO.	PART NO.	FIGURE NO.	ITEM NO.	PART NO.	FIGURE NO.	ITEM NO.	PART NO.	FIGURE NO.	ITEM NO.
821/00367	C1-1-1	37	827/80218	B2-1-1	4	904/20274	B1-5-1	11	C4E7327	E1-8-1	7
821/00410	C1-4-10	18	827/80219	B2-1-1	2	926/15500	B2-18-1	7	CEJ0531	E1-7-1	8
821/10267	B2-1-20	12	827/80220	B2-2-1	2	928/50250	C1-5-1	1 03	CNA0584	E1-61-1	55
821/10292	T6-4-2	20	827/80221	B2-2-1	2 01	980/84766	A3-3-1	2	G8/7	E1-3-1	17
821/10301	E1-21-1	6B	828/10081	E3-15-1	2	980/84767	A3-3-1	4	HUB	F4-2-3	1
821/10303	E1-20-1	5	828/10124	E3-15-1	2	980/84768	A3-3-1	3	I 391/3203Z	B1-3-1	18
821/10379	E1-1-1	10	828/10307	E1-1-1	8	980/A1702	A3-1-1	A	JBN0013	D1-1-1	1B
823/00372	T6-4-2	27	828/10307	E1-3-1	8	993/99703	B2-2-1	8	JBV0515	E1-4-1	5
823/00394	E1-23-1	3	830/11410	E1-20-1	1	998/10856	B3-1-1	31	JG0NV411	B3-5-1	1
823/00394	E1-18-1	11	830/11426	E1-22-1	1	998/10857	B3-1-1	32	JG0NV412	B3-5-1	1
823/00394	E1-19-1	12	830/11427	E1-22-1	2	ANV0071	E1-6-1	6	JHC0001	B1-4-1	15
823/00409	E1-22-1	3	830/11428	E1-23-1	2	BHV1034	B3-5-1	15	JHH0009	C1-5-1	13
823/00516	B2-1-1	48	830/11429	E1-23-1	1	BHV1034	B3-5-1	16	JHH0028	T6-4-2	30
826/01103	A3-8-1	3	830/11449	E1-21-1	2	BHV1034	B3-12-1	8	JHH0029	T6-4-2	2
826/01144	C1-1-1	5	830/12084	E1-20-1	2	BHV1034	B3-12-1	9	JHH0039	T4-3-1	9
826/01144	T4-3-1	11	830/12138	E1-19-1	6	BHV1034	B3-12-1	10	JHH0053	T3-4-1	9
826/01347	C1-1-1	38	830/12139	E1-19-1	5	BHV1034	B3-12-1	11	JHH0062	T6-4-1	1
826/01347	T4-3-1	13	830/12204	E1-17-1	1	BLA2717	E3-15-1	2	JHH0062	T6-4-2	1
826/01518	B2-4-1	11	830/12205	E1-17-1	2	BLH0487	E1-70-2	2	JHH0065	T6-4-2	4
826/01518	C3-3-1	10	830/12206	E1-21-1	10	BLP1188	B3-1-1	30	JHH0067	T6-4-2	3
826/01519	B2-1-1	49	830/12207	E1-21-1	8	BMA0342	E1-7-1	9	JHH0071	C1-5-1	14
826/01519	B2-4-1	3	830/13089	E1-21-1	7	BPR0007	E1-72-1	21.1	JHH0074	B2-10-1	3
826/01519	B2-8-1	7	830/13939	E1-1-1	2	BRA0127	E1-1-1	13	JHH0082	B1-3-1	21
826/01519	C1-2-1	31	831/00063	B2-10-1	8	BRJ0190	E1-3-1	19	JHH0120	B1-4-1	8
826/01570	B2-4-1	15	831/10304	B3-1-1	31B	BRJ0190	E1-7-1	17	JHH0125	T4-3-1	19
826/01787	T3-4-1	7	831/10304	B3-2-1	2	BRJ0190	E1-69-1	12	JHJ0050	E1-70-2	4
826/10611	D1-1-1	54	831/10305	B3-1-1	2	BRJ0190	E1-70-2	14	JHJ0063	E1-7-1	16
826/10713	T3-4-1	6	831/10305	B3-1-1	32B	BRJ1286	B1-3-1	16	JHJ0063	E1-20-1	9
826/11027	B1-5-12	5	834/10668	E1-1-1	1	BRJ1545	E1-71-1	2	JHJ0080	E1-4-1	6
826/11027	B1-5-31	15	885/14014	D1-1-1	14	BRJ1545	E1-70-2	12	JHJ0080	E1-17-1	17
826/11108	B2-1-20	11	892/01194	C3-6-1	7	BRP0007	E1-72-1	5.1	JHJ0119	E1-7-1	27
826/11113	B1-4-1	4	892/01196	C3-6-1	4	BRP0007	E1-72-1	14.1	JHJ0168	E1-63-1	58
826/11245	B1-5-1	10	903/20749	E1-2-1	5	BRP0007	E1-72-1	19.1	JHN0141	B2-1-10	31
827/80217	B2-1-1	3	904/20126	E3-14-1	7	C4E3606	F4-3-1	12	JHN0178	B2-1-10	3

JCB INDIA LTD.

NUMERICAL INDEX - JS 140

PART NO.	FIGURE NO.	ITEM NO.	PART NO.	FIGURE NO.	ITEM NO.	PART NO.	FIGURE NO.	ITEM NO.	PART NO.	FIGURE NO.	ITEM NO.
JHN0211	B2-10-1	2	JHP0070	B5-3-1		JNB0146	F4-3-1	5	JNV1579	B3-2-1	4
JHP0037	B3-1-1	5	JHP0080	D1-1-1	55	JNJ0062	E1-4-1	2	JNV1580	B3-5-1	3
JHP0037	B3-1-1	26	JHP0111	B2-4-1	1	JNJ0178	E1-70-2	36/4	JNV1580	B3-5-1	4
JHP0037	B3-2-1	6	JHP0111	B5-2-1	13	JNJ0399	E1-70-1	16	JRA022	J1-2-1	01 09
JHP0037	B3-2-1	8	JHP0134	B1-3-1	23	JNJ0399	E1-72-1	3	JRA0226	J1-2-1	01 08
JHP0037	B3-5-1	6	JHR0128	C1-2-1	2	JNJ0399	E1-72-1	16	JRA0233	J1-6-1	7.9
JHP0037	F4-3-1	05 07	JLJ0299	E1-4-1	3	JNJ0540	E1-71-1	7	JRA0283	E1-8-1	16
JHP0037	F4-3-1	14	JLJ0444	E1-21-1		JNJ0540	E1-70-2	35/2	JRB0113	B1-2-1	7
JHP0042	E1-21-1	6G	JLJ0444	E1-19-1	3	JNP0042	B3-5-1	23	JRH0012	C1-5-1	5
JHP0042	E3-14-1	3	JLV0143	E1-22-1	4	JNV0087	B3-5-1	11	JRH0083	B1-4-1	7
JHP0042	J1-1-2	11	JLV0249	E1-7-1	14	JNV0088	B3-5-1	12	JRJ0079	E1-61-1	4B
JHP0042	T1-8-1	2	JLV0262	E1-69-1	13	JNV0233	E1-4-1	8	JRJ0079	E1-70-1	15
JHP0043	B1-3-1	24	JLV1796	B3-2-1	3	JNV0329	E1-70-2	34/8	JRJ0100	E1-69-1	8
JHP0043	B1-4-1	17	JNA0204	J1-1-2	01 01	JNV0534	B3-12-1	1	JRJ0100	E1-70-2	34/1
JHP0043	E3-1-1	3	JNA0222	J1-2-2	1	JNV0566	E1-20-1	4	JRJ0117	E1-63-1	59B
JHP0043	F4-1-1	2	JNA0223	J1-2-1	1	JNV0566	E1-21-1	6D	JRJ0119	E1-63-1	59A
JHP0043	F4-3-1	8	JNA0223	J1-2-2	2	JNV087	B3-1-1	33	JRJ0119	E1-72-1	4
JHP0043	J1-1-2	14	JNA0224	J1-2-2	3	JNV0905	B3-2-1	16	JRJ0123	E1-72-1	10
JHP0043	J1-1-2	17	JNA0224	J1-6-1	00A	JNV0906	B3-2-1	17	JRJ0124	E1-70-1	22
JHP0043	T1-8-1	1	JNA0225	J1-6-1	7	JNV1036	E1-21-1	6B	JRJ0124	E1-72-1	13
JHP0043	A3-6-1	4	JNA0226	J1-2-1	01 01	JNV1152	E1-19-1	2	JRJ0124	E1-72-1	22
JHP0043	A3-7-1	4	JNA0227	J1-2-1	01 03	JNV1164	E1-23-1	4	JRJ0135	E1-69-1	7
JHP0044	E1-70-2	5	JNA0229	J1-2-1	01 07	JNV1333	E1-19-1	1	JRJ0135	E1-70-2	34/5
JHP0045	B2-3-1	3	JNA0230	J1-2-1	01 02	JNV1402	B3-5-1	7	JRJ0349	E1-18-1	4
JHP0046	B2-4-1	2	JNA0231	J1-2-1	01 04	JNV1403	B3-5-1	8	JRJ0349	E1-19-1	14
JHP0046	C1-2-1	1	JNA0232	J1-2-1	01 05	JNV1414	B3-1-1	6A	JRP0086	B5-3-1	5
JHP0046	D1-1-1	3	JNA0235	J1-2-1	01 06	JNV1414	B3-12-1	1	JRP0087	B5-3-1	
JHP0046	E1-2-1	8	JNA0236	J1-6-1	7.5	JNV1414	B3-12-1	5	JSH0007	T6-4-1	3
JHP0046	E1-3-1	14	JNA0237	J1-6-1	7.1	JNV1455	E1-21-1	1	JSJ10042	B1-4-1	5
JHP0046	E1-8-1	3	JNA0238	J1-6-1	7.3	JNV1506	E1-18-1	1	JSR0006	C1-5-1	7
JHP0046	E2-1-1	4	JNA0239	J1-6-1	7.2	JNV1507	E1-18-1	2	JSR0018	T4-3-1	20
JHP0049	B1-2-1	12	JNA0240	J1-6-1	7.6	JNV1529	E1-18-1	3	KAJ2176	E1-8-1	11
JHP0068	B5-3-1	4	JNA0318	J1-1-2	3	JNV1566	E1-19-1	4	KAJ3248	E1-69-1	17
JHP0069	B5-3-1	6	JNA0318	J1-1-2	8	JNV1577	B3-1-1	3	KAJ3248	E1-70-2	16

JCB INDIA LTD.

NUMERICAL INDEX - JS 140

PART NO.	FIGURE NO.	ITEM NO.	PART NO.	FIGURE NO.	ITEM NO.	PART NO.	FIGURE NO.	ITEM NO.	PART NO.	FIGURE NO.	ITEM NO.
KAJ3248	E1-71-1	4	KHJ0345	E1-3-1	12	KHN1398	B1-2-2	5	KNB0374	F4-3-1	05 05
KAJ3248	E1-70-2	34/7	KHJ0348	E1-71-1	9	KHN1436	B2-10-1	4	KNB0571	F4-3-1	15
KAR0152	B1-5-11	16	KHJ0348	E1-17-1	26	KHN1542	B2-10-1	5	KNB0571	F4-3-1	16
KAR0152	C1-1-1	7	KHJ0348	E1-70-2	29	KHR0319	C1-1-1	10	KNC0007	F4-3-1	13
KAR0152	T6-4-2	7	KHJ0350	E1-7-1	25	KHR0611	C1-2-1	3	KNC0054	F4-3-1	11
KAR0576	C1-1-1	8	KHJ0351	E1-6-1	4	KHR0737	B2-4-1	18	KNH0528	T1-8-1	9
KAR0576	T6-4-1	4	KHJ0363	E1-3-1	18	KHR0737	B2-8-1	3	KNH0589	T1-8-1	10
KAV0743	B3-5-1	14	KHJ0363	E1-70-1	7	KHR0737	C1-1-1	11	KNJ0287	E1-7-1	4
KBB0445	B1-6-1	1	KHJ0363	E1-71-1	1	KHR0737	D1-1-1	22	KNJ0287	E1-50-1	4
KBJ1691A	E3-15-1	2	KHJ0363	E1-70-2	8	KHR1407	C1-1-1	12	KNJ0287	E3-15-1	2
KHB0063	B1-6-1	2	KHJ0641	E1-70-2	13	KHR1407	C1-3-1	22	KNJ0288	E1-7-1	4 01
KHH0040	B1-4-1	11	KHJ0768	D1-1-1	30	KHR1408	T4-3-1	28	KNJ0604	E1-5-1	10
KHH0137	B1-4-1	12	KHJ0769	D1-1-1	6	KHR1444	C1-1-1	13	KNJ0604	E1-21-1	9
KHH0142	C1-1-1	9	KHJ0869	E1-70-1	11	KHR1445	C1-1-1	14	KNJ0604	E1-69-1	3
KHH0142	C1-4-10	10	KHJ0869	E1-70-2	41	KHR1446	C3-3-1	14	KNJ0604	E1-70-2	40
KHH0143	E1-8-1	21	KHJ0894	E1-70-1	4	KHR1716	C1-1-1	16	KNJ0605	E1-1-1	6
KHH0258	T4-3-1	21	KHJ0897	E1-8-1	8	KHR1957	C1-1-1	17	KNJ0605	E1-2-1	10
KHH0266	C1-1-1	1	KHJ0947	B2-4-1	17	KHV0098	B3-2-1	7	KNJ0605	E1-5-1	2
KHJ0341	E1-8-1	6	KHJ0947	D1-1-1	11	KHV0098	B3-5-1	5	KNJ0605	E1-6-1	8
KHJ0341	E1-61-1	12	KHJ0948	D1-1-1	12	KHV0098	B3-5-1	22	KNJ0605	E1-20-1	8
KHJ0341	E1-69-1	15	KHJ0950	D1-1-1	45	KHV0100	B3-1-1	4	KNJ0605	E1-21-1	3
KHJ0341	E1-70-1	2	KHJ0973	E1-70-2	17	KHV0100	B3-2-1	5	KNJ0605	E1-70-2	18
KHJ0341	E1-71-1	3	KHJ0973	E1-72-1	2	KHV0111	B3-5-1	10	KNJ0606	E1-3-1	11
KHJ0341	E1-17-1	16	KHJ0973	E1-72-1	8	KHV0114	B3-5-1	9	KNJ0606	E1-17-1	3
KHJ0341	E1-70-2	9	KHJ0973	E1-72-1	11	KMV0932	B3-1-1	28	KNJ0702	E1-4-1	4
KHJ0342	E1-7-1	12	KHJ0992	B1-3-1	3	KNA0358	E1-5-1	3	KNJ0718	E1-3-1	13
KHJ0342	E1-69-1	5	KHJ1032	E3-15-1	2	KNA0362	E1-5-1	7	KNJ0758	E1-61-1	3
KHJ0342	E1-69-1	6	KHJ1211	D1-1-1	43	KNA0362	E1-69-1	10	KNJ0758	E1-69-1	4
KHJ0342	E1-70-2	10	KHN0243	D1-1-1	41	KNA0362	E1-70-2	34/3	KNJ0758	E1-71-1	6
KHJ0343	E1-6-1	3	KHN0268	D1-1-1	42	KNA0363	E1-71-1	5	KNJ0758	E1-17-1	24
KHJ0343	E1-7-1	13	KHN0297	J1-6-1	2	KNA0363	E1-70-2	35/1	KNJ0758	E1-70-2	19
KHJ0343	E1-70-2	11	KHN1260	C1-5-1	4	KNA0531	J1-1-2	2	KNJ0759	E1-69-1	2
KHJ0344	E1-7-1	1	KHN1395	B1-5-12	6	KNA0588	E1-5-1	4	KNJ0759	E1-72-1	5
KHJ0344	E1-69-1	14	KHN1395	B1-5-31	7	KNB0373	F4-3-1	05 01	KNJ0759	E1-72-1	14

JCB INDIA LTD.

NUMERICAL INDEX - JS 140

PART NO.	FIGURE NO.	ITEM NO.	PART NO.	FIGURE NO.	ITEM NO.	PART NO.	FIGURE NO.	ITEM NO.	PART NO.	FIGURE NO.	ITEM NO.
KNJ0759	E1-72-1	19	KNV0488	B3-1-1	16	KRJ3566	E1-70-2	36/2	KTJ1133	E1-71-1	8
KNJ0759	E1-72-1	21	KNV0490	B3-2-1	14	KRJ4133	E1-70-1	21	KTJ1133	E1-71-1	10
KNJ0759	E1-70-2	20	KNV0534	B3-1-1	6	KRJ4133	E1-72-1	18	KTJ1133	E1-70-2	34/4
KNJ1072	E1-72-1	6	KNV0534	B3-12-1	5	KRN0081	E1-70-2	23	KTJ1133	E1-70-2	36/1
KNJ1109	E1-70-2	36/4	KNV0538	B3-2-1	9	KRN0363	B1-5-12	7	LAM0063	E2-7-1	2
KNJ1112	E1-69-1	16	KNV0538	B3-12-1	7	KRN0364	B1-5-12	8	LBB0182	E2-7-1	39
KNJ1112	E1-70-1	9	KNV0539	B3-1-1	23	KRN1418	B1-5-31	9	LBB0262	E2-7-1	32
KNJ1112	E1-70-2	34/6	KNV0539	B3-12-1	4	KRN1482	B1-5-12	18	LBQ0112	E2-7-1	16
KNJ1113	E1-70-1	13	KNV0696	B3-1-1	17	KRN1497	B1-5-12	1A	LBQ0182	E2-7-1	38
KNJ1113	E1-72-1	15	KNV0696	B3-12-1	2	KRN1497	B1-5-12	2A	LBQ0262	E2-7-1	33
KNJ1115	E1-7-1	11	KNV0696	B3-12-1	3	KRR1078	C1-1-1	18	LBQ5025	E3-7-1	7
KNJ1115	E1-69-1	9	KNV0756	B3-1-1	24	KRV0548	E1-23-1	8	LBQ5255	E2-7-1	11
KNJ1115	E1-70-1	14	KNV0756	B3-1-1	24	KRV0548	E1-17-1	13	LBQ5257	E2-7-1	13
KNJ1115	E1-72-1	20	KNV0816	E1-23-1		KRV0548	E1-18-1	5	LCC0014	E3-7-1	30
KNJ1115	E1-70-2	34/2	KRA0017	E1-5-1	9	KRV0548	E1-19-1	11	LEC0025	E3-7-1	6
KNJ1133	E1-63-1	59C	KRA0789	E1-5-1	8	KRV0975	E1-18-1	6	LJC0003	E3-7-1	25
KNJ1133	E1-70-1	8	KRA0814	B1-2-2	13	KRV1200	E1-22-1	5	LKC0001	E3-7-1	24
KNJ1133	E1-70-1	19	KRA0999	E3-14-1	5	KSJ0968	E1-8-1	15	LKC0005	E3-7-1	13
KNJ1133	E1-70-1	20	KRA1000	E3-14-1	6	KSJ0968	E1-70-2	36/6	LKM0104	E2-7-1	20
KNJ1231	E1-70-1	10	KRB0681	F4-3-1	1	KSJ1871	E1-63-1	59E	LLC0118	E3-7-1	27
KNJ1697	E1-70-2	36/5	KRB0681	J1-1-2	4	KSJ1871	E1-63-1	59F	LLC0128	E3-7-1	4
KNJ1821	E1-1-1	4	KRB0682	F4-3-1	2	KSJ2465	D1-1-1	34	LLM0059	E2-7-1	40
KNJ1821	E1-70-2	21	KRB0682	J1-1-2	5	KSJ2465	E1-50-1	9	LLP0114	E3-7-1	2
KNJ1919	E1-20-1	19	KRB0736	B1-6-1	3	KSJ2465	E1-61-1	1	LMC0085	E3-7-1	26
KNJ1920	E1-20-1	18	KRB0737	B1-6-1	4	KSJ2465	E3-7-1	0	LMC0102	E2-7-1	34 01
KNJ1933	E1-50-1	11	KRB0738	B1-6-1	5	KSN0939	B1-5-31	10	LMC0107	E3-7-1	12
KNJ1933	E1-70-2	22	KRB0739	B1-6-1	6	KSV0282	E1-19-1	18	LMM0471	E2-7-1	15
KNJ1936	E1-4-1	17	KRH0781	T1-8-1	11	KTJ0678	E1-61-1	4D	LMM0547	E2-7-1	23
KNV0464	B3-5-1	13	KRJ0963	E1-2-1	7	KTJ0678	E1-70-1	6	LNM0428	E2-7-1	28
KNV0473	B3-1-1	11	KRJ1588	B1-5-12	19	KTJ0810	E1-61-1	4A	LNM0431	E2-7-1	34
KNV0484	B3-5-1	17	KRJ1588	B1-5-31	8	KTJ0810	E1-70-1	5	LNM0434	E2-7-1	00A
KNV0485	B3-5-1	18	KRJ3461	B1-3-1	1	KTJ0907	E1-61-1	5A	LNO0104	F4-8-1	B
KNV0486	B3-1-1	18	KRJ3463	B1-3-1	2	KTJ0907	E1-61-1	5B	LPC0203	E3-7-1	14
KNV0487	B3-1-1	19	KRJ3560	E1-70-1	3	KTJ1133	E1-69-1	11	LPC0204	E3-7-1	15

JCB INDIA LTD.

NUMERICAL INDEX - JS 140

PART NO.	FIGURE NO.	ITEM NO.	PART NO.	FIGURE NO.	ITEM NO.	PART NO.	FIGURE NO.	ITEM NO.	PART NO.	FIGURE NO.	ITEM NO.
LPC0205	E3-7-1	17	LZM0333	E2-7-1	21	N.S.P	F4-2-3	202	NSP	E2-7-1	25
LPC0213	E3-7-1	8	LZM0336	E2-7-1	5	N.S.P	F4-2-3	203	NSP	E2-7-1	27
LPM0052	E2-7-1	29	LZM0337	E2-7-1	7	N.S.P	F4-2-3	204	NSP	E3-14-1	8 01
LPM0109	E2-7-1	19	LZM0345	E2-7-1	10	N.S.P	F4-2-3	205	NSP	E3-14-1	8 02
LPM0110	E2-7-1	37	LZM0346	E2-7-1	9	N.S.P	F4-2-3	206	NSP	E3-14-1	8 03
LPM0113	E2-7-1	12	MPV2193	E1-7-1	26	N.S.P	F4-2-3	213	NSP	E3-14-1	8 04
LPM0118	E2-7-1	36	N.S.P	E3-2-1	1	N.S.P	F4-2-3	301	NSP	E3-14-1	8 05
LPM0119	E2-7-1	6	N.S.P	E3-2-1	2	N.S.P	F4-2-3	323	NSP	E3-14-1	8 07
LPM0120	E2-7-1	1	N.S.P	E3-2-1	3	N.S.P	F4-2-3	326	NSP	E3-14-1	8 08
LQC0034	E3-7-1	31	N.S.P	E3-2-1	4	N.S.P	F4-2-3	327	NSP	E3-14-1	8 09
LQC0035	E3-7-1	32	N.S.P	E3-2-1	6	N.S.P	F4-2-3	330	NSP	E4-1-1	24
LQM0021	E2-7-1	34 01	N.S.P	E3-2-1	7	N.S.P	F4-2-3		NSP	E4-1-1	25
LSC0214	E3-7-1	21	N.S.P	E3-2-1	8	N.S.P	F4-2-3		NSP	E4-1-1	26
LSC0236	E3-7-1	20	N.S.P	E3-2-1	9	NSP	A3-1-1	26	NSP	E4-1-1	27
LSC0237	E3-7-1	11	N.S.P	E3-2-1	10	NSP	A3-1-1	28	NSP	E4-1-1	28
LSC0238	E3-7-1	18	N.S.P	E3-2-1	41	NSP	A3-1-1	29	NSP	E4-1-1	29
LSC0239	E3-7-1	22	N.S.P	E3-2-1	48	NSP	A3-1-1	39	NSP	E4-1-1	30
LSC0240	E3-7-1	23	N.S.P	E3-2-1	52	NSP	A3-1-1	40	NSP	E4-1-1	31
LSM0073	E2-7-1	14	N.S.P	E3-2-1	75	NSP	A3-1-1	41	NSP	E4-1-1	32
LSM0075	E2-7-1	31	N.S.P	E3-2-1	76	NSP	A3-1-1	42	NSP	E4-1-1	33
LSM0133	E2-7-1	18	N.S.P	F4-2-3	3	NSP	A3-1-1	49	NSP	E4-1-1	34
LTM0207	E2-7-1	3	N.S.P	F4-2-3	5	NSP	A3-1-1	50	NSP	E4-1-1	35
LTM0208	E2-7-1	22	N.S.P	F4-2-3	6	NSP	A3-1-1	51	NSP	E4-1-1	36
LUC0101	E3-7-1	29	N.S.P	F4-2-3	7	NSP	A3-2-1	4	NSP	E4-1-1	37
LUC0102	E3-7-1	28	N.S.P	F4-2-3	9	NSP	A3-2-1	5	NSP	E4-1-1	38
LUC0104	E3-7-1	19	N.S.P	F4-2-3	10	NSP	A3-2-1	6	NSP	E4-2-1	26
LUC0106	E3-7-1	10	N.S.P	F4-2-3	11	NSP	B1-4-1	8 01	NSP	E4-2-1	27
LUC0107	E3-7-1	9	N.S.P	F4-2-3	12	NSP	B1-4-1	8 02	NSP	E4-2-1	28
LUM0158	E2-7-1	35	N.S.P	F4-2-3	16	NSP	B1-4-1	8 03	NSP	E4-2-1	29
LWC0003	E3-7-1	1	N.S.P	F4-2-3	27	NSP	C1-4-1	2	NSP	E4-2-1	30
LWC0004	E3-7-1	5	N.S.P	F4-2-3	29	NSP	E1-8-1	12.9	NSP	E4-2-1	31
LZC0076	E2-7-1	17	N.S.P	F4-2-3	105	NSP	E1-21-1	6	NSP	E4-2-1	32
LZC0158	E3-7-1	3	N.S.P	F4-2-3	106	NSP	E2-7-1	8	NSP	E4-2-1	33
LZM0191	E2-7-1	30	N.S.P	F4-2-3	201	NSP	E2-7-1	24	NSP	E4-2-1	34

JCB INDIA LTD.

NUMERICAL INDEX - JS 140

PART NO.	FIGURE NO.	ITEM NO.	PART NO.	FIGURE NO.	ITEM NO.	PART NO.	FIGURE NO.	ITEM NO.	PART NO.	FIGURE NO.	ITEM NO.
NSP	E4-2-1	35	NSP	T1-6-1	1	NSP	T2-3-2	7	NSP	T6-2-1	1
NSP	E4-2-1	36	NSP	T1-6-1	3	NSP	T2-3-2	8	NSP	T6-2-1	2
NSP	E4-2-1	37	NSP	T1-6-1	5	NSP	T2-3-2	10	NSP	T6-2-2	1
NSP	E4-2-1	38	NSP	T1-6-1	7	NSP	T3-3-2	1	NSP	T6-2-2	2
NSP	E4-2-1	39	NSP	T1-6-1	8	NSP	T3-3-2	2	NSP	T6-2-2	3
NSP	E4-2-1	40	NSP	T1-6-1	9	NSP	T3-3-2	6	NSP	T6-2-2	4
NSP	E4-3-1	19	NSP	T1-6-1	10	NSP	T3-3-2	7	NSP	T6-2-2	7
NSP	E4-3-1	24	NSP	T1-6-1	11	NSP	T3-3-2	8	NSP	T6-2-3	1
NSP	E4-3-1	25	NSP	T1-6-1	12	NSP	T3-3-2	11	NSP	T6-2-3	2
NSP	E4-3-1	26	NSP	T1-6-1	13	NSP	T3-3-2	12	NSP	T6-2-3	3
NSP	E4-3-1	27	NSP	T1-6-1	14	NSP	T3-3-2	13	NSP	T6-2-3	4
NSP	E4-3-1	28	NSP	T1-6-1	15	NSP	T3-3-2	14	NSP	T6-2-3	5
NSP	E4-3-1	29	NSP	T1-7-1	1	NSP	T4-1-1	3	NSP	T6-2-3	7
NSP	E4-3-1	30	NSP	T1-7-1	2	NSP	T4-1-2	1	NSP	T6-2-4	1
NSP	E4-3-1	31	NSP	T1-7-1	3	NSP	T4-1-2	3	NSP	T6-2-4	2
NSP	E4-3-1	32	NSP	T1-7-1	4	NSP	T4-2-1	1	NSP	T6-2-4	3
NSP	E4-3-1	33	NSP	T1-7-1	5	NSP	T4-2-1	3	NSP	T6-2-4	4
NSP	E4-3-1	34	NSP	T1-7-1	7	NSP	T4-2-2	1	NSP	T6-2-4	5
NSP	E4-3-1	35	NSP	T1-7-1	9	NSP	T4-2-2	2	NSP	T6-2-4	6
NSP	E4-3-1	36	NSP	T1-7-1	10	NSP	T4-2-2	3	NSP	T6-2-4	7
NSP	E4-3-1	37	NSP	T1-7-1	11	NSP	T4-2-2	5	NSP	T6-2-4	9
NSP	F4-4-1	13 02	NSP	T1-7-1	12	NSP	T4-2-2	6	NSP	T6-7-1	1
NSP	F4-4-1	13 03	NSP	T1-7-1	13	NSP	T4-2-2	7	NSP	T6-7-1	2
NSP	F4-8-1	13-1	NSP	T2-3-1	1	NSP	T4-2-4	1	NSP	T6-7-1	4
NSP	F4-8-1	13-2	NSP	T2-3-1	2	NSP	T4-2-4	2	NSP	T6-7-1	5
NSP	F4-8-1	13-3	NSP	T2-3-1	3	NSP	T4-2-4	4	NSP	T6-7-1	6
NSP	T1-3-1	2	NSP	T2-3-1	4	NSP	T5-5-1	1	NSP	T6-7-1	7
NSP	T1-3-1	3	NSP	T2-3-1	5	NSP	T5-5-1	2	NSP	T6-7-1	10
NSP	T1-3-1	4	NSP	T2-3-2	1	NSP	T5-5-1	3	NSP	T7-1-2	1
NSP	T1-3-1	5	NSP	T2-3-2	2	NSP	T5-5-1	6	NSP	T7-2-1	1
NSP	T1-3-1	6	NSP	T2-3-2	3	NSP	T5-5-1	7	NSP	T7-2-1	2
NSP	T1-5-2	1	NSP	T2-3-2	4	NSP	T5-5-1	8	NSP	T7-2-1	3
NSP	T1-5-2	2	NSP	T2-3-2	5	NSP	T5-5-1	10	NSP	T7-2-1	5
NSP	T1-5-2	4	NSP	T2-3-2	6	NSP	T5-5-1	11	NSP	T7-2-1	6