RUTHZIL TRATOR COMERCIAL DE PEÇAS LTDA 11 97083-6812 ROLANDO

WHEELED EXCAVATOR

M1421600 to M1421799
Model JS160W AUTO - TIER 3]

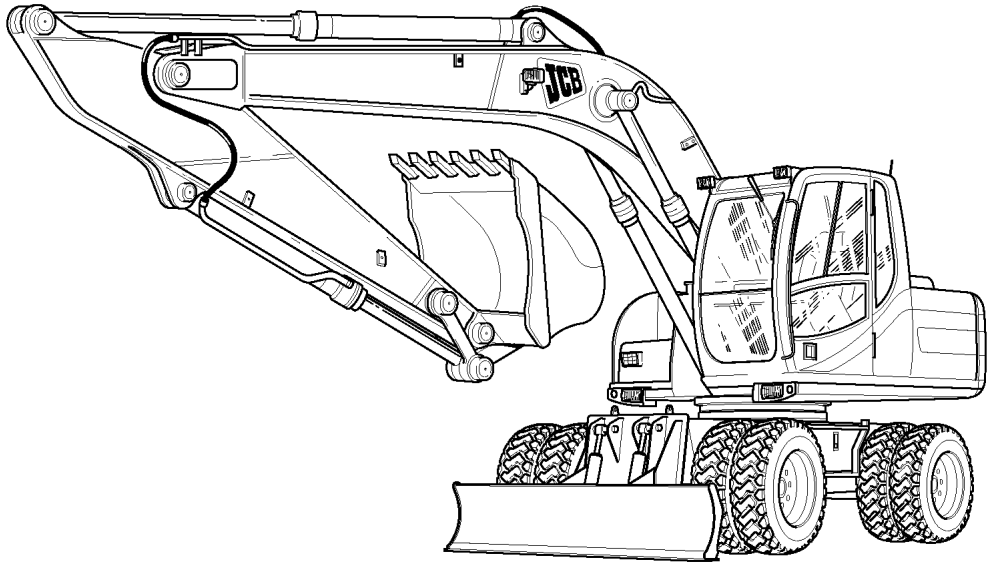

ATTACHMENTS	A
BODYWORK, CAB, LOADER END	B
ELECTRICS-MACHINE, CAB & ENGINE	C
CONTROLS-MACHINE, ENGINE & STEERING	D
HYDRAULICS & AIR INCLUDING, STEERING	E
AXLES, WHEELS & TRANSMISSION	F
ENGINE 4JJ1-XYSJ01 TIER 3	R

JS160W

910010

P.S.I	Pounds Per Square Inch
A/R	As Required
N.S.P	None Serviced Part
N/A	Not Applicable / Not Available
HBCV	Hose Burst Check Valve
KP	Kingpost
SS	Sideshift
CM	Centremount
M.P.H	Miles Per Hour
K.P.H	Kilometres Per Hour
STD	Standard
O/D	Outside Diameter
I/D	Inside Diameter
M.S.S	Multiple Supersession
T.I	Technical Information
M/S	Manual Shift Transmission
P/S	Powershift Transmission
M TBA	Machine Serial Number Not Yet Known
SUPERSEDED	Part Fully Interchangeable
TO M	To Machine Number
M ON	From Machine Number

4WD	4 Wheel Drive
LTR	Litre
L1=	Length (vertical)
L2=	Length (horizontal)
L=	Length
MM	Millimeter
T=	Thickness
W/	With
WO/	Without
KG	Kilogram
LH	Left Hand
RH	Right Hand
PTO	Power Take Off
S/M	Sitemaster
H/M	Hammermaster
PR	Pair
4WS	4 Wheel Steer
2WS	2 Wheel Steer
C/W	Complete With

9809/0058	Desk Top Reader 240 Volt
9809/0059	Desk Top Reader 110 Volt
9809/0060	Bulb For 9809/0058 & 9809/0059
9809/0048	Bulb For 375 Reader
9809/0044	Case 2 Reader Portable
9809/0054	Bulb For Case 2 Reader Fhx
9809/0045	Case 4 Reader Large Screen
9809/0055	Bulb For Case 4 Reader Epz
9809/0007	Bulb For Bell & Howell Sr 1020
9809/0047	Bulb For Mt4 Reader
9809/0053	Hand Held Elite Reader
9809/0056	Bulb For Microscot Reader

Lens

9809/0017	Lens 29mm For Sr 1020

Binder & Panels

9809/0006	Binder For Fiche (service)
9809/0052	Binder For Fiche (prof. Prod. Support)
9809/0015	Binder Fiche Panels

PAGE	ILLN	ITEM	PART NUMBER	CHANGE NUMBER	DESCRIPTION
A2-3-1		2	331/47909		Toeplate
A2-3-1		4	1340/2401		Nut
A2-3-2		1	980/86140		Bucket
B1-2-1	*				
B1-4-1	*				
B1-5-1	*				
B1-5-5	*				
B1-5-20	*				
B1-5-40	*				
B1-6-1		1	335/13581		Counterweight
B1-11-1		25A	1316/4130		Bolt
B1-21-15		23	335/11676		Body
B2-1-10		32	826/11487		Latch
B2-1-10		33	826/11486		Latch
B2-1-10		34	6900/0619		Screw
B2-16-1		9	335/13853		Plate
B2-16-1		16	331/59705		Plate
B3-10-1		12	KLV0167		Pin
B3-10-1		13	6009/3724D		Bolt
B3-10-1		14	173R016VD		Nut
B5-1-1	*				
B5-1-1		3A	817/19832		Decal
B5-2-1	*				
B5-2-1		12	817/70003		Decal
B5-2-1		14	817/70116		Decal
B5-2-1		20	817/70117		Decal
B5-2-1		23	817/17526		Label
B5-2-1		30	332/J0613		Decal
B5-2-10	*				
C1-3-1	*				
C1-3-1		11	718/20026		Cable
C3-11-1		1	717/20225		Radio
C3-11-1		1	717/20226		Radio
C3-11-1		1	717/20227		Radio
C3-12-1	*				
C3-12-1		33	123/04999		Compressor
D1-1-1		27	928/60339		Valve
D1-1-1		30	331/57463		Bracket
D1-1-1		33	331/57439		Pedal
D1-2-10	*				
E1-1-1	*				
E1-2-1	*				
E1-3-1	*				
E1-4-10	*				
E1-10-1	*				
E1-13-1	*				
E1-17-1	*				
E1-17-1		13 03	627/10543		Hose
E1-17-1		13 04	627/10543		Hose
E1-22-10	*				
E1-25-1	*				
E1-29-10		44	830/13798		Tube
E1-29-30	*				
E1-30-1	*				
E1-30-10	*				
E1-30-10		5	KNJ0606		Adapter
E1-30-10		6	1609/0002		Adapter
E1-30-10		15	1315/0509D		Screw
E1-30-10		20	335/13018		Plate
E1-30-10		31 01	627/10407		Hose
E1-30-10		31 02	627/10407		Hose
E1-30-10		32	627/10519		Hose
E1-30-10		45	816/90712		Adapter
E1-31-1	*				

PAGE	ILLN	ITEM	PART NUMBER	CHANGE NUMBER	DESCRIPTION
E1-31-1		3	721/11632		Harness
E1-32-1	*				
E1-32-10	*				
E1-32-20	*				
E1-33-1	*				
E1-33-10	*				
E1-33-20	*				
E1-36-1	*				
E1-46-10		4	JLV1871		Hose
E1-46-10		5	JLV1868		Hose
E1-46-10		6	JLV0594		Hose
E1-46-10		7	JNJ0393		Hose
E1-46-10		9	KNJ1697		Hose
E1-46-10		17	KAJ2176		Adapter
E1-46-10		23	JLJ0055		Adapter
E1-48-1		3	CNA0584		Adapter
E1-48-1		12	JLV0594		Hose
E1-48-1		13	KHJ1335		Hose
E1-48-1		14	KTJ0812		Hose
E1-48-1		15	KTJ0813		Hose
E1-48-1		16	KNJ0605		Adapter
E1-48-1		17	627/10537	Superseded	Hose
E1-48-1		18	830/13253		Pipe
E1-48-1		21	335/11072		Bracket
E1-48-1		28	JLV0433		Adapter
E1-48-1		29	KHJ0869		Adapter
E1-48-20	*				
E1-61-1		1	928/60339		Valve
E1-61-1		12	KBJ2208		Hose
E1-61-1		13	JLV0719		Hose
E1-61-1		14	KSJ0806		Hose
E1-62-1		56E	KNJ1109		Hose
E1-62-1		56F	KNJ1109		Hose
E1-65-1		8	KNJ1119		Hose
E1-65-1		9	627/10382		Hose
E1-65-1		10	KNJ1314		Hose
E1-65-1		12	KBJ2348		Hose
E1-65-1		13	KSJ1871		Hose
E1-65-1		14	627/10199		Hose
E1-65-1		15	KTJ1215		Hose
E1-68-1		12	KNJ1109		Hose
E1-68-1		13	KNJ1109		Hose
E1-68-1		15	KNJ1109		Hose
E1-68-1		16	KNJ1109		Hose
E1-69-1	*				
E1-69-1		13	JNJ0418		Hose
E1-69-1		14	JNJ0418		Hose
E1-70-1		10	KRJ3577		Hose
E1-70-1		11	KNJ1849		Hose
E1-70-1		12	KRJ3571		Hose
E1-70-1		13	JLJ0326		Hose
E1-70-1		14	KBJ2346		Hose
E1-71-1		10	KNJ1119		Hose
E1-71-1		12	KNJ1314		Hose
E1-71-1		18	KNJ1956		Hose
E1-71-1		19	627/10382		Hose
E2-1-1	*				
E2-2-1	*				
E2-6-10		46A	20/951974		Kit-seal
E3-1-1	*				
E3-8-1		1	25/222885		Valve
E3-15-1		6	32/925838		Element
E3-17-1		2	32/925164		Element
E3-17-1		3	828/10081		O Ring

PAGE	ILLN	ITEM	PART NUMBER	CHANGE NUMBER	DESCRIPTION
E3-17-1		6	823/10181		Washer
E3-17-1		7	823/10201		Washer
F3-2-1		1	331/49505		Wheel
F3-2-1		1	331/49504		Wheel
F3-2-1		3	42/925276		Tyre
F4-5-1		1	KRB0697		Pipe
F4-5-1		2	KRB0696		Pipe
R1-4-1		7	02/802460		Kit-main bearing
R1-4-1		7	02/801713		Kit-bearing
R1-4-1		7	02/802461		Kit-main bearing
R1-4-1		7	02/802462		Kit-main bearing
R1-4-1		15	02/802470		Piston
R1-4-1		15	02/802471		Piston
R1-4-1		18	02/802472		Kit-piston ring
R1-6-1		6	02/802505		Gasket
R1-6-1		6	02/802506		Gasket
R1-7-1		3	02/802154		Nut
R2-1-1		11	02/802367		Gasket
R2-1-1		11	02/802368		Gasket
R4-3-1	*				
R5-3-1		1 01	02/801481		Element
R7-5-2	*				
R8-1-1		1	02/802344		Kit-gasket
R8-1-2		1	02/802347		Kit-gasket

JS160W

TITLE	PAGE NUMBER	CHANGE NUMBER
A ATTACHMENTS		
BUCKETS	**A2**	
BUCKET, GRADING/DITCHING, 1524MM. WIDE	A2-3-2	
BUCKET, GRADING/DITCHING, 1829MM. 72" WIDE	A2-3-1	
BUCKET, 1000 WIDE, 0.71 CUBIC METRES	A2-1-7	
BUCKET, 1050MM HEAVY DUTY	A2-1-26	
BUCKET, 1100 WIDE, 0.81 CUBIC METRES	A2-1-8	
BUCKET, 1150MM HEAVY DUTY	A2-1-27	
BUCKET, 1200 WIDE, 0.90 CUBIC METRES	A2-1-9	
BUCKET, 1250MM HEAVY DUTY	A2-1-28	
BUCKET, 1300 WIDE, 0.99 CUBIC METRES	A2-1-10	
BUCKET, 450MM,HEAVY DUTY	A2-1-20	
BUCKET, 500 WIDE, 0.26 CUBIC METRES	A2-1-1	
BUCKET, 550MM HEAVY DUTY	A2-1-21	
BUCKET, 600 WIDE, 0.35 CUBIC METRES	A2-1-2	
BUCKET, 650MM HEAVY DUTY	A2-1-22	
BUCKET, 700 WIDE, 0.44 CUBIC METRES	A2-1-3	
BUCKET, 750 WIDE, 0.47 CUBIC METRES	A2-1-4	
BUCKET, 750MM HEAVY DUTY	A2-1-23	
	A2-1-24	
BUCKET, 800 WIDE, 0.53 CUBIC METRES	A2-1-5	
BUCKET, 900 WIDE, 0.62 CUBIC METRES	A2-1-6	
BUCKET, 950MM HEAVY DUTY	A2-1-25	
ATTACHMENTS	**A3**	
QUICKHITCH, HYDRAULIC, MPG, MILLER	A3-11-1	
QUICKHITCH, JS160, HYDRAULIC, BUG, MILLER	A3-10-1	
QUICKHITCH, MANUAL	A3-9-1	
ROCKBREAKER HM 860Q, JS160W, 980/90214, 980/90474	A3-1-1	
ROCKBREAKER HM1260Q, JS160W, 980/90216, 980/90291	A3-2-1	
B BODYWORK, CAB, LOADER END		
BODYWORK/FRAME	**B1**	
BAFFLES, PUMP BAY	B1-5-50	
BLADE, DOZER, FRONT & REAR MOUNTED	B1-11-1	
CHASSIS, WITH TOOLBOX	B1-9-1	
COUNTERWEIGHT REAR, AND MIRROR	B1-6-1	
COVERS, UNDERSIDE MAINFRAME	B1-2-1	
COWLINGS, ENGINE BULKHEAD	B1-5-40	
COWLINGS, TOOLBOX & HAND RAIL	B1-5-30	
DOORS WITH FITTINGS, LEFT HAND SIDE BODY, RIGHT HAND SIDE BODY	B1-5-10	
ENGINE COVERS	B1-5-5	
FRAME SUPPORT	B1-5-1	
GRILLES, & TREAD PLATES	B1-5-20	
MAINFRAME, MONO BUILD	B1-1-1	
MAINFRAME, TAB 160W BUILD	B1-1-10	
STABILISER, FRONT & REAR	B1-21-15	
TANK, DIESEL FUEL	B1-4-1	
TANK, HYDRAULIC	B1-3-1	
WHEELCHOCK, GERMAN	B1-9-10	
CAB	**B2**	
CAB	B2-1-1	
CAB DOOR, COMPONENTS	B2-2-1	
CAB MOUNTINGS, CAB FOOR & MAT	B2-16-1	
CAB PANELS	B2-8-1	
CAB, MOUNTING FASTENERS	B2-1-30	
CONSOLE, CAB SERVO CONTROL, LEFT HAND, FIXED CONSOLE	B2-4-1	
CONSOLE, CAB SERVO CONTROL, RIGHT HAND	B2-5-1	
DIRECT GLAZING, REPLACEMENT MATERIAL	B2-18-1	
FIRE EXTINGUISHER	B2-11-1	
FLOOR COMPONENTS, SEAT SLIDE, LEVER ISOLATOR	B2-10-1	
FRONT SCREEN, UPPER & LOWER	B2-1-10	
FRONT WIPER, & CAB COMPONENTS	B2-1-20	

TITLE	PAGE NUMBER	CHANGE NUMBER
FRONT WIPER, CAB LOWER WINDOW, SEE C3-15-10	B2-15-1	
GUARD, FOPS CAGE, FRONT GUARD SALES OPTION	B2-9-20	
GUARD, FOPS, FRONT AND TOP, CAB MOUNTED	B2-9-1	
MIRRORS, EXTERNAL	B2-7-2	
RAIN VISOR, CAB	B2-12-1	
SEAT BELT, STANDARD	B2-3-30	
SEAT BELT, 76MM (3") WIDE, OPTIONAL	B2-3-40	
SEAT, AIR SUSPENSION, HIGH BACK	B2-3-20	
SEAT, HIGH BACK, STANDARD	B2-3-1	
VANDAL GUARD, CAB, 3PC FRONT PANEL	B2-14-1	
WASH/WIPE, WINDSCREEN, SEE C3-15-1	B2-6-1	
LOADER FRONT END	**B3**	
BOOM GREASING, MONO BOOM	B3-4-1	
BOOM GREASING, TAB BOOM	B3-4-10	
BOOM, LOWER, TRIPLE ARTICULATING	B3-10-1	
BOOM, MONO	B3-1-1	
BOOM, UPPER, TRIPLE ARTICULATING	B3-11-1	
BRIDGE BASHING, U K ONLY	B3-12-1	
DIPPER 2.25M	B3-2-1	
DIPPER 2.70M	B3-2-10	
DIPPER 3.05M	B3-2-20	
REFURBISHMENTS	**B5**	
DECALS, MACHINE	B5-1-1	
DECALS, MACHINE, CONTROL LABELS	B5-2-10	
DECALS, WARNING	B5-2-1	
DECALS, WARNING, USA BUILD	B5-3-1	
TOOLS	B5-4-1	

C ELECTRICS-MACHINE, CAB & ENGINE

ELECTRICS, MAIN MACHINE	**C1**	
ALARM, REVERSE	C1-7-1	
BATTERY INSTALLATION, 24 VOLT	C1-3-1	
ELECTRICS, CAB	C1-2-1	
ELECTRICS, MACHINE	C1-1-1	
HORN	C1-8-1	
LIGHT, WORKING, BOOM	C1-6-10	
LIGHT, WORKING, CAB & REAR, USE WITH RAIN GUARD	C1-6-20	
ROAD LIGHTS, ROW, RIGHT HAND DIP	C1-4-10	
ROAD LIGHTS, UK, LEFT HAND DIP	C1-4-1	
ELECTRICS, ENGINE	**C2**	
ALTERNATOR	C2-4-1	
ALTERNATOR MOUNTINGS	C2-5-1	
ECU HARNESS	C2-2-1	
ENGINE ELECTRICS	C2-1-1	
ENGINE, CONTROL MODULE	C2-1-2	
MOTOR,STARTER	C2-3-1	
ELECTRICS, CAB	**C3**	
AIR CON	C3-12-1	
	C3-12-10	
CIGAR LIGHTER	C3-14-1	
COMBI UNIT FIG 2	C3-12-20	
FRONT WIPER, CAB LOWER WINDOW	C3-15-10	
FUSE BOX	C3-7-1	
HEATER	C3-5-1	
HEATER UNIT	C3-5-10	
HEATER UNIT FIG 2	C3-5-20	
LIGHT, BEACON, HAZARD WARNING, AMBER	C3-9-1	
RADIO	C3-11-1	
SWITCH PANEL, SIDE CONSOLE, RIGHT HAND	C3-2-1	
WASH/WIPE, WINDSCREEN	C3-15-1	

D CONTROLS-MACHINE, ENGINE & STEERING

CONTROLS, MACHINE	**D1**	
CONTROLS, EXCAVATOR, CAB	D1-1-1	
PEDAL CONTROLS, MONO BOOM BUILD	D1-2-1	
PEDAL CONTROLS, TAB BOOM BUILD	D1-2-10	

TITLE	PAGE NUMBER	CHANGE NUMBER
CONTROLS, ENGINE	**D2**	
CONTROLS, THROTTLE & STOP, CAB	D2-2-1	
COLUMN, STEERING	**D3**	
STEERING COLUMN	D3-1-1	

E HYDRAULICS & AIR INCLUDING, STEERING

HOSE & PIPEWORK	**E1**	
ARM HIGHT LIMITER, OPTIONAL, MONO BOOM	E1-36-1	
CIRCUIT, AUXILIARY LOW FLOW, MONO BOOM BUILD	E1-29-20	
CIRCUIT, AUXILIARY LOW FLOW, TAB BOOM BUILD	E1-29-30	
CIRCUIT, AUXILIARY/HAMMER, MONO BOOM	E1-30-20	
CIRCUIT, AUXILIARY, HAMMER & LOW FLOW, MONO BOOM	E1-31-20	
CIRCUIT, AUXILIARY, HAMMER & LOW FLOW, TAB BOOM	E1-31-30	
CIRCUIT, BOOM & DIPPER HBCV, MONO BOOM	E1-25-1	
CIRCUIT, BOOM & DIPPER HBCV, TAB BOOM (2 VALVE HBCV BOOM ONLY)	E1-25-10	
CIRCUIT, BOOM & DIPPER HBCV, TAB BOOM (3 & 4 VALVE HBCV)	E1-25-20	
CIRCUIT, BOOM POSITION RAM, HBCV FEED & RETURN, TAB BOOM	E1-48-30	
CIRCUIT, BOOM POSITION RAM, MAINFRAME	E1-48-1	
CIRCUIT, BOOM POSITION RAM, TAB, WITH HBCV	E1-48-20	
CIRCUIT, BOOM RAM, MAINFRAME, MONO BOOM	E1-20-1	
CIRCUIT, BOOM RAM, MAINFRAME, TAB BOOM	E1-20-10	
CIRCUIT, BRAKES, LOWER CHASSIS	E1-15-1	
CIRCUIT, BUCKET RAM, MONOBOOM	E1-23-1	
CIRCUIT, BUCKET, GRAB CHANGEOVER	E1-34-1	
CIRCUIT, BYPASS, HYDRAULIC FILTER	E1-8-1	
CIRCUIT, CRUISE CONTROL	E1-50-1	
CIRCUIT, DIPPER & BUCKET	E1-21-1	
CIRCUIT, DIPPER RAM, & BUCKET RAM, TAB BOOM	E1-22-10	
CIRCUIT, DIPPER RAM, HBCV FEED & RETURN	E1-26-1	
CIRCUIT, DIPPER RAM, MONOBOOM	E1-22-1	
CIRCUIT, DOZER CONTROL, MAINFRAME	E1-45-1	
CIRCUIT, DOZER/STAB CONTROL	E1-45-10	
CIRCUIT, DOZER/STAB, MAINFRAME	E1-46-1	
CIRCUIT, DRAIN, MOTOR & SOLENOID	E1-10-1	
CIRCUIT, DUAL CONTROLS, STANDARD USA, OPTIONAL UK WORLD	E1-14-1	
CIRCUIT, FAN DRIVE	E1-9-1	
CIRCUIT, FRONT & REAR STAB, CHASSIS	E1-46-30	
CIRCUIT, FRONT DOZER, REAR STAB, CHASSIS	E1-46-10	
	E1-46-15	
CIRCUIT, FRONT STAB, REAR DOZER, CHASSIS	E1-46-40	
CIRCUIT, HAMMER, AUXILIARY BOOM PIPES, TAB BOOM	E1-30-30	
CIRCUIT, HAMMER, AUXILIARY, MAINFRAME MONO BOOM	E1-31-1	
CIRCUIT, HAMMER, AUXILIARY, MAINFRAME TAB BOOM	E1-31-10	
CIRCUIT, HAMMER, FULLFLOW 2.25 DIPPER	E1-33-1	
CIRCUIT, HAMMER, FULLFLOW 2.7 DIPPER	E1-33-10	
CIRCUIT, HAMMER, FULLFLOW 3.05 DIPPER	E1-33-20	
CIRCUIT, HAMMER, MAINFRAME, MONO BOOM	E1-30-1	
	E1-30-40	
CIRCUIT, HAMMER, MAINFRAME, TAB BOOM	E1-30-10	
CIRCUIT, LOW FLOW, AUXILIARY, MAINFRAME , TAB BOOM BUILD	E1-29-10	
CIRCUIT, LOW FLOW, AUXILIARY, MAINFRAME, MONO BOOM BUILD	E1-29-1	
CIRCUIT, LOW FLOW, 2.25M DIPPER	E1-32-1	

TITLE	PAGE NUMBER	CHANGE NUMBER
CIRCUIT, LOW FLOW, 2.7M DIPPER	E1-32-10	
CIRCUIT, LOW FLOW, 3.05M DIPPER	E1-32-20	
CIRCUIT, MANIFOLD, UNDER CAB	E1-68-1	
CIRCUIT, MILLER Q. HITCH, 980/ 90463	E1-60-1	
CIRCUIT, NEUTRAL PRESSURE	E1-2-1	
CIRCUIT, NEUTRAL, RETURN & OIL COOLER	E1-3-1	
CIRCUIT, NON-HBCV, BOOM POSITION RAM	E1-48-10	
CIRCUIT, PILOT LINE, MAIN CONTROL VALVE	E1-71-1	
CIRCUIT, PUMP SUCTION	E1-1-1	
CIRCUIT, PUMP, PILOT PRESSURE, & RETURN LINE	E1-13-1	
CIRCUIT, PUMP, PILOT PRESSURE, CONTROL LINE	E1-12-1	
CIRCUIT, REAR DOZER, CHASSIS	E1-47-1	
CIRCUIT, REAR DOZER, CHASSIS, PLUS LOGIC VALVE OPTION	E1-47-10	
CIRCUIT, REAR STAB, CHASSIS	E1-46-20	
CIRCUIT, RETURN LINE, PILOT PRESSURE, MAIN CONTROL VALVE	E1-72-1	
CIRCUIT, STEERING &, BRAKES, MAINFRAME	E1-17-10	
CIRCUIT, STEERING, CHASSIS	E1-17-1	
CIRCUIT, SWING	E1-6-1	
CIRCUIT, TANK MANIFOLD	E1-69-1	
CIRCUIT, TEST POINTS	E1-35-1	
CIRCUIT, TRACTION PILOT LINE, UPPER CHASSIS	E1-4-10	
CIRCUIT, TRACTION, LOWER CHASSIS	E1-5-1	
CIRCUIT, TRACTION, UPPER CHASSIS	E1-4-1	
CIRCUIT, VALVE, CUSHION	E1-65-1	
CIRCUIT, VALVE, DRIVE PEDAL	E1-61-1	
CIRCUIT, VALVE, LH CONTROLLER	E1-62-1	
CIRCUIT, VALVE, PILOT SHUTTLE	E1-70-1	
CIRCUIT, VALVE, RH CONTROLLER	E1-63-1	
CIRCUIT, VALVE, SHUTTLE	E1-66-1	
CIRCUIT, VALVE, SOLENOID	E1-67-1	
CIRCUIT, VALVE, 3 STATION	E1-64-1	
PUMP/MOTOR & PUMP DRIVE	**E2**	
MOTOR, DRIVE, FIG 1	E2-6-10	
MOTOR, DRIVE, FIG 2	E2-6-11	
MOTOR, SWING	E2-7-1	
PUMP, MAIN HYDRAULIC	E2-1-1	
PUMP, PISTON, MAIN HYDRAULIC, & COMPONENTS	E2-2-1	
VALVES & HYDRAULIC FILTERS	**E3**	
COUPLING, ROTARY	E3-14-20	
FILTER, AUXILIARY/HAMMER, RETURN	E3-16-1	
FILTER, BYPASS, HYDRAULIC	E3-17-1	
FILTER, HYDRAULIC, STEER CIRCUIT	E3-16-10	
LUBRICANTS & FILTERS	E3-15-1	
MOUNTINGS, ROTARY COUPLING	E3-14-1	
OILS, BIODEGRADABLE, HYDRAULIC	E3-15-10	
VALVE, ASSEMBLY, & MOUNTING	E3-1-1	
VALVE, BRAKE PEDAL	E3-3-1	
VALVE, CONTROL, COMPONENTS FIG 1	E3-2-1	
VALVE, CONTROL, COMPONENTS FIG 2	E3-2-2	
VALVE, HAMMER	E3-24-1	
VALVE, HAND CONTROL, SERVO	E3-6-1	
VALVE, PILOT SHUTTLE	E3-23-1	
VALVE, RELIEF, SERVICE PORT	E3-2-45	
VALVE, SOLENOID	E3-8-1	
VALVE, SOLENOID, TAB HAMMER, JS175W AUTO T3	E3-9-1	
VALVE, STEERING	E3-40-1	
RAMS	**E4**	
BOOM RAM, NONE HBCV	E4-1-10	
CIRCUIT, BOOM RAM, NONE HBCV	E4-1-1	
CIRCUIT, BOOM RAM, WITH HBCV, TAB BOOM	E4-1-20	
RAM, AXLE LOCK	E4-6-1	
RAM, BOOM, WITH HBCV, TAB BOOM	E4-1-30	
RAM, DIPPER, ASSEMBLY WITH HBCV, MONO BOOM & TAB BOOM	E4-2-10	

TITLE	PAGE NUMBER	CHANGE NUMBER
RAM, DIPPER, ASSY WITHOUT HBCV, MONO BOOM & TAB BOOM	E4-2-1	
RAM, DIPPER, COMPONENTS	E4-2-20	
RAM, POSITION, ASSEMBLY, TAB BOOM, WITHOUT HBCV	E4-7-1	
RAM, POSITION, HBCV, ASSEMBLY	E4-7-10	

F AXLES, WHEELS & TRANSMISSION

AXLES, FRONT F1

AXLE ASSEMBLY, FRONT, 18. 16:1 RATIO 453/30800	F1-1-1	
CROWN WHEEL & PINION, 18. 16:1 AXLE, 453/30800	F1-6-1	
DIFFERENTIAL, ASSEMBLY, 18. 16:1, STEER AXLE 453/30800	F1-5-1	
HUB & COMPONENTS, AXLE WITH HUB BRAKES, 18.16:1 RATIO 453/30800	F1-3-1	
KNUCKLE, STEERING, 18.16:1 RATIO, 453/30800	F1-4-1	
RAM, STEERING AXLE, INSTALLATION	F1-7-1	

AXLES, REAR F2

AXLE ASSEMBLY, REAR, 18/16:1 RATIO 450/42700	F2-1-1	
CROWN WHEEL & PINION, 18. 16:1 AXLE, 450/42700	F2-6-1	
DIFFERENTIAL, ASSEMBLY, 18. 16:1, 450/42700	F2-5-1	
HUB & COMPONENTS, AXLE WITH HUB BRAKES, 18.16:1 RATIO 450/42700	F2-3-1	

WHEELS, TYRES & PROPSHAFTS F3

PROPSHAFTS, TRANSMISSION	F3-1-1	
WHEELS & TYRES, DUALS	F3-4-1	
WHEELS & TYRES, DUALS, 10. 00 X 20 EM22 16PR & EM23	F3-3-1	
WHEELS & TYRES, FLOATATION, LEFT HAND SIDE FRONT AND REAR	F3-5-1	
WHEELS & TYRES, SINGLES	F3-2-1	

SLEW GEARBOXES F4

CIRCUIT, SWING RING GREASING	F4-5-1	
GEARBOX, SWING	F4-4-1	
MOTOR, SWING	F4-3-1	

TRANSMISSION F5

GEARBOX BRAKE DISC, GROUP	F5-7-1	
GEARBOX CLUTCH DISC, GROUP	F5-6-1	
GEARBOX GEARSHIFT, SENSOR GROUP	F5-9-1	
GEARBOX HOUSING, GROUP	F5-2-1	
GEARBOX OIL PIPES, GROUP	F5-3-1	
GEARBOX OUTPUT, GROUP	F5-10-1	
GEARBOX PLANET DRIVE, GROUP	F5-8-1	
GEARBOX, INPUT HOUSING, GROUP	F5-4-1	
TRANSMISSION, POWERSHIFT	F5-1-1	

R ENGINE 4JJ1-XYSJ01 TIER 3

ENGINE BLOCK & SUB-ASSEMBLIES R1

BLOCK ASSEMBLY	R1-3-1	
CAMSHAFTS, & TIMING GEARS	R1-6-2	
CRANKSHAFT, BEARINGS, PISTONS & CON-RODS	R1-4-1	
ENGINE MOUNTINGS	R1-8-1	
ENGINE, COMPLETE, 4JJ1-XYSJ01	R1-1-1	
FANS,PULLEYS & BELTS, EU ONLY	R1-5-1	
FANS,PULLEYS & BELTS, NON EU	R1-5-2	
FLYWHEEL & HOUSING	R1-7-1	
TIMING CASE, & FRONT COVER	R1-6-1	

CYLINDER HEAD & SUB-ASSEMBLIES R2

CYLINDER HEAD	R2-1-1	
LIFTING PLATES	R2-6-1	
ROCKER ASSEMBLY, INLET/ EXHAUST VALVES	R2-2-1	
ROCKER COVER, & BREATHER PIPE	R2-3-1	

TITLE	PAGE NUMBER	CHANGE NUMBER
INDUCTION & EXHAUST SYSTEMS	**R3**	
EXHAUST SYSTEM	R3-4-1	
EXHAUST, RECIRCULATION	R3-5-1	
FILTER, AIR	R3-3-1	
MANIFOLD, EXHAUST	R3-2-1	
MANIFOLD, INDUCTION	R3-1-1	
SYSTEM, COOLING	**R4**	
CHARGE AIR COOLER	R4-7-1	
COOLER ASSEMBLY	R4-4-1	
COOLER COMBINATION, MOUNTING &, SOUND PROOFING	R4-3-1	
EXHAUST, RECIRCULATION, WATER COOLING	R4-8-1	
PUMP WATER	R4-1-1	
RADIATOR, HOSES & FITTINGS	R4-5-1	
THERMOSTAT,HOUSING, & PIPEWORK	R4-2-1	
SYSTEM, LUBRICATION	**R5**	
COOLER, ENGINE OIL	R5-4-1	
OIL FILTER, REMOTE MOUNTED	R5-3-1	
PUMP, OIL	R5-2-1	
SUMP, OIL, & FITTINGS	R5-1-1	
SYSTEM, FUEL	**R6**	
FILTER, FUEL	R6-7-1	
FILTER, FUEL SEDIMENT, 5 MICRON	R6-6-1	
FUEL LIFT PUMP	R6-8-1	
FUEL SYSTEM	R6-2-1	
FUEL SYSTEM	R6-4-1	
PUMP, FUEL INJECTION, INSTALLATION	R6-1-1	
EQUIPMENT, AUXILIARY	**R7**	
COMPRESSOR, AIR CONDITIONING	R7-6-1	
COMPRESSOR, INSTALLATION, AIR CONDITIONING	R7-5-2	
TURBO, PIPEWORK	R7-2-1	
TURBOCHARGER	R7-1-1	
GASKET SETS	**R8**	
GASKET SET, CYLINDER HEAD, OVERHAUL	R8-1-2	
GASKET SET, ENGINE OVERHAUL	R8-1-1	

WHEELED EXCAVATOR

M1421600 to M1421799
Model JS160W AUTO - TIER 3]

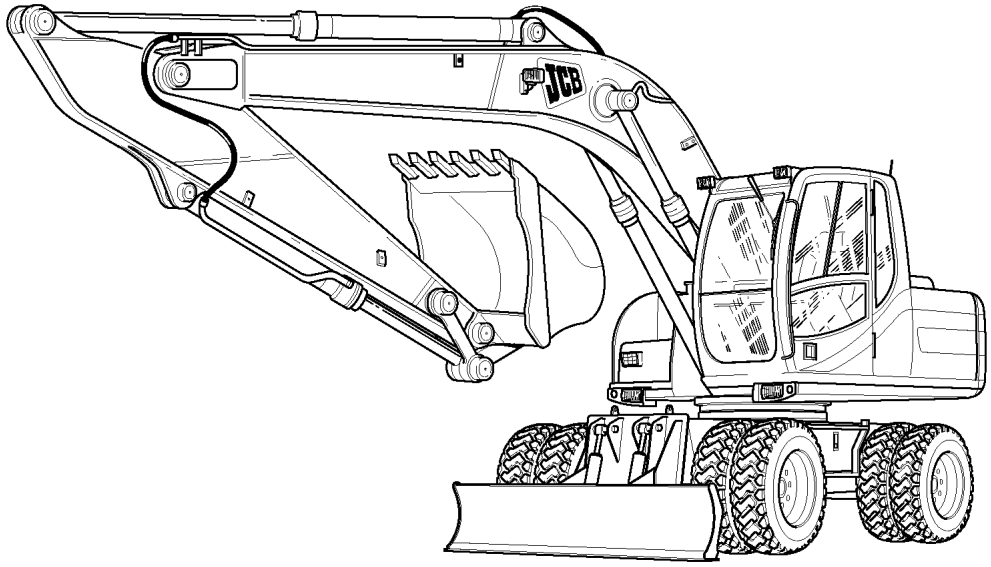

EQUIPEMENTS	A
CARROSSERIE, CABINE, PARTIE CHARGEUSE	B
EQUIPEMENT ELECTRIQUE-ENGIN, CABINE & MOTEUR	C
COMMANDES-ENGIN, MOTEUR	D
SYSTEME HYDRAULIQUE	E
BOIT PIVOT ORIEN DIRECTION	F
MOTEUR	R

910010

P.S.I.	Livres par pouce carré
A/R	Suivant besoin
N.S.P.	Pièce non réparable
N/A	Sans objet - Non disponible
HBCV	Valve de protection contre l'éclatement des flexibles
KP	Pivot principal
SS	Déport latéral (pelle)
CM	Pivot central fixe (pelle)
M.P.H.	Miles à l'heure
K.P.H.	Kilomètres à l'heure
STD	Standard
O/D	Diamètre extérieur
I/D	Diamètre intérieur
M.S.S.	Remplacement par plusieurs pièces
T.I.	Information Technique
M/S	Transmission à commande manuelle
P/S	Transmission automatique
M TBA	Numéro de série machine non encore connu
SUPERSEDED	Pièce entièrement interchangeable
TO M	Jusqu'au numéro de série machine
M ON	A partir du numéro de série machine

4WD	4 roues motrices
LTR	Litre
L1=	Longueur (verticale)
L2=	Longueur (horizontale)
L=	Longueur
MM	Millimètres
T=	Epaisseur
W/	Avec
WO/	Sans
KG	Kilogramme
LH	Gauche (côté)
RH	Droit (côté)
PTO	Prise de mouvement
S/M	Sitemaster
H/M	Hammermaster
PR	Paire
4WS	4 roues directrices
2WS	2 roues directrices
C/W	Complet avec

9809/0058	Desk Top Reader 240 Volt
9809/0059	Desk Top Reader 110 Volt
9809/0060	Bulb For 9809/0058 & 9809/0059
9809/0048	Bulb For 375 Reader
9809/0044	Case 2 Reader Portable
9809/0054	Bulb For Case 2 Reader Fhx
9809/0045	Case 4 Reader Large Screen
9809/0055	Bulb For Case 4 Reader Epz
9809/0007	Bulb For Bell & Howell Sr 1020
9809/0047	Bulb For Mt4 Reader
9809/0053	Hand Held Elite Reader
9809/0056	Bulb For Microscot Reader

Lens

9809/0017	Lens 29mm For Sr 1020

Binder & Panels

9809/0006	Binder For Fiche (service)
9809/0052	Binder For Fiche (prof. Prod. Support)
9809/0015	Binder Fiche Panels

PAGE	ILLN	ITEM	PART NUMBER	CHANGE NUMBER	DESCRIPTION
A2-3-1		2	331/47909		Toeplate
A2-3-1		4	1340/2401		Nut
A2-3-2		1	980/86140		Bucket
B1-2-1	*				
B1-4-1	*				
B1-5-1	*				
B1-5-5	*				
B1-5-20	*				
B1-5-40	*				
B1-6-1		1	335/13581		Counterweight
B1-11-1		25A	1316/4130		Bolt
B1-21-15		23	335/11676		Body
B2-1-10		32	826/11487		Latch
B2-1-10		33	826/11486		Latch
B2-1-10		34	6900/0619		Screw
B2-16-1		9	335/13853		Plate
B2-16-1		16	331/59705		Plate
B3-10-1		12	KLV0167		Pin
B3-10-1		13	6009/3724D		Bolt
B3-10-1		14	173R016VD		Nut
B5-1-1	*				
B5-1-1		3A	817/19832		Decal
B5-2-1	*				
B5-2-1		12	817/70003		Decal
B5-2-1		14	817/70116		Decal
B5-2-1		20	817/70117		Decal
B5-2-1		23	817/17526		Label
B5-2-1		30	332/J0613		Decal
B5-2-10	*				
C1-3-1	*				
C1-3-1		11	718/20026		Cable
C3-11-1		1	717/20225		Radio
C3-11-1		1	717/20226		Radio
C3-11-1		1	717/20227		Radio
C3-12-1	*				
C3-12-1		33	123/04999		Compressor
D1-1-1		27	928/60339		Valve
D1-1-1		30	331/57463		Bracket
D1-1-1		33	331/57439		Pedal
D1-2-10	*				
E1-1-1	*				
E1-2-1	*				
E1-3-1	*				
E1-4-10	*				
E1-10-1	*				
E1-13-1	*				
E1-17-1	*				
E1-17-1		13 03	627/10543		Hose
E1-17-1		13 04	627/10543		Hose
E1-22-10	*				
E1-25-1	*				
E1-29-10		44	830/13798		Tube
E1-29-30	*				
E1-30-1	*				
E1-30-10	*				
E1-30-10		5	KNJ0606		Adapter
E1-30-10		6	1609/0002		Adapter
E1-30-10		15	1315/0509D		Screw
E1-30-10		20	335/13018		Plate
E1-30-10		31 01	627/10407		Hose
E1-30-10		31 02	627/10407		Hose
E1-30-10		32	627/10519		Hose
E1-30-10		45	816/90712		Adapter
E1-31-1	*				

PAGE	ILLN	ITEM	PART NUMBER	CHANGE NUMBER	DESCRIPTION
E1-31-1		3	721/11632		Harness
E1-32-1	*				
E1-32-10	*				
E1-32-20	*				
E1-33-1	*				
E1-33-10	*				
E1-33-20	*				
E1-36-1	*				
E1-46-10		4	JLV1871		Hose
E1-46-10		5	JLV1868		Hose
E1-46-10		6	JLV0594		Hose
E1-46-10		7	JNJ0393		Hose
E1-46-10		9	KNJ1697		Hose
E1-46-10		17	KAJ2176		Adapter
E1-46-10		23	JLJ0055		Adapter
E1-48-1		3	CNA0584		Adapter
E1-48-1		12	JLV0594		Hose
E1-48-1		13	KHJ1335		Hose
E1-48-1		14	KTJ0812		Hose
E1-48-1		15	KTJ0813		Hose
E1-48-1		16	KNJ0605		Adapter
E1-48-1		17	627/10537	Superseded	Hose
E1-48-1		18	830/13253		Pipe
E1-48-1		21	335/11072		Bracket
E1-48-1		28	JLV0433		Adapter
E1-48-1		29	KHJ0869		Adapter
E1-48-20	*				
E1-61-1		1	928/60339		Valve
E1-61-1		12	KBJ2208		Hose
E1-61-1		13	JLV0719		Hose
E1-61-1		14	KSJ0806		Hose
E1-62-1		56E	KNJ1109		Hose
E1-62-1		56F	KNJ1109		Hose
E1-65-1		8	KNJ1119		Hose
E1-65-1		9	627/10382		Hose
E1-65-1		10	KNJ1314		Hose
E1-65-1		12	KBJ2348		Hose
E1-65-1		13	KSJ1871		Hose
E1-65-1		14	627/10199		Hose
E1-65-1		15	KTJ1215		Hose
E1-68-1		12	KNJ1109		Hose
E1-68-1		13	KNJ1109		Hose
E1-68-1		15	KNJ1109		Hose
E1-68-1		16	KNJ1109		Hose
E1-69-1	*				
E1-69-1		13	JNJ0418		Hose
E1-69-1		14	JNJ0418		Hose
E1-70-1		10	KRJ3577		Hose
E1-70-1		11	KNJ1849		Hose
E1-70-1		12	KRJ3571		Hose
E1-70-1		13	JLJ0326		Hose
E1-70-1		14	KBJ2346		Hose
E1-71-1		10	KNJ1119		Hose
E1-71-1		12	KNJ1314		Hose
E1-71-1		18	KNJ1956		Hose
E1-71-1		19	627/10382		Hose
E2-1-1	*				
E2-2-1	*				
E2-6-10		46A	20/951974		Kit-seal
E3-1-1	*				
E3-8-1		1	25/222885		Valve
E3-15-1		6	32/925838		Element
E3-17-1		2	32/925164		Element
E3-17-1		3	828/10081		O Ring

PAGE	ILLN	ITEM	PART NUMBER	CHANGE NUMBER	DESCRIPTION
E3-17-1		6	823/10181		Washer
E3-17-1		7	823/10201		Washer
F3-2-1		1	331/49505		Wheel
F3-2-1		1	331/49504		Wheel
F3-2-1		3	42/925276		Tyre
F4-5-1		1	KRB0697		Pipe
F4-5-1		2	KRB0696		Pipe
R1-4-1		7	02/802460		Kit-main bearing
R1-4-1		7	02/801713		Kit-bearing
R1-4-1		7	02/802461		Kit-main bearing
R1-4-1		7	02/802462		Kit-main bearing
R1-4-1		15	02/802470		Piston
R1-4-1		15	02/802471		Piston
R1-4-1		18	02/802472		Kit-piston ring
R1-6-1		6	02/802505		Gasket
R1-6-1		6	02/802506		Gasket
R1-7-1		3	02/802154		Nut
R2-1-1		11	02/802367		Gasket
R2-1-1		11	02/802368		Gasket
R4-3-1	*				
R5-3-1		1 01	02/801481		Element
R7-5-2	*				
R8-1-1		1	02/802344		Kit-gasket
R8-1-2		1	02/802347		Kit-gasket

JS160W

TITLE	PAGE NUMBER	CHANGE NUMBER

A EQUIPEMENTS

GODETS DE PELLE A2

BUCKET, GRADING/DITCHING, 1524MM. WIDE	A2-3-2	
BUCKET, GRADING/DITCHING, 1829MM. 72" WIDE	A2-3-1	
BUCKET, 1000 WIDE, 0.71 CUBIC METRES	A2-1-7	
BUCKET, 1050MM HEAVY DUTY	A2-1-26	
BUCKET, 1100 WIDE, 0.81 CUBIC METRES	A2-1-8	
BUCKET, 1150MM HEAVY DUTY	A2-1-27	
BUCKET, 1200 WIDE, 0.90 CUBIC METRES	A2-1-9	
BUCKET, 1250MM HEAVY DUTY	A2-1-28	
BUCKET, 1300 WIDE, 0.99 CUBIC METRES	A2-1-10	
BUCKET, 450MM,HEAVY DUTY	A2-1-20	
BUCKET, 500 WIDE, 0.26 CUBIC METRES	A2-1-1	
BUCKET, 550MM HEAVY DUTY	A2-1-21	
BUCKET, 600 WIDE, 0.35 CUBIC METRES	A2-1-2	
BUCKET, 650MM HEAVY DUTY	A2-1-22	
BUCKET, 700 WIDE, 0.44 CUBIC METRES	A2-1-3	
BUCKET, 750 WIDE, 0.47 CUBIC METRES	A2-1-4	
BUCKET, 750MM HEAVY DUTY	A2-1-23	
	A2-1-24	
BUCKET, 800 WIDE, 0.53 CUBIC METRES	A2-1-5	
BUCKET, 900 WIDE, 0.62 CUBIC METRES	A2-1-6	
BUCKET, 950MM HEAVY DUTY	A2-1-25	

EQUIPEMENT AUXILIAIRE A3

QUICKHITCH, HYDRAULIC, MPG, MILLER	A3-11-1	
QUICKHITCH, JS160, HYDRAULIC, BUG, MILLER	A3-10-1	
QUICKHITCH, MANUAL	A3-9-1	
ROCKBREAKER HM 860Q, JS160W, 980/90214, 980/90474	A3-1-1	
ROCKBREAKER HM1260Q, JS160W, 980/90216, 980/90291	A3-2-1	

B CARROSSERIE, CABINE, PARTIE CHARGEUSE

CARROSSERIE/CHASSIS B1

BAFFLES, PUMP BAY	B1-5-50	
CHASSIS PRINCIPAL	B1-1-1	
	B1-1-10	
CHASSIS, WITH TOOLBOX	B1-9-1	
CONTREPOIDS ARRIERE	B1-6-1	
COVERS, UNDERSIDE MAINFRAME	B1-2-1	
COWLINGS, ENGINE BULKHEAD	B1-5-40	
COWLINGS, TOOLBOX & HAND RAIL	B1-5-30	
DOORS WITH FITTINGS, LEFT HAND SIDE BODY, RIGHT HAND SIDE BODY	B1-5-10	
ENGINE COVERS	B1-5-5	
FRAME SUPPORT	B1-5-1	
GRILLES, & TREAD PLATES	B1-5-20	
LAME, CONCASSEUR	B1-11-1	
RESERVOIR, CARBU.DIESEL	B1-4-1	
RESERVOIR, HYDRAULIQUE	B1-3-1	
STABILISER, FRONT & REAR	B1-21-15	
WHEELCHOCK, GERMAN	B1-9-10	

CABINE B2

CAB	B2-1-1	
CAB DOOR, COMPONENTS	B2-2-1	
CAB MOUNTINGS, CAB FOOR & MAT	B2-16-1	
CAB PANELS	B2-8-1	
CAB, MOUNTING FASTENERS	B2-1-30	
CONSOLE, CAB SERVO CONTROL, LEFT HAND, FIXED CONSOLE	B2-4-1	
CONSOLE, CAB SERVO CONTROL, RIGHT HAND	B2-5-1	
DIRECT GLAZING, REPLACEMENT MATERIAL	B2-18-1	
EXTINCTEUR	B2-11-1	
FLOOR COMPONENTS, SEAT SLIDE, LEVER ISOLATOR	B2-10-1	
FRONT SCREEN, UPPER & LOWER	B2-1-10	
FRONT WIPER, & CAB COMPONENTS	B2-1-20	
FRONT WIPER, CAB LOWER WINDOW, SEE C3-15-10	B2-15-1	
GUARD, FOPS CAGE, FRONT GUARD SALES OPTION	B2-9-20	

TITLE	PAGE NUMBER	CHANGE NUMBER
GUARD, FOPS, FRONT AND TOP, CAB MOUNTED	B2-9-1	
LAVAGE/ESSUI-GLACES PARE-BRISE	B2-6-1	
RAIN VISOR, CAB	B2-12-1	
RETROVISEURS EXTERIEUR	B2-7-2	
SEAT BELT, STANDARD	B2-3-30	
SEAT BELT, 76MM (3") WIDE, OPTIONAL	B2-3-40	
SEAT, AIR SUSPENSION, HIGH BACK	B2-3-20	
SEAT, HIGH BACK, STANDARD	B2-3-1	
VANDAL GUARD, CAB, 3PC FRONT PANEL	B2-14-1	
PARTIE CHARGEUSE	**B3**	
BOOM GREASING, MONO BOOM	B3-4-1	
BOOM GREASING, TAB BOOM	B3-4-10	
BOOM, LOWER, TRIPLE ARTICULATING	B3-10-1	
BOOM, UPPER, TRIPLE ARTICULATING	B3-11-1	
BRIDGE BASHING, U K ONLY	B3-12-1	
CHARGEUR 2.25M	B3-2-1	
CHARGEUR 3.0M	B3-2-20	
DIPPER 2.70M	B3-2-10	
FLECHE	B3-1-1	
INGREDIENTS	**B5**	
DECALS, MACHINE	B5-1-1	
DECALS, MACHINE, CONTROL LABELS	B5-2-10	
DECALS, WARNING	B5-2-1	
DECALS, WARNING, USA BUILD	B5-3-1	
OUTILS	B5-4-1	

C EQUIPEMENT ELECTRIQUE-ENGIN, CABINE & MOTEUR

EQUIPEMENT ELECTR. PRINCIPAL	**C1**	
ALARME, MARCHE ARRIERE	C1-7-1	
BATTERIE INSTALLATIO24 VOLTS	C1-3-1	
ELECTRICITE, CABINE	C1-2-1	
ELECTRICITE, MACHINE	C1-1-1	
HORN	C1-8-1	
LIGHT, WORKING, CAB & REAR, USE WITH RAIN GUARD	C1-6-20	
PHARE, DE TRAVAIL FLECHE	C1-6-10	
ROAD LIGHTS, ROW, RIGHT HAND DIP	C1-4-10	
ROAD LIGHTS, UK, LEFT HAND DIP	C1-4-1	
EQUIPEMENT ELECTRIQUE, MOTEUR	**C2**	
ALTERNATOR	C2-4-1	
ALTERNATOR MOUNTINGS	C2-5-1	
ECU HARNESS	C2-2-1	
ENGINE ELECTRICS	C2-1-1	
ENGINE, CONTROL MODULE	C2-1-2	
MOTOR,STARTER	C2-3-1	
EQUIPEMENT ELECTRIQUE, CABINE	**C3**	
AIR CON	C3-12-1	
	C3-12-10	
CIGAR LIGHTER	C3-14-1	
COMBI UNIT FIG 2	C3-12-20	
FRONT WIPER, CAB LOWER WINDOW	C3-15-10	
FUSE BOX	C3-7-1	
HEATER	C3-5-1	
HEATER UNIT	C3-5-10	
HEATER UNIT FIG 2	C3-5-20	
LAVAGE/ESSUI-GLACES PARE-BRISE	C3-15-1	
PHARE, BALISAGE AVERTISSEMENT DANGERAMBRE	C3-9-1	
RADIO	C3-11-1	
SWITCH PANEL, SIDE CONSOLE, RIGHT HAND	C3-2-1	

D COMMANDES-ENGIN, MOTEUR

COMMANDES DE L'ENGIN	**D1**	
COMMANDES, EXCAVATEUR	D1-1-1	
PEDAL CONTROLS, MONO BOOM BUILD	D1-2-1	

TITLE	PAGE NUMBER	CHANGE NUMBER
PEDAL CONTROLS, TAB BOOM BUILD	D1-2-10	
COMMANDES DU MOTEUR	**D2**	
CONTROLS, THROTTLE & STOP, CAB	D2-2-1	
COLONNE DE DIRECTION	**D3**	
STEERING COLUMN	D3-1-1	

E SYSTEME HYDRAULIQUE

TUYAUTERIE ET FLEXIBLES	**E1**	
ARM HIGHT LIMITER, OPTIONAL, MONO BOOM	E1-36-1	
CIRCUIT EXCAVATEUR & GODET	E1-21-1	
CIRCUIT, ASSERVISSEMPOINT MORT FIG 1	E1-12-1	
	E1-13-1	
CIRCUIT, AUXILIARY LOW FLOW, MONO BOOM BUILD	E1-29-20	
CIRCUIT, AUXILIARY LOW FLOW, TAB BOOM BUILD	E1-29-30	
CIRCUIT, AUXILIARY/HAMMER, MONO BOOM	E1-30-20	
CIRCUIT, AUXILIARY, HAMMER & LOW FLOW, MONO BOOM	E1-31-20	
CIRCUIT, AUXILIARY, HAMMER & LOW FLOW, TAB BOOM	E1-31-30	
CIRCUIT, BOOM & DIPPER HBCV, MONO BOOM	E1-25-1	
CIRCUIT, BOOM & DIPPER HBCV, TAB BOOM (2 VALVE HBCV BOOM ONLY)	E1-25-10	
CIRCUIT, BOOM & DIPPER HBCV, TAB BOOM (3 & 4 VALVE HBCV)	E1-25-20	
CIRCUIT, BOOM POSITION RAM, HBCV FEED & RETURN, TAB BOOM	E1-48-30	
CIRCUIT, BOOM POSITION RAM, MAINFRAME	E1-48-1	
CIRCUIT, BOOM POSITION RAM, TAB, WITH HBCV	E1-48-20	
CIRCUIT, BRAKES, LOWER CHASSIS	E1-15-1	
CIRCUIT, BUCKET RAM, MONOBOOM	E1-23-1	
CIRCUIT, BUCKET, GRAB CHANGEOVER	E1-34-1	
CIRCUIT, BYPASS, HYDRAULIC FILTER	E1-8-1	
CIRCUIT, CHENILLE CHASSIS PRINCIPAL	E1-4-1	
	E1-4-10	
CIRCUIT, CRUISE CONTROL	E1-50-1	
CIRCUIT, DIPPER RAM, & BUCKET RAM, TAB BOOM	E1-22-10	
CIRCUIT, DIPPER RAM, HBCV FEED & RETURN	E1-26-1	
CIRCUIT, DIPPER RAM, MONOBOOM	E1-22-1	
CIRCUIT, DOZER CONTROL, MAINFRAME	E1-45-1	
CIRCUIT, DOZER/STAB CONTROL	E1-45-10	
CIRCUIT, DOZER/STAB, MAINFRAME	E1-46-1	
CIRCUIT, DRAIN, MOTOR & SOLENOID	E1-10-1	
CIRCUIT, DUAL CONTROLS, STANDARD USA, OPTIONAL UK WORLD	E1-14-1	
CIRCUIT, FAN DRIVE	E1-9-1	
CIRCUIT, FRONT & REAR STAB, CHASSIS	E1-46-30	
CIRCUIT, FRONT DOZER, REAR STAB, CHASSIS	E1-46-10	
	E1-46-15	
CIRCUIT, FRONT STAB, REAR DOZER, CHASSIS	E1-46-40	
CIRCUIT, HAMMER, AUXILIARY BOOM PIPES, TAB BOOM	E1-30-30	
CIRCUIT, HAMMER, AUXILIARY, MAINFRAME MONO BOOM	E1-31-1	
CIRCUIT, HAMMER, AUXILIARY, MAINFRAME TAB BOOM	E1-31-10	
CIRCUIT, HAMMER, FULLFLOW 2.25 DIPPER	E1-33-1	
CIRCUIT, HAMMER, FULLFLOW 2.7 DIPPER	E1-33-10	
CIRCUIT, HAMMER, FULLFLOW 3.05 DIPPER	E1-33-20	
CIRCUIT, HAMMER, MAINFRAME, MONO BOOM	E1-30-1	
	E1-30-40	
CIRCUIT, HAMMER, MAINFRAME, TAB BOOM	E1-30-10	

TITLE	PAGE NUMBER	CHANGE NUMBER
CIRCUIT, LOW FLOW, AUXILIARY, MAINFRAME , TAB BOOM BUILD	E1-29-10	
CIRCUIT, LOW FLOW, AUXILIARY, MAINFRAME, MONO BOOM BUILD	E1-29-1	
CIRCUIT, LOW FLOW, 2.25M DIPPER	E1-32-1	
CIRCUIT, LOW FLOW, 2.7M DIPPER	E1-32-10	
CIRCUIT, LOW FLOW, 3.05M DIPPER	E1-32-20	
CIRCUIT, MANIFOLD, UNDER CAB	E1-68-1	
CIRCUIT, MILLER Q. HITCH, 980/ 90463	E1-60-1	
CIRCUIT, NEUTRAL PRESSURE	E1-2-1	
CIRCUIT, NEUTRAL, RETURN & OIL COOLER	E1-3-1	
CIRCUIT, NON-HBCV, BOOM POSITION RAM	E1-48-10	
CIRCUIT, PILOT LINE, MAIN CONTROL VALVE	E1-71-1	
CIRCUIT, PUMP SUCTION	E1-1-1	
CIRCUIT, REAR DOZER, CHASSIS	E1-47-1	
CIRCUIT, REAR DOZER, CHASSIS, PLUS LOGIC VALVE OPTION	E1-47-10	
CIRCUIT, REAR STAB, CHASSIS	E1-46-20	
CIRCUIT, RETURN LINE, PILOT PRESSURE, MAIN CONTROL VALVE	E1-72-1	
CIRCUIT, STEERING &, BRAKES, MAINFRAME	E1-17-10	
CIRCUIT, STEERING, CHASSIS	E1-17-1	
CIRCUIT, SWING	E1-6-1	
CIRCUIT, TANK MANIFOLD	E1-69-1	
CIRCUIT, TEST POINTS	E1-35-1	
CIRCUIT, TRACTION, LOWER CHASSIS	E1-5-1	
CIRCUIT, VALVE, CUSHION	E1-65-1	
CIRCUIT, VALVE, DRIVE PEDAL	E1-61-1	
CIRCUIT, VALVE, LH CONTROLLER	E1-62-1	
CIRCUIT, VALVE, PILOT SHUTTLE	E1-70-1	
CIRCUIT, VALVE, RH CONTROLLER	E1-63-1	
CIRCUIT, VALVE, SHUTTLE	E1-66-1	
CIRCUIT, VALVE, SOLENOID	E1-67-1	
CIRCUIT, VALVE, 3 STATION	E1-64-1	
CIRCUIT, VERIN FLECHCHASSIS PRINCIPAL	E1-20-1	
	E1-20-10	
POMPE, MOTEUR, ENTRAINEM POMPE	**E2**	
MOTOR, DRIVE, FIG 1	E2-6-10	
MOTOR, DRIVE, FIG 2	E2-6-11	
MOTOR, SWING	E2-7-1	
POMPE, PISTON HYDRAULIQUE, PRINCIP& COMPOSANTS FIG 1	E2-2-1	
PUMP, MAIN HYDRAULIC	E2-1-1	
VALVES ET FILTRES HYDRAULIQUES	**E3**	
ACCOUPLEMEN ROTATIF	E3-14-20	
FILTER, AUXILIARY/HAMMER, RETURN	E3-16-1	
FILTER, BYPASS, HYDRAULIC	E3-17-1	
FILTER, HYDRAULIC, STEER CIRCUIT	E3-16-10	
LUBRIFIANTS & FILTRES	E3-15-1	
MOUNTINGS, ROTARY COUPLING	E3-14-1	
OILS, BIODEGRADABLE, HYDRAULIC	E3-15-10	
SOUPAPE, CDE MANUELLASSERVIE	E3-6-1	
SOUPAPE, COMMANDE COMPOSANTS FIG 1	E3-2-1	
SOUPAPE, COMMANDE COMPOSANTS FIG 2	E3-2-2	
SOUPAPE, DIRECTION	E3-40-1	
SOUPAPE, ENSEMBLE & MONTURE	E3-1-1	
VALVE, BRAKE PEDAL	E3-3-1	
VALVE, HAMMER	E3-24-1	
VALVE, PILOT SHUTTLE	E3-23-1	
VALVE, RELIEF, SERVICE PORT	E3-2-45	
VALVE, SOLENOID	E3-8-1	
VALVE, SOLENOID, TAB HAMMER, JS175W AUTO T3	E3-9-1	
VERINS	**E4**	
CIRCUIT, BOOM RAM, WITH HBCV, TAB BOOM	E4-1-20	
RAM, AXLE LOCK	E4-6-1	
RAM, DIPPER, ASSEMBLY WITH HBCV, MONO BOOM & TAB BOOM	E4-2-10	

TITLE	PAGE NUMBER	CHANGE NUMBER
RAM, DIPPER, COMPONENTS	E4-2-20	
RAM, POSITION, ASSEMBLY, TAB BOOM, WITHOUT HBCV	E4-7-1	
RAM, POSITION, HBCV, ASSEMBLY	E4-7-10	
VERIN, EXCAVATEUR	E4-2-1	
VERIN, FLECHE	E4-1-1	
	E4-1-10	
	E4-1-30	

F BOIT PIVOT ORIEN DIRECTION

AXLES, FRONT F1

ARTICULATION, DIRECTESSIEU	F1-4-1
CROWN WHEEL & PINION, 18. 16:1 AXLE, 453/30800	F1-6-1
DIFFERENTIAL, ASSEMBLY, 18. 16:1, STEER AXLE 453/30800	F1-5-1
MOYEU & COMPOSANTS ES. AVEC FREIN SUR MOYEU	F1-3-1
PONT AVANT	F1-1-1
RAM, STEERING AXLE, INSTALLATION	F1-7-1

AXLES, REAR F2

CROWN WHEEL & PINION, 18. 16:1 AXLE, 450/42700	F2-6-1
DIFFERENTIAL, ASSEMBLY, 18. 16:1, 450/42700	F2-5-1
MOYEU & COMPOSANTS ES. AVEC FREIN SUR MOYEU	F2-3-1
PONT ARRIERE	F2-1-1

WHEELS, TYRES & PROPSHAFTS F3

ARBRES DE PROPULSIONTRANSMISSION	F3-1-1
WHEELS & TYRES, DUALS	F3-4-1
WHEELS & TYRES, DUALS, 10. 00 X 20 EM22 16PR & EM23	F3-3-1
WHEELS & TYRES, FLOATATION, LEFT HAND SIDE FRONT AND REAR	F3-5-1
WHEELS & TYRES, SINGLES	F3-2-1

BOITIER ORIENT ET DE CHENILLES F4

CIRCUIT, SWING RING GREASING	F4-5-1
GEARBOX, SWING	F4-4-1
MOTOR, SWING	F4-3-1

TRANSMISSION F5

BOITE DE VITESSES, DISQUES D'EMBRAYAGE	F5-6-1
BOITE DE VITESSES, DISQUES DE FREIN	F5-7-1
BOITE DE VITESSES, ENSEMBLE DE ENTREE	F5-4-1
BOITE DE VITESSES, ENSEMBLE DE SORTIE	F5-10-1
BOITE DE VITESSES, ENSEMBLE DEMBRAYAGE	F5-2-1
BOITE DE VITESSES, TRAIN FINAL	F5-8-1
BOITE DE VITESSES, TUYAUTERIE	F5-3-1
BOITE DE VITESSES, VALVE DE CHANGEMENT DE VITESSES	F5-9-1
TRANSMISSION SELECTEUR DE COMMAND	F5-1-1

R MOTEUR

BLOC MOTEUR ET SOUS ENSEMBLES R1

BLOCK ASSEMBLY	R1-3-1
CAMSHAFTS, & TIMING GEARS	R1-6-2
ENGINE, COMPLETE, 4JJ1-XYSJ01	R1-1-1
FANS,PULLEYS & BELTS, EU ONLY	R1-5-1
FANS,PULLEYS & BELTS, NON EU	R1-5-2
FLYWHEEL & HOUSING	R1-7-1
MOTEUR, FIXATIONS	R1-8-1
TIMING CASE, & FRONT COVER	R1-6-1
VILEBREQUIN, PALIERSPIST. & BIELES DE LI	R1-4-1

CULASSE ET SOUS ENSEMBLES R2

CULASSE	R2-1-1
ENSEMBLE BASCULEUR SOUPAPES ADM/ECHAP.	R2-2-1
LIFTING PLATES	R2-6-1

TITLE	PAGE NUMBER	CHANGE NUMBER
ROCKER COVER, & BREATHER PIPE	R2-3-1	
ADMISSION ET ECHAPPEMENT	**R3**	
EXHAUST SYSTEM	R3-4-1	
EXHAUST, RECIRCULATION	R3-5-1	
FILTRE, A AIR	R3-3-1	
MANIFOLD, EXHAUST	R3-2-1	
MANIFOLD, INDUCTION	R3-1-1	
SYSTEME DE REFROIDISSEMENT	**R4**	
CHARGE AIR COOLER	R4-7-1	
COOLER COMBINATION, MOUNTING &, SOUND PROOFING	R4-3-1	
EXHAUST, RECIRCULATION, WATER COOLING	R4-8-1	
PUMP WATER	R4-1-1	
RADIATEUR CONDUITES & ACCESSOIR.	R4-4-1	
RADIATEUR CONDUITES& ACCESSOITYPE	R4-5-1	
THERMOSTAT,HOUSING, & PIPEWORK	R4-2-1	
SYSTEME DE LUBRIFICATION	**R5**	
CARTER, HUILE & ACCESSOIRES	R5-1-1	
COOLER, ENGINE OIL	R5-4-1	
OIL FILTER, REMOTE MOUNTED	R5-3-1	
POMPE, HUILE	R5-2-1	

TITLE	PAGE NUMBER	CHANGE NUMBER
SYSTEME D'ALIMENTATION	**R6**	
FILTRE DEPOT DE CARBURANT	R6-6-1	
FILTRE, A CARBURANT	R6-7-1	
FUEL LIFT PUMP	R6-8-1	
FUEL SYSTEM	R6-4-1	
PUMP, FUEL INJECTION, INSTALLATION	R6-1-1	
SYSTEME DE CARBURANT	R6-2-1	
EQUIPMENTS AUXILIARES	**R7**	
COMPRESSEUR, CONDITIONEMENT D'AIR	R7-6-1	
COMPRESSEUR, 12V CONDITIONNEMENT D'AIR	R7-5-2	
TURBO, TUYAUTERIE	R7-2-1	
TURBOCHARGER	R7-1-1	
JEUX DE JOINTS	**R8**	
GASKET SET, CYLINDER HEAD, OVERHAUL	R8-1-2	
GASKET SET, ENGINE OVERHAUL	R8-1-1	

WHEELED EXCAVATOR

M1421600 to M1421799
Model JS160W AUTO - TIER 3]

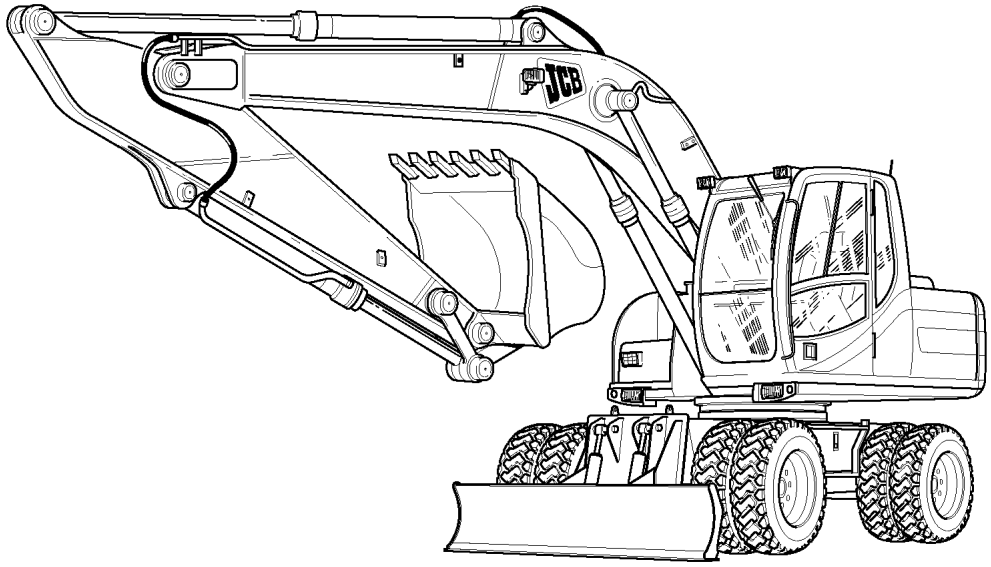

ANBAUGERAETE	A
AUFBAU, FAHRERHAUS, LADTERTEIL	B
ELEKTRISCHE ANLAGE - MASCHINE, FAHRERHAUS & MOTOR	C
BEDIENUNGSELEMENTE - MASCHINE, MOTOR	D
HYDRAULIK	E
SCHWENKWERK U RAUPENGETRIEBE	F
ENGINE 4JJ1-XYSJ01 TIER 3	R

910010

ABKÜRZUNGSSCHLÜSSEL

P.S.I.	Pfund pro Quadratzoll
A/R	Nach Bedarf
N.S.P.	Nicht reparierbares Bauteil
N/A	Entfällt/nicht verfügbar
HBCV	Schlauchberstschutzventil
KP	Königssäule
SS	Seitenschieber
CM	Mittenanbau
M.P.H.	Meilen pro Stunde
K.P.H.	Kilometer pro Stunde
STD	Standard, normal, serienmäßig
O/D	Außendurchmesser
I/D	Innendurchmesser
M.S.S.	Mehrfachersetzung
T.I.	Technische Informationen
M/S	Handschaltgetriebe
P/S	Powershift-Getriebe
M TBA	Maschinen-Seriennummer noch nicht bekannt
SUPERSEDED	Bauteil vollständig austauschbar
TO M	Bis Maschine Nummer
M ON	Ab Maschine Nummer

4WD	Allradantrieb
LTR	Liter
L1=	Länge (senkrecht)
L2=	Länge (waagerecht)
L=	Länge
MM	Millimeter
T=	Dicke
W/	Mit
WO/	Ohne
KG	Kilogramm
LH	Links
RH	Rechts
PTO	Zapfwelle
S/M	Sitemaster
H/M	Hammermaster
PR	Paar
4WS	Allradlenkung
2WS	Zweiradlenkung
C/W	Komplett mit

9809/0058	Desk Top Reader 240 Volt
9809/0059	Desk Top Reader 110 Volt
9809/0060	Bulb For 9809/0058 & 9809/0059
9809/0048	Bulb For 375 Reader
9809/0044	Case 2 Reader Portable
9809/0054	Bulb For Case 2 Reader Fhx
9809/0045	Case 4 Reader Large Screen
9809/0055	Bulb For Case 4 Reader Epz
9809/0007	Bulb For Bell & Howell Sr 1020
9809/0047	Bulb For Mt4 Reader
9809/0053	Hand Held Elite Reader
9809/0056	Bulb For Microscot Reader

Lens

9809/0017	Lens 29mm For Sr 1020

Binder & Panels

9809/0006	Binder For Fiche (service)
9809/0052	Binder For Fiche (prof. Prod. Support)
9809/0015	Binder Fiche Panels

PAGE	ILLN	ITEM	PART NUMBER	CHANGE NUMBER	DESCRIPTION
A2-3-1		2	331/47909		Toeplate
A2-3-1		4	1340/2401		Nut
A2-3-2		1	980/86140		Bucket
B1-2-1	*				
B1-4-1	*				
B1-5-1	*				
B1-5-5	*				
B1-5-20	*				
B1-5-40	*				
B1-6-1		1	335/13581		Counterweight
B1-11-1		25A	1316/4130		Bolt
B1-21-15		23	335/11676		Body
B2-1-10		32	826/11487		Latch
B2-1-10		33	826/11486		Latch
B2-1-10		34	6900/0619		Screw
B2-16-1		9	335/13853		Plate
B2-16-1		16	331/59705		Plate
B3-10-1		12	KLV0167		Pin
B3-10-1		13	6009/3724D		Bolt
B3-10-1		14	173R016VD		Nut
B5-1-1	*				
B5-1-1		3A	817/19832		Decal
B5-2-1	*				
B5-2-1		12	817/70003		Decal
B5-2-1		14	817/70116		Decal
B5-2-1		20	817/70117		Decal
B5-2-1		23	817/17526		Label
B5-2-1		30	332/J0613		Decal
B5-2-10	*				
C1-3-1	*				
C1-3-1		11	718/20026		Cable
C3-11-1		1	717/20225		Radio
C3-11-1		1	717/20226		Radio
C3-11-1		1	717/20227		Radio
C3-12-1	*				
C3-12-1		33	123/04999		Compressor
D1-1-1		27	928/60339		Valve
D1-1-1		30	331/57463		Bracket
D1-1-1		33	331/57439		Pedal
D1-2-10	*				
E1-1-1	*				
E1-2-1	*				
E1-3-1	*				
E1-4-10	*				
E1-10-1	*				
E1-13-1	*				
E1-17-1	*				
E1-17-1		13 03	627/10543		Hose
E1-17-1		13 04	627/10543		Hose
E1-22-10	*				
E1-25-1	*				
E1-29-10		44	830/13798		Tube
E1-29-30	*				
E1-30-1	*				
E1-30-10	*				
E1-30-10		5	KNJ0606		Adapter
E1-30-10		6	1609/0002		Adapter
E1-30-10		15	1315/0509D		Screw
E1-30-10		20	335/13018		Plate
E1-30-10		31 01	627/10407		Hose
E1-30-10		31 02	627/10407		Hose
E1-30-10		32	627/10519		Hose
E1-30-10		45	816/90712		Adapter
E1-31-1	*				

PAGE	ILLN	ITEM	PART NUMBER	CHANGE NUMBER	DESCRIPTION
E1-31-1		3	721/11632		Harness
E1-32-1	*				
E1-32-10	*				
E1-32-20	*				
E1-33-1	*				
E1-33-10	*				
E1-33-20	*				
E1-36-1	*				
E1-46-10		4	JLV1871		Hose
E1-46-10		5	JLV1868		Hose
E1-46-10		6	JLV0594		Hose
E1-46-10		7	JNJ0393		Hose
E1-46-10		9	KNJ1697		Hose
E1-46-10		17	KAJ2176		Adapter
E1-46-10		23	JLJ0055		Adapter
E1-48-1		3	CNA0584		Adapter
E1-48-1		12	JLV0594		Hose
E1-48-1		13	KHJ1335		Hose
E1-48-1		14	KTJ0812		Hose
E1-48-1		15	KTJ0813		Hose
E1-48-1		16	KNJ0605		Adapter
E1-48-1		17	627/10537	Superseded	Hose
E1-48-1		18	830/13253		Pipe
E1-48-1		21	335/11072		Bracket
E1-48-1		28	JLV0433		Adapter
E1-48-1		29	KHJ0869		Adapter
E1-48-20	*				
E1-61-1		1	928/60339		Valve
E1-61-1		12	KBJ2208		Hose
E1-61-1		13	JLV0719		Hose
E1-61-1		14	KSJ0806		Hose
E1-62-1		56E	KNJ1109		Hose
E1-62-1		56F	KNJ1109		Hose
E1-65-1		8	KNJ1119		Hose
E1-65-1		9	627/10382		Hose
E1-65-1		10	KNJ1314		Hose
E1-65-1		12	KBJ2348		Hose
E1-65-1		13	KSJ1871		Hose
E1-65-1		14	627/10199		Hose
E1-65-1		15	KTJ1215		Hose
E1-68-1		12	KNJ1109		Hose
E1-68-1		13	KNJ1109		Hose
E1-68-1		15	KNJ1109		Hose
E1-68-1		16	KNJ1109		Hose
E1-69-1	*				
E1-69-1		13	JNJ0418		Hose
E1-69-1		14	JNJ0418		Hose
E1-70-1		10	KRJ3577		Hose
E1-70-1		11	KNJ1849		Hose
E1-70-1		12	KRJ3571		Hose
E1-70-1		13	JLJ0326		Hose
E1-70-1		14	KBJ2346		Hose
E1-71-1		10	KNJ1119		Hose
E1-71-1		12	KNJ1314		Hose
E1-71-1		18	KNJ1956		Hose
E1-71-1		19	627/10382		Hose
E2-1-1	*				
E2-2-1	*				
E2-6-10		46A	20/951974		Kit-seal
E3-1-1	*				
E3-8-1		1	25/222885		Valve
E3-15-1		6	32/925838		Element
E3-17-1		2	32/925164		Element
E3-17-1		3	828/10081		O Ring

PAGE	ILLN	ITEM	PART NUMBER	CHANGE NUMBER	DESCRIPTION
E3-17-1		6	823/10181		Washer
E3-17-1		7	823/10201		Washer
F3-2-1		1	331/49505		Wheel
F3-2-1		1	331/49504		Wheel
F3-2-1		3	42/925276		Tyre
F4-5-1		1	KRB0697		Pipe
F4-5-1		2	KRB0696		Pipe
R1-4-1		7	02/802460		Kit-main bearing
R1-4-1		7	02/801713		Kit-bearing
R1-4-1		7	02/802461		Kit-main bearing
R1-4-1		7	02/802462		Kit-main bearing
R1-4-1		15	02/802470		Piston
R1-4-1		15	02/802471		Piston
R1-4-1		18	02/802472		Kit-piston ring
R1-6-1		6	02/802505		Gasket
R1-6-1		6	02/802506		Gasket
R1-7-1		3	02/802154		Nut
R2-1-1		11	02/802367		Gasket
R2-1-1		11	02/802368		Gasket
R4-3-1	*				
R5-3-1		1 01	02/801481		Element
R7-5-2	*				
R8-1-1		1	02/802344		Kit-gasket
R8-1-2		1	02/802347		Kit-gasket

JS160W

TITLE	PAGE NUMBER	CHANGE NUMBER

A ANBAUGERAETE

TIEFLOFFEL A2

BUCKET, GRADING/DITCHING, 1524MM. WIDE	A2-3-2	
BUCKET, GRADING/DITCHING, 1829MM. 72" WIDE	A2-3-1	
BUCKET, 1000 WIDE, 0.71 CUBIC METRES	A2-1-7	
BUCKET, 1050MM HEAVY DUTY	A2-1-26	
BUCKET, 1100 WIDE, 0.81 CUBIC METRES	A2-1-8	
BUCKET, 1150MM HEAVY DUTY	A2-1-27	
BUCKET, 1200 WIDE, 0.90 CUBIC METRES	A2-1-9	
BUCKET, 1250MM HEAVY DUTY	A2-1-28	
BUCKET, 1300 WIDE, 0.99 CUBIC METRES	A2-1-10	
BUCKET, 450MM,HEAVY DUTY	A2-1-20	
BUCKET, 500 WIDE, 0.26 CUBIC METRES	A2-1-1	
BUCKET, 550MM HEAVY DUTY	A2-1-21	
BUCKET, 600 WIDE, 0.35 CUBIC METRES	A2-1-2	
BUCKET, 650MM HEAVY DUTY	A2-1-22	
BUCKET, 700 WIDE, 0.44 CUBIC METRES	A2-1-3	
BUCKET, 750 WIDE, 0.47 CUBIC METRES	A2-1-4	
BUCKET, 750MM HEAVY DUTY	A2-1-23	
	A2-1-24	
BUCKET, 800 WIDE, 0.53 CUBIC METRES	A2-1-5	
BUCKET, 900 WIDE, 0.62 CUBIC METRES	A2-1-6	
BUCKET, 950MM HEAVY DUTY	A2-1-25	

ANBAUGERAETE A3

QUICKHITCH, HYDRAULIC, MPG, MILLER	A3-11-1	
QUICKHITCH, JS160, HYDRAULIC, BUG, MILLER	A3-10-1	
QUICKHITCH, MANUAL	A3-9-1	
ROCKBREAKER HM 860Q, JS160W, 980/90214, 980/90474	A3-1-1	
ROCKBREAKER HM1260Q, JS160W, 980/90216, 980/90291	A3-2-1	

B AUFBAU, FAHRERHAUS, LADTERTEIL

AUFBAU/RAHMENWERK B1

BAFFLES, PUMP BAY	B1-5-50	
CHASSIS, WITH TOOLBOX	B1-9-1	
COVERS, UNDERSIDE MAINFRAME	B1-2-1	
COWLINGS, ENGINE BULKHEAD	B1-5-40	
COWLINGS, TOOLBOX & HAND RAIL	B1-5-30	
DOORS WITH FITTINGS, LEFT HAND SIDE BODY, RIGHT HAND SIDE BODY	B1-5-10	
ENGINE COVERS	B1-5-5	
FRAME SUPPORT	B1-5-1	
GEGENGEWICHT HINTEN	B1-6-1	
GRILLES, & TREAD PLATES	B1-5-20	
HAUPTRAHMEN	B1-1-1	
	B1-1-10	
SCHILD, RAUPE	B1-11-1	
STABILISER, FRONT & REAR	B1-21-15	
TANK, DIESELKRAFTST.	B1-4-1	
TANK, HYDRAULIK	B1-3-1	
WHEELCHOCK, GERMAN	B1-9-10	

FAHRERHAUS B2

CAB	B2-1-1	
CAB DOOR, COMPONENTS	B2-2-1	
CAB MOUNTINGS, CAB FOOR & MAT	B2-16-1	
CAB PANELS	B2-8-1	
CAB, MOUNTING FASTENERS	B2-1-30	
CONSOLE, CAB SERVO CONTROL, LEFT HAND, FIXED CONSOLE	B2-4-1	
CONSOLE, CAB SERVO CONTROL, RIGHT HAND	B2-5-1	
DIRECT GLAZING, REPLACEMENT MATERIAL	B2-18-1	
FIRE EXTINGUISHER	B2-11-1	
FLOOR COMPONENTS, SEAT SLIDE, LEVER ISOLATOR	B2-10-1	
FRONT SCREEN, UPPER & LOWER	B2-1-10	
FRONT WIPER, & CAB COMPONENTS	B2-1-20	
FRONT WIPER, CAB LOWER WINDOW, SEE C3-15-10	B2-15-1	
GUARD, FOPS CAGE, FRONT GUARD SALES OPTION	B2-9-20	

TITLE	PAGE NUMBER	CHANGE NUMBER
GUARD, FOPS, FRONT AND TOP, CAB MOUNTED	B2-9-1	
RAIN VISOR, CAB	B2-12-1	
SEAT BELT, STANDARD	B2-3-30	
SEAT BELT, 76MM (3") WIDE, OPTIONAL	B2-3-40	
SEAT, AIR SUSPENSION, HIGH BACK	B2-3-20	
SEAT, HIGH BACK, STANDARD	B2-3-1	
SPIEGEL AUSSEN	B2-7-2	
VANDAL GUARD, CAB, 3PC FRONT PANEL	B2-14-1	
WISCH/WASCH-ANL. WINDSCHUTZSCHEIBE	B2-6-1	
LADERTEIL	**B3**	
AUSLEGER	B3-1-1	
BOOM GREASING, MONO BOOM	B3-4-1	
BOOM GREASING, TAB BOOM	B3-4-10	
BOOM, LOWER, TRIPLE ARTICULATING	B3-10-1	
BOOM, UPPER, TRIPLE ARTICULATING	B3-11-1	
BRIDGE BASHING, U K ONLY	B3-12-1	
DIPPER 2.70M	B3-2-10	
LOFFELSTIEL 2.25M	B3-2-1	
LOFFELSTIEL 3.0M	B3-2-20	
AUFBESSERUNGSMITTEL	**B5**	
DECALS, MACHINE	B5-1-1	
DECALS, MACHINE, CONTROL LABELS	B5-2-10	
DECALS, WARNING	B5-2-1	
DECALS, WARNING, USA BUILD	B5-3-1	
WERKZEUGE	B5-4-1	

C ELEKTRISCHE ANLAGE - MASCHINE, FAHRERHAUS & MOTOR

ELEKTRISCHE HAUPTANLAGE	**C1**	
ARBEITSSCHEINWERFER AUSLEGER	C1-6-10	
BATTERIE INSTALLATION24 VOLT	C1-3-1	
ELEKTR. ANL., KAB.	C1-2-1	
ELEKTR. ANL., MASCHINE	C1-1-1	
HORN	C1-8-1	
LIGHT, WORKING, CAB & REAR, USE WITH RAIN GUARD	C1-6-20	
ROAD LIGHTS, ROW, RIGHT HAND DIP	C1-4-10	
ROAD LIGHTS, UK, LEFT HAND DIP	C1-4-1	
WARNSIGNAL,RUCKW.	C1-7-1	
ELEKTRISCHE ANLAGE, MOTOR	**C2**	
ALTERNATOR	C2-4-1	
ALTERNATOR MOUNTINGS	C2-5-1	
ECU HARNESS	C2-2-1	
ENGINE ELECTRICS	C2-1-1	
ENGINE, CONTROL MODULE	C2-1-2	
MOTOR,STARTER	C2-3-1	
ELEKTRISCHE ANLAGE, FAHRERHAUS	**C3**	
AIR CON	C3-12-1	
	C3-12-10	
CIGAR LIGHTER	C3-14-1	
COMBI UNIT FIG 2	C3-12-20	
FRONT WIPER, CAB LOWER WINDOW	C3-15-10	
FUSE BOX	C3-7-1	
HEATER	C3-5-1	
HEATER UNIT	C3-5-10	
HEATER UNIT FIG 2	C3-5-20	
RADIO	C3-11-1	
SWITCH PANEL, SIDE CONSOLE, RIGHT HAND	C3-2-1	
WARNBELEUCHTUNG RUNDUM-LEUCHTE BERNSTEIN	C3-9-1	
WISCH/WASCH-ANL. WINDSCHUTZSCHEIBE	C3-15-1	

D BEDIENUNGSELEMENTE - MASCHINE, MOTOR

HEBEL U SCHALTER, MASCHINE	**D1**	
PEDAL CONTROLS, MONO BOOM BUILD	D1-2-1	

TITLE	PAGE NUMBER	CHANGE NUMBER
PEDAL CONTROLS, TAB BOOM BUILD	D1-2-10	
STEUERUNG, BAGGER-	D1-1-1	
HEBEL UND SCHALTER, MOTOR	**D2**	
CONTROLS, THROTTLE & STOP, CAB	D2-2-1	
LENKSAEULE	**D3**	
STEERING COLUMN	D3-1-1	

E HYDRAULIK

SCHLAEUCHE UND ROHRLEITUNGEN	**E1**	
ARM HIGHT LIMITER, OPTIONAL, MONO BOOM	E1-36-1	
CIRCUIT, AUXILIARY LOW FLOW, MONO BOOM BUILD	E1-29-20	
CIRCUIT, AUXILIARY LOW FLOW, TAB BOOM BUILD	E1-29-30	
CIRCUIT, AUXILIARY/HAMMER, MONO BOOM	E1-30-20	
CIRCUIT, AUXILIARY, HAMMER & LOW FLOW, MONO BOOM	E1-31-20	
CIRCUIT, AUXILIARY, HAMMER & LOW FLOW, TAB BOOM	E1-31-30	
CIRCUIT, BOOM & DIPPER HBCV, MONO BOOM	E1-25-1	
CIRCUIT, BOOM & DIPPER HBCV, TAB BOOM (2 VALVE HBCV BOOM ONLY)	E1-25-10	
CIRCUIT, BOOM & DIPPER HBCV, TAB BOOM (3 & 4 VALVE HBCV)	E1-25-20	
CIRCUIT, BOOM POSITION RAM, HBCV FEED & RETURN, TAB BOOM	E1-48-30	
CIRCUIT, BOOM POSITION RAM, MAINFRAME	E1-48-1	
CIRCUIT, BOOM POSITION RAM, TAB, WITH HBCV	E1-48-20	
CIRCUIT, BRAKES, LOWER CHASSIS	E1-15-1	
CIRCUIT, BUCKET RAM, MONOBOOM	E1-23-1	
CIRCUIT, BUCKET, GRAB CHANGEOVER	E1-34-1	
CIRCUIT, BYPASS, HYDRAULIC FILTER	E1-8-1	
CIRCUIT, CRUISE CONTROL	E1-50-1	
CIRCUIT, DIPPER RAM, & BUCKET RAM, TAB BOOM	E1-22-10	
CIRCUIT, DIPPER RAM, HBCV FEED & RETURN	E1-26-1	
CIRCUIT, DIPPER RAM, MONOBOOM	E1-22-1	
CIRCUIT, DOZER CONTROL, MAINFRAME	E1-45-1	
CIRCUIT, DOZER/STAB CONTROL	E1-45-10	
CIRCUIT, DOZER/STAB, MAINFRAME	E1-46-1	
CIRCUIT, DRAIN, MOTOR & SOLENOID	E1-10-1	
CIRCUIT, DUAL CONTROLS, STANDARD USA, OPTIONAL UK WORLD	E1-14-1	
CIRCUIT, FAN DRIVE	E1-9-1	
CIRCUIT, FRONT & REAR STAB, CHASSIS	E1-46-30	
CIRCUIT, FRONT DOZER, REAR STAB, CHASSIS	E1-46-10	
	E1-46-15	
CIRCUIT, FRONT STAB, REAR DOZER, CHASSIS	E1-46-40	
CIRCUIT, HAMMER, AUXILIARY BOOM PIPES, TAB BOOM	E1-30-30	
CIRCUIT, HAMMER, AUXILIARY, MAINFRAME MONO BOOM	E1-31-1	
CIRCUIT, HAMMER, AUXILIARY, MAINFRAME TAB BOOM	E1-31-10	
CIRCUIT, HAMMER, FULLFLOW 2.25 DIPPER	E1-33-1	
CIRCUIT, HAMMER, FULLFLOW 2.7 DIPPER	E1-33-10	
CIRCUIT, HAMMER, FULLFLOW 3.05 DIPPER	E1-33-20	
CIRCUIT, HAMMER, MAINFRAME, MONO BOOM	E1-30-1	
	E1-30-40	
CIRCUIT, HAMMER, MAINFRAME, TAB BOOM	E1-30-10	
CIRCUIT, LOW FLOW, AUXILIARY, MAINFRAME , TAB BOOM BUILD	E1-29-10	
CIRCUIT, LOW FLOW, AUXILIARY, MAINFRAME, MONO BOOM BUILD	E1-29-1	
CIRCUIT, LOW FLOW, 2.25M DIPPER	E1-32-1	
CIRCUIT, LOW FLOW, 2.7M DIPPER	E1-32-10	

TITLE	PAGE NUMBER	CHANGE NUMBER
CIRCUIT, LOW FLOW, 3.05M DIPPER	E1-32-20	
CIRCUIT, MANIFOLD, UNDER CAB	E1-68-1	
CIRCUIT, MILLER Q. HITCH, 980/ 90463	E1-60-1	
CIRCUIT, NEUTRAL PRESSURE	E1-2-1	
CIRCUIT, NEUTRAL, RETURN & OIL COOLER	E1-3-1	
CIRCUIT, NON-HBCV, BOOM POSITION RAM	E1-48-10	
CIRCUIT, PILOT LINE, MAIN CONTROL VALVE	E1-71-1	
CIRCUIT, PUMP SUCTION	E1-1-1	
CIRCUIT, REAR DOZER, CHASSIS	E1-47-1	
CIRCUIT, REAR DOZER, CHASSIS, PLUS LOGIC VALVE OPTION	E1-47-10	
CIRCUIT, REAR STAB, CHASSIS	E1-46-20	
CIRCUIT, RETURN LINE, PILOT PRESSURE, MAIN CONTROL VALVE	E1-72-1	
CIRCUIT, STEERING &, BRAKES, MAINFRAME	E1-17-10	
CIRCUIT, STEERING, CHASSIS	E1-17-1	
CIRCUIT, SWING	E1-6-1	
CIRCUIT, TANK MANIFOLD	E1-69-1	
CIRCUIT, TEST POINTS	E1-35-1	
CIRCUIT, TRACTION, LOWER CHASSIS	E1-5-1	
CIRCUIT, VALVE, CUSHION	E1-65-1	
CIRCUIT, VALVE, DRIVE PEDAL	E1-61-1	
CIRCUIT, VALVE, LH CONTROLLER	E1-62-1	
CIRCUIT, VALVE, PILOT SHUTTLE	E1-70-1	
CIRCUIT, VALVE, RH CONTROLLER	E1-63-1	
CIRCUIT, VALVE, SHUTTLE	E1-66-1	
CIRCUIT, VALVE, SOLENOID	E1-67-1	
CIRCUIT, VALVE, 3 STATION	E1-64-1	
STEUERKREIS LOFFELSTIEL&LOFFEL	E1-21-1	
STEUERKREIS, AUSL.ZYL. HAUPTRAHMEN	E1-20-1	
	E1-20-10	
STEUERKREIS, RAUPE HAUPTRAHMEN	E1-4-1	
	E1-4-10	
STEUERKREIS, SERVO NEUTRAL FIG 1	E1-12-1	
	E1-13-1	
PUMPE, MOTOR,UND PUMPENANTRIEB	**E2**	
KOLBENPUMPE HAUPT-HYDRAULIK & BAUTEILE FIG 1	E2-2-1	
MOTOR, DRIVE, FIG 1	E2-6-10	
MOTOR, DRIVE, FIG 2	E2-6-11	
MOTOR, SWING	E2-7-1	
PUMP, MAIN HYDRAULIC	E2-1-1	
VENTILE UND HRDAULIKFILTER	**E3**	
FILTER, AUXILIARY/HAMMER, RETURN	E3-16-1	
FILTER, BYPASS, HYDRAULIC	E3-17-1	
FILTER, HYDRAULIC, STEER CIRCUIT	E3-16-10	
KUPPLUNG, DREH-	E3-14-20	
MOUNTINGS, ROTARY COUPLING	E3-14-1	
OILS, BIODEGRADABLE, HYDRAULIC	E3-15-10	
SCHMIERMITTEL & FILTER	E3-15-1	
VALVE, BRAKE PEDAL	E3-3-1	
VALVE, HAMMER	E3-24-1	
VALVE, PILOT SHUTTLE	E3-23-1	
VALVE, RELIEF, SERVICE PORT	E3-2-45	
VALVE, SOLENOID	E3-8-1	
VALVE, SOLENOID, TAB HAMMER, JS175W AUTO T3	E3-9-1	
VENTIL, HANDSTEUER. SERVO	E3-6-1	
VENTIL, KOMPL. & HALTERUNG	E3-1-1	
VENTIL, LENKUNG-	E3-40-1	
VENTIL, STEUERUNG BAUTEILE FIG 1	E3-2-1	
VENTIL, STEUERUNG BAUTEILE FIG 2	E3-2-2	
ZYLINDER	**E4**	
CIRCUIT, BOOM RAM, WITH HBCV, TAB BOOM	E4-1-20	
RAM, AXLE LOCK	E4-6-1	
RAM, DIPPER, ASSEMBLY WITH HBCV, MONO BOOM & TAB BOOM	E4-2-10	
RAM, DIPPER, COMPONENTS	E4-2-20	
RAM, POSITION, ASSEMBLY, TAB BOOM, WITHOUT HBCV	E4-7-1	

TITLE	PAGE NUMBER	CHANGE NUMBER
RAM, POSITION, HBCV, ASSEMBLY	E4-7-10	
ZYL., AUSLEGER	E4-1-1	
	E4-1-10	
	E4-1-30	
ZYL., LOFFELSTIEL	E4-2-1	

F SCHWENKWERK U RAUPENGETRIEBE

AXLES, FRONT	**F1**
ACHSSCHENKEL ACHSE	F1-4-1
CROWN WHEEL & PINION, 18. 16:1 AXLE, 453/30800	F1-6-1
DIFFERENTIAL, ASSEMBLY, 18. 16:1, STEER AXLE 453/30800	F1-5-1
NABE & BAUTEILE ACHSE MIT NABENBREMSE	F1-3-1
RAM, STEERING AXLE, INSTALLATION	F1-7-1
VORDERACHSE	F1-1-1
AXLES, REAR	**F2**
CROWN WHEEL & PINION, 18. 16:1 AXLE, 450/42700	F2-6-1
DIFFERENTIAL, ASSEMBLY, 18. 16:1, 450/42700	F2-5-1
HINTERASCHE	F2-1-1
NABE & BAUTEILE ACHSE MIT NABENBREMSE	F2-3-1

TITLE	PAGE NUMBER	CHANGE NUMBER
WHEELS, TYRES & PROPSHAFTS	**F3**	
KARDANWELLE GETRIEBE	F3-1-1	
WHEELS & TYRES, DUALS	F3-4-1	
WHEELS & TYRES, DUALS, 10. 00 X 20 EM22 16PR & EM23	F3-3-1	
WHEELS & TYRES, FLOATATION, LEFT HAND SIDE FRONT AND REAR	F3-5-1	
WHEELS & TYRES, SINGLES	F3-2-1	
SCHWENKWERK-U RAUPENGETRIEBE	**F4**	
CIRCUIT, SWING RING GREASING	F4-5-1	
GEARBOX, SWING	F4-4-1	
MOTOR, SWING	F4-3-1	
TRANSMISSION	**F5**	
GEARBOX OUTPUT, GROUP	F5-10-1	
GETRIEBE BREMSSCHEIBEN GRUPPE	F5-7-1	
GETRIEBE EINGANGSWELLE GEHAUSE	F5-4-1	
GETRIEBE GEHAUSE	F5-2-1	
GETRIEBE HYDR. SCHALTEINHEIT	F5-9-1	
GETRIEBE KUPPLUNGSSCHEIBEN GRUPPE	F5-6-1	
GETRIEBE LASTSCHALTGETRIEBE	F5-1-1	
GETRIEBE OLLEITUNGEN	F5-3-1	
GETRIEBE PLANETENANTRIEB GRUPPE	F5-8-1	

R ENGINE 4JJ1-XYSJ01 TIER 3

MOTORBLOCK U UNTERGRUPPEN	**R1**
BLOCK ASSEMBLY	R1-3-1
CAMSHAFTS, & TIMING GEARS	R1-6-2
ENGINE, COMPLETE, 4JJ1-XYSJ01	R1-1-1
FANS,PULLEYS & BELTS, EU ONLY	R1-5-1
FANS,PULLEYS & BELTS, NON EU	R1-5-2
FLYWHEEL & HOUSING	R1-7-1
KURBELWELLE, LAGER KOLBEN & PLEUEL	R1-4-1
MOTORAUFHANGUNG	R1-8-1
TIMING CASE, & FRONT COVER	R1-6-1
ZYLINDERKOPF U UNTERGRUPPEN	**R2**
KIPPHEBEL EIN-/ AUSLASSVENTILE	R2-2-1
LIFTING PLATES	R2-6-1
ROCKER COVER, & BREATHER PIPE	R2-3-1
ZYLINDERKOPF	R2-1-1

TITLE	PAGE NUMBER	CHANGE NUMBER
EINLASS-U AUSPUFFANLAGE	**R3**	
EXHAUST SYSTEM	R3-4-1	
EXHAUST, RECIRCULATION	R3-5-1	
LUFTFILTER	R3-3-1	
MANIFOLD, EXHAUST	R3-2-1	
MANIFOLD, INDUCTION	R3-1-1	
KUEHLANLAGE	**R4**	
CHARGE AIR COOLER	R4-7-1	
COOLER COMBINATION, MOUNTING &, SOUND PROOFING	R4-3-1	
EXHAUST, RECIRCULATION, WATER COOLING	R4-8-1	
KUHLER SCHLAUCHE & ZUBEH.	R4-4-1	
	R4-5-1	
PUMP WATER	R4-1-1	
THERMOSTAT,HOUSING, & PIPEWORK	R4-2-1	
SCHMIERANLAGE	**R5**	
COOLER, ENGINE OIL	R5-4-1	
OIL FILTER, REMOTE MOUNTED	R5-3-1	
OLPUMPE	R5-2-1	
OLWANNE & ANSCHLUSSE	R5-1-1	
KRAFTSTOFFANLAGE	**R6**	
FILTER KRAFTSTOFFABL.	R6-6-1	
FUEL LIFT PUMP	R6-8-1	
FUEL SYSTEM	R6-4-1	
KRAFTSTOFFANLAGE	R6-2-1	
KRAFTSTOFFILTER	R6-7-1	
PUMP, FUEL INJECTION, INSTALLATION	R6-1-1	
ZUSATZGERAETE	**R7**	
COMPRESSOR KLIMAANLAGE	R7-6-1	
KOMPRESSOR 12.VOLT KLIMAANLAGE	R7-5-2	
TURBO, LEITUNGEN	R7-2-1	
TURBOCHARGER	R7-1-1	
DICHTUNGSSAETZE	**R8**	
GASKET SET, CYLINDER HEAD, OVERHAUL	R8-1-2	
GASKET SET, ENGINE OVERHAUL	R8-1-1	

WHEELED EXCAVATOR

M1421600 to M1421799
Model JS160W AUTO - TIER 3]

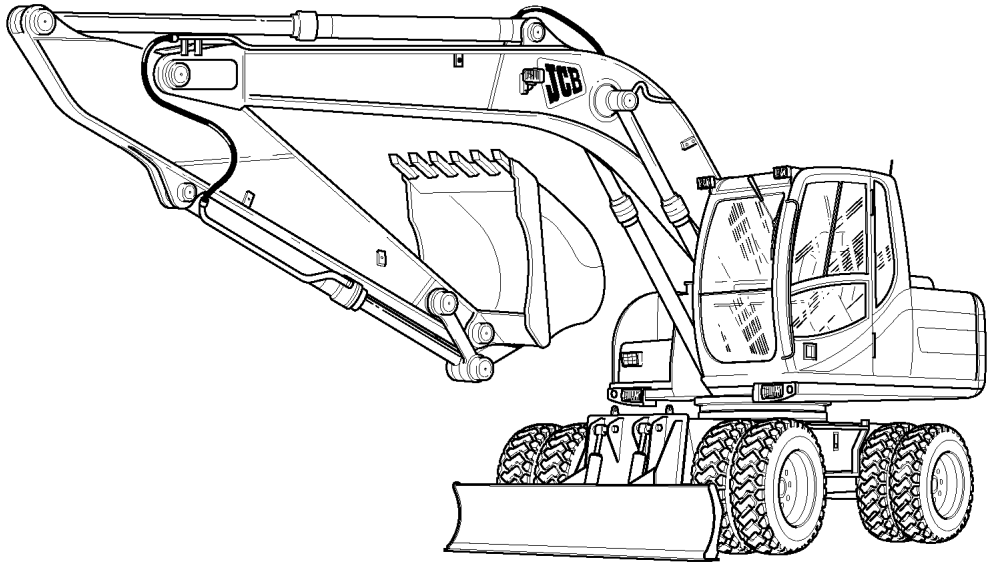

ACCESSORI A

CARROZZERIA, CABINA, SEZIONE CARICATORA B

IMPIANTO ELETTRICO-MACCHINA, CABINA E MOTORE C

COMANDI-MACCHINA, MOTORE D

IMPIANTO IDRAULICO E

INGRANAGGI DELLA, GIRANTEDI TRAZIONE F

ENGINE 4JJ1-XYSJ01 TIER 3 R

910010

P.S.I.	Libras por pulgada cuadrada
A/R	Según sea necesario
N.S.P.	Pieza sin ninguna revisión
N/A	No aplicable/no disponible
HBCV	Válvula de protección contra reventones de flexibles
KP	Fulcro
SS	Desplazamiento lateral
CM	Montura central
M.P.H.	Millas por hora
K.P.H.	Kilómetros por hora
STD	Estándar
O/D	Diámetro exterior
I/D	Diámetro interior
M.S.S.	Substitución múltiple
T.I.	Información Técnica
M/S	Transmisión de cambio manual
P/S	Transmisión de cambio asistido
M TBA	Número de serie de máquina aún no conocido
SUPERSEDED	Pieza completamente intercambiable
TO M	Hasta la máquina número
M ON	Desde la máquina número
4WD	Tracción doble
LTR	Litro
L1=	Longitud (vertical)
L2=	Longitud (horizontal)
L=	Longitud
MM	Milímetro
T=	Espesor
W/	Con
WO/	Sin
KG	Kilogramo
LH	De la izquierda
RH	De la derecha
PTO	Toma de fuerza
S/M	Sitemaster
H/M	Hammermaster
PR	Par
4WS	Dirección de 4 ruedas
2WS	Dirección de 2 ruedas
C/W	Completo con

9809/0058	Desk Top Reader 240 Volt
9809/0059	Desk Top Reader 110 Volt
9809/0060	Bulb For 9809/0058 & 9809/0059
9809/0048	Bulb For 375 Reader
9809/0044	Case 2 Reader Portable
9809/0054	Bulb For Case 2 Reader Fhx
9809/0045	Case 4 Reader Large Screen
9809/0055	Bulb For Case 4 Reader Epz
9809/0007	Bulb For Bell & Howell Sr 1020
9809/0047	Bulb For Mt4 Reader
9809/0053	Hand Held Elite Reader
9809/0056	Bulb For Microscot Reader

Lens

9809/0017	Lens 29mm For Sr 1020

Binder & Panels

9809/0006	Binder For Fiche (service)
9809/0052	Binder For Fiche (prof. Prod. Support)
9809/0015	Binder Fiche Panels

PAGE	ILLN	ITEM	PART NUMBER	CHANGE NUMBER	DESCRIPTION
A2-3-1		2	331/47909		Toeplate
A2-3-1		4	1340/2401		Nut
A2-3-2		1	980/86140		Bucket
B1-2-1	*				
B1-4-1	*				
B1-5-1	*				
B1-5-5	*				
B1-5-20	*				
B1-5-40	*				
B1-6-1		1	335/13581		Counterweight
B1-11-1		25A	1316/4130		Bolt
B1-21-15		23	335/11676		Body
B2-1-10		32	826/11487		Latch
B2-1-10		33	826/11486		Latch
B2-1-10		34	6900/0619		Screw
B2-16-1		9	335/13853		Plate
B2-16-1		16	331/59705		Plate
B3-10-1		12	KLV0167		Pin
B3-10-1		13	6009/3724D		Bolt
B3-10-1		14	173R016VD		Nut
B5-1-1	*				
B5-1-1		3A	817/19832		Decal
B5-2-1	*				
B5-2-1		12	817/70003		Decal
B5-2-1		14	817/70116		Decal
B5-2-1		20	817/70117		Decal
B5-2-1		23	817/17526		Label
B5-2-1		30	332/J0613		Decal
B5-2-10	*				
C1-3-1	*				
C1-3-1		11	718/20026		Cable
C3-11-1		1	717/20225		Radio
C3-11-1		1	717/20226		Radio
C3-11-1		1	717/20227		Radio
C3-12-1	*				
C3-12-1		33	123/04999		Compressor
D1-1-1		27	928/60339		Valve
D1-1-1		30	331/57463		Bracket
D1-1-1		33	331/57439		Pedal
D1-2-10	*				
E1-1-1	*				
E1-2-1	*				
E1-3-1	*				
E1-4-10	*				
E1-10-1	*				
E1-13-1	*				
E1-17-1	*				
E1-17-1		13 03	627/10543		Hose
E1-17-1		13 04	627/10543		Hose
E1-22-10	*				
E1-25-1	*				
E1-29-10		44	830/13798		Tube
E1-29-30	*				
E1-30-1	*				
E1-30-10	*				
E1-30-10		5	KNJ0606		Adapter
E1-30-10		6	1609/0002		Adapter
E1-30-10		15	1315/0509D		Screw
E1-30-10		20	335/13018		Plate
E1-30-10		31 01	627/10407		Hose
E1-30-10		31 02	627/10407		Hose
E1-30-10		32	627/10519		Hose
E1-30-10		45	816/90712		Adapter
E1-31-1	*				

PAGE	ILLN	ITEM	PART NUMBER	CHANGE NUMBER	DESCRIPTION
E1-31-1		3	721/11632		Harness
E1-32-1	*				
E1-32-10	*				
E1-32-20	*				
E1-33-1	*				
E1-33-10	*				
E1-33-20	*				
E1-36-1	*				
E1-46-10		4	JLV1871		Hose
E1-46-10		5	JLV1868		Hose
E1-46-10		6	JLV0594		Hose
E1-46-10		7	JNJ0393		Hose
E1-46-10		9	KNJ1697		Hose
E1-46-10		17	KAJ2176		Adapter
E1-46-10		23	JLJ0055		Adapter
E1-48-1		3	CNA0584		Adapter
E1-48-1		12	JLV0594		Hose
E1-48-1		13	KHJ1335		Hose
E1-48-1		14	KTJ0812		Hose
E1-48-1		15	KTJ0813		Hose
E1-48-1		16	KNJ0605		Adapter
E1-48-1		17	627/10537	Superseded	Hose
E1-48-1		18	830/13253		Pipe
E1-48-1		21	335/11072		Bracket
E1-48-1		28	JLV0433		Adapter
E1-48-1		29	KHJ0869		Adapter
E1-48-20	*				
E1-61-1		1	928/60339		Valve
E1-61-1		12	KBJ2208		Hose
E1-61-1		13	JLV0719		Hose
E1-61-1		14	KSJ0806		Hose
E1-62-1		56E	KNJ1109		Hose
E1-62-1		56F	KNJ1109		Hose
E1-65-1		8	KNJ1119		Hose
E1-65-1		9	627/10382		Hose
E1-65-1		10	KNJ1314		Hose
E1-65-1		12	KBJ2348		Hose
E1-65-1		13	KSJ1871		Hose
E1-65-1		14	627/10199		Hose
E1-65-1		15	KTJ1215		Hose
E1-68-1		12	KNJ1109		Hose
E1-68-1		13	KNJ1109		Hose
E1-68-1		15	KNJ1109		Hose
E1-68-1		16	KNJ1109		Hose
E1-69-1	*				
E1-69-1		13	JNJ0418		Hose
E1-69-1		14	JNJ0418		Hose
E1-70-1		10	KRJ3577		Hose
E1-70-1		11	KNJ1849		Hose
E1-70-1		12	KRJ3571		Hose
E1-70-1		13	JLJ0326		Hose
E1-70-1		14	KBJ2346		Hose
E1-71-1		10	KNJ1119		Hose
E1-71-1		12	KNJ1314		Hose
E1-71-1		18	KNJ1956		Hose
E1-71-1		19	627/10382		Hose
E2-1-1	*				
E2-2-1	*				
E2-6-10		46A	20/951974		Kit-seal
E3-1-1	*				
E3-8-1		1	25/222885		Valve
E3-15-1		6	32/925838		Element
E3-17-1		2	32/925164		Element
E3-17-1		3	828/10081		O Ring

PAGE	ILLN	ITEM	PART NUMBER	CHANGE NUMBER	DESCRIPTION
E3-17-1		6	823/10181		Washer
E3-17-1		7	823/10201		Washer
F3-2-1		1	331/49505		Wheel
F3-2-1		1	331/49504		Wheel
F3-2-1		3	42/925276		Tyre
F4-5-1		1	KRB0697		Pipe
F4-5-1		2	KRB0696		Pipe
R1-4-1		7	02/802460		Kit-main bearing
R1-4-1		7	02/801713		Kit-bearing
R1-4-1		7	02/802461		Kit-main bearing
R1-4-1		7	02/802462		Kit-main bearing
R1-4-1		15	02/802470		Piston
R1-4-1		15	02/802471		Piston
R1-4-1		18	02/802472		Kit-piston ring
R1-6-1		6	02/802505		Gasket
R1-6-1		6	02/802506		Gasket
R1-7-1		3	02/802154		Nut
R2-1-1		11	02/802367		Gasket
R2-1-1		11	02/802368		Gasket
R4-3-1	*				
R5-3-1		1 01	02/801481		Element
R7-5-2	*				
R8-1-1		1	02/802344		Kit-gasket
R8-1-2		1	02/802347		Kit-gasket

JS160W

TITLE	PAGE NUMBER	CHANGE NUMBER

A ACCESSORI

BENNE A2

BUCKET, GRADING/DITCHING, 1524MM. WIDE	A2-3-2	
BUCKET, GRADING/DITCHING, 1829MM. 72" WIDE	A2-3-1	
BUCKET, 1000 WIDE, 0.71 CUBIC METRES	A2-1-7	
BUCKET, 1050MM HEAVY DUTY	A2-1-26	
BUCKET, 1100 WIDE, 0.81 CUBIC METRES	A2-1-8	
BUCKET, 1150MM HEAVY DUTY	A2-1-27	
BUCKET, 1200 WIDE, 0.90 CUBIC METRES	A2-1-9	
BUCKET, 1250MM HEAVY DUTY	A2-1-28	
BUCKET, 1300 WIDE, 0.99 CUBIC METRES	A2-1-10	
BUCKET, 450MM,HEAVY DUTY	A2-1-20	
BUCKET, 500 WIDE, 0.26 CUBIC METRES	A2-1-1	
BUCKET, 550MM HEAVY DUTY	A2-1-21	
BUCKET, 600 WIDE, 0.35 CUBIC METRES	A2-1-2	
BUCKET, 650MM HEAVY DUTY	A2-1-22	
BUCKET, 700 WIDE, 0.44 CUBIC METRES	A2-1-3	
BUCKET, 750 WIDE, 0.47 CUBIC METRES	A2-1-4	
BUCKET, 750MM HEAVY DUTY	A2-1-23	
	A2-1-24	
BUCKET, 800 WIDE, 0.53 CUBIC METRES	A2-1-5	
BUCKET, 900 WIDE, 0.62 CUBIC METRES	A2-1-6	
BUCKET, 950MM HEAVY DUTY	A2-1-25	

EQUIPAGGIAMENTE A3

QUICKHITCH, HYDRAULIC, MPG, MILLER	A3-11-1	
QUICKHITCH, JS160, HYDRAULIC, BUG, MILLER	A3-10-1	
QUICKHITCH, MANUAL	A3-9-1	
ROCKBREAKER HM 860Q, JS160W, 980/90214, 980/90474	A3-1-1	
ROCKBREAKER HM1260Q, JS160W, 980/90216, 980/90291	A3-2-1	

B CARROZZERIA, CABINA, SEZIONE CARICATORA

CARROZZERIA/TELAIO B1

BAFFLES, PUMP BAY	B1-5-50	
CHASSIS, WITH TOOLBOX	B1-9-1	
CONTRAPPESO POSTERIORE	B1-6-1	
COVERS, UNDERSIDE MAINFRAME	B1-2-1	
COWLINGS, ENGINE BULKHEAD	B1-5-40	
COWLINGS, TOOLBOX & HAND RAIL	B1-5-30	
DOORS WITH FITTINGS, LEFT HAND SIDE BODY, RIGHT HAND SIDE BODY	B1-5-10	
ENGINE COVERS	B1-5-5	
FRAME SUPPORT	B1-5-1	
GRILLES, & TREAD PLATES	B1-5-20	
LAMA, APRIPISTA	B1-11-1	
SERBATOIO GASOLIO	B1-4-1	
SERBATOIO IDRAULICO	B1-3-1	
STABILISER, FRONT & REAR	B1-21-15	
TELAIO PRINCIPALE	B1-1-1	
	B1-1-10	
WHEELCHOCK, GERMAN	B1-9-10	

CABINA B2

CAB	B2-1-1	
CAB DOOR, COMPONENTS	B2-2-1	
CAB MOUNTINGS, CAB FOOR & MAT	B2-16-1	
CAB PANELS	B2-8-1	
CAB, MOUNTING FASTENERS	B2-1-30	
CONSOLE, CAB SERVO CONTROL, LEFT HAND, FIXED CONSOLE	B2-4-1	
CONSOLE, CAB SERVO CONTROL, RIGHT HAND	B2-5-1	
DIRECT GLAZING, REPLACEMENT MATERIAL	B2-18-1	
FIRE EXTINGUISHER	B2-11-1	
FLOOR COMPONENTS, SEAT SLIDE, LEVER ISOLATOR	B2-10-1	
FRONT SCREEN, UPPER & LOWER	B2-1-10	
FRONT WIPER, & CAB COMPONENTS	B2-1-20	
FRONT WIPER, CAB LOWER WINDOW, SEE C3-15-10	B2-15-1	
GUARD, FOPS CAGE, FRONT GUARD SALES OPTION	B2-9-20	

TITLE	PAGE NUMBER	CHANGE NUMBER
GUARD, FOPS, FRONT AND TOP, CAB MOUNTED	B2-9-1	
RAIN VISOR, CAB	B2-12-1	
SEAT BELT, STANDARD	B2-3-30	
SEAT BELT, 76MM (3") WIDE, OPTIONAL	B2-3-40	
SEAT, AIR SUSPENSION, HIGH BACK	B2-3-20	
SEAT, HIGH BACK, STANDARD	B2-3-1	
SPECCHI ESTERNI	B2-7-2	
TERGICRISTALLO/LAVAVETRO PARABREZZA	B2-6-1	
VANDAL GUARD, CAB, 3PC FRONT PANEL	B2-14-1	
SEZIONE CARICATRICE	**B3**	
BOOM GREASING, MONO BOOM	B3-4-1	
BOOM GREASING, TAB BOOM	B3-4-10	
BOOM, LOWER, TRIPLE ARTICULATING	B3-10-1	
BOOM, UPPER, TRIPLE ARTICULATING	B3-11-1	
BRACCIO PRINCIPALE	B3-1-1	
BRIDGE BASHING, U K ONLY	B3-12-1	
DIPPER 2.70M	B3-2-10	
SECONDO BRACCIO 2.25M	B3-2-1	
SECONDO BRACCIO 3.0M	B3-2-20	
MATERIALI RICONDIZIONAMENTO	**B5**	
ATTREZZI	B5-4-1	
DECALS, MACHINE	B5-1-1	
DECALS, MACHINE, CONTROL LABELS	B5-2-10	
DECALS, WARNING	B5-2-1	
DECALS, WARNING, USA BUILD	B5-3-1	

C IMPIANTO ELETTRICO-MACCHINA, CABINA E MOTORE

IMPIANTO ELETTRICO PRINCIPALE	**C1**	
ALLARME, RETROMARCIA	C1-7-1	
HORN	C1-8-1	
INSTALLAZIONE BATTERIA 24 V	C1-3-1	
LIGHT, WORKING, CAB & REAR, USE WITH RAIN GUARD	C1-6-20	
LUCE DI LAVORO BRACCIO PRINCIPALE	C1-6-10	
PARTE ELETTRICA, CABINA	C1-2-1	
PARTE ELETTRICA, MACCHINA	C1-1-1	
ROAD LIGHTS, ROW, RIGHT HAND DIP	C1-4-10	
ROAD LIGHTS, UK, LEFT HAND DIP	C1-4-1	
IMPIANTO ELETTRICO MOTORE	**C2**	
ALTERNATOR	C2-4-1	
ALTERNATOR MOUNTINGS	C2-5-1	
ECU HARNESS	C2-2-1	
ENGINE ELECTRICS	C2-1-1	
ENGINE, CONTROL MODULE	C2-1-2	
MOTOR,STARTER	C2-3-1	
IMPIANTO ELETTRICO CABINA	**C3**	
AIR CON	C3-12-1	
	C3-12-10	
CIGAR LIGHTER	C3-14-1	
COMBI UNIT FIG 2	C3-12-20	
FRONT WIPER, CAB LOWER WINDOW	C3-15-10	
FUSE BOX	C3-7-1	
HEATER	C3-5-1	
HEATER UNIT	C3-5-10	
HEATER UNIT FIG 2	C3-5-20	
LUCE, FARO SEGNALAZIONE PERICOLO AMBRA	C3-9-1	
RADIO	C3-11-1	
SWITCH PANEL, SIDE CONSOLE, RIGHT HAND	C3-2-1	
TERGICRISTALLO/LAVAVETRO PARABREZZA	C3-15-1	

D COMANDI-MACCHINA, MOTORE

COMANDI MACCHINA	**D1**	
COMANDI, ESCAVATORE	D1-1-1	
PEDAL CONTROLS, MONO BOOM BUILD	D1-2-1	
PEDAL CONTROLS, TAB BOOM BUILD	D1-2-10	

TITLE	PAGE NUMBER	CHANGE NUMBER
COMANDI MOTORE	**D2**	
CONTROLS, THROTTLE & STOP, CAB	D2-2-1	
PIANTONE	**D3**	
STEERING COLUMN	D3-1-1	

E IMPIANTO IDRAULICO

TUBAZIONI	**E1**	
ARM HIGHT LIMITER, OPTIONAL, MONO BOOM	E1-36-1	
CIRCUIT, AUXILIARY LOW FLOW, MONO BOOM BUILD	E1-29-20	
CIRCUIT, AUXILIARY LOW FLOW, TAB BOOM BUILD	E1-29-30	
CIRCUIT, AUXILIARY/HAMMER, MONO BOOM	E1-30-20	
CIRCUIT, AUXILIARY, HAMMER & LOW FLOW, MONO BOOM	E1-31-20	
CIRCUIT, AUXILIARY, HAMMER & LOW FLOW, TAB BOOM	E1-31-30	
CIRCUIT, BOOM & DIPPER HBCV, MONO BOOM	E1-25-1	
CIRCUIT, BOOM & DIPPER HBCV, TAB BOOM (2 VALVE HBCV BOOM ONLY)	E1-25-10	
CIRCUIT, BOOM & DIPPER HBCV, TAB BOOM (3 & 4 VALVE HBCV)	E1-25-20	
CIRCUIT, BOOM POSITION RAM, HBCV FEED & RETURN, TAB BOOM	E1-48-30	
CIRCUIT, BOOM POSITION RAM, MAINFRAME	E1-48-1	
CIRCUIT, BOOM POSITION RAM, TAB, WITH HBCV	E1-48-20	
CIRCUIT, BRAKES, LOWER CHASSIS	E1-15-1	
CIRCUIT, BUCKET RAM, MONOBOOM	E1-23-1	
CIRCUIT, BUCKET, GRAB CHANGEOVER	E1-34-1	
CIRCUIT, BYPASS, HYDRAULIC FILTER	E1-8-1	
CIRCUIT, CRUISE CONTROL	E1-50-1	
CIRCUIT, DIPPER RAM, & BUCKET RAM, TAB BOOM	E1-22-10	
CIRCUIT, DIPPER RAM, HBCV FEED & RETURN	E1-26-1	
CIRCUIT, DIPPER RAM, MONOBOOM	E1-22-1	
CIRCUIT, DOZER CONTROL, MAINFRAME	E1-45-1	
CIRCUIT, DOZER/STAB CONTROL	E1-45-10	
CIRCUIT, DOZER/STAB, MAINFRAME	E1-46-1	
CIRCUIT, DRAIN, MOTOR & SOLENOID	E1-10-1	
CIRCUIT, DUAL CONTROLS, STANDARD USA, OPTIONAL UK WORLD	E1-14-1	
CIRCUIT, FAN DRIVE	E1-9-1	
CIRCUIT, FRONT & REAR STAB, CHASSIS	E1-46-30	
CIRCUIT, FRONT DOZER, REAR STAB, CHASSIS	E1-46-10	
CIRCUIT, FRONT DOZER, REAR STAB, CHASSIS	E1-46-15	
CIRCUIT, FRONT STAB, REAR DOZER, CHASSIS	E1-46-40	
CIRCUIT, HAMMER, AUXILIARY BOOM PIPES, TAB BOOM	E1-30-30	
CIRCUIT, HAMMER, AUXILIARY, MAINFRAME MONO BOOM	E1-31-1	
CIRCUIT, HAMMER, AUXILIARY, MAINFRAME TAB BOOM	E1-31-10	
CIRCUIT, HAMMER, FULLFLOW 2.25 DIPPER	E1-33-1	
CIRCUIT, HAMMER, FULLFLOW 2.7 DIPPER	E1-33-10	
CIRCUIT, HAMMER, FULLFLOW 3.05 DIPPER	E1-33-20	
CIRCUIT, HAMMER, MAINFRAME, MONO BOOM	E1-30-1	
	E1-30-40	
CIRCUIT, HAMMER, MAINFRAME, TAB BOOM	E1-30-10	
CIRCUIT, LOW FLOW, AUXILIARY, MAINFRAME , TAB BOOM BUILD	E1-29-10	
CIRCUIT, LOW FLOW, AUXILIARY, MAINFRAME, MONO BOOM BUILD	E1-29-1	
CIRCUIT, LOW FLOW, 2.25M DIPPER	E1-32-1	
CIRCUIT, LOW FLOW, 2.7M DIPPER	E1-32-10	
CIRCUIT, LOW FLOW, 3.05M DIPPER	E1-32-20	
CIRCUIT, MANIFOLD, UNDER CAB	E1-68-1	

TITLE	PAGE NUMBER	CHANGE NUMBER
CIRCUIT, MILLER Q. HITCH, 980/90463	E1-60-1	
CIRCUIT, NEUTRAL PRESSURE	E1-2-1	
CIRCUIT, NEUTRAL, RETURN & OIL COOLER	E1-3-1	
CIRCUIT, NON-HBCV, BOOM POSITION RAM	E1-48-10	
CIRCUIT, PILOT LINE, MAIN CONTROL VALVE	E1-71-1	
CIRCUIT, PUMP SUCTION	E1-1-1	
CIRCUIT, REAR DOZER, CHASSIS	E1-47-1	
CIRCUIT, REAR DOZER, CHASSIS, PLUS LOGIC VALVE OPTION	E1-47-10	
CIRCUIT, REAR STAB, CHASSIS	E1-46-20	
CIRCUIT, RETURN LINE, PILOT PRESSURE, MAIN CONTROL VALVE	E1-72-1	
CIRCUIT, STEERING &, BRAKES, MAINFRAME	E1-17-10	
CIRCUIT, STEERING, CHASSIS	E1-17-1	
CIRCUIT, SWING	E1-6-1	
CIRCUIT, TANK MANIFOLD	E1-69-1	
CIRCUIT, TEST POINTS	E1-35-1	
CIRCUIT, TRACTION, LOWER CHASSIS	E1-5-1	
CIRCUIT, VALVE, CUSHION	E1-65-1	
CIRCUIT, VALVE, DRIVE PEDAL	E1-61-1	
CIRCUIT, VALVE, LH CONTROLLER	E1-62-1	
CIRCUIT, VALVE, PILOT SHUTTLE	E1-70-1	
CIRCUIT, VALVE, RH CONTROLLER	E1-63-1	
CIRCUIT, VALVE, SHUTTLE	E1-66-1	
CIRCUIT, VALVE, SOLENOID	E1-67-1	
CIRCUIT, VALVE, 3 STATION	E1-64-1	
CIRCUITO SCARIFICATORE E BENNA	E1-21-1	
CIRCUITO, CINGOLO TELAIO PRINCIPALE	E1-4-1	
	E1-4-10	
CIRCUITO, PISTONE BRACCIO INCASTELLATURA PRINCIPALE	E1-20-1	
	E1-20-10	
CIRCUITO, SERVO NEUTRO FIG 1	E1-12-1	
	E1-13-1	
POMPA, MOTORE TRASCINAM. POMPA	**E2**	
MOTOR, DRIVE, FIG 1	E2-6-10	
MOTOR, DRIVE, FIG 2	E2-6-11	
MOTOR, SWING	E2-7-1	
POMPA, PISTONE SISTEMA IDRAULICO PRINCIPALE E COMPONENTI FIG 1	E2-2-1	
PUMP, MAIN HYDRAULIC	E2-1-1	
VALVOLE E FILTRI IDRAULICI	**E3**	
FILTER, AUXILIARY/HAMMER, RETURN	E3-16-1	
FILTER, BYPASS, HYDRAULIC	E3-17-1	
FILTER, HYDRAULIC, STEER CIRCUIT	E3-16-10	
GIUNTO, ROTANTE	E3-14-20	
GRUPPO DISTRIBUTORE E FISSAGGIO	E3-1-1	
LUBRIFICANTI E FILTRI	E3-15-1	
MOUNTINGS, ROTARY COUPLING	E3-14-1	
OILS, BIODEGRADABLE, HYDRAULIC	E3-15-10	
VALVE, BRAKE PEDAL	E3-3-1	
VALVE, HAMMER	E3-24-1	
VALVE, PILOT SHUTTLE	E3-23-1	
VALVE, RELIEF, SERVICE PORT	E3-2-45	
VALVE, SOLENOID	E3-8-1	
VALVE, SOLENOID, TAB HAMMER, JS175W AUTO T3	E3-9-1	
VALVOLA, REGOLAZIONE COMPONENTI FIG 1	E3-2-1	
VALVOLA, REGOLAZIONE COMPONENTI FIG 2	E3-2-2	
VALVOLA, SERVOCOMANDO MANUALE	E3-6-1	
VALVOLA, STERZO	E3-40-1	
MARTINETTI	**E4**	
CIRCUIT, BOOM RAM, WITH HBCV, TAB BOOM	E4-1-20	
PISTONE, BRACCIO PRINCIPALE	E4-1-1	
	E4-1-10	
	E4-1-30	
PISTONE, SECONDO BRACCIO	E4-2-1	
RAM, AXLE LOCK	E4-6-1	
RAM, DIPPER, ASSEMBLY WITH HBCV, MONO BOOM & TAB BOOM	E4-2-10	

TITLE	PAGE NUMBER	CHANGE NUMBER
RAM, DIPPER, COMPONENTS	E4-2-20	
RAM, POSITION, ASSEMBLY, TAB BOOM, WITHOUT HBCV	E4-7-1	
RAM, POSITION, HBCV, ASSEMBLY	E4-7-10	

F INGRANAGGI DELLA, GIRANTEDI TRAZIONE

AXLES, FRONT	**F1**
ARTICOLAZIONE STERZO ASSALE	F1-4-1
CROWN WHEEL & PINION, 18. 16:1 AXLE, 453/30800	F1-6-1
DIFFERENTIAL, ASSEMBLY, 18. 16:1, STEER AXLE 453/30800	F1-5-1
GRUPPO ASSALE ANTERIORE	F1-1-1
MOZZO E COMPONENTI ASSALE CON FRENI SUI MOZZI	F1-3-1
RAM, STEERING AXLE, INSTALLATION	F1-7-1
AXLES, REAR	**F2**
ASSALE POSTERIORE	F2-1-1
CROWN WHEEL & PINION, 18. 16:1 AXLE, 450/42700	F2-6-1
DIFFERENTIAL, ASSEMBLY, 18. 16:1, 450/42700	F2-5-1
MOZZO E COMPONENTI ASSALE CON FRENI SUI MOZZI	F2-3-1
WHEELS, TYRES & PROPSHAFTS	**F3**
ALBERI DI TRASMISSIONE TRASMISSIONE	F3-1-1
WHEELS & TYRES, DUALS	F3-4-1
WHEELS & TYRES, DUALS, 10. 00 X 20 EM22 16PR & EM23	F3-3-1
WHEELS & TYRES, FLOATATION, LEFT HAND SIDE FRONT AND REAR	F3-5-1
WHEELS & TYRES, SINGLES	F3-2-1
SLEW GEARBOXES	**F4**
CIRCUIT, SWING RING GREASING	F4-5-1
GEARBOX, SWING	F4-4-1
MOTOR, SWING	F4-3-1
TRANSMISSION	**F5**
GRUPPO DISCHI FRENOTRASMISSIONE	F5-7-1
GRUPPO DISCHI FRIZIONE TRASMISSIONE	F5-6-1
GRUPPO ENTRATA TRASMISSIONE	F5-4-1
GRUPPO PLANETARI RIDUTTORE	F5-8-1
GRUPPO SENSORI TRASMISSIONE	F5-9-1
GRUPPO TRASMISSIONE	F5-2-1
GRUPPO USCITA TRASMISSIONE	F5-10-1
SISTEMA ALIMENTAZIONE TRASMISSIONE	F5-3-1
TRASMISSIONE POWERSHIFT	F5-1-1

R ENGINE 4JJ1-XYSJ01 TIER 3

ENGINE BLOCK & SUB-ASSEMBLIES	**R1**
ALBERO A GOMITO, BRONZINE PISTONI E BIELLE	R1-4-1
BLOCK ASSEMBLY	R1-3-1
CAMSHAFTS, & TIMING GEARS	R1-6-2
ENGINE, COMPLETE, 4JJ1-XYSJ01	R1-1-1
FANS,PULLEYS & BELTS, EU ONLY	R1-5-1
FANS,PULLEYS & BELTS, NON EU	R1-5-2
FLYWHEEL & HOUSING	R1-7-1
SUPPORTI MOTORE	R1-8-1
TIMING CASE, & FRONT COVER	R1-6-1
CYLINDER HEAD & SUB-ASSEMBLIES	**R2**
GRUPPO BILANCIERI VALVOLA ASPIRAZIONE/SCARICO	R2-2-1
LIFTING PLATES	R2-6-1
ROCKER COVER, & BREATHER PIPE	R2-3-1
TESTATA	R2-1-1

TITLE	PAGE NUMBER	CHANGE NUMBER
INDUCTION & EXHAUST SYSTEMS	**R3**	
EXHAUST SYSTEM	R3-4-1	
EXHAUST, RECIRCULATION	R3-5-1	
FILTRO, ARIA	R3-3-1	
MANIFOLD, EXHAUST	R3-2-1	
MANIFOLD, INDUCTION	R3-1-1	
SYSTEM, COOLING	**R4**	
CHARGE AIR COOLER	R4-7-1	
COOLER COMBINATION, MOUNTING &, SOUND PROOFING	R4-3-1	
EXHAUST, RECIRCULATION, WATER COOLING	R4-8-1	
PUMP WATER	R4-1-1	
RADIATORE MANICOTTI E RACCORDI	R4-4-1	
RADIATORE MANICOTTIE RACCORDI	R4-5-1	
THERMOSTAT,HOUSING, & PIPEWORK	R4-2-1	
SYSTEM, LUBRICATION	**R5**	
COOLER, ENGINE OIL	R5-4-1	
COPPA OLIO E RACCORDI	R5-1-1	
OIL FILTER, REMOTE MOUNTED	R5-3-1	
POMPA, OLIO	R5-2-1	
SYSTEM, FUEL	**R6**	
FILTRO SEDIMENTI GASOLIO	R6-6-1	
FILTRO, GASOLIO	R6-7-1	
FUEL LIFT PUMP	R6-8-1	
FUEL SYSTEM	R6-4-1	
PUMP, FUEL INJECTION, INSTALLATION	R6-1-1	
SISTEMA GASOLIO	R6-2-1	
EQUIPMENT, AUXILIARY	**R7**	
COMPRESSORE CONDIZIONAMENTO ARIA	R7-6-1	
COMPRESSORE 12 V CONDIZIONAMENTO ARIA	R7-5-2	
TURBO, TUBAZIONI	R7-2-1	
TURBOCHARGER	R7-1-1	
GASKET SETS	**R8**	
GASKET SET, CYLINDER HEAD, OVERHAUL	R8-1-2	
GASKET SET, ENGINE OVERHAUL	R8-1-1	

WHEELED EXCAVATOR

M1421600 to M1421799
Model JS160W AUTO - TIER 3]

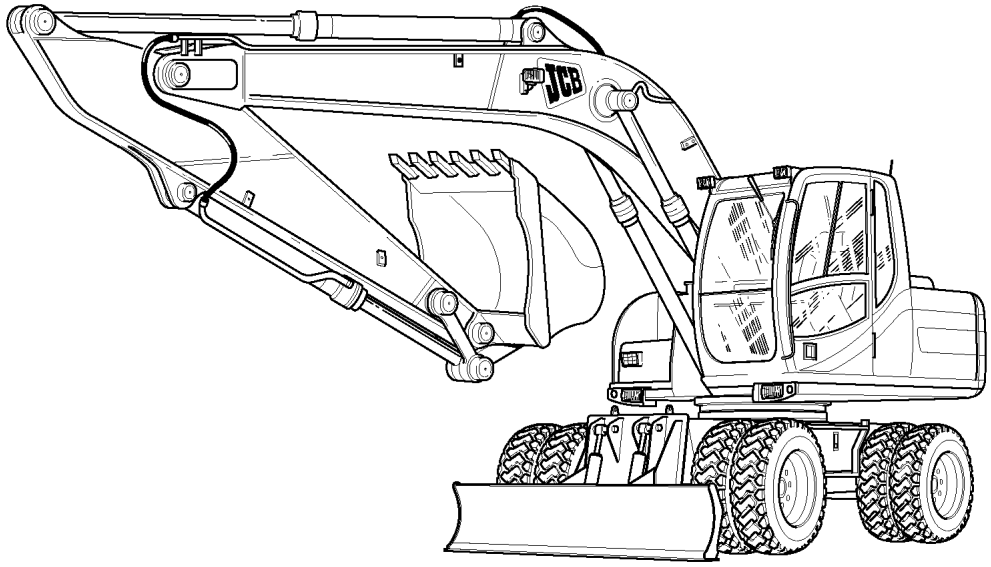

ACESSORIOS	A
CARROSSERIA, CABINE, CARREGADOR	B
SISTEMA ELECTRICO - MAQUINA, CABINE E MOTOR	C
COMANDOS - MAQUINA, MOTOR	D
SISTEMA HIDRAULICO	E
CAIXA LAGARTAS/GIRADOR	F
ENGINE 4JJ1-XYSJ01 TIER 3	R

910010

P.S.I.	Libras por Polegada Quadrada
A/R	Se Necessário
N.S.P.	Peça Não Revista
N/A	Não Aplicável/Não Disponível
HBCV	Válvula de Verificação Anti-rebentamento de Tubos
KP	Kingpost
SS	Sideshift
CM	Pivot Central
M.P.H.	Milhas por Hora
K.P.H.	Quilómetros por Hora
STD	Standard
O/D	Diâmetro Exterior
I/D	Diâmetro Interior
M.S.S.	Substituição Múltipla
T.I.	Informação Técnica
M/S	Transmissão Shift Manual
P/S	Transmissão Powershift
M TBA	Número de Série da Máquina ainda Desconhecido
SUPERSEDED	Peça Totalmente Substituível
TO M	Até ao Número de Série
M ON	A Partir do Número de Série
4WD	Tracção às 4 Rodas
LTR	Litro
L1=	Comprimento (vertical)
L2=	Comprimento (horizontal)
L=	Comprimento
MM	Milímetro
T=	Espessura
W/	Com
WO/	Sem
KG	Quilograma
LH	Lado Esquerdo
RH	Lado Direito
PTO	Potência de Arranque
S/M	Sitemaster
H/M	Hammermaster
PR	Par
4WS	Direcção às 4 Rodas
2WS	Direcção às 2 Rodas
C/W	Juntamente com

9809/0058	Desk Top Reader 240 Volt
9809/0059	Desk Top Reader 110 Volt
9809/0060	Bulb For 9809/0058 & 9809/0059
9809/0048	Bulb For 375 Reader
9809/0044	Case 2 Reader Portable
9809/0054	Bulb For Case 2 Reader Fhx
9809/0045	Case 4 Reader Large Screen
9809/0055	Bulb For Case 4 Reader Epz
9809/0007	Bulb For Bell & Howell Sr 1020
9809/0047	Bulb For Mt4 Reader
9809/0053	Hand Held Elite Reader
9809/0056	Bulb For Microscot Reader

Lens

9809/0017	Lens 29mm For Sr 1020

Binder & Panels

9809/0006	Binder For Fiche (service)
9809/0052	Binder For Fiche (prof. Prod. Support)
9809/0015	Binder Fiche Panels

PAGE	ILLN	ITEM	PART NUMBER	CHANGE NUMBER	DESCRIPTION
A2-3-1		2	331/47909		Toeplate
A2-3-1		4	1340/2401		Nut
A2-3-2		1	980/86140		Bucket
B1-2-1	*				
B1-4-1	*				
B1-5-1	*				
B1-5-5	*				
B1-5-20	*				
B1-5-40	*				
B1-6-1		1	335/13581		Counterweight
B1-11-1		25A	1316/4130		Bolt
B1-21-15		23	335/11676		Body
B2-1-10		32	826/11487		Latch
B2-1-10		33	826/11486		Latch
B2-1-10		34	6900/0619		Screw
B2-16-1		9	335/13853		Plate
B2-16-1		16	331/59705		Plate
B3-10-1		12	KLV0167		Pin
B3-10-1		13	6009/3724D		Bolt
B3-10-1		14	173R016VD		Nut
B5-1-1	*				
B5-1-1		3A	817/19832		Decal
B5-2-1	*				
B5-2-1		12	817/70003		Decal
B5-2-1		14	817/70116		Decal
B5-2-1		20	817/70117		Decal
B5-2-1		23	817/17526		Label
B5-2-1		30	332/J0613		Decal
B5-2-10	*				
C1-3-1	*				
C1-3-1		11	718/20026		Cable
C3-11-1		1	717/20225		Radio
C3-11-1		1	717/20226		Radio
C3-11-1		1	717/20227		Radio
C3-12-1	*				
C3-12-1		33	123/04999		Compressor
D1-1-1		27	928/60339		Valve
D1-1-1		30	331/57463		Bracket
D1-1-1		33	331/57439		Pedal
D1-2-10	*				
E1-1-1	*				
E1-2-1	*				
E1-3-1	*				
E1-4-10	*				
E1-10-1	*				
E1-13-1	*				
E1-17-1	*				
E1-17-1		13 03	627/10543		Hose
E1-17-1		13 04	627/10543		Hose
E1-22-10	*				
E1-25-1	*				
E1-29-10		44	830/13798		Tube
E1-29-30	*				
E1-30-1	*				
E1-30-10	*				
E1-30-10		5	KNJ0606		Adapter
E1-30-10		6	1609/0002		Adapter
E1-30-10		15	1315/0509D		Screw
E1-30-10		20	335/13018		Plate
E1-30-10		31 01	627/10407		Hose
E1-30-10		31 02	627/10407		Hose
E1-30-10		32	627/10519		Hose
E1-30-10		45	816/90712		Adapter
E1-31-1	*				

PAGE	ILLN	ITEM	PART NUMBER	CHANGE NUMBER	DESCRIPTION
E1-31-1		3	721/11632		Harness
E1-32-1	*				
E1-32-10	*				
E1-32-20	*				
E1-33-1	*				
E1-33-10	*				
E1-33-20	*				
E1-36-1	*				
E1-46-10		4	JLV1871		Hose
E1-46-10		5	JLV1868		Hose
E1-46-10		6	JLV0594		Hose
E1-46-10		7	JNJ0393		Hose
E1-46-10		9	KNJ1697		Hose
E1-46-10		17	KAJ2176		Adapter
E1-46-10		23	JLJ0055		Adapter
E1-48-1		3	CNA0584		Adapter
E1-48-1		12	JLV0594		Hose
E1-48-1		13	KHJ1335		Hose
E1-48-1		14	KTJ0812		Hose
E1-48-1		15	KTJ0813		Hose
E1-48-1		16	KNJ0605		Adapter
E1-48-1		17	627/10537	Superseded	Hose
E1-48-1		18	830/13253		Pipe
E1-48-1		21	335/11072		Bracket
E1-48-1		28	JLV0433		Adapter
E1-48-1		29	KHJ0869		Adapter
E1-48-20	*				
E1-61-1		1	928/60339		Valve
E1-61-1		12	KBJ2208		Hose
E1-61-1		13	JLV0719		Hose
E1-61-1		14	KSJ0806		Hose
E1-62-1		56E	KNJ1109		Hose
E1-62-1		56F	KNJ1109		Hose
E1-65-1		8	KNJ1119		Hose
E1-65-1		9	627/10382		Hose
E1-65-1		10	KNJ1314		Hose
E1-65-1		12	KBJ2348		Hose
E1-65-1		13	KSJ1871		Hose
E1-65-1		14	627/10199		Hose
E1-65-1		15	KTJ1215		Hose
E1-68-1		12	KNJ1109		Hose
E1-68-1		13	KNJ1109		Hose
E1-68-1		15	KNJ1109		Hose
E1-68-1		16	KNJ1109		Hose
E1-69-1	*				
E1-69-1		13	JNJ0418		Hose
E1-69-1		14	JNJ0418		Hose
E1-70-1		10	KRJ3577		Hose
E1-70-1		11	KNJ1849		Hose
E1-70-1		12	KRJ3571		Hose
E1-70-1		13	JLJ0326		Hose
E1-70-1		14	KBJ2346		Hose
E1-71-1		10	KNJ1119		Hose
E1-71-1		12	KNJ1314		Hose
E1-71-1		18	KNJ1956		Hose
E1-71-1		19	627/10382		Hose
E2-1-1	*				
E2-2-1	*				
E2-6-10		46A	20/951974		Kit-seal
E3-1-1	*				
E3-8-1		1	25/222885		Valve
E3-15-1		6	32/925838		Element
E3-17-1		2	32/925164		Element
E3-17-1		3	828/10081		O Ring

PAGE	ILLN	ITEM	PART NUMBER	CHANGE NUMBER	DESCRIPTION
E3-17-1		6	823/10181		Washer
E3-17-1		7	823/10201		Washer
F3-2-1		1	331/49505		Wheel
F3-2-1		1	331/49504		Wheel
F3-2-1		3	42/925276		Tyre
F4-5-1		1	KRB0697		Pipe
F4-5-1		2	KRB0696		Pipe
R1-4-1		7	02/802460		Kit-main bearing
R1-4-1		7	02/801713		Kit-bearing
R1-4-1		7	02/802461		Kit-main bearing
R1-4-1		7	02/802462		Kit-main bearing
R1-4-1		15	02/802470		Piston
R1-4-1		15	02/802471		Piston
R1-4-1		18	02/802472		Kit-piston ring
R1-6-1		6	02/802505		Gasket
R1-6-1		6	02/802506		Gasket
R1-7-1		3	02/802154		Nut
R2-1-1		11	02/802367		Gasket
R2-1-1		11	02/802368		Gasket
R4-3-1	*				
R5-3-1		1 01	02/801481		Element
R7-5-2	*				
R8-1-1		1	02/802344		Kit-gasket
R8-1-2		1	02/802347		Kit-gasket

JS160W

TITLE	PAGE NUMBER	CHANGE NUMBER
A ACESSORIOS		
BALDES	**A2**	
BUCKET, GRADING/DITCHING, 1524MM. WIDE	A2-3-2	
BUCKET, GRADING/DITCHING, 1829MM. 72" WIDE	A2-3-1	
BUCKET, 1000 WIDE, 0.71 CUBIC METRES	A2-1-7	
BUCKET, 1050MM HEAVY DUTY	A2-1-26	
BUCKET, 1100 WIDE, 0.81 CUBIC METRES	A2-1-8	
BUCKET, 1150MM HEAVY DUTY	A2-1-27	
BUCKET, 1200 WIDE, 0.90 CUBIC METRES	A2-1-9	
BUCKET, 1250MM HEAVY DUTY	A2-1-28	
BUCKET, 1300 WIDE, 0.99 CUBIC METRES	A2-1-10	
BUCKET, 450MM,HEAVY DUTY	A2-1-20	
BUCKET, 500 WIDE, 0.26 CUBIC METRES	A2-1-1	
BUCKET, 550MM HEAVY DUTY	A2-1-21	
BUCKET, 600 WIDE, 0.35 CUBIC METRES	A2-1-2	
BUCKET, 650MM HEAVY DUTY	A2-1-22	
BUCKET, 700 WIDE, 0.44 CUBIC METRES	A2-1-3	
BUCKET, 750 WIDE, 0.47 CUBIC METRES	A2-1-4	
BUCKET, 750MM HEAVY DUTY	A2-1-23	
	A2-1-24	
BUCKET, 800 WIDE, 0.53 CUBIC METRES	A2-1-5	
BUCKET, 900 WIDE, 0.62 CUBIC METRES	A2-1-6	
BUCKET, 950MM HEAVY DUTY	A2-1-25	
ACESSORIOS	**A3**	
QUICKHITCH, HYDRAULIC, MPG, MILLER	A3-11-1	
QUICKHITCH, JS160, HYDRAULIC, BUG, MILLER	A3-10-1	
QUICKHITCH, MANUAL	A3-9-1	
ROCKBREAKER HM 860Q, JS160W, 980/90214, 980/90474	A3-1-1	
ROCKBREAKER HM1260Q, JS160W, 980/90216, 980/90291	A3-2-1	
B CARROSSERIA, CABINE, CARREGADOR		
CARROSSERIA/CHASSIS	**B1**	
BAFFLES, PUMP BAY	B1-5-50	
CHASSIS, WITH TOOLBOX	B1-9-1	
CONTRAPESO TRASEIRO	B1-6-1	
COVERS, UNDERSIDE MAINFRAME	B1-2-1	
COWLINGS, ENGINE BULKHEAD	B1-5-40	
COWLINGS, TOOLBOX & HAND RAIL	B1-5-30	
DEPFSITO, HIDRAULICO	B1-3-1	
DEPFSITO,COMBUSTIVEL	B1-4-1	
DOORS WITH FITTINGS, LEFT HAND SIDE BODY, RIGHT HAND SIDE BODY	B1-5-10	
ENGINE COVERS	B1-5-5	
ESTRUTURA PRINCIPAL	B1-1-1	
	B1-1-10	
FRAME SUPPORT	B1-5-1	
GRILLES, & TREAD PLATES	B1-5-20	
LAMINA, NIVELAMENTO	B1-11-1	
STABILISER, FRONT & REAR	B1-21-15	
WHEELCHOCK, GERMAN	B1-9-10	
CABINE	**B2**	
CAB	B2-1-1	
CAB DOOR, COMPONENTS	B2-2-1	
CAB MOUNTINGS, CAB FOOR & MAT	B2-16-1	
CAB PANELS	B2-8-1	
CAB, MOUNTING FASTENERS	B2-1-30	
CONSOLE, CAB SERVO CONTROL, LEFT HAND, FIXED CONSOLE	B2-4-1	
CONSOLE, CAB SERVO CONTROL, RIGHT HAND	B2-5-1	
DIRECT GLAZING, REPLACEMENT MATERIAL	B2-18-1	
ESPELHOS RETROVISOREEXTERIORES	B2-7-2	
EXTINTOR	B2-11-1	
FLOOR COMPONENTS, SEAT SLIDE, LEVER ISOLATOR	B2-10-1	
FRONT SCREEN, UPPER & LOWER	B2-1-10	
FRONT WIPER, & CAB COMPONENTS	B2-1-20	
FRONT WIPER, CAB LOWER WINDOW, SEE C3-15-10	B2-15-1	

TITLE	PAGE NUMBER	CHANGE NUMBER
GUARD, FOPS CAGE, FRONT GUARD SALES OPTION	B2-9-20	
GUARD, FOPS, FRONT AND TOP, CAB MOUNTED	B2-9-1	
LIMPA PARA-BRISAS PARA-BRISAS	B2-6-1	
RAIN VISOR, CAB	B2-12-1	
SEAT BELT, STANDARD	B2-3-30	
SEAT BELT, 76MM (3") WIDE, OPTIONAL	B2-3-40	
SEAT, AIR SUSPENSION, HIGH BACK	B2-3-20	
SEAT, HIGH BACK, STANDARD	B2-3-1	
VANDAL GUARD, CAB, 3PC FRONT PANEL	B2-14-1	
SECCAO CARREGADOR	**B3**	
BOOM GREASING, MONO BOOM	B3-4-1	
BOOM GREASING, TAB BOOM	B3-4-10	
BOOM, LOWER, TRIPLE ARTICULATING	B3-10-1	
BOOM, UPPER, TRIPLE ARTICULATING	B3-11-1	
BRACO	B3-1-1	
BRIDGE BASHING, U K ONLY	B3-12-1	
DIPPER 2.70M	B3-2-10	
LANCA 2.25M	B3-2-1	
LANCA 3.0M	B3-2-20	
MATERIAL DE REABASTECIMENTO	**B5**	
DECALS, MACHINE	B5-1-1	
DECALS, MACHINE, CONTROL LABELS	B5-2-10	
DECALS, WARNING	B5-2-1	
DECALS, WARNING, USA BUILD	B5-3-1	
FERRAMENTAS	B5-4-1	

C SISTEMA ELECTRICO - MAQUINA, CABINE E MOTOR

SISTEMA ELECTRICO PRINCIPAL	**C1**	
ALARME, INVERSAO	C1-7-1	
FAROL, TRABALHO BRACO	C1-6-10	
HORN	C1-8-1	
INSTALACAO BATERIA 24 VOLTS	C1-3-1	
LIGHT, WORKING, CAB & REAR, USE WITH RAIN GUARD	C1-6-20	
ROAD LIGHTS, ROW, RIGHT HAND DIP	C1-4-10	
ROAD LIGHTS, UK, LEFT HAND DIP	C1-4-1	
SIST.ELECTR., CABINA	C1-2-1	
SIST.ELECTR.,MAQUINA	C1-1-1	
SISTEMA ELECTRICO MOTOR	**C2**	
ALTERNATOR	C2-4-1	
ALTERNATOR MOUNTINGS	C2-5-1	
ECU HARNESS	C2-2-1	
ENGINE ELECTRICS	C2-1-1	
ENGINE, CONTROL MODULE	C2-1-2	
MOTOR,STARTER	C2-3-1	
SISTEMA ELECTRICO CABINE	**C3**	
AIR CON	C3-12-1	
	C3-12-10	
CIGAR LIGHTER	C3-14-1	
COMBI UNIT FIG 2	C3-12-20	
FRONT WIPER, CAB LOWER WINDOW	C3-15-10	
FUSE BOX	C3-7-1	
HEATER	C3-5-1	
HEATER UNIT	C3-5-10	
HEATER UNIT FIG 2	C3-5-20	
LIMPA PARA-BRISAS PARA-BRISAS	C3-15-1	
LUZ, FAROL ROTATIVO AVISO DE PERIGO AMBAR	C3-9-1	
RADIO	C3-11-1	
SWITCH PANEL, SIDE CONSOLE, RIGHT HAND	C3-2-1	

D COMANDOS - MAQUINA, MOTOR

COMANDOS, MAQUINA	**D1**	
COMADOS, ESCAVADORA	D1-1-1	
PEDAL CONTROLS, MONO BOOM BUILD	D1-2-1	
PEDAL CONTROLS, TAB BOOM BUILD	D1-2-10	

TITLE	PAGE NUMBER	CHANGE NUMBER
COMANDOS MOTOR	**D2**	
CONTROLS, THROTTLE & STOP, CAB	D2-2-1	
COLUNA DE DIRECCAO	**D3**	
STEERING COLUMN	D3-1-1	

E SISTEMA HIDRAULICO

MANGUERIAS E TUBAGEM	**E1**	
ARM HIGHT LIMITER, OPTIONAL, MONO BOOM	E1-36-1	
CIRCUIT, AUXILIARY LOW FLOW, MONO BOOM BUILD	E1-29-20	
CIRCUIT, AUXILIARY LOW FLOW, TAB BOOM BUILD	E1-29-30	
CIRCUIT, AUXILIARY/HAMMER, MONO BOOM	E1-30-20	
CIRCUIT, AUXILIARY, HAMMER & LOW FLOW, MONO BOOM	E1-31-20	
CIRCUIT, AUXILIARY, HAMMER & LOW FLOW, TAB BOOM	E1-31-30	
CIRCUIT, BOOM & DIPPER HBCV, MONO BOOM	E1-25-1	
CIRCUIT, BOOM & DIPPER HBCV, TAB BOOM (2 VALVE HBCV BOOM ONLY)	E1-25-10	
CIRCUIT, BOOM & DIPPER HBCV, TAB BOOM (3 & 4 VALVE HBCV)	E1-25-20	
CIRCUIT, BOOM POSITION RAM, HBCV FEED & RETURN, TAB BOOM	E1-48-30	
CIRCUIT, BOOM POSITION RAM, MAINFRAME	E1-48-1	
CIRCUIT, BOOM POSITION RAM, TAB, WITH HBCV	E1-48-20	
CIRCUIT, BRAKES, LOWER CHASSIS	E1-15-1	
CIRCUIT, BUCKET RAM, MONOBOOM	E1-23-1	
CIRCUIT, BUCKET, GRAB CHANGEOVER	E1-34-1	
CIRCUIT, BYPASS, HYDRAULIC FILTER	E1-8-1	
CIRCUIT, CRUISE CONTROL	E1-50-1	
CIRCUIT, DIPPER RAM, & BUCKET RAM, TAB BOOM	E1-22-10	
CIRCUIT, DIPPER RAM, HBCV FEED & RETURN	E1-26-1	
CIRCUIT, DIPPER RAM, MONOBOOM	E1-22-1	
CIRCUIT, DOZER CONTROL, MAINFRAME	E1-45-1	
CIRCUIT, DOZER/STAB CONTROL	E1-45-10	
CIRCUIT, DOZER/STAB, MAINFRAME	E1-46-1	
CIRCUIT, DRAIN, MOTOR & SOLENOID	E1-10-1	
CIRCUIT, DUAL CONTROLS, STANDARD USA, OPTIONAL UK WORLD	E1-14-1	
CIRCUIT, FAN DRIVE	E1-9-1	
CIRCUIT, FRONT & REAR STAB, CHASSIS	E1-46-30	
CIRCUIT, FRONT DOZER, REAR STAB, CHASSIS	E1-46-10	
	E1-46-15	
CIRCUIT, FRONT STAB, REAR DOZER, CHASSIS	E1-46-40	
CIRCUIT, HAMMER, AUXILIARY BOOM PIPES, TAB BOOM	E1-30-30	
CIRCUIT, HAMMER, AUXILIARY, MAINFRAME MONO BOOM	E1-31-1	
CIRCUIT, HAMMER, AUXILIARY, MAINFRAME TAB BOOM	E1-31-10	
CIRCUIT, HAMMER, FULLFLOW 2.25 DIPPER	E1-33-1	
CIRCUIT, HAMMER, FULLFLOW 2.7 DIPPER	E1-33-10	
CIRCUIT, HAMMER, FULLFLOW 3.05 DIPPER	E1-33-20	
CIRCUIT, HAMMER, MAINFRAME, MONO BOOM	E1-30-1	
	E1-30-40	
CIRCUIT, HAMMER, MAINFRAME, TAB BOOM	E1-30-10	
CIRCUIT, LOW FLOW, AUXILIARY, MAINFRAME , TAB BOOM BUILD	E1-29-10	
CIRCUIT, LOW FLOW, AUXILIARY, MAINFRAME, MONO BOOM BUILD	E1-29-1	
CIRCUIT, LOW FLOW, 2.25M DIPPER	E1-32-1	
CIRCUIT, LOW FLOW, 2.7M DIPPER	E1-32-10	
CIRCUIT, LOW FLOW, 3.05M DIPPER	E1-32-20	
CIRCUIT, MANIFOLD, UNDER CAB	E1-68-1	

TITLE	PAGE NUMBER	CHANGE NUMBER
CIRCUIT, MILLER Q. HITCH, 980/ 90463	E1-60-1	
CIRCUIT, NEUTRAL PRESSURE	E1-2-1	
CIRCUIT, NEUTRAL, RETURN & OIL COOLER	E1-3-1	
CIRCUIT, NON-HBCV, BOOM POSITION RAM	E1-48-10	
CIRCUIT, PILOT LINE, MAIN CONTROL VALVE	E1-71-1	
CIRCUIT, PUMP SUCTION	E1-1-1	
CIRCUIT, REAR DOZER, CHASSIS	E1-47-1	
CIRCUIT, REAR DOZER, CHASSIS, PLUS LOGIC VALVE OPTION	E1-47-10	
CIRCUIT, REAR STAB, CHASSIS	E1-46-20	
CIRCUIT, RETURN LINE, PILOT PRESSURE, MAIN CONTROL VALVE	E1-72-1	
CIRCUIT, STEERING &, BRAKES, MAINFRAME	E1-17-10	
CIRCUIT, STEERING, CHASSIS	E1-17-1	
CIRCUIT, SWING	E1-6-1	
CIRCUIT, TANK MANIFOLD	E1-69-1	
CIRCUIT, TEST POINTS	E1-35-1	
CIRCUIT, TRACTION, LOWER CHASSIS	E1-5-1	
CIRCUIT, VALVE, CUSHION	E1-65-1	
CIRCUIT, VALVE, DRIVE PEDAL	E1-61-1	
CIRCUIT, VALVE, LH CONTROLLER	E1-62-1	
CIRCUIT, VALVE, PILOT SHUTTLE	E1-70-1	
CIRCUIT, VALVE, RH CONTROLLER	E1-63-1	
CIRCUIT, VALVE, SHUTTLE	E1-66-1	
CIRCUIT, VALVE, SOLENOID	E1-67-1	
CIRCUIT, VALVE, 3 STATION	E1-64-1	
CIRCUITO LANCA E BALDE	E1-21-1	
CIRCUITO, RASTOS ESTRUTURA PRINCIPAL	E1-4-1	
	E1-4-10	
CIRCUITO, SERVO NEUTRO FIG 1	E1-12-1	
	E1-13-1	
CIRCUITO,CILIN. BRACOESTRUTURA PRINCIPAL	E1-20-1	
	E1-20-10	
BOMBA/MOTOR E ACIONAM. BOMBA	**E2**	
BOMBA, PISTON HIDRAULICO PRINCIPALE COMPONENTES FIG 1	E2-2-1	
MOTOR, DRIVE, FIG 1	E2-6-10	
MOTOR, DRIVE, FIG 2	E2-6-11	
MOTOR, SWING	E2-7-1	
PUMP, MAIN HYDRAULIC	E2-1-1	
VALVULAS E FILTROS HIDRAULICOS	**E3**	
FILTER, AUXILIARY/HAMMER, RETURN	E3-16-1	
FILTER, BYPASS, HYDRAULIC	E3-17-1	
FILTER, HYDRAULIC, STEER CIRCUIT	E3-16-10	
JUNTA, ROTATIVA	E3-14-20	
LUBRIFIC. E FILTROS	E3-15-1	
MOUNTINGS, ROTARY COUPLING	E3-14-1	
OILS, BIODEGRADABLE, HYDRAULIC	E3-15-10	
VALVE, BRAKE PEDAL	E3-3-1	
VALVE, HAMMER	E3-24-1	
VALVE, PILOT SHUTTLE	E3-23-1	
VALVE, RELIEF, SERVICE PORT	E3-2-45	
VALVE, SOLENOID	E3-8-1	
VALVE, SOLENOID, TAB HAMMER, JS175W AUTO T3	E3-9-1	
VALVULA, COMANDO COMPONENTES FIG 1	E3-2-1	
VALVULA, COMANDO COMPONENTES FIG 2	E3-2-2	
VALVULA, CONJUNTO E ACESS. MONTAGEM	E3-1-1	
VALVULA, DIRECCAO	E3-40-1	
VALVULA,COMANDO MANUSERVO	E3-6-1	
CILINDROS	**E4**	
CILINDRO DO BRACO	E4-1-1	
	E4-1-10	
	E4-1-30	
CILINDRO, LANCA	E4-2-1	
CIRCUIT, BOOM RAM, WITH HBCV, TAB BOOM	E4-1-20	
RAM, AXLE LOCK	E4-6-1	
RAM, DIPPER, ASSEMBLY WITH HBCV, MONO BOOM & TAB BOOM	E4-2-10	
RAM, DIPPER, COMPONENTS	E4-2-20	

TITLE	PAGE NUMBER	CHANGE NUMBER
RAM, POSITION, ASSEMBLY, TAB BOOM, WITHOUT HBCV	E4-7-1	
RAM, POSITION, HBCV, ASSEMBLY	E4-7-10	

F CAIXA LAGARTAS/ GIRADOR

AXLES, FRONT	F1	
ARTICULACAO	F1-4-1	
CROWN WHEEL & PINION, 18. 16:1 AXLE, 453/30800	F1-6-1	
CUBO E COMPONENTES EIXO C/TRAVOES CUBOS	F1-3-1	
DIFFERENTIAL, ASSEMBLY, 18. 16:1, STEER AXLE 453/30800	F1-5-1	
EIXO COMPLETO FRONTAL	F1-1-1	
RAM, STEERING AXLE, INSTALLATION	F1-7-1	

AXLES, REAR	F2	
CONJUNTO DO EIXO TRASEIRO	F2-1-1	
CROWN WHEEL & PINION, 18. 16:1 AXLE, 450/42700	F2-6-1	
CUBO E COMPONENTES EIXO C/TRAVOES CUBOS	F2-3-1	
DIFFERENTIAL, ASSEMBLY, 18. 16:1, 450/42700	F2-5-1	

WHEELS, TYRES & PROPSHAFTS	F3	
VEIOS TRANSMISSAO TRANSMISSAO	F3-1-1	
WHEELS & TYRES, DUALS	F3-4-1	
WHEELS & TYRES, DUALS, 10. 00 X 20 EM22 16PR & EM23	F3-3-1	
WHEELS & TYRES, FLOATATION, LEFT HAND SIDE FRONT AND REAR	F3-5-1	
WHEELS & TYRES, SINGLES	F3-2-1	

SLEW GEARBOXES	F4	
CIRCUIT, SWING RING GREASING	F4-5-1	
GEARBOX, SWING	F4-4-1	
MOTOR, SWING	F4-3-1	

TRANSMISSION	F5	
GRUPO DA ENGRENAGEMPLANETARIA DA CAIXADE VELOCIDADES	F5-8-1	
GRUPO DAS TUBAGENS DE OLEO DA CAIXA DE VELOCIDADES	F5-3-1	
GRUPO DE SAIDA DA CAIXA DE VELOCIDADES	F5-10-1	
GRUPO DO COMPARTIMENTO DA CAIXO DE VELOCIDADES	F5-2-1	
GRUPO DO COMPARTIMENTO DE ENTRADA DA CAIXA DE VELOCIDADES	F5-4-1	
GRUPO DO SENSOR DE MUDANCA DE VELOCIDADES DA CAIXA DE VELOCIDADES	F5-9-1	
GRUPO DOS DISCOS DEEMBRAIAGEM DA CAIXADE VELOCIDADES	F5-6-1	
GRUPO DOS DISCOS DETRAVAGEM DA CAIXA DE VELOCIDADES	F5-7-1	
TRANSMISSAO POWERSHIFT	F5-1-1	

R ENGINE 4JJ1-XYSJ01 TIER 3

ENGINE BLOCK & SUB-ASSEMBLIES	R1	
BLOCK ASSEMBLY	R1-3-1	
CAMBOTA, BRONZES PISTONS E BIELAS	R1-4-1	
CAMSHAFTS, & TIMING GEARS	R1-6-2	
ENGINE, COMPLETE, 4JJ1-XYSJ01	R1-1-1	
FANS,PULLEYS & BELTS, EU ONLY	R1-5-1	
FANS,PULLEYS & BELTS, NON EU	R1-5-2	
FLYWHEEL & HOUSING	R1-7-1	
SUPORTES DO MOTOR	R1-8-1	
TIMING CASE, & FRONT COVER	R1-6-1	

CYLINDER HEAD & SUB-ASSEMBLIES	R2	
BALANCINS, COMPLETOSVALVULA ESC/ ADMIS	R2-2-1	

TITLE	PAGE NUMBER	CHANGE NUMBER
CABECA DO MOTOR	R2-1-1	
LIFTING PLATES	R2-6-1	
ROCKER COVER, & BREATHER PIPE	R2-3-1	
INDUCTION & EXHAUST SYSTEMS	**R3**	
EXHAUST SYSTEM	R3-4-1	
EXHAUST, RECIRCULATION	R3-5-1	
FILTRO, AR	R3-3-1	
MANIFOLD, EXHAUST	R3-2-1	
MANIFOLD, INDUCTION	R3-1-1	
SYSTEM, COOLING	**R4**	
CHARGE AIR COOLER	R4-7-1	
COOLER COMBINATION, MOUNTING &, SOUND PROOFING	R4-3-1	
EXHAUST, RECIRCULATION, WATER COOLING	R4-8-1	
PUMP WATER	R4-1-1	
RADIADOR MANGUEIRAS E ACESSF.	R4-4-1	
RADIADOR MANGUEIRASE ACESSF.	R4-5-1	
THERMOSTAT,HOUSING, & PIPEWORK	R4-2-1	
SYSTEM, LUBRICATION	**R5**	
BOMBA, FLEO	R5-2-1	
CARTER, FLEO E ACESSFRIOS	R5-1-1	
COOLER, ENGINE OIL	R5-4-1	
OIL FILTER, REMOTE MOUNTED	R5-3-1	

TITLE	PAGE NUMBER	CHANGE NUMBER
SYSTEM, FUEL	**R6**	
FILTRO SEDIMENTO COMBUSTIVE	R6-6-1	
FILTRO, COMBUSTIVEL	R6-7-1	
FUEL LIFT PUMP	R6-8-1	
FUEL SYSTEM	R6-4-1	
PUMP, FUEL INJECTION, INSTALLATION	R6-1-1	
SISTEMA DE COMBUSTIV	R6-2-1	
EQUIPMENT, AUXILIARY	**R7**	
COMPRESSOR AR CONDICIONADO	R7-6-1	
COMPRESSOR 12 VOLTS AR CONDICIONADO	R7-5-2	
TURBO, TUBAGEM	R7-2-1	
TURBOCHARGER	R7-1-1	
GASKET SETS	**R8**	
GASKET SET, CYLINDER HEAD, OVERHAUL	R8-1-2	
GASKET SET, ENGINE OVERHAUL	R8-1-1	

WHEELED EXCAVATOR

M1421600 to M1421799
Model JS160W AUTO - TIER 3]

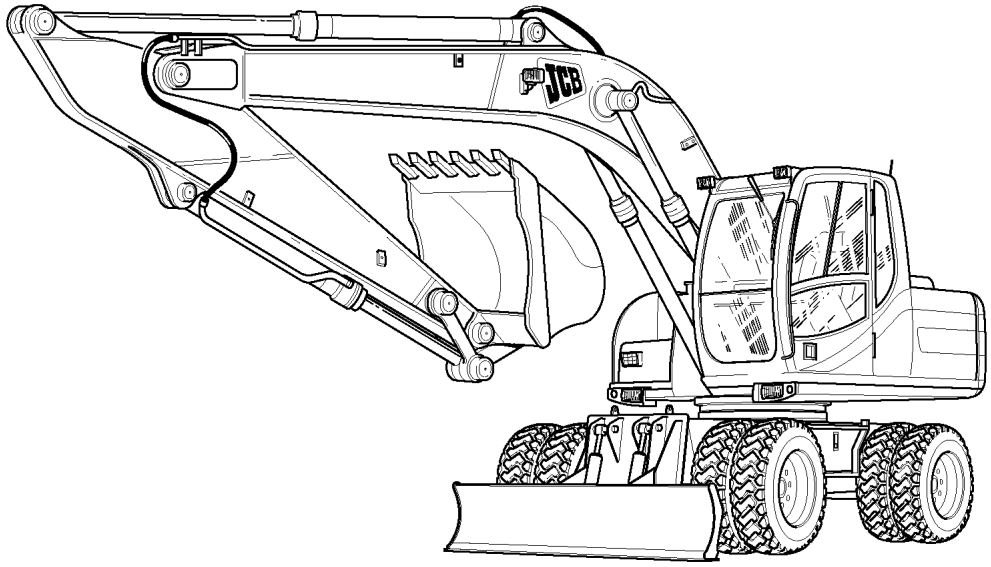

ACCESORIOS	A
CARROCERIA, CABINA, SECCION CARGADORA	B
INSTALACION ELECTRICA-MAQUINA, CABINA Y MOTOR	C
MANDOS-MAQUINA, MOTOR	D
SISTEMA HIDRAULICO	E
REDUCTOR DE GIRO/MOTRICES	F
ENGINE 4JJ1-XYSJ01 TIER 3	R

910010

P.S.I.	Libbre per pollice quadrato
A/R	Secondo necessità
N.S.P.	Particolare che non necessita di manutenzione
N/A	Non valido/Non disponibile
HBCV	Valvola di non ritorno sicurezza antiscoppio tubazioni
KP	Perno snodo
SS	Retroescavatore traslabile
CM	Retroescavatore fisso
M.P.H.	Miglia per ora
K.P.H.	Chilometri per ora
STD	Normale
O/D	Diametro esterno
I/D	Diametro interno
M.S.S.	Annullamento/sostituzione multipla
T.I.	Bollettino tecnico
M/S	Cambio meccanico
P/S	Cambio automatico
M TBA	N° serie macchina non deliberato
SUPERSEDED	Intercambiabile
TO M	Fino al N° macchina
M ON	Dal N° macchina
4WD	4 ruote motrice
LTR	Litro
L1=	Lunghezza (verticale)
L2=	Lunghezza (orizzontale)
L=	Lunghezza
MM	Millimetri
T=	Spessore
W/	Con
WO/	Senza
KG	Chilogrammo
LH	Sinistro
RH	Destro
PTO	Presa di forza
S/M	Cantiere
H/M	Martello
PR	Coppia
4WS	4 ruote sterzanti
2WS	2 ruote sterzanti
C/W	Completo di

9809/0058	Desk Top Reader 240 Volt
9809/0059	Desk Top Reader 110 Volt
9809/0060	Bulb For 9809/0058 & 9809/0059
9809/0048	Bulb For 375 Reader
9809/0044	Case 2 Reader Portable
9809/0054	Bulb For Case 2 Reader Fhx
9809/0045	Case 4 Reader Large Screen
9809/0055	Bulb For Case 4 Reader Epz
9809/0007	Bulb For Bell & Howell Sr 1020
9809/0047	Bulb For Mt4 Reader
9809/0053	Hand Held Elite Reader
9809/0056	Bulb For Microscot Reader

Lens

9809/0017	Lens 29mm For Sr 1020

Binder & Panels

9809/0006	Binder For Fiche (service)
9809/0052	Binder For Fiche (prof. Prod. Support)
9809/0015	Binder Fiche Panels

PAGE	ILLN	ITEM	PART NUMBER	CHANGE NUMBER	DESCRIPTION
A2-3-1		2	331/47909		Toeplate
A2-3-1		4	1340/2401		Nut
A2-3-2		1	980/86140		Bucket
B1-2-1	*				
B1-4-1	*				
B1-5-1	*				
B1-5-5	*				
B1-5-20	*				
B1-5-40	*				
B1-6-1		1	335/13581		Counterweight
B1-11-1		25A	1316/4130		Bolt
B1-21-15		23	335/11676		Body
B2-1-10		32	826/11487		Latch
B2-1-10		33	826/11486		Latch
B2-1-10		34	6900/0619		Screw
B2-16-1		9	335/13853		Plate
B2-16-1		16	331/59705		Plate
B3-10-1		12	KLV0167		Pin
B3-10-1		13	6009/3724D		Bolt
B3-10-1		14	173R016VD		Nut
B5-1-1	*				
B5-1-1		3A	817/19832		Decal
B5-2-1	*				
B5-2-1		12	817/70003		Decal
B5-2-1		14	817/70116		Decal
B5-2-1		20	817/70117		Decal
B5-2-1		23	817/17526		Label
B5-2-1		30	332/J0613		Decal
B5-2-10	*				
C1-3-1	*				
C1-3-1		11	718/20026		Cable
C3-11-1		1	717/20225		Radio
C3-11-1		1	717/20226		Radio
C3-11-1		1	717/20227		Radio
C3-12-1	*				
C3-12-1		33	123/04999		Compressor
D1-1-1		27	928/60339		Valve
D1-1-1		30	331/57463		Bracket
D1-1-1		33	331/57439		Pedal
D1-2-10	*				
E1-1-1	*				
E1-2-1	*				
E1-3-1	*				
E1-4-10	*				
E1-10-1	*				
E1-13-1	*				
E1-17-1	*				
E1-17-1		13 03	627/10543		Hose
E1-17-1		13 04	627/10543		Hose
E1-22-10	*				
E1-25-1	*				
E1-29-10		44	830/13798		Tube
E1-29-30	*				
E1-30-1	*				
E1-30-10	*				
E1-30-10		5	KNJ0606		Adapter
E1-30-10		6	1609/0002		Adapter
E1-30-10		15	1315/0509D		Screw
E1-30-10		20	335/13018		Plate
E1-30-10		31 01	627/10407		Hose
E1-30-10		31 02	627/10407		Hose
E1-30-10		32	627/10519		Hose
E1-30-10		45	816/90712		Adapter
E1-31-1	*				

PAGE	ILLN	ITEM	PART NUMBER	CHANGE NUMBER	DESCRIPTION
E1-31-1		3	721/11632		Harness
E1-32-1	*				
E1-32-10	*				
E1-32-20	*				
E1-33-1	*				
E1-33-10	*				
E1-33-20	*				
E1-36-1	*				
E1-46-10		4	JLV1871		Hose
E1-46-10		5	JLV1868		Hose
E1-46-10		6	JLV0594		Hose
E1-46-10		7	JNJ0393		Hose
E1-46-10		9	KNJ1697		Hose
E1-46-10		17	KAJ2176		Adapter
E1-46-10		23	JLJ0055		Adapter
E1-48-1		3	CNA0584		Adapter
E1-48-1		12	JLV0594		Hose
E1-48-1		13	KHJ1335		Hose
E1-48-1		14	KTJ0812		Hose
E1-48-1		15	KTJ0813		Hose
E1-48-1		16	KNJ0605		Adapter
E1-48-1		17	627/10537	Superseded	Hose
E1-48-1		18	830/13253		Pipe
E1-48-1		21	335/11072		Bracket
E1-48-1		28	JLV0433		Adapter
E1-48-1		29	KHJ0869		Adapter
E1-48-20	*				
E1-61-1		1	928/60339		Valve
E1-61-1		12	KBJ2208		Hose
E1-61-1		13	JLV0719		Hose
E1-61-1		14	KSJ0806		Hose
E1-62-1		56E	KNJ1109		Hose
E1-62-1		56F	KNJ1109		Hose
E1-65-1		8	KNJ1119		Hose
E1-65-1		9	627/10382		Hose
E1-65-1		10	KNJ1314		Hose
E1-65-1		12	KBJ2348		Hose
E1-65-1		13	KSJ1871		Hose
E1-65-1		14	627/10199		Hose
E1-65-1		15	KTJ1215		Hose
E1-68-1		12	KNJ1109		Hose
E1-68-1		13	KNJ1109		Hose
E1-68-1		15	KNJ1109		Hose
E1-68-1		16	KNJ1109		Hose
E1-69-1	*				
E1-69-1		13	JNJ0418		Hose
E1-69-1		14	JNJ0418		Hose
E1-70-1		10	KRJ3577		Hose
E1-70-1		11	KNJ1849		Hose
E1-70-1		12	KRJ3571		Hose
E1-70-1		13	JLJ0326		Hose
E1-70-1		14	KBJ2346		Hose
E1-71-1		10	KNJ1119		Hose
E1-71-1		12	KNJ1314		Hose
E1-71-1		18	KNJ1956		Hose
E1-71-1		19	627/10382		Hose
E2-1-1	*				
E2-2-1	*				
E2-6-10		46A	20/951974		Kit-seal
E3-1-1	*				
E3-8-1		1	25/222885		Valve
E3-15-1		6	32/925838		Element
E3-17-1		2	32/925164		Element
E3-17-1		3	828/10081		O Ring

PAGE	ILLN	ITEM	PART NUMBER	CHANGE NUMBER	DESCRIPTION
E3-17-1		6	823/10181		Washer
E3-17-1		7	823/10201		Washer
F3-2-1		1	331/49505		Wheel
F3-2-1		1	331/49504		Wheel
F3-2-1		3	42/925276		Tyre
F4-5-1		1	KRB0697		Pipe
F4-5-1		2	KRB0696		Pipe
R1-4-1		7	02/802460		Kit-main bearing
R1-4-1		7	02/801713		Kit-bearing
R1-4-1		7	02/802461		Kit-main bearing
R1-4-1		7	02/802462		Kit-main bearing
R1-4-1		15	02/802470		Piston
R1-4-1		15	02/802471		Piston
R1-4-1		18	02/802472		Kit-piston ring
R1-6-1		6	02/802505		Gasket
R1-6-1		6	02/802506		Gasket
R1-7-1		3	02/802154		Nut
R2-1-1		11	02/802367		Gasket
R2-1-1		11	02/802368		Gasket
R4-3-1	*				
R5-3-1		1 01	02/801481		Element
R7-5-2	*				
R8-1-1		1	02/802344		Kit-gasket
R8-1-2		1	02/802347		Kit-gasket

JS160W

TITLE	PAGE NUMBER	CHANGE NUMBER

A ACCESORIOS

CUCHARAS A2

BUCKET, GRADING/DITCHING, 1524MM. WIDE	A2-3-2	
BUCKET, GRADING/DITCHING, 1829MM. 72" WIDE	A2-3-1	
BUCKET, 1000 WIDE, 0.71 CUBIC METRES	A2-1-7	
BUCKET, 1050MM HEAVY DUTY	A2-1-26	
BUCKET, 1100 WIDE, 0.81 CUBIC METRES	A2-1-8	
BUCKET, 1150MM HEAVY DUTY	A2-1-27	
BUCKET, 1200 WIDE, 0.90 CUBIC METRES	A2-1-9	
BUCKET, 1250MM HEAVY DUTY	A2-1-28	
BUCKET, 1300 WIDE, 0.99 CUBIC METRES	A2-1-10	
BUCKET, 450MM,HEAVY DUTY	A2-1-20	
BUCKET, 500 WIDE, 0.26 CUBIC METRES	A2-1-1	
BUCKET, 550MM HEAVY DUTY	A2-1-21	
BUCKET, 600 WIDE, 0.35 CUBIC METRES	A2-1-2	
BUCKET, 650MM HEAVY DUTY	A2-1-22	
BUCKET, 700 WIDE, 0.44 CUBIC METRES	A2-1-3	
BUCKET, 750 WIDE, 0.47 CUBIC METRES	A2-1-4	
BUCKET, 750MM HEAVY DUTY	A2-1-23	
	A2-1-24	
BUCKET, 800 WIDE, 0.53 CUBIC METRES	A2-1-5	
BUCKET, 900 WIDE, 0.62 CUBIC METRES	A2-1-6	
BUCKET, 950MM HEAVY DUTY	A2-1-25	

ACCESORIOS A3

QUICKHITCH, HYDRAULIC, MPG, MILLER	A3-11-1	
QUICKHITCH, JS160, HYDRAULIC, BUG, MILLER	A3-10-1	
QUICKHITCH, MANUAL	A3-9-1	
ROCKBREAKER HM 860Q, JS160W, 980/90214, 980/90474	A3-1-1	
ROCKBREAKER HM1260Q, JS160W, 980/90216, 980/90291	A3-2-1	

B CARROCERIA, CABINA, SECCION CARGADORA

CARROCERIA/BASTIDORB1

BAFFLES, PUMP BAY	B1-5-50	
CHASSIS, WITH TOOLBOX	B1-9-1	
CONTRAPESO TRASERO	B1-6-1	
COVERS, UNDERSIDE MAINFRAME	B1-2-1	
COWLINGS, ENGINE BULKHEAD	B1-5-40	
COWLINGS, TOOLBOX & HAND RAIL	B1-5-30	
CUCHILLA, DOZER	B1-11-1	
DOORS WITH FITTINGS, LEFT HAND SIDE BODY, RIGHT HAND SIDE BODY	B1-5-10	
ENGINE COVERS	B1-5-5	
ESTRUCTURA	B1-1-1	
	B1-1-10	
FRAME SUPPORT	B1-5-1	
GRILLES, & TREAD PLATES	B1-5-20	
STABILISER, FRONT & REAR	B1-21-15	
TANQUE, GASOLEO	B1-4-1	
TANQUE, HIDRAULICO	B1-3-1	
WHEELCHOCK, GERMAN	B1-9-10	

CABINA B2

CAB	B2-1-1	
CAB DOOR, COMPONENTS	B2-2-1	
CAB MOUNTINGS, CAB FOOR & MAT	B2-16-1	
CAB PANELS	B2-8-1	
CAB, MOUNTING FASTENERS	B2-1-30	
CONSOLE, CAB SERVO CONTROL, LEFT HAND, FIXED CONSOLE	B2-4-1	
CONSOLE, CAB SERVO CONTROL, RIGHT HAND	B2-5-1	
DIRECT GLAZING, REPLACEMENT MATERIAL	B2-18-1	
ESPEJOS EXTERNOS	B2-7-2	
FIRE EXTINGUISHER	B2-11-1	
FLOOR COMPONENTS, SEAT SLIDE, LEVER ISOLATOR	B2-10-1	
FRONT SCREEN, UPPER & LOWER	B2-1-10	
FRONT WIPER, & CAB COMPONENTS	B2-1-20	
FRONT WIPER, CAB LOWER WINDOW, SEE C3-15-10	B2-15-1	

TITLE	PAGE NUMBER	CHANGE NUMBER
GUARD, FOPS CAGE, FRONT GUARD SALES OPTION	B2-9-20	
GUARD, FOPS, FRONT AND TOP, CAB MOUNTED	B2-9-1	
LAVA/LIMPIA PARABRISAS	B2-6-1	
RAIN VISOR, CAB	B2-12-1	
SEAT BELT, STANDARD	B2-3-30	
SEAT BELT, 76MM (3") WIDE, OPTIONAL	B2-3-40	
SEAT, AIR SUSPENSION, HIGH BACK	B2-3-20	
SEAT, HIGH BACK, STANDARD	B2-3-1	
VANDAL GUARD, CAB, 3PC FRONT PANEL	B2-14-1	
SECCION CARGADORA	**B3**	
BOOM GREASING, MONO BOOM	B3-4-1	
BOOM GREASING, TAB BOOM	B3-4-10	
BOOM, LOWER, TRIPLE ARTICULATING	B3-10-1	
BOOM, UPPER, TRIPLE ARTICULATING	B3-11-1	
BRAZO PENET. 2.25M	B3-2-1	
BRAZO PENET. 3.0M	B3-2-20	
BRIDGE BASHING, U K ONLY	B3-12-1	
DIPPER 2.70M	B3-2-10	
PLUMA	B3-1-1	
MATERIAL REACONDICIONAMIENTO	**B5**	
DECALS, MACHINE	B5-1-1	
DECALS, MACHINE, CONTROL LABELS	B5-2-10	
DECALS, WARNING	B5-2-1	
DECALS, WARNING, USA BUILD	B5-3-1	
HERRAMIENTAS	B5-4-1	

C INSTALACION ELECTRICA-MAQUINA, CABINA Y MOTOR

INSTALACION ELECTRICA PRAL	**C1**	
ALARMA, RETROCESO	C1-7-1	
BATERIA INSTALACION 24 VOLTIOS	C1-3-1	
ELECTRICO, CABINA	C1-2-1	
ELECTRICO, MAQUINA	C1-1-1	
HORN	C1-8-1	
LIGHT, WORKING, CAB & REAR, USE WITH RAIN GUARD	C1-6-20	
LUCES DE TRABAJO PLUMA	C1-6-10	
ROAD LIGHTS, ROW, RIGHT HAND DIP	C1-4-10	
ROAD LIGHTS, UK, LEFT HAND DIP	C1-4-1	
INSTALACION ELECTRICA, MOTOR	**C2**	
ALTERNATOR	C2-4-1	
ALTERNATOR MOUNTINGS	C2-5-1	
ECU HARNESS	C2-2-1	
ENGINE ELECTRICS	C2-1-1	
ENGINE, CONTROL MODULE	C2-1-2	
MOTOR,STARTER	C2-3-1	
INSTALACION ELECTRICA, CABINE	**C3**	
AIR CON	C3-12-1	
	C3-12-10	
CIGAR LIGHTER	C3-14-1	
COMBI UNIT FIG 2	C3-12-20	
FAROS AVISO ACCIDENTE AMBAR	C3-9-1	
FRONT WIPER, CAB LOWER WINDOW	C3-15-10	
FUSE BOX	C3-7-1	
HEATER	C3-5-1	
HEATER UNIT	C3-5-10	
HEATER UNIT FIG 2	C3-5-20	
LAVA/LIMPIA PARABRISAS	C3-15-1	
RADIO	C3-11-1	
SWITCH PANEL, SIDE CONSOLE, RIGHT HAND	C3-2-1	

D MANDOS-MAQUINA, MOTOR

MANDOS DE LA MAQUINA	**D1**	
CONTROLES,EXCAVAD.	D1-1-1	
PEDAL CONTROLS, MONO BOOM BUILD	D1-2-1	
PEDAL CONTROLS, TAB BOOM BUILD	D1-2-10	

TITLE	PAGE NUMBER	CHANGE NUMBER
MANDOS DEL MOTOR	**D2**	
CONTROLS, THROTTLE & STOP, CAB	D2-2-1	
COLUMNA	**D3**	
STEERING COLUMN	D3-1-1	

E SISTEMA HIDRAULICO

MANGUERAS Y TUBERIA	**E1**	
ARM HIGHT LIMITER, OPTIONAL, MONO BOOM	E1-36-1	
CIRC.,PLUMA CILIND. ESRUCTURA PPAL.	E1-20-1	
	E1-20-10	
CIRCUIT, AUXILIARY LOW FLOW, MONO BOOM BUILD	E1-29-20	
CIRCUIT, AUXILIARY LOW FLOW, TAB BOOM BUILD	E1-29-30	
CIRCUIT, AUXILIARY/HAMMER, MONO BOOM	E1-30-20	
CIRCUIT, AUXILIARY, HAMMER & LOW FLOW, MONO BOOM	E1-31-20	
CIRCUIT, AUXILIARY, HAMMER & LOW FLOW, TAB BOOM	E1-31-30	
CIRCUIT, BOOM & DIPPER HBCV, MONO BOOM	E1-25-1	
CIRCUIT, BOOM & DIPPER HBCV, TAB BOOM (2 VALVE HBCV BOOM ONLY)	E1-25-10	
CIRCUIT, BOOM & DIPPER HBCV, TAB BOOM (3 & 4 VALVE HBCV)	E1-25-20	
CIRCUIT, BOOM POSITION RAM, HBCV FEED & RETURN, TAB BOOM	E1-48-30	
CIRCUIT, BOOM POSITION RAM, MAINFRAME	E1-48-1	
CIRCUIT, BOOM POSITION RAM, TAB, WITH HBCV	E1-48-20	
CIRCUIT, BRAKES, LOWER CHASSIS	E1-15-1	
CIRCUIT, BUCKET RAM, MONOBOOM	E1-23-1	
CIRCUIT, BUCKET, GRAB CHANGEOVER	E1-34-1	
CIRCUIT, BYPASS, HYDRAULIC FILTER	E1-8-1	
CIRCUIT, CRUISE CONTROL	E1-50-1	
CIRCUIT, DIPPER RAM, & BUCKET RAM, TAB BOOM	E1-22-10	
CIRCUIT, DIPPER RAM, HBCV FEED & RETURN	E1-26-1	
CIRCUIT, DIPPER RAM, MONOBOOM	E1-22-1	
CIRCUIT, DOZER CONTROL, MAINFRAME	E1-45-1	
CIRCUIT, DOZER/STAB CONTROL	E1-45-10	
CIRCUIT, DOZER/STAB, MAINFRAME	E1-46-1	
CIRCUIT, DRAIN, MOTOR & SOLENOID	E1-10-1	
CIRCUIT, DUAL CONTROLS, STANDARD USA, OPTIONAL UK WORLD	E1-14-1	
CIRCUIT, FAN DRIVE	E1-9-1	
CIRCUIT, FRONT & REAR STAB, CHASSIS	E1-46-30	
CIRCUIT, FRONT DOZER, REAR STAB, CHASSIS	E1-46-10	
	E1-46-15	
CIRCUIT, FRONT STAB, REAR DOZER, CHASSIS	E1-46-40	
CIRCUIT, HAMMER, AUXILIARY BOOM PIPES, TAB BOOM	E1-30-30	
CIRCUIT, HAMMER, AUXILIARY, MAINFRAME MONO BOOM	E1-31-1	
CIRCUIT, HAMMER, AUXILIARY, MAINFRAME TAB BOOM	E1-31-10	
CIRCUIT, HAMMER, FULLFLOW 2.25 DIPPER	E1-33-1	
CIRCUIT, HAMMER, FULLFLOW 2.7 DIPPER	E1-33-10	
CIRCUIT, HAMMER, FULLFLOW 3.05 DIPPER	E1-33-20	
CIRCUIT, HAMMER, MAINFRAME, MONO BOOM	E1-30-1	
	E1-30-40	
CIRCUIT, HAMMER, MAINFRAME, TAB BOOM	E1-30-10	
CIRCUIT, LOW FLOW, AUXILIARY, MAINFRAME , TAB BOOM BUILD	E1-29-10	
CIRCUIT, LOW FLOW, AUXILIARY, MAINFRAME, MONO BOOM BUILD	E1-29-1	
CIRCUIT, LOW FLOW, 2.25M DIPPER	E1-32-1	
CIRCUIT, LOW FLOW, 2.7M DIPPER	E1-32-10	
CIRCUIT, LOW FLOW, 3.05M DIPPER	E1-32-20	
CIRCUIT, MANIFOLD, UNDER CAB	E1-68-1	

TITLE	PAGE NUMBER	CHANGE NUMBER
CIRCUIT, MILLER Q. HITCH, 980/ 90463	E1-60-1	
CIRCUIT, NEUTRAL PRESSURE	E1-2-1	
CIRCUIT, NEUTRAL, RETURN & OIL COOLER	E1-3-1	
CIRCUIT, NON-HBCV, BOOM POSITION RAM	E1-48-10	
CIRCUIT, PILOT LINE, MAIN CONTROL VALVE	E1-71-1	
CIRCUIT, PUMP SUCTION	E1-1-1	
CIRCUIT, REAR DOZER, CHASSIS	E1-47-1	
CIRCUIT, REAR DOZER, CHASSIS, PLUS LOGIC VALVE OPTION	E1-47-10	
CIRCUIT, REAR STAB, CHASSIS	E1-46-20	
CIRCUIT, RETURN LINE, PILOT PRESSURE, MAIN CONTROL VALVE	E1-72-1	
CIRCUIT, STEERING &, BRAKES, MAINFRAME	E1-17-10	
CIRCUIT, STEERING, CHASSIS	E1-17-1	
CIRCUIT, SWING	E1-6-1	
CIRCUIT, TANK MANIFOLD	E1-69-1	
CIRCUIT, TEST POINTS	E1-35-1	
CIRCUIT, TRACTION, LOWER CHASSIS	E1-5-1	
CIRCUIT, VALVE, CUSHION	E1-65-1	
CIRCUIT, VALVE, DRIVE PEDAL	E1-61-1	
CIRCUIT, VALVE, LH CONTROLLER	E1-62-1	
CIRCUIT, VALVE, PILOT SHUTTLE	E1-70-1	
CIRCUIT, VALVE, RH CONTROLLER	E1-63-1	
CIRCUIT, VALVE, SHUTTLE	E1-66-1	
CIRCUIT, VALVE, SOLENOID	E1-67-1	
CIRCUIT, VALVE, 3 STATION	E1-64-1	
CIRCUITO BRZO PENET.Y CAZO	E1-21-1	
CIRCUITO SERVO NEUTRAL FIG 1	E1-12-1	
	E1-13-1	
CIRCUITO, ORUGA ESTRUCTURA PPAL.	E1-4-1	
	E1-4-10	
BOMBA, MOTOR, ACCIONAM. BOMBA	**E2**	
BOMBA PISTON HIDRAULICO PPAL. Y COMPONENTES FIG 1	E2-2-1	
MOTOR, DRIVE, FIG 1	E2-6-10	
MOTOR, DRIVE, FIG 2	E2-6-11	
MOTOR, SWING	E2-7-1	
PUMP, MAIN HYDRAULIC	E2-1-1	
VALVULAS Y FILTROS HIDRAULICOS	**E3**	
ACOPLAM.,ROTATIVO	E3-14-20	
FILTER, AUXILIARY/HAMMER, RETURN	E3-16-1	
FILTER, BYPASS, HYDRAULIC	E3-17-1	
FILTER, HYDRAULIC, STEER CIRCUIT	E3-16-10	
LUBRIC. Y FILTROS	E3-15-1	
MOUNTINGS, ROTARY COUPLING	E3-14-1	
OILS, BIODEGRADABLE, HYDRAULIC	E3-15-10	
VALV. CONTROL MANDO SERVO	E3-6-1	
VALVE, BRAKE PEDAL	E3-3-1	
VALVE, HAMMER	E3-24-1	
VALVE, PILOT SHUTTLE	E3-23-1	
VALVE, RELIEF, SERVICE PORT	E3-2-45	
VALVE, SOLENOID	E3-8-1	
VALVE, SOLENOID, TAB HAMMER, JS175W AUTO T3	E3-9-1	
VALVULA MONTAJE Y MONTURAS	E3-1-1	
VALVULA, CONTROL COMPONENTES FIG 1	E3-2-1	
VALVULA, CONTROL COMPONENTES FIG 2	E3-2-2	
VALVULA, DIRECCION	E3-40-1	
CILINDROS	**E4**	
CILIND. PLUMA ELEV.	E4-1-1	
	E4-1-10	
	E4-1-30	
CILIND.PLUMA EXCAV.	E4-2-1	
CIRCUIT, BOOM RAM, WITH HBCV, TAB BOOM	E4-1-20	
RAM, AXLE LOCK	E4-6-1	
RAM, DIPPER, ASSEMBLY WITH HBCV, MONO BOOM & TAB BOOM	E4-2-10	
RAM, DIPPER, COMPONENTS	E4-2-20	
RAM, POSITION, ASSEMBLY, TAB BOOM, WITHOUT HBCV	E4-7-1	
RAM, POSITION, HBCV, ASSEMBLY	E4-7-10	

TITLE	PAGE NUMBER	CHANGE NUMBER

F REDUCTOR DE GIRO/ MOTRICES

AXLES, FRONT F1

ARTICULAC. DIRECC.	F1-4-1	
CONJUNTO PUENTE DELANTERO	F1-1-1	
CROWN WHEEL & PINION, 18. 16:1 AXLE, 453/30800	F1-6-1	
CUBO Y COMPONENTES EJE CON FRENOS CUBO	F1-3-1	
DIFFERENTIAL, ASSEMBLY, 18. 16:1, STEER AXLE 453/30800	F1-5-1	
RAM, STEERING AXLE, INSTALLATION	F1-7-1	

AXLES, REAR F2

CONJUNTO DE EJE TRASERO	F2-1-1	
CROWN WHEEL & PINION, 18. 16:1 AXLE, 450/42700	F2-6-1	
CUBO Y COMPONENTES EJE CON FRENOS CUBO	F2-3-1	
DIFFERENTIAL, ASSEMBLY, 18. 16:1, 450/42700	F2-5-1	

WHEELS, TYRES & PROPSHAFTS F3

CARDAN TRANSMISION	F3-1-1	
WHEELS & TYRES, DUALS	F3-4-1	
WHEELS & TYRES, DUALS, 10. 00 X 20 EM22 16PR & EM23	F3-3-1	
WHEELS & TYRES, FLOATATION, LEFT HAND SIDE FRONT AND REAR	F3-5-1	
WHEELS & TYRES, SINGLES	F3-2-1	

SLEW GEARBOXES F4

CIRCUIT, SWING RING GREASING	F4-5-1	
GEARBOX, SWING	F4-4-1	
MOTOR, SWING	F4-3-1	

TRANSMISSION F5

CONJUNTO DE CARCASADE CAJA DE CAMBIOS	F5-2-1	
CONJUNTO DE CARCASADE EJE DE ENTRADA DE CAJA DE CAMBIOS	F5-4-1	
CONJUNTO DE DISCOS DE EMBRAGUE DE CAJA DE CAMBIOS	F5-6-1	
CONJUNTO DE DISCOS DE FRENO DE CAJA DE CAMBIOS	F5-7-1	
CONJUNTO DE SENSORES DE SELECCION DE MARCHAS DE CAJA DE CAMBIOS	F5-9-1	
CONJUNTO DE TUBERIAS DE ACEITE DE CAJA DE CAMBIOS	F5-3-1	
CONJUNTO DEL EJE DESALIDA DE CAJA DE CAMBIOS	F5-10-1	
CONJUNTO DEL PLANETARIO DE CAJA DE CAMBIOS	F5-8-1	
TRANSMISION POWERSHIFT	F5-1-1	

R ENGINE 4JJ1-XYSJ01 TIER 3

ENGINE BLOCK & SUB-ASSEMBLIES R1

BLOCK ASSEMBLY	R1-3-1	
CAMSHAFTS, & TIMING GEARS	R1-6-2	
CIGUENAL,COJINETES PISTONES Y BIELAS	R1-4-1	
ENGINE, COMPLETE, 4JJ1-XYSJ01	R1-1-1	
FANS,PULLEYS & BELTS, EU ONLY	R1-5-1	
FANS,PULLEYS & BELTS, NON EU	R1-5-2	
FLYWHEEL & HOUSING	R1-7-1	
MOTOR MONTURAS	R1-8-1	
TIMING CASE, & FRONT COVER	R1-6-1	

CYLINDER HEAD & SUB-ASSEMBLIES R2

CULATA	R2-1-1	
LIFTING PLATES	R2-6-1	
OSCILADOR CONJUNTO VALV. ADMIS./ESCAPE	R2-2-1	
ROCKER COVER, & BREATHER PIPE	R2-3-1	

INDUCTION & EXHAUST SYSTEMS R3

EXHAUST SYSTEM	R3-4-1	
EXHAUST, RECIRCULATION	R3-5-1	

TITLE	PAGE NUMBER	CHANGE NUMBER
FILTRO, AIRE	R3-3-1	
MANIFOLD, EXHAUST	R3-2-1	
MANIFOLD, INDUCTION	R3-1-1	
SYSTEM, COOLING	**R4**	
CHARGE AIR COOLER	R4-7-1	
COOLER COMBINATION, MOUNTING &, SOUND PROOFING	R4-3-1	
EXHAUST, RECIRCULATION, WATER COOLING	R4-8-1	
PUMP WATER	R4-1-1	
RADIADOR LATIGUIL.Y HERRAJ.	R4-4-1	
RADIADOR LATIGUIL.YHERRAJ.	R4-5-1	
THERMOSTAT,HOUSING, & PIPEWORK	R4-2-1	
SYSTEM, LUBRICATION	**R5**	
BOMBA DE ACEITE	R5-2-1	
CARTER, ACEITE Y HERRAJES	R5-1-1	
COOLER, ENGINE OIL	R5-4-1	
OIL FILTER, REMOTE MOUNTED	R5-3-1	
SYSTEM, FUEL	**R6**	
COMBUST. SIST.	R6-2-1	
FILTRO, ACEITE SEDIMENTO COMBUST.	R6-6-1	
FILTRO, COMBUSTIBLE	R6-7-1	
FUEL LIFT PUMP	R6-8-1	
FUEL SYSTEM	R6-4-1	
PUMP, FUEL INJECTION, INSTALLATION	R6-1-1	

TITLE	PAGE NUMBER	CHANGE NUMBER
EQUIPMENT, AUXILIARY	**R7**	
COMPRESOR AIRE ACONDICIONADO	R7-6-1	
COMPRESOR 12 VOLT AIRE ACONDICIONADO	R7-5-2	
TURBO, TUBERIAS	R7-2-1	
TURBOCHARGER	R7-1-1	
GASKET SETS	**R8**	
GASKET SET, CYLINDER HEAD, OVERHAUL	R8-1-2	
GASKET SET, ENGINE OVERHAUL	R8-1-1	

WHEELED EXCAVATOR

M1421699 to M1421799
Model JS160W T3 ENGINE

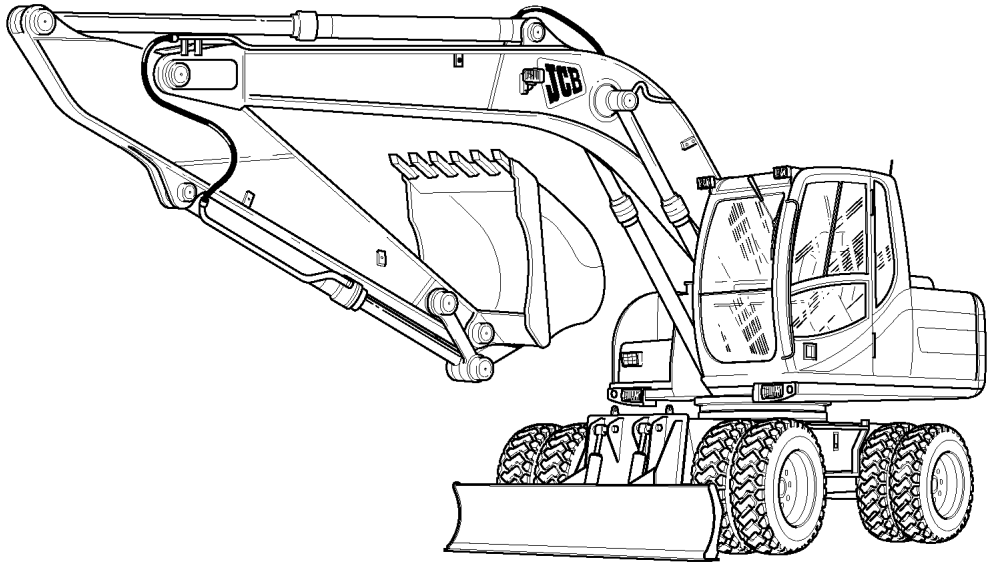

ATTACHMENTS	A
BODYWORK, CAB, LOADER END	B
ELECTRICS-MACHINE, CAB & ENGINE	C
CONTROLS-MACHINE, ENGINE & STEERING	D
HYDRAULICS & AIR INCLUDING, STEERING	E
AXLES, WHEELS & TRANSMISSION	F
ENGINE 4JJ1-XYSJ01 TIER 3	R

910010

P.S.I	Pounds Per Square Inch
A/R	As Required
N.S.P	None Serviced Part
N/A	Not Applicable / Not Available
HBCV	Hose Burst Check Valve
KP	Kingpost
SS	Sideshift
CM	Centremount
M.P.H	Miles Per Hour
K.P.H	Kilometres Per Hour
STD	Standard
O/D	Outside Diameter
I/D	Inside Diameter
M.S.S	Multiple Supersession
T.I	Technical Information
M/S	Manual Shift Transmission
P/S	Powershift Transmission
M TBA	Machine Serial Number Not Yet Known
SUPERSEDED	Part Fully Interchangeable
TO M	To Machine Number
M ON	From Machine Number

4WD	4 Wheel Drive
LTR	Litre
L1=	Length (vertical)
L2=	Length (horizontal)
L=	Length
MM	Millimeter
T=	Thickness
W/	With
WO/	Without
KG	Kilogram
LH	Left Hand
RH	Right Hand
PTO	Power Take Off
S/M	Sitemaster
H/M	Hammermaster
PR	Pair
4WS	4 Wheel Steer
2WS	2 Wheel Steer
C/W	Complete With

9809/0058	Desk Top Reader 240 Volt
9809/0059	Desk Top Reader 110 Volt
9809/0060	Bulb For 9809/0058 & 9809/0059
9809/0048	Bulb For 375 Reader
9809/0044	Case 2 Reader Portable
9809/0054	Bulb For Case 2 Reader Fhx
9809/0045	Case 4 Reader Large Screen
9809/0055	Bulb For Case 4 Reader Epz
9809/0007	Bulb For Bell & Howell Sr 1020
9809/0047	Bulb For Mt4 Reader
9809/0053	Hand Held Elite Reader
9809/0056	Bulb For Microscot Reader

Lens

9809/0017	Lens 29mm For Sr 1020

Binder & Panels

9809/0006	Binder For Fiche (service)
9809/0052	Binder For Fiche (prof. Prod. Support)
9809/0015	Binder Fiche Panels

PAGE	ILLN	ITEM	PART NUMBER	CHANGE NUMBER	DESCRIPTION
A2-3-1		2	331/47909		Toeplate
A2-3-1		4	1340/2401		Nut
A2-3-2		1	980/86140		Bucket
B1-2-1	*				
B1-4-1	*				
B1-5-1	*				
B1-5-5	*				
B1-5-20	*				
B1-5-40	*				
B1-6-1		1	335/13581		Counterweight
B1-11-1		25A	1316/4130		Bolt
B1-21-15		23	335/11676		Body
B2-1-10		32	826/11487		Latch
B2-1-10		33	826/11486		Latch
B2-1-10		34	6900/0619		Screw
B2-16-1		9	335/13853		Plate
B2-16-1		16	331/59705		Plate
B3-10-1		12	KLV0167		Pin
B3-10-1		13	6009/3724D		Bolt
B3-10-1		14	173R016VD		Nut
B5-1-1	*				
B5-1-1		3A	817/19832		Decal
B5-2-1	*				
B5-2-1		12	817/70003		Decal
B5-2-1		14	817/70116		Decal
B5-2-1		20	817/70117		Decal
B5-2-1		23	817/17526		Label
B5-2-1		30	332/J0613		Decal
B5-2-10	*				
C1-3-1	*				
C1-3-1		11	718/20026		Cable
C3-11-1		1	717/20225		Radio
C3-11-1		1	717/20226		Radio
C3-11-1		1	717/20227		Radio
C3-12-1	*				
C3-12-1		33	123/04999		Compressor
D1-1-1		27	928/60339		Valve
D1-1-1		30	331/57463		Bracket
D1-1-1		33	331/57439		Pedal
D1-2-10	*				
E1-1-1	*				
E1-2-1	*				
E1-3-1	*				
E1-4-10	*				
E1-10-1	*				
E1-13-1	*				
E1-17-1	*				
E1-17-1		13 03	627/10543		Hose
E1-17-1		13 04	627/10543		Hose
E1-22-10	*				
E1-25-1	*				
E1-29-10		44	830/13798		Tube
E1-29-30	*				
E1-30-1	*				
E1-30-10	*				
E1-30-10		5	KNJ0606		Adapter
E1-30-10		6	1609/0002		Adapter
E1-30-10		15	1315/0509D		Screw
E1-30-10		20	335/13018		Plate
E1-30-10		31 01	627/10407		Hose
E1-30-10		31 02	627/10407		Hose
E1-30-10		32	627/10519		Hose
E1-30-10		45	816/90712		Adapter
E1-31-1	*				

PAGE	ILLN	ITEM	PART NUMBER	CHANGE NUMBER	DESCRIPTION
E1-31-1		3	721/11632		Harness
E1-32-1	*				
E1-32-10	*				
E1-32-20	*				
E1-33-1	*				
E1-33-10	*				
E1-33-20	*				
E1-36-1	*				
E1-46-10		4	JLV1871		Hose
E1-46-10		5	JLV1868		Hose
E1-46-10		6	JLV0594		Hose
E1-46-10		7	JNJ0393		Hose
E1-46-10		9	KNJ1697		Hose
E1-46-10		17	KAJ2176		Adapter
E1-46-10		23	JLJ0055		Adapter
E1-48-1		3	CNA0584		Adapter
E1-48-1		12	JLV0594		Hose
E1-48-1		13	KHJ1335		Hose
E1-48-1		14	KTJ0812		Hose
E1-48-1		15	KTJ0813		Hose
E1-48-1		16	KNJ0605		Adapter
E1-48-1		17	627/10537	Superseded	Hose
E1-48-1		18	830/13253		Pipe
E1-48-1		21	335/11072		Bracket
E1-48-1		28	JLV0433		Adapter
E1-48-1		29	KHJ0869		Adapter
E1-48-20	*				
E1-61-1		1	928/60339		Valve
E1-61-1		12	KBJ2208		Hose
E1-61-1		13	JLV0719		Hose
E1-61-1		14	KSJ0806		Hose
E1-62-1		56E	KNJ1109		Hose
E1-62-1		56F	KNJ1109		Hose
E1-65-1		8	KNJ1119		Hose
E1-65-1		9	627/10382		Hose
E1-65-1		10	KNJ1314		Hose
E1-65-1		12	KBJ2348		Hose
E1-65-1		13	KSJ1871		Hose
E1-65-1		14	627/10199		Hose
E1-65-1		15	KTJ1215		Hose
E1-68-1		12	KNJ1109		Hose
E1-68-1		13	KNJ1109		Hose
E1-68-1		15	KNJ1109		Hose
E1-68-1		16	KNJ1109		Hose
E1-69-1	*				
E1-69-1		13	JNJ0418		Hose
E1-69-1		14	JNJ0418		Hose
E1-70-1		10	KRJ3577		Hose
E1-70-1		11	KNJ1849		Hose
E1-70-1		12	KRJ3571		Hose
E1-70-1		13	JLJ0326		Hose
E1-70-1		14	KBJ2346		Hose
E1-71-1		10	KNJ1119		Hose
E1-71-1		12	KNJ1314		Hose
E1-71-1		18	KNJ1956		Hose
E1-71-1		19	627/10382		Hose
E2-1-1	*				
E2-2-1	*				
E2-6-10		46A	20/951974		Kit-seal
E3-1-1	*				
E3-8-1		1	25/222885		Valve
E3-15-1		6	32/925838		Element
E3-17-1		2	32/925164		Element
E3-17-1		3	828/10081		O Ring

PAGE	ILLN	ITEM	PART NUMBER	CHANGE NUMBER	DESCRIPTION
E3-17-1		6	823/10181		Washer
E3-17-1		7	823/10201		Washer
F3-2-1		1	331/49505		Wheel
F3-2-1		1	331/49504		Wheel
F3-2-1		3	42/925276		Tyre
F4-5-1		1	KRB0697		Pipe
F4-5-1		2	KRB0696		Pipe
R1-4-1		7	02/802460		Kit-main bearing
R1-4-1		7	02/801713		Kit-bearing
R1-4-1		7	02/802461		Kit-main bearing
R1-4-1		7	02/802462		Kit-main bearing
R1-4-1		15	02/802470		Piston
R1-4-1		15	02/802471		Piston
R1-4-1		18	02/802472		Kit-piston ring
R1-6-1		6	02/802505		Gasket
R1-6-1		6	02/802506		Gasket
R1-7-1		3	02/802154		Nut
R2-1-1		11	02/802367		Gasket
R2-1-1		11	02/802368		Gasket
R4-3-1	*				
R5-3-1		1 01	02/801481		Element
R7-5-2	*				
R8-1-1		1	02/802344		Kit-gasket
R8-1-2		1	02/802347		Kit-gasket

JS160W

TITLE	PAGE NUMBER	CHANGE NUMBER

A ATTACHMENTS

BUCKETS A2

BUCKET, GRADING/DITCHING, 1524MM. WIDE	A2-3-2	
BUCKET, GRADING/DITCHING, 1829MM. 72" WIDE	A2-3-1	
BUCKET, 1000 WIDE, 0.71 CUBIC METRES	A2-1-7	
BUCKET, 1050MM HEAVY DUTY	A2-1-26	
BUCKET, 1100 WIDE, 0.81 CUBIC METRES	A2-1-8	
BUCKET, 1150MM HEAVY DUTY	A2-1-27	
BUCKET, 1200 WIDE, 0.90 CUBIC METRES	A2-1-9	
BUCKET, 1250MM HEAVY DUTY	A2-1-28	
BUCKET, 1300 WIDE, 0.99 CUBIC METRES	A2-1-10	
BUCKET, 450MM,HEAVY DUTY	A2-1-20	
BUCKET, 500 WIDE, 0.26 CUBIC METRES	A2-1-1	
BUCKET, 550MM HEAVY DUTY	A2-1-21	
BUCKET, 600 WIDE, 0.35 CUBIC METRES	A2-1-2	
BUCKET, 650MM HEAVY DUTY	A2-1-22	
BUCKET, 700 WIDE, 0.44 CUBIC METRES	A2-1-3	
BUCKET, 750 WIDE, 0.47 CUBIC METRES	A2-1-4	
BUCKET, 750MM HEAVY DUTY	A2-1-23	
	A2-1-24	
BUCKET, 800 WIDE, 0.53 CUBIC METRES	A2-1-5	
BUCKET, 900 WIDE, 0.62 CUBIC METRES	A2-1-6	
BUCKET, 950MM HEAVY DUTY	A2-1-25	

ATTACHMENTS A3

QUICKHITCH, HYDRAULIC, MPG, MILLER	A3-11-1	
QUICKHITCH, JS160, HYDRAULIC, BUG, MILLER	A3-10-1	
QUICKHITCH, MANUAL	A3-9-1	
ROCKBREAKER HM 860Q, JS160W, 980/90214, 980/90474	A3-1-1	
ROCKBREAKER HM1260Q, JS160W, 980/90216, 980/90291	A3-2-1	

B BODYWORK, CAB, LOADER END

BODYWORK/FRAME B1

BAFFLES, PUMP BAY	B1-5-50	
BLADE, DOZER, FRONT & REAR MOUNTED	B1-11-1	
CHASSIS, WITH TOOLBOX	B1-9-1	
COUNTERWEIGHT REAR, AND MIRROR	B1-6-1	
COVERS, UNDERSIDE MAINFRAME	B1-2-1	
COWLINGS, ENGINE BULKHEAD	B1-5-40	
COWLINGS, TOOLBOX & HAND RAIL	B1-5-30	
DOORS WITH FITTINGS, LEFT HAND SIDE BODY, RIGHT HAND SIDE BODY	B1-5-10	
ENGINE COVERS	B1-5-5	
FRAME SUPPORT	B1-5-1	
GRILLES, & TREAD PLATES	B1-5-20	
MAINFRAME, MONO BUILD	B1-1-1	
MAINFRAME, TAB 160W BUILD	B1-1-10	
STABILISER, FRONT & REAR	B1-21-15	
TANK, DIESEL FUEL	B1-4-1	
TANK, HYDRAULIC	B1-3-1	
WHEELCHOCK, GERMAN	B1-9-10	

CAB B2

CAB	B2-1-1	
CAB DOOR, COMPONENTS	B2-2-1	
CAB MOUNTINGS, CAB FOOR & MAT	B2-16-1	
CAB PANELS	B2-8-1	
CAB, MOUNTING FASTENERS	B2-1-30	
CONSOLE, CAB SERVO CONTROL, LEFT HAND, FIXED CONSOLE	B2-4-1	
CONSOLE, CAB SERVO CONTROL, RIGHT HAND	B2-5-1	
DIRECT GLAZING, REPLACEMENT MATERIAL	B2-18-1	
FIRE EXTINGUISHER	B2-11-1	
FLOOR COMPONENTS, SEAT SLIDE, LEVER ISOLATOR	B2-10-1	
FRONT SCREEN, UPPER & LOWER	B2-1-10	
FRONT WIPER, & CAB COMPONENTS	B2-1-20	

TITLE	PAGE NUMBER	CHANGE NUMBER
FRONT WIPER, CAB LOWER WINDOW, SEE C3-15-10	B2-15-1	
GUARD, FOPS CAGE, FRONT GUARD SALES OPTION	B2-9-20	
GUARD, FOPS, FRONT AND TOP, CAB MOUNTED	B2-9-1	
MIRRORS, EXTERNAL	B2-7-2	
RAIN VISOR, CAB	B2-12-1	
SEAT BELT, STANDARD	B2-3-30	
SEAT BELT, 76MM (3") WIDE, OPTIONAL	B2-3-40	
SEAT, AIR SUSPENSION, HIGH BACK	B2-3-20	
SEAT, HIGH BACK, STANDARD	B2-3-1	
VANDAL GUARD, CAB, 3PC FRONT PANEL	B2-14-1	
WASH/WIPE, WINDSCREEN, SEE C3-15-1	B2-6-1	
LOADER FRONT END	**B3**	
BOOM GREASING, MONO BOOM	B3-4-1	
BOOM GREASING, TAB BOOM	B3-4-10	
BOOM, LOWER, TRIPLE ARTICULATING	B3-10-1	
BOOM, MONO	B3-1-1	
BOOM, UPPER, TRIPLE ARTICULATING	B3-11-1	
BRIDGE BASHING, U K ONLY	B3-12-1	
DIPPER 2.25M	B3-2-1	
DIPPER 2.70M	B3-2-10	
DIPPER 3.05M	B3-2-20	
REFURBISHMENTS	**B5**	
DECALS, MACHINE	B5-1-1	
DECALS, MACHINE, CONTROL LABELS	B5-2-10	
DECALS, WARNING	B5-2-1	
DECALS, WARNING, USA BUILD	B5-3-1	
TOOLS	B5-4-1	

C ELECTRICS-MACHINE, CAB & ENGINE

ELECTRICS, MAIN MACHINE	**C1**	
ALARM, REVERSE	C1-7-1	
BATTERY INSTALLATION, 24 VOLT	C1-3-1	
ELECTRICS, CAB	C1-2-1	
ELECTRICS, MACHINE	C1-1-1	
HORN	C1-8-1	
LIGHT, WORKING, BOOM	C1-6-10	
LIGHT, WORKING, CAB & REAR, USE WITH RAIN GUARD	C1-6-20	
ROAD LIGHTS, ROW, RIGHT HAND DIP	C1-4-10	
ROAD LIGHTS, UK, LEFT HAND DIP	C1-4-1	
ELECTRICS, ENGINE	**C2**	
ALTERNATOR	C2-4-1	
ALTERNATOR MOUNTINGS	C2-5-1	
ECU HARNESS	C2-2-1	
ENGINE ELECTRICS	C2-1-1	
ENGINE, CONTROL MODULE	C2-1-2	
MOTOR,STARTER	C2-3-1	
ELECTRICS, CAB	**C3**	
AIR CON	C3-12-1	
	C3-12-10	
CIGAR LIGHTER	C3-14-1	
COMBI UNIT FIG 2	C3-12-20	
FRONT WIPER, CAB LOWER WINDOW	C3-15-10	
FUSE BOX	C3-7-1	
HEATER	C3-5-1	
HEATER UNIT	C3-5-10	
HEATER UNIT FIG 2	C3-5-20	
LIGHT, BEACON, HAZARD WARNING, AMBER	C3-9-1	
RADIO	C3-11-1	
SWITCH PANEL, SIDE CONSOLE, RIGHT HAND	C3-2-1	
WASH/WIPE, WINDSCREEN	C3-15-1	

D CONTROLS-MACHINE, ENGINE & STEERING

CONTROLS, MACHINE	**D1**	
CONTROLS, EXCAVATOR, CAB	D1-1-1	
PEDAL CONTROLS, MONO BOOM BUILD	D1-2-1	
PEDAL CONTROLS, TAB BOOM BUILD	D1-2-10	

TITLE	PAGE NUMBER	CHANGE NUMBER
CONTROLS, ENGINE	**D2**	
CONTROLS, THROTTLE & STOP, CAB	D2-2-1	
COLUMN, STEERING	**D3**	
STEERING COLUMN	D3-1-1	

E HYDRAULICS & AIR INCLUDING, STEERING

HOSE & PIPEWORK	**E1**	
ARM HIGHT LIMITER, OPTIONAL, MONO BOOM	E1-36-1	
CIRCUIT, AUXILIARY LOW FLOW, MONO BOOM BUILD	E1-29-20	
CIRCUIT, AUXILIARY LOW FLOW, TAB BOOM BUILD	E1-29-30	
CIRCUIT, AUXILIARY/HAMMER, MONO BOOM	E1-30-20	
CIRCUIT, AUXILIARY, HAMMER & LOW FLOW, MONO BOOM	E1-31-20	
CIRCUIT, AUXILIARY, HAMMER & LOW FLOW, TAB BOOM	E1-31-30	
CIRCUIT, BOOM & DIPPER HBCV, MONO BOOM	E1-25-1	
CIRCUIT, BOOM & DIPPER HBCV, TAB BOOM (2 VALVE HBCV BOOM ONLY)	E1-25-10	
CIRCUIT, BOOM & DIPPER HBCV, TAB BOOM (3 & 4 VALVE HBCV)	E1-25-20	
CIRCUIT, BOOM POSITION RAM, HBCV FEED & RETURN, TAB BOOM	E1-48-30	
CIRCUIT, BOOM POSITION RAM, MAINFRAME	E1-48-1	
CIRCUIT, BOOM POSITION RAM, TAB, WITH HBCV	E1-48-20	
CIRCUIT, BOOM RAM, MAINFRAME, MONO BOOM	E1-20-1	
CIRCUIT, BOOM RAM, MAINFRAME, TAB BOOM	E1-20-10	
CIRCUIT, BRAKES, LOWER CHASSIS	E1-15-1	
CIRCUIT, BUCKET RAM, MONOBOOM	E1-23-1	
CIRCUIT, BUCKET, GRAB CHANGEOVER	E1-34-1	
CIRCUIT, BYPASS, HYDRAULIC FILTER	E1-8-1	
CIRCUIT, CRUISE CONTROL	E1-50-1	
CIRCUIT, DIPPER & BUCKET	E1-21-1	
CIRCUIT, DIPPER RAM, & BUCKET RAM, TAB BOOM	E1-22-10	
CIRCUIT, DIPPER RAM, HBCV FEED & RETURN	E1-26-1	
CIRCUIT, DIPPER RAM, MONOBOOM	E1-22-1	
CIRCUIT, DOZER CONTROL, MAINFRAME	E1-45-1	
CIRCUIT, DOZER/STAB CONTROL	E1-45-10	
CIRCUIT, DOZER/STAB, MAINFRAME	E1-46-1	
CIRCUIT, DRAIN, MOTOR & SOLENOID	E1-10-1	
CIRCUIT, DUAL CONTROLS, STANDARD USA, OPTIONAL UK WORLD	E1-14-1	
CIRCUIT, FAN DRIVE	E1-9-1	
CIRCUIT, FRONT & REAR STAB, CHASSIS	E1-46-30	
CIRCUIT, FRONT DOZER, REAR STAB, CHASSIS	E1-46-10	
	E1-46-15	
CIRCUIT, FRONT STAB, REAR DOZER, CHASSIS	E1-46-40	
CIRCUIT, HAMMER, AUXILIARY BOOM PIPES, TAB BOOM	E1-30-30	
CIRCUIT, HAMMER, AUXILIARY, MAINFRAME MONO BOOM	E1-31-1	
CIRCUIT, HAMMER, AUXILIARY, MAINFRAME TAB BOOM	E1-31-10	
CIRCUIT, HAMMER, FULLFLOW 2.25 DIPPER	E1-33-1	
CIRCUIT, HAMMER, FULLFLOW 2.7 DIPPER	E1-33-10	
CIRCUIT, HAMMER, FULLFLOW 3.05 DIPPER	E1-33-20	
CIRCUIT, HAMMER, MAINFRAME, MONO BOOM	E1-30-1	
	E1-30-40	
CIRCUIT, HAMMER, MAINFRAME, TAB BOOM	E1-30-10	
CIRCUIT, LOW FLOW, AUXILIARY, MAINFRAME , TAB BOOM BUILD	E1-29-10	
CIRCUIT, LOW FLOW, AUXILIARY, MAINFRAME, MONO BOOM BUILD	E1-29-1	
CIRCUIT, LOW FLOW, 2.25M DIPPER	E1-32-1	

TITLE	PAGE NUMBER	CHANGE NUMBER
CIRCUIT, LOW FLOW, 2.7M DIPPER	E1-32-10	
CIRCUIT, LOW FLOW, 3.05M DIPPER	E1-32-20	
CIRCUIT, MANIFOLD, UNDER CAB	E1-68-1	
CIRCUIT, MILLER Q. HITCH, 980/ 90463	E1-60-1	
CIRCUIT, NEUTRAL PRESSURE	E1-2-1	
CIRCUIT, NEUTRAL, RETURN & OIL COOLER	E1-3-1	
CIRCUIT, NON-HBCV, BOOM POSITION RAM	E1-48-10	
CIRCUIT, PILOT LINE, MAIN CONTROL VALVE	E1-71-1	
CIRCUIT, PUMP SUCTION	E1-1-1	
CIRCUIT, PUMP, PILOT PRESSURE, & RETURN LINE	E1-13-1	
CIRCUIT, PUMP, PILOT PRESSURE, CONTROL LINE	E1-12-1	
CIRCUIT, REAR DOZER, CHASSIS	E1-47-1	
CIRCUIT, REAR DOZER, CHASSIS, PLUS LOGIC VALVE OPTION	E1-47-10	
CIRCUIT, REAR STAB, CHASSIS	E1-46-20	
CIRCUIT, RETURN LINE, PILOT PRESSURE, MAIN CONTROL VALVE	E1-72-1	
CIRCUIT, STEERING &, BRAKES, MAINFRAME	E1-17-10	
CIRCUIT, STEERING, CHASSIS	E1-17-1	
CIRCUIT, SWING	E1-6-1	
CIRCUIT, TANK MANIFOLD	E1-69-1	
CIRCUIT, TEST POINTS	E1-35-1	
CIRCUIT, TRACTION PILOT LINE, UPPER CHASSIS	E1-4-10	
CIRCUIT, TRACTION, LOWER CHASSIS	E1-5-1	
CIRCUIT, TRACTION, UPPER CHASSIS	E1-4-1	
CIRCUIT, VALVE, CUSHION	E1-65-1	
CIRCUIT, VALVE, DRIVE PEDAL	E1-61-1	
CIRCUIT, VALVE, LH CONTROLLER	E1-62-1	
CIRCUIT, VALVE, PILOT SHUTTLE	E1-70-1	
CIRCUIT, VALVE, RH CONTROLLER	E1-63-1	
CIRCUIT, VALVE, SHUTTLE	E1-66-1	
CIRCUIT, VALVE, SOLENOID	E1-67-1	
CIRCUIT, VALVE, 3 STATION	E1-64-1	
PUMP/MOTOR & PUMP DRIVE	**E2**	
MOTOR, DRIVE, FIG 1	E2-6-10	
MOTOR, DRIVE, FIG 2	E2-6-11	
MOTOR, SWING	E2-7-1	
PUMP, MAIN HYDRAULIC	E2-1-1	
PUMP, PISTON, MAIN HYDRAULIC, & COMPONENTS	E2-2-1	
VALVES & HYDRAULIC FILTERS	**E3**	
COUPLING, ROTARY	E3-14-20	
FILTER, AUXILIARY/HAMMER, RETURN	E3-16-1	
FILTER, BYPASS, HYDRAULIC	E3-17-1	
FILTER, HYDRAULIC, STEER CIRCUIT	E3-16-10	
LUBRICANTS & FILTERS	E3-15-1	
MOUNTINGS, ROTARY COUPLING	E3-14-1	
OILS, BIODEGRADABLE, HYDRAULIC	E3-15-10	
VALVE, ASSEMBLY, & MOUNTING	E3-1-1	
VALVE, BRAKE PEDAL	E3-3-1	
VALVE, CONTROL, COMPONENTS FIG 1	E3-2-1	
VALVE, CONTROL, COMPONENTS FIG 2	E3-2-2	
VALVE, HAMMER	E3-24-1	
VALVE, HAND CONTROL, SERVO	E3-6-1	
VALVE, PILOT SHUTTLE	E3-23-1	
VALVE, RELIEF, SERVICE PORT	E3-2-45	
VALVE, SOLENOID	E3-8-1	
VALVE, SOLENOID, TAB HAMMER, JS175W AUTO T3	E3-9-1	
VALVE, STEERING	E3-40-1	
RAMS	**E4**	
BOOM RAM, NONE HBCV	E4-1-10	
CIRCUIT, BOOM RAM, NONE HBCV	E4-1-1	
CIRCUIT, BOOM RAM, WITH HBCV, TAB BOOM	E4-1-20	
RAM, AXLE LOCK	E4-6-1	
RAM, BOOM, WITH HBCV, TAB BOOM	E4-1-30	
RAM, DIPPER, ASSEMBLY WITH HBCV, MONO BOOM & TAB BOOM	E4-2-10	

TITLE	PAGE NUMBER	CHANGE NUMBER
RAM, DIPPER, ASSY WITHOUT HBCV, MONO BOOM & TAB BOOM	E4-2-1	
RAM, DIPPER, COMPONENTS	E4-2-20	
RAM, POSITION, ASSEMBLY, TAB BOOM, WITHOUT HBCV	E4-7-1	
RAM, POSITION, HBCV, ASSEMBLY	E4-7-10	

F AXLES, WHEELS & TRANSMISSION

AXLES, FRONT F1

AXLE ASSEMBLY, FRONT, 18. 16:1 RATIO 453/30800	F1-1-1	
CROWN WHEEL & PINION, 18. 16:1 AXLE, 453/30800	F1-6-1	
DIFFERENTIAL, ASSEMBLY, 18. 16:1, STEER AXLE 453/30800	F1-5-1	
HUB & COMPONENTS, AXLE WITH HUB BRAKES, 18.16:1 RATIO 453/30800	F1-3-1	
KNUCKLE, STEERING, 18.16:1 RATIO, 453/30800	F1-4-1	
RAM, STEERING AXLE, INSTALLATION	F1-7-1	

AXLES, REAR F2

AXLE ASSEMBLY, REAR, 18/16:1 RATIO 450/42700	F2-1-1	
CROWN WHEEL & PINION, 18. 16:1 AXLE, 450/42700	F2-6-1	
DIFFERENTIAL, ASSEMBLY, 18. 16:1, 450/42700	F2-5-1	
HUB & COMPONENTS, AXLE WITH HUB BRAKES, 18.16:1 RATIO 450/42700	F2-3-1	

WHEELS, TYRES & PROPSHAFTS F3

PROPSHAFTS, TRANSMISSION	F3-1-1	
WHEELS & TYRES, DUALS	F3-4-1	
WHEELS & TYRES, DUALS, 10. 00 X 20 EM22 16PR & EM23	F3-3-1	
WHEELS & TYRES, FLOATATION, LEFT HAND SIDE FRONT AND REAR	F3-5-1	
WHEELS & TYRES, SINGLES	F3-2-1	

SLEW GEARBOXES F4

CIRCUIT, SWING RING GREASING	F4-5-1	
GEARBOX, SWING	F4-4-1	
MOTOR, SWING	F4-3-1	

TRANSMISSION F5

GEARBOX BRAKE DISC, GROUP	F5-7-1	
GEARBOX CLUTCH DISC, GROUP	F5-6-1	
GEARBOX GEARSHIFT, SENSOR GROUP	F5-9-1	
GEARBOX HOUSING, GROUP	F5-2-1	
GEARBOX OIL PIPES, GROUP	F5-3-1	
GEARBOX OUTPUT, GROUP	F5-10-1	
GEARBOX PLANET DRIVE, GROUP	F5-8-1	
GEARBOX, INPUT HOUSING, GROUP	F5-4-1	
TRANSMISSION, POWERSHIFT	F5-1-1	

R ENGINE 4JJ1-XYSJ01 TIER 3

ENGINE BLOCK & SUB-ASSEMBLIES R1

BLOCK ASSEMBLY	R1-3-1	
CAMSHAFTS, & TIMING GEARS	R1-6-2	
CRANKSHAFT, BEARINGS, PISTONS & CON-RODS	R1-4-1	
ENGINE MOUNTINGS	R1-8-1	
ENGINE, COMPLETE, 4JJ1-XYSJ01	R1-1-1	
FANS,PULLEYS & BELTS, EU ONLY	R1-5-1	
FANS,PULLEYS & BELTS, NON EU	R1-5-2	
FLYWHEEL & HOUSING	R1-7-1	
TIMING CASE, & FRONT COVER	R1-6-1	

CYLINDER HEAD & SUB-ASSEMBLIES R2

CYLINDER HEAD	R2-1-1	
LIFTING PLATES	R2-6-1	
ROCKER ASSEMBLY, INLET/ EXHAUST VALVES	R2-2-1	
ROCKER COVER, & BREATHER PIPE	R2-3-1	

TITLE	PAGE NUMBER	CHANGE NUMBER
INDUCTION & EXHAUST SYSTEMS	**R3**	
EXHAUST SYSTEM	R3-4-1	
EXHAUST, RECIRCULATION	R3-5-1	
FILTER, AIR	R3-3-1	
MANIFOLD, EXHAUST	R3-2-1	
MANIFOLD, INDUCTION	R3-1-1	
SYSTEM, COOLING	**R4**	
CHARGE AIR COOLER	R4-7-1	
COOLER ASSEMBLY	R4-4-1	
COOLER COMBINATION, MOUNTING &, SOUND PROOFING	R4-3-1	
EXHAUST, RECIRCULATION, WATER COOLING	R4-8-1	
PUMP WATER	R4-1-1	
RADIATOR, HOSES & FITTINGS	R4-5-1	
THERMOSTAT,HOUSING, & PIPEWORK	R4-2-1	
SYSTEM, LUBRICATION	**R5**	
COOLER, ENGINE OIL	R5-4-1	
OIL FILTER, REMOTE MOUNTED	R5-3-1	
PUMP, OIL	R5-2-1	
SUMP, OIL, & FITTINGS	R5-1-1	
SYSTEM, FUEL	**R6**	
FILTER, FUEL	R6-7-1	
FILTER, FUEL SEDIMENT, 5 MICRON	R6-6-1	
FUEL LIFT PUMP	R6-8-1	
FUEL SYSTEM	R6-2-1	
FUEL SYSTEM	R6-4-1	
PUMP, FUEL INJECTION, INSTALLATION	R6-1-1	
EQUIPMENT, AUXILIARY	**R7**	
COMPRESSOR, AIR CONDITIONING	R7-6-1	
COMPRESSOR, INSTALLATION, AIR CONDITIONING	R7-5-2	
TURBO, PIPEWORK	R7-2-1	
TURBOCHARGER	R7-1-1	
GASKET SETS	**R8**	
GASKET SET, CYLINDER HEAD, OVERHAUL	R8-1-2	
GASKET SET, ENGINE OVERHAUL	R8-1-1	

WHEELED EXCAVATOR

M1421699 to M1421799
Model JS160W T3 ENGINE

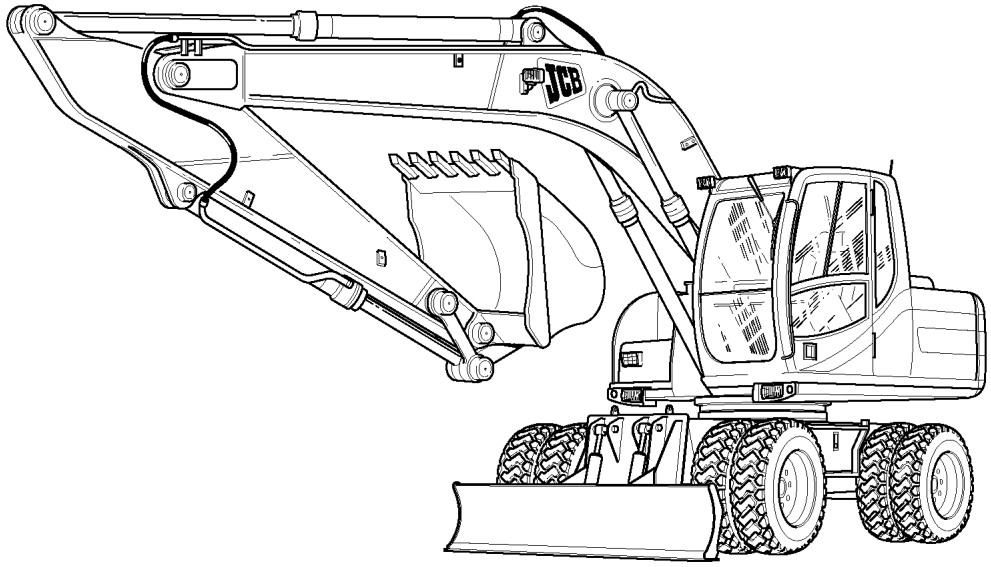

EQUIPEMENTS	A
CARROSSERIE, CABINE, PARTIE CHARGEUSE	B
EQUIPEMENT ELECTRIQUE-ENGIN, CABINE & MOTEUR	C
COMMANDES-ENGIN, MOTEUR	D
SYSTEME HYDRAULIQUE	E
BOIT PIVOT ORIEN DIRECTION	F
MOTEUR	R

910010

P.S.I.	Livres par pouce carré
A/R	Suivant besoin
N.S.P.	Pièce non réparable
N/A	Sans objet - Non disponible
HBCV	Valve de protection contre l'éclatement des flexibles
KP	Pivot principal
SS	Déport latéral (pelle)
CM	Pivot central fixe (pelle)
M.P.H.	Miles à l'heure
K.P.H.	Kilomètres à l'heure
STD	Standard
O/D	Diamètre extérieur
I/D	Diamètre intérieur
M.S.S.	Remplacement par plusieurs pièces
T.I.	Information Technique
M/S	Transmission à commande manuelle
P/S	Transmission automatique
M TBA	Numéro de série machine non encore connu
SUPERSEDED	Pièce entièrement interchangeable
TO M	Jusqu'au numéro de série machine
M ON	A partir du numéro de série machine

4WD	4 roues motrices
LTR	Litre
L1=	Longueur (verticale)
L2=	Longueur (horizontale)
L=	Longueur
MM	Millimètres
T=	Epaisseur
W/	Avec
WO/	Sans
KG	Kilogramme
LH	Gauche (côté)
RH	Droit (côté)
PTO	Prise de mouvement
S/M	Sitemaster
H/M	Hammermaster
PR	Paire
4WS	4 roues directrices
2WS	2 roues directrices
C/W	Complet avec

9809/0058	Desk Top Reader 240 Volt
9809/0059	Desk Top Reader 110 Volt
9809/0060	Bulb For 9809/0058 & 9809/0059
9809/0048	Bulb For 375 Reader
9809/0044	Case 2 Reader Portable
9809/0054	Bulb For Case 2 Reader Fhx
9809/0045	Case 4 Reader Large Screen
9809/0055	Bulb For Case 4 Reader Epz
9809/0007	Bulb For Bell & Howell Sr 1020
9809/0047	Bulb For Mt4 Reader
9809/0053	Hand Held Elite Reader
9809/0056	Bulb For Microscot Reader

Lens

9809/0017	Lens 29mm For Sr 1020

Binder & Panels

9809/0006	Binder For Fiche (service)
9809/0052	Binder For Fiche (prof. Prod. Support)
9809/0015	Binder Fiche Panels

PAGE	ILLN	ITEM	PART NUMBER	CHANGE NUMBER	DESCRIPTION
A2-3-1		2	331/47909		Toeplate
A2-3-1		4	1340/2401		Nut
A2-3-2		1	980/86140		Bucket
B1-2-1	*				
B1-4-1	*				
B1-5-1	*				
B1-5-5	*				
B1-5-20	*				
B1-5-40	*				
B1-6-1		1	335/13581		Counterweight
B1-11-1		25A	1316/4130		Bolt
B1-21-15		23	335/11676		Body
B2-1-10		32	826/11487		Latch
B2-1-10		33	826/11486		Latch
B2-1-10		34	6900/0619		Screw
B2-16-1		9	335/13853		Plate
B2-16-1		16	331/59705		Plate
B3-10-1		12	KLV0167		Pin
B3-10-1		13	6009/3724D		Bolt
B3-10-1		14	173R016VD		Nut
B5-1-1	*				
B5-1-1		3A	817/19832		Decal
B5-2-1	*				
B5-2-1		12	817/70003		Decal
B5-2-1		14	817/70116		Decal
B5-2-1		20	817/70117		Decal
B5-2-1		23	817/17526		Label
B5-2-1		30	332/J0613		Decal
B5-2-10	*				
C1-3-1	*				
C1-3-1		11	718/20026		Cable
C3-11-1		1	717/20225		Radio
C3-11-1		1	717/20226		Radio
C3-11-1		1	717/20227		Radio
C3-12-1	*				
C3-12-1		33	123/04999		Compressor
D1-1-1		27	928/60339		Valve
D1-1-1		30	331/57463		Bracket
D1-1-1		33	331/57439		Pedal
D1-2-10	*				
E1-1-1	*				
E1-2-1	*				
E1-3-1	*				
E1-4-10	*				
E1-10-1	*				
E1-13-1	*				
E1-17-1	*				
E1-17-1		13 03	627/10543		Hose
E1-17-1		13 04	627/10543		Hose
E1-22-10	*				
E1-25-1	*				
E1-29-10		44	830/13798		Tube
E1-29-30	*				
E1-30-1	*				
E1-30-10	*				
E1-30-10		5	KNJ0606		Adapter
E1-30-10		6	1609/0002		Adapter
E1-30-10		15	1315/0509D		Screw
E1-30-10		20	335/13018		Plate
E1-30-10		31 01	627/10407		Hose
E1-30-10		31 02	627/10407		Hose
E1-30-10		32	627/10519		Hose
E1-30-10		45	816/90712		Adapter
E1-31-1	*				

PAGE	ILLN	ITEM	PART NUMBER	CHANGE NUMBER	DESCRIPTION
E1-31-1		3	721/11632		Harness
E1-32-1	*				
E1-32-10	*				
E1-32-20	*				
E1-33-1	*				
E1-33-10	*				
E1-33-20	*				
E1-36-1	*				
E1-46-10		4	JLV1871		Hose
E1-46-10		5	JLV1868		Hose
E1-46-10		6	JLV0594		Hose
E1-46-10		7	JNJ0393		Hose
E1-46-10		9	KNJ1697		Hose
E1-46-10		17	KAJ2176		Adapter
E1-46-10		23	JLJ0055		Adapter
E1-48-1		3	CNA0584		Adapter
E1-48-1		12	JLV0594		Hose
E1-48-1		13	KHJ1335		Hose
E1-48-1		14	KTJ0812		Hose
E1-48-1		15	KTJ0813		Hose
E1-48-1		16	KNJ0605		Adapter
E1-48-1		17	627/10537	Superseded	Hose
E1-48-1		18	830/13253		Pipe
E1-48-1		21	335/11072		Bracket
E1-48-1		28	JLV0433		Adapter
E1-48-1		29	KHJ0869		Adapter
E1-48-20	*				
E1-61-1		1	928/60339		Valve
E1-61-1		12	KBJ2208		Hose
E1-61-1		13	JLV0719		Hose
E1-61-1		14	KSJ0806		Hose
E1-62-1		56E	KNJ1109		Hose
E1-62-1		56F	KNJ1109		Hose
E1-65-1		8	KNJ1119		Hose
E1-65-1		9	627/10382		Hose
E1-65-1		10	KNJ1314		Hose
E1-65-1		12	KBJ2348		Hose
E1-65-1		13	KSJ1871		Hose
E1-65-1		14	627/10199		Hose
E1-65-1		15	KTJ1215		Hose
E1-68-1		12	KNJ1109		Hose
E1-68-1		13	KNJ1109		Hose
E1-68-1		15	KNJ1109		Hose
E1-68-1		16	KNJ1109		Hose
E1-69-1	*				
E1-69-1		13	JNJ0418		Hose
E1-69-1		14	JNJ0418		Hose
E1-70-1		10	KRJ3577		Hose
E1-70-1		11	KNJ1849		Hose
E1-70-1		12	KRJ3571		Hose
E1-70-1		13	JLJ0326		Hose
E1-70-1		14	KBJ2346		Hose
E1-71-1		10	KNJ1119		Hose
E1-71-1		12	KNJ1314		Hose
E1-71-1		18	KNJ1956		Hose
E1-71-1		19	627/10382		Hose
E2-1-1	*				
E2-2-1	*				
E2-6-10		46A	20/951974		Kit-seal
E3-1-1	*				
E3-8-1		1	25/222885		Valve
E3-15-1		6	32/925838		Element
E3-17-1		2	32/925164		Element
E3-17-1		3	828/10081		O Ring

PAGE	ILLN	ITEM	PART NUMBER	CHANGE NUMBER	DESCRIPTION
E3-17-1		6	823/10181		Washer
E3-17-1		7	823/10201		Washer
F3-2-1		1	331/49505		Wheel
F3-2-1		1	331/49504		Wheel
F3-2-1		3	42/925276		Tyre
F4-5-1		1	KRB0697		Pipe
F4-5-1		2	KRB0696		Pipe
R1-4-1		7	02/802460		Kit-main bearing
R1-4-1		7	02/801713		Kit-bearing
R1-4-1		7	02/802461		Kit-main bearing
R1-4-1		7	02/802462		Kit-main bearing
R1-4-1		15	02/802470		Piston
R1-4-1		15	02/802471		Piston
R1-4-1		18	02/802472		Kit-piston ring
R1-6-1		6	02/802505		Gasket
R1-6-1		6	02/802506		Gasket
R1-7-1		3	02/802154		Nut
R2-1-1		11	02/802367		Gasket
R2-1-1		11	02/802368		Gasket
R4-3-1	*				
R5-3-1		1 01	02/801481		Element
R7-5-2	*				
R8-1-1		1	02/802344		Kit-gasket
R8-1-2		1	02/802347		Kit-gasket

JS160W

TITLE	PAGE NUMBER	CHANGE NUMBER

A EQUIPEMENTS

GODETS DE PELLE A2

BUCKET, GRADING/DITCHING, 1524MM. WIDE	A2-3-2	
BUCKET, GRADING/DITCHING, 1829MM. 72" WIDE	A2-3-1	
BUCKET, 1000 WIDE, 0.71 CUBIC METRES	A2-1-7	
BUCKET, 1050MM HEAVY DUTY	A2-1-26	
BUCKET, 1100 WIDE, 0.81 CUBIC METRES	A2-1-8	
BUCKET, 1150MM HEAVY DUTY	A2-1-27	
BUCKET, 1200 WIDE, 0.90 CUBIC METRES	A2-1-9	
BUCKET, 1250MM HEAVY DUTY	A2-1-28	
BUCKET, 1300 WIDE, 0.99 CUBIC METRES	A2-1-10	
BUCKET, 450MM,HEAVY DUTY	A2-1-20	
BUCKET, 500 WIDE, 0.26 CUBIC METRES	A2-1-1	
BUCKET, 550MM HEAVY DUTY	A2-1-21	
BUCKET, 600 WIDE, 0.35 CUBIC METRES	A2-1-2	
BUCKET, 650MM HEAVY DUTY	A2-1-22	
BUCKET, 700 WIDE, 0.44 CUBIC METRES	A2-1-3	
BUCKET, 750 WIDE, 0.47 CUBIC METRES	A2-1-4	
BUCKET, 750MM HEAVY DUTY	A2-1-23	
	A2-1-24	
BUCKET, 800 WIDE, 0.53 CUBIC METRES	A2-1-5	
BUCKET, 900 WIDE, 0.62 CUBIC METRES	A2-1-6	
BUCKET, 950MM HEAVY DUTY	A2-1-25	

EQUIPEMENT AUXILIAIRE A3

QUICKHITCH, HYDRAULIC, MPG, MILLER	A3-11-1	
QUICKHITCH, JS160, HYDRAULIC, BUG, MILLER	A3-10-1	
QUICKHITCH, MANUAL	A3-9-1	
ROCKBREAKER HM 860Q, JS160W, 980/90214, 980/90474	A3-1-1	
ROCKBREAKER HM1260Q, JS160W, 980/90216, 980/90291	A3-2-1	

B CARROSSERIE, CABINE, PARTIE CHARGEUSE

CARROSSERIE/CHASSIS B1

BAFFLES, PUMP BAY	B1-5-50	
CHASSIS PRINCIPAL	B1-1-1	
	B1-1-10	
CHASSIS, WITH TOOLBOX	B1-9-1	
CONTREPOIDS ARRIERE	B1-6-1	
COVERS, UNDERSIDE MAINFRAME	B1-2-1	
COWLINGS, ENGINE BULKHEAD	B1-5-40	
COWLINGS, TOOLBOX & HAND RAIL	B1-5-30	
DOORS WITH FITTINGS, LEFT HAND SIDE BODY, RIGHT HAND SIDE BODY	B1-5-10	
ENGINE COVERS	B1-5-5	
FRAME SUPPORT	B1-5-1	
GRILLES, & TREAD PLATES	B1-5-20	
LAME, CONCASSEUR	B1-11-1	
RESERVOIR, CARBU.DIESEL	B1-4-1	
RESERVOIR, HYDRAULIQUE	B1-3-1	
STABILISER, FRONT & REAR	B1-21-15	
WHEELCHOCK, GERMAN	B1-9-10	

CABINE B2

CAB	B2-1-1	
CAB DOOR, COMPONENTS	B2-2-1	
CAB MOUNTINGS, CAB FOOR & MAT	B2-16-1	
CAB PANELS	B2-8-1	
CAB, MOUNTING FASTENERS	B2-1-30	
CONSOLE, CAB SERVO CONTROL, LEFT HAND, FIXED CONSOLE	B2-4-1	
CONSOLE, CAB SERVO CONTROL, RIGHT HAND	B2-5-1	
DIRECT GLAZING, REPLACEMENT MATERIAL	B2-18-1	
EXTINCTEUR	B2-11-1	
FLOOR COMPONENTS, SEAT SLIDE, LEVER ISOLATOR	B2-10-1	
FRONT SCREEN, UPPER & LOWER	B2-1-10	
FRONT WIPER, & CAB COMPONENTS	B2-1-20	
FRONT WIPER, CAB LOWER WINDOW, SEE C3-15-10	B2-15-1	
GUARD, FOPS CAGE, FRONT GUARD SALES OPTION	B2-9-20	

TITLE	PAGE NUMBER	CHANGE NUMBER
GUARD, FOPS, FRONT AND TOP, CAB MOUNTED	B2-9-1	
LAVAGE/ESSUI-GLACES PARE-BRISE	B2-6-1	
RAIN VISOR, CAB	B2-12-1	
RETROVISEURS EXTERIEUR	B2-7-2	
SEAT BELT, STANDARD	B2-3-30	
SEAT BELT, 76MM (3") WIDE, OPTIONAL	B2-3-40	
SEAT, AIR SUSPENSION, HIGH BACK	B2-3-20	
SEAT, HIGH BACK, STANDARD	B2-3-1	
VANDAL GUARD, CAB, 3PC FRONT PANEL	B2-14-1	
PARTIE CHARGEUSE	**B3**	
BOOM GREASING, MONO BOOM	B3-4-1	
BOOM GREASING, TAB BOOM	B3-4-10	
BOOM, LOWER, TRIPLE ARTICULATING	B3-10-1	
BOOM, UPPER, TRIPLE ARTICULATING	B3-11-1	
BRIDGE BASHING, U K ONLY	B3-12-1	
CHARGEUR 2.25M	B3-2-1	
CHARGEUR 3.0M	B3-2-20	
DIPPER 2.70M	B3-2-10	
FLECHE	B3-1-1	
INGREDIENTS	**B5**	
DECALS, MACHINE	B5-1-1	
DECALS, MACHINE, CONTROL LABELS	B5-2-10	
DECALS, WARNING	B5-2-1	
DECALS, WARNING, USA BUILD	B5-3-1	
OUTILS	B5-4-1	

C EQUIPEMENT ELECTRIQUE-ENGIN, CABINE & MOTEUR

EQUIPEMENT ELECTR. PRINCIPAL	**C1**	
ALARME, MARCHE ARRIERE	C1-7-1	
BATTERIE INSTALLATIO24 VOLTS	C1-3-1	
ELECTRICITE, CABINE	C1-2-1	
ELECTRICITE, MACHINE	C1-1-1	
HORN	C1-8-1	
LIGHT, WORKING, CAB & REAR, USE WITH RAIN GUARD	C1-6-20	
PHARE, DE TRAVAIL FLECHE	C1-6-10	
ROAD LIGHTS, ROW, RIGHT HAND DIP	C1-4-10	
ROAD LIGHTS, UK, LEFT HAND DIP	C1-4-1	
EQUIPEMENT ELECTRIQUE, MOTEUR	**C2**	
ALTERNATOR	C2-4-1	
ALTERNATOR MOUNTINGS	C2-5-1	
ECU HARNESS	C2-2-1	
ENGINE ELECTRICS	C2-1-1	
ENGINE, CONTROL MODULE	C2-1-2	
MOTOR,STARTER	C2-3-1	
EQUIPEMENT ELECTRIQUE, CABINE	**C3**	
AIR CON	C3-12-1	
	C3-12-10	
CIGAR LIGHTER	C3-14-1	
COMBI UNIT FIG 2	C3-12-20	
FRONT WIPER, CAB LOWER WINDOW	C3-15-10	
FUSE BOX	C3-7-1	
HEATER	C3-5-1	
HEATER UNIT	C3-5-10	
HEATER UNIT FIG 2	C3-5-20	
LAVAGE/ESSUI-GLACES PARE-BRISE	C3-15-1	
PHARE, BALISAGE AVERTISSEMENT DANGERAMBRE	C3-9-1	
RADIO	C3-11-1	
SWITCH PANEL, SIDE CONSOLE, RIGHT HAND	C3-2-1	

D COMMANDES-ENGIN, MOTEUR

COMMANDES DE L'ENGIN	**D1**	
COMMANDES, EXCAVATEUR	D1-1-1	
PEDAL CONTROLS, MONO BOOM BUILD	D1-2-1	

TITLE	PAGE NUMBER	CHANGE NUMBER
PEDAL CONTROLS, TAB BOOM BUILD	D1-2-10	
COMMANDES DU MOTEUR	**D2**	
CONTROLS, THROTTLE & STOP, CAB	D2-2-1	
COLONNE DE DIRECTION	**D3**	
STEERING COLUMN	D3-1-1	

E SYSTEME HYDRAULIQUE

TUYAUTERIE ET FLEXIBLES	**E1**	
ARM HIGHT LIMITER, OPTIONAL, MONO BOOM	E1-36-1	
CIRCUIT EXCAVATEUR & GODET	E1-21-1	
CIRCUIT, ASSERVISSEMPOINT MORT FIG 1	E1-12-1	
	E1-13-1	
CIRCUIT, AUXILIARY LOW FLOW, MONO BOOM BUILD	E1-29-20	
CIRCUIT, AUXILIARY LOW FLOW, TAB BOOM BUILD	E1-29-30	
CIRCUIT, AUXILIARY/HAMMER, MONO BOOM	E1-30-20	
CIRCUIT, AUXILIARY, HAMMER & LOW FLOW, MONO BOOM	E1-31-20	
CIRCUIT, AUXILIARY, HAMMER & LOW FLOW, TAB BOOM	E1-31-30	
CIRCUIT, BOOM & DIPPER HBCV, MONO BOOM	E1-25-1	
CIRCUIT, BOOM & DIPPER HBCV, TAB BOOM (2 VALVE HBCV BOOM ONLY)	E1-25-10	
CIRCUIT, BOOM & DIPPER HBCV, TAB BOOM (3 & 4 VALVE HBCV)	E1-25-20	
CIRCUIT, BOOM POSITION RAM, HBCV FEED & RETURN, TAB BOOM	E1-48-30	
CIRCUIT, BOOM POSITION RAM, MAINFRAME	E1-48-1	
CIRCUIT, BOOM POSITION RAM, TAB, WITH HBCV	E1-48-20	
CIRCUIT, BRAKES, LOWER CHASSIS	E1-15-1	
CIRCUIT, BUCKET RAM, MONOBOOM	E1-23-1	
CIRCUIT, BUCKET, GRAB CHANGEOVER	E1-34-1	
CIRCUIT, BYPASS, HYDRAULIC FILTER	E1-8-1	
CIRCUIT, CHENILLE CHASSIS PRINCIPAL	E1-4-1	
	E1-4-10	
CIRCUIT, CRUISE CONTROL	E1-50-1	
CIRCUIT, DIPPER RAM, & BUCKET RAM, TAB BOOM	E1-22-10	
CIRCUIT, DIPPER RAM, HBCV FEED & RETURN	E1-26-1	
CIRCUIT, DIPPER RAM, MONOBOOM	E1-22-1	
CIRCUIT, DOZER CONTROL, MAINFRAME	E1-45-1	
CIRCUIT, DOZER/STAB CONTROL	E1-45-10	
CIRCUIT, DOZER/STAB, MAINFRAME	E1-46-1	
CIRCUIT, DRAIN, MOTOR & SOLENOID	E1-10-1	
CIRCUIT, DUAL CONTROLS, STANDARD USA, OPTIONAL UK WORLD	E1-14-1	
CIRCUIT, FAN DRIVE	E1-9-1	
CIRCUIT, FRONT & REAR STAB, CHASSIS	E1-46-30	
CIRCUIT, FRONT DOZER, REAR STAB, CHASSIS	E1-46-10	
	E1-46-15	
CIRCUIT, FRONT STAB, REAR DOZER, CHASSIS	E1-46-40	
CIRCUIT, HAMMER, AUXILIARY BOOM PIPES, TAB BOOM	E1-30-30	
CIRCUIT, HAMMER, AUXILIARY, MAINFRAME MONO BOOM	E1-31-1	
CIRCUIT, HAMMER, AUXILIARY, MAINFRAME TAB BOOM	E1-31-10	
CIRCUIT, HAMMER, FULLFLOW 2.25 DIPPER	E1-33-1	
CIRCUIT, HAMMER, FULLFLOW 2.7 DIPPER	E1-33-10	
CIRCUIT, HAMMER, FULLFLOW 3.05 DIPPER	E1-33-20	
CIRCUIT, HAMMER, MAINFRAME, MONO BOOM	E1-30-1	
	E1-30-40	
CIRCUIT, HAMMER, MAINFRAME, TAB BOOM	E1-30-10	

TITLE	PAGE NUMBER	CHANGE NUMBER
CIRCUIT, LOW FLOW, AUXILIARY, MAINFRAME , TAB BOOM BUILD	E1-29-10	
CIRCUIT, LOW FLOW, AUXILIARY, MAINFRAME, MONO BOOM BUILD	E1-29-1	
CIRCUIT, LOW FLOW, 2.25M DIPPER	E1-32-1	
CIRCUIT, LOW FLOW, 2.7M DIPPER	E1-32-10	
CIRCUIT, LOW FLOW, 3.05M DIPPER	E1-32-20	
CIRCUIT, MANIFOLD, UNDER CAB	E1-68-1	
CIRCUIT, MILLER Q. HITCH, 980/ 90463	E1-60-1	
CIRCUIT, NEUTRAL PRESSURE	E1-2-1	
CIRCUIT, NEUTRAL, RETURN & OIL COOLER	E1-3-1	
CIRCUIT, NON-HBCV, BOOM POSITION RAM	E1-48-10	
CIRCUIT, PILOT LINE, MAIN CONTROL VALVE	E1-71-1	
CIRCUIT, PUMP SUCTION	E1-1-1	
CIRCUIT, REAR DOZER, CHASSIS	E1-47-1	
CIRCUIT, REAR DOZER, CHASSIS, PLUS LOGIC VALVE OPTION	E1-47-10	
CIRCUIT, REAR STAB, CHASSIS	E1-46-20	
CIRCUIT, RETURN LINE, PILOT PRESSURE, MAIN CONTROL VALVE	E1-72-1	
CIRCUIT, STEERING &, BRAKES, MAINFRAME	E1-17-10	
CIRCUIT, STEERING, CHASSIS	E1-17-1	
CIRCUIT, SWING	E1-6-1	
CIRCUIT, TANK MANIFOLD	E1-69-1	
CIRCUIT, TEST POINTS	E1-35-1	
CIRCUIT, TRACTION, LOWER CHASSIS	E1-5-1	
CIRCUIT, VALVE, CUSHION	E1-65-1	
CIRCUIT, VALVE, DRIVE PEDAL	E1-61-1	
CIRCUIT, VALVE, LH CONTROLLER	E1-62-1	
CIRCUIT, VALVE, PILOT SHUTTLE	E1-70-1	
CIRCUIT, VALVE, RH CONTROLLER	E1-63-1	
CIRCUIT, VALVE, SHUTTLE	E1-66-1	
CIRCUIT, VALVE, SOLENOID	E1-67-1	
CIRCUIT, VALVE, 3 STATION	E1-64-1	
CIRCUIT, VERIN FLECHCHASSIS PRINCIPAL	E1-20-1	
	E1-20-10	
POMPE, MOTEUR, ENTRAINEM POMPE	**E2**	
MOTOR, DRIVE, FIG 1	E2-6-10	
MOTOR, DRIVE, FIG 2	E2-6-11	
MOTOR, SWING	E2-7-1	
POMPE, PISTON HYDRAULIQUE, PRINCIP& COMPOSANTS FIG 1	E2-2-1	
PUMP, MAIN HYDRAULIC	E2-1-1	
VALVES ET FILTRES HYDRAULIQUES	**E3**	
ACCOUPLEMEN ROTATIF	E3-14-20	
FILTER, AUXILIARY/HAMMER, RETURN	E3-16-1	
FILTER, BYPASS, HYDRAULIC	E3-17-1	
FILTER, HYDRAULIC, STEER CIRCUIT	E3-16-10	
LUBRIFIANTS & FILTRES	E3-15-1	
MOUNTINGS, ROTARY COUPLING	E3-14-1	
OILS, BIODEGRADABLE, HYDRAULIC	E3-15-10	
SOUPAPE, CDE MANUELLASSERVIE	E3-6-1	
SOUPAPE, COMMANDE COMPOSANTS FIG 1	E3-2-1	
SOUPAPE, COMMANDE COMPOSANTS FIG 2	E3-2-2	
SOUPAPE, DIRECTION	E3-40-1	
SOUPAPE, ENSEMBLE & MONTURE	E3-1-1	
VALVE, BRAKE PEDAL	E3-3-1	
VALVE, HAMMER	E3-24-1	
VALVE, PILOT SHUTTLE	E3-23-1	
VALVE, RELIEF, SERVICE PORT	E3-2-45	
VALVE, SOLENOID	E3-8-1	
VALVE, SOLENOID, TAB HAMMER, JS175W AUTO T3	E3-9-1	
VERINS	**E4**	
CIRCUIT, BOOM RAM, WITH HBCV, TAB BOOM	E4-1-20	
RAM, AXLE LOCK	E4-6-1	
RAM, DIPPER, ASSEMBLY WITH HBCV, MONO BOOM & TAB BOOM	E4-2-10	

TITLE	PAGE NUMBER	CHANGE NUMBER
RAM, DIPPER, COMPONENTS	E4-2-20	
RAM, POSITION, ASSEMBLY, TAB BOOM, WITHOUT HBCV	E4-7-1	
RAM, POSITION, HBCV, ASSEMBLY	E4-7-10	
VERIN, EXCAVATEUR	E4-2-1	
VERIN, FLECHE	E4-1-1	
	E4-1-10	
	E4-1-30	

F BOIT PIVOT ORIEN DIRECTION

AXLES, FRONT F1

ARTICULATION, DIRECTESSIEU	F1-4-1	
CROWN WHEEL & PINION, 18. 16:1 AXLE, 453/30800	F1-6-1	
DIFFERENTIAL, ASSEMBLY, 18. 16:1, STEER AXLE 453/30800	F1-5-1	
MOYEU & COMPOSANTS ES. AVEC FREIN SUR MOYEU	F1-3-1	
PONT AVANT	F1-1-1	
RAM, STEERING AXLE, INSTALLATION	F1-7-1	

AXLES, REAR F2

CROWN WHEEL & PINION, 18. 16:1 AXLE, 450/42700	F2-6-1	
DIFFERENTIAL, ASSEMBLY, 18. 16:1, 450/42700	F2-5-1	
MOYEU & COMPOSANTS ES. AVEC FREIN SUR MOYEU	F2-3-1	
PONT ARRIERE	F2-1-1	

WHEELS, TYRES & PROPSHAFTS F3

ARBRES DE PROPULSIONTRANSMISSION	F3-1-1	
WHEELS & TYRES, DUALS	F3-4-1	
WHEELS & TYRES, DUALS, 10. 00 X 20 EM22 16PR & EM23	F3-3-1	
WHEELS & TYRES, FLOATATION, LEFT HAND SIDE FRONT AND REAR	F3-5-1	
WHEELS & TYRES, SINGLES	F3-2-1	

BOITIER ORIENT ET DE CHENILLES F4

CIRCUIT, SWING RING GREASING	F4-5-1	
GEARBOX, SWING	F4-4-1	
MOTOR, SWING	F4-3-1	

TRANSMISSION F5

BOITE DE VITESSES, DISQUES D'EMBRAYAGE	F5-6-1	
BOITE DE VITESSES, DISQUES DE FREIN	F5-7-1	
BOITE DE VITESSES, ENSEMBLE DE ENTREE	F5-4-1	
BOITE DE VITESSES, ENSEMBLE DE SORTIE	F5-10-1	
BOITE DE VITESSES, ENSEMBLE DEMBRAYAGE	F5-2-1	
BOITE DE VITESSES, TRAIN FINAL	F5-8-1	
BOITE DE VITESSES, TUYAUTERIE	F5-3-1	
BOITE DE VITESSES, VALVE DE CHANGEMENT DE VITESSES	F5-9-1	
TRANSMISSION SELECTEUR DE COMMAND	F5-1-1	

R MOTEUR

BLOC MOTEUR ET SOUS ENSEMBLES R1

BLOCK ASSEMBLY	R1-3-1	
CAMSHAFTS, & TIMING GEARS	R1-6-2	
ENGINE, COMPLETE, 4JJ1-XYSJ01	R1-1-1	
FANS,PULLEYS & BELTS, EU ONLY	R1-5-1	
FANS,PULLEYS & BELTS, NON EU	R1-5-2	
FLYWHEEL & HOUSING	R1-7-1	
MOTEUR, FIXATIONS	R1-8-1	
TIMING CASE, & FRONT COVER	R1-6-1	
VILEBREQUIN, PALIERSPIST. & BIELES DE LI	R1-4-1	

CULASSE ET SOUS ENSEMBLES R2

CULASSE	R2-1-1	
ENSEMBLE BASCULEUR SOUPAPES ADM/ECHAP.	R2-2-1	
LIFTING PLATES	R2-6-1	

TITLE	PAGE NUMBER	CHANGE NUMBER
ROCKER COVER, & BREATHER PIPE	R2-3-1	
ADMISSION ET ECHAPPEMENT	**R3**	
EXHAUST SYSTEM	R3-4-1	
EXHAUST, RECIRCULATION	R3-5-1	
FILTRE, A AIR	R3-3-1	
MANIFOLD, EXHAUST	R3-2-1	
MANIFOLD, INDUCTION	R3-1-1	
SYSTEME DE REFROIDISSEMENT	**R4**	
CHARGE AIR COOLER	R4-7-1	
COOLER COMBINATION, MOUNTING &, SOUND PROOFING	R4-3-1	
EXHAUST, RECIRCULATION, WATER COOLING	R4-8-1	
PUMP WATER	R4-1-1	
RADIATEUR CONDUITES & ACCESSOIR.	R4-4-1	
RADIATEUR CONDUITES& ACCESSOITYPE	R4-5-1	
THERMOSTAT,HOUSING, & PIPEWORK	R4-2-1	
SYSTEME DE LUBRIFICATION	**R5**	
CARTER, HUILE & ACCESSOIRES	R5-1-1	
COOLER, ENGINE OIL	R5-4-1	
OIL FILTER, REMOTE MOUNTED	R5-3-1	
POMPE, HUILE	R5-2-1	

TITLE	PAGE NUMBER	CHANGE NUMBER
SYSTEME D'ALIMENTATION	**R6**	
FILTRE DEPOT DE CARBURANT	R6-6-1	
FILTRE, A CARBURANT	R6-7-1	
FUEL LIFT PUMP	R6-8-1	
FUEL SYSTEM	R6-4-1	
PUMP, FUEL INJECTION, INSTALLATION	R6-1-1	
SYSTEME DE CARBURANT	R6-2-1	
EQUIPMENTS AUXILIARES	**R7**	
COMPRESSEUR, CONDITIONEMENT D'AIR	R7-6-1	
COMPRESSEUR, 12V CONDITIONNEMENT D'AIR	R7-5-2	
TURBO, TUYAUTERIE	R7-2-1	
TURBOCHARGER	R7-1-1	
JEUX DE JOINTS	**R8**	
GASKET SET, CYLINDER HEAD, OVERHAUL	R8-1-2	
GASKET SET, ENGINE OVERHAUL	R8-1-1	

WHEELED EXCAVATOR

M1421699 to M1421799
Model JS160W T3 ENGINE

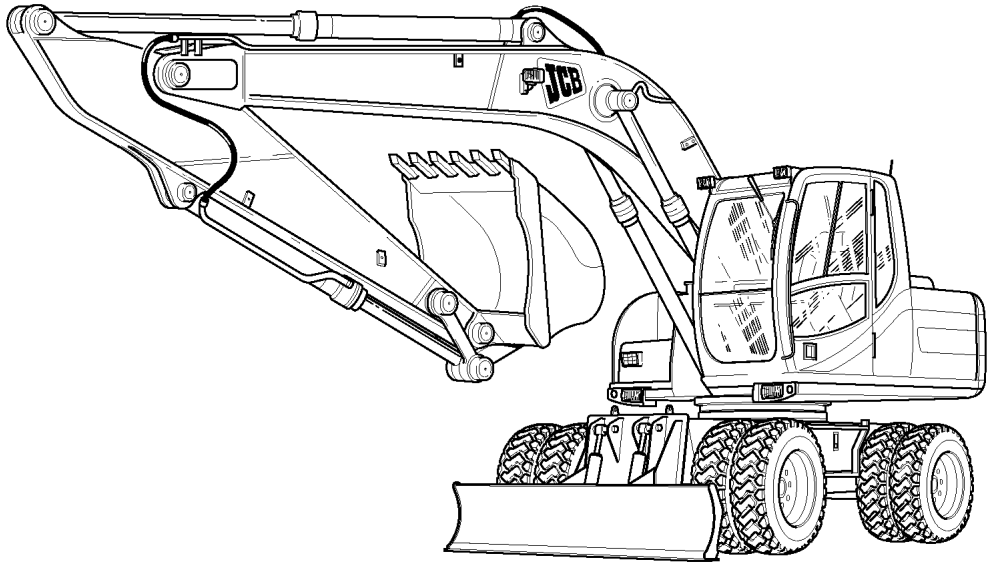

ANBAUGERAETE	A
AUFBAU, FAHRERHAUS, LADTERTEIL	B
ELEKTRISCHE ANLAGE - MASCHINE, FAHRERHAUS & MOTOR	C
BEDIENUNGSELEMENTE - MASCHINE, MOTOR	D
HYDRAULIK	E
SCHWENKWERK U RAUPENGETRIEBE	F
ENGINE 4JJ1-XYSJ01 TIER 3	R

910010

ABKÜRZUNGSSCHLÜSSEL

P.S.I.	Pfund pro Quadratzoll
A/R	Nach Bedarf
N.S.P.	Nicht reparierbares Bauteil
N/A	Entfällt/nicht verfügbar
HBCV	Schlauchberstschutzventil
KP	Königssäule
SS	Seitenschieber
CM	Mittenanbau
M.P.H.	Meilen pro Stunde
K.P.H.	Kilometer pro Stunde
STD	Standard, normal, serienmäßig
O/D	Außendurchmesser
I/D	Innendurchmesser
M.S.S.	Mehrfachersetzung
T.I.	Technische Informationen
M/S	Handschaltgetriebe
P/S	Powershift-Getriebe
M TBA	Maschinen-Seriennummer noch nicht bekannt
SUPERSEDED	Bauteil vollständig austauschbar
TO M	Bis Maschine Nummer
M ON	Ab Maschine Nummer

4WD	Allradantrieb
LTR	Liter
L1=	Länge (senkrecht)
L2=	Länge (waagerecht)
L=	Länge
MM	Millimeter
T=	Dicke
W/	Mit
WO/	Ohne
KG	Kilogramm
LH	Links
RH	Rechts
PTO	Zapfwelle
S/M	Sitemaster
H/M	Hammermaster
PR	Paar
4WS	Allradlenkung
2WS	Zweiradlenkung
C/W	Komplett mit

9809/0058	Desk Top Reader 240 Volt
9809/0059	Desk Top Reader 110 Volt
9809/0060	Bulb For 9809/0058 & 9809/0059
9809/0048	Bulb For 375 Reader
9809/0044	Case 2 Reader Portable
9809/0054	Bulb For Case 2 Reader Fhx
9809/0045	Case 4 Reader Large Screen
9809/0055	Bulb For Case 4 Reader Epz
9809/0007	Bulb For Bell & Howell Sr 1020
9809/0047	Bulb For Mt4 Reader
9809/0053	Hand Held Elite Reader
9809/0056	Bulb For Microscot Reader

Lens

9809/0017	Lens 29mm For Sr 1020

Binder & Panels

9809/0006	Binder For Fiche (service)
9809/0052	Binder For Fiche (prof. Prod. Support)
9809/0015	Binder Fiche Panels

PAGE	ILLN	ITEM	PART NUMBER	CHANGE NUMBER	DESCRIPTION
A2-3-1		2	331/47909		Toeplate
A2-3-1		4	1340/2401		Nut
A2-3-2		1	980/86140		Bucket
B1-2-1	*				
B1-4-1	*				
B1-5-1	*				
B1-5-5	*				
B1-5-20	*				
B1-5-40	*				
B1-6-1		1	335/13581		Counterweight
B1-11-1		25A	1316/4130		Bolt
B1-21-15		23	335/11676		Body
B2-1-10		32	826/11487		Latch
B2-1-10		33	826/11486		Latch
B2-1-10		34	6900/0619		Screw
B2-16-1		9	335/13853		Plate
B2-16-1		16	331/59705		Plate
B3-10-1		12	KLV0167		Pin
B3-10-1		13	6009/3724D		Bolt
B3-10-1		14	173R016VD		Nut
B5-1-1	*				
B5-1-1		3A	817/19832		Decal
B5-2-1	*				
B5-2-1		12	817/70003		Decal
B5-2-1		14	817/70116		Decal
B5-2-1		20	817/70117		Decal
B5-2-1		23	817/17526		Label
B5-2-1		30	332/J0613		Decal
B5-2-10	*				
C1-3-1	*				
C1-3-1		11	718/20026		Cable
C3-11-1		1	717/20225		Radio
C3-11-1		1	717/20226		Radio
C3-11-1		1	717/20227		Radio
C3-12-1	*				
C3-12-1		33	123/04999		Compressor
D1-1-1		27	928/60339		Valve
D1-1-1		30	331/57463		Bracket
D1-1-1		33	331/57439		Pedal
D1-2-10	*				
E1-1-1	*				
E1-2-1	*				
E1-3-1	*				
E1-4-10	*				
E1-10-1	*				
E1-13-1	*				
E1-17-1	*				
E1-17-1		13 03	627/10543		Hose
E1-17-1		13 04	627/10543		Hose
E1-22-10	*				
E1-25-1	*				
E1-29-10		44	830/13798		Tube
E1-29-30	*				
E1-30-1	*				
E1-30-10	*				
E1-30-10		5	KNJ0606		Adapter
E1-30-10		6	1609/0002		Adapter
E1-30-10		15	1315/0509D		Screw
E1-30-10		20	335/13018		Plate
E1-30-10		31 01	627/10407		Hose
E1-30-10		31 02	627/10407		Hose
E1-30-10		32	627/10519		Hose
E1-30-10		45	816/90712		Adapter
E1-31-1	*				

PAGE	ILLN	ITEM	PART NUMBER	CHANGE NUMBER	DESCRIPTION
E1-31-1		3	721/11632		Harness
E1-32-1	*				
E1-32-10	*				
E1-32-20	*				
E1-33-1	*				
E1-33-10	*				
E1-33-20	*				
E1-36-1	*				
E1-46-10		4	JLV1871		Hose
E1-46-10		5	JLV1868		Hose
E1-46-10		6	JLV0594		Hose
E1-46-10		7	JNJ0393		Hose
E1-46-10		9	KNJ1697		Hose
E1-46-10		17	KAJ2176		Adapter
E1-46-10		23	JLJ0055		Adapter
E1-48-1		3	CNA0584		Adapter
E1-48-1		12	JLV0594		Hose
E1-48-1		13	KHJ1335		Hose
E1-48-1		14	KTJ0812		Hose
E1-48-1		15	KTJ0813		Hose
E1-48-1		16	KNJ0605		Adapter
E1-48-1		17	627/10537	Superseded	Hose
E1-48-1		18	830/13253		Pipe
E1-48-1		21	335/11072		Bracket
E1-48-1		28	JLV0433		Adapter
E1-48-1		29	KHJ0869		Adapter
E1-48-20	*				
E1-61-1		1	928/60339		Valve
E1-61-1		12	KBJ2208		Hose
E1-61-1		13	JLV0719		Hose
E1-61-1		14	KSJ0806		Hose
E1-62-1		56E	KNJ1109		Hose
E1-62-1		56F	KNJ1109		Hose
E1-65-1		8	KNJ1119		Hose
E1-65-1		9	627/10382		Hose
E1-65-1		10	KNJ1314		Hose
E1-65-1		12	KBJ2348		Hose
E1-65-1		13	KSJ1871		Hose
E1-65-1		14	627/10199		Hose
E1-65-1		15	KTJ1215		Hose
E1-68-1		12	KNJ1109		Hose
E1-68-1		13	KNJ1109		Hose
E1-68-1		15	KNJ1109		Hose
E1-68-1		16	KNJ1109		Hose
E1-69-1	*				
E1-69-1		13	JNJ0418		Hose
E1-69-1		14	JNJ0418		Hose
E1-70-1		10	KRJ3577		Hose
E1-70-1		11	KNJ1849		Hose
E1-70-1		12	KRJ3571		Hose
E1-70-1		13	JLJ0326		Hose
E1-70-1		14	KBJ2346		Hose
E1-71-1		10	KNJ1119		Hose
E1-71-1		12	KNJ1314		Hose
E1-71-1		18	KNJ1956		Hose
E1-71-1		19	627/10382		Hose
E2-1-1	*				
E2-2-1	*				
E2-6-10		46A	20/951974		Kit-seal
E3-1-1	*				
E3-8-1		1	25/222885		Valve
E3-15-1		6	32/925838		Element
E3-17-1		2	32/925164		Element
E3-17-1		3	828/10081		O Ring

PAGE	ILLN	ITEM	PART NUMBER	CHANGE NUMBER	DESCRIPTION
E3-17-1		6	823/10181		Washer
E3-17-1		7	823/10201		Washer
F3-2-1		1	331/49505		Wheel
F3-2-1		1	331/49504		Wheel
F3-2-1		3	42/925276		Tyre
F4-5-1		1	KRB0697		Pipe
F4-5-1		2	KRB0696		Pipe
R1-4-1		7	02/802460		Kit-main bearing
R1-4-1		7	02/801713		Kit-bearing
R1-4-1		7	02/802461		Kit-main bearing
R1-4-1		7	02/802462		Kit-main bearing
R1-4-1		15	02/802470		Piston
R1-4-1		15	02/802471		Piston
R1-4-1		18	02/802472		Kit-piston ring
R1-6-1		6	02/802505		Gasket
R1-6-1		6	02/802506		Gasket
R1-7-1		3	02/802154		Nut
R2-1-1		11	02/802367		Gasket
R2-1-1		11	02/802368		Gasket
R4-3-1	*				
R5-3-1		1 01	02/801481		Element
R7-5-2	*				
R8-1-1		1	02/802344		Kit-gasket
R8-1-2		1	02/802347		Kit-gasket

JS160W

TITLE	PAGE NUMBER	CHANGE NUMBER

A ANBAUGERAETE

TIEFLOFFEL A2

BUCKET, GRADING/DITCHING, 1524MM. WIDE	A2-3-2	
BUCKET, GRADING/DITCHING, 1829MM. 72" WIDE	A2-3-1	
BUCKET, 1000 WIDE, 0.71 CUBIC METRES	A2-1-7	
BUCKET, 1050MM HEAVY DUTY	A2-1-26	
BUCKET, 1100 WIDE, 0.81 CUBIC METRES	A2-1-8	
BUCKET, 1150MM HEAVY DUTY	A2-1-27	
BUCKET, 1200 WIDE, 0.90 CUBIC METRES	A2-1-9	
BUCKET, 1250MM HEAVY DUTY	A2-1-28	
BUCKET, 1300 WIDE, 0.99 CUBIC METRES	A2-1-10	
BUCKET, 450MM,HEAVY DUTY	A2-1-20	
BUCKET, 500 WIDE, 0.26 CUBIC METRES	A2-1-1	
BUCKET, 550MM HEAVY DUTY	A2-1-21	
BUCKET, 600 WIDE, 0.35 CUBIC METRES	A2-1-2	
BUCKET, 650MM HEAVY DUTY	A2-1-22	
BUCKET, 700 WIDE, 0.44 CUBIC METRES	A2-1-3	
BUCKET, 750 WIDE, 0.47 CUBIC METRES	A2-1-4	
BUCKET, 750MM HEAVY DUTY	A2-1-23	
	A2-1-24	
BUCKET, 800 WIDE, 0.53 CUBIC METRES	A2-1-5	
BUCKET, 900 WIDE, 0.62 CUBIC METRES	A2-1-6	
BUCKET, 950MM HEAVY DUTY	A2-1-25	

ANBAUGERAETE A3

QUICKHITCH, HYDRAULIC, MPG, MILLER	A3-11-1	
QUICKHITCH, JS160, HYDRAULIC, BUG, MILLER	A3-10-1	
QUICKHITCH, MANUAL	A3-9-1	
ROCKBREAKER HM 860Q, JS160W, 980/90214, 980/90474	A3-1-1	
ROCKBREAKER HM1260Q, JS160W, 980/90216, 980/90291	A3-2-1	

B AUFBAU, FAHRERHAUS, LADTERTEIL

AUFBAU/RAHMENWERK B1

BAFFLES, PUMP BAY	B1-5-50	
CHASSIS, WITH TOOLBOX	B1-9-1	
COVERS, UNDERSIDE MAINFRAME	B1-2-1	
COWLINGS, ENGINE BULKHEAD	B1-5-40	
COWLINGS, TOOLBOX & HAND RAIL	B1-5-30	
DOORS WITH FITTINGS, LEFT HAND SIDE BODY, RIGHT HAND SIDE BODY	B1-5-10	
ENGINE COVERS	B1-5-5	
FRAME SUPPORT	B1-5-1	
GEGENGEWICHT HINTEN	B1-6-1	
GRILLES, & TREAD PLATES	B1-5-20	
HAUPTRAHMEN	B1-1-1	
	B1-1-10	
SCHILD, RAUPE	B1-11-1	
STABILISER, FRONT & REAR	B1-21-15	
TANK, DIESELKRAFTST.	B1-4-1	
TANK, HYDRAULIK	B1-3-1	
WHEELCHOCK, GERMAN	B1-9-10	

FAHRERHAUS B2

CAB	B2-1-1	
CAB DOOR, COMPONENTS	B2-2-1	
CAB MOUNTINGS, CAB FOOR & MAT	B2-16-1	
CAB PANELS	B2-8-1	
CAB, MOUNTING FASTENERS	B2-1-30	
CONSOLE, CAB SERVO CONTROL, LEFT HAND, FIXED CONSOLE	B2-4-1	
CONSOLE, CAB SERVO CONTROL, RIGHT HAND	B2-5-1	
DIRECT GLAZING, REPLACEMENT MATERIAL	B2-18-1	
FIRE EXTINGUISHER	B2-11-1	
FLOOR COMPONENTS, SEAT SLIDE, LEVER ISOLATOR	B2-10-1	
FRONT SCREEN, UPPER & LOWER	B2-1-10	
FRONT WIPER, & CAB COMPONENTS	B2-1-20	
FRONT WIPER, CAB LOWER WINDOW, SEE C3-15-10	B2-15-1	
GUARD, FOPS CAGE, FRONT GUARD SALES OPTION	B2-9-20	

TITLE	PAGE NUMBER	CHANGE NUMBER
GUARD, FOPS, FRONT AND TOP, CAB MOUNTED	B2-9-1	
RAIN VISOR, CAB	B2-12-1	
SEAT BELT, STANDARD	B2-3-30	
SEAT BELT, 76MM (3") WIDE, OPTIONAL	B2-3-40	
SEAT, AIR SUSPENSION, HIGH BACK	B2-3-20	
SEAT, HIGH BACK, STANDARD	B2-3-1	
SPIEGEL AUSSEN	B2-7-2	
VANDAL GUARD, CAB, 3PC FRONT PANEL	B2-14-1	
WISCH/WASCH-ANL. WINDSCHUTZSCHEIBE	B2-6-1	
LADERTEIL	**B3**	
AUSLEGER	B3-1-1	
BOOM GREASING, MONO BOOM	B3-4-1	
BOOM GREASING, TAB BOOM	B3-4-10	
BOOM, LOWER, TRIPLE ARTICULATING	B3-10-1	
BOOM, UPPER, TRIPLE ARTICULATING	B3-11-1	
BRIDGE BASHING, U K ONLY	B3-12-1	
DIPPER 2.70M	B3-2-10	
LOFFELSTIEL 2.25M	B3-2-1	
LOFFELSTIEL 3.0M	B3-2-20	
AUFBESSERUNGSMITTEL	**B5**	
DECALS, MACHINE	B5-1-1	
DECALS, MACHINE, CONTROL LABELS	B5-2-10	
DECALS, WARNING	B5-2-1	
DECALS, WARNING, USA BUILD	B5-3-1	
WERKZEUGE	B5-4-1	

C ELEKTRISCHE ANLAGE - MASCHINE, FAHRERHAUS & MOTOR

ELEKTRISCHE HAUPTANLAGE	**C1**	
ARBEITSSCHEINWERFER AUSLEGER	C1-6-10	
BATTERIE INSTALLATION24 VOLT	C1-3-1	
ELEKTR. ANL., KAB.	C1-2-1	
ELEKTR. ANL., MASCHINE	C1-1-1	
HORN	C1-8-1	
LIGHT, WORKING, CAB & REAR, USE WITH RAIN GUARD	C1-6-20	
ROAD LIGHTS, ROW, RIGHT HAND DIP	C1-4-10	
ROAD LIGHTS, UK, LEFT HAND DIP	C1-4-1	
WARNSIGNAL,RUCKW.	C1-7-1	
ELEKTRISCHE ANLAGE, MOTOR	**C2**	
ALTERNATOR	C2-4-1	
ALTERNATOR MOUNTINGS	C2-5-1	
ECU HARNESS	C2-2-1	
ENGINE ELECTRICS	C2-1-1	
ENGINE, CONTROL MODULE	C2-1-2	
MOTOR,STARTER	C2-3-1	
ELEKTRISCHE ANLAGE, FAHRERHAUS	**C3**	
AIR CON	C3-12-1	
	C3-12-10	
CIGAR LIGHTER	C3-14-1	
COMBI UNIT FIG 2	C3-12-20	
FRONT WIPER, CAB LOWER WINDOW	C3-15-10	
FUSE BOX	C3-7-1	
HEATER	C3-5-1	
HEATER UNIT	C3-5-10	
HEATER UNIT FIG 2	C3-5-20	
RADIO	C3-11-1	
SWITCH PANEL, SIDE CONSOLE, RIGHT HAND	C3-2-1	
WARNBELEUCHTUNG RUNDUM-LEUCHTE BERNSTEIN	C3-9-1	
WISCH/WASCH-ANL. WINDSCHUTZSCHEIBE	C3-15-1	

D BEDIENUNGSELEMENTE - MASCHINE, MOTOR

HEBEL U SCHALTER, MASCHINE	**D1**	
PEDAL CONTROLS, MONO BOOM BUILD	D1-2-1	

TITLE	PAGE NUMBER	CHANGE NUMBER
PEDAL CONTROLS, TAB BOOM BUILD	D1-2-10	
STEUERUNG, BAGGER-	D1-1-1	
HEBEL UND SCHALTER, MOTOR	**D2**	
CONTROLS, THROTTLE & STOP, CAB	D2-2-1	
LENKSAEULE	**D3**	
STEERING COLUMN	D3-1-1	

E HYDRAULIK

SCHLAEUCHE UND ROHRLEITUNGEN	**E1**	
ARM HIGHT LIMITER, OPTIONAL, MONO BOOM	E1-36-1	
CIRCUIT, AUXILIARY LOW FLOW, MONO BOOM BUILD	E1-29-20	
CIRCUIT, AUXILIARY LOW FLOW, TAB BOOM BUILD	E1-29-30	
CIRCUIT, AUXILIARY/HAMMER, MONO BOOM	E1-30-20	
CIRCUIT, AUXILIARY, HAMMER & LOW FLOW, MONO BOOM	E1-31-20	
CIRCUIT, AUXILIARY, HAMMER & LOW FLOW, TAB BOOM	E1-31-30	
CIRCUIT, BOOM & DIPPER HBCV, MONO BOOM	E1-25-1	
CIRCUIT, BOOM & DIPPER HBCV, TAB BOOM (2 VALVE HBCV BOOM ONLY)	E1-25-10	
CIRCUIT, BOOM & DIPPER HBCV, TAB BOOM (3 & 4 VALVE HBCV)	E1-25-20	
CIRCUIT, BOOM POSITION RAM, HBCV FEED & RETURN, TAB BOOM	E1-48-30	
CIRCUIT, BOOM POSITION RAM, MAINFRAME	E1-48-1	
CIRCUIT, BOOM POSITION RAM, TAB, WITH HBCV	E1-48-20	
CIRCUIT, BRAKES, LOWER CHASSIS	E1-15-1	
CIRCUIT, BUCKET RAM, MONOBOOM	E1-23-1	
CIRCUIT, BUCKET, GRAB CHANGEOVER	E1-34-1	
CIRCUIT, BYPASS, HYDRAULIC FILTER	E1-8-1	
CIRCUIT, CRUISE CONTROL	E1-50-1	
CIRCUIT, DIPPER RAM, & BUCKET RAM, TAB BOOM	E1-22-10	
CIRCUIT, DIPPER RAM, HBCV FEED & RETURN	E1-26-1	
CIRCUIT, DIPPER RAM, MONOBOOM	E1-22-1	
CIRCUIT, DOZER CONTROL, MAINFRAME	E1-45-1	
CIRCUIT, DOZER/STAB CONTROL	E1-45-10	
CIRCUIT, DOZER/STAB, MAINFRAME	E1-46-1	
CIRCUIT, DRAIN, MOTOR & SOLENOID	E1-10-1	
CIRCUIT, DUAL CONTROLS, STANDARD USA, OPTIONAL UK WORLD	E1-14-1	
CIRCUIT, FAN DRIVE	E1-9-1	
CIRCUIT, FRONT & REAR STAB, CHASSIS	E1-46-30	
CIRCUIT, FRONT DOZER, REAR STAB, CHASSIS	E1-46-10	
	E1-46-15	
CIRCUIT, FRONT STAB, REAR DOZER, CHASSIS	E1-46-40	
CIRCUIT, HAMMER, AUXILIARY BOOM PIPES, TAB BOOM	E1-30-30	
CIRCUIT, HAMMER, AUXILIARY, MAINFRAME MONO BOOM	E1-31-1	
CIRCUIT, HAMMER, AUXILIARY, MAINFRAME TAB BOOM	E1-31-10	
CIRCUIT, HAMMER, FULLFLOW 2.25 DIPPER	E1-33-1	
CIRCUIT, HAMMER, FULLFLOW 2.7 DIPPER	E1-33-10	
CIRCUIT, HAMMER, FULLFLOW 3.05 DIPPER	E1-33-20	
CIRCUIT, HAMMER, MAINFRAME, MONO BOOM	E1-30-1	
	E1-30-40	
CIRCUIT, HAMMER, MAINFRAME, TAB BOOM	E1-30-10	
CIRCUIT, LOW FLOW, AUXILIARY, MAINFRAME , TAB BOOM BUILD	E1-29-10	
CIRCUIT, LOW FLOW, AUXILIARY, MAINFRAME, MONO BOOM BUILD	E1-29-1	
CIRCUIT, LOW FLOW, 2.25M DIPPER	E1-32-1	
CIRCUIT, LOW FLOW, 2.7M DIPPER	E1-32-10	

TITLE	PAGE NUMBER	CHANGE NUMBER
CIRCUIT, LOW FLOW, 3.05M DIPPER	E1-32-20	
CIRCUIT, MANIFOLD, UNDER CAB	E1-68-1	
CIRCUIT, MILLER Q. HITCH, 980/ 90463	E1-60-1	
CIRCUIT, NEUTRAL PRESSURE	E1-2-1	
CIRCUIT, NEUTRAL, RETURN & OIL COOLER	E1-3-1	
CIRCUIT, NON-HBCV, BOOM POSITION RAM	E1-48-10	
CIRCUIT, PILOT LINE, MAIN CONTROL VALVE	E1-71-1	
CIRCUIT, PUMP SUCTION	E1-1-1	
CIRCUIT, REAR DOZER, CHASSIS	E1-47-1	
CIRCUIT, REAR DOZER, CHASSIS, PLUS LOGIC VALVE OPTION	E1-47-10	
CIRCUIT, REAR STAB, CHASSIS	E1-46-20	
CIRCUIT, RETURN LINE, PILOT PRESSURE, MAIN CONTROL VALVE	E1-72-1	
CIRCUIT, STEERING &, BRAKES, MAINFRAME	E1-17-10	
CIRCUIT, STEERING, CHASSIS	E1-17-1	
CIRCUIT, SWING	E1-6-1	
CIRCUIT, TANK MANIFOLD	E1-69-1	
CIRCUIT, TEST POINTS	E1-35-1	
CIRCUIT, TRACTION, LOWER CHASSIS	E1-5-1	
CIRCUIT, VALVE, CUSHION	E1-65-1	
CIRCUIT, VALVE, DRIVE PEDAL	E1-61-1	
CIRCUIT, VALVE, LH CONTROLLER	E1-62-1	
CIRCUIT, VALVE, PILOT SHUTTLE	E1-70-1	
CIRCUIT, VALVE, RH CONTROLLER	E1-63-1	
CIRCUIT, VALVE, SHUTTLE	E1-66-1	
CIRCUIT, VALVE, SOLENOID	E1-67-1	
CIRCUIT, VALVE, 3 STATION	E1-64-1	
STEUERKREIS LOFFELSTIEL&LOFFEL	E1-21-1	
STEUERKREIS, AUSL.ZYL. HAUPTRAHMEN	E1-20-1	
	E1-20-10	
STEUERKREIS, RAUPE HAUPTRAHMEN	E1-4-1	
	E1-4-10	
STEUERKREIS, SERVO NEUTRAL FIG 1	E1-12-1	
	E1-13-1	
PUMPE, MOTOR,UND PUMPENANTRIEB	**E2**	
KOLBENPUMPE HAUPT-HYDRAULIK & BAUTEILE FIG 1	E2-2-1	
MOTOR, DRIVE, FIG 1	E2-6-10	
MOTOR, DRIVE, FIG 2	E2-6-11	
MOTOR, SWING	E2-7-1	
PUMP, MAIN HYDRAULIC	E2-1-1	
VENTILE UND HRDAULIKFILTER	**E3**	
FILTER, AUXILIARY/HAMMER, RETURN	E3-16-1	
FILTER, BYPASS, HYDRAULIC	E3-17-1	
FILTER, HYDRAULIC, STEER CIRCUIT	E3-16-10	
KUPPLUNG, DREH-	E3-14-20	
MOUNTINGS, ROTARY COUPLING	E3-14-1	
OILS, BIODEGRADABLE, HYDRAULIC	E3-15-10	
SCHMIERMITTEL & FILTER	E3-15-1	
VALVE, BRAKE PEDAL	E3-3-1	
VALVE, HAMMER	E3-24-1	
VALVE, PILOT SHUTTLE	E3-23-1	
VALVE, RELIEF, SERVICE PORT	E3-2-45	
VALVE, SOLENOID	E3-8-1	
VALVE, SOLENOID, TAB HAMMER, JS175W AUTO T3	E3-9-1	
VENTIL, HANDSTEUER. SERVO	E3-6-1	
VENTIL, KOMPL. & HALTERUNG	E3-1-1	
VENTIL, LENKUNG-	E3-40-1	
VENTIL, STEUERUNG BAUTEILE FIG 1	E3-2-1	
VENTIL, STEUERUNG BAUTEILE FIG 2	E3-2-2	
ZYLINDER	**E4**	
CIRCUIT, BOOM RAM, WITH HBCV, TAB BOOM	E4-1-20	
RAM, AXLE LOCK	E4-6-1	
RAM, DIPPER, ASSEMBLY WITH HBCV, MONO BOOM & TAB BOOM	E4-2-10	
RAM, DIPPER, COMPONENTS	E4-2-20	
RAM, POSITION, ASSEMBLY, TAB BOOM, WITHOUT HBCV	E4-7-1	

TITLE	PAGE NUMBER	CHANGE NUMBER
RAM, POSITION, HBCV, ASSEMBLY	E4-7-10	
ZYL., AUSLEGER	E4-1-1	
	E4-1-10	
	E4-1-30	
ZYL., LOFFELSTIEL	E4-2-1	

F SCHWENKWERK U RAUPENGETRIEBE

AXLES, FRONT	**F1**
ACHSSCHENKEL ACHSE	F1-4-1
CROWN WHEEL & PINION, 18. 16:1 AXLE, 453/30800	F1-6-1
DIFFERENTIAL, ASSEMBLY, 18. 16:1, STEER AXLE 453/30800	F1-5-1
NABE & BAUTEILE ACHSE MIT NABENBREMSE	F1-3-1
RAM, STEERING AXLE, INSTALLATION	F1-7-1
VORDERACHSE	F1-1-1
AXLES, REAR	**F2**
CROWN WHEEL & PINION, 18. 16:1 AXLE, 450/42700	F2-6-1
DIFFERENTIAL, ASSEMBLY, 18. 16:1, 450/42700	F2-5-1
HINTERASCHE	F2-1-1
NABE & BAUTEILE ACHSE MIT NABENBREMSE	F2-3-1

TITLE	PAGE NUMBER	CHANGE NUMBER
WHEELS, TYRES & PROPSHAFTS	**F3**	
KARDANWELLE GETRIEBE	F3-1-1	
WHEELS & TYRES, DUALS	F3-4-1	
WHEELS & TYRES, DUALS, 10. 00 X 20 EM22 16PR & EM23	F3-3-1	
WHEELS & TYRES, FLOATATION, LEFT HAND SIDE FRONT AND REAR	F3-5-1	
WHEELS & TYRES, SINGLES	F3-2-1	
SCHWENKWERK-U RAUPENGETRIEBE	**F4**	
CIRCUIT, SWING RING GREASING	F4-5-1	
GEARBOX, SWING	F4-4-1	
MOTOR, SWING	F4-3-1	
TRANSMISSION	**F5**	
GEARBOX OUTPUT, GROUP	F5-10-1	
GETRIEBE BREMSSCHEIBEN GRUPPE	F5-7-1	
GETRIEBE EINGANGSWELLE GEHAUSE	F5-4-1	
GETRIEBE GEHAUSE	F5-2-1	
GETRIEBE HYDR. SCHALTEINHEIT	F5-9-1	
GETRIEBE KUPPLUNGSSCHEIBEN GRUPPE	F5-6-1	
GETRIEBE LASTSCHALTGETRIEBE	F5-1-1	
GETRIEBE OLLEITUNGEN	F5-3-1	
GETRIEBE PLANETENANTRIEB GRUPPE	F5-8-1	

R ENGINE 4JJ1-XYSJ01 TIER 3

MOTORBLOCK U UNTERGRUPPEN	**R1**
BLOCK ASSEMBLY	R1-3-1
CAMSHAFTS, & TIMING GEARS	R1-6-2
ENGINE, COMPLETE, 4JJ1-XYSJ01	R1-1-1
FANS,PULLEYS & BELTS, EU ONLY	R1-5-1
FANS,PULLEYS & BELTS, NON EU	R1-5-2
FLYWHEEL & HOUSING	R1-7-1
KURBELWELLE, LAGER KOLBEN & PLEUEL	R1-4-1
MOTORAUFHANGUNG	R1-8-1
TIMING CASE, & FRONT COVER	R1-6-1
ZYLINDERKOPF U UNTERGRUPPEN	**R2**
KIPPHEBEL EIN-/ AUSLASSVENTILE	R2-2-1
LIFTING PLATES	R2-6-1
ROCKER COVER, & BREATHER PIPE	R2-3-1
ZYLINDERKOPF	R2-1-1

TITLE	PAGE NUMBER	CHANGE NUMBER
EINLASS-U AUSPUFFANLAGE	**R3**	
EXHAUST SYSTEM	R3-4-1	
EXHAUST, RECIRCULATION	R3-5-1	
LUFTFILTER	R3-3-1	
MANIFOLD, EXHAUST	R3-2-1	
MANIFOLD, INDUCTION	R3-1-1	
KUEHLANLAGE	**R4**	
CHARGE AIR COOLER	R4-7-1	
COOLER COMBINATION, MOUNTING &, SOUND PROOFING	R4-3-1	
EXHAUST, RECIRCULATION, WATER COOLING	R4-8-1	
KUHLER SCHLAUCHE & ZUBEH.	R4-4-1	
	R4-5-1	
PUMP WATER	R4-1-1	
THERMOSTAT,HOUSING, & PIPEWORK	R4-2-1	
SCHMIERANLAGE	**R5**	
COOLER, ENGINE OIL	R5-4-1	
OIL FILTER, REMOTE MOUNTED	R5-3-1	
OLPUMPE	R5-2-1	
OLWANNE & ANSCHLUSSE	R5-1-1	
KRAFTSTOFFANLAGE	**R6**	
FILTER KRAFTSTOFFABL.	R6-6-1	
FUEL LIFT PUMP	R6-8-1	
FUEL SYSTEM	R6-4-1	
KRAFTSTOFFANLAGE	R6-2-1	
KRAFTSTOFFILTER	R6-7-1	
PUMP, FUEL INJECTION, INSTALLATION	R6-1-1	
ZUSATZGERAETE	**R7**	
COMPRESSOR KLIMAANLAGE	R7-6-1	
KOMPRESSOR 12.VOLT KLIMAANLAGE	R7-5-2	
TURBO, LEITUNGEN	R7-2-1	
TURBOCHARGER	R7-1-1	
DICHTUNGSSAETZE	**R8**	
GASKET SET, CYLINDER HEAD, OVERHAUL	R8-1-2	
GASKET SET, ENGINE OVERHAUL	R8-1-1	

WHEELED EXCAVATOR

M1421699 to M1421799
Model JS160W T3 ENGINE

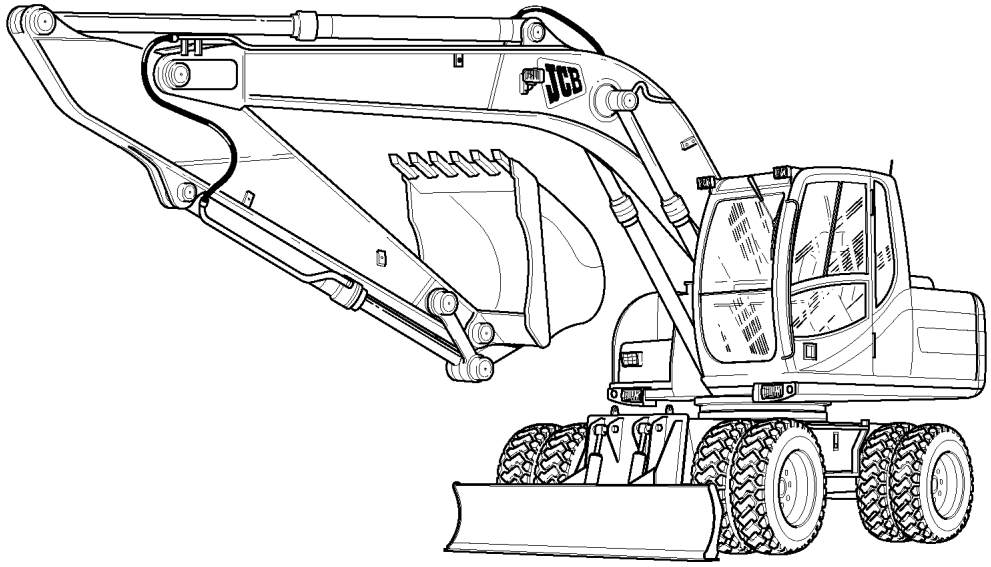

ACCESSORI A

CARROZZERIA, CABINA, SEZIONE CARICATORA B

IMPIANTO ELETTRICO-MACCHINA, CABINA E MOTORE C

COMANDI-MACCHINA, MOTORE D

IMPIANTO IDRAULICO E

INGRANAGGI DELLA, GIRANTEDI TRAZIONE F

ENGINE 4JJ1-XYSJ01 TIER 3 R

910010

CLAVE PARA ABREVIATURAS USUALES

P.S.I.	Libras por pulgada cuadrada
A/R	Según sea necesario
N.S.P.	Pieza sin ninguna revisión
N/A	No aplicable/no disponible
HBCV	Válvula de protección contra reventones de flexibles
KP	Fulcro
SS	Desplazamiento lateral
CM	Montura central
M.P.H.	Millas por hora
K.P.H.	Kilómetros por hora
STD	Estándar
O/D	Diámetro exterior
I/D	Diámetro interior
M.S.S.	Substitución múltiple
T.I.	Información Técnica
M/S	Transmisión de cambio manual
P/S	Transmisión de cambio asistido
M TBA	Número de serie de máquina aún no conocido
SUPERSEDED	Pieza completamente intercambiable
TO M	Hasta la máquina número
M ON	Desde la máquina número
4WD	Tracción doble
LTR	Litro
L1=	Longitud (vertical)
L2=	Longitud (horizontal)
L=	Longitud
MM	Milímetro
T=	Espesor
W/	Con
WO/	Sin
KG	Kilogramo
LH	De la izquierda
RH	De la derecha
PTO	Toma de fuerza
S/M	Sitemaster
H/M	Hammermaster
PR	Par
4WS	Dirección de 4 ruedas
2WS	Dirección de 2 ruedas
C/W	Completo con

9809/0058	Desk Top Reader 240 Volt
9809/0059	Desk Top Reader 110 Volt
9809/0060	Bulb For 9809/0058 & 9809/0059
9809/0048	Bulb For 375 Reader
9809/0044	Case 2 Reader Portable
9809/0054	Bulb For Case 2 Reader Fhx
9809/0045	Case 4 Reader Large Screen
9809/0055	Bulb For Case 4 Reader Epz
9809/0007	Bulb For Bell & Howell Sr 1020
9809/0047	Bulb For Mt4 Reader
9809/0053	Hand Held Elite Reader
9809/0056	Bulb For Microscot Reader

Lens

9809/0017	Lens 29mm For Sr 1020

Binder & Panels

9809/0006	Binder For Fiche (service)
9809/0052	Binder For Fiche (prof. Prod. Support)
9809/0015	Binder Fiche Panels

PAGE	ILLN	ITEM	PART NUMBER	CHANGE NUMBER	DESCRIPTION
A2-3-1		2	331/47909		Toeplate
A2-3-1		4	1340/2401		Nut
A2-3-2		1	980/86140		Bucket
B1-2-1	*				
B1-4-1	*				
B1-5-1	*				
B1-5-5	*				
B1-5-20	*				
B1-5-40	*				
B1-6-1		1	335/13581		Counterweight
B1-11-1		25A	1316/4130		Bolt
B1-21-15		23	335/11676		Body
B2-1-10		32	826/11487		Latch
B2-1-10		33	826/11486		Latch
B2-1-10		34	6900/0619		Screw
B2-16-1		9	335/13853		Plate
B2-16-1		16	331/59705		Plate
B3-10-1		12	KLV0167		Pin
B3-10-1		13	6009/3724D		Bolt
B3-10-1		14	173R016VD		Nut
B5-1-1	*				
B5-1-1		3A	817/19832		Decal
B5-2-1	*				
B5-2-1		12	817/70003		Decal
B5-2-1		14	817/70116		Decal
B5-2-1		20	817/70117		Decal
B5-2-1		23	817/17526		Label
B5-2-1		30	332/J0613		Decal
B5-2-10	*				
C1-3-1	*				
C1-3-1		11	718/20026		Cable
C3-11-1		1	717/20225		Radio
C3-11-1		1	717/20226		Radio
C3-11-1		1	717/20227		Radio
C3-12-1	*				
C3-12-1		33	123/04999		Compressor
D1-1-1		27	928/60339		Valve
D1-1-1		30	331/57463		Bracket
D1-1-1		33	331/57439		Pedal
D1-2-10	*				
E1-1-1	*				
E1-2-1	*				
E1-3-1	*				
E1-4-10	*				
E1-10-1	*				
E1-13-1	*				
E1-17-1	*				
E1-17-1		13 03	627/10543		Hose
E1-17-1		13 04	627/10543		Hose
E1-22-10	*				
E1-25-1	*				
E1-29-10		44	830/13798		Tube
E1-29-30	*				
E1-30-1	*				
E1-30-10	*				
E1-30-10		5	KNJ0606		Adapter
E1-30-10		6	1609/0002		Adapter
E1-30-10		15	1315/0509D		Screw
E1-30-10		20	335/13018		Plate
E1-30-10		31 01	627/10407		Hose
E1-30-10		31 02	627/10407		Hose
E1-30-10		32	627/10519		Hose
E1-30-10		45	816/90712		Adapter
E1-31-1	*				

PAGE	ILLN	ITEM	PART NUMBER	CHANGE NUMBER	DESCRIPTION
E1-31-1		3	721/11632		Harness
E1-32-1	*				
E1-32-10	*				
E1-32-20	*				
E1-33-1	*				
E1-33-10	*				
E1-33-20	*				
E1-36-1	*				
E1-46-10		4	JLV1871		Hose
E1-46-10		5	JLV1868		Hose
E1-46-10		6	JLV0594		Hose
E1-46-10		7	JNJ0393		Hose
E1-46-10		9	KNJ1697		Hose
E1-46-10		17	KAJ2176		Adapter
E1-46-10		23	JLJ0055		Adapter
E1-48-1		3	CNA0584		Adapter
E1-48-1		12	JLV0594		Hose
E1-48-1		13	KHJ1335		Hose
E1-48-1		14	KTJ0812		Hose
E1-48-1		15	KTJ0813		Hose
E1-48-1		16	KNJ0605		Adapter
E1-48-1		17	627/10537	Superseded	Hose
E1-48-1		18	830/13253		Pipe
E1-48-1		21	335/11072		Bracket
E1-48-1		28	JLV0433		Adapter
E1-48-1		29	KHJ0869		Adapter
E1-48-20	*				
E1-61-1		1	928/60339		Valve
E1-61-1		12	KBJ2208		Hose
E1-61-1		13	JLV0719		Hose
E1-61-1		14	KSJ0806		Hose
E1-62-1		56E	KNJ1109		Hose
E1-62-1		56F	KNJ1109		Hose
E1-65-1		8	KNJ1119		Hose
E1-65-1		9	627/10382		Hose
E1-65-1		10	KNJ1314		Hose
E1-65-1		12	KBJ2348		Hose
E1-65-1		13	KSJ1871		Hose
E1-65-1		14	627/10199		Hose
E1-65-1		15	KTJ1215		Hose
E1-68-1		12	KNJ1109		Hose
E1-68-1		13	KNJ1109		Hose
E1-68-1		15	KNJ1109		Hose
E1-68-1		16	KNJ1109		Hose
E1-69-1	*				
E1-69-1		13	JNJ0418		Hose
E1-69-1		14	JNJ0418		Hose
E1-70-1		10	KRJ3577		Hose
E1-70-1		11	KNJ1849		Hose
E1-70-1		12	KRJ3571		Hose
E1-70-1		13	JLJ0326		Hose
E1-70-1		14	KBJ2346		Hose
E1-71-1		10	KNJ1119		Hose
E1-71-1		12	KNJ1314		Hose
E1-71-1		18	KNJ1956		Hose
E1-71-1		19	627/10382		Hose
E2-1-1	*				
E2-2-1	*				
E2-6-10		46A	20/951974		Kit-seal
E3-1-1	*				
E3-8-1		1	25/222885		Valve
E3-15-1		6	32/925838		Element
E3-17-1		2	32/925164		Element
E3-17-1		3	828/10081		O Ring

PAGE	ILLN	ITEM	PART NUMBER	CHANGE NUMBER	DESCRIPTION
E3-17-1		6	823/10181		Washer
E3-17-1		7	823/10201		Washer
F3-2-1		1	331/49505		Wheel
F3-2-1		1	331/49504		Wheel
F3-2-1		3	42/925276		Tyre
F4-5-1		1	KRB0697		Pipe
F4-5-1		2	KRB0696		Pipe
R1-4-1		7	02/802460		Kit-main bearing
R1-4-1		7	02/801713		Kit-bearing
R1-4-1		7	02/802461		Kit-main bearing
R1-4-1		7	02/802462		Kit-main bearing
R1-4-1		15	02/802470		Piston
R1-4-1		15	02/802471		Piston
R1-4-1		18	02/802472		Kit-piston ring
R1-6-1		6	02/802505		Gasket
R1-6-1		6	02/802506		Gasket
R1-7-1		3	02/802154		Nut
R2-1-1		11	02/802367		Gasket
R2-1-1		11	02/802368		Gasket
R4-3-1	*				
R5-3-1		1 01	02/801481		Element
R7-5-2	*				
R8-1-1		1	02/802344		Kit-gasket
R8-1-2		1	02/802347		Kit-gasket

JS160W

TITLE	PAGE NUMBER	CHANGE NUMBER

A ACCESSORI

BENNE A2

BUCKET, GRADING/DITCHING, 1524MM. WIDE	A2-3-2	
BUCKET, GRADING/DITCHING, 1829MM. 72" WIDE	A2-3-1	
BUCKET, 1000 WIDE, 0.71 CUBIC METRES	A2-1-7	
BUCKET, 1050MM HEAVY DUTY	A2-1-26	
BUCKET, 1100 WIDE, 0.81 CUBIC METRES	A2-1-8	
BUCKET, 1150MM HEAVY DUTY	A2-1-27	
BUCKET, 1200 WIDE, 0.90 CUBIC METRES	A2-1-9	
BUCKET, 1250MM HEAVY DUTY	A2-1-28	
BUCKET, 1300 WIDE, 0.99 CUBIC METRES	A2-1-10	
BUCKET, 450MM,HEAVY DUTY	A2-1-20	
BUCKET, 500 WIDE, 0.26 CUBIC METRES	A2-1-1	
BUCKET, 550MM HEAVY DUTY	A2-1-21	
BUCKET, 600 WIDE, 0.35 CUBIC METRES	A2-1-2	
BUCKET, 650MM HEAVY DUTY	A2-1-22	
BUCKET, 700 WIDE, 0.44 CUBIC METRES	A2-1-3	
BUCKET, 750 WIDE, 0.47 CUBIC METRES	A2-1-4	
BUCKET, 750MM HEAVY DUTY	A2-1-23	
	A2-1-24	
BUCKET, 800 WIDE, 0.53 CUBIC METRES	A2-1-5	
BUCKET, 900 WIDE, 0.62 CUBIC METRES	A2-1-6	
BUCKET, 950MM HEAVY DUTY	A2-1-25	

EQUIPAGGIAMENTE A3

QUICKHITCH, HYDRAULIC, MPG, MILLER	A3-11-1	
QUICKHITCH, JS160, HYDRAULIC, BUG, MILLER	A3-10-1	
QUICKHITCH, MANUAL	A3-9-1	
ROCKBREAKER HM 860Q, JS160W, 980/90214, 980/90474	A3-1-1	
ROCKBREAKER HM1260Q, JS160W, 980/90216, 980/90291	A3-2-1	

B CARROZZERIA, CABINA, SEZIONE CARICATORA

CARROZZERIA/TELAIO B1

BAFFLES, PUMP BAY	B1-5-50	
CHASSIS, WITH TOOLBOX	B1-9-1	
CONTRAPPESO POSTERIORE	B1-6-1	
COVERS, UNDERSIDE MAINFRAME	B1-2-1	
COWLINGS, ENGINE BULKHEAD	B1-5-40	
COWLINGS, TOOLBOX & HAND RAIL	B1-5-30	
DOORS WITH FITTINGS, LEFT HAND SIDE BODY, RIGHT HAND SIDE BODY	B1-5-10	
ENGINE COVERS	B1-5-5	
FRAME SUPPORT	B1-5-1	
GRILLES, & TREAD PLATES	B1-5-20	
LAMA, APRIPISTA	B1-11-1	
SERBATOIO GASOLIO	B1-4-1	
SERBATOIO IDRAULICO	B1-3-1	
STABILISER, FRONT & REAR	B1-21-15	
TELAIO PRINCIPALE	B1-1-1	
	B1-1-10	
WHEELCHOCK, GERMAN	B1-9-10	

CABINA B2

CAB	B2-1-1	
CAB DOOR, COMPONENTS	B2-2-1	
CAB MOUNTINGS, CAB FOOR & MAT	B2-16-1	
CAB PANELS	B2-8-1	
CAB, MOUNTING FASTENERS	B2-1-30	
CONSOLE, CAB SERVO CONTROL, LEFT HAND, FIXED CONSOLE	B2-4-1	
CONSOLE, CAB SERVO CONTROL, RIGHT HAND	B2-5-1	
DIRECT GLAZING, REPLACEMENT MATERIAL	B2-18-1	
FIRE EXTINGUISHER	B2-11-1	
FLOOR COMPONENTS, SEAT SLIDE, LEVER ISOLATOR	B2-10-1	
FRONT SCREEN, UPPER & LOWER	B2-1-10	
FRONT WIPER, & CAB COMPONENTS	B2-1-20	
FRONT WIPER, CAB LOWER WINDOW, SEE C3-15-10	B2-15-1	
GUARD, FOPS CAGE, FRONT GUARD SALES OPTION	B2-9-20	

TITLE	PAGE NUMBER	CHANGE NUMBER
GUARD, FOPS, FRONT AND TOP, CAB MOUNTED	B2-9-1	
RAIN VISOR, CAB	B2-12-1	
SEAT BELT, STANDARD	B2-3-30	
SEAT BELT, 76MM (3") WIDE, OPTIONAL	B2-3-40	
SEAT, AIR SUSPENSION, HIGH BACK	B2-3-20	
SEAT, HIGH BACK, STANDARD	B2-3-1	
SPECCHI ESTERNI	B2-7-2	
TERGICRISTALLO/LAVAVETRO PARABREZZA	B2-6-1	
VANDAL GUARD, CAB, 3PC FRONT PANEL	B2-14-1	
SEZIONE CARICATRICE	**B3**	
BOOM GREASING, MONO BOOM	B3-4-1	
BOOM GREASING, TAB BOOM	B3-4-10	
BOOM, LOWER, TRIPLE ARTICULATING	B3-10-1	
BOOM, UPPER, TRIPLE ARTICULATING	B3-11-1	
BRACCIO PRINCIPALE	B3-1-1	
BRIDGE BASHING, U K ONLY	B3-12-1	
DIPPER 2.70M	B3-2-10	
SECONDO BRACCIO 2.25M	B3-2-1	
SECONDO BRACCIO 3.0M	B3-2-20	
MATERIALI RICONDIZIONAMENTO	**B5**	
ATTREZZI	B5-4-1	
DECALS, MACHINE	B5-1-1	
DECALS, MACHINE, CONTROL LABELS	B5-2-10	
DECALS, WARNING	B5-2-1	
DECALS, WARNING, USA BUILD	B5-3-1	

C IMPIANTO ELETTRICO-MACCHINA, CABINA E MOTORE

IMPIANTO ELETTRICO PRINCIPALE	**C1**	
ALLARME, RETROMARCIA	C1-7-1	
HORN	C1-8-1	
INSTALLAZIONE BATTERIA 24 V	C1-3-1	
LIGHT, WORKING, CAB & REAR, USE WITH RAIN GUARD	C1-6-20	
LUCE DI LAVORO BRACCIO PRINCIPALE	C1-6-10	
PARTE ELETTRICA, CABINA	C1-2-1	
PARTE ELETTRICA, MACCHINA	C1-1-1	
ROAD LIGHTS, ROW, RIGHT HAND DIP	C1-4-10	
ROAD LIGHTS, UK, LEFT HAND DIP	C1-4-1	
IMPIANTO ELETTRICO MOTORE	**C2**	
ALTERNATOR	C2-4-1	
ALTERNATOR MOUNTINGS	C2-5-1	
ECU HARNESS	C2-2-1	
ENGINE ELECTRICS	C2-1-1	
ENGINE, CONTROL MODULE	C2-1-2	
MOTOR,STARTER	C2-3-1	
IMPIANTO ELETTRICO CABINA	**C3**	
AIR CON	C3-12-1	
	C3-12-10	
CIGAR LIGHTER	C3-14-1	
COMBI UNIT FIG 2	C3-12-20	
FRONT WIPER, CAB LOWER WINDOW	C3-15-10	
FUSE BOX	C3-7-1	
HEATER	C3-5-1	
HEATER UNIT	C3-5-10	
HEATER UNIT FIG 2	C3-5-20	
LUCE, FARO SEGNALAZIONE PERICOLO AMBRA	C3-9-1	
RADIO	C3-11-1	
SWITCH PANEL, SIDE CONSOLE, RIGHT HAND	C3-2-1	
TERGICRISTALLO/LAVAVETRO PARABREZZA	C3-15-1	

D COMANDI-MACCHINA, MOTORE

COMANDI MACCHINA	**D1**	
COMANDI, ESCAVATORE	D1-1-1	
PEDAL CONTROLS, MONO BOOM BUILD	D1-2-1	
PEDAL CONTROLS, TAB BOOM BUILD	D1-2-10	

TITLE	PAGE NUMBER	CHANGE NUMBER
COMANDI MOTORE	**D2**	
CONTROLS, THROTTLE & STOP, CAB	D2-2-1	
PIANTONE	**D3**	
STEERING COLUMN	D3-1-1	

E IMPIANTO IDRAULICO

TUBAZIONI	**E1**	
ARM HIGHT LIMITER, OPTIONAL, MONO BOOM	E1-36-1	
CIRCUIT, AUXILIARY LOW FLOW, MONO BOOM BUILD	E1-29-20	
CIRCUIT, AUXILIARY LOW FLOW, TAB BOOM BUILD	E1-29-30	
CIRCUIT, AUXILIARY/HAMMER, MONO BOOM	E1-30-20	
CIRCUIT, AUXILIARY, HAMMER & LOW FLOW, MONO BOOM	E1-31-20	
CIRCUIT, AUXILIARY, HAMMER & LOW FLOW, TAB BOOM	E1-31-30	
CIRCUIT, BOOM & DIPPER HBCV, MONO BOOM	E1-25-1	
CIRCUIT, BOOM & DIPPER HBCV, TAB BOOM (2 VALVE HBCV BOOM ONLY)	E1-25-10	
CIRCUIT, BOOM & DIPPER HBCV, TAB BOOM (3 & 4 VALVE HBCV)	E1-25-20	
CIRCUIT, BOOM POSITION RAM, HBCV FEED & RETURN, TAB BOOM	E1-48-30	
CIRCUIT, BOOM POSITION RAM, MAINFRAME	E1-48-1	
CIRCUIT, BOOM POSITION RAM, TAB, WITH HBCV	E1-48-20	
CIRCUIT, BRAKES, LOWER CHASSIS	E1-15-1	
CIRCUIT, BUCKET RAM, MONOBOOM	E1-23-1	
CIRCUIT, BUCKET, GRAB CHANGEOVER	E1-34-1	
CIRCUIT, BYPASS, HYDRAULIC FILTER	E1-8-1	
CIRCUIT, CRUISE CONTROL	E1-50-1	
CIRCUIT, DIPPER RAM, & BUCKET RAM, TAB BOOM	E1-22-10	
CIRCUIT, DIPPER RAM, HBCV FEED & RETURN	E1-26-1	
CIRCUIT, DIPPER RAM, MONOBOOM	E1-22-1	
CIRCUIT, DOZER CONTROL, MAINFRAME	E1-45-1	
CIRCUIT, DOZER/STAB CONTROL	E1-45-10	
CIRCUIT, DOZER/STAB, MAINFRAME	E1-46-1	
CIRCUIT, DRAIN, MOTOR & SOLENOID	E1-10-1	
CIRCUIT, DUAL CONTROLS, STANDARD USA, OPTIONAL UK WORLD	E1-14-1	
CIRCUIT, FAN DRIVE	E1-9-1	
CIRCUIT, FRONT & REAR STAB, CHASSIS	E1-46-30	
CIRCUIT, FRONT DOZER, REAR STAB, CHASSIS	E1-46-10	
CIRCUIT, FRONT DOZER, REAR STAB, CHASSIS	E1-46-15	
CIRCUIT, FRONT STAB, REAR DOZER, CHASSIS	E1-46-40	
CIRCUIT, HAMMER, AUXILIARY BOOM PIPES, TAB BOOM	E1-30-30	
CIRCUIT, HAMMER, AUXILIARY, MAINFRAME MONO BOOM	E1-31-1	
CIRCUIT, HAMMER, AUXILIARY, MAINFRAME TAB BOOM	E1-31-10	
CIRCUIT, HAMMER, FULLFLOW 2.25 DIPPER	E1-33-1	
CIRCUIT, HAMMER, FULLFLOW 2.7 DIPPER	E1-33-10	
CIRCUIT, HAMMER, FULLFLOW 3.05 DIPPER	E1-33-20	
CIRCUIT, HAMMER, MAINFRAME, MONO BOOM	E1-30-1	
	E1-30-40	
CIRCUIT, HAMMER, MAINFRAME, TAB BOOM	E1-30-10	
CIRCUIT, LOW FLOW, AUXILIARY, MAINFRAME , TAB BOOM BUILD	E1-29-10	
CIRCUIT, LOW FLOW, AUXILIARY, MAINFRAME, MONO BOOM BUILD	E1-29-1	
CIRCUIT, LOW FLOW, 2.25M DIPPER	E1-32-1	
CIRCUIT, LOW FLOW, 2.7M DIPPER	E1-32-10	
CIRCUIT, LOW FLOW, 3.05M DIPPER	E1-32-20	
CIRCUIT, MANIFOLD, UNDER CAB	E1-68-1	

TITLE	PAGE NUMBER	CHANGE NUMBER
CIRCUIT, MILLER Q. HITCH, 980/90463	E1-60-1	
CIRCUIT, NEUTRAL PRESSURE	E1-2-1	
CIRCUIT, NEUTRAL, RETURN & OIL COOLER	E1-3-1	
CIRCUIT, NON-HBCV, BOOM POSITION RAM	E1-48-10	
CIRCUIT, PILOT LINE, MAIN CONTROL VALVE	E1-71-1	
CIRCUIT, PUMP SUCTION	E1-1-1	
CIRCUIT, REAR DOZER, CHASSIS	E1-47-1	
CIRCUIT, REAR DOZER, CHASSIS, PLUS LOGIC VALVE OPTION	E1-47-10	
CIRCUIT, REAR STAB, CHASSIS	E1-46-20	
CIRCUIT, RETURN LINE, PILOT PRESSURE, MAIN CONTROL VALVE	E1-72-1	
CIRCUIT, STEERING &, BRAKES, MAINFRAME	E1-17-10	
CIRCUIT, STEERING, CHASSIS	E1-17-1	
CIRCUIT, SWING	E1-6-1	
CIRCUIT, TANK MANIFOLD	E1-69-1	
CIRCUIT, TEST POINTS	E1-35-1	
CIRCUIT, TRACTION, LOWER CHASSIS	E1-5-1	
CIRCUIT, VALVE, CUSHION	E1-65-1	
CIRCUIT, VALVE, DRIVE PEDAL	E1-61-1	
CIRCUIT, VALVE, LH CONTROLLER	E1-62-1	
CIRCUIT, VALVE, PILOT SHUTTLE	E1-70-1	
CIRCUIT, VALVE, RH CONTROLLER	E1-63-1	
CIRCUIT, VALVE, SHUTTLE	E1-66-1	
CIRCUIT, VALVE, SOLENOID	E1-67-1	
CIRCUIT, VALVE, 3 STATION	E1-64-1	
CIRCUITO SCARIFICATORE E BENNA	E1-21-1	
CIRCUITO, CINGOLO TELAIO PRINCIPALE	E1-4-1	
	E1-4-10	
CIRCUITO, PISTONE BRACCIO INCASTELLATURA PRINCIPALE	E1-20-1	
	E1-20-10	
CIRCUITO, SERVO NEUTRO FIG 1	E1-12-1	
	E1-13-1	
POMPA, MOTORE TRASCINAM. POMPA	**E2**	
MOTOR, DRIVE, FIG 1	E2-6-10	
MOTOR, DRIVE, FIG 2	E2-6-11	
MOTOR, SWING	E2-7-1	
POMPA, PISTONE SISTEMA IDRAULICO PRINCIPALE E COMPONENTI FIG 1	E2-2-1	
PUMP, MAIN HYDRAULIC	E2-1-1	
VALVOLE E FILTRI IDRAULICI	**E3**	
FILTER, AUXILIARY/HAMMER, RETURN	E3-16-1	
FILTER, BYPASS, HYDRAULIC	E3-17-1	
FILTER, HYDRAULIC, STEER CIRCUIT	E3-16-10	
GIUNTO, ROTANTE	E3-14-20	
GRUPPO DISTRIBUTORE E FISSAGGIO	E3-1-1	
LUBRIFICANTI E FILTRI	E3-15-1	
MOUNTINGS, ROTARY COUPLING	E3-14-1	
OILS, BIODEGRADABLE, HYDRAULIC	E3-15-10	
VALVE, BRAKE PEDAL	E3-3-1	
VALVE, HAMMER	E3-24-1	
VALVE, PILOT SHUTTLE	E3-23-1	
VALVE, RELIEF, SERVICE PORT	E3-2-45	
VALVE, SOLENOID	E3-8-1	
VALVE, SOLENOID, TAB HAMMER, JS175W AUTO T3	E3-9-1	
VALVOLA, REGOLAZIONE COMPONENTI FIG 1	E3-2-1	
VALVOLA, REGOLAZIONE COMPONENTI FIG 2	E3-2-2	
VALVOLA, SERVOCOMANDO MANUALE	E3-6-1	
VALVOLA, STERZO	E3-40-1	
MARTINETTI	**E4**	
CIRCUIT, BOOM RAM, WITH HBCV, TAB BOOM	E4-1-20	
PISTONE, BRACCIO PRINCIPALE	E4-1-1	
	E4-1-10	
	E4-1-30	
PISTONE, SECONDO BRACCIO	E4-2-1	
RAM, AXLE LOCK	E4-6-1	
RAM, DIPPER, ASSEMBLY WITH HBCV, MONO BOOM & TAB BOOM	E4-2-10	

TITLE	PAGE NUMBER	CHANGE NUMBER
RAM, DIPPER, COMPONENTS	E4-2-20	
RAM, POSITION, ASSEMBLY, TAB BOOM, WITHOUT HBCV	E4-7-1	
RAM, POSITION, HBCV, ASSEMBLY	E4-7-10	

F INGRANAGGI DELLA, GIRANTEDI TRAZIONE

AXLES, FRONT	**F1**
ARTICOLAZIONE STERZO ASSALE	F1-4-1
CROWN WHEEL & PINION, 18. 16:1 AXLE, 453/30800	F1-6-1
DIFFERENTIAL, ASSEMBLY, 18. 16:1, STEER AXLE 453/30800	F1-5-1
GRUPPO ASSALE ANTERIORE	F1-1-1
MOZZO E COMPONENTI ASSALE CON FRENI SUI MOZZI	F1-3-1
RAM, STEERING AXLE, INSTALLATION	F1-7-1
AXLES, REAR	**F2**
ASSALE POSTERIORE	F2-1-1
CROWN WHEEL & PINION, 18. 16:1 AXLE, 450/42700	F2-6-1
DIFFERENTIAL, ASSEMBLY, 18. 16:1, 450/42700	F2-5-1
MOZZO E COMPONENTI ASSALE CON FRENI SUI MOZZI	F2-3-1
WHEELS, TYRES & PROPSHAFTS	**F3**
ALBERI DI TRASMISSIONE TRASMISSIONE	F3-1-1
WHEELS & TYRES, DUALS	F3-4-1
WHEELS & TYRES, DUALS, 10. 00 X 20 EM22 16PR & EM23	F3-3-1
WHEELS & TYRES, FLOATATION, LEFT HAND SIDE FRONT AND REAR	F3-5-1
WHEELS & TYRES, SINGLES	F3-2-1
SLEW GEARBOXES	**F4**
CIRCUIT, SWING RING GREASING	F4-5-1
GEARBOX, SWING	F4-4-1
MOTOR, SWING	F4-3-1
TRANSMISSION	**F5**
GRUPPO DISCHI FRENOTRASMISSIONE	F5-7-1
GRUPPO DISCHI FRIZIONE TRASMISSIONE	F5-6-1
GRUPPO ENTRATA TRASMISSIONE	F5-4-1
GRUPPO PLANETARI RIDUTTORE	F5-8-1
GRUPPO SENSORI TRASMISSIONE	F5-9-1
GRUPPO TRASMISSIONE	F5-2-1
GRUPPO USCITA TRASMISSIONE	F5-10-1
SISTEMA ALIMENTAZIONE TRASMISSIONE	F5-3-1
TRASMISSIONE POWERSHIFT	F5-1-1

R ENGINE 4JJ1-XYSJ01 TIER 3

ENGINE BLOCK & SUB-ASSEMBLIES	**R1**
ALBERO A GOMITO, BRONZINE PISTONI E BIELLE	R1-4-1
BLOCK ASSEMBLY	R1-3-1
CAMSHAFTS, & TIMING GEARS	R1-6-2
ENGINE, COMPLETE, 4JJ1-XYSJ01	R1-1-1
FANS,PULLEYS & BELTS, EU ONLY	R1-5-1
FANS,PULLEYS & BELTS, NON EU	R1-5-2
FLYWHEEL & HOUSING	R1-7-1
SUPPORTI MOTORE	R1-8-1
TIMING CASE, & FRONT COVER	R1-6-1
CYLINDER HEAD & SUB-ASSEMBLIES	**R2**
GRUPPO BILANCIERI VALVOLA ASPIRAZIONE/SCARICO	R2-2-1
LIFTING PLATES	R2-6-1
ROCKER COVER, & BREATHER PIPE	R2-3-1
TESTATA	R2-1-1

TITLE	PAGE NUMBER	CHANGE NUMBER
INDUCTION & EXHAUST SYSTEMS	**R3**	
EXHAUST SYSTEM	R3-4-1	
EXHAUST, RECIRCULATION	R3-5-1	
FILTRO, ARIA	R3-3-1	
MANIFOLD, EXHAUST	R3-2-1	
MANIFOLD, INDUCTION	R3-1-1	
SYSTEM, COOLING	**R4**	
CHARGE AIR COOLER	R4-7-1	
COOLER COMBINATION, MOUNTING &, SOUND PROOFING	R4-3-1	
EXHAUST, RECIRCULATION, WATER COOLING	R4-8-1	
PUMP WATER	R4-1-1	
RADIATORE MANICOTTI E RACCORDI	R4-4-1	
RADIATORE MANICOTTIE RACCORDI	R4-5-1	
THERMOSTAT,HOUSING, & PIPEWORK	R4-2-1	
SYSTEM, LUBRICATION	**R5**	
COOLER, ENGINE OIL	R5-4-1	
COPPA OLIO E RACCORDI	R5-1-1	
OIL FILTER, REMOTE MOUNTED	R5-3-1	
POMPA, OLIO	R5-2-1	
SYSTEM, FUEL	**R6**	
FILTRO SEDIMENTI GASOLIO	R6-6-1	
FILTRO, GASOLIO	R6-7-1	
FUEL LIFT PUMP	R6-8-1	
FUEL SYSTEM	R6-4-1	
PUMP, FUEL INJECTION, INSTALLATION	R6-1-1	
SISTEMA GASOLIO	R6-2-1	
EQUIPMENT, AUXILIARY	**R7**	
COMPRESSORE CONDIZIONAMENTO ARIA	R7-6-1	
COMPRESSORE 12 V CONDIZIONAMENTO ARIA	R7-5-2	
TURBO, TUBAZIONI	R7-2-1	
TURBOCHARGER	R7-1-1	
GASKET SETS	**R8**	
GASKET SET, CYLINDER HEAD, OVERHAUL	R8-1-2	
GASKET SET, ENGINE OVERHAUL	R8-1-1	

WHEELED EXCAVATOR

M1421699 to M1421799
Model JS160W T3 ENGINE

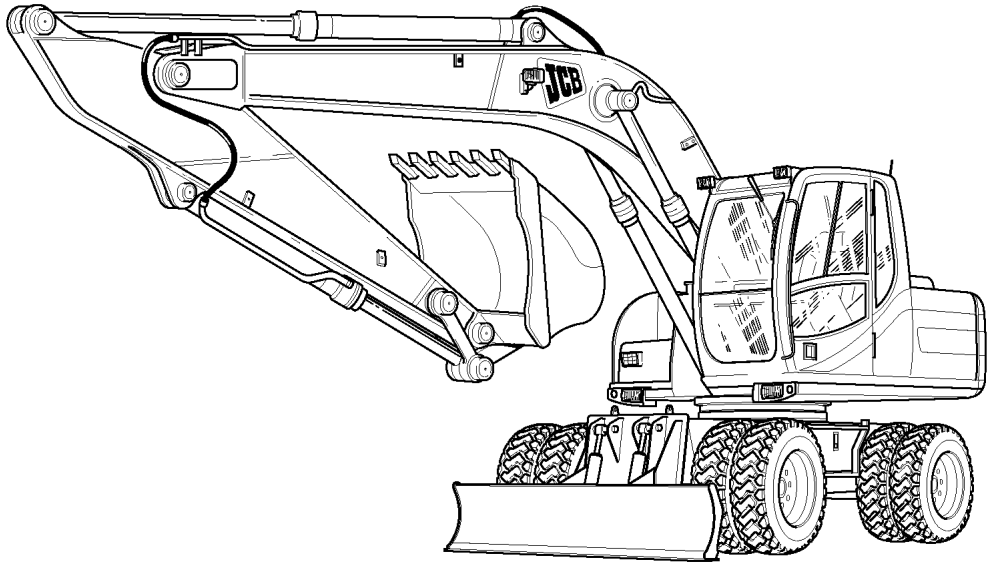

ACESSORIOS	A
CARROSSERIA, CABINE, CARREGADOR	B
SISTEMA ELECTRICO - MAQUINA, CABINE E MOTOR	C
COMANDOS - MAQUINA, MOTOR	D
SISTEMA HIDRAULICO	E
CAIXA LAGARTAS/GIRADOR	F
ENGINE 4JJ1-XYSJ01 TIER 3	R

910010

P.S.I.	Libras por Polegada Quadrada
A/R	Se Necessário
N.S.P.	Peça Não Revista
N/A	Não Aplicável/Não Disponível
HBCV	Válvula de Verificação Anti-rebentamento de Tubos
KP	Kingpost
SS	Sideshift
CM	Pivot Central
M.P.H.	Milhas por Hora
K.P.H.	Quilómetros por Hora
STD	Standard
O/D	Diâmetro Exterior
I/D	Diâmetro Interior
M.S.S.	Substituição Múltipla
T.I.	Informação Técnica
M/S	Transmissão Shift Manual
P/S	Transmissão Powershift
M TBA	Número de Série da Máquina ainda Desconhecido
SUPERSEDED	Peça Totalmente Substituível
TO M	Até ao Número de Série
M ON	A Partir do Número de Série
4WD	Tracção às 4 Rodas
LTR	Litro
L1=	Comprimento (vertical)
L2=	Comprimento (horizontal)
L=	Comprimento
MM	Milímetro
T=	Espessura
W/	Com
WO/	Sem
KG	Quilograma
LH	Lado Esquerdo
RH	Lado Direito
PTO	Potência de Arranque
S/M	Sitemaster
H/M	Hammermaster
PR	Par
4WS	Direcção às 4 Rodas
2WS	Direcção às 2 Rodas
C/W	Juntamente com

9809/0058	Desk Top Reader 240 Volt
9809/0059	Desk Top Reader 110 Volt
9809/0060	Bulb For 9809/0058 & 9809/0059
9809/0048	Bulb For 375 Reader
9809/0044	Case 2 Reader Portable
9809/0054	Bulb For Case 2 Reader Fhx
9809/0045	Case 4 Reader Large Screen
9809/0055	Bulb For Case 4 Reader Epz
9809/0007	Bulb For Bell & Howell Sr 1020
9809/0047	Bulb For Mt4 Reader
9809/0053	Hand Held Elite Reader
9809/0056	Bulb For Microscot Reader

Lens

9809/0017	Lens 29mm For Sr 1020

Binder & Panels

9809/0006	Binder For Fiche (service)
9809/0052	Binder For Fiche (prof. Prod. Support)
9809/0015	Binder Fiche Panels

PAGE	ILLN	ITEM	PART NUMBER	CHANGE NUMBER	DESCRIPTION
A2-3-1		2	331/47909		Toeplate
A2-3-1		4	1340/2401		Nut
A2-3-2		1	980/86140		Bucket
B1-2-1	*				
B1-4-1	*				
B1-5-1	*				
B1-5-5	*				
B1-5-20	*				
B1-5-40	*				
B1-6-1		1	335/13581		Counterweight
B1-11-1		25A	1316/4130		Bolt
B1-21-15		23	335/11676		Body
B2-1-10		32	826/11487		Latch
B2-1-10		33	826/11486		Latch
B2-1-10		34	6900/0619		Screw
B2-16-1		9	335/13853		Plate
B2-16-1		16	331/59705		Plate
B3-10-1		12	KLV0167		Pin
B3-10-1		13	6009/3724D		Bolt
B3-10-1		14	173R016VD		Nut
B5-1-1	*				
B5-1-1		3A	817/19832		Decal
B5-2-1	*				
B5-2-1		12	817/70003		Decal
B5-2-1		14	817/70116		Decal
B5-2-1		20	817/70117		Decal
B5-2-1		23	817/17526		Label
B5-2-1		30	332/J0613		Decal
B5-2-10	*				
C1-3-1	*				
C1-3-1		11	718/20026		Cable
C3-11-1		1	717/20225		Radio
C3-11-1		1	717/20226		Radio
C3-11-1		1	717/20227		Radio
C3-12-1	*				
C3-12-1		33	123/04999		Compressor
D1-1-1		27	928/60339		Valve
D1-1-1		30	331/57463		Bracket
D1-1-1		33	331/57439		Pedal
D1-2-10	*				
E1-1-1	*				
E1-2-1	*				
E1-3-1	*				
E1-4-10	*				
E1-10-1	*				
E1-13-1	*				
E1-17-1	*				
E1-17-1		13 03	627/10543		Hose
E1-17-1		13 04	627/10543		Hose
E1-22-10	*				
E1-25-1	*				
E1-29-10		44	830/13798		Tube
E1-29-30	*				
E1-30-1	*				
E1-30-10	*				
E1-30-10		5	KNJ0606		Adapter
E1-30-10		6	1609/0002		Adapter
E1-30-10		15	1315/0509D		Screw
E1-30-10		20	335/13018		Plate
E1-30-10		31 01	627/10407		Hose
E1-30-10		31 02	627/10407		Hose
E1-30-10		32	627/10519		Hose
E1-30-10		45	816/90712		Adapter
E1-31-1	*				

PAGE	ILLN	ITEM	PART NUMBER	CHANGE NUMBER	DESCRIPTION
E1-31-1		3	721/11632		Harness
E1-32-1	*				
E1-32-10	*				
E1-32-20	*				
E1-33-1	*				
E1-33-10	*				
E1-33-20	*				
E1-36-1	*				
E1-46-10		4	JLV1871		Hose
E1-46-10		5	JLV1868		Hose
E1-46-10		6	JLV0594		Hose
E1-46-10		7	JNJ0393		Hose
E1-46-10		9	KNJ1697		Hose
E1-46-10		17	KAJ2176		Adapter
E1-46-10		23	JLJ0055		Adapter
E1-48-1		3	CNA0584		Adapter
E1-48-1		12	JLV0594		Hose
E1-48-1		13	KHJ1335		Hose
E1-48-1		14	KTJ0812		Hose
E1-48-1		15	KTJ0813		Hose
E1-48-1		16	KNJ0605		Adapter
E1-48-1		17	627/10537	Superseded	Hose
E1-48-1		18	830/13253		Pipe
E1-48-1		21	335/11072		Bracket
E1-48-1		28	JLV0433		Adapter
E1-48-1		29	KHJ0869		Adapter
E1-48-20	*				
E1-61-1		1	928/60339		Valve
E1-61-1		12	KBJ2208		Hose
E1-61-1		13	JLV0719		Hose
E1-61-1		14	KSJ0806		Hose
E1-62-1		56E	KNJ1109		Hose
E1-62-1		56F	KNJ1109		Hose
E1-65-1		8	KNJ1119		Hose
E1-65-1		9	627/10382		Hose
E1-65-1		10	KNJ1314		Hose
E1-65-1		12	KBJ2348		Hose
E1-65-1		13	KSJ1871		Hose
E1-65-1		14	627/10199		Hose
E1-65-1		15	KTJ1215		Hose
E1-68-1		12	KNJ1109		Hose
E1-68-1		13	KNJ1109		Hose
E1-68-1		15	KNJ1109		Hose
E1-68-1		16	KNJ1109		Hose
E1-69-1	*				
E1-69-1		13	JNJ0418		Hose
E1-69-1		14	JNJ0418		Hose
E1-70-1		10	KRJ3577		Hose
E1-70-1		11	KNJ1849		Hose
E1-70-1		12	KRJ3571		Hose
E1-70-1		13	JLJ0326		Hose
E1-70-1		14	KBJ2346		Hose
E1-71-1		10	KNJ1119		Hose
E1-71-1		12	KNJ1314		Hose
E1-71-1		18	KNJ1956		Hose
E1-71-1		19	627/10382		Hose
E2-1-1	*				
E2-2-1	*				
E2-6-10		46A	20/951974		Kit-seal
E3-1-1	*				
E3-8-1		1	25/222885		Valve
E3-15-1		6	32/925838		Element
E3-17-1		2	32/925164		Element
E3-17-1		3	828/10081		O Ring

PAGE	ILLN	ITEM	PART NUMBER	CHANGE NUMBER	DESCRIPTION
E3-17-1		6	823/10181		Washer
E3-17-1		7	823/10201		Washer
F3-2-1		1	331/49505		Wheel
F3-2-1		1	331/49504		Wheel
F3-2-1		3	42/925276		Tyre
F4-5-1		1	KRB0697		Pipe
F4-5-1		2	KRB0696		Pipe
R1-4-1		7	02/802460		Kit-main bearing
R1-4-1		7	02/801713		Kit-bearing
R1-4-1		7	02/802461		Kit-main bearing
R1-4-1		7	02/802462		Kit-main bearing
R1-4-1		15	02/802470		Piston
R1-4-1		15	02/802471		Piston
R1-4-1		18	02/802472		Kit-piston ring
R1-6-1		6	02/802505		Gasket
R1-6-1		6	02/802506		Gasket
R1-7-1		3	02/802154		Nut
R2-1-1		11	02/802367		Gasket
R2-1-1		11	02/802368		Gasket
R4-3-1	*				
R5-3-1		1 01	02/801481		Element
R7-5-2	*				
R8-1-1		1	02/802344		Kit-gasket
R8-1-2		1	02/802347		Kit-gasket

JS160W

TITLE	PAGE NUMBER	CHANGE NUMBER

A ACESSORIOS

BALDES A2

BUCKET, GRADING/DITCHING, 1524MM. WIDE	A2-3-2	
BUCKET, GRADING/DITCHING, 1829MM. 72" WIDE	A2-3-1	
BUCKET, 1000 WIDE, 0.71 CUBIC METRES	A2-1-7	
BUCKET, 1050MM HEAVY DUTY	A2-1-26	
BUCKET, 1100 WIDE, 0.81 CUBIC METRES	A2-1-8	
BUCKET, 1150MM HEAVY DUTY	A2-1-27	
BUCKET, 1200 WIDE, 0.90 CUBIC METRES	A2-1-9	
BUCKET, 1250MM HEAVY DUTY	A2-1-28	
BUCKET, 1300 WIDE, 0.99 CUBIC METRES	A2-1-10	
BUCKET, 450MM,HEAVY DUTY	A2-1-20	
BUCKET, 500 WIDE, 0.26 CUBIC METRES	A2-1-1	
BUCKET, 550MM HEAVY DUTY	A2-1-21	
BUCKET, 600 WIDE, 0.35 CUBIC METRES	A2-1-2	
BUCKET, 650MM HEAVY DUTY	A2-1-22	
BUCKET, 700 WIDE, 0.44 CUBIC METRES	A2-1-3	
BUCKET, 750 WIDE, 0.47 CUBIC METRES	A2-1-4	
BUCKET, 750MM HEAVY DUTY	A2-1-23	
	A2-1-24	
BUCKET, 800 WIDE, 0.53 CUBIC METRES	A2-1-5	
BUCKET, 900 WIDE, 0.62 CUBIC METRES	A2-1-6	
BUCKET, 950MM HEAVY DUTY	A2-1-25	

ACESSORIOS A3

QUICKHITCH, HYDRAULIC, MPG, MILLER	A3-11-1	
QUICKHITCH, JS160, HYDRAULIC, BUG, MILLER	A3-10-1	
QUICKHITCH, MANUAL	A3-9-1	
ROCKBREAKER HM 860Q, JS160W, 980/90214, 980/90474	A3-1-1	
ROCKBREAKER HM1260Q, JS160W, 980/90216, 980/90291	A3-2-1	

B CARROSSERIA, CABINE, CARREGADOR

CARROSSERIA/CHASSIS B1

BAFFLES, PUMP BAY	B1-5-50	
CHASSIS, WITH TOOLBOX	B1-9-1	
CONTRAPESO TRASEIRO	B1-6-1	
COVERS, UNDERSIDE MAINFRAME	B1-2-1	
COWLINGS, ENGINE BULKHEAD	B1-5-40	
COWLINGS, TOOLBOX & HAND RAIL	B1-5-30	
DEPFSITO, HIDRAULICO	B1-3-1	
DEPFSITO,COMBUSTIVEL	B1-4-1	
DOORS WITH FITTINGS, LEFT HAND SIDE BODY, RIGHT HAND SIDE BODY	B1-5-10	
ENGINE COVERS	B1-5-5	
ESTRUTURA PRINCIPAL	B1-1-1	
	B1-1-10	
FRAME SUPPORT	B1-5-1	
GRILLES, & TREAD PLATES	B1-5-20	
LAMINA, NIVELAMENTO	B1-11-1	
STABILISER, FRONT & REAR	B1-21-15	
WHEELCHOCK, GERMAN	B1-9-10	

CABINE B2

CAB	B2-1-1	
CAB DOOR, COMPONENTS	B2-2-1	
CAB MOUNTINGS, CAB FOOR & MAT	B2-16-1	
CAB PANELS	B2-8-1	
CAB, MOUNTING FASTENERS	B2-1-30	
CONSOLE, CAB SERVO CONTROL, LEFT HAND, FIXED CONSOLE	B2-4-1	
CONSOLE, CAB SERVO CONTROL, RIGHT HAND	B2-5-1	
DIRECT GLAZING, REPLACEMENT MATERIAL	B2-18-1	
ESPELHOS RETROVISOREEXTERIORES	B2-7-2	
EXTINTOR	B2-11-1	
FLOOR COMPONENTS, SEAT SLIDE, LEVER ISOLATOR	B2-10-1	
FRONT SCREEN, UPPER & LOWER	B2-1-10	
FRONT WIPER, & CAB COMPONENTS	B2-1-20	
FRONT WIPER, CAB LOWER WINDOW, SEE C3-15-10	B2-15-1	

TITLE	PAGE NUMBER	CHANGE NUMBER
GUARD, FOPS CAGE, FRONT GUARD SALES OPTION	B2-9-20	
GUARD, FOPS, FRONT AND TOP, CAB MOUNTED	B2-9-1	
LIMPA PARA-BRISAS PARA-BRISAS	B2-6-1	
RAIN VISOR, CAB	B2-12-1	
SEAT BELT, STANDARD	B2-3-30	
SEAT BELT, 76MM (3") WIDE, OPTIONAL	B2-3-40	
SEAT, AIR SUSPENSION, HIGH BACK	B2-3-20	
SEAT, HIGH BACK, STANDARD	B2-3-1	
VANDAL GUARD, CAB, 3PC FRONT PANEL	B2-14-1	
SECCAO CARREGADOR	**B3**	
BOOM GREASING, MONO BOOM	B3-4-1	
BOOM GREASING, TAB BOOM	B3-4-10	
BOOM, LOWER, TRIPLE ARTICULATING	B3-10-1	
BOOM, UPPER, TRIPLE ARTICULATING	B3-11-1	
BRACO	B3-1-1	
BRIDGE BASHING, U K ONLY	B3-12-1	
DIPPER 2.70M	B3-2-10	
LANCA 2.25M	B3-2-1	
LANCA 3.0M	B3-2-20	
MATERIAL DE REABASTECIMENTO	**B5**	
DECALS, MACHINE	B5-1-1	
DECALS, MACHINE, CONTROL LABELS	B5-2-10	
DECALS, WARNING	B5-2-1	
DECALS, WARNING, USA BUILD	B5-3-1	
FERRAMENTAS	B5-4-1	

C SISTEMA ELECTRICO - MAQUINA, CABINE E MOTOR

SISTEMA ELECTRICO PRINCIPAL	**C1**	
ALARME, INVERSAO	C1-7-1	
FAROL, TRABALHO BRACO	C1-6-10	
HORN	C1-8-1	
INSTALACAO BATERIA 24 VOLTS	C1-3-1	
LIGHT, WORKING, CAB & REAR, USE WITH RAIN GUARD	C1-6-20	
ROAD LIGHTS, ROW, RIGHT HAND DIP	C1-4-10	
ROAD LIGHTS, UK, LEFT HAND DIP	C1-4-1	
SIST.ELECTR., CABINA	C1-2-1	
SIST.ELECTR.,MAQUINA	C1-1-1	
SISTEMA ELECTRICO MOTOR	**C2**	
ALTERNATOR	C2-4-1	
ALTERNATOR MOUNTINGS	C2-5-1	
ECU HARNESS	C2-2-1	
ENGINE ELECTRICS	C2-1-1	
ENGINE, CONTROL MODULE	C2-1-2	
MOTOR,STARTER	C2-3-1	
SISTEMA ELECTRICO CABINE	**C3**	
AIR CON	C3-12-1	
	C3-12-10	
CIGAR LIGHTER	C3-14-1	
COMBI UNIT FIG 2	C3-12-20	
FRONT WIPER, CAB LOWER WINDOW	C3-15-10	
FUSE BOX	C3-7-1	
HEATER	C3-5-1	
HEATER UNIT	C3-5-10	
HEATER UNIT FIG 2	C3-5-20	
LIMPA PARA-BRISAS PARA-BRISAS	C3-15-1	
LUZ, FAROL ROTATIVO AVISO DE PERIGO AMBAR	C3-9-1	
RADIO	C3-11-1	
SWITCH PANEL, SIDE CONSOLE, RIGHT HAND	C3-2-1	

D COMANDOS - MAQUINA, MOTOR

COMANDOS, MAQUINA	**D1**	
COMADOS, ESCAVADORA	D1-1-1	
PEDAL CONTROLS, MONO BOOM BUILD	D1-2-1	
PEDAL CONTROLS, TAB BOOM BUILD	D1-2-10	

TITLE	PAGE NUMBER	CHANGE NUMBER
COMANDOS MOTOR	**D2**	
CONTROLS, THROTTLE & STOP, CAB	D2-2-1	
COLUNA DE DIRECCAO	**D3**	
STEERING COLUMN	D3-1-1	

E SISTEMA HIDRAULICO

MANGUERIAS E TUBAGEM	**E1**	
ARM HIGHT LIMITER, OPTIONAL, MONO BOOM	E1-36-1	
CIRCUIT, AUXILIARY LOW FLOW, MONO BOOM BUILD	E1-29-20	
CIRCUIT, AUXILIARY LOW FLOW, TAB BOOM BUILD	E1-29-30	
CIRCUIT, AUXILIARY/HAMMER, MONO BOOM	E1-30-20	
CIRCUIT, AUXILIARY, HAMMER & LOW FLOW, MONO BOOM	E1-31-20	
CIRCUIT, AUXILIARY, HAMMER & LOW FLOW, TAB BOOM	E1-31-30	
CIRCUIT, BOOM & DIPPER HBCV, MONO BOOM	E1-25-1	
CIRCUIT, BOOM & DIPPER HBCV, TAB BOOM (2 VALVE HBCV BOOM ONLY)	E1-25-10	
CIRCUIT, BOOM & DIPPER HBCV, TAB BOOM (3 & 4 VALVE HBCV)	E1-25-20	
CIRCUIT, BOOM POSITION RAM, HBCV FEED & RETURN, TAB BOOM	E1-48-30	
CIRCUIT, BOOM POSITION RAM, MAINFRAME	E1-48-1	
CIRCUIT, BOOM POSITION RAM, TAB, WITH HBCV	E1-48-20	
CIRCUIT, BRAKES, LOWER CHASSIS	E1-15-1	
CIRCUIT, BUCKET RAM, MONOBOOM	E1-23-1	
CIRCUIT, BUCKET, GRAB CHANGEOVER	E1-34-1	
CIRCUIT, BYPASS, HYDRAULIC FILTER	E1-8-1	
CIRCUIT, CRUISE CONTROL	E1-50-1	
CIRCUIT, DIPPER RAM, & BUCKET RAM, TAB BOOM	E1-22-10	
CIRCUIT, DIPPER RAM, HBCV FEED & RETURN	E1-26-1	
CIRCUIT, DIPPER RAM, MONOBOOM	E1-22-1	
CIRCUIT, DOZER CONTROL, MAINFRAME	E1-45-1	
CIRCUIT, DOZER/STAB CONTROL	E1-45-10	
CIRCUIT, DOZER/STAB, MAINFRAME	E1-46-1	
CIRCUIT, DRAIN, MOTOR & SOLENOID	E1-10-1	
CIRCUIT, DUAL CONTROLS, STANDARD USA, OPTIONAL UK WORLD	E1-14-1	
CIRCUIT, FAN DRIVE	E1-9-1	
CIRCUIT, FRONT & REAR STAB, CHASSIS	E1-46-30	
CIRCUIT, FRONT DOZER, REAR STAB, CHASSIS	E1-46-10	
	E1-46-15	
CIRCUIT, FRONT STAB, REAR DOZER, CHASSIS	E1-46-40	
CIRCUIT, HAMMER, AUXILIARY BOOM PIPES, TAB BOOM	E1-30-30	
CIRCUIT, HAMMER, AUXILIARY, MAINFRAME MONO BOOM	E1-31-1	
CIRCUIT, HAMMER, AUXILIARY, MAINFRAME TAB BOOM	E1-31-10	
CIRCUIT, HAMMER, FULLFLOW 2.25 DIPPER	E1-33-1	
CIRCUIT, HAMMER, FULLFLOW 2.7 DIPPER	E1-33-10	
CIRCUIT, HAMMER, FULLFLOW 3.05 DIPPER	E1-33-20	
CIRCUIT, HAMMER, MAINFRAME, MONO BOOM	E1-30-1	
	E1-30-40	
CIRCUIT, HAMMER, MAINFRAME, TAB BOOM	E1-30-10	
CIRCUIT, LOW FLOW, AUXILIARY, MAINFRAME , TAB BOOM BUILD	E1-29-10	
CIRCUIT, LOW FLOW, AUXILIARY, MAINFRAME, MONO BOOM BUILD	E1-29-1	
CIRCUIT, LOW FLOW, 2.25M DIPPER	E1-32-1	
CIRCUIT, LOW FLOW, 2.7M DIPPER	E1-32-10	
CIRCUIT, LOW FLOW, 3.05M DIPPER	E1-32-20	
CIRCUIT, MANIFOLD, UNDER CAB	E1-68-1	

TITLE	PAGE NUMBER	CHANGE NUMBER
CIRCUIT, MILLER Q. HITCH, 980/ 90463	E1-60-1	
CIRCUIT, NEUTRAL PRESSURE	E1-2-1	
CIRCUIT, NEUTRAL, RETURN & OIL COOLER	E1-3-1	
CIRCUIT, NON-HBCV, BOOM POSITION RAM	E1-48-10	
CIRCUIT, PILOT LINE, MAIN CONTROL VALVE	E1-71-1	
CIRCUIT, PUMP SUCTION	E1-1-1	
CIRCUIT, REAR DOZER, CHASSIS	E1-47-1	
CIRCUIT, REAR DOZER, CHASSIS, PLUS LOGIC VALVE OPTION	E1-47-10	
CIRCUIT, REAR STAB, CHASSIS	E1-46-20	
CIRCUIT, RETURN LINE, PILOT PRESSURE, MAIN CONTROL VALVE	E1-72-1	
CIRCUIT, STEERING &, BRAKES, MAINFRAME	E1-17-10	
CIRCUIT, STEERING, CHASSIS	E1-17-1	
CIRCUIT, SWING	E1-6-1	
CIRCUIT, TANK MANIFOLD	E1-69-1	
CIRCUIT, TEST POINTS	E1-35-1	
CIRCUIT, TRACTION, LOWER CHASSIS	E1-5-1	
CIRCUIT, VALVE, CUSHION	E1-65-1	
CIRCUIT, VALVE, DRIVE PEDAL	E1-61-1	
CIRCUIT, VALVE, LH CONTROLLER	E1-62-1	
CIRCUIT, VALVE, PILOT SHUTTLE	E1-70-1	
CIRCUIT, VALVE, RH CONTROLLER	E1-63-1	
CIRCUIT, VALVE, SHUTTLE	E1-66-1	
CIRCUIT, VALVE, SOLENOID	E1-67-1	
CIRCUIT, VALVE, 3 STATION	E1-64-1	
CIRCUITO LANCA E BALDE	E1-21-1	
CIRCUITO, RASTOS ESTRUTURA PRINCIPAL	E1-4-1	
	E1-4-10	
CIRCUITO, SERVO NEUTRO FIG 1	E1-12-1	
	E1-13-1	
CIRCUITO,CILIN. BRACOESTRUTURA PRINCIPAL	E1-20-1	
	E1-20-10	
BOMBA/MOTOR E ACIONAM. BOMBA	**E2**	
BOMBA, PISTON HIDRAULICO PRINCIPALE COMPONENTES FIG 1	E2-2-1	
MOTOR, DRIVE, FIG 1	E2-6-10	
MOTOR, DRIVE, FIG 2	E2-6-11	
MOTOR, SWING	E2-7-1	
PUMP, MAIN HYDRAULIC	E2-1-1	
VALVULAS E FILTROS HIDRAULICOS	**E3**	
FILTER, AUXILIARY/HAMMER, RETURN	E3-16-1	
FILTER, BYPASS, HYDRAULIC	E3-17-1	
FILTER, HYDRAULIC, STEER CIRCUIT	E3-16-10	
JUNTA, ROTATIVA	E3-14-20	
LUBRIFIC. E FILTROS	E3-15-1	
MOUNTINGS, ROTARY COUPLING	E3-14-1	
OILS, BIODEGRADABLE, HYDRAULIC	E3-15-10	
VALVE, BRAKE PEDAL	E3-3-1	
VALVE, HAMMER	E3-24-1	
VALVE, PILOT SHUTTLE	E3-23-1	
VALVE, RELIEF, SERVICE PORT	E3-2-45	
VALVE, SOLENOID	E3-8-1	
VALVE, SOLENOID, TAB HAMMER, JS175W AUTO T3	E3-9-1	
VALVULA, COMANDO COMPONENTES FIG 1	E3-2-1	
VALVULA, COMANDO COMPONENTES FIG 2	E3-2-2	
VALVULA, CONJUNTO E ACESS. MONTAGEM	E3-1-1	
VALVULA, DIRECCAO	E3-40-1	
VALVULA,COMANDO MANUSERVO	E3-6-1	
CILINDROS	**E4**	
CILINDRO DO BRACO	E4-1-1	
	E4-1-10	
	E4-1-30	
CILINDRO, LANCA	E4-2-1	
CIRCUIT, BOOM RAM, WITH HBCV, TAB BOOM	E4-1-20	
RAM, AXLE LOCK	E4-6-1	
RAM, DIPPER, ASSEMBLY WITH HBCV, MONO BOOM & TAB BOOM	E4-2-10	
RAM, DIPPER, COMPONENTS	E4-2-20	

TITLE	PAGE NUMBER	CHANGE NUMBER
RAM, POSITION, ASSEMBLY, TAB BOOM, WITHOUT HBCV	E4-7-1	
RAM, POSITION, HBCV, ASSEMBLY	E4-7-10	

F CAIXA LAGARTAS/ GIRADOR

AXLES, FRONT F1

ARTICULACAO	F1-4-1	
CROWN WHEEL & PINION, 18. 16:1 AXLE, 453/30800	F1-6-1	
CUBO E COMPONENTES EIXO C/TRAVOES CUBOS	F1-3-1	
DIFFERENTIAL, ASSEMBLY, 18. 16:1, STEER AXLE 453/30800	F1-5-1	
EIXO COMPLETO FRONTAL	F1-1-1	
RAM, STEERING AXLE, INSTALLATION	F1-7-1	

AXLES, REAR F2

CONJUNTO DO EIXO TRASEIRO	F2-1-1	
CROWN WHEEL & PINION, 18. 16:1 AXLE, 450/42700	F2-6-1	
CUBO E COMPONENTES EIXO C/TRAVOES CUBOS	F2-3-1	
DIFFERENTIAL, ASSEMBLY, 18. 16:1, 450/42700	F2-5-1	

WHEELS, TYRES & PROPSHAFTS F3

VEIOS TRANSMISSAO TRANSMISSAO	F3-1-1	
WHEELS & TYRES, DUALS	F3-4-1	
WHEELS & TYRES, DUALS, 10. 00 X 20 EM22 16PR & EM23	F3-3-1	
WHEELS & TYRES, FLOATATION, LEFT HAND SIDE FRONT AND REAR	F3-5-1	
WHEELS & TYRES, SINGLES	F3-2-1	

SLEW GEARBOXES F4

CIRCUIT, SWING RING GREASING	F4-5-1	
GEARBOX, SWING	F4-4-1	
MOTOR, SWING	F4-3-1	

TRANSMISSION F5

GRUPO DA ENGRENAGEMPLANETARIA DA CAIXADE VELOCIDADES	F5-8-1	
GRUPO DAS TUBAGENS DE OLEO DA CAIXA DE VELOCIDADES	F5-3-1	
GRUPO DE SAIDA DA CAIXA DE VELOCIDADES	F5-10-1	
GRUPO DO COMPARTIMENTO DA CAIXO DE VELOCIDADES	F5-2-1	
GRUPO DO COMPARTIMENTO DE ENTRADA DA CAIXA DE VELOCIDADES	F5-4-1	
GRUPO DO SENSOR DE MUDANCA DE VELOCIDADES DA CAIXA DE VELOCIDADES	F5-9-1	
GRUPO DOS DISCOS DEEMBRAIAGEM DA CAIXADE VELOCIDADES	F5-6-1	
GRUPO DOS DISCOS DETRAVAGEM DA CAIXA DE VELOCIDADES	F5-7-1	
TRANSMISSAO POWERSHIFT	F5-1-1	

R ENGINE 4JJ1-XYSJ01 TIER 3

ENGINE BLOCK & SUB-ASSEMBLIES R1

BLOCK ASSEMBLY	R1-3-1	
CAMBOTA, BRONZES PISTONS E BIELAS	R1-4-1	
CAMSHAFTS, & TIMING GEARS	R1-6-2	
ENGINE, COMPLETE, 4JJ1-XYSJ01	R1-1-1	
FANS,PULLEYS & BELTS, EU ONLY	R1-5-1	
FANS,PULLEYS & BELTS, NON EU	R1-5-2	
FLYWHEEL & HOUSING	R1-7-1	
SUPORTES DO MOTOR	R1-8-1	
TIMING CASE, & FRONT COVER	R1-6-1	

CYLINDER HEAD & SUB-ASSEMBLIES R2

BALANCINS, COMPLETOSVALVULA ESC/ ADMIS	R2-2-1	

TITLE	PAGE NUMBER	CHANGE NUMBER
CABECA DO MOTOR	R2-1-1	
LIFTING PLATES	R2-6-1	
ROCKER COVER, & BREATHER PIPE	R2-3-1	
INDUCTION & EXHAUST SYSTEMS	**R3**	
EXHAUST SYSTEM	R3-4-1	
EXHAUST, RECIRCULATION	R3-5-1	
FILTRO, AR	R3-3-1	
MANIFOLD, EXHAUST	R3-2-1	
MANIFOLD, INDUCTION	R3-1-1	
SYSTEM, COOLING	**R4**	
CHARGE AIR COOLER	R4-7-1	
COOLER COMBINATION, MOUNTING &, SOUND PROOFING	R4-3-1	
EXHAUST, RECIRCULATION, WATER COOLING	R4-8-1	
PUMP WATER	R4-1-1	
RADIADOR MANGUEIRAS E ACESSF.	R4-4-1	
RADIADOR MANGUEIRASE ACESSF.	R4-5-1	
THERMOSTAT,HOUSING, & PIPEWORK	R4-2-1	
SYSTEM, LUBRICATION	**R5**	
BOMBA, FLEO	R5-2-1	
CARTER, FLEO E ACESSFRIOS	R5-1-1	
COOLER, ENGINE OIL	R5-4-1	
OIL FILTER, REMOTE MOUNTED	R5-3-1	

TITLE	PAGE NUMBER	CHANGE NUMBER
SYSTEM, FUEL	**R6**	
FILTRO SEDIMENTO COMBUSTIVE	R6-6-1	
FILTRO, COMBUSTIVEL	R6-7-1	
FUEL LIFT PUMP	R6-8-1	
FUEL SYSTEM	R6-4-1	
PUMP, FUEL INJECTION, INSTALLATION	R6-1-1	
SISTEMA DE COMBUSTIV	R6-2-1	
EQUIPMENT, AUXILIARY	**R7**	
COMPRESSOR AR CONDICIONADO	R7-6-1	
COMPRESSOR 12 VOLTS AR CONDICIONADO	R7-5-2	
TURBO, TUBAGEM	R7-2-1	
TURBOCHARGER	R7-1-1	
GASKET SETS	**R8**	
GASKET SET, CYLINDER HEAD, OVERHAUL	R8-1-2	
GASKET SET, ENGINE OVERHAUL	R8-1-1	

WHEELED EXCAVATOR

M1421699 to M1421799
Model JS160W T3 ENGINE

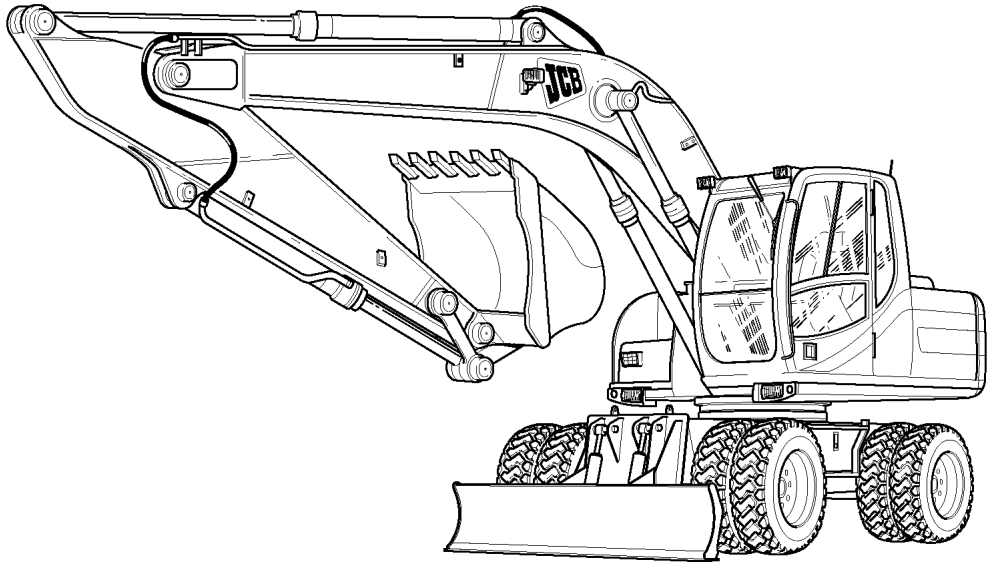

ACCESORIOS	A
CARROCERIA, CABINA, SECCION CARGADORA	B
INSTALACION ELECTRICA-MAQUINA, CABINA Y MOTOR	C
MANDOS-MAQUINA, MOTOR	D
SISTEMA HIDRAULICO	E
REDUCTOR DE GIRO/MOTRICES	F
ENGINE 4JJ1-XYSJ01 TIER 3	R

910010

P.S.I.	Libbre per pollice quadrato
A/R	Secondo necessità
N.S.P.	Particolare che non necessita di manutenzione
N/A	Non valido/Non disponibile
HBCV	Valvola di non ritorno sicurezza antiscoppio tubazioni
KP	Perno snodo
SS	Retroescavatore traslabile
CM	Retroescavatore fisso
M.P.H.	Miglia per ora
K.P.H.	Chilometri per ora
STD	Normale
O/D	Diametro esterno
I/D	Diametro interno
M.S.S.	Annullamento/sostituzione multipla
T.I.	Bollettino tecnico
M/S	Cambio meccanico
P/S	Cambio automatico
M TBA	N° serie macchina non deliberato
SUPERSEDED	Intercambiabile
TO M	Fino al N° macchina
M ON	Dal N° macchina
4WD	4 ruote motrice
LTR	Litro
L1=	Lunghezza (verticale)
L2=	Lunghezza (orizzontale)
L=	Lunghezza
MM	Millimetri
T=	Spessore
W/	Con
WO/	Senza
KG	Chilogrammo
LH	Sinistro
RH	Destro
PTO	Presa di forza
S/M	Cantiere
H/M	Martello
PR	Coppia
4WS	4 ruote sterzanti
2WS	2 ruote sterzanti
C/W	Completo di

9809/0058	Desk Top Reader 240 Volt
9809/0059	Desk Top Reader 110 Volt
9809/0060	Bulb For 9809/0058 & 9809/0059
9809/0048	Bulb For 375 Reader
9809/0044	Case 2 Reader Portable
9809/0054	Bulb For Case 2 Reader Fhx
9809/0045	Case 4 Reader Large Screen
9809/0055	Bulb For Case 4 Reader Epz
9809/0007	Bulb For Bell & Howell Sr 1020
9809/0047	Bulb For Mt4 Reader
9809/0053	Hand Held Elite Reader
9809/0056	Bulb For Microscot Reader

Lens

9809/0017	Lens 29mm For Sr 1020

Binder & Panels

9809/0006	Binder For Fiche (service)
9809/0052	Binder For Fiche (prof. Prod. Support)
9809/0015	Binder Fiche Panels

PAGE	ILLN	ITEM	PART NUMBER	CHANGE NUMBER	DESCRIPTION
A2-3-1		2	331/47909		Toeplate
A2-3-1		4	1340/2401		Nut
A2-3-2		1	980/86140		Bucket
B1-2-1	*				
B1-4-1	*				
B1-5-1	*				
B1-5-5	*				
B1-5-20	*				
B1-5-40	*				
B1-6-1		1	335/13581		Counterweight
B1-11-1		25A	1316/4130		Bolt
B1-21-15		23	335/11676		Body
B2-1-10		32	826/11487		Latch
B2-1-10		33	826/11486		Latch
B2-1-10		34	6900/0619		Screw
B2-16-1		9	335/13853		Plate
B2-16-1		16	331/59705		Plate
B3-10-1		12	KLV0167		Pin
B3-10-1		13	6009/3724D		Bolt
B3-10-1		14	173R016VD		Nut
B5-1-1	*				
B5-1-1		3A	817/19832		Decal
B5-2-1	*				
B5-2-1		12	817/70003		Decal
B5-2-1		14	817/70116		Decal
B5-2-1		20	817/70117		Decal
B5-2-1		23	817/17526		Label
B5-2-1		30	332/J0613		Decal
B5-2-10	*				
C1-3-1	*				
C1-3-1		11	718/20026		Cable
C3-11-1		1	717/20225		Radio
C3-11-1		1	717/20226		Radio
C3-11-1		1	717/20227		Radio
C3-12-1	*				
C3-12-1		33	123/04999		Compressor
D1-1-1		27	928/60339		Valve
D1-1-1		30	331/57463		Bracket
D1-1-1		33	331/57439		Pedal
D1-2-10	*				
E1-1-1	*				
E1-2-1	*				
E1-3-1	*				
E1-4-10	*				
E1-10-1	*				
E1-13-1	*				
E1-17-1	*				
E1-17-1		13 03	627/10543		Hose
E1-17-1		13 04	627/10543		Hose
E1-22-10	*				
E1-25-1	*				
E1-29-10		44	830/13798		Tube
E1-29-30	*				
E1-30-1	*				
E1-30-10	*				
E1-30-10		5	KNJ0606		Adapter
E1-30-10		6	1609/0002		Adapter
E1-30-10		15	1315/0509D		Screw
E1-30-10		20	335/13018		Plate
E1-30-10		31 01	627/10407		Hose
E1-30-10		31 02	627/10407		Hose
E1-30-10		32	627/10519		Hose
E1-30-10		45	816/90712		Adapter
E1-31-1	*				

PAGE	ILLN	ITEM	PART NUMBER	CHANGE NUMBER	DESCRIPTION
E1-31-1		3	721/11632		Harness
E1-32-1	*				
E1-32-10	*				
E1-32-20	*				
E1-33-1	*				
E1-33-10	*				
E1-33-20	*				
E1-36-1	*				
E1-46-10		4	JLV1871		Hose
E1-46-10		5	JLV1868		Hose
E1-46-10		6	JLV0594		Hose
E1-46-10		7	JNJ0393		Hose
E1-46-10		9	KNJ1697		Hose
E1-46-10		17	KAJ2176		Adapter
E1-46-10		23	JLJ0055		Adapter
E1-48-1		3	CNA0584		Adapter
E1-48-1		12	JLV0594		Hose
E1-48-1		13	KHJ1335		Hose
E1-48-1		14	KTJ0812		Hose
E1-48-1		15	KTJ0813		Hose
E1-48-1		16	KNJ0605		Adapter
E1-48-1		17	627/10537	Superseded	Hose
E1-48-1		18	830/13253		Pipe
E1-48-1		21	335/11072		Bracket
E1-48-1		28	JLV0433		Adapter
E1-48-1		29	KHJ0869		Adapter
E1-48-20	*				
E1-61-1		1	928/60339		Valve
E1-61-1		12	KBJ2208		Hose
E1-61-1		13	JLV0719		Hose
E1-61-1		14	KSJ0806		Hose
E1-62-1		56E	KNJ1109		Hose
E1-62-1		56F	KNJ1109		Hose
E1-65-1		8	KNJ1119		Hose
E1-65-1		9	627/10382		Hose
E1-65-1		10	KNJ1314		Hose
E1-65-1		12	KBJ2348		Hose
E1-65-1		13	KSJ1871		Hose
E1-65-1		14	627/10199		Hose
E1-65-1		15	KTJ1215		Hose
E1-68-1		12	KNJ1109		Hose
E1-68-1		13	KNJ1109		Hose
E1-68-1		15	KNJ1109		Hose
E1-68-1		16	KNJ1109		Hose
E1-69-1	*				
E1-69-1		13	JNJ0418		Hose
E1-69-1		14	JNJ0418		Hose
E1-70-1		10	KRJ3577		Hose
E1-70-1		11	KNJ1849		Hose
E1-70-1		12	KRJ3571		Hose
E1-70-1		13	JLJ0326		Hose
E1-70-1		14	KBJ2346		Hose
E1-71-1		10	KNJ1119		Hose
E1-71-1		12	KNJ1314		Hose
E1-71-1		18	KNJ1956		Hose
E1-71-1		19	627/10382		Hose
E2-1-1	*				
E2-2-1	*				
E2-6-10		46A	20/951974		Kit-seal
E3-1-1	*				
E3-8-1		1	25/222885		Valve
E3-15-1		6	32/925838		Element
E3-17-1		2	32/925164		Element
E3-17-1		3	828/10081		O Ring

PAGE	ILLN	ITEM	PART NUMBER	CHANGE NUMBER	DESCRIPTION
E3-17-1		6	823/10181		Washer
E3-17-1		7	823/10201		Washer
F3-2-1		1	331/49505		Wheel
F3-2-1		1	331/49504		Wheel
F3-2-1		3	42/925276		Tyre
F4-5-1		1	KRB0697		Pipe
F4-5-1		2	KRB0696		Pipe
R1-4-1		7	02/802460		Kit-main bearing
R1-4-1		7	02/801713		Kit-bearing
R1-4-1		7	02/802461		Kit-main bearing
R1-4-1		7	02/802462		Kit-main bearing
R1-4-1		15	02/802470		Piston
R1-4-1		15	02/802471		Piston
R1-4-1		18	02/802472		Kit-piston ring
R1-6-1		6	02/802505		Gasket
R1-6-1		6	02/802506		Gasket
R1-7-1		3	02/802154		Nut
R2-1-1		11	02/802367		Gasket
R2-1-1		11	02/802368		Gasket
R4-3-1	*				
R5-3-1		1 01	02/801481		Element
R7-5-2	*				
R8-1-1		1	02/802344		Kit-gasket
R8-1-2		1	02/802347		Kit-gasket

JS160W

TITLE	PAGE NUMBER	CHANGE NUMBER

A ACCESORIOS

CUCHARAS A2

BUCKET, GRADING/DITCHING, 1524MM. WIDE	A2-3-2	
BUCKET, GRADING/DITCHING, 1829MM. 72" WIDE	A2-3-1	
BUCKET, 1000 WIDE, 0.71 CUBIC METRES	A2-1-7	
BUCKET, 1050MM HEAVY DUTY	A2-1-26	
BUCKET, 1100 WIDE, 0.81 CUBIC METRES	A2-1-8	
BUCKET, 1150MM HEAVY DUTY	A2-1-27	
BUCKET, 1200 WIDE, 0.90 CUBIC METRES	A2-1-9	
BUCKET, 1250MM HEAVY DUTY	A2-1-28	
BUCKET, 1300 WIDE, 0.99 CUBIC METRES	A2-1-10	
BUCKET, 450MM,HEAVY DUTY	A2-1-20	
BUCKET, 500 WIDE, 0.26 CUBIC METRES	A2-1-1	
BUCKET, 550MM HEAVY DUTY	A2-1-21	
BUCKET, 600 WIDE, 0.35 CUBIC METRES	A2-1-2	
BUCKET, 650MM HEAVY DUTY	A2-1-22	
BUCKET, 700 WIDE, 0.44 CUBIC METRES	A2-1-3	
BUCKET, 750 WIDE, 0.47 CUBIC METRES	A2-1-4	
BUCKET, 750MM HEAVY DUTY	A2-1-23	
	A2-1-24	
BUCKET, 800 WIDE, 0.53 CUBIC METRES	A2-1-5	
BUCKET, 900 WIDE, 0.62 CUBIC METRES	A2-1-6	
BUCKET, 950MM HEAVY DUTY	A2-1-25	

ACCESORIOS A3

QUICKHITCH, HYDRAULIC, MPG, MILLER	A3-11-1	
QUICKHITCH, JS160, HYDRAULIC, BUG, MILLER	A3-10-1	
QUICKHITCH, MANUAL	A3-9-1	
ROCKBREAKER HM 860Q, JS160W, 980/90214, 980/90474	A3-1-1	
ROCKBREAKER HM1260Q, JS160W, 980/90216, 980/90291	A3-2-1	

B CARROCERIA, CABINA, SECCION CARGADORA

CARROCERIA/BASTIDORB1

BAFFLES, PUMP BAY	B1-5-50	
CHASSIS, WITH TOOLBOX	B1-9-1	
CONTRAPESO TRASERO	B1-6-1	
COVERS, UNDERSIDE MAINFRAME	B1-2-1	
COWLINGS, ENGINE BULKHEAD	B1-5-40	
COWLINGS, TOOLBOX & HAND RAIL	B1-5-30	
CUCHILLA, DOZER	B1-11-1	
DOORS WITH FITTINGS, LEFT HAND SIDE BODY, RIGHT HAND SIDE BODY	B1-5-10	
ENGINE COVERS	B1-5-5	
ESTRUCTURA	B1-1-1	
	B1-1-10	
FRAME SUPPORT	B1-5-1	
GRILLES, & TREAD PLATES	B1-5-20	
STABILISER, FRONT & REAR	B1-21-15	
TANQUE, GASOLEO	B1-4-1	
TANQUE, HIDRAULICO	B1-3-1	
WHEELCHOCK, GERMAN	B1-9-10	

CABINA B2

CAB	B2-1-1	
CAB DOOR, COMPONENTS	B2-2-1	
CAB MOUNTINGS, CAB FOOR & MAT	B2-16-1	
CAB PANELS	B2-8-1	
CAB, MOUNTING FASTENERS	B2-1-30	
CONSOLE, CAB SERVO CONTROL, LEFT HAND, FIXED CONSOLE	B2-4-1	
CONSOLE, CAB SERVO CONTROL, RIGHT HAND	B2-5-1	
DIRECT GLAZING, REPLACEMENT MATERIAL	B2-18-1	
ESPEJOS EXTERNOS	B2-7-2	
FIRE EXTINGUISHER	B2-11-1	
FLOOR COMPONENTS, SEAT SLIDE, LEVER ISOLATOR	B2-10-1	
FRONT SCREEN, UPPER & LOWER	B2-1-10	
FRONT WIPER, & CAB COMPONENTS	B2-1-20	
FRONT WIPER, CAB LOWER WINDOW, SEE C3-15-10	B2-15-1	

TITLE	PAGE NUMBER	CHANGE NUMBER
GUARD, FOPS CAGE, FRONT GUARD SALES OPTION	B2-9-20	
GUARD, FOPS, FRONT AND TOP, CAB MOUNTED	B2-9-1	
LAVA/LIMPIA PARABRISAS	B2-6-1	
RAIN VISOR, CAB	B2-12-1	
SEAT BELT, STANDARD	B2-3-30	
SEAT BELT, 76MM (3") WIDE, OPTIONAL	B2-3-40	
SEAT, AIR SUSPENSION, HIGH BACK	B2-3-20	
SEAT, HIGH BACK, STANDARD	B2-3-1	
VANDAL GUARD, CAB, 3PC FRONT PANEL	B2-14-1	
SECCION CARGADORA	**B3**	
BOOM GREASING, MONO BOOM	B3-4-1	
BOOM GREASING, TAB BOOM	B3-4-10	
BOOM, LOWER, TRIPLE ARTICULATING	B3-10-1	
BOOM, UPPER, TRIPLE ARTICULATING	B3-11-1	
BRAZO PENET. 2.25M	B3-2-1	
BRAZO PENET. 3.0M	B3-2-20	
BRIDGE BASHING, U K ONLY	B3-12-1	
DIPPER 2.70M	B3-2-10	
PLUMA	B3-1-1	
MATERIAL REACONDICIONAMIENTO	**B5**	
DECALS, MACHINE	B5-1-1	
DECALS, MACHINE, CONTROL LABELS	B5-2-10	
DECALS, WARNING	B5-2-1	
DECALS, WARNING, USA BUILD	B5-3-1	
HERRAMIENTAS	B5-4-1	

C INSTALACION ELECTRICA-MAQUINA, CABINA Y MOTOR

INSTALACION ELECTRICA PRAL	**C1**	
ALARMA, RETROCESO	C1-7-1	
BATERIA INSTALACION 24 VOLTIOS	C1-3-1	
ELECTRICO, CABINA	C1-2-1	
ELECTRICO, MAQUINA	C1-1-1	
HORN	C1-8-1	
LIGHT, WORKING, CAB & REAR, USE WITH RAIN GUARD	C1-6-20	
LUCES DE TRABAJO PLUMA	C1-6-10	
ROAD LIGHTS, ROW, RIGHT HAND DIP	C1-4-10	
ROAD LIGHTS, UK, LEFT HAND DIP	C1-4-1	
INSTALACION ELECTRICA, MOTOR	**C2**	
ALTERNATOR	C2-4-1	
ALTERNATOR MOUNTINGS	C2-5-1	
ECU HARNESS	C2-2-1	
ENGINE ELECTRICS	C2-1-1	
ENGINE, CONTROL MODULE	C2-1-2	
MOTOR,STARTER	C2-3-1	
INSTALACION ELECTRICA, CABINE	**C3**	
AIR CON	C3-12-1	
	C3-12-10	
CIGAR LIGHTER	C3-14-1	
COMBI UNIT FIG 2	C3-12-20	
FAROS AVISO ACCIDENTE AMBAR	C3-9-1	
FRONT WIPER, CAB LOWER WINDOW	C3-15-10	
FUSE BOX	C3-7-1	
HEATER	C3-5-1	
HEATER UNIT	C3-5-10	
HEATER UNIT FIG 2	C3-5-20	
LAVA/LIMPIA PARABRISAS	C3-15-1	
RADIO	C3-11-1	
SWITCH PANEL, SIDE CONSOLE, RIGHT HAND	C3-2-1	

D MANDOS-MAQUINA, MOTOR

MANDOS DE LA MAQUINA	**D1**	
CONTROLES,EXCAVAD.	D1-1-1	
PEDAL CONTROLS, MONO BOOM BUILD	D1-2-1	
PEDAL CONTROLS, TAB BOOM BUILD	D1-2-10	

TITLE	PAGE NUMBER	CHANGE NUMBER
MANDOS DEL MOTOR	**D2**	
CONTROLS, THROTTLE & STOP, CAB	D2-2-1	
COLUMNA	**D3**	
STEERING COLUMN	D3-1-1	

E SISTEMA HIDRAULICO

MANGUERAS Y TUBERIA	**E1**	
ARM HIGHT LIMITER, OPTIONAL, MONO BOOM	E1-36-1	
CIRC.,PLUMA CILIND. ESRUCTURA PPAL.	E1-20-1	
	E1-20-10	
CIRCUIT, AUXILIARY LOW FLOW, MONO BOOM BUILD	E1-29-20	
CIRCUIT, AUXILIARY LOW FLOW, TAB BOOM BUILD	E1-29-30	
CIRCUIT, AUXILIARY/HAMMER, MONO BOOM	E1-30-20	
CIRCUIT, AUXILIARY, HAMMER & LOW FLOW, MONO BOOM	E1-31-20	
CIRCUIT, AUXILIARY, HAMMER & LOW FLOW, TAB BOOM	E1-31-30	
CIRCUIT, BOOM & DIPPER HBCV, MONO BOOM	E1-25-1	
CIRCUIT, BOOM & DIPPER HBCV, TAB BOOM (2 VALVE HBCV BOOM ONLY)	E1-25-10	
CIRCUIT, BOOM & DIPPER HBCV, TAB BOOM (3 & 4 VALVE HBCV)	E1-25-20	
CIRCUIT, BOOM POSITION RAM, HBCV FEED & RETURN, TAB BOOM	E1-48-30	
CIRCUIT, BOOM POSITION RAM, MAINFRAME	E1-48-1	
CIRCUIT, BOOM POSITION RAM, TAB, WITH HBCV	E1-48-20	
CIRCUIT, BRAKES, LOWER CHASSIS	E1-15-1	
CIRCUIT, BUCKET RAM, MONOBOOM	E1-23-1	
CIRCUIT, BUCKET, GRAB CHANGEOVER	E1-34-1	
CIRCUIT, BYPASS, HYDRAULIC FILTER	E1-8-1	
CIRCUIT, CRUISE CONTROL	E1-50-1	
CIRCUIT, DIPPER RAM, & BUCKET RAM, TAB BOOM	E1-22-10	
CIRCUIT, DIPPER RAM, HBCV FEED & RETURN	E1-26-1	
CIRCUIT, DIPPER RAM, MONOBOOM	E1-22-1	
CIRCUIT, DOZER CONTROL, MAINFRAME	E1-45-1	
CIRCUIT, DOZER/STAB CONTROL	E1-45-10	
CIRCUIT, DOZER/STAB, MAINFRAME	E1-46-1	
CIRCUIT, DRAIN, MOTOR & SOLENOID	E1-10-1	
CIRCUIT, DUAL CONTROLS, STANDARD USA, OPTIONAL UK WORLD	E1-14-1	
CIRCUIT, FAN DRIVE	E1-9-1	
CIRCUIT, FRONT & REAR STAB, CHASSIS	E1-46-30	
CIRCUIT, FRONT DOZER, REAR STAB, CHASSIS	E1-46-10	
	E1-46-15	
CIRCUIT, FRONT STAB, REAR DOZER, CHASSIS	E1-46-40	
CIRCUIT, HAMMER, AUXILIARY BOOM PIPES, TAB BOOM	E1-30-30	
CIRCUIT, HAMMER, AUXILIARY, MAINFRAME MONO BOOM	E1-31-1	
CIRCUIT, HAMMER, AUXILIARY, MAINFRAME TAB BOOM	E1-31-10	
CIRCUIT, HAMMER, FULLFLOW 2.25 DIPPER	E1-33-1	
CIRCUIT, HAMMER, FULLFLOW 2.7 DIPPER	E1-33-10	
CIRCUIT, HAMMER, FULLFLOW 3.05 DIPPER	E1-33-20	
CIRCUIT, HAMMER, MAINFRAME, MONO BOOM	E1-30-1	
	E1-30-40	
CIRCUIT, HAMMER, MAINFRAME, TAB BOOM	E1-30-10	
CIRCUIT, LOW FLOW, AUXILIARY, MAINFRAME , TAB BOOM BUILD	E1-29-10	
CIRCUIT, LOW FLOW, AUXILIARY, MAINFRAME, MONO BOOM BUILD	E1-29-1	
CIRCUIT, LOW FLOW, 2.25M DIPPER	E1-32-1	
CIRCUIT, LOW FLOW, 2.7M DIPPER	E1-32-10	
CIRCUIT, LOW FLOW, 3.05M DIPPER	E1-32-20	
CIRCUIT, MANIFOLD, UNDER CAB	E1-68-1	

TITLE	PAGE NUMBER	CHANGE NUMBER
CIRCUIT, MILLER Q. HITCH, 980/ 90463	E1-60-1	
CIRCUIT, NEUTRAL PRESSURE	E1-2-1	
CIRCUIT, NEUTRAL, RETURN & OIL COOLER	E1-3-1	
CIRCUIT, NON-HBCV, BOOM POSITION RAM	E1-48-10	
CIRCUIT, PILOT LINE, MAIN CONTROL VALVE	E1-71-1	
CIRCUIT, PUMP SUCTION	E1-1-1	
CIRCUIT, REAR DOZER, CHASSIS	E1-47-1	
CIRCUIT, REAR DOZER, CHASSIS, PLUS LOGIC VALVE OPTION	E1-47-10	
CIRCUIT, REAR STAB, CHASSIS	E1-46-20	
CIRCUIT, RETURN LINE, PILOT PRESSURE, MAIN CONTROL VALVE	E1-72-1	
CIRCUIT, STEERING &, BRAKES, MAINFRAME	E1-17-10	
CIRCUIT, STEERING, CHASSIS	E1-17-1	
CIRCUIT, SWING	E1-6-1	
CIRCUIT, TANK MANIFOLD	E1-69-1	
CIRCUIT, TEST POINTS	E1-35-1	
CIRCUIT, TRACTION, LOWER CHASSIS	E1-5-1	
CIRCUIT, VALVE, CUSHION	E1-65-1	
CIRCUIT, VALVE, DRIVE PEDAL	E1-61-1	
CIRCUIT, VALVE, LH CONTROLLER	E1-62-1	
CIRCUIT, VALVE, PILOT SHUTTLE	E1-70-1	
CIRCUIT, VALVE, RH CONTROLLER	E1-63-1	
CIRCUIT, VALVE, SHUTTLE	E1-66-1	
CIRCUIT, VALVE, SOLENOID	E1-67-1	
CIRCUIT, VALVE, 3 STATION	E1-64-1	
CIRCUITO BRZO PENET.Y CAZO	E1-21-1	
CIRCUITO SERVO NEUTRAL FIG 1	E1-12-1	
	E1-13-1	
CIRCUITO, ORUGA ESTRUCTURA PPAL.	E1-4-1	
	E1-4-10	
BOMBA, MOTOR, ACCIONAM. BOMBA	**E2**	
BOMBA PISTON HIDRAULICO PPAL. Y COMPONENTES FIG 1	E2-2-1	
MOTOR, DRIVE, FIG 1	E2-6-10	
MOTOR, DRIVE, FIG 2	E2-6-11	
MOTOR, SWING	E2-7-1	
PUMP, MAIN HYDRAULIC	E2-1-1	
VALVULAS Y FILTROS HIDRAULICOS	**E3**	
ACOPLAM.,ROTATIVO	E3-14-20	
FILTER, AUXILIARY/HAMMER, RETURN	E3-16-1	
FILTER, BYPASS, HYDRAULIC	E3-17-1	
FILTER, HYDRAULIC, STEER CIRCUIT	E3-16-10	
LUBRIC. Y FILTROS	E3-15-1	
MOUNTINGS, ROTARY COUPLING	E3-14-1	
OILS, BIODEGRADABLE, HYDRAULIC	E3-15-10	
VALV. CONTROL MANDO SERVO	E3-6-1	
VALVE, BRAKE PEDAL	E3-3-1	
VALVE, HAMMER	E3-24-1	
VALVE, PILOT SHUTTLE	E3-23-1	
VALVE, RELIEF, SERVICE PORT	E3-2-45	
VALVE, SOLENOID	E3-8-1	
VALVE, SOLENOID, TAB HAMMER, JS175W AUTO T3	E3-9-1	
VALVULA MONTAJE Y MONTURAS	E3-1-1	
VALVULA, CONTROL COMPONENTES FIG 1	E3-2-1	
VALVULA, CONTROL COMPONENTES FIG 2	E3-2-2	
VALVULA, DIRECCION	E3-40-1	
CILINDROS	**E4**	
CILIND. PLUMA ELEV.	E4-1-1	
	E4-1-10	
	E4-1-30	
CILIND.PLUMA EXCAV.	E4-2-1	
CIRCUIT, BOOM RAM, WITH HBCV, TAB BOOM	E4-1-20	
RAM, AXLE LOCK	E4-6-1	
RAM, DIPPER, ASSEMBLY WITH HBCV, MONO BOOM & TAB BOOM	E4-2-10	
RAM, DIPPER, COMPONENTS	E4-2-20	
RAM, POSITION, ASSEMBLY, TAB BOOM, WITHOUT HBCV	E4-7-1	
RAM, POSITION, HBCV, ASSEMBLY	E4-7-10	

TITLE	PAGE NUMBER	CHANGE NUMBER

F REDUCTOR DE GIRO/ MOTRICES

AXLES, FRONT F1

ARTICULAC. DIRECC.	F1-4-1	
CONJUNTO PUENTE DELANTERO	F1-1-1	
CROWN WHEEL & PINION, 18. 16:1 AXLE, 453/30800	F1-6-1	
CUBO Y COMPONENTES EJE CON FRENOS CUBO	F1-3-1	
DIFFERENTIAL, ASSEMBLY, 18. 16:1, STEER AXLE 453/30800	F1-5-1	
RAM, STEERING AXLE, INSTALLATION	F1-7-1	

AXLES, REAR F2

CONJUNTO DE EJE TRASERO	F2-1-1	
CROWN WHEEL & PINION, 18. 16:1 AXLE, 450/42700	F2-6-1	
CUBO Y COMPONENTES EJE CON FRENOS CUBO	F2-3-1	
DIFFERENTIAL, ASSEMBLY, 18. 16:1, 450/42700	F2-5-1	

WHEELS, TYRES & PROPSHAFTS F3

CARDAN TRANSMISION	F3-1-1	
WHEELS & TYRES, DUALS	F3-4-1	
WHEELS & TYRES, DUALS, 10. 00 X 20 EM22 16PR & EM23	F3-3-1	
WHEELS & TYRES, FLOATATION, LEFT HAND SIDE FRONT AND REAR	F3-5-1	
WHEELS & TYRES, SINGLES	F3-2-1	

SLEW GEARBOXES F4

CIRCUIT, SWING RING GREASING	F4-5-1	
GEARBOX, SWING	F4-4-1	
MOTOR, SWING	F4-3-1	

TRANSMISSION F5

CONJUNTO DE CARCASADE CAJA DE CAMBIOS	F5-2-1	
CONJUNTO DE CARCASADE EJE DE ENTRADA DE CAJA DE CAMBIOS	F5-4-1	
CONJUNTO DE DISCOS DE EMBRAGUE DE CAJA DE CAMBIOS	F5-6-1	
CONJUNTO DE DISCOS DE FRENO DE CAJA DE CAMBIOS	F5-7-1	
CONJUNTO DE SENSORES DE SELECCION DE MARCHAS DE CAJA DE CAMBIOS	F5-9-1	
CONJUNTO DE TUBERIAS DE ACEITE DE CAJA DE CAMBIOS	F5-3-1	
CONJUNTO DEL EJE DESALIDA DE CAJA DE CAMBIOS	F5-10-1	
CONJUNTO DEL PLANETARIO DE CAJA DE CAMBIOS	F5-8-1	
TRANSMISION POWERSHIFT	F5-1-1	

R ENGINE 4JJ1-XYSJ01 TIER 3

ENGINE BLOCK & SUB-ASSEMBLIES R1

BLOCK ASSEMBLY	R1-3-1	
CAMSHAFTS, & TIMING GEARS	R1-6-2	
CIGUENAL,COJINETES PISTONES Y BIELAS	R1-4-1	
ENGINE, COMPLETE, 4JJ1-XYSJ01	R1-1-1	
FANS,PULLEYS & BELTS, EU ONLY	R1-5-1	
FANS,PULLEYS & BELTS, NON EU	R1-5-2	
FLYWHEEL & HOUSING	R1-7-1	
MOTOR MONTURAS	R1-8-1	
TIMING CASE, & FRONT COVER	R1-6-1	

CYLINDER HEAD & SUB-ASSEMBLIES R2

CULATA	R2-1-1	
LIFTING PLATES	R2-6-1	
OSCILADOR CONJUNTO VALV. ADMIS./ESCAPE	R2-2-1	
ROCKER COVER, & BREATHER PIPE	R2-3-1	

INDUCTION & EXHAUST SYSTEMS R3

EXHAUST SYSTEM	R3-4-1	
EXHAUST, RECIRCULATION	R3-5-1	

TITLE	PAGE NUMBER	CHANGE NUMBER
FILTRO, AIRE	R3-3-1	
MANIFOLD, EXHAUST	R3-2-1	
MANIFOLD, INDUCTION	R3-1-1	
SYSTEM, COOLING	**R4**	
CHARGE AIR COOLER	R4-7-1	
COOLER COMBINATION, MOUNTING &, SOUND PROOFING	R4-3-1	
EXHAUST, RECIRCULATION, WATER COOLING	R4-8-1	
PUMP WATER	R4-1-1	
RADIADOR LATIGUIL.Y HERRAJ.	R4-4-1	
RADIADOR LATIGUIL.YHERRAJ.	R4-5-1	
THERMOSTAT,HOUSING, & PIPEWORK	R4-2-1	
SYSTEM, LUBRICATION	**R5**	
BOMBA DE ACEITE	R5-2-1	
CARTER, ACEITE Y HERRAJES	R5-1-1	
COOLER, ENGINE OIL	R5-4-1	
OIL FILTER, REMOTE MOUNTED	R5-3-1	
SYSTEM, FUEL	**R6**	
COMBUST. SIST.	R6-2-1	
FILTRO, ACEITE SEDIMENTO COMBUST.	R6-6-1	
FILTRO, COMBUSTIBLE	R6-7-1	
FUEL LIFT PUMP	R6-8-1	
FUEL SYSTEM	R6-4-1	
PUMP, FUEL INJECTION, INSTALLATION	R6-1-1	

TITLE	PAGE NUMBER	CHANGE NUMBER
EQUIPMENT, AUXILIARY	**R7**	
COMPRESOR AIRE ACONDICIONADO	R7-6-1	
COMPRESOR 12 VOLT AIRE ACONDICIONADO	R7-5-2	
TURBO, TUBERIAS	R7-2-1	
TURBOCHARGER	R7-1-1	
GASKET SETS	**R8**	
GASKET SET, CYLINDER HEAD, OVERHAUL	R8-1-2	
GASKET SET, ENGINE OVERHAUL	R8-1-1	

A

- A2 BUCKETS
- A3 ATTACHMENTS

ENGLISH

A2-1-1 BUCKET, 500 WIDE, 0.26 CUBIC METRES
A2-1-2 BUCKET, 600 WIDE, 0.35 CUBIC METRES
A2-1-3 BUCKET, 700 WIDE, 0.44 CUBIC METRES
A2-1-4 BUCKET, 750 WIDE, 0.47 CUBIC METRES
A2-1-5 BUCKET, 800 WIDE, 0.53 CUBIC METRES
A2-1-6 BUCKET, 900 WIDE, 0.62 CUBIC METRES
A2-1-7 BUCKET, 1000 WIDE, 0.71 CUBIC METRES
A2-1-8 BUCKET, 1100 WIDE, 0.81 CUBIC METRES
A2-1-9 BUCKET, 1200 WIDE, 0.90 CUBIC METRES
A2-1-10 BUCKET, 1300 WIDE, 0.99 CUBIC METRES
A2-1-20 BUCKET, 450MM,HEAVY DUTY
A2-1-21 BUCKET, 550MM HEAVY DUTY
A2-1-22 BUCKET, 650MM HEAVY DUTY
A2-1-23 BUCKET, 750MM HEAVY DUTY
A2-1-24 BUCKET, 750MM HEAVY DUTY
A2-1-25 BUCKET, 950MM HEAVY DUTY
A2-1-26 BUCKET, 1050MM HEAVY DUTY
A2-1-27 BUCKET, 1150MM HEAVY DUTY
A2-1-28 BUCKET, 1250MM HEAVY DUTY
A2-3-1 BUCKET, GRADING/DITCHING, 1829MM. 72" WIDE
A2-3-2 BUCKET, GRADING/DITCHING, 1524MM. WIDE

FRANCAIS

A2-1-1 BUCKET, 500 WIDE, 0.26 CUBIC METRES
A2-1-2 BUCKET, 600 WIDE, 0.35 CUBIC METRES
A2-1-3 BUCKET, 700 WIDE, 0.44 CUBIC METRES
A2-1-4 BUCKET, 750 WIDE, 0.47 CUBIC METRES
A2-1-5 BUCKET, 800 WIDE, 0.53 CUBIC METRES
A2-1-6 BUCKET, 900 WIDE, 0.62 CUBIC METRES
A2-1-7 BUCKET, 1000 WIDE, 0.71 CUBIC METRES
A2-1-8 BUCKET, 1100 WIDE, 0.81 CUBIC METRES
A2-1-9 BUCKET, 1200 WIDE, 0.90 CUBIC METRES
A2-1-10 BUCKET, 1300 WIDE, 0.99 CUBIC METRES
A2-1-20 BUCKET, 450MM,HEAVY DUTY
A2-1-21 BUCKET, 550MM HEAVY DUTY
A2-1-22 BUCKET, 650MM HEAVY DUTY
A2-1-23 BUCKET, 750MM HEAVY DUTY
A2-1-24 BUCKET, 750MM HEAVY DUTY
A2-1-25 BUCKET, 950MM HEAVY DUTY
A2-1-26 BUCKET, 1050MM HEAVY DUTY
A2-1-27 BUCKET, 1150MM HEAVY DUTY
A2-1-28 BUCKET, 1250MM HEAVY DUTY
A2-3-1 BUCKET, GRADING/DITCHING, 1829MM. 72" WIDE
A2-3-2 BUCKET, GRADING/DITCHING, 1524MM. WIDE

DEUTSCH

A2-1-1 BUCKET, 500 WIDE, 0.26 CUBIC METRES
A2-1-2 BUCKET, 600 WIDE, 0.35 CUBIC METRES
A2-1-3 BUCKET, 700 WIDE, 0.44 CUBIC METRES
A2-1-4 BUCKET, 750 WIDE, 0.47 CUBIC METRES
A2-1-5 BUCKET, 800 WIDE, 0.53 CUBIC METRES
A2-1-6 BUCKET, 900 WIDE, 0.62 CUBIC METRES
A2-1-7 BUCKET, 1000 WIDE, 0.71 CUBIC METRES
A2-1-8 BUCKET, 1100 WIDE, 0.81 CUBIC METRES
A2-1-9 BUCKET, 1200 WIDE, 0.90 CUBIC METRES
A2-1-10 BUCKET, 1300 WIDE, 0.99 CUBIC METRES
A2-1-20 BUCKET, 450MM,HEAVY DUTY
A2-1-21 BUCKET, 550MM HEAVY DUTY
A2-1-22 BUCKET, 650MM HEAVY DUTY
A2-1-23 BUCKET, 750MM HEAVY DUTY
A2-1-24 BUCKET, 750MM HEAVY DUTY
A2-1-25 BUCKET, 950MM HEAVY DUTY
A2-1-26 BUCKET, 1050MM HEAVY DUTY
A2-1-27 BUCKET, 1150MM HEAVY DUTY
A2-1-28 BUCKET, 1250MM HEAVY DUTY
A2-3-1 BUCKET, GRADING/DITCHING, 1829MM. 72" WIDE
A2-3-2 BUCKET, GRADING/DITCHING, 1524MM. WIDE

ITALIANO

A2-1-1 BUCKET, 500 WIDE, 0.26 CUBIC METRES
A2-1-2 BUCKET, 600 WIDE, 0.35 CUBIC METRES
A2-1-3 BUCKET, 700 WIDE, 0.44 CUBIC METRES
A2-1-4 BUCKET, 750 WIDE, 0.47 CUBIC METRES
A2-1-5 BUCKET, 800 WIDE, 0.53 CUBIC METRES
A2-1-6 BUCKET, 900 WIDE, 0.62 CUBIC METRES
A2-1-7 BUCKET, 1000 WIDE, 0.71 CUBIC METRES
A2-1-8 BUCKET, 1100 WIDE, 0.81 CUBIC METRES
A2-1-9 BUCKET, 1200 WIDE, 0.90 CUBIC METRES
A2-1-10 BUCKET, 1300 WIDE, 0.99 CUBIC METRES
A2-1-20 BUCKET, 450MM,HEAVY DUTY
A2-1-21 BUCKET, 550MM HEAVY DUTY
A2-1-22 BUCKET, 650MM HEAVY DUTY
A2-1-23 BUCKET, 750MM HEAVY DUTY
A2-1-24 BUCKET, 750MM HEAVY DUTY
A2-1-25 BUCKET, 950MM HEAVY DUTY
A2-1-26 BUCKET, 1050MM HEAVY DUTY
A2-1-27 BUCKET, 1150MM HEAVY DUTY
A2-1-28 BUCKET, 1250MM HEAVY DUTY
A2-3-1 BUCKET, GRADING/DITCHING, 1829MM. 72" WIDE
A2-3-2 BUCKET, GRADING/DITCHING, 1524MM. WIDE

PORTUGUES

A2-1-1 BUCKET, 500 WIDE, 0.26 CUBIC METRES
A2-1-2 BUCKET, 600 WIDE, 0.35 CUBIC METRES
A2-1-3 BUCKET, 700 WIDE, 0.44 CUBIC METRES
A2-1-4 BUCKET, 750 WIDE, 0.47 CUBIC METRES
A2-1-5 BUCKET, 800 WIDE, 0.53 CUBIC METRES
A2-1-6 BUCKET, 900 WIDE, 0.62 CUBIC METRES
A2-1-7 BUCKET, 1000 WIDE, 0.71 CUBIC METRES
A2-1-8 BUCKET, 1100 WIDE, 0.81 CUBIC METRES
A2-1-9 BUCKET, 1200 WIDE, 0.90 CUBIC METRES
A2-1-10 BUCKET, 1300 WIDE, 0.99 CUBIC METRES
A2-1-20 BUCKET, 450MM,HEAVY DUTY
A2-1-21 BUCKET, 550MM HEAVY DUTY
A2-1-22 BUCKET, 650MM HEAVY DUTY
A2-1-23 BUCKET, 750MM HEAVY DUTY
A2-1-24 BUCKET, 750MM HEAVY DUTY
A2-1-25 BUCKET, 950MM HEAVY DUTY
A2-1-26 BUCKET, 1050MM HEAVY DUTY
A2-1-27 BUCKET, 1150MM HEAVY DUTY
A2-1-28 BUCKET, 1250MM HEAVY DUTY
A2-3-1 BUCKET, GRADING/DITCHING, 1829MM. 72" WIDE
A2-3-2 BUCKET, GRADING/DITCHING, 1524MM. WIDE

ESPANOL

A2-1-1 BUCKET, 500 WIDE, 0.26 CUBIC METRES
A2-1-2 BUCKET, 600 WIDE, 0.35 CUBIC METRES
A2-1-3 BUCKET, 700 WIDE, 0.44 CUBIC METRES
A2-1-4 BUCKET, 750 WIDE, 0.47 CUBIC METRES
A2-1-5 BUCKET, 800 WIDE, 0.53 CUBIC METRES
A2-1-6 BUCKET, 900 WIDE, 0.62 CUBIC METRES
A2-1-7 BUCKET, 1000 WIDE, 0.71 CUBIC METRES
A2-1-8 BUCKET, 1100 WIDE, 0.81 CUBIC METRES
A2-1-9 BUCKET, 1200 WIDE, 0.90 CUBIC METRES
A2-1-10 BUCKET, 1300 WIDE, 0.99 CUBIC METRES
A2-1-20 BUCKET, 450MM,HEAVY DUTY
A2-1-21 BUCKET, 550MM HEAVY DUTY
A2-1-22 BUCKET, 650MM HEAVY DUTY
A2-1-23 BUCKET, 750MM HEAVY DUTY
A2-1-24 BUCKET, 750MM HEAVY DUTY
A2-1-25 BUCKET, 950MM HEAVY DUTY
A2-1-26 BUCKET, 1050MM HEAVY DUTY
A2-1-27 BUCKET, 1150MM HEAVY DUTY
A2-1-28 BUCKET, 1250MM HEAVY DUTY
A2-3-1 BUCKET, GRADING/DITCHING, 1829MM. 72" WIDE
A2-3-2 BUCKET, GRADING/DITCHING, 1524MM. WIDE

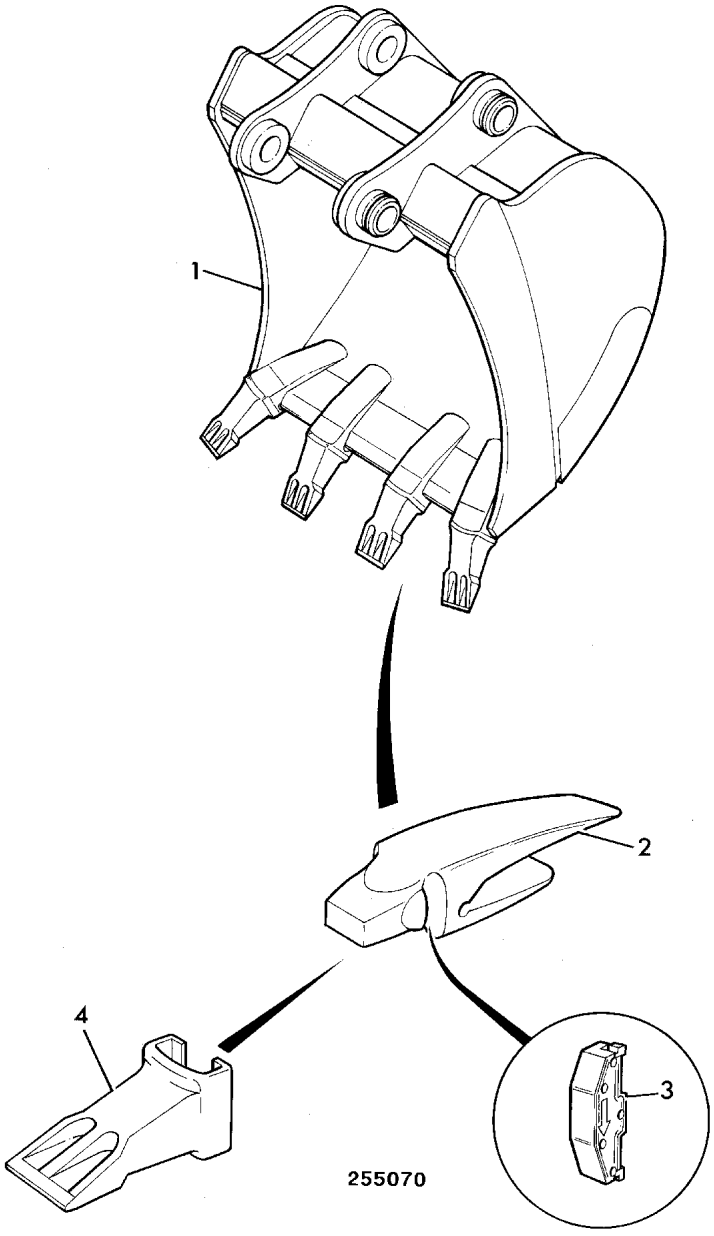

	FROM	TO	FROM	TO
JS160W				

ITEM	PART NO	CHANGE NO	DESCRIPTION	REMARKS	USAGE CODE	QTY
1	981/00410		Bucket, GP 500mm wide			1
2	993/99633		:Adapter, tooth, V19			A/R
	993/99577		:Adapter, tooth, V23			A/R
3	510/92002		:Pin, locking			A/R
4	993/99632		:Tooth, type V19 SYL			A/R
	993/99634		:Tooth, point			A/R

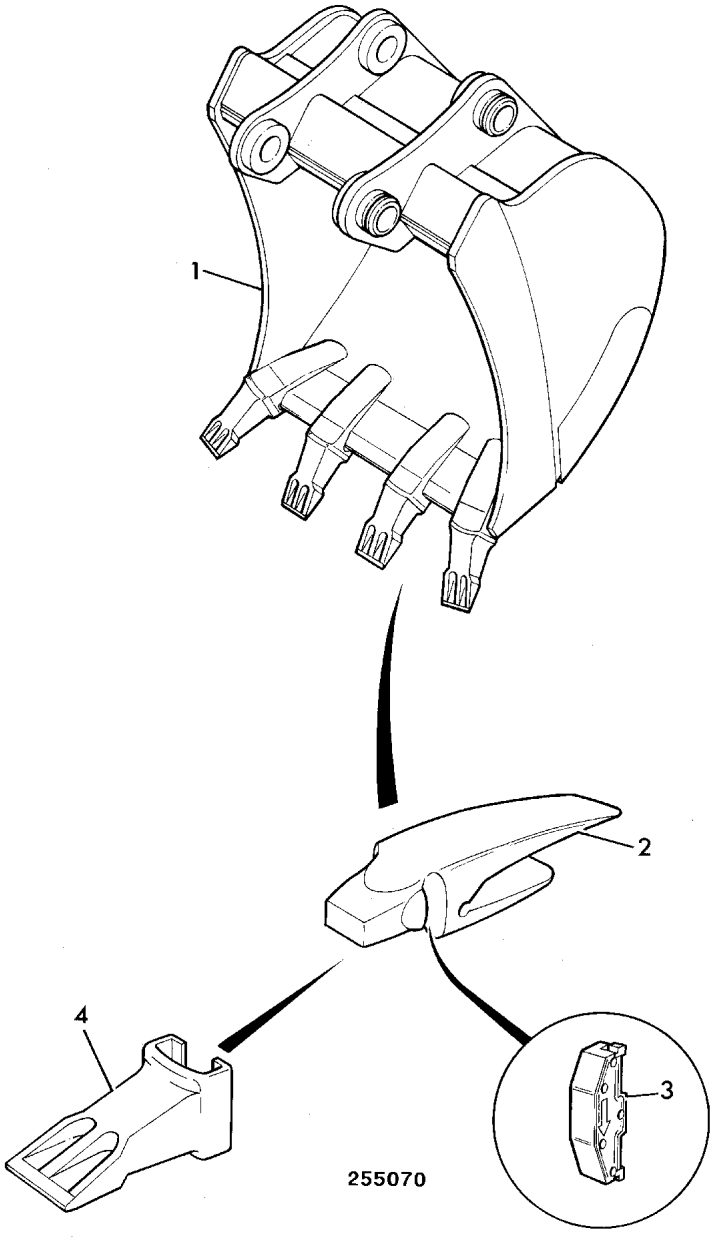

	FROM	TO	FROM	TO
JS160W				

ITEM	PART NO	CHANGE NO	DESCRIPTION	REMARKS	USAGE CODE	QTY
1	981/00411		Bucket, GP 600mm wide			1
2	993/99633		:Adapter, tooth, V19			A/R
	993/99577		:Adapter, tooth, V23			A/R
3	510/92002		:Pin, locking			A/R
4	993/99632		:Tooth, type V19 SYL			A/R
	993/99634		:Tooth, point			A/R

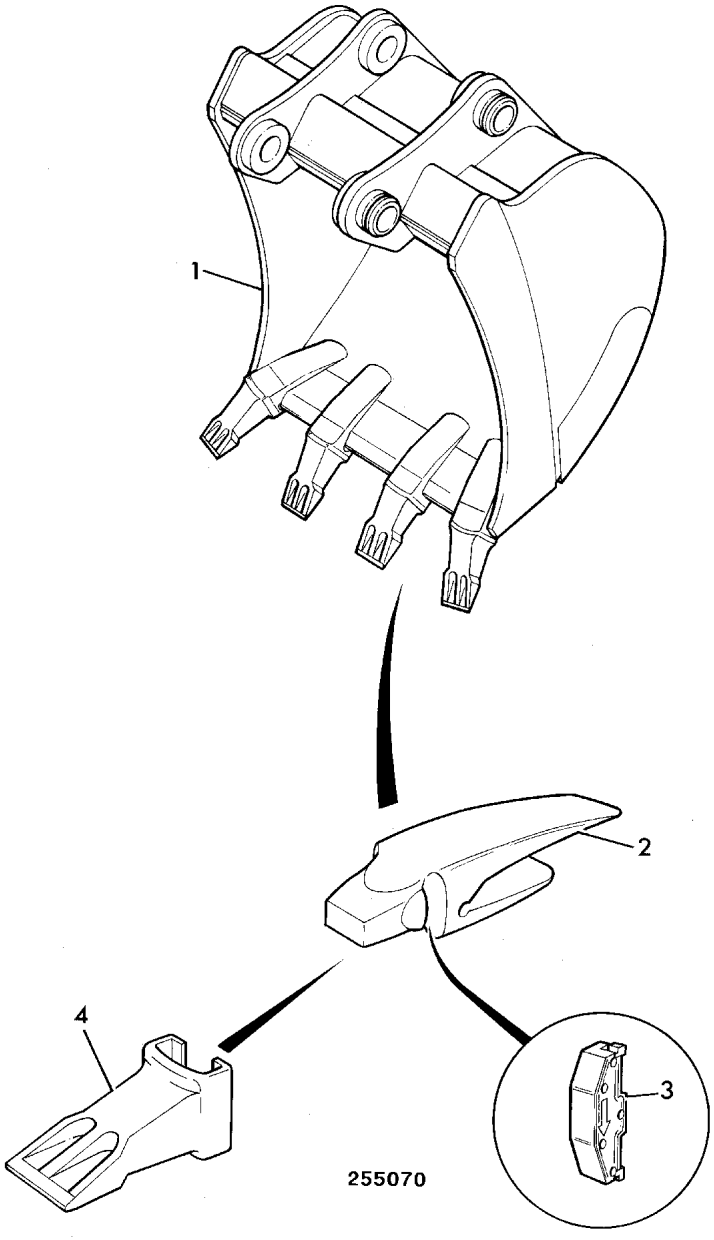

	FROM	TO	FROM	TO
JS160W				

ITEM	PART NO	CHANGE NO	DESCRIPTION	REMARKS	USAGE CODE	QTY
1	981/00412		Bucket, GP 700mm wide			1
2	993/99633		:Adapter, tooth, V19			A/R
	993/99577		:Adapter, tooth, V23			A/R
3	510/92002		:Pin, locking			A/R
4	993/99632		:Tooth, type V19 SYL			A/R
	993/99634		:Tooth, point			A/R

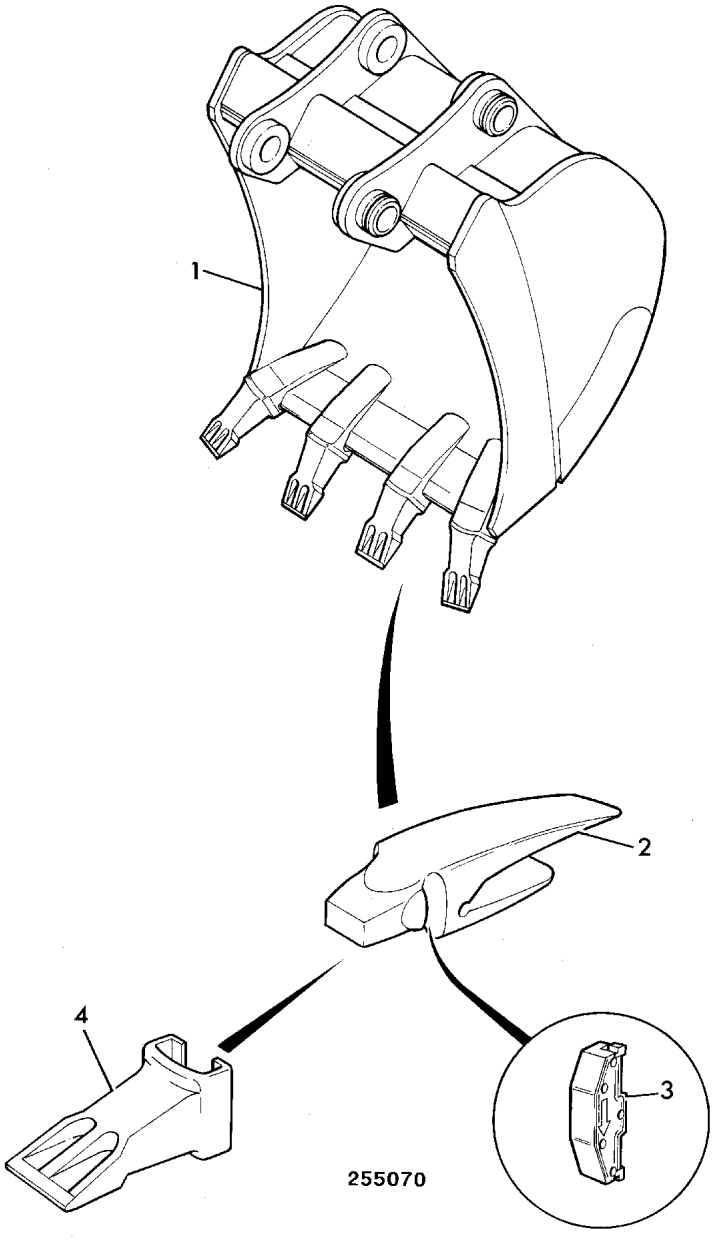

	FROM	TO	FROM	TO
JS160W				

ITEM	PART NO	CHANGE NO	DESCRIPTION	REMARKS	USAGE CODE	QTY
1	981/00413		Bucket, GP 750mm wide			1
2	993/99633		:Adapter, tooth, V19			A/R
	993/99577		:Adapter, tooth, V23			A/R
3	510/92002		:Pin, locking			A/R
4	993/99632		:Tooth, type V19 SYL			A/R
	993/99634		:Tooth, point			A/R

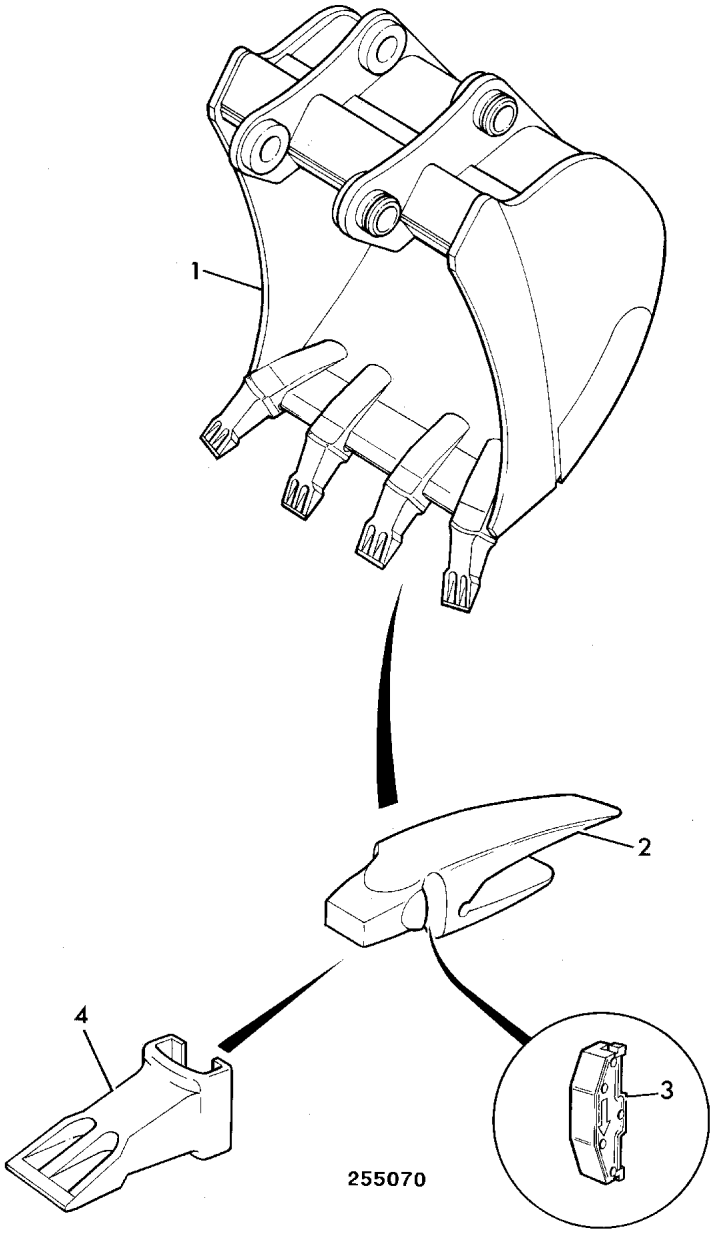

	FROM	TO	FROM	TO
JS160W				

ITEM	PART NO	CHANGE NO	DESCRIPTION	REMARKS	USAGE CODE	QTY
1	981/00414		Bucket, GP 800mm wide			1
2	993/99633		:Adapter, tooth, V19			A/R
	993/99577		:Adapter, tooth, V23			A/R
3	510/92002		:Pin, locking			A/R
4	993/99632		:Tooth, type V19 SYL			A/R
	993/99634		:Tooth, point			A/R

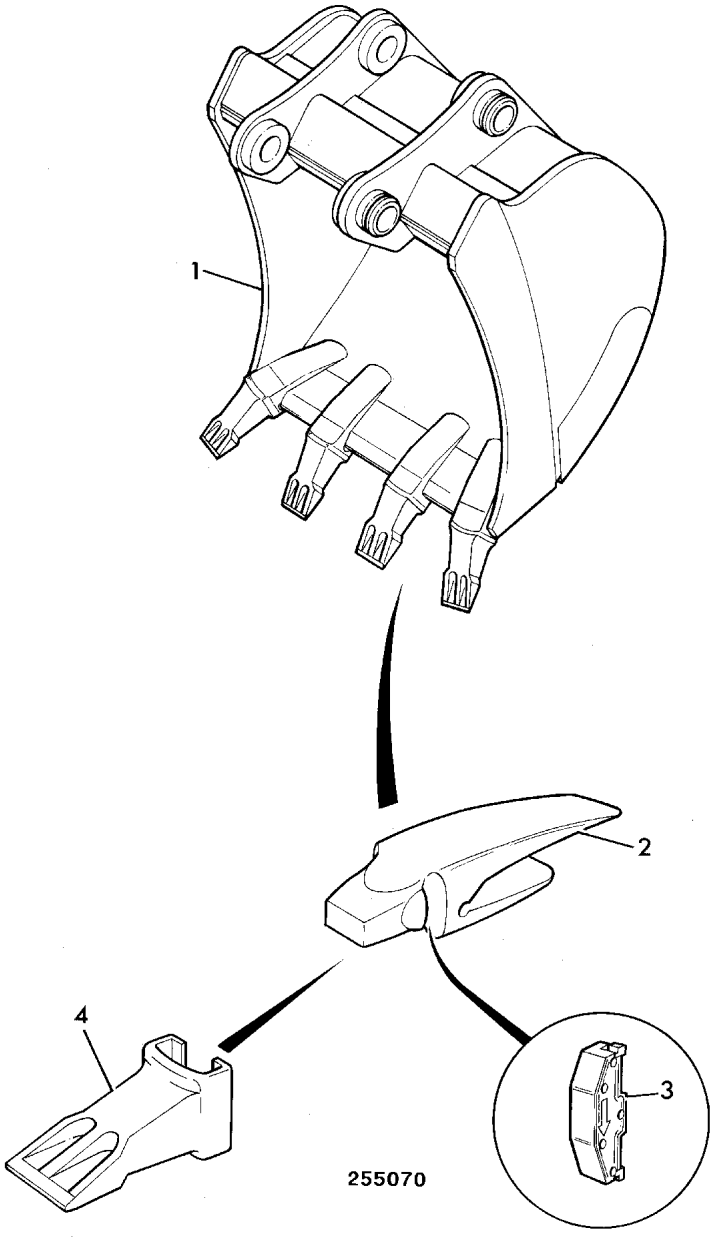

	FROM	TO	FROM	TO
JS160W				

ITEM	PART NO	CHANGE NO	DESCRIPTION	REMARKS	USAGE CODE	QTY
1	981/00415		Bucket, GP 900mm wide			1
2	993/99633		:Adapter, tooth, V19			A/R
	993/99577		:Adapter, tooth, V23			A/R
3	510/92002		:Pin, locking			A/R
4	993/99632		:Tooth, type V19 SYL			A/R
	993/99634		:Tooth, point			A/R

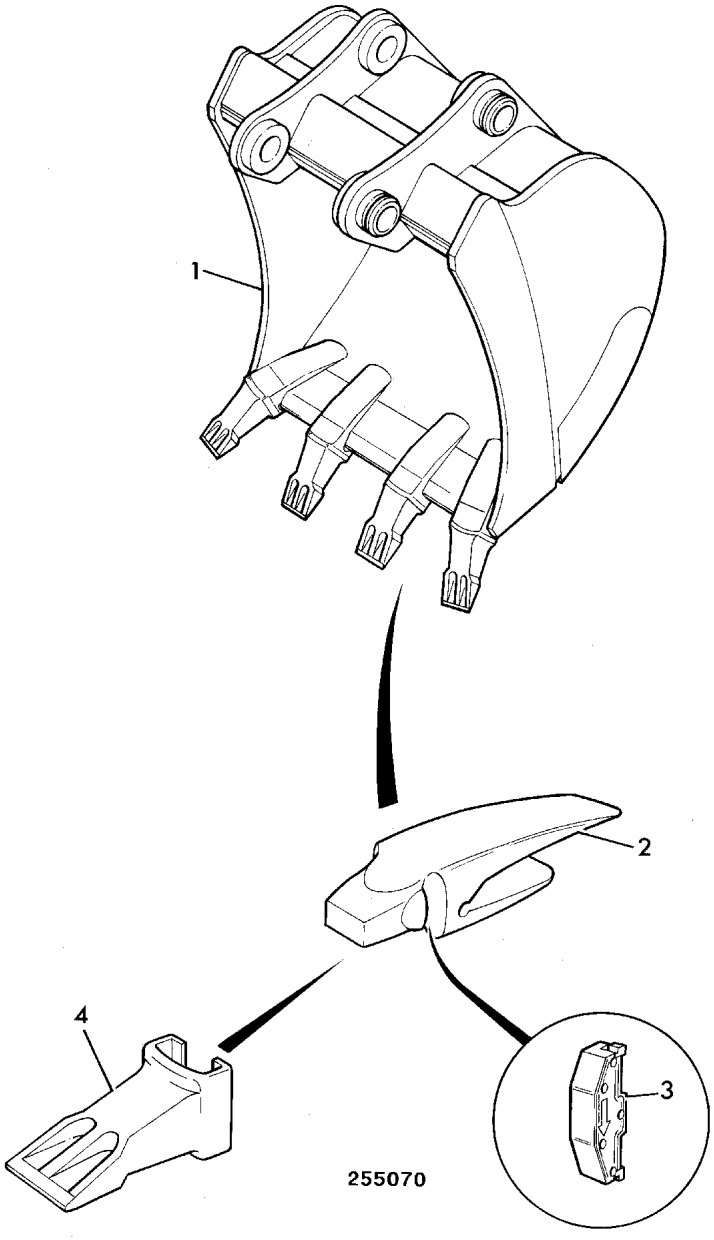

	FROM	TO	FROM	TO
JS160W				

ITEM	PART NO	CHANGE NO	DESCRIPTION	REMARKS	USAGE CODE	QTY
1	981/00416		Bucket, GP 1000mm wide			1
2	993/99633		:Adapter, tooth, V19			A/R
	993/99577		:Adapter, tooth, V23			A/R
3	510/92002		:Pin, locking			A/R
4	993/99632		:Tooth, type V19 SYL			A/R
	993/99634		:Tooth, point			A/R

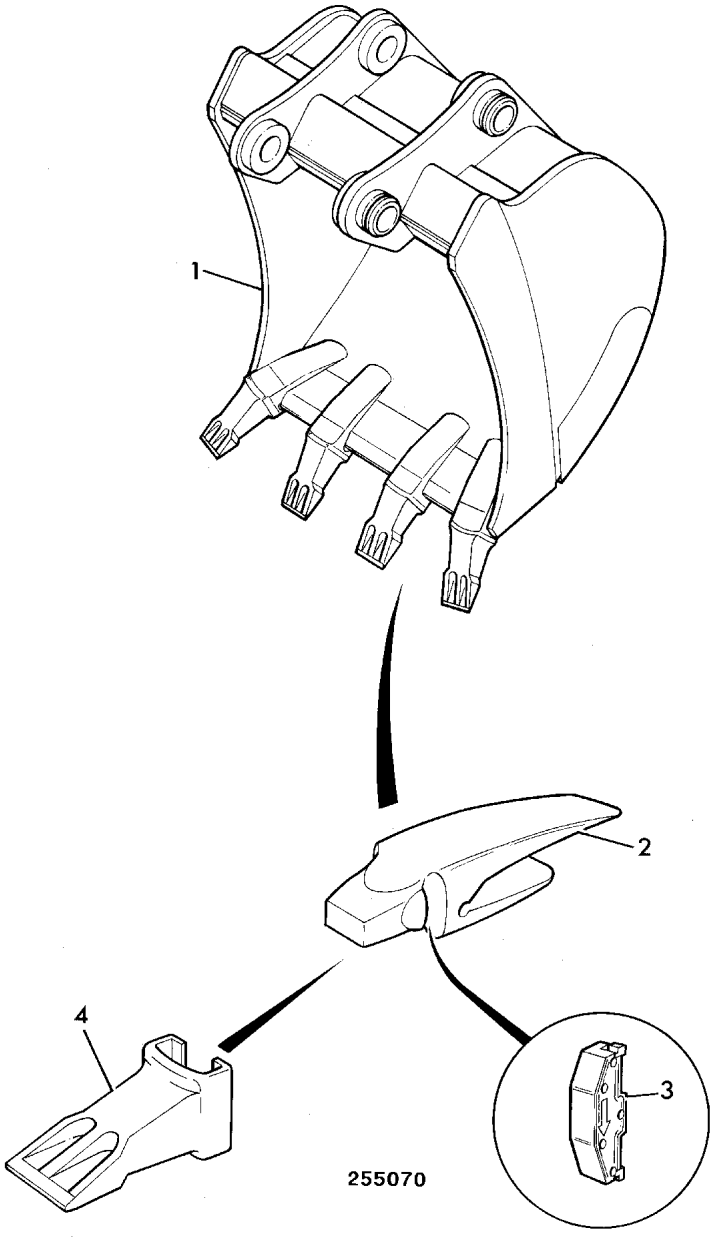

	FROM	TO	FROM	TO
JS160W				

ITEM	PART NO	CHANGE NO	DESCRIPTION	REMARKS	USAGE CODE	QTY
1	981/00417		Bucket, GP 1100mm wide			1
2	993/99633		:Adapter, tooth, V19			A/R
	993/99577		:Adapter, tooth, V23			A/R
3	510/92002		:Pin, locking			A/R
4	993/99632		:Tooth, type V19 SYL			A/R
	993/99634		:Tooth, point			A/R

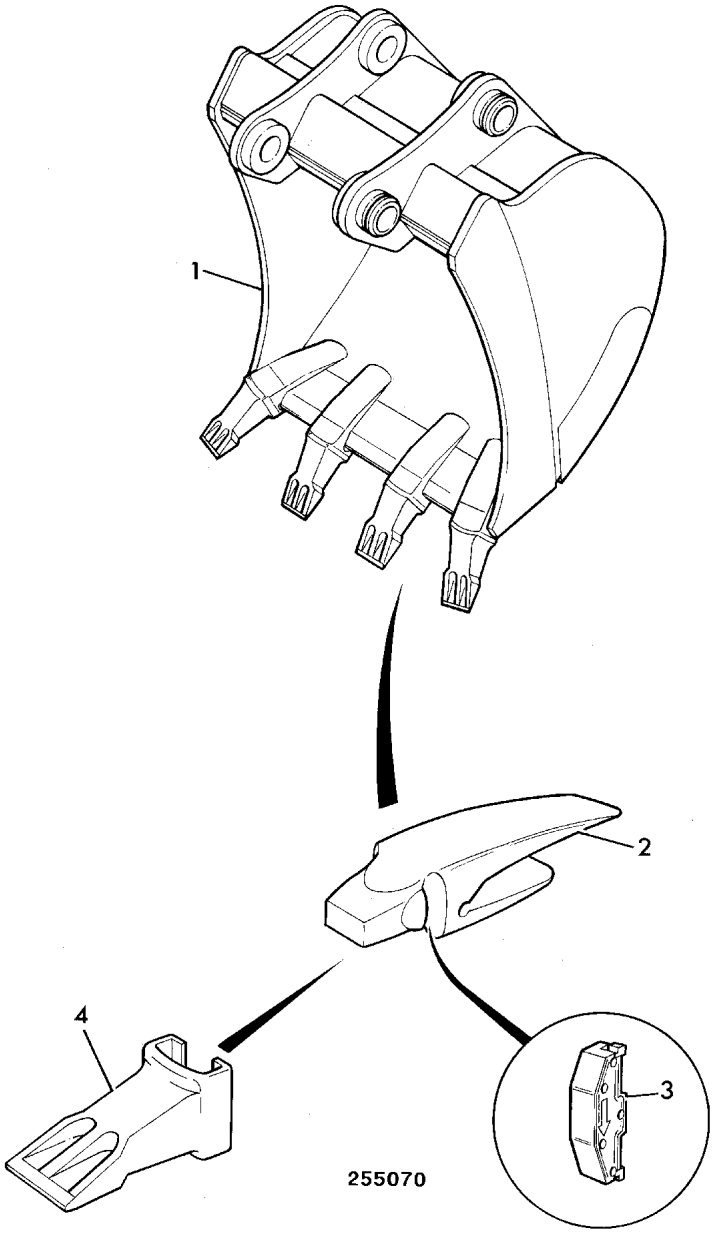

	FROM	TO	FROM	TO
JS160W				

ITEM	PART NO	CHANGE NO	DESCRIPTION	REMARKS	USAGE CODE	QTY
1	981/00418		Bucket, GP 1200mm wide			1
2	993/99633		:Adapter, tooth, V19			A/R
	993/99577		:Adapter, tooth, V23			A/R
3	510/92002		:Pin, locking			A/R
4	993/99632		:Tooth, type V19 SYL			A/R
	993/99634		:Tooth, point			A/R

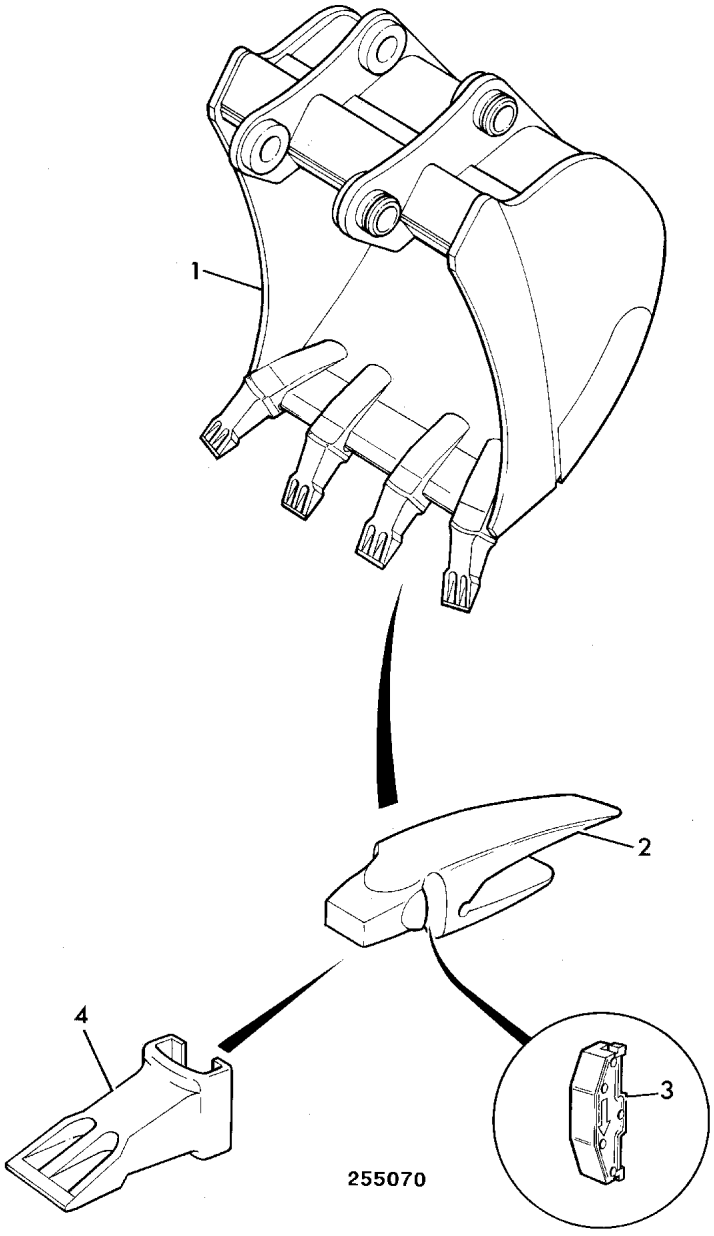

	FROM	TO	FROM	TO
JS160W				

ITEM	PART NO	CHANGE NO	DESCRIPTION	REMARKS	USAGE CODE	QTY
1	981/00419		Bucket, GP 1300mm wide			1
2	993/99633		:Adapter, tooth, V19			A/R
	993/99577		:Adapter, tooth, V23			A/R
3	510/92002		:Pin, locking			A/R
4	993/99632		:Tooth, type V19 SYL			A/R
	993/99634		:Tooth, point			A/R

A2-1-20 BUCKET, 450MM,HEAVY DUTY

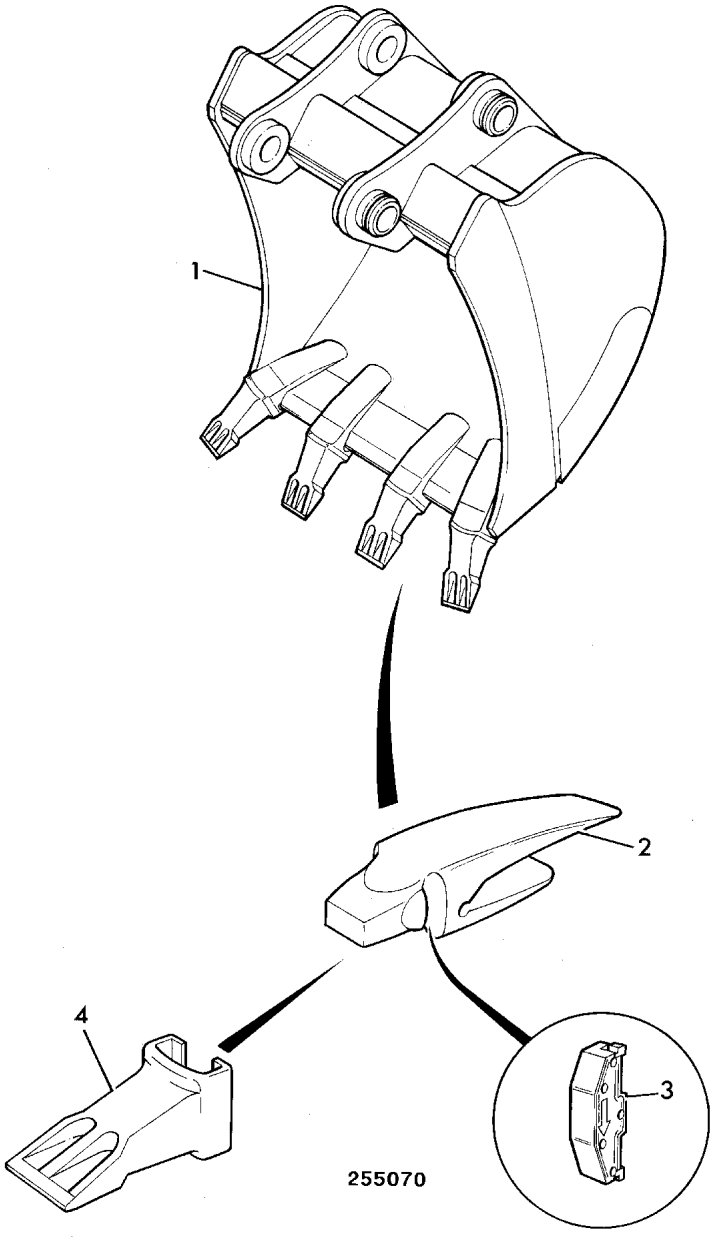

	FROM	TO	FROM	TO
JS160W				

ITEM	PART NO	CHANGE NO	DESCRIPTION	REMARKS	USAGE CODE	QTY
1	980/89141		Bucket, 450mm Heavy Duty			1
2	993/99577		Adapter, tooth, V23			A/R
3	510/92002		Pin, locking			A/R
4	993/99634		Tooth, point			A/R

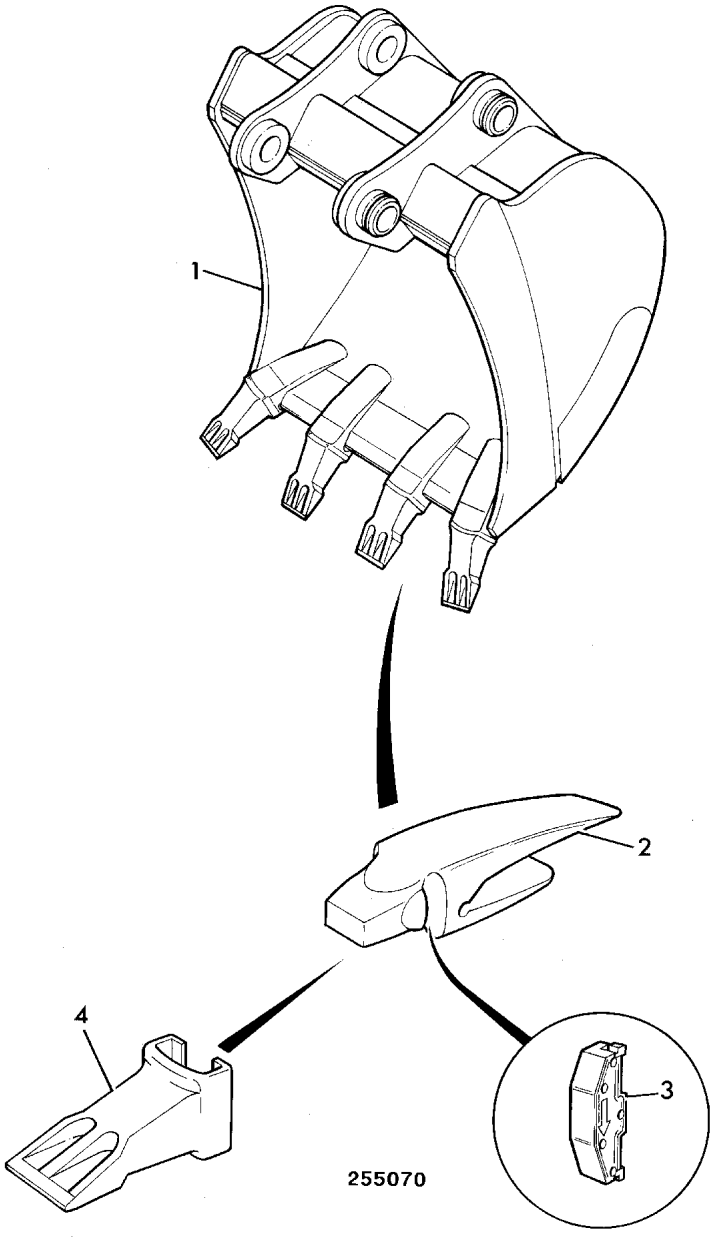

	FROM	TO	FROM	TO
JS160W				

ITEM	PART NO	CHANGE NO	DESCRIPTION	REMARKS	USAGE CODE	QTY
1	980/89142		Bucket, 550MM Heavy Duty			1
2	993/99577		:Adapter, tooth, V23			A/R
3	510/92002		:Pin, locking			A/R
4	993/99634		:Tooth, point			A/R

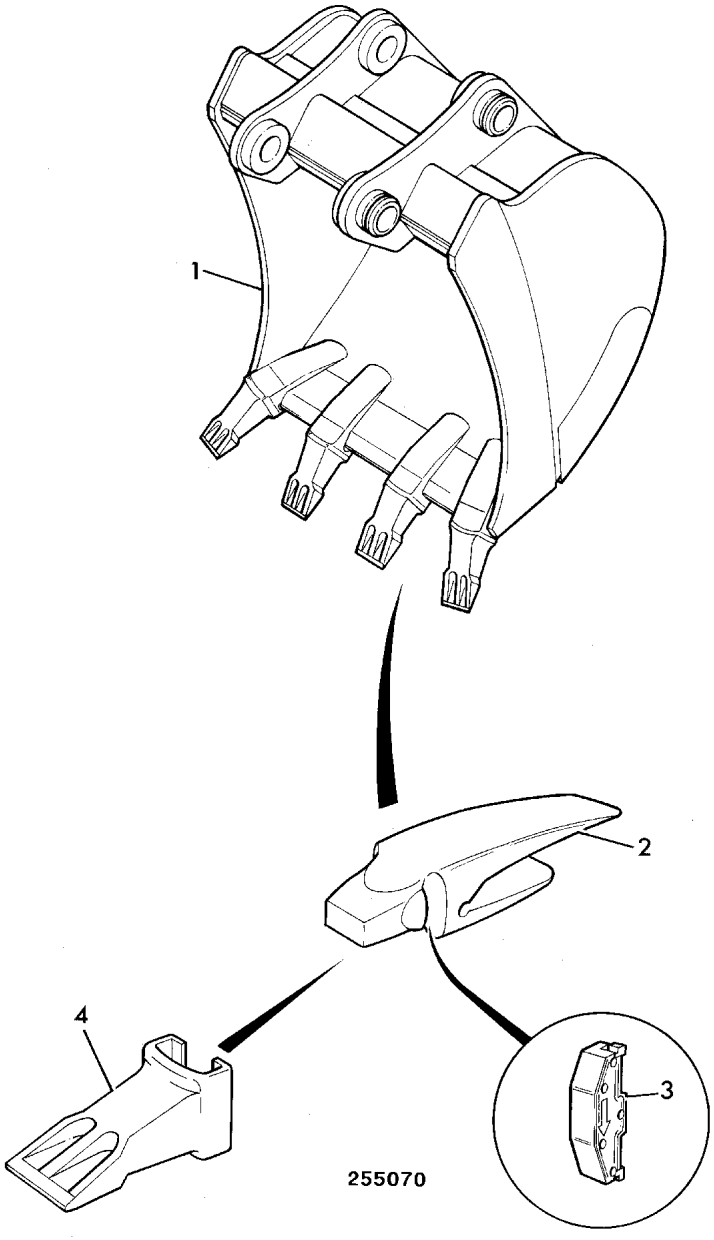

	FROM	TO	FROM	TO
JS160W				

ITEM	PART NO	CHANGE NO	DESCRIPTION	REMARKS	USAGE CODE	QTY
1	980/89175		Bucket, 650mm Heavy Duty			1
2	993/99577		:Adapter, tooth, V23			A/R
3	510/92002		:Pin, locking			A/R
4	993/99634		:Tooth, point			A/R

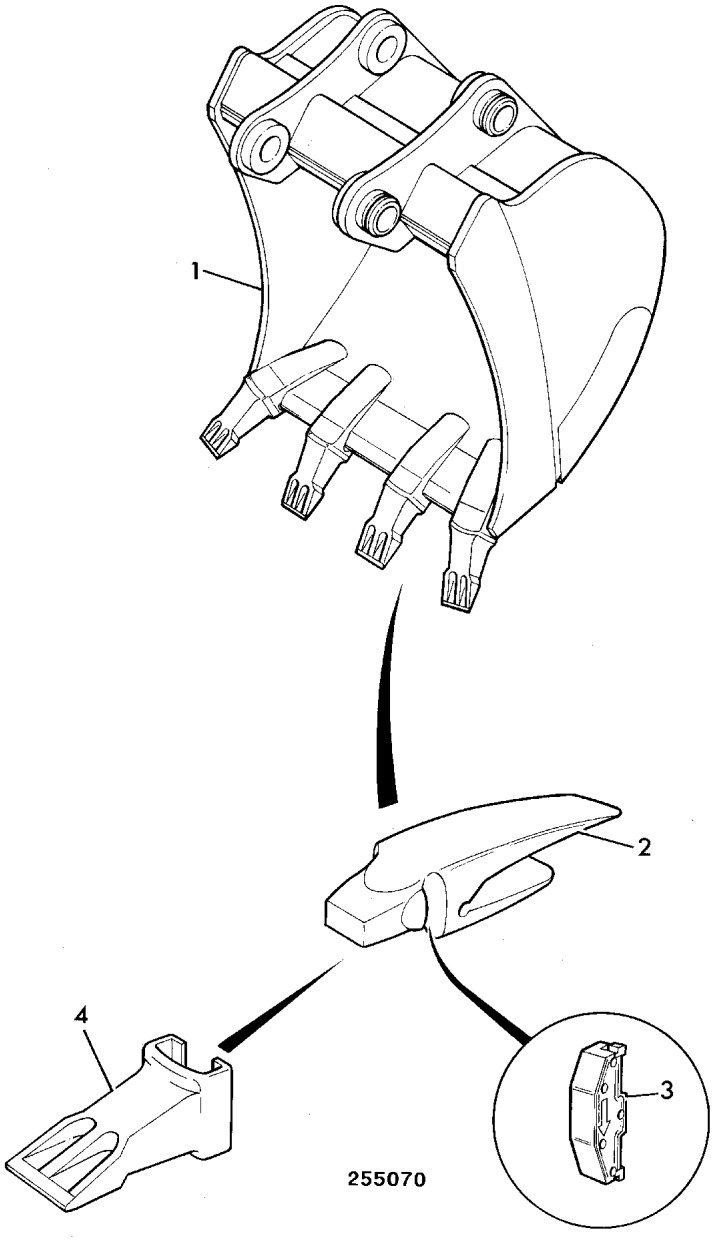

	FROM	TO	FROM	TO
JS160W				

ITEM	PART NO	CHANGE NO	DESCRIPTION	REMARKS	USAGE CODE	QTY
1	980/89176		Bucket, 750mm Heavy Duty			1
2	993/99577		:Adapter, tooth, V23			A/R
3	510/92002		:Pin, locking			A/R
4	993/99634		:Tooth, point			A/R

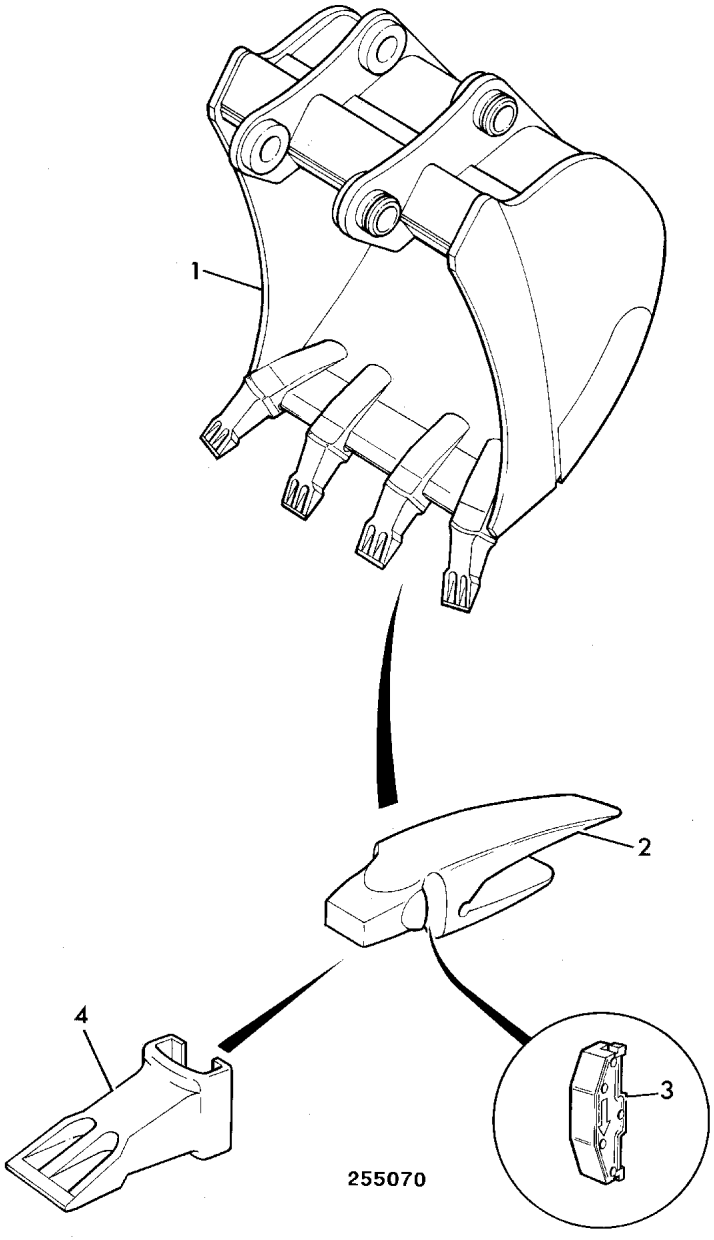

	FROM	TO	FROM	TO
JS160W				

ITEM	PART NO	CHANGE NO	DESCRIPTION	REMARKS	USAGE CODE	QTY
1	980/89177		Bucket, 850mm Heavy Duty			1
2	993/99577		:Adapter, tooth, V23			A/R
3	510/92002		:Pin, locking			A/R
4	993/99634		:Tooth, point			A/R

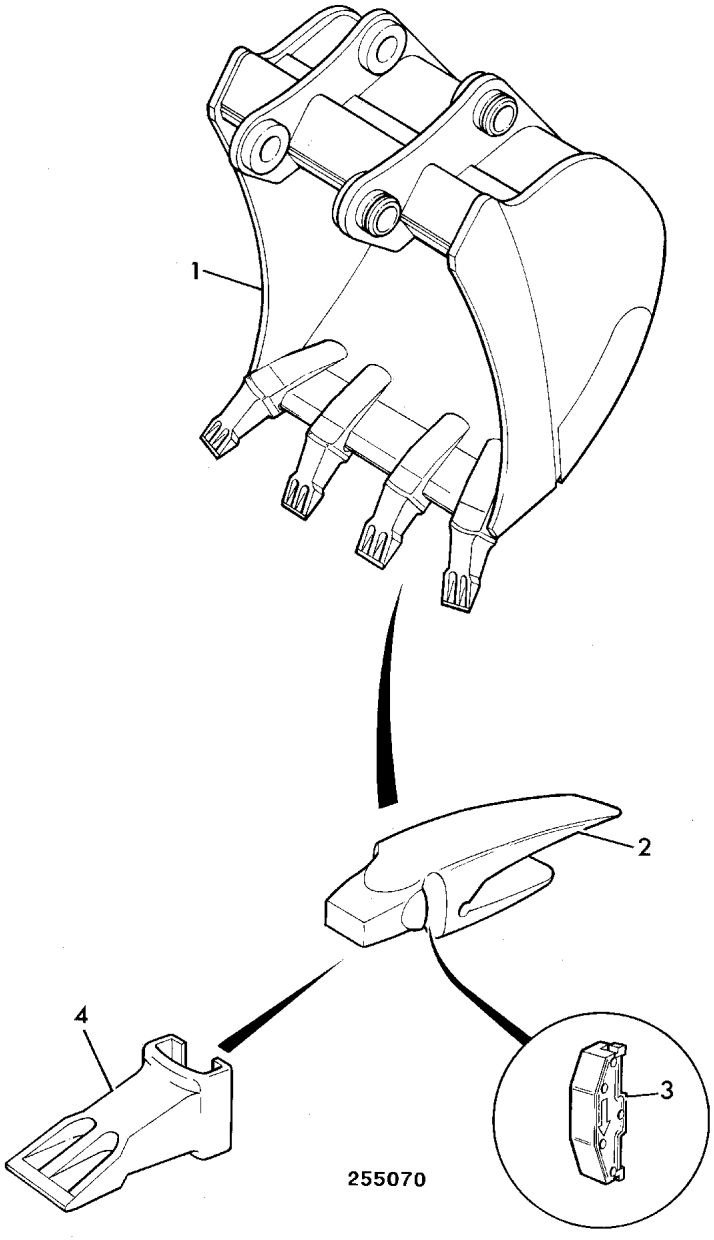

	FROM	TO	FROM	TO
JS160W				

ITEM	PART NO	CHANGE NO	DESCRIPTION	REMARKS	USAGE CODE	QTY
1	980/89143		Bucket, 950mm Heavy Duty			1
2	993/99577		:Adapter, tooth, V23			A/R
3	510/92002		:Pin, locking			A/R
4	993/99634		:Tooth, point			A/R

A2-1-26 BUCKET, 1050MM HEAVY DUTY

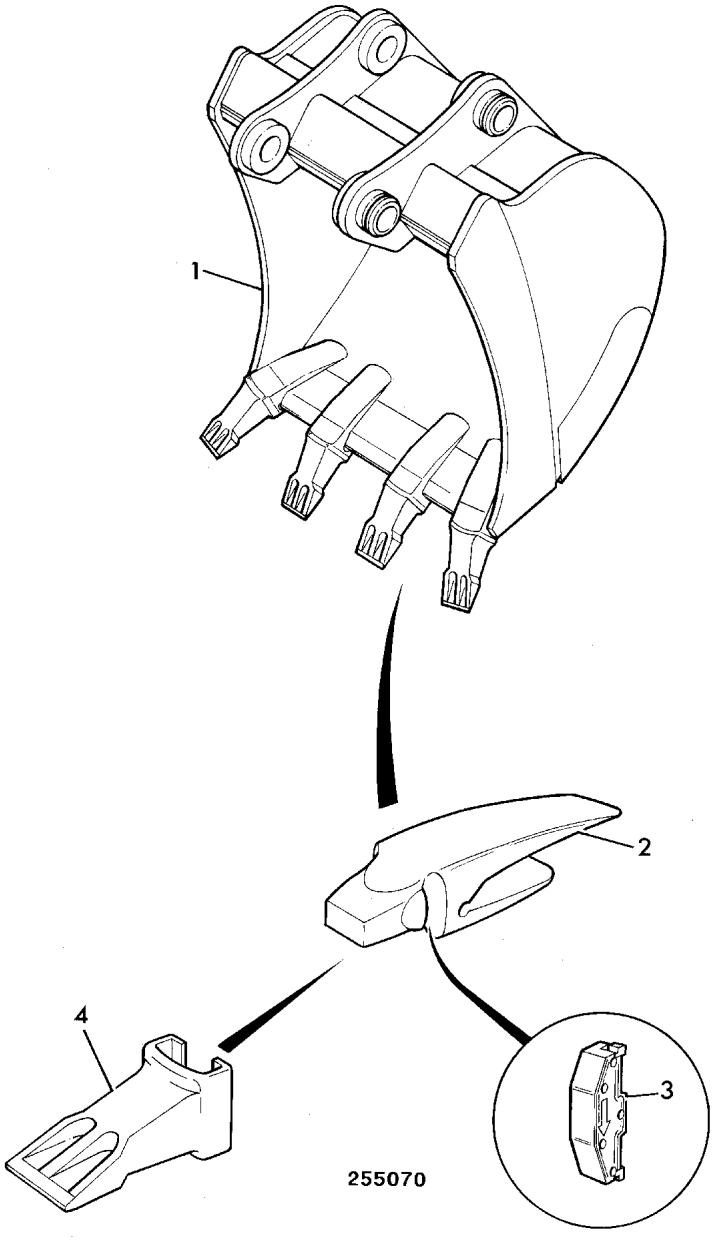

	FROM	TO	FROM	TO
JS160W				

ITEM	PART NO	CHANGE NO	DESCRIPTION	REMARKS	USAGE CODE	QTY
1	980/89144		Bucket, 1050mm Heavy Duty			1
2	993/99577		:Adapter, tooth, V23			A/R
3	510/92002		:Pin, locking			A/R
4	993/99634		:Tooth, point			A/R

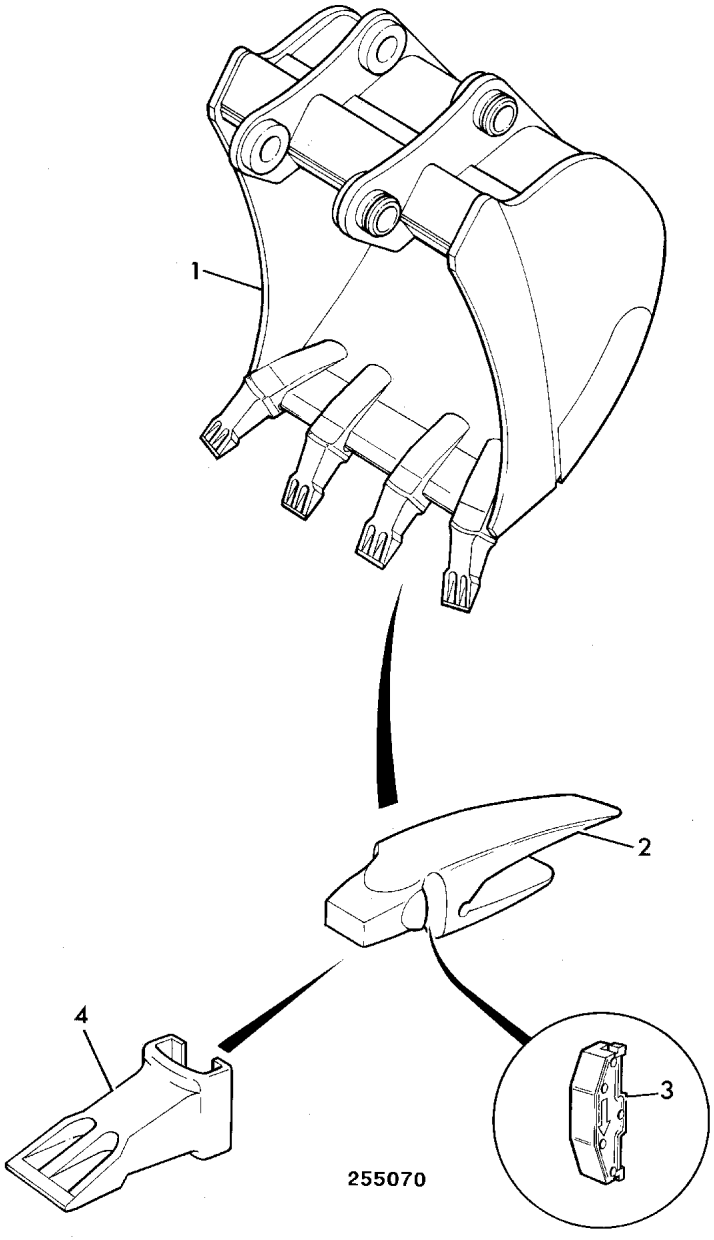

	FROM	TO	FROM	TO
JS160W				

ITEM	PART NO	CHANGE NO	DESCRIPTION	REMARKS	USAGE CODE	QTY
1	980/89178		Bucket, Heavy Duty			1
2	993/99577		:Adapter, tooth, V23			A/R
3	510/92002		:Pin, locking			A/R
4	993/99634		:Tooth, point			A/R

A2-1-28 BUCKET, 1250MM HEAVY DUTY

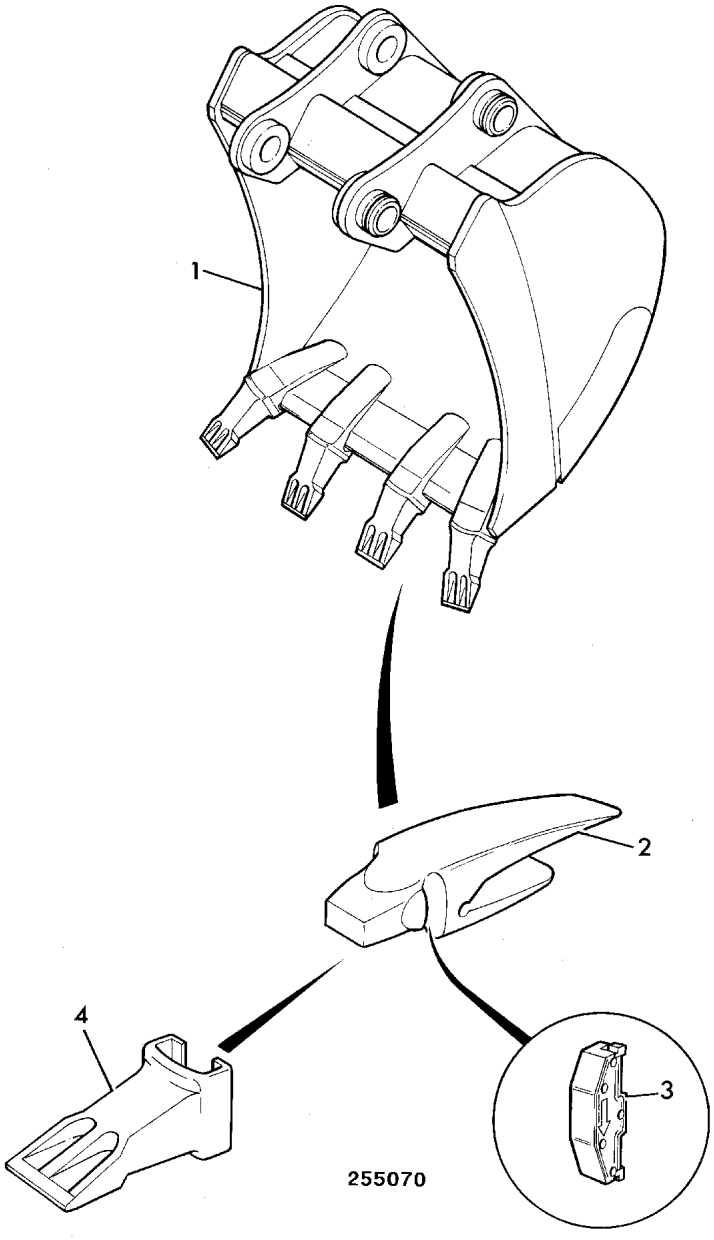

	FROM	TO	FROM	TO
JS160W				

ITEM	PART NO	CHANGE NO	DESCRIPTION	REMARKS	USAGE CODE	QTY
1	980/89179		Bucket, 1250mm Heavy Duty			1
2	993/99577		:Adapter, tooth, V23			A/R
3	510/92002		:Pin, locking			A/R
4	993/99634		:Tooth, point			A/R

A2-3-1 BUCKET, GRADING/DITCHING, 1829MM. 72" WIDE

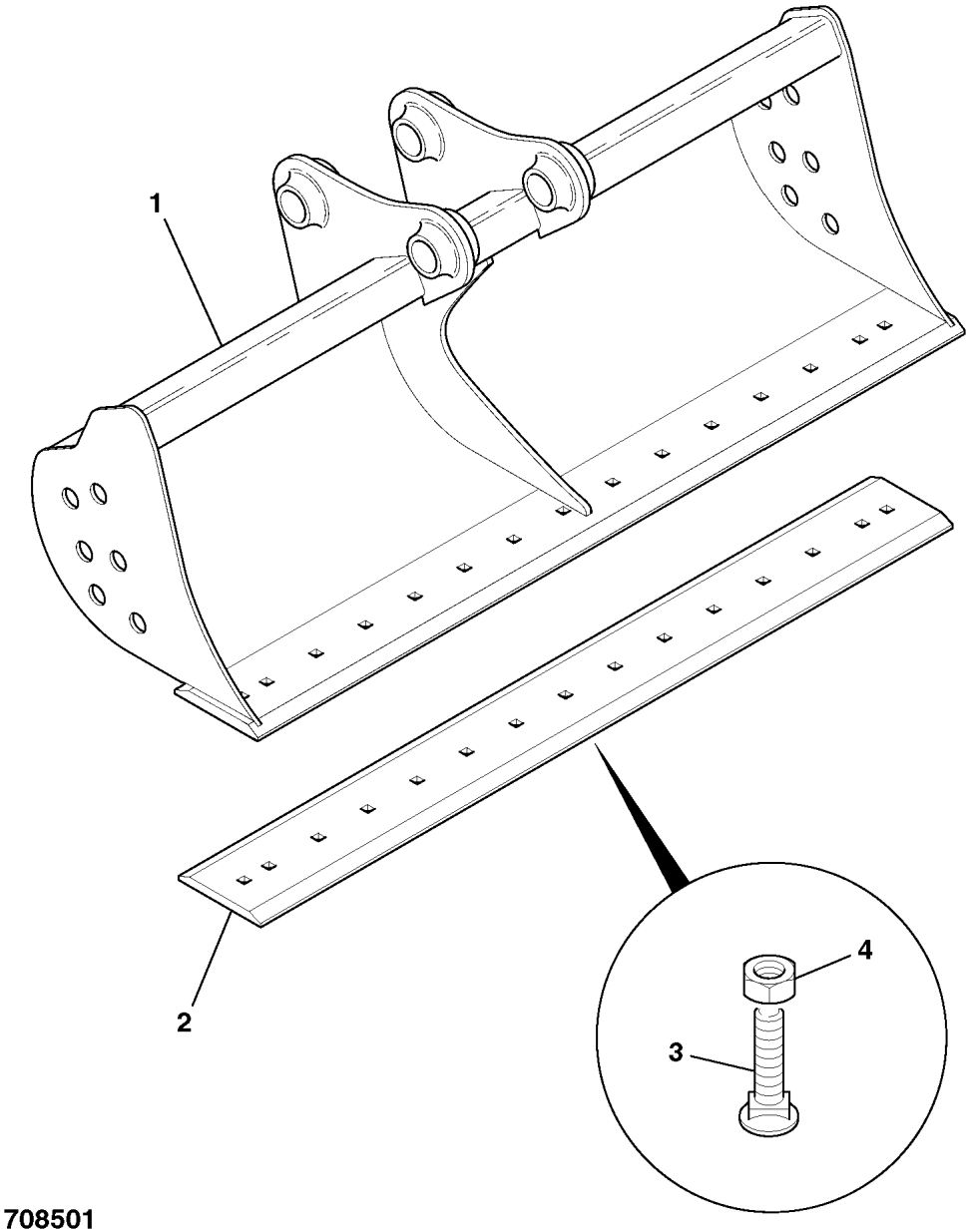

708501

	FROM	TO	FROM	TO
JS160W				

ITEM	PART NO	CHANGE NO	DESCRIPTION	REMARKS	USAGE CODE	QTY
1	980/86141		Bucket, grading, 1829mm. 72", wide, JS150, 180			1
2	* 331/47909		Toeplate, reversible 72" wide	Use with bucket 980/89607		1
3	826/10641		Ploughbolt, 1"UNC			6
4	* 1340/2401		Nut, 1"UNC hexagon			6
5	1416/0013		Washer			6

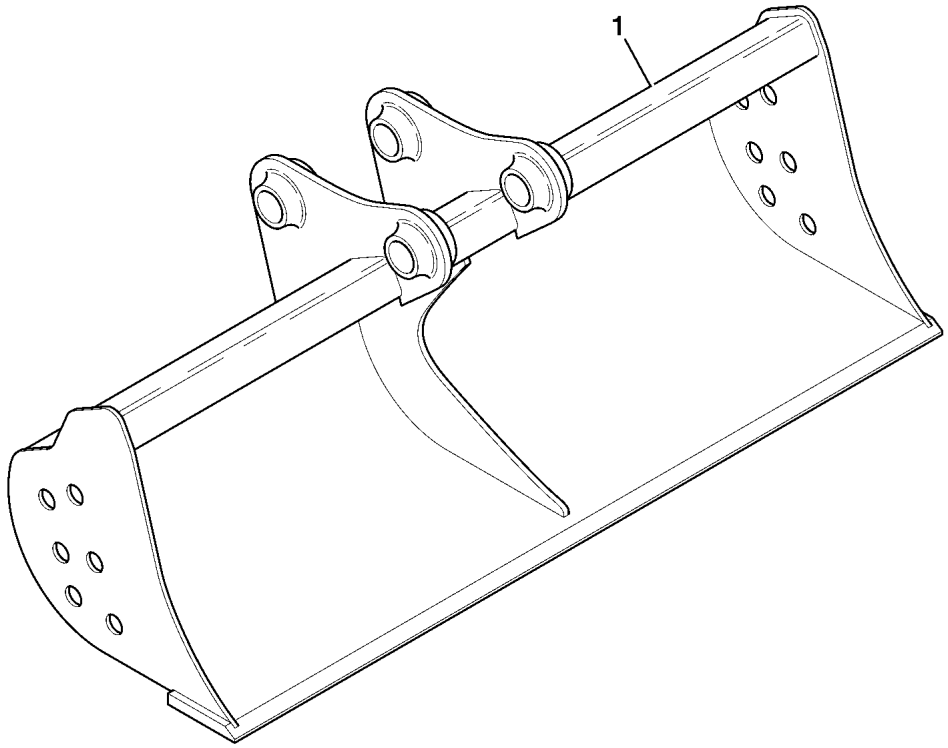

	FROM	TO	FROM	TO
JS160W				

ITEM	PART NO	CHANGE NO	DESCRIPTION	REMARKS	USAGE CODE	QTY
1	980/89604		Bucket, grading, 1524mm. 60", wide, JS160, 180			1
	* 980/86140		Bucket, grading, 1524mm. 60", wide, JS150, 180			1

708500

A

A2 BUCKETS
● A3 ATTACHMENTS

ENGLISH

A3-1-1 ROCKBREAKER HM 860Q, JS160W, 980/90214, 980/90474

A3-2-1 ROCKBREAKER HM1260Q, JS160W, 980/90216, 980/90291

A3-9-1 QUICKHITCH, MANUAL

A3-10-1 QUICKHITCH, JS160, HYDRAULIC, BUG, MILLER

A3-11-1 QUICKHITCH, HYDRAULIC, MPG, MILLER

FRANCAIS

A3-1-1 ROCKBREAKER HM 860Q, JS160W, 980/90214, 980/90474

A3-2-1 ROCKBREAKER HM1260Q, JS160W, 980/90216, 980/90291

A3-9-1 QUICKHITCH, MANUAL

A3-10-1 QUICKHITCH, JS160, HYDRAULIC, BUG, MILLER

A3-11-1 QUICKHITCH, HYDRAULIC, MPG, MILLER

DEUTSCH

A3-1-1 ROCKBREAKER HM 860Q, JS160W, 980/90214, 980/90474

A3-2-1 ROCKBREAKER HM1260Q, JS160W, 980/90216, 980/90291

A3-9-1 QUICKHITCH, MANUAL

A3-10-1 QUICKHITCH, JS160, HYDRAULIC, BUG, MILLER

A3-11-1 QUICKHITCH, HYDRAULIC, MPG, MILLER

ITALIANO

A3-1-1 ROCKBREAKER HM 860Q, JS160W, 980/90214, 980/90474

A3-2-1 ROCKBREAKER HM1260Q, JS160W, 980/90216, 980/90291

A3-9-1 QUICKHITCH, MANUAL

A3-10-1 QUICKHITCH, JS160, HYDRAULIC, BUG, MILLER

A3-11-1 QUICKHITCH, HYDRAULIC, MPG, MILLER

PORTUGUES

A3-1-1 ROCKBREAKER HM 860Q, JS160W, 980/90214, 980/90474

A3-2-1 ROCKBREAKER HM1260Q, JS160W, 980/90216, 980/90291

A3-9-1 QUICKHITCH, MANUAL

A3-10-1 QUICKHITCH, JS160, HYDRAULIC, BUG, MILLER

A3-11-1 QUICKHITCH, HYDRAULIC, MPG, MILLER

ESPANOL

A3-1-1 ROCKBREAKER HM 860Q, JS160W, 980/90214, 980/90474

A3-2-1 ROCKBREAKER HM1260Q, JS160W, 980/90216, 980/90291

A3-9-1 QUICKHITCH, MANUAL

A3-10-1 QUICKHITCH, JS160, HYDRAULIC, BUG, MILLER

A3-11-1 QUICKHITCH, HYDRAULIC, MPG, MILLER

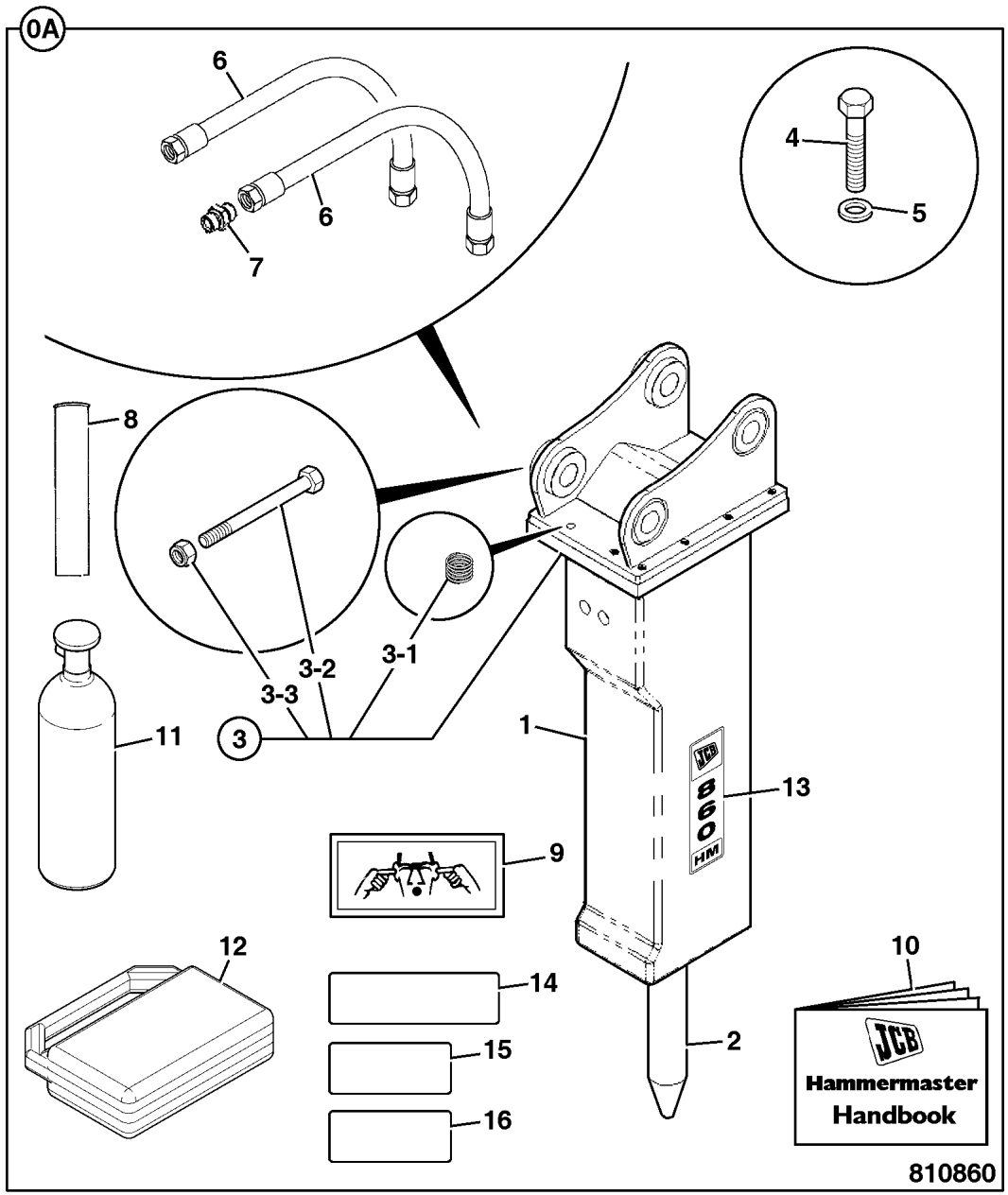

	FROM	TO	FROM	TO
JS160W				

ITEM	PART NO	CHANGE NO	DESCRIPTION	REMARKS	USAGE CODE	QTY
0A	980/90474		Rockbreaker, HM860Q c/ w chisel, JS160W, 175W			1
	980/90214		Rockbreaker, HM860 c/w moil, JS160W, JS175W			1
1	980/90198		:Rockbreaker, HM860Q ABI	See 9802/0060 Pages A6-1-5, A6-1-10, A6-1-11		1
2	331/53614		:Tool, flat chisel, HM 860Q			1
	331/53613		:Tool, moil, HM 860Q			1
3	980/90232		:Bracket, rockbreaker hanger, JS160 HM860Q			1
3A	826/11469		::Insert, M20 helicoil			12
3B	1315/3724Z		::Bolt, M16 x 140			2
3C	1370/0603Z		::Nut, M16			2
4	1391/3812		:Bolt			12
5	823/10323		:Washer, Nord Lock M20, Glued Pair			12
6	624/80059		:Hose			2
7	816/90185		:Adapter, G1-G3/4A. standard			1
8	4003/2305		:Grease, hammer			2
9	817/00592		:Label			1
10	9814/0526		:Manual, operator, HM1160-HM4160			1
11	892/01194		:Tool, Nitrogen cylinder 2L			1
12	892/01193		:Tool, service			1

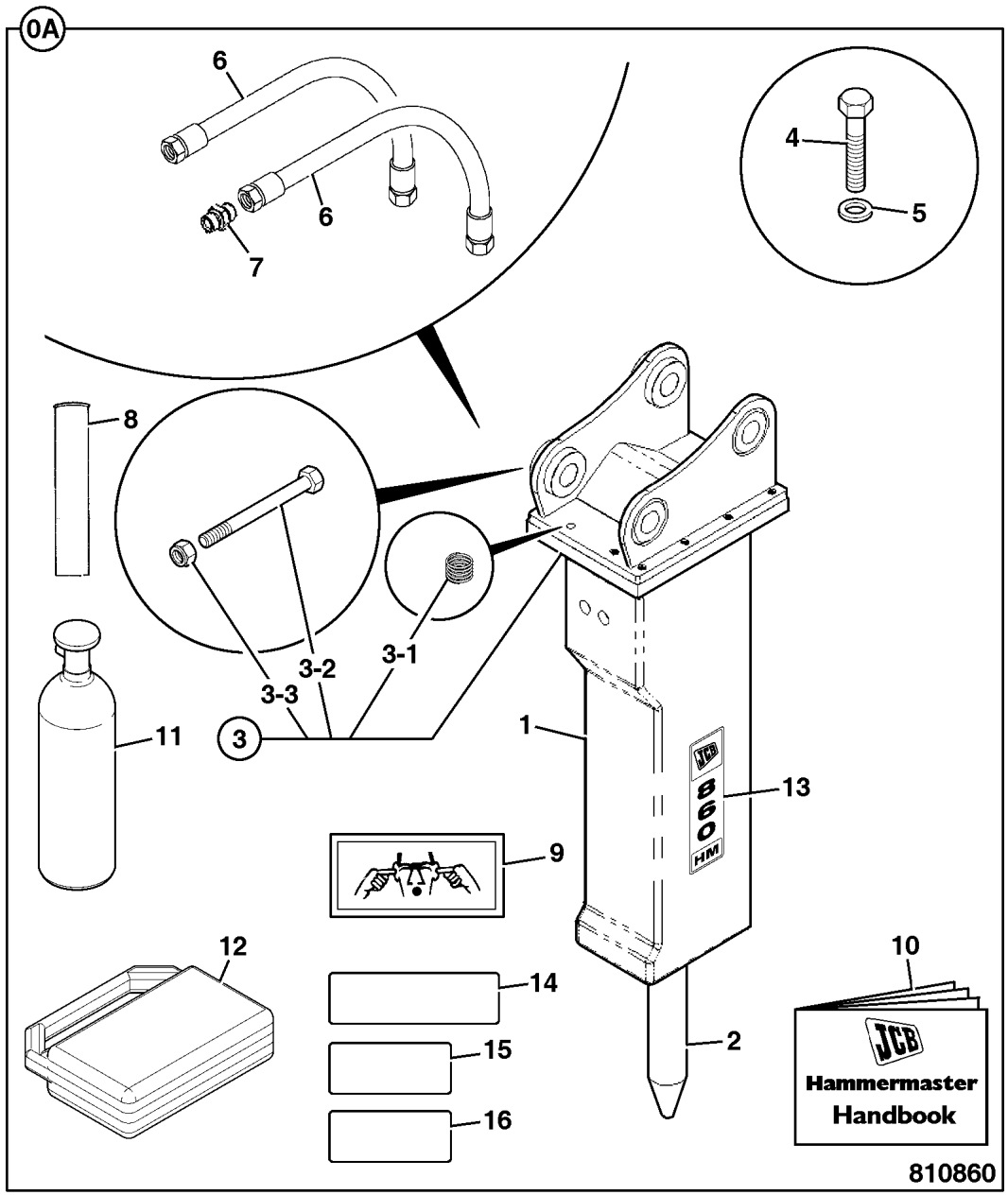

ITEM	PART NO	CHANGE NO	DESCRIPTION	REMARKS	USAGE CODE	QTY
13	817/20109		:Decal, HM860			2
14	817/70133		:Label, warning accumulator			1
15	817/70134		:Decal, flying debris			1
16	817/70058		:Decal, warning,read manual, before operating m/c			1

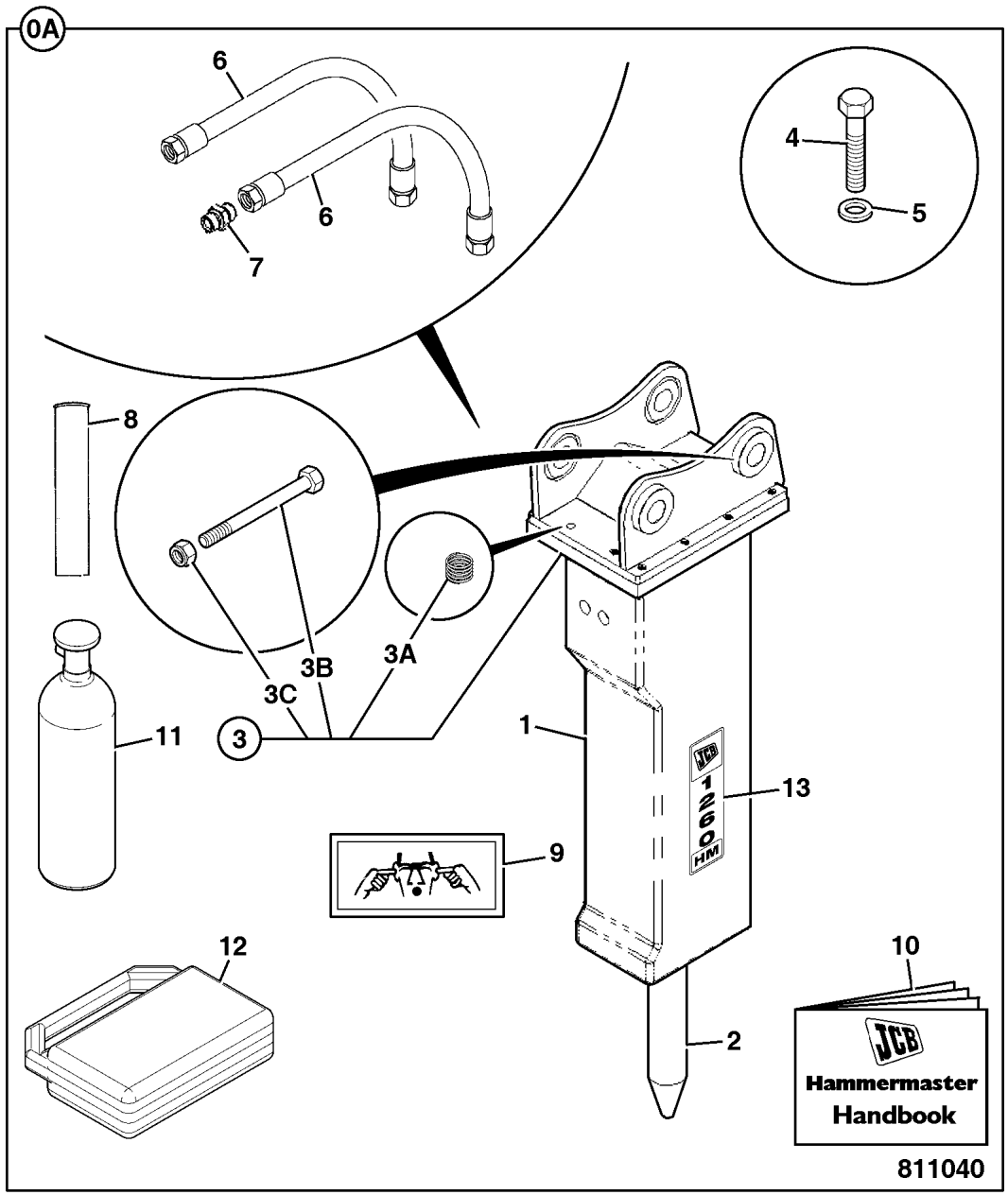

	FROM	TO	FROM	TO
JS160W				

ITEM	PART NO	CHANGE NO	DESCRIPTION	REMARKS	USAGE CODE	QTY
0A	980/90291		Rockbreaker, HM1260Q c/ w chisel, JS160, JS180			1
	980/90216		Rockbreaker, HM1260Q c/ w moil, JS160, JS180			1
1	980/90199		:Rockbreaker, HM1260Q ABI	See 9802/0060 Pages A6-2-1, A6-2-5, A6-2-6		1
2	331/53896		:Tool, chisel, HM1260Q			1
	331/53895		:Tool, moil, HM1260Q			1
3	980/90251		:Bracket, hanger, JS160			1
3A	826/11470		::Insert, M30 helicoil			12
3B	1315/3724Z		::Bolt, M16 x 140			2
3C	1370/0603Z		::Nut, M16			2
4	1391/4118		:Capscrew			12
5	823/10729		:Washer			12
6	624/80059		:Hose			2
7	816/90185		:Adapter, G1-G3/4A. standard			1
8	4003/2305		:Grease, hammer			2
9	817/00592		:Label			1
10	9814/0526		:Manual, operator, HM1160-HM4160			1
11	892/01194		:Tool, Nitrogen cylinder 2L			1
12	892/01193		:Tool, service			1
13	817/20110		:Decal, HM1260			2

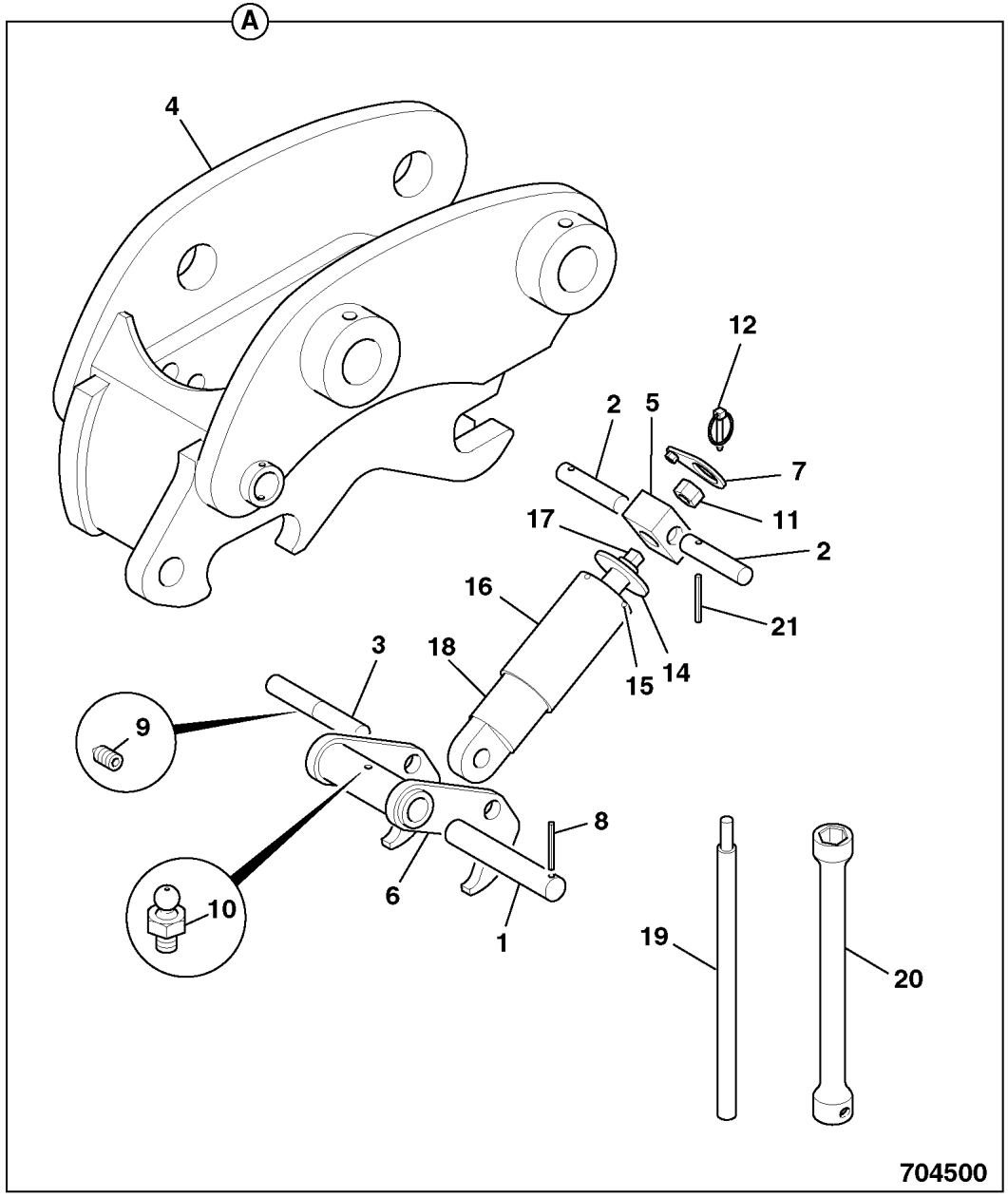

	FROM	TO	FROM	TO
JS160W				

ITEM	PART NO	CHANGE NO	DESCRIPTION	REMARKS	USAGE CODE	QTY
0A	980/89007		Quickhitch, assembly, mechanical			1
1	331/25191		:Pin, hook			1
2	331/40222		:Pin, block PAIR, 980/89007 Q/Hitch			1
3	811/90184		:Pivot, Pin, Ram hook			1
4	331/40223		:Frame, WA Coupler Frame, 980/89007 Q/Hitch			1
5	331/40224		:Block, pivot			1
6	331/40228		:Hook, hook assembly, 980/89007 q/hitch			1
7	331/40237		:Plate, lock plate q/hitch, 980/89005,6,7,8			1
8	913/10123		:Pin, Roll			1
9	826/11161		:Screw, grubscrew M8x10, JS Q/Hitch			1
10	816/13413		:Nipple, grease nipple, JS Q/Hitch			2
11	331/40238		:Nut, retaining nut, JS Q/Hitch			1
12	331/40239		:Pin, lynch pin, JS Q/Hitch			1
13	826/10621		:Bolt	Not shown		2
14	331/21310		:Washer, Belleville			2
15	331/21311		:Rivet			4
16	331/24563		:Cover, protective			1

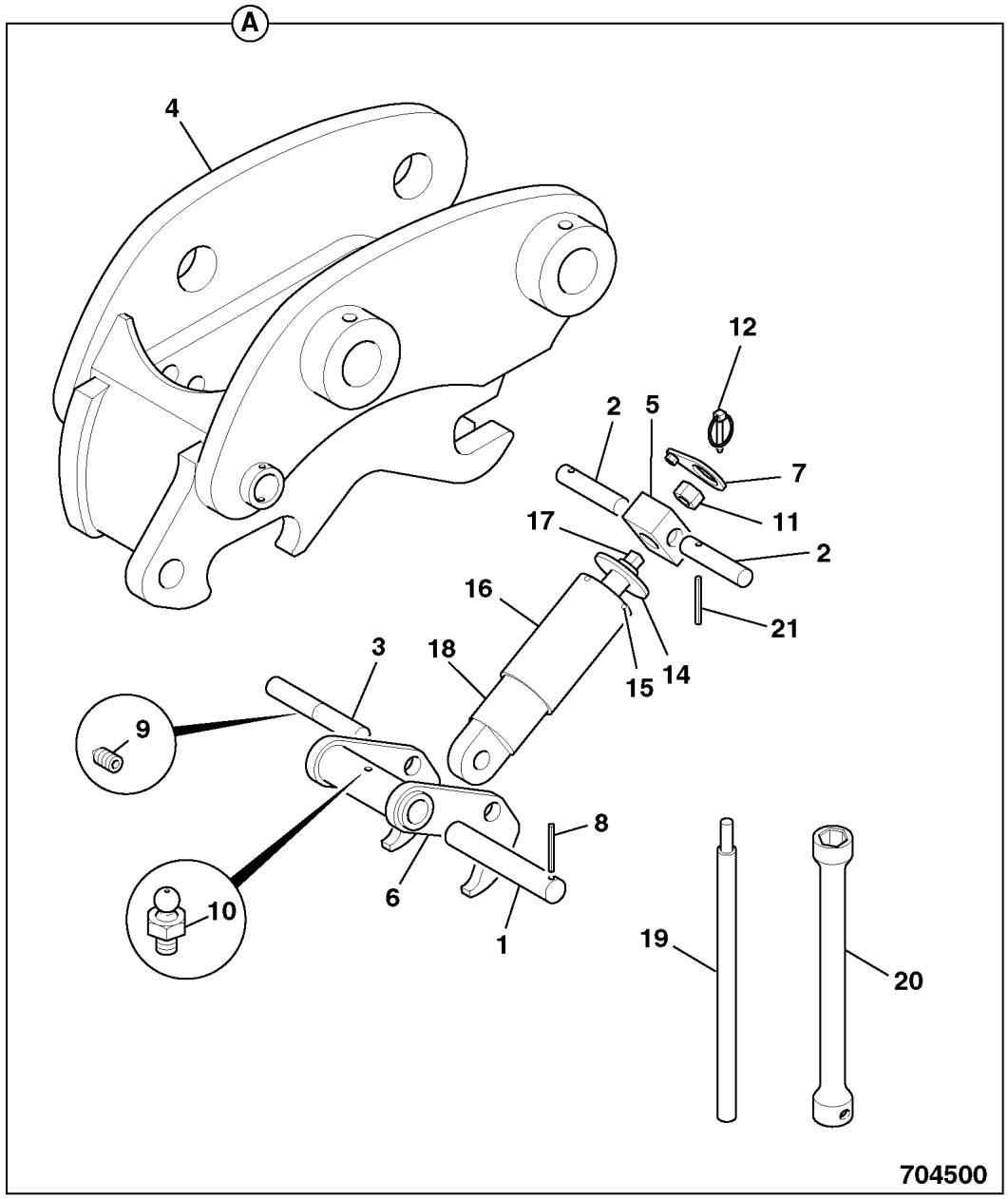

ITEM	PART NO	CHANGE NO	DESCRIPTION	REMARKS	USAGE CODE	QTY
17	983/11041		:Adjuster, mechlolc mechanisum			1
18	NSP		:None serviced part			1
19	331/40241		:Bar, tommy bar, JS Q/ Hitch			1
20	331/40242		:Socket, nut socket, JS Q/ Hitch			1
21	331/40244		:Pin, roll pin, JS Q/Hitch			2
22	JHP0151		:Decal, warning,, bucket-cab			1

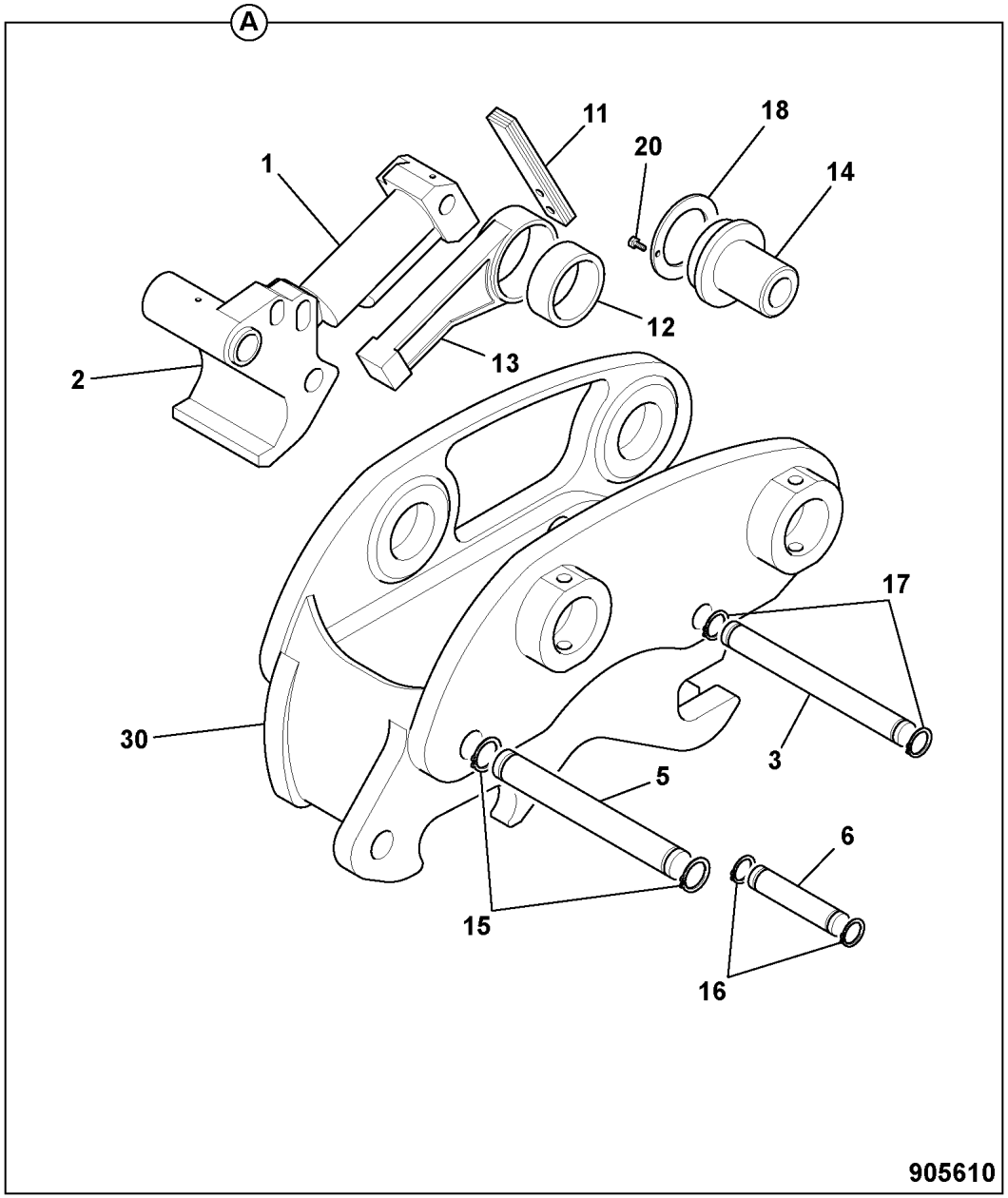

	FROM	TO	FROM	TO
JS160W				

ITEM	PART NO	CHANGE NO	DESCRIPTION	REMARKS	USAGE CODE	QTY
0A	980/90487		Quickhitch, BUG	Installation kit see page E1-60-5		1
1	331/69621		Ram			1
	991/10124		:Kit, Seal			1
	25/220702		Valve, Check			1
2	331/69589		Hook			1
3	331/69611		Pin, ram			1
5	331/69608		Pin, hook			1
6	331/69406		Pin, hook-cylinder			1
9	816/13413		Nipple, grease nipple, JS Q/Hitch			1
11	331/21645		Spring			1
12	331/21666		Bush, blocking bar, assy			1
13	331/69588		Bar, blocking			1
14	331/69586		Insert			1
15	331/63727		Circlip, 50mm diameter			1
16	331/63726		Circlip, 35mm diameter			1
17	331/63726		Circlip, 35mm diameter			1
18	331/69414		Plate, retaining			1
20	.		'See Remark'	M5x15csk		1
30	331/69565		Frame			1
40	980/90463		Kit, quickhitch	Details E1-60-1		1

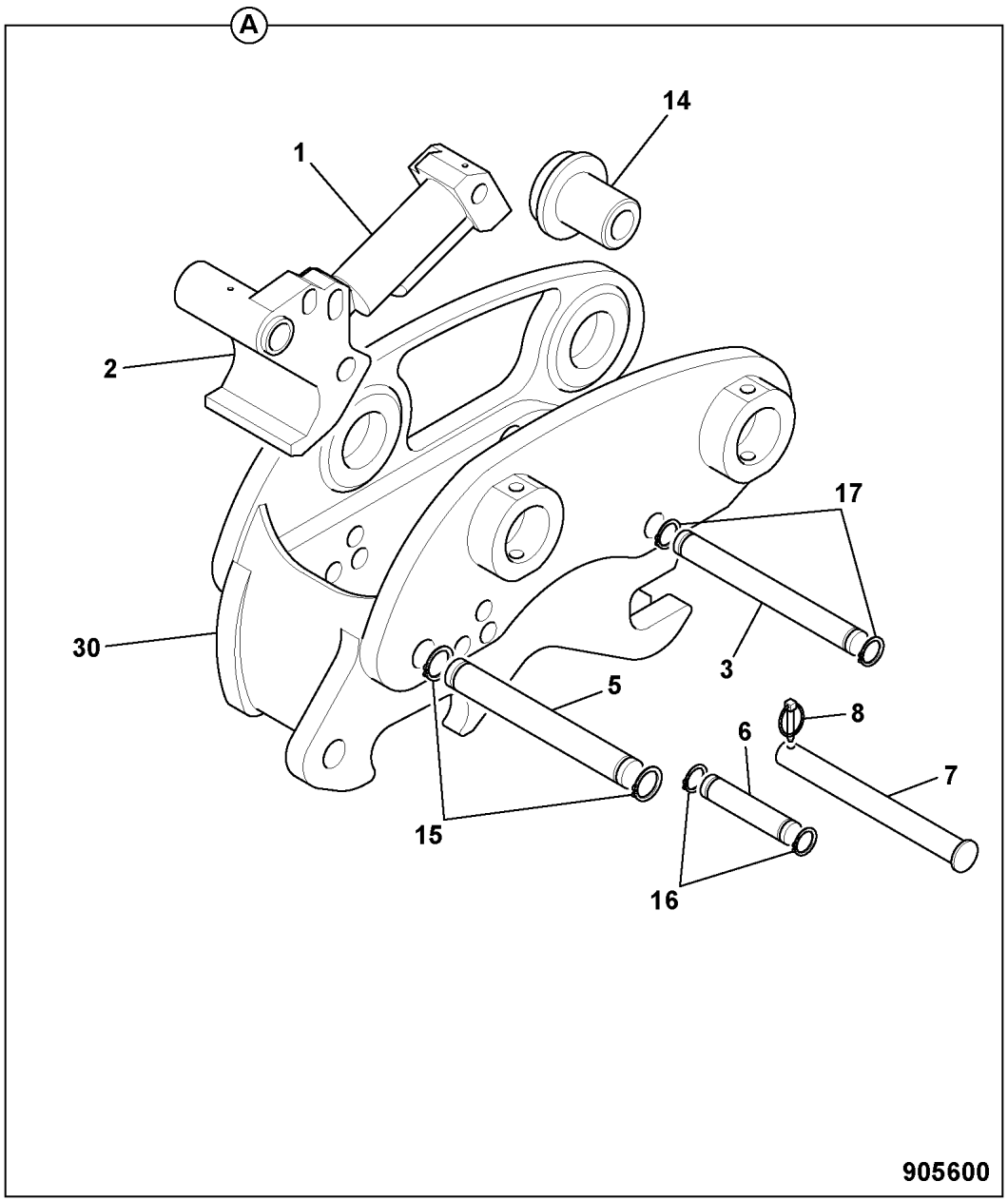

	FROM	TO	FROM	TO
JS160W				

ITEM	PART NO	CHANGE NO	DESCRIPTION	REMARKS	USAGE CODE	QTY
0A	980/90498		Quickhitch, MPG			1
1	331/69621		Ram			1
	991/10125		Kit, Seal			1
	25/220702		Valve, Check			1
2	331/69591		Hook			1
3	331/69609		Pin, ram			1
5	331/69606		Pin, hook			1
6	331/69406		Pin, hook-cylinder			1
7	331/69612		Pin, safety			1
8	331/40239		Pin, lynch pin, JS Q/Hitch			1
9	816/13413		Nipple, grease nipple, JS Q/Hitch			1
14	331/69586		Insert			1
15	331/63727		Circlip, 50mm diameter			1
16	331/63726		Circlip, 35mm diameter			1
17	331/63726		Circlip, 35mm diameter			1
30	331/69568		Frame			1
40	980/90463		Kit, quickhitch	Details E1-60-1		1

B

- B1 BODYWORK/FRAME
- B2 CAB
- B3 LOADER FRONT END
- B5 REFURBISHMENTS

ENGLISH

B1-1-1 MAINFRAME, MONO BUILD
B1-1-10 MAINFRAME, TAB 160W BUILD
B1-2-1 COVERS, UNDERSIDE MAINFRAME
B1-3-1 TANK, HYDRAULIC
B1-4-1 TANK, DIESEL FUEL
B1-5-1 FRAME SUPPORT
B1-5-5 ENGINE COVERS
B1-5-10 DOORS WITH FITTINGS, LEFT HAND SIDE BODY, RIGHT HAND SIDE BODY
B1-5-20 GRILLES, & TREAD PLATES
B1-5-30 COWLINGS, TOOLBOX & HAND RAIL
B1-5-40 COWLINGS, ENGINE BULKHEAD
B1-5-50 BAFFLES, PUMP BAY
B1-6-1 COUNTERWEIGHT REAR, AND MIRROR
B1-9-1 CHASSIS, WITH TOOLBOX
B1-9-10 WHEELCHOCK, GERMAN
B1-11-1 BLADE, DOZER, FRONT & REAR MOUNTED
B1-21-15 STABILISER, FRONT & REAR

FRANCAIS

B1-1-1 CHASSIS PRINCIPAL
B1-1-10 CHASSIS PRINCIPAL
B1-2-1 COVERS, UNDERSIDE MAINFRAME
B1-3-1 RESERVOIR, HYDRAULIQUE
B1-4-1 RESERVOIR, CARBU.DIESEL
B1-5-1 FRAME SUPPORT
B1-5-5 ENGINE COVERS
B1-5-10 DOORS WITH FITTINGS, LEFT HAND SIDE BODY, RIGHT HAND SIDE BODY
B1-5-20 GRILLES, & TREAD PLATES
B1-5-30 COWLINGS, TOOLBOX & HAND RAIL
B1-5-40 COWLINGS, ENGINE BULKHEAD
B1-5-50 BAFFLES, PUMP BAY
B1-6-1 CONTREPOIDS ARRIERE
B1-9-1 CHASSIS, WITH TOOLBOX
B1-9-10 WHEELCHOCK, GERMAN
B1-11-1 LAME, CONCASSEUR
B1-21-15 STABILISER, FRONT & REAR

DEUTSCH

B1-1-1 HAUPTRAHMEN
B1-1-10 HAUPTRAHMEN
B1-2-1 COVERS, UNDERSIDE MAINFRAME
B1-3-1 TANK, HYDRAULIK
B1-4-1 TANK, DIESELKRAFTST.
B1-5-1 FRAME SUPPORT
B1-5-5 ENGINE COVERS
B1-5-10 DOORS WITH FITTINGS, LEFT HAND SIDE BODY, RIGHT HAND SIDE BODY
B1-5-20 GRILLES, & TREAD PLATES
B1-5-30 COWLINGS, TOOLBOX & HAND RAIL
B1-5-40 COWLINGS, ENGINE BULKHEAD
B1-5-50 BAFFLES, PUMP BAY
B1-6-1 GEGENGEWICHT HINTEN
B1-9-1 CHASSIS, WITH TOOLBOX
B1-9-10 WHEELCHOCK, GERMAN
B1-11-1 SCHILD, RAUPE
B1-21-15 STABILISER, FRONT & REAR

ITALIANO

B1-1-1 TELAIO PRINCIPALE
B1-1-10 TELAIO PRINCIPALE
B1-2-1 COVERS, UNDERSIDE MAINFRAME
B1-3-1 SERBATOIO IDRAULICO
B1-4-1 SERBATOIO GASOLIO
B1-5-1 FRAME SUPPORT
B1-5-5 ENGINE COVERS
B1-5-10 DOORS WITH FITTINGS, LEFT HAND SIDE BODY, RIGHT HAND SIDE BODY
B1-5-20 GRILLES, & TREAD PLATES
B1-5-30 COWLINGS, TOOLBOX & HAND RAIL
B1-5-40 COWLINGS, ENGINE BULKHEAD
B1-5-50 BAFFLES, PUMP BAY
B1-6-1 CONTRAPPESO POSTERIORE
B1-9-1 CHASSIS, WITH TOOLBOX
B1-9-10 WHEELCHOCK, GERMAN
B1-11-1 LAMA, APRIPISTA
B1-21-15 STABILISER, FRONT & REAR

PORTUGUES

B1-1-1 ESTRUTURA PRINCIPAL
B1-1-10 ESTRUTURA PRINCIPAL
B1-2-1 COVERS, UNDERSIDE MAINFRAME
B1-3-1 DEPFSITO, HIDRAULICO
B1-4-1 DEPFSITO,COMBUSTIVEL
B1-5-1 FRAME SUPPORT
B1-5-5 ENGINE COVERS
B1-5-10 DOORS WITH FITTINGS, LEFT HAND SIDE BODY, RIGHT HAND SIDE BODY
B1-5-20 GRILLES, & TREAD PLATES
B1-5-30 COWLINGS, TOOLBOX & HAND RAIL
B1-5-40 COWLINGS, ENGINE BULKHEAD

B1-5-50 BAFFLES, PUMP BAY
B1-6-1 CONTRAPESO TRASEIRO
B1-9-1 CHASSIS, WITH TOOLBOX
B1-9-10 WHEELCHOCK, GERMAN
B1-11-1 LAMINA, NIVELAMENTO
B1-21-15 STABILISER, FRONT & REAR

ESPANOL

B1-1-1 ESTRUCTURA
B1-1-10 ESTRUCTURA
B1-2-1 COVERS, UNDERSIDE MAINFRAME
B1-3-1 TANQUE, HIDRAULICO
B1-4-1 TANQUE, GASOLEO
B1-5-1 FRAME SUPPORT
B1-5-5 ENGINE COVERS
B1-5-10 DOORS WITH FITTINGS, LEFT HAND SIDE BODY, RIGHT HAND SIDE BODY
B1-5-20 GRILLES, & TREAD PLATES
B1-5-30 COWLINGS, TOOLBOX & HAND RAIL
B1-5-40 COWLINGS, ENGINE BULKHEAD
B1-5-50 BAFFLES, PUMP BAY
B1-6-1 CONTRAPESO TRASERO
B1-9-1 CHASSIS, WITH TOOLBOX
B1-9-10 WHEELCHOCK, GERMAN
B1-11-1 CUCHILLA, DOZER
B1-21-15 STABILISER, FRONT & REAR

	FROM	TO	FROM	TO
JS160W				

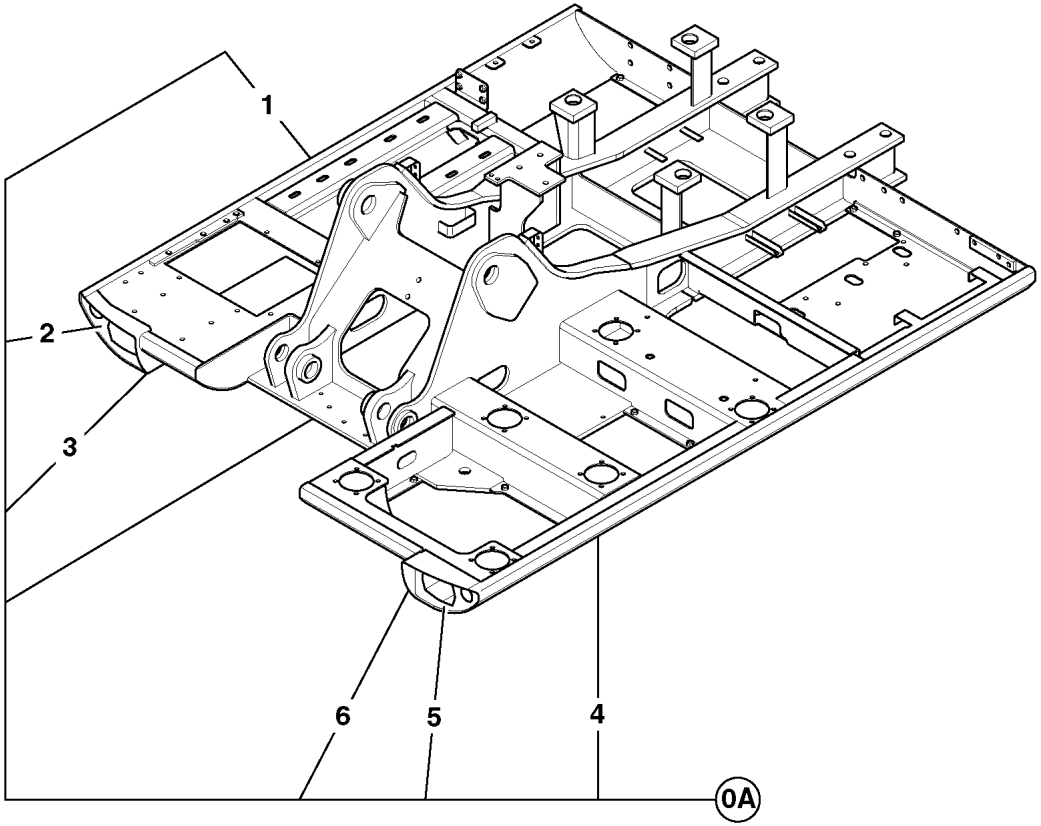

ITEM	PART NO	CHANGE NO	DESCRIPTION	REMARKS	USAGE CODE	QTY
0A	335/13268		Frame, revolving			1
1	331/63738		:Plate, skirt pressing, right hand side			1
2	331/47449		:Plate, head light			1
3	331/47851		:Plate, light surround, JS175W AUTO			1
4	331/63732		:Plate, skirt pressing, left hand side			1
5	331/47449		:Plate, head light			1
6	331/47450		:Plate, head light, left hand mounting			1

910900

	FROM	TO	FROM	TO
JS160W				

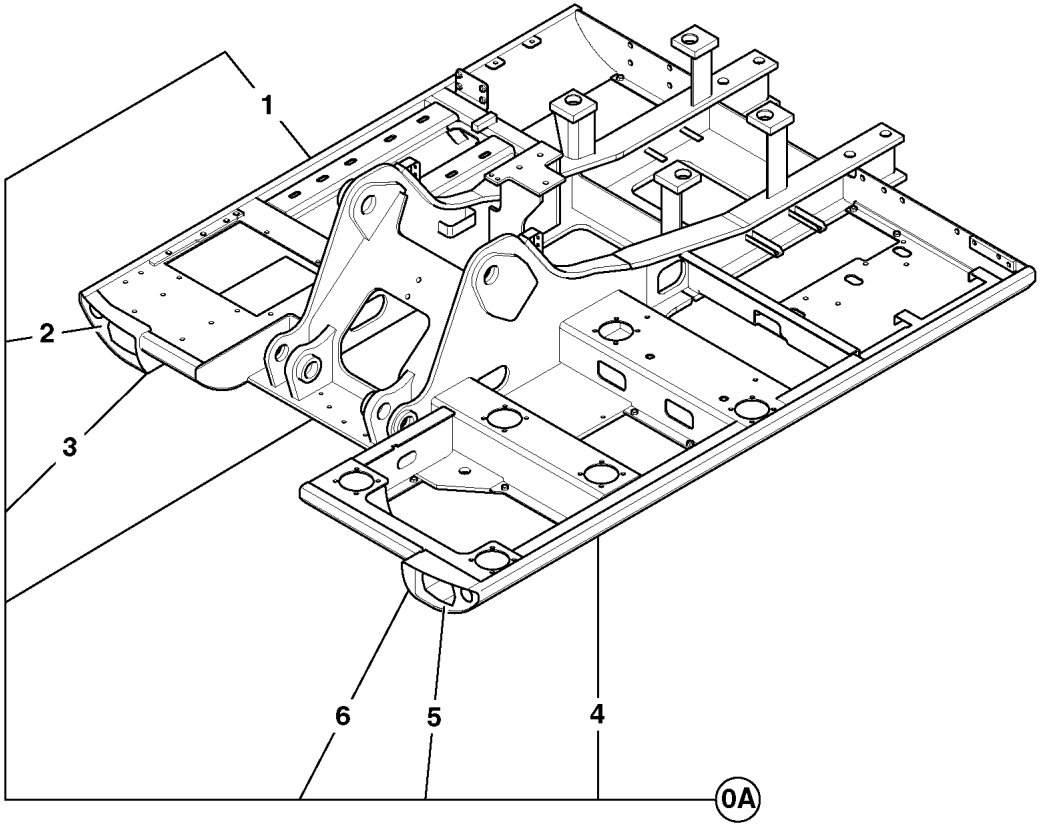

ITEM	PART NO	CHANGE NO	DESCRIPTION	REMARKS	USAGE CODE	QTY
0A	335/12966		Frame, revolving, JS160W TAB			1
1	331/63738		:Plate, skirt pressing, right hand side			1
2	331/47449		:Plate, head light			1
3	331/47851		:Plate, light surround, JS175W AUTO			1
4	331/63732		:Plate, skirt pressing, left hand side			1
5	331/47449		:Plate, head light			1
6	331/47450		:Plate, head light, left hand mounting			1

910900

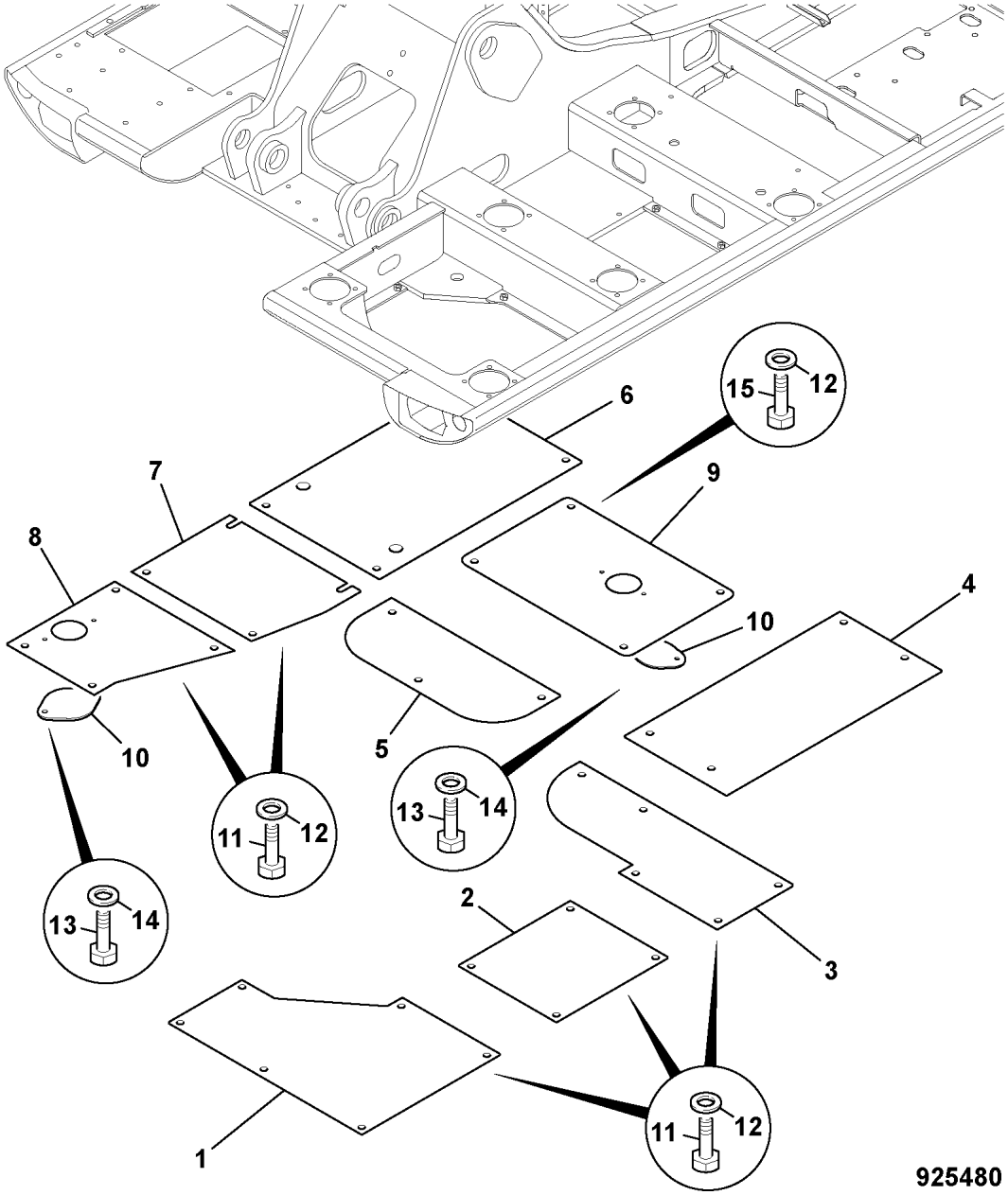

925480

	FROM	TO	FROM	TO
JS160W				

ITEM	PART NO	CHANGE NO	DESCRIPTION	REMARKS	USAGE CODE	QTY
1	331/42780		Cover, under			1
2	331/42782		Cover, under			1
3	331/65819		Plate, under cover, JS160W AUTO T3			1
4	331/66606		Plate, under cover			1
5	331/65815		Plate, under cover, JS160W AUTO T3			1
6	331/66592		Plate, under cover, pump bay			1
7	331/65880		Plate, under cover, JS160W AUTO T3			1
8	331/64928		Plate, Cover			1
9	331/63822		Plate, Cover			1
10	331/31978		Cover, under, access panel			1
11	1315/0509D		Screw, M12x35mm long			28
12	JHP0049		Washer			32
13	1316/0405D		Bolt			4
14	1420/0008D		Washer, M10			4
15	1316/3512D		Bolt, M12X50			4

	FROM	TO	FROM	TO
JS160W				

ITEM	PART NO	CHANGE NO	DESCRIPTION	REMARKS	USAGE CODE	QTY
1	215/14905		Tank, Hydraulic			1
2	KNJ1822		:Cover			1
2A	CSP0161		:O Ring	For item 2		1
3	JNJ0326		:Cover			1
3A	BLA2717		:O Ring	For item 3		1
4	1316/0405D		Bolt	For item 3		4
5	JHP0046		Washer, M10	For items 4 & 11		8
7	KNJ1601		Spring, compression	For return filter		1
8	KRJ1600		Valve, filter relief			1
9	KRJ1599		Element, filter return			1
	32/925185		Element, flushing only	Only fitted for flushing. Max 100 hours only.		1
10	JHH0119		Gauge	C/W banjo bolts & seals		1
10 02	KHJ0815		:Bolt			2
10 03	KHJ0816		:Seal, washer			4
11	1316/0408D		Setscrew	For item 2		4
12	KHH0040		Shim, plate, T=0.03"			4
13	KHH0137		Shim, plate			4
14	826/11113		Stud, threaded M16x93	Into Hyd Tank base		2
14A	1316/3716D		Bolt			2
15	JSJ0042		Spacer	For item 14		4
16	1371/0603Z		Nut, M16	For item 14		2

ITEM	PART NO	CHANGE NO	DESCRIPTION	REMARKS	USAGE CODE	QTY
17	BRJ1286		Plug	Hyd Tank drain		1
17 01	UBJ0158		:O Ring	For item 17		1
18	32/925693		Breather, air c/w rubber cap	Fit to item 2		1
18 01	KRJ3461		:Element	For item 18		1
19	1391/3203Z		Capscrew	Secures item 18		4
20	1420/0006Z		Washer, M6	For item 19		4
21	32/925359		Strainer, assembly	Inside tank		1
22	JHH0082		Plug	For item 3		1
23	1406/0029		Seal, Dowty	For item 22		1
25	JHP0043		Washer, M16			4

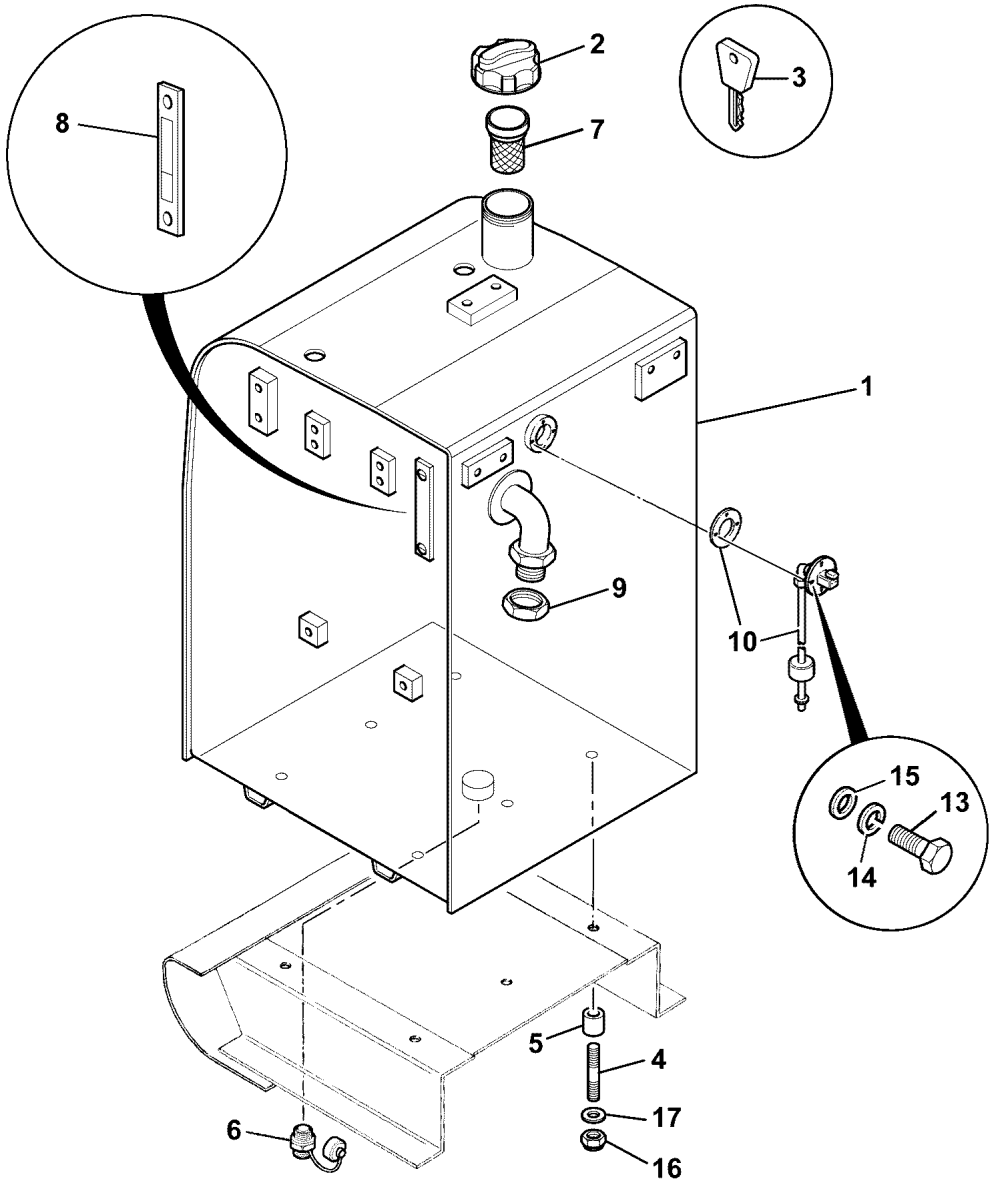

905710

	FROM	TO	FROM	TO
JS160W				

ITEM	PART NO	CHANGE NO	DESCRIPTION	REMARKS	USAGE CODE	QTY
1	215/13815		Tank, fuel, ABI, JS160T			1
2	331/31152		:Cap, filler with lock			1
3	701/45501		::Key, Door/Ignition, Ref 14657			1
4	826/11113		Stud, threaded M16x93			3
5	JSJ0042		Spacer			6
6	32/925428		Plug, drain valve			1
7	JRH0083		Strainer, fuel filter			1
8	JHH0120		Gauge, diesel fuel level			1
9	331/42586		Cap, blanking, 3/4" BSP			1
10	716/30142		Sender, fuel level, with gasket			1
13	1316/0103Z		Screw, M5 X 16			4
14	1420/0005Z		Washer, M5			4
15	JHC0001		Gasket, sealant, liquid packing			A/R
16	1371/0603Z		Nut, M16			3
17	JHP0043		Washer, M16			6

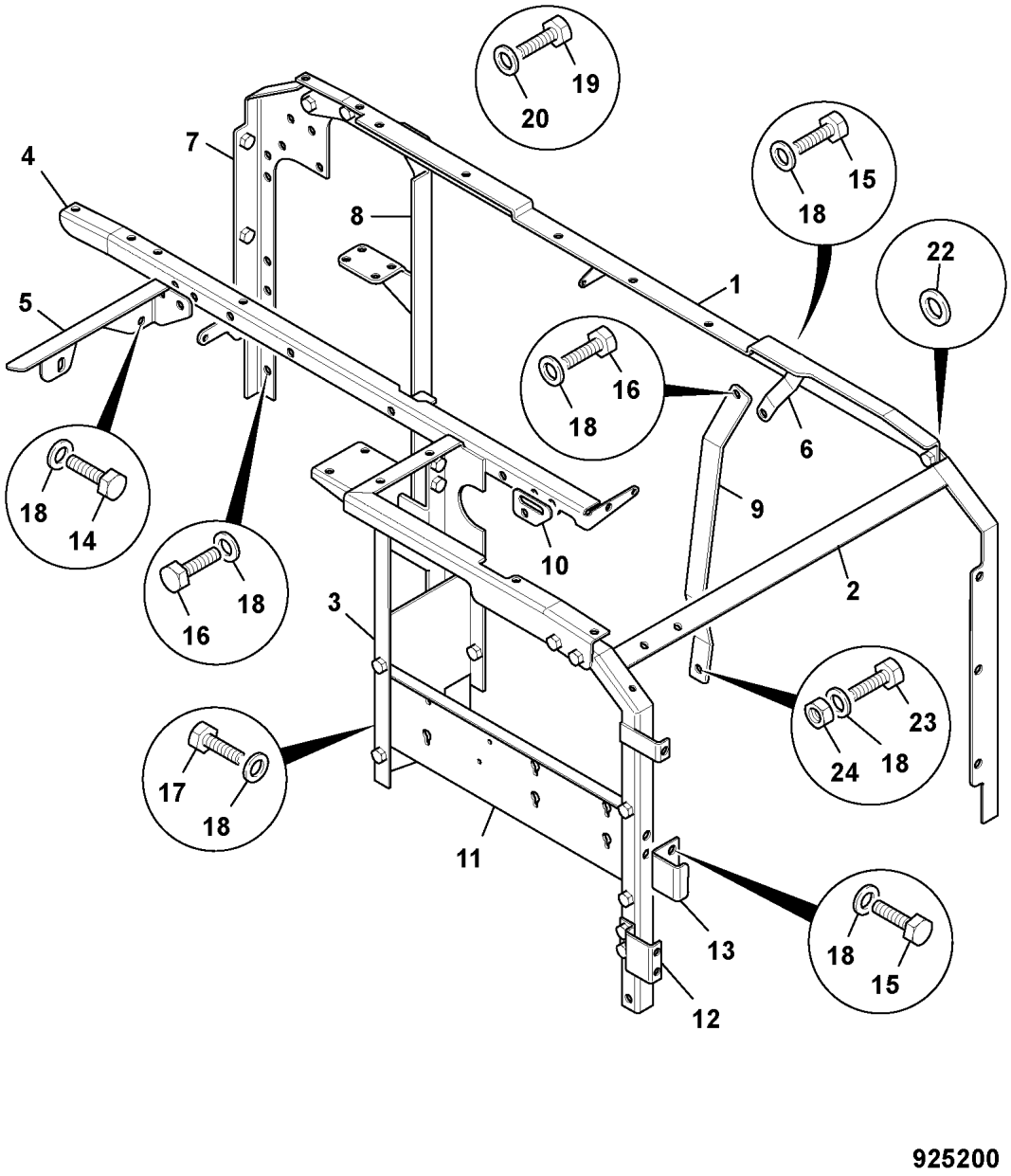

925200

	FROM	TO	FROM	TO
JS160W				

ITEM	PART NO	CHANGE NO	DESCRIPTION	REMARKS	USAGE CODE	QTY
1	335/12548		Frame, centre rail			1
2	332/J1968		Frame, door support			1
3	332/J1399		Frame, cab rear			1
4	332/J1543		Frame, assembly top			1
5	335/12545		Bracket			1
6	335/13862		Bracket, radiator			1
7	331/63991		Frame, door support, right hand			1
8	332/J1630		Frame, righthand inner post			1
9	332/J1778		Stay, radiator			1
10	331/63783		Bracket, radiator support			1
11	331/62381		Bracket, VALVE MOUNT			1
12	331/35115		Bracket, Dovetail mounting			1
13	331/35105		Bracket, Door catch			1
14	1316/0505D		Bolt, M12 x 20mm			4
15	1316/0507D		Screw, set pin			7
16	1316/0508D		Screw			21
17	1316/0509D		Bolt, grade 12.9			4
18	1420/0009D		Washer, M12			41
19	1316/0303D		Screw			2
20	1420/0007D		Washer, M8 plain			2
21	332/J1343		Plate			1

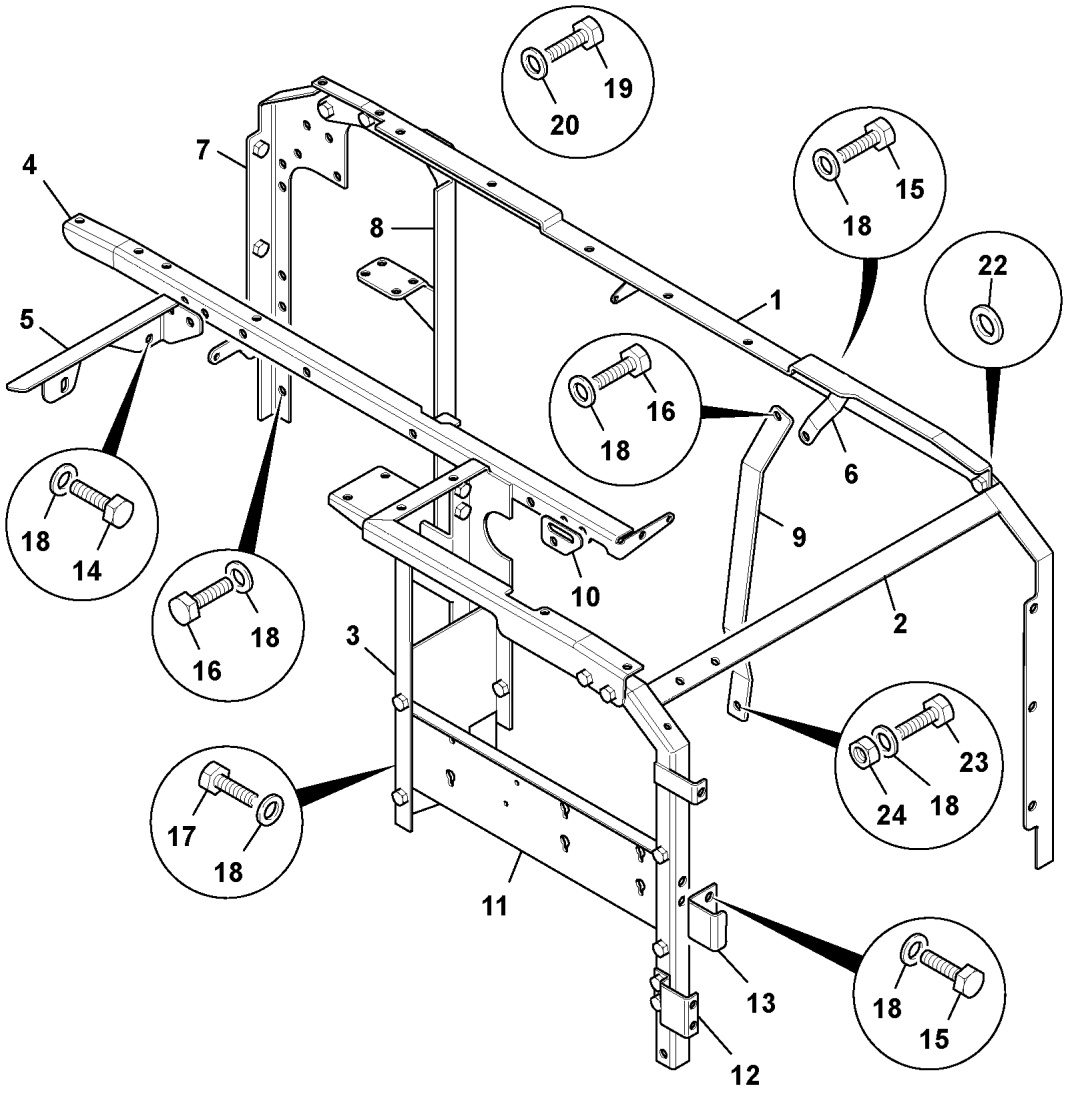

925200

ITEM	PART NO	CHANGE NO	DESCRIPTION	REMARKS	USAGE CODE	QTY
22	332/J1773		Spacer, plate			1
23	1316/0510D		Screw			1
24	1370/0401D		Nut, M12			1

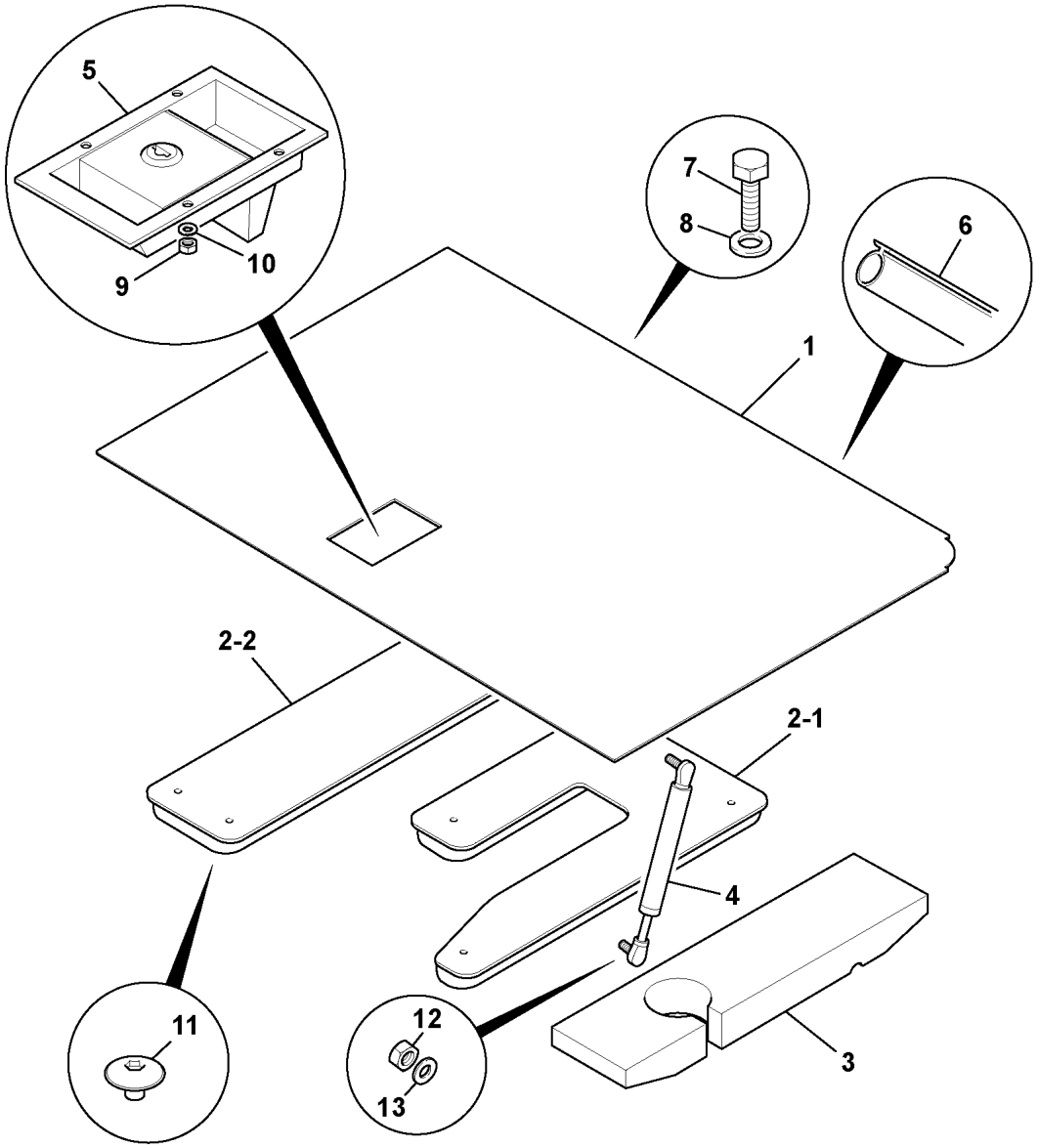

907180

	FROM	TO	FROM	TO
JS160W				

ITEM	PART NO	CHANGE NO	DESCRIPTION	REMARKS	USAGE CODE	QTY
1	335/12953		Cover, engine, black	Painted black.		1
	335/14083		Cover, engine, yellow	Painted yellow.		1
2 01	331/44191		Panel, soundproofing			1
2 02	331/63806		Panel, soundproofing, bonnet			1
3	331/63701		Seal, foam, bonnet			1
4	331/34453		Strut, gas, bonnet			1
5	826/11245		Latch, paddle, engine cover			1
6	904/20274		Seal			1
7	1316/0508D		Screw			3
8	1420/0009D		Washer, M12			3
9	1370/0003Z		Nut			4
10	1420/0005Z		Washer, M5			4
11	826/01308		Retainer, insulation			8
12	1371/0201Z		Nut			1
13	1420/0007Z		Washer, plain, M8			1

	FROM	TO	FROM	TO
JS160W				



Our Apologies, No Illustration is Currently Available.

ITEM	PART NO	CHANGE NO	DESCRIPTION	REMARKS	USAGE CODE	QTY
1	332/J2040		Door, left hand side			1
1A	KRN1497		:Hinge			2
2	332/J2045		Door, right hand side			1
2A	KRN1497		:Hinge			2
3	331/34370		Bracket, door latch			1
4	331/34382		Bracket, door buffer			1
5	826/11027		Latch, paddle			2
6	KHN1395		Stop, rubber			2
7	KRN0363		Bracket			2
8	KRN0364		Stop			2
9	1420/0009D		Washer, M12			6
10	1316/0508D		Screw			6
11	1420/0008D		Washer, M10			4
12	1420/0006D		Washer, M6 plain			8
13	1420/0005D		Washer			8
14	1370/0301D		Nut, M10			2
15	1370/0001D		Nut, plain M5			8
16	1316/0405D		Bolt			4
17	1316/0203D		Screw			8
18	KRN1482		Stay			2
19	KRJ1588		Pin			2
20	331/66427		Panel, door soundproofing			1

ITEM	PART NO	CHANGE NO	DESCRIPTION	REMARKS	USAGE CODE	QTY
21	331/43999		Panel, soundproofing, right hand door			1
24	826/01308		Retainer, insulation			17
25	331/42293		Panel, soundproofing, cab rear			1



Our Apologies, No Illustration is Currently Available.

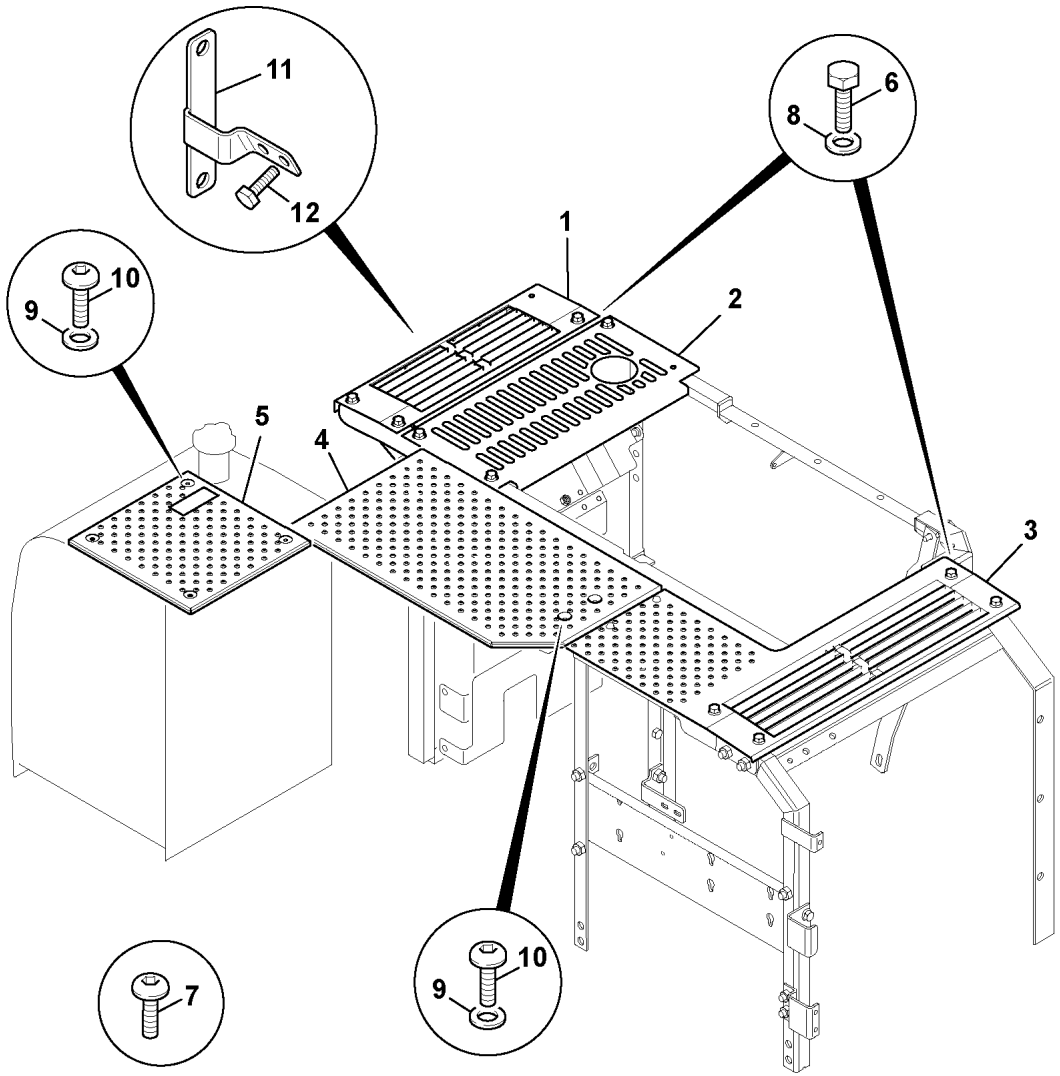

926050

	FROM	TO	FROM	TO
JS160W				

ITEM	PART NO	CHANGE NO	DESCRIPTION	REMARKS	USAGE CODE	QTY
1	332/J1600		Cover, exhaust			1
2	332/J2687		Grille, exhaust			1
3	335/13047		Grille, left hand			1
4	335/13876		Cover, valve, JS145W T3			1
5	335/12951		Step, top			1
6	1316/0507D		Screw, set pin			14
7	826/11192		Screw, button head			2
8	1420/0009D		Washer, M12			14
9	1420/0008D		Washer, M10			6
10	826/11115		Screw, M10			6
11	332/J1745		Pressing			1
12	1316/0505D		Bolt, M12 x 20mm			2

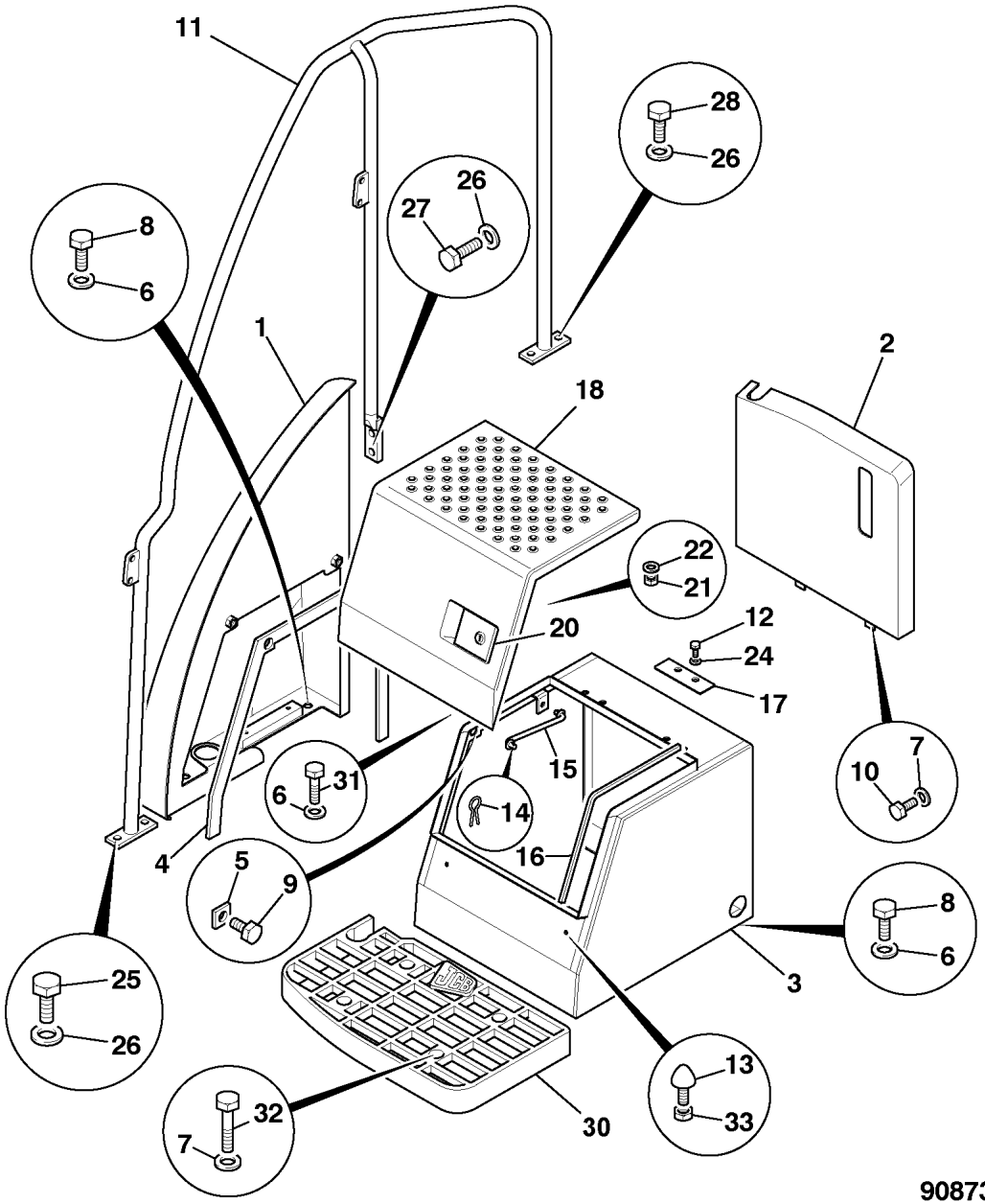

908730

	FROM	TO	FROM	TO
JS160W				

ITEM	PART NO	CHANGE NO	DESCRIPTION	REMARKS	USAGE CODE	QTY
1	335/08133		Box, tool side			1
2	346/00522		Cover, tank			1
2 01	331/63636		:Bracket, tank cover mounting			2
2 02	1316/0403D		:Screw			4
2 03	1420/0008D		:Washer, M10			4
3	332/J2122		Box, Tool			1
4	904/20273		Seal, strip, toolbox			1
5	331/35176		Washer, square			2
6	1420/0009D		Washer, M12			8
7	1420/0007D		Washer, M8 plain			4
8	1316/0509D		Bolt, grade 12.9			8
9	1316/0505D		Bolt, M12 x 20mm			2
10	1316/0303D		Screw			2
11	335/12631		Rail, handrail			1
12	1316/0405D		Bolt			4
13	KHN1395		Stop, rubber			2
14	KRJ1588		Pin			2
15	KRN1418		Stay			1
16	KSN0939		Cushion, rubber			1
17	331/34946		Spacer, hinge packer			2
18	335/12426		Cover, toolbox, JS175W AUTO T3			1
20	826/11027		Latch, paddle			1

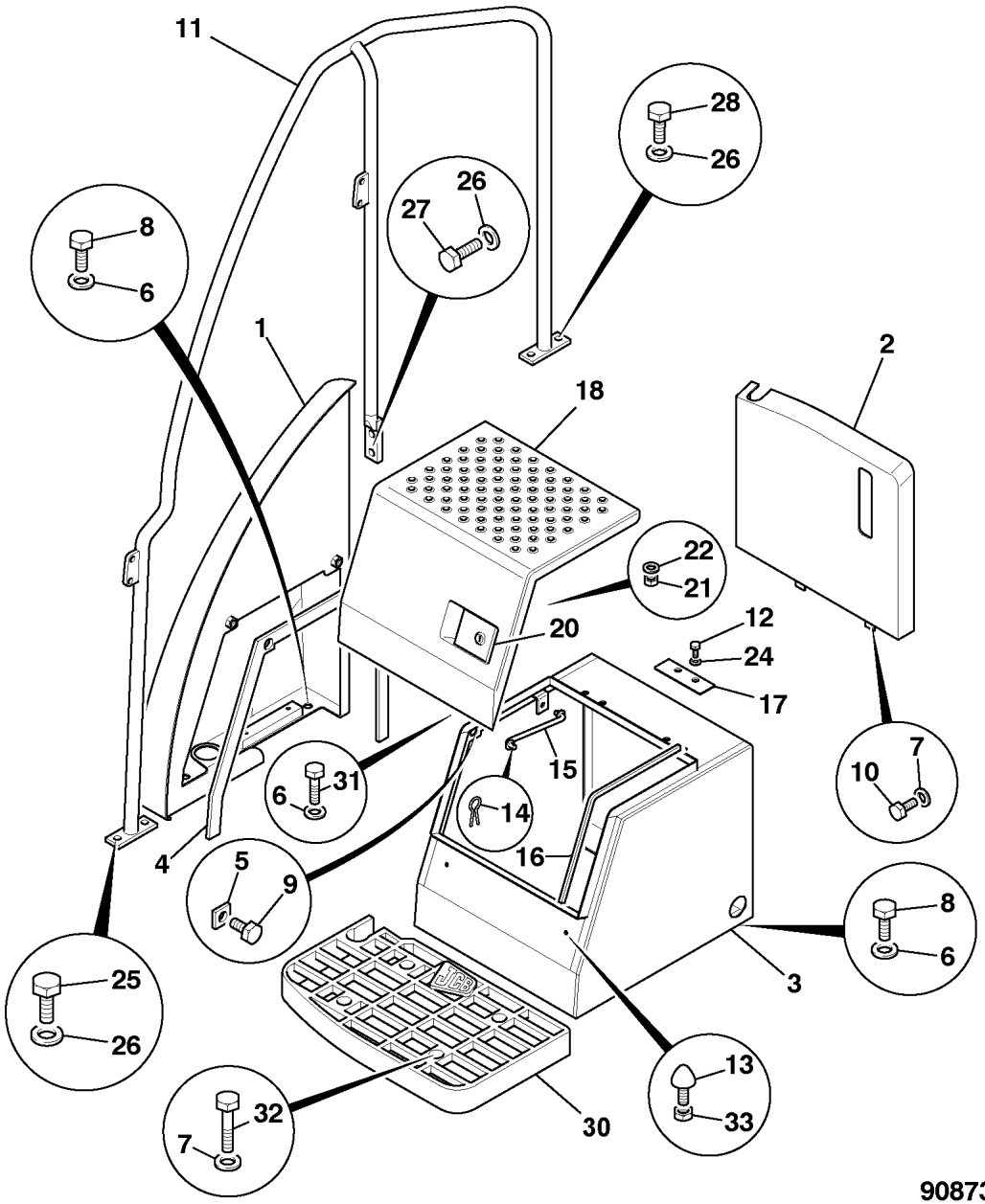

908730

ITEM	PART NO	CHANGE NO	DESCRIPTION	REMARKS	USAGE CODE	QTY
21	1371/0001Z		Nut			4
22	1420/0005D		Washer			4
23	1316/0405D		Bolt			4
24	1420/0008D		Washer, M10			6
25	1316/0510D		Screw			2
26	1420/0009D		Washer, M12			6
27	1316/0508D		Screw			2
28	1316/0509D		Bolt, grade 12.9			2
29	1420/0009D		Washer, M12			6
30	331/62144		Step, cast, toolbox			1
31	1316/0507Z		Screw, M12x30			6
32	1316/3315D		Bolt, BOLT M8x65			1
33	1371/0301Z		Nut, high strength, M10			2
34	1316/3415D		Bolt, BOLT M10 X 65	For item 30. use also item 35		4
35	1420/0008D		Washer, M10	Use with item 34		4
99	215/13903		G.A, HAND RAIL, JS175W AUTO T3			1
	215/13535		G.A, TOOLBOX COVER, JS175W AUTO T3			1

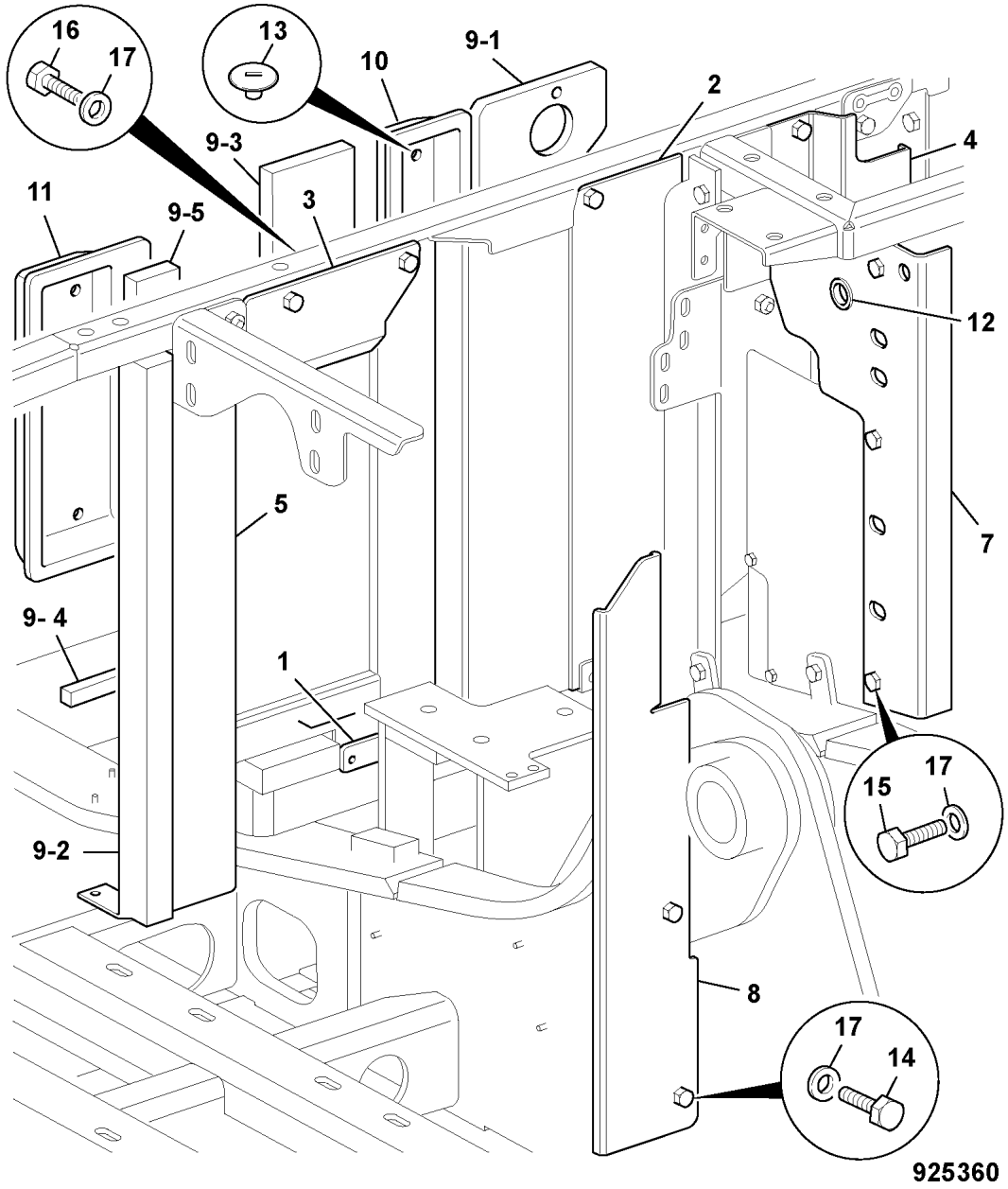

	FROM	TO	FROM	TO
JS160W				

ITEM	PART NO	CHANGE NO	DESCRIPTION	REMARKS	USAGE CODE	QTY
1	332/J2719		Plate, retainer			1
2	332/J2667		Plate, bulkhead			1
3	332/J0110		Plate, bulkhead			1
4	332/J1437		Plate, bulkhead			1
5	332/J1633		Plate, bulkhead			1
7	332/J2676		Plate, cab rear bulkhead			1
8	331/65757		Plate, infill, JS160W AUTO T3			1
9 01	332/J1409		Foam, seal			1
9 02	331/63413		Panel, soundproofing, bulkhead			1
9 03	331/63414		Panel, soundproofing, bulkhead			1
9 04	331/63416		Panel, soundproofing, bulkhead			1
9 05	331/65788		Panel, BULKHEAD S/ PROOFING, JS160W AUTO T3			1
10	332/J2668		Baffle, JS160 AUTO T3			1
11	331/65780		Baffle, , JS160W AUTO T3			1
12	KAR0152		Grommet			1
13	826/01308		Retainer, insulation			9
14	1315/0507D		Setscrew, M12 x 25			2
15	1316/0507D		Screw, set pin			11
16	1316/0509D		Bolt, grade 12.9			2

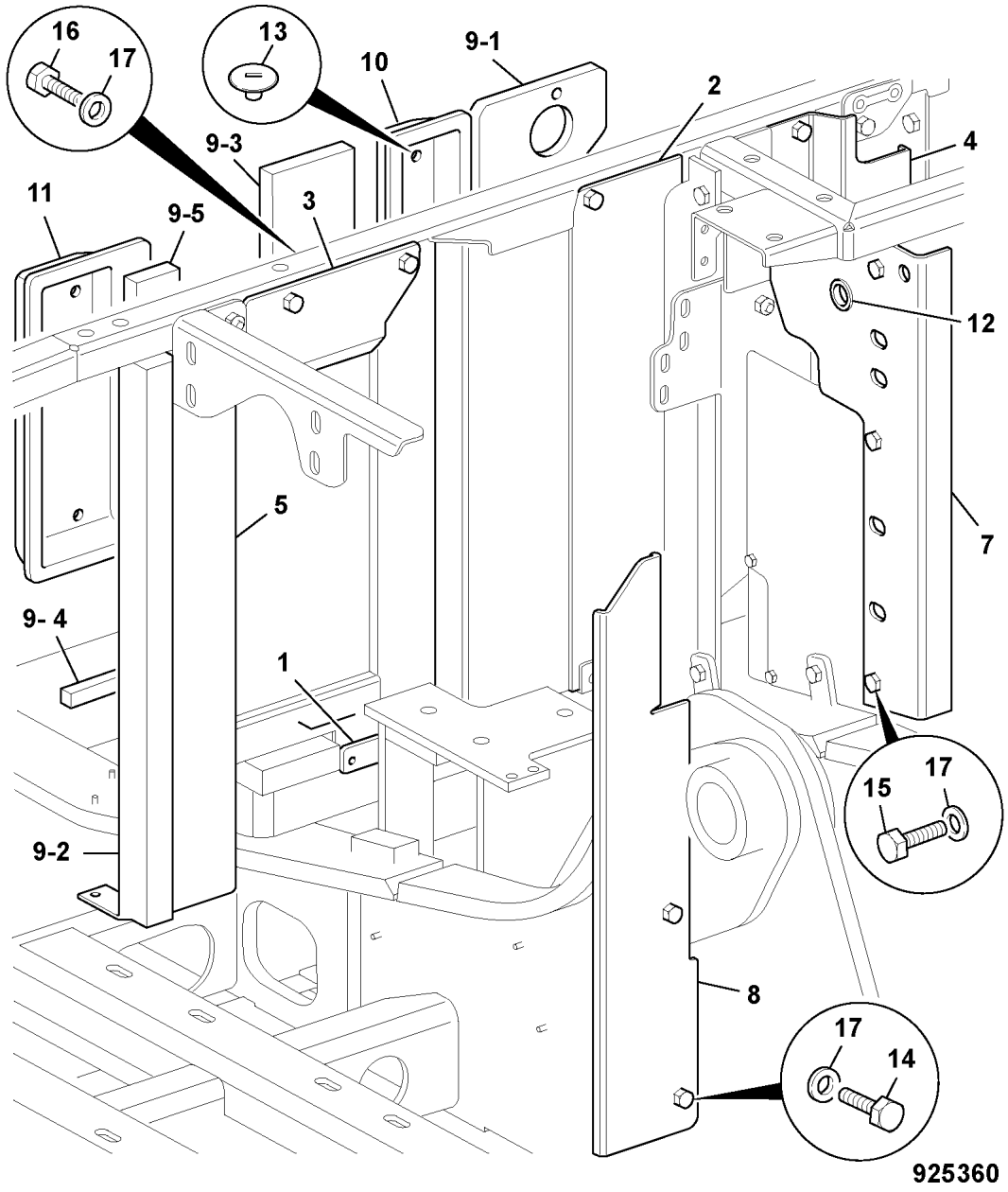

ITEM	PART NO	CHANGE NO	DESCRIPTION	REMARKS	USAGE CODE	QTY
17	1420/0009D		Washer, M12			15

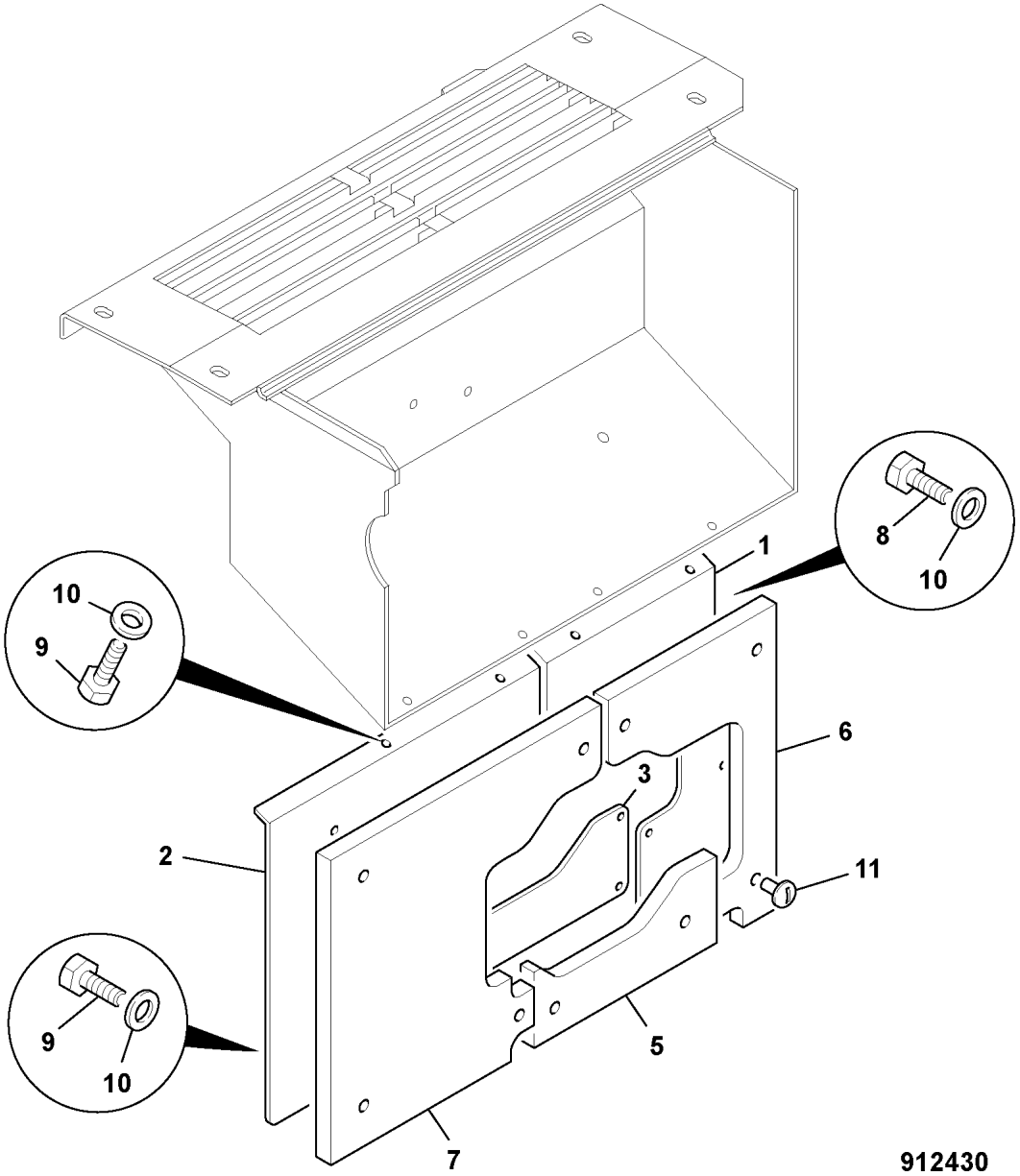

	FROM	TO	FROM	TO
JS160W				

ITEM	PART NO	CHANGE NO	DESCRIPTION	REMARKS	USAGE CODE	QTY
1	331/61927		Plate			1
2	331/61928		Plate			1
3	331/61929		Plate			1
5	331/62050		Foam, Pump bay forward			1
6	331/63092		Foam, Pump bay			1
7	331/63093		Foam, Pump bay			1
8	1316/0507D		Screw, set pin			4
9	1315/0505D		Screw, M12x20			9
10	1420/0009D		Washer, M12			12
11	826/01308		Retainer, insulation			9

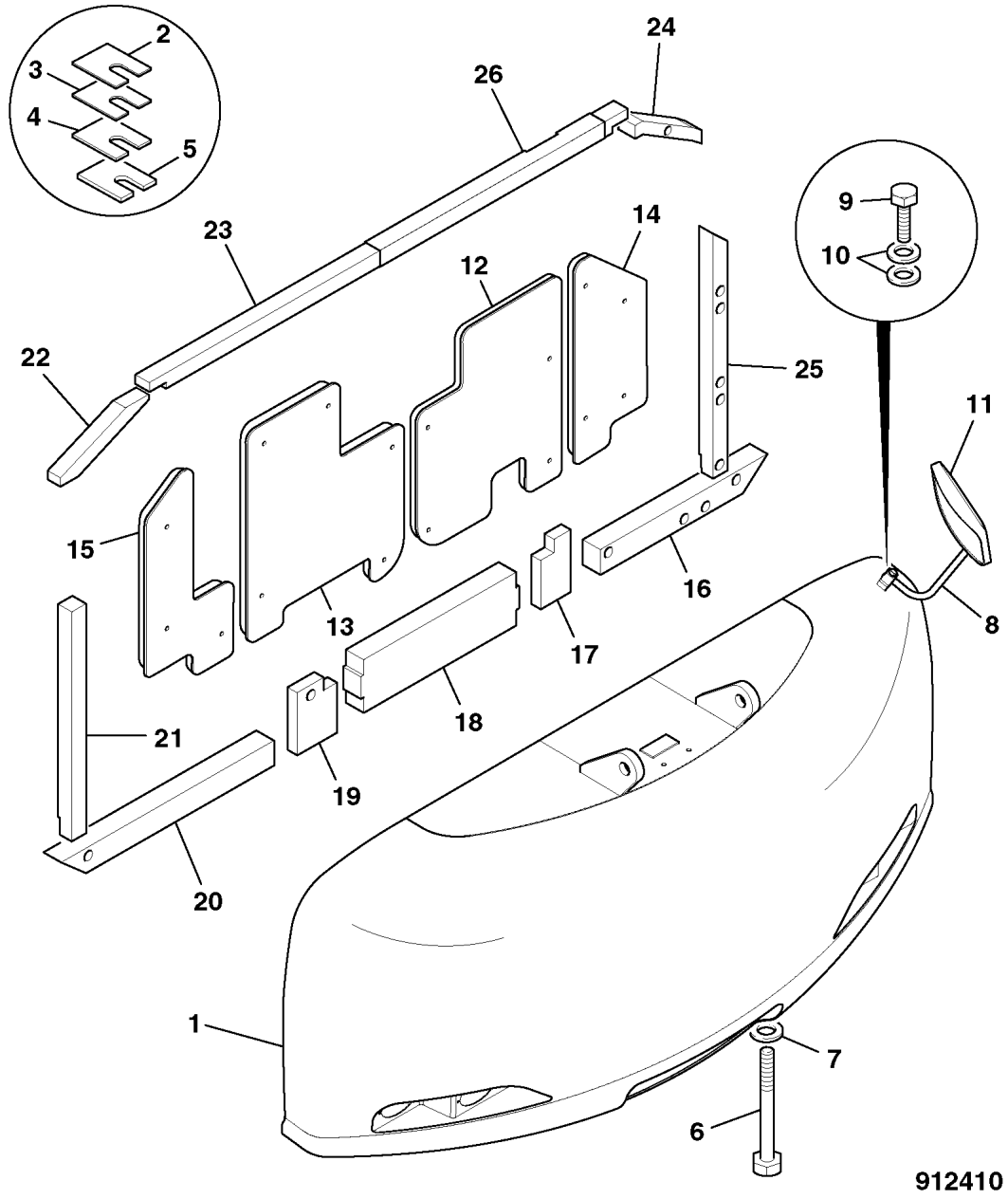

	FROM	TO	FROM	TO
JS160W				

ITEM	PART NO	CHANGE NO	DESCRIPTION	REMARKS	USAGE CODE	QTY
1	* 335/13581		Counterweight, JS175W T3, 3.2T			1
2	KRB0736		Shim, t=0.8			2
3	KRB0737		Shim, t=1.2			2
4	KRB0738		Shim, t=2.3			2
5	KRB0739		Shim, t=4.5			2
6	KBB0445		Bolt	Secures item 1		4
7	KHB0063		Washer, high strength	For item 6		4
8	JHB0002		Mounting, mirror	Fit to item 1		1
9	1316/3512D		Bolt, M12X50	Secures item 8		1
10	1420/0009Z		Washer, Plain M12	For item 9		1
11	158/30491		Mirror			1
12	332/J2682		Panel, CWT SOUNDPROOFING			1
13	332/J2636		Panel, CWT SOUNDPROOFING			1
14	331/65900		Panel, CWT s/proofing LH, JS175W AUTO T3			1
15	331/65885		Panel, CWT s/proofing RH, JS175W AUTO T3			1
16	331/64547		Foam, bottom right, JS175W AUTO T3			1
17	331/44289		Panel, foam pad, right hand c/weight			19
18	331/44290		Panel, foam seal, centre c/ weight			1

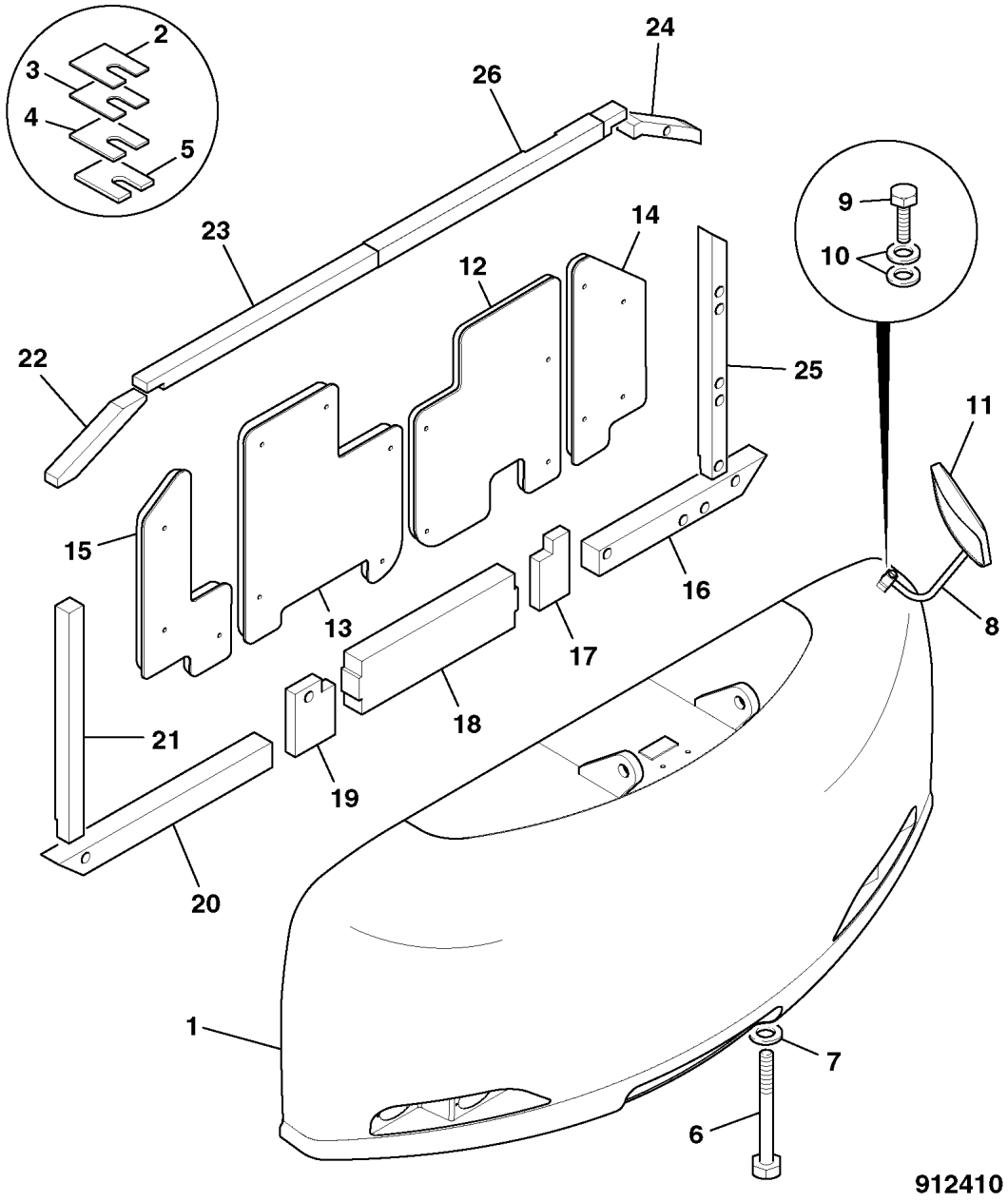

ITEM	PART NO	CHANGE NO	DESCRIPTION	REMARKS	USAGE CODE	QTY
19	331/44291		Panel, foam pad, left hand c/weight			2
20	331/64548		Foam, bottom left, JS175W AUTO T3			1
21	331/64549		Foam, LEFT UPRIGHT, JS175W AUTO T3			1
22	331/64550		Foam, LEFT UPRIGHT, JS175W AUTO T3			1
23	331/64551		Foam, TOP, JS175W AUTO T3			1
24	331/64553		Foam, RIGHT TOP, JS175W AUTO T3			1
25	331/64555		Foam, RIGHT UPRIGHT, JS175W AUTO T3			1
26	331/65031		Foam, top, JS175W AUTO T3			1

	FROM	TO	FROM	TO
JS160W				



Our Apologies, No Illustration is Currently Available.

ITEM	PART NO	CHANGE NO	DESCRIPTION	REMARKS	USAGE CODE	QTY
1	JG0LA101		Chassis, 160W			1
10	.		'See Remark'	Axle lock ram, see frame E4-6-1		2
11	1316/9530D		Bolt, BOLT M18 X 200			8
12	JHP0079		Washer			1
24	JLV1826		Step, right hand			1
25	JLV1824		Step, left hand			1
26	1316/0508D		Screw			16
27	1420/0009D		Washer, M12			16
28	821/00140		Plate, cover M6, @ 20mm CRS			2
29	821/00286		Clamp, pipe			2
34	JLN0167		Box, tool			1
34 01	231/55300		:Catch, locking			1
34 02	246/38501		:Key			1
34 03	2410/0113		::Grommet, 32mm dia	Rubber stop for lid		1
35	1316/0408Z		Screw, M10x30			4
36	JHP0075		Washer			4
37	JLA0457		Grommet, 120 OD x 86 ID	To protect hose through chassis bulkhead		6
38	335/11064		Step, chassis			1
39	331/56788		Bracket, chassis step			1
40	1316/0509D		Bolt, grade 12.9			1

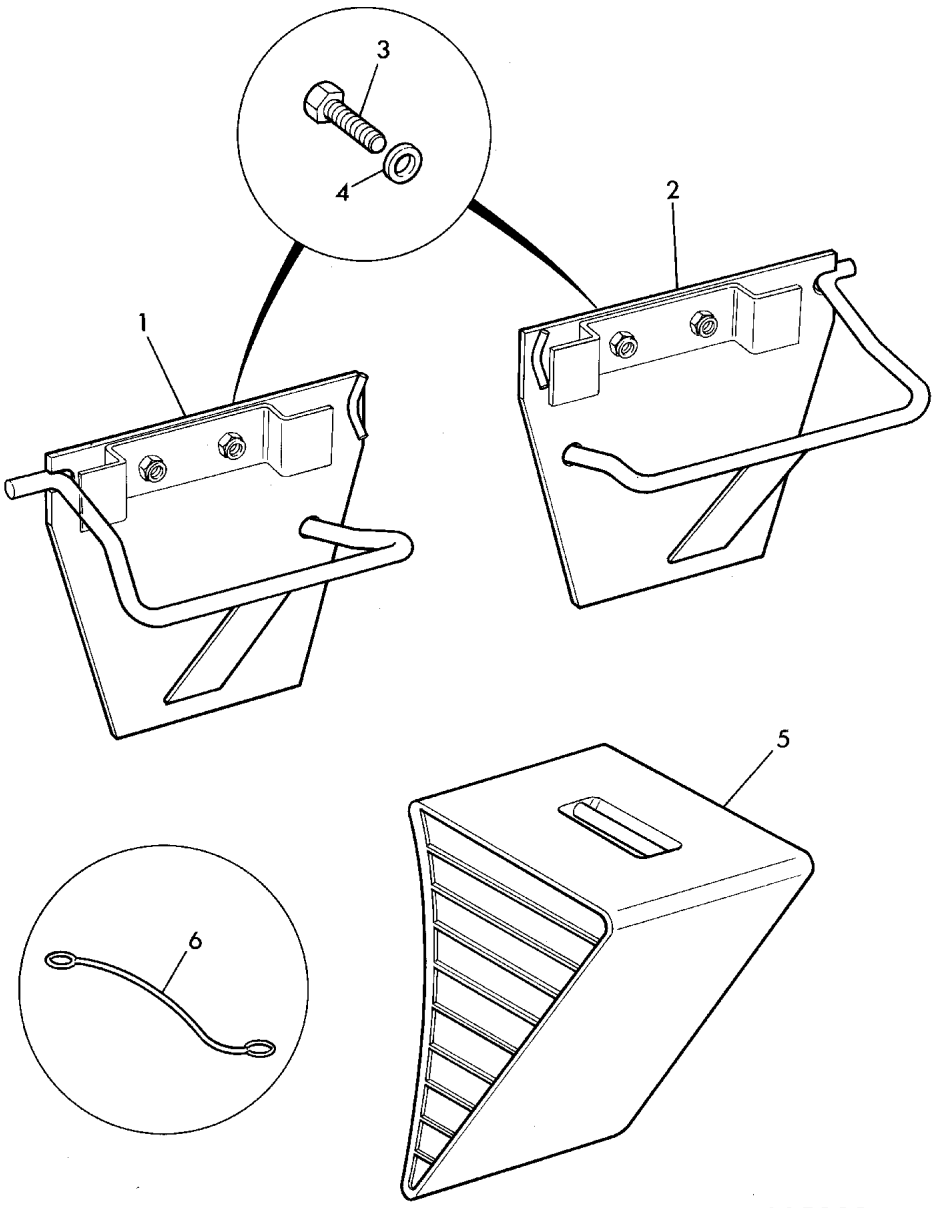

205960

	FROM	TO	FROM	TO
JS160W				

ITEM	PART NO	CHANGE NO	DESCRIPTION	REMARKS	USAGE CODE	QTY
1	JLV1080		Bracket, wheel chock stowage, left hand			1
2	JLV1080		Bracket, wheel chock stowage, left hand			1
3	1316/0407Z		Bolt, high strength			6
4	1420/0008Z		Washer, Plain M10			8
5	141/01463		Chock, wheel			2
6	120/38401		Strap			2

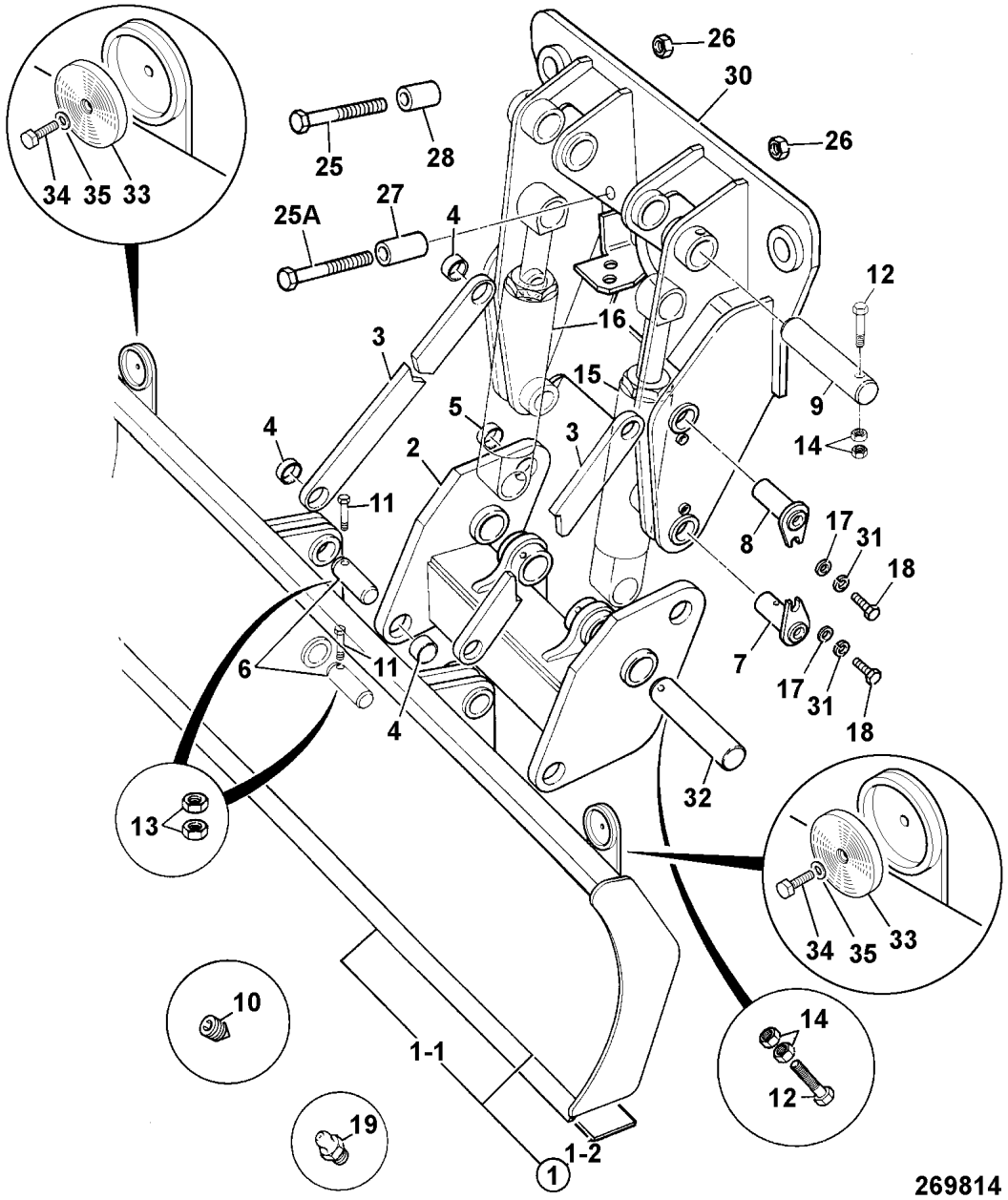

	FROM	TO	FROM	TO
JS160W				

ITEM	PART NO	CHANGE NO	DESCRIPTION	REMARKS	USAGE CODE	QTY
1	335/11317		Blade, dozer			1
1 01	JLV0377		:Toeplate, dozer blade			1
1 02	JLV0378		:Plate, bottom, dozer blade			1
2	335/04279		Link, lower, dozer blade, wheeled			1
3	335/04276		Link, upper, dozer blade, wheeled			2
4	831/10296		Bearing			6
5	831/10002		Bush			2
6	JLV1596		Pin, pivot			4
7	911/40079		Pin, pivot			2
8	JLV0755		Pin, pivot			2
9	JLV1627		Pin, pivot			2
10	816/80027		Plug			2
11	1316/3416D		Bolt			4
12	1316/3520D		Bolt			4
13	1371/0301D		Nut, M10 high strength			8
14	1371/0401D		Nut			8
15	.		'See Remark'	Ram, right hand, see E4-4-10.		1
16	.		'See Remark'	Ram, left hand, see E4-4-1.		1
17	1420/0009D		Washer, M12			8
18	1316/0508D		Screw			4

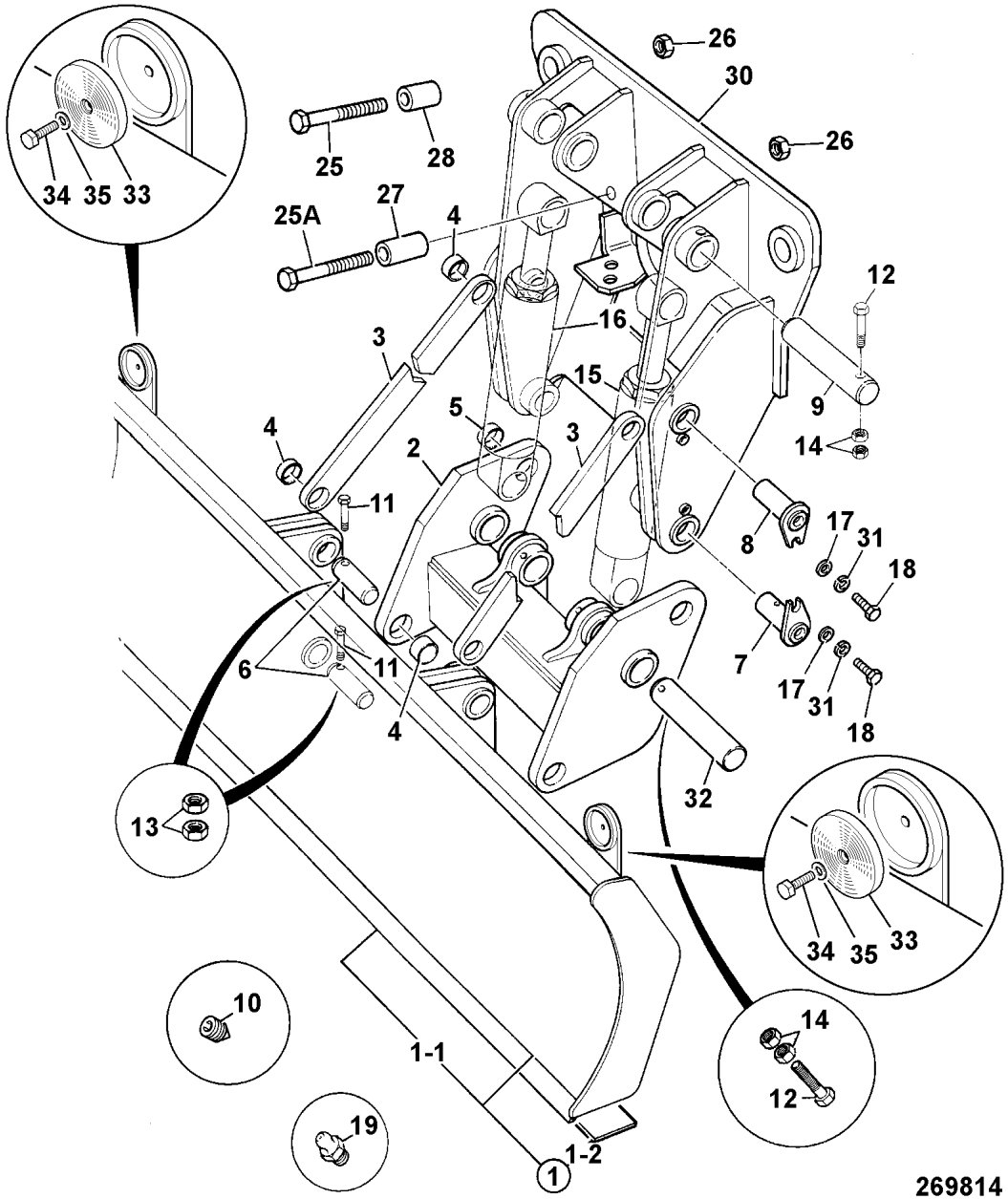

ITEM	PART NO	CHANGE NO	DESCRIPTION	REMARKS	USAGE CODE	QTY
19	1450/0001		Nipple, grease, straight, 1/8 BSP			12
25	1316/4126		Bolt	Top bolt		2
25A	* 1316/4130		Bolt, M30 x 200lg	Bottom bolt		2
26	1371/1003D		Nut			4
27	829/30460		Spacer, extension tube			2
28	331/14841		Bush, tube bushing			2
30	335/04291		Bracket, dozer mounting			1
31	1425/0009Z		Washer, Spring M12			4
32	JLV1627		Pin, pivot			2
33	703/05800		Reflector, red			2
33A	700/50207		Reflector, White			1
34	1315/0105D		Screw, M5x20			4
35	1420/0005D		Washer			4

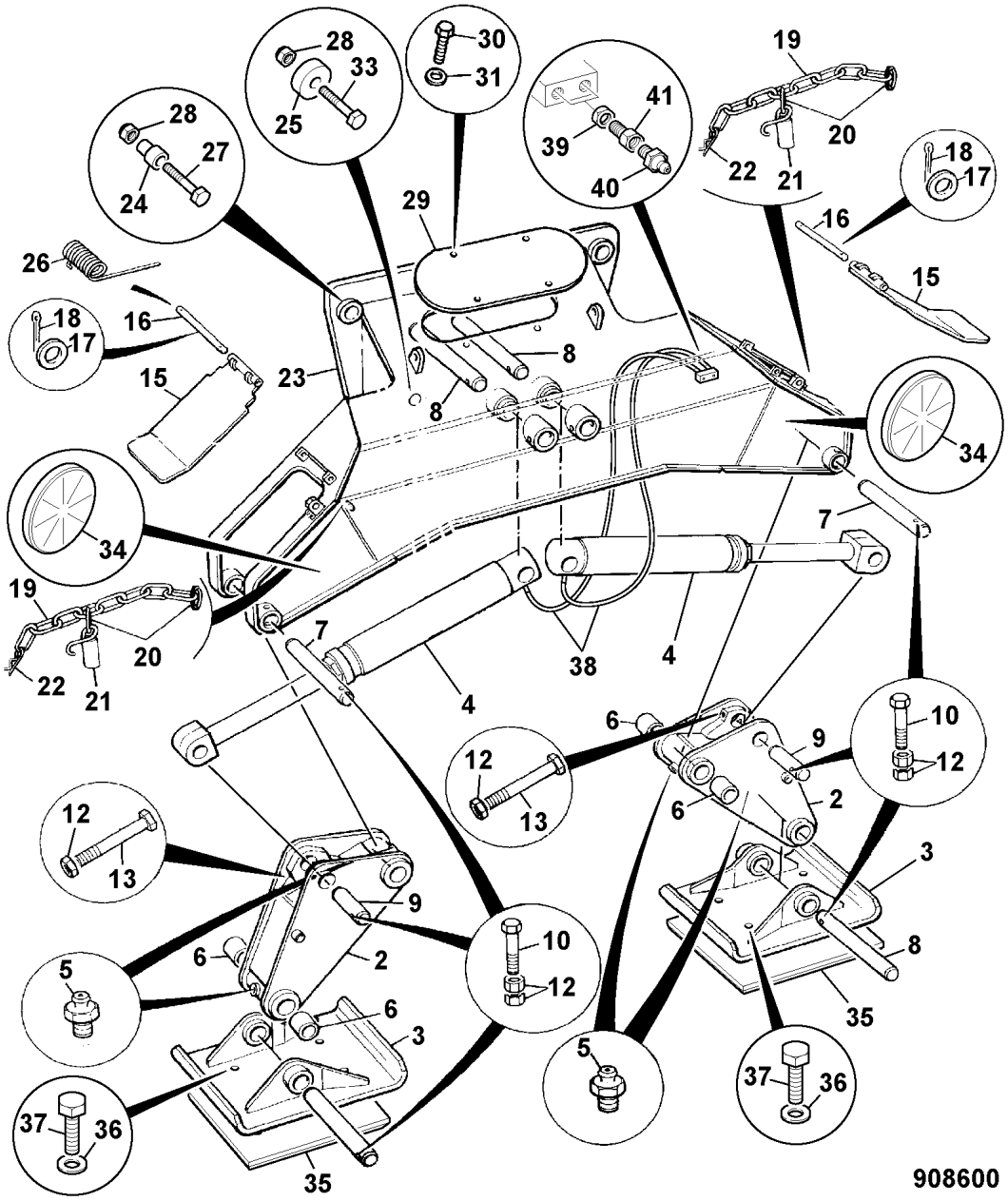

JS160W

	FROM	TO	FROM	TO

ITEM	PART NO	CHANGE NO	DESCRIPTION	REMARKS	USAGE CODE	QTY
2	JG0LV438		Leg, stabiliser			2
3	JG0LV121		Foot, stabiliser			2
	335/09731		Foot, stabiliser	Optional		2
4	.		'See Remark'	For components see E4-9-1.		2
5	1450/0001		Nipple, grease, straight, 1/8 BSP			6
6	JLV0420		Bush			8
8	JLV0421		Pin, pivot			4
9	JLV0422		Pin, pivot			2
10	1316/3523D		Bolt, BOLT M12 X 130			6
11	1420/0009D		Washer, M12			16
12	1371/0401D		Nut			16
13	1316/3526D		Bolt, BOLT M12 X 160			2
15	JLV0514		Plate, ram guard			2
16	JLV0515		Pin, pivot, ram guard			2
17	1420/0011D		Washer, M16			4
18	6079/0513		Pin, split			4
19	141/00855		Chain			2
20	259/93303		Ring, key			4
21	JLV0520		Pin, travel			2
22	JLV0521		Clip, R			2
23	* 335/11676		Body, stabiliser			1
24	331/14841		Bush, tube bushing			2

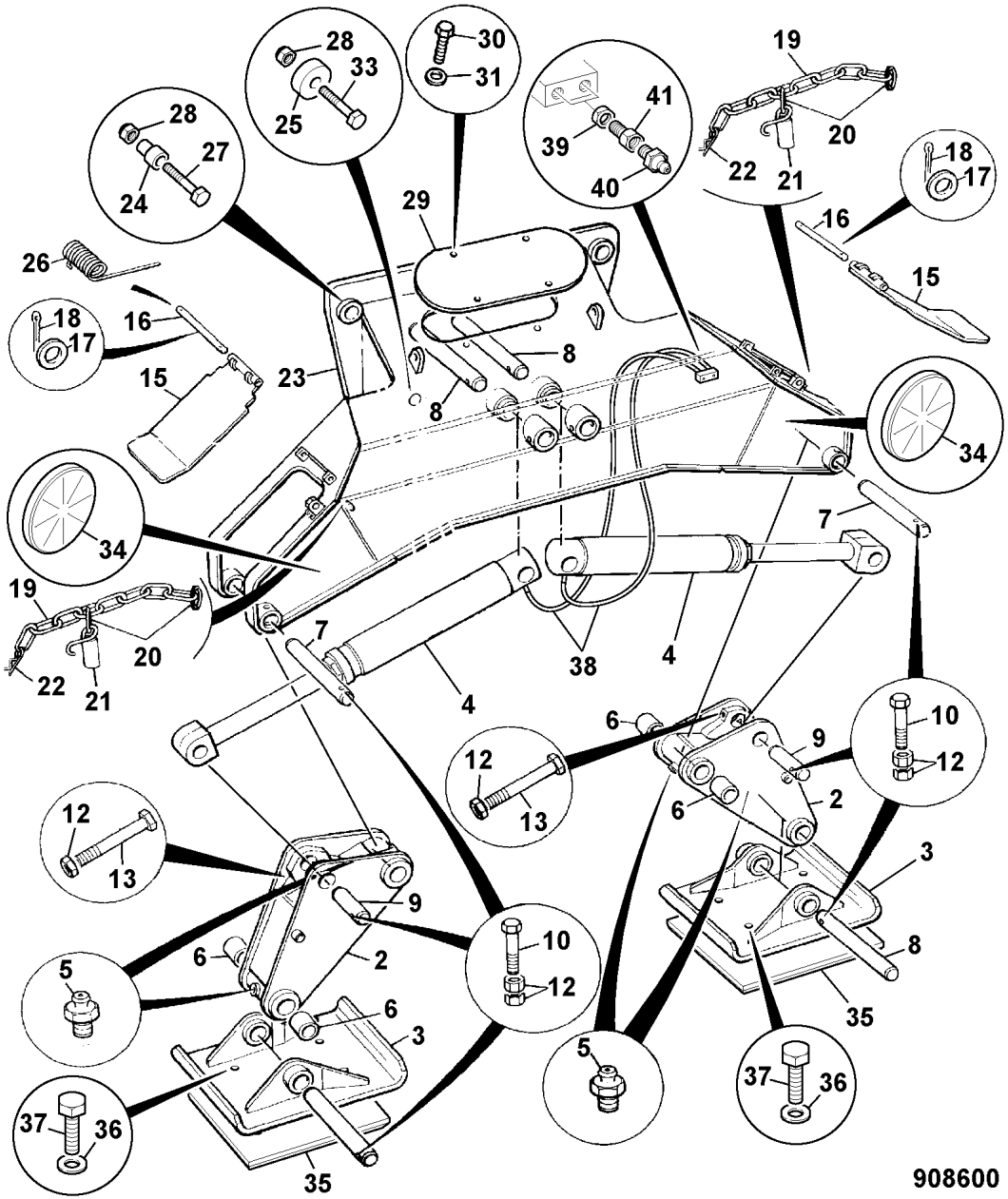

ITEM	PART NO	CHANGE NO	DESCRIPTION	REMARKS	USAGE CODE	QTY
25	829/30460		Spacer, extension tube			2
26	JLV0798		Spring, torsion			2
	JLV0811		Spring, torsion R.H	Right hand.		2
27	1316/4126D		Bolt, BOLT;M30 X 3 X 160			2
	1316/4130D		Bolt			2
28	1371/1003D		Nut			4
29	JLV1883		Cover, stabiliser			1
30	1316/0408D		Setscrew			4
31	1420/0008D		Washer, M10			4
32	331/35938		Pad, Street			2
33	1316/4130		Bolt, M30 x 200lg			1
34	700/50004		Reflector, red selfadhesive, 60 dia			1
35	331/35938		Pad, Street			1
36	1420/0009D		Washer, M12			1
37	1316/0509D		Bolt, grade 12.9			1
38	JLV0663		Hose			1
39	1356/0201Z		Nut			1
40	1450/0001		Nipple, grease, straight, 1/8 BSP			1
41	816/20048		Adapter, 2 way			1

B

- B1 BODYWORK/FRAME
- ● B2 CAB
- B3 LOADER FRONT END
- B5 REFURBISHMENTS

ENGLISH

B2-1-1 CAB
B2-1-10 FRONT SCREEN, UPPER & LOWER
B2-1-20 FRONT WIPER, & CAB COMPONENTS
B2-1-30 CAB, MOUNTING FASTENERS
B2-2-1 CAB DOOR, COMPONENTS
B2-3-1 SEAT, HIGH BACK, STANDARD
B2-3-20 SEAT, AIR SUSPENSION, HIGH BACK
B2-3-30 SEAT BELT, STANDARD
B2-3-40 SEAT BELT, 76mm (3") WIDE, OPTIONAL
B2-4-1 CONSOLE, CAB SERVO CONTROL, LEFT HAND, FIXED CONSOLE
B2-5-1 CONSOLE, CAB SERVO CONTROL, RIGHT HAND
B2-6-1 WASH/WIPE, WINDSCREEN, SEE C3-15-1
B2-7-2 MIRRORS, EXTERNAL
B2-8-1 CAB PANELS
B2-9-1 GUARD, FOPS, FRONT AND TOP, CAB MOUNTED
B2-9-20 GUARD, FOPS CAGE, FRONT GUARD SALES OPTION
B2-10-1 FLOOR COMPONENTS, SEAT SLIDE, LEVER ISOLATOR
B2-11-1 FIRE EXTINGUISHER
B2-12-1 RAIN VISOR, CAB
B2-14-1 VANDAL GUARD, CAB, 3pc Front Panel
B2-15-1 FRONT WIPER, CAB LOWER WINDOW, SEE C3-15-10
B2-16-1 CAB MOUNTINGS, CAB FOOR & MAT
B2-18-1 DIRECT GLAZING, REPLACEMENT MATERIAL

FRANCAIS

B2-1-1 CAB
B2-1-10 FRONT SCREEN, UPPER & LOWER
B2-1-20 FRONT WIPER, & CAB COMPONENTS
B2-1-30 CAB, MOUNTING FASTENERS
B2-2-1 CAB DOOR, COMPONENTS
B2-3-1 SEAT, HIGH BACK, STANDARD
B2-3-20 SEAT, AIR SUSPENSION, HIGH BACK
B2-3-30 SEAT BELT, STANDARD
B2-3-40 SEAT BELT, 76mm (3") WIDE, OPTIONAL
B2-4-1 CONSOLE, CAB SERVO CONTROL, LEFT HAND, FIXED CONSOLE
B2-5-1 CONSOLE, CAB SERVO CONTROL, RIGHT HAND
B2-6-1 LAVAGE/ESSUI-GLACES PARE-BRISE
B2-7-2 RETROVISEURS EXTERIEUR
B2-8-1 CAB PANELS
B2-9-1 GUARD, FOPS, FRONT AND TOP, CAB MOUNTED
B2-9-20 GUARD, FOPS CAGE, FRONT GUARD SALES OPTION
B2-10-1 FLOOR COMPONENTS, SEAT SLIDE, LEVER ISOLATOR
B2-11-1 EXTINCTEUR
B2-12-1 RAIN VISOR, CAB
B2-14-1 VANDAL GUARD, CAB, 3pc Front Panel
B2-15-1 FRONT WIPER, CAB LOWER WINDOW, SEE C3-15-10
B2-16-1 CAB MOUNTINGS, CAB FOOR & MAT
B2-18-1 DIRECT GLAZING, REPLACEMENT MATERIAL

DEUTSCH

B2-1-1 CAB
B2-1-10 FRONT SCREEN, UPPER & LOWER
B2-1-20 FRONT WIPER, & CAB COMPONENTS
B2-1-30 CAB, MOUNTING FASTENERS
B2-2-1 CAB DOOR, COMPONENTS
B2-3-1 SEAT, HIGH BACK, STANDARD
B2-3-20 SEAT, AIR SUSPENSION, HIGH BACK
B2-3-30 SEAT BELT, STANDARD
B2-3-40 SEAT BELT, 76mm (3") WIDE, OPTIONAL
B2-4-1 CONSOLE, CAB SERVO CONTROL, LEFT HAND, FIXED CONSOLE
B2-5-1 CONSOLE, CAB SERVO CONTROL, RIGHT HAND
B2-6-1 WISCH/WASCH-ANL. WINDSCHUTZSCHEIBE
B2-7-2 SPIEGEL AUSSEN
B2-8-1 CAB PANELS
B2-9-1 GUARD, FOPS, FRONT AND TOP, CAB MOUNTED
B2-9-20 GUARD, FOPS CAGE, FRONT GUARD SALES OPTION
B2-10-1 FLOOR COMPONENTS, SEAT SLIDE, LEVER ISOLATOR
B2-11-1 FIRE EXTINGUISHER
B2-12-1 RAIN VISOR, CAB
B2-14-1 VANDAL GUARD, CAB, 3pc Front Panel
B2-15-1 FRONT WIPER, CAB LOWER WINDOW, SEE C3-15-10
B2-16-1 CAB MOUNTINGS, CAB FOOR & MAT
B2-18-1 DIRECT GLAZING, REPLACEMENT MATERIAL

ITALIANO

B2-1-1 CAB
B2-1-10 FRONT SCREEN, UPPER & LOWER
B2-1-20 FRONT WIPER, & CAB COMPONENTS
B2-1-30 CAB, MOUNTING FASTENERS
B2-2-1 CAB DOOR, COMPONENTS
B2-3-1 SEAT, HIGH BACK, STANDARD
B2-3-20 SEAT, AIR SUSPENSION, HIGH BACK

B2-3-30 SEAT BELT, STANDARD
B2-3-40 SEAT BELT, 76mm (3") WIDE, OPTIONAL
B2-4-1 CONSOLE, CAB SERVO CONTROL, LEFT HAND, FIXED CONSOLE
B2-5-1 CONSOLE, CAB SERVO CONTROL, RIGHT HAND
B2-6-1 TERGICRISTALLO/LAVAVETRO PARABREZZA
B2-7-2 SPECCHI ESTERNI
B2-8-1 CAB PANELS
B2-9-1 GUARD, FOPS, FRONT AND TOP, CAB MOUNTED
B2-9-20 GUARD, FOPS CAGE, FRONT GUARD SALES OPTION
B2-10-1 FLOOR COMPONENTS, SEAT SLIDE, LEVER ISOLATOR
B2-11-1 FIRE EXTINGUISHER
B2-12-1 RAIN VISOR, CAB
B2-14-1 VANDAL GUARD, CAB, 3pc Front Panel
B2-15-1 FRONT WIPER, CAB LOWER WINDOW, SEE C3-15-10
B2-16-1 CAB MOUNTINGS, CAB FOOR & MAT
B2-18-1 DIRECT GLAZING, REPLACEMENT MATERIAL

PORTUGUES

B2-1-1 CAB
B2-1-10 FRONT SCREEN, UPPER & LOWER
B2-1-20 FRONT WIPER, & CAB COMPONENTS
B2-1-30 CAB, MOUNTING FASTENERS
B2-2-1 CAB DOOR, COMPONENTS
B2-3-1 SEAT, HIGH BACK, STANDARD
B2-3-20 SEAT, AIR SUSPENSION, HIGH BACK
B2-3-30 SEAT BELT, STANDARD
B2-3-40 SEAT BELT, 76mm (3") WIDE, OPTIONAL
B2-4-1 CONSOLE, CAB SERVO CONTROL, LEFT HAND, FIXED CONSOLE
B2-5-1 CONSOLE, CAB SERVO CONTROL, RIGHT HAND
B2-6-1 LIMPA PARA-BRISAS PARA-BRISAS
B2-7-2 ESPELHOS RETROVISOREEXTERIORES
B2-8-1 CAB PANELS
B2-9-1 GUARD, FOPS, FRONT AND TOP, CAB MOUNTED
B2-9-20 GUARD, FOPS CAGE, FRONT GUARD SALES OPTION
B2-10-1 FLOOR COMPONENTS, SEAT SLIDE, LEVER ISOLATOR
B2-11-1 EXTINTOR
B2-12-1 RAIN VISOR, CAB
B2-14-1 VANDAL GUARD, CAB, 3pc Front Panel
B2-15-1 FRONT WIPER, CAB LOWER WINDOW, SEE C3-15-10
B2-16-1 CAB MOUNTINGS, CAB FOOR & MAT
B2-18-1 DIRECT GLAZING, REPLACEMENT MATERIAL

ESPANOL

B2-1-1 CAB
B2-1-10 FRONT SCREEN, UPPER & LOWER
B2-1-20 FRONT WIPER, & CAB COMPONENTS
B2-1-30 CAB, MOUNTING FASTENERS
B2-2-1 CAB DOOR, COMPONENTS
B2-3-1 SEAT, HIGH BACK, STANDARD
B2-3-20 SEAT, AIR SUSPENSION, HIGH BACK
B2-3-30 SEAT BELT, STANDARD
B2-3-40 SEAT BELT, 76mm (3") WIDE, OPTIONAL
B2-4-1 CONSOLE, CAB SERVO CONTROL, LEFT HAND, FIXED CONSOLE
B2-5-1 CONSOLE, CAB SERVO CONTROL, RIGHT HAND
B2-6-1 LAVA/LIMPIA PARABRISAS
B2-7-2 ESPEJOS EXTERNOS
B2-8-1 CAB PANELS
B2-9-1 GUARD, FOPS, FRONT AND TOP, CAB MOUNTED
B2-9-20 GUARD, FOPS CAGE, FRONT GUARD SALES OPTION
B2-10-1 FLOOR COMPONENTS, SEAT SLIDE, LEVER ISOLATOR
B2-11-1 FIRE EXTINGUISHER
B2-12-1 RAIN VISOR, CAB
B2-14-1 VANDAL GUARD, CAB, 3pc Front Panel
B2-15-1 FRONT WIPER, CAB LOWER WINDOW, SEE C3-15-10
B2-16-1 CAB MOUNTINGS, CAB FOOR & MAT
B2-18-1 DIRECT GLAZING, REPLACEMENT MATERIAL

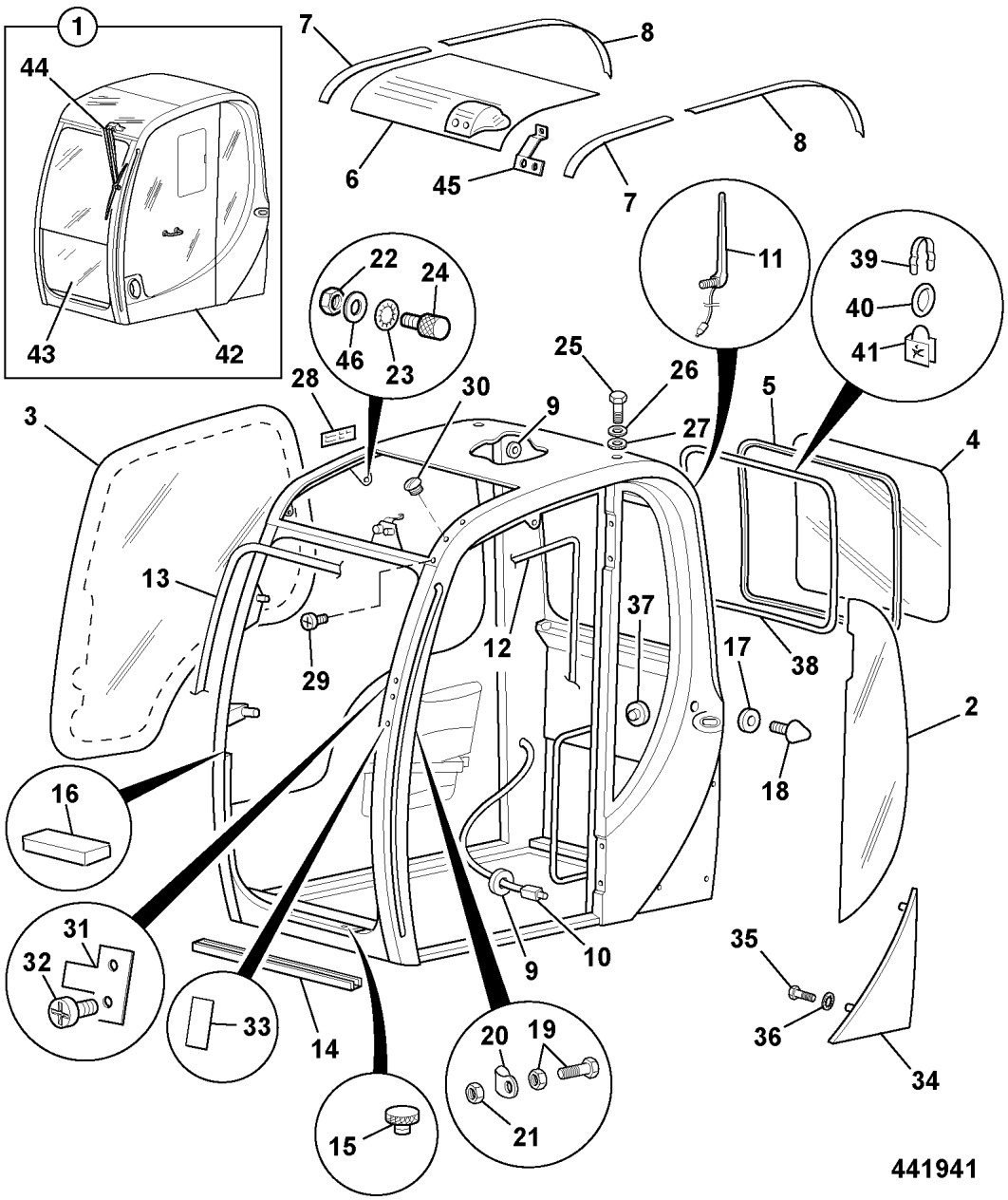

	FROM	TO	FROM	TO
JS160W				

ITEM	PART NO	CHANGE NO	DESCRIPTION	REMARKS	USAGE CODE	QTY
1	335/08495		Cab, operators, ABI, JS175W AUTO			1
1A	335/14495		Cab, JS Wheeled build c/w, cab guard mountings			1
2	827/80219		:Glass, cab l/hand rear, TIM CAB			1
3	827/80217		:Glass, cab r/hand, TIM CAB			1
4	827/80218		:Glass, cab rear, TIM CAB			1
5	331/36329		:Seal			1
6	331/36330		:Screen, Top opening			1
7	331/36331		:Seal			2
8	331/36332		:Seal			2
9	6900/0592		:Grommet			3
10	331/36328		:Harness, cab			1
11	6900/0564		:Aerial			1
12	6900/0533		:Seal			1
13	6900/0532		:Seal			1
14	6900/0531		:Seal			1
15	6900/0597		:Grommet			2
16	6900/0997		:Spacer, rubber			2
17	6900/0563		:Washer			1
18	6900/0562		:Stopper			1
19	331/36334		:Striker			1
20	331/36335		:Guard			1

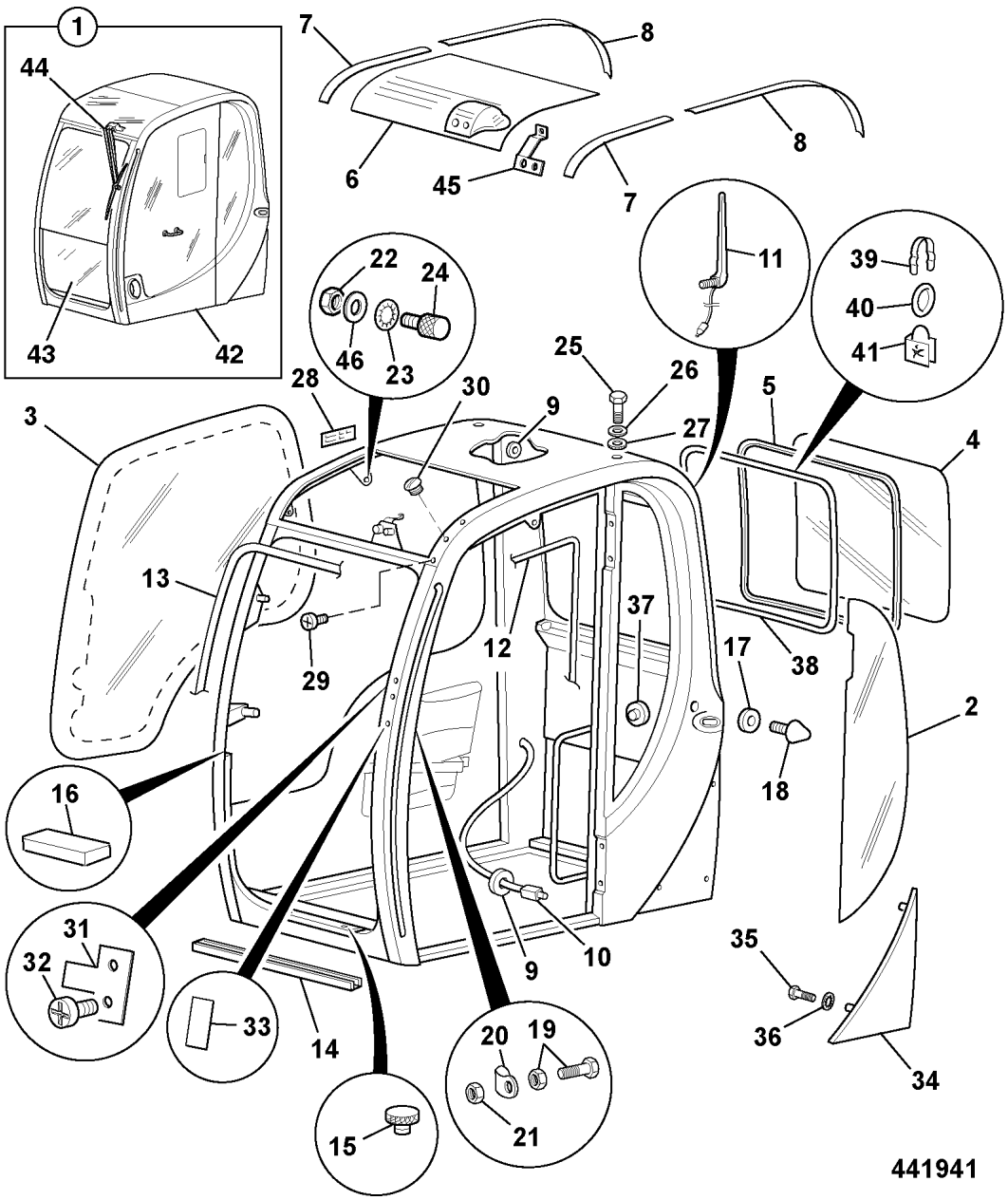

ITEM	PART NO	CHANGE NO	DESCRIPTION	REMARKS	USAGE CODE	QTY
21	331/36336		:Nut			1
22	6900/0571		:Nut			4
23	331/37332		:Washer			2
24	6900/0548		:Striker, lower			4
25	6900/0566		:Screw			4
26	6900/0567		:Washer			4
27	6900/0568		:Washer, fiber			4
28	NSP		:None serviced part			1
29	331/36337		:Plug, Plastic			4
30	331/36339		:Button			2
31	6900/0635		:Bracket, wiper blade			1
32	6900/0995		:Screw			2
33	331/36377		:Adhesive			1
34	331/36343		:Cover, rear			1
35	1315/0303Z		:Screw, M8 x 16			3
36	6900/0570		:Washer			3
37	6900/0555		:Plug			2
38	331/36374		:Strip, locking			1
39	331/36375		:Bracket, ring			1
40	331/36376		:Ring			1
42	.		:'See Remark'	cab door see frame B2-2-1		1
43	.		:'See Remark'	Front screen see frame B2-1-10		1
44	.		:'See Remark'	Wiper motor see frame B2-1-20		1
45	331/37328		:Bracket, motor support			1
46	6900/0569		:Washer			2

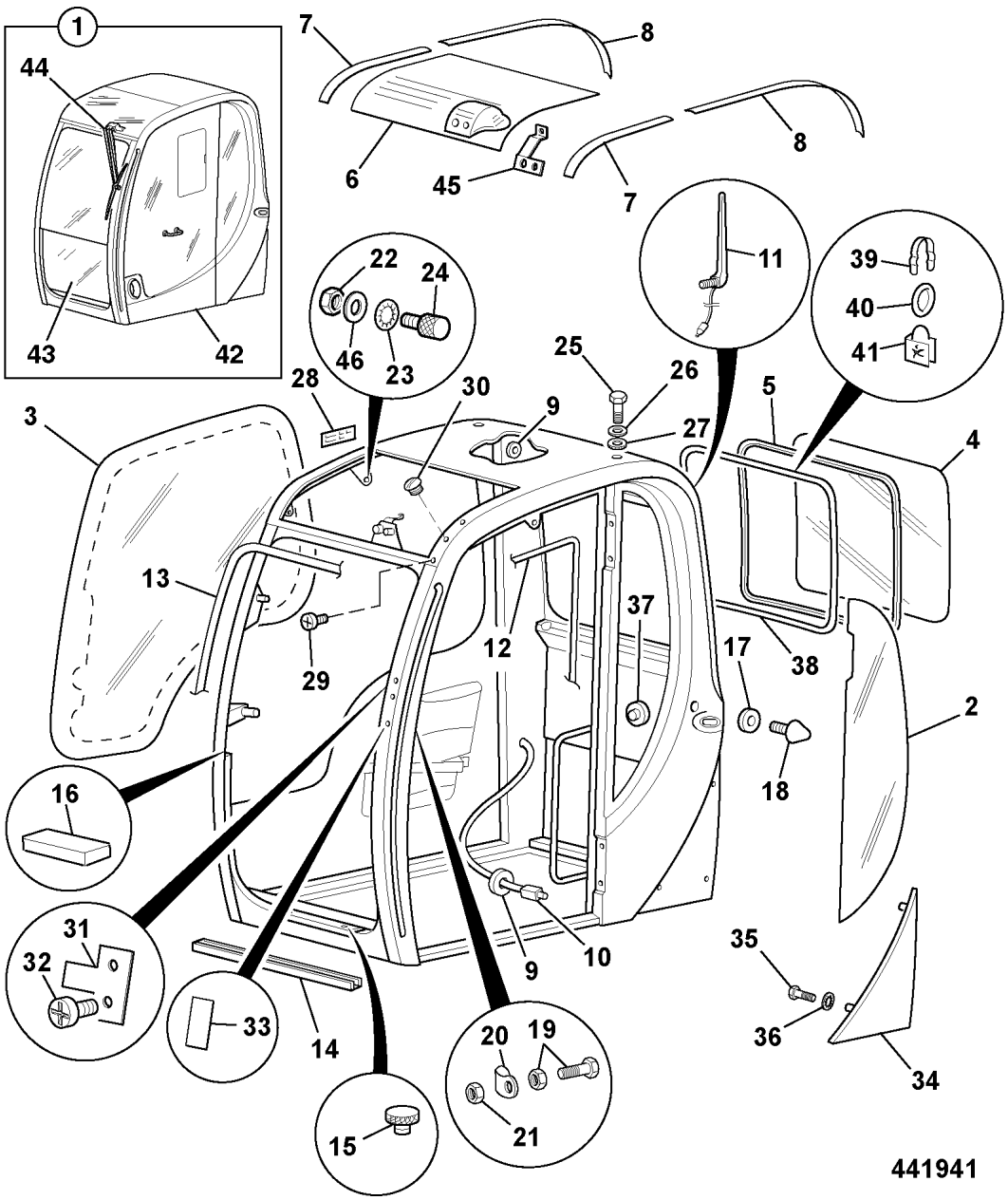

ITEM	PART NO	CHANGE NO	DESCRIPTION	REMARKS	USAGE CODE	QTY
47	331/37601		Panel, noise damping			1

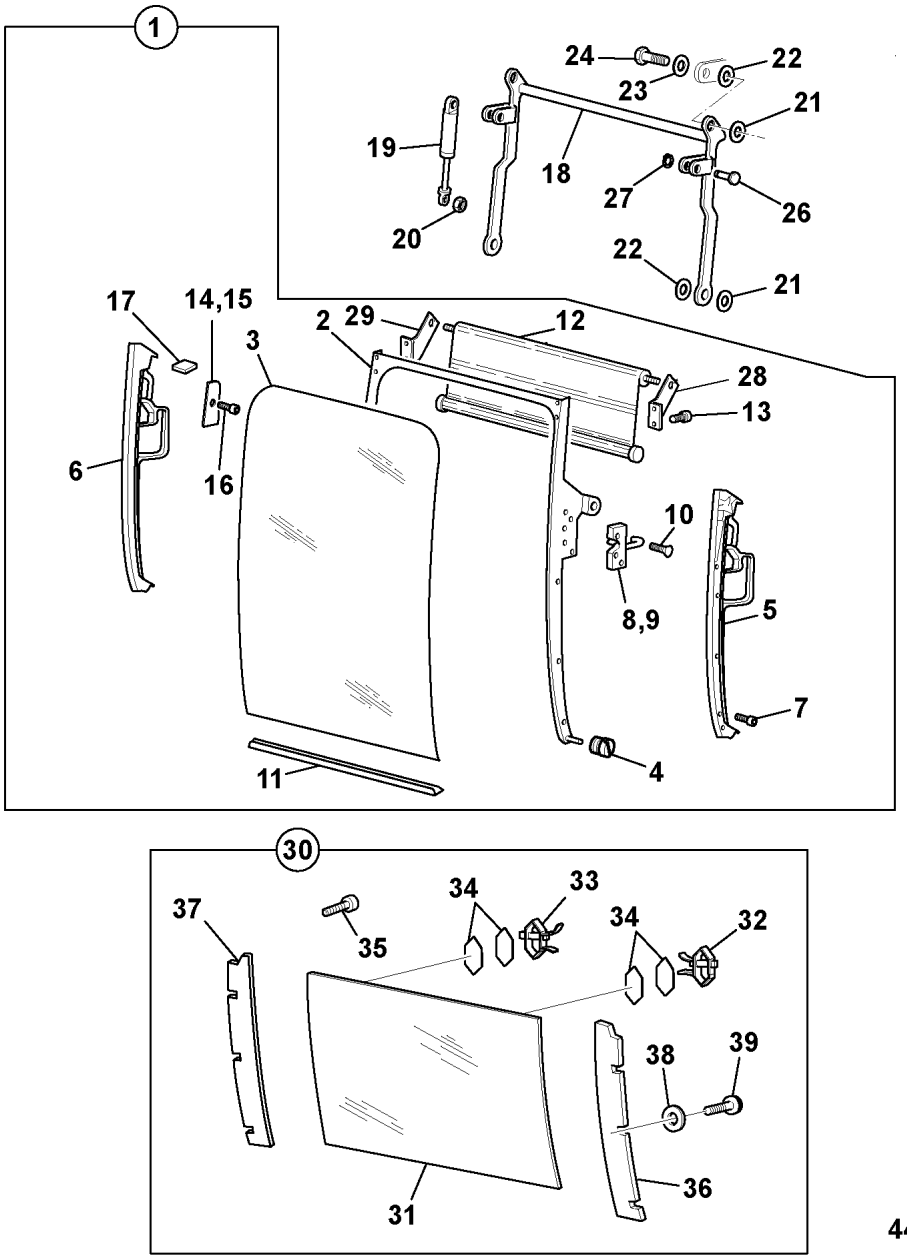

441952

	FROM	TO	FROM	TO
JS160W				

ITEM	PART NO	CHANGE NO	DESCRIPTION	REMARKS	USAGE CODE	QTY
1	331/58198		Windscreen, assembly			1
2	331/36366		:Frame, window			1
3	331/58212		:Windscreen			1
4	6900/0513		:Roller			1
5	6900/0688		:Slide, left hand, grey			1
6	6900/0689		:Slide, right hand, grey			1
7	6900/0616		:Screw			16
8	331/36367		:Latch, left hand			1
9	331/36368		:Latch, right hand			1
10	6900/0619		:Screw			8
11	331/58208		:Seal, translucent			1
12	331/58206		:Blind, c/w guides			1
13	6900/0995		:Screw			4
14	6900/0622		:Cover, left hand			1
15	6900/0623		:Cover, right hand			1
16	6900/0616		:Screw			2
17	331/36369		:Stop, foam			2
18	331/36370		Arm			1
19	331/36371		Spring, air			2
20	6900/0988		Nut			4
21	331/36372		Spacer			4
22	331/36373		Washer			4
23	6900/0569		Washer			4

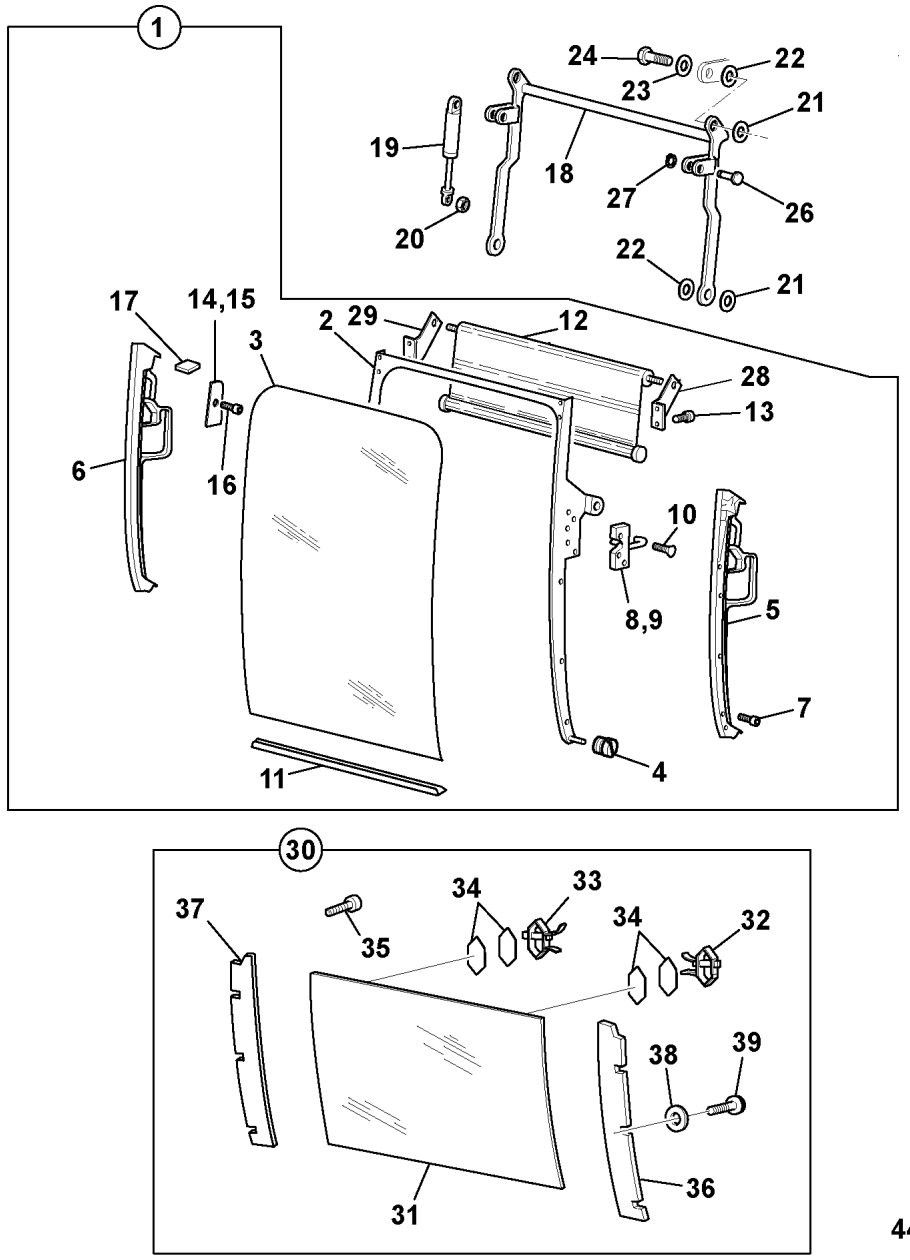

441952

ITEM	PART NO	CHANGE NO	DESCRIPTION	REMARKS	USAGE CODE	QTY
24	6900/0612		Screw			2
25	1315/0303Z		Screw, M8 x 16			2
26	331/37335		Pin, pivot			2
27	331/37336		Circlip			2
28	331/58201		Bracket, lh sunblind			1
29	331/58204		Bracket, rh sunblind			1
30	NSP		None serviced part			1
31	JHN0141		:Glass, lower, 745x542mm			1
32	* 826/11487		:Latch, Right Hand			1
33	* 826/11486		:Latch, Left hand			1
34	* 6900/0619		:Screw			4
35	6900/0987		:Screw			4
36	6900/0685		Slide, left hand, black			1
37	6900/0686		Slide, right hand, black			1
38	6900/0640		Washer			6
39	6900/0560		Screw			6
40	6900/0604		Spacer			1

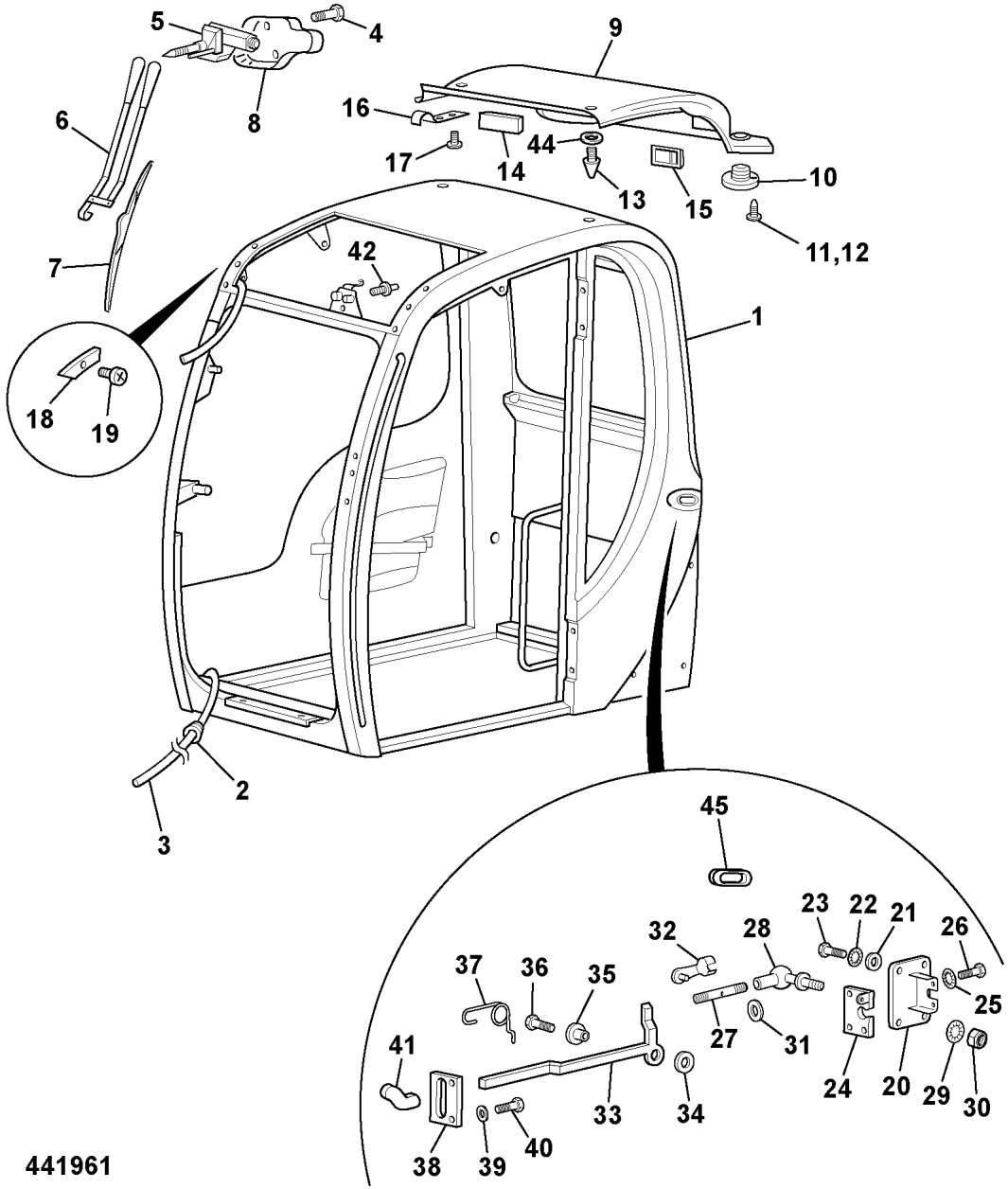

441961

	FROM	TO	FROM	TO
JS160W				

ITEM	PART NO	CHANGE NO	DESCRIPTION	REMARKS	USAGE CODE	QTY
1	.		'See Remark'	See frame B2-1-1		1
2	331/36340		:Grommet			1
3	331/36341		:Hose, 4300lg			1
4	6900/0554		:Screw			2
5	714/40346		:Motor, 24V wiper			1
6	714/40345		:Arm, wiper			1
7	714/40344		:Blade, Wiper, 600mm long			1
8	331/36342		:Cover, wiper motor			1
9	331/36344		:Trim, roof panel			1
10	6900/0585		:Speaker			2
11	826/11108		:Screw			8
12	821/10267		:Clip			8
13	331/19926		:Stop, cab roof			2
14	331/36346		:Cover			1
15	6900/0587		:Light, roof			1
16	331/36356		:Hook			2
17	6900/0554		:Screw			4
18	331/36357		:Plate			2
19	6900/0554		:Screw			2
20	6900/0544		:Cover			1
21	6900/0569		:Washer			4
22	6900/0609		:Washer			4

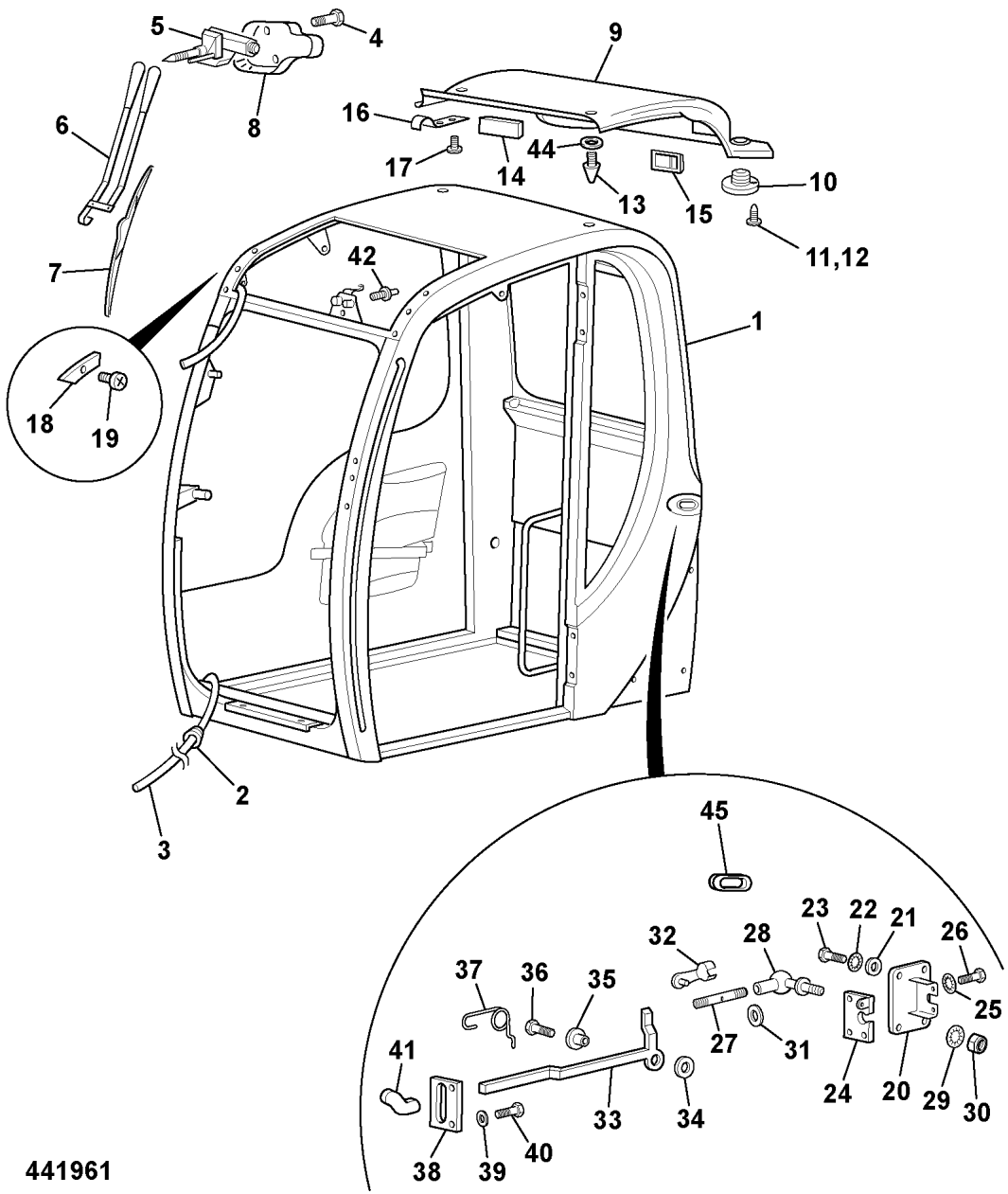

441961

ITEM	PART NO	CHANGE NO	DESCRIPTION	REMARKS	USAGE CODE	QTY
23	6900/0599		:Screw			4
24	6900/0543		:Latch			1
25	6900/0550		:Washer			4
26	6900/0608		:Screw			4
27	331/36359		:Rod, axle			1
28	6900/0627		:Joint, ball			1
29	6900/0637		:Washer			1
30	6900/0551		:Nut			1
31	6900/0652		:Grommet			1
32	6900/0523		:Clip, axle			1
33	331/36360		:Lever			1
34	6900/0605		:Spacer, plastic			1
35	6900/0604		:Spacer			1
36	6900/0603		:Screw			1
37	6900/0606		:Spring			1
38	6900/0541		:Guide			1
39	6900/0550		:Washer			2
40	6900/0601		:Screw			2
41	331/19929		:Knob			1
42	331/36361		:Jet, washer			1
43	2410/1209		:Grommet	Blank off lower wiper holes		2
44	331/37333		:Washer, foam			1
45	331/37334		:Grommet			1

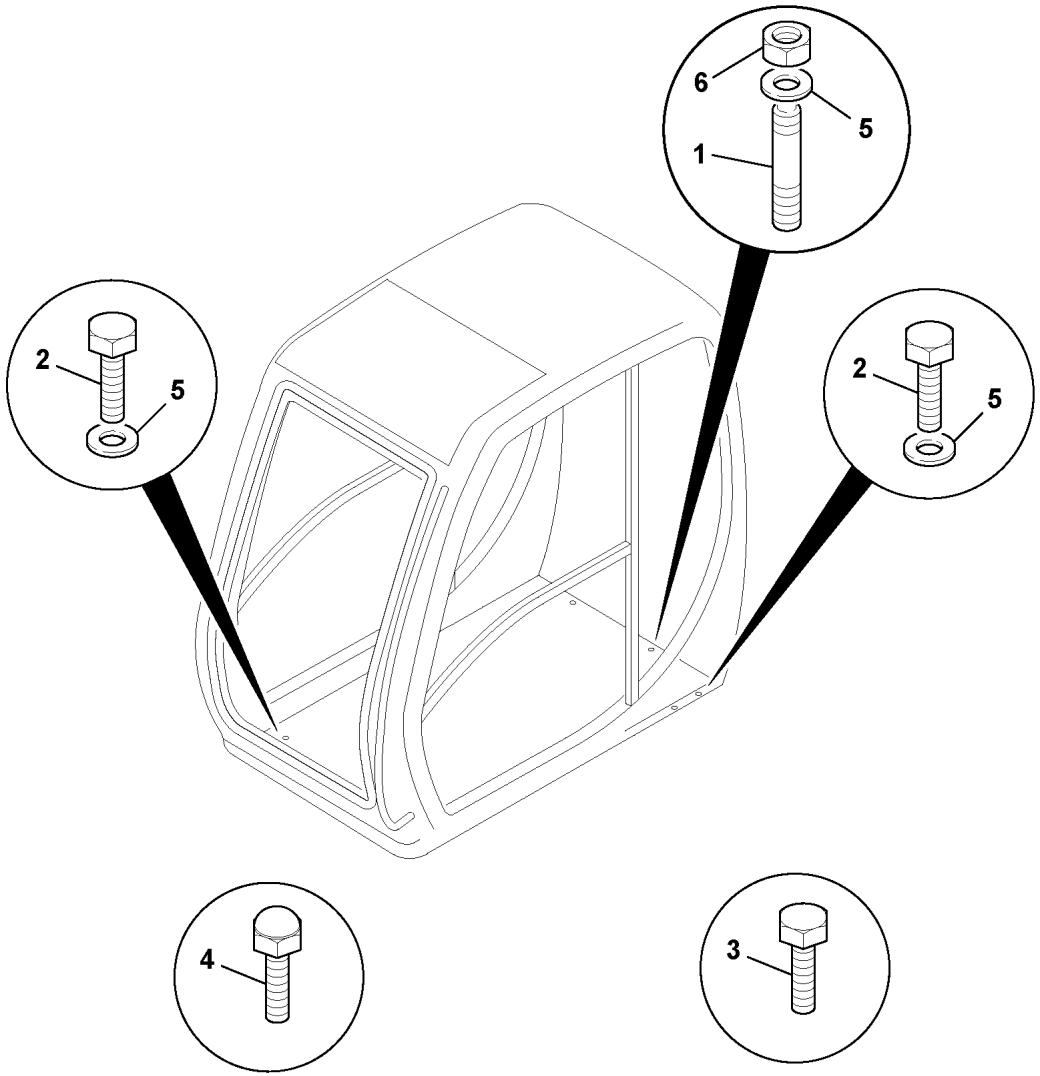

723090

	FROM	TO	FROM	TO
JS160W				

ITEM	PART NO	CHANGE NO	DESCRIPTION	REMARKS	USAGE CODE	QTY
1	KHN1256		Bolt			2
2	1316/3514D		Bolt, M12 x 60			4
3	1316/3516D		Bolt, M12 x 70			2
4	826/01649		Bolt, Dome Head, Tuf-lok			1
5	JHP0042		Washer, plain			8
6	1371/0401D		Nut			2

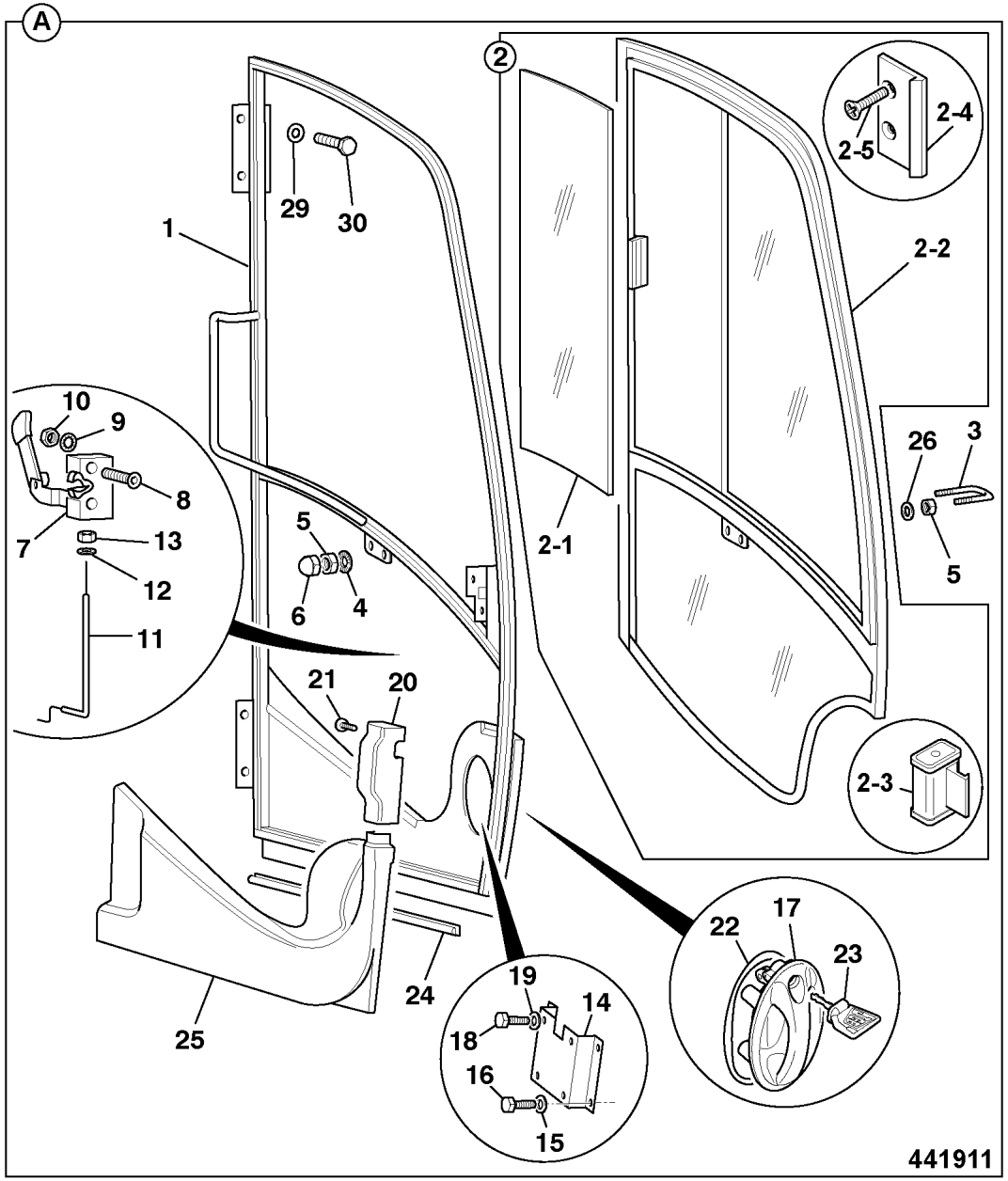

JS160W

	FROM	TO	FROM	TO

ITEM	PART NO	CHANGE NO	DESCRIPTION	REMARKS	USAGE CODE	QTY
0A	331/36354		Door, assembly,JX cab			1
1	331/36358		:Door, Cab door, cab door frame			1
2	331/45035		:Window, assembly, sliding			1
2 01	827/80221		::Glass, sliding section			1
2 02	827/80220		::Glass, Door			1
2 03	331/36362		::Handle, Window handle assemb, JS cab			1
2 04	331/36364		::Striker, Window striker, JS cab			1
2 05	331/36365		::Screw			1
2 06	332/C0979		::Seal, strip	between fixed and sliding glass		1
3	331/36378		:Hook, door lock back			1
4	6900/0644		:Washer			2
5	6900/0574		:Nut			4
6	331/36379		:Cap, Cap,nut, Door lock back			2
7	331/36380		:Lock, door			1
8	993/99703		:Screw, countersunk head			2
9	6900/0570		:Washer			2
10	6900/0571		:Nut			2
11	331/36381		:Rod, lock			1
12	331/36382		:Washer, lock rod			1

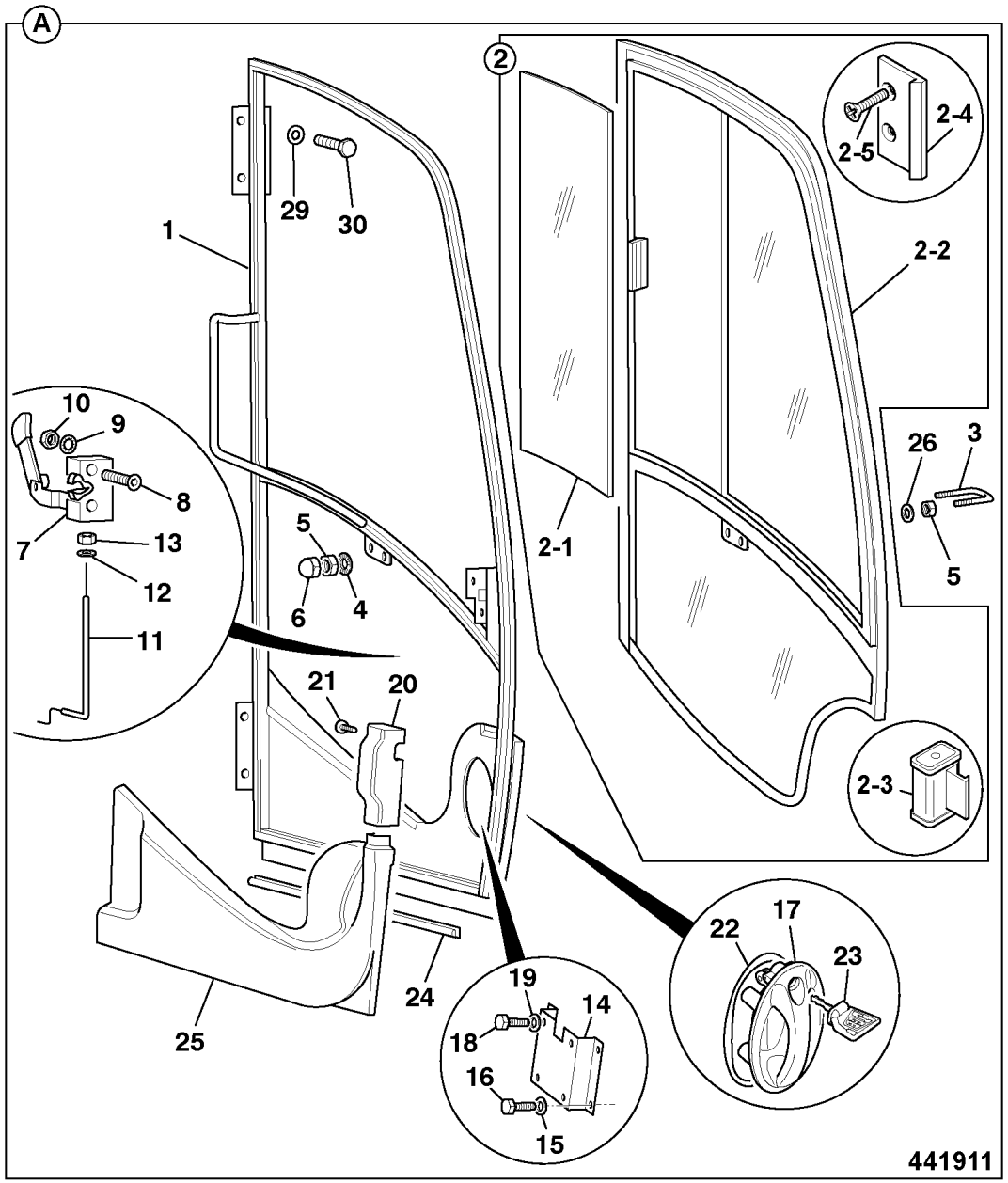

ITEM	PART NO	CHANGE NO	DESCRIPTION	REMARKS	USAGE CODE	QTY
13	331/36383		:Nut, safety			1
14	331/36384		:Bracket, support handle			1
15	6900/0550		:Washer			4
16	331/36385		:Screw, handle support			4
17	331/36386		:Handle, cab door			1
18	331/36385		:Screw, handle support			4
19	6900/0550		:Washer			4
20	331/36389		:Cover, lock			1
21	6900/0616		:Screw			2
22	331/36390		:Seal, handle			1
23	701/45501		:Key, Door/Ignition, Ref 14657			1
24	331/36393		:Seal, door lower			1
25	331/36394		:Cover, inside door			1
26	331/36387		:Washer			2
27	331/41505		:Spacer, hinge			2
29	6900/0992		:Washer			4
30	331/36392		:Screw			4

B2-3-1 SEAT, HIGH BACK, STANDARD

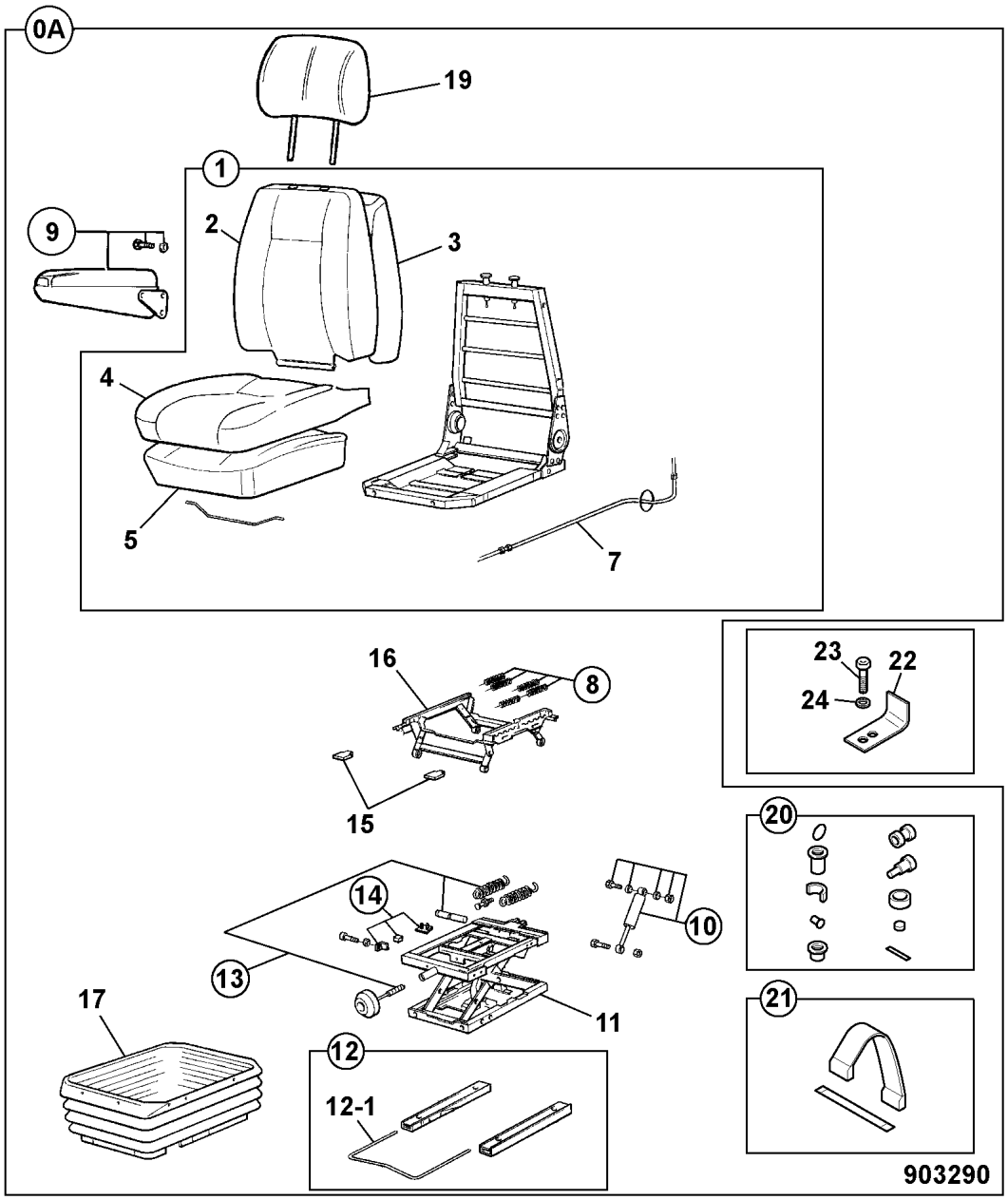

	FROM	TO	FROM	TO
JS160W				

ITEM	PART NO	CHANGE NO	DESCRIPTION	REMARKS	USAGE CODE	QTY
0A	40/911151		Seat, standard high back			1
1	1		:TBA			1
2	40/911167		::Kit-backrest cover, Kit-backrest fabric			1
3	40/910472		::Kit, back foam			1
4	40/911168		::Kit-seat cover, kit-seat cover fabri			1
5	40/910476		::Kit, seat foam			1
7	6900/0021		::Kit, cable adjustment			1
8	40/207713		:Kit, spring height adj.			1
9	40/910502		:Kit, armrest, LH & RH & fixings			1
10	40/207809		:Kit, damper assembly			1
11	40/911174		:Kit-suspension			1
12	40/911172		:Kit-slide rail, fore & aft adjuster			1
12 01	40/911173		::Handle			1
13	40/205614		:Kit, knob/weight adjuster			1
14	40/205613		:Kit-upstop/bumpstop			1
15	6900/0027		:Handle, assembly, grey			1
16	40/911169		:Kit, height riser			1
17	40/911171		:Kit-suspension cover			1
19	40/911093		:Kit, headrest			1
20	40/205617		:Kit, bearing			1
21	40/910382		:Kit, Tether			1

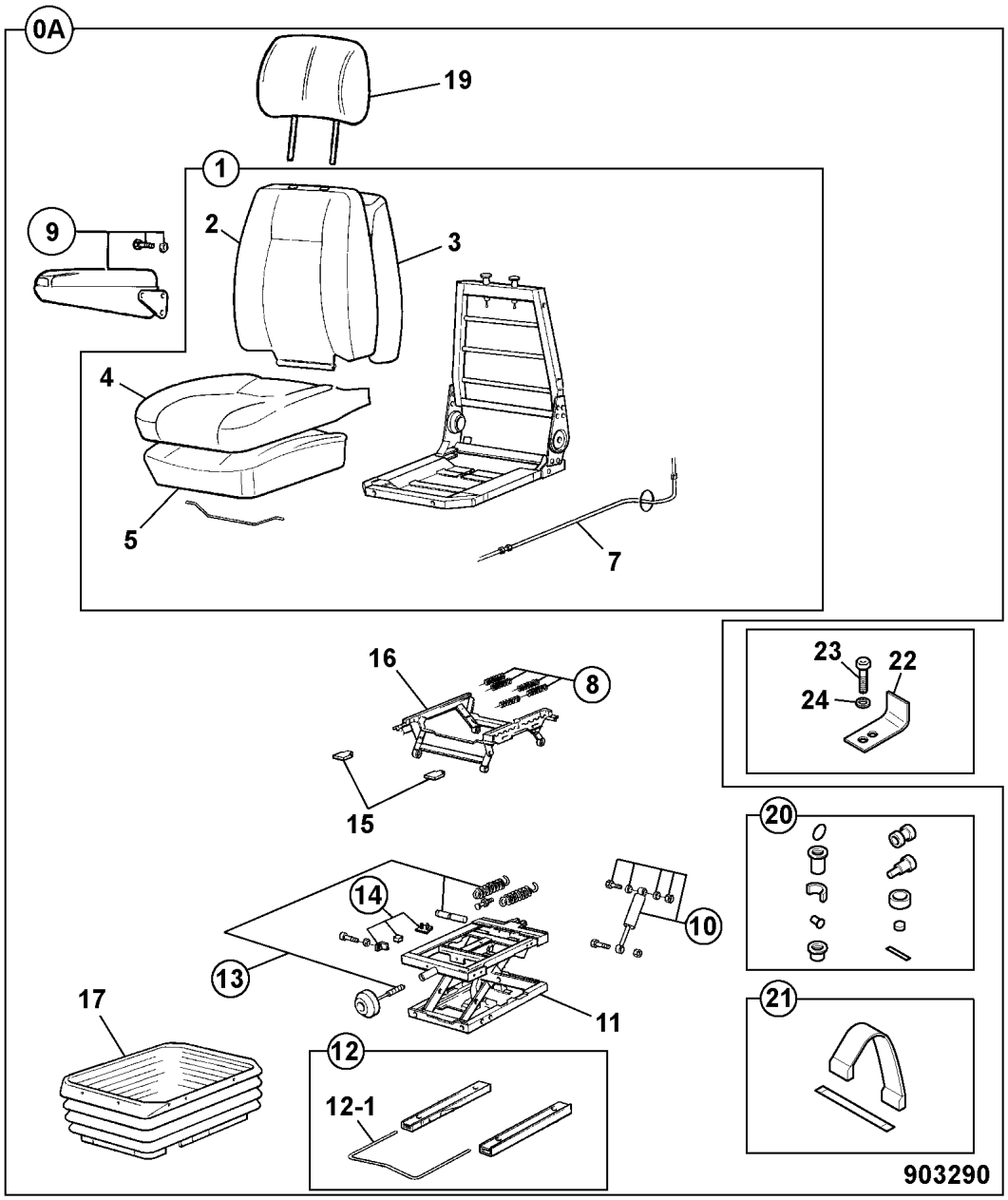

ITEM	PART NO	CHANGE NO	DESCRIPTION	REMARKS	USAGE CODE	QTY
22	331/21990		Bracket, Seatstop			1
23	1391/3307D		Capscrew			1
24	1420/0007D		Washer, M8 plain			1

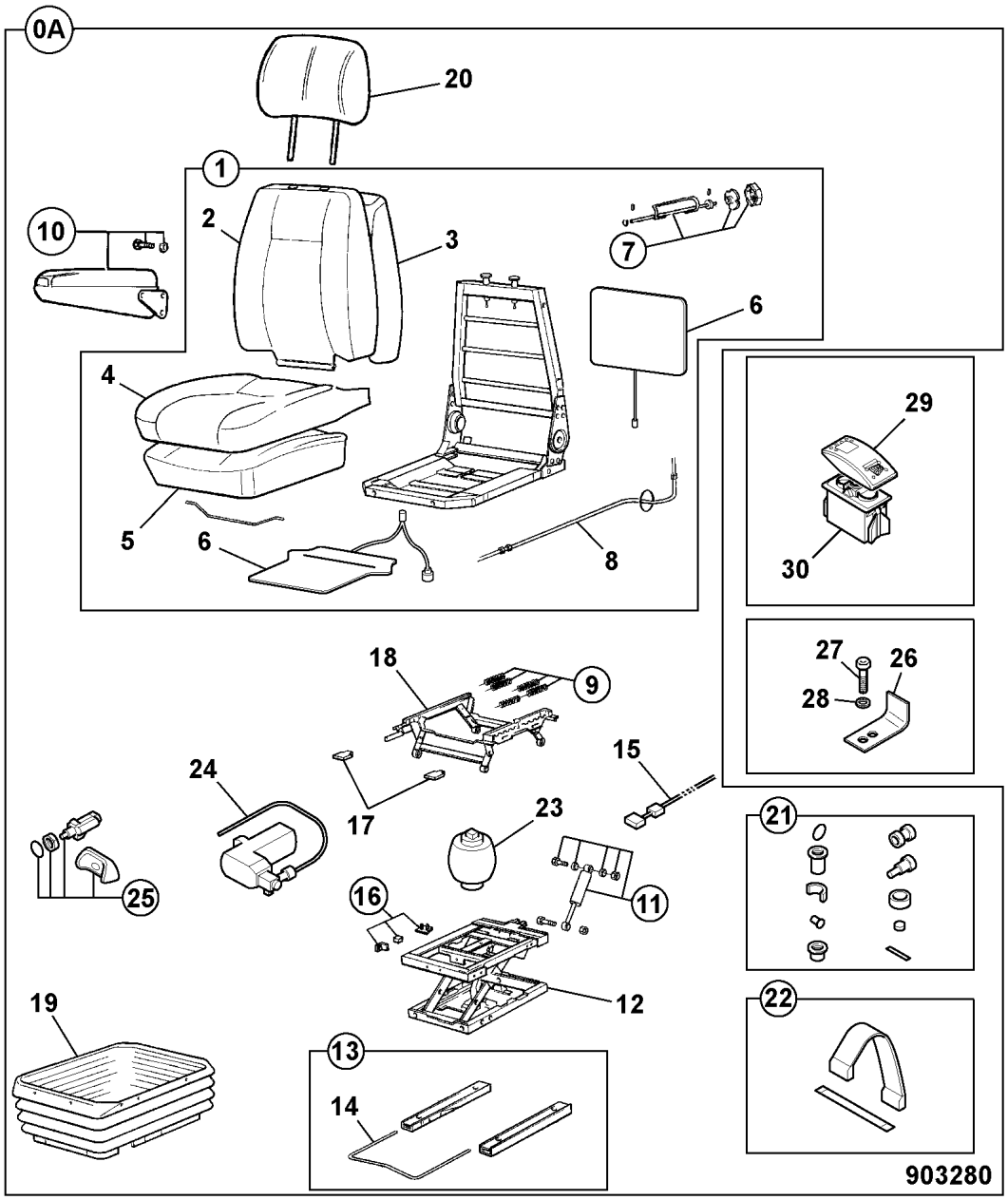

	FROM	TO	FROM	TO
JS160W				

ITEM	PART NO	CHANGE NO	DESCRIPTION	REMARKS	USAGE CODE	QTY
0A	40/911152		Seat, air suspension, seat & high back			1
1	332/C2191		:Seat, upper assembly			1
2	40/911167		::Kit-backrest cover, Kit-backrest fabric			1
3	40/910472		::Kit, back foam			1
4	40/911168		::Kit-seat cover, kit-seat cover fabri			1
5	40/910476		::Kit, seat foam			1
6	40/910638		::Kit-heater, seat			1
7	332/C2188		::Kit-lumbar adjuster			1
8	6900/0021		::Kit, cable adjustment			1
9	40/207713		:Kit, spring height adj.			1
10	40/910502		:Kit, armrest, LH & RH & fixings			1
11	40/207809		:Kit, damper assembly			1
12	40/910493		:Kit, suspension assembly			1
13	40/911172		:Kit-slide rail, fore & aft adjuster			1
14	40/911173		::Handle			1
15	1		:TBA			1
16	40/205613		:Kit-upstop/bumpstop			1
17	6900/0027		:Handle, assembly, grey			1
18	40/911169		:Kit, height riser			1

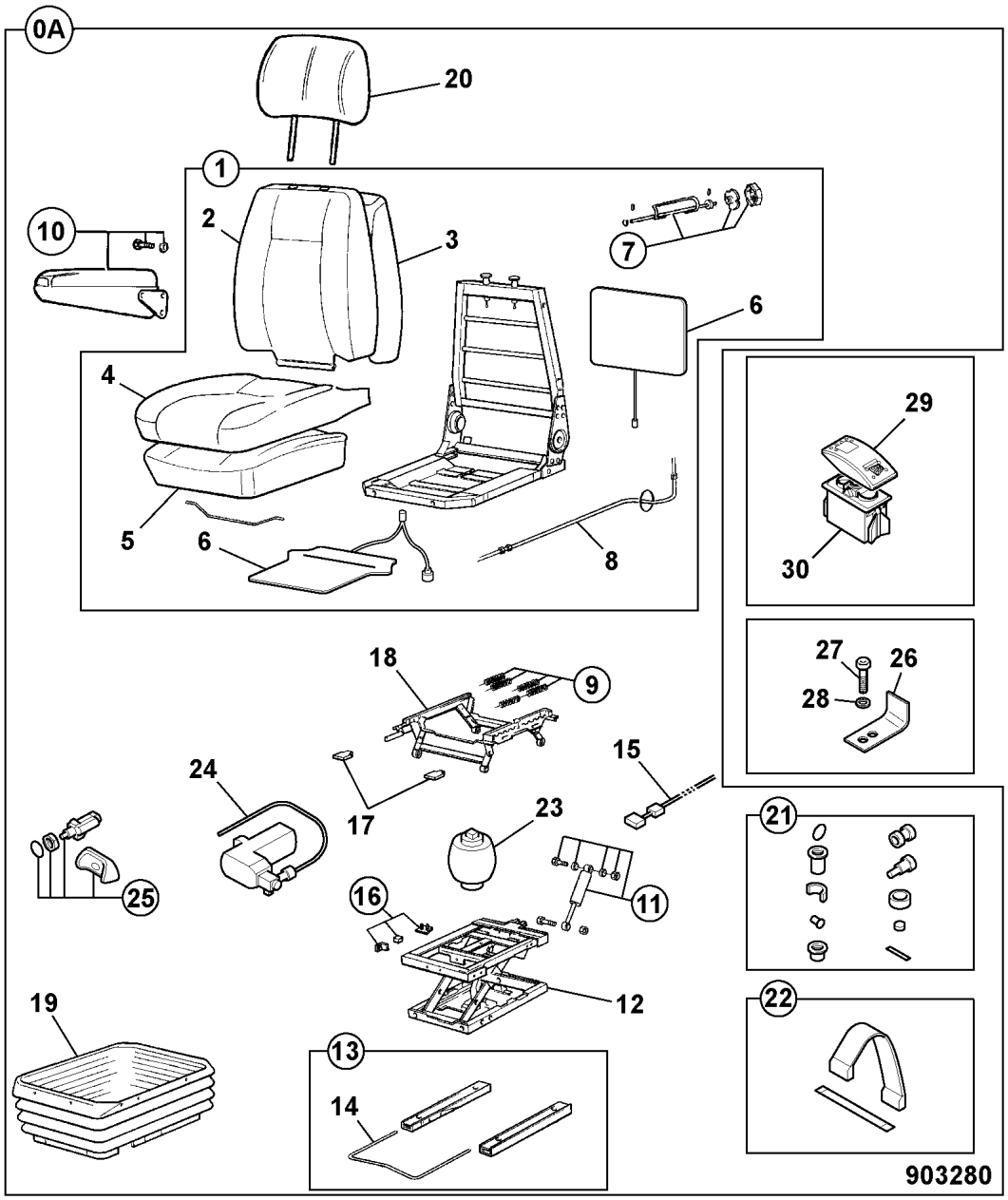

ITEM	PART NO	CHANGE NO	DESCRIPTION	REMARKS	USAGE CODE	QTY
19	332/C2186		:Kit-suspension cover			1
20	40/911093		:Kit, headrest			1
21	40/206804		:Kit-bearing			1
22	40/910382		:Kit, Tether			1
23	40/910201		:Kit, Air-Spring			1
24	332/C2190		:Kit-compressor			1
24A	332/C3209		:Harness, & Hoses			1
25	40/910975		:Kit-valve, air suspension			1
26	331/21990		Bracket, Seatstop			1
27	1391/3307D		Capscrew			1
28	1420/0007D		Washer, M8 plain			1
29	701/58852		Decal, heated seat, white lens			1
30	701/60031		Switch, 24V			1

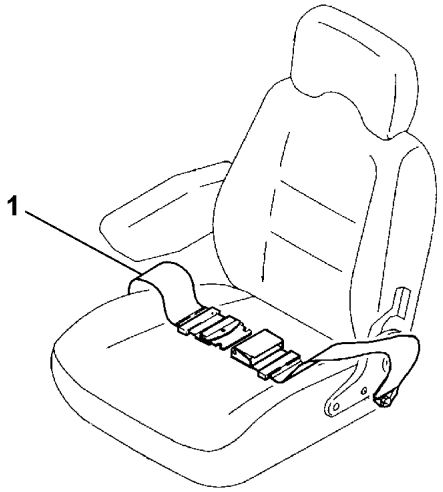

	FROM	TO	FROM	TO
JS160W				

ITEM	PART NO	CHANGE NO	DESCRIPTION	REMARKS	USAGE CODE	QTY
1	259/27700		Belt, seat			1

903150

	FROM	TO	FROM	TO
JS160W				

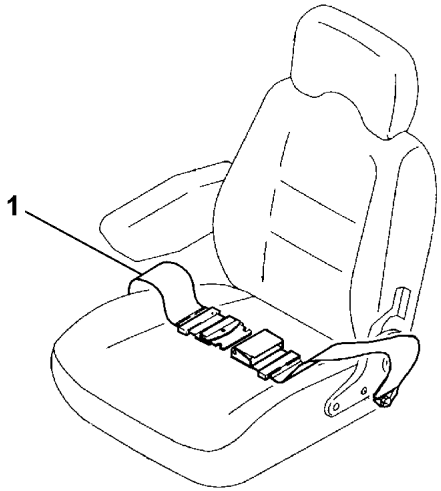

ITEM	PART NO	CHANGE NO	DESCRIPTION	REMARKS	USAGE CODE	QTY
	40/902400		Kit-seat belt			1

903150

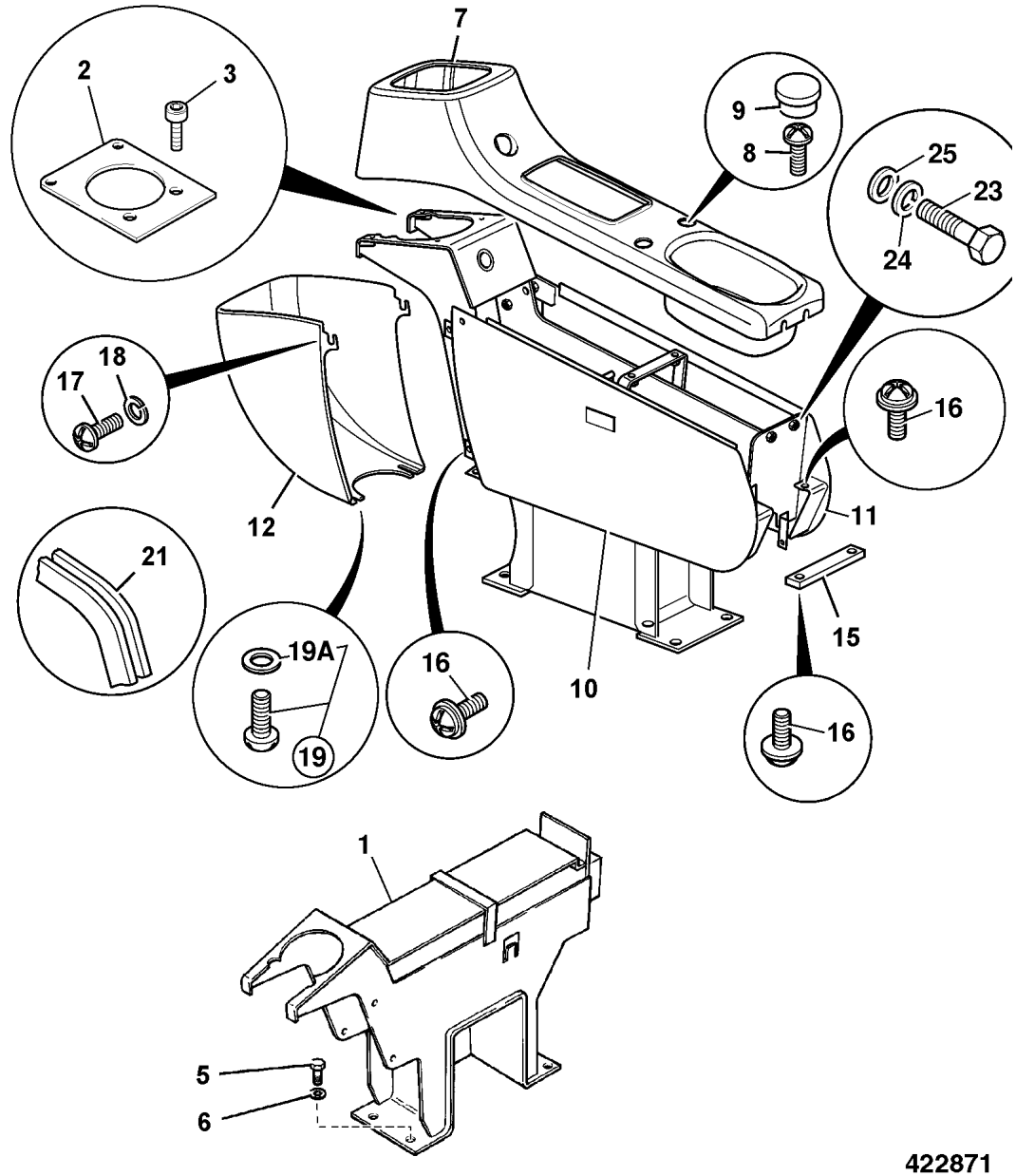

422871

	FROM	TO	FROM	TO
JS160W				

ITEM	PART NO	CHANGE NO	DESCRIPTION	REMARKS	USAGE CODE	QTY
	335/05915		Stand, console, left hand			1
2	331/18592		Plate, mounting, control valve			1
3	KHR0737		Screw, pan head			4
5	1391/3407D		Capscrew, M10			4
6	JHP0046		Washer, M10			4
7	331/57525		Cover, left hand console, JS175W	Standard build without Rear Dozer		1
	331/18077		Panel, Console, No switch l/h top	Rear Dozer option		1
8	KHR0738		Screw, pan head			2
9	835/10071		Cap, Blanking			2
10	335/06231		Panel, console, left hand side			1
11	335/06230		Panel, console, right hand side			1
12	331/18079		Panel, Console, Front access			1
15	KHN1313		Bracket			1
16	KHR0736		Screw, pan head			8
17	826/01281		Capscrew, button head, M6 x 12			2
18	1425/0006D		Washer, spring, M6			2
19	826/01281		Capscrew, button head, M6 x 12			2
19A	823/00516		Washer, nylon, M6			2

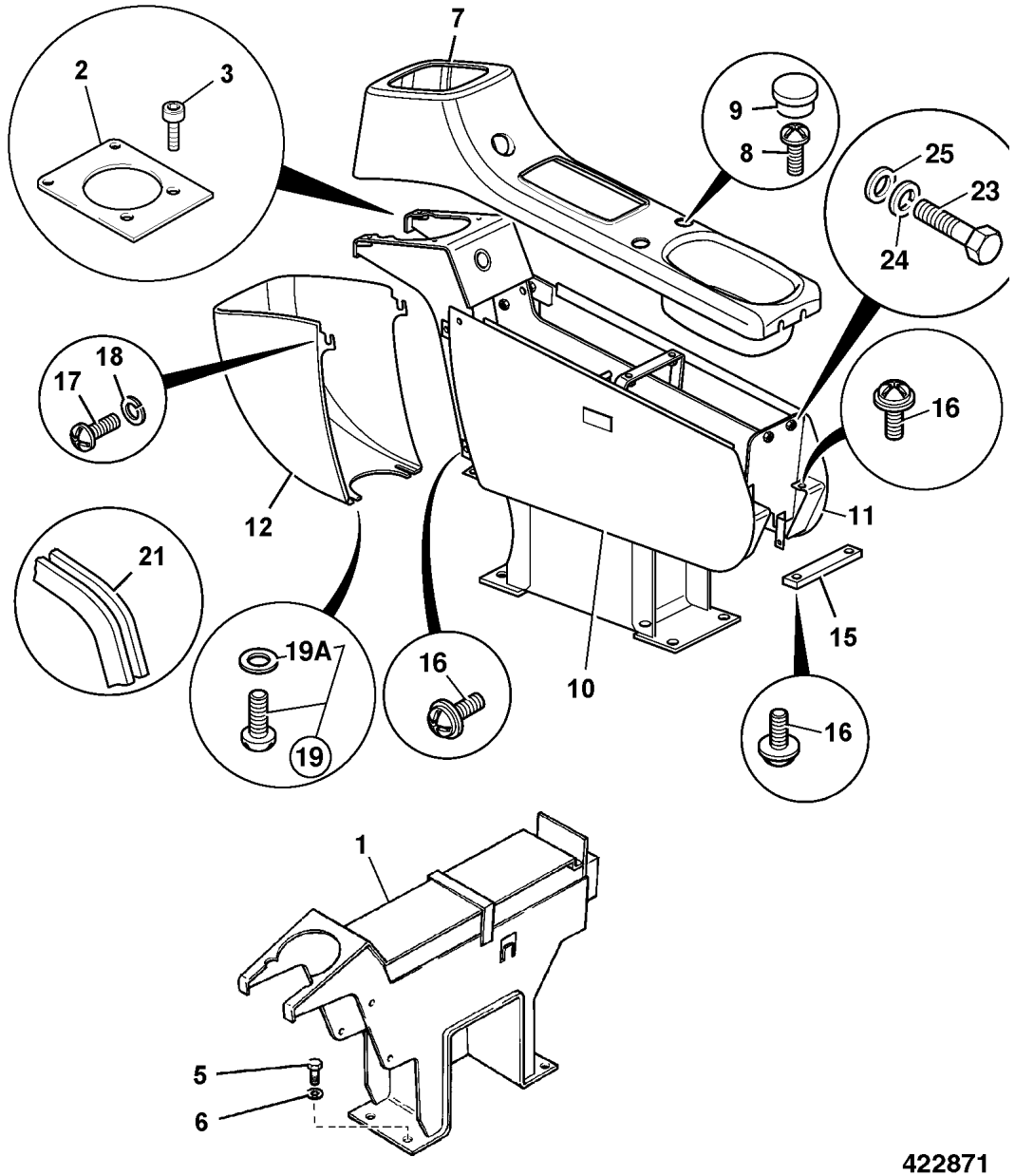

422871

ITEM	PART NO	CHANGE NO	DESCRIPTION	REMARKS	USAGE CODE	QTY
21	JHH0111		Strip, edging			1
23	1316/0203D		Screw			2
24	1425/0006D		Washer, spring, M6			2
25	1420/0006D		Washer, M6 plain			2

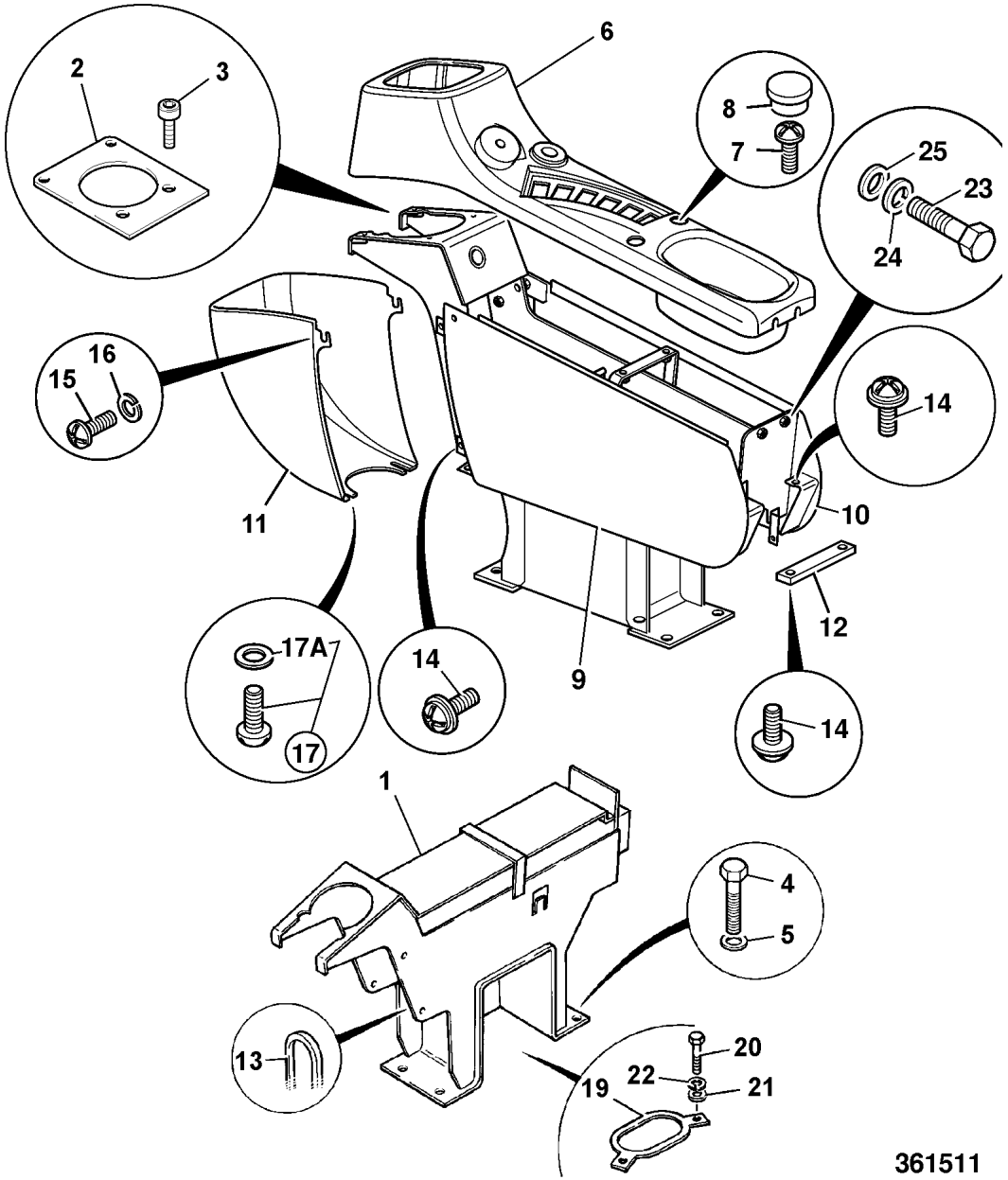

361511

	FROM	TO	FROM	TO
JS160W				

ITEM	PART NO	CHANGE NO	DESCRIPTION	REMARKS	USAGE CODE	QTY
1	335/06958		Stand, console, right hand, Dozer option	Dozer option		1
2	331/18592		Plate, mounting, control valve			1
3	KHR0737		Screw, pan head			4
4	1391/3407D		Capscrew, M10			4
5	JHP0046		Washer, M10			4
6	331/30572		Panel, console, top,right hand			1
7	KHR0738		Screw, pan head			2
8	835/10071		Cap, Blanking			2
9	335/06230		Panel, console, right hand side	Standard biuld		1
	335/06957		Panel, console, left hand side dozer	Dozer option		1
10	335/06229		Panel, console, left hand side			1
11	331/30617		Panel, console, front access			1
12	KHN1313		Bracket			1
13	JHH0111		Strip, edging			1
14	KHR0736		Screw, pan head			8
15	826/01281		Capscrew, button head, M6 x 12			2
16	1425/0006D		Washer, spring, M6			2

B2-5-1 CONSOLE, CAB SERVO CONTROL, RIGHT HAND

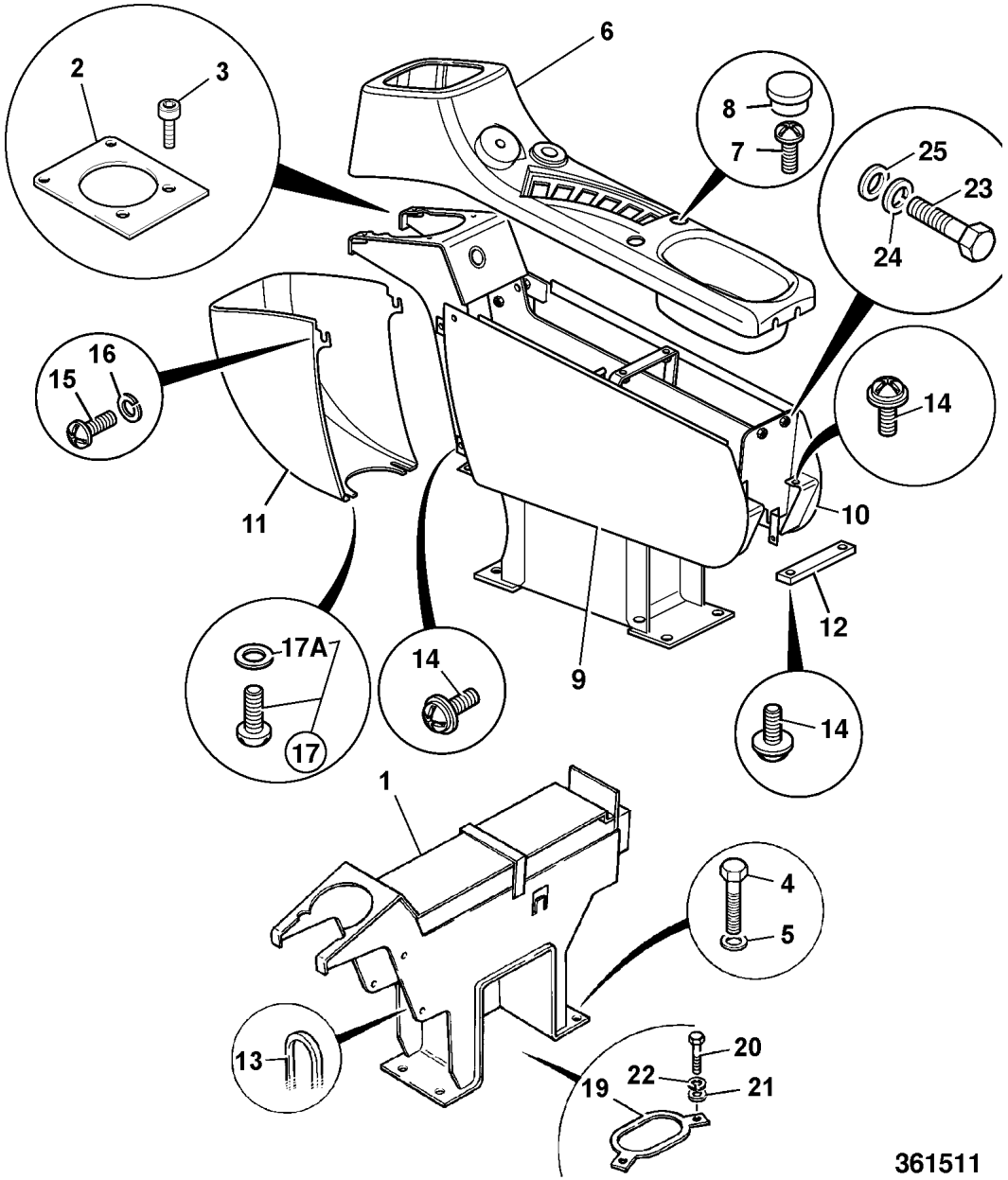

ITEM	PART NO	CHANGE NO	DESCRIPTION	REMARKS	USAGE CODE	QTY
17	826/01281		Capscrew, button head, M6 x 12			2
17A	823/00513		Washer, coupling flange			2
19	KHJ0947		Guide			1
20	1316/0303D		Screw			4
21	1420/0007D		Washer, M8 plain			4
22	1425/0007D		Washer, M8 spring			4
23	1316/0203D		Screw			2
24	1425/0006D		Washer, spring, M6			2
25	1420/0006D		Washer, M6 plain			2

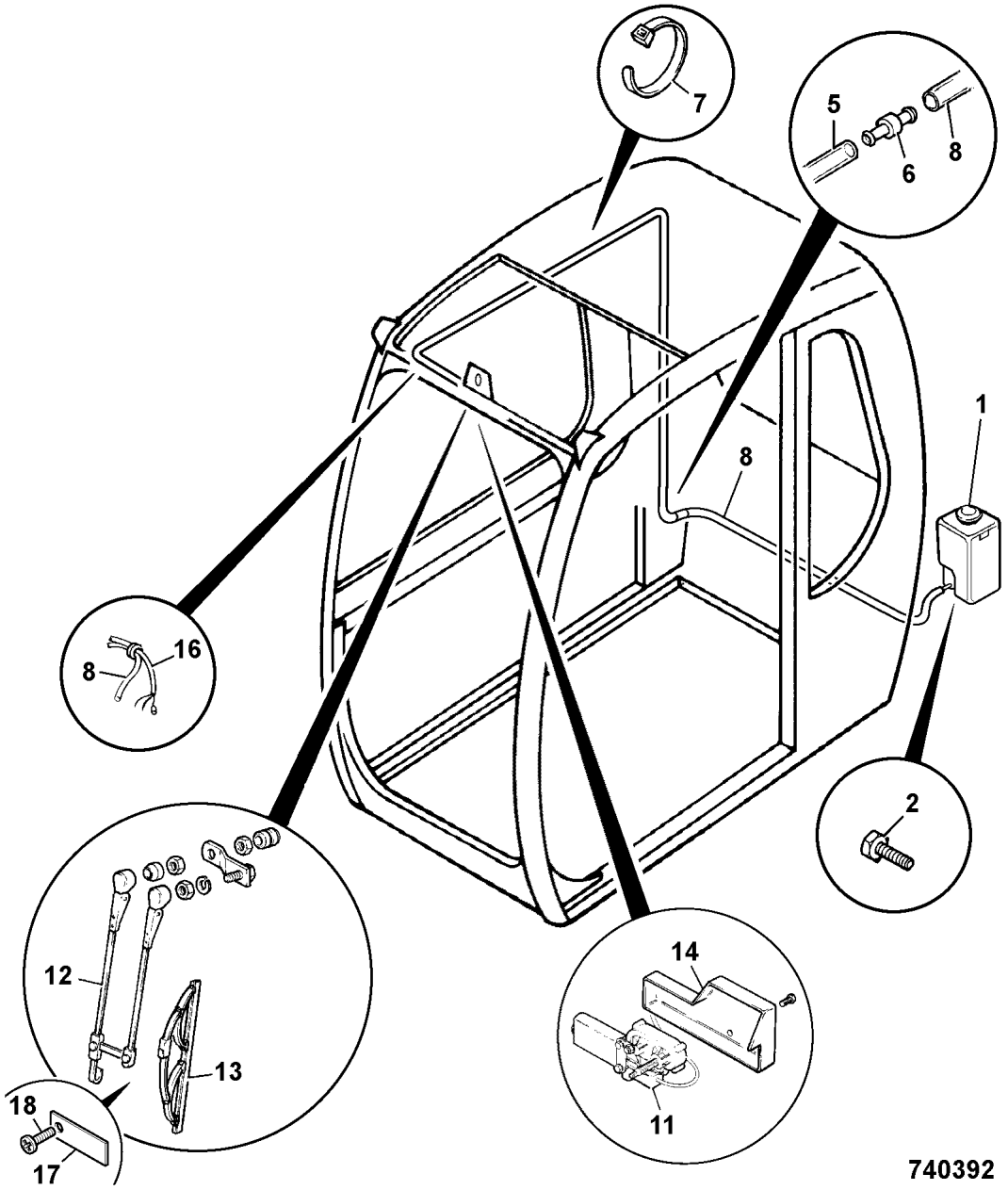

740392

	FROM	TO	FROM	TO
JS160W				

ITEM	PART NO	CHANGE NO	DESCRIPTION	REMARKS	USAGE CODE	QTY
1	JHN0160		Tank, screen wash, with pump	Includes bracket and cap		1
2	6012/0103Z		Bolt			2
3	1420/0005Z		Washer, M5			2
4	1425/0005Z		Washer, spring, M5			2
4 01	1371/0001Z		Nut			2
5	KHR1181		Tube			1
6	KHR1178		Adapter, fir tree			1
7	270/00106		Tie, Cable 385mm long			10
8	331/36341		Hose, 4300lg	See frame B2-1-20		1
11	714/40346		Motor, 24V wiper			1
12	714/40451		Arm, wiper			1
13	714/40452		Blade, wiper			1
14	331/36342		Cover, wiper motor			1
16	331/36328		Harness, cab	See frame B2-1-1		1
17	331/59205		Spring, Leaf			1
18	6900/0995		Screw			1

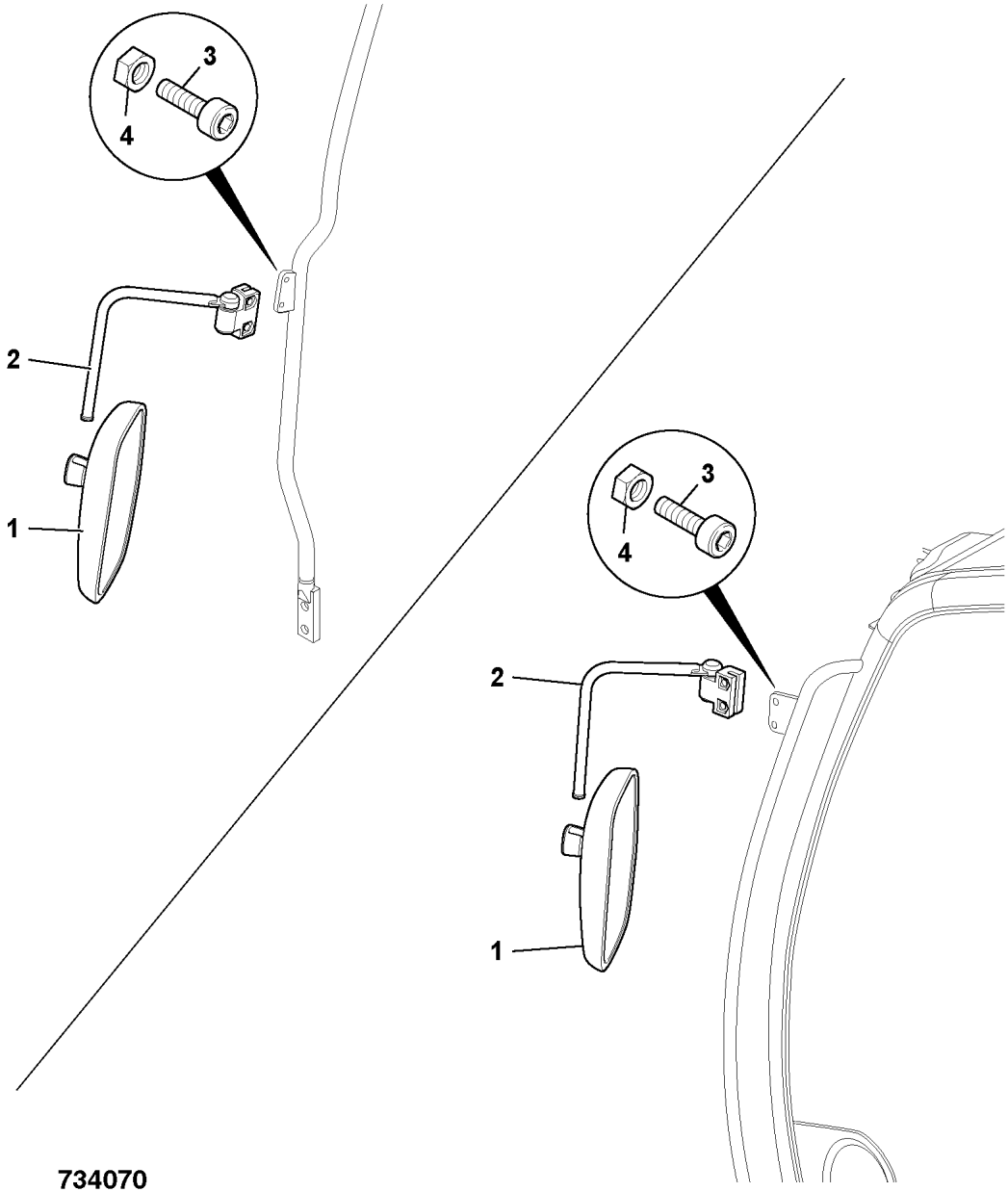

734070

	FROM	TO	FROM	TO
JS160W				

ITEM	PART NO	CHANGE NO	DESCRIPTION	REMARKS	USAGE CODE	QTY
1	331/41860		Mirror, external			2
	331/65365		:Glass, mirror			1
2	331/41862		Arm, mirror mounting			2
3	1391/3407D		Capscrew, M10			4
4	1371/0301Z		Nut, high strength, M10			4

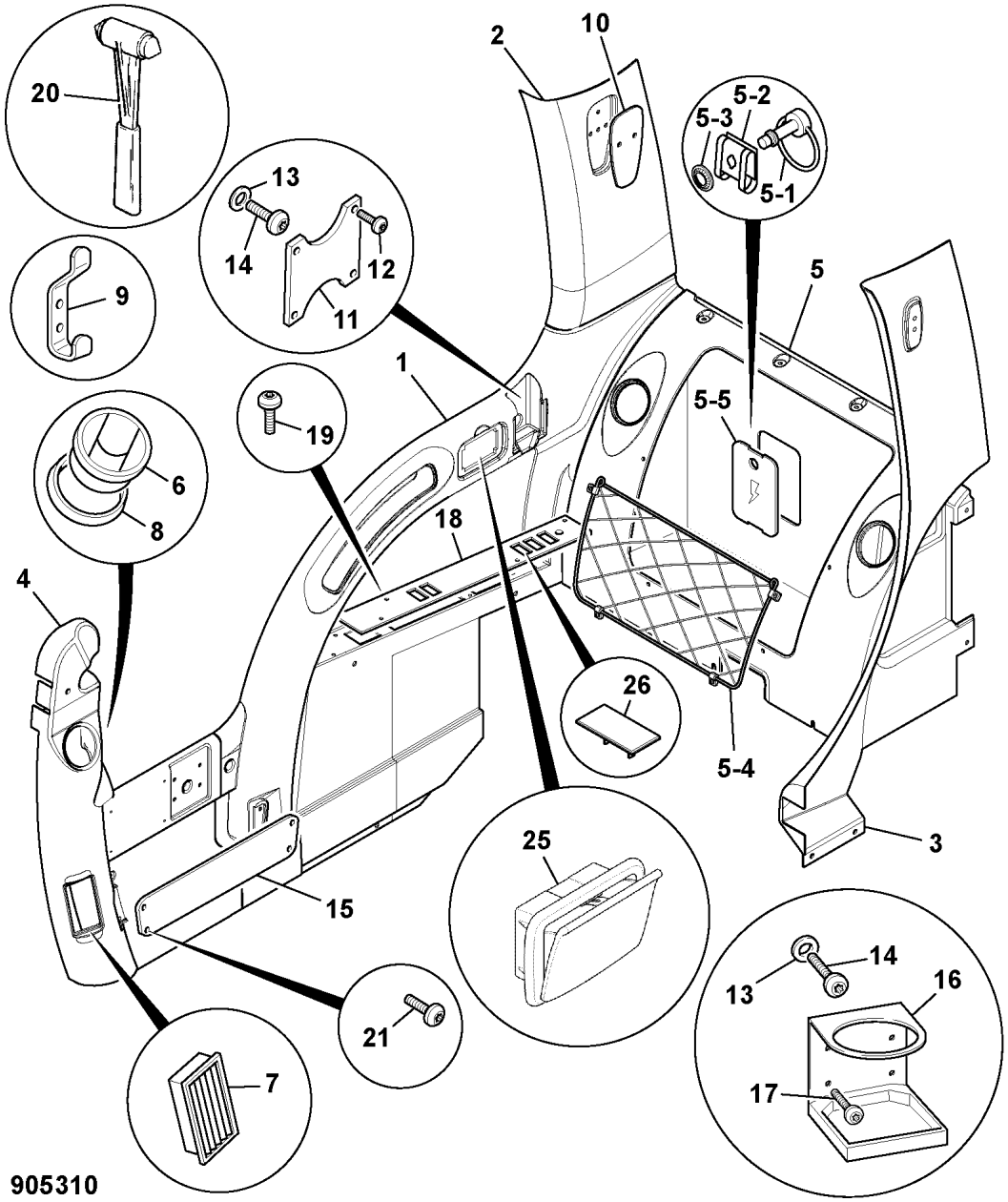

JS160W

	FROM	TO	FROM	TO

ITEM	PART NO	CHANGE NO	DESCRIPTION	REMARKS	USAGE CODE	QTY
1	331/27117		Panel, centre consol			1
2	331/27118		Panel, pillar cover R/Hand			1
3	331/27119		Panel, pillar left hand			1
4	331/32400		Moulding, A post plenum			1
5	331/62964		Panel, rear storage			1
5 01	331/37941		:Stud, 1/4 turn bail			1
5 02	331/37942		:Receptacle			1
5 03	331/32652		:Retainer			1
5 04	331/58684		:Net, REAR COVER			1
5 05	331/27131		:Cover, rear			1
6	331/26974		Vent, air(76.5mm dia.hole)			4
7	30/925586		Vent, air, front & rear console			1
8	30/925732		Adapter, Air Vent			2
9	142/01083		Hook, coat			1
10	331/27453		Plate, hammer retaining			1
11	331/27951		Retainer, mobile phone			1
12	826/10996		Screw, M4 x 10mm, button head			4
13	823/00516		Washer, nylon, M6			30
14	826/01519		Screw			30
15	331/31610		Panel, stowage side			1
16	331/31695		Holder, cup			1
17	KHR0328		Screw, truss			4

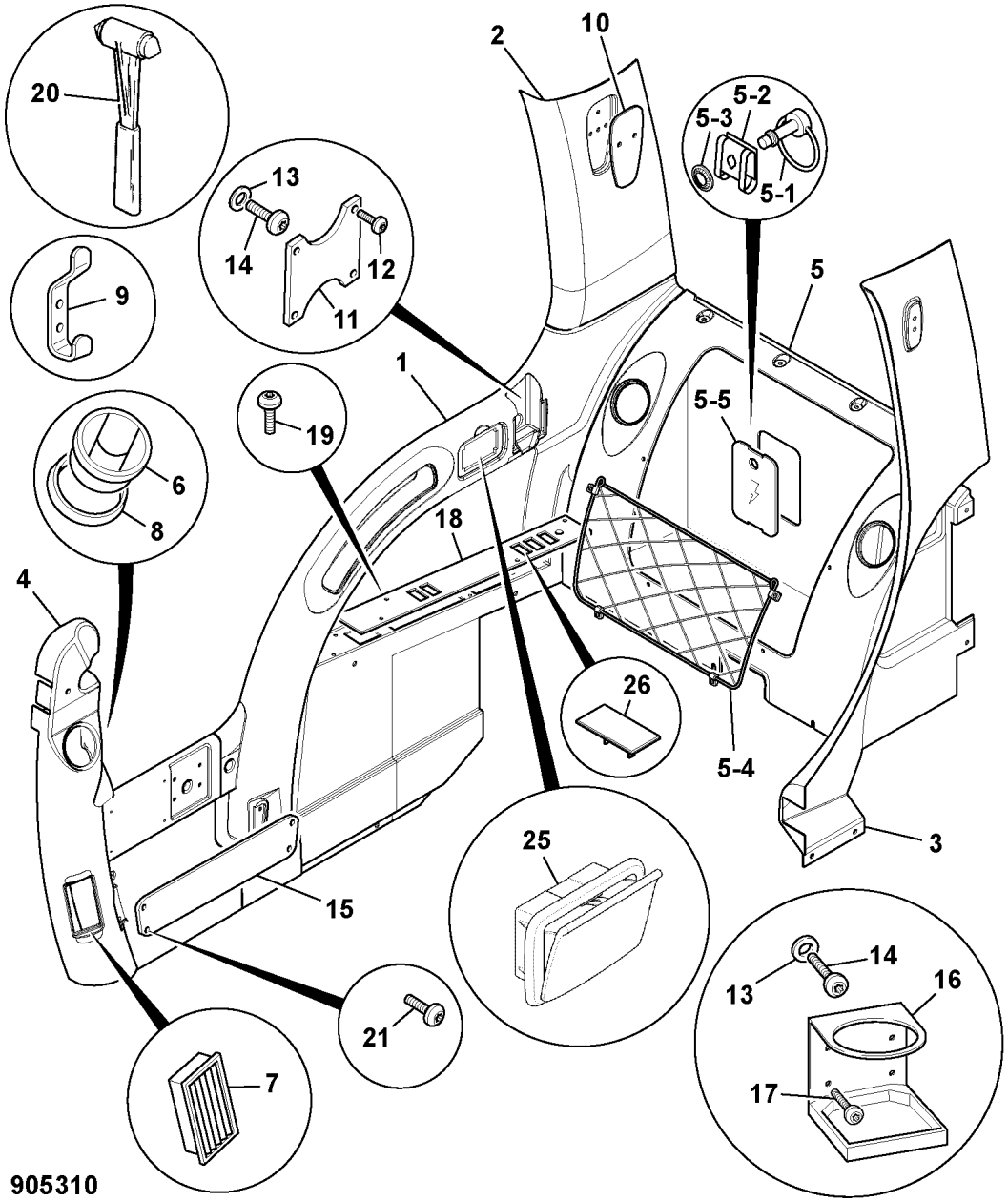

ITEM	PART NO	CHANGE NO	DESCRIPTION	REMARKS	USAGE CODE	QTY
18	331/31995		Panel, facia, heater			1
19	826/11096		Screw			6
20	265/00678		Tool, emergency, glass breaker	Optional		1
21	826/10995		Screw			4
22	331/37602		Panel, noise damping			1
23	331/37603		Panel, noise damping			1
24	331/37604		Panel, noise damping			1
25	331/32481		Ashtray			1
26	701/60010		Blank			3

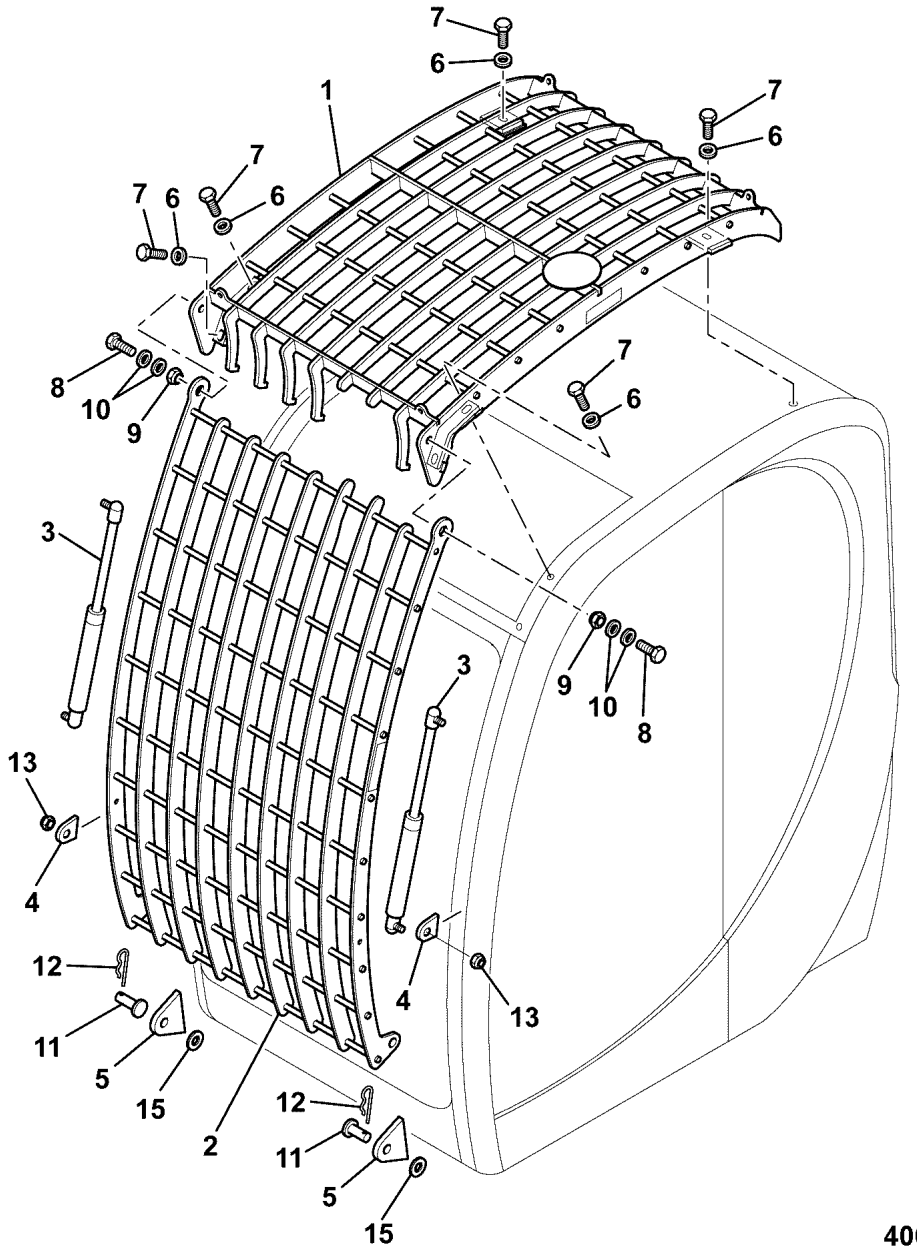

	FROM	TO	FROM	TO
JS160W				

ITEM	PART NO	CHANGE NO	DESCRIPTION	REMARKS	USAGE CODE	QTY
1	335/05926		:Guard, cab top			1
2	335/05928		:Guard, cab front			1
3	331/39462		:Strut, gas, bonnet			2
4	331/36717		:Lug			2
5	331/14753		:Plate, mounting			2
6	1411/0005D		:Washer			6
7	1316/0508D		:Screw			6
8	1316/0711D		:Bolt			2
9	1371/0603D		:Nut, M16 self locking			2
10	1420/0011D		:Washer, M16			6
11	331/37055		:Pin			2
12	JLV0521		:Clip, R			2
13	1371/0203D		:Nut, M8 locking			4
14	141/00855		:Chain			2
15	1420/0012D		:Washer, plain			4

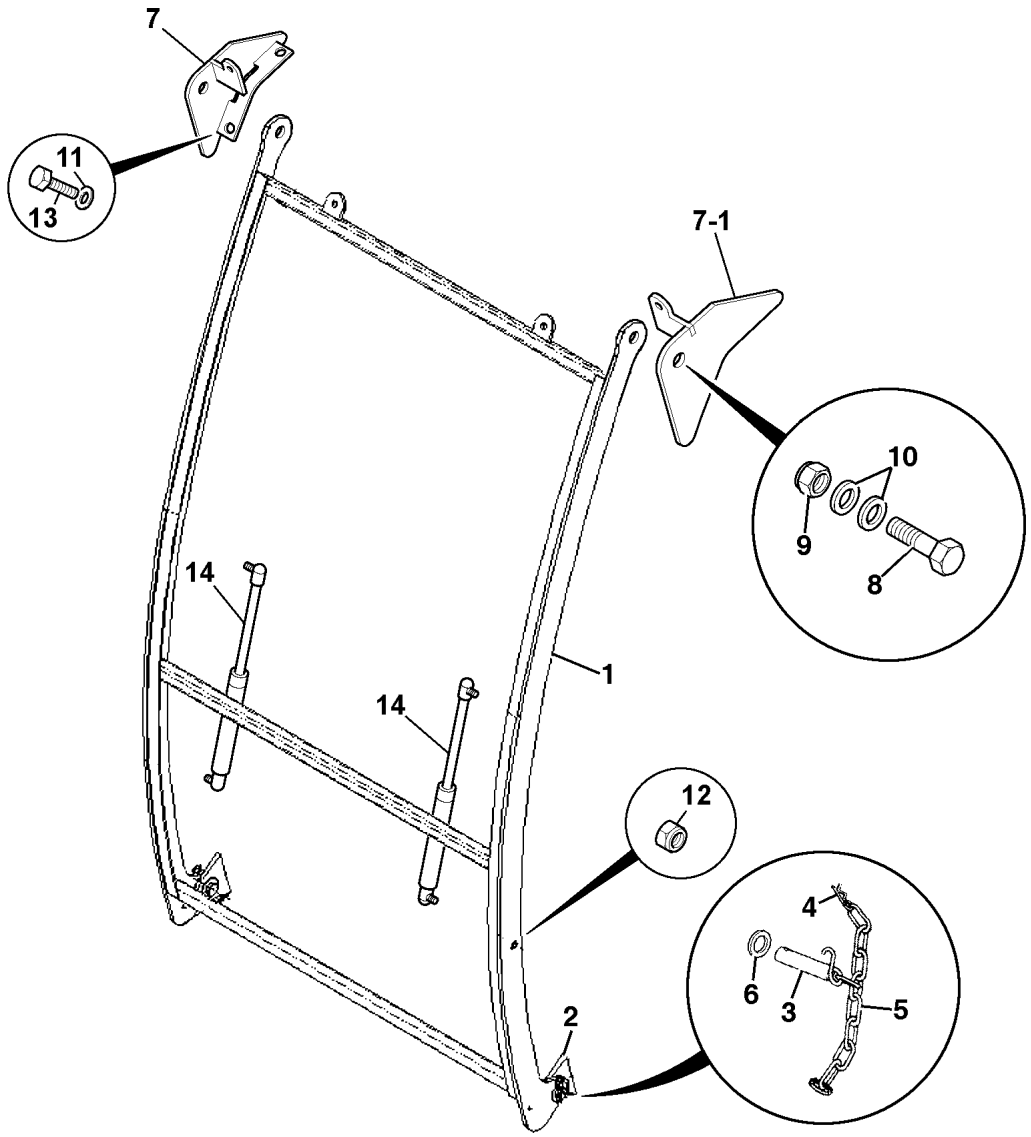

903170

	FROM	TO	FROM	TO
JS160W				

ITEM	PART NO	CHANGE NO	DESCRIPTION	REMARKS	USAGE CODE	QTY
1	331/57169		Guard, cab screen			1
2	331/14753		Plate, mounting			2
3	331/37055		Pin			2
4	JLV0521		Clip, R			2
5	141/00855		Chain			2
6	1420/0012D		Washer, plain			4
7	335/13288		Bracket, right hand side			1
7 01	335/13289		Bracket, left hand side			1
8	1316/0711D		Bolt			2
9	1371/0603D		Nut, M16 self locking			2
10	1420/0011D		Washer, M16			4
11	1411/0005D		Washer			4
12	1371/0203D		Nut, M8 locking			4
13	1316/0508D		Screw			4
14	331/39462		Strut, gas, bonnet			2

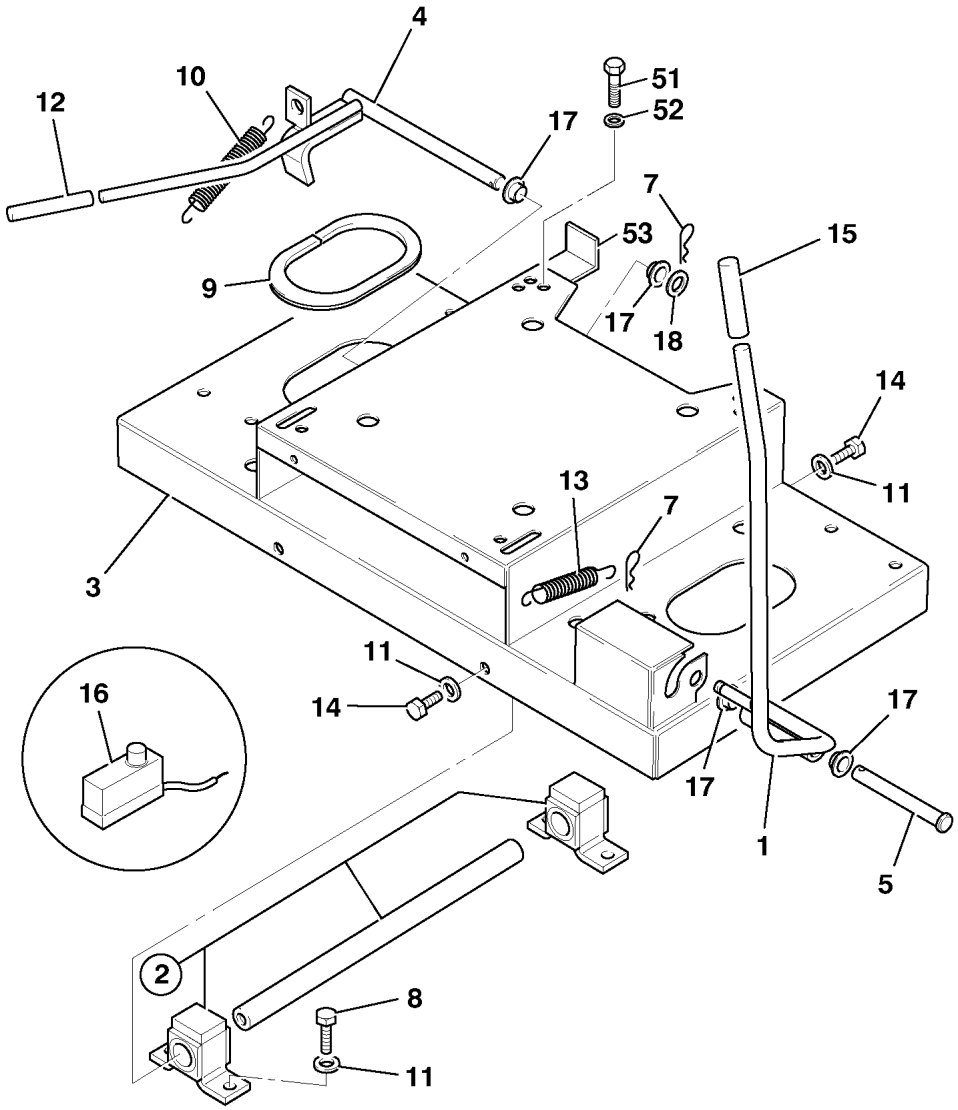

331282

	FROM	TO	FROM	TO
JS160W				

ITEM	PART NO	CHANGE NO	DESCRIPTION	REMARKS	USAGE CODE	QTY
1	JHN0210		Lever, lock			1
2	JHN0204		Kit, linear, bearing			1
3	JHN0209		Base, seat			1
4	335/05454		Lever, console index,seat			1
5	JHN0211		Spindle			1
7	JLV0521		Clip, R			2
8	1391/3408Z		Capscrew			8
9	JHH0074		Strip, edging			1
10	KHN1127		Spring, extension			1
11	JHP0046		Washer, M10			12
12	KHN1122		Cap			1
13	KHN1436		Spring, extension			1
14	1316/0405Z		Screw, M10 x 20			4
15	KHN1542		Cap			1
16	701/80215		Switch, limit			1
17	KHN1442		Bush, oilless			4
18	1420/0011Z		Washer, M16 plain			1
19	KHR0737		Screw, pan head			3

	FROM	TO	FROM	TO
JS160W				

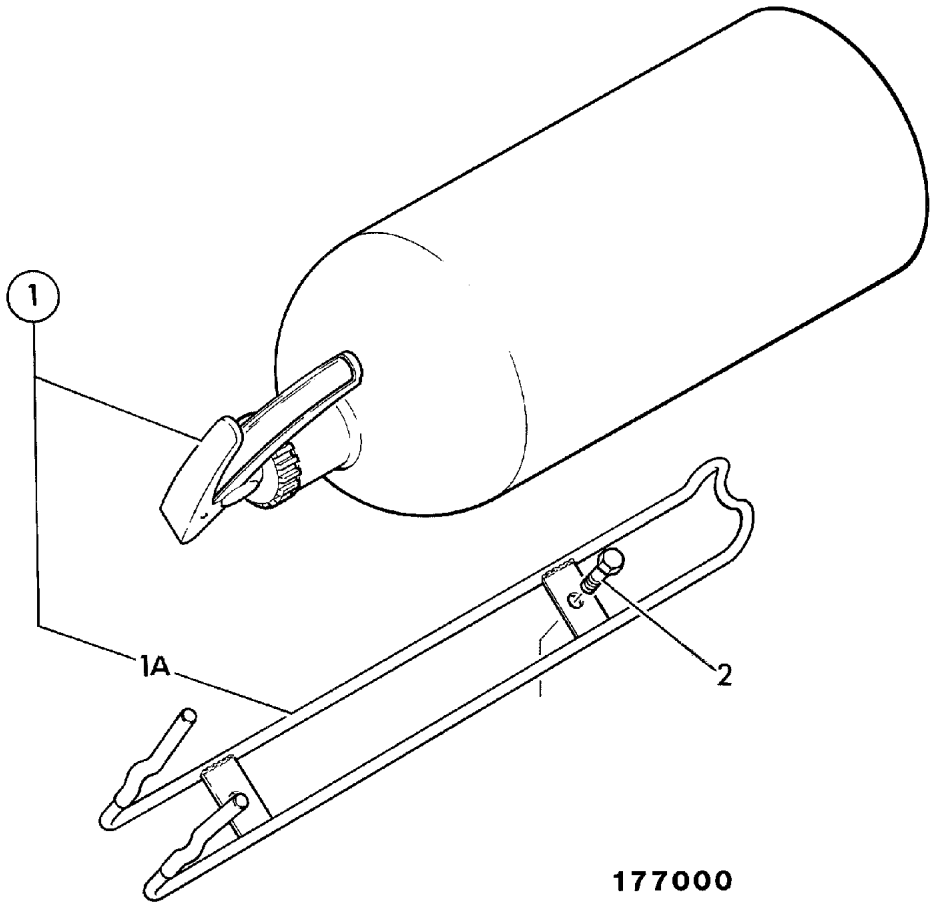

ITEM	PART NO	CHANGE NO	DESCRIPTION	REMARKS	USAGE CODE	QTY
1	159/69381		Extinguisher, fire c/w cradle			1
1A	993/68400		:Extinguisher, fire, 2KG ABC Powder			1
2	1315/0103D		Screw			2
	1370/0003D		Nut, lock M5			2

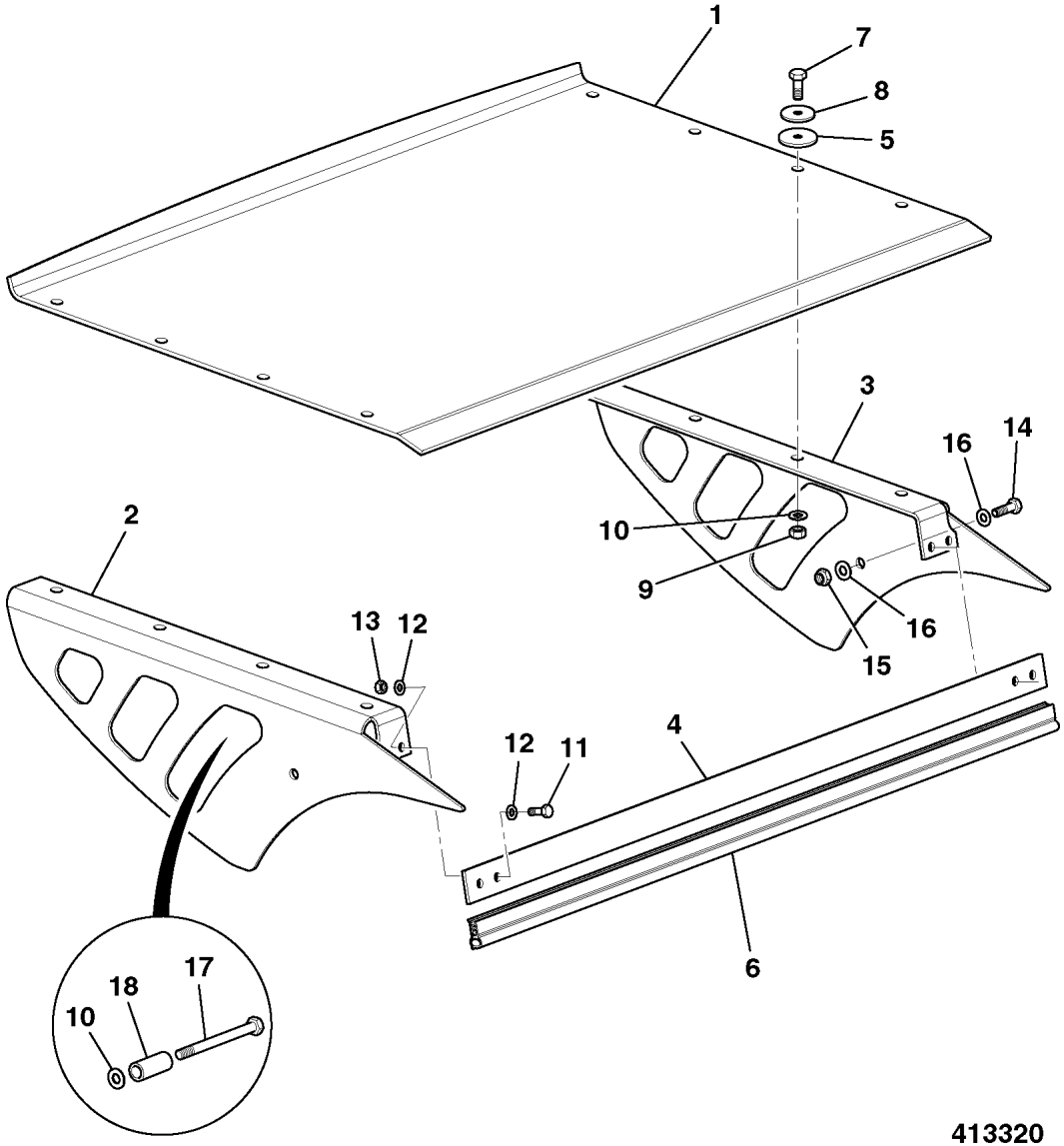

413320

	FROM	TO	FROM	TO
JS160W				

ITEM	PART NO	CHANGE NO	DESCRIPTION	REMARKS	USAGE CODE	QTY
0A	215/11136		Kit, rain visor			1
1	331/27176		Cover, rain shield			1
2	335/05129		Bracket, rain guard			1
3	335/05130		Bracket, rain guard			1
4	331/27173		Strip, seal mounting			1
5	823/00537		Washer, sealing,rubber			8
6	926/01115		Seal, strip			1
7	1315/0307Z		Screw, M8 X 25			8
8	1412/0002Z		Washer			8
9	1370/0203Z		Nut, self lock, M8			10
10	1420/0007Z		Washer, plain, M8			8
	JHP0080		Washer			4
10A	1425/0007Z		Washer, spring			2
11	1315/0207Z		Screw, M6 x 25mm long			4
12	1420/0006Z		Washer, M6			8
13	1370/0103Z		Nut, Self lock, M6			4
14	1315/0507Z		Bolt			4
16	1420/0009Z		Washer, Plain M12			4
17	1315/3320Z		Bolt			2
18	829/30738		Spacer, cab lights			2



Our Apologies, No Illustration is Currently Available.

	FROM	TO	FROM	TO
JS160W				

ITEM	PART NO	CHANGE NO	DESCRIPTION	REMARKS	USAGE CODE	QTY
0	215/11137		Guard, cab vandal			1
0A	340/00613		:Kit, Vandal Guard, 2pc Front			1
1	331/62811		:Guard, Front Upper			1
2	331/62812		:Guard, Front Lower			1
3	331/62813		:Bracket, Front Retainer			1
4	331/43255		:Guard, front deflector			1
5	331/43256		:Guard, rear			1
6	331/43257		:Guard, door			1
7	331/43258		:Guard, quarter			1
8	331/43259		:Guard, boom side front, hinged			1
9	331/43260		:Guard, boom side rear, hinged			1
10	331/43261		:Handle, plastic, boom side guard			1
11	331/43262		:Bracket, plastic, front lower lock			1
12	331/43263		:Channel, front panel			1
13	331/43264		:Channel, front			1
14	331/43265		:Channel, right hand side, hinging			1
15	331/43266		:Channel, left hand side, hinging			1
16	331/43267		:Bar, right hand side roof			1
17	331/43268		:Bar, left hand side roof			1

ITEM	PART NO	CHANGE NO	DESCRIPTION	REMARKS	USAGE CODE	QTY
18	331/43269		:Template, drill guard			1
19	331/43270		:Rack, roof storage			1
20	331/43271		:Kit-fixing, parts, vandal guard			1
21	331/44932		:Lock, assembly, snap			1
22	331/44934		:Key, snap lock			1



Our Apologies, No Illustration is Currently Available.

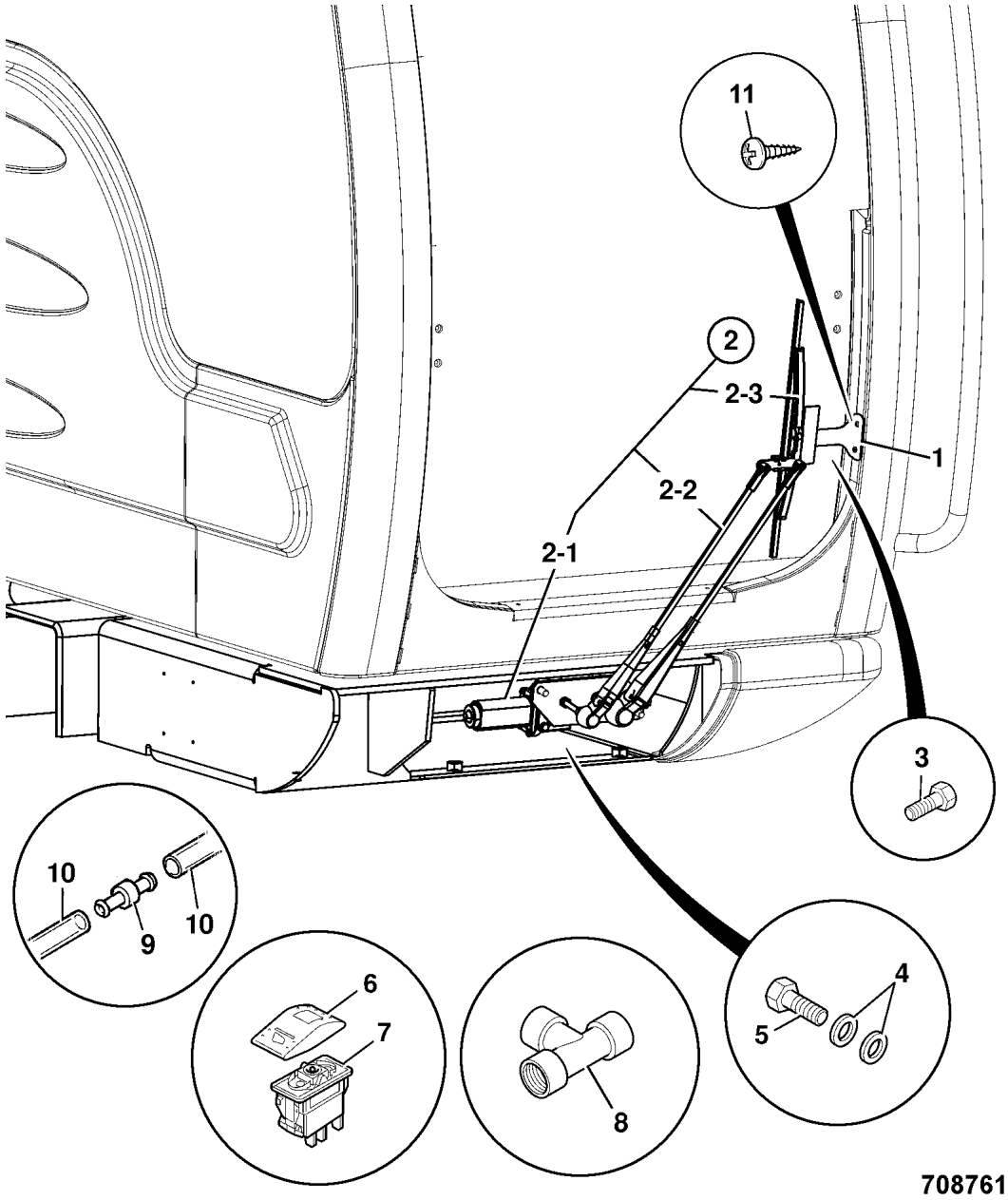

	FROM	TO	FROM	TO
JS160W				

ITEM	PART NO	CHANGE NO	DESCRIPTION	REMARKS	USAGE CODE	QTY
1	331/38512		Bracket, lower wiper stop			1
2	NSP		None serviced part			1
2 01	714/40289		:Motor, lower wiper			1
2 02	714/40290		:Arm, lower wiper			1
2 03	714/40291		:Blade, lower wiper			1
3	1430/0303Z		Screw			2
4	1420/0008Z		Washer, Plain M10			2
4A	1316/0407Z		Bolt, high strength			2
5	331/32190		Plate, wiper mounting			1
6	701/60041		Switch, 24V			1
7	701/58915		Cover, switch, lower wiper			1
8	331/43487		Adapter, plastic tee			1
9	KHR1178		Adapter, fir tree	Not required. Remove from m/c		1
10	KHR1179		Sleeve			1
11	1430/0303Z		Screw			2

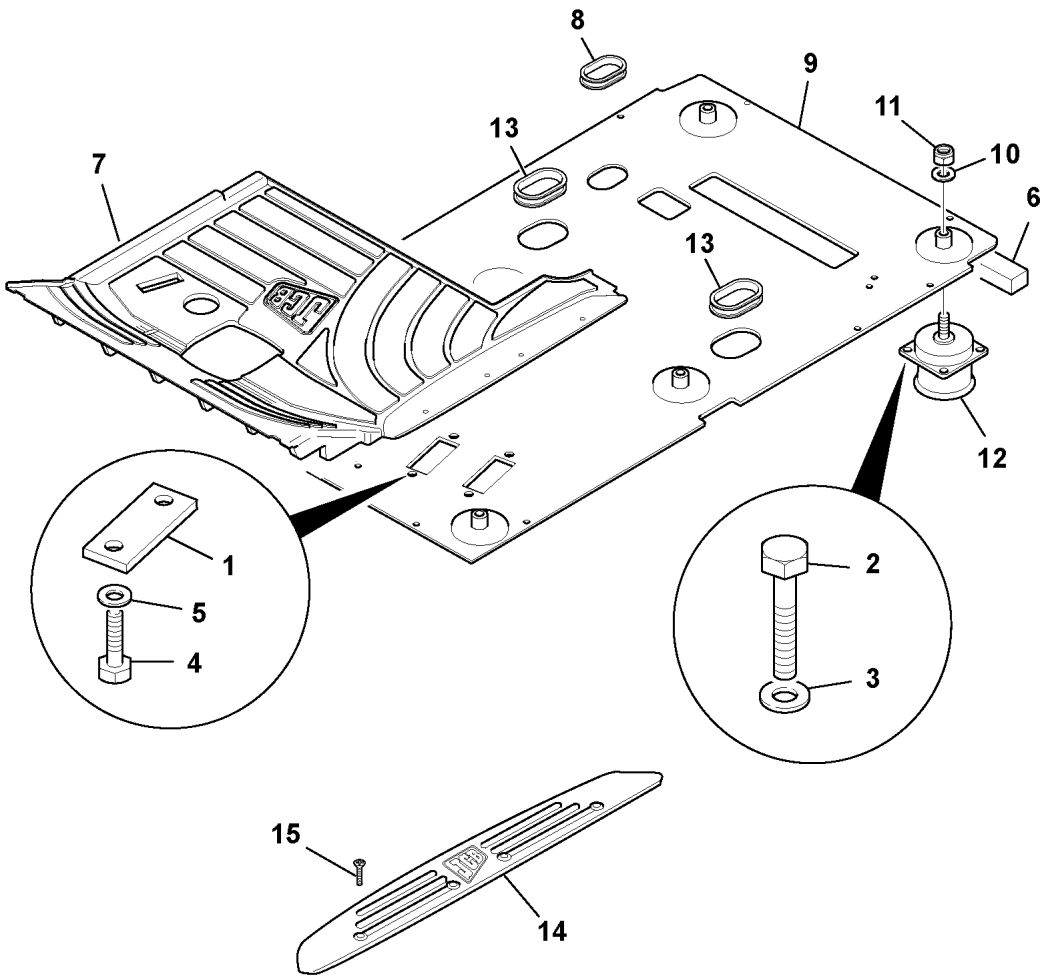

787270

	FROM	TO	FROM	TO
JS160W				

ITEM	PART NO	CHANGE NO	DESCRIPTION	REMARKS	USAGE CODE	QTY
1	331/35486		Plate, 2mm thick			2
2	1316/0408D		Setscrew			24
3	JHP0046		Washer, M10			24
4	1316/0403D		Screw			4
5	1420/0008D		Washer, M10			4
6	KHJ0951		Seal, cushion			1
7	331/50622		Floormat			1
8	KHJ0950		Grommet			1
9	* 335/13853		Plate, Cab Floor			1
10	KHN0243		Washer, special			6
11	KHN0268		Nut, u			6
12	KHJ1211		Rubber, mount			6
13	KHJ0950		Grommet			2
14	331/31353		Plate, Kick			1
15	826/00726		Bolt			4
16	* 331/59705		Plate, retaining			1
17	1316/0201Z		Screw			2
18	1420/0006D		Washer, M6 plain			2

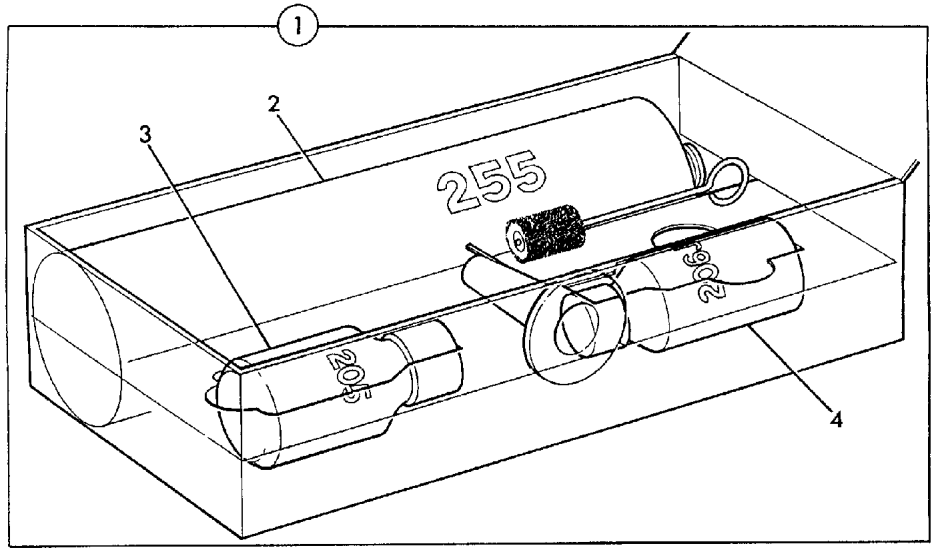

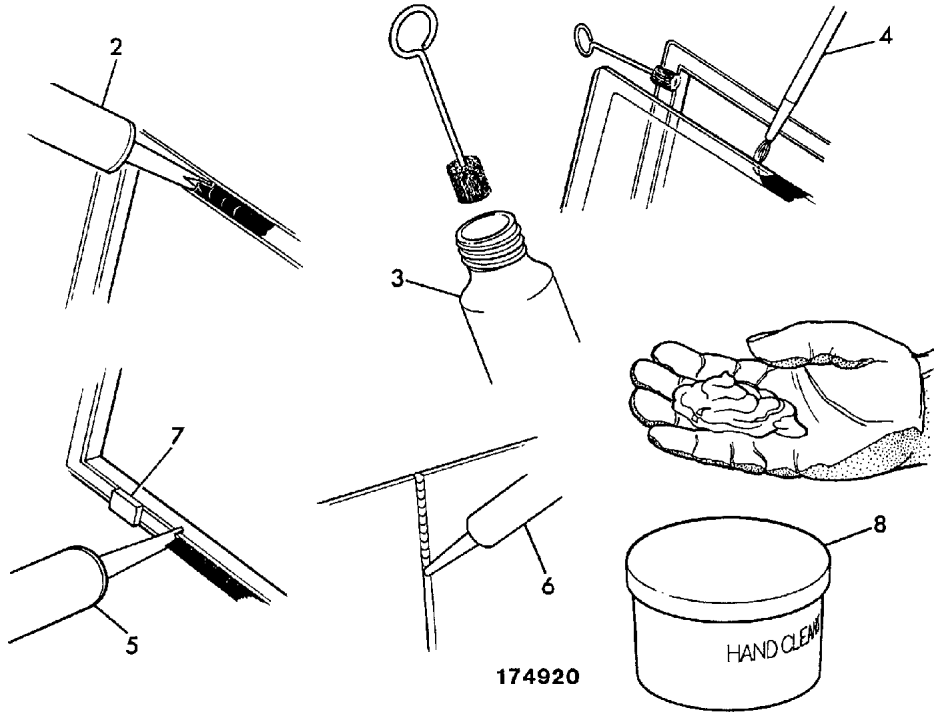

FROM TO FROM TO

JS160W

ITEM	PART NO	CHANGE NO	DESCRIPTION	REMARKS	USAGE CODE	QTY
1	993/55700		Adhesive, kit-JCB ultrafast, glazing			1
2	4103/2109		:Adhesive, JCB ultrafast, 310ml cartridge			A/R
3	4104/1203		Cleaner, primer SIKA 205, 250ml			A/R
	4104/1203		:Cleaner, primer SIKA 205, 250ml			A/R
4	4201/4906		:Paint, black primer 206J, 30ml	Black ceramic ink band around glass border.		A/R
	4201/4906		Paint, black primer 206J, 30ml			A/R
5	4102/2309		Sealant, black acrylic 221, 310ml cartridge			A/R
6	4102/0901		Sealant, clear DP2205, 310ml			A/R
7	926/15500		Spacer, block			A/R
8	4104/1310		Cleaner, hand, polyurethane, 454gm/1lb			A/R

B

- B1 BODYWORK/FRAME
- B2 CAB
- ● B3 LOADER FRONT END
- B5 REFURBISHMENTS

ENGLISH

B3-1-1 BOOM, MONO
B3-2-1 DIPPER 2.25M
B3-2-10 DIPPER 2.70M
B3-2-20 DIPPER 3.05M
B3-4-1 BOOM GREASING, MONO BOOM
B3-4-10 BOOM GREASING, TAB BOOM
B3-10-1 BOOM, LOWER, TRIPLE ARTICULATING
B3-11-1 BOOM, UPPER, TRIPLE ARTICULATING
B3-12-1 BRIDGE BASHING, U K ONLY

FRANCAIS

B3-1-1 FLECHE
B3-2-1 CHARGEUR 2.25M
B3-2-10 DIPPER 2.70M
B3-2-20 CHARGEUR 3.0M
B3-4-1 BOOM GREASING, MONO BOOM
B3-4-10 BOOM GREASING, TAB BOOM
B3-10-1 BOOM, LOWER, TRIPLE ARTICULATING
B3-11-1 BOOM, UPPER, TRIPLE ARTICULATING
B3-12-1 BRIDGE BASHING, U K ONLY

DEUTSCH

B3-1-1 AUSLEGER
B3-2-1 LOFFELSTIEL 2.25M
B3-2-10 DIPPER 2.70M
B3-2-20 LOFFELSTIEL 3.0M
B3-4-1 BOOM GREASING, MONO BOOM
B3-4-10 BOOM GREASING, TAB BOOM
B3-10-1 BOOM, LOWER, TRIPLE ARTICULATING
B3-11-1 BOOM, UPPER, TRIPLE ARTICULATING
B3-12-1 BRIDGE BASHING, U K ONLY

ITALIANO

B3-1-1 BRACCIO PRINCIPALE
B3-2-1 SECONDO BRACCIO 2.25M
B3-2-10 DIPPER 2.70M
B3-2-20 SECONDO BRACCIO 3.0M
B3-4-1 BOOM GREASING, MONO BOOM
B3-4-10 BOOM GREASING, TAB BOOM
B3-10-1 BOOM, LOWER, TRIPLE ARTICULATING
B3-11-1 BOOM, UPPER, TRIPLE ARTICULATING
B3-12-1 BRIDGE BASHING, U K ONLY

PORTUGUES

B3-1-1 BRACO
B3-2-1 LANCA 2.25M
B3-2-10 DIPPER 2.70M
B3-2-20 LANCA 3.0M
B3-4-1 BOOM GREASING, MONO BOOM
B3-4-10 BOOM GREASING, TAB BOOM
B3-10-1 BOOM, LOWER, TRIPLE ARTICULATING
B3-11-1 BOOM, UPPER, TRIPLE ARTICULATING
B3-12-1 BRIDGE BASHING, U K ONLY

ESPANOL

B3-1-1 PLUMA
B3-2-1 BRAZO PENET. 2.25M
B3-2-10 DIPPER 2.70M
B3-2-20 BRAZO PENET. 3.0M
B3-4-1 BOOM GREASING, MONO BOOM
B3-4-10 BOOM GREASING, TAB BOOM
B3-10-1 BOOM, LOWER, TRIPLE ARTICULATING
B3-11-1 BOOM, UPPER, TRIPLE ARTICULATING
B3-12-1 BRIDGE BASHING, U K ONLY

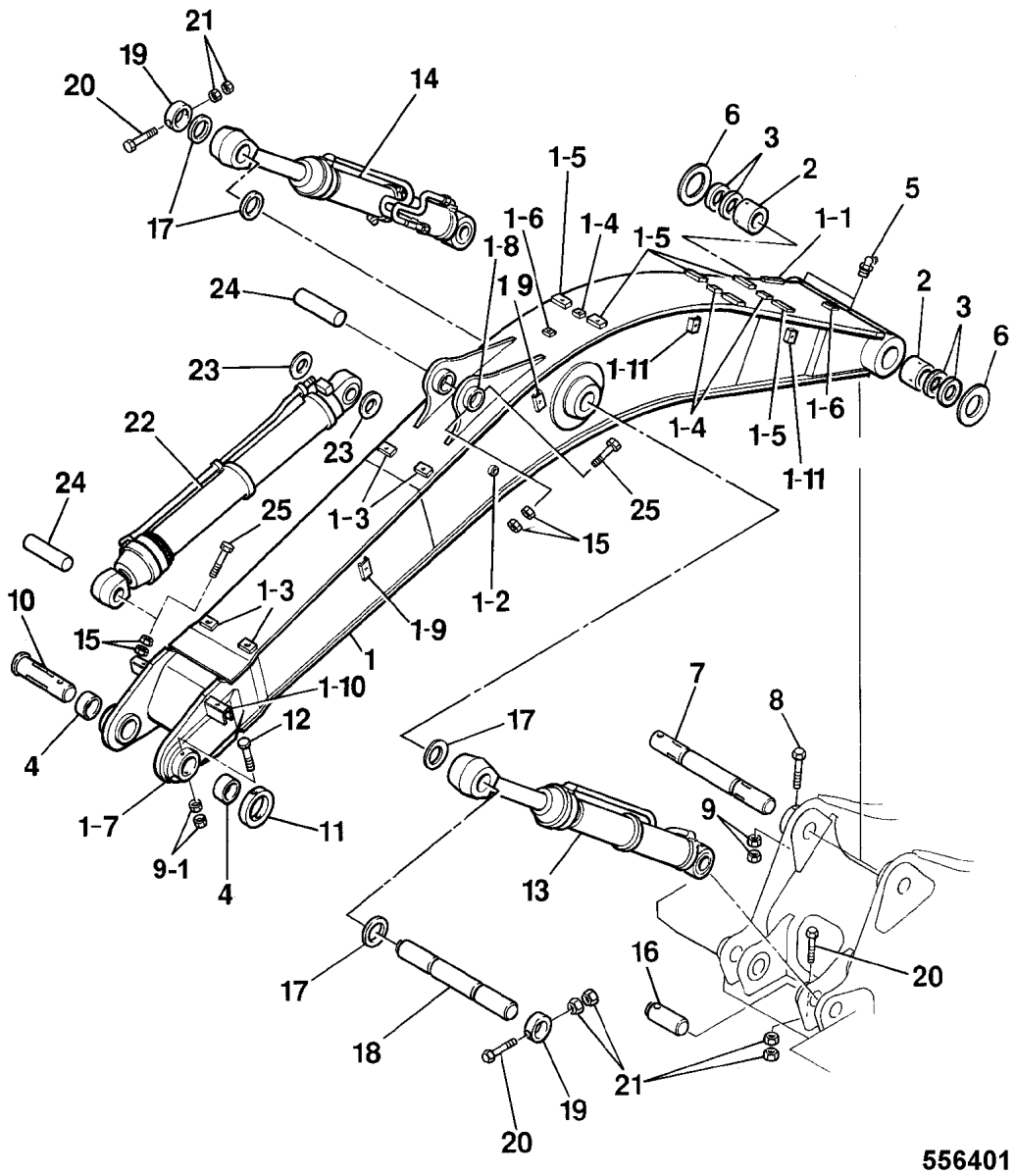

556401

	FROM	TO	FROM	TO
JS160W				

ITEM	PART NO	CHANGE NO	DESCRIPTION	REMARKS	USAGE CODE	QTY
1	335/03573		Boom, JS160 mono			1
	335/07571		Boom, c/w arm limiter			1
1 01	JSV0296		:Manifold, 3 way			1
1 02	KHV0060		:Clamp, base			1
1 03	JLV0038		:Base, clamp			4
1 04	KRV0481		:Clamp, base			3
1 05	KRV0695		:Clamp, base			6
1 06	KRV0252		:Clamp, base			1
1 07	KHV0188		:Collar			1
1 08	KHV0161		:Collar			1
1 09	331/27231		:Bar, base			6
2	831/10309		:Bush			2
3	KHV0101		:Seal, dust			4
4	JLV1797		:Bush, steel			2
5	JHP0038		Nipple, grease, angled			2
	JHP0037		Nipple, grease, straight			1
6	KLV0035		Shim, 81mm ID x 170mm OD, 1.2mm thick			2
	JLV1528		Shim, 81mm DI x 170mm OD, 0.8mm thick			2
7	811/90373		Pin, pivot, JS160 Boom to frame			1
8	6009/4027D		Bolt			1
9	173R024VD		Nut			4

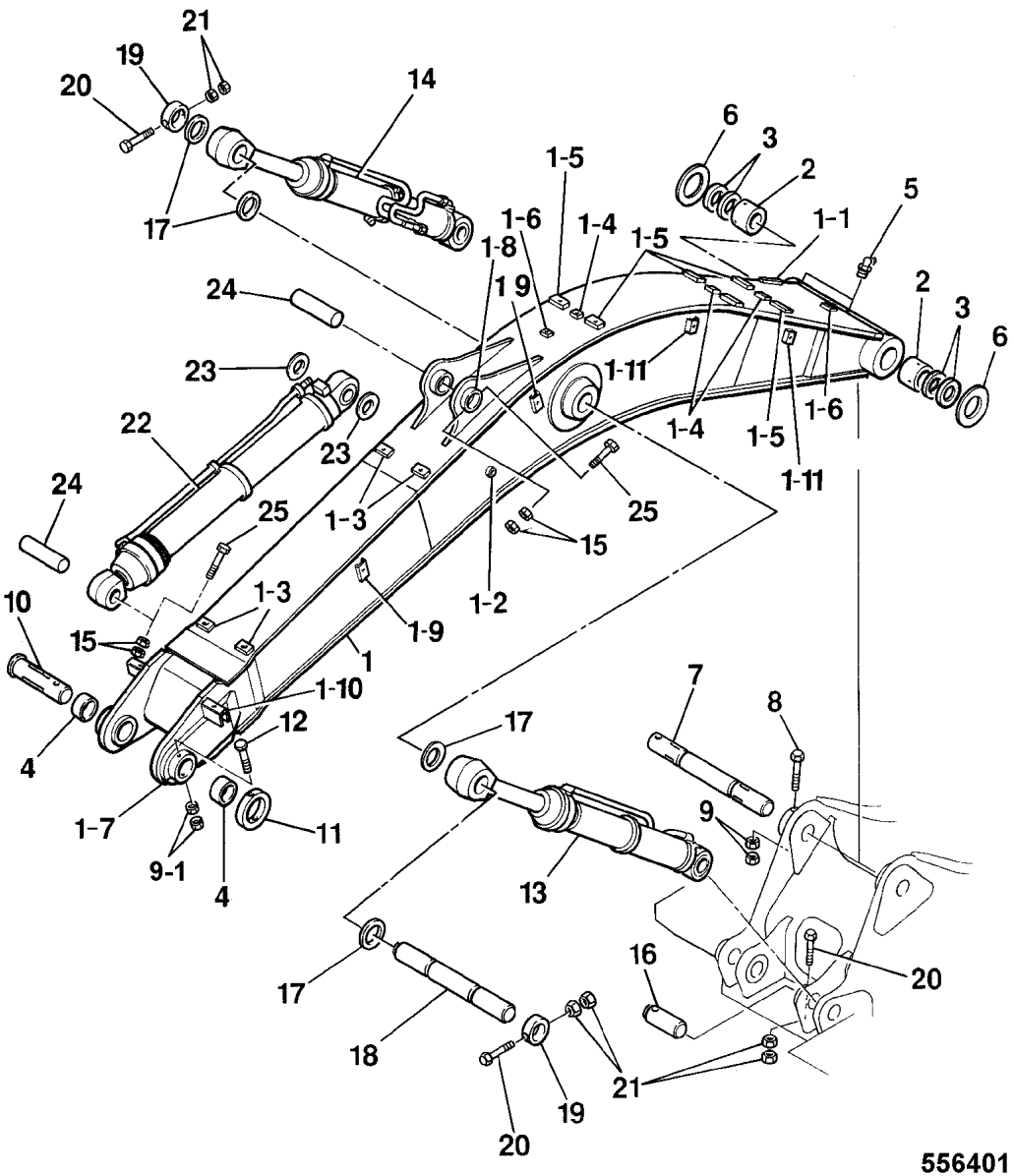

ITEM	PART NO	CHANGE NO	DESCRIPTION	REMARKS	USAGE CODE	QTY
10	811/90377		Pin, pivot, JS160 Arm to boom			1
11	KLV0032		Collar, set			1
12	6009/4028Z		Bolt			1
13	331/42328		Ram, boom use with HBCV			1
14	331/42328		Ram, boom use with HBCV			1
15	173R020VD		Nut			4
16	KLV0167		Pin, pivot			2
17	KLV0170		Shim, 81mm ID x 110mm OD, 1.2mm thick			4
18	JLV0938		Pin, attachmet			1
19	KLV0033		Lock, ring, special			2
20	6009/3725D		Bolt			4
21	173R016VD		Nut			2
22	331/42329		Ram, arm, JS160 AUTO			1
23	KRV1178		Shim, 1.2mm thick			2
24	KLV0171		Pin, pivot			2
25	6009/3825D		Bolt			4
26	998/10858		Kit-pin & bush, JS160 Arm to boom			1
26 01	811/90377		:Pin, pivot, JS160 Arm to boom			1
26 02	831/10309		:Bush			2
27	998/10859		Kit-pin & bush, JS160 Boom to frame			1
27 01	811/90373		:Pin, pivot, JS160 Boom to frame			1

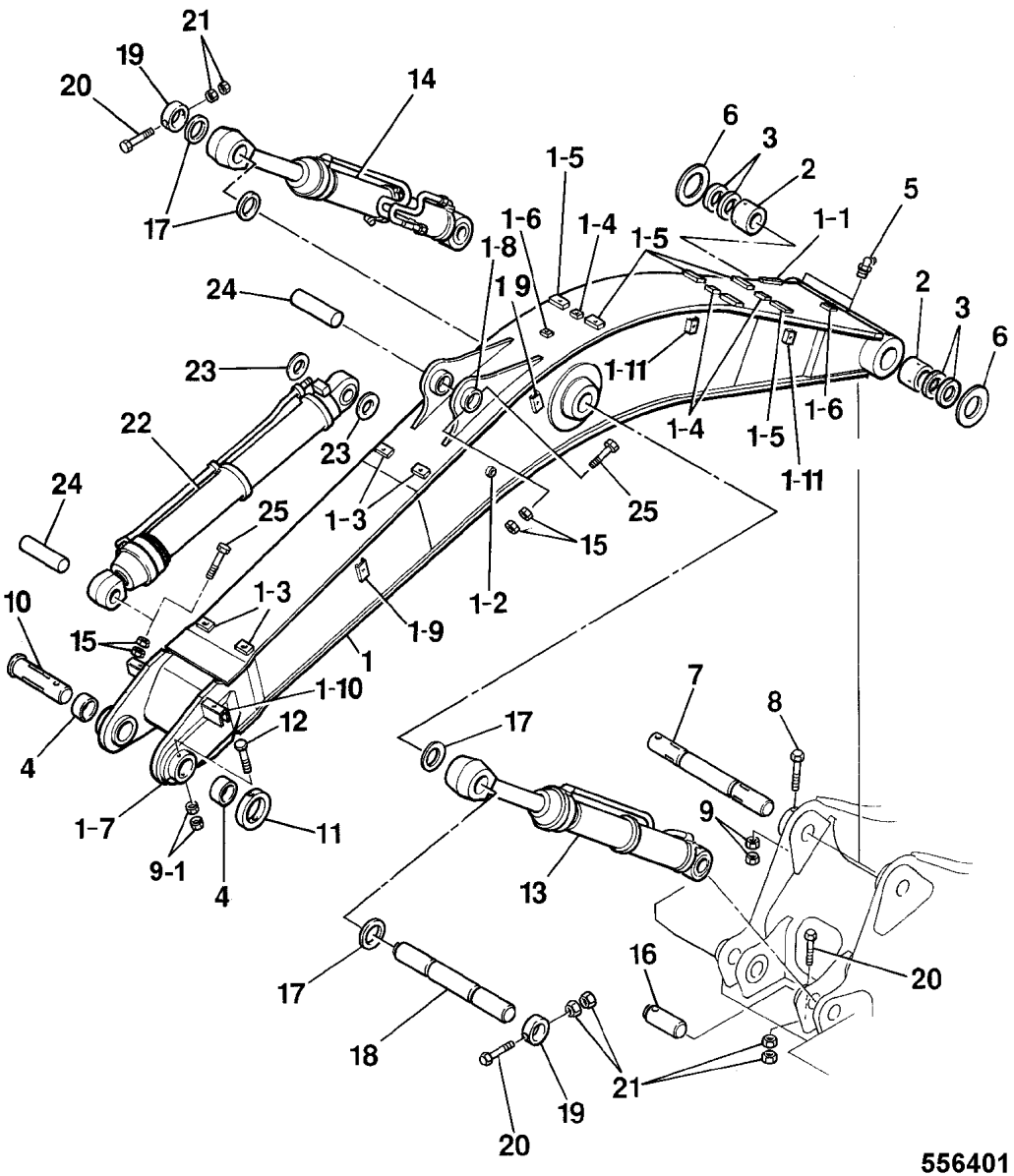

ITEM	PART NO	CHANGE NO	DESCRIPTION	REMARKS	USAGE CODE	QTY
27 02	831/10309		:Bush			2

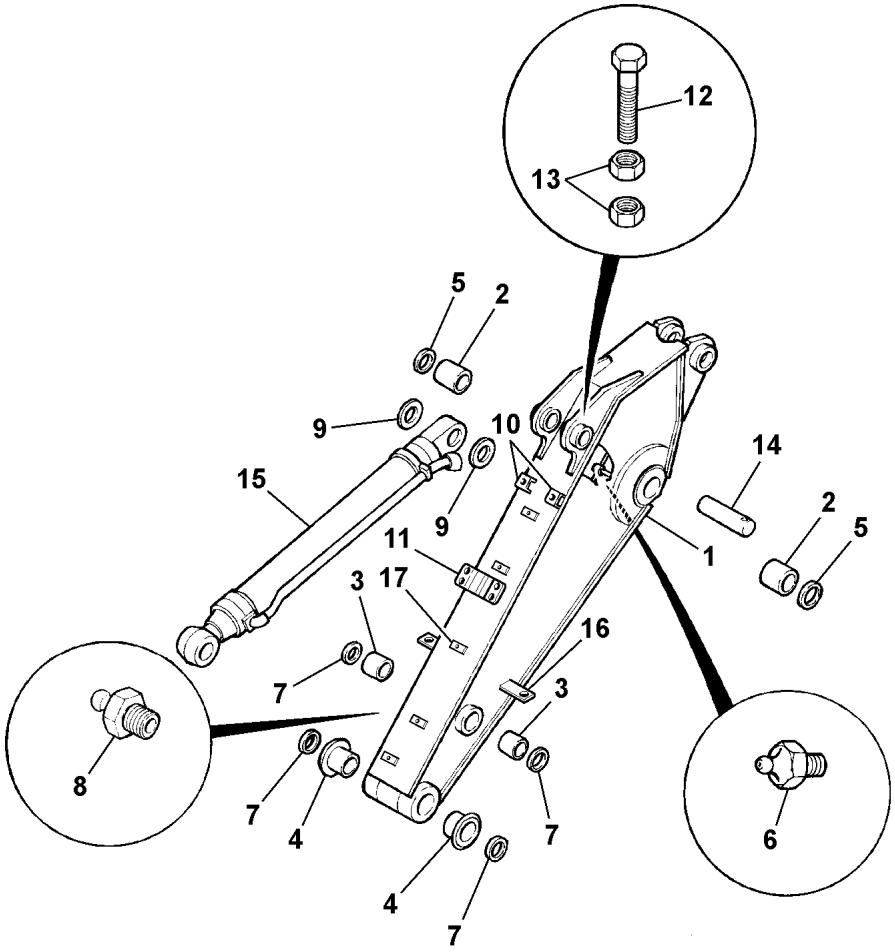

907291

	FROM	TO	FROM	TO
JS160W				

ITEM	PART NO	CHANGE NO	DESCRIPTION	REMARKS	USAGE CODE	QTY
1	JG0LV386		Dipper, 2.25M			1
2	831/10309		Bush			2
3	JLV1800		Bush, steel			2
4	JLV1799		Bush, steel			2
5	KHV0101		Seal, dust			4
6	JHP0038		Nipple, grease, angled			1
7	KHV0098		Seal, dust			2
8	JHP0037		Nipple, grease, straight			1
9	KLV0034		Shim, 66mm ID x 110mm OD, 1.2mm thick			2
10	JNV1119		Bar, base			2
11	JNV1159		Bar, base			1
12	6009/3723Z		Bolt			1
13	173R016VZ		Nut			2
14	KLV0195		Pin, attachment			1
15	.		'See Remark'	Bucket ram, see Index E4		1

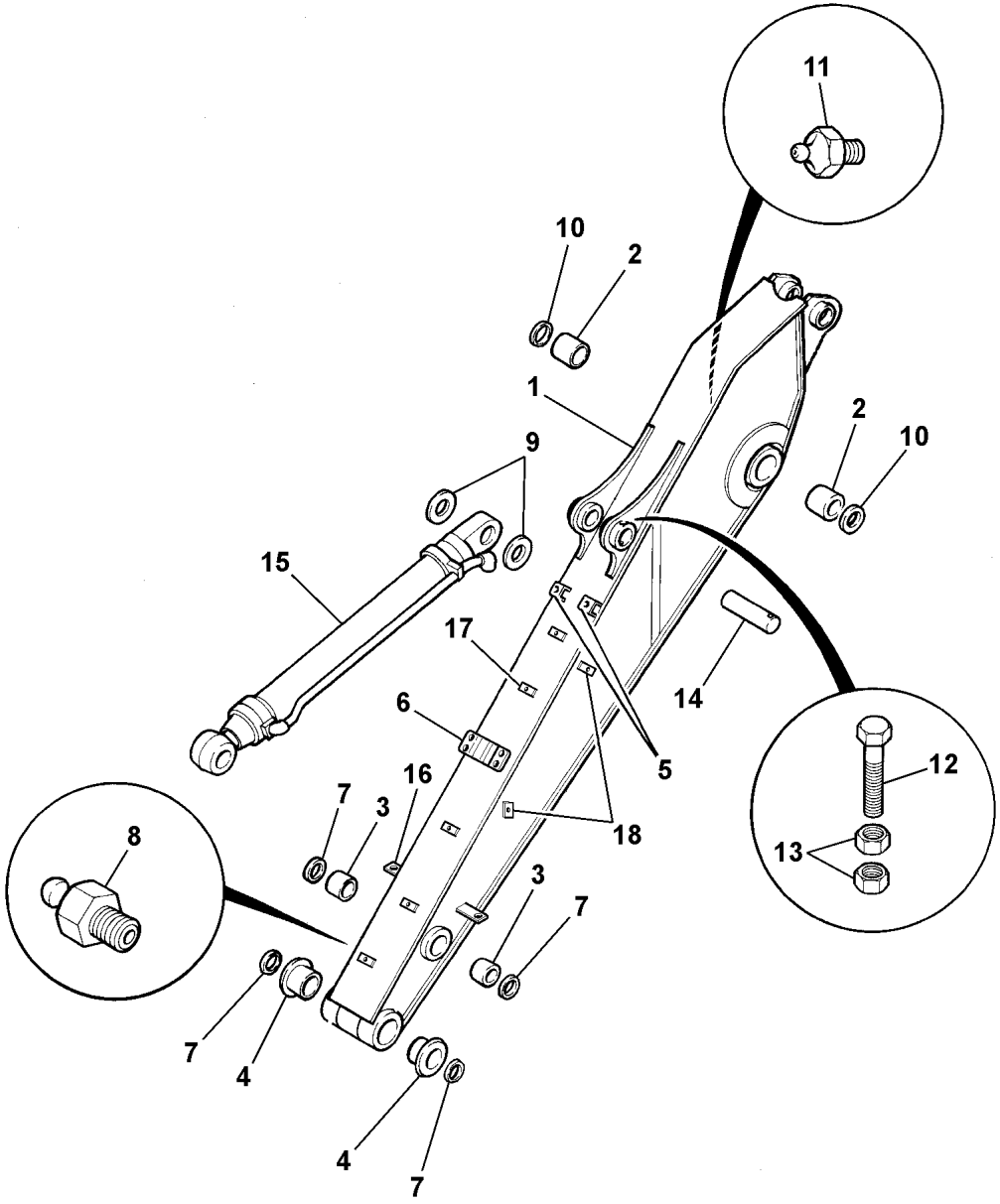

907311

	FROM	TO	FROM	TO
JS160W				

ITEM	PART NO	CHANGE NO	DESCRIPTION	REMARKS	USAGE CODE	QTY
1	JG0LV389		Dipper, 2.70M			1
2	831/10309		Bush			2
3	JLV1800		Bush, steel			2
4	JLV1799		Bush, steel			2
5	KHV0101		Seal, dust			4
6	JHP0038		Nipple, grease, angled			1
7	KHV0098		Seal, dust			2
8	JHP0037		Nipple, grease, straight			1
9	KLV0034		Shim, 66mm ID x 110mm OD, 1.2mm thick			2
10	JNV1119		Bar, base			2
11	JNV1159		Bar, base			1
12	6009/3723Z		Bolt			1
13	173R016VZ		Nut			2
14	KLV0195		Pin, attachment			1
15	.		'See Remark'	Bucket ram, see Index E4		1

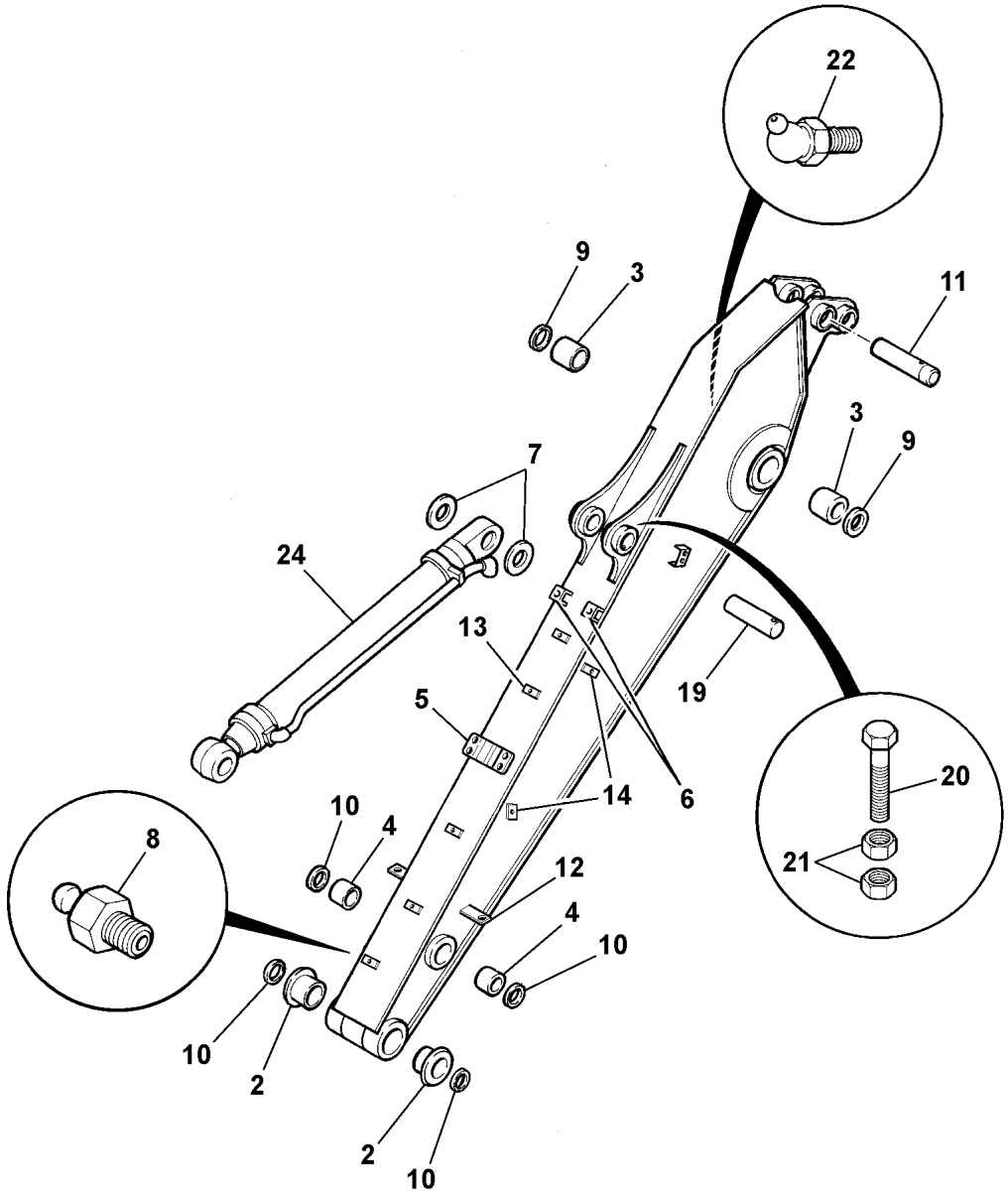

907301

	FROM	TO	FROM	TO
JS160W				

ITEM	PART NO	CHANGE NO	DESCRIPTION	REMARKS	USAGE CODE	QTY
1	JG0LV391		Dipper, 3.05M			1
2	831/10309		Bush			2
3	JLV1800		Bush, steel			2
4	JLV1799		Bush, steel			2
5	KHV0101		Seal, dust			4
6	JHP0038		Nipple, grease, angled			1
7	KHV0098		Seal, dust			2
8	JHP0037		Nipple, grease, straight			1
9	KLV0034		Shim, 66mm ID x 110mm OD, 1.2mm thick			2
10	JNV1119		Bar, base			2
11	JNV1159		Bar, base			1
12	6009/3723Z		Bolt			1
13	173R016VZ		Nut			2
14	KLV0195		Pin, attachment			1
15	.		'See Remark'	Bucket ram, see Index E4		1

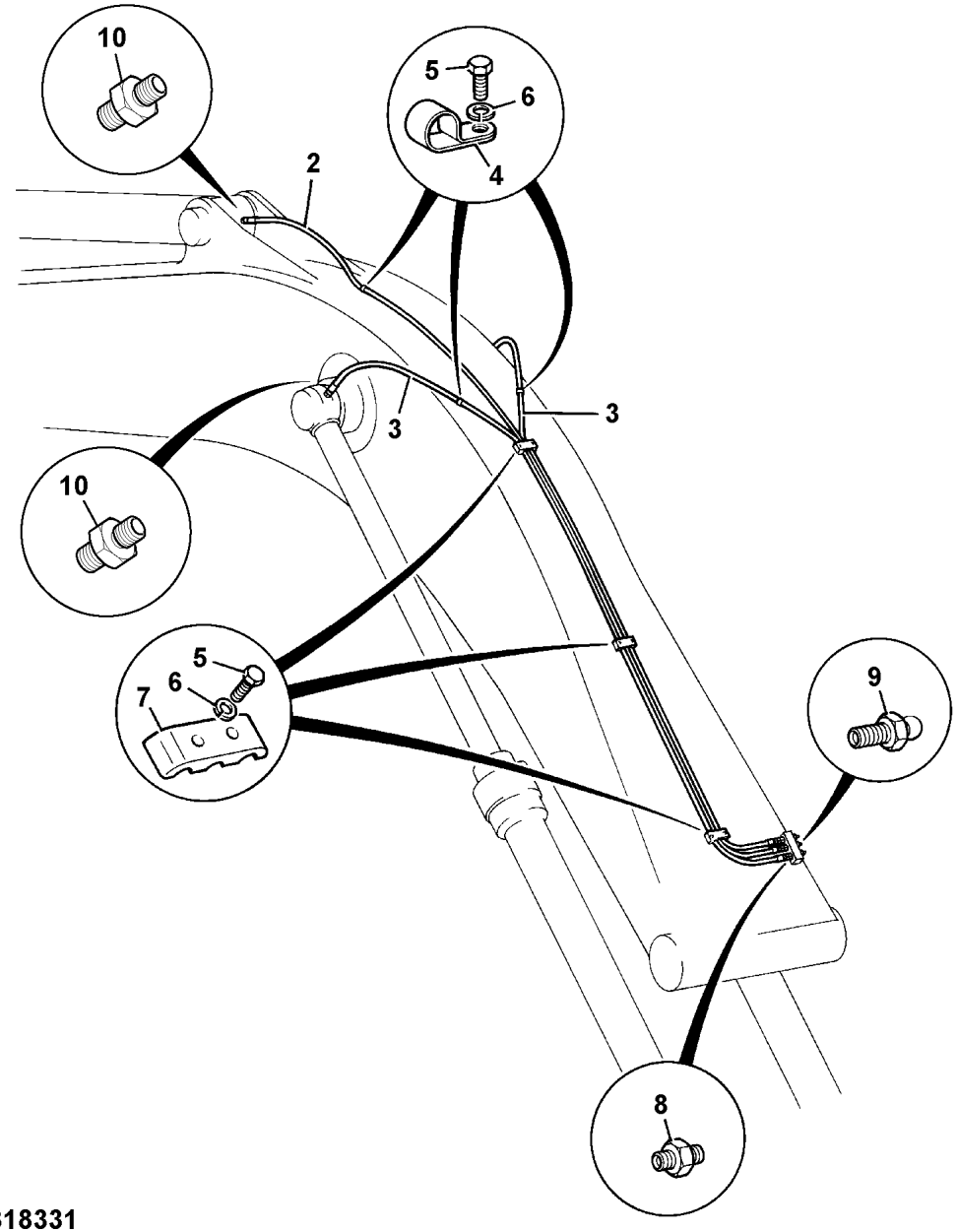

318331

	FROM	TO	FROM	TO
JS160W				

ITEM	PART NO	CHANGE NO	DESCRIPTION	REMARKS	USAGE CODE	QTY
2	627/10054		Hose			1
3	627/10055		Hose			2
4	KHR1444		Clamp			3
5	1316/0201Z		Screw			9
6	1425/0006Z		Washer, Spring			9
7	JLV1852		Clamp, plate			3
8	JLV1547		Adapter			3
9	JHP0037		Nipple, grease, straight			3
10	1609/0002		Adapter			3

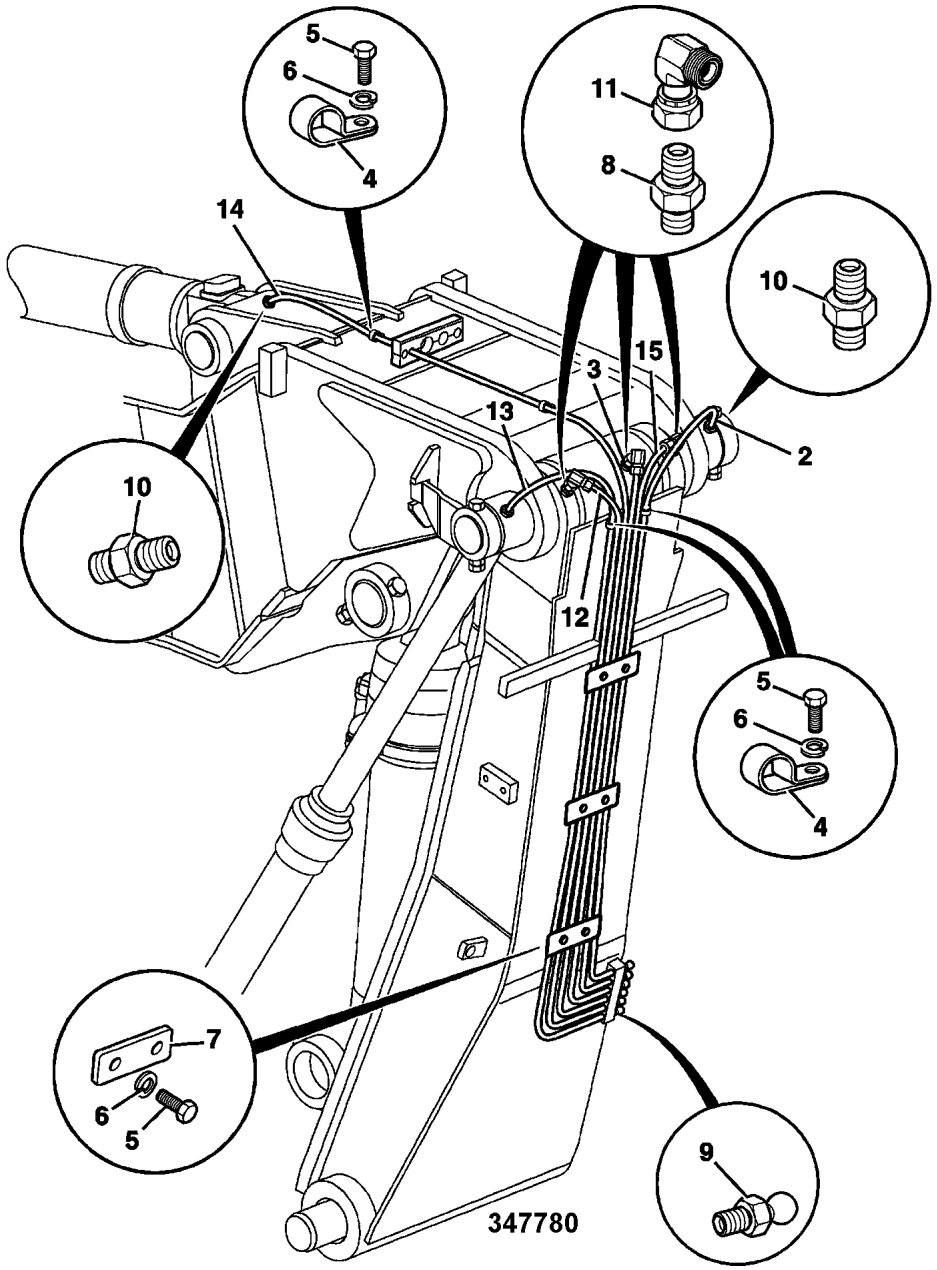

	FROM	TO	FROM	TO
JS160W				

ITEM	PART NO	CHANGE NO	DESCRIPTION	REMARKS	USAGE CODE	QTY
2	JLV1686		Hose			1
3	JLV1684		Hose			1
4	KHR1444		Clamp			4
5	1316/0201Z		Screw			12
6	1425/0006Z		Washer, Spring			12
7	JLV1687		Clamp			4
8	1609/0002		Adapter			1
9	JHP0037		Nipple, grease, straight			6
10	JLV1547		Adapter			8
11	JLV1551		Elbow			3
12	JLV1681		Hose			1
13	JLV1682		Hose			1
14	JLV1683		Hose			1
15	JLV1684		Hose			1

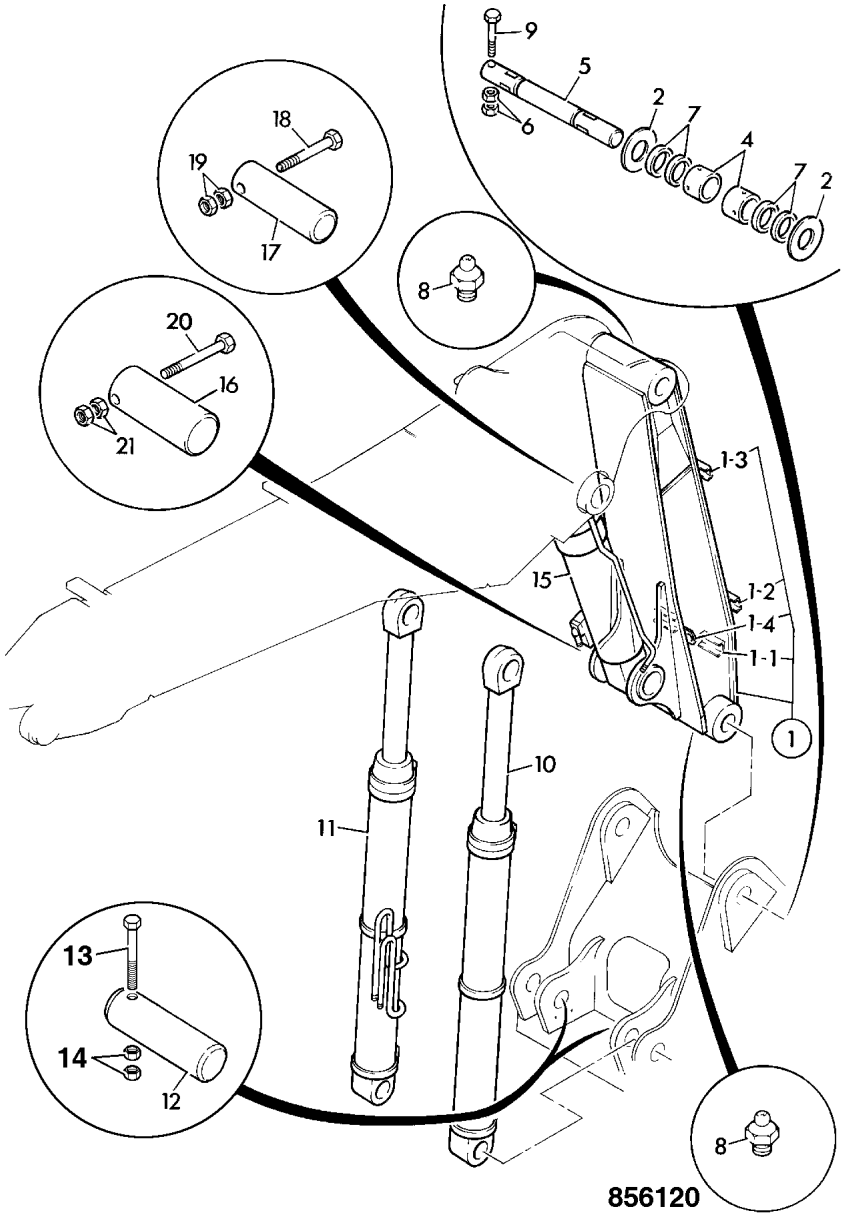

	FROM	TO	FROM	TO
JS160W				

ITEM	PART NO	CHANGE NO	DESCRIPTION	REMARKS	USAGE CODE	QTY
1	335/04141		Boom, lower, JS160W			1
2	KLV0035		Shim, 81mm ID x 170mm OD, 1.2mm thick			2
4	JLV1798		Bush, steel			2
5	811/90279		Pin, pivot, boom base	Chromed pin		1
6	172R024VZ		Nut			2
7	KHV0101		Seal, dust			4
8	JHP0037		Nipple, grease, straight			3
9	6009/4028Z		Bolt			1
10	JLV1150		Ram, boom without H.B.C.V, T.A.B	For components see frame E4-1-20.		1
	JLV1488		Ram, boom with H.B.C.V, T.A.B	For components see frame E4-1-30.		1
11	JLV1150		Ram, boom without H.B.C.V, T.A.B	For components see frame E4-1-20.		1
	JLV1488		Ram, boom with H.B.C.V, T.A.B	For components see E4-1-30.		1
12	* KLV0167		Pin, pivot			2
13	* 6009/3724D		Bolt			4
14	* 173R016VD		Nut			8
15	.		'See Remark'	Position ram see index E4		1
16	JLV1524		Pin, pivot			1
17	JLV1677		Pin, pivot			1
18	6009/3724Z		Bolt			1

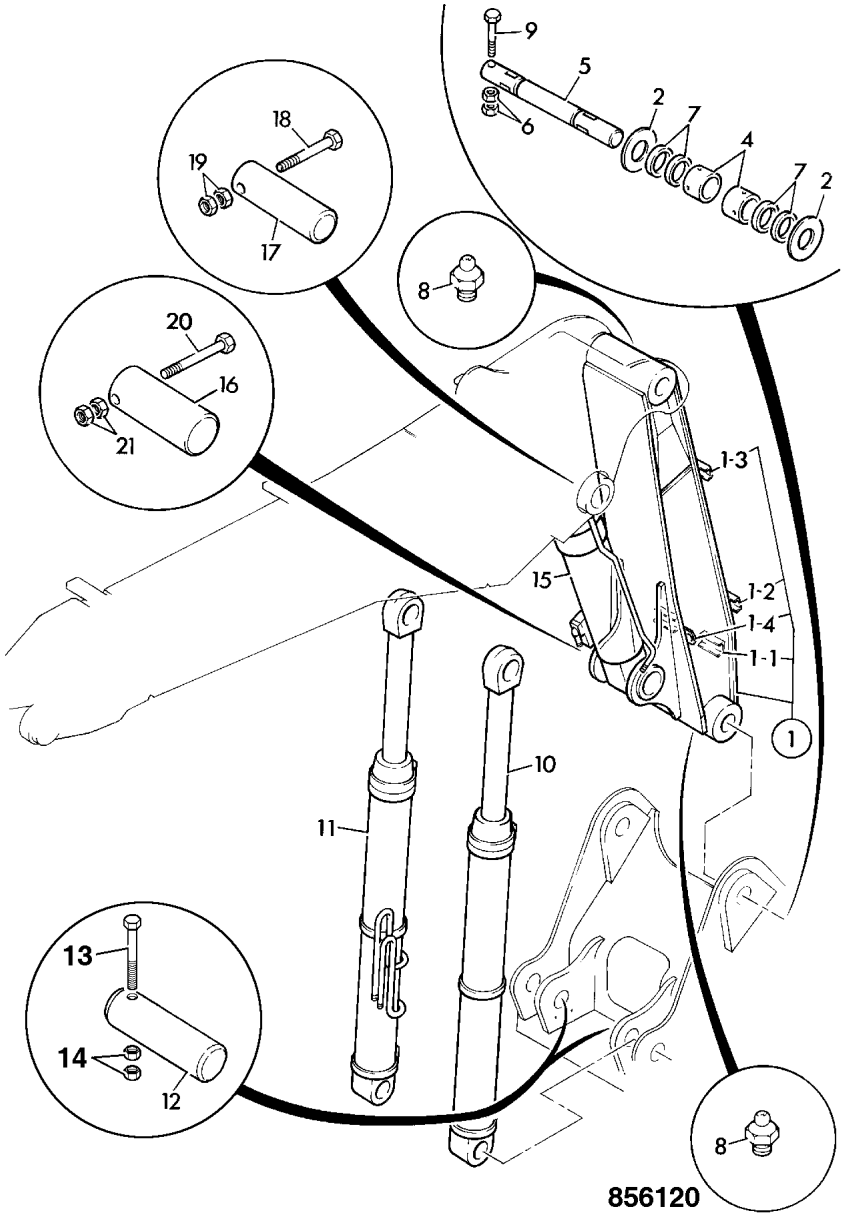

ITEM	PART NO	CHANGE NO	DESCRIPTION	REMARKS	USAGE CODE	QTY
19	173R016VZ		Nut			2
20	6009/3724Z		Bolt			1
21	173R016VZ		Nut			2
22	826/01510		Screw, countersunk			4

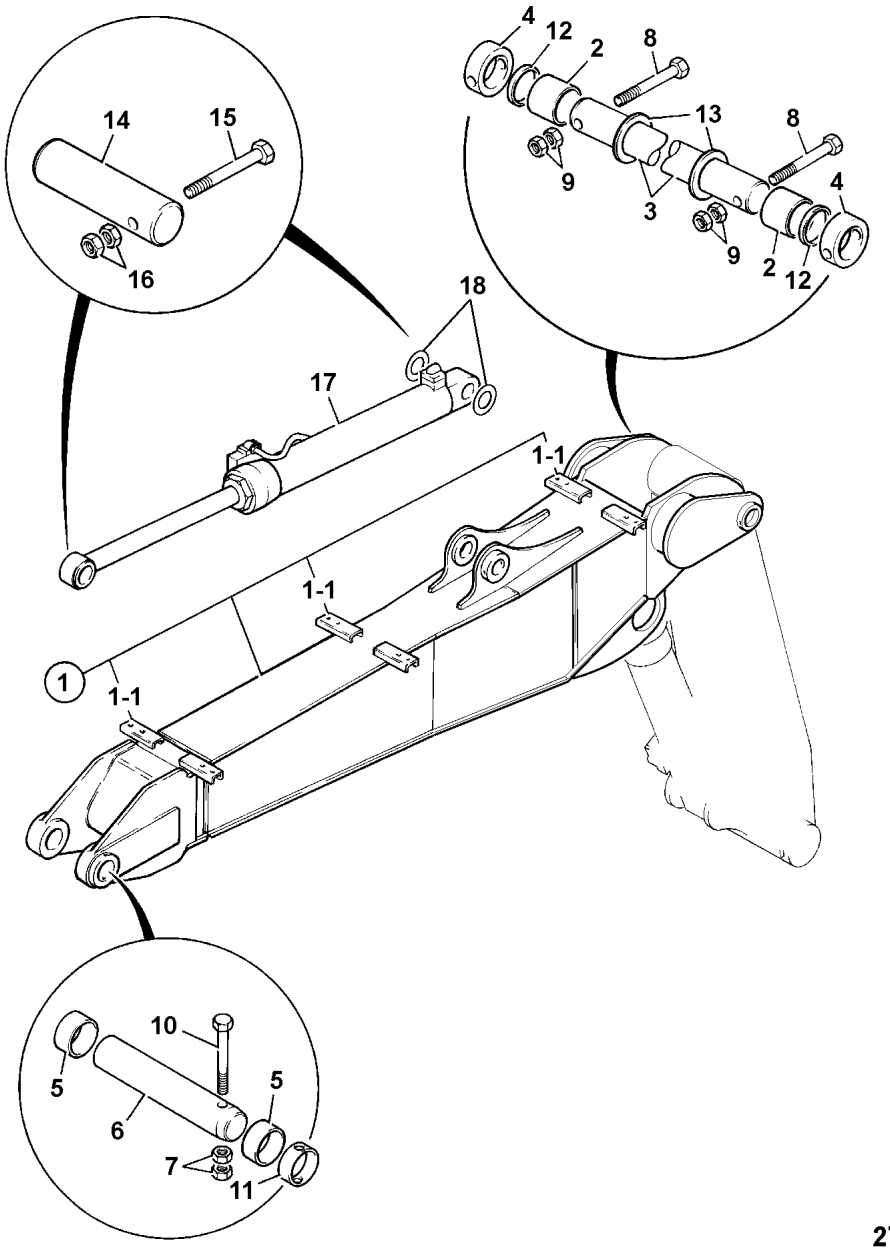

279224

	FROM	TO	FROM	TO
JS160W				

ITEM	PART NO	CHANGE NO	DESCRIPTION	REMARKS	USAGE CODE	QTY
1	JG0LV299		Boom, upper, complete			1
2	JLV1832		Bush			2
3	811/90532		Pin, pivot			1
4	KHV0162		Collar			2
5	JLV1797		Bush, steel			2
6	JLV0935		Pin, attachment			1
7	173R024VD		Nut			2
8	6009/3827D		Bolt			2
9	173R020VD		Nut			4
10	6009/4027D		Bolt			1
11	KLV0032		Collar, set			1
13	KLV0170		Shim, 81mm ID x 110mm OD, 1.2mm thick			2
14	KLV0171		Pin, pivot			2
15	6009/3825D		Bolt			2
16	173R020VZ		Nut			4
17	.		'See Remark'	Dipper ram		1
18	KRV1176		Shim, 76mm ID x 130mm OD, 1.2mm thick			2

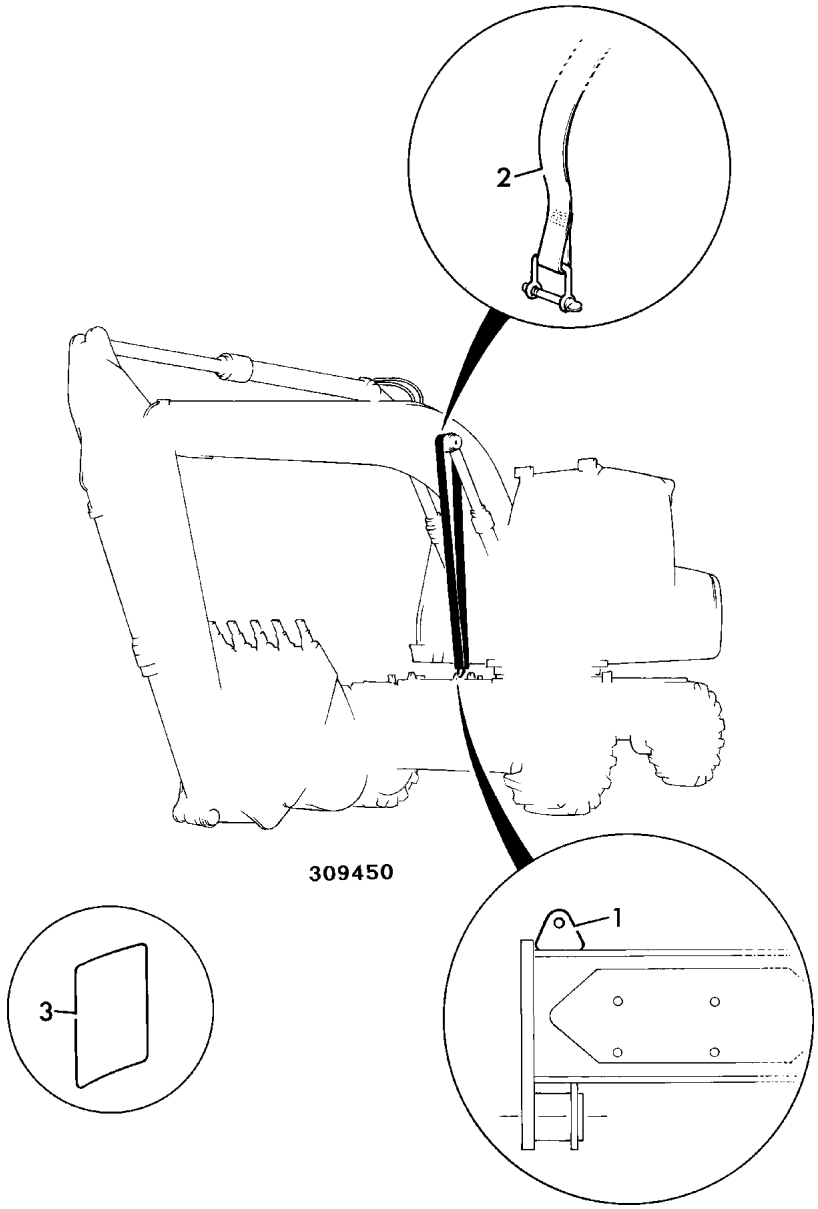

	FROM	TO	FROM	TO
JS160W				

ITEM	PART NO	CHANGE NO	DESCRIPTION	REMARKS	USAGE CODE	QTY
1	331/35692		Plate			1
2	JHP0180		Strap, with link			1
3	JHA0007		Lug, fitment			1

B

- B1 BODYWORK/FRAME
- B2 CAB
- B3 LOADER FRONT END
- ● B5 REFURBISHMENTS

ENGLISH

B5-1-1 DECALS, MACHINE
B5-2-1 DECALS, WARNING
B5-2-10 DECALS, MACHINE, CONTROL LABELS
B5-3-1 DECALS, WARNING, USA BUILD
B5-4-1 TOOLS

FRANCAIS

B5-1-1 DECALS, MACHINE
B5-2-1 DECALS, WARNING
B5-2-10 DECALS, MACHINE, CONTROL LABELS
B5-3-1 DECALS, WARNING, USA BUILD
B5-4-1 OUTILS

DEUTSCH

B5-1-1 DECALS, MACHINE
B5-2-1 DECALS, WARNING
B5-2-10 DECALS, MACHINE, CONTROL LABELS
B5-3-1 DECALS, WARNING, USA BUILD
B5-4-1 WERKZEUGE

ITALIANO

B5-1-1 DECALS, MACHINE
B5-2-1 DECALS, WARNING
B5-2-10 DECALS, MACHINE, CONTROL LABELS
B5-3-1 DECALS, WARNING, USA BUILD
B5-4-1 ATTREZZI

PORTUGUES

B5-1-1 DECALS, MACHINE
B5-2-1 DECALS, WARNING
B5-2-10 DECALS, MACHINE, CONTROL LABELS
B5-3-1 DECALS, WARNING, USA BUILD
B5-4-1 FERRAMENTAS

ESPANOL

B5-1-1 DECALS, MACHINE
B5-2-1 DECALS, WARNING
B5-2-10 DECALS, MACHINE, CONTROL LABELS
B5-3-1 DECALS, WARNING, USA BUILD
B5-4-1 HERRAMIENTAS

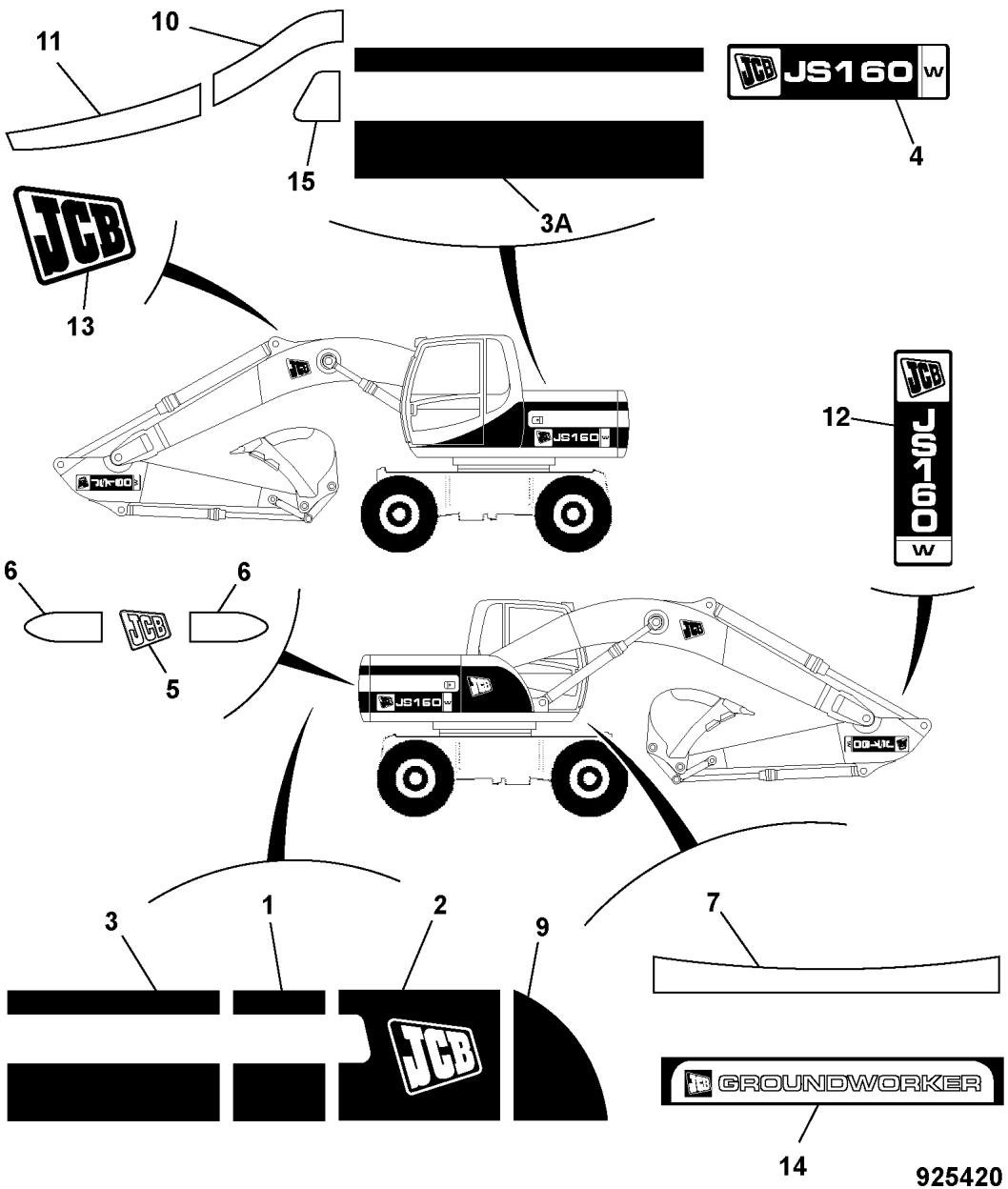

	FROM	TO	FROM	TO
JS160W				

ITEM	PART NO	CHANGE NO	DESCRIPTION	REMARKS	USAGE CODE	QTY
1	817/19289		Decal, Hyd tank stripe, Auto			1
2	817/19295		Decal, Fuel tank, Auto			1
3	817/18768		Decal, strip, engine & pump bay			1
3A	* 817/19832		Decal, stripes, engine, pump bay			1
4	332/J2066		Decal, JS160W MACHINE ID			2
5	817/17441		Decal, Counterweight			1
6	817/18765		Decal, strip, counterweight			2
7	817/18761		Decal, cab, under front window			1
9	817/18767		Decal, toolbox			1
10	817/18763		Decal, cab side			1
11	817/18762		Decal, cab door			1
12	817/19331		Decal, Arm, JS160W			2
13	817/17422		Decal, JCB Insignia (Black)			2
14	817/18917		Decal, sun visor, Groundworker			1
15	817/19408		Decal, cab side			1

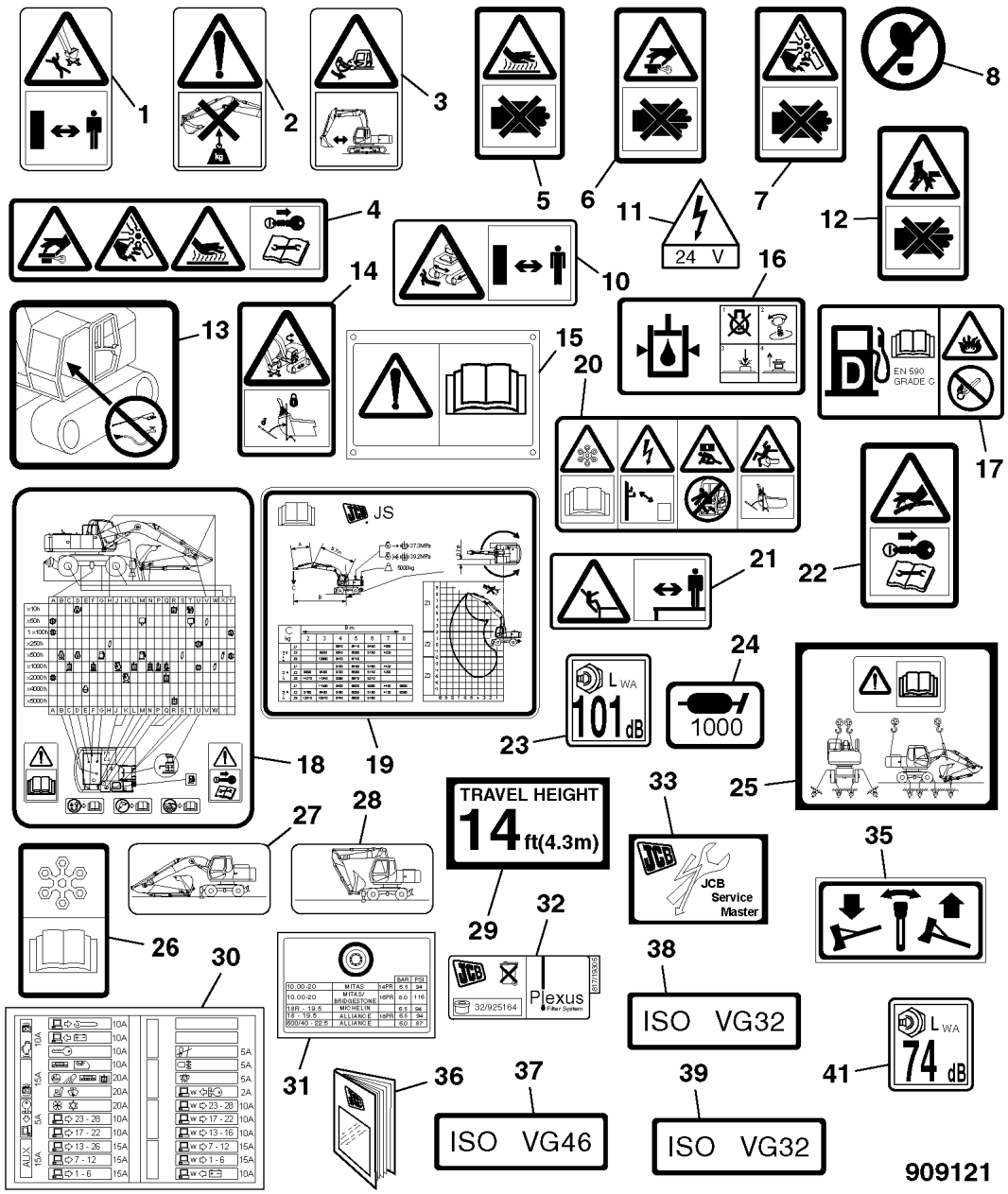

	FROM	TO	FROM	TO
JS160W				

ITEM	PART NO	CHANGE NO	DESCRIPTION	REMARKS	USAGE CODE	QTY
1	817/19470		Decal, WARNING, Arm Bucket, KEEP CLEAR			1
2	JLP0283		Label, NO CRANING			1
3	JHP0151		Decal, warning,, bucket-cab			1
4	817/18535		Decal, WARNING, coolant pressure			1
5	817/18536		Decal, WARNING, Hot surfaces			1
6	817/18537		Decal, WARNING, High pressure & hot			1
7	817/18538		Decal, WARNING, Rotating parts			1
8	817/18566		Decal, Warning, No Step			1
10	817/18528		Decal, WARNING, KEEP CLEAR			1
11	817/02370		Decal, warning 24 volt			1
12	*817/70003		Decal, Warning, hazard to hands			1
13	JHP0111		Label, NO wash, cab			1
14	*817/70116		Decal, WARNING SIGN:, Lock lever			1
15	817/18541		Decal, WARNING, PRODUCT LIABILITY			1
16	817/19960		Decal, WARNING SIGN, hydraulic tank vent			1

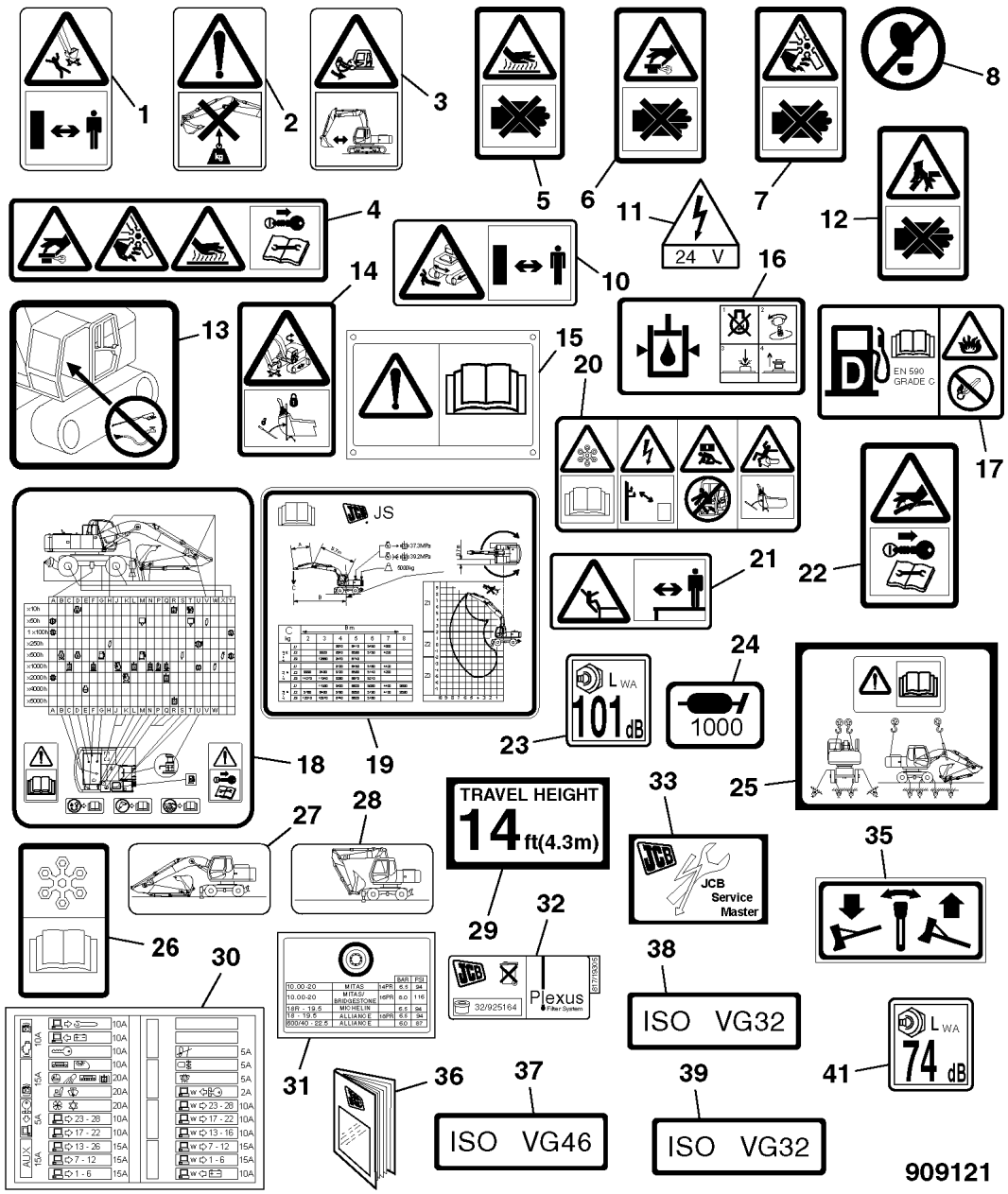

ITEM	PART NO	CHANGE NO	DESCRIPTION	REMARKS	USAGE CODE	QTY
17	817/18527		Decal, WARNING, NO NAKED LIGHT			1
18	817/20328		Decal, lubrication chart, JS wheeled AUTO			1
20	*817/70117		Decal, WARNING SIGN, EU Multiple			1
21	817/18531		Decal, WARNING, KEEP CLEAR			1
22	817/18532		Decal, WARNING, SIGN HP Hose			1
23	*817/17526		Label, noise, 101 LWA			1
24	817/19074		Label, Lubrication, 1000 Hours			4
25	817/20344		Decal, lift & tie-down			1
26	817/19660		Decal, Instruction sigh, Cold weather			1
27	JLP0244		Label, oil level			1
28	JLP0253		Label, oil level			1
29	817/04840		Label, 12FT (3.7m), travel height			1
	817/04842		Decal, 14' (4.3m), travel height			1
30	*332/J0613		Decal, fuse box			1
31	817/20332		Decal, tyre pressure			1
32	817/19305		Decal, plexus filter			1
33	817/17540		Label, Diagnostic socket			1
35	817/19404		Decal, dozer controls			1
36	1		TBA			1
	1		TBA			1

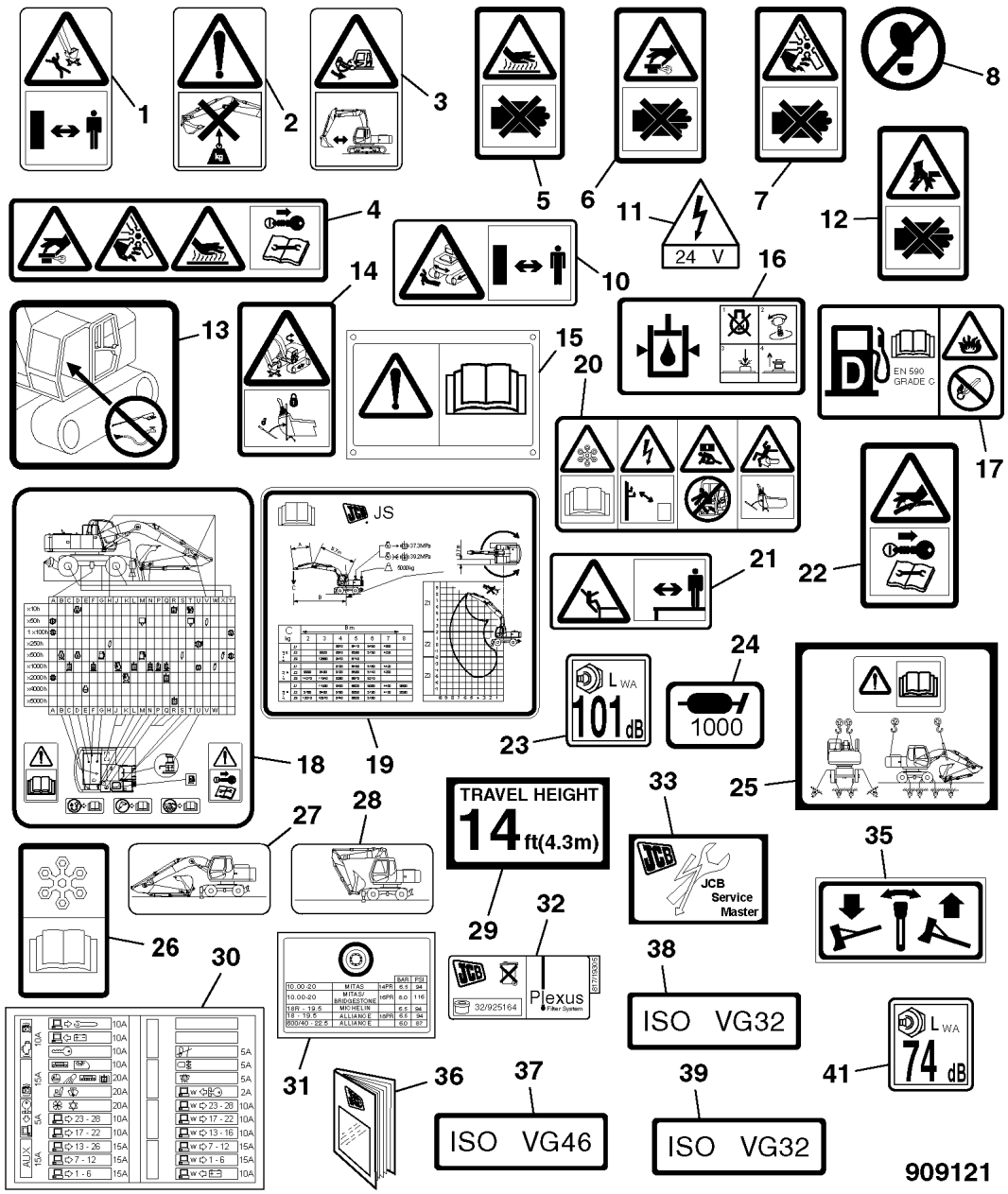

ITEM	PART NO	CHANGE NO	DESCRIPTION	REMARKS	USAGE CODE	QTY
37	817/20649		Decal, HYD OIL LABEL (HP46)			1
38	817/20650		Label, HYD OIL LABEL (HP32			1
39	817/20651		Label, HYD OIL LABEL (HP68)			1
41	817/20415		Label, Decibel 74 LPA, Internal			1

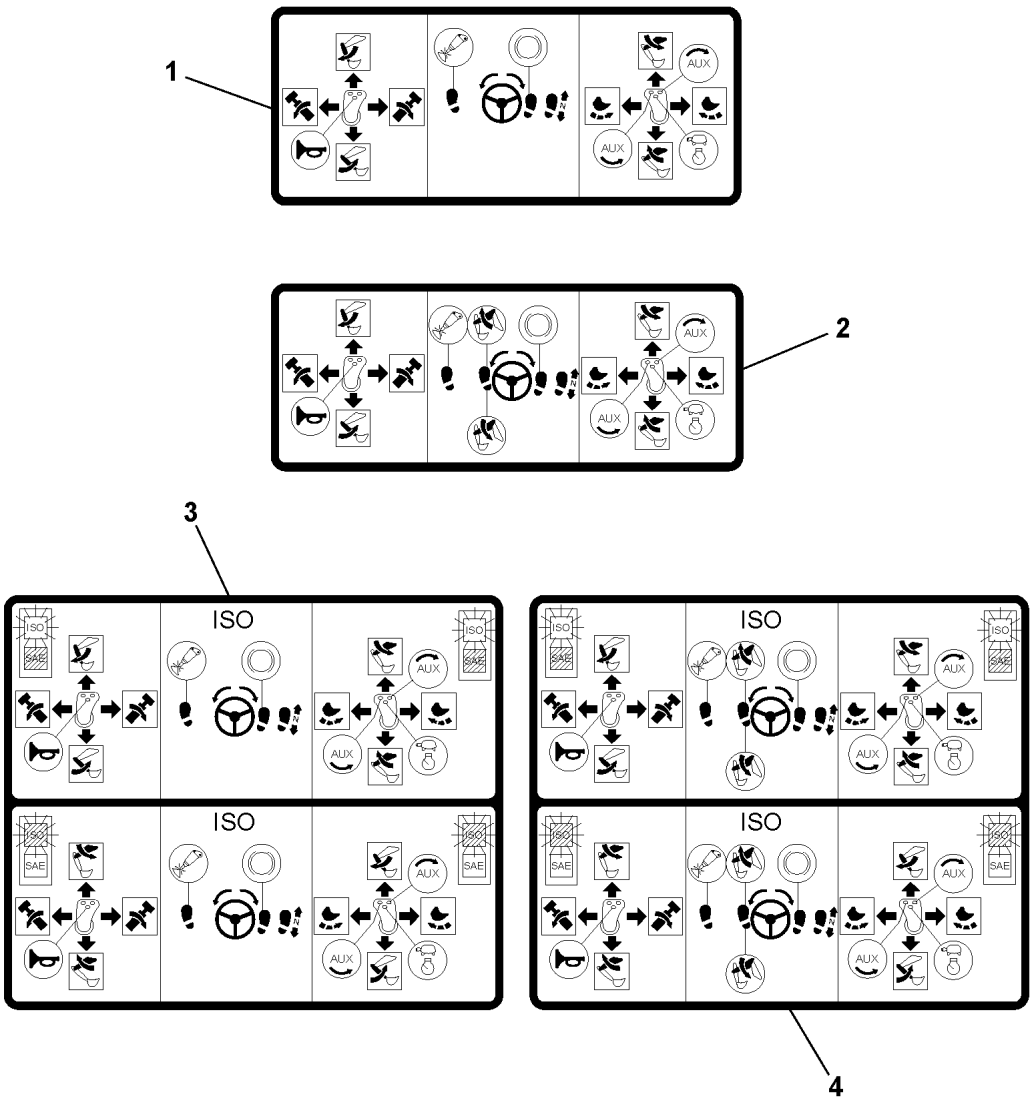

925330

	FROM	TO	FROM	TO
JS160W				

ITEM	PART NO	CHANGE NO	DESCRIPTION	REMARKS	USAGE CODE	QTY
1	817/20393		Label, ISO, mono boom control			1
2	817/20329		Label, ISO, TAB BOOM CONTROLS			1
3	817/20394		Label, ISO-SAE, MONO BOOM CONTROLS			1
4	817/20360		Label, ISO to SAE, TAB BOOM CONTROLS			1

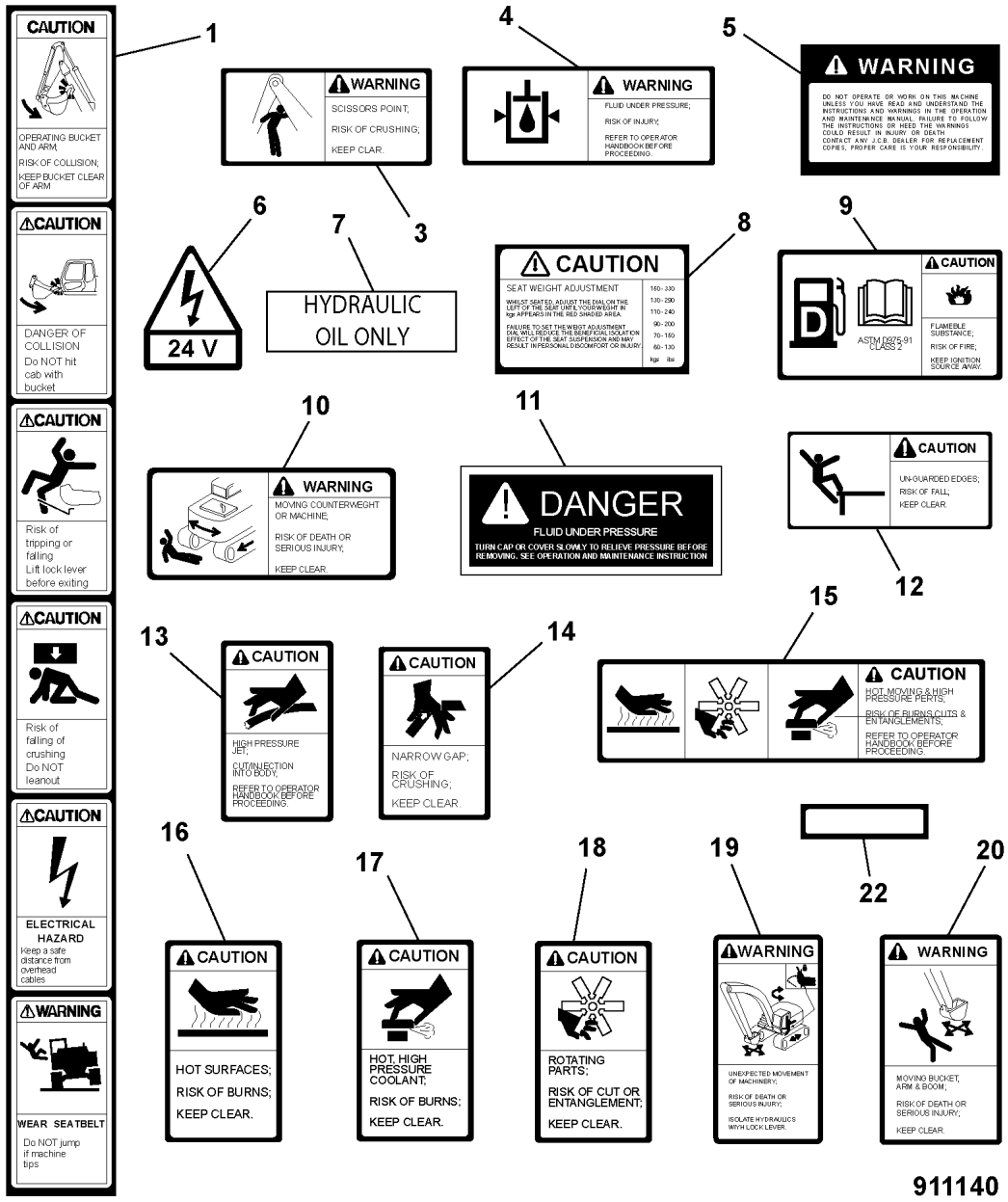

	FROM	TO	FROM	TO
JS160W				

ITEM	PART NO	CHANGE NO	DESCRIPTION	REMARKS	USAGE CODE	QTY
1	817/70118		Decal, WARNING SIGN, USA Multiple			1
3	817/18995		Decal, WARNING SIGN, scissors point risk			3
4	817/18996		Decal, WARNING SIGN, fluid under pressure			1
5	817/01639		Label, WARNING English, Read operating book			1
6	817/02370		Decal, warning 24 volt			1
7	817/03237		Label, hydraulic oil only			1
8	817/18997		Decal, WARNING SIGN, seat, weight adjustment			1
9	332/J1115		Decal, Warning deisel, No naked flame			1
10	817/18958		Decal, WARNING			2
11	817/00497		Label, danger, fluid under pressure			1
12	817/18960		Decal, WARNING, Sign Edge			1
13	817/18961		Decal, WARNING, Sign HP Hoses			1
14	817/70046		Decal, Warning CRUSH, SHEAR, HANDS. DO NOT TOUCH			1
15	817/18963		Decal, WARNING, Sign Engine Bay			1
16	817/18964		Decal, WARNING, Sign Hot Surface			2

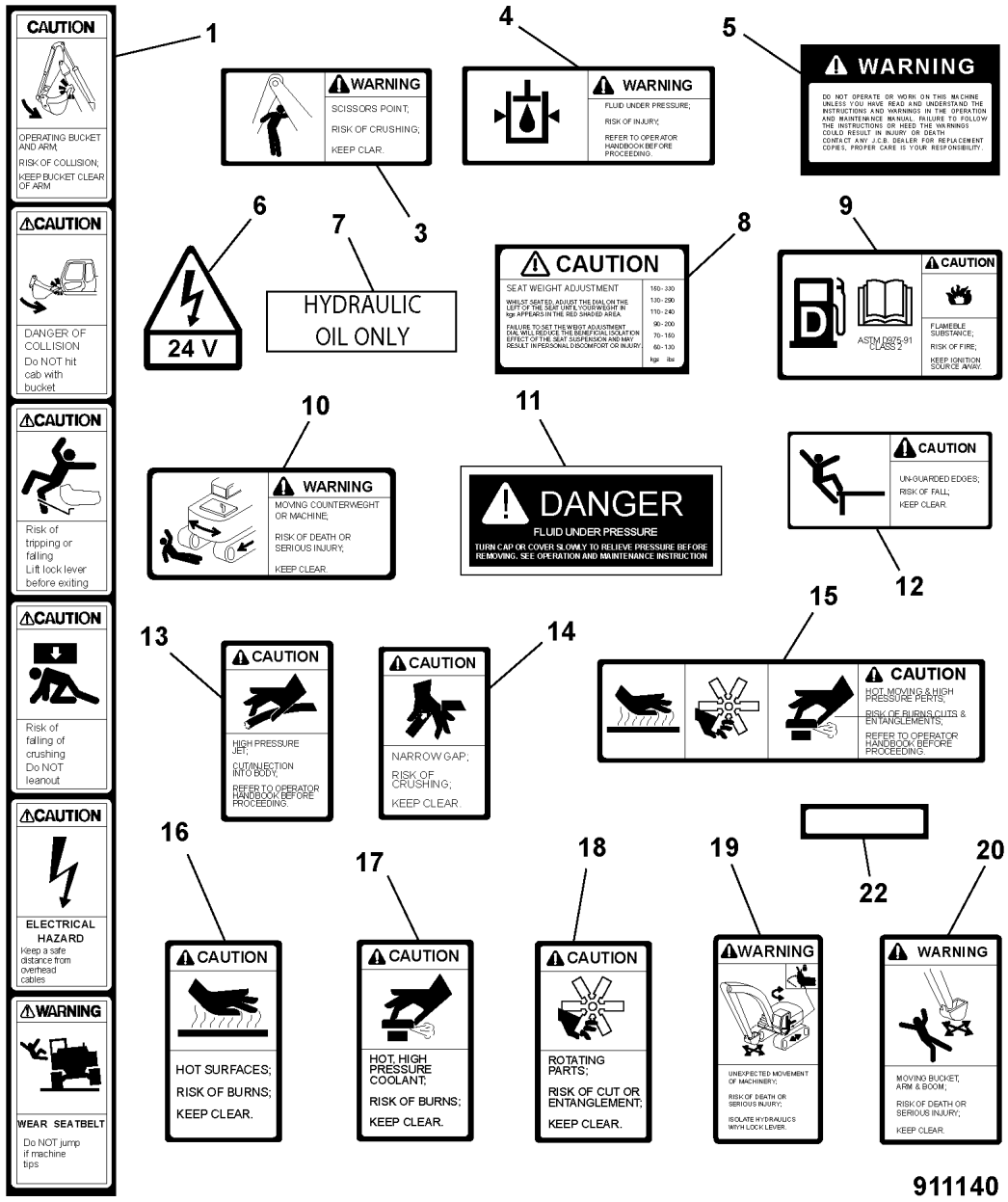

ITEM	PART NO	CHANGE NO	DESCRIPTION	REMARKS	USAGE CODE	QTY
17	817/18965		Decal, WARNING, Sign HP Coolant			1
18	817/18966		Decal, WARNING, Sign Engine Fan			1
19	817/70115		Decal, WARNING SIGN, Lock lever			1
20	817/19471		Decal, WARNING, Dipper, Bucket			2
22	817/05155		Label, hi-lite, chassis stamp			1
23	JHP0168		Rivet			8
24	817/20984		Label, EPA STAGE 3, USA LEGISLATIVE			1

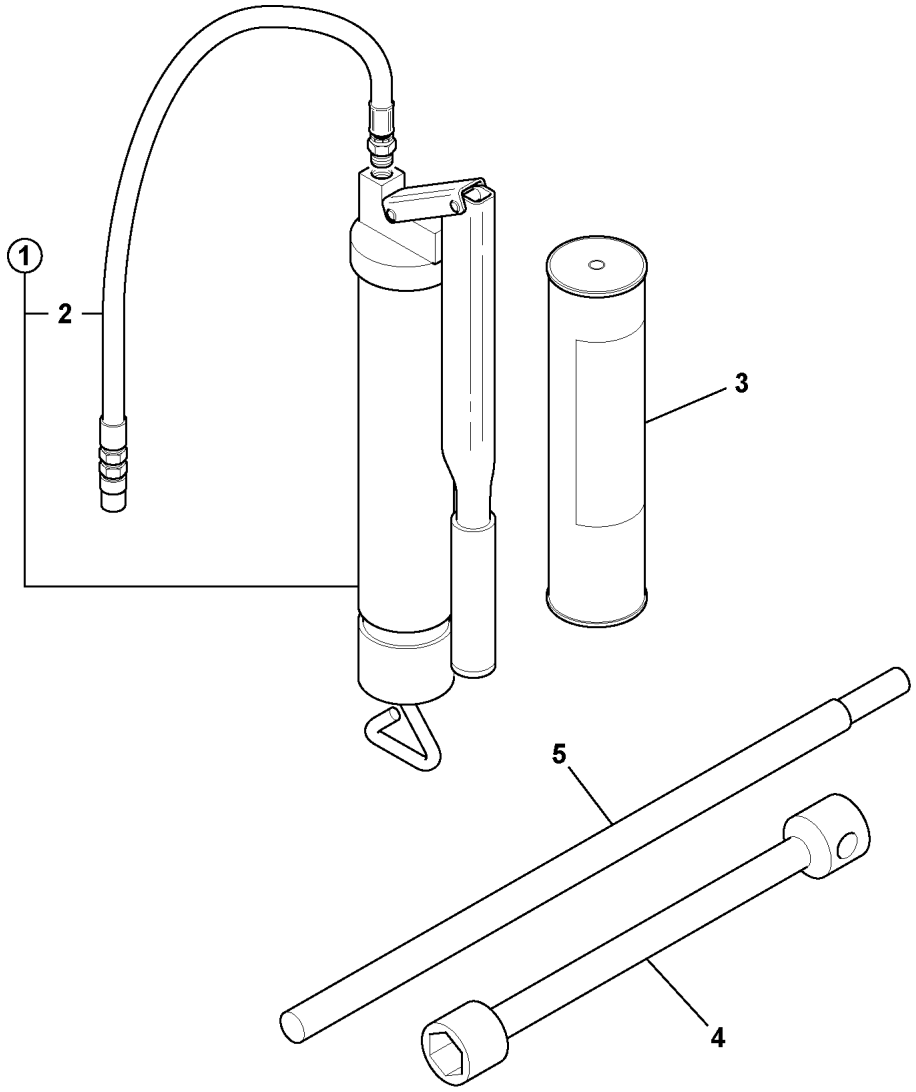

908740

	FROM	TO	FROM	TO
JS160W				

ITEM	PART NO	CHANGE NO	DESCRIPTION	REMARKS	USAGE CODE	QTY
1	992/11300		Tool, grease gun			1
2	915/07301		:Connector, flexible			1
3	4003/2017		Grease, HP, 400g x 24			A/R
4	JLP0302		Tool, wheel wrench, 27A/F wheel nut			1
5	825/99902		Bar, tommy			1

C

- C1 ELECTRICS, MAIN MACHINE
- C2 ELECTRICS, ENGINE
- C3 ELECTRICS, CAB

ENGLISH

C1-1-1 ELECTRICS, MACHINE
C1-2-1 ELECTRICS, CAB
C1-3-1 BATTERY INSTALLATION, 24 VOLT
C1-4-1 ROAD LIGHTS, UK, LEFT HAND DIP
C1-4-10 ROAD LIGHTS, ROW, RIGHT HAND DIP
C1-6-10 LIGHT, WORKING, BOOM
C1-6-20 LIGHT, WORKING, CAB & REAR, USE WITH RAIN GUARD
C1-7-1 ALARM, REVERSE
C1-8-1 HORN

FRANCAIS

C1-1-1 ELECTRICITE, MACHINE
C1-2-1 ELECTRICITE, CABINE
C1-3-1 BATTERIE INSTALLATIO24 VOLTS
C1-4-1 ROAD LIGHTS, UK, LEFT HAND DIP
C1-4-10 ROAD LIGHTS, ROW, RIGHT HAND DIP
C1-6-10 PHARE, DE TRAVAIL FLECHE
C1-6-20 LIGHT, WORKING, CAB & REAR, USE WITH RAIN GUARD
C1-7-1 ALARME, MARCHE ARRIERE
C1-8-1 HORN

DEUTSCH

C1-1-1 ELEKTR. ANL., MASCHINE
C1-2-1 ELEKTR. ANL., KAB.
C1-3-1 BATTERIE INSTALLATION24 VOLT
C1-4-1 ROAD LIGHTS, UK, LEFT HAND DIP
C1-4-10 ROAD LIGHTS, ROW, RIGHT HAND DIP
C1-6-10 ARBEITSSCHEINWERFER AUSLEGER
C1-6-20 LIGHT, WORKING, CAB & REAR, USE WITH RAIN GUARD
C1-7-1 WARNSIGNAL,RUCKW.
C1-8-1 HORN

ITALIANO

C1-1-1 PARTE ELETTRICA, MACCHINA
C1-2-1 PARTE ELETTRICA, CABINA
C1-3-1 INSTALLAZIONE BATTERIA 24 V
C1-4-1 ROAD LIGHTS, UK, LEFT HAND DIP
C1-4-10 ROAD LIGHTS, ROW, RIGHT HAND DIP
C1-6-10 LUCE DI LAVORO BRACCIO PRINCIPALE
C1-6-20 LIGHT, WORKING, CAB & REAR, USE WITH RAIN GUARD
C1-7-1 ALLARME, RETROMARCIA
C1-8-1 HORN

PORTUGUES

C1-1-1 SIST.ELECTR.,MAQUINA
C1-2-1 SIST.ELECTR., CABINA
C1-3-1 INSTALACAO BATERIA 24 VOLTS
C1-4-1 ROAD LIGHTS, UK, LEFT HAND DIP
C1-4-10 ROAD LIGHTS, ROW, RIGHT HAND DIP
C1-6-10 FAROL, TRABALHO BRACO
C1-6-20 LIGHT, WORKING, CAB & REAR, USE WITH RAIN GUARD
C1-7-1 ALARME, INVERSAO
C1-8-1 HORN

ESPANOL

C1-1-1 ELECTRICO, MAQUINA
C1-2-1 ELECTRICO, CABINA
C1-3-1 BATERIA INSTALACION 24 VOLTIOS
C1-4-1 ROAD LIGHTS, UK, LEFT HAND DIP
C1-4-10 ROAD LIGHTS, ROW, RIGHT HAND DIP
C1-6-10 LUCES DE TRABAJO PLUMA
C1-6-20 LIGHT, WORKING, CAB & REAR, USE WITH RAIN GUARD
C1-7-1 ALARMA, RETROCESO
C1-8-1 HORN

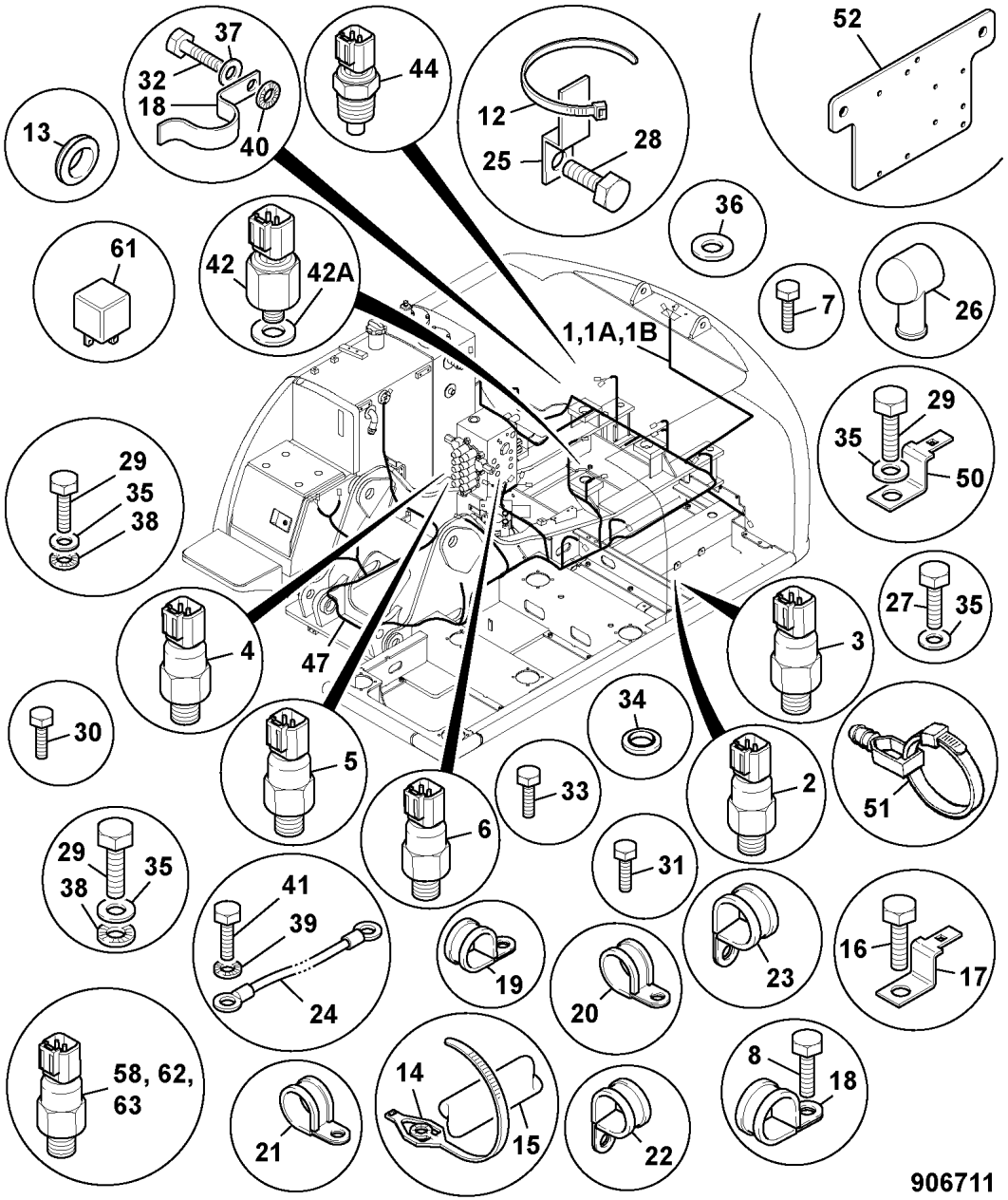

	FROM	TO	FROM	TO
JS160W				

ITEM	PART NO	CHANGE NO	DESCRIPTION	REMARKS	USAGE CODE	QTY
1	721/12331		Harness, Main, JS160W Tier 3			1
1A	332/J2701		Harness, JS Tier 3 Wheeled			1
1B	721/12336		Harness, Cruise control			1
2	701/80372		Switch, Auto Mode pressure, 22bar	Auto mode		1
3	701/80373		Switch, Slew pressure, 5bar 1/4" BSP	Swing, boom up boom down		1
4	701/80374		Switch, Upper servo pressure, 12bar	Excavating		1
5	701/80375		Switch, Travel pressure, 20bar			1
6	701/80471		Controller, Servo Assembly	Auto boost		2
7	JHN0048		Bolt			1
8	JHR0128		Bolt			5
12	826/01144		Tie, cable, 200mm long			8
13	KAR0152		Grommet			2
14	826/01143		Tie, cable, L=300mm x W=3.6mm			9
15	KHR0139		Hose, corrugated			3
16	KHR0737		Screw, pan head			22
17	KHR1317		Clip			1
18	KHR1326		Clamp	18mm dia		2
19	KHR1327		Clamp	22mm dia		3

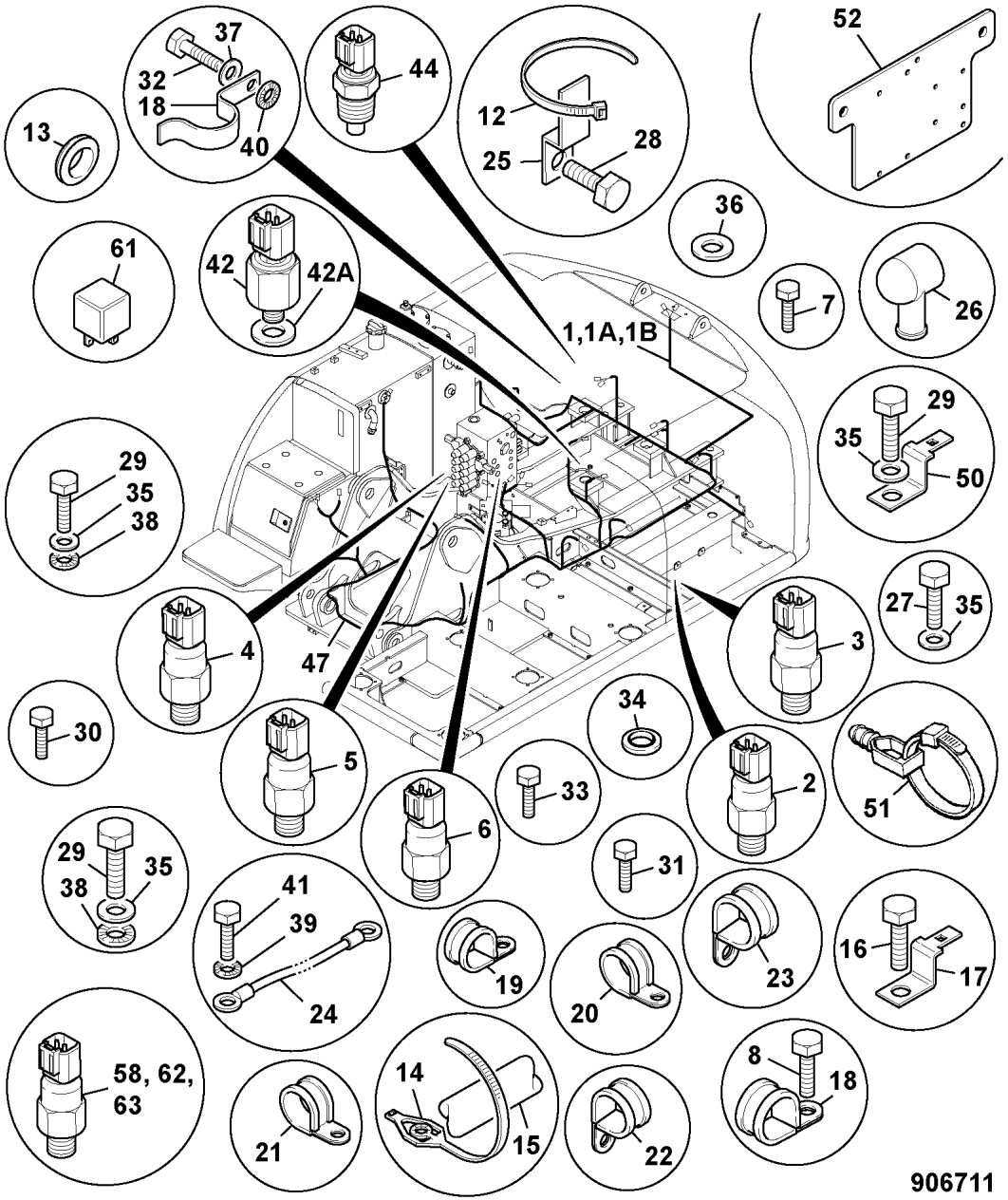

ITEM	PART NO	CHANGE NO	DESCRIPTION	REMARKS	USAGE CODE	QTY
20	KHR1407		Clamp	25mm dia		1
21	KHR1408		Clamp	30mm dia		1
22	KHR1444		Clamp	12mm dia		3
23	KHR1445		Clamp	15mm dia		1
24	KHR1451		Cable, earth			1
25	KHR1588		Clip			1
26	KHR1716		Cap, terminal			2
27	1316/0301D		Screw			2
28	1316/0303D		Screw			3
29	1316/0305D		Screw, set			1
30	1316/0307D		Screw			2
31	1316/0407D		Screw			2
32	1316/0505D		Bolt, M12 x 20mm			1
33	1316/0507D		Screw, set pin			2
34	1406/0015		Washer, seal			1
35	1420/0007D		Washer, M8 plain			8
36	1420/0008D		Washer, M10			2
37	1420/0009D		Washer, M12			1
38	6063/0006Z		Washer, starlock			3
39	6063/0007Z		Washer, starlock			1
40	6063/0009Z		Washer, starlock			1
41	6012/0298Z		Screw, pan head			3
42	701/80328		Switch, overheat warning			1
42A	1406/0015		Washer, seal			1
44	716/30129		Sensor, temperature			2
47	721/12220		Harness, boom working, Deutsch connector			1

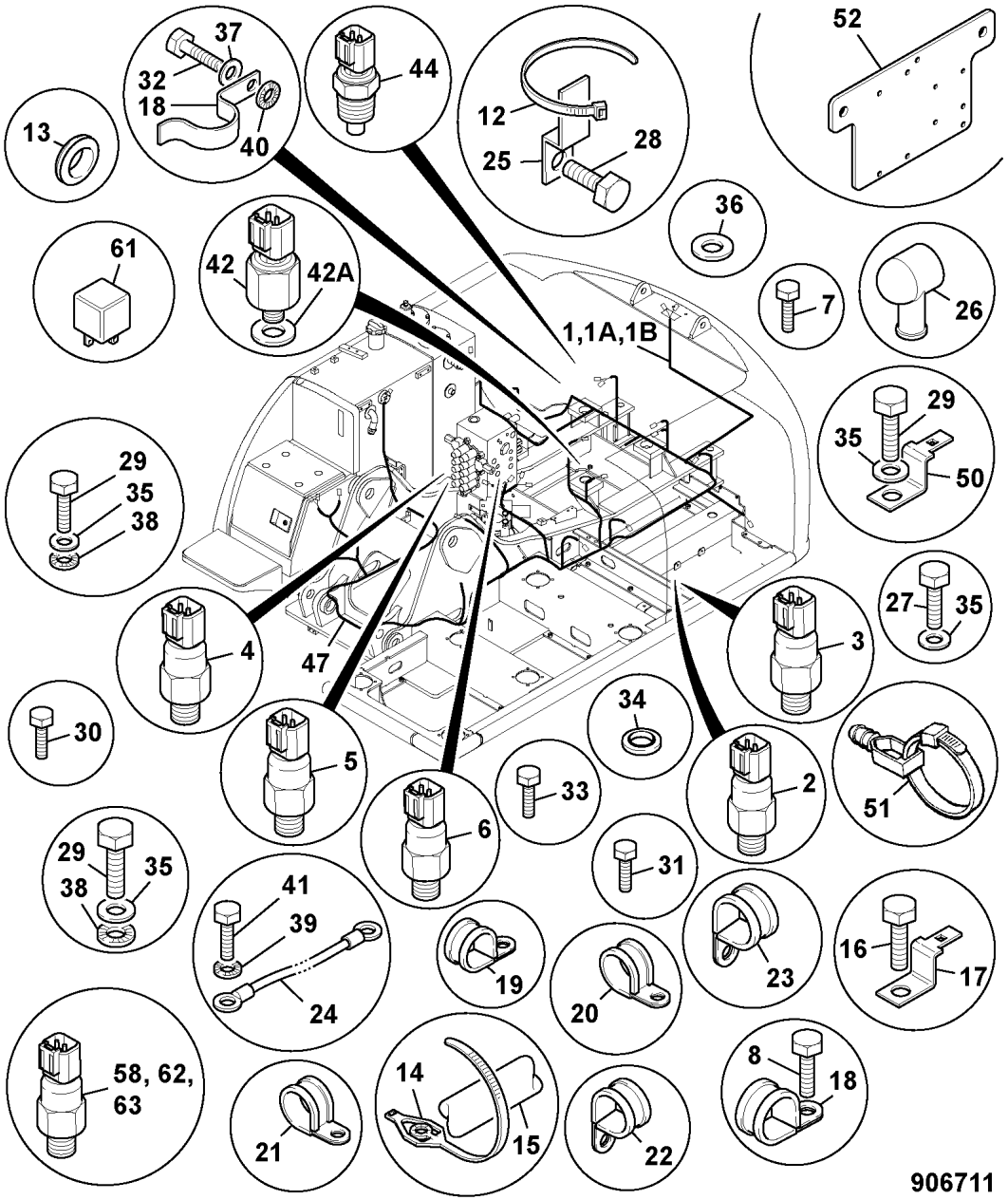

ITEM	PART NO	CHANGE NO	DESCRIPTION	REMARKS	USAGE CODE	QTY
50	821/00367		Clip			1
51	826/01347		Tie, cable c/w mounting, 4.6mm x 190mm			55
52	.		'See Remark'	Battery See Index C1		1
58	701/80335		Switch, pressure, ZF transmission			1
61	JHR0174		Relay, 24 volt			1
62	701/80373		Switch, Slew pressure, 5bar 1/4" BSP			1
63	701/80554		Switch, brake pressure			1
64	701/80335		Switch, pressure, ZF transmission	Transmission		1

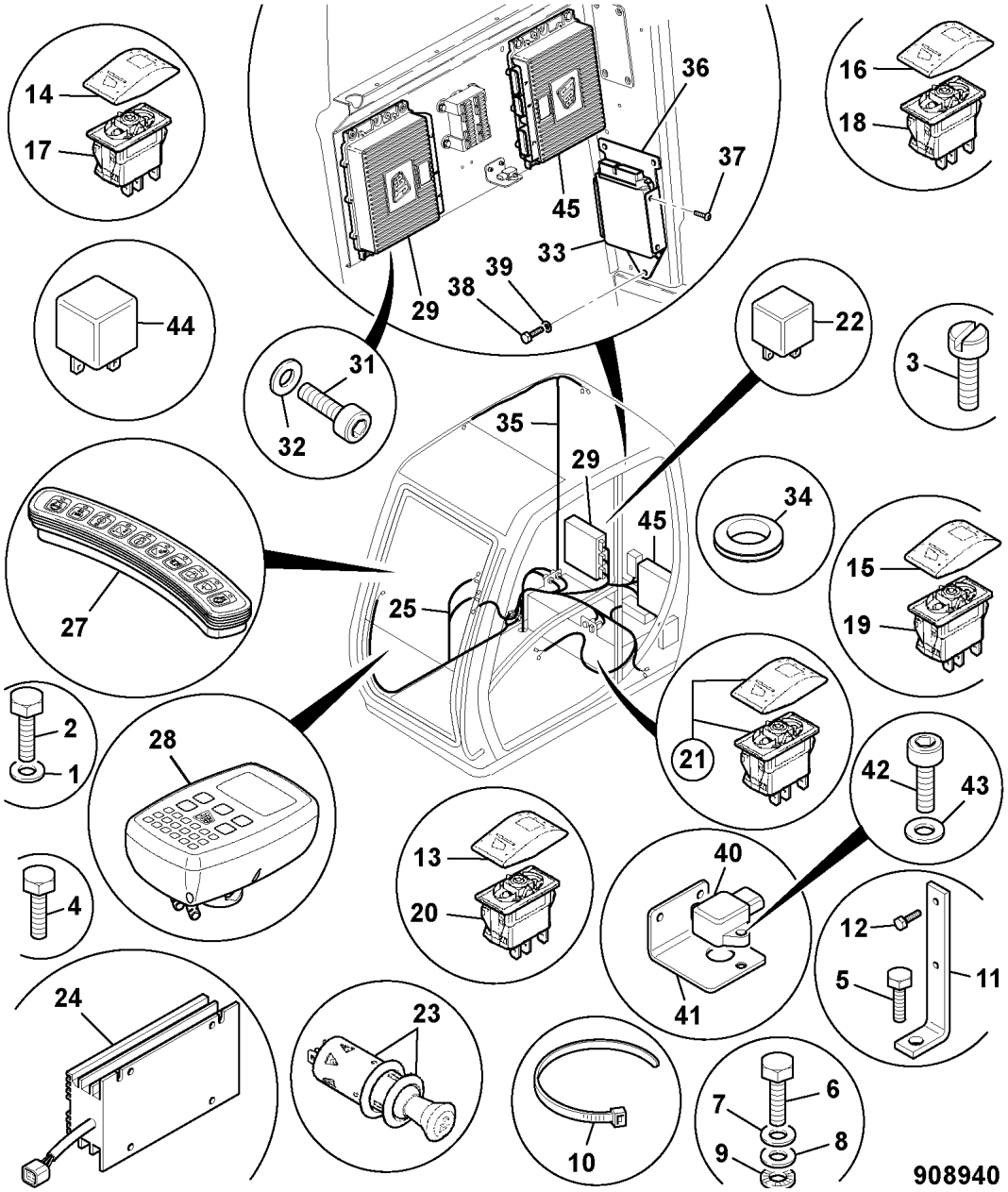

	FROM	TO	FROM	TO
JS160W				

ITEM	PART NO	CHANGE NO	DESCRIPTION	REMARKS	USAGE CODE	QTY
1	JHP0046		Washer, M10			1
2	JHR0128		Bolt			2
3	KHR0611		Screw, pan head			4
4	1316/0305D		Screw, set			4
5	1316/0405D		Bolt			1
6	1316/9403D		Bolt, SCREW; M4 X 16			4
7	1420/0004Z		Washer, M4			4
8	1420/0007D		Washer, M8 plain			4
9	6063/0008Z		Washer, starlock			1
10	242/00290		Tie, panel fixing cable			4
11	331/17400		Bracket, Earth, Harness			1
12	6012/0198Z		Screw, pan head			1
13	701/58826		Actuator, front worklights, switch decal			1
14	701/58853		Cap, decal, boom priority			1
15	701/58855		Decal, mute, radio	Radio use with item 17		1
16	701/58886		Cap, decal, cab interior			1
17	701/60000		Switch, 12V			1
18	701/60030		Switch, 24V			1
19	701/60031		Switch, 24V			1
20	701/60041		Switch, 24V			1
21	701/80214		Switch, Redundancy			1
22	716/30075		Relay, Stop solenoid			1

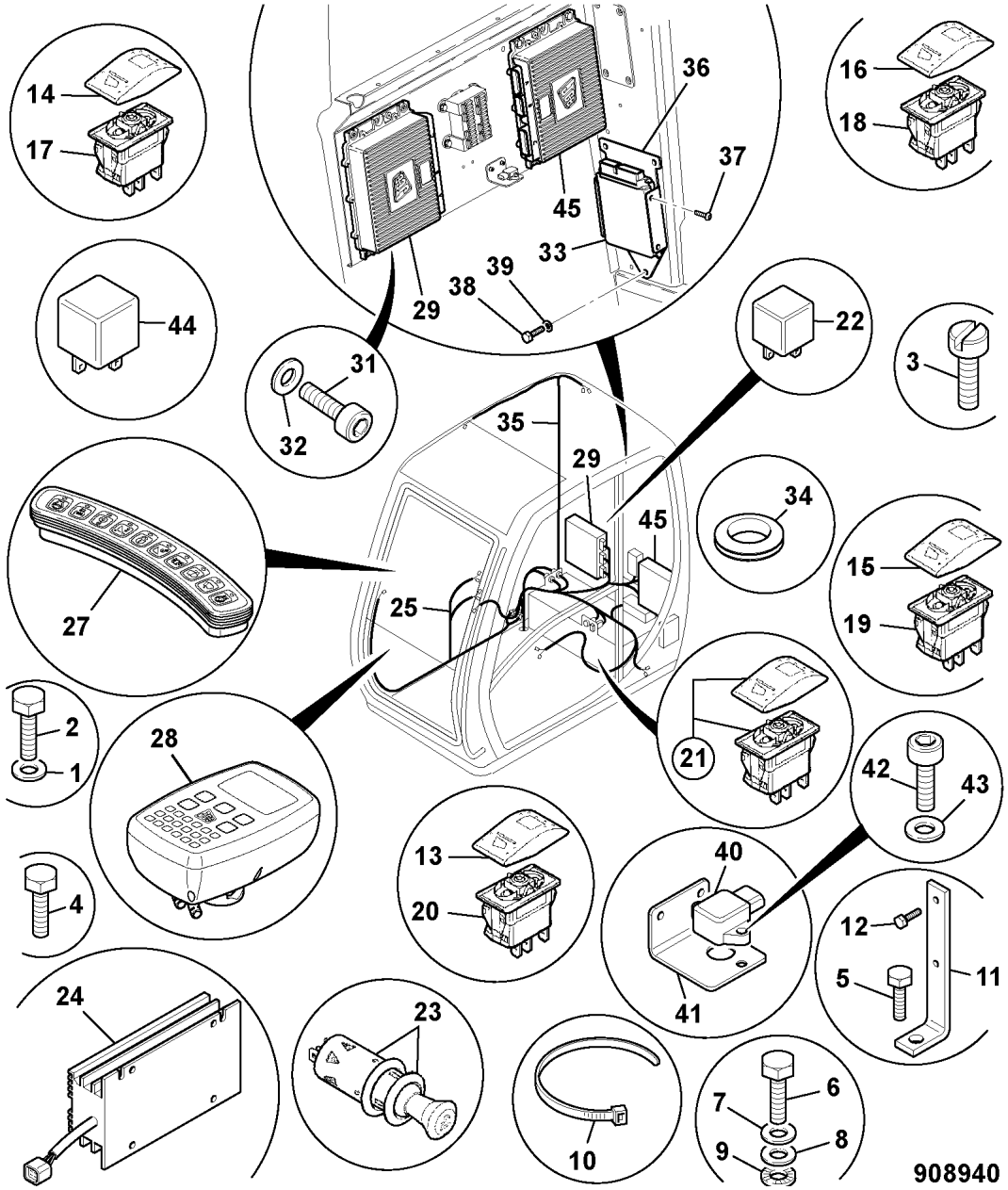

ITEM	PART NO	CHANGE NO	DESCRIPTION	REMARKS	USAGE CODE	QTY
23	717/12900		Lighter, cigarette, 12 volt			1
24	717/20154		Convertor, volt, 24 volts to 12 volts			1
25	721/11637		Harness, fascia			1
26	721/12522		Harness, cab, JS200			1
27	701/80544		Panel, RH switch fascia, JS175W AUTO			1
28	728/80073		Unit, EMS monitor, Programmed			1
29	728/80071		Unit, ECU1 Mk3, Programmed unit			1
31	1391/3407D		Capscrew, M10			6
32	1420/0008D		Washer, M10			6
33	728/80120		Unit, ECM -4JJ 92kW, engine			1
34	2410/1209		Grommet			2
35	721/12060		Harness, cab engine, JS330 AUTO			1
36	331/55578		Bracket, ECM mounting			1
37	826/01281		Capscrew, button head, M6 x 12			4
38	1315/0405D		Setscrew, M10 x 20			3
39	1420/0008D		Washer, M10			3
40	716/30259		Sensor, barometric pressure			1
41	331/65330		Bracket, barometric sensor			1
42	1391/3101D		Screw, cap			4
43	1420/0005D		Washer			2
44	JHR0174		Relay, 24 volt			3

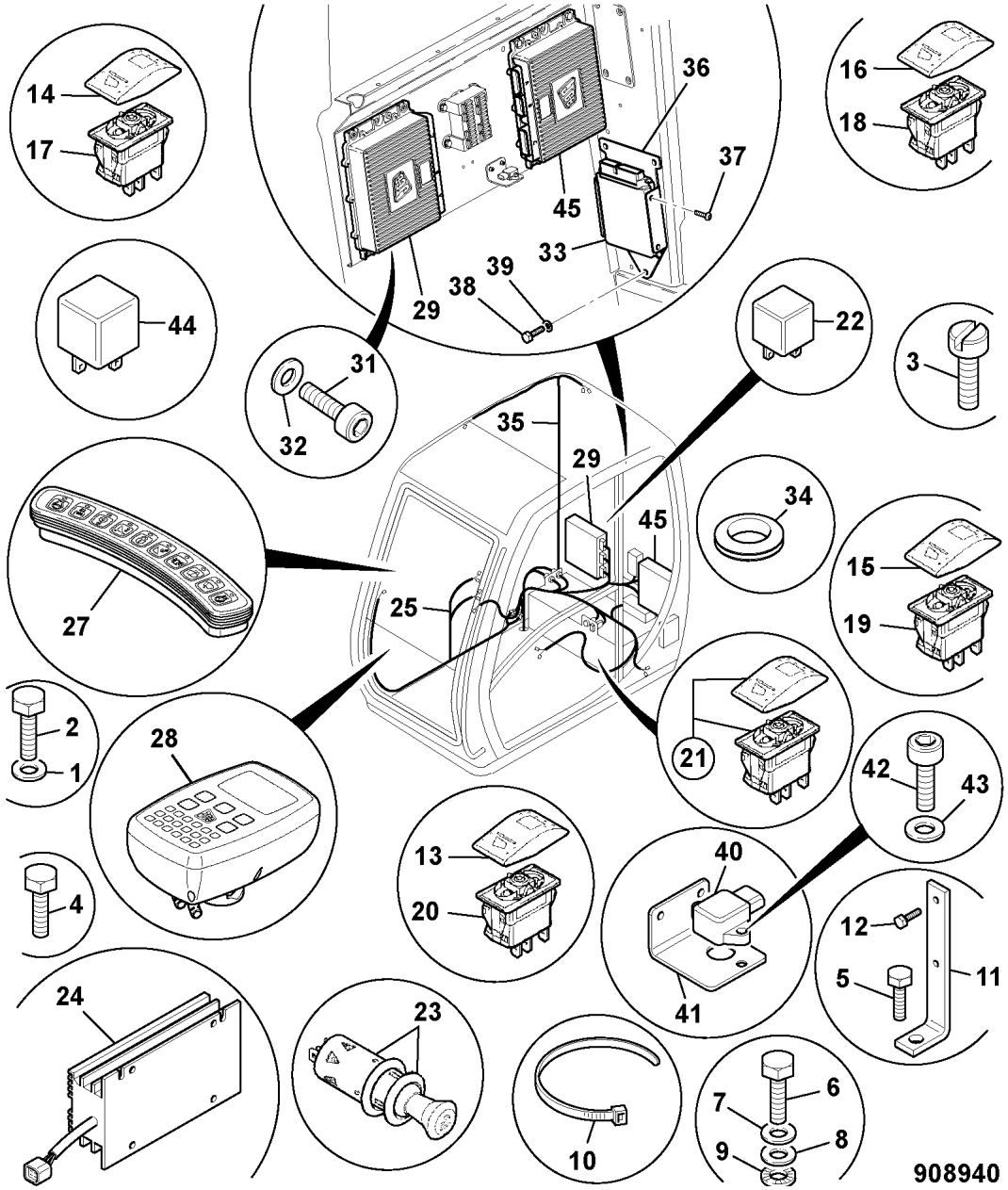

ITEM	PART NO	CHANGE NO	DESCRIPTION	REMARKS	USAGE CODE	QTY
45	728/80072		Unit, ECU, JS175W AUTO			1

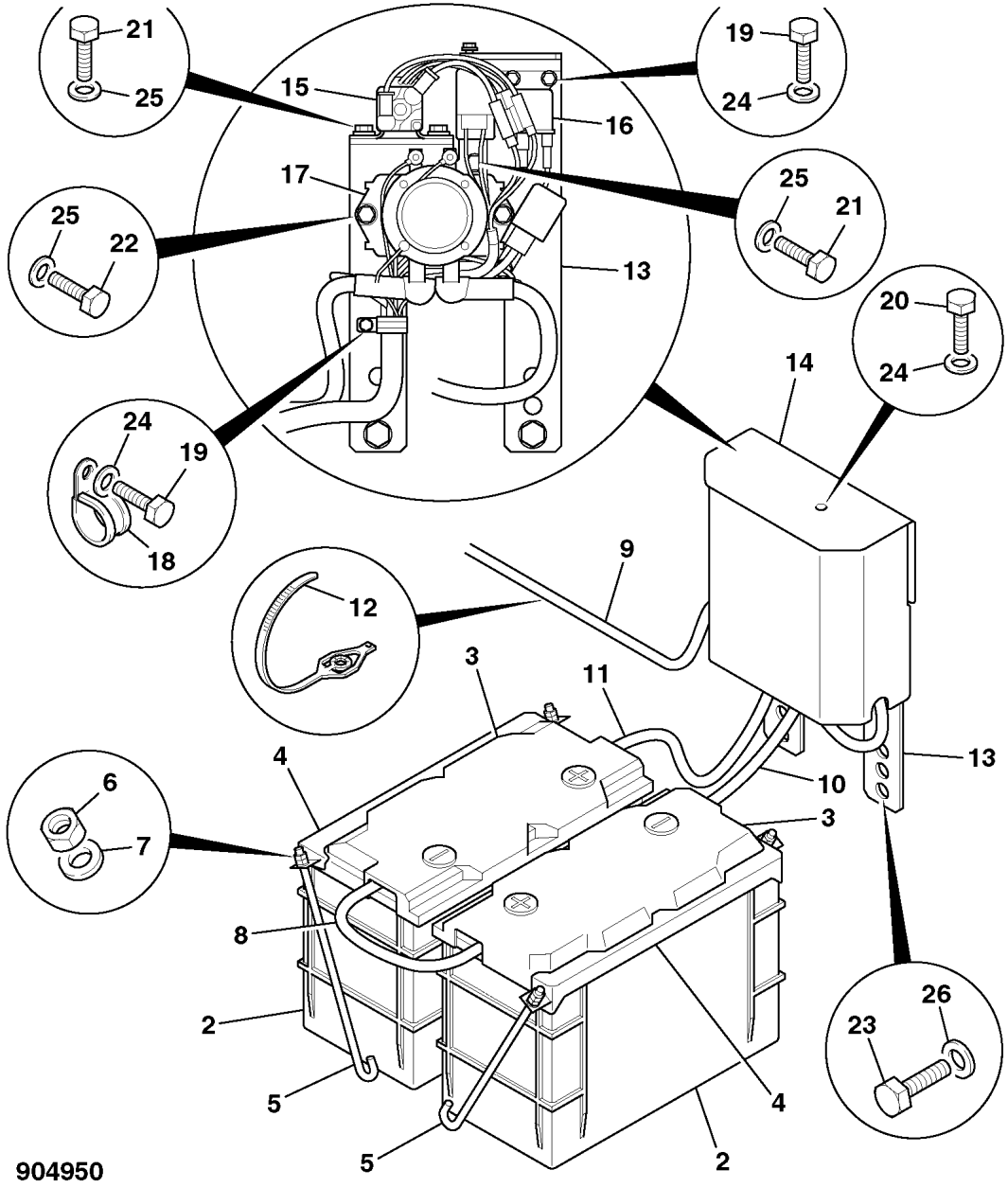

JS160W

	FROM	TO	FROM	TO

ITEM	PART NO	CHANGE NO	DESCRIPTION	REMARKS	USAGE CODE	QTY
2	708/04100		Battery, type 663			2
3	708/10061		Cover, battery			2
4	335/09676		Clamp, battery			2
5	826/01379		Bolt, swing			4
6	1370/0101D		Nut, plain			8
7	1420/0006D		Washer, M6 plain			4
8	718/20180		Cable, battery link, positive to negative			1
9	JNR0055		Cable, battery relay to, starter motor			1
10	718/56074		Cable, battery, negative			1
11	*718/20026		Cable, battery positive to, battery relay			1
12	826/01347		Tie, cable c/w mounting, 4.6mm x 190mm			2
13	331/63495		Plate, relay mounting			1
14	335/13716		Cover, relay			1
15	716/26100		Relay, starter safety			1
16	716/30260		Relay, thermostart			1
17	716/30205		Relay, battery			1
18	KHR1407		Clamp			1
19	1315/0201D		Screw, set M6x12			3
20	1315/0203D		Setscrew			1
21	1315/0301D		Setscrew, M8 x 12mm			4
22	1315/0307D		Setscrew, M8x25			3

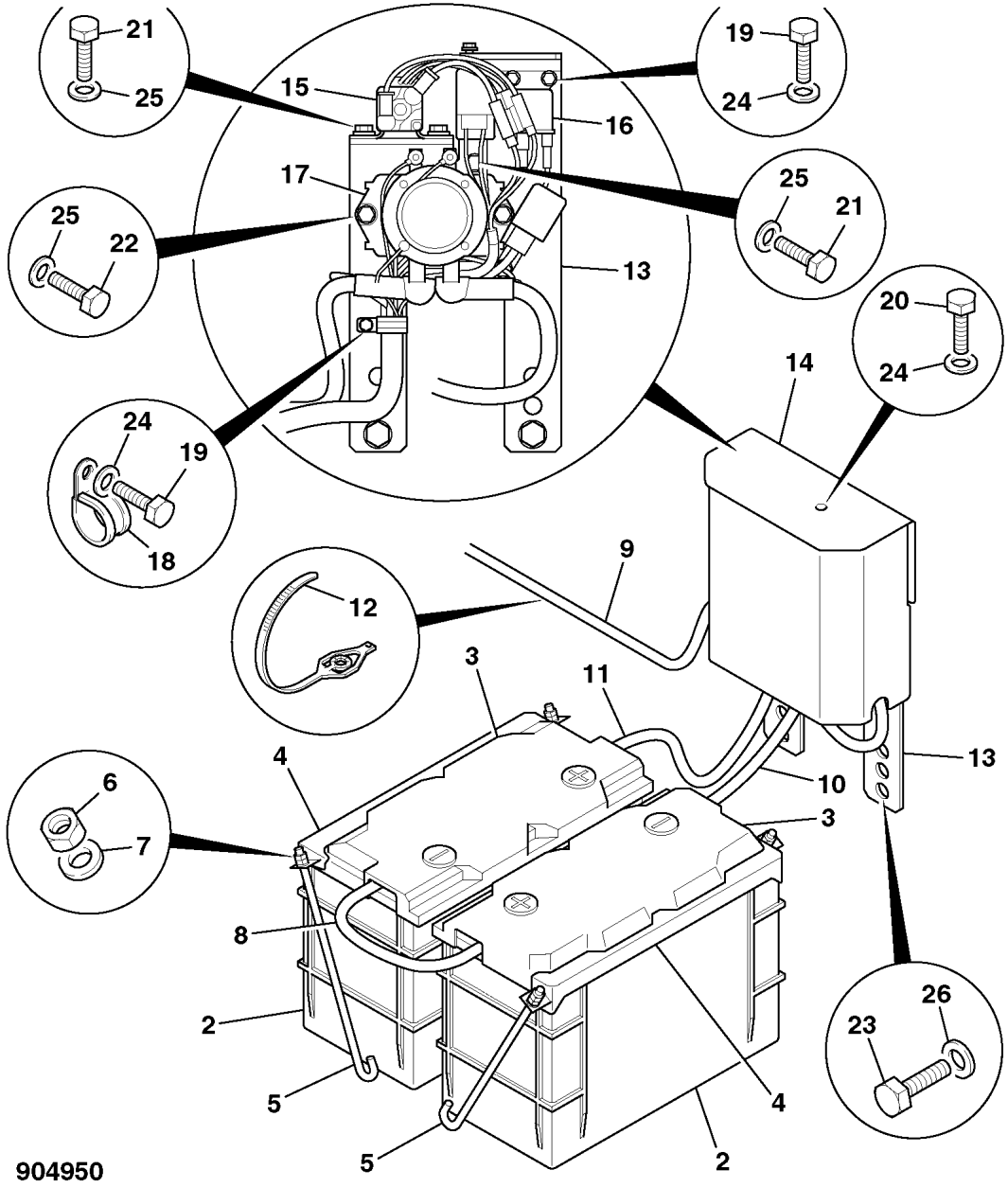

ITEM	PART NO	CHANGE NO	DESCRIPTION	REMARKS	USAGE CODE	QTY
23	1316/0510D		Screw			2
24	1420/0006D		Washer, M6 plain			4
25	1420/0007D		Washer, M8 plain			7
26	1420/0009D		Washer, M12			2

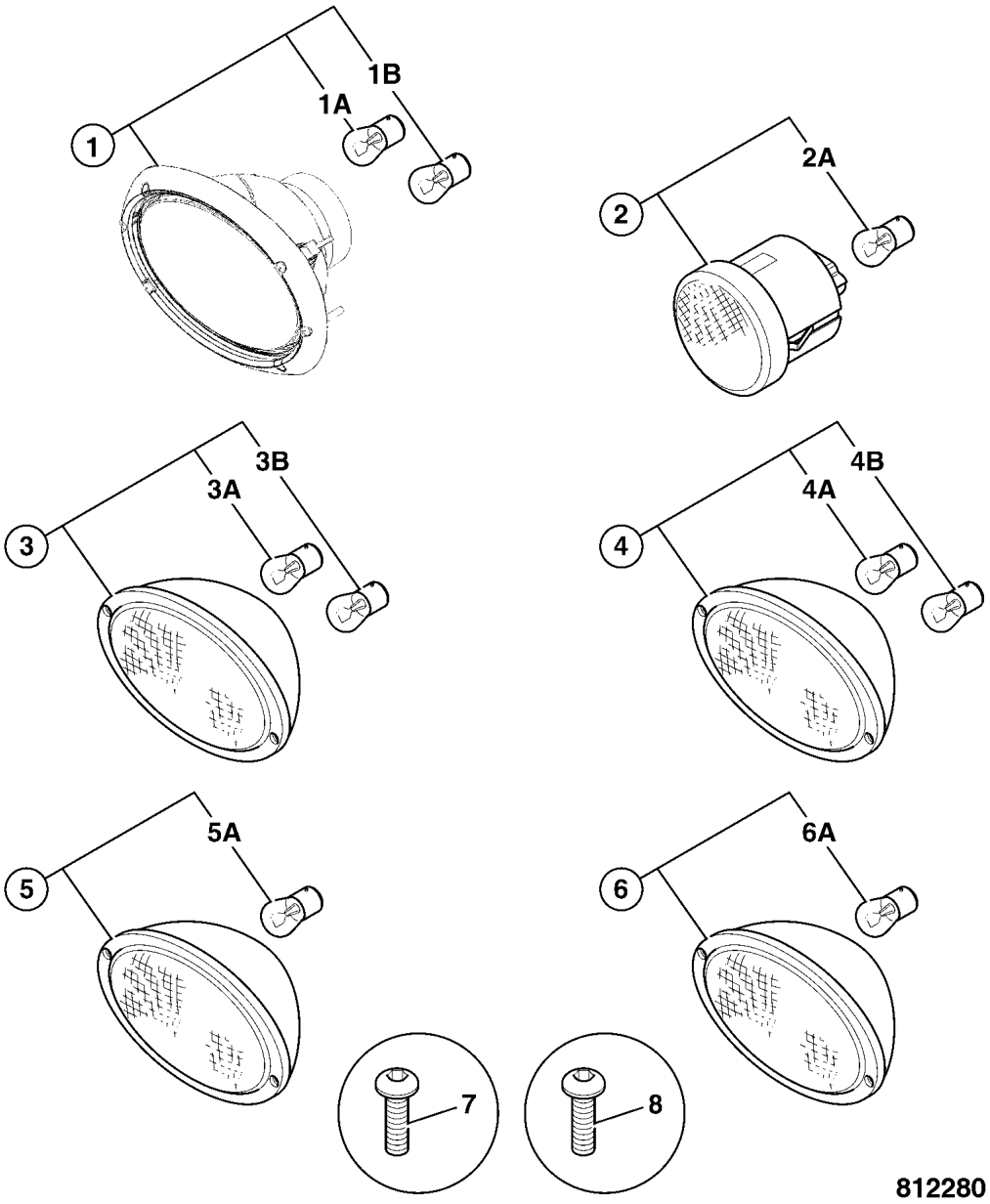

812280

	FROM	TO	FROM	TO
JS160W				

ITEM	PART NO	CHANGE NO	DESCRIPTION	REMARKS	USAGE CODE	QTY
1	700/50156		Light, head, 24V oval light, left hand dip			2
1 01	1		:TBA			1
1 02	1		:TBA			1
2	700/50164		Light, indicator, 24V			1
2 01	720/20017		:Bulb, 24v 21W			1
3	700/50157		Light, rear stop, dip, c/w flasher			1
3 01	720/20017		:Bulb, 24v 21W			1
3 02	720/20018		:Bulb, 24v 5/21W			1
4	700/50158		Light, rear stop, dip, c/w flasher			1
4 01	720/20017		:Bulb, 24v 21W			1
4 02	720/20018		::Bulb, 24v 5/21W			1
5	700/50159		Light, rear fog, 24V			1
5 01	720/20017		:Bulb, 24v 21W			1
6	700/50162		Light, reverse, 24V, left hand			1
6 01	720/20017		:Bulb, 24v 21W			1
7	826/00967		Screw, M4 panhead, posidrive			4
8	JHN0098		Screw, pan head, M5			8

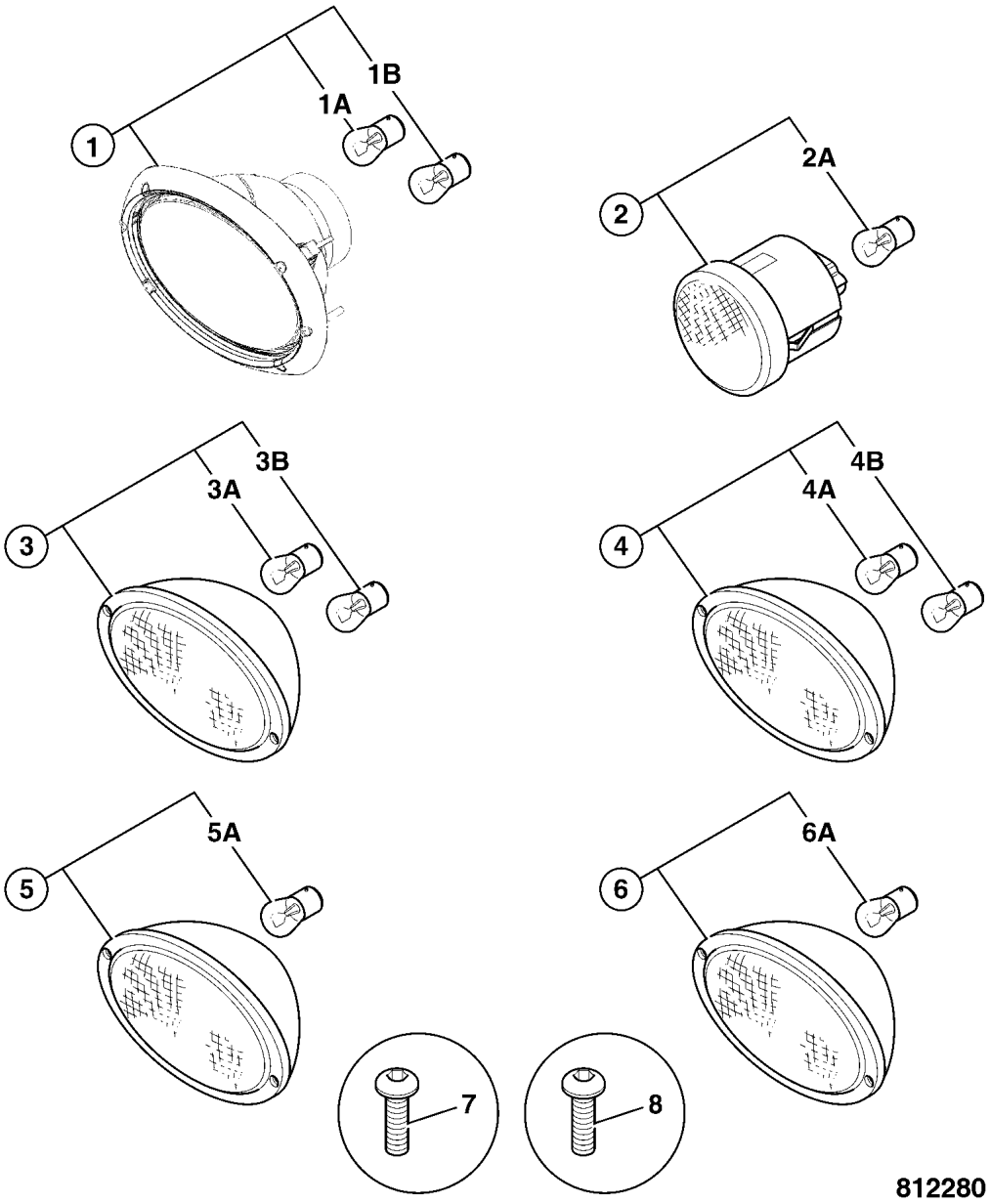

812280

	FROM	TO	FROM	TO
JS160W				

ITEM	PART NO	CHANGE NO	DESCRIPTION	REMARKS	USAGE CODE	QTY
1	700/50155		Light, head, 24V oval light, right hand dip			2
1 01	1		:TBA			1
1 02	1		:TBA			1
2	700/50164		Light, indicator, 24V			1
2 01	720/20017		:Bulb, 24v 21W			1
3	700/50157		Light, rear stop, dip, c/w flasher			1
3 01	720/20017		:Bulb, 24v 21W			1
3 02	720/20018		:Bulb, 24v 5/21W			1
4	700/50158		Light, rear stop, dip, c/w flasher			1
4 01	720/20017		:Bulb, 24v 21W			1
4 02	720/20018		::Bulb, 24v 5/21W			1
5	700/50160		Light, rear fog, 24V			1
5 01	720/20017		:Bulb, 24v 21W			1
6	700/50161		Light, reverse, 24V			1
6 01	720/20017		:Bulb, 24v 21W			1
7	826/00967		Screw, M4 panhead, posidrive			4
8	JHN0098		Screw, pan head, M5			8

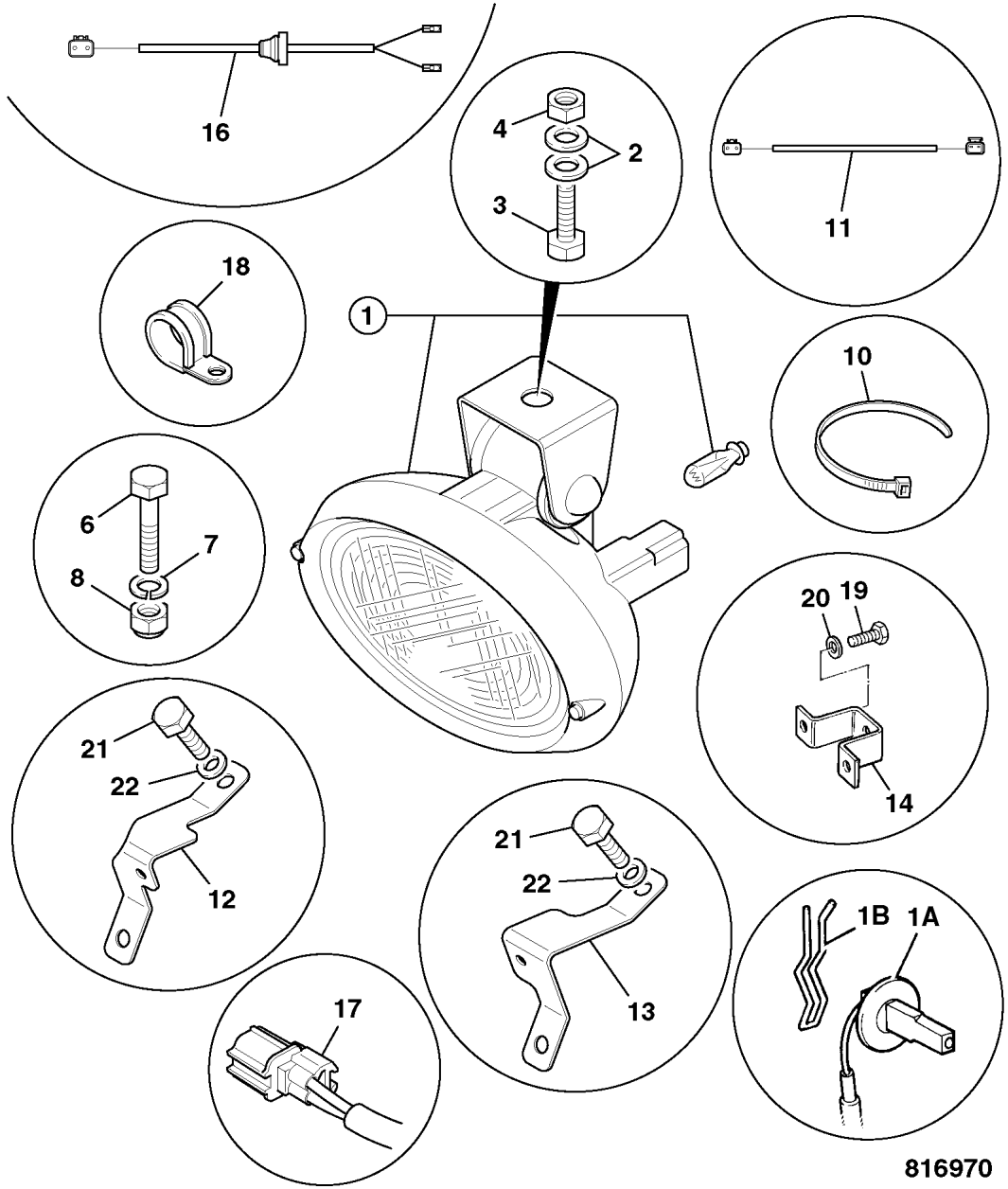

	FROM	TO	FROM	TO
JS160W				

ITEM	PART NO	CHANGE NO	DESCRIPTION	REMARKS	USAGE CODE	QTY
1	700/50170		Light, working, rear body mounted			3
1A	720/20032		:Bulb, H3 24v 70w			1
1B	700/10103		:Spring			1
2	1420/0007Z		Washer, plain, M8			6
3	1315/0305Z		Screw, M8 x 20mm long			3
4	1371/0201Z		Nut			3
5	123/06305		Bracket			3
6	1316/0305Z		Bolt, high tensile			3
7	1420/0007Z		Washer, plain, M8			3
8	1370/0201Z		Nut, M8			3
10	826/01143		Tie, cable, L=300mm x W=3.6mm			3
11	721/11815		Harness, hammer & auxiliary, extension	To rear light unit		1
12	331/36877		Bracket, right hand light			1
13	331/36878		Bracket, left hand light			1
14	JHR0025		Bracket, rear light	For rear light		1
16	721/12219		Harness, cab work lights, deutsch connector	Cab working lights.		2
17	7232/0005		Housing, connector			2
18	821/00410		Clip, pipe			2
19	1315/0305Z		Screw, M8 x 20mm long	Secures item 14		2
20	1420/0007Z		Washer, plain, M8	For item 19		2
21	1316/0505Z		Screw, M12x20			4

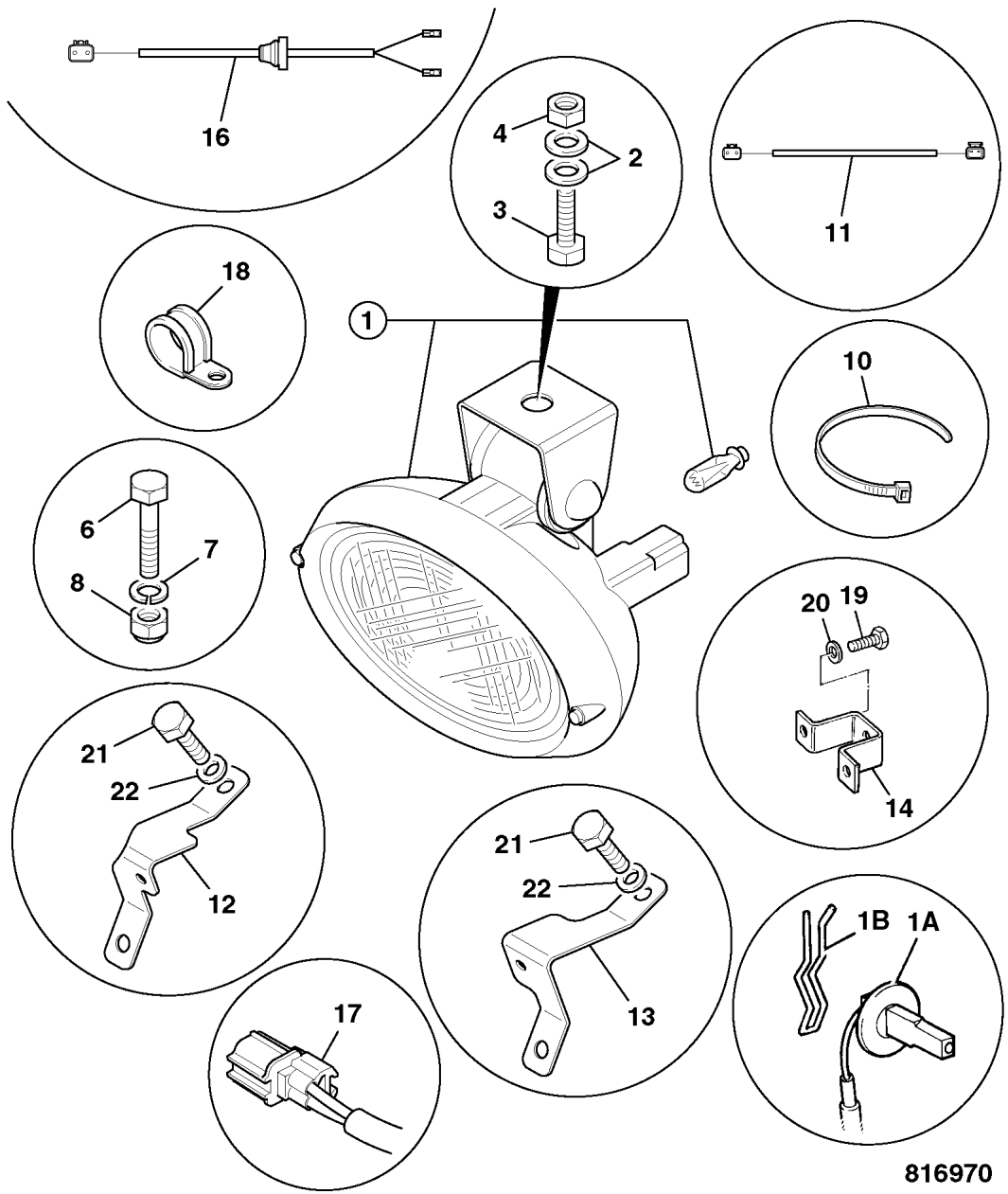

ITEM	PART NO	CHANGE NO	DESCRIPTION	REMARKS	USAGE CODE	QTY
22	1420/0009Z		Washer, Plain M12			4

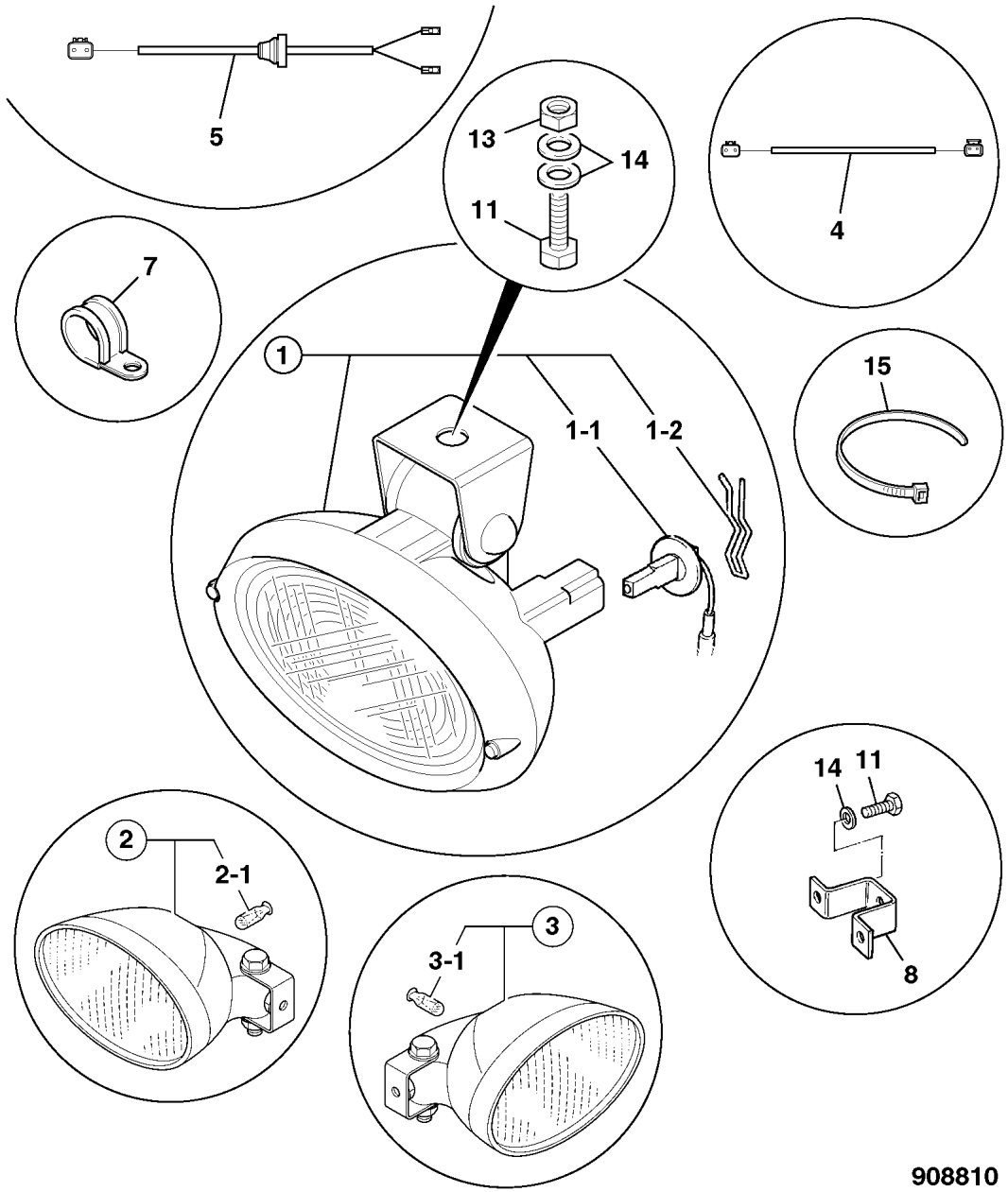

908810

	FROM	TO	FROM	TO
JS160W				

ITEM	PART NO	CHANGE NO	DESCRIPTION	REMARKS	USAGE CODE	QTY
1	700/50170		Light, working, rear body mounted			1
1 01	720/20032		:Bulb, H3 24v 70w			1
1 02	700/10103		:Spring			1
2	700/50147		Light, front working,LH, 24 volt			1
2 01	720/20032		:Bulb, H3 24v 70w			1
3	700/50148		Light, front working,RH, 24 volt			1
3 01	720/20032		:Bulb, H3 24v 70w			1
4	721/11815		Harness, hammer & auxiliary, extension			1
5	721/12219		Harness, cab work lights, deutsch connector			2
7	821/00410		Clip, pipe			2
8	JHR0025		Bracket, rear light			1
11	1316/0305		Screw, set			5
13	1371/0201D		Nut, M8 high stress			3
14	1420/0007D		Washer, M8 plain			8
15	826/01143		Tie, cable, L=300mm x W=3.6mm			3

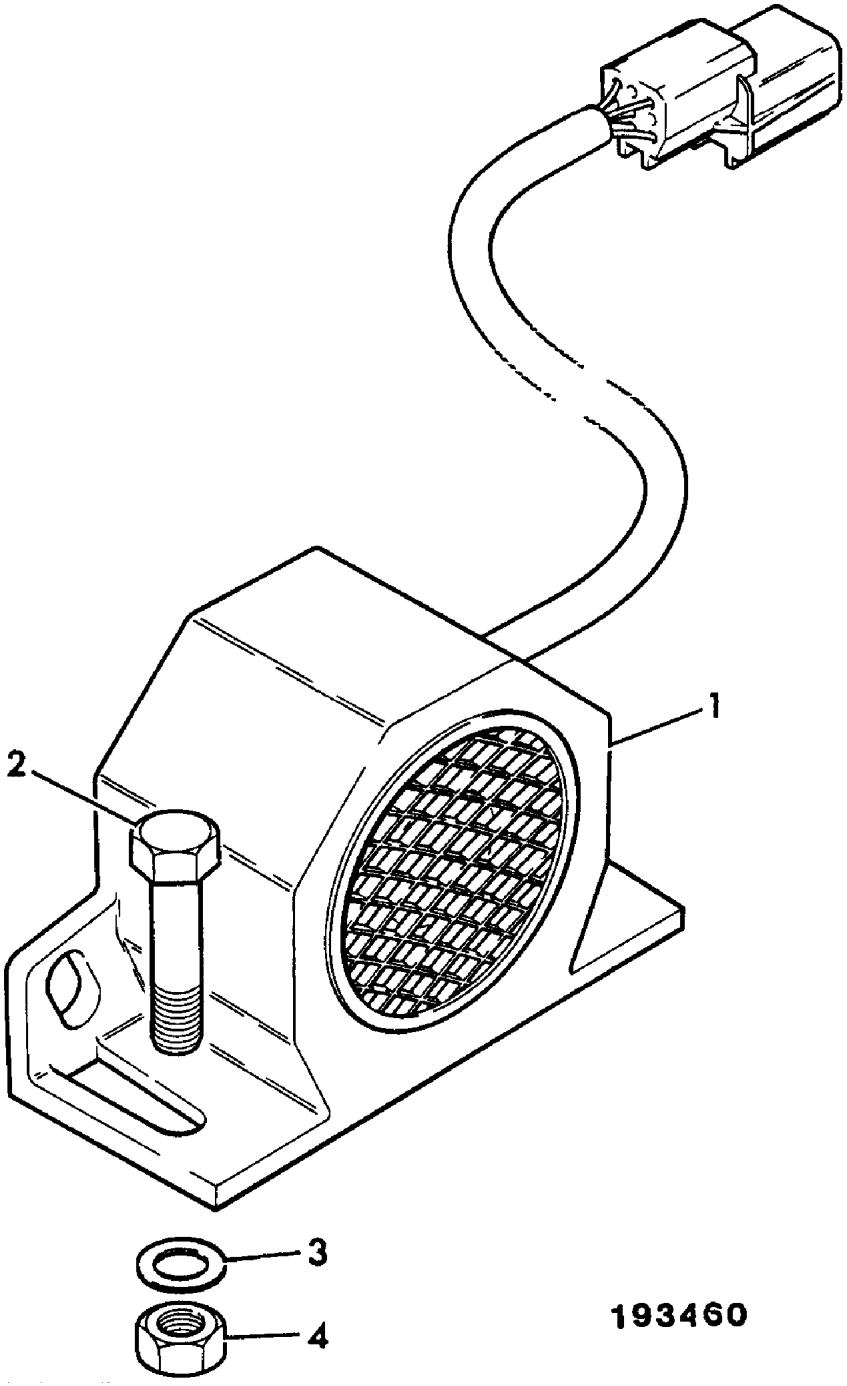

	FROM	TO	FROM	TO
JS160W				

ITEM	PART NO	CHANGE NO	DESCRIPTION	REMARKS	USAGE CODE	QTY
1	717/07700		Alarm, reverse			1
2	KHR0738		Screw, pan head			2
3	.		'See Remark'	Not required		1
4	.		'See Remark'	Not required		1

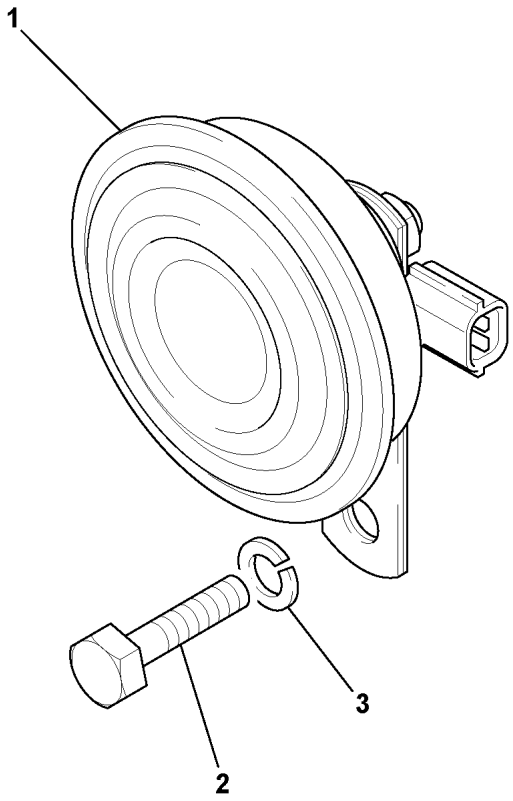

	FROM	TO	FROM	TO
JS160W				

ITEM	PART NO	CHANGE NO	DESCRIPTION	REMARKS	USAGE CODE	QTY
1	717/20152		Horn			1
2	1316/0305D		Screw, set			1
3	1425/0007D		Washer, M8 spring			1

903300

C

- C1 ELECTRICS, MAIN MACHINE
- C2 ELECTRICS, ENGINE
- C3 ELECTRICS, CAB

ENGLISH

C2-1-1 ENGINE ELECTRICS
C2-1-2 ENGINE, CONTROL MODULE
C2-2-1 ECU HARNESS
C2-3-1 MOTOR,STARTER
C2-4-1 ALTERNATOR
C2-5-1 ALTERNATOR MOUNTINGS

FRANCAIS

C2-1-1 ENGINE ELECTRICS
C2-1-2 ENGINE, CONTROL MODULE
C2-2-1 ECU HARNESS
C2-3-1 MOTOR,STARTER
C2-4-1 ALTERNATOR
C2-5-1 ALTERNATOR MOUNTINGS

DEUTSCH

C2-1-1 ENGINE ELECTRICS
C2-1-2 ENGINE, CONTROL MODULE
C2-2-1 ECU HARNESS
C2-3-1 MOTOR,STARTER
C2-4-1 ALTERNATOR
C2-5-1 ALTERNATOR MOUNTINGS

ITALIANO

C2-1-1 ENGINE ELECTRICS
C2-1-2 ENGINE, CONTROL MODULE
C2-2-1 ECU HARNESS
C2-3-1 MOTOR,STARTER
C2-4-1 ALTERNATOR
C2-5-1 ALTERNATOR MOUNTINGS

PORTUGUES

C2-1-1 ENGINE ELECTRICS
C2-1-2 ENGINE, CONTROL MODULE
C2-2-1 ECU HARNESS
C2-3-1 MOTOR,STARTER
C2-4-1 ALTERNATOR
C2-5-1 ALTERNATOR MOUNTINGS

ESPANOL

C2-1-1 ENGINE ELECTRICS
C2-1-2 ENGINE, CONTROL MODULE
C2-2-1 ECU HARNESS
C2-3-1 MOTOR,STARTER
C2-4-1 ALTERNATOR
C2-5-1 ALTERNATOR MOUNTINGS

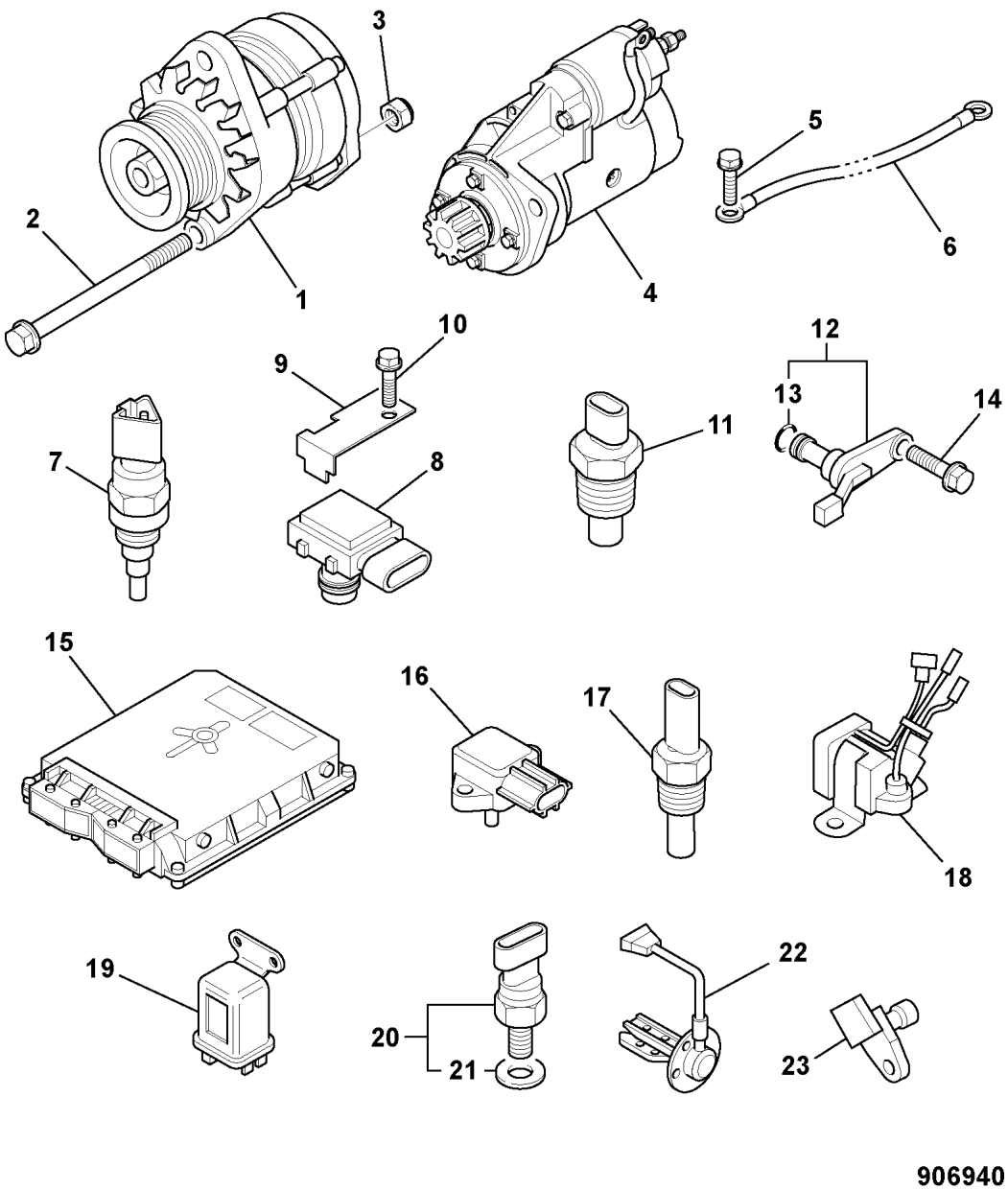

	FROM	TO	FROM	TO
JS160W				

ITEM	PART NO	CHANGE NO	DESCRIPTION	REMARKS	USAGE CODE	QTY
1	02/802633		Alternator			1
2	02/802634		Bolt			1
3	02/801076		Nut, M10 flange			1
4	02/802632		Motor, starter			1
5	02/802502		Bolt			2
6	02/800784		Lead, starter earth			1
7	02/802635		Sensor, water temperature			1
8	02/802640		Sensor, air pressure			1
9	02/802637		Bracket			1
10	02/802536		Bolt			1
11	716/30262		Sensor, inlet temperature			1
12	02/802405		Sensor, angle position	Camshaft		1
13	02/802406		:Gasket, position sensor, crankshaft			1
14	02/802407		Bolt, sensor			1
15	728/80120		Unit, ECM -4JJ 92kW, engine			1
16	716/30259		Sensor, barometric pressure			1
17	716/30262		Sensor, inlet temperature			1
18	716/30177		Relay, safety, pulse			1
19	716/30260		Relay, thermostart			1
20	716/30341		Sensor, oil pressure			1
21	32/919404		:Washer, seal			1

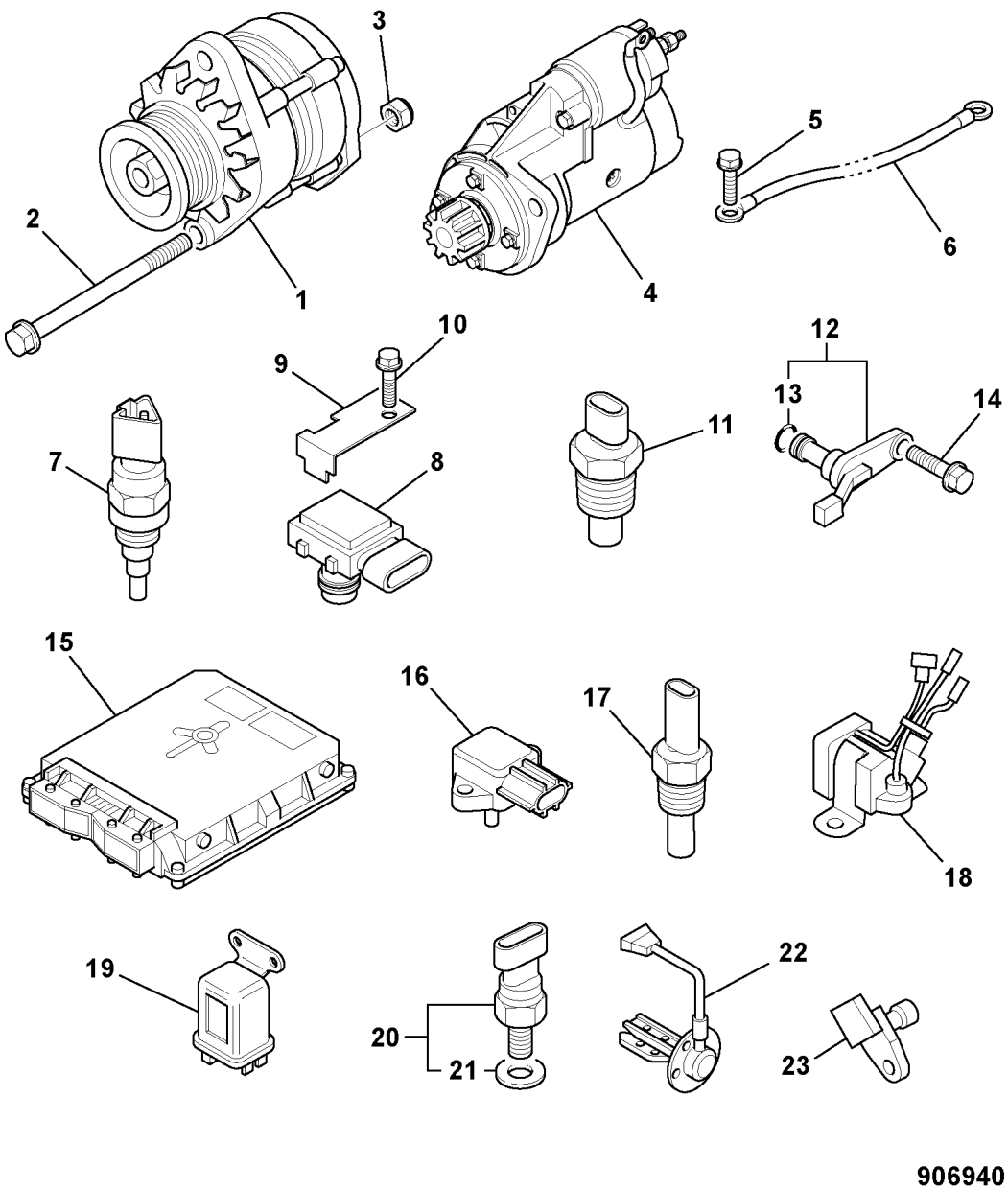

906940

ITEM	PART NO	CHANGE NO	DESCRIPTION	REMARKS	USAGE CODE	QTY
22	701/80561		Switch, oil level			1
23	02/802405		Sensor, angle position	Camshaft		1

	FROM	TO	FROM	TO
JS160W				

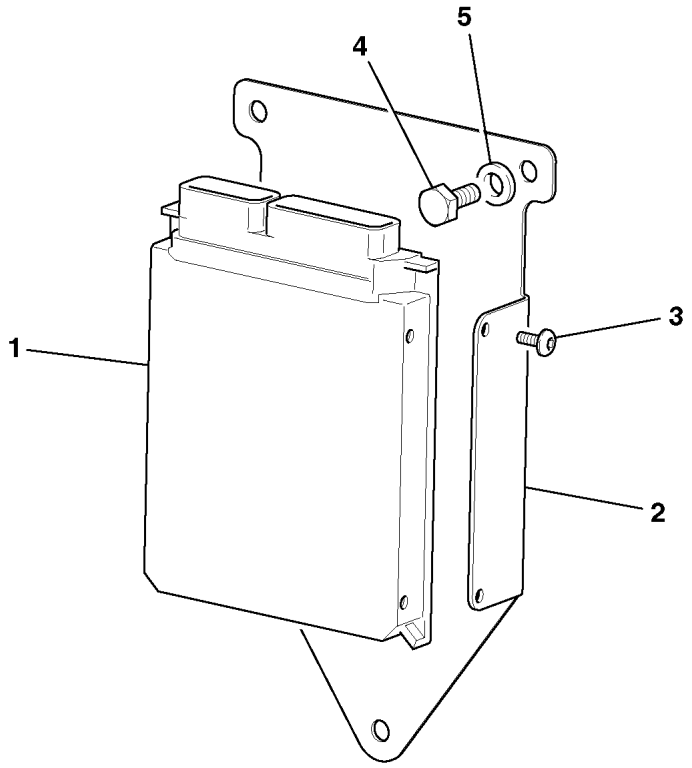

ITEM	PART NO	CHANGE NO	DESCRIPTION	REMARKS	USAGE CODE	QTY
1	728/80120		Unit, ECM -4JJ 92kW, engine			1
2	331/55578		Bracket, ECM mounting			1
3	826/01281		Capscrew, button head, M6 x 12			4
4	1315/0405D		Setscrew, M10 x 20			3
5	1420/0008D		Washer, M10			3

870600

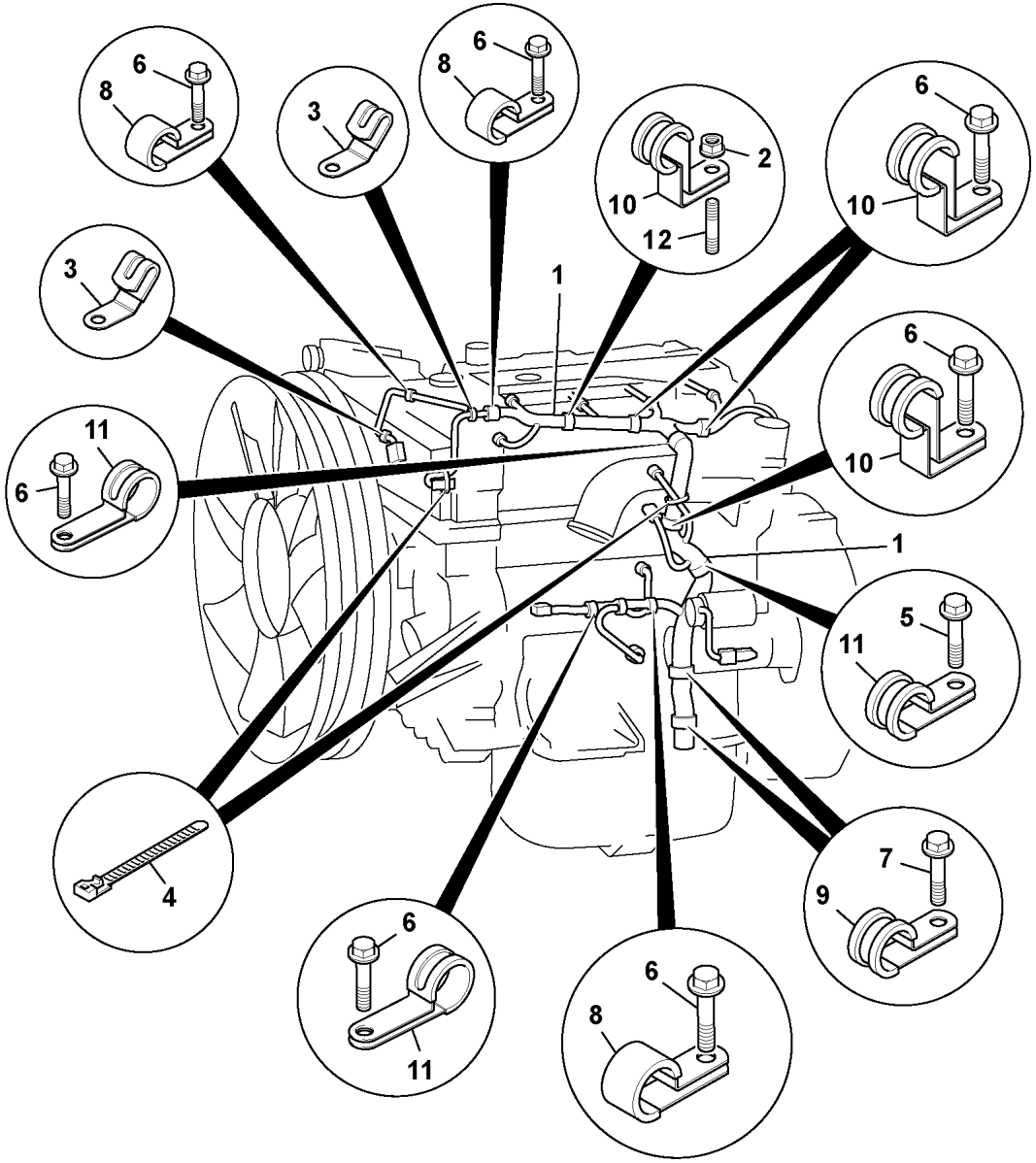

905790

	FROM	TO	FROM	TO
JS160W				

ITEM	PART NO	CHANGE NO	DESCRIPTION	REMARKS	USAGE CODE	QTY
1	02/802642		Harness			1
2	02/802388		Nut, cover			1
3	02/801994		Clip			3
4	02/801453		Tie, cable			3
5	02/802536		Bolt			1
6	02/802550		Bolt			8
7	02/802643		Bolt			2
8	02/802644		Clip			2
9	02/802645		Clip			2
10	02/802646		Clip			3
11	02/802647		Clip			1
12	02/802650		Clip			1

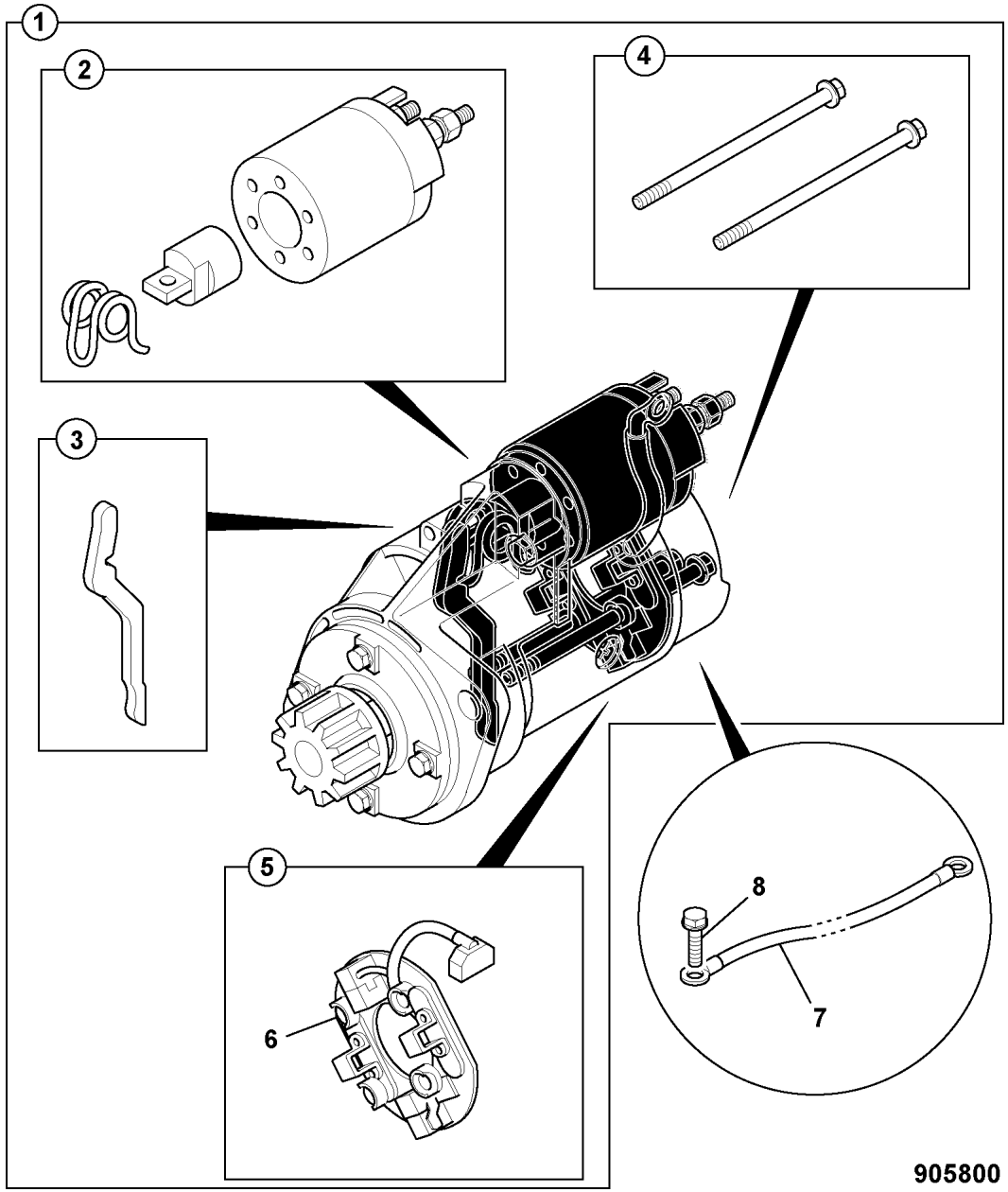

	FROM	TO	FROM	TO
JS160W				

ITEM	PART NO	CHANGE NO	DESCRIPTION	REMARKS	USAGE CODE	QTY
1	02/802632		Motor, starter			1
2	714/40497		:Solenoid, starter, motor			1
3	714/40498		::Lever, solenoid, operating			1
4	714/40499		:Bolt, fixing			2
5	714/40500		:Holder, brush			1
6	714/40501		::Spring, brush holder			1
7	02/800784		Lead, starter earth			1
8	02/802502		Bolt			1

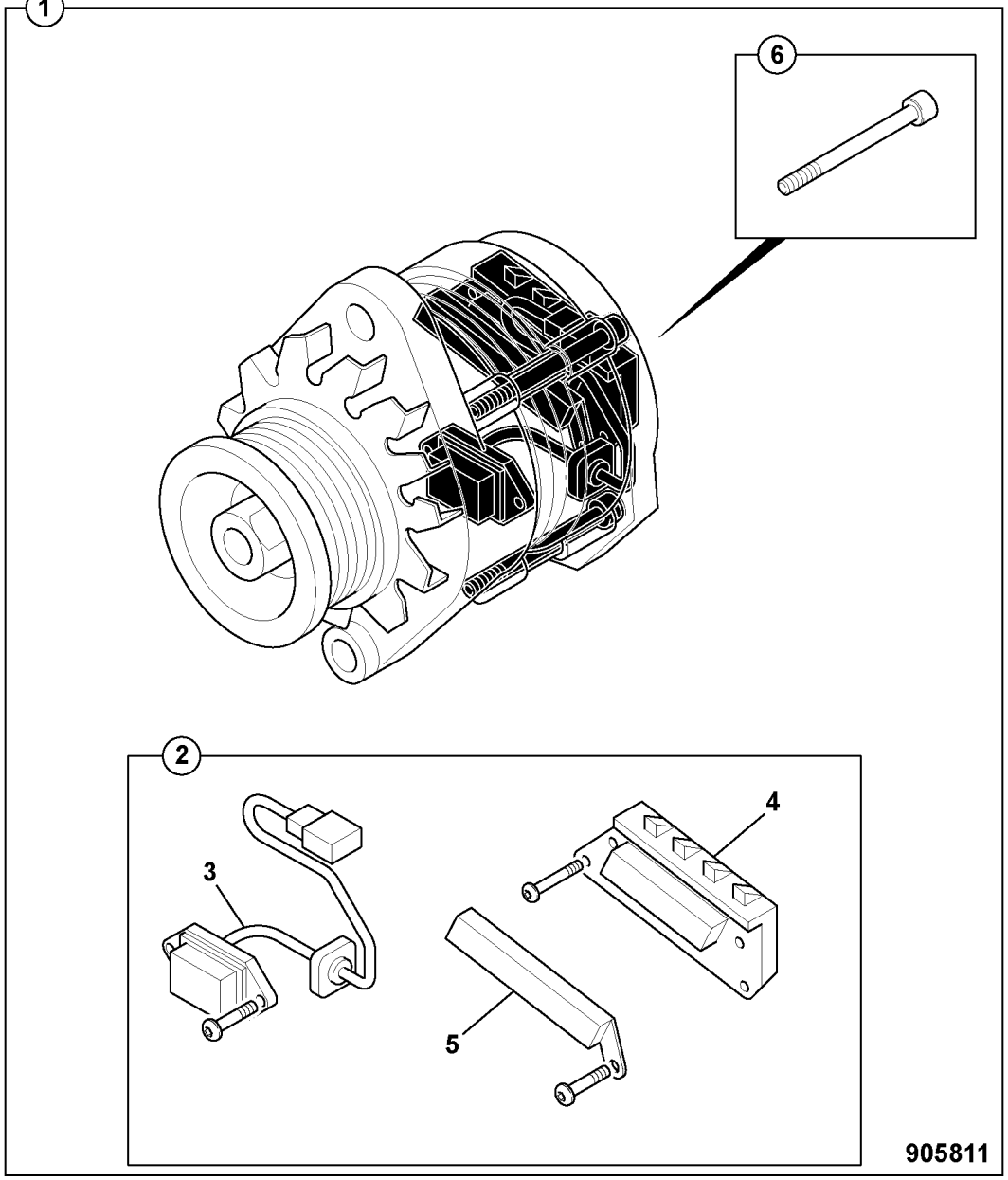

	FROM	TO	FROM	TO
JS160W				

ITEM	PART NO	CHANGE NO	DESCRIPTION	REMARKS	USAGE CODE	QTY
1	02/802633		Alternator			1
2	714/40503		:Cover, alternator assembly			1
3	714/40504		::Regulator, voltage			1
4	714/40505		::Rectifier, alternator			1
5	714/40506		::Condenser, alternator			1
6	714/40507		:Bolt, fixing			3

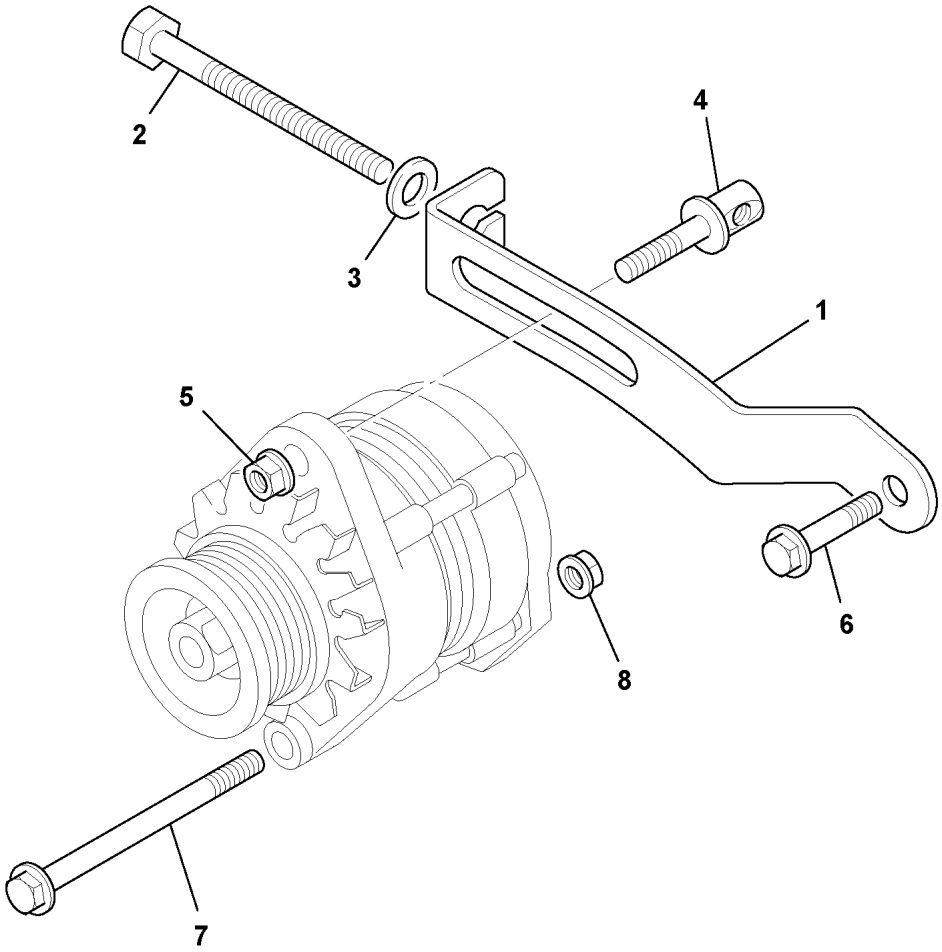

905820

	FROM	TO	FROM	TO
JS160W				

ITEM	PART NO	CHANGE NO	DESCRIPTION	REMARKS	USAGE CODE	QTY
1	02/802541		Plate, adjuster			1
2	02/800932		Bolt, adjusting			1
3	02/802328		Washer			1
4	02/800933		Adjuster			1
5	02/802388		Nut, cover			1
6	02/802542		Bolt			1
7	02/802634		Bolt			1
8	02/801076		Nut, M10 flange			1
9	.		'See Remark'	Mounting bracket see R1-8-1		1

C

- C1 ELECTRICS, MAIN MACHINE
- C2 ELECTRICS, ENGINE
- ● C3 ELECTRICS, CAB

ENGLISH

C3-2-1 SWITCH PANEL, SIDE CONSOLE, RIGHT HAND
C3-5-1 HEATER
C3-5-10 HEATER UNIT
C3-5-20 HEATER UNIT FIG 2
C3-7-1 FUSE BOX
C3-9-1 LIGHT, BEACON, HAZARD WARNING, AMBER
C3-11-1 RADIO
C3-12-1 AIR CON
C3-12-10 AIR CON
C3-12-20 COMBI UNIT FIG 2
C3-14-1 CIGAR LIGHTER
C3-15-1 WASH/WIPE, WINDSCREEN
C3-15-10 FRONT WIPER, CAB LOWER WINDOW

FRANCAIS

C3-2-1 SWITCH PANEL, SIDE CONSOLE, RIGHT HAND
C3-5-1 HEATER
C3-5-10 HEATER UNIT
C3-5-20 HEATER UNIT FIG 2
C3-7-1 FUSE BOX
C3-9-1 PHARE, BALISAGE AVERTISSEMENT DANGERAMBRE
C3-11-1 RADIO
C3-12-1 AIR CON
C3-12-10 AIR CON
C3-12-20 COMBI UNIT FIG 2
C3-14-1 CIGAR LIGHTER
C3-15-1 LAVAGE/ESSUI-GLACES PARE-BRISE
C3-15-10 FRONT WIPER, CAB LOWER WINDOW

DEUTSCH

C3-2-1 SWITCH PANEL, SIDE CONSOLE, RIGHT HAND
C3-5-1 HEATER
C3-5-10 HEATER UNIT
C3-5-20 HEATER UNIT FIG 2
C3-7-1 FUSE BOX
C3-9-1 WARNBELEUCHTUNG RUNDUM-LEUCHTE BERNSTEIN
C3-11-1 RADIO
C3-12-1 AIR CON
C3-12-10 AIR CON
C3-12-20 COMBI UNIT FIG 2
C3-14-1 CIGAR LIGHTER
C3-15-1 WISCH/WASCH-ANL. WINDSCHUTZSCHEIBE
C3-15-10 FRONT WIPER, CAB LOWER WINDOW

ITALIANO

C3-2-1 SWITCH PANEL, SIDE CONSOLE, RIGHT HAND
C3-5-1 HEATER
C3-5-10 HEATER UNIT
C3-5-20 HEATER UNIT FIG 2
C3-7-1 FUSE BOX
C3-9-1 LUCE, FARO SEGNALAZIONE PERICOLO AMBRA
C3-11-1 RADIO
C3-12-1 AIR CON
C3-12-10 AIR CON
C3-12-20 COMBI UNIT FIG 2
C3-14-1 CIGAR LIGHTER
C3-15-1 TERGICRISTALLO/LAVAVETRO PARABREZZA
C3-15-10 FRONT WIPER, CAB LOWER WINDOW

PORTUGUES

C3-2-1 SWITCH PANEL, SIDE CONSOLE, RIGHT HAND
C3-5-1 HEATER
C3-5-10 HEATER UNIT
C3-5-20 HEATER UNIT FIG 2
C3-7-1 FUSE BOX
C3-9-1 LUZ, FAROL ROTATIVO AVISO DE PERIGO AMBAR
C3-11-1 RADIO
C3-12-1 AIR CON
C3-12-10 AIR CON
C3-12-20 COMBI UNIT FIG 2
C3-14-1 CIGAR LIGHTER
C3-15-1 LIMPA PARA-BRISAS PARA-BRISAS
C3-15-10 FRONT WIPER, CAB LOWER WINDOW

ESPANOL

C3-2-1 SWITCH PANEL, SIDE CONSOLE, RIGHT HAND
C3-5-1 HEATER
C3-5-10 HEATER UNIT
C3-5-20 HEATER UNIT FIG 2
C3-7-1 FUSE BOX
C3-9-1 FAROS AVISO ACCIDENTE AMBAR
C3-11-1 RADIO
C3-12-1 AIR CON
C3-12-10 AIR CON
C3-12-20 COMBI UNIT FIG 2
C3-14-1 CIGAR LIGHTER
C3-15-1 LAVA/LIMPIA PARABRISAS
C3-15-10 FRONT WIPER, CAB LOWER WINDOW

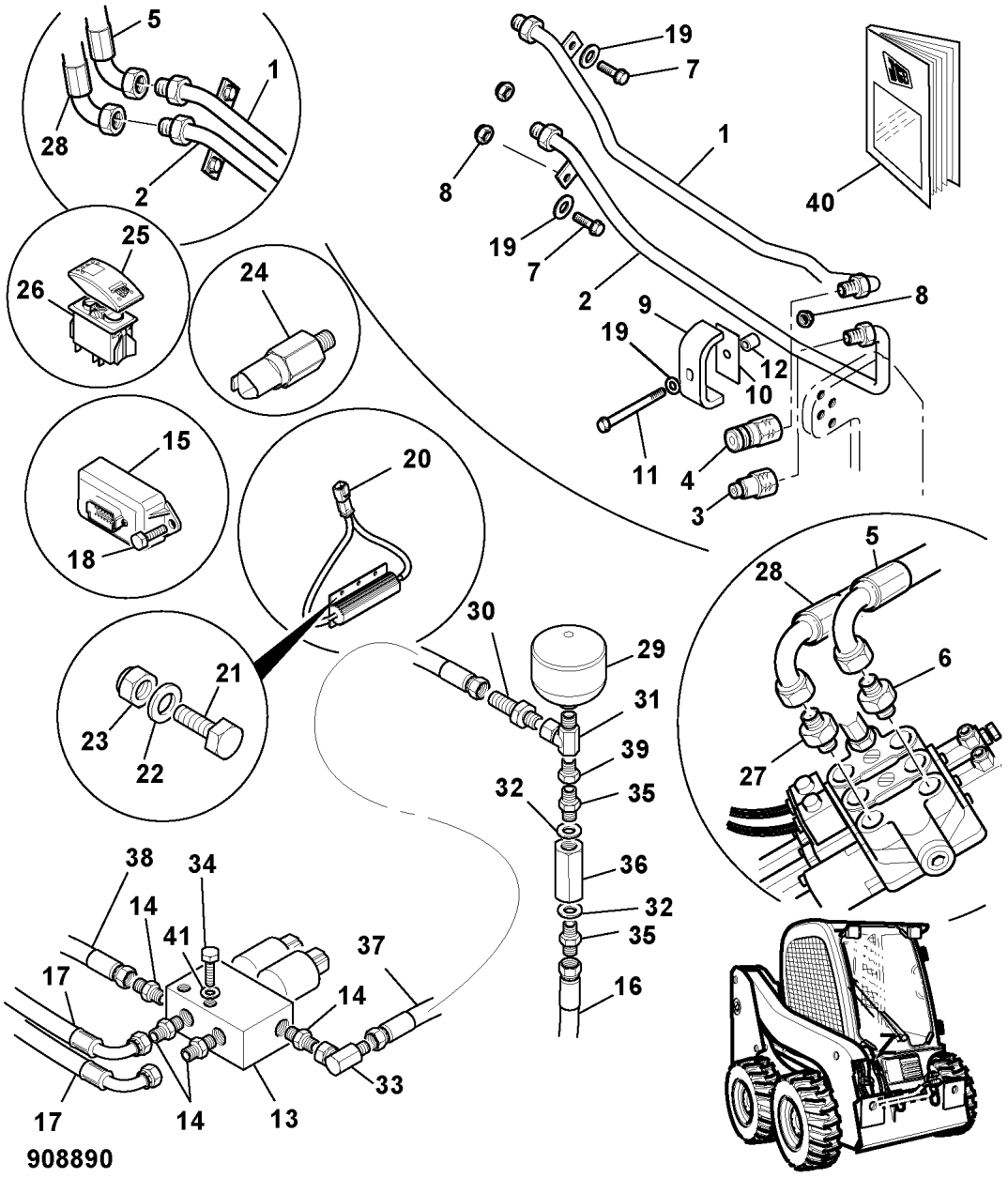

	FROM	TO	FROM	TO
JS160W				

ITEM	PART NO	CHANGE NO	DESCRIPTION	REMARKS	USAGE CODE	QTY
1	JHP0046		Washer, M10			1
2	JHR0128		Bolt			2
3	KHR0611		Screw, pan head			4
4	1316/0305D		Screw, set			4
5	1316/0405D		Bolt			1
6	1316/9403D		Bolt, SCREW; M4 X 16			4
7	1420/0004Z		Washer, M4			4
8	1420/0007D		Washer, M8 plain			4
9	6063/0008Z		Washer, starlock			1
10	242/00290		Tie, panel fixing cable			4
11	331/17400		Bracket, Earth, Harness			1
12	6012/0198Z		Screw, pan head			1
13	701/58826		Actuator, front worklights, switch decal			1
14	701/58853		Cap, decal, boom priority			1
15	701/58855		Decal, mute, radio	Radio use with item 17		1
16	701/58886		Cap, decal, cab interior			1
17	701/60000		Switch, 12V			1
18	701/60030		Switch, 24V			1
19	701/60031		Switch, 24V			1
20	701/60041		Switch, 24V			1
21	701/80214		Switch, Redundancy			1
22	716/30075		Relay, Stop solenoid			1

C3-2-1 SWITCH PANEL, SIDE CONSOLE, RIGHT HAND

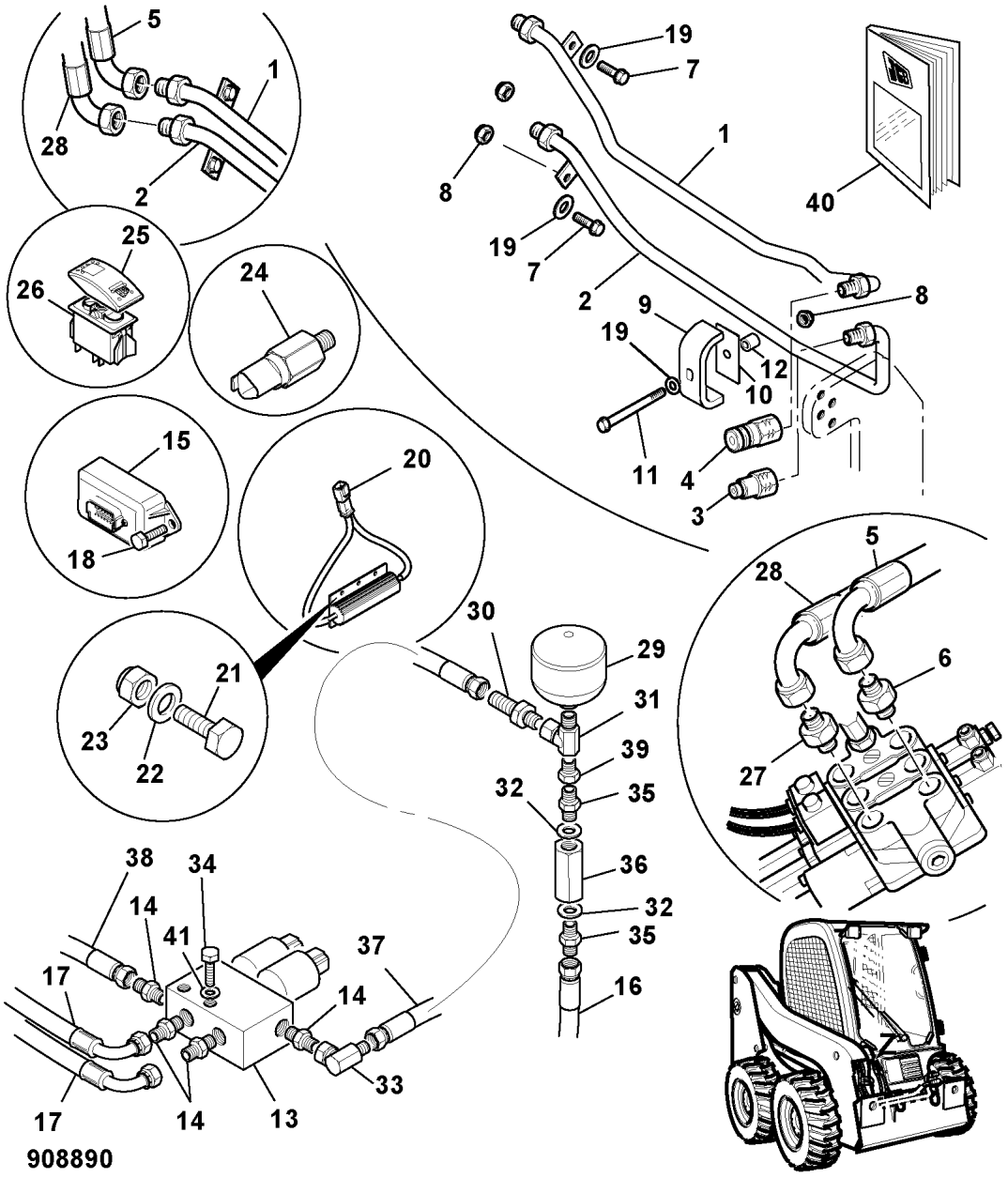

ITEM	PART NO	CHANGE NO	DESCRIPTION	REMARKS	USAGE CODE	QTY
23	717/12900		Lighter, cigarette, 12 volt			1
24	717/20154		Convertor, volt, 24 volts to 12 volts			1
25	721/11637		Harness, fascia			1
26	721/12522		Harness, cab, JS200			1
27	701/80544		Panel, RH switch fascia, JS175W AUTO			1
28	728/80073		Unit, EMS monitor, Programmed			1
29	728/80071		Unit, ECU1 Mk3, Programmed unit			1
31	1391/3407D		Capscrew, M10			6
32	1420/0008D		Washer, M10			6
33	728/80120		Unit, ECM -4JJ 92kW, engine			1
34	2410/1209		Grommet			2
35	721/12060		Harness, cab engine, JS330 AUTO			1
36	331/55578		Bracket, ECM mounting			1
37	826/01281		Capscrew, button head, M6 x 12			4
38	1315/0405D		Setscrew, M10 x 20			3
39	1420/0008D		Washer, M10			3
40	716/30259		Sensor, barometric pressure			1
41	331/65330		Bracket, barometric sensor			1
42	1391/3101D		Screw, cap			4
43	1420/0005D		Washer			2
44	JHR0174		Relay, 24 volt			3

C3-2-1 SWITCH PANEL, SIDE CONSOLE, RIGHT HAND

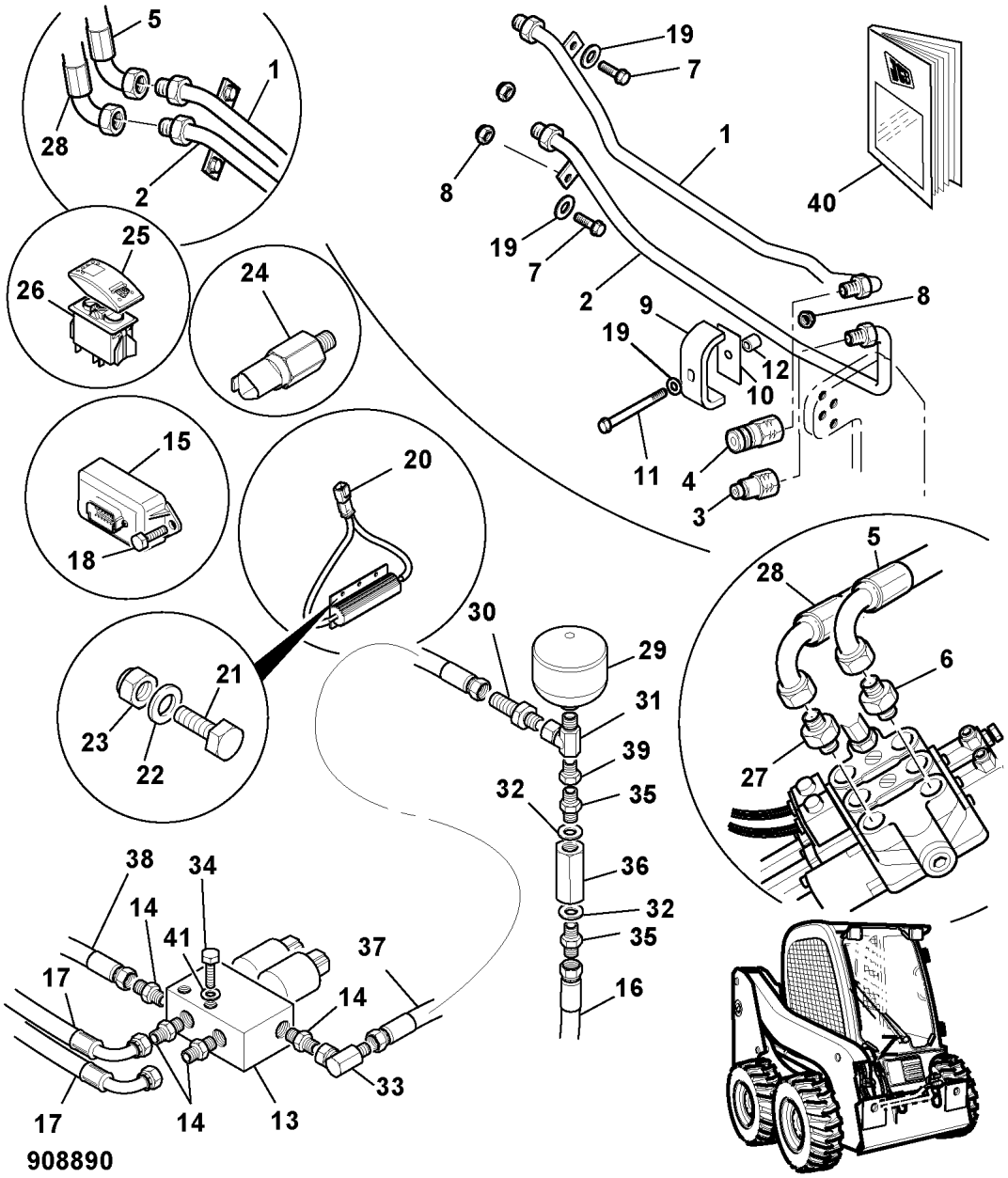

ITEM	PART NO	CHANGE NO	DESCRIPTION	REMARKS	USAGE CODE	QTY
45	728/80072		Unit, ECU, JS175W AUTO			1

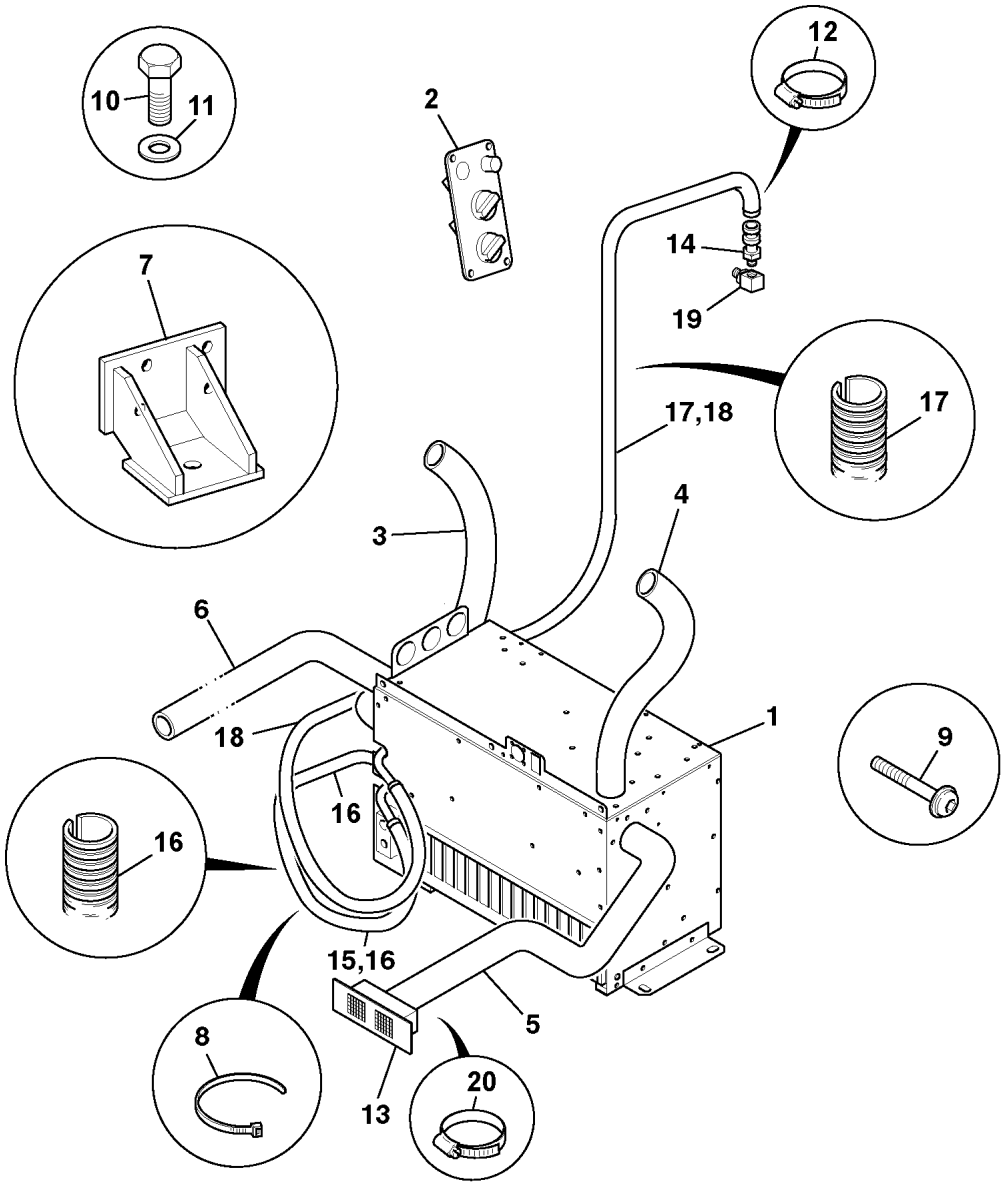

738160

	FROM	TO	FROM	TO
JS160W				

ITEM	PART NO	CHANGE NO	DESCRIPTION	REMARKS	USAGE CODE	QTY
1	30/927072		Heater, unit assembly			1
2	30/927073		Unit, heater control panel			1
3	30/925753		Hose, air duct 50.8x750L, right hand rear			1
4	30/925754		Hose, air duct 50.8x500L, left hand rear			1
5	30/925755		Hose, air duct 60x1250L, foot vent			1
6	30/925756		Hose, air duct 60x1450L, front vents			1
7	335/09713		Bracket, engine mounting, front	Engine mounting		1
8	826/01143		Tie, cable, L=300mm x W=3.6mm			8
9	KHR0737		Screw, pan head			2
10	1316/0405D		Bolt			1
11	1420/0008D		Washer, M10			1
12	2201/0005		Clip, jubilee			4
13	331/28366		Plate, foot vent			1
14	JHN0158		Adapter			1
15	834/10980		Hose, water			1
16	647/10501		Tube, corrugated			1
17	647/10501		Tube, corrugated			1
18	834/10887		Hose, water			1
19	KRR0831		Adapter, elbow			1

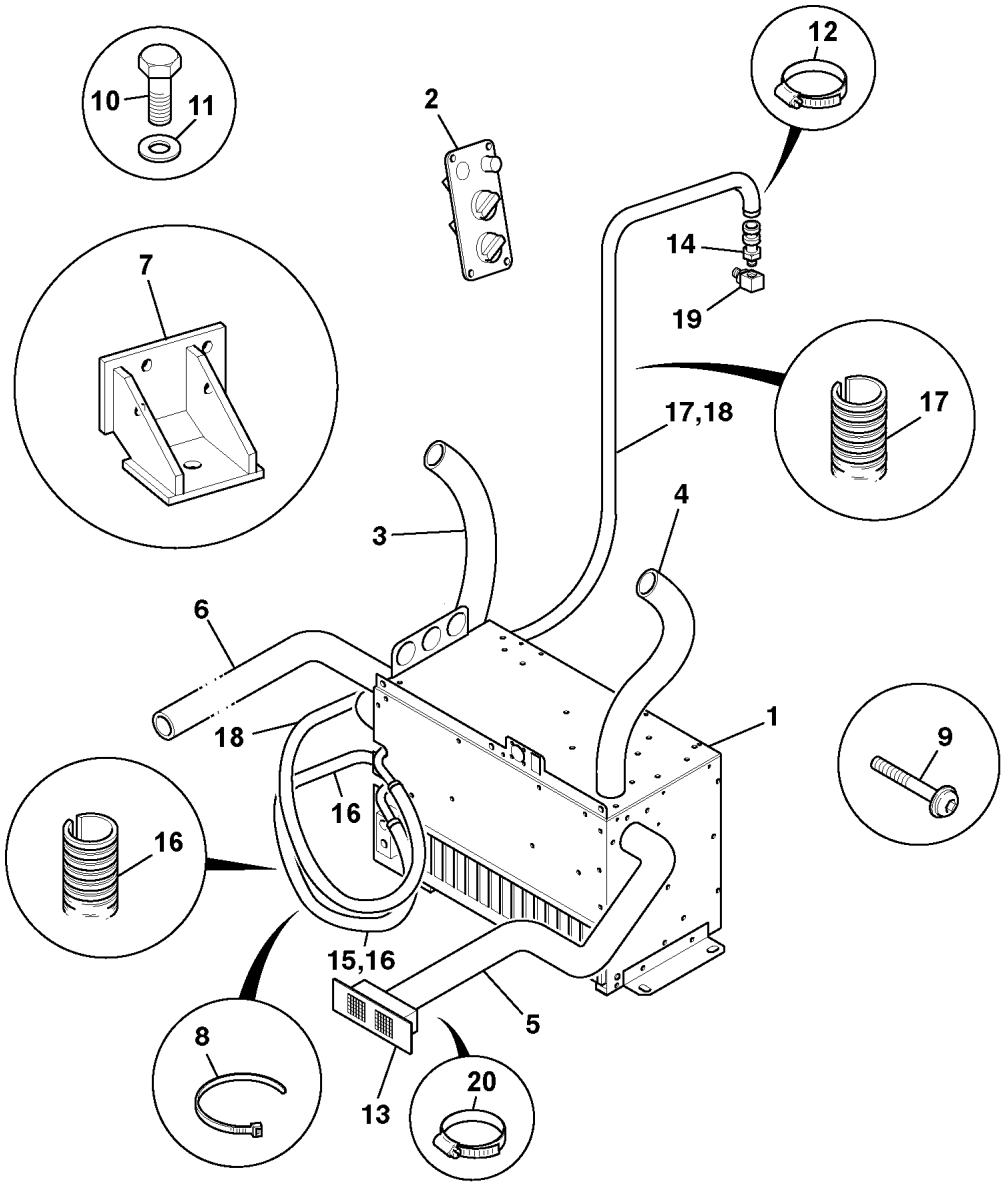

738160

ITEM	PART NO	CHANGE NO	DESCRIPTION	REMARKS	USAGE CODE	QTY
20	821/10127		Clip			1
21	331/37714		Panel, noise damping			1
22	331/37715		Panel, noise damping			1
23	331/37587		Panel, foam acoustic, cab floor			2
24	30/926020		Filter, fresh air	Standard		1
24A	32/925775		Filter, carbon cab filter	Option		1
24B	32/925774		Filter, P3 cab filter	Option		1

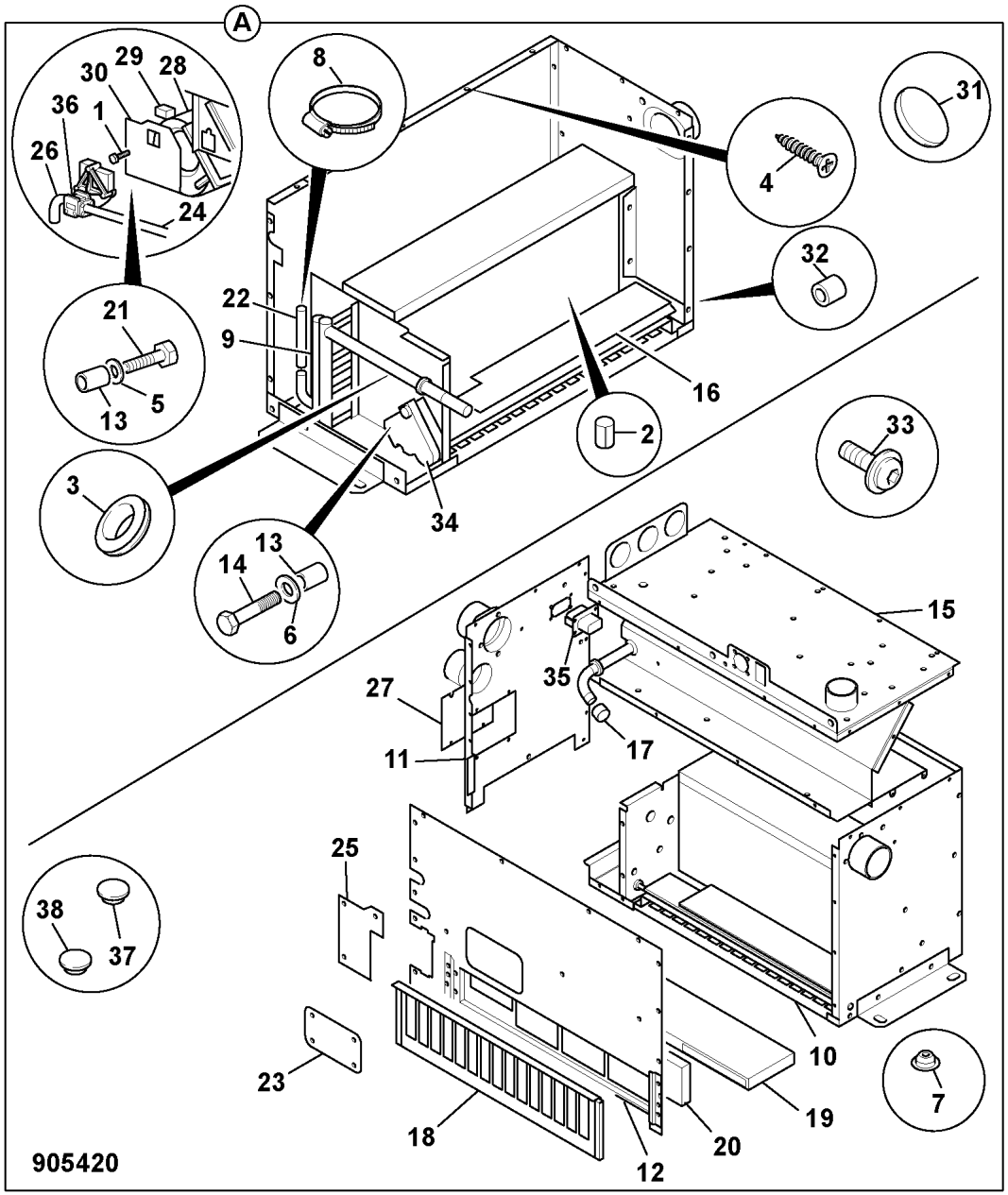

	FROM	TO	FROM	TO
JS160W				

ITEM	PART NO	CHANGE NO	DESCRIPTION	REMARKS	USAGE CODE	QTY
0A	30/927072		Heater, unit assembly			1
1	NSP		:None serviced part			7
2	NSP		:None serviced part			3
3	30/925898		:Grommet			4
4	30/925900		:Screw			60
5	NSP		:None serviced part			2
6	NSP		:None serviced part			3
7	30/925906		:Washer, shoulder 6.2 I/D			1
8	30/925907		:Clip, Jubilee			2
9	30/926000		:Coil, heater			1
10	NSP		:None serviced part			1
11	NSP		:None serviced part			1
12	NSP		:None serviced part			1
13	1		:TBA			5
14	1		:TBA			3
15	NSP		:None serviced part			1
16	30/927146		:Plate, flap assembly			1
17	923/10138		:Cap			2
18	NSP		:None serviced part			1
19	30/926020		:Filter, fresh air	Standard		1
	32/925775		Filter, carbon cab filter	Optional		1
	32/925774		Filter, P3 cab filter	Optional		1
20	30/927145		:Kit-seal			1

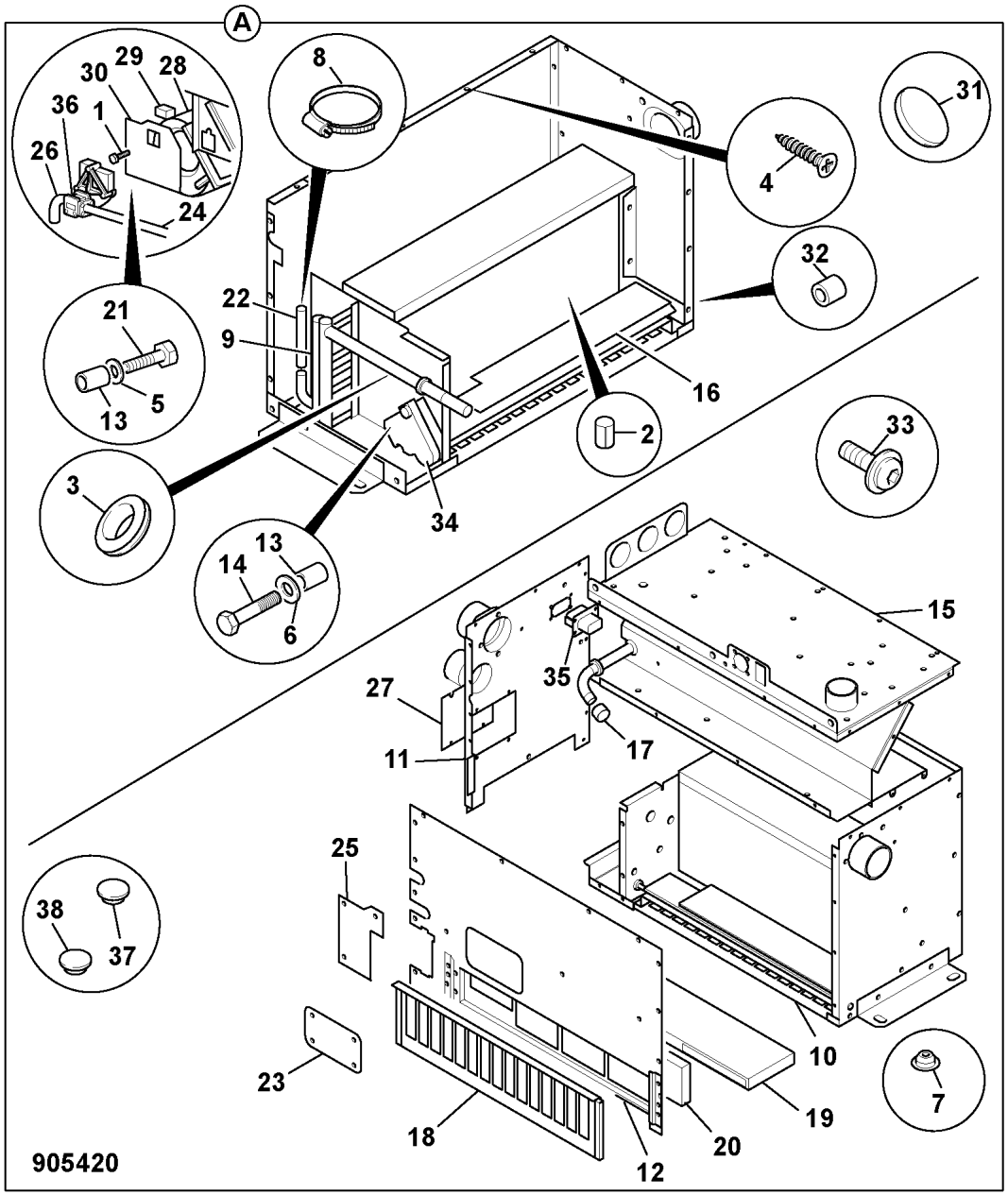

ITEM	PART NO	CHANGE NO	DESCRIPTION	REMARKS	USAGE CODE	QTY
21	1		:TBA			2
22	30/927144		:Hose			1
23	NSP		:None serviced part			1
24	30/927141		:Pipe			1
25	NSP		:None serviced part			1
26	30/926018		:Pipe, 90x5/8 dia.			1
27	NSP		:None serviced part			1
28	30/927142		:Blower, assembly, 24v			1
29	30/927148		:Relay			1
30	NSP		:None serviced part			1
31	NSP		:None serviced part			1
32	NSP		:None serviced part			1
33	1		:TBA			4
34	30/926005		:Actuator, 12v			1
35	30/927147		:Harness, heater uni			1
36	30/927137		:Valve, water			1
37	NSP		:None serviced part			1
38	NSP		:None serviced part			1

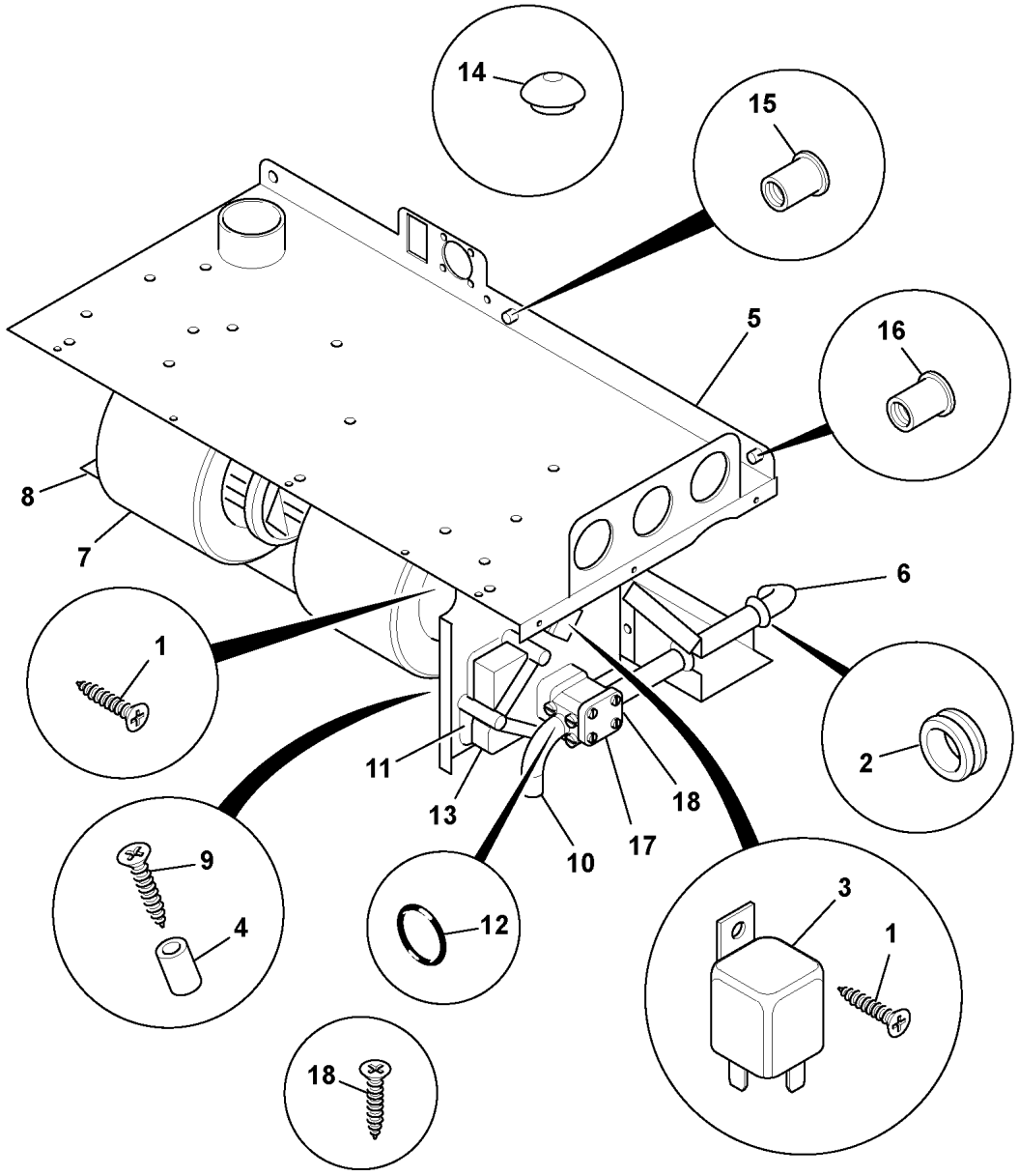

443900

	FROM	TO	FROM	TO
JS160W				

ITEM	PART NO	CHANGE NO	DESCRIPTION	REMARKS	USAGE CODE	QTY
1	1		TBA			6
2	1		TBA			2
3	30/926015		Relay, 24v spst			2
4	1		TBA			2
5	1		TBA			1
6	30/926016		Pipe, water in			1
7	30/926017		Blower, 24v D700			1
8	1		TBA			1
9	1		TBA			2
10	30/926018		Pipe, 90x5/8 dia.			1
11	1		TBA			1
12	30/926019		O Ring			2
13	30/926005		Actuator, 12v			1
14	1		TBA			1
15	1		TBA			5
16	1		TBA			3
17	30/926023		Valve, water &, actuator frame			1
18	1		TBA			8

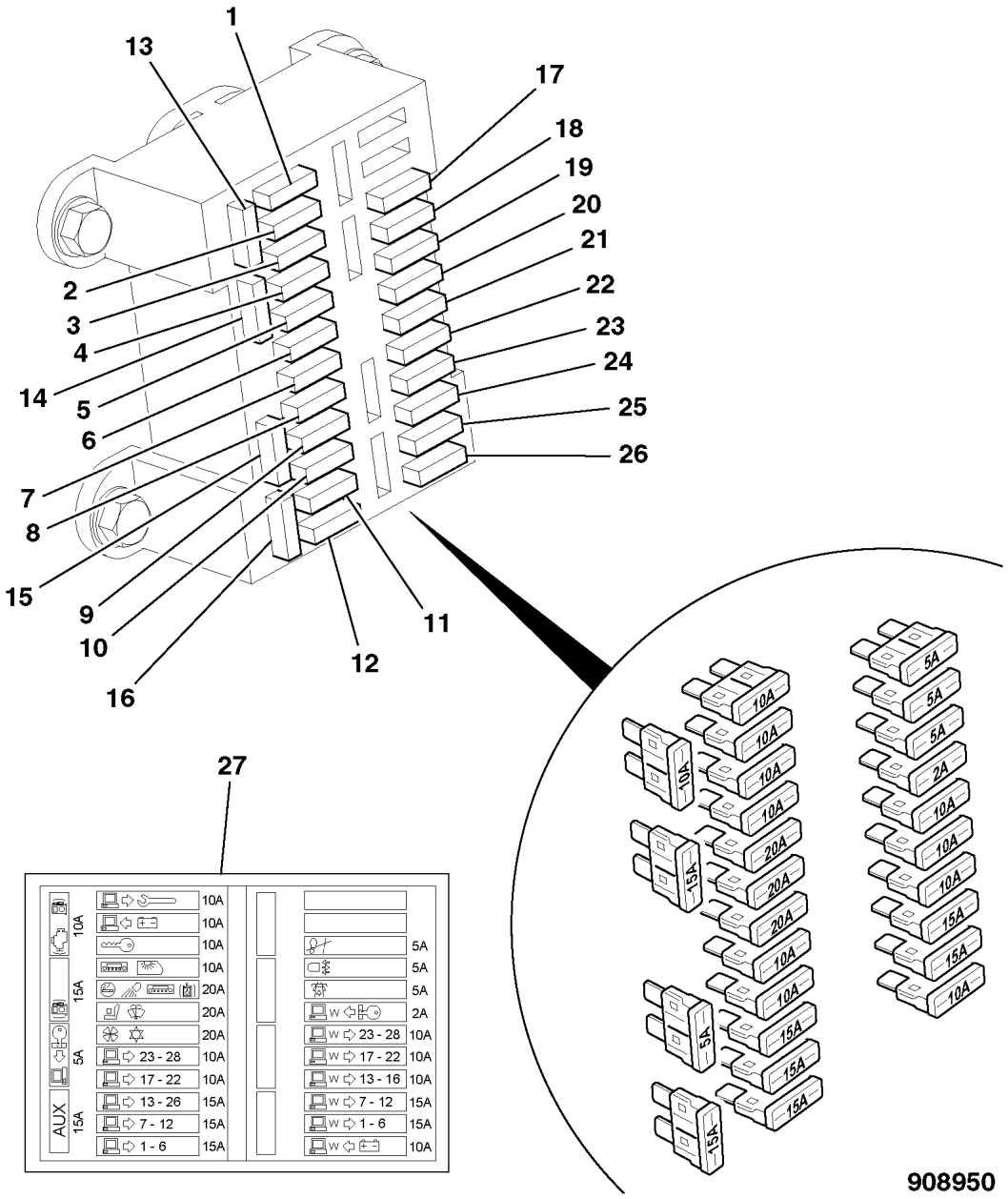

	FROM	TO	FROM	TO
JS160W				

ITEM	PART NO	CHANGE NO	DESCRIPTION	REMARKS	USAGE CODE	QTY
1	716/05705		Fuse, 10 amp	Diagnostic		1
2	716/05705		Fuse, 10 amp	ECU & EMS battery supply		1
3	716/05705		Fuse, 10 amp	Key Switch		1
4	716/05705		Fuse, 10 amp	Radio(memory), Interior Light		1
5	716/05707		Fuse, 20 amp	Lighter,W/lights, Radio(Ign),Opt/ Hydraulics		1
6	716/05707		Fuse, 20 amp	Heated Seat,Wiper		1
7	716/05707		Fuse, 20 amp	Autofan,Heater/Air-Conditioning		1
8	716/05705		Fuse, 10 amp	Controller outputs 23-28		1
9	716/05705		Fuse, 10 amp	Controller outputs 17-22		1
10	716/05706		Fuse, 15 Amp	Controller outputs 13-16		1
11	716/05706		Fuse, 15 Amp	Controller outputs 7-12		1
12	716/05706		Fuse, 15 Amp	Controller outputs 1-6		1
13	716/05705		Fuse, 10 amp	Engine fuel lift pump		1
14	716/05706		Fuse, 15 Amp	Optional refuel pump		1
15	716/05703		Fuse, 5 Amp	Facia,ECU & EMS Ignition supply		1

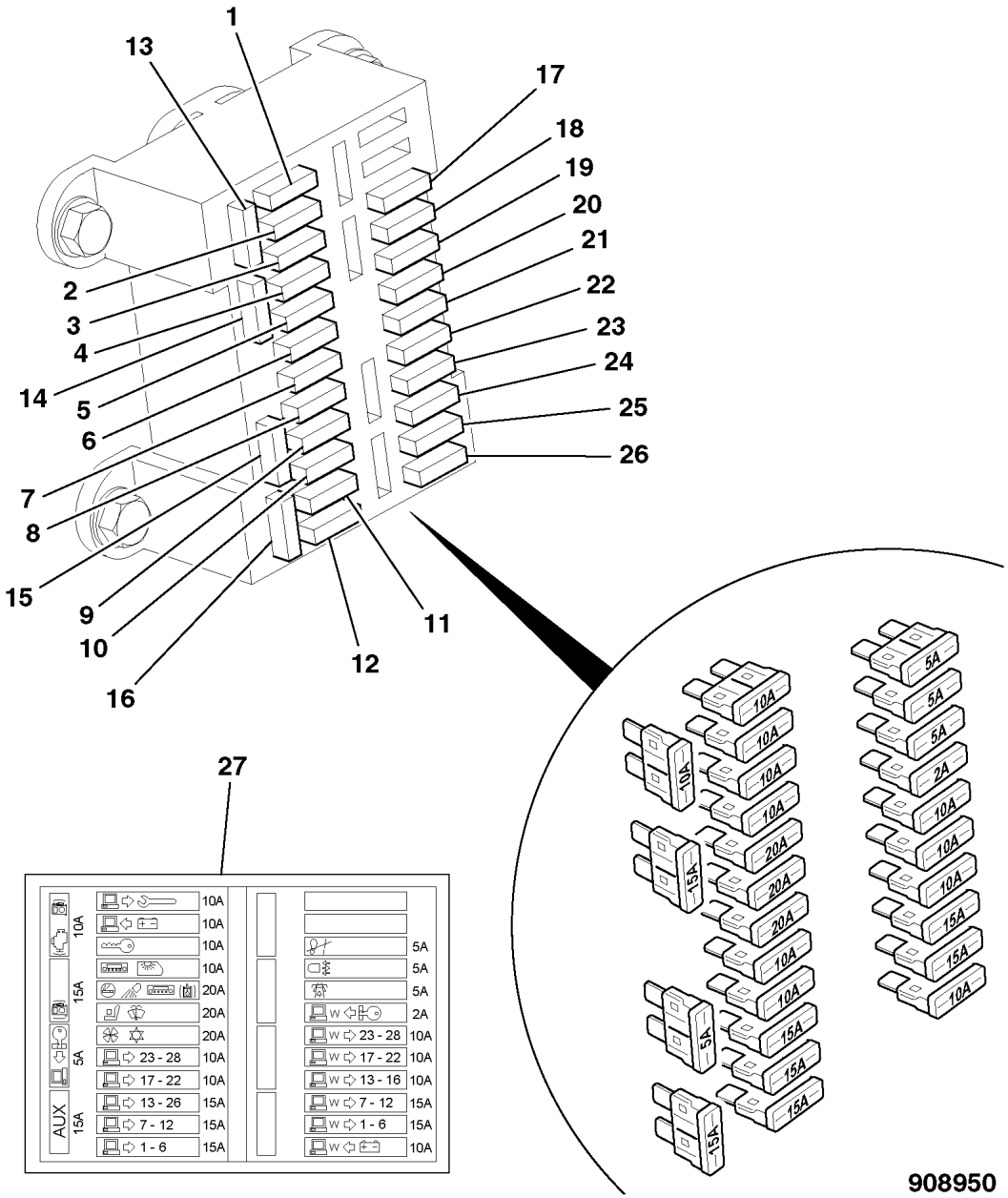

ITEM	PART NO	CHANGE NO	DESCRIPTION	REMARKS	USAGE CODE	QTY
16	716/05706		Fuse, 15 Amp	Auxilliary		1
17	716/05703		Fuse, 5 Amp	Drive isolate		1
18	716/05703		Fuse, 5 Amp	Fog light		1
19	716/05703		Fuse, 5 Amp	Travel mode (Aligh sw)		1
20	716/30138		Fuse, 2 Amp	ECU-W Ignition supply		1
21	716/05705		Fuse, 10 amp	Controller (W) Outputs 23-28		1
22	716/05706		Fuse, 15 Amp	Controller (W) Outputs 17-22		1
23	716/05705		Fuse, 10 amp	Controller (W) Outputs 13-16		1
24	716/05706		Fuse, 15 Amp	Controller (W) Outputs 7-12		1
25	716/05706		Fuse, 15 Amp	Controller (W) Outputs 1-6		1
26	716/05705		Fuse, 10 amp	ECU-W Battery supply		1
27	332/J0613		Decal, fuse box			1

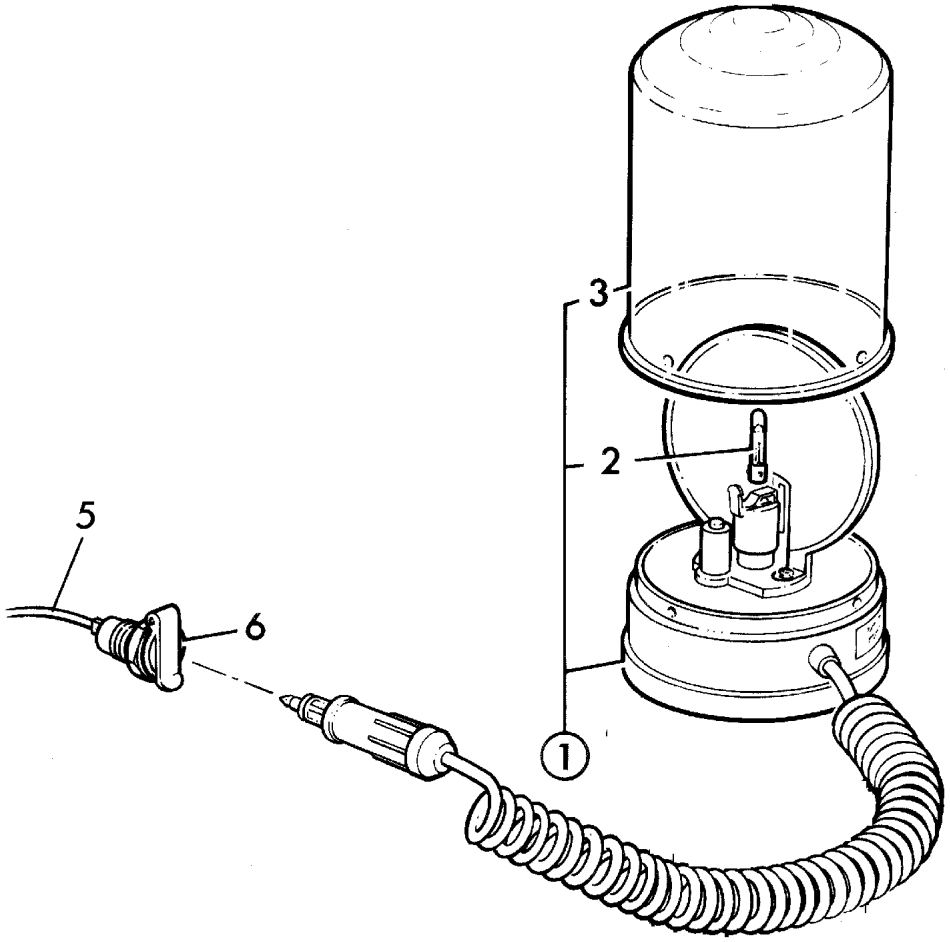

141593

	FROM	TO	FROM	TO
JS160W				

ITEM	PART NO	CHANGE NO	DESCRIPTION	REMARKS	USAGE CODE	QTY
1	700/26700		Beacon, magnetic 24 volt, amber			1
2	720/20040		:Bulb, 24v 70w H1			1
3	700/26701		:Lens, amber, 121mm dia			1
5	.		'See Remark'	Part of mainframe harness		1
6	715/04300		Socket			1

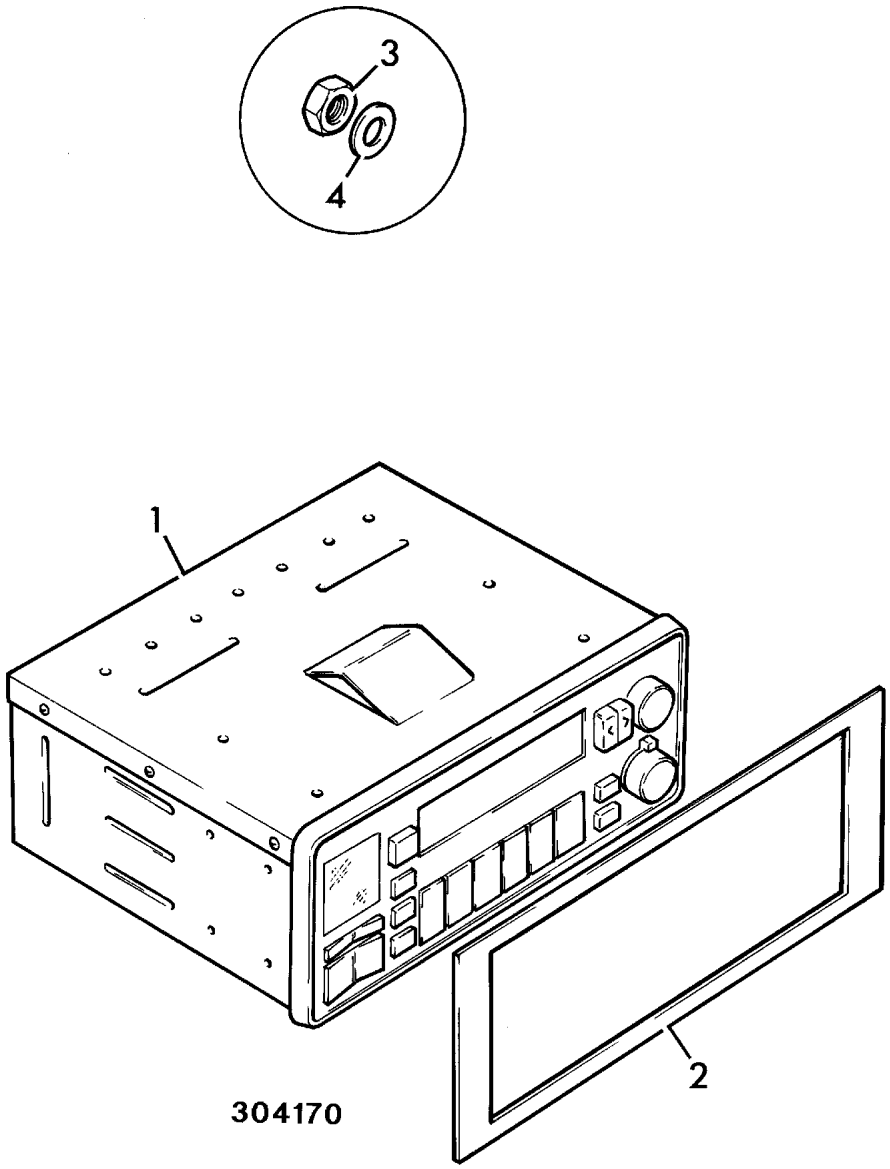

	FROM	TO	FROM	TO
JS160W				

ITEM	PART NO	CHANGE NO	DESCRIPTION	REMARKS	USAGE CODE	QTY
1	717/20346		Radio			1
	*717/20225		Radio, 12V BQR Tuner, FM,MW,LW. + clock			1
	*717/20226		Radio, 12V cassette BQR Tun, FM,MW,LW + clock			1
	*717/20227		Radio, 12V cassette RDS tun, FM,MW,LW Autostore			1
	717/20228		Radio, 12V CD player RDS, FM,MW,LW RDS clock			1
2	JHN0164		Panel, radio			1
3	1370/0003Z		Nut			1
4	1420/0005Z		Washer, M5			1

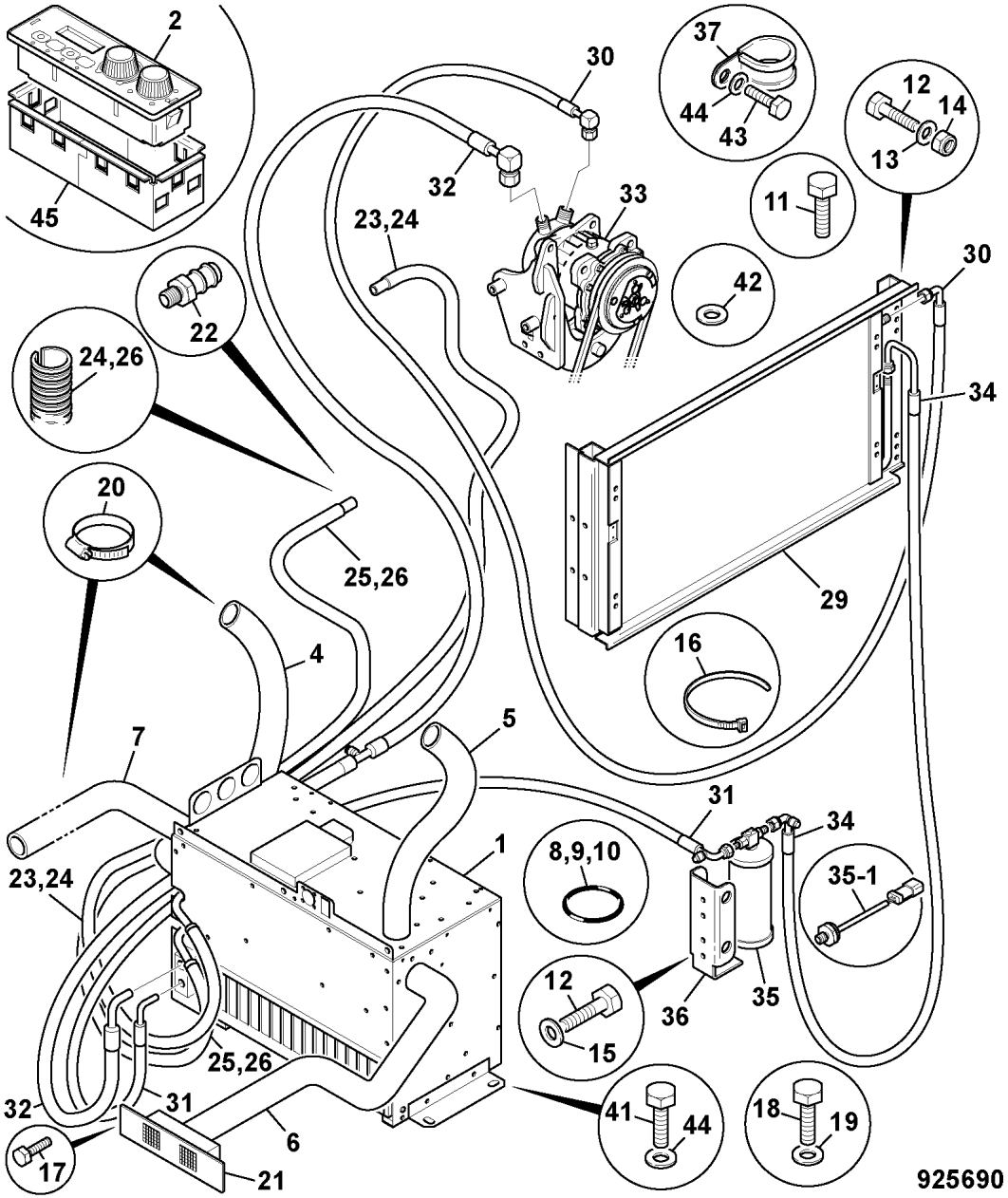

JS160W

	FROM	TO	FROM	TO

ITEM	PART NO	CHANGE NO	DESCRIPTION	REMARKS	USAGE CODE	QTY
0A	980/A0893		Kit, Air con, JS Tier 3			1
1	30/927074		Unit, air con assembly, climate control			1
2	30/927075		Panel, ATC climate control			1
4	30/925753		Hose, air duct 50.8x750L, right hand rear			1
5	30/925754		Hose, air duct 50.8x500L, left hand rear			1
6	30/925755		Hose, air duct 60x1250L, foot vent			1
7	30/925756		Hose, air duct 60x1450L, front vents			1
8	993/84100		O Ring, No 8			1
9	993/84200		O Ring, 8mm			1
10	993/84300		O Ring, 10mm			1
11	1316/0205D		Screw, set			2
12	1316/0305D		Screw, set			4
13	1420/0007D		Washer, M8 plain			4
14	1370/0201D		Nut, M8			4
15	1420/0006D		Washer, M6 plain			2
16	826/01143		Tie, cable, L=300mm x W=3.6mm			8
17	KHR0737		Screw, pan head			2
18	1316/0405D		Bolt			4
19	1420/0008D		Washer, M10			4

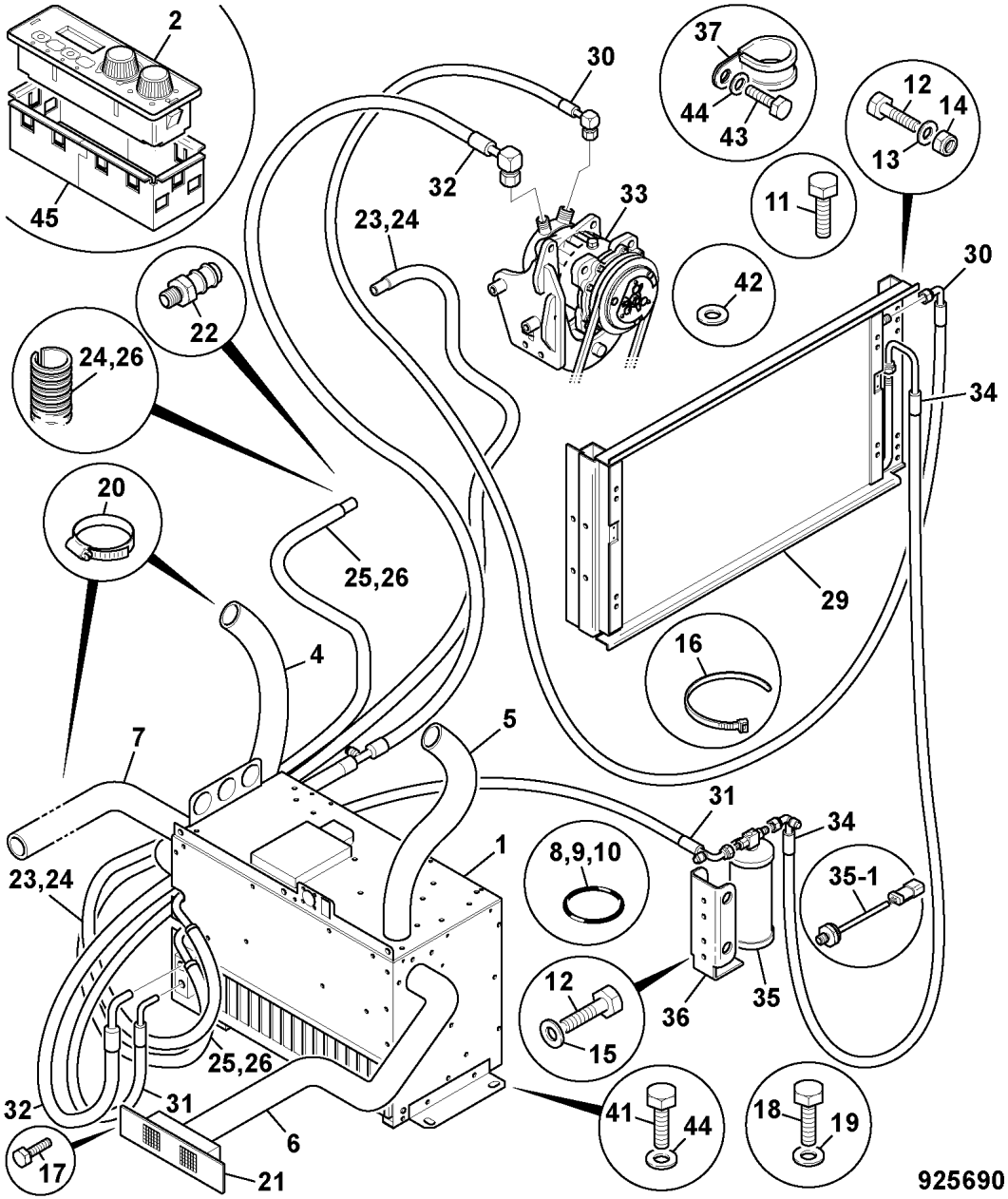

ITEM	PART NO	CHANGE NO	DESCRIPTION	REMARKS	USAGE CODE	QTY
20	2201/0005		Clip, jubilee			4
21	331/28366		Plate, foot vent			1
22	JHN0158		Adapter			2
23	834/10887		Hose, water			1
24	647/10501		Tube, corrugated			1
25	834/10980		Hose, water			1
26	647/10503		Tube, corrugated			1
29	30/926116		Condenser, JS130 T2			1
29 01	30/926566		:Retainer, catch			1
30	649/51654		Hose, compressor to, condenser			1
31	649/51656		Hose, receiver drier - TXV, JS130 T2			1
32	649/51756		Hose, TXV to compressor, JS160-180 T2			1
33	* 123/04999		Compressor, 24v	For components see R7-5-1		1
34	649/51655		Hose, condenser to, receiver drier			1
35	30/926117		Drier, receiver, JS130 T2			1
35 01	701/80404		Switch, binary female			1
36	331/40593		Bracket, receiver drier, JS130 T2			1
37	821/10127		Clip			1
41	1316/0205D		Screw, set			2
42	1420/0006D		Washer, M6 plain			2
43	1316/0403D		Screw			1
44	1420/0008D		Washer, M10			1
45	1		TBA	332/J1000		1

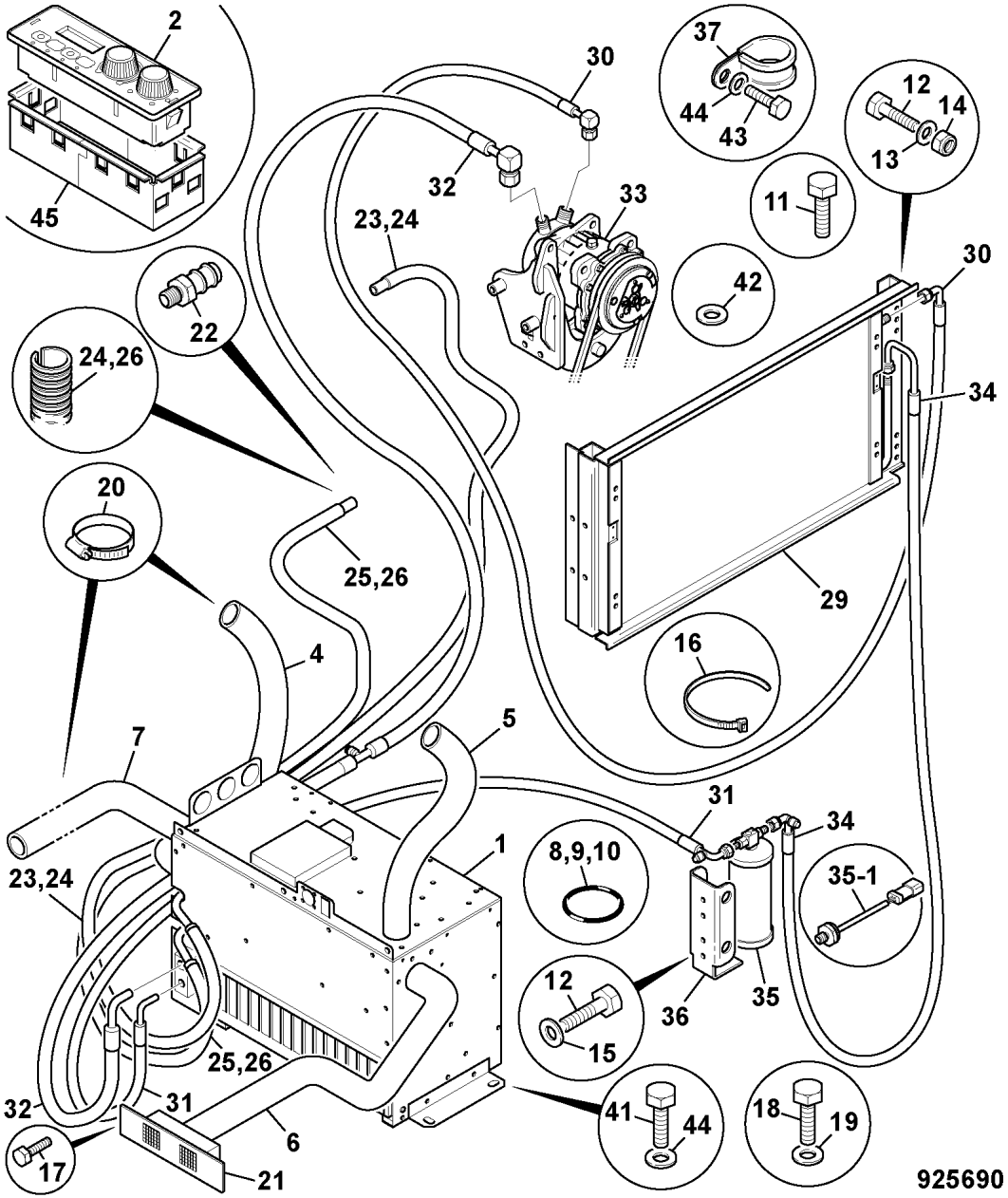

ITEM	PART NO	CHANGE NO	DESCRIPTION	REMARKS	USAGE CODE	QTY
46	721/12509		Harness, Facia, ATC			1

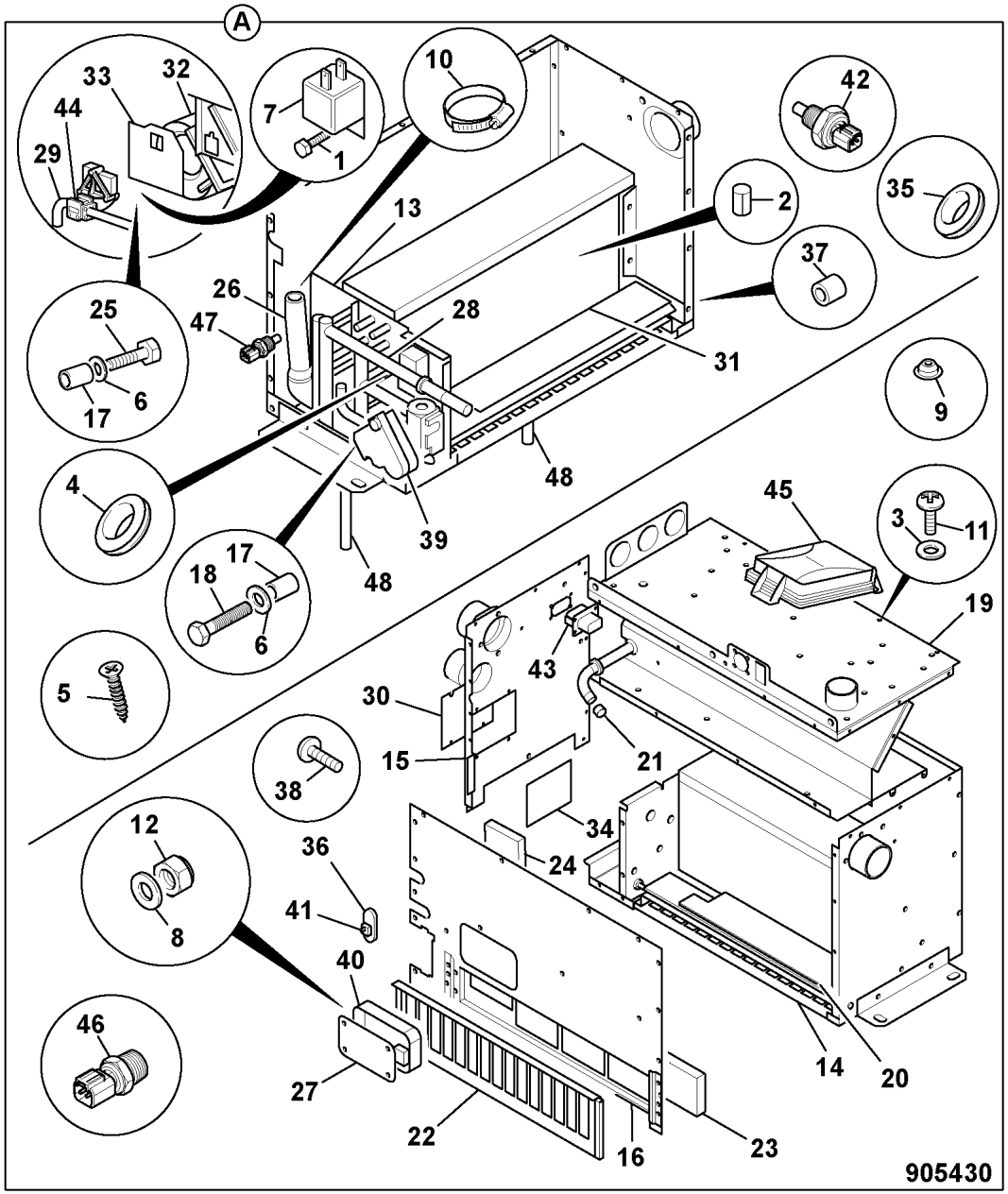

	FROM	TO	FROM	TO
JS160W				

ITEM	PART NO	CHANGE NO	DESCRIPTION	REMARKS	USAGE CODE	QTY
0A	30/927074		Unit, air con assembly, climate control			1
1	1		:TBA			7
2	1		:TBA			3
3	30/925897		:Washer, M3			1
4	30/925898		:Grommet			5
5	30/925900		:Screw			59
6	1		:TBA			2
7	30/926015		:Relay, 24v spst			3
8	1		:TBA			5
9	30/925906		:Washer, shoulder 6.2 I/D			1
10	30/925907		:Clip, Jubilee			2
11	1		:TBA			1
12	331/36622		:Nut, M5			2
13	30/926000		:Coil, heater			1
14	NSP		:None serviced part			1
15	NSP		:None serviced part			1
16	NSP		:None serviced part			1
17	1		:TBA			5
18	1		:TBA			3
19	NSP		:None serviced part			1
20	30/927146		:Plate, flap assembly			1
21	923/10138		:Cap			2

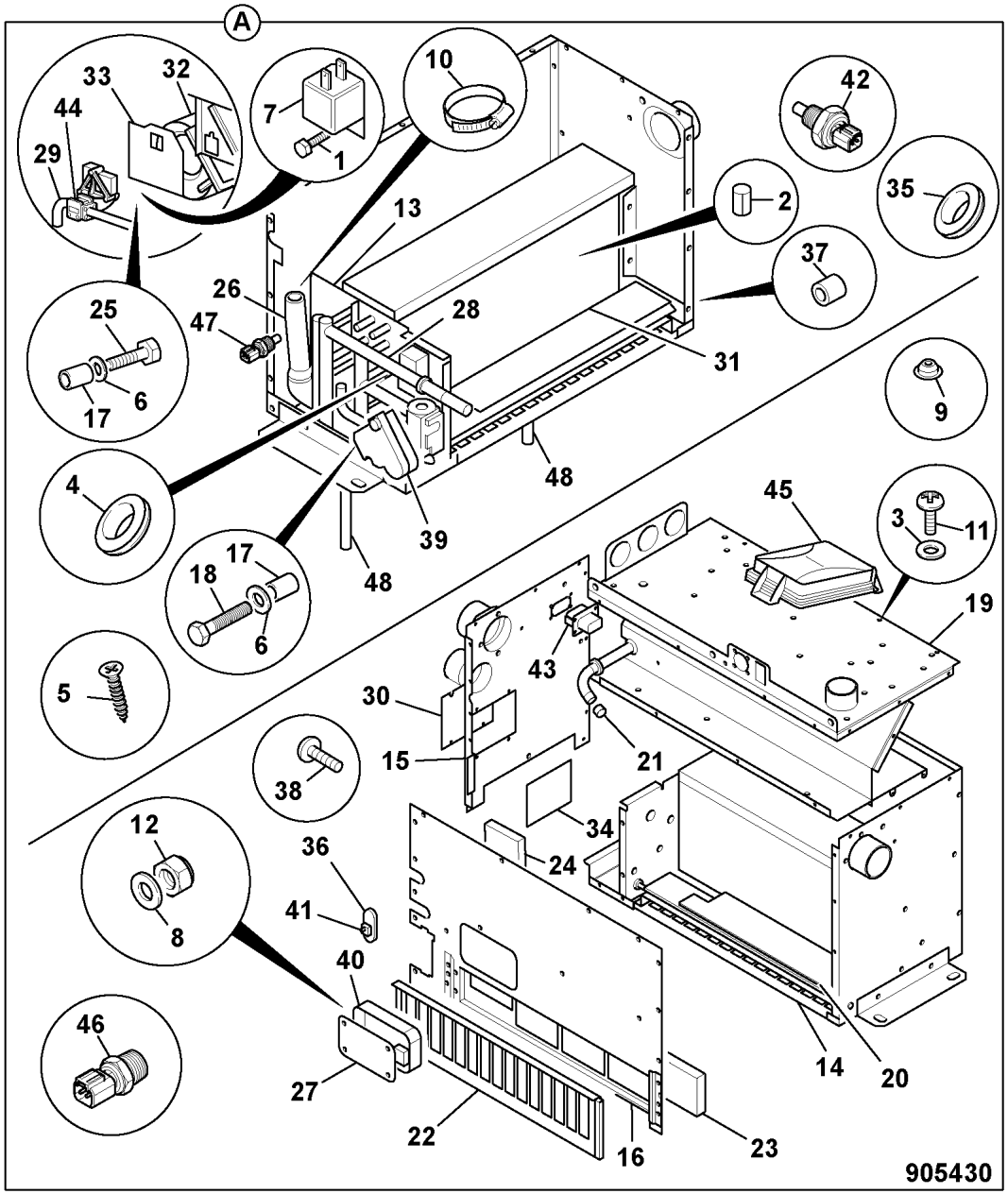

ITEM	PART NO	CHANGE NO	DESCRIPTION	REMARKS	USAGE CODE	QTY
22	NSP		:None serviced part			1
23	30/926020		:Filter, fresh air			1
	32/925775		Filter, carbon cab filter			1
	32/925774		Filter, P3 cab filter			1
24	30/927145		:Kit-seal			1
25	1		:TBA			2
26	30/927144		:Hose			1
27	NSP		:None serviced part			1
28	30/927141		:Pipe			1
29	30/926018		:Pipe, 90x5/8 dia.			1
30	NSP		:None serviced part			1
31	30/927143		:Coil, assembly, evap			1
32	30/927142		:Blower, assembly, 24v			1
33	NSP		:None serviced part			1
34	NSP		:None serviced part			1
35	NSP		:None serviced part			1
36	NSP		:None serviced part			1
37	NSP		:None serviced part			1
38	NSP		:None serviced part			4
39	30/926005		:Actuator, 12v			1
40	30/926177		:Unit, PW module			1
41	30/927140		:Thermostat			1
42	30/927139		:Switch, low pressure			1
43	30/927138		:Harness, air con unit			1
44	30/927137		:Valve, water			1
45	30/927136		:Control, module			1
46	30/927134		:Sensor, probe			1

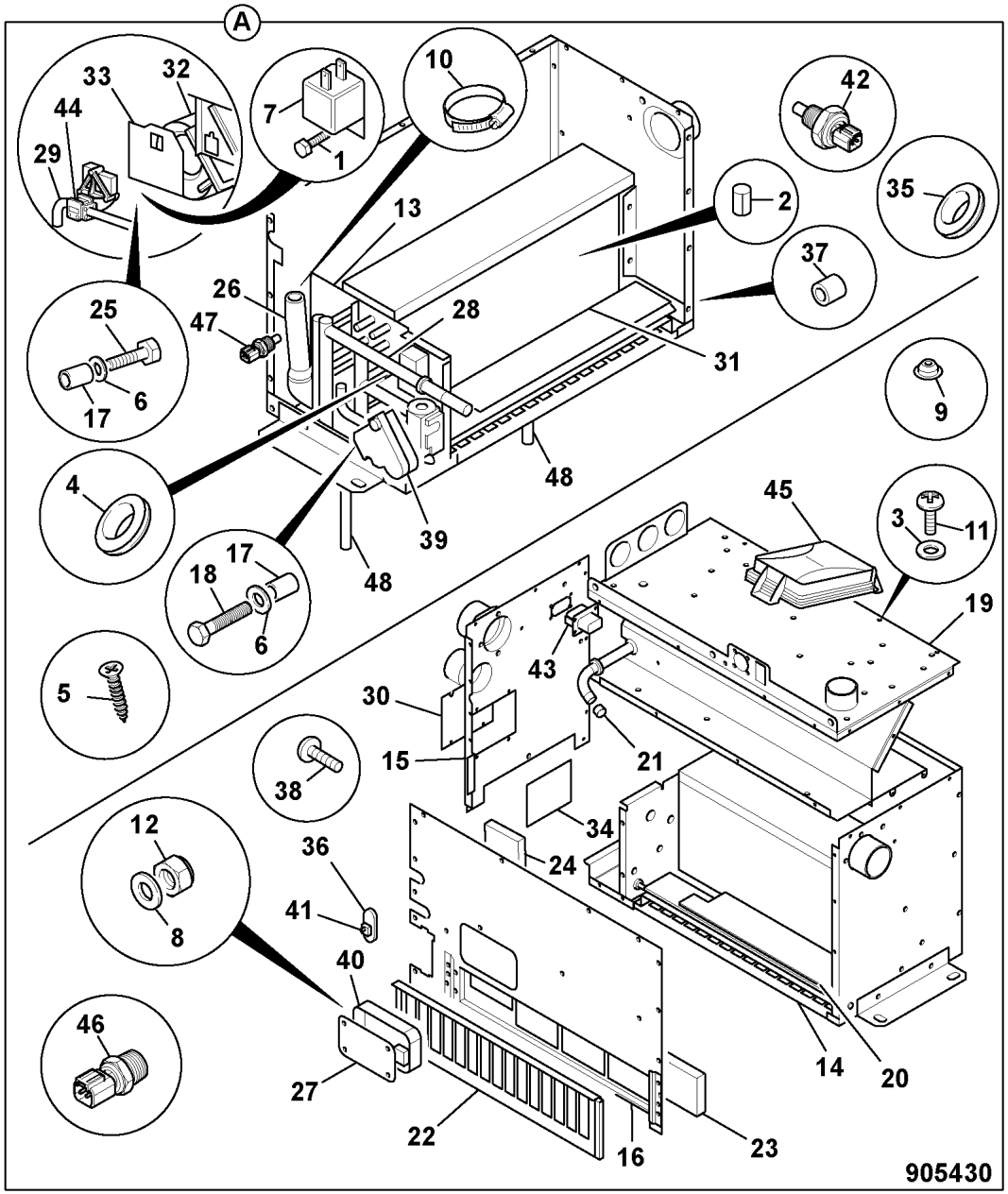

ITEM	PART NO	CHANGE NO	DESCRIPTION	REMARKS	USAGE CODE	QTY
47	30/927133		:Sensor, temp			1
48	30/927135		:Tube, air con drain			1

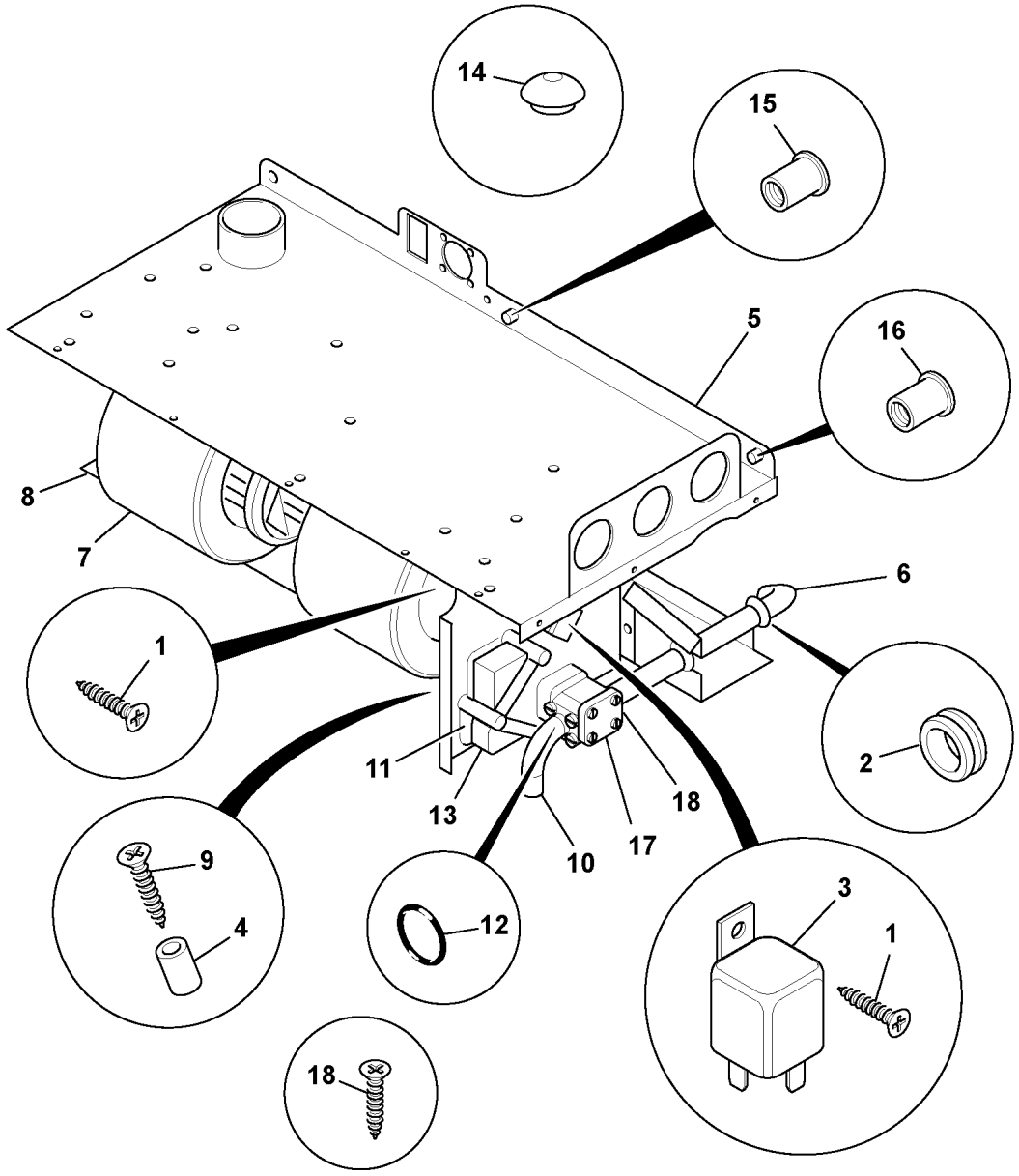

443900

	FROM	TO	FROM	TO
JS160W				

ITEM	PART NO	CHANGE NO	DESCRIPTION	REMARKS	USAGE CODE	QTY
1	1		TBA			6
2	1		TBA			2
3	30/926015		Relay, 24v spst			2
4	1		TBA			2
5	1		TBA			1
6	30/926016		Pipe, water in			1
7	30/926017		Blower, 24v D700			1
8	1		TBA			1
9	1		TBA			2
10	30/926018		Pipe, 90x5/8 dia.			1
11	1		TBA			1
12	30/926019		O Ring			2
13	30/926005		Actuator, 12v			1
14	1		TBA			1
15	1		TBA			5
16	1		TBA			3
17	30/926023		Valve, water &, actuator frame			1
18	1		TBA			8

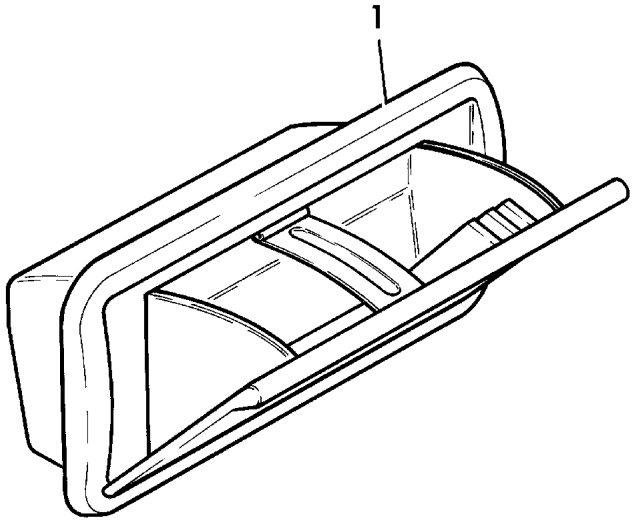

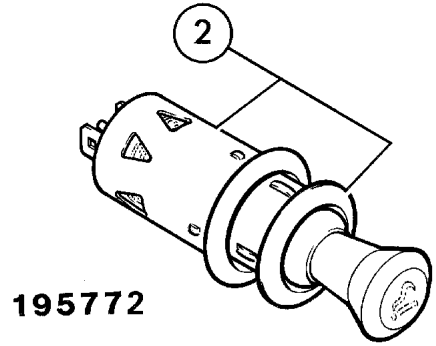

	FROM	TO	FROM	TO
JS160W				

ITEM	PART NO	CHANGE NO	DESCRIPTION	REMARKS	USAGE CODE	QTY
1	331/32481		Ashtray			1
2	717/12900		Lighter, cigarette, 12 volt			1

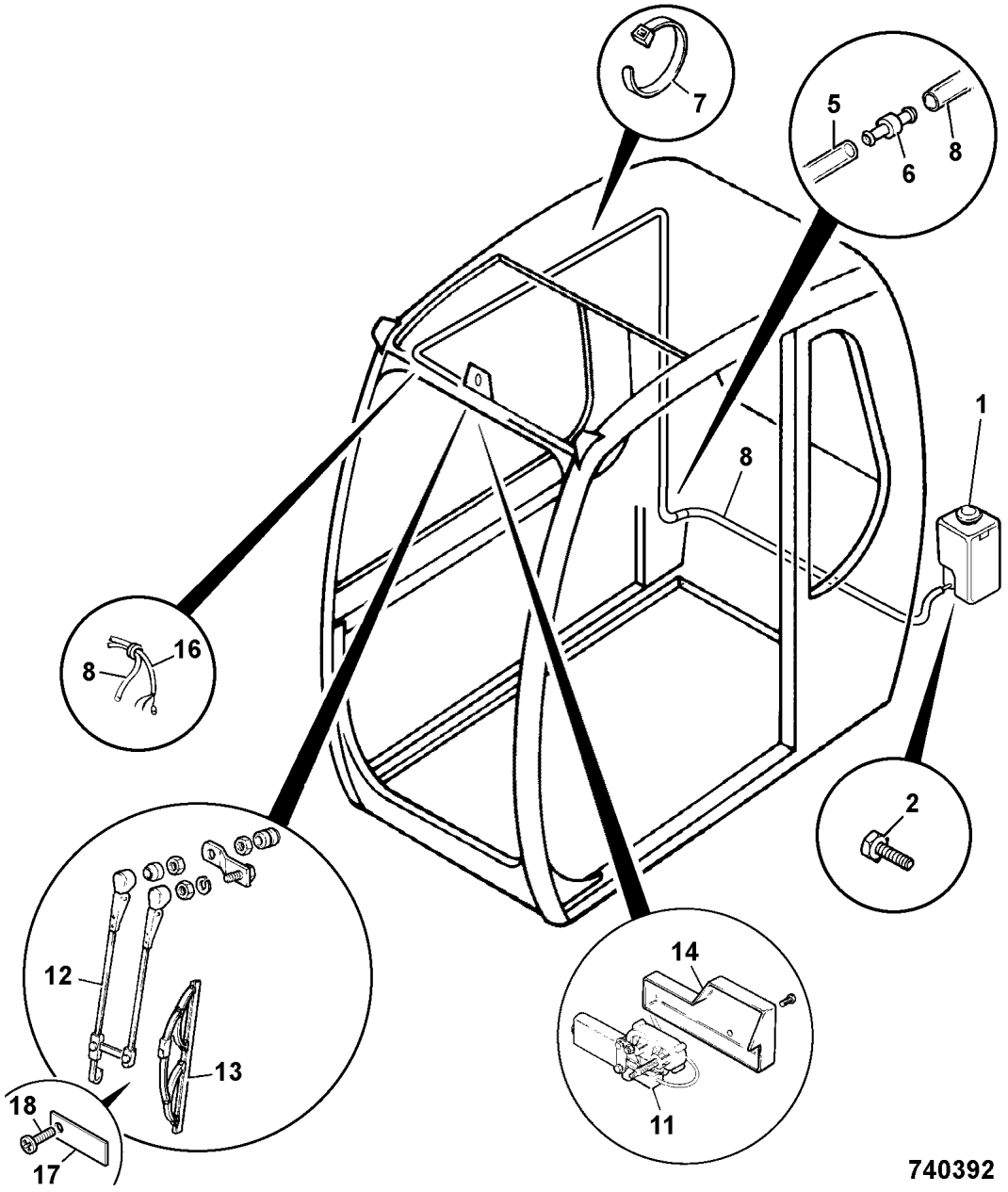

740392

	FROM	TO	FROM	TO
JS160W				

ITEM	PART NO	CHANGE NO	DESCRIPTION	REMARKS	USAGE CODE	QTY
1	JHN0160		Tank, screen wash, with pump	Includes bracket and cap		1
2	6012/0103Z		Bolt			2
3	1420/0005Z		Washer, M5			2
4	1425/0005Z		Washer, spring, M5			2
4 01	1371/0001Z		Nut			2
5	KHR1181		Tube			1
6	KHR1178		Adapter, fir tree			1
7	270/00106		Tie, Cable 385mm long			10
8	331/36341		Hose, 4300lg	See frame B2-1-20		1
11	714/40346		Motor, 24V wiper			1
12	714/40451		Arm, wiper			1
13	714/40452		Blade, wiper			1
14	331/36342		Cover, wiper motor			1
16	331/36328		Harness, cab	See frame B2-1-1		1
17	331/59205		Spring, Leaf			1
18	6900/0995		Screw			1

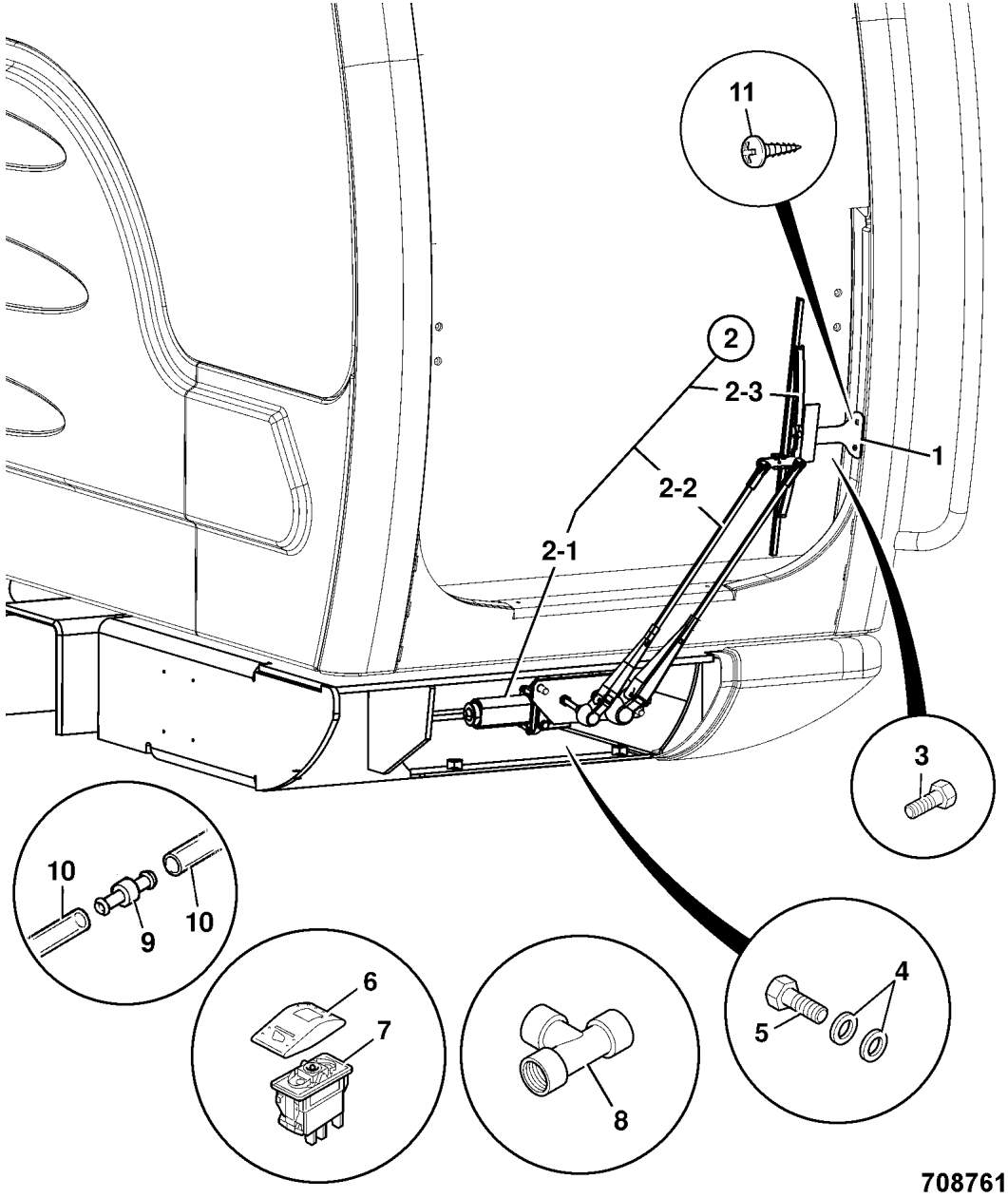

	FROM	TO	FROM	TO
JS160W				

ITEM	PART NO	CHANGE NO	DESCRIPTION	REMARKS	USAGE CODE	QTY
1	331/38512		Bracket, lower wiper stop			1
2	NSP		None serviced part			1
2 01	714/40289		:Motor, lower wiper			1
2 02	714/40290		:Arm, lower wiper			1
2 03	714/40291		:Blade, lower wiper			1
3	1430/0303Z		Screw			2
4	1420/0008Z		Washer, Plain M10			2
4A	1316/0407Z		Bolt, high strength			2
5	331/32190		Plate, wiper mounting			1
6	701/60041		Switch, 24V			1
7	701/58915		Cover, switch, lower wiper			1
8	331/43487		Adapter, plastic tee			1
9	KHR1178		Adapter, fir tree	Not required. Remove from m/c		1
10	KHR1179		Sleeve			1
11	1430/0303Z		Screw			2

D

● D1 CONTROLS, MACHINE
D2 CONTROLS, ENGINE
D3 COLUMN, STEERING

ENGLISH

D1-1-1 CONTROLS, EXCAVATOR, CAB
D1-2-1 PEDAL CONTROLS, MONO BOOM BUILD
D1-2-10 PEDAL CONTROLS, TAB BOOM BUILD

FRANCAIS

D1-1-1 COMMANDES, EXCAVATEUR
D1-2-1 PEDAL CONTROLS, MONO BOOM BUILD
D1-2-10 PEDAL CONTROLS, TAB BOOM BUILD

DEUTSCH

D1-1-1 STEUERUNG, BAGGER-
D1-2-1 PEDAL CONTROLS, MONO BOOM BUILD
D1-2-10 PEDAL CONTROLS, TAB BOOM BUILD

ITALIANO

D1-1-1 COMANDI, ESCAVATORE
D1-2-1 PEDAL CONTROLS, MONO BOOM BUILD
D1-2-10 PEDAL CONTROLS, TAB BOOM BUILD

PORTUGUES

D1-1-1 COMADOS, ESCAVADORA
D1-2-1 PEDAL CONTROLS, MONO BOOM BUILD
D1-2-10 PEDAL CONTROLS, TAB BOOM BUILD

ESPANOL

D1-1-1 CONTROLES,EXCAVAD.
D1-2-1 PEDAL CONTROLS, MONO BOOM BUILD
D1-2-10 PEDAL CONTROLS, TAB BOOM BUILD

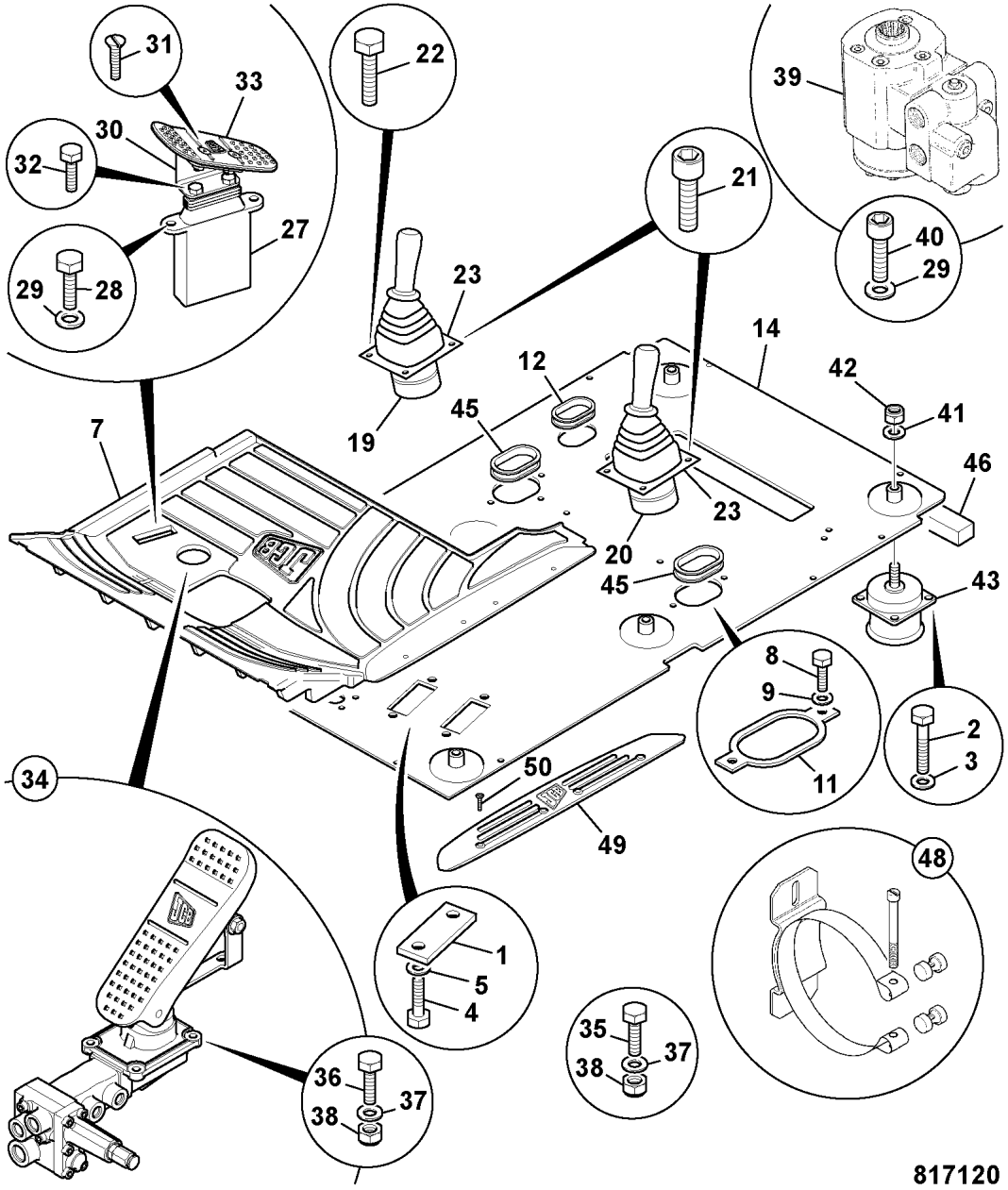

817120

	FROM	TO	FROM	TO
JS160W				

ITEM	PART NO	CHANGE NO	DESCRIPTION	REMARKS	USAGE CODE	QTY
1	331/35486		Plate, 2mm thick			2
2	1316/0408D		Setscrew			24
3	JHP0046		Washer, M10			24
4	1316/0403D		Screw			4
5	1420/0008D		Washer, M10			4
7	331/50622		Floormat			1
8	1316/0305D		Screw, set			4
9	JHP0080		Washer			4
11	KHJ0947		Guide			2
12	KHJ0948		Grommet			1
14	335/13853		Plate, Cab Floor			1
19	25/222892		Valve, hand controler, right hand			1
20	25/222891		Valve, hand controler, left hand			1
21	1391/3210Z		Capscrew			4
22	KHR0737		Screw, pan head			4
23	331/18592		Plate, mounting, control valve			2
27	* 928/60339		Valve, hammer, auxiliary, foot operated			1
28	1316/0405D		Bolt			6
29	1420/0008D		Washer, M10			12
30	* 331/57463		Bracket, pedal, right hand			1

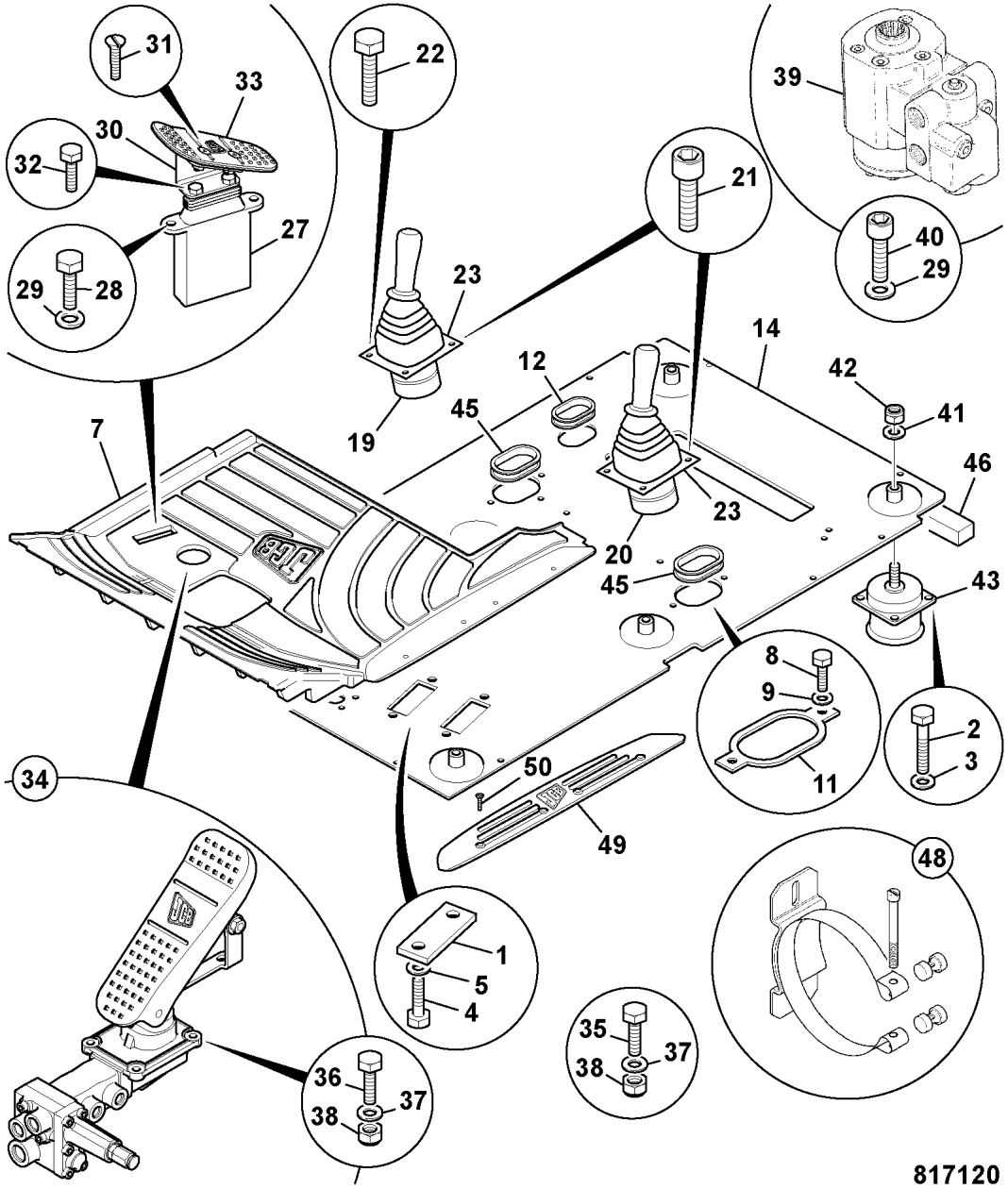

817120

ITEM	PART NO	CHANGE NO	DESCRIPTION	REMARKS	USAGE CODE	QTY
31	826/10811		Screw, c/sunk socket head, M8 x 30			2
32	1316/0403D		Screw			2
33	* 331/57439		Pedal, foot, right hand			1
34	25/222749		Valve, brake pedal assembly	See E1-17-10 &E3-3-1		1
35	1316/0307D		Screw			4
36	1316/0310D		Screw			1
37	1420/0007D		Washer, M8 plain			11
38	1370/0201D		Nut, M8			2
39	JRJ0346		Valve, steer			1
40	1391/3407D		Capscrew, M10			4
41	KHN0243		Washer, special			6
42	KHN0268		Nut, u			6
43	KHJ1211		Rubber, mount			6
45	KHJ0950		Grommet			3
46	KHJ0951		Seal, cushion			1
48	821/10138		Clamp, accumulator, 133/142mm Dia			2
48A	1316/0303D		Screw			4
48B	1420/0007D		Washer, M8 plain			4
49	331/31353		Plate, Kick			1
50	826/00727		Bolt			4
52	MPR2006		Washer, special			8
99	215/14485		G.A., GA CAB BASE, ALL WHEELED M/C			1

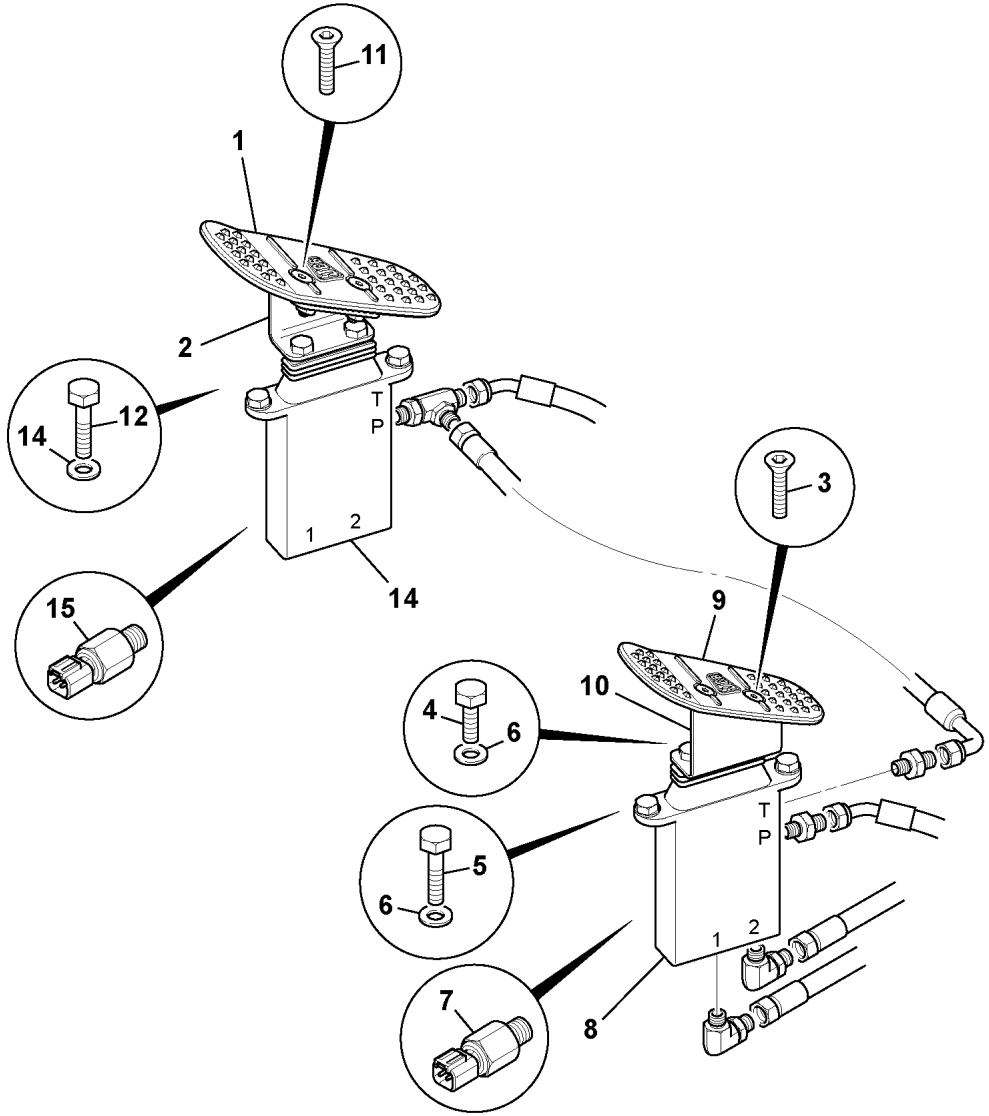

924090

	FROM	TO	FROM	TO
JS160W				

ITEM	PART NO	CHANGE NO	DESCRIPTION	REMARKS	USAGE CODE	QTY
1	331/57463		Bracket, pedal, right hand	Drive pedal control		1
2	331/57439		Pedal, foot, right hand			1
3	826/10811		Screw, c/sunk socket head, M8 x 30			2
4	1316/0403Z		Screw			2
5	1316/0407Z		Bolt, high strength			2
6	1420/0008Z		Washer, Plain M10			2
7	701/80373		Switch, Slew pressure, 5bar 1/4" BSP			1
8	928/60339		Valve, hammer, auxiliary, foot operated			2
9	589/10208		Pedal, left hand casting	Optional Hammer control See items 9 to 15		1
10	331/38358		Bracket, pedal			1
11	826/10811		Screw, c/sunk socket head, M8 x 30			2
12	1316/0407D		Screw			2
13	1420/0008D		Washer, M10			2
14	928/60339		Valve, hammer, auxiliary, foot operated			1
15	701/80373		Switch, Slew pressure, 5bar 1/4" BSP			1

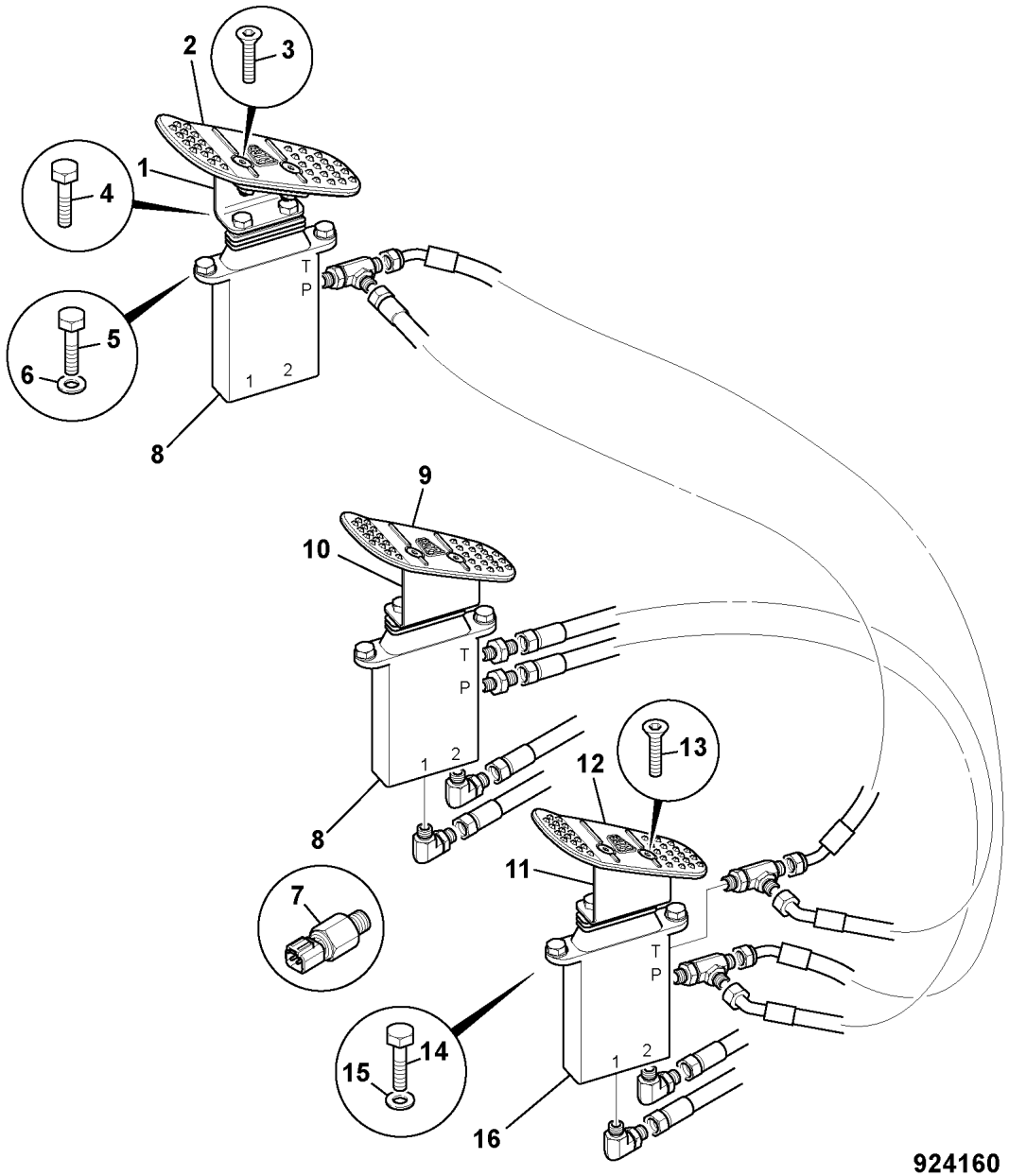

924160

	FROM	TO	FROM	TO
JS160W				

ITEM	PART NO	CHANGE NO	DESCRIPTION	REMARKS	USAGE CODE	QTY
1	331/57463		Bracket, pedal, right hand	Drive pedal control		1
2	331/57439		Pedal, foot, right hand			1
3	826/10811		Screw, c/sunk socket head, M8 x 30			2
4	1316/0403Z		Screw			2
5	1316/0407Z		Bolt, high strength			2
6	1420/0008Z		Washer, Plain M10			2
7	701/80373		Switch, Slew pressure, 5bar 1/4" BSP			1
8	928/60339		Valve, hammer, auxiliary, foot operated			2
9	589/10208		Pedal, left hand casting	TAB control		1
10	331/38358		Bracket, pedal			1
11	331/38358		Bracket, pedal	Optiolal Hammer control see items 11 to 16.		1
12	589/10208		Pedal, left hand casting			1
13	826/10811		Screw, c/sunk socket head, M8 x 30			2
14	1316/0407D		Screw			2
15	1420/0008D		Washer, M10			2
16	928/60339		Valve, hammer, auxiliary, foot operated			1

D

D1 CONTROLS, MACHINE
● D2 CONTROLS, ENGINE
D3 COLUMN, STEERING

ENGLISH

D2-2-1 CONTROLS, THROTTLE & STOP, CAB

FRANCAIS

D2-2-1 CONTROLS, THROTTLE & STOP, CAB

DEUTSCH

D2-2-1 CONTROLS, THROTTLE & STOP, CAB

ITALIANO

D2-2-1 CONTROLS, THROTTLE & STOP, CAB

PORTUGUES

D2-2-1 CONTROLS, THROTTLE & STOP, CAB

ESPANOL

D2-2-1 CONTROLS, THROTTLE & STOP, CAB

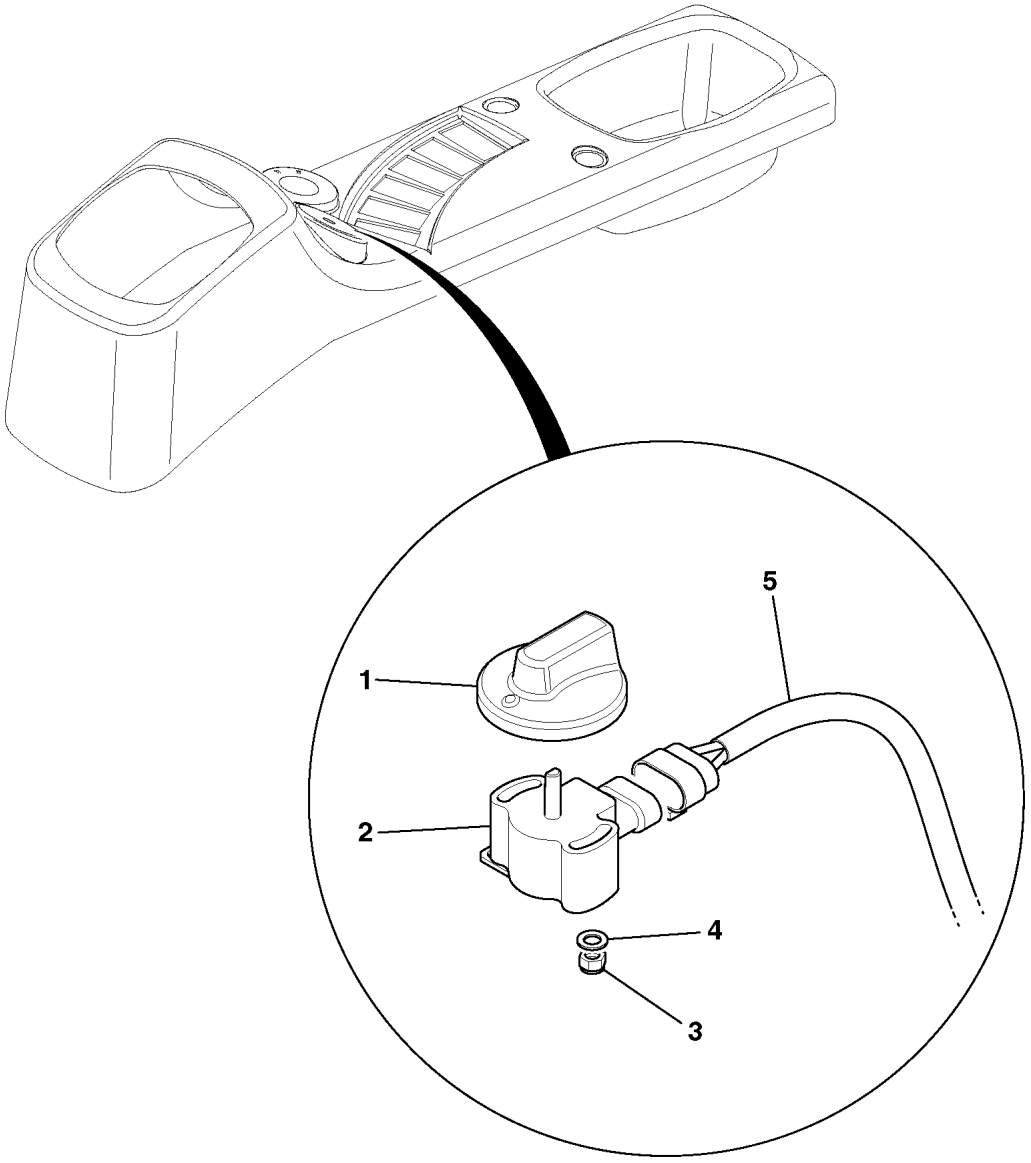

906470

	FROM	TO	FROM	TO
JS160W				

ITEM	PART NO	CHANGE NO	DESCRIPTION	REMARKS	USAGE CODE	QTY
1	331/21736		Knob, throttle control	See C3-2-1		1
2	716/30155		Potentiometer			1
3	1370/9401Z		Nut			2
4	1420/0004Z		Washer, M4			2
5	.		'See Remark'	Cab Harness, See frame C1-1-1		1

D

D1 CONTROLS, MACHINE
D2 CONTROLS, ENGINE
● D3 COLUMN, STEERING

ENGLISH

D3-1-1 STEERING COLUMN

FRANCAIS

D3-1-1 STEERING COLUMN

DEUTSCH

D3-1-1 STEERING COLUMN

ITALIANO

D3-1-1 STEERING COLUMN

PORTUGUES

D3-1-1 STEERING COLUMN

ESPANOL

D3-1-1 STEERING COLUMN

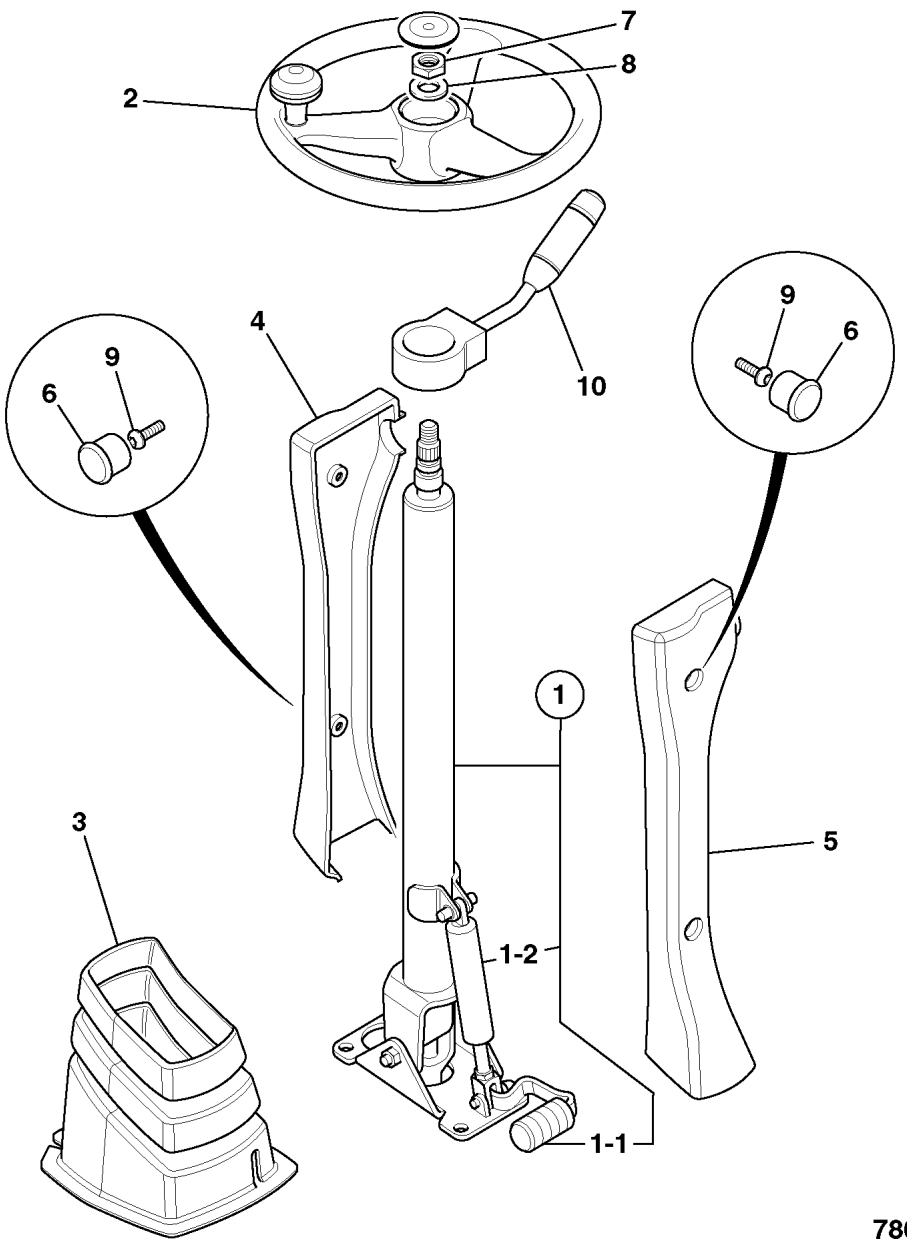

786841

	FROM	TO	FROM	TO
JS160W				

ITEM	PART NO	CHANGE NO	DESCRIPTION	REMARKS	USAGE CODE	QTY
1	335/90221		Column, steering, Adjustable			1
1 01	331/55198		:Grip, Foot pedal			1
1 02	331/55201		:Strut, Gas, strut c/w, pins, star washers			1
2	128/11789		Wheel, steering, as supplied			1
2 01	331/25693		:Wheel, steering, splined hub			1
2 02	331/27487		:Cap, steering wheel			1
2 03	331/27411		:Knob, spinner			1
3	331/53094		Gaiter, steering column			1
4	331/53597		Cover, shroud, steer column			1
5	331/53598		Cover, shroud, steer column			1
6	835/10071		Cap, Blanking			4
7	176R016VZ		Nut			1
8	1420/0011Z		Washer, M16 plain			1
9	826/01309		Screw, M5 x 10mm Long			4
10	JLR0008		Switch, steer column			1

E

- E1 HOSE & PIPEWORK
- E2 PUMP/MOTOR & PUMP DRIVE
- E3 VALVES & HYDRAULIC FILTERS
- E4 RAMS

ENGLISH

E1-1-1 CIRCUIT, PUMP SUCTION
E1-2-1 CIRCUIT, NEUTRAL PRESSURE
E1-3-1 CIRCUIT, NEUTRAL, RETURN & OIL COOLER
E1-4-1 CIRCUIT, TRACTION, UPPER CHASSIS
E1-4-10 CIRCUIT, TRACTION PILOT LINE, UPPER CHASSIS
E1-5-1 CIRCUIT, TRACTION, LOWER CHASSIS
E1-6-1 CIRCUIT, SWING
E1-8-1 CIRCUIT, BYPASS, HYDRAULIC FILTER
E1-9-1 CIRCUIT, FAN DRIVE
E1-10-1 CIRCUIT, DRAIN, MOTOR & SOLENOID
E1-12-1 CIRCUIT, PUMP, PILOT PRESSURE, CONTROL LINE
E1-13-1 CIRCUIT, PUMP, PILOT PRESSURE, & RETURN LINE
E1-14-1 CIRCUIT, DUAL CONTROLS, STANDARD USA, OPTIONAL UK WORLD
E1-15-1 CIRCUIT, BRAKES, LOWER CHASSIS
E1-17-1 CIRCUIT, STEERING, CHASSIS
E1-17-10 CIRCUIT, STEERING &, BRAKES, MAINFRAME
E1-20-1 CIRCUIT, BOOM RAM, MAINFRAME, MONO BOOM
E1-20-10 CIRCUIT, BOOM RAM, MAINFRAME, TAB BOOM
E1-21-1 CIRCUIT, DIPPER & BUCKET
E1-22-1 CIRCUIT, DIPPER RAM, MONOBOOM
E1-22-10 CIRCUIT, DIPPER RAM, & BUCKET RAM, TAB BOOM
E1-23-1 CIRCUIT, BUCKET RAM, MONOBOOM
E1-25-1 CIRCUIT, BOOM & DIPPER HBCV, MONO BOOM
E1-25-10 CIRCUIT, BOOM & DIPPER HBCV, TAB BOOM (2 VALVE HBCV BOOM ONLY)
E1-25-20 CIRCUIT, BOOM & DIPPER HBCV, TAB BOOM (3 & 4 VALVE HBCV)
E1-26-1 CIRCUIT, DIPPER RAM, HBCV FEED & RETURN
E1-29-1 CIRCUIT, LOW FLOW, AUXILIARY, MAINFRAME, MONO BOOM BUILD
E1-29-10 CIRCUIT, LOW FLOW, AUXILIARY, MAINFRAME , TAB BOOM BUILD
E1-29-20 CIRCUIT, AUXILIARY LOW FLOW, MONO BOOM BUILD
E1-29-30 CIRCUIT, AUXILIARY LOW FLOW, TAB BOOM BUILD
E1-30-1 CIRCUIT, HAMMER, MAINFRAME, MONO BOOM
E1-30-10 CIRCUIT, HAMMER, MAINFRAME, TAB BOOM
E1-30-20 CIRCUIT, AUXILIARY/HAMMER, MONO BOOM
E1-30-30 CIRCUIT, HAMMER, AUXILIARY BOOM PIPES, TAB BOOM
E1-30-40 CIRCUIT, HAMMER, MAINFRAME, MONO BOOM
E1-31-1 CIRCUIT, HAMMER, AUXILIARY, MAINFRAME MONO BOOM
E1-31-10 CIRCUIT, HAMMER, AUXILIARY, MAINFRAME TAB BOOM
E1-31-20 CIRCUIT, AUXILIARY, HAMMER & LOW FLOW, MONO BOOM
E1-31-30 CIRCUIT, AUXILIARY, HAMMER & LOW FLOW, TAB BOOM
E1-32-1 CIRCUIT, LOW FLOW, 2.25M DIPPER
E1-32-10 CIRCUIT, LOW FLOW, 2.7M DIPPER
E1-32-20 CIRCUIT, LOW FLOW, 3.05M DIPPER
E1-33-1 CIRCUIT, HAMMER, FULLFLOW 2.25 DIPPER
E1-33-10 CIRCUIT, HAMMER, FULLFLOW 2.7 DIPPER
E1-33-20 CIRCUIT, HAMMER, FULLFLOW 3.05 DIPPER
E1-34-1 CIRCUIT, BUCKET, GRAB CHANGEOVER
E1-35-1 CIRCUIT, TEST POINTS
E1-36-1 ARM HIGHT LIMITER, OPTIONAL, MONO BOOM
E1-45-1 CIRCUIT, DOZER CONTROL, MAINFRAME
E1-45-10 CIRCUIT, DOZER/STAB CONTROL
E1-46-1 CIRCUIT, DOZER/STAB, MAINFRAME
E1-46-10 CIRCUIT, FRONT DOZER, REAR STAB, CHASSIS
E1-46-15 CIRCUIT, FRONT DOZER, REAR STAB, CHASSIS
E1-46-20 CIRCUIT, REAR STAB, CHASSIS
E1-46-30 CIRCUIT, FRONT & REAR STAB, CHASSIS
E1-46-40 CIRCUIT, FRONT STAB, REAR DOZER, CHASSIS
E1-47-1 CIRCUIT, REAR DOZER, CHASSIS
E1-47-10 CIRCUIT, REAR DOZER, CHASSIS, PLUS LOGIC VALVE OPTION
E1-48-1 CIRCUIT, BOOM POSITION RAM, MAINFRAME
E1-48-10 CIRCUIT, NON-HBCV, BOOM POSITION RAM
E1-48-20 CIRCUIT, BOOM POSITION RAM, TAB, WITH HBCV
E1-48-30 CIRCUIT, BOOM POSITION RAM, HBCV FEED & RETURN, TAB BOOM
E1-50-1 CIRCUIT, CRUISE CONTROL
E1-60-1 CIRCUIT, MILLER Q. HITCH, 980/90463
E1-61-1 CIRCUIT, VALVE, DRIVE PEDAL
E1-62-1 CIRCUIT, VALVE, LH CONTROLLER
E1-63-1 CIRCUIT, VALVE, RH CONTROLLER
E1-64-1 CIRCUIT, VALVE, 3 STATION
E1-65-1 CIRCUIT, VALVE, CUSHION
E1-66-1 CIRCUIT, VALVE, SHUTTLE
E1-67-1 CIRCUIT, VALVE, SOLENOID
E1-68-1 CIRCUIT, MANIFOLD, UNDER CAB
E1-69-1 CIRCUIT, TANK MANIFOLD
E1-70-1 CIRCUIT, VALVE, PILOT SHUTTLE
E1-71-1 CIRCUIT, PILOT LINE, MAIN CONTROL VALVE
E1-72-1 CIRCUIT, RETURN LINE, PILOT PRESSURE, MAIN CONTROL VALVE

FRANCAIS

E1-1-1 CIRCUIT, PUMP SUCTION

E1-2-1 CIRCUIT, NEUTRAL PRESSURE
E1-3-1 CIRCUIT, NEUTRAL, RETURN & OIL COOLER
E1-4-1 CIRCUIT, CHENILLE CHASSIS PRINCIPAL
E1-4-10 CIRCUIT, CHENILLE CHASSIS PRINCIPAL
E1-5-1 CIRCUIT, TRACTION, LOWER CHASSIS
E1-6-1 CIRCUIT, SWING
E1-8-1 CIRCUIT, BYPASS, HYDRAULIC FILTER
E1-9-1 CIRCUIT, FAN DRIVE
E1-10-1 CIRCUIT, DRAIN, MOTOR & SOLENOID
E1-12-1 CIRCUIT, ASSERVISSEMPOINT MORT FIG 1
E1-13-1 CIRCUIT, ASSERVISSEMPOINT MORT FIG 1
E1-14-1 CIRCUIT, DUAL CONTROLS, STANDARD USA, OPTIONAL UK WORLD
E1-15-1 CIRCUIT, BRAKES, LOWER CHASSIS
E1-17-1 CIRCUIT, STEERING, CHASSIS
E1-17-10 CIRCUIT, STEERING &, BRAKES, MAINFRAME
E1-20-1 CIRCUIT, VERIN FLECHCHASSIS PRINCIPAL
E1-20-10 CIRCUIT, VERIN FLECHCHASSIS PRINCIPAL
E1-21-1 CIRCUIT EXCAVATEUR & GODET
E1-22-1 CIRCUIT, DIPPER RAM, MONOBOOM
E1-22-10 CIRCUIT, DIPPER RAM, & BUCKET RAM, TAB BOOM
E1-23-1 CIRCUIT, BUCKET RAM, MONOBOOM
E1-25-1 CIRCUIT, BOOM & DIPPER HBCV, MONO BOOM
E1-25-10 CIRCUIT, BOOM & DIPPER HBCV, TAB BOOM (2 VALVE HBCV BOOM ONLY)
E1-25-20 CIRCUIT, BOOM & DIPPER HBCV, TAB BOOM (3 & 4 VALVE HBCV)
E1-26-1 CIRCUIT, DIPPER RAM, HBCV FEED & RETURN
E1-29-1 CIRCUIT, LOW FLOW, AUXILIARY, MAINFRAME, MONO BOOM BUILD
E1-29-10 CIRCUIT, LOW FLOW, AUXILIARY, MAINFRAME , TAB BOOM BUILD
E1-29-20 CIRCUIT, AUXILIARY LOW FLOW, MONO BOOM BUILD
E1-29-30 CIRCUIT, AUXILIARY LOW FLOW, TAB BOOM BUILD
E1-30-1 CIRCUIT, HAMMER, MAINFRAME, MONO BOOM
E1-30-10 CIRCUIT, HAMMER, MAINFRAME, TAB BOOM
E1-30-20 CIRCUIT, AUXILIARY/HAMMER, MONO BOOM
E1-30-30 CIRCUIT, HAMMER, AUXILIARY BOOM PIPES, TAB BOOM
E1-30-40 CIRCUIT, HAMMER, MAINFRAME, MONO BOOM
E1-31-1 CIRCUIT, HAMMER, AUXILIARY, MAINFRAME MONO BOOM
E1-31-10 CIRCUIT, HAMMER, AUXILIARY, MAINFRAME TAB BOOM
E1-31-20 CIRCUIT, AUXILIARY, HAMMER & LOW FLOW, MONO BOOM
E1-31-30 CIRCUIT, AUXILIARY, HAMMER & LOW FLOW, TAB BOOM
E1-32-1 CIRCUIT, LOW FLOW, 2.25M DIPPER
E1-32-10 CIRCUIT, LOW FLOW, 2.7M DIPPER
E1-32-20 CIRCUIT, LOW FLOW, 3.05M DIPPER
E1-33-1 CIRCUIT, HAMMER, FULLFLOW 2.25 DIPPER
E1-33-10 CIRCUIT, HAMMER, FULLFLOW 2.7 DIPPER
E1-33-20 CIRCUIT, HAMMER, FULLFLOW 3.05 DIPPER
E1-34-1 CIRCUIT, BUCKET, GRAB CHANGEOVER
E1-35-1 CIRCUIT, TEST POINTS
E1-36-1 ARM HIGHT LIMITER, OPTIONAL, MONO BOOM
E1-45-1 CIRCUIT, DOZER CONTROL, MAINFRAME
E1-45-10 CIRCUIT, DOZER/STAB CONTROL
E1-46-1 CIRCUIT, DOZER/STAB, MAINFRAME
E1-46-10 CIRCUIT, FRONT DOZER, REAR STAB, CHASSIS
E1-46-15 CIRCUIT, FRONT DOZER, REAR STAB, CHASSIS
E1-46-20 CIRCUIT, REAR STAB, CHASSIS
E1-46-30 CIRCUIT, FRONT & REAR STAB, CHASSIS
E1-46-40 CIRCUIT, FRONT STAB, REAR DOZER, CHASSIS
E1-47-1 CIRCUIT, REAR DOZER, CHASSIS
E1-47-10 CIRCUIT, REAR DOZER, CHASSIS, PLUS LOGIC VALVE OPTION
E1-48-1 CIRCUIT, BOOM POSITION RAM, MAINFRAME
E1-48-10 CIRCUIT, NON-HBCV, BOOM POSITION RAM
E1-48-20 CIRCUIT, BOOM POSITION RAM, TAB, WITH HBCV
E1-48-30 CIRCUIT, BOOM POSITION RAM, HBCV FEED & RETURN, TAB BOOM
E1-50-1 CIRCUIT, CRUISE CONTROL
E1-60-1 CIRCUIT, MILLER Q. HITCH, 980/90463
E1-61-1 CIRCUIT, VALVE, DRIVE PEDAL
E1-62-1 CIRCUIT, VALVE, LH CONTROLLER
E1-63-1 CIRCUIT, VALVE, RH CONTROLLER
E1-64-1 CIRCUIT, VALVE, 3 STATION
E1-65-1 CIRCUIT, VALVE, CUSHION
E1-66-1 CIRCUIT, VALVE, SHUTTLE
E1-67-1 CIRCUIT, VALVE, SOLENOID
E1-68-1 CIRCUIT, MANIFOLD, UNDER CAB
E1-69-1 CIRCUIT, TANK MANIFOLD
E1-70-1 CIRCUIT, VALVE, PILOT SHUTTLE
E1-71-1 CIRCUIT, PILOT LINE, MAIN CONTROL VALVE
E1-72-1 CIRCUIT, RETURN LINE, PILOT PRESSURE, MAIN CONTROL VALVE

DEUTSCH

E1-1-1 CIRCUIT, PUMP SUCTION
E1-2-1 CIRCUIT, NEUTRAL PRESSURE
E1-3-1 CIRCUIT, NEUTRAL, RETURN & OIL COOLER
E1-4-1 STEUERKREIS, RAUPE HAUPTRAHMEN

E1-4-10 STEUERKREIS, RAUPE HAUPTRAHMEN
E1-5-1 CIRCUIT, TRACTION, LOWER CHASSIS
E1-6-1 CIRCUIT, SWING
E1-8-1 CIRCUIT, BYPASS, HYDRAULIC FILTER
E1-9-1 CIRCUIT, FAN DRIVE
E1-10-1 CIRCUIT, DRAIN, MOTOR & SOLENOID
E1-12-1 STEUERKREIS, SERVO NEUTRAL FIG 1
E1-13-1 STEUERKREIS, SERVO NEUTRAL FIG 1
E1-14-1 CIRCUIT, DUAL CONTROLS, STANDARD USA, OPTIONAL UK WORLD
E1-15-1 CIRCUIT, BRAKES, LOWER CHASSIS
E1-17-1 CIRCUIT, STEERING, CHASSIS
E1-17-10 CIRCUIT, STEERING &, BRAKES, MAINFRAME
E1-20-1 STEUERKREIS, AUSL.ZYL. HAUPTRAHMEN
E1-20-10 STEUERKREIS, AUSL.ZYL. HAUPTRAHMEN
E1-21-1 STEUERKREIS LOFFELSTIEL&LOFFEL
E1-22-1 CIRCUIT, DIPPER RAM, MONOBOOM
E1-22-10 CIRCUIT, DIPPER RAM, & BUCKET RAM, TAB BOOM
E1-23-1 CIRCUIT, BUCKET RAM, MONOBOOM
E1-25-1 CIRCUIT, BOOM & DIPPER HBCV, MONO BOOM
E1-25-10 CIRCUIT, BOOM & DIPPER HBCV, TAB BOOM (2 VALVE HBCV BOOM ONLY)
E1-25-20 CIRCUIT, BOOM & DIPPER HBCV, TAB BOOM (3 & 4 VALVE HBCV)
E1-26-1 CIRCUIT, DIPPER RAM, HBCV FEED & RETURN
E1-29-1 CIRCUIT, LOW FLOW, AUXILIARY, MAINFRAME, MONO BOOM BUILD
E1-29-10 CIRCUIT, LOW FLOW, AUXILIARY, MAINFRAME , TAB BOOM BUILD
E1-29-20 CIRCUIT, AUXILIARY LOW FLOW, MONO BOOM BUILD
E1-29-30 CIRCUIT, AUXILIARY LOW FLOW, TAB BOOM BUILD
E1-30-1 CIRCUIT, HAMMER, MAINFRAME, MONO BOOM
E1-30-10 CIRCUIT, HAMMER, MAINFRAME, TAB BOOM
E1-30-20 CIRCUIT, AUXILIARY/HAMMER, MONO BOOM
E1-30-30 CIRCUIT, HAMMER, AUXILIARY BOOM PIPES, TAB BOOM
E1-30-40 CIRCUIT, HAMMER, MAINFRAME, MONO BOOM
E1-31-1 CIRCUIT, HAMMER, AUXILIARY, MAINFRAME MONO BOOM
E1-31-10 CIRCUIT, HAMMER, AUXILIARY, MAINFRAME TAB BOOM
E1-31-20 CIRCUIT, AUXILIARY, HAMMER & LOW FLOW, MONO BOOM
E1-31-30 CIRCUIT, AUXILIARY, HAMMER & LOW FLOW, TAB BOOM
E1-32-1 CIRCUIT, LOW FLOW, 2.25M DIPPER
E1-32-10 CIRCUIT, LOW FLOW, 2.7M DIPPER
E1-32-20 CIRCUIT, LOW FLOW, 3.05M DIPPER
E1-33-1 CIRCUIT, HAMMER, FULLFLOW 2.25 DIPPER
E1-33-10 CIRCUIT, HAMMER, FULLFLOW 2.7 DIPPER
E1-33-20 CIRCUIT, HAMMER, FULLFLOW 3.05 DIPPER
E1-34-1 CIRCUIT, BUCKET, GRAB CHANGEOVER
E1-35-1 CIRCUIT, TEST POINTS
E1-36-1 ARM HIGHT LIMITER, OPTIONAL, MONO BOOM
E1-45-1 CIRCUIT, DOZER CONTROL, MAINFRAME
E1-45-10 CIRCUIT, DOZER/STAB CONTROL
E1-46-1 CIRCUIT, DOZER/STAB, MAINFRAME
E1-46-10 CIRCUIT, FRONT DOZER, REAR STAB, CHASSIS
E1-46-15 CIRCUIT, FRONT DOZER, REAR STAB, CHASSIS
E1-46-20 CIRCUIT, REAR STAB, CHASSIS
E1-46-30 CIRCUIT, FRONT & REAR STAB, CHASSIS
E1-46-40 CIRCUIT, FRONT STAB, REAR DOZER, CHASSIS
E1-47-1 CIRCUIT, REAR DOZER, CHASSIS
E1-47-10 CIRCUIT, REAR DOZER, CHASSIS, PLUS LOGIC VALVE OPTION
E1-48-1 CIRCUIT, BOOM POSITION RAM, MAINFRAME
E1-48-10 CIRCUIT, NON-HBCV, BOOM POSITION RAM
E1-48-20 CIRCUIT, BOOM POSITION RAM, TAB, WITH HBCV
E1-48-30 CIRCUIT, BOOM POSITION RAM, HBCV FEED & RETURN, TAB BOOM
E1-50-1 CIRCUIT, CRUISE CONTROL
E1-60-1 CIRCUIT, MILLER Q. HITCH, 980/90463
E1-61-1 CIRCUIT, VALVE, DRIVE PEDAL
E1-62-1 CIRCUIT, VALVE, LH CONTROLLER
E1-63-1 CIRCUIT, VALVE, RH CONTROLLER
E1-64-1 CIRCUIT, VALVE, 3 STATION
E1-65-1 CIRCUIT, VALVE, CUSHION
E1-66-1 CIRCUIT, VALVE, SHUTTLE
E1-67-1 CIRCUIT, VALVE, SOLENOID
E1-68-1 CIRCUIT, MANIFOLD, UNDER CAB
E1-69-1 CIRCUIT, TANK MANIFOLD
E1-70-1 CIRCUIT, VALVE, PILOT SHUTTLE
E1-71-1 CIRCUIT, PILOT LINE, MAIN CONTROL VALVE
E1-72-1 CIRCUIT, RETURN LINE, PILOT PRESSURE, MAIN CONTROL VALVE

ITALIANO

E1-1-1 CIRCUIT, PUMP SUCTION
E1-2-1 CIRCUIT, NEUTRAL PRESSURE
E1-3-1 CIRCUIT, NEUTRAL, RETURN & OIL COOLER
E1-4-1 CIRCUITO, CINGOLO TELAIO PRINCIPALE
E1-4-10 CIRCUITO, CINGOLO TELAIO PRINCIPALE
E1-5-1 CIRCUIT, TRACTION, LOWER CHASSIS
E1-6-1 CIRCUIT, SWING

E1-8-1 CIRCUIT, BYPASS, HYDRAULIC FILTER
E1-9-1 CIRCUIT, FAN DRIVE
E1-10-1 CIRCUIT, DRAIN, MOTOR & SOLENOID
E1-12-1 CIRCUITO, SERVO NEUTRO FIG 1
E1-13-1 CIRCUITO, SERVO NEUTRO FIG 1
E1-14-1 CIRCUIT, DUAL CONTROLS, STANDARD USA, OPTIONAL UK WORLD
E1-15-1 CIRCUIT, BRAKES, LOWER CHASSIS
E1-17-1 CIRCUIT, STEERING, CHASSIS
E1-17-10 CIRCUIT, STEERING &, BRAKES, MAINFRAME
E1-20-1 CIRCUITO, PISTONE BRACCIO INCASTELLATURA PRINCIPALE
E1-20-10 CIRCUITO, PISTONE BRACCIO INCASTELLATURA PRINCIPALE
E1-21-1 CIRCUITO SCARIFICATORE E BENNA
E1-22-1 CIRCUIT, DIPPER RAM, MONOBOOM
E1-22-10 CIRCUIT, DIPPER RAM, & BUCKET RAM, TAB BOOM
E1-23-1 CIRCUIT, BUCKET RAM, MONOBOOM
E1-25-1 CIRCUIT, BOOM & DIPPER HBCV, MONO BOOM
E1-25-10 CIRCUIT, BOOM & DIPPER HBCV, TAB BOOM (2 VALVE HBCV BOOM ONLY)
E1-25-20 CIRCUIT, BOOM & DIPPER HBCV, TAB BOOM (3 & 4 VALVE HBCV)
E1-26-1 CIRCUIT, DIPPER RAM, HBCV FEED & RETURN
E1-29-1 CIRCUIT, LOW FLOW, AUXILIARY, MAINFRAME, MONO BOOM BUILD
E1-29-10 CIRCUIT, LOW FLOW, AUXILIARY, MAINFRAME , TAB BOOM BUILD
E1-29-20 CIRCUIT, AUXILIARY LOW FLOW, MONO BOOM BUILD
E1-29-30 CIRCUIT, AUXILIARY LOW FLOW, TAB BOOM BUILD
E1-30-1 CIRCUIT, HAMMER, MAINFRAME, MONO BOOM
E1-30-10 CIRCUIT, HAMMER, MAINFRAME, TAB BOOM
E1-30-20 CIRCUIT, AUXILIARY/HAMMER, MONO BOOM
E1-30-30 CIRCUIT, HAMMER, AUXILIARY BOOM PIPES, TAB BOOM
E1-30-40 CIRCUIT, HAMMER, MAINFRAME, MONO BOOM
E1-31-1 CIRCUIT, HAMMER, AUXILIARY, MAINFRAME MONO BOOM
E1-31-10 CIRCUIT, HAMMER, AUXILIARY, MAINFRAME TAB BOOM
E1-31-20 CIRCUIT, AUXILIARY, HAMMER & LOW FLOW, MONO BOOM
E1-31-30 CIRCUIT, AUXILIARY, HAMMER & LOW FLOW, TAB BOOM
E1-32-1 CIRCUIT, LOW FLOW, 2.25M DIPPER
E1-32-10 CIRCUIT, LOW FLOW, 2.7M DIPPER
E1-32-20 CIRCUIT, LOW FLOW, 3.05M DIPPER
E1-33-1 CIRCUIT, HAMMER, FULLFLOW 2.25 DIPPER
E1-33-10 CIRCUIT, HAMMER, FULLFLOW 2.7 DIPPER
E1-33-20 CIRCUIT, HAMMER, FULLFLOW 3.05 DIPPER
E1-34-1 CIRCUIT, BUCKET, GRAB CHANGEOVER
E1-35-1 CIRCUIT, TEST POINTS
E1-36-1 ARM HIGHT LIMITER, OPTIONAL, MONO BOOM
E1-45-1 CIRCUIT, DOZER CONTROL, MAINFRAME
E1-45-10 CIRCUIT, DOZER/STAB CONTROL
E1-46-1 CIRCUIT, DOZER/STAB, MAINFRAME
E1-46-10 CIRCUIT, FRONT DOZER, REAR STAB, CHASSIS
E1-46-15 CIRCUIT, FRONT DOZER, REAR STAB, CHASSIS
E1-46-20 CIRCUIT, REAR STAB, CHASSIS
E1-46-30 CIRCUIT, FRONT & REAR STAB, CHASSIS
E1-46-40 CIRCUIT, FRONT STAB, REAR DOZER, CHASSIS
E1-47-1 CIRCUIT, REAR DOZER, CHASSIS
E1-47-10 CIRCUIT, REAR DOZER, CHASSIS, PLUS LOGIC VALVE OPTION
E1-48-1 CIRCUIT, BOOM POSITION RAM, MAINFRAME
E1-48-10 CIRCUIT, NON-HBCV, BOOM POSITION RAM
E1-48-20 CIRCUIT, BOOM POSITION RAM, TAB, WITH HBCV
E1-48-30 CIRCUIT, BOOM POSITION RAM, HBCV FEED & RETURN, TAB BOOM
E1-50-1 CIRCUIT, CRUISE CONTROL
E1-60-1 CIRCUIT, MILLER Q. HITCH, 980/90463
E1-61-1 CIRCUIT, VALVE, DRIVE PEDAL
E1-62-1 CIRCUIT, VALVE, LH CONTROLLER
E1-63-1 CIRCUIT, VALVE, RH CONTROLLER
E1-64-1 CIRCUIT, VALVE, 3 STATION
E1-65-1 CIRCUIT, VALVE, CUSHION
E1-66-1 CIRCUIT, VALVE, SHUTTLE
E1-67-1 CIRCUIT, VALVE, SOLENOID
E1-68-1 CIRCUIT, MANIFOLD, UNDER CAB
E1-69-1 CIRCUIT, TANK MANIFOLD
E1-70-1 CIRCUIT, VALVE, PILOT SHUTTLE
E1-71-1 CIRCUIT, PILOT LINE, MAIN CONTROL VALVE
E1-72-1 CIRCUIT, RETURN LINE, PILOT PRESSURE, MAIN CONTROL VALVE

PORTUGUES

E1-1-1 CIRCUIT, PUMP SUCTION
E1-2-1 CIRCUIT, NEUTRAL PRESSURE
E1-3-1 CIRCUIT, NEUTRAL, RETURN & OIL COOLER
E1-4-1 CIRCUITO, RASTOS ESTRUTURA PRINCIPAL
E1-4-10 CIRCUITO, RASTOS ESTRUTURA PRINCIPAL
E1-5-1 CIRCUIT, TRACTION, LOWER CHASSIS
E1-6-1 CIRCUIT, SWING
E1-8-1 CIRCUIT, BYPASS, HYDRAULIC FILTER
E1-9-1 CIRCUIT, FAN DRIVE

E1-10-1 CIRCUIT, DRAIN, MOTOR & SOLENOID
E1-12-1 CIRCUITO, SERVO NEUTRO FIG 1
E1-13-1 CIRCUITO, SERVO NEUTRO FIG 1
E1-14-1 CIRCUIT, DUAL CONTROLS, STANDARD USA, OPTIONAL UK WORLD
E1-15-1 CIRCUIT, BRAKES, LOWER CHASSIS
E1-17-1 CIRCUIT, STEERING, CHASSIS
E1-17-10 CIRCUIT, STEERING &, BRAKES, MAINFRAME
E1-20-1 CIRCUITO,CILIN.BRACOESTRUTURA PRINCIPAL
E1-20-10 CIRCUITO,CILIN.BRACOESTRUTURA PRINCIPAL
E1-21-1 CIRCUITO LANCA E BALDE
E1-22-1 CIRCUIT, DIPPER RAM, MONOBOOM
E1-22-10 CIRCUIT, DIPPER RAM, & BUCKET RAM, TAB BOOM
E1-23-1 CIRCUIT, BUCKET RAM, MONOBOOM
E1-25-1 CIRCUIT, BOOM & DIPPER HBCV, MONO BOOM
E1-25-10 CIRCUIT, BOOM & DIPPER HBCV, TAB BOOM (2 VALVE HBCV BOOM ONLY)
E1-25-20 CIRCUIT, BOOM & DIPPER HBCV, TAB BOOM (3 & 4 VALVE HBCV)
E1-26-1 CIRCUIT, DIPPER RAM, HBCV FEED & RETURN
E1-29-1 CIRCUIT, LOW FLOW, AUXILIARY, MAINFRAME, MONO BOOM BUILD
E1-29-10 CIRCUIT, LOW FLOW, AUXILIARY, MAINFRAME , TAB BOOM BUILD
E1-29-20 CIRCUIT, AUXILIARY LOW FLOW, MONO BOOM BUILD
E1-29-30 CIRCUIT, AUXILIARY LOW FLOW, TAB BOOM BUILD
E1-30-1 CIRCUIT, HAMMER, MAINFRAME, MONO BOOM
E1-30-10 CIRCUIT, HAMMER, MAINFRAME, TAB BOOM
E1-30-20 CIRCUIT, AUXILIARY/HAMMER, MONO BOOM
E1-30-30 CIRCUIT, HAMMER, AUXILIARY BOOM PIPES, TAB BOOM
E1-30-40 CIRCUIT, HAMMER, MAINFRAME, MONO BOOM
E1-31-1 CIRCUIT, HAMMER, AUXILIARY, MAINFRAME MONO BOOM
E1-31-10 CIRCUIT, HAMMER, AUXILIARY, MAINFRAME TAB BOOM
E1-31-20 CIRCUIT, AUXILIARY, HAMMER & LOW FLOW, MONO BOOM
E1-31-30 CIRCUIT, AUXILIARY, HAMMER & LOW FLOW, TAB BOOM
E1-32-1 CIRCUIT, LOW FLOW, 2.25M DIPPER
E1-32-10 CIRCUIT, LOW FLOW, 2.7M DIPPER
E1-32-20 CIRCUIT, LOW FLOW, 3.05M DIPPER
E1-33-1 CIRCUIT, HAMMER, FULLFLOW 2.25 DIPPER
E1-33-10 CIRCUIT, HAMMER, FULLFLOW 2.7 DIPPER
E1-33-20 CIRCUIT, HAMMER, FULLFLOW 3.05 DIPPER
E1-34-1 CIRCUIT, BUCKET, GRAB CHANGEOVER
E1-35-1 CIRCUIT, TEST POINTS
E1-36-1 ARM HIGHT LIMITER, OPTIONAL, MONO BOOM
E1-45-1 CIRCUIT, DOZER CONTROL, MAINFRAME
E1-45-10 CIRCUIT, DOZER/STAB CONTROL
E1-46-1 CIRCUIT, DOZER/STAB, MAINFRAME
E1-46-10 CIRCUIT, FRONT DOZER, REAR STAB, CHASSIS
E1-46-15 CIRCUIT, FRONT DOZER, REAR STAB, CHASSIS
E1-46-20 CIRCUIT, REAR STAB, CHASSIS
E1-46-30 CIRCUIT, FRONT & REAR STAB, CHASSIS
E1-46-40 CIRCUIT, FRONT STAB, REAR DOZER, CHASSIS
E1-47-1 CIRCUIT, REAR DOZER, CHASSIS
E1-47-10 CIRCUIT, REAR DOZER, CHASSIS, PLUS LOGIC VALVE OPTION
E1-48-1 CIRCUIT, BOOM POSITION RAM, MAINFRAME
E1-48-10 CIRCUIT, NON-HBCV, BOOM POSITION RAM
E1-48-20 CIRCUIT, BOOM POSITION RAM, TAB, WITH HBCV
E1-48-30 CIRCUIT, BOOM POSITION RAM, HBCV FEED & RETURN, TAB BOOM
E1-50-1 CIRCUIT, CRUISE CONTROL
E1-60-1 CIRCUIT, MILLER Q. HITCH, 980/90463
E1-61-1 CIRCUIT, VALVE, DRIVE PEDAL
E1-62-1 CIRCUIT, VALVE, LH CONTROLLER
E1-63-1 CIRCUIT, VALVE, RH CONTROLLER
E1-64-1 CIRCUIT, VALVE, 3 STATION
E1-65-1 CIRCUIT, VALVE, CUSHION
E1-66-1 CIRCUIT, VALVE, SHUTTLE
E1-67-1 CIRCUIT, VALVE, SOLENOID
E1-68-1 CIRCUIT, MANIFOLD, UNDER CAB
E1-69-1 CIRCUIT, TANK MANIFOLD
E1-70-1 CIRCUIT, VALVE, PILOT SHUTTLE
E1-71-1 CIRCUIT, PILOT LINE, MAIN CONTROL VALVE
E1-72-1 CIRCUIT, RETURN LINE, PILOT PRESSURE, MAIN CONTROL VALVE

ESPANOL

E1-1-1 CIRCUIT, PUMP SUCTION
E1-2-1 CIRCUIT, NEUTRAL PRESSURE
E1-3-1 CIRCUIT, NEUTRAL, RETURN & OIL COOLER
E1-4-1 CIRCUITO, ORUGA ESTRUCTURA PPAL.
E1-4-10 CIRCUITO, ORUGA ESTRUCTURA PPAL.
E1-5-1 CIRCUIT, TRACTION, LOWER CHASSIS
E1-6-1 CIRCUIT, SWING
E1-8-1 CIRCUIT, BYPASS, HYDRAULIC FILTER
E1-9-1 CIRCUIT, FAN DRIVE
E1-10-1 CIRCUIT, DRAIN, MOTOR & SOLENOID
E1-12-1 CIRCUITO SERVO NEUTRAL FIG 1
E1-13-1 CIRCUITO SERVO NEUTRAL FIG 1

E1-14-1 CIRCUIT, DUAL CONTROLS, STANDARD USA, OPTIONAL UK WORLD
E1-15-1 CIRCUIT, BRAKES, LOWER CHASSIS
E1-17-1 CIRCUIT, STEERING, CHASSIS
E1-17-10 CIRCUIT, STEERING &, BRAKES, MAINFRAME
E1-20-1 CIRC.,PLUMA CILIND. ESRUCTURA PPAL.
E1-20-10 CIRC.,PLUMA CILIND. ESRUCTURA PPAL.
E1-21-1 CIRCUITO BRZO PENET.Y CAZO
E1-22-1 CIRCUIT, DIPPER RAM, MONOBOOM
E1-22-10 CIRCUIT, DIPPER RAM, & BUCKET RAM, TAB BOOM
E1-23-1 CIRCUIT, BUCKET RAM, MONOBOOM
E1-25-1 CIRCUIT, BOOM & DIPPER HBCV, MONO BOOM
E1-25-10 CIRCUIT, BOOM & DIPPER HBCV, TAB BOOM (2 VALVE HBCV BOOM ONLY)
E1-25-20 CIRCUIT, BOOM & DIPPER HBCV, TAB BOOM (3 & 4 VALVE HBCV)
E1-26-1 CIRCUIT, DIPPER RAM, HBCV FEED & RETURN
E1-29-1 CIRCUIT, LOW FLOW, AUXILIARY, MAINFRAME, MONO BOOM BUILD
E1-29-10 CIRCUIT, LOW FLOW, AUXILIARY, MAINFRAME , TAB BOOM BUILD
E1-29-20 CIRCUIT, AUXILIARY LOW FLOW, MONO BOOM BUILD
E1-29-30 CIRCUIT, AUXILIARY LOW FLOW, TAB BOOM BUILD
E1-30-1 CIRCUIT, HAMMER, MAINFRAME, MONO BOOM
E1-30-10 CIRCUIT, HAMMER, MAINFRAME, TAB BOOM
E1-30-20 CIRCUIT, AUXILIARY/HAMMER, MONO BOOM
E1-30-30 CIRCUIT, HAMMER, AUXILIARY BOOM PIPES, TAB BOOM
E1-30-40 CIRCUIT, HAMMER, MAINFRAME, MONO BOOM
E1-31-1 CIRCUIT, HAMMER, AUXILIARY, MAINFRAME MONO BOOM
E1-31-10 CIRCUIT, HAMMER, AUXILIARY, MAINFRAME TAB BOOM
E1-31-20 CIRCUIT, AUXILIARY, HAMMER & LOW FLOW, MONO BOOM
E1-31-30 CIRCUIT, AUXILIARY, HAMMER & LOW FLOW, TAB BOOM
E1-32-1 CIRCUIT, LOW FLOW, 2.25M DIPPER
E1-32-10 CIRCUIT, LOW FLOW, 2.7M DIPPER
E1-32-20 CIRCUIT, LOW FLOW, 3.05M DIPPER
E1-33-1 CIRCUIT, HAMMER, FULLFLOW 2.25 DIPPER
E1-33-10 CIRCUIT, HAMMER, FULLFLOW 2.7 DIPPER
E1-33-20 CIRCUIT, HAMMER, FULLFLOW 3.05 DIPPER
E1-34-1 CIRCUIT, BUCKET, GRAB CHANGEOVER
E1-35-1 CIRCUIT, TEST POINTS
E1-36-1 ARM HIGHT LIMITER, OPTIONAL, MONO BOOM
E1-45-1 CIRCUIT, DOZER CONTROL, MAINFRAME
E1-45-10 CIRCUIT, DOZER/STAB CONTROL
E1-46-1 CIRCUIT, DOZER/STAB, MAINFRAME
E1-46-10 CIRCUIT, FRONT DOZER, REAR STAB, CHASSIS
E1-46-15 CIRCUIT, FRONT DOZER, REAR STAB, CHASSIS
E1-46-20 CIRCUIT, REAR STAB, CHASSIS
E1-46-30 CIRCUIT, FRONT & REAR STAB, CHASSIS
E1-46-40 CIRCUIT, FRONT STAB, REAR DOZER, CHASSIS
E1-47-1 CIRCUIT, REAR DOZER, CHASSIS
E1-47-10 CIRCUIT, REAR DOZER, CHASSIS, PLUS LOGIC VALVE OPTION
E1-48-1 CIRCUIT, BOOM POSITION RAM, MAINFRAME
E1-48-10 CIRCUIT, NON-HBCV, BOOM POSITION RAM
E1-48-20 CIRCUIT, BOOM POSITION RAM, TAB, WITH HBCV
E1-48-30 CIRCUIT, BOOM POSITION RAM, HBCV FEED & RETURN, TAB BOOM
E1-50-1 CIRCUIT, CRUISE CONTROL
E1-60-1 CIRCUIT, MILLER Q. HITCH, 980/90463
E1-61-1 CIRCUIT, VALVE, DRIVE PEDAL
E1-62-1 CIRCUIT, VALVE, LH CONTROLLER
E1-63-1 CIRCUIT, VALVE, RH CONTROLLER
E1-64-1 CIRCUIT, VALVE, 3 STATION
E1-65-1 CIRCUIT, VALVE, CUSHION
E1-66-1 CIRCUIT, VALVE, SHUTTLE
E1-67-1 CIRCUIT, VALVE, SOLENOID
E1-68-1 CIRCUIT, MANIFOLD, UNDER CAB
E1-69-1 CIRCUIT, TANK MANIFOLD
E1-70-1 CIRCUIT, VALVE, PILOT SHUTTLE
E1-71-1 CIRCUIT, PILOT LINE, MAIN CONTROL VALVE
E1-72-1 CIRCUIT, RETURN LINE, PILOT PRESSURE, MAIN CONTROL VALVE

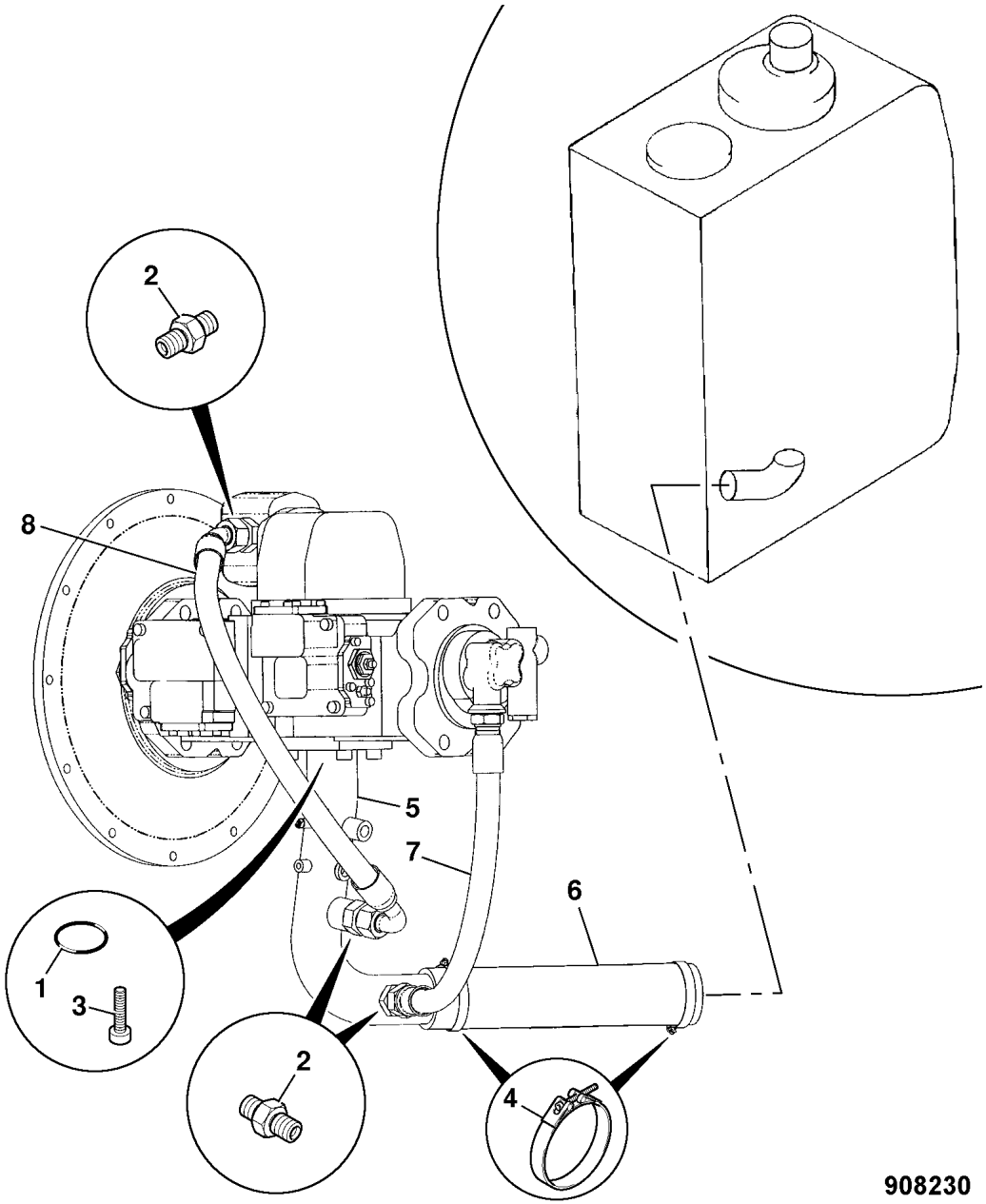

908230

	FROM	TO	FROM	TO
JS160W				

ITEM	PART NO	CHANGE NO	DESCRIPTION	REMARKS	USAGE CODE	QTY
1	BRA0127		O Ring			1
2	KNJ0605		Adapter, straight			3
2 01	UBJ0158		:O Ring			1
3	1391/3508Z		Capscrew, M12x30			4
4	332/J2884		Clamp, hose			4
5	830/12031		Pipe, suction			1
6	834/11568		Hose, suction			1
7	KNJ1821		Hose, hyd, (l=470)			1
8	KNJ2143		Hose, hyd, (l=800)			1

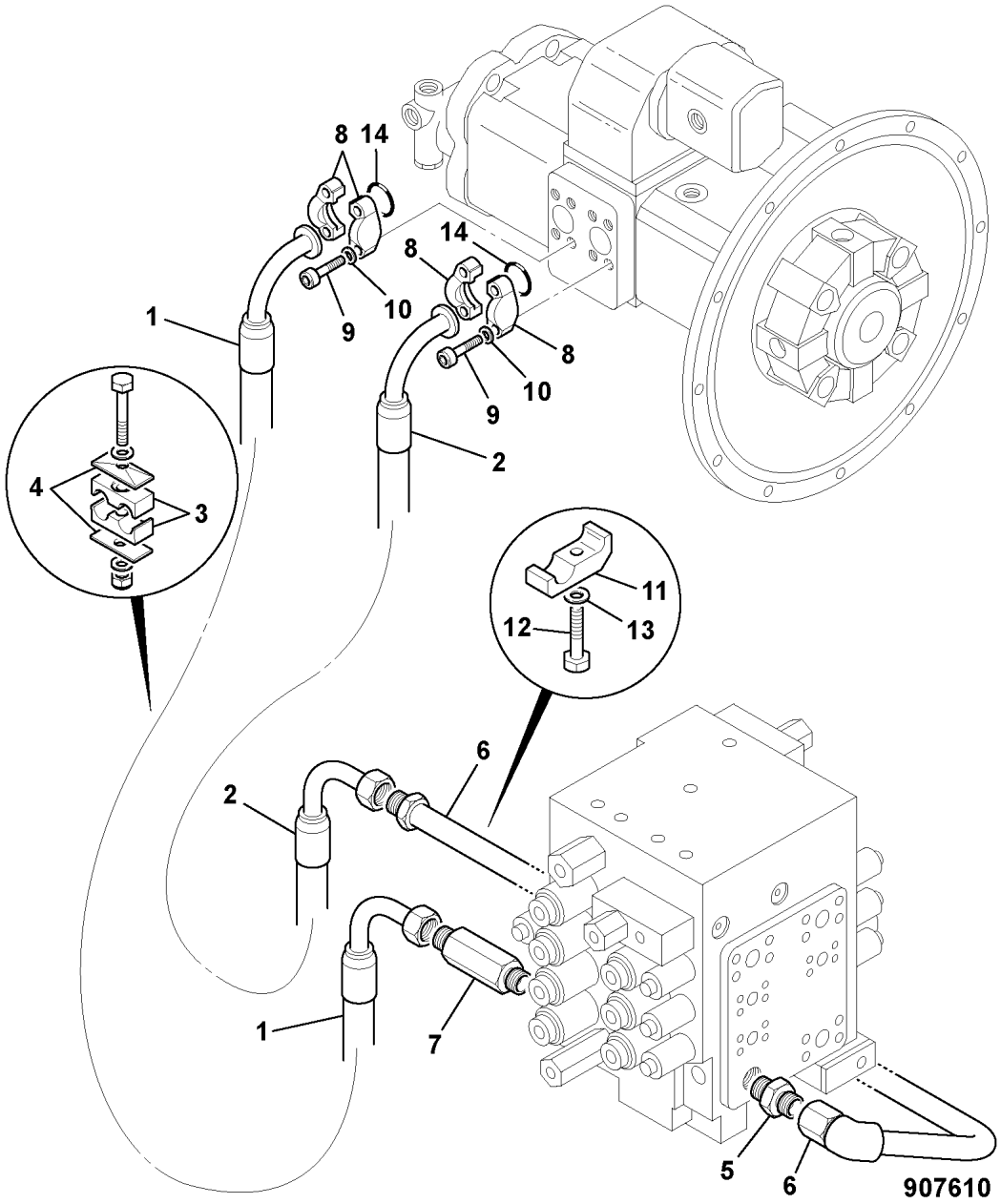

	FROM	TO	FROM	TO
JS160W				

ITEM	PART NO	CHANGE NO	DESCRIPTION	REMARKS	USAGE CODE	QTY
1	616/80311		Hose			1
2	616/80310		Hose			1
3	821/00270		Clamp, 32mm/32mm holes, 54mm high			2
4	821/00271		Plate, cover, M8 x 65mm			2
5	KNJ0605		Adapter, straight			1
6	830/13506		Pipe, assembly			1
7	JHJ0080		Adapter			1
8	KRJ0963		Flange, split			4
9	1391/3409Z		Capscrew, M10 x 35mm			8
10	JHP0046		Washer, M10			8
11	KRV0548		Clamp			1
12	1316/3512D		Bolt, M12X50			1
13	JHP0042		Washer, plain			1
14	2407/0205		O Ring			2

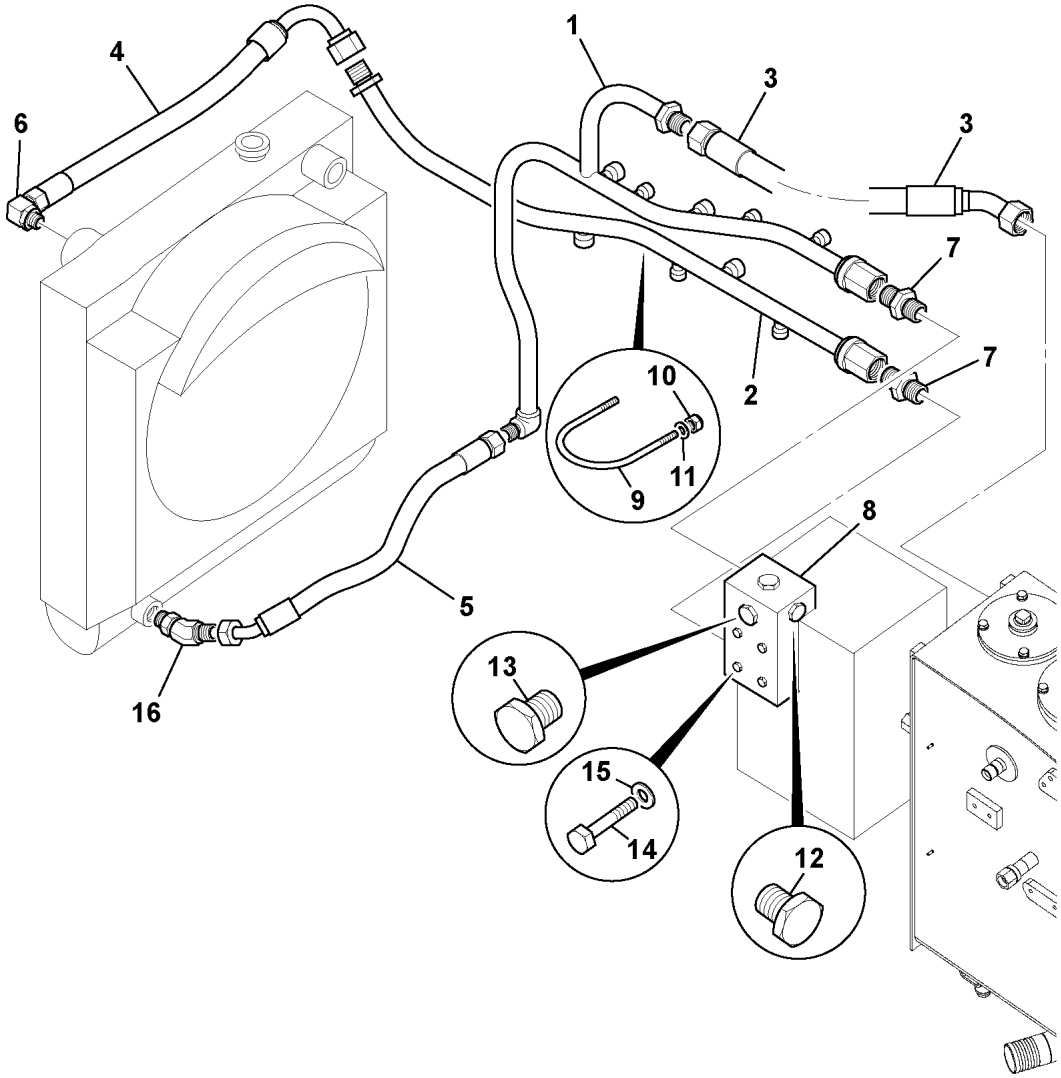

926060

	FROM	TO	FROM	TO
JS160W				

ITEM	PART NO	CHANGE NO	DESCRIPTION	REMARKS	USAGE CODE	QTY
1	332/J1403		Pipe, return			1
2	830/13935		Pipe, oil cooler			1
3	627/10635		Hose			1
4	KSJ2315		Hose, hydraulic			1
5	332/J2637		Hose			1
6	KHJ0345		Adapter, elbow			1
7	KNJ0606		Adapter			2
8	KNJ2280		Manifold			1
9	KNJ0718		Bolt, u			2
10	1371/0303D		Nut, M10 grade 10.9			4
11	JHP0046		Washer, M10			8
12	BRJ0174		Plug			1
13	BRJ0190		Plug			1
14	1316/3419D		Bolt			4
15	JHP0046		Washer, M10			8
16	KHJ0352		Elbow			1

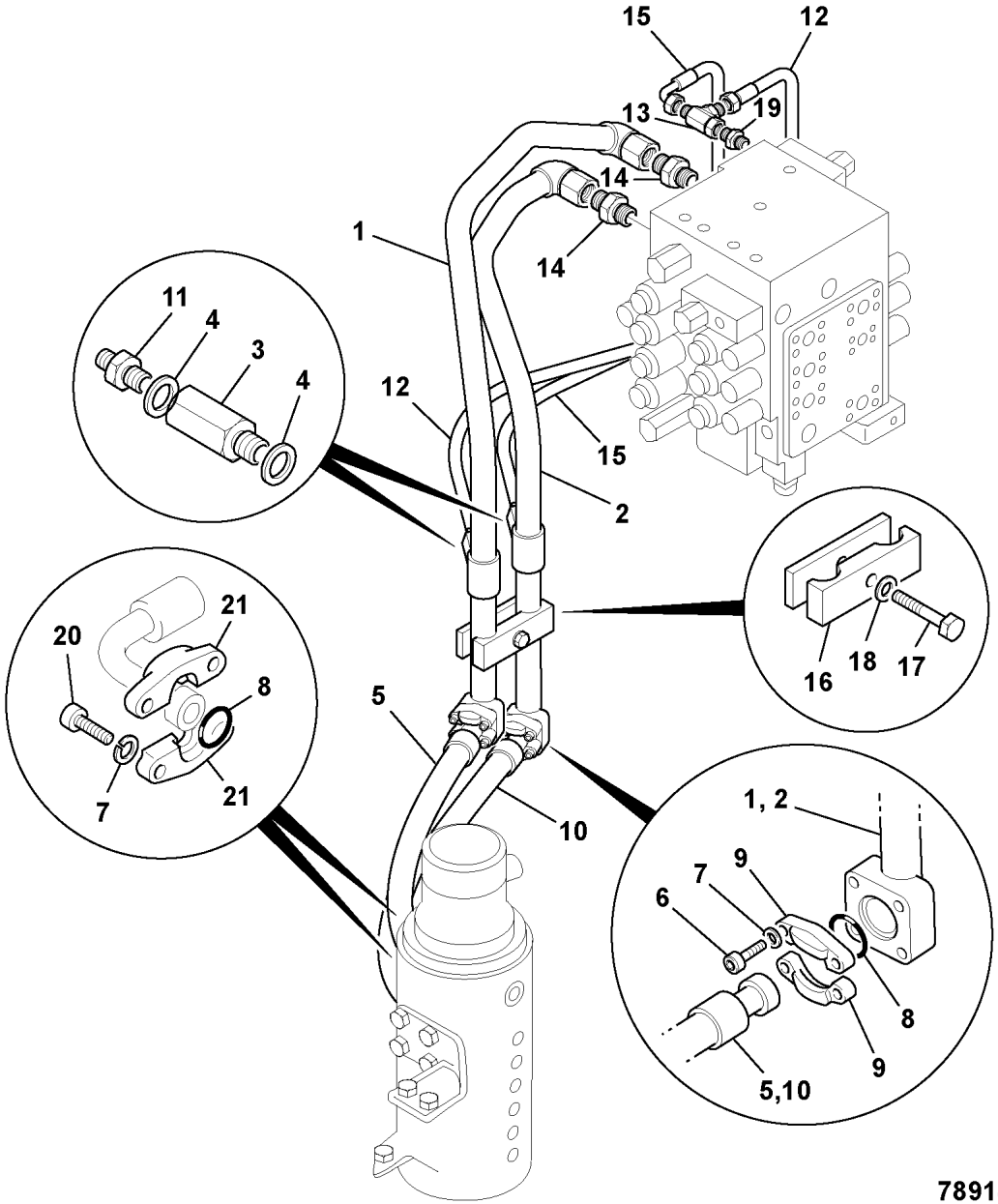

789142

JS160W

	FROM	TO	FROM	TO

ITEM	PART NO	CHANGE NO	DESCRIPTION	REMARKS	USAGE CODE	QTY
1	830/13734		Pipe, assembly, traction			1
2	830/13750		Pipe, assembly, traction			1
3	JLJ0186		Valve, check			2
4	1406/0018		Seal, bonded, 1/2" BSP			4
5	616/80251		Hose			1
6	1391/3511D		Capscrew			8
7	1425/0009D		Washer, M12 spring			8
8	210/92901		Clamp, flange 1"			4
9	2407/0210		O Ring			2
10	616/80252		Hose			1
11	1606/0007		Adapter			2
12	627/10617		Hose			1
13	JHJ0100		Adapter, tee			1
14	KRJ1391		Adapter			2
15	627/10618		Hose			1
16	JLV0287		Clamp			1
17	1316/0514D		Bolt, M12 x 60mm			1
18	1420/0009D		Washer, M12			1
19	JLJ0051		Adapter, M/M, 1/4"BSP-3/8"BSP			1
20	1391/3509D		Capscrew, M12 X 35LG			8
21	KRJ2682		Flange, split			4

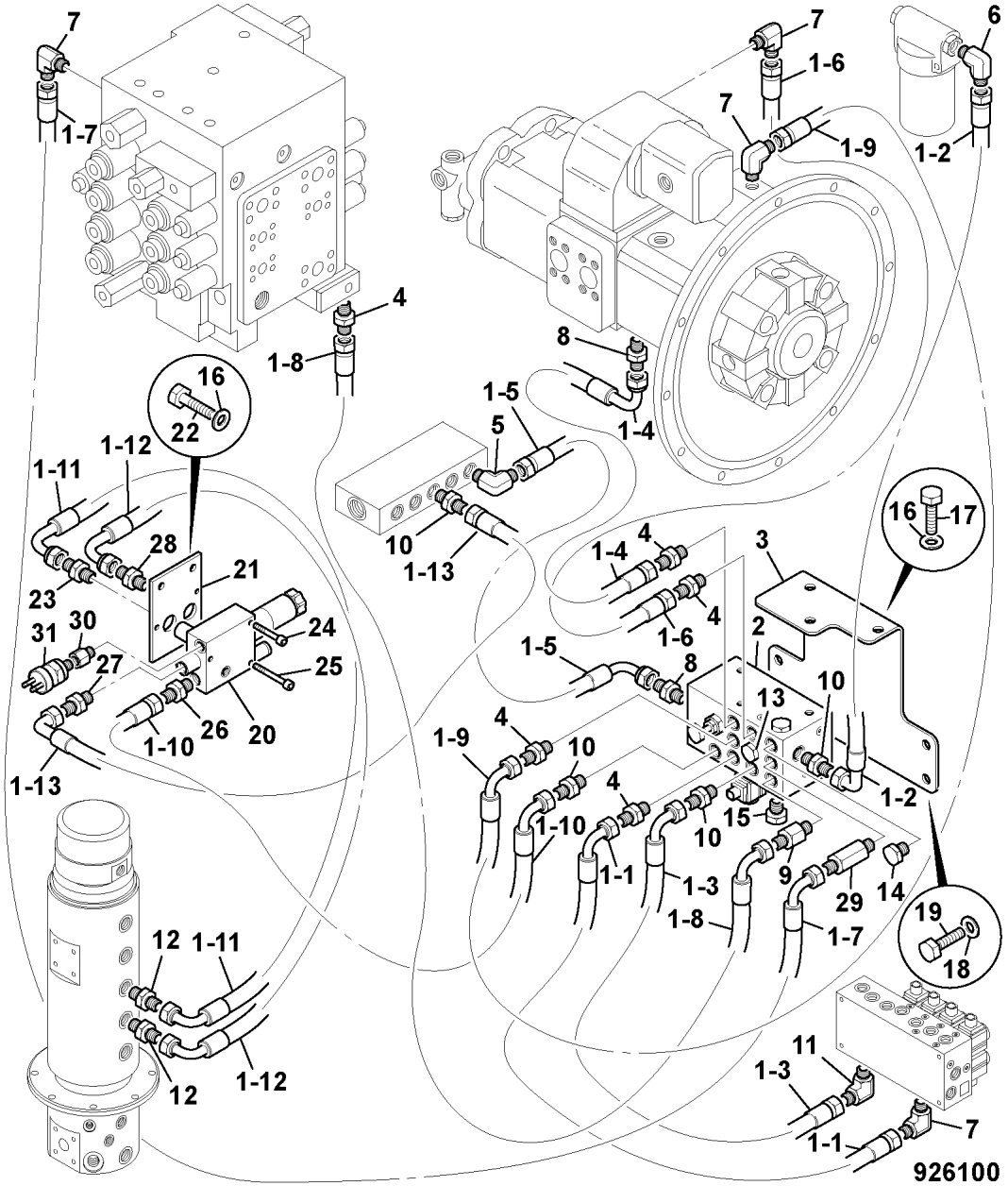

	FROM	TO	FROM	TO
JS160W				

ITEM	PART NO	CHANGE NO	DESCRIPTION	REMARKS	USAGE CODE	QTY
1 01	KSJ1635		Hose, nylon			1
1 02	627/10400		Hose			1
1 03	MPJ0143		Hose, nylon			1
1 04	KRJ3671		Hose, nylon			1
1 05	JNV0329		Hose, Colour (none)			1
1 06	JLV0263		Hose			1
1 07	JLV0469		Hose			1
1 08	KBJ2203		Hose			1
1 09	JLV0219		Hose			1
1 10	KRJ3935		Hose, nylon			1
1 11	JLV0784		Hose			1
1 12	JRJ0107		Hose, pink			1
1 13	JRJ0107		Hose, pink			1
2	25/223238		Valve, solenoid			1
3	332/J2540		Bracket, JS175W AUTO T3			1
4	KNJ0758		Adapter			5
5	KHJ0640		Elbow			1
6	KHJ0641		Adapter, elbow			1
7	KHJ0341		Adapter, elbow			4
8	KAJ2176		Adapter			2
9	JHJ0105		Adapter, extended			1
10	KNJ0759		Adapter			4
11	KHJ0342		Adapter, elbow			1

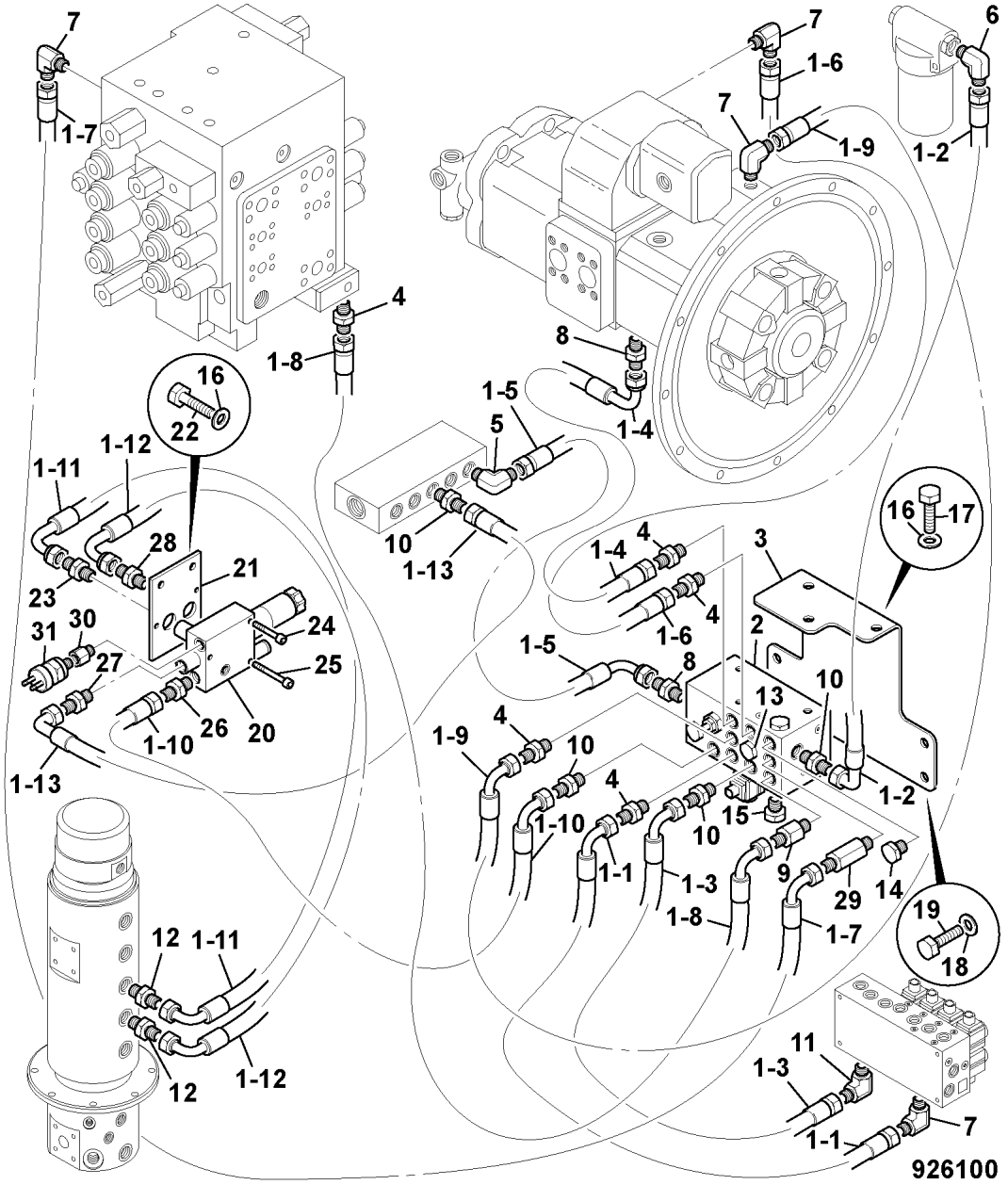

ITEM	PART NO	CHANGE NO	DESCRIPTION	REMARKS	USAGE CODE	QTY
12	JLJ0104		Adapter, 1/2 X 3/8			2
13	KHJ0363		Plug			1
14	BRJ1545		Plug			1
15	BRJ0190		Plug			1
16	1420/0008D		Washer, M10			5
17	1315/0407D		Setscrew, M10 x 25mm long			3
18	1420/0009D		Washer, M12			4
19	1316/0508D		Screw			4
20	25/223203		Valve, transmission control			1
21	331/64869		Plate, valve mounting, JS175W AUTO T3			1
22	1315/0408D		Setscrew, M10 x 30			2
23	816/90991		Adapter			1
24	1391/3310D		Capscrew			2
25	1391/3312D		Capscrew			1
26	816/15149		Adapter, M16			1
27	816/90992		Adapter			1
28	816/91010		Adapter			1
29	JHJ0106		Adapter, M/M, 1/4", 50mm ext.			1
30	332/J2507		Adapter			1
31	701/80335		Switch, pressure, ZF transmission			1

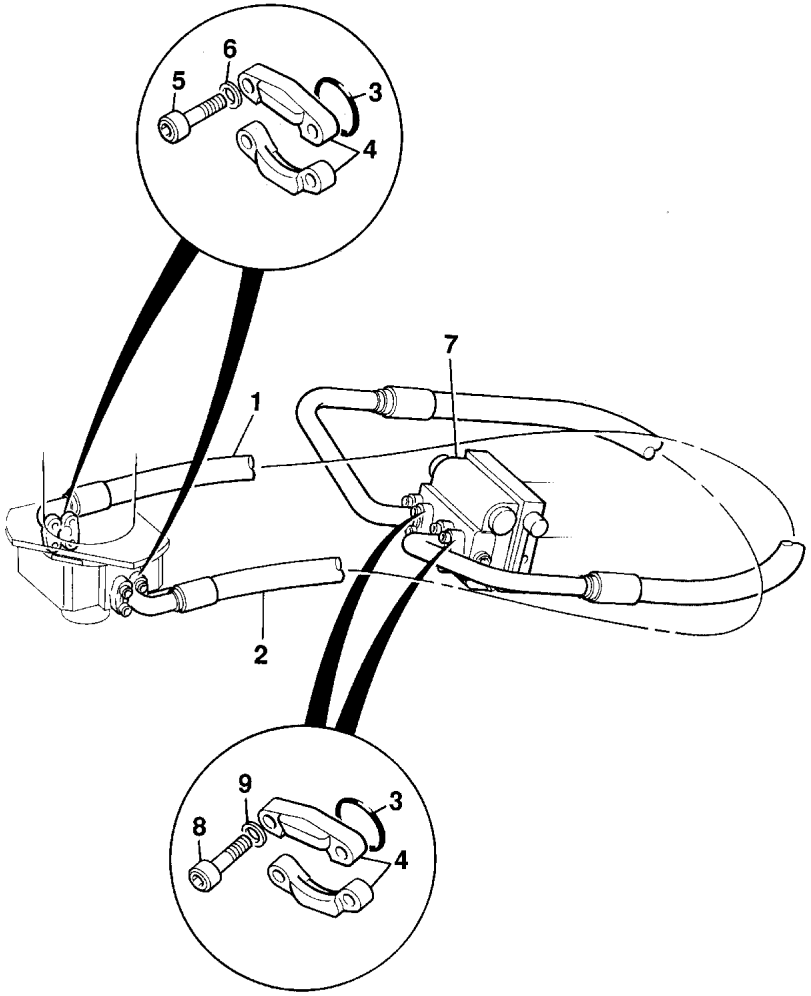

271770

	FROM	TO	FROM	TO
JS160W				

ITEM	PART NO	CHANGE NO	DESCRIPTION	REMARKS	USAGE CODE	QTY
1	JLJ0496		Hose, drive, left hand			1
2	616/80081		Hose			1
3	2407/0210		O Ring			4
4	210/92901		Clamp, flange 1"			4
5	1391/3511Z		Capscrew			4
6	1425/0009Z		Washer, Spring M12			4
7	.		'See Remark'	Motor, see index E2		1
8	1391/3511Z		Capscrew			4
9	1425/0011Z		Washer, spring			4

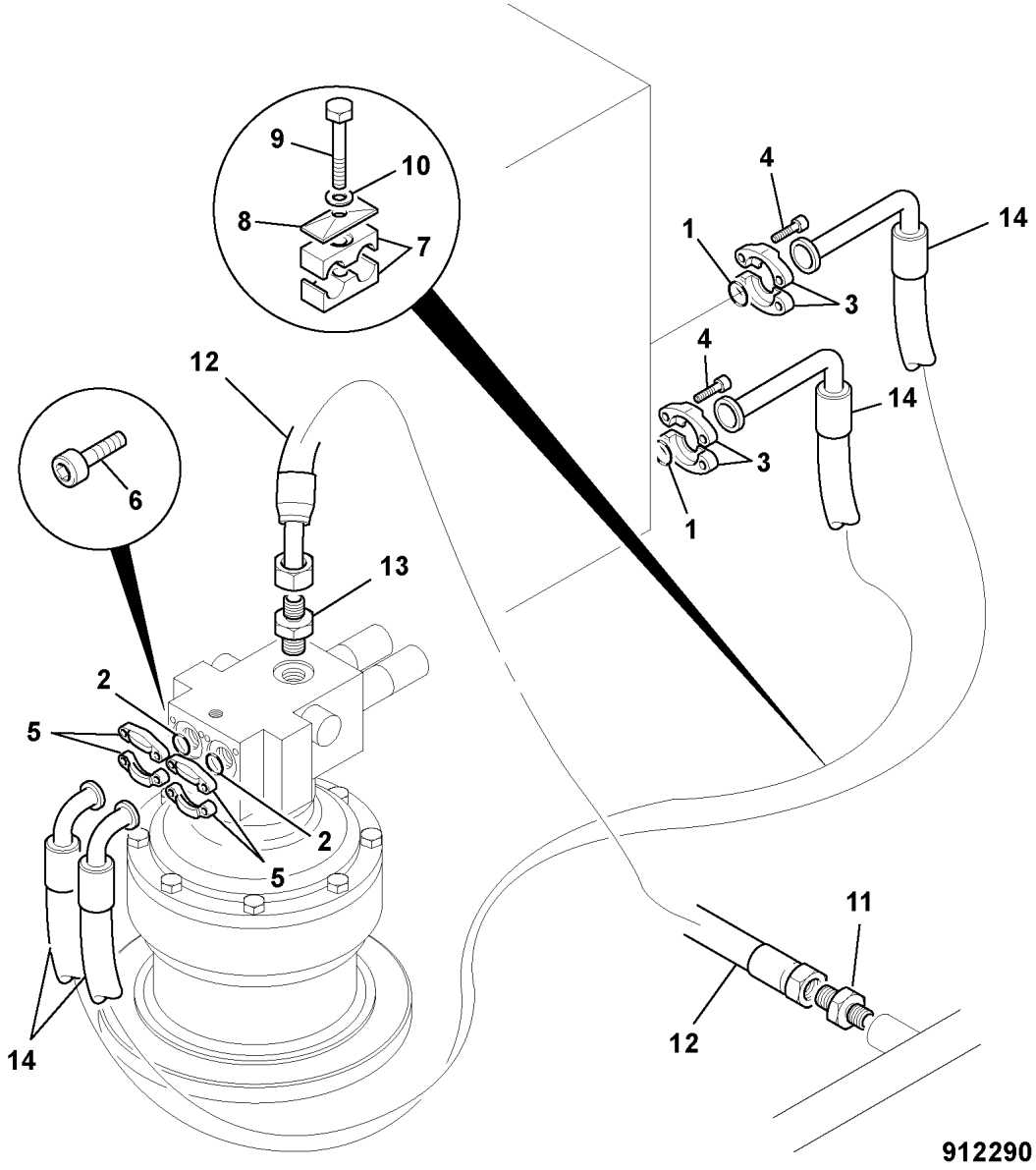

	FROM	TO	FROM	TO
JS160W				

ITEM	PART NO	CHANGE NO	DESCRIPTION	REMARKS	USAGE CODE	QTY
1	2400/0201		O Ring			2
2	2400/0205		O Ring			2
3	JLJ0353		Flange, split			4
4	1391/3308D		Capscrew			8
5	KRJ2681		Flange, split			4
6	1391/3408D		Capscrew			8
7	KNJ2122		Clamp, hose			2
8	KNJ2116		Clamp			1
9	1316/3514D		Bolt, M12 x 60			1
10	JHP0042		Washer, plain			1
11	KNJ0605		Adapter, straight			1
12	JRJ0127		Hose			1
13	BRJ0180		Adapter			1
14	JLJ0440		Hose			2

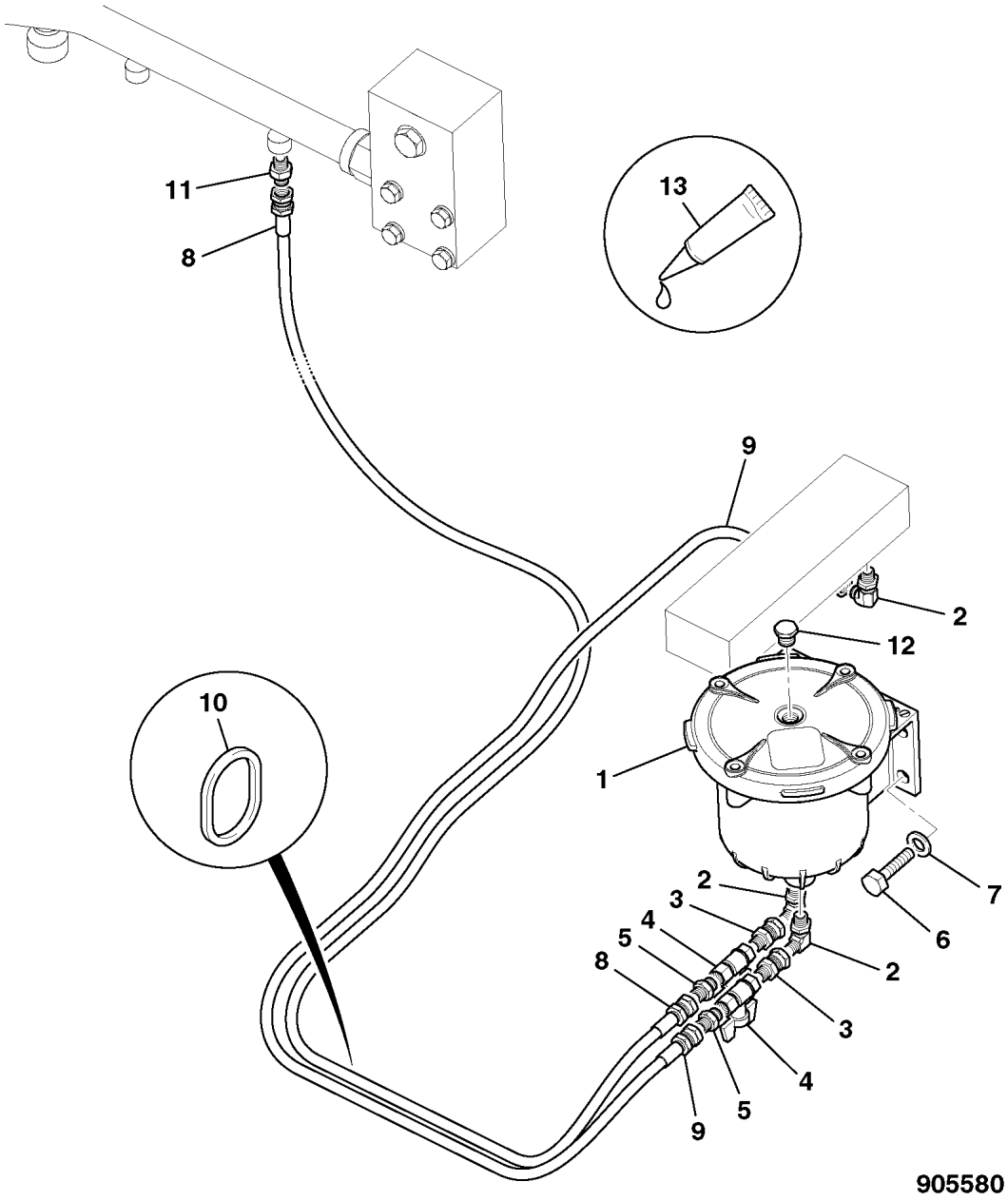

905580

	FROM	TO	FROM	TO
JS160W				

ITEM	PART NO	CHANGE NO	DESCRIPTION	REMARKS	USAGE CODE	QTY
1	32/925964		Filter, Plexus	For components see E3-17-1		1
2	KHJ0341		Adapter, elbow			3
3	C4E7327		Adapter			2
4	KHJ0897		Tap, drain			2
5	1609/0002		Adapter			2
6	1316/3410D		Bolt			4
7	JHP0046		Washer, M10			4
8	KTJ0676		Hose, nylon			1
9	KTJ0812		Hose, nylon, red			1
10	KHH0143		Band, harness retainer			2
11	KAJ2176		Adapter			1
12	KHJ0739		Screw, pan head			1

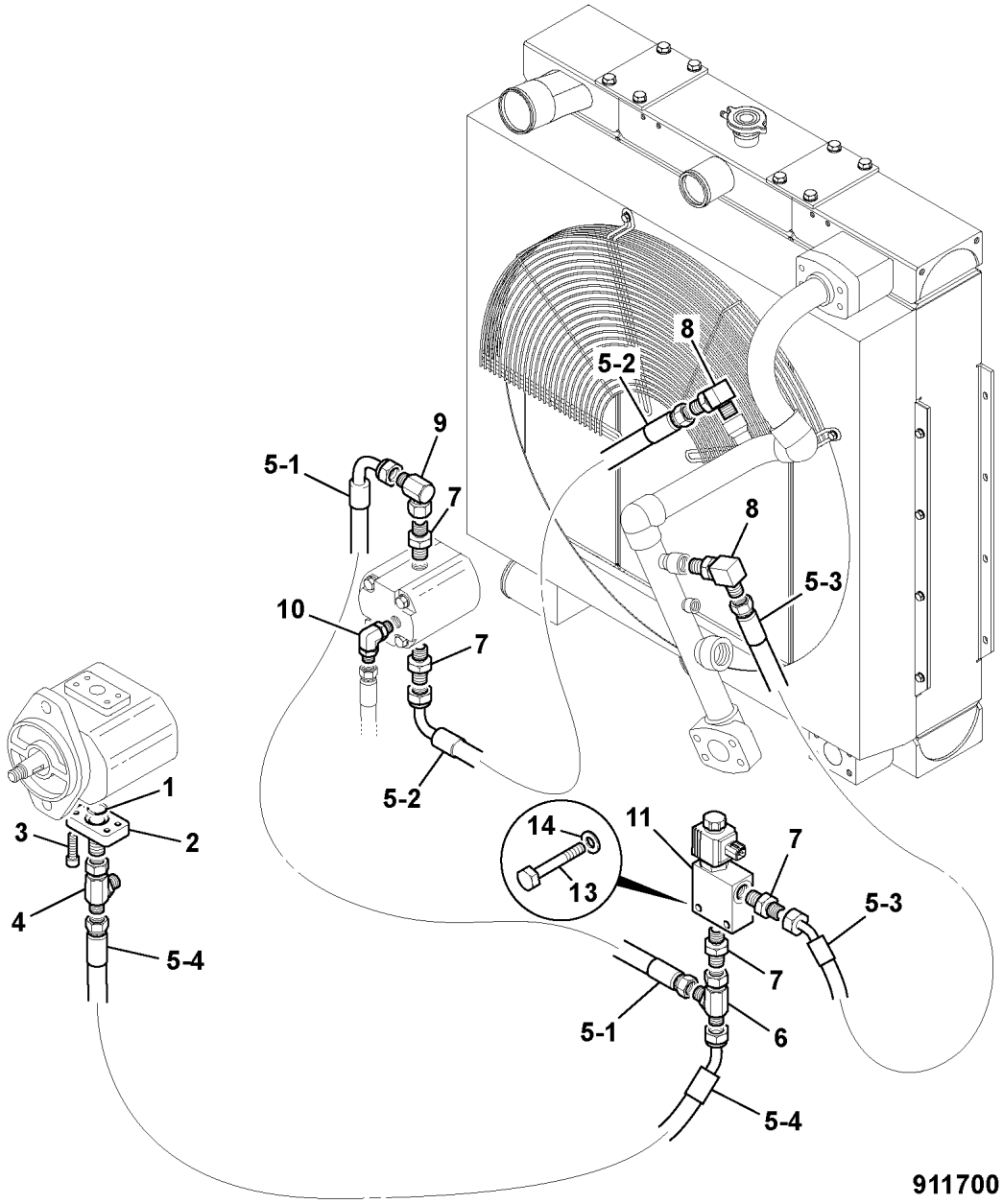

911700

	FROM	TO	FROM	TO
JS160W				

ITEM	PART NO	CHANGE NO	DESCRIPTION	REMARKS	USAGE CODE	QTY
1	2407/0205		O Ring			1
2	JHJ0117		Flange, 3/4 SAE, 1/2 BSP			1
3	1391/3408D		Capscrew			4
4	816/50008		Adapter, Tee			1
5 01	JLV0920		Hose	Solenoid Port P to fan motor inlet pressure		1
5 02	627/10416		Hose, 600mm	Fan motor outlet to oil cooler drain line		1
5 03	JRJ0175		Hose, hydraulic	Solenoid port T to oil cooler drain line		1
5 04	JNJ0378		Hose	Fan motor port A4 to solenoid pressure line		1
6	816/90270		Adapter, tee, M/F/M			1
7	1620/2055		Adapter, 39.5mm lg. M/M			4
8	KHJ0343		Adapter, elbow			2
9	816/40016		Adapter, 90			1
10	816/90618		Adapter, elbow			1
11	25/222697		Valve, solenoid, proportional			1
13	1316/3212D		Bolt			2
14	1420/0006D		Washer, M6 plain			2

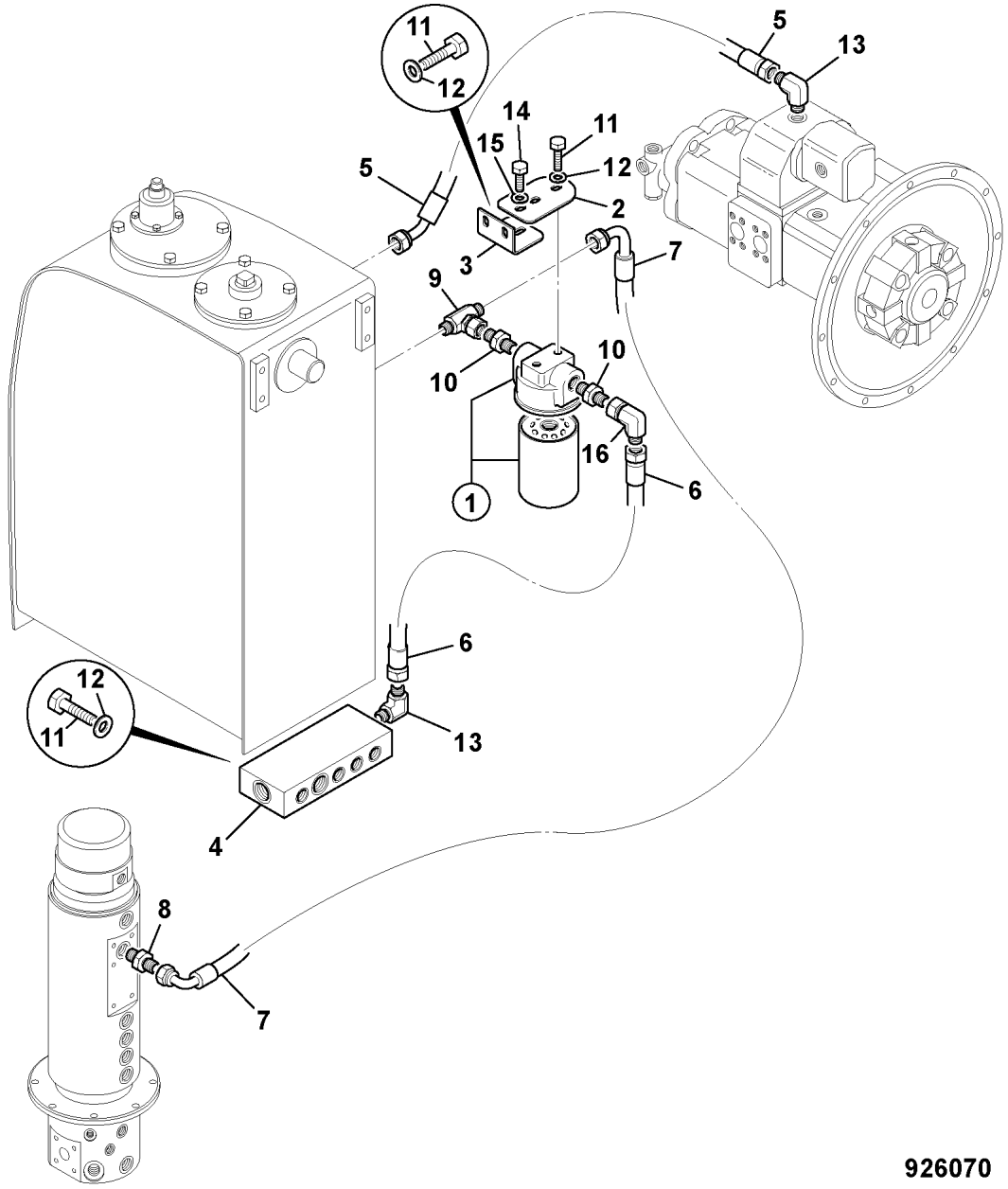

926070

	FROM	TO	FROM	TO
JS160W				

ITEM	PART NO	CHANGE NO	DESCRIPTION	REMARKS	USAGE CODE	QTY
1	KNJ0287		Filter, assembly, hydraulic			1
2	331/61952		Bracket, Filter			1
3	331/61958		Bracket, Filter			1
4	JLJ0284		Manifold			1
5	627/10649		Hose			1
6	627/10613		Hose			1
7	627/10630		Hose			1
8	KNJ0605		Adapter, straight			1
9	816/90141		Adapter, tee			1
10	MPV2193		Adapter			2
11	1316/0405D		Bolt			6
12	1420/0008D		Washer, M10			6
13	KHJ0522		Adapter, elbow			2
14	1316/0507D		Screw, set pin			1
15	1420/0009D		Washer, M12			1
16	JHJ0119		Adapter			1

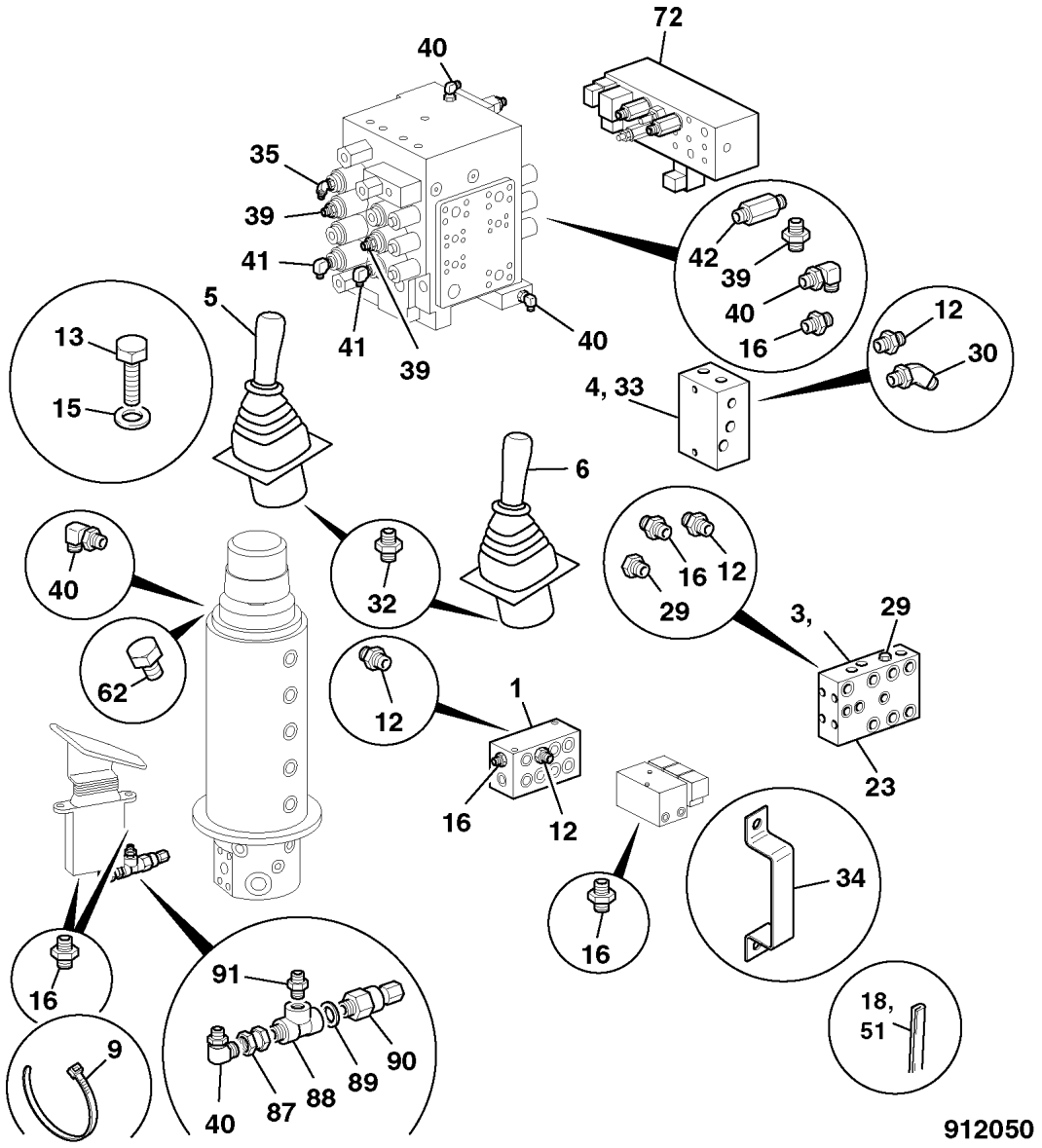

	FROM	TO	FROM	TO
JS160W				

ITEM	PART NO	CHANGE NO	DESCRIPTION	REMARKS	USAGE CODE	QTY
1	.		'See Remark'	See E1-68-1		1
2	.		'See Remark'			1
3	.		'See Remark'	See E1-66-1		1
4	.		'See Remark'	See E1-65-1		1
5	.		'See Remark'	See E1-63-1		1
6	.		'See Remark'	See E1-62-1		1
9	KAR0017		Tie, harness retainer			16
12	KNJ0759		Adapter			22
14	1316/0405D		Bolt			6
15	JHP0046		Washer, M10			6
16	KNJ0758		Adapter			8
18	JHH0097		Strip			1
23	25/222638		Valve, shuttle			1
29	KHJ0363		Plug			6
30	KHJ0342		Adapter, elbow			2
32	1620/0003		Adapter			10
	JHJ0168		Adapter, filtered			2
33	25/220040		Valve, cushion			1
35	KHJ0348		Adapter, elbow			1
39	KNJ1106		Adapter			1
40	KHJ0341		Adapter, elbow			6
41	KRJ3560		Adapter, elbow			7
42	JNJ0554		Adapter			2

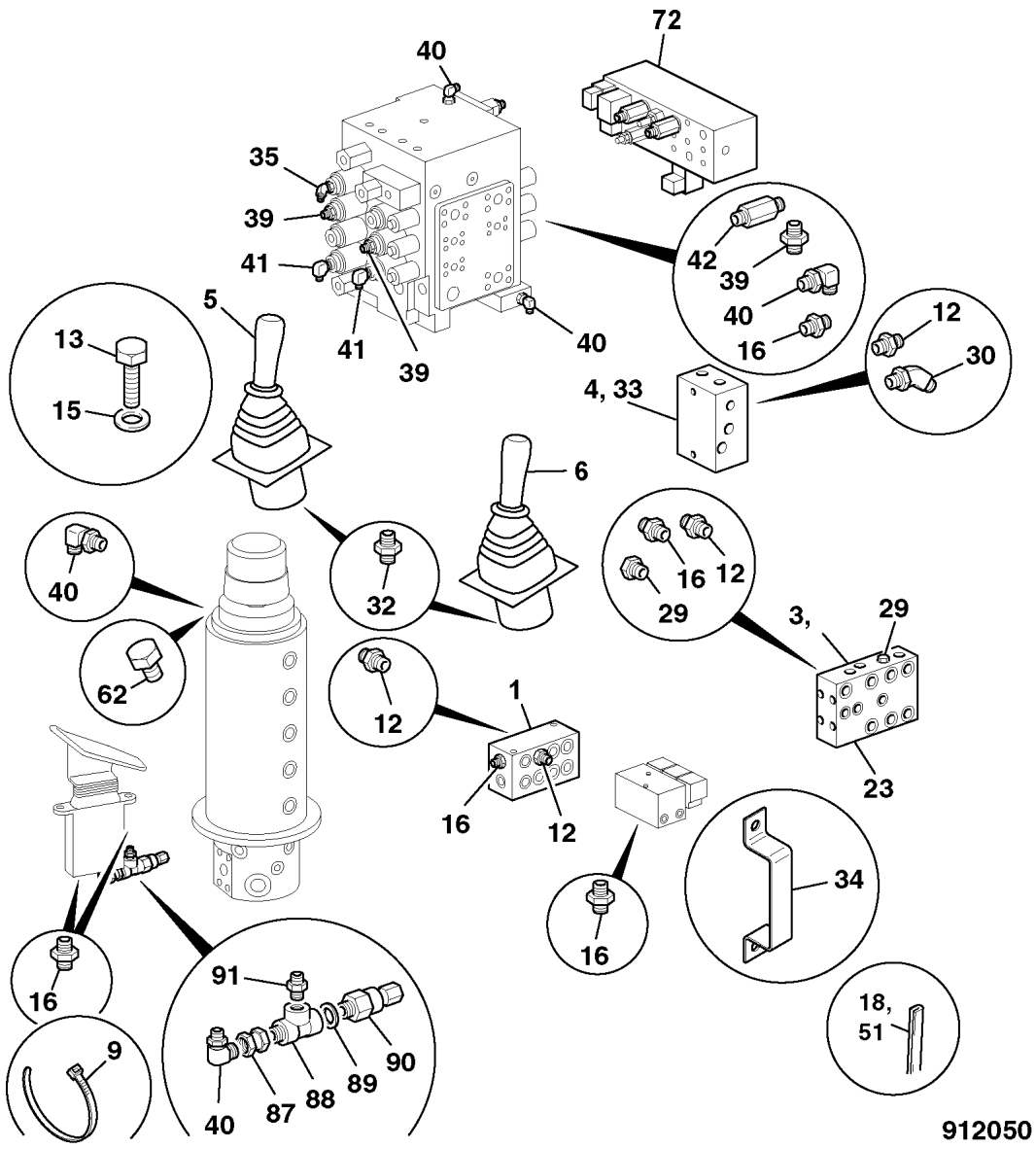

ITEM	PART NO	CHANGE NO	DESCRIPTION	REMARKS	USAGE CODE	QTY
51	JNN0048		Strip, edging			2
58	JLJ0273		Adapter			2
62	JLJ0062		Plug			7
72	25/223027		Valve, transmission			1
87	C4E7327		Adapter			1
88	JHJ0172		Adapter, tee			1
89	JHP0204		Washer, back up			1
90	701/80373		Switch, Slew pressure, 5bar 1/4" BSP			1
91	1609/0002		Adapter			1

FROM TO FROM TO

JS160W



ITEM	PART NO	CHANGE NO	DESCRIPTION	REMARKS	USAGE CODE	QTY
1	.		'See Remark'			1
2	.		'See Remark'			1
3	.		'See Remark'			1
4	.		'See Remark'			1
5	1425/0007D		Washer, M8 spring			2
6	KNJ0758		Adapter			17
7	816/00464		Adapter, elbow - male/ female			2
8	FAJ0225		Adapter, hose			2
9	JHJ0050		Accumulator			1
10	KHJ0341		Adapter, elbow			9
11	331/51156		Manifold, cab pilot, Aluminium			1
12	KRN0081		Spacer			2
13	KHJ0342		Adapter, elbow			4
14	1316/3218D		Bolt			2
15	KHJ0641		Adapter, elbow			1
16	JHJ0062		Adapter			1
17	32/925214		Filter, assembly, servo			1
17 01	KBJ1691		:Element, servo, filter			1
17 02	KHJ1032		:O Ring			1
18	JHP0046		Washer, M10			6
19	C4E5507		Adapter			2
20	KNJ0759		Adapter			3

Our Apologies, No Illustration is Currently Available.



ITEM	PART NO	CHANGE NO	DESCRIPTION	REMARKS	USAGE CODE	QTY
21	1316/0405D		Bolt			4
22	25/222885		Valve, 8 station solenoid			1
23	1371/0301D		Nut, M10 high strength			2
24	JHP0204		Washer, back up			1
25	JHJ0172		Adapter, tee			1
26	JHJ0105		Adapter, extended			2
27	C4E7327		Adapter			2
28	701/80373		Switch, Slew pressure, 5bar 1/4" BSP			1
29	KNJ1106		Adapter			1
30	KHJ0568		Filter, line			1
31	1609/0002		Adapter			1
32	25/220540		Valve, assembly, shuttle sequence			1
33	25/223026		Valve, 3 station solenoid			1
34	1391/3314D		Capscrew, M8 x 60 LG, GRADE 12.9			2
35	1606/0003		Adapter			2
36	KHJ0363		Plug			9
37	BRJ1545		Plug			5
38	1420/0006D		Washer, M6 plain			2
39	1391/3216D		Capscrew			2
40	1406/0011		Seal, bonded			2
41	1604/0002		Adapter, 1/4" BSP M/M			2
42	KHJ0348		Adapter, elbow			3
43	1425/0006D		Washer, spring, M6			4
44	KHJ0869		Adapter, tee			2
45	1316/0318D		Bolt			2

Our Apologies, No Illustration is Currently Available.



ITEM	PART NO	CHANGE NO	DESCRIPTION	REMARKS	USAGE CODE	QTY
46	KAJ2176		Adapter			4
47	1406/0015		Washer, seal			2
48	331/62381		Bracket, VALVE MOUNT			1
49	1316/0507D		Screw, set pin			4
50	1420/0009D		Washer, M12			4
51	KAR0017		Tie, harness retainer			10
52	JNN0044		Strip, edging			2

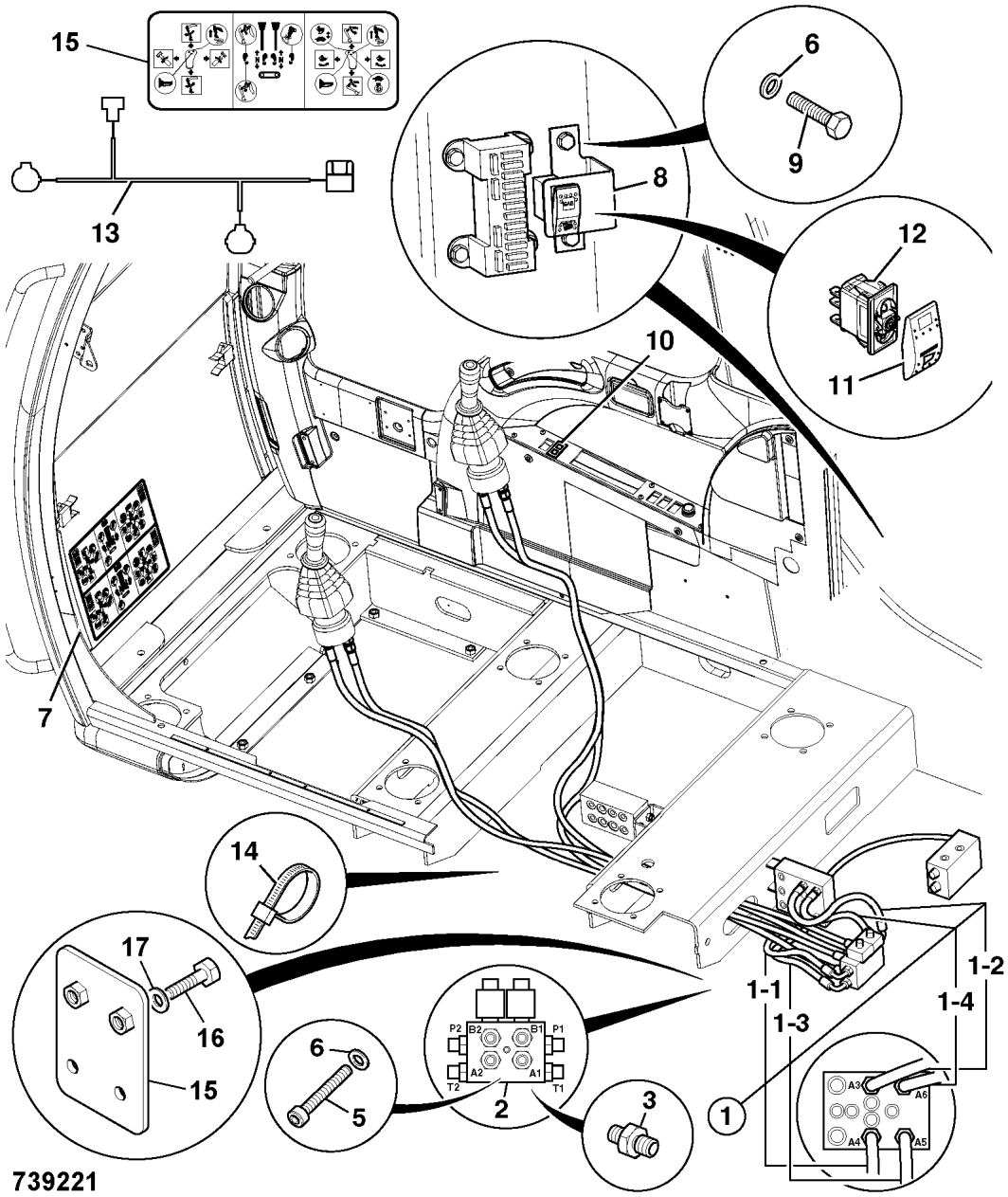

	FROM	TO	FROM	TO
JS160W				

ITEM	PART NO	CHANGE NO	DESCRIPTION	REMARKS	USAGE CODE	QTY
1	TBA		Part number, Not Yet Known			1

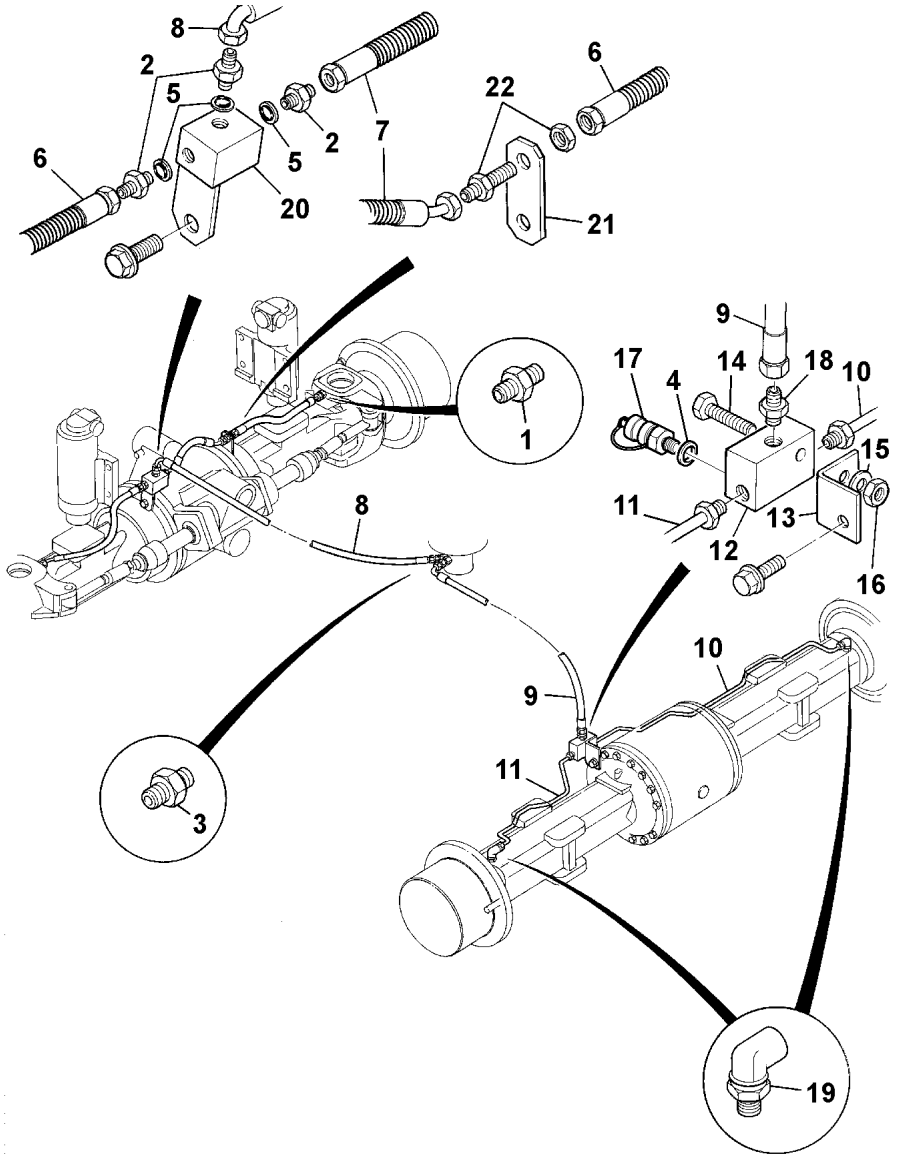

273831

	FROM	TO	FROM	TO
JS160W				

ITEM	PART NO	CHANGE NO	DESCRIPTION	REMARKS	USAGE CODE	QTY
	JHJ0099		Adapter, M14 x 3/8			2
2	1604/0003		Adapter, male/male			3
3	JLJ0053		Adapter, 3/8 X 3/8			2
4	1406/0011		Seal, bonded			1
5	1406/0015		Washer, seal			3
6	JLV1140		Hose, 3/8 x 600			2
7	JLV1141		Hose, 3/8 x 300			1
8	JNJ0574		Hose, 3/8" x 2000			1
9	JLV1137		Hose, 3/8" x 1500			1
10	JLJ0465		Pipe, brake rear, R.H.			1
11	JLJ0464		Pipe, brake rear, L.H.			1
12	816/55041		Block, tee M16			1
13	JLA0335		Bracket, brake, rear			1
14	1316/3412D		Bolt, Screw M10 X 50			1
15	1420/0008D		Washer, M10			1
16	1371/0303D		Nut, M10 grade 10.9			1
17	JTJ0028		Connector, pressure test			1
18	816/15113		Adapter, M16-3/8" BSP			1
19	JHJ0084		Elbow, M14 x M16, M/F			2
20	JLA0308		Block, tee			1
21	JLA0309		Strap, support			1
22	816/90057		Adapter, bulkhead M/M			1

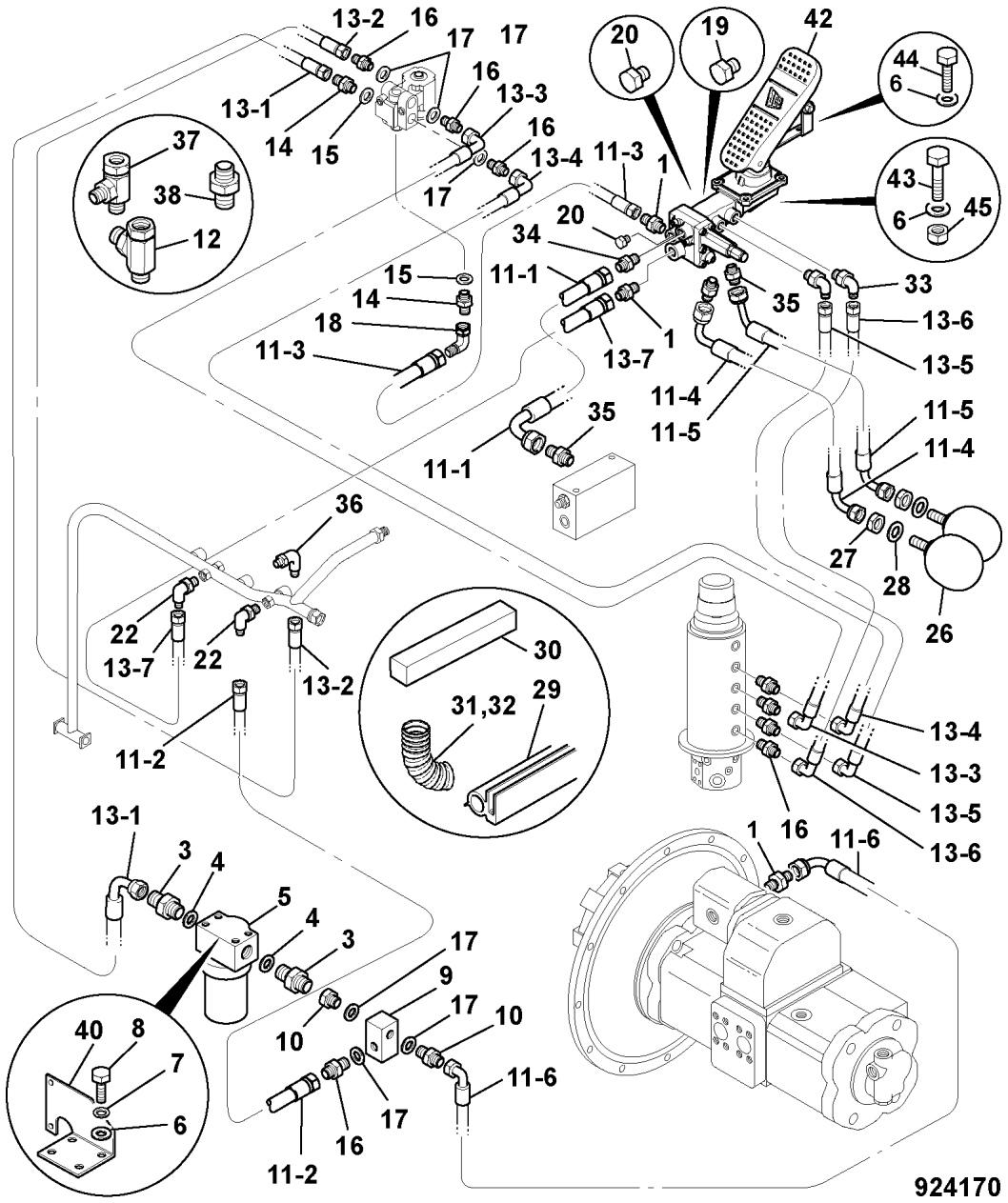

	FROM	TO	FROM	TO
JS160W				

ITEM	PART NO	CHANGE NO	DESCRIPTION	REMARKS	USAGE CODE	QTY
1	FAJ0225		Adapter, hose			3
2	627/10637		Hose			1
3	1606/0008		Adapter			2
4	1406/0021		Seal, bonded 3/4" BSP			2
5	JLJ0232		Filter, steer	For components see E3-16-10		1
6	1420/0007D		Washer, M8 plain			4
7	1425/0007D		Washer, M8 spring			4
8	1316/0303D		Screw			4
9	JLJ0286		Valve, relief			1
10	1612/2051		Adapter			1
11 01	627/10638		Hose	Brake valve port P to steer valve port FE		1
11 02	JNV0311		Hose	Brake valve port N to cab manifold port T3		1
11 03	627/10093		Hose	Brake valve port R1 tp accumulator port 2		1
11 04	JRJ0307		Hose, 3/8-290, blue	Brake valve port R2 to accumulator port 1		1
12	JNJ0554		Adapter			1
13 01	JNJ0493		Hose, 3/8" x 4650	Steering unit port P to out steer filter		1

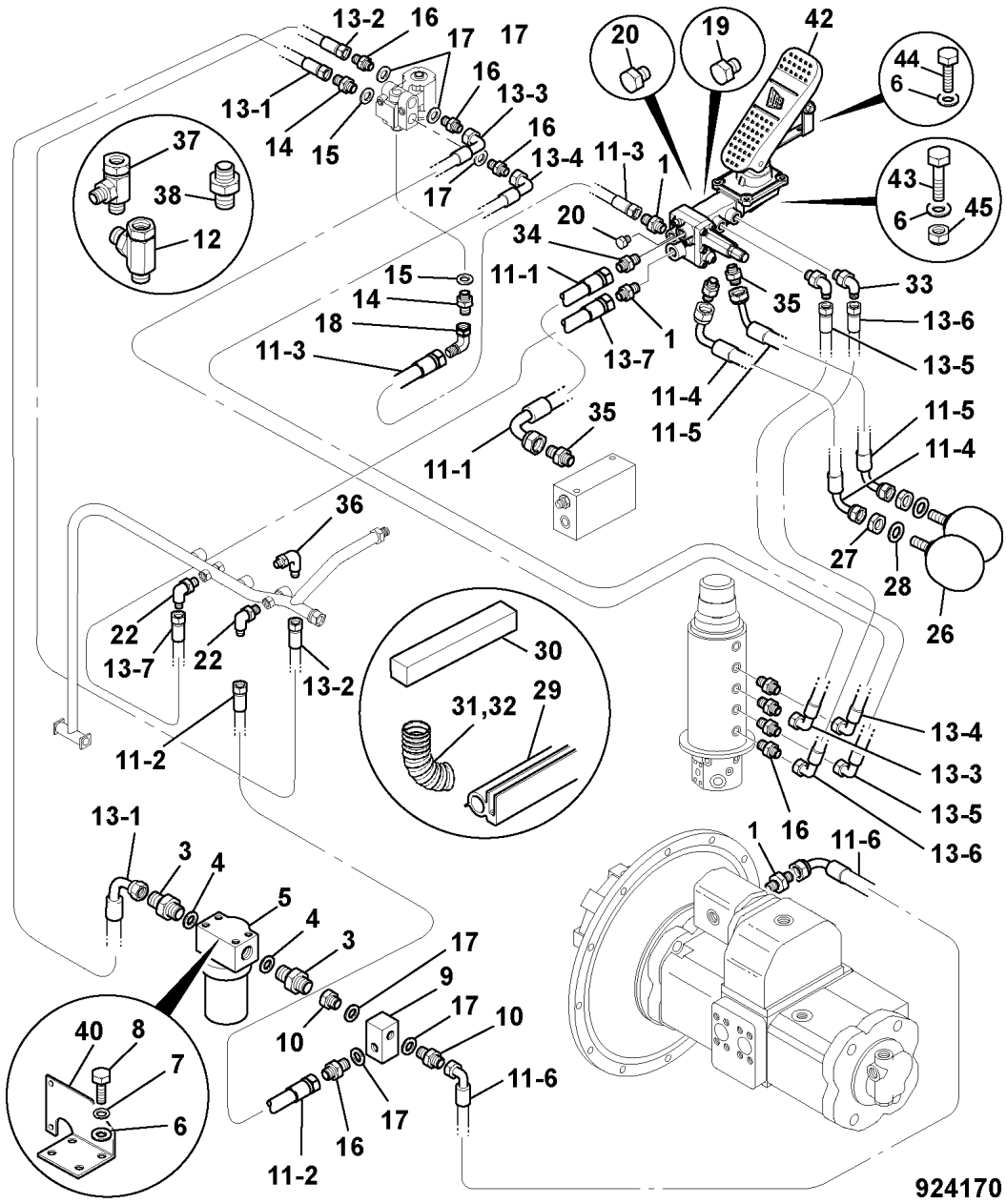

ITEM	PART NO	CHANGE NO	DESCRIPTION	REMARKS	USAGE CODE	QTY
13 02	JRJ0313		Hose, 3/8-3000, yellow/ blue	Steer unit port T to tank return rail		1
13 03	* 627/10543		Hose	Brake valve port T1 to rotary coupling port 1		1
13 04	* 627/10543		Hose	Brake valve port T2 to rotary coupling port 3		1
13 05	JNJ0576		Hose, 3/8" x 1900	Steer unit port R to rotary coupling port 5		1
13 06	JNJ0576		Hose, 3/8" x 1900	Steer unit port L to rotary coupling port 7		1
13 07	JNJ0577		Hose, 3/8" x 3200	Brake valve port B to tank return rail		1
14	1606/0007		Adapter			2
15	1406/0018		Seal, bonded, 1/2" BSP			2
16	1604/0003		Adapter, male/male			8
17	1406/0015		Washer, seal			5
18	KRJ3357		Adapter, elbow			1
19	BRJ1545		Plug			1
20	KHJ0363		Plug			1
22	KHJ0342		Adapter, elbow			2
26	JLJ0096		Accumulator, assembly			2
27	1356/0003Z		Nut			1
28	1420/0011D		Washer, M16			2
31	JSH0046		Tube			1
32	JSH0009		Tube			1
33	KRJ3560		Adapter, elbow			2

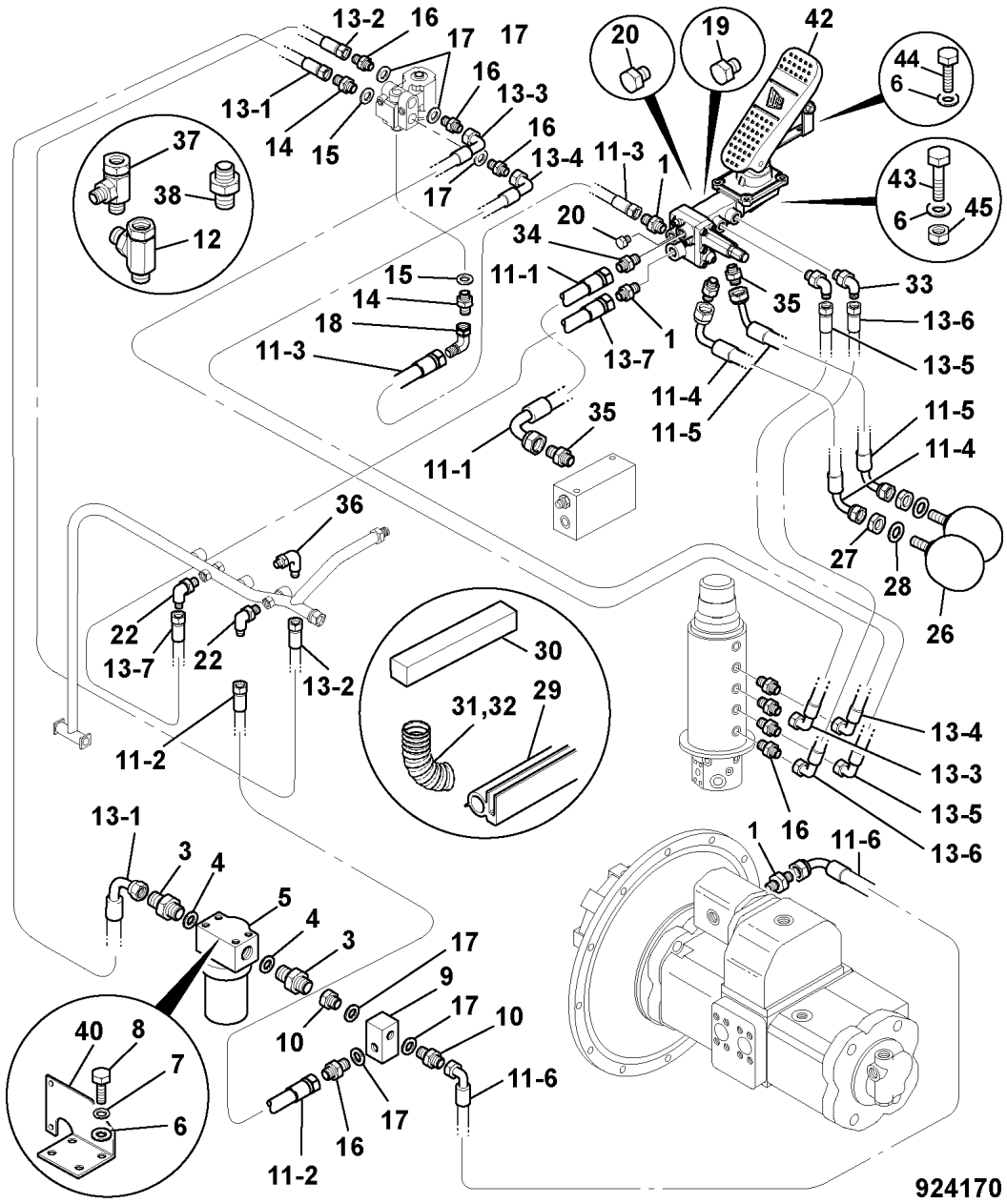

ITEM	PART NO	CHANGE NO	DESCRIPTION	REMARKS	USAGE CODE	QTY
34	KNJ0759		Adapter			1
35	KNJ1106		Adapter			3
36	KHJ0641		Adapter, elbow			1
37	816/50040		Adapter, test			1
38	KNJ0604		Adapter, 1/2" M/M			1
41	JNJ0492		Hose, 3/8" x 2825			1
42	25/222749		Valve, brake pedal assembly			1
43	1316/0307D		Screw			4
44	1316/0310D		Screw			1
45	1370/0201D		Nut, M8			2

FROM TO FROM TO

JS160W



ITEM	PART NO	CHANGE NO	DESCRIPTION	REMARKS	USAGE CODE	QTY
1	FAJ0225		Adapter, hose			3
2	627/10637		Hose			1
3	1606/0008		Adapter			2
4	1406/0021		Seal, bonded 3/4" BSP			2
5	JLJ0232		Filter, steer	For components see E3-16-10		1
6	1420/0007D		Washer, M8 plain			9
7	1425/0007D		Washer, M8 spring			4
8	1316/0303D		Screw			4
9	JLJ0286		Valve, relief			1
10	1612/2051		Adapter			1
11 01	JNJ0493		Hose, 3/8" x 4650	Steer unit Port P to out steer filter		1
11 02	JRJ0313		Hose, 3/8-3000, yellow/ blue	Steer unit Port T to Tank return rail		1
11 03	627/10543		Hose	Brake valve Port T1 to Rotary coupling port 1		1
11 04	627/10543		Hose	Brake valve Port T2 to Rotary coupling port 3		1
11 05	JNJ0576		Hose, 3/8" x 1900	Steer unit Port R to Rotary coupling port 5		1
11 06	JNJ0576		Hose, 3/8" x 1900	Steer unit Port L to Rotary coupling port 7		1



Our Apologies, No Illustration is Currently Available.

ITEM	PART NO	CHANGE NO	DESCRIPTION	REMARKS	USAGE CODE	QTY
11 07	JNJ0577		Hose, 3/8" x 3200	Brake valve Port B to Tank return rail		1
12	JNJ0554		Adapter			1
13 01	627/10638		Hose	Brake valve port P to Steer unit Port EF		1
13 02	JNV0311		Hose	Brake valve port N to Cab manifold port T3		1
13 03	627/10093		Hose	Brake valve port R1 to Accumulator Port 2		1
13 04	JRJ0307		Hose, 3/8-290, blue	Brake valve port R2 to Accumulator Port 1		1
14	1606/0007		Adapter			2
15	1406/0018		Seal, bonded, 1/2" BSP			2
16	1604/0003		Adapter, male/male			8
17	1406/0015		Washer, seal			5
18	KRJ3357		Adapter, elbow			1
20	BRJ1545		Plug			1
21	KHJ0363		Plug			1
22	JLJ0096		Accumulator, assembly			2
23	1356/0003Z		Nut			2
24	1420/0011D		Washer, M16			2
25	KRJ3560		Adapter, elbow			2
26	KNJ0759		Adapter			1
27	KNJ1106		Adapter			3
28	KHJ0641		Adapter, elbow			1
29	1316/0507D		Screw, set pin			2



Our Apologies, No Illustration is Currently Available.

ITEM	PART NO	CHANGE NO	DESCRIPTION	REMARKS	USAGE CODE	QTY
31	JSH0046		Tube			2
32	JSH0009		Tube			2
36	KHJ0342		Adapter, elbow			2
37	25/222749		Valve, brake pedal assembly			1
38	1316/0307D		Screw			4
39	1370/0201D		Nut, M8			2
40	1316/0310D		Screw			1

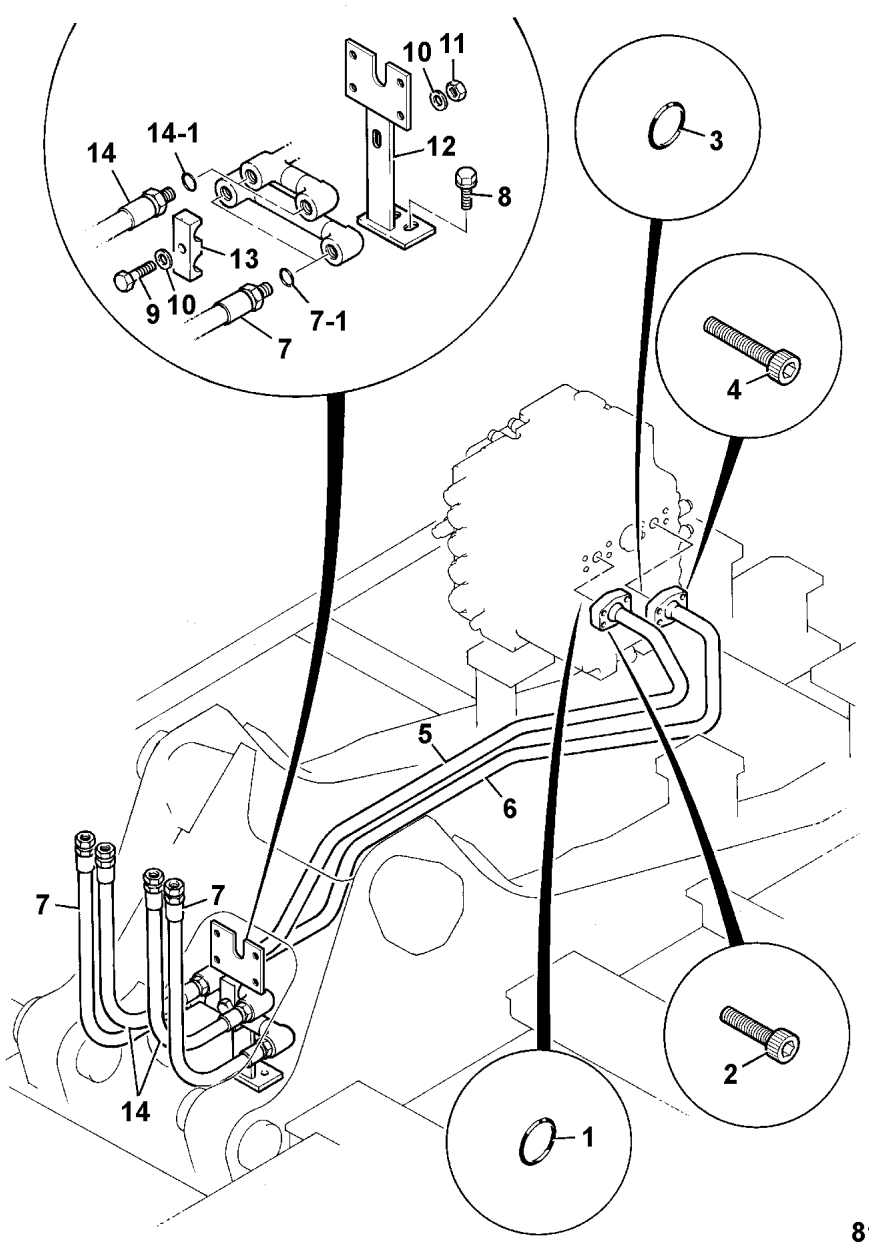

817070

	FROM	TO	FROM	TO
JS160W				

ITEM	PART NO	CHANGE NO	DESCRIPTION	REMARKS	USAGE CODE	QTY
1	2400/0201		O Ring			1
2	1391/3308D		Capscrew			4
3	2400/0205		O Ring			1
4	1391/3409D		Capscrew, M10x35			4
5	JNV1430		Pipe			1
6	JLJ0530		Pipe			1
7	JLJ0299		Hose			2
8	JHN0048		Bolt			2
9	1316/3515D		Bolt			1
9 01	UBJ0158		:O Ring			1
10	1420/0009D		Washer, M12			2
11	1371/0402D		Nut			1
12	335/11867		Bracket, mounting			1
13	JRJ0126		Clamp			1
14	JLJ0301		Hose			2

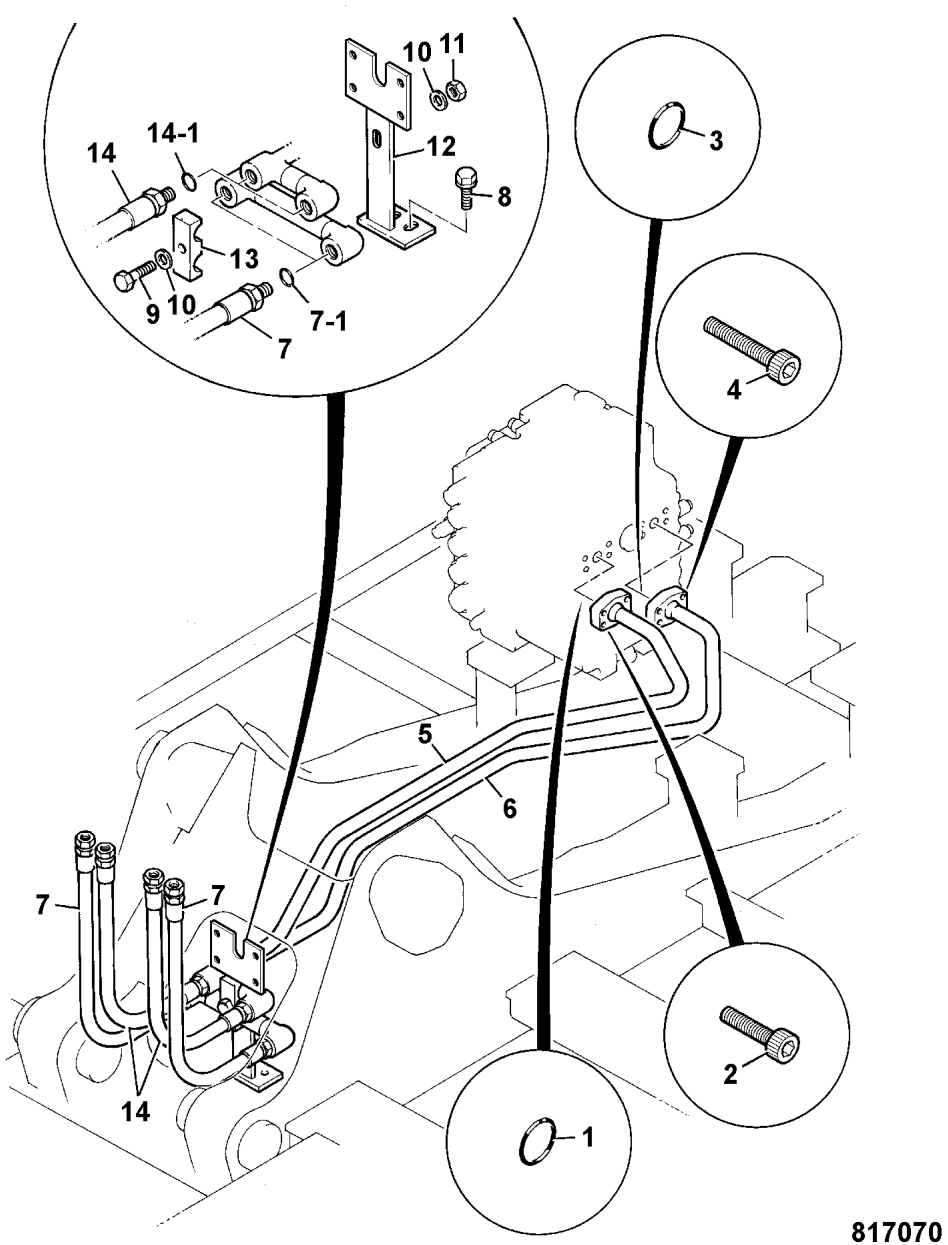

817070

	FROM	TO	FROM	TO
JS160W				

ITEM	PART NO	CHANGE NO	DESCRIPTION	REMARKS	USAGE CODE	QTY
1	2400/0201		O Ring			1
2	1391/3308D		Capscrew			4
3	2400/0205		O Ring			1
4	1391/3408D		Capscrew			4
5	JNV1430		Pipe			1
6	JLJ0530		Pipe			1
7	JLJ0444		Hose			2
8	JHN0048		Bolt			2
9	1316/3513D		Bolt			1
9 01	UBJ0158		:O Ring			1
10	1420/0009D		Washer, M12			1
11	1371/0402D		Nut			1
12	335/11867		Bracket, mounting			1
13	JRJ0126		Clamp			1
14	JLJ0443		Hose			2

	FROM	TO	FROM	TO
JS160W				



Our Apologies, No Illustration is Currently Available.

ITEM	PART NO	CHANGE NO	DESCRIPTION	REMARKS	USAGE CODE	QTY
1	JLV1226		Hose			1
2	JLV1226		Hose			1
3	JLV1226		Hose			2
3 01	UBJ0158		:O Ring			1
4	1391/3408D		Capscrew			8
5	2407/0205		O Ring			2
6	2400/0201		O Ring			2
7	JLJ0469		Pipe, bucket			1
8	1391/3308D		Capscrew			8
9	JLJ0420		Bracket			1
10	JHN0048		Bolt			4
11	830/12402		Pipe, arm			1
12	830/12403		Pipe, arm			1
13	JNV1436		Clamp			1
14	JNV1437		Clamp			1
15	1316/3716D		Bolt			1
16	1420/0011Z		Washer, M16 plain			2
17	1371/0601D		Nut			1
18	JLJ0470		Pipe, bucket			1
19	1425/0011D		Washer, spring			1
20	331/16661		Bracket, mounting			1
21	1316/3516D		Bolt, M12 x 70			1
22	1420/0009D		Washer, M12			2



ITEM	PART NO	CHANGE NO	DESCRIPTION	REMARKS	USAGE CODE	QTY
23	1425/0009D		Washer, M12 spring			1
24	1371/0401D		Nut			1
25	1425/0007D		Washer, M8 spring			2
26	1420/0007D		Washer, M8 plain			2
27	821/00367		Clip			2
28	1316/0301D		Screw			2

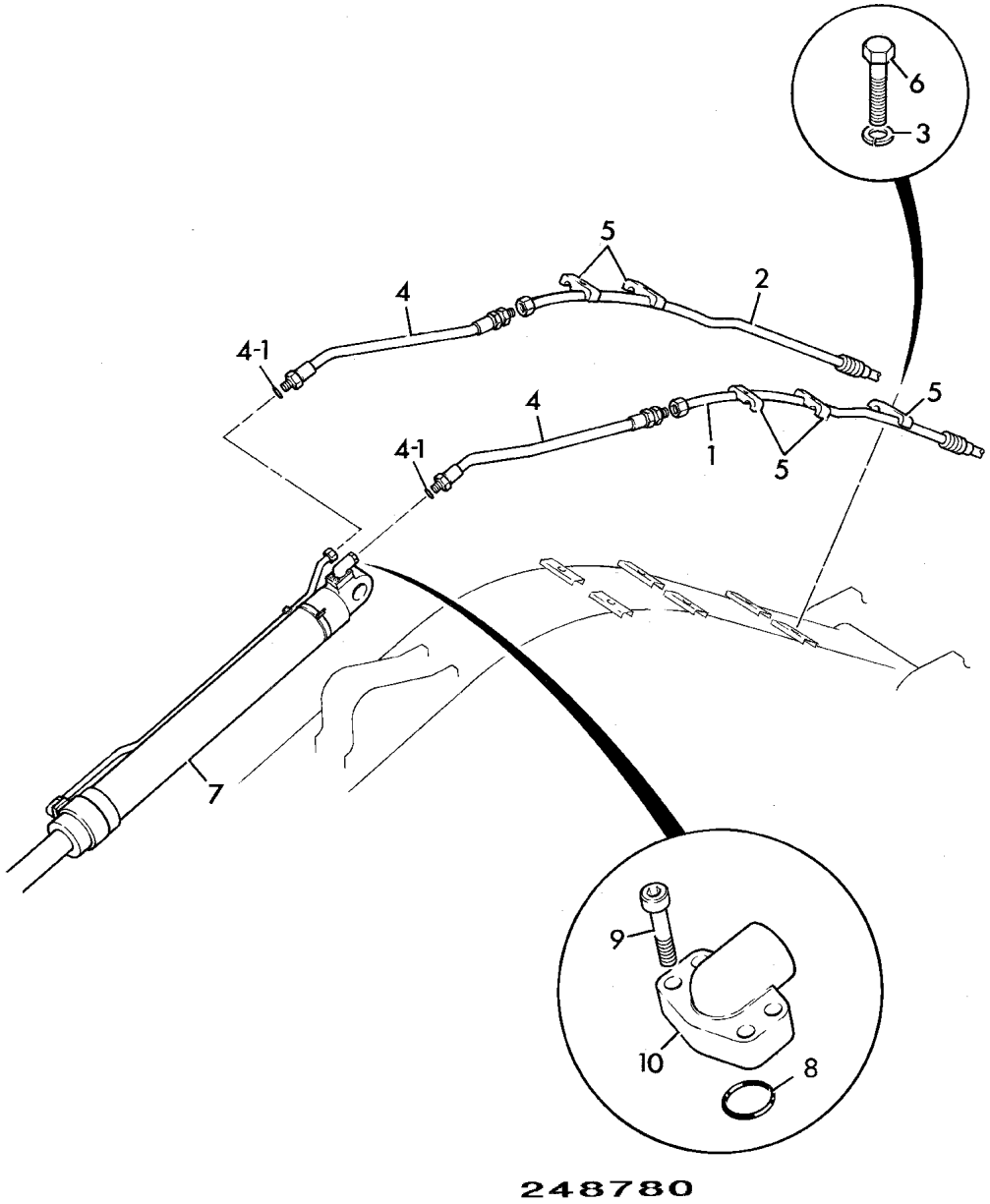

248780

	FROM	TO	FROM	TO
JS160W				

ITEM	PART NO	CHANGE NO	DESCRIPTION	REMARKS	USAGE CODE	QTY
1	335/03295		Pipe, arm ram feed			1
2	335/03295		Pipe, arm ram feed			1
3	823/00409		Washer, Schnorr heavy duty, M16			8
4	627/10648		Hose			2
4 01	UBJ0158		:O Ring			1
5	KRV1200		Clamp, pipe			8
6	1316/3716Z		Bolt			8
7	331/42329		Ram, arm, JS160 AUTO	Dipper ram standard pipework, see E4-2-1		1
	331/42329		Ram, arm, JS160 AUTO	Dipper ram with HBCV, see E4-2-10		1
8	2407/0210		O Ring			1
9	1391/3510Z		Capscrew, M12x40			4
10	JLV1297		Flange			1

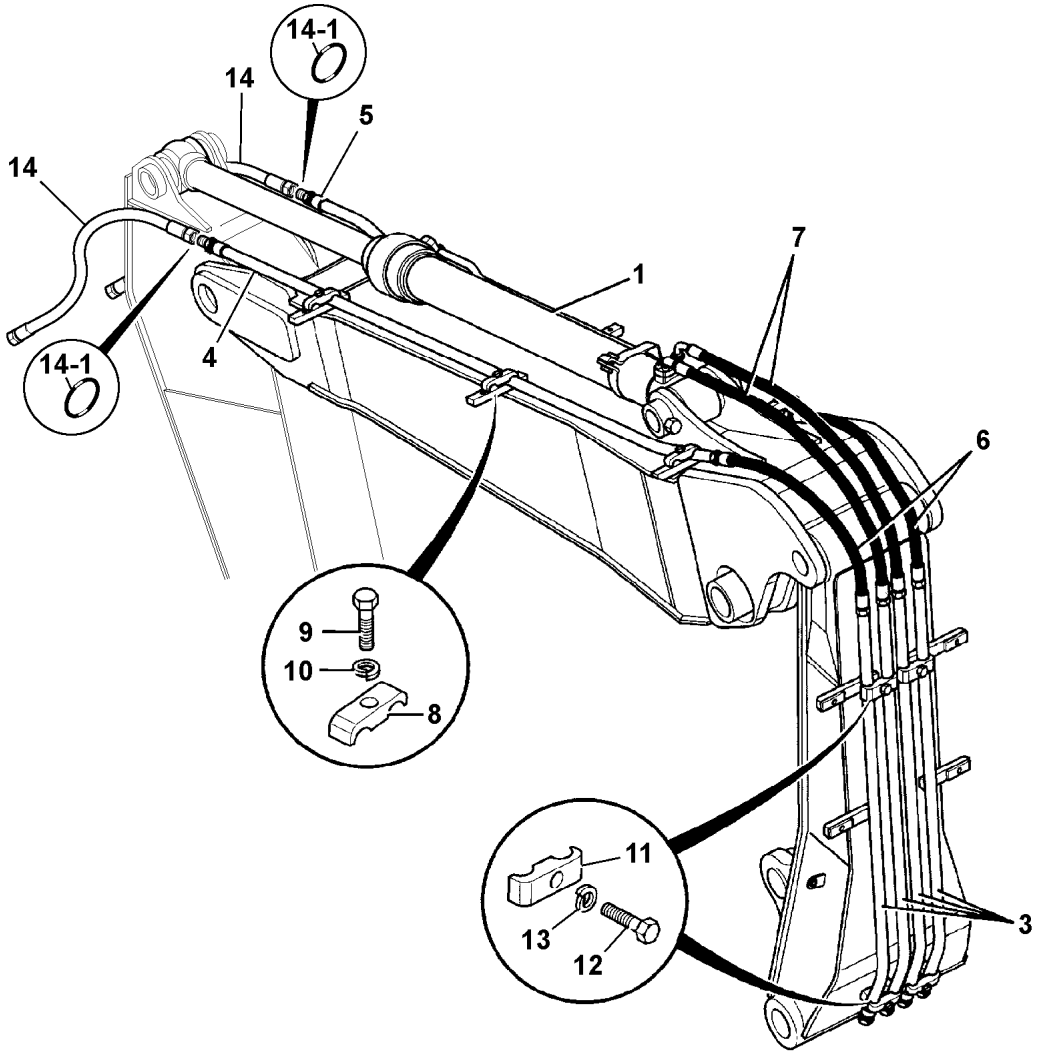

346842

	FROM	TO	FROM	TO
JS160W				

ITEM	PART NO	CHANGE NO	DESCRIPTION	REMARKS	USAGE CODE	QTY
1	331/42329		Ram, arm, JS160 AUTO	Dipper ram standard without HBCV See E4-2-1		1
	331/42329		Ram, arm, JS160 AUTO	Dipper ram with HBCV See E4-2-10		1
3	335/03352		Pipe, ram feed, TAB build			4
4	JLV1556		Pipe, feed			1
5	JLV1557		Pipe, feed			1
6	JLV1385		Hose			2
7	JLV1387		Hose			2
8	KRV0548		Clamp			6
9	1316/3514D		Bolt, M12 x 60			6
10	1425/0009D		Washer, M12 spring			6
11	KRV1200		Clamp, pipe			4
12	1316/3716D		Bolt			4
13	1425/0011D		Washer, spring			4
14	JNV1164		Hose, hydraulic, L=1400	2.25M Dipper		2
	JNV1164		Hose, hydraulic, L=1400	2.7M Dipper		2
	KRV1667		Hose, hyd, (l=1700)	3.05M Dipper		2
14 01	UBJ0158		:O Ring			1

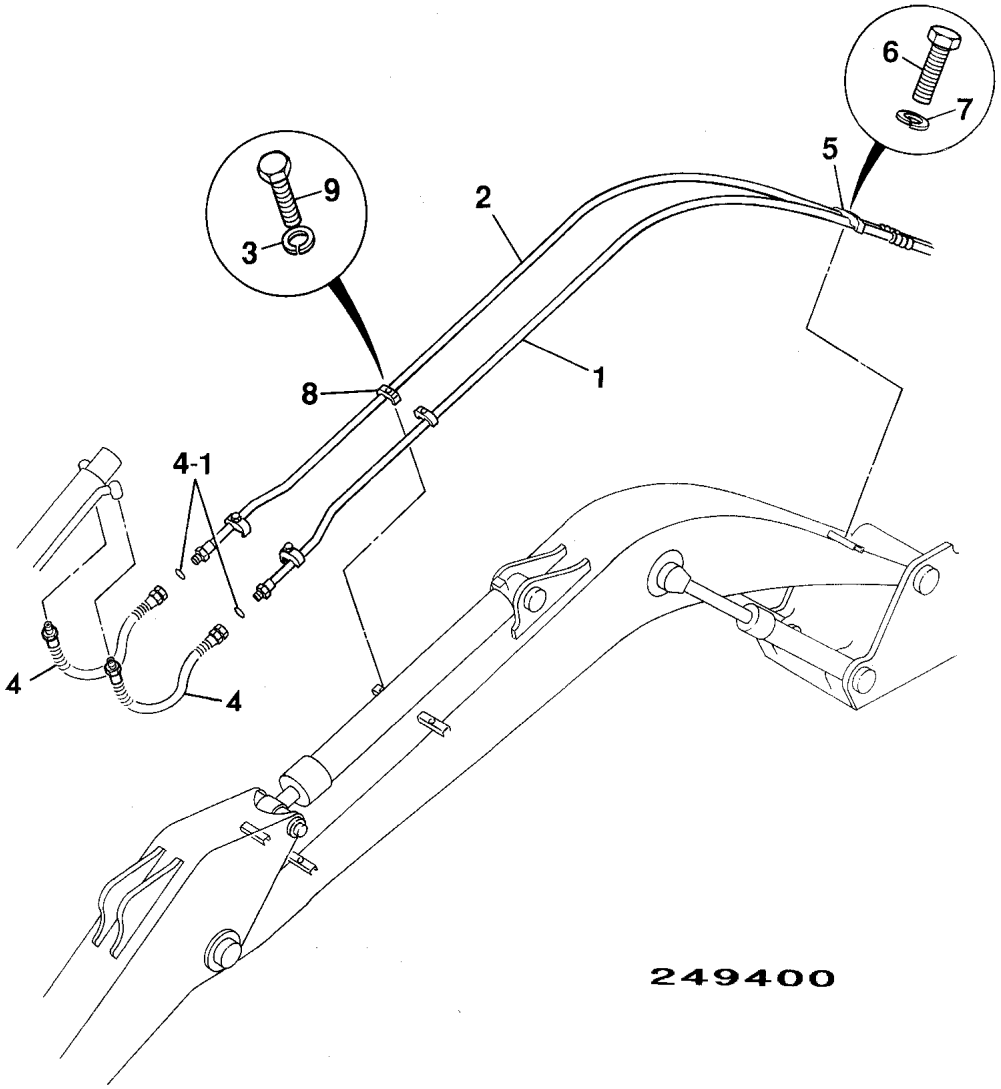

	FROM	TO	FROM	TO
JS160W				

ITEM	PART NO	CHANGE NO	DESCRIPTION	REMARKS	USAGE CODE	QTY
1	830/12877		Pipe, bucket ram, rod side, JS175W			1
2	830/12878		Pipe, bucket ram head side, JS175W			1
3	823/00394		Washer, special			4
4	JNV1164		Hose, hydraulic, L=1400	2.25M Dipper		2
	JNV1164	Superseded	Hose, hydraulic, L=1400	2.7M Dipper		2
	627/10647		Hose			2
	KRV1667		Hose, hyd, (l=1700)	3.05M Dipper		2
4 01	UBJ0158		:O Ring			1
5	KRV1200		Clamp, pipe			1
6	1316/3716D		Bolt			1
7	823/00409		Washer, Schnorr heavy duty, M16			1
8	KRV0548		Clamp			4
9	1316/3514D		Bolt, M12 x 60			4

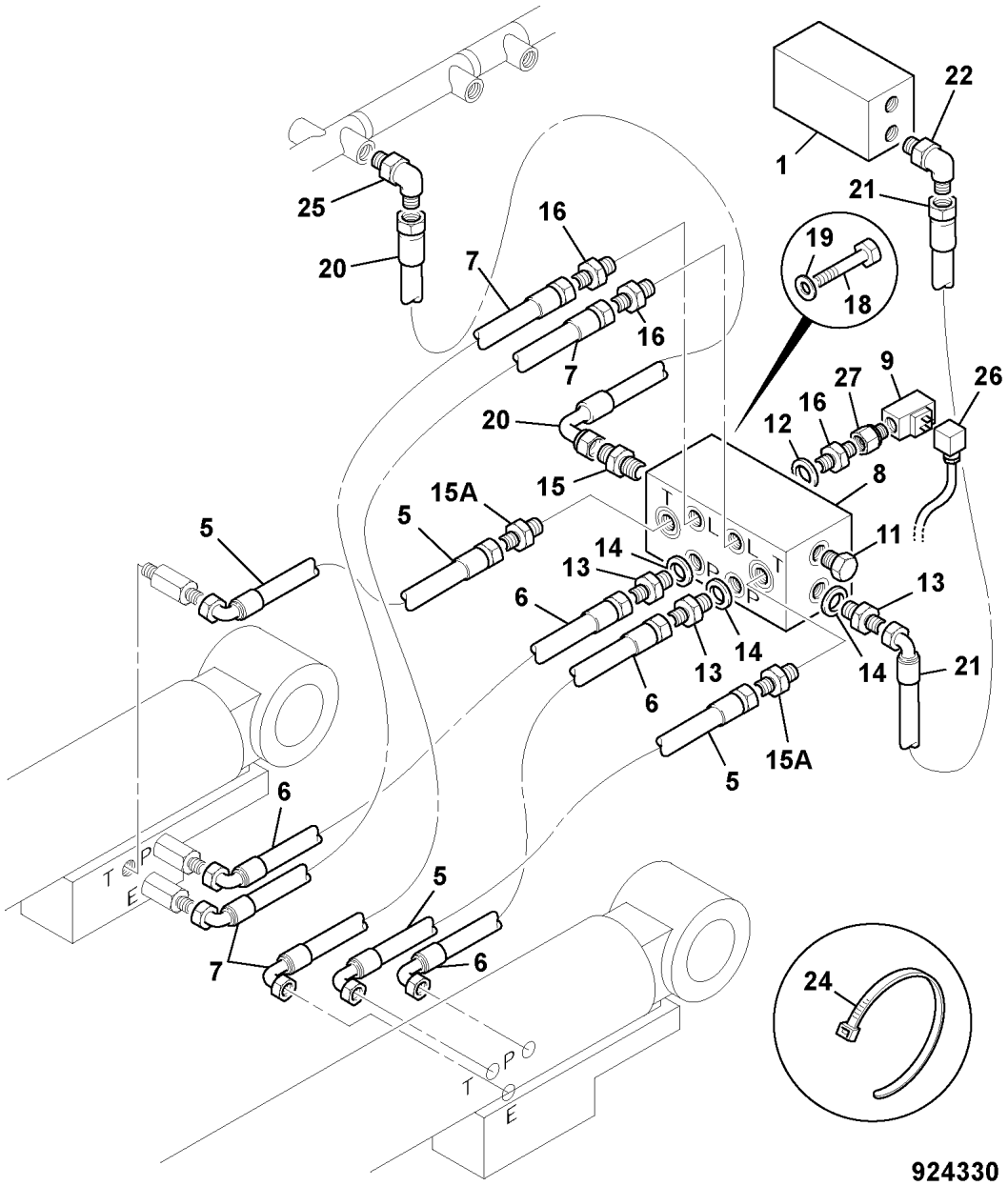

	FROM	TO	FROM	TO
JS160W				

ITEM	PART NO	CHANGE NO	DESCRIPTION	REMARKS	USAGE CODE	QTY
1	.		'See Remark'	Cushion valve see E1-65-1 or E3-13-1		1
5	JRV0382		Hose	Port T		2
6	JRV0382		Hose	Port P		2
7	JNV1311		Hose, hyd; 1/4", L=900	Port E		2
8	332/J2697		Manifold			1
9	701/80196		Switch, pressure, 175 bar			1
11	KHJ0363		Plug			1
12	1406/0011		Seal, bonded			1
13	KNJ0759		Adapter			3
14	1406/0015		Washer, seal			3
15	KNJ0604		Adapter, 1/2" M/M			1
15A	JHJ0062		Adapter			2
16	KNJ0758		Adapter			1
18	1316/0407D		Screw			4
19	1420/0008D		Washer, M10			4
20	JLV1728		Hose			1
21	KNJ1344		Hose, nylon, yellow green			1
22	KHJ0342		Adapter, elbow			1
24	KAR0017		Tie, harness retainer			40
25	KHJ0343		Adapter, elbow			1
26	721/10466		Harness, arm suspension, P8 backhoe loader			1

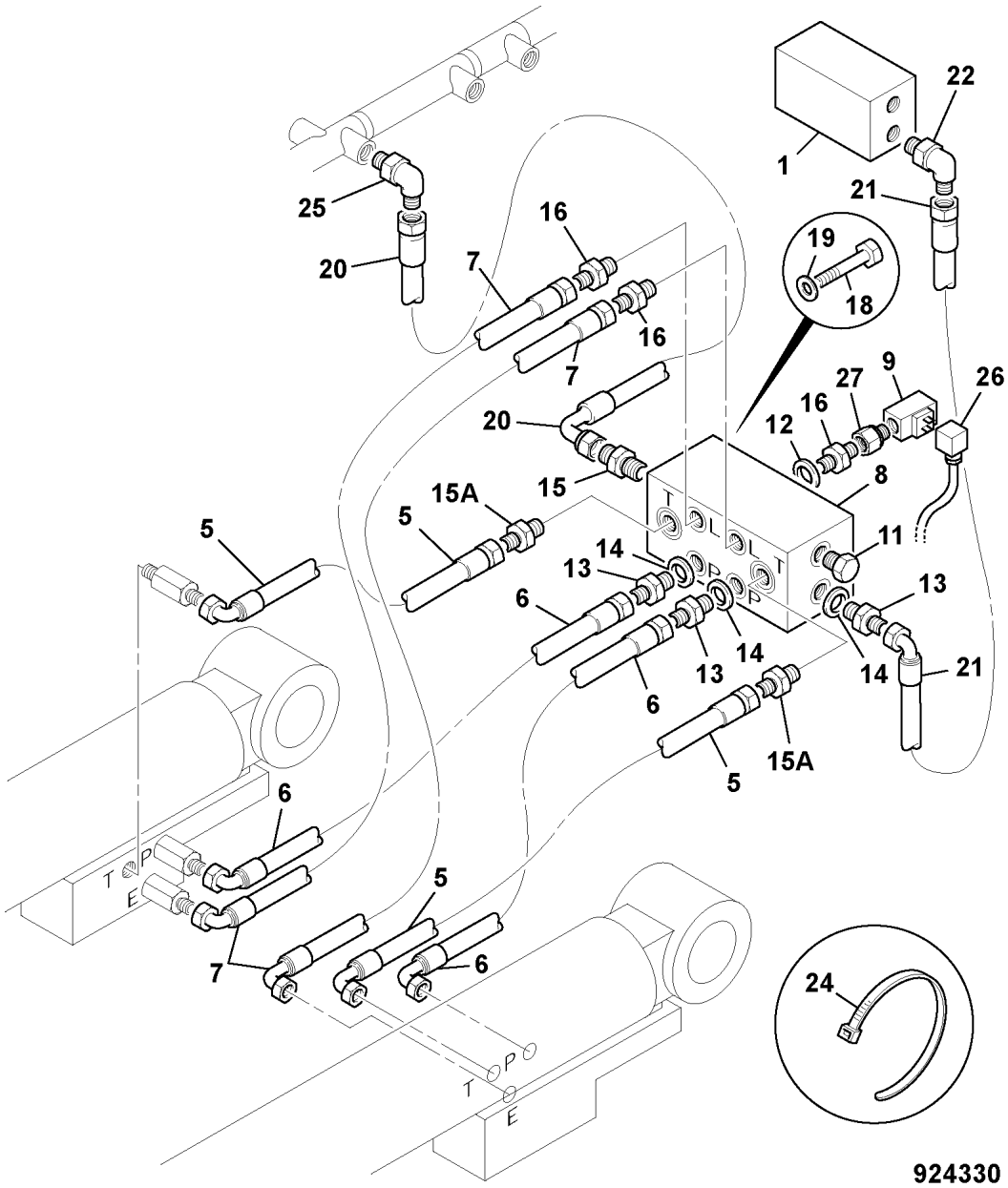

ITEM	PART NO	CHANGE NO	DESCRIPTION	REMARKS	USAGE CODE	QTY
27	JNJ0636		Socket			1



	FROM	TO	FROM	TO
JS160W				

ITEM	PART NO	CHANGE NO	DESCRIPTION	REMARKS	USAGE CODE	QTY
1	.		'See Remark'	Cushion valve see E1-65-1 or E3-13-1		1
5	JRV0382		Hose	Port T		2
6	JRV0382		Hose	Port P		2
7	JNV1311		Hose, hyd; 1/4", L=900	Port E		2
8	332/J2697		Manifold	Boom ONLY (2 valve HBCV)		1
9	701/80196		Switch, pressure, 175 bar			1
11	KHJ0363		Plug			1
12	1406/0011		Seal, bonded			1
13	KNJ0759		Adapter			3
14	1406/0015		Washer, seal			3
15	KNJ0604		Adapter, 1/2" M/M			1
15A	JHJ0062		Adapter			2
16	KNJ0758		Adapter			1
18	1316/0407D		Screw			4
19	1420/0008D		Washer, M10			4
20	JLV1728		Hose			1
21	KNJ1344		Hose, nylon, yellow green			1
22	KHJ0342		Adapter, elbow			1
24	KAR0017		Tie, harness retainer			40
25	KHJ0343		Adapter, elbow			1
26	721/10466		Harness, arm suspension, P8 backhoe loader			1

ITEM	PART NO	CHANGE NO	DESCRIPTION	REMARKS	USAGE CODE	QTY
27	JNJ0636		Socket			1



Our Apologies, No Illustration is Currently Available.

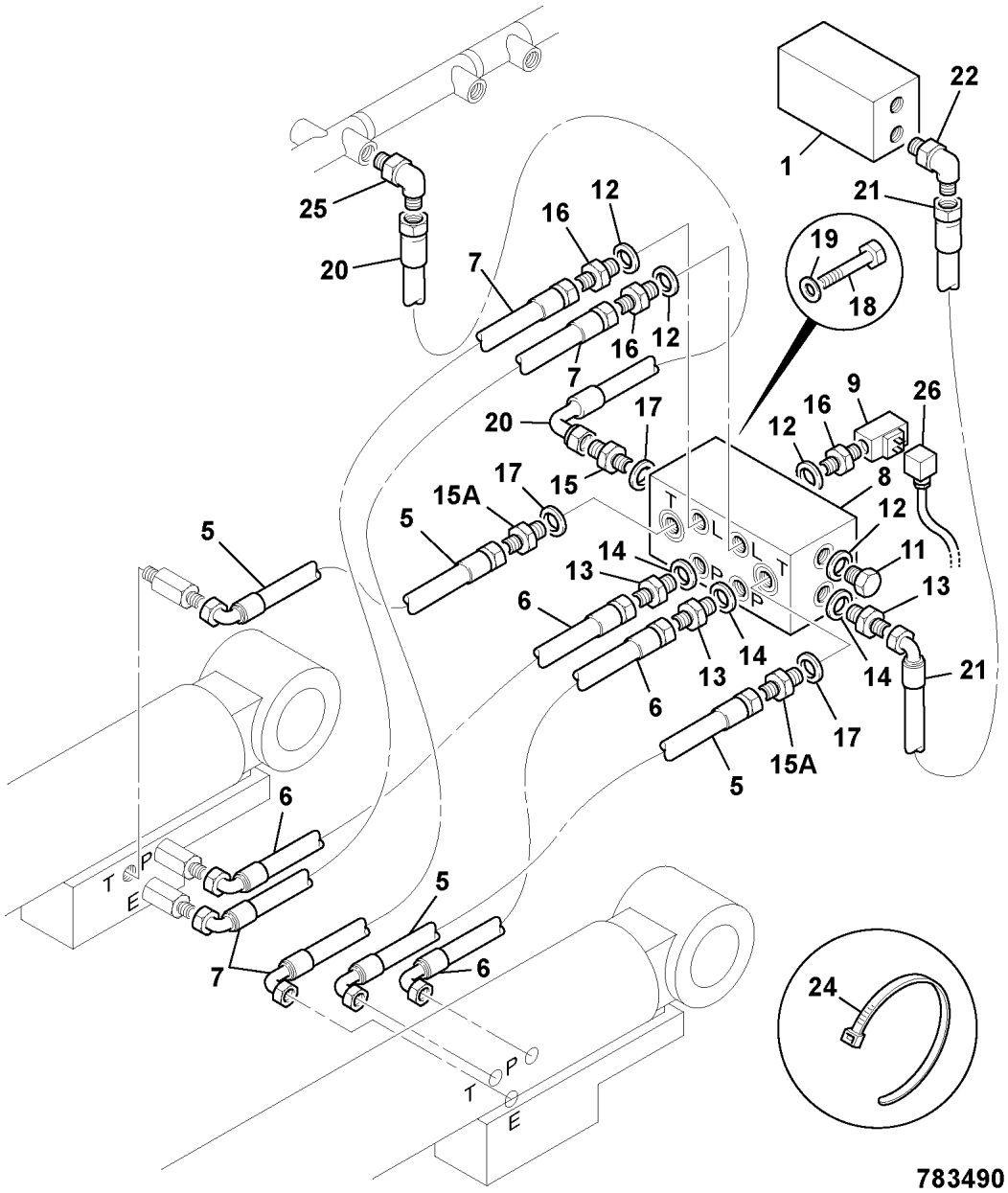

	FROM	TO	FROM	TO
JS160W				

ITEM	PART NO	CHANGE NO	DESCRIPTION	REMARKS	USAGE CODE	QTY
1	.		'See Remark'	Cushion valve see E1-65-1 or E3-13-1		1
5	JRV0382		Hose	Port T		2
6	JRV0382		Hose	Port P		2
7	JNV1311		Hose, hyd; 1/4", L=900	Port E		2
8	JLV1614		Manifold, block			1
9	701/80196		Switch, pressure, 175 bar			1
11	892/00055A		Plug			1
12	1406/0011		Seal, bonded			4
13	1604/2052		Adapter			1
14	1406/0015		Washer, seal			3
15	1604/2053		Adapter			1
15A	1606/0007		Adapter			2
16	1604/2051		Adapter			3
17	1406/0018		Seal, bonded, 1/2" BSP			3
18	1316/0407D		Screw			4
19	1420/0008D		Washer, M10			4
20	JLV1728		Hose			1
21	KNJ1344		Hose, nylon, yellow green			1
22	KHJ0342		Adapter, elbow			1
24	270/00106		Tie, Cable 385mm long			40
25	KHJ0343		Adapter, elbow			1

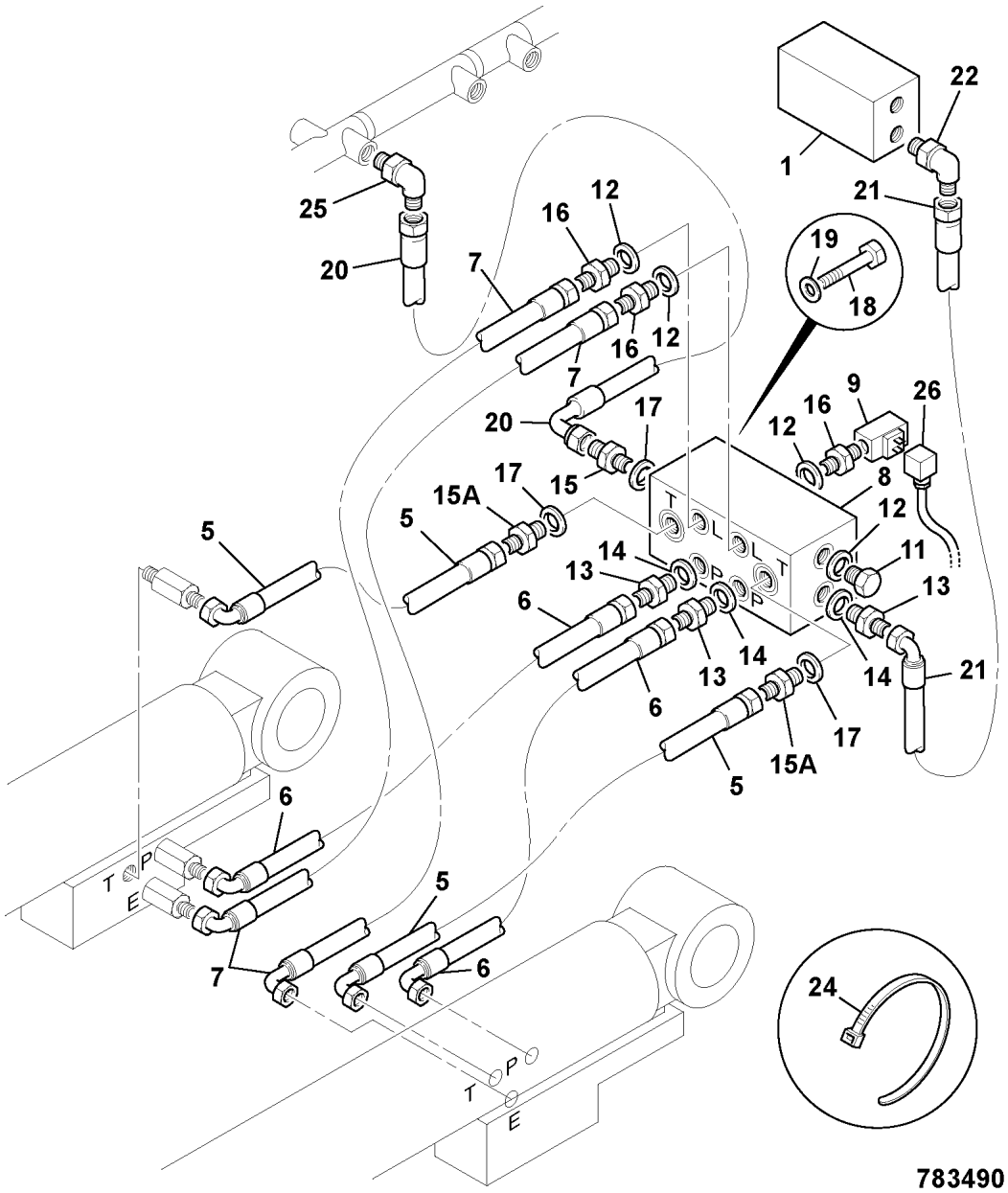

ITEM	PART NO	CHANGE NO	DESCRIPTION	REMARKS	USAGE CODE	QTY
26	721/10466		Harness, arm suspension, P8 backhoe loader			1

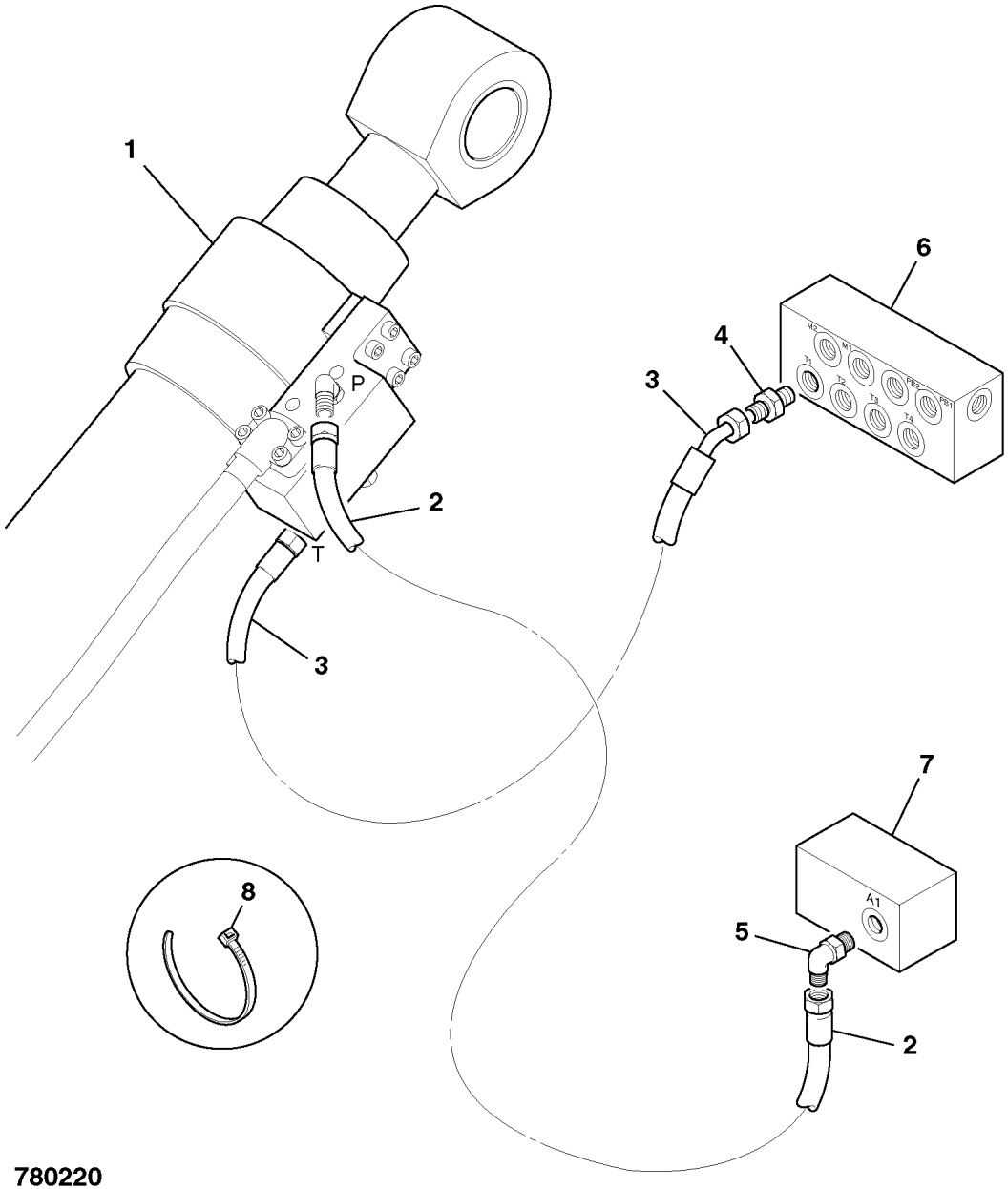

780220

	FROM	TO	FROM	TO
JS160W				

ITEM	PART NO	CHANGE NO	DESCRIPTION	REMARKS	USAGE CODE	QTY
1	.		'See Remark'	Dipper ram see E4-2-10		1
2	JLV1535		Hose			1
3	JBV0403		Hose			1
4	KNJ0759		Adapter			1
5	KHJ0342		Adapter, elbow			1
7	25/220040		Valve, cushion			1
8	KAR0016		Tie, cable			11
	KAR0017		Tie, harness retainer			12



	FROM	TO	FROM	TO
JS160W				

ITEM	PART NO	CHANGE NO	DESCRIPTION	REMARKS	USAGE CODE	QTY
1	331/34479		Bracket, valve mounting			1
3	830/12027		Pipe, low flow			2
4	627/10524		Hose			1
5	JLV0602		Hose			1
6	JLJ0403		Hose			1
7	627/10525		Hose			1
8	JBV0439		Hose			2
9	627/10526		Hose			1
10	331/66450		Bracket			1
11	KRV0548		Clamp			1
12	1316/3409D		Bolt			2
13	BRJ0180		Adapter			2
14	KNJ0605		Adapter, straight			1
15	KRA0789		Adapter, tee			1
16	816/90712		Adapter			1
17	928/60044		Valve, check			1
18	331/56486		Bracket, priorty valve			1
19	1604/0004		Adapter, male/male			1
20	1406/0018		Seal, bonded, 1/2" BSP			2
21	1606/0007		Adapter			4
22	1406/0015		Washer, seal			4
23	1316/0508D		Screw			4
24	1420/0009D		Washer, M12			4



Our Apologies, No Illustration is Currently Available.

ITEM	PART NO	CHANGE NO	DESCRIPTION	REMARKS	USAGE CODE	QTY
25	1391/3109Z		Capscrew			4
26	1391/3318D		Capscrew, M8 x 80mm, GRADE 12.9			3
27	1316/3514D		Bolt, M12 x 60			1
28	1420/0008D		Washer, M10			2
43	816/90713		Adapter			1
44	830/13798		Tube, Low Flow			1
45	JNJ0544		Hose			1
46	1612/0004		Adapter, male/female			1
47	721/12243		Harness, low flow			1



	FROM	TO	FROM	TO
JS160W				

ITEM	PART NO	CHANGE NO	DESCRIPTION	REMARKS	USAGE CODE	QTY
1	331/34479		Bracket, valve mounting			1
3	830/12027		Pipe, low flow			2
4	627/10524		Hose			1
5	JLV0602		Hose			1
6	JLJ0403		Hose			1
7	627/10525		Hose			1
8	JBV0439		Hose			2
9	627/10526		Hose			1
10	331/66450		Bracket			1
11	KRV0548		Clamp			1
12	1316/3409D		Bolt			2
13	BRJ0180		Adapter			2
14	KNJ0605		Adapter, straight			1
15	JHJ0063		Adapter			1
16	816/90712		Adapter			1
17	928/60044		Valve, check			1
18	331/56486		Bracket, priorty valve			1
19	1604/0004		Adapter, male/male			1
20	1406/0018		Seal, bonded, 1/2" BSP			2
21	1606/0007		Adapter			4
22	1406/0015		Washer, seal			4
23	1316/0508D		Screw			4
24	1420/0009D		Washer, M12			4



Our Apologies, No Illustration is Currently Available.

ITEM	PART NO	CHANGE NO	DESCRIPTION	REMARKS	USAGE CODE	QTY
25	1391/3109Z		Capscrew			4
26	1391/3318D		Capscrew, M8 x 80mm, GRADE 12.9			3
27	1316/3514D		Bolt, M12 x 60			1
28	1420/0008D		Washer, M10			2
34	JRJ0343		Valve, low flow	Grab		1
	JRJ0344		Valve, low flow	Weed cutter		1
42	KHJ0343		Adapter, elbow			1
43	816/90713		Adapter			1
44	* 830/13798		Tube, Low Flow			1
45	627/10529		Hose			1
46	1612/0004		Adapter, male/female			1
47	721/12243		Harness, low flow			1
48	25/222436		Valve, priority	Grab		1
	25/222435		Valve, priority	Weed cutter		1

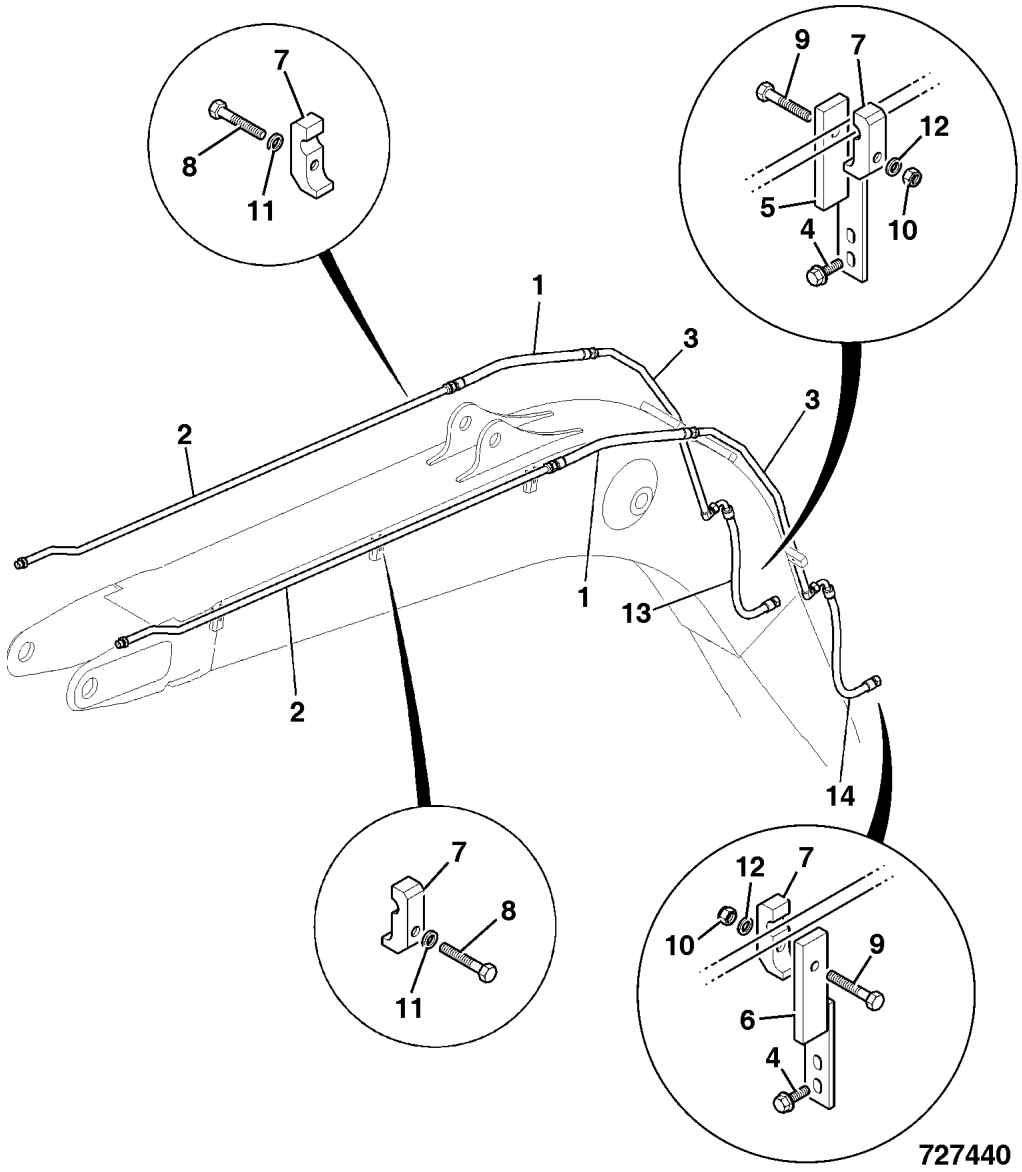

	FROM	TO	FROM	TO
JS160W				

ITEM	PART NO	CHANGE NO	DESCRIPTION	REMARKS	USAGE CODE	QTY
1	JBV0439		Hose			2
2	JLV1494		Pipe, upper boom			2
3	JLV1694		Pipe			2
4	1316/3510D		Bolt, BOLT			4
5	JNB0157		Bracket, pipes			1
6	335/07416		Bracket, pipe suport, right hand			1
7	JRJ0259		Clamp, pipe			12
8	1316/3512D		Bolt, M12X50			10
9	1316/3516D		Bolt, M12 x 70			2
10	1371/0401D		Nut			2
10A	1316/3516D		Bolt, M12 x 70			2
11	823/00394		Washer, special			10
12	1420/0009D		Washer, M12			8
13	JBV0439		Hose			1
14	JBV0439		Hose			1

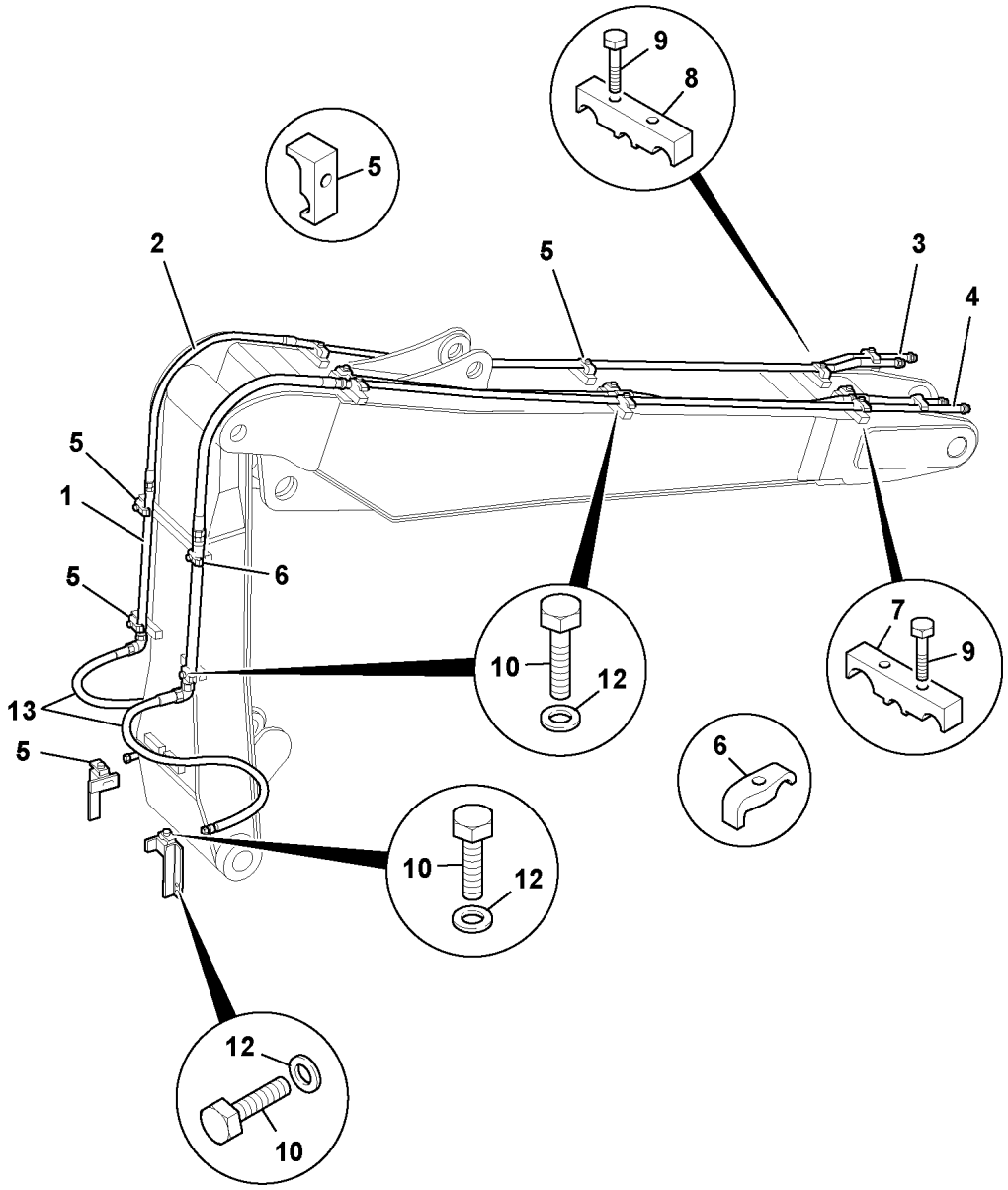

925270

	FROM	TO	FROM	TO
JS160W				

ITEM	PART NO	CHANGE NO	DESCRIPTION	REMARKS	USAGE CODE	QTY
1	JNV1524		Pipe, grab, lower boom			2
2	JLV1383		Hose			2
3	JLV1624		Pipe, low flow, left hand upper boom			1
4	JLV1625		Pipe, low flow, righthand upper boom			1
5	JRJ0259		Clamp, pipe			6
6	KRV0548		Clamp			6
7	JLV1559		Clamp, triple pipe			3
8	JLV1560		Clamp			3
9	1316/3510D		Bolt, BOLT			4
10	1316/3518D		Bolt			2
11	1316/3522D		Bolt, BOLT M12 X 120			2
12	1420/0009D		Washer, M12			4
13	JBV0439		Hose			2

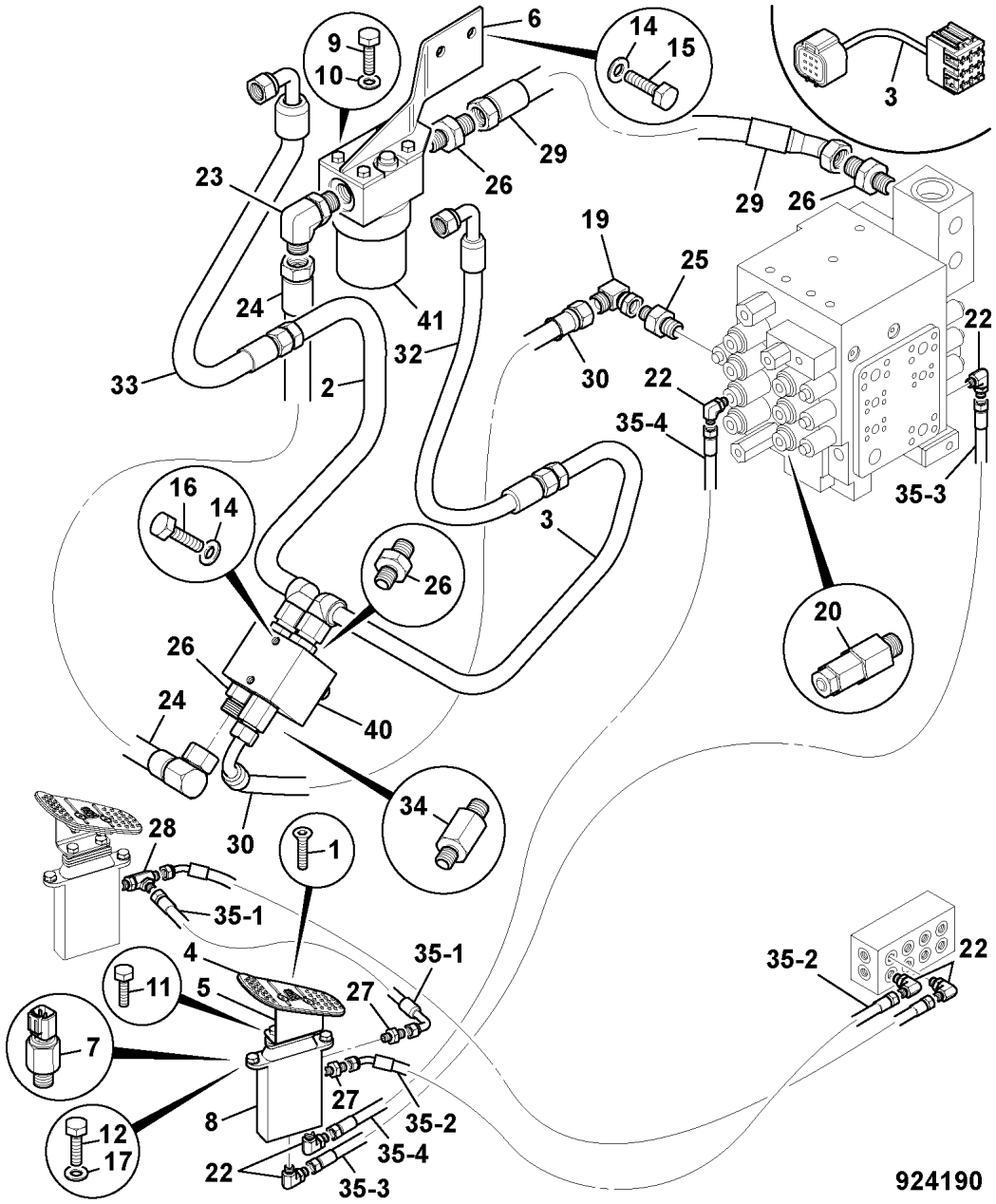

	FROM	TO	FROM	TO
JS160W				

ITEM	PART NO	CHANGE NO	DESCRIPTION	REMARKS	USAGE CODE	QTY
1	826/10811		Screw, c/sunk socket head, M8 x 30			2
2	830/12146		Pipe, hammer, aux, boom feed			1
3	830/13423		Pipe, hammer, aux, JS175W AUTO MONO			1
4	589/10208		Pedal, left hand casting			1
5	331/38358		Bracket, pedal			1
6	335/13018		Plate, Mounting			1
7	701/80373		Switch, Slew pressure, 5bar 1/4" BSP			1
8	928/60339		Valve, hammer, auxiliary, foot operated			1
9	1316/0301D		Screw			4
10	1420/0007D		Washer, M8 plain			4
11	1316/0403D		Screw			2
12	1316/0407D		Screw			2
14	1420/0009D		Washer, M12			4
15	1316/0508D		Screw			2
16	1316/0509D		Bolt, grade 12.9			2
17	1420/0008D		Washer, M10			2
19	JHJ0119		Adapter			1
20	25/221161		Valve, relief			2
22	KHJ0341		Adapter, elbow			6
23	KHJ0345		Adapter, elbow			1

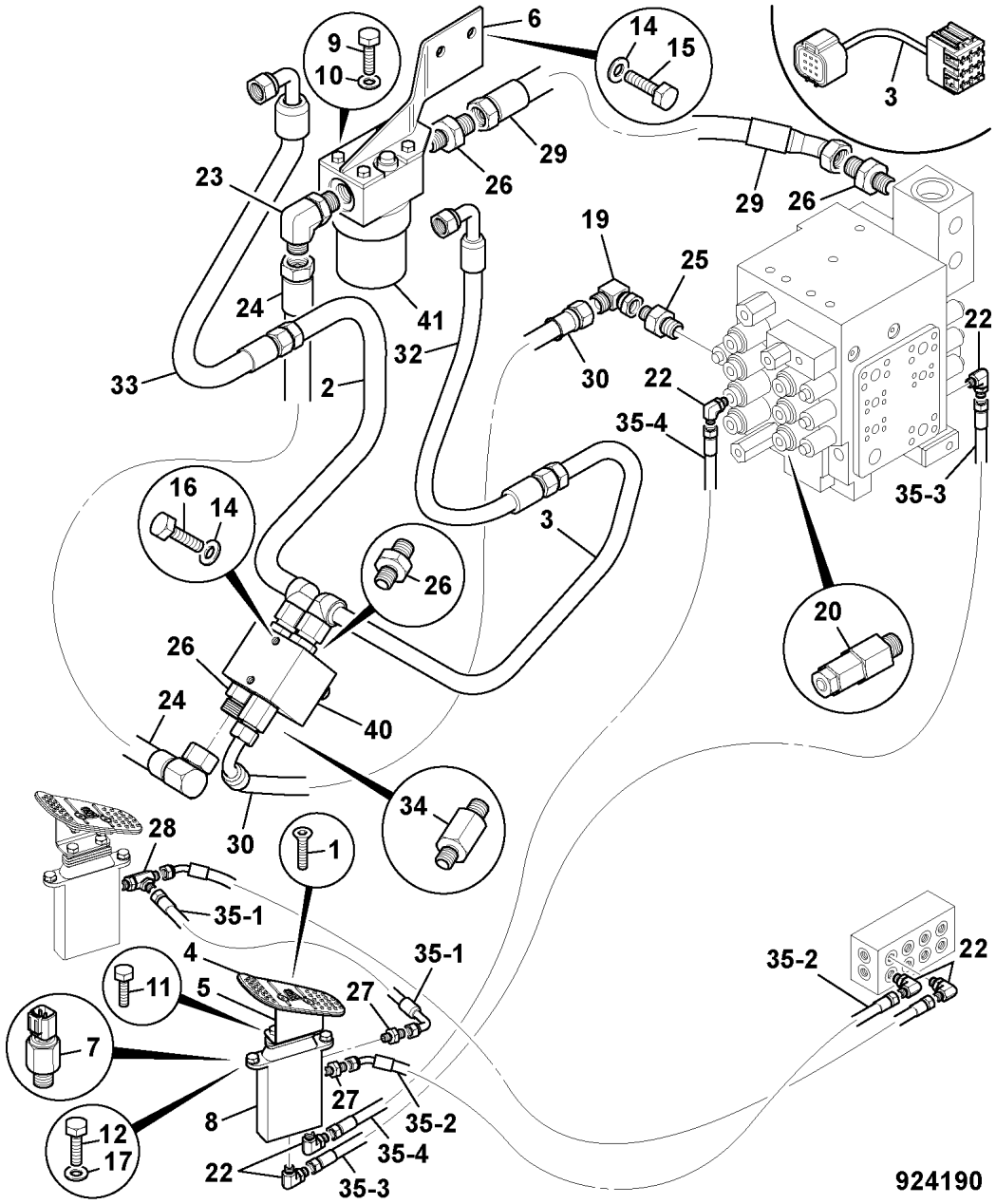

ITEM	PART NO	CHANGE NO	DESCRIPTION	REMARKS	USAGE CODE	QTY
24	627/10522		Hose			1
25	KNJ0605		Adapter, straight			1
26	KNJ0606		Adapter			5
27	KNJ0758		Adapter			2
28	KHJ0869		Adapter, tee			1
29	627/10519		Hose			1
30	627/10340		Hose			1
32	JNJ0598		Hose			1
33	JNJ0599		Hose			1
34	816/90712		Adapter			1
35 01	KBJ2346		Hose, nylon			1
35 02	KHJ1335		Hose			1
35 03	KTJ0812		Hose, nylon, red			1
35 04	KTJ0813		Hose			1
40	331/41610		Manifold, breaker			1
41	32/925602		Filter, return			1

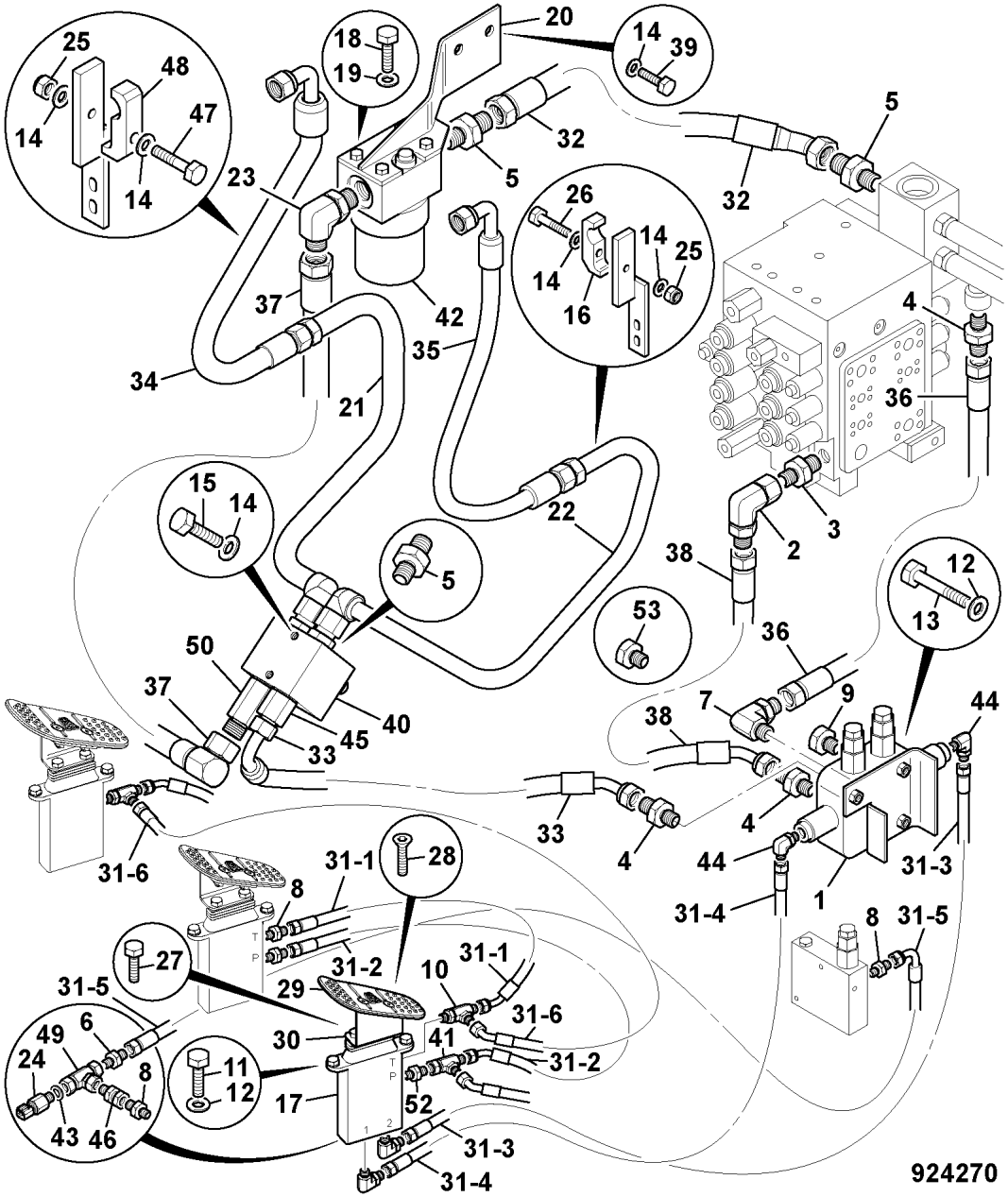

	FROM	TO	FROM	TO
JS160W				

ITEM	PART NO	CHANGE NO	DESCRIPTION	REMARKS	USAGE CODE	QTY
1	JLJ0235		Valve, control			1
2	JHJ0119		Adapter			1
3	JHJ0063		Adapter			1
4	KNJ0605		Adapter, straight			3
5	* KNJ0606		Adapter			5
6	* 1609/0002		Adapter			1
7	KHJ1303		Adapter, swivel elbow			1
8	KNJ0758		Adapter			3
9	JLJ0064		Plug			1
10	KHJ0869		Adapter, tee			1
11	1316/0407D		Screw			2
12	1420/0008D		Washer, M10			5
13	1316/3419D		Bolt			3
14	1420/0009D		Washer, M12			8
15	* 1315/0509D		Screw, M12x35mm long			2
16	KRV0548		Clamp			1
17	928/60339		Valve, hammer, auxiliary, foot operated			1
18	1316/0301D		Screw			4
19	1420/0007D		Washer, M8 plain			4
20	* 335/13018		Plate, Mounting			1
21	830/13187		Pipe, hammer auxiliary, JS175W AUTO			1

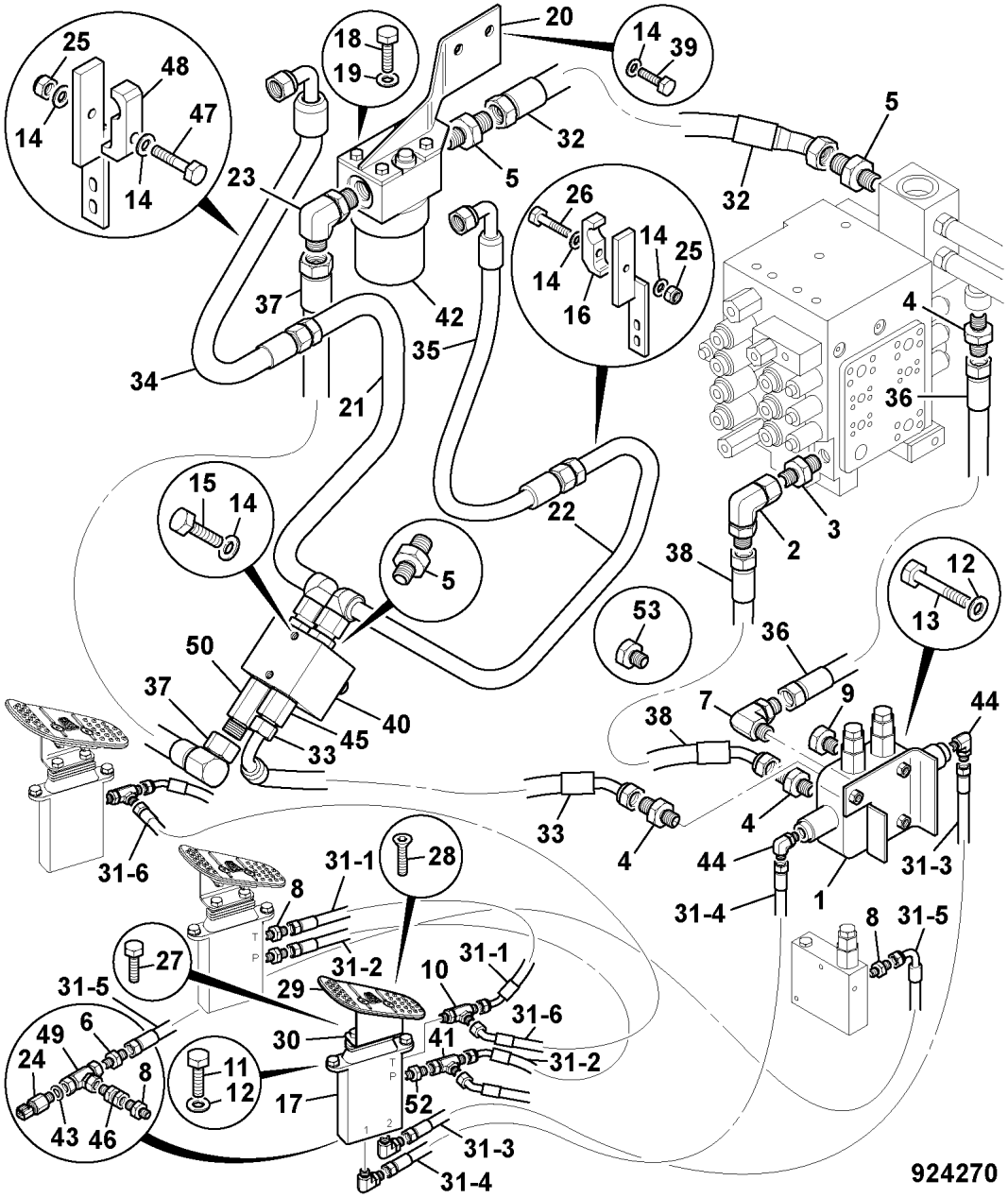

ITEM	PART NO	CHANGE NO	DESCRIPTION	REMARKS	USAGE CODE	QTY
22	830/13189		Pipe, hammer auxiliary, JS175W AUTO			1
23	KHJ0345		Adapter, elbow			1
24	701/80373		Switch, Slew pressure, 5bar 1/4" BSP			1
25	1370/0401D		Nut, M12			2
26	1316/3518D		Bolt			1
27	1316/0403D		Screw			2
28	826/10811		Screw, c/sunk socket head, M8 x 30			2
29	589/10208		Pedal, left hand casting			1
30	331/38358		Bracket, pedal			1
31 01	*627/10407		Hose			1
31 02	*627/10407		Hose			1
31 03	KNA0363		Hose, nylon			1
31 04	KBJ2439		Hose, nylon			1
31 05	KNJ1849		Hose			1
31 06	627/10651		Hose			1
32	*627/10519		Hose			1
33	627/10538		Hose			1
34	JNJ0599		Hose			1
35	JNJ0598		Hose			1
36	627/10535		Hose			1
37	627/10522		Hose			1
38	627/10536		Hose			1
39	1316/0508D		Screw			2
40	331/41610		Manifold, breaker			1
41	816/50031		Adapter, Tee			1

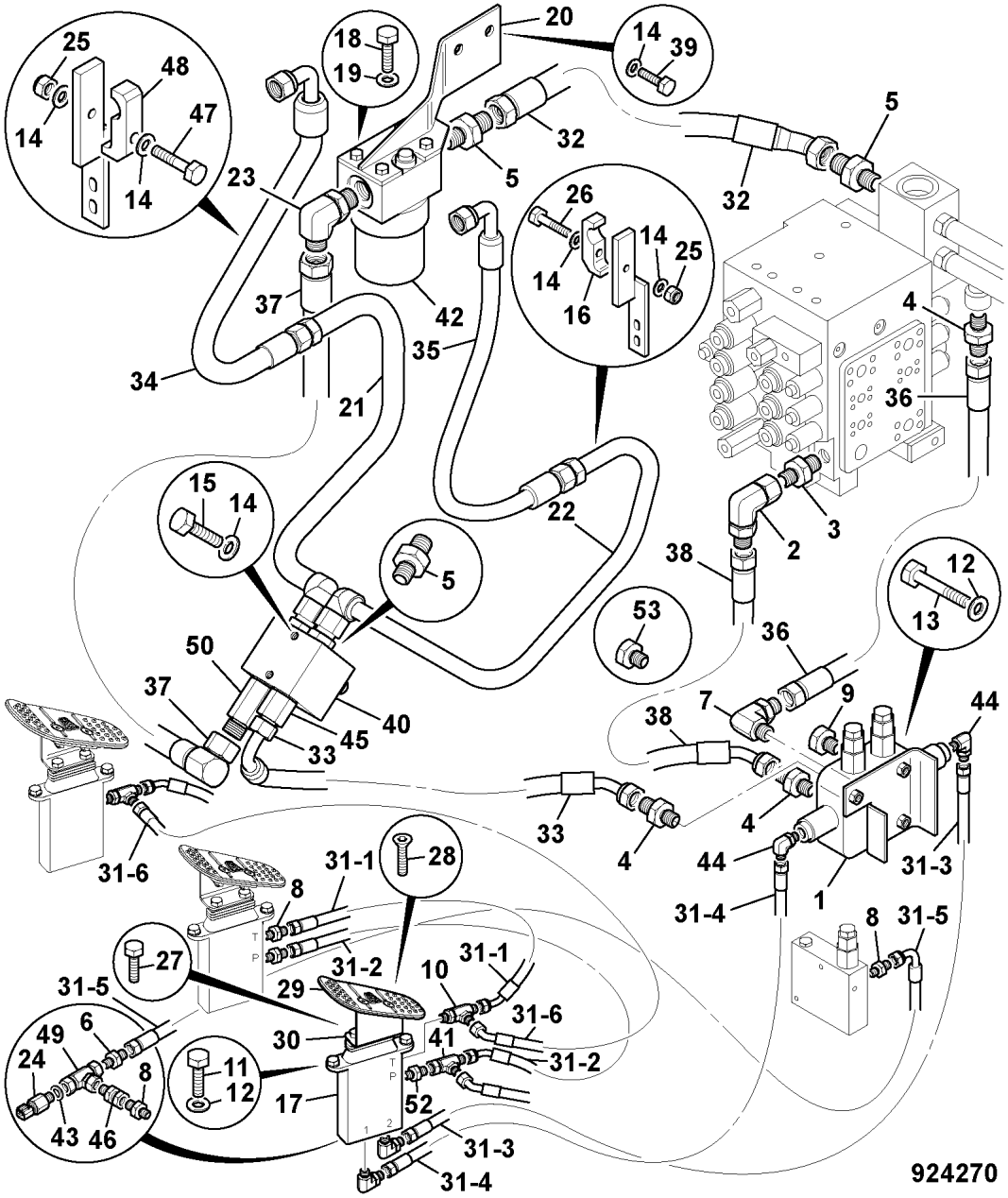

ITEM	PART NO	CHANGE NO	DESCRIPTION	REMARKS	USAGE CODE	QTY
42	32/925602		Filter, return			1
43	JHP0204		Washer, back up			1
44	KHJ0341		Adapter, elbow			4
45	*816/90712		Adapter			1
46	C4E7327		Adapter			1
47	1316/3519D		Bolt			1
48	JRJ0349		Clamp, pipe			1
49	JHJ0172		Adapter, tee			1
50	933/20030		Adapter			1
52	CNA0584		Adapter			1
53	KHJ0363		Plug			1

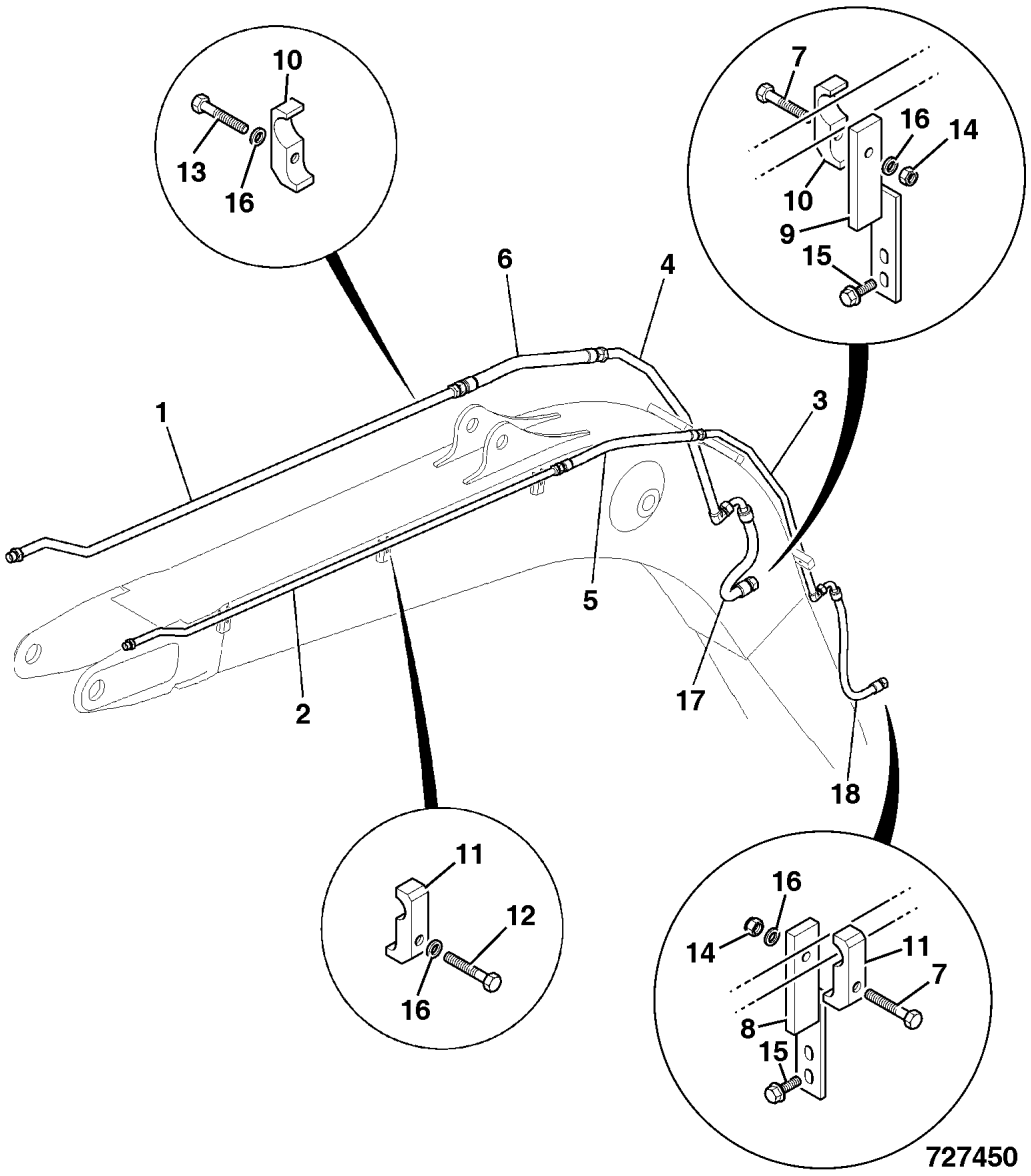

	FROM	TO	FROM	TO
JS160W				

ITEM	PART NO	CHANGE NO	DESCRIPTION	REMARKS	USAGE CODE	QTY
0A	980/89830		Kit-hammer, auxiliary boom, JS160 & 180AUTO			1
1	JLV1326		:Pipe, assembly, hammer			1
2	JLV1327		:Pipe, assembly, hammer			1
3	JLV1692		:Pipe			1
4	JLV1693		:Pipe			1
5	KNV0681		:Hose, hydraulic			1
6	KRV1645		:Hose, hydraulic			1
7	1316/3510D		:Bolt, BOLT	Use with item 18		1
	1316/3519D		:Bolt	Use with item 17		1
8	JNB0157		:Bracket, pipes			1
9	335/07416		:Bracket, pipe suport, right hand			1
10	JRJ0349		:Clamp, pipe			6
11	KRV0548		:Clamp			6
12	1316/3514D		:Bolt, M12 x 60			5
13	1316/3516D		:Bolt, M12 x 70			5
14	1371/0401D		:Nut			2
15	1316/3510D		:Bolt, BOLT			4
16	823/00394		:Washer, special			10
	1420/0009D		Washer, M12			8
17	JNJ0599		:Hose			1
18	JNJ0598		:Hose			1
19	9814/0473		:Book, fitting instructions			1

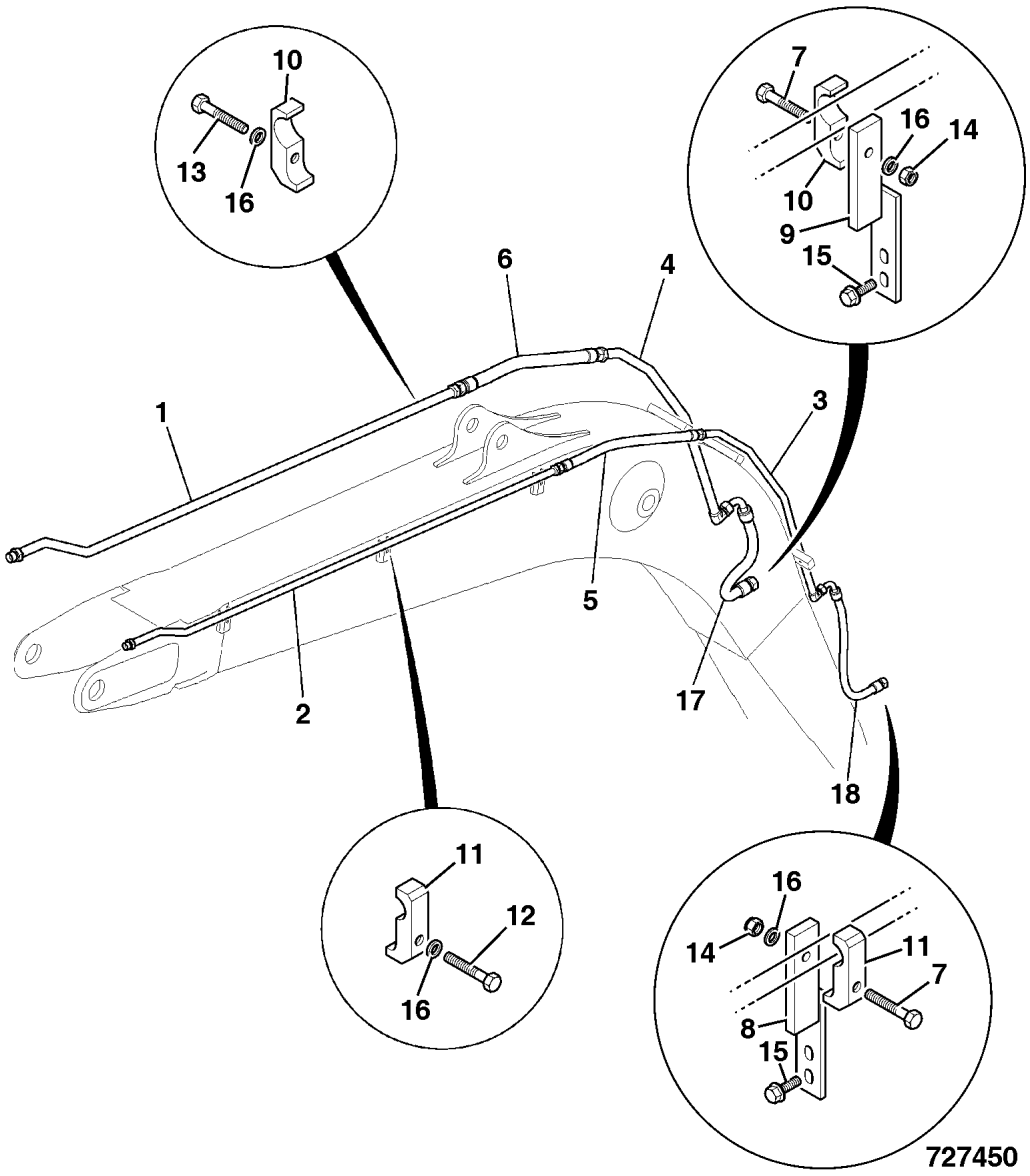

ITEM	PART NO	CHANGE NO	DESCRIPTION	REMARKS	USAGE CODE	QTY
20	1316/3517D		Bolt, M12 x 75			1

	FROM	TO	FROM	TO
JS160W				



ITEM	PART NO	CHANGE NO	DESCRIPTION	REMARKS	USAGE CODE	QTY
1	JLV1559		Clamp, triple pipe			3
2	JLV1560		Clamp			3
3	JRJ0349		Clamp, pipe			3
4	KRV0548		Clamp			3
5	1316/3514D		Bolt, M12 x 60			8
6	1316/3516D		Bolt, M12 x 70			2
7	1316/3518D		Bolt			2
8	1316/3522D		Bolt, BOLT M12 X 120			2
9	1420/0009D		Washer, M12			2
10	JLV1622		Pipe, hammer feed, TAB upper boom			1
11	JLV1623		Pipe, hammer return, TAB upper boom			1
12	JLV1386		Hose			1
13	JLV1395		Hose			1
14	JNV1423		Pipe, hammer feed, lower boom			1
15	JNV1422		Pipe, hammer return, lower boom			1
16	JNJ0517		Hose			1
17	JLV0538		Hose			1

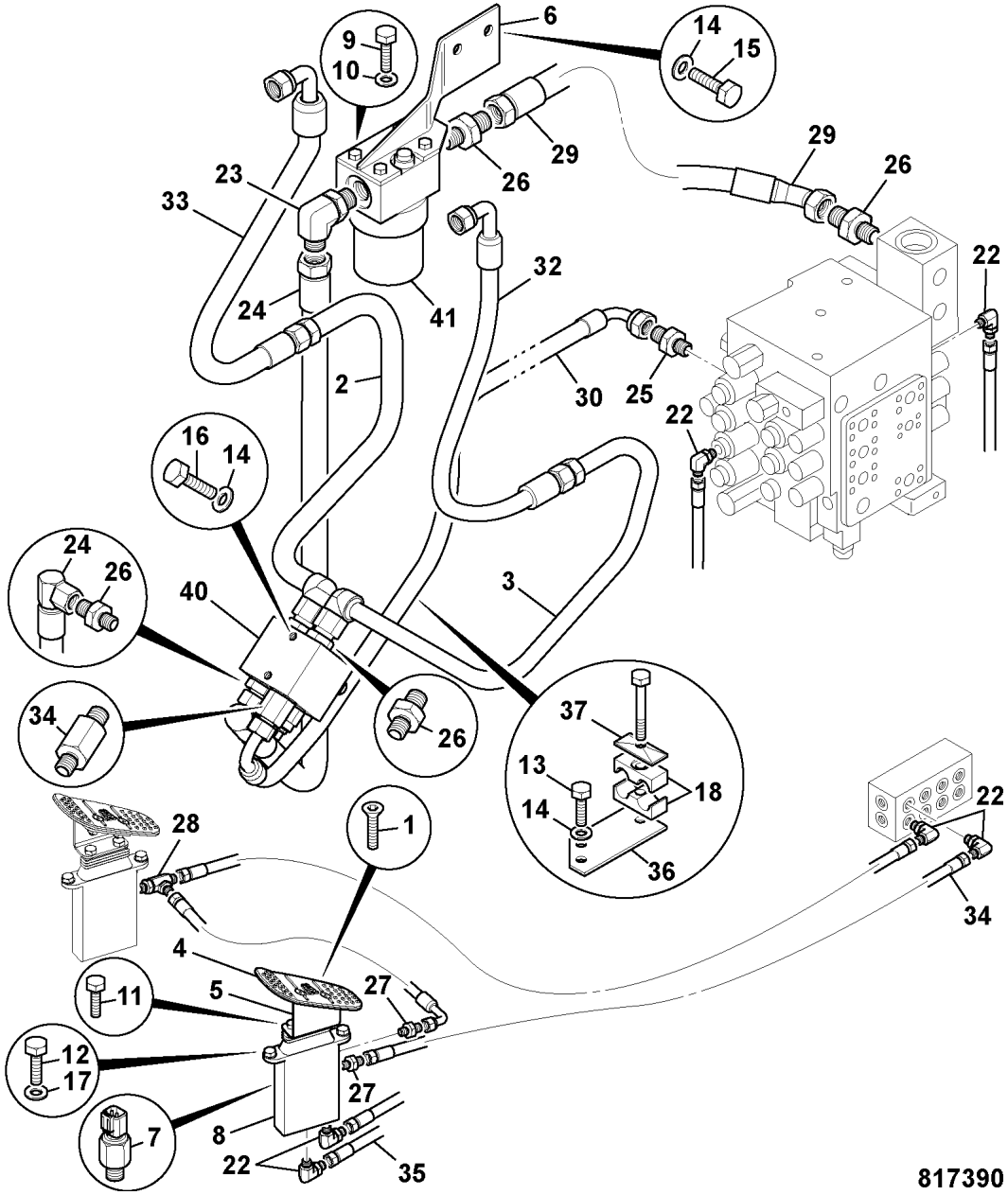

	FROM	TO	FROM	TO
JS160W				

ITEM	PART NO	CHANGE NO	DESCRIPTION	REMARKS	USAGE CODE	QTY
1	826/10811		Screw, c/sunk socket head, M8 x 30			2
2	830/12146		Pipe, hammer, aux, boom feed			1
3	830/13423		Pipe, hammer, aux, JS175W AUTO MONO			1
4	589/10208		Pedal, left hand casting			1
5	331/38358		Bracket, pedal			1
6	335/11608		Plate, mounting			1
7	701/80373		Switch, Slew pressure, 5bar 1/4" BSP			1
8	928/60339		Valve, hammer, auxiliary, foot operated			1
9	1316/0301D		Screw			4
10	1420/0007D		Washer, M8 plain			4
11	1316/0403D		Screw			2
12	1316/0407D		Screw			2
13	1316/0508D		Screw			2
14	1420/0009D		Washer, M12			4
15	1316/0508D		Screw			2
16	1316/0509D		Bolt, grade 12.9			2
17	1420/0008D		Washer, M10			2
20	JG0NJ117		Valve, Hammer Relief			1
22	JHJ0119		Adapter			5
23	KHJ0345		Adapter, elbow			1

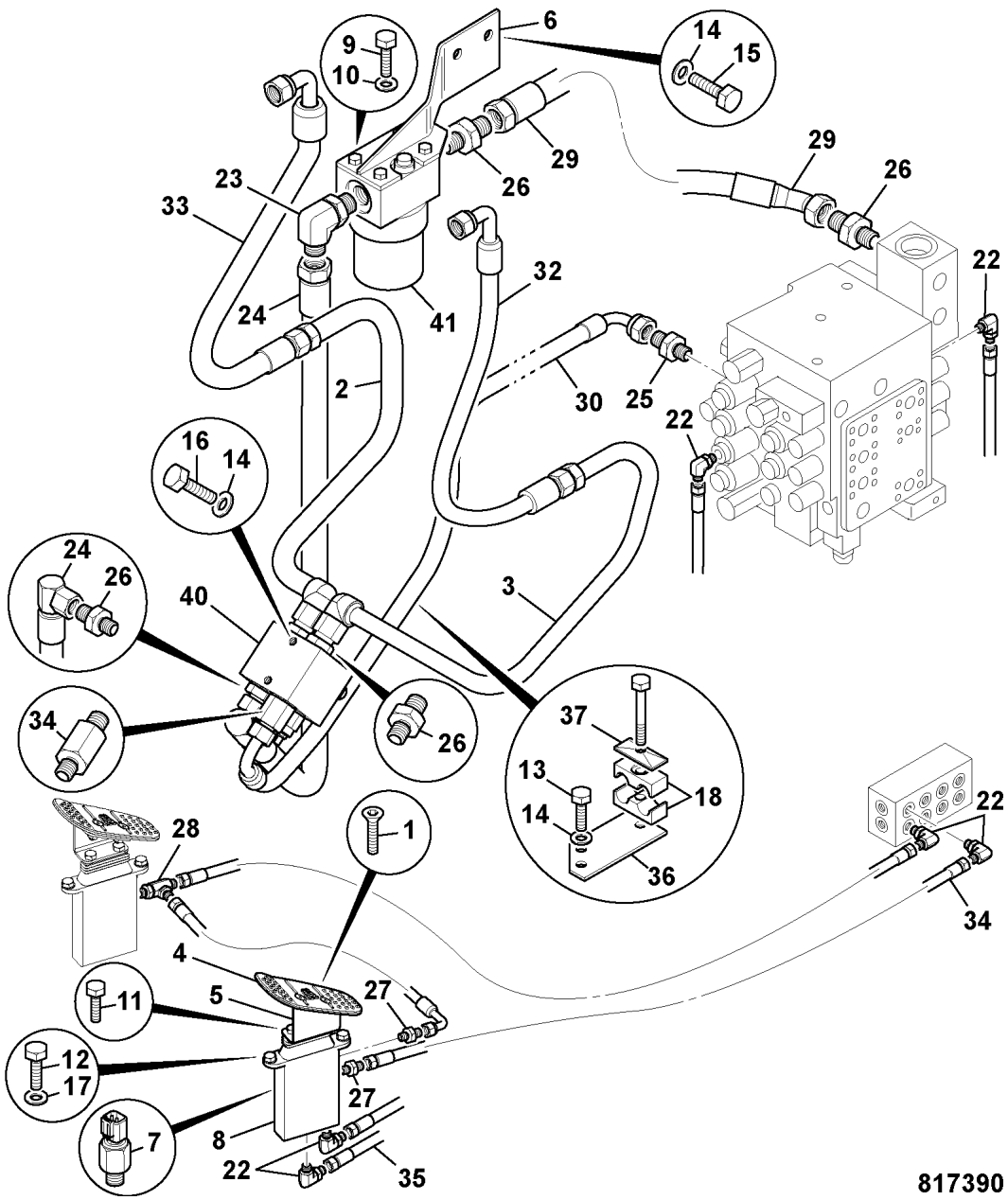

ITEM	PART NO	CHANGE NO	DESCRIPTION	REMARKS	USAGE CODE	QTY
24	627/10522		Hose			1
25	KNJ0605		Adapter, straight			1
26	KNJ0606		Adapter			5
27	KNJ0758		Adapter			2
28	KHJ0869		Adapter, tee			1
29	627/10519		Hose			1
30	627/10340		Hose		A	1
32	JNJ0598		Hose			1
33	JNJ0599		Hose			1
34	BRJ0180		Adapter			1
36	KTJ0812		Hose, nylon, red			1
37	KTJ0812		Hose, nylon, red			1
38	KHJ1335		Hose			1
39	JLV0594		Hose			1
40	KSV0282		Clamp, pipe			1
41	KRV0548		Clamp			1
42	1316/3516D		Bolt, M12 x 70		A	1
43	1316/3514D		Bolt, M12 x 60			1
44	1370/0401D		Nut, M12			2
45	1420/0009D		Washer, M12			8
46	331/41610		Manifold, breaker			1

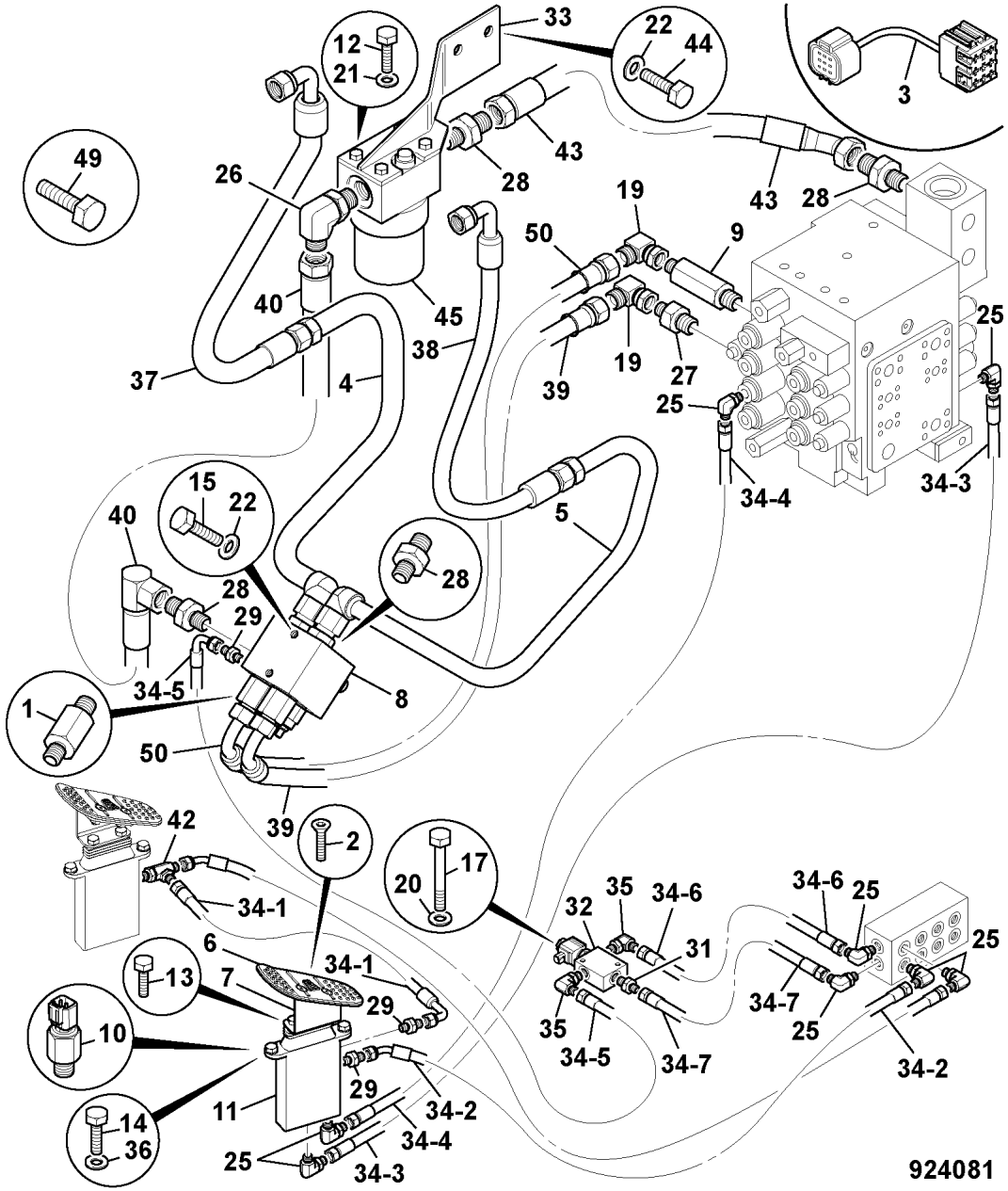

	FROM	TO	FROM	TO
JS160W				

ITEM	PART NO	CHANGE NO	DESCRIPTION	REMARKS	USAGE CODE	QTY
1	816/90712		Adapter			2
2	826/10811		Screw, c/sunk socket head, M8 x 30			2
3	*721/11632		Harness, hammer, auxiliary, JS130/160 AUTO			1
4	830/13423		Pipe, hammer, aux, JS175W AUTO MONO			1
5	830/12146		Pipe, hammer, aux, boom feed			1
6	589/10208		Pedal, left hand casting			1
7	331/38358		Bracket, pedal			1
8	25/222216		Valve, hammer auxiliary, changeover			2
9	JNV0083		Adapter			1
10	701/80373		Switch, Slew pressure, 5bar 1/4" BSP			1
11	928/60339		Valve, hammer, auxiliary, foot operated			1
12	1316/0301D		Screw			4
13	1316/0403D		Screw			2
14	1316/0407D		Screw			2
15	1316/0509D		Bolt, grade 12.9			2
17	1316/3212D		Bolt			2
19	JHJ0119		Adapter			2
20	1420/0006D		Washer, M6 plain			2
21	1420/0007D		Washer, M8 plain			4

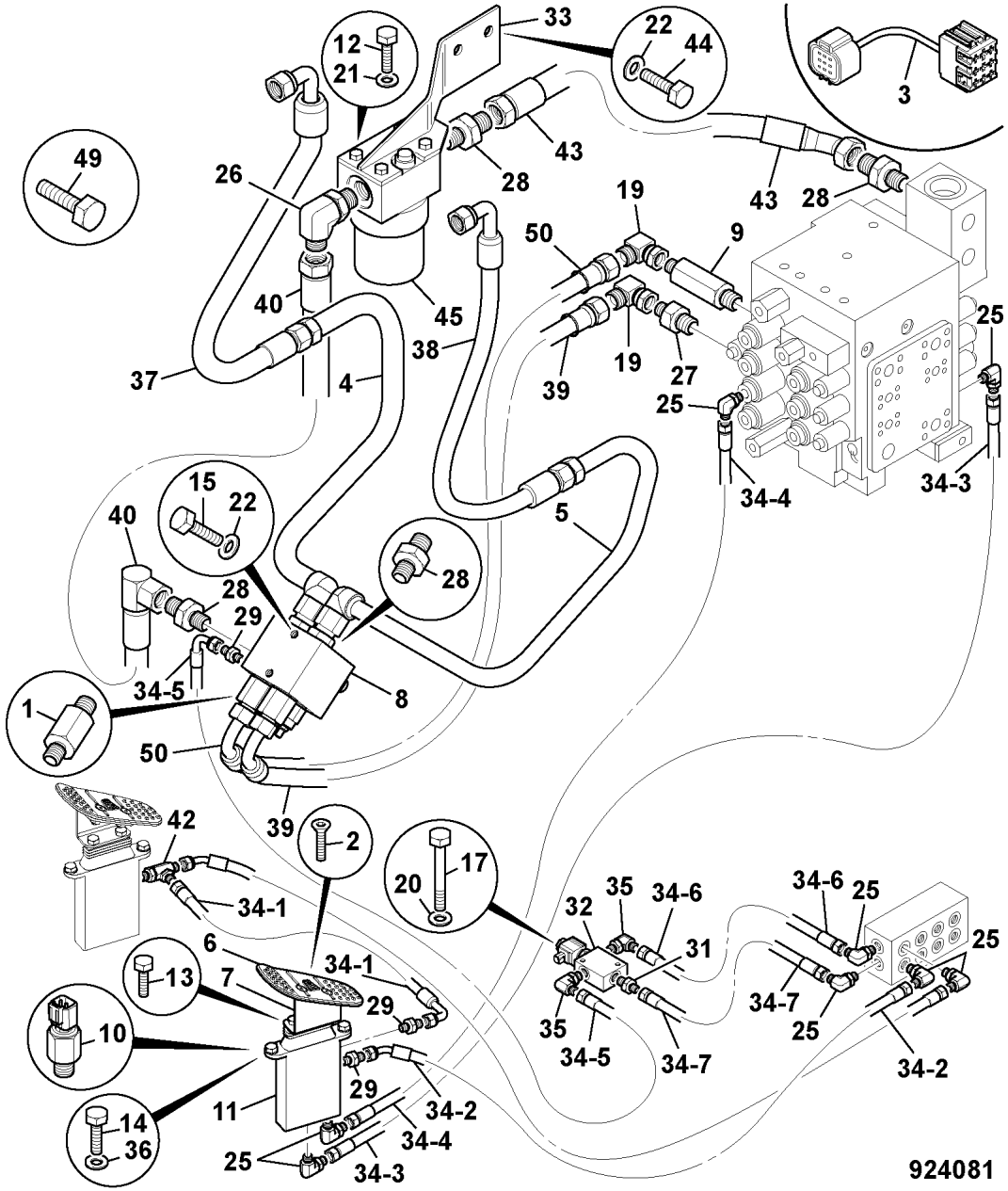

ITEM	PART NO	CHANGE NO	DESCRIPTION	REMARKS	USAGE CODE	QTY
22	1420/0009D		Washer, M12			6
25	KHJ0341		Adapter, elbow			7
26	KHJ0345		Adapter, elbow			1
27	KNJ0605		Adapter, straight			2
28	KNJ0606		Adapter			5
29	KNJ0758		Adapter			3
31	KAJ2176		Adapter			1
32	25/221009		Valve, solenoid			1
33	335/13018		Plate, Mounting			1
34 01	KBJ2346		Hose, nylon			1
34 02	KHJ1335		Hose			1
34 03	KTJ0813		Hose			1
34 04	KTJ0812		Hose, nylon, red			1
34 05	KAJ2193		Hose			1
34 06	KTJ0906		Hose, nylon			1
34 07	KTJ0906		Hose, nylon			1
35	KHJ0640		Elbow			2
36	1420/0008D		Washer, M10			2
37	JNJ0599		Hose			1
38	JNJ0598		Hose			1
39	627/10340		Hose			1
40	627/10522		Hose			1
41	335/11616		Bracket, hose clamp			1
42	KHJ0869		Adapter, tee			1
43	627/10519		Hose			1
44	1316/0508D		Screw			2
45	32/925602		Filter, return			1

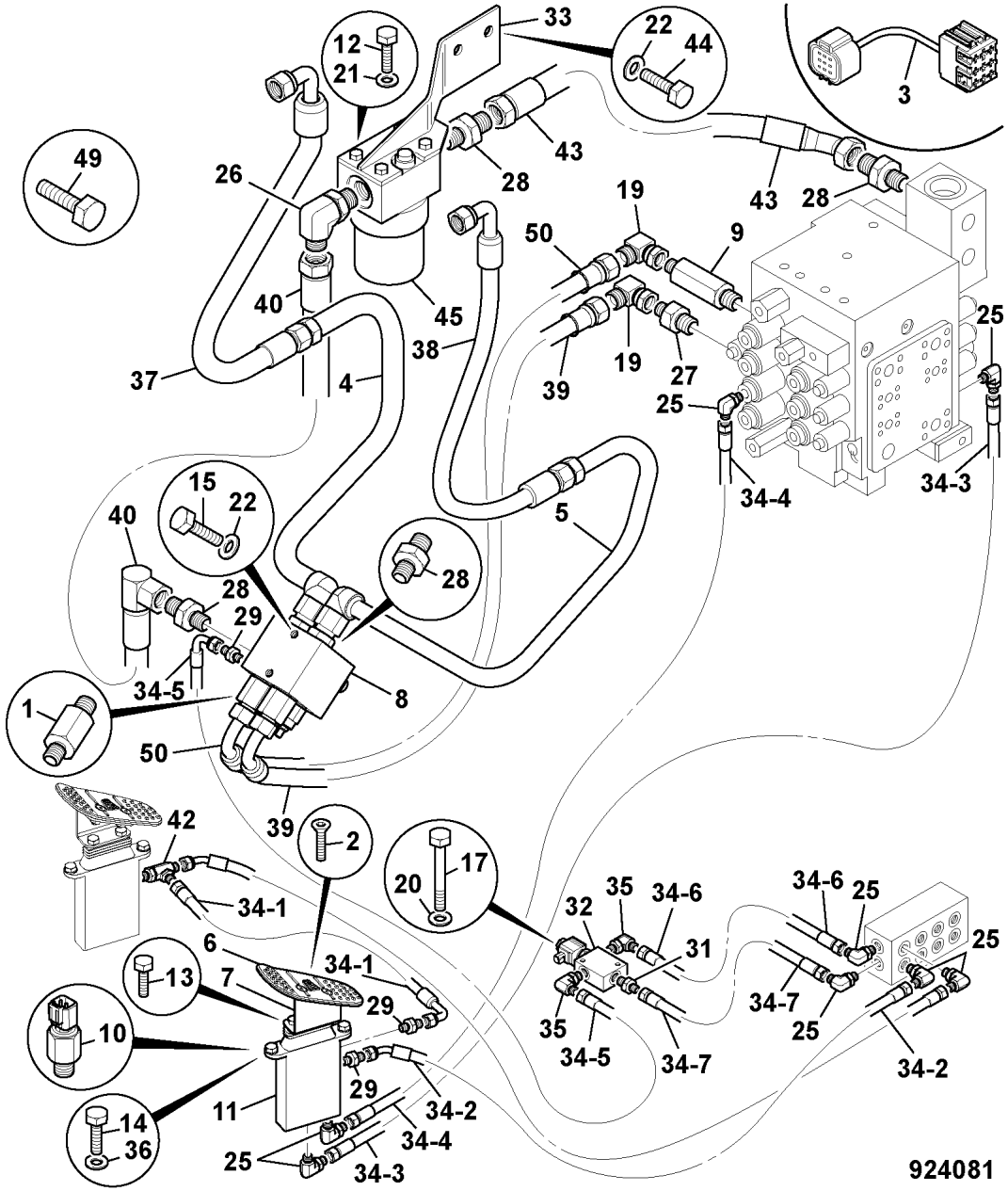

ITEM	PART NO	CHANGE NO	DESCRIPTION	REMARKS	USAGE CODE	QTY
49	1316/3510D		Bolt, BOLT			4
50	627/10339		Hose			1
51	1316/0507D		Screw, set pin			2
52	25/221161		Valve, relief			2
99	215/14767		G.A, MONO HAMMER/AUX HYDR, JS175W AUTO T3			1

	FROM	TO	FROM	TO
JS160W				



ITEM	PART NO	CHANGE NO	DESCRIPTION	REMARKS	USAGE CODE	QTY
1	KNJ0605		Adapter, straight			4
2	1316/0509D		Bolt, grade 12.9			2
3	1420/0009D		Washer, M12			8
4	1316/0301D		Screw			4
5	1420/0007D		Washer, M8 plain			4
6	KNJ0758		Adapter			4
7	KAJ2176		Adapter			1
8	1316/3519D		Bolt			1
9	1316/3518D		Bolt			1
10	1370/0401D		Nut, M12			2
11	701/80373		Switch, Slew pressure, 5bar 1/4" BSP			1
13	1316/3212D		Bolt			2
14	1316/0505D		Bolt, M12 x 20mm			4
15	25/221009		Valve, solenoid	See E3-9-1 for details		1
16	1420/0006D		Washer, M6 plain			2
17	KHJ0345		Adapter, elbow			1
18	25/222216		Valve, hammer auxiliary, changeover			1
19	816/90712		Adapter			2
20	KNJ0606		Adapter			5
21	KRV0548		Clamp			1
22	JRJ0349		Clamp, pipe			1



Our Apologies, No Illustration is Currently Available.

ITEM	PART NO	CHANGE NO	DESCRIPTION	REMARKS	USAGE CODE	QTY
23	JHJ0172		Adapter, tee			1
24	830/13187		Pipe, hammer auxiliary, JS175W AUTO			1
25	830/13189		Pipe, hammer auxiliary, JS175W AUTO			1
26	1316/0508D		Screw			2
27	335/13018		Plate, Mounting			1
28	1609/0002		Adapter			1
29	816/50031		Adapter, Tee			1
30	C4E7327		Adapter			1
31	KHJ0341		Adapter, elbow			6
32	1316/0403D		Screw			2
33	826/10811		Screw, c/sunk socket head, M8 x 30			2
34	589/10208		Pedal, left hand casting			1
35	331/38358		Bracket, pedal			1
36	1316/0407D		Screw			2
37	928/60339		Valve, hammer, auxiliary, foot operated			1
38	KHJ0869		Adapter, tee			1
39	816/30002		Adapter			1
40	JHJ0119		Adapter			1
41	JHJ0063		Adapter			1
42	32/925602		Filter, return	See E3-16-1 for details		1
43	KHJ1303		Adapter, swivel elbow			1
44	1420/0008D		Washer, M10			5
45	JLJ0235		Valve, control	See E3-24-01 for details		1



ITEM	PART NO	CHANGE NO	DESCRIPTION	REMARKS	USAGE CODE	QTY
46	1316/3419D		Bolt			3
47	JHP0204		Washer, back up			1
48	721/11632		Harness, hammer, auxiliary, JS130/160 AUTO			1
49 01	627/10407		Hose			2
49 03	KNA0363		Hose, nylon			1
49 04	KBJ2439		Hose, nylon			1
49 05	KNJ1849		Hose			1
49 06	KRJ3579		Hose, nylon			1
49 07	KTJ0807		Hose, nylon			1
49 08	627/10619		Hose, 1/4 ST-135 570, JS175W AUTO T3			1
49 09	627/10651		Hose			1
50	JNJ0599		Hose			1
51	JNJ0598		Hose			1
52	627/10535		Hose			1
53	627/10522		Hose			1
54	627/10539		Hose			1
55	627/10538		Hose			1
56	627/10536		Hose			1
57	627/10519		Hose			1
58	KHJ0640		Elbow			2
60	CNA0584		Adapter			1
61	KHJ0363		Plug			1

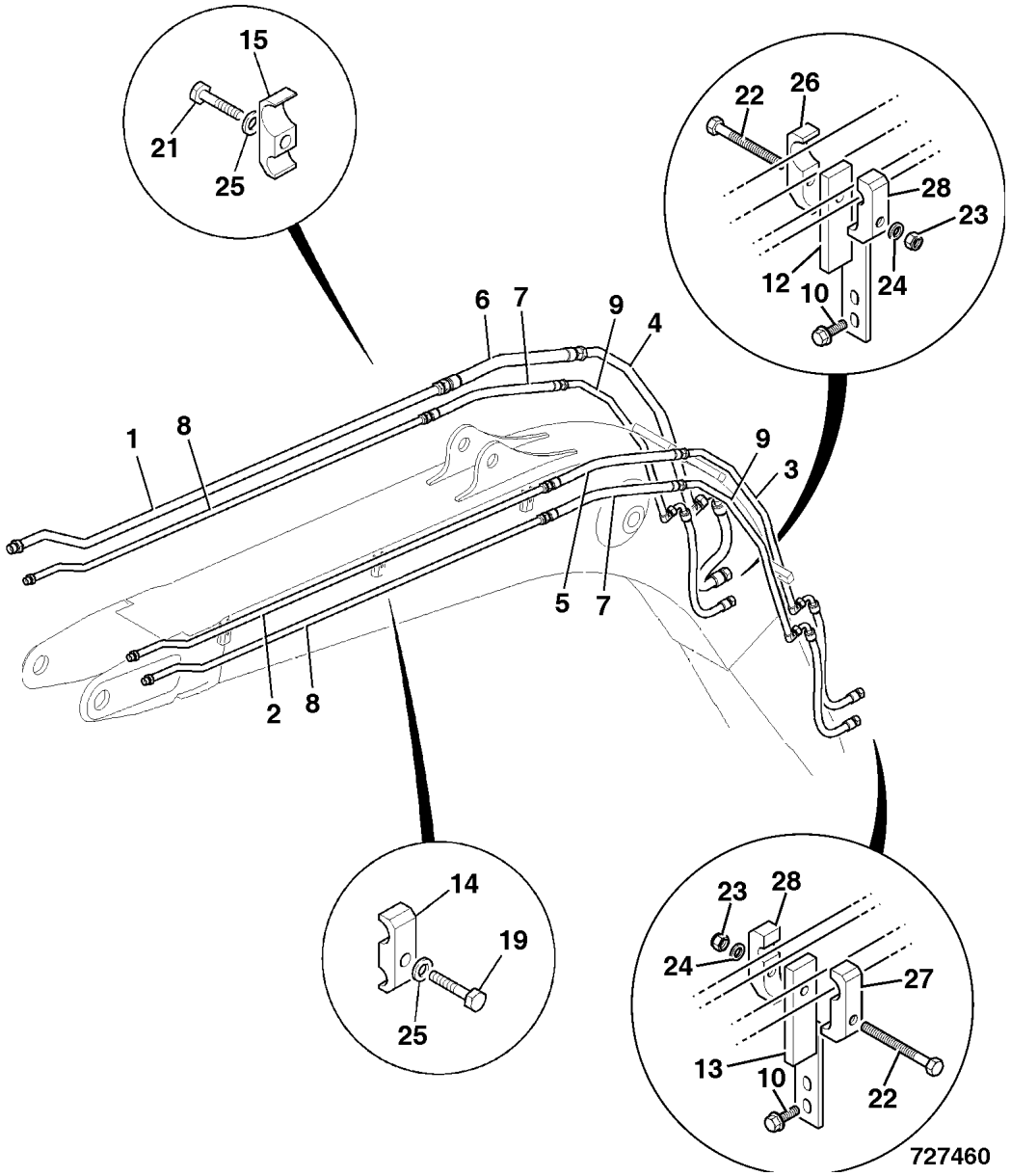

	FROM	TO	FROM	TO
JS160W				

ITEM	PART NO	CHANGE NO	DESCRIPTION	REMARKS	USAGE CODE	QTY
1	JLV1326		Pipe, assembly, hammer			1
2	JLV1327		Pipe, assembly, hammer			1
3	JLV1692		Pipe			1
4	JLV1693		Pipe			1
5	KNV0681		Hose, hydraulic			1
6	KRV1645		Hose, hydraulic			1
7	JBV0439		Hose			2
8	JLV1494		Pipe, upper boom			2
9	JLV1694		Pipe			2
10	1316/3510D		Bolt, BOLT			4
12	JNB0157		Bracket, pipes			1
13	335/07416		Bracket, pipe suport, right hand			1
14	JNV1468		Clamp, 1/2" x 3/4"			5
15	JNV1469		Clamp, 1/2" x 1"			5
19	1316/3514D		Bolt, M12 x 60			5
21	1316/3516D		Bolt, M12 x 70			5
22	1316/3520D		Bolt			1
	1316/3518D		Bolt			1
23	1371/0401D		Nut			2
25	823/00394		Washer, special			18
26	KRV0548		Clamp	3/4"		1
27	JRV0423		Clamp, 1/2" x 1"	1"		1

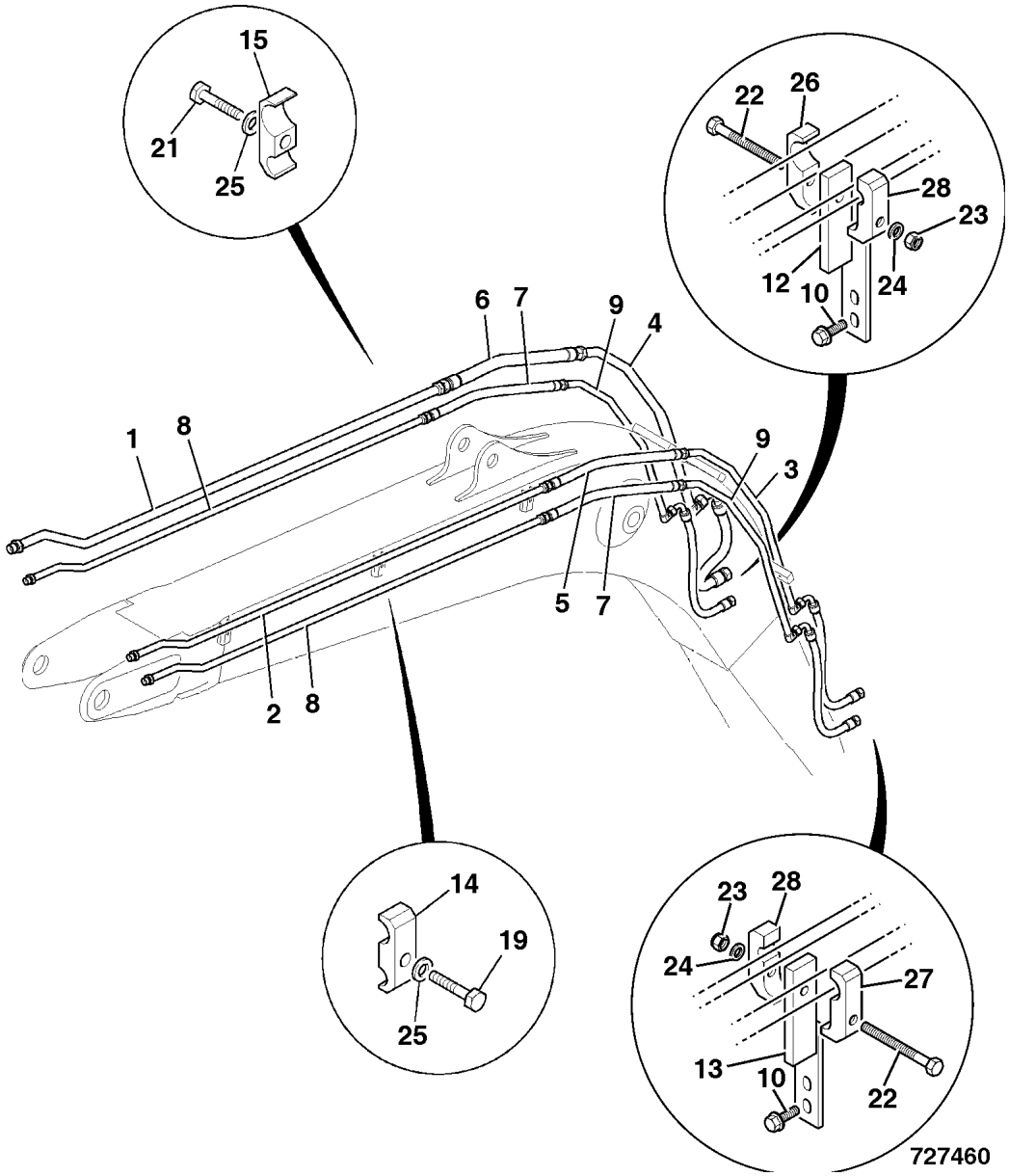

ITEM	PART NO	CHANGE NO	DESCRIPTION	REMARKS	USAGE CODE	QTY
28	JRV0422		Clamp, 1/2" x 3/4"	1/2"		1

	FROM	TO	FROM	TO
JS160W				



ITEM	PART NO	CHANGE NO	DESCRIPTION	REMARKS	USAGE CODE	QTY
1	JLV1559		Clamp, triple pipe			3
2	JLV1560		Clamp			3
3	JNV1468		Clamp, 1/2" x 3/4"			5
4	JNV1469		Clamp, 1/2" x 1"			6
5	1316/3514D		Bolt, M12 x 60			8
6	1316/3516D		Bolt, M12 x 70			2
7	1316/3518D		Bolt			2
8	1316/3522D		Bolt, BOLT M12 X 120			12
9	1420/0009D		Washer, M12			2
10	JLV1622		Pipe, hammer feed, TAB upper boom			1
11	JLV1623		Pipe, hammer return, TAB upper boom			1
12	JLV1386		Hose			1
13	JLV1395		Hose			1
14	JNV1423		Pipe, hammer feed, lower boom			1
15	JNV1422		Pipe, hammer return, lower boom			1
16	JNJ0517		Hose			1
17	JLV0538		Hose			1
18	JNV1524		Pipe, grab, lower boom			2
19	JLV1383		Hose			2
20	JLV1624		Pipe, low flow, left hand upper boom			1

ITEM	PART NO	CHANGE NO	DESCRIPTION	REMARKS	USAGE CODE	QTY
21	JLV1625		Pipe, low flow, righthand upper boom			1
22	JNV0519		Hose			2



Our Apologies, No Illustration is Currently Available.

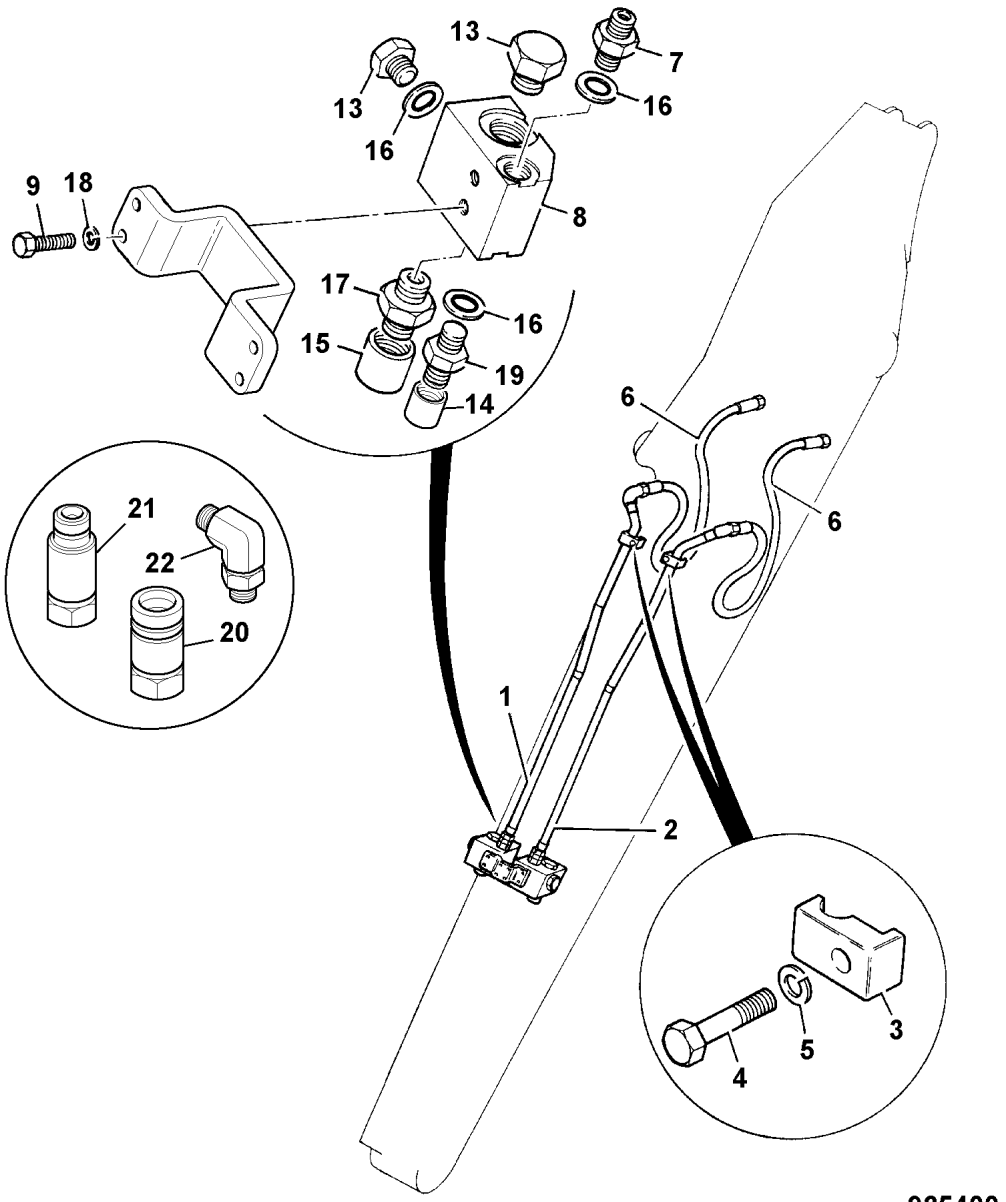

925400

	FROM	TO	FROM	TO
JS160W				

ITEM	PART NO	CHANGE NO	DESCRIPTION	REMARKS	USAGE CODE	QTY
1	JLV1735		Pipe, low flow, right hand			1
2	JLV1734		Pipe, low flow, left hand			1
3	JRJ0259		Clamp, pipe			2
4	1316/3512D		Bolt, M12X50			2
5	823/00394		Washer, special			2
6	JLV1742		Hose			2
7	1604/2053		Adapter			2
8	JRV0434		Manifold			2
9	1316/0410D		Bolt			4
13	G8/0		Plug			6
14	816/00196		Cap, blanking 3/4"BSP, steel			2
15	816/90274		Cap, blanking 3/4"BSP, female	See E1-34-1		2
16	1406/0018		Seal, bonded, 1/2" BSP			6
17	JLJ0054		Adapter, 3/4" x 3/4"			2
18	1425/0008Z		Washer, Spring M10			4
19	1604/2053		Adapter	1/2"BSP Adapter		2
20	45/910400		Coupling, 1/2" BSP female, quick release	Optional		2
21	45/910500		Coupling, 1/2" BSP male, quick release	Optional		2
22	KHJ0343		Adapter, elbow	Used with angling bucket kit.		2

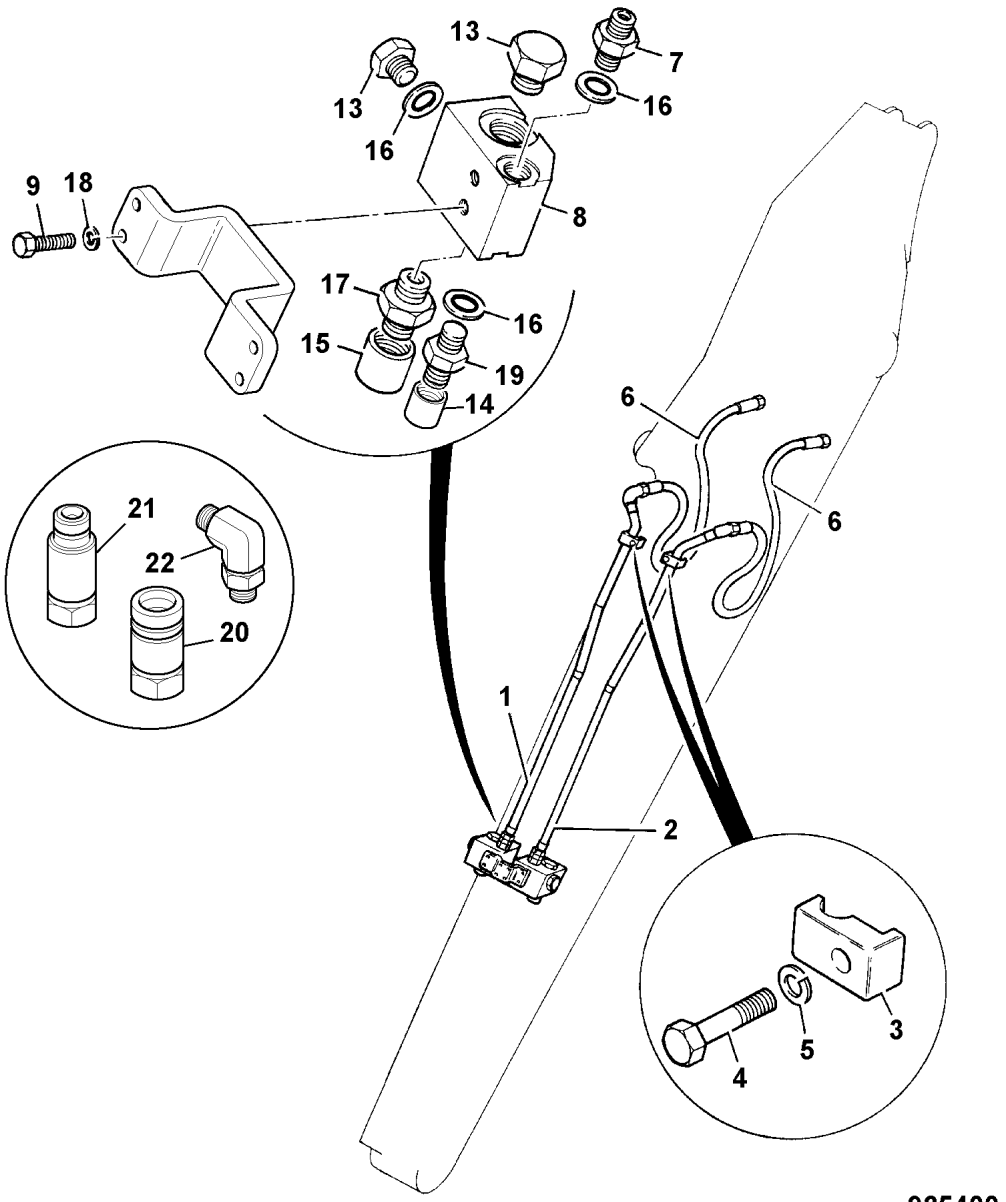

925400

	FROM	TO	FROM	TO
JS160W				

ITEM	PART NO	CHANGE NO	DESCRIPTION	REMARKS	USAGE CODE	QTY
1	JLV1737		Pipe, low flow, right hand			1
2	JLV1736		Pipe, low flow, left hand			1
3	JRJ0259		Clamp, pipe			2
4	1316/3512D		Bolt, M12X50			2
5	823/00394		Washer, special			2
6	JLV1743		Hose			2
7	1604/2053		Adapter			2
8	JRV0434		Manifold			2
9	1316/0410D		Bolt			4
13	G8/0		Plug			6
14	816/00196		Cap, blanking 3/4"BSP, steel			2
15	816/90274		Cap, blanking 3/4"BSP, female	See E1-34-1		2
16	1406/0018		Seal, bonded, 1/2" BSP			6
17	JLJ0054		Adapter, 3/4" x 3/4"			2
18	1425/0008Z		Washer, Spring M10			4
19	1604/2053		Adapter	1/2"BSP Adapter		2
20	45/910400		Coupling, 1/2" BSP female, quick release	Optional		2
21	45/910500		Coupling, 1/2" BSP male, quick release	Optional		2
22	KHJ0343		Adapter, elbow	Used with angling bucket kit.		2

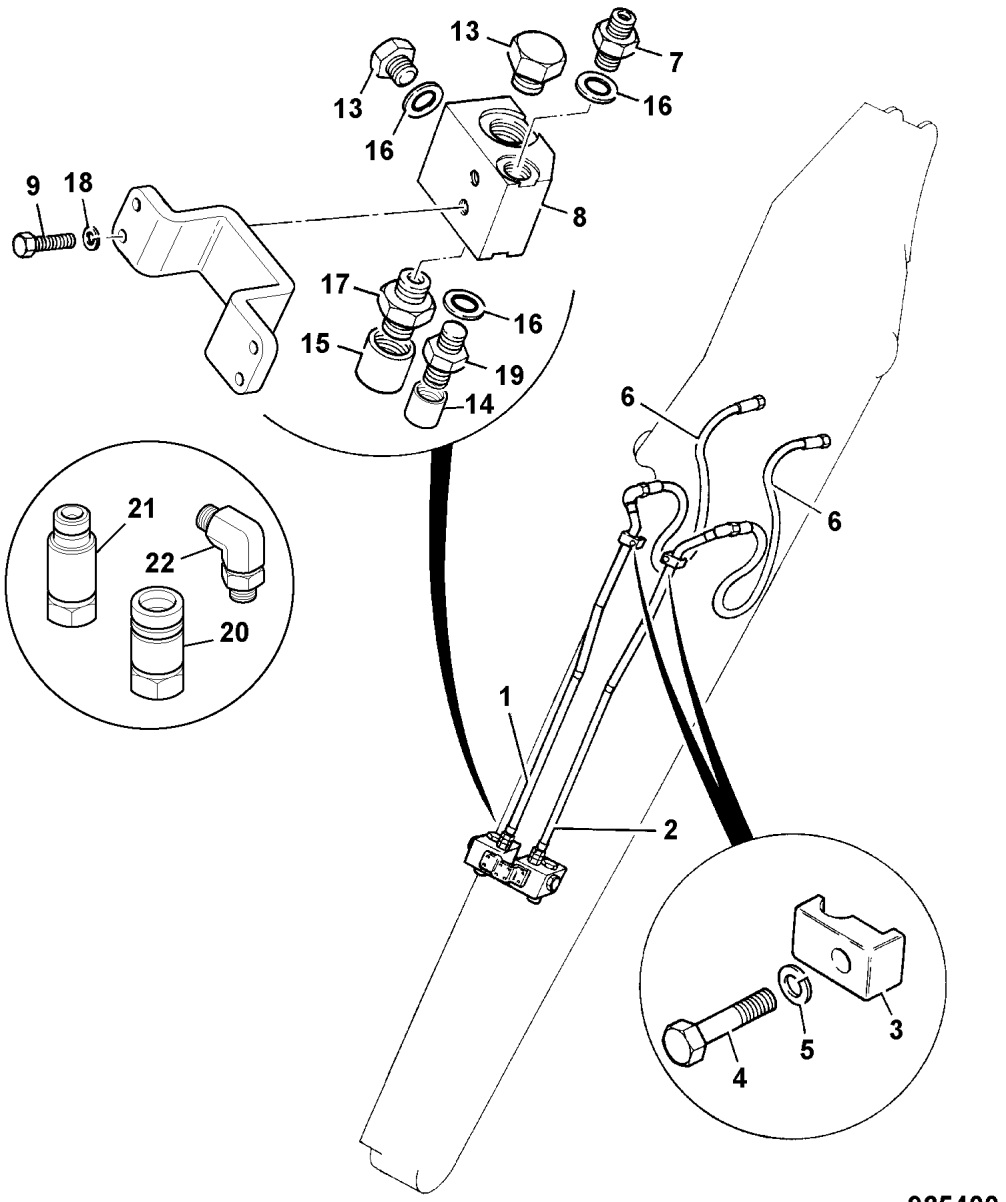

925400

	FROM	TO	FROM	TO
JS160W				

ITEM	PART NO	CHANGE NO	DESCRIPTION	REMARKS	USAGE CODE	QTY
1	JLV1739		Pipe, low flow, right hand			1
2	JLV1738		Pipe, low flow, left hand			1
3	JRJ0259		Clamp, pipe			2
4	1316/3512D		Bolt, M12X50			2
5	823/00394		Washer, special			2
6	JLV1177		Hose			2
7	1604/2053		Adapter			2
8	JRV0434		Manifold			2
9	1316/0410D		Bolt			4
13	G8/0		Plug			6
14	816/00196		Cap, blanking 3/4"BSP, steel			2
15	816/90274		Cap, blanking 3/4"BSP, female	See E1-34-1		2
16	1406/0018		Seal, bonded, 1/2" BSP			6
17	JLJ0054		Adapter, 3/4" x 3/4"			2
18	1425/0008Z		Washer, Spring M10			4
19	1604/2053		Adapter	1/2"BSP Adapter		2
20	45/910400		Coupling, 1/2" BSP female, quick release	Optional		2
21	45/910500		Coupling, 1/2" BSP male, quick release	Optional		2
22	KHJ0343		Adapter, elbow	Used with angling bucket kit.		2

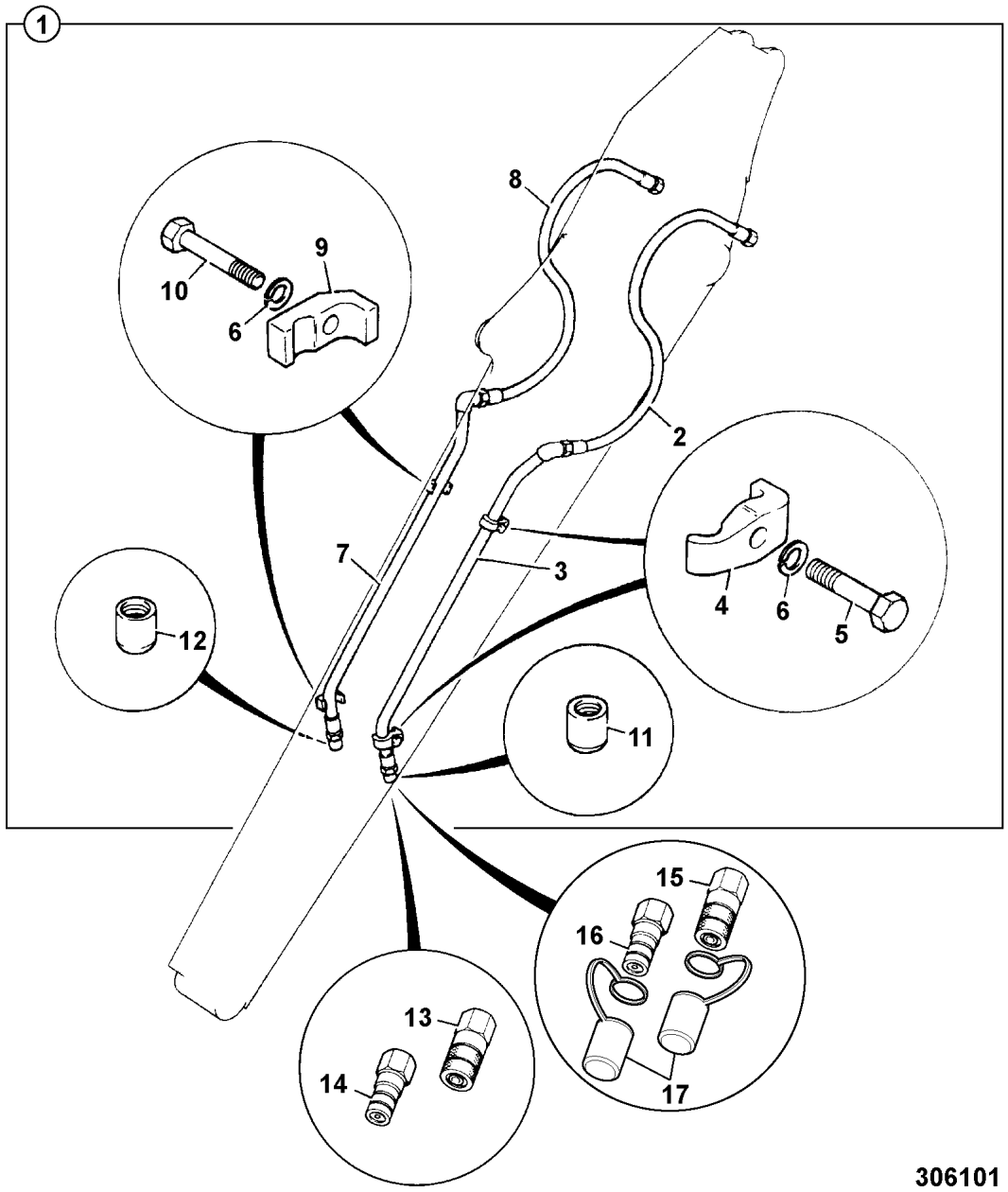

306101

	FROM	TO	FROM	TO
JS160W				

ITEM	PART NO	CHANGE NO	DESCRIPTION	REMARKS	USAGE CODE	QTY
1	980/89833		Kit, Dipper 2.25 LH			1
2	JLV0146		:Hose	Feed		1
3	JNV1506		:Pipe, hammer feed			1
4	KRV0548		:Clamp			2
5	1316/3513D		:Bolt			2
6	823/00394		:Washer, special			4
7	JNV1507		:Pipe, hammer return			1
8	JNV0254		:Hose	Return		1
9	JRJ0349		:Clamp, pipe			2
10	1316/3515D		:Bolt			2
11	816/90274		:Cap, blanking 3/4"BSP, female			1
12	816/90205		:Cap, blanking 1" BSP, female			1
13	JLV0535		Coupling, female, 1" BSP			1
14	45/909900		Coupling, 1" BSP male			1
15	JLV0531		Coupling, female, 3/4" BSP			1
16	45/909800		Coupling, 3/4"BSP male			1
17	835/10066		Cap, male thread cover	Protects threads of part 45/909900		1
	6900/0070		Cap, female thread cover	Protects threads of part JLV0535		1

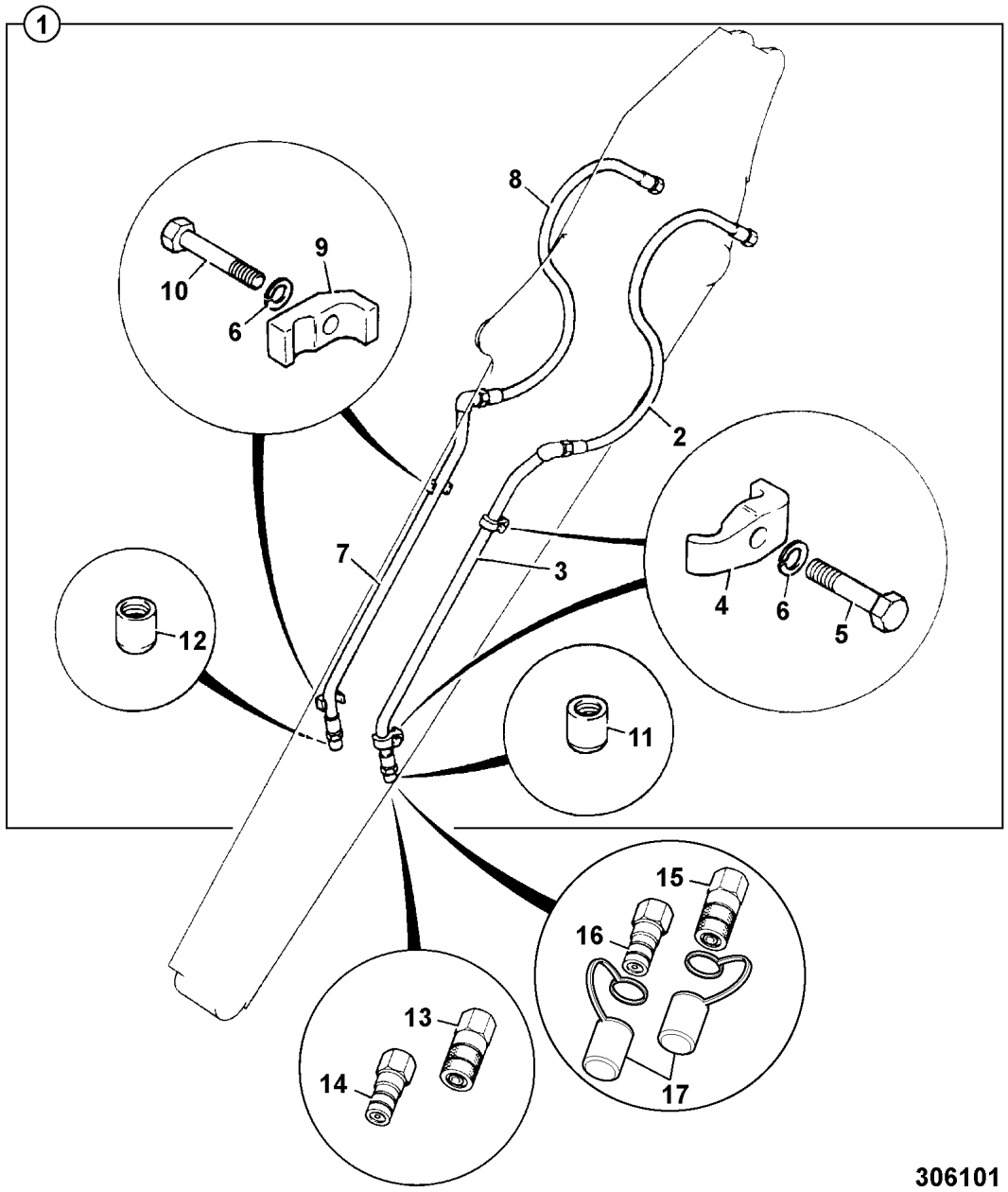

306101

	FROM	TO	FROM	TO
JS160W				

ITEM	PART NO	CHANGE NO	DESCRIPTION	REMARKS	USAGE CODE	QTY
1	980/89834		Kit, Dipper 2.7 LH Feed			1
2	JLV1355		:Hose, hydraulic	Feed		1
3	JNV1489		:Pipe, hammer feed	Feed		1
4	KRV0548		:Clamp			2
5	1316/3513D		:Bolt			2
6	823/00394		:Washer, special			4
7	JNV1490		:Pipe, hammer return	Return		1
8	KSV0662		:Hose, hydraulic	Return		1
9	JRJ0349		:Clamp, pipe			2
10	1316/3515D		:Bolt			2
11	816/90274		:Cap, blanking 3/4"BSP, female			1
12	816/90205		:Cap, blanking 1" BSP, female			1
13	JLV0535		Coupling, female, 1" BSP			1
14	45/909900		Coupling, 1" BSP male			1
15	JLV0531		Coupling, female, 3/4" BSP			1
16	45/909800		Coupling, 3/4"BSP male			1
17	835/10066		Cap, male thread cover	Protects threads of part 45/909900		1
	6900/0070		Cap, female thread cover	Protects threads of part JLV0535		1

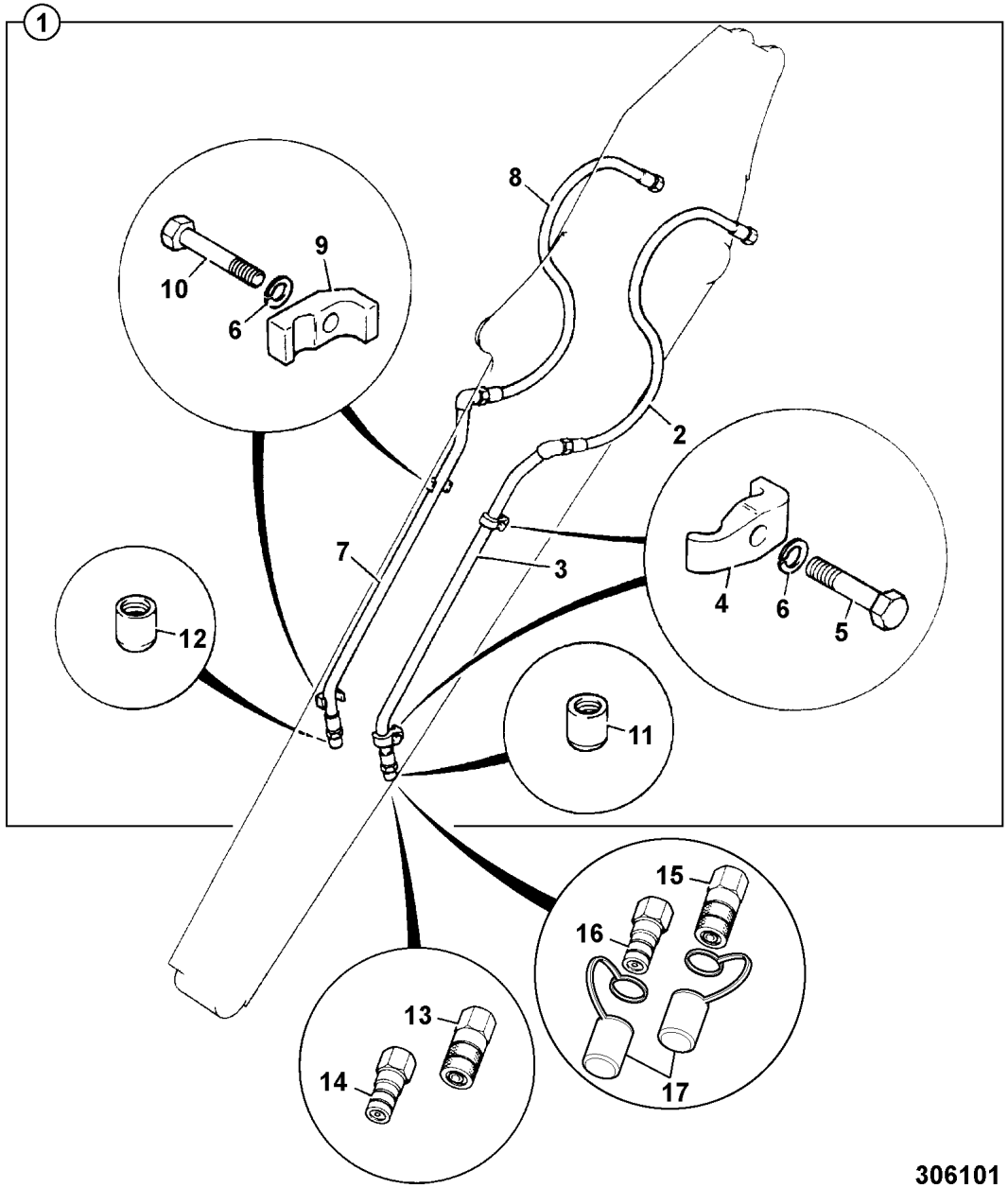

306101

	FROM	TO	FROM	TO
JS160W				

ITEM	PART NO	CHANGE NO	DESCRIPTION	REMARKS	USAGE CODE	QTY
1	980/89835		Kit, Dipper 3.05 LH Feed			1
2	627/10647		:Hose	Feed		1
3	JNV1489		:Pipe, hammer feed	Feed		1
4	KRV0548		:Clamp			2
5	1316/3513D		:Bolt			2
6	823/00394		:Washer, special			4
7	JNV1490		:Pipe, hammer return	Return		1
8	JNV1166		:Hose, hydraulic, L=1740	Return		1
9	JRJ0349		:Clamp, pipe			2
10	1316/3515D		:Bolt			2
11	816/90274		:Cap, blanking 3/4"BSP, female			1
12	816/90205		:Cap, blanking 1" BSP, female			1
13	JLV0535		Coupling, female, 1" BSP			1
14	45/909900		Coupling, 1" BSP male			1
15	JLV0531		Coupling, female, 3/4" BSP			1
16	45/909800		Coupling, 3/4"BSP male			1
17	835/10066		Cap, male thread cover	Protects threads of part 45/909900		1
	6900/0070		Cap, female thread cover	Protects threads of part JLV0535		1

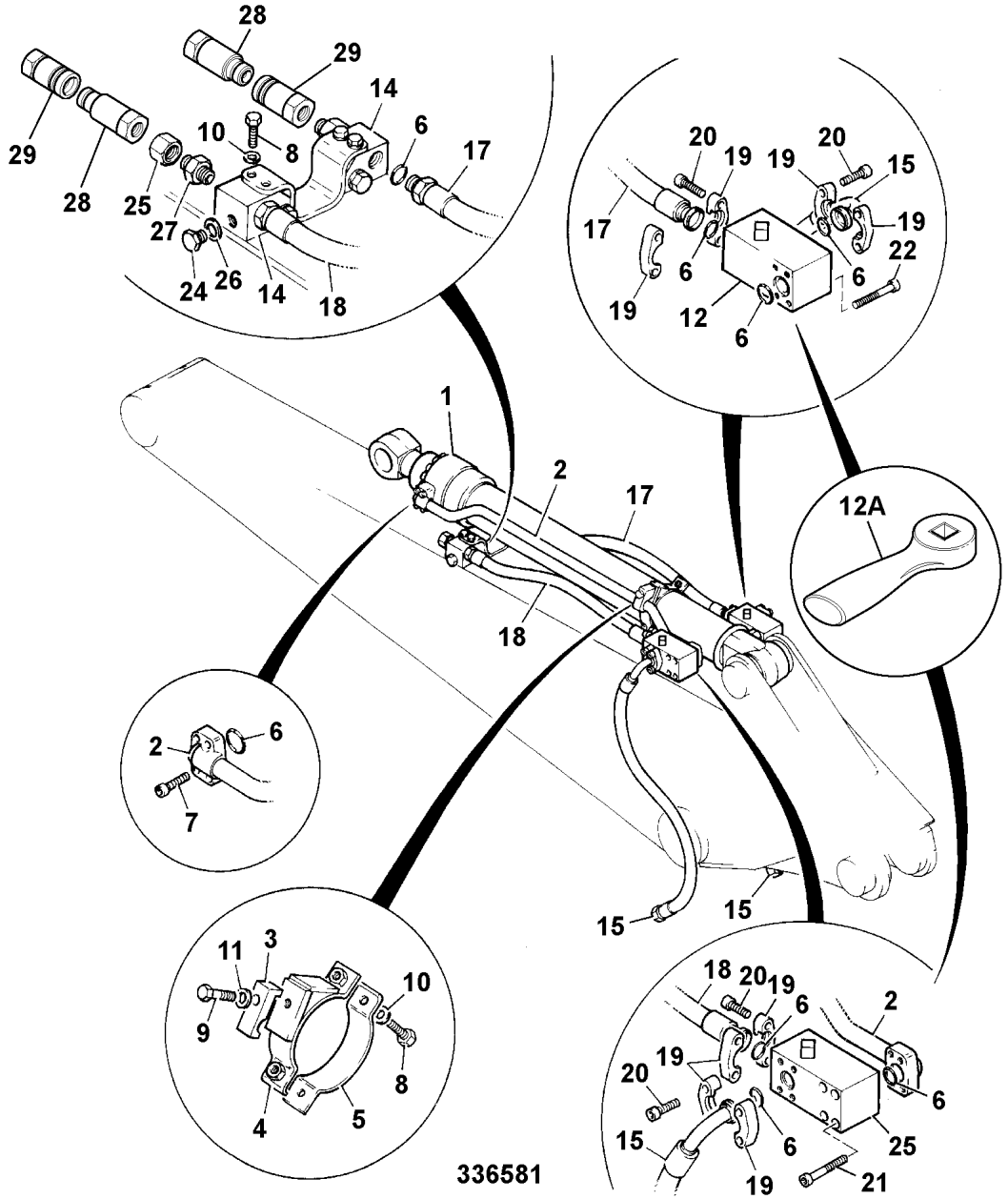

	FROM	TO	FROM	TO
JS160W				

ITEM	PART NO	CHANGE NO	DESCRIPTION	REMARKS	USAGE CODE	QTY
1	331/42330		Ram, bucket, JS160 AUTO			1
2	JLV1325		Pipe, feed, bucket cylinder			1
3	KRV0548		Clamp			1
4	JLV1304		Clamp, assembly			1
5	JLV1305		Clamp			1
6	2407/0205		O Ring			8
7	1391/3409D		Capscrew, M10x35			4
8	1316/3410D		Bolt			5
9	1316/3512D		Bolt, M12X50			1
10	1425/0008D		Washer, spring, M10			5
11	1425/0009D		Washer, M12 spring			1
12	928/60371		Valve, CHANGE OVER, INTEGRATED CHECK VAL	Rod End Only		1
12A	332/C7781		:Key			1
12B	332/C8616		:Kit-Seal			1
14	JRV0434		Manifold			2
15	JNV1416		Hose, 3/4" x 1400	For 2.25M and 2. 7M arm.		2
	JLV1399		Hose, hydraulic	For 3.05M arm.		2
17	JLV1740		Hose, hydraulic			1
18	JNV1554		Hose, hydraulic			1
19	KRJ0963		Flange, split			8
20	1391/3410D		Capscrew, M10 x 40			16

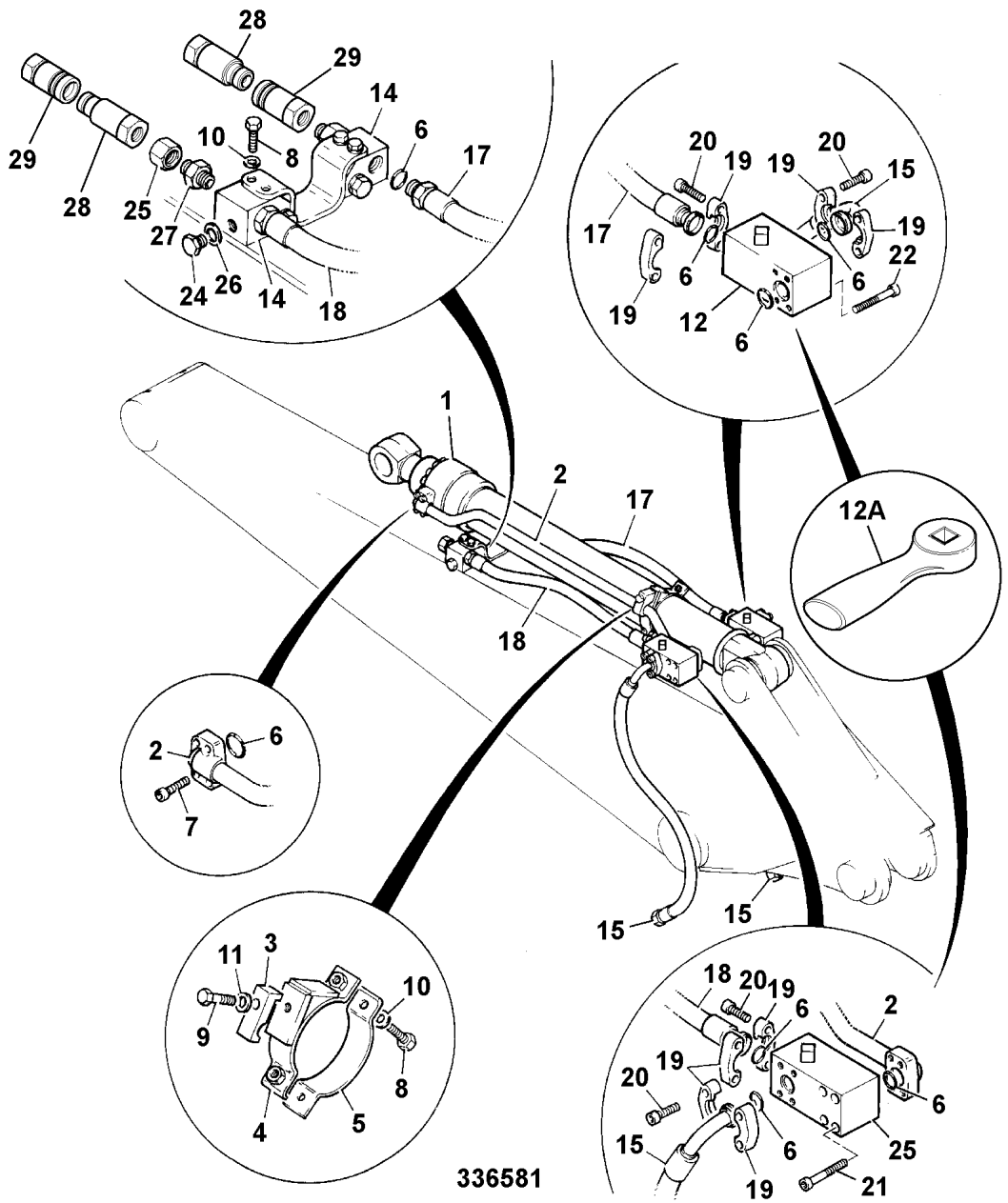

ITEM	PART NO	CHANGE NO	DESCRIPTION	REMARKS	USAGE CODE	QTY
21	1391/3418D		Capscrew, socket head			4
22	1391/3419Z		Capscrew			4
24	G8/0		Plug			6
25	816/90274		Cap, blanking 3/4"BSP, female	Standard		2
26	1406/0018		Seal, bonded, 1/2" BSP			6
27	JLJ0054		Adapter, 3/4" x 3/4"			2
28	928/60372		Valve, CHANGE OVER, WITH INTEGRATED CHEC			1
28B	332/C8613		:Kit-seal			1
29	45/908400		Coupling, 3/4 BSP, female, quick release type A	Optional		2
30	45/910300		Coupling, 3/4" BSP male, quick release			2

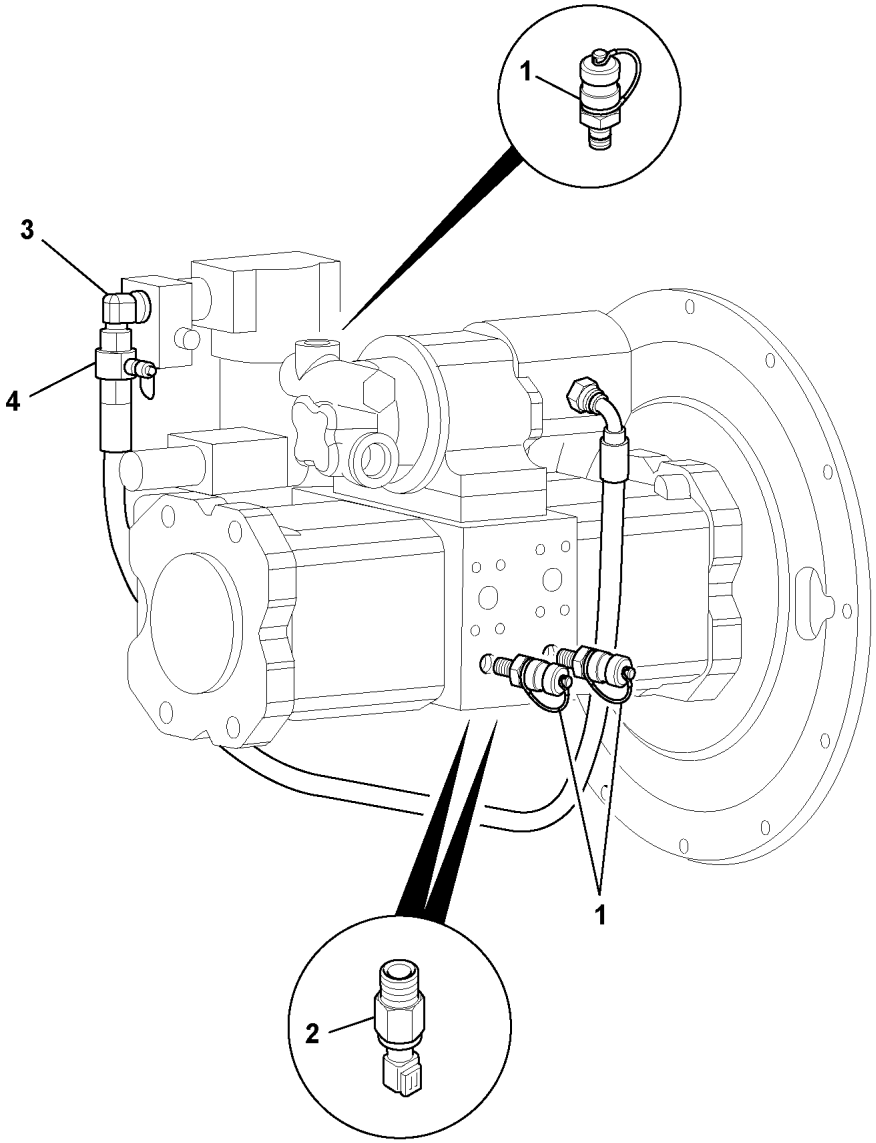

912260

	FROM	TO	FROM	TO
JS160W				

ITEM	PART NO	CHANGE NO	DESCRIPTION	REMARKS	USAGE CODE	QTY
1	JTJ0028		Connector, pressure test			3
2	701/80462		Switch, pressure, 298bar 1/4" BSP			2
3	KHJ0342		Adapter, elbow			1
4	816/55038		Adapter, tee, pressure test			1

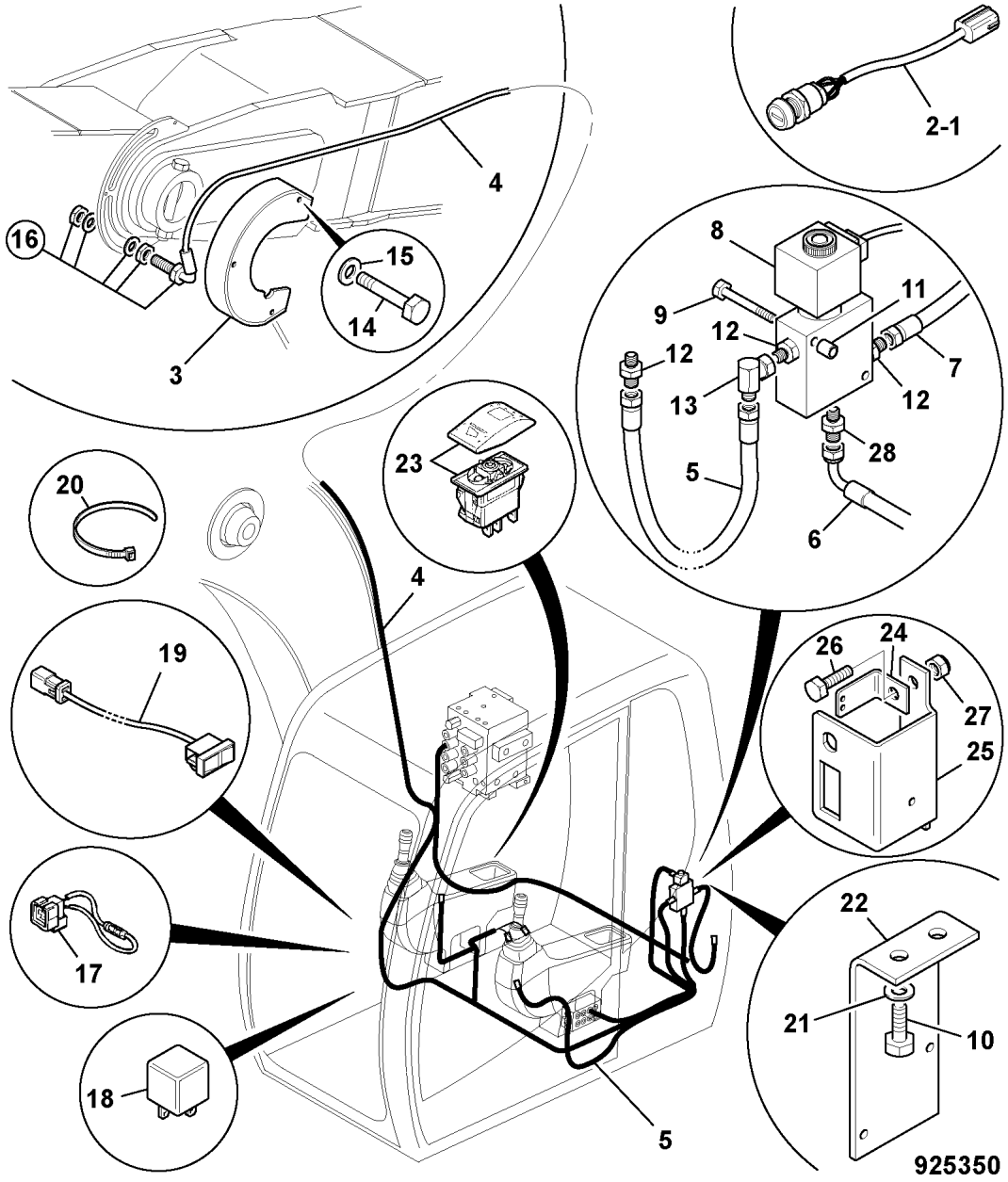

	FROM	TO	FROM	TO
JS160W				

ITEM	PART NO	CHANGE NO	DESCRIPTION	REMARKS	USAGE CODE	QTY
1	331/43741		Bracket, sensor position	Welded to boom 335/07571		1
2	721/11790		Harness, cab, arm limiter			1
2 01	721/11852		:Switch, & harness assembly			1
3	335/07569		Cover, sensor, JS Arm limiter			1
4	721/11758		Harness, arm limiter, JS160			1
5	627/10380		Hose			1
6	KNJ1864		Hose, nylon, (L=900)			1
7	KNJ1109		Hose, nylon, light green			1
8	25/221009		Valve, solenoid			1
9	1316/3212D		Bolt			2
10	1316/0303D		Screw			4
11	829/31047		Spacer			2
12	KNJ0759		Adapter			3
13	KHJ0342		Adapter, elbow			1
14	1315/3313D		Bolt			3
15	1420/0007D		Washer, M8 plain			7
16	701/80608		Switch, proximity, lift arm reset			1
17	716/10700		Plug, single diode, 2 way			1
18	JHR0174		Relay, 24 volt			1

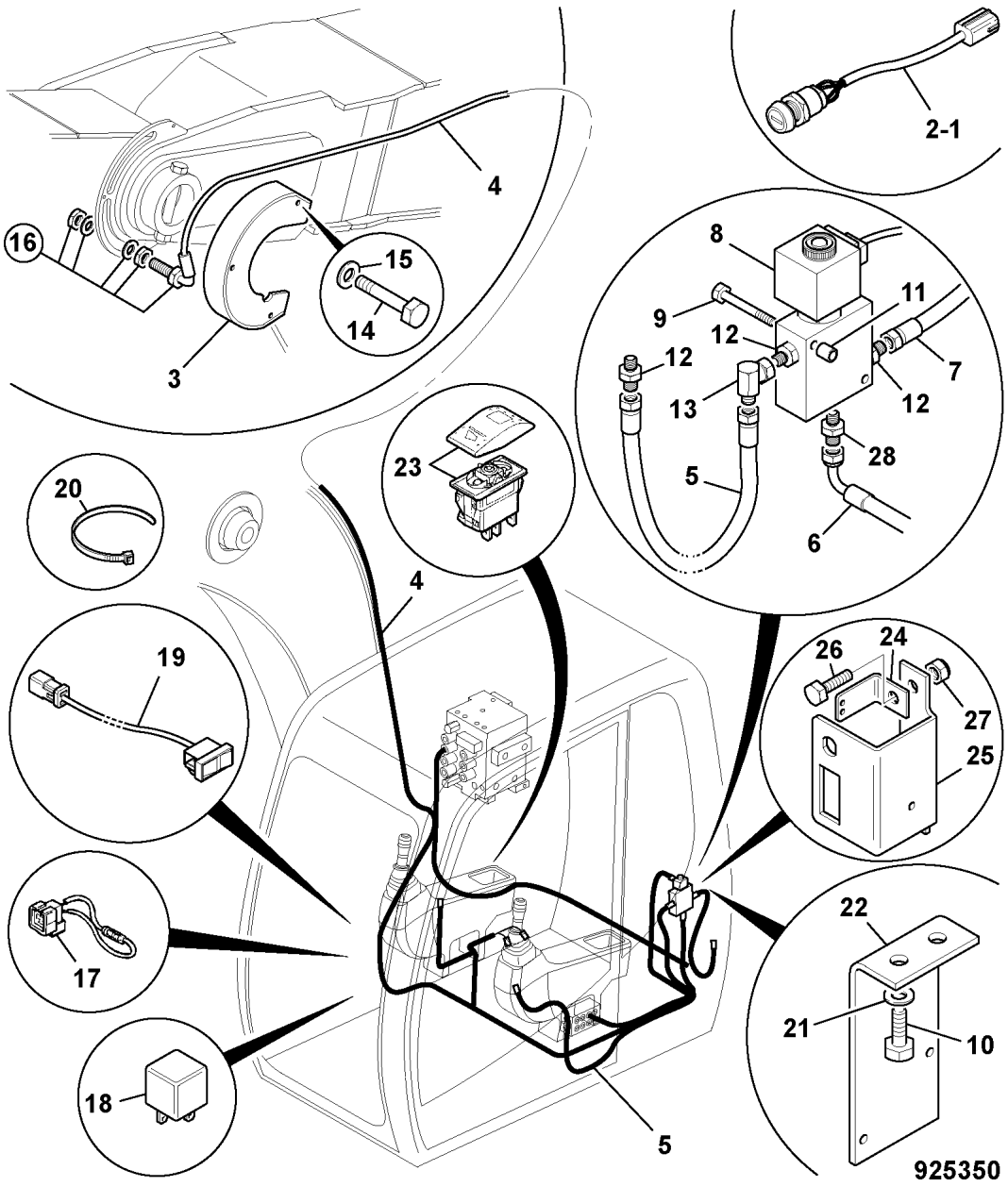

ITEM	PART NO	CHANGE NO	DESCRIPTION	REMARKS	USAGE CODE	QTY
19	701/80493		Switch, rocker 24V, c/w lock			1
20	826/01144		Tie, cable, 200mm long			10
21	1420/0006D		Washer, M6 plain			2
22	331/45936		Bracket, solenoid valve			1
23	701/80306		Switch, parkbrake, locking, 24V			1
24	335/09421		Bracket, relay			1
25	331/47204		Bracket, ISO & Arm limit			1
26	826/11010		Screw, socket button head, M5 x 12			1
27	1370/0001D		Nut, plain M5			1
28	KNJ0759		Adapter			3

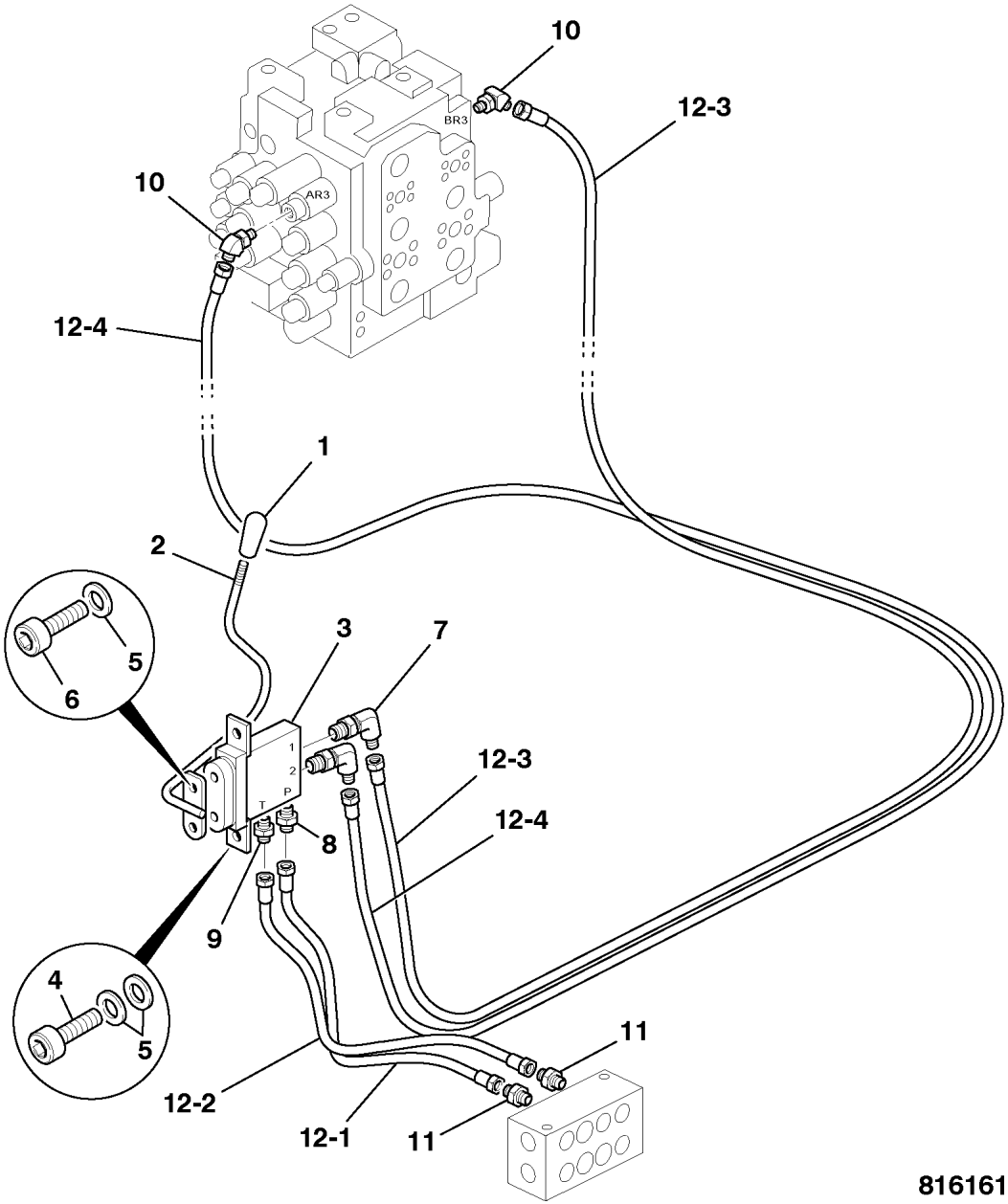

816161

	FROM	TO	FROM	TO
JS160W				

ITEM	PART NO	CHANGE NO	DESCRIPTION	REMARKS	USAGE CODE	QTY
1	331/35326		Knob			1
2	335/06965		Lever, dozer			1
3	928/60251		Valve, dozer			1
4	1391/3305D		Capscrew			2
5	1420/0007D		Washer, M8 plain			5
6	1391/3303D		Capscrew			2
7	816/90618		Adapter, elbow			2
8	816/13133		Adapter, c/w filter			1
9	1620/2051		Adapter, 1/4"BSP x 9/16"SAE			1
10	KHJ0348		Adapter, elbow			2
11	KAJ2176		Adapter			2
12 01	KTJ0906		Hose, nylon			1
12 02	KTJ0906		Hose, nylon			1
12 03	KTJ0678		Hose			1
12 04	KTJ0682		Hose, nylon			1

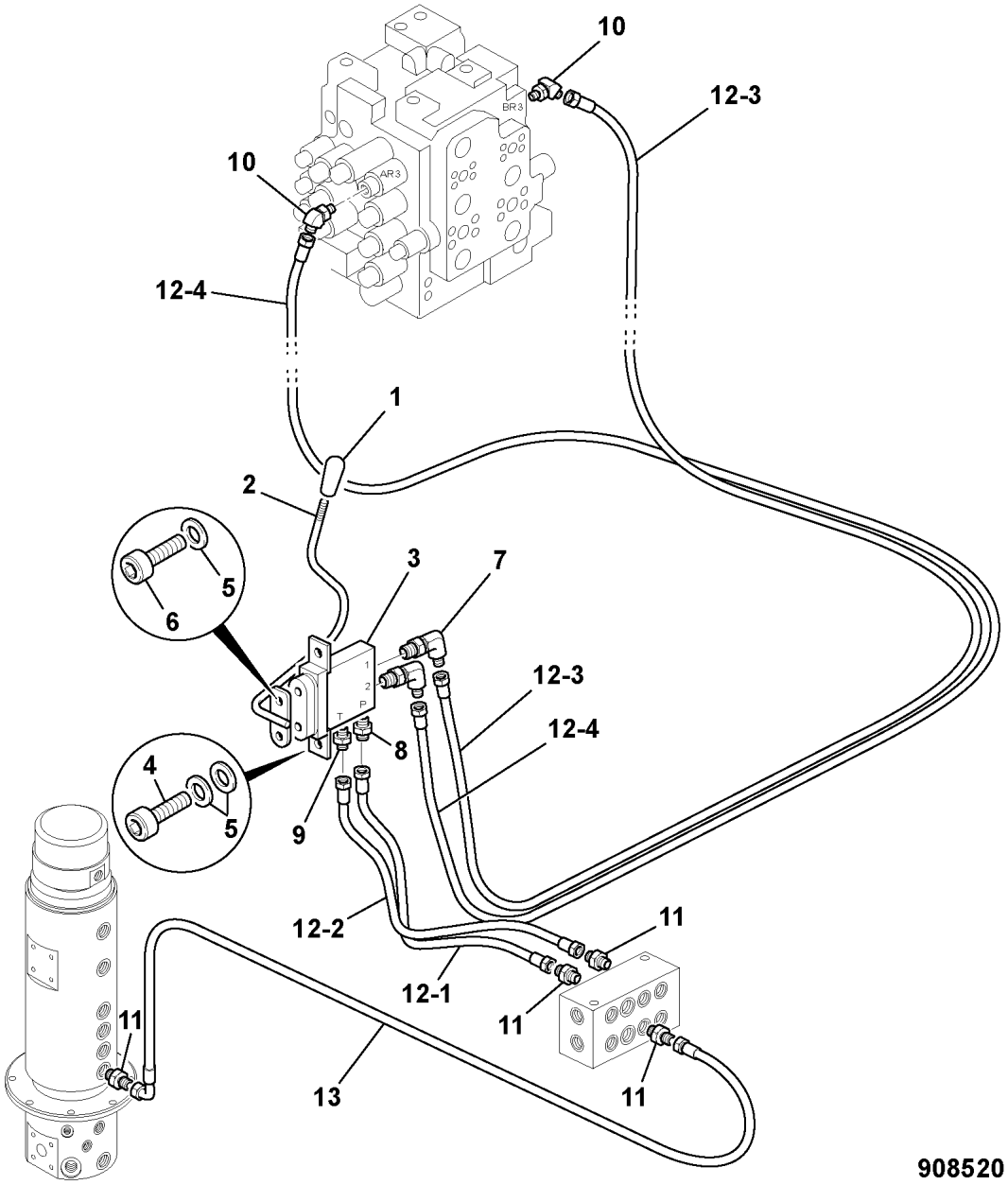

908520

	FROM	TO	FROM	TO
JS160W				

ITEM	PART NO	CHANGE NO	DESCRIPTION	REMARKS	USAGE CODE	QTY
1	331/35326		Knob			1
2	335/06965		Lever, dozer			1
3	928/60251		Valve, dozer			1
4	1391/3305D		Capscrew			2
5	1420/0007D		Washer, M8 plain			5
6	1391/3303D		Capscrew			2
7	816/90618		Adapter, elbow			2
8	816/13133		Adapter, c/w filter			1
9	1620/2051		Adapter, 1/4"BSP x 9/16"SAE			1
10	KHJ0348		Adapter, elbow			2
11	KAJ2176		Adapter			4
12 01	KTJ0906		Hose, nylon			1
12 02	KTJ0906		Hose, nylon			1
12 03	KTJ0678		Hose			1
12 04	KTJ0682		Hose, nylon			1
13	JNJ0395		Hose, 1/4" x 1500, white/violet			1
99	340/00366		G.A, HOSE KIT - DOZER CON			1

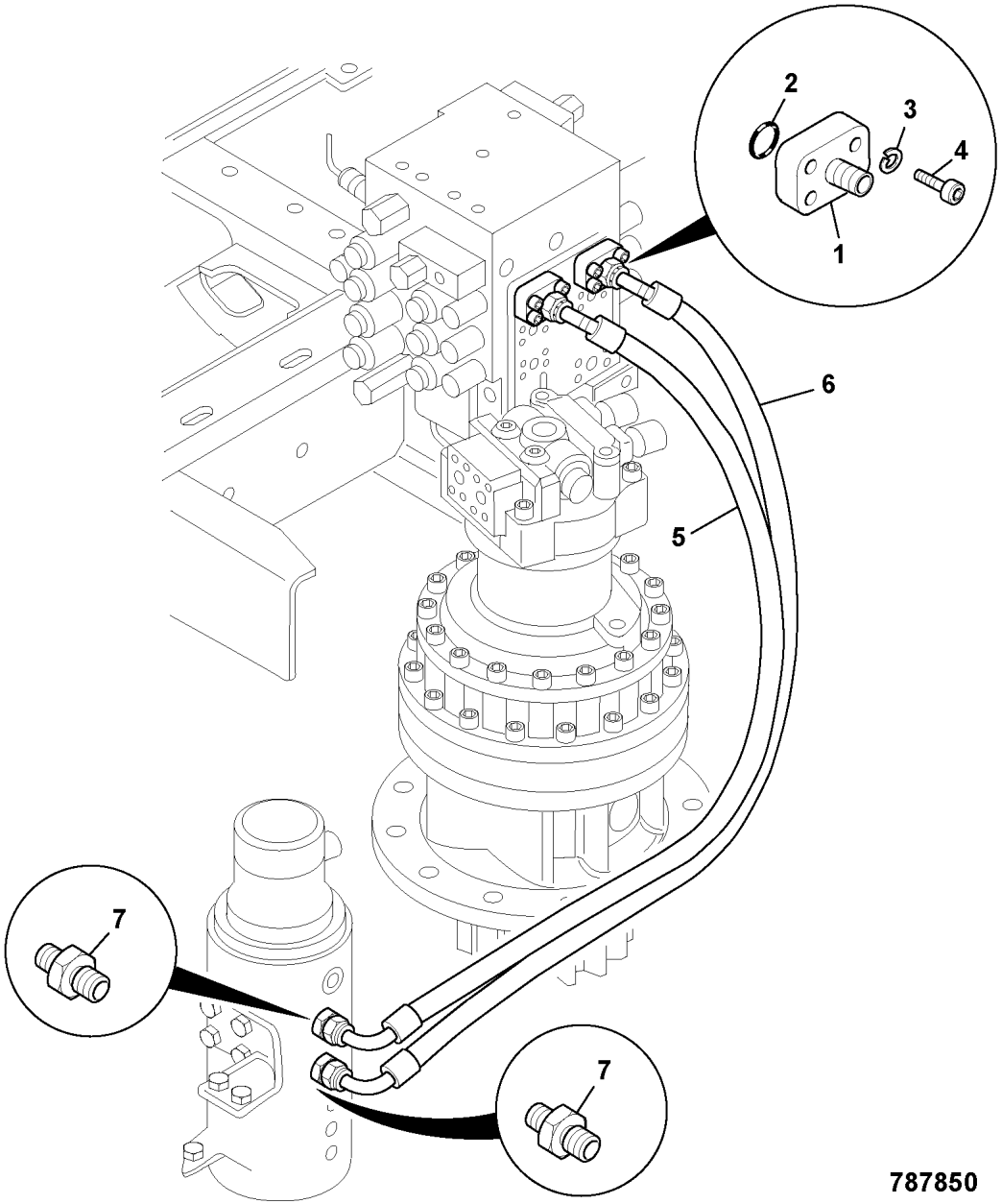

787850

	FROM	TO	FROM	TO
JS160W				

ITEM	PART NO	CHANGE NO	DESCRIPTION	REMARKS	USAGE CODE	QTY
1	JHJ0117		Flange, 3/4 SAE, 1/2 BSP			2
2	2400/0205		O Ring			2
3	1425/0008D		Washer, spring, M10			8
4	1391/3508D		Capscrew, M12 x 30			8
5	627/10494		Hose			1
6	627/10495		Hose			1
7	ANV0071		Adapter			1

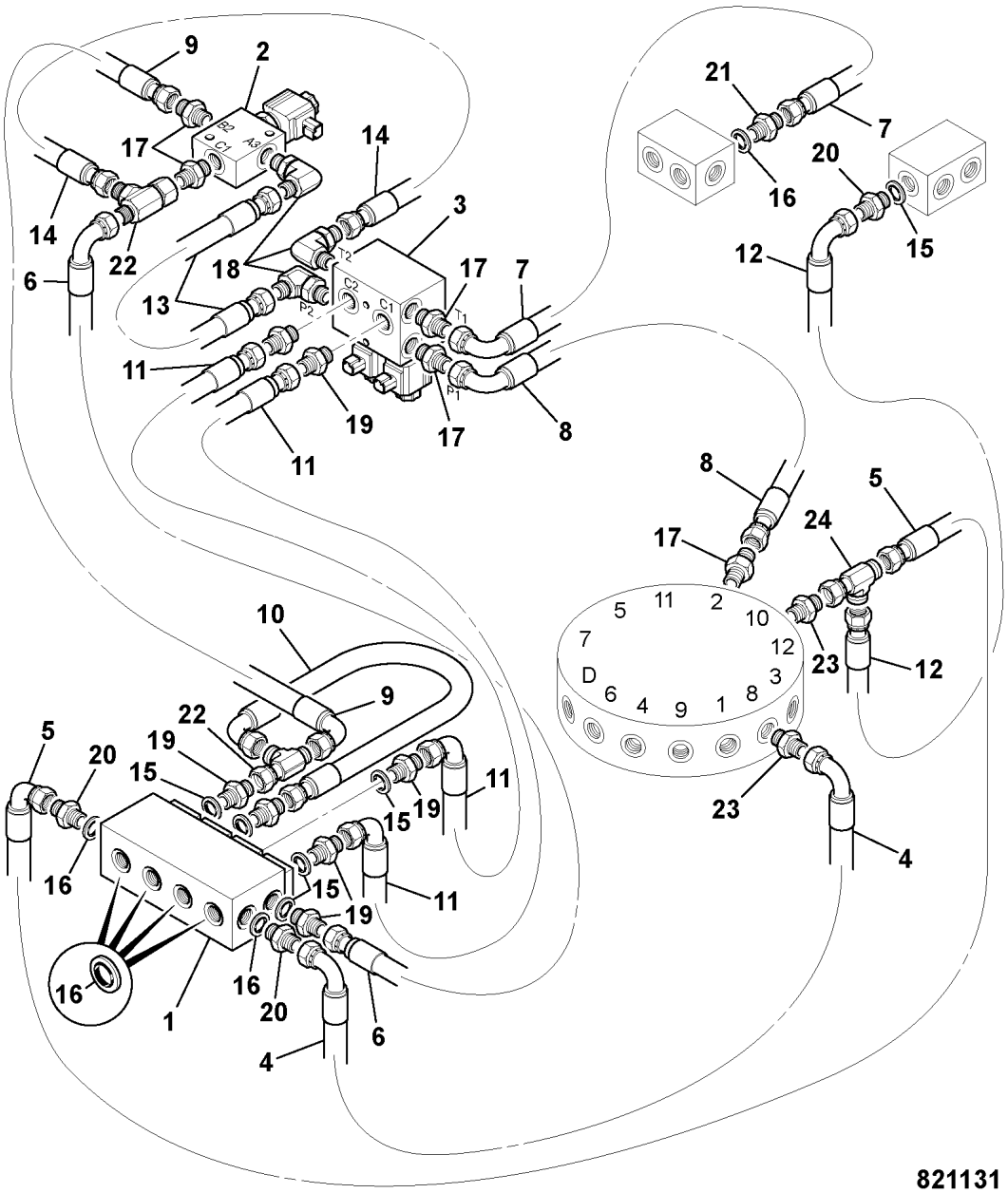

	FROM	TO	FROM	TO
JS160W				

ITEM	PART NO	CHANGE NO	DESCRIPTION	REMARKS	USAGE CODE	QTY
1	JLJ0386		Valve, logic			1
2	25/221009		Valve, solenoid			1
3	25/222709		Valve, dual solenoid			1
4	* JLV1871		Hose			1
5	* JLV1868		Hose			1
6	* JLV0594		Hose			1
7	* JNJ0393		Hose, 1/4" x 1425, violet			1
8	JLV1446		Hose			1
9	* KNJ1697		Hose			1
10	JLV1574		Hose			1
11	KBJ2438		Hose			2
12	627/10022		Hose			1
13	KTJ0670		Hose, nylon			1
14	KSJ2406		Hose, 1/4x1/4x450			1
15	1406/0011		Seal, bonded			5
16	1406/0018		Seal, bonded, 1/2" BSP			8
17	* KAJ2176		Adapter			5
18	KHJ0640		Elbow			3
19	1604/0002		Adapter, 1/4" BSP M/M			7
20	1604/0004		Adapter, male/male			3
21	1606/0004		Adapter			1
22	816/50031		Adapter, Tee			2
23	* JLJ0055		Adapter			2

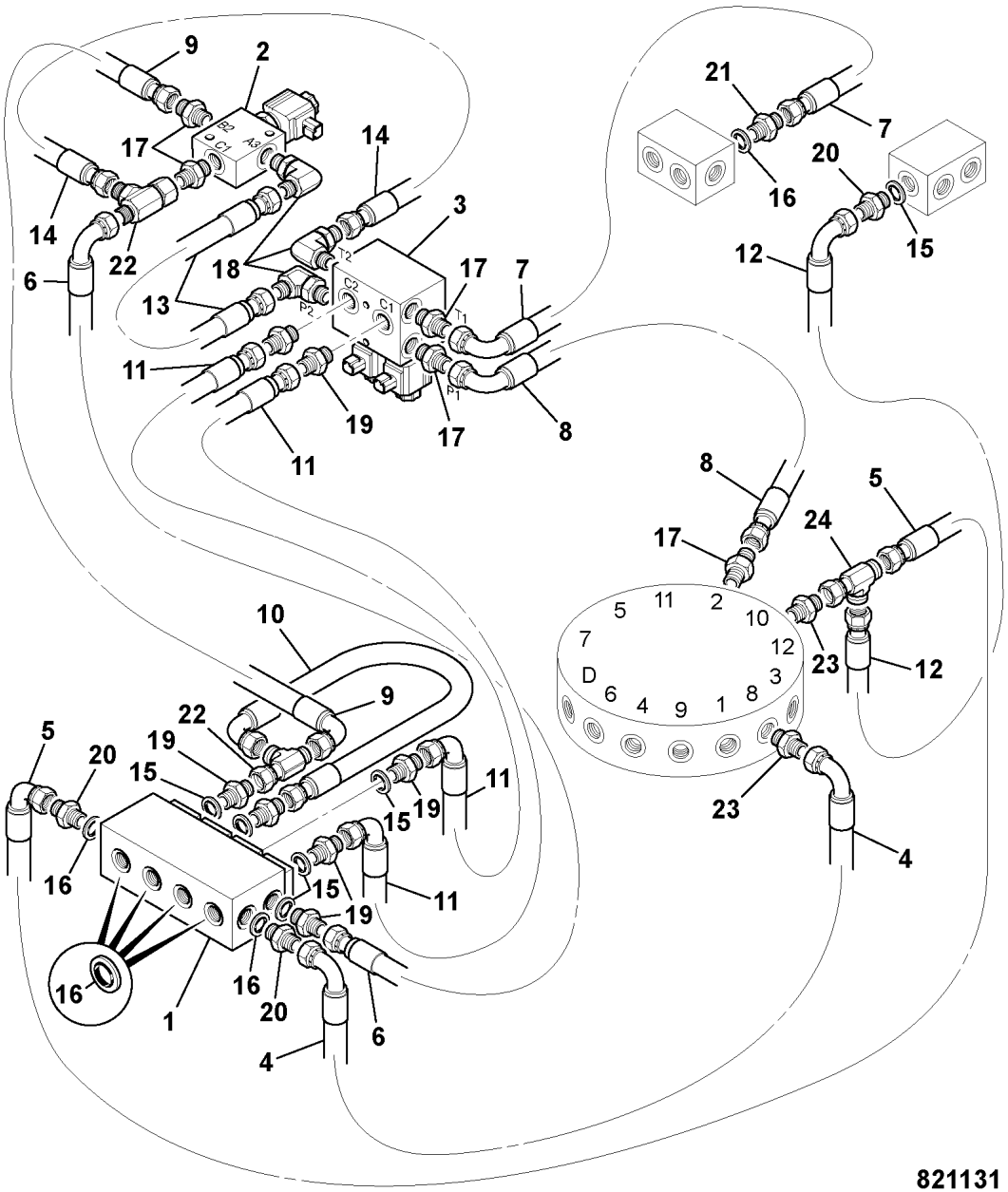

821131

ITEM	PART NO	CHANGE NO	DESCRIPTION	REMARKS	USAGE CODE	QTY
24	816/90270		Adapter, tee, M/F/M			1

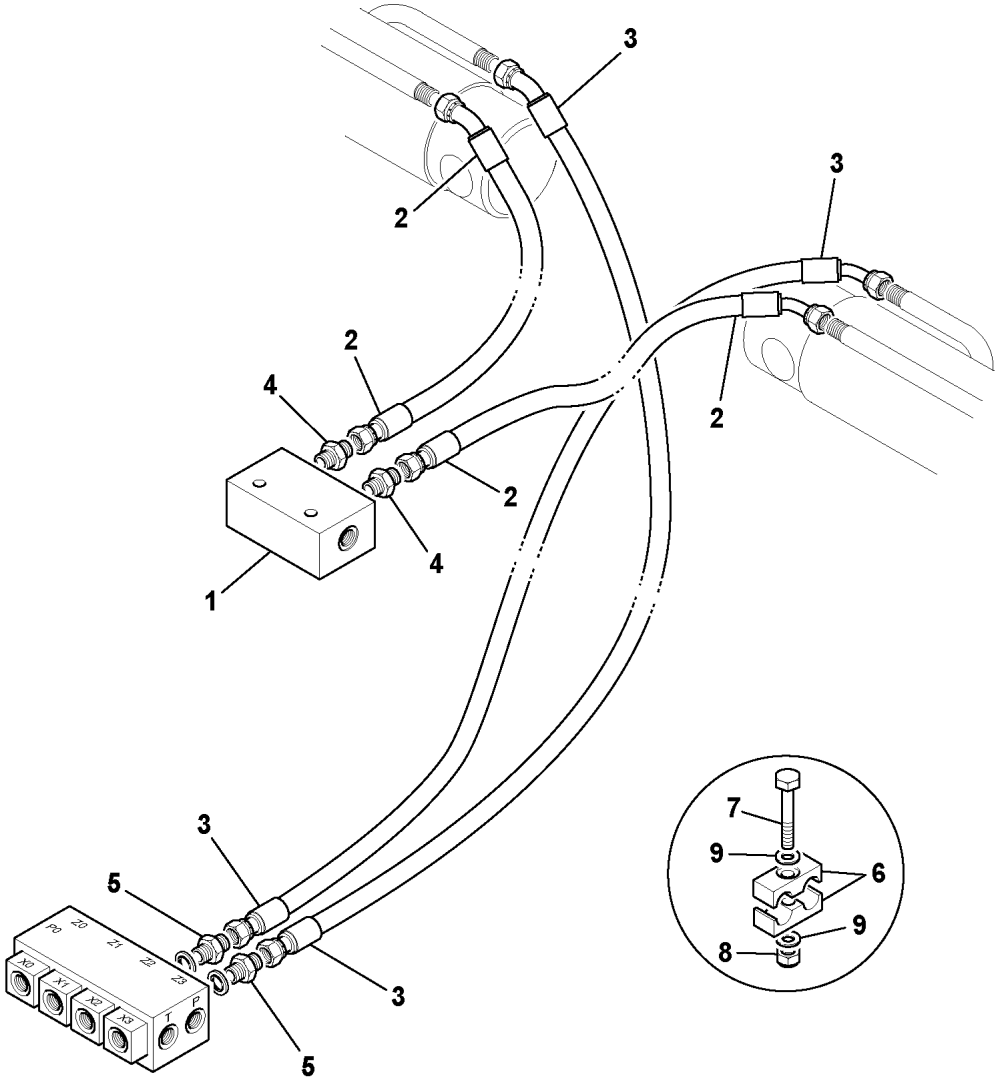

874860

	FROM	TO	FROM	TO
JS160W				

ITEM	PART NO	CHANGE NO	DESCRIPTION	REMARKS	USAGE CODE	QTY
1	JLV0722		Adapter, tee, stabiliser			1
2	JLV1886		Hose			2
3	JLV1869		Hose			2
4	1604/0002		Adapter, 1/4" BSP M/M			2
5	1606/0004		Adapter			2
6	821/00147		Clamp			3
7	1316/0210D		Bolt			3
8	1370/0103D		Nut, M6 lock			2
9	1420/0006D		Washer, M6 plain			6

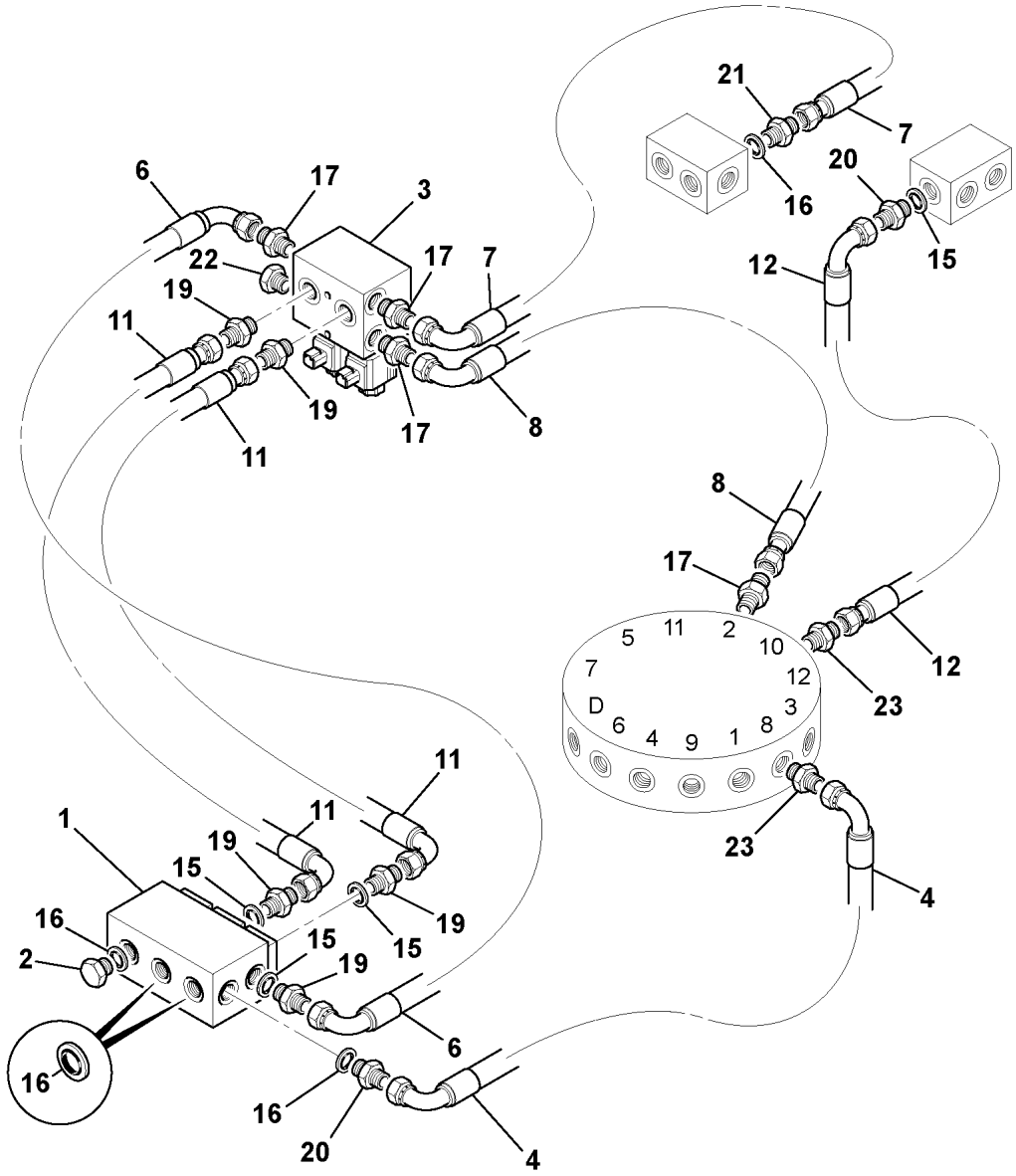

821120

	FROM	TO	FROM	TO
JS160W				

ITEM	PART NO	CHANGE NO	DESCRIPTION	REMARKS	USAGE CODE	QTY
1	JLJ0161		Valve, logic			1
3	25/222709		Valve, dual solenoid			1
4	JLV1871		Hose			1
6	JLV0594		Hose			1
7	JNJ0393		Hose, 1/4" x 1425, violet			1
8	JLV1446		Hose			1
11	KBJ2438		Hose			2
12	627/10022		Hose			1
15	1406/0011		Seal, bonded			4
16	1406/0018		Seal, bonded, 1/2" BSP			5
17	KAJ2176		Adapter			4
19	1604/0002		Adapter, 1/4" BSP M/M			5
20	1604/0004		Adapter, male/male			2
21	1606/0004		Adapter			1
22	BRJ1545		Plug			1
23	JLJ0055		Adapter			2

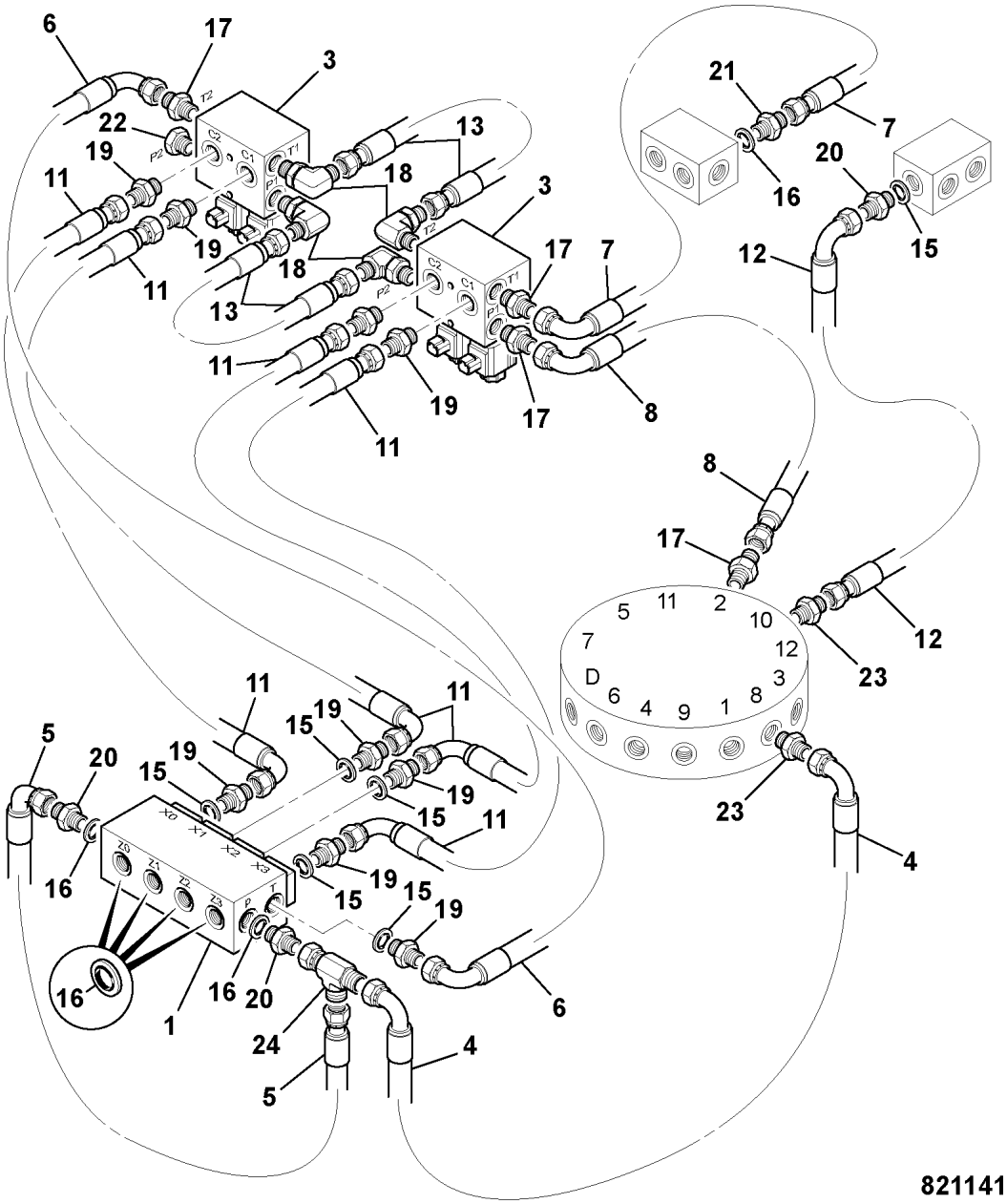

	FROM	TO	FROM	TO
JS160W				

ITEM	PART NO	CHANGE NO	DESCRIPTION	REMARKS	USAGE CODE	QTY
1	JLJ0386		Valve, logic			1
3	25/222709		Valve, dual solenoid			2
4	JLV1871		Hose			1
5	JLV1870		Hose			1
6	JLV0594		Hose			1
7	JNJ0393		Hose, 1/4" x 1425, violet			1
8	JLV1446		Hose			1
11	KBJ2438		Hose			4
12	627/10022		Hose			1
13	KTJ0670		Hose, nylon			2
15	1406/0011		Seal, bonded			6
16	1406/0018		Seal, bonded, 1/2" BSP			7
17	KAJ2176		Adapter			4
18	KHJ0650		Adapter			4
19	1604/0002		Adapter, 1/4" BSP M/M			9
20	1604/0004		Adapter, male/male			3
21	1606/0004		Adapter			1
22	BRJ1545		Plug			1
23	JLJ0055		Adapter			2
24	816/90270		Adapter, tee, M/F/M			1

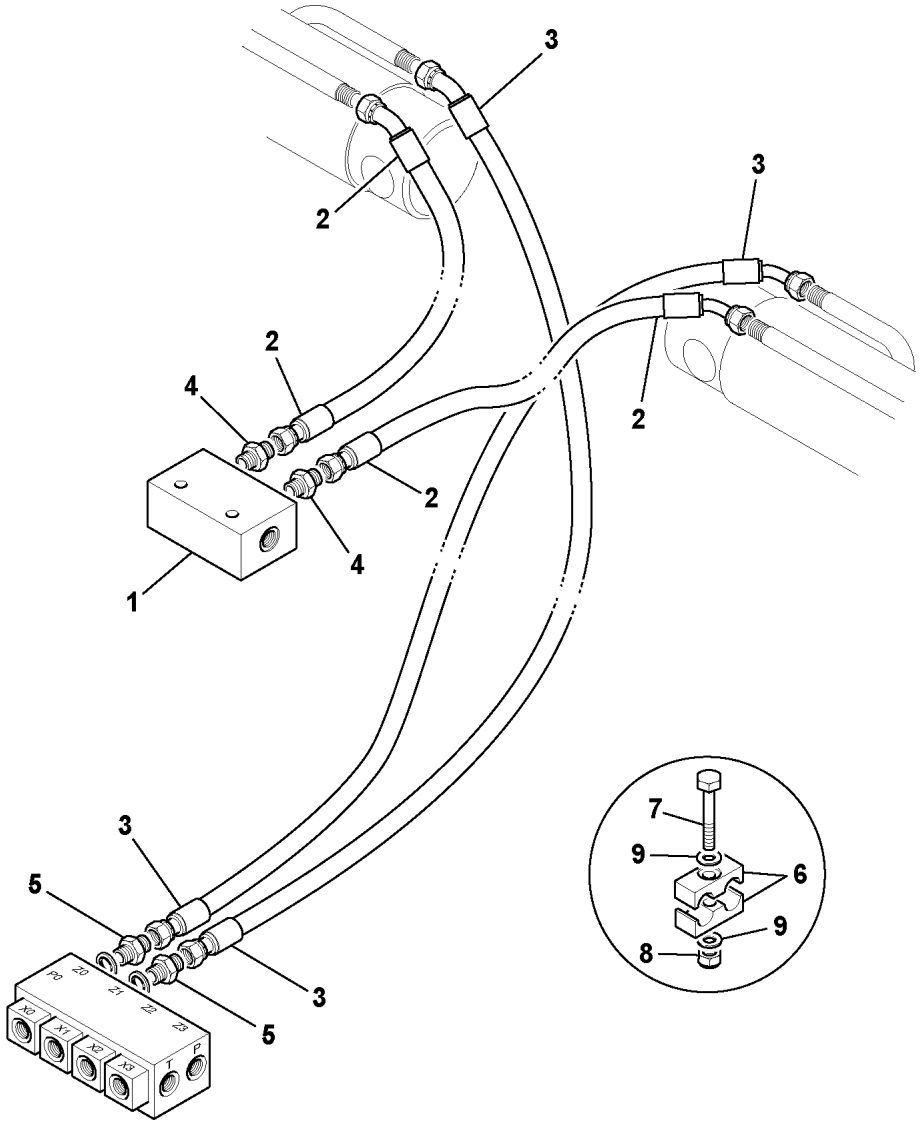

874861

	FROM	TO	FROM	TO
JS160W				

ITEM	PART NO	CHANGE NO	DESCRIPTION	REMARKS	USAGE CODE	QTY
1	JLV0722		Adapter, tee, stabiliser			1
2	JLV1886		Hose			2
3	JLV1869		Hose			2
4	1604/0002		Adapter, 1/4" BSP M/M			2
5	1606/0004		Adapter			2
6	821/00147		Clamp			3
7	1316/0210D		Bolt			3
8	1370/0103D		Nut, M6 lock			2
9	1420/0006D		Washer, M6 plain			6

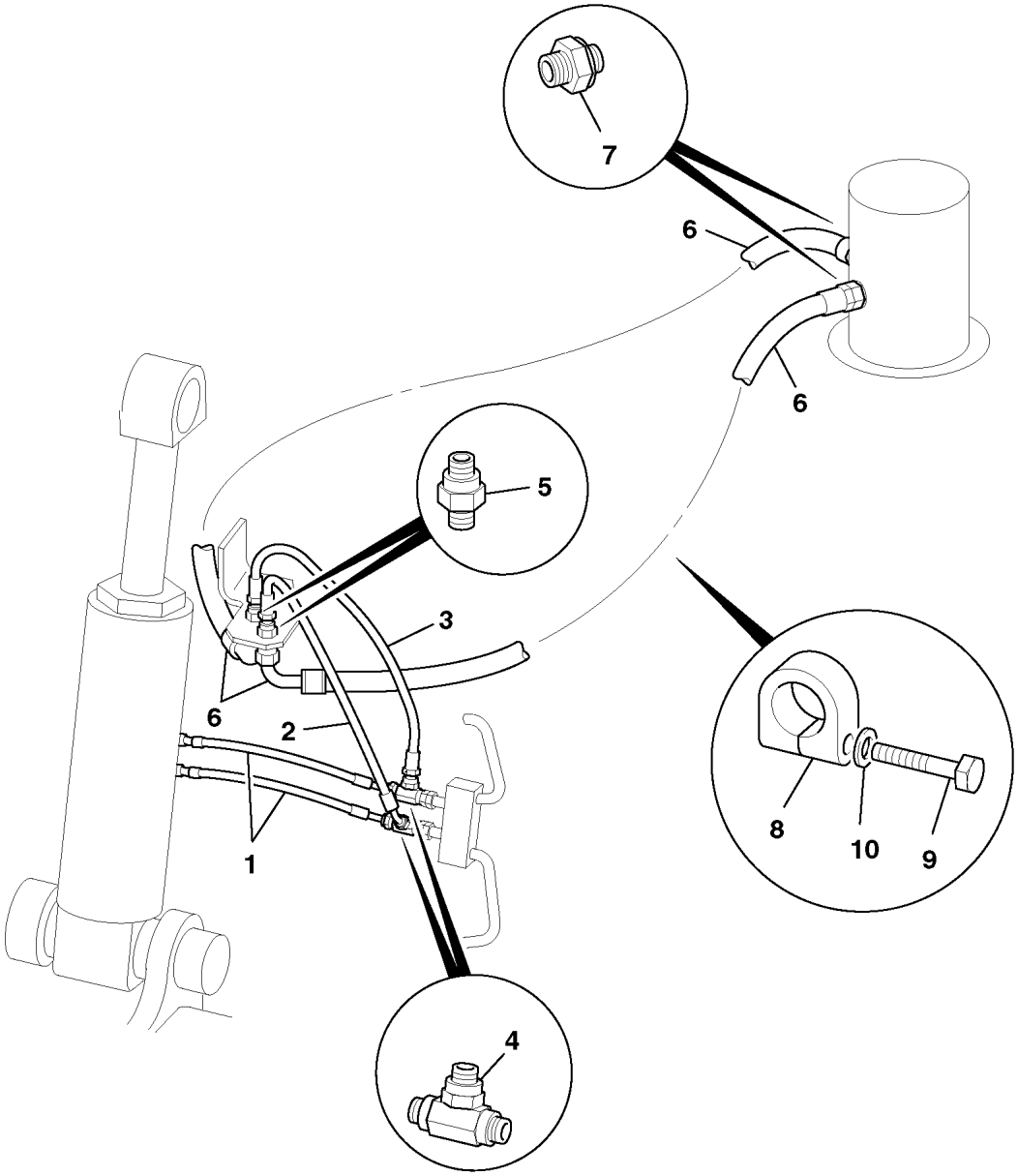

819380

	FROM	TO	FROM	TO
JS160W				

ITEM	PART NO	CHANGE NO	DESCRIPTION	REMARKS	USAGE CODE	QTY
1	JLV1701		Hose, 1/4" x 360			2
2	JLV1702		Hose, 1/4" x 520			1
3	JLV1708		Hose, 1/4" x 550, wire guarded			1
4	816/50031		Adapter, Tee			2
5	816/10127		Adapter			2
6	627/10022		Hose			2
7	JLJ0055		Adapter			2
8	JLJ0045		Clamp			2
9	1316/0210D		Bolt			2
10	1420/0006D		Washer, M6 plain			2

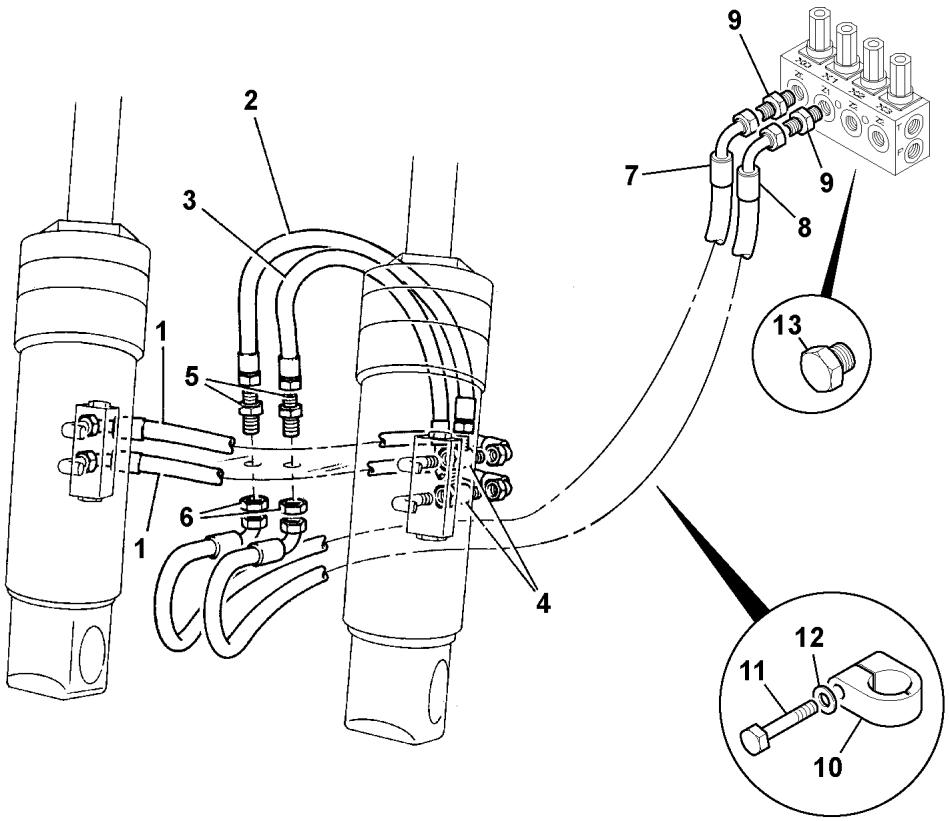

908570

	FROM	TO	FROM	TO
JS160W				

ITEM	PART NO	CHANGE NO	DESCRIPTION	REMARKS	USAGE CODE	QTY
1	JLV1701		Hose, 1/4" x 360			2
2	JLV1702		Hose, 1/4" x 520			1
3	JLV1708		Hose, 1/4" x 550, wire guarded			1
4	816/10127		Adapter			1
5	816/10127		Adapter			2
6	1356/0204Z		Nut			2
7	JLV1868		Hose			1
8	JLV1868		Hose			1
9	1604/0004		Adapter, male/male			2
10	JLJ0045		Clamp			2
11	1316/0210D		Bolt			2
12	1420/0006D		Washer, M6 plain			2
13	G8/0		Plug			1

E1-48-1 CIRCUIT, BOOM POSITION RAM, MAINFRAME

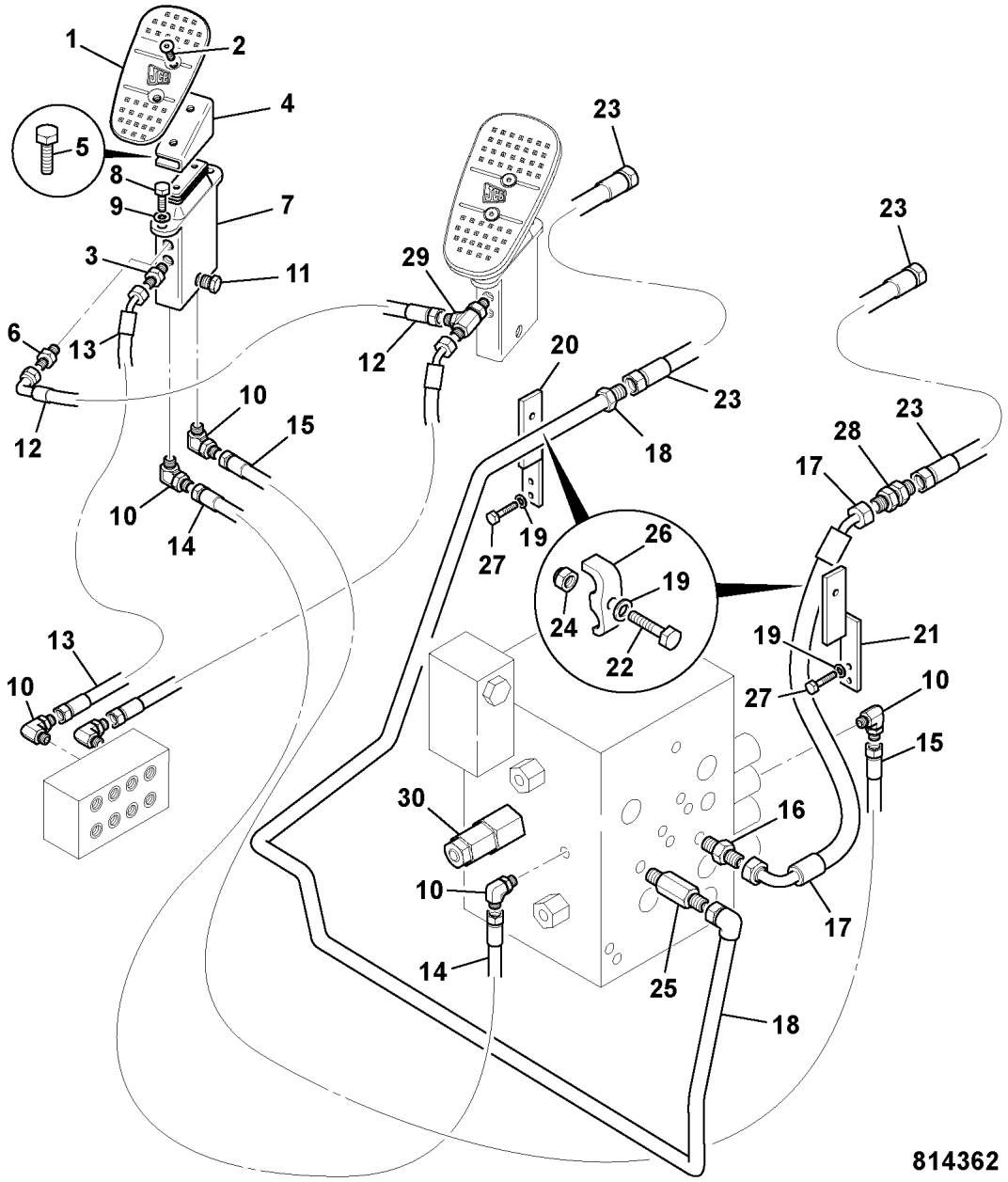

	FROM	TO	FROM	TO
JS160W				

ITEM	PART NO	CHANGE NO	DESCRIPTION	REMARKS	USAGE CODE	QTY
1	589/10208		Pedal, left hand casting			1
2	826/10811		Screw, c/sunk socket head, M8 x 30			2
3	* CNA0584		Adapter			1
4	331/38358		Bracket, pedal			1
5	1316/0403D		Screw			2
6	KNJ0758		Adapter			6
7	928/60339		Valve, hammer, auxiliary, foot operated			1
8	1316/0407D		Screw			2
9	1420/0008D		Washer, M10			2
10	KHJ0341		Adapter, elbow			5
11	KHJ0363		Plug			1
12	* JLV0594		Hose			1
13	* KHJ1335		Hose			1
14	* KTJ0812		Hose, nylon, red			1
15	* KTJ0813		Hose			1
16	* KNJ0605		Adapter, straight			1
17	* 627/10537	Superseded	Hose			1
	627/10572		Hose, 650mm			1
18	* 830/13253		Pipe			1
19	1420/0009D		Washer, M12			10
20	JNB0157		Bracket, pipes			1
21	* 335/11072		Bracket, right hand pipe			1

E1-48-1 CIRCUIT, BOOM POSITION RAM, MAINFRAME

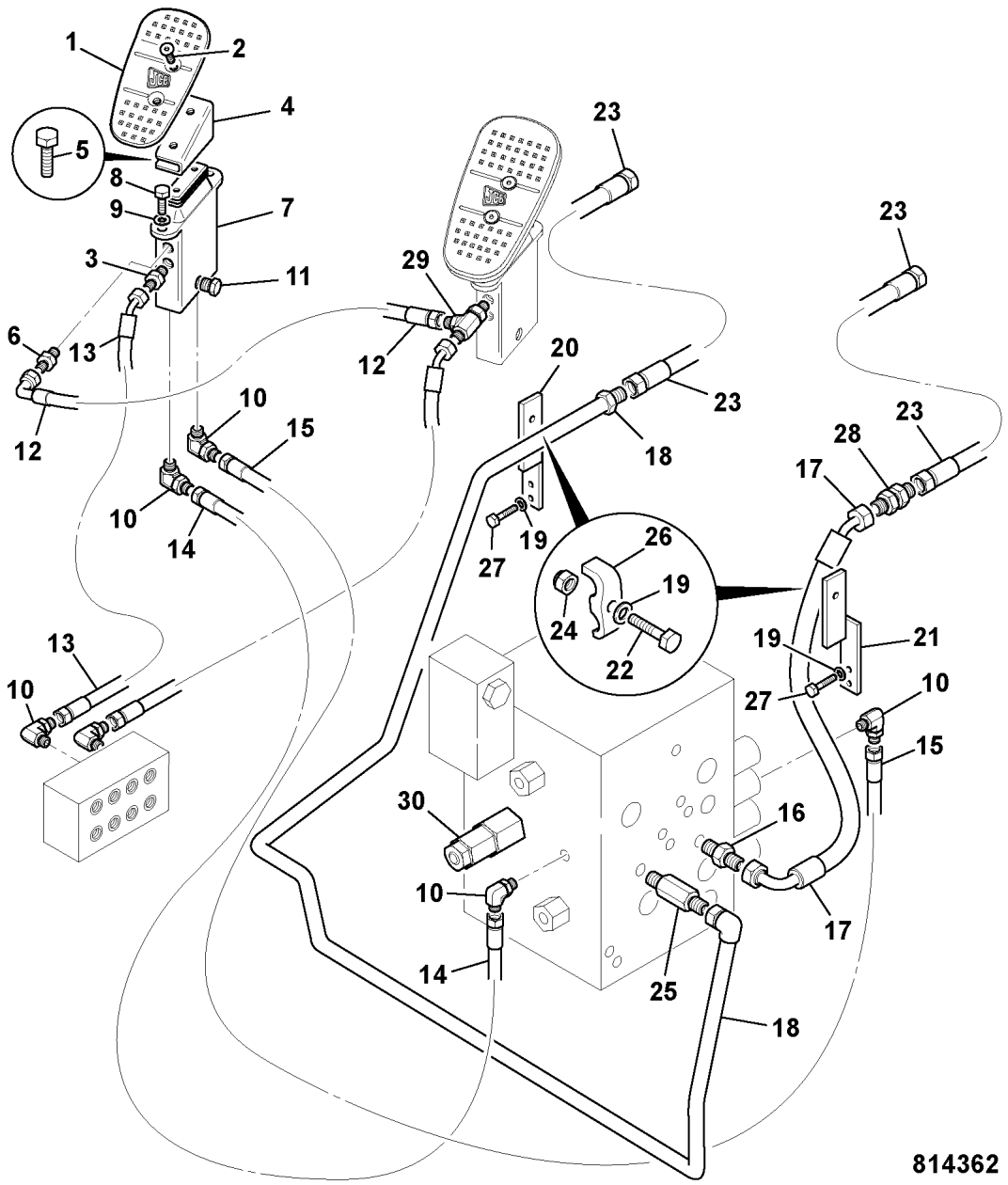

ITEM	PART NO	CHANGE NO	DESCRIPTION	REMARKS	USAGE CODE	QTY
22	1316/3518D		Bolt			2
23	JLJ0439		Hose			2
24	1371/0401D		Nut			2
25	JNV0083		Adapter			1
26	KRV0548		Clamp			2
27	1316/3510D		Bolt, BOLT			4
28	* JLV0433		Adapter			1
29	* KHJ0869		Adapter, tee			1
30	25/221160		Valve, relief			2

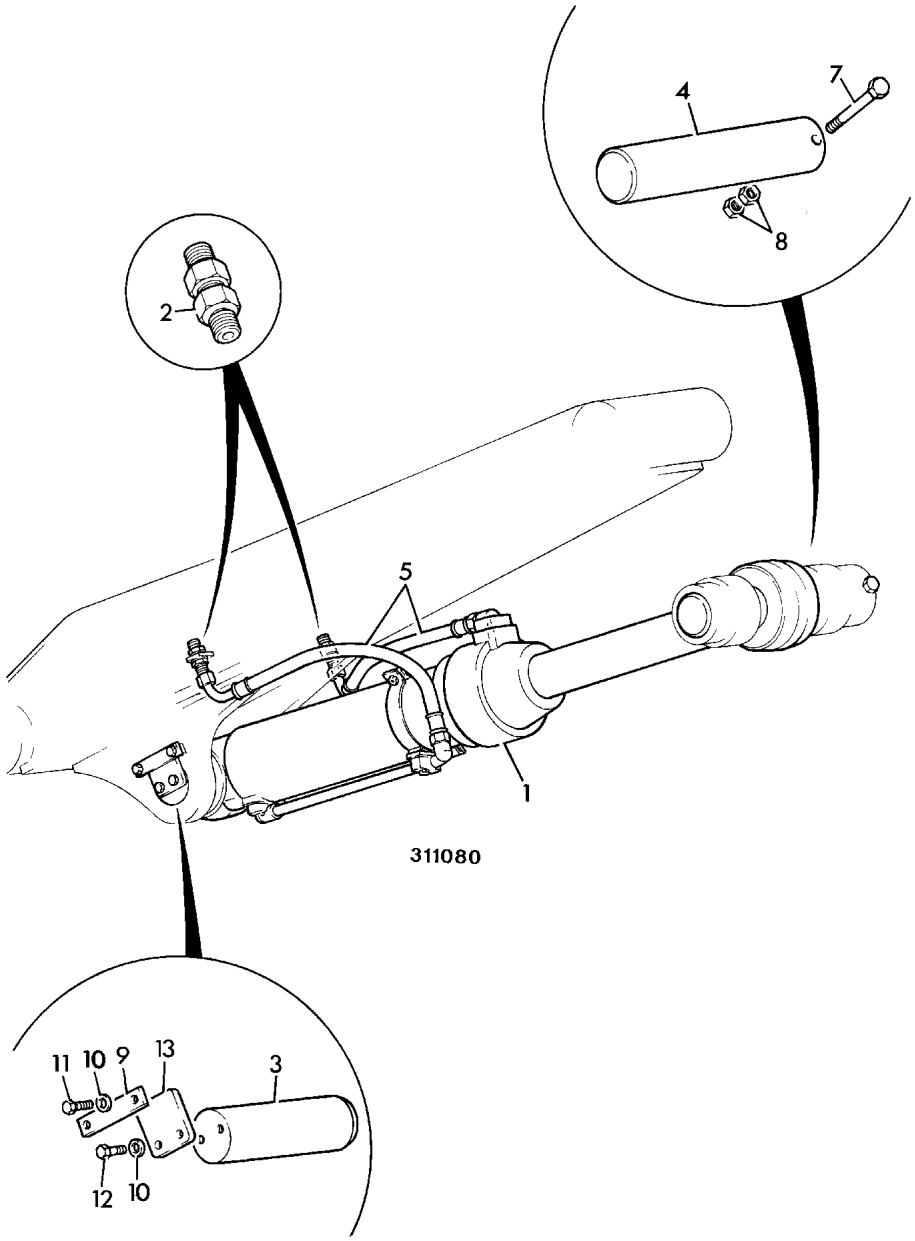

	FROM	TO	FROM	TO
JS160W				

ITEM	PART NO	CHANGE NO	DESCRIPTION	REMARKS	USAGE CODE	QTY
1	331/49655		Ram, assembly, position			1
2	JLV0433		Adapter			2
3	JLV1524		Pin, pivot			1
4	JLV1677		Pin, pivot			1
5	JLV1697		Hose			2
7	6009/3827Z		Bolt			1
8	172R020VZ		Nut			2
9	JLV1523		Plate, keep			1
10	1425/0009Z		Washer, Spring M12			4
11	1316/0507Z		Screw, M12x30			2
12	1316/3509Z		Bolt, M12x35			2
13	JLV1522		Plate, locking			1

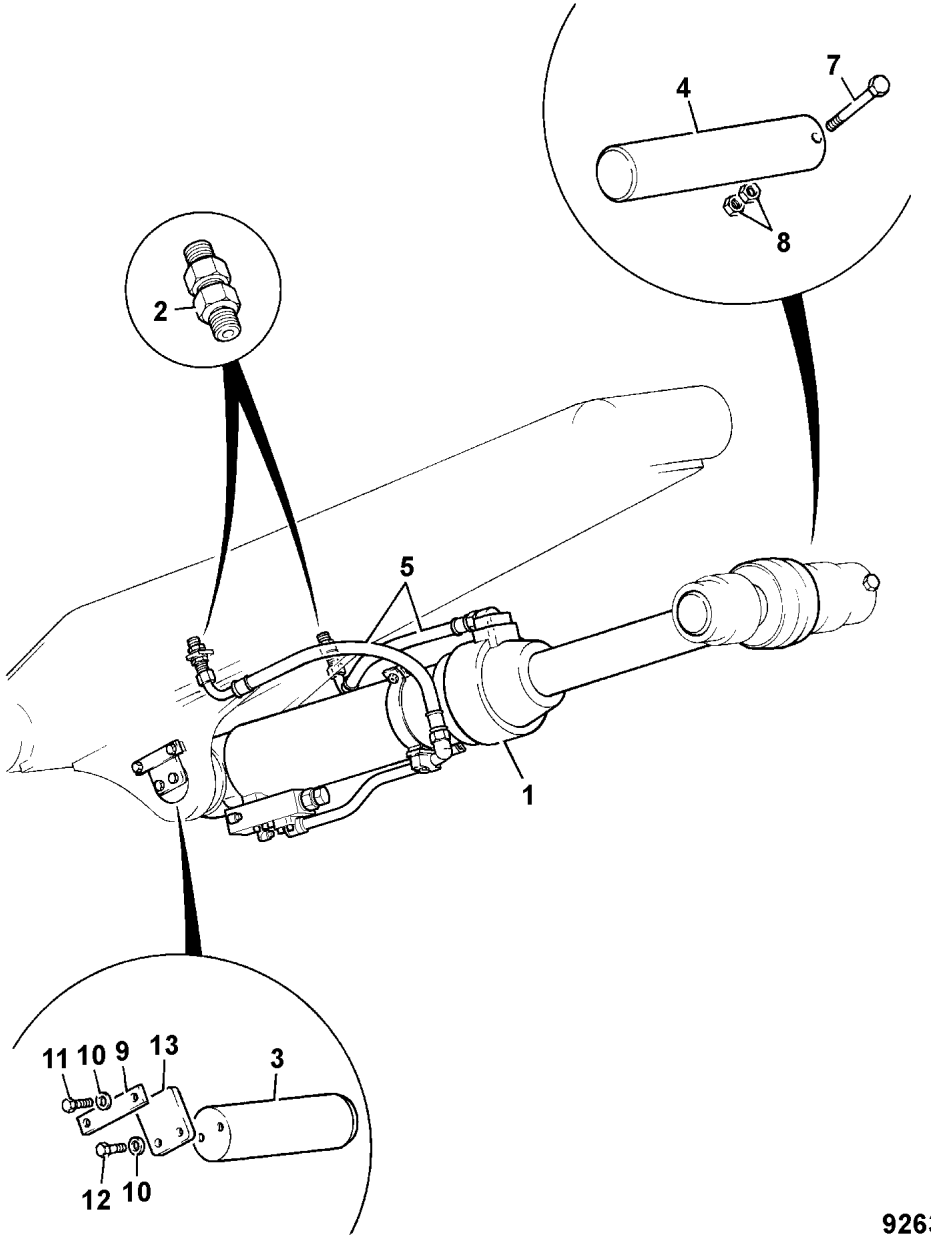

926340

	FROM	TO	FROM	TO
JS160W				

ITEM	PART NO	CHANGE NO	DESCRIPTION	REMARKS	USAGE CODE	QTY
1	331/49655		Ram, assembly, position			1
2	JLV0433		Adapter			2
3	JLV1524		Pin, pivot			1
4	JLV1677		Pin, pivot			1
5	JLV1697		Hose			2
7	6009/3827D		Bolt			1
8	172R020VZ		Nut			2
9	JLV1523		Plate, keep			1
10	1425/0009D		Washer, M12 spring			4
11	1316/0507D		Screw, set pin			2
12	1316/3509D		Bolt, M12 X 35			2
13	JLV1522		Plate, locking			1

	FROM	TO	FROM	TO
JS160W				



ITEM	PART NO	CHANGE NO	DESCRIPTION	REMARKS	USAGE CODE	QTY
1	JLV1614		Manifold, block			1
11	JNJ0418		Hose			2
12	JLV1639		Hose			2
15	1604/2051		Adapter			4
16	JNJ0554		Adapter			1
19	JHJ0111		Adapter, tee			2
24	1406/0011		Seal, bonded			4

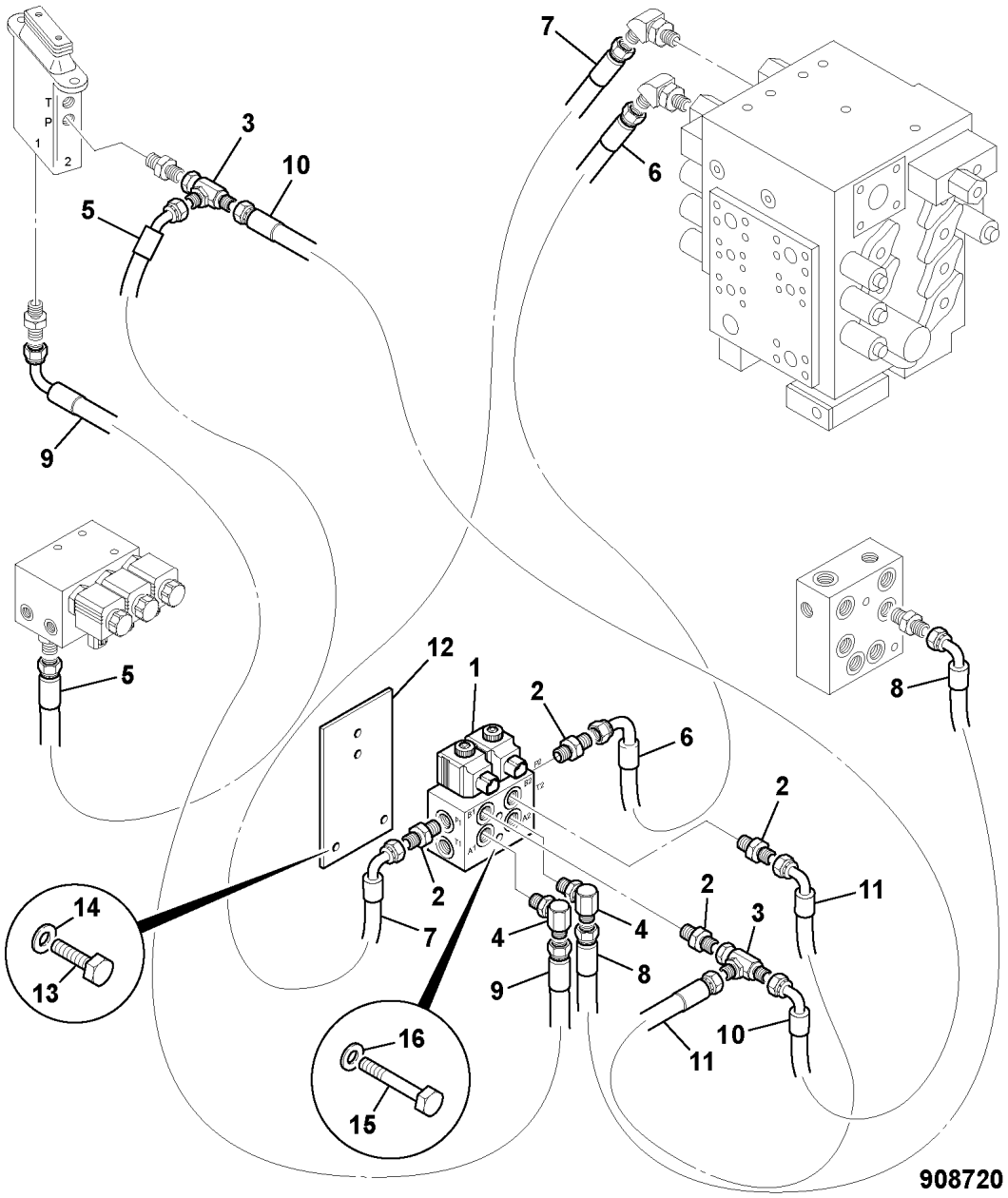

	FROM	TO	FROM	TO
JS160W				

ITEM	PART NO	CHANGE NO	DESCRIPTION	REMARKS	USAGE CODE	QTY
1	25/221066		Valve, dual controls			1
2	1606/0003		Adapter			1
3	816/50031		Adapter, Tee			1
4	KHJ0341		Adapter, elbow			1
5	KRJ4102		Hose			1
6	KSJ1635		Hose, nylon			1
7	KSJ1635		Hose, nylon			1
8	KBJ2346		Hose, nylon			1
9	JLV0469		Hose			1
10	JLV0469		Hose			1
11	JLV0285		Hose			1
12	331/62359		Bracket, Mounting			1
13	1316/0316D		Screw, Set, M8 x 70			1
14	1420/0007D		Washer, M8 plain			1
15	1316/0405D		Bolt			1
16	1420/0008D		Washer, M10			1
17	721/12336		Harness, Cruise control	See C1-1-1		1

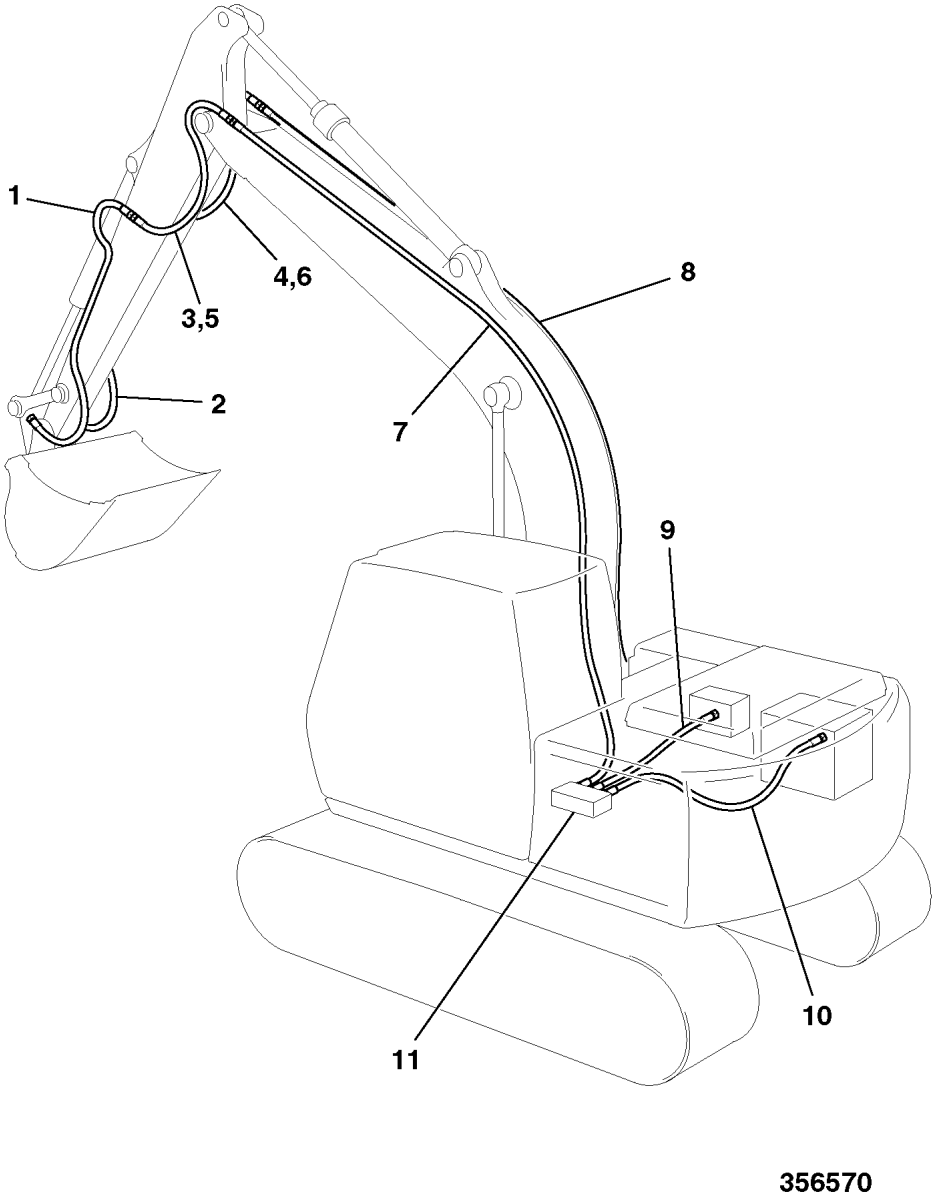

356570

	FROM	TO	FROM	TO
JS160W				

ITEM	PART NO	CHANGE NO	DESCRIPTION	REMARKS	USAGE CODE	QTY
0	1		TBA			1
1	332/A0016		:Hose, Coupler hose, c/w guard blue			1
2	332/A0017		:Hose, Coupler hose c/w, spring guard yellow			1
3	1		:TBA	Boom to dipper-short and med stick (blue)		1
4	1		:TBA	Boom to dipper-short and med stick (yellow)		1
5	1		:TBA	Boom to dipper-long stick (blue)		1
6	1		:TBA	Boom to dipper-long stick (yellow)		1
7	331/65996		:Hose, assembly, boom, blue, 11300mm	Valve to boom (blue)		1
8	331/69499		:Hose, Boom Yellow, 11300mm	Valve to boom (yellow)		1
9	627/00005		:Hose, Red, 1500mm	Pressure line (red)		1
10	627/00058		Hose, solenoid-tank, Green 1500mm	Tank return line (green)		1
11	928/60073		Valve, Actuator			1
12	717/20081		Alarm, Warning buzzer, 24V	Warning alarm inside cab		1
13	701/80250		Switch	Rocker switch inside cab		1

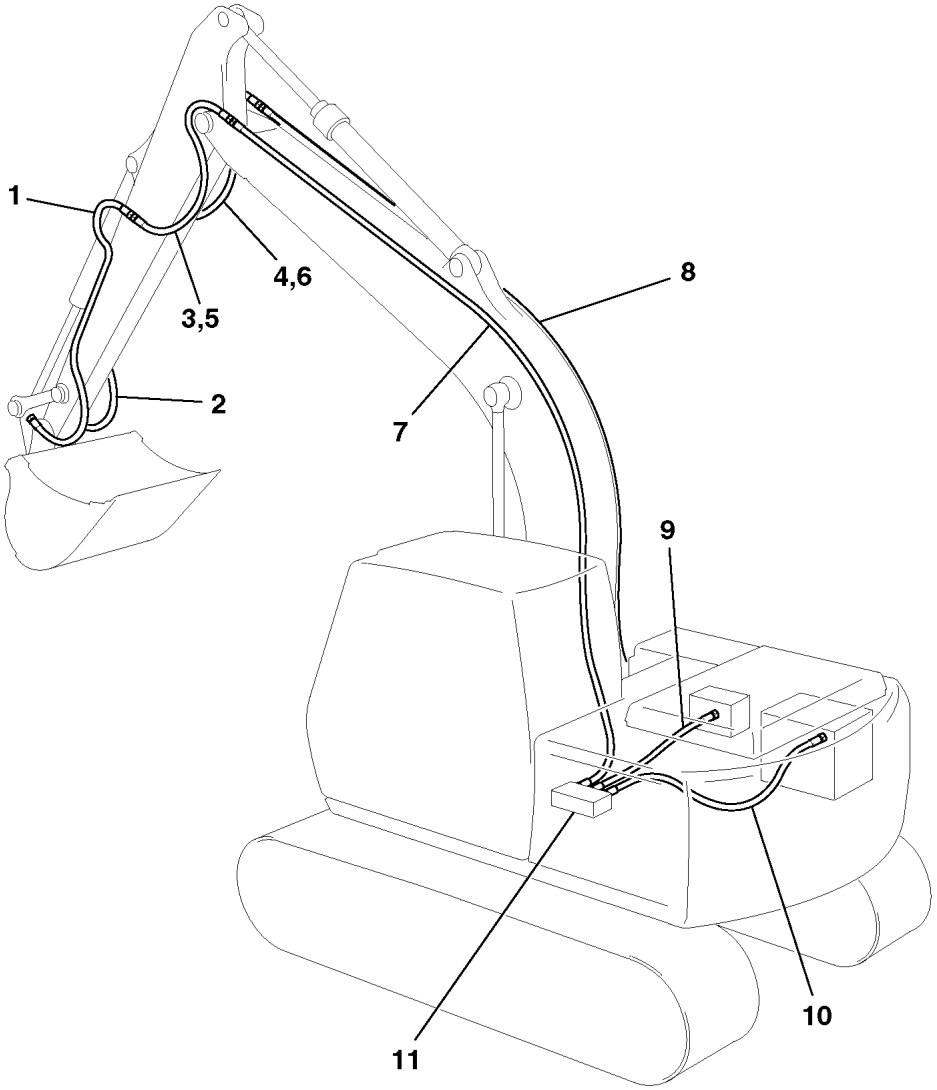

356570

ITEM	PART NO	CHANGE NO	DESCRIPTION	REMARKS	USAGE CODE	QTY
14	JHP0151		Decal, warning,, bucket-cab			1
15	JRP0142		Label, warning, bucket-boom			1
16	817/04690		Decal, warning,text,, bucket throat extend			1
17	817/16890		Label, Q/Hitch, visual instruction			1
18	9814/0311		Book, fitting instructions, JCB quickhitch	Fitting instructions & spec sheet		1
19	331/30321		Clamp, hose (double), assembly	includes base, clamp & bolt		7

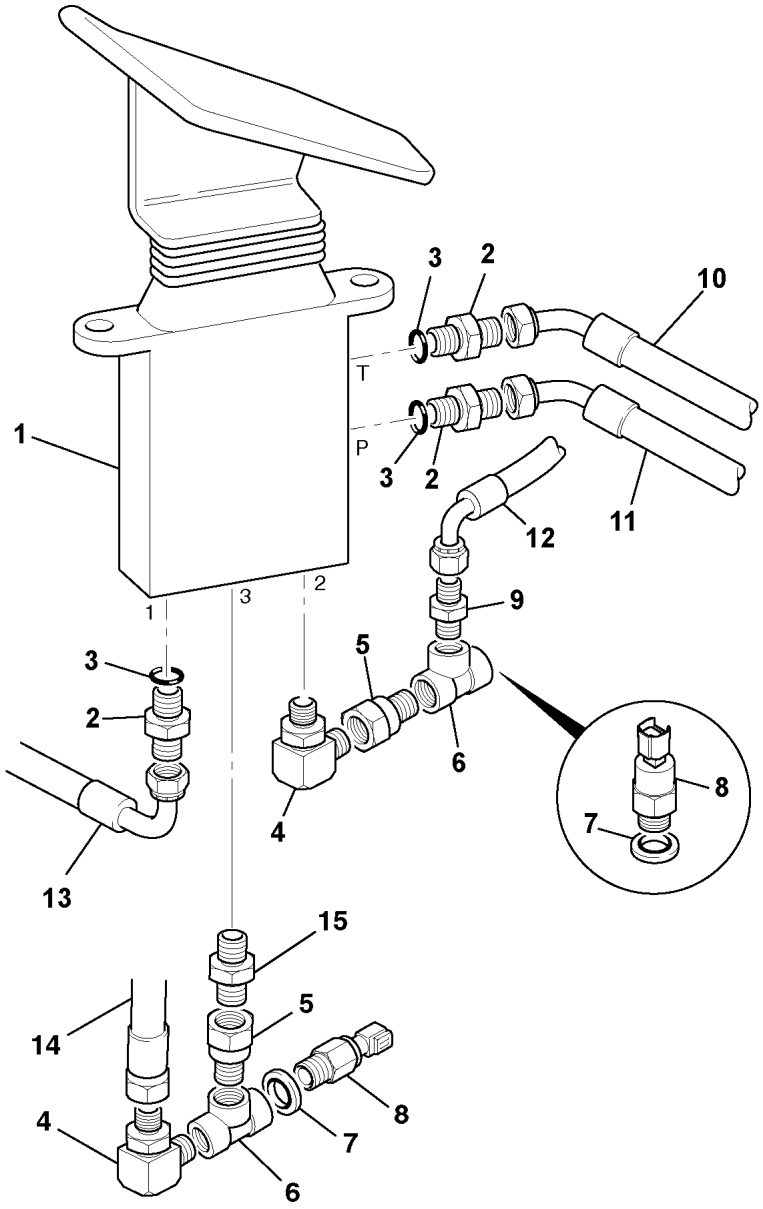

912180

	FROM	TO	FROM	TO
JS160W				

ITEM	PART NO	CHANGE NO	DESCRIPTION	REMARKS	USAGE CODE	QTY
1	* 928/60339		Valve, hammer, auxiliary, foot operated			1
2	KNJ0758		Adapter			3
3	LBQ0112		:O Ring			1
4	KHJ0341		Adapter, elbow			2
5	C4E7327		Adapter			2
6	JHJ0172		Adapter, tee			2
7	JHP0204		Washer, back up			2
8	701/80373		Switch, Slew pressure, 5bar 1/4" BSP			2
9	1609/0002		Adapter			2
10	627/10620		Hose	Drive pedal port T to cab manifold port T4		1
11	KRJ4102		Hose	Drive pedal port P to 3 station valve port C1		1
12	* KBJ2208		Hose	Drive pedal port 2 to main valve port b14		1
13	* JLV0719		Hose	Drive pedal port 1 to main valve port a14		1
14	* KSJ0806		Hose, nylon	Drive pedal port 3 to pilot shuttle valve IN		1
15	KNJ0758		Adapter			1

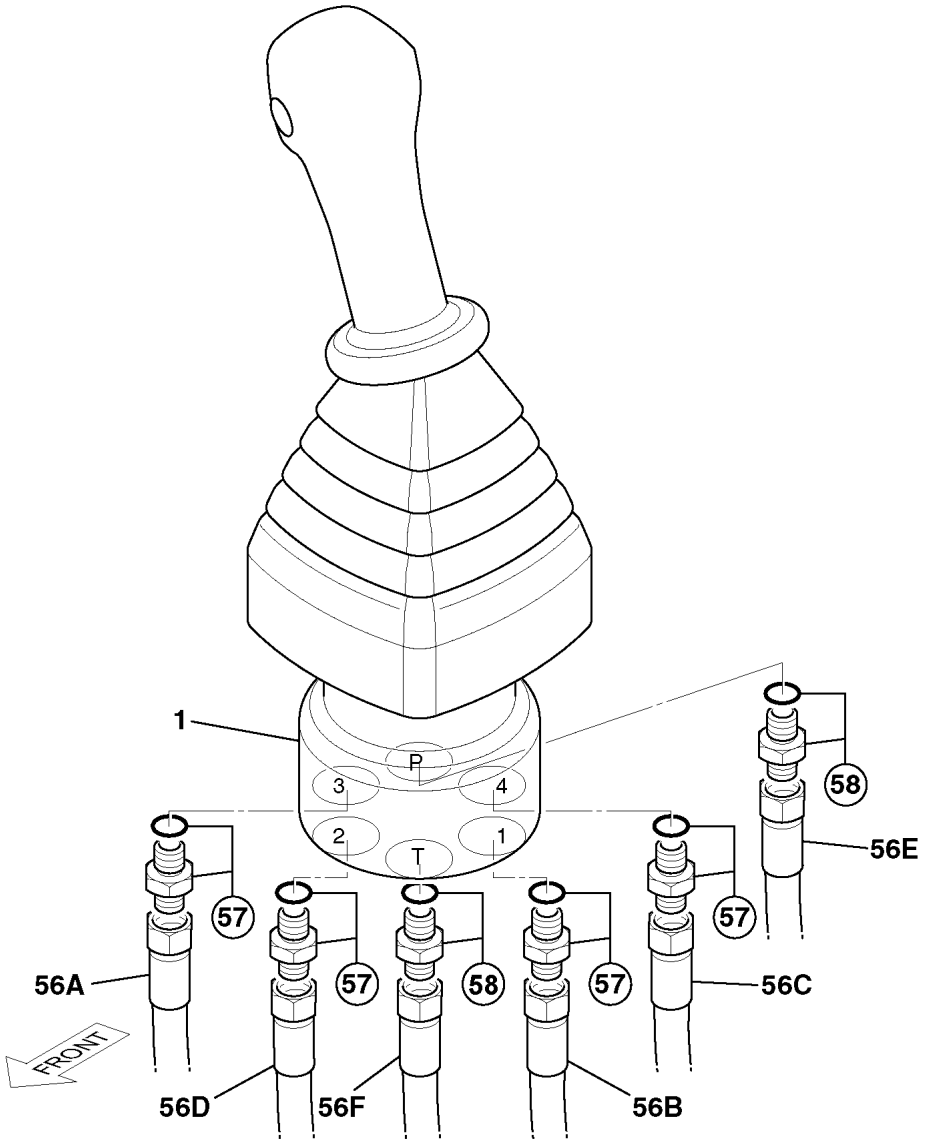

413211

	FROM	TO	FROM	TO
JS160W				

ITEM	PART NO	CHANGE NO	DESCRIPTION	REMARKS	USAGE CODE	QTY
1	25/222891		Valve, hand controler, left hand			1
56A	KNJ1072		Hose, nylon	port 3 to shuttle valve port A1. Swing right		1
56B	KSJ1132		Hose, nylon	port 1 to shuttle valve port A2. Swing left.		1
56C	KNJ1314		Hose, nylon, (l=1650)	port 4 to shuttle valve port A6. Arm in.		1
56D	KNJ1314		Hose, nylon, (l=1650)	port 2 to shuttle valve port A5. Arm out.		1
56E	* KNJ1109		Hose, nylon, light green	port P to Cab manifold port P6		1
56F	* KNJ1109		Hose, nylon, light green	port T to Cab manifold port T6		1
57	1620/2052		Adapter			4
57 01	2401/0505		:O Ring			1
58	JHJ0168		Adapter, filtered	Port P		1
	1620/2052		Adapter	Port T		1
58 01	2401/0505		:O Ring			1
99	215/12486		G.A, PILOT CONTROL			1

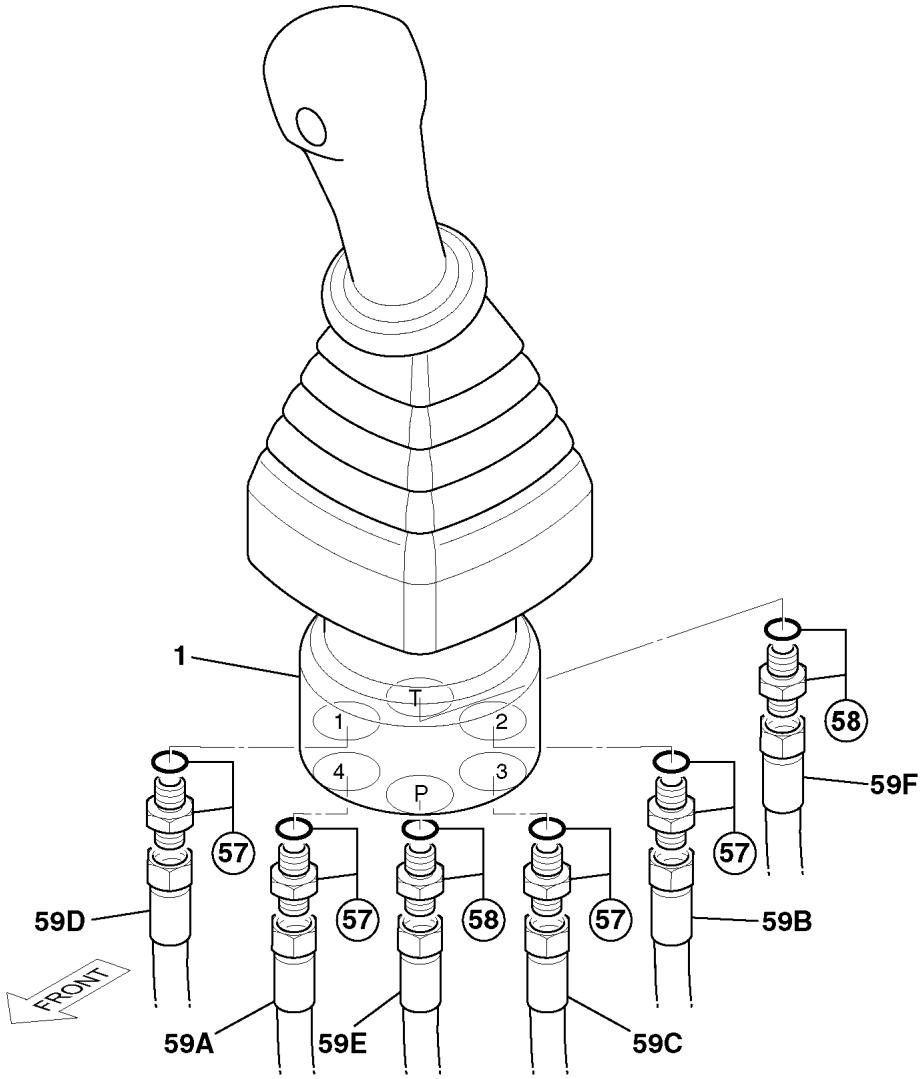

	FROM	TO	FROM	TO
JS160W				

ITEM	PART NO	CHANGE NO	DESCRIPTION	REMARKS	USAGE CODE	QTY
1	25/222892		Valve, hand controler, right hand			1
57	1620/2052		Adapter	Port 1, 2, 3 & 4		4
57 01	2401/0505		O Ring			1
58	JHJ0168		Adapter, filtered	Port P		1
	1620/2052		Adapter	Port T		1
58 01	2401/0505		O Ring			1
59A	JRJ0119		Hose, red	port 4 to shuttle valve port A4. Boom down		1
59B	KNJ1123		Hose, nylon	port 2 to shuttle valve pot A3. Boom up		1
59C	KNJ1122		Hose, nylon	Port 3 to shuttle valve port A7 bucket close		1
59D	JRJ0119		Hose, red	port 1 to shuttle valve port A8 Bucket open		1
59E	KNJ1109		Hose, nylon, light green	Port P to cab manifold Port P2		1
59F	KNJ1109		Hose, nylon, light green	Port T to Cab manifold Port T2		1
99	215/12486		G.A, PILOT CONTROL			1

413221

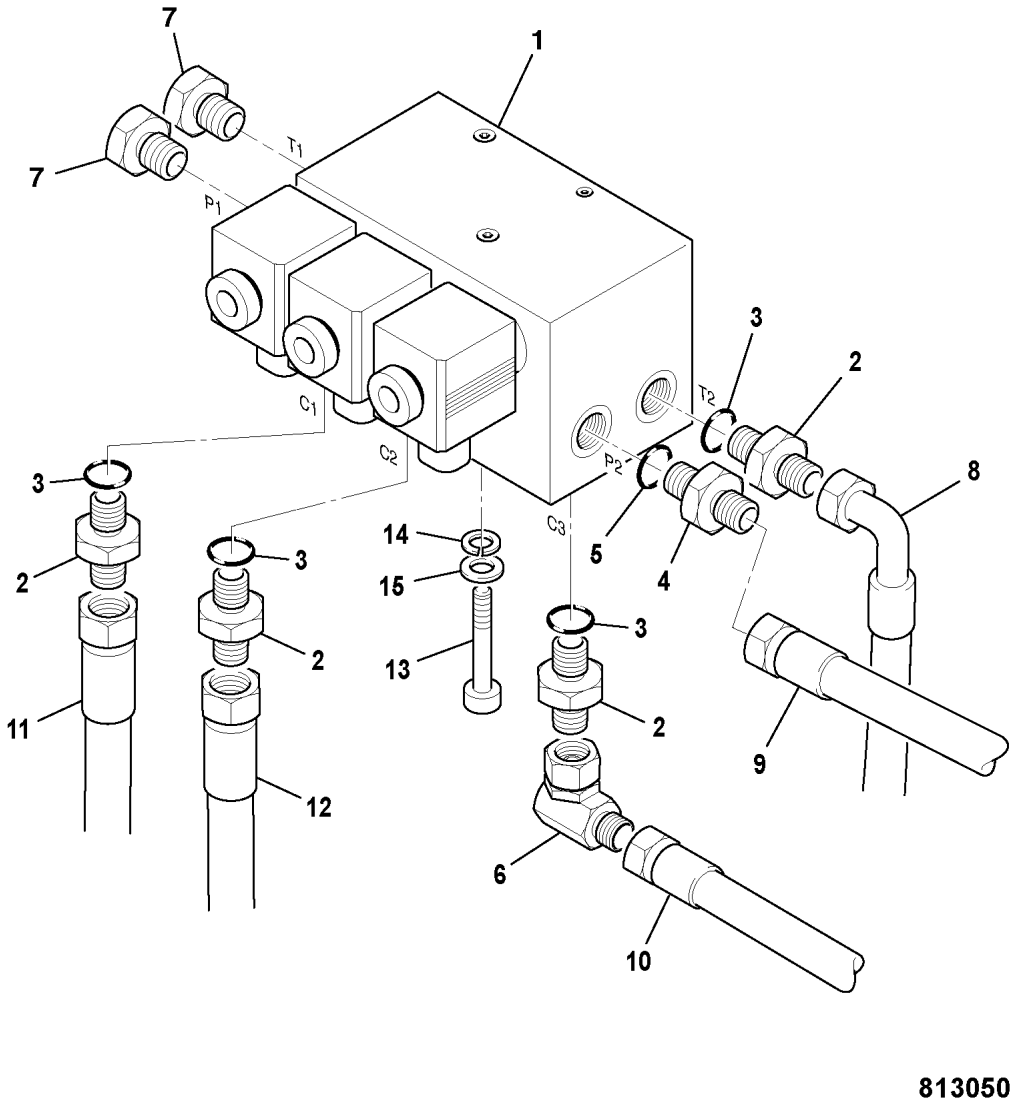

813050

	FROM	TO	FROM	TO
JS160W				

ITEM	PART NO	CHANGE NO	DESCRIPTION	REMARKS	USAGE CODE	QTY
1	25/223026		Valve, 3 station solenoid			1
2	KNJ0758		Adapter	Ports C1, C2 & C3		3
	KNJ0759		Adapter	Port T2		1
3	LBQ0112		:O Ring			1
4	KNJ1106		Adapter			1
5	LBQ0112		:O Ring			1
6	816/00464		Adapter, elbow - male/ female			1
7	BRJ1545		Plug			2
8	KHJ1039		Hose, nylon	3 Station port T2 to cab manifold port T8		1
9	KRJ3935		Hose, nylon	3 Station port P2 to 8 station port B2		1
10	KSJ2466		Hose, nylon	3 Station port C3 to cab manifold port P8		1
11	KRJ4102		Hose	3 Station port C1 to drive pedal port P		1
12	332/J2453		Hose	3 Station port C2 to rotary coupling port 12		1
13	1391/3216D		Capscrew			2
14	1425/0006D		Washer, spring, M6			2
15	1420/0006D		Washer, M6 plain			2

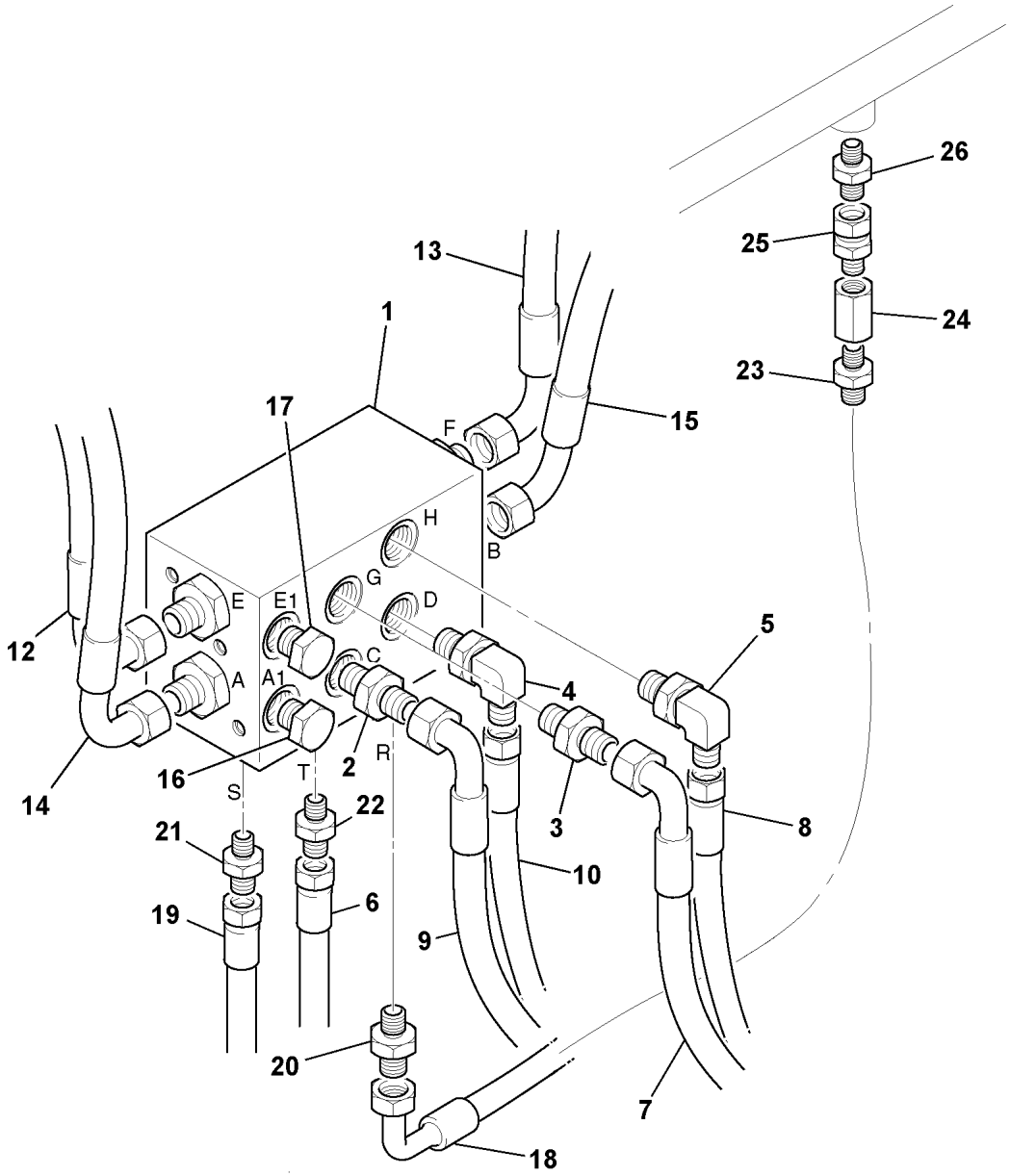

907350

	FROM	TO	FROM	TO
JS160W				

ITEM	PART NO	CHANGE NO	DESCRIPTION	REMARKS	USAGE CODE	QTY
1	25/220040		Valve, cushion			1
2	KNJ0759		Adapter	Port C		1
3	KNJ0759		Adapter	Port G		1
4	KHJ0342		Adapter, elbow	Port D		1
5	KHJ0342		Adapter, elbow	Port H		1
6	JNJ0418		Hose	Port T to manifold port T9. Drain line		1
7	KNJ1956		Hose, nylon	Port G to main control valve port ar1		1
8	*KNJ1119		Hose	Port H to main control valve port br1		1
9	*627/10382		Hose	Port C to main control valve port a13 Arm IN		1
10	*KNJ1314		Hose, nylon, (l=1650)	Port D to main control valve port b13 Arm OUT		1
12	*KBJ2348		Hose, nylon	Port E to shuttle valve port B4		1
13	*KSJ1871		Hose, nylon	Port F to shuttle valve port B3		1
14	*627/10199		Hose, 3/8	Port A to shuttle valve port B6. Arm (1) IN		1

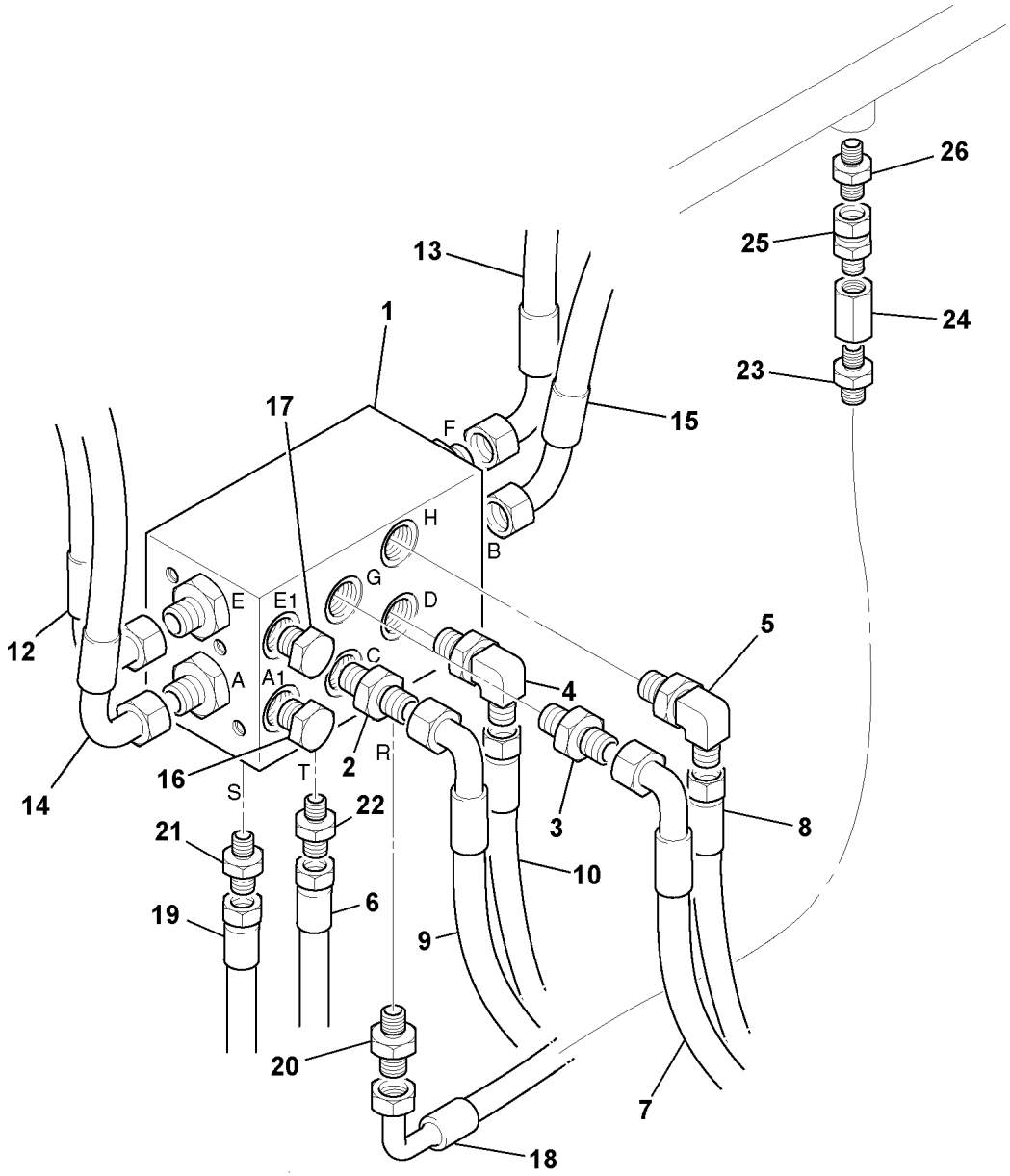

907350

ITEM	PART NO	CHANGE NO	DESCRIPTION	REMARKS	USAGE CODE	QTY
15	* KTJ1215		Hose, nylon	Port B to shuttle valve port B5. Arm (1) Out.		1
16	BRJ1545		Plug			1
	KNJ0759		Adapter	Optional HBCV See E1-25-1		1
17	BRJ1545		Plug			1
	KNJ0759		Adapter	Optional HBCV See E1-25-1		1
18	JNJ0440		Hose, 1/4" x 1750, blue	Port R to Item 23, 24, 25, 26 cooler pipes		1
19	JNJ0418		Hose	Port S to Tank manifold port T9		1
20	KAJ2176		Adapter	Port R		1
21	KHJ0341		Adapter, elbow	Port S		1
22	KAJ2176		Adapter	Port T		1
23	1609/0002		Adapter			1
24	KHJ0568		Filter, line			1
25	C4E7327		Adapter			1
26	KNJ0758		Adapter			1

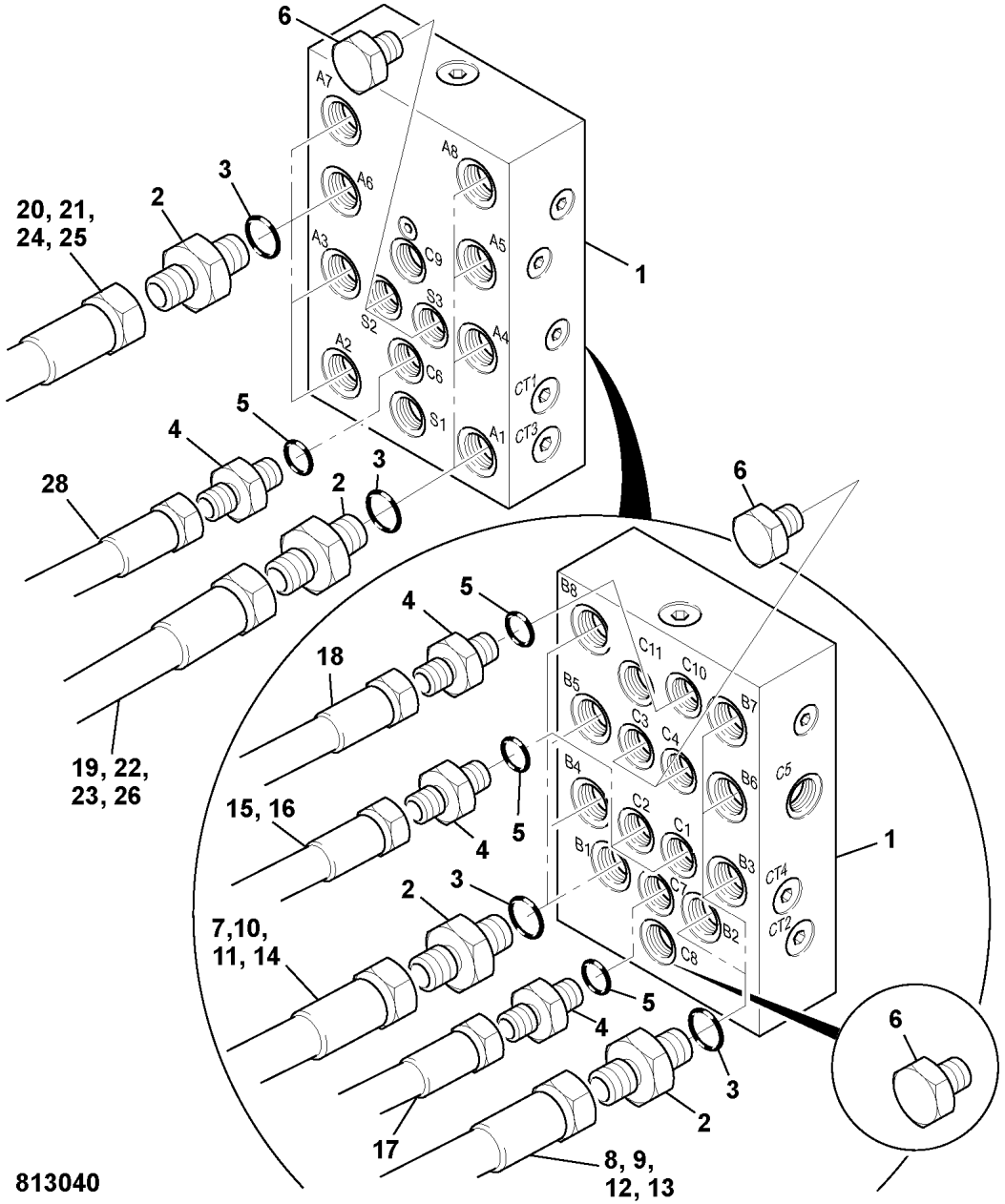

	FROM	TO	FROM	TO
JS160W				

ITEM	PART NO	CHANGE NO	DESCRIPTION	REMARKS	USAGE CODE	QTY
1	25/222638		Valve, shuttle			1
2	KNJ0759		Adapter			16
3	LBQ0142		:O Ring			1
4	KNJ0758		Adapter			6
5	LBQ0112		:O Ring			1
6	KHJ0363		Plug			6
7	KNJ1122		Hose, nylon	Shuttle valve port B1 to main valve port a11		1
8	KNJ1314		Hose, nylon, (l=1650)	Shuttle valve port B2 to main valve port b11		1
9	KSJ1871		Hose, nylon	Shuttle valve port B3 to cushion valve port F		1
10	KBJ2348		Hose, nylon	Shuttle valve port B4 to cushion valve port E		1
11	KTJ1215		Hose, nylon	Shuttle valve port B5 to cushion valve port B		1
12	627/10199		Hose, 3/8	Shuttle valve port B6 to cushion valve port A		1
13	KNJ1123		Hose, nylon	Shuttle valve port B7 to main valve port ar2		1

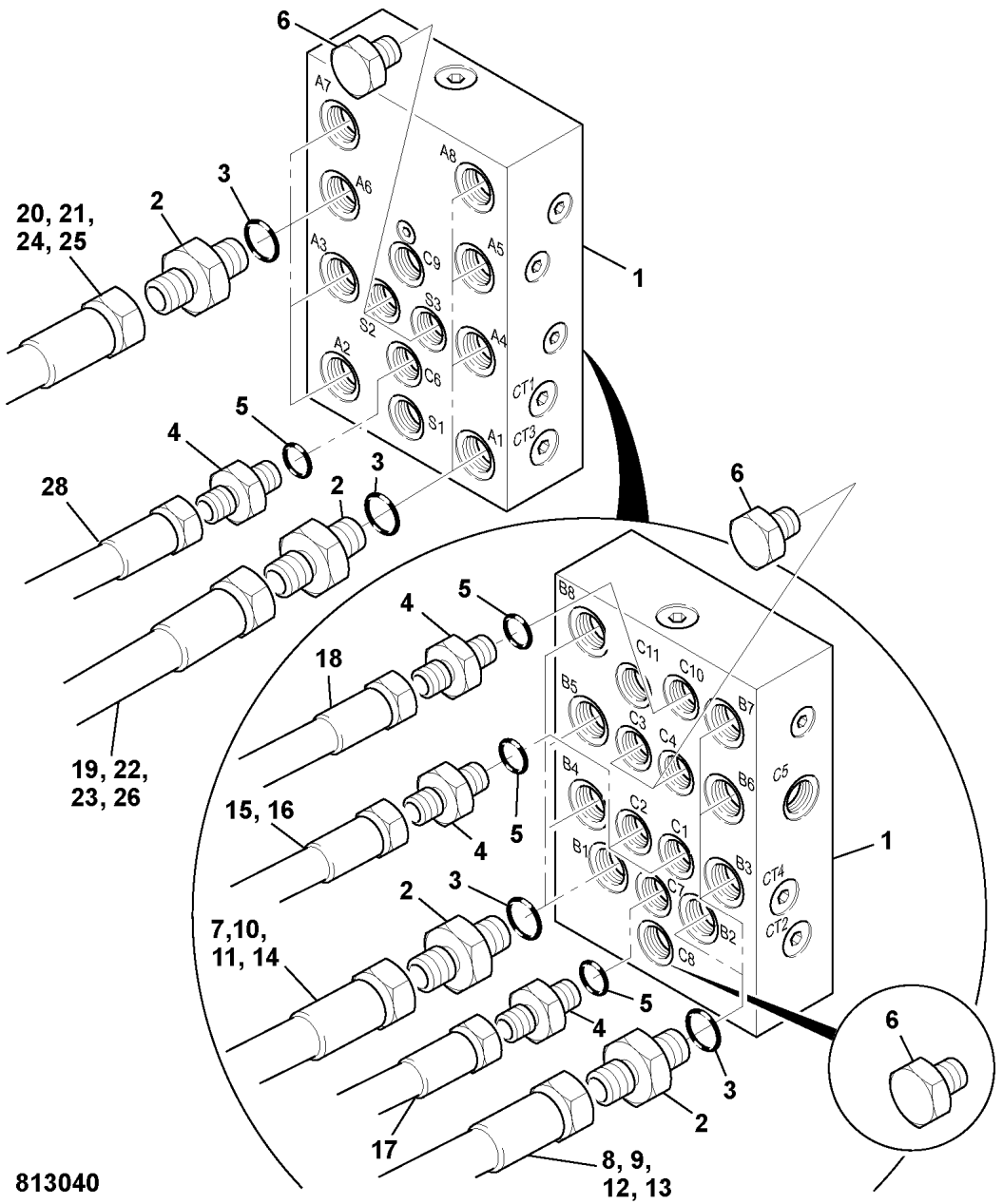

ITEM	PART NO	CHANGE NO	DESCRIPTION	REMARKS	USAGE CODE	QTY
14	KNJ1314		Hose, nylon, (l=1650)	Shuttle valve port B8 to main valve port br2		1
15	KNA0363		Hose, nylon	Shuttle valve port C1 to main valve port d		1
16	KTJ0675		Hose, nylon	Shuttle valve port C2 to main valve port ar11		1
17	JLV1446		Hose	Port C7 to 8 station valve port A		1
18	KNJ1067	Superseded	Hose	Shuttle valve port C10 to main valve port b		1
	KBJ2439		Hose, nylon			1
19	KNJ1072		Hose, nylon	Shuttle valve port A1 to LH controler port 3		1
20	KSJ1132		Hose, nylon	Shuttle valve port A2 to LH controler port 1		1
21	KNJ1123		Hose, nylon	Shuttle valve port A3 to RH controler port 2		1
22	JRJ0119		Hose, red	Shuttle valve port A4 to RH controler port 4		1
23	KNJ1314		Hose, nylon, (l=1650)	Shuttle valve port A5 to LH controler port 2		1
24	KNJ1314		Hose, nylon, (l=1650)	Shuttle valve port A6 to LH controler port 4		1

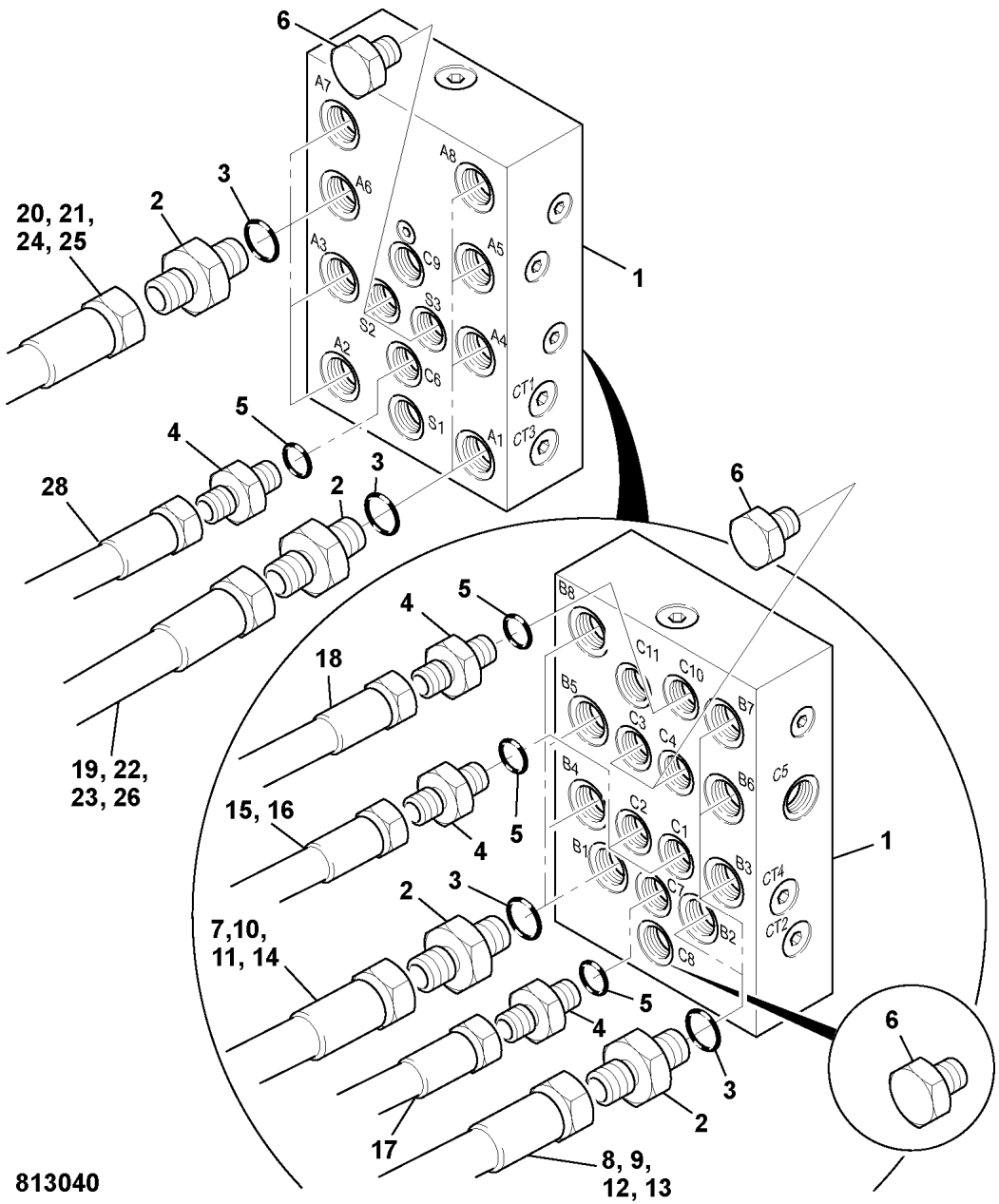

ITEM	PART NO	CHANGE NO	DESCRIPTION	REMARKS	USAGE CODE	QTY
25	KNJ1122		Hose, nylon	Shuttle valve port A7 to RH controler port 3		1
26	JRJ0119		Hose, red	Shuttle valve port A8 to LH controler port 1		1
27	KRJ3571		Hose	Shuttle valve port C11 to pilot shuttle portA		1
28	KBJ2438		Hose	Shuttle valve port C6 to 8station val port C6		1

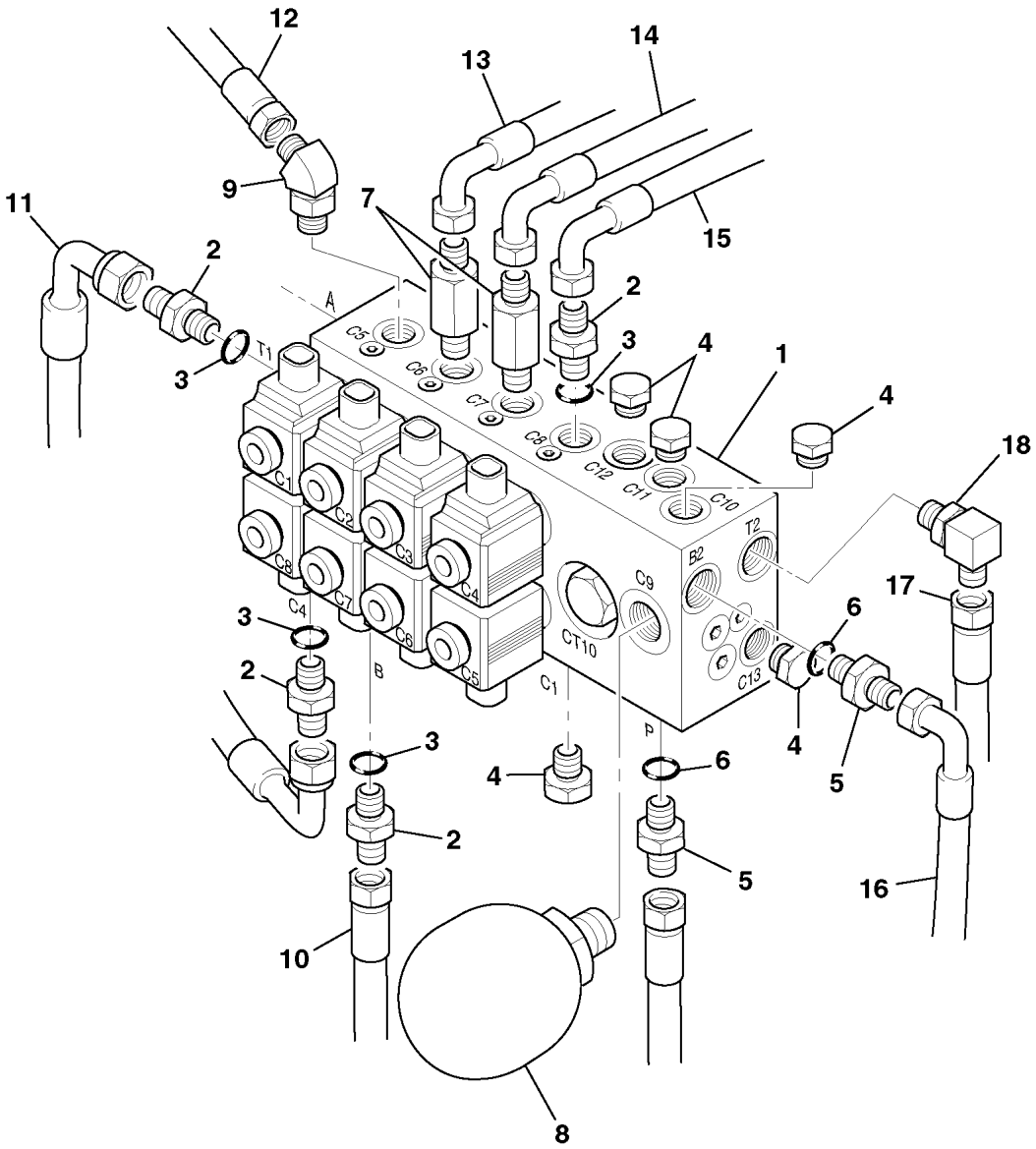

812970

JS160W

	FROM	TO	FROM	TO

ITEM	PART NO	CHANGE NO	DESCRIPTION	REMARKS	USAGE CODE	QTY
1	25/222885		Valve, 8 station solenoid			1
2	KNJ0758		Adapter			4
3	LBQ0112		:O Ring			1
4	KHJ0363		Plug			5
5	KNJ0759		Adapter			1
6	LBQ0142		:O Ring			1
7	JHJ0105		Adapter, extended			2
8	JHJ0050		Accumulator			1
9	KHJ0348		Adapter, elbow			1
10	KNJ1067	Superseded	Hose	8 station valve port B to swing motor port PR		1
	KBJ2439		Hose, nylon			1
11	JLV0594		Hose	8 station valve port T1 to polt shuttle portT		1
12	KBJ2346		Hose, nylon	8 station valve port C5 to p shuttle port PP		1
13	KBJ2438		Hose	8station valve port C6 to shuttle val port C6		1
14	KNJ1849		Hose	8 station val port C7 to main valve port Py		1

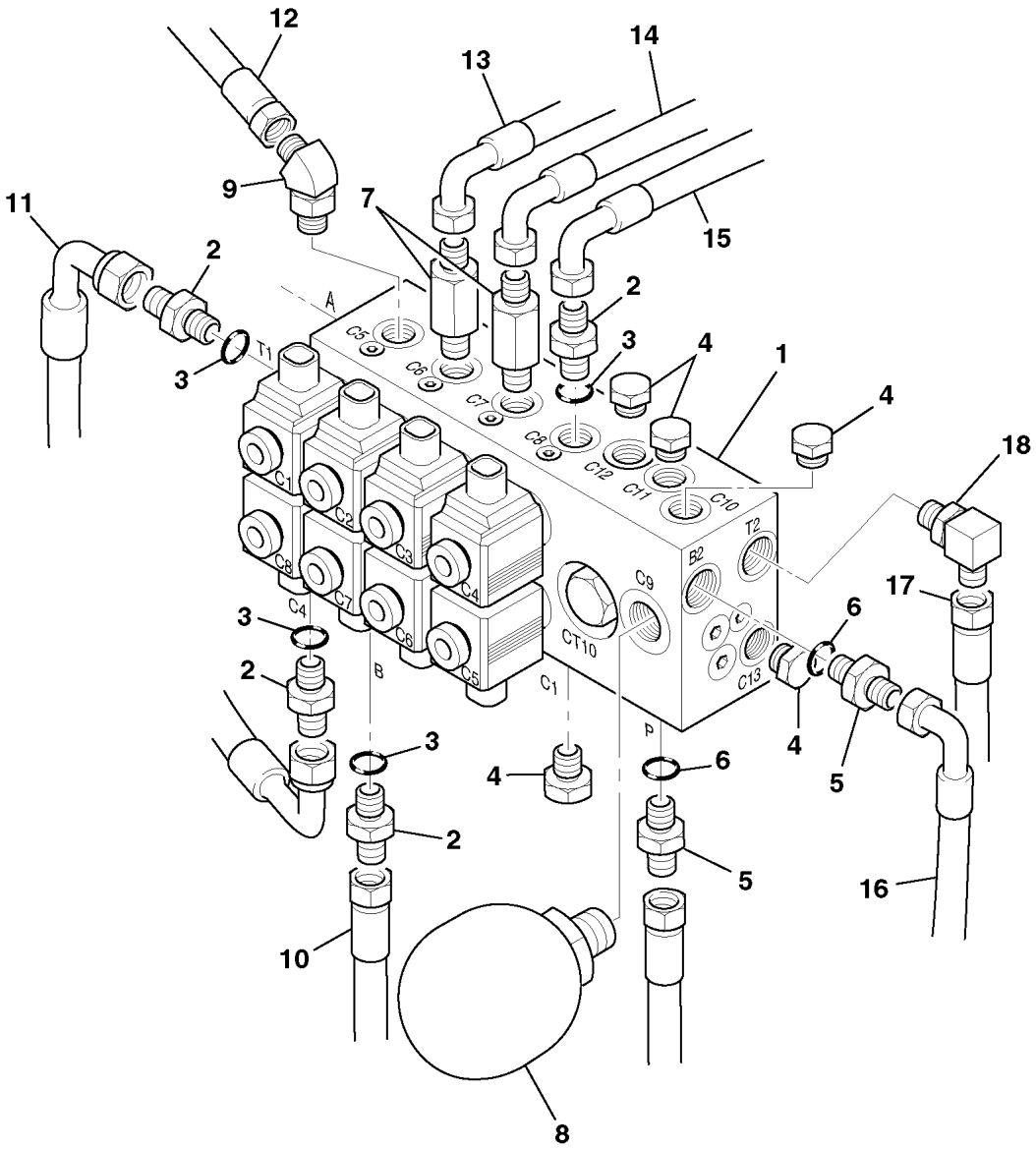

812970

ITEM	PART NO	CHANGE NO	DESCRIPTION	REMARKS	USAGE CODE	QTY
15	KBJ2203		Hose	8 station valve port C8 to main valve port h		1
16	KRJ3935		Hose, nylon	8station val port B2 to 3station val port P2		1
17	KNJ1314		Hose, nylon, (l=1650)	8 station valve port T2 to t manifold port T3		1
18	KHJ0342		Adapter, elbow			1
19	JLV1446		Hose	8 station val Port A to shuttle valve port C7		1

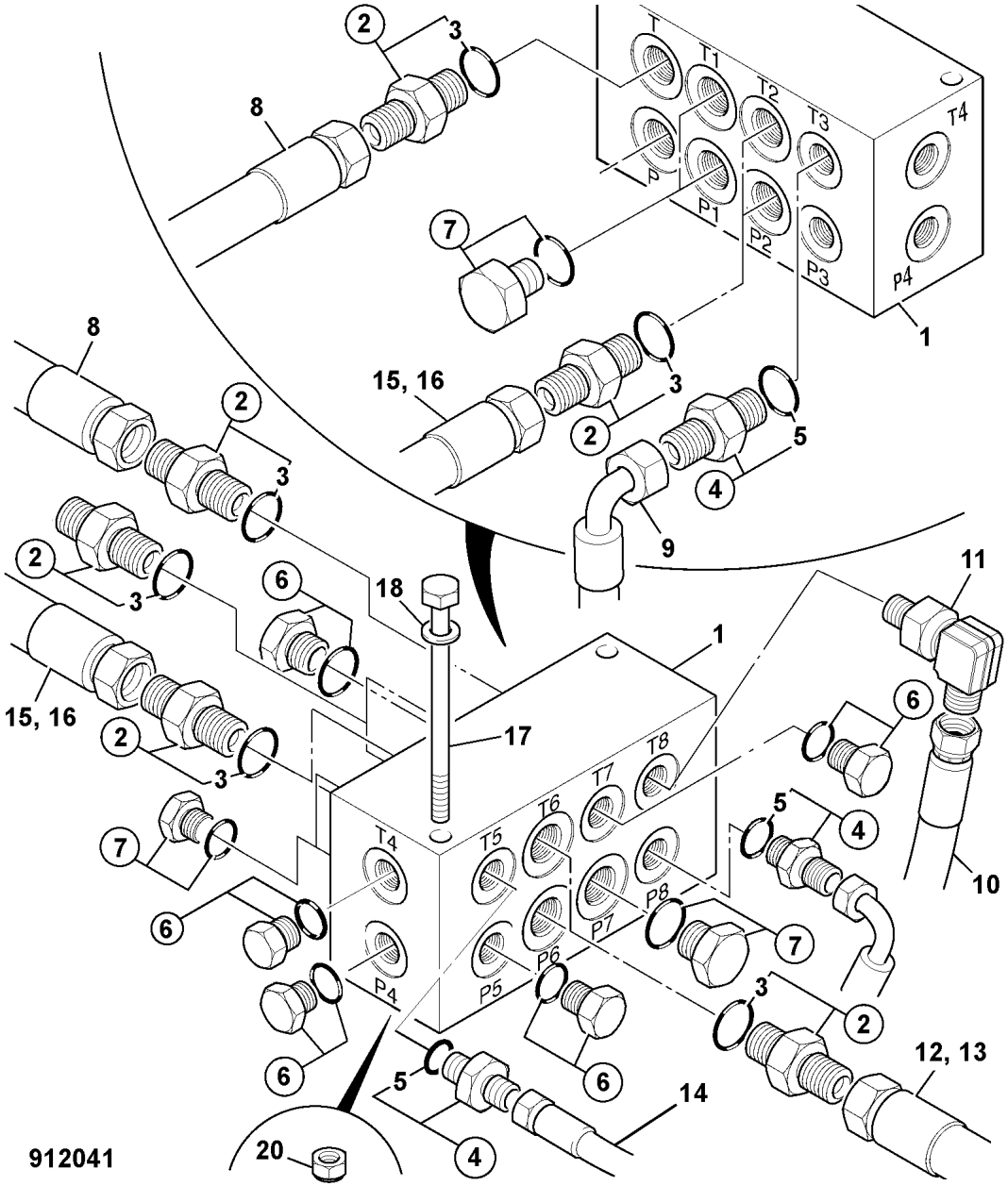

	FROM	TO	FROM	TO
JS160W				

ITEM	PART NO	CHANGE NO	DESCRIPTION	REMARKS	USAGE CODE	QTY
1	331/51156		Manifold, cab pilot, Aluminium			1
2	KNJ0759		Adapter			4
3	LBQ0142		:O Ring			1
4	KNJ0758		Adapter			3
5	LBQ0112		:O Ring			1
6	KHJ0363		Plug			4
7	BRJ1545		Plug			3
8	KNJ1128		Hose, nylon	Cab manifold port T to tank manifold port T2		1
10	KHJ1039		Hose, nylon	Cab manifold port T8 to 3 station port T2		1
11	KRJ3560		Adapter, elbow			1
12	* KNJ1109		Hose, nylon, light green	Cab manifold port T6 to LH controler port T		1
13	* KNJ1109		Hose, nylon, light green	Cab manifold port P6 to LH controler port P		1
14	627/10620		Hose	Cab manifold port T5 to drive pedal port T		1
15	* KNJ1109		Hose, nylon, light green	Cab manifold port T2 to RH controler port T		1

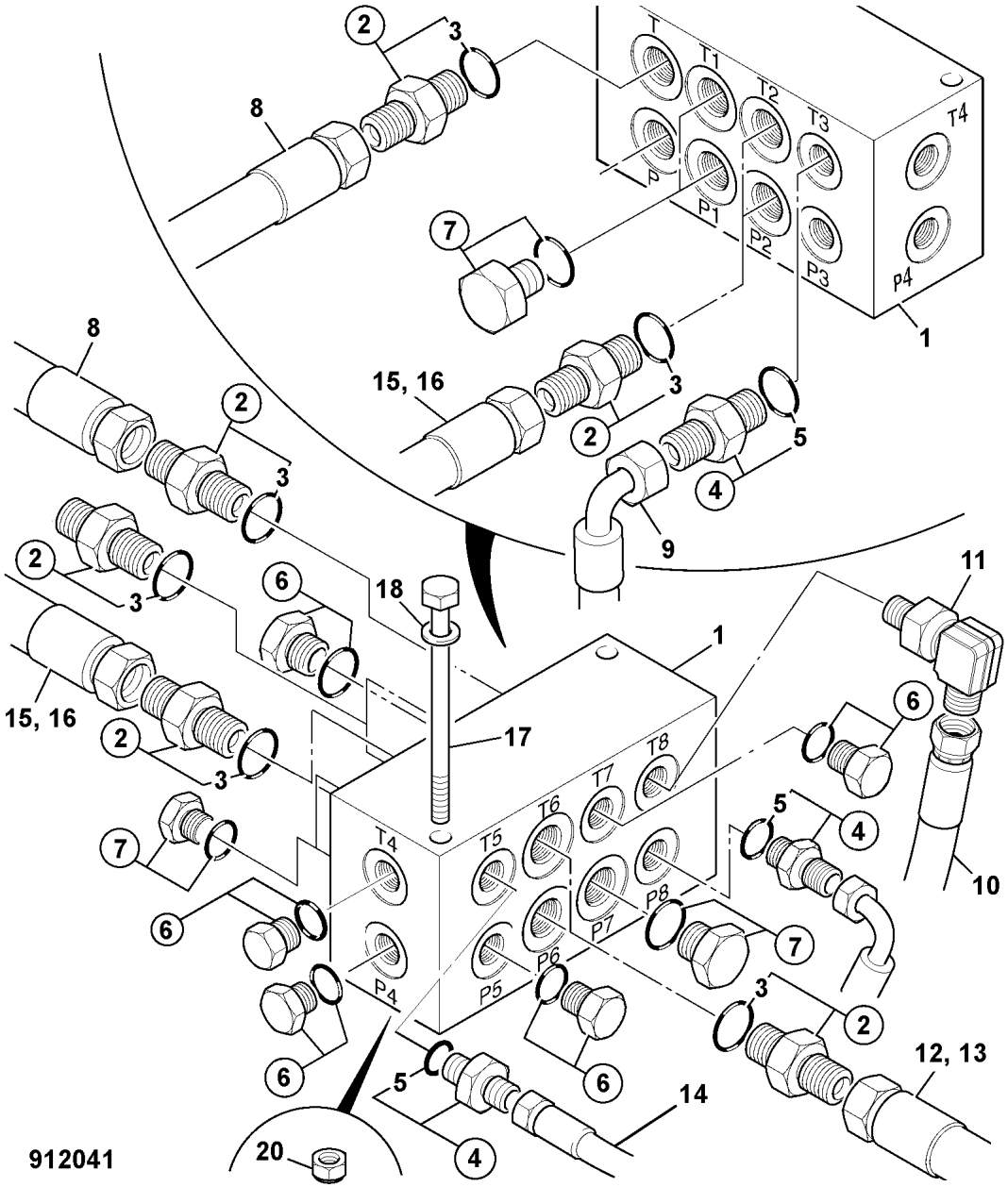

ITEM	PART NO	CHANGE NO	DESCRIPTION	REMARKS	USAGE CODE	QTY
16	* KNJ1109		Hose, nylon, light green	Cab manifold port P2 to RH controler port P		1
17	1316/0318D		Bolt			2
18	JHP0046		Washer, M10			2
19	KSJ2466		Hose, nylon	Port P8 to 3 station valve port C3		1
20	1371/0301D		Nut, M10 high strength			2

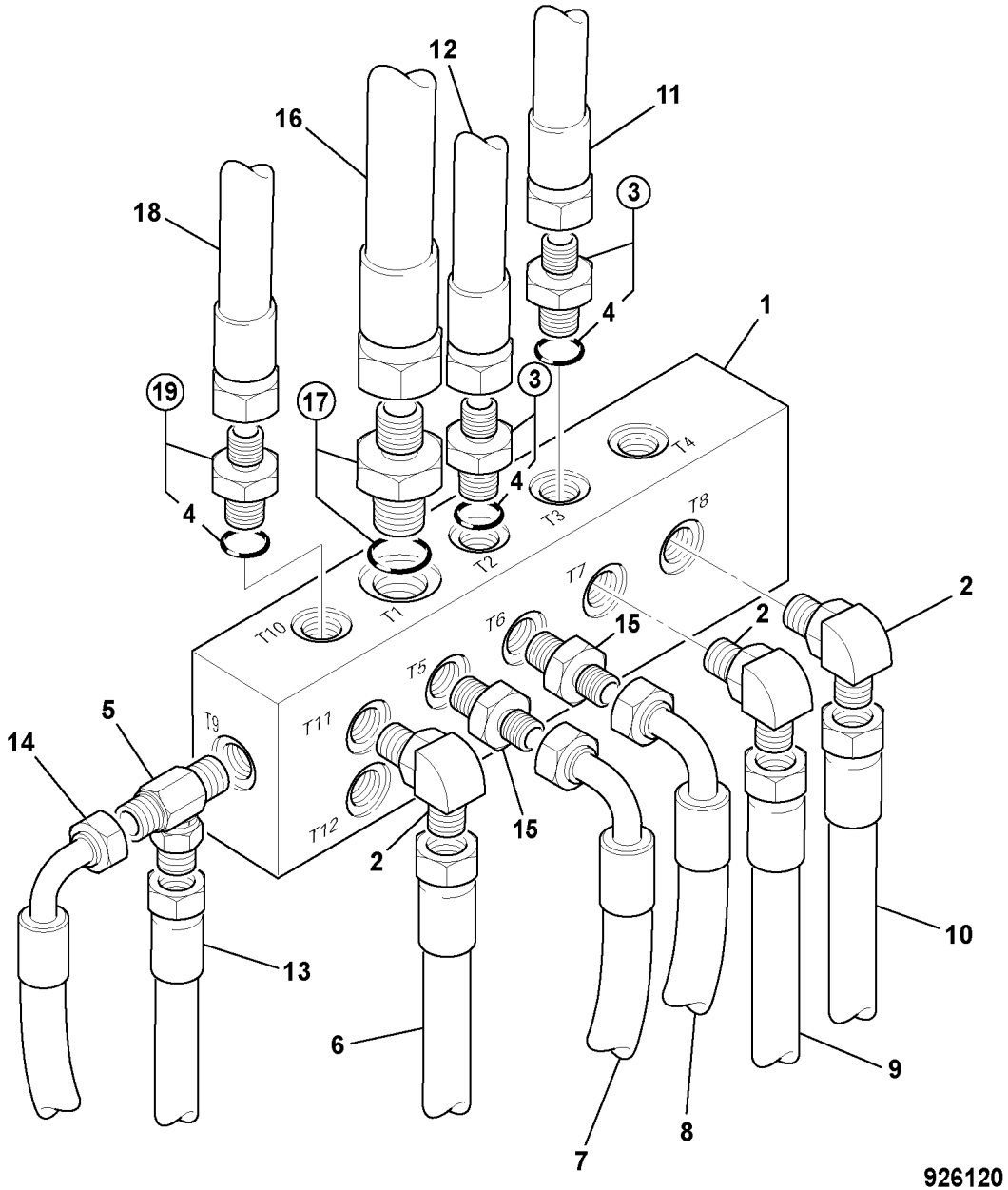

	FROM	TO	FROM	TO
JS160W				

ITEM	PART NO	CHANGE NO	DESCRIPTION	REMARKS	USAGE CODE	QTY
1	JLJ0284		Manifold			1
2	KHJ0341		Adapter, elbow			6
3	KNJ0758		Adapter			1
4	LBQ0142		:O Ring			1
5	KHJ0869		Adapter, tee			1
6	KTJ0906		Hose, nylon	Tank manifold port T11 to main valve port dr4		1
7	KBJ2207		Hose, nylon	Tank manifold port T5 to main valve port dr1		1
8	KBJ2207		Hose, nylon	Tank manifold port T6 to main valve port dr2		1
9	KBJ2207		Hose, nylon	Tank manifold port T7 to main valve port dr3		1
10	KRJ3577		Hose, nylon	Tank manifold port T8 to Pilot s valve portB		1
11	KNJ1314		Hose, nylon, (l=1650)	Tank manifold port T3 to 8 station valve T2		1
12	KNJ1128		Hose, nylon	Tank manifold port T2 to cab manifold port T		1
13	* JNJ0418		Hose	Tank manifold port T9 to cushion valve port S		1

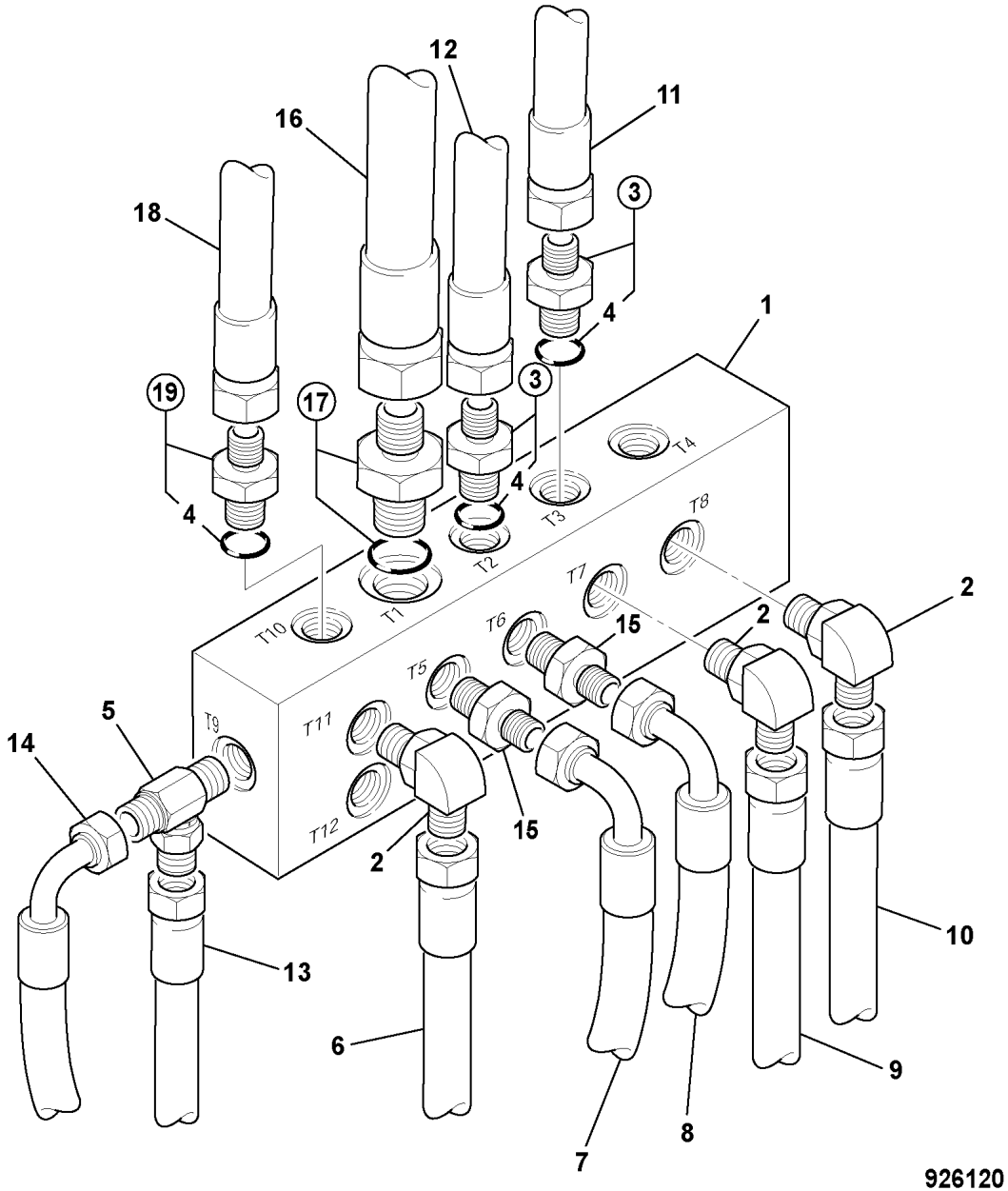

926120

ITEM	PART NO	CHANGE NO	DESCRIPTION	REMARKS	USAGE CODE	QTY
14	* JNJ0418		Hose	Tank manifold port T9 to cushion valve port T		1
15	KNJ0758		Adapter			2
16	KNJ1119		Hose	Tank manifold Port T1 to swing motor port DB		1
17	JHJ0062		Adapter			1
18	JRJ0107		Hose, pink	Tank manifold port T10 to Trans valve port T		1
19	KNJ0759		Adapter			1

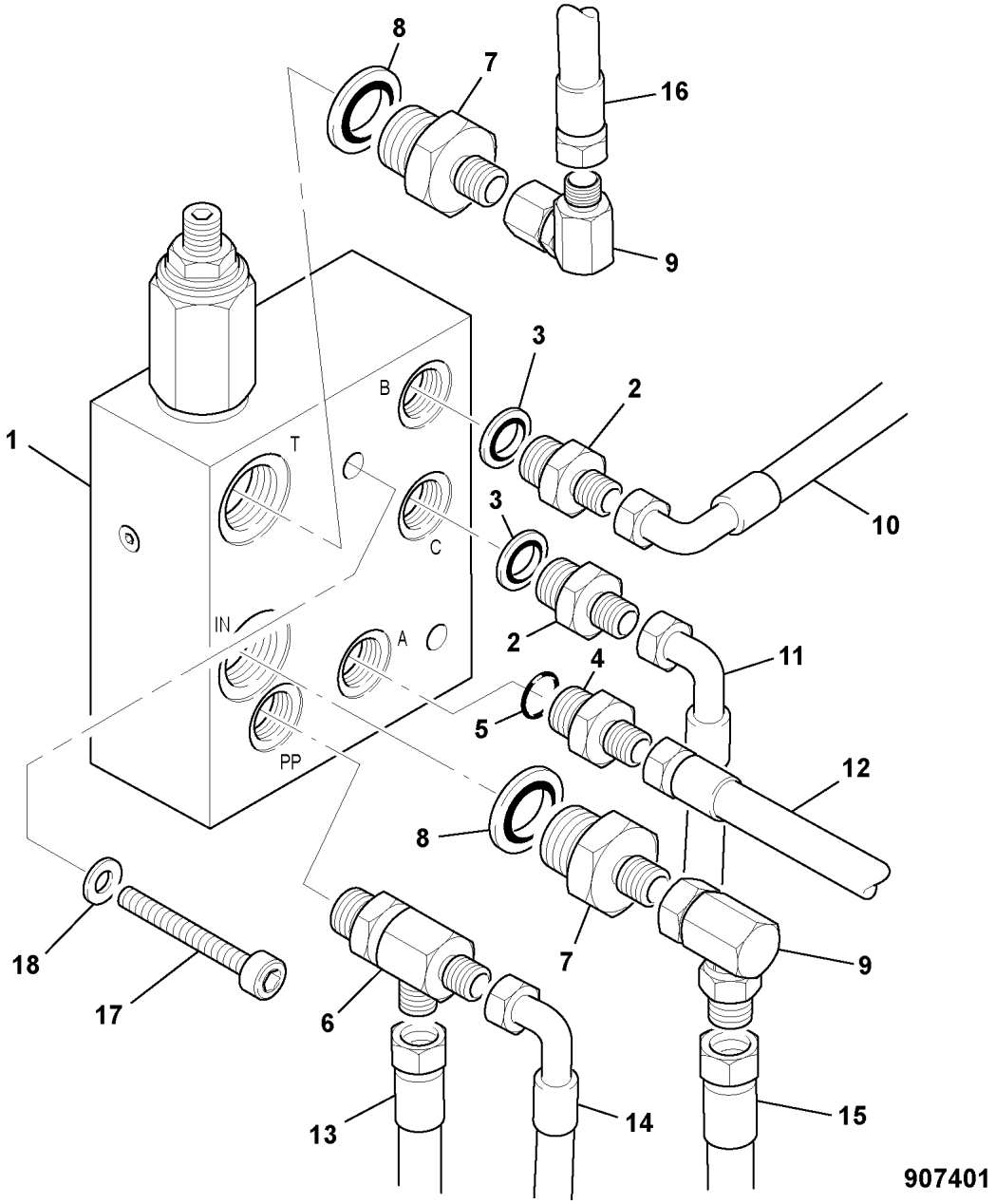

907401

	FROM	TO	FROM	TO
JS160W				

ITEM	PART NO	CHANGE NO	DESCRIPTION	REMARKS	USAGE CODE	QTY
1	25/220540		Valve, assembly, shuttle sequence			1
2	1604/0002		Adapter, 1/4" BSP M/M			2
3	1406/0011		Seal, bonded			2
4	KNJ0758		Adapter			1
5	LBQ0112		:O Ring			1
6	KHJ0869		Adapter, tee			1
7	1606/0003		Adapter			2
8	1406/0015		Washer, seal			2
9	816/00464		Adapter, elbow - male/ female			2
10	* KRJ3577		Hose, nylon	Pilot shuttle port B to tank manifold port T8		1
11	* KNJ1849		Hose	pilot shuttle port C to main valve port a1		1
12	* KRJ3571		Hose	Pilot shuttle port A to shuttle valve portC11		1
13	* JLJ0326		Hose	Pilot shuttle port PP to main valve port Px		1
14	* KBJ2346		Hose, nylon	Pilot shuttle port PP to 8 station valve C5		1
15	KSJ0806		Hose, nylon	Pilot shuttle port IN to drive pedal port 3		1

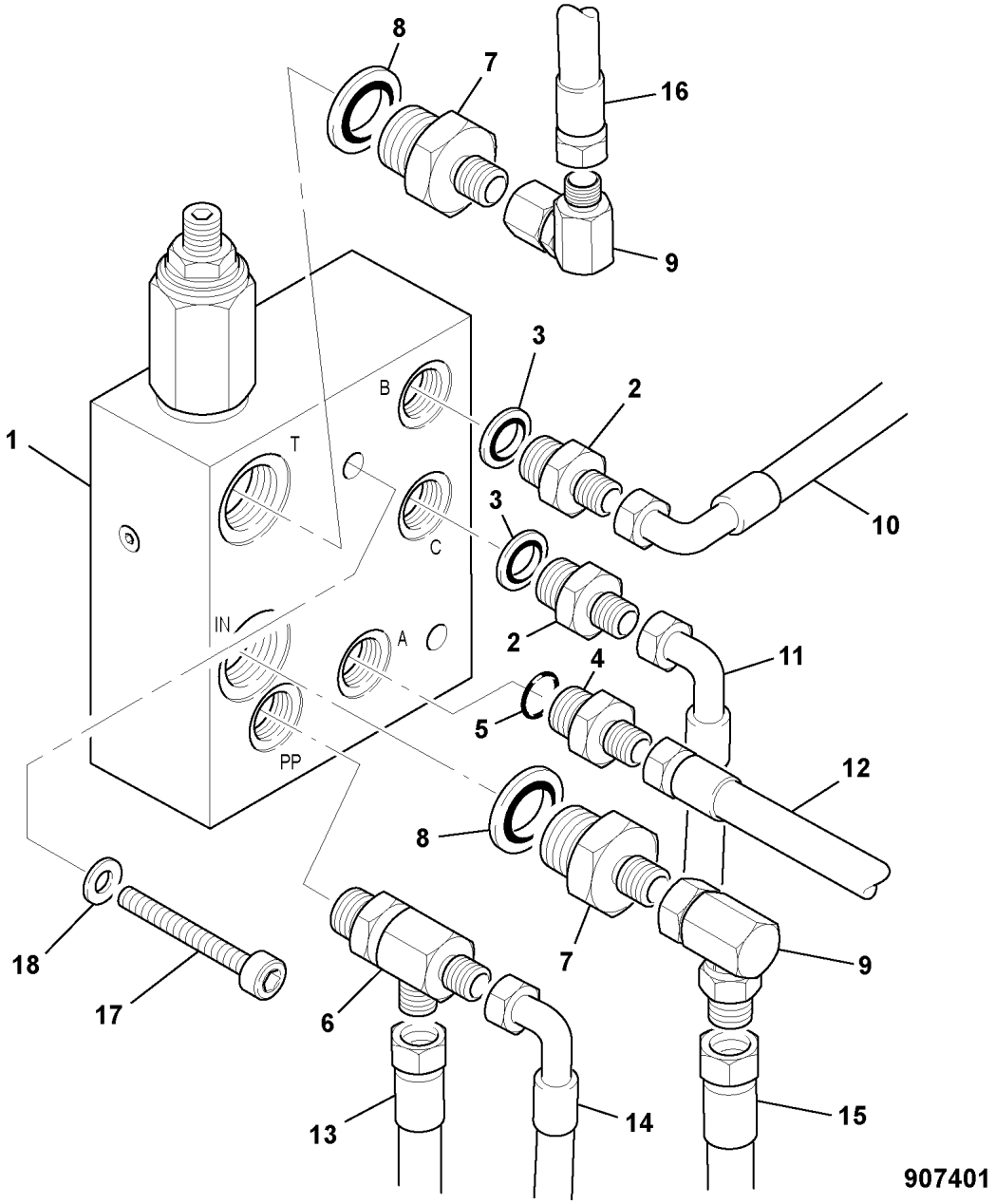

ITEM	PART NO	CHANGE NO	DESCRIPTION	REMARKS	USAGE CODE	QTY
16	JLV0594		Hose	Pilot shuttle port T to 8 station valve T1		1
17	1391/3314D		Capscrew, M8 x 60 LG, GRADE 12.9			2
18	1425/0007D		Washer, M8 spring			2

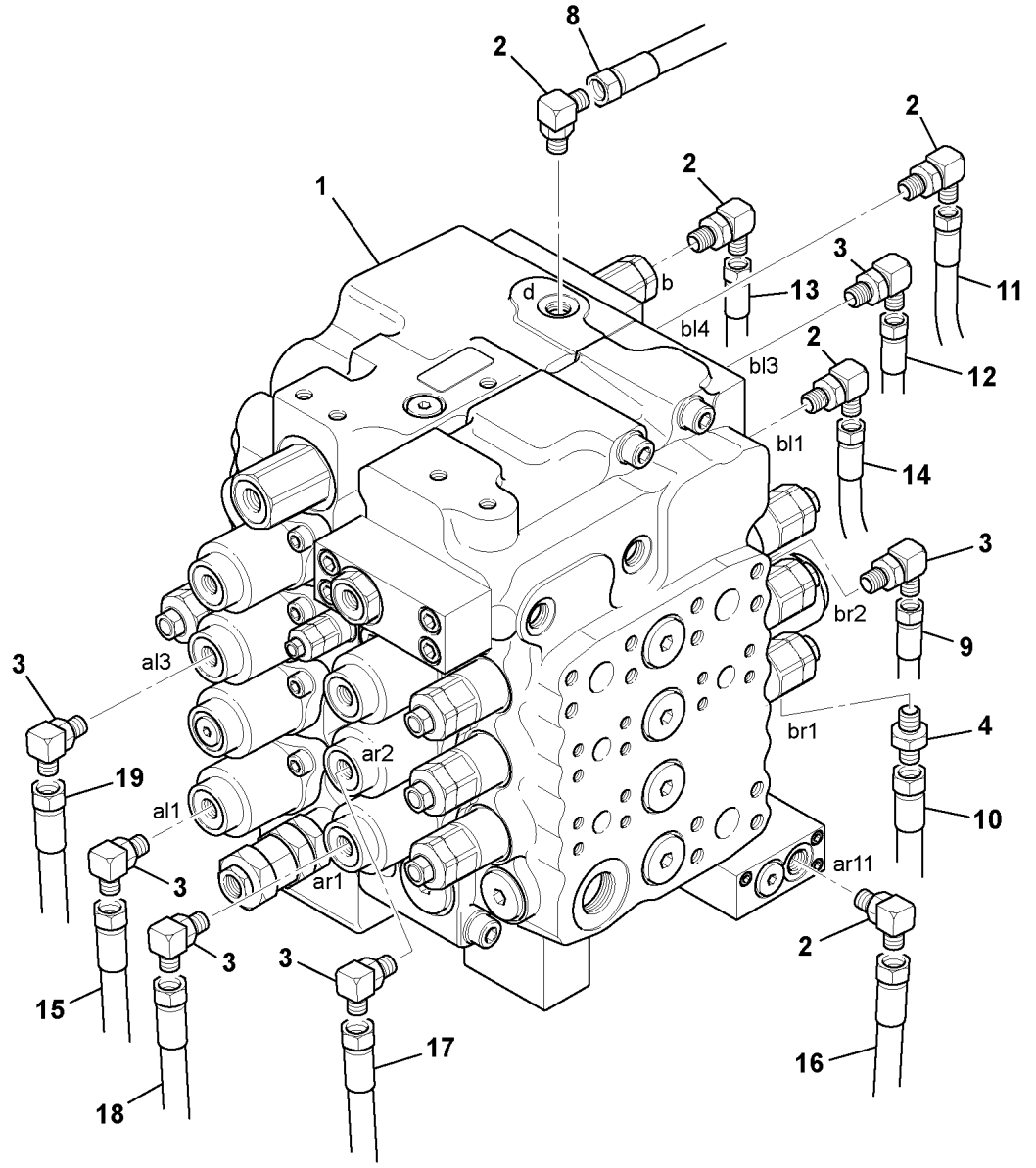

907390

JS160W

	FROM	TO	FROM	TO

ITEM	PART NO	CHANGE NO	DESCRIPTION	REMARKS	USAGE CODE	QTY
1	25/223653		Valve, Main Control			1
2	KHJ0341		Adapter, elbow			4
3	KRJ3560		Adapter, elbow			7
4	KNJ1106		Adapter			1
8	KNA0363		Hose, nylon	Main valve port d to shuttle valve port C1		1
9	KNJ1314		Hose, nylon, (l=1650)	Main valve port br2 to shuttle valve port B8		1
10	* KNJ1119		Hose	Main valve port br1 to cushion valve port H		1
11	KBJ2208		Hose	Main valve port bl4 to drive pedal port 2		1
12	* KNJ1314		Hose, nylon, (l=1650)	Main valve port bl3 to cushion valve port D		1
13	KNJ1067	Superseded	Hose	Main valve port b to shuttle valve port C10		1
	KBJ2439		Hose, nylon			1
14	KNJ1314		Hose, nylon, (l=1650)	Main valve port bl1 to shuttle valve port B2		1
15	KNJ1122		Hose, nylon	Main valve port al1 to shuttle valve port B1		1

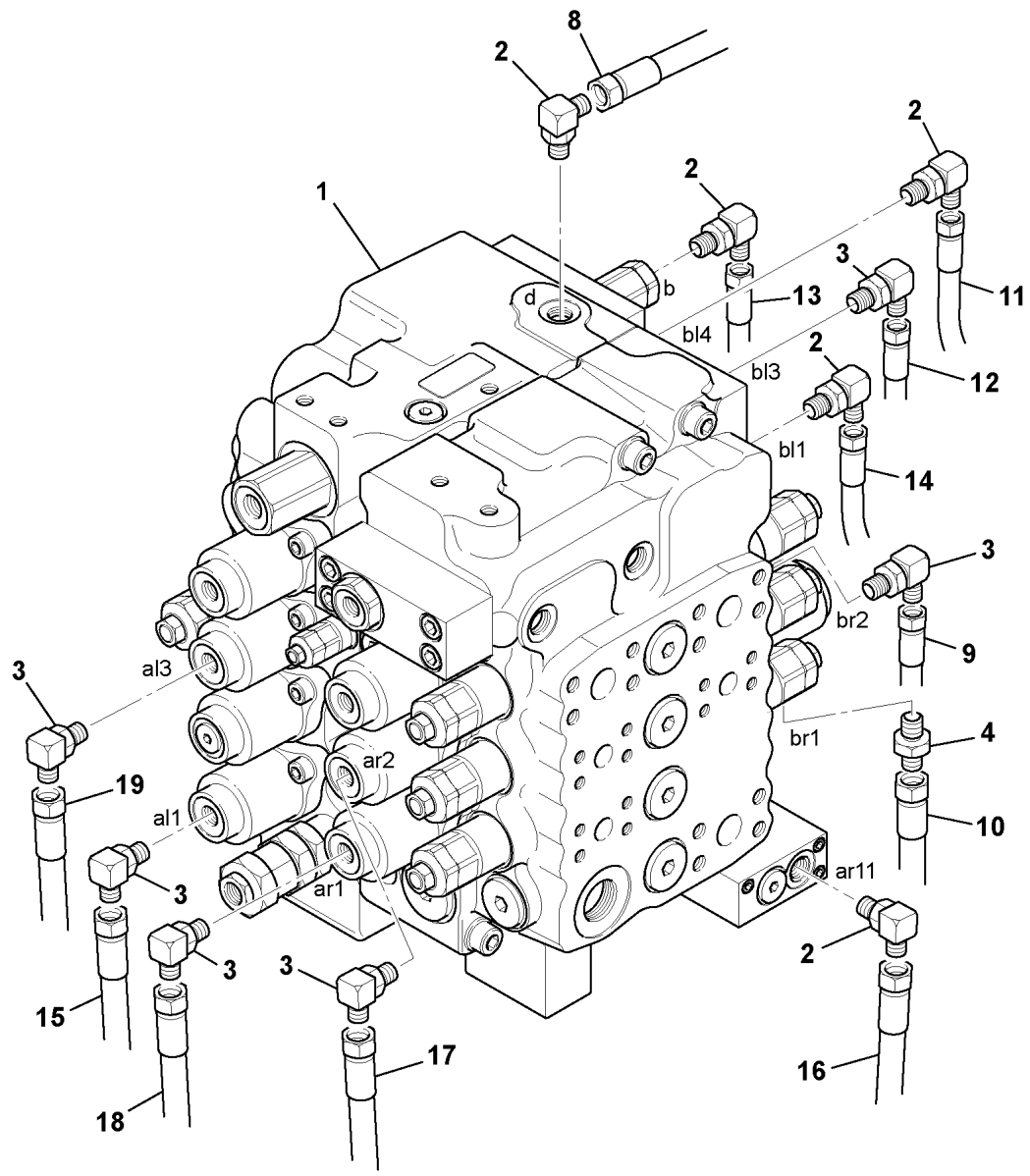

907390

ITEM	PART NO	CHANGE NO	DESCRIPTION	REMARKS	USAGE CODE	QTY
16	KTJ0675		Hose, nylon	Main valve port ar11 to shuttle valve port C2		1
17	KNJ1123		Hose, nylon	Main valve port ar2 to shuttle valve port B7		1
18	* KNJ1956		Hose, nylon	Main valve port ar1 to cushion valve port G		1
19	* 627/10382		Hose	Main valve port al3 to cushion valve port C		1

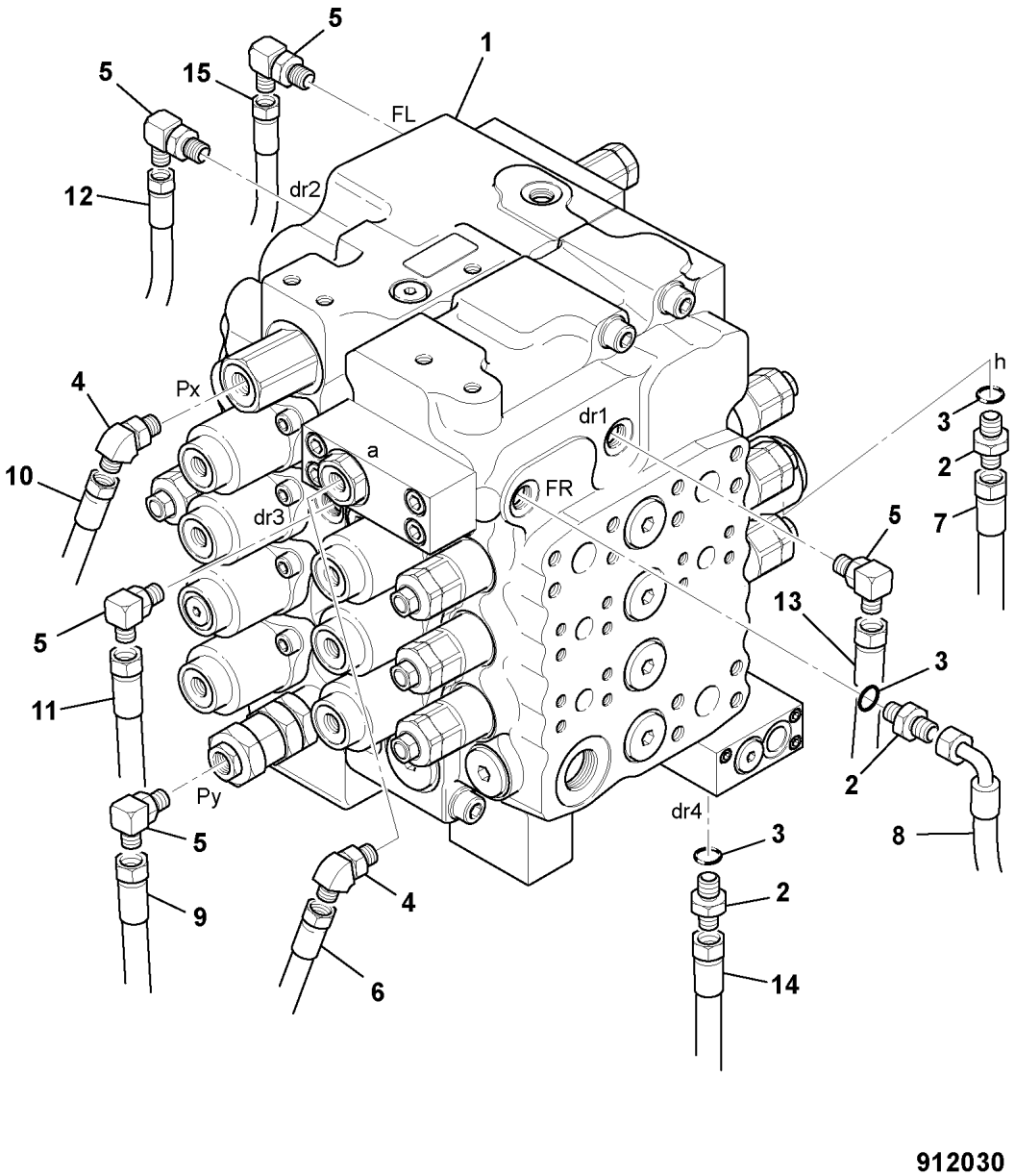

912030

	FROM	TO	FROM	TO
JS160W				

ITEM	PART NO	CHANGE NO	DESCRIPTION	REMARKS	USAGE CODE	QTY
1	25/223653		Valve, Main Control			1
2	KNJ0758		Adapter			3
3	LBQ0112		:O Ring			1
4	KHJ0348		Adapter, elbow			2
5	KHJ0341		Adapter, elbow			5
6	KNJ1849		Hose	Main valve port a to pilot shuttle port C		1
7	KBJ2203		Hose	Main valve port h to 8 station valve port C8		1
8	JLJ0326		Hose	Main valve port FR to main pump port Pi1		1
9	KNJ1849		Hose	Main valve port Py to 8 station valve port C7		1
10	JLJ0326		Hose	Main valve port Px to pilot shuttle port PP		1
11	KBJ2207		Hose, nylon	Main valve port dr3 to tank manifold port T7		1
12	KBJ2207		Hose, nylon	Main valve port dr2 to tank manifold port T6		1
13	KBJ2207		Hose, nylon	Main valve port dr1 to tank manifold port T5		1

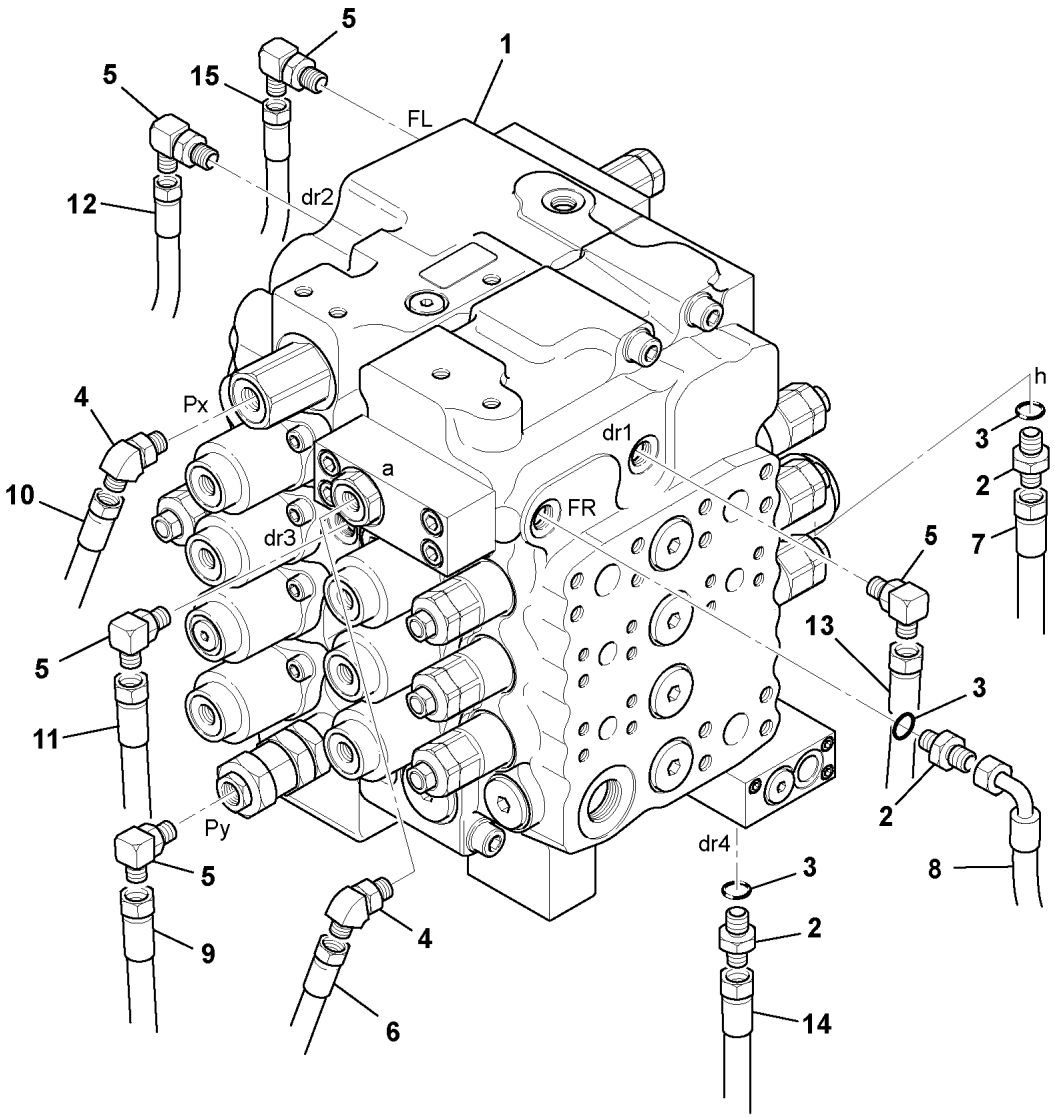

912030

ITEM	PART NO	CHANGE NO	DESCRIPTION	REMARKS	USAGE CODE	QTY
14	KTJ0906		Hose, nylon	Main valve port dr4 to tank manifold port T11		1
15	KTJ0809		Hose, yellow	Main valve port FL to main pump port Pi2		1

E

E1 HOSE & PIPEWORK
● E2 PUMP/MOTOR & PUMP DRIVE
E3 VALVES & HYDRAULIC FILTERS
E4 RAMS

ENGLISH

E2-1-1 PUMP, MAIN HYDRAULIC
E2-2-1 PUMP, PISTON, MAIN HYDRAULIC, & COMPONENTS
E2-6-10 MOTOR, DRIVE, FIG 1
E2-6-11 MOTOR, DRIVE, FIG 2
E2-7-1 MOTOR, SWING

FRANCAIS

E2-1-1 PUMP, MAIN HYDRAULIC
E2-2-1 POMPE, PISTON HYDRAULIQUE, PRINCIP& COMPOSANTS FIG 1
E2-6-10 MOTOR, DRIVE, FIG 1
E2-6-11 MOTOR, DRIVE, FIG 2
E2-7-1 MOTOR, SWING

DEUTSCH

E2-1-1 PUMP, MAIN HYDRAULIC
E2-2-1 KOLBENPUMPE HAUPT-HYDRAULIK & BAUTEILE FIG 1
E2-6-10 MOTOR, DRIVE, FIG 1
E2-6-11 MOTOR, DRIVE, FIG 2
E2-7-1 MOTOR, SWING

ITALIANO

E2-1-1 PUMP, MAIN HYDRAULIC
E2-2-1 POMPA, PISTONE SISTEMA IDRAULICO PRINCIPALE E COMPONENTI FIG 1
E2-6-10 MOTOR, DRIVE, FIG 1
E2-6-11 MOTOR, DRIVE, FIG 2
E2-7-1 MOTOR, SWING

PORTUGUES

E2-1-1 PUMP, MAIN HYDRAULIC
E2-2-1 BOMBA, PISTON HIDRAULICO PRINCIPALE COMPONENTES FIG 1
E2-6-10 MOTOR, DRIVE, FIG 1
E2-6-11 MOTOR, DRIVE, FIG 2
E2-7-1 MOTOR, SWING

ESPANOL

E2-1-1 PUMP, MAIN HYDRAULIC
E2-2-1 BOMBA PISTON HIDRAULICO PPAL. Y COMPONENTES FIG 1
E2-6-10 MOTOR, DRIVE, FIG 1
E2-6-11 MOTOR, DRIVE, FIG 2
E2-7-1 MOTOR, SWING

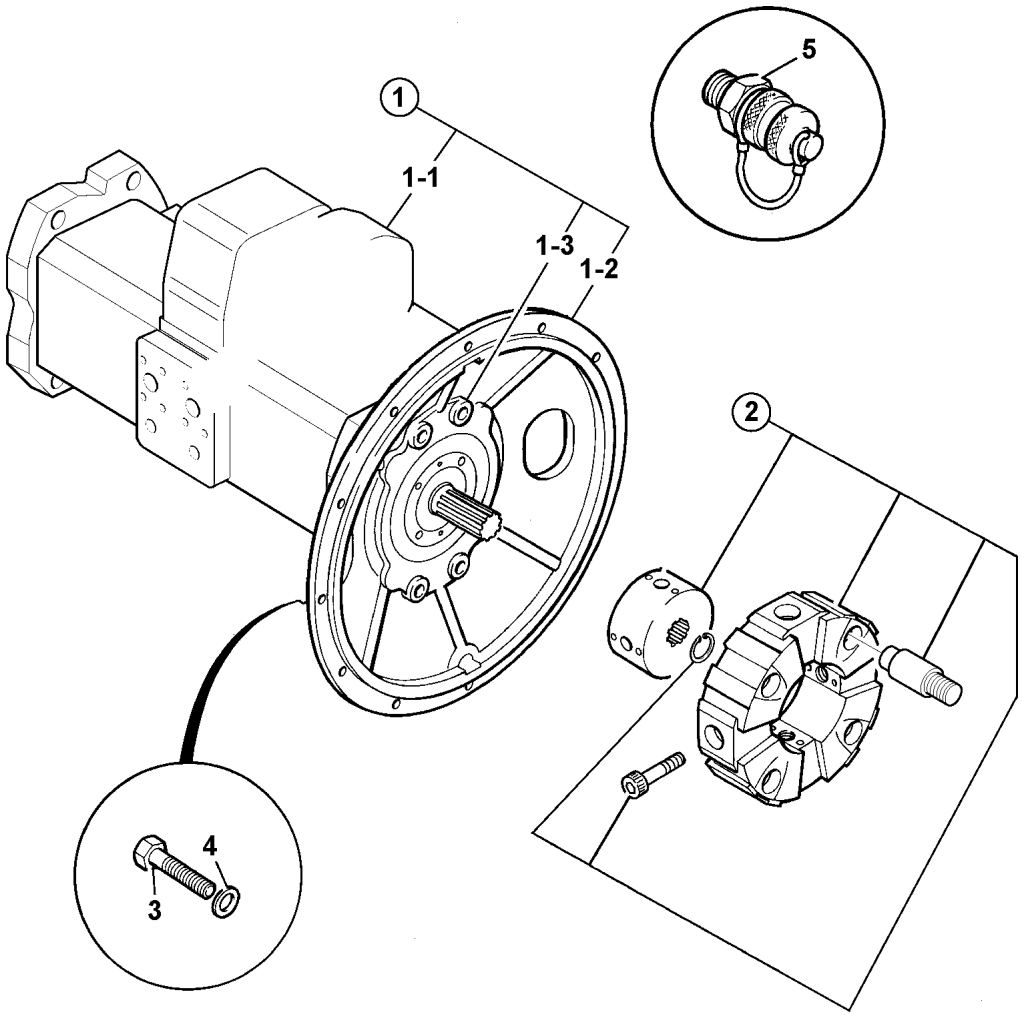

908850

	FROM	TO	FROM	TO
JS160W				

ITEM	PART NO	CHANGE NO	DESCRIPTION	REMARKS	USAGE CODE	QTY
1	20/925753		Pump, main hydraulic			1
1 01	NSP		:None serviced part			1
1 02	332/C1013		:Housing, pump mounting			1
1 03	332/C1078		:Capscrew			4
2	331/25063		Coupling, assembly, pump engine, including bolts			1
3	1316/0408D		Setscrew			10
4	JHP0046		Washer, M10			10
5	JTJ0028		Connector, pressure test			3

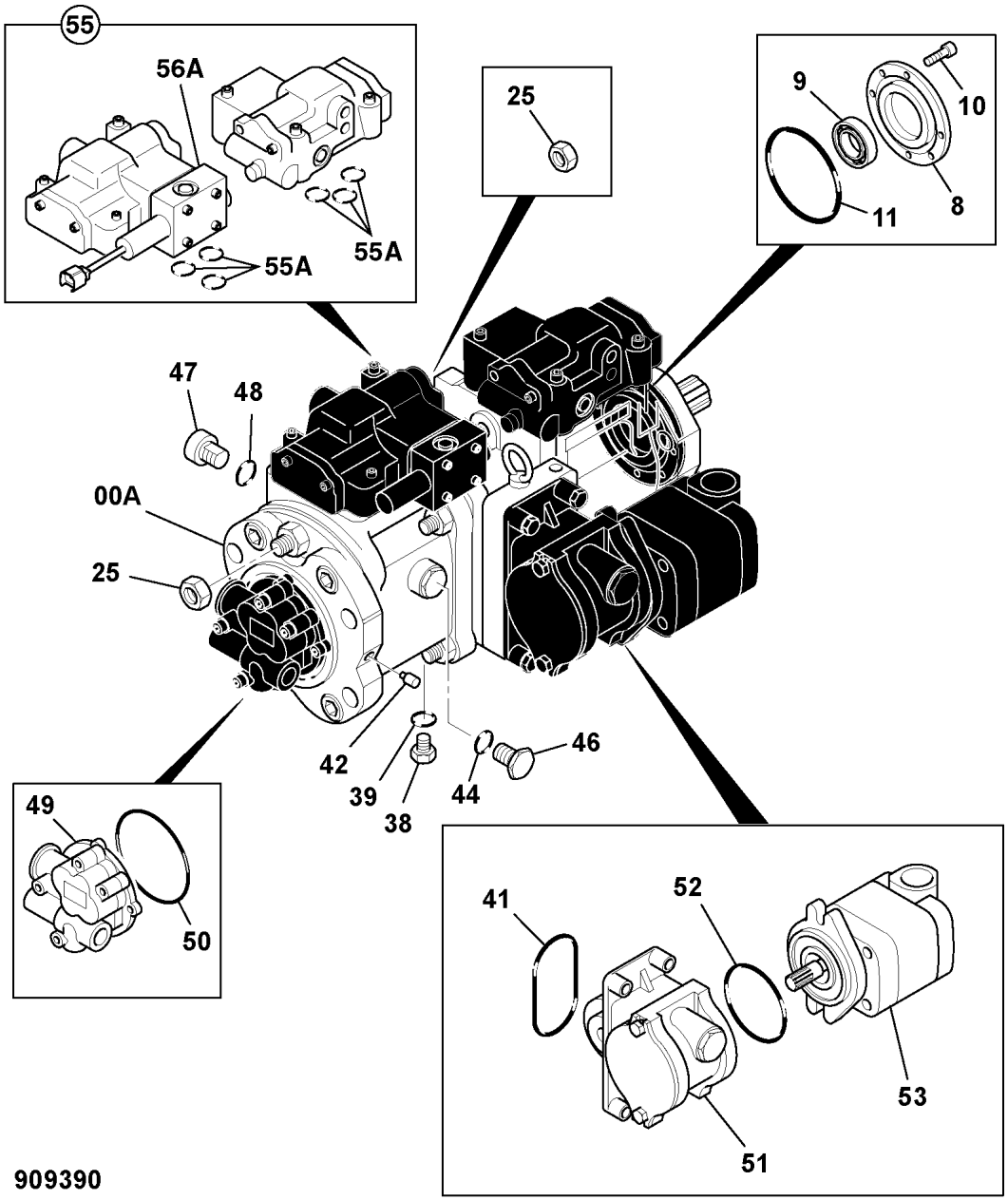

	FROM	TO	FROM	TO
JS160W				

ITEM	PART NO	CHANGE NO	DESCRIPTION	REMARKS	USAGE CODE	QTY
0A	20/925753		Pump, main hydraulic	JS145W		1
8	20/951845		:Cover, & seal assembly			1
9	20/951263		:Seal, oil			1
10	826/10676		:Screw, cap, SKT head			8
11	828/10220		:Seal, O ring			1
25	162R016VZ		:Nut, high strength			4
38	LLP0041		:Plug			2
39	LBQ0112		:O Ring			2
41	LBQ0953		:O Ring			1
42	LLP0114		:Plug			15
44	LBQ0182		:O Ring			4
46	20/950609		:Plug			4
47	20/950608		:Plug			2
48	828/10214		:Seal, O ring			2
49	332/C1080		:Pump			1
50	828/10220		:Seal, O ring			1
51	20/950662		:Drive, power take_off, unit			1
52	1		TBA			1
53	20/950663		Pump, gear	Aux pump optional		1
55	332/C2972		:Regulator, kit. Front & Rear			1pr
55A	332/C4076		::Kit-seal, regulator			2
56A	20/950631		::Valve, proportional, reducing			1

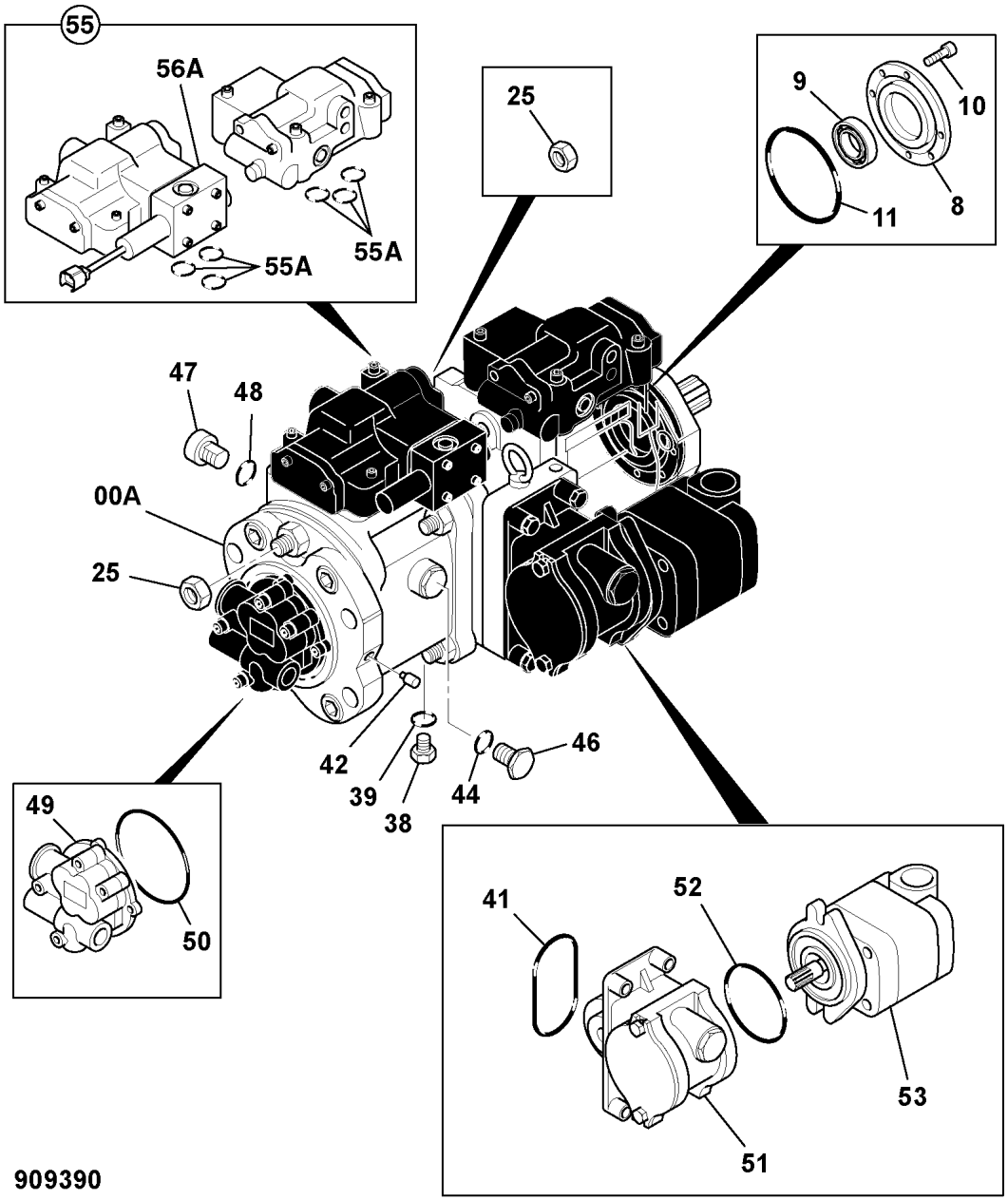

ITEM	PART NO	CHANGE NO	DESCRIPTION	REMARKS	USAGE CODE	QTY
59	332/C4075		:Kit-seal, main pump			1

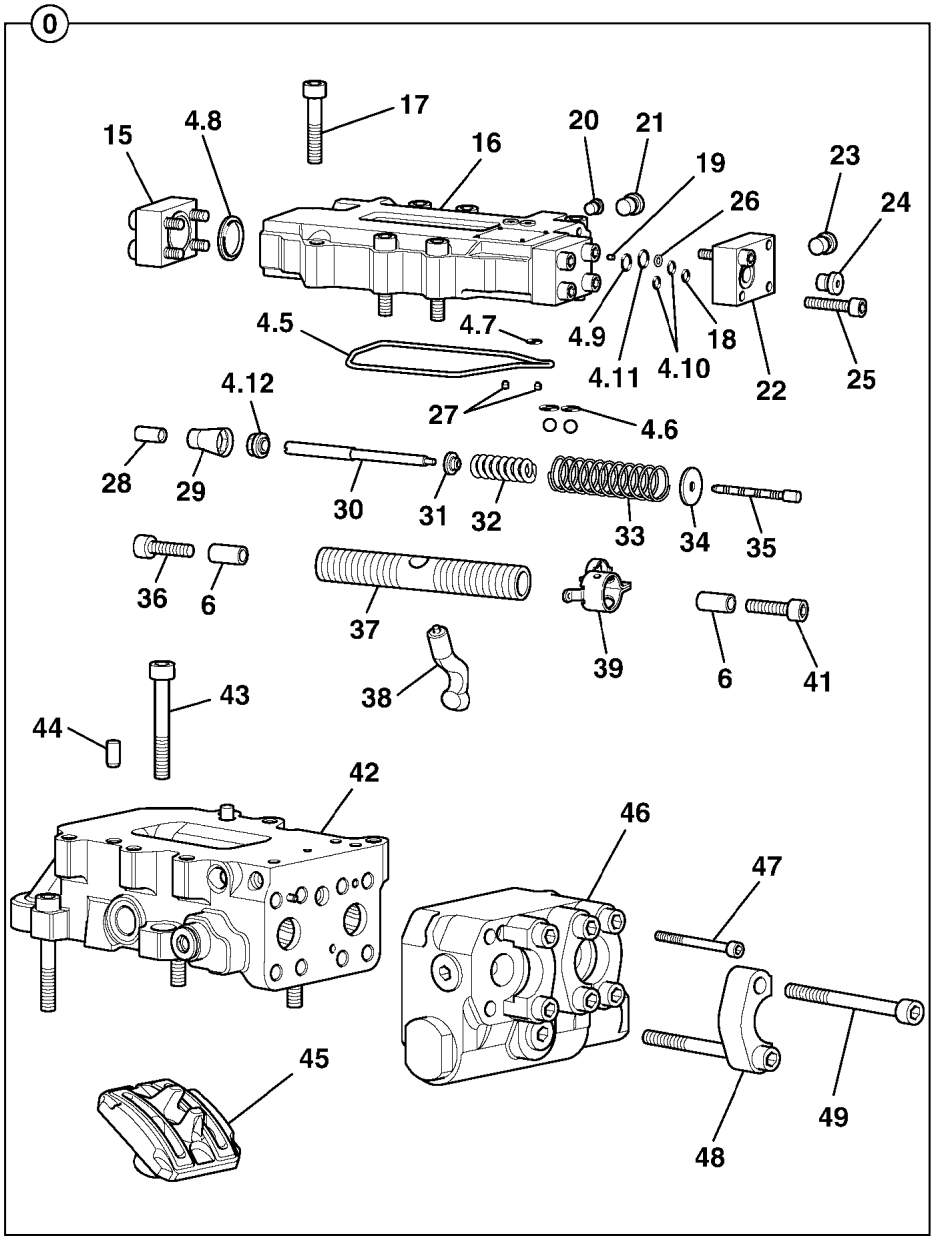

	FROM	TO	FROM	TO
JS160W				

ITEM	PART NO	CHANGE NO	DESCRIPTION	REMARKS	USAGE CODE	QTY
0A	20/925815		Motor, drive, 130/145/160/175W T3			1
1	331/34856		::Kit, piston repair			1
1 01	NSP		:::None serviced part	part of kit, item 1		1
1 02	NSP		:::None serviced part	part of kit, item 1		1
1 03	NSP		:::None serviced part	part of kit, item 1		1
1 04	NSP		:::None serviced part	part of kit, item 1		1
2	20/951254		::Kit, shaft repair			1
2 01	NSP		:::None serviced part	part of kit, item 2		1
2 02	NSP		:::None serviced part	part of kit, item 2		1
2 03	NSP		:::None serviced part	part of kit, item 2		1
2 04	NSP		:::None serviced part	part of kit, item 2		1
2 05	NSP		:::None serviced part	part of kit, item2		1
2 06	NSP		:::None serviced part	part of kit, item 2		1
2 07	NSP		:::None serviced part	part of kit, item 2		1
3	20/951254		::Kit, shaft repair			1
3 01	NSP		:::None serviced part	part of kit, item 3		1
3 02	NSP		:::None serviced part	part of kit, item 3		1
3 03	NSP		:::None serviced part	part of kit, item 3		1
3 04	NSP		:::None serviced part	part of kit, item 3		1
4	20/951256		::Kit, seals,motor	includes items 4.1 to 4.12, 18 & 26		1
4 01	NSP		:::None serviced part	part of kit, item 4		1
4 02	NSP		:::None serviced part	part of kit, item 4		1

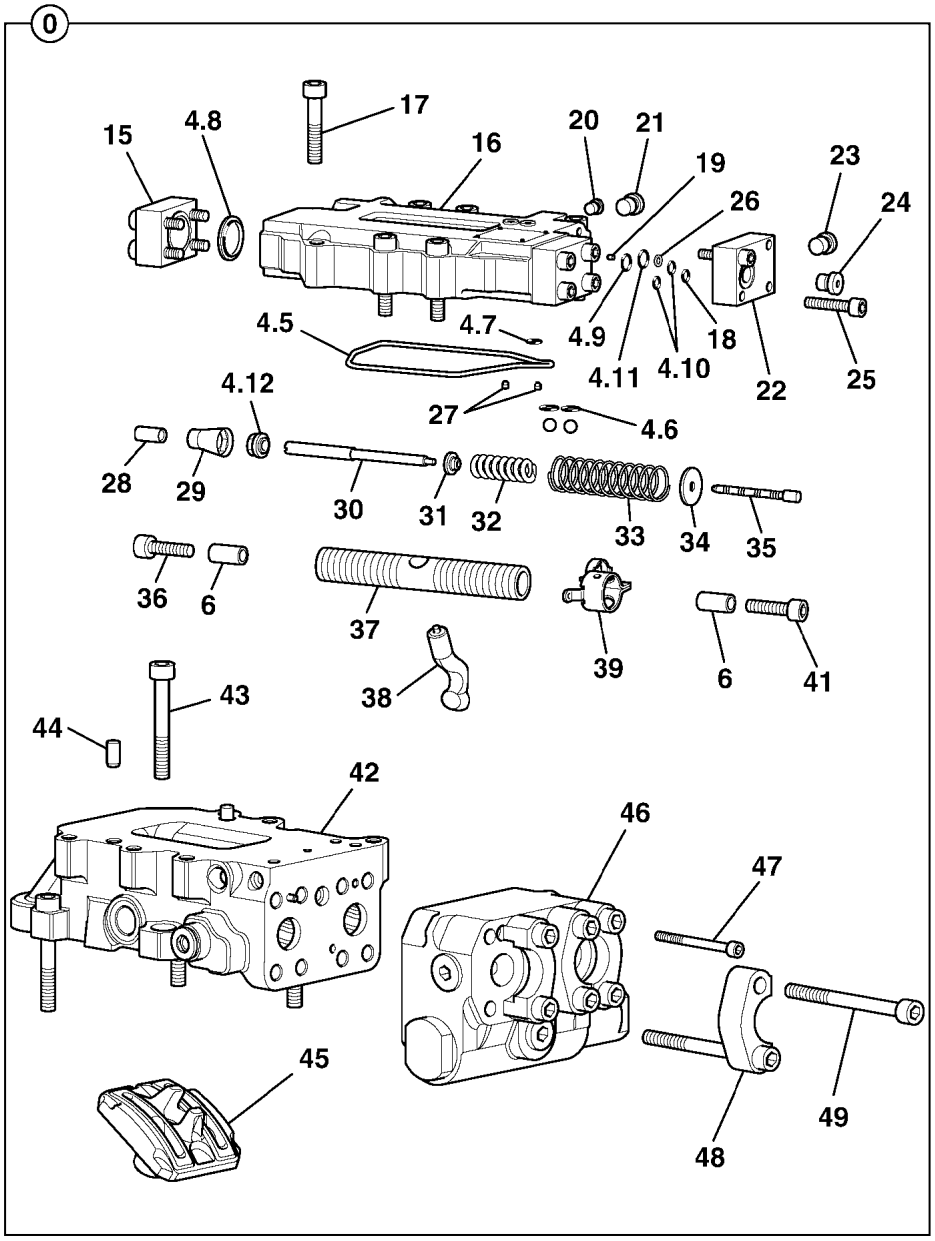

ITEM	PART NO	CHANGE NO	DESCRIPTION	REMARKS	USAGE CODE	QTY
4 03	NSP		:::None serviced part	part of kit, item 4		1
4 04	NSP		:::None serviced part	part of kit, item 4		1
4 05	NSP		:::None serviced part	part of kit, item 4		1
4 06	NSP		:::None serviced part	part of kit, item 4		2
4 07	NSP		:::None serviced part	part of kit, item 4		1
4 08	NSP		:::None serviced part	part of kit, item 4		1
4 09	NSP		:::None serviced part	part of kit, item 4		1
4 10	NSP		:::None serviced part	part of kit, item 4		2
4 11	NSP		:::None serviced part	part of kit, item 4		1
4 12	NSP		:::None serviced part	part of kit, item 4		1
5	20/951257		::Kit, spacer washer			1
6	20/951258		::Kit, Kit stop washer			1
7	NSP		::None serviced part			1
8	NSP		::None serviced part			1
9	NSP		::None serviced part			1
10	NSP		::None serviced part			1
11	NSP		::None serviced part			1
12	NSP		::None serviced part			1
13	NSP		:::None serviced part			1
14	NSP		::None serviced part			1
15	NSP		::None serviced part			2
16	NSP		:::None serviced part			1
17	NSP		::None serviced part			6
18	NSP		:::None serviced part	part of kit, item 4		1
19	NSP		::None serviced part			1
20	NSP		::None serviced part			4
21	NSP		::None serviced part			2

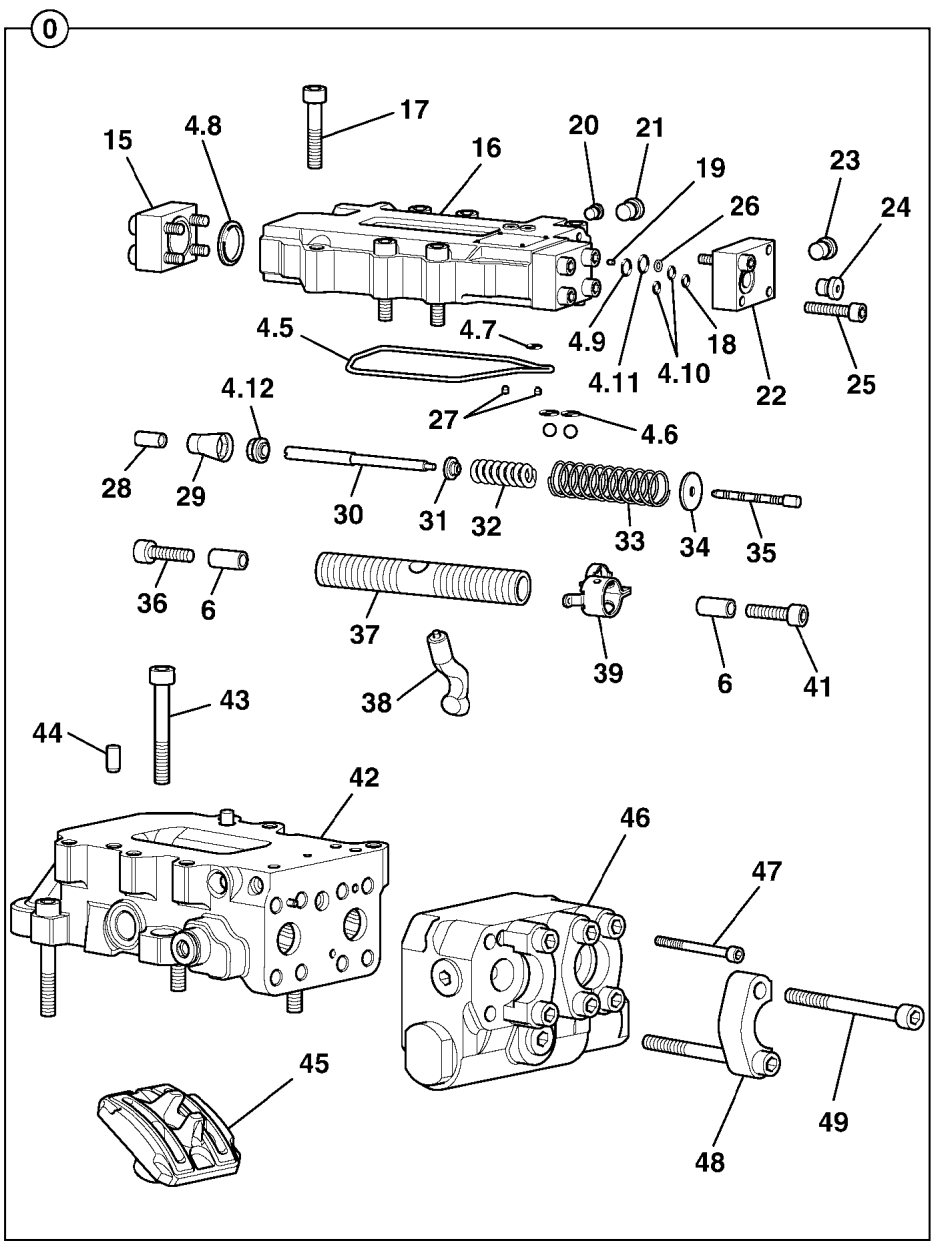

ITEM	PART NO	CHANGE NO	DESCRIPTION	REMARKS	USAGE CODE	QTY
22	NSP		::None serviced part			1
23	NSP		::None serviced part			1
24	NSP		::None serviced part			1
25	NSP		::None serviced part	M10 x 30mm 10.9 grade.		4
26	NSP		:::None serviced part	part of kit, item 4		1
27	NSP		::None serviced part			1
28	NSP		::None serviced part			1
29	NSP		::None serviced part			1
30	NSP		::None serviced part			1
31	NSP		::None serviced part			1
32	NSP		::None serviced part			1
33	NSP		::None serviced part			1
34	NSP		::None serviced part			1
35	NSP		::None serviced part			1
36	NSP		::None serviced part			1
37	NSP		::None serviced part			1
38	NSP		::None serviced part			1
39	NSP		::None serviced part			1
41	NSP		::None serviced part			1
42	NSP		::None serviced part			1
43	NSP		::None serviced part			4
44	NSP		::None serviced part			2
45	NSP		::None serviced part			1
46	NSP		::None serviced part			1
46A	* 20/951974		:::Kit-seal			1
47	NSP		::None serviced part			2

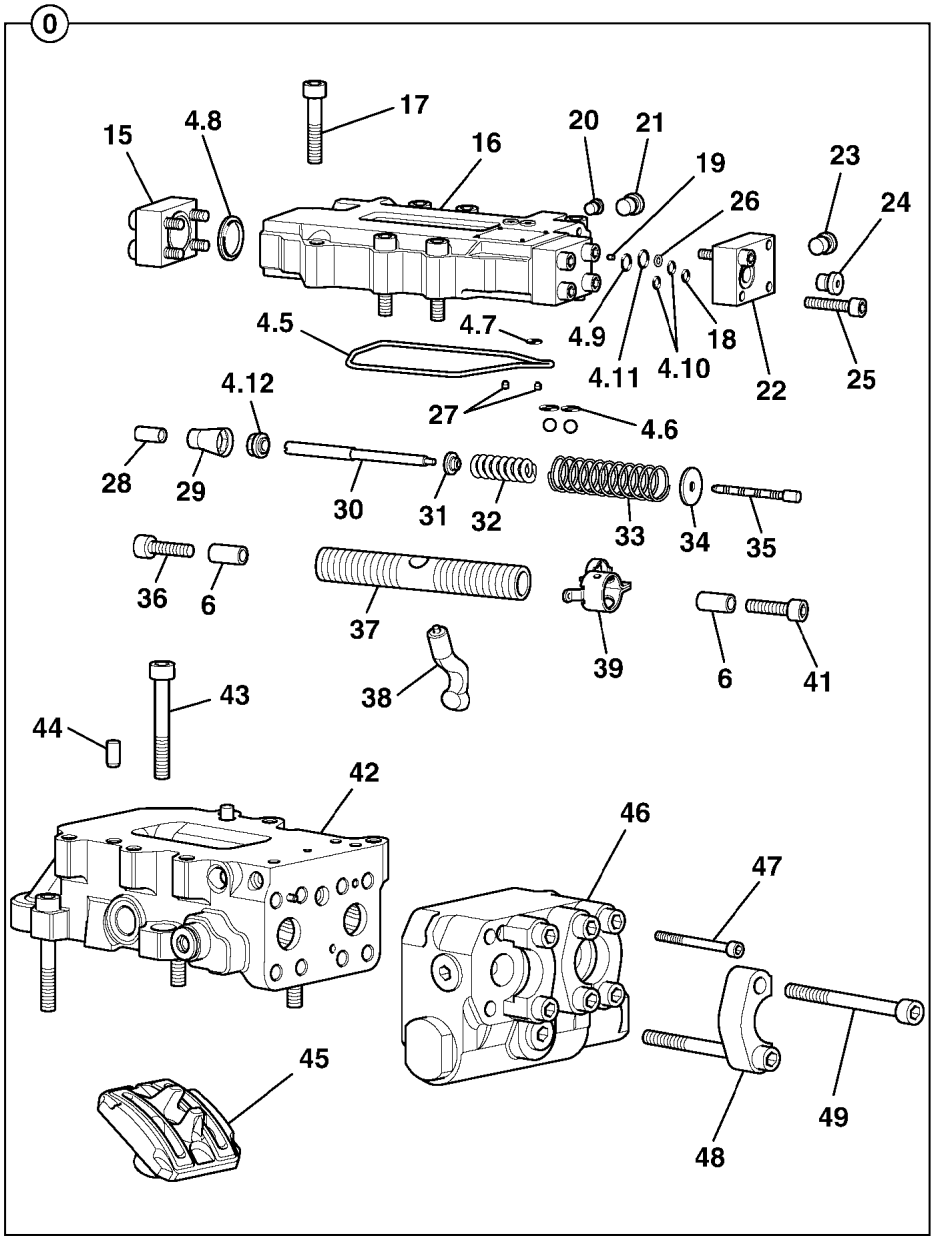

ITEM	PART NO	CHANGE NO	DESCRIPTION	REMARKS	USAGE CODE	QTY
48	210/92901		Clamp, flange 1"			4
49	1391/3511Z		Capscrew			8

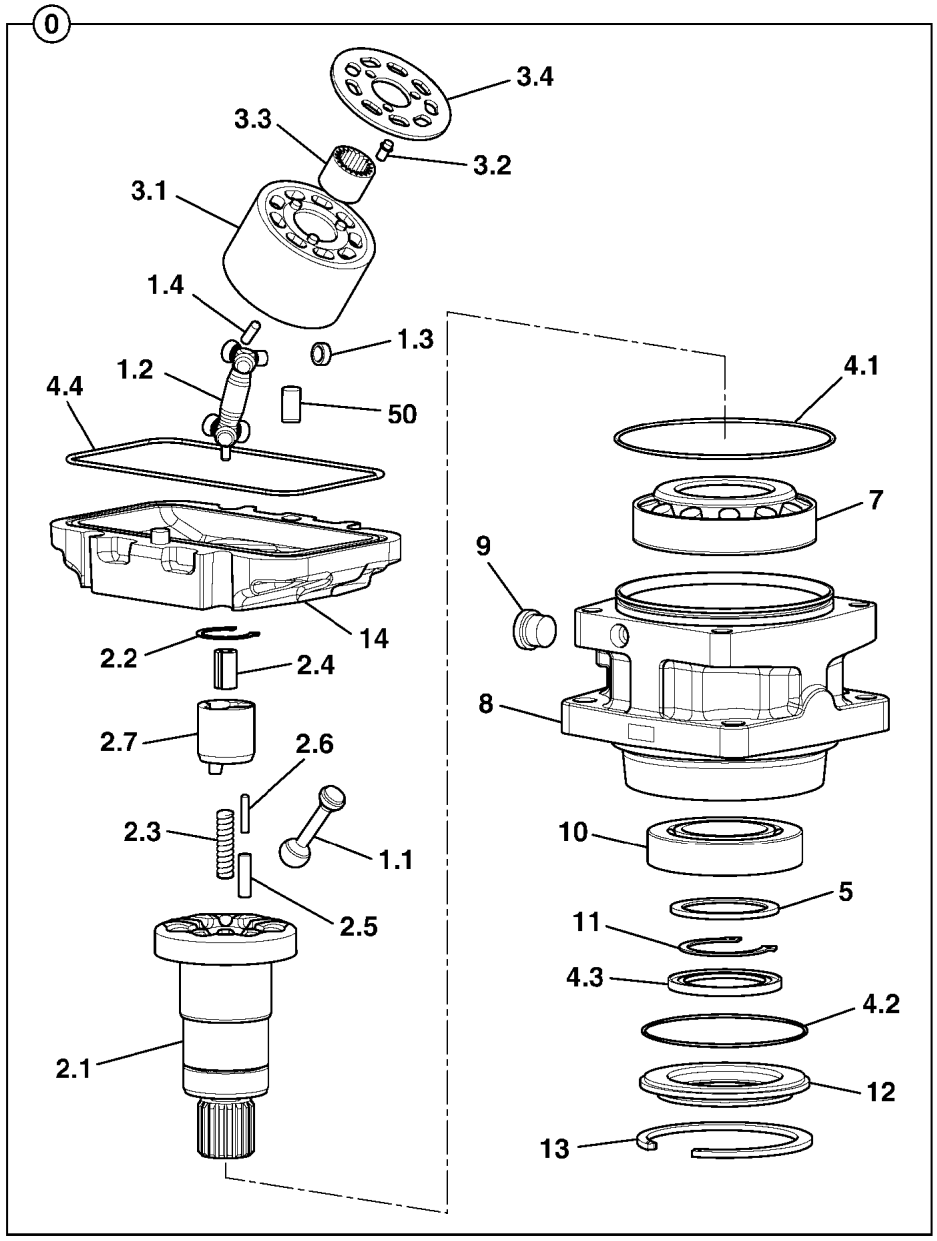

	FROM	TO	FROM	TO
JS160W				

ITEM	PART NO	CHANGE NO	DESCRIPTION	REMARKS	USAGE CODE	QTY
0A	20/925815		Motor, drive, 130/145/160/175W T3			1
1	331/34856		::Kit, piston repair			1
1 01	NSP		:::None serviced part	part of kit, item 1		1
1 02	NSP		:::None serviced part	part of kit, item 1		1
1 03	NSP		:::None serviced part	part of kit, item 1		1
1 04	NSP		:::None serviced part	part of kit, item 1		1
2	20/951254		::Kit, shaft repair			1
2 01	NSP		:::None serviced part	part of kit, item 2		1
2 02	NSP		:::None serviced part	part of kit, item 2		1
2 03	NSP		:::None serviced part	part of kit, item 2		1
2 04	NSP		:::None serviced part	part of kit, item 2		1
2 05	NSP		:::None serviced part	part of kit, item2		1
2 06	NSP		:::None serviced part	part of kit, item 2		1
2 07	NSP		:::None serviced part	part of kit, item 2		1
3	20/951254		::Kit, shaft repair			1
3 01	NSP		:::None serviced part	part of kit, item 3		1
3 02	NSP		:::None serviced part	part of kit, item 3		1
3 03	NSP		:::None serviced part	part of kit, item 3		1
3 04	NSP		:::None serviced part	part of kit, item 3		1
4	20/951256		::Kit, seals,motor	includes items 4.1 to 4.12, 18 & 26		1
4 01	NSP		:::None serviced part	part of kit, item 4		1
4 02	NSP		:::None serviced part	part of kit, item 4		1

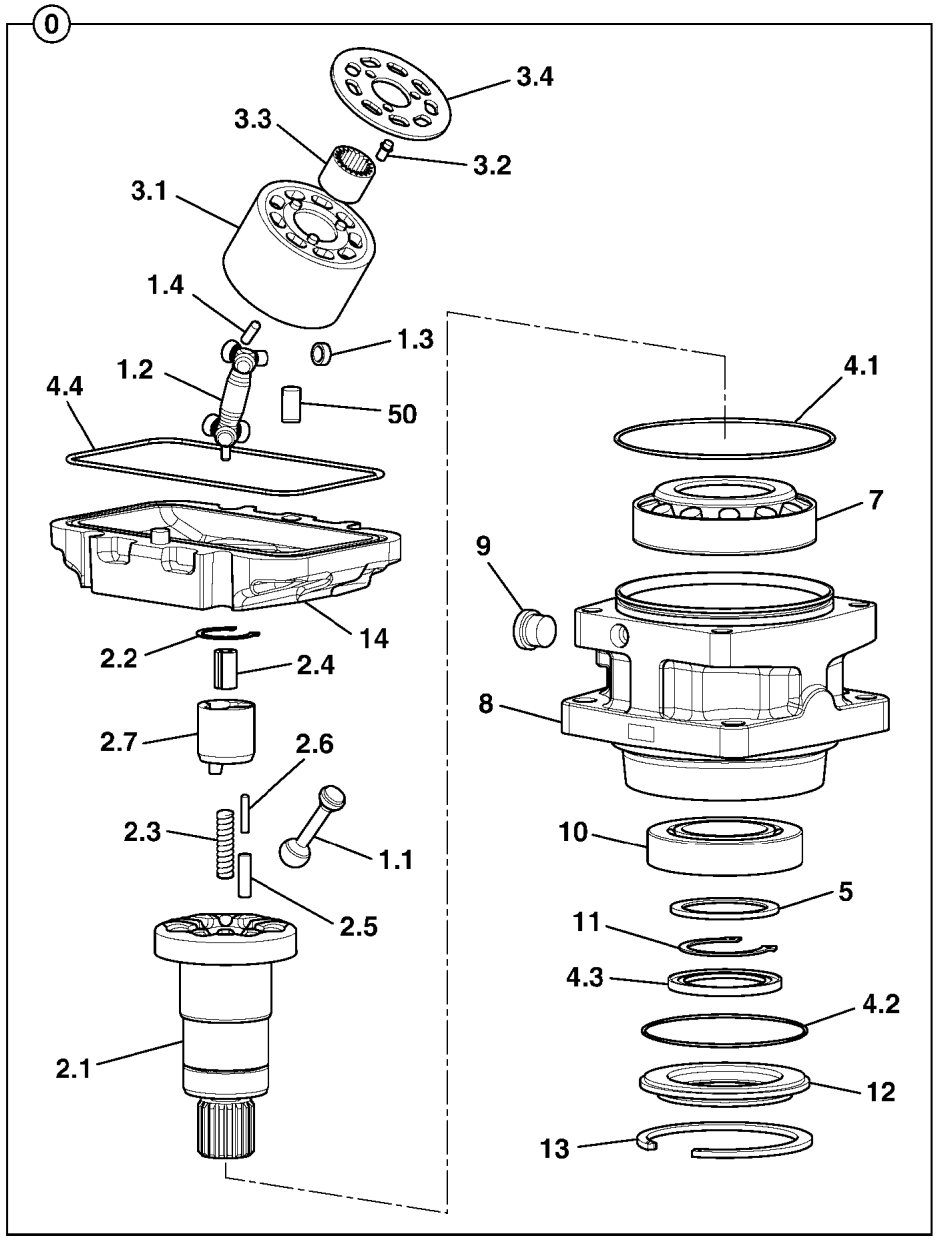

ITEM	PART NO	CHANGE NO	DESCRIPTION	REMARKS	USAGE CODE	QTY
4 03	NSP		:::None serviced part	part of kit, item 4		1
4 04	NSP		:::None serviced part	part of kit, item 4		1
4 05	NSP		:::None serviced part	part of kit, item 4		1
4 06	NSP		:::None serviced part	part of kit, item 4		2
4 07	NSP		:::None serviced part	part of kit, item 4		1
4 08	NSP		:::None serviced part	part of kit, item 4		1
4 09	NSP		:::None serviced part	part of kit, item 4		1
4 10	NSP		:::None serviced part	part of kit, item 4		2
4 11	NSP		:::None serviced part	part of kit, item 4		1
4 12	NSP		:::None serviced part	part of kit, item 4		1
5	20/951257		::Kit, spacer washer			1
6	20/951258		::Kit, Kit stop washer			1
7	NSP		::None serviced part			1
8	NSP		::None serviced part			1
9	NSP		::None serviced part			1
10	NSP		::None serviced part			1
11	NSP		::None serviced part			1
12	NSP		::None serviced part			1
13	NSP		:::None serviced part			1
14	NSP		::None serviced part			1
15	NSP		::None serviced part			2
16	NSP		:::None serviced part			1
17	NSP		::None serviced part			6
18	NSP		:::None serviced part	part of kit, item 4		1
19	NSP		::None serviced part			1
20	NSP		::None serviced part			4
21	NSP		::None serviced part			2

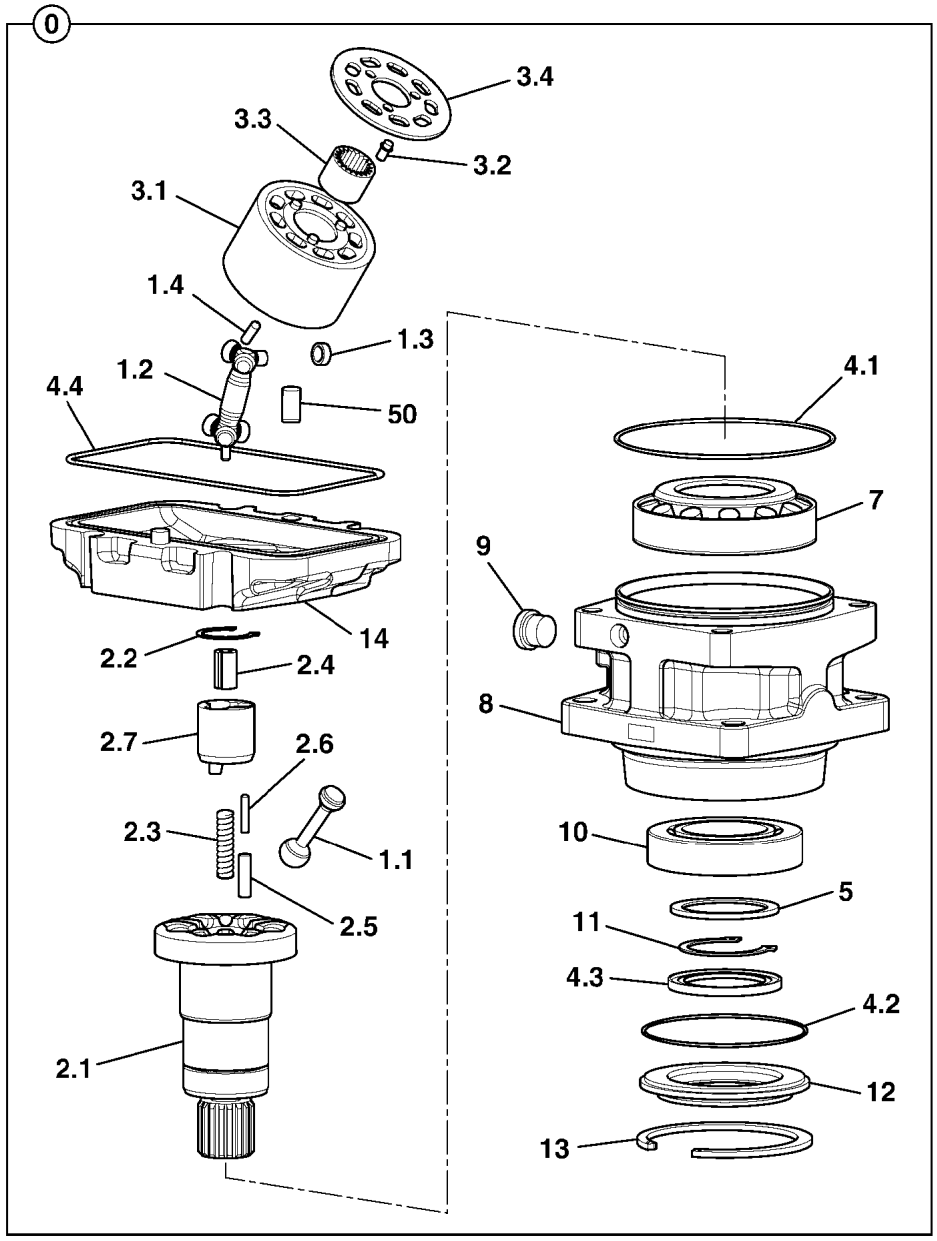

ITEM	PART NO	CHANGE NO	DESCRIPTION	REMARKS	USAGE CODE	QTY
22	NSP		::None serviced part			1
23	NSP		::None serviced part			1
24	NSP		::None serviced part			1
25	NSP		::None serviced part			4
26	NSP		:::None serviced part	part of kit, item 4		1
27	NSP		::None serviced part			1
28	NSP		::None serviced part			1
29	NSP		::None serviced part			1
30	NSP		::None serviced part			1
31	NSP		::None serviced part			1
32	NSP		::None serviced part			1
33	NSP		::None serviced part			1
34	NSP		::None serviced part			1
35	NSP		::None serviced part			1
36	NSP		::None serviced part			1
37	NSP		::None serviced part			1
38	NSP		::None serviced part			1
39	NSP		::None serviced part			1
41	NSP		::None serviced part			1
42	NSP		::None serviced part			1
43	NSP		::None serviced part			4
44	NSP		::None serviced part			2
45	NSP		::None serviced part			1
46	NSP		::None serviced part			1
47	NSP		::None serviced part			2
48	210/92901		Clamp, flange 1"			4
49	1391/3511Z		Capscrew			8

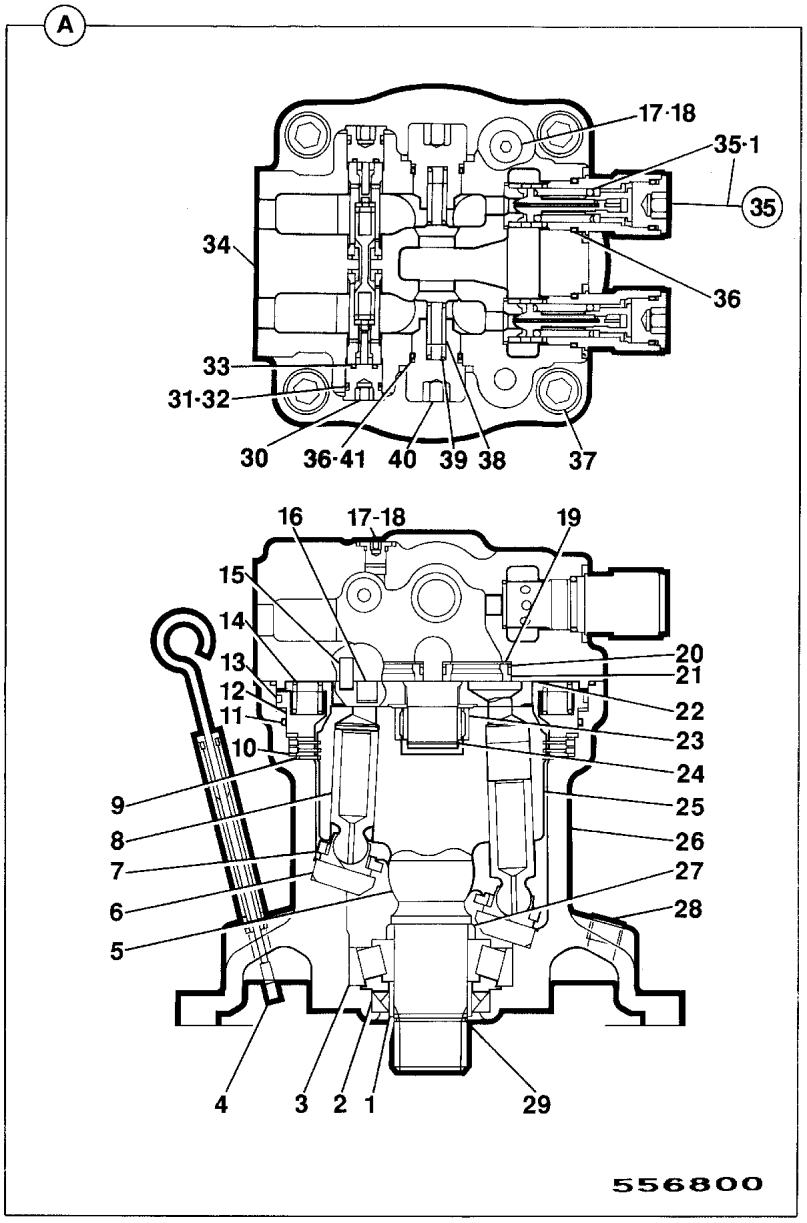

FROM TO FROM TO

JS160W

ITEM	PART NO	CHANGE NO	DESCRIPTION	REMARKS	USAGE CODE	QTY
0A	JLC0007		Motor, swing			1
1	LMM0338		:Spacer			1
2	LAM0037		:Seal, oil			1
3	LTM0129		:Bearing			1
4	LZM0343		:Gauge, oil level, with tube			1
5	LSM0080		:Spring			1
6	LMM0334		:Plate			1
7	LMM0335		:Plate, return			1
8	NSP		:None serviced part			9
9	LMM0337		:Plate, friction			3
10	LMM0336		:Plate, mating			3
11	LBQ5262		:O Ring			1
12	LPM0117		:Piston			1
13	828/00329		:O Ring, to suit 187.4 groove			2
14	LSM0082		:Spring			18
15	LMM0545		:Pin			2
16	LPM0115		:Piston			2
17	LZC0076		:Plug, blanking			3
18	LBQ0112		:O Ring			3
19	LSM0135		:Spring			4
20	LPM0112		:Ring, tef			4
21	LKM0106		:Bush			4

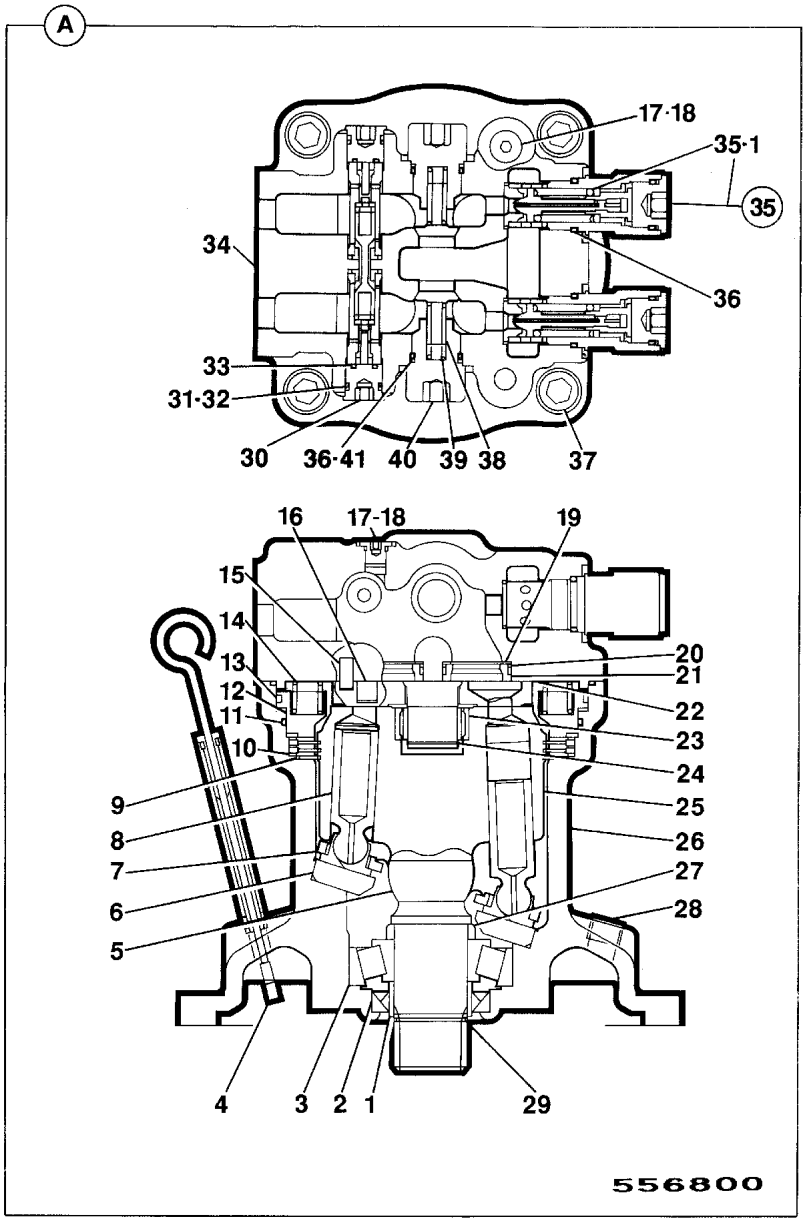

ITEM	PART NO	CHANGE NO	DESCRIPTION	REMARKS	USAGE CODE	QTY
22	LZM0335		:Plate, balance			1
23	LTM0130		:Bearing			1
24	LMM0330		:Ring, lock			1
25	NSP		:None serviced part			1
26	NSP		:None serviced part			1
27	LMM0605		:Collar			1
28	UBJ0384		:Plug			1
29	LMM0329		:Ring, lock			1
30	LNM0428		:Valve, bypass assembly			2
31	LBQ0182		:O Ring			2
32	LBC0201		:Ring, back up			2
33	LBQ0122		:O Ring			2
34	NSP		:None serviced part			1
35	LNM0431		:Valve, relief assembly			2
35 01	LQM0021		::Shim			1
36	LBQ0262		:O Ring			4
37	1391/3714		:Capscrew			4
38	LPM0052		:Valve, check			2
39	LSM0075		:Spring			2
40	LZM0191		:Cap			2
41	LBB0262		:Ring, back-up			2

E

E1 HOSE & PIPEWORK
E2 PUMP/MOTOR & PUMP DRIVE
● E3 VALVES & HYDRAULIC FILTERS
E4 RAMS

ENGLISH

E3-1-1 VALVE, ASSEMBLY, & MOUNTING
E3-2-1 VALVE, CONTROL, COMPONENTS FIG 1
E3-2-2 VALVE, CONTROL, COMPONENTS FIG 2
E3-2-45 VALVE, RELIEF, SERVICE PORT
E3-3-1 VALVE, BRAKE PEDAL
E3-6-1 VALVE, HAND CONTROL, SERVO
E3-8-1 VALVE, SOLENOID
E3-9-1 VALVE, SOLENOID, TAB HAMMER, JS175W AUTO T3
E3-14-1 MOUNTINGS, ROTARY COUPLING
E3-14-20 COUPLING, ROTARY
E3-15-1 LUBRICANTS & FILTERS
E3-15-10 OILS, BIODEGRADABLE, HYDRAULIC
E3-16-1 FILTER, AUXILIARY/HAMMER, RETURN
E3-16-10 FILTER, HYDRAULIC, STEER CIRCUIT
E3-17-1 FILTER, BYPASS, HYDRAULIC
E3-23-1 VALVE, PILOT SHUTTLE
E3-24-1 VALVE, HAMMER
E3-40-1 VALVE, STEERING

FRANCAIS

E3-1-1 SOUPAPE, ENSEMBLE & MONTURE
E3-2-1 SOUPAPE, COMMANDE COMPOSANTS FIG 1
E3-2-2 SOUPAPE, COMMANDE COMPOSANTS FIG 2
E3-2-45 VALVE, RELIEF, SERVICE PORT
E3-3-1 VALVE, BRAKE PEDAL
E3-6-1 SOUPAPE, CDE MANUELLASSERVIE
E3-8-1 VALVE, SOLENOID
E3-9-1 VALVE, SOLENOID, TAB HAMMER, JS175W AUTO T3
E3-14-1 MOUNTINGS, ROTARY COUPLING
E3-14-20 ACCOUPLEMEN ROTATIF
E3-15-1 LUBRIFIANTS & FILTRES
E3-15-10 OILS, BIODEGRADABLE, HYDRAULIC
E3-16-1 FILTER, AUXILIARY/HAMMER, RETURN
E3-16-10 FILTER, HYDRAULIC, STEER CIRCUIT
E3-17-1 FILTER, BYPASS, HYDRAULIC
E3-23-1 VALVE, PILOT SHUTTLE
E3-24-1 VALVE, HAMMER
E3-40-1 SOUPAPE, DIRECTION

DEUTSCH

E3-1-1 VENTIL, KOMPL. & HALTERUNG
E3-2-1 VENTIL, STEUERUNG BAUTEILE FIG 1
E3-2-2 VENTIL, STEUERUNG BAUTEILE FIG 2
E3-2-45 VALVE, RELIEF, SERVICE PORT
E3-3-1 VALVE, BRAKE PEDAL
E3-6-1 VENTIL, HANDSTEUER. SERVO
E3-8-1 VALVE, SOLENOID
E3-9-1 VALVE, SOLENOID, TAB HAMMER, JS175W AUTO T3
E3-14-1 MOUNTINGS, ROTARY COUPLING
E3-14-20 KUPPLUNG, DREH-
E3-15-1 SCHMIERMITTEL & FILTER
E3-15-10 OILS, BIODEGRADABLE, HYDRAULIC
E3-16-1 FILTER, AUXILIARY/HAMMER, RETURN
E3-16-10 FILTER, HYDRAULIC, STEER CIRCUIT
E3-17-1 FILTER, BYPASS, HYDRAULIC
E3-23-1 VALVE, PILOT SHUTTLE
E3-24-1 VALVE, HAMMER
E3-40-1 VENTIL, LENKUNG-

ITALIANO

E3-1-1 GRUPPO DISTRIBUTORE E FISSAGGIO
E3-2-1 VALVOLA, REGOLAZIONE COMPONENTI FIG 1
E3-2-2 VALVOLA, REGOLAZIONE COMPONENTI FIG 2
E3-2-45 VALVE, RELIEF, SERVICE PORT
E3-3-1 VALVE, BRAKE PEDAL
E3-6-1 VALVOLA, SERVOCOMANDO MANUALE
E3-8-1 VALVE, SOLENOID
E3-9-1 VALVE, SOLENOID, TAB HAMMER, JS175W AUTO T3
E3-14-1 MOUNTINGS, ROTARY COUPLING
E3-14-20 GIUNTO, ROTANTE
E3-15-1 LUBRIFICANTI E FILTRI
E3-15-10 OILS, BIODEGRADABLE, HYDRAULIC
E3-16-1 FILTER, AUXILIARY/HAMMER, RETURN
E3-16-10 FILTER, HYDRAULIC, STEER CIRCUIT
E3-17-1 FILTER, BYPASS, HYDRAULIC
E3-23-1 VALVE, PILOT SHUTTLE
E3-24-1 VALVE, HAMMER
E3-40-1 VALVOLA, STERZO

PORTUGUES

E3-1-1 VALVULA, CONJUNTO E ACESS.MONTAGEM
E3-2-1 VALVULA, COMANDO COMPONENTES FIG 1
E3-2-2 VALVULA, COMANDO COMPONENTES FIG 2
E3-2-45 VALVE, RELIEF, SERVICE PORT
E3-3-1 VALVE, BRAKE PEDAL
E3-6-1 VALVULA,COMANDO MANUSERVO
E3-8-1 VALVE, SOLENOID
E3-9-1 VALVE, SOLENOID, TAB HAMMER, JS175W AUTO T3
E3-14-1 MOUNTINGS, ROTARY COUPLING
E3-14-20 JUNTA, ROTATIVA
E3-15-1 LUBRIFIC. E FILTROS
E3-15-10 OILS, BIODEGRADABLE, HYDRAULIC

E3-16-1 FILTER, AUXILIARY/HAMMER, RETURN
E3-16-10 FILTER, HYDRAULIC, STEER CIRCUIT
E3-17-1 FILTER, BYPASS, HYDRAULIC
E3-23-1 VALVE, PILOT SHUTTLE
E3-24-1 VALVE, HAMMER
E3-40-1 VALVULA, DIRECCAO

ESPANOL

E3-1-1 VALVULA MONTAJE Y MONTURAS
E3-2-1 VALVULA, CONTROL COMPONENTES FIG 1
E3-2-2 VALVULA, CONTROL COMPONENTES FIG 2
E3-2-45 VALVE, RELIEF, SERVICE PORT
E3-3-1 VALVE, BRAKE PEDAL
E3-6-1 VALV. CONTROL MANDO SERVO
E3-8-1 VALVE, SOLENOID
E3-9-1 VALVE, SOLENOID, TAB HAMMER, JS175W AUTO T3
E3-14-1 MOUNTINGS, ROTARY COUPLING
E3-14-20 ACOPLAM.,ROTATIVO
E3-15-1 LUBRIC. Y FILTROS
E3-15-10 OILS, BIODEGRADABLE, HYDRAULIC
E3-16-1 FILTER, AUXILIARY/HAMMER, RETURN
E3-16-10 FILTER, HYDRAULIC, STEER CIRCUIT
E3-17-1 FILTER, BYPASS, HYDRAULIC
E3-23-1 VALVE, PILOT SHUTTLE
E3-24-1 VALVE, HAMMER
E3-40-1 VALVULA, DIRECCION

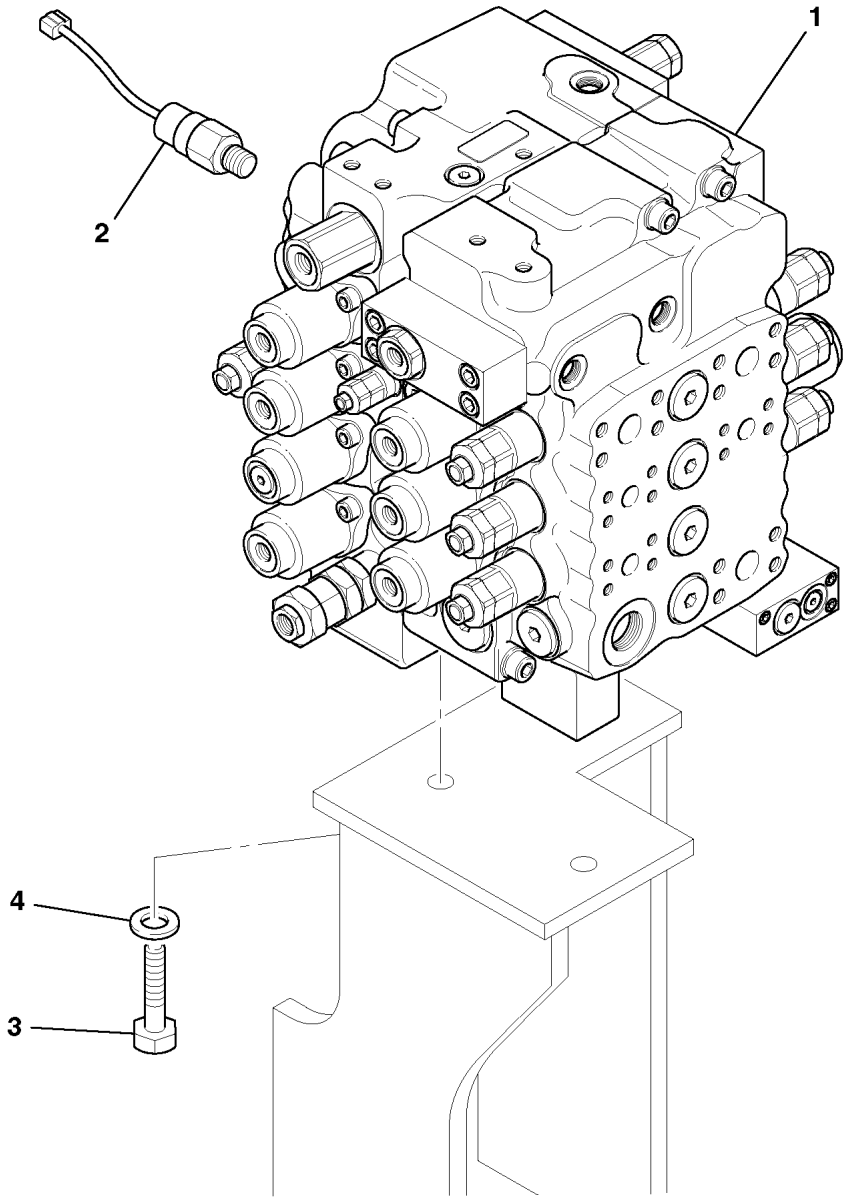

910920

	FROM	TO	FROM	TO
JS160W				

ITEM	PART NO	CHANGE NO	DESCRIPTION	REMARKS	USAGE CODE	QTY
1	25/221159		Valve, control main			1
2	701/80445		Switch, Pressure 20bar, Travel			1
3	1316/0709D		Screw			3
4	JHP0043		Washer, M16			3

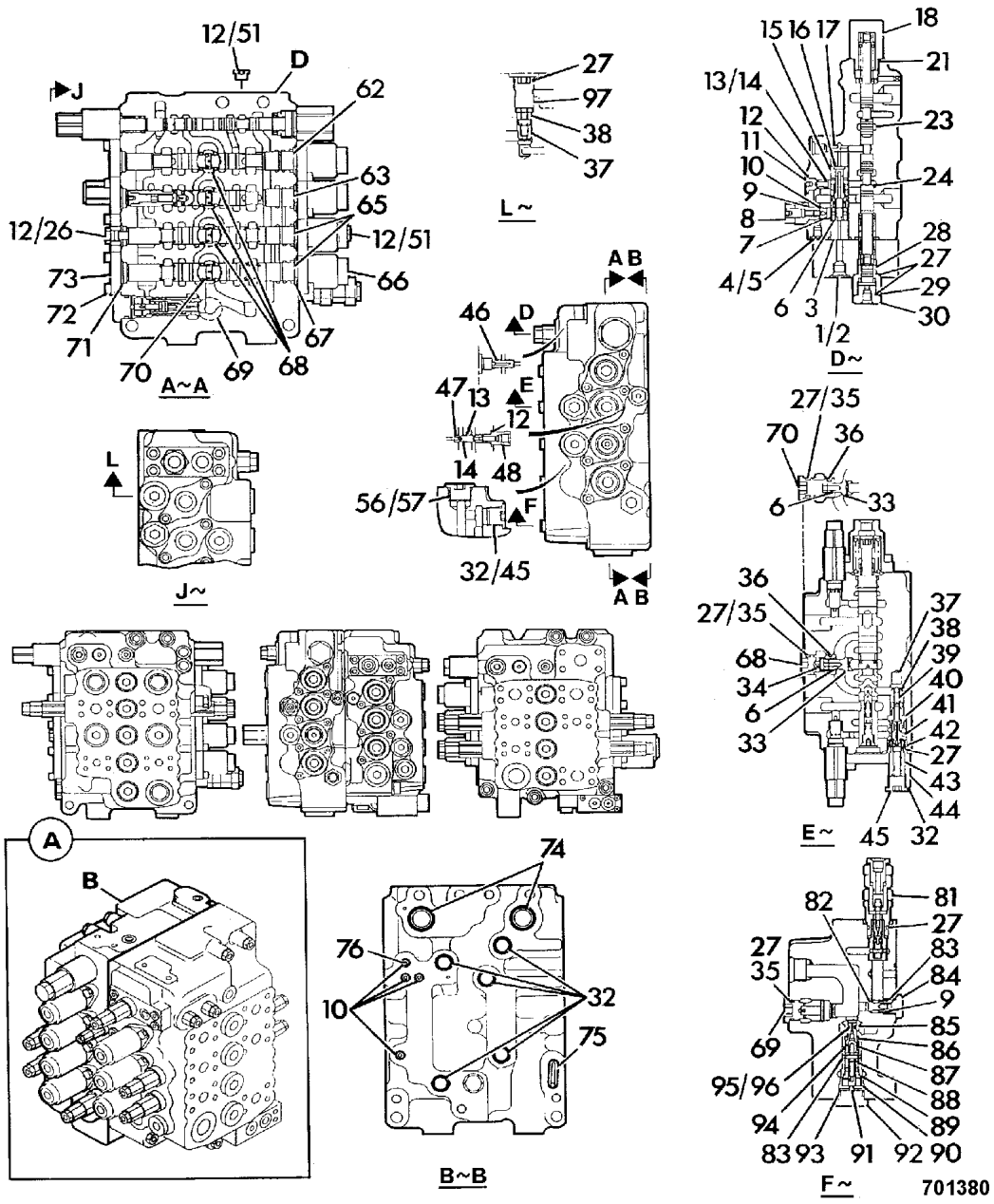

	FROM	TO	FROM	TO
JS160W				

ITEM	PART NO	CHANGE NO	DESCRIPTION	REMARKS	USAGE CODE	QTY
0A	25/221159		Valve, control main	See frame E3-1-1 for assembly.		1
0B	NSP		:None serviced part			1
0D	NSP		::None serviced part			1
1	6004/3411		::Capscrew			8
2	LZC0146		::Cover			2
3	LKC0003		::Bush			2
4	LPC0112		::Cap			2
5	LBQ0082		::O Ring			2
6	LSC0095		::Spring			9
7	LMC0093		::Sleeve			2
8	LNC0203		::Valve, relief			2
9	LBQ0142		::O Ring			3
10	LBQ0102		::O Ring			8
11	LPC0131		::Restrictor			2
12	LBQ0112		::O Ring			8
13	LBB0072		::Ring, back-up			3
14	LBQ0072		::O Ring			3
15	LMC0100		::Sleeve			2
16	LPC0115		::Spool			2
17	LMC0101		::Spacer			2
18	LPC0141		::Cap			1
21	LBQ5014		::O Ring			1

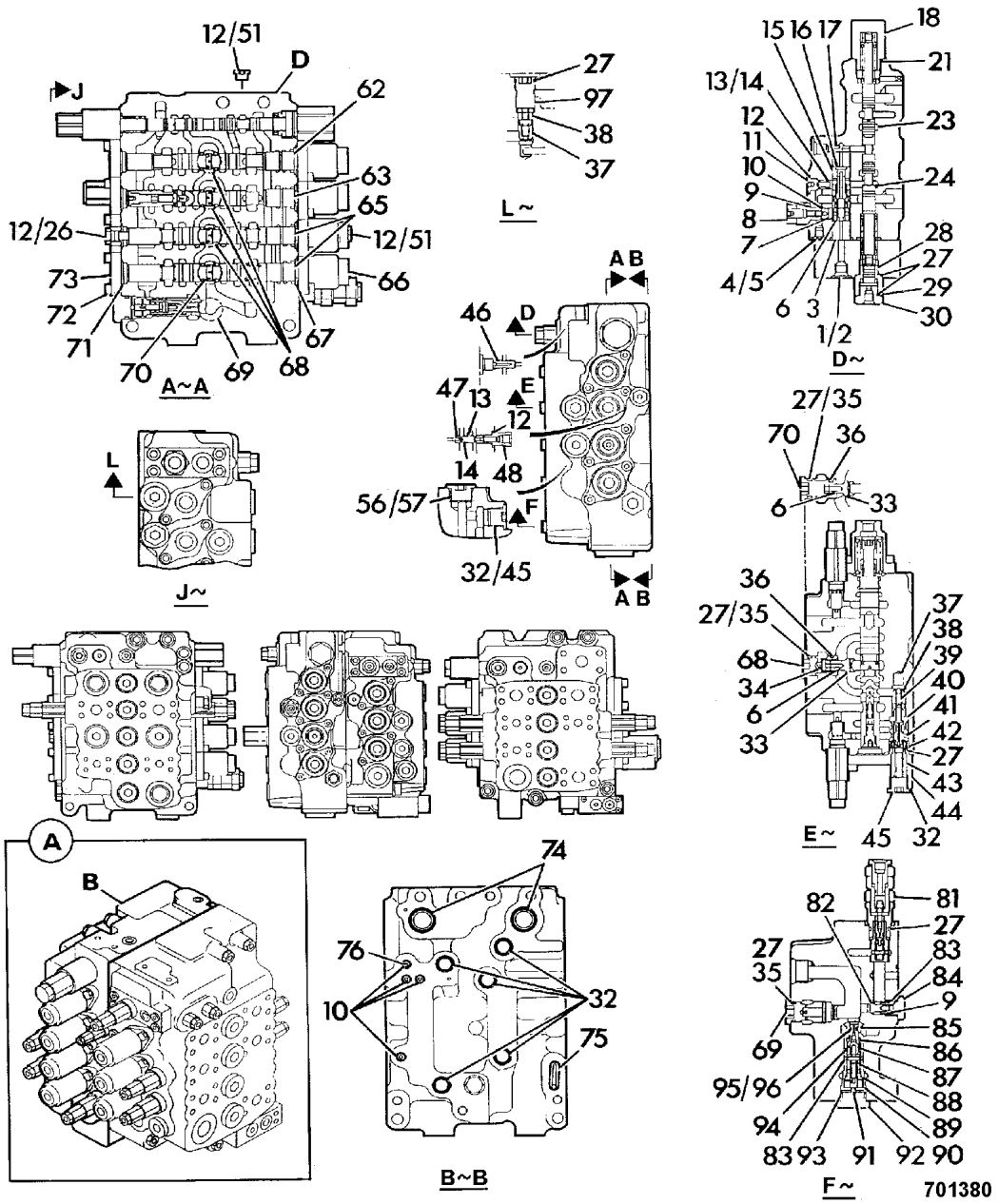

ITEM	PART NO	CHANGE NO	DESCRIPTION	REMARKS	USAGE CODE	QTY
23	NSP		::None serviced part			1
24	NSP		::None serviced part			1
26	LPC0151		::Cap			1
27	LBQ0212		::O Ring			16
28	LPC0121		::Piston			1
29	LPC0140		::Cap			1
30	LPC0139		::Cap			2
32	LBC0083		::O Ring			15
33	LPC0033		::Valve, check			7
34	LPC0045		::Valve, check			5
35	LBB0212		::Ring, back-up			9
36	LEC0015		::Insert, nylon chip			7
37	LPC0126		::Valve, check			2
38	LSC0201		::Spring			2
39	LPC0120		::Piston			1
40	LPC0118		::Spool			1
41	LMC0095		::Sleeve			1
42	LSC0208		::Spring			1
43	LPC0143		::Guide, spring			1
44	LPC0135		::Cap			1
45	LPC0113		::Cap			4
46	LPC0130		::Restrictor			1
47	LPC0037		::Restrictor			1
48	LPC0111		::Cap			1
51	LZC0076		::Plug, blanking			4
56	LZC0077		::Cap			4
57	LBQ8222		::O Ring			4

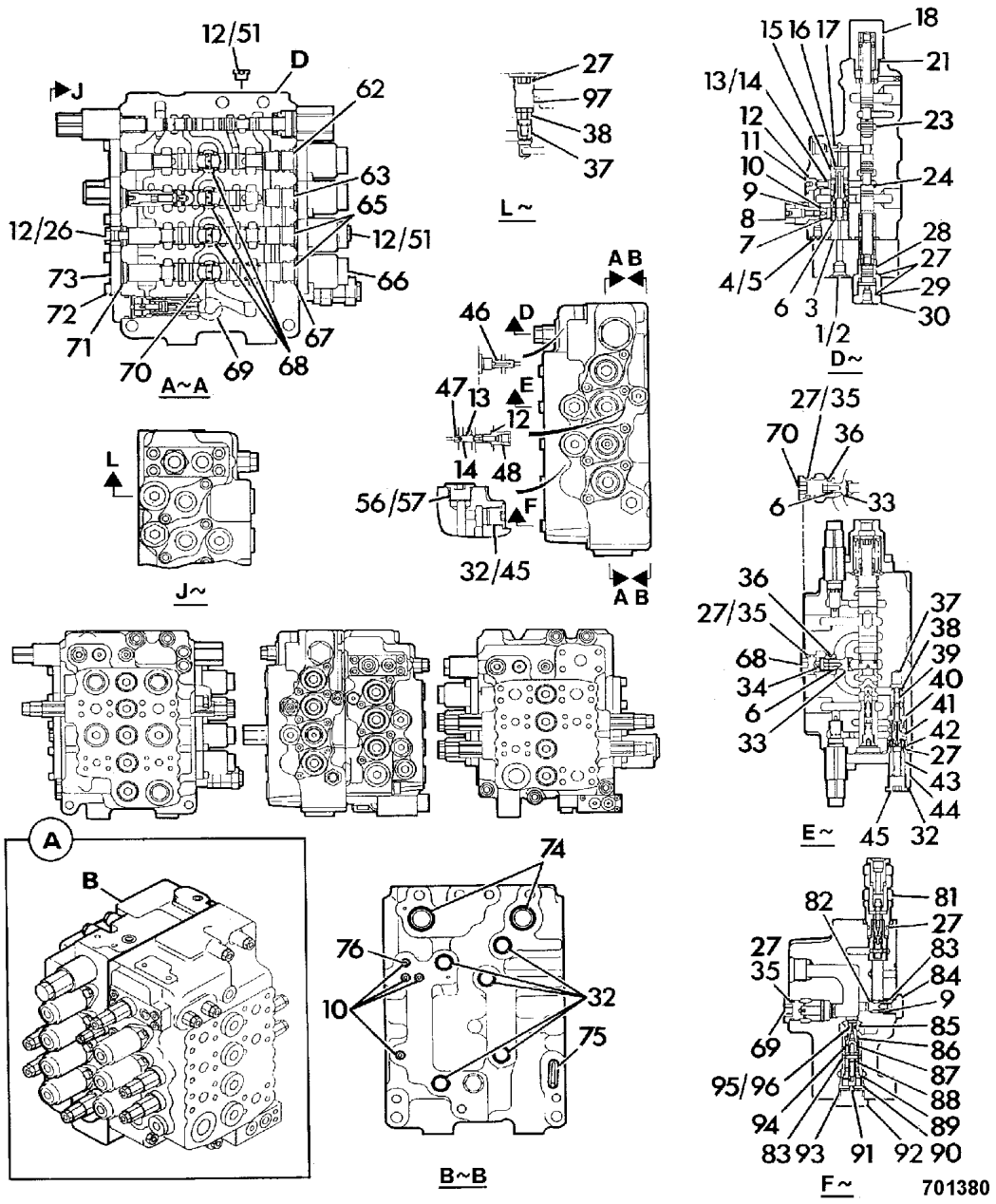

ITEM	PART NO	CHANGE NO	DESCRIPTION	REMARKS	USAGE CODE	QTY
62	NSP		::None serviced part			2
63	NSP		::None serviced part			1
64	NSP		::None serviced part			1
65	NSP		::None serviced part			2
66	LZC0145		::Cover			7
67	LBQ6127		::O Ring			7
68	LPC0133		::Cap			5
69	LPC0138		::Cap			2
70	LZC0070		::Cap			2
71	LBQ6123		::O Ring			7
72	6004/3307		::Capscrew			28
73	LMC0092		::Retainer			6
74	LBQ0292		::O Ring			3
75	LBQ6122		::O Ring			1
76	LKC0004		::Bush			1
81	LNC0204		::Valve, main relief			1
82	LPC0127		::Valve, check			1
83	LSC0102		::Spring			2
84	LPC0137		::Cap			1
85	LPC0128		::Valve, check			1
86	LSC0207		::Spring			1
87	LMC0096		::Sleeve			1
88	LSC0101		::Spring			1
89	LBC0072		::O Ring			1
90	LMC0097		::Sleeve			1
91	LPC0122		::Piston			1
92	LPC0134		::Cap			1

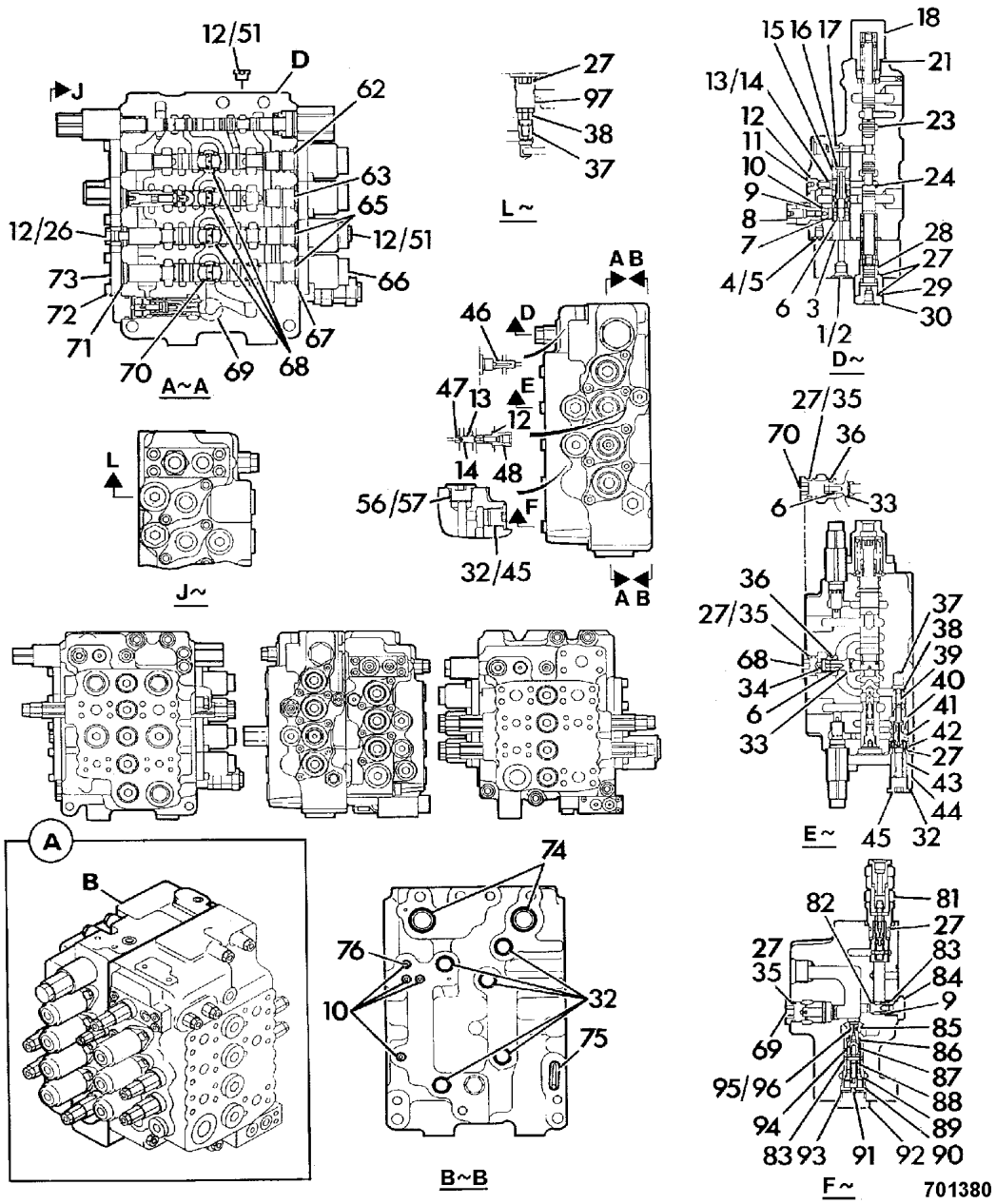

ITEM	PART NO	CHANGE NO	DESCRIPTION	REMARKS	USAGE CODE	QTY
93	LBQ0262		::O Ring			1
94	LPC0123		::Valve, check			1
95	LBC0073		::Ring, back-up			2
96	LBQ6011		::O Ring			1
97	LPC0136		::Cap			1

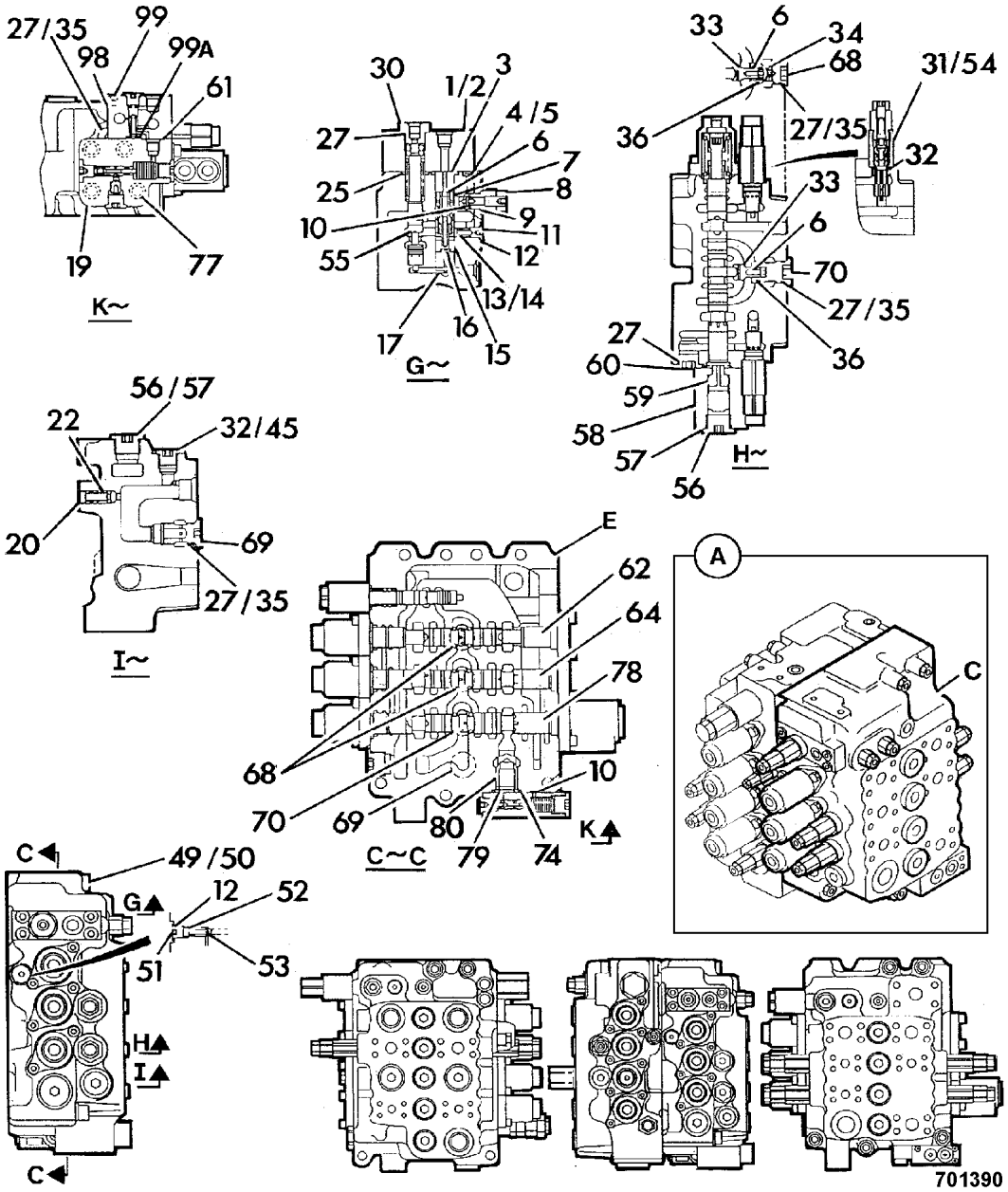

	FROM	TO	FROM	TO
JS160W				

ITEM	PART NO	CHANGE NO	DESCRIPTION	REMARKS	USAGE CODE	QTY
0A	25/221159		Valve, control main	See frame E3-1-1 for assembly.		1
0B	NSP		:None serviced part			1
0D	NSP		::None serviced part			1
1	6004/3411		::Capscrew			8
2	LZC0146		::Cover			2
3	LKC0003		::Bush			2
4	LPC0112		::Cap			2
5	LBQ0082		::O Ring			2
6	LSC0095		::Spring			9
7	LMC0093		::Sleeve			2
8	LNC0203		::Valve, relief			2
9	LBQ0142		::O Ring			3
10	LBQ0102		::O Ring			8
11	LPC0131		::Restrictor			2
12	LBQ0112		::O Ring			8
13	LBB0072		::Ring, back-up			3
14	LBQ0072		::O Ring			3
15	LMC0100		::Sleeve			2
16	LPC0115		::Spool			2
17	LMC0101		::Spacer			2
19	LNC0201		::Cover			1
20	LSC0220		::Spring			1

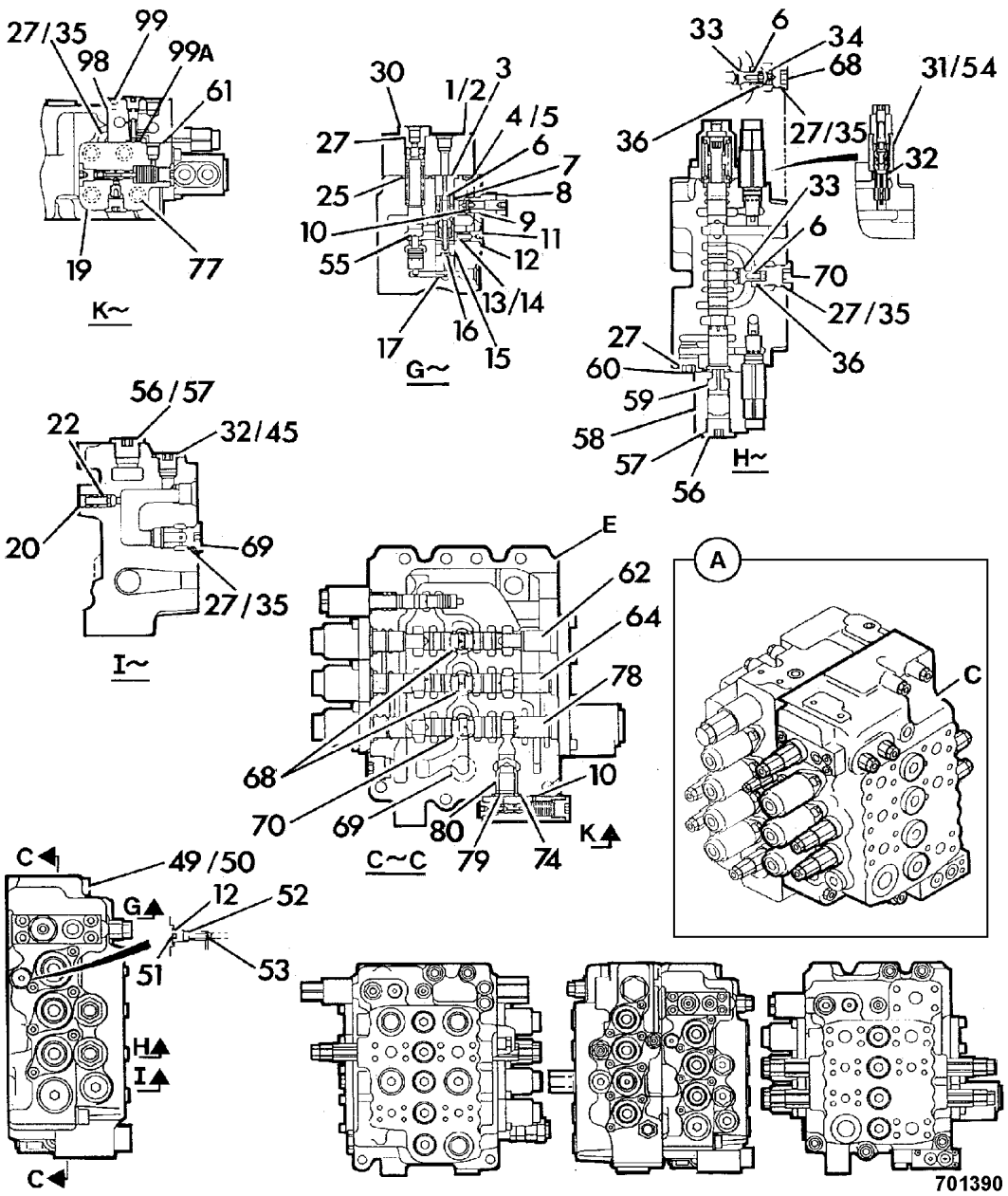

ITEM	PART NO	CHANGE NO	DESCRIPTION	REMARKS	USAGE CODE	QTY
22	LPC0150		::Valve, check			1
25	LBQ0253		::O Ring			4
27	LBQ0212		::O Ring			16
30	LPC0139		::Cap			2
31	LNC0206	Superseded	::Valve, relief	Includes O Ring item 32		5
	KNP0287	To JUL-2002	::Valve, relief	Includes item 32, adjust pressure on fitting.		5
	25/221160		Valve, relief			5
32	LBC0083		::O Ring			15
33	LPC0033		::Valve, check			7
34	LPC0045		::Valve, check			5
35	LBB0212		::Ring, back-up			9
36	LEC0015		::Insert, nylon chip			7
45	LPC0113		::Cap			4
49	6060/0009	Superseded	::Washer, spring			7
	6060/0009Z		::Washer, M12 spring			7
50	LUM0163		::Bolt, hex, soc			7
51	LZC0076		::Plug, blanking			4
52	LSC0203		::Spring			1
53	LPC0124		::Valve, check			1
54	LNC0207		::Valve, relief	Includes O Ring item 32		1
55	NSP		::None serviced part			1
56	LZC0077		::Cap			4
57	LBQ8222		::O Ring			4
58	LZC0147		::Cover			1

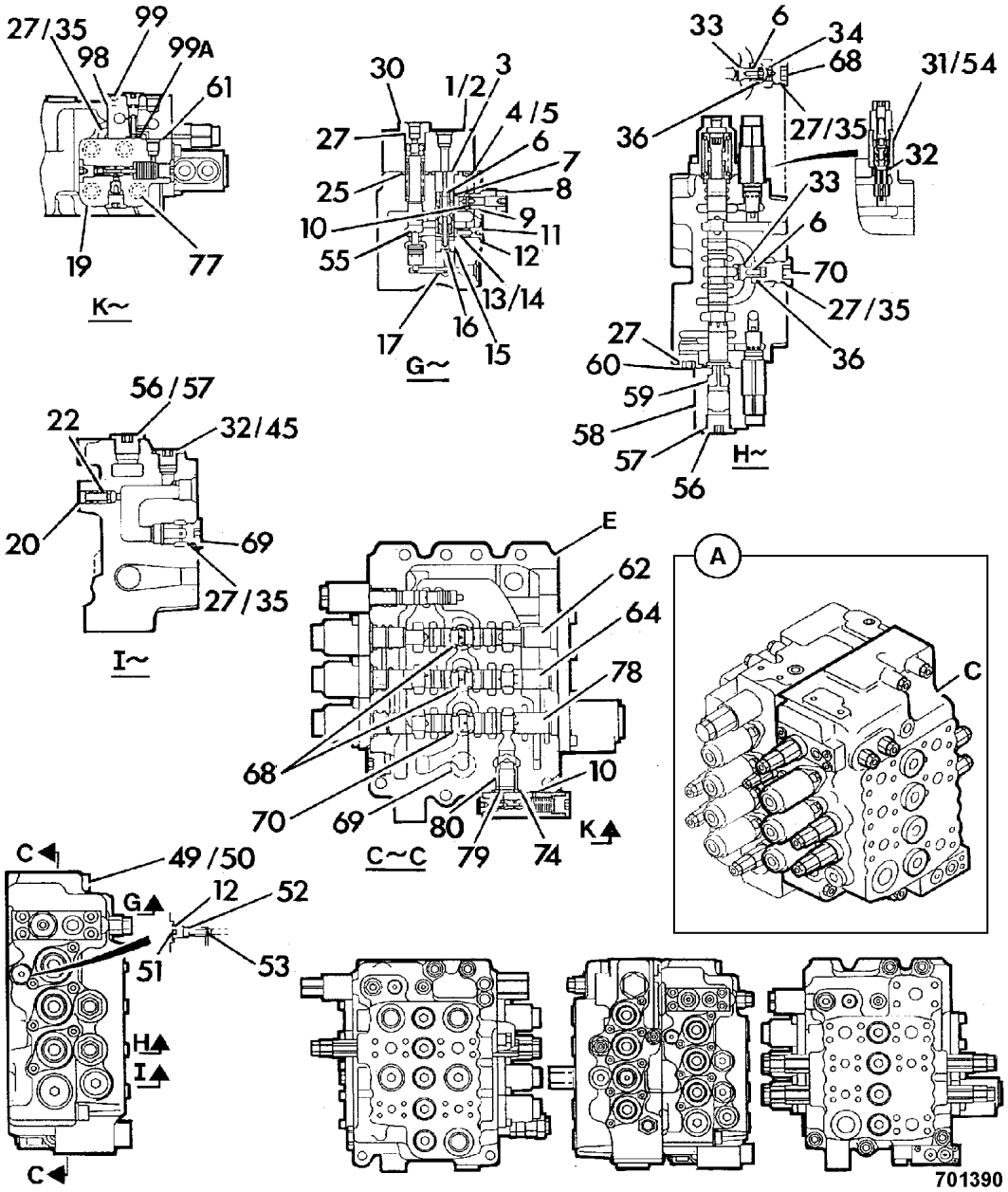

ITEM	PART NO	CHANGE NO	DESCRIPTION	REMARKS	USAGE CODE	QTY
59	LPC0149		::Piston			1
60	LPC0142		::Cap			1
61	LBQ0202	Superseded	::O Ring			1
	LQC0026		::Kit-Seal			1
62	NSP		::None serviced part			2
64	NSP		::None serviced part			1
68	LPC0133		::Cap			5
69	LPC0138		::Cap			2
70	LZC0070		::Cap			2
77	6004/3508	Superseded	::Capscrew			4
	1391/3508		::Capscrew, M12 x 30			4
78	NSP		::None serviced part			1
79	LSC0202		::Spring			1
80	LPC0129		::Poppet			1
98	LNC0195		::Valve, selector			1
99	6004/3112		::Capscrew			3
99A	LBC0017	Superseded	::O Ring			1
	LBQ6016		::O Ring			1

	FROM	TO	FROM	TO
JS160W				

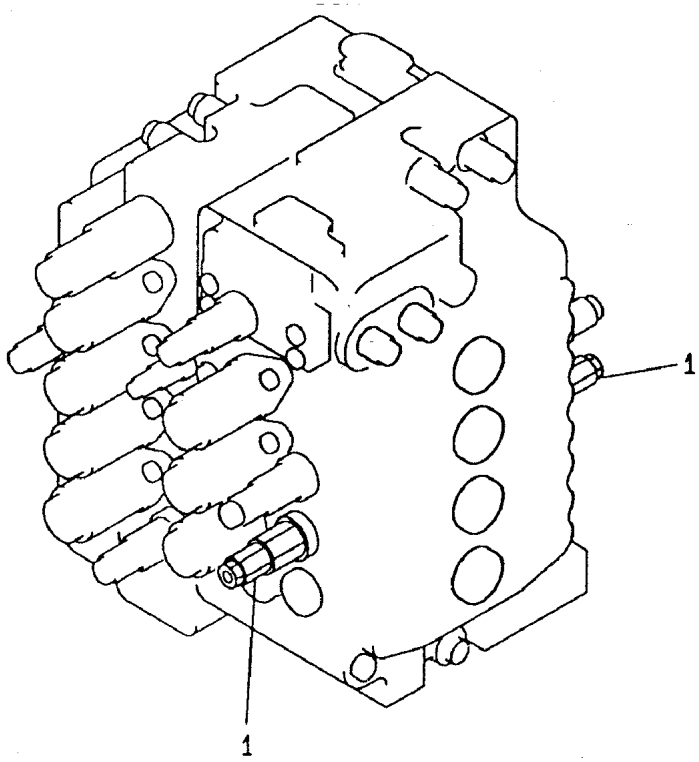

254990

ITEM	PART NO	CHANGE NO	DESCRIPTION	REMARKS	USAGE CODE	QTY
1	25/221160		Valve, relief			2

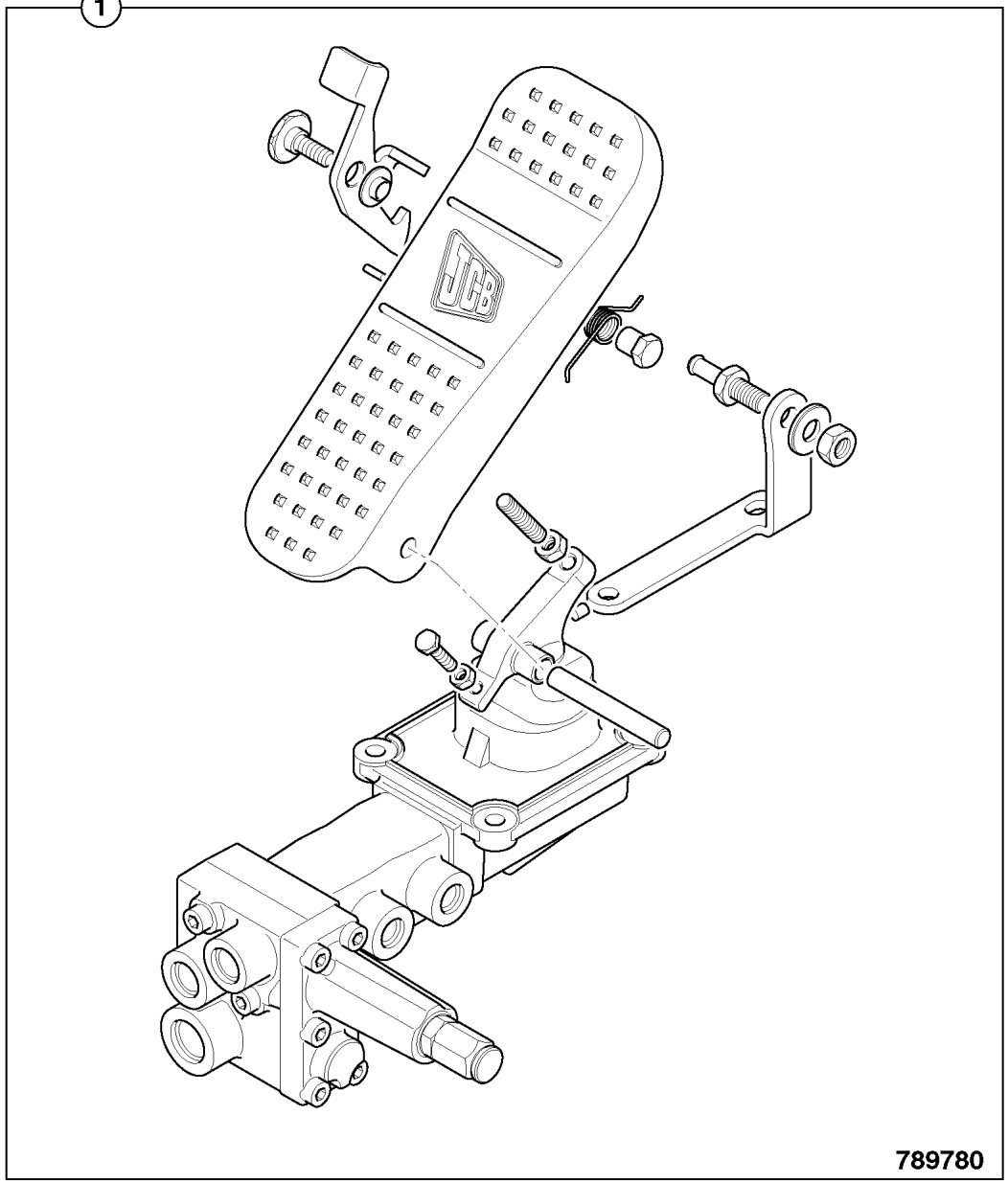

	FROM	TO	FROM	TO
JS160W				

ITEM	PART NO	CHANGE NO	DESCRIPTION	REMARKS	USAGE CODE	QTY
	25/222749		Valve, brake pedal assembly			1

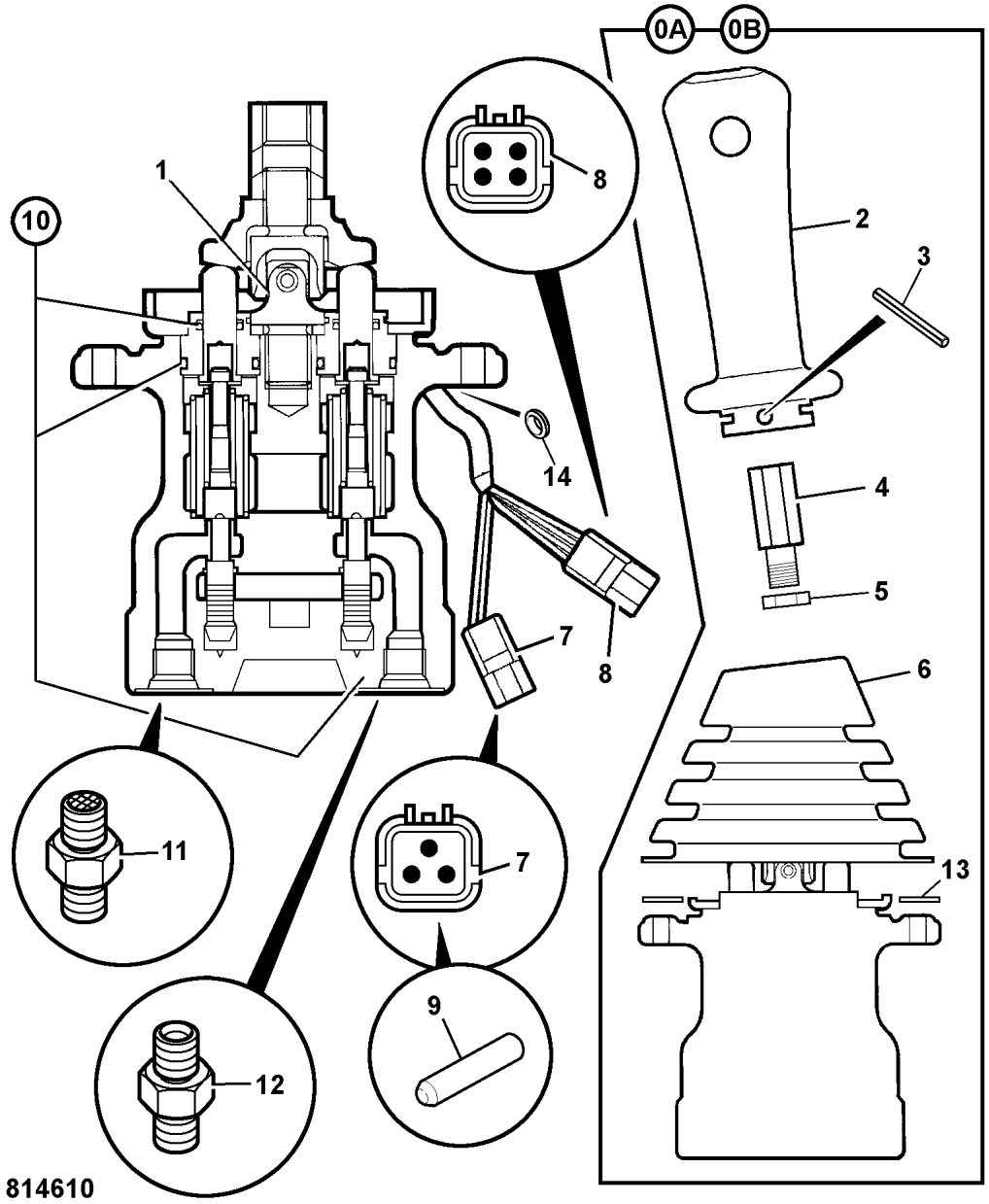

	FROM	TO	FROM	TO
JS160W				

ITEM	PART NO	CHANGE NO	DESCRIPTION	REMARKS	USAGE CODE	QTY
0A	25/222891		:Valve, hand controler, left hand	Left hand controller		1
0B	25/222892		:Valve, hand controler, right hand	Right hand controller		1
1	331/11565		:Joint, knuckle			1
2	331/14366		:Handle, with switch			1
3	826/10591		:Pin, roll			1
4	331/11043		:Lever			1
5	826/10628		:Nut, locking			1
6	331/20582		:Gaiter, Joystick			1
7	721/10400		:Connector, 3 pin	left hand 2 fitted, not fitted to right hand		A/R
8	721/10100		:Connector, 4 pin	left hand 1 fitted, right hand 2 fitted		A/R
9	721/10401		:Connector	8 per controller		8
10	998/10318		:Kit-seal			1
11	JHJ0168		Adapter, filtered	1 per controller port P		1
12	1620/2052		Adapter			5
13	25/221280		Plate			1
14	828/10020		:Grommet			1

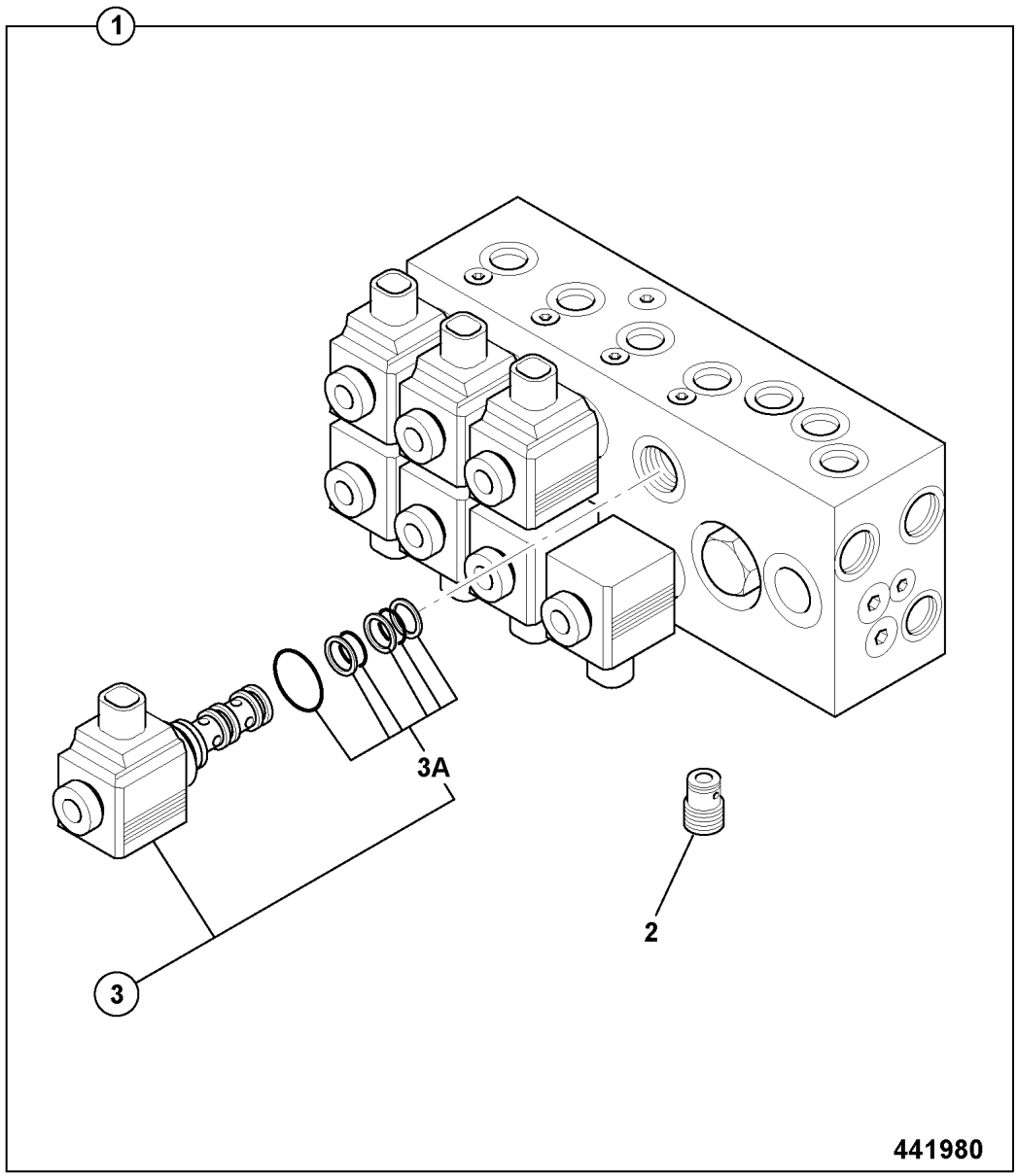

	FROM	TO	FROM	TO
JS160W				

ITEM	PART NO	CHANGE NO	DESCRIPTION	REMARKS	USAGE CODE	QTY
1	* 25/222885		Valve, 8 station solenoid			1
2	25/208213		:Valve, shuttle			1
3	25/220555		:Cartridge, valve, excl. coil			8
3A	25/220533		::Kit, seal			1
4	25/221263		:Coil, 24V			8

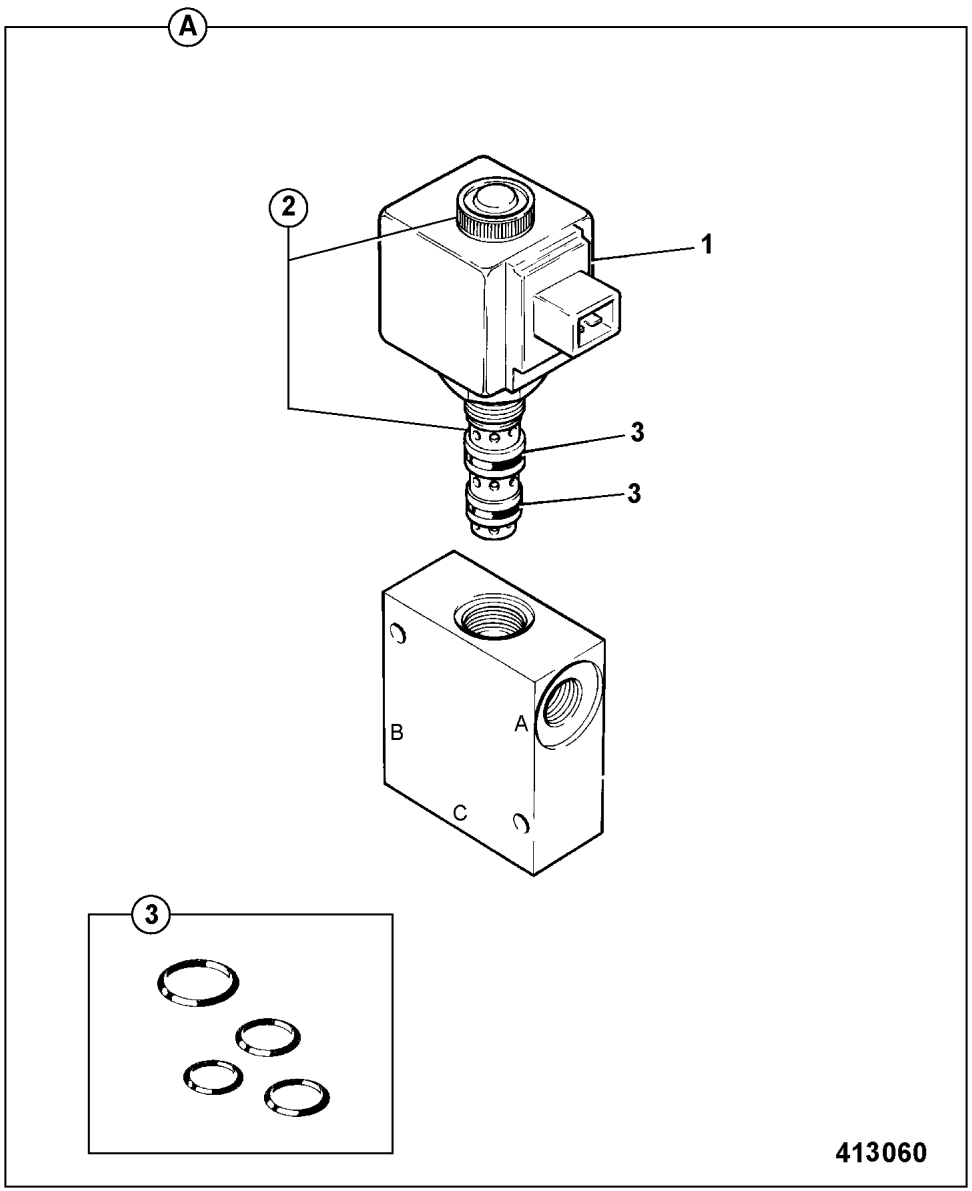

	FROM	TO	FROM	TO
JS160W				

ITEM	PART NO	CHANGE NO	DESCRIPTION	REMARKS	USAGE CODE	QTY
0A	25/221009		Valve, solenoid			1
1	25/221263		:Coil, 24V			1
2	25/220555		:Cartridge, valve, excl. coil			1
3	25/220533		::Kit, seal			1

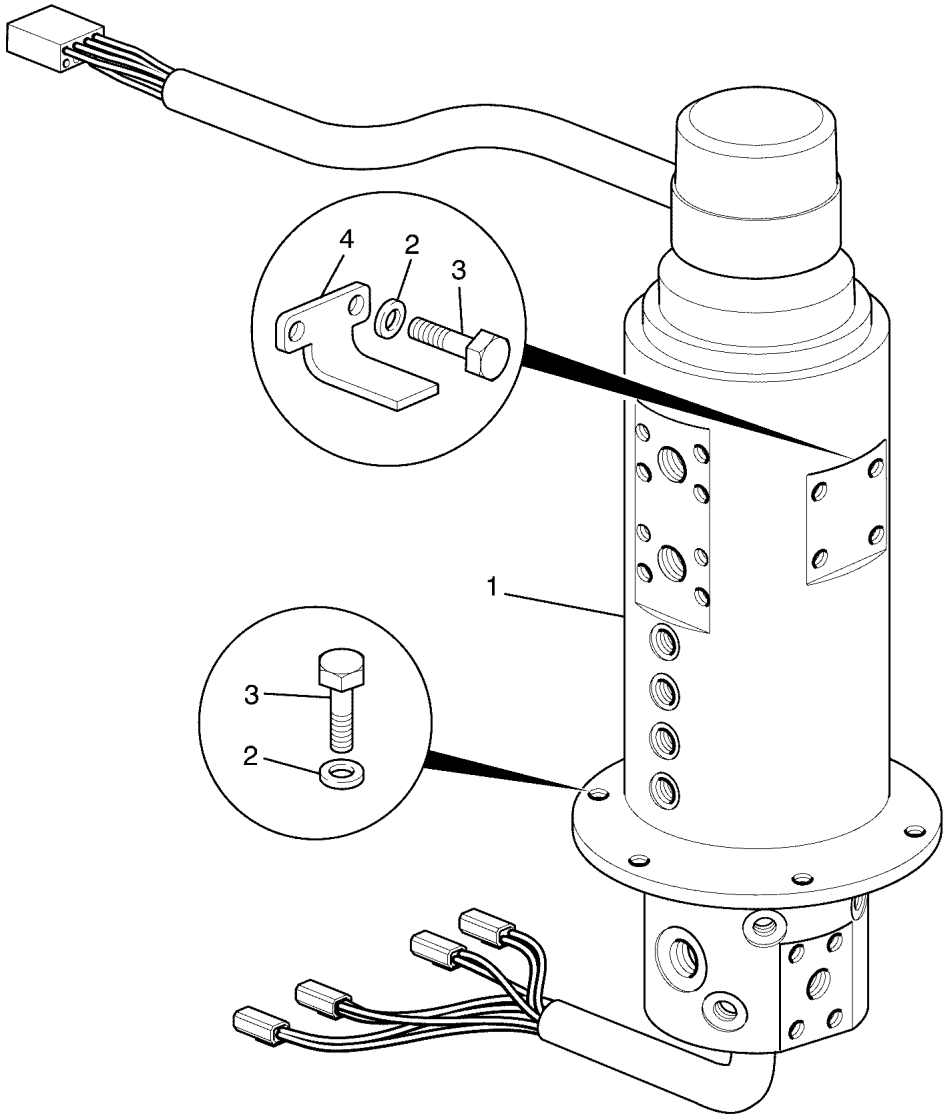

814670

	FROM	TO	FROM	TO
JS160W				

ITEM	PART NO	CHANGE NO	DESCRIPTION	REMARKS	USAGE CODE	QTY
1	45/920118		Coupling, rotary no slip ring, JS175W AUTO			1
	45/920117		Coupling, rotary c/w slip ring, JS175W AUTO			1
2	JHP0042		Washer, plain			8
3	1316/0508D		Screw			8
4	332/J2506		Bracket, anti rotation			1

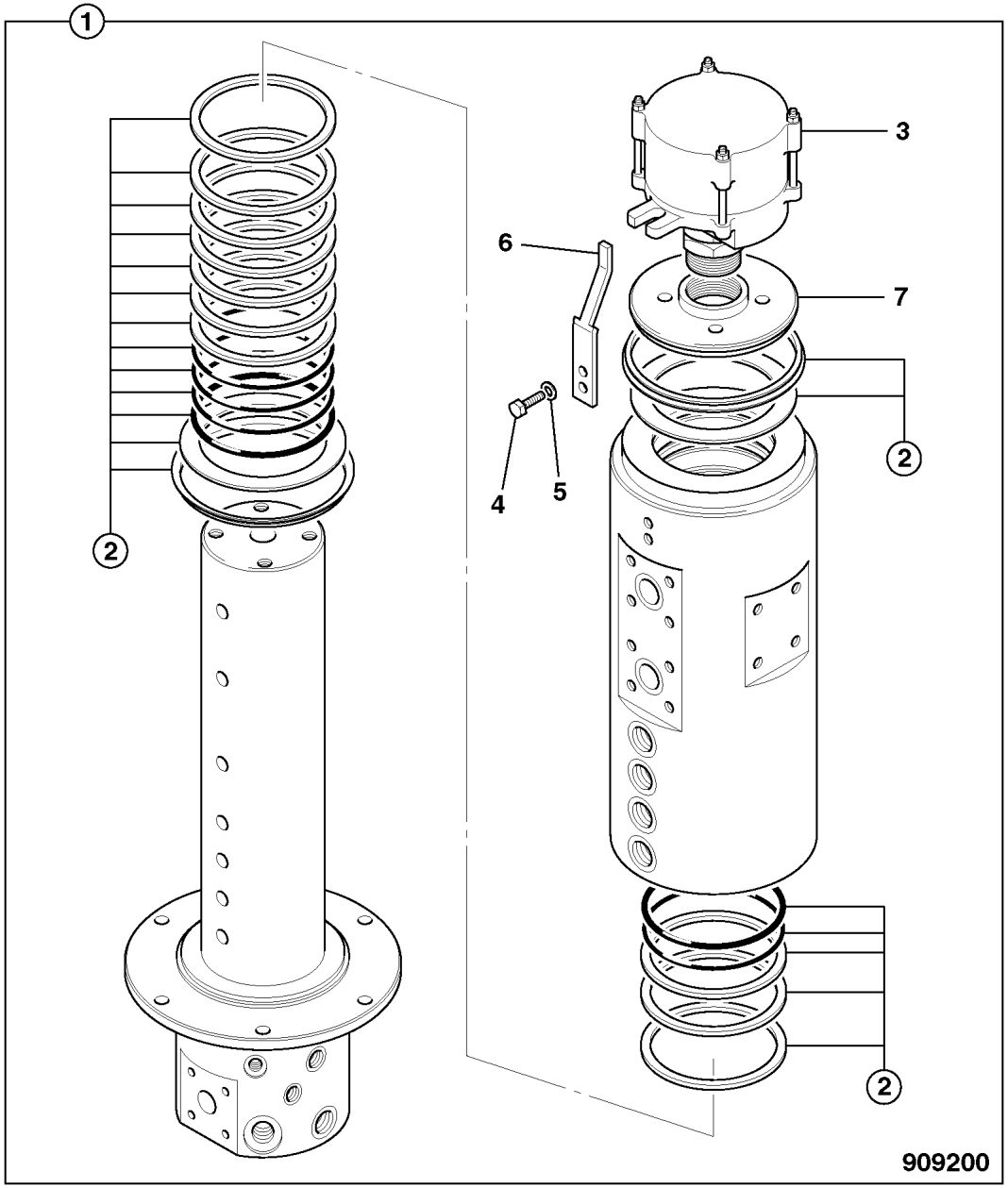

	FROM	TO	FROM	TO
JS160W				

ITEM	PART NO	CHANGE NO	DESCRIPTION	REMARKS	USAGE CODE	QTY
1	45/920117		Coupling, rotary c/w slip ring, JS175W AUTO			1
2	332/C3819		:Kit-seal, rotary coupling, JS145W			1
3	332/C3820		:Kit-repair, rotary coupling, JS145W			1
4	1		:TBA			1
5	1		:TBA			1
6	1		:TBA			1
7	1		:TBA			1
8	1		:TBA			4
9	1		:TBA			1
10	1		:TBA			4

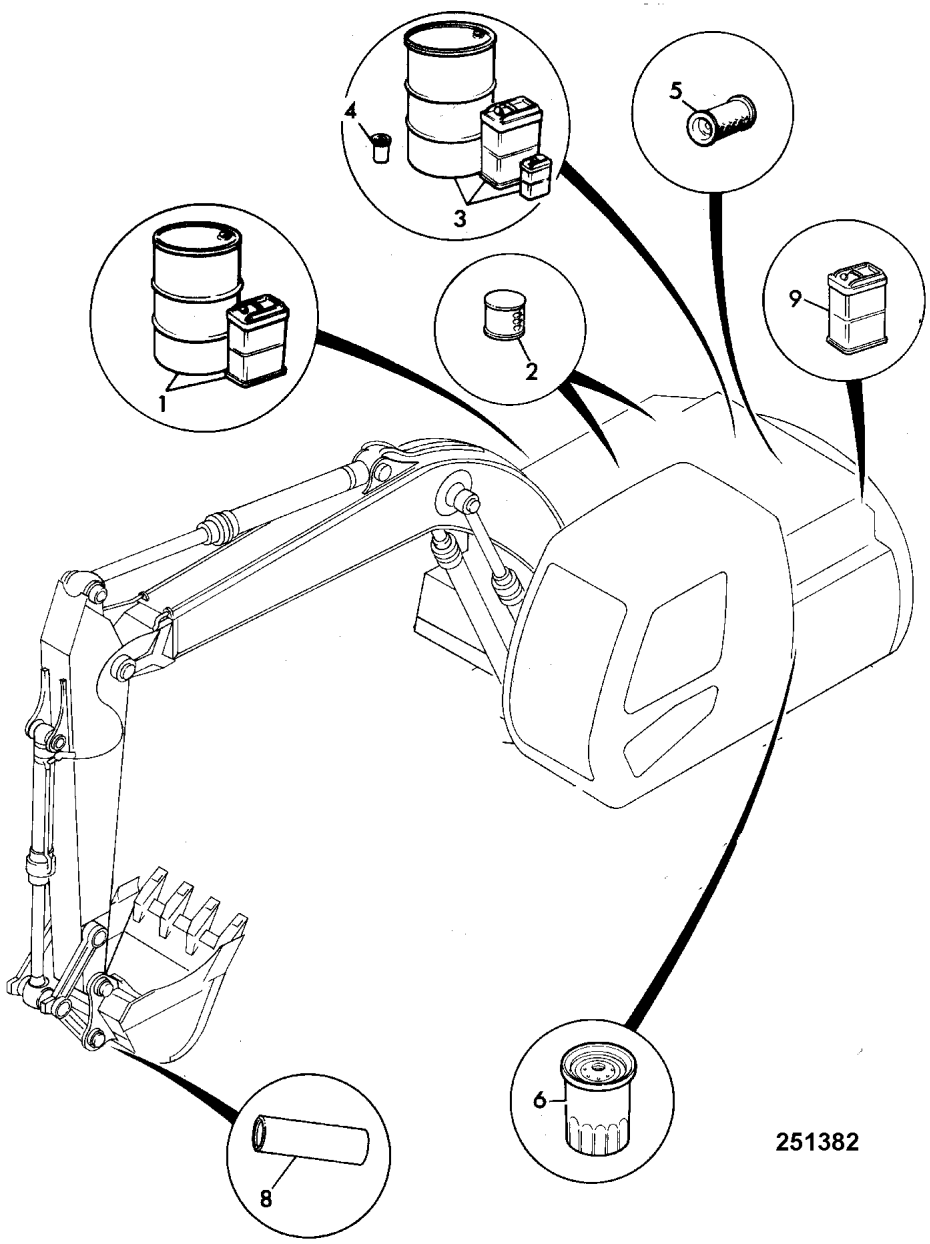

	FROM	TO	FROM	TO
JS160W				

ITEM	PART NO	CHANGE NO	DESCRIPTION	REMARKS	USAGE CODE	QTY
1	4002/1001		Fluid, hydraulic JCB HP32, 5 litres	Below 38C (100F) (See Label ISO VG32)		1
	4002/1023		Fluid, hydraulic JCB HP32, 25 litre	Below 38C (100F) (See Label ISO VG32)		1
	4002/1024		Fluid, hydraulic JCB HP32, 200 litre	Below 38C (100F) (See Label ISO VG32)		1
	4002/0801		Fluid, hydraulic 46, 5 litre	Above 38C (100F) (See Label ISO VG46)		1
	4002/0802		Fluid, hydraulic 46, 25 litre	Above 38C (100F) (See Label ISO VG46)		1
	4002/0803		Fluid, hydraulic 46, 200 litre	Above 38C (100F) (See Label ISO VG46)		1
	4002/0701		Fluid, hydraulic ISO68, 200 litre	Hot Climate (See Label ISO VG68)		1
2	KRJ1599		Element, filter return	Standard. BLA2717 must be ordered with this.		1
	32/925185		Element, flushing only	Only fitted for flushing, max 100 hours only		1
	BLA2717		O Ring	For KRJ1599		1
	32/925164		Element, filter bypass, Plexus			1

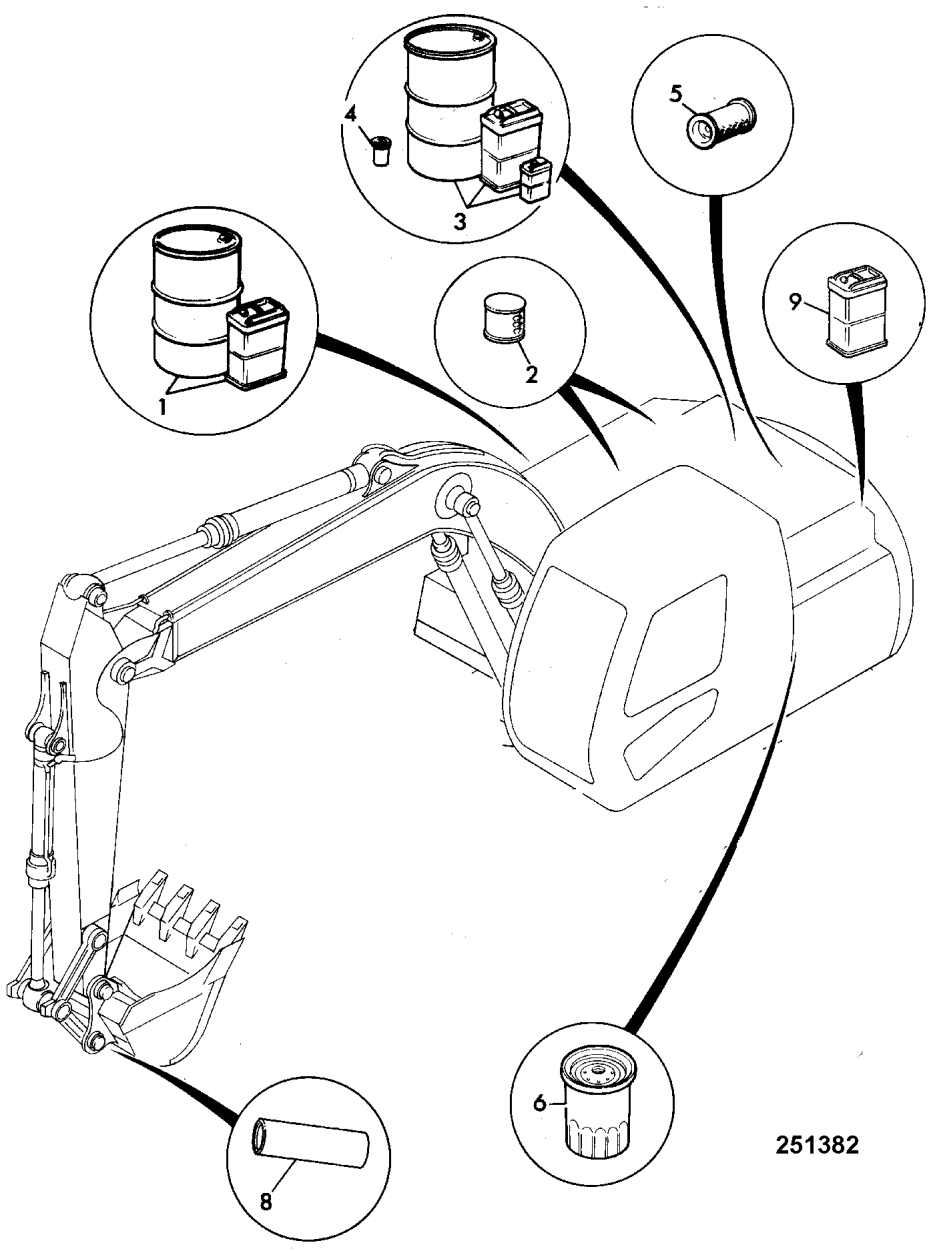

ITEM	PART NO	CHANGE NO	DESCRIPTION	REMARKS	USAGE CODE	QTY
	332/C1493		O Ring	For 332/C1491		2
	332/C1496		O Ring	For 332/C1491.		1
	KBJ1691		Element, servo, filter	Servo filter.		1
	KHJ1032		O Ring	For KBJ1691		1
	KNJ0288		Element, oil, filter	Drain line filter.		1
	KHJ0568		Filter, line	In line filter.		1
	6900/0056		Element, filter	Auxiliary filter.		1
	6900/0841		Kit-seal, filter	Auxiliary filter.		1
	6900/0084		Element, steer filter, c/w seal	Steering		1
3	4004/0301		Oil, JCB super universal, agricultural 25 l			1
	4004/0302		Oil, JCB super universal, agricultural 200 l			1
	4001/0801		Oil, JCB Multigrade, 15W/40 - 5 litre			1
	4001/0802		Oil, JCB Multigrade, 15W/40 - 25 ltre			1
	4001/1503		Oil, 15W/40, 200 litres			1
4	02/801481		Element, oil filter, cartridge	Engine oil		1
5	580/12020		Element, air filter, main			1
	580/12021		Element, air filter, safety			1
6	* 32/925838		Element, fuel filter, cartridge			1
	32/925869		Element, fuel sediment filter, cartridge	Sediment filter		1
7	4000/0701		Oil, Special Gear Oil, Plus. 25 litre	Axle hubs & diff		A/R
	4000/0702		Oil, JCB Special gear, 5 litres	Axle hubs & diff		A/R

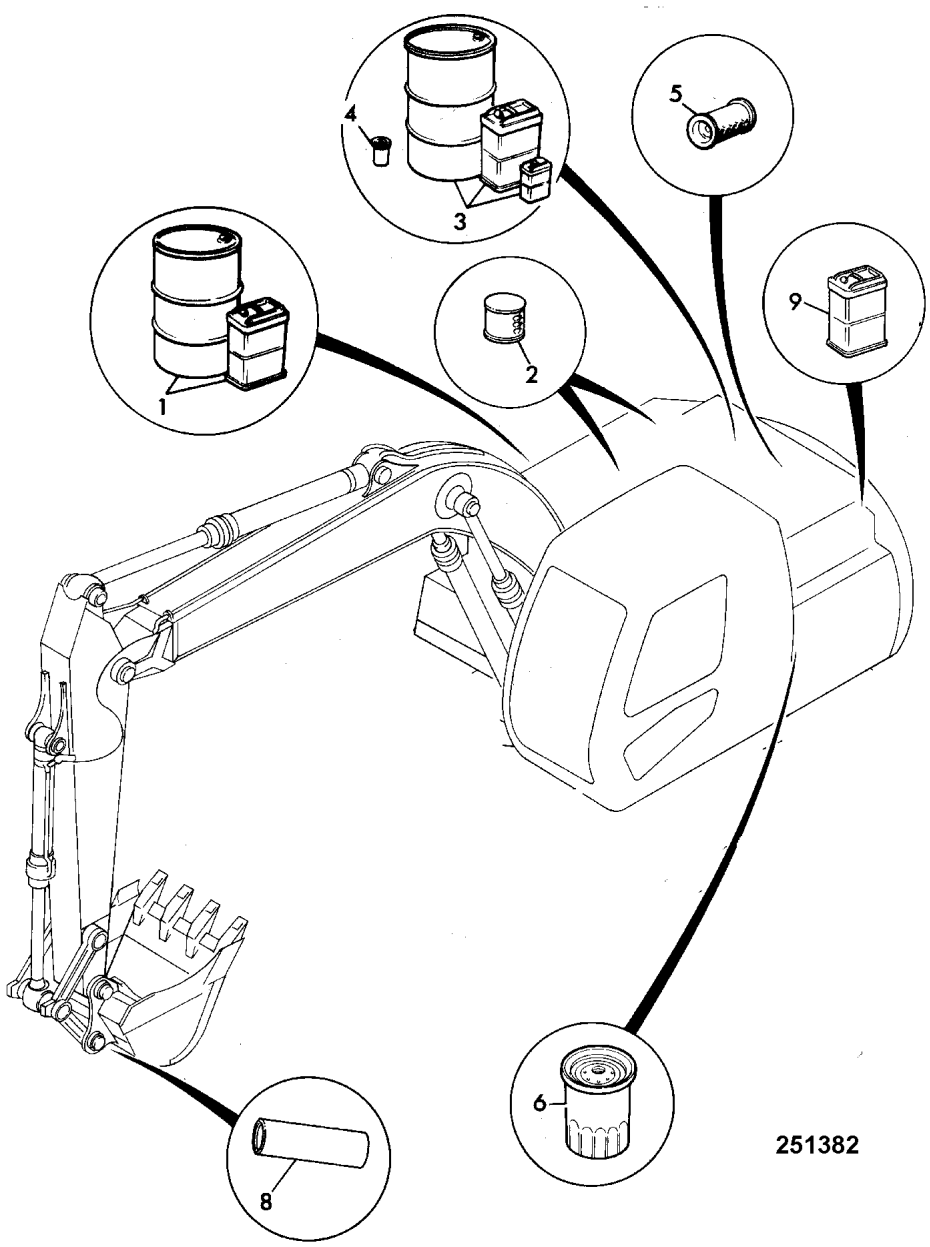

ITEM	PART NO	CHANGE NO	DESCRIPTION	REMARKS	USAGE CODE	QTY
	4001/1502		Oil, 15W/40, 25 litres	Transmission		A/R
8	4003/2017		Grease, HP, 400g x 24			1
	4003/2005		Grease, HP 50kg			1
	4003/1501		Grease, MPL-EP	Propshaft		A/R
9	4006/0102		Fluid, anti-freeze, 5 litre			1

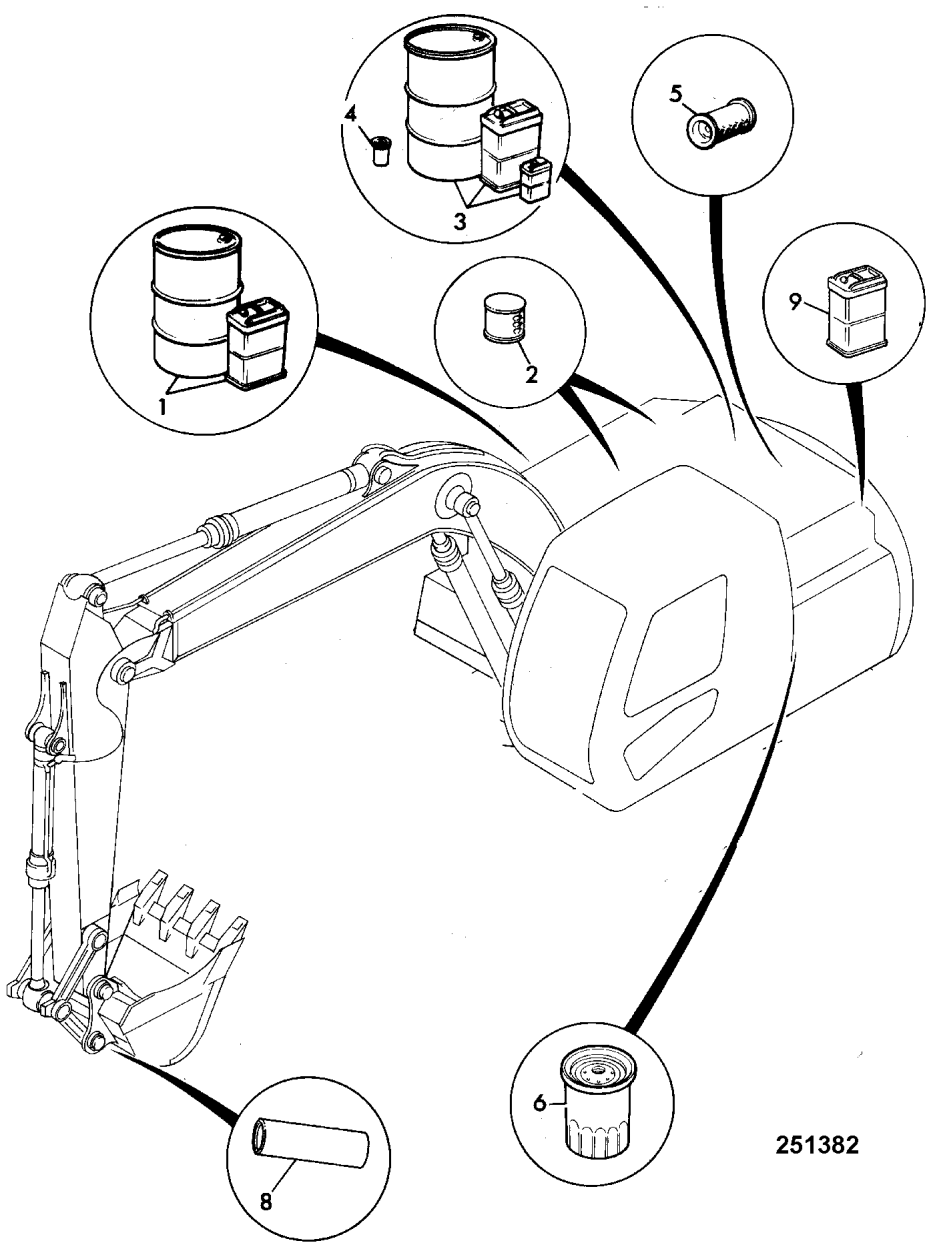

	FROM	TO	FROM	TO
JS160W				

ITEM	PART NO	CHANGE NO	DESCRIPTION	REMARKS	USAGE CODE	QTY
1	4002/1223		Fluid, hydraulic, 25 litres, Biodegradable			1
	4002/1224		Fluid, hydraulic 205 litres, Biodegradable			1
2	.		'See Remark'	Please see E3-15-1 for items 2 to 9		1

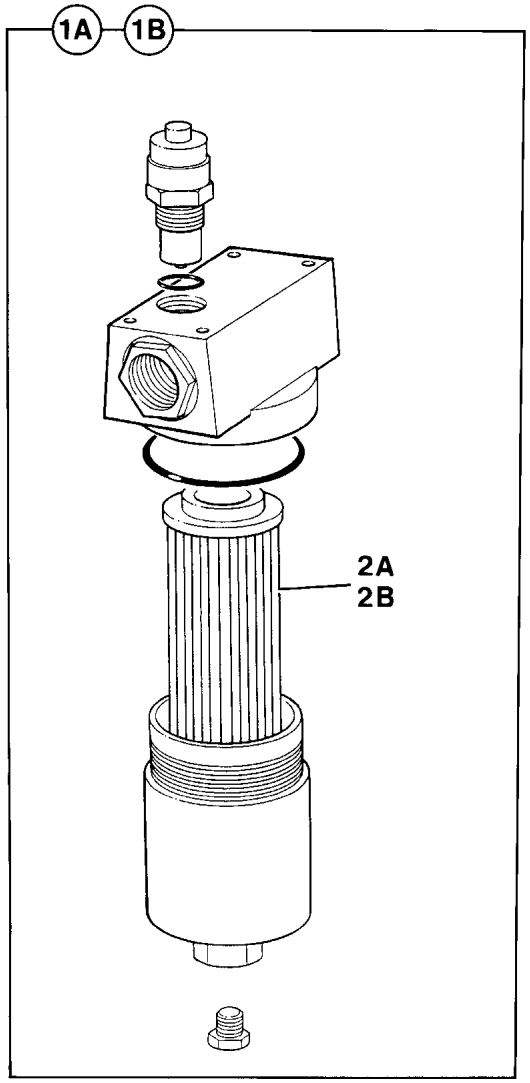

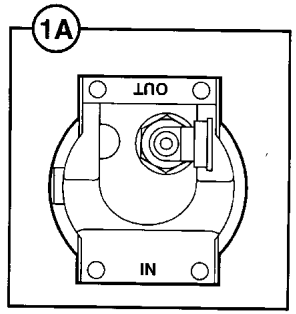

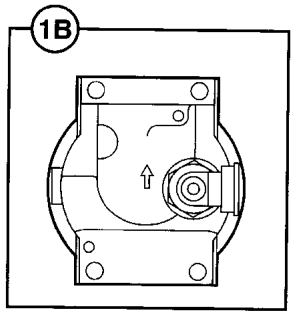

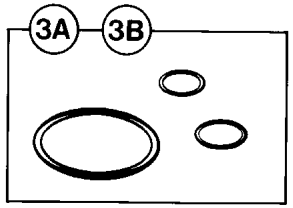

313270

	FROM	TO	FROM	TO
JS160W				

ITEM	PART NO	CHANGE NO	DESCRIPTION	REMARKS	USAGE CODE	QTY
1B	32/925602		Filter, return			1
1B01	928/60040		Valve, visual indicator			1
2B	6900/0056		Element, filter			1
3B	6900/0841		Kit-seal, filter			1
4	817/19304		Decal, filter, hammer, auxiliary			1

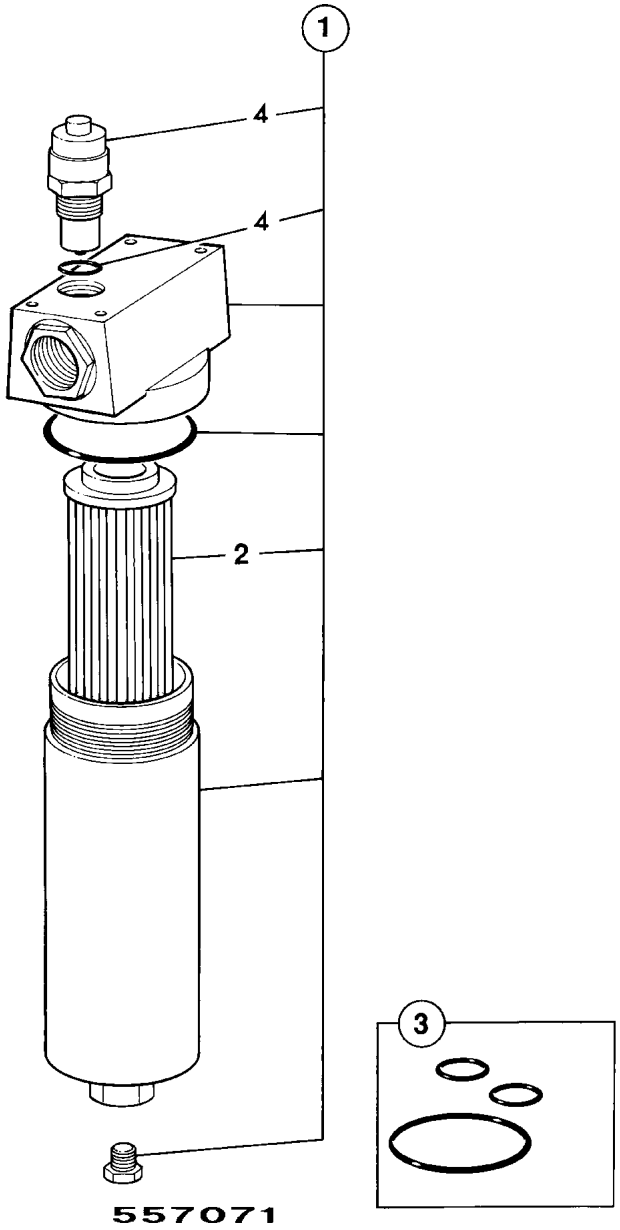

	FROM	TO	FROM	TO
JS160W				

ITEM	PART NO	CHANGE NO	DESCRIPTION	REMARKS	USAGE CODE	QTY
1	JLJ0232		Filter, steer			1
2	6900/0084		:Element, steer filter, c/w seal			1
3	32/909802		:Kit-seal, filter			1

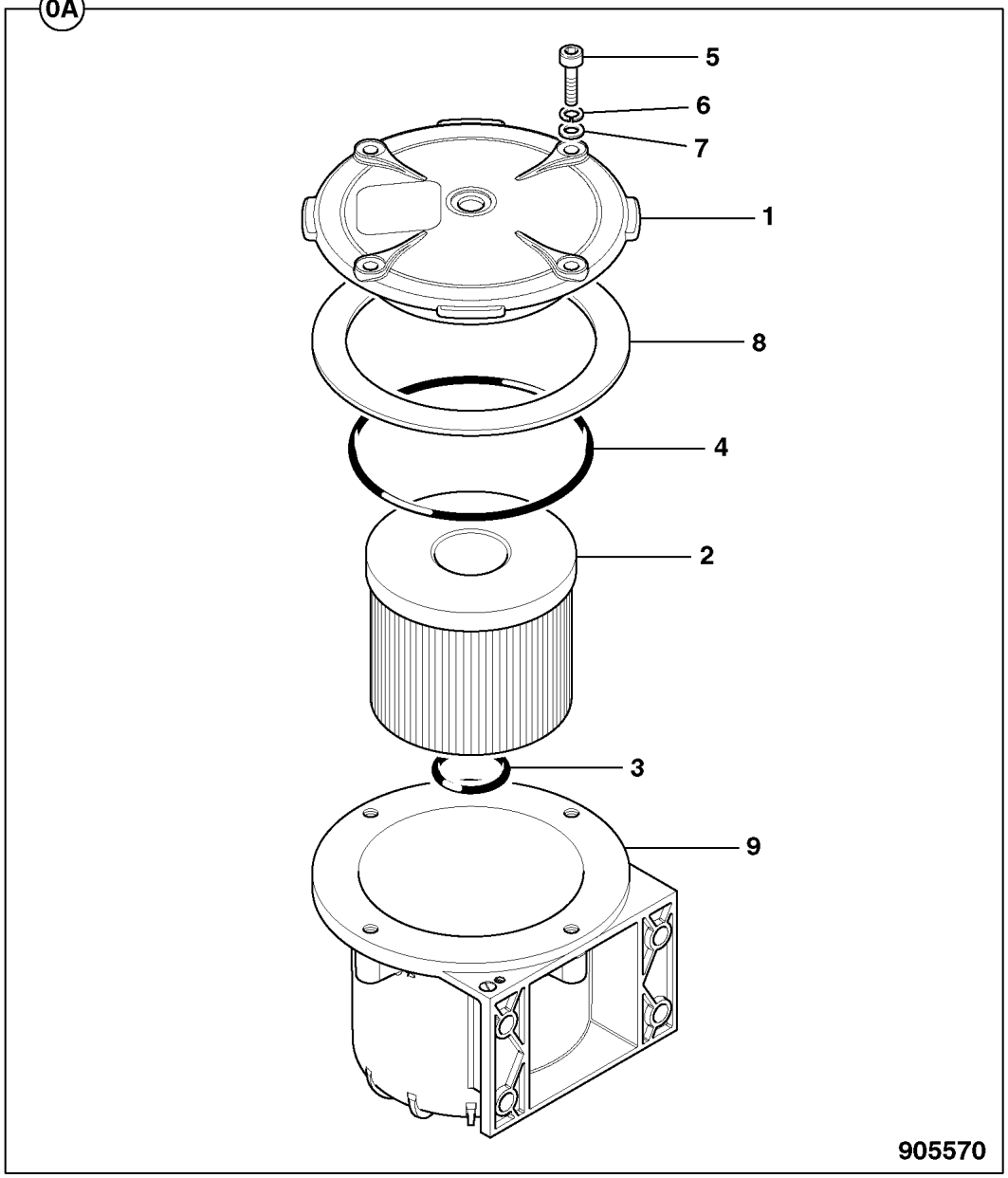

	FROM	TO	FROM	TO
JS160W				

ITEM	PART NO	CHANGE NO	DESCRIPTION	REMARKS	USAGE CODE	QTY
0A	32/925964		Filter, Plexus			1
1	332/C1504		:Cover			1
2	* 32/925164		:Element, filter bypass, Plexus			1
3	* 828/10081		:O Ring			1
4	332/C1496		:O Ring			1
5	332/C1499		:Capscrew			1
6	* 823/10181		:Washer, spring, st. steel			1
7	* 823/10201		:Washer, M8, st. steel			1
8	332/C1503		:Seal			1
9	NSP		None serviced part	Housing		1

E3-23-1 VALVE, PILOT SHUTTLE

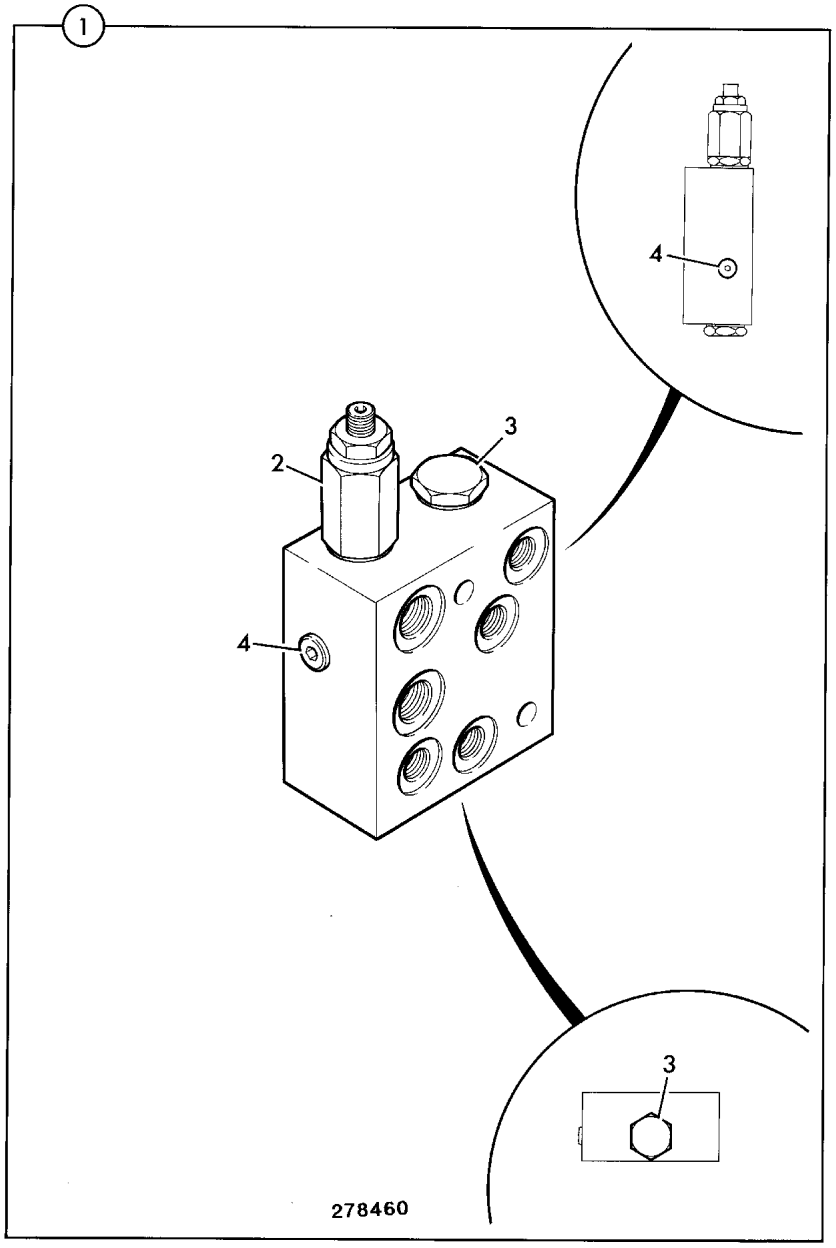

	FROM	TO	FROM	TO
JS160W				

ITEM	PART NO	CHANGE NO	DESCRIPTION	REMARKS	USAGE CODE	QTY
1	25/220540		Valve, assembly, shuttle sequence			1
2	6900/0463		:Cartridge, sequence	CT1		1
3	6900/0462		:Cartridge, shuttle	CT2 & CT3		2

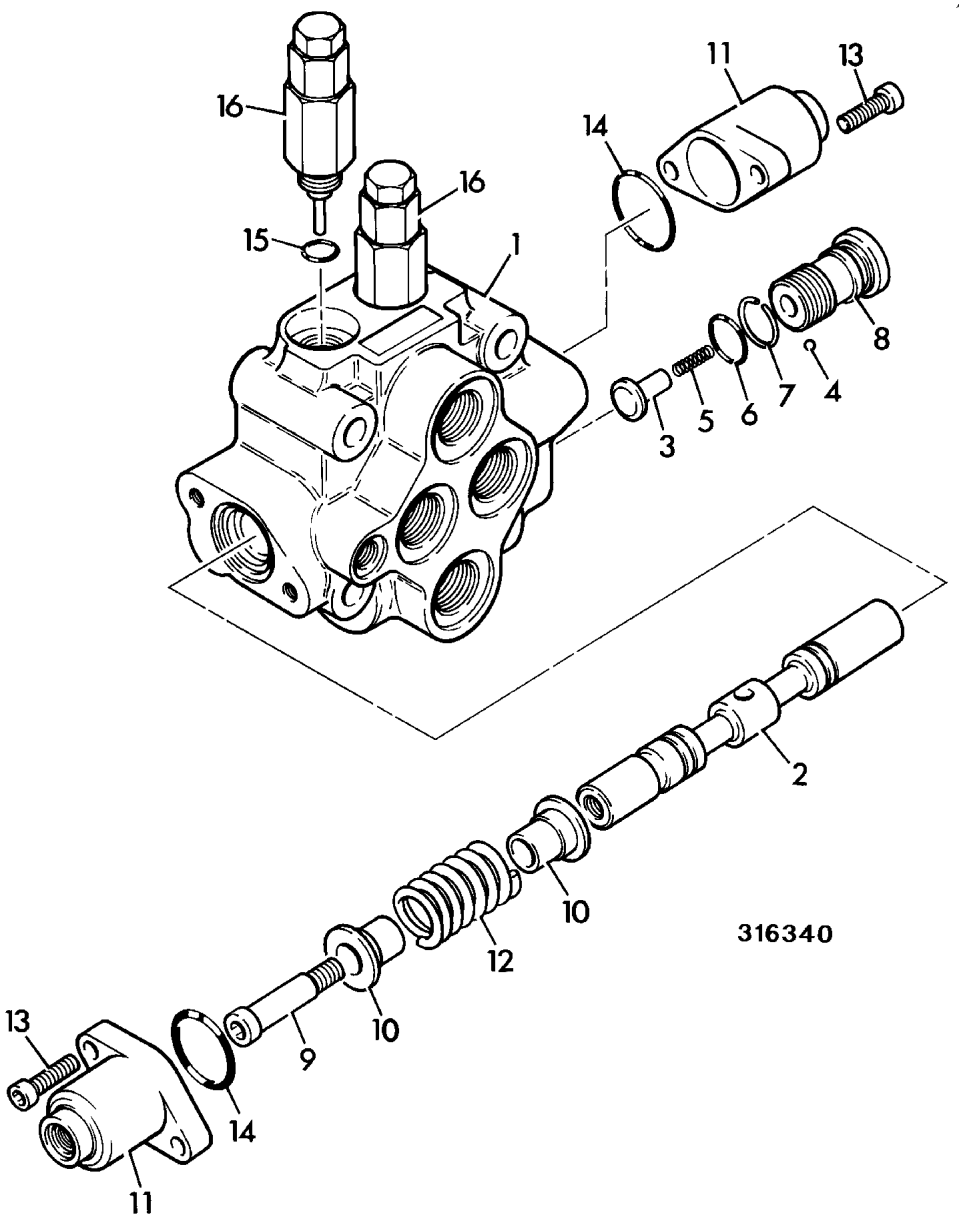

	FROM	TO	FROM	TO
JS160W				

ITEM	PART NO	CHANGE NO	DESCRIPTION	REMARKS	USAGE CODE	QTY
0A	JLJ0235		Valve, control			1
1	N.S.P		None serviced part			1
2	N.S.P		None serviced part			1
3	6900/0866		:Adapter, check			1
4	6900/0867		:Clip, nylon			1
5	6900/0868		:Spring			1
6	6900/0869		:O Ring			1
7	6900/0870		:Ring, back up			1
8	6900/0871		:Cap			1
9	6900/0872		:Cap			1
10	6900/0873		:Guide			2
11	6900/0874		:Cover			2
12	6900/0875		:Spring			1
13	6900/0876		:Bolt			4
14	6900/0877		:O Ring			2
15	6900/0878		:O Ring			2
16	6900/0879		:Valve, relief, assembly			2

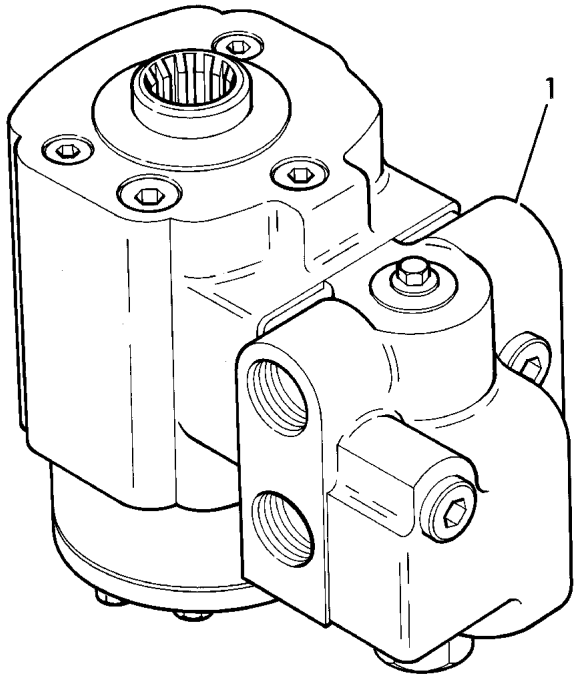

273540

	FROM	TO	FROM	TO
JS160W				

ITEM	PART NO	CHANGE NO	DESCRIPTION	REMARKS	USAGE CODE	QTY
1	JRJ0346		Valve, steer			1

E

E1 HOSE & PIPEWORK
E2 PUMP/MOTOR & PUMP DRIVE
E3 VALVES & HYDRAULIC FILTERS
● E4 RAMS

ENGLISH

E4-1-1 CIRCUIT, BOOM RAM, NONE HBCV
E4-1-10 BOOM RAM, NONE HBCV
E4-1-20 CIRCUIT, BOOM RAM, WITH HBCV, TAB BOOM
E4-1-30 RAM, BOOM, WITH HBCV, TAB BOOM
E4-2-1 RAM, DIPPER, ASSY WITHOUT HBCV, MONO BOOM & TAB BOOM
E4-2-10 RAM, DIPPER, ASSEMBLY WITH HBCV, MONO BOOM & TAB BOOM
E4-2-20 RAM, DIPPER, COMPONENTS
E4-6-1 RAM, AXLE LOCK
E4-7-1 RAM, POSITION, ASSEMBLY, TAB BOOM, WITHOUT HBCV
E4-7-10 RAM, POSITION, HBCV, ASSEMBLY

FRANCAIS

E4-1-1 VERIN, FLECHE
E4-1-10 VERIN, FLECHE
E4-1-20 CIRCUIT, BOOM RAM, WITH HBCV, TAB BOOM
E4-1-30 VERIN, FLECHE
E4-2-1 VERIN, EXCAVATEUR
E4-2-10 RAM, DIPPER, ASSEMBLY WITH HBCV, MONO BOOM & TAB BOOM
E4-2-20 RAM, DIPPER, COMPONENTS
E4-6-1 RAM, AXLE LOCK
E4-7-1 RAM, POSITION, ASSEMBLY, TAB BOOM, WITHOUT HBCV
E4-7-10 RAM, POSITION, HBCV, ASSEMBLY

DEUTSCH

E4-1-1 ZYL., AUSLEGER
E4-1-10 ZYL., AUSLEGER
E4-1-20 CIRCUIT, BOOM RAM, WITH HBCV, TAB BOOM
E4-1-30 ZYL., AUSLEGER
E4-2-1 ZYL., LOFFELSTIEL
E4-2-10 RAM, DIPPER, ASSEMBLY WITH HBCV, MONO BOOM & TAB BOOM
E4-2-20 RAM, DIPPER, COMPONENTS
E4-6-1 RAM, AXLE LOCK
E4-7-1 RAM, POSITION, ASSEMBLY, TAB BOOM, WITHOUT HBCV
E4-7-10 RAM, POSITION, HBCV, ASSEMBLY

ITALIANO

E4-1-1 PISTONE, BRACCIO PRINCIPALE
E4-1-10 PISTONE, BRACCIO PRINCIPALE
E4-1-20 CIRCUIT, BOOM RAM, WITH HBCV, TAB BOOM
E4-1-30 PISTONE, BRACCIO PRINCIPALE
E4-2-1 PISTONE, SECONDO BRACCIO
E4-2-10 RAM, DIPPER, ASSEMBLY WITH HBCV, MONO BOOM & TAB BOOM
E4-2-20 RAM, DIPPER, COMPONENTS
E4-6-1 RAM, AXLE LOCK
E4-7-1 RAM, POSITION, ASSEMBLY, TAB BOOM, WITHOUT HBCV
E4-7-10 RAM, POSITION, HBCV, ASSEMBLY

PORTUGUES

E4-1-1 CILINDRO DO BRACO
E4-1-10 CILINDRO DO BRACO
E4-1-20 CIRCUIT, BOOM RAM, WITH HBCV, TAB BOOM
E4-1-30 CILINDRO DO BRACO
E4-2-1 CILINDRO, LANCA
E4-2-10 RAM, DIPPER, ASSEMBLY WITH HBCV, MONO BOOM & TAB BOOM
E4-2-20 RAM, DIPPER, COMPONENTS
E4-6-1 RAM, AXLE LOCK
E4-7-1 RAM, POSITION, ASSEMBLY, TAB BOOM, WITHOUT HBCV
E4-7-10 RAM, POSITION, HBCV, ASSEMBLY

ESPANOL

E4-1-1 CILIND. PLUMA ELEV.
E4-1-10 CILIND. PLUMA ELEV.
E4-1-20 CIRCUIT, BOOM RAM, WITH HBCV, TAB BOOM
E4-1-30 CILIND. PLUMA ELEV.
E4-2-1 CILIND.PLUMA EXCAV.
E4-2-10 RAM, DIPPER, ASSEMBLY WITH HBCV, MONO BOOM & TAB BOOM
E4-2-20 RAM, DIPPER, COMPONENTS
E4-6-1 RAM, AXLE LOCK
E4-7-1 RAM, POSITION, ASSEMBLY, TAB BOOM, WITHOUT HBCV
E4-7-10 RAM, POSITION, HBCV, ASSEMBLY

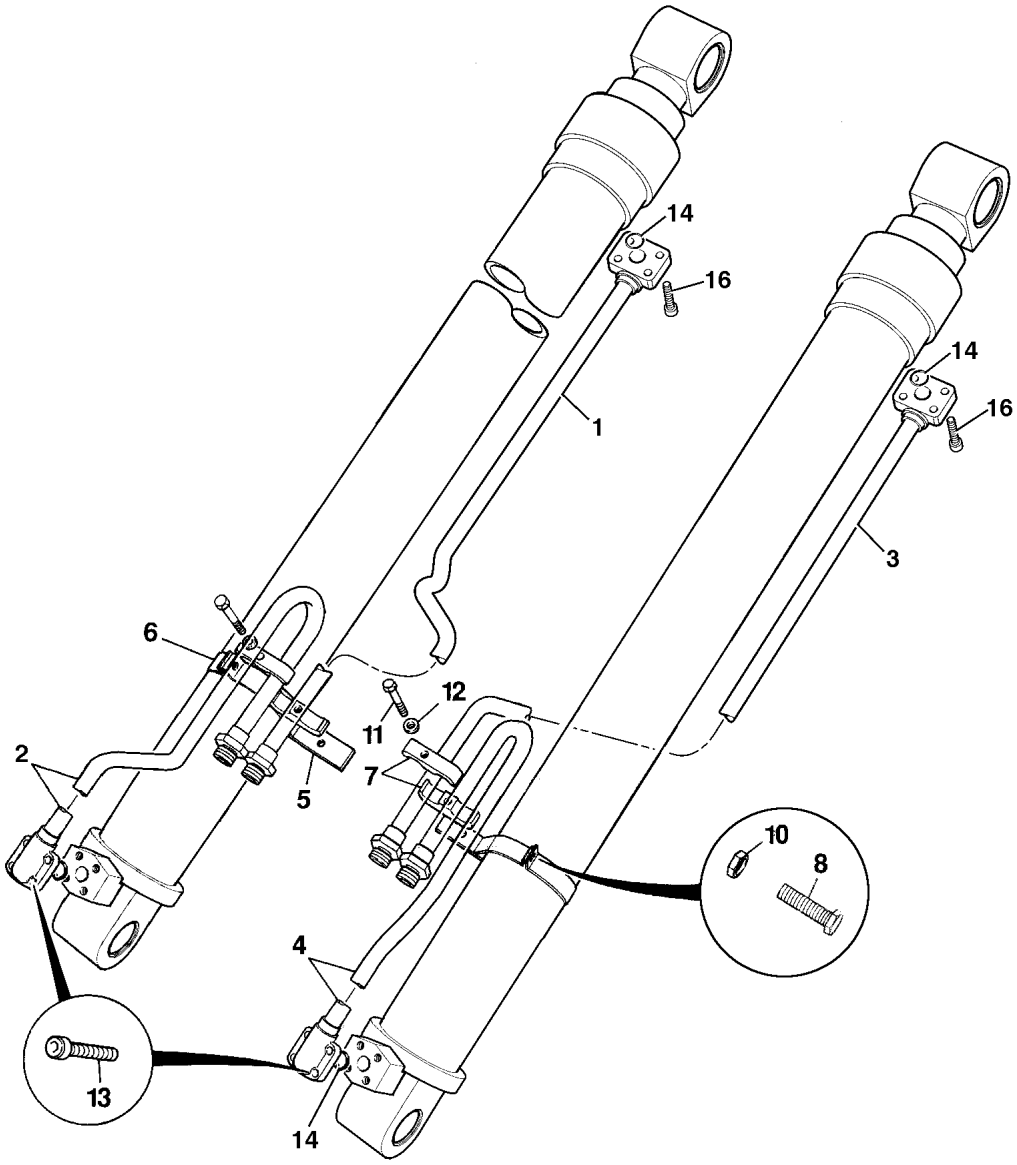

728250

	FROM	TO	FROM	TO
JS160W				

ITEM	PART NO	CHANGE NO	DESCRIPTION	REMARKS	USAGE CODE	QTY
	830/12338		Pipe, boom lower left hand			1
2	JLV1256		Pipe, boom lift, left hand none HBCV			1
3	830/12337		Pipe, boom lower righthand			1
4	JLV1255		Pipe, boom lift, right hand none HBCV			1
5	821/10314		Clamp			2
6	821/10313		Clamp			1
7	JRJ0218		Clamp, pipe			4
8	1316/3410D		Bolt			4
10	1371/0301D		Nut, M10 high strength			4
11	1316/3514D		Bolt, M12 x 60			2
12	1420/0009Z		Washer, Plain M12			2
13	1391/3410D		Capscrew, M10 x 40			8
14	2407/0205		O Ring			4
16	1391/3410D		Capscrew, M10 x 40			8

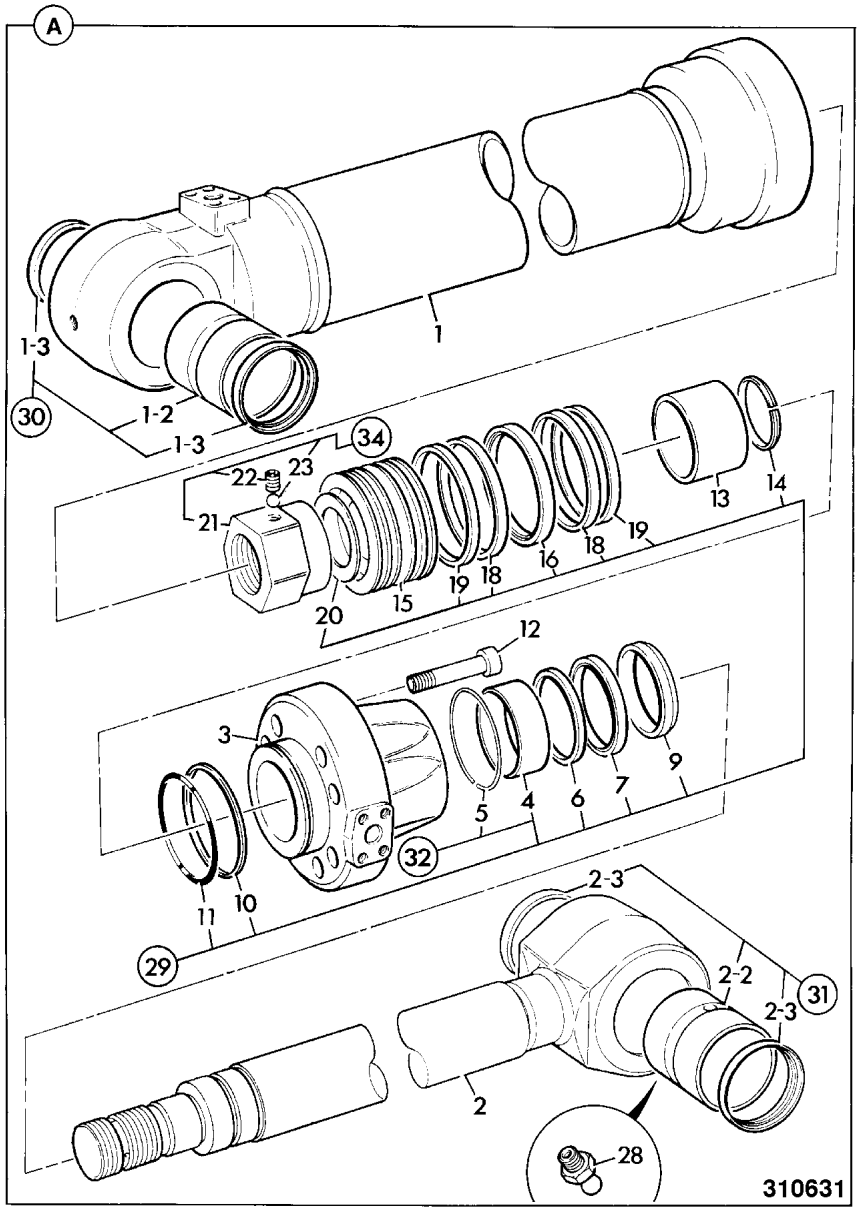

	FROM	TO	FROM	TO
JS160W				

ITEM	PART NO	CHANGE NO	DESCRIPTION	REMARKS	USAGE CODE	QTY
0A	331/17731		Ram, cylinder boom			2
1	998/10693		:Kit, Kit cylinder tube re			1
1 02	331/11854		::Bush, pin bushing			1
1 03	331/11839		::Wiper, pin bushing			2
2	903/20565		:Rod, Rod piston assembly			1
2 02	331/11851		::Bush, pin bushing			1
2 03	331/11838		::Seal, Pivot Pin			2
3	903/20550		:Head, Head cylinder			1
4	NSP		:None serviced part			1
5	NSP		:None serviced part			1
6	NSP		:None serviced part			1
7	NSP		:None serviced part	Includes back up ring		1
9	NSP		:None serviced part			1
10	NSP		:None serviced part			1
11	NSP		:None serviced part			1
12	903/20376		:Screw			12
13	331/11863		:Cushion, ring			1
14	903/20551		:Ring, Ring cushion			1
15	331/11764		:Piston, boom ram, 115/80MM			1
16	NSP		:None serviced part			1
18	NSP		:None serviced part			2

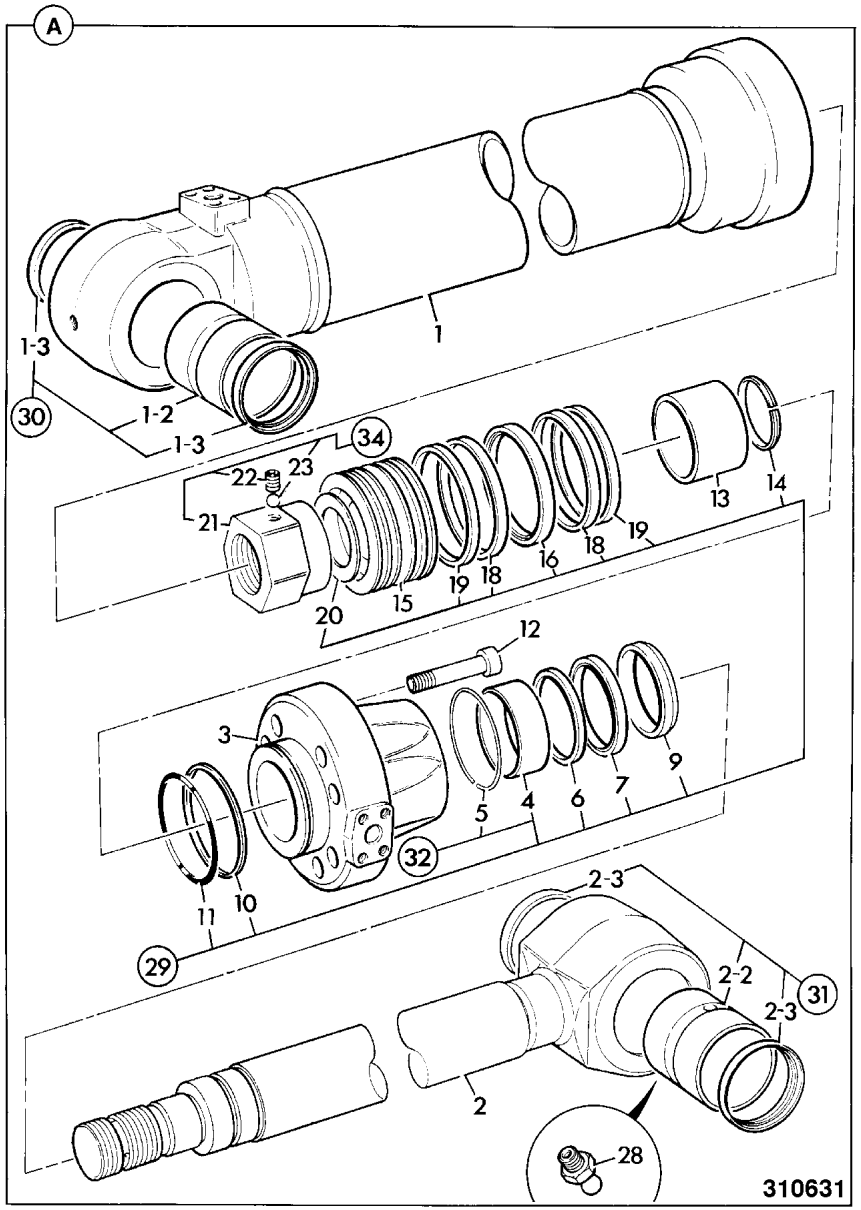

ITEM	PART NO	CHANGE NO	DESCRIPTION	REMARKS	USAGE CODE	QTY
19	NSP		:None serviced part			2
20	NSP		:None serviced part			1
21	6900/0971		:Nut			1
22	NSP		:None serviced part			1
23	NSP		:None serviced part			1
28	6900/0723		:Nipple, grease	Cylinder dump end		1
	903/20566		:Nipple, grease	Rod eye end		1
29	998/10040		:Kit, boom ram seal kit, 115MM CYL X 80MM ROD	Includes items 4,6, 7,9,10,11,14,16,18, 19 & 20		1
30	998/10693		:Kit, Kit cylinder tube re	Includes items 1,1. 2 & 1.3		1
31	998/10694		:Kit, Kit piston rod repai	Includes items 2,2. 2 & 2.3		1
32	998/10060		:Kit, cylinder head repair	Includes items 3,4 & 5		1
34	6900/0976		:Kit, repair, nut	Includes items 21, 22 & 23		1

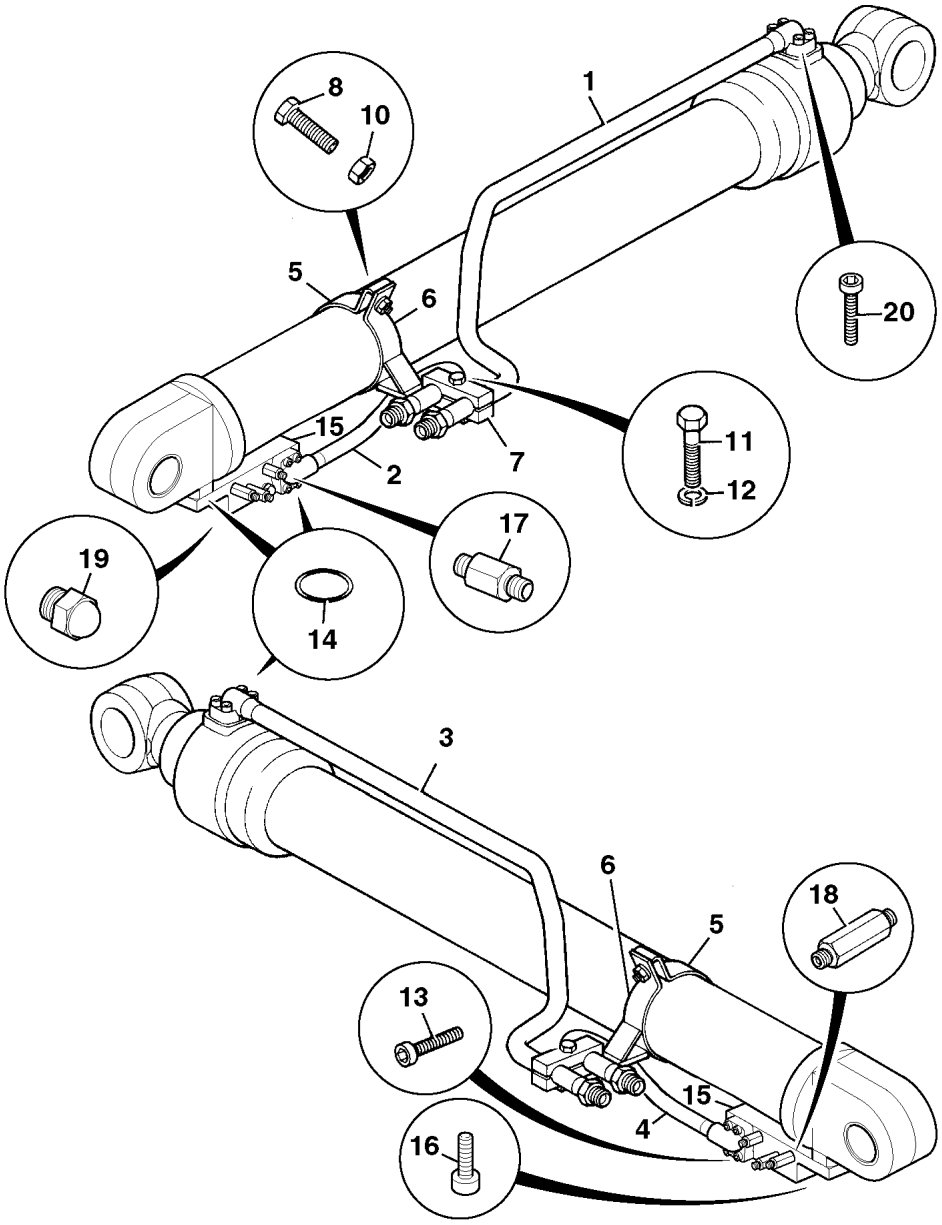

255172

	FROM	TO	FROM	TO
JS160W				

ITEM	PART NO	CHANGE NO	DESCRIPTION	REMARKS	USAGE CODE	QTY
1	JLV1720		Pipe, boom, left hand			1
2	830/12228		Pipe, boom lift, left hand HBCV			1
3	JLV1721		Pipe, feed, right hand			1
4	830/12220		Pipe, boom lower, right hand HBCV			1
5	821/10313		Clamp			2
6	335/07784		Bracket, boom ram clamp			2
7	JRJ0218		Clamp, pipe			4
8	1316/3410D		Bolt			4
10	1371/0301D		Nut, M10 high strength			4
11	1316/3514D		Bolt, M12 x 60			2
12	1420/0009D		Washer, M12			2
13	1391/3409D		Capscrew, M10x35			16
14	2407/0205		O Ring			6
15	25/222559		Valve, HBCV, boom ram			2
15A	904/20358		:Kit-seal	Seal kit		1
15B	25/222901		:Cartridge, relief valve			1
16	1391/3410D		Capscrew, M10 x 40			8
17	JHV0215		Adapter			2
18	JHV0216		Adapter			4
19	816/13417		Nipple, bleed, 9/16 UNF			2

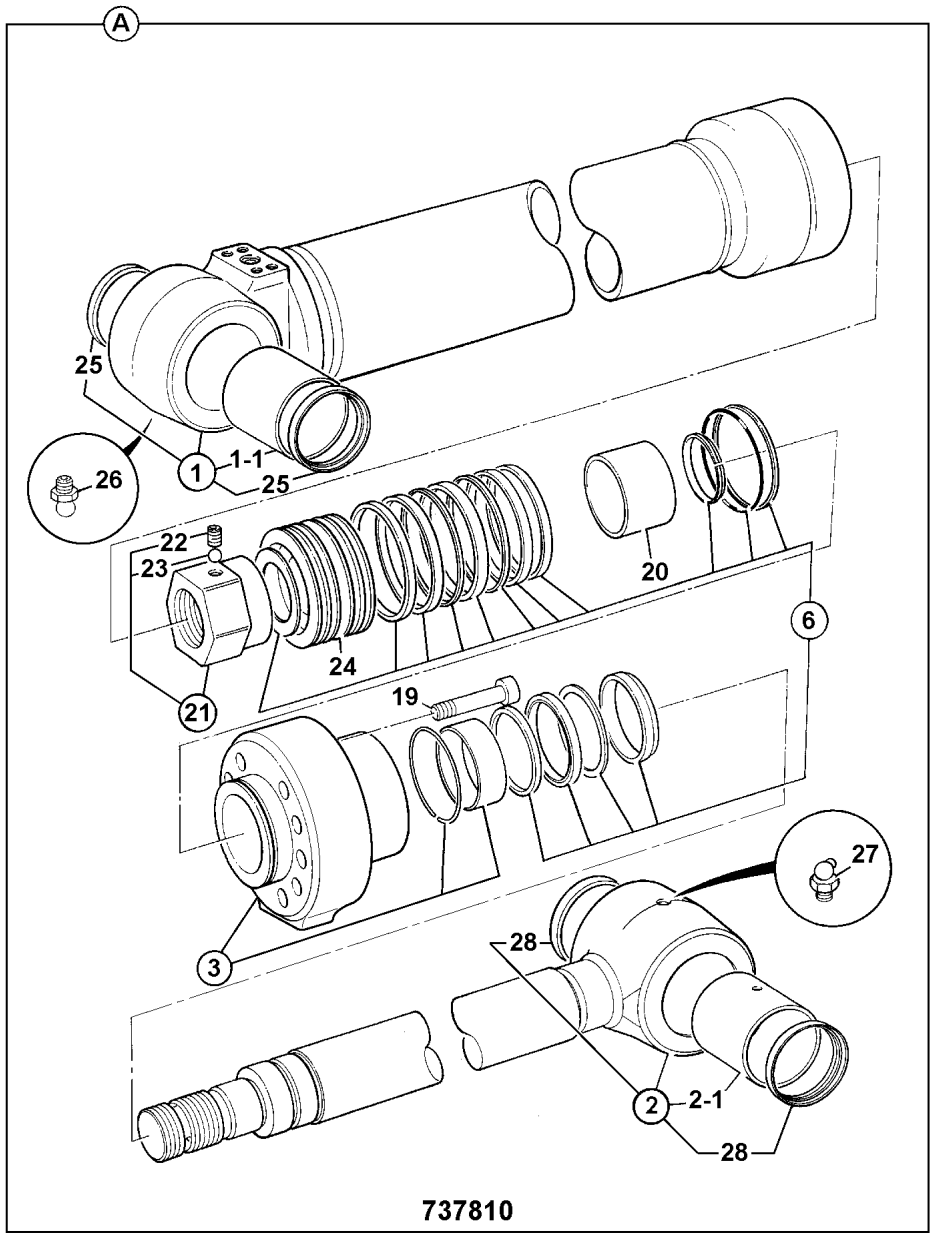

737810

	FROM	TO	FROM	TO
JS160W				

ITEM	PART NO	CHANGE NO	DESCRIPTION	REMARKS	USAGE CODE	QTY
0A	331/44477		Ram, boom			2
1	1		:TBA			1
1 01	831/10349		::Bearing, 80-70-100 long			1
2	1		:TBA			1
2 01	831/10350		::Bearing, 90-80-90 long			1
3	903/20906		:Head, Cylinder			1
6	903/20903		:Kit-repair, Boom ram			1
19	LUU0152		:Capscrew			10
20	LAU0152		:Ring, cushion			1
21	903/20860		:Nut			1
22	LUU0100		::Screw, set			1
23	LPU0074		::Ball, steel			1
24	LPU0097		:Piston			1
25	813/10275		:Seal	Cylinder end		2
26	JHP0037		:Nipple, grease, straight			1
27	JHP0038		:Nipple, grease, angled			1
28	813/10276		:Seal			2

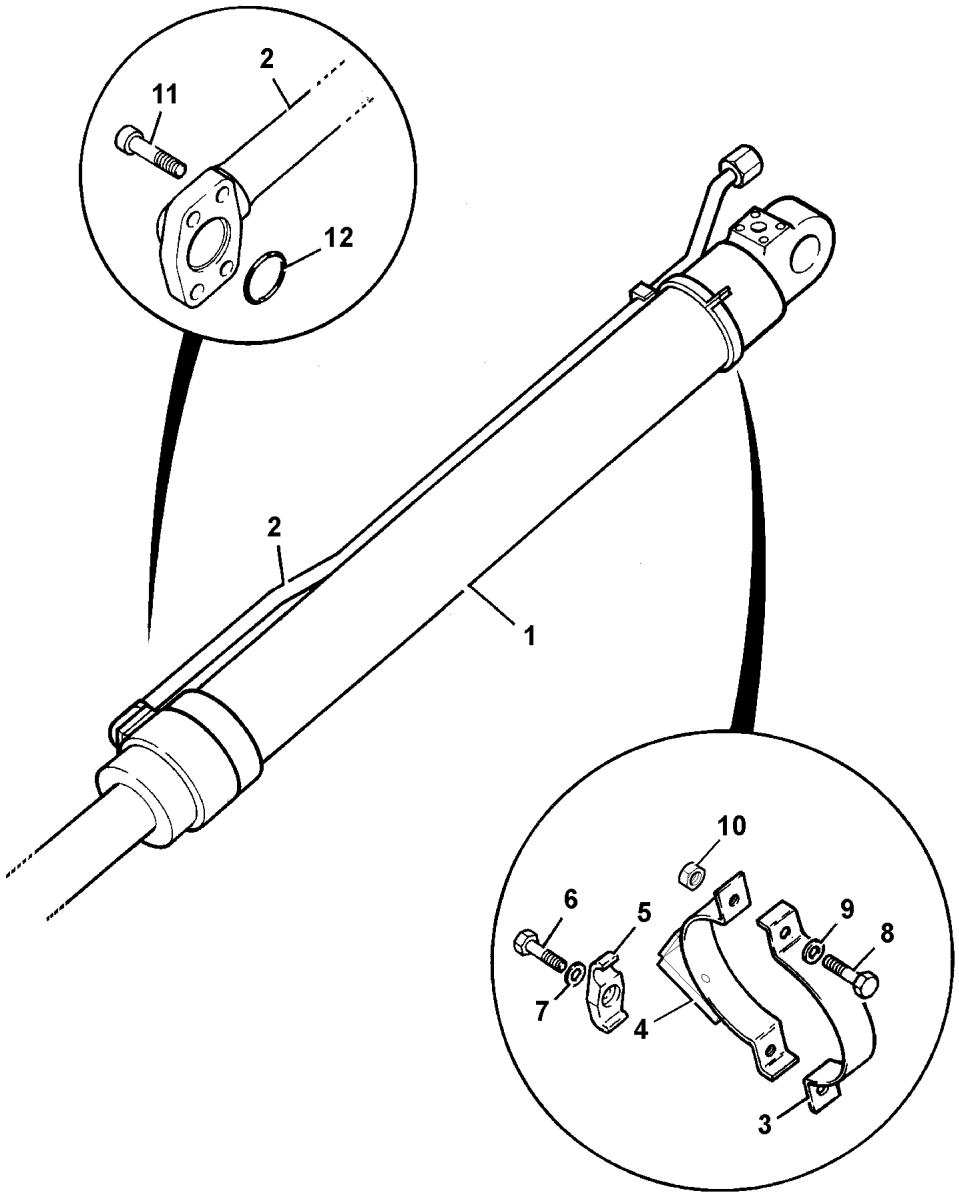

705560

	FROM	TO	FROM	TO
JS160W				

ITEM	PART NO	CHANGE NO	DESCRIPTION	REMARKS	USAGE CODE	QTY
1	331/42329		Ram, arm, JS160 AUTO			1
2	830/12110		Pipe, rod side arm ram			1
3	821/10315		Clamp			1
4	821/10316		Clamp			1
5	KRV0548		Clamp			1
6	1316/3512D		Bolt, M12X50			1
7	1420/0009D		Washer, M12			1
8	1316/3410D		Bolt			2
10	1371/0301Z		Nut, high strength, M10			2
11	1391/3410D		Capscrew, M10 x 40			4
12	2407/0205		O Ring			1

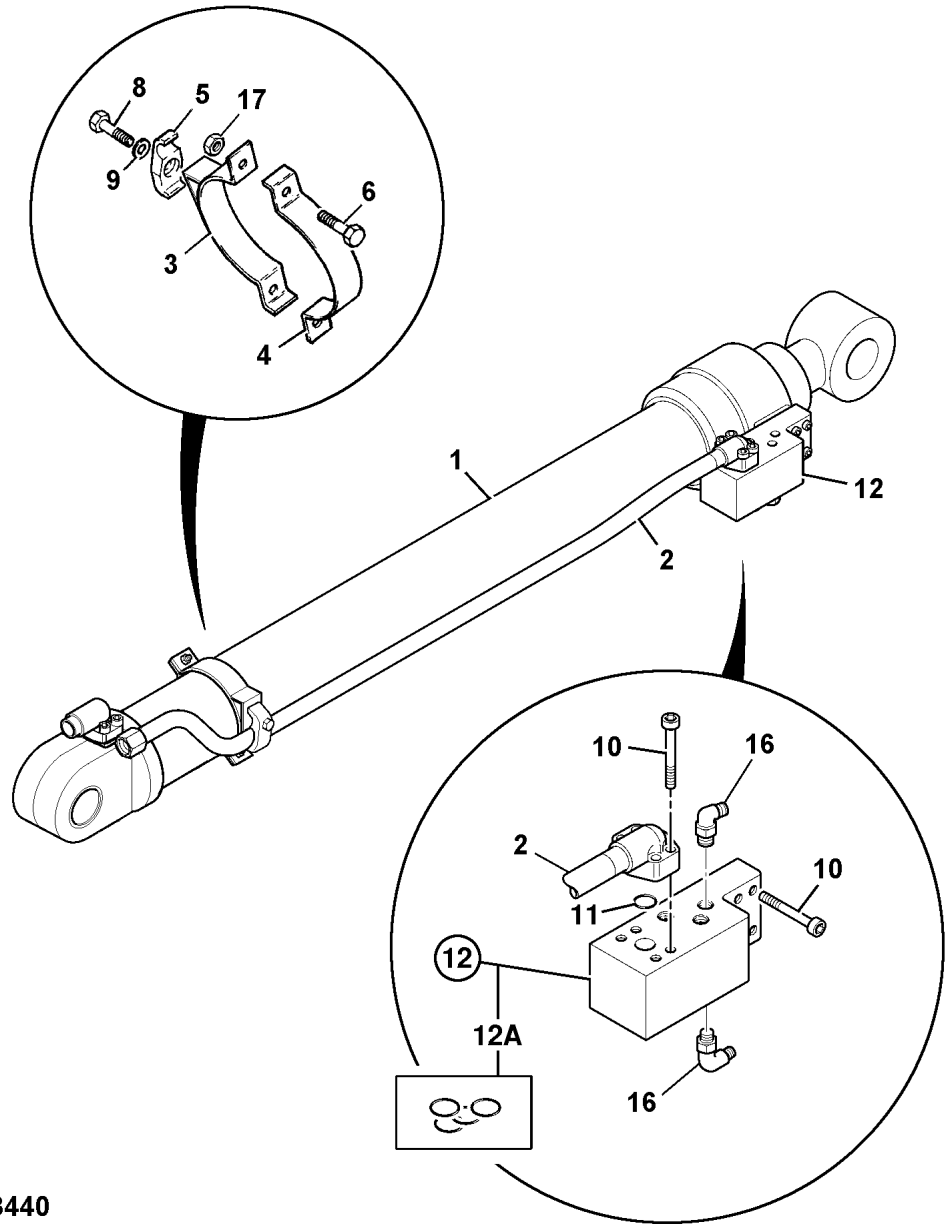

783440

	FROM	TO	FROM	TO
JS160W				

ITEM	PART NO	CHANGE NO	DESCRIPTION	REMARKS	USAGE CODE	QTY
1	331/42329		Ram, arm, JS160 AUTO			1
2	830/12109		Pipe, rod side feed, dipper ram H.B.C.V.			1
3	821/10315		Clamp			1
4	821/10316		Clamp			1
5	KRV0548		Clamp			1
6	1316/3410D		Bolt			2
8	1316/3512D		Bolt, M12X50			1
9	1420/0009D		Washer, M12			1
10	1391/3409D		Capscrew, M10x35	Use to fit item 2 to item 12		4
	1391/3412D		Capscrew, M10X50	Use to fit item 12 to ram item 1		4
11	2407/0205		O Ring			2
12	25/222471		Valve, HBCV, Dipper ram			1
12A	25/222727		:Kit-seal, dipper HBCV			1
16	JHJ0037		Adapter, elbow, 9/16UNF-3/8BSP			2
17	1370/0301D		Nut, M10			2

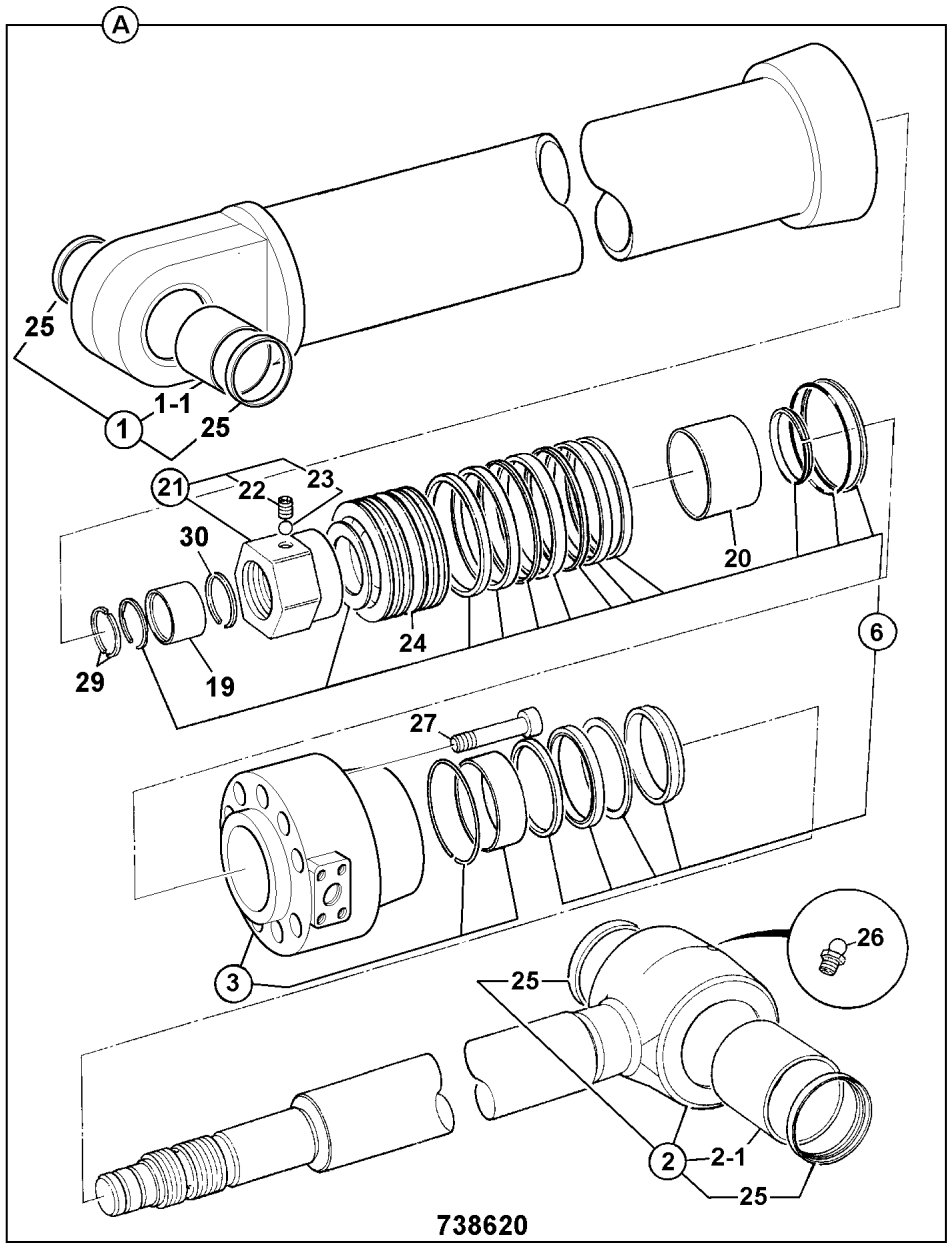

	FROM	TO	FROM	TO
JS160W				

ITEM	PART NO	CHANGE NO	DESCRIPTION	REMARKS	USAGE CODE	QTY
0A	331/42329		Ram, arm, JS160 AUTO			1
1	903/20913		:Cylinder, 120mm ID			1
1 01	903/20923		::Bush			1
2	903/20914		:Rod, piston 85mm dia			1
2 01	903/20923		::Bush			1
3	903/20915		:Head, Cylinder, 120x8			1
6	903/20916		:Kit-repair, Dipper ram			1
19	903/20917		:Ring, cushion			1
20	903/20918		:Ring, cushion			1
21	903/20919		:Nut, piston head			1
22	LUU0100		::Screw, set			1
23	LPU0074		::Ball, steel			1
24	903/20920		:Piston			1
25	903/20924		:Seal, grease			4
26	JHP0038		:Nipple, grease, angled			1
27	LUU0152		:Capscrew			12
29	903/20922		:Stopper			1
30	903/20921		:Ring, snap			1

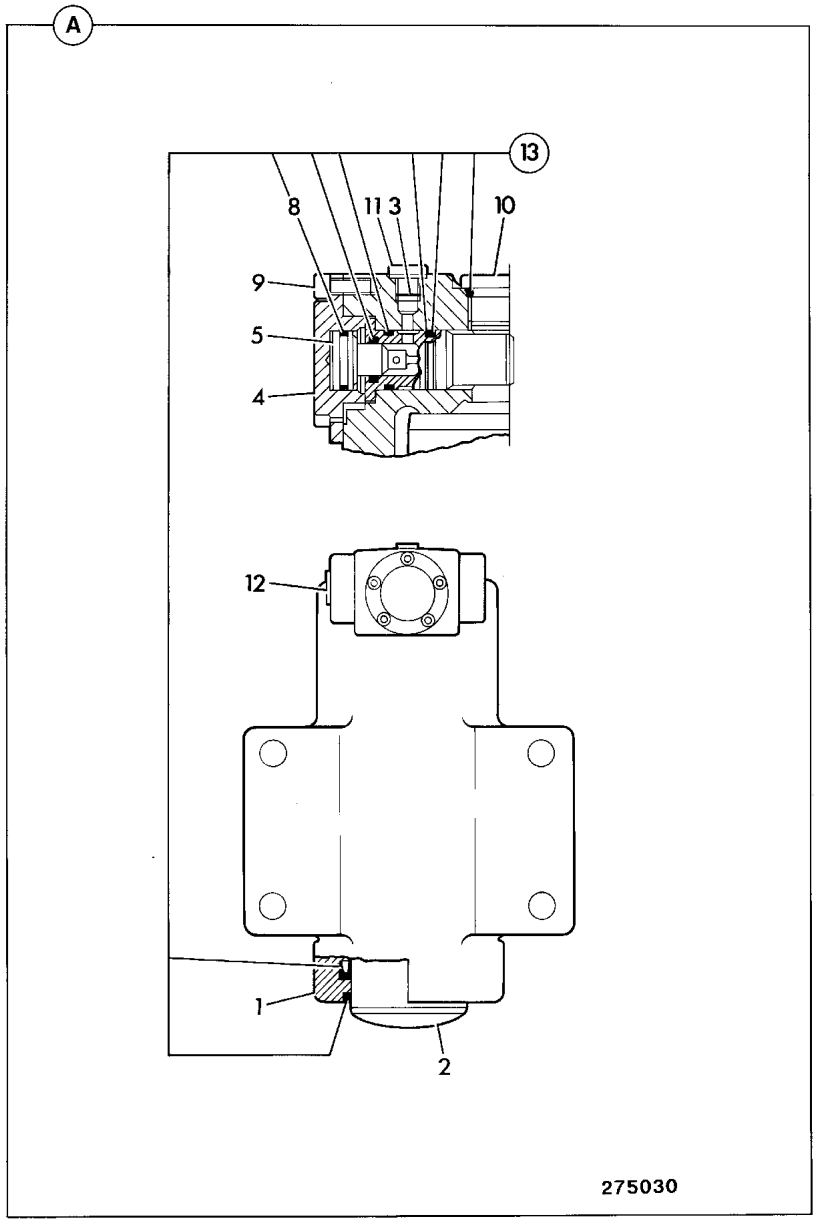

	FROM	TO	FROM	TO
JS160W				

ITEM	PART NO	CHANGE NO	DESCRIPTION	REMARKS	USAGE CODE	QTY
0A	JLA0255		Ram, axle lock			2
1	NSP		None serviced part			1
2	6900/0911		:Piston, rod			1
3	6900/0912		:Piston, assembly			1
4	NSP		None serviced part			1
5	6900/0913		:Seat			1
9	6900/0914		:Screw			5
10	NSP		None serviced part			1
11	NSP		None serviced part			1
12	NSP		None serviced part			1
13	6900/0451		:Kit-seal			1

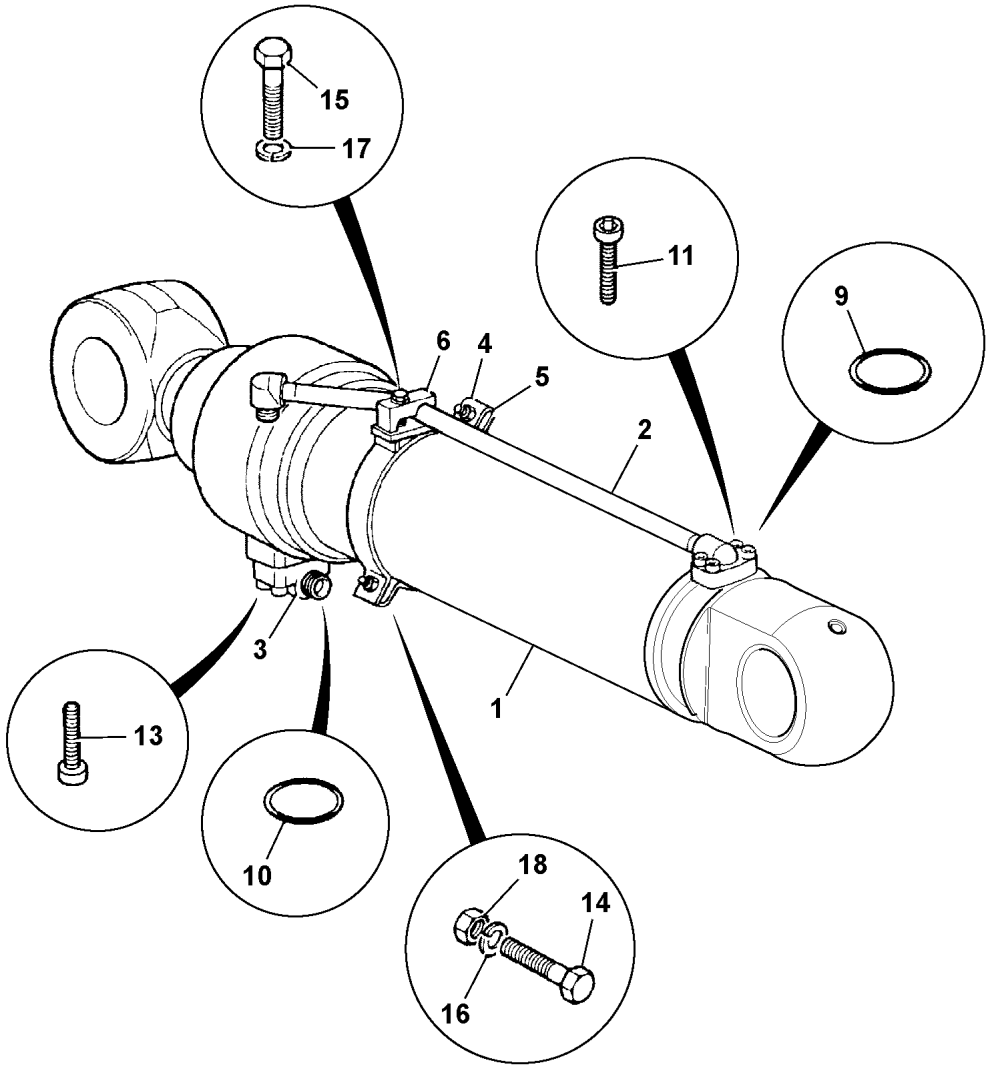

783500

	FROM	TO	FROM	TO
JS160W				

ITEM	PART NO	CHANGE NO	DESCRIPTION	REMARKS	USAGE CODE	QTY
1	.		'See Remark'	Ram, see E4-7-20		1
2	JNV1080		Bracket, pipe			1
3	JNV1081		Clamp, cylinder			1
4	JRJ0259		Clamp, pipe			1
5	1425/0009Z		Washer, Spring M12			2
6	1425/0008Z		Washer, Spring M10			2
7	1371/0301D		Nut, M10 high strength			2
8	1316/3410Z		Bolt, M10x40			2
9	1316/3510Z		Bolt			1
10	1391/3510Z		Capscrew, M12x40			4
11	2407/0210		O Ring			1
12	JNV1405		Pipe, feed			1
13	1425/0008Z		Washer, Spring M10			2

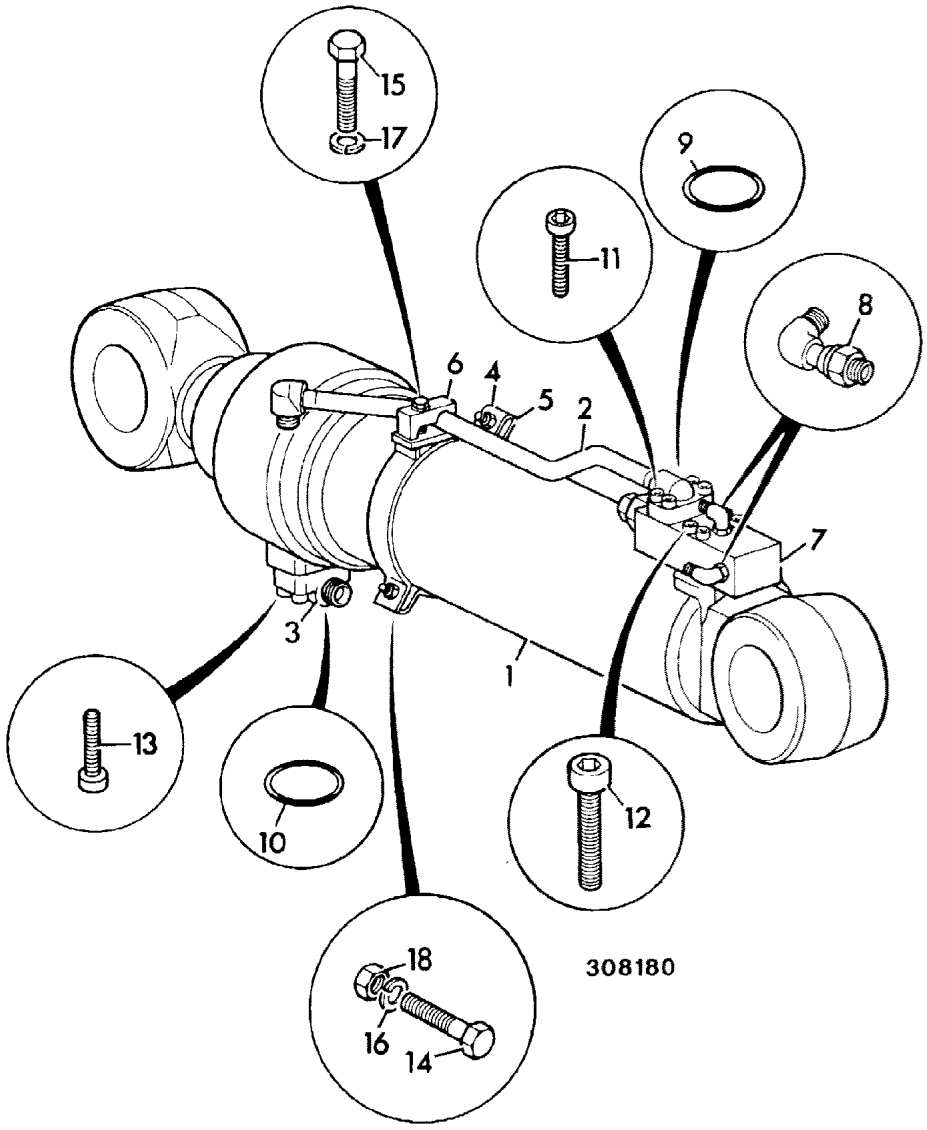

	FROM	TO	FROM	TO
JS160W				

ITEM	PART NO	CHANGE NO	DESCRIPTION	REMARKS	USAGE CODE	QTY
1	331/49655		Ram, assembly, position			1
2	JLV1729		Pipe, feed			1
3	JLV1605		Flange			1
4	JLV1503		Bracket, pipe			1
5	JLV1504		Clamp			1
6	JLV1364		Clamp, pipe			1
7	JLV1510		Valve, hose burst			1
7A	25/222224		:Kit, Seal, for JLV1510	For item 7		1
7B	6900/1004		:Cartridge, relief	For item 7		1
8	JLV1543		Elbow			2
9	2407/0205		O Ring			1
10	2407/0210		O Ring			1
11	1391/3409Z		Capscrew, M10 x 35mm			4
12	1391/3416Z		Capscrew			4
13	1391/3511Z		Capscrew			4
14	1316/3410Z		Bolt, M10x40			2
15	1316/3510Z		Bolt			1
16	1425/0008Z		Washer, Spring M10			6
17	1425/0009Z		Washer, Spring M12			5
18	1371/0301Z		Nut, high strength, M10			2

F

● F1 AXLES, FRONT
F2 AXLES, REAR
F3 WHEELS, TYRES & PROPSHAFTS
F4 SLEW GEARBOXES
F5 TRANSMISSION

ENGLISH

F1-1-1 AXLE ASSEMBLY, FRONT, 18.16:1 RATIO 453/30800
F1-3-1 HUB & COMPONENTS, AXLE WITH HUB BRAKES, 18.16:1 RATIO 453/30800
F1-4-1 KNUCKLE, STEERING, 18.16:1 RATIO, 453/30800
F1-5-1 DIFFERENTIAL, ASSEMBLY, 18.16:1, STEER AXLE 453/30800
F1-6-1 CROWN WHEEL & PINION, 18.16:1 AXLE, 453/30800
F1-7-1 RAM, STEERING AXLE, INSTALLATION

FRANCAIS

F1-1-1 PONT AVANT
F1-3-1 MOYEU & COMPOSANTS ES.AVEC FREIN SUR MOYEU
F1-4-1 ARTICULATION, DIRECTESSIEU
F1-5-1 DIFFERENTIAL, ASSEMBLY, 18.16:1, STEER AXLE 453/30800
F1-6-1 CROWN WHEEL & PINION, 18.16:1 AXLE, 453/30800
F1-7-1 RAM, STEERING AXLE, INSTALLATION

DEUTSCH

F1-1-1 VORDERACHSE
F1-3-1 NABE & BAUTEILE ACHSE MIT NABENBREMSE
F1-4-1 ACHSSCHENKEL ACHSE
F1-5-1 DIFFERENTIAL, ASSEMBLY, 18.16:1, STEER AXLE 453/30800
F1-6-1 CROWN WHEEL & PINION, 18.16:1 AXLE, 453/30800
F1-7-1 RAM, STEERING AXLE, INSTALLATION

ITALIANO

F1-1-1 GRUPPO ASSALE ANTERIORE
F1-3-1 MOZZO E COMPONENTI ASSALE CON FRENI SUI MOZZI
F1-4-1 ARTICOLAZIONE STERZO ASSALE
F1-5-1 DIFFERENTIAL, ASSEMBLY, 18.16:1, STEER AXLE 453/30800
F1-6-1 CROWN WHEEL & PINION, 18.16:1 AXLE, 453/30800
F1-7-1 RAM, STEERING AXLE, INSTALLATION

PORTUGUES

F1-1-1 EIXO COMPLETO FRONTAL
F1-3-1 CUBO E COMPONENTES EIXO C/TRAVOES CUBOS
F1-4-1 ARTICULACAO
F1-5-1 DIFFERENTIAL, ASSEMBLY, 18.16:1, STEER AXLE 453/30800
F1-6-1 CROWN WHEEL & PINION, 18.16:1 AXLE, 453/30800
F1-7-1 RAM, STEERING AXLE, INSTALLATION

ESPANOL

F1-1-1 CONJUNTO PUENTE DELANTERO
F1-3-1 CUBO Y COMPONENTES EJE CON FRENOS CUBO
F1-4-1 ARTICULAC. DIRECC.
F1-5-1 DIFFERENTIAL, ASSEMBLY, 18.16:1, STEER AXLE 453/30800
F1-6-1 CROWN WHEEL & PINION, 18.16:1 AXLE, 453/30800
F1-7-1 RAM, STEERING AXLE, INSTALLATION

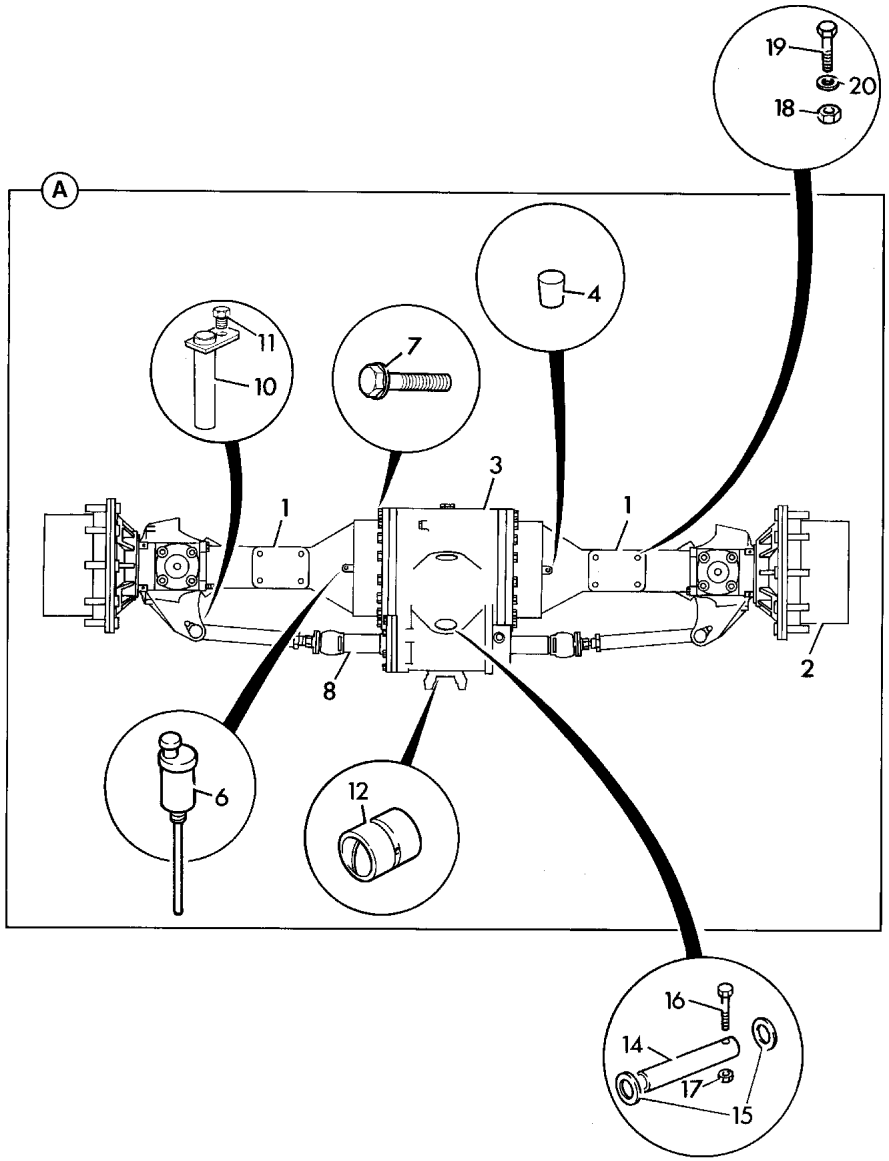

271290

	FROM	TO	FROM	TO
JS160W				

ITEM	PART NO	CHANGE NO	DESCRIPTION	REMARKS	USAGE CODE	QTY
0A	453/30800		Axle, assembly			1
1	453/30770		:Kit, axle arm, assembly	Kit Axle Right Hand		1
	453/30760		:Kit, axle arm, assembly	Kit Axle Left Hand		1
2	.		:'See Remark'	Hub, see F1-3-1		1
3	.		:'See Remark'	Differential assembly, see F1-5-1		1
4	450/13302		:Plug, breather			1
6	453/00303		:Breather, plastic	Not part of axle assembly		1
7	826/01083		:Bolt, flanged			32
8	.		:'See Remark'	Ram, steering, see F1-7-1		1
10	911/22800		:Pin, pivot, 105mm x 25mm dia.			2
11	1321/0405Z		:Bolt			2
12	808/00403		:Bush, liner			2
14	JLA0078		Pin, axle pivot			1
15	JLA0079		Washer, thrust			2
16	1316/3523Z		Bolt			1
17	1371/0401Z		Nut, M12			2
18	JLA0288		Pad, reaction			2
19	1316/3715Z		Bolt			8
20	1420/0011Z		Washer, M16 plain			8

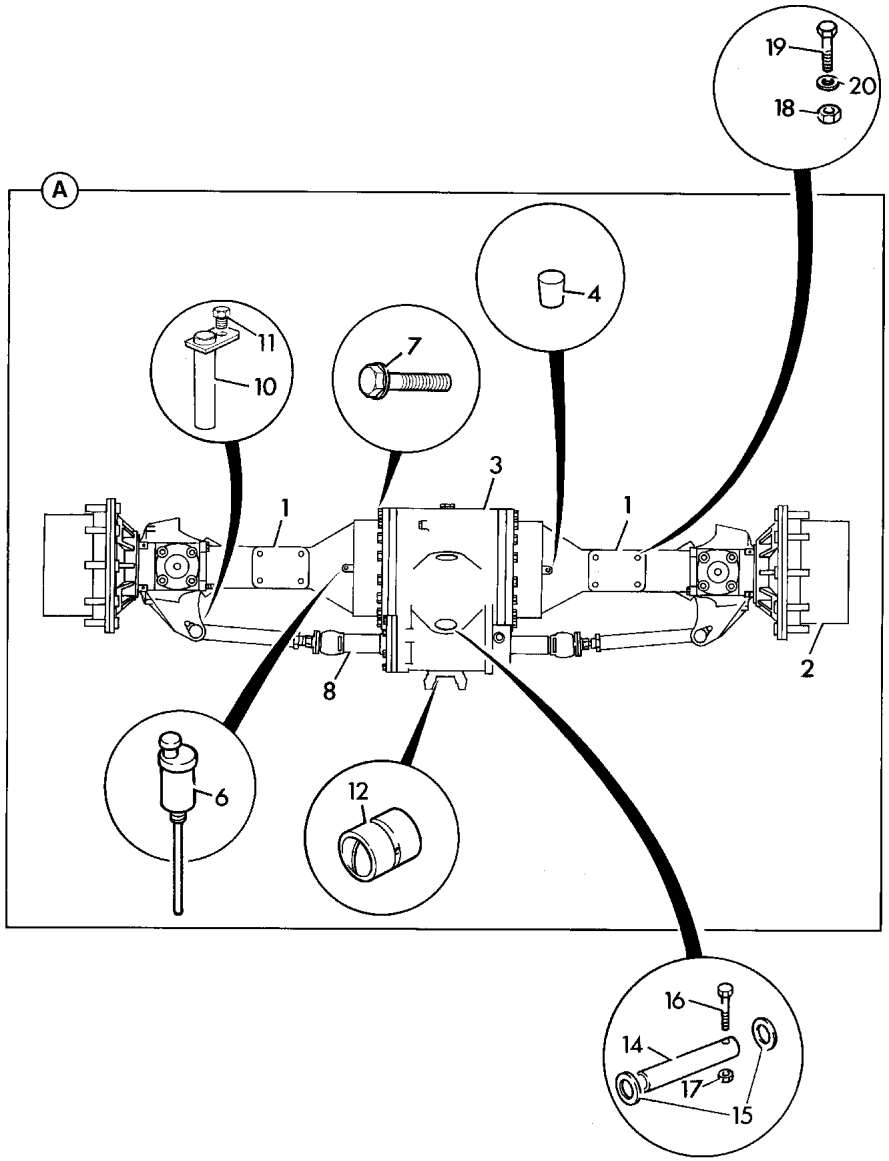

271290

ITEM	PART NO	CHANGE NO	DESCRIPTION	REMARKS	USAGE CODE	QTY
21	458/20261		Plug, blanking, tapered blank			4
22	140/00937		Stop	axle lockstop if fitted		2

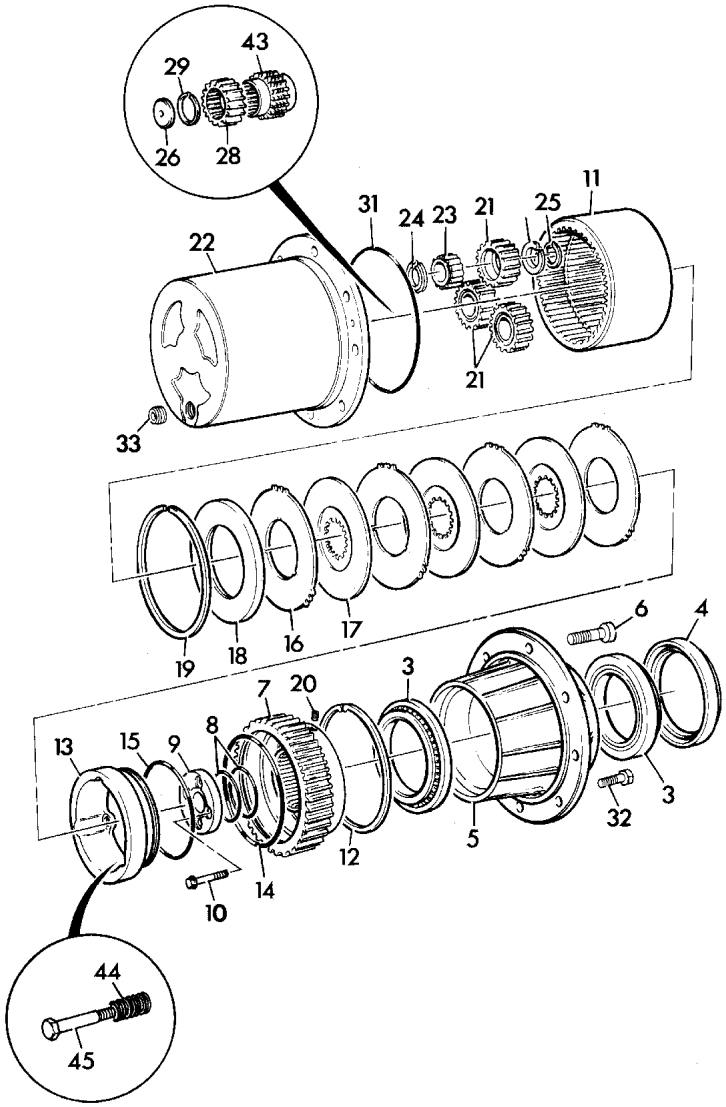

276440

	FROM	TO	FROM	TO
JS160W				

ITEM	PART NO	CHANGE NO	DESCRIPTION	REMARKS	USAGE CODE	QTY
3	907/52200		Bearing			2
4	904/50033		Seal, oil, 127 x 160 x 15.5-17			1
5	453/30303		Hub, without studs			1
6	826/01655		Stud, wheel			10
7	453/30202		Carrier, annulus			1
8	828/00248		O Ring			2
9	453/30305		Plate, retaining			1
10	826/01435		Bolt, verbus ripp, M12 x 55mm long			4
11	453/26310		Ring, annulus			1
12	821/00210		Circlip, internal, square section			1
13	453/30203		Piston, brake			1
14	813/50014		Seal			1
15	813/50015		Seal			1
16	458/20289		Plate, brake counter			5
17	458/20353		Plate, brake friction			4
18	453/01807		Plate, pressure			1
19	2203/1145		Circlip			1
20	826/01343		Screw, grub, nylon coated			2
21	450/10206		Gear, planet			3
22	453/30302		Carrier, planetary hub			1
23	907/50200		Bearing, roller, double row			3

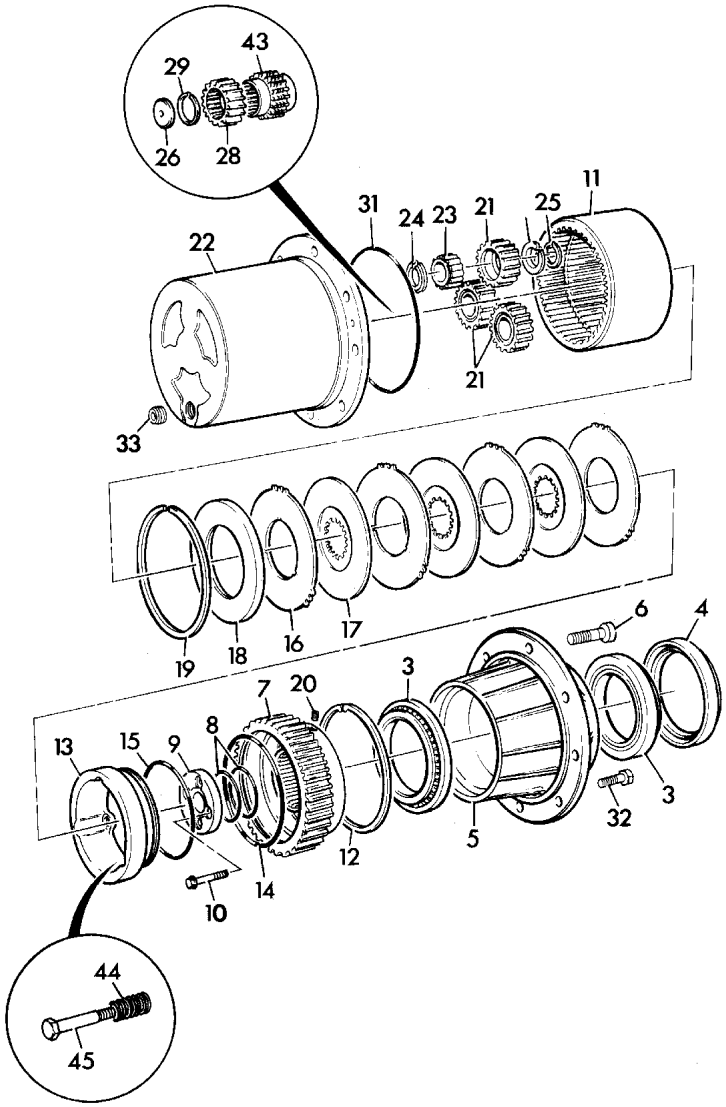

276440

ITEM	PART NO	CHANGE NO	DESCRIPTION	REMARKS	USAGE CODE	QTY
24	821/00209		Circlip			6
25	2203/0054		Circlip			3
26	450/10208		Pad, thrust			1
28	454/07401		Gear, sun, 45mm long			1
29	821/00494		Circlip, External			1
31	828/00196		O Ring			1
32	1321/0407Z		Bolt, coated			2
33	816/82010		Plug, magnetic, M22			1
43	453/30304		Carrier, brake plate			1
44	814/00413		Spring			3
45	453/26308		Pin, brake back-off			3

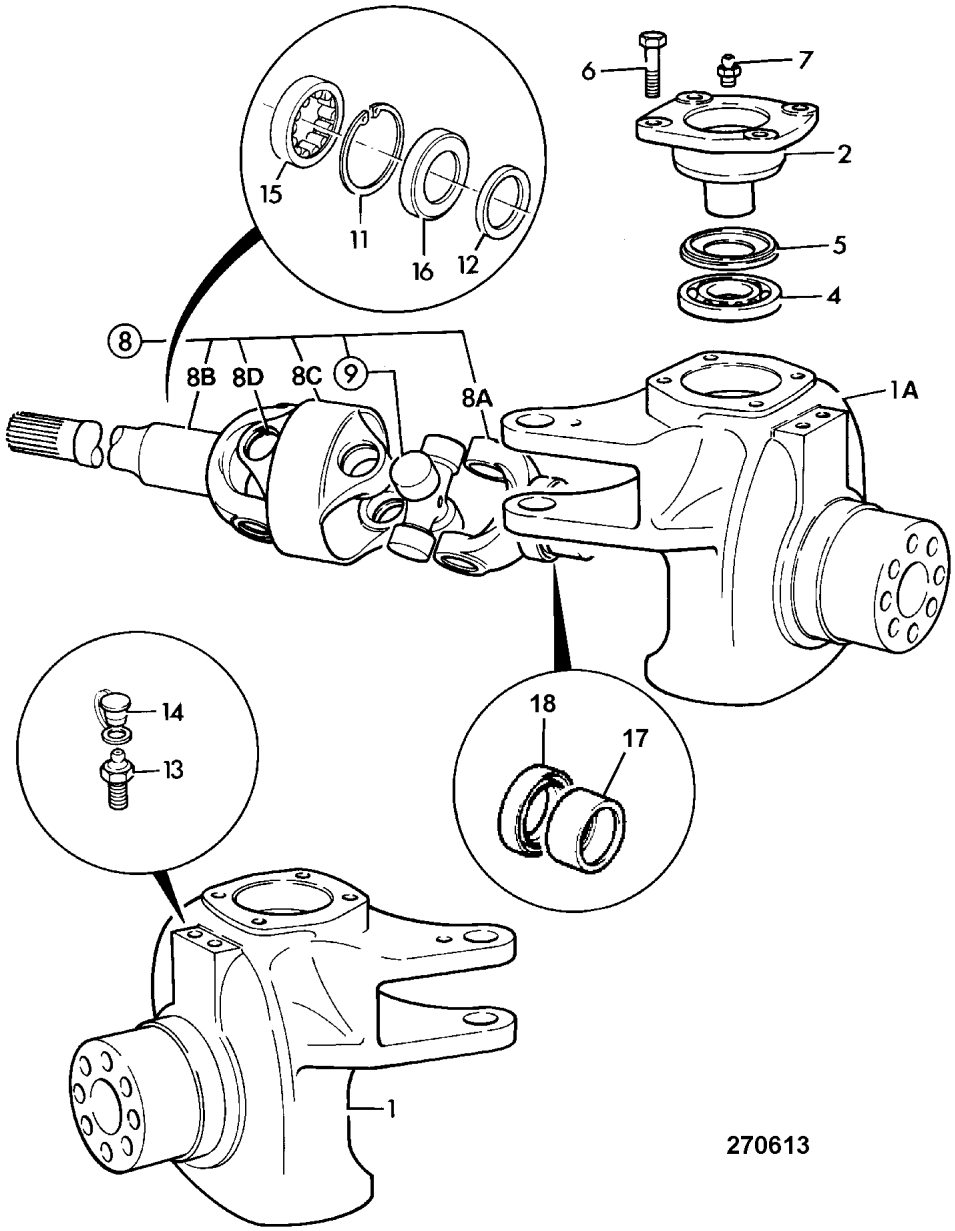

	FROM	TO	FROM	TO
JS160W				

ITEM	PART NO	CHANGE NO	DESCRIPTION	REMARKS	USAGE CODE	QTY
1	453/30781		Joint, knuckle swivel			1
1A	453/30791		Joint, knuckle swivel			1
2	453/30761		Trunnion			4
4	907/54100		Bearing			4
5	904/50048		Seal			4
6	826/01795		Bolt, verbuss ripp, M16 x 40			16
7	816/13132		Nipple, grease	See TI 11/055 for fitting instruction.		4
8	914/87700		Shaft, drive assembly			2
8A	914/87702		:Shaft, drive	Shaft, wheel side		1
8B	914/87701		:Shaft, drive assembly	Shaft diff. side		1
8C	914/86403		:Yoke, double	Spacer		1
8D	914/84203		:Circlip	Circlip		4
9	914/84204		:Kit-spider, 96mm over caps, 35mm cap diameter			2
11	2203/1082		Circlip			2
12	448/04802		Ring, masking			2
13	816/60040		Nipple, bleed			2
14	835/00017		Cap, grease nipple			2
15	907/08400		Bearing			2
16	904/50040		Seal			2
17	904/50009		Seal	Knuckle end seal.		2
18	917/50200		Bearing	Knuckle end bearing.		2

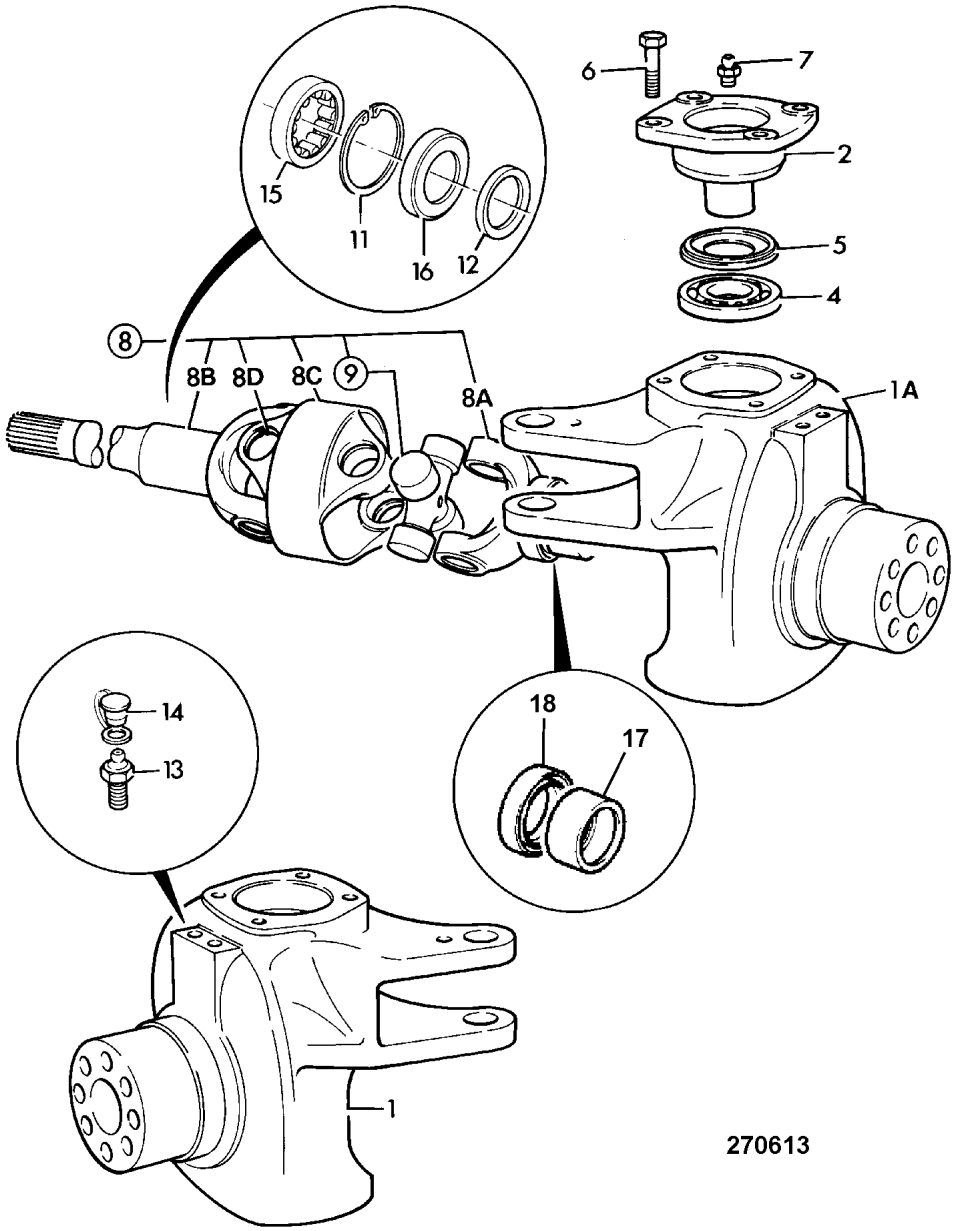

270613

ITEM	PART NO	CHANGE NO	DESCRIPTION	REMARKS	USAGE CODE	QTY
19	826/01065		Screw, grub			1

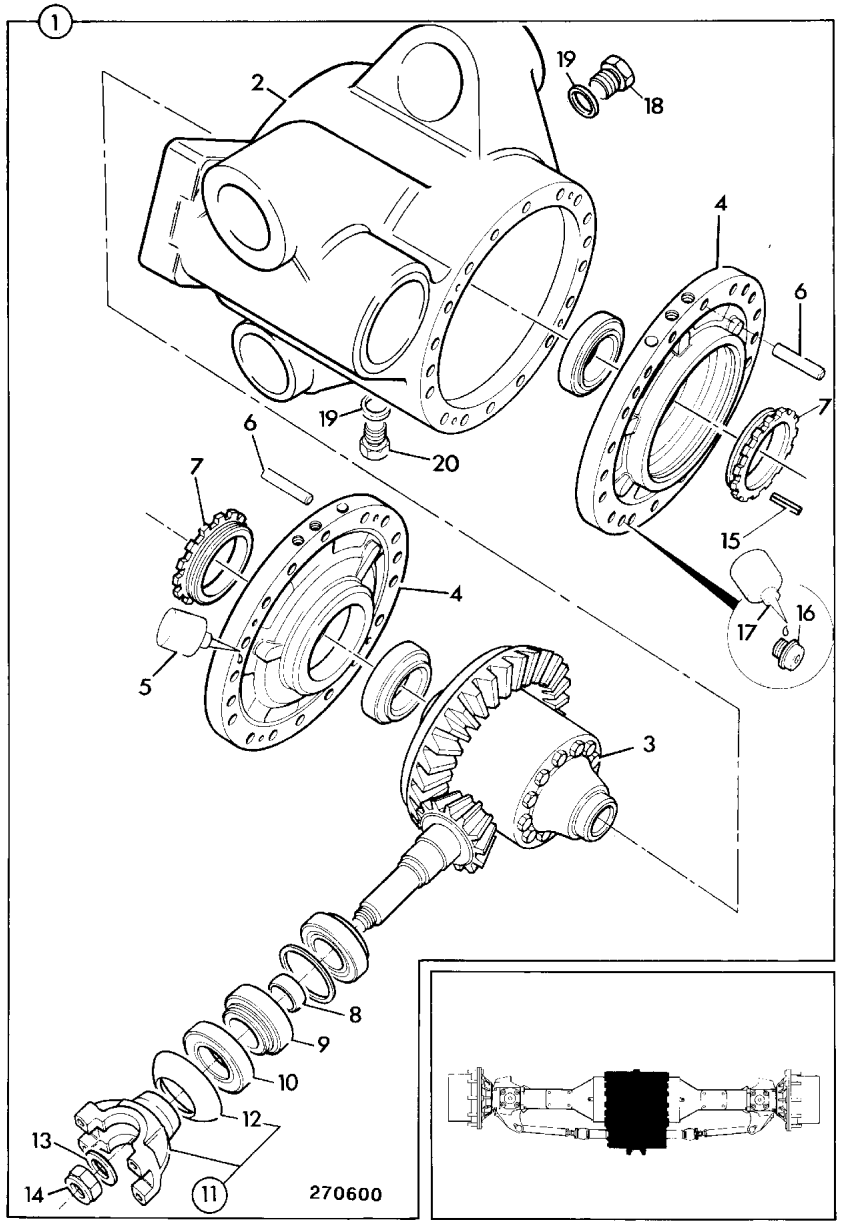

	FROM	TO	FROM	TO
JS160W				

ITEM	PART NO	CHANGE NO	DESCRIPTION	REMARKS	USAGE CODE	QTY
1	453/27300		Differential, assembly			1
2	458/20251		:Casing, drivehead			1
3	.		:'See Remark'	Differential components see F1-6-1		1
4	453/26602		:Housing, brake piston			2
5	4102/1212		:Gasket, Multigasket			A/R
6	826/00919		:Dowel			4
7	450/10403		:Nut, side differential			2
8	921/53400		:Kit-Spacer			1
9	907/08300		:Bearing, taper roller			1
10	904/50023		:Seal			1
11	450/27200		:Yoke			1
12	N.S.P.		::None serviced part			1
14	826/01483		:Nut, stake and washer, M24			1
15	826/00818		:Pin, tension			2
16	1392/3407		:Capscrew			8
17	4101/0251		:Sealant, Threadlock, 50ml			A/R
18	816/80037		Plug, filler			1
19	1406/0021		Seal, bonded 3/4" BSP			2
20	816/80012		Plug, magnetic, 3/4"BSP			1

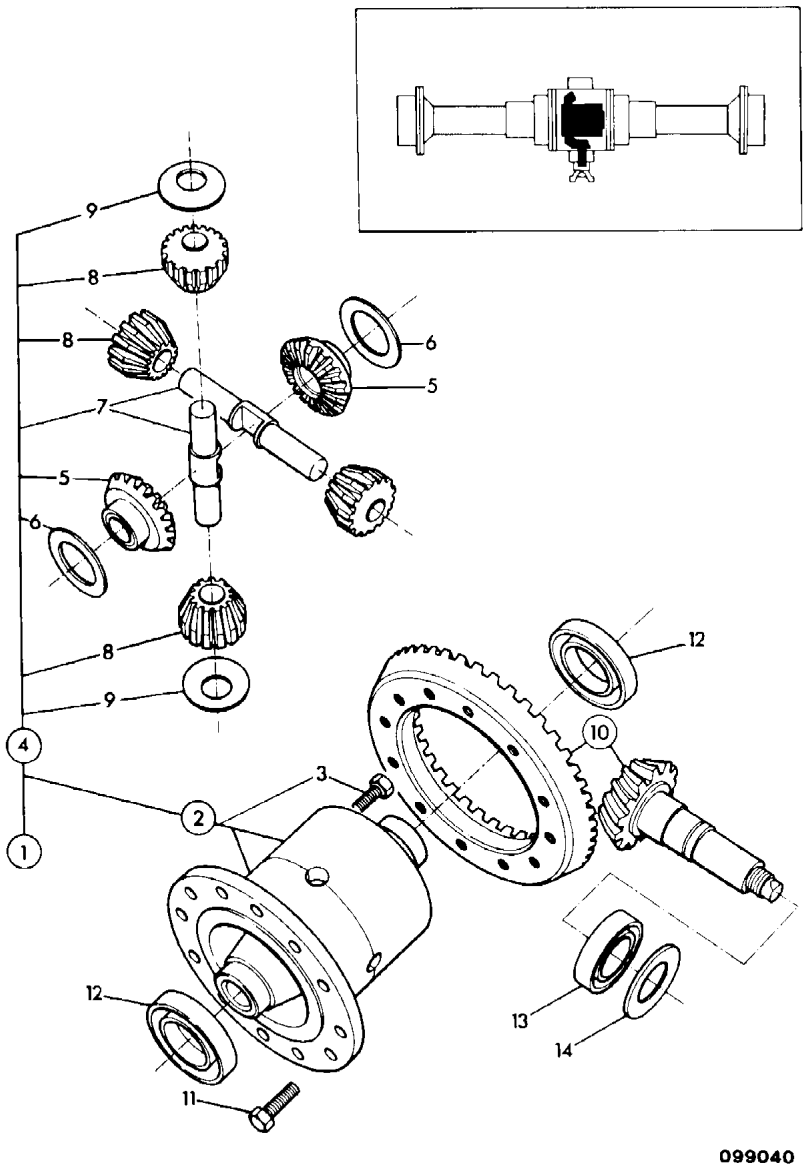

	FROM	TO	FROM	TO
JS160W				

ITEM	PART NO	CHANGE NO	DESCRIPTION	REMARKS	USAGE CODE	QTY
1	450/10900		Differential, assembly			1
2	450/10800		:Casing, assembly, differential			1
3	1315/3418Z		::Bolt, M10x80			8
4	450/16900		:Kit-gear, differential			1
5	N.S.P.		:None serviced part			1
6	808/00209		:Washer, thrust, side gear			2
7	450/10903		:Pin, trunnion			2
8	N.S.P.		:None serviced part			4
9	808/00210		:Washer, thrust, pinion			4
10	458/70035		Gear, crown wheel & pinion, 11T/37T (Blue)			1
11	826/01080		Bolt			12
12	907/50100		Bearing, taper roller			2
13	907/09000		Bearing			1
14	921/01900		Kit-shim			1

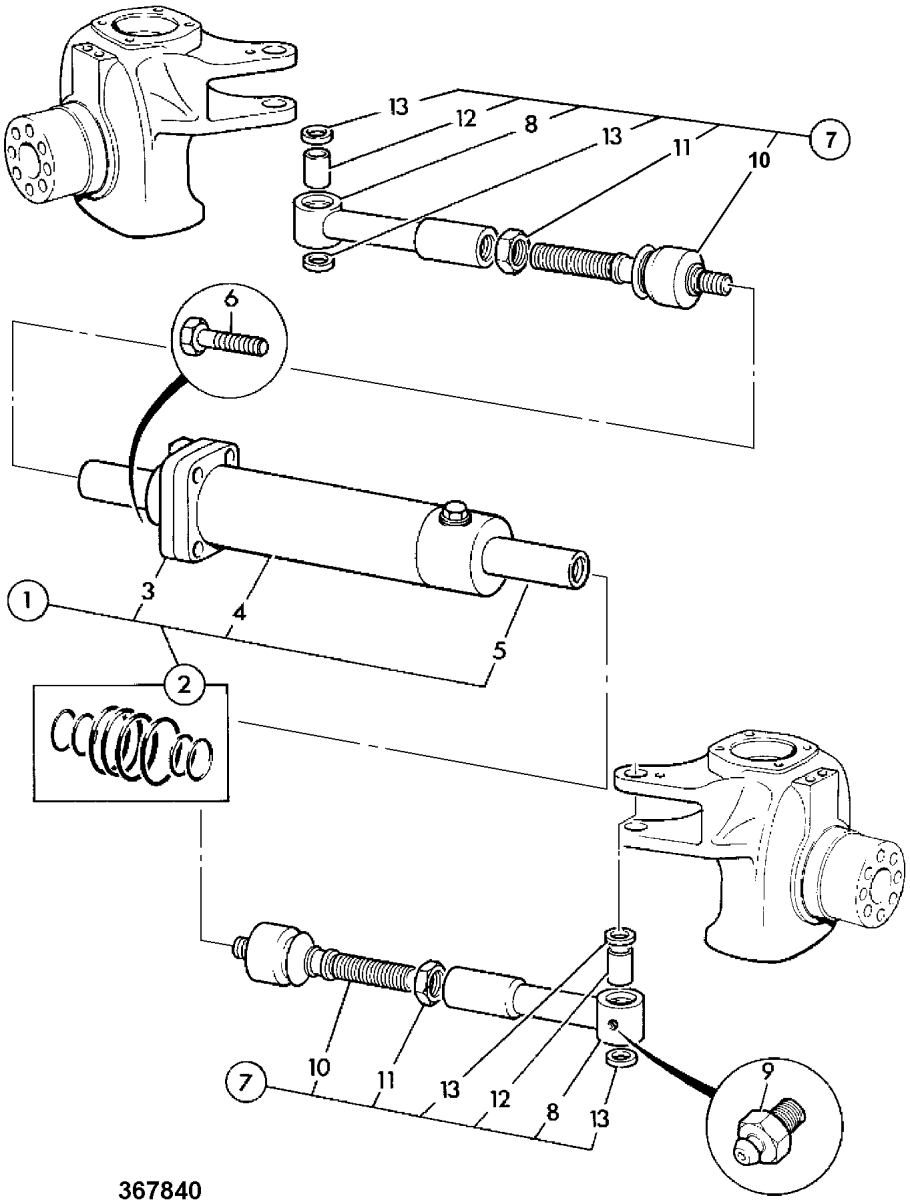

367840

	FROM	TO	FROM	TO
JS160W				

ITEM	PART NO	CHANGE NO	DESCRIPTION	REMARKS	USAGE CODE	QTY
1	453/26800		Ram, powered track rod			1
2	998/10312		:Kit-seal	Seal kit		1
3	903/20024		:Kit-end cap	End cap		1
4	N.S.P		:None serviced part	Cylinder		1
5	903/20023		:Rod, assembly	Rod assembly		1
6	826/01656		Bolt, M14 x 50			4
7	453/26700		Link, steer, assembly	Right hand		1
	453/29000		Link, steer, assembly	Left hand		1
8	453/26701		:Link, steering	Right hand		1
	453/29001		Link, steer	Left hand		1
9	1450/1007		:Nipple, grease, 45 deg. angle			1
10	453/26702		:Joint, ball			1
11	826/01329		:Nut			1
12	808/00253		:Bush, 33mm long, 30mm OD X 25mm ID			1
13	904/09300		:Seal, oil			2

F

F1 AXLES, FRONT
● F2 AXLES, REAR
F3 WHEELS, TYRES & PROPSHAFTS
F4 SLEW GEARBOXES
F5 TRANSMISSION

ENGLISH

F2-1-1 AXLE ASSEMBLY, REAR, 18/16:1 RATIO 450/42700
F2-3-1 HUB & COMPONENTS, AXLE WITH HUB BRAKES, 18.16:1 RATIO 450/42700
F2-5-1 DIFFERENTIAL, ASSEMBLY, 18.16:1, 450/42700
F2-6-1 CROWN WHEEL & PINION, 18.16:1 AXLE, 450/42700

FRANCAIS

F2-1-1 PONT ARRIERE
F2-3-1 MOYEU & COMPOSANTS ES.AVEC FREIN SUR MOYEU
F2-5-1 DIFFERENTIAL, ASSEMBLY, 18.16:1, 450/42700
F2-6-1 CROWN WHEEL & PINION, 18.16:1 AXLE, 450/42700

DEUTSCH

F2-1-1 HINTERASCHE
F2-3-1 NABE & BAUTEILE ACHSE MIT NABENBREMSE
F2-5-1 DIFFERENTIAL, ASSEMBLY, 18.16:1, 450/42700
F2-6-1 CROWN WHEEL & PINION, 18.16:1 AXLE, 450/42700

ITALIANO

F2-1-1 ASSALE POSTERIORE
F2-3-1 MOZZO E COMPONENTI ASSALE CON FRENI SUI MOZZI
F2-5-1 DIFFERENTIAL, ASSEMBLY, 18.16:1, 450/42700
F2-6-1 CROWN WHEEL & PINION, 18.16:1 AXLE, 450/42700

PORTUGUES

F2-1-1 CONJUNTO DO EIXO TRASEIRO
F2-3-1 CUBO E COMPONENTES EIXO C/TRAVOES CUBOS
F2-5-1 DIFFERENTIAL, ASSEMBLY, 18.16:1, 450/42700
F2-6-1 CROWN WHEEL & PINION, 18.16:1 AXLE, 450/42700

ESPANOL

F2-1-1 CONJUNTO DE EJE TRASERO
F2-3-1 CUBO Y COMPONENTES EJE CON FRENOS CUBO
F2-5-1 DIFFERENTIAL, ASSEMBLY, 18.16:1, 450/42700
F2-6-1 CROWN WHEEL & PINION, 18.16:1 AXLE, 450/42700

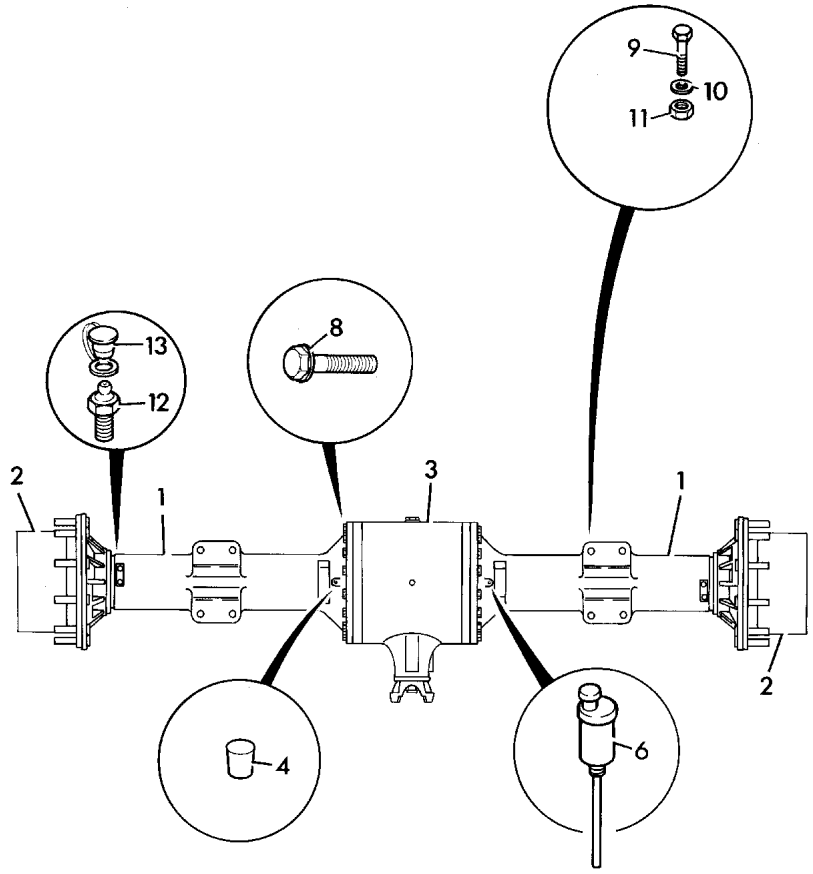

271281

	FROM	TO	FROM	TO
JS160W				

ITEM	PART NO	CHANGE NO	DESCRIPTION	REMARKS	USAGE CODE	QTY
0A	450/42700		Axle, assembly			1
1	458/10461		:Kit-arm, axle assembly, pad mount			2
1 01	450/42803		::Arm, axle			1
2	.		::'See Remark'	Hub, see F2-3-1		2
3	.		:'See Remark'	Differential assembly, see F2-5-1		1
4	450/13302		:Plug, breather			1
6	453/00303		:Breather, plastic			1
8	826/01083		:Bolt, flanged			28
9	JHA0006		Bolt, M20 x 250			8
10	1420/0012Z		Washer			16
11	1371/0703Z		Nut, self lock			8
12	816/60040		Nipple, bleed			2
13	835/00017		Cap, grease nipple			2

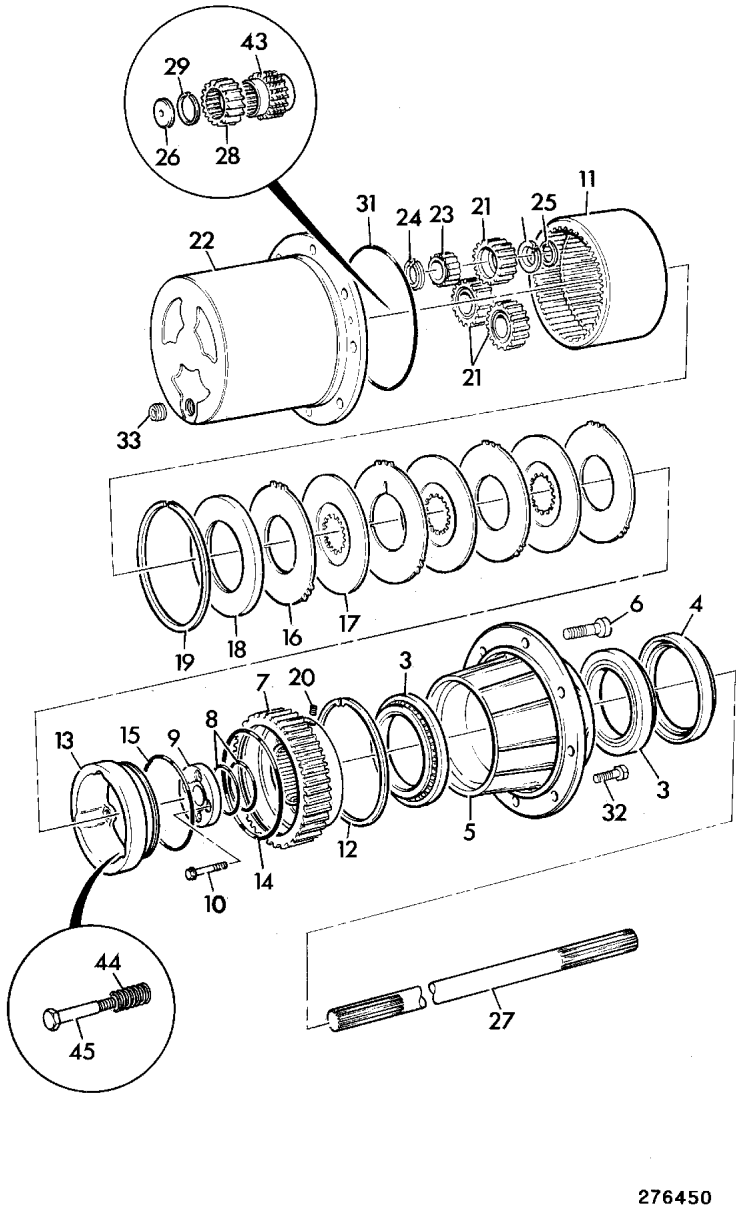

276450

	FROM	TO	FROM	TO
JS160W				

ITEM	PART NO	CHANGE NO	DESCRIPTION	REMARKS	USAGE CODE	QTY
3	907/52200		Bearing			2
4	904/50033		Seal, oil, 127 x 160 x 15.5-17			1
5	453/30303		Hub, without studs			1
6	826/01655		Stud, wheel			10
7	453/30202		Carrier, annulus			1
8	828/00248		O Ring			2
9	453/30305		Plate, retaining			2
10	826/01435		Bolt, verbus ripp, M12 x 55mm long			4
11	453/26310		Ring, annulus			1
12	821/00210		Circlip, internal, square section			1
13	453/30203		Piston, brake			1
14	813/50014		Seal			1
15	813/50015		Seal			1
16	458/20289		Plate, brake counter			5
17	458/20353		Plate, brake friction			4
18	453/01807		Plate, pressure			1
19	2203/1145		Circlip			1
20	826/01343		Screw, grub, nylon coated			4
21	450/10206		Gear, planet			3
22	453/30302		Carrier, planetary hub			1
23	907/50200		Bearing, roller, double row			3

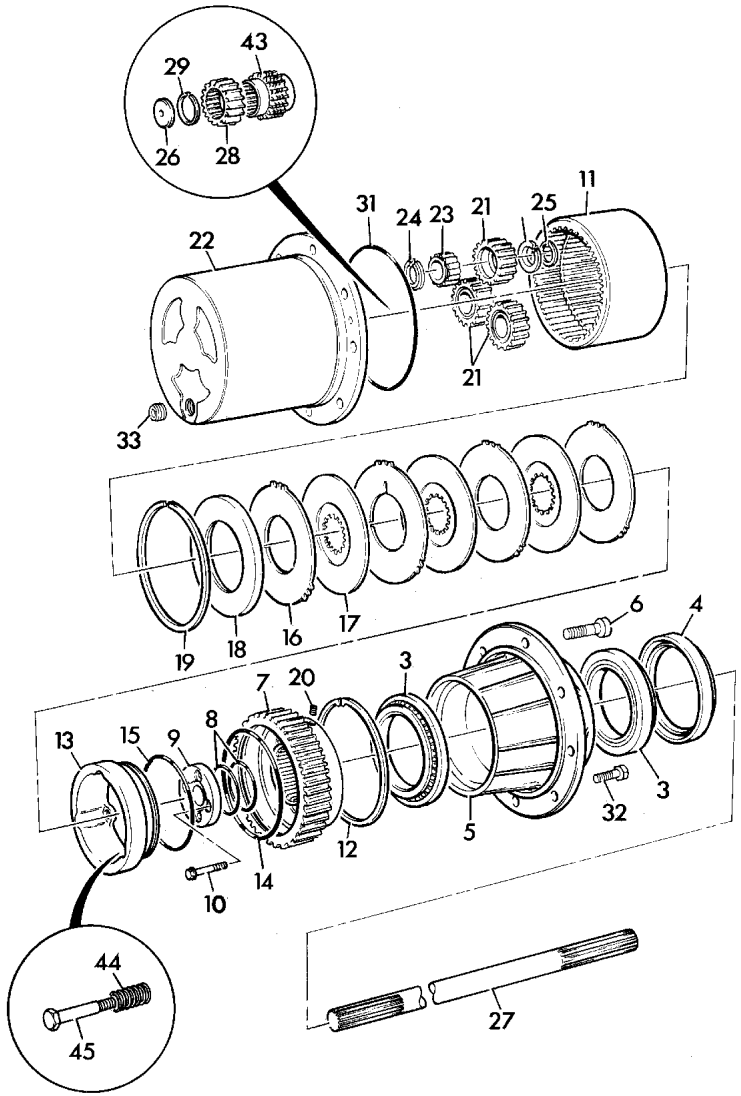

276450

ITEM	PART NO	CHANGE NO	DESCRIPTION	REMARKS	USAGE CODE	QTY
24	821/00209		Circlip			6
25	2203/0054		Circlip			3
26	450/10208		Pad, thrust			1
27	450/42802		Shaft, drive			1
28	454/07401		Gear, sun, 45mm long			1
29	821/00494		Circlip, External			1
31	828/00196		O Ring			1
32	1321/0407Z		Bolt, coated			2
33	816/82010		Plug, magnetic, M22			1
43	453/30304		Carrier, brake plate			1
44	814/00413		Spring			3
45	453/26308		Pin, brake back-off			3

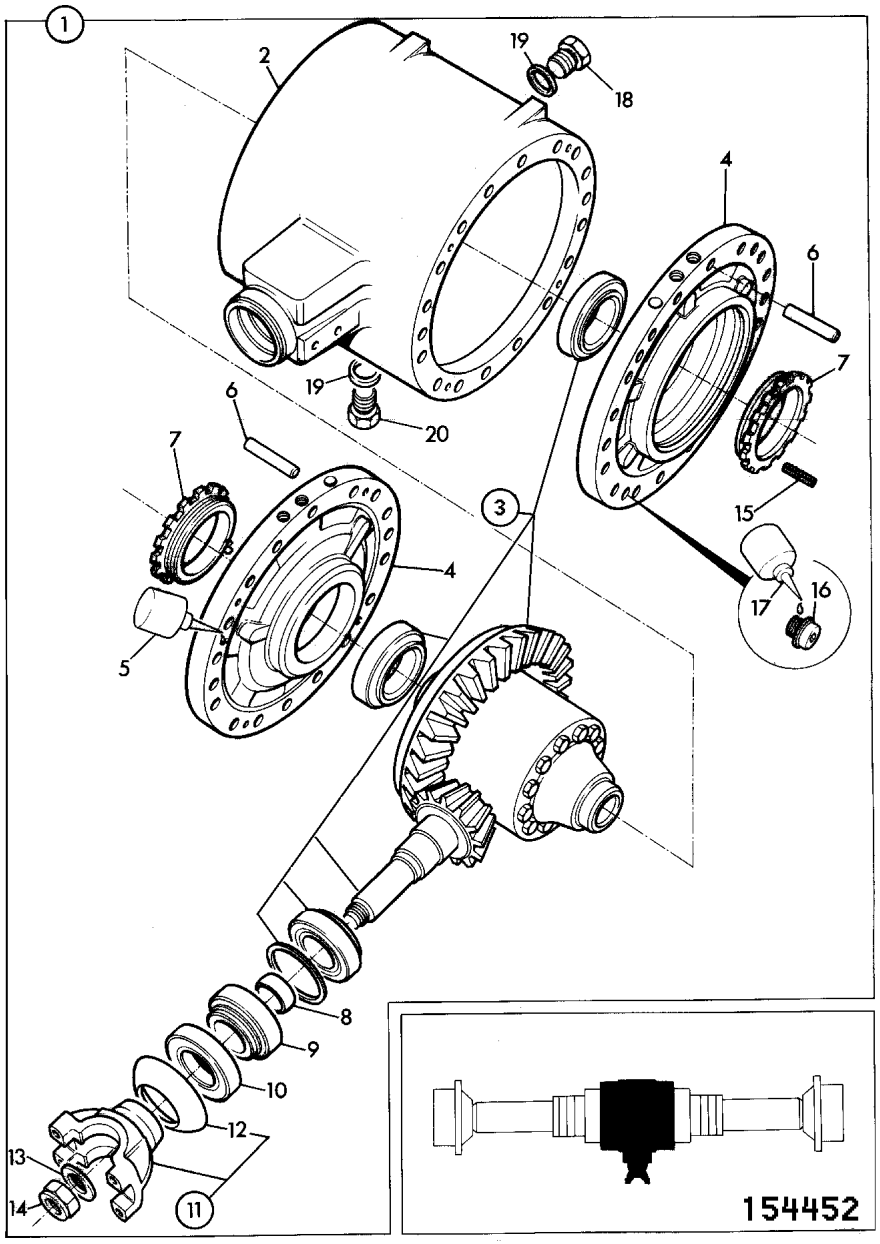

	FROM	TO	FROM	TO
JS160W				

ITEM	PART NO	CHANGE NO	DESCRIPTION	REMARKS	USAGE CODE	QTY
1	453/27400		Differential, assembly			1
2	450/17101		:Casing, differential			1
3	.		:'See Remark'	Differential components see F2-6-1		1
4	458/20252		:Housing, brake piston			2
5	4102/1212		:Gasket, Multigasket			A/R
6	826/00919		:Dowel			4
7	450/10403		:Nut, side differential			2
8	921/53400		:Kit-Spacer			1
8 02	.		'See Remark'	see TI GEN106		1
9	907/08300		:Bearing, taper roller			1
10	904/50023		:Seal			1
11	450/27200		:Yoke			1
12	N.S.P.		::None serviced part			1
14	826/01483		:Nut, stake and washer, M24			1
15	826/00818		:Pin, tension			2
16	1392/3407		:Capscrew			8
17	4101/0251		:Sealant, Threadlock, 50ml			A/R
18	816/80037		Plug, filler			1
19	1406/0021		Seal, bonded 3/4" BSP			2
20	816/80012		Plug, magnetic, 3/4"BSP			1

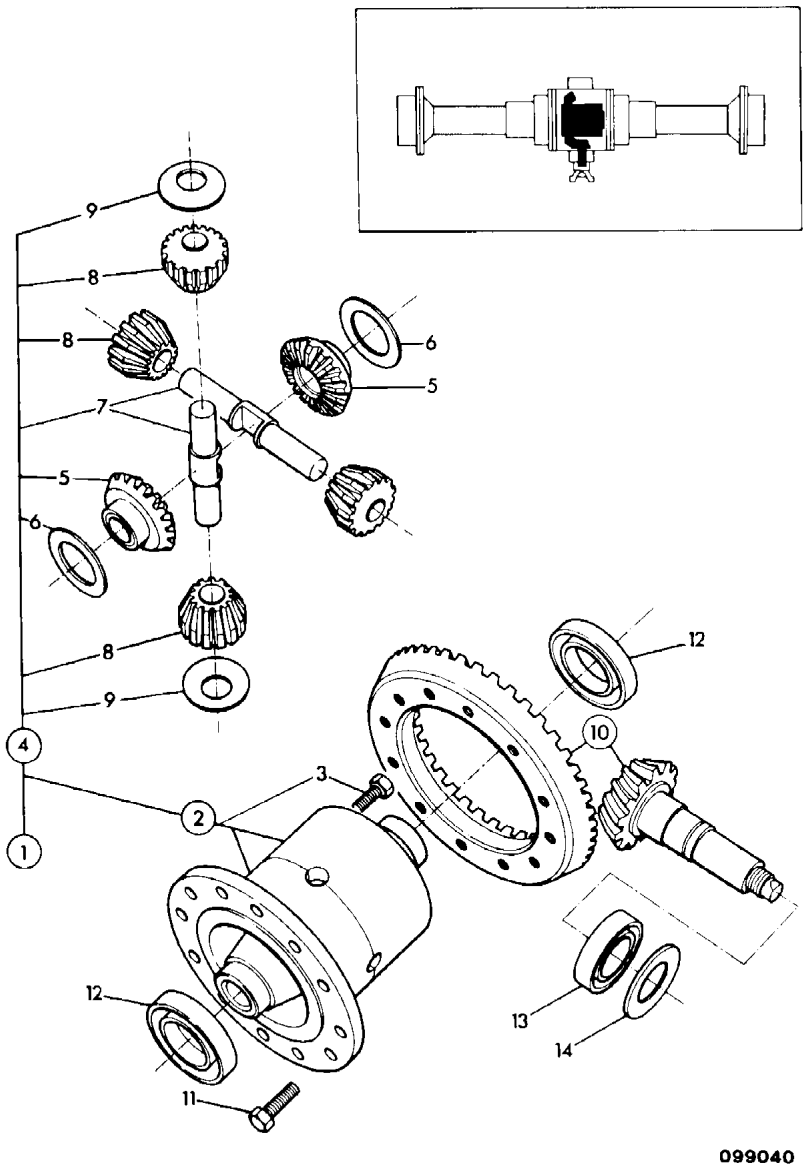

	FROM	TO	FROM	TO
JS160W				

ITEM	PART NO	CHANGE NO	DESCRIPTION	REMARKS	USAGE CODE	QTY
1	450/10900		Differential, assembly			1
2	450/10800		:Casing, assembly, differential			1
3	1315/3418Z		::Bolt, M10x80			8
4	450/16900		:Kit-gear, differential			1
5	N.S.P.		:None serviced part			1
6	808/00209		:Washer, thrust, side gear			2
7	450/10903		:Pin, trunnion			2
8	N.S.P.		:None serviced part			4
9	808/00210		:Washer, thrust, pinion			4
10	458/70035		Gear, crown wheel & pinion, 11T/37T (Blue)			1
11	826/01080		Bolt			12
12	907/50100		Bearing, taper roller			2
13	907/09000		Bearing			1
14	921/01900		Kit-shim			1

F

F1 AXLES, FRONT
F2 AXLES, REAR
● F3 WHEELS, TYRES & PROPSHAFTS
F4 SLEW GEARBOXES
F5 TRANSMISSION

ENGLISH

F3-1-1 PROPSHAFTS, TRANSMISSION
F3-2-1 WHEELS & TYRES, SINGLES
F3-3-1 WHEELS & TYRES, DUALS, 10.00 X 20 EM22 16PR & EM23
F3-4-1 WHEELS & TYRES, DUALS
F3-5-1 WHEELS & TYRES, FLOATATION, LEFT HAND SIDE FRONT AND REAR

FRANCAIS

F3-1-1 ARBRES DE PROPULSIONTRANSMISSION
F3-2-1 WHEELS & TYRES, SINGLES
F3-3-1 WHEELS & TYRES, DUALS, 10.00 X 20 EM22 16PR & EM23
F3-4-1 WHEELS & TYRES, DUALS
F3-5-1 WHEELS & TYRES, FLOATATION, LEFT HAND SIDE FRONT AND REAR

DEUTSCH

F3-1-1 KARDANWELLE GETRIEBE
F3-2-1 WHEELS & TYRES, SINGLES
F3-3-1 WHEELS & TYRES, DUALS, 10.00 X 20 EM22 16PR & EM23
F3-4-1 WHEELS & TYRES, DUALS
F3-5-1 WHEELS & TYRES, FLOATATION, LEFT HAND SIDE FRONT AND REAR

ITALIANO

F3-1-1 ALBERI DI TRASMISSIONE TRASMISSIONE
F3-2-1 WHEELS & TYRES, SINGLES
F3-3-1 WHEELS & TYRES, DUALS, 10.00 X 20 EM22 16PR & EM23
F3-4-1 WHEELS & TYRES, DUALS
F3-5-1 WHEELS & TYRES, FLOATATION, LEFT HAND SIDE FRONT AND REAR

PORTUGUES

F3-1-1 VEIOS TRANSMISSAO TRANSMISSAO
F3-2-1 WHEELS & TYRES, SINGLES
F3-3-1 WHEELS & TYRES, DUALS, 10.00 X 20 EM22 16PR & EM23
F3-4-1 WHEELS & TYRES, DUALS
F3-5-1 WHEELS & TYRES, FLOATATION, LEFT HAND SIDE FRONT AND REAR

ESPANOL

F3-1-1 CARDAN TRANSMISION
F3-2-1 WHEELS & TYRES, SINGLES
F3-3-1 WHEELS & TYRES, DUALS, 10.00 X 20 EM22 16PR & EM23
F3-4-1 WHEELS & TYRES, DUALS
F3-5-1 WHEELS & TYRES, FLOATATION, LEFT HAND SIDE FRONT AND REAR

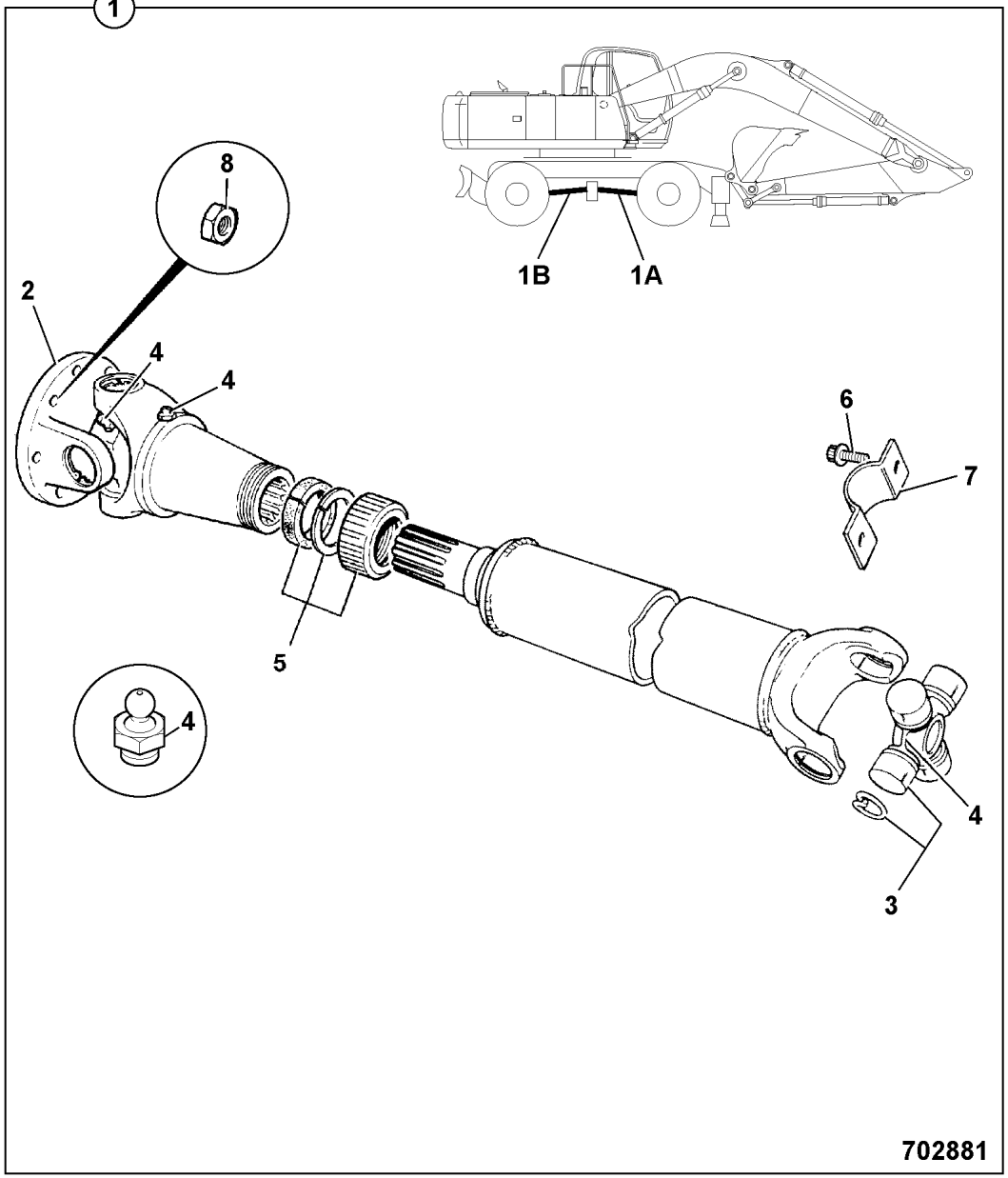

	FROM	TO	FROM	TO
JS160W				

ITEM	PART NO	CHANGE NO	DESCRIPTION	REMARKS	USAGE CODE	QTY
1A	JLA0262		Propshaft, assembly, front	Front steer axle to Gearbox.		1
1B	JLA0263		Propshaft, assembly, rear	Rear axle to Gearbox		1
2	6900/0003		:Flange, yoke			1
3	914/35401		:Kit-spider			2
4	914/39703		:Nipple, grease			3
5	914/35403		:Kit-end cap			1
6	826/00892		Screw, special	For bearing strap 116/00525		8
7	116/00525		Strap			4
8	826/10594		Nut, Nyloc M10 x 1.0	Torque to 68Nm		16

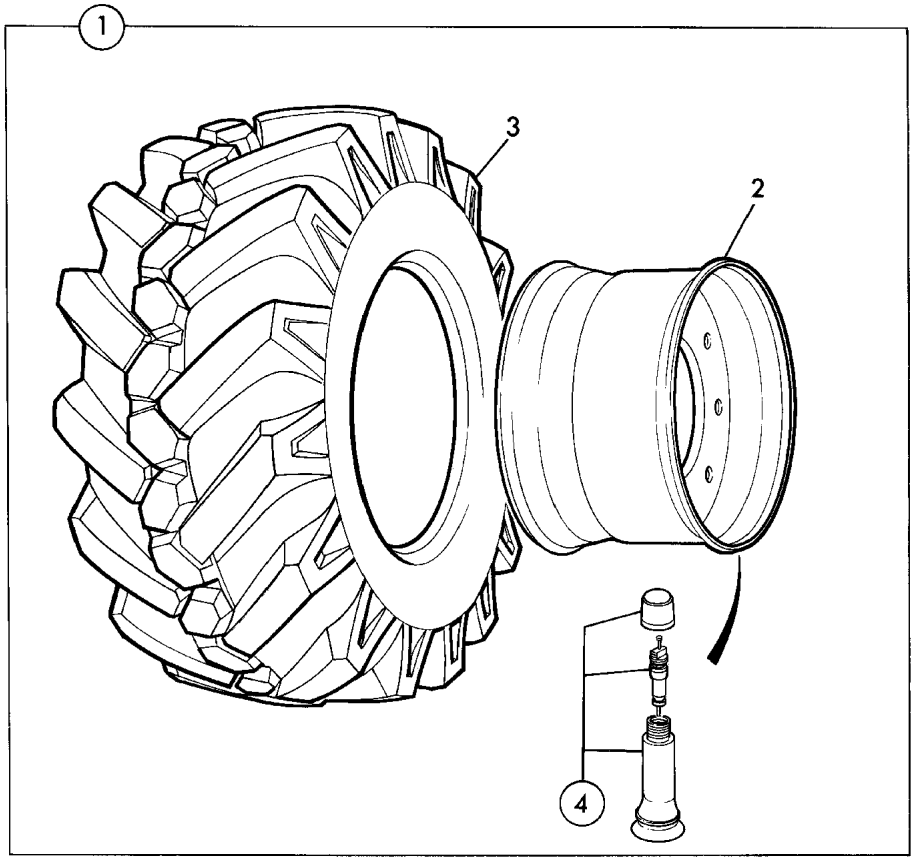

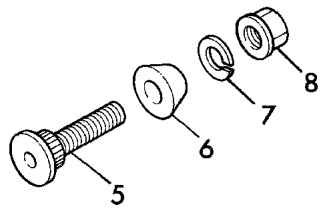

200520

	FROM	TO	FROM	TO
JS160W				

ITEM	PART NO	CHANGE NO	DESCRIPTION	REMARKS	USAGE CODE	QTY
1	JG0LA058		Wheel, with michelin tyre, left hand	Fitted to left hand side only.		2
	JG0LA059		Wheel, with michelin tyre, right hand	Fitted to right hand side only.		2
	* 331/49505		Wheel, & tyre left hand, Alliance 18-19.5 18P			1
	* 331/49504		Wheel, & TYRE right hand, Alliance 18-19.5 18P			1
2	JLA0291		:Wheel, centre, 14 x 19.5, 10 stud			1
3	JLA0083		:Tyre, 18R X 19.5, Michelin			1
	* 42/925276		:Tyre, 18-19.5 18PR, Alliance			1
4	JLA0324		:Valve, tyre			1
5	826/01655		Stud, wheel			40
6	10/907145		Ring, centering			40
7	JLA0173		Washer, spring			40
8	JLA0175		Nut, wheel			40

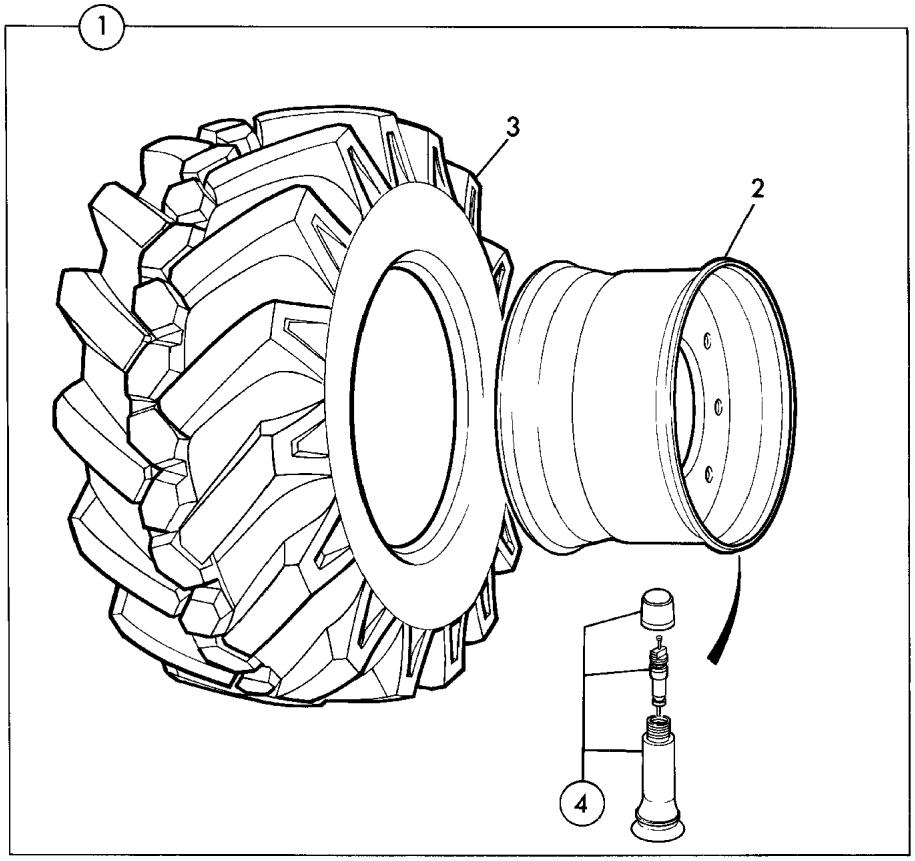

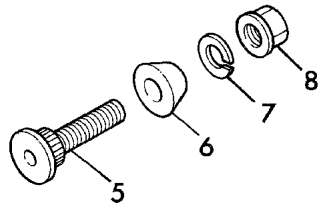

200520

	FROM	TO	FROM	TO
JS160W				

ITEM	PART NO	CHANGE NO	DESCRIPTION	REMARKS	USAGE CODE	QTY
1	215/13838		Wheel, with tyre, left hand, 10.00 X 20 EM22 16PR	Fitted to left hand side only.		4
	215/13839		Wheel, with tyre right hand, 10.00 X 20 EM22 16PR	Fitted to right hand side only.		4
	215/13845		Wheel, with tyre left hand, 10.00 x 20 EM23 16PR			4
	215/13846		Wheel, with tyre right hand, 10.00 x 20 EM23 16PR			4
2	JLA0290		:Wheel, centre, B7.5 x 20, 10 stud			1
3	42/925363		:Tyre, 10.00 x 20 EM22 16PR, MITAS			1
	42/925346		:Tyre, 10.00 x 20 EM23 16PR, MITAS			1
4	6900/0006		:Tube, inner			1
5	.		::'See Remark'	Valve extension		1
6	.		::'See Remark'	Valve		1
7	.		::'See Remark'	Dust cap		1
8	JLA0086		Spacer, tyre			4
9	826/01655		Stud, wheel			40
10	10/907145		Ring, centering			40
11	JLA0173		Washer, spring			40
12	JLA0175		Nut, wheel			40

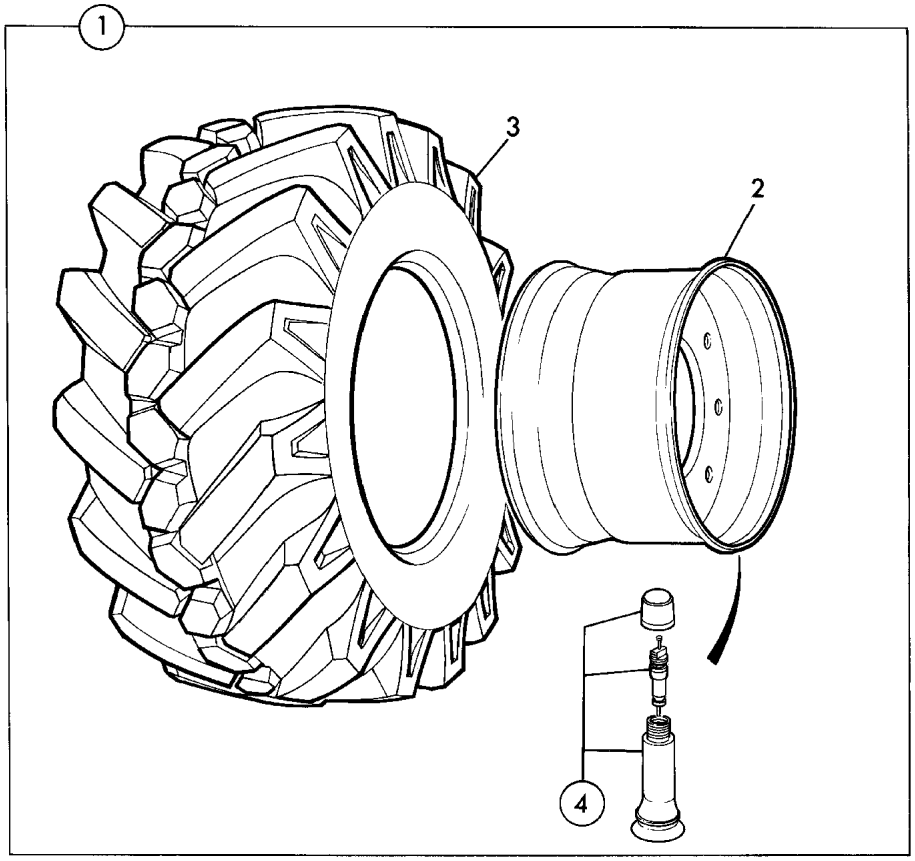

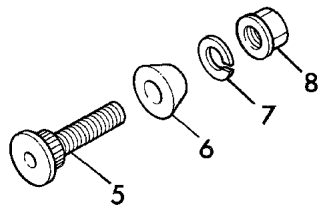

200520

	FROM	TO	FROM	TO
JS160W				

ITEM	PART NO	CHANGE NO	DESCRIPTION	REMARKS	USAGE CODE	QTY
1	JG0LA119		Wheel, with tyre, left hand, 1000-20 14pr	Fitted to left hand side only.	A	4
	JG0LA118		Wheel, with tyre right hand, 1000-20 14pr	Fitted to right hand side only.	A	4
2	JLA0290		:Wheel, centre, B7.5 x 20, 10 stud		A	1
3	JLA0497		:Tyre, 1000-20 14PR BS FG, Bridgestone		A	1
4	6900/0006		:Tube, inner		A	1
5	.		::'See Remark'	Valve extension		1
6	.		::'See Remark'	Valve		1
7	.		::'See Remark'	Dust cap		1
8	JLA0086		Spacer, tyre		A	4
9	826/01655		Stud, wheel			40
10	10/907145		Ring, centering			40
11	JLA0173		Washer, spring			40
12	JLA0175		Nut, wheel			40
13	140/00937		Stop			2

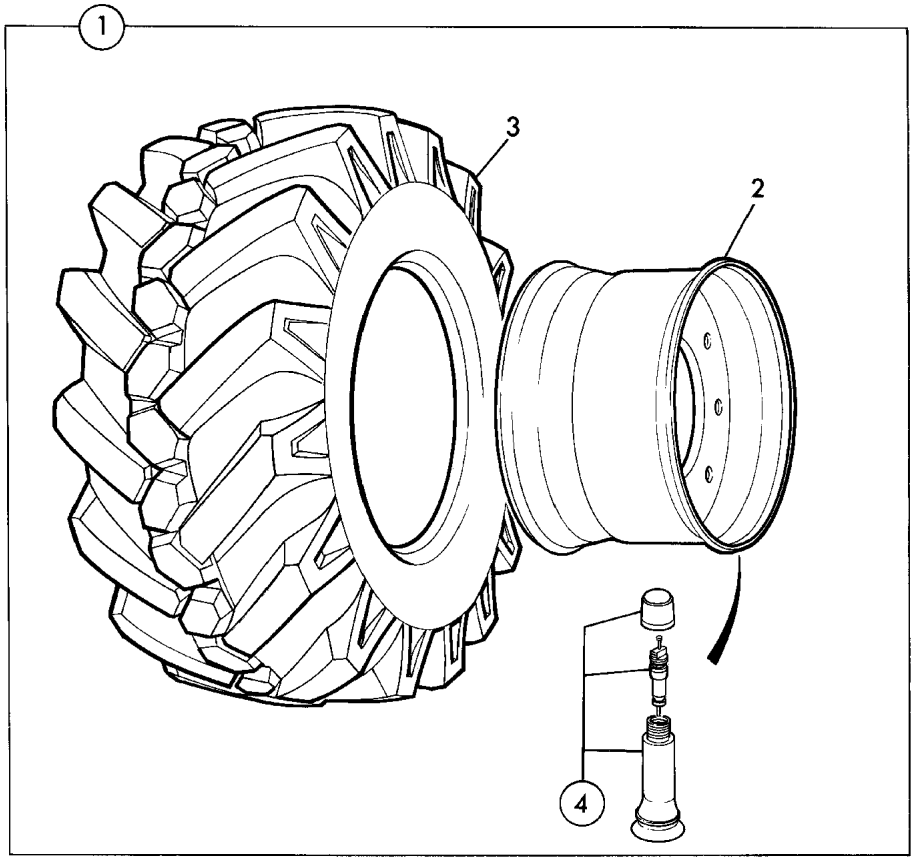

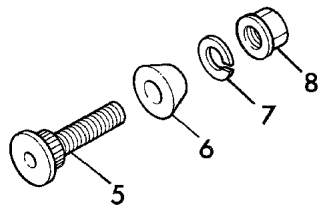

200520

	FROM	TO	FROM	TO
JS160W				

ITEM	PART NO	CHANGE NO	DESCRIPTION	REMARKS	USAGE CODE	QTY
1	JLA0495		Wheel, & tyre Left hand, floatation			2
2	6900/0927		:Wheel, 20/22.5, h2 10/ 335			1
3	6900/0926		:Tyre, 600/40-22.5 18pr, tubeless			1
4	6900/0928		:Valve, tubeless			1

F

F1 AXLES, FRONT
F2 AXLES, REAR
F3 WHEELS, TYRES & PROPSHAFTS
● F4 SLEW GEARBOXES
F5 TRANSMISSION

ENGLISH

F4-3-1 MOTOR, SWING
F4-4-1 GEARBOX, SWING
F4-5-1 CIRCUIT, SWING RING GREASING

FRANCAIS

F4-3-1 MOTOR, SWING
F4-4-1 GEARBOX, SWING
F4-5-1 CIRCUIT, SWING RING GREASING

DEUTSCH

F4-3-1 MOTOR, SWING
F4-4-1 GEARBOX, SWING
F4-5-1 CIRCUIT, SWING RING GREASING

ITALIANO

F4-3-1 MOTOR, SWING
F4-4-1 GEARBOX, SWING
F4-5-1 CIRCUIT, SWING RING GREASING

PORTUGUES

F4-3-1 MOTOR, SWING
F4-4-1 GEARBOX, SWING
F4-5-1 CIRCUIT, SWING RING GREASING

ESPANOL

F4-3-1 MOTOR, SWING
F4-4-1 GEARBOX, SWING
F4-5-1 CIRCUIT, SWING RING GREASING

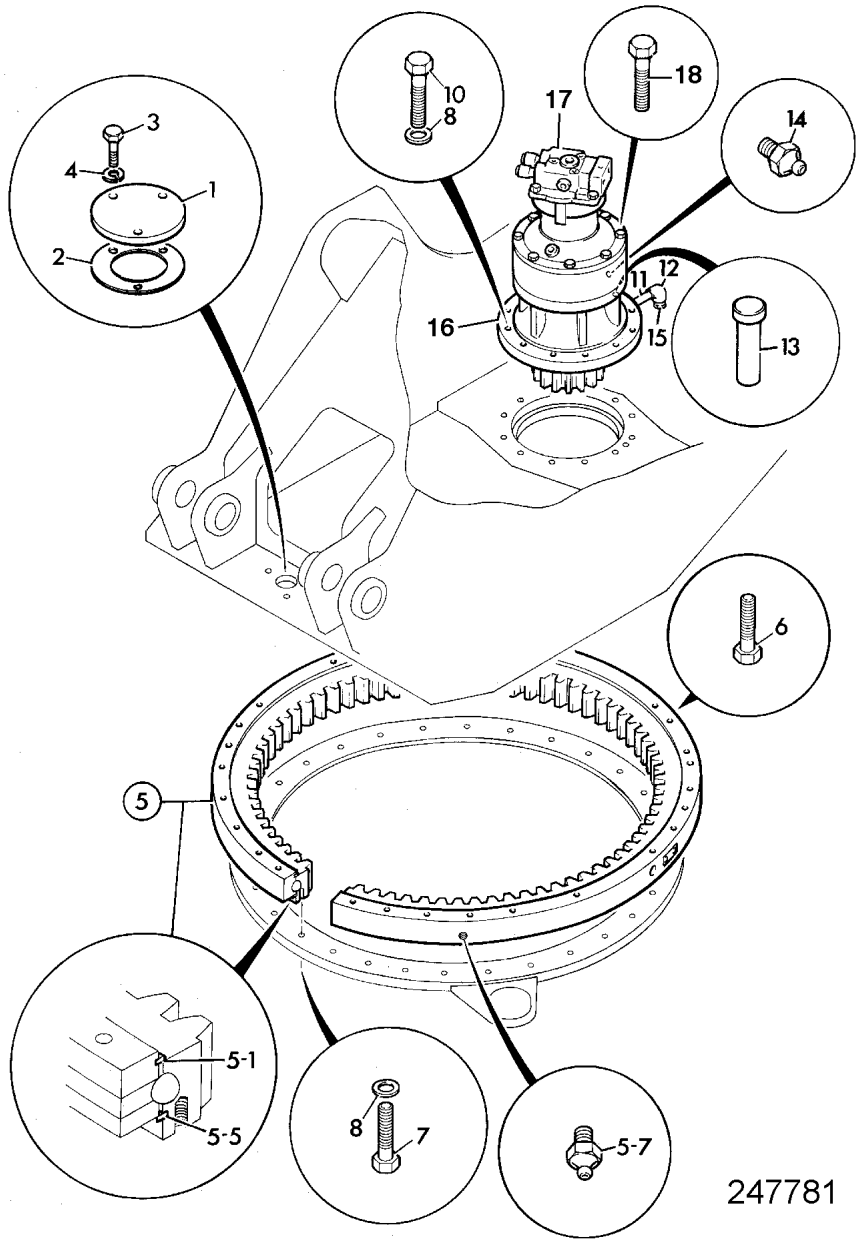

	FROM	TO	FROM	TO
JS160W				

ITEM	PART NO	CHANGE NO	DESCRIPTION	REMARKS	USAGE CODE	QTY
1	KRB0681		Plate, cover			1
2	KRB0682		Packing, cork			1
3	1316/0507D		Screw, set pin			3
4	1425/0009D		Washer, M12 spring			3
5	331/12091		Ring, swing			1
5 01	6900/0035		:Seal			1
5 05	6900/0035		:Seal			1
5 07	JHP0037		:Nipple, grease, straight			4
6	1316/3819D		Bolt, BOLT.M20X90LG.10.9			31
7	1316/3815D		Bolt, BOLT;M20 X 65			36
8	JHP0044		Washer			47
10	1316/3817D		Bolt			11
11	KNC0052		Pipe			1
12	C4E3606		Adapter, elbow			1
13	KRC0105		Pin, headed			1
14	JHP0037		Nipple, grease, straight			1
15	UBJ0373		Plug			1
16	JLC0008		Gearbox, swing	For components see frame F4-4-1.		1
17	JLC0007		Motor, swing	For components see frame E2-7-1.		1
18	1391/3509Z		Capscrew			16

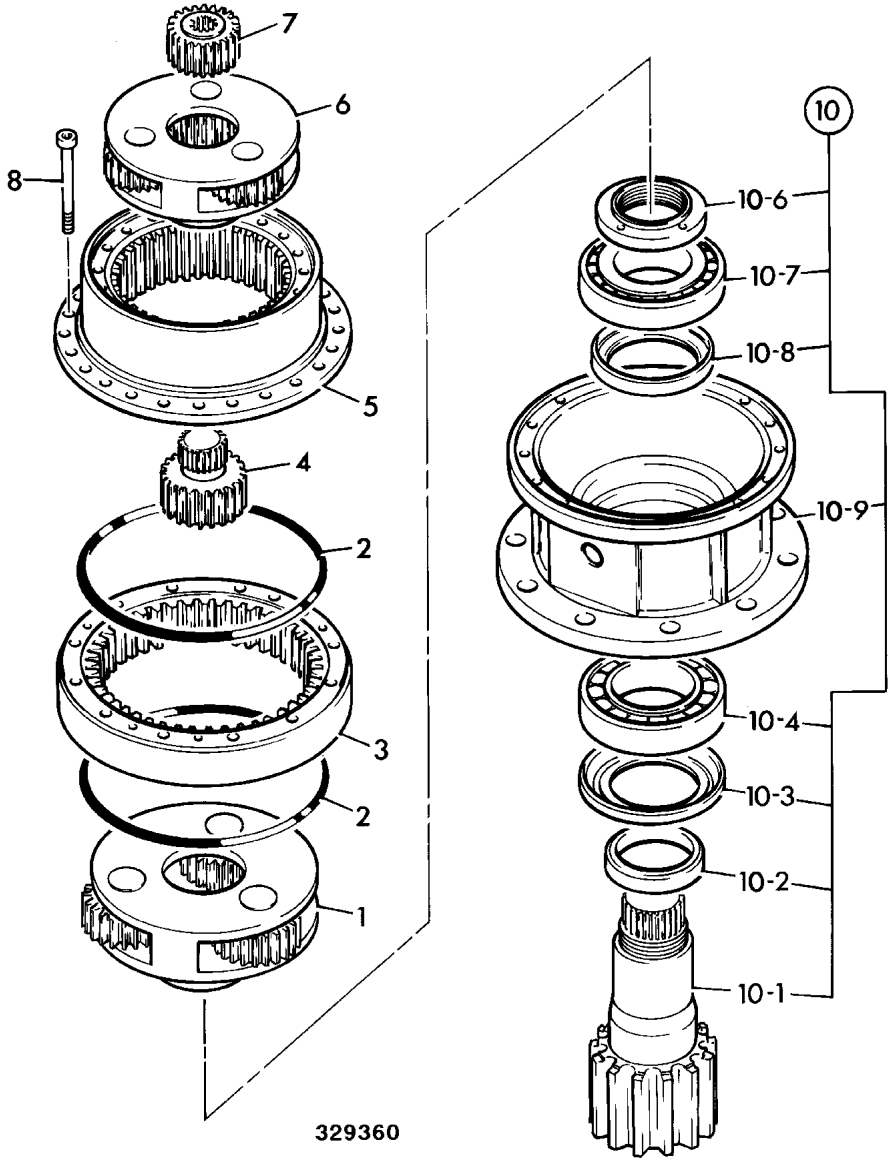

	FROM	TO	FROM	TO
JS160W				

ITEM	PART NO	CHANGE NO	DESCRIPTION	REMARKS	USAGE CODE	QTY
0A	JLC0008		Gearbox, swing			1
1	05/903878		:Gear, reduction assembly			1
2	05/903861		:O Ring			2
3	05/903879		:Ring, toothed			1
4	05/903880		:Gear, sun			1
5	05/903864		:Cover			1
5A	05/903865		:Ring, toothed			1
6	05/903881		:Gear, reduction assembly			1
7	05/903882		:Gear, sun			1
8	05/903883		:Screw			16
10	05/903885		:Gear, output assembly			1
10 01	05/903884		::Shaft, pinion, 15 teeth			1
10 02	05/903870		::Spacer			1
10 03	05/903871		::Ring			1
10 04	05/903872		::Bearing			1
10 06	05/903874		::Nut			1
10 07	05/903875		::Bearing			1
10 08	05/903876		::Seal, ring			1
10 09	05/903877		::Housing, gearbox			1

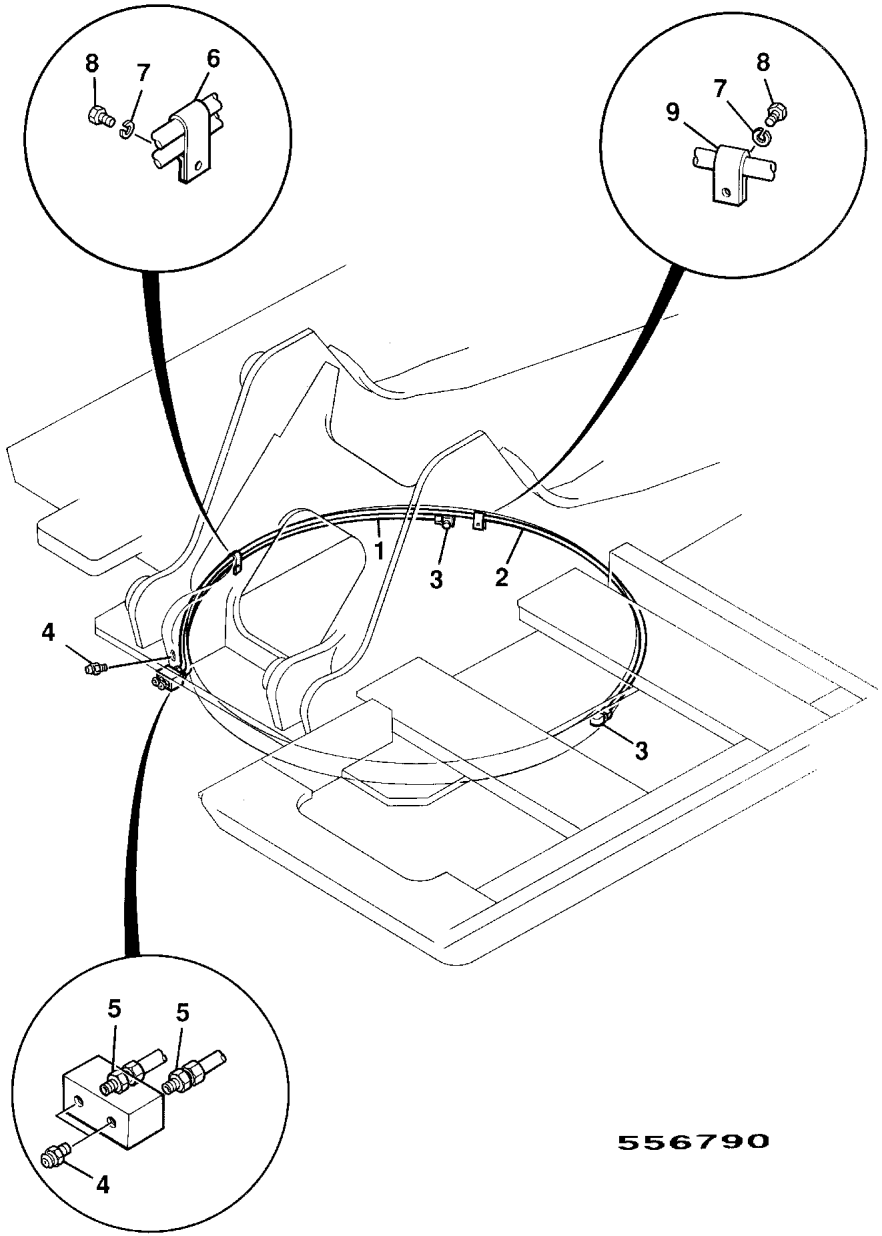

	FROM	TO	FROM	TO
JS160W				

ITEM	PART NO	CHANGE NO	DESCRIPTION	REMARKS	USAGE CODE	QTY
1	* KRB0697		Pipe, assembly, grease line			1
2	* KRB0696		Pipe, assembly, grease line			1
3	KMJ0985		Adapter, elbow			2
4	JHP0037		Nipple, grease, straight			3
5	KMJ0964		Connector			2
6	KRR0173		Clamp			1
7	1420/0006D		Washer, M6 plain			2
8	1316/0201D		Screw			2
9	KRR0170		Clamp			1
10	JRB0055		Plate, block	Welded to frame.		1

F

F1 AXLES, FRONT
F2 AXLES, REAR
F3 WHEELS, TYRES & PROPSHAFTS
F4 SLEW GEARBOXES
● F5 TRANSMISSION

ENGLISH

F5-1-1 TRANSMISSION, POWERSHIFT
F5-2-1 GEARBOX HOUSING, GROUP
F5-3-1 GEARBOX OIL PIPES, GROUP
F5-4-1 GEARBOX, INPUT HOUSING, GROUP
F5-6-1 GEARBOX CLUTCH DISC, GROUP
F5-7-1 GEARBOX BRAKE DISC, GROUP
F5-8-1 GEARBOX PLANET DRIVE, GROUP
F5-9-1 GEARBOX GEARSHIFT, SENSOR GROUP
F5-10-1 GEARBOX OUTPUT, GROUP

FRANCAIS

F5-1-1 TRANSMISSION SELECTEUR DE COMMAND
F5-2-1 BOITE DE VITESSES, ENSEMBLE DEMBRAYAGE
F5-3-1 BOITE DE VITESSES, TUYAUTERIE
F5-4-1 BOITE DE VITESSES, ENSEMBLE DE ENTREE
F5-6-1 BOITE DE VITESSES, DISQUES D'EMBRAYAGE
F5-7-1 BOITE DE VITESSES, DISQUES DE FREIN
F5-8-1 BOITE DE VITESSES, TRAIN FINAL
F5-9-1 BOITE DE VITESSES, VALVE DE CHANGEMENT DE VITESSES
F5-10-1 BOITE DE VITESSES, ENSEMBLE DE SORTIE

DEUTSCH

F5-1-1 GETRIEBE LASTSCHALTGETRIEBE
F5-2-1 GETRIEBE GEHAUSE
F5-3-1 GETRIEBE OLLEITUNGEN
F5-4-1 GETRIEBE EINGANGSWELLE GEHAUSE
F5-6-1 GETRIEBE KUPPLUNGSSCHEIBEN GRUPPE
F5-7-1 GETRIEBE BREMSSCHEIBEN GRUPPE
F5-8-1 GETRIEBE PLANETENANTRIEB GRUPPE
F5-9-1 GETRIEBE HYDR. SCHALTEINHEIT
F5-10-1 GEARBOX OUTPUT, GROUP

ITALIANO

F5-1-1 TRASMISSIONE POWERSHIFT
F5-2-1 GRUPPO TRASMISSIONE
F5-3-1 SISTEMA ALIMENTAZIONE TRASMISSIONE
F5-4-1 GRUPPO ENTRATA TRASMISSIONE
F5-6-1 GRUPPO DISCHI FRIZIONE TRASMISSIONE
F5-7-1 GRUPPO DISCHI FRENOTRASMISSIONE
F5-8-1 GRUPPO PLANETARI RIDUTTORE
F5-9-1 GRUPPO SENSORI TRASMISSIONE
F5-10-1 GRUPPO USCITA TRASMISSIONE

PORTUGUES

F5-1-1 TRANSMISSAO POWERSHIFT
F5-2-1 GRUPO DO COMPARTIMENTO DA CAIXO DE VELOCIDADES
F5-3-1 GRUPO DAS TUBAGENS DE OLEO DA CAIXA DE VELOCIDADES
F5-4-1 GRUPO DO COMPARTIMENTO DE ENTRADA DA CAIXA DE VELOCIDADES
F5-6-1 GRUPO DOS DISCOS DEEMBRAIAGEM DA CAIXADE VELOCIDADES
F5-7-1 GRUPO DOS DISCOS DETRAVAGEM DA CAIXA DE VELOCIDADES
F5-8-1 GRUPO DA ENGRENAGEMPLANETARIA DA CAIXADE VELOCIDADES
F5-9-1 GRUPO DO SENSOR DE MUDANCA DE VELOCIDADES DA CAIXA DE VELOCIDADES
F5-10-1 GRUPO DE SAIDA DA CAIXA DE VELOCIDADES

ESPANOL

F5-1-1 TRANSMISION POWERSHIFT
F5-2-1 CONJUNTO DE CARCASADE CAJA DE CAMBIOS
F5-3-1 CONJUNTO DE TUBERIAS DE ACEITE DE CAJA DE CAMBIOS
F5-4-1 CONJUNTO DE CARCASADE EJE DE ENTRADA DE CAJA DE CAMBIOS
F5-6-1 CONJUNTO DE DISCOS DE EMBRAGUE DE CAJA DE CAMBIOS
F5-7-1 CONJUNTO DE DISCOS DE FRENO DE CAJA DE CAMBIOS
F5-8-1 CONJUNTO DEL PLANETARIO DE CAJA DE CAMBIOS
F5-9-1 CONJUNTO DE SENSORES DE SELECCION DE MARCHAS DE CAJA DE CAMBIOS
F5-10-1 CONJUNTO DEL EJE DESALIDA DE CAJA DE CAMBIOS

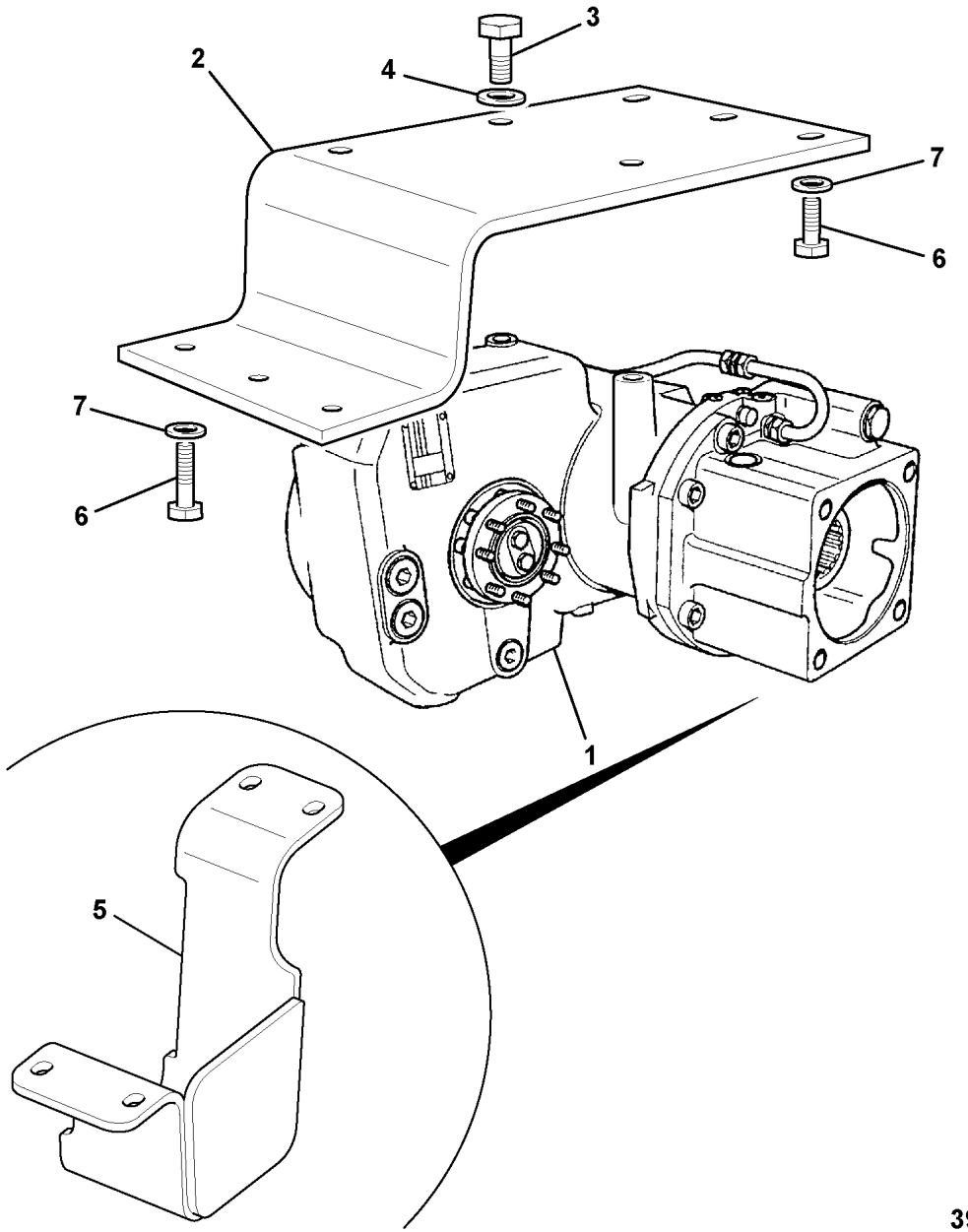

392411

	FROM	TO	FROM	TO
JS160W				

ITEM	PART NO	CHANGE NO	DESCRIPTION	REMARKS	USAGE CODE	QTY
1	05/205600		Transmission, assembly			1
2	JLA0486		Mounting, plate, transmission			1
3	1316/0811Z		Bolt			3
4	JHP0044		Washer			3
5	335/13345		Guard, transmission			1
6	1316/0712Z		Bolt			10
7	JHP0043		Washer, M16			10

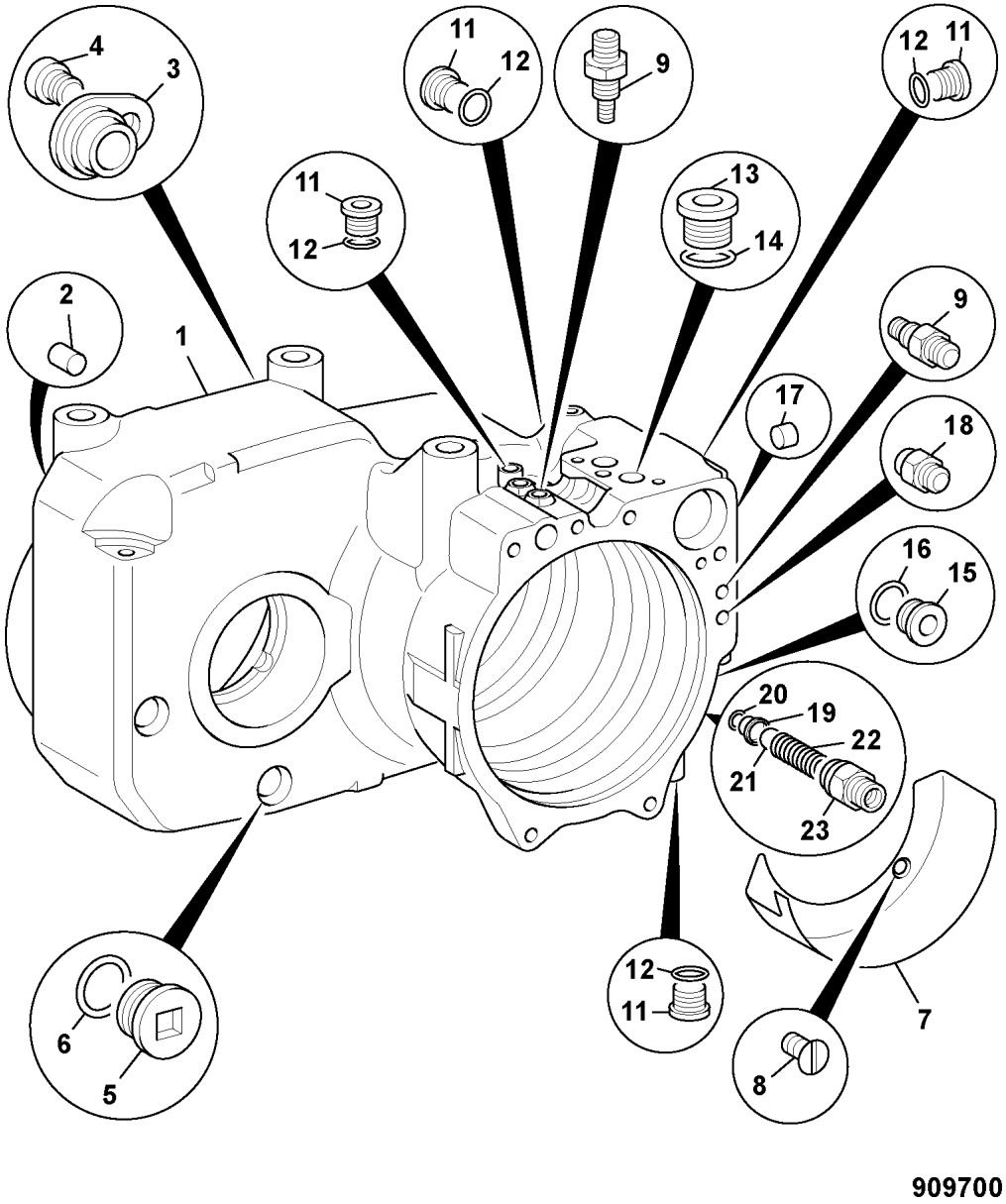

909700

	FROM	TO	FROM	TO
JS160W				

ITEM	PART NO	CHANGE NO	DESCRIPTION	REMARKS	USAGE CODE	QTY
1	332/C4641		Housing			1
2	332/C4644		Dowel			1
3	332/C4645		Cover			1
4	04/800177		Bolt			1
5	332/C4647		Screw			2
6	10/904305		O Ring			2
7	332/C4651		Screen			1
8	332/C4652		Screw			2
9	10/907342		Valve, venting			2
11	04/600262		Plug			6
12	10/907341		O Ring			6
13	10/906820		Plug			2
14	10/906821		O Ring			2
15	04/800322		Plug			1
16	10/909205		Ring, seal			1
17	332/C4653		Plug			8
18	332/C4656		Nipple, NIPPLE, LUB, ZF GEARBOX			1
19	332/C4657		Valve, VALVE, ZF GEARBOX			1
20	04/600384		O Ring			1
21	332/C4658		Ball, BALL, ZF GEARBOX			1
22	332/C4662		Spring, SPRING, COM, ZF GEARBOX			1

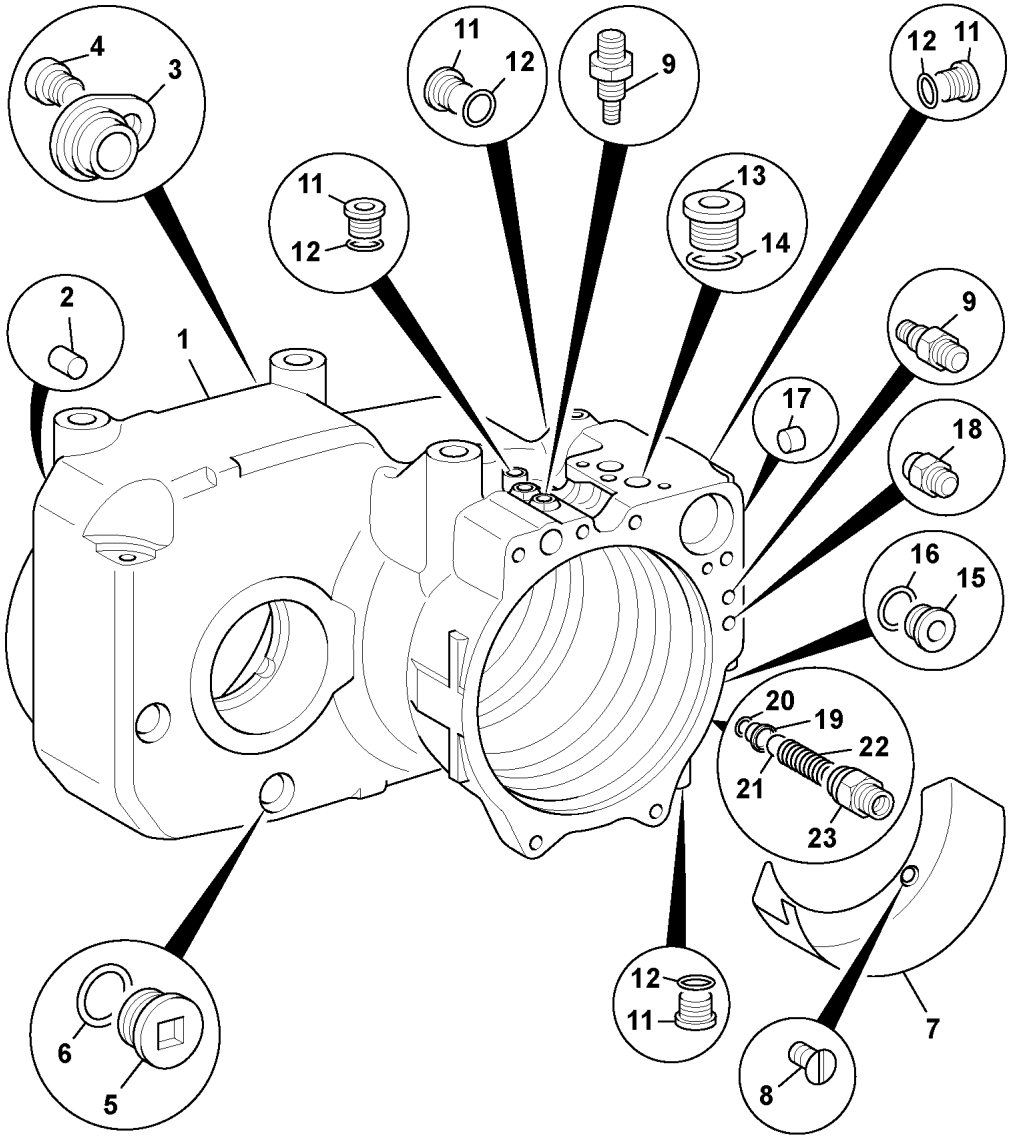

909700

ITEM	PART NO	CHANGE NO	DESCRIPTION	REMARKS	USAGE CODE	QTY
23	332/C4663		Breather, BREATHER, ZF GEARBOX			1

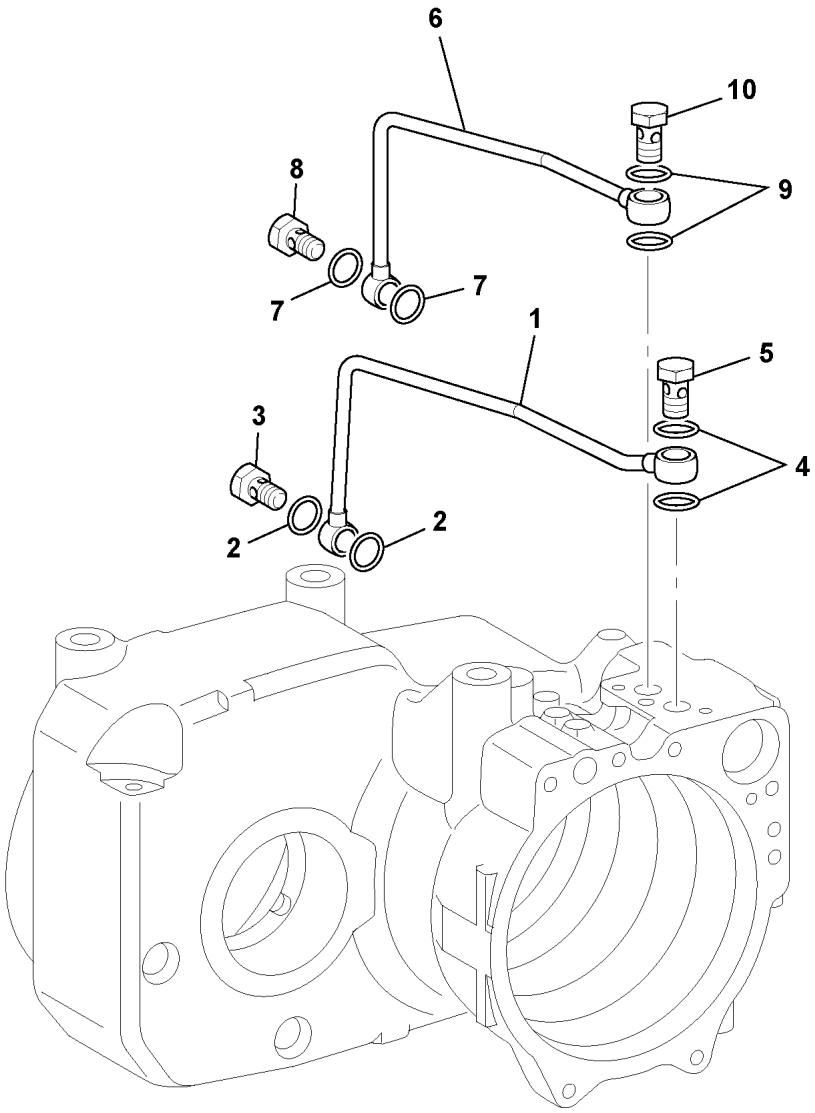

909690

	FROM	TO	FROM	TO
JS160W				

ITEM	PART NO	CHANGE NO	DESCRIPTION	REMARKS	USAGE CODE	QTY
1	332/C5243		Tube, oil			1
2	04/800485		Ring, sealing			2
3	04/800484		Adapter			1
4	04/800379		Ring, seal			2
5	04/800220		Bolt, banjo			1
6	332/C5245		Tube, oil			1
7	04/800485		Ring, sealing			2
8	04/800484		Adapter			1
9	04/800379		Ring, seal			2
10	04/800220		Bolt, banjo			1

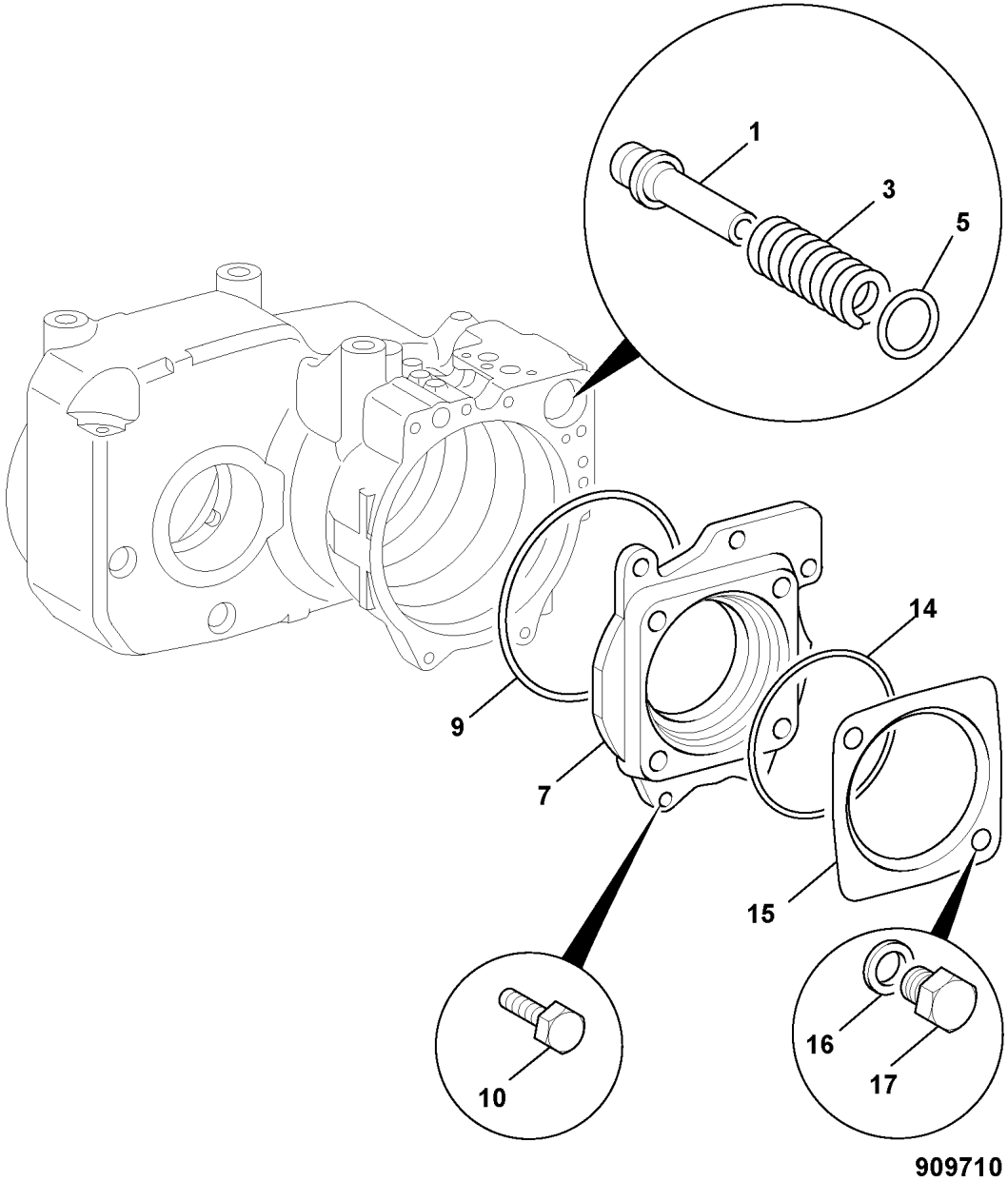

	FROM	TO	FROM	TO
JS160W				

ITEM	PART NO	CHANGE NO	DESCRIPTION	REMARKS	USAGE CODE	QTY
1	332/C4632		Piston			1
3	332/C4635		Spring, compression			1
5	332/C4636		O Ring			1
7	332/C4637		Housing, input			1
9	10/907041		O Ring			1
10	332/C4640		Screw			5
14	10/907507		O Ring			1
15	332/C4638		Cover			1
16	332/C4639		Washer			2
17	04/600564		Screw, hexagon			2

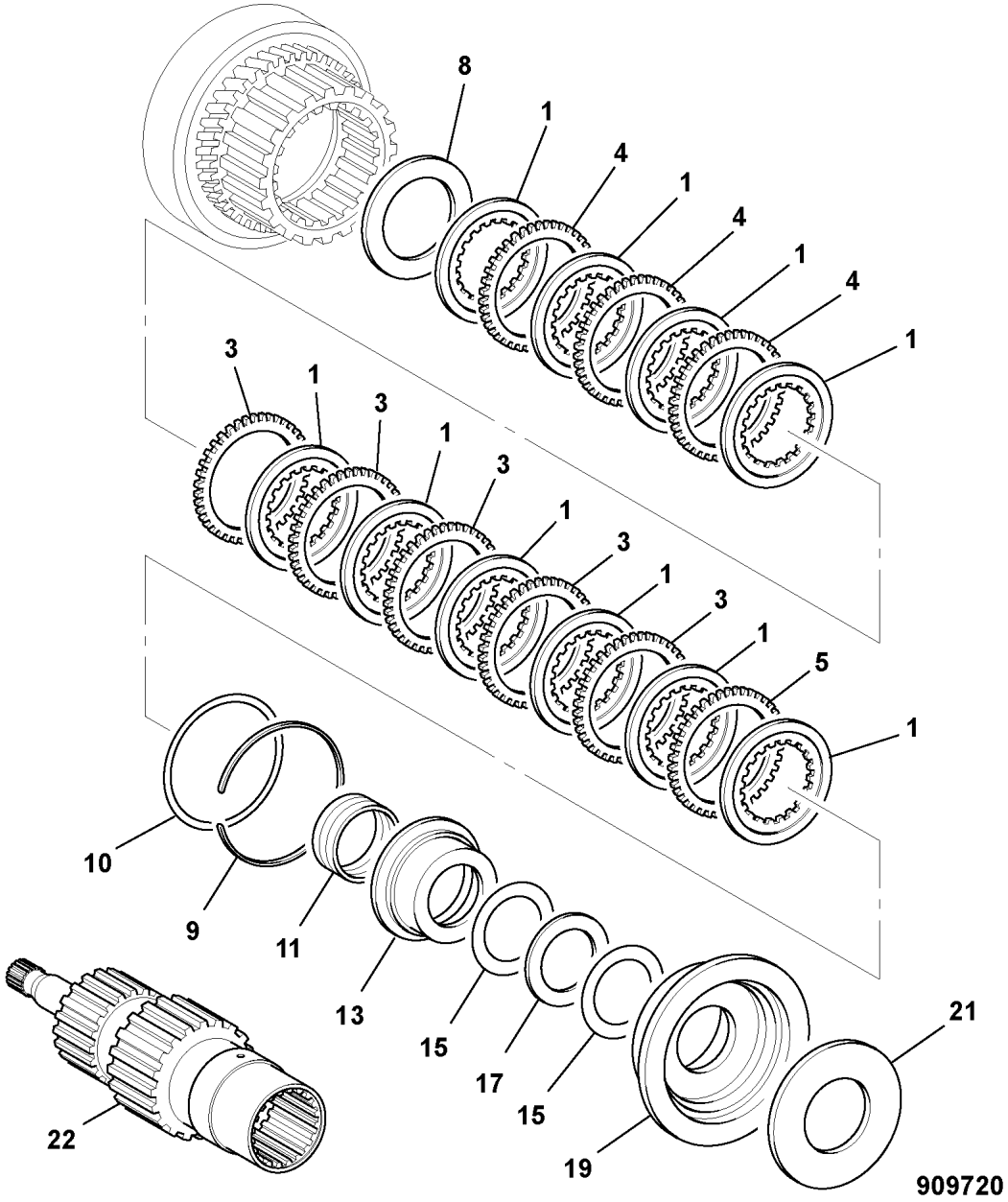

	FROM	TO	FROM	TO
JS160W				

ITEM	PART NO	CHANGE NO	DESCRIPTION	REMARKS	USAGE CODE	QTY
1	332/C4679		Disk, clutch			10
3	332/C4680		Disk, clutch			5
4	332/C4681		Disk, clutch			3
5	332/C4681		Disk, clutch			1
	332/C4680		Disk, clutch			1
	332/C4684		Disk, clutch			1
8	332/C4685		Washer			1
9	332/C4686		Ring, snap			1
10	332/C4687		Shim			1
11	332/C4688		Spring, compression			1
13	332/C4689		Piece, thrust			1
15	04/600181		Washer			2
17	332/C4693		Bearing, roller cage			1
19	332/C4696		Piston			1
21	332/C4697		Spring, set			1
22	332/C4726		Shaft, input			1

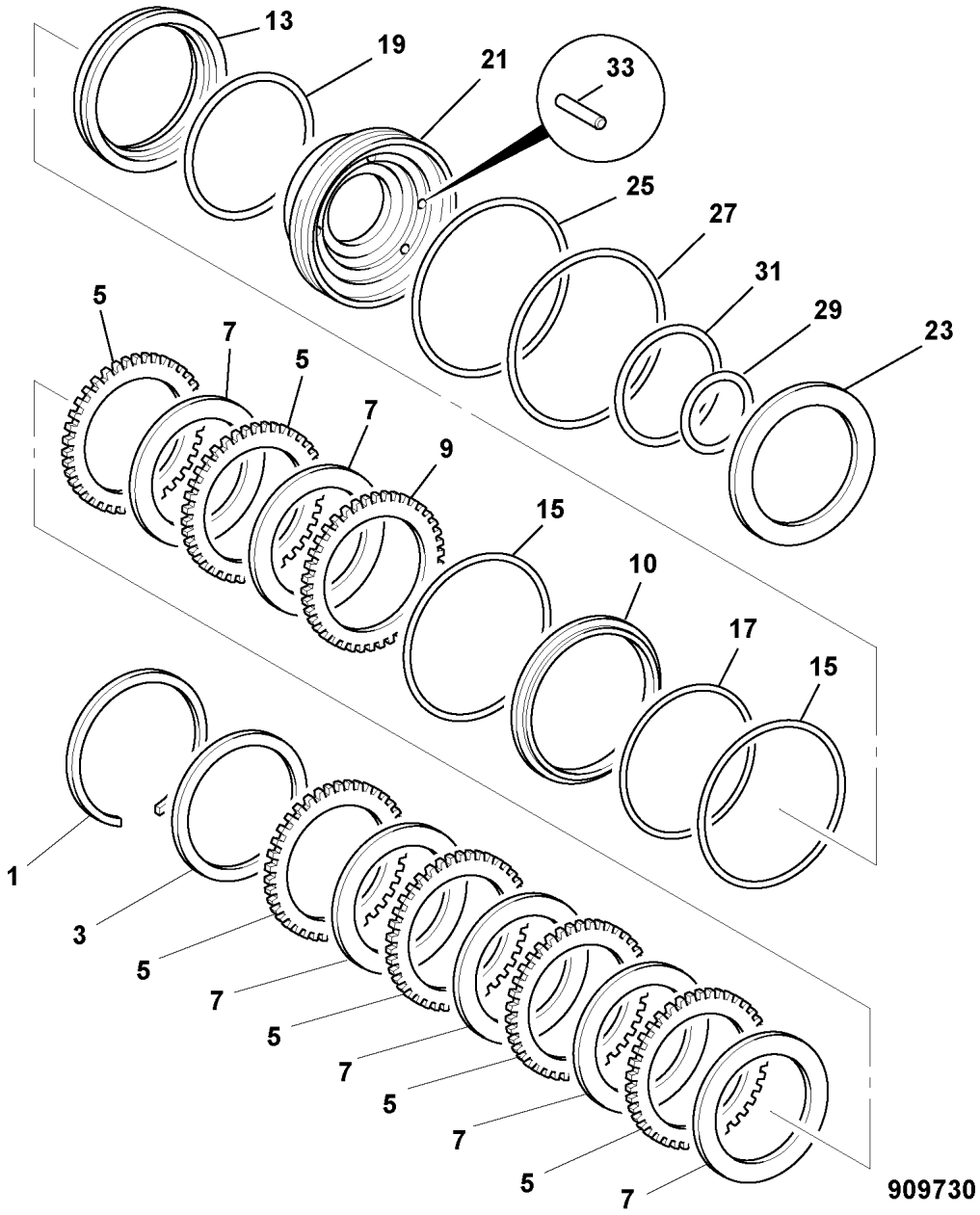

	FROM	TO	FROM	TO
JS160W				

ITEM	PART NO	CHANGE NO	DESCRIPTION	REMARKS	USAGE CODE	QTY
1	10/907380		Circlip			1
3	10/907379		Shim, end			1
5	04/600063		Disc, clutch			6
7	10/907388		Disc, clutch			6
9	10/907381		Disc, clutch			1
	10/907385		Disc, clutch, S=3,3			1
	04/600063		Disc, clutch			1
	04/600065		Disc, clutch S=2.8			1
	10/907384		Disc, clutch, B=3,5			1
	10/907386		Disc, clutch, S=3,4			1
	10/907382		Disc, clutch, B=3,7			1
10	332/C4666		Ring			1
13	332/C4667		Ring			1
15	332/C4668		O Ring			2
17	828/10040		O Ring			1
19	332/C4669		Gasket			1
21	332/C4670		Piston			1
23	332/C4671		Spring, set			1
25	332/C4672		Gasket			1
27	332/C4673		Gasket			1
29	332/C4674		Gasket			1
31	332/C4675		Gasket			1
33	332/C4676		Pin			2

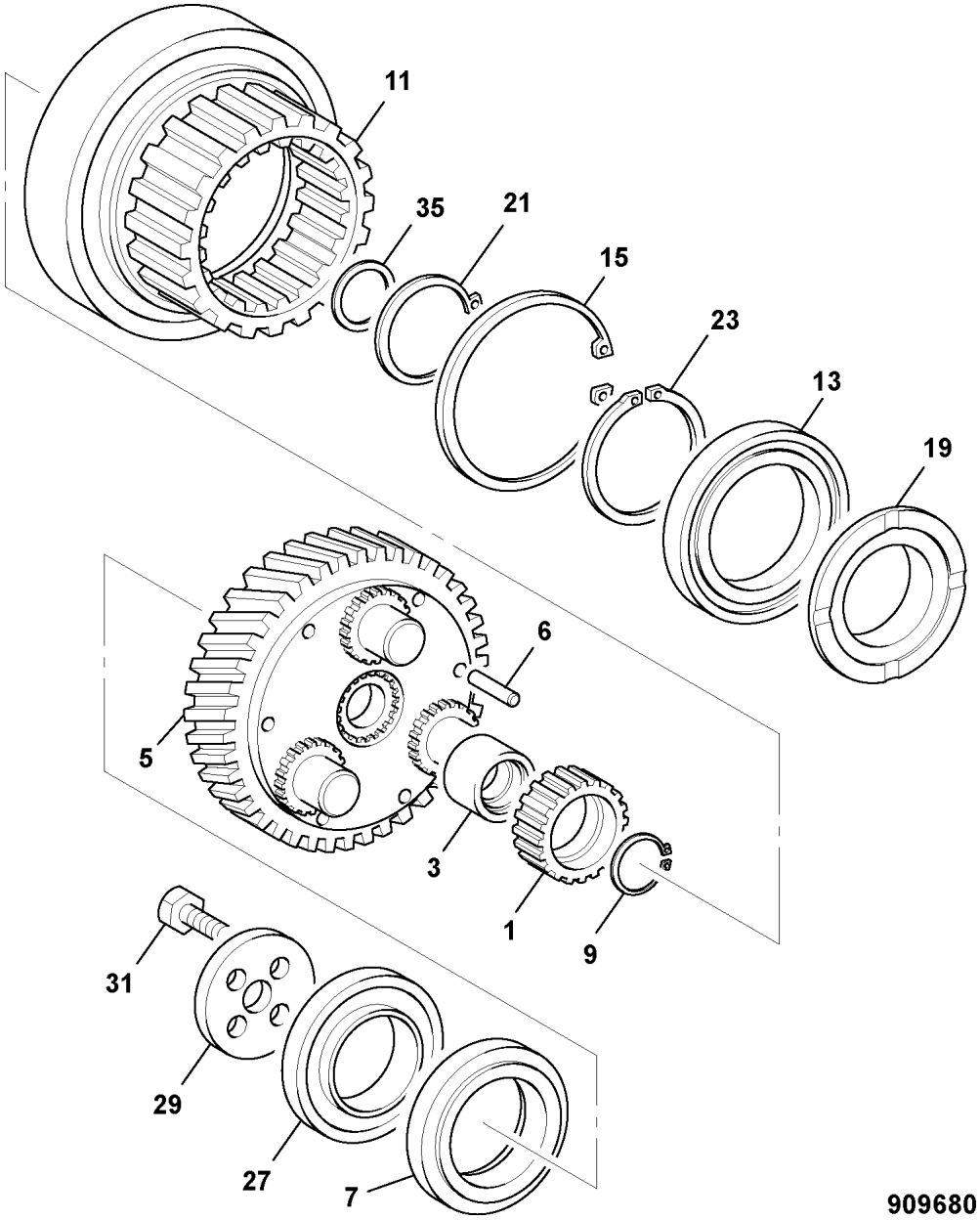

909680

	FROM	TO	FROM	TO
JS160W				

ITEM	PART NO	CHANGE NO	DESCRIPTION	REMARKS	USAGE CODE	QTY
1	332/C4704		Gear, planet			3
3	332/C4706		Bearing			3
5	332/C4725		Carrier, planet			1
6	332/C4708		Pin, slot			6
7	332/C4709		Bearing			1
9	332/C4710		Ring, retaining			3
11	332/C4711		Gear, ring			1
13	332/C4713		Bearing			1
15	332/C4715		Ring, retaining			1
19	332/C4717		Disk, centering			1
21	332/C4719		Ring, retaining			1
23	10/300783		Retainer, ring			1
27	332/C4709		Bearing			1
29	332/C4720		Washer			1
31	332/C4721		Bolt			4
35	332/C4722		Bearing, needle cage			1

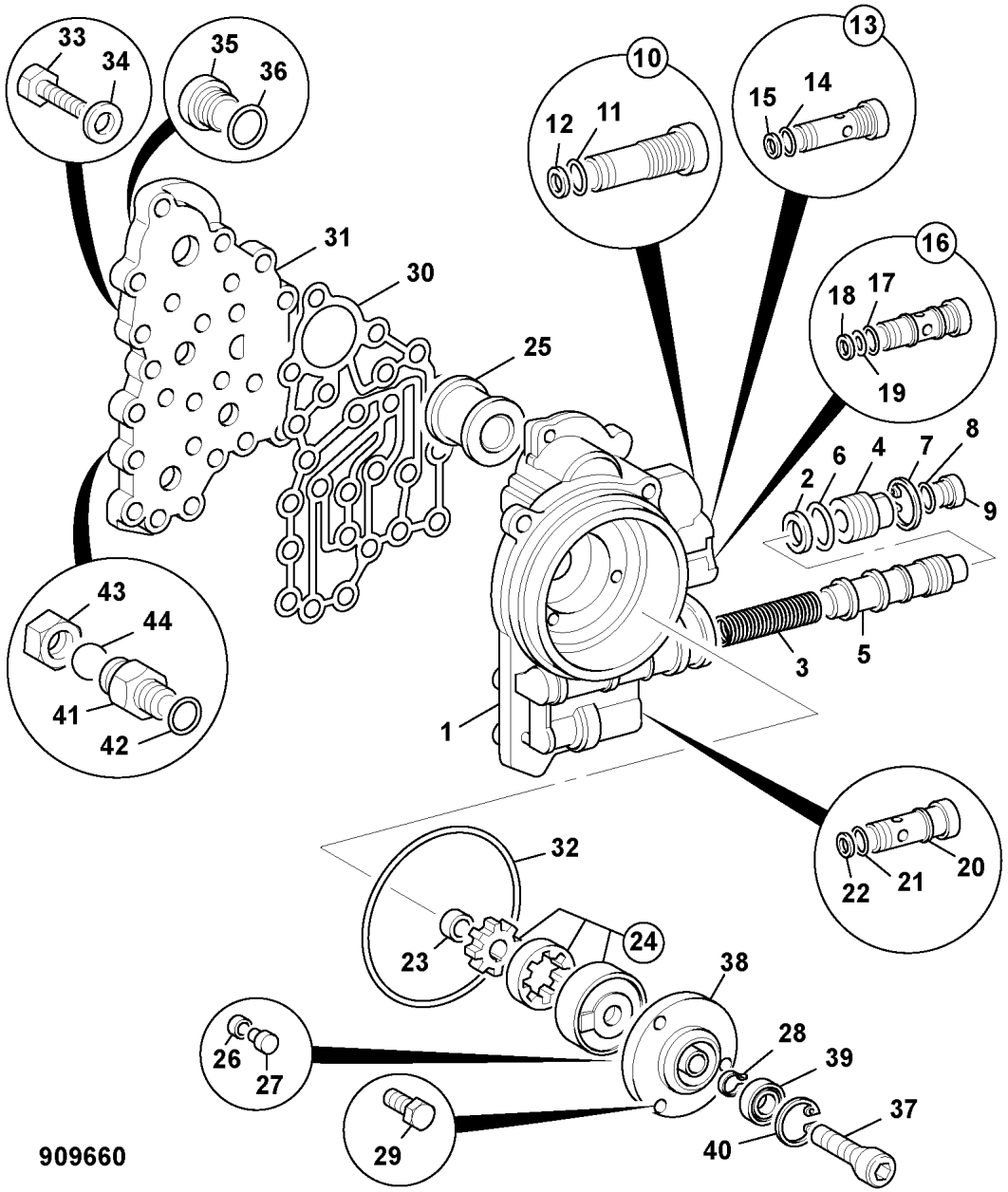

	FROM	TO	FROM	TO
JS160W				

ITEM	PART NO	CHANGE NO	DESCRIPTION	REMARKS	USAGE CODE	QTY
1	332/C4739		Housing			1
2	10/907451		Gasket			1
3	10/909202		Spring			1
4	332/C4682		Plug			1
5	10/909206		Piston			1
6	10/907333		O Ring			1
7	10/909229		Ring, retaining			1
8	10/909205		Ring, seal			1
9	04/800322		Plug			1
10	332/C4692		Valve, pressure relief			1
11	04/801406		:O Ring			1
12	332/C5232		:O Ring			1
13	10/909208		Valve, check			1
14	332/C5234		:O Ring			1
15	332/C5235		:O Ring			1
16	10/909209		Valve, check			1
17	332/C5234		:O Ring			1
18	332/C5235		:O Ring			1
19	10/907341		:O Ring			1
20	10/909210		Valve, check			1
21	332/C5234		:O Ring			1
22	332/C5235		:O Ring			1
23	10/909211		Sleeve, needle			1

F5-9-1 GEARBOX GEARSHIFT, SENSOR GROUP

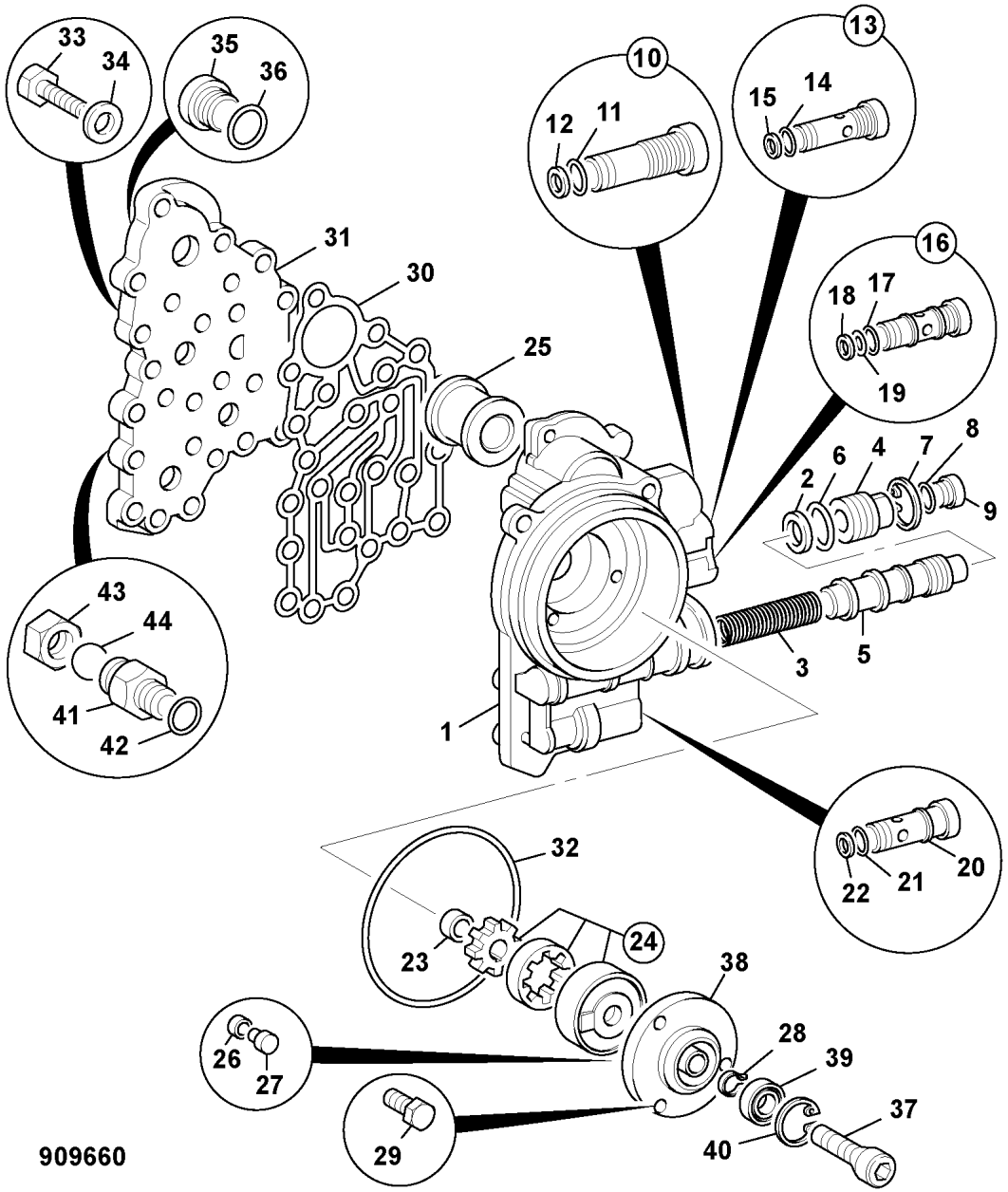

ITEM	PART NO	CHANGE NO	DESCRIPTION	REMARKS	USAGE CODE	QTY
24	332/C5236		Rotor, set			1
25	10/909239		Filter, screen			1
26	10/909214		Ball			4
27	10/909215		Spring			3
28	10/909216		Ring, retaining			1
29	10/909217		Screw			3
30	332/C5238		Gasket			1
31	10/909242		Cover			1
32	10/909220		O Ring			2
33	10/909222		Screw			23
34	10/909224		Washer			23
35	04/800195		Plug			1
36	10/907465		O Ring			1
37	332/C5240		Shaft, pump			1
38	10/909227		Cover			1
39	10/909228		Bearing			1
40	10/909229		Ring, retaining			1
41	04/800385		Adapter			2
42	10/906821		O Ring			2
43	04/800222		Nut			2
44	332/C5242		Ball			2

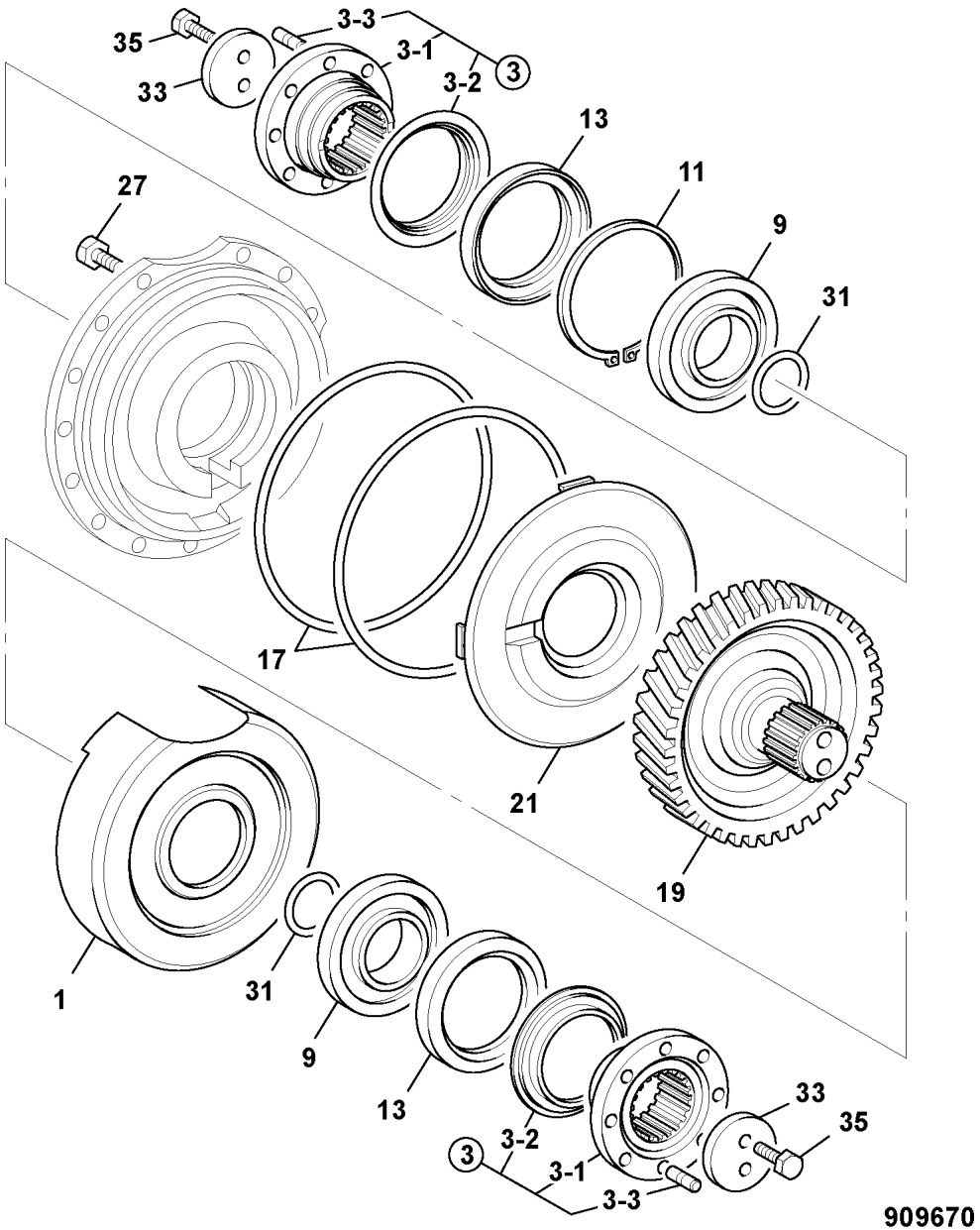

909670

	FROM	TO	FROM	TO
JS160W				

ITEM	PART NO	CHANGE NO	DESCRIPTION	REMARKS	USAGE CODE	QTY
1	332/C4733		Cover			1
3	332/C4727		Flange, output			1
3 01	332/C4729		:Flange, OUTPUT			1
3 02	332/C4731		:Shield			1
3 03	332/C4732		:Stud			1
9	04/600104		Bearing, ball			2
11	10/907427		Circlip			1
13	332/C4734		Seal, shaft			2
17	10/907041		O Ring			2
19	332/C4735		Gear, output			1
21	332/C4737		Deflector, oil			1
25	332/C4738		Screen			1
27	10/907315		Screw			5
31	10/907473		O Ring			2
33	10/907474		Washer			2
35	10/907475		Screw			4
37	04/600104		Bearing, ball			1

R

● R1 ENGINE BLOCK & SUB-ASSEMBLIES
R2 CYLINDER HEAD & SUB-ASSEMBLIES
R3 INDUCTION & EXHAUST SYSTEMS
R4 SYSTEM, COOLING
R5 SYSTEM, LUBRICATION
R6 SYSTEM, FUEL
R7 EQUIPMENT, AUXILIARY
R8 GASKET SETS

ENGLISH

R1-1-1 ENGINE, COMPLETE, 4JJ1-XYSJ01
R1-3-1 BLOCK ASSEMBLY
R1-4-1 CRANKSHAFT, BEARINGS, PISTONS & CON-RODS
R1-5-1 FANS,PULLEYS & BELTS, EU ONLY
R1-5-2 FANS,PULLEYS & BELTS, NON EU
R1-6-1 TIMING CASE, & FRONT COVER
R1-6-2 CAMSHAFTS, & TIMING GEARS
R1-7-1 FLYWHEEL & HOUSING
R1-8-1 ENGINE MOUNTINGS

FRANCAIS

R1-1-1 ENGINE, COMPLETE, 4JJ1-XYSJ01
R1-3-1 BLOCK ASSEMBLY
R1-4-1 VILEBREQUIN, PALIERSPIST. & BIELES DE LI
R1-5-1 FANS,PULLEYS & BELTS, EU ONLY
R1-5-2 FANS,PULLEYS & BELTS, NON EU
R1-6-1 TIMING CASE, & FRONT COVER
R1-6-2 CAMSHAFTS, & TIMING GEARS
R1-7-1 FLYWHEEL & HOUSING
R1-8-1 MOTEUR, FIXATIONS

DEUTSCH

R1-1-1 ENGINE, COMPLETE, 4JJ1-XYSJ01
R1-3-1 BLOCK ASSEMBLY
R1-4-1 KURBELWELLE, LAGER KOLBEN & PLEUEL
R1-5-1 FANS,PULLEYS & BELTS, EU ONLY
R1-5-2 FANS,PULLEYS & BELTS, NON EU
R1-6-1 TIMING CASE, & FRONT COVER
R1-6-2 CAMSHAFTS, & TIMING GEARS
R1-7-1 FLYWHEEL & HOUSING
R1-8-1 MOTORAUFHANGUNG

ITALIANO

R1-1-1 ENGINE, COMPLETE, 4JJ1-XYSJ01
R1-3-1 BLOCK ASSEMBLY
R1-4-1 ALBERO A GOMITO, BRONZINE PISTONI E BIELLE
R1-5-1 FANS,PULLEYS & BELTS, EU ONLY
R1-5-2 FANS,PULLEYS & BELTS, NON EU
R1-6-1 TIMING CASE, & FRONT COVER
R1-6-2 CAMSHAFTS, & TIMING GEARS
R1-7-1 FLYWHEEL & HOUSING
R1-8-1 SUPPORTI MOTORE

PORTUGUES

R1-1-1 ENGINE, COMPLETE, 4JJ1-XYSJ01
R1-3-1 BLOCK ASSEMBLY
R1-4-1 CAMBOTA, BRONZES PISTONS E BIELAS
R1-5-1 FANS,PULLEYS & BELTS, EU ONLY
R1-5-2 FANS,PULLEYS & BELTS, NON EU
R1-6-1 TIMING CASE, & FRONT COVER
R1-6-2 CAMSHAFTS, & TIMING GEARS
R1-7-1 FLYWHEEL & HOUSING
R1-8-1 SUPORTES DO MOTOR

ESPANOL

R1-1-1 ENGINE, COMPLETE, 4JJ1-XYSJ01
R1-3-1 BLOCK ASSEMBLY
R1-4-1 CIGUENAL,COJINETES PISTONES Y BIELAS
R1-5-1 FANS,PULLEYS & BELTS, EU ONLY
R1-5-2 FANS,PULLEYS & BELTS, NON EU
R1-6-1 TIMING CASE, & FRONT COVER
R1-6-2 CAMSHAFTS, & TIMING GEARS
R1-7-1 FLYWHEEL & HOUSING
R1-8-1 MOTOR MONTURAS

	FROM	TO	FROM	TO
JS160W				

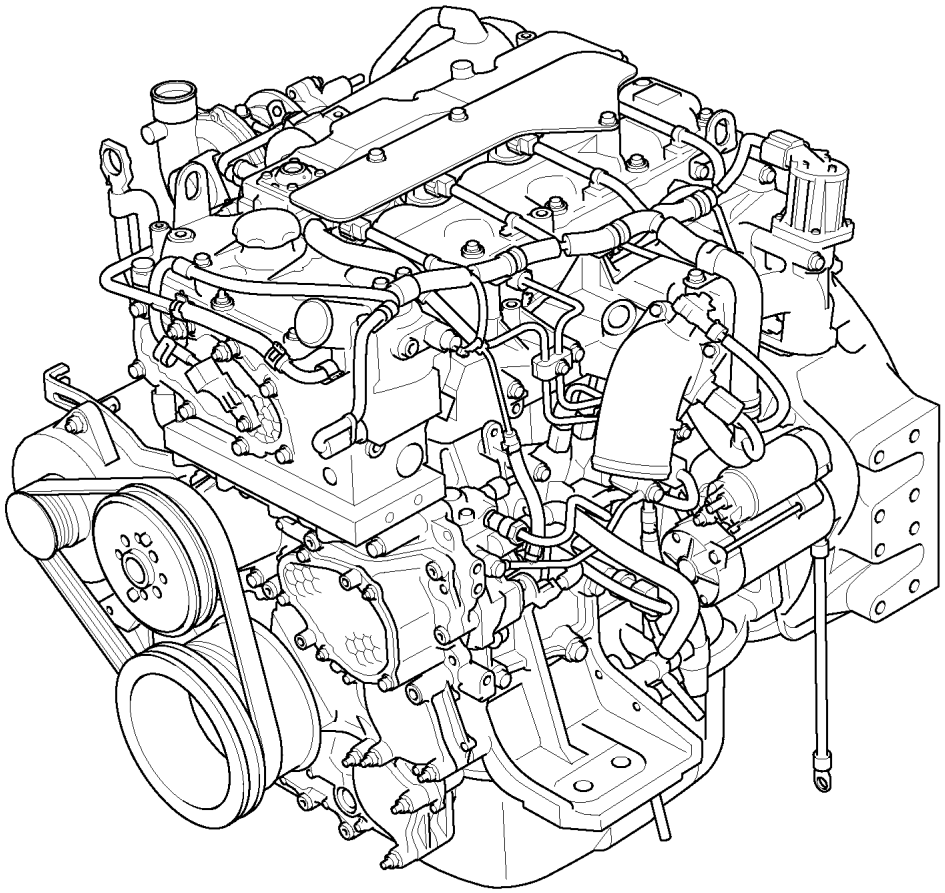

905830

ITEM	PART NO	CHANGE NO	DESCRIPTION	REMARKS	USAGE CODE	QTY
1	01/145386		Engine, complete, 4JJ1-XYSJ01			1

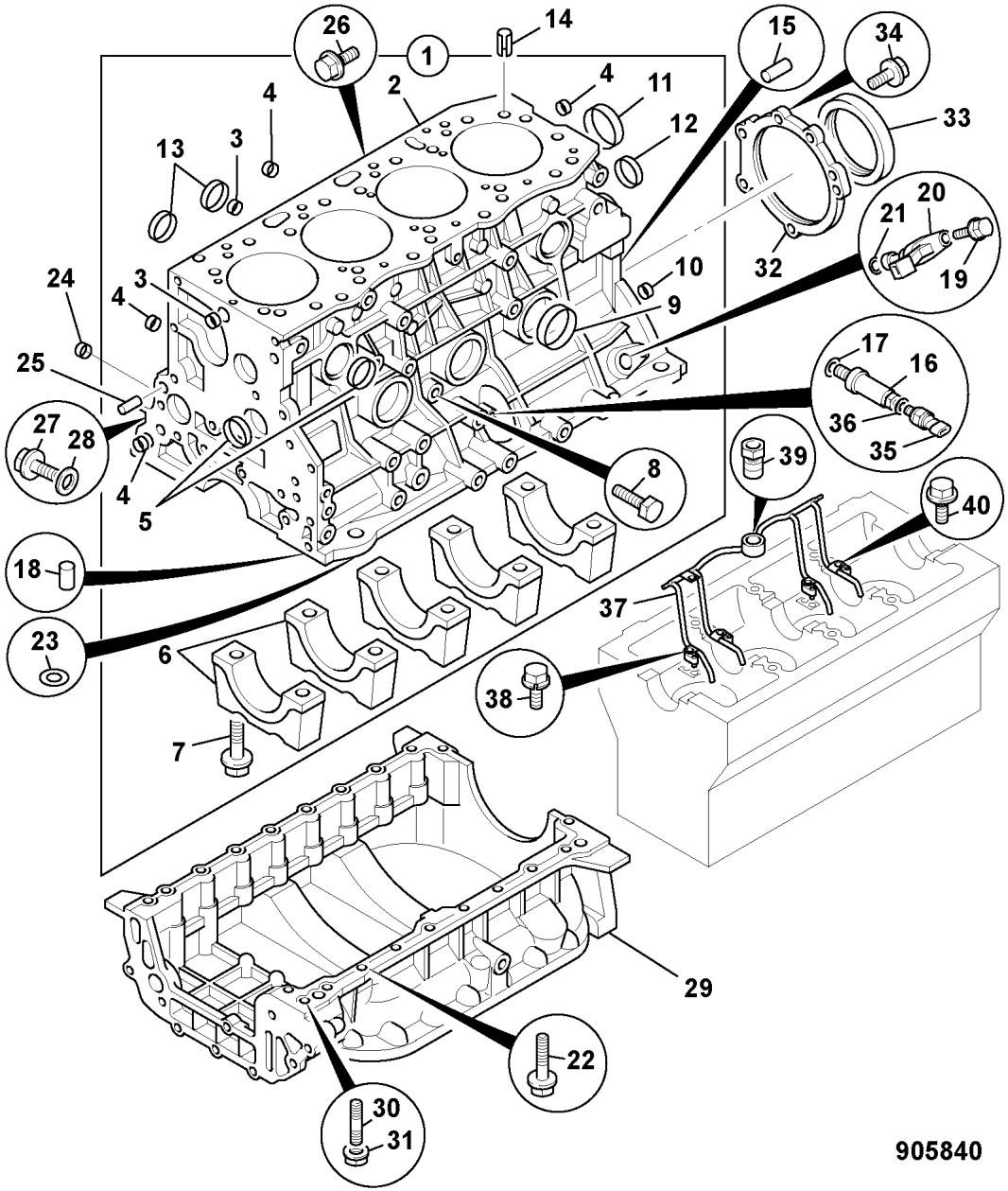

	FROM	TO	FROM	TO
JS160W				

ITEM	PART NO	CHANGE NO	DESCRIPTION	REMARKS	USAGE CODE	QTY
	02/802396		Block, assembly, cyl.			1
2	NSP		:None serviced part			1
3	5112190080		:Cup, sealing, D=18			2
4	5111290060		:Plug, sealing, D=16			6
5	5112190150		:Plug, D=32			4
6	NSP		:None serviced part			1
7	8944326420		:Bolt			10
8	02/800019		:Plug, water drain, PT 1/4			2
9	02/801711		:Plug, D=45			3
10	5096000130		:Plug, D=12			1
11	5112190180		:Cup, sealing, D=36			1
12	5112190170		:Cup, sealing, D=38			1
13	5112190180		:Cup, sealing, D=36			2
14	8944533440		Dowel			2
15	02/801812		Pin			2
16	02/802399		Nozzle, oil pressure warning			1
17	02/802398		Gasket, nozzle, oil pressure warning			1
18	9098785970		Pin			2
19	02/802407		Bolt, sensor			1
20	02/802405		Sensor, angle position			1
21	02/802406		:Gasket, position sensor, crankshaft			1

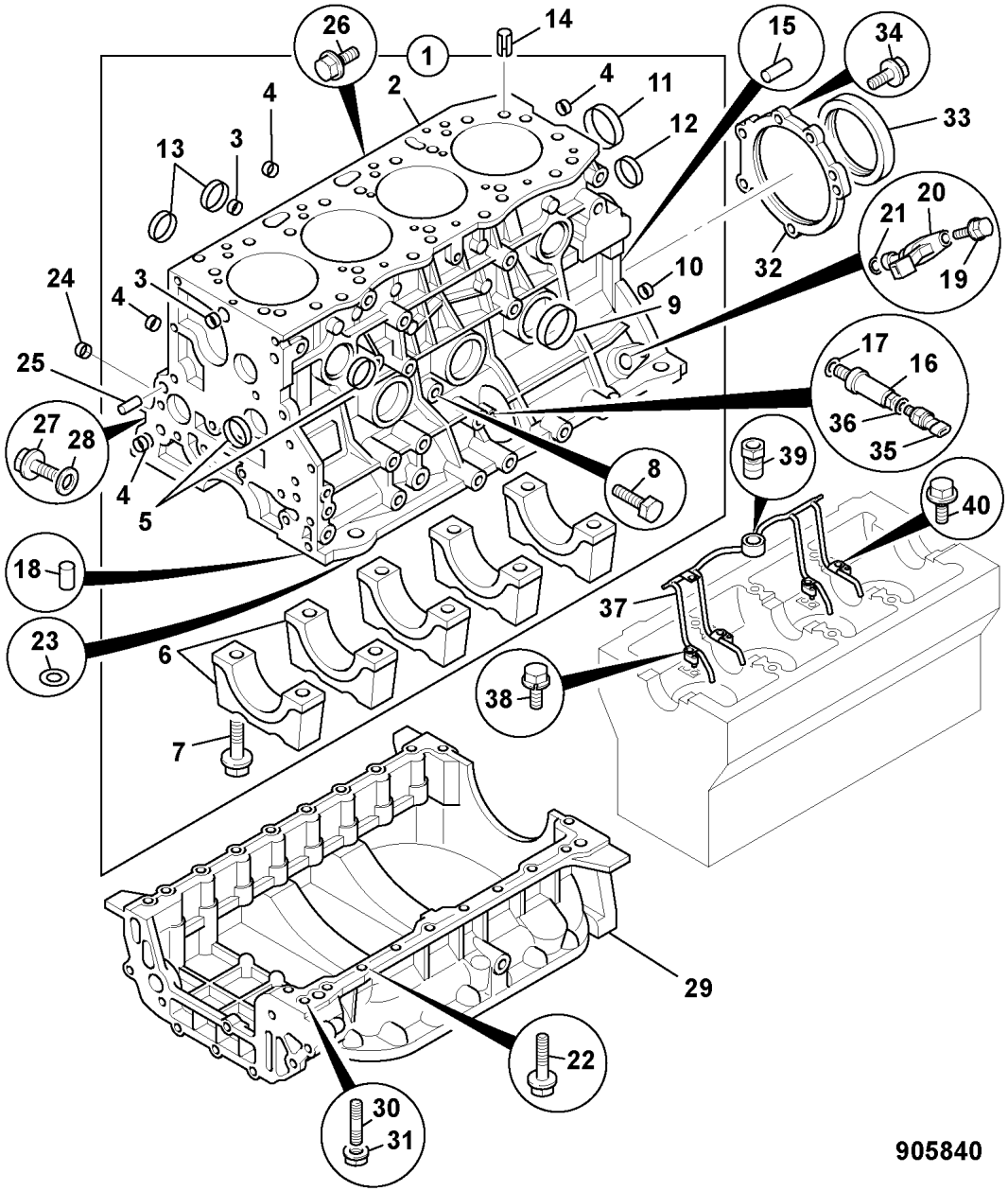

ITEM	PART NO	CHANGE NO	DESCRIPTION	REMARKS	USAGE CODE	QTY
22	02/802401		Bolt, crankcase			19
23	02/802404		Gasket, crankshaft / cable			1
24	1096050500		Plug			5
25	02/802400		Pin, flywheel housing			1
26	9096065350		Bolt			1
27	8943168000		Plug			1
28	9095714140		Washer, seal			1
29	02/802415		Casing, crankshaft			1
30	02/802416		Stud, crankcase			1
31	02/802388		Nut, cover			1
32	02/802499		Housing, crankshaft seal			1
33	02/800905		Seal, rear oil			1
34	02/802401		Bolt, crankcase			5
35	716/30341		Sensor, oil pressure			1
36	32/919404		Washer, seal			1
37	02/802617		Pipe, oil jet			1
38	02/802615		Bolt			1
39	02/802618		Valve, relief			1
40	02/802616		Bolt			4

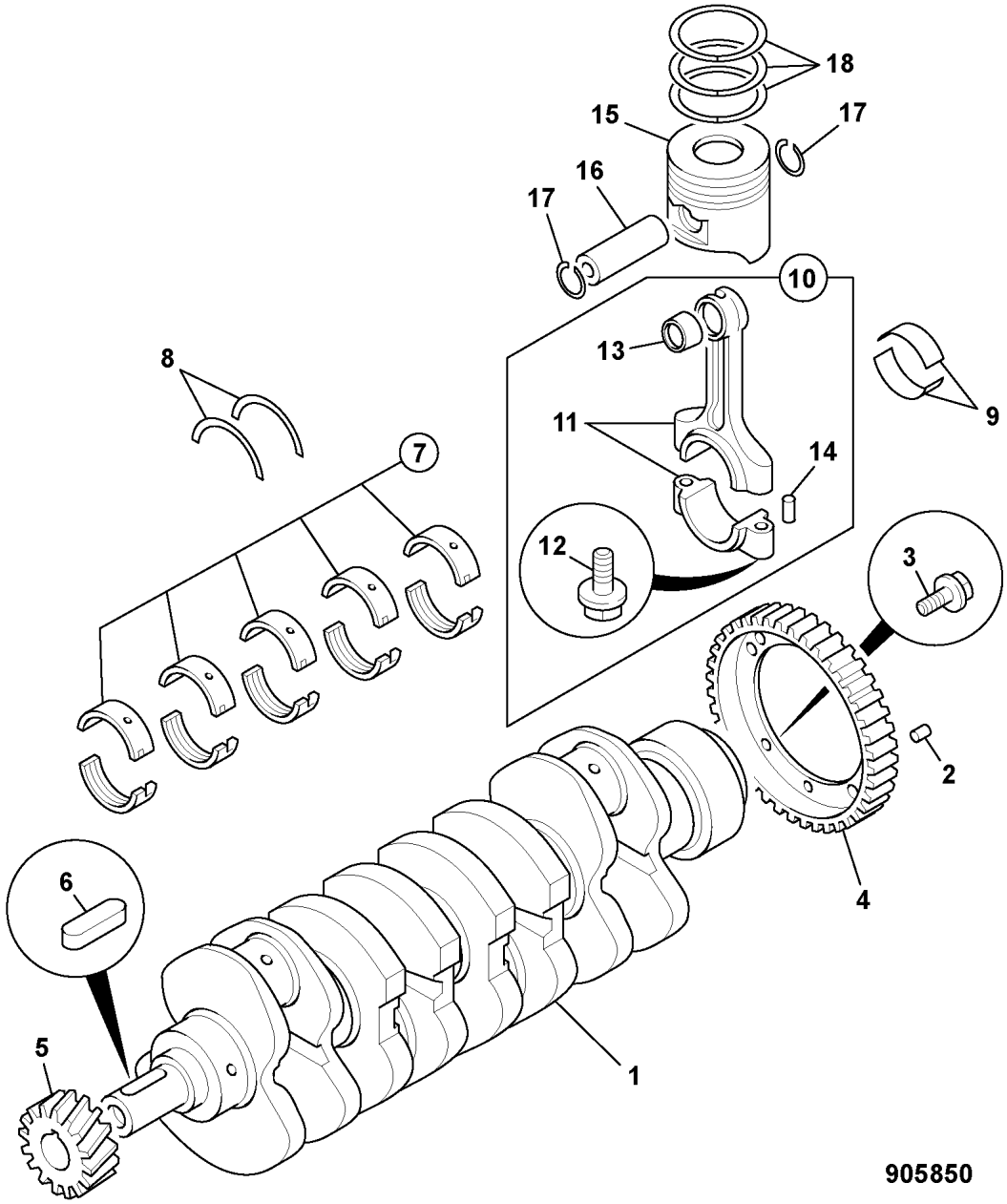

	FROM	TO	FROM	TO
JS160W				

ITEM	PART NO	CHANGE NO	DESCRIPTION	REMARKS	USAGE CODE	QTY
1	02/802458		Crankshaft			1
2	02/800894		Pin, dowel			1
3	02/802477		Bolt, timing, ring			3
4	02/802476		Rotor, crankshaft sensor			1
5	02/802466		Gear, crankshaft, pulley			1
6	02/800901		Key, woodruff			1
7	02/802459		Kit-main bearing			5
	*02/802460		Kit-main bearing, oversize			5
	*02/801713		Kit-bearing, main black			5
	*02/802461		Kit-main bearing, oversize			5
	*02/802462		Kit-main bearing, oversize			5
8	02/800886		Kit-thrust washer			2
9	02/802339		Kit-bearing, big end			4
10	02/802474		Rod, connecting			4
11	NSP		:None serviced part			1
12	02/800893		:Bolt, conrod			2
13	02/802475		:Bush, connecting rod			1
14	02/800894		:Pin, dowel			2
15	02/802469		Piston			4
	*02/802470		Piston, oversize			4
	*02/802471		Piston, oversize			4
16	02/802473		Pin, gudgeon			4
17	02/800899		Ring, snap			8

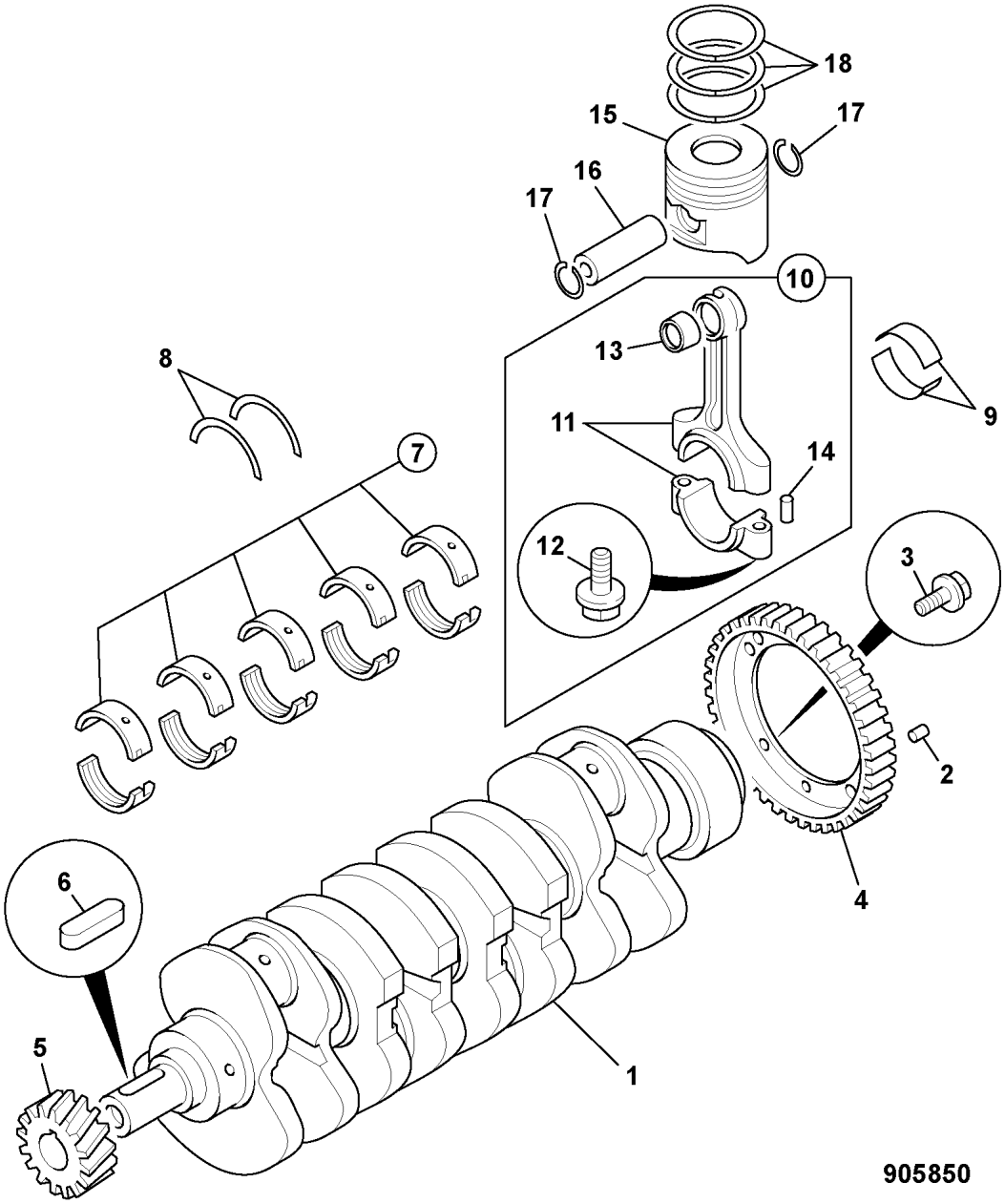

ITEM	PART NO	CHANGE NO	DESCRIPTION	REMARKS	USAGE CODE	QTY
18	* 02/802472		Kit-piston ring, standard			4

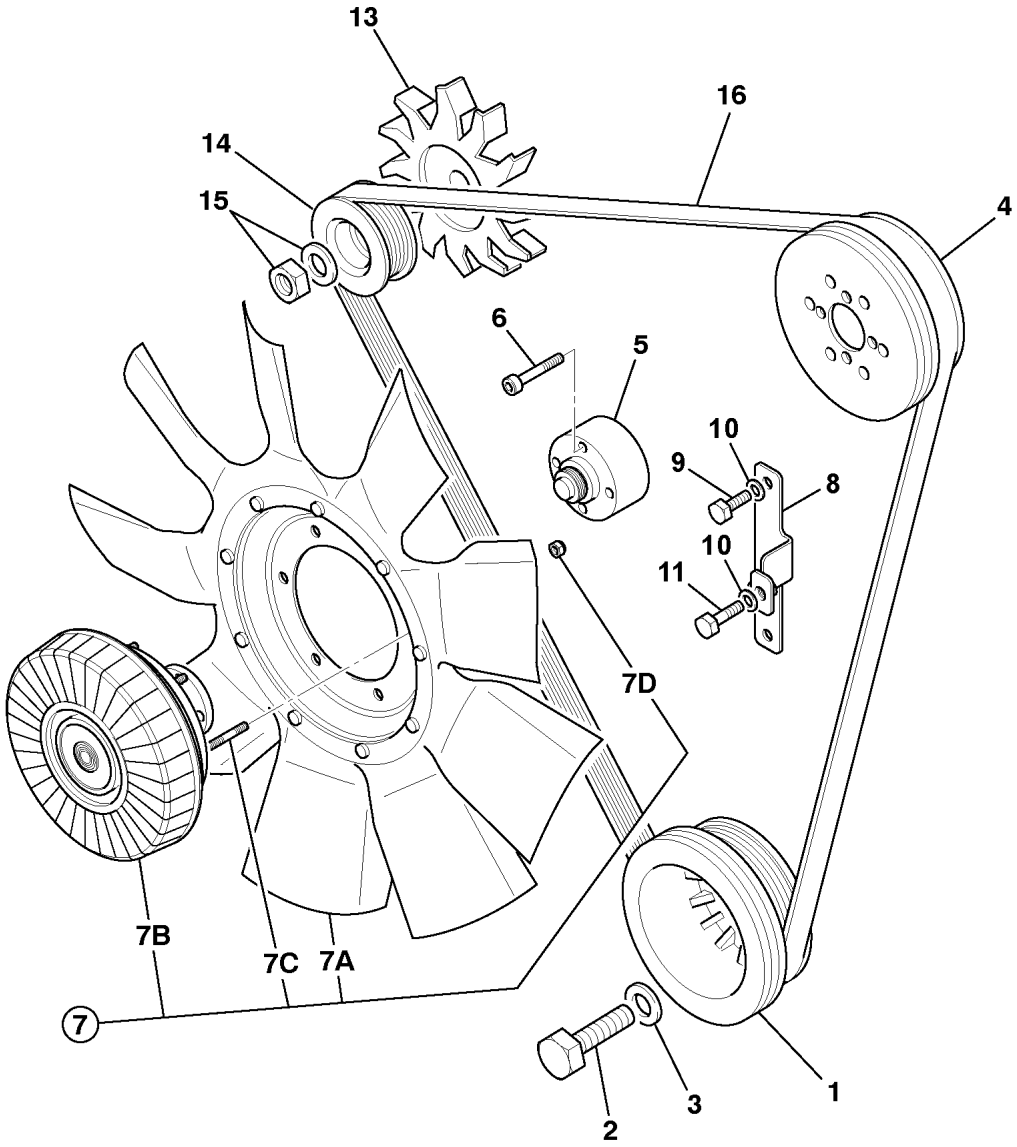

905860

	FROM	TO	FROM	TO
JS160W				

ITEM	PART NO	CHANGE NO	DESCRIPTION	REMARKS	USAGE CODE	QTY
1	02/802464		Pulley, crankshaft			1
2	02/802465		Bolt, crankshaft, pulley			1
3	02/800908		Washer, crankshaft			1
4	02/802543		Pulley, fan			1
5	829/31540		Spacer, fan			1
6	1391/3308D		Capscrew			4
7	30/927023		Fan, viscous clutch, assembly			1
7A	30/927052		:Fan, 550mm diameter			1
7B	TBA		:Part number, Not Yet Known			1
7C	30/927058		:Bolt			6
7D	30/927041		:Kit-bracket, anti-rotation, c/w fittings			1
8	335/13872		Bracket, cable retention			1
9	1316/0201D		Screw			2
10	1420/0006D		Washer, M6 plain			3
11	1316/0203D		Screw			1
13	02/802652		Fan, alternator			1
14	02/802651		Pulley, alternator			1
15	1812294740		Nut			1
16	02/802540		Belt, fan			1

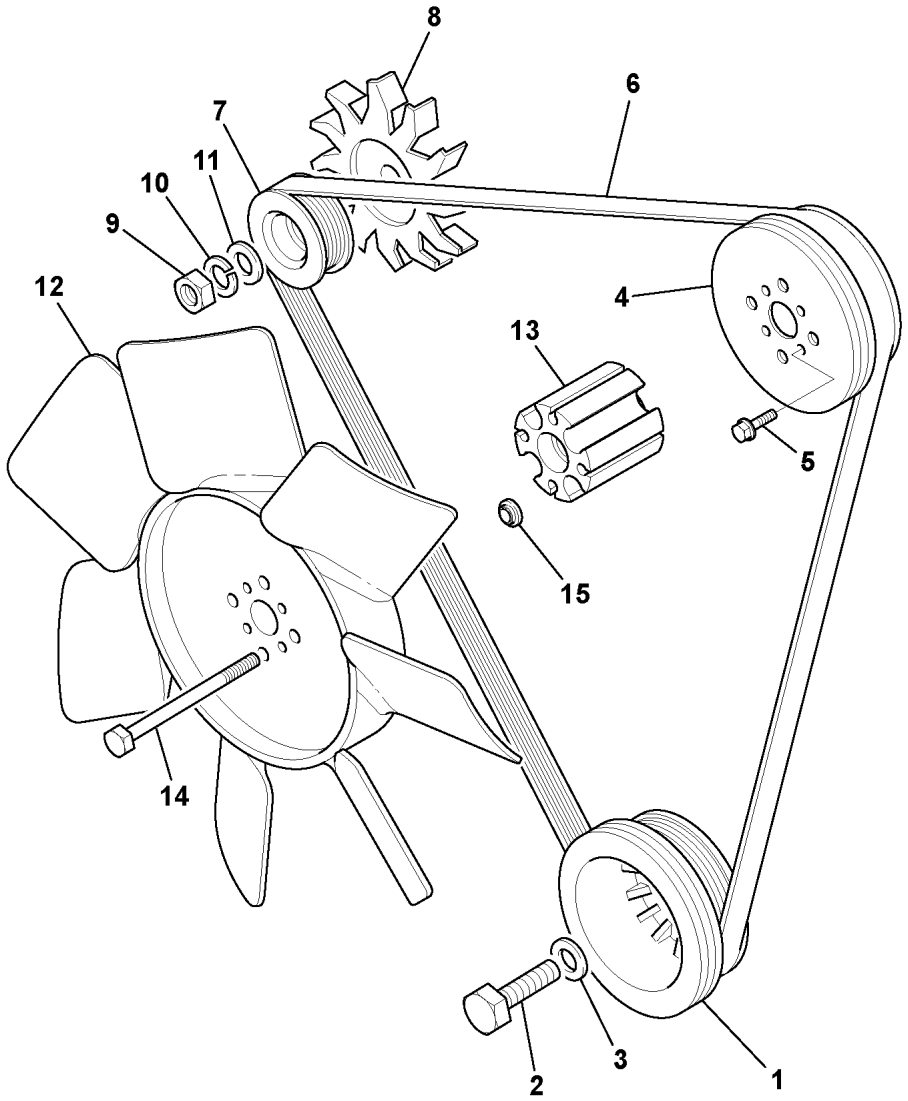

905870

	FROM	TO	FROM	TO
JS160W				

ITEM	PART NO	CHANGE NO	DESCRIPTION	REMARKS	USAGE CODE	QTY
1	02/802464		Pulley, crankshaft			1
2	02/802465		Bolt, crankshaft, pulley			1
3	02/800908		Washer, crankshaft			1
4	02/802543		Pulley, fan			1
5	0208006120		Bolt			2
6	02/802540		Belt, fan			1
7	02/802651		Pulley, alternator			1
8	02/802652		Fan, alternator			1
9	1812294740		Nut			1
10	1812294790		Washer, spring			1
11	1812294780		Washer, plain			1
12	30/926121		Fan, puller, D=550mm			1
13	829/31408		Spacer, fan, heavy duty pump			1
14	826/11178		Bolt, M8 x 95 lg			4
15	331/35722		Collar, fan mounting			4

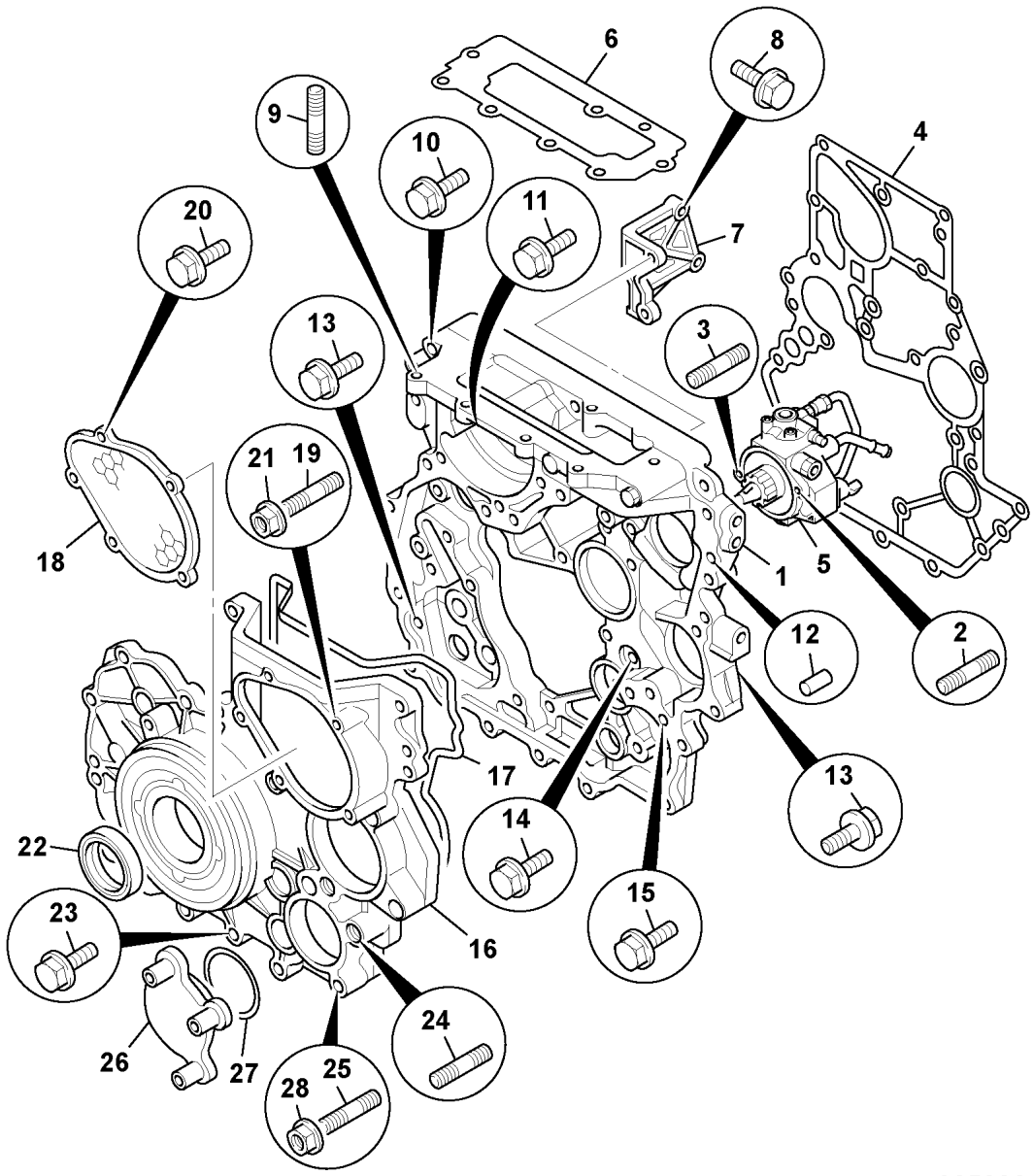

905880

	FROM	TO	FROM	TO
JS160W				

ITEM	PART NO	CHANGE NO	DESCRIPTION	REMARKS	USAGE CODE	QTY
1	02/802478		Case, timing gear			1
2	02/802495		Stud			1
3	02/802496		Stud			1
4	02/802480		Gasket, gear case - cylinder			1
5	.		'See Remark'	See section R6-1-1		1
6	02/802504		Gasket			1
	* 02/802505		Gasket			1
	* 02/802506		Gasket			1
7	02/802492		Bracket, gear case cover			1
8	02/802484		Bolt			3
9	02/802494		Stud			2
10	02/802393		Bolt, cyl head			1
11	02/802482		Bolt			1
12	02/801812		Pin			2
13	02/802358		Bolt			16
14	02/802418		Bolt			1
15	02/802483		Bolt			2
16	02/802489		Cover, gear case			1
17	02/802485		Gasket, gear case - cover			1
18	02/802497		Seal, oil, crankshaft front			1
19	02/802493		Stud			2
20	02/802407		Bolt, sensor			3

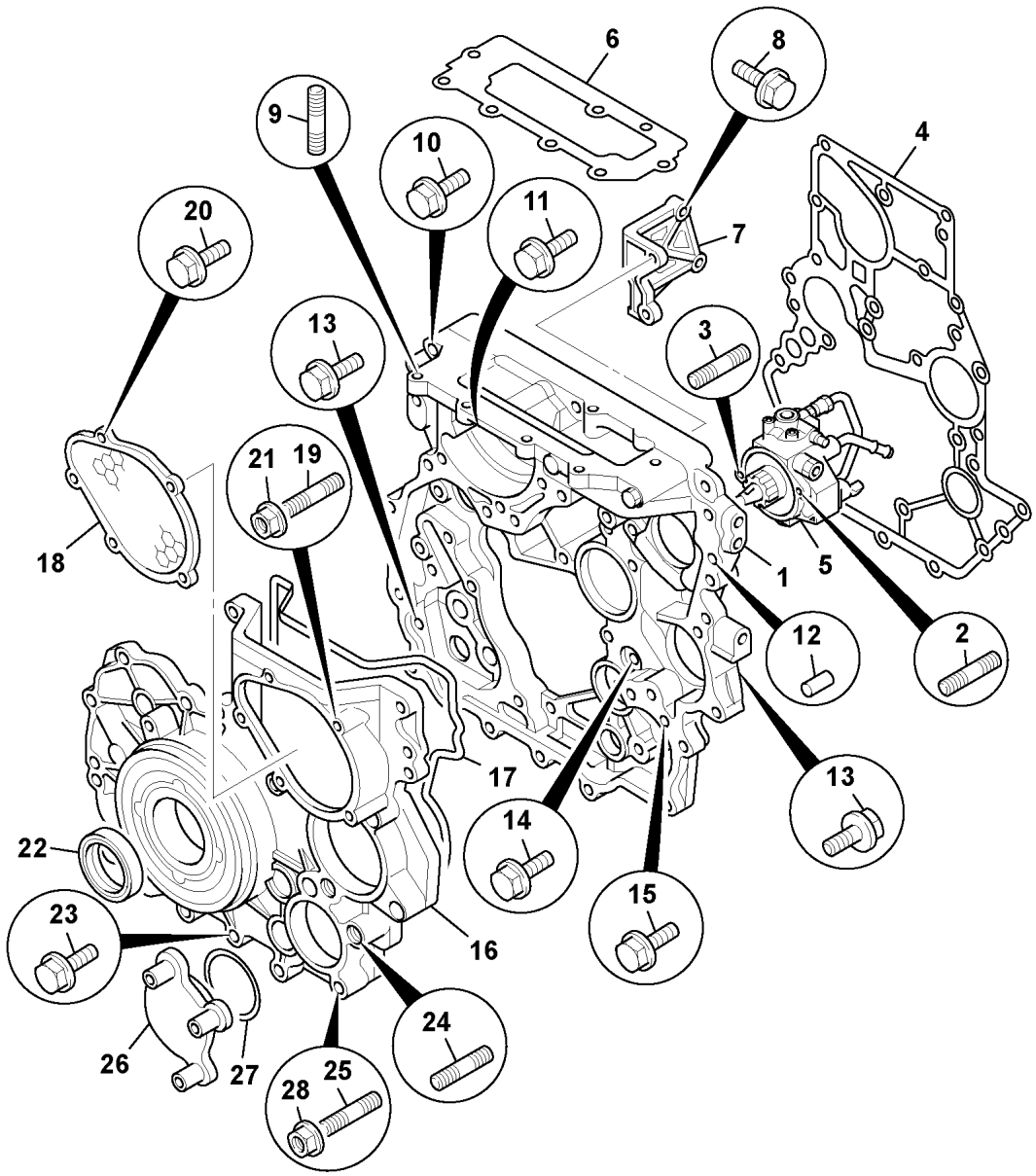

905880

ITEM	PART NO	CHANGE NO	DESCRIPTION	REMARKS	USAGE CODE	QTY
21	02/802351		Nut			2
22	02/802497		Seal, oil, crankshaft front			1
23	02/802488		Bolt			14
24	02/802487		Stud			1
25	02/802486		Stud			6
26	02/802490		Cover			1
27	02/802491		Gasket			1
28	02/802388		Nut, cover			3

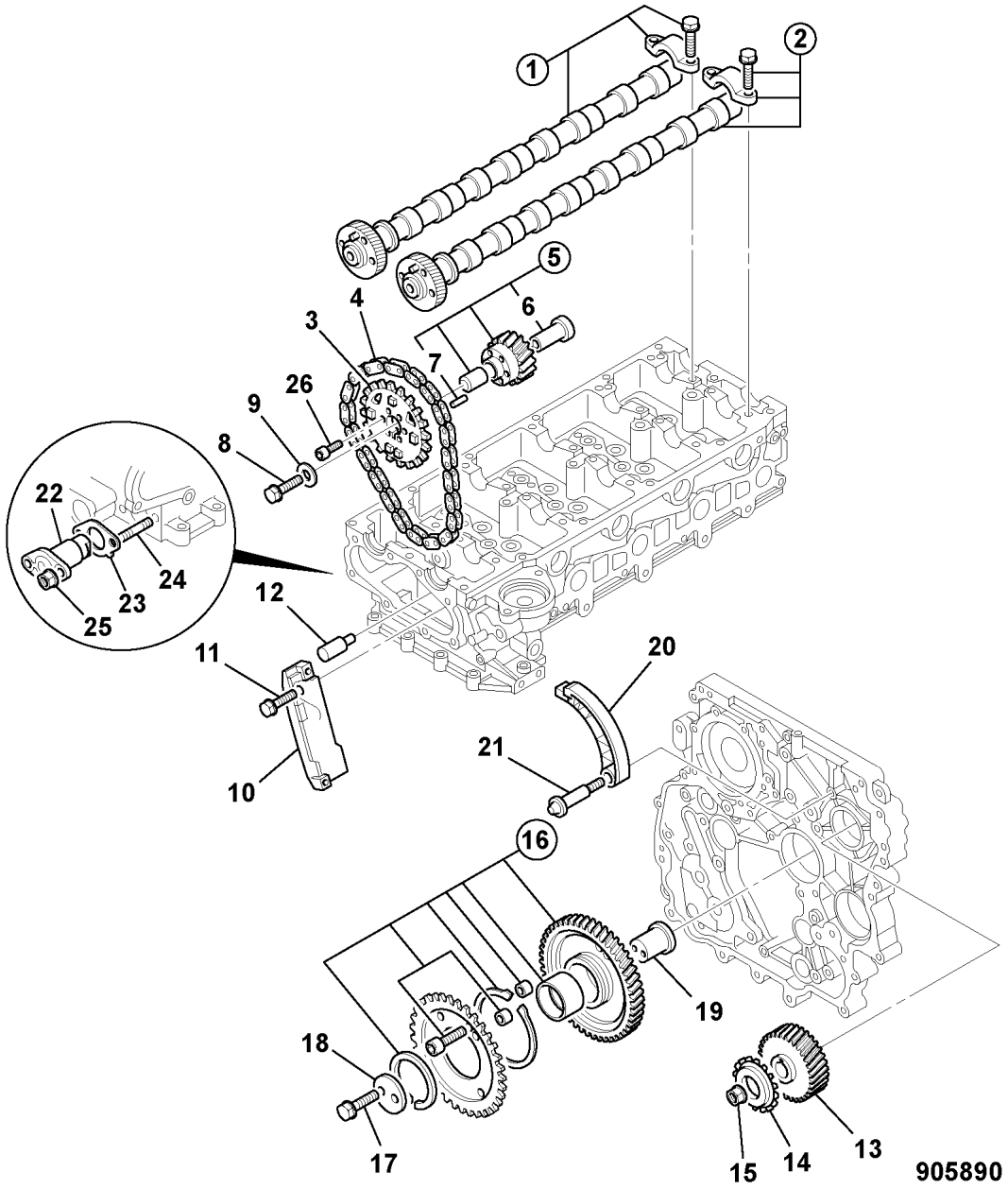

	FROM	TO	FROM	TO
JS160W				

ITEM	PART NO	CHANGE NO	DESCRIPTION	REMARKS	USAGE CODE	QTY
1	02/802421		Camshaft, exhaust			1
2	02/802420		Camshaft, inlet			1
3	02/802443		Sprocket, idler			1
4	02/802445		Chain, timing			1
5	02/802439		Gear, idler			1
6	02/802437		:Shaft, idler gear			1
7	9081605100		:Pin, thrust			1
8	02/802441		Bolt, idler gear			1
9	02/802451		Flange			1
10	02/802447		Guide, timing chain			1
11	02/802449		Bolt			2
12	02/802448		Jet, oil timing chain			1
13	02/802454		Gear, injection pump			1
14	02/802443		Sprocket, idler			1
15	02/802456		Nut			1
16	02/802438		Gear, idler			1
17	02/802440		Bolt, idler gear			2
18	02/802450		Flange			1
19	02/802436		Shaft, idler gear			1
20	02/802453		Lever, tension			1
21	02/802457		Pivot, chain lever			1
22	02/802446		Adjuster, chain tensioner			1
23	02/802442		Gasket, chain tensioner			1

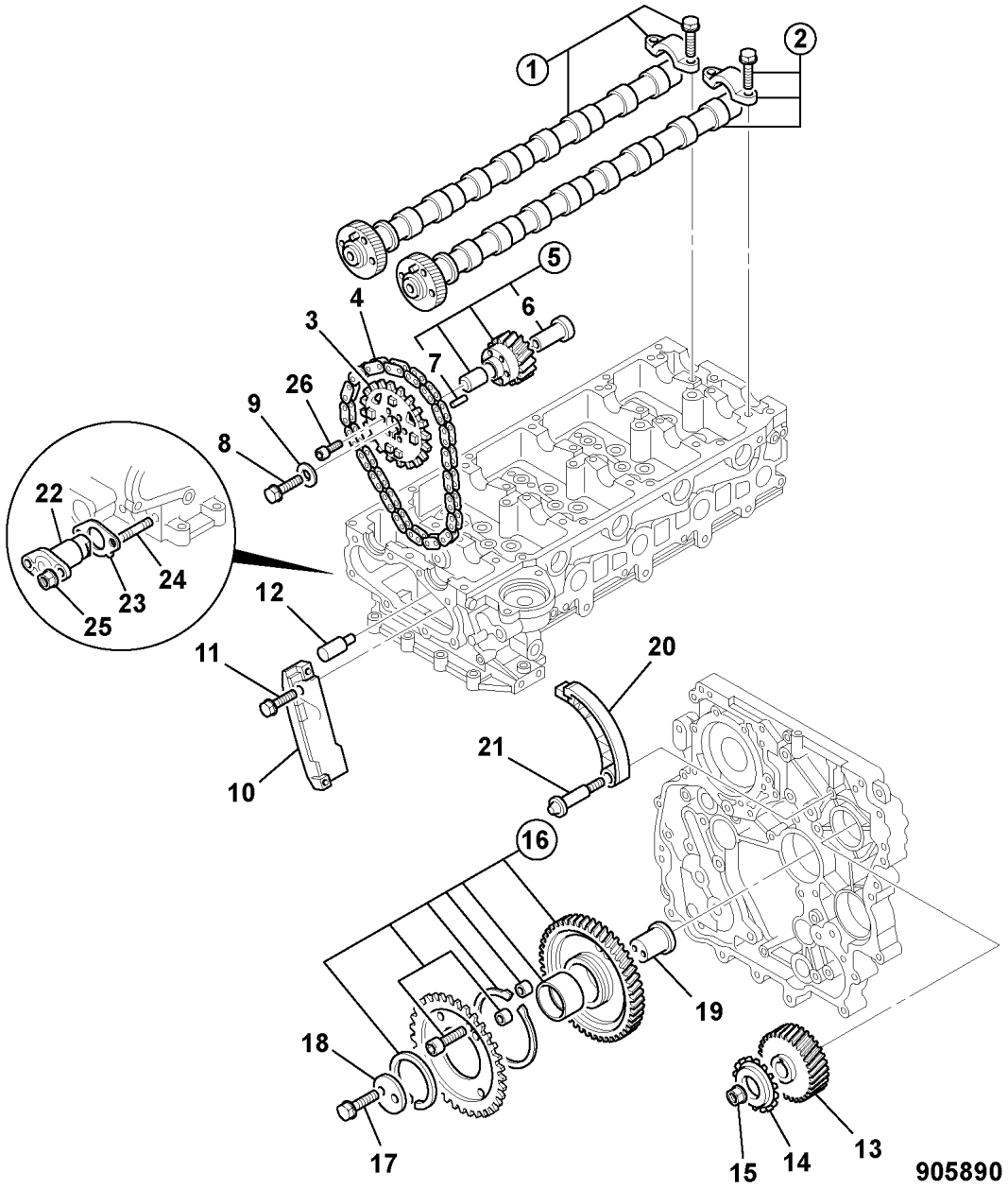

ITEM	PART NO	CHANGE NO	DESCRIPTION	REMARKS	USAGE CODE	QTY
24	02/802455		Stud			2
25	02/802351		Nut			2
26	02/802444		Bolt			6

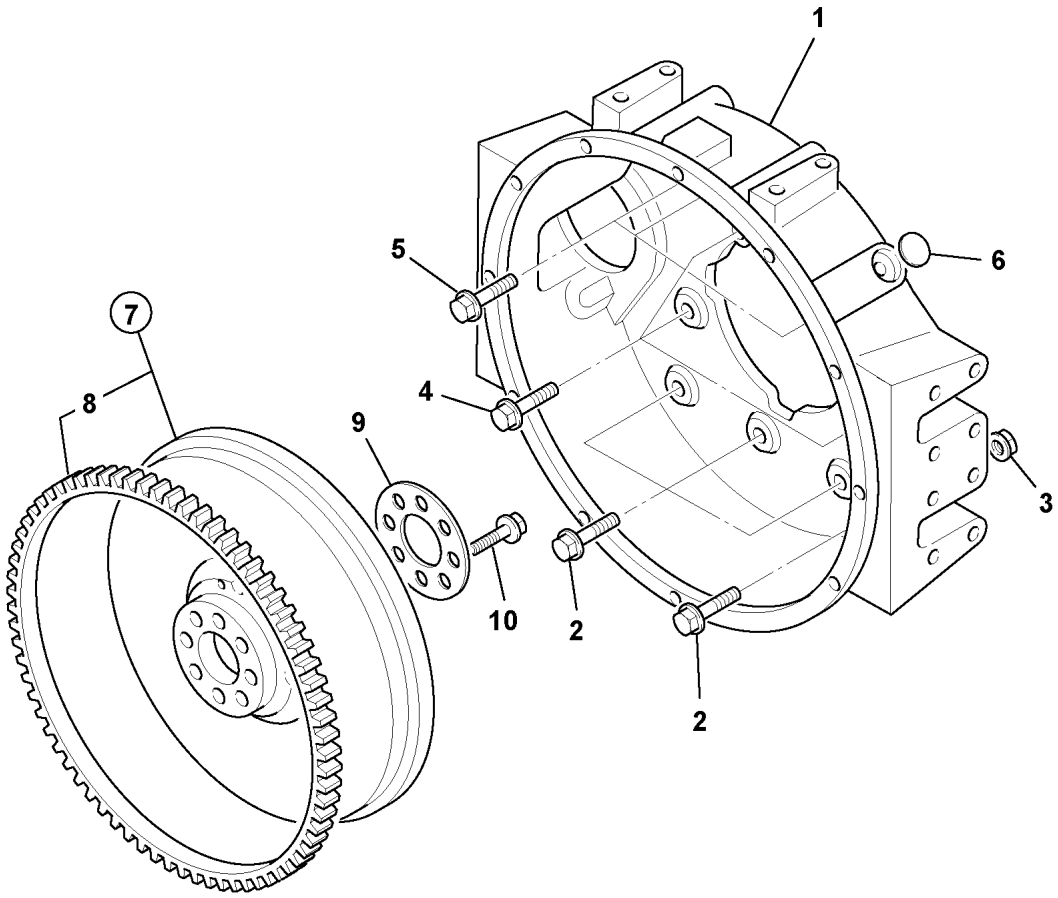

905900

	FROM	TO	FROM	TO
JS160W				

ITEM	PART NO	CHANGE NO	DESCRIPTION	REMARKS	USAGE CODE	QTY
1	02/802479		Housing, flywheel			1
2	02/802502		Bolt			4
3	* 02/802154		Nut			1
4	5090002270		Bolt, M12 X 25mm			3
5	02/802501		Bolt			3
6	02/802503		Cover			1
7	02/802463		Flywheel			1
8	02/802467		:Gear, starter ring			1
9	02/800268		Plate, locking			1
10	02/802468		Bolt, flywheel, washer			8

	FROM	TO	FROM	TO
JS160W				



ITEM	PART NO	CHANGE NO	DESCRIPTION	REMARKS	USAGE CODE	QTY
1	335/12761		Mounting, engine			1
1A	335/12553		Bracket, engine mounting	For aircon see section W7-5-1		1
2	JHP0043		Washer, M16			8
3	1420/0009D		Washer, M12			8
4	1316/0509D		Bolt, grade 12.9			4
5	1316/3723D		Bolt, M16x130			2
6	KRH0781		Mounting, metalastik			4
7	KNH0589		Plate			4
8	1371/0603Z		Nut, M16			4
9	1316/3724D		Bolt, M16 X 140			2
10	KNH0528		Mounting, metalastik			4
11	332/J0104	To M	Bracket, engine mounting			1
	332/J2387		Bracket, engine mounting			1
12	1316/0511D		Bolt, M12 x 45			4

R

R1 ENGINE BLOCK & SUB-ASSEMBLIES

● R2 CYLINDER HEAD & SUB-ASSEMBLIES

R3 INDUCTION & EXHAUST SYSTEMS

R4 SYSTEM, COOLING

R5 SYSTEM, LUBRICATION

R6 SYSTEM, FUEL

R7 EQUIPMENT, AUXILIARY

R8 GASKET SETS

ENGLISH

R2-1-1 CYLINDER HEAD
R2-2-1 ROCKER ASSEMBLY, INLET/EXHAUST VALVES
R2-3-1 ROCKER COVER, & BREATHER PIPE
R2-6-1 LIFTING PLATES

FRANCAIS

R2-1-1 CULASSE
R2-2-1 ENSEMBLE BASCULEUR SOUPAPES ADM/ECHAP.
R2-3-1 ROCKER COVER, & BREATHER PIPE
R2-6-1 LIFTING PLATES

DEUTSCH

R2-1-1 ZYLINDERKOPF
R2-2-1 KIPPHEBEL EIN-/AUSLASSVENTILE
R2-3-1 ROCKER COVER, & BREATHER PIPE
R2-6-1 LIFTING PLATES

ITALIANO

R2-1-1 TESTATA
R2-2-1 GRUPPO BILANCIERI VALVOLA ASPIRAZIONE/ SCARICO
R2-3-1 ROCKER COVER, & BREATHER PIPE
R2-6-1 LIFTING PLATES

PORTUGUES

R2-1-1 CABECA DO MOTOR
R2-2-1 BALANCINS, COMPLETOSVALVULA ESC/ADMIS
R2-3-1 ROCKER COVER, & BREATHER PIPE
R2-6-1 LIFTING PLATES

ESPANOL

R2-1-1 CULATA
R2-2-1 OSCILADOR CONJUNTO VALV.ADMIS./ESCAPE
R2-3-1 ROCKER COVER, & BREATHER PIPE
R2-6-1 LIFTING PLATES

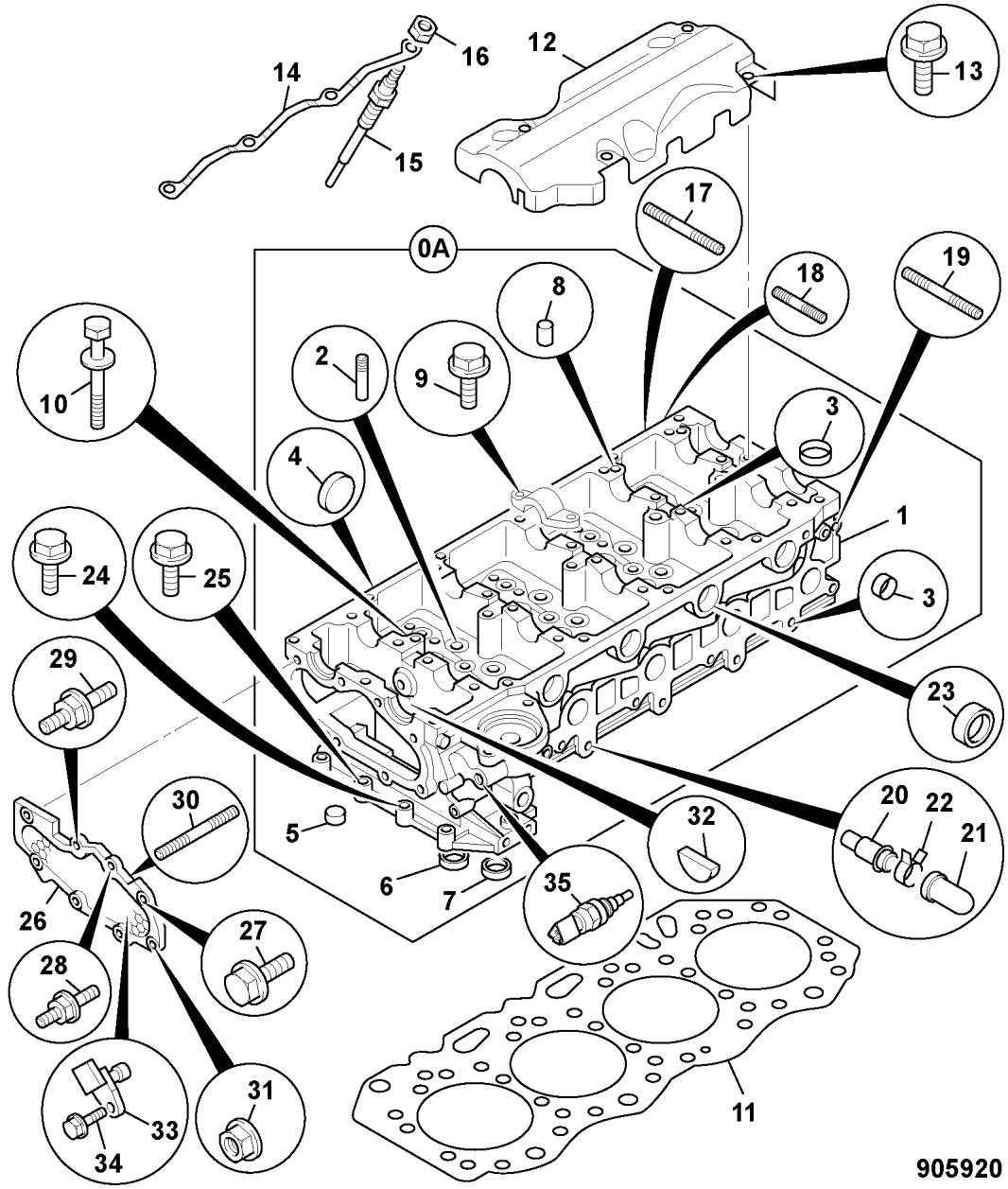

JS160W

	FROM	TO	FROM	TO

ITEM	PART NO	CHANGE NO	DESCRIPTION	REMARKS	USAGE CODE	QTY
0A	02/802365		Head, Head cylinder assemb			1
1	NSP		:None serviced part			1
2	02/802370		:Guide, Guide valve			16
3	5112190080		:Cup, sealing, D=18			13
4	02/801791		:Plug			2
5	02/802373		:Cup, Cup plug			7
6	02/802372		:Seat, exhaust valve			8
7	02/802371		:Seat, inlet valve			8
8	02/802382		:Pipe, htr			20
9	02/802384		:Bolt, fix			20
10	02/802369		Bolt			18
11	02/802366		Gasket, Gasket cylinder head			1
	*02/802367		Gasket, cylinder head, oversize			1
	*02/802368		Gasket, cylinder head, oversize			1
12	02/802387		Plate, baffle, cyl head			1
13	02/802385		Bolt, baffle plate			4
14	02/802376		Connector, glow plug			1
15	02/802375		Thermostart			4
16	02/802060		Nut			4
17	02/802378		Stud, exh. manif.			4
18	02/802379		Stud, exh. Manifold			4

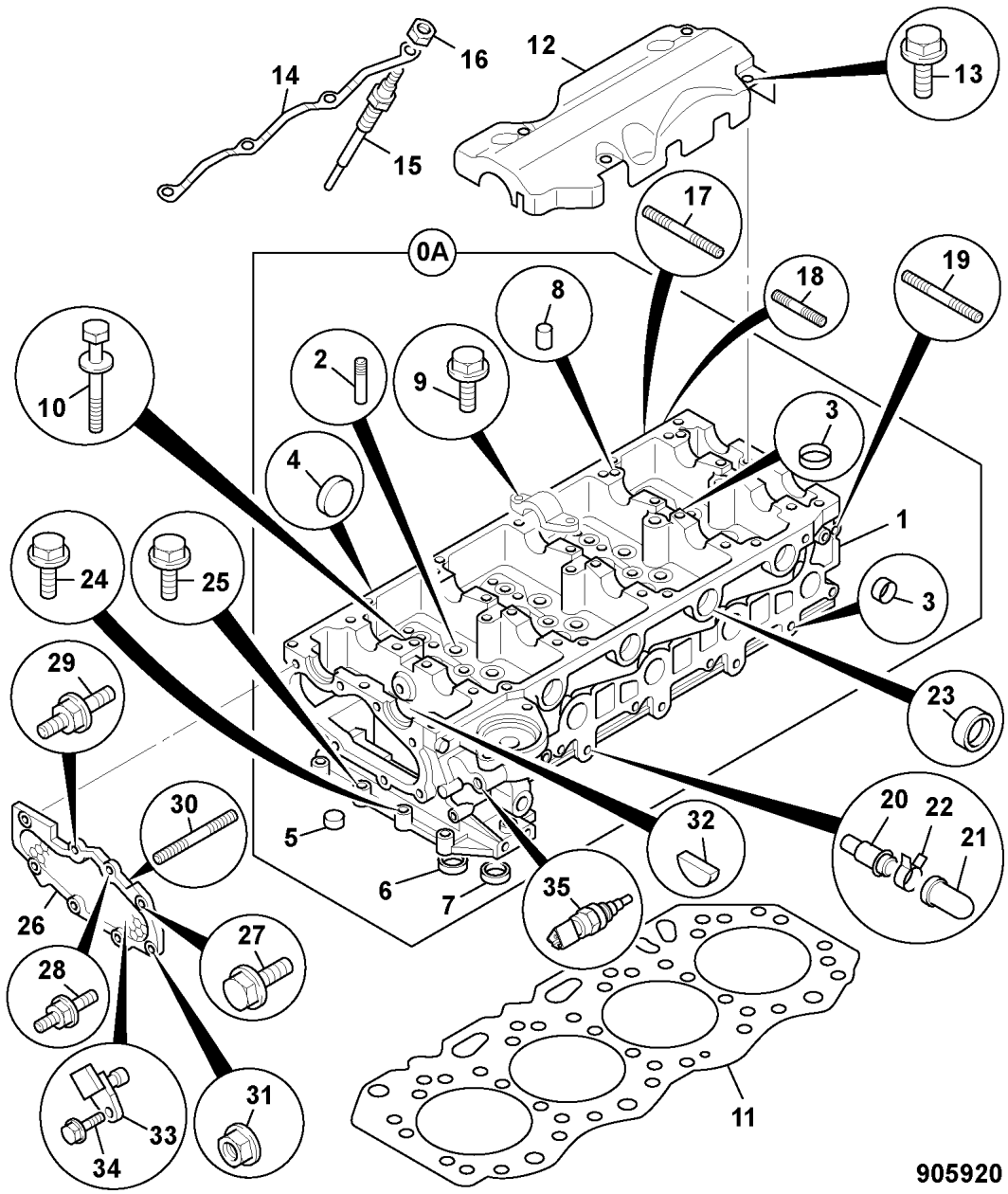

ITEM	PART NO	CHANGE NO	DESCRIPTION	REMARKS	USAGE CODE	QTY
19	02/802374		Stud			2
20	02/802382		Pipe, htr			1
21	02/800956		Cap			1
22	02/802395		Clip, cap			1
23	02/801207		Gasket, injector sleeve			4
24	02/802394		Bolt, cyl. head			3
25	02/802393		Bolt, cyl head			1
26	02/802392		Cover, cyl head			1
27	02/802383		Bolt, cover			4
28	02/802390		Stud, cam carrier			2
29	02/802391		Stud, cam carrier			1
30	02/802389		Stud, cover			2
31	02/802388		Nut, cover			2
32	02/802452		Gasket			4
33	02/802405		Sensor, angle position	Camshaft		1
34	TBA		Part number, Not Yet Known			1

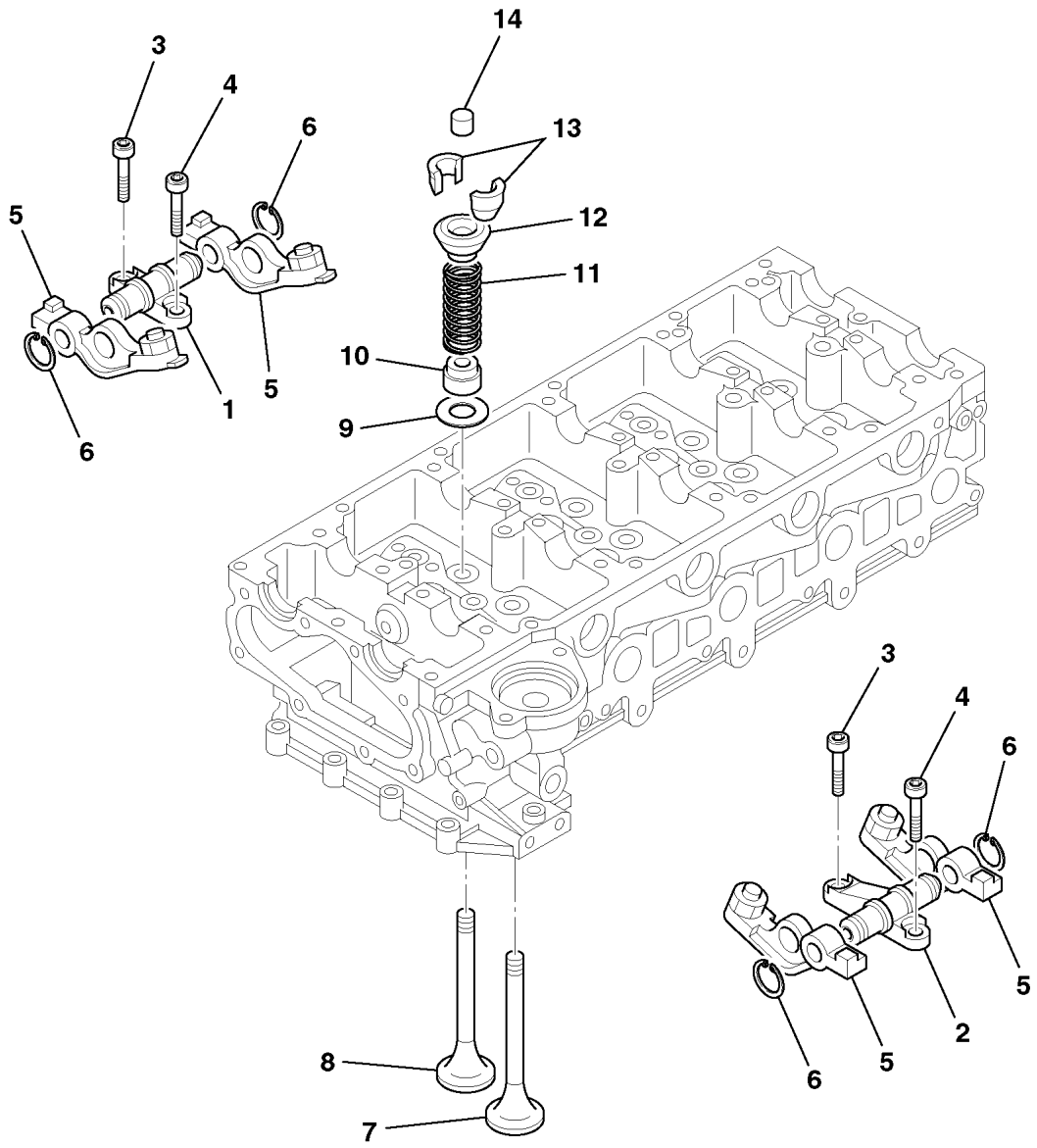

905930

	FROM	TO	FROM	TO
JS160W				

ITEM	PART NO	CHANGE NO	DESCRIPTION	REMARKS	USAGE CODE	QTY
1	02/802425		Shaft, rocker arm			4
2	02/802424		Shaft, rocker arm			4
3	02/802435		Bolt, rocker shaft			8
4	02/802434		Bolt, rocker shaft			8
5	02/802433		Arm, rocker			16
6	02/802426		Circlip, rocker arm			16
7	02/802422		Valve, inlet			8
8	02/802423		Valve, exhaust			8
9	02/802430		Seat, spring			16
10	02/802432		Seal, valve guide			16
11	02/802429		Spring, valve			16
12	02/802431		Seat, spring,upper			16
13	02/802427		Collet, split			32
14	02/802428		Cap, valve stem			16

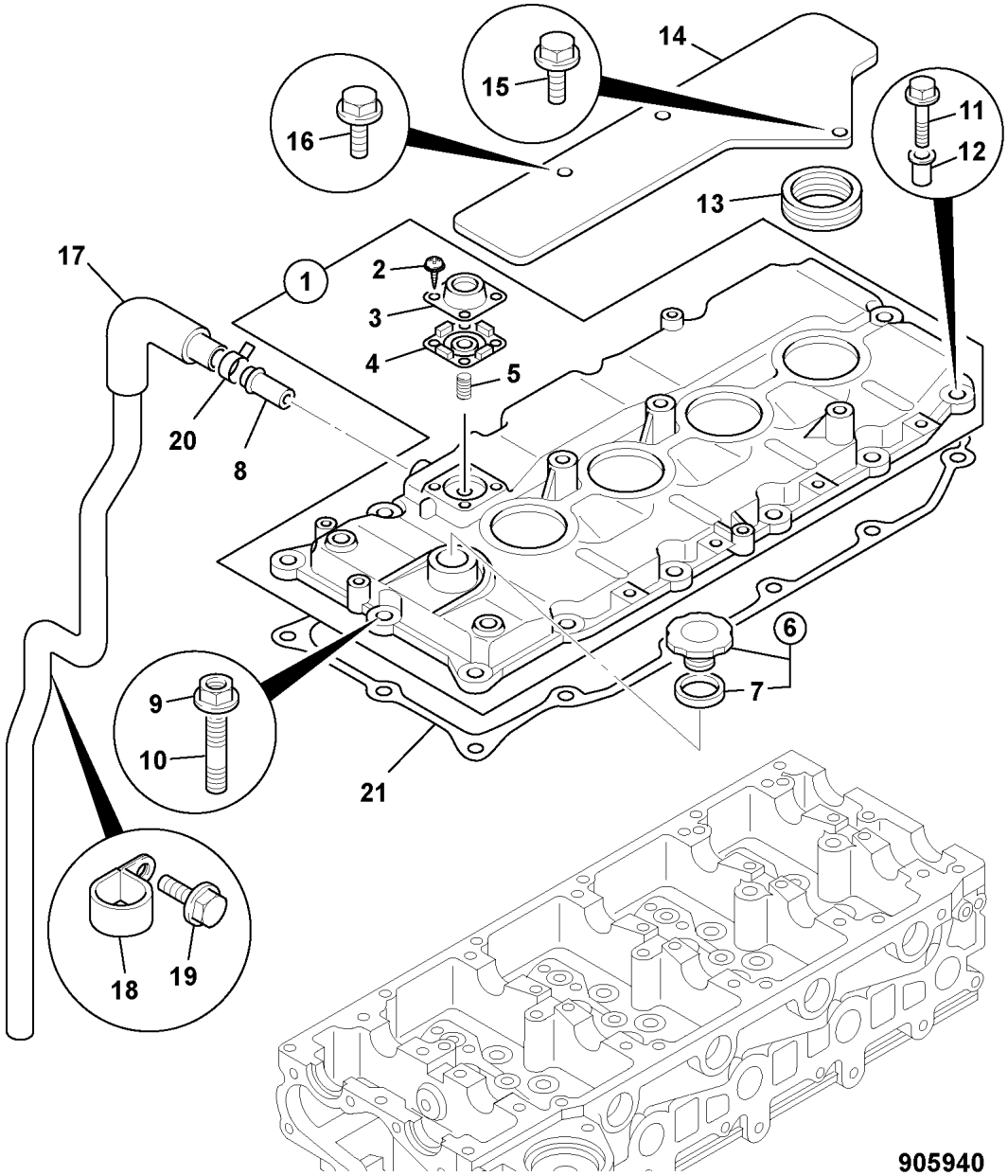

	FROM	TO	FROM	TO
JS160W				

ITEM	PART NO	CHANGE NO	DESCRIPTION	REMARKS	USAGE CODE	QTY
1	02/802364		Cover, rocker			1
2	02/802356		:Screw			4
3	02/802364		:Cover, rocker			1
4	02/802363		:Diaphragm, Diaphragm breather			1
5	02/802362		:Spring, Spring breather			1
6	02/800398		Cap, oil filler			1
7	02/800399		:Seal			1
8	02/802352		Pipe, hose connector			1
9	02/802351		Nut			1
10	02/802355		Stud			1
11	02/802393		Bolt, cyl head			13
12	02/802354		Mounting, rubber			14
13	02/802361		Seal			4
14	02/802360		Cover			1
15	02/802358		Bolt			1
16	02/802359		Bolt			2
17	02/800405		Hose, oil breather, L=920			1
18	02/802526		Clip			1
19	02/802358		Bolt			1
20	8941211130		Clip, hose			1
21	02/802357		Gasket, cylinder head cover			1

	FROM	TO	FROM	TO
JS160W				

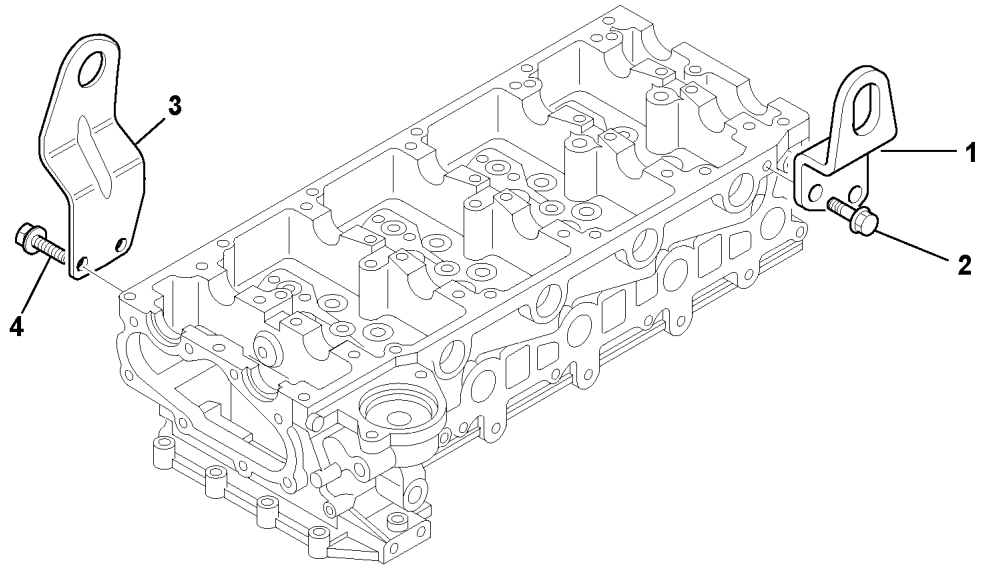

ITEM	PART NO	CHANGE NO	DESCRIPTION	REMARKS	USAGE CODE	QTY
1	02/802377		Bracket, hanger eng. RR			1
2	02/802358		Bolt			2
3	02/802386		Bracket, hanger eng. front			1
4	02/802380		Bolt, hanger front			2

905950

R

R1 ENGINE BLOCK & SUB-ASSEMBLIES
R2 CYLINDER HEAD & SUB-ASSEMBLIES
● R3 INDUCTION & EXHAUST SYSTEMS
R4 SYSTEM, COOLING
R5 SYSTEM, LUBRICATION
R6 SYSTEM, FUEL
R7 EQUIPMENT, AUXILIARY
R8 GASKET SETS

ENGLISH

R3-1-1 MANIFOLD, INDUCTION
R3-2-1 MANIFOLD, EXHAUST
R3-3-1 FILTER, AIR
R3-4-1 EXHAUST SYSTEM
R3-5-1 EXHAUST, RECIRCULATION

FRANCAIS

R3-1-1 MANIFOLD, INDUCTION
R3-2-1 MANIFOLD, EXHAUST
R3-3-1 FILTRE, A AIR
R3-4-1 EXHAUST SYSTEM
R3-5-1 EXHAUST, RECIRCULATION

DEUTSCH

R3-1-1 MANIFOLD, INDUCTION
R3-2-1 MANIFOLD, EXHAUST
R3-3-1 LUFTFILTER
R3-4-1 EXHAUST SYSTEM
R3-5-1 EXHAUST, RECIRCULATION

ITALIANO

R3-1-1 MANIFOLD, INDUCTION
R3-2-1 MANIFOLD, EXHAUST
R3-3-1 FILTRO, ARIA
R3-4-1 EXHAUST SYSTEM
R3-5-1 EXHAUST, RECIRCULATION

PORTUGUES

R3-1-1 MANIFOLD, INDUCTION
R3-2-1 MANIFOLD, EXHAUST
R3-3-1 FILTRO, AR
R3-4-1 EXHAUST SYSTEM
R3-5-1 EXHAUST, RECIRCULATION

ESPANOL

R3-1-1 MANIFOLD, INDUCTION
R3-2-1 MANIFOLD, EXHAUST
R3-3-1 FILTRO, AIRE
R3-4-1 EXHAUST SYSTEM
R3-5-1 EXHAUST, RECIRCULATION

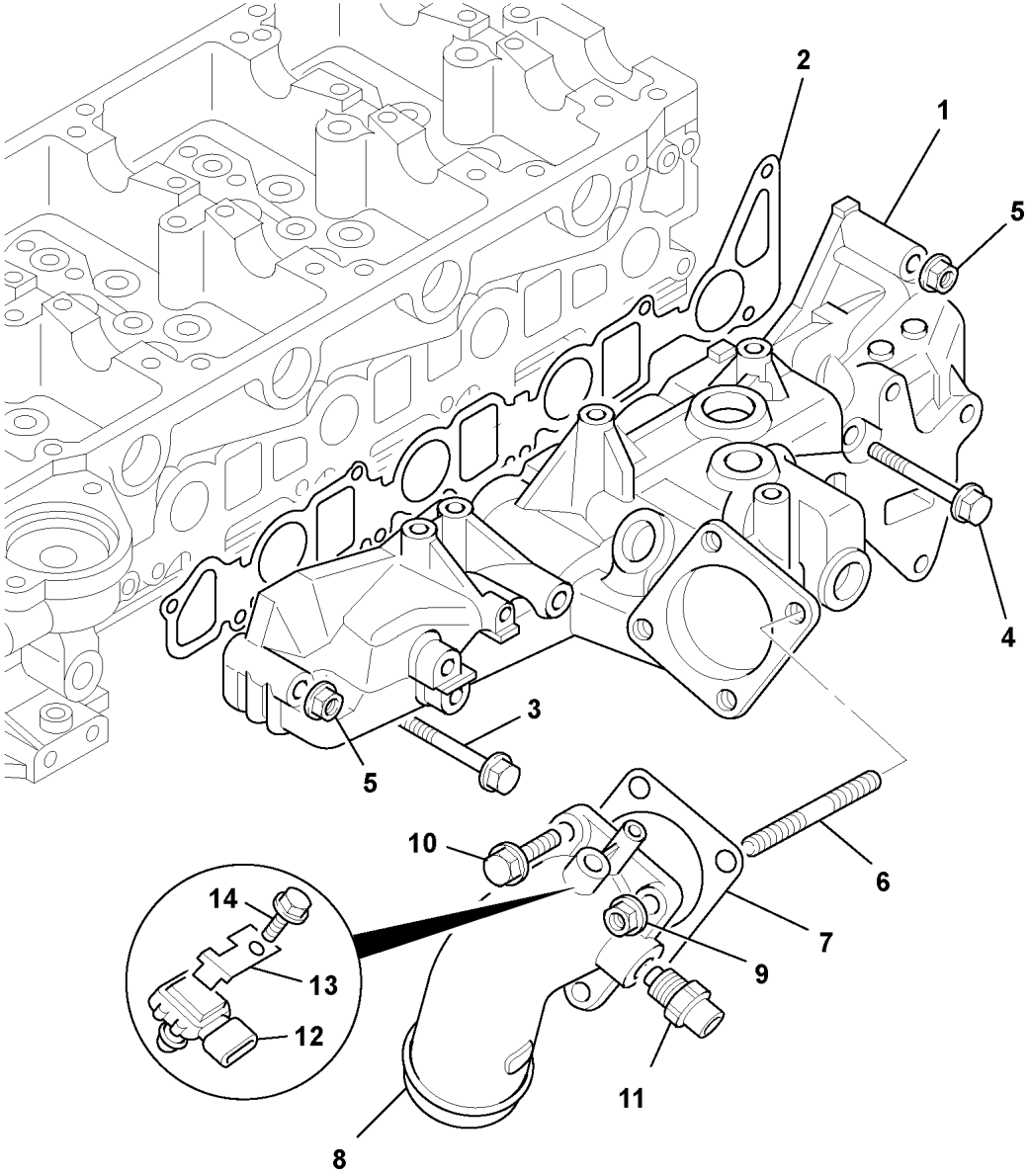

905960

	FROM	TO	FROM	TO
JS160W				

ITEM	PART NO	CHANGE NO	DESCRIPTION	REMARKS	USAGE CODE	QTY
1	02/802513		Manifold, inlet			1
2	02/802514		Gasket, manifold - cylinder			1
3	02/802516		Bolt			4
4	02/802517		Bolt			2
5	02/802388		Nut, cover			2
6	02/802518		Stud			2
7	02/802515		Gasket			1
8	02/802520		Pipe			1
9	02/802519		Nut			2
10	02/802393		Bolt, cyl head			2
11	716/30262		Sensor, inlet temperature			1
12	02/802640		Sensor, air pressure			1
13	02/802637		Bracket			1
14	02/802536		Bolt			1

	FROM	TO	FROM	TO
JS160W				

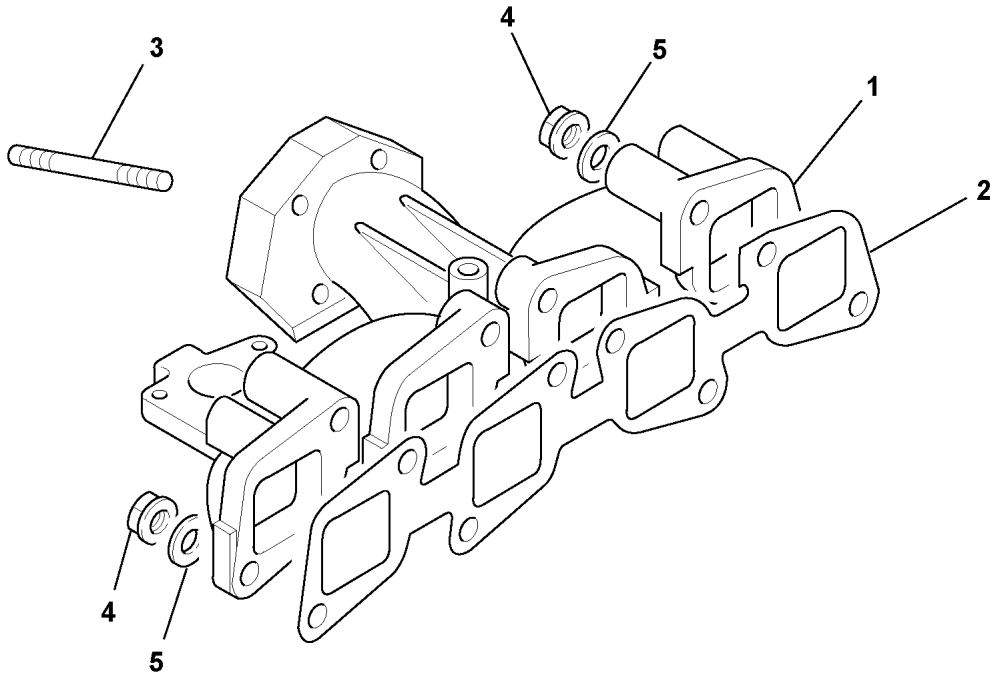

ITEM	PART NO	CHANGE NO	DESCRIPTION	REMARKS	USAGE CODE	QTY
1	02/802521		Manifold, exhaust			1
2	02/802522		Gasket, exhaust manifold			1
3	02/802523		Stud			4
4	02/802524		Nut			8
5	02/802525		Washer			8

905970

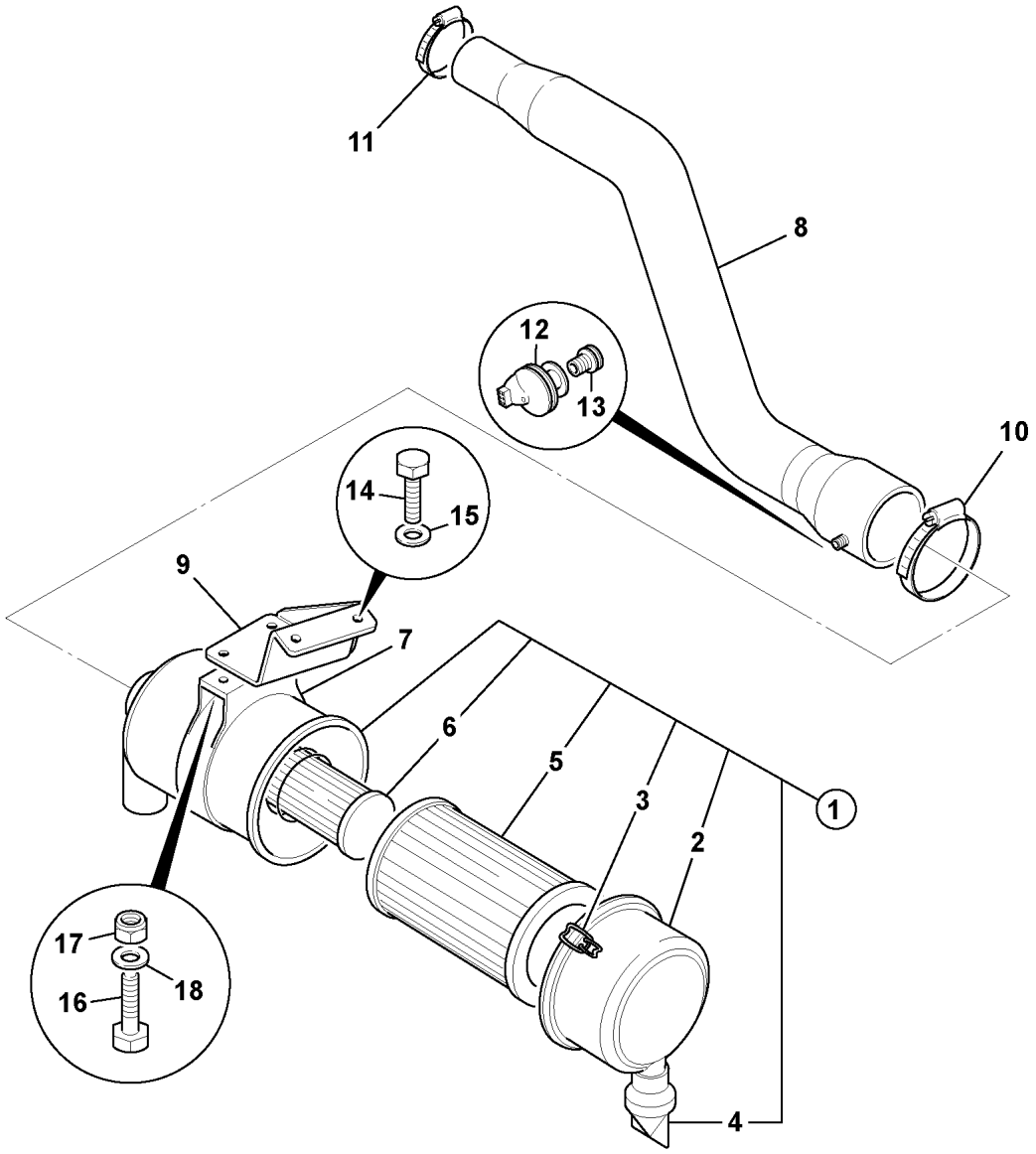

905980

	FROM	TO	FROM	TO
JS160W				

ITEM	PART NO	CHANGE NO	DESCRIPTION	REMARKS	USAGE CODE	QTY
1	580/12060		Kit-air filter			1
2	32/925213		:Cover, end			1
3	32/925211		::Clip, overcentre			2
4	32/916603		:Valve, dust			1
5	32/917804		:Element, air filter, main			1
6	32/917805		:Element, air filter, safety			1
7	32/917803		Bracket, mounting			1
8	834/11523		Hose, induction			1
9	331/43480		Bracket, air cleaner			1
10	2201/0015		Clip, jubilee			1
11	2201/0013		Clip, jubilee			1
12	JNH0070		Switch, vacuum sensor			1
13	162/02674		Adapter, vacuum sensor			1
14	1316/0508D		Screw			2
15	1411/0005Z		Washer			2
16	1315/3311D		Bolt			2
17	1370/0203D		Nut, lock			2
18	1420/0007D		Washer, M8 plain			4

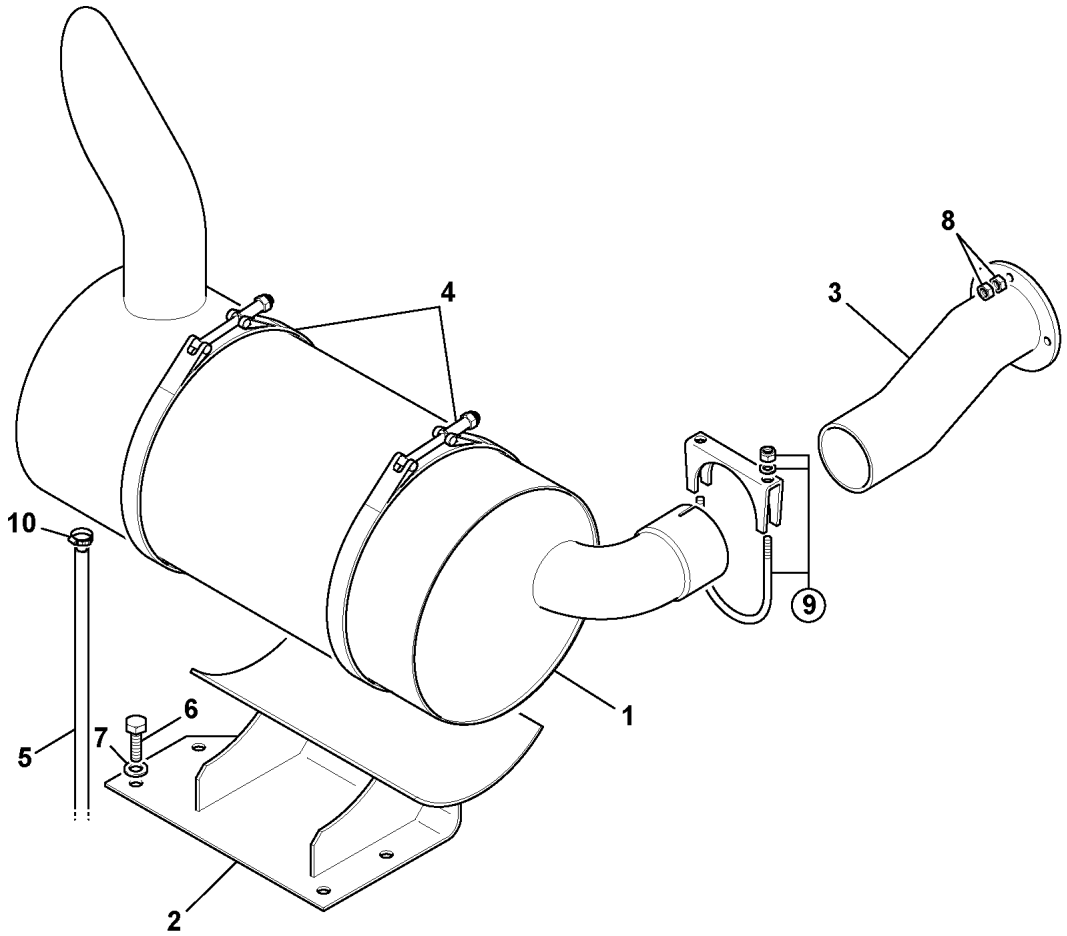

	FROM	TO	FROM	TO
JS160W				

ITEM	PART NO	CHANGE NO	DESCRIPTION	REMARKS	USAGE CODE	QTY
1	331/62069		Silencer, exhaust			1
2	335/12856		Bracket, exhaust mounting			1
3	331/62103		Pipe			1
4	826/11056		Strap, exhaust			2
5	JHH0053		Tube, teflon drain, 950mm long			1
6	1316/0407D		Screw			4
7	JHP0045		Washer			4
8	1371/0201Z		Nut			6
9	KHH0132		Clamp, pipe			1
10	2201/0001		Clip, jubilee			1

905990

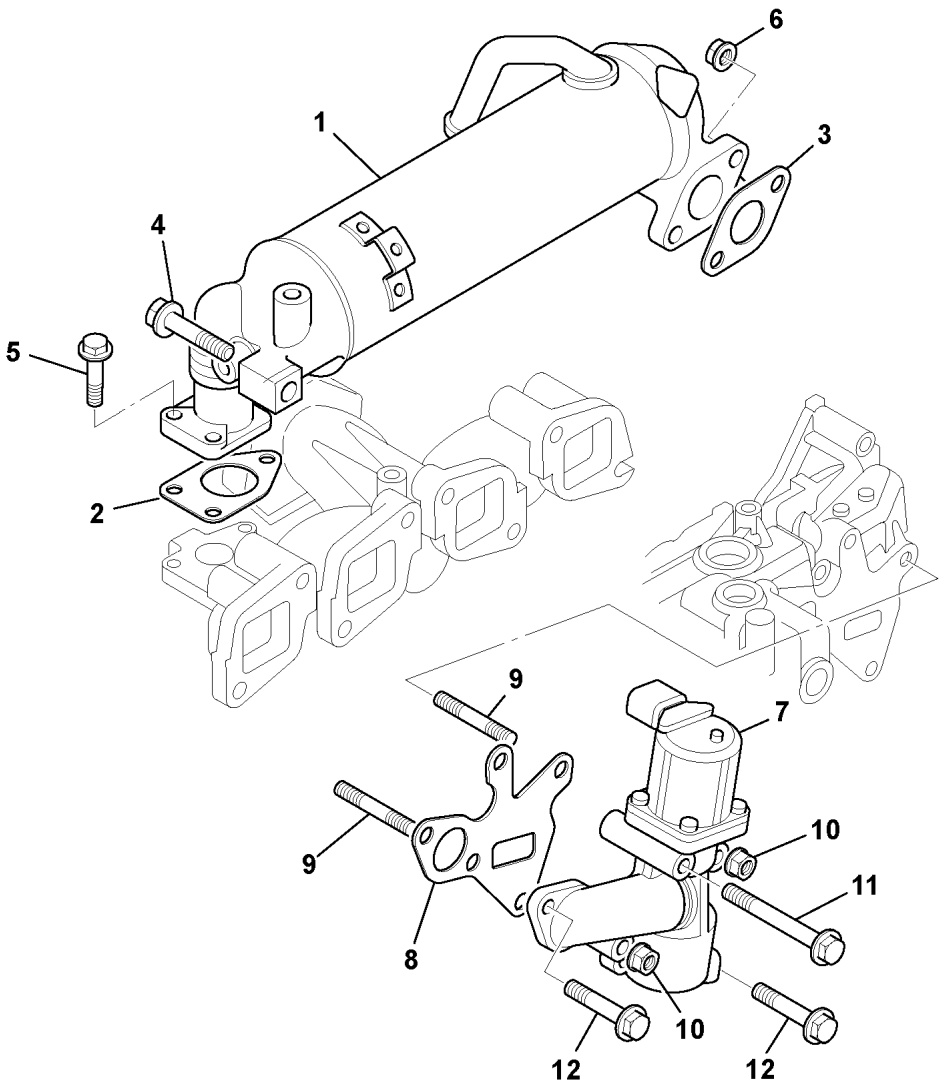

906000

	FROM	TO	FROM	TO
JS160W				

ITEM	PART NO	CHANGE NO	DESCRIPTION	REMARKS	USAGE CODE	QTY
1	02/802631		Cooler			1
2	02/802629		Gasket			1
3	02/802628		Gasket			1
4	02/802630		Bolt			1
5	02/802625		Bolt			3
6	02/802388		Nut, cover			2
7	02/802624		Valve			1
8	02/802626		Gasket			1
9	02/802627		Stud			2
10	02/802388		Nut, cover			2
11	02/802534		Bolt			1
12	02/802401		Bolt, crankcase			2

R

R1 ENGINE BLOCK & SUB-ASSEMBLIES
R2 CYLINDER HEAD & SUB-ASSEMBLIES
R3 INDUCTION & EXHAUST SYSTEMS
● R4 SYSTEM, COOLING
R5 SYSTEM, LUBRICATION
R6 SYSTEM, FUEL
R7 EQUIPMENT, AUXILIARY
R8 GASKET SETS

ENGLISH

R4-1-1 PUMP WATER
R4-2-1 THERMOSTAT,HOUSING, & PIPEWORK
R4-3-1 COOLER COMBINATION, MOUNTING &, SOUND PROOFING
R4-4-1 COOLER ASSEMBLY
R4-5-1 RADIATOR, HOSES & FITTINGS
R4-7-1 CHARGE AIR COOLER
R4-8-1 EXHAUST, RECIRCULATION, WATER COOLING

FRANCAIS

R4-1-1 PUMP WATER
R4-2-1 THERMOSTAT,HOUSING, & PIPEWORK
R4-3-1 COOLER COMBINATION, MOUNTING &, SOUND PROOFING
R4-4-1 RADIATEUR CONDUITES & ACCESSOIR.
R4-5-1 RADIATEUR CONDUITES& ACCESSOITYPE
R4-7-1 CHARGE AIR COOLER
R4-8-1 EXHAUST, RECIRCULATION, WATER COOLING

DEUTSCH

R4-1-1 PUMP WATER
R4-2-1 THERMOSTAT,HOUSING, & PIPEWORK
R4-3-1 COOLER COMBINATION, MOUNTING &, SOUND PROOFING
R4-4-1 KUHLER SCHLAUCHE & ZUBEH.
R4-5-1 KUHLER SCHLAUCHE & ZUBEH.
R4-7-1 CHARGE AIR COOLER
R4-8-1 EXHAUST, RECIRCULATION, WATER COOLING

ITALIANO

R4-1-1 PUMP WATER
R4-2-1 THERMOSTAT,HOUSING, & PIPEWORK
R4-3-1 COOLER COMBINATION, MOUNTING &, SOUND PROOFING
R4-4-1 RADIATORE MANICOTTI E RACCORDI
R4-5-1 RADIATORE MANICOTTIE RACCORDI
R4-7-1 CHARGE AIR COOLER
R4-8-1 EXHAUST, RECIRCULATION, WATER COOLING

PORTUGUES

R4-1-1 PUMP WATER
R4-2-1 THERMOSTAT,HOUSING, & PIPEWORK
R4-3-1 COOLER COMBINATION, MOUNTING &, SOUND PROOFING
R4-4-1 RADIADOR MANGUEIRAS E ACESSF.
R4-5-1 RADIADOR MANGUEIRASE ACESSF.
R4-7-1 CHARGE AIR COOLER
R4-8-1 EXHAUST, RECIRCULATION, WATER COOLING

ESPANOL

R4-1-1 PUMP WATER
R4-2-1 THERMOSTAT,HOUSING, & PIPEWORK
R4-3-1 COOLER COMBINATION, MOUNTING &, SOUND PROOFING
R4-4-1 RADIADOR LATIGUIL.Y HERRAJ.
R4-5-1 RADIADOR LATIGUIL.YHERRAJ.
R4-7-1 CHARGE AIR COOLER
R4-8-1 EXHAUST, RECIRCULATION, WATER COOLING

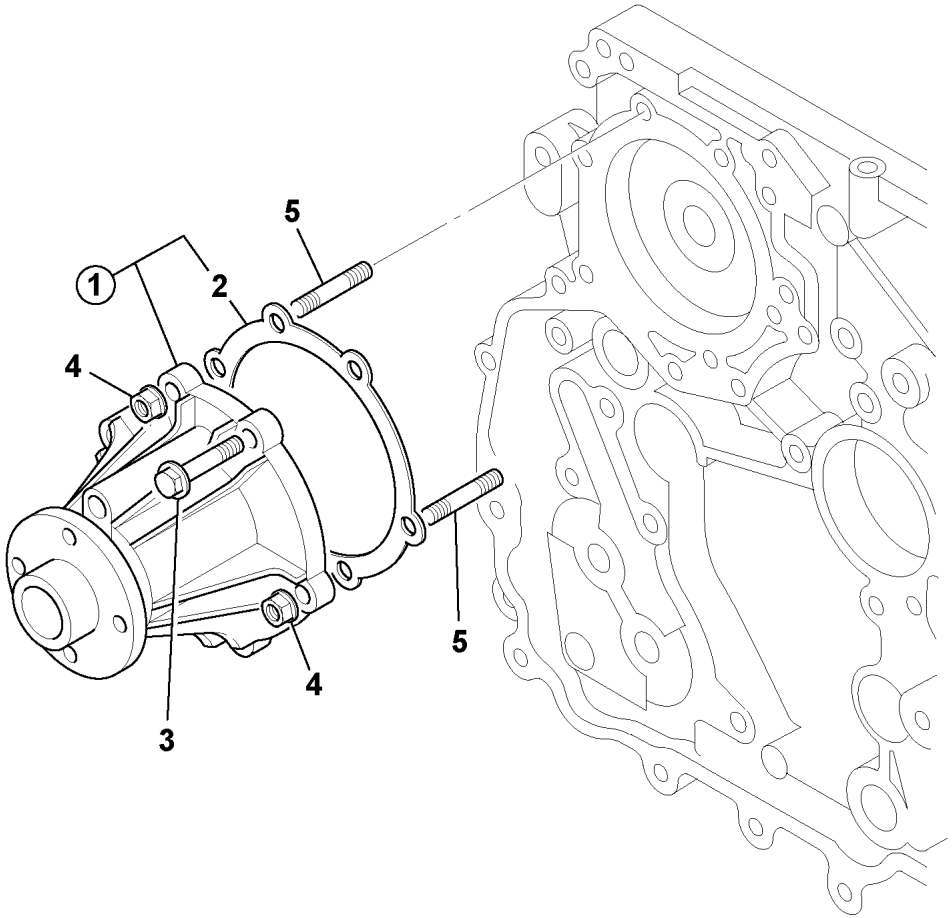

906010

	FROM	TO	FROM	TO
JS160W				

ITEM	PART NO	CHANGE NO	DESCRIPTION	REMARKS	USAGE CODE	QTY
1	02/802527		Pump, water			1
2	02/802528		:Gasket			1
3	02/802393		Bolt, cyl head			4
4	02/802388		Nut, cover			2
5	02/802529		Stud			2

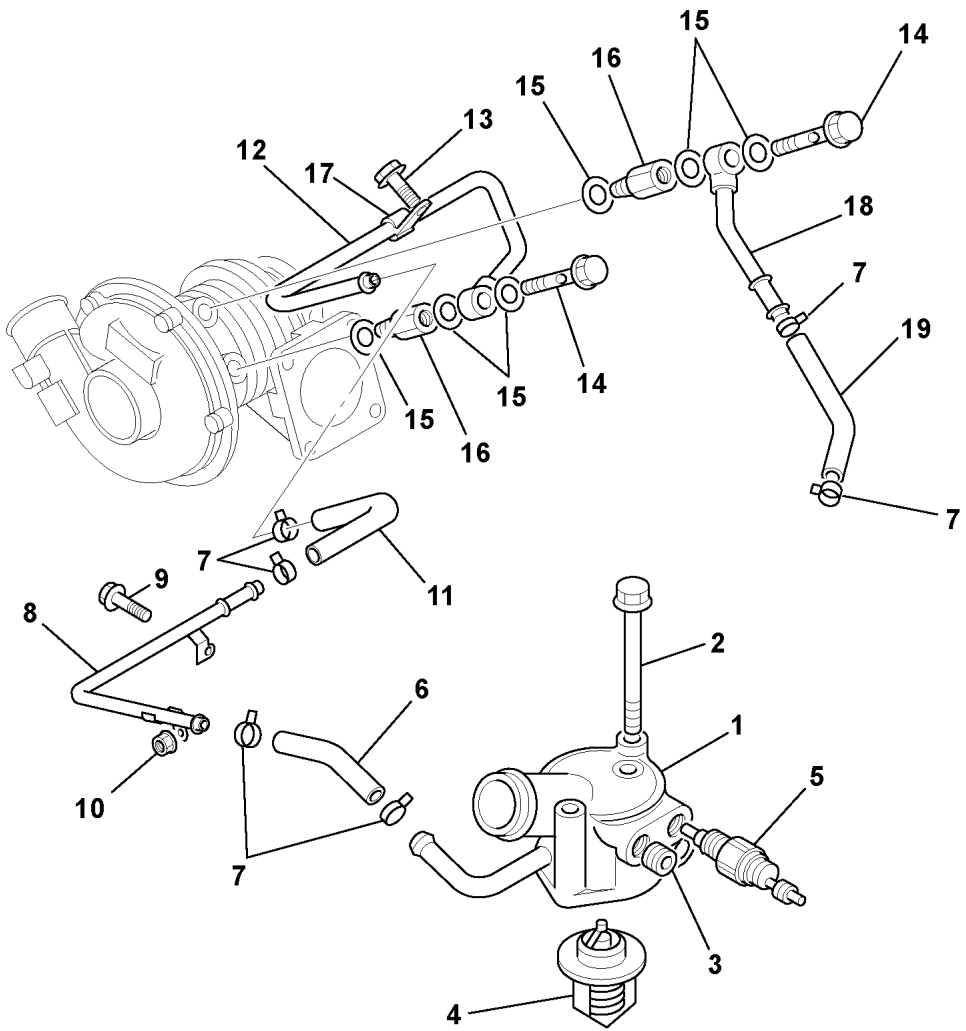

906020

	FROM	TO	FROM	TO
JS160W				

ITEM	PART NO	CHANGE NO	DESCRIPTION	REMARKS	USAGE CODE	QTY
1	02/802533		Pipe			1
2	02/802534		Bolt			2
3	5096050050		Plug			1
4	02/802531		Thermostat			1
5	701/57300		Switch, temperature sender, 3/8"			1
6	02/802555		Hose			1
7	02/802554		Clip			6
8	02/802552		Pipe, water, turbochager			1
9	02/802536		Bolt			1
10	02/802351		Nut			1
11	02/802556		Hose			1
12	02/802551		Pipe, water, turbocharger			1
13	02/802536		Bolt			1
14	02/802559		Bolt, banjo			2
15	9095714120		Washer, seal			6
16	02/802557		Adapter, pipe - turbochager			1
17	02/802535		Clip			1
18	02/802558		Pipe, water inlet, turbochager			1
19	02/802560		Hose			1

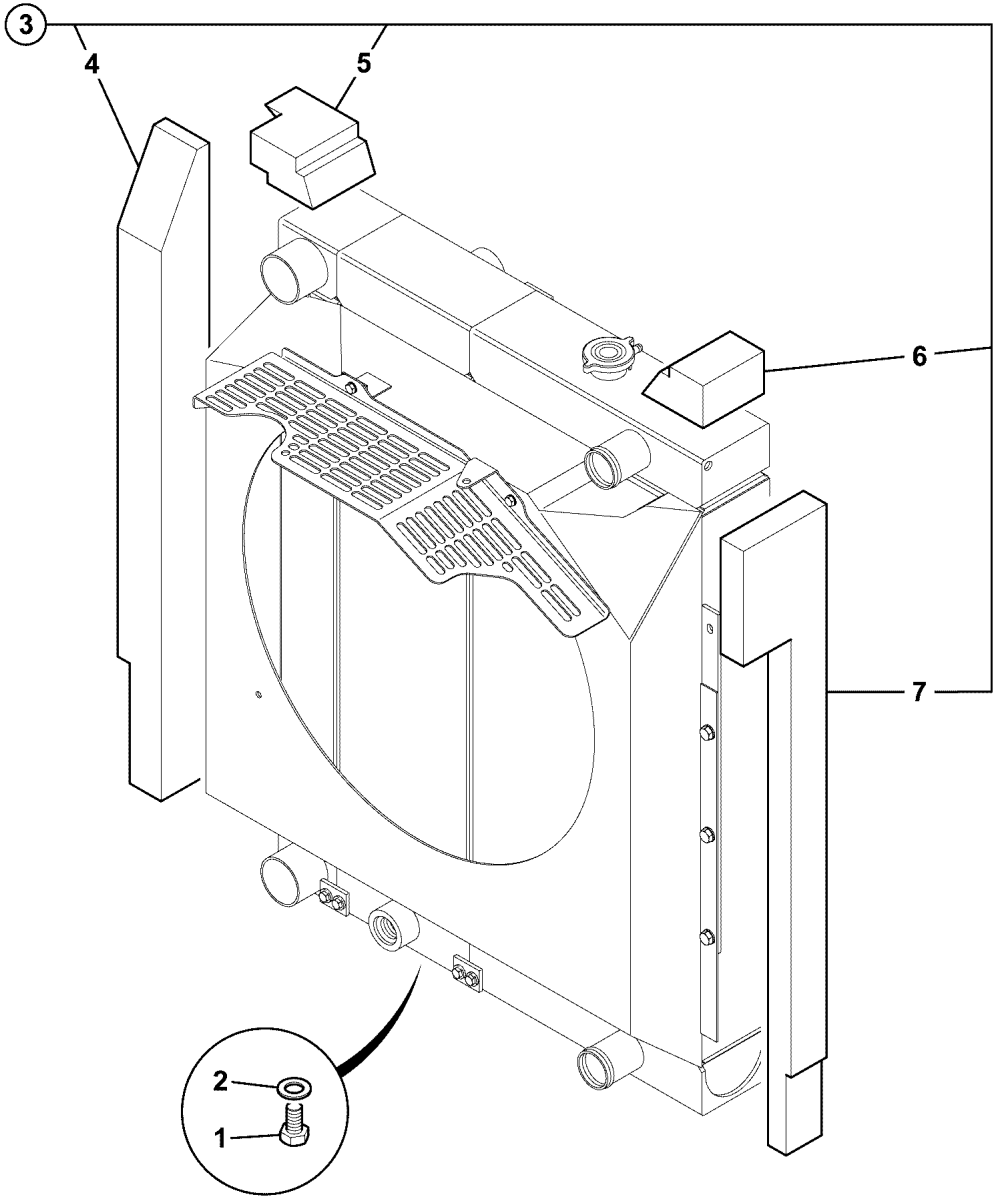

925520

	FROM	TO	FROM	TO
JS160W				

ITEM	PART NO	CHANGE NO	DESCRIPTION	REMARKS	USAGE CODE	QTY
1	1316/0505D		Bolt, M12 x 20mm			8
2	1420/0009D		Washer, M12			8
3	340/00700		Kit, soundproofing			1
4	331/66644		:Seal, anti-recirculation			1
5	331/43945		:Seal, anti-recirculation			1
6	331/41898		:Seal, anti-recirculation			1
7	331/66643		:Seal, anti-recirculation			1

R4-4-1 COOLER ASSEMBLY

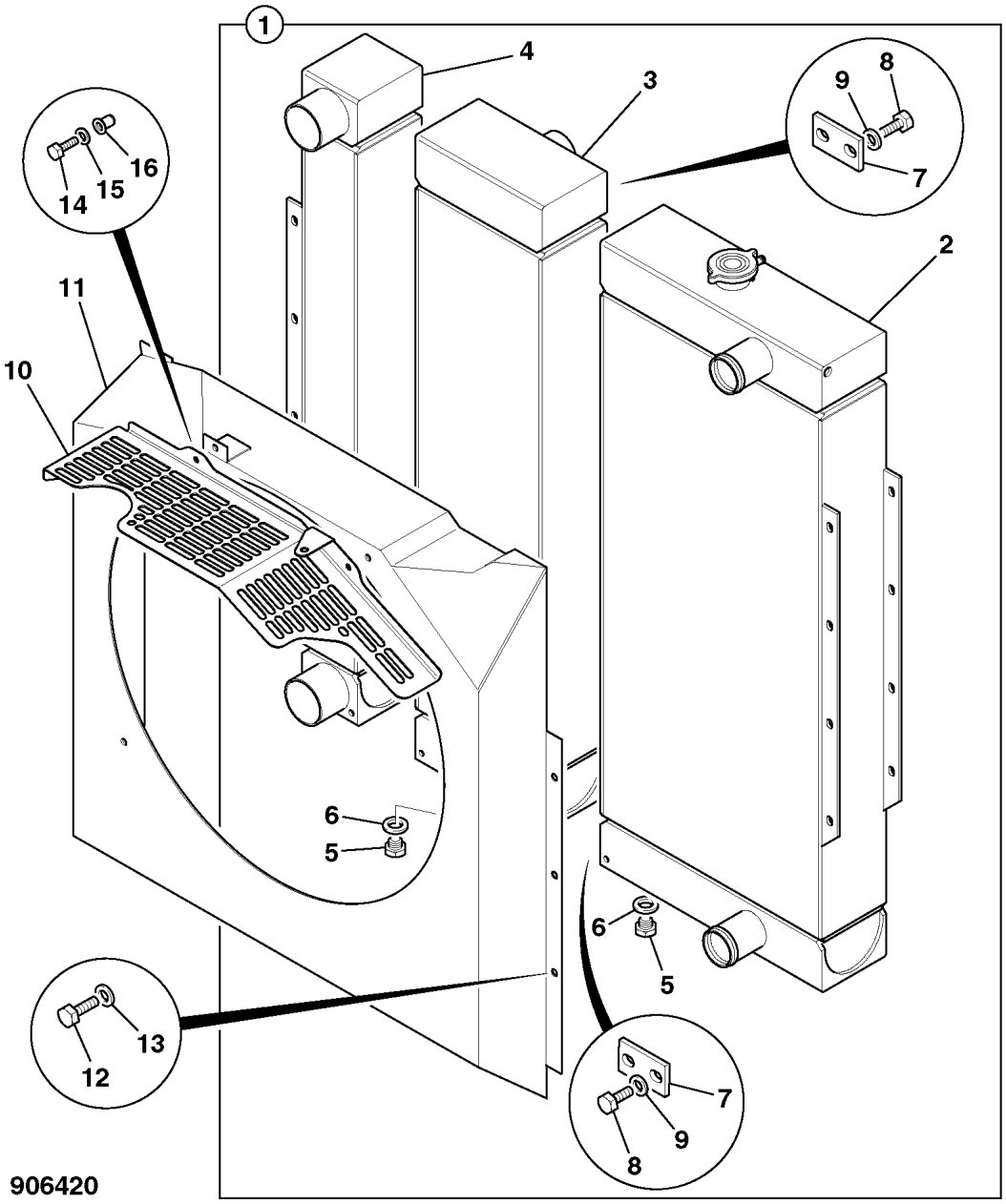

	FROM	TO	FROM	TO
JS160W				

ITEM	PART NO	CHANGE NO	DESCRIPTION	REMARKS	USAGE CODE	QTY
1	30/926970		Cooler, combination			1
2	332/C0971		:Radiator			1
3	332/C0970		:Cooler, oil			1
4	332/C0965		:Cooler, charge air			1
5	30/927149		:Tap, drain			2
6	TBA		:Part number, Not Yet Known			1
7	30/927151		Plate			6
8	1315/0307D		Setscrew, M8x25			12
9	1420/0007D		Washer, M8 plain			12
10	331/63784		Guard, fan			1
11	335/12736		Cowling, fan			1
12	1316/0307D		Screw			7
13	1420/0007D		Washer, M8 plain			7
14	1316/0205D		Screw, set			2
15	1420/0006D		Washer, M6 plain			2
16	826/10602		Nut, self locating weld			2

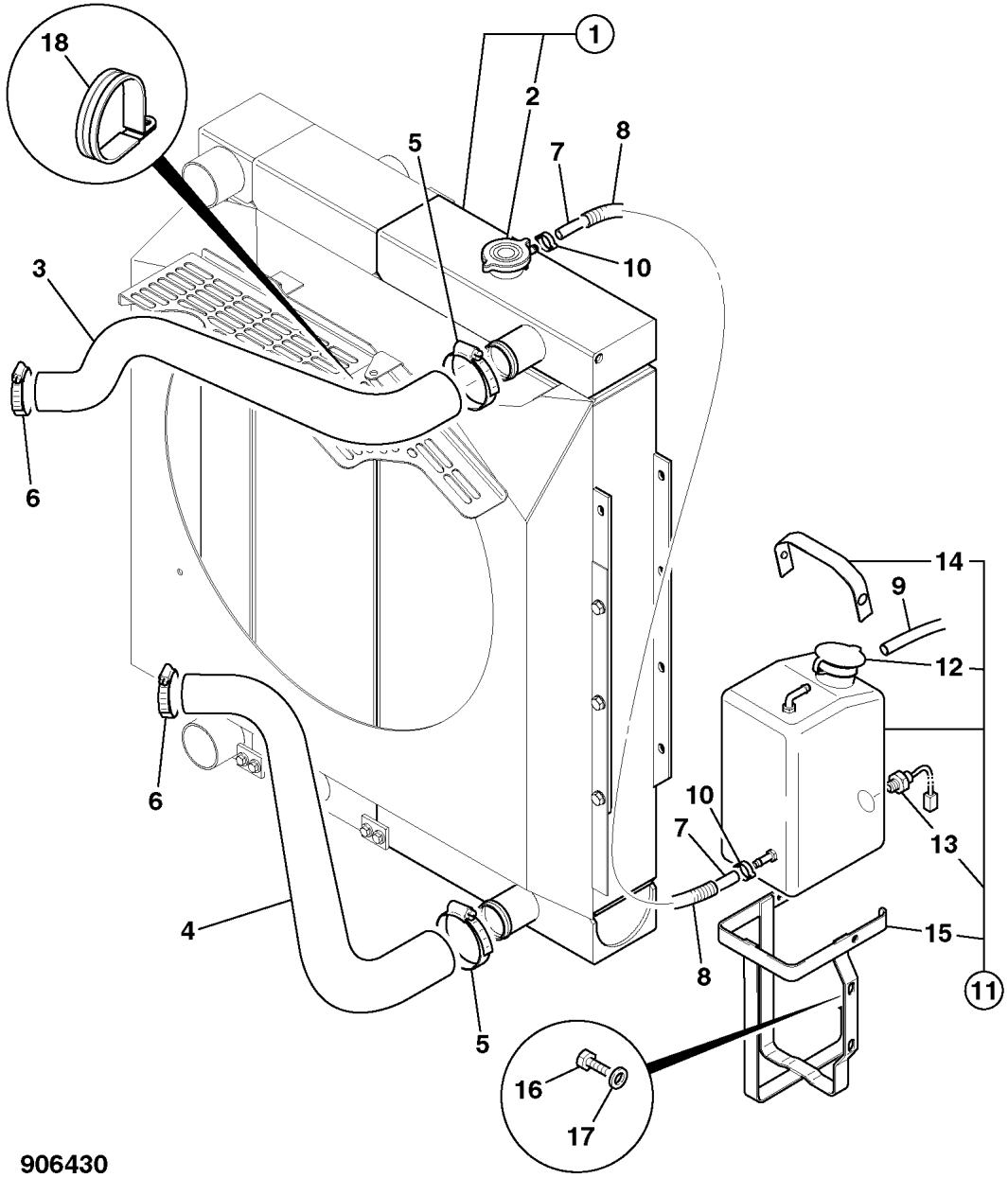

906430

	FROM	TO	FROM	TO
JS160W				

ITEM	PART NO	CHANGE NO	DESCRIPTION	REMARKS	USAGE CODE	QTY
1	332/C0971		Radiator			1
2	30/927150		:Cap, radiator			1
3	834/11492		Hose, radiator top			1
4	834/11493		Hose, radiator bottom			1
5	2201/0012		Clip, jubilee			2
6	2201/0011		Clip, jubilee			2
7	KHH0222		Hose, rubber, 8mm x 1400mm long	1400mm long		1
8	650/10219		Tube, corrugated, L=1320mm			1
9	JHH0047		Hose, vinyl			1
10	821/10406		Clamp, ear			2
11	331/42966		Tank, radiator expansion			1
12	331/15712		Cap, expansion tank			1
13	716/30071		:Sensor, low water level			1
14	331/18023		:Strap, retaining			1
15	331/15711		:Bracket, mounting, expansion tank			1
16	1316/0103Z		Screw, M5 X 16			2
17	1420/0005Z		Washer, M5			2
18	821/10292		Clip, P, 50mm dia.			1
19	1420/0005Z		Washer, M5			2
20	821/10292		Clip, P, 50mm dia.			1

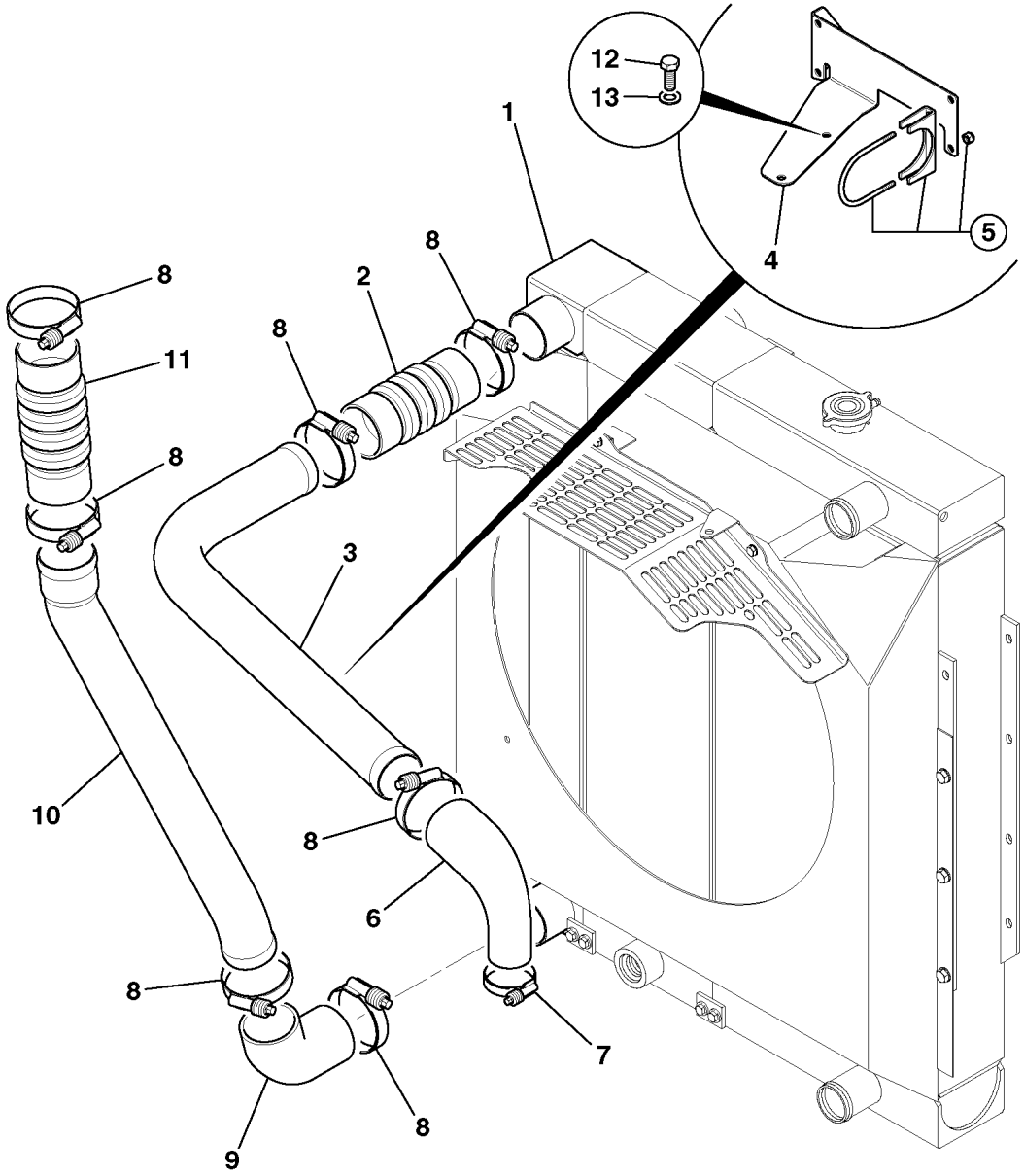

906450

	FROM	TO	FROM	TO
JS160W				

ITEM	PART NO	CHANGE NO	DESCRIPTION	REMARKS	USAGE CODE	QTY
1	332/C0965		Cooler, charge air			1
2	834/10456		Hose, air charge cooler			1
3	830/13546		Tube, upper			1
4	332/J0639		Bracket			2
5	KHH0132		Clamp, pipe			2
6	834/11392		Hose			1
7	821/10236		Clip, constant torque worm			1
8	821/10191		Clip, breeze (57-79), constant torque			7
9	834/11451		Hose, elbow 105 deg			1
10	830/13545		Tube, CAC lower			1
11	834/11161		Hose			1
12	1316/0301D		Screw			1
13	1420/0007D		Washer, M8 plain			1

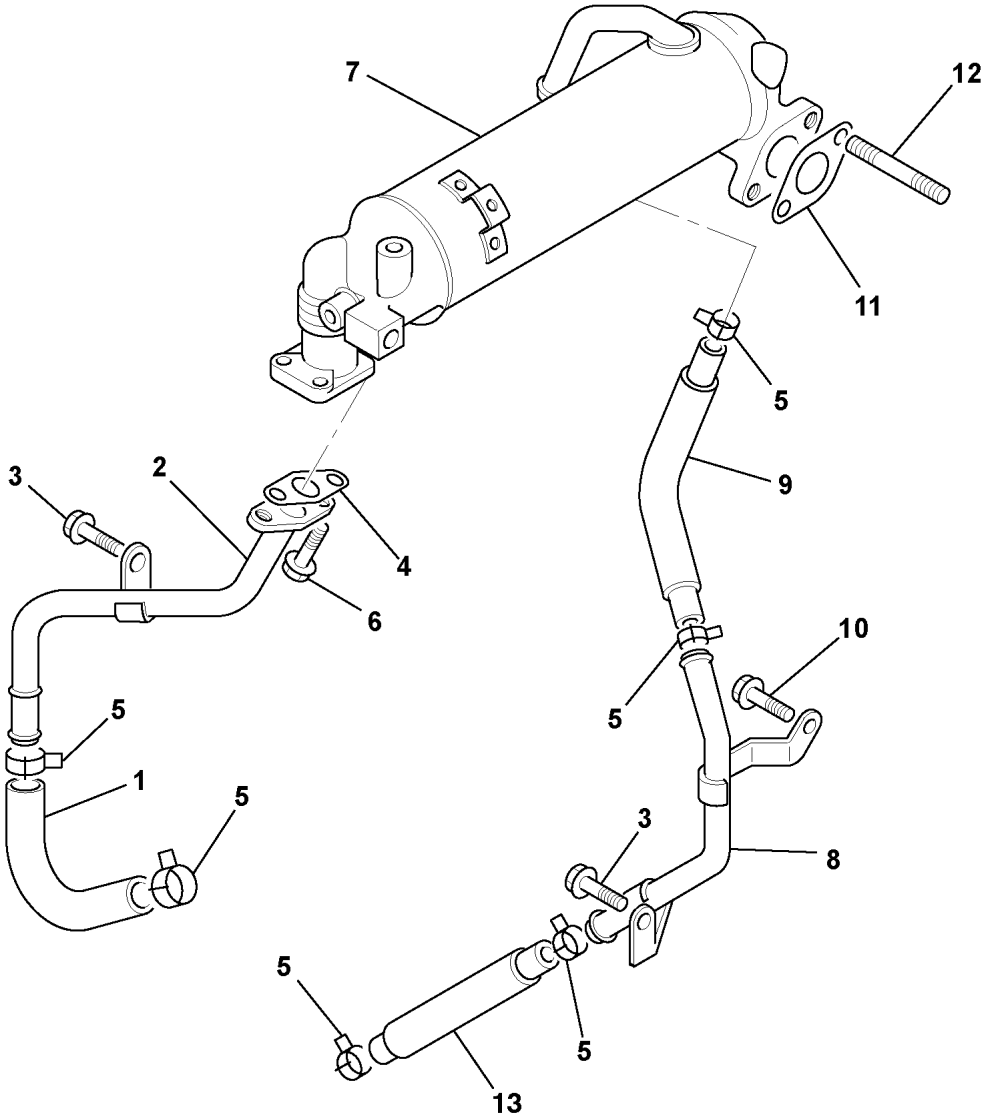

906030

	FROM	TO	FROM	TO
JS160W				

ITEM	PART NO	CHANGE NO	DESCRIPTION	REMARKS	USAGE CODE	QTY
1	02/802562		Hose			1
2	02/802561		Pipe			1
3	02/802550		Bolt			2
4	02/802553		Gasket, water pipe			1
5	02/802395		Clip, cap			6
6	02/802549		Bolt			2
7	.		'See Remark'	See frame R3-5-1		1
8	02/802565		Pipe			1
9	02/802563		Hose			1
10	02/802418		Bolt			1
11	02/802628		Gasket			1
12	02/802271		Stud			2
13	02/801883		Hose, water pipe			1

R

R1 ENGINE BLOCK & SUB-ASSEMBLIES
R2 CYLINDER HEAD & SUB-ASSEMBLIES
R3 INDUCTION & EXHAUST SYSTEMS
R4 SYSTEM, COOLING
● R5 SYSTEM, LUBRICATION
R6 SYSTEM, FUEL
R7 EQUIPMENT, AUXILIARY
R8 GASKET SETS

ENGLISH

R5-1-1 SUMP, OIL, & FITTINGS
R5-2-1 PUMP, OIL
R5-3-1 OIL FILTER, REMOTE MOUNTED
R5-4-1 COOLER, ENGINE OIL

FRANCAIS

R5-1-1 CARTER, HUILE & ACCESSOIRES
R5-2-1 POMPE, HUILE
R5-3-1 OIL FILTER, REMOTE MOUNTED
R5-4-1 COOLER, ENGINE OIL

DEUTSCH

R5-1-1 OLWANNE & ANSCHLUSSE
R5-2-1 OLPUMPE
R5-3-1 OIL FILTER, REMOTE MOUNTED
R5-4-1 COOLER, ENGINE OIL

ITALIANO

R5-1-1 COPPA OLIO E RACCORDI
R5-2-1 POMPA, OLIO
R5-3-1 OIL FILTER, REMOTE MOUNTED
R5-4-1 COOLER, ENGINE OIL

PORTUGUES

R5-1-1 CARTER, FLEO E ACESSFRIOS
R5-2-1 BOMBA, FLEO
R5-3-1 OIL FILTER, REMOTE MOUNTED
R5-4-1 COOLER, ENGINE OIL

ESPANOL

R5-1-1 CARTER, ACEITE Y HERRAJES
R5-2-1 BOMBA DE ACEITE
R5-3-1 OIL FILTER, REMOTE MOUNTED
R5-4-1 COOLER, ENGINE OIL

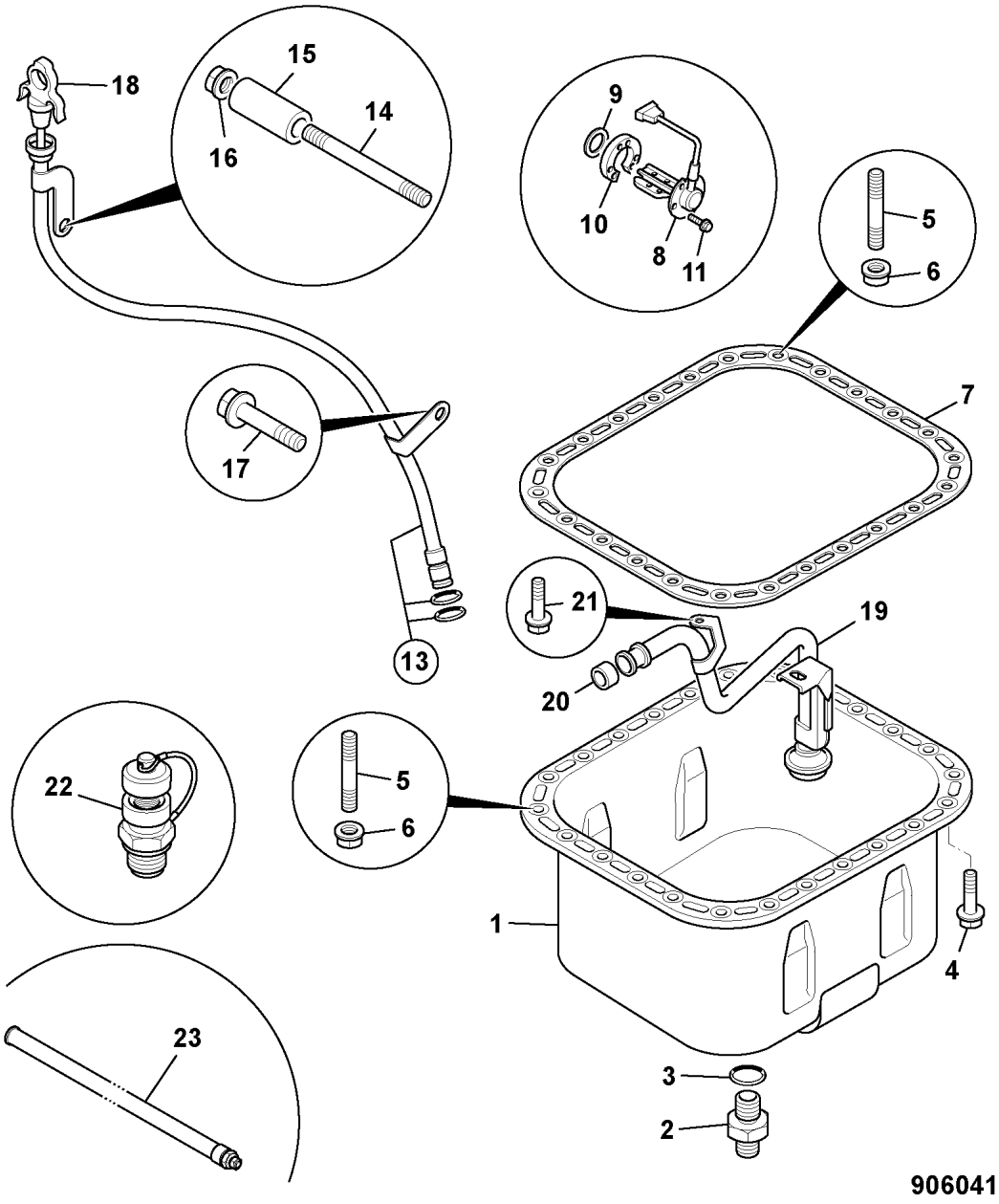

	FROM	TO	FROM	TO
JS160W				

ITEM	PART NO	CHANGE NO	DESCRIPTION	REMARKS	USAGE CODE	QTY
1	02/802410		Sump, pan assy.			1
2	1096040220		Plug, oil drain			1
3	1096230580		O Ring			1
4	02/802418		Bolt			22
5	02/802414		Stud, sump pan			2
6	02/802388		Nut, cover			2
7	02/802413		Gasket, sump			1
8	701/80561		Switch, oil level			1
9	02/801194		Seal, ID=27			1
10	02/801818		Spacer			1
11	02/802419		Bolt, oil level switch			3
13	02/802412		Tube, dipstick			1
14	02/802417		Stud, guide tube			1
15	02/802213		Spacer			1
16	02/801076		Nut, M10 flange			1
17	.		'See Remark'	See section R5-4-1		1
18	02/802411		Dipstick			1
19	02/802612		Pipe, oil strainer			1
20	02/802613		Gasket			1
21	02/802418		Bolt			2
22	32/925429		Valve, oil drain, M24X2 - M26X1.5 HOSE			1
23	340/00184		Hose, oil drain & keeper, M26 X 1.5 & M12			1

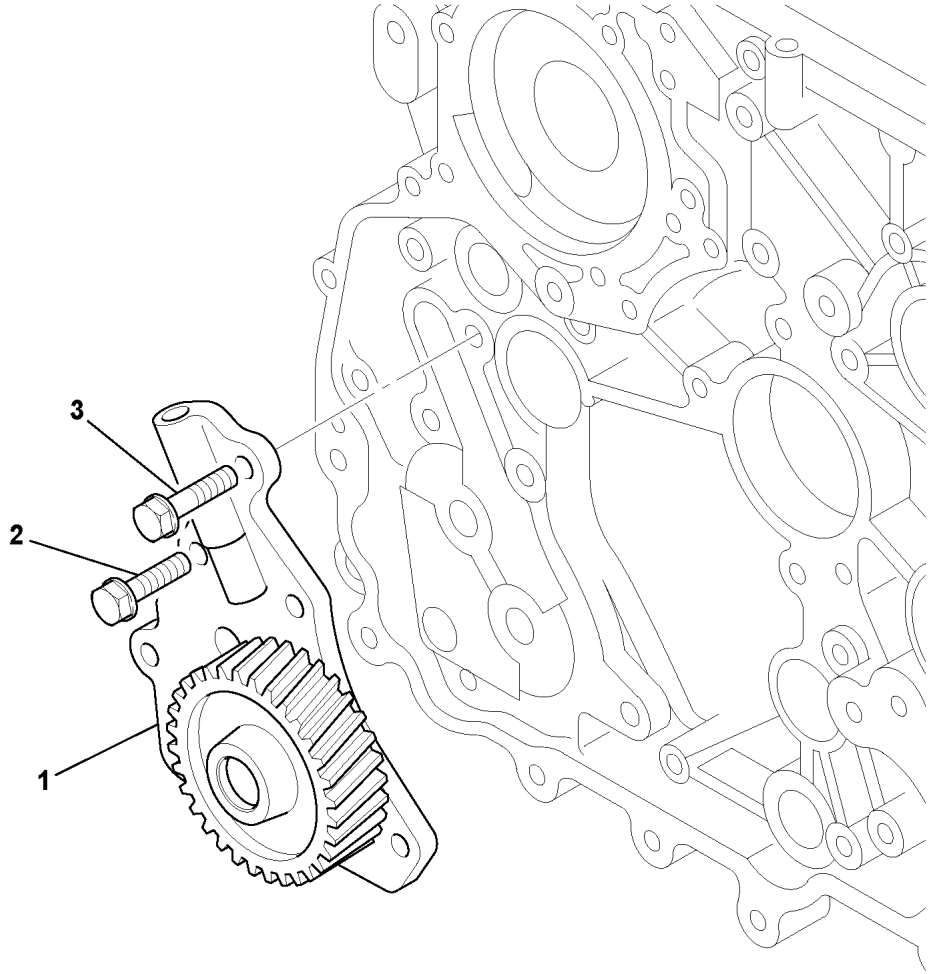

906050

	FROM	TO	FROM	TO
JS160W				

ITEM	PART NO	CHANGE NO	DESCRIPTION	REMARKS	USAGE CODE	QTY
1	02/802610		Pump, assy. oil			1
2	02/802611		Bolt			4
3	02/802483		Bolt			2

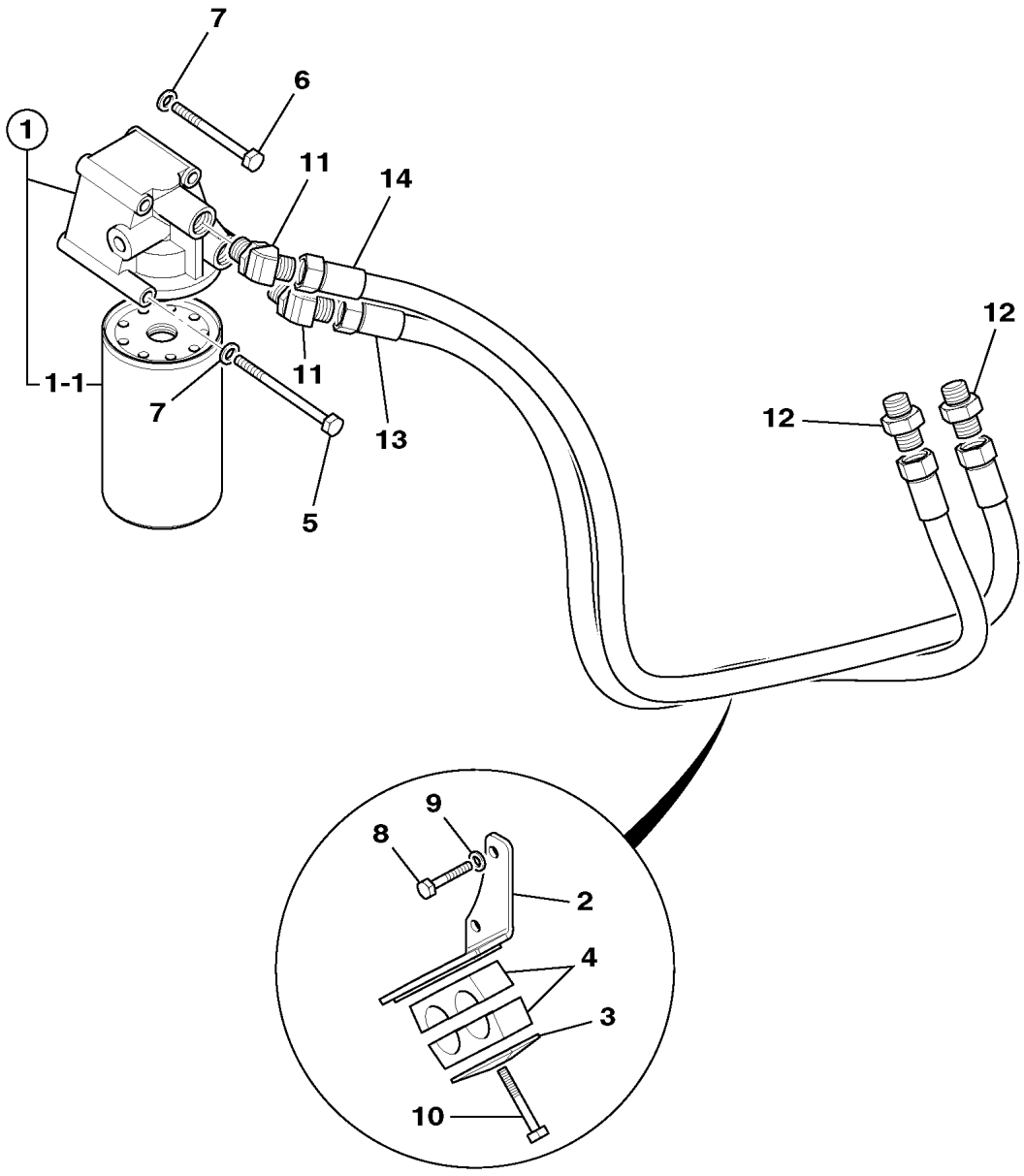

908180

	FROM	TO	FROM	TO
JS160W				

ITEM	PART NO	CHANGE NO	DESCRIPTION	REMARKS	USAGE CODE	QTY
1	581/18080		Filter, engine oil, remote mounting			1
	817/18846		Label, engine oil, 02/801481			1
1 01	* 02/801481		:Element, oil filter, cartridge			1
2	335/13865		Bracket, hose clamp			1
3	821/00443		Plate, cover			1
4	821/00442		Clamp, body			2
5	1316/3424D		Bolt			2
6	1316/3421D		Bolt, M10 X 110			2
7	1420/0008D		Washer, M10			4
8	1316/0409D		Screw, M10X35			2
9	JHP0046		Washer, M10			2
10	1316/3314D		Bolt, BOLT M8x60			1
11	KHJ0351		Adapter, elbow 135deg			2
12	KNJ0605		Adapter, straight			2
13	627/10621		Hose, oil cooler			1
14	332/J0329		Hose, oil cooler			1

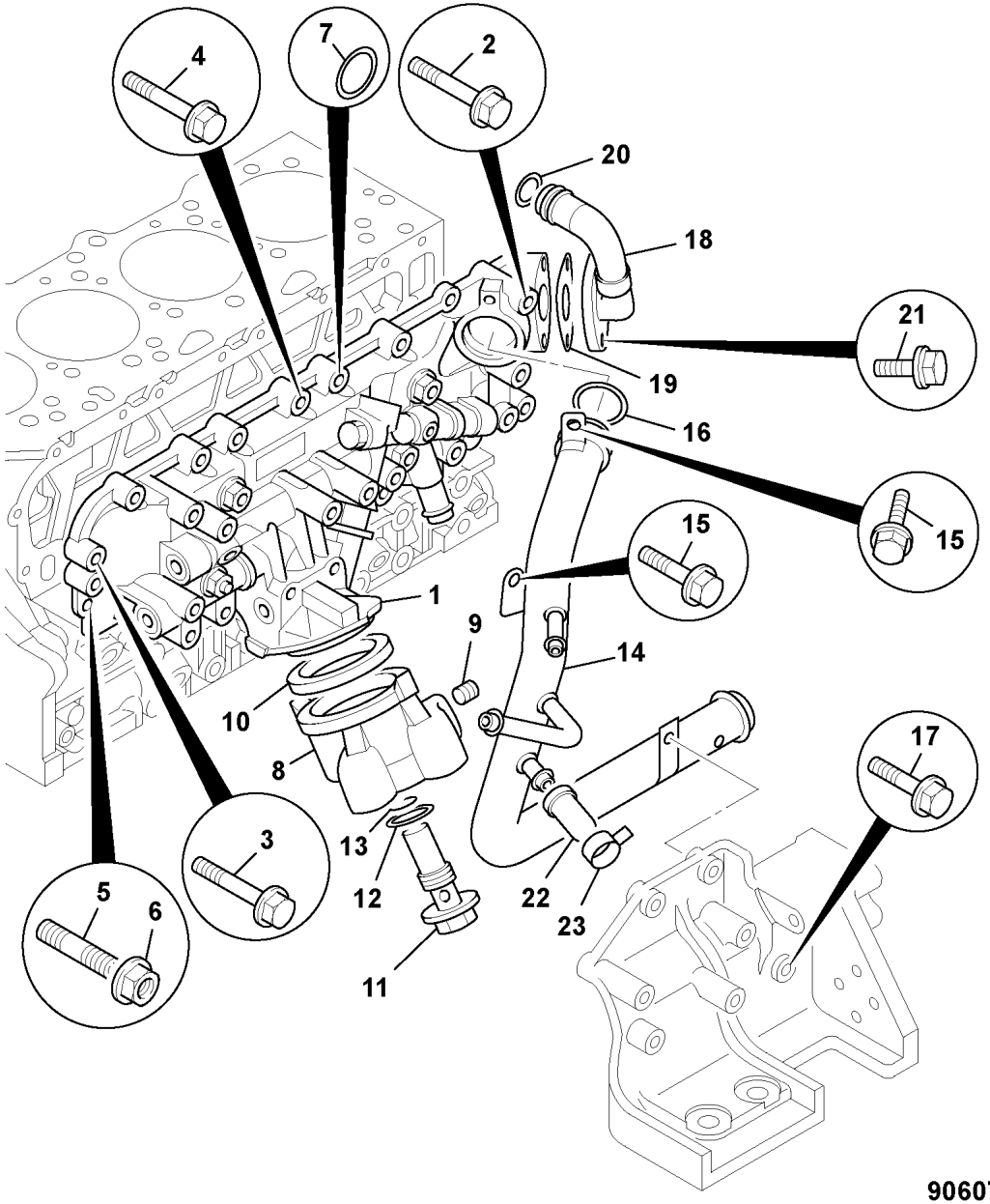

906070

	FROM	TO	FROM	TO
JS160W				

ITEM	PART NO	CHANGE NO	DESCRIPTION	REMARKS	USAGE CODE	QTY
1	02/802609		Cooler, assy.			1
2	02/802516		Bolt			4
3	02/802394		Bolt, cyl. head			12
4	02/802606		Bolt			2
5	02/802608		Stud			2
6	02/802388		Nut, cover			2
7	02/802319		Gasket			2
8	02/802607		Cover, oil port			1
9	02/802408		Plug			1
10	02/802397		Gasket, oil port, cover			1
11	02/802409		Plug			1
12	02/802403		Gasket, plug			1
13	02/802402		Gasket, plug			1
14	02/802530		Pipe			1
15	02/802518		Stud			2
16	02/802539		Gasket			1
17	02/802484		Bolt			1
18	02/802532		Pipe			1
19	02/802538		Gasket			1
20	02/802537		Gasket			1
21	02/802401		Bolt, crankcase			2
22	02/800956		Cap			1
23	02/802395		Clip, cap			1

R

R1 ENGINE BLOCK & SUB-ASSEMBLIES
R2 CYLINDER HEAD & SUB-ASSEMBLIES
R3 INDUCTION & EXHAUST SYSTEMS
R4 SYSTEM, COOLING
R5 SYSTEM, LUBRICATION
● R6 SYSTEM, FUEL
R7 EQUIPMENT, AUXILIARY
R8 GASKET SETS

ENGLISH

R6-1-1 PUMP, FUEL INJECTION, INSTALLATION
R6-2-1 FUEL SYSTEM
R6-4-1 FUEL SYSTEM
R6-6-1 FILTER, FUEL SEDIMENT, 5 MICRON
R6-7-1 FILTER, FUEL
R6-8-1 FUEL LIFT PUMP

FRANCAIS

R6-1-1 PUMP, FUEL INJECTION, INSTALLATION
R6-2-1 SYSTEME DE CARBURANT
R6-4-1 FUEL SYSTEM
R6-6-1 FILTRE DEPOT DE CARBURANT
R6-7-1 FILTRE, A CARBURANT
R6-8-1 FUEL LIFT PUMP

DEUTSCH

R6-1-1 PUMP, FUEL INJECTION, INSTALLATION
R6-2-1 KRAFTSTOFFANLAGE
R6-4-1 FUEL SYSTEM
R6-6-1 FILTER KRAFTSTOFFABL.
R6-7-1 KRAFTSTOFFILTER
R6-8-1 FUEL LIFT PUMP

ITALIANO

R6-1-1 PUMP, FUEL INJECTION, INSTALLATION
R6-2-1 SISTEMA GASOLIO
R6-4-1 FUEL SYSTEM
R6-6-1 FILTRO SEDIMENTI GASOLIO
R6-7-1 FILTRO, GASOLIO
R6-8-1 FUEL LIFT PUMP

PORTUGUES

R6-1-1 PUMP, FUEL INJECTION, INSTALLATION
R6-2-1 SISTEMA DE COMBUSTIV
R6-4-1 FUEL SYSTEM
R6-6-1 FILTRO SEDIMENTO COMBUSTIVE
R6-7-1 FILTRO, COMBUSTIVEL
R6-8-1 FUEL LIFT PUMP

ESPANOL

R6-1-1 PUMP, FUEL INJECTION, INSTALLATION
R6-2-1 COMBUST. SIST.
R6-4-1 FUEL SYSTEM
R6-6-1 FILTRO, ACEITE SEDIMENTO COMBUST.
R6-7-1 FILTRO, COMBUSTIBLE
R6-8-1 FUEL LIFT PUMP

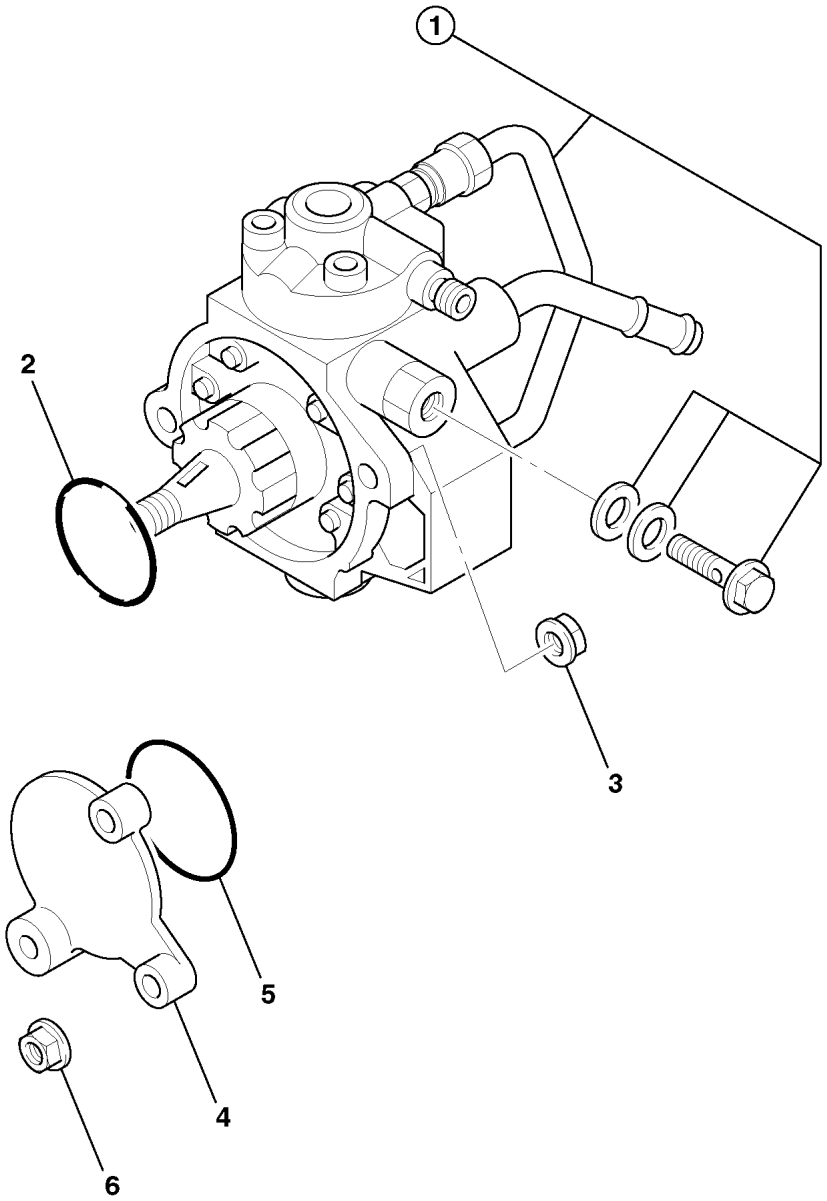

906080

	FROM	TO	FROM	TO
JS160W				

ITEM	PART NO	CHANGE NO	DESCRIPTION	REMARKS	USAGE CODE	QTY
1	02/802600		Pump, fuel			1
2	1096235410		O Ring, id=49.7			1
3	02/802388		Nut, cover			2
4	02/802603		Cover			1
5	02/802604		Gasket			1
6	02/802388		Nut, cover			3

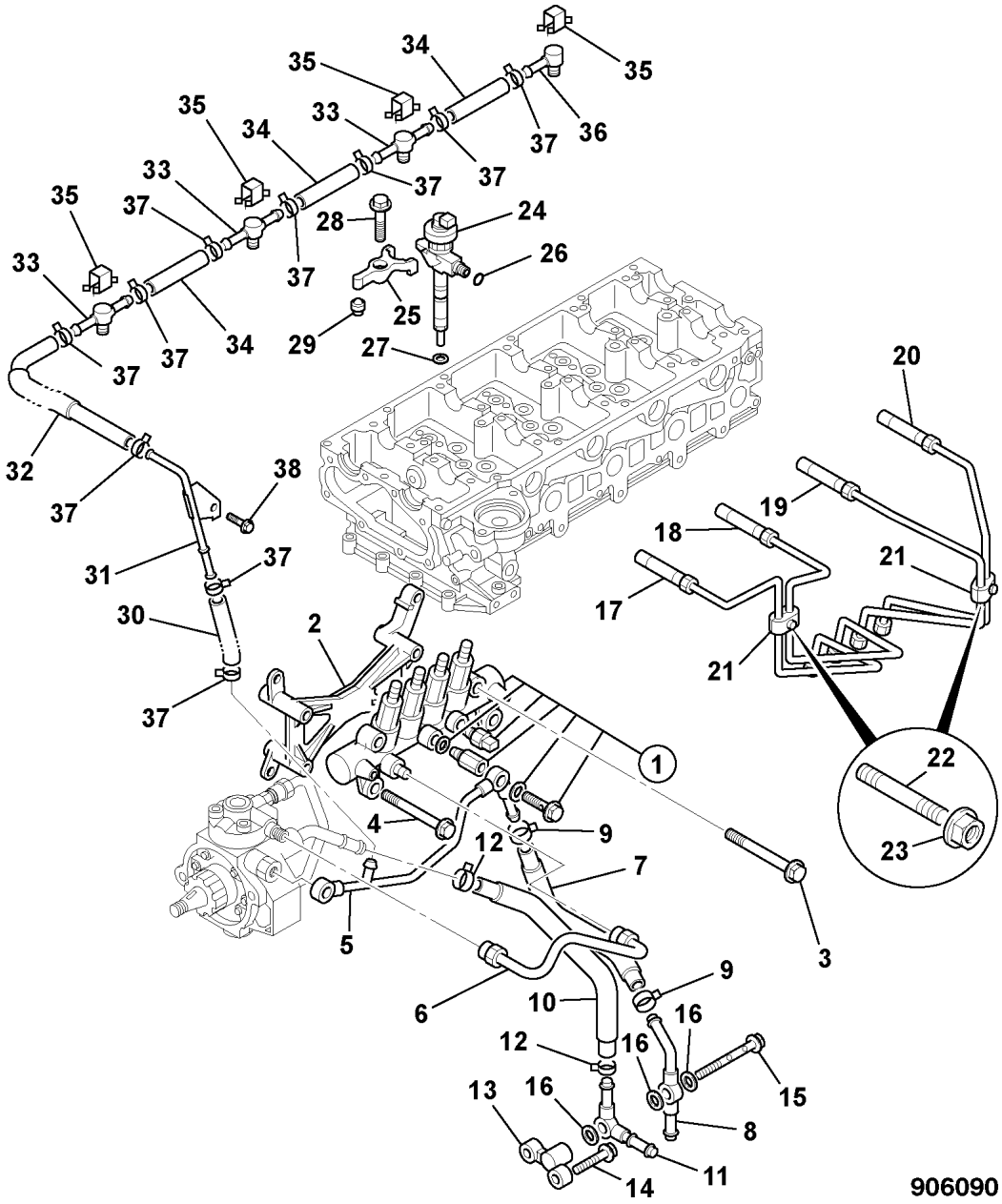

	FROM	TO	FROM	TO
JS160W				

ITEM	PART NO	CHANGE NO	DESCRIPTION	REMARKS	USAGE CODE	QTY
1	02/802587		Manifold, common rail, assy.			1
2	02/802592		Bracket			1
3	02/802593		Bolt			2
4	02/802516		Bolt			2
5	02/802583		Pipe, fuel			1
6	02/802586		Pipe, fuel			1
7	02/802598		Hose			1
8	02/802596		Pipe, fuel			1
9	02/802591		Clip			2
10	02/802599		Hose			1
11	02/802595		Pipe			1
12	02/802590		Clip			2
13	02/802602		Bracket			1
14	02/802401		Bolt, crankcase			2
15	02/802588		Bolt, banjo			1
16	32/919404		Washer, seal			3
17	02/802566		Pipe, fuel injection no.1			1
18	02/802567		Pipe, fuel injection No.2			1
19	02/802568		Pipe, fuel injection No. 3			1
20	02/802569		Pipe, fuel injection No. 4			1
21	02/802577		Clip			4
22	02/802564		Stud, pipe clamp			2

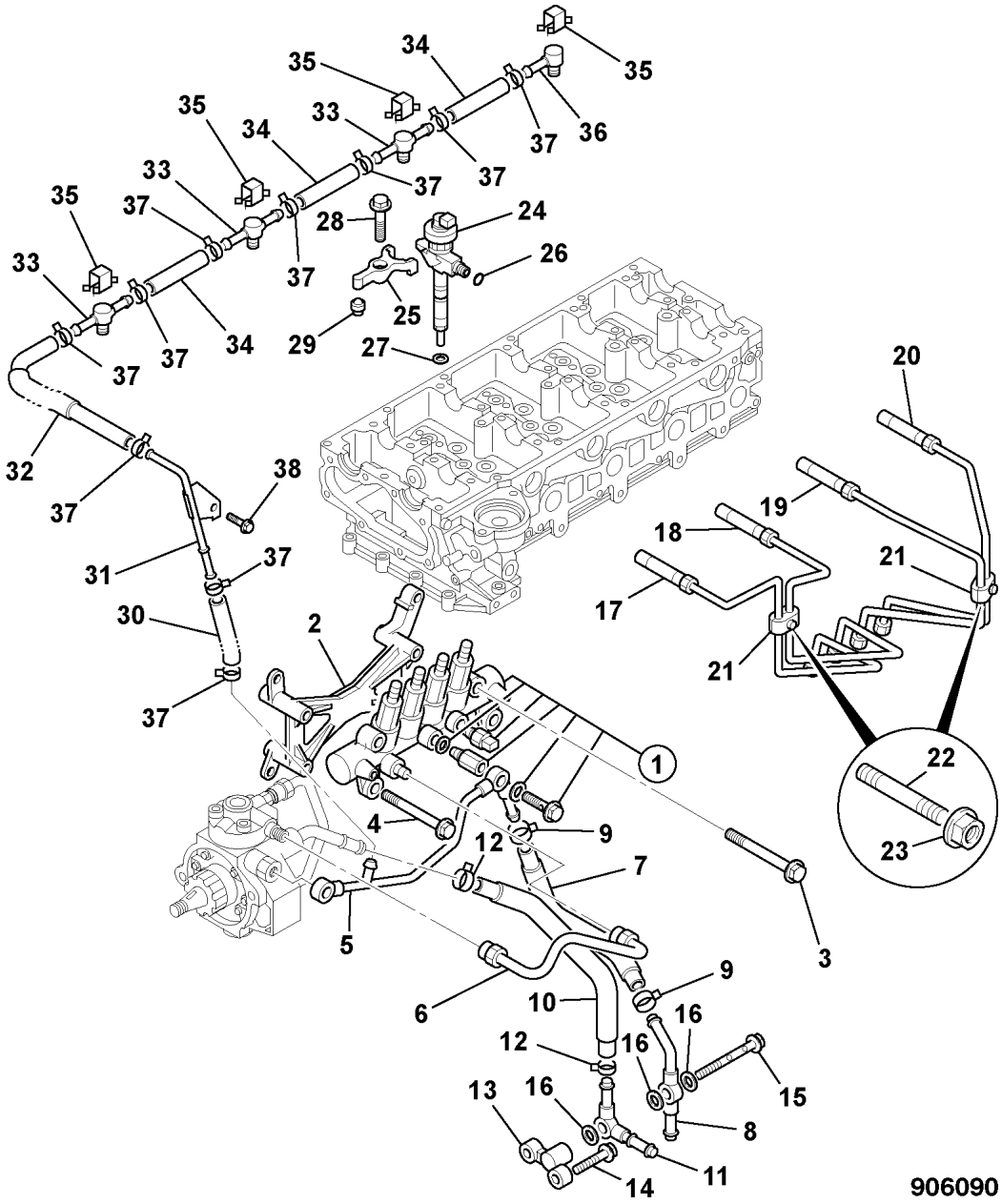

ITEM	PART NO	CHANGE NO	DESCRIPTION	REMARKS	USAGE CODE	QTY
23	02/802578		Nut			2
24	02/802574		Injector, assembly			4
25	02/802575		Clamp, nozzle holder			4
26	02/802584		Gasket			4
27	02/802576		Gasket, injection nozzle			4
28	02/802594		Bolt			4
29	02/802597		Pin			4
30	02/802571		Hose			1
31	02/802582		Pipe			1
32	02/802573		Hose			1
33	02/802581		Pipe			3
34	02/802572		Hose			3
35	02/802579		Clip			4
36	02/802580		Pipe			1
37	02/802570		Clip			10
38	02/802550		Bolt			1

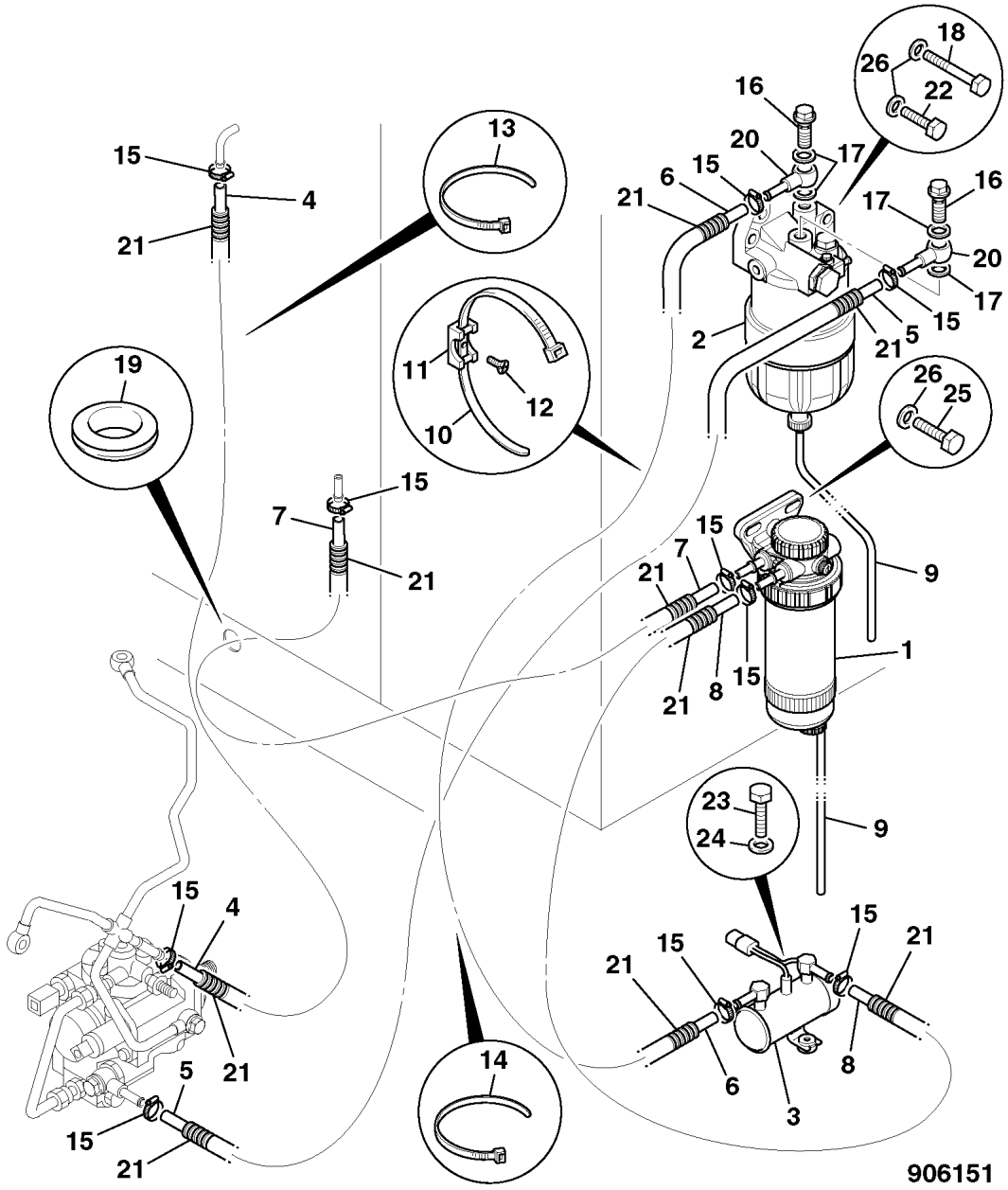

	FROM	TO	FROM	TO
JS160W				

ITEM	PART NO	CHANGE NO	DESCRIPTION	REMARKS	USAGE CODE	QTY
1	32/925868		Filter, fuel sediment, assembly 5 micron	For service parts see R6-7-1		1
2	32/925732		Filter, fuel sedimentor	For service parts see R6-6-1		1
3	17/926100		Pump, fuel feed	For service parts see R6-8-1		1
4	JHH0064		Tube, vinyl			1
5	JHH0062		Tube, vinyl			1
6	JHH0122		Tube	Length = approx 800mm		1
7	JHH0025		Tube, fuel, L=1700			1
8	JHH0019		Tube, vinyl			1
9	647/11101		Tube, vinyl			2
10	KHH0142		Tie, harness retainer			2
11	KHR0319		Clamp, special			2
12	6012/0298Z		Screw, pan head			2
13	826/01347		Tie, cable c/w mounting, 4.6mm x 190mm			2
14	KAR0016		Tie, cable			2
15	2201/0001		Clip, jubilee			10
16	32/925749		Bolt, banjo			2
17	813/10291		Washer, sealing			4
18	1316/3417D		Bolt, BOLT			1
19	KAR0152		Grommet			1
20	32/925748		Coupling, banjo			2

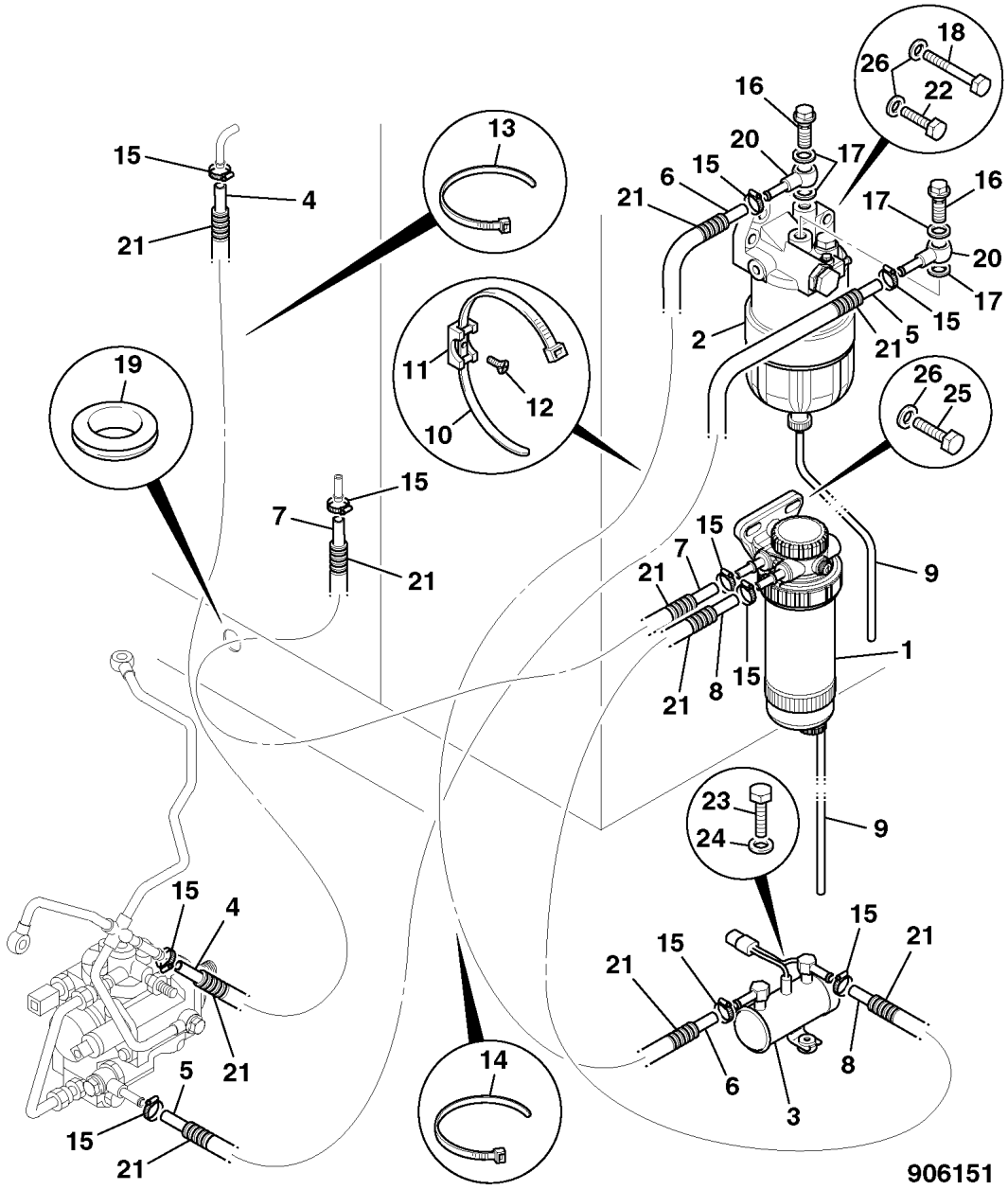

ITEM	PART NO	CHANGE NO	DESCRIPTION	REMARKS	USAGE CODE	QTY
21	JSH0001		Tube, corrugated			1
22	1316/0410D		Bolt			2
23	1316/0310D		Screw			2
24	1420/0007D		Washer, M8 plain			2
25	1316/0407D		Screw			2
26	1420/0008D		Washer, M10			5

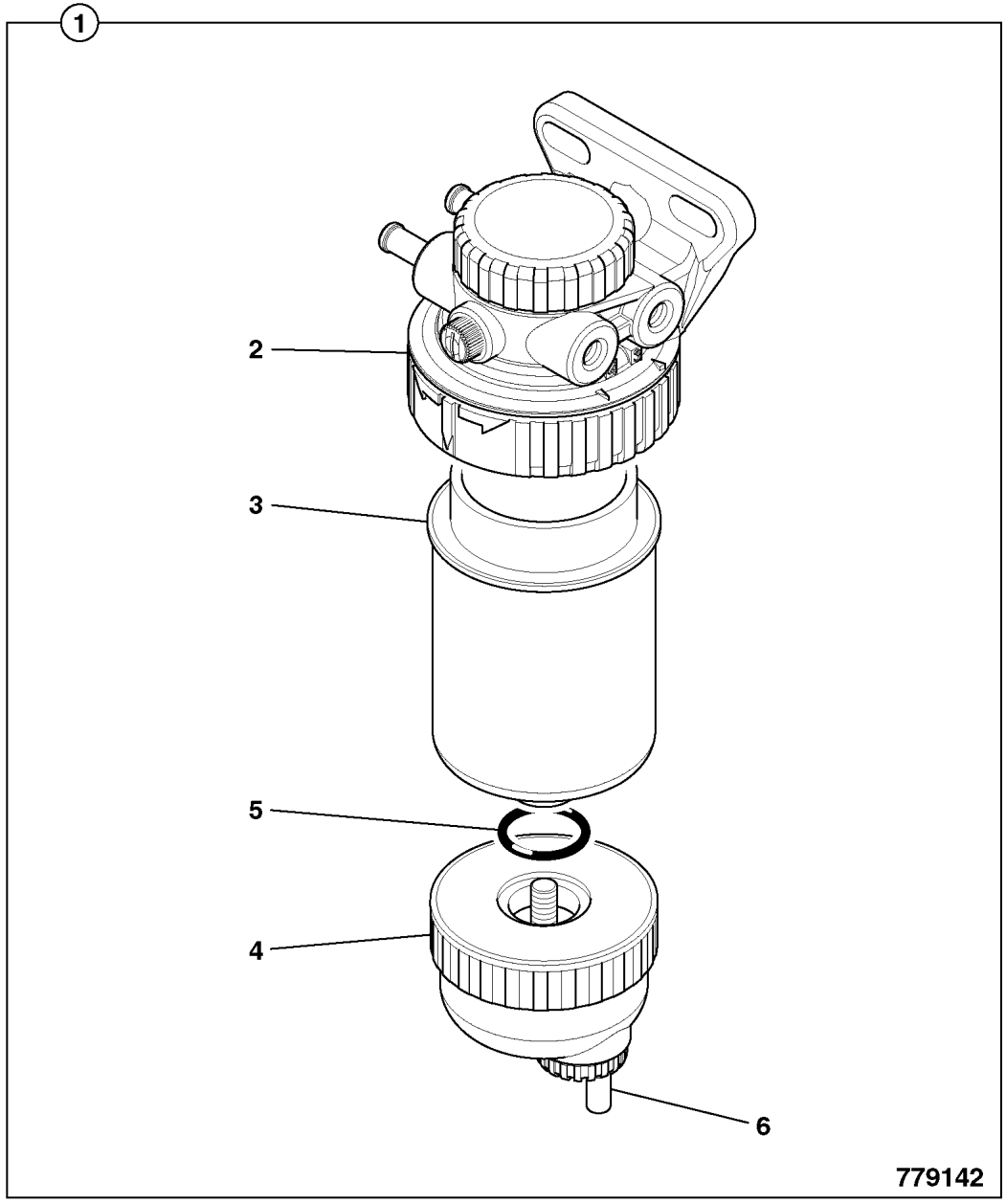

	FROM	TO	FROM	TO
JS160W				

ITEM	PART NO	CHANGE NO	DESCRIPTION	REMARKS	USAGE CODE	QTY
1	32/925868		Filter, fuel sediment, assembly 5 micron			1
2	N.S.P		:None serviced part			1
3	32/925869		:Element, fuel sediment filter, cartridge			1
4	32/925708		:Bowl, assembly			1
5	32/925733		:Seal, o'ring			1
6	32/925817		Kit-drain valve, with seal			1

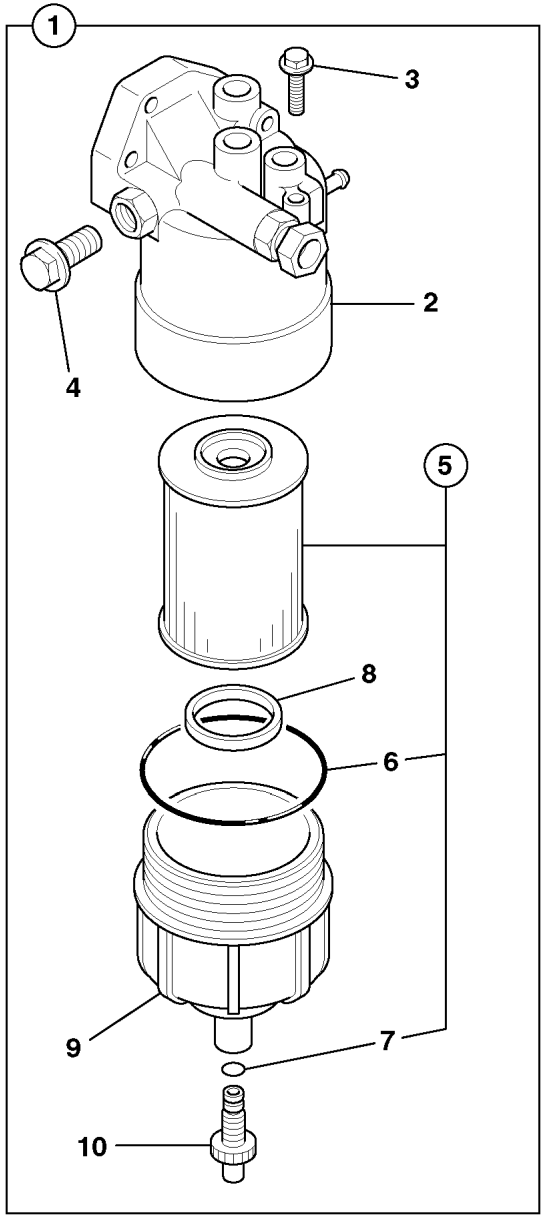

870470

	FROM	TO	FROM	TO
JS160W				

ITEM	PART NO	CHANGE NO	DESCRIPTION	REMARKS	USAGE CODE	QTY
1	32/925732		Filter, fuel sedimentor			1
2	NSP		:None serviced part			1
3	02/802296		:Plug			1
4	02/802297		:Plug			1
5	32/925838		:Element, fuel filter, cartridge			1
6	32/925839		::Gasket			1
7	32/925841		::Plug			1
8	32/925840		:Float, water level			1
9	NSP		:None serviced part			1
10	02/802298		:Plug			1

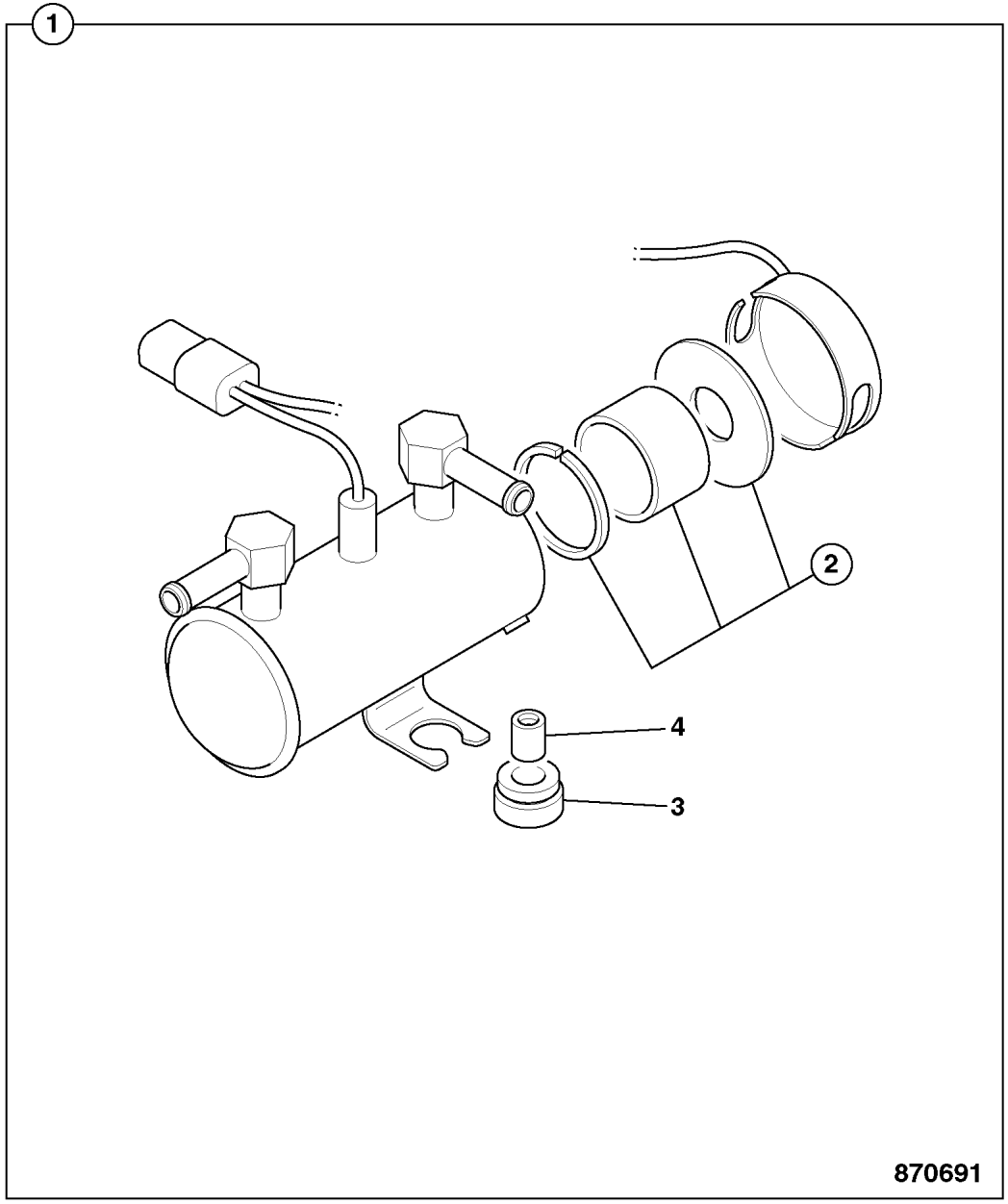

	FROM	TO	FROM	TO
JS160W				

ITEM	PART NO	CHANGE NO	DESCRIPTION	REMARKS	USAGE CODE	QTY
1	17/926100		Pump, fuel feed			1
2	17/926101		:Kit-filter			1
3	02/802196		:Grommet			2
4	02/802195		:Collar			2

R

R1 ENGINE BLOCK & SUB-ASSEMBLIES
R2 CYLINDER HEAD & SUB-ASSEMBLIES
R3 INDUCTION & EXHAUST SYSTEMS
R4 SYSTEM, COOLING
R5 SYSTEM, LUBRICATION
R6 SYSTEM, FUEL
● R7 EQUIPMENT, AUXILIARY
R8 GASKET SETS

ENGLISH

R7-1-1 TURBOCHARGER
R7-2-1 TURBO, PIPEWORK
R7-5-2 COMPRESSOR, INSTALLATION, AIR CONDITIONING
R7-6-1 COMPRESSOR, AIR CONDITIONING

FRANCAIS

R7-1-1 TURBOCHARGER
R7-2-1 TURBO, TUYAUTERIE
R7-5-2 COMPRESSEUR, 12V CONDITIONNEMENT D'AIR
R7-6-1 COMPRESSEUR, CONDITIONEMENT D'AIR

DEUTSCH

R7-1-1 TURBOCHARGER
R7-2-1 TURBO, LEITUNGEN
R7-5-2 KOMPRESSOR 12.VOLT KLIMAANLAGE
R7-6-1 COMPRESSOR KLIMAANLAGE

ITALIANO

R7-1-1 TURBOCHARGER
R7-2-1 TURBO, TUBAZIONI
R7-5-2 COMPRESSORE 12 V CONDIZIONAMENTO ARIA
R7-6-1 COMPRESSORE CONDIZIONAMENTO ARIA

PORTUGUES

R7-1-1 TURBOCHARGER
R7-2-1 TURBO, TUBAGEM
R7-5-2 COMPRESSOR 12 VOLTS AR CONDICIONADO
R7-6-1 COMPRESSOR AR CONDICIONADO

ESPANOL

R7-1-1 TURBOCHARGER
R7-2-1 TURBO, TUBERIAS
R7-5-2 COMPRESOR 12 VOLT AIRE ACONDICIONADO
R7-6-1 COMPRESOR AIRE ACONDICIONADO

	FROM	TO	FROM	TO
JS160W				

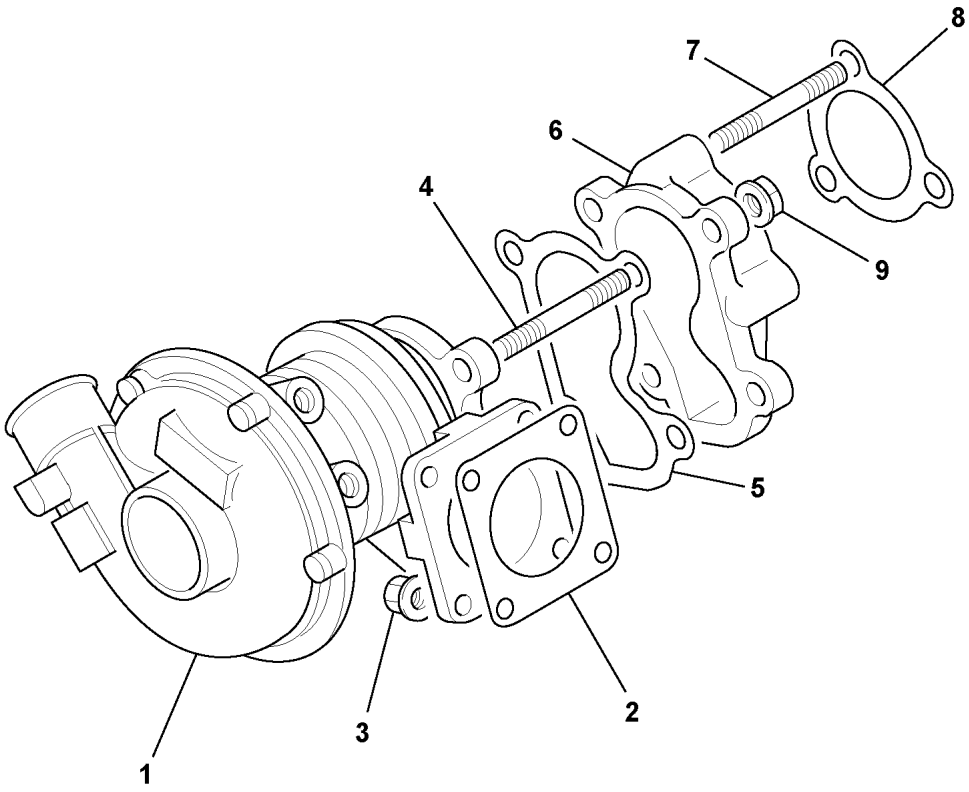

906160

ITEM	PART NO	CHANGE NO	DESCRIPTION	REMARKS	USAGE CODE	QTY
1	02/802544		Turbocharger			1
2	02/802545		Gasket, Gasket turbocharger			1
3	02/802456		Nut			4
4	02/802523		Stud			4
5	02/802601		Gasket			1
6	02/802547		Adapter, Adapter exhaust pipe			1
7	02/800813		Stud			3
8	8943690210		Gasket			1
9	02/802548		Nut, exhaust pipe			4

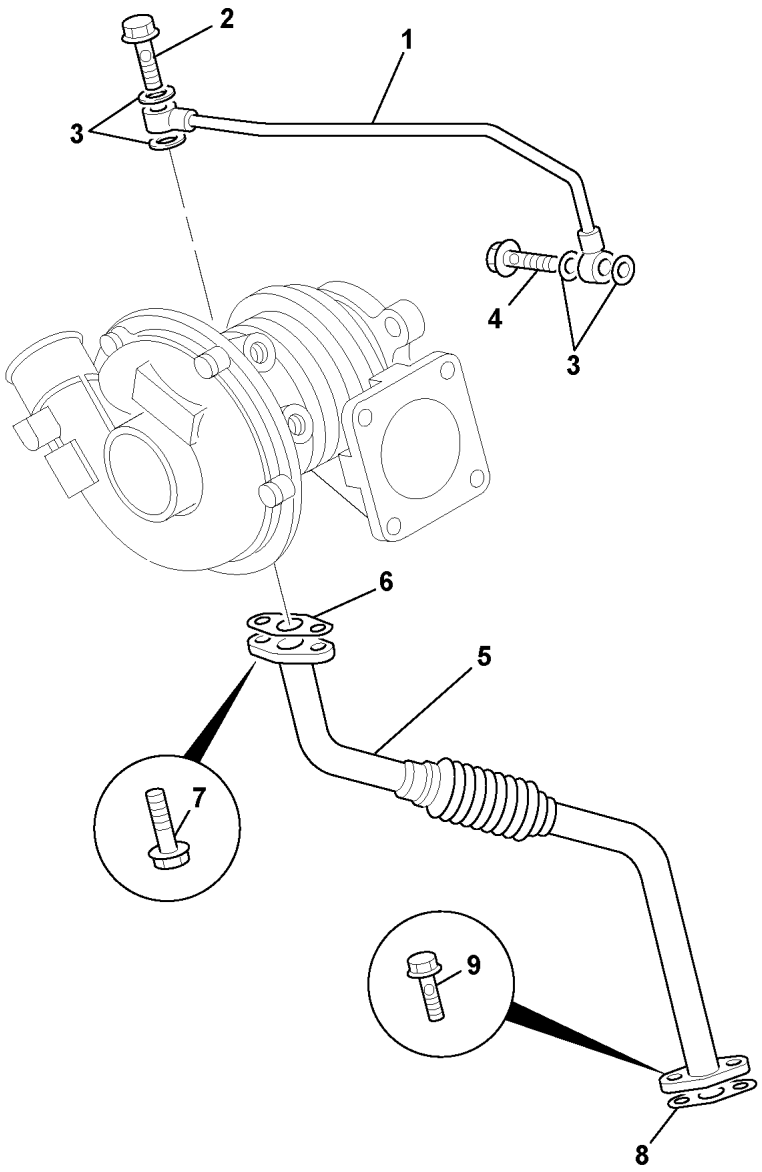

906170

	FROM	TO	FROM	TO
JS160W				

ITEM	PART NO	CHANGE NO	DESCRIPTION	REMARKS	USAGE CODE	QTY
1	02/802619		Pipe, oil, feed			1
2	02/802614		Bolt			1
3	9095714100		Washer, seal			4
4	9099062051		Bolt			1
5	02/802621		Pipe, oil return			1
6	02/802620		Gasket, pipe - turbochager			1
7	02/802623		Bolt			2
8	02/802622		Gasket, pipe - cylinder bloc			1
9	02/802542		Bolt			2

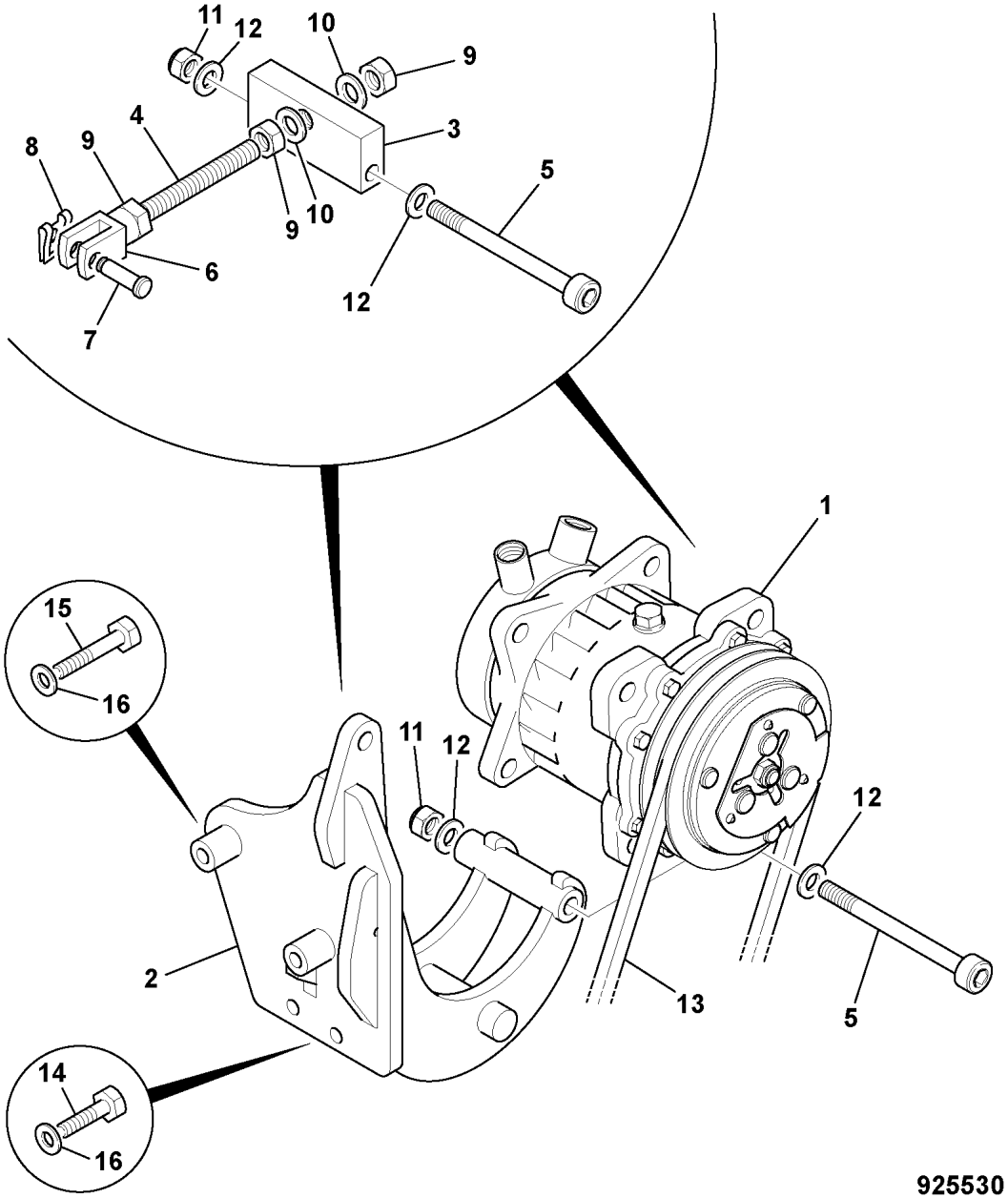

925530

	FROM	TO	FROM	TO
JS160W				

ITEM	PART NO	CHANGE NO	DESCRIPTION	REMARKS	USAGE CODE	QTY
1	123/04999		Compressor, 24v	See section R7-6-1 for service parts		1
2	332/J0658		Bracket, Compressor mounting			1
3	332/J0662		Bar, Adjuster			1
4	826/11558		Screw, adjuster			1
5	332/J1316		Bolt, Shoulder			2
6	913/10359		Clevis, M12			1
7	913/00040		Pin, clevis			1
8	821/00211		Clip, safety fastener			1
9	1370/0401D		Nut, M12			3
10	1420/0009D		Washer, M12			2
11	1370/0303D		Nut, M10			2
12	1422/0008D		Washer, Hardened washer			4
13	331/44674		Belt, drive, L=1138			1
14	1391/3308D		Capscrew			2
15	1391/3312D		Capscrew			2
16	1422/0007D		Washer, Hardened washer			4

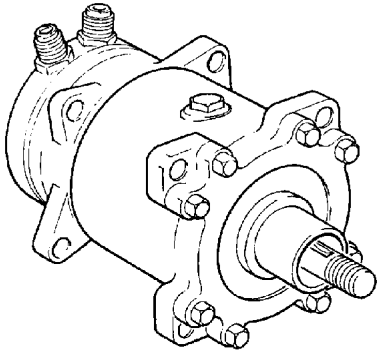

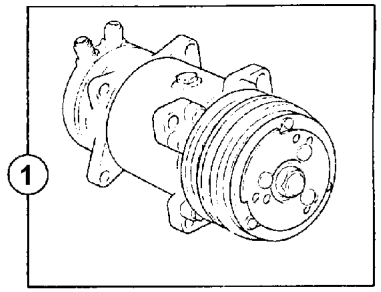

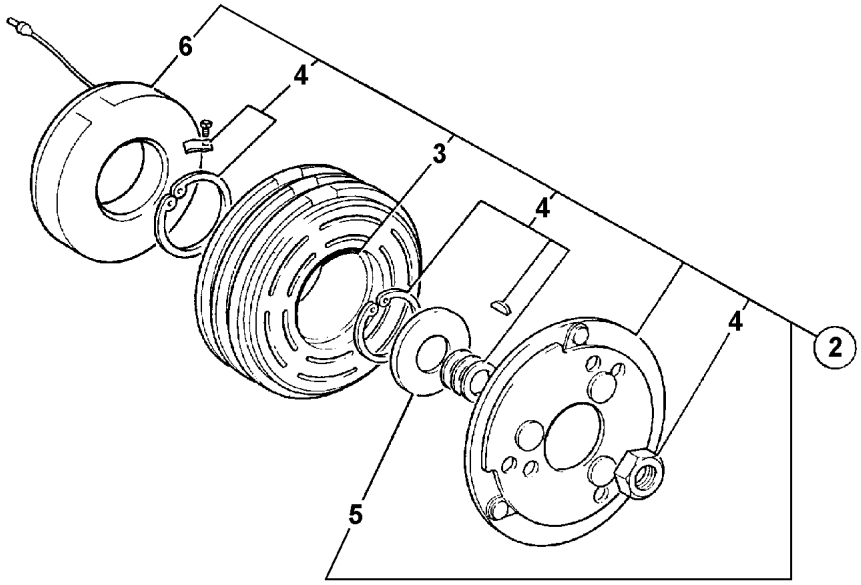

188431

	FROM	TO	FROM	TO
JS160W				

ITEM	PART NO	CHANGE NO	DESCRIPTION	REMARKS	USAGE CODE	QTY
1	123/04998		Compressor, 12v			1
2	997/11400		:Clutch, coil assembly, 12v			1
3	141/00823		::Bearing			1
4	141/00824		::Kit-sundry parts			1
5	141/00867		:Cover, bearing dust			1
6	141/00822		:Coil, field			1

R

R1 ENGINE BLOCK & SUB-ASSEMBLIES
R2 CYLINDER HEAD & SUB-ASSEMBLIES
R3 INDUCTION & EXHAUST SYSTEMS
R4 SYSTEM, COOLING
R5 SYSTEM, LUBRICATION
R6 SYSTEM, FUEL
R7 EQUIPMENT, AUXILIARY
● R8 GASKET SETS

ENGLISH

R8-1-1 GASKET SET, ENGINE OVERHAUL
R8-1-2 GASKET SET, CYLINDER HEAD, OVERHAUL

FRANCAIS

R8-1-1 GASKET SET, ENGINE OVERHAUL
R8-1-2 GASKET SET, CYLINDER HEAD, OVERHAUL

DEUTSCH

R8-1-1 GASKET SET, ENGINE OVERHAUL
R8-1-2 GASKET SET, CYLINDER HEAD, OVERHAUL

ITALIANO

R8-1-1 GASKET SET, ENGINE OVERHAUL
R8-1-2 GASKET SET, CYLINDER HEAD, OVERHAUL

PORTUGUES

R8-1-1 GASKET SET, ENGINE OVERHAUL
R8-1-2 GASKET SET, CYLINDER HEAD, OVERHAUL

ESPANOL

R8-1-1 GASKET SET, ENGINE OVERHAUL
R8-1-2 GASKET SET, CYLINDER HEAD, OVERHAUL

	FROM	TO	FROM	TO
JS160W				



ITEM	PART NO	CHANGE NO	DESCRIPTION	REMARKS	USAGE CODE	QTY
1	* 02/802344		Kit-gasket, engine overhaul			1
2	02/802345		Kit-gasket, engine overhaul, oversize			1
3	02/802346		Kit-gasket, engine overhaul, oversize			1



	FROM	TO	FROM	TO
JS160W				

ITEM	PART NO	CHANGE NO	DESCRIPTION	REMARKS	USAGE CODE	QTY
1	* 02/802347		Kit-gasket, cylinder head, overhaul			1
2	02/802348		Kit-gasket, cylinder head, overhaul oversize			1
3	02/802349		Kit-gasket, cylinder head, overhaul oversize			1

DESCRIPTION	PAGE NUMBER	ITEM NUMBER
'		
'See Remark'	D2-2-1	5
'See Remark'	F3-3-1	5
'See Remark'	F3-4-1	5
A		
Adapter, tooth, V23	A2-1-1	2
Adapter, Adapter exhaust pipe	R7-1-1	6
Adjuster, chain tensioner	R1-6-2	22
Alarm, reverse	C1-7-1	1
Alternator	C2-1-1	1
Alternator	C2-4-1	1
Arm, rocker	R2-2-1	5
B		
Bar, Adjuster	R7-5-2	3
Bearing	F1-4-1	4
Belt, fan	R1-5-1	16
Belt, fan	R1-5-2	6
Block, assembly, cyl.	R1-3-1	1
Body, stabiliser	B1-21-15	23
Bolt	B1-11-1	25
Bolt	C2-1-1	10
Bolt, verbuss ripp, M16 x 40	F1-4-1	6
Bolt, M12 x 20mm	R4-3-1	1
Boom, upper, complete	B3-11-1	1
Bowl, assembly	R6-6-1	4
Bracket	R3-1-1	13
Bracket	R6-2-1	13
Bracket	R6-2-1	2
Bracket, air cleaner	R3-3-1	9
Bracket, cable retention	R1-5-1	8
Bracket, engine mounting	R1-8-1	1
Bracket, exhaust mounting	R3-4-1	2
Bracket, gear case cover	R1-6-1	7
Bracket, hanger eng. front	R2-6-1	3
Bracket, hanger eng. RR	R2-6-1	1
Bracket, hose clamp	R5-3-1	2
Bracket, Compressor mounting	R7-5-2	2
Bracket, ECM mounting	C2-1-2	2
Bucket, GP 500mm wide	A2-1-1	1
Bucket, Heavy Duty	A2-1-27	1
Bucket, 1050mm Heavy Duty	A2-1-26	1
Bucket, 1250mm Heavy Duty	A2-1-28	1
Bucket, 550MM Heavy Duty	A2-1-21	1
Bucket, 650mm Heavy Duty	A2-1-22	1
Bucket, 750mm Heavy Duty	A2-1-23	1
Bucket, 850mm Heavy Duty	A2-1-24	1
Bucket, 950mm Heavy Duty	A2-1-25	1
Bush, connecting rod	R1-4-1	13
Bush, tube bushing	B1-11-1	28
Bush, tube bushing	B1-21-15	24
C		
Camshaft, exhaust	R1-6-2	1
Camshaft, inlet	R1-6-2	2
Cap, expansion tank	R4-5-1	12
Cap, oil filler	R2-3-1	6
Cap, radiator	R4-5-1	2
Carrier, planetary hub	F2-3-1	22
Case, timing gear	R1-6-1	1
Casing, crankshaft	R1-3-1	29
Chain, timing	R1-6-2	4
Clip, safety fastener	R7-5-2	8
Collar	R6-8-1	4
Compressor, 12v	R7-6-1	1
Compressor, 24v	R7-5-2	1
Condenser, alternator	C2-4-1	5
Connector, glow plug	R2-1-1	14
Cooler	R3-5-1	1
Cooler, assy.	R5-4-1	1
Cooler, charge air	R4-4-1	4
Cooler, charge air	R4-7-1	1
Cooler, combination	R4-4-1	1
Cooler, oil	R4-4-1	3
Cover	R1-6-1	26
Cover	R2-3-1	14
Cover	R6-1-1	4
Cover, alternator assembly	C2-4-1	2
Cover, cyl head	R2-1-1	26
Cover, gear case	R1-6-1	16
Cover, oil port	R5-4-1	8
Cover, rocker	R2-3-1	1
Cover, stabiliser	B1-21-15	29
Cowling, fan	R4-4-1	11
Crankshaft	R1-4-1	1
D		
Differential, assembly	F1-5-1	1

DESCRIPTION	PAGE NUMBER	ITEM NUMBER
Differential, assembly	F2-5-1	1
Dipstick	R5-1-1	18
E		
Element, air filter, main	R3-3-1	5
Element, air filter, safety	R3-3-1	6
Element, fuel filter, cartridge	E3-15-1	6
Element, fuel filter, cartridge	R6-7-1	5
Element, fuel sediment filter, cartridge	R6-6-1	3
Element, oil filter, cartridge	R5-3-1	1
Engine, complete, 4JJ1-XYSJ01	R1-1-1	1
F		
Fan, alternator	R1-5-1	13
Fan, alternator	R1-5-2	8
Fan, puller, D=550mm	R1-5-2	12
Fan, viscous clutch, assembly	R1-5-1	7
Filter, engine oil, remote mounting	R5-3-1	1
Filter, fuel sediment, assembly 5 micron	R6-4-1	1
Filter, fuel sediment, assembly 5 micron	R6-6-1	1
Filter, fuel sedimentor	R6-4-1	2
Filter, fuel sedimentor	R6-7-1	1
Flange	R1-6-2	18
Float, water level	R6-7-1	8
Flywheel	R1-7-1	7
Foot, stabiliser	B1-21-15	3
G		
G.A, PILOT CONTROL	E1-62-1	99
Gasket	R1-6-1	6
Gasket	R1-6-1	27
Gasket	R3-1-1	7
Gasket	R3-5-1	8
Gasket	R3-5-1	3
Gasket	R3-5-1	2
Gasket	R4-1-1	2
Gasket	R4-8-1	11
Gasket	R5-4-1	19
Gasket	R6-7-1	6
Gasket	R7-1-1	5
Gasket	R7-1-1	8
Gasket, chain tensioner	R1-6-2	23
Gasket, cylinder head cover	R2-3-1	21
Gasket, exhaust manifold	R3-2-1	2
Gasket, gear case - cover	R1-6-1	17
Gasket, gear case - cylinder	R1-6-1	4
Gasket, manifold - cylinder	R3-1-1	2
Gasket, pipe - cylinder bloc	R7-2-1	8
Gasket, pipe - turbochager	R7-2-1	6
Gasket, sump	R5-1-1	7
Gasket, water pipe	R4-8-1	4
Gasket, Gasket cylinder head	R2-1-1	11
Gasket, Gasket turbocharger	R7-1-1	2
Gear, crankshaft, pulley	R1-4-1	5
Gear, idler	R1-6-2	16
Gear, idler	R1-6-2	5
Gear, injection pump	R1-6-2	13
Gear, starter ring	R1-7-1	8
Grommet	R6-8-1	3
Guard, fan	R4-4-1	10
Guide, timing chain	R1-6-2	10
H		
Harness	C2-2-1	1
Head, Head cylinder assemb	R2-1-1	0
Holder, brush	C2-3-1	5
Hose	E1-5-1	2
Hose	E1-20-1	7
Hose	E1-20-10	7
Hose	E1-22-10	7
Hose	E1-22-10	6
Hose	R4-2-1	19
Hose	R4-2-1	11
Hose	R4-2-1	6
Hose	R4-7-1	11
Hose	R4-7-1	6
Hose	R4-8-1	9
Hose	R4-8-1	1
Hose	R6-2-1	34
Hose	R6-2-1	32
Hose	R6-2-1	30
Hose	R6-2-1	10
Hose	R6-2-1	7
Hose, air charge cooler	R4-7-1	2
Hose, drive, left hand	E1-5-1	1
Hose, elbow 105 deg	R4-7-1	9
Hose, induction	R3-3-1	8
Hose, oil breather, L=920	R2-3-1	17

DESCRIPTION	PAGE NUMBER	ITEM NUMBER
Hose, oil cooler	R5-3-1	13
Hose, oil cooler	R5-3-1	14
Hose, oil drain & keeper, M26 X 1.5 & M12	R5-1-1	23
Hose, radiator bottom	R4-5-1	4
Hose, radiator top	R4-5-1	3
Hose, water pipe	R4-8-1	13
Housing, crankshaft seal	R1-3-1	32
Housing, flywheel	R1-7-1	1
I		
Injector, assembly	R6-2-1	24
J		
Jet, oil timing chain	R1-6-2	12
K		
Key	B1-9-1	34
Kit-air filter	R3-3-1	1
Kit-bearing, big end	R1-4-1	9
Kit-drain valve, with seal	R6-6-1	6
Kit-end cap	F1-7-1	3
Kit-filter	R6-8-1	2
Kit-gasket, cylinder head, overhaul	R8-1-2	1
Kit-gasket, engine overhaul	R8-1-1	1
Kit-main bearing	R1-4-1	7
Kit-piston ring, standard	R1-4-1	18
Kit-seal	F1-7-1	2
Kit, soundproofing	R4-3-1	3
Knob, throttle control	D2-2-1	1
L		
Lead, starter earth	C2-1-1	6
Lead, starter earth	C2-3-1	7
Leg, stabiliser	B1-21-15	2
Lever, solenoid, operating	C2-3-1	3
Lever, tension	R1-6-2	20
Link, steer, assembly	F1-7-1	7
Link, steer, assembly	F1-7-1	7
M		
Manifold, common rail, assy.	R6-2-1	1
Manifold, exhaust	R3-2-1	1
Manifold, inlet	R3-1-1	1
Motor, starter	C2-1-1	4
Motor, starter	C2-3-1	1
Motor, swing	E2-7-1	0
Mounting, engine	R1-8-1	1
Mounting, metalastik	R1-8-1	10
N		
Nipple, grease	F1-4-1	7
Nipple, grease, 45 deg. angle	F1-7-1	9
Nozzle, oil pressure warning	R1-3-1	16
Nut	B1-11-1	26
Nut	B1-21-15	28
Nut	D2-2-1	3
Nut, wheel	F3-2-1	8
Nut, wheel	F3-3-1	12
Nut, wheel	F3-4-1	12
O		
O Ring, id=49.7	R6-1-1	2
P		
Pin, pivot	B3-10-1	17
Pin, pivot	B3-10-1	16
Pipe	R3-1-1	8
Pipe	R3-4-1	3
Pipe	R4-2-1	1
Pipe	R4-8-1	2
Pipe	R4-8-1	8
Pipe	R5-4-1	14
Pipe	R6-2-1	11
Pipe	R6-2-1	36
Pipe	R6-2-1	33
Pipe	R6-2-1	31
Pipe, brake rear, L.H.	E1-15-1	11
Pipe, brake rear, R.H.	E1-15-1	10
Pipe, bucket	E1-21-1	7
Pipe, bucket	E1-21-1	18
Pipe, feed	E1-22-10	4
Pipe, feed	E1-22-10	5
Pipe, fuel	R6-2-1	8
Pipe, fuel	R6-2-1	6

DESCRIPTION	PAGE NUMBER	ITEM NUMBER
Pipe, fuel	R6-2-1	5
Pipe, fuel injection no.1	R6-2-1	17
Pipe, fuel injection No. 3	R6-2-1	19
Pipe, fuel injection No. 4	R6-2-1	20
Pipe, fuel injection No.2	R6-2-1	18
Pipe, oil jet	R1-3-1	37
Pipe, oil return	R7-2-1	5
Pipe, oil strainer	R5-1-1	19
Pipe, oil, feed	R7-2-1	1
Pipe, water inlet, turbochager	R4-2-1	18
Pipe, water, turbochager	R4-2-1	8
Pipe, water, turbocharger	R4-2-1	12
Piston	R1-4-1	15
Plate, adjuster	C2-5-1	1
Plate, baffle, cyl head	R2-1-1	12
Plate, locking	R1-7-1	9
Plug	R6-7-1	10
Plug	R6-7-1	7
Plug	R6-7-1	4
Plug	R6-7-1	3
Potentiometer	D2-2-1	2
Pulley, alternator	R1-5-1	14
Pulley, alternator	R1-5-2	7
Pulley, crankshaft	R1-5-1	1
Pulley, crankshaft	R1-5-2	1
Pulley, fan	R1-5-1	4
Pulley, fan	R1-5-2	4
Pump, assy. oil	R5-2-1	1
Pump, fuel	R6-1-1	1
Pump, fuel feed	R6-4-1	3
Pump, fuel feed	R6-8-1	1
Pump, water	R4-1-1	1

R

DESCRIPTION	PAGE NUMBER	ITEM NUMBER
Radiator	R4-4-1	2
Radiator	R4-5-1	1
Radio	C3-11-1	1
Ram, powered track rod	F1-7-1	1
Rectifier, alternator	C2-4-1	4
Regulator, voltage	C2-4-1	3
Relay, safety, pulse	C2-1-1	18
Relay, thermostart	C2-1-1	19
Rod, assembly	F1-7-1	5
Rod, connecting	R1-4-1	10
Rotor, crankshaft sensor	R1-4-1	4

S

DESCRIPTION	PAGE NUMBER	ITEM NUMBER
Seal	F1-4-1	5
Seal, anti-recirculation	R4-3-1	4
Seal, anti-recirculation	R4-3-1	5
Seal, anti-recirculation	R4-3-1	6
Seal, anti-recirculation	R4-3-1	7
Seal, o'ring	R6-6-1	5
Seal, oil, crankshaft front	R1-6-1	18
Seal, oil, crankshaft front	R1-6-1	22
Seal, rear oil	R1-3-1	33
Seal, valve guide	R2-2-1	10
Seat, spring	R2-2-1	9
Sensor, air pressure	C2-1-1	8
Sensor, air pressure	R3-1-1	12
Sensor, angle position	C2-1-1	12
Sensor, angle position	C2-1-1	23
Sensor, angle position	R1-3-1	20
Sensor, barometric pressure	C2-1-1	16
Sensor, inlet temperature	C2-1-1	17
Sensor, inlet temperature	C2-1-1	11
Sensor, inlet temperature	R3-1-1	11
Sensor, low water level	R4-5-1	13
Sensor, oil pressure	C2-1-1	20
Sensor, oil pressure	R1-3-1	35
Sensor, water temperature	C2-1-1	7
Shaft, idler gear	R1-6-2	6
Shaft, idler gear	R1-6-2	19
Shaft, rocker arm	R2-2-1	1
Shaft, rocker arm	R2-2-1	2
Silencer, exhaust	R3-4-1	1
Solenoid, starter, motor	C2-3-1	2
Spacer, extension tube	B1-11-1	27
Spacer, extension tube	B1-21-15	25
Spacer, fan	R1-5-1	5
Spacer, tyre	F3-3-1	8
Spacer, tyre	F3-4-1	8
Spring, brush holder	C2-3-1	6
Spring, torsion R.H	B1-21-15	26
Sprocket, idler	R1-6-2	14
Sprocket, idler	R1-6-2	3
Sump, pan assy.	R5-1-1	1
Switch, oil level	C2-1-1	22
Switch, oil level	R5-1-1	8
Switch, pressure, 175 bar	E1-25-1	9
Switch, pressure, 175 bar	E1-25-10	9
Switch, pressure, 175 bar	E1-25-20	9
Switch, temperature sender, 3/8"	R4-2-1	5

DESCRIPTION	PAGE NUMBER	ITEM NUMBER
T		
Tank, radiator expansion	R4-5-1	11
Thermostart	R2-1-1	15
Thermostat	R4-2-1	4
Tooth, point	A2-1-1	4
Tube	R6-4-1	6
Tube, dipstick	R5-1-1	13
Tube, fuel, L=1700	R6-4-1	7
Tube, inner	F3-3-1	4
Tube, inner	F3-4-1	4
Tube, upper	R4-7-1	3
Tube, vinyl	R6-4-1	4
Tube, vinyl	R6-4-1	5
Tube, vinyl	R6-4-1	8
Tube, CAC lower	R4-7-1	10
Tube, Low Flow	E1-29-10	44
Turbocharger	R7-1-1	1
Tyre, 10.00 x 20 EM22 16PR, MITAS	F3-3-1	3
Tyre, 1000-20 14PR BS FG, Bridgestone	F3-4-1	3
Tyre, 18R X 19.5, Michelin	F3-2-1	3
U		
Unit, ECM -4JJ 92kW, engine	C2-1-1	15
Unit, ECM -4JJ 92kW, engine	C2-1-2	1
V		
Valve	R3-5-1	7
Valve, dust	R3-3-1	4
Valve, exhaust	R2-2-1	8
Valve, inlet	R2-2-1	7
Valve, oil drain, M24X2 - M26X1.5 HOSE	R5-1-1	22
W		
Washer, M12	R4-3-1	2
Washer, M4	D2-2-1	4
Wheel, centre, B7.5 x 20, 10 stud	F3-3-1	2
Wheel, centre, B7.5 x 20, 10 stud	F3-4-1	2
Wheel, centre, 14 x 19.5, 10 stud	F3-2-1	2