RUTHZIL TRATOR COMERCIAL DE PEÇAS LTDA 11 97083-6812 ROLANDO

JCB INDIA LTD.

E-22

MODEL JS 200

CRAWLER EXCAVATOR

PARTS BOOK

MACHINE NO. - 1202000

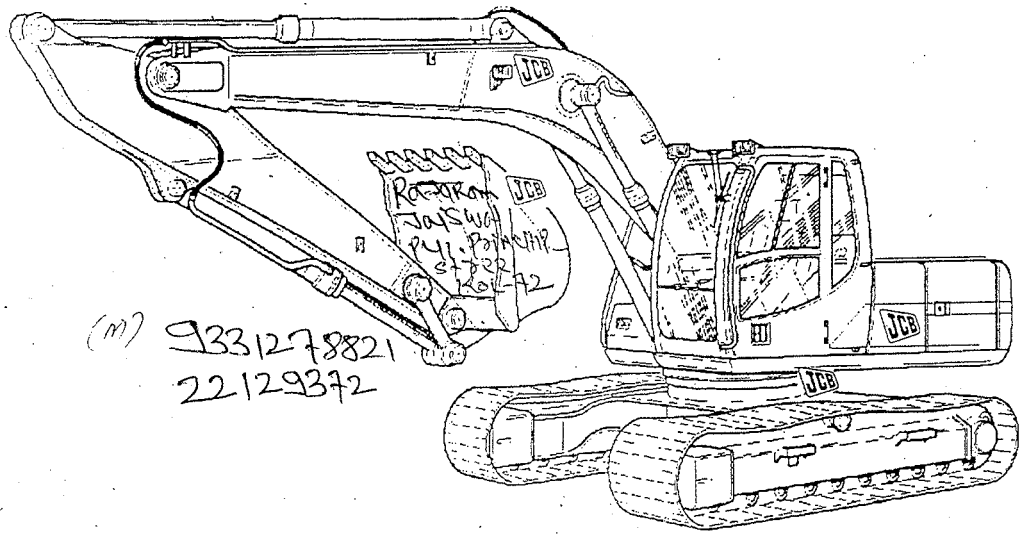

(M) 9331278821
22129372

INDEX

ATTACHMENTS — A

BODYWORK, CAB, LOADER END — B

ELECTRICS-MACHINE, CAB & ENGINE — C

CONTROLS-MACHINE, ENGINE — D

HYDRAULICS & AIR — E

TRACK/SLEW GEARBOX — F

TRACK & RUNNING GEAR, UNDERCARRIAGE — J

ENGINE — T

LIGHTS — L

PARTS LOCATION PROCEDURE

- REFER TO MACHINE DATE PLATE_____
  1 Machine Serial No.
  2 Engine Serial No.
  3 Gearbox Serial No.
  4 Torque Converter Serial No.
  5 Axle Serial No.

JCB MACHINE SERIAL NO.	MONTH & YEAR OF MFG.
ENGINE SERIAL NO.	PUMP SERIAL NO.
VALVE BLOCK SERIAL NO.	CHASIS NO.

JCB INDIA LIMITED
23/7, MATHURA ROAD, BALLABGARH-121004 (INDIA)

- SELECT SECTION _____

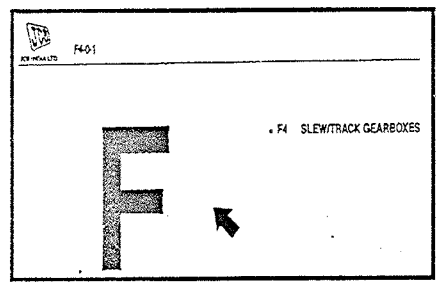

- REFER TO INDEX _____

F - TRACK/SLEW GEARBOX	
SLEW/TRACK GEARBOXES	F4
GEARBOX, ASSEMBLY & SPROCKET	F4-1-1
GEARBOX, TRACK	F4-2-1
MOTOR, SWING	F4-3-1
GEARBOX, SWING	F4-4-1

- LOCATE ITEM _____

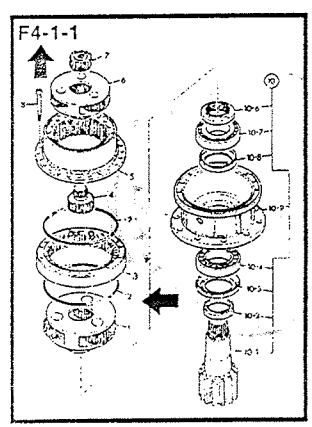

All item Nos. within a box or attached to another line are part of a assembly

PARTS ORDERING PROCEDURE

- MACHINE MODEL NO. AND SERIAL NO. _____

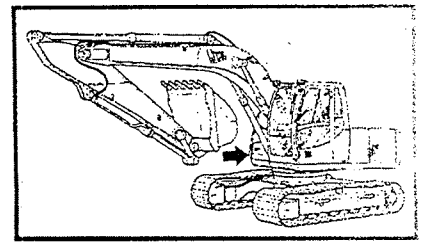

- PAGE REFERENCE NO._____

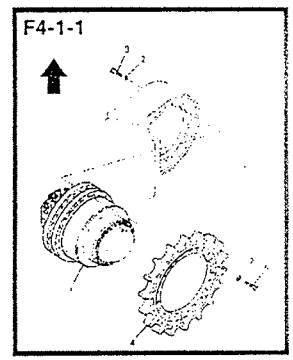

RAJA RAM JAISWAL
Kolkata
700075

- ILLUSTRATION ITEM NO._____

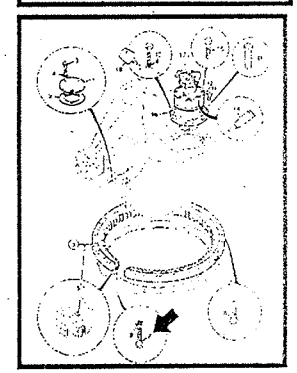

The purpose of this book is to assist the operator in ordering parts quickly and easily from a JCB Dealer. The index at the beginning of each section MUST be used with refererence to the machine type and seial number, to find the correct page for the part required.

JCB INDIA LTD.

RAJA RAM JAISWAL
Kolkata
700073
14, Princep Street, Shop No.

PART NO. / ISSUE NO. : 229 / 01269
ISSUE DATE : SEPT. 2005

TITLE	PAGE NO.
A - ATTACHMENTS	
BUCKETS	**A2**
BUCKET, WIDE, 0.89 CUBIC METRES	A2-1-5
BUCKET, WIDE, 1.02 CUBIC METRES	A2-1-6
BUCKET, WIDE, 1.20 CUBIC METRES	A2-1-7
BUCKET, WIDE, 0.9 CUBIC METER (I.I.D.)	A2-1-11
B - BODYWORK, CAB, EXCAVATOR END, REFURBISHMENT	
BODYWORK/FRAME	**B1**
MAINFRAME, REVOLVING	B1-1-1
COVERS, LOWER, MAINFRAME	B1-2-1
TANK, HYDRAULIC	B1-3-1
TANK, DIESEL FUEL	B1-4-1
COWLINGS, ENGINE COVER	B1-5-1
TOP COVER	B1-5-2
FRAME WORK	B1-5-10
BULK HEADS	B1-5-11
DOORS	B1-5-20
TOOL BOX & HAND DRILL	B1-5-30
TOOL BOX	B1-5
COUNTER WEIGHT REAR (INDIAN BUILD)	B1-6-1

TITLE	PAGE NO.
CAB	**B2**
CAB	B2-1-1
FRONT SCREEN	B2-1-10
FRONT WIPER, & CAB COMPONENTS	B2-1-20
CAB, MOUNTING FASTENERS	B2-1-30
CAB DOOR COMPONENTS	B2-2-1
SEAT, STANDARD	B2-3-1
CONSOLE, CAB CONTROL, LEFT HAND & RIGHT HAND, FIXED CONSOLE	B2-4-1
CAB PANELS	B2-8-1
FLOOR COMPONENTS, SEAT SLIDE, LEVER ISOLATOR	B2-10-1
DIRECT GLAZING, REPLACEMENT MATERIAL, CAB	B2-18-1
EXCAVATOR END	**B3**
BOOM	B3-1-1
DIPPER 1.91M	B3-2-1
DIPPER 2.4 M	B3-2-10
DIPPER 2.4M, JS 220 XTRA DUTY	B3-2-11
BOOM GREASING	B3-4-1
TIPPING LINK, & LINKAGE	B3-5-1
EXCAVATOR, SHIMS	B3-12-1

JCB INDIA LTD.

PART NO. / ISSUE NO. : 229 / 01269

ISSUE DATE : SEPT. 2005

TITLE	PAGE NO.
REFURBISHMENTS	**B5**
DECALS, MACHINE	B5-1-1
DECALS, WARNING	B5-2-1
LABELS	B5-2-3
TOOLS	B5-3-1
C - ELECTRICS-MACHINE CAB & ENGINE	
ELECTRICS, MAIN MACHINE	**C1**
ELECTRICS, MACHINE	C1-1-1
ELECTRICS, CAB	C1-2-1
BATTERY INSTALLATION, 24 VOLT	C1-3-1
LIGHT, WORKING, TOOLBOX	C1-4-1
LIGHT, WORKING, CAB & REAR	C1-4-10
PUMP, DIESEL, REFUELING	C1-5-1
HORN	C1-6-1
ELECTRICS, CAB	**C3**
SWITCH PANEL, SIDE CONSOLE, RIGHT HAND	C3-2-1
MONITORING SYSTEM	C3-3-1
FUSE & RELAYS	C3-4-1

TITLE	PAGE NO.
D - CONTROLS-MACHINE, ENGINE	
CONTROLS, MACHINE	**D1**
CONTROLS, EXCAVATOR, CAB	D1-1-1
CONTROLS, ENGINE	**D2**
ENGINE CONTROLS	D2-1-1
HAND THROTTLE LEVER CONTROL	D2-2-1
E - HYDRAULICS, PUMP, VALVES & RAM	
HOSE & PIPEWORK	**E1**
CIRCUIT, PUMP SUCTION	E1-1-1
CIRCUIT, NEUTRAL PRESSURE	E1-2-1
CIRCUIT, NEUTRAL, RETURN & OIL COOLER	E1-3-1
CIRCIT, TANK MAINFRAME	E1-4-1
CIRCUIT, TRACK, UNDERCARRIAGE	E1-5-1
CIRCUIT, SWING	E1-6-1
CIRCUIT, BYPASS. HYDRAULIC FILTER	E1-8-1
CIRCUIT, DRAIN, MOTOR & SOLENIOD	E1-10-1
CIRCUIT, PUMP, PILOT PRESSURE, & RETURN LINE	E1-11-1
CIRCUIT, BOOM RAMS, MAINFRAME	E1-20-1
CIRCUIT, DIPPER & BUCKET	E1-21-1

RAJA RAM JAISWAL & CO. P-41, Princep Street, Shop No. Kolkata 700073

JCB INDIA LTD.

PART NO. / ISSUE NO. : 229 / 01269

ISSUE DATE : SEPT. 2005

TITLE	PAGE NO.
CIRCUIT, DIPPER RAM, MONOBOOM	E1-22-1
CIRCUIT, BUCKET RAM, 1.91M DIPPER	E1-23-1
CIRCUIT, BUCKET RAM, 2.4M DIPPER	E1-23-10
CIRCUIT, BUCKET RAM, PIPEWORK	E1-23-40
CIRCUIT, HAMMER CONTROL MAINFRAME	E1-30-10
CIRCUIT, AUXILIARY/HAMMER, MAINFRAME	E1-31-20
CIRCUIT, AUXILIARY/HAMMER, 1.91M DIPPER	E1-33-1
CIRCUIT, AUXILIARY/HAMMER, 2.40M DIPPER	E1-33-2
CIRCUIT, BUCKET RAM, TAB BOOM	E1-44-1
CIRCUIT, HYDRAULIC COMPONENTS, LAYOUT, REVOLVING FRAME	E1-50-1
CIRCUIT, VALVE, TRACK CONTROL	E1-61-1
CIRCUIT, VALVE. LH CONTROLLER	E1-62-1
CIRCUIT VALVE RH CONTROLLER	E1-63-1
CIRCUIT, VALVE, SOLENOID	E1-67-1
CIRCUIT, MANIFOLD, UNDER CAB	E1-68-1
CIRCUIT, TANK MANIFOLD	E1-69-1
CIRCUIT, PILOT LINE, MAIN CONTROL VALVE	E1-70-1
CIRCUIT, RETURN LINE, PILOT PRESSURE, MAIN CONTROL VALVE	E1-71-1
CIRCUIT, CHECK VALVE	E1-72-1
PUMP/MOTOR & PUMP DRIVE	**E2**
PUMP, PISTON, MAIN HYDRAULIC, DRIVE GROUP	E2-1-1
PUMP, PISTON, MAIN HYDRAULIC & COMPONENTS	E2-2-1
PUMP, PISTON, MAIN HYDRAULIC & COMPONENTS FIG 2	E2-2-2
PUMP, PISTON, MAIN HYDRAULIC & COMPONENTS FIG 3	E2-2-3
MOTOR, SWING	E2-7-1
VALVES & HYDRAULIC FILTERS	**E3**
VALVE, ASSEMBLY & MOUNTING	E3-1-1
VALVE, CONTROL, COMPONENTS FIG 1	E3-2-1
VALVE, CONTROL, COMPONENTS FIG 2	E3-2-2
VALVE, CONTROL, COMPONENTS FIG 3	E3-2-3
VALVE, CONTROL, COMPONENTS FIG 4	E3-2-4
VALVE, HAND CONTROL, SERVO	E3-6-1
VALVE, TRACK CONTROL, HAND AND FOOT	E3-7-1
VALVE, AUXILIARY, FOOT CONTROL	E3-7-10
VALVE SOLENOID	E3-8-1
COUPLING, ROTARY	E3-14-1
LUBRICANTS & FILTERS	E3-15-1
FILTER, HYDRAULIC, AUXILIARY CIRCUIT	E3-16-1
RAM	**E4**
BOOM RAM (LH)	E4-1-1
BOOM RAM (RH)	E4-1-2
RAM, DIPPER	E4-2-1
RAM, BUCKET	E4-3-1

RAJA RAM JAISWAL
Kolkata
700013
41, Princep Street, Shop No.

JS200 PARTS CATALOGUE INDEX SHEET

JCB INDIA LTD.

PART NO. / ISSUE NO. : 229 / 01269

ISSUE DATE : SEPT. 2005

TITLE	PAGE NO.
F - TRACK/SLEW GEARBOX	
SLEW/TRACK GEARBOXES	**F4**
GEARBOX, ASSEMBLY & SPROCKET	F4-1-1
GEARBOX, TRACK	F4-2-1
MOTOR, SWING	F4-3-1
GEARBOX, SWING	F4-4-1
J - TRACK & RUNNING GEAR, UNDERCARRIAGE	
TRACK, GEAR/UNDERCARRIAGE	**J1**
UNDERCARRIAGE	J1-1-1
IDLER WHEEL	J1-2-1
ROLLER, TRACK BOTTOM	J1-3-1
ROLLER, TRACK TOP	J1-4-1
CHAIN TRACK, GROUSER, 46 LINK	J1-5-1
RECOIL UNIT	J1-6-1
T - ENGINE	
ENGINE BLOCK & SUBASSEMBLIES	**T1**
ENGINE COMPLETE	T1-1-1
ENGINE MOUNTINGS	T1-8-1

TITLE	PAGE NO.
INDUCTION & EXHAUST SYSTEM	**T3**
FILTER, AIR	T3-3-1
EXHAUST SYSTEM	T3-4-1
SYSTEM COOLING	**T4**
RADIATOR, FITTINGS & MOUNTINGS	T4-3-1
RADIATOR OIL COLLER ASSY.	T4-4-1
LIGHTS	**L1**
WORKING LIGHTS ADDITIONAL	L1-2

RAJA RAM JAISWAL
41, Prince Street, Shop No. 8
Kolkata
700073

A

- A2 BUCKETS

RAJA RAM JAISWAL
P-41, Princep treet, Shop No. 9
Kolkata
700075

JCB INDIA LTD.

A2-1-5 BUCKET, WIDE, 0.89 CUBIC METRES

ISSUE - 1

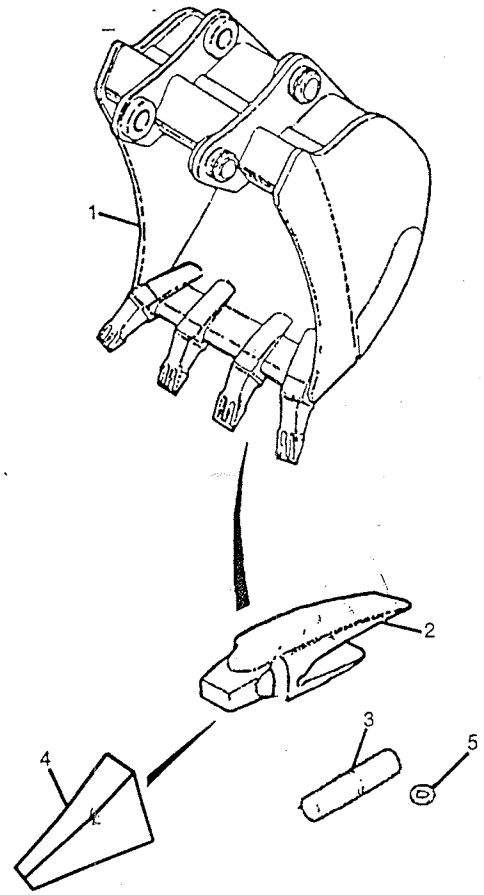

ITEM	PART NO.	CHANGE NO.	DESCRIPTION	REMARKS	QTY.
1	229/00590		Bucket		1
2	980/84765		Adapted, tooth - 1966		6
3	980/84767		Pin, locking,		6
4	980/84766		Tooth		6
5	980/84768		Washer		6

MAHAJA RAM JAISWAL
MP-41, Princep Street, Shop
Kolkata
700075

A2-1-6 BUCKET, WIDE, 1.02 CUBIC METRES

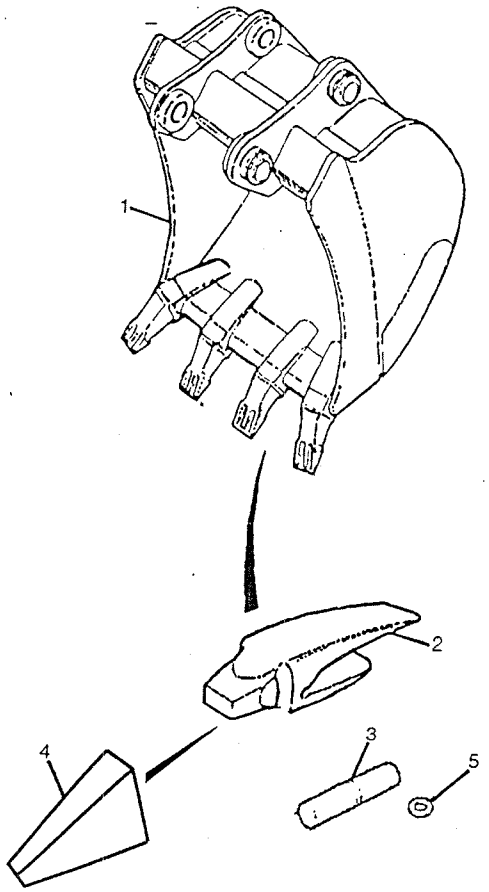

ITEM	PART NO.	CHANGE NO.	DESCRIPTION	REMARKS	QTY.
1	331/11726		Bucket		1
2	980/84765		Adapted, tooth		6
3	980/84767		Pin, locking,		6
4	980/84766		Tooth 333/P7952		6
5	980/84768		Washer		6

RAJA RAM JAISWAL & CO.
P-141, Princep Street, Shop No. 9
Kolkata
700075

JCB INDIA LTD.

A2-1-7 BUCKET, WIDE, 1.20 CUBIC METRES

ISSUE - 1

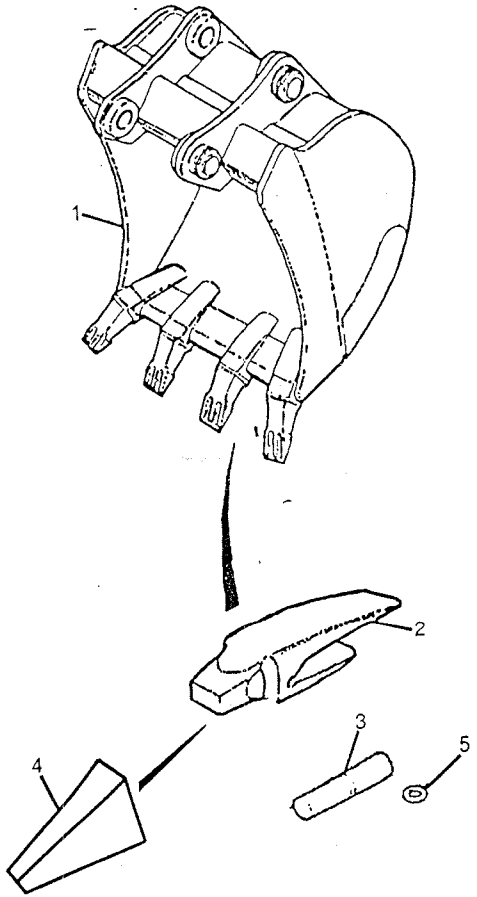

ITEM	PART NO.	CHANGE NO.	DESCRIPTION	REMARKS	QTY.
1	980/86142		Bucket		1
2	980/84765		Adapted, tooth		6
3	980/84767		Pin, locking,		6
4	980/84766		Tooth		6
5	980/84768		Washer		6

RAJA RAM JAISWAL & CO.
Kolkata
700073
Princep Street, Shop No.

JCB INDIA LTD.

A2-1-11 BUCKET, WIDE, 0.90 CUBIC METRES (H.D.)

ISSUE - 1

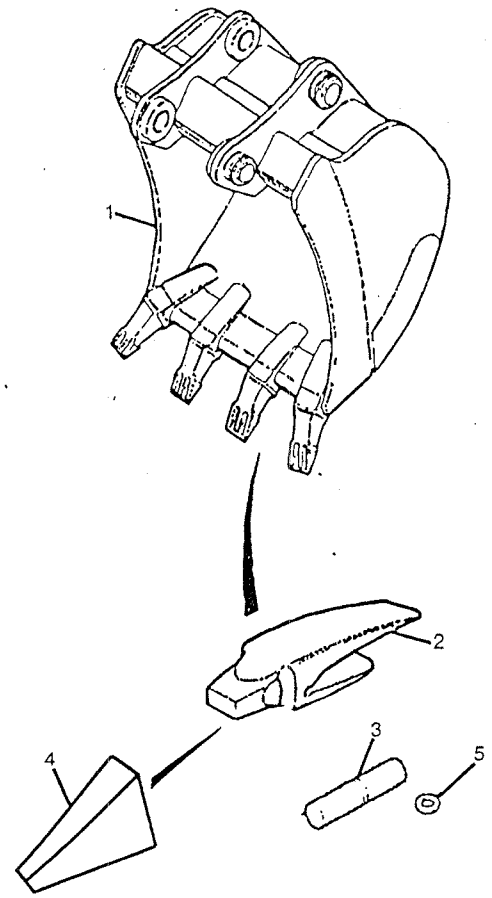

ITEM	PART NO.	CHANGE NO.	DESCRIPTION	REMARKS	QTY.
1	229/00963		Bucket		1

RAJA RAM JAISWAL & CO.
P-11, Princep Street, Shop No. 8
Kolkata
700013

B

- B1 BODYWORK/FRAME
- B2 CAB
- B3 EXCAVATOR END
- B5 REFURBISHMENTS

RAJA RAM JAISWAL & CO.
Kolkata
700013
41, Princep Street, Shop No. 9

JCB INDIA LTD.

B1-1-1 MAINFRAME, REVOLVING

ISSUE - 1

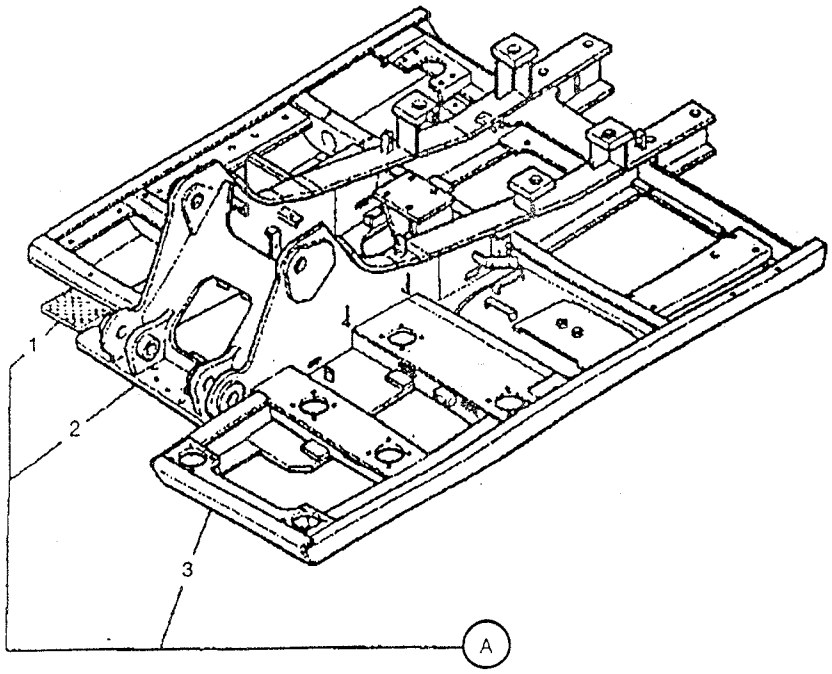

ITEM	PART NO.	CHANGE NO.	DESCRIPTION	REMARKS	QTY.
0A	229/01054		Frame, revolving		1
1	229/01208		Platform, right hand side		1
2	335/07886		Frame, revolving A&E		1
3	229/01057		Platform, left hand side		1

RAJA RAM JAISWAL
P-41, Princep Street, Shop No. 9
Kolkata
700075

B1-2-1 COVERS, LOWER, MAINFRAME

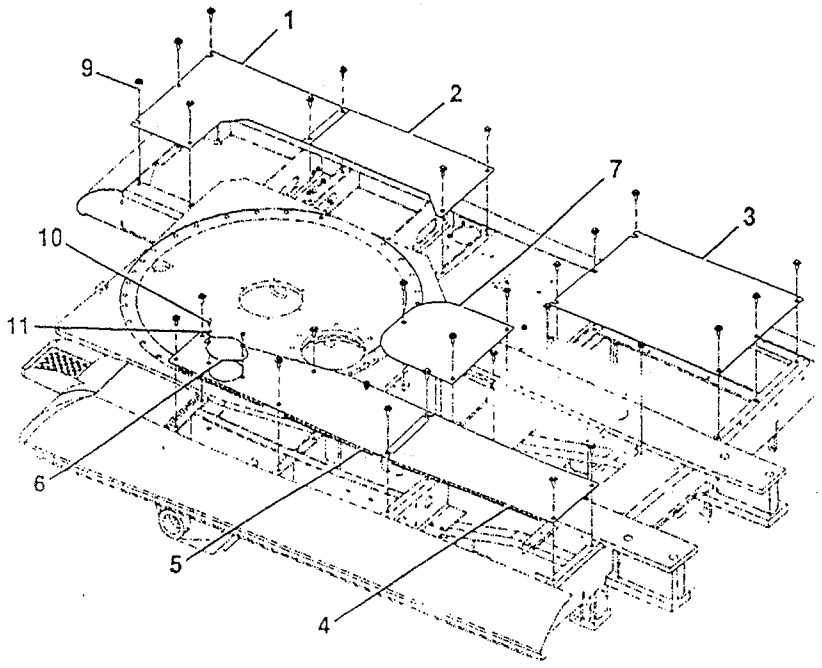

ITEM	PART NO.	CHANGE NO.	DESCRIPTION	REMARKS	QTY.
1	331/35462		Cover, under, cub front		1
2	331/35464		Cover, under, cub rear		1
3	331/30004		Cover, under, radiator assembly		1
4	229/01360		Cover, under, pump bay		1
5	331/31977		Cover, under, hyd & fuel tanks		1
6	331/31978		Cover, under, access panel	attached to item 5	1
7	JRB0113		Cover, under, center		1
9	1316/0509Z		Bolt	used to attach at cover	29
10	1316/0405Z		Screw, M10 x M20	attach access panel to item 5	2
11	1420/0008Z		Washer, Plain	used with item 10	2
12	JHP0049		Washer		27

RAJA RAM JAISWAL & CO
41, Princep Street, Shop No 6
Kolkata
700075

JCB INDIA LTD.

B1-3-1 TANK, HYDRAULIC

ISSUE - 1

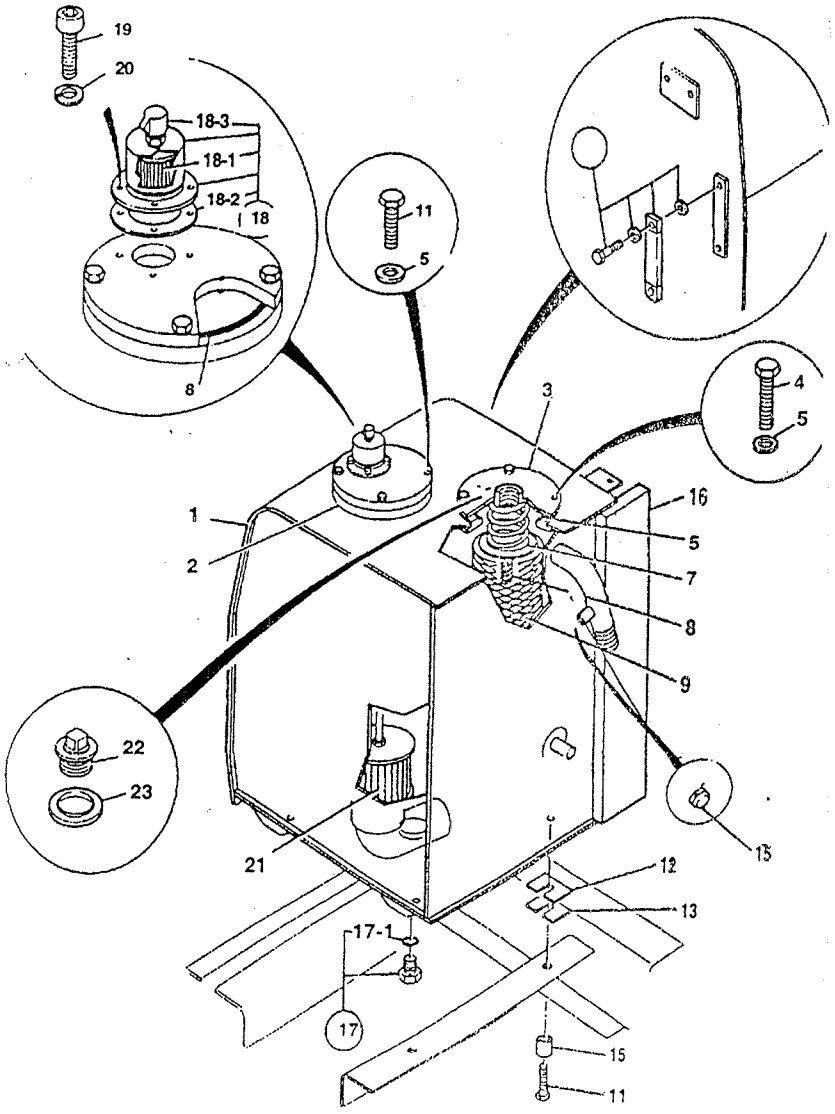

ITEM	PART NO.	CHANGE NO.	DESCRIPTION	REMARKS	QTY.
1	229/01286		Tank, hydraulic	Tank only, on fitings	1
2	KNJ1822		Cover		1
3	JRJ0148		Cover		1
4	1316/0405Z		Screw, M10 x 20		4
5	JHP0046		Washer		8
6	*KNJ0381		O Ring	Use with item 3	1
6A	CSP0161		O Ring	Use with item 2	1
7	KRJ3457		Spring, compression		1
8	KRJ2246		Valve, relief		1
9	KRJ3836		Filter, return		1
10	JHH0119		Gauge	includes banjo bolts & seals	1
11	1316/0408Z		Screw		4
12	KHH0040		Shim, plate, T = 0.03"		4
13	KHH0137		Shim plate		4
14	1316/3716Z		Bolt		4
15	JSJ0042		Spacer		4
16	KRJ4608		Seal, cushion		1
17	BRJ1286		Plug		1
17 01	UBJ0158		O Ring		1
18	32/925692		Breather, air		1
18 01	KRJ3461		Element		1

RAJA RAM JAISWAL
P-41, Princep Street, Shop No. 6
Kolkata
700073

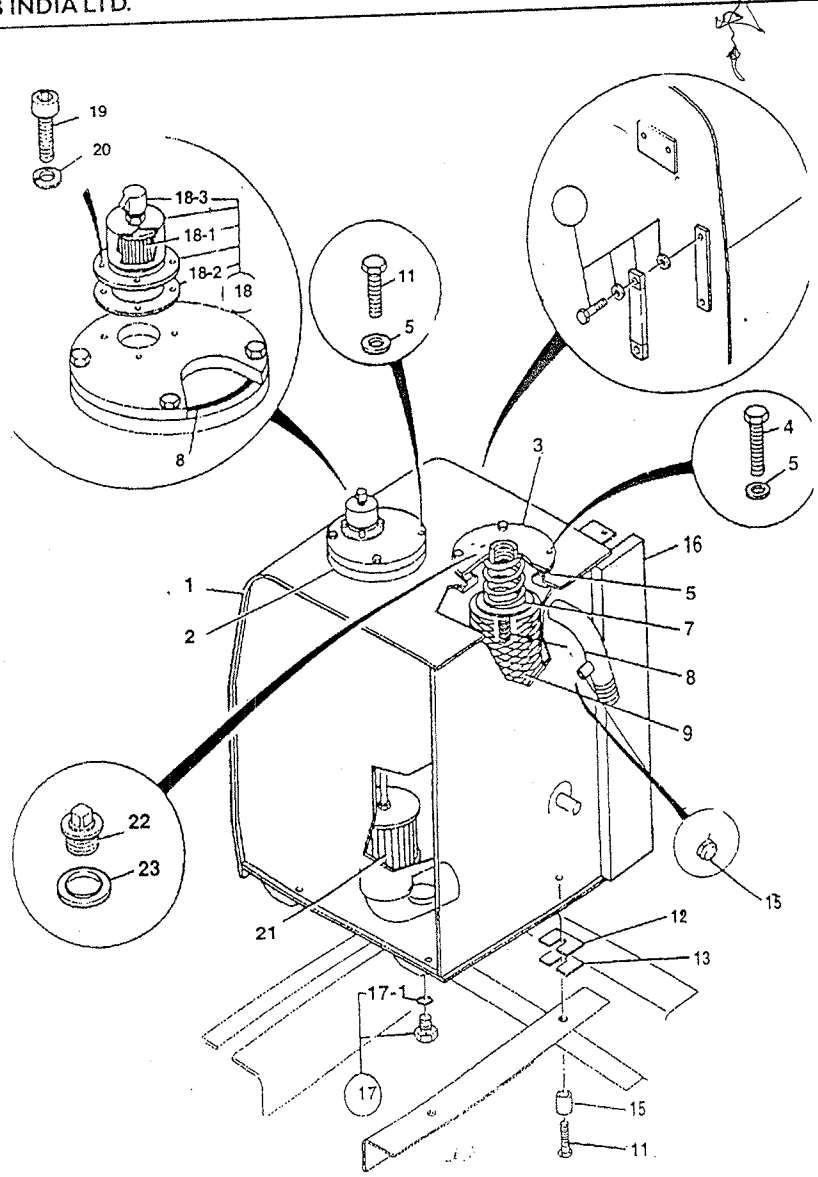

ITEM	PART NO.	CHANGE NO.	DESCRIPTION	REMARKS	QTY.
18 02	KRJ3463		Packing		1
18 03	KHJ0992		Nut		1
19	1316/0203Z		Screw		4
20	1425/0006Z		Washer, Spring		4
21	32/925359		Strainer, assembly		1
22	JHH0082		Plug		1
23	1406/0029		Seal, Dowty		1
24	JHP0134		Label, hyd tank vent	Decal, venting instructions, graphic	1
25	816/00190		Blanking Plug		1

RAJA RAM JAISWAL & CO
14-P-41, Princep Street, Shop No
Kolkata
700075

JCB INDIA LTD.

B1-4-1 TANK, DIESEL FUEL

ISSUE - 1

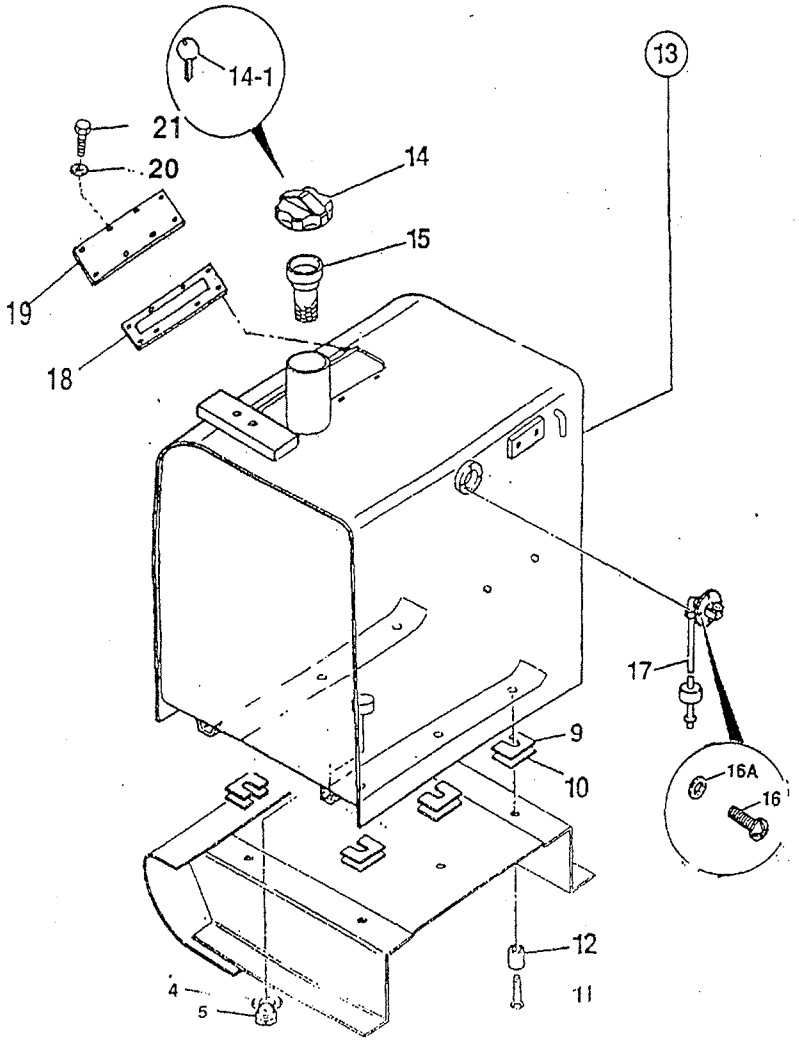

ITEM	PART NO.	CHANGE NO.	DESCRIPTION	REMARKS	QTY.
4	1406/0021		Bonded Washer		1
5	816/80012		Plug, drain vawe, M20 x 1 5-M22X1.5 HOSE		1
9	KHH0040		Shim, plate, T= 003"		6
10	KHHO137		Shim, plate		6
11	1316/3716Z		Bolt		6
12	JSJ0042		Spacer		6
13	229/01283		Tank,dieselfuel, assembly		1
14	331/31152		Cap, filler wilh lock		1
14 01	701/45501		Key, Door/Ignition, Ref 14657		1
15	JRH0083		filter		1
16	1315/0103Z		Screw		4
16A	1420/0005Z		Washer, M5		4
16B	1425/0005Z		Spring washer		4
17	716/30142		Sender, fuel level, with gasket		1
18	229/00605		Gasket		1
19	229/00606		Inspection Cover Plate		1
20	1420/0007Z		Washer		8
21	1316/0305Z		Bolt		8

RAJA RAM JAISWAL
Kolkata
700015
P-41, Princep Street, Shop No. 6

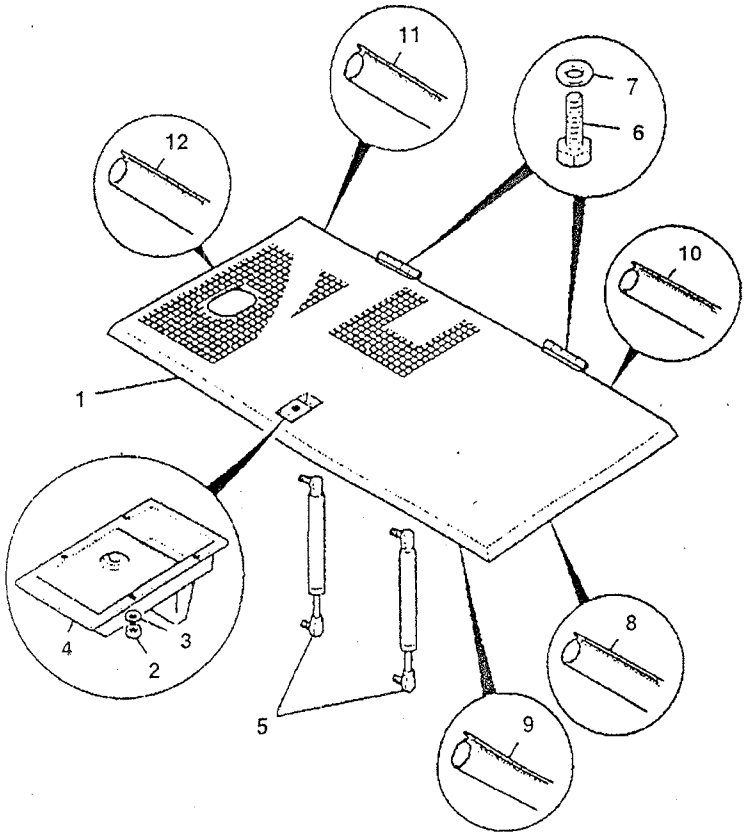

ITEM	PART NO.	CHANGE NO.	DESCRIPTION	REMARKS	QTY.
1	229/01110		Bonnet		1
2	1370/0001Z		Nut, M5-8		4
3	1420/0005Z		Washer, M5		4
4	826/11245		Latch, paddle, bonnet		1
5	331/34453		Strut, gas, bonnet		1
6	1316/0507Z		Screw		4
7	1420/0009Z		Washer		4
8	904/20275		Seal, bonnet		1
9	904/20293		Seal, bonnet		1
10	904/20294		Seal, bonnet		1
11	904/20279		Seal, bonnet		1
12	904/20280		Seal, bonnet		1

RAJA RAM JAISWAL
Kolkata
700073
41, Princep Street, Shop No. 6

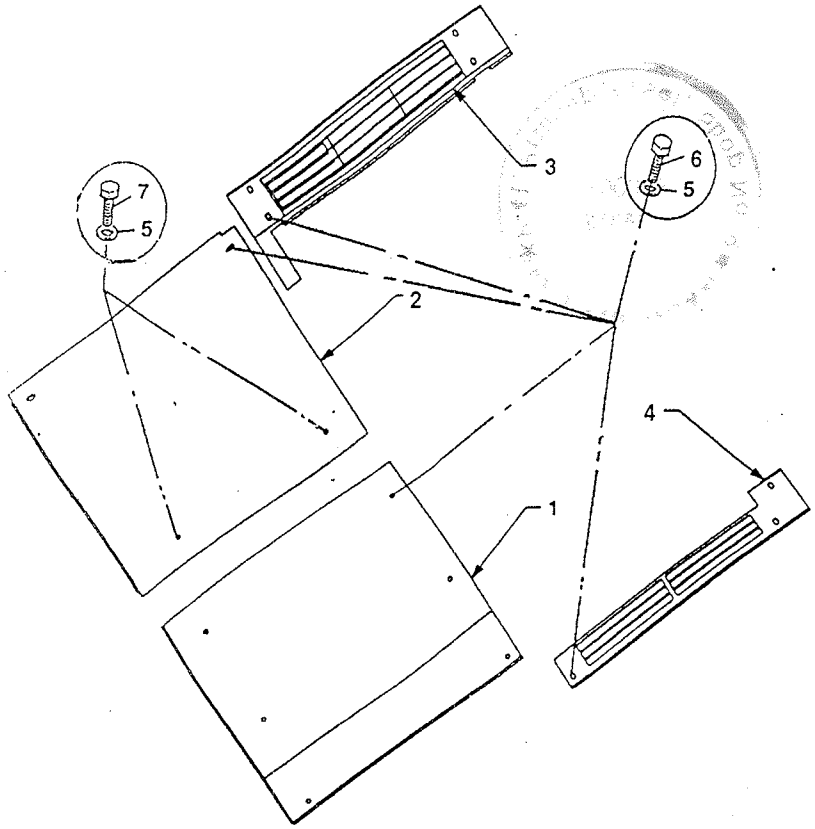

ITEM	PART NO.	CHANGE NO.	DESCRIPTION	REMARKS	QTY.
1	229/01152		Cover Cab Rear		1
2	229/01153		Cover Middle		1
3	229/01154		Grill Top RH Rear		1
4	335/08041		Grill Top LH Rear		1
5	1411/0005Z		Washer		15
6	1316/05072		Bolt		13
7	1316/0508Z		Bolt		2

RAJA RAM JAISWAL & CO
Kolkata
700073
14-P-41, Princep Street, Shop No.

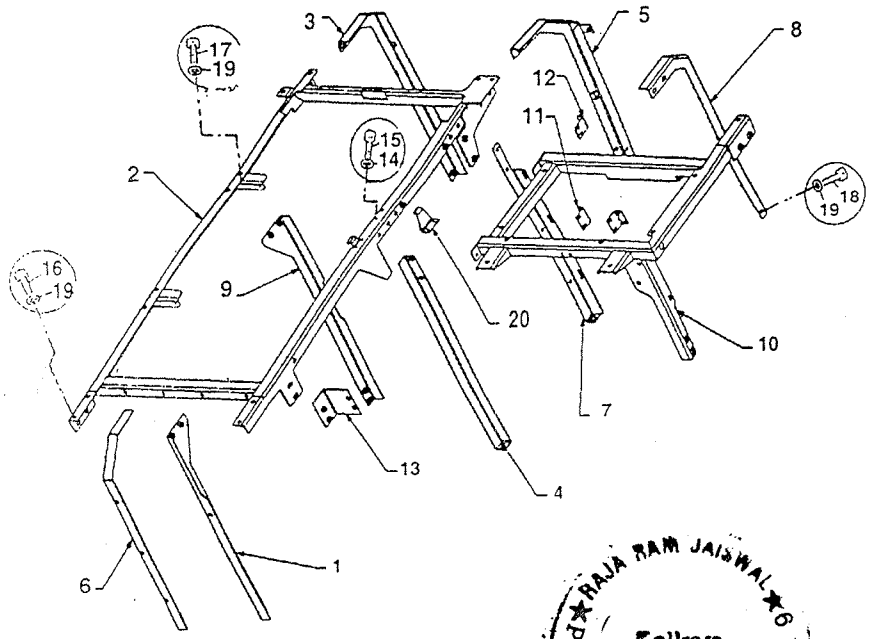

ITEM	PART NO.	CHANGE NO.	DESCRIPTION	REMARKS	QTY.
1	335/07529		WA-RH-RR-INR-LEG		1
2	229/01390		WA-Top-Frame		1
3	335/07334		WA-LH-RR-LEG		1
4	335/07335		WA-LH-MID-CTR-LE		1
5	335/07336		WA-LH-MID-LEG		1
6	335/07337		WA-RH-RR-LEG		1
7	335/07421		WA-LH-MID-INR-LE		1
8	335/07510		WA-LH-FRT-LEG		1
9	331/42872		WA-LH-RR-INR-LEG		1
10	229/01160		WA Frame Work-Cab Rear		1
11	331/34257		WA-Door-Latch-BR		2
12	331/34260		Door-Retainer-BR		1
13	335/08267		HYD-Tank-Bracket		1
14	1420/0007Z		Plain-Washer-M8		8
15	1316/0305Z		Screw-M8x20		8
16	1316/0505Z		Screw-M12x20		3
17	1316/0507Z		M12x25 SET SCR		20
18	1316/0508Z		Screw M12x30		14
19	1420/0009Z		Plain Washer M12		37
20	229/01117		Bonnet Catch Bracket		1

RAJA RAM JAISWAL
Kolkata
700015
P-41, Princep Street, Shop No. 6

JCB INDIA LTD.

B1-5-11 BULK HEAD

ISSUE - 1

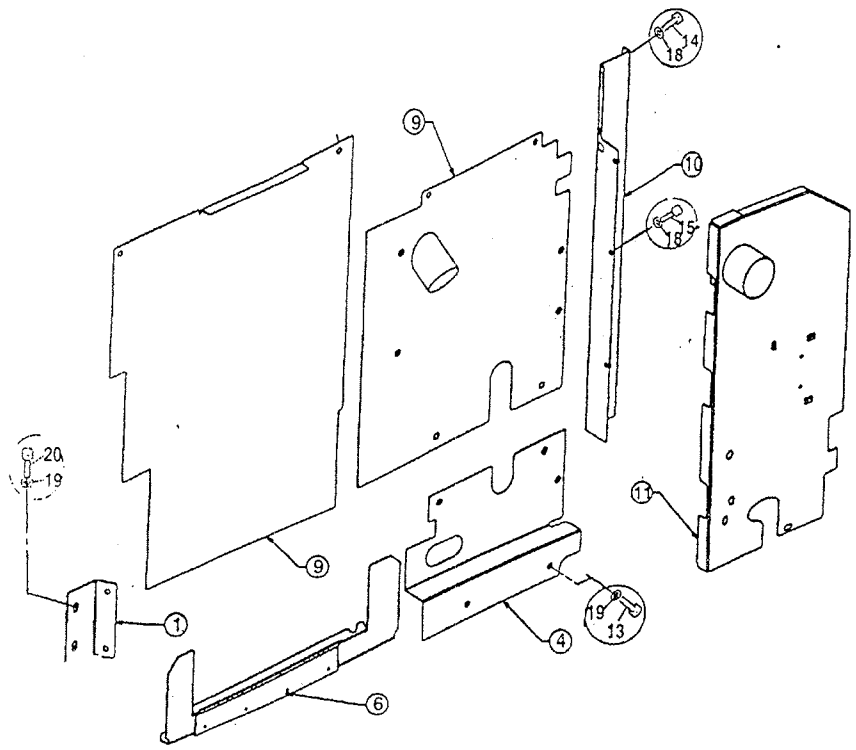

ITEM	PART NO.	CHANGE NO.	DESCRIPTION	REMARKS	QTY.
1	229/01551		Bulk Head Plate		1
4	331/43645		Bulk Head Plate		1
6	335/07437		Bulk Head Plate		1
7	229/01550		Valve Block Access Plate		1
9	335/07563		Plate : Bulk Head		1
10	335/07576		Plate : Bulk Head		1
11	335/07577		Bulk Head : Anti-Reacrculat		1
14	1316/0303Z		Screw : M8x16		5
15	1316/0505Z		Screw : M8x20		3
17	1316/0507Z		Screw : M12x25		13
18	1420/0007Z		Washer M8		8
19	1420/0009Z		Washer M12		22
20	1316/0505Z		Screw : M12x20		9

RAJA RAM JAISWAL
1, Princep Street, Shop No. P-41
Kolkata
700075

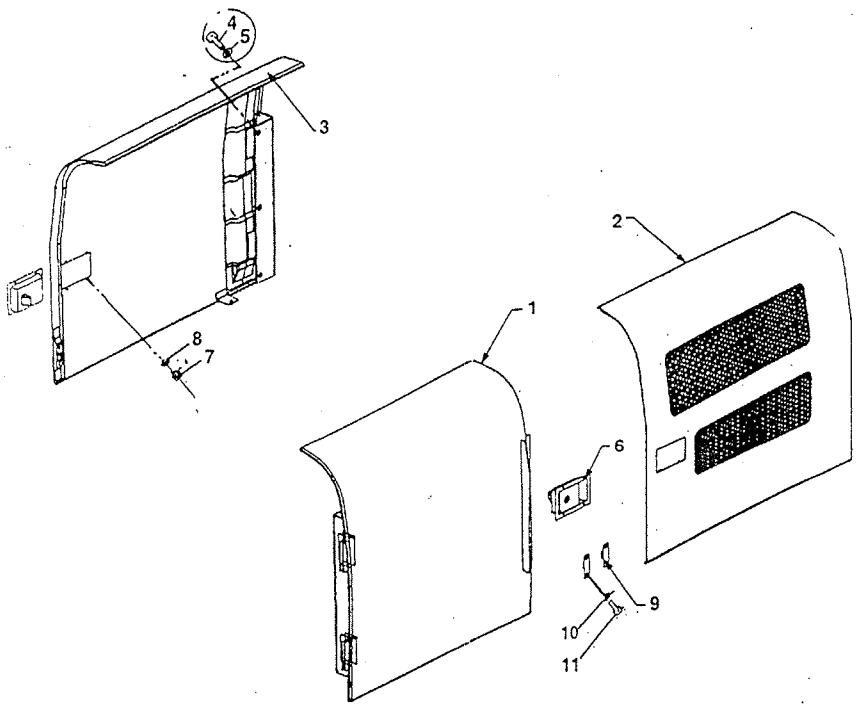

ITEM	PART NO.	CHANGE NO.	DESCRIPTION	REMARKS	QTY.
1	229/01166		WA LH Front Door		1
2	229/1164		WA RH Door		1
3	229/01165		WA LH Rear Door		1
4	1316/0508Z		Screw		9
5	1411/0005Z		Washer		9
6	826/11027		Paddle Latch		2
7	1370/0001Z		Plain Nut		8
8	1420/0005Z		Plain Washer		8
9	KRN0364		Stopper		3
10	1420/0006Z		Plain Washer		6
11	1316/0203Z		Screw		6

Kolkata
700073

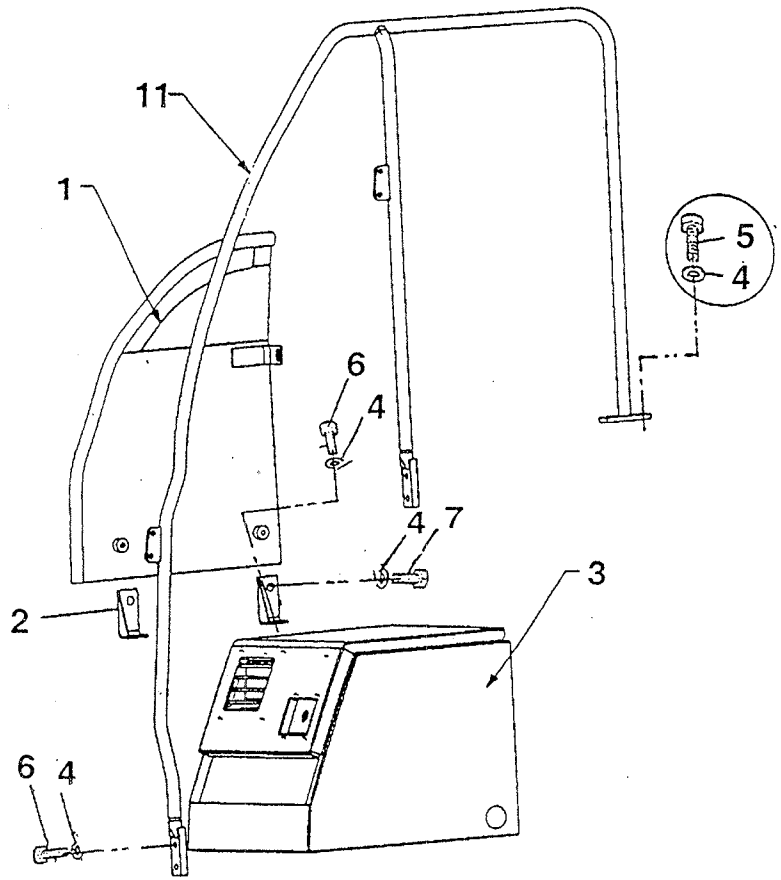

ITEM	PART NO.	CHANGE NO.	DESCRIPTION	REMARKS	QTY.
1	229/01205		Tool Box Side RH Fabrication		1
2	229/01199		Support Side Skin		2
3	229/01140		Tool Box Assembly		1
4	1420/0009Z		Washer Plain-M12		10
5	1316/0510Z		Screw HEX HD-M12x40		2
6	1316/0509Z		Screw HEX HD-M12x25		6
7	1316/0505Z		Screw HEX HD-M12x20		2
8	335/05862		Hand Rail		1

RAJA RAM JAISWAL
P-41, Princep Street, Shop No. 6
Kolkata
700017S

JCB INDIA LTD.

B1-5-31 TOOL BOX ASSEMBLY

ISSUE - 1

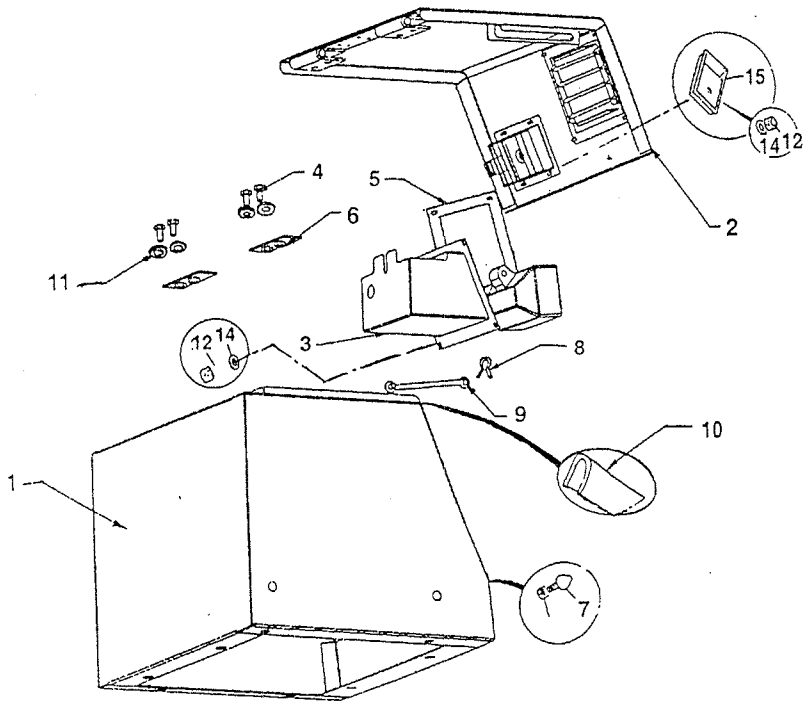

ITEM	PART NO.	CHANGE NO.	DESCRIPTION	REMARKS	QTY.
1	229/01150		Tool Box WA		1
2	229/01141		GA Tool Box LID		1
3	229/01138		WA Light Box		1
4	1318/0405Z		Set Screw M10×20		4
5	229/01203		Gasket		1
6	331/34946		Hinge Packer		2
7	KHN1395		Stopper : Rubber		2
8	KRJ1588		Pin : Hair Clip		2
9	KRN1418		Stay		1
10	KSN0939		Cushion : Rubber		1
11	1420/0008Z		Plain Washer M10		4
12	1370/0001Z		Plain Nut M5		8
14	1420/0005Z		Plain Washer		8
15	826/11027		Paddle Latch		1

Kolkata 700071

JCB INDIA LTD.

B1-6-1 COUNTER WEIGHT REAR (INDIAN BUILD)

ISSUE - 1

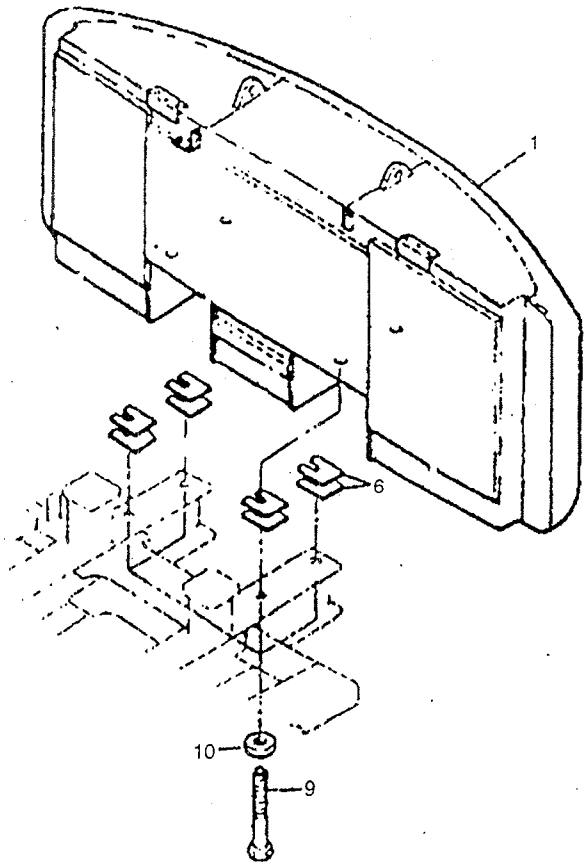

ITEM	PART NO.	CHANGE NO.	DESCRIPTION	REMARKS	QTY.
1	331/35416		Counter Weight ; 3.7 Ton		1
6	KRB0736		Shim ; t = 0.8		A/R
	KRB0737		Shim ; t = 1.2		A/R
	KRB0738		Shim ; t = 2.3		A/R
	KRB0739		Shim ; t = 4.5		A/R
9	KBB0445		Bolt ; Spl (M30 x 290)		4
10	KHB0063		Washer High Strength		4

RAJA RAM JAISWAL & CO.
P-41, Princep
Kolkata
700078

B

B1 BODYWORK/FRAME
• B2 CAB
B3 EXCAVATOR END
B5 REFURBISHMENTS

RAJA RAM JAISWAL & CO.
P-41, Princep Street, Shop No. 6
Kolkata
700075

JCB INDIA LTD.

B2-1-10 FRONT SCREEN

ISSUE - 1

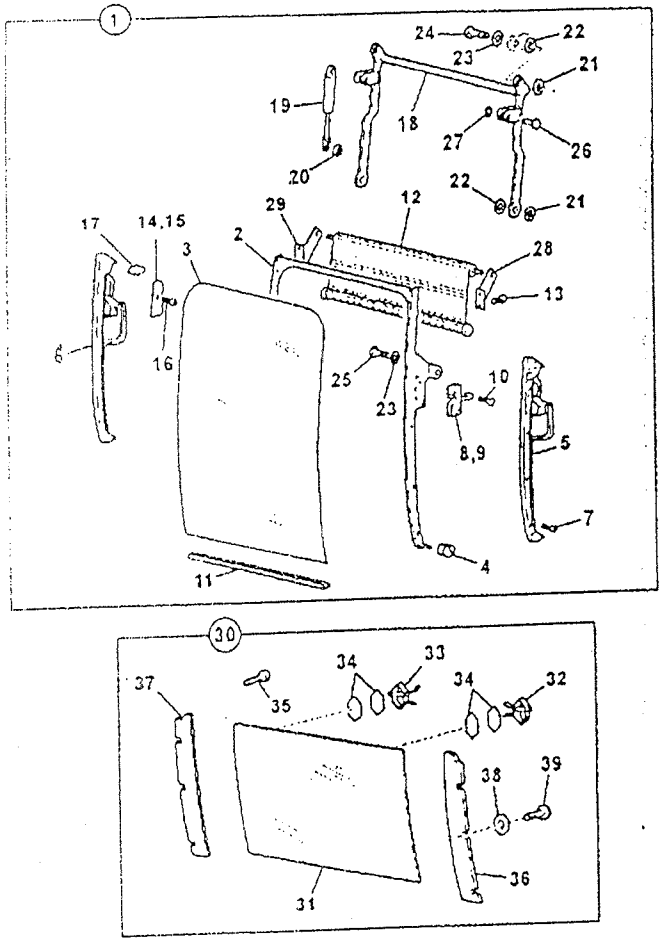

ITEM	PART NO.	CHANGE NO.	DESCRIPTION	REMARKS	QTY
1	331/36363		Windscreen, assembly		1
2	331/36366		Frame, window		1
3	JHN0178		Glass		1
4	6900/0513		Roller		1
5	6900/0688		Slide, left hand, gray		1
6	6900/0689		Slide, right hand, grey		1
7	6900/0616		Screw		14
8	331/36367		Latch, left hand		1
9	331/36368		Latch, right hand		1
10	6900/0619		Screw		2
11	6900/0508		Seal, plastic		1
12	6900/0621		Screen, sun		1
13	6900/0995		Screw		2
14	6900/0622		Cover, left hand		1
15	1430/1204		Cover, right hand		1
16	6900/0616		Screw		4
17	331/36369		Stop foam		1
18	331/36370		Arm		1
19	331/36371		Spring, air		1
20	1370/0203Z		Nut		4
21	331/36372		Spacer		4
22	331/36373		Washer		4
23	6900/0569		Washer		2
24	1315/0305Z		Screw		2
25	1315/0303Z		Bolt, M8 x 16		2
26	*331/37335		Pin, pivot		1

RAM JAISWAL

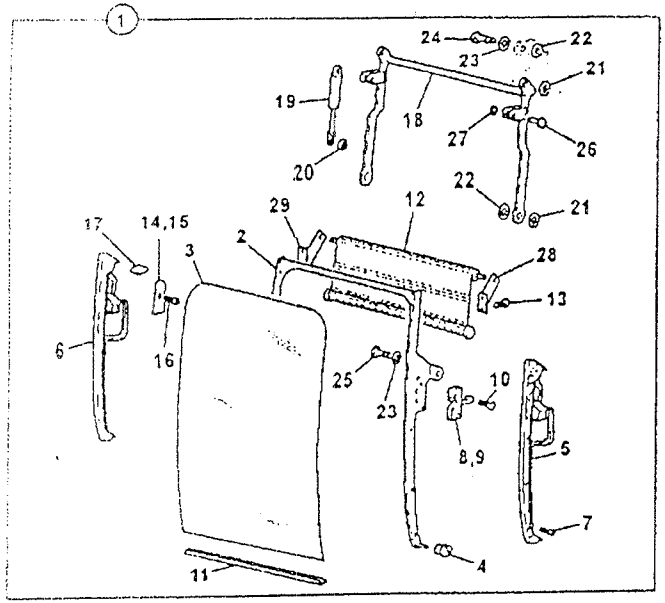

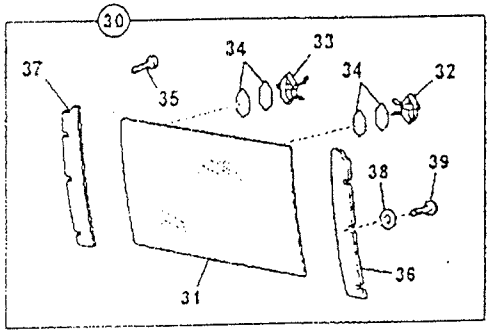

ITEM	PART NO.	CHANGE NO.	DESCRIPTION	REMARKS	QTY
28	331/37329		Bracket, sun visor, left hand side		
29	331/37330		Brackel, sun visor, right hand side		
30	6900/0983		Glass, complete, lower front		
31	JHN0141		Glass, lower		
32	6900/0984		Latch, left hand		
33	6900/0985		Latch, right hand		
34	6900/0986		Spacer		
35	6900/0987		Screw		
36	6900/0685		Slide, left hand, black		
37	6900/0686		Slide, fight hand, black		
38	6900/0640		Washer		
39	6900/0560		Screw		

RAJA RAM JAISWAL & CO.
P-141, Princep Street, Shop No. 6
Kolkata
700075

JCB INDIA LTD.

B2-1-20 FRONT WIPER, & CAB COMPONENTS

ISSUE -

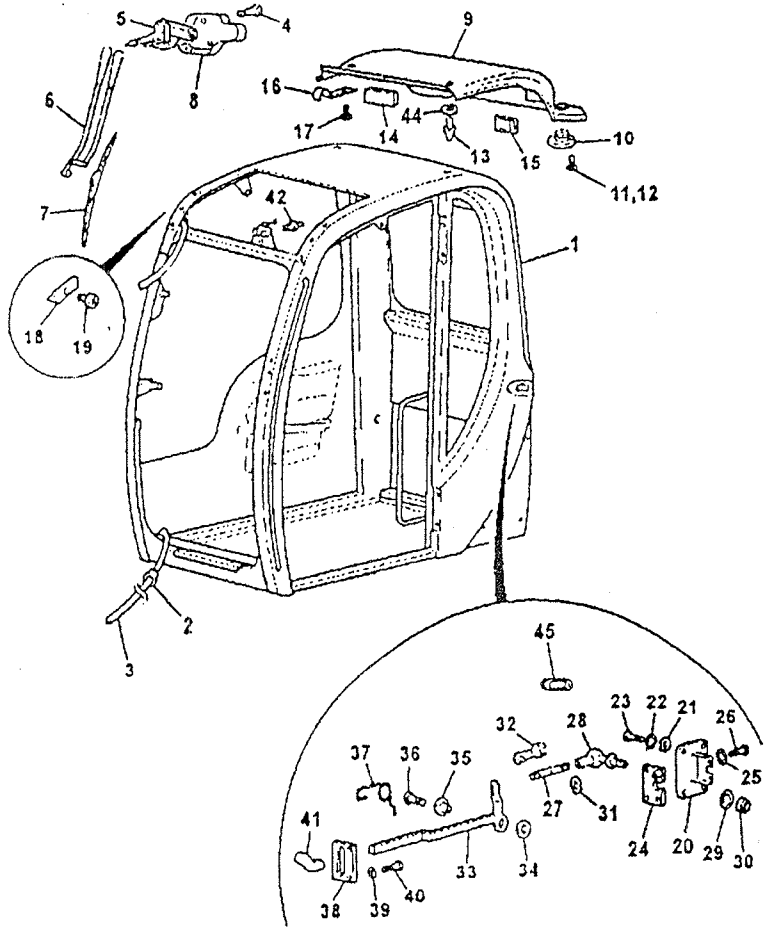

ITEM	PART NO.	CHANGE NO.	DESCRIPTION	REMARKS	QTY.
1			'See Remark'	See frame B2-1-1	1
2					
3					
4	6900/0554		Screw		2
5	714/40267		Motor, wiper		1
6	714/40266		Arm, wiper		1
7	6900/0634		Blade, wiper		1
8	331/36342		Cover, wiper motor		1
9	229/01196		Trim, roof panel		1
10	229/01230		Speaker		2
11	826/11108		Screw		8
12	821/10267		Clip		8
13	331/19926		Stop,cab roof		2
14	717/08600		Cover Radio Blank		1
15	696/01536		Light, roof		1
16	331/36356		Hook		2
17	6900/0554		Screw		4
18	331/36357		Plate		2
19	6900/0554		Screw		2
20	6900/0544		Cover		1
21	6900/0569		Washer		4
22	6900/0609		Washer		4
23	1315/0307Z		Screw		4
24	6900/0543		Latch		1
25	1420/0006Z		Washer		4
26	1315/0207Z		Screw		4

RAJ JAISWAL & CO.
41, Princep Street, Shop No.
Kolkata
700075

JCB INDIA LTD.

B2-1-20 FRONT WIPER, & CAB COMPONENTS

ISSUE -

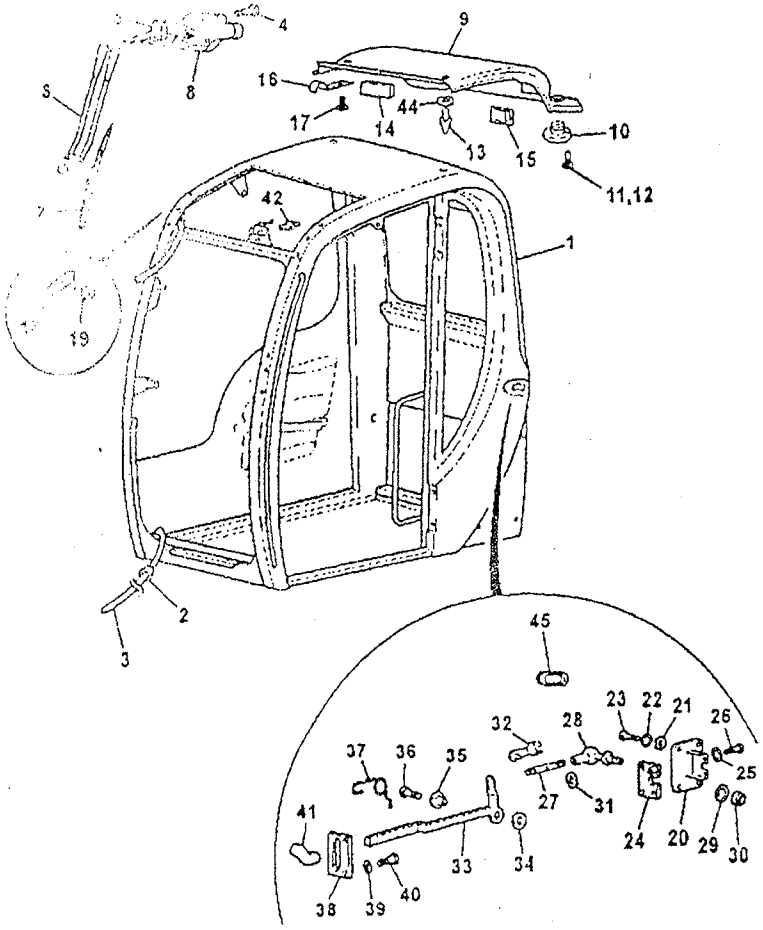

ITEM	PART NO.	CHANGE NO.	DESCRIPTION	REMARKS	QTY.
27	331/36359		Rod, axle		1
28	6900/0627		Joint, ball		1
29	6900/0637		Washer		1
30	1370/0101Z		Nut		1
31	6900/0652		Grommet		1
32	6900/0523		Clip, axle		1
33	331/36360		Lever		1
34	6900/0605		Spacer, plastic		1
35	6900/0604		Spacer		-
36	6900/0603		Screw		1
37	6900/0606		Spring		-
38	6900/0541		Guide		1
39	6900/0550		Washer		2
40	6900/0601		Screw		2
41	331/19929		Knob		1
42					
43					
44	*331/37333		Washer, foam		-
45	331/37334		Grommet		1

RAJA RAM JAISWAL & CO.
P-41, Princep Street, Shop No. 6
Kolkata
700075

ITEM	PART NO.	CHANGE NO.	DESCRIPTION	REMARKS	QTY.
1					
2	1316/3514		Bolt, hex head		
3	1316/3516		Bolt		
4					
5					
6	1371/0401		Nut		

RAJA RAM JAISWAL & CO
Kolkata
700073
41, Princep Street, Shop No

Illustration Not Available at Time of Publication

B2-2-1 CAB DOOR COMPONENTS

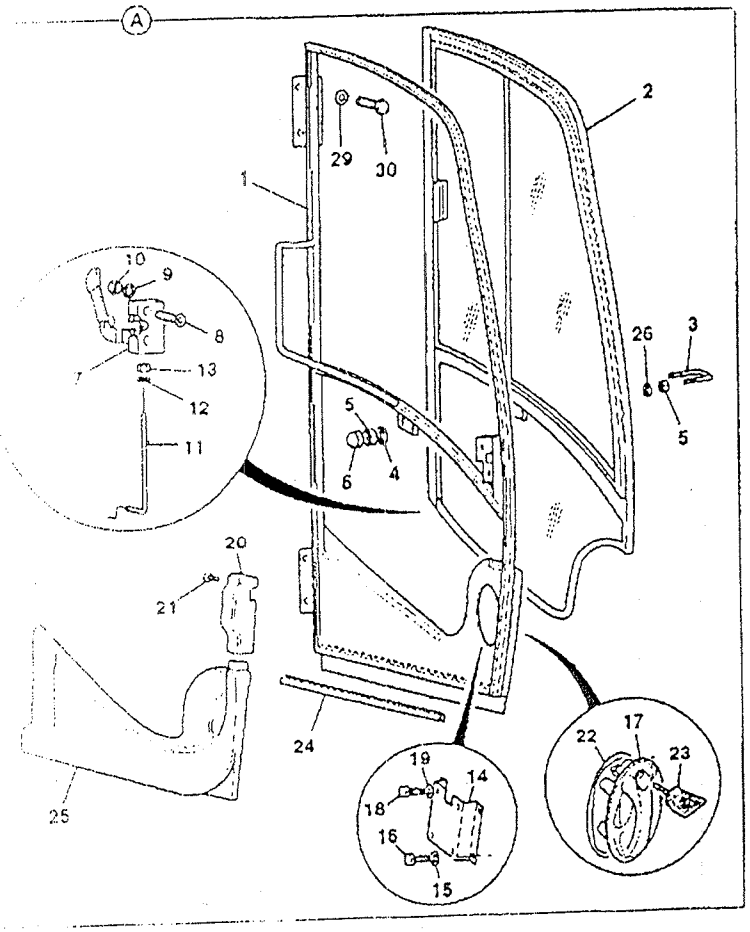

ITEM	PART NO.	CHANGE NO.	DESCRIPTION	REMARKS
0A	331/36354		Door, assembly, JX cab	
1	331/36358		Door, cab door, cab door frame	
2	827/80220		Glass, Door Lower	
2 01	827/80221		Glass, door sliding	
2 02	331/36362		Handle, Window handle assemb, JS cab	
2 03	331/36364		Striker, Window striker JS cab	
2 04	331/36365		Screw	
3	331/36378		Hook, door lock back	
4	6900/0644		Washer	
5	1370/0301Z		Nut	
6	331/36379		Cap, Cap,nut, Door lock back	
7	331/36380		Lock, door	
8	993/99703		Screw, countersunk head	
9	6900/0570		Washer	
10	6900/0571		Nut	
11	331/36381		Rod, lock	
12	1420/0004Z		Washer, lock rod	
13	1370/9403Z		Nut, safety	
14	331/36384		Bracket, support handle	
15	1420/0006Z		Waaher	
16	1315/0203Z		Screw, handle support	
17	331/36386		Handle, cab door	
18	1315/0203Z		Screw, handle support	

RAJA RAM JAISWAL
Kolkata
700075
P-41, Princep Street, Shop No. 6

B2-2-1 CAB DOOR COMPONENTS

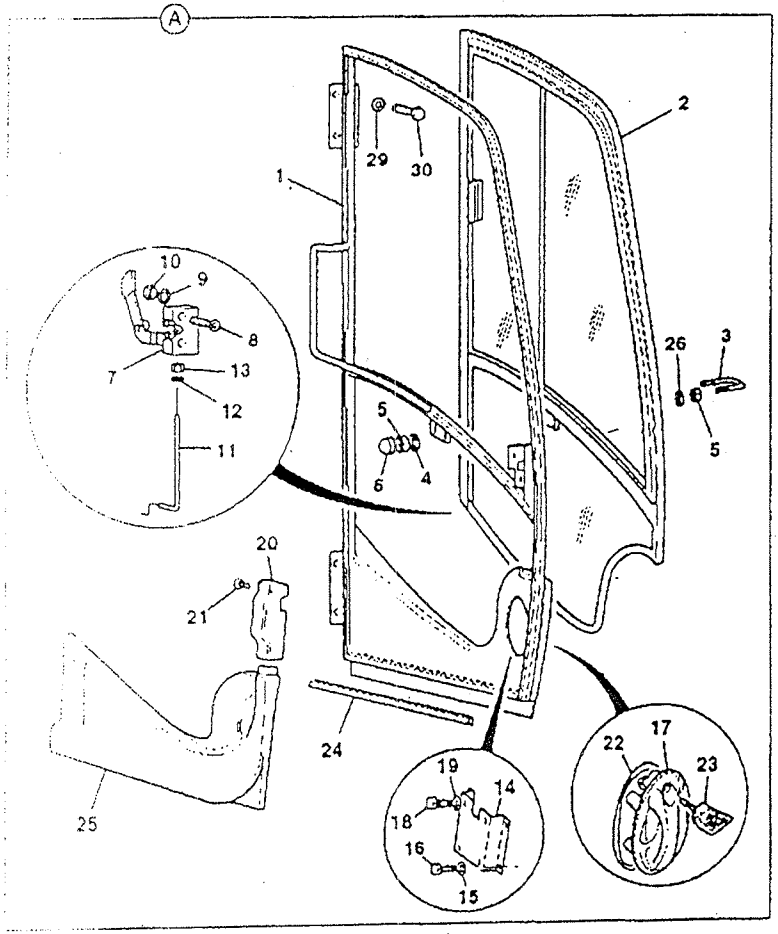

ITEM	PART NO.	CHANGE NO.	DESCRIPTION	REMARKS	QTY
19	1420/0006Z		Washer		[illegible]
20	331/36389		Cover, lock		[illegible]
21	6900/0616		Screw		[illegible]
22	331/36390		Seal, handle		[illegible]
23	701/45501		Key, Door/Ignition, Ref 14657		[illegible]
24	331/36393		Seal, door lower		[illegible]
25	331/36394		Cover, inside door		[illegible]
26	331/36387		Screw, support handle		[illegible]
29	6900/0992		Washer		[illegible]
30	331/36392		Seal, door bottom		[illegible]

RAJA RAM JAISWAL
P-41, Princep Street, Shop No. 6
Kolkata
700075

JCB INDIA LTD.

B2-3-1 SEAT

ISSUE -

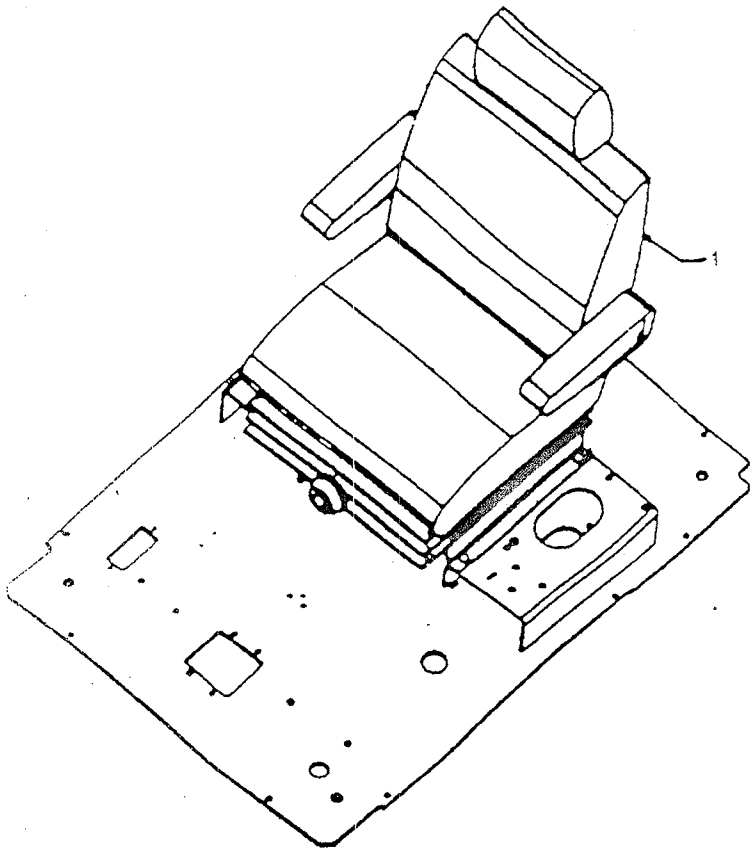

ITEM	PART NO.	CHANGE NO.	DESCRIPTION	REMARKS	QTY.
1	229/00229		Suspension Seat		
2	1315/0405Z		Bolt M10×20		
3	1425/0008Z		Washer Spring M10		

RAJA RAM JAISWAL
Kolkata
700075
P-41, Princep Street, Shop No.

JCB INDIA LTD.

B2-4-1 CONSOLE CAB CONTROLS, LH & RH, FIXED CONSOLE

ISSUE - 1

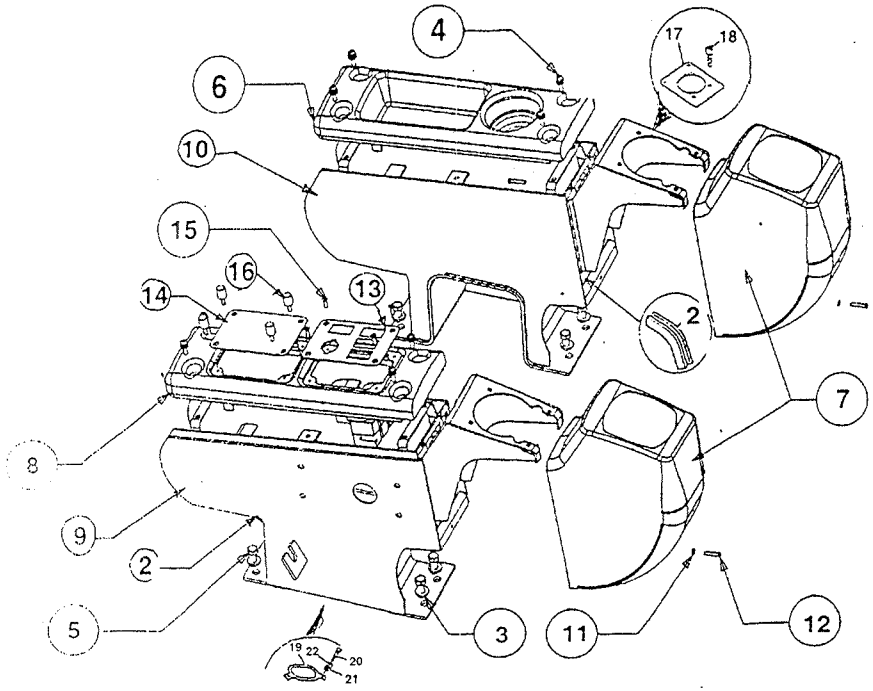

ITEM	PART NO.	CHANGE NO.	DESCRIPTION	REMARKS	QTY.
1	JHP0111		Edging Strip		4
2	JHP0046		Washer		8
3	KHR0738		Screw Pan Head M6x20		8
4	1391/3407Z		Bolt Socket Head M10x25		8
5	229/01169		LH Console Cover		1
6	229/01137		Console Cover		2
7	229/01170		Console Top Panel RH		1
8	229/01181		Framework Support RH (Dog)		1
9	229/01180		Framework Support LH (Dog)		1
10	1420/0005Z		Washer M5		3
11	826/01518		Screw M5x20		3
12	229/01135		Switch Plate		1
13	229/01136		Box Fuse Cover		1
14	229/01128		Countersunk Screw		4
15	826/01570		Thumb Screw		4
16	331/18592		Plate, mounting, control valve		1
17	KHR0737		Screw, Pan Head		1
18	KHJ0947		Guide		1
19	1316/0303Z		Screw		4
20	1420/0007Z		Washer, Plain		4

RAJA RAM JAISWAL
Kolkata
700078
P-41, Princep Street, Shop No.

B2-8-1 CAB REAR PANEL

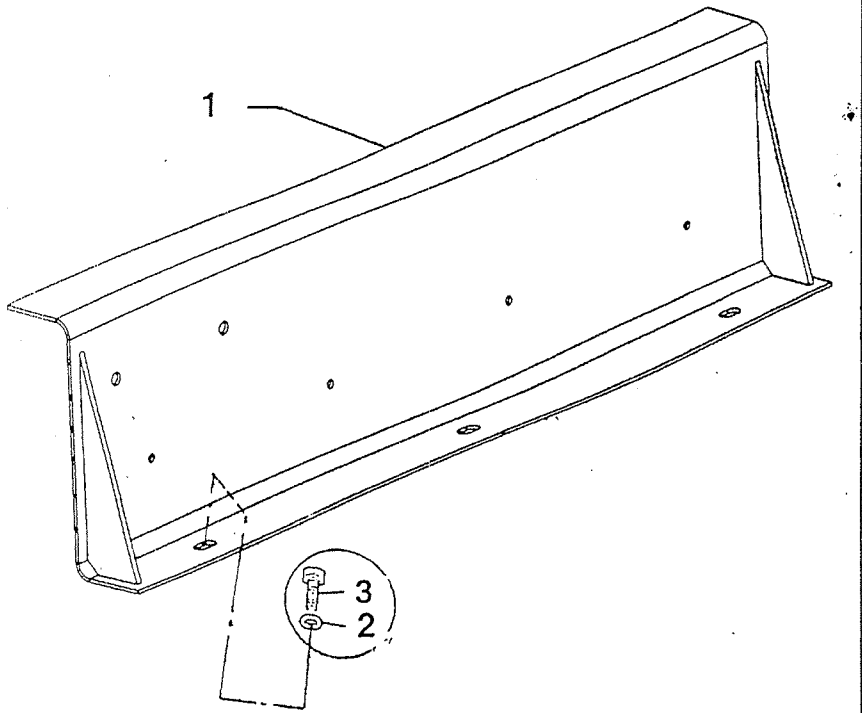

ITEM	PART NO.	CHANGE NO.	DESCRIPTION	REMARKS	QTY.
1	229/01195		Tool Plate		1
2	1315/0401Z		Bolt		3
3	1420/0008Z		Washer		3

RAJA RAM JAISWAL & CO
P-41, Princep Street, Shop No 9
Kolkata
700075

B2-10-1 FLOOR COMPONENTS, LEVER ISOLATOR

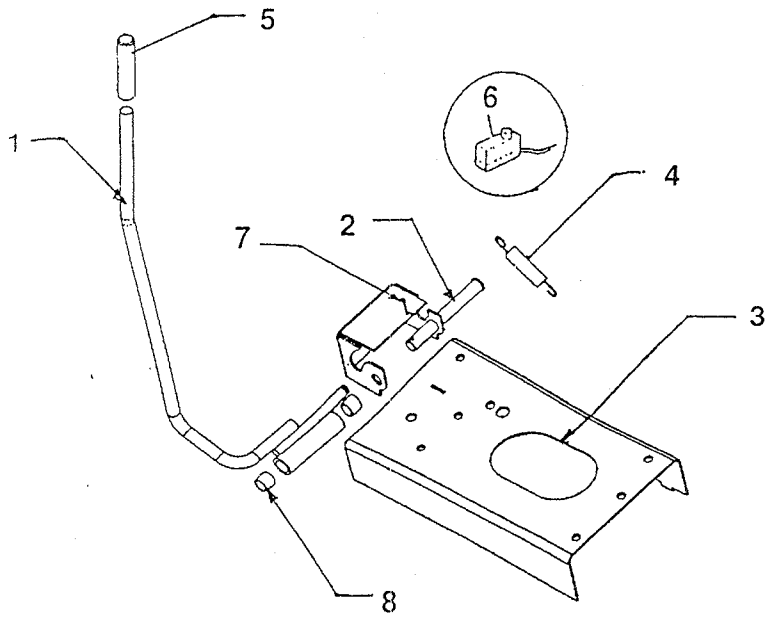

ITEM	PART NO.	CHANGE NO.	DESCRIPTION	REMARKS	QTY.
1	229/00070		Lever, Lock		1
2	JHN0211		Spindle		1
3	JHH0074		Edging Strip		2
4	KHN1436		Spring : Tension		1
5	KHN1542		Cap : Vinyl		1
6	229/00385		Limit Switch		1
7	2103/0709		R Clip		1
8	831/00063		Self Lubricating Bearing		2

RAJA RAM JAISWAL
Kolkata
700073
P-14, Princep Street, Shop No.

B2-18-1 DIRECT GLAZING, REPLACEMENT MATERIAL

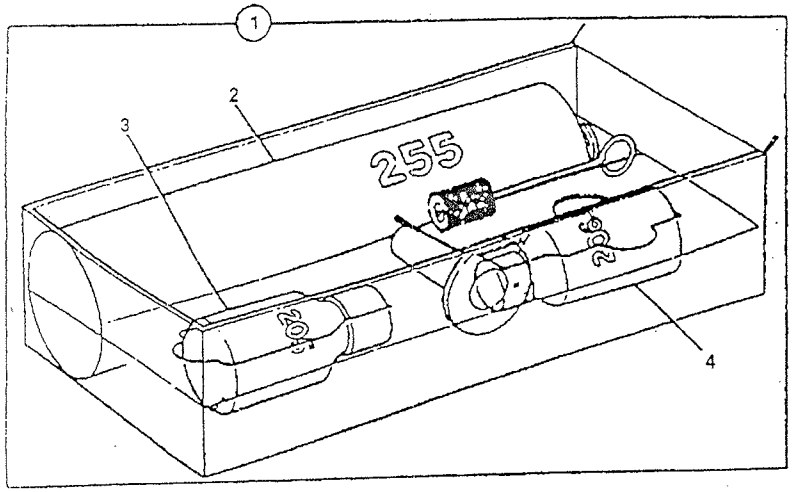

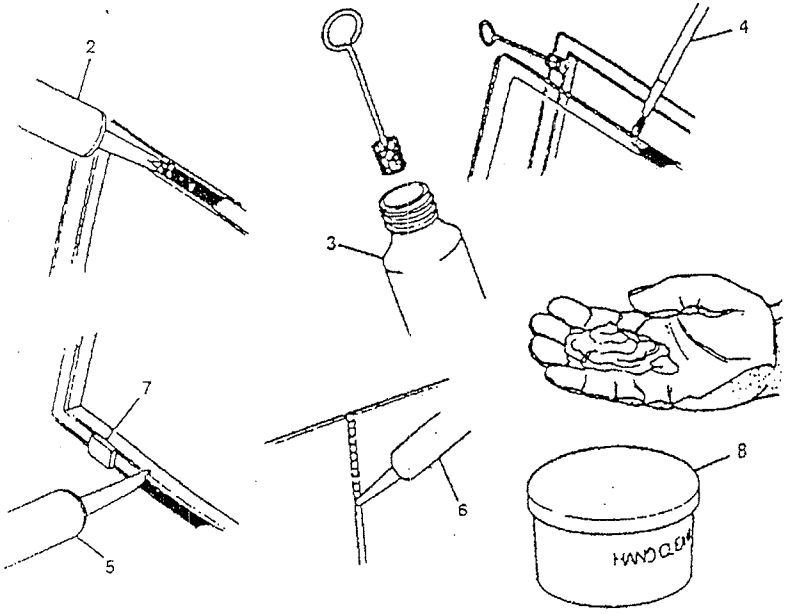

ITEM	PART NO.	CHANGE NO.	DESCRIPTION	REMARKS	QTY.
1			Adhesive, kit JCB ultrafast, glazing	S.P.N.	1
2	646/05321		.Adhesive, JCB ultrafast, 310ml cartridge	see foot note	A/R
3	646/05325		:Cleaner, active wiper 205, 30ml		A/R
4	646/05323		:Paint, black primer 206J, 30ml	Black ceramic ink band around glass border	A/R
	646/05324		:Paint, black primer 206J, 200gm		A/R
5	646/05321		Sealant, black acylic 221, 310ml cartridge		A/R
6	4102/0933		Sealant, DP2205 clear, Silicone		A/R
7	926/15500		Spacer, block		A/R
8	4104/1310		Cleaner, hand, polyulethane, 454gm/1lb		A/R

RAJA RAM JAISWAL & CO.
P-41, Princep Street, Shop No. 6
Kolkata
700075

B

B1 BODYWORK/FRAME
B2 CAB
B3 EXCAVATOR END
B5 REFURBISHMENTS

RAJA RAM JAISWAL
Kolkata
700015
P-14, Princep Street, Shop No. 9

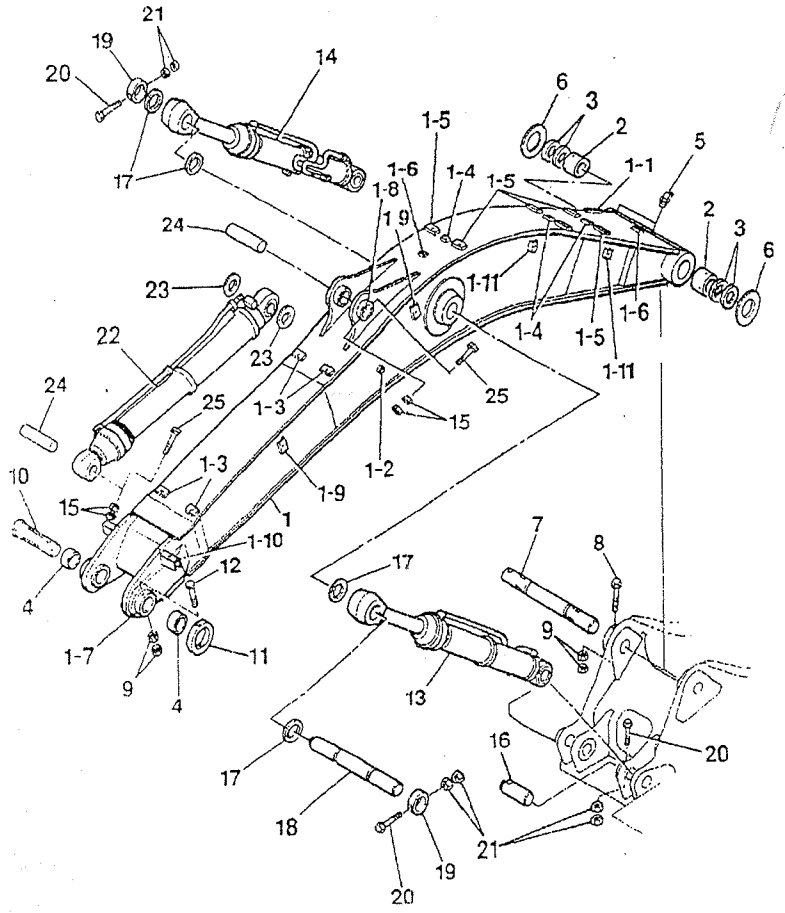

ITEM	PART NO.	CHANGE NO.	DESCRIPTION	REMARKS	QTY.
1	229/01062	Superseded	Boom, mono		1
	331/13247		Boom, mono		1
1.1	JSV0296	KSV0311	Manifold, 4 way		1
1.2	KHV0060		Clamp, base		1
1.3	331/27231	JLV1827	Base, clamp		4
1.4	331/27870	KRV0481	Clamp, base		3
1.5	331/27232	KRV0695	Clamp, base		6
	KTV0700				
1.6	331/27869	KRV0252	Clamp, base		2
1.7	KHV0164		Collar		1
1.8	KHV0162		Collar		1
1.9	KHV0162		Collar		1
1.10	KHV0164		Collar		1
1.11	JBV0295		Clamp, base		4
1.12	JBV0298		Clamp, base		4
1.13	JRV0277		Clamp, base		2
2	831/10291		Bush, steel		2
3	KHV0103		Seal, dust		4
4	JRV0597		Bush, steel		2
5	JHP0038		Nipple, grease, angled		2
6	KRV1180		Shim, 1.2mm thick		2
7	KRV1572		Pin, pivot		1
8	6009/4028Z		Bolt		1
9	173R024VZ		Nut		4
10	KRV1380	Superseded	Pin, pivot		1
	811/90382		Pin, pivot, boom to arm	Chromed pin	1
11	KRV0704		Collar, set		1

RAJA RAM JAISWAL
DP-41, Princep Street, Shop No 6
Kolkata
700075

JCB INDIA LTD.

B3-1-1 BOOM

ISSUE - 1

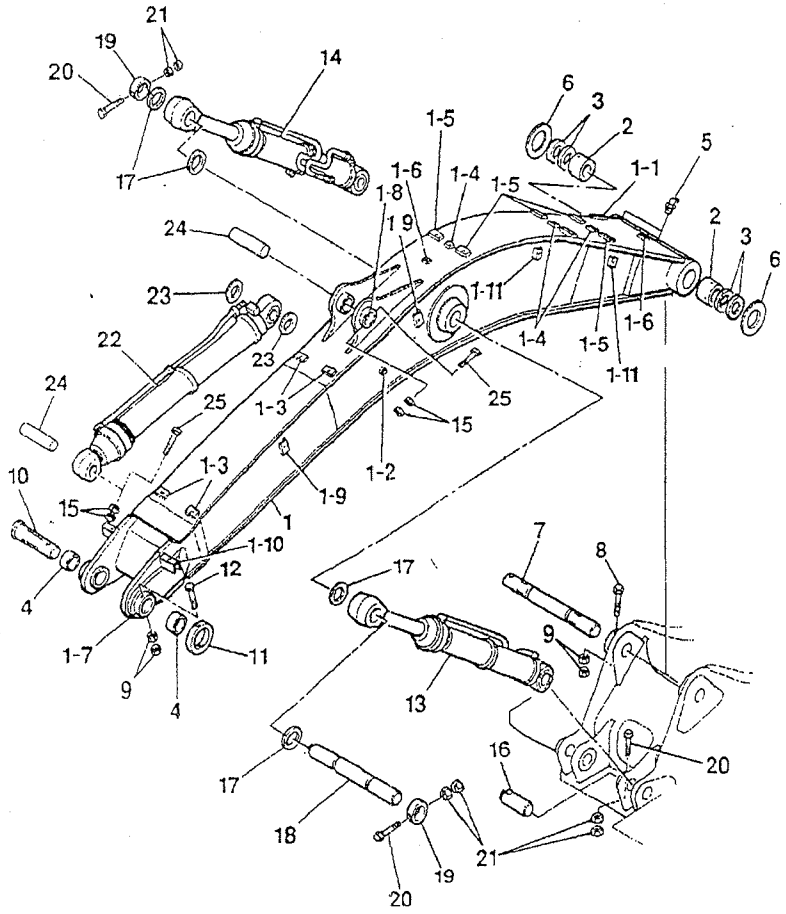

ITEM	PART NO.	CHANGE NO.	DESCRIPTION	REMARKS	QTY.
12	6009/4029Z		Bolt		1
13	229/00484		Ram, boom LH	For components see frame E4-1-1	1
14	229/00483		Ram, boom RH	For components see frame E4-1-5	1
15	173R020VZ		Nut, high strength		12
16	KRV1124		Pin, pivot		2
17	KRV1178		Shim, 1.2mm thick		4
18	KRV1122		Pin, Pivot		1
19	KRV1156		Ring, locking		2
20	6009/3826Z		Bolt		4
21	173R020VZ		Nut		8
22	JRV0288	to S/N 705409	Ra, dipper arm	For components see frame E4-2-1	1
	229/00570		Ram, dipper	For components see frame E4-2-2	1
23	KRV1197		Shim, 1.2mm thick		2
24	KRV1126		Pin, pivot		2
25	6009/3826Z		Bolt		2

RAJA RAM JAISWAL
P-41, Princep Street, Shop No. 6
Kolkata
700017S

B3-2-1 DIPPER 1.91M

ISSUE - 1

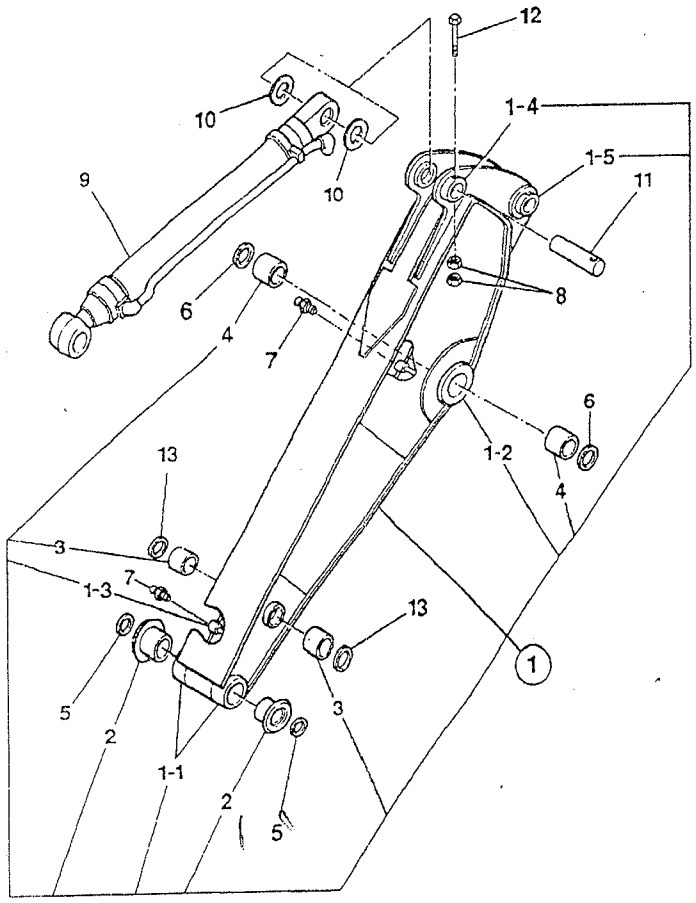

ITEM	PART NO.	CHANGE NO.	DESCRIPTION	REMARKS	QTY.
1	335/02216		Dipper, 1.91M arm		1
1 01	NSP		None serviced part		2
1 02	KRV1363		Boss forged		2
1 03	KRV0514		Adapter, tap		2
1 04	KHV0161		Collar		1
1 05	KHV0162		Collar		1
2	JRV0594		Bush, steel		2
3	JRV0595		Bush, steel		2
4	831/10291		Bush, bearing		2
5	KHV0101		Seal, dust		2
6	KHV0103		Seal, dust		2
7	JHP0037		Nipple, grease, straight		2
8	172R020VR		Nut, high, strength		2
9	331/32602		Ram, bucket, 115mm cyl x 85mm rob	For components see frame E4-3-1	1
10	KRV1176		Shim, 1.2mm thick		2
11	KRV1127		Pin, attachment		1
12	6009/3825Z		Bolt		1
13	KHV0100		Seal, dust		2
14	*JRP0142		Label, warning, bucket-boom		1

RAJA RAM JAISWAL
P-41, Princep Street, Shop No 6
Kolkata
700078

B3-2-10 DIPPER 2.4 M

ISSUE - 3

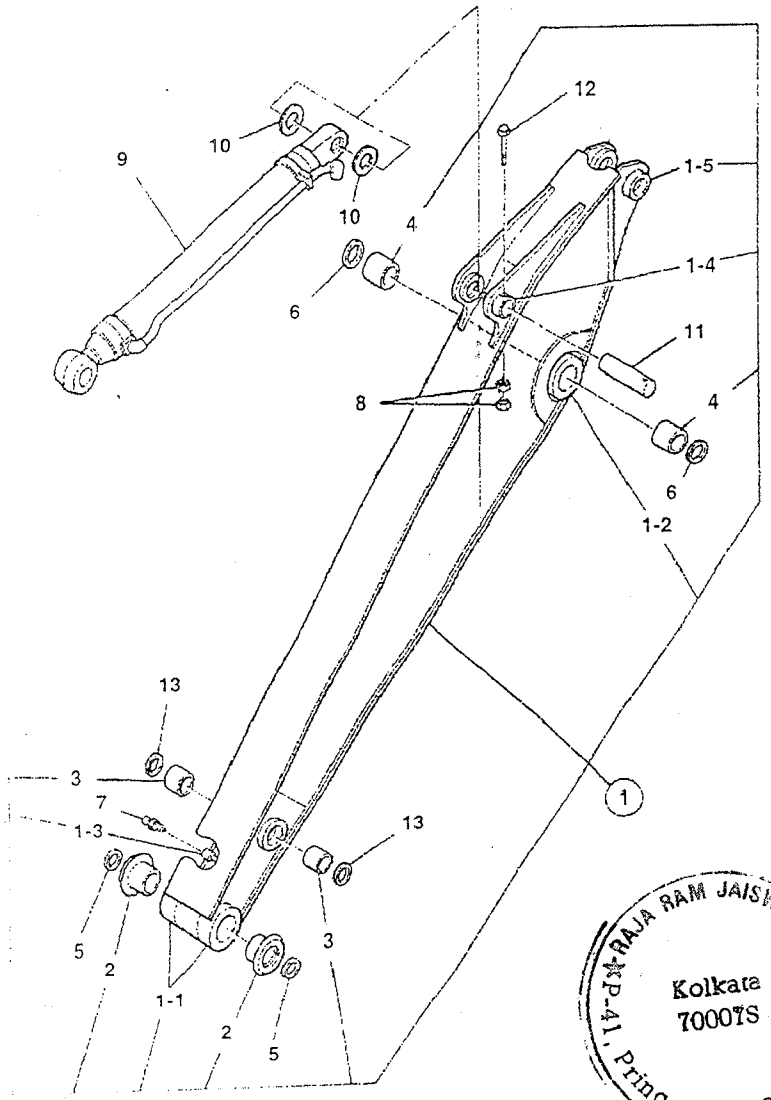

ITEM	PART NO.	CHANGE NO.	DESCRIPTION	REMARKS	QTY.
DA	229/01063		Dipper, 2.4M Ssales Conversion only	Sales conversion only	1
1	335/02217		Dipper, 2.4M	Service replacement only	1
1 01	JRVO157		Boss		2
1 02	KRV1363		Boss forged		2
1 03	KRV0514		Adapter, tap		2
1 04	KHV0161		Collar		1
1 05	KHV0162		Collar		1
2	KRV1128		Bush, steel		2
3	KRV1131		Bush		2
4	831/10291	KRV1132	Bush, steel		2
5	KHV0101		Seal, dust		2
6	KHV0103		Seal, dust		2
7	JHP0037		Nipple, grease, straight		2
8	1371/0701		Nut, high, strength		2
9	229/00573		Ram, bucket	For components see frame E4-3-1	1
10	KRV1176		Shim, 1.2mm thick		2
11	KRV1127		Pin, attachment		1
12	1316/3825		Bolt		1
13	KHV0100		Seal, dust		2

M/S RAJA RAM JAISWAL & CO.
MP-41, Princep Street, Shop No.
Kolkata
700075

B3-2-11 DIPPER 2.4M, JS 220 XTRA DUTY

ISSUE - 1

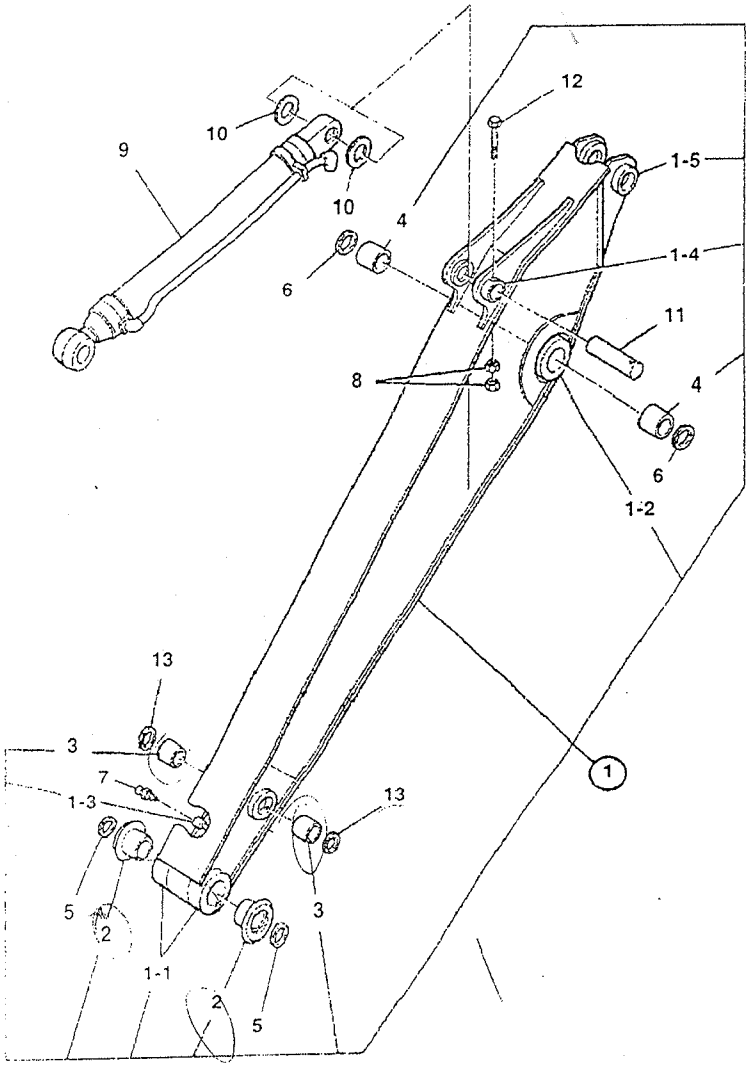

ITEM	PART NO.	CHANGE NO.	DESCRIPTION	REMARKS	QTY.
1	229/01305		Dipper, 2.4M arm JS220XD		1
1 01	NSP		None serviced part		2
1 02	KRV1363		Boss forged		2
1 03	KRV0514		Adapter, tap		2
1 04	KHV0161		Collar		1
1 05	KHV0162		Collar		1
2	JRV0594		Bush, steel		2
3	JRV0595		Bush, steel		2
4	831/10291		Bush, bearing		2
5	KHV0101		Seal, dust		2
6	KHV0103		Seal, dust		2
7	JHP0037		Nipple, grease, straight		2
8	1371/0701		Nut, high, strength		2
9	229/00573		TBA	P/Ex	1
10	KRV1176		Shim, 1.2mm thick		2
11	KRV1127		Pin, attachment		1
12	1316/3825		Bolt		1
13	KHV0100		Seal, dust		2

RAJA RAM JAISWAL
P-41, Princep Street, Shop No 5
Kolkata
700075

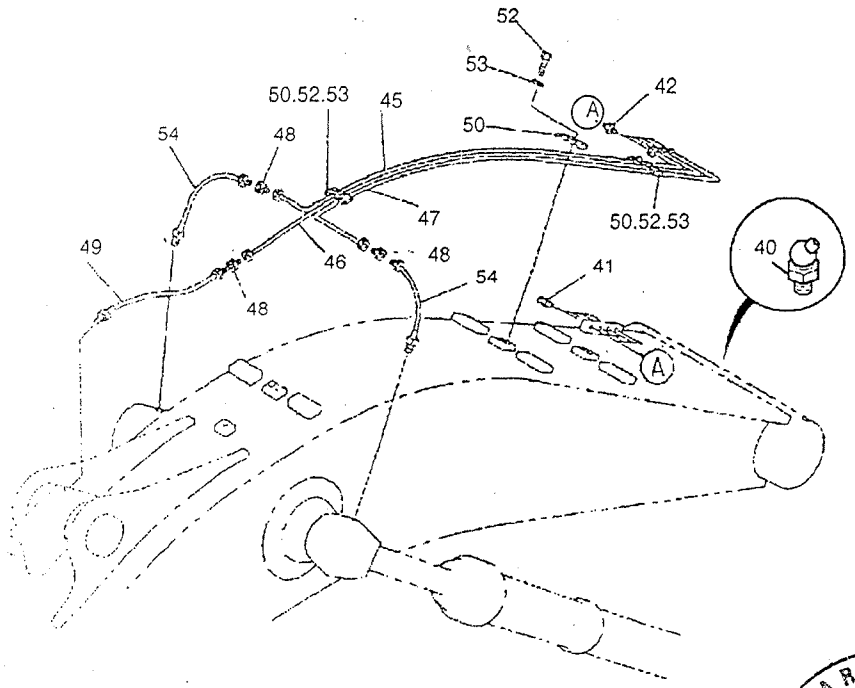

ITEM	PART NO.	CHANGE NO.	DESCRIPTION	REMARKS	QTY.
40	JHP0038		Nipple, grease, angled	Tier 1only, not fitted to Tier 2	1
41	JHP0037		Nipple, grease, straight	Tier 1 only	4
	JHP0037		Nipple, grease, straight	Tier 2 only (3 manifold & 3 Boom base)	6
42	KMJ0964		Connector		4
45	KRV1419		Pipe, grease, right hand boom ram		1
46	KRV1420		Pipe, grease, dipper ram		1
47	KRV1421		Pipe, grease, left hand boom ram		1
48	KMJ0707		Adapter		3
49	KRV0370		Hose, nylon		1
50	KRV0550		Clamp		3
52	1316/0308Z		Screw		6
53	1425/0007Z		Washer, spring		6
54	KRV0370		Hose, nylon		2

RAJA RAM JAISWAL & CO.
41, Princep Street, Shop No. 9
Kolkata
700075

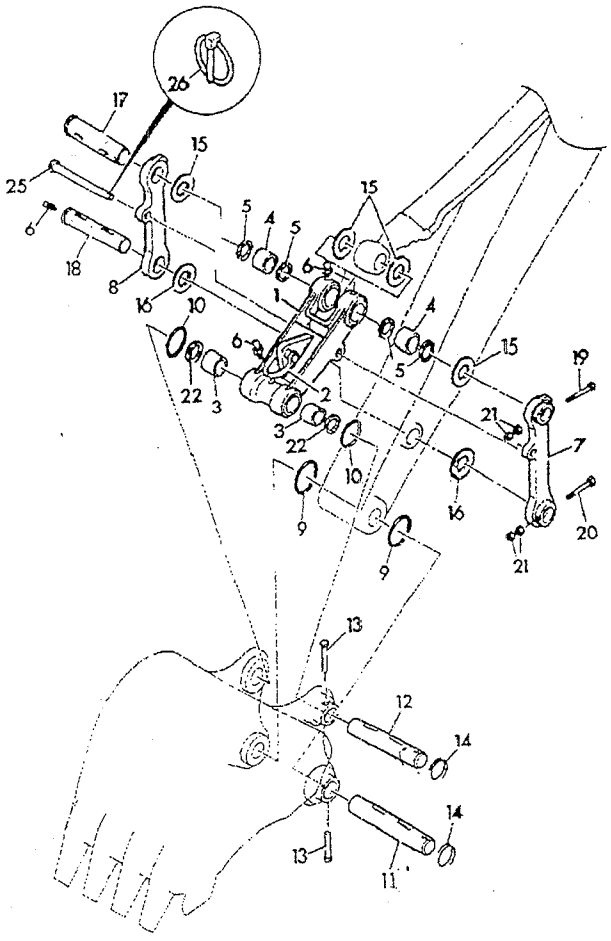

ITEM	PART NO.	CHANGE NO.	DESCRIPTION	REMARKS	QTY.
1	JGORV386		Link, bucket		1
	JG0RV119		Link, bucket, 1 tonne lift		1
	JG0RV118		Link, bucket, max lift		1
	*JGORV155		Link, bucket c/w hook, 12 5 tonne EUR + ROW		1
2	JNV0020		Link, bow shackle		1
	JBV0015		Link, bow shackle		1
3	JRV0077		Bush, steel		2
4	JRV0593		Bush, steel		2
5	KHV0102		Seal, dust		4
6	JHP0037		Nipple, grease, straight		4
7	JRV0209		Link, arm, left hand		1
8	JRV0208		Link, arm, right hand		1
9	KHV0117		O Ring		2
10	KHV0114		O Ring		2
11	JRV0071		Pin, pivot		1
12	JRV0071		Pin, pivot		1
13	KRV1161		Pin		2
14	KRV1162		Ring		2
15	KHV0170		Shim, 1.2mm thick		4
16	KHV0169		Shim, 1.2mm thick		2
17	KRV1120		Pin, attachment		1
18	KRV1121		Pin, attachment		1
19	6009/3827Z		Bolt		1
20	6009/3826Z		Bolt		1
21	173R020VZ		Nut, high, strength		4

★RAJA RAM JAISWAL★6
41, Princep Street, Shop No
Kolkata
700013

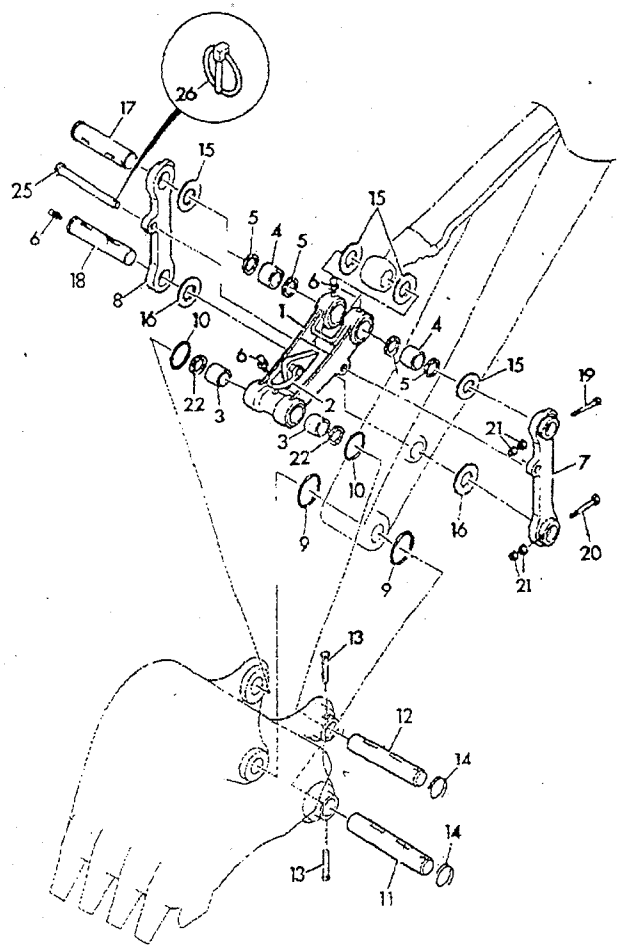

ITEM	PART NO.	CHANGE NO.	DESCRIPTION	REMARKS	QTY.
22	KHV0101		Seal, dust		4
23	JLP0283		Label, NO CRANING		1
25	331/15196		Pin, locking		1
26	JNV0377		Clip, R		1

RAJA RAM JAISWAL
Kolkata
700073
41, Princep Street, Shop No. 9

JCB INDIA LTD.

B3-12-1 EXCAVATOR, SHIMS

ISSUE - 1

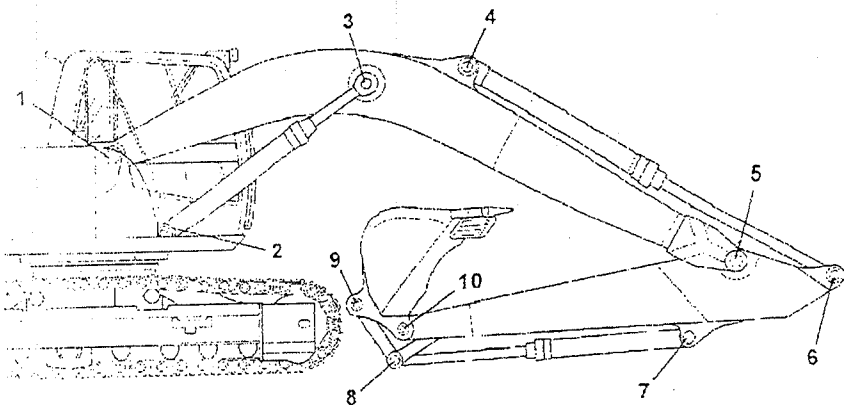

ITEM	PART NO.	CHANGE NO.	DESCRIPTION	REMARKS	QTY.
1	KSP0268		Shim, 0.8mm thick	0.8MM Thickness	A/R
	KRV1180		Shim, 1.2mm thick	1.2MM Thickness	A/R
2	KRV1178		Shim, 1.2mm thick		A/R
3	KRV1178		Shim, 1.2mm thick		A/R
4	KRV1197		Shim, 1.2mm thick		A/R
5	823/10579		Shim, 91mm x 160mm x 0.8mm	0.8MM Thickness	A/R
	KSP0268		Shim, 91mm x 160mm x 1.2mm	1.2MM Thickness	A/R
6			See Remark	Not able to shim	1
7	KRV1176		Shim, 1.2mm thick		A/R
8	KHV0170		Shim, 1.2mm thick		A/R
9	KHV0169		Shim, 1.2mm thick		A/R
10	KHV0170		Shim, 1.2mm thick		A/R

RAJA RAM JAISWAL ☆6 ☆P-41, Princep Street, Shop No. Kolkata 700078

B

B1 BODYWORK/FRAME
B2 CAB
B3 EXCAVATOR END
B5 REFURBISHMENTS

RAJA RAM JAISWAL ★ 6
P-41, Princep Street, Shop No.
Kolkata
700075

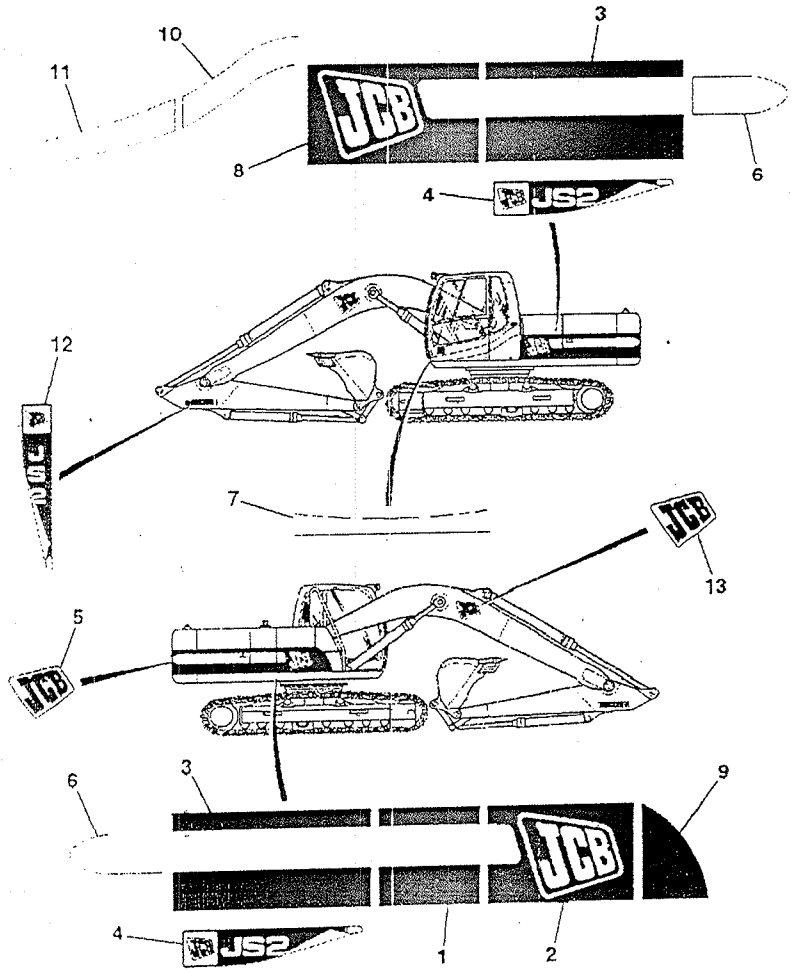

ITEM	PART NO.	CHANGE NO.	DESCRIPTION	REMARKS	QTY.
1	817/18769		Decal, strip, hydraulic tank		1
2	817/18766		Decal, fuel tank		1
3	817/18768		Decal, strip, engine & pump bay		1
4	229/01647		Decal. JS200		2
5	817/17441		Decal, counterweight		1
6	817/18765		Decal, strip, counterweight		2
7	817/18761		Decal, cab, under front window		1
8	817/18764		Decal, hydraulic bay door		1
9	817/18767		Decal, toolbox		1
10	817/18763		Decal, cab side		1
11	817/18762		Decal, cab door		1
12	229/01648		Decal, JS200, Arm		2
13	817/17423		Decal, JCB Insignia (Black). Boom		2

RAJA RAM JAISWAL
P-41, Princep Street, Shop No. 6
Kolkata
700075

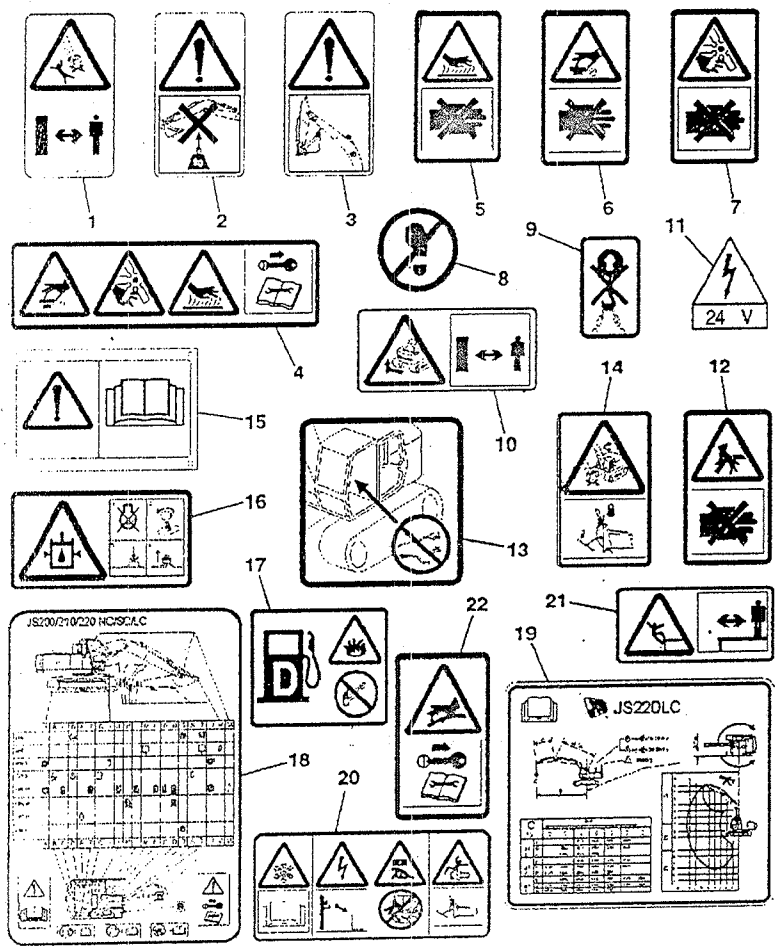

ITEM	PART NO.	CHANGE NO.	DESCRIPTION	REMARKS	QTY.
1	817/18542		Decal, WARNING, Arm Bucket KEEP CLEAR		1
2	JLP0283		Label, NO CRANING		1
3	JRP0142		Label, warning, bucket-boom		1
4	817/18535		Decal, WARNING, coolant pressure		1
5	817/18536		Decal, WARNING, Hot surfaces		1
6	817/18537		Decal, WARNING, High pressure & hot		1
7	817/18538		Decal, WARNING, Rotating parts		1
8	817/18566		Decal, WARNING, NO Step		1
9	JHP0121		Label, counterweight M/C NO LIFT		1
10	817/18528		Decal, WARNING, KEEP CLEAR		1
11	817/02370		Decal, warning 24 volt		1
12	817/18533		Decal, WARNING, KEEP HANDS AWAY		1
13	JHP0111		Label, NO wash, cab		1
14	817/18539		Decal, WARNING Sign lock lever		1
15	817/18541		Decal, WARNING PRODUCT LIABILITY		1
16	JHP0134		Label, hyd tank vent		1
17	817/18727		Label, warning		1
18	229/01289		Decal, LUBRICATION CHART, NON LANGUAGE		1

RAJA RAM JAISWAL
P-41, Princep Street, Shop No. 6
Kolkata
700075

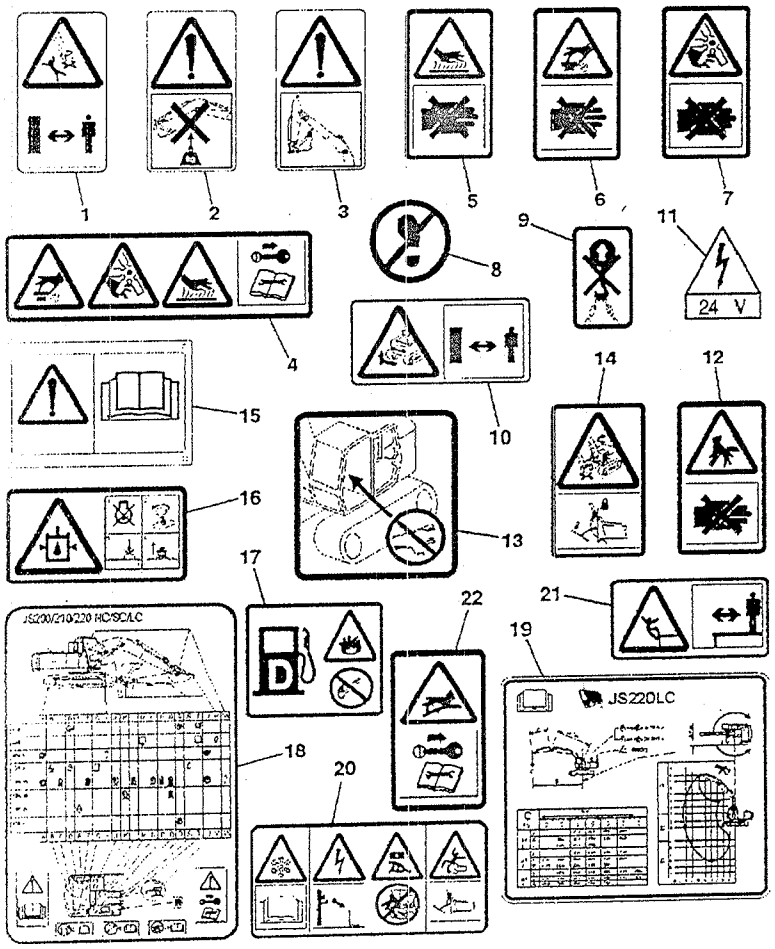

ITEM	PART NO.	CHANGE NO.	DESCRIPTION	REMARKS	QTY.
19	817/18802		Decal, LIFTING CHART, JS200		1
20	817/18529		Decal, WARNING, CAB SIGH		1
21	817/18531		Decal, WARNING, KEEP CLEAR		1
22	817/18532		Decal, WARNING, SIGN HP Hose		1
			Label, noise 105 LWA		1
			Decal, sun visor		1

RAJA RAM JAISWAL
P-41, Princep Street, Shop No. 6
Kolkata
700013

ITEM	PART NO.	CHANGE NO.	DESCRIPTION	REMARKS	QTY.
1	817/18846		Label, engine oil, 02/801481		1
2	817/18847		Label, Fuel Flier		1
3	817/18848		Label, return oil		1
4	817/18849		Label, pilot kilter, KBJ1691		1
5	817/18851		Label, plexus filter, 32/925140		1
6	817/18853		Label, hammer return		1
7	229/01231		Label-Distilled water		1

RAJA RAM JAISWAL & CO.
P-41, Princep Street, Shop No. 9
Kolkata
700075

Illustration Not Available at Time of Publication

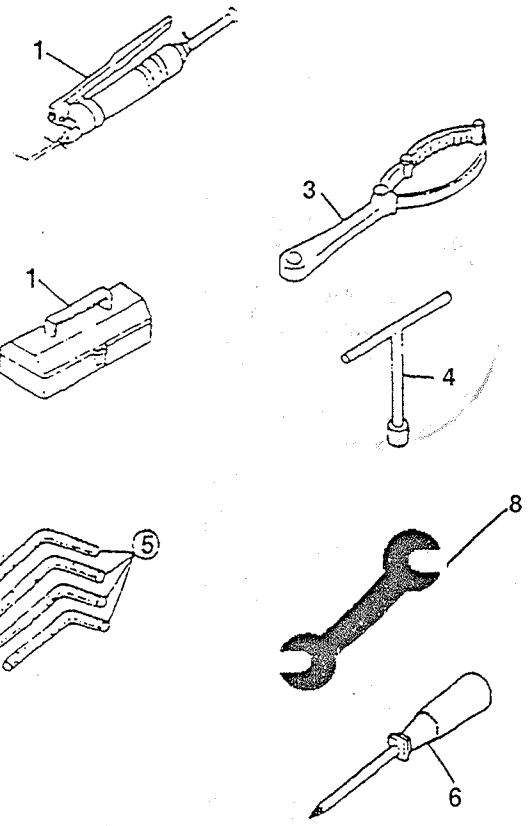

ITEM	PART NO.	CHANGE NO.	DESCRIPTION	REMARKS	QTY.
1	130/99510		Tool Bag		1
3	229/01545		Tool, filter wrench		1
4	JHP0068		Spanner, box		1
5	JRP0086		Key, allen, 5mm		1
	40/301694		Key, allen, 6mm		1
	130/14053		Key, allen, 8mm		1
	JRP0087		Key, allen, 10mm		1
6	JHP0069		Tool, screw driver, pozidrive		1
	JHP0070		Tool, screw driver, pozidrive		1
7	40/301494		Tool, grease gun		1
8	130/14011		D.E. Spanner		1
	130/14012		D.E. Spanner		1
	130/14013		D.E. Spanner		1
	130/14014		D.E. Spanner		1
	130/99557		D.E. Spanner		1
	130/14015		D.E. Spanner		1
	130/99560		Ring Spanner		1
	130/995555		D.E. Spanner		1

RAJA RAM JAISWAL
P-41, Princep Street, Shop No. 6
Kolkata
700073

C

- C1 ELECTRICS, MAIN MACHINE
- C2 ELECTRICS, ENGINE
- C3 ELECTRICS, CAB

RAJA RAM JAISWAL
Kolkata
700073
P-41, Princep Street, Shop No. 6

Illustration Not Available at Time of Publication

ITEM	PART NO.	CHANGE NO.	DESCRIPTION	REMARKS	QTY.
1	229/00601		Battery Cable-Positive		1
2	229/00602		Battery Cable-Link		1
3	229/00603		Battery Cable-Negative		1
4	229/01236		Battery Cable		1
5	826/01144		Band Harness (See KHH0142)		8
6	001/00233		Band Harness (See KHH0142)		29
7	KAR0152		Rubber; Grommet (See KAR0151)		1
8	KAR0576		Rubber; Grommet		1
9	KHH0142		Band; Harness		14
10	KHR0319		Clamp; SPL		7
11	KHR0737		Screw Pan HD M6x16 (See KHR0611)		17
12	KHR1407		Clamp; SPL		1
13	KHR1444		Clamp		2
14	KHR1445		Clamp; SPL		3
15	KHR1451		Wire; Earth		1
16	KHR1716		Cap; Terminal		2
17	KHR1957		Clip		1
18	KRR1078		Bracket Special		1
1	KHH0266		Boss; SPL (See KHH0145)		1
19	1316/0301Z		Screw M8x12		1
20	1316/0305Z		Screw; M8x20		3

RAJA RAM JAISWAL & CO.
P-41, Princep Street, Shop No.
Kolkata
700075

RAJA RAM JAISWAL & CO.
P-41, Princep Street, Shop No.
Kolkata
700075

Illustration Not Available at Time of Publication

ITEM	PART NO.	CHANGE NO.	DESCRIPTION	REMARKS	QTY.
21	1316/0405Z		Screw M10x20		1
22	1316/0507Z		Set Pin		2
23	229/01377		Adaptor M/F 1/2" NPTF/M16		1
24	1420/0007Z		Washer Plain M8		4
25	1420/0008Z		Washer Plain M10		1
26	1420/0009Z		Washer Plain M12		2
27	1425/0007Z		Washer Spring M8		4
28	1425/0008Z		Washer Spring M10		2
29	1425/0009Z		Washer Spring M12		2
30	186-0106ZZ		Washer; Toothed		3
31	186-0108ZZ		Washer; Toothed		1
32	186-0110ZZ		Washer, Toothed		1
33	186-112ZZ		Washer; Toothed		1
34	6012/0298Z		Screw; Pin HD Recess M6x8		7
35	716/30205		Battery Relay		1
36	229/01223		Harness Main		1
37	821/00367		Clip		1
38	826/01347		Cable Tie Push On		41
39	701/80327		Engine Oil Pressure Switch		1
40	701/80328		Temperature Switch		2
41	40/302723		Temp Sensor		1
42	1406/0018		Dowty Seal		2
43	1316/0105Z		Screw M5x20		1
44	1420/0005Z		Washer M5		1
45	1370/0001		Nut M5		1

Illustration Not Available at Time of Publication

ITEM	PART NO.	CHANGE NO.	DESCRIPTION	REMARKS	QTY.
1	JHP0046		Washer		1
2	JHR0128		Bolt		2
3	KHR0611		Screw, pan head		4
4	1316/O305Z		Bolt, high tensile		4
5	1316/0405Z		Screw, M10 x 20		1
6	1316/9403Z		Screw, M4 X 16		4
7	1420/0004Z		Washer, M4		4
8	1420/0007Z		Washer, plain		4
9	6063/0008Z		Washer, starlock		1
10	242/00290		Tie, panel fixin cable		4
11					
12					
13					
14					
15					
16					
17					
18					
19					
20					
21					
22					
23					
24					
25	229/01222		Harness, Fascia		1

RAJA RAM JAISWAL
P-41, Princep Street, Shop No. 6
Kolkata
700075

ITEM	PART NO.	CHANGE NO.	DESCRIPTION	REMARKS	QTY.
26	229/01221		Harness, cab		1
29	728/28300		Unit Electronic control, Tracked / Wheeled		1
30	TBA		Unit Software, ECU 1		1
31	826/01519		Capscrew, socket head		3
32	1420/0006Z		Washer, Plain		3
33	229/01226		Fuse Box MTG. Clip		

RAJA RAM JAISWAL & CO.
P-41, Princep Street, Shop No. 9
Kolkata
700075

Illustration Not Available at Time of Publication

C1-3-1 BATTERY INSTALLATION

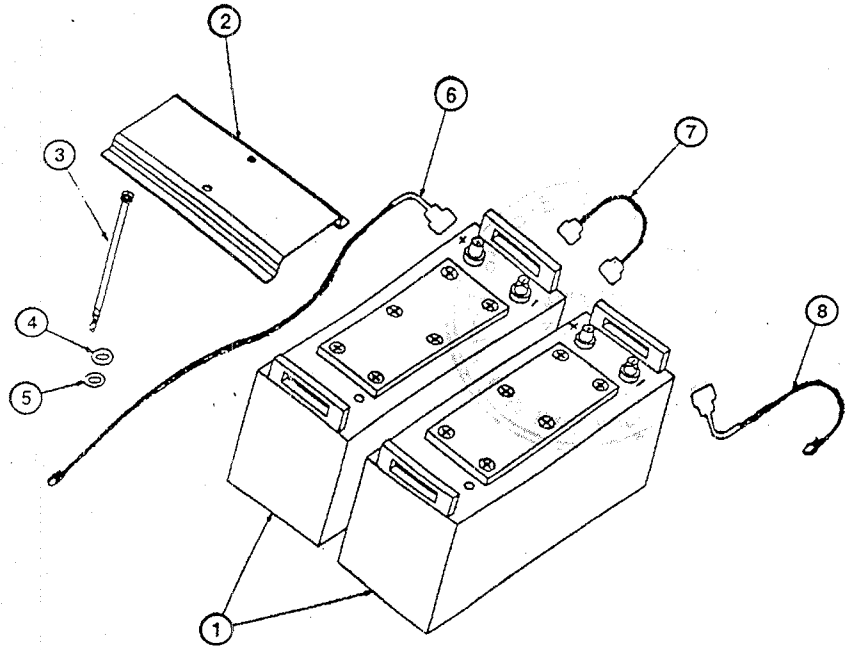

ITEM	PART NO.	CHANGE NO.	DESCRIPTION	REMARKS	QTY.
1	40/302290		Battery MHD1300		2
2	229/00598		Clamp : Battery		1
3	JHR0099		Bolt : SPL		2
4	1425/0008Z		Washer : Spring		2
5	JHP0046		Washer		2
6	229/00601		Positive Lead		1
7	229/00602		Link Lead		1
8	229/00603		Negative Lead		1

RAJA RAM JAISWAL
41, Princep Street, Shop No. 6
Kolkata
700075

JCB INDIA LTD.

C1-4-1 LIGHT, WORKING, TOOLBOX

ISSUE - 1

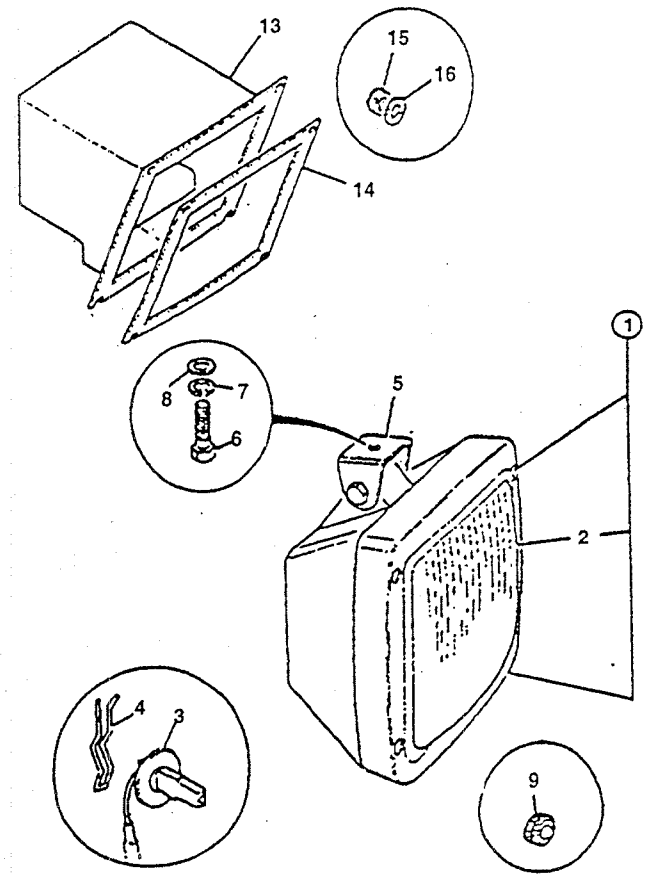

ITEM	PART NO.	CHANGE NO.	DESCRIPTION	REMARKS	QTY.
1	229/00595		Light Working		1
2	NSP		None serviced part		1
3	720/20032		Bulb, 12V-55W H3		1
4	700/10103		Spring		1
5	123/06305		Bracket		1
6	1316/0305Z		Bolt, high tensile		1
7	1420/0007Z		washer, plain		1
8	1370/0201Z		Nut, M8		1
10					
11					
12					
13	229/01138		Box, work light		1
14	229/01203		Gasket		1
15	1370/0001Z		Nut, M5-8		4
16	1420/0005Z		Washer, M5		4

RAJA RAM JAISWAL & CO.
41, Princep Street, Shop No. 6
Kolkata
700075

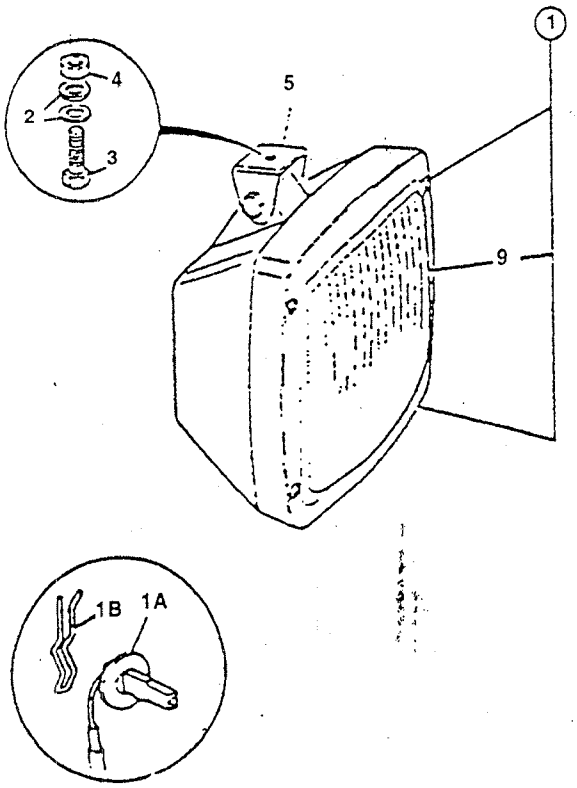

ITEM	PART NO.	CHANGE NO.	DESCRIPTION	REMARKS	QTY.
1	229/00595		Light, assembly		3
1A	720/20032		Bulb, H3 24v 70w		1
1B	700/10103		Spring		1
2	1420/0007Z		Washer, plain		6
3	1315/0305Z		Bolt		3
4	1371/0202Z		Nut		3
5	123/06305		Bracket		3
10	KHH0142		Tie, harness retainer		3
11			See Remark	Not fitted	
12	331/36877		Bracket, right hand light		1
13	331/36878		Bracket, left hand light		1
14			See Remark	Not fitted	
15			See Remark	Not fitted	
16					
17	646/04474		Housing, connector		2
18	821/00410		Clip, pipe		2
19	*1315/0305Z		Bolt		2
20	*1420/0007Z		Washer, plain		2
21	1316/0505Z		Screw		4
22	1420/0009Z		Washer		4

RAJA RAM JAISWAL & CO
P-21, Princep Street, Shop No
Kolkata
700017S

C1-5-1 PUMP, DIESEL, REFUELING

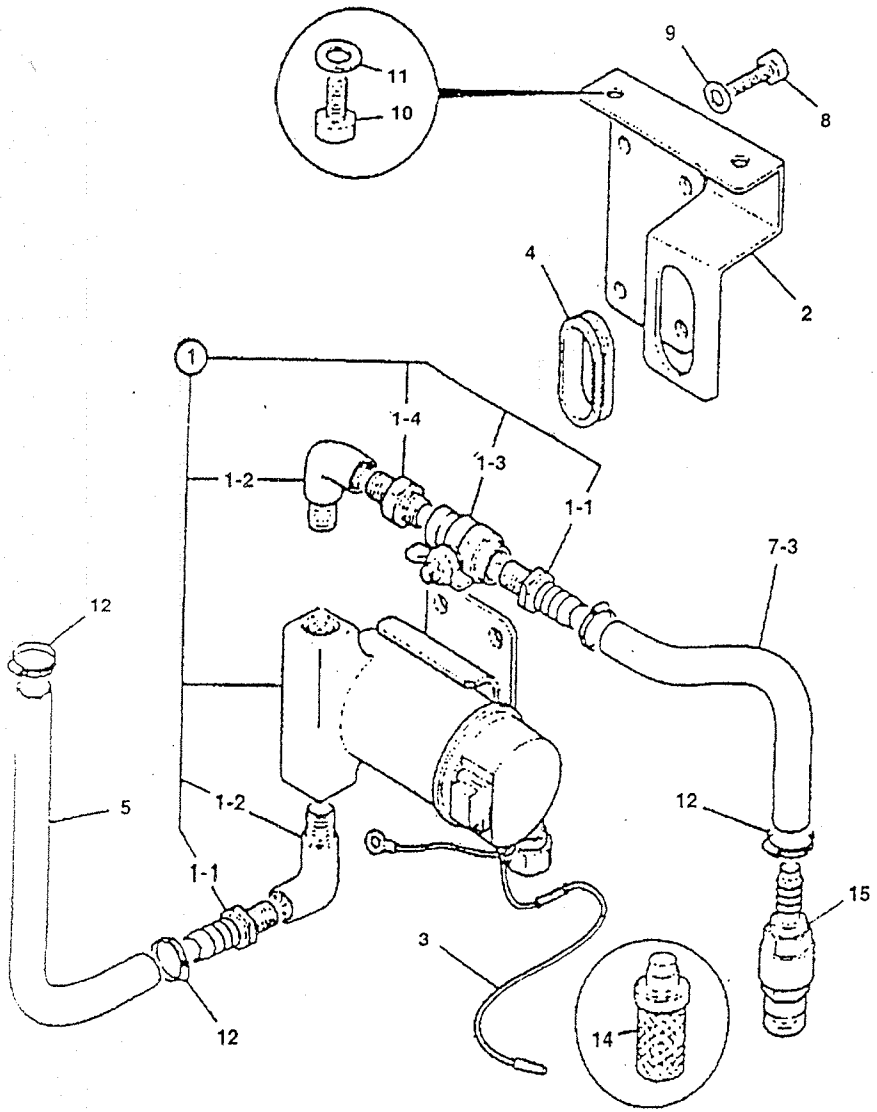

ITEM	PART NO.	CHANGE NO.	DESCRIPTION	REMARKS	QTY.
1	20/951277		Pump, relueting		1
1 03	928/50250		Valve, ball		1
1 04	1604/0006		Adapter, 3/4" BSP M/M		1
2	331/35222		Bracket, refueling pump		1
3	721/11430		Harness, earth ink, refueling pump		1
4	KHN1260		Grommet, rubber		1
5	JRH0012		Hose		1
7	JSR0006		Hose		1
8	1316/0507Z		Screw		4
9	1420/0009Z		Washer		4
10	1316/0403Z		Screw		2
11	1420/0008Z		Washer, Plan		2
12	2201/0007		Clip, jublee		4
13	JHH0009		Hose, 3500mm long		1
14	JHH0071		Valve, non return		1
15	215/11319		Straner, assembly		1

RAJA RAM JAISWAL
P-41, Princep Street, Shop No
Kolkata
700073

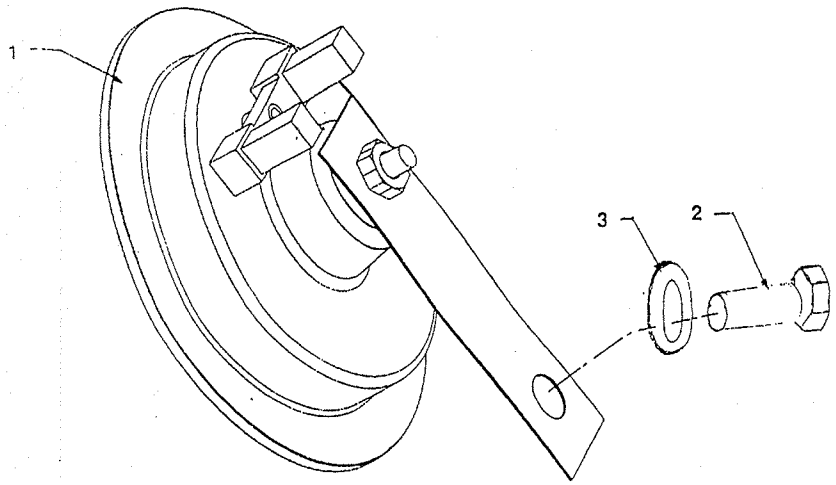

ITEM	PART NO.	CHANGE NO.	DESCRIPTION	REMARKS	QTY.
1	229/01242		Horn		1
2	1316/0305Z		Bolt high tensile		1
3	1425/0007Z		Washer, spring		1

RAJA RAM JAISWAL
P-41, Princep Street, Shop No. 9
Kolkata
700075

C

- C1 ELECTRICS, MAIN MACHINE
- C2 ELECTRICS, ENGINE
- • C3 ELECTRICS, CAB

RAJA RAM JAISWAL & CO.
P-41, Princep Street, Shop No.
Kolkata
700075

JCB INDIA LTD.

C3-2-1 SWITCH PANEL, SIDE CONSOLE, RIGHT HAND

ISSUE - 1

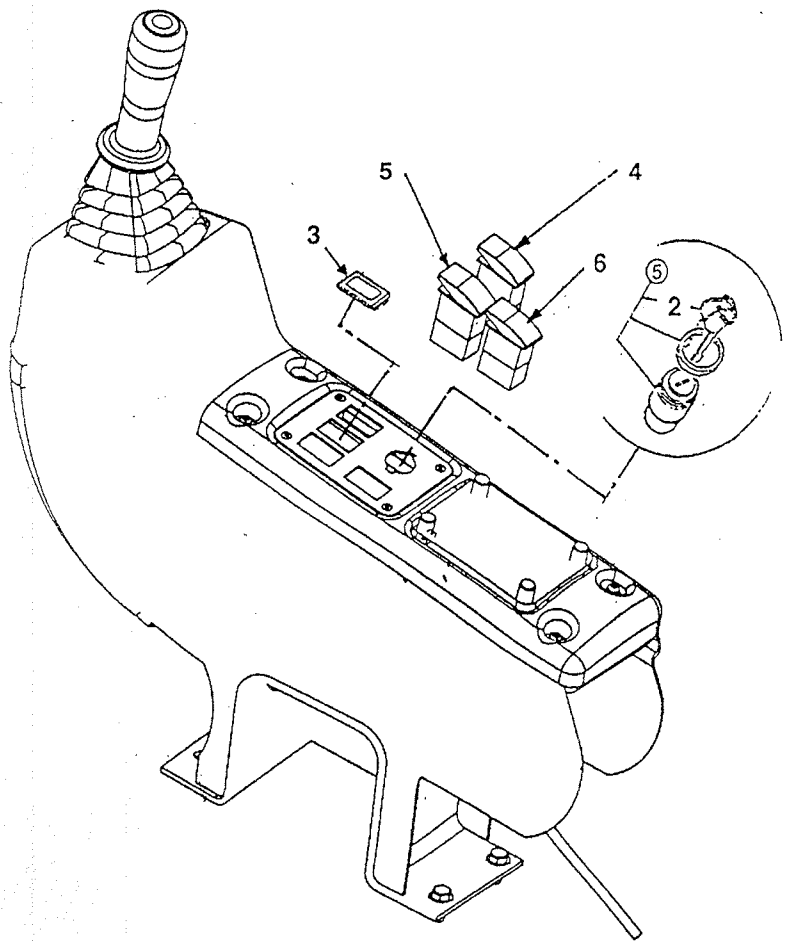

ITEM	PART NO.	CHANGE NO.	DESCRIPTION	REMARKS	QTY.
1	701/80184		Switch, ignition		1
2	701/45501		Key, Door/ignition Ref 14657		1
3	701/60010		Blank		1
4	229/01520		Work Lamp S/W		1
5	229/01521		Servo ISO S/W		1
6	229/01522		Swing Lock S/W		1

RAJA RAM JAISWAL
P-41, Princep Street, Shop No. 6
Kolkata
700075

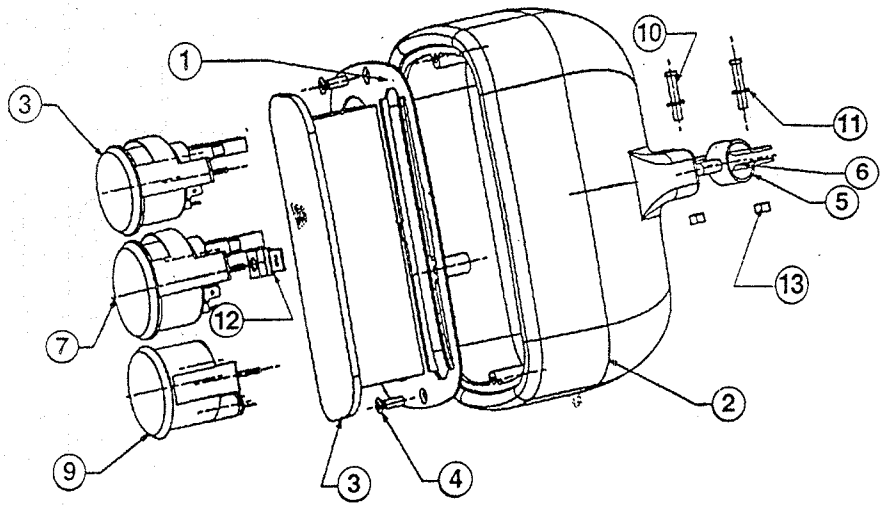

ITEM	PART NO.	CHANGE NO.	DESCRIPTION	REMARKS	QTY.
1	229/01125		Panel Plate		
2	229/01126		Facia Panel Moulding		
3	229/01127		Warning Cluster		
4	229/01128		Countersunk Screw		
5	229/01129		Mounting Clamp		
6	229/01130		Bush		
7	229/01131		Fuel Gauge		
8	229/01132		Hour Meter Gauge		
9	229/01133		Temp Gauge		
10	826/01518		Screw M5		
11	1420/0005Z		Washer M5		
12	264/34901		Clip		
13	1370/0001		Nut M5		

RAJA RAM JAISWAL
Kolkata
700071S
P-41, Princep Street, Shop No. 9

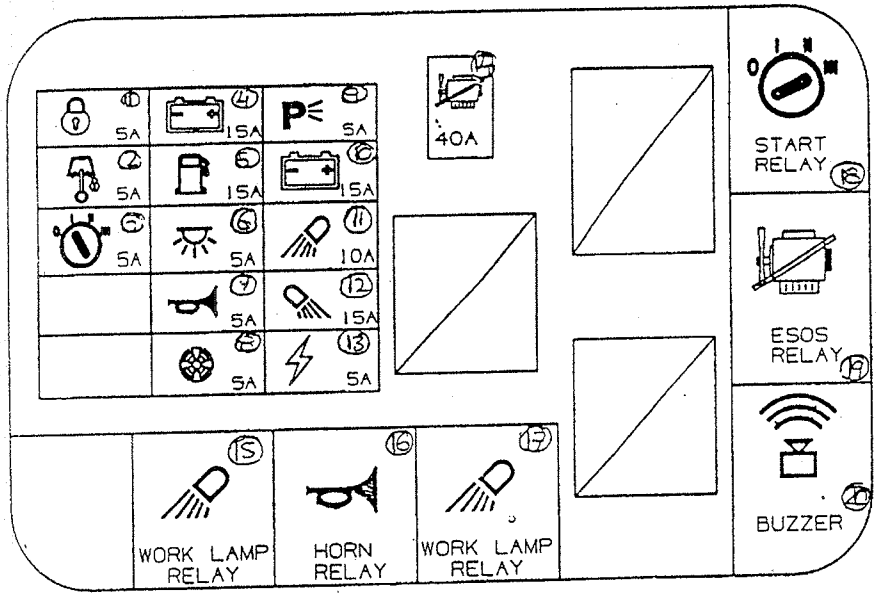

ITEM	PART NO.	CHANGE NO.	DESCRIPTION	REMARKS	QTY.
1	TBA		Fuse 5A		1
2	TBA		Fuse 5A		1
3	TBA		Fuse 5A		1
4	TBA		Fuse 15A		1
5	TBA		Fuse 15A		1
6	TBA		Fuse 5A		1
7	TBA		Fuse 5A		1
8	TBA		Fuse 5A		1
9	TBA		Fuse 5A		1
10	TBA		Fuse 15A		1
11	TBA		Fuse 10A		1
12	TBA		Fuse 15A		1
13	TBA		Fuse 5A		1
14	TBA		Fuse 40A		1
15	229/01389		Relay N/O		1
16	229/01389		Relay N/O		1
17	229/01389		Relay N/O		1
18	696/01479		Relay		1
19	696/01479		Relay		1
20	696/01487		Buzzer		2
21	229/01288		Fuse Box Decal		1

RAJA RAM JAISWAL
P-41, Princep Street, Shop No. 6
Kolkata
700075

D

- D1 CONTROLS MACHINE
- D2 CONTROLS, ENGINE

RAJA RAM JAISWAL
Kolkata
700073
P-41, Princep Street, Shop No. 6

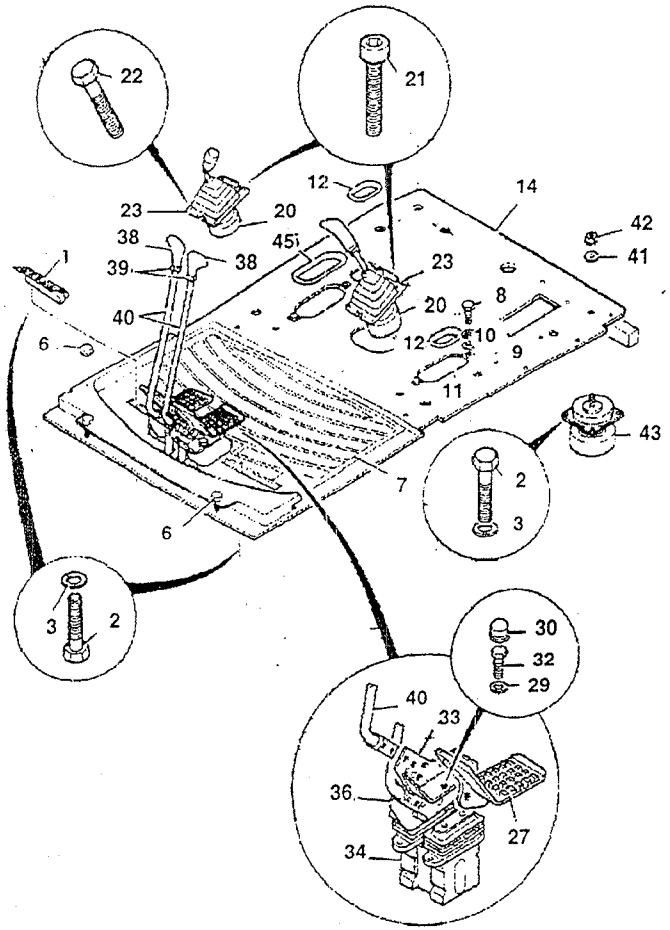

ITEM	PART NO.	CHANGE NO.	DESCRIPTION	REMARKS	QTY.
1	1316/0407Z		Bolt, high strength		4
2	1316/0408Z		Screw		24
3	JHP0046		Washer		28
4					
5					
6	KHJ0769		Cap, spl		3
7	229/01239		Mat, cab floor		1
8	1316/0305Z		Bolt, high tensile		4
9	1420/0007Z		Washer, plain		4
10	1425/0007Z		Washer, spring		4
11	KHJ0947		Guide		2
12	KHJ0948		Grommet	with 30mm hole	1
14	229/01268		Plate, cab floor		1
20	25/221095		Valve, hand control, right hand	Right hand controller E3-6-1 for components	1
	25/221094		Valve, hand control, left hand	Left hand controller E3-6-1 for components	1
21	1391/3210Z		Capscrew		4
22	KHR0737		Screw, pan head		4
23	331/18592		Plate, mounting, control valve		2
27	229/01533		Pedal, foot left track	Left hand pedal	1
	229/01534		Pedal, foot right track	Right hand pedal	1
29	1420/0008Z		Washer, Plain		4
30	KHJ0768		Cap, spl		4
32	1316/0403Z		Screw		4

RAJA RAM JAISWAL
P-41, Princep Street, Shop No. 6
Kolkata
700073

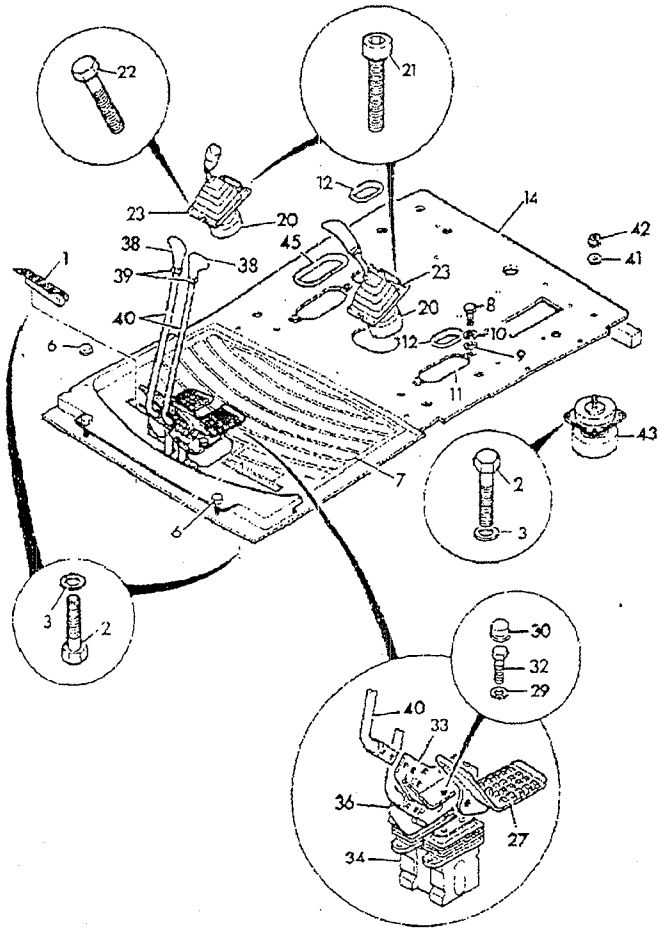

ITEM	PART NO.	CHANGE NO.	DESCRIPTION	REMARKS	QTY.
34	KSJ2465		Valve, remote control	See frame E3-7-2 for components	1
38	122/38501		Knob, track level, c/w clear cap		2
39			See Remark	not used on the assembly	1
40	229/01526		Lever, left hand track	left hand lever	1
	229/01527		Lever, right hand track	right hand lever	1
41	KHN0243		Washer, special		6
42	KHN0268		Nut, U		6
43	KHJ1211		Rubber, mount		6
45	KHJ0950		Grommet		2
48	817/18824		Decal, track lever		2
51	1391/3208Z		Screw, cap		4
52	MPR2006		Washer, special		8
53	1316/0405Z		Screw, M10 x 20		4
54	826/10611		Screw, c/sunk socket head, M8 x 30		4
55	JHP0080		Washer		4

RAJA RAM JAISWAL
P-141, Princep Street, Shop No. 6
Kolkata
700073

D

D1 CONTROLS MACHINE

• D2 CONTROLS, ENGINE

RAJA RAM JAISWAL ★ 6
Kolkata
700013
P-41, Princep Street, Shop No. 9

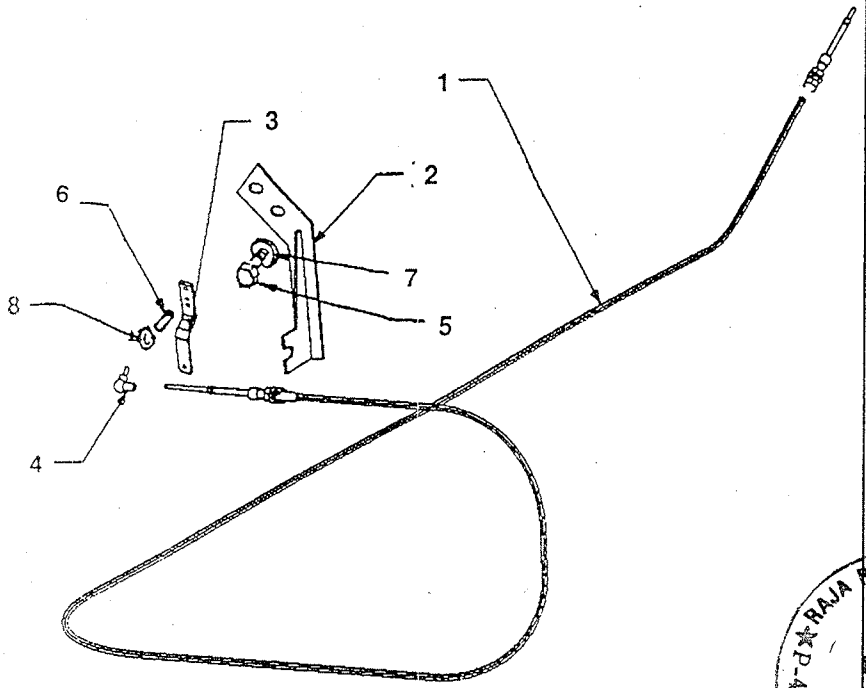

ITEM	PART NO.	CHANGE NO.	DESCRIPTION	REMARKS	QTY.
1	229/01200		Cable Throttle Control		1
2	229/01202		Cable Mounting Bracket		1
3	229/01209		Lever Bracket		1
4	696/00477		Ball Joint		1
5	1316/0507Z		Screw M12x25		2
6	1315/0201Z		Screw M6x12		2
7	1411/0005Z		Washer 1/2"		2
8	1425/0006Z		Washer Locking		2

RAJA RAM JAISWAL & CO.
P-41, Princep Street, Shop No.
Kolkata
700075

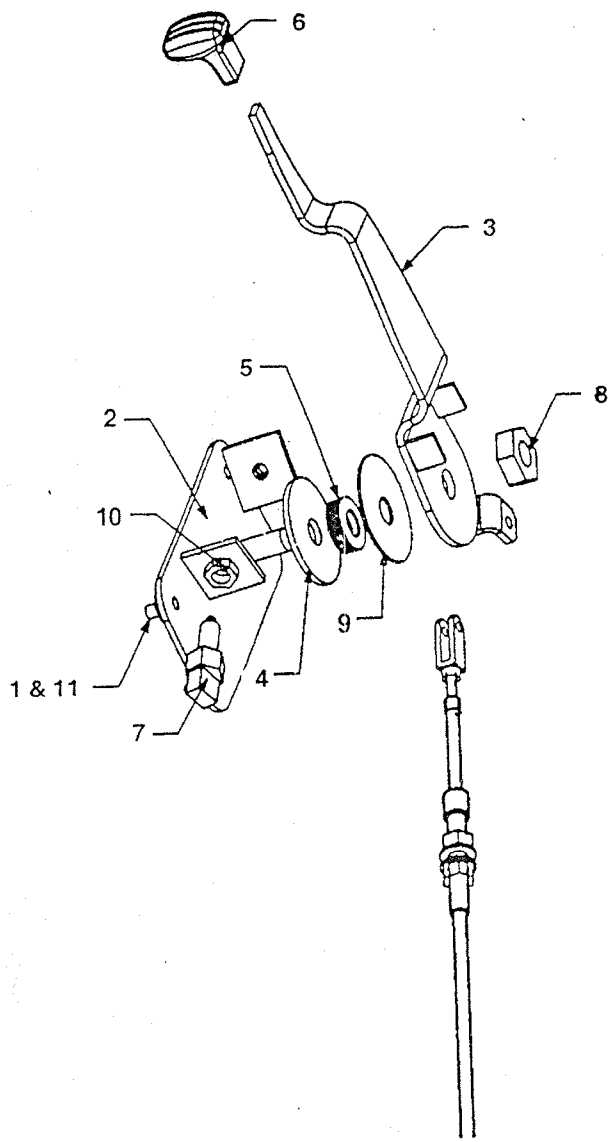

ITEM	PART NO.	CHANGE NO.	DESCRIPTION	REMARKS	QTY.
1	1370/0201Z		Nut M8		4
2	229/01349		Mounting Plate-WA		1
3	229/01350		Lever		1
4	229/01351		Liner Washer		1
5	229/01353		Disk Spring Washer		3
6	331/30884		Knob		1
7	701/42000		Brake lamp switch		1
8	1370/0601Z		Nut M16		1
9	229/01382		Steel washer		1
10	1370/0402Z		Thin Nut M12		2
11	1420/0007Z		Washer M8		4

RAJA RAM JAISWAL
P-41, Princep Street, Shop No. 6
Kolkata
700073

E

- E1 HOSE & PIPEWORK
- E2 PUMP/MOTOR & PUMP DRIVE
- E3 VALVES & HYDRAULIC FILTERS
- E4 RAMS

★RAJA RAM JAISWAL★6
Kolkata
700073
P-41, Princep Street, Shop No.

E1-1-1 CIRCUIT, PUMP SUCTION

ISSUE - 1

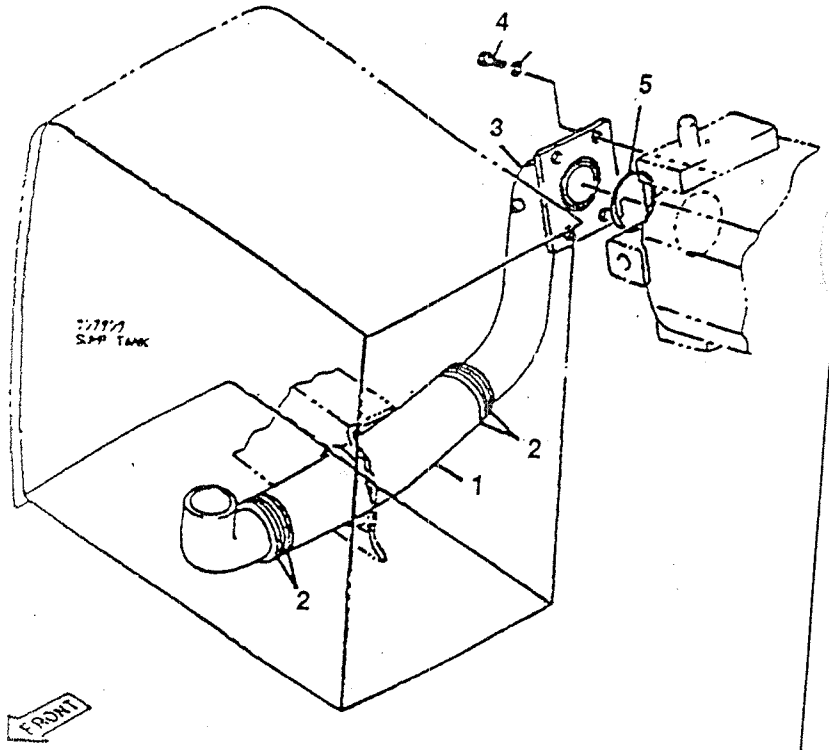

ITEM	PART NO.	CHANGE NO.	DESCRIPTION	REMARKS	QTY.
1	834/10661		Hose, Return		1
2	2201/0015		Clip, jubilee		4
3	229/01378		Pipe, assembly, suction		1
4	1391/3508Z		Capscrew, M12x30		4
5	BRA0127		O Ring		1

RAJA RAM JAISWAL & CO.
41, Princep Street, Stop No.
Kolkata
700075

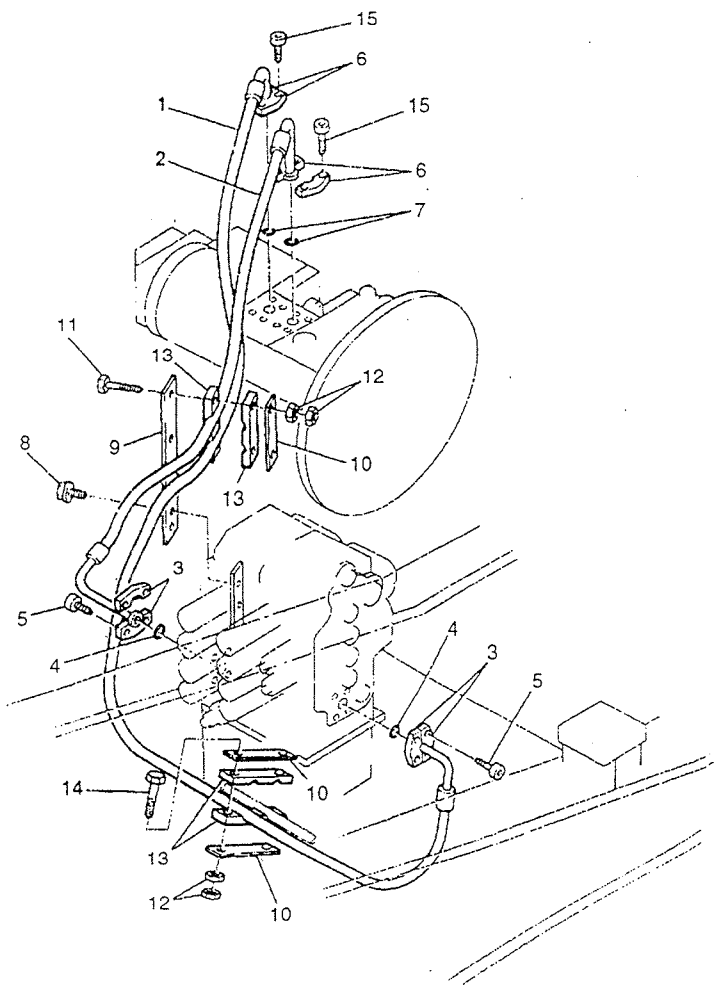

ITEM	PART NO.	CHANGE NO.	DESCRIPTION	REMARKS	QTY.
1	627/10045		Hose		1
2	*927/10046		Hose		1
3	210/92901		Clamp, flange 1"		4
4	2407/0210		Seal, O ring		2
5	1391/3408Z		Capscrew		8
6	KRJ0963		Flange, split		4
7	2407/0205		Seal, O Ring		2
8	1316/0507Z		Screw		4
9	*331/27334		Bracket		1
10	*KRJ4280		Plate, triple clamp		1
11	1316/3520Z		Bolt		2
12	1371/0401Z		Nut		8
13	*KRJ4279		Clamp, triple		2
14	1316/3519Z		Bolt		2
15	1391/3508Z		Capscrew, M12 x 30		8
16	331/30964		Bracket, bulkhead		1
17	KRJ4442		Clamp, hose		2
18	KRJ4443		Plate		1
19	1420/0009Z		Washer		1
20	1411/0005Z		Washer		2

RAJA RAM JAISWAL
P-41, Princep Street, Shop No. 6
Kolkata
700075

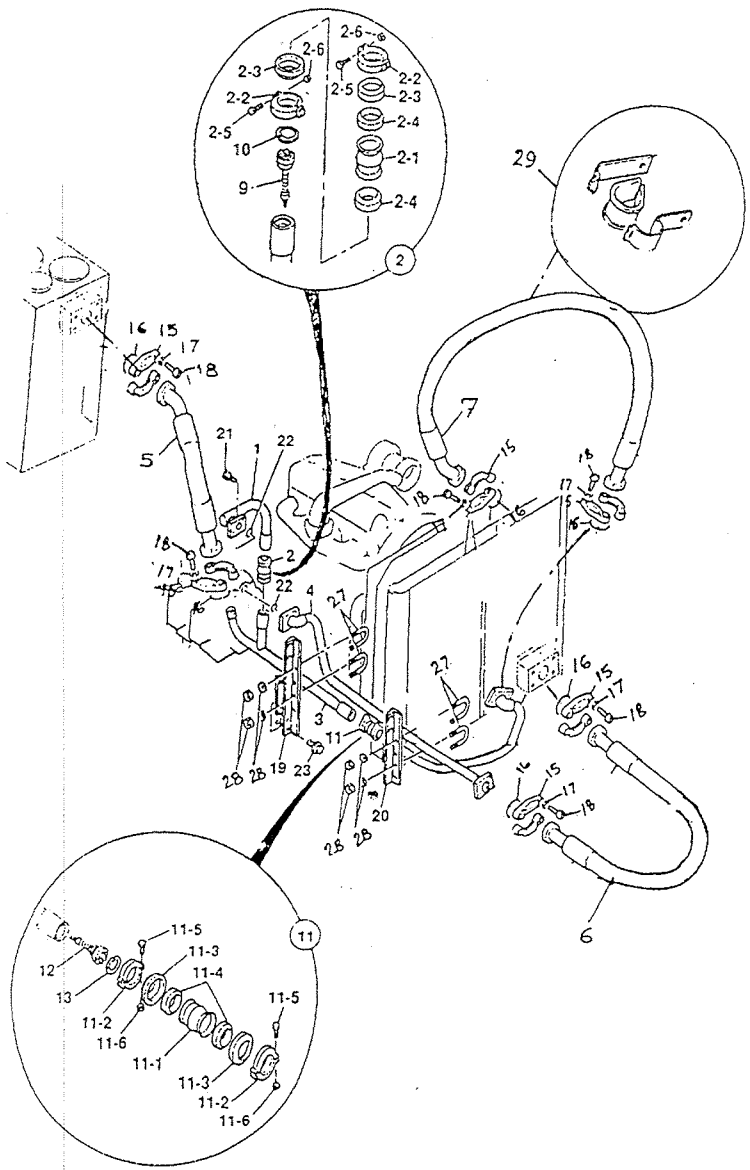

ITEM	PART NO.	CHANGE NO.	DESCRIPTION	REMARKS	QTY.
1	830/11754		Pipe, assembly		1
2	KRJ3818		Shaft, cplg spl		1
2 01	KRJ3819		Sleeve, spl		1
2 02	KRJ3820		shaft, cplg, spl		2
2 03	KRJ3821		Retainer, spl		2
2 04	KRJ3822		Gasket, spl		2
2 05	KRJ3512		Bolt, spl		2
2 06	KRJ3513		Nut spl		2
3	830/11572		Pipe, oil return		1
4	830/11746		Pipe assembly		1
5	627/10276		Hose, Return		1
6	627/10274		Hose		1
7	627/10348		Hose, oil cooler		1
8			Pipe assembly		1
9	KRJ3515		Valve, check		1
10	380A0500Z		Ring, snap		1
11	KRJ3813		Shaft, cplg, spl		1
11 01	KRJ3814		Sleeve, spl		1
11 02	KRJ3815		Shaft cplg, spl		2
11 03	KRJ3816		Retainer, spl		2
11 04	KRJ3817		Gasket, spl		2
11 05	KRJ3512		Bolt, spl		2
11 06	KRJ3513		Nut, spl		2
12	KRJ3823		Valve, check		1
13	380A0400Z		Ring, snap		1
14	KRJ3507		Shaft, cplg, spl		1

RAJA RAM JAISWAL & CO
Kolkata
700073

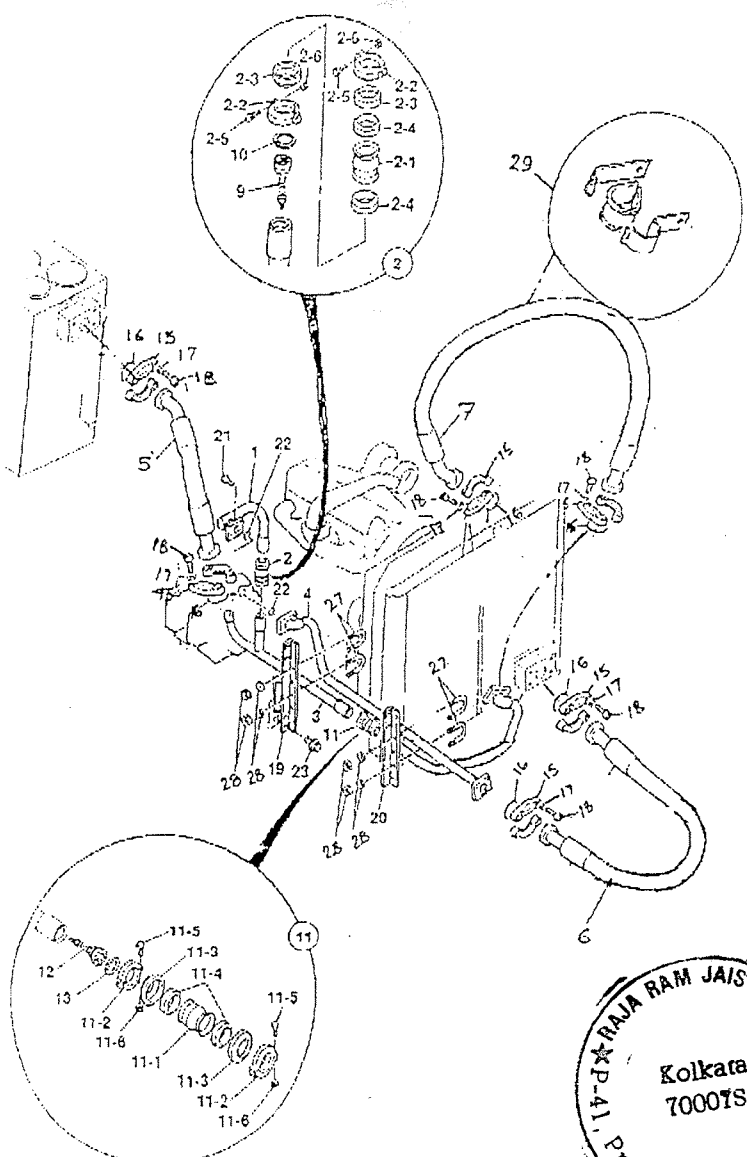

ITEM	PART NO.	CHANGE NO.	DESCRIPTION	REMARKS	QTY.
14 01	KRJ3508		Sleeve, spl		1
14 02	KRJ3509		Shaft cplg, spl		2
14 03	KRJ3510		Retainer, spl		2
14 04	KRJ3511		Gasket, spl		2
14 05	KRJ3512		Bolt, spl		2
14 06	KRJ3513		Nut, spl		2
15	KTJ1663		Flang		12
16	2400/0216		O-Ring		5
17	1411/0005Z		Washer		26
18	1391/3509Z		Cap Screw		24
19	331/29264		Bracket		1
20	335/06186		Bracket		1
21	1391/3509Z		Capscrew		8
22	BHA0956		O Ring		2
23	TBA		Part number, Not yet known		4
24	BRJ0174		Plug		1
24 01	LBQ0292		O Ring		1
25	1316/0407Z		Screw	Use with item 20 & 26	2
26	1420/0008Z		Washer, Plain		2
27	KNJ0719		U-Bolt		4
28	1371/0301Z		Nut		8
29	821/10292		P-Clip		1

RAJA RAM JAISWAL
P-41, Princep Street, Shop No. 6
Kolkata
700073

E1-4-1 CIRCUIT, TRACK, MAINFRAME

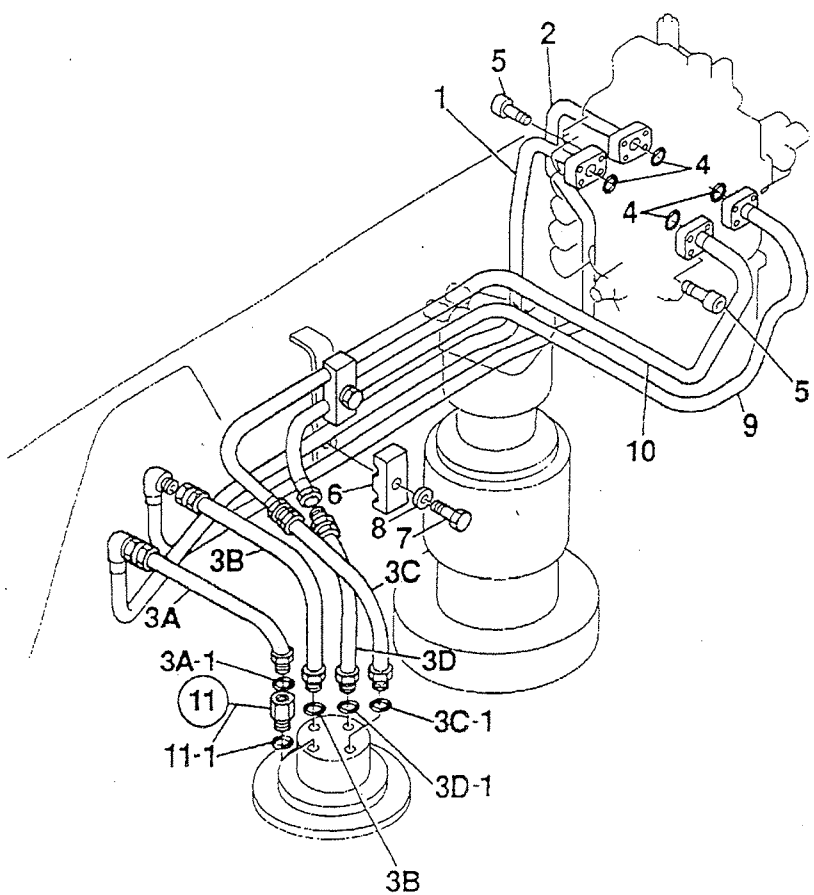

ITEM	PART NO.	CHANGE NO.	DESCRIPTION	REMARKS	QTY.
1	830/10951		Pipe assembly		1
2	830/10952		Pipe assembly		1
3A	KRJ4551		Hose		1
3A 01	2400/0204		Seal, O ring		1
3B	KRJ4551		Hose		1
3B 01	2400/0204		Seal, O ring		1
3C	KRJ2370		Hose		1
3C 01	2400/0204		Seal, O ring		1
3D	KRJ4553		Hose		1
3D 01	2400/0204		Seal, O ring		1
4	2407/0205		Seal, O Ring		4
5	1391/3409Z		Capscrew, M10 x 35mm		12
	1391/3413Z		Capscrew	Port B	4
6	JRJ0218		Clamp, pipe		2
7	1316/3513Z		Bolt		2
8	JHP0042		Washer, plan		2
9	830/10953		Pipe assembly		1
10	830/10954		Pipe assembly		1
11	KNJ1936		Adapter		1
11 01	2400/0204		Seal, O ring		1

RAJA RAM JAISWAL
P-41, Princep Street, Shop No. 6
Kolkata
700078

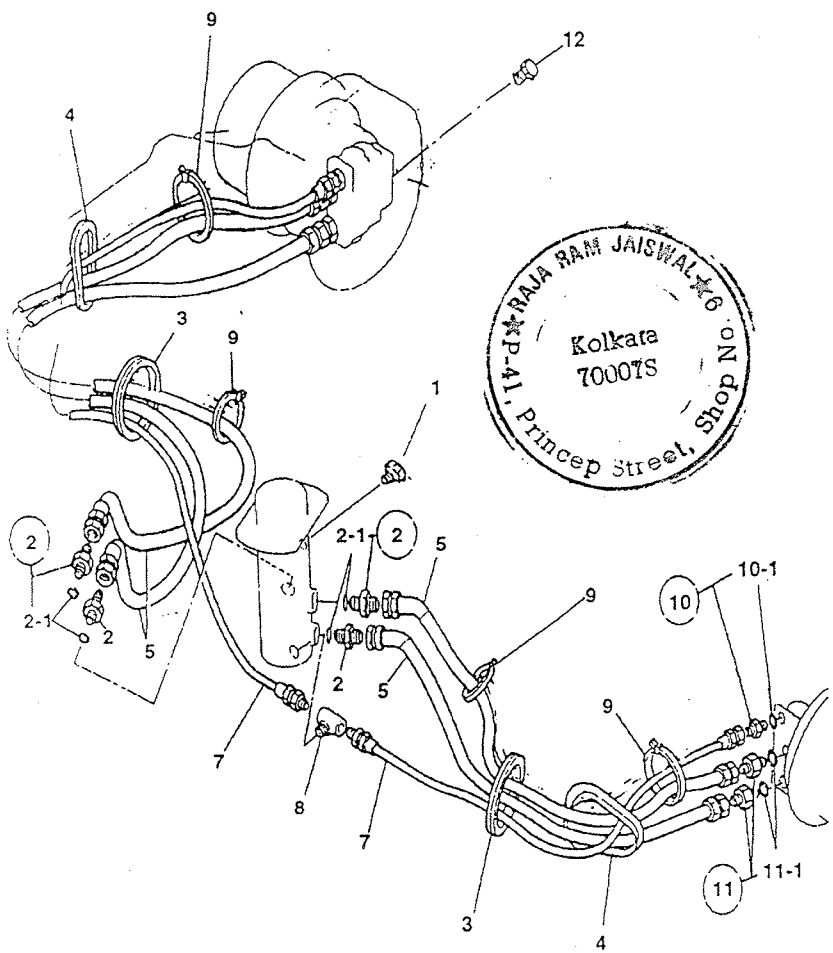

RAJA RAM JAISWAL & CO
P-41, Princep Street, Shop No.
Kolkata
700075

ITEM	PART NO.	CHANGE NO.	DESCRIPTION	REMARKS	QTY.
1	KHJ0363		Plug		1
2	KRJ1391		Adapter		4
2 01	UBJ0158		O Ring		1
3	KRA1138		Cushion, rubber		2
4	KNA0520		Cushion, rubber		2
5	KRA1238		Hose	JS200S	4
7	KRA0791		Hose	JS200S	2
8	KRA0789		Adapter, tee		1
9	001/00233		Tie harness retainer		4
10	KNJ0604		Adapter, 1/2" M/M		2
10 01	UBJ0157		O Ring		1
11	KNJ0606		Adapter		4
11 01	BHJ0795		O Ring		1
12	816/00468		Plug		2

E1-6-1 CIRCUIT, SWING

ISSUE - 1

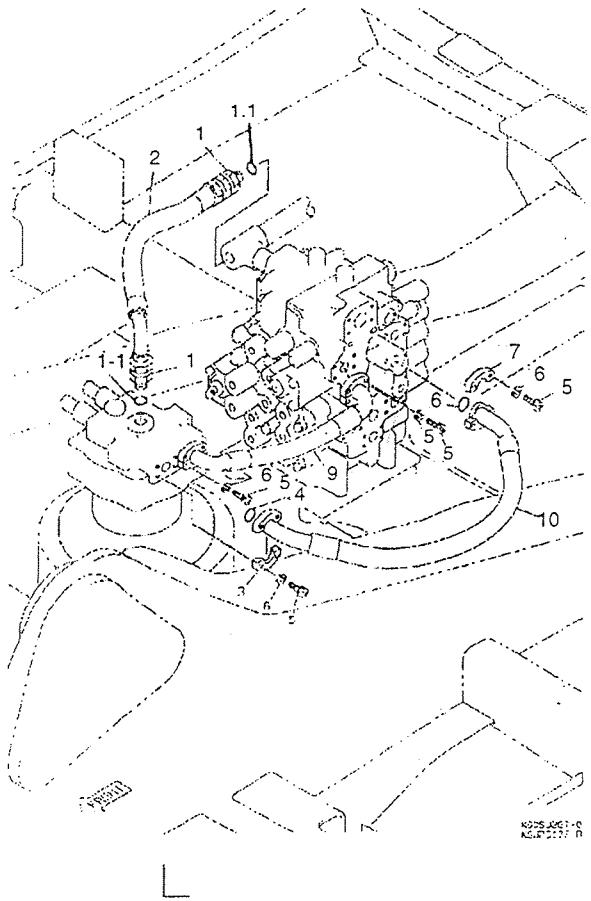

ITEM	PART NO.	CHANGE NO.	DESCRIPTION	REMARKS	QTY.
1	KNJ0606		Adapter		2
1 01	BHJ0795		O Ring		2
2	627/10284		Hose		1
3	KRJ2681		Flange, split		4
4	2407/0205		Seal, O Ring		2
5	1391/3408Z		Capscrew		16
6	1425/0008Z		Washer, spring		16
7	KRJ2682		Flange, split		4
8	2407/0210		Seal, O ring		2
9	627/10044		Hose		1
10	627/10043		Hose		1

RAJA RAM JAISWAL
Kolkata
700079
P-41, Princep Street, Shop No. 9

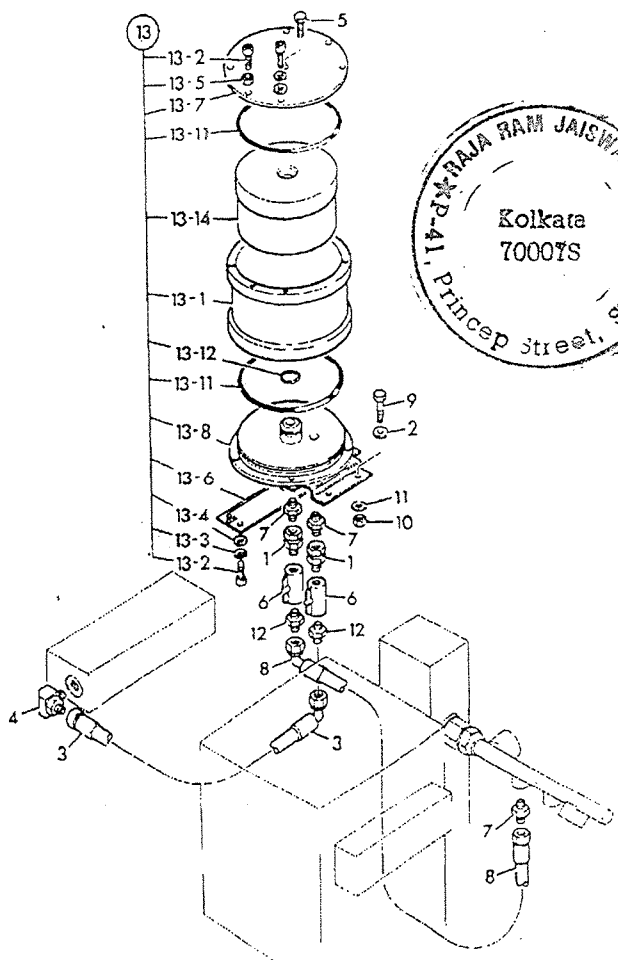

RAJA RAM JAISWAL & CO.
P-41, Princep Street, Shop No.
Kolkata
700073

ITEM	PART NO.	CHANGE NO.	DESCRIPTION	REMARKS	QTY.
1	C4E7327		Adapter		2
2	JHPO046		Washer		4
3	KSJ0968		Hose, nylon, blue		1
4			See Remark		1
5	KHJ0739		Screw, pan head		1
5 01	*UEJ0360		O Ring		1
6	KHJ0897		Tap, drain		2
7	KHJ0341		Adapter elbow		1
7 01	*UEJ0360		O Ring		1
8	KSJ0806		Hose nylon		1
9	1316/0407Z		Bolt, high strength		4
10	1425/0008Z		Washer, spring		4
11	1420/0008Z		Washer, Plain		4
12	CRE5507		See Remark Adoptor		
13	JRJ0238		Filter, bypass		1
13 01	32/925120		Case filter		1
13 02	826/10302		Capscrew, M8 st. steel		10
13 03	823/10181		Washer, spring, st. steel		8
13 04	823/10201		Washer, M8, st. steel		8
13 05	826/10321		Nut, M8 plain st. steel		2
13 06	32/925121		Bracket, mounting		2
13 07	32/925122		Cover top		1
13 08	32/925123		Base, filter		1
13 11	828/10080		O Ring		2
13 12	828/10081		O Ring		1
13 14	32/925140		Element, filter bypass Plexus		1

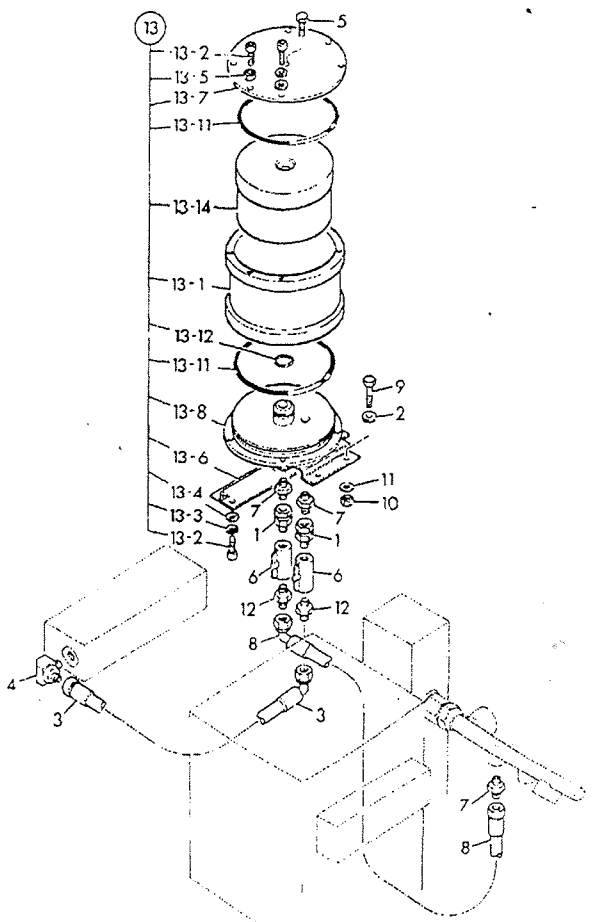

ITEM	PART NO.	CHANGE NO.	DESCRIPTION	REMARKS	QTY.
15	KHH0143		Band harness retainer		4
16	KHJ0348		Adapter, elbow		1
16 01	UEJ0360		O Ring		1
17	KNJ0815		Adoptor		2

RAJA RAM JAISWAL
P-41, Princep Street, Shop No. 9
Kolkata
700073

JCB INDIA LTD.

E1-10-1 CIRCUIT, DRAIN, MOTOR & SOLENIOD

ISSUE - 1

RAJA RAM JAISWAL
Kolkata
700075
P-41, Princep Street, Shop No 6

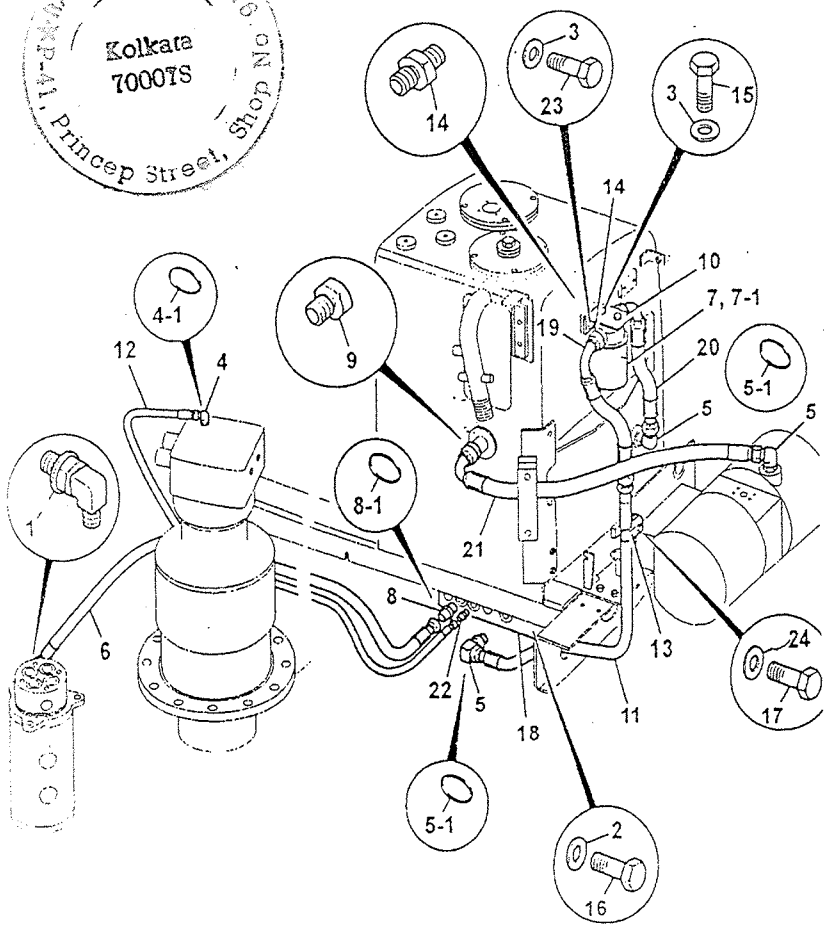

ITEM	PART NO.	CHANGE NO.	DESCRIPTION	REMARKS	QTY.
1	BHS0182		Adaptor		1
2	JHP0042		Washer, Plain		2
3	JHP0046		Washer, M10		4
4	KHJ0342		Adaptor, Elbow		1
4.1	BRP0007		O Ring		1
5	KHJ0344		Adaptor, Elbow		3
5.1	UBJ0158		O Ring		1
6	KNA0362		Hose		1
7	KNJ0287		Filter, Hydraulic		1
7.1	KNJ0288		Element, Oil, Filter		1
8	KNJ0604		Adaptor, 1/2" M/M		1
8.1	UBJ0157		O Ring		1
9	KNJ0605		Adaptor		1
10	KRJ2662		Bracket		1
11	KRJ4229		Pipe		1
12	KRJ4450		Hose, Hyd. (1=1750)		1
13	KRV0548		Clamp		1
14	MPV2193		Adaptor		1
15	1316/0405Z		Screw, M10x20		2
16	1316/0508Z		Screw		2
17	1316/3512Z		Bolt, M12x50		1
18	331/27235		Manifold		1
19	627/10083		Hose		1
20	627/10084		Hose		1
21	635/80037		Hose		1
22	KNJ0759		Adaptor		1
23	1316/0403Z		Screw		2
24	1420/0009Z		Washer, Plain M12		1

JCB INDIA LTD.

E1-11-1 CIRCUIT, PUMP, PILOT PRESSURE & RETURN LINE

ISSUE - 1

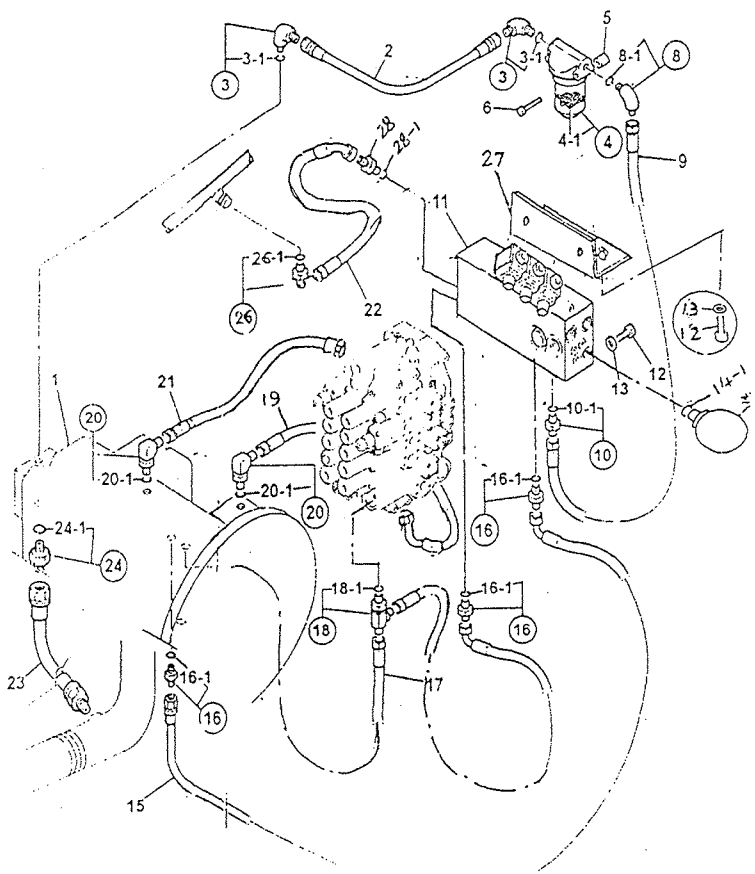

ITEM	PART NO.	CHANGE NO.	DESCRIPTION	REMARKS	QTY.
1			'See Remark'	Pump see frame E2-1-1	1
2	AWV0019		Hose, hydraulic		1
3	KHJ0343		Adapter, elbow		2
3 01	UBJ0157		O Ring		1
4	32/925214		Filter, assembly, servo		1
4 01	KBJ1691		Element, servo, filter		1
4 02	KHJ1032		O Ring		1
5	KRN0081		Spacer		2
6	1316/3218Z		Bolt		2
8	KHJ0641		Adapter, elbow		1
8 01	UBJ0157		O Ring		1
9	JLV0288		Hose		1
10	KNJ0759		Adapter		1
10 01	BRP0007		O Ring		1
11	229/01003		Solenoid, valve assembly		1
12	1316/0405Z		Bolt		24
13	1420/0008Z		Washer		24
14	JHJ0050		Accumulator		1
14 01	LBQ0182		O Ring		1
15	JNV0329		Hose Colour (none)		1
16	KNJ0758		Adapter		1
16 01	LBQ0112		O Ring		1
17	KAJ2847		Hose		1
18	KHJ0869		Adapter, tee		1
1801	LBQ0112		O Ring		1
19	JRJ0094		Hose, nylon		1

RAJA RAM JAISWAL & CO. P-41, Princep Street, Shop No. Kolkata 700073

E1-11-1 CIRCUIT, PUMP, PILOT PRESSURE & RETURN LINE

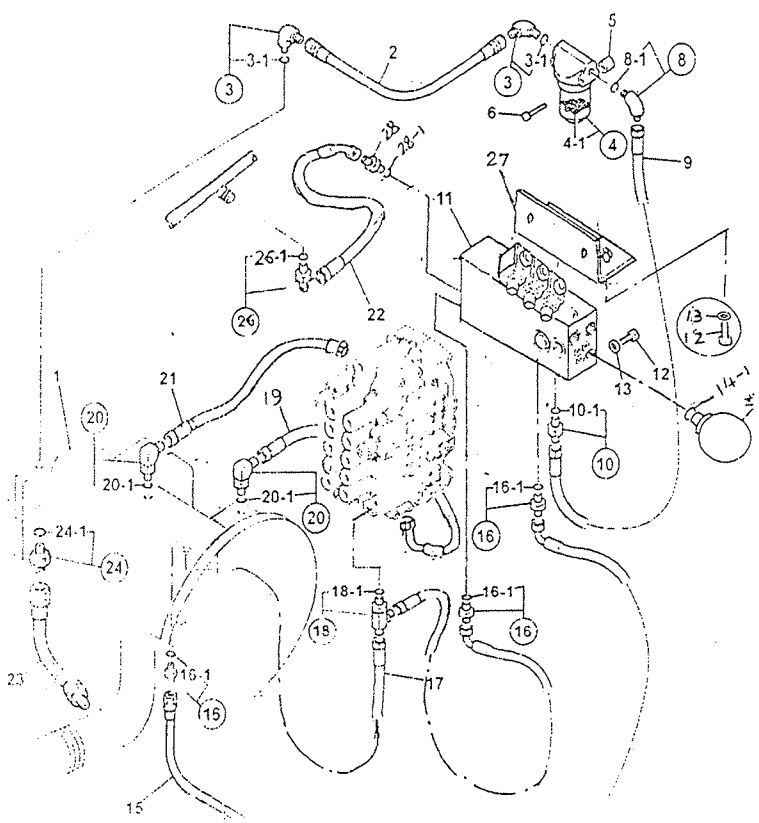

ITEM	PART NO.	CHANGE NO.	DESCRIPTION	REMARKS	QTY.
20	KNJ0758		Adapter. elbow		3
20 01	LBQ0112		O Ring		1
21	JRJ0079		Hose, nylon		1
22	627/10073		Hose		1
23	KNJ1821		Hose hyd, (L = 470)		1
24	KNJ0605		Adapter		2
24 01	LBQ0112		O Ring		1
25	331/27941		Bracket, return line filter		1
26	KNJ0759		Adaptor		1
26.1	LBQ0112		O-Ring		1
27	229/01281		Bracket, Solenoid MIG.		1
28	KHJ0342		Elbow		
28.1	LBQ0112		O-Ring		

RAJA RAM JAISWAL & CO.
P-41, Princep Street, Shop No
Kolkata
700075

E1-20-1 CIRCUIT, BOOM RAMS, MAINFRAME

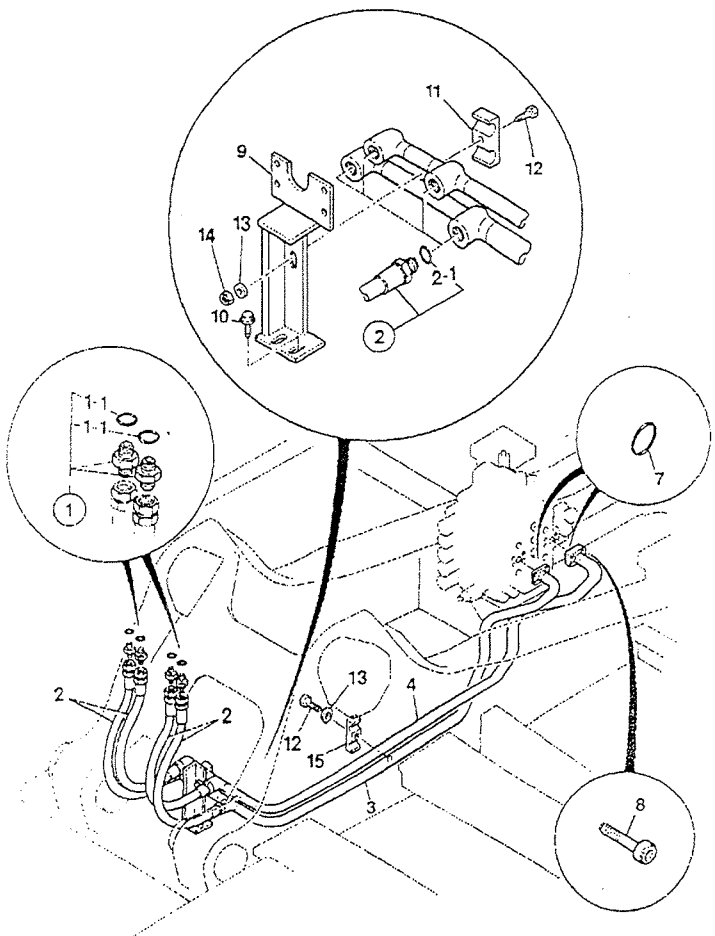

ITEM	PART NO.	CHANGE NO.	DESCRIPTION	REMARKS	QTY
1	KNJ0605		Adapter		4
1 01	2400/0204		Seal, O ring		1
2	KRJ3868		Hose, hyd, (L = 800)		4
2 01	2400/0204		Seal, O ring		1
3	830/10949		Pipe assembly		1
4	830/10950		Pipe assembly		1
7	2407/0210		Seal, O ring		2
8	1391/3409Z		Capscrew, M10 x 35mm		8
9	JRJ0133		Bracket		1
10	JHN0048		Bolt		2
11	JRJ0126		Clamp		1
12	1316/3515Z		Bolt		2
13	JHP0042		Washer, plain		2
14	1371/0401Z		Nut		1
15	KBJ1595		Clamp, pipe		1

RAJA RAM JAISWAL & CO.
P-41, Princep Street, Shop No. 6
Kolkata
700075

JCB INDIA LTD.

E1-21-1 CIRCUIT, DIPPER & BUCKET

ISSUE - 1

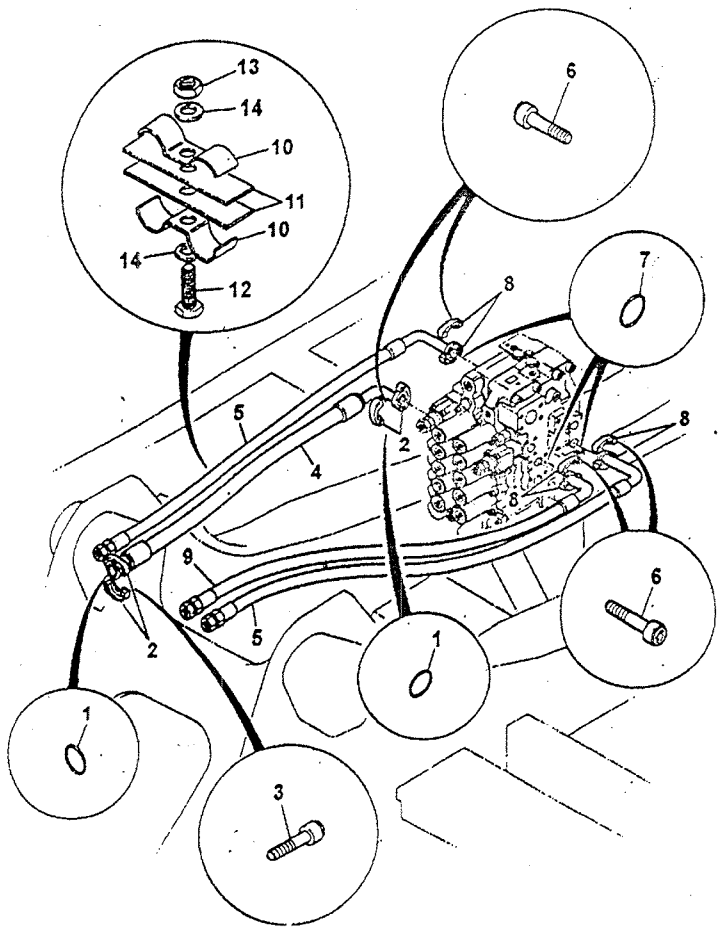

ITEM	PART NO.	CHANGE NO.	DESCRIPTION	REMARKS	QTY.
1	2407/0210		Seal, O ring		2
2	KRJ2682		Flange, split		4
3	1391/3409Z		Capscrew, M10 x 35mm		4
4	KSJ2308		Hose, hydaulic		1
5	627/10041		Hose		1
6	1391/3409Z		Capscrew, M10 x 35mm		16
7	2407/0210		Seal, O ring		3
8	KRJ2682		Flange, split		6
9	627/10048		Hose		1
10	KRJ4447		Clamp, hose		2
11	KRJ4448		Cushion, rubber		2
12	1316/0309Z		Bolt		1
13	1371/0201Z		Nut		2
14	JHP0080		Washer		4
15	627/10042		Hose		1

RAJA RAM JAISWAL
P-41, Princep Street, Shop No. 6
Kolkata
700078

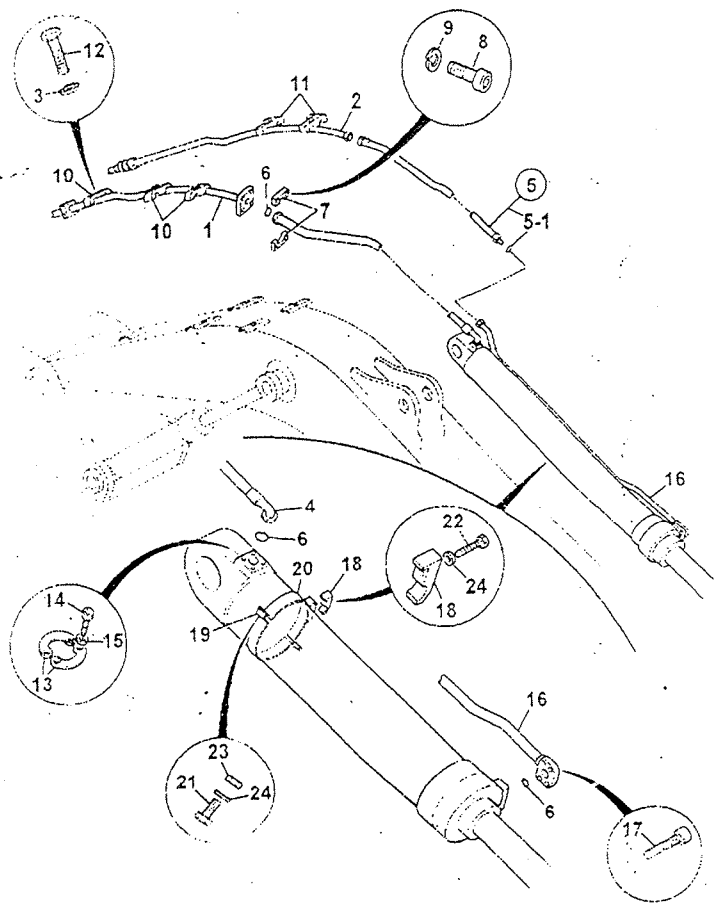

ITEM	PART NO.	CHANGE NO.	DESCRIPTION	REMARKS	QTY.
1	830/10959		Pipe assembly left hand dipper ram		1
2	830/10958		Pipe assembly right hand dipper ram		1
3	6060/0011Z		Washer spring		5
4	JRV0325		Hose		1
5	JLV0143		Hose		1
5.1	UBJ0158		O Ring		1
6	2400/0210	Superseded	O Ring		3
	2407/0210		Seal, O ring		3
7	KRJ2682		Flange split		2
8	1391/3409Z		Capscrew M10 x 35mm		4
9	6061/0008R		Washer spring		4
10	KRV0549		Clamp		3
11	KRV1200		Clamp pipe		2
12	1316/3716Z		Bolt		5
13	210/92901		Clamp flange 1"		2
14	1391/3511Z		Capscrew		4
15	1425/0009Z		Washer, spring		4
16	JRV0361		Pipe, dipper ram rod side		1
17	1391/3510Z		Capscrew		4
18	KMJI714		Clamp pipe		1
19	JRV0292		Clamp		1
20	JRV0291		Clamp assembly		1
21	1316/3510Z		Bolt		2
22	1316/3513Z		Bolt		1
23	1371/0401Z		Nut		2
24	823/00394		Washer, spring		3

RAM JAISWAL
P-41, Princep Street, Shop No. 6
Kolkata
700075

JCB INDIA LTD.

E1-23-1 CIRCUIT, BUCKET RAM, 1.91M DIPPER

ISSUE - 1

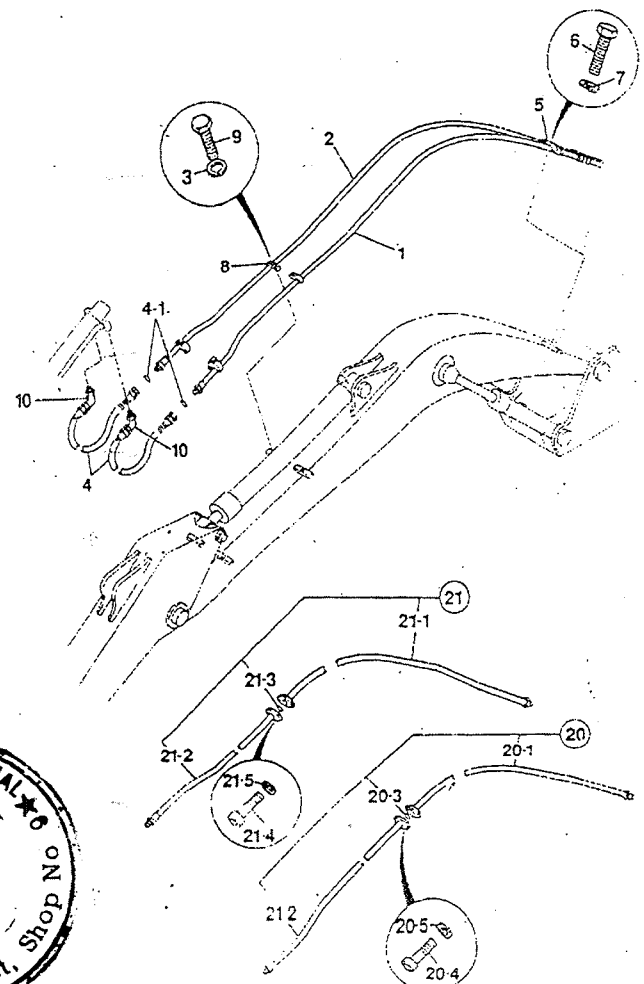

RAJA RAM JAISWAL
Kolkata
700073
P-41, Princep Street, Shop No 6

ITEM	PART NO.	CHANGE NO.	DESCRIPTION	REMARKS	QTY.
1	KRV1204		Pipe left hand, bucket ram		1
2	KRV1203		Pipe right hand bucket ram		1
3	823/00394		Washer, special		4
4	JLV0326		Hose		2
4 01	UBJ0158		O Ring		1
5	KRV1200		Clamp, pipe		1
6	1316/3716Z		Bolt		1
7	823/00409		Washer, special		1
8	KRV0548		Clamp		4
9	*1316/3514Z		Bolt		4
10	KNJ0605		Adapter		2
20	KRV1769		Pipe assembly bucket ram left hand		1
20 01	KRV1767		Pipe, bucket ram, left hand		1
20 02	KRV1766		Pipe, bucket ram, left hand		1
20 03	UHJ0415		O Ring		1
20 04	6004/3409R		Capscrew		4
20 05	6061/0008R		Washer, spring		4
21	KRV1768		Pipe, assembly bucket ram, right hand		1
21 01	KRV1765		Pipe, bucket ram, right hand		1
21 02	KRV1764		Pipe, bucket ram, right hand		1
21 03	UHJ0415		O Ring		1
21 04	6004/3409R		Capscrew		4
21 05	6061/0008R		Washer, spring		4

E1-23-10 CIRCUIT, BUCKET RAM, 2.4M DIPPER

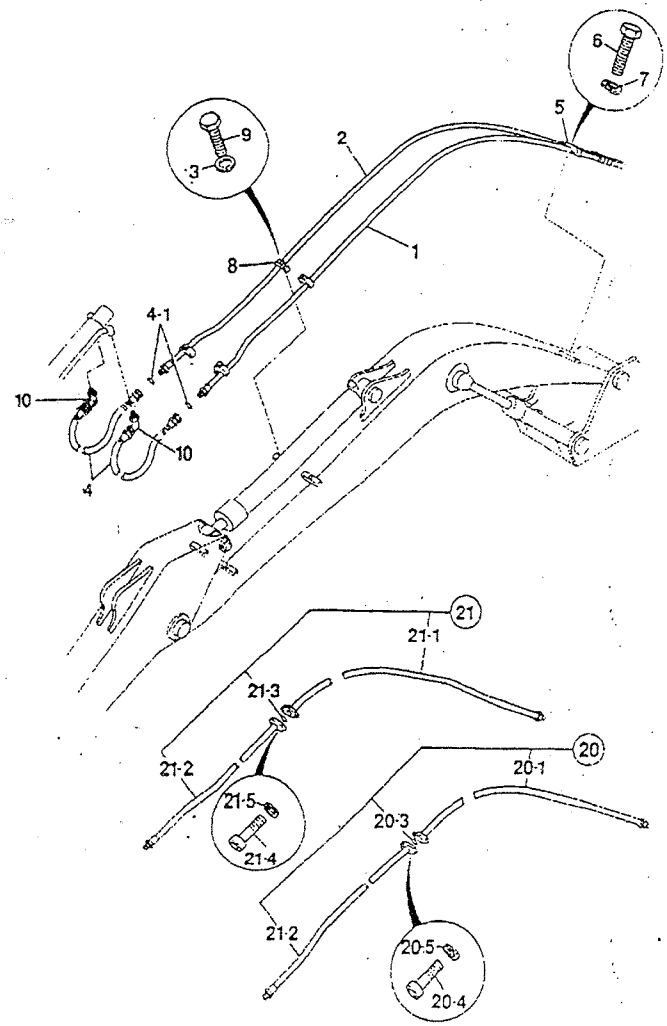

ITEM	PART NO.	CHANGE NO.	DESCRIPTION	REMARKS	QTY.
1	KRV1204		Pipe left hand, bucket ram		1
2	KRV1203		Pipe right hand bucket ram		1
3	823/00394		Washer, special		4
4	KRV1932		Hose		2
4 01	UBJ0158		O Ring		1
5	KRV1200		Clamp, pipe		1
8	1316/3716Z		Bolt		1
7	823/00409		Washer, special		1
8	KRV0548		Clamp		4
9	1316/3714Z		Bolt		4
10	KNJ0605		Adapter		2
20	KRV1769		Pipe assembly bucket ram, left hand		1
20 01	KRV1767		Pipe, bucket ram, left hand		1
20 02	KRV1766		Pipe, bucket ram, left hand		1
20 03	UHJ0415		O Ring		1
20 04	600413409R		Capscrew		4
20 05	6061/0008R		Washer, spring		4
21	KRV1768		Pipe assembly bucket ram right hand		1
21 01	KRV1765		Pipe bucket ram, right hand		1
21 02	KRV1764		Pipe, bucket ram, right hand		1
21 03	UHJ0415		O Ring		1
21 04	6004/3409R		Capscrew		4
21 05	6061/0008R		Washer, spring		4

RAJA RAM JAISWAL
P-41, Princep Street, Shop No. 6
Kolkata
700073

E1-23-40 CIRCUIT, BUCKET RAM, PIPEWORK

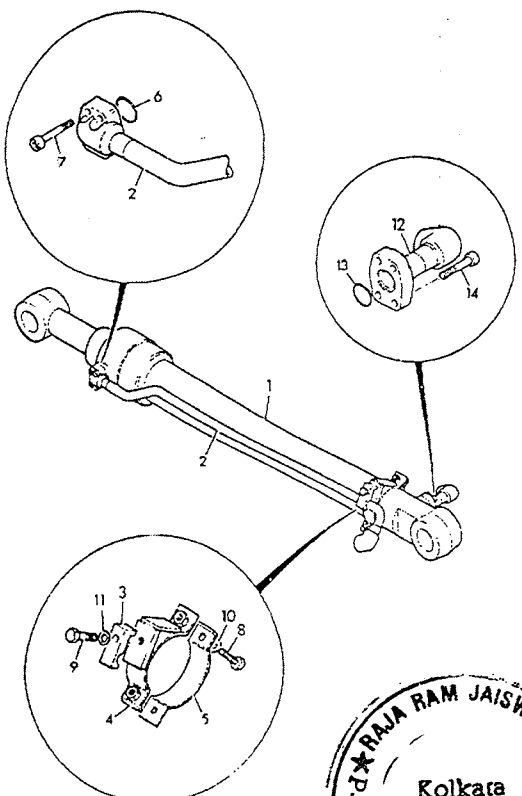

ITEM	PART NO.	CHANGE NO.	DESCRIPTION	REMARKS	QTY.
1	229/00573		Ram, bucket, 115mm cly x 85mm rod		1
2	JRV0529		Pipe bucket		1
3	KRV0548		Clamp		1
4	JRV0568		Clamp, assembly		1
5	JRV0569		Clamp		1
6	2407/0205		Seal, O Ring		1
7	1391/3409Z		Capscrew, M10 x 35mm		4
8	1316/3410Z		Bolt		2
9	1316/3511Z		Bolt		1
10	1425/0008Z		Washer, spring		2
11	1425/0009Z		Washer, spring		1
12	JHV0285		Pipe bucket		1
13	2407/0205		Seal, O Ring		1
14	1391/3409Z		Capscrew, M10 x 35mm		4
15	1371/0301Z		Nut, high strength, M10		2

RAJA RAM JAISWAL
P-41, Princep Street, Shop No 6
Kolkata
700073

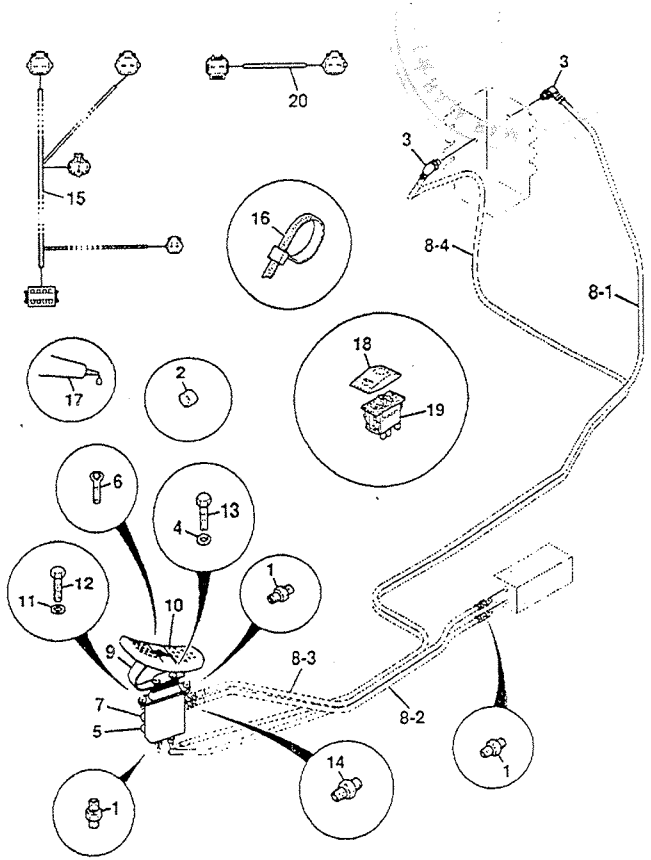

ITEM	PART NO.	CHANGE NO.	DESCRIPTION	REMARKS	QTY.
1	KNJ0758		Adapter		5
2	KHJ0768		Cap, spl		2
3	KHJ0640		Elbow		2
4	JHP0046		Washer		2
5	928/60209		Valve, remote control, hammer pedal		1
6	826/10811		Screw, c/sunk socket head, M8 x 30		2
7	701/80373		Switch, pressure 5 bar		1
8 01	KTJ0907		Hose nylon		1
8 02	KBJ2205		Hose, nylon		1
8 03	JSV0319		Hose		1
8 04	KTJ0907		Hose, nylon		1
9	335/04915		Pedal, hammer		1
10	331/32621		Pedal, foot, Hammer Aux.		1
11	1420/0008Z		Washer, Plain		2
12	1316/0407Z		Bolt, high strength		2
13	1316/0403Z		Screw		2
14	CNA0584		Adapter		1
15	721/10455		Harness, breaker		1
16	204/07006		Tie cable		1
17			See Remark		1
18	701/58832		Cover rock breaker switch soft touch		1
19	701/60032		Switch, 24V		2
20	721/10456		Harness, hammer auxiliary		1

★RAJA RAM JAISWAL★ 6
P-41, Princep Street, Shop No.
Kolkata
700075

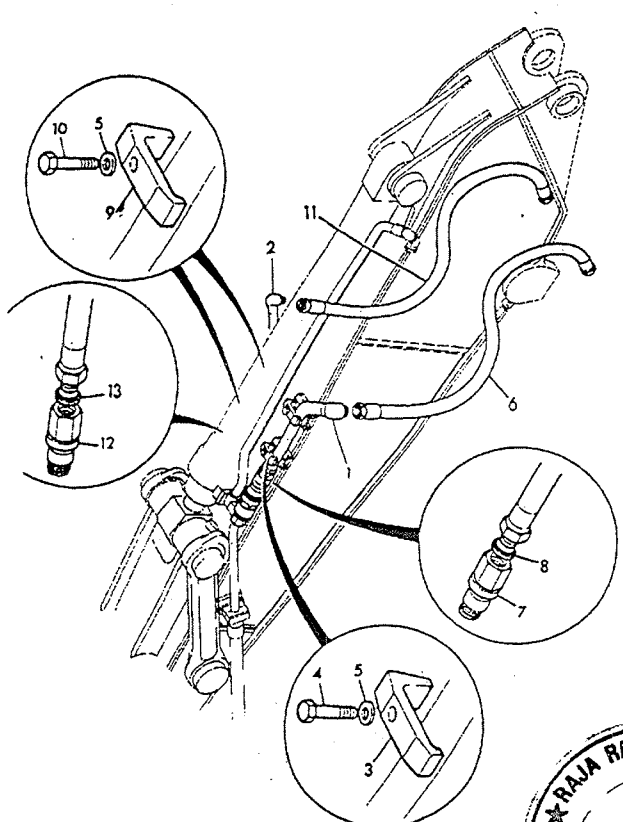

ITEM	PART NO.	CHANGE NO.	DESCRIPTION	REMARKS	QTY.
1	JRV0345		Pipe auxiliary return		1
2	JRV0344		Pipe auxiliary feed		1
3	JRV0278		Clamp		2
4	1316/3719Z		Bolt		2
5	*823/00409		Washer, special		4
6	JRV0336		Hose		1
7	JHV0195		Coupling, female, 1 1/4" BSP		1
8	1406/0029		Seal, Dowty		1
9	KSV0282		Clamp, pipe		2
10	1316/3717Z		Bolt		2
11	JLV0733		Hose		1
12	JLV0535		Coupling female, 1" BSP		1
13	1406/0026		Washer, seal		1
14	6900/0676		Coupling, male 1 1/4" bsp		1
	45/909900		Coupling, 1" BSP male		1
17	835/10066		Cap, male thread cover	Protects threads of part 45/909900	1
	835/10065		Cap, female thread cover	Protects threads of part JLV0535	1

RAJA RAM JAISWAL
P-41, Princep Street, Shop No. 6
Kolkata
700075

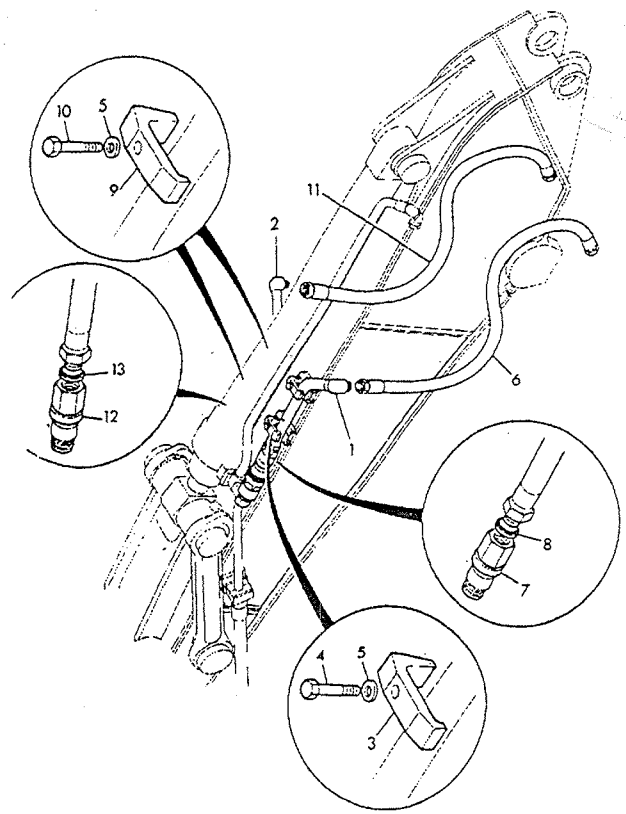

ITEM	PART NO.	CHANGE NO.	DESCRIPTION	REMARKS	QTY.
1	JRV0343		Pipe auxiliary return		1
2	JRV0342		Pipe auxiliary feed		1
3	JRV0278		Clamp		2
4	1316/3719Z		Bolt		2
5	*823/00409		Washer, special		4
6	JRV0332		Hose		1
7	JHV0195		Coupling, female, 1 1/4" BSP		1
8	1406/0029		Seal, Dowty		1
9	KSV0282		Clamp, pipe		2
10	1316/3717Z		Bolt		2
11	JRV0331		Hose		1
12	JLV0535		Coupling female, 1" BSP		1
13	1406/0026		Washer, seal		1
14	6900/0676		Coupling, male 1 1/4" bsp		1
	45/909900		Coupling, 1" BSP male		1
17	835/10066		Cap, male thread cover	Protects threads of part 45/909900	1
	835/10065		Cap, female thread cover	Protects threads of part JLV0535	1

★RAJA RAM JAISWAL★6
P-41, Princep Street, Shop No.
Kolkata
700075

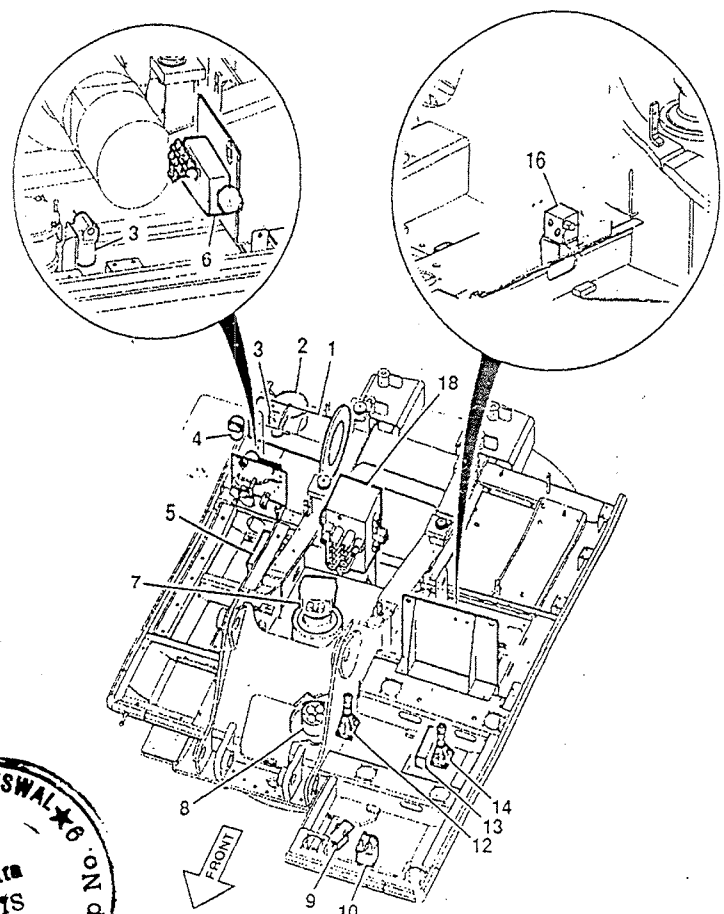

ITEM	PART NO.	CHANGE NO.	DESCRIPTION	REMARKS	QTY.
1	229/01005		Pump, assembly, complete, with mounting flange		1
1 01	20/925309		Pump, main		1
1 02	KRJ3449		Mounting, flange		1
1 03	1391/3813Z		Capscrew		4
2	JRJ0238		Filter, bypass		1
3	32/925214		Filter, assembly, servo		1
4	KNJ0287		Filter, hydraulic		1
5	331/27235		Manifold		1
6	229/01003		Solenoid, valve assembly	For adapters & hoses see E1-67-1	1
7	20/925315		Motor, swing		1
8	229/01008		Coupling, rotary		1
9	928/60209		Valve, remote control hammer pedal		1
10	KSJ2465		Valve, remote control		1
11			See-Remark	Not fitted	
12	25/221094		Valve, hand control, left hand	For adapters & hoses see E1-62-1	1
13	KNJ1933		Manifold	For adapters & hoses see E1-68-1	1
14	25/221095		Valve, hand control, light hand	For adapters & hoses see E1-63-1	1
16	229/01004		Check Valve	For adapters & hoses see E 1-64-1	1

RAJA RAM JAISWAL
Kolkata
700013

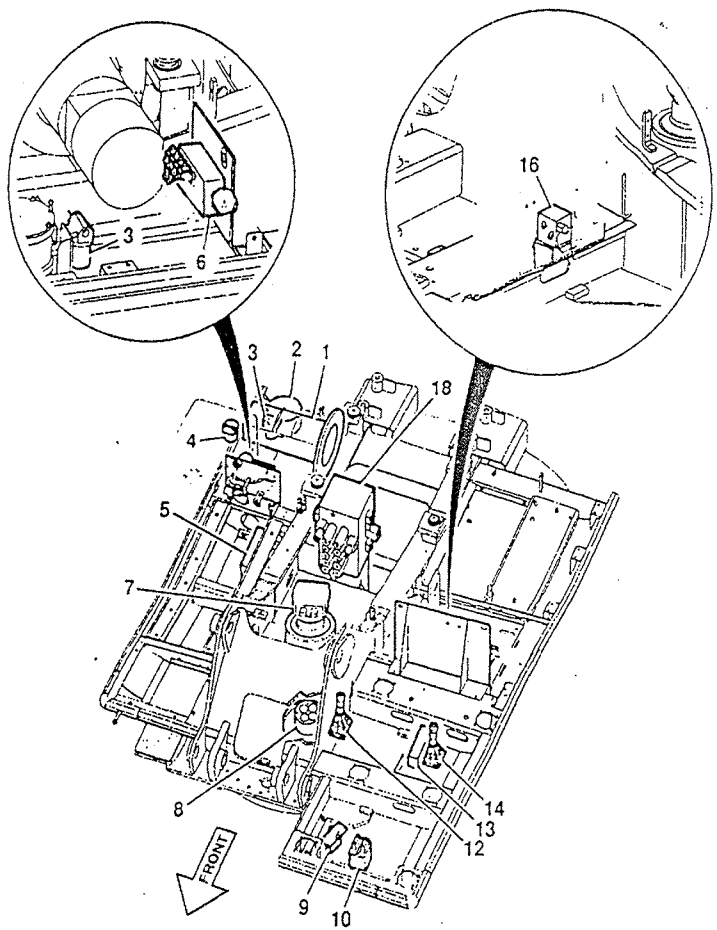

ITEM	PART NO.	CHANGE NO.	DESCRIPTION	REMARKS	QTY.
18	229/01001		Valve, main control	For adapters & hoses see E1-70-1 & E1-71-1	1

RAJA RAM JAISWAL
Kolkata
700073
41, Princep Street, Shop No. 6

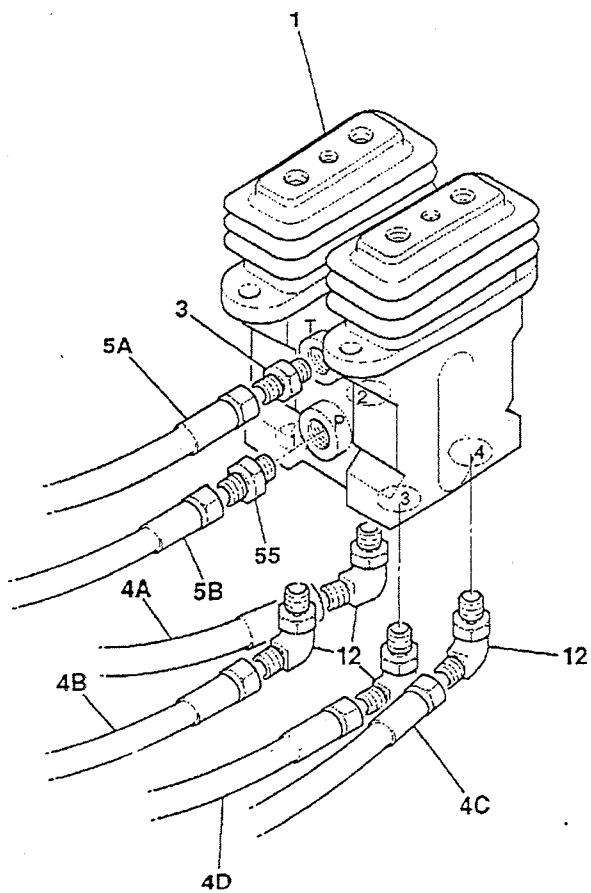

ITEM	PART NO.	CHANGE NO.	DESCRIPTION	REMARKS	QTY.
1	KSJ2465		Valve, remote control		1
3	KNJ0758		Adapter		1
4A	KTJ0674		Hose nylon	port 2 to main control valve port Pa1	1
4B	627/10071		Hose, 1_4 str-str	port 1 to main control valve port Pb1	1
4C	KTJ0812		Hose nylon red	port 4 to main control valve port Pa6	1
4D	JRJ0079		Hose, gray, gray	port 3 to main control valve port Pb6	1
5A	KTJ0907		Hose red orange	port T to manifold port T5	1
5B	KTJ0907		Hose red yellow	port P to manifold 1 port P5	
12	KHJ0341		Adapter, elbow		4
55	CNA0584		Adapter		1

RAJA RAM JAISWAL
Kolkata
700015
P-41, Princep Street, Shop No. 6

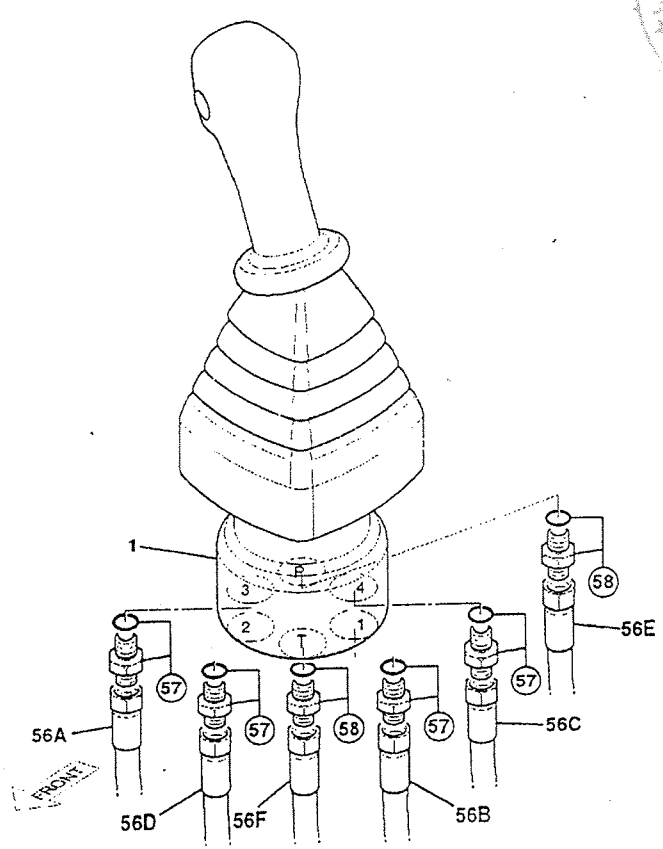

ITEM	PART NO.	CHANGE NO.	DESCRIPTION	REMARKS	QTY.
1	25/221094		Valve, hand control, lelf hand		1
56A	KNJ1134		Hose violet	port 3 to shuttle valve port A1	1
56B	KNJ1231		Hose, orange	port 1 to shuttle valve port A2	1
56C	JRJ0123		Hose, pink	port 4 to shuttle valve port A6	1
56D	JRJ0124		Hose I green	port 2 to shuttle valve port A5	1
56E	JRJ0116		Hose, white	port P to manifold port P6	1
56F	KNJ1997		Hose hydraulic (L=1150)	port T to manifold port T6	1
57	1620/0003		Adapter		4
	2401/0505		O Ring		1
58	JHJ0168		Adapter, filtered		2
	2401/0505		O Ring		1

RAJA RAM JAISWAL & CO. 41, Princep Street, Kolkata 700013 Shop No.

E1-63-1 CIRCUIT, VALVE, RH CONTROLLER

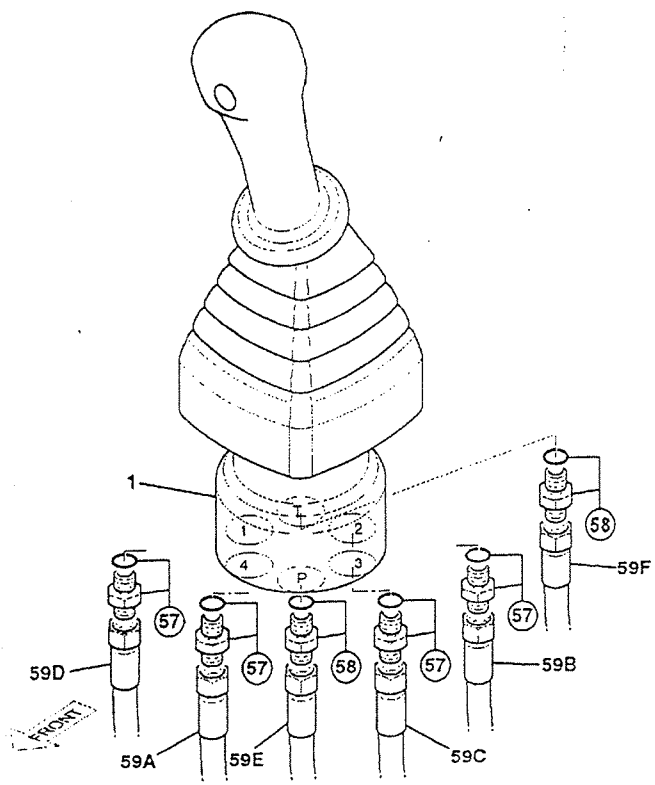

ITEM	PART NO.	CHANGE NO.	DESCRIPTION	REMARKS	QTY.
1	25/221095		Valve, hand control, right hand		1
57	1620/0005		Adapter		4
57 01	2401/0505		O Ring		1
58	JHJ0168		Adapter, filtered		2
58 01	2401/0505		O Ring		1
59A	JRJ0119		Hose red	port 4 to shuttle valve port A4	1
59B	JRJ0117		Hose blue	port 2 to shuttle valve port A3	1
59C	KSJ2397		Hose nylon	port 3 to main valve port Pb7 bucket ram	1
59D	627/10076		Hose 3_8 str-str	port 1 to main valva port Pa7 bucket ram	1
59E	JRJ0115		Hose white	port P to manifold port P2	1
59F	KNJ1998		Hose hydraulic, (L=1200)	port T to manifold port T2	1

RAJA RAM JAISWAL
P-41, Princep Street, Shop No. 9
Kolkata
700075

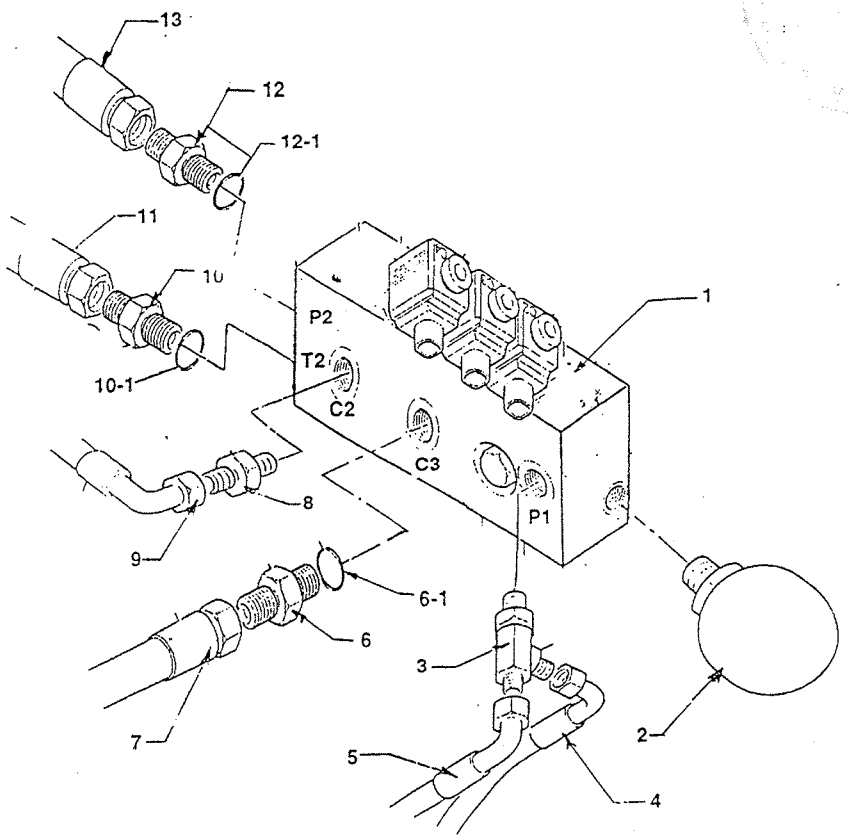

ITEM	PART NO.	CHANGE NO.	DESCRIPTION	REMARKS	QTY.
1	229/01003		Solenoid Valve		1
2	JHJ0050		Accumulator		1
3	KHJ0973		Tee Adaptor		1
4	KTJ1133		Hose		1
5	JLV0288		Hose		1
6	KNJ0758		Adaptor		1
6.1	UEJ0360		O-Ring		1
7	KTJ1133		Hose		1
8	KNJ0758		Adaptor		1
9	JNV0329		Hose		1
10	KHJ0342		Adaptor		1
10.1	BRP0007		O-Ring		1
11	627/10073		Hose		1
12	KNJ0759		Adaptor		1
12.1	BRP0007		O-Ring		1
13	KSJ2397		Hose		1

RAJA RAM JAISWAL & CO. P-41, Princep Street, Shop No. Kolkata 700007S

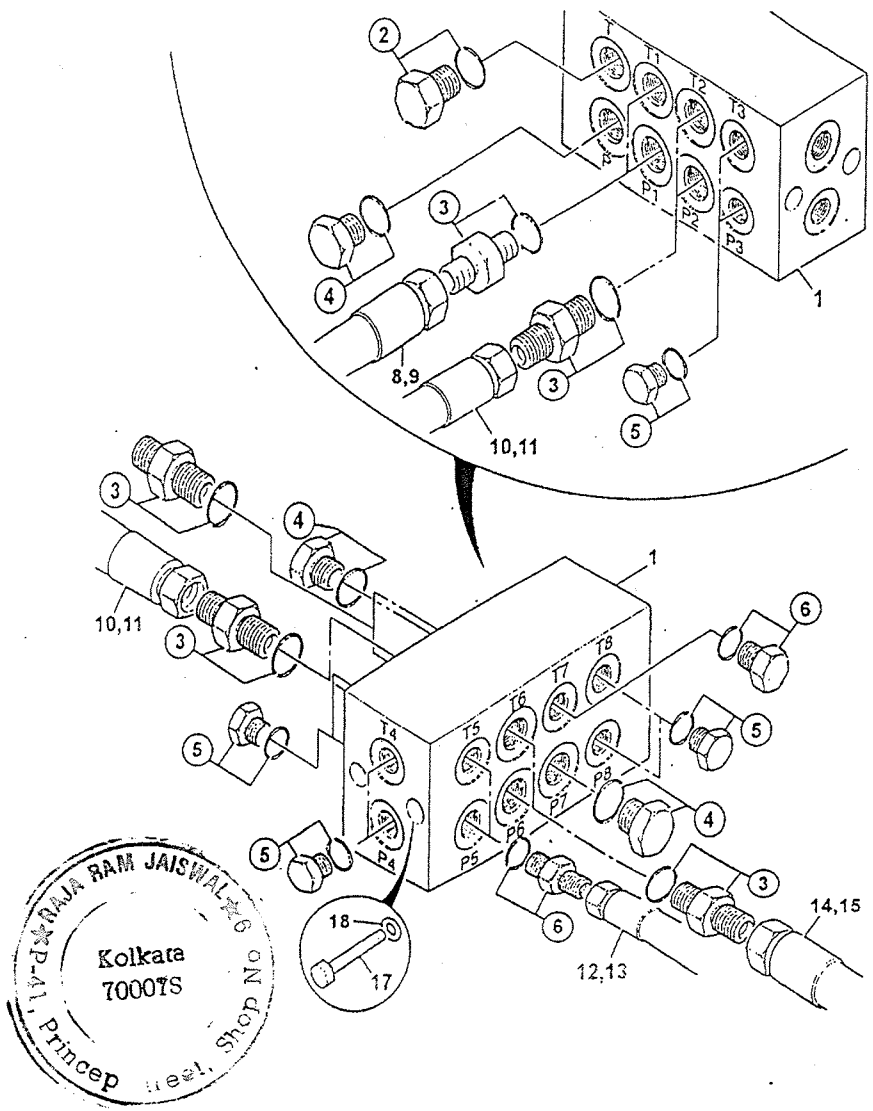

RAJA RAM JAISWAL
P-41, Princep Street, Shop No 6
Kolkata
700075

ITEM	PART NO.	CHANGE NO.	DESCRIPTION	REMARKS	QTY.
1	KNJ1933		Manifold		1
2	BRJ1545		Adapter	Port T	1
3	KNJ0759		Adapter	Port T1,T2,T6,P1. P2,P6	6
4	CEA0399		Plug	Port P, P7	2
5	KHJ0363		Plug	Port T3, T4, T8,P3, P4' P8	6
6	KHJ0363		Adapter	Port T5,T7,P5	3
7					1
8	JRJ0100		Hose white, blue	Port T1 to tank manifold Port T1	1
9	KSJ2397		Hose, pink, pink	Port P1 to solenoid valve Port P2	1
10	JRJ0115		Hose, white	Port P2 to RH controller Pori P	1
11	KNJ1998		Hose, hydraulic (L=1200)	Port T2 to RH controller Port T	1
12	KTJ0907		Hose, white, orange	Port T5 to tracking vallie Port T	1
13	KTJ0907		Hose, red yellow	Port P5 to tracking valve Port P	1
14	JRJ0116		Hose,white	Port P6 to LH controller Port P	1
15	KNJ1997		Hose,hydraulic, (L=1150)	Port T 6 to LH controller Port T	1
17	BLH0487		Bolt		2
18	JHP0046		Washer		2

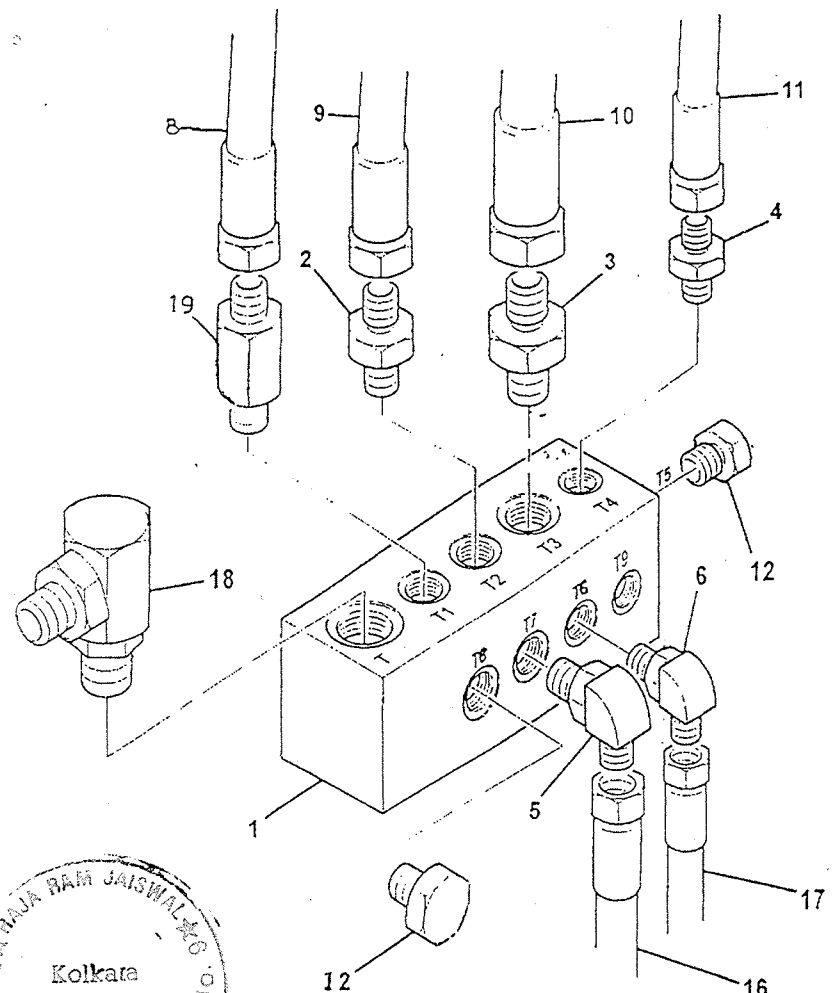

ITEM	PART NO.	CHANGE NO.	DESCRIPTION	REMARKS	QTY.
1	331/27235		Manifold		1
2	KNJ0759		Adapter		2
3	KNJ0604		Adapter, 1/2" M/M		1
4	KNJ0758		Adapter		1
5	KHJ0342		Adapter, elbow		2
6	KHJ0342		Adapter, elbow		1
7	627/10073		Hose	Port T to solenoid valve port T2	1
8	JRJ0100		Hose, white, blue	Port T1 to cab manifold port T1	1
9	KRJ4450		Hose, hyd, (L=1750)	Port T2 to swing motor port T	1
10	KNA0362		Hose	Port T3 to rotary coupling port T	1
11	KTJ113		Hose, nylon	Port T4 to main control valve port Dr3	1
12	KHJ0363		Adapter	Port T5	2
14	1		TBA		1
16	KNJ1122		Hose, nlyon	Port T7 to main control valve port Dr1	1
17	KNJ1115		Hose	Port T8 to main control valve port Dr4	13
18	KHJ0344		Adapter, elbow		1
19	KHJ0759		Adapter, tee		1

SHRI RAJA RAM JAISWAL & CO.
41, Princep Street, Shop No.
Kolkata
700075

E1-70-1 CIRCUIT, PILOT LINE, MAIN CONTROL VALVE

ISSUE - 1

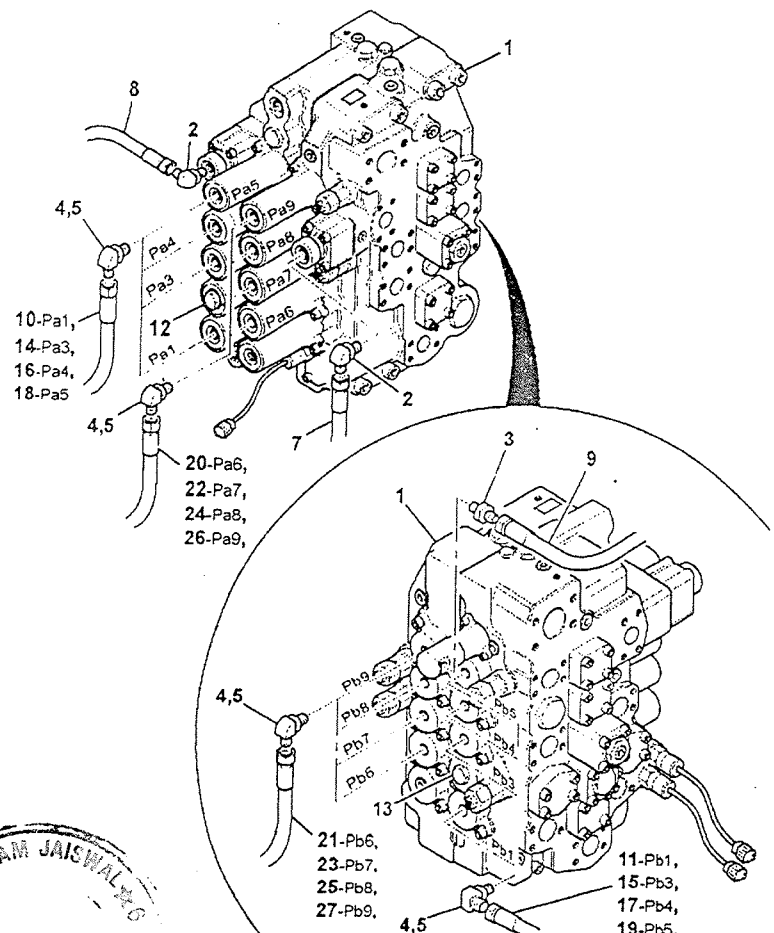

ITEM	PART NO.	CHANGE NO.	DESCRIPTION	REMARKS	QTY.
1	229/01001		Valve, main control		1
2	KHJ0341		Adapter, elbow		6
3	KHJ0973		Adapter		1
4	KHJ0640		Elbow		7
5	KHJ0342		Adapter, elbow		7
7	JNJ0427		Hose	Port Pc2 to Check valve port B1	1
8	KBJ1688		Hose, nylon	Port Pc 1 to Control valve port P65	1
					1
					4
9	KHJ0363		Plug		1
10	KTJ0674		Hose nylon	LH Traval Port Pej to traval pedal port 2	1
11	627/10071		Hose, 1-4 str-str	LH Travel port Pb1 to travel pedal port 1	1
14	KNJ1231		Hose Swing	Port Pa3 to LH Joy Stick port 1	1
15	KNJ1134		Hose	Swing Port Pa3 to LH Joy Stick Port 3	1

RAJA RAM JAISWAL
Kolkata
70007S
P-41 Princep ... Shop No

E1-70-1 CIRCUIT, PILOT LINE, MAIN CONTROL VALVE

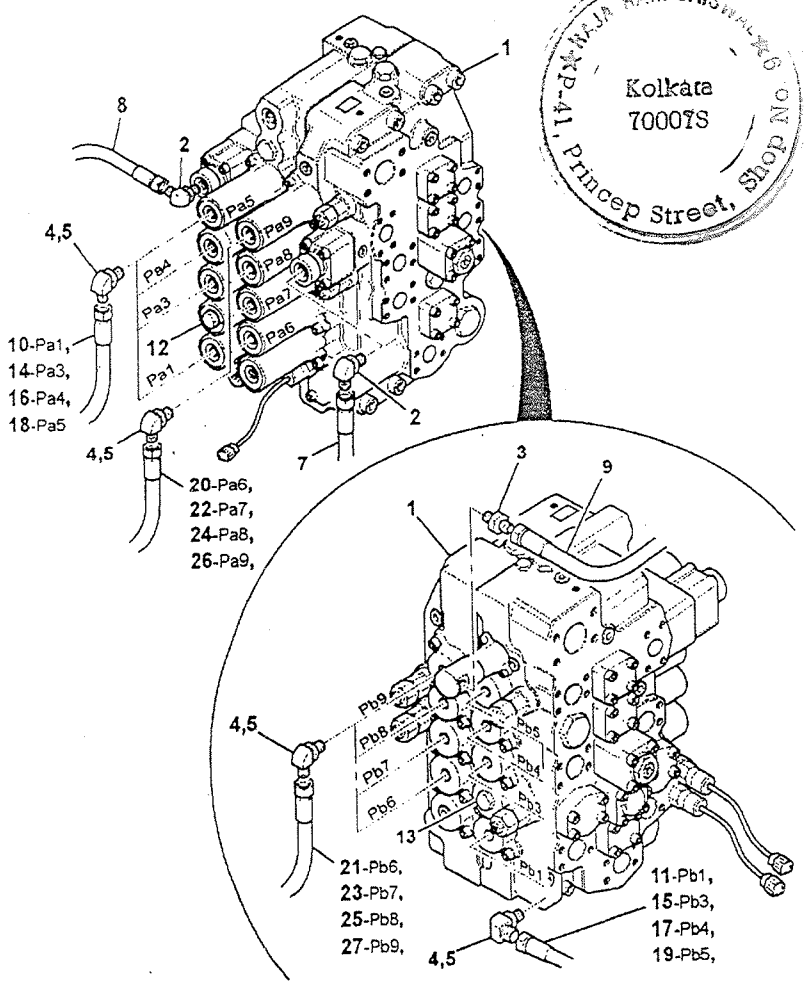

RAJA RAM JAISWAL
Kolkata
700078
P-41, Princep Street, Shop No. 6

ITEM	PART NO.	CHANGE NO.	DESCRIPTION	REMARKS	QTY.
16	KNJ1115		Hose nylon	Boom 2, Port Pa4 to manifold T6	1
17	627/10060		Hose nylon	Boom 2, Port Pb4 to check valve port A2	1
18	JRJ0117		Hose	Arm 1 Port Pa5 to check Valve port A4	1
19	JRJ0110		Hose	Arm 1 Port Pb5 to check valve port A3	1
20	KTJ0812		Hose, nylon, red	RH Travel Port Pa6 to travel pedal port 4	1
21	JRJ0079		Hose gray, gray	RH Travel Port Pb6 to travel pedal port 3	1
22	KSJ2397		Hose, 3_8 str-str	Bucket Por1 Pa7 to RH joystick port 1	1
23	627/10076		Hose nylon	Bucket Port Pb7 to RH joystick port 1	1
24	KRJ4133		Hose, blue	Boom 1 Port Pa8 to check valve port A2	1
25	JRJ0117		Hose nylon, red	Boom 1 Port Pb8 to check valve port A1	1
26	627/10060		Hose, nylon, green	Arm 2 Port Pa9 to shuttle Valve port B4	1
27	627/10060		Hose, nylon	Arm 2 Port Pb9 to check valve port B3	1

E1-71-1 CIRCUIT, RETURN LINE, PILOT PRESSURE, MAIN CONTROL VALVE ISSUE - 1

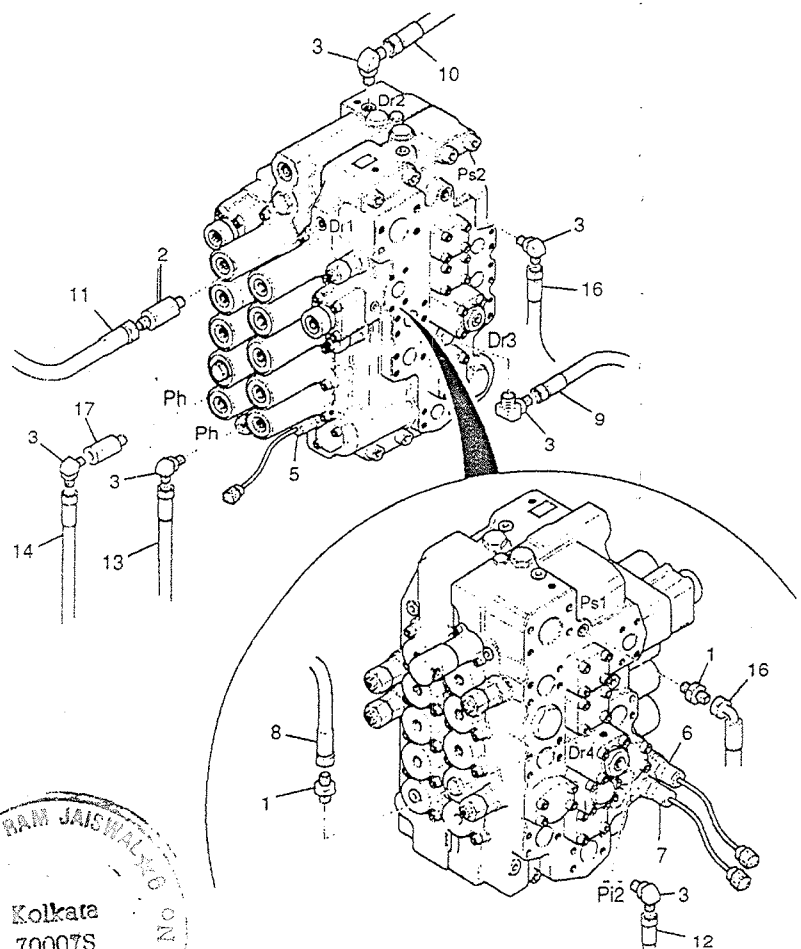

ITEM	PART NO.	CHANGE NO.	DESCRIPTION	REMARKS	QTY.
1	KHJ0894		Adapter		2
2	KNJ0759		Adapter		1
3	KHJ0341		Adapter, elbow		6
8					1
9					1
10	KTJ1133		Hose nylon	Port Dr2 to tank manifold pori T4	1
11	KNJ1122		Hose nylon	Port Dr1 tee to tank manifold T7	1
12	JRJ0094		Hose	Port P51 to pump PT 1	1
15	JRJ0079		Hose while, orange	Port Ps2 to pump PT 2	1
16	KAJ2847		Hose, nylon	Port Pp pump port Psv	1
17	KHJ0894		Adapter	Port Pp	

Kolkata 700078

E1-72-1 CIRCUIT CHECK VALVE

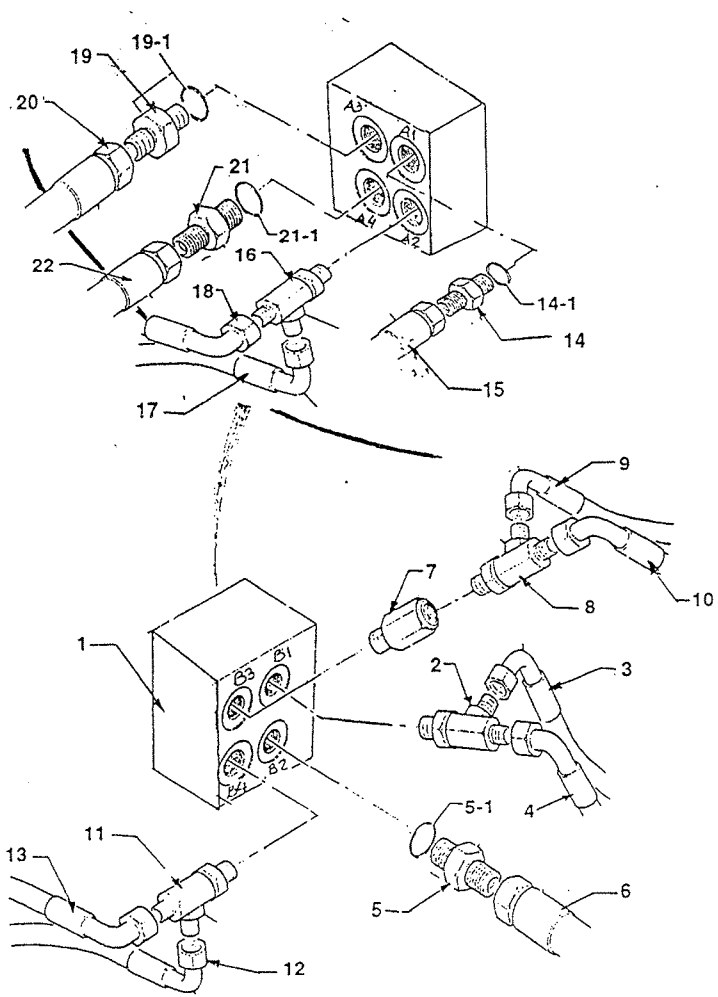

ITEM	PART NO.	CHANGE NO.	DESCRIPTION	REMARKS	QTY.
1	229/01004		Check Valve		1
2	KHJ0973		Tee Adaptor		1
3	JNJ0427		Hose		1
4	JRJ0119		Hose		1
5	KNJ0759		Adaptor		1
5.1	BRP0007		O-Ring		1
6	JRJ0117		Hose		1
7	229/01354		Adaptor		1
8	KHJ0973		Tee Adaptor		1
9	627/10060		Hose		1
10	JRJ0123		Hose		1
11	KHJ0973		Tee Adaptor		1
12	627/10060		Hose		1
13	JRJ0124		Hose		1
14	KNJ0758		Adaptor		1
14.1	UEJ0360		O-Ring		1
15	JRJ0117		Hose		1
16	KHJ0973		Tee Adaptor		1
17	627/10060		Hose		1
18	KRJ4133		Hose		1
19	KNJ0758		Adaptor		1
19.1	UEJ0360		O-Ring		1
20	JRJ0110		Hose		1
21	KNJ0758		Adaptor		1
21.1	UEJ0360		O-Ring		1
22	JRJ0117		Hose		1

RAJA RAM JAISWAL & CO
P-41, Princep Street, Shop No.
Kolkata
700017S

E

E1 HOSE & PIPEWORK
• E2 PUMP/MOTOR & PUMP DRIVE
E3 VALVES & HYDRAULIC FILTERS
E4 RAMS

RAJA RAM JAISWAL
Kolkata
700071S
41, Princep Street, Shop No 9

E2-1-1 PUMP, PISTON, MAIN HYDRAULIC, DRIVE GROUP

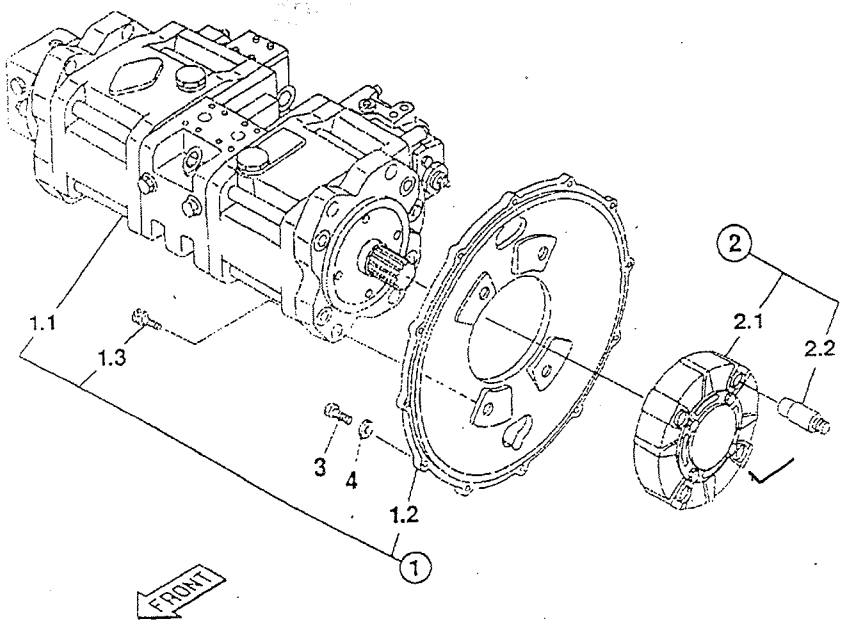

ITEM	PART NO.	CHANGE NO.	DESCRIPTION	REMARKS	QTY.
1	229/01005		Pump, assembly complete, with mounting flange		1
1 01	20/925309		Pump, main		1
1 02	KRJ3449		Mouting, flange		1
1 03	131613813Z		Bolt		4
2	JRJ0213		Coupling, pump drive		1
2 01	KRJ3451		Coupling, rubber		1
2 02	KRJ2657		Pin, special		4
3	1316/0408Z		Bolt		8
4	JHP0046		Washer		8

RAJA RAM JAISWAL
P-41, Princep Street, Shop No. 6
Kolkata
700073

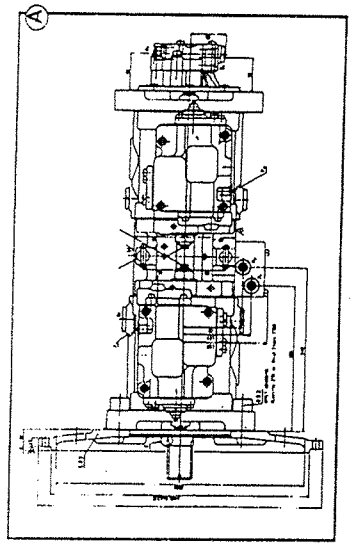

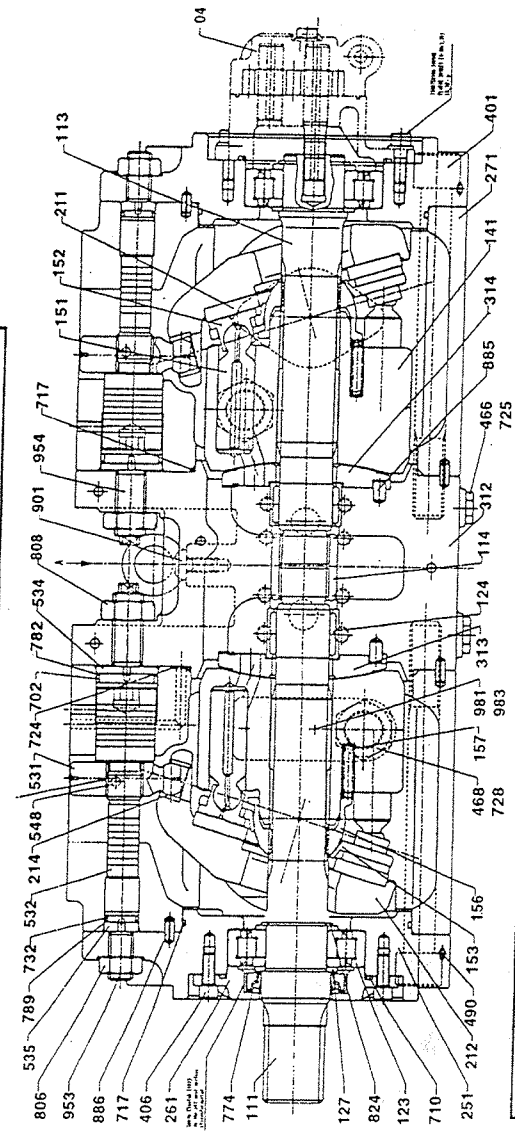

ITEM	PART NO.	CHANGE NO.	DESCRIPTION	REMARKS	QTY.
0A	229/01005		Pump, assembly, complete with mounting flange		1
0B	20/925309		Pump, main		1
111	LJP0035		Shaft, drive, front		1
113	LJP0036		Shaft, drive, rear		1
114	LCP0036		Coupling, spline		1
123	LTP0044		Bearing		2
124	LTP0045		Bearing		2
824	LMP0147		Spacer		4
153	331/37712		Bush, spherical bush		2
157	LSP0109		Spring		18
156	LB00502		Spacer, special	Also replaces item 11 LKP0030	1
211	LMP0208		Plate		2
212	LMP0210		Plate, swash support		2
261	LZP0176		Cover, front oil seal		1
271	LWP0006		Casing pump		2
312	LPP0097		Valve, block		1
401	1391/3310		Capscrew		8
406	1391/3305		Capscrew M8 x 20		4
426	LLP0041		Plug		2
468	LLM0028		Plug		4

RAJA RAM JAISWAL
Kolkata
700073
P-41, Princep Street, Shop No 6

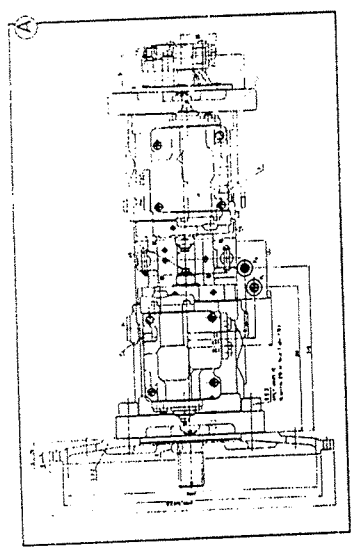

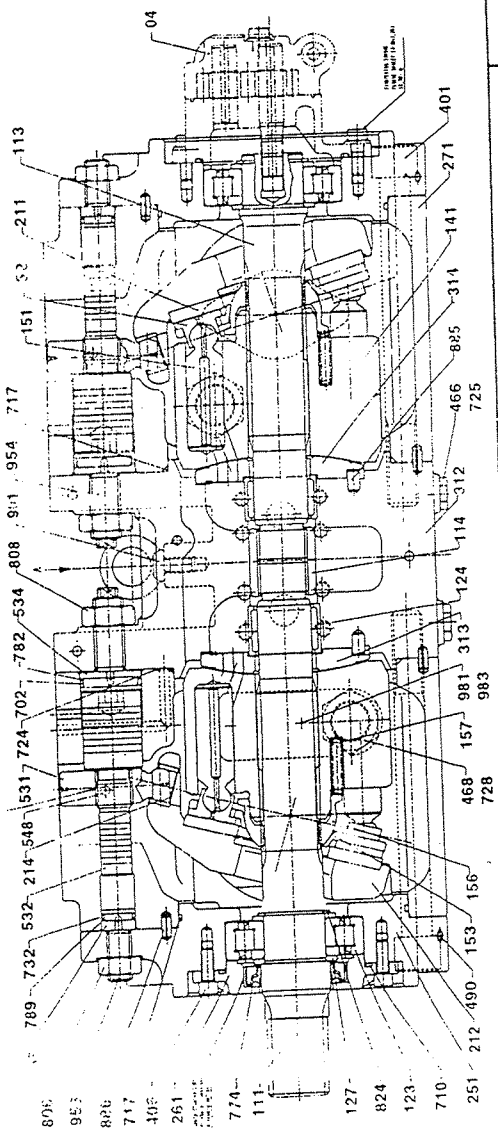

ITEM	PART NO.	CHANGE NO.	DESCRIPTION	REMARKS	QTY.
490	LLP0114		Plug		24
532	LPP0100		Piston, servo		2
534	LMP0212		Stopper		2
535	LMP0213		Stopper		2
702	LBQ0353		O Ring		2
710	LBQ0953		O Ring		2
717	LBQ1453		O Ring		4
724	LBQ0082		O Ring		16
725	LBQ0112		O Ring		4
728	LBQ0242		O Ring		4
732	LBQ0182		O Ring		2
774	331/38027		Seal Oil		1
789	LBB0182		Ring, back-up		2
792	LBB0353		Ring, back-up		2
806	162R016VN		Nut, high, strength		2
808	162R020VN		Nut, high, strength		2
127	370A0400Z		Ring, stop		2
885	LMP0108		Pin, plate		2
886	LMP0217		Pin spring		4
901	126R010SN		Bolt, eye		2
953	LUP0189		Screw		2

RAJA RAM JAISWAL ★ 6
P-41, Princep Street, Shop No.
Kolkata
700073

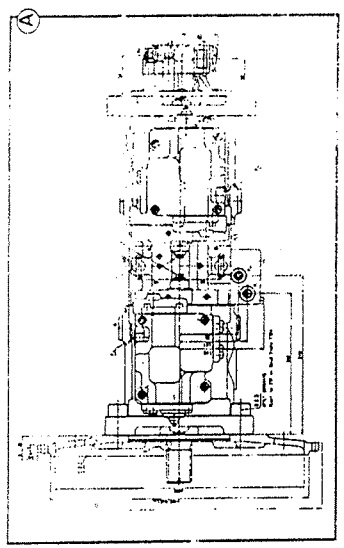

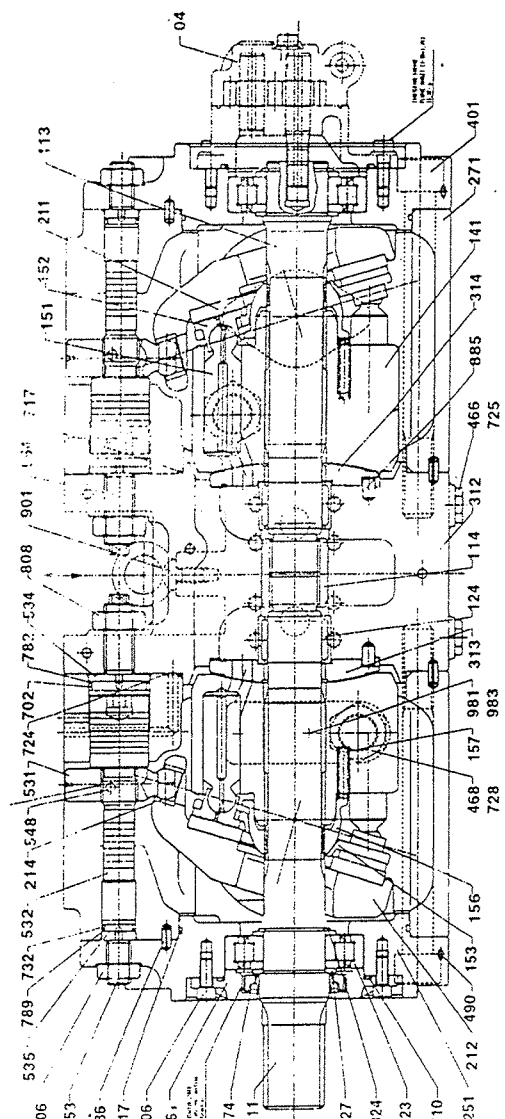

ITEM	PART NO.	CHANGE NO.	DESCRIPTION	REMARKS	QTY.
954	LUP0190		Screw		2
981	NSP		None serviced part		2
983	LMP0218		Pin		2
151	LNP0173		Piston, sub assembly		2
313	LNP0174		Cylinder, sub assembly		1
141	LNP0175		Cylinder, sub assembly		1
214	LNP0176		Kit-swash plate, sub assembly		2
548	LNP0180		Pin, assembly, tilting		2
04	*20/925164		Pump, assembly, servo		1

RAJA RAM JAISWAL
Kolkata
700073
41, Princep Street, Shop No 6

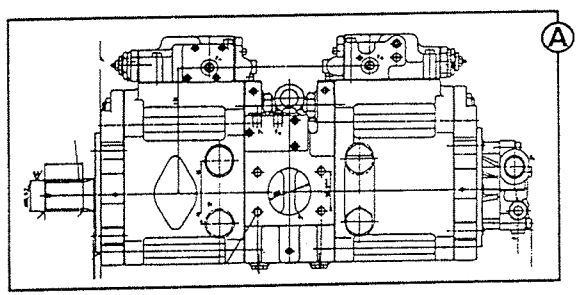

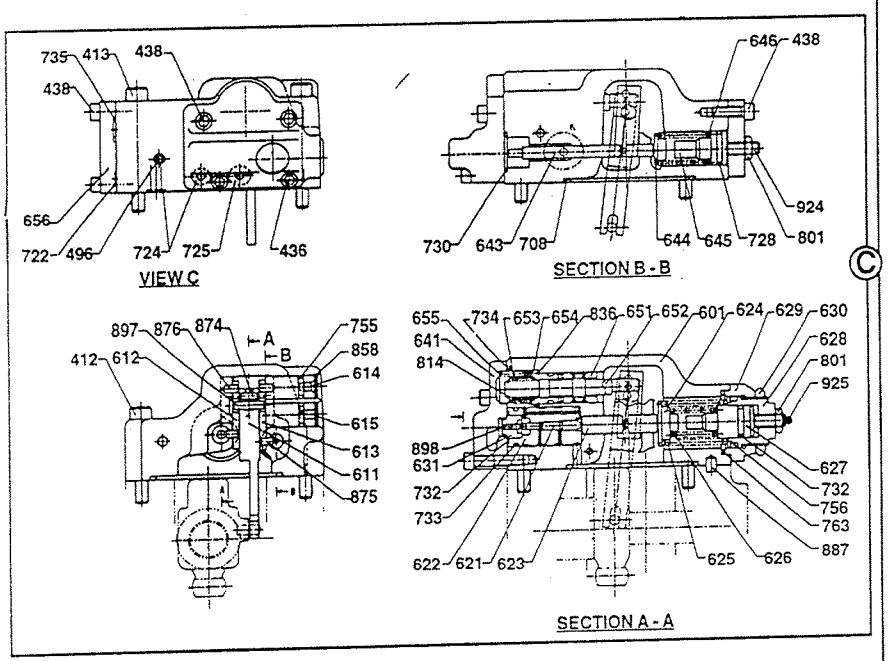

ITEM	PART NO.	CHANGE NO.	DESCRIPTION	REMARKS	QTY.
0A			See Remarks	See frame E2-2-1	1
0C			Valve, regulator assembly		1
1			Capscrew		2
2			Capscrew M8 x 70 long		2
3			Capscrew		2
4			Capscrew		10
5			Plug		5
6			None serviced part		1
7			None serviced part		1
8			None serviced part		1
9			None serviced part		1
10			None serviced part		1
11			None serviced part		1
12			None serviced part		1
13			None serviced part		1
14			None serviced part		1
15			None serviced part		1
16			None serviced part		1
17			None serviced part		1
18			None serviced part		1
19			None serviced part		1
20			None serviced part		1
21			None serviced part		1
22			None serviced part		1
23			None serviced part		1
24			None serviced part		1

RAJA RAM JAISWAL
P-41, Princep Street, Shop No. 6
Kolkata
700013

E2-2-2 PUMP, PISTON, MAIN HYDRAULIC & COMPONENTS FIG 2

ISSUE - 1

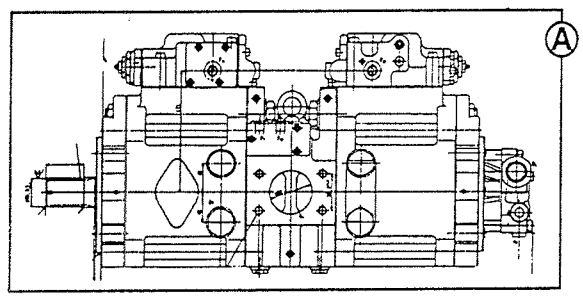

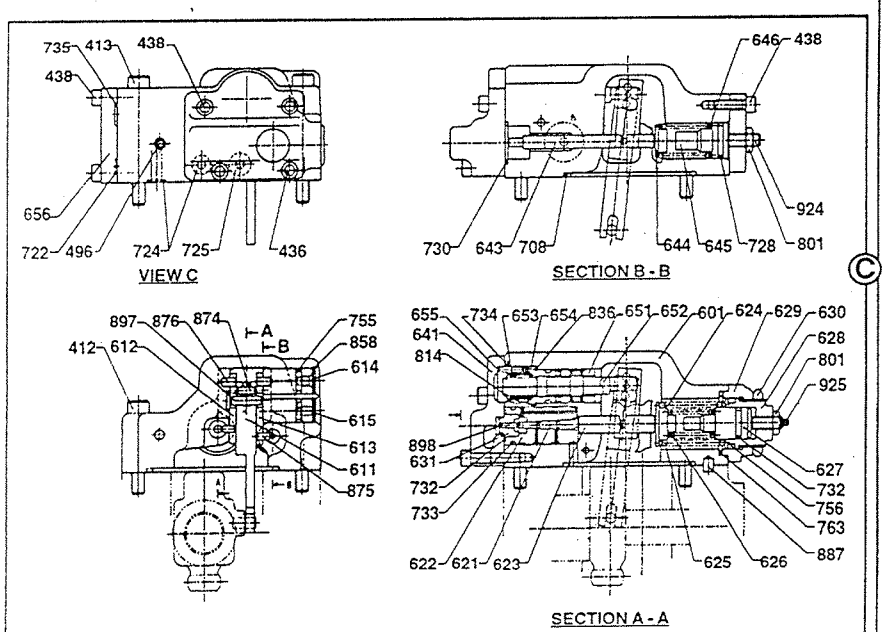

ITEM	PART NO.	CHANGE NO.	DESCRIPTION	REMARKS	QTY.
25			None serviced part		1
26			None serviced part		1
27			None serviced part		1
28			None serviced part		1
29			None serviced part		1
30			None serviced part		1
31			None serviced part		1
32			None serviced part		1
33			None serviced part		1
34			None serviced part		1
35			None serviced part		1
36			None serviced part		1
37			O Ring		1
38			O Ring		3
39			O Ring		1
40			O Ring		9
41			O Ring		1
42			O Ring		1
43			O Ring		1
44			O Ring		2
45			O Ring		1
46			O Ring		1
47			O Ring		1
48			O Ring		2
49			O Ring		1
50			O Ring		1

RAJA RAM JAISWAL
P-41, Princep Street, Shop No. 6
Kolkata
700078

E2-2-2 PUMP, PISTON, MAIN HYDRAULIC & COMPONENTS FIG 2

ISSUE - 1

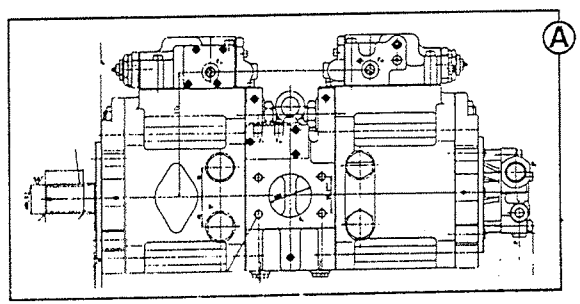

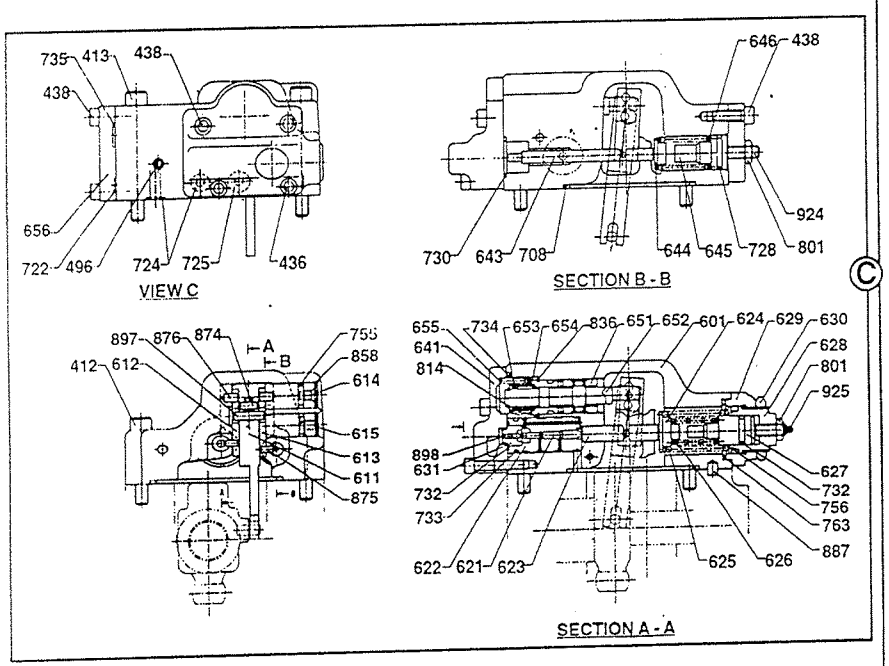

ITEM	PART NO.	CHANGE NO.	DESCRIPTION	REMARKS	QTY.
51			Nut		3
52			Ring, snap		1
53			None serviced part		1
54			Ring, snap		2
55			None serviced part		1
56			None serviced part		4
57			None serviced part		1
58			None serviced part		1
59			None serviced part		1
60			Screw, set		1
61			None serviced part		1

RAJA RAM JAISWAL ★ 6 ★ P-41, Princep Street, Shop No.
Kolkata
700075

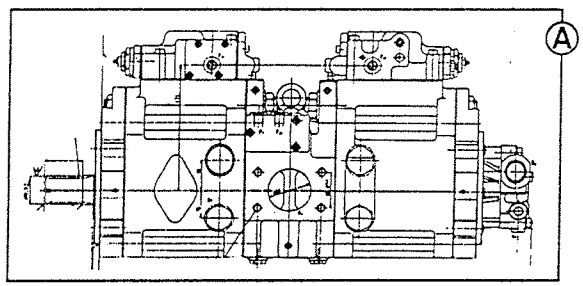

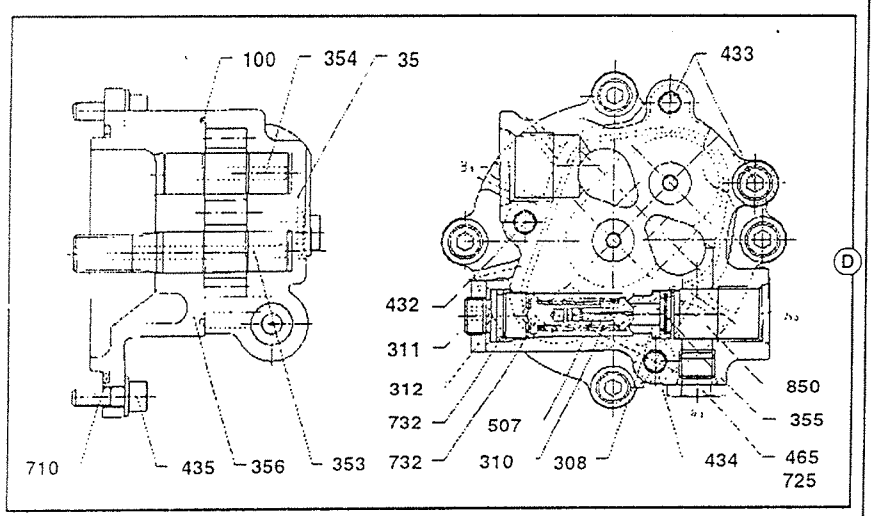

ITEM	PART NO.	CHANGE NO.	DESCRIPTION	REMARKS	QTY.
0A			'See Remark'	See page E2-2-1	1
0D			Pump, assembly, servo		1
1			Gear, case assembly		1
1 01			None serviced part		1
1 02			None serviced part		1
1 03			None serviced part		1
1 04			None serviced part		1
1 05			None serviced part		1
2			Screw skt head shouldered, cap		4
3			Poppet, assembly		1
3 01			None serviced part		1
3 02			None serviced part		1
4			Screw, adjusting		1
5			Nut		1
6			Spring		1
7			Plug		1
8			O Ring		1
9			Filter		1
10			Ring, snap		1
11			Seal, O ring		1
12			Seal, ring		1
13			Seal, O ring		1
14			Screw, skt head shouldered, cap		2
15			Screw, skt head shouldered, cap		2

RAJA RAM JAISWAL & CO
1, Princep Street, Shop No. 4
Kolkata
700075

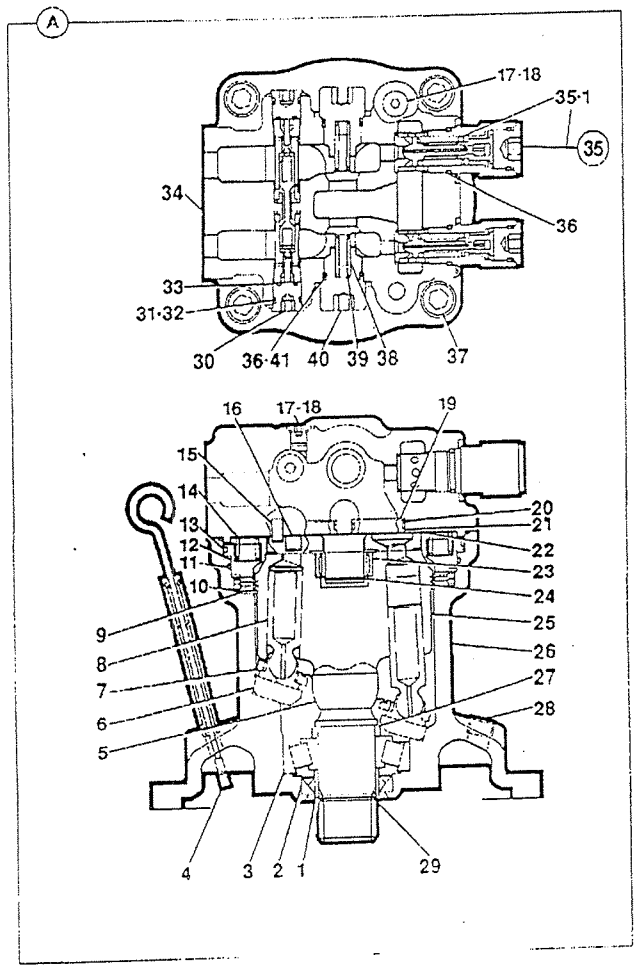

ITEM	PART NO.	CHANGE NO.	DESCRIPTION	REMARKS	QTY.
0A	20/925315		Motor, swing		1
1	LMM0338		Spacer		1
2	LAM0037		Seal, oil		1
3	LTM0129		Bearing		1
4	LZM0343		Gauge, oil level with tube		1
5	LSM0080		Spring		1
6	LMM0334		Plate		1
7	LMM0335		Plate, return		1
8	NSP		None serviced part		9
9	LMM0337		Plate, friction		3
10	LMM0336		Plate, mating		3
11	LBQ5262		O Ring		1
12	LPM0117		Piston		1
13	LBQ5263		O Ring		2
14	LSM0082		Spring		18
15	LMM0545		Pin		2
16	LPM0115		Piston		2
17	LZC0076		Plug, blanking		3
18	LBQ0112		O Ring		3
19	LSM0135		Spring		4
20	LPM0112		Ring, tef		4
21	LKM0106		Bush		4
22	LZM0335		Plate, balance		1
23	LTM0130		Bearing		1
24	LMM0330		Ring lock		1
25	NSP		None serviced pant		1

RAJA RAM JAISWAL & CO.
P-41, Princep Street, Kolkata 700073

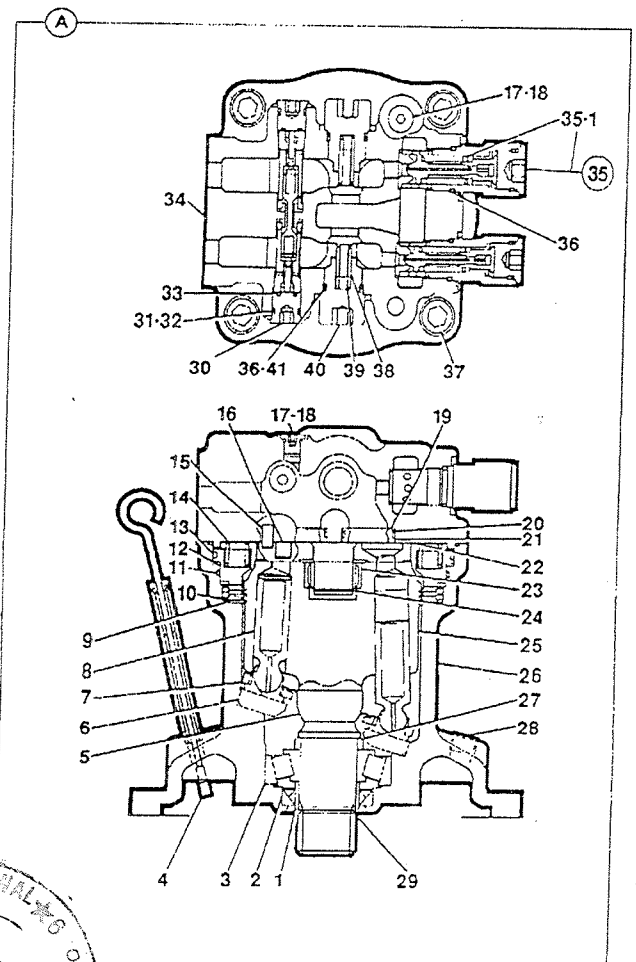

ITEM	PART NO.	CHANGE NO.	DESCRIPTION	REMARKS	QTY.
26	NSP		None serviced part		1
27	LMM0605		Collar		1
28	UBJ0384		Plug		2
29	LMM0329		Ring, lock		1
30	LNM0428		Valve, bypass assembly		2
31	LBQ0182		O Ring		2
32	LBC0201		Ring, back up		2
33	LBQ0122		O Ring		2
34	NSP		None serviced part		1
35	1		TBA		2
35 01	LMC0102		Kit-shim, relief valve		1
36	LBQ0262		O Ring		4
37	6004/3714		Capscrew		4
38	LPM0052		Valve, check		2
39	LSM0075		Spring		2
40	LZM0191		Cap		2
41	LBB0262		Ring, back-up		2

Kolkata 700075

E

E1 HOSE & PIPEWORK
E2 PUMP/MOTOR & PUMP DRIVE
• E3 VALVES & HYDRAULIC FILTERS
E4 RAMS

RAJA RAM JAISWAL & CO.
P-14, Princep Street, Shop No. 9
Kolkata
700075

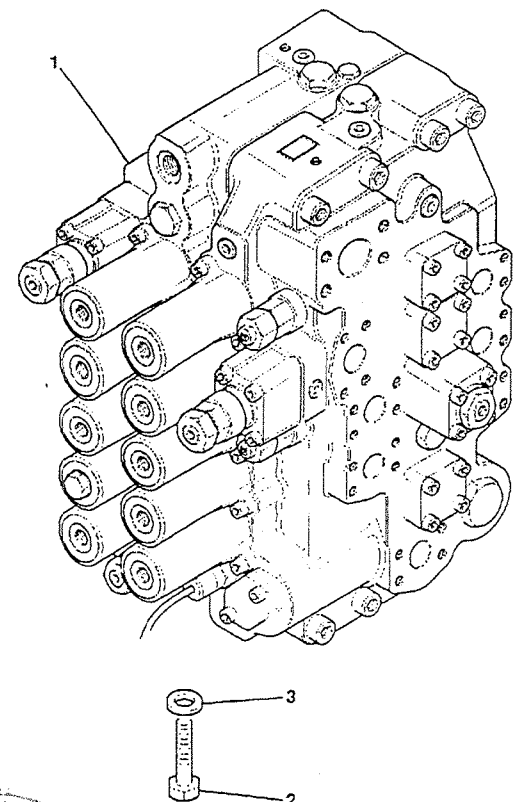

ITEM	PART NO.	CHANGE NO.	DESCRIPTION	REMARKS	QTY.
1	229/01001		Valve, main control		1
2	1316/0711Z		Screw		4
3	JHP0043		Washer		4

Kolkata 700075

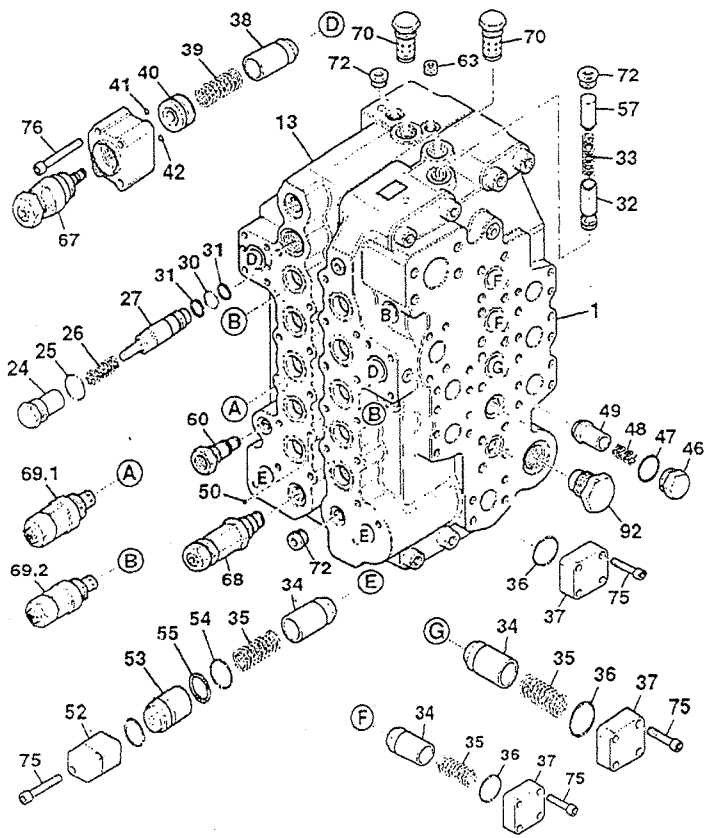

ITEM	PART NO.	CHANGE NO.	DESCRIPTION	REMARKS	QTY.
1			See Ramarks	See frame E3-1-1	1
13	NSP		None serviced part		1
24	25/221768		Plug		1
25	25/221769		O Ring, seal		1
26	25/221770		Spring		1
27	25/221771		Spring, assy		1
30	25/221772		O Ring, seal		1
31	25/221773		Ring, Back-up		2
32	25/221774		Poppet		2
33	25/221775		Spring		2
34	25/221630		Valve, poppet		8
35	25/221631		Spring		9
36	25/221776		O Ring, seal		10
37	25/221777		Flange		8
38	25/221778		Poppet		2
39	25/221779		Spring		2
40	25/221780		Spacer assy		2
41	25/221781		O Ring, seal		2
42	25/221782		O Ring, seal		2
46	25/221685		Plug		1
47	25/221666		Seal, O-ring		1
48	25/221678		Spring		1
49	25/221786		Poppet		1
50	1		TBA		13
52	25/221688		Flange		2
53	25/221632		Spacer, valve		2

RAJA RAM JAISWAL & CO. P-41, Princep Street, Kolkata 700073 Shop No.

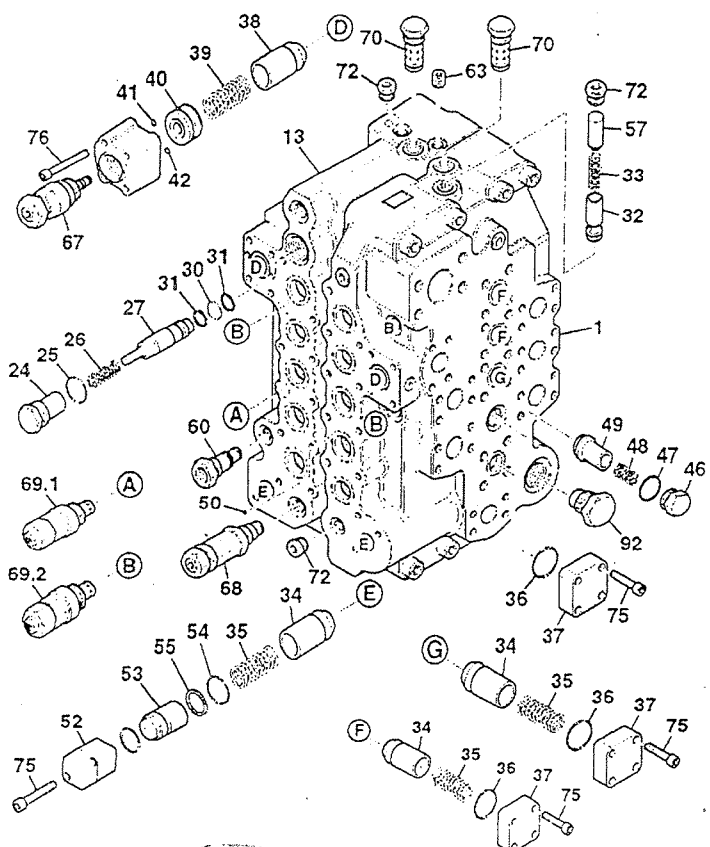

ITEM	PART NO.	CHANGE NO.	DESCRIPTION	REMARKS	QTY.
54	25/221633		Seal, O ring		2
55	25/221634		Ring back-up		2
57	25/221788		Spacer		1
60	25/221671		Plug, assembly		1
63	25/221790		Plug, orifice		1
67	25/221791		Valve, anti-drift, assy		2
68	25/221792		Kit-relief valve		1
69 01	25/221793		Kit-relief valve 31.4		2
69 02	25/221794		Kit-relief valve, 39.2		5
70	25/221796		Valve, relief, assy		2
72	701/80371		Switch, pressure, 335 bar		1
75	25/221695		Bolt socket-head M10		44
76	25/221799		Bolt socket-head M10		8

RAJA RAM JAISWAL & CO.
P-41, Princep Street, Shop No.
Kolkata
700075

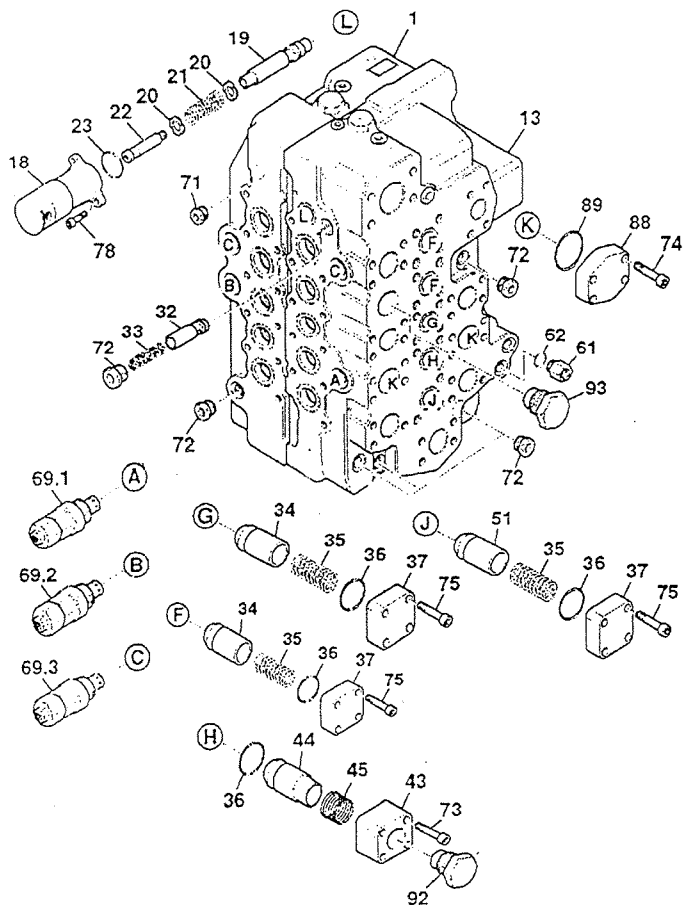

ITEM	PART NO.	CHANGE NO.	DESCRIPTION	REMARKS	QTY.
1			'See Remark'	See frame E3-1-1	1
13	NSP		None serviced part		1
18	25/221764		Cap		1
19	NSP		None serviced part		1
20	25/221635		Seat, spring		2
21	25/221765		Spring		1
22	25/221766		End, spool		1
23	25/221767		O Ring, seal		1
32	25/221774		Poppet		2
33	25/221775		Spring		2
34	25/221630		Valve, poppet		8
35	25/221631		Spring		9
36	25/221776		O Ring, seal		10
37	25/221777		Flange		10
43	25/221783		Flange		1
44	25/221784		Poppet		1
45	25/221785		Spring		1
51	25/221787		Poppet		1
61	701/80374		Switch, pressure 12 bar	Replaces plug	1
61 01	701/80375		Switch, pressure 20 bar		1
62	25/221653		Seal, O ring		2
69 01	25/221793		Kit-refief valve, 31.4		2
69 02	25/221794		Kit,-refief valve, 39.2		5
69 03	25/221795		Kit-refief valve 26.4		1
71	25/221691		Plug, assembly		1
72	25/221690		Plug assembly		11

RAJA RAM JAISWAL & CO.
P-41, Princep Street, Shop No.
Kolkata
700075

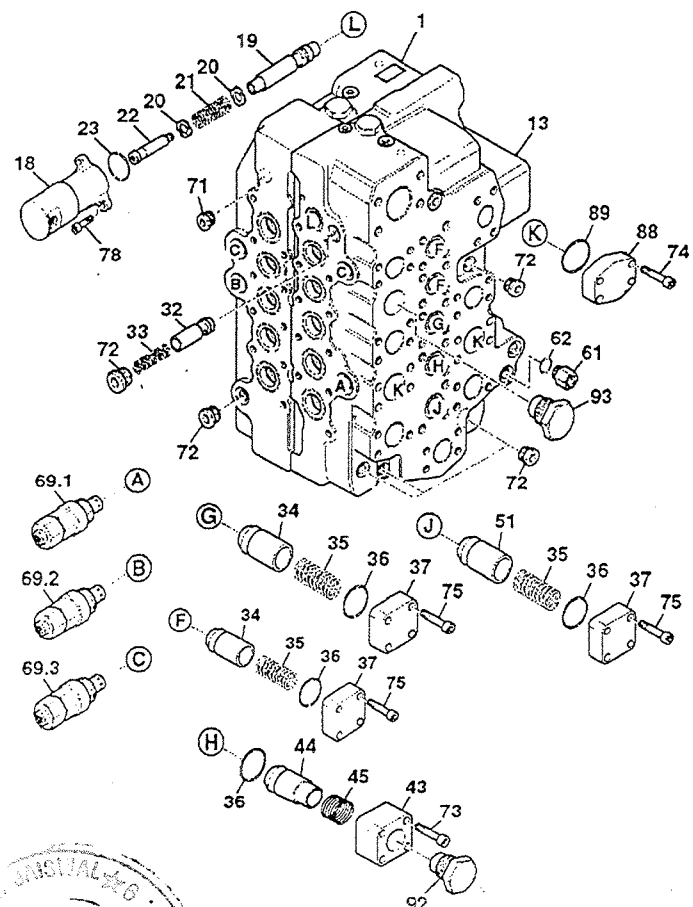

ITEM	PART NO.	CHANGE NO.	DESCRIPTION	REMARKS	QTY.
73	25/221797		Bolt, socket-head M10		4
74	25/221798		Bolt, sockel-head M10		40
75	25/221695		Bolt, socket-head M10		44
78	25/221716		Bolt, socket-head M6		2
83	25/221813		Bolt socket head M10		8
88	25/221802		Cap		2
89	25/221723		Seal, O ring		2
92	25/221804		Plug assy		2
93	25/221805		Plug assy		1

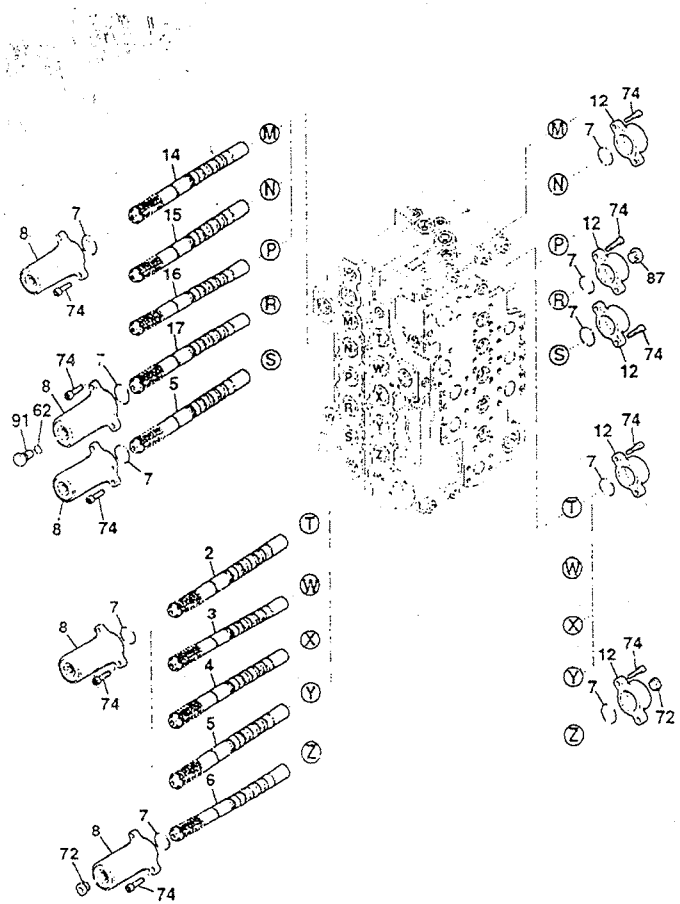

ITEM	PART NO.	CHANGE NO.	DESCRIPTION	REMARKS	QTY.
2	NSP		None serviced part		1
3	NSP		None serviced part		1
4	NSP		None serviced part		1
5	NSP		None serviced part		2
6	NSP		None serviced part		1
7	25/221761		O Ring, seal		20
8	25/221762		Cap		10
12	25/221763		Cap		10
14	NSP		None serviced part		1
15	NSP		None serviced part		1
16	N.S.P.		None serviced part		1
17	NSP		None serviced part		1
62	25/221653		Seal, O ring		2
72	25/221690		Plug assembly		11
74	25/221798		Bolt, socket-head M10		40
87	25/221816		Plug, assy		1
91	25/221803		Plug		1

RAJA RAM JAISWAL & CO.
P-41, Princep Street, Shop No. 6
Kolkata
700075

E3-2-4 VALVE, CONTROL, COMPONENTS FIG 4

ISSUE - 1

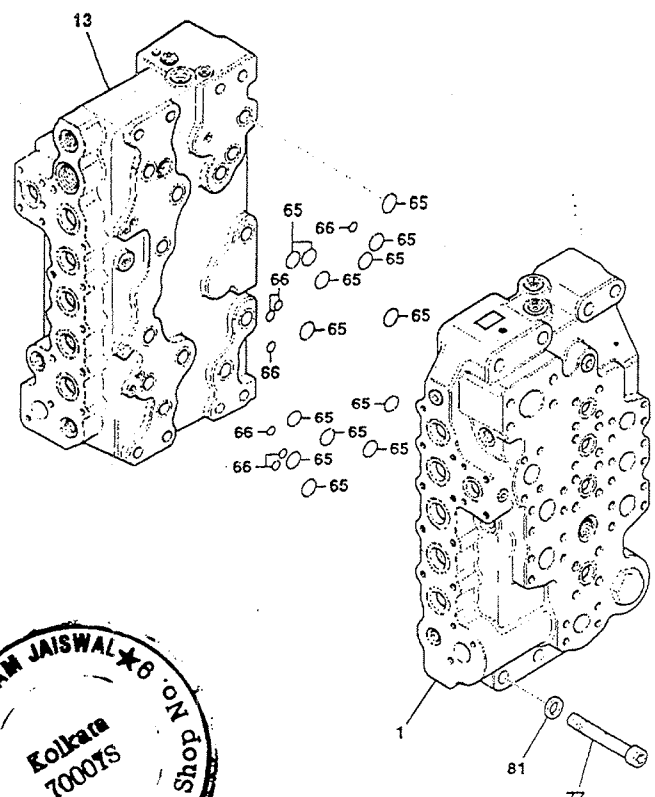

RAJA RAM JAISWAL ★ 6 P-41, Princep Street, Shop No. Kolkata 700017S

ITEM	PART NO.	CHANGE NO.	DESCRIPTION	REMARKS	QTY.
1	1		TBA	Seeframe E3-1-1	1
13	NSP		None serviced part		1
65	25/221700		Seal, O ring		1
66	25/221702		Seal, O-ring		7
77	25/221800		Bolt socket-head M16		8
81	25/221801		Washer		8

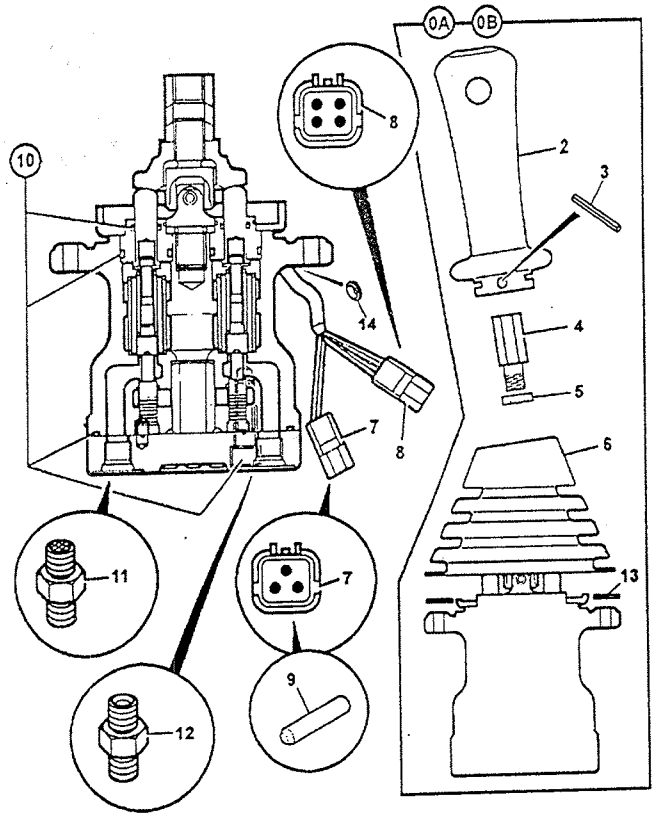

ITEM	PART NO.	CHANGE NO.	DESCRIPTION	REMARKS	QTY.
0A	25/221094		Valve, hand control, left hand	Left hand controller	1
0B	25/221095		Velve, hand control, right hand	Right hand controller	1
2	331/23382		Handle, with swtch, AMS		10
3	826/10591		Pin roll		1
4	331/11043		Lever		1
5	826/10628		Nut, locking		1
6	331/20582		Gaiter, Joystick		1
7	721/10400		Connector, 3 pin	left hand 2 filted, not fitted to right hand	A/R
8	721/10100		Connector, 4 pin	left hand 1 fitted, right hand 2 fitted	A/R
9	721/10401		Connector	8 per controller	8
10	998/10318		Kit-seal		1
11	JHJ0168		Adapter, filtered	1 per controller port P	1
12	1620/0003		Adapter	5 per controller	5
13	25/221280		Plate		1
14	828/10020		Grommet		1

RAJA RAM JAISWAL
P-41, Princep Street, Shop No. 6
Kolkata
700013

E3-7-1 VALVE, TRACK CONTROL, HAND AND FOOT

ISSUE - 1

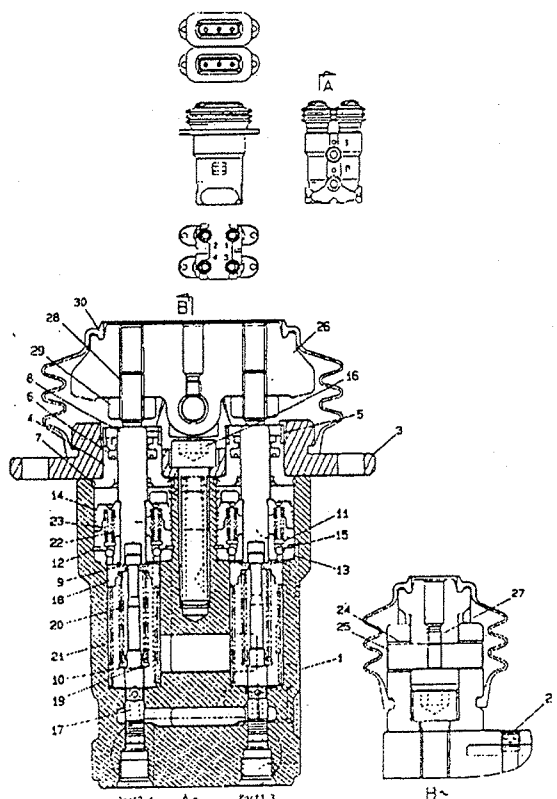

ITEM	PART NO.	CHANGE NO.	DESCRIPTION	REMARKS	QTY.
0	KSJ2465		Valve, remote control		1
1	LWC0003		Case		1
2	LLP0114		Plug		2
3	LZC0158		Cover		2
4	LLC0128		Plug		4
5	LWC0004		Cap, grease		4
6	LEC0025		Seal		4
7	LBQ5025		O Ring		4
8	LPC0213		Rod, push		4
9	LUC0107		Washer		8
10	LUC0106		Washer		4
11	LSC0237		Seat, spring		4
12	LMC0107		Retainer		4
13	LKC0005		Bush		4
14	LPC0203		Piston		4
15	LPC0204		Ball		12
16	6004/3513		Capscrew		2
17	LPC0205		Spool		4
18	LSC0238		Seat, spring		4
19	LUC0104		Washer		4
20	LSC0236		Spring		4
21	LSC0214		Spring		4
22	LSC0239		Spring		4
23	LSC0240		Spring		4
24	LKC0001		Bush		4
25	LJC0003		Shaft, cam		2

RAJA RAM JAISWAL ★ P-41, Princep Street, Shop No. 6 ★ Kolkata 700013

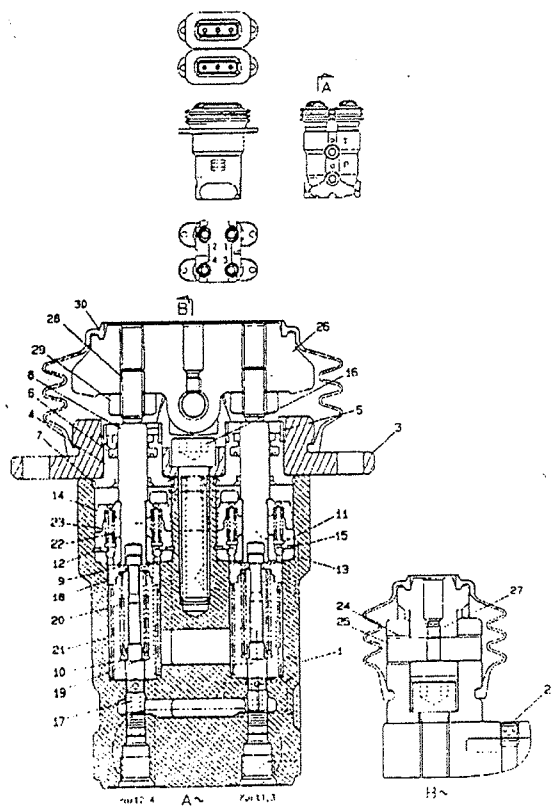

ITEM	PART NO.	CHANGE NO.	DESCRIPTION	REMARKS	QTY.
26	LMC0085		Cam		2
27	LLC0118		Screw		2
28	LUC0102		Bolt		4
29	LUC0101		Nut, lock		4
30	LCC0014		Gaiter, rubber bellows		2
31	LQC0034		Kit casing	Includes items 1 and 17	1
32	LQC0035		Kit-seal, 1	Includes items 6 and 7	1

RAJA RAM JAISWAL & CO.
P-41, Princep Street, Shop No. 6
Kolkata
700075

JCB INDIA LTD.

E3-8-1 VALVE SOLENOID

ISSUE - 1

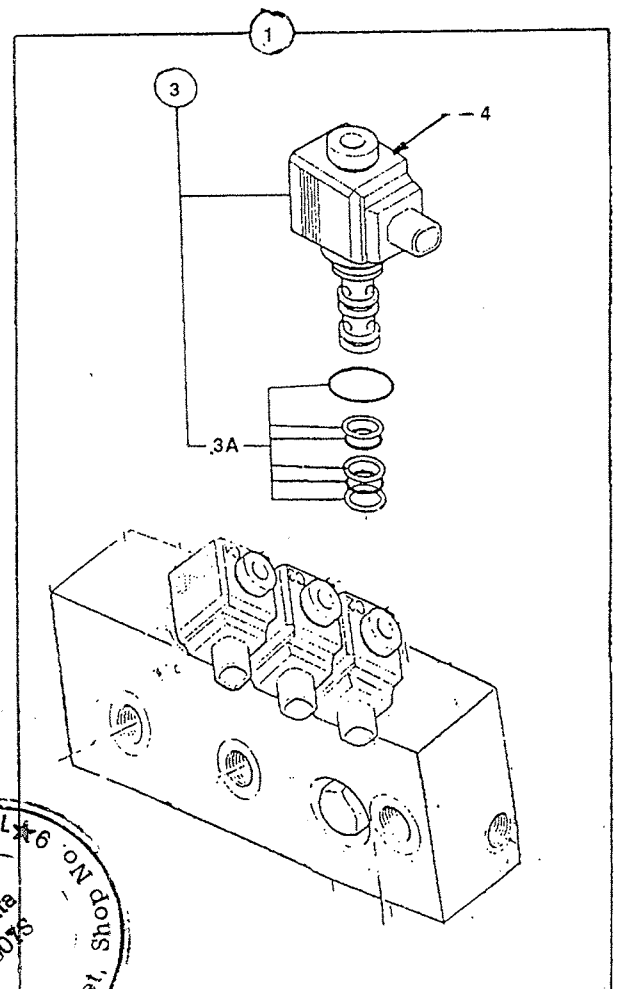

ITEM	PART NO.	CHANGE NO.	DESCRIPTION	REMARKS	QTY.
1	229/01003		Solenoid, valve assembly		1
3	25/220555		Cartridge, valve		8
3A	25/220533		Kit, seal		1
4	25/221263		Coil		8

RAJA RAM JAISWAL ★ P-41, Princep Street, Shop No. 9 Kolkata 700075

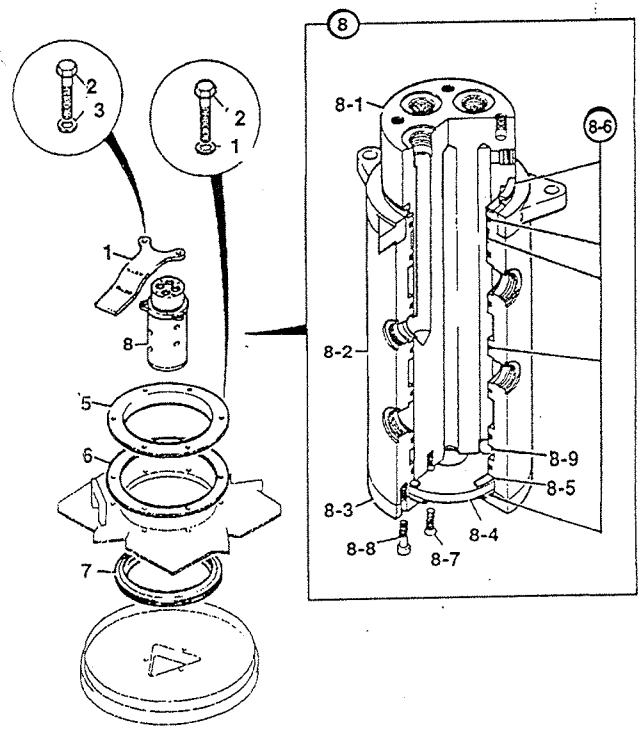

ITEM	PART NO.	CHANGE NO.	DESCRIPTION	REMARKS	QTY.
1	229/01009		Bracket, stop		1
2	1316/0508Z		Screw		12
3	JHP0042		Washer, plain		6
4	1406/0011		Seal, bonded		6
5	KRA0999		Retainer seal		1
6	KRA1000		Gasket, rubber		1
7	904/20126		Ring, seal		1
8	229/01008		Coupling, rolary		1
8 01			Plug		1
8 02			Housing		1
8 03			Cover		1
8 04			Cover		1
8 05			Ring guide axial		2
8 06			Kit, seals		1
8 07			Screw, countersunk		4
8 08			Capscrew, M8 x 20		6
8 09			Ball, expander		1

RAJA RAM JAISWAL
Kolkata
700073
P-41, Princep Street, Shop No. 6

E3-15-1 LUBRICANTS & FILTERS

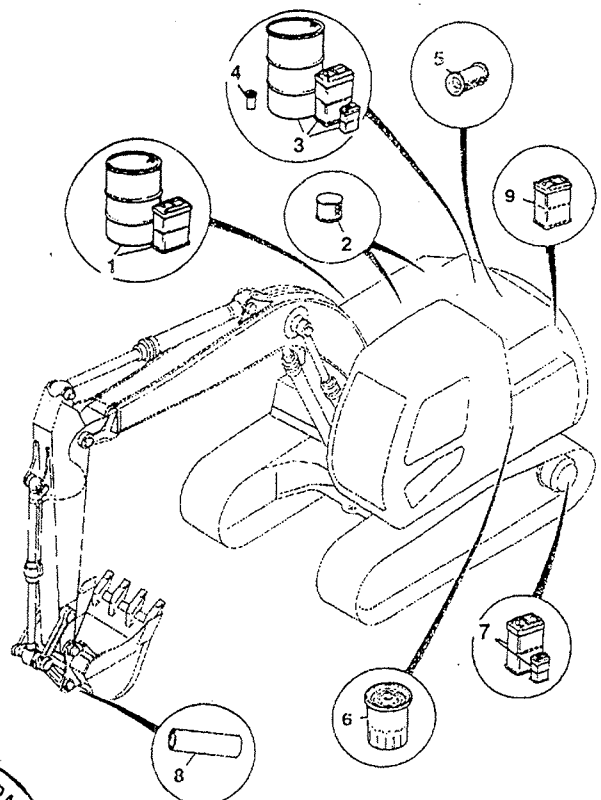

ITEM	PART NO.	CHANGE NO.	DESCRIPTION	REMARKS	QTY.
1	4002/0801		Fluid, hydraulic, 5 litre		1
	4002/0802		Fluid, hydraulic, 25 litre		1
	229/00024		Fluid, hydraulic 200 lilre		1
2	KRJ3836		Fiter, return	Main, hydraulic	1
	*KNJ0381		O Ring		1
	32/925140		Element filter bypass Plexus		1
	*828/10080		O Ring	For 32/925140	2
	828/10081		O Ring	For 32/925140	1
	KBJ1691		Element, servo, filter	Servo filter	1
	KNJ0288		Element oil, filter	Drain line	1
	6900/0051		Element filter	Auxiliary filter	1
3	4004/0301		Oil, JCB super universal, agricultural 25 l		1
	4004/0302		Oil, JCB super universal, agricultural 200 l		1
	4001/0801		Oil, JCB Multigrade, 15W/ 40 - 5 litre		1
	4001/0802		Oil, JCB Multigrade, 15W/ 40 - 25 litre		1
	4001/0803		Oil, JCB Multigrade, 15W/ 40 - 200 litre		1
7	4000/0301		Oil, HD90 gear, 5 litre	Track gearbox	1
8	4003/2000		Grease, 12.5 Kg	12.5Kg	1
9	229/01233		Fluid anti-freeze, 14 litre		1
10	229/01232		Distilled water, 14 litre		

RAJA RAM JAISWAL ★ 6 Kolkata 700075 ★ KP-41, Princep Street, Shop No.

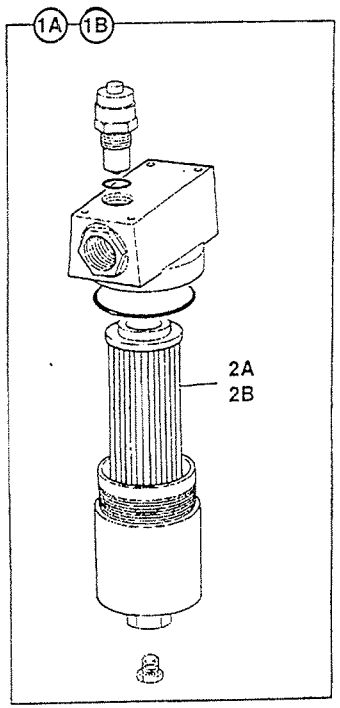

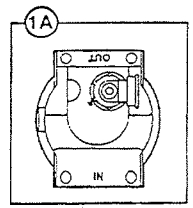

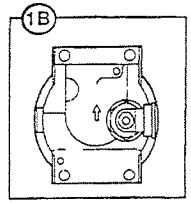

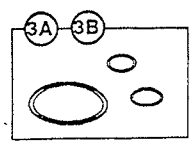

ITEM	PART NO.	CHANGE NO.	DESCRIPTION	REMARKS	QTY.
1B	JBJ0066		Filter, hydraulic		1
2B	6900/0051		Element, filter		1
3B	6900/0841		Kit-seal, filter		1
4B	928/60040		Valve, visual indicator		1

RAJA RAM JAISWAL
Kolkata
700073
PP-41, Princep Street, Shop No. 9

E

E1 HOSE & PIPEWORK
E2 PUMP/MOTOR & PUMP DRIVE
E3 VALVES & HYDRAULIC FILTERS
E4 RAMS

RAJA RAM JAISWAL & CO.
P-41, Princep Street, Shop No.
Kolkata
700017S

E4-1-1 BOOM RAM (LH)

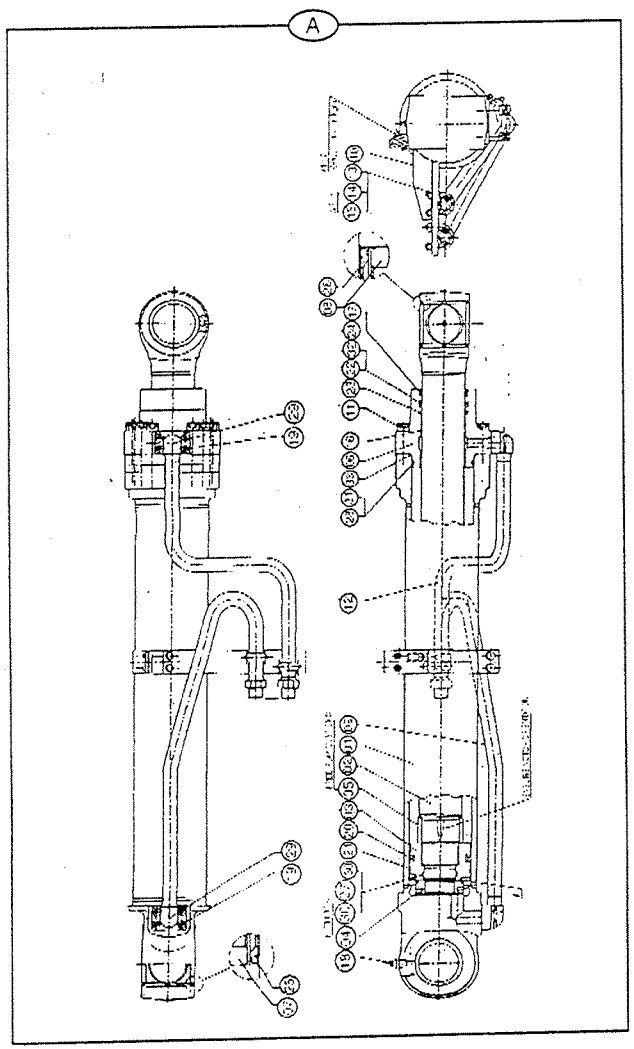

ITEM	PART NO.	CHANGE NO.	DESCRIPTION	REMARKS	QTY.
A.	229/00484		Boom Ram Assy. (LH)		1
1.	550/41740		Tube S/A		1
2.	550/41737		Piston Rod S/A		1
3.	550/41926		Piston		1
4.	550/41936		Piston Road Nut		1
5.	550/41931		H.E. Cush. Bush		1
6.	550/41729		H.E. Cover		1
7.	550/41934		Bush (CE)		1
8.	550/41734		Bush (RE)		1
9.	550/41950		Pipe S/A - CE (RH)		1
10.	550/41947		Clamp S/A		1
11.	550/41915		Hex. Soc. HD. Cap Screw		1
12.	550/41951		Pipe S/A - HE (RH)		12
13.	550/41940		Clamp		1
14.	550/41920		Nyloc Nut		2
15.	550/41941		Washer		4
16.	550/41723		Bimetal Bush		4
17.	550/41922		Snap Ring		1
18.	550/41919		Grease Nipple		1
19.	550/41913		Hex. Soc. HD. Cap Screw		1
20.	550/41904		Piston Seal		8
21.	550/41908		Piston BRG.		1
22.	550/41898		Rod Seal		2
23.	550/41895		Rod Seal.		1
24.	550/41881		Wiper.		1
25.	550/41910		Wiper (CE)		1
26.	550/41911		Wiper (RE)		2
27.	550/41870		STD. O-Ring (PISTON)		2
28.	550/41873		STD. O-Ring (HEC)		1
29.	550/41878		STD. O-Ring (ELBOW)		1
30.	550/41884		Back Up Ring (PISTON)		2
31.	550/41886		Back Up Ring (HEC)		2
32.	550/41887		Back Up Ring (R. Seal)		1
33.	550/41875		STD. O-Ring (TUBE CHMF.)		1
34.	550/41747		Spare Seal Kit		1

RAJA RAM JAISWAL
P-41, Princep Street, Shop No. 8
Kolkata
700073

JCB INDIA LTD.

E4-1-2 BOOM RAM (RH)

ISSUE - 1

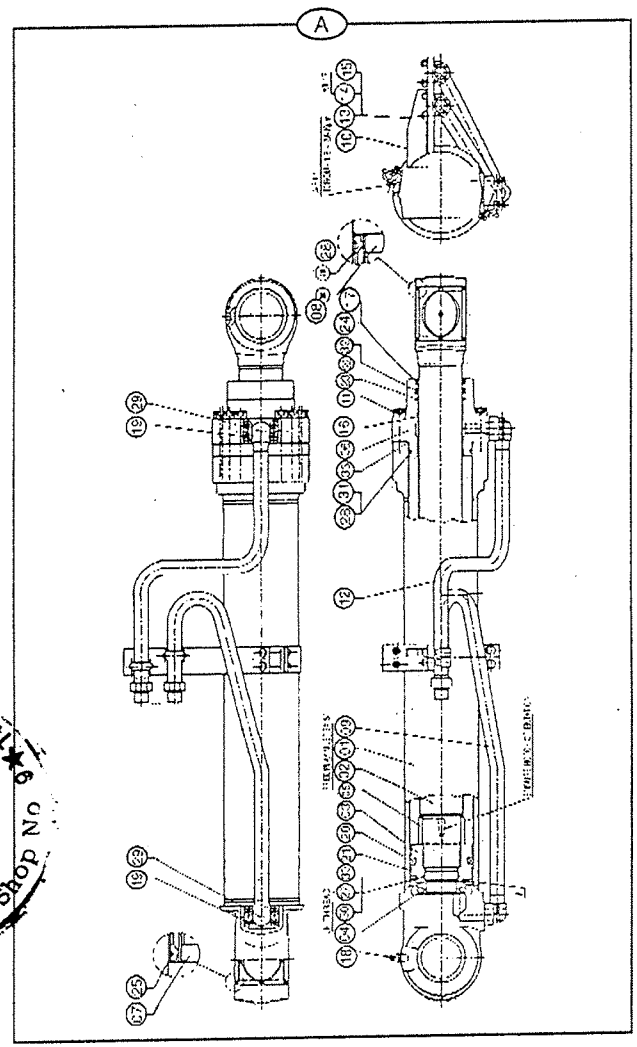

ITEM	PART NO.	CHANGE NO.	DESCRIPTION	REMARKS	QTY.
A.	229/00483		Boom Ram Assy. RH		1
1.	550/41740		Tube S/A		1
2.	550/41737		Piston Rod S/A		1
3.	550/41926		Piston		1
4.	550/41936		Piston Rod Nut		1
5.	550/41931		H.E. Cush. Bush		1
6.	550/41729		H.E. Cover		1
7.	550/41934		Bush (CE)		1
8.	550/41734		Bush (RE)		1
9.	550/41950		Pipe S/A - CE (RH)		1
10.	550/41947		Clamp S/A		1
11.	550/41915		Hex. Soc. HD. Cap Screw		12
12.	550/41951		Pipe S/A - HE (RH)		1
13.	550/41940		Clamp		2
14.	550/41920		Nyloc Nut		4
15.	550/41941		Washer		4
16.	550/41723		Bimetal Bush		1
17.	550/41922		Snap Ring		1
18.	550/41919		Grease Nipple		1
19.	550/41913		Hex. Soc. HD. Cap Screw		8
20.	550/41901		Piston Seal		1
21.	550/41908		Piston BRG.		2
22.	550/41898		Rod Seal		1
23.	550/41895		Rod Seal		1
24.	550/41881		Wiper.		1
25.	550/41910		Wiper (CE)		2
26.	550/41911		Wiper (RE)		2
27.	550/41870		STD. O-Ring (PISTON)		1
28.	550/41873		STD. O-Ring (HEC)		1
29.	550/41878		STD. O-Ring (ELBOW)		2
30.	550/41848		Back Up Ring (PISTON)		2
31.	550/41886		Back Up Ring (HEC)		1
32.	550/41887		Back Up Ring (R. Seal)		1
33.	550/41875		STD. O-Ring (TUBE CHMF.)		1
34.	550/41747		Spare Seal Kit		1

RAJA RAM JAISWAL
P-41, Princep Street, Shop No. 6
Kolkata
700013

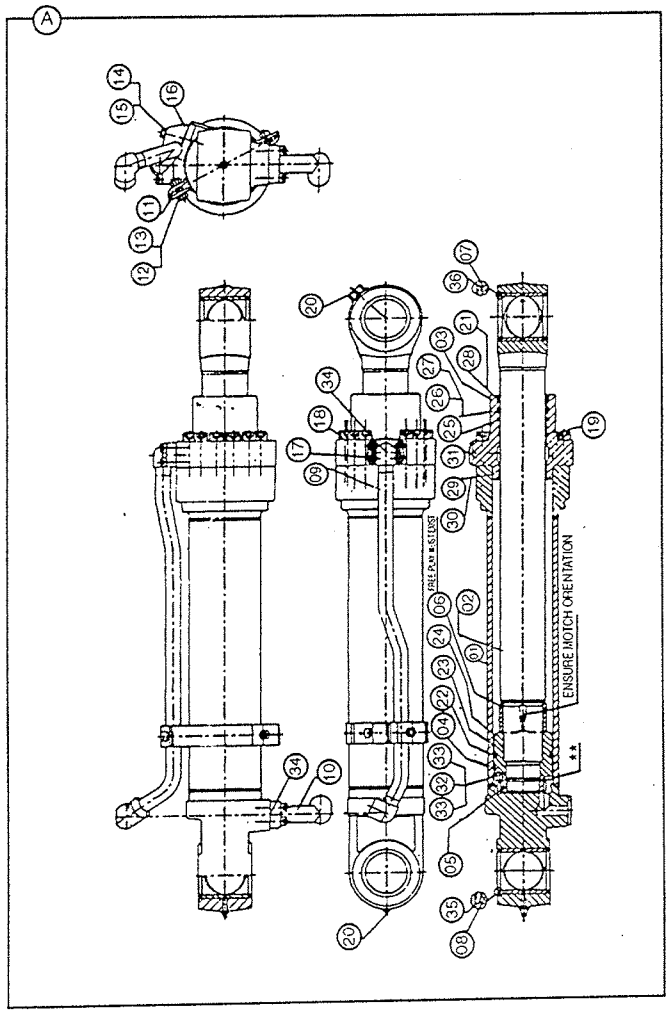

ITEM	PART NO.	CHANGE NO.	DESCRIPTION	REMARKS	QTY.
A	229/00570		Ram Dipper		1
1	550/42220		Tube S/A		1
2	550/42221		Piston Rod S/A		1
3	550/42222		Piston		1
4	550/42223		Piston Rod Nut		1
5	550/42224		C.E. Cush Bush		1
6	550/42225		H.E. Cush Bush		1
7	550/42226		H.E. Cover		1
8	550/41735		Bush		2
9	550/42227		Pipe S/A		1
10	550/42228		Clamp S/A		1
11	550/42229		Hex HD Bolt		2
12	550/42230		Grease Nipple		1
13	550/41914		Hex Soc HD Cap Screw		4
14	550/41940		Clamp		1
15	550/41920		Nyloc Nut		2
14	550/41917		Machined Washer		2
16	550/41941		Washer		1
17	550/42231		Bimelal Bush		1
18	550/41915		Hex Sockel HD Cap Screw		14
19	550/41918		Ch. Alloy Steel valve		12
20	550/41916		Hex Socket Set Screw		1
21	550/42232		Snap Ring		1
22	550/42233		Piston Seal		1
23	550/42233		Piston Bearing		2
24	550/42235		Piston Bearing		2

M/S. RAJA RAM JAISWAL & CO.
P-41, Princep Street, Shop No.
Kolkata
700075

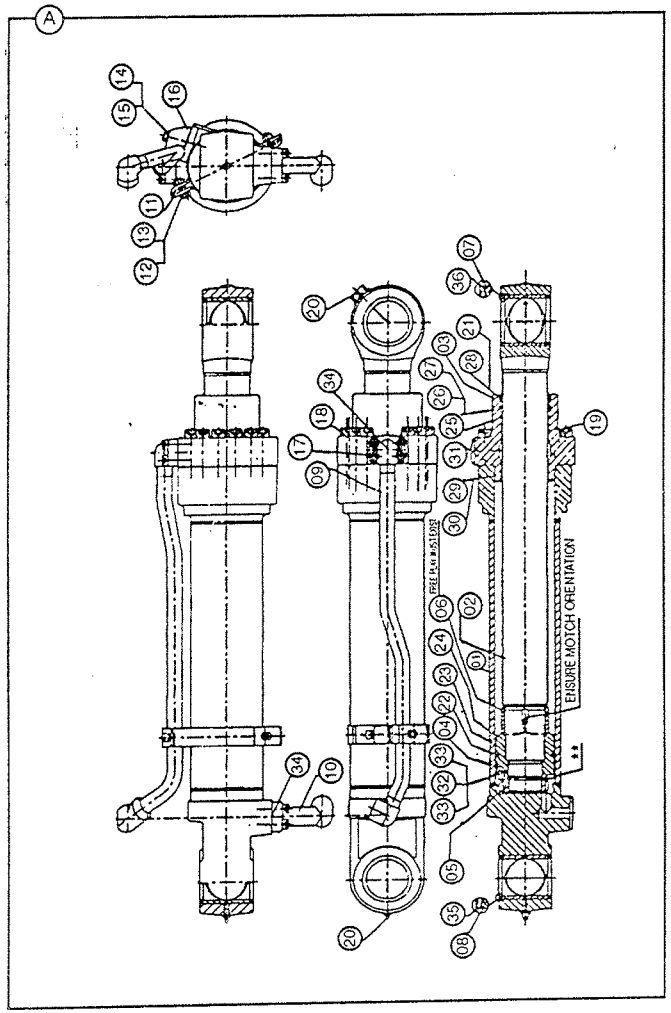

ITEM	PART NO.	CHANGE NO.	DESCRIPTION	REMARKS	QTY.
25	550142236		Wipper		1
26	550/42910		Wipper (CE & RE)		4
27	550/41871		STD O-Ring (Piston)		1
28	550/42237		STD O-Ring (HEC)		1
29	550/41879		STD O-Ring (Elbow & Port)		1
30	550/41885		Back-up Ring (Piston)		2
31	550/42238		Back-up Ring (Rod Seal)		1
32	550/42239		Back-up Ring (HEC O-Ring)		1
33	550/42240		STD O-Ring (Tube CHME)		1
34	550/42241		Rod Seal (Primary)		1
35	550/42242		Rod Seal (Secondary)		1
36	550/42243		Spare Seal Kit		1

RAJA RAM JAISWAL
Kolkata
700073
P-41, Princep Street, Shop No 9

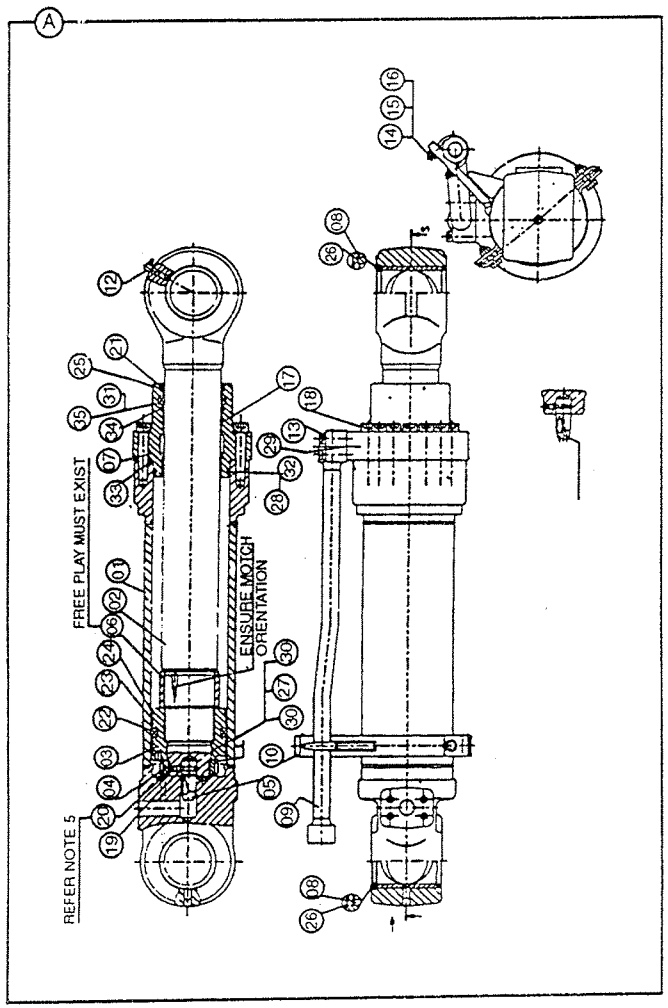

ITEM	PART NO.	CHANGE NO.	DESCRIPTION	REMARKS	QTY.
A	229/00573		Ram Bucket, Seal Kit		1
1	550/42199		Tube S/a		1
2	550/42200		Piston Rod S/A		1
3	550/42201		H.E.Cover		1
4			Piston		1
5	550/42203		Piston Rod Nut		1
6	550/41931		H.E. Cush Bush		1
7	550/41731		Bush (RE)		1
8	550/41732		Bush (CE)		1
9	550/42204		Pipe S/A		1
10	550/41938		Port		1
11	550/42205		Clamp		1
12	550/42206		Hex. HD Bolt		2
13	550/41941		Washer		2
14	550/41917		Machined Washer		1
15	550/41912		Hex HD Bolt		1
16	550/41939		Clamp		1
17	550/41913		Hex Sco HD Cap Screw		8
18	550/41915		Hex Sco HD Cap Screw		12
19	550/41723		Metal Bush		1
20	550/41919		Grease Nipple		2
21			Snap Ring		1
22	550/42207		Piston Seal		1
23	550/42208		Piston Bearing		2
24	550/42209		Piston Bearing		2
25	550/42210		Rod Seal (Primary)		1

RAJA RAM JAISWAL & CO.
P-41, Princep Street, Shop No.
Kolkata
700075

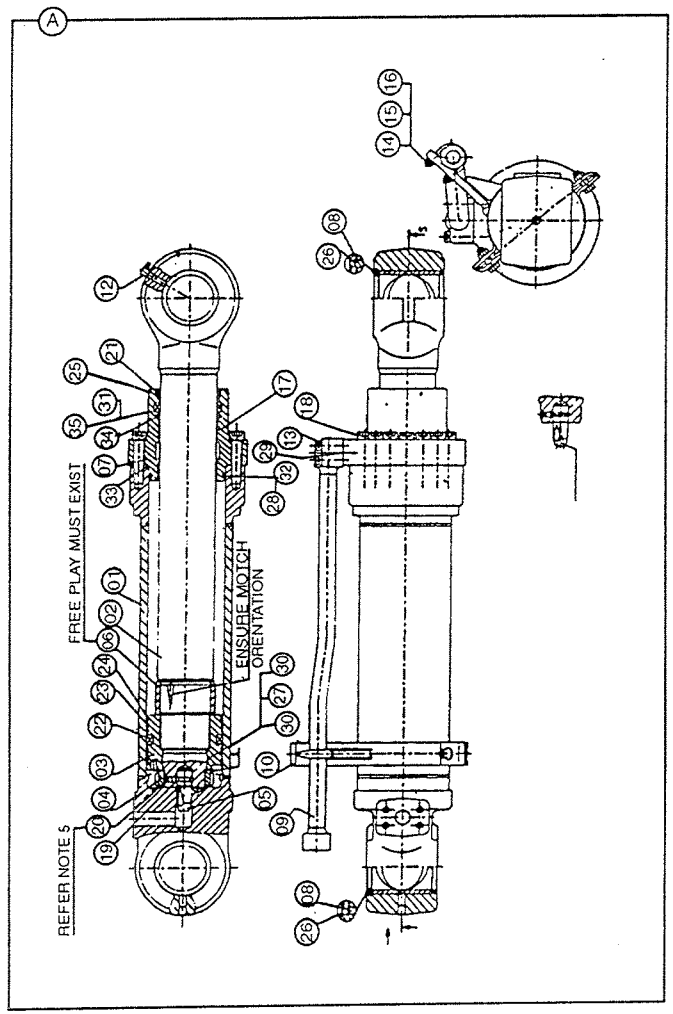

ITEM	PART NO.	CHANGE NO.	DESCRIPTION	REMARKS	QTY.
26	550/42211		Rod Seal (Secondary)		1
27	550/42212		Back-Up Ring (Rod Seal)		1
28	550/42213		Wipper		1
29	550/42214		Back-Up Ring (HEC)		1
30	550/42215		STD O-Ring (HEC)		1
31	550/42216		STD O-Ring (Tube CHMF)		1
32	550/42217		STD-O-Ring (Piston)		1
33	550/42218		Back-up Ring (Piston)		2
34	550/41878		STD O-Ring		2
35	550/41909		Wiper (CE)		2
36	550/41911		Wiper (RE)		2
37	550/42219		Spare Seal Kit		1

RAJA RAM JAISWAL
P-41, Princep Street, Shop No. 9
Kolkata
700075

F

• F4 SLEW/TRACK GEARBOXES

RAJA RAM JAISWAL & CO.
41, Princep Street, Shop No. 9
Kolkata
700075

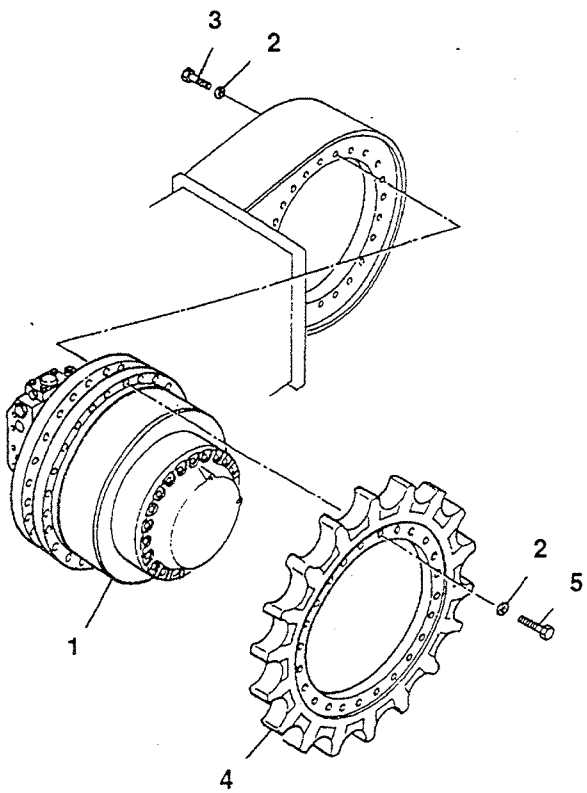

ITEM	PART NO.	CHANGE NO.	DESCRIPTION	REMARKS	QTY.
1	229/01002		Motor, & track motor		2
2	JHP0043		Washer		96
3	1316/3713Z		Bolt		52
4	331/42641		Sprocket, drive, 21 teeth & 22 holes		2
5	1316/3715Z		Bolt		44

RAJA RAM JAISWAL
Kolkata
700073
41, Princep Street, Shop No. 9

JCB INDIA LTD.

F4-2-1 GEARBOX, TRACK

ISSUE - 1

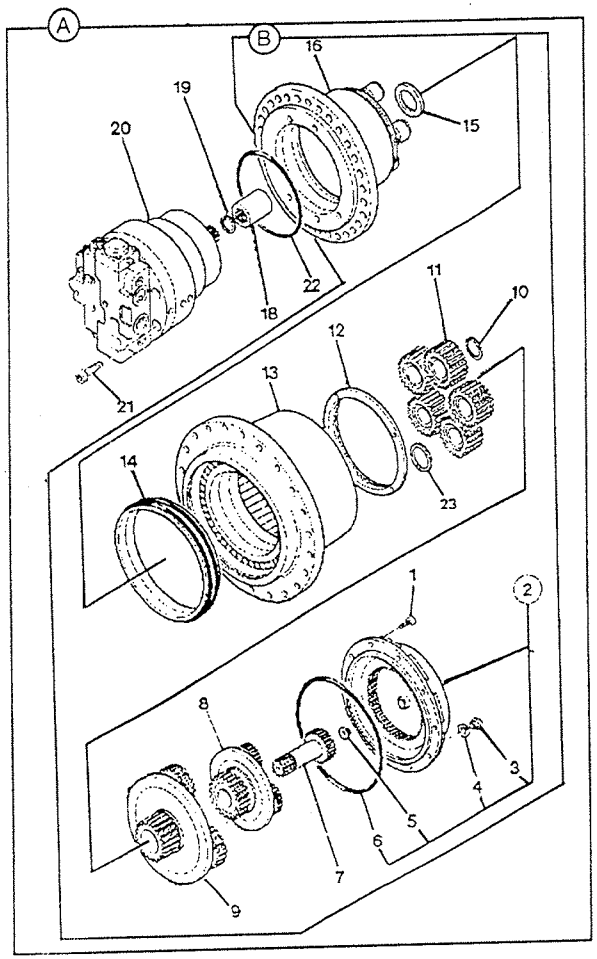

ITEM	PART NO.	CHANGE NO.	DESCRIPTION	REMARKS	QTY.
0A	229/01002		Motor, & track motor		2
0B	JRA0121		Gearbox		1
1	05/901963		Capscrew		10
2	05/903801		Cover, set		1
3	05/903822		Plug, breather		2
4	05/903803		Washer		2
5	05/903820		Pad		1
6	05/903819		O Ring		1
7	05/903804		Gear, sun		1
8	05/903805		Gear, reduction set 1st planet		1
9	05/903806		Gear, reduction set 2nd planet		1
10	05/903807		Circlip		5
11	05/903808		Gear, plant		5
12	05/903809		Nut		1
13	05/903859		Housing, wrth bearing		1
14	05/903811		Seal, assembly		1
15	05/903812		Ring centering		1
16	05/903813		Hub		1
18	05/903854		Coupling		1
19	05/903855		Circlip		1
20	JRA0124		TBA Motor Track		1
21	1391/3520Z		Capscrew		3
22	05/903814		O Ring		1
23	05/903838		Spacer		5

RAJA RAM JAISWAL & CO
P-41, Princep Street, Shop No.
Kolkata
700075

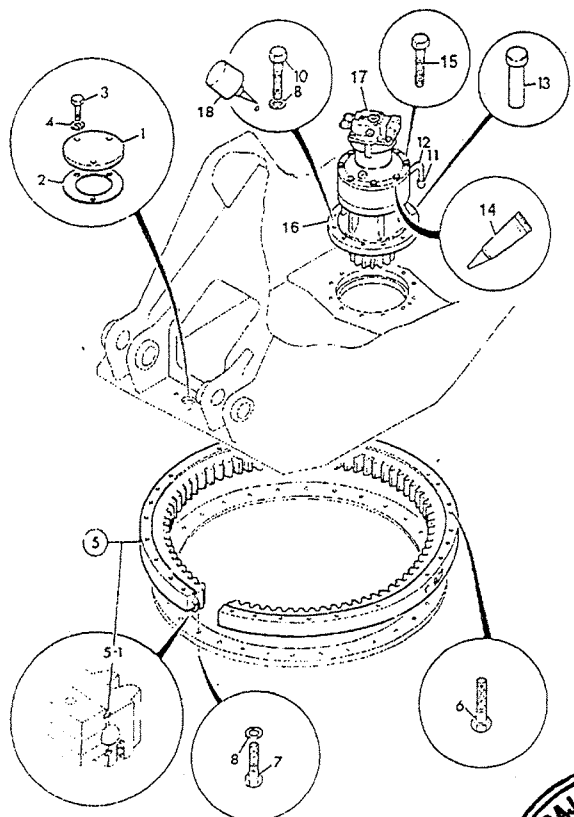

ITEM	PART NO.	CHANGE NO.	DESCRIPTION	REMARKS	QTY.
1	KRB0681		Plate, cover		1
2	KRB0682		Packing, cork		1
3	1316/0507Z		Screw		3
4	1425/0009Z		Washer, spring		3
5	JRB0017		Ring, slew		1
5 01	6900/0035		Seal		1
6	1316/3820Z		Bolt		31
7	1316/3815Z		Bolt		36
8	JHP0044		Washer		47
10	1316/3817Z		Bolt		11
11	C4E9301		Capscrew		1
12	JBC0004		Pipe assembly		1
13	KRC0105		Pin, headed		1
14	4101/0500		Sealant threaclocker, 50ml	Liquid gasket seal 50ml	A/R
15	1391/3509Z		Capscrew		16
16	229/01006		Gearbox. swing	For components see frama F4-4-1	1
17	20/925315		Motor, swing	For components see frame E2-7-1	1
18	4101/0500		Fluid, locking, Loctite 262		A/R

RAJA RAM JAISWAL
Kolkata
700075

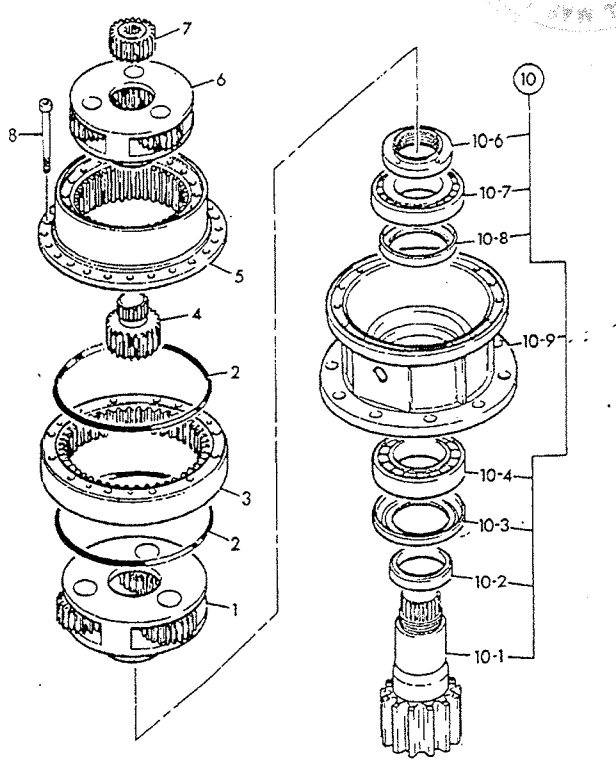

ITEM	PART NO.	CHANGE NO.	DESCRIPTION	REMARKS	QTY.
	229/01006		Gearbox, swing	2T261600522	1
1	05/903860		Gear, reduction assembly		1
2	05/903861		O Ring		2
3	05/903862		Ring, toothed		1
4	05/903863		Gear, sun		1
5	05/903864		Cover		1
5A	05/903865		Ring, toothed		1
6	05/903866		Gear, reduction assembly		1
7	05/903867		Gear, sun		1
8	05/903868		Screw		16
10	05/903873		Gear, output assembly		1
10 01	05/903869		Shaft, pinion		1
10 02	05/903870		Spacer		1
10 03	05/903871		Ring		1
10 04	05/903872		Bearing		1
10 06	051903874		Nut		1
10 07	05/903875		Bearing		1
10 08	05/903876		Seal, ring		1
10 09	05/903877		Housing, gearbox		1
11			See Remark	Gauge,oil level see page E2-7-3, Swing motor	1

RAJA RAM JAISWAL
P-41, Princep Street, Shop No. 6
Kolkata
700073

J

- J1 TRACK, GEAR/ UNDERCARRIAGE

RAJA RAM JAISWAL
Kolkata
700073
Shop No. 9
P-14, Princep

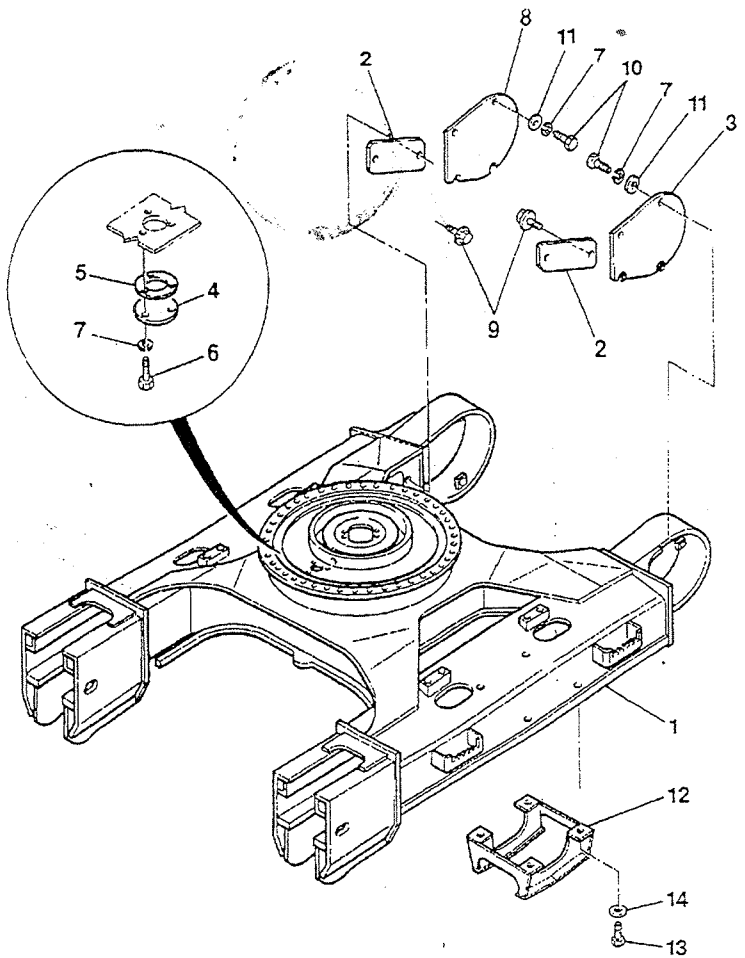

ITEM	PART NO.	CHANGE NO.	DESCRIPTION	REMARKS	QTY.
1	JG0RA041		Frame, undercarriage	JS200S/JS220S	1
2	KRA1107		Cover	JS200SC	2
3	JRA0306		Cover, track motor, left hand		1
4	KRB0681		Plate, cover		1
5	KRB0682		Packing, cork		1
6	1316/0505Z		Screw		3
7	6060/0009Z		Washer, spring		11
8	JRA0306		cover track motor, right hand		1
9	JHN0048		Bolt		4
10	1316/0509Z		Bolt		8
11			See Remark	JS200S	8
	JHP0042		Washer, Plain	JS200LC	8
12	229/01212		Guide, track	Round leading edge	2
13	*1316/9512Z		Bolt		8
14	JHP0079		Washer, high, strength		8

RAJA RAM JAISWAL & CO.
P-41, Princep Street, Shop No. 6
Kolkata
700013

JCB INDIA LTD.

J1-2-1 IDLER WHEEL

ISSUE - 1

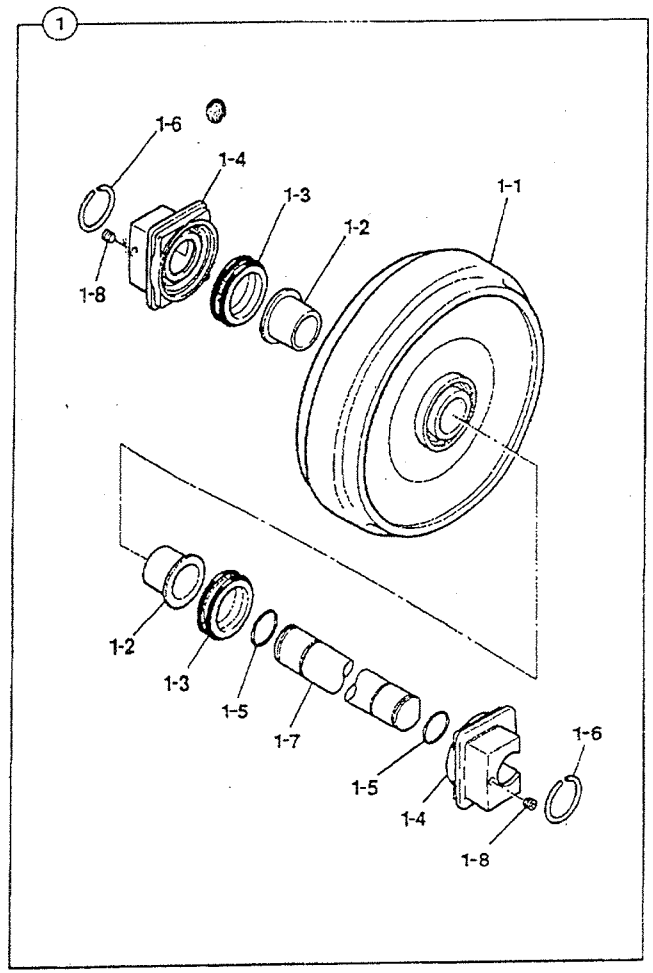

ITEM	PART NO.	CHANGE NO.	DESCRIPTION	REMARKS	QTY.
1	JRA0214		Wheel, idler		2
	JRA0218		Seal, oil floating		2
1 01	JRA0217		Wheel, track idler		1
1 02	JRA0221		Bush		2
1 04	JRA0222		Hub		2
1 05	JRA0223		O Ring		2
1 06	JRA0228		Wire		2
1 07	JRA0220		Shaft, idler		1
1 08	JRA0226		Plug		1

RAJA RAM JAISWAL & CO.
P-41, Princep Street, Shop No.
Kolkata
700073

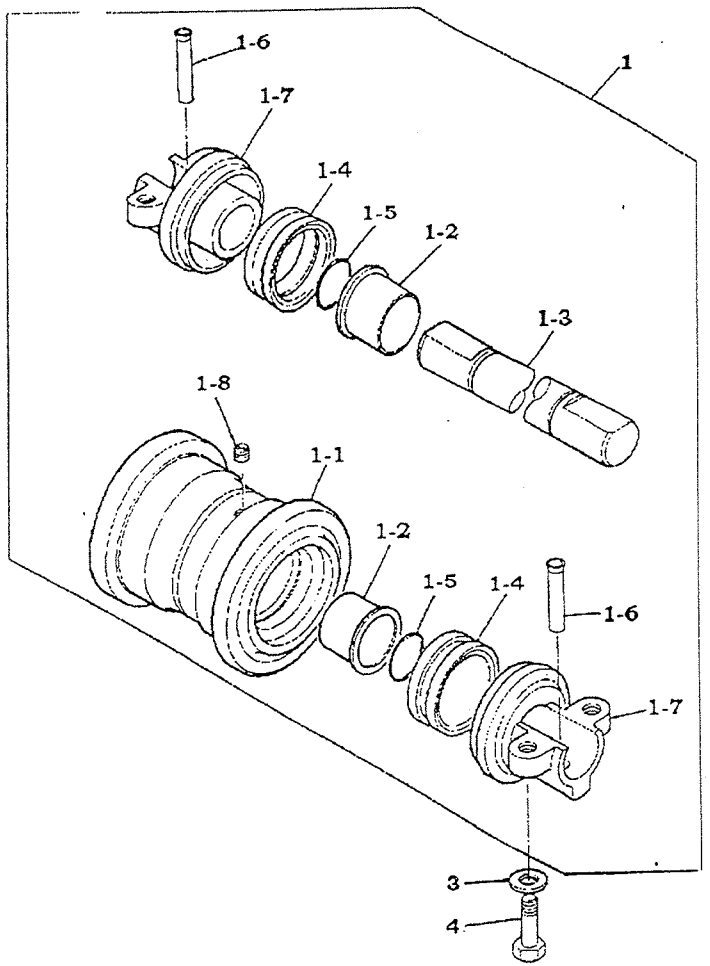

ITEM	PART NO.	CHANGE NO.	DESCRIPTION	REMARKS	QTY.
1					
	229/01082		Roller track		14
1 01			Roller, track		1
1 02			Bush		2
1 03			Shaft		1
1 04			Seal, oil, floating		2
1 05			O Ring		2
1 06			Dowel		2
1 07			Bracket		2
1 08			Plug		1
3	JHP0079		Washer		56
4	1316/9521Z		Bolt		56

RAJA RAM JAISWAL ★6
P-41, Princep Street, Shop No.
Kolkata
700075

JCB INDIA LTD.

J1-4-1 ROLLER, TRACK TOP

ISSUE - 1

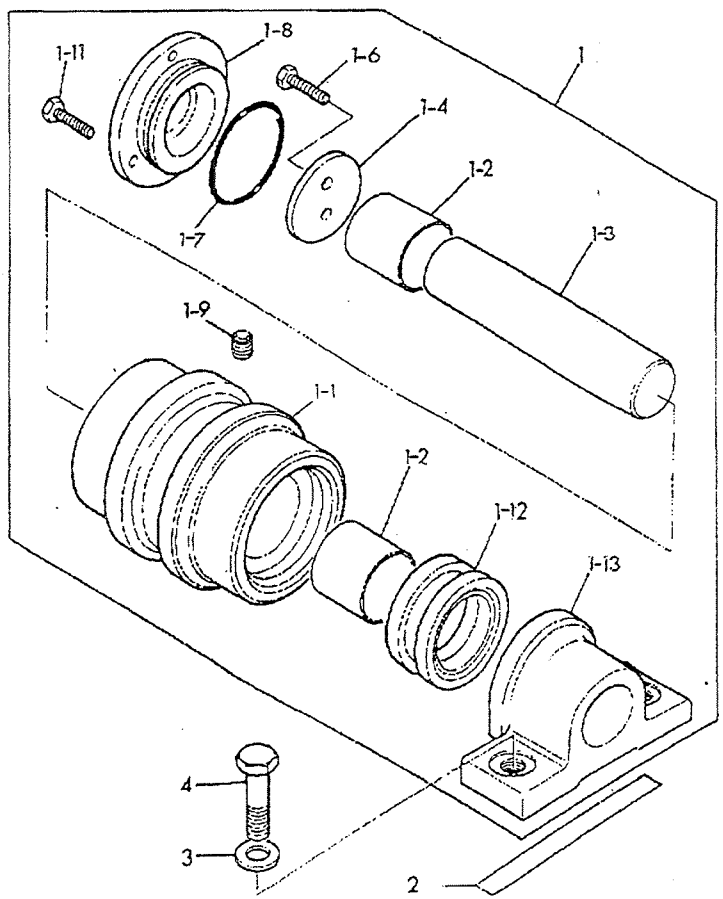

ITEM	PART NO.	CHANGE NO.	DESCRIPTION	REMARKS	QTY.
1	229/01083		Roller, assembly, top		4
1 01			Roller		1
1 02			Bush		2
1 03			Shaft		1
1 04			Plate, thrust		1
1 06			Capscrew		2
1 07			O Ring		1
1 08			Cover		1
1 09			Plug		1
1 11			Bolt		4
1 12			Seal, oil, floating		1
1 13			Bracket		1
2	JHA0005		Shim		4
3	JHP0044		Washer		8
4	1316/3812Z		Bolt		8

RAJA RAM JAISWAL & CO.
41, Princep Street, Shop No
Kolkata
700075

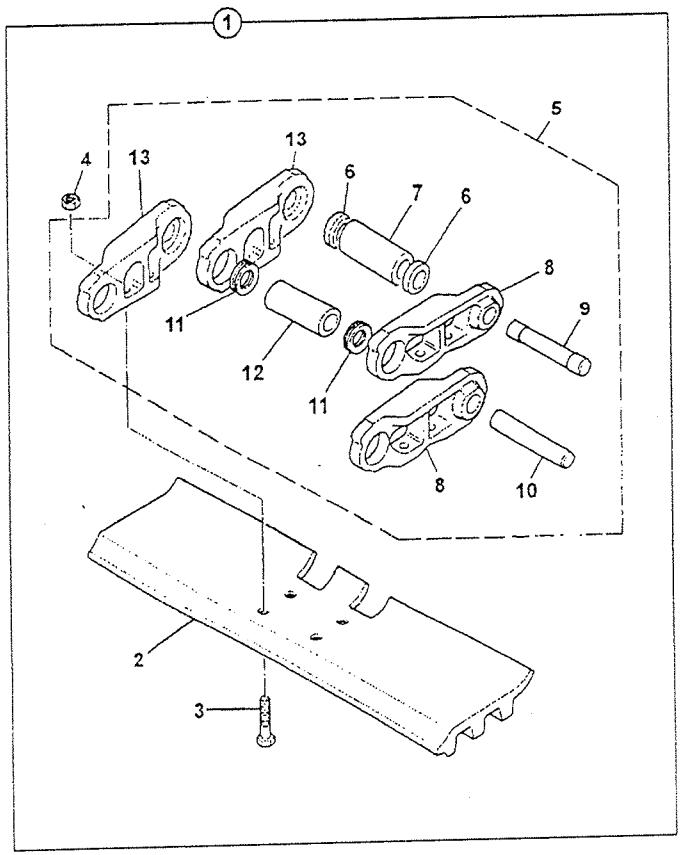

ITEM	PART NO.	CHANGE NO.	DESCRIPTION	REMARKS	QTY.
1	229/01081		Chain, & shoe assembly 500mm wide STD Duty		2
2	JRA0182		Plate, 500mm track grouser		46
3			Bolt track plate		184
4			Nut, track plate		184
5			Chain, track, 46 link		1
6			Spacer master		2
7			Bush, master		1
8			Link, track, left hand		46
9			Pin master		1
10			Pin, track		45
11			Seal, dust		90
12			Bush		45
13			Link, track, right hand		46

RAJA RAM JAISWAL
Kolkata
700013
P-41, Princep Street, Shop No. 6

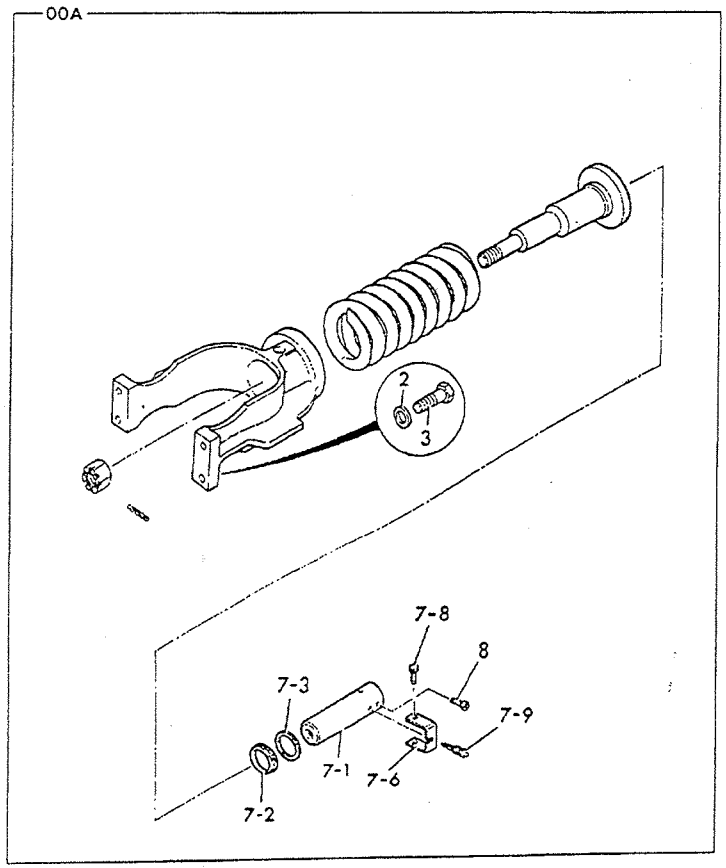

ITEM	PART NO.	CHANGE NO.	DESCRIPTION	REMARKS	QTY.
0A	JRA0215		Kit-recoil, assembly		2
2	JHP0061		Washer		8
3	1316/3712Z		Bolt		8
7 01	JRA0230		Rod, piston		1
7 02	JRA0231		Seal		1
7 03	JRA0232		Seal, dust		1
7 06	JRA0234		Bracket		1
7 08	1316/0403Z		Screw		2
7 09	JRA0233		Valve, check		1
8	6011/0707Z		Capscrew		1

RAJA RAM JAISWAL & CO.
41, Princep Street, Shop No.
Kolkata
700013

T

- T1 ENGINE ASSEMBLIES
- T3 INDUCTION & EXHAUST SYSTEMS
- T4 SYSTEM, COOLING
- T6 SYSTEM, FUEL

RAJA RAM JAISWAL & CO.
1, Princep Street, Shop No.
Kolkata
700073

T1-1-1 ENGINE COMPLETE

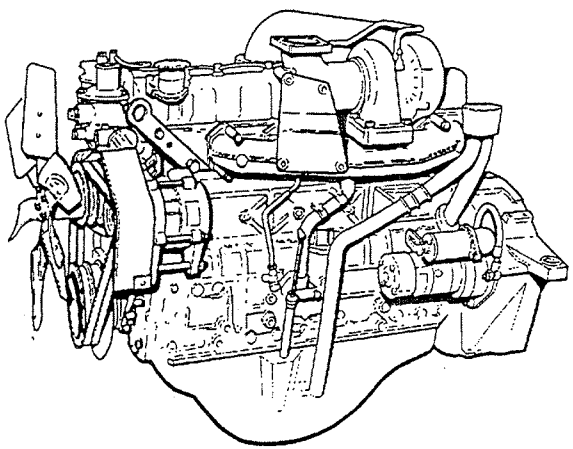

ITEM	PART NO.	CHANGE NO.	DESCRIPTION	REMARKS	QTY.
1	229/01010		Engine, complete		1

RAJA RAM JAISWAL & CO.
41, Princep Street, Shop No.
Kolkata
700007S

T1-8-1 ENGINE MOUNTINGS

ISSUE - 1

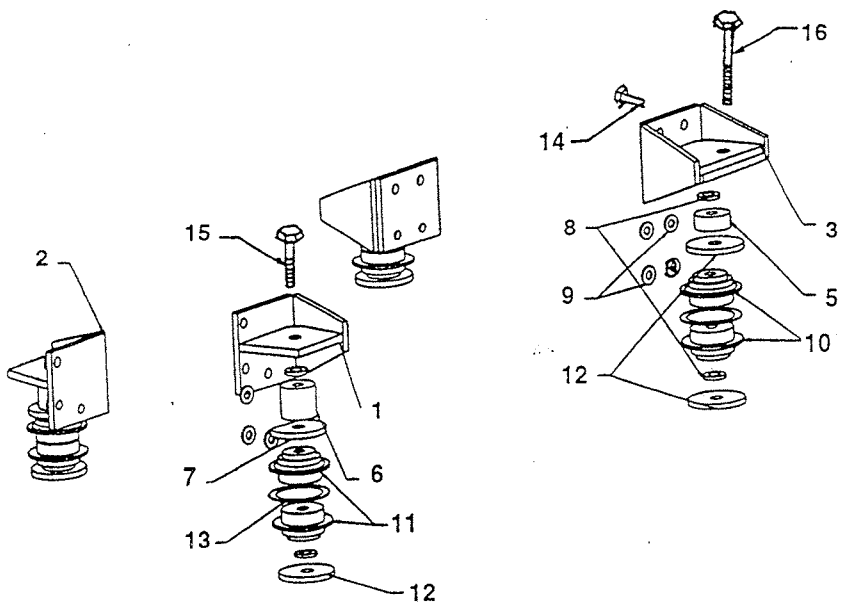

ITEM	PART NO.	CHANGE NO.	DESCRIPTION	REMARKS	QTY.
1	229/01101		Supt : Engine LH Front		1
2	229/01102		Supt : Engine RH Front		1
3	229/01103		Supt : Engine LH Rear		2
5	229/01106		Spacer Engine MTG Rear		2
6	229/01107		Spacer Engine MTG Front		2
7	229/01108		Large Washer		2
8	JHP0043		Washer High STG		8
9	JHP0042		Washer		14
10	KRH0780		Engine Mount		4
11	KRH0781		Rubber Elastic		4
12	KNH0589		Plate		6
13	JRB0129		Shim		A/R
14	1316/0509Z		Bolt M12x35		14
15	1316/3727Z		Bolt M16x170		2
16	1316/3729Z		Bolt M16x190		2

RAJA RAM JAISWAL
P-41, Princep Street, Shop No. 6
Kolkata
700075

T

T1 ENGINE BLOCK & SUB-ASSEMBLIES

T2 CYLINDER HEAD & SUB-ASSEMBLIES

T3 INDUCTION & EXHAUST SYSTEMS

T4 SYSTEM, COOLING

T5 SYSTEM, LUBRICATION

T6 SYSTEM, FUEL

T7 EQUIPMENT, AUXILIARY

T8 GASKET SETS

RAJA RAM JAISWAL
P-41, Princep Street, Shop No. 6
Kolkata
700078

T3-3-1 FILTER, AIR

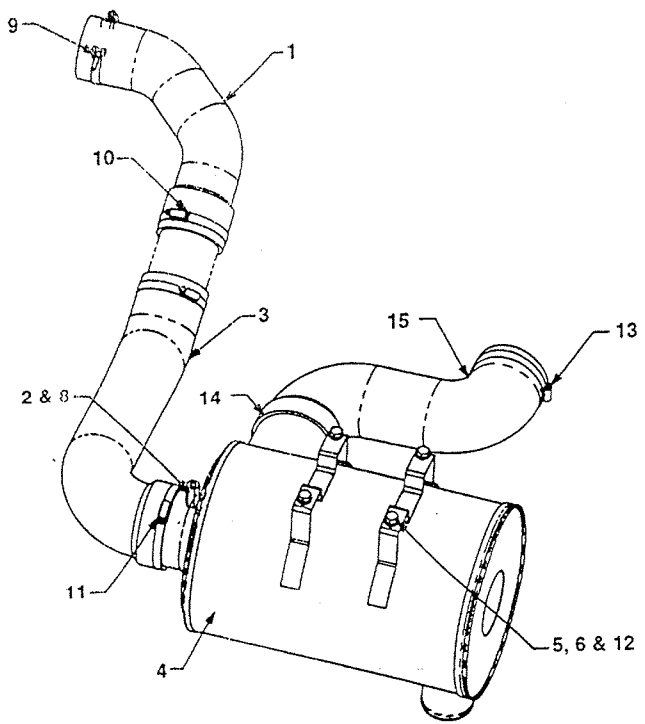

ITEM	PART NO.	CHANGE NO.	DESCRIPTION	REMARKS	QTY.
1	229/01036		Hose Air Inlet		1
2	701/36500		Restriction Indicator		1
3	229/01355		Hose Air Inlet		1
4	229/01357		Air Cleaner		1
5	1370/0201Z		Screw M8		4
6	1316/0307Z		Screw M8x25		4
8	229/01528		Adaptor		1
9	229/01555		T-Bolt Clamp		1
10	229/01556		T-Bolt Clamp		1
11	229/01557		T-Bolt Clamp		2
12	1411/0003Z		Washer Plain 3/8"		4
13	229/01558		T-Bolt Clamp		1
14	229/01559		T-Bolt Clamp		1
15	229/01356		Hose Air Inlet		1

RAJA RAM JAISWAL & CO.
Kolkata
700073
P-41, Princep Street, Shop No.

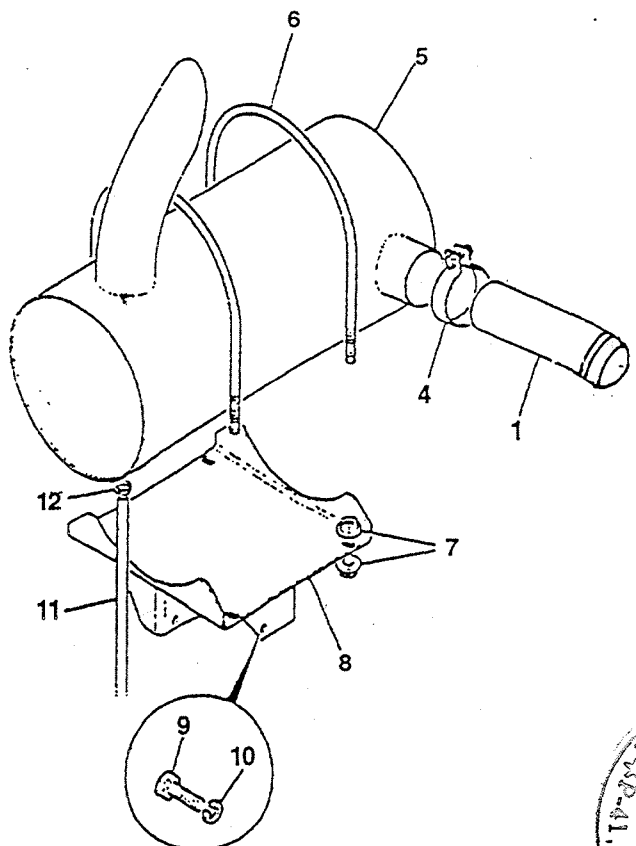

ITEM	PART NO.	CHANGE NO.	DESCRIPTION	REMARKS	QTY.
1	229/01033		Pipe exhaust		1
4	JSH0085		Clamp, exhaust		1
5	229/01031		Silencer, exhaust		1
6	826/10713		Bolt, 'U' D=282		2
7	826/01787		Nut, flanged, M10		8
8	229/01032		Bracket, silencer mounting		1
9	1316/3409Z		Bolt		14
10	JHP0046		Washer		14
11	JHH0053		Tube, teflon drain, 900mm long		1
12	2201/0001		Clip, jubilee		1

RAM JAISWAL
Kolkata
700013

T

T1 ENGINE BLOCK & SUB-ASSEMBLIES
T2 CYLINDER HEAD & SUB-ASSEMBLIES
T3 INDUCTION & EXHAUST SYSTEMS
T4 SYSTEM, COOLING
T5 SYSTEM, LUBRICATION
T6 SYSTEM, FUEL
T7 EQUIPMENT, AUXILIARY
T8 GASKET SETS

RAJA RAM JAISWAL & CO.
P-41, Princep Street, Shop No. 9
Kolkata
700075

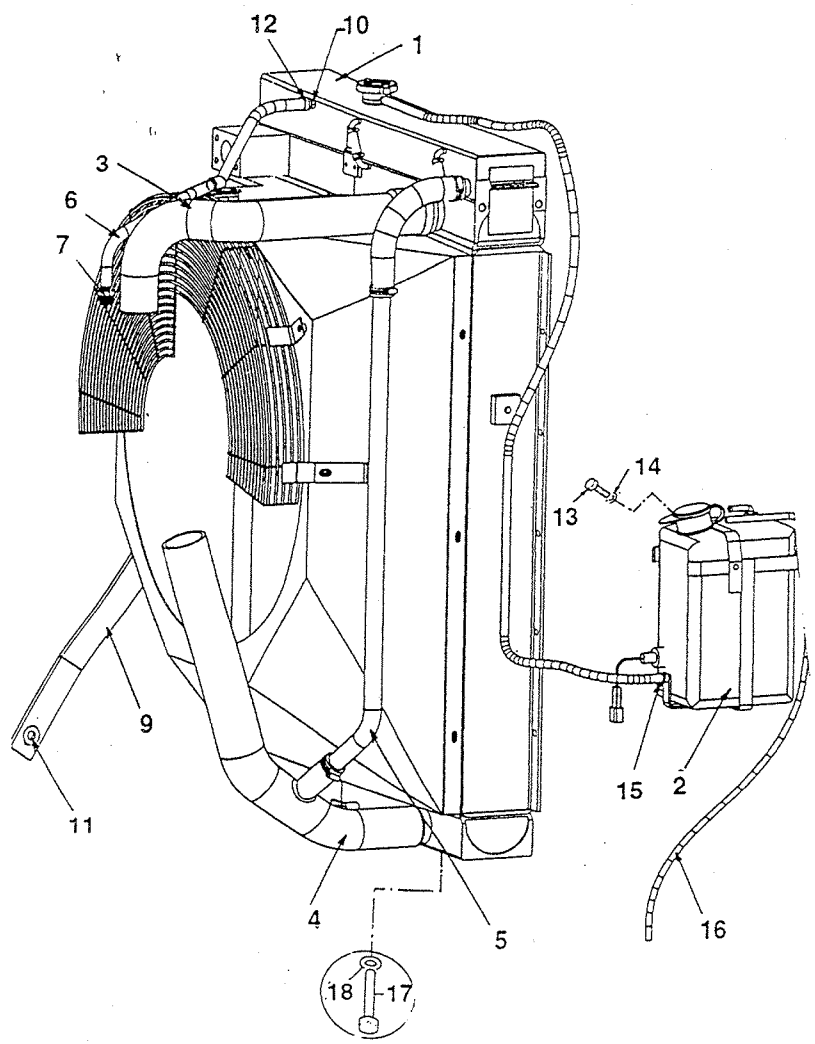

ITEM	PART NO.	CHANGE NO.	DESCRIPTION	REMARKS	QTY.
1	229/01120		Radiator Assy, Alum		1
2	331/13929		Radiator Topup Bottle		1
3	229/01037		Radiator Hose-Top		1
4	229/01038		Radiator Hose-Bottom		1
5	229/01039		Hose-Make Up		1
6	JHH0039		Hose-Vent		1
7	477/00969		Venting Adaptor		1
9	331/38381		Stay, Radiator		1
10	229/01118		Venting Adaptor		1
11	JHP0042		Washer		2
12	2201/0003		Clip Worm Drive		2
13	1316/0103Z		Screw		2
14	1420/0005Z		Plain Washer		2
15	2201/0001		Clip Worm Drive 8/6		2
16	JHH0125		Tube : PVC (See JH0046)		1
17	1316/0507Z		Screw : M12x25		9
18	1420/0009Z		Plain Washer		8

RAJA RAM JAISWAL
Kolkata
700073
14, Princep street, Shop No.

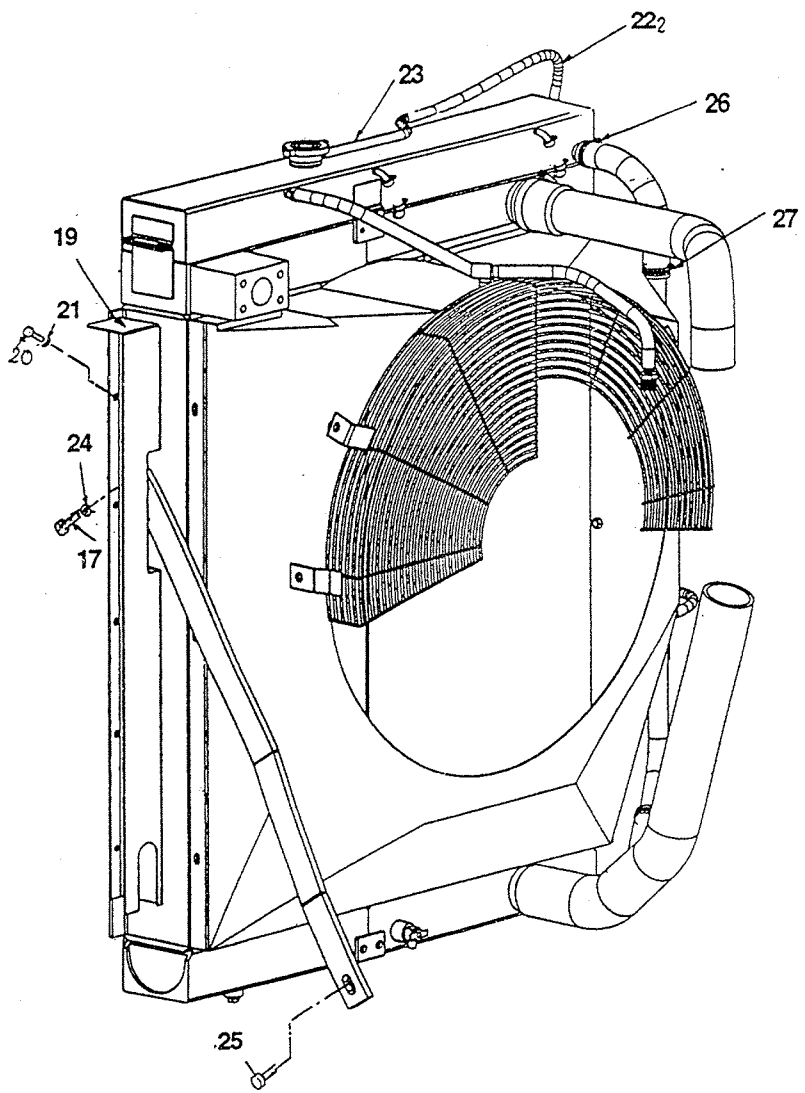

ITEM	PART NO.	CHANGE NO.	DESCRIPTION	REMARKS	QTY.
19	331/36765		Plate, Sealing		1
20	1316/0305Z		Screw : M8x20		9
21	1420/0007Z		Plain Washer M8		9
22	JSR0018		Tube : Corrugated		1
23	KHH0258		Hose : Rubber		1
24	JHP0042		Washer M12		2
25	1316/0509Z		Screw : M12x35		1
26	2201/0012		Clip Worm Drive 46/7		2
27	2201/0011		Clip Worm Drive 40/6		2

RAJA RAM JAISWAL
Kolkata
700013
P-41, Princep Street, Shop No. 6

JCB INDIA LTD.

T4-4-1 RADIATOR OIL COOLER ASSY.

ISSUE - 1

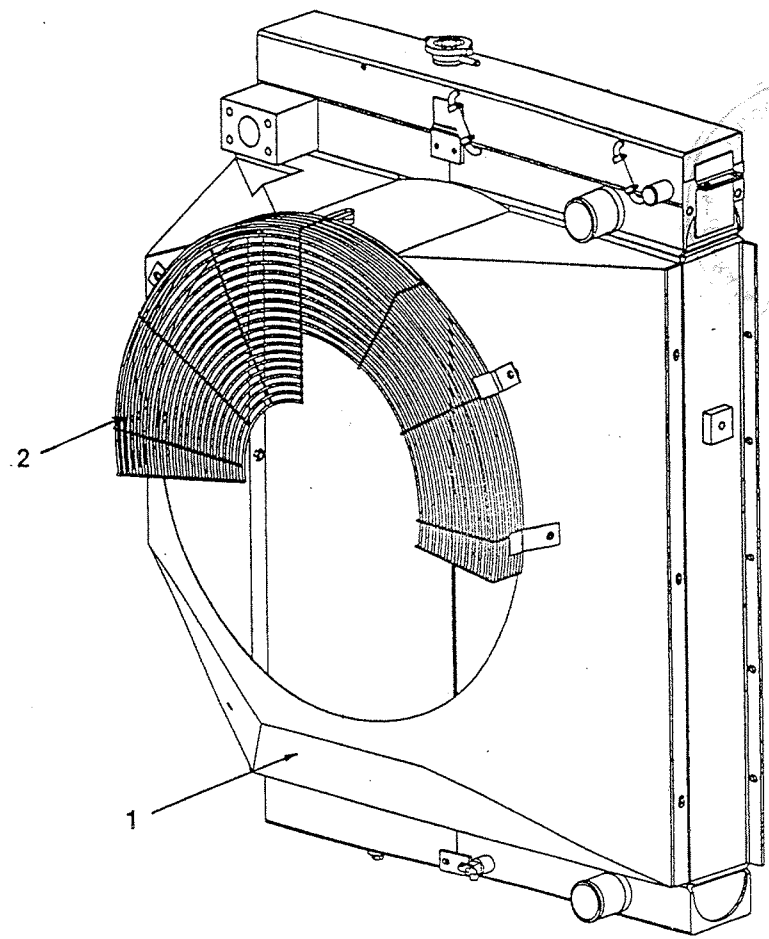

ITEM	PART NO.	CHANGE NO.	DESCRIPTION	REMARKS	QTY.
1	229/01121		Cowling, Cowling Fan		1
2	229/01124		Guard, Fan		1

RAJA RAM JAISWAL
Kolkata
700073
P-41, Princep Street, Shop No. 6

T

T1 ENGINE BLOCK & SUB-ASSEMBLIES
T2 CYLINDER HEAD & SUB-ASSEMBLIES
T3 INDUCTION & EXHAUST SYSTEMS
T4 SYSTEM, COOLING
T5 SYSTEM, LUBRICATION
• T6 SYSTEM, FUEL
T7 EQUIPMENT, AUXILIARY
T8 GASKET SETS

RAJA RAM JAISWAL
P-41, Princep Street, Shop No. 6
Kolkata
700075

T6-4-1 FUEL LINES - FUEL TANK TO ENGINE

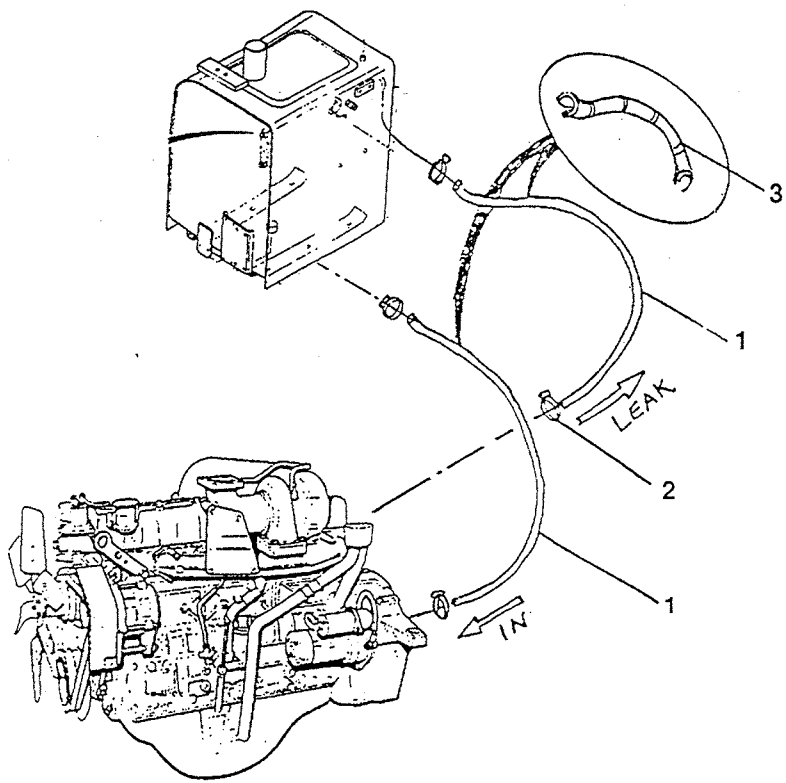

ITEM	PART NO.	CHANGE NO.	DESCRIPTION	REMARKS	QTY.
1	JHH0033		Fuel Hose		2
2	2201/0001		Clip Worm Drive		4
3	JSH0007		Corrugated		2
4	KAR0576		Rubber Grommet		1

RAJA RAM JAISWAL
Kolkata
700075

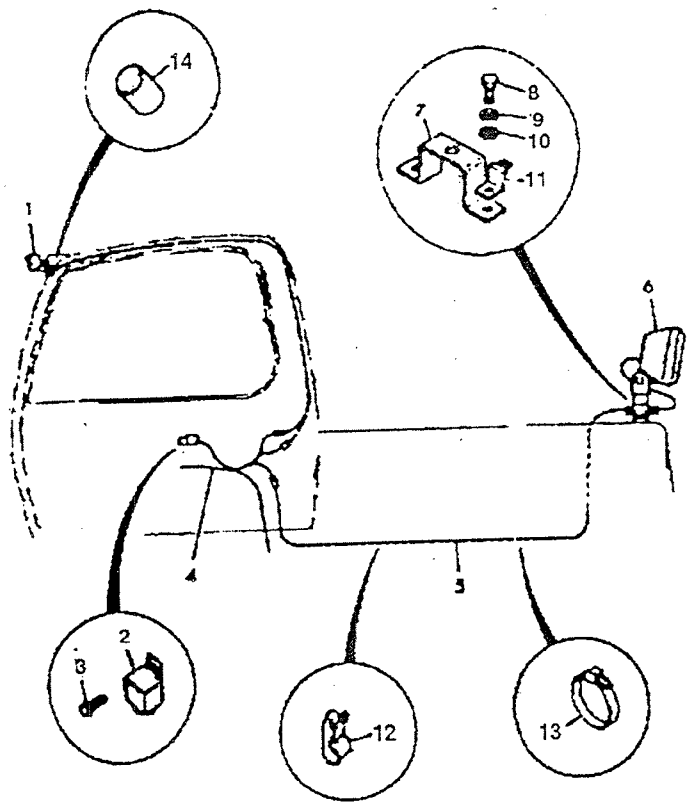

ITEM	PART NO.	CHANGE NO.	DESCRIPTION	REMARKS	QTY.
1	JHR0151		Light, Working		2
1-1	696/00921		Bulb		1
2	716/11100		Relay 24V Dioded		1
3	KHR0736		Screw Pan Head		1
4	JRR0030		Harness, Cab Lights		1
5	229/00596		Harness Extension, Rear		1
6	229/00595		Light Assemly		1
7	JHR0025		Bracket Rear Light	To M705982	1
	123/06305		Bracket	M705983 on	1
8	1315/0305Z		Bolt		2
9	1425/0007Z		Washer Spring		2
10	1420/0007Z		Washer Plain		2
11	821/00367		Clip		1
12	KMR0242		Clip		4
13	204/07006		Tie; Cable		10
14	JHR0158		Boot		1

RAJA RAM JAISWAL
Kolkata
700073
14, Princep Street, Shop No. P-41

JCB INDIA LTD.

NUMERICAL INDEX - JS 200

PART NO.	FIGURE NO.	ITEM NO.	PART NO.	FIGURE NO.	ITEM NO.	PART NO.	FIGURE NO.	ITEM NO.	PART NO.	FIGURE NO.	ITEM NO.
51903874	F4-4-1	1	05/903811	F4-2-1	1	130/14011	B5-3-1	1	1316/0305Z	C1-4-1	1
550142236	E4-2-1	1	05/903812	F4-2-1	1	130/14012	B5-3-1	1	1316/0305Z	C1-6-1	1
*1315/0305Z	C1-4-10	2	05/903813	F4-2-1	1	130/14013	B5-3-1	1	1316/0305Z	D1-1-1	4
*1316/3514Z	E1-23-1	4	05/903814	F4-2-1	1	130/14014	B5-3-1	1	1316/0305Z	T4-3-1	9
*1316/9512Z	J1-1-1	8	05/903819	F4-2-1	1	130/14015	B5-3-1	1	1316/0307Z	T3-3-1	4
*1420/0007Z	C1-4-10	2	05/903820	F4-2-1	1	130/14053	B5-3-1	1	1316/0308Z	B3-4-1	6
*20/925164	E2-2-1	1	05/903822	F4-2-1	2	130/99510	B5-3-1	1	1316/0309Z	E1-21-1	1
*331/27334	E1-2-1	1	05/903838	F4-2-1	5	130/995555	B5-3-1	1	1316/0403Z	C1-5-1	2
*331/37333	B2-1-20	1	05/903854	F4-2-1	1	130/99557	B5-3-1	1	1316/0403Z	D1-1-1	4
*331/37335	B2-1-10	2	05/903855	F4-2-1	1	130/99560	B5-3-1	1	1316/0403Z	E1-10-1	2
*823/00409	E1-33-1	4	05/903859	F4-2-1	1	1315/0103Z	B1-4-1	4	1316/0403Z	E1-30-10	2
*823/00409	E1-33-2	4	05/903860	F4-4-1	1	1315/0201Z	D2-1-1	2	1316/0403Z	J1-6-1	2
*828/10080	E3-15-1	2	05/903861	F4-4-1	2	1315/0203Z	B2-2-1	4	1316/0405Z	B1-2-1	2
*927/10046	E1-2-1	1	05/903862	F4-4-1	1	1315/0203Z	B2-2-1	4	1316/0405Z	B1-3-1	4
*JGORV155	B3-5-1	1	05/903863	F4-4-1	1	1315/0207Z	B2-1-20	4	1316/0405Z	C1-1-1	1
*JRP0142	B3-2-1	1	05/903864	F4-4-1	1	1315/0303Z	B2-1-1	3	1316/0405Z	C1-2-1	1
*KNJ0381	B1-3-1	1	05/903865	F4-4-1	1	1315/0303Z	B2-1-10	2	1316/0405Z	D1-1-1	4
*KNJ0381	E3-15-1	1	05/903866	F4-4-1	1	1315/0305Z	B2-1-10	2	1316/0405Z	E1-10-1	2
*KRJ4279	E1-2-1	2	05/903867	F4-4-1	1	1315/0305Z	C1-4-10	3	1316/0405Z	E1-11-1	24
*KRJ4280	E1-2-1	1	05/903868	F4-4-1	16	1315/0305Z	L1-2	2	1316/0407Z	D1-1-1	4
*UEJ0360	E1-8-1	1	05/903869	F4-4-1	1	1315/0307Z	B2-1-20	4	1316/0407Z	E1-3-1	2
*UEJ0360	E1-8-1	1	05/903870	F4-4-1	1	1315/0401Z	B2-8-1	3	1316/0407Z	E1-8-1	4
001/00233	C1-1-1	29	05/903871	F4-4-1	1	1315/0405Z	B2-3-1	4	1316/0407Z	E1-30-10	2
001/00233	E1-5-1	4	05/903872	F4-4-1	1	1316/0103Z	T4-3-1	2	1316/0408Z	B1-3-1	4
05/901963	F4-2-1	10	05/903873	F4-4-1	1	1316/0105Z	C1-1-1	1	1316/0408Z	D1-1-1	24
05/903801	F4-2-1	1	05/903875	F4-4-1	1	1316/0203Z	B1-3-1	4	1316/0408Z	E2-1-1	8
05/903803	F4-2-1	2	05/903876	F4-4-1	1	1316/0203Z	B1-5-20	6	1316/0505Z	B1-5-10	3
05/903804	F4-2-1	1	05/903877	F4-4-1	1	1316/0301Z	C1-1-1	1	1316/0505Z	B1-5-11	3
05/903805	F4-2-1	1	122/38501	D1-1-1	2	1316/0303Z	B1-5-11	5	1316/0505Z	B1-5-11	9
05/903806	F4-2-1	1	123/06305	C1-4-1	1	1316/0303Z	B2-4-1	4	1316/0505Z	B1-5-30	2
05/903807	F4-2-1	5	123/06305	C1-4-10	3	1316/0305Z	B1-4-1	8	1316/0505Z	C1-4-10	4
05/903808	F4-2-1	5	123/06305	L1-2	1	1316/0305Z	B1-5-10	8	1316/0505Z	J1-1-1	3
05/903809	F4-2-1	1	126R010SN	E2-2-1	2	1316/0305Z	C1-1-1	3	1316/05072	B1-5-2	13

AM JAISWAL
Kolkata
70007S
Shop No
Street,

Kolkata
700075

JCB INDIA LTD.

NUMERICAL INDEX - JS 200

PART NO.	FIGURE NO.	ITEM NO.	PART NO.	FIGURE NO.	ITEM NO.	PART NO.	FIGURE NO.	ITEM NO.	PART NO.	FIGURE NO.	ITEM NO.
1316/0507Z	B1-5-1	4	1316/3520Z	E1-2-1	2	1370/0101Z	B2-1-20	1	1391/3413Z	E1-4-1	4
1316/0507Z	B1-5-10	20	1316/3712Z	J1-6-1	8	1370/0201Z	C1-4-1	1	1391/3508Z	E1-1-1	4
1316/0507Z	B1-5-11	13	1316/3713Z	F4-1-1	52	1370/0201Z	D2-2-1	4	1391/3508Z	E1-2-1	8
1316/0507Z	C1-1-1	2	1316/3714Z	E1-23-10	4	1370/0201Z	T3-3-1	4	1391/3509Z	E1-3-1	24
1316/0507Z	C1-5-1	4	1316/3715Z	F4-1-1	44	1370/0203Z	B2-1-10	4	1391/3509Z	E1-3-1	8
1316/0507Z	D2-1-1	2	1316/3716Z	B1-3-1	4	1370/0301Z	B2-2-1	4	1391/3509Z	F4-3-1	16
1316/0507Z	E1-2-1	4	1316/3716Z	B1-4-1	6	1370/0402Z	D2-2-1	2	1391/3510Z	E1-22-1	4
1316/0507Z	F4-3-1	3	1316/3716Z	E1-22-1	5	1370/0601Z	D2-2-1	1	1391/3511Z	E1-22-1	4
1316/0507Z	T4-3-1	9	1316/3716Z	E1-23-1	1	1370/9403Z	B2-2-1	1	1391/3520Z	F4-2-1	3
1316/0508Z	B1-5-2	2	1316/3716Z	E1-23-10	1	1371/0201Z	E1-21-1	2	1391/3813Z	E1-50-1	4
1316/0508Z	B1-5-10	14	1316/3717Z	E1-33-1	2	1371/0202Z	C1-4-10	3	1406/0011	E3-14-1	6
1316/0508Z	B1-5-20	9	1316/3717Z	E1-33-2	2	1371/0301Z	E1-3-1	8	1406/0018	C1-1-1	2
1316/0508Z	E1-10-1	2	1316/3719Z	E1-33-1	2	1371/0301Z	E1-23-40	2	1406/0021	B1-4-1	1
1316/0508Z	E3-14-1	12	1316/3719Z	E1-33-2	2	1371/0401	B2-1-30	2	1406/0026	E1-33-1	1
1316/0509Z	B1-2-1	29	1316/3727Z	T1-8-1	2	1371/0401Z	E1-2-1	8	1406/0026	E1-33-2	1
1316/0509Z	B1-5-30	6	1316/3729Z	T1-8-1	2	1371/0401Z	E1-20-1	1	1406/0029	B1-3-1	1
1316/0509Z	J1-1-1	8	1316/3812Z	J1-4-1	8	1371/0401Z	E1-22-1	2	1406/0029	E1-33-1	1
1316/0509Z	T1-8-1	14	1316/3815Z	F4-3-1	36	1371/0701	B3-2-10	2	1406/0029	E1-33-2	1
1316/0509Z	T4-3-1	1	1316/3817Z	F4-3-1	11	1371/0701	B3-2-11	2	1411/0003Z	T3-3-1	4
1316/0510Z	B1-5-30	2	1316/3820Z	F4-3-1	31	1391/3208Z	D1-1-1	4	1411/0005Z	B1-5-2	15
1316/0711Z	E3-1-1	4	1316/3825	B3-2-10	1	1391/3210Z	D1-1-1	4	1411/0005Z	B1-5-20	9
1316/3218Z	E1-11-1	2	1316/3825	B3-2-11	1	1391/3305	E2-2-1	4	1411/0005Z	D2-1-1	2
1316/3409Z	T3-4-1	14	1316/9403Z	C1-2-1	4	1391/3310	E2-2-1	8	1411/0005Z	E1-2-1	2
1316/3410Z	E1-23-40	2	1316/9521Z	J1-3-1	56	1391/3407Z	B2-4-1	8	1411/0005Z	E1-3-1	26
1316/3510Z	E1-22-1	2	1316/O305Z	C1-2-1	4	1391/3408Z	E1-2-1	8	1420/0004Z	B2-2-1	1
1316/3511Z	E1-23-40	1	131613813Z	E2-1-1	4	1391/3408Z	E1-6-1	16	1420/0004Z	C1-2-1	4
1316/3512Z	E1-10-1	1	1318/0405Z	B1-5-31	4	1391/3409Z	E1-4-1	12	1420/0005Z	B1-4-1	4
1316/3513Z	E1-4-1	2	1370/0001	C1-1-1	1	1391/3409Z	E1-20-1	8	1420/0005Z	B1-5-1	4
1316/3513Z	E1-22-1	1	1370/0001	C3-3-1		1391/3409Z	E1-21-1	4	1420/0005Z	B1-5-20	8
1316/3514	B2-1-30	4	1370/0001Z	B1-5-1	4	1391/3409Z	E1-21-1	16	1420/0005Z	B1-5-31	8
1316/3515Z	E1-20-1	2	1370/0001Z	B1-5-20	8	1391/3409Z	E1-22-1	4	1420/0005Z	B2-4-1	3
1316/3516	B2-1-30	2	1370/0001Z	B1-5-31	8	1391/3409Z	E1-23-40	4	1420/0005Z	C1-1-1	1
1316/3519Z	E1-2-1	2	1370/0001Z	C1-4-1	4	1391/3409Z	E1-23-40	4	1420/0005Z	C1-4-1	4

JCB INDIA LTD.

NUMERICAL INDEX - JS 200

PART NO.	FIGURE NO.	ITEM NO.	PART NO.	FIGURE NO.	ITEM NO.	PART NO.	FIGURE NO.	ITEM NO.	PART NO.	FIGURE NO.	ITEM NO.
1420/0005Z	T4-3-1	2	1420/0009Z	C1-4-10	4	173R020VZ	B3-5-1	4	229/00484	B3-1-1	1
1420/0006Z	B1-5-20	6	1420/0009Z	C1-5-1	4	173R024VZ	B3-1-1	4	229/00484	E4-1-1	1
1420/0006Z	B2-1-20	4	1420/0009Z	E1-2-1	1	186-0106ZZ	C1-1-1	3	229/00570	B3-1-1	1
1420/0006Z	B2-2-1	4	1420/0009Z	E1-10-1	1	186-0108ZZ	C1-1-1	1	229/00570	E4-2-1	1
1420/0006Z	B2-2-1	4	1420/0009Z	T4-3-1	8	186-0110ZZ	C1-1-1	1	229/00573	B3-2-10	1
1420/0006Z	C1-2-1	3	1425/0005Z	B1-4-1	4	186-112ZZ	C1-1-1	1	229/00573	B3-2-11	1
1420/0007Z	B1-4-1	8	1425/0006Z	B1-3-1	4	20/925309	E1-50-1	1	229/00573	E1-23-40	1
1420/0007Z	B1-5-10	8	1425/0006Z	D2-1-1	2	20/925309	E2-1-1	1	229/00573	E4-3-1	1
1420/0007Z	B1-5-11	8	1425/0007Z	B3-4-1	6	20/925309	E2-2-1	1	229/00590	A2-1-5	1
1420/0007Z	B2-4-1	4	1425/0007Z	C1-1-1	4	20/925315	E1-50-1	1	229/00595	C1-4-1	1
1420/0007Z	C1-1-1	4	1425/0007Z	C1-6-1	1	20/925315	E2-7-1	1	229/00595	C1-4-10	3
1420/0007Z	C1-2-1	4	1425/0007Z	D1-1-1	4	20/925315	F4-3-1	1	229/00595	L1-2	1
1420/0007Z	C1-4-1	1	1425/0007Z	L1-2	2	20/951277	C1-5-1	1	229/00596	L1-2	1
1420/0007Z	C1-4-10	6	1425/0008Z	B2-3-1	4	204/07006	E1-30-10	1	229/00598	C1-3-1	1
1420/0007Z	D1-1-1	4	1425/0008Z	C1-1-1	2	204/07006	L1-2	10	229/00601	C1-1-1	1
1420/0007Z	D2-2-1	4	1425/0008Z	C1-3-1	2	210/92901	E1-2-1	4	229/00601	C1-3-1	1
1420/0007Z	T4-3-1	9	1425/0008Z	E1-6-1	16	210/92901	E1-22-1	2	229/00602	C1-1-1	1
1420/0007Z	L1-2	2	1425/0008Z	E1-8-1	4	2103/0709	B2-10-1	1	229/00602	C1-3-1	1
1420/0008Z	B1-2-1	2	1425/0008Z	E1-23-40	2	215/11319	C1-5-1	1	229/00603	C1-1-1	1
1420/0008Z	B1-5-31	4	1425/0009Z	C1-1-1	2	2201/0001	T3-4-1	1	229/00603	C1-3-1	1
1420/0008Z	B2-8-1	3	1425/0009Z	E1-22-1	4	2201/0001	T4-3-1	2	229/00605	B1-4-1	1
1420/0008Z	C1-1-1	1	1425/0009Z	E1-23-40	1	2201/0001	T6-4-1	4	229/00606	B1-4-1	1
1420/0008Z	C1-5-1	2	1425/0009Z	F4-3-1	3	2201/0003	T4-3-1	2	229/00963	A2-1-11	1
1420/0008Z	D1-1-1	4	1430/1204	B2-1-10	1	2201/0007	C1-5-1	4	229/01001	E1-50-1	1
1420/0008Z	E1-3-1	2	1604/0006	C1-5-1	1	2201/0011	T4-3-1	2	229/01001	E1-70-1	1
1420/0008Z	E1-8-1	4	1620/0003	E1-62-1	4	2201/0012	T4-3-1	2	229/01001	E3-1-1	1
1420/0008Z	E1-11-1	24	1620/0003	E3-6-1	5	2201/0015	E1-1-1	4	229/01002	F4-1-1	2
1420/0008Z	E1-30-10	2	1620/0005	E1-63-1	4	229/00024	E3-15-1	1	229/01002	F4-2-1	2
1420/0009Z	B1-5-1	4	162R016VN	E2-2-1	2	229/00070	B2-10-1	1	229/01003	E1-11-1	1
1420/0009Z	B1-5-10	37	162R020VN	E2-2-1	2	229/00229	B2-3-1	1	229/01003	E1-50-1	1
1420/0009Z	B1-5-11	22	172R020VR	B3-2-1	2	229/00385	B2-10-1	1	229/01003	E1-67-1	1
1420/0009Z	B1-5-30	10	173R020VZ	B3-1-1	12	229/00483	B3-1-1	1	229/01003	E3-8-1	1
1420/0009Z	C1-1-1	2	173R020VZ	B3-1-1	8	229/00483	E4-1-2	1	229/01004	E1-50-1	1

SANJAY RAM JAISWAL
Kolkata
700078

JCB INDIA LTD.

NUMERICAL INDEX - JS 200

PART NO.	FIGURE NO.	ITEM NO.	PART NO.	FIGURE NO.	ITEM NO.	PART NO.	FIGURE NO.	ITEM NO.	PART NO.	FIGURE NO.	ITEM NO.
229/01004	E1-72-1	1	229/01120	T4-3-1	1	229/01199	B1-5-30	2	229/01354	E1-72-1	1
229/01005	E1-50-1	1	229/01121	T4-4-1	1	229/01200	D2-1-1	1	229/01355	T3-3-1	1
229/01005	E2-1-1	1	229/01124	T4-4-1	1	229/01202	D2-1-1	1	229/01356	T3-3-1	1
229/01005	E2-2-1	1	229/01125	C3-3-1		229/01203	B1-5-31	1	229/01357	T3-3-1	1
229/01006	F4-3-1	1	229/01126	C3-3-1		229/01203	C1-4-1	1	229/01360	B1-2-1	1
229/01006	F4-4-1	1	229/01127	C3-3-1		229/01205	B1-5-30	1	229/01377	C1-1-1	1
229/01008	E1-50-1	1	229/01128	B2-4-1	4	229/01208	B1-1-1	1	229/01378	E1-1-1	1
229/01008	E3-14-1	1	229/01128	C3-3-1		229/01209	D2-1-1	1	229/01382	D2-2-1	1
229/01009	E3-14-1	1	229/01129	C3-3-1		229/01212	J1-1-1	2	229/01389	C3-4-1	1
229/01010	T1-1-1	1	229/01130	C3-3-1		229/01221	C1-2-1	1	229/01389	C3-4-1	1
229/01031	T3-4-1	1	229/01131	C3-3-1		229/01222	C1-2-1	1	229/01389	C3-4-1	1
229/01032	T3-4-1	1	229/01132	C3-3-1		229/01223	C1-1-1	1	229/01390	B1-5-10	1
229/01033	T3-4-1	1	229/01133	C3-3-1		229/01224	B2-1-1	1	229/01520	C3-2-1	1
229/01036	T3-3-1	1	229/01135	B2-4-1	1	229/01226	C1-2-1		229/01521	C3-2-1	1
229/01037	T4-3-1	1	229/01136	B2-4-1	1	229/01230	B2-1-20	2	229/01522	C3-2-1	1
229/01038	T4-3-1	1	229/01137	B2-4-1	2	229/01231	B5-2-3	1	229/01526	D1-1-1	1
229/01039	T4-3-1	1	229/01138	B1-5-31	1	229/01232	E3-15-1	1	229/01527	D1-1-1	1
229/01054	B1-1-1	1	229/01138	C1-4-1	1	229/01233	E3-15-1	1	229/01528	T3-3-1	1
229/01057	B1-1-1	1	229/01140	B1-5-30	1	229/01236	B2-1-1	1	229/01533	D1-1-1	1
229/01062	B3-1-1	1	229/01141	B1-5-31	1	229/01236	C1-1-1	1	229/01534	D1-1-1	1
229/01063	B3-2-10	1	229/01150	B1-5-31	1	229/01239	D1-1-1	1	229/01545	B5-3-1	1
229/01081	J1-5-1	2	229/01152	B1-5-2	1	229/01242	C1-6-1	1	229/01550	B1-5-11	1
229/01082	J1-3-1	14	229/01153	B1-5-2	1	229/01268	D1-1-1	1	229/01551	B1-5-11	1
229/01083	J1-4-1	4	229/01154	B1-5-2	1	229/01281	E1-11-1	1	229/01555	T3-3-1	1
229/01101	T1-8-1	1	229/01160	B1-5-10	1	229/01283	B1-4-1	1	229/01556	T3-3-1	1
229/01102	T1-8-1	1	229/01165	B1-5-20	1	229/01286	B1-3-1	1	229/01557	T3-3-1	2
229/01103	T1-8-1	2	229/01166	B1-5-20	1	229/01288	C3-4-1	1	229/01558	T3-3-1	1
229/01106	T1-8-1	2	229/01169	B2-4-1	1	229/01289	B5-2-1	1	229/01559	T3-3-1	1
229/01107	T1-8-1	2	229/01170	B2-4-1	1	229/01305	B3-2-11	1	229/01647	B5-1-1	2
229/01108	T1-8-1	2	229/01180	B2-4-1	1	229/01349	D2-2-1	1	229/01648	B5-1-1	2
229/01110	B1-5-1	1	229/01181	B2-4-1	1	229/01350	D2-2-1	1	229/1164	B1-5-20	1
229/01117	B1-5-10	1	229/01195	B2-8-1	1	229/01351	D2-2-1	1	2400/0204	E1-4-1	1
229/01118	T4-3-1	1	229/01196	B2-1-20	1	229/01353	D2-2-1	3	2400/0204	E1-4-1	1

JAISWAL
Kolkata
700073
Princep Street,

JCB INDIA LTD.

NUMERICAL INDEX - JS 200

PART NO.	FIGURE NO.	ITEM NO.	PART NO.	FIGURE NO.	ITEM NO.	PART NO.	FIGURE NO.	ITEM NO.	PART NO.	FIGURE NO.	ITEM NO.
2400/0204	E1-4-1	1	25/221095	E3-6-1	1	25/221767	E3-2-2	1	25/221795	E3-2-2	1
2400/0204	E1-4-1	1	25/221263	E3-8-1	8	25/221768	E3-2-1	1	25/221796	E3-2-1	2
2400/0204	E1-4-1	1	25/221280	E3-6-1	1	25/221769	E3-2-1	1	25/221797	E3-2-2	4
2400/0204	E1-20-1	1	25/221630	E3-2-1	8	25/221770	E3-2-1	1	25/221798	E3-2-2	40
2400/0204	E1-20-1	1	25/221630	E3-2-2	8	25/221771	E3-2-1	1	25/221798	E3-2-3	40
2400/0210	E1-22-1	3	25/221631	E3-2-1	9	25/221772	E3-2-1	1	25/221799	E3-2-1	8
2400/0216	E1-3-1	5	25/221631	E3-2-2	9	25/221773	E3-2-1	2	25/221800	E3-2-4	8
2401/0505	E1-62-1	1	25/221632	E3-2-1	2	25/221774	E3-2-1	2	25/221801	E3-2-4	8
2401/0505	E1-62-1	1	25/221633	E3-2-1	2	25/221774	E3-2-2	2	25/221802	E3-2-2	2
2401/0505	E1-63-1	1	25/221634	E3-2-1	2	25/221775	E3-2-1	2	25/221803	E3-2-3	1
2401/0505	E1-63-1	1	25/221635	E3-2-2	2	25/221775	E3-2-2	2	25/221804	E3-2-2	2
2407/0205	E1-2-1	2	25/221653	E3-2-2	2	25/221776	E3-2-1	10	25/221805	E3-2-2	1
2407/0205	E1-4-1	4	25/221653	E3-2-3	2	25/221776	E3-2-2	10	25/221813	E3-2-2	8
2407/0205	E1-6-1	2	25/221666	E3-2-1	1	25/221777	E3-2-1	8	25/221816	E3-2-3	1
2407/0205	E1-23-40	1	25/221671	E3-2-1	1	25/221777	E3-2-2	10	264/34901	C3-3-1	
2407/0205	E1-23-40	1	25/221678	E3-2-1	1	25/221778	E3-2-1	2	32/925120	E1-8-1	1
2407/0210	E1-2-1	2	25/221685	E3-2-1	1	25/221779	E3-2-1	2	32/925121	E1-8-1	2
2407/0210	E1-6-1	2	25/221688	E3-2-1	2	25/221780	E3-2-1	2	32/925122	E1-8-1	1
2407/0210	E1-20-1	2	25/221690	E3-2-2	11	25/221781	E3-2-1	2	32/925123	E1-8-1	1
2407/0210	E1-21-1	2	25/221690	E3-2-3	11	25/221782	E3-2-1	2	32/925140	E1-8-1	1
2407/0210	E1-21-1	3	25/221691	E3-2-2	1	25/221783	E3-2-2	1	32/925140	E3-15-1	1
2407/0210	E1-22-1	3	25/221695	E3-2-1	44	25/221784	E3-2-2	1	32/925214	E1-11-1	1
2410/1104	B2-1-1	1	25/221695	E3-2-2	44	25/221785	E3-2-2	1	32/925214	E1-50-1	1
242/00290	C1-2-1	4	25/221700	E3-2-4	1	25/221786	E3-2-1	1	32/925359	B1-3-1	1
25/220533	E3-8-1	1	25/221702	E3-2-4	7	25/221787	E3-2-2	1	32/925692	B1-3-1	1
25/220555	E3-8-1	8	25/221716	E3-2-2	2	25/221788	E3-2-1	1	331/11043	E3-6-1	1
25/221094	D1-1-1	1	25/221723	E3-2-2	2	25/221790	E3-2-1	1	331/11726	A2-1-6	1
25/221094	E1-50-1	1	25/221761	E3-2-3	20	25/221791	E3-2-1	2	331/13247	B3-1-1	1
25/221094	E1-62-1	1	25/221762	E3-2-3	10	25/221792	E3-2-1	1	331/13929	T4-3-1	1
25/221094	E3-6-1	1	25/221763	E3-2-3	10	25/221793	E3-2-1	2	331/15196	B3-5-1	1
25/221095	D1-1-1	1	25/221764	E3-2-2	1	25/221793	E3-2-2	2	331/18592	B2-4-1	1
25/221095	E1-50-1	1	25/221765	E3-2-2	1	25/221794	E3-2-1	5	331/18592	D1-1-1	2
25/221095	E1-63-1	1	25/221766	E3-2-2	1	25/221794	E3-2-2	5	331/19926	B2-1-20	2

RAJA RAM JAISWAL
Kolkata
700017S

JCB INDIA LTD.

NUMERICAL INDEX - JS 200

PART NO.	FIGURE NO.	ITEM NO.	PART NO.	FIGURE NO.	ITEM NO.	PART NO.	FIGURE NO.	ITEM NO.	PART NO.	FIGURE NO.	ITEM NO.
331/19929	B2-1-20	1	331/36334	B2-1-1	1	331/36387	B2-2-1	2	335/07576	B1-5-11	1
331/20582	E3-6-1	1	331/36335	B2-1-1	1	331/36389	B2-2-1	1	335/07577	B1-5-11	1
331/23382	E3-6-1	10	331/36336	B2-1-1	1	331/36390	B2-2-1	1	335/07886	B1-1-1	1
331/27231	B3-1-1	4	331/36342	B2-1-20	1	331/36392	B2-2-1	4	335/08041	B1-5-2	1
331/27232	B3-1-1	6	331/36343	B2-1-1	1	331/36393	B2-2-1	1	335/08267	B1-5-10	1
331/27235	E1-10-1	1	331/36354	B2-2-1	1	331/36394	B2-2-1	1	370A0400Z	E2-2-1	2
331/27235	E1-50-1	1	331/36356	B2-1-20	2	331/36765	T4-3-1	1	380A0400Z	E1-3-1	1
331/27235	E1-69-1	1	331/36357	B2-1-20	2	331/36877	C1-4-10	1	380A0500Z	E1-3-1	1
331/27869	B3-1-1	2	331/36358	B2-2-1	1	331/36878	C1-4-10	1	40/301494	B5-3-1	1
331/27870	B3-1-1	3	331/36359	B2-1-20	1	331/37329	B2-1-10	1	40/301694	B5-3-1	1
331/27941	E1-11-1	1	331/36360	B2-1-20	1	331/37330	B2-1-10	1	40/302290	C1-3-1	2
331/29264	E1-3-1	1	331/36362	B2-2-1	1	331/37332	B2-1-1	2	40/302723	C1-1-1	1
331/30004	B1-2-1	1	331/36363	B2-1-10	1	331/37334	B2-1-20	1	4000/0301	E3-15-1	1
331/30884	D2-2-1	1	331/36364	B2-2-1	1	331/37712	E2-2-1	2	4001/0801	E3-15-1	1
331/30964	E1-2-1	1	331/36365	B2-2-1	1	331/38027	E2-2-1	1	4001/0802	E3-15-1	1
331/31152	B1-4-1	1	331/36366	B2-1-10	1	331/38381	T4-3-1	1	4001/0803	E3-15-1	1
331/31977	B1-2-1	1	331/36367	B2-1-10	1	331/42641	F4-1-1	2	4002/0801	E3-15-1	1
331/31978	B1-2-1	1	331/36368	B2-1-10	1	331/42872	B1-5-10	1	4002/0802	E3-15-1	1
331/32602	B3-2-1	1	331/36369	B2-1-10	2	331/43645	B1-5-11	1	4003/2000	E3-15-1	1
331/32621	E1-30-10	1	331/36370	B2-1-10	1	335/02216	B3-2-1	1	4004/0301	E3-15-1	1
331/34257	B1-5-10	2	331/36371	B2-1-10	2	335/02217	B3-2-10	1	4004/0302	E3-15-1	1
331/34260	B1-5-10	1	331/36372	B2-1-10	4	335/04915	E1-30-10	1	4101/0500	F4-3-1	A/R
331/34453	B1-5-1	1	331/36373	B2-1-10	4	335/05862	B1-5-30	1	4101/0500	F4-3-1	A/R
331/34946	B1-5-31	2	331/36374	B2-1-1	1	335/06186	E1-3-1	1	4102/0933	B2-18-1	A/R
331/35222	C1-5-1	1	331/36375	B2-1-1	1	335/07334	B1-5-10	1	4104/1310	B2-18-1	A/R
331/35416	B1-6-1	1	331/36376	B2-1-1	1	335/07335	B1-5-10	1	45/909900	E1-33-1	1
331/35462	B1-2-1	1	331/36377	B2-1-1	1	335/07336	B1-5-10	1	45/909900	E1-33-2	1
331/35464	B1-2-1	1	331/36378	B2-2-1	1	335/07337	B1-5-10	1	477/00969	T4-3-1	1
331/36329	B2-1-1	1	331/36379	B2-2-1	2	335/07421	B1-5-10	1	550/41723	E4-1-1	4
331/36330	B2-1-1	1	331/36380	B2-2-1	1	335/07437	B1-5-11	1	550/41723	E4-1-2	1
331/36331	B2-1-1	2	331/36381	B2-2-1	1	335/07510	B1-5-10	1	550/41723	E4-3-1	1
331/36332	B2-1-1	2	331/36384	B2-2-1	1	335/07529	B1-5-10	1	550/41729	E4-1-1	1
331/36333	B2-1-1	1	331/36386	B2-2-1	1	335/07563	B1-5-11	1	550/41729	E4-1-2	1

Kolkata 700075

JCB INDIA LTD.

NUMERICAL INDEX - JS 200

PART NO.	FIGURE NO.	ITEM NO.	PART NO.	FIGURE NO.	ITEM NO.	PART NO.	FIGURE NO.	ITEM NO.	PART NO.	FIGURE NO.	ITEM NO.
550/41731	E4-3-1	1	550/41898	E4-1-1	2	550/41931	E4-1-1	1	550/42211	E4-3-1	1
550/41732	E4-3-1	1	550/41898	E4-1-2	1	550/41931	E4-1-2	1	550/42212	E4-3-1	1
550/41734	E4-1-1	1	550/41901	E4-1-2	1	550/41931	E4-3-1	1	550/42213	E4-3-1	1
550/41734	E4-1-2	1	550/41904	E4-1-1	8	550/41934	E4-1-1	1	550/42214	E4-3-1	1
550/41735	E4-2-1	2	550/41908	E4-1-1	1	550/41934	E4-1-2	1	550/42215	E4-3-1	1
550/41737	E4-1-1	1	550/41908	E4-1-2	2	550/41936	E4-1-1	1	550/42216	E4-3-1	1
550/41737	E4-1-2	1	550/41909	E4-3-1	2	550/41936	E4-1-2	1	550/42217	E4-3-1	1
550/41740	E4-1-1	1	550/41911	E4-1-1	2	550/41938	E4-3-1	1	550/42218	E4-3-1	2
550/41740	E4-1-2	1	550/41911	E4-1-2	2	550/41939	E4-3-1	1	550/42219	E4-3-1	1
550/41747	E4-1-1	1	550/41911	E4-3-1	2	550/41940	E4-1-1	1	550/42220	E4-2-1	1
550/41747	E4-1-2	1	550/41912	E4-3-1	1	550/41940	E4-1-2	2	550/42221	E4-2-1	1
550/41848	E4-1-2	2	550/41913	E4-1-1	1	550/41940	E4-2-1	1	550/42222	E4-2-1	1
550/41870	E4-1-1	2	550/41913	E4-1-2	8	550/41941	E4-1-1	4	550/42223	E4-2-1	1
550/41870	E4-1-2	1	550/41913	E4-3-1	8	550/41941	E4-1-2	4	550/42224	E4-2-1	1
550/41871	E4-2-1	1	550/41914	E4-2-1	4	550/41941	E4-2-1	1	550/42225	E4-2-1	1
550/41873	E4-1-1	1	550/41915	E4-1-1	1	550/41941	E4-3-1	2	550/42226	E4-2-1	1
550/41873	E4-1-2	1	550/41915	E4-1-2	12	550/41947	E4-1-1	1	550/42227	E4-2-1	1
550/41875	E4-1-1	1	550/41915	E4-2-1	14	550/41947	E4-1-2	1	550/42228	E4-2-1	1
550/41875	E4-1-2	1	550/41915	E4-3-1	12	550/41950	E4-1-1	1	550/42229	E4-2-1	2
550/41878	E4-1-1	1	550/41916	E4-2-1	1	550/41950	E4-1-2	1	550/42230	E4-2-1	1
550/41878	E4-1-2	2	550/41917	E4-2-1	2	550/41951	E4-1-1	12	550/42231	E4-2-1	1
550/41878	E4-3-1	2	550/41917	E4-3-1	1	550/41951	E4-1-2	1	550/42232	E4-2-1	1
550/41879	E4-2-1	1	550/41918	E4-2-1	12	550/42199	E4-3-1	1	550/42233	E4-2-1	1
550/41881	E4-1-1	1	550/41919	E4-1-1	1	550/42200	E4-3-1	1	550/42233	E4-2-1	2
550/41881	E4-1-2	1	550/41919	E4-1-2	1	550/42201	E4-3-1	1	550/42235	E4-2-1	2
550/41884	E4-1-1	2	550/41919	E4-3-1	2	550/42203	E4-3-1	1	550/42237	E4-2-1	1
550/41885	E4-2-1	2	550/41920	E4-1-1	2	550/42204	E4-3-1	1	550/42238	E4-2-1	1
550/41886	E4-1-1	2	550/41920	E4-1-2	4	550/42205	E4-3-1	1	550/42239	E4-2-1	1
550/41886	E4-1-2	1	550/41920	E4-2-1	2	550/42206	E4-3-1	2	550/42240	E4-2-1	1
550/41887	E4-1-1	1	550/41922	E4-1-1	1	550/42207	E4-3-1	1	550/42241	E4-2-1	1
550/41887	E4-1-2	1	550/41922	E4-1-2	1	550/42208	E4-3-1	2	550/42242	E4-2-1	1
550/41895	E4-1-1	1	550/41926	E4-1-1	1	550/42209	E4-3-1	2	550/42243	E4-2-1	1
550/41895	E4-1-2	1	550/41926	E4-1-2	1	550/42210	E4-3-1	1	550/42910	E4-2-1	4

RAJA RAM JAISWAL & CO
Kolkata
700075
Real Shop

JCB INDIA LTD.

NUMERICAL INDEX - JS 200

PART NO.	FIGURE NO.	ITEM NO.	PART NO.	FIGURE NO.	ITEM NO.	PART NO.	FIGURE NO.	ITEM NO.	PART NO.	FIGURE NO.	ITEM NO.
6004/3409R	E1-23-1	4	627/10060	E1-72-1	1	6900/0548	B2-1-1	4	6900/0627	B2-1-20	1
6004/3409R	E1-23-1	4	627/10060	E1-72-1	1	6900/0550	B2-1-20	2	6900/0634	B2-1-20	1
6004/3409R	E1-23-10	4	627/10071	E1-61-1	1	6900/0554	B2-1-20	2	6900/0637	B2-1-20	1
6004/3513	E3-7-1	2	627/10071	E1-70-1	1	6900/0554	B2-1-20	4	6900/0640	B2-1-10	6
6004/3714	E2-7-1	4	627/10073	E1-11-1	1	6900/0554	B2-1-20	2	6900/0644	B2-2-1	2
600413409R	E1-23-10	4	627/10073	E1-67-1	1	6900/0555	B2-1-1	2	6900/0652	B2-1-20	1
6009/3825Z	B3-2-1	1	627/10073	E1-69-1	1	6900/0560	B2-1-10	6	6900/0676	E1-33-1	1
6009/3826Z	B3-1-1	4	627/10076	E1-63-1	1	6900/0562	B2-1-1	1	6900/0676	E1-33-2	1
6009/3826Z	B3-1-1	2	627/10076	E1-70-1	1	6900/0563	B2-1-1	1	6900/0685	B2-1-10	1
6009/3826Z	B3-5-1	1	627/10083	E1-10-1	1	6900/0566	B2-1-1	4	6900/0686	B2-1-10	1
6009/3827Z	B3-5-1	1	627/10084	E1-10-1	1	6900/0567	B2-1-1	4	6900/0688	B2-1-10	1
6009/4028Z	B3-1-1	1	627/10274	E1-3-1	1	6900/0568	B2-1-1	4	6900/0689	B2-1-10	1
6009/4029Z	B3-1-1	1	627/10276	E1-3-1	1	6900/0569	B2-1-1	2	6900/0841	E3-16-1	1
6011/0707Z	J1-6-1	1	627/10284	E1-6-1	1	6900/0569	B2-1-10	4	6900/0983	B2-1-10	1
6012/0298Z	C1-1-1	7	627/10348	E1-3-1	1	6900/0569	B2-1-20	4	6900/0984	B2-1-10	1
6060/0009Z	J1-1-1	11	635/80037	E1-10-1	1	6900/0570	B2-1-1	3	6900/0985	B2-1-10	1
6060/0011Z	E1-22-1	5	646/04474	C1-4-10	2	6900/0570	B2-2-1	2	6900/0986	B2-1-10	4
6061/0008R	E1-22-1	4	646/05321	B2-18-1	A/R	6900/0571	B2-1-1	4	6900/0987	B2-1-10	4
6061/0008R	E1-23-1	4	646/05321	B2-18-1	A/R	6900/0571	B2-2-1	2	6900/0992	B2-2-1	4
6061/0008R	E1-23-1	4	646/05323	B2-18-1	A/R	6900/0592	B2-1-1	3	6900/0995	B2-1-10	4
6061/0008R	E1-23-10	4	646/05324	B2-18-1	A/R	6900/0597	B2-1-1	2	6900/0997	B2-1-1	2
6061/0008R	E1-23-10	4	646/05325	B2-18-1	A/R	6900/0601	B2-1-20	2	696/00477	D2-1-1	1
6063/0008Z	C1-2-1	1	6900/0035	F4-3-1	1	6900/0603	B2-1-20	1	696/00921	L1-2	1
627/10041	E1-21-1	1	6900/0051	E3-15-1	1	6900/0604	B2-1-20	1	696/01479	C3-4-1	1
627/10042	E1-21-1	1	6900/0051	E3-16-1	1	6900/0605	B2-1-20	1	696/01479	C3-4-1	1
627/10043	E1-6-1	1	6900/0508	B2-1-10	1	6900/0606	B2-1-20	1	696/01487	C3-4-1	2
627/10044	E1-6-1	1	6900/0513	B2-1-10	1	6900/0609	B2-1-20	4	696/01536	B2-1-20	1
627/10045	E1-2-1	1	6900/0523	B2-1-20	1	6900/0616	B2-1-10	16	700/10103	C1-4-1	1
627/10048	E1-21-1	1	6900/0531	B2-1-1	1	6900/0616	B2-1-10	2	700/10103	C1-4-10	1
627/10060	E1-70-1	1	6900/0532	B2-1-1	1	6900/0616	B2-2-1	2	701/36500	T3-3-1	1
627/10060	E1-70-1	1	6900/0541	B2-1-20	1	6900/0619	B2-1-10	8	701/42000	D2-2-1	1
627/10060	E1-70-1	1	6900/0543	B2-1-20	1	6900/0621	B2-1-10	1	701/45501	B1-4-1	1
627/10060	E1-72-1	1	6900/0544	B2-1-20	1	6900/0622	B2-1-10	1	701/45501	B2-2-1	1

Kolkata
700075
Princep Street, Shop No.

JCB INDIA LTD.

NUMERICAL INDEX - JS 200

PART NO.	FIGURE NO.	ITEM NO.	PART NO.	FIGURE NO.	ITEM NO.	PART NO.	FIGURE NO.	ITEM NO.	PART NO.	FIGURE NO.	ITEM NO.
701/45501	C3-2-1	1	817/18528	B5-2-1	1	821/00410	C1-4-10	2	827/80221	B2-2-1	1
701/58832	E1-30-10	1	817/18529	B5-2-1	1	821/10267	B2-1-20	8	828/10020	E3-6-1	1
701/60010	C3-2-1	1	817/18531	B5-2-1	1	821/10292	E1-3-1	1	828/10080	E1-8-1	2
701/60032	E1-30-10	2	817/18532	B5-2-1	1	823/00394	E1-22-1	3	828/10081	E1-8-1	1
701/80184	C3-2-1	1	817/18533	B5-2-1	1	823/00394	E1-23-1	4	828/10081	E3-15-1	1
701/80327	C1-1-1	1	817/18535	B5-2-1	1	823/00394	E1-23-10	4	830/10949	E1-20-1	1
701/80328	C1-1-1	2	817/18536	B5-2-1	1	823/00409	E1-23-1	1	830/10950	E1-20-1	1
701/80371	E3-2-1	1	817/18537	B5-2-1	1	823/00409	E1-23-10	1	830/10951	E1-4-1	1
701/80373	E1-30-10	1	817/18538	B5-2-1	1	823/10181	E1-8-1	8	830/10952	E1-4-1	1
701/80374	E3-2-2	1	817/18539	B5-2-1	1	823/10201	E1-8-1	8	830/10953	E1-4-1	1
701/80375	E3-2-2	1	817/18541	B5-2-1	1	823/10579	B3-12-1	A/R	830/10954	E1-4-1	1
714/40266	B2-1-20	1	817/18542	B5-2-1	1	826/01144	C1-1-1	8	830/10958	E1-22-1	1
714/40267	B2-1-20	1	817/18566	B5-2-1	1	826/01347	C1-1-1	41	830/10959	E1-22-1	1
716/11100	L1-2	1	817/18727	B5-2-1	1	826/01518	B2-4-1	3	830/11572	E1-3-1	1
716/30142	B1-4-1	1	817/18761	B5-1-1	1	826/01518	C3-3-1		830/11746	E1-3-1	1
716/30205	C1-1-1	1	817/18762	B5-1-1	1	826/01519	C1-2-1	3	830/11754	E1-3-1	1
717/08600	B2-1-20	1	817/18763	B5-1-1	1	826/01570	B2-4-1	4	831/00063	B2-10-1	2
720/20032	C1-4-1	1	817/18764	B5-1-1	1	826/01787	T3-4-1	8	831/10291	B3-1-1	2
720/20032	C1-4-10	1	817/18765	B5-1-1	2	826/10302	E1-8-1	10	831/10291	B3-2-1	2
721/10100	E3-6-1	A/R	817/18766	B5-1-1	1	826/10321	E1-8-1	2	831/10291	B3-2-10	2
721/10400	E3-6-1	A/R	817/18767	B5-1-1	1	826/10591	E3-6-1	1	831/10291	B3-2-11	2
721/10401	E3-6-1	8	817/18768	B5-1-1	1	826/10611	D1-1-1	4	834/10661	E1-1-1	1
721/10455	E1-30-10	1	817/18769	B5-1-1	1	826/10628	E3-6-1	1	835/10065	E1-33-1	1
721/10456	E1-30-10	1	817/18802	B5-2-1	1	826/10713	T3-4-1	2	835/10065	E1-33-2	1
721/11430	C1-5-1	1	817/18824	D1-1-1	2	826/10811	E1-30-10	2	835/10066	E1-33-1	1
728/28300	C1-2-1	1	817/18846	B5-2-3	1	826/11027	B1-5-20	2	835/10066	E1-33-2	1
811/90382	B3-1-1	1	817/18847	B5-2-3	1	826/11027	B1-5-31	1	904/20126	E3-14-1	1
816/00190	B1-3-1	1	817/18848	B5-2-3	1	826/11108	B2-1-20	8	904/20275	B1-5-1	1
816/00468	E1-5-1	2	817/18849	B5-2-3	1	826/11245	B1-5-1	1	904/20279	B1-5-1	1
816/80012	B1-4-1	1	817/18851	B5-2-3	1	827/80217	B2-1-1	1	904/20280	B1-5-1	1
817/02370	B5-2-1	1	817/18853	B5-2-3	1	827/80218	B2-1-1	1	904/20293	B1-5-1	1
817/17423	B5-1-1	2	821/00367	C1-1-1	1	827/80219	B2-1-1	1	904/20294	B1-5-1	1
817/17441	B5-1-1	1	821/00367	L1-2	1	827/80220	B2-2-1	1	926/15500	B2-18-1	A/R

RAJA RAM JAISWAL
Kolkata
700073
Princep Street, Shop

JCB INDIA LTD.

NUMERICAL INDEX - JS 200

RAJA RAM JAISWAL & CO.
Kolkata
700073
Princep Street, Shop No.

PART NO.	FIGURE NO.	ITEM NO.	PART NO.	FIGURE NO.	ITEM NO.	PART NO.	FIGURE NO.	ITEM NO.	PART NO.	FIGURE NO.	ITEM NO.
928/50250	C1-5-1	1	BRP0007	E1-72-1	1	JHN0048	J1-1-1	4	JHP0046	E2-1-1	8
928/60040	E3-16-1	1	C4E7327	E1-8-1	2	JHN0141	B2-1-10	1	JHP0046	T3-4-1	14
928/60209	E1-30-10	1	C4E9301	F4-3-1	1	JHN0178	B2-1-10	1	JHP0049	B1-2-1	27
928/60209	E1-50-1	1	CEA0399	E1-68-1	2	JHN0211	B2-10-1	1	JHP0061	J1-6-1	8
980/84765	A2-1-5	6	CNA0584	E1-30-10	1	JHP0037	B3-2-1	2	JHP0068	B5-3-1	1
980/84765	A2-1-6	6	CNA0584	E1-61-1	1	JHP0037	B3-2-10	2	JHP0069	B5-3-1	1
980/84765	A2-1-7	6	CRE5507	E1-8-1		JHP0037	B3-2-11	2	JHP0070	B5-3-1	1
980/84766	A2-1-5	6	CSP0161	B1-3-1	1	JHP0037	B3-4-1	4	JHP0079	J1-1-1	8
980/84766	A2-1-6	6	JBC0004	F4-3-1	1	JHP0037	B3-4-1	6	JHP0079	J1-3-1	56
980/84766	A2-1-7	6	JBJ0066	E3-16-1	1	JHP0037	B3-5-1	4	JHP0080	D1-1-1	4
980/84767	A2-1-5	6	JBV0015	B3-5-1	1	JHP0038	B3-1-1	2	JHP0080	E1-21-1	4
980/84767	A2-1-6	6	JBV0295	B3-1-1	4	JHP0038	B3-4-1	1	JHP0111	B2-4-1	4
980/84767	A2-1-7	6	JBV0298	B3-1-1	4	JHP0042	E1-4-1	2	JHP0111	B5-2-1	1
980/84768	A2-1-5	6	JG0RA041	J1-1-1	1	JHP0042	E1-10-1	2	JHP0121	B5-2-1	1
980/84768	A2-1-6	6	JG0RV118	B3-5-1	1	JHP0042	E1-20-1	2	JHP0134	B1-3-1	1
980/84768	A2-1-7	6	JG0RV119	B3-5-1	1	JHP0042	E3-14-1	6	JHP0134	B5-2-1	1
980/86142	A2-1-7	1	JG0RV386	B3-5-1	1	JHP0042	J1-1-1	8	JHPO046	E1-8-1	4
993/99703	B2-2-1	2	JHA0005	J1-4-1	4	JHP0042	T1-8-1	14	JHR0025	L1-2	1
998/10318	E3-6-1	1	JHH0009	C1-5-1	1	JHP0042	T4-3-1	2	JHR0099	C1-3-1	2
AWV0019	E1-11-1	1	JHH0033	T6-4-1	2	JHP0042	T4-3-1	2	JHR0128	C1-2-1	2
BHA0956	E1-3-1	2	JHH0039	T4-3-1	1	JHP0043	E3-1-1	4	JHR0151	L1-2	2
BHJ0795	E1-5-1	1	JHH0053	T3-4-1	1	JHP0043	F4-1-1	96	JHR0158	L1-2	1
BHJ0795	E1-6-1	2	JHH0071	C1-5-1	1	JHP0043	T1-8-1	8	JHV0195	E1-33-1	1
BHS0182	E1-10-1	1	JHH0074	B2-10-1	2	JHP0044	F4-3-1	47	JHV0195	E1-33-2	1
BLH0487	E1-68-1	2	JHH0082	B1-3-1	1	JHP0044	J1-4-1	8	JHV0285	E1-23-40	1
BRA0127	E1-1-1	1	JHH0119	B1-3-1	1	JHP0046	B1-3-1	8	JLP0283	B3-5-1	1
BRJ0174	E1-3-1	1	JHH0125	T4-3-1	1	JHP0046	B2-4-1	8	JLP0283	B5-2-1	1
BRJ1286	B1-3-1	1	JHJ0050	E1-11-1	1	JHP0046	C1-2-1	1	JLV0143	E1-22-1	1
BRJ1545	E1-68-1	1	JHJ0050	E1-67-1	1	JHP0046	C1-3-1	2	JLV0288	E1-11-1	1
BRP0007	E1-10-1	1	JHJ0168	E1-62-1	2	JHP0046	D1-1-1	28	JLV0288	E1-67-1	1
BRP0007	E1-11-1	1	JHJ0168	E1-63-1	2	JHP0046	E1-10-1	4	JLV0326	E1-23-1	2
BRP0007	E1-67-1	1	JHJ0168	E3-6-1	1	JHP0046	E1-30-10	2	JLV0535	E1-33-1	1
BRP0007	E1-67-1	1	JHN0048	E1-20-1	2	JHP0046	E1-68-1	2	JLV0535	E1-33-2	1

JCB INDIA LTD.

NUMERICAL INDEX - JS 200

PART NO.	FIGURE NO.	ITEM NO.	PART NO.	FIGURE NO.	ITEM NO.	PART NO.	FIGURE NO.	ITEM NO.	PART NO.	FIGURE NO.	ITEM NO.
JLV0733	E1-33-1	1	JRJ0079	E1-61-1	1	JRP0087	B5-3-1	1	JSH0007	T6-4-1	2
JNJ0427	E1-70-1	1	JRJ0079	E1-70-1	1	JRP0142	B5-2-1	1	JSH0085	T3-4-1	1
JNJ0427	E1-72-1	1	JRJ0079	E1-71-1	1	JRR0030	L1-2	1	JSJ0042	B1-3-1	4
JNV0020	B3-5-1	1	JRJ0094	E1-11-1	1	JRV0071	B3-5-1	1	JSJ0042	B1-4-1	6
JNV0329	E1-11-1	1	JRJ0094	E1-71-1	1	JRV0071	B3-5-1	1	JSR0006	C1-5-1	1
JNV0329	E1-67-1	1	JRJ0100	E1-68-1	1	JRV0077	B3-5-1	2	JSR0018	T4-3-1	1
JNV0377	B3-5-1	1	JRJ0100	E1-69-1	1	JRV0208	B3-5-1	1	JSV0296	B3-1-1	1
JRA0121	F4-2-1	1	JRJ0110	E1-70-1	1	JRV0209	B3-5-1	1	JSV0319	E1-30-10	1
JRA0124	F4-2-1	1	JRJ0110	E1-72-1	1	JRV0277	B3-1-1	2	KAJ2847	E1-11-1	1
JRA0182	J1-5-1	46	JRJ0115	E1-63-1	1	JRV0278	E1-33-1	2	KAJ2847	E1-71-1	1
JRA0214	J1-2-1	2	JRJ0115	E1-68-1	1	JRV0278	E1-33-2	2	KAR0152	C1-1-1	1
JRA0215	J1-6-1	2	JRJ0116	E1-62-1	1	JRV0288	B3-1-1	1	KAR0576	C1-1-1	1
JRA0217	J1-2-1	1	JRJ0116	E1-68-1	1	JRV0291	E1-22-1	1	KAR0576	T6-4-1	1
JRA0218	J1-2-1	2	JRJ0117	E1-63-1	1	JRV0292	E1-22-1	1	KBB0445	B1-6-1	4
JRA0220	J1-2-1	1	JRJ0117	E1-70-1	1	JRV0325	E1-22-1	1	KBJ1595	E1-20-1	1
JRA0221	J1-2-1	2	JRJ0117	E1-70-1	1	JRV0331	E1-33-2	1	KBJ1688	E1-70-1	1
JRA0222	J1-2-1	2	JRJ0117	E1-72-1	1	JRV0332	E1-33-2	1	KBJ1691	E1-11-1	1
JRA0223	J1-2-1	2	JRJ0117	E1-72-1	1	JRV0336	E1-33-1	1	KBJ1691	E3-15-1	1
JRA0226	J1-2-1	1	JRJ0117	E1-72-1	1	JRV0342	E1-33-2	1	KBJ2205	E1-30-10	1
JRA0228	J1-2-1	2	JRJ0119	E1-63-1	1	JRV0343	E1-33-2	1	KHB0063	B1-6-1	4
JRA0230	J1-6-1	1	JRJ0119	E1-72-1	1	JRV0344	E1-33-1	1	KHH0040	B1-3-1	4
JRA0231	J1-6-1	1	JRJ0123	E1-62-1	1	JRV0345	E1-33-1	1	KHH0040	B1-4-1	6
JRA0232	J1-6-1	1	JRJ0123	E1-72-1	1	JRV0529	E1-23-40	1	KHH0137	B1-3-1	4
JRA0233	J1-6-1	1	JRJ0124	E1-62-1	1	JRV0568	E1-23-40	1	KHH0142	C1-1-1	14
JRA0234	J1-6-1	1	JRJ0124	E1-72-1	1	JRV0569	E1-23-40	1	KHH0142	C1-4-10	3
JRA0306	J1-1-1	1	JRJ0126	E1-20-1	1	JRV0593	B3-5-1	2	KHH0143	E1-8-1	4
JRA0306	J1-1-1	1	JRJ0133	E1-20-1	1	JRV0594	B3-2-1	2	KHH0258	T4-3-1	1
JRB0017	F4-3-1	1	JRJ0148	B1-3-1	1	JRV0594	B3-2-11	2	KHH0266	C1-1-1	1
JRB0113	B1-2-1	1	JRJ0213	E2-1-1	1	JRV0595	B3-2-1	2	KHHO137	B1-4-1	6
JRB0129	T1-8-1	A/R	JRJ0218	E1-4-1	2	JRV0595	B3-2-11	2	KHJ0341	E1-8-1	1
JRH0012	C1-5-1	1	JRJ0238	E1-8-1	1	JRV0597	B3-1-1	2	KHJ0341	E1-61-1	4
JRH0083	B1-4-1	1	JRJ0238	E1-50-1	1	JRVO157	B3-2-10	2	KHJ0341	E1-70-1	6
JRJ0079	E1-11-1	1	JRP0086	B5-3-1	1	JRVO361	E1-22-1	1	KHJ0341	E1-71-1	6

RAJA RAM JAISWAL
Kolkata
700073
Princep Street, Sho

JCB INDIA LTD.

NUMERICAL INDEX - JS 200

PART NO.	FIGURE NO.	ITEM NO.
KHJ0342	E1-10-1	1
KHJ0342	E1-11-1	
KHJ0342	E1-67-1	1
KHJ0342	E1-69-1	2
KHJ0342	E1-69-1	1
KHJ0342	E1-70-1	7
KHJ0343	E1-11-1	2
KHJ0344	E1-10-1	3
KHJ0344	E1-69-1	1
KHJ0348	E1-8-1	1
KHJ0363	E1-5-1	1
KHJ0363	E1-68-1	6
KHJ0363	E1-68-1	3
KHJ0363	E1-69-1	2
KHJ0363	E1-70-1	1
KHJ0640	E1-30-10	2
KHJ0640	E1-70-1	7
KHJ0641	E1-11-1	1
KHJ0739	E1-8-1	1
KHJ0759	E1-69-1	1
KHJ0768	D1-1-1	4
KHJ0768	E1-30-10	2
KHJ0769	D1-1-1	3
KHJ0869	E1-11-1	1
KHJ0894	E1-71-1	2
KHJ0894	E1-71-1	
KHJ0897	E1-8-1	2
KHJ0947	B2-4-1	1
KHJ0947	D1-1-1	2
KHJ0948	D1-1-1	1
KHJ0950	D1-1-1	2
KHJ0973	E1-67-1	1
KHJ0973	E1-70-1	1
KHJ0973	E1-72-1	1
KHJ0973	E1-72-1	1
KHJ0973	E1-72-1	1
KHJ0973	E1-72-1	1
KHJ0992	B1-3-1	1
KHJ1032	E1-11-1	1
KHJ1211	D1-1-1	6
KHN0243	D1-1-1	6
KHN0268	D1-1-1	6
KHN1260	C1-5-1	1
KHN1395	B1-5-31	2
KHN1436	B2-10-1	1
KHN1542	B2-10-1	1
KHR0319	C1-1-1	7
KHR0611	C1-2-1	4
KHR0736	L1-2	1
KHR0737	B2-4-1	1
KHR0737	C1-1-1	17
KHR0737	D1-1-1	4
KHR0738	B2-4-1	8
KHR1407	C1-1-1	1
KHR1444	C1-1-1	2
KHR1445	C1-1-1	3
KHR1451	C1-1-1	1
KHR1716	C1-1-1	2
KHR1957	C1-1-1	1
KHV0060	B3-1-1	1
KHV0100	B3-2-1	2
KHV0100	B3-2-10	2
KHV0100	B3-2-11	2
KHV0101	B3-2-1	2
KHV0101	B3-2-10	2
KHV0101	B3-2-11	2
KHV0101	B3-5-1	4
KHV0102	B3-5-1	4
KHV0103	B3-1-1	4
KHV0103	B3-2-1	2
KHV0103	B3-2-10	2
KHV0103	B3-2-11	2
KHV0114	B3-5-1	2
KHV0117	B3-5-1	2
KHV0161	B3-2-1	1
KHV0161	B3-2-10	1
KHV0161	B3-2-11	1
KHV0162	B3-1-1	1
KHV0162	B3-1-1	1
KHV0162	B3-2-1	1
KHV0162	B3-2-10	1
KHV0162	B3-2-11	1
KHV0164	B3-1-1	1
KHV0164	B3-1-1	1
KHV0169	B3-5-1	2
KHV0169	B3-12-1	A/R
KHV0170	B3-5-1	4
KHV0170	B3-12-1	A/R
KHV0170	B3-12-1	A/R
KMJ0707	B3-4-1	3
KMJ0964	B3-4-1	4
KMJI714	E1-22-1	1
KMR0242	L1-2	4
KNA0362	E1-10-1	1
KNA0362	E1-69-1	1
KNA0520	E1-5-1	2
KNH0589	T1-8-1	6
KNJ0287	E1-10-1	1
KNJ0287	E1-50-1	1
KNJ0288	E1-10-1	1
KNJ0288	E3-15-1	1
KNJ0604	E1-5-1	2
KNJ0604	E1-10-1	1
KNJ0604	E1-69-1	1
KNJ0605	E1-10-1	1
KNJ0605	E1-11-1	2
KNJ0605	E1-20-1	4
KNJ0605	E1-23-1	2
KNJ0605	E1-23-10	2
KNJ0606	E1-5-1	4
KNJ0606	E1-6-1	2
KNJ0719	E1-3-1	4
KNJ0758	E1-11-1	1
KNJ0758	E1-11-1	3
KNJ0758	E1-30-10	5
KNJ0758	E1-61-1	1
KNJ0758	E1-67-1	1
KNJ0758	E1-67-1	1
KNJ0758	E1-69-1	1
KNJ0758	E1-72-1	1
KNJ0758	E1-72-1	1
KNJ0758	E1-72-1	1
KNJ0759	E1-10-1	1
KNJ0759	E1-11-1	1
KNJ0759	E1-11-1	1
KNJ0759	E1-67-1	1
KNJ0759	E1-68-1	6
KNJ0759	E1-69-1	2
KNJ0759	E1-71-1	1
KNJ0759	E1-72-1	1
KNJ0815	E1-8-1	2
KNJ1115	E1-69-1	13

RAM JAISWAL
Kolkata
700015
Shop No.
Street

JCB INDIA LTD.

NUMERICAL INDEX - JS 200

PART NO.	FIGURE NO.	ITEM NO.	PART NO.	FIGURE NO.	ITEM NO.	PART NO.	FIGURE NO.	ITEM NO.	PART NO.	FIGURE NO.	ITEM NO.
KNJ1115	E1-70-1	1	KRH0781	T1-8-1	4	KRJ3815	E1-3-1	2	KRV0514	B3-2-11	2
KNJ1122	E1-69-1	1	KRJ0963	E1-2-1	4	KRJ3816	E1-3-1	2	KRV0548	E1-10-1	1
KNJ1122	E1-71-1	1	KRJ1391	E1-5-1	4	KRJ3817	E1-3-1	2	KRV0548	E1-23-1	4
KNJ1134	E1-62-1	1	KRJ1588	B1-5-31	2	KRJ3818	E1-3-1	1	KRV0548	E1-23-10	4
KNJ1134	E1-70-1	1	KRJ2246	B1-3-1	1	KRJ3819	E1-3-1	1	KRV0548	E1-23-40	1
KNJ1231	E1-62-1	1	KRJ2370	E1-4-1	1	KRJ3820	E1-3-1	2	KRV0549	E1-22-1	3
KNJ1231	E1-70-1	1	KRJ2657	E2-1-1	4	KRJ3821	E1-3-1	2	KRV0550	B3-4-1	3
KNJ1821	E1-11-1	1	KRJ2662	E1-10-1	1	KRJ3822	E1-3-1	2	KRV0704	B3-1-1	1
KNJ1822	B1-3-1	1	KRJ2681	E1-6-1	4	KRJ3823	E1-3-1	1	KRV1120	B3-5-1	1
KNJ1933	E1-50-1	1	KRJ2682	E1-6-1	4	KRJ3836	B1-3-1	1	KRV1121	B3-5-1	1
KNJ1933	E1-68-1	1	KRJ2682	E1-21-1	4	KRJ3836	E3-15-1	1	KRV1122	B3-1-1	1
KNJ1936	E1-4-1	1	KRJ2682	E1-21-1	6	KRJ3868	E1-20-1	4	KRV1124	B3-1-1	2
KNJ1997	E1-62-1	1	KRJ2682	E1-22-1	2	KRJ4133	E1-70-1	1	KRV1126	B3-1-1	2
KNJ1997	E1-68-1	1	KRJ3449	E1-50-1	1	KRJ4133	E1-72-1	1	KRV1127	B3-2-1	1
KNJ1998	E1-63-1	1	KRJ3449	E2-1-1	1	KRJ4229	E1-10-1	1	KRV1127	B3-2-10	1
KNJ1998	E1-68-1	1	KRJ3451	E2-1-1	1	KRJ4442	E1-2-1	2	KRV1127	B3-2-11	1
KRA0789	E1-5-1	1	KRJ3457	B1-3-1	1	KRJ4443	E1-2-1	1	KRV1128	B3-2-10	2
KRA0791	E1-5-1	2	KRJ3461	B1-3-1	1	KRJ4447	E1-21-1	2	KRV1131	B3-2-10	2
KRA0999	E3-14-1	1	KRJ3463	B1-3-1	1	KRJ4448	E1-21-1	2	KRV1156	B3-1-1	2
KRA1000	E3-14-1	1	KRJ3507	E1-3-1	1	KRJ4450	E1-10-1	1	KRV1161	B3-5-1	2
KRA1107	J1-1-1	2	KRJ3508	E1-3-1	1	KRJ4450	E1-69-1	1	KRV1162	B3-5-1	2
KRA1138	E1-5-1	2	KRJ3509	E1-3-1	2	KRJ4551	E1-4-1	1	KRV1176	B3-2-1	2
KRA1238	E1-5-1	4	KRJ3510	E1-3-1	2	KRJ4551	E1-4-1	1	KRV1176	B3-2-10	2
KRB0681	F4-3-1	1	KRJ3511	E1-3-1	2	KRJ4553	E1-4-1	1	KRV1176	B3-2-11	2
KRB0681	J1-1-1	1	KRJ3512	E1-3-1	2	KRJ4608	B1-3-1	1	KRV1176	B3-12-1	A/R
KRB0682	F4-3-1	1	KRJ3512	E1-3-1	2	KRN0081	E1-11-1	2	KRV1178	B3-1-1	4
KRB0682	J1-1-1	1	KRJ3512	E1-3-1	2	KRN0364	B1-5-20	3	KRV1178	B3-12-1	A/R
KRB0736	B1-6-1	A/R	KRJ3513	E1-3-1	2	KRN1418	B1-5-31	1	KRV1178	B3-12-1	A/R
KRB0737	B1-6-1	A/R	KRJ3513	E1-3-1	2	KRR1078	C1-1-1	1	KRV1180	B3-1-1	2
KRB0738	B1-6-1	A/R	KRJ3513	E1-3-1	2	KRV0370	B3-4-1	1	KRV1180	B3-12-1	A/R
KRB0739	B1-6-1	A/R	KRJ3515	E1-3-1	1	KRV0370	B3-4-1	2	KRV1197	B3-1-1	2
KRC0105	F4-3-1	1	KRJ3813	E1-3-1	1	KRV0514	B3-2-1	2	KRV1197	B3-12-1	A/R
KRH0780	T1-8-1	4	KRJ3814	E1-3-1	1	KRV0514	B3-2-10	2	KRV1200	E1-22-1	2

RAJA RAM JAISWAL
Kolkata
700075
Princep Street, Shop No

JCB INDIA LTD.

NUMERICAL INDEX - JS 200

PART NO.	FIGURE NO.	ITEM NO.	PART NO.	FIGURE NO.	ITEM NO.	PART NO.	FIGURE NO.	ITEM NO.	PART NO.	FIGURE NO.	ITEM NO.
KRV1200	E1-23-1	1	KSJ2397	E1-70-1	1	LBQ0112	E1-11-1	1	LLP0041	E2-2-1	2
KRV1200	E1-23-10	1	KSJ2465	D1-1-1	1	LBQ0112	E1-11-1	1	LLP0114	E2-2-1	24
KRV1203	E1-23-1	1	KSJ2465	E1-50-1	1	LBQ0112	E1-11-1	1	LLP0114	E3-7-1	2
KRV1203	E1-23-10	1	KSJ2465	E1-61-1	1	LBQ0112	E1-11-1	1	LMC0085	E3-7-1	2
KRV1204	E1-23-1	1	KSJ2465	E3-7-1	1	LBQ0112	E1-11-1	1	LMC0102	E2-7-1	1
KRV1204	E1-23-10	1	KSN0939	B1-5-31	1	LBQ0112	E1-11-1		LMC0107	E3-7-1	4
KRV1363	B3-2-1	2	KSP0268	B3-12-1	A/R	LBQ0112	E2-2-1	4	LMM0329	E2-7-1	1
KRV1363	B3-2-10	2	KSP0268	B3-12-1	A/R	LBQ0112	E2-7-1	3	LMM0330	E2-7-1	1
KRV1363	B3-2-11	2	KSV0282	E1-33-1	2	LBQ0122	E2-7-1	2	LMM0334	E2-7-1	1
KRV1380	B3-1-1	1	KSV0282	E1-33-2	2	LBQ0182	E1-11-1	1	LMM0335	E2-7-1	1
KRV1419	B3-4-1	1	KTJ0674	E1-61-1	1	LBQ0182	E2-2-1	2	LMM0336	E2-7-1	3
KRV1420	B3-4-1	1	KTJ0674	E1-70-1	1	LBQ0182	E2-7-1	2	LMM0337	E2-7-1	3
KRV1421	B3-4-1	1	KTJ0812	E1-61-1	1	LBQ0242	E2-2-1	4	LMM0338	E2-7-1	1
KRV1572	B3-1-1	1	KTJ0812	E1-70-1	1	LBQ0262	E2-7-1	4	LMM0545	E2-7-1	2
KRV1764	E1-23-1	1	KTJ0907	E1-30-10	1	LBQ0292	E1-3-1	1	LMM0605	E2-7-1	1
KRV1764	E1-23-10	1	KTJ0907	E1-30-10	1	LBQ0353	E2-2-1	2	LMP0108	E2-2-1	2
KRV1765	E1-23-1	1	KTJ0907	E1-61-1	1	LBQ0953	E2-2-1	2	LMP0147	E2-2-1	4
KRV1765	E1-23-10	1	KTJ0907	E1-61-1		LBQ1453	E2-2-1	4	LMP0208	E2-2-1	2
KRV1766	E1-23-1	1	KTJ0907	E1-68-1	1	LBQ5025	E3-7-1	4	LMP0210	E2-2-1	2
KRV1766	E1-23-10	1	KTJ0907	E1-68-1	1	LBQ5262	E2-7-1	1	LMP0212	E2-2-1	2
KRV1767	E1-23-1	1	KTJ113	E1-69-1	1	LBQ5263	E2-7-1	2	LMP0213	E2-2-1	2
KRV1767	E1-23-10	1	KTJ1133	E1-67-1	1	LCC0014	E3-7-1	2	LMP0217	E2-2-1	4
KRV1768	E1-23-1	1	KTJ1133	E1-67-1	1	LCP0036	E2-2-1	1	LMP0218	E2-2-1	2
KRV1768	E1-23-10	1	KTJ1133	E1-71-1	1	LEC0025	E3-7-1	4	LNM0428	E2-7-1	2
KRV1769	E1-23-1	1	KTJ1663	E1-3-1	12	LJC0003	E3-7-1	2	LNP0173	E2-2-1	2
KRV1769	E1-23-10	1	KTV0700	B3-1-1		LJP0035	E2-2-1	1	LNP0174	E2-2-1	1
KRV1932	E1-23-10	2	LAM0037	E2-7-1	1	LJP0036	E2-2-1	1	LNP0175	E2-2-1	1
KSJ0806	E1-8-1	1	LB00502	E2-2-1	1	LKC0001	E3-7-1	4	LNP0176	E2-2-1	2
KSJ0968	E1-8-1	1	LBB0182	E2-2-1	2	LKC0005	E3-7-1	4	LNP0180	E2-2-1	2
KSJ2308	E1-21-1	1	LBB0262	E2-7-1	2	LKM0106	E2-7-1	4	LPC0203	E3-7-1	4
KSJ2397	E1-63-1	1	LBB0353	E2-2-1	2	LLC0118	E3-7-1	2	LPC0204	E3-7-1	12
KSJ2397	E1-67-1	1	LBC0201	E2-7-1	2	LLC0128	E3-7-1	4	LPC0205	E3-7-1	4
KSJ2397	E1-68-1	1	LBQ0082	E2-2-1	16	LLM0028	E2-2-1	4	LPC0213	E3-7-1	4

AJA RAM JAISWAL
Kolkata
700015
ncep Street, Shop No.

JCB INDIA LTD.

NUMERICAL INDEX - JS 200

PART NO.	FIGURE NO.	ITEM NO.	PART NO.	FIGURE NO.	ITEM NO.	PART NO.	FIGURE NO.	ITEM NO.	PART NO.	FIGURE NO.	ITEM NO.
LPM0052	E2-7-1	2	LZC0076	E2-7-1	3	TBA	C3-4-1	1		E2-2-2	1
LPM0112	E2-7-1	4	LZC0158	E3-7-1	2	TBA	C3-4-1	1		E2-2-2	2
LPM0115	E2-7-1	2	LZM0191	E2-7-1	2	TBA	C3-4-1	1		E2-2-2	2
LPM0117	E2-7-1	1	LZM0335	E2-7-1	1	TBA	C3-4-1	1		E2-2-2	2
LPP0097	E2-2-1	1	LZM0343	E2-7-1	1	TBA	C3-4-1	1		E2-2-2	10
LPP0100	E2-2-1	2	LZP0176	E2-2-1	1	TBA	C3-4-1	1		E2-2-2	5
LQC0034	E3-7-1	1	MPR2006	D1-1-1	8	TBA	C3-4-1	1		E2-2-2	1
LQC0035	E3-7-1	1	MPV2193	E1-10-1	1	TBA	C3-4-1	1		E2-2-2	1
LSC0214	E3-7-1	4	N.S.P.	E3-2-3	1	TBA	C3-4-1	1		E2-2-2	1
LSC0236	E3-7-1	4	NSP	B3-2-1	2	TBA	C3-4-1	1		E2-2-2	1
LSC0237	E3-7-1	4	NSP	B3-2-11	2	TBA	C3-4-1	1		E2-2-2	1
LSC0238	E3-7-1	4	NSP	C1-4-1	1	TBA	E1-3-1	4		E2-2-2	1
LSC0239	E3-7-1	4	NSP	E2-2-1	2	UBJ0157	E1-5-1	1		E2-2-2	1
LSC0240	E3-7-1	4	NSP	E2-7-1	9	UBJ0157	E1-10-1	1		E2-2-2	1
LSM0075	E2-7-1	2	NSP	E2-7-1	1	UBJ0157	E1-11-1	1		E2-2-2	1
LSM0080	E2-7-1	1	NSP	E2-7-1	1	UBJ0157	E1-11-1	1		E2-2-2	1
LSM0082	E2-7-1	18	NSP	E2-7-1	1	UBJ0158	B1-3-1	1		E2-2-2	1
LSM0135	E2-7-1	4	NSP	E3-2-1	1	UBJ0158	E1-5-1	1		E2-2-2	1
LSP0109	E2-2-1	18	NSP	E3-2-2	1	UBJ0158	E1-10-1	1		E2-2-2	1
LTM0129	E2-7-1	1	NSP	E3-2-2	1	UBJ0158	E1-22-1	1		E2-2-2	1
LTM0130	E2-7-1	1	NSP	E3-2-3	1	UBJ0158	E1-23-1	1		E2-2-2	1
LTP0044	E2-2-1	2	NSP	E3-2-3	1	UBJ0158	E1-23-10	1		E2-2-2	1
LTP0045	E2-2-1	2	NSP	E3-2-3	1	UBJ0384	E2-7-1	2		E2-2-2	1
LUC0101	E3-7-1	4	NSP	E3-2-3	2	UEJ0360	E1-8-1	1		E2-2-2	1
LUC0102	E3-7-1	4	NSP	E3-2-3	1	UEJ0360	E1-67-1	1		E2-2-2	1
LUC0104	E3-7-1	4	NSP	E3-2-3	1	UEJ0360	E1-72-1	1		E2-2-2	1
LUC0106	E3-7-1	4	NSP	E3-2-3	1	UEJ0360	E1-72-1	1		E2-2-2	1
LUC0107	E3-7-1	8	NSP	E3-2-3	1	UEJ0360	E1-72-1	1		E2-2-2	1
LUP0189	E2-2-1	2	NSP	E3-2-4	1	UHJ0415	E1-23-1	1		E2-2-2	1
LUP0190	E2-2-1	2	TBA	C1-2-1	1	UHJ0415	E1-23-1	1		E2-2-2	1
LWC0003	E3-7-1	1	TBA	C3-4-1	1	UHJ0415	E1-23-10	1		E2-2-2	1
LWC0004	E3-7-1	4	TBA	C3-4-1	1	UHJ0415	E1-23-10	1		E2-2-2	1
LWP0006	E2-2-1	2	TBA	C3-4-1	1		E2-2-2	1		E2-2-2	1

RAM JAISWAL
Kolkata
700078

JCB INDIA LTD.

NUMERICAL INDEX - JS 200

PART NO.	FIGURE NO.	ITEM NO.	PART NO.	FIGURE NO.	ITEM NO.	PART NO.	FIGURE NO.	ITEM NO.	PART NO.	FIGURE NO.	ITEM NO.
	E2-2-2	1		E2-2-3	1		F4-4-1	1			
	E2-2-2	1		E2-2-3	1		J1-1-1	8			
	E2-2-2	1		E2-2-3	1		J1-3-1	1			
	E2-2-2	1		E2-2-3	1		J1-3-1	2			
	E2-2-2	1		E2-2-3	4		J1-3-1	1			
	E2-2-2	3		E2-2-3	1		J1-3-1	2			
	E2-2-2	1		E2-2-3	1		J1-3-1	2			
	E2-2-2	9		E2-2-3	1		J1-3-1	2			
	E2-2-2	1		E2-2-3	1		J1-3-1	2			
	E2-2-2	1		E2-2-3	1		J1-3-1	1			
	E2-2-2	1		E2-2-3	1		J1-4-1	1			
	E2-2-2	2		E2-2-3	1		J1-4-1	2			
	E2-2-2	1		E2-2-3	1		J1-4-1	1			
	E2-2-2	1		E2-2-3	1		J1-4-1	1			
	E2-2-2	1		E2-2-3	1		J1-4-1	2			
	E2-2-2	2		E2-2-3	1		J1-4-1	1			
	E2-2-2	1		E2-2-3	1		J1-4-1	1			
	E2-2-2	1		E2-2-3	1		J1-4-1	1			
	E2-2-2	3		E2-2-3	2		J1-4-1	4			
	E2-2-2	1		E2-2-3	2		J1-4-1	1			
	E2-2-2	1		E3-2-1	1		J1-4-1	1			
	E2-2-2	2		E3-2-2	1		J1-5-1	184			
	E2-2-2	1		E3-14-1	1		J1-5-1	184			
	E2-2-2	4		E3-14-1	1		J1-5-1	1			
	E2-2-2	1		E3-14-1	1		J1-5-1	2			
	E2-2-2	1		E3-14-1	1		J1-5-1	1			
	E2-2-2	1		E3-14-1	2		J1-5-1	46			
	E2-2-2	1		E3-14-1	1		J1-5-1	1			
	E2-2-2	1		E3-14-1	4		J1-5-1	45			
	E2-2-3	1		E3-14-1	6		J1-5-1	90			
	E2-2-3	1		E3-14-1	1		J1-5-1	45			
	E2-2-3	1		E4-3-1	1		J1-5-1	46			
	E2-2-3	1		E4-3-1	1						

JAISWAL
Kolkata
700078
AP-41, Princep Street, Shop No. 6

~~9334~~