RUTHZIL TRATOR COMERCIAL DE PEÇAS LTDA 11 97083-6812 ROLANDO

Parts Book

Produced by the Technical Publications department of
JCB Service, Rocester, Staffordshire ST14 5LS, England

Printed in England

Model JS200, JS220 CRAWLER EXCAVATOR

SEM CODIGO DE PEÇAS

OWNER PARTS BOOK
M705001 on
Publication No. 9800/5811 Issue 6

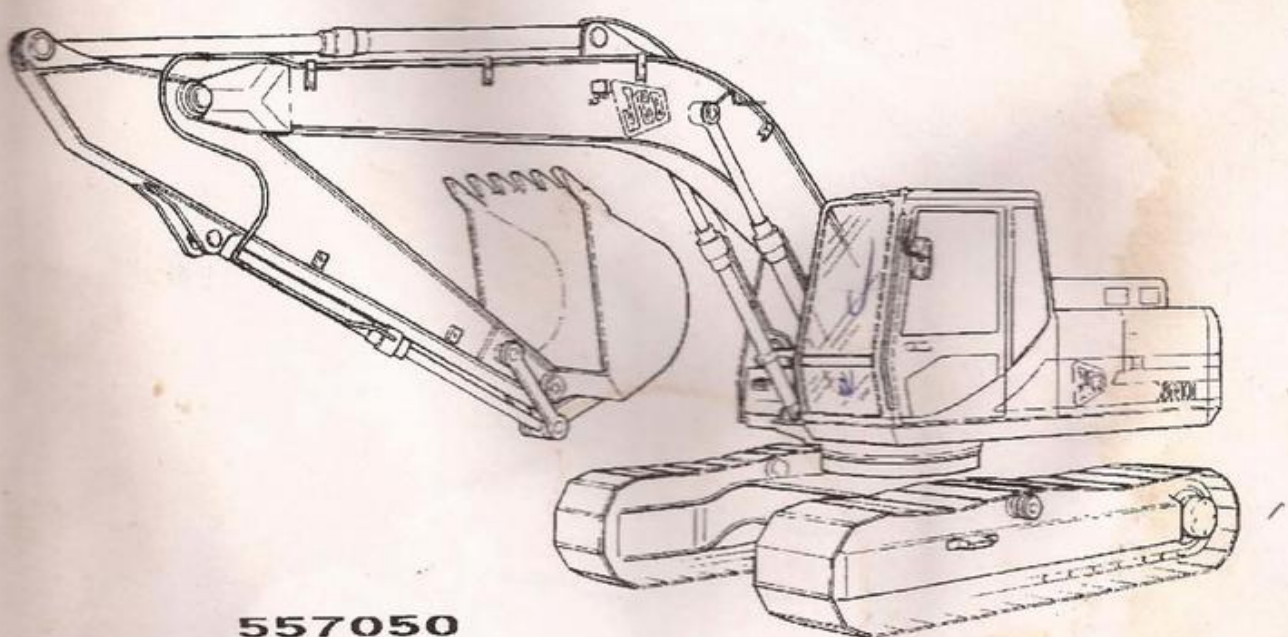

557050

Printed in England

OWNER PARTS BOOK

M705001 on
Model JS200, JS220 CRAWLER EXCAVATOR

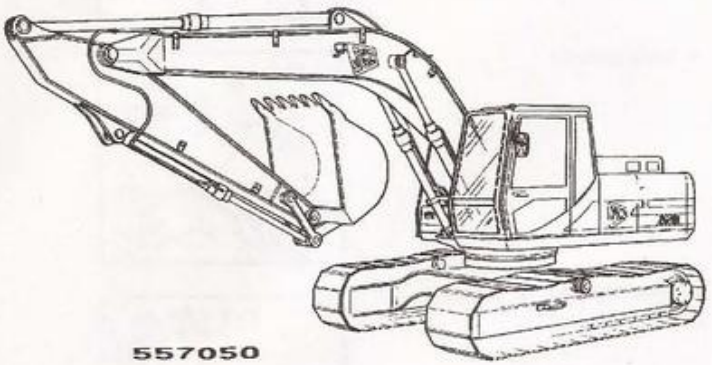

557050

ATTACHMENTS	A
BODYWORK, CAB, LOADER END	B
ELECTRICS-MACHINE, CAB & ENGINE	C
CONTROLS-MACHINE, ENGINE	D
HYDRAULICS & AIR	E
TRACK/SLEW GEARBOX	F
TRACK & RUNNING GEAR, UNDERCARRAGE	J
ENGINE, 6BD1TLE05 & 6BG1TQBO4	K

VIN SLPJS903YE07006699

PIN 07706699

ENGINE 116893

AÑO DE CONSTRUCCION: SEPTIEMBRE 2000

JS200

TITLE	PAGE NUMBER	CHANGE NUMBER
A ATTACHMENTS		
BUCKETS	**A2**	
BUCKET, 1000 WIDE, 0.81 CUBIC METRES	A2-1-15	
BUCKET, 1200 WIDE, 1.02 CUBIC METRES	A2-1-16	
BUCKET, 1500 WIDE, 1.18 CUBIC METRES	A2-1-17	
BUCKET, 600 WIDE, 0.40 CUBIC METRES	A2-1-13	
BUCKET, 900 WIDE, 0.70 CUBIC METRES	A2-1-14	
QUICKHITCH, HYDRAULIC	A2-6-2	
QUICKHITCH, INSTALLATION KIT	A2-6-10	
QUICKHITCH, MANUAL	A2-6-1	
TOOTH OPTIONS	A2-5-1	
B BODYWORK, CAB, LOADER END		
BODYWORK/FRAME	**B1**	
COUNTERWEIGHT, REAR	B1-6-1	
COUNTERWEIGHT, REAR, JS200N SALES SPECIAL	B1-6-3	
COUNTERWEIGHT, REAR, 15M LONG REACH	B1-6-10	
COVER, LOWER, MAINFRAME	B1-2-1	
COWLINGS, ENGINE COVER	B1-5-1	
COWLINGS, FIG 1	B1-5-10	
COWLINGS, FIG 1, FOPS CAB CAGE	B1-5-11	
COWLINGS, FIG 2	B1-5-20	
COWLINGS, FIG 3	B1-5-30	
MAINFRAME	B1-1-1	
REAR MIRROR., COUNTERWEIGHT	B1-6-40	
TANK, DIESEL FUEL	B1-4-1	
TANK, HYDRAULIC	B1-3-1	
CAB	**B2**	
CAB, FIG 1	B2-1-1	M705001 on
	B2-1-1	To M705637
CAB, FIG 1, EURO CAB	B2-1-2	M705638 on
	B2-1-3	M705785 on
	B2-1-2	To M705785
CAB, FIG 2	B2-1-10	M705001 on
	B2-1-10	To M705637
CAB, FIG 2, EURO CAB	B2-1-11	M705638 on
	B2-1-11	To M705784
	B2-1-12	M705785 on
CAB, FIG 3	B2-1-20	M705001 on
	B2-1-20	To M705637
CAB, FIG 3, EURO CAB	B2-1-21	M705638 on
	B2-1-21	To M705784
	B2-1-22	M705785 on
CAB, FIG 4	B2-1-30	M705001 on
	B2-1-30	To M705637
CAB, FIG 5	B2-1-40	M705001 on
	B2-1-40	To M705637
CONSOLE, CAB SERVO CONTROL, LEFT HAND	B2-4-1	M705001 on
CONSOLE, CAB SERVO CONTROL, LEFT HAND	B2-4-1	To M705637
CONSOLE, CAB SERVO CONTROL, LEFT HAND FIXED CONSOLE	B2-4-2	M705638 on
CONSOLE, CAB SERVO CONTROL, LEFT HAND, FIG 2	B2-4-10	M705001 on
	B2-4-10	To M705637
CONSOLE, CAB SERVO CONTROL, RIGHT HAND	B2-5-1	M705001 on
	B2-5-1	To M705637
CONSOLE, CAB SERVO CONTROL, RIGHT HAND FIXED CONSOLE	B2-5-2	M705638 on
CONSOLE, CAB SERVO CONTROL, RIGHT HAND, FIG 2	B2-5-10	M705001 on
	B2-5-10	To M705637
COVER, CAB, OVERNIGHT	B2-13-1	
DIRECT GLAZING, REPLACEMENT MATERIAL, EURO CAB	B2-18-1	
DOOR & COMPONENTS	B2-2-1	M705001 on
	B2-2-1	To M705637
DOOR & COMPONENTS, EURO CAB	B2-2-2	M705638 on
	B2-2-2	To M705784
	B2-2-3	M705785 on
FIRE EXTINGUISHER	B2-11-1	
FLOOR COMPONENTS, FIG 1	B2-10-1	M705001 on
	B2-10-1	To M706112
	B2-10-2	M706113 on
FLOOR COMPONENTS, FIG 2	B2-10-10	M 705001 on
	B2-10-10	To M 705637
FLOOR COMPONENTS, FIG 2, EURO CAB	B2-10-20	M 705638 on

TITLE	PAGE NUMBER	CHANGE NUMBER
FLOOR COMPONENTS, FIG 2, EURO CAB	B2-10-20	To M 706112
	B2-10-30	M 706113 on
GUARD, CAB FRONT WINDOW, & ROOF TOP	B2-9-1	M705001 on
	B2-9-1	To M705637
GUARD, FOPS CAGE	B2-9-10	M705001 on
	B2-9-10	To M705637
GUARD, FOPS CAGE, EURO CAB	B2-9-15	M705638 on
MIRRORS, EXTERNAL	B2-7-1	
RAIN VISOR	B2-12-1	M705001 on
	B2-12-1	To M705637
RAIN VISOR, EURO CAB	B2-12-3	M705638 on
SEAT	B2-3-1	
SUNROOF (OPTIONAL)	B2-1-41	M705001 on
	B2-1-41	To M705637
VANDAL GUARD, EURO CAB	B2-13-4	M705638 on
VISOR, SUN	B2-12-2	
WASH/WIPE, WINDSCREEN, EURO CAB	B2-6-2	M705638 on
LOADER FRONT END	**B3**	
BOOM	B3-1-1	
BOOM GREASING	B3-4-1	
BOOM GREASING, 15M LONG REACH	B3-4-10	
BOOM, 15M LONG REACH	B3-1-10	
DIPPER 1.91M	B3-2-1	
DIPPER 2.4M	B3-2-10	
DIPPER 3.0M	B3-2-20	
DIPPER, 6.4M	B3-2-30	
EXCAVATOR, SHIMS	B3-12-1	
LINK, TRANSPORTATION	B3-3-2	
TIPPING LINK, & LINKAGE	B3-5-1	
TIPPING LINK, & LINKAGE, 15M LONG REACH	B3-5-10	
REFURBISHMENTS	**B5**	
DECALS	B5-2-1	
DECALS, MACHINE	B5-1-10	M705001 on
	B5-1-10	To M705784
	B5-1-13	M705785 on
FIRE EXTINGUISHER	B5-7-1	
PAINT	B5-5-1	
TOOLS	B5-3-1	

C ELECTRICS-MACHINE, CAB & ENGINE

ELECTRICS, MAIN MACHINE	**C1**	
ALARM, TRAVEL, OPTIONAL	C1-10-1	
BATTERY INSTALLATION, 24 VOLT	C1-3-1	M705001 on
	C1-3-1	To M706298
	C1-3-3	M706299 on
ELECTRICS, CAB	C1-2-1	
ELECTRICS, MACHINE	C1-1-1	M705001 on
	C1-1-1	To M706298
	C1-1-2	M706299 on
LIGHT, WORKING	C1-4-1	M705001 on
	C1-4-1	To M705637
LIGHT, WORKING, ADDITIONAL, EURO CAB	C1-4-2	M705638 on
LIGHT, WORKING,, BOOM AND TOOLBOX	C1-6-1	
PUMP, DIESEL, REFUELLING	C1-5-1	
ELECTRICS, ENGINE	**C2**	
ALTERNATOR	C2-3-1	To M705317
	C2-3-2	M705318 on
	C2-3-3	
ELECTRICAL EQUIPMENT	C2-1-1	To M705317
	C2-1-2	M705318 on
MOTOR, STARTER	C2-5-1	To M705317
	C2-5-2	M705318 on
	C2-5-3	
MOUNTINGS & FITTINGS, ALTERNATOR & STARTER	C2-6-1	To M705317
	C2-6-2	M705318 on
ELECTRICS, CAB	**C3**	
AIR CON	C3-12-1	M705001 on
	C3-12-1	To M705637
AIR CONDITIONING, CONDENSER ASSEMBLY	C3-12-5	M705638 on
AIR CONDITIONING, EURO CAB	C3-12-2	M705638 on
GAUGE, SYSTEM, CONTROL MONITOR	C3-1-1	
HEATER ASSEMBLY	C3-5-1	M705001 on
	C3-5-1	To M705637
HEATER ASSEMBLY, EURO CAB	C3-5-2	M705638 on
	C3-5-2	To M706246
	C3-5-4	M706247 on
HEATER ASSEMBLY, EURO CAB, AIR CONDITIONING	C3-5-3	M705638 on

TITLE	PAGE NUMBER	CHANGE NUMBER
HEATER ASSEMBLY, EURO CAB, AIR CONDITIONING	C3-5-3	To M706246
	C3-5-5	M706247 on
HEATER DEMISTER	C3-5-20	M705001 on
	C3-5-21	M705001 on
	C3-5-20	To M705637
	C3-5-21	To M705637
HEATER, INSTALLATION	C3-4-1	M705001 on
	C3-4-1	To M705637
HEATER, INSTALLATION, EURO CAB	C3-4-2	M705638 on
HEATER, INSTALLATION, EURO CAB, AIR CONDITIONING	C3-4-3	M705638 on
LIGHT, BEACON, HAZARD WARNING, AMBER	C3-9-1	
OVERLOAD WARNING, SYSTEM	C3-8-1	
RADIO	C3-11-1	M705001 on
	C3-11-1	To M705637
RADIO, EURO CAB	C3-11-2	M705638 on
SWITCH PANEL, CONSOLE BOX	C3-2-1	

D CONTROLS-MACHINE, ENGINE

CONTROLS, MACHINE	**D1**	
CONTROLS, EXCAVATOR	D1-1-1	M705001 on
	D1-1-1	To M705637
CONTROLS, EXCAVATOR, EURO CAB	D1-1-2	M705638 on
CONTROLS, ENGINE	**D2**	
CONTROLS, THROTTLE & STOP	D2-1-1	To M705317
	D2-1-2	M705318 on

E HYDRAULICS & AIR

HOSE & PIPEWORK	**E1**	
CIRCUIT, AUXILIARY/HAMMER, BOOM	E1-32-1	
CIRCUIT, AUXILIARY/HAMMER, MAINFRAME	E1-30-10	
CIRCUIT, AUXILIARY/HAMMER, MAINFRAME LOW FLOW	E1-30-30	
CIRCUIT, AUXILIARY/HAMMER, 1. 91M DIPPER	E1-33-1	
CIRCUIT, AUXILIARY/HAMMER, 2. 40M DIPPER	E1-33-2	
CIRCUIT, AUXILIARY/HAMMER, 3. 00M DIPPER	E1-33-3	
CIRCUIT, AUXILIARY, MAINFRAME	E1-30-1	
CIRCUIT, BOOM OVERLOAD, 2 HBCV SUPPLEMENT	E1-25-1	
CIRCUIT, BOOM OVERLOAD, 3 HBCV SUPPLEMENT	E1-25-10	
CIRCUIT, BOOM RAM, MAINFRAME	E1-20-1	
CIRCUIT, BOOM RAM, NONE HBCV	E1-24-1	
CIRCUIT, BOOM RAM, WITH HBCV	E1-24-10	
CIRCUIT, BUCKET RAM, 1.91M DIPPER	E1-23-1	
CIRCUIT, BUCKET RAM, 2.4M DIPPER	E1-23-10	
CIRCUIT, BUCKET RAM, 3.0M DIPPER	E1-23-20	
CIRCUIT, BUCKET RAM, 6.4M DIPPER	E1-23-30	
CIRCUIT, BYPASS, HYDRAULIC FILTER	E1-8-1	M705001 on
	E1-8-1	To M706112
	E1-8-2	M706113 on
CIRCUIT, CHANGEOVER, BUCKET/GRAB LOW FLOW	E1-53-2	
CIRCUIT, DIPPER & BUCKET	E1-21-1	
CIRCUIT, DIPPER RAM, H.B.C.V., ASSEMBLY	E1-43-1	
CIRCUIT, DIPPER RAM, HBCV FEED & RETURN	E1-26-1	
CIRCUIT, DIPPER RAM, MONOBOOM	E1-22-1	
CIRCUIT, DIPPER RAM, MONOBOOM, WITH HBCV	E1-22-10	
CIRCUIT, DIPPER RAM, MONOBOOM, 15M LONG RIG	E1-22-20	
CIRCUIT, DIPPER RAM, WITHOUT H.B.C.V.	E1-43-10	
CIRCUIT, DRAIN, MOTOR & SOLENIOD	E1-10-1	
CIRCUIT, HAMMER MAINFRAME	E1-30-20	
CIRCUIT, LOW FLOW, 2.4M DIPPER	E1-35-1	
CIRCUIT, LOW FLOW, 3.0M DIPPER	E1-35-2	
CIRCUIT, NEUTRAL PRESSURE	E1-2-1	
CIRCUIT, NEUTRAL, RETURN & OIL COOLER	E1-3-1	
CIRCUIT, PUMP SUCTION	E1-1-1	

TITLE	PAGE NUMBER	CHANGE NUMBER
CIRCUIT, SERVO, CONTROLS SIDE FIG 1	E1-13-1	
CIRCUIT, SERVO, CONTROLS SIDE FIG 2	E1-13-10	
CIRCUIT, SERVO, NEUTRAL FIG 1	E1-11-1	
CIRCUIT, SERVO, NEUTRAL FIG 2	E1-11-10	
CIRCUIT, SERVO, NEUTRAL FIG 3	E1-11-20	
CIRCUIT, SWING	E1-6-1	
CIRCUIT, TRACK, MAINFRAME	E1-4-1	
CIRCUIT, TRACK, UNDERCARRIAGE	E1-5-1	
PUMP/MOTOR & PUMP DRIVE	**E2**	
MOTOR, SWING	E2-7-1	M705001 on
	E2-7-1	To M705906
	E2-7-3	M705907 on
MOTOR, SWING, LONG REACH	E2-7-2	
MOTOR, TRACK	E2-6-1	
PUMP, PISTON, MAIN HYDRAULIC, & COMPONENTS	E2-2-1	
PUMP, PISTON, MAIN HYDRAULIC, & COMPONENTS FIG 2	E2-2-2	
PUMP, PISTON, MAIN HYDRAULIC, & COMPONENTS FIG 3	E2-2-3	
PUMP, PISTON, MAIN HYDRAULIC, & COMPONENTS FIG 4	E2-2-4	
PUMP, PISTON, MAIN HYDRAULIC, DRIVE GROUPS	E2-1-1	
VALVES & HYDRAULIC FILTERS	**E3**	
COUPLING, ROTARY	E3-14-1	M705001 on
	E3-14-1	To M706219
	E3-14-2	M706220 on
FILTER, HYDRAULIC, AUXILIARY CIRCUIT	E3-16-1	
LUBRICANTS & FILTERS	E3-15-1	
OILS, BIODEGRADABLE, HYDRAULIC	E3-15-2	
VALVE SOLENOID	E3-8-1	
VALVE, ASSEMBLY, & MOUNTING	E3-1-1	
VALVE, CONTROL, COMPONENTS FIG 1	E3-2-1	
VALVE, CONTROL, COMPONENTS FIG 2	E3-2-2	
VALVE, CUSHION	E3-13-1	
VALVE, DIVERTER, TAB + BREAKER	E3-20-1	
VALVE, DIVERTER, TAB + BREAKER + AUX	E3-21-1	
VALVE, FOOT CONTROL, SERVO	E3-7-1	
	E3-10-1	
VALVE, HAND CONTROL, SERVO	E3-6-2	JUL-96 on
	E3-6-1	To JUN-96
	E3-6-2	To M706025
	E3-6-3	M706026 on
VALVE, PRIORITY	E3-18-2	
VALVE, PRIORITY, 15LPM	E3-18-1	
VALVE, RELIEF, SERVICE PORT	E3-2-45	
VALVE, SWING BRAKE	E3-17-1	
RAMS	**E4**	
RAM, BOOM	E4-1-1	M705001 on
	E4-1-1	To M705543
	E4-1-5	M705544 on
RAM, BUCKET	E4-3-1	705001 on
	E4-3-1	To 705409
	E4-3-2	705410 on
RAM, BUCKET, LONG REACH	E4-3-4	
RAM, BUCKET, PIPEWORK	E4-3-5	
RAM, DIPPER	E4-2-1	M705001 on
	E4-2-1	To M705409
	E4-2-2	M705410 on
RAM, DIPPER, LONG REACH	E4-2-5	

F TRACK/SLEW GEARBOX

SLEW/TRACK GEARBOXES	**F4**	
CIRCUIT, SWING RING GREASING	F4-5-1	
GEARBOX, ASSEMBLY & SPROCKET	F4-1-1	
GEARBOX, SWING	F4-4-1	M705001 on
	F4-4-1	To M705906
	F4-4-2	M705907 on
GEARBOX, TRACK	F4-2-1	
MOTOR, SWING	F4-3-1	M705001 on
	F4-3-1	To M705906
	F4-3-2	M705907 on

J TRACK & RUNNING GEAR, UNDERCARRAGE

TITLE	PAGE NUMBER	CHANGE NUMBER
TRACK, GEAR/ UNDERCARRIAGE	**J1**	
CHAIN, TRACK, GROUSER, 46 LINK	J1-5-1	
CHAIN, TRACK, GROUSER, 49 LINK	J1-5-2	
CHAIN, TRACK, GROUSER, 49 LINK HEAVY DUTY	J1-5-5	
COVER, LOWER, UNDERCARRIAGE	J1-7-1	
IDLER WHEEL	J1-2-1	M705001 on
	J1-2-1	To M705268
	J1-2-10	M705269 on
RECOIL UNIT	J1-6-1	M705001 on
	J1-6-1	To M705268
	J1-6-10	M705269 on
ROLLER, TRACK BOTTOM	J1-3-1	M705001 on
	J1-3-1	To M705311
	J1-3-2	M705312 on
ROLLER, TRACK TOP	J1-4-1	
STEP EXTENSION	J1-8-1	
UNDERCARRIAGE	J1-1-1	

K ENGINE, 6BD1TLE05 & 6BG1TQBO4

TITLE	PAGE NUMBER	CHANGE NUMBER
ENGINE BLOCK & SUB-ASSEMBLIES	**K1**	
BLOCK ASSEMBLY	K1-3-1	To M705317
	K1-3-2	M705318 on
CAMSHAFT & GEARS	K1-6-2	To M705317
	K1-6-12	M705318 on
CRANKSHAFT, BEARINGS, PISTONS & CON-RODS	K1-4-1	To M705317
	K1-4-2	M705318 on
ENGINE MOUNTINGS	K1-8-1	To M705317
	K1-8-2	M705318 on
ENGINE, COMPLETE	K1-1-1	To M705317
	K1-1-2	M705318 on
FANS, PULLEYS, & FAN BELT	K1-5-1	To M705317
	K1-5-2	M705318 on
FLYWHEEL & HOUSING	K1-7-1	To M705317
	K1-7-2	M705318 on
TIMING CASE	K1-6-1	To M705317
	K1-6-11	M705318 on
CYLINDER HEAD & SUB-ASSEMBLIES	**K2**	
CYLINDER HEAD	K2-1-1	To M705317
	K2-1-2	M705318 on
LIFTING PLATES, ENGINE	K2-4-1	To M705317
	K2-4-2	M705318 on
ROCKER ASSEMBLY, INLET/ EXHAUST VALVES, PUSH RODS & TAPPETS	K2-2-1	To M705317
ROCKER ASSEMBLY, INLET/ EXHAUST VALVES, PUSH RODS & TAPPETS	K2-2-2	M705318 on
ROCKER COVER	K2-3-1	To M705317
	K2-3-2	M705318 on
INDUCTION & EXHAUST SYSTEMS	**K3**	
EXHAUST SYSTEM	K3-4-1	To M705317
	K3-4-2	M705318 on
	K3-4-2	To M705523
	K3-4-3	M705524 on
FILTER, AIR	K3-3-1	To M705317
	K3-3-2	M705318 on
MANIFOLD, EXHAUST	K3-2-1	To M705317
	K3-2-2	M705318 on
MANIFOLD, INDUCTION	K3-1-1	To M705317
	K3-1-2	M705318 on
SYSTEM, COOLING	**K4**	
PUMP, WATER	K4-1-1	To M705317
	K4-1-2	M705318 on
RADIATOR, FITTINGS & MOUNTINGS	K4-3-1	To M705317
	K4-3-2	M705318 on
RADIATOR, HOSES & FITTINGS	K4-4-1	To M705317
	K4-4-2	M705318 on
THERMOSTAT, HOUSING, INLET & OUTLET	K4-2-1	To M705317
	K4-2-2	M705318 on
SYSTEM, LUBRICATION	**K5**	
COOLER, OIL	K5-5-1	To M705317

TITLE	PAGE NUMBER	CHANGE NUMBER
COOLER, OIL	K5-5-2	M705318 on
FILTER, OIL	K5-4-1	To M705317
	K5-4-2	M705318 on
PIPES, OIL	K5-6-1	To M705317
	K5-6-2	M705318 on
PISTON COOLING JETS	K5-3-1	To M705317
	K5-3-2	M705318 on
PUMP, OIL	K5-2-1	To M705317
	K5-2-2	M705318 on
SUMP, OIL, & FITTINGS	K5-1-1	To M705317
	K5-1-2	M705318 on
SYSTEM, FUEL	**K6**	
FILTER, FUEL	K6-7-1	To M705317
	K6-7-2	M705318 on
FILTER, FUEL SEDIMENT	K6-6-1	To M705317
	K6-6-2	M705318 on
	K6-6-2	To M705585
	K6-6-3	M705586 on
FUEL PIPES, FUEL TANK TO FILTER	K6-4-1	To M705317
	K6-4-2	M705318 on
	K6-4-2	To M705585
	K6-4-3	M705586 on
FUEL SYSTEM	K6-2-1	To M705317
	K6-2-2	M705318 on
GOVERNOR ASSEMBLY, FUEL INJECTION PUMP	K6-1-20	To M705317
	K6-1-21	M705318 on
INJECTORS, FUEL	K6-2-11	To M705317
	K6-2-21	M705318 on
PUMP, FUEL INJECTION	K6-1-10	To M705317
PUMP, FUEL INJECTION	K6-1-11	M705318 on
PUMP, FUEL INJECTION, INSTALLATION	K6-1-1	To M705317
	K6-1-2	M705318 on
PUMP, FUEL LIFT	K6-8-1	To M705317
	K6-8-2	M705318 on
EQUIPMENT, AUXILIARY	**K7**	
TURBO, PIPEWORK	K7-2-1	To M705317
	K7-2-2	M705318 on
TURBOCHARGER	K7-1-1	To M705317
	K7-1-2	M705318 on
GASKET SETS	**K8**	
GASKET SET, OVERHAUL	K8-1-1	To M705317
	K8-1-11	M705318 on
GASKET SET, OVERHAUL, TOP	K8-1-2	To M705317
	K8-1-12	M705318 on
KIT, PISTON & LINER	K8-2-1	To M705317
	K8-2-11	M705318 on

A

A2-1-13 BUCKET, 600 WIDE, 0.40 CUBIC METRES

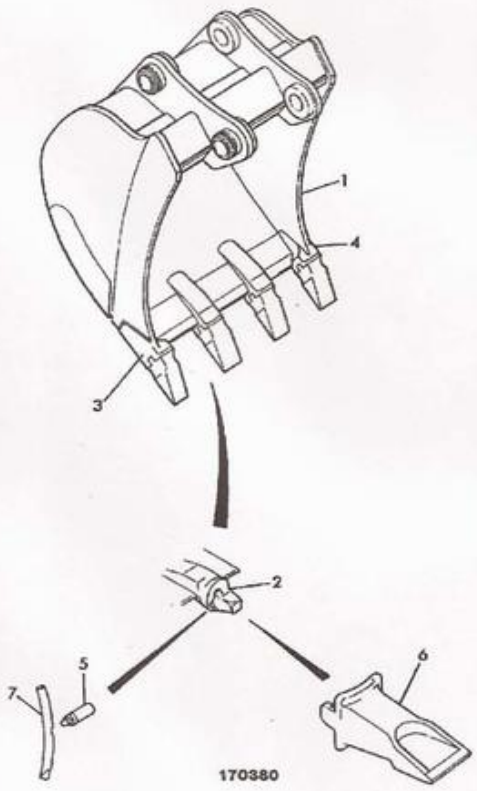

A2-1-14 BUCKET, 900 WIDE, 0.70 CUBIC METRES

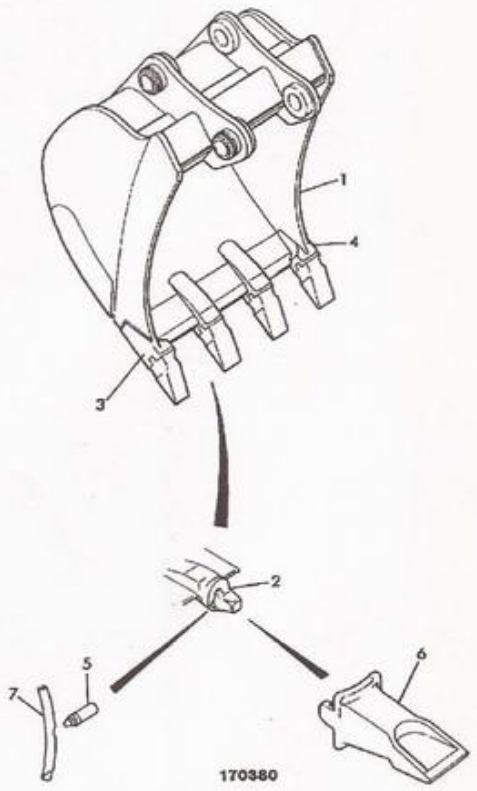

A2-1-15 BUCKET, 1000 WIDE, 0.81 CUBIC METRES

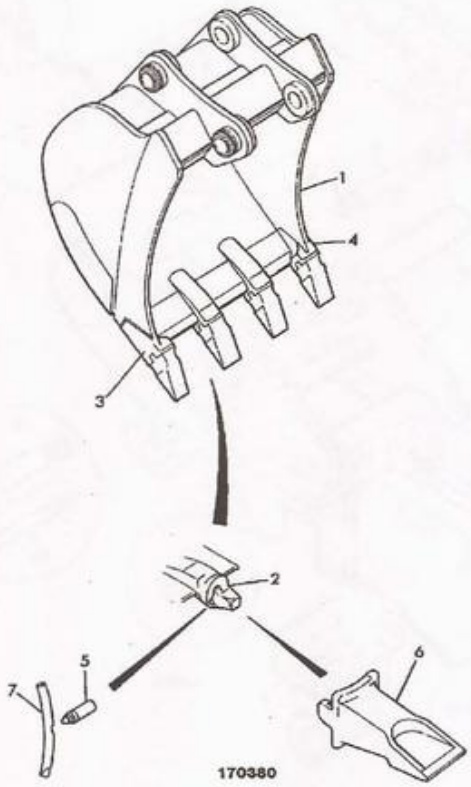

A2-1-16 BUCKET, 1200 WIDE, 1.02 CUBIC METRES

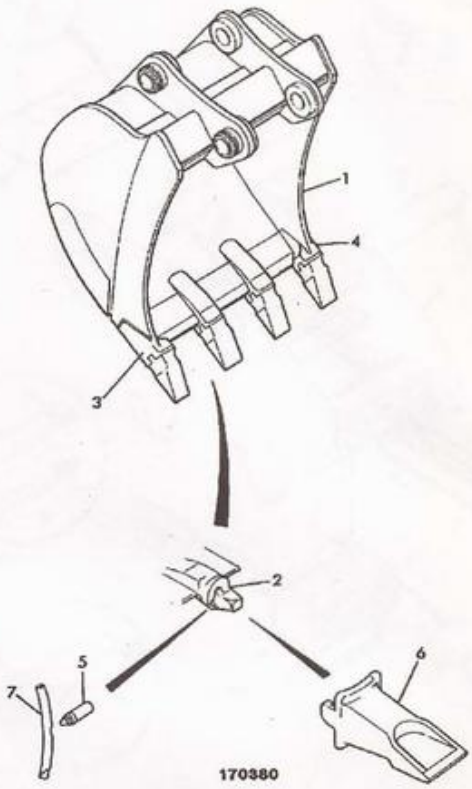

A2-1-17 BUCKET, 1500 WIDE, 1.18 CUBIC METRES

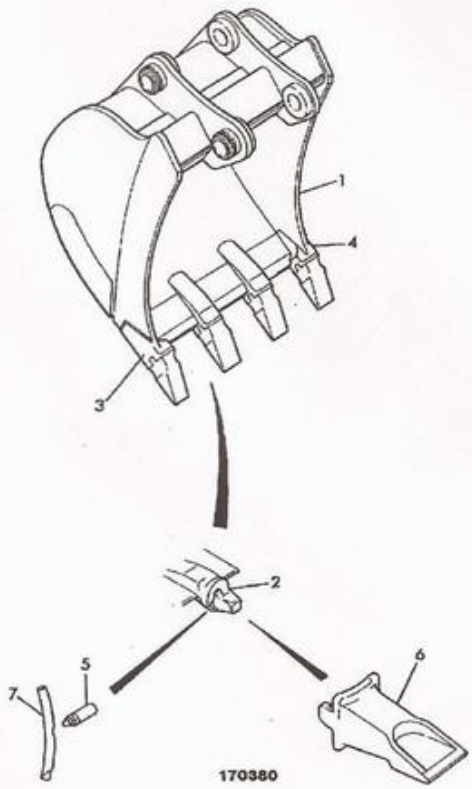

A2-5-1 TOOTH OPTIONS

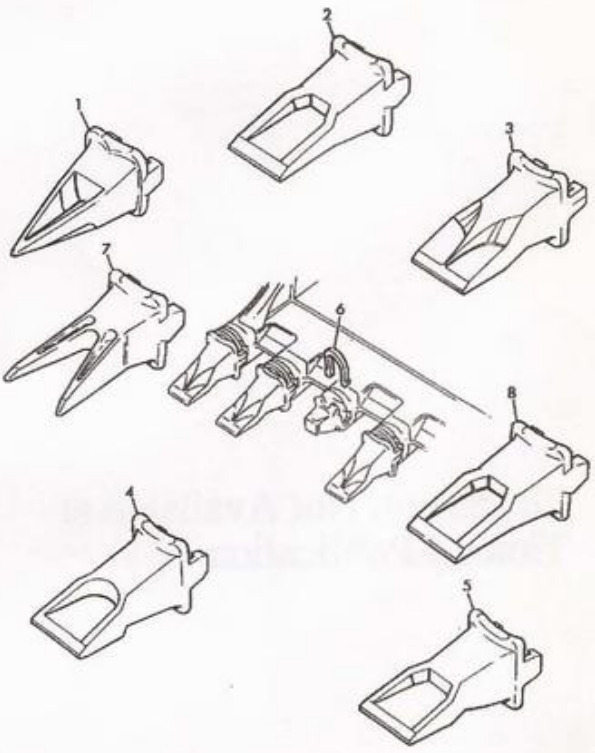

A2-6-1 QUICKHITCH, MANUAL

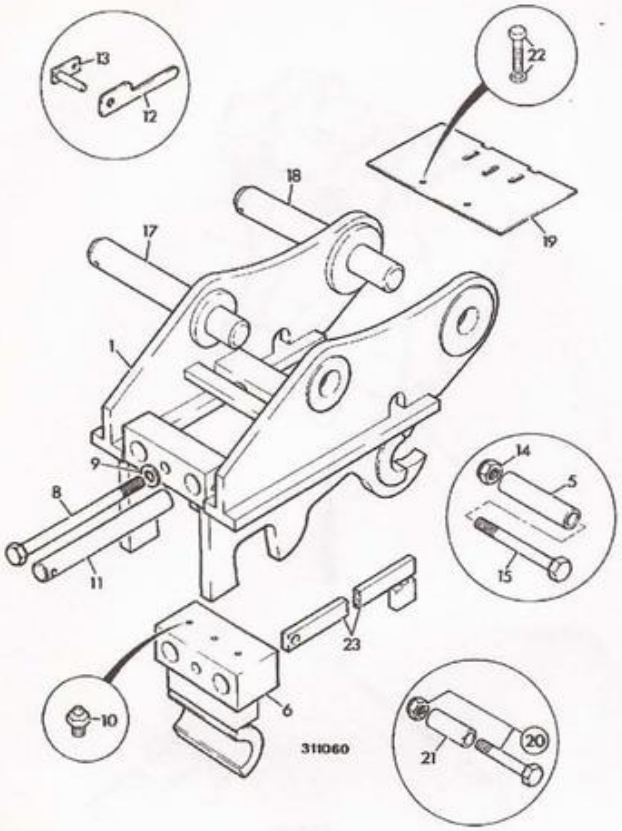

A2-6-2 QUICKHITCH, HYDRAULIC

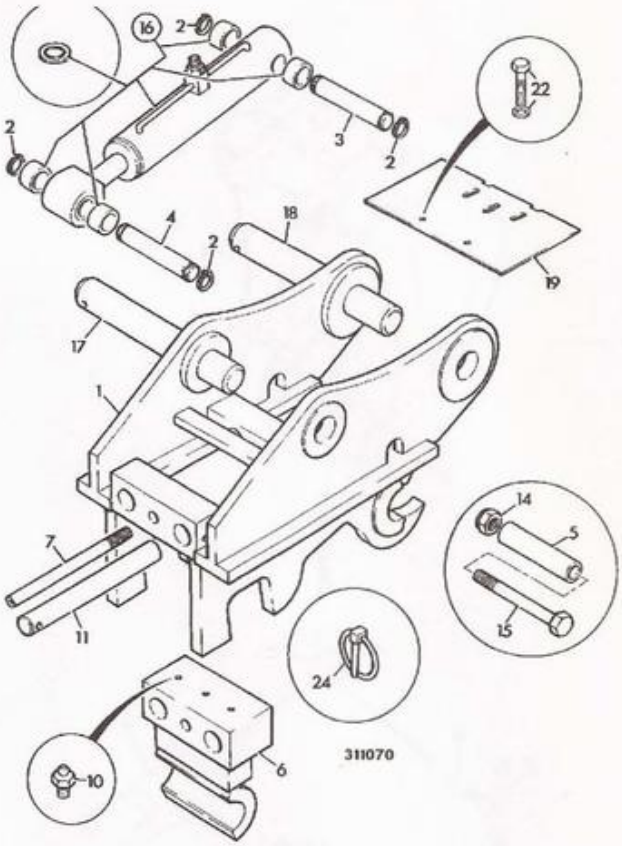

A2-6-10 QUICKHITCH, INSTALLATION KIT

Illustration Not Available at Time of Publication

B

B1 BODYWORK/FRAME
B2 CAB
B3 LOADER FRONT END
B5 REFURBISHMENTS

B1-1-1 MAINFRAME

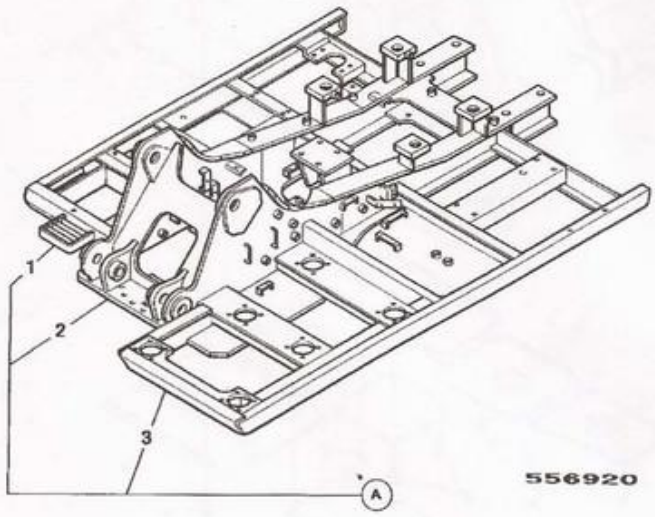

B1-1-2 MAINFRAME

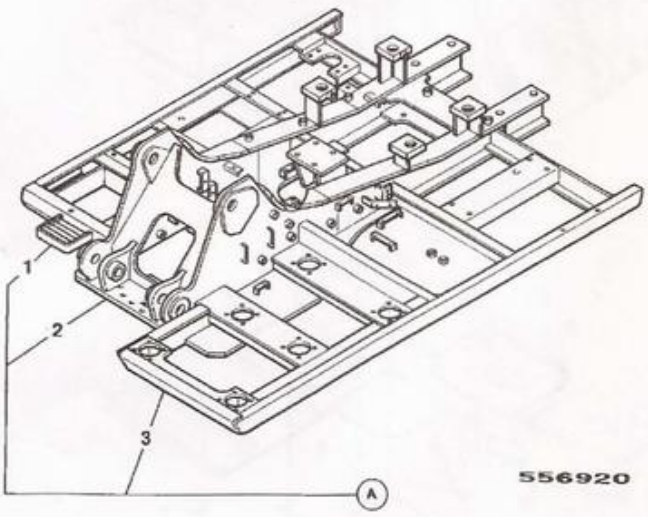

B1-1-10 MAINFRAME, JS220

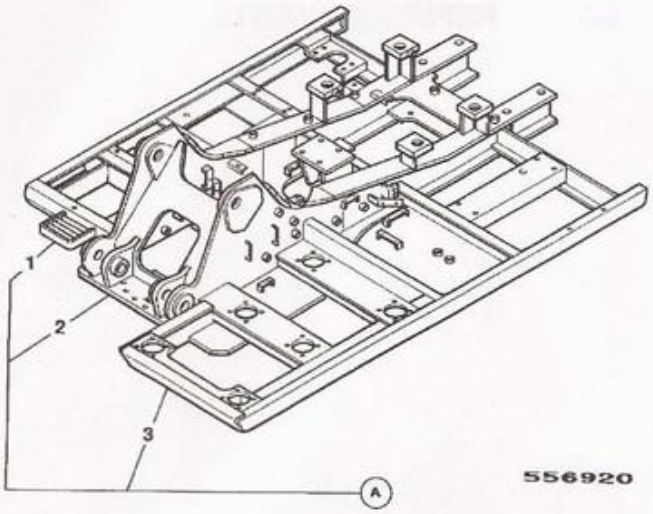

B1-1-20 MAINFRAME, JS220XD

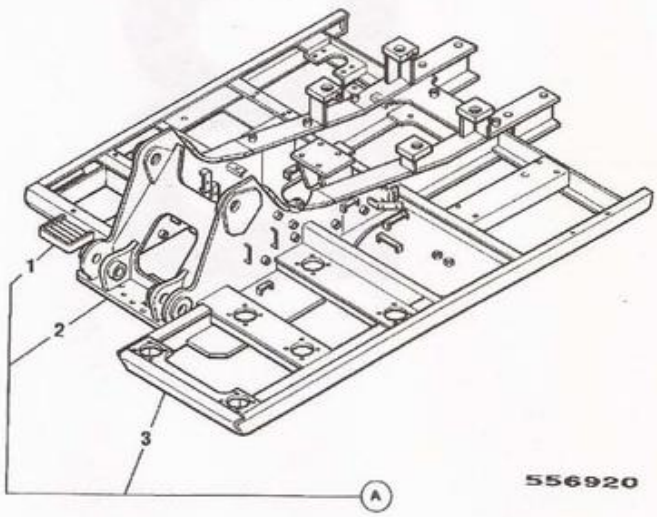

B1-2-1 COVER, LOWER, MAINFRAME

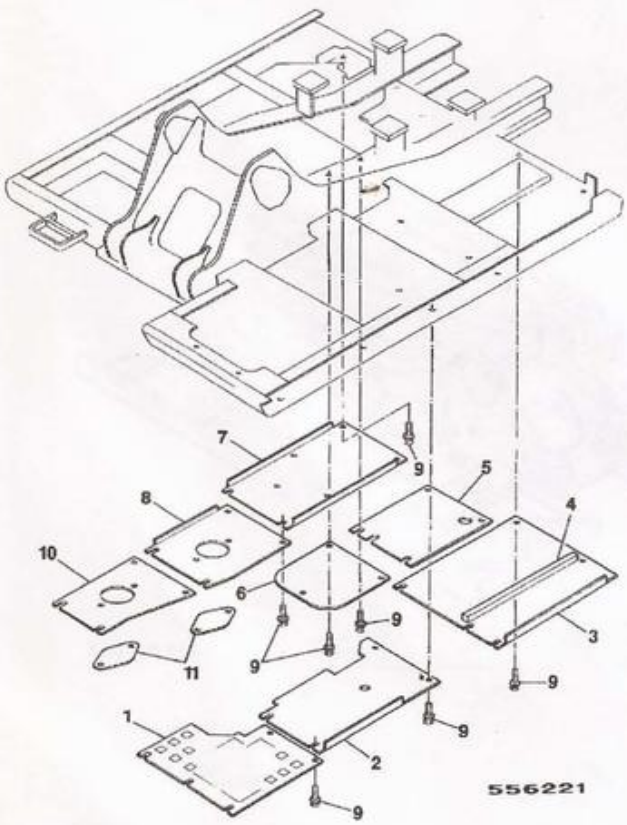

B1-2-2 COVER, LOWER, MAINFRAME

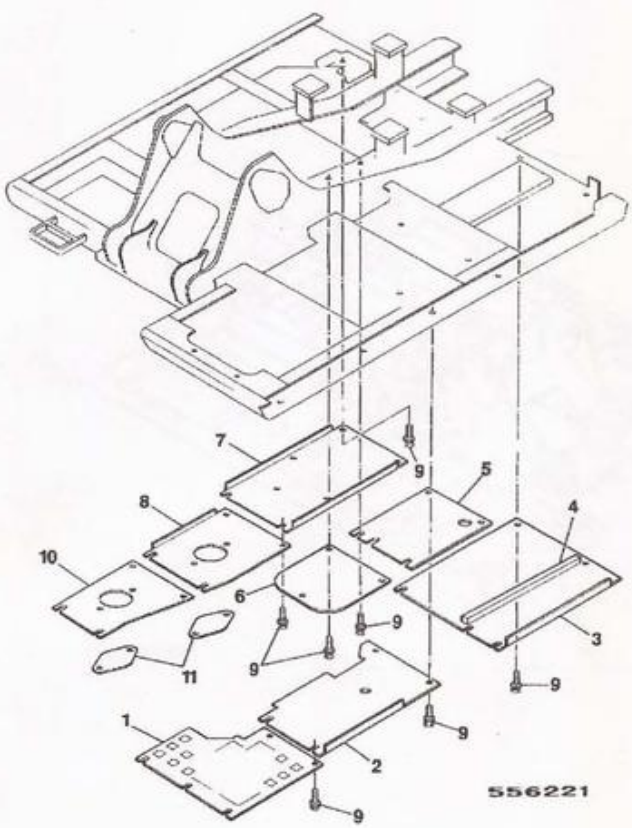

B1-2-10 COVER, LOWER, MAINFRAME, JS220

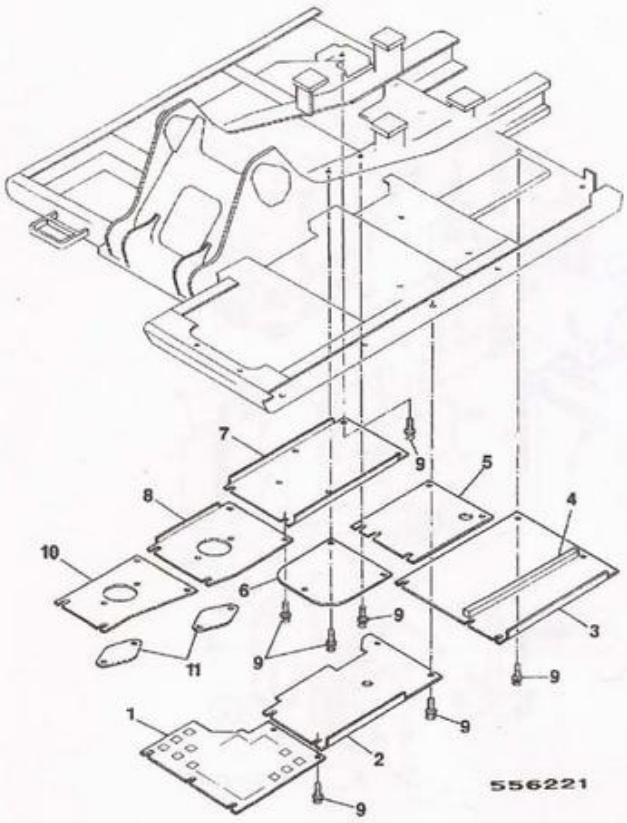

B1-2-20 COVER, LOWER, MAINFRAME, JS220XD

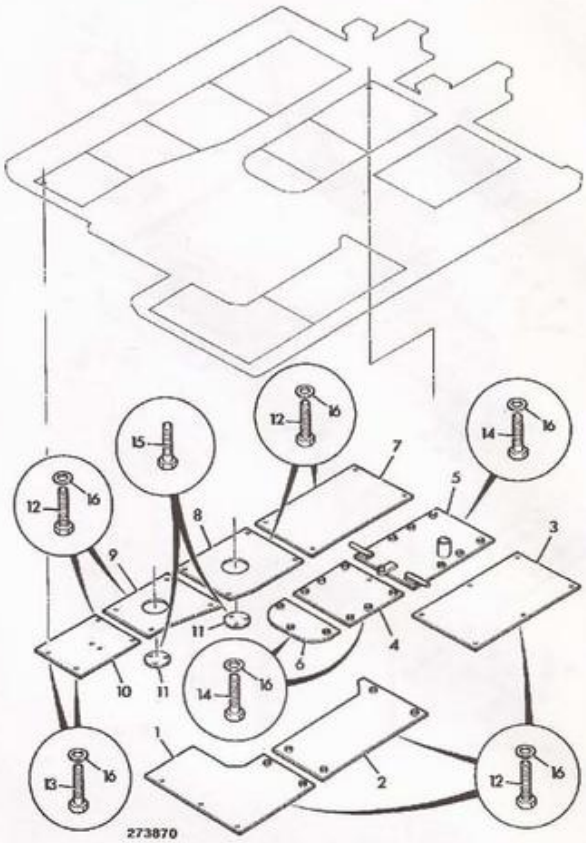

B1-3-1 TANK, HYDRAULIC

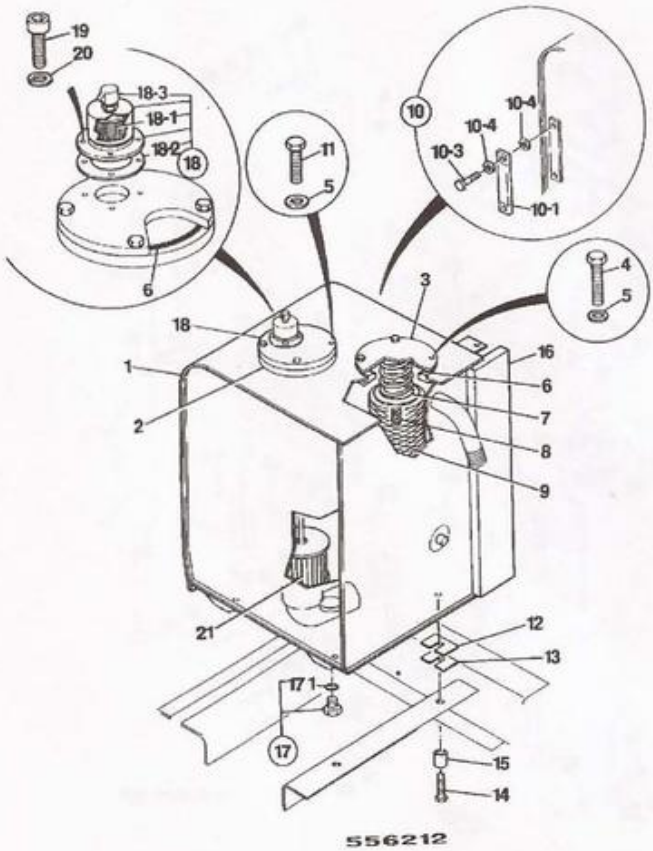

B1-4-1 TANK, DIESEL FUEL

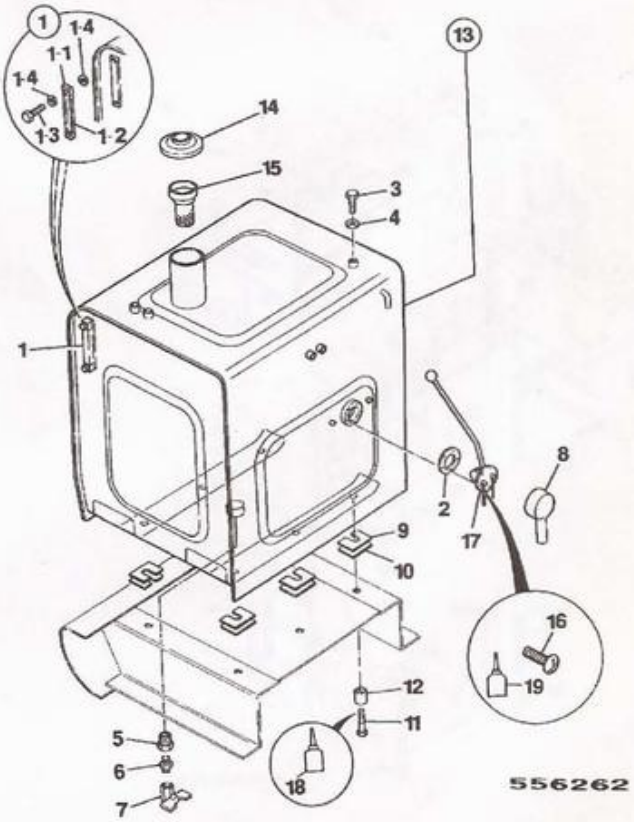

B1-5-1 COWLINGS, ENGINE COVER

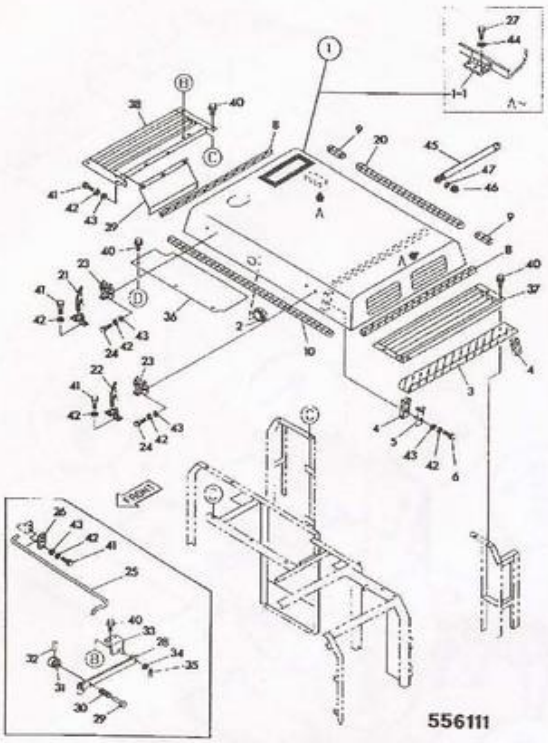

B1-5-10 COWLINGS, FIG 1

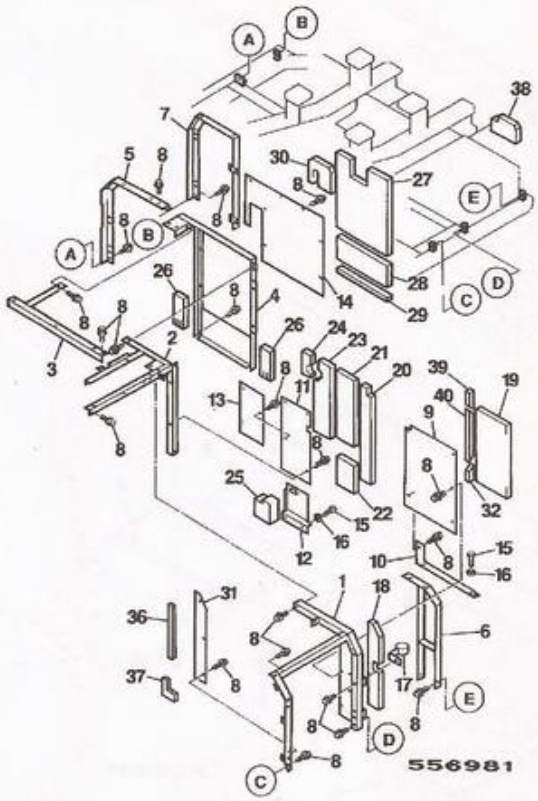

B1-5-11 COWLINGS, FIG 1, FOPS CAB CAGE

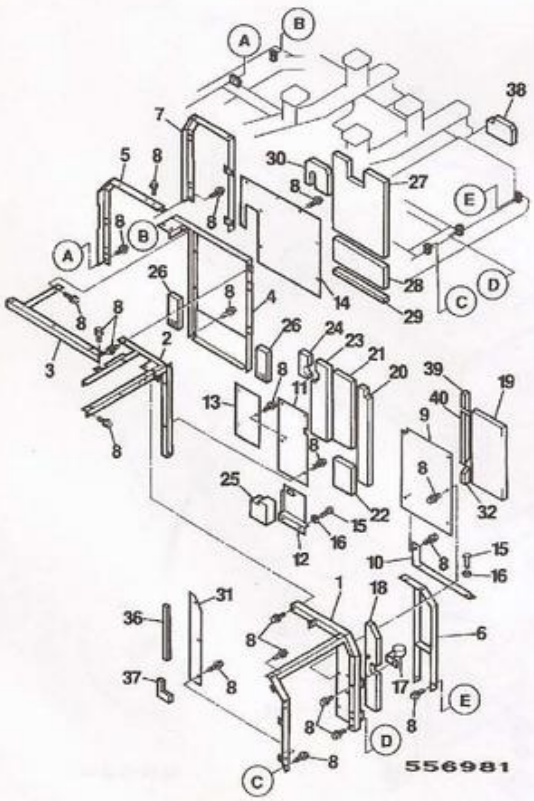

B1-5-20 COWLINGS, FIG 2

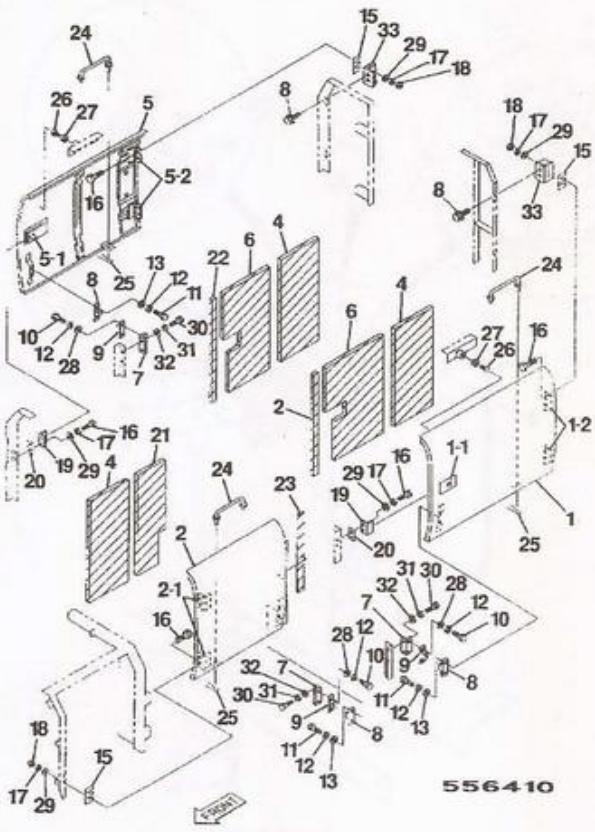

B1-5-30 COWLINGS, FIG 3

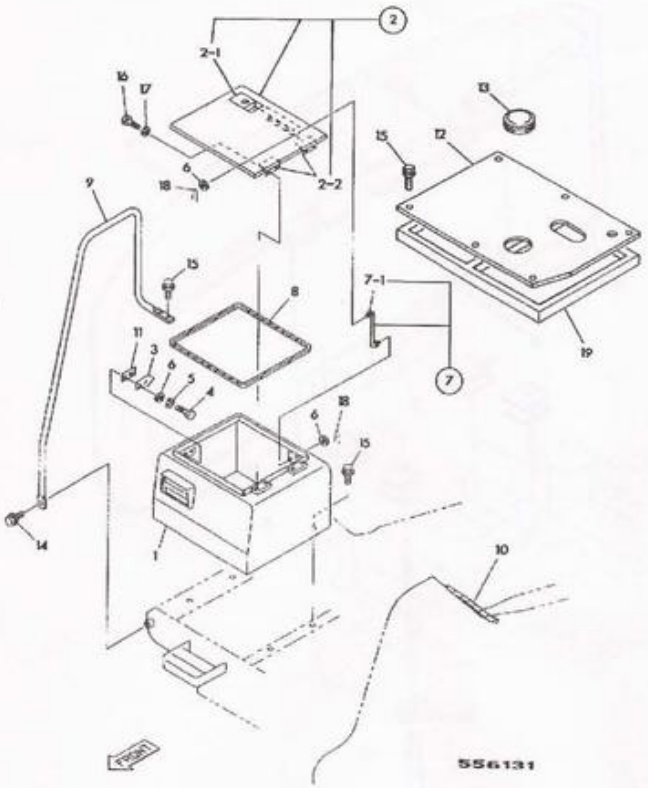

B1-6-1 COUNTERWEIGHT, REAR

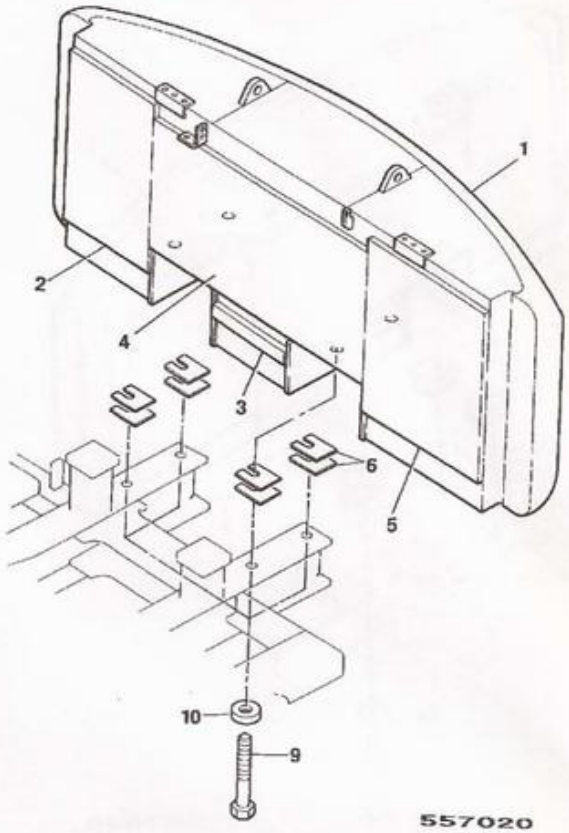

B1-6-2 COUNTERWEIGHT, REAR

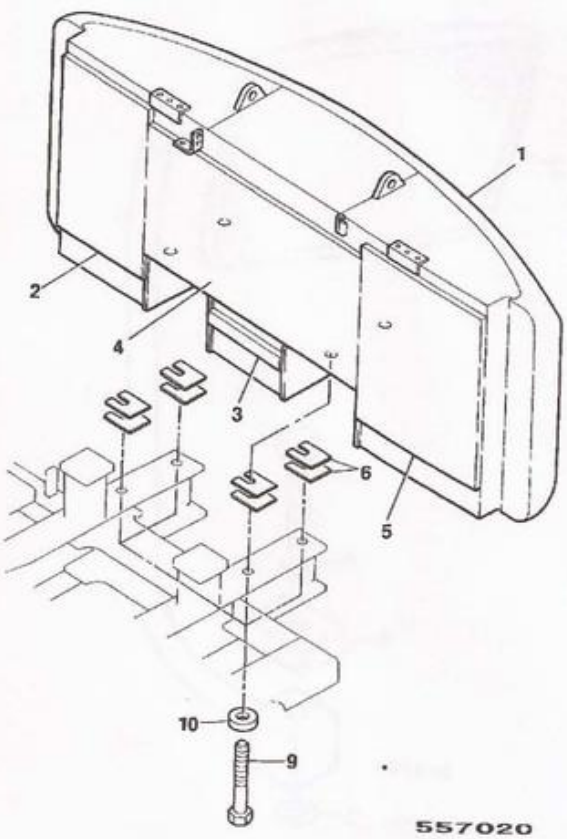

B1-6-3 COUNTERWEIGHT, REAR, JS200N SALES SPECIAL

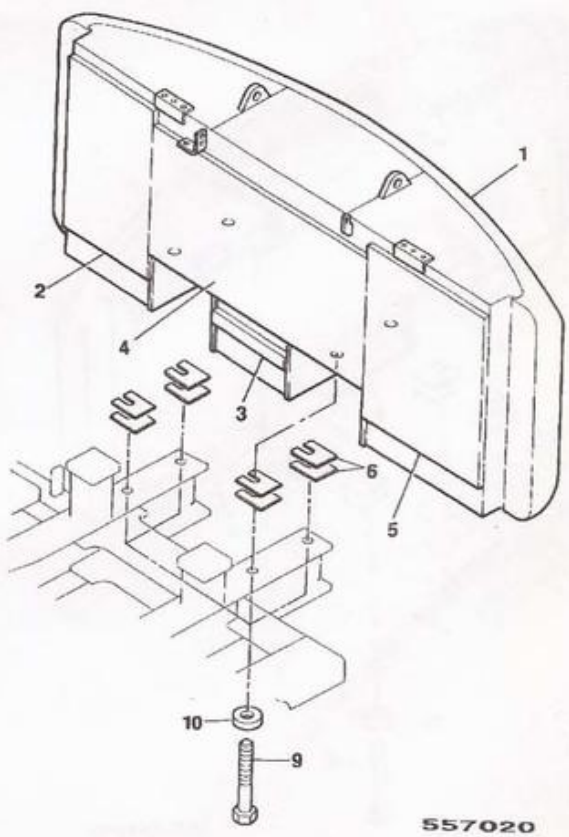

B1-6-10 COUNTERWEIGHT, REAR, 15M LONG REACH

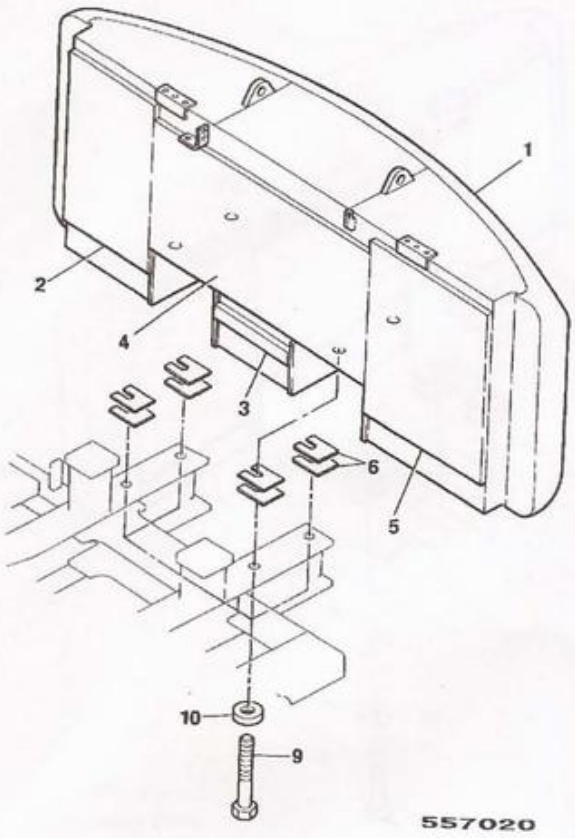

B1-6-20 COUNTERWEIGHT, REAR

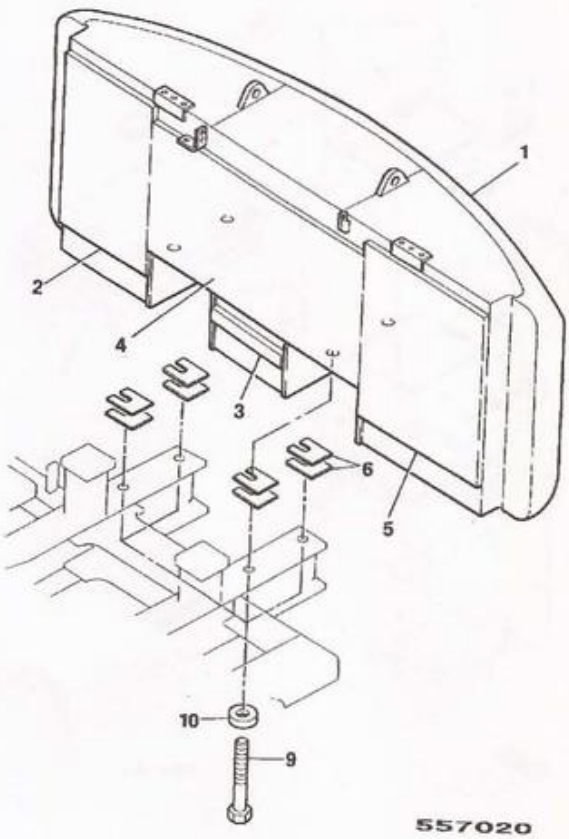

B1-6-30 COUNTERWEIGHT, REAR, JS220 XTRA DUTY

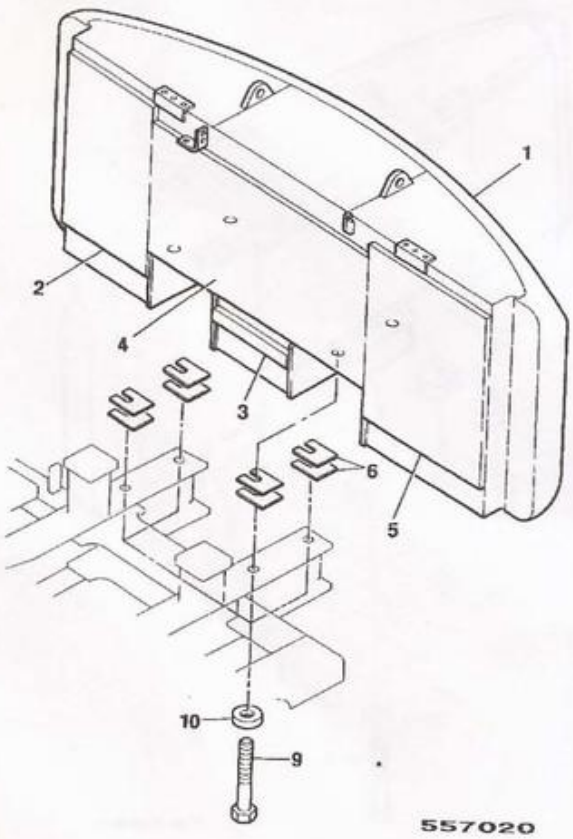

B1-6-40 REAR MIRROR., COUNTERWEIGHT

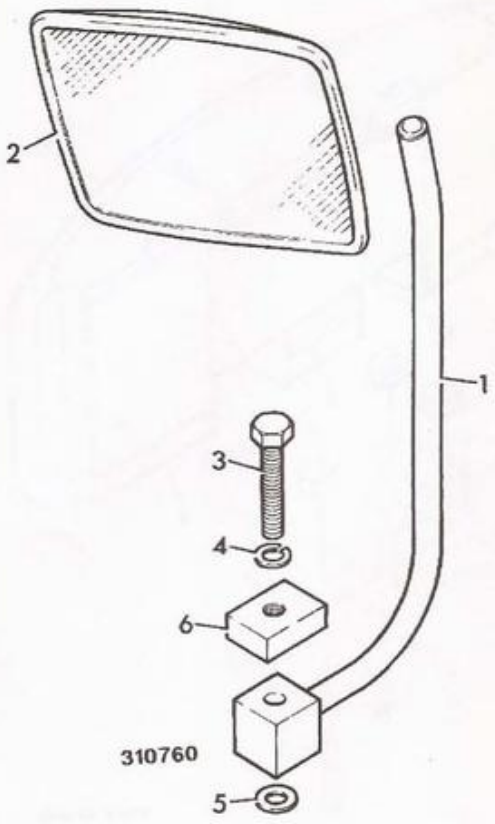

B2-1-1 CAB, FIG 1

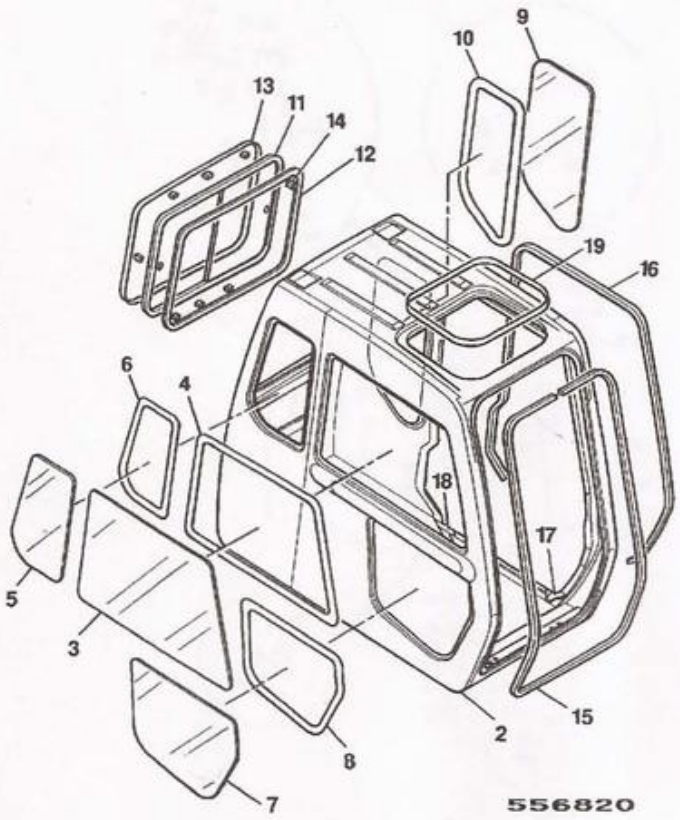

B2-1-2 CAB, FIG 1, EURO CAB

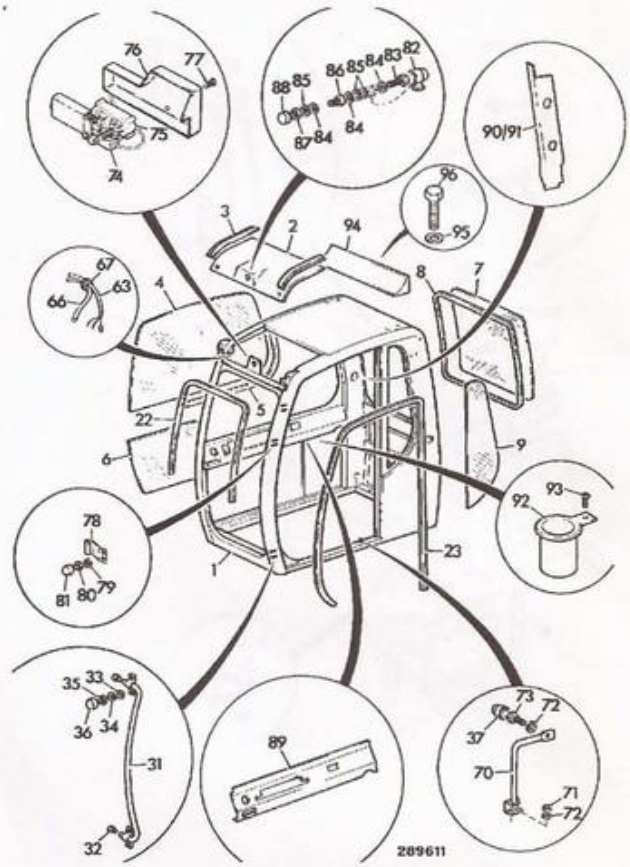

B2-1-3 CAB, FIG 1, EURO CAB

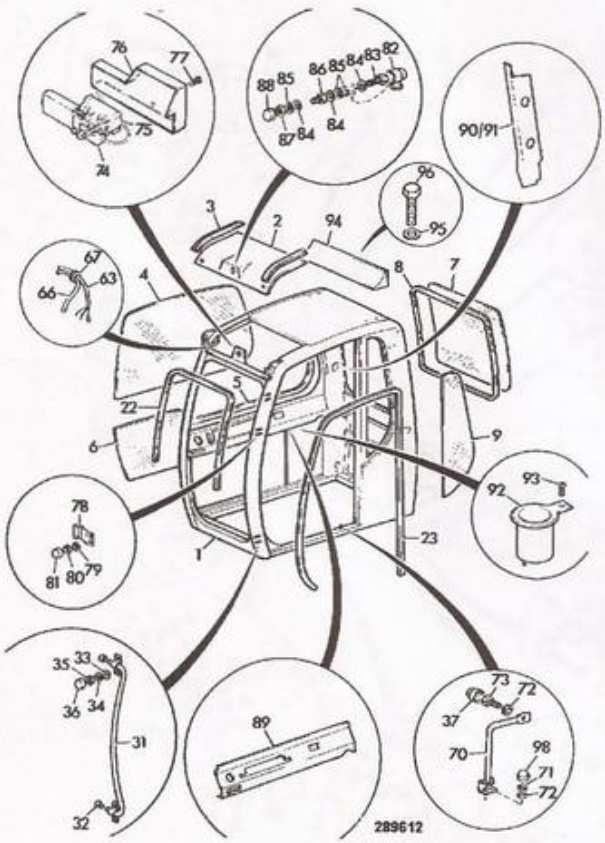

B2-1-10 CAB, FIG 2

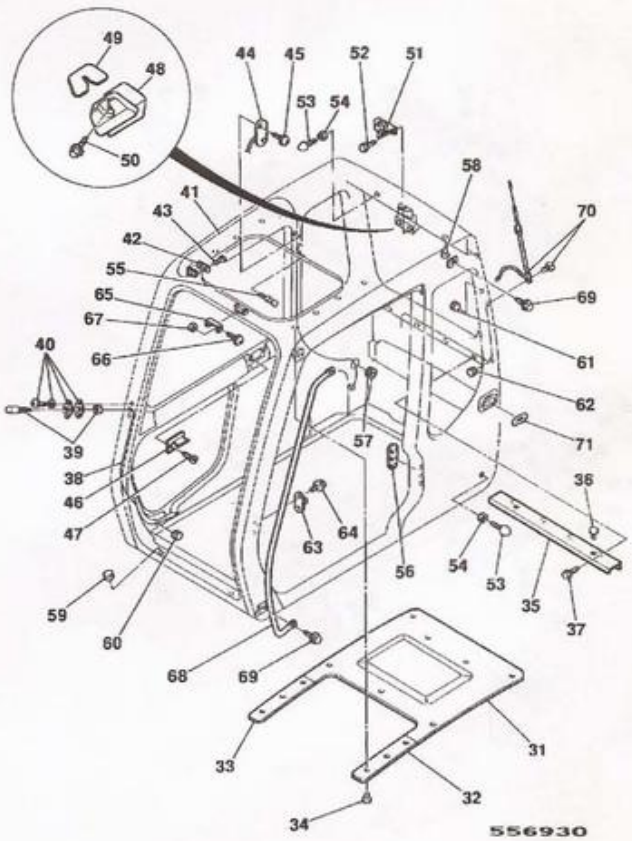

B2-1-11 CAB, FIG 2, EURO CAB

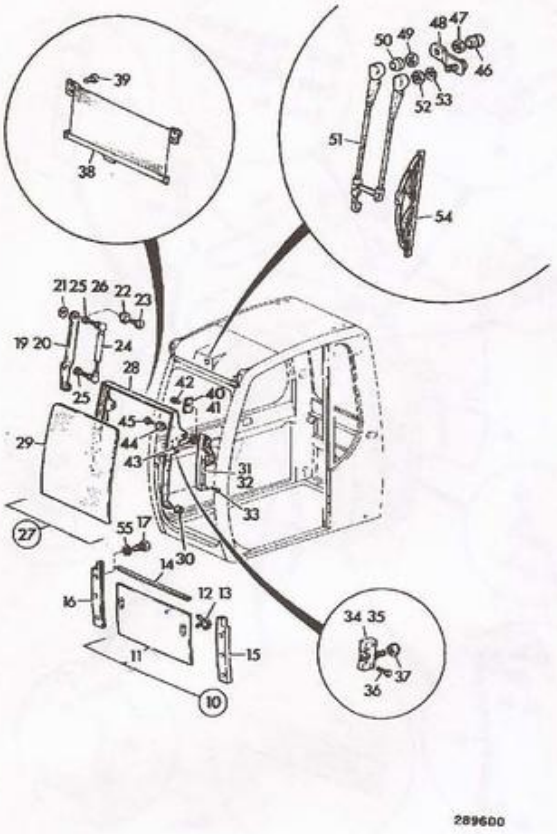

B2-1-12 CAB, FIG 2, EURO CAB

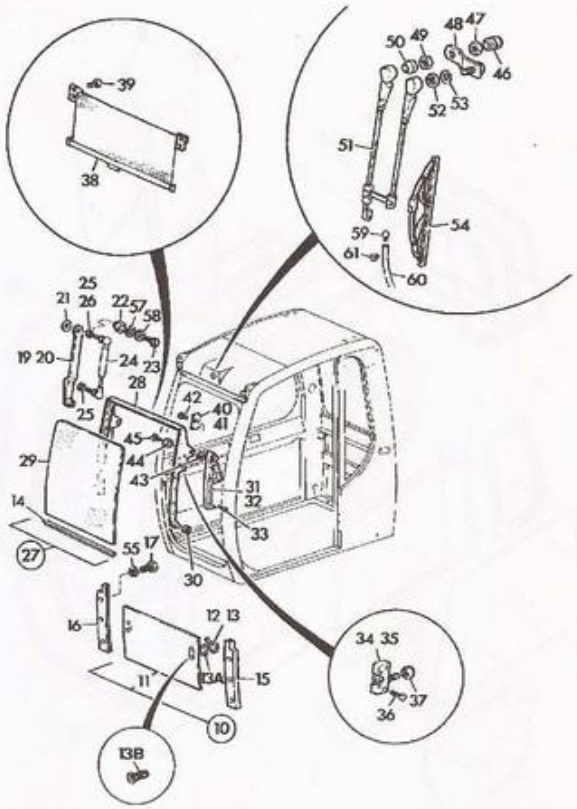

B2-1-20 CAB, FIG 3

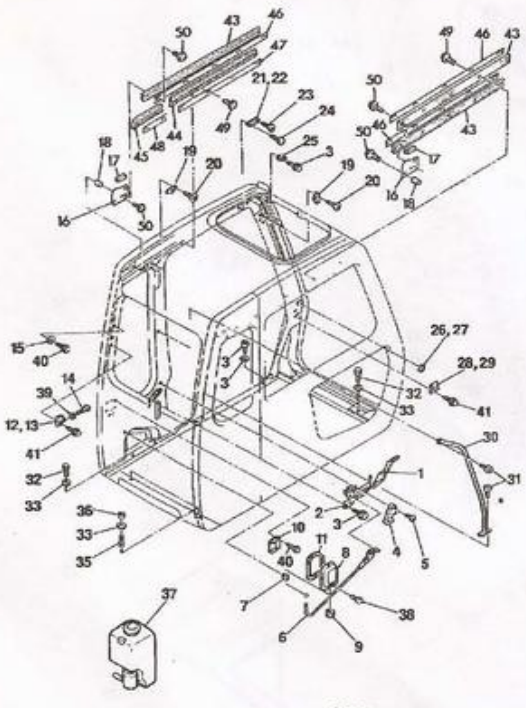

B2-1-21 CAB, FIG 3, EURO CAB

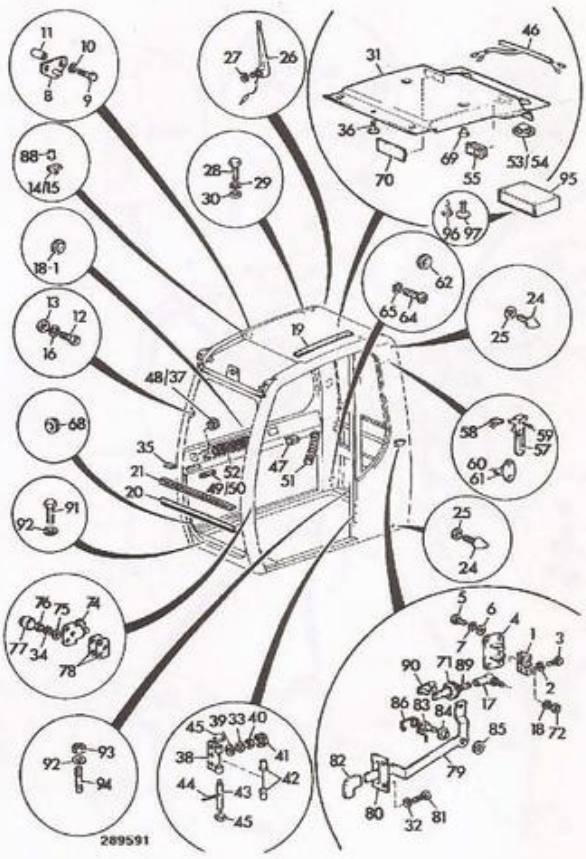

B2-1-22 CAB, FIG 3, EURO CAB

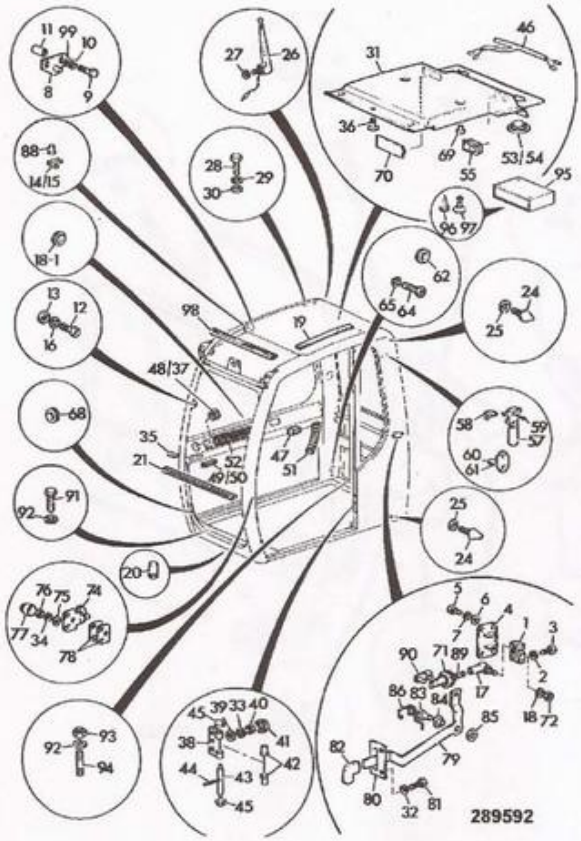

B2-1-30 CAB, FIG 4

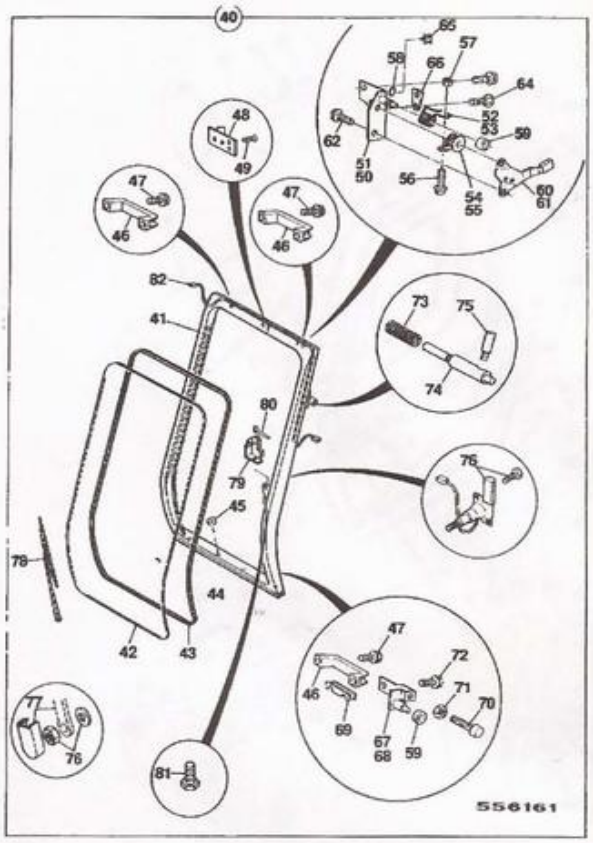

B2-1-40 CAB, FIG 5

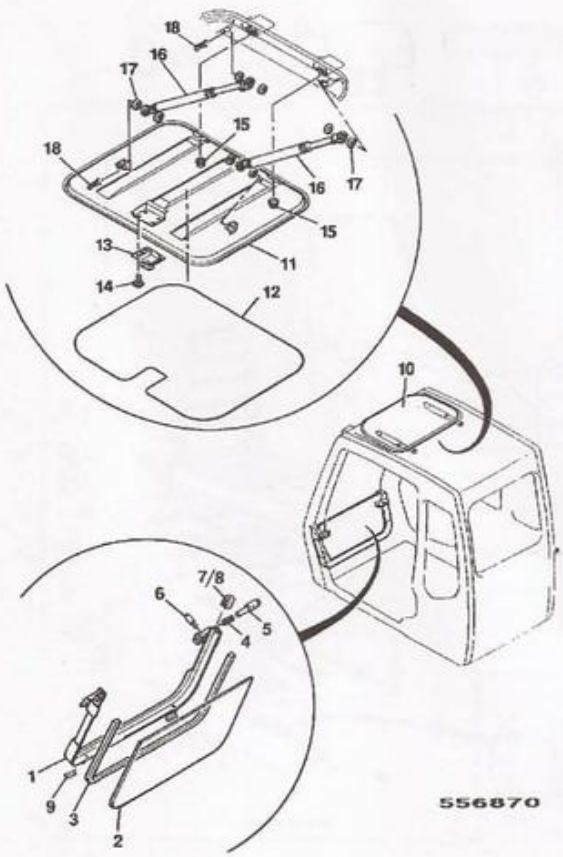

B2-1-41 SUNROOF (OPTIONAL)

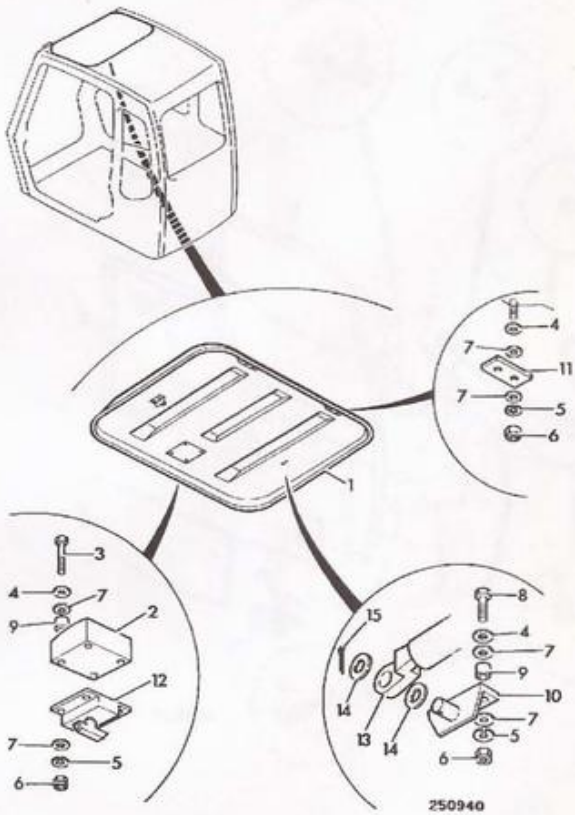

B2-2-1 DOOR & COMPONENTS

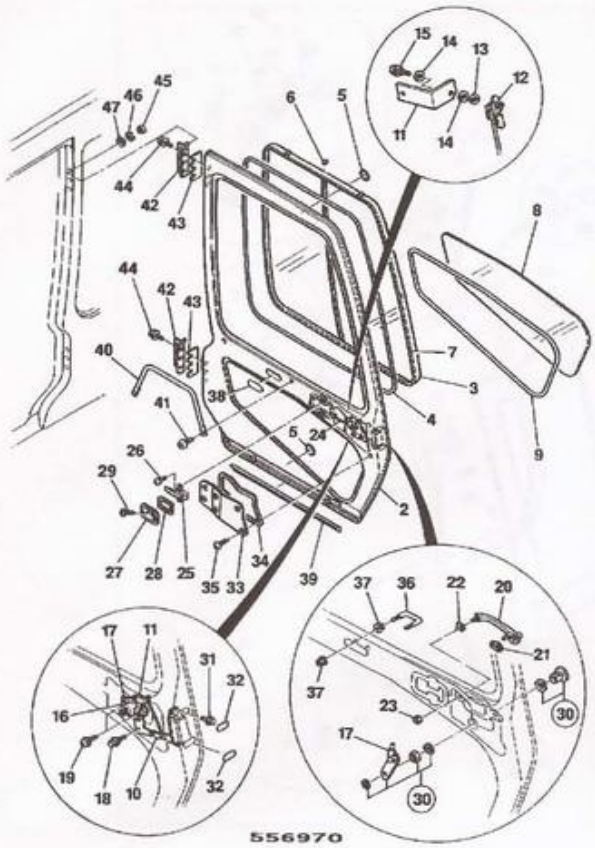

B2-2-2 DOOR & COMPONENTS, EURO CAB

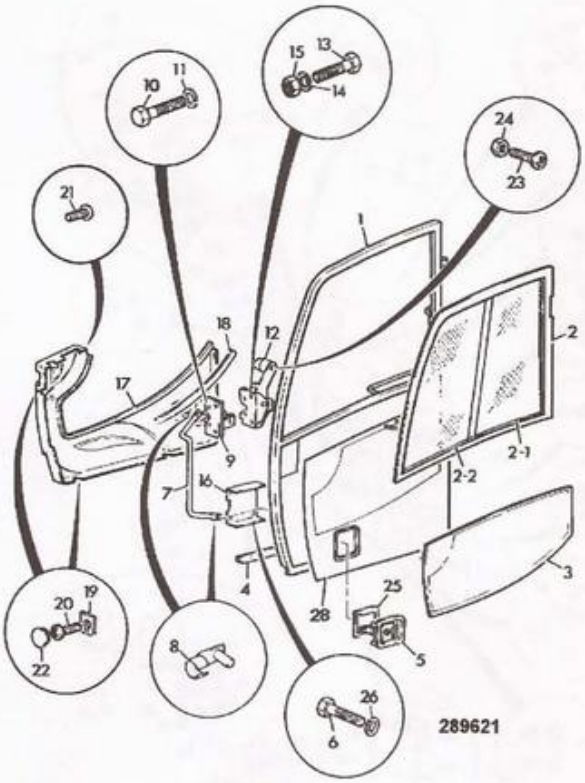

B2-2-3 DOOR & COMPONENTS, EURO CAB

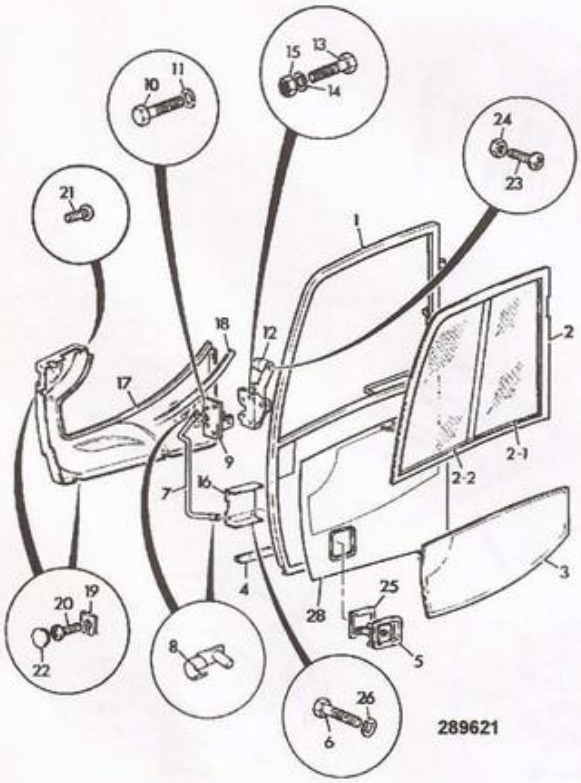

B2-3-1 SEAT

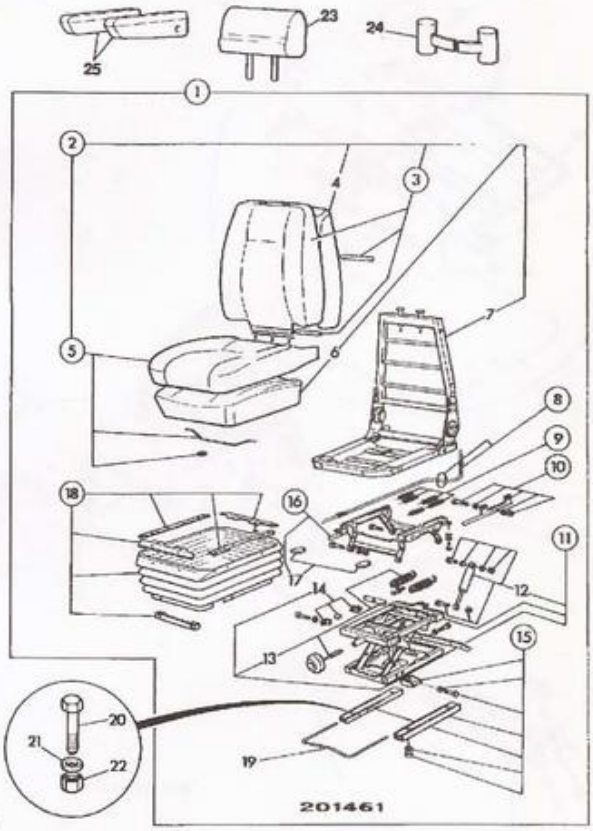

B2-4-1 CONSOLE, CAB SERVO CONTROL, LEFT HAND

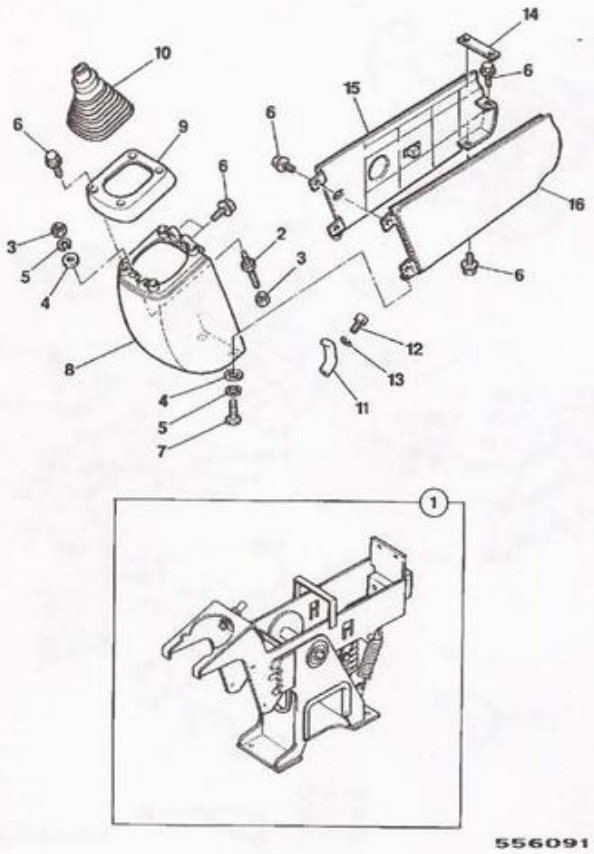

B2-4-2 CONSOLE, CAB SERVO CONTROL, LEFT HAND FIXED CONSOLE

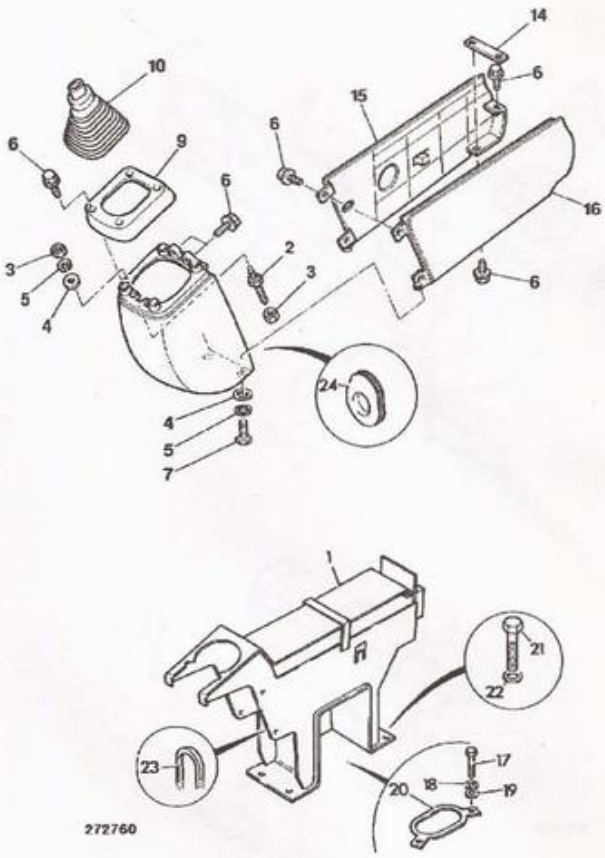

B2-4-10 CONSOLE, CAB SERVO CONTROL, LEFT HAND, FIG 2

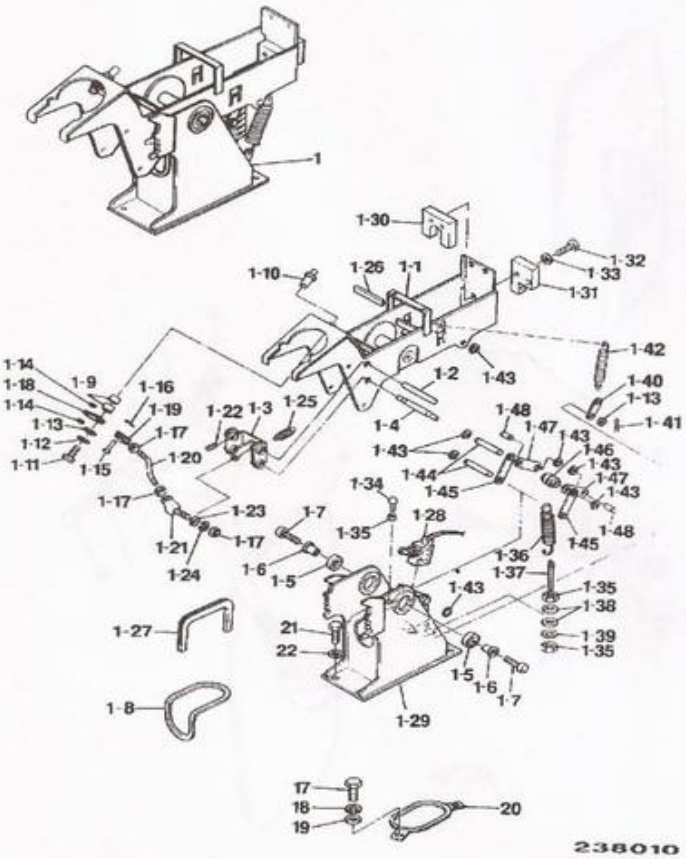

B2-5-1 CONSOLE, CAB SERVO CONTROL, RIGHT HAND

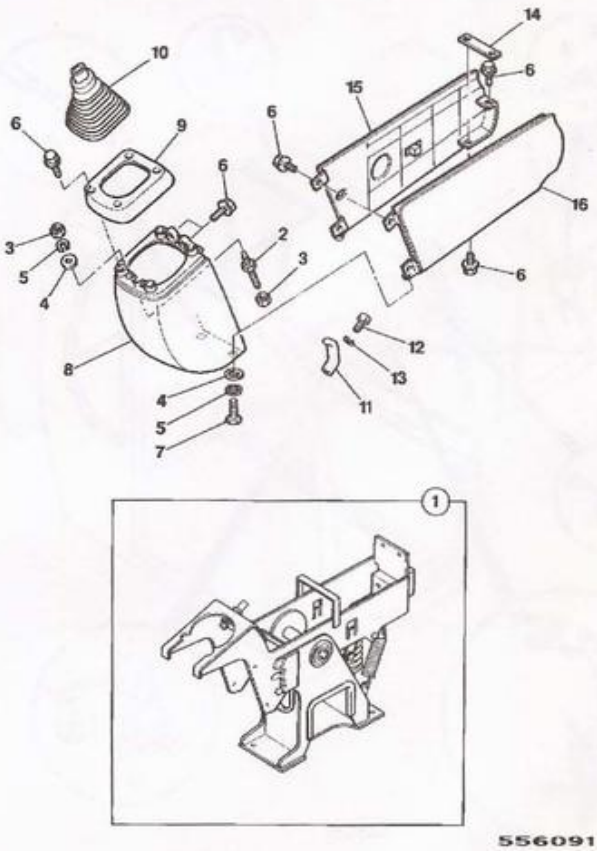

B2-5-2 CONSOLE, CAB SERVO CONTROL, RIGHT HAND FIXED CONSOLE

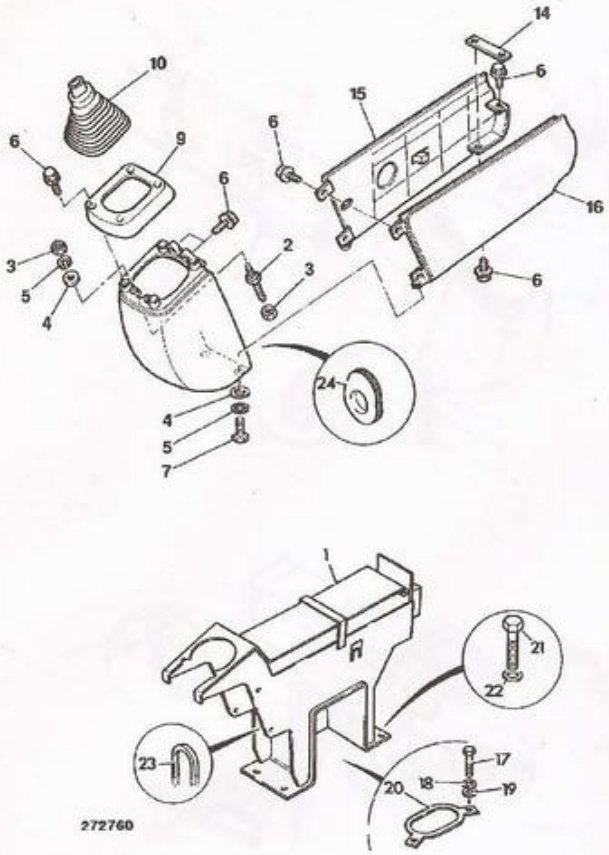

B2-5-10 CONSOLE, CAB SERVO CONTROL, RIGHT HAND, FIG 2

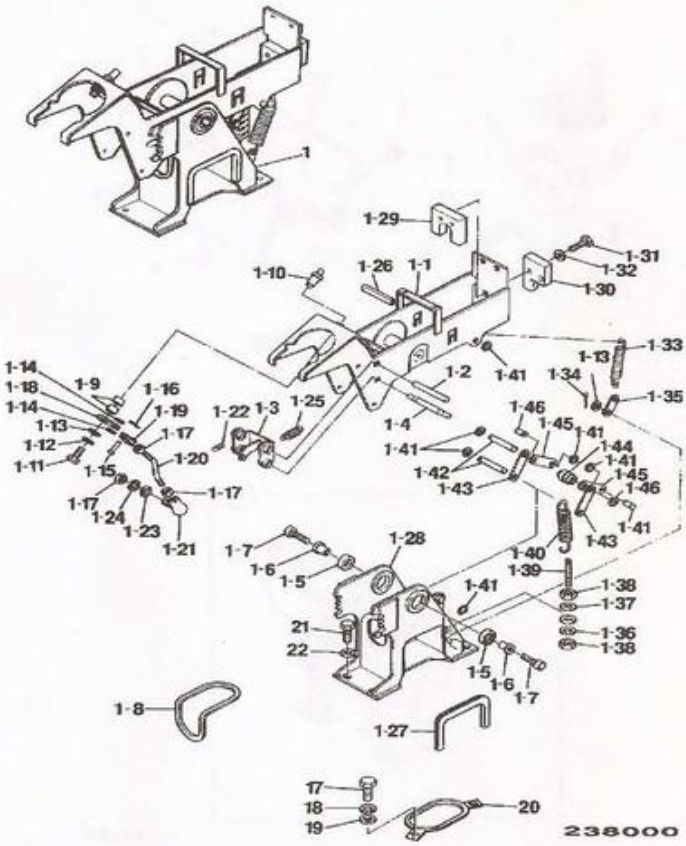

B2-6-2 WASH/WIPE, WINDSCREEN, EURO CAB

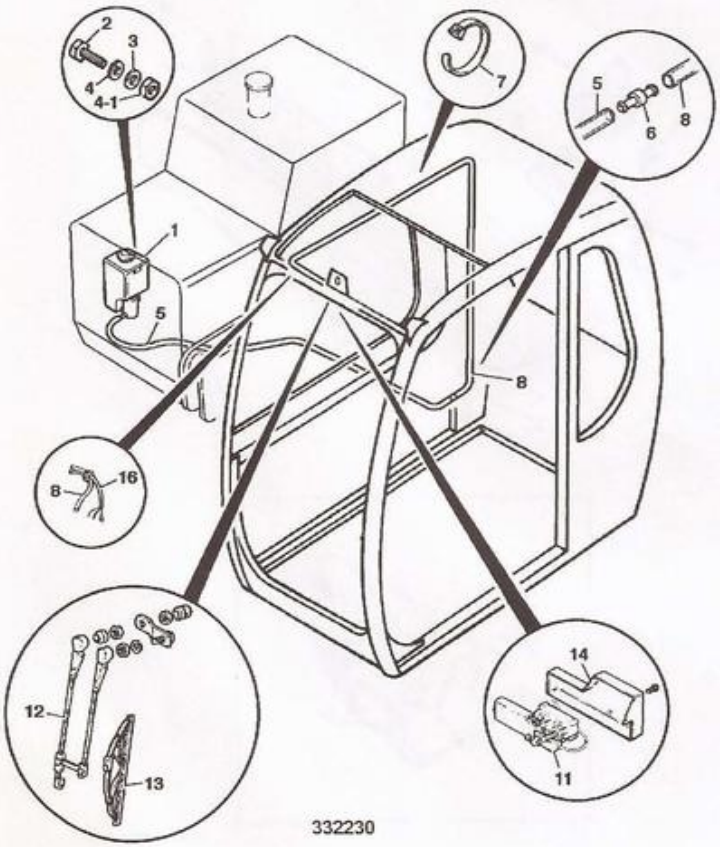

B2-7-1 MIRRORS, EXTERNAL

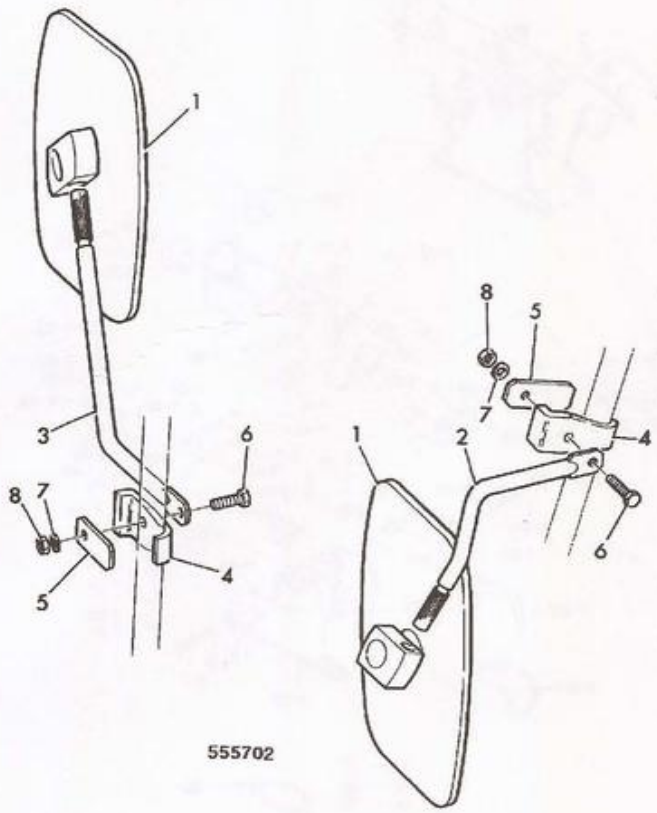

B2-9-1 GUARD, CAB FRONT WINDOW, & ROOF TOP

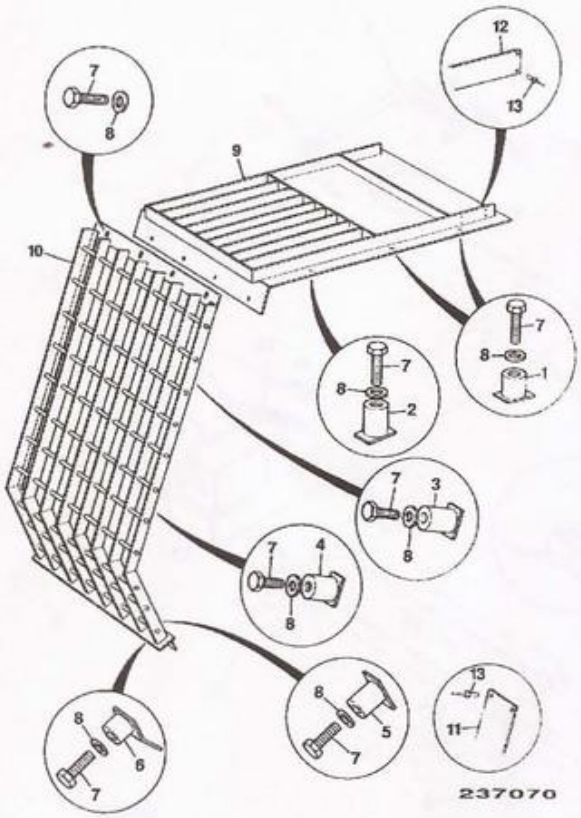

B2-9-10 GUARD, FOPS CAGE

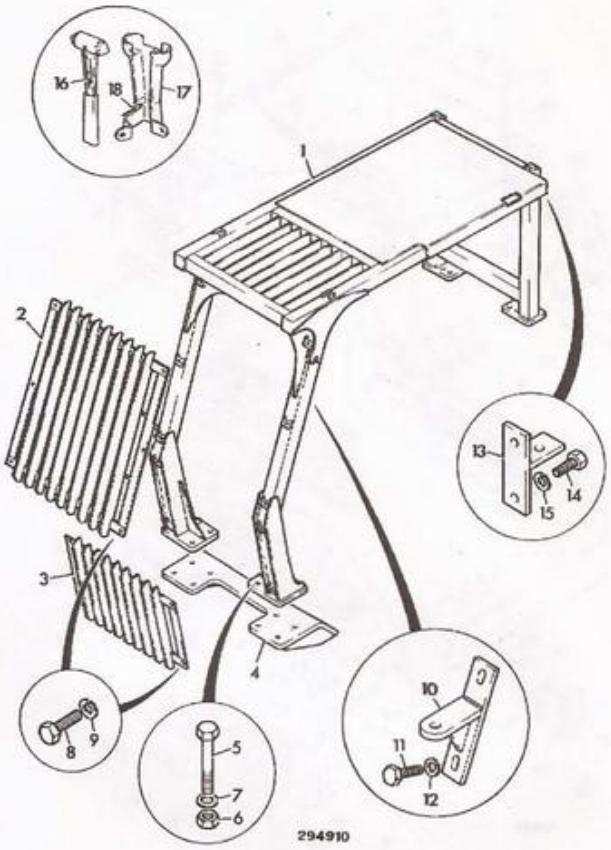

B2-9-11 GUARD, FOPS CAGE, EURO CAB JS220 HEAVY DUTY

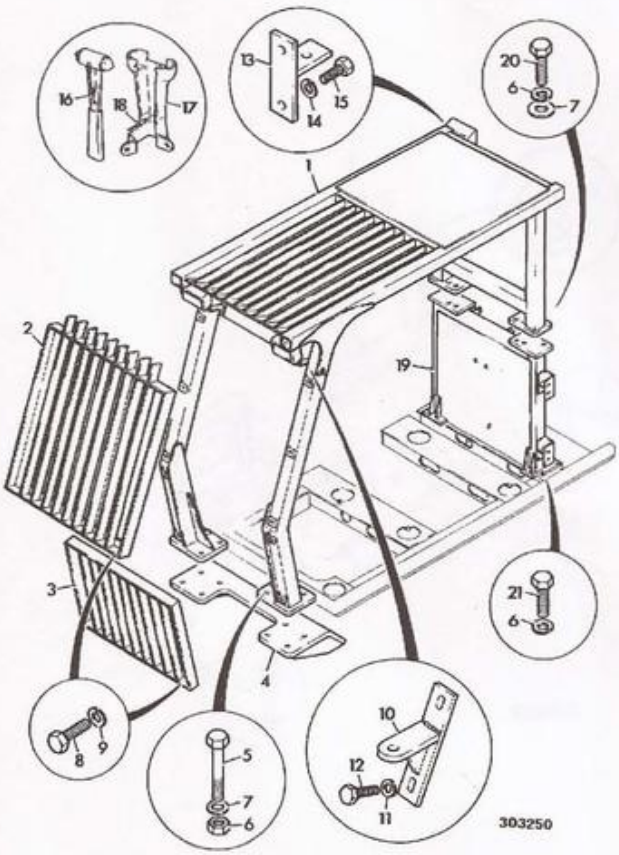

B2-9-15 GUARD, FOPS CAGE, EURO CAB

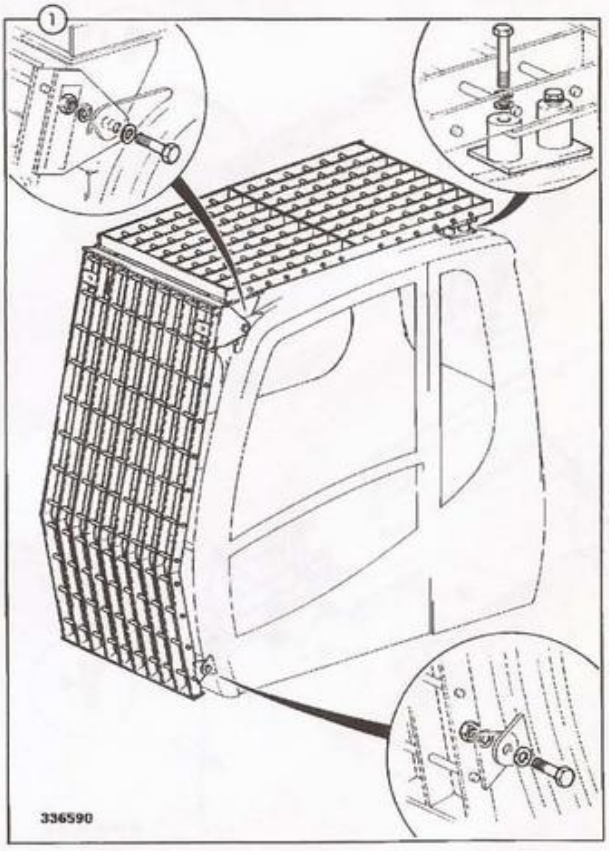

B2-10-1 FLOOR COMPONENTS, FIG 1

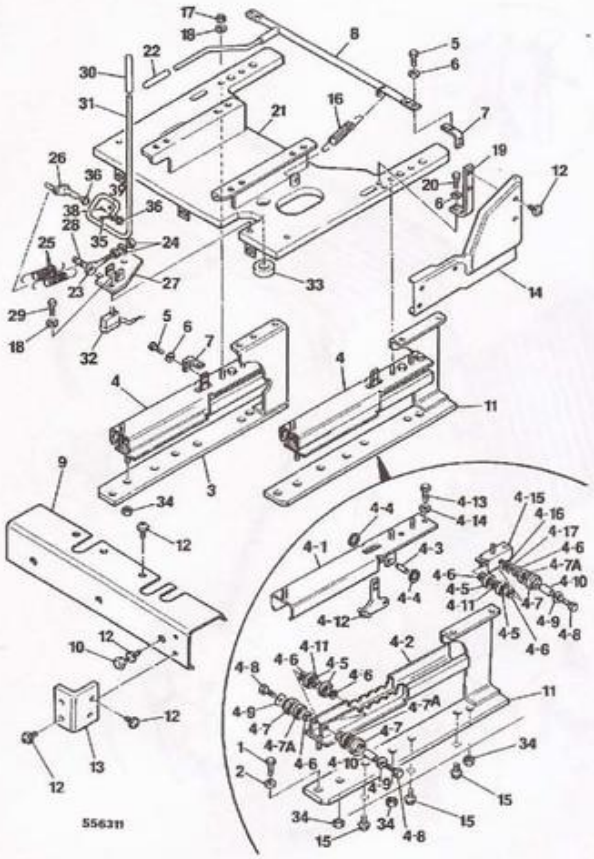

B2-10-2 FLOOR COMPONENTS, FIG 1

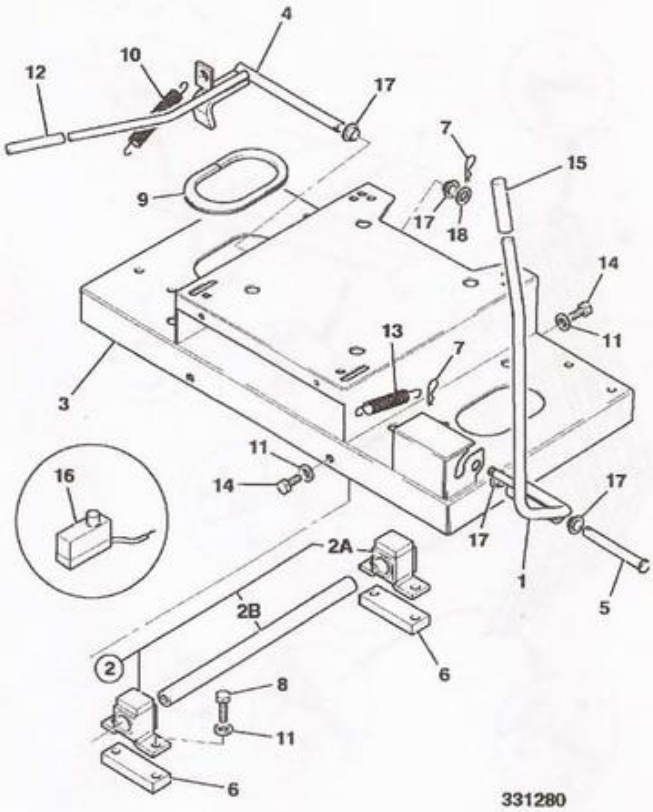

B2-10-10 FLOOR COMPONENTS, FIG 2

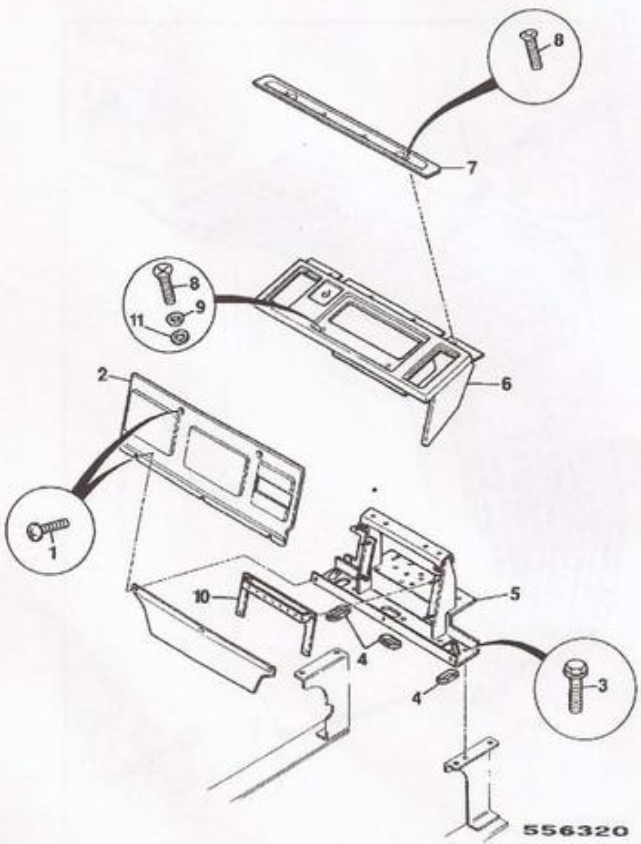

B2-10-20 FLOOR COMPONENTS, FIG 2, EURO CAB

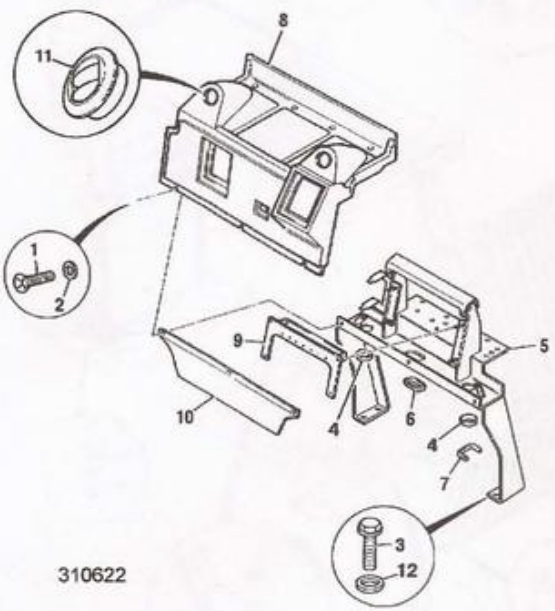

B2-10-30 FLOOR COMPONENTS, FIG 2, EURO CAB

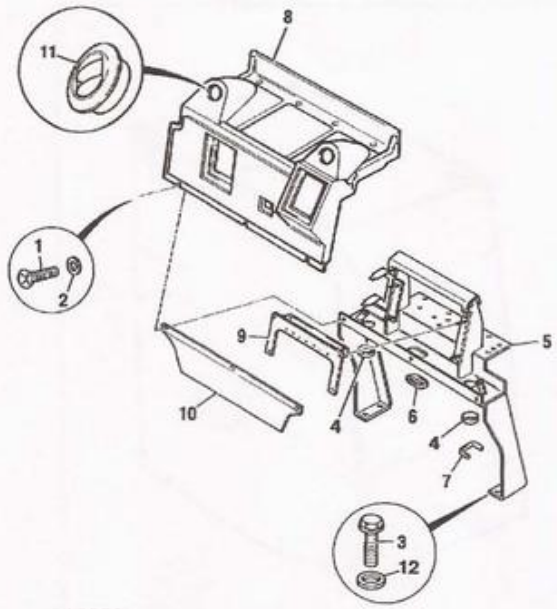

310623

B2-11-1 FIRE EXTINGUISHER

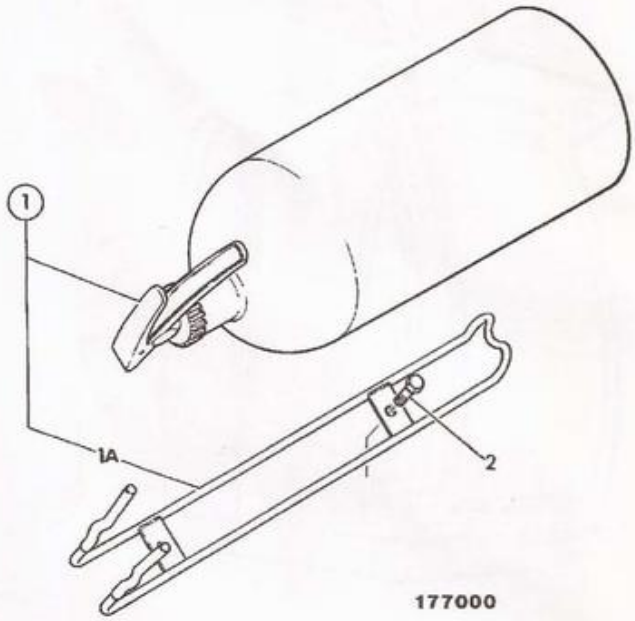

177000

B2-12-1 RAIN VISOR

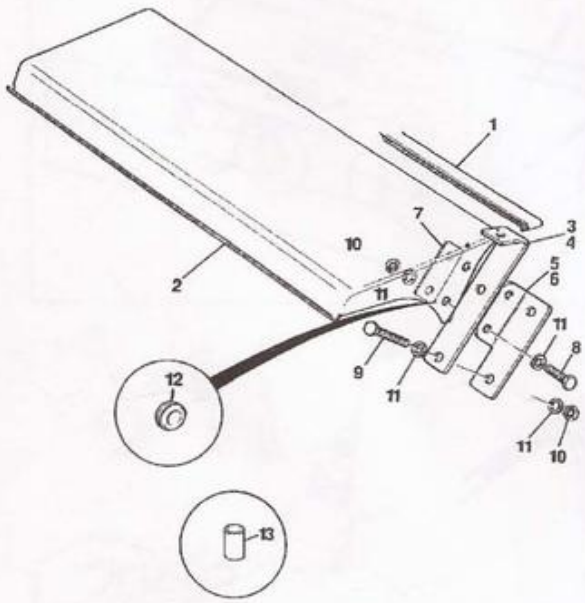

279200

B2-12-2 VISOR, SUN

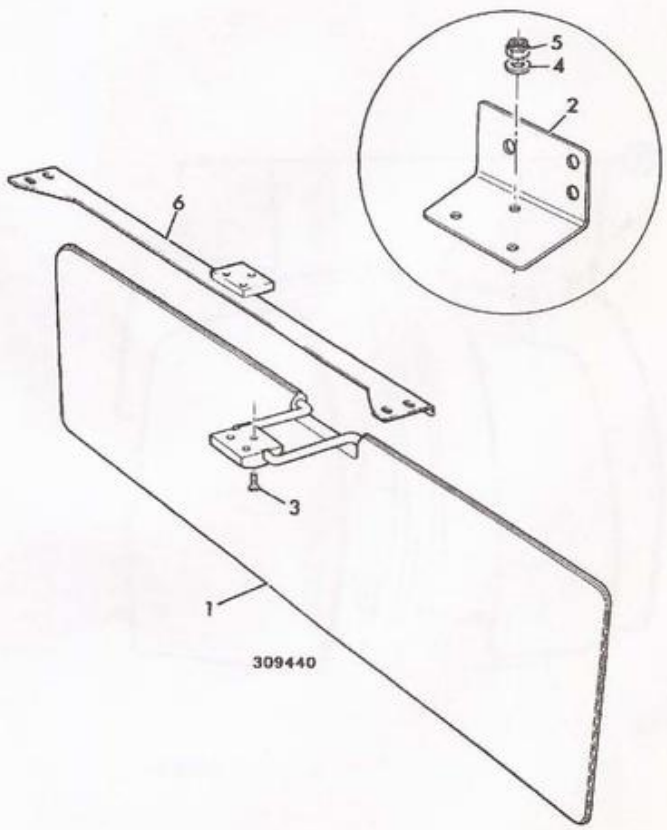

309440

B2-12-3 RAIN VISOR, EURO CAB

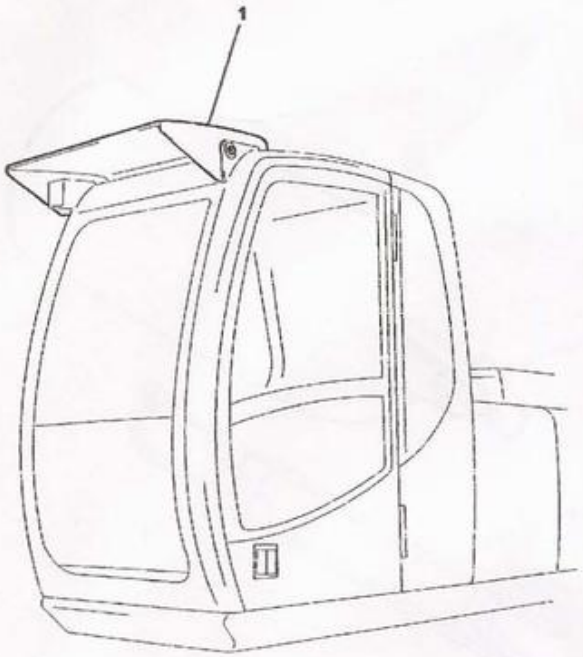

333260

B2-13-1 COVER, CAB, OVERNIGHT

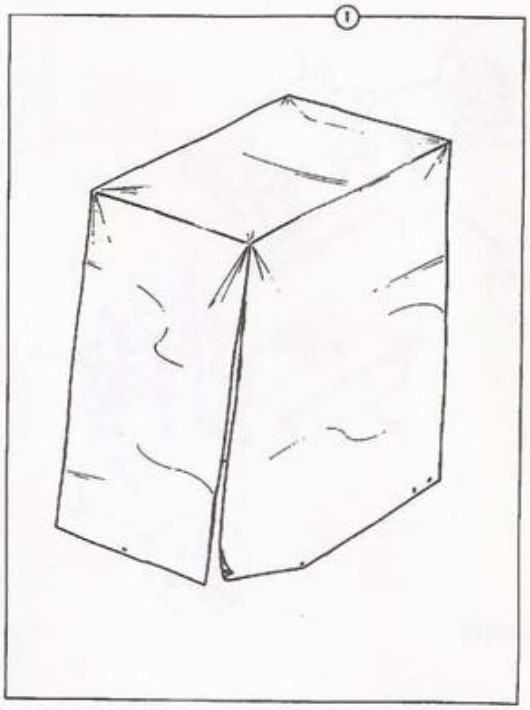

147580

B2-13-4 VANDAL GUARD, EURO CAB

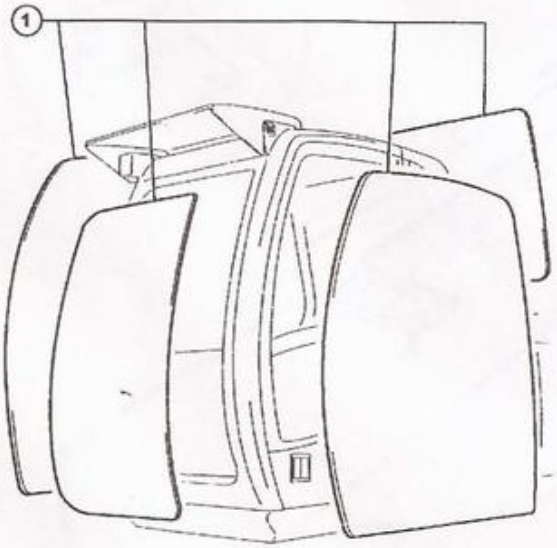

333270

B2-18-1 DIRECT GLAZING, REPLACEMENT MATERIAL, EURO CAB

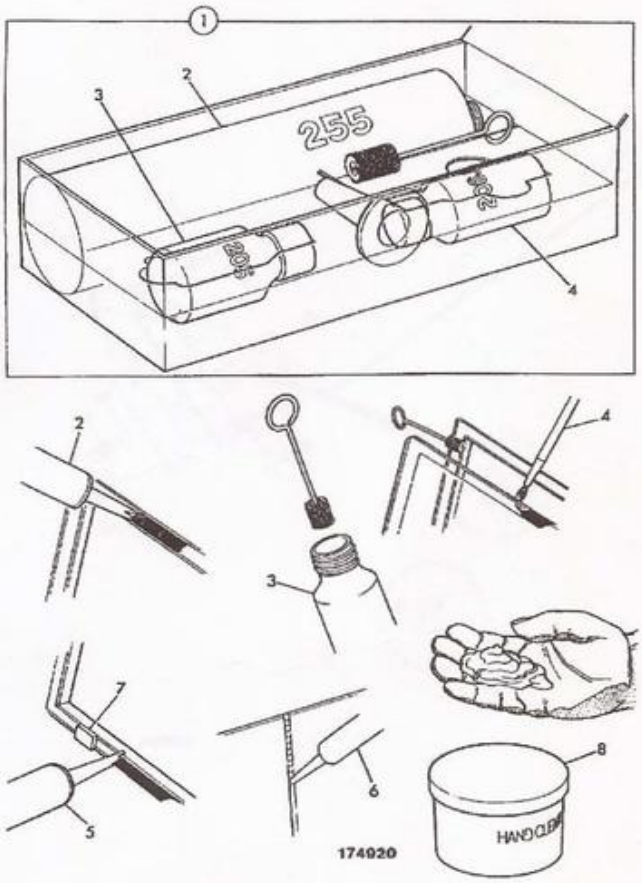

174920

B3-1-1 BOOM

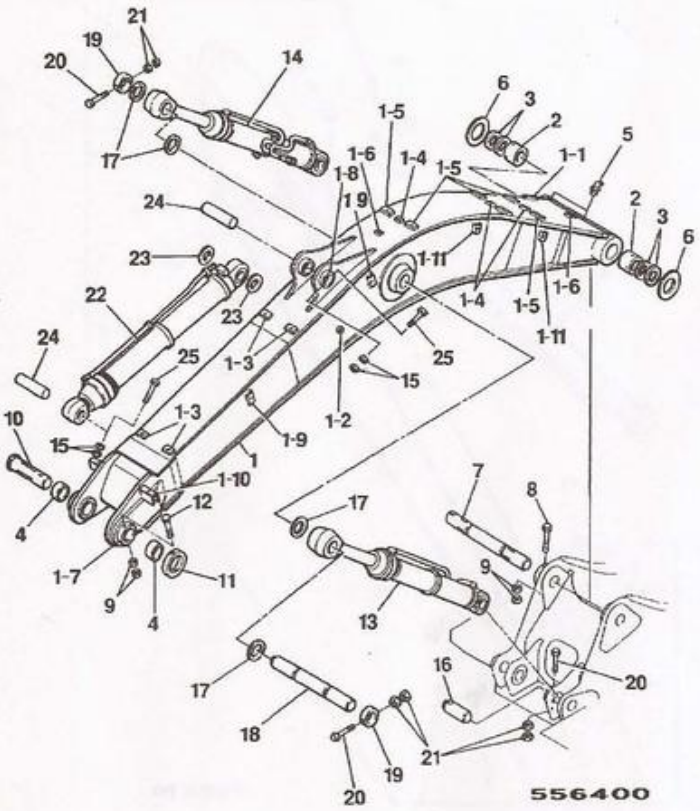

B3-1-10 BOOM, 15M LONG REACH

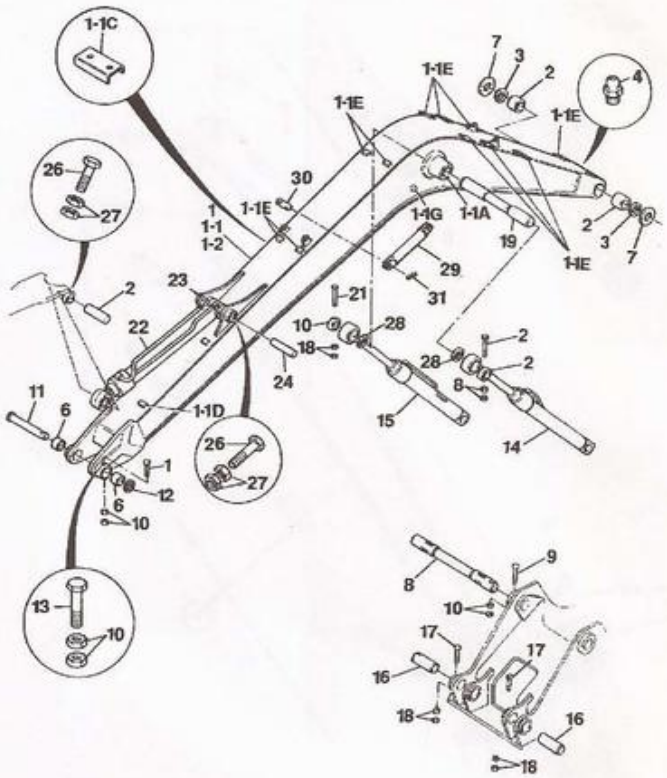

B3-2-1 DIPPER 1.91M

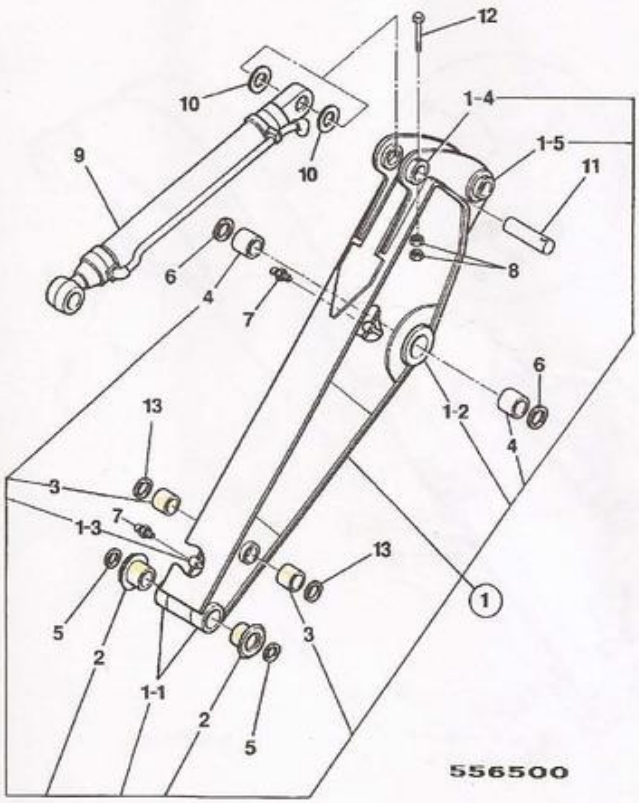

B3-2-10 DIPPER 2.4M

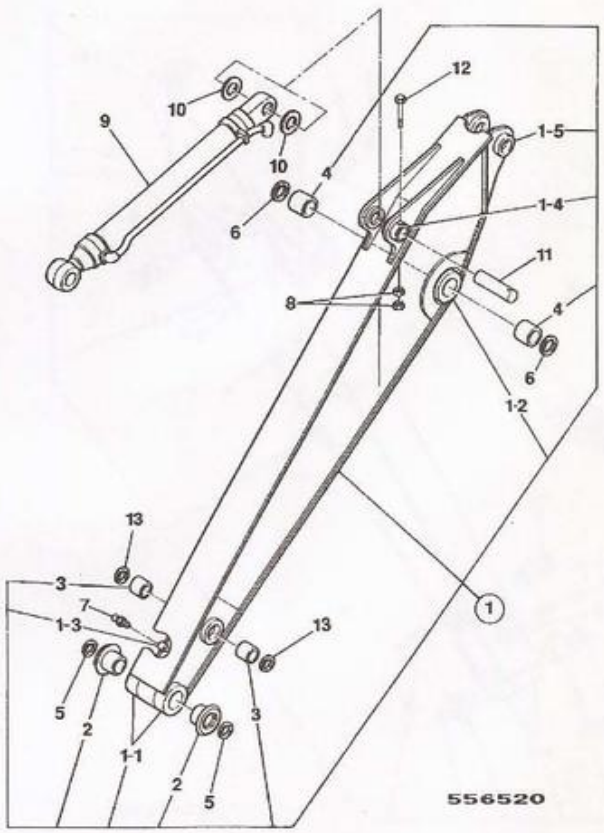

B3-2-11 DIPPER 2.4M, JS220 XTRA DUTY

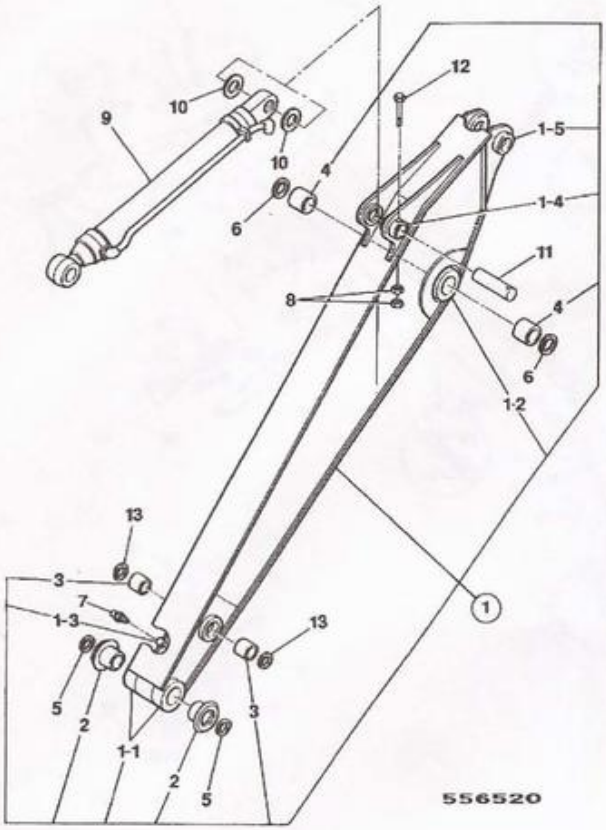

B3-2-20 DIPPER 3.0M

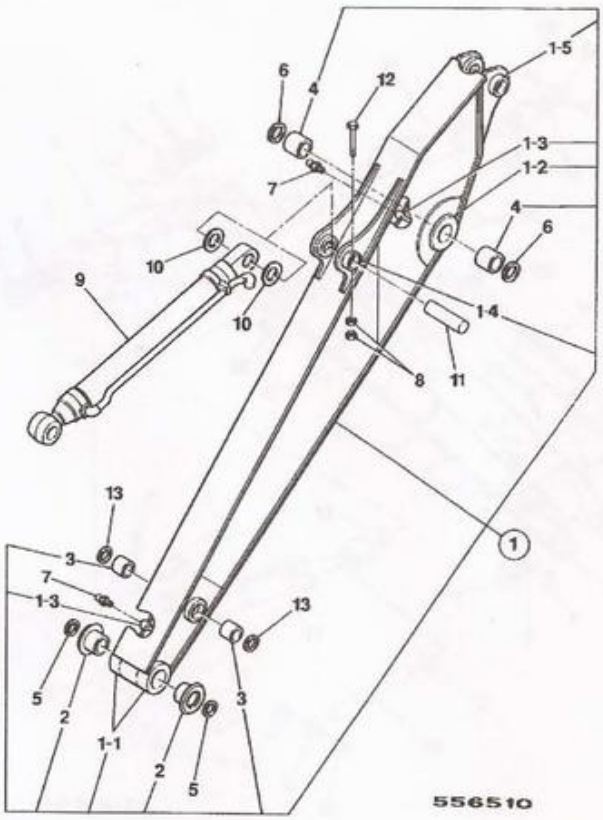

B3-2-21 DIPPER 3.0M, JS220 XTRA DUTY

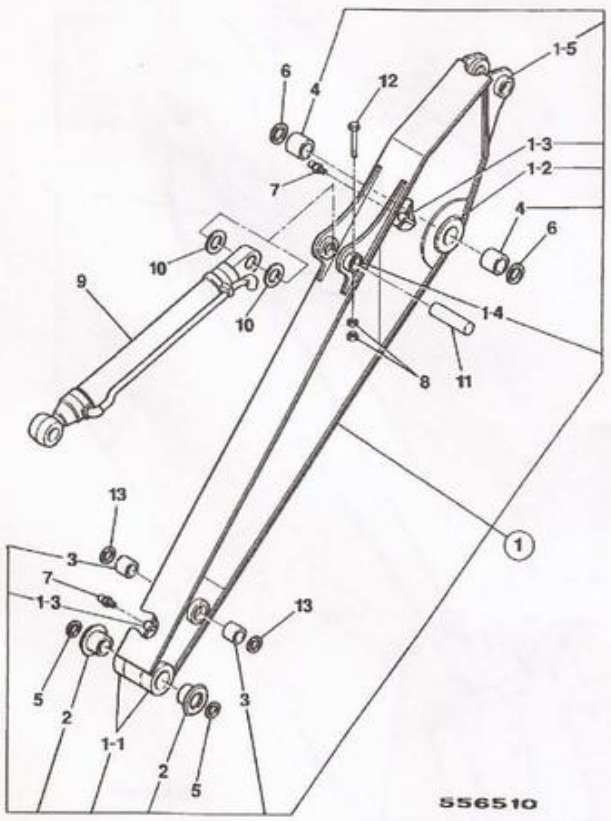

B3-2-30 DIPPER, 6.4M

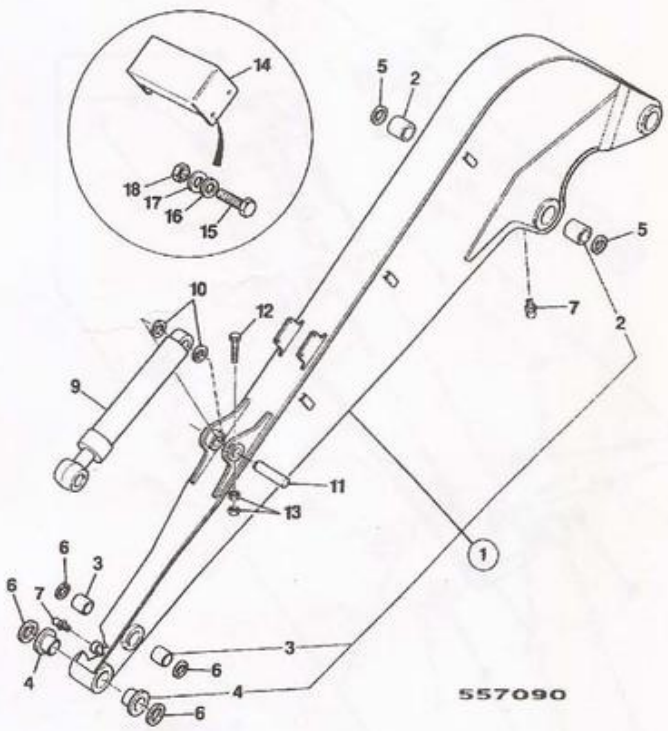

B3-3-2 LINK, TRANSPORTATION

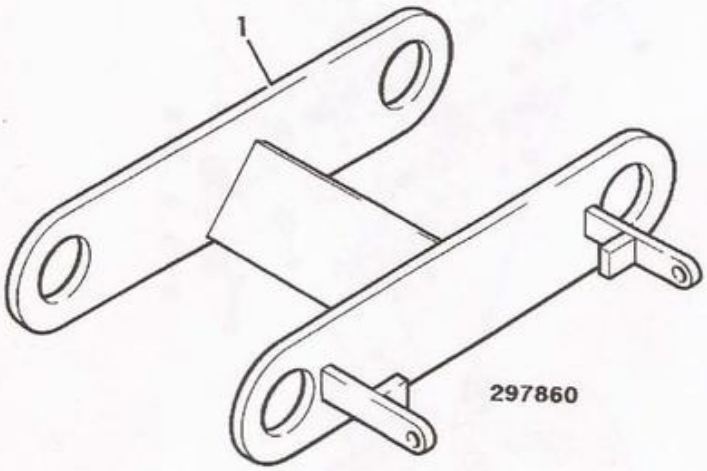

B3-4-1 BOOM GREASING

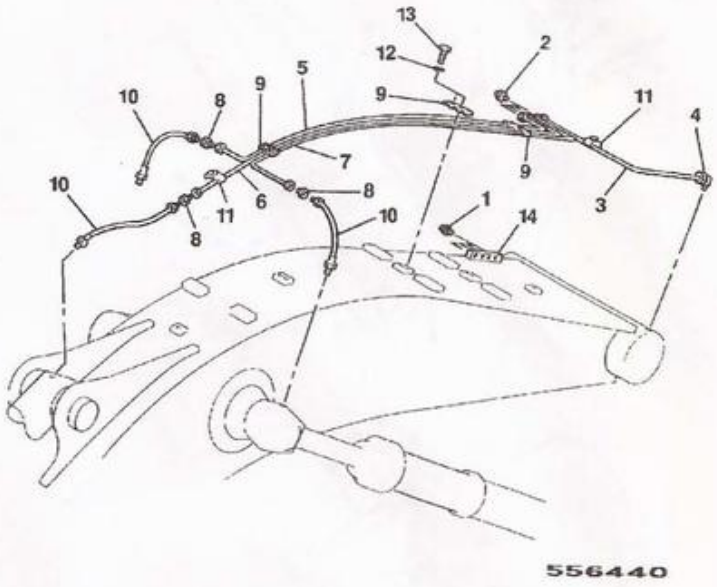

B3-4-10 BOOM GREASING, 15M LONG REACH

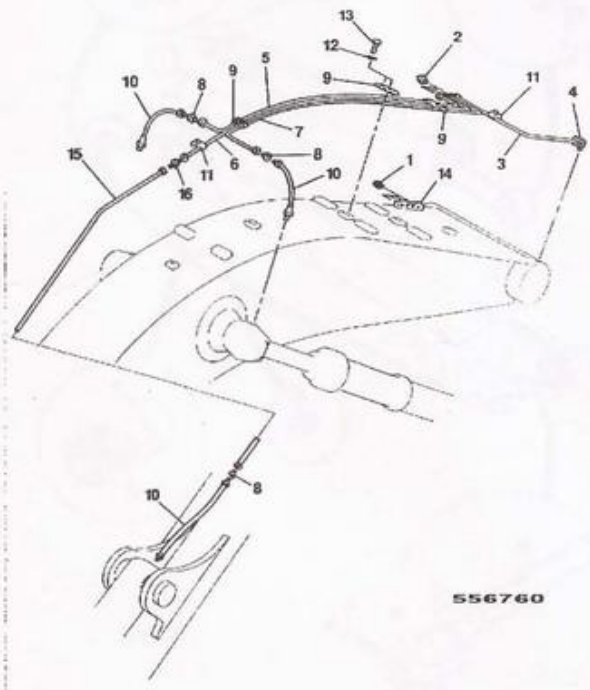

B3-5-1 TIPPING LINK, & LINKAGE

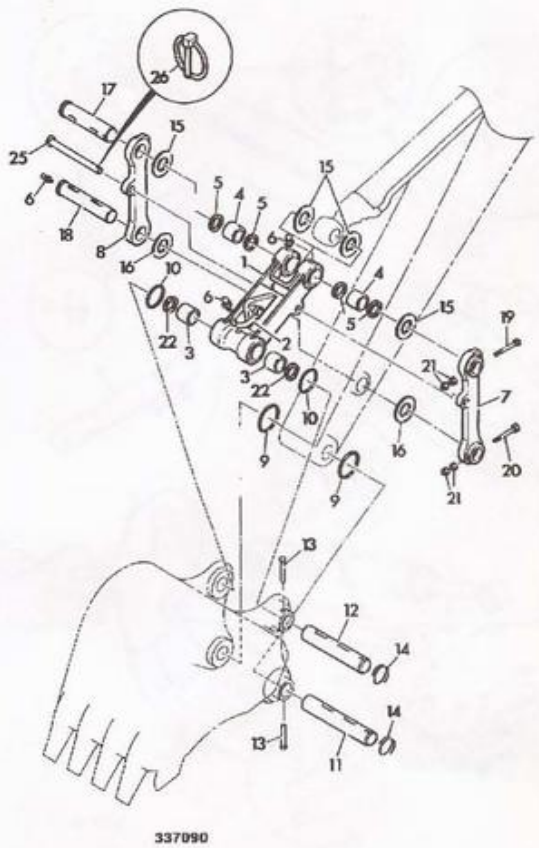

B3-5-10 TIPPING LINK, & LINKAGE, 15M LONG REACH

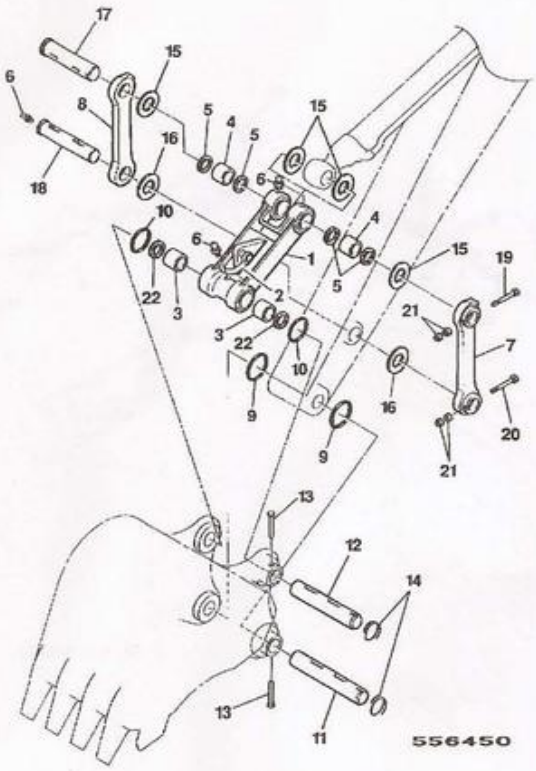

B3-5-20 TIPPING LINK, & LINKAGE, JS220 XTRA DUTY

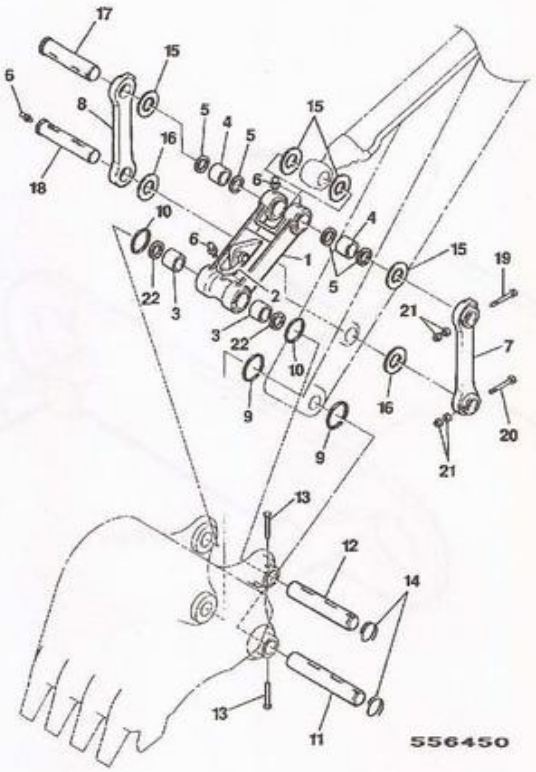

B3-10-1 BOOM, LOWER, TRIPLE ARTICULATING

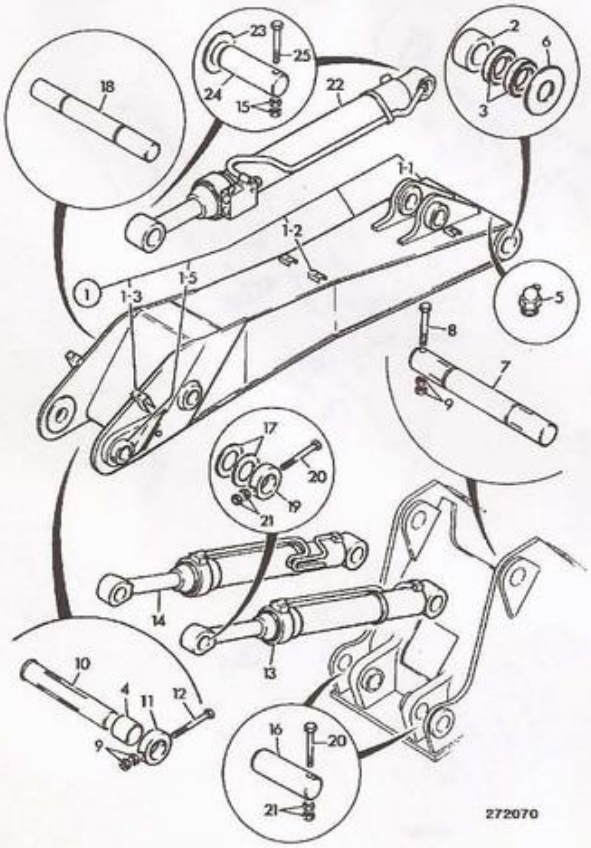

B3-11-1 BOOM, UPPER, TRIPLE ARTICULATING

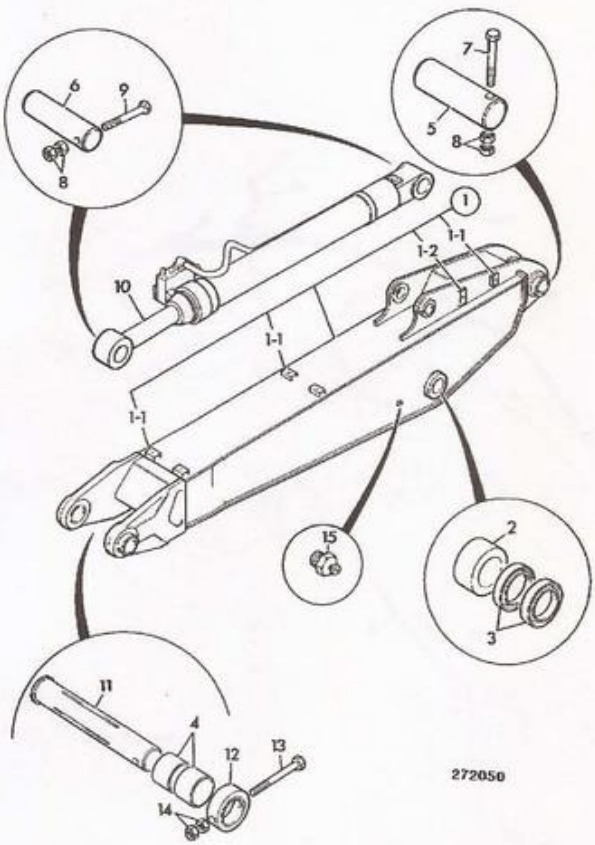

B3-12-1 EXCAVATOR, SHIMS

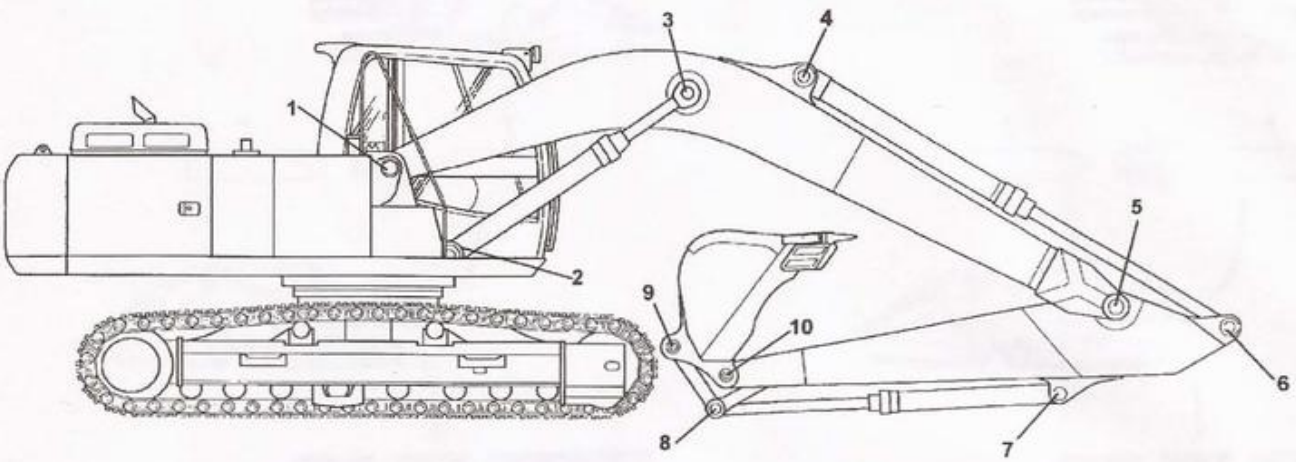

652110

B5-1-10 DECALS, MACHINE

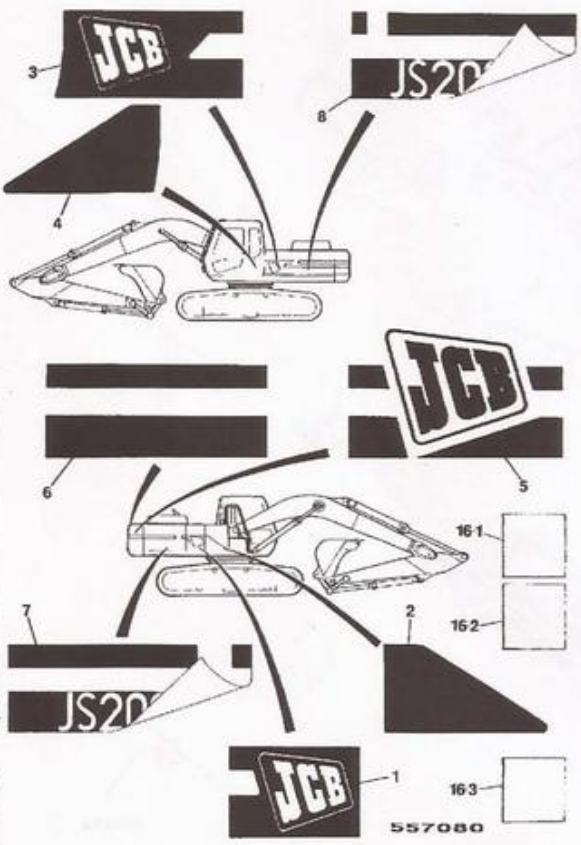

557080

B5-1-11 DECALS, MACHINE, JS220

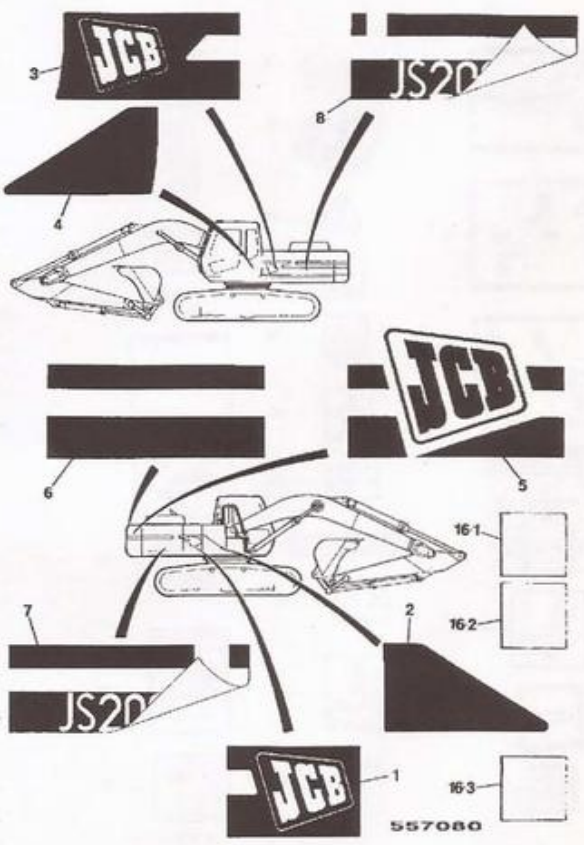

557080

B5-1-13 DECALS, MACHINE

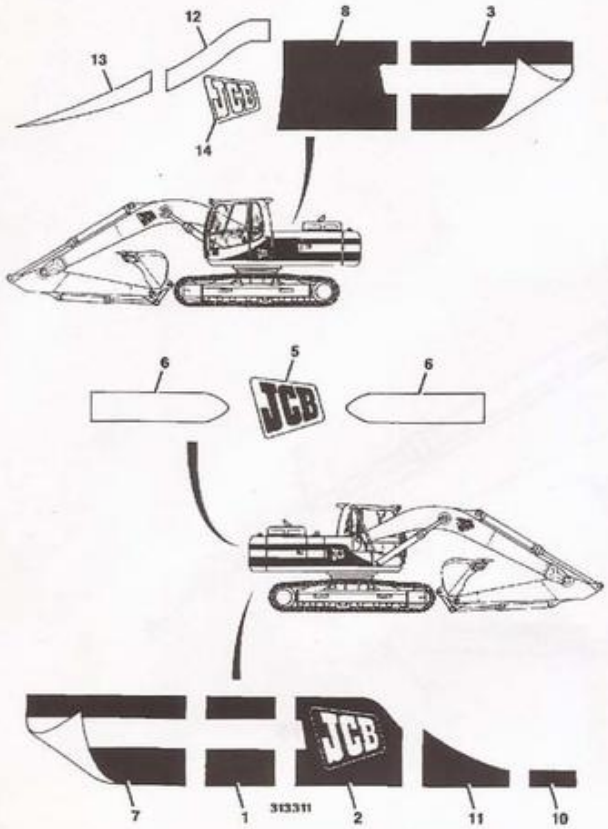

B5-1-14 DECALS, MACHINE, JS220

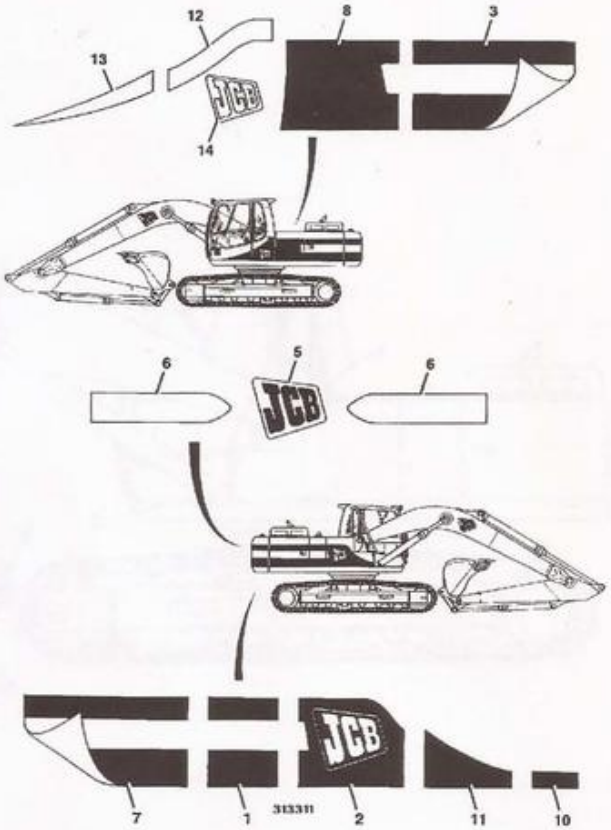

B5-2-1 DECALS

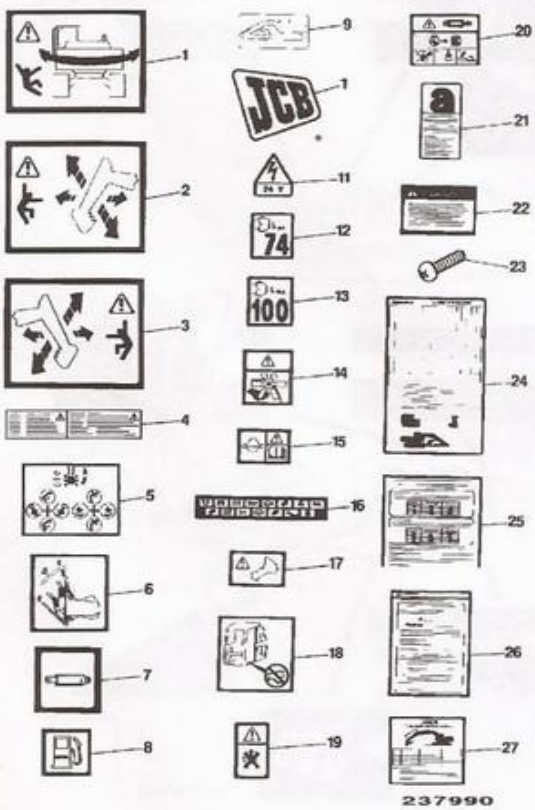

B5-3-1 TOOLS

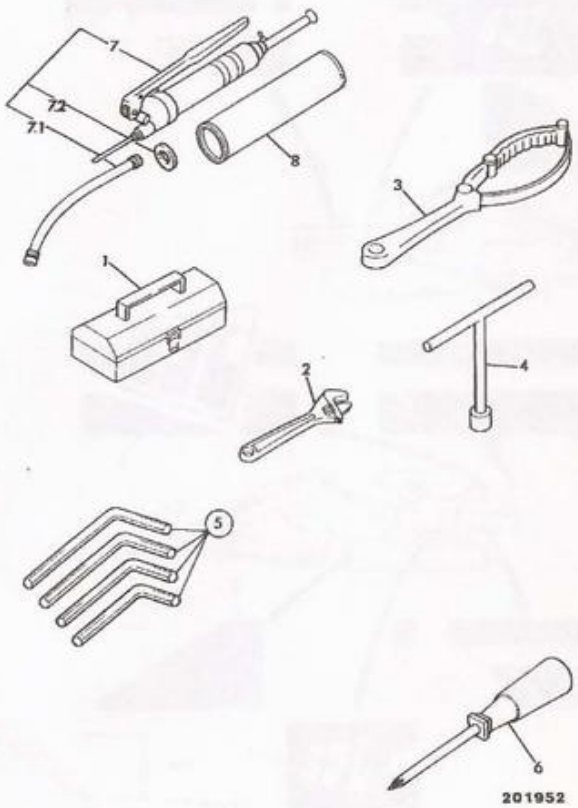

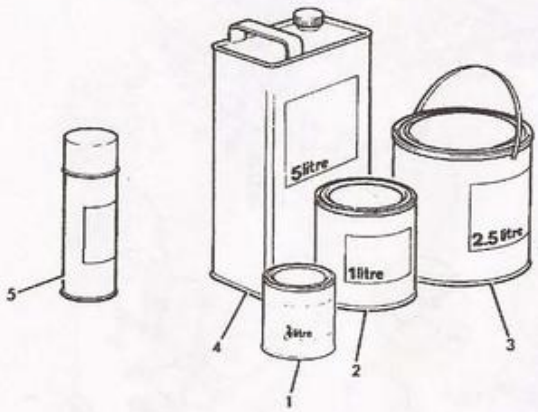

154940

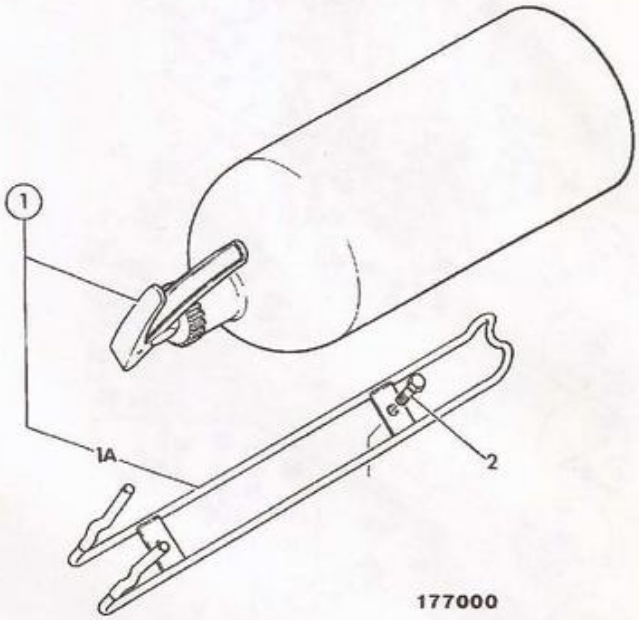

177000

C

C1 ELECTRICS, MAIN MACHINE
C2 ELECTRICS, ENGINE
C3 ELECTRICS, CAB

C1-1-1 ELECTRICS, MACHINE

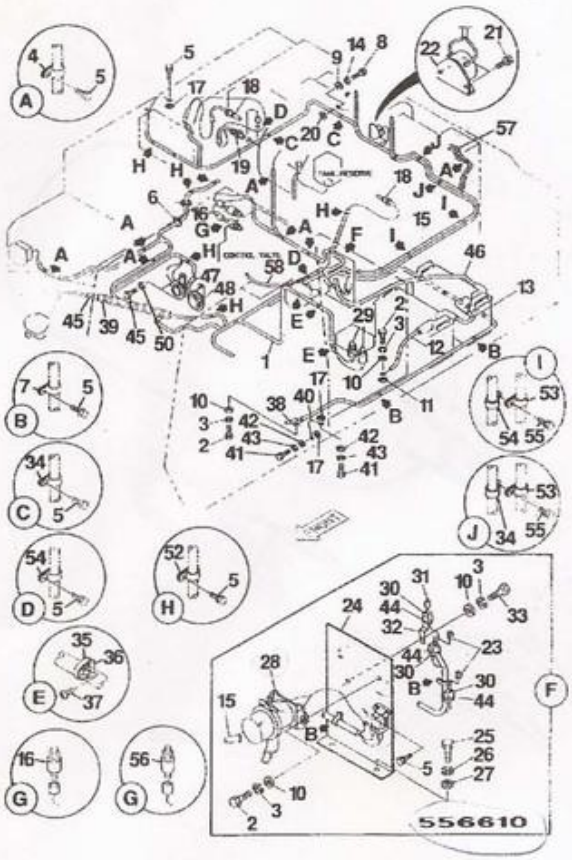

C1-1-2 ELECTRICS, MACHINE

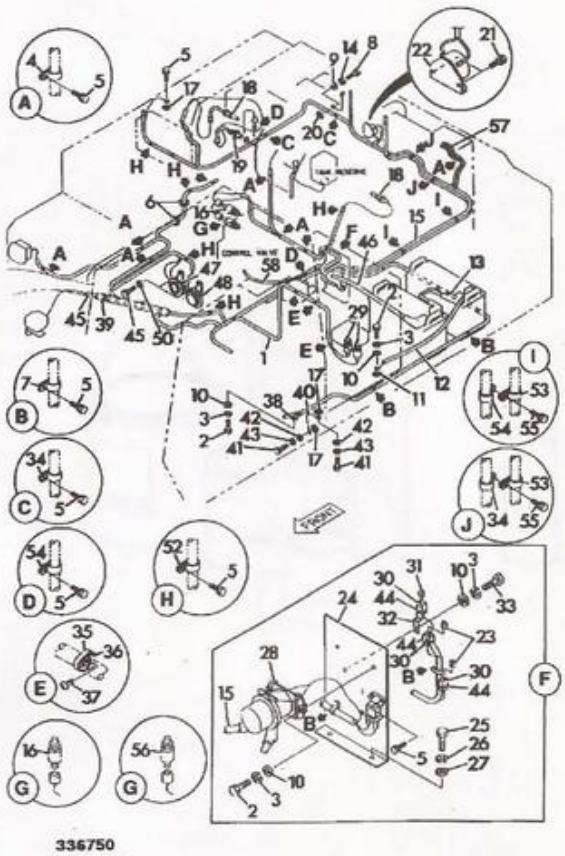

C1-2-1 ELECTRICS, CAB

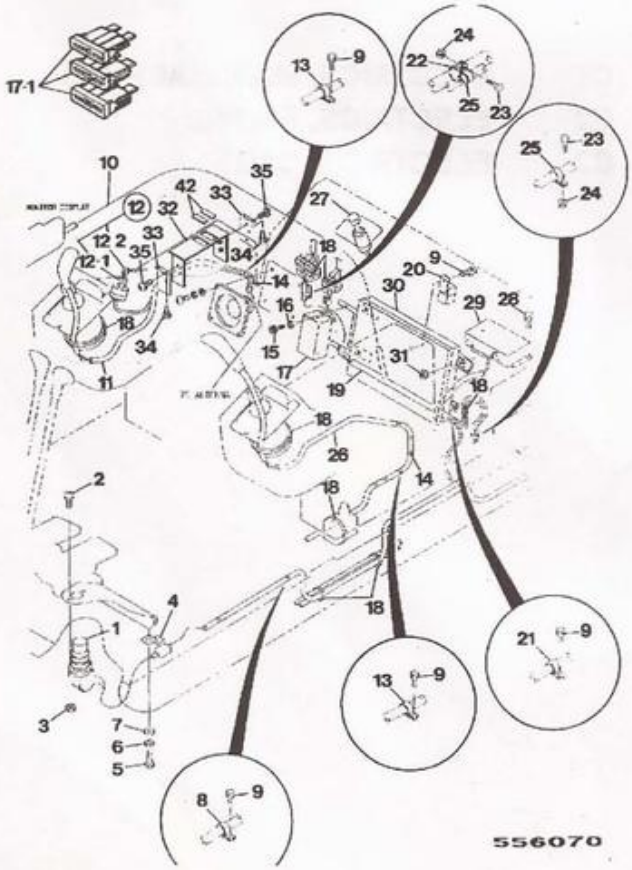

C1-3-1 BATTERY INSTALLATION, 24 VOLT

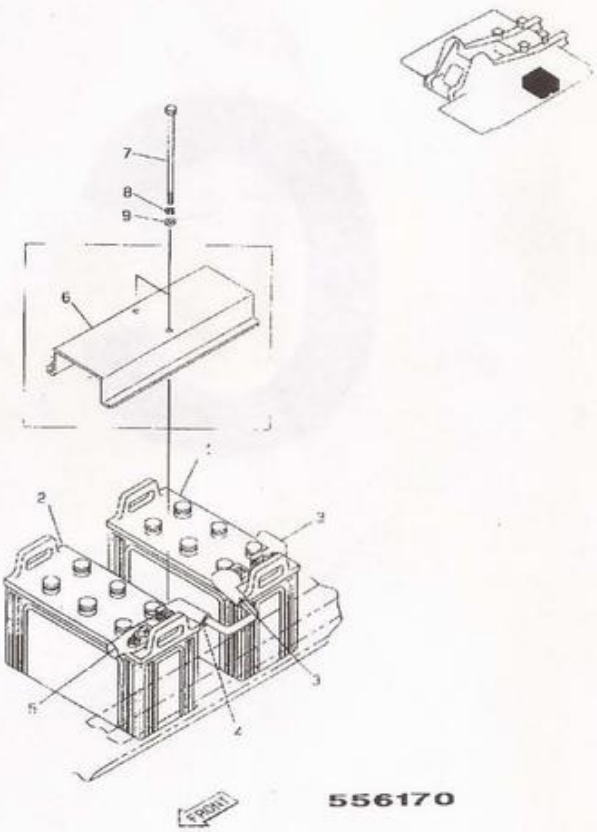

C1-3-3 BATTERY INSTALLATION, 24 VOLT

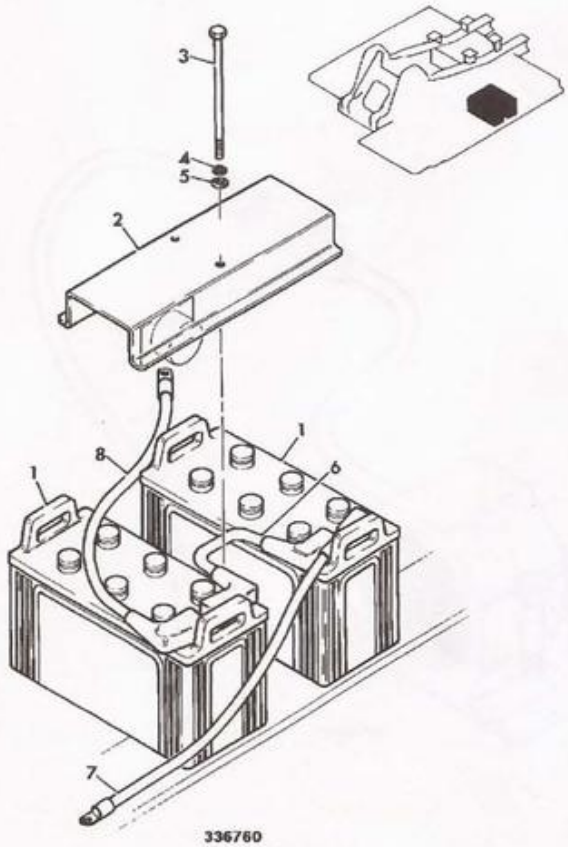

C1-4-1 LIGHT, WORKING

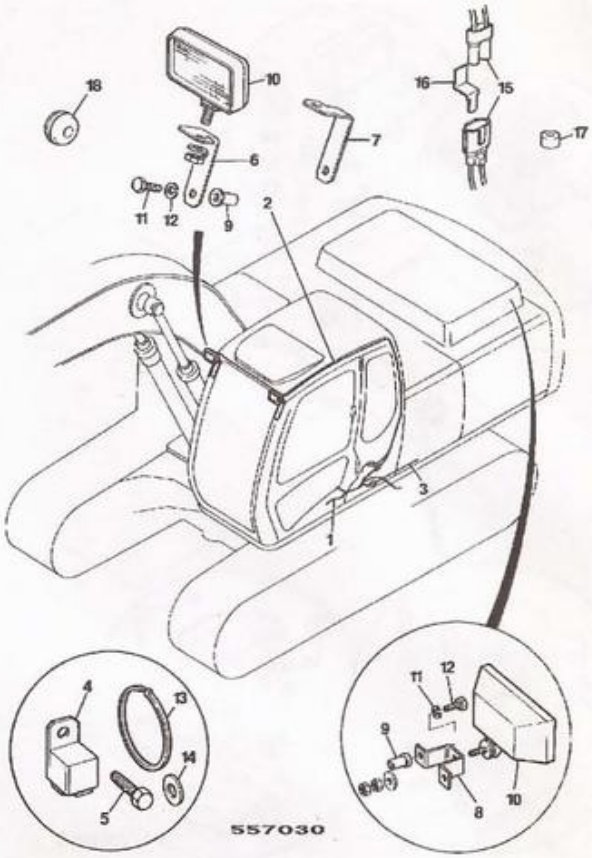

C1-4-2 LIGHT, WORKING, ADDITIONAL, EURO CAB

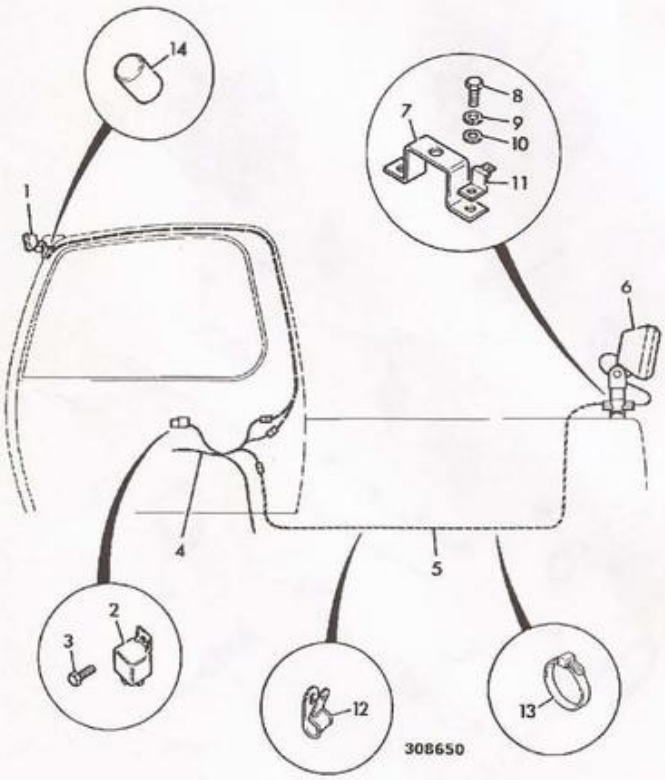

C1-5-1 PUMP, DIESEL, REFUELLING

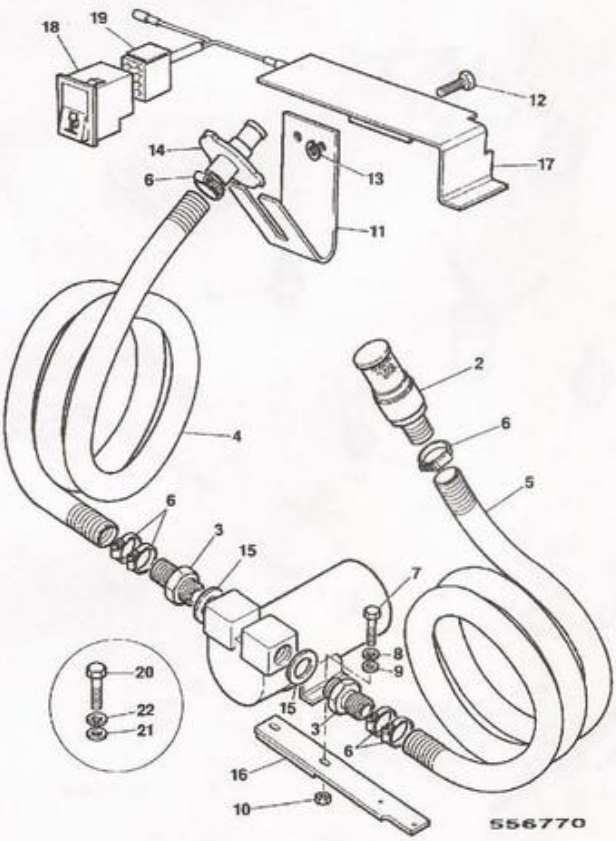

C1-6-1 LIGHT, WORKING,, BOOM AND TOOLBOX

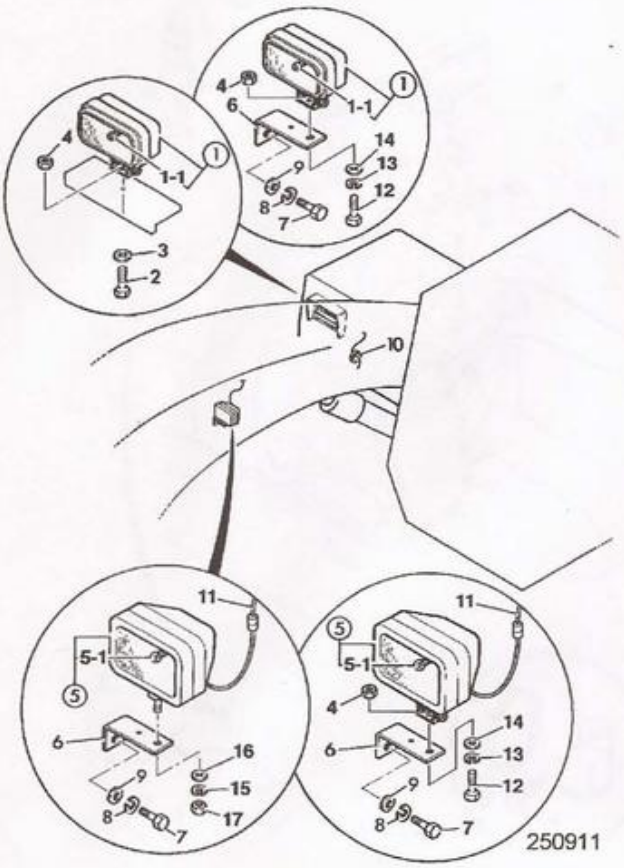

C1-10-1 ALARM, TRAVEL, OPTIONAL

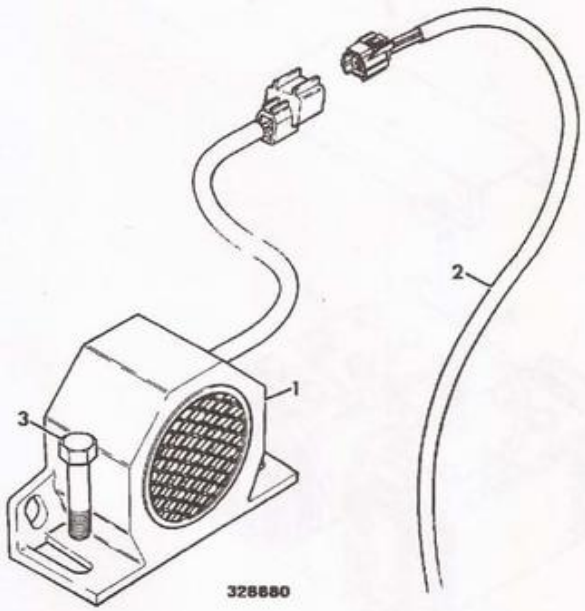

C2-1-1 ELECTRICAL EQUIPMENT

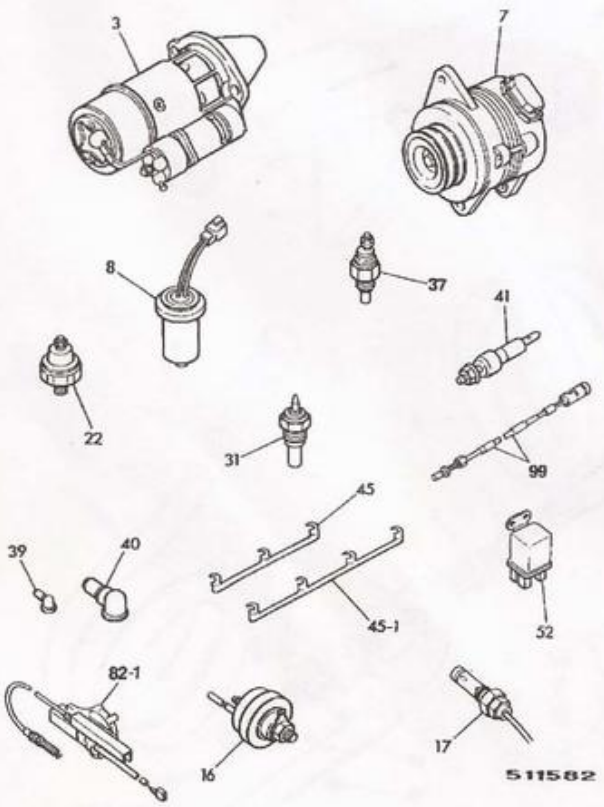

C2-1-2 ELECTRICAL EQUIPMENT

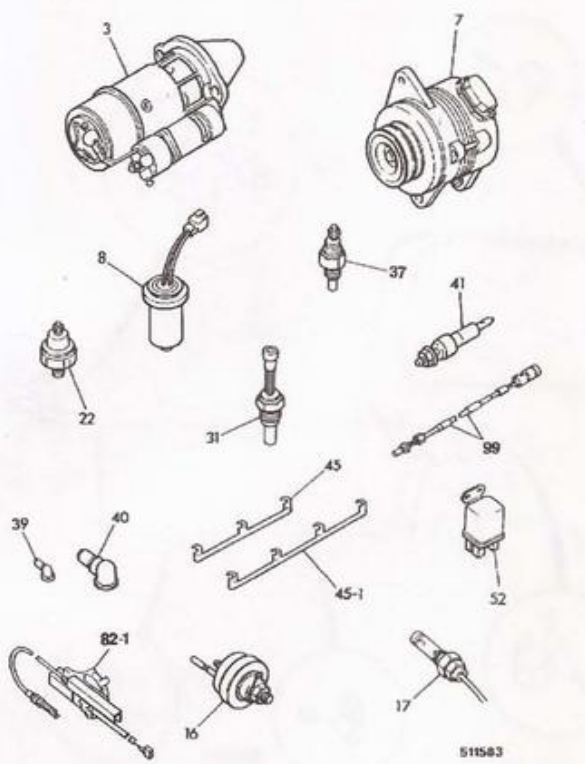

C2-3-1 ALTERNATOR

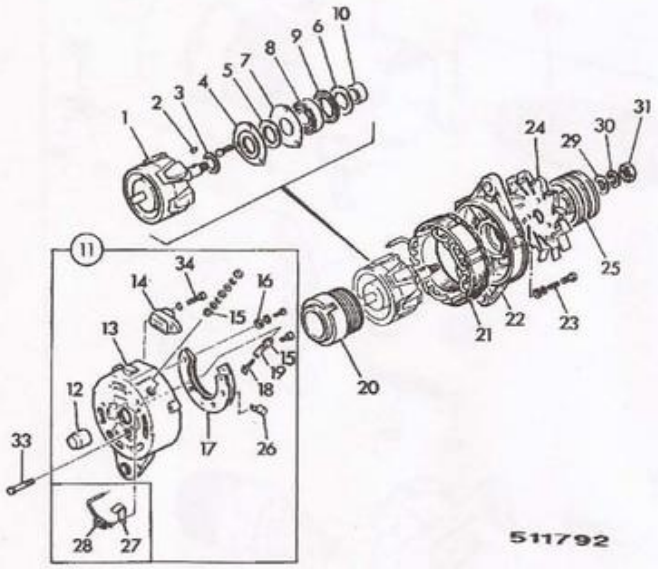

C2-3-2 ALTERNATOR

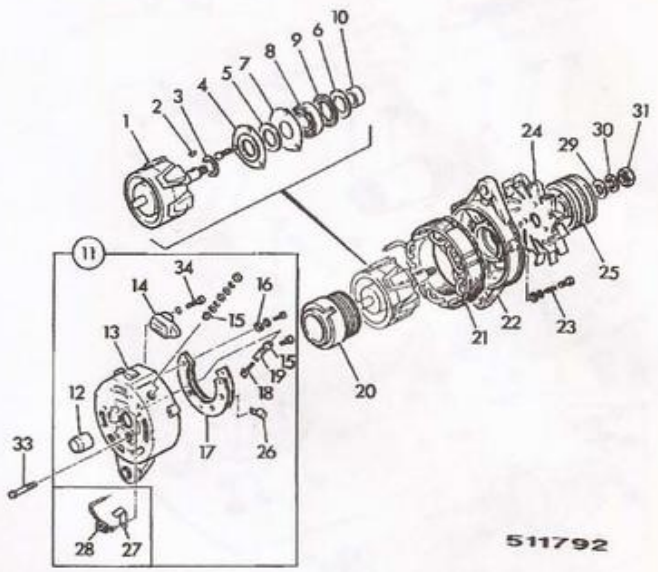

C2-3-3 ALTERNATOR

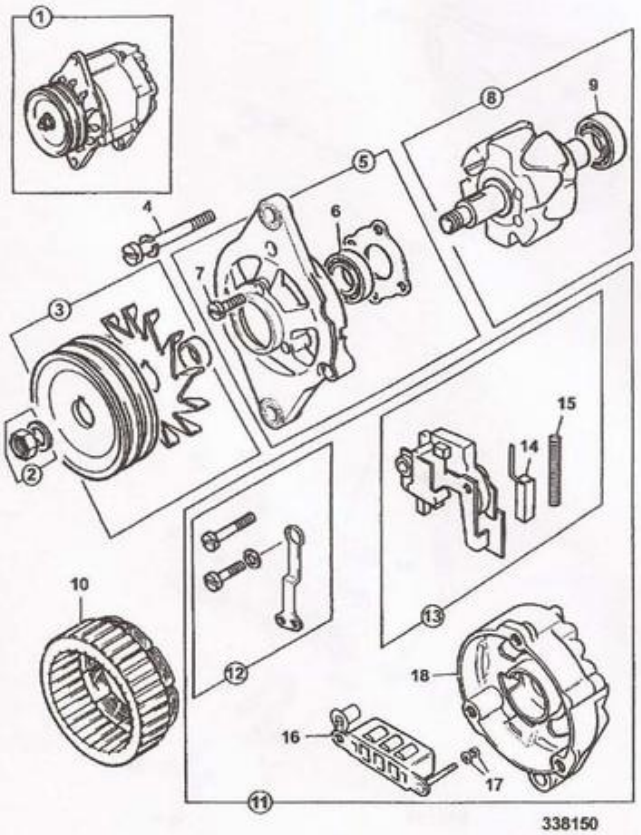

C2-5-1 MOTOR, STARTER

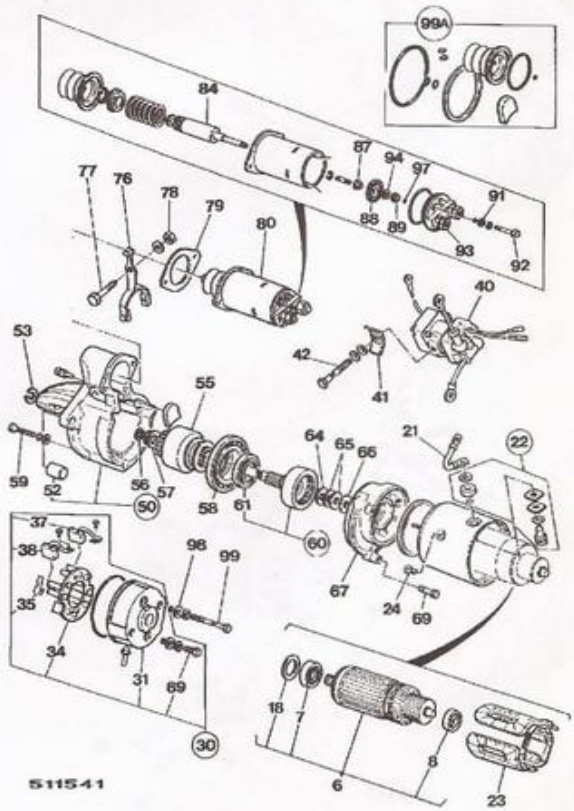

C2-5-2 MOTOR, STARTER

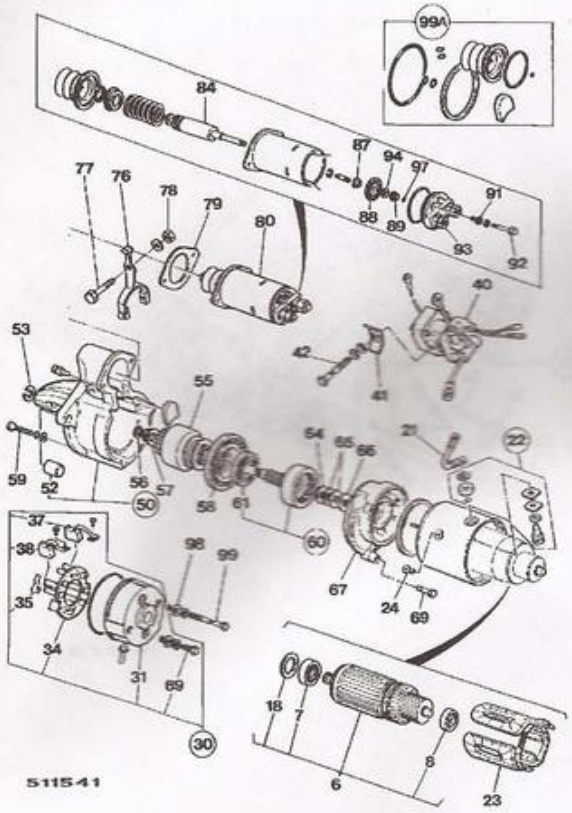

C2-5-3 MOTOR, STARTER

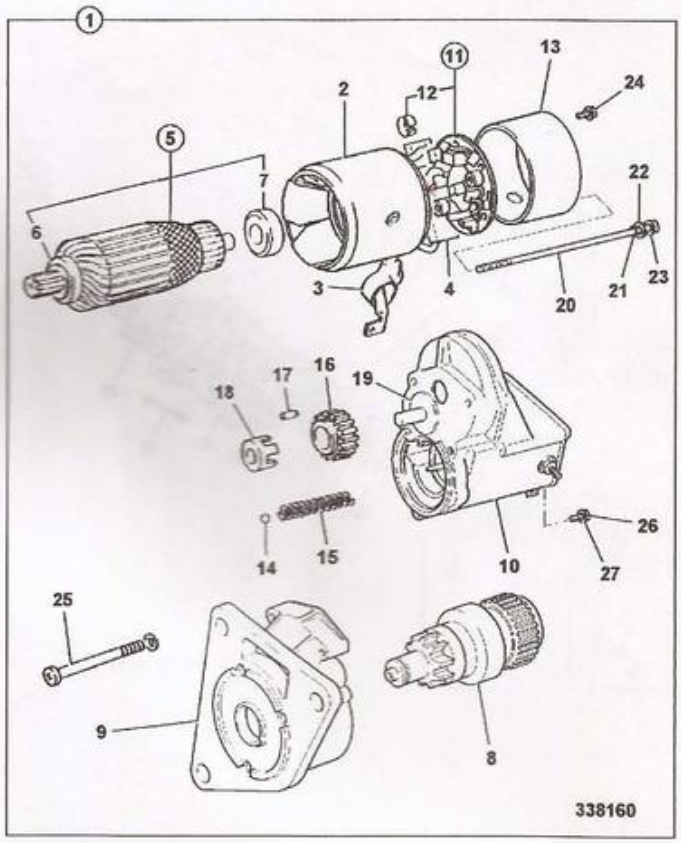

C2-6-1 MOUNTINGS & FITTINGS, ALTERNATOR & STARTER

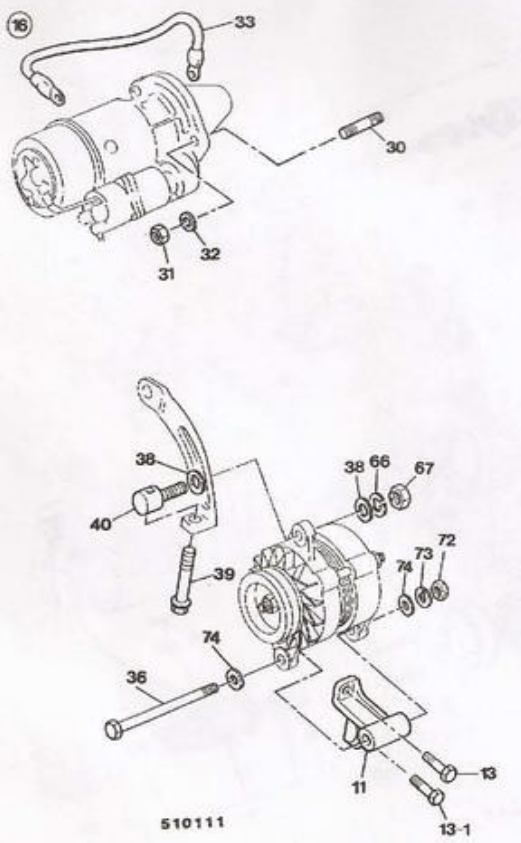

C2-6-2 MOUNTINGS & FITTINGS, ALTERNATOR & STARTER

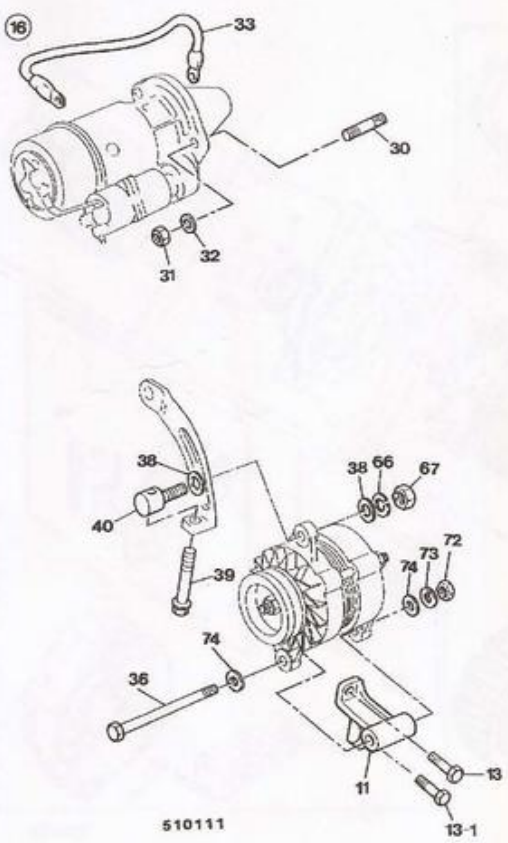

C3-1-1 GAUGE, SYSTEM, CONTROL MONITOR

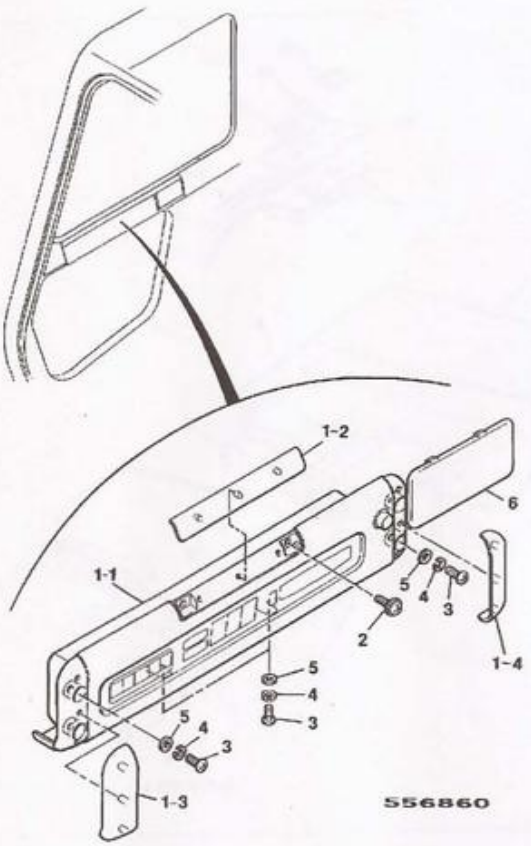

C3-2-1 SWITCH PANEL, CONSOLE BOX

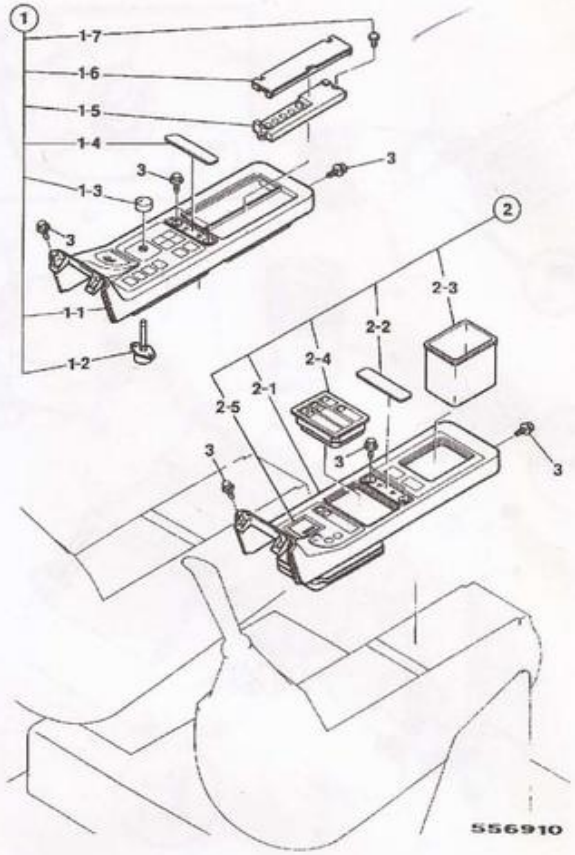

C3-4-1 HEATER, INSTALLATION

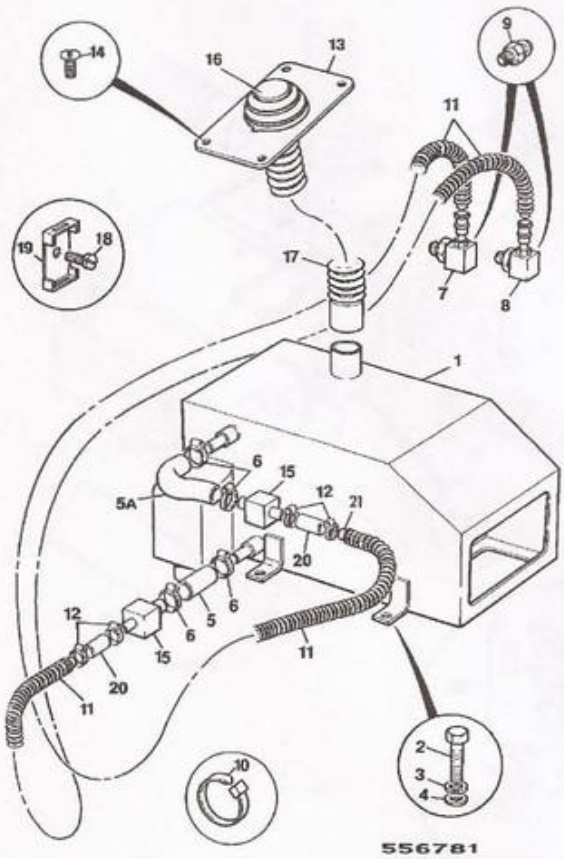

C3-4-2 HEATER, INSTALLATION, EURO CAB

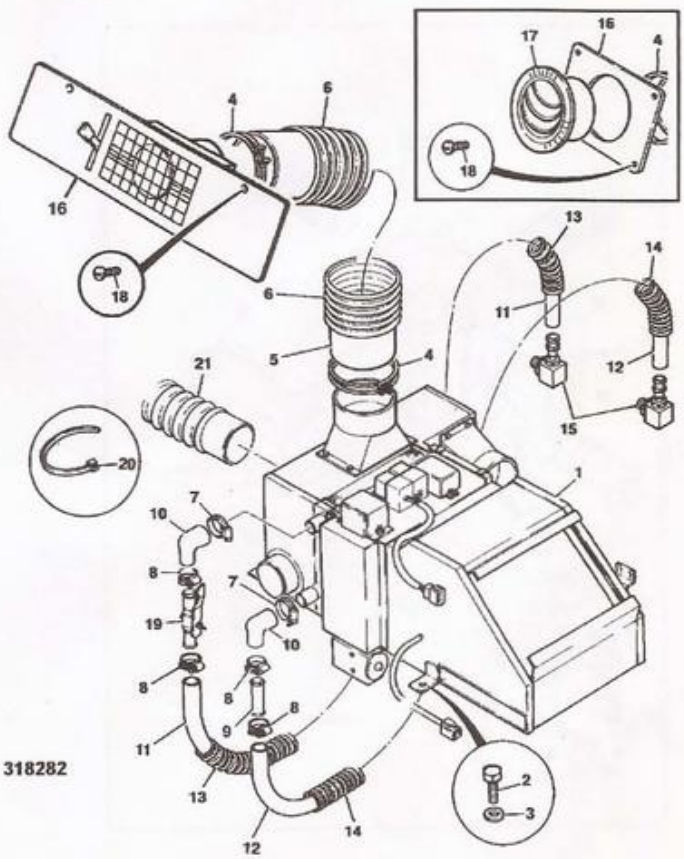

C3-4-3 HEATER, INSTALLATION, EURO CAB, AIR CONDITIONING

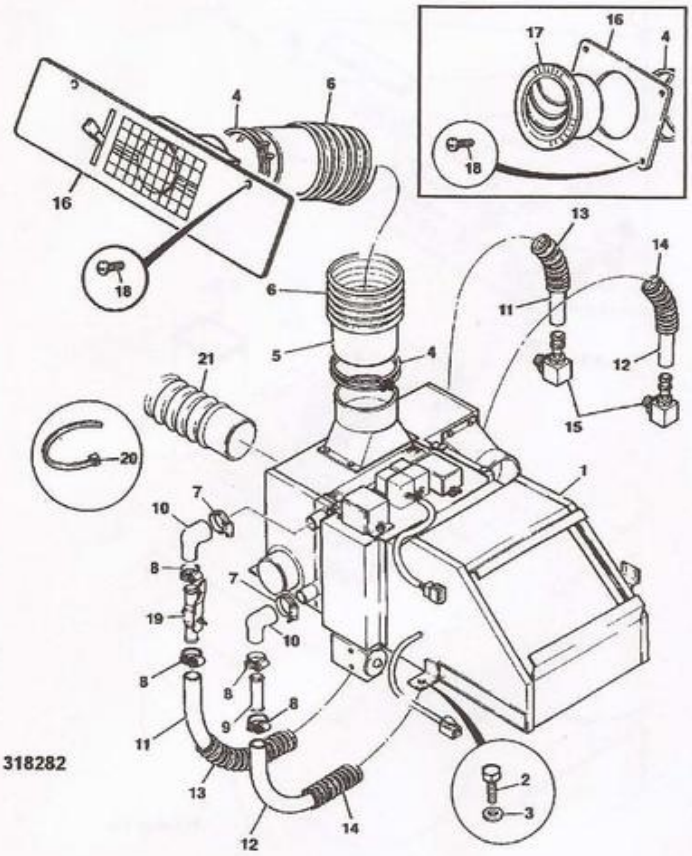

C3-5-1 HEATER ASSEMBLY

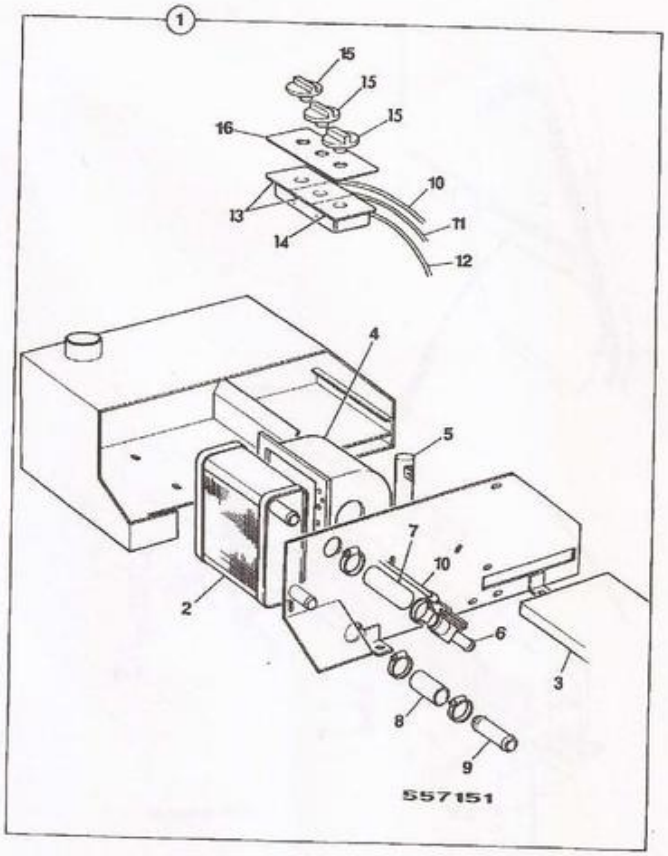

C3-5-2 HEATER ASSEMBLY, EURO CAB

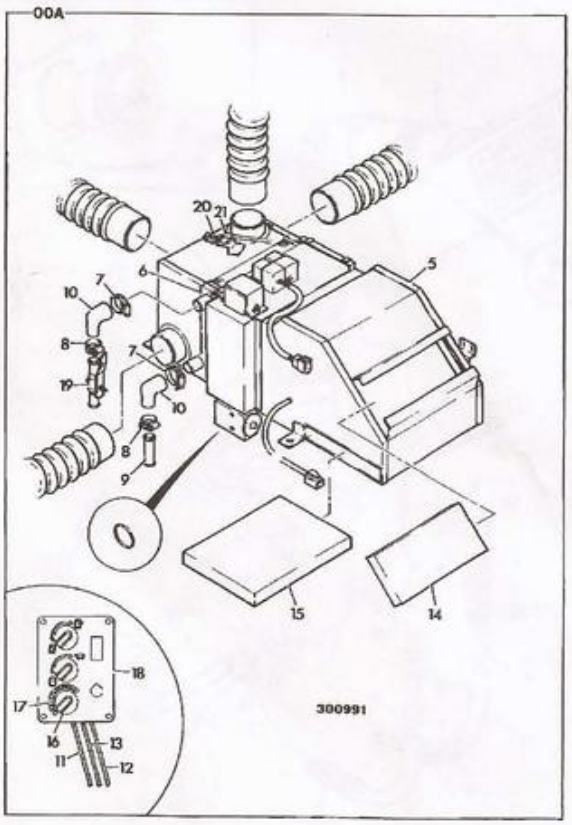

C3-5-3 HEATER ASSEMBLY, EURO CAB, AIR CONDITIONING

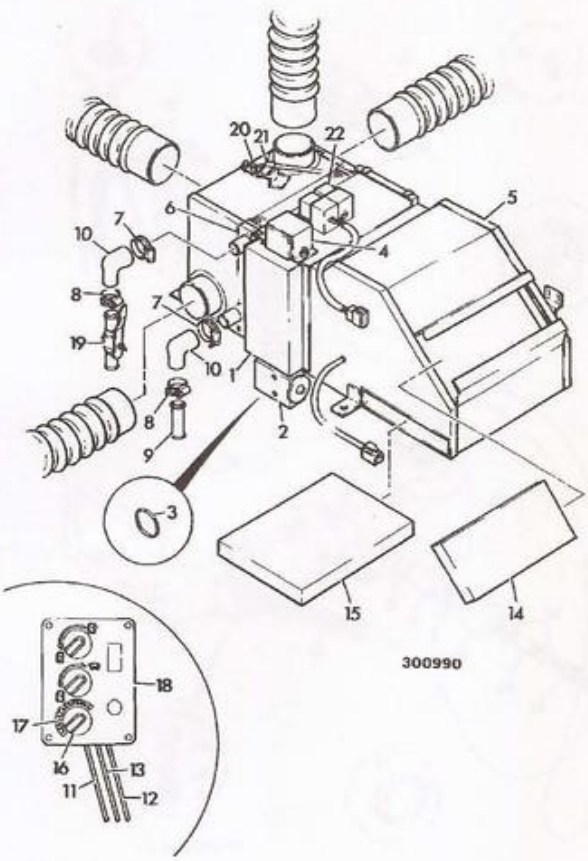

C3-5-4 HEATER ASSEMBLY, EURO CAB

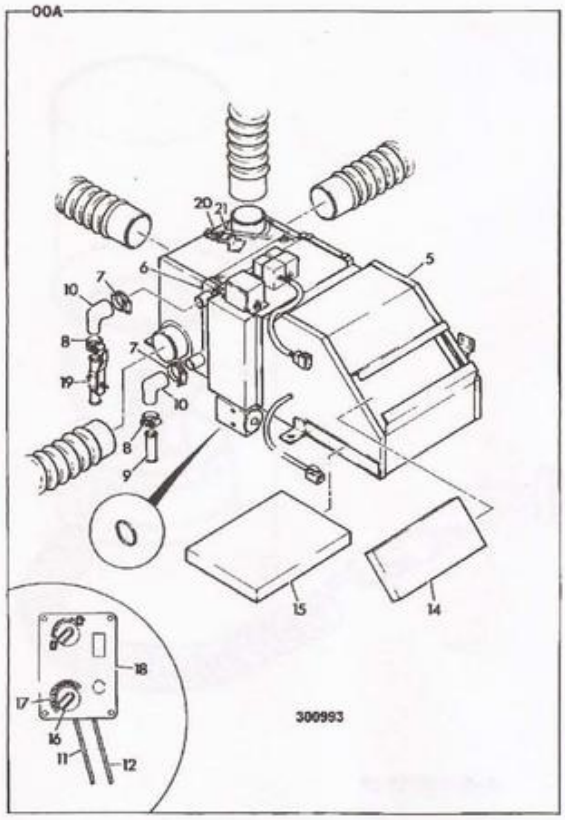

C3-5-5 HEATER ASSEMBLY, EURO CAB, AIR CONDITIONING

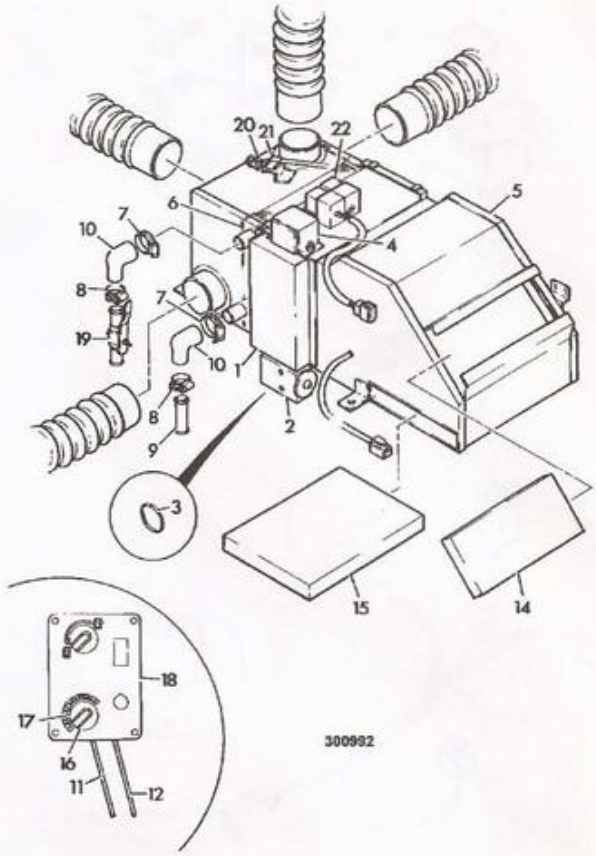

C3-5-20 HEATER DEMISTER

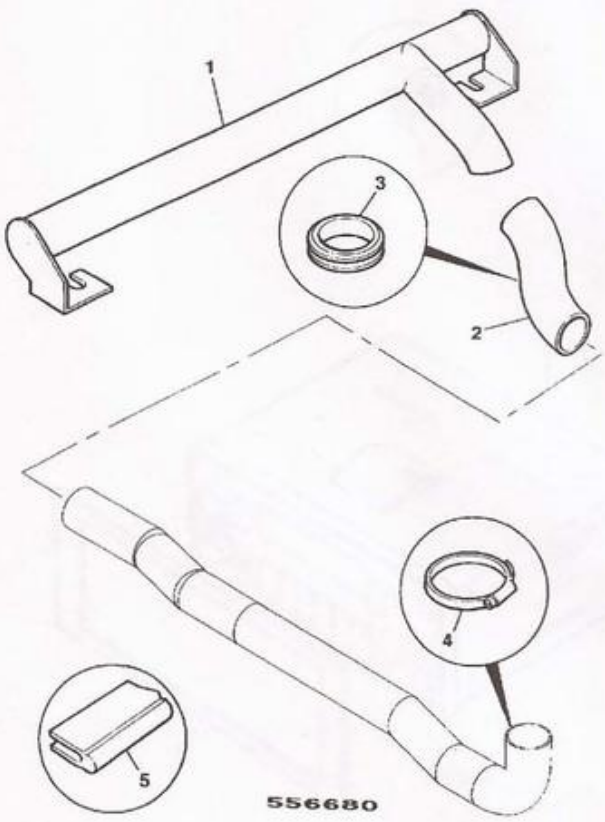

C3-5-21 HEATER DEMISTER

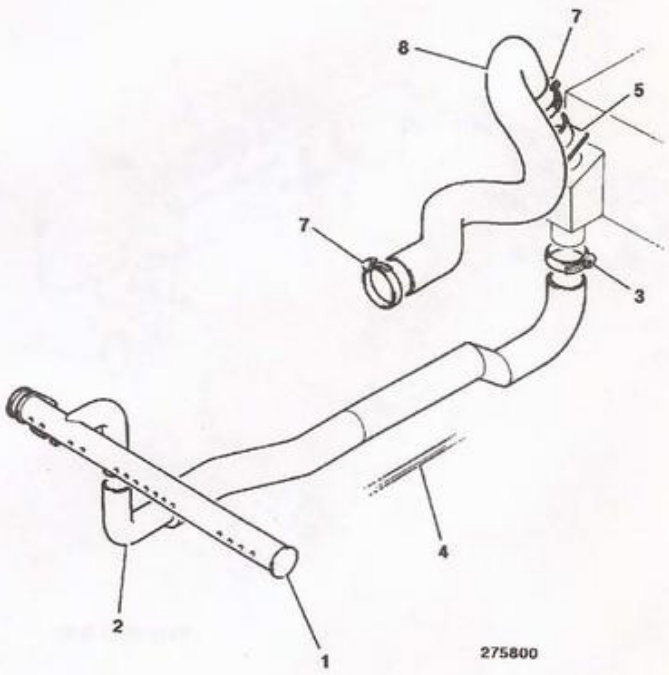

C3-8-1 OVERLOAD WARNING, SYSTEM

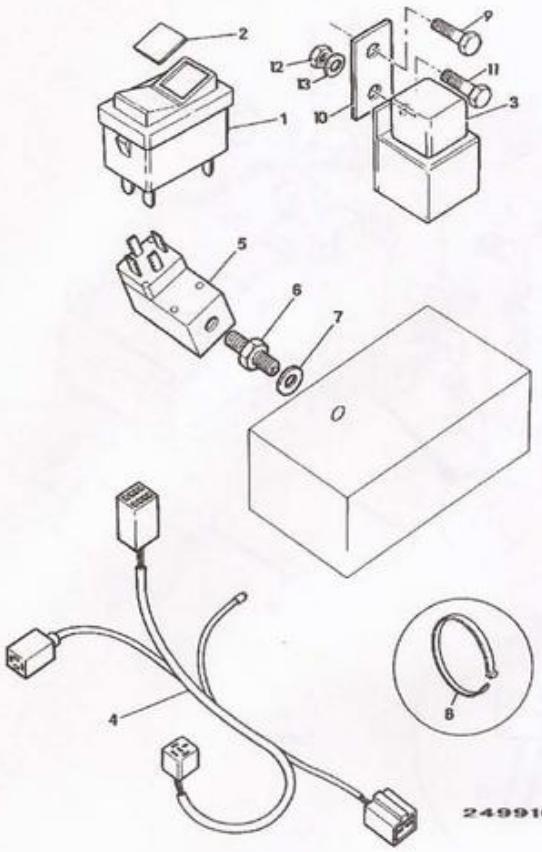

C3-9-1 LIGHT, BEACON, HAZARD WARNING, AMBER

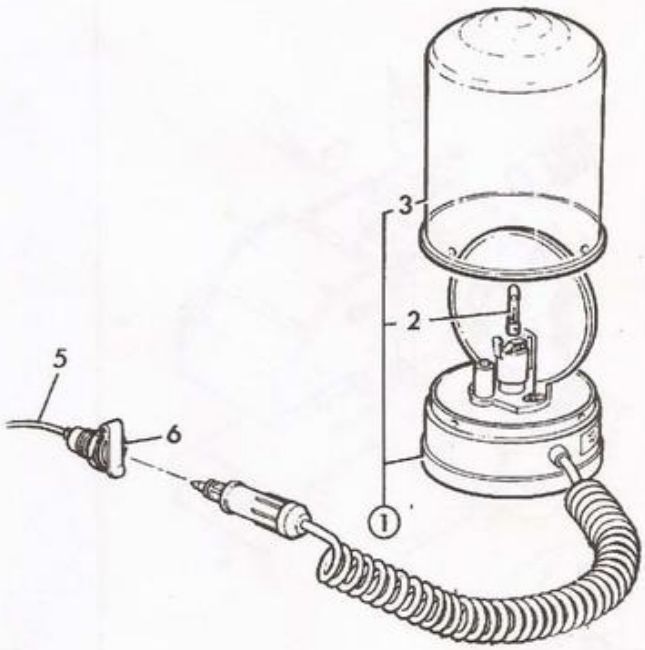

C3-11-1 RADIO

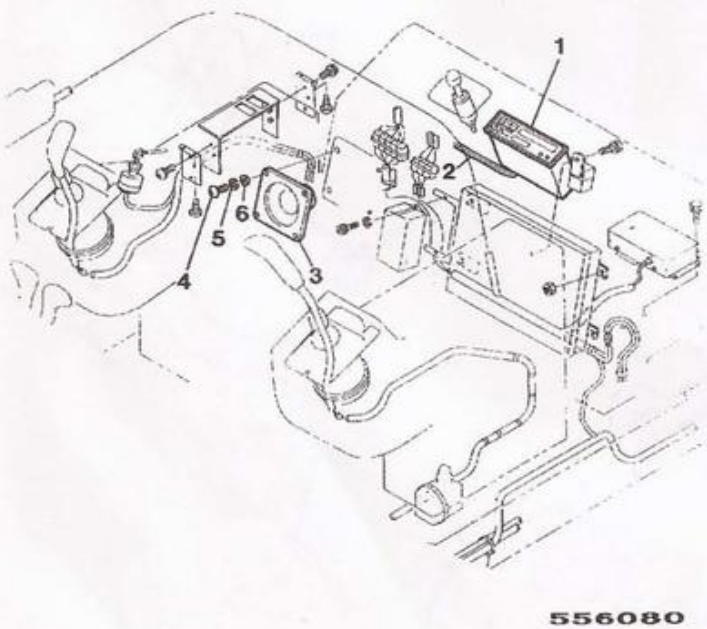

C3-11-2 RADIO, EURO CAB

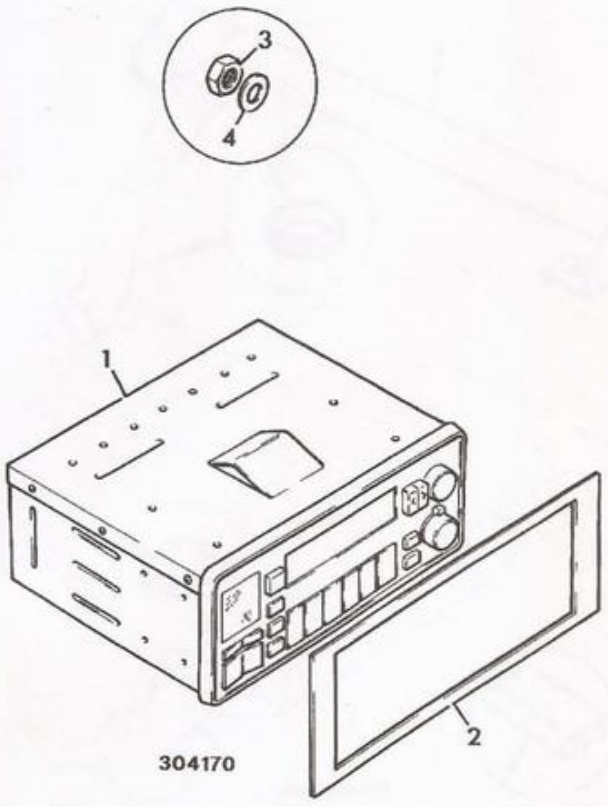

C3-12-1 AIR CON

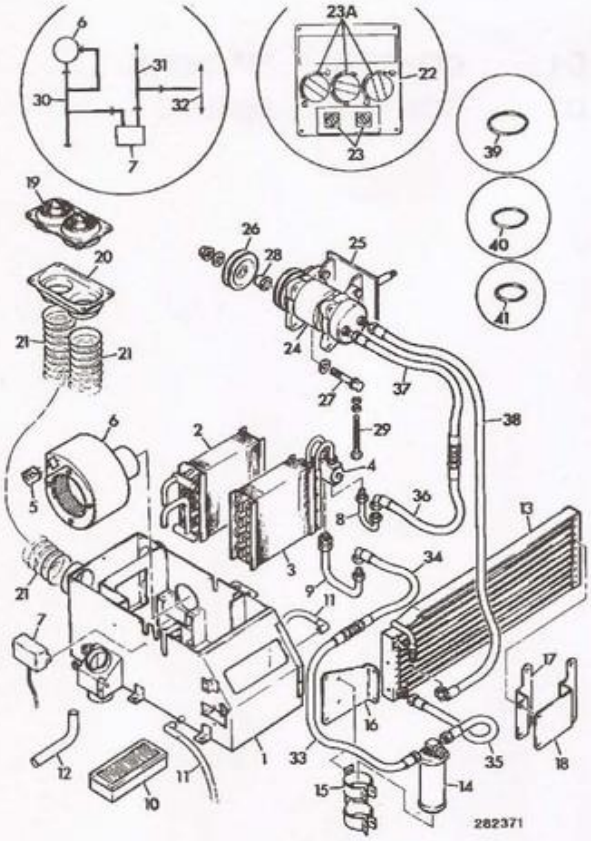

C3-12-2 AIR CONDITIONING, EURO CAB

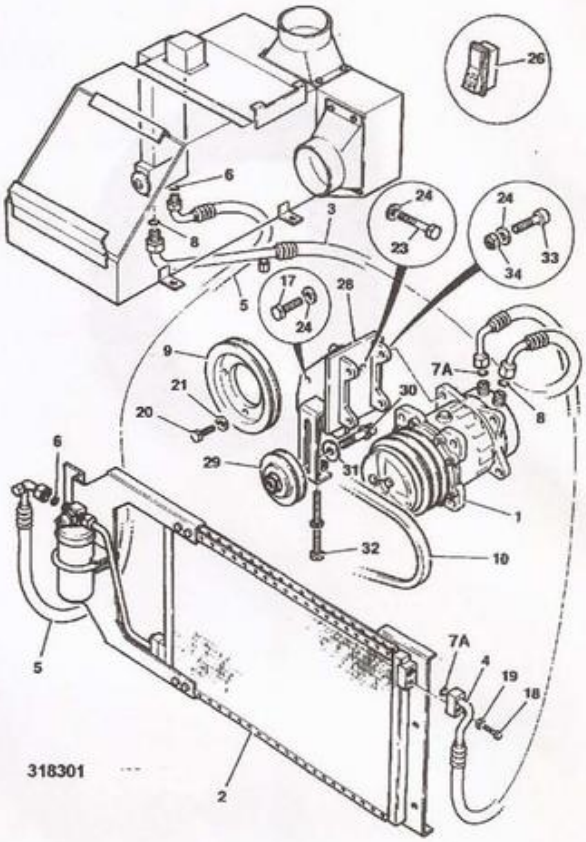

C3-12-5 AIR CONDITIONING, CONDENSER ASSEMBLY

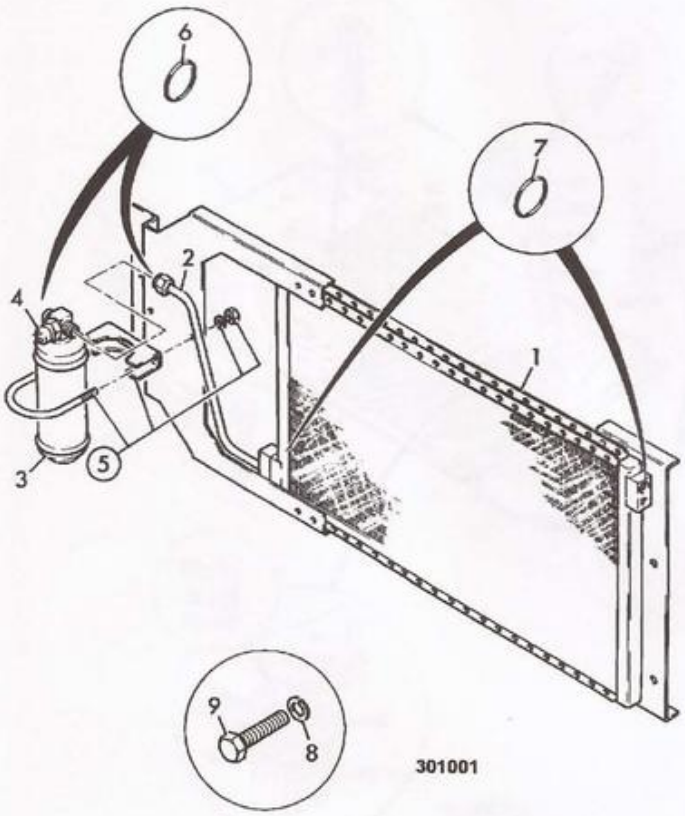

D

D1 CONTROLS, MACHINE
D2 CONTROLS, ENGINE

D1-1-1 CONTROLS, EXCAVATOR

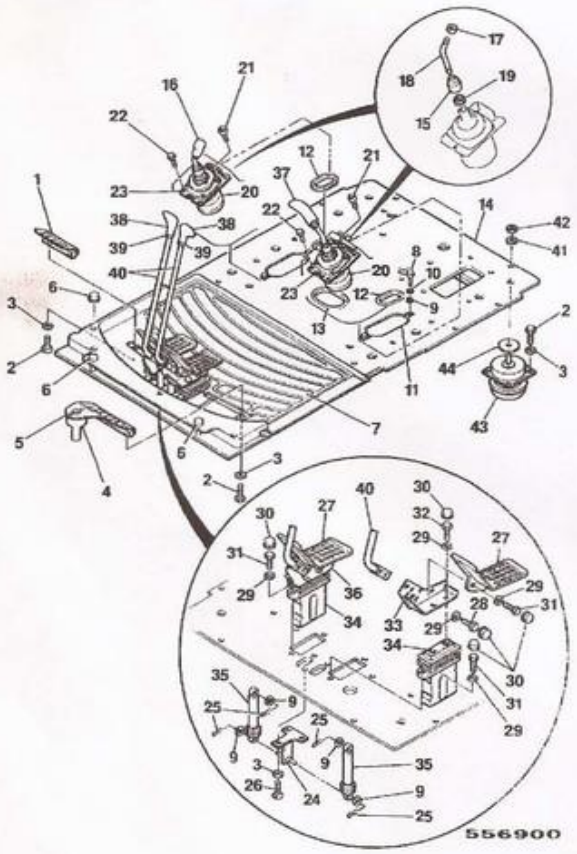

D1-1-2 CONTROLS, EXCAVATOR, EURO CAB

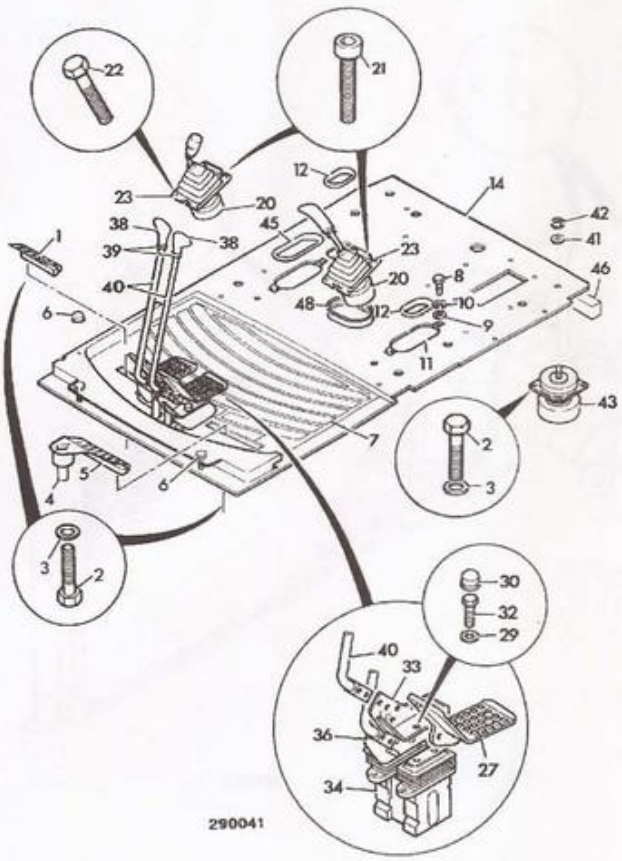

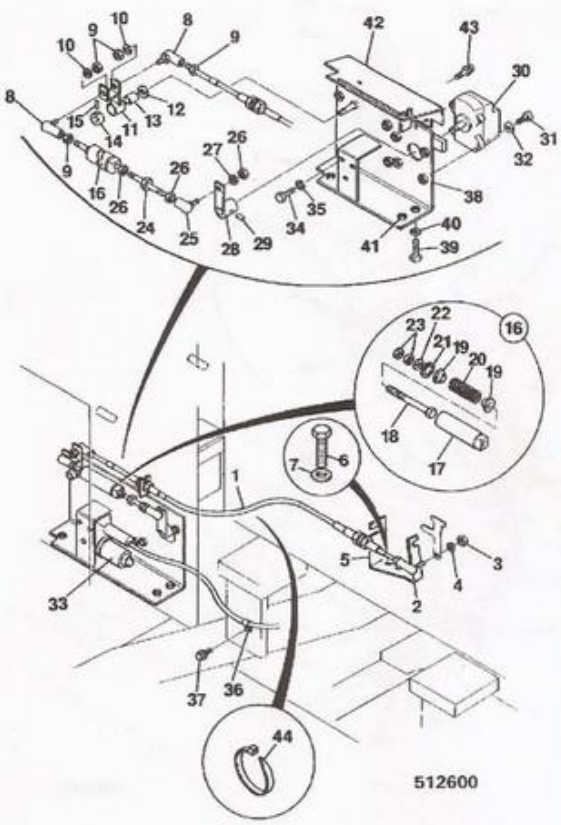

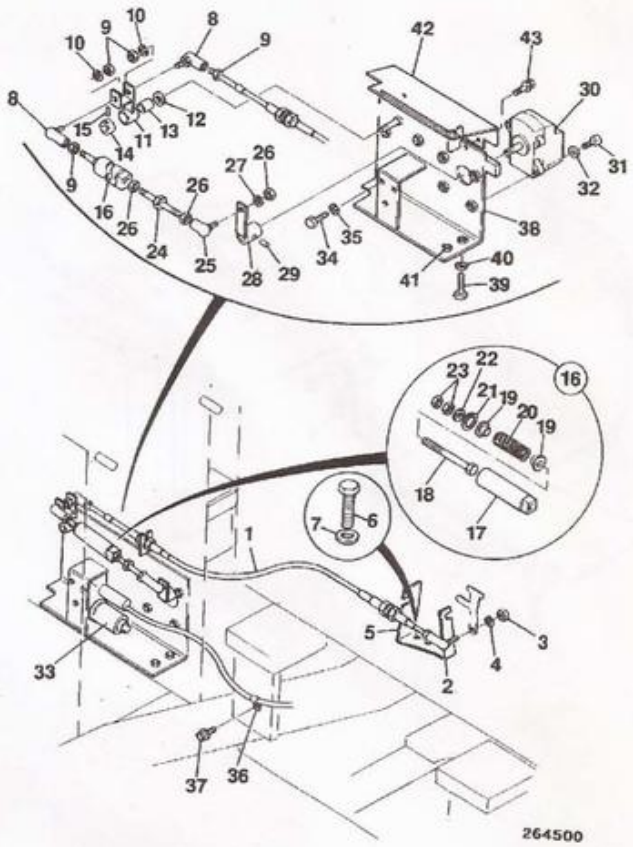

E

E1 HOSE & PIPEWORK
E2 PUMP/MOTOR & PUMP DRIVE
E3 VALVES & HYDRAULIC FILTERS
E4 RAMS

E1-1-1 CIRCUIT, PUMP SUCTION

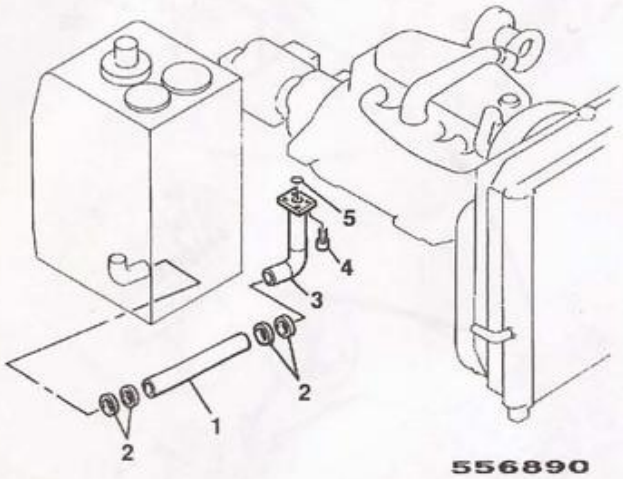

E1-2-1 CIRCUIT, NEUTRAL PRESSURE

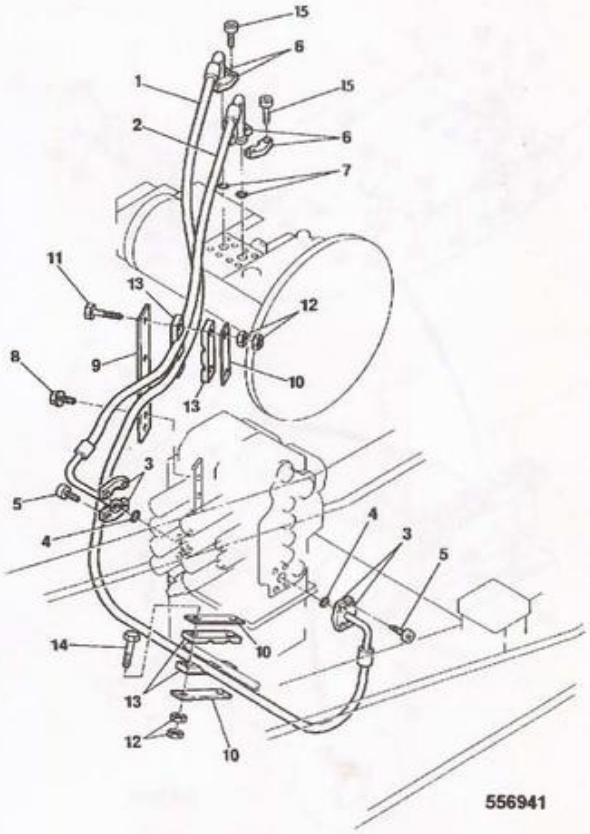

E1-3-1 CIRCUIT, NEUTRAL, RETURN & OIL COOLER

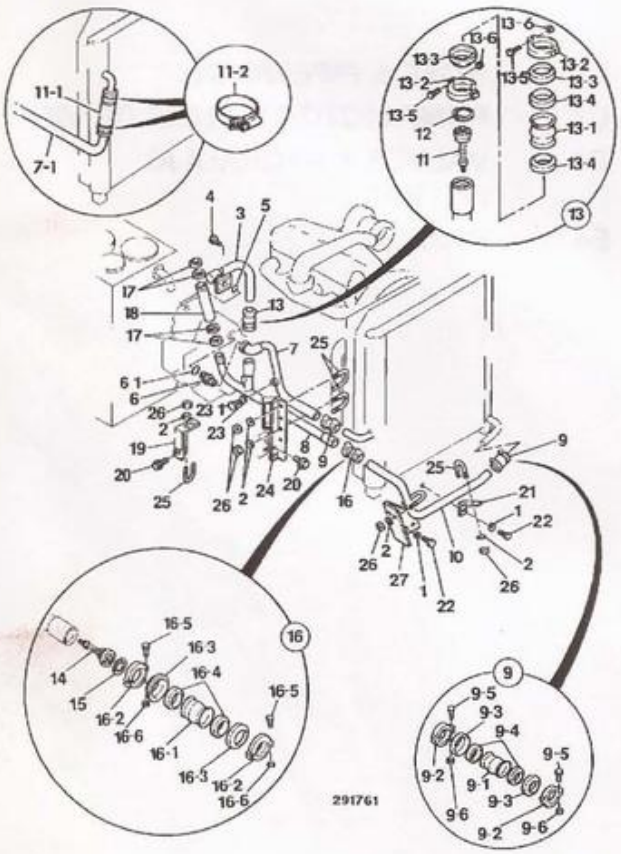

E1-4-1 CIRCUIT, TRACK, MAINFRAME

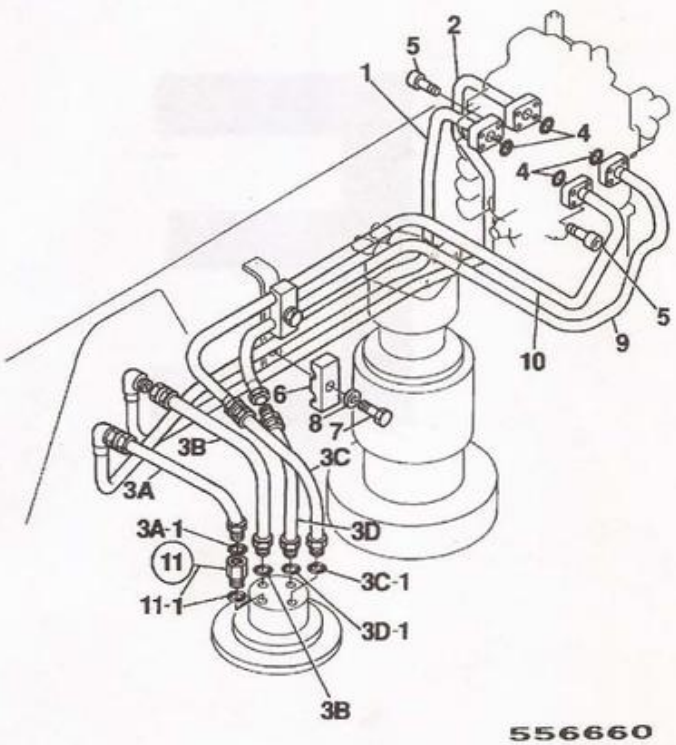

E1-5-1 CIRCUIT, TRACK, UNDERCARRIAGE

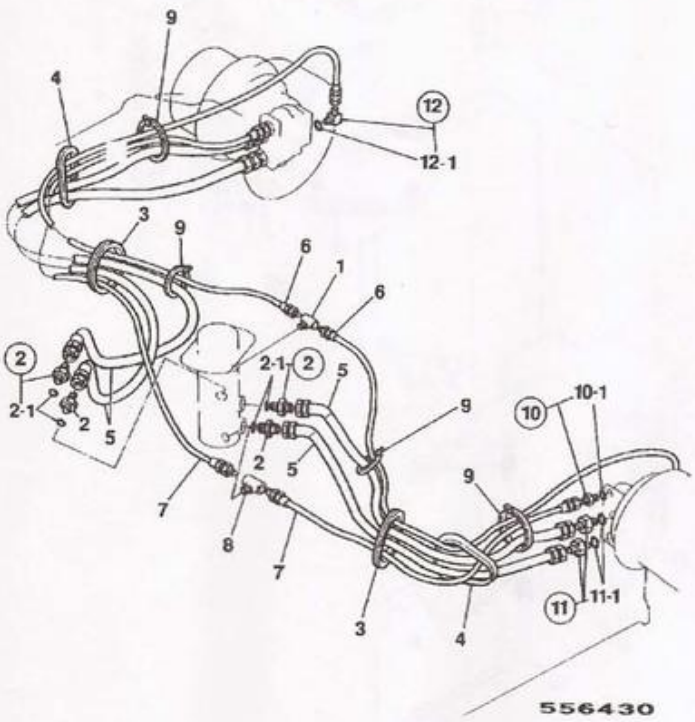

E1-6-1 CIRCUIT, SWING

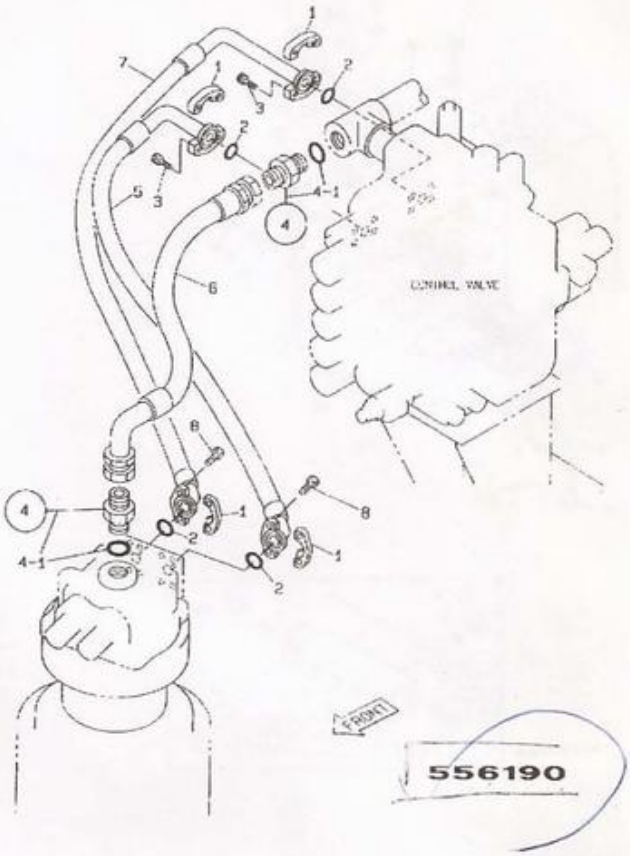

E1-8-1 CIRCUIT, BYPASS, HYDRAULIC FILTER

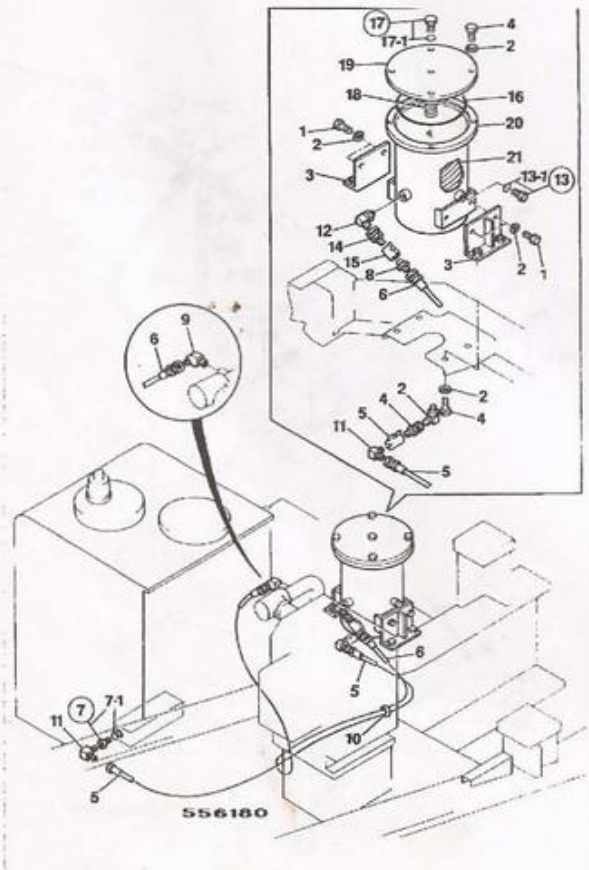

E1-8-2 CIRCUIT, BYPASS, HYDRAULIC FILTER

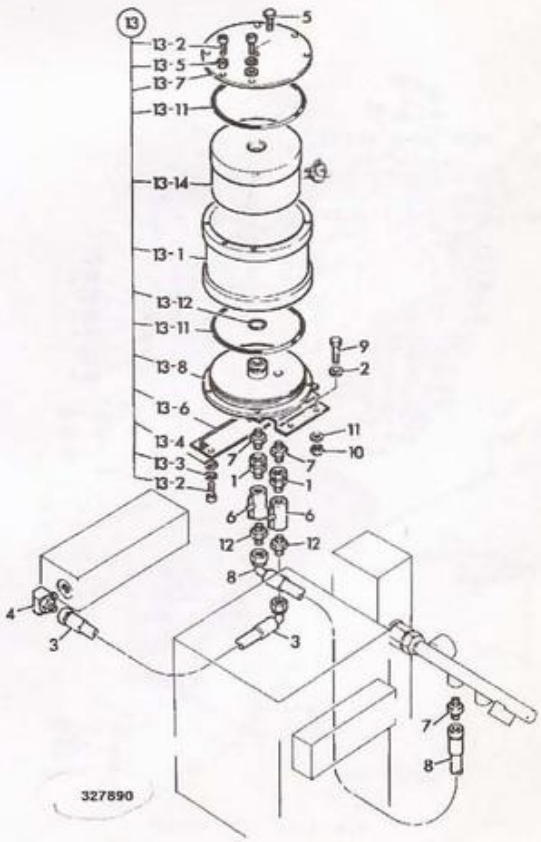

E1-10-1 CIRCUIT, DRAIN, MOTOR & SOLENIOD

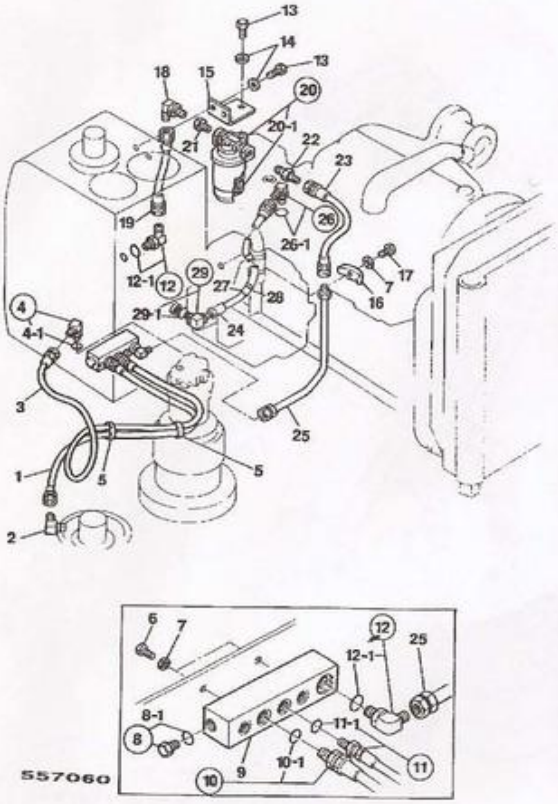

E1-11-1 CIRCUIT, SERVO, NEUTRAL FIG 1

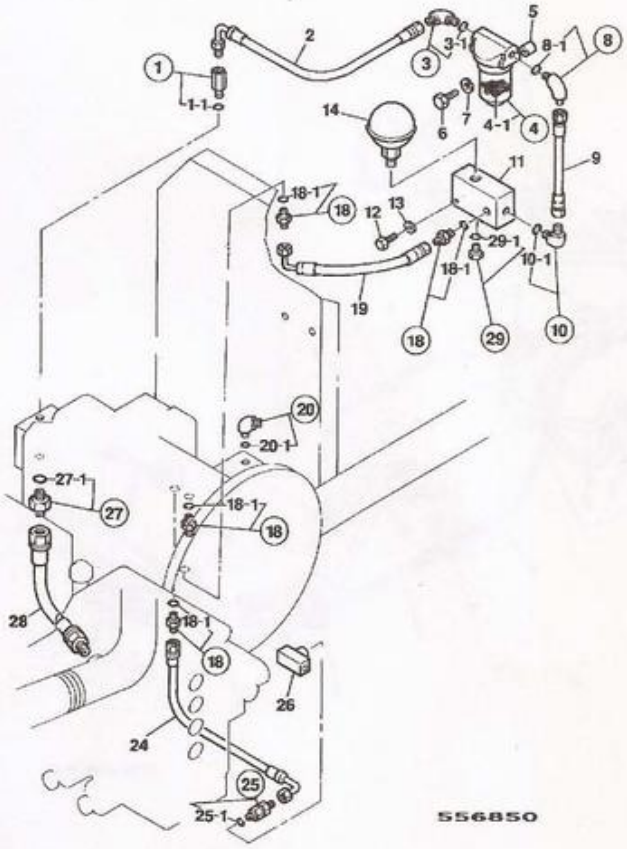

E1-11-10 CIRCUIT, SERVO, NEUTRAL FIG 2

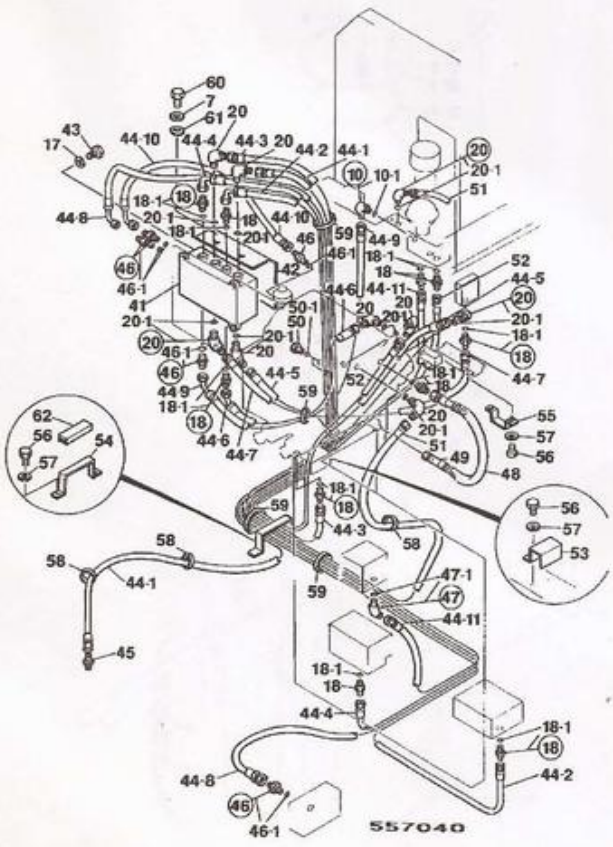

E1-11-20 CIRCUIT, SERVO, NEUTRAL FIG 3

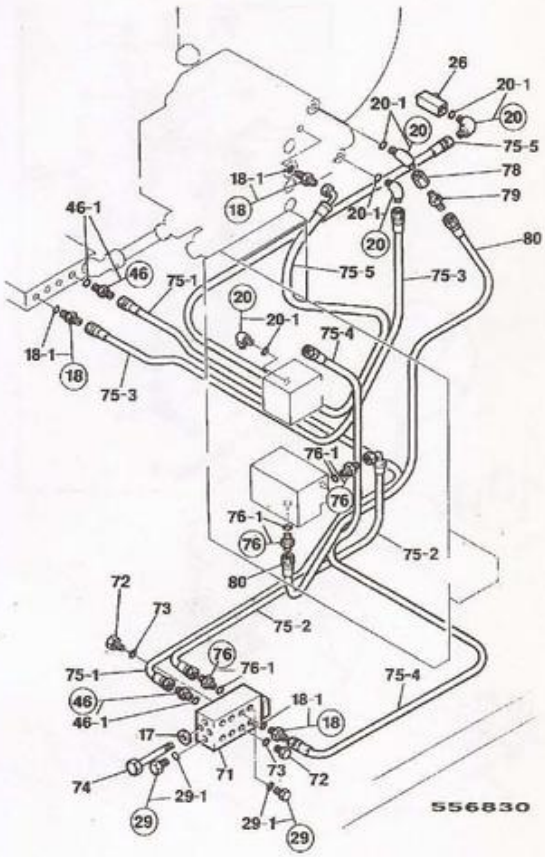

E1-13-1 CIRCUIT, SERVO, CONTROLS SIDE FIG 1

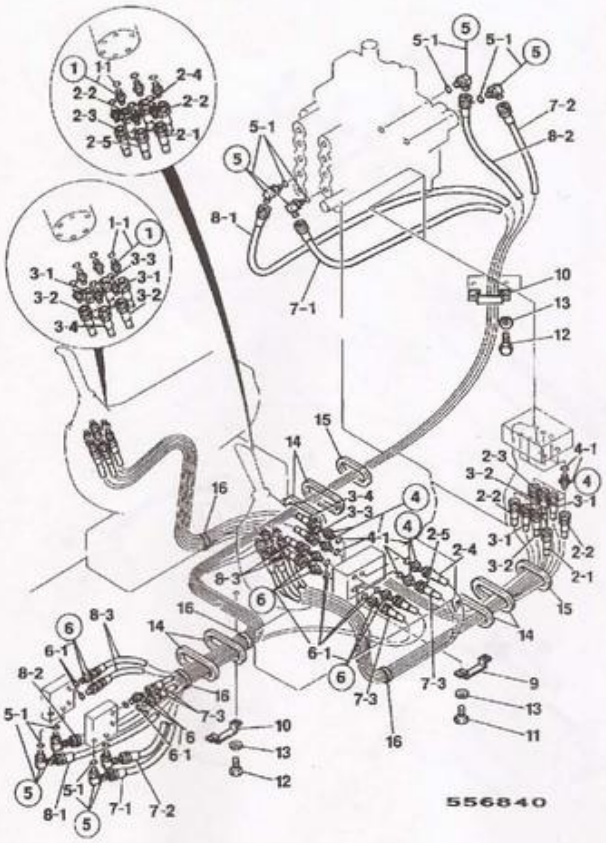

E1-13-10 CIRCUIT, SERVO, CONTROLS SIDE FIG 2

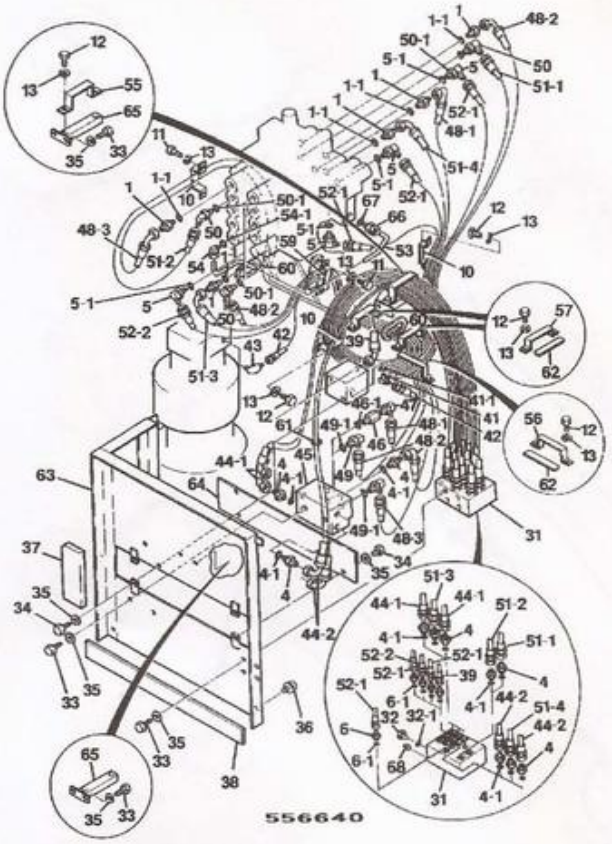

E1-20-1 CIRCUIT, BOOM RAM, MAINFRAME

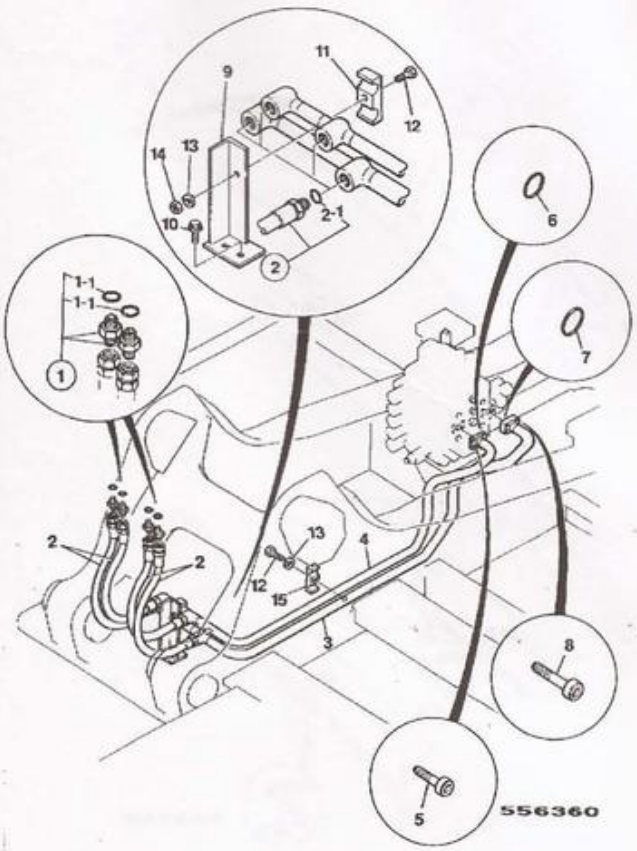

E1-21-1 CIRCUIT, DIPPER & BUCKET

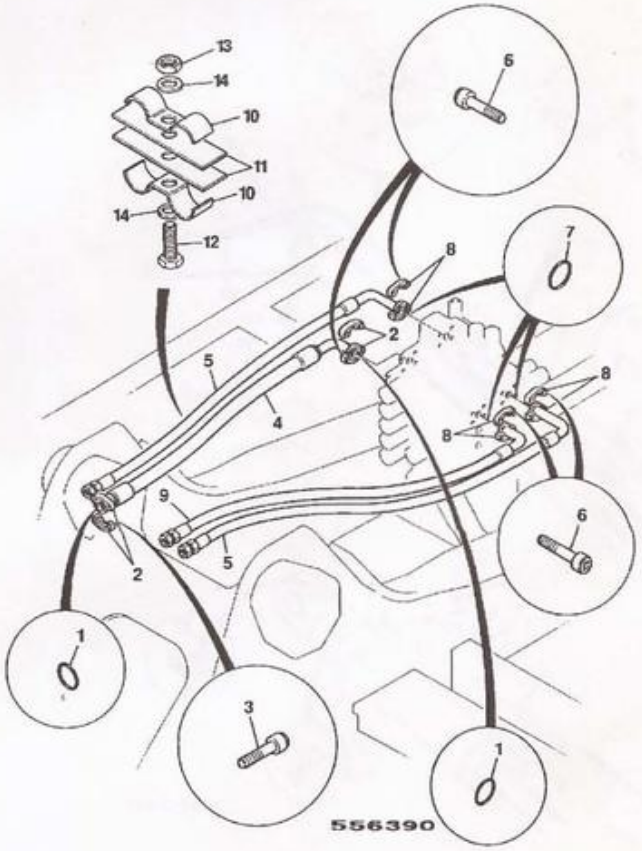

E1-22-1 CIRCUIT, DIPPER RAM, MONOBOOM

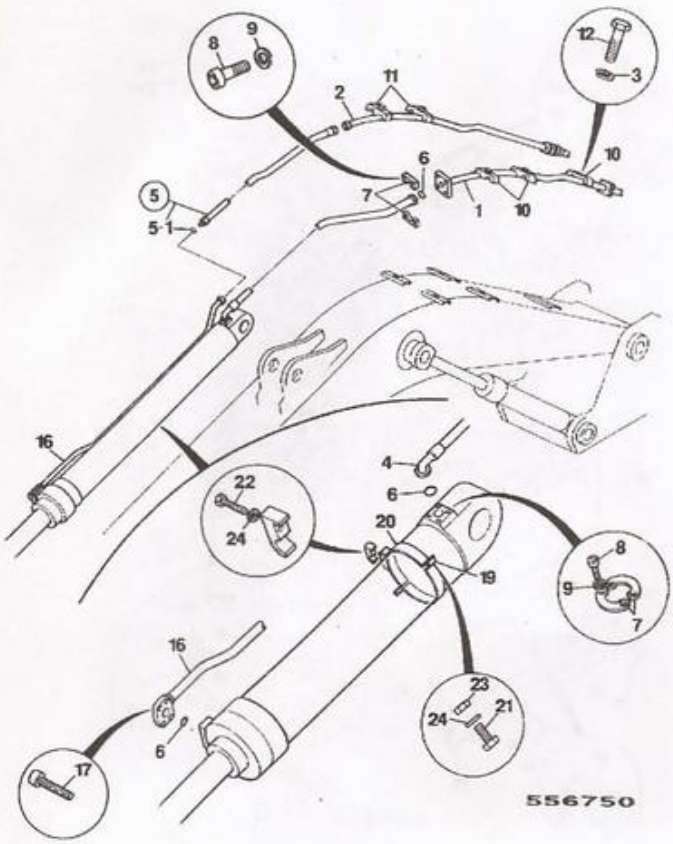

E1-22-10 CIRCUIT, DIPPER RAM, MONOBOOM, WITH HBCV

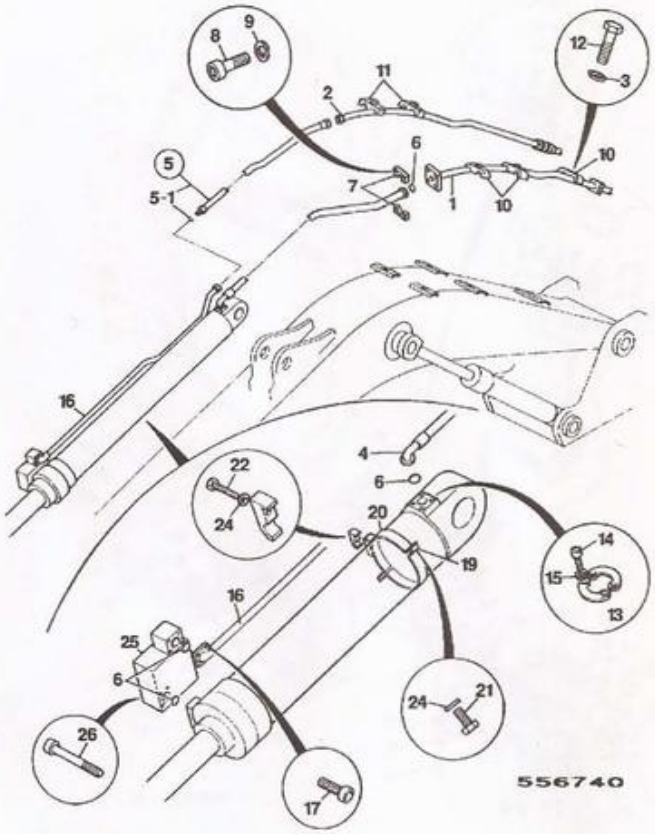

E1-22-20 CIRCUIT, DIPPER RAM, MONOBOOM, 15M LONG RIG

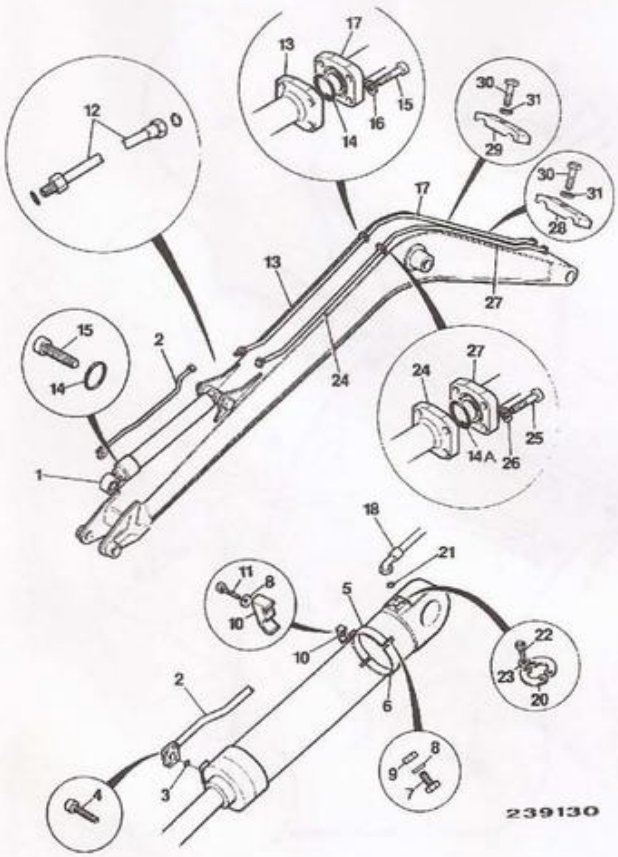

E1-23-1 CIRCUIT, BUCKET RAM, 1.91M DIPPER

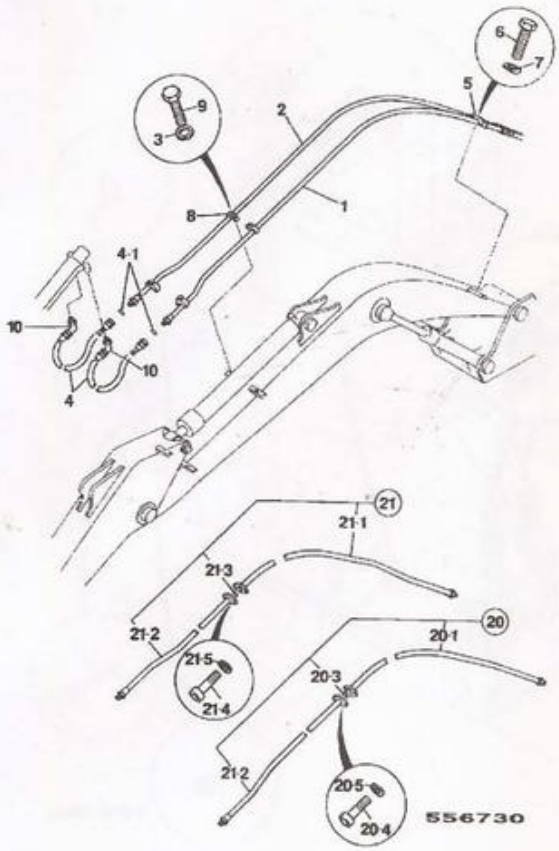

E1-23-10 CIRCUIT, BUCKET RAM, 2.4M DIPPER

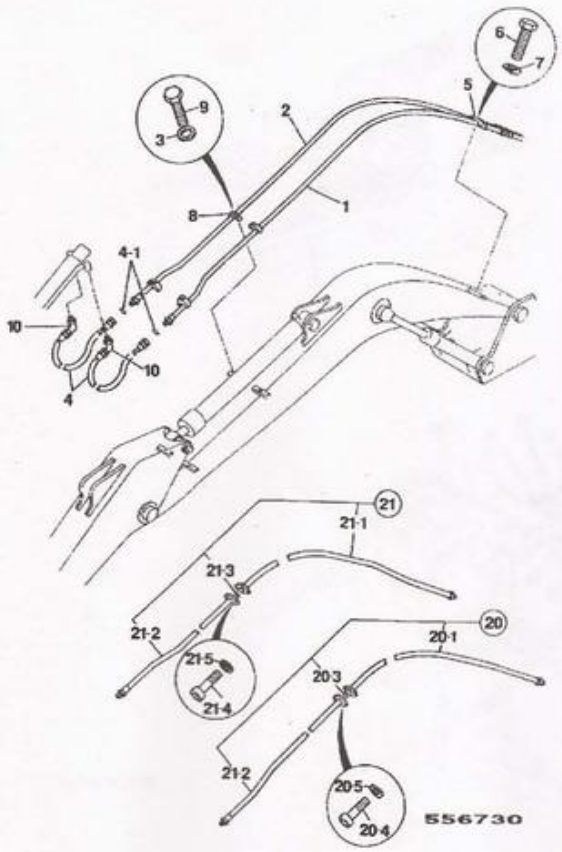

E1-23-20 CIRCUIT, BUCKET RAM, 3.0M DIPPER

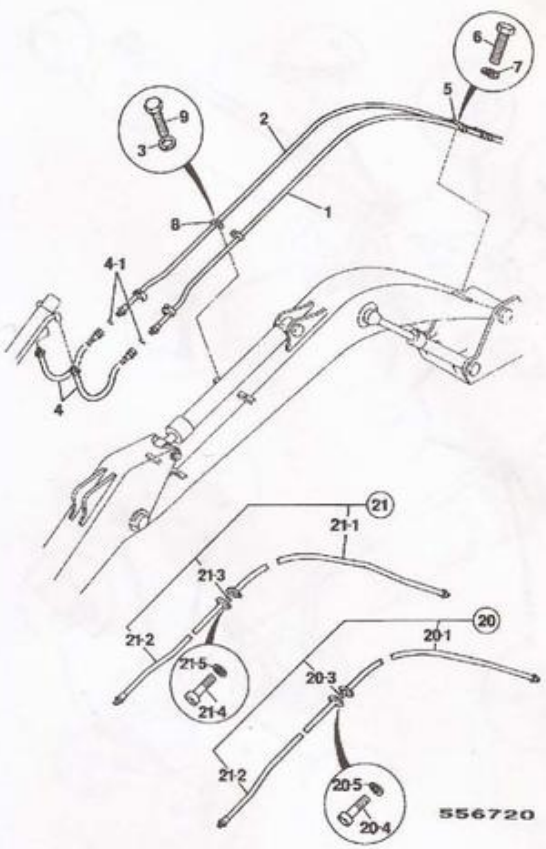

E1-23-30 CIRCUIT, BUCKET RAM, 6.4M DIPPER

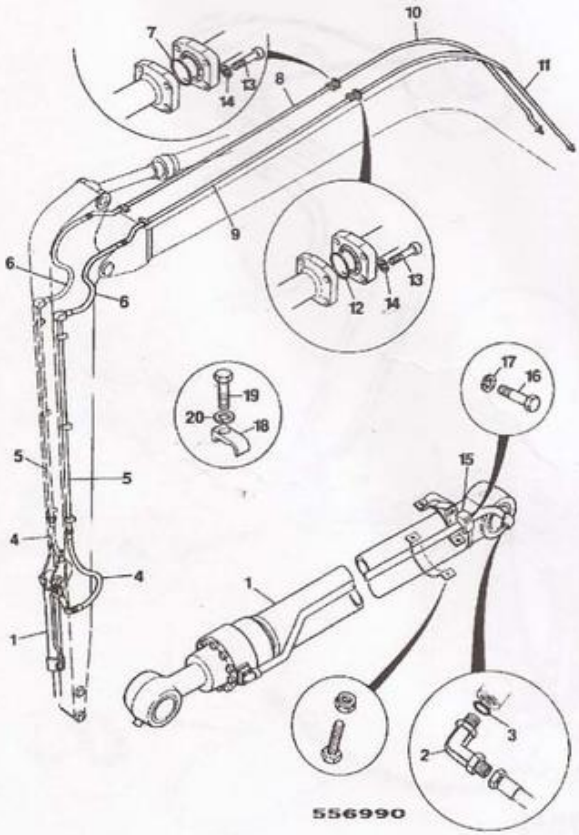

E1-24-1 CIRCUIT, BOOM RAM, NONE HBCV

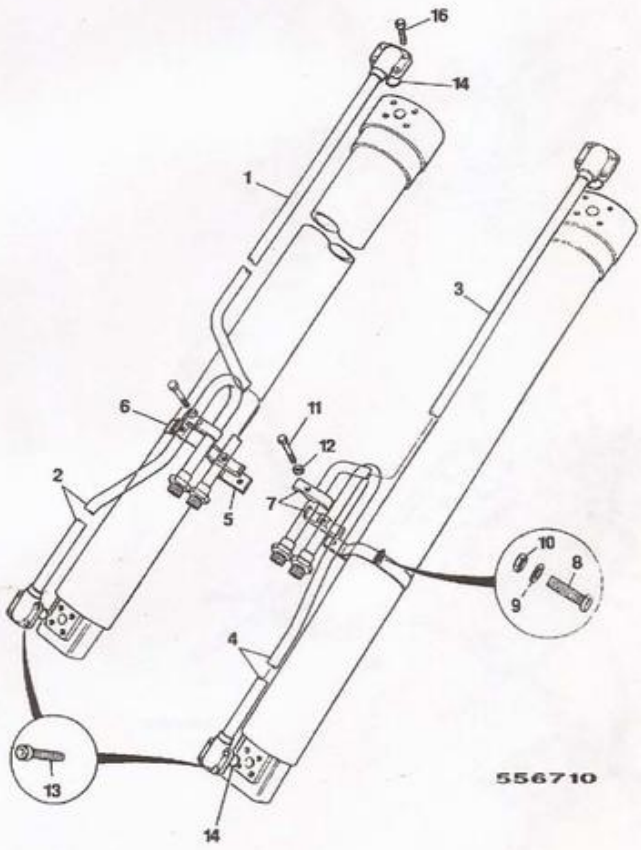

E1-24-10 CIRCUIT, BOOM RAM, WITH HBCV

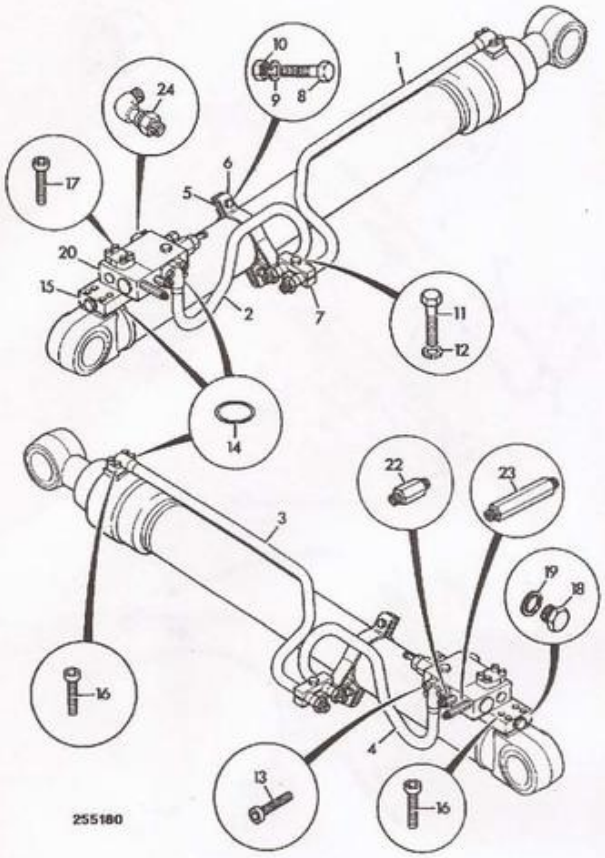

E1-25-1 CIRCUIT, BOOM OVERLOAD, 2 HBCV SUPPLEMENT

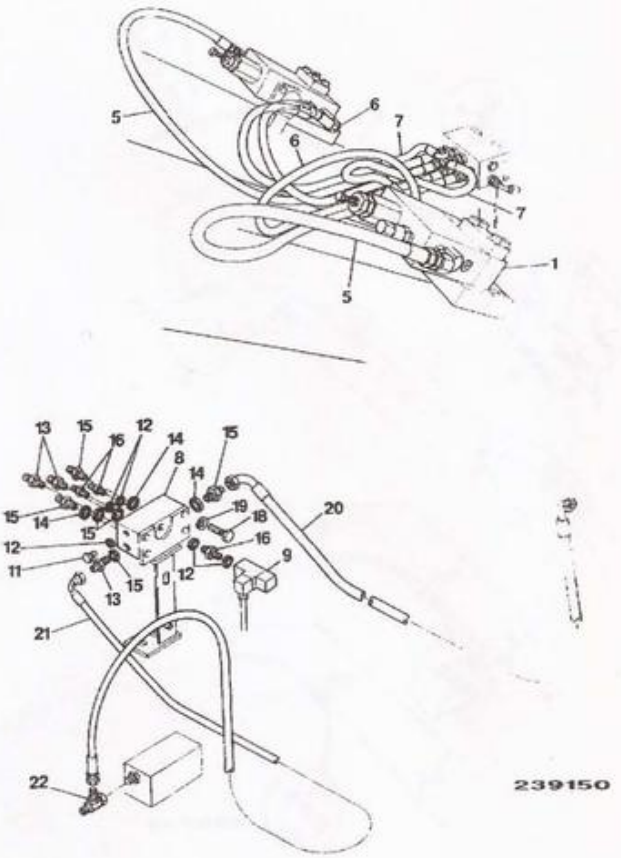

E1-25-10 CIRCUIT, BOOM OVERLOAD, 3 HBCV SUPPLEMENT

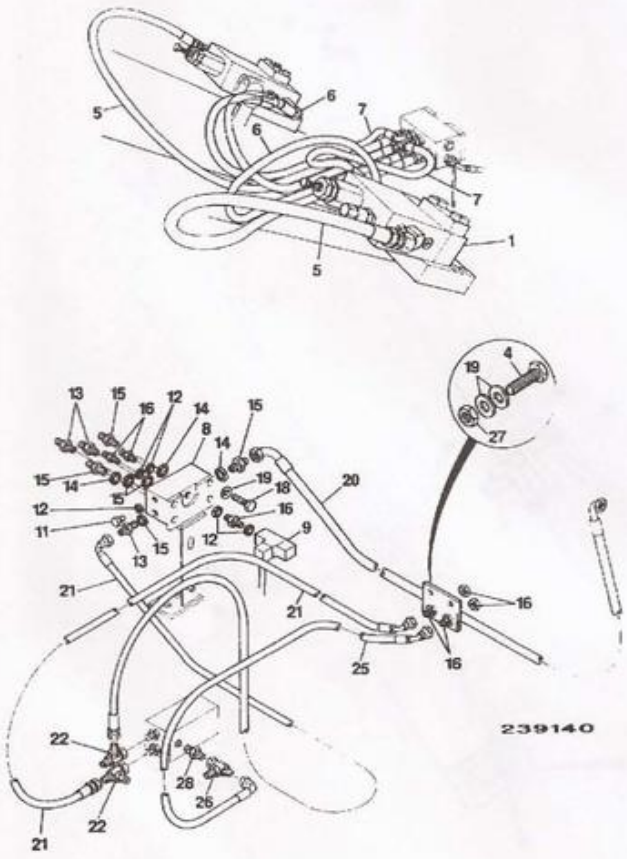

E1-26-1 CIRCUIT, DIPPER RAM, HBCV FEED & RETURN

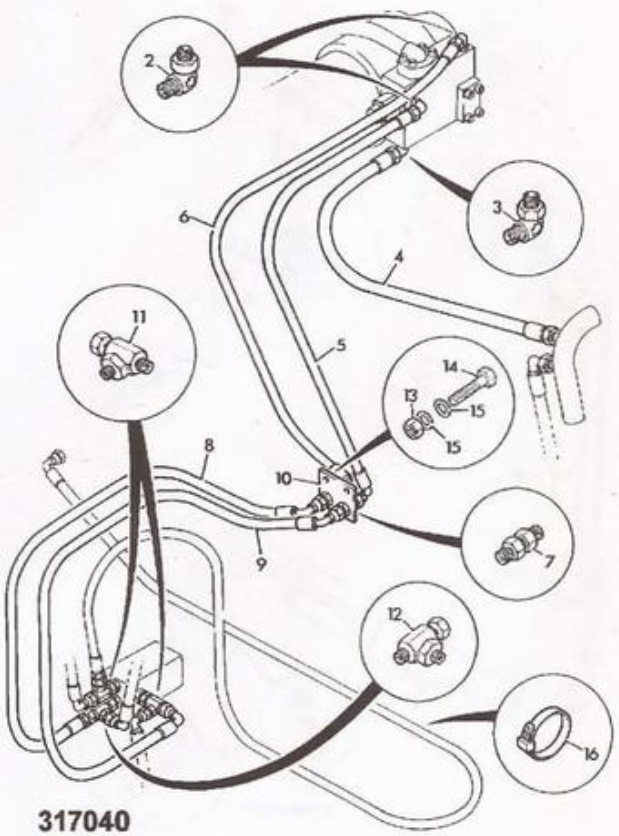

E1-30-1 CIRCUIT, AUXILIARY, MAINFRAME

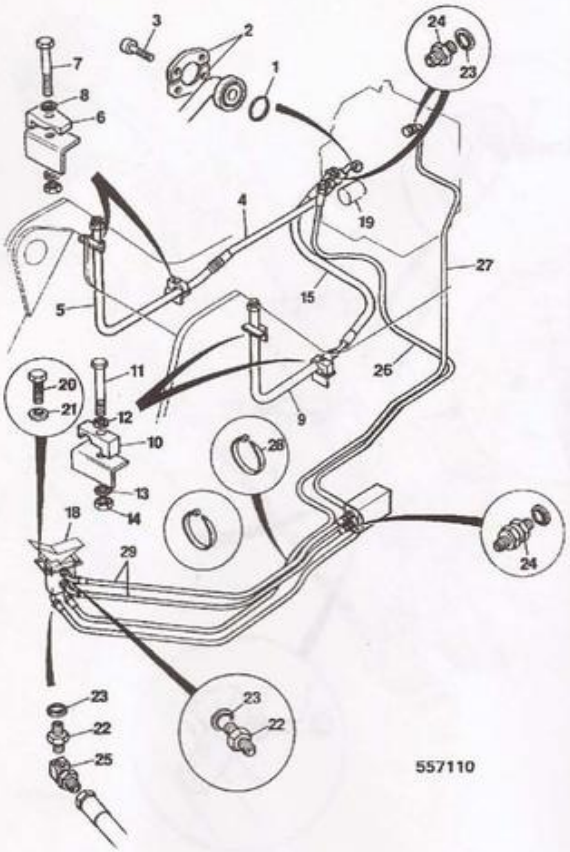

E1-30-10 CIRCUIT, AUXILIARY/HAMMER, MAINFRAME

Illustration Not Available at Time of Publication

E1-30-20 CIRCUIT, HAMMER MAINFRAME

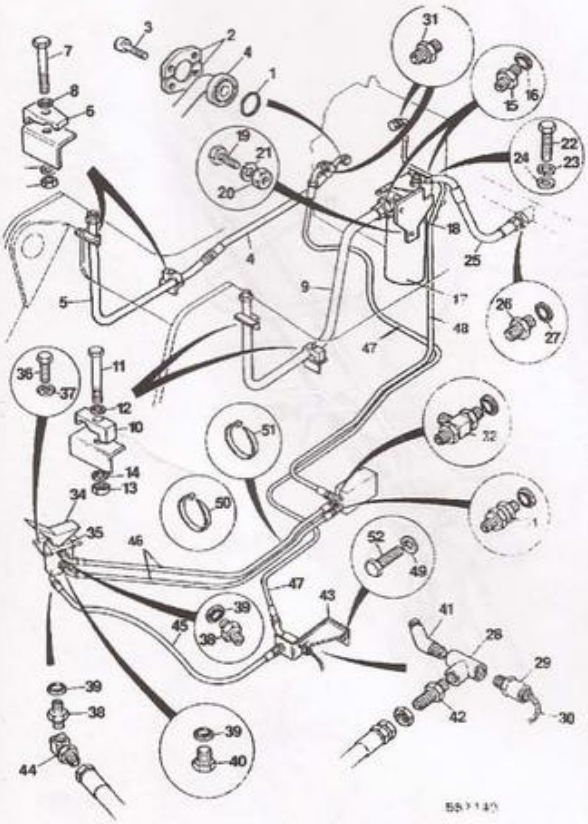

E1-30-30 CIRCUIT, AUXILIARY/HAMMER, MAINFRAME LOW FLOW

Illustration Not Available at Time of Publication

E1-32-1 CIRCUIT, AUXILIARY/HAMMER, BOOM

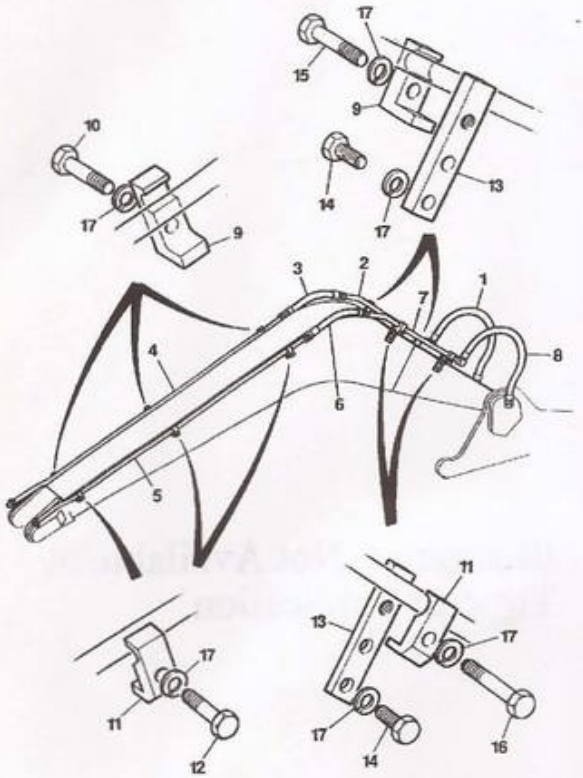

E1-33-1 CIRCUIT, AUXILIARY/HAMMER, 1.91M DIPPER

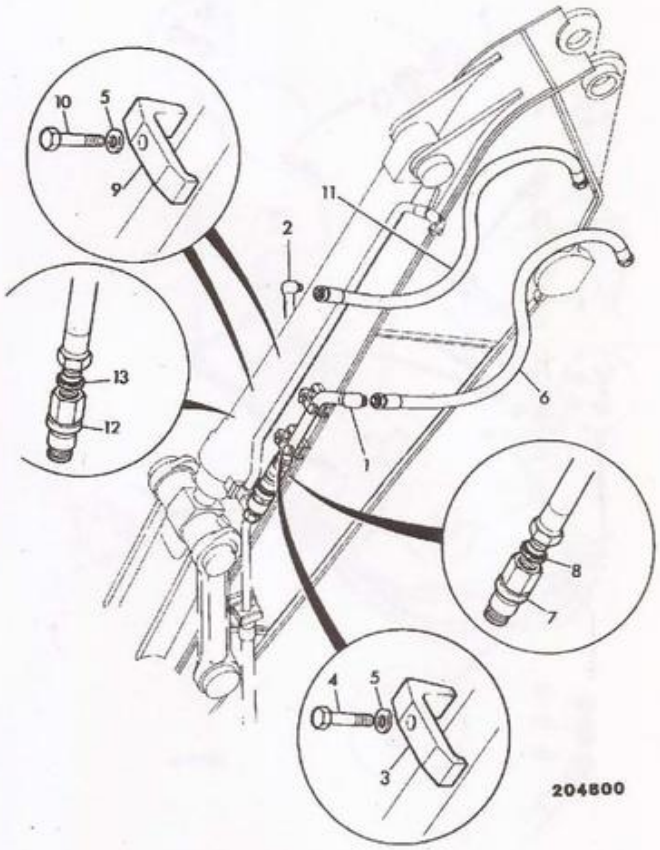

E1-33-2 CIRCUIT, AUXILIARY/HAMMER, 2.40M DIPPER

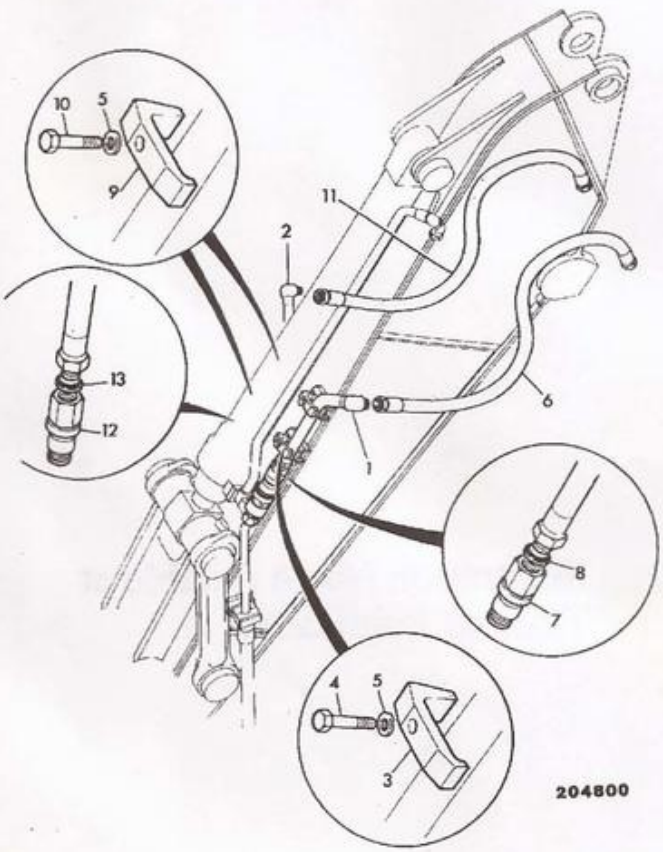

E1-33-3 CIRCUIT, AUXILIARY/HAMMER, 3.00M DIPPER

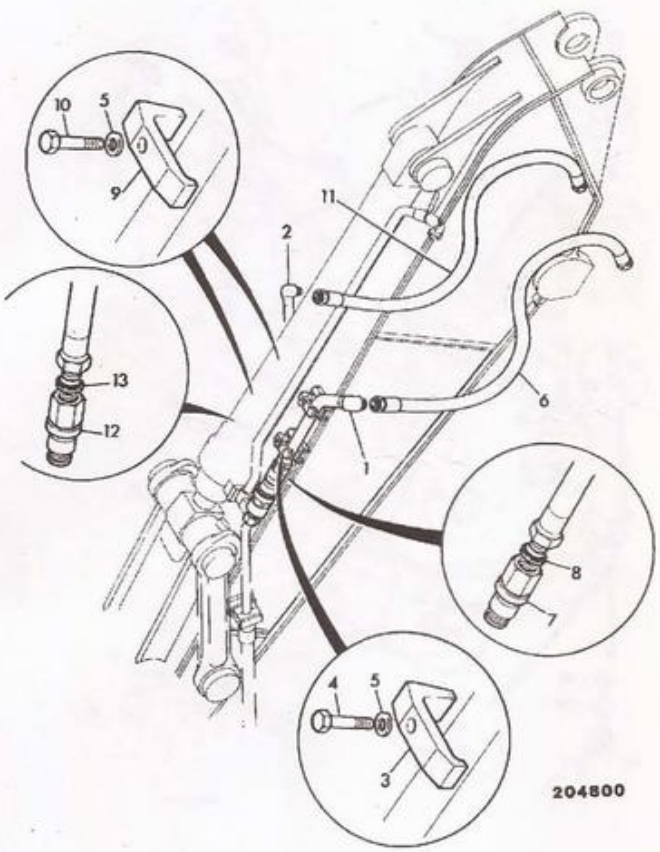

E1-34-1 CIRCUIT, AUXILIARY, BOOM & DIPPER, 15M ARM WITH WEEDMOWER

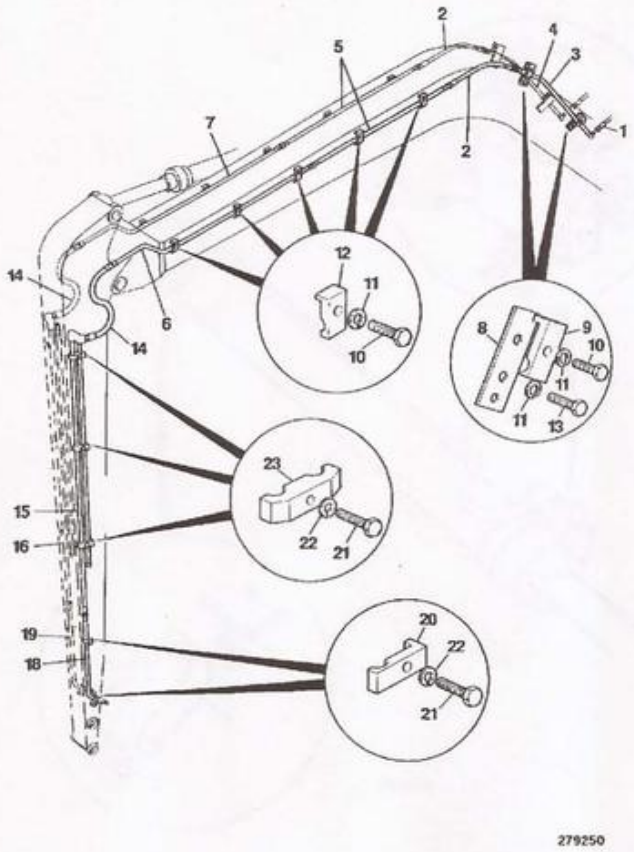

E1-35-1 CIRCUIT, LOW FLOW, 2.4M DIPPER

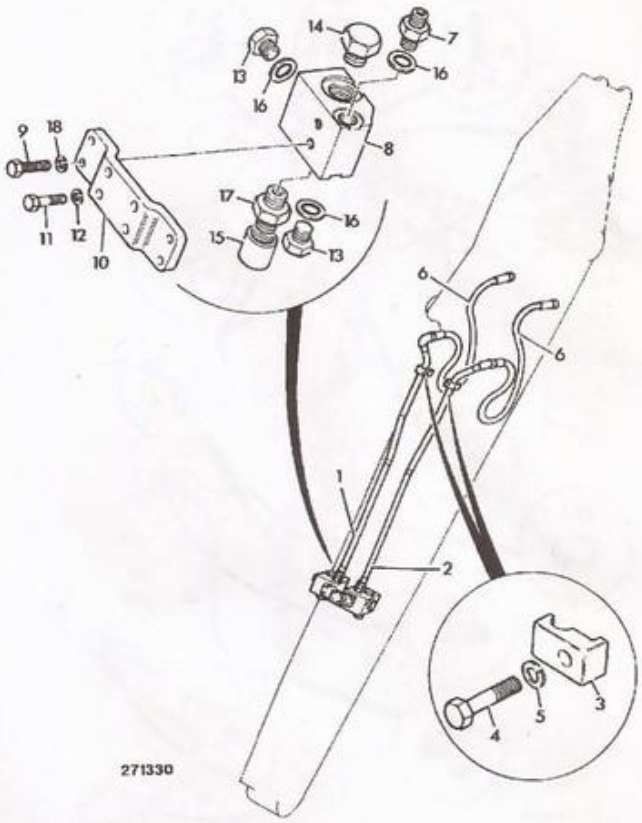

E1-35-2 CIRCUIT, LOW FLOW, 3.0M DIPPER

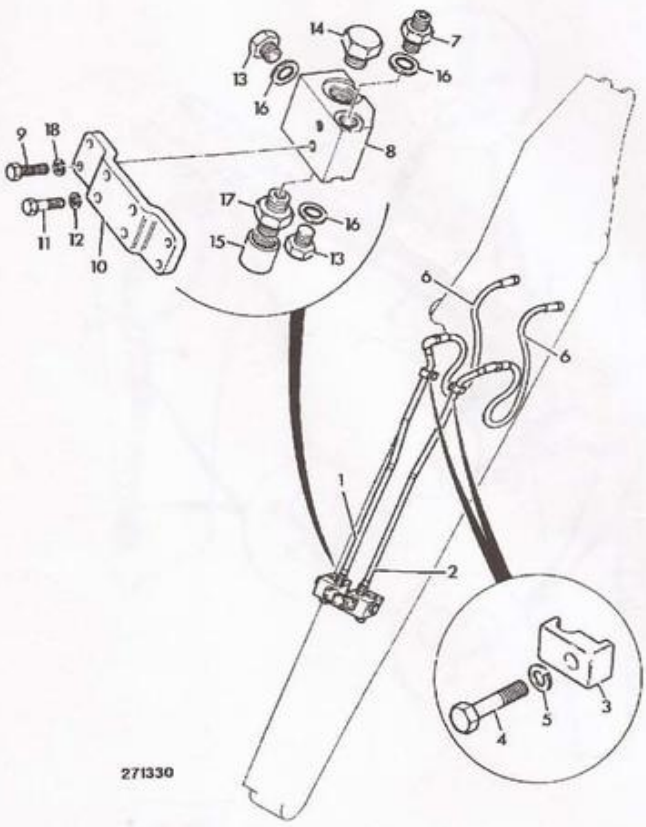

E1-42-1 CIRCUIT, DIPPER RAM, TRIPLE ARTICULATING, WITHOUT HBCV

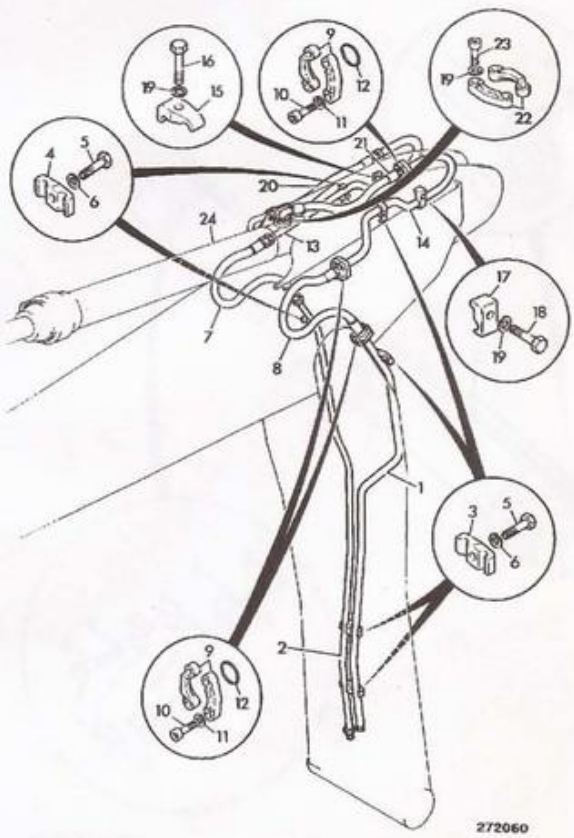

E1-42-10 CIRCUIT, DIPPER RAM, 1RIPLE ARTICULATING, WITH HBCV

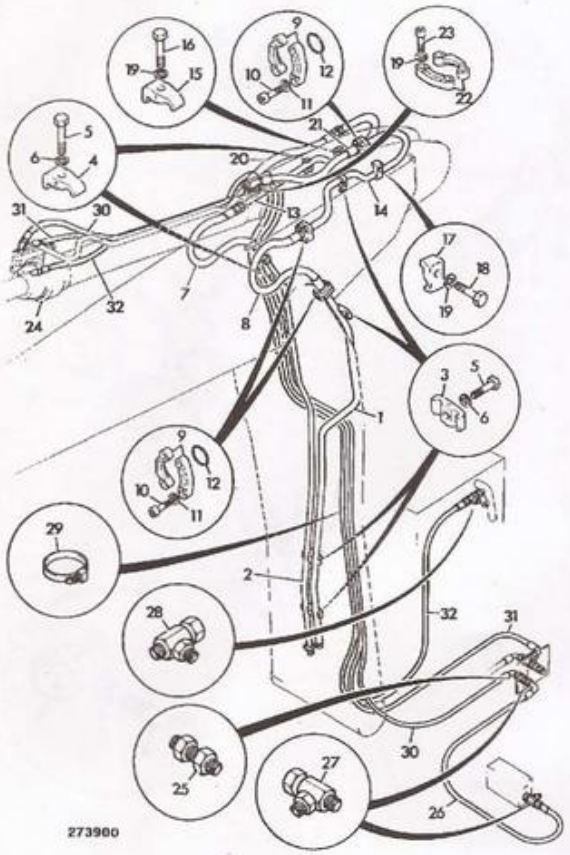

E1-43-1 CIRCUIT, DIPPER RAM, H.B.C.V., ASSEMBLY

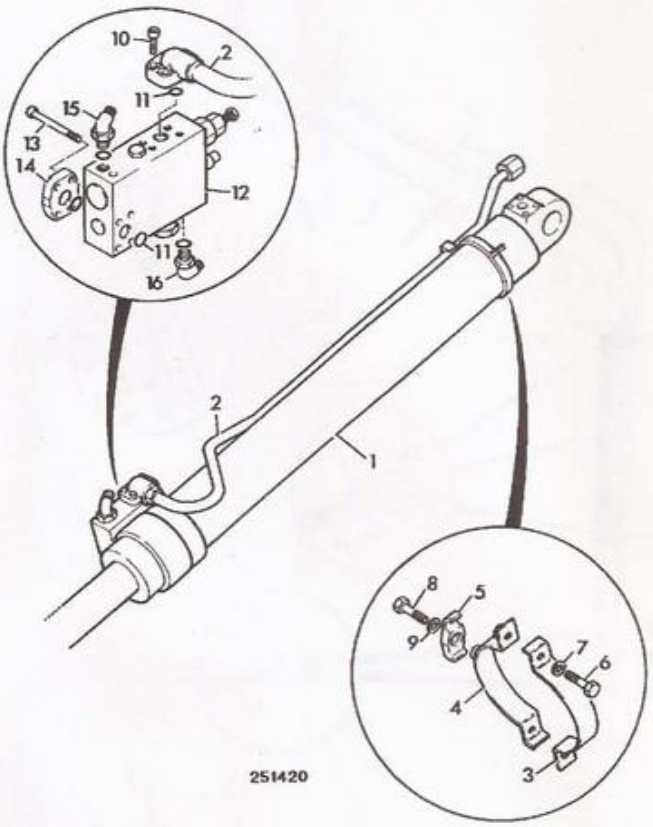

E1-43-10 CIRCUIT, DIPPER RAM, WITHOUT H.B.C.V.

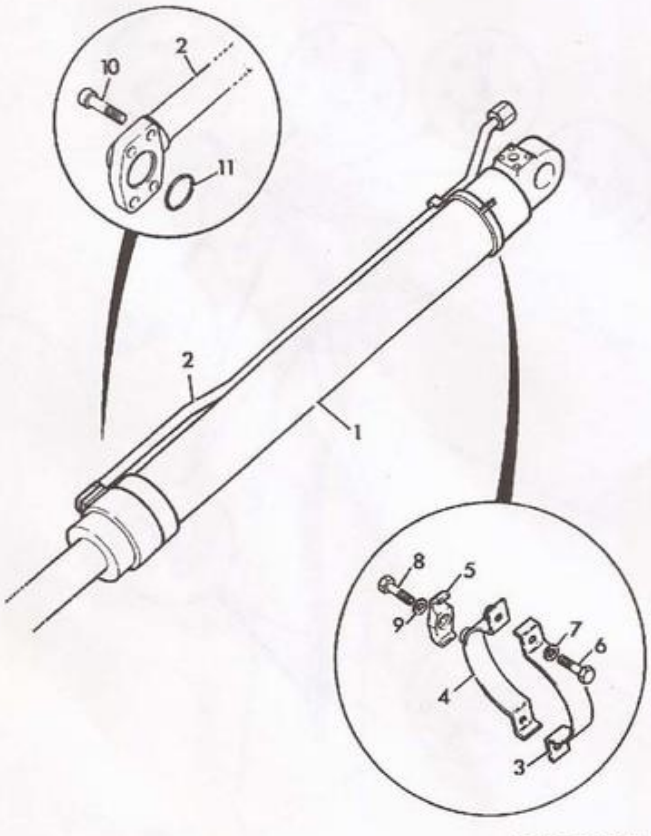

E1-44-1 CIRCUIT, BUCKET RAM, TAB BOOM

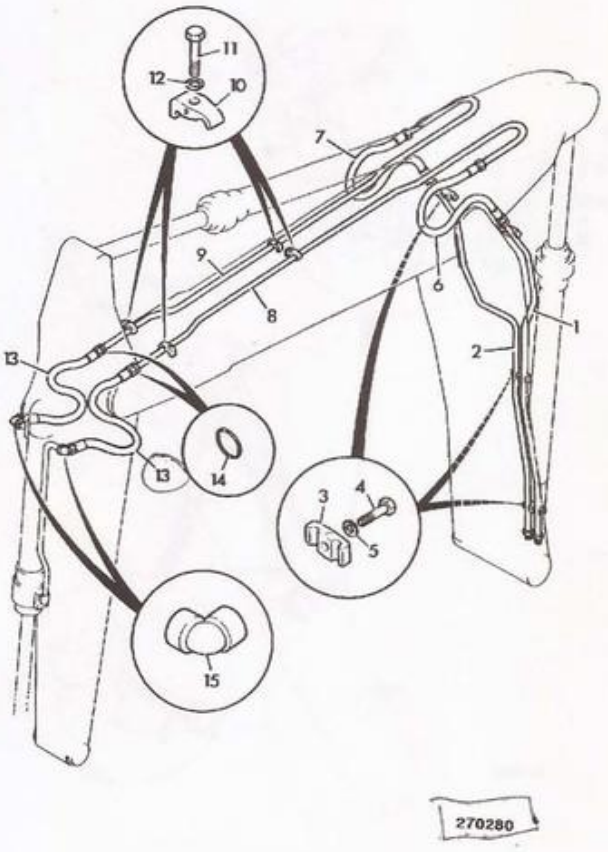

E1-45-1 CIRCUIT, POSITION, RAM

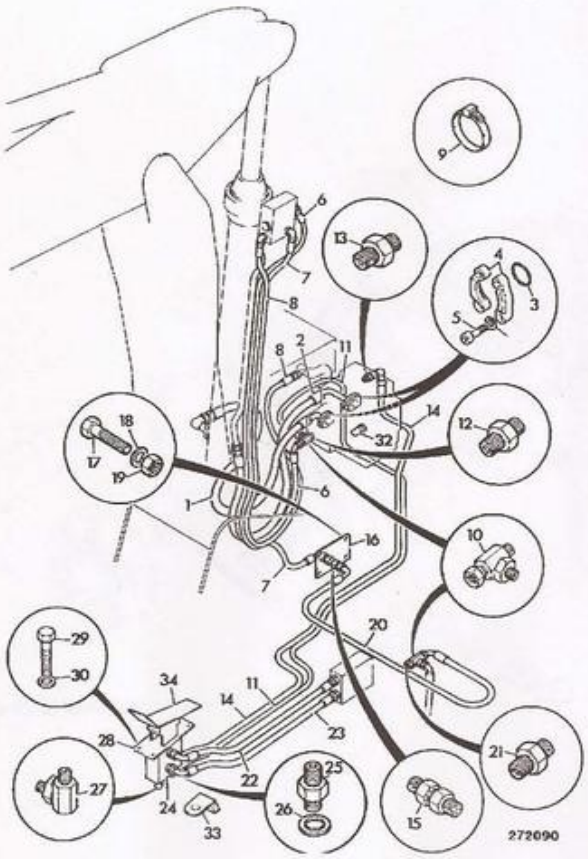

E1-46-1 CIRCUIT. BREAKER, TAB BUILD

Illustration Not Available at Time of Publication

E1-50-1 CIRCUIT. BREAKER, TAB BUILD

Illustration Not Available at Time of Publication

E1-53-2 CIRCUIT, CHANGEOVER, BUCKET/GRAB LOW FLOW

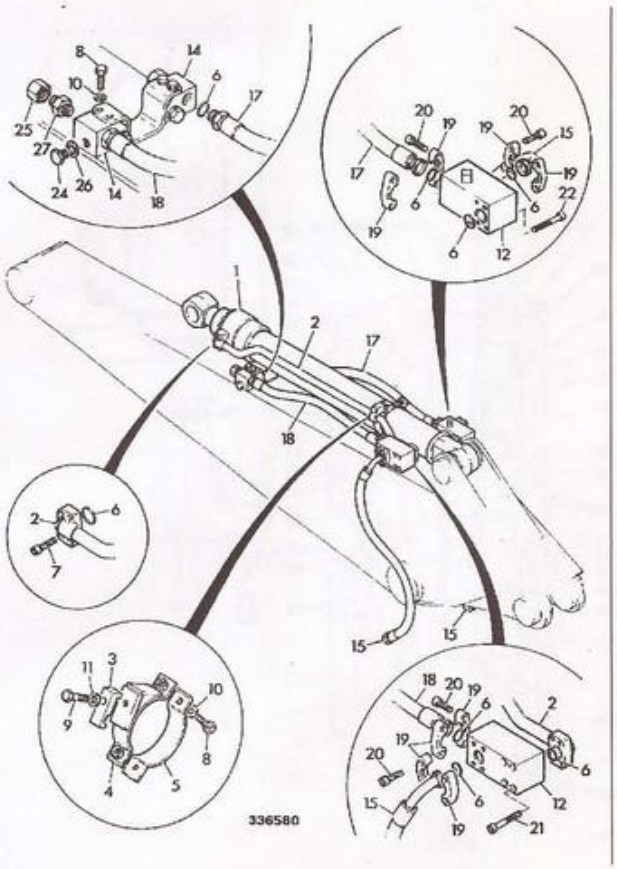

E1-54-1 CIRCUIT, AUXILIARY, MERGED FLOW HEAVY DUTY

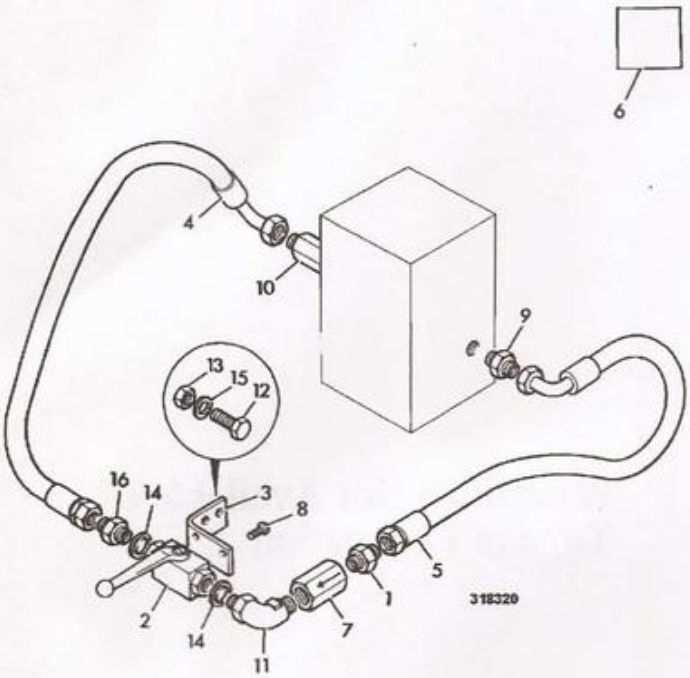

E2-1-1 PUMP, PISTON, MAIN HYDRAULIC, DRIVE GROUPS

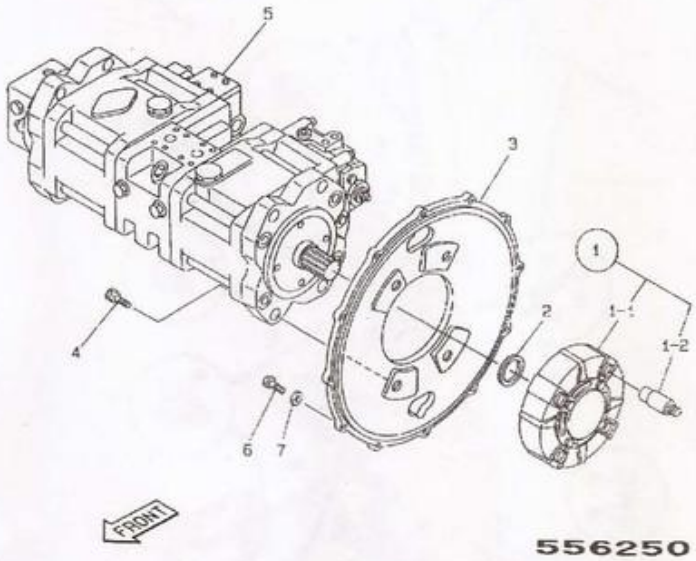

E2-2-1 PUMP, PISTON, MAIN HYDRAULIC, & COMPONENTS

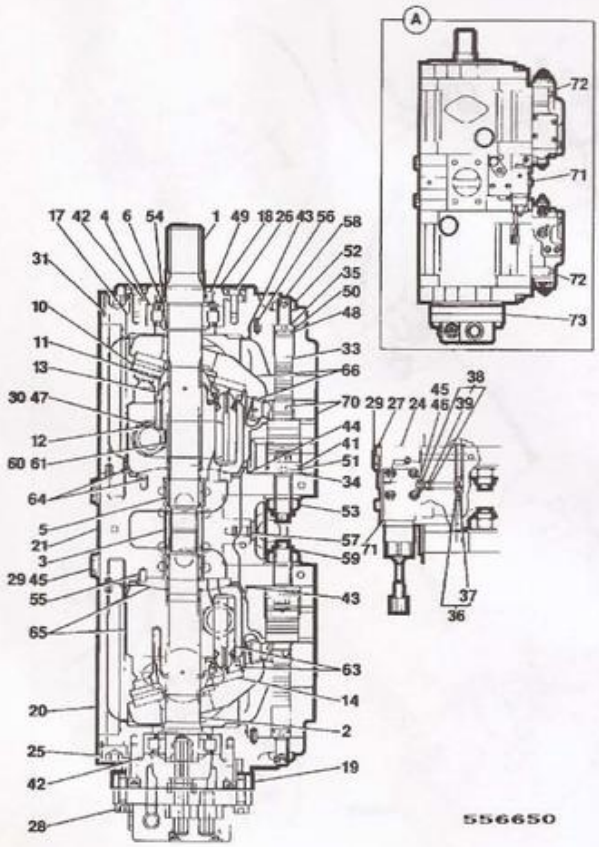

E2-2-2 PUMP, PISTON, MAIN HYDRAULIC, & COMPONENTS FIG 2

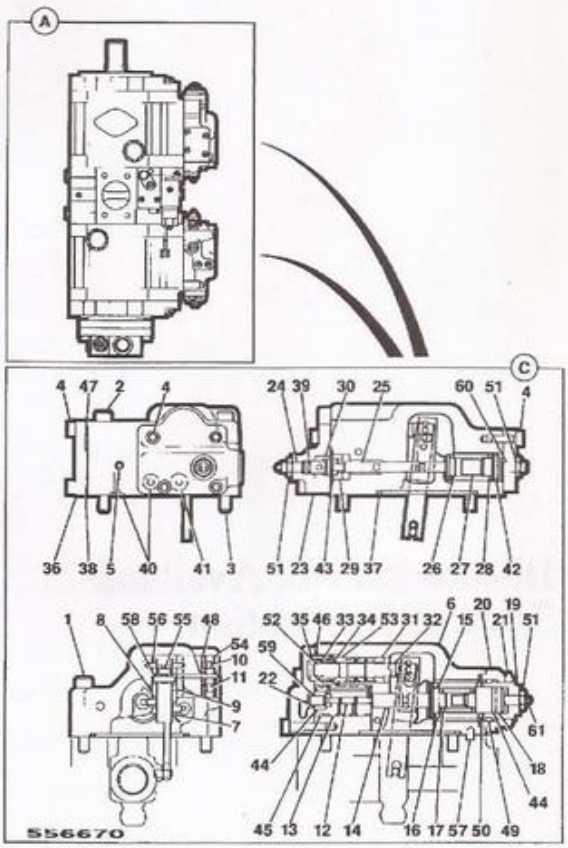

E2-2-3 PUMP, PISTON, MAIN HYDRAULIC, & COMPONENTS
FIG 3

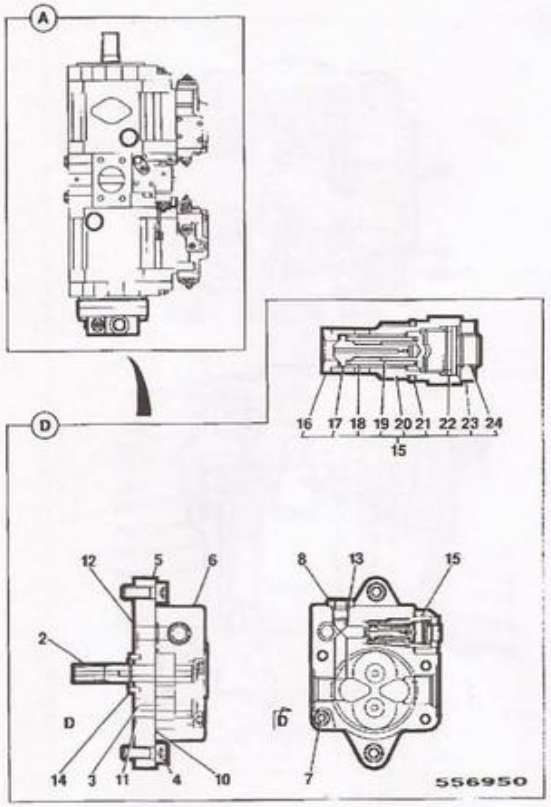

E2-2-4 PUMP, PISTON, MAIN HYDRAULIC, & COMPONENTS
FIG 4

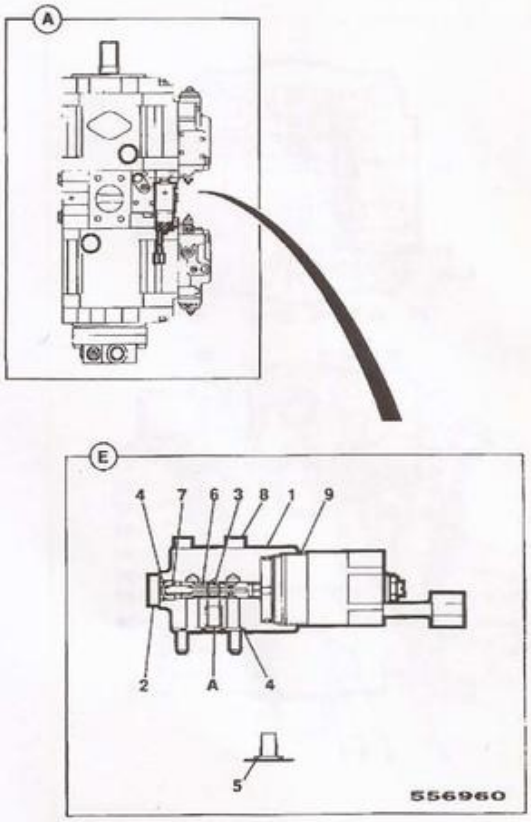

E2-6-1 MOTOR, TRACK

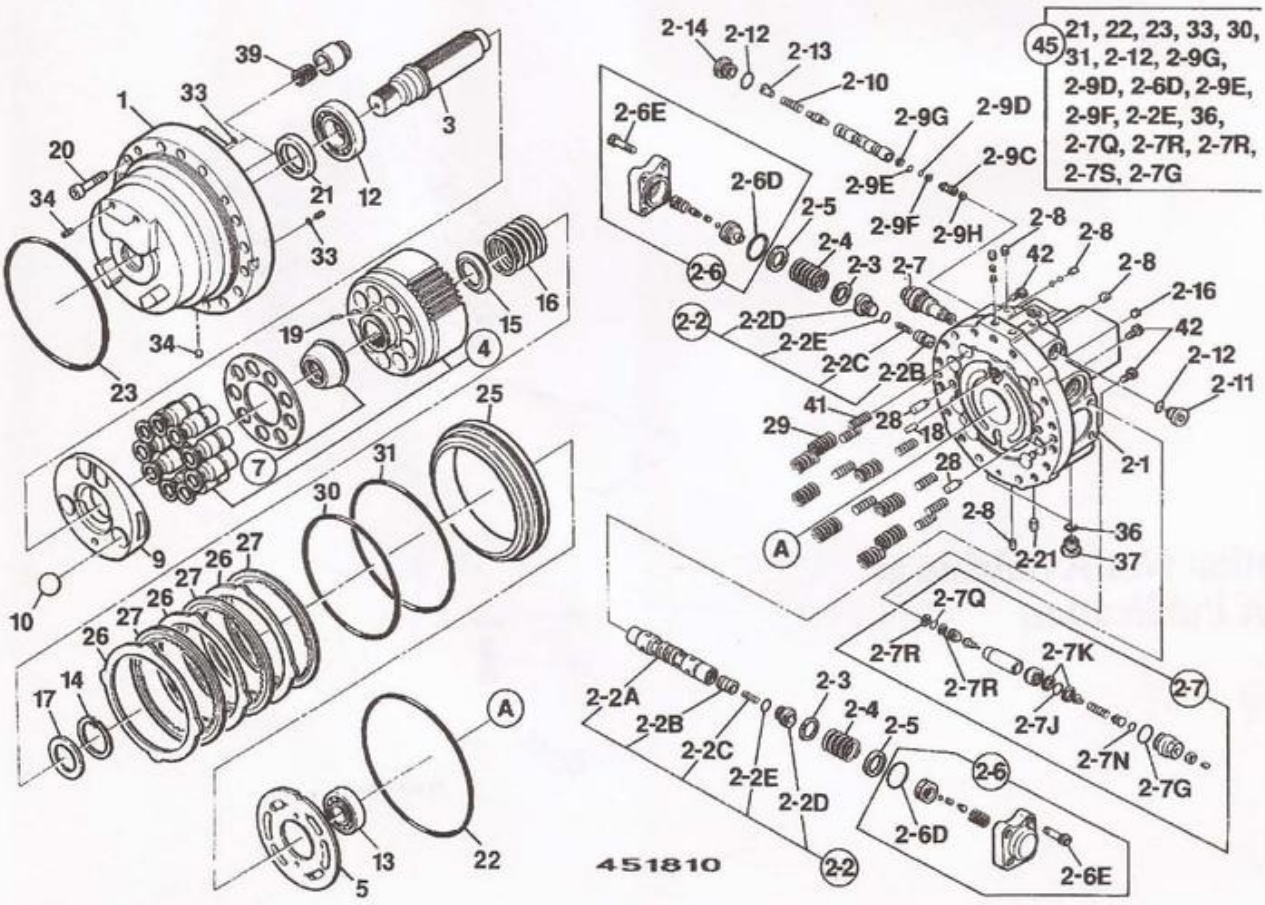

E2-7-1 MOTOR, SWING

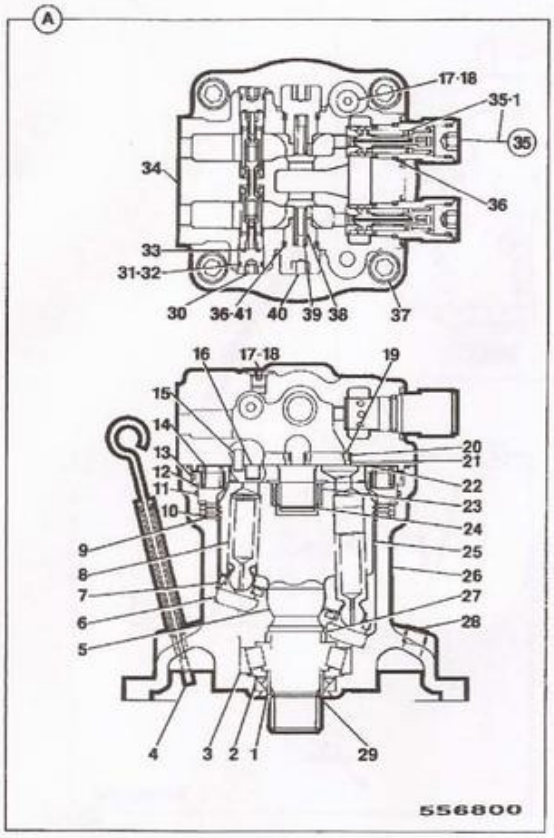

E2-7-2 MOTOR, SWING, LONG REACH

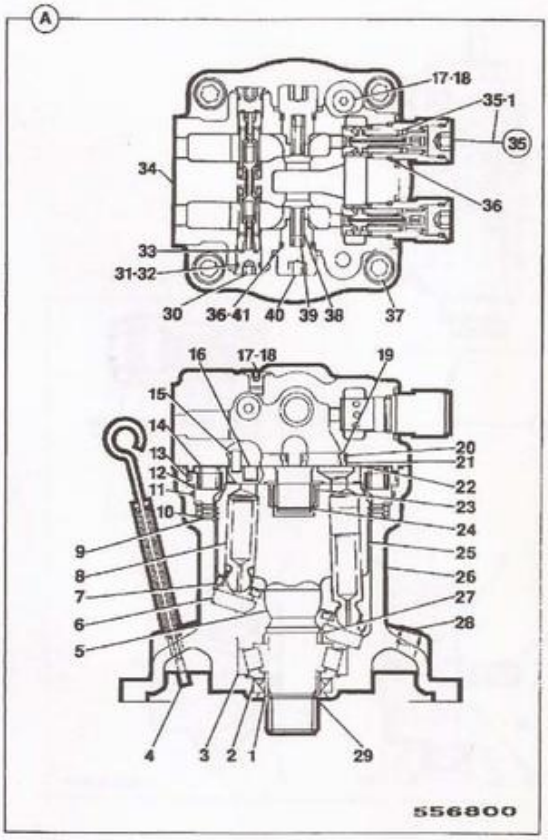

E2-7-3 MOTOR, SWING

Illustration Not Available at Time of Publication

E3-1-1 VALVE, ASSEMBLY, & MOUNTING

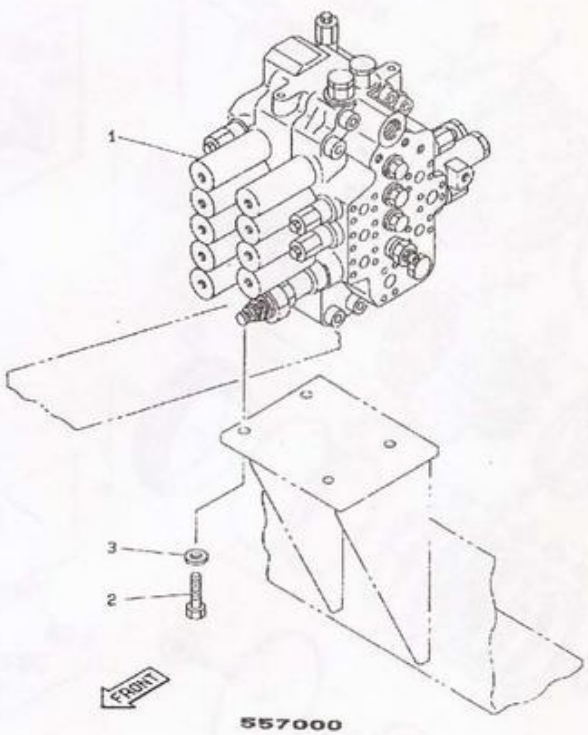

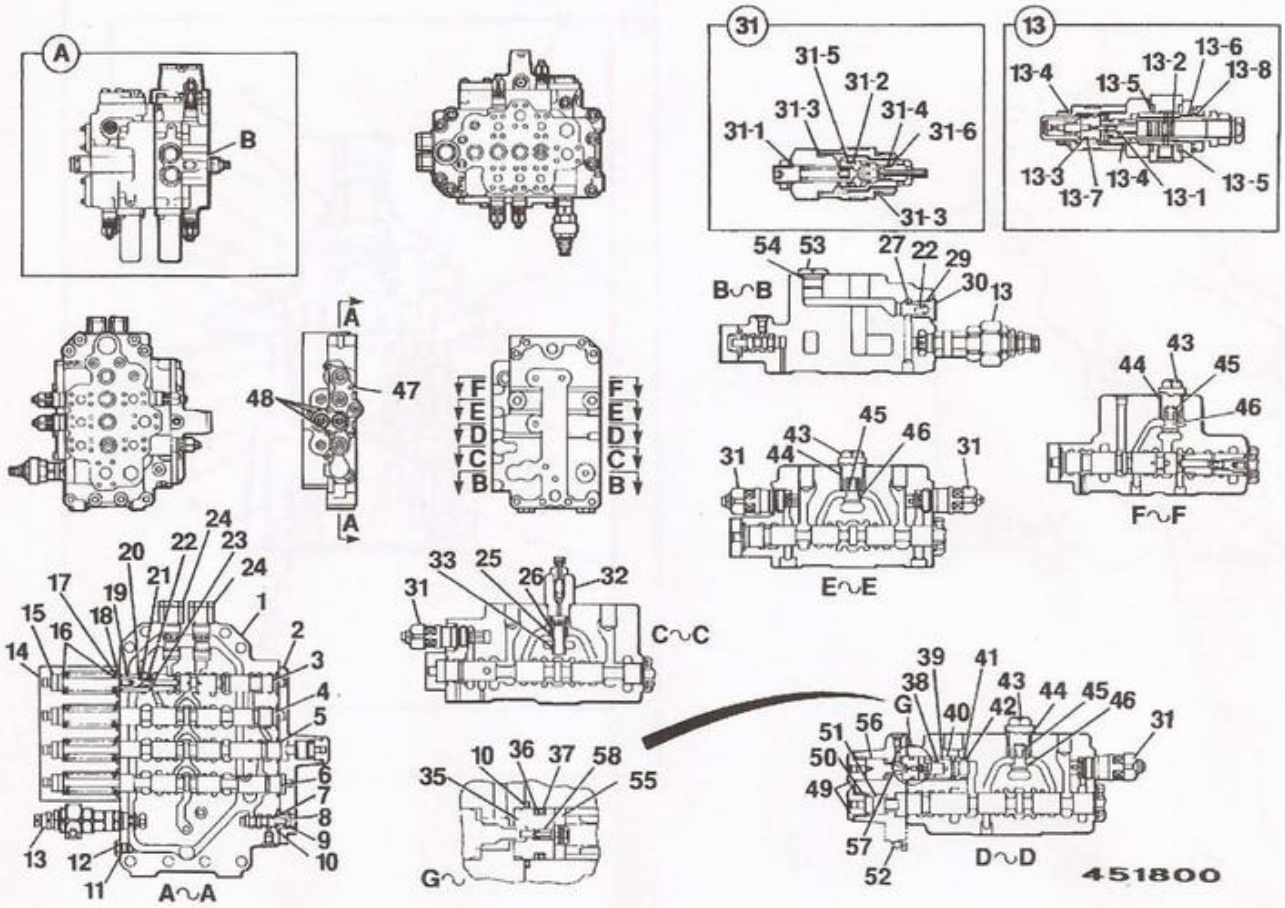
A
B
31
31-5
31-2
31-3
31-4
31-1
31-6
31-3
13
13-4
13-5
13-2
13-6
13-8
13-3
13-7
13-4
13-1
13-5
54 53 27 22 29 30 13
B∿B
A
48
47
A
F E D C B
F E D C B
44 43 45 46
F∿F
31 44 43 45 46 31
E∿E
24 22 20 23 24 21 17 19 18 15 16 14 1 2 3 4 5 6 7 8 9 10 13 12 11
A∿A
33 25 26 32 31
C∿C
10 36 37 58 55 35
G∿
39 41 38 G 40 42 43 44 45 46 31 51 56 50 49 57 52
D∿D
451800

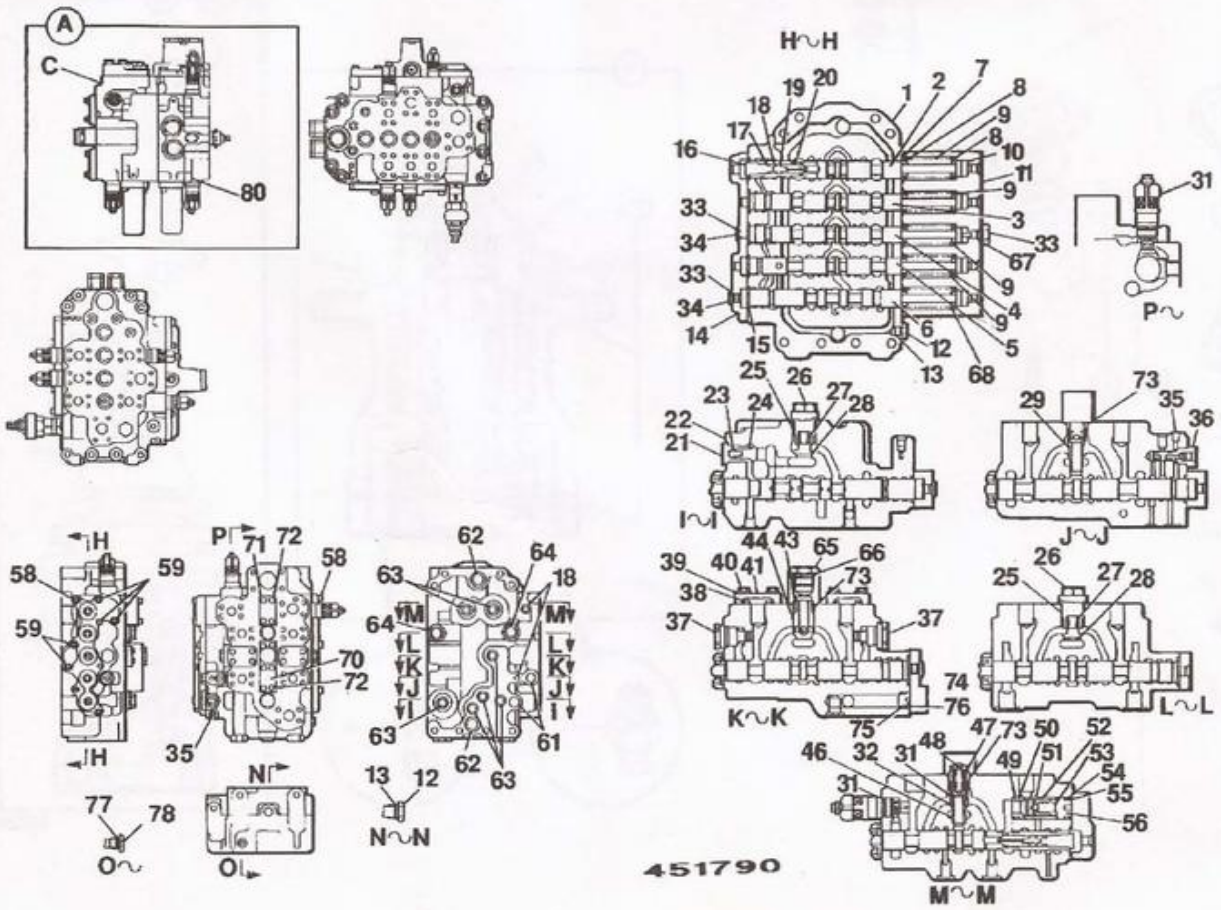
A
C
80
H∿H
20 19 18 17 16 1 2 7 8 9 8 10 11 9 3 33 67 9 4 9 6 12 5 13 68 33 34 33 34 14 15
31
P∿
25 26 27 28 23 24 22 21
I∿I
29 73 35 36
J∿J
44 43 65 66 39 40 41 38 37 73 37
K∿K
25 26 27 28 74 76
L∿L
75
46 32 31 48 47 73 50 52 49 51 53 54 55 56 31
M∿M
451790
H
58 59 59
H
P
71 72 58 70 72 35
N
O
77 78
O
62 64 18 63 M 64 L K J I 63 61 62 63
13 12
N∿N

E3-2-45 VALVE, RELIEF, SERVICE PORT

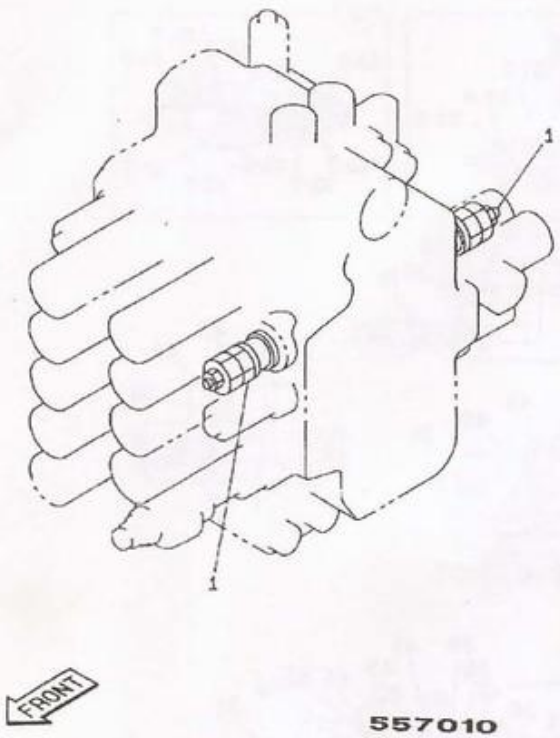

E3-6-1 VALVE, HAND CONTROL, SERVO

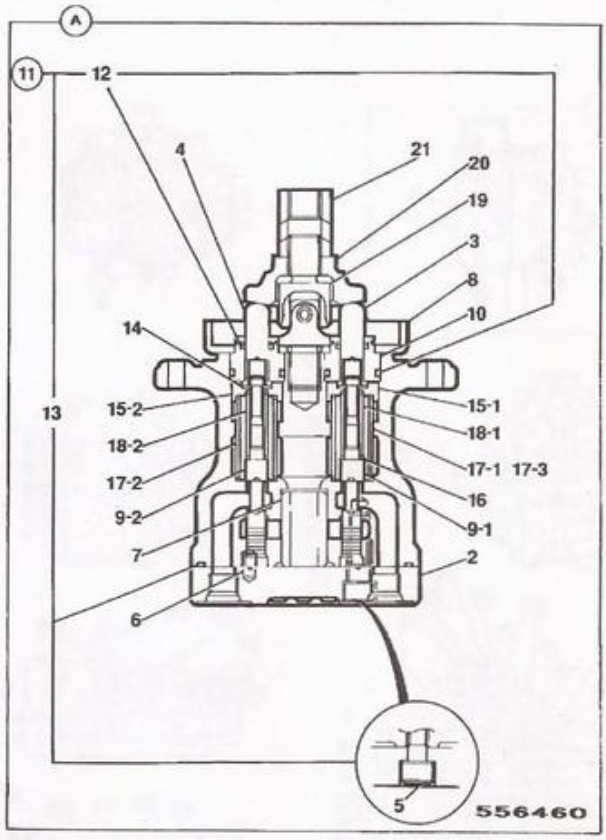

E3-6-2 VALVE, HAND CONTROL, SERVO

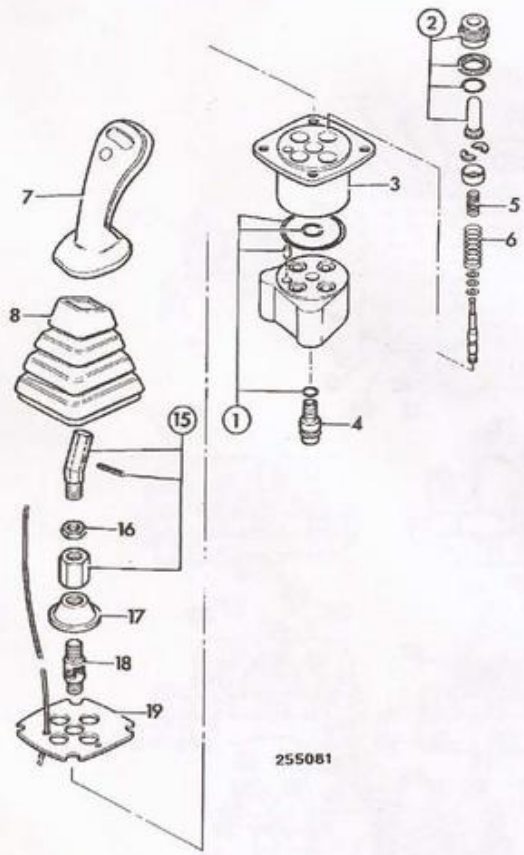

E3-6-3 VALVE, HAND CONTROL, SERVO

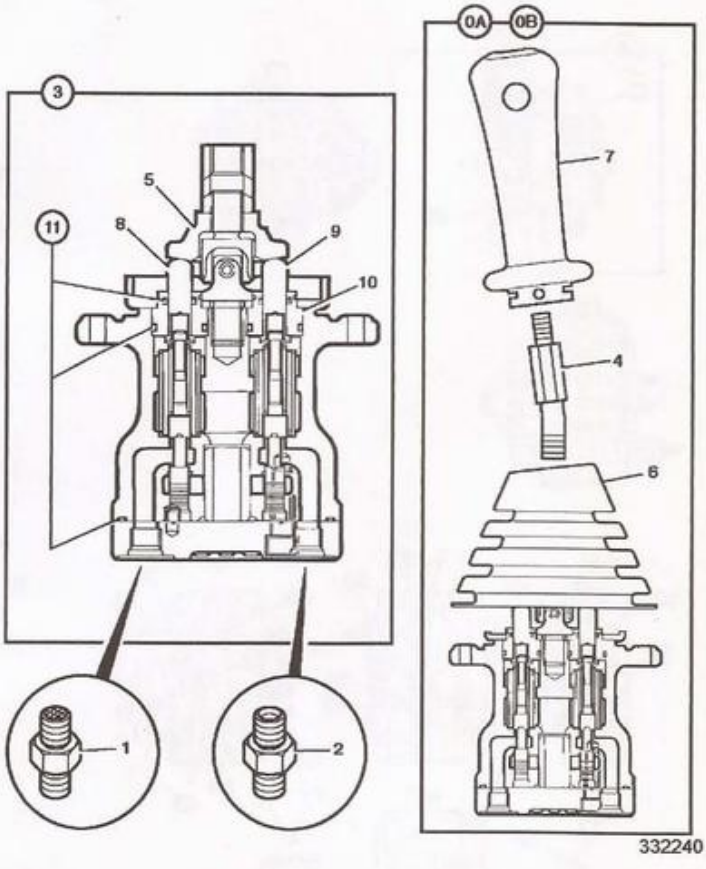

E3-7-1 VALVE, FOOT CONTROL, SERVO

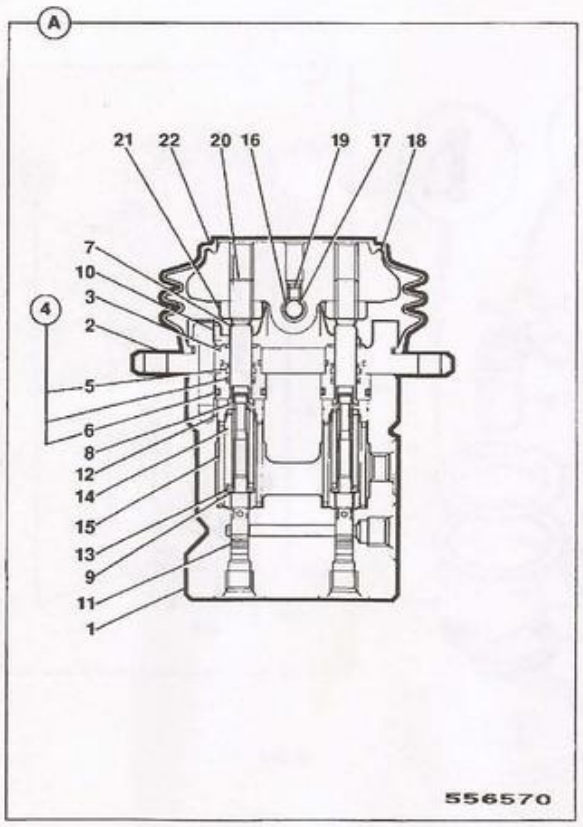

E3-8-1 VALVE SOLENOID

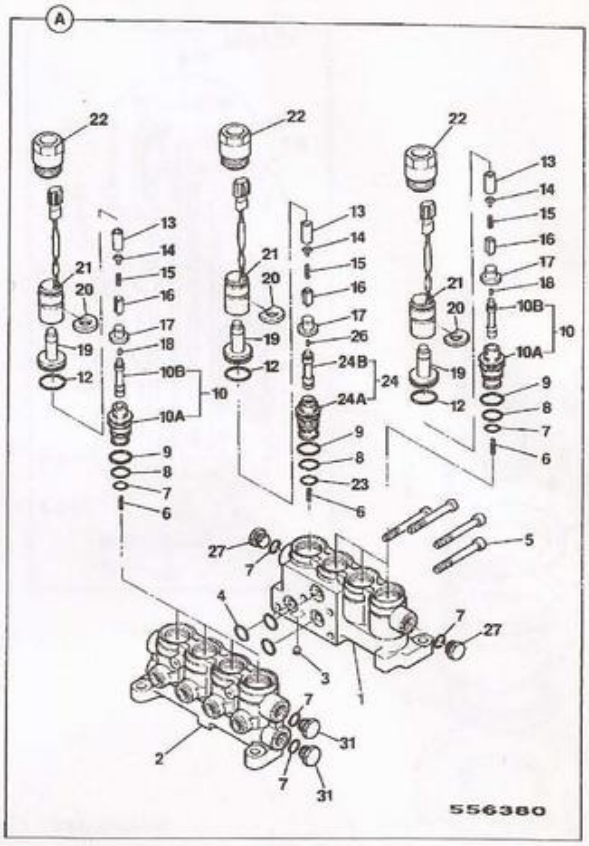

E3-10-1 VALVE, FOOT CONTROL, SERVO

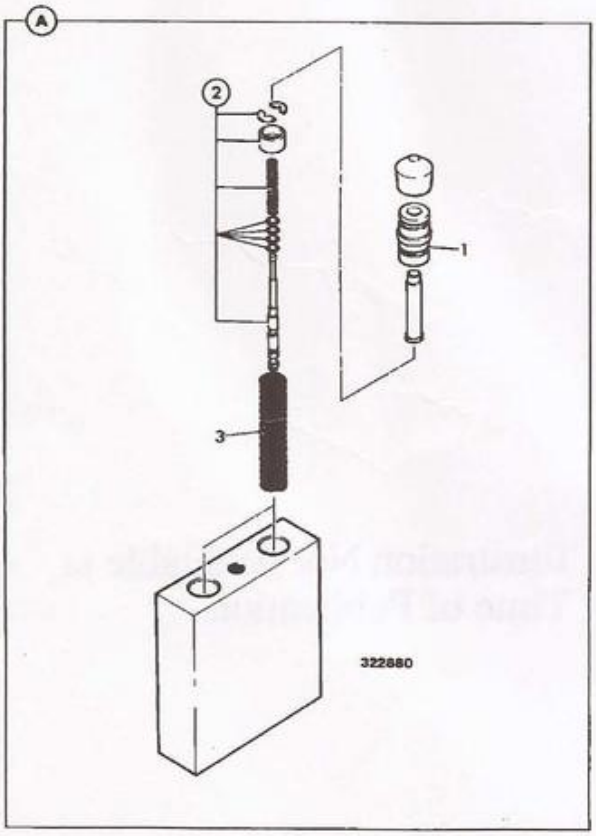

E3-13-1 VALVE, CUSHION

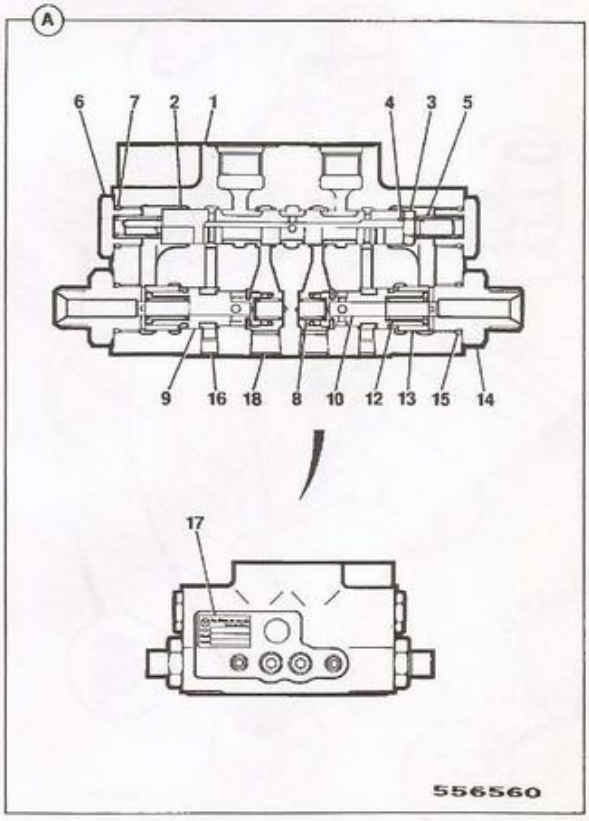

E3-14-1 COUPLING, ROTARY

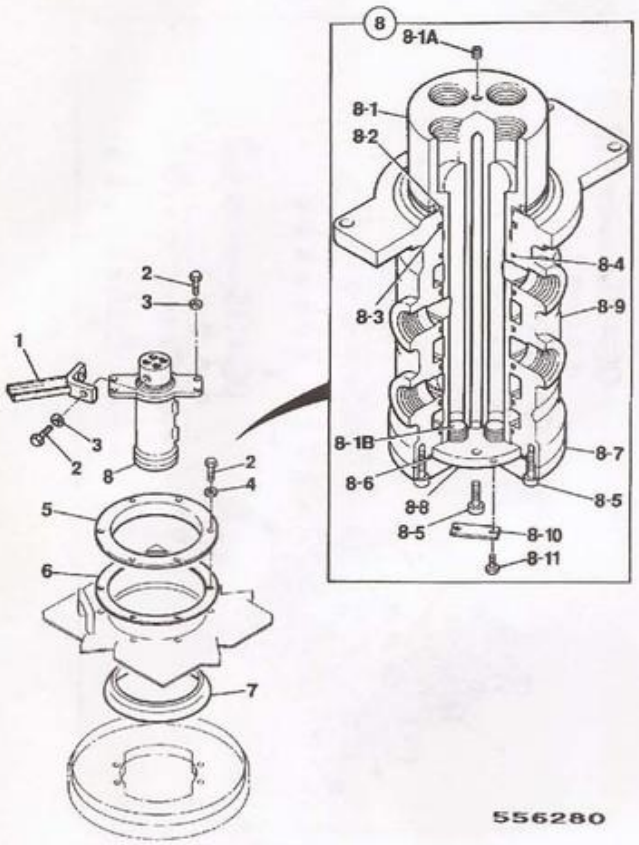

E3-14-2 COUPLING, ROTARY

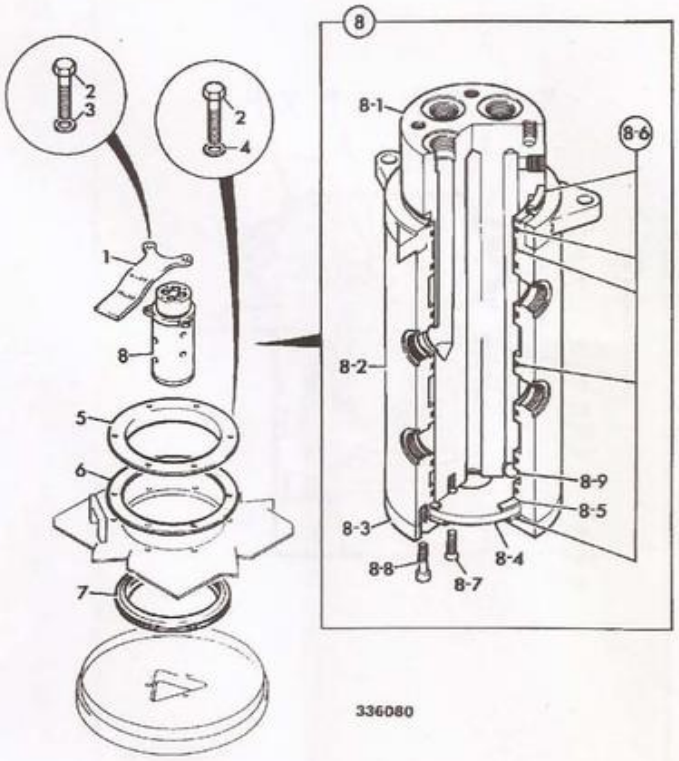

E3-15-1 LUBRICANTS & FILTERS

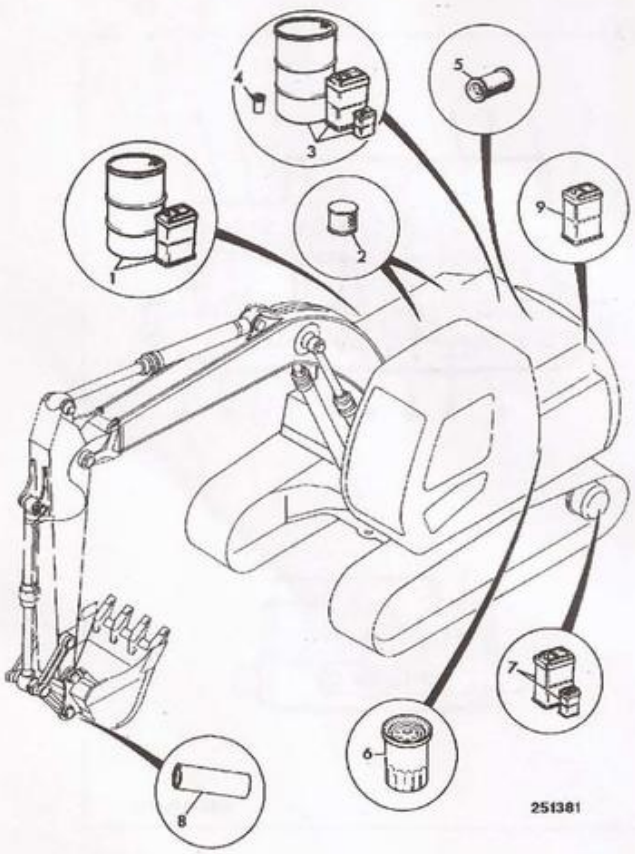

E3-15-2 OILS, BIODEGRADABLE, HYDRAULIC

Illustration Not Available at Time of Publication

E3-16-1 FILTER, HYDRAULIC, AUXILIARY CIRCUIT

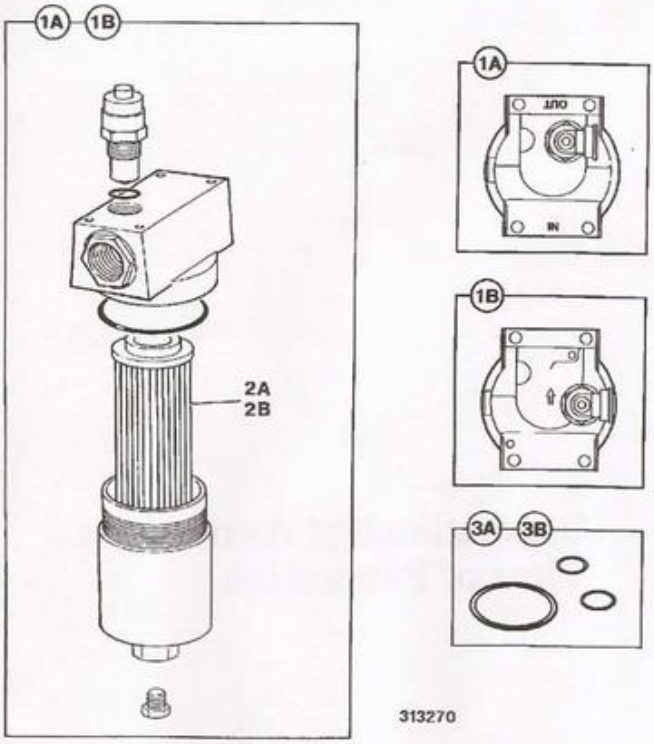

E3-17-1 VALVE, SWING BRAKE

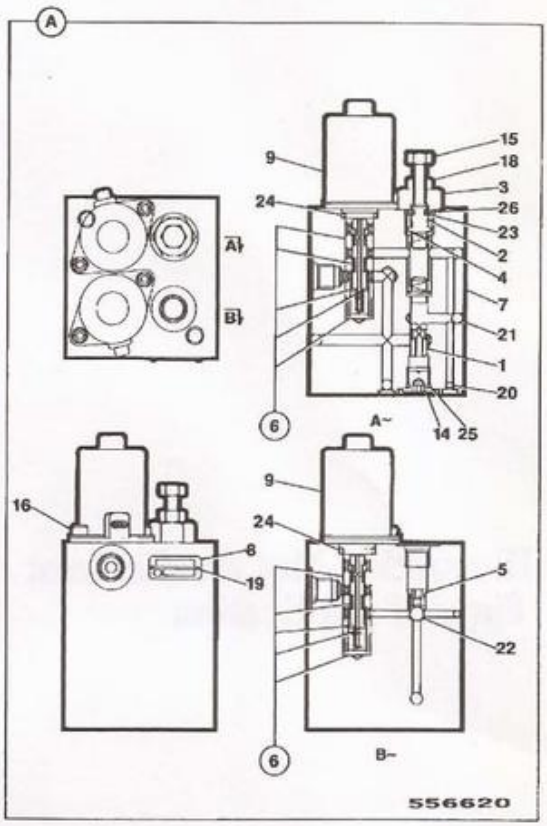

E3-18-1 VALVE, PRIORITY, 15LPM

Illustration Not Available at Time of Publication

E3-18-2 VALVE, PRIORITY

Illustration Not Available at Time of Publication

E3-20-1 VALVE, DIVERTER, TAB + BREAKER

Illustration Not Available at Time of Publication

E3-21-1 VALVE, DIVERTER, TAB + BREAKER + AUX

Illustration Not Available at Time of Publication

E4-1-1 RAM, BOOM

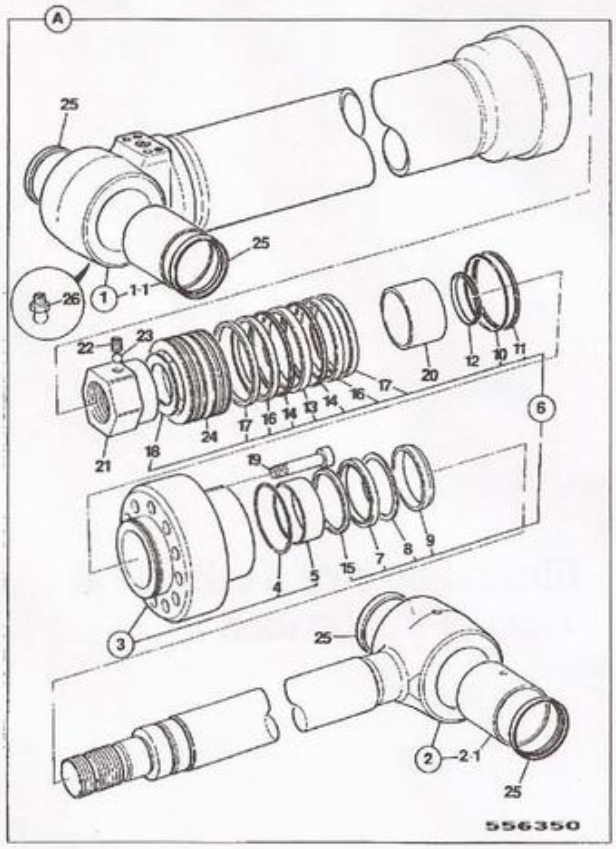

E4-1-5 RAM, BOOM

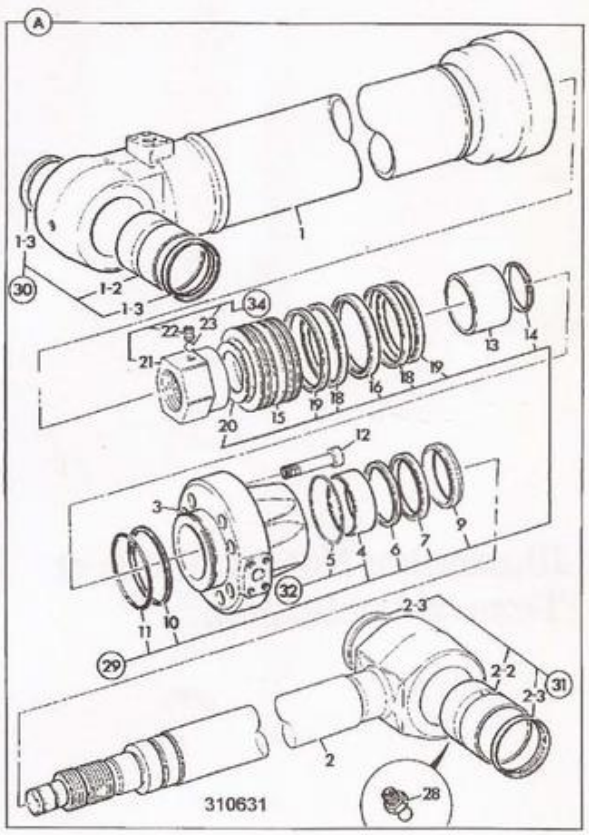

E4-2-1 RAM, DIPPER

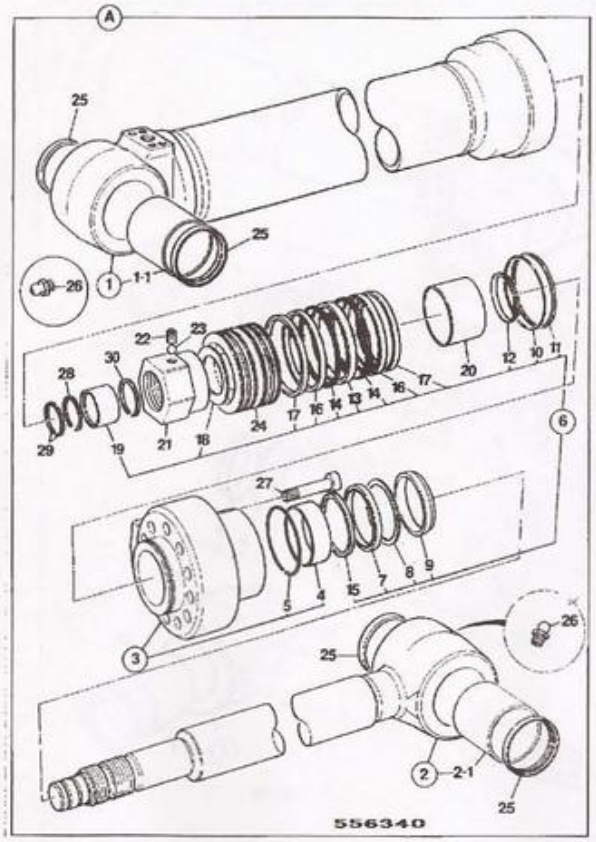

E4-2-2 RAM, DIPPER

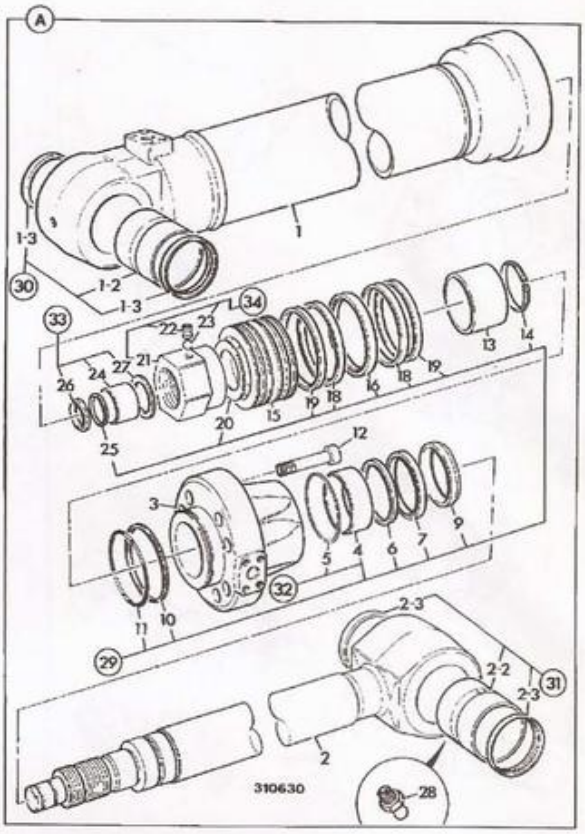

E4-2-5 RAM, DIPPER, LONG REACH

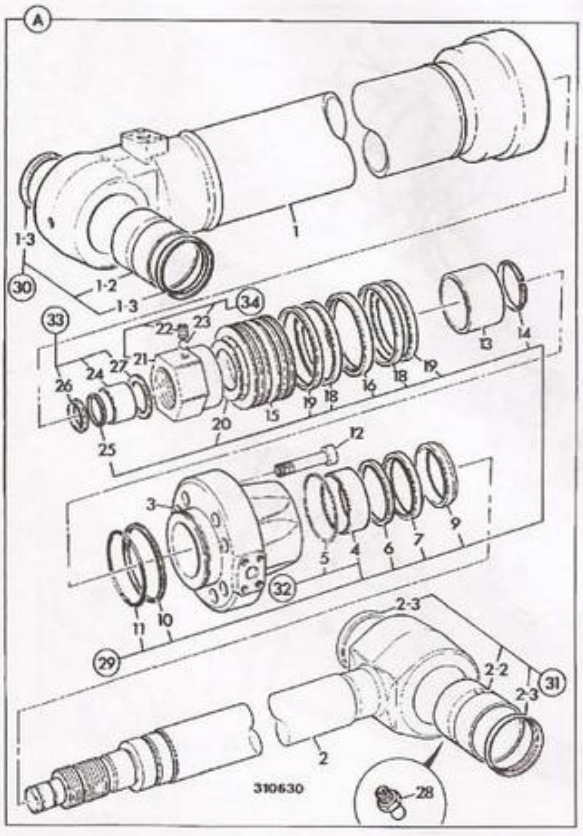

E4-3-1 RAM, BUCKET

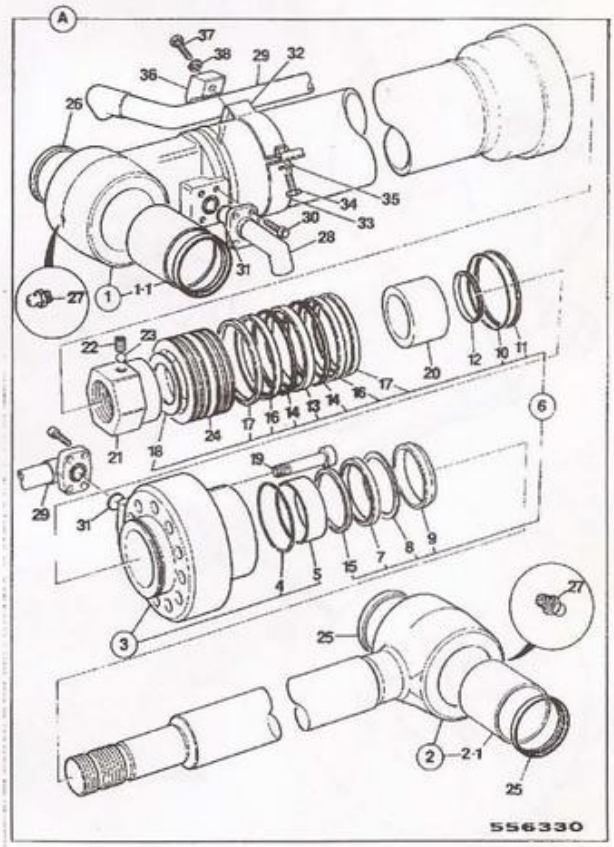

E4-3-2 RAM, BUCKET

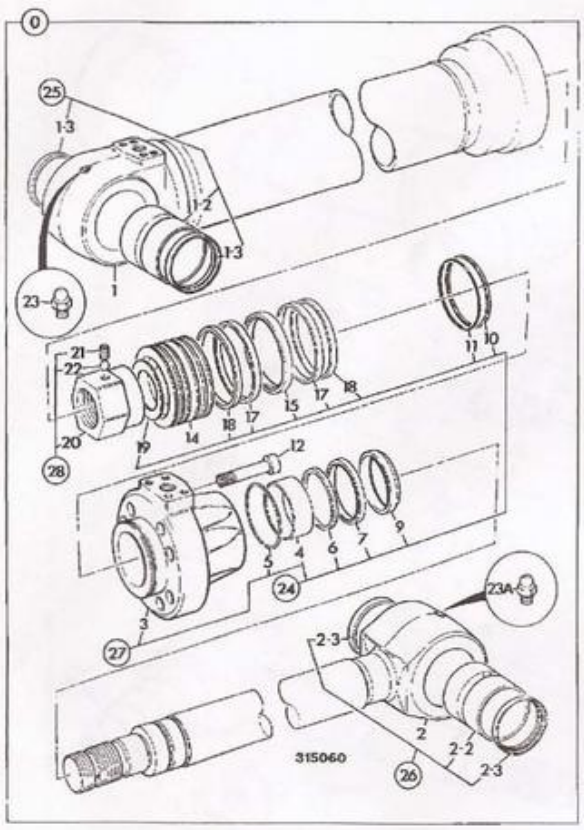

E4-3-4 RAM, BUCKET, LONG REACH

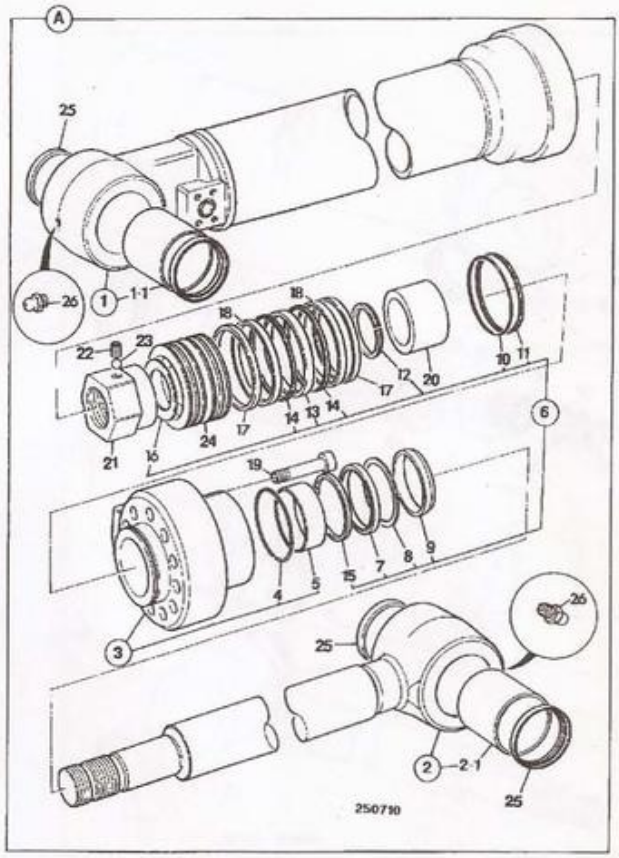

E4-3-5 RAM, BUCKET, PIPEWORK

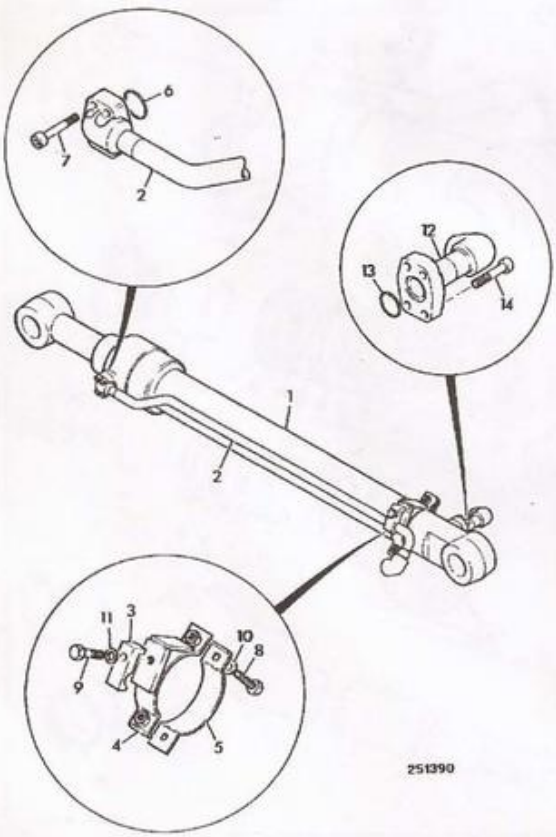

E4-3-10 RAM, BUCKET, JS220 XTRA DUTY

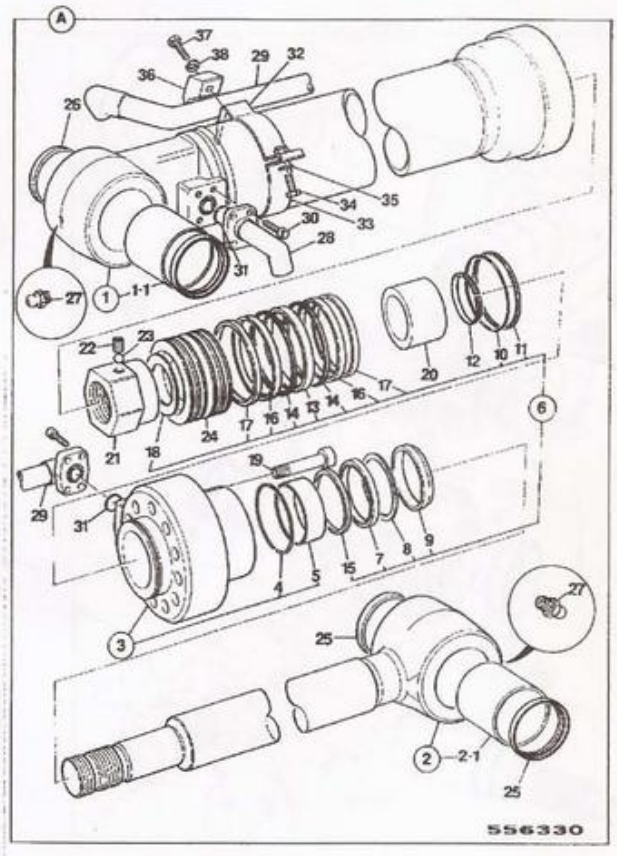

E4-7-1 RAM, BOOM POSITION, TRIPLE ARTICULATED

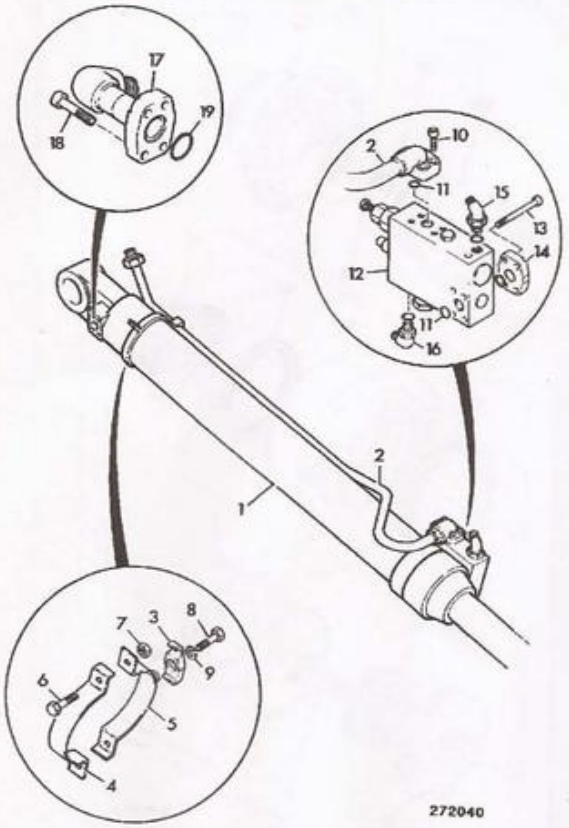

E4-7-10 RAM, BOOM POSITION, COMPONENTS TRIPLE ARTICULATED

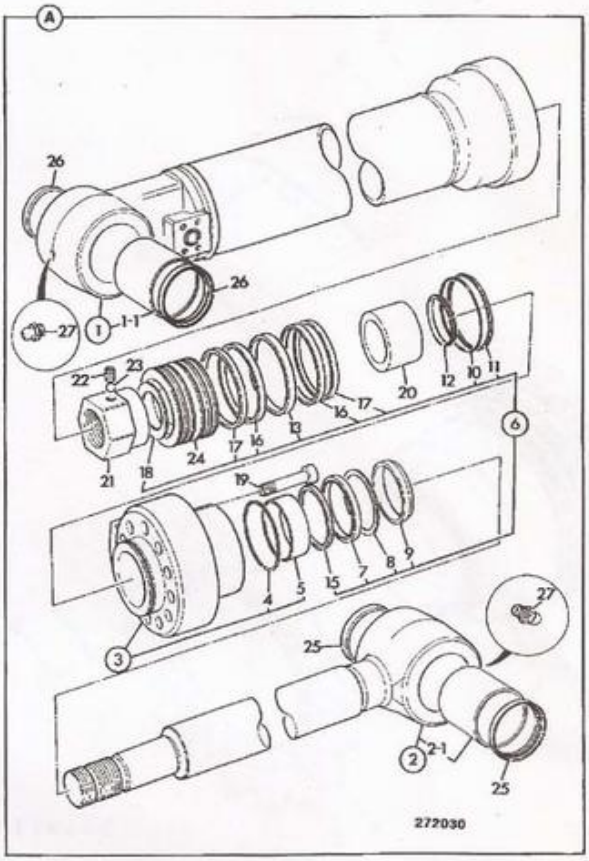

F

F4 SLEW/TRACK GEARBOXES

F4-1-1 GEARBOX, ASSEMBLY & SPROCKET

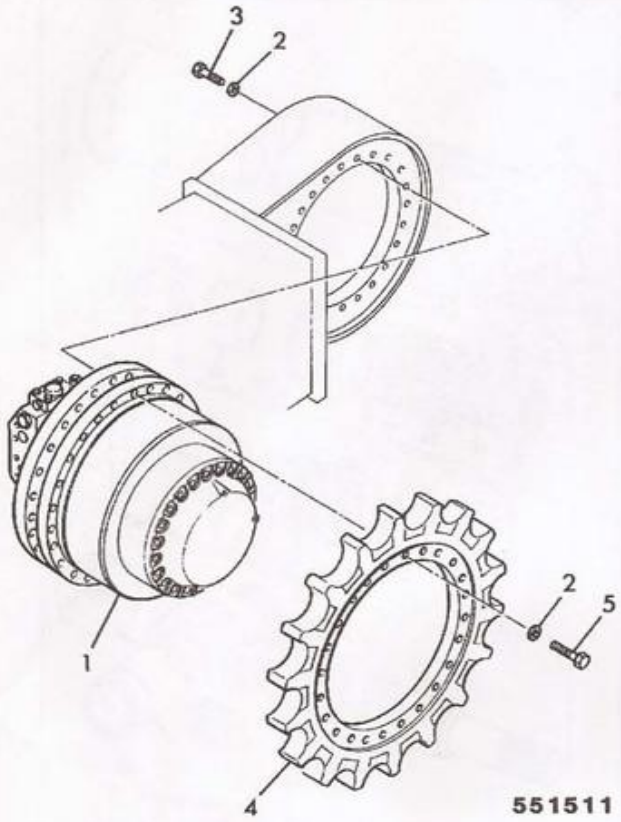

F4-2-1 GEARBOX, TRACK

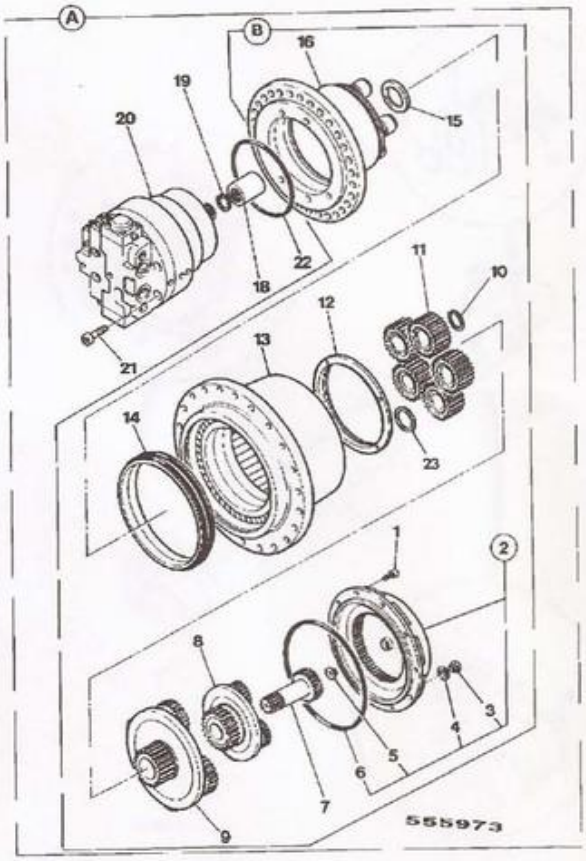

F4-3-1 MOTOR, SWING

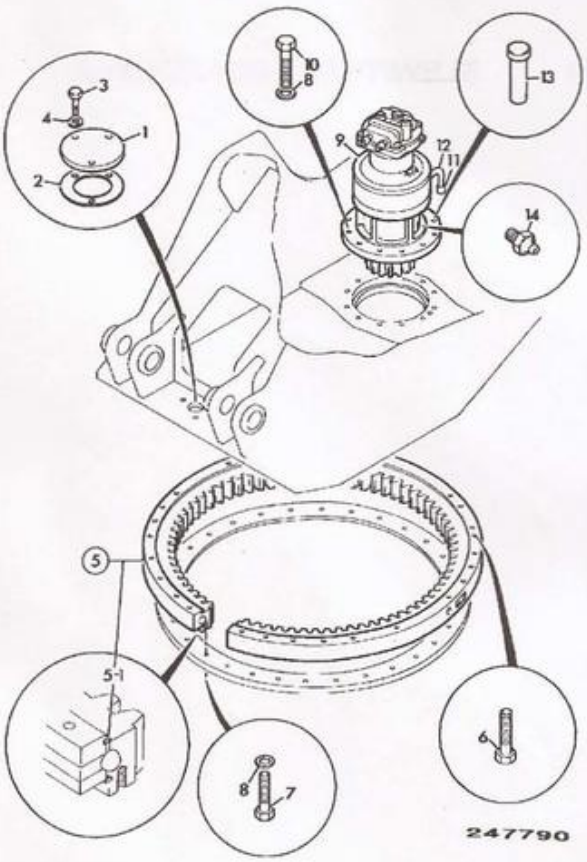

F4-3-2 MOTOR, SWING

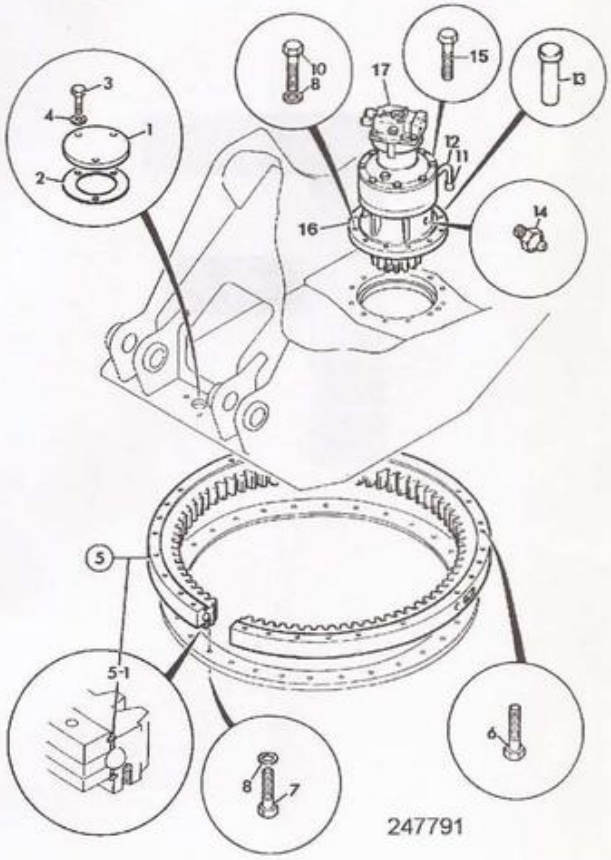

F4-4-1 GEARBOX, SWING

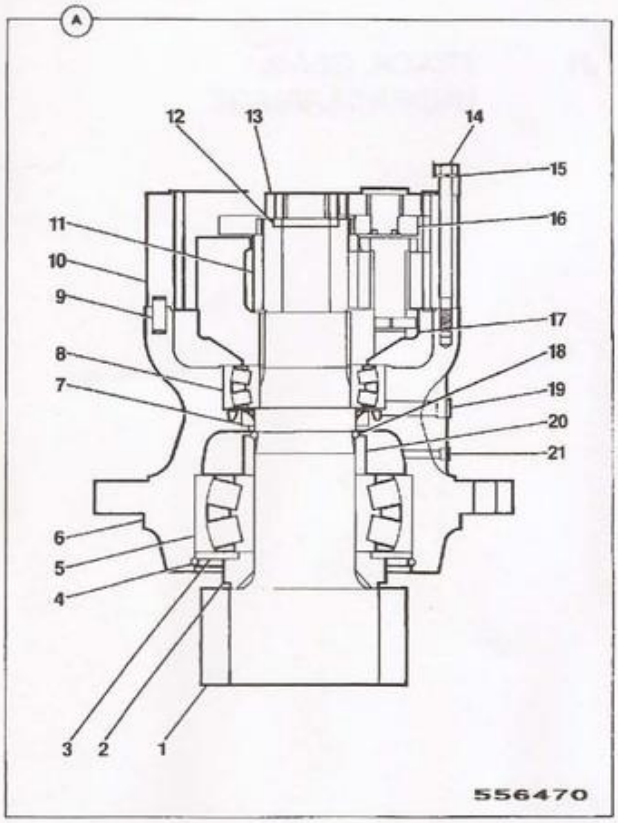

F4-4-2 GEARBOX, SWING

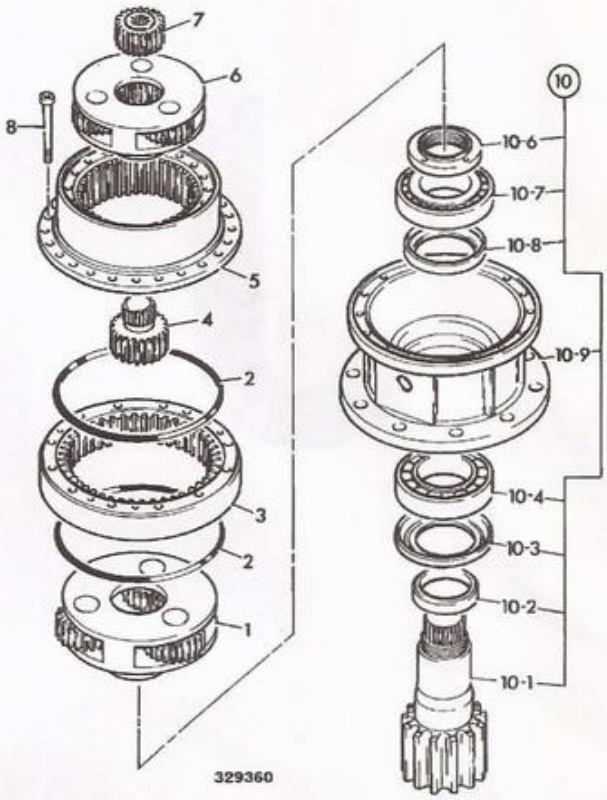

F4-5-1 CIRCUIT, SWING RING GREASING

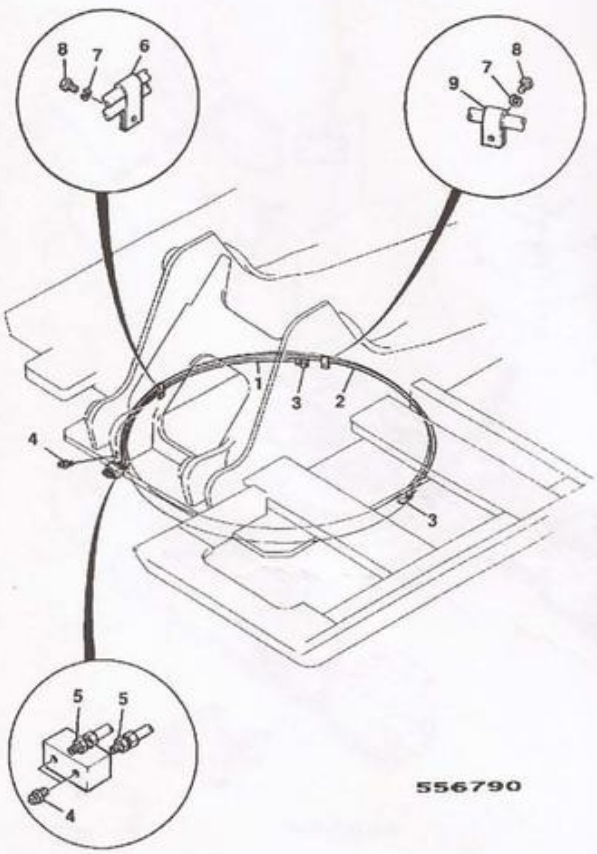

J

J1 TRACK, GEAR/ UNDERCARRIAGE

J1-1-1 UNDERCARRIAGE

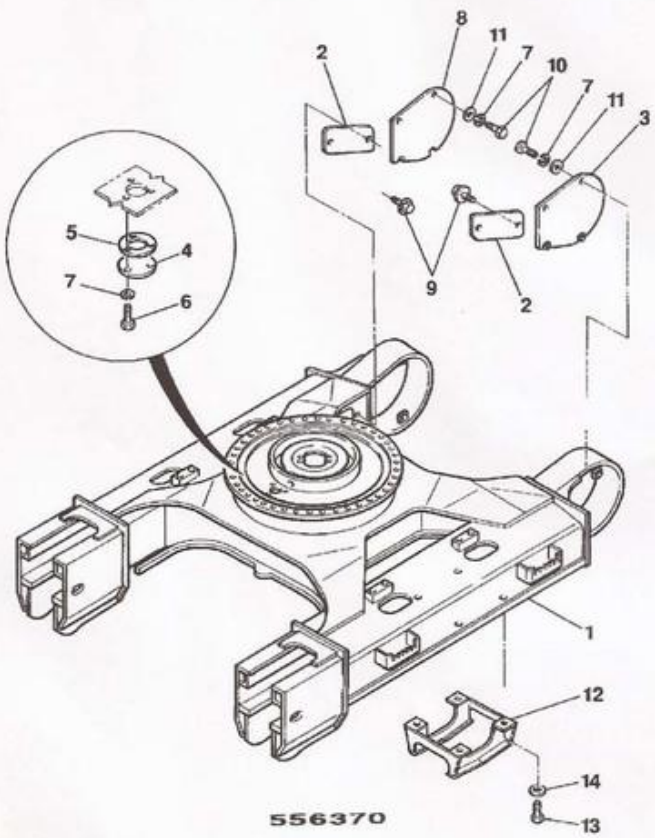

J1-1-2 UNDERCARRIAGE, JS210SLC

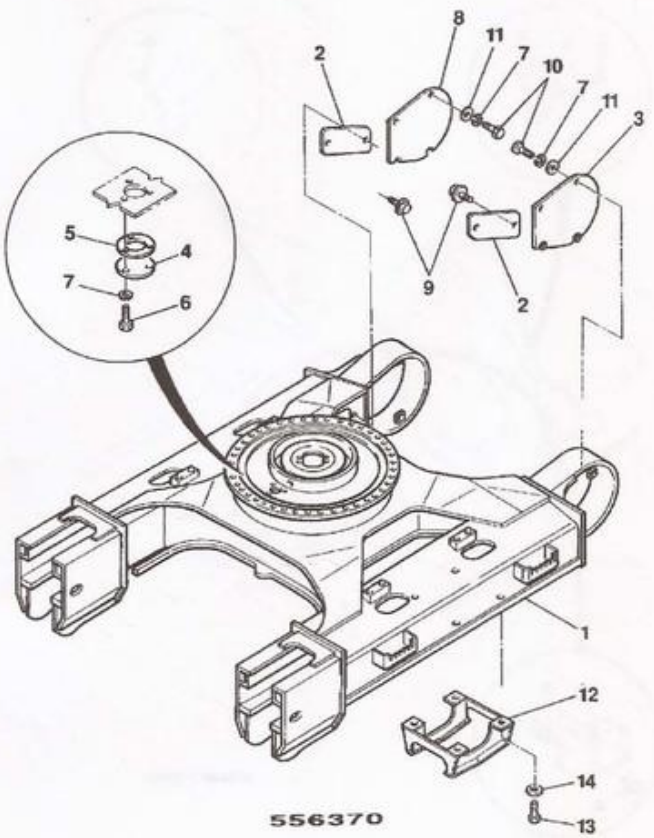

J1-1-10 UNDERCARRIAGE, JS220 XTRA DUTY

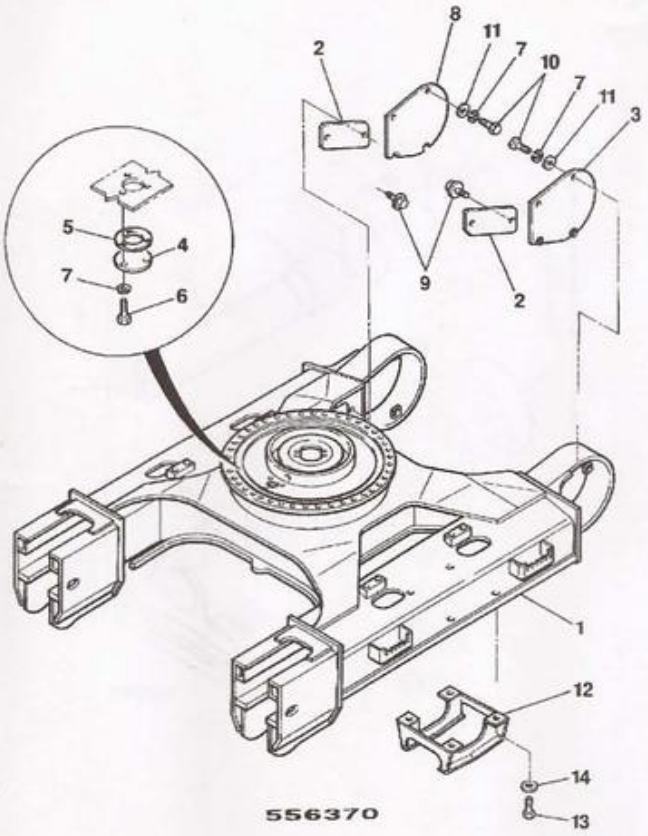

J1-2-1 IDLER WHEEL

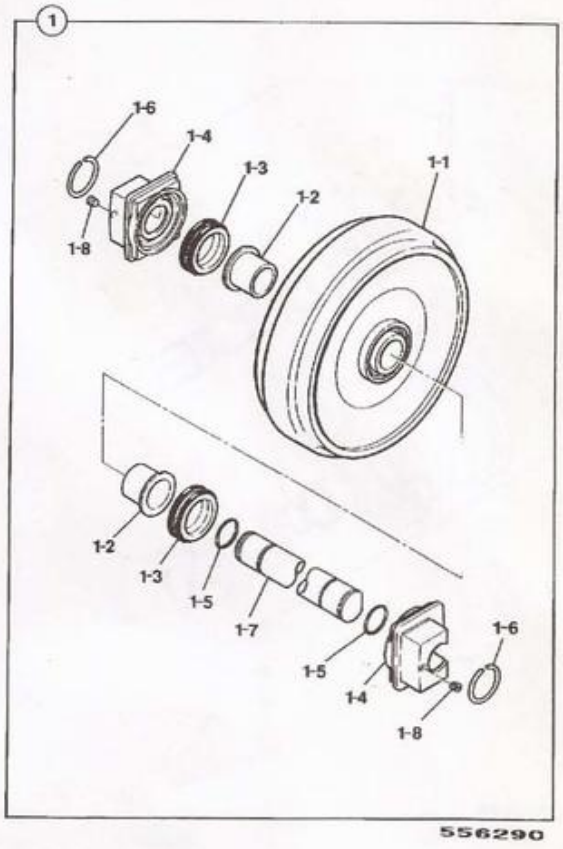

J1-2-10 IDLER WHEEL

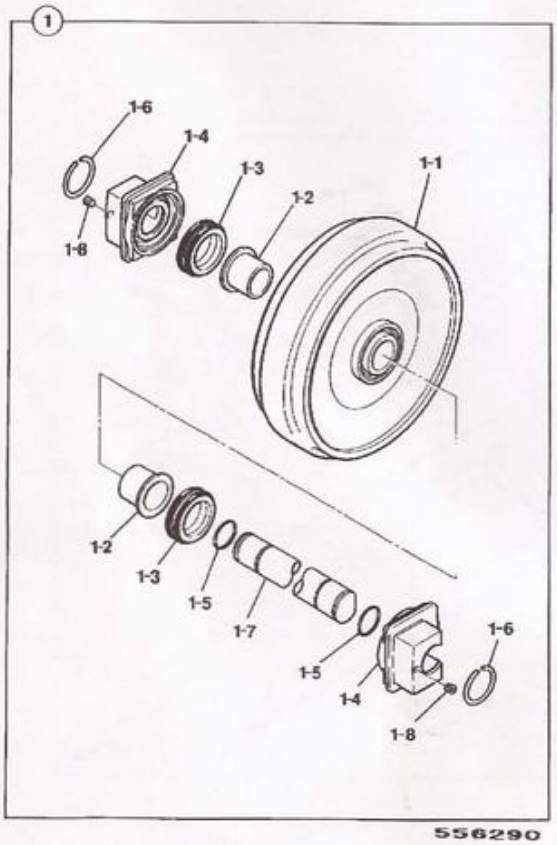

J1-3-1 ROLLER, TRACK BOTTOM

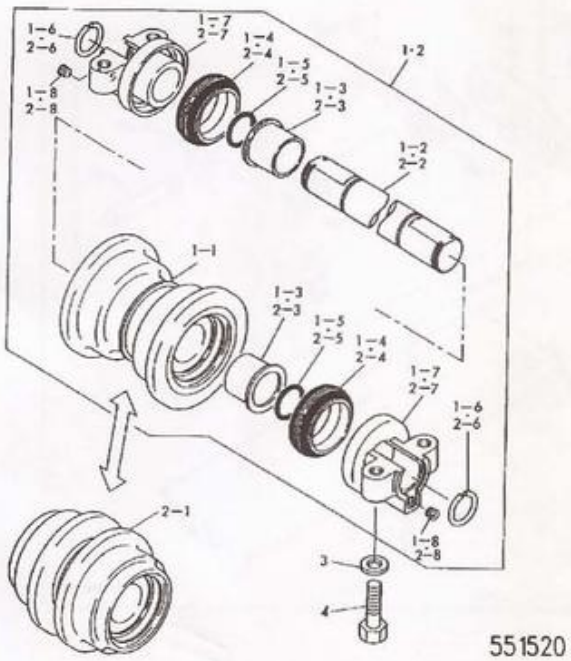

J1-3-2 ROLLER, TRACK BOTTOM

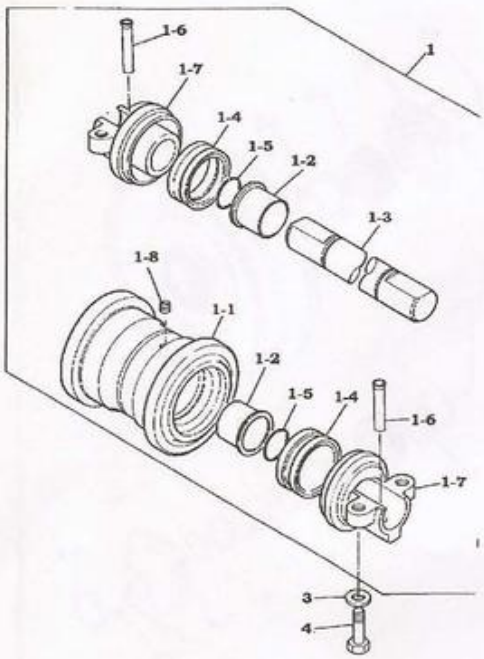

252490

J1-4-1 ROLLER, TRACK TOP

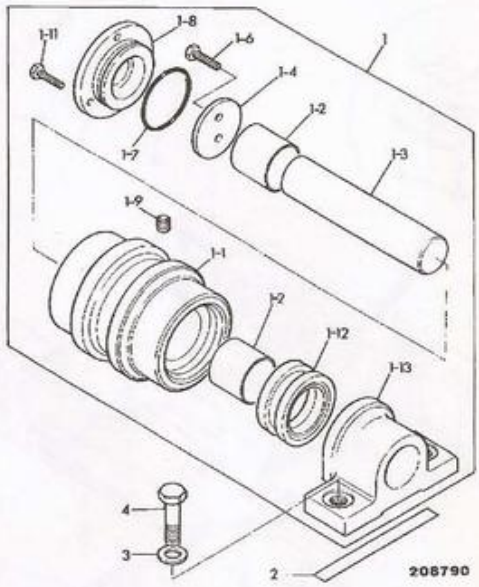

J1-5-1 CHAIN, TRACK, GROUSER, 46 LINK

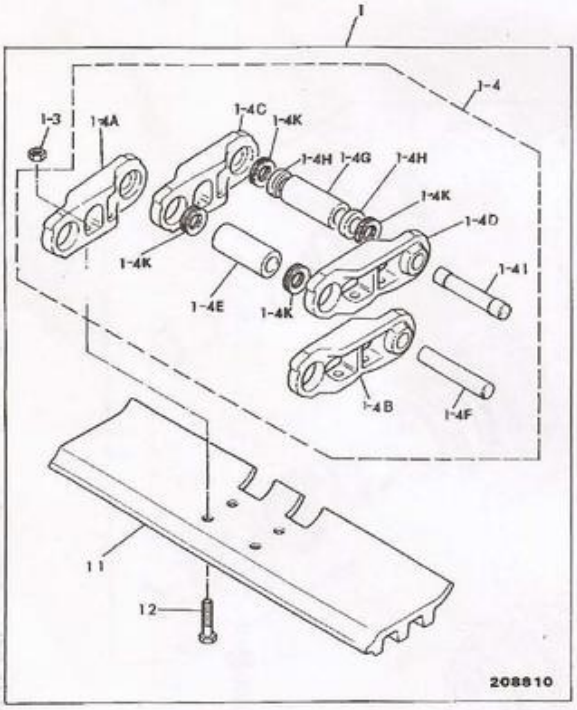

J1-5-2 CHAIN, TRACK, GROUSER, 49 LINK

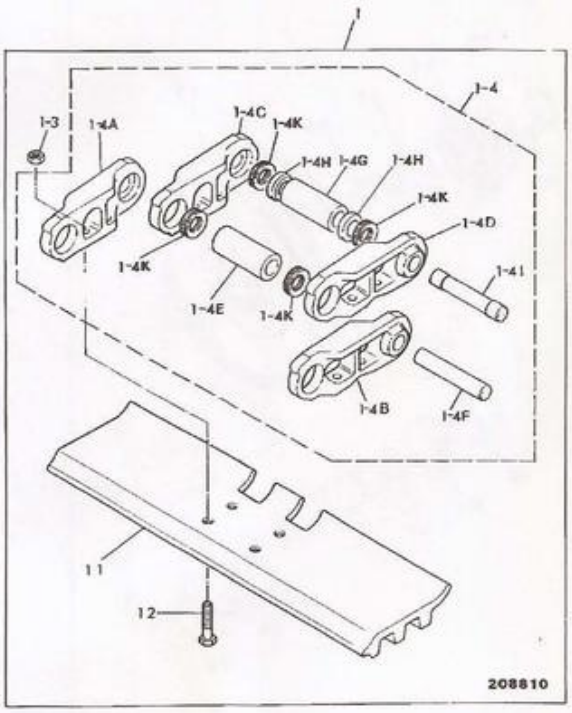

J1-5-5 CHAIN, TRACK, GROUSER, 49 LINK HEAVY DUTY

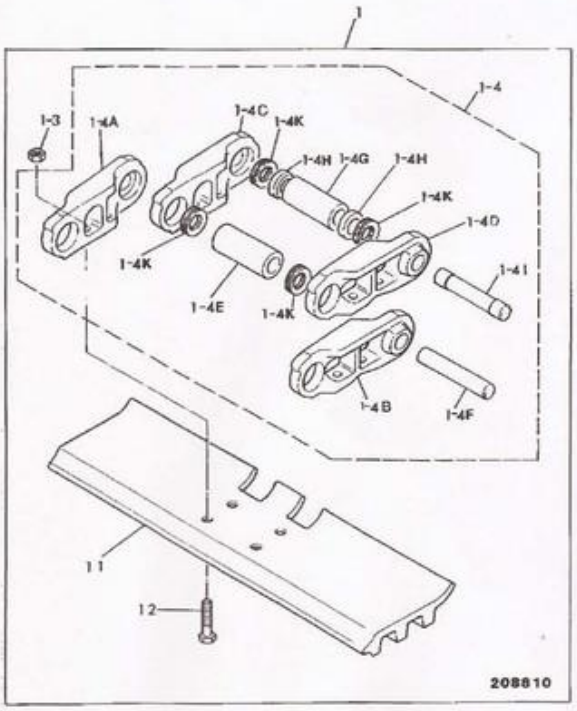

J1-6-1 RECOIL UNIT

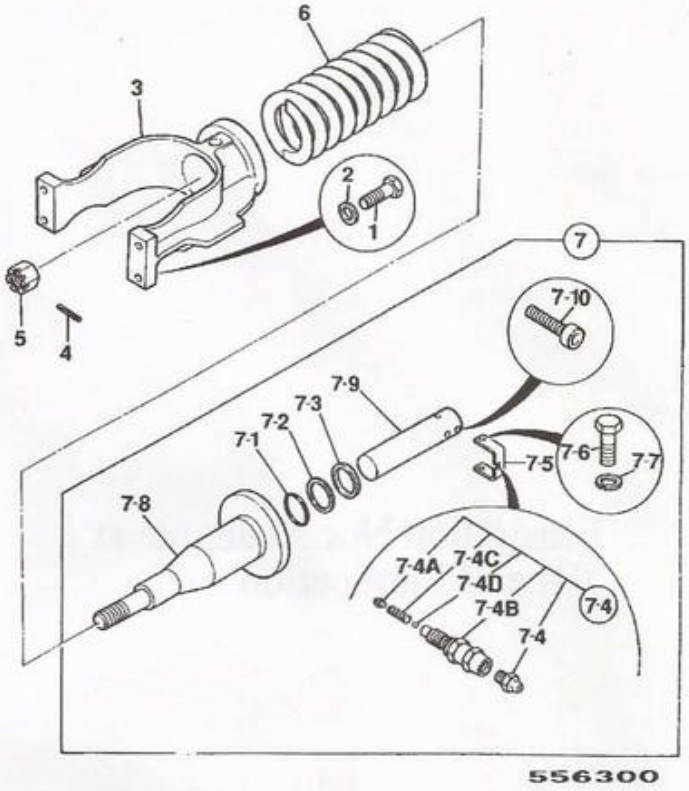

J1-6-10 RECOIL UNIT

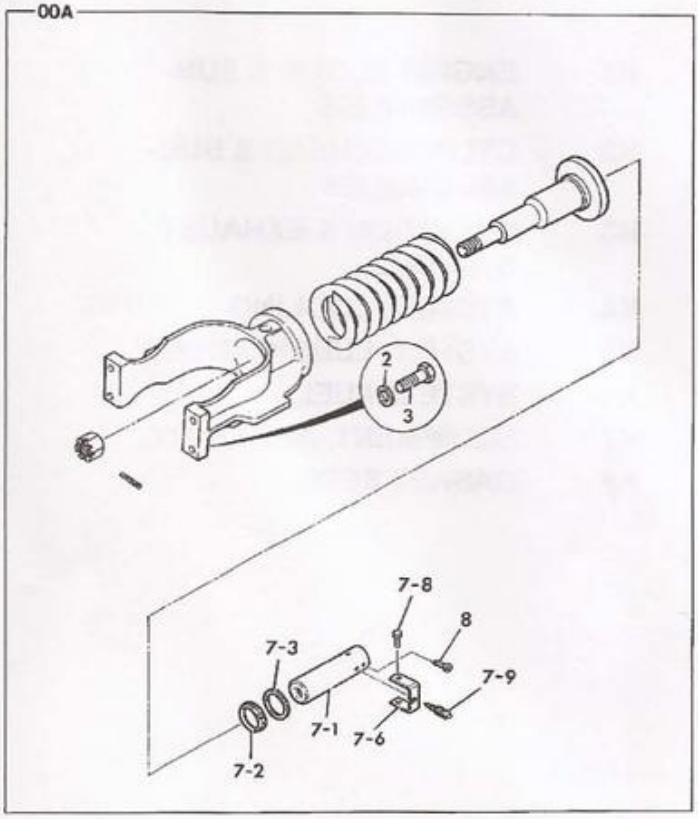

J1-7-1 COVER, LOWER, UNDERCARRIAGE

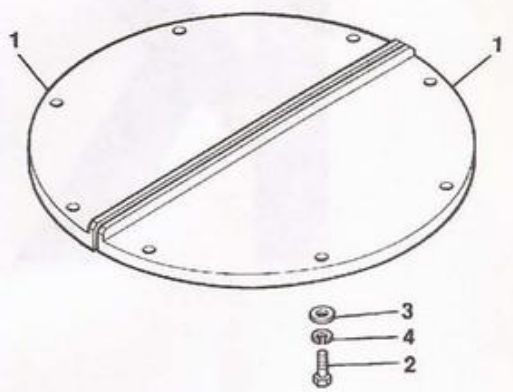

Illustration Not Available at Time of Publication

K

K1 ENGINE BLOCK & SUB-ASSEMBLIES
K2 CYLINDER HEAD & SUB-ASSEMBLIES
K3 INDUCTION & EXHAUST SYSTEMS
K4 SYSTEM, COOLING
K5 SYSTEM, LUBRICATION
K6 SYSTEM, FUEL
K7 EQUIPMENT, AUXILIARY
K8 GASKET SETS

K1-1-1 ENGINE, COMPLETE

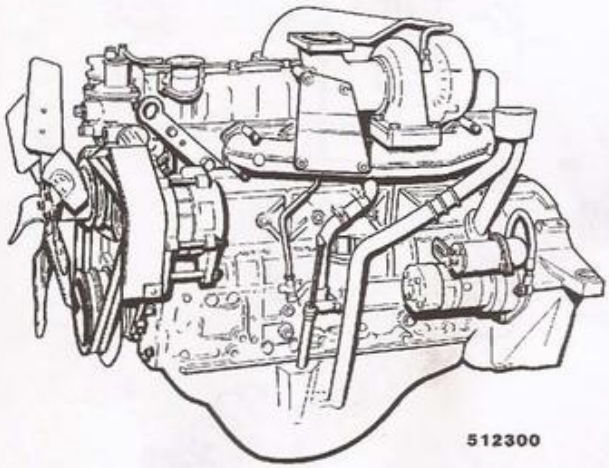

K1-1-2 ENGINE, COMPLETE

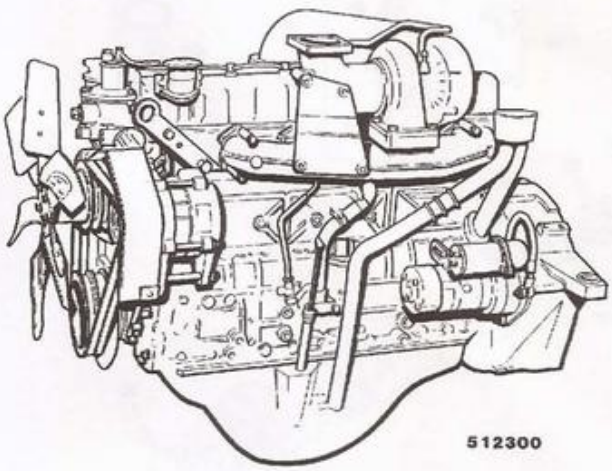

K1-3-1 BLOCK ASSEMBLY

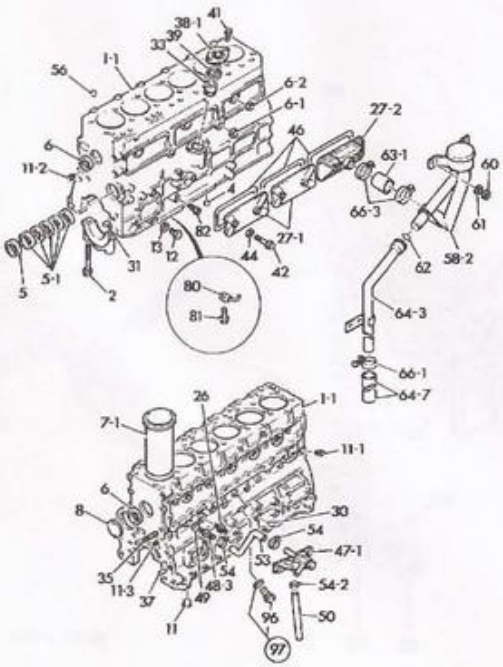

511591

K1-3-2 BLOCK ASSEMBLY

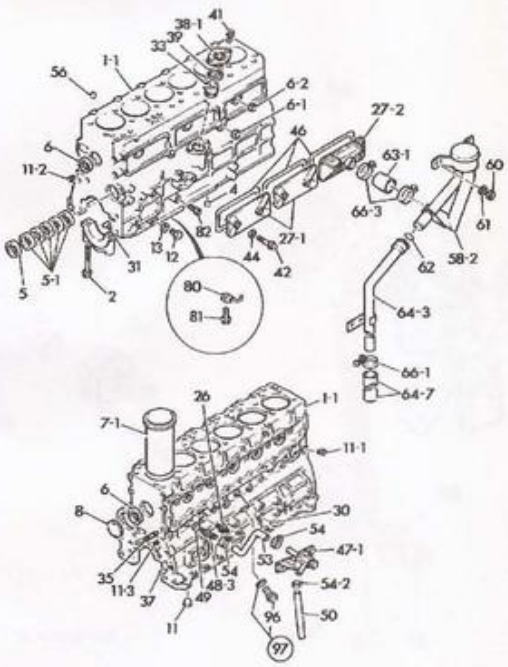

511591

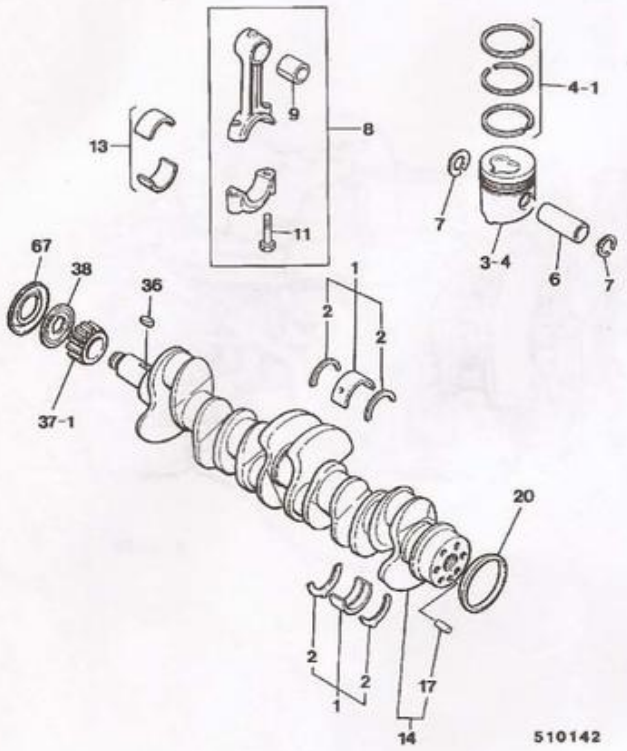
13
9
8
11
4-1
7
3-4
6
7
67
38
36
37-1
1
2
2
20
2
1
2
17
14
510142

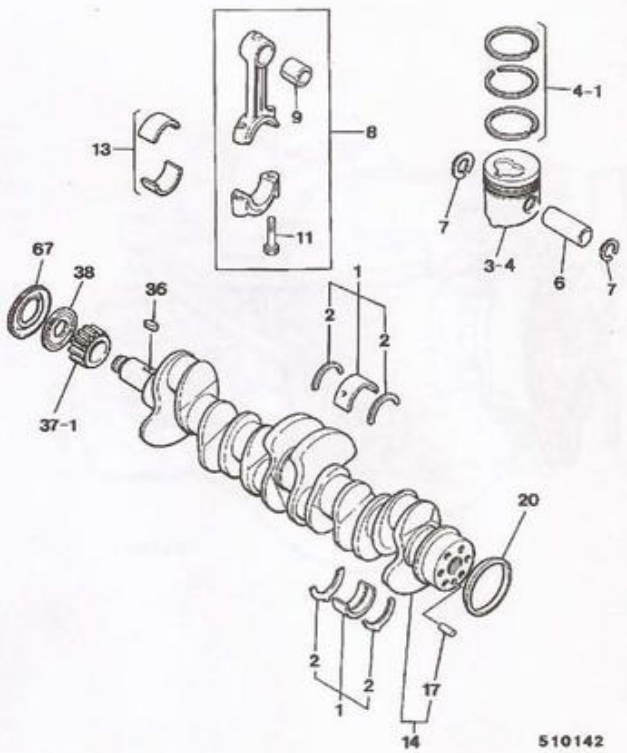
13
9
8
11
4-1
7
3-4
6
7
67
38
36
37-1
1
2
2
20
2
1
2
17
14
510142

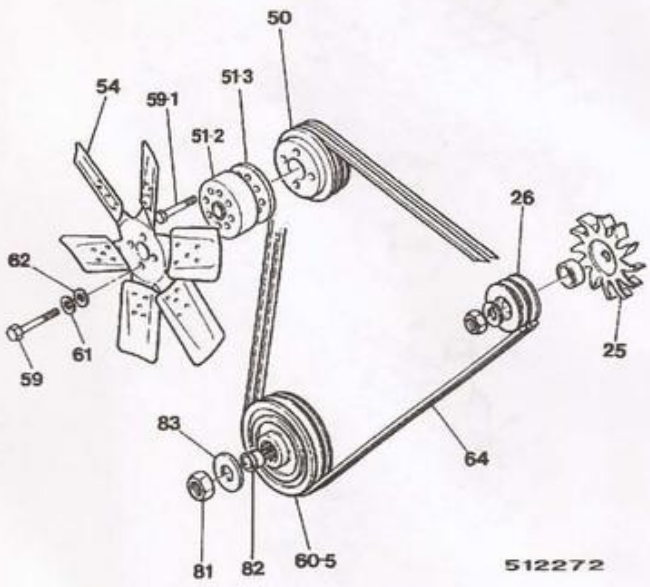
50
54
59-1
51-3
51-2
26
62
61
59
25
83
64
81
82
60-5
512272

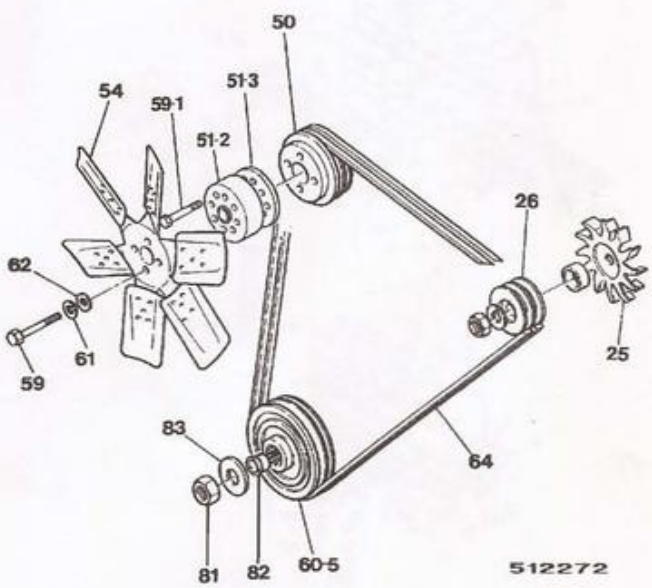
50
54
59-1
51-3
51-2
26
62
61
59
25
83
64
81
82
60-5
512272

K1-6-1 TIMING CASE

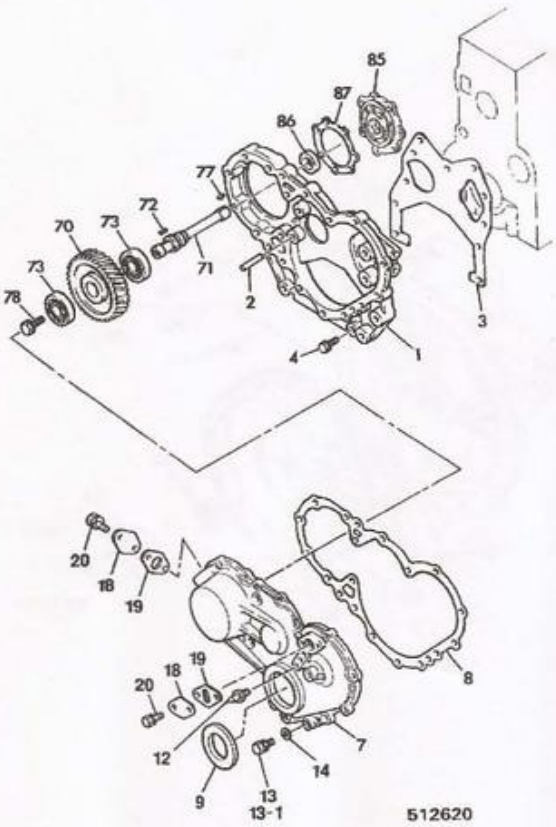

512620

K1-6-2 CAMSHAFT & GEARS

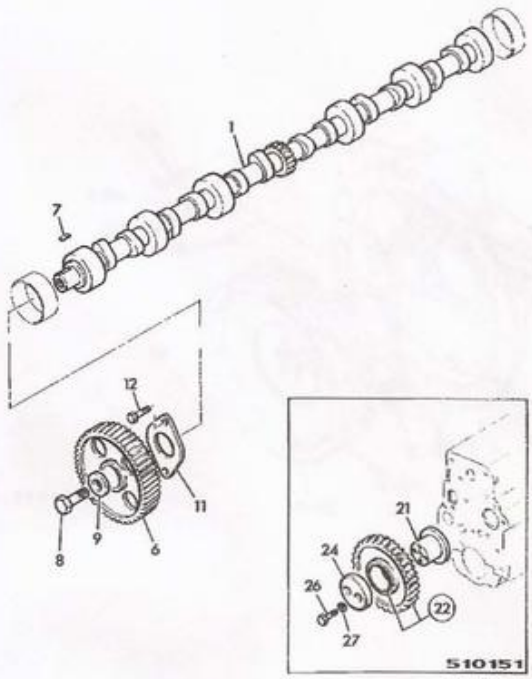

510151

K1-6-11 TIMING CASE

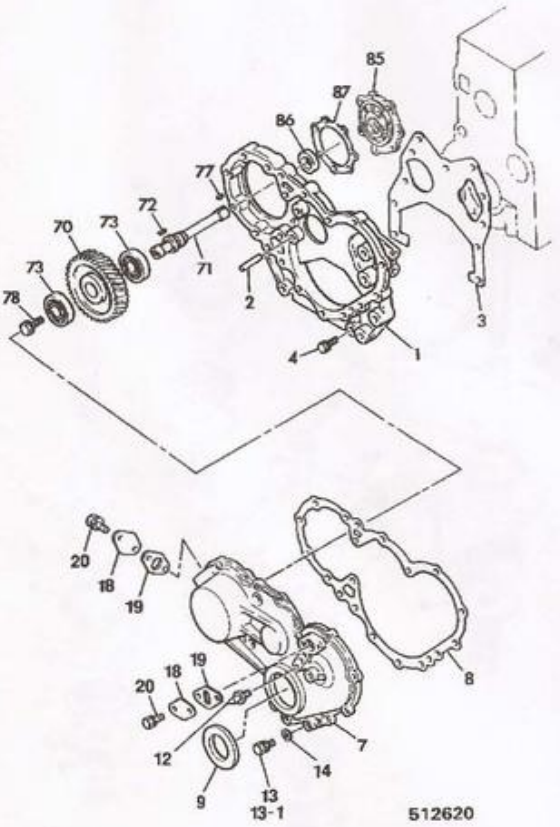

512620

K1-6-12 CAMSHAFT & GEARS

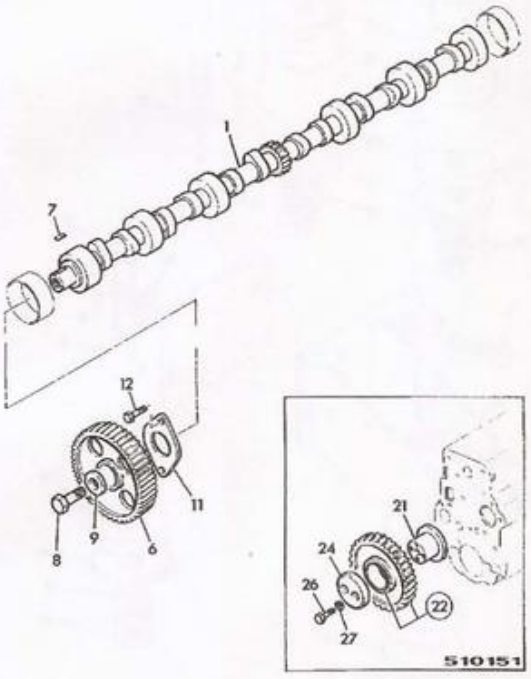

510151

K1-7-1 FLYWHEEL & HOUSING

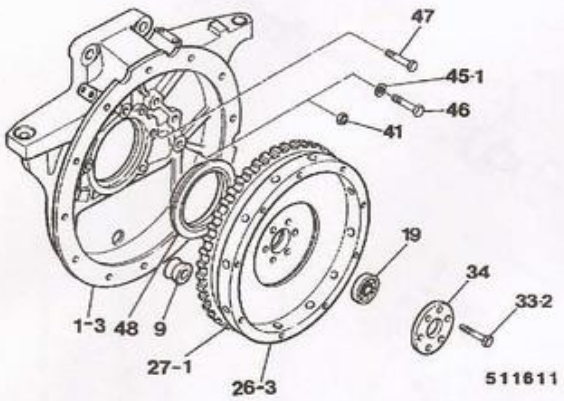

K1-7-2 FLYWHEEL & HOUSING

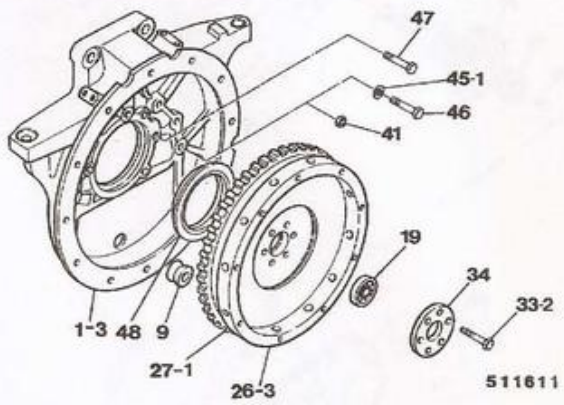

K1-8-1 ENGINE MOUNTINGS

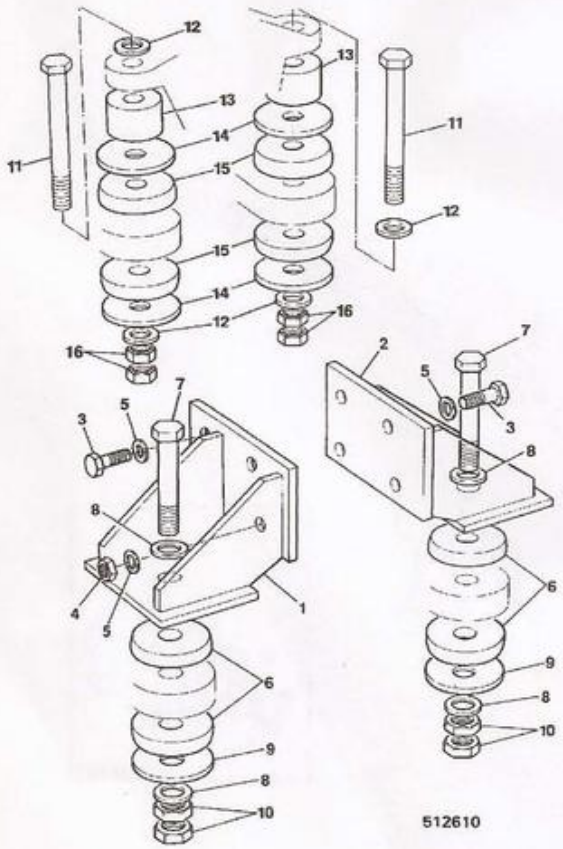

K1-8-2 ENGINE MOUNTINGS

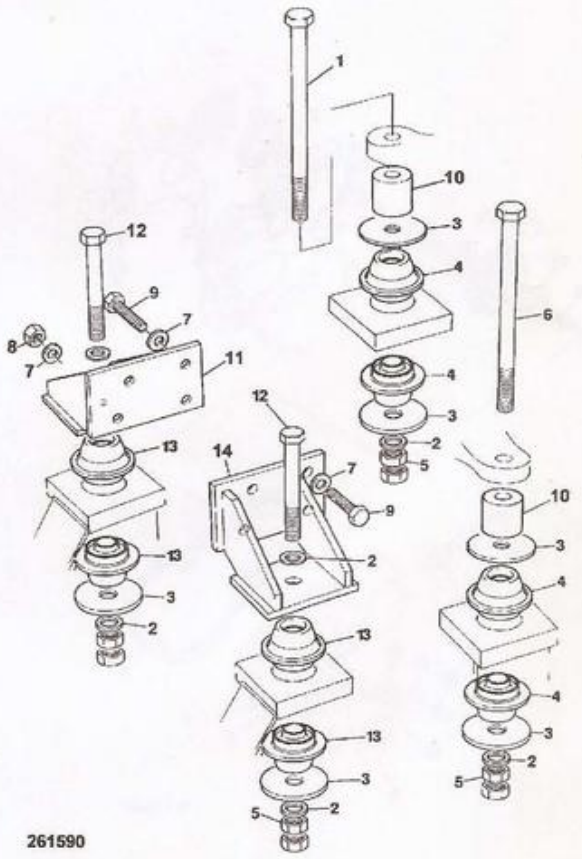

K2-1-1 CYLINDER HEAD

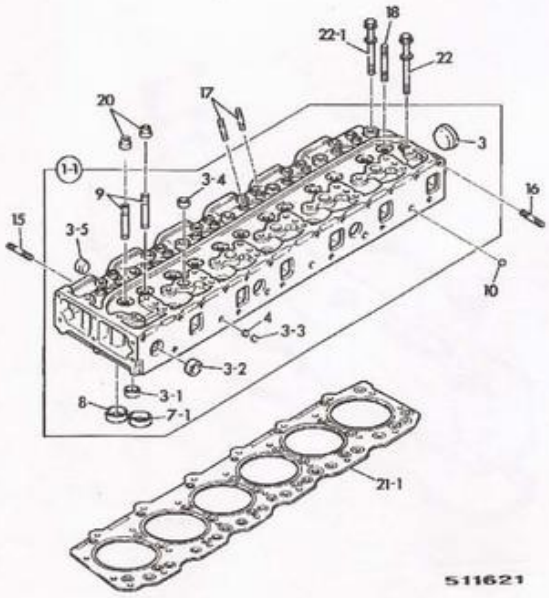

K2-1-2 CYLINDER HEAD

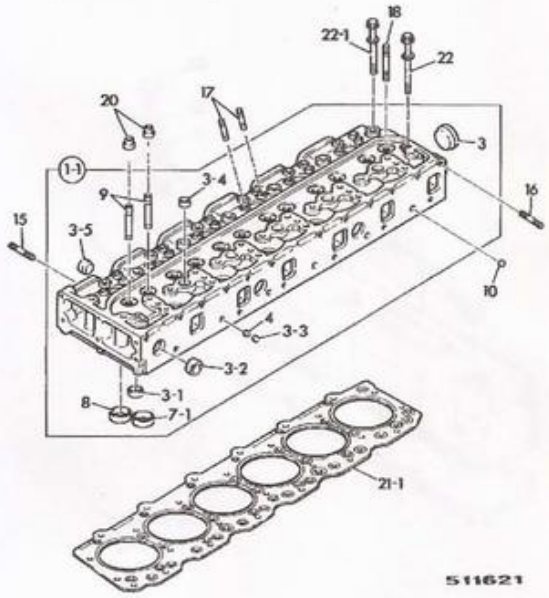

K2-2-1 ROCKER ASSEMBLY, INLET/EXHAUST VALVES, PUSH RODS & TAPPETS

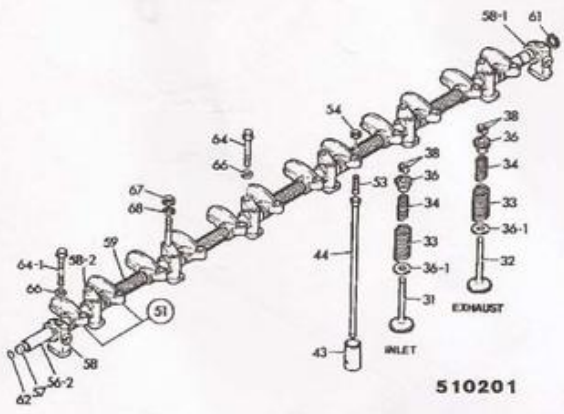

K2-2-2 ROCKER ASSEMBLY, INLET/EXHAUST VALVES, PUSH RODS & TAPPETS

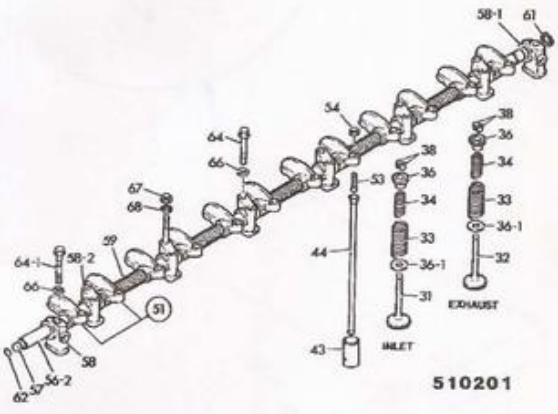

K2-3-1 ROCKER COVER

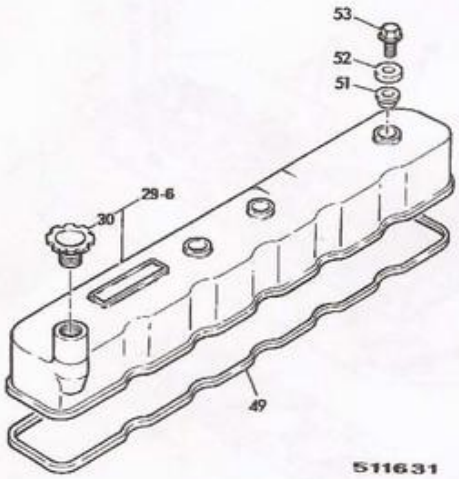

K2-3-2 ROCKER COVER

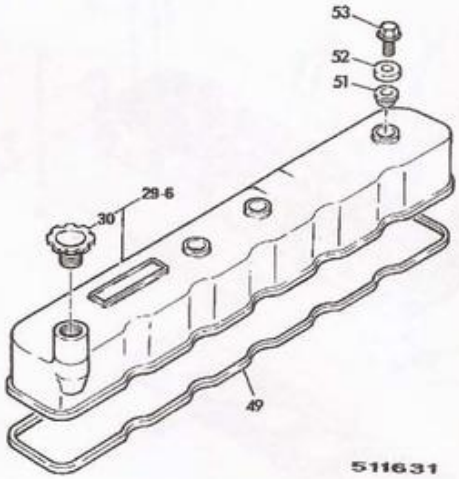

K2-4-1 LIFTING PLATES, ENGINE

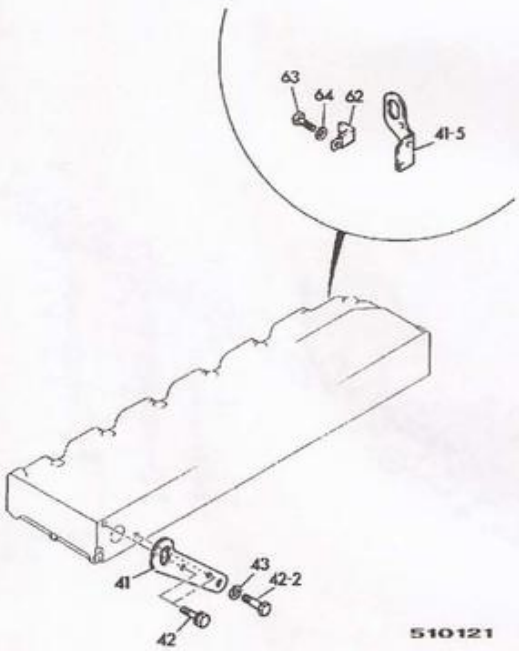

K2-4-2 LIFTING PLATES, ENGINE

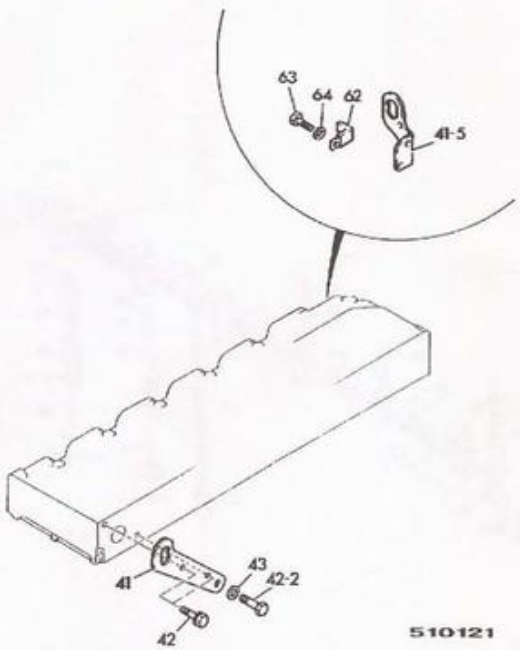

K3-1-1 MANIFOLD, INDUCTION

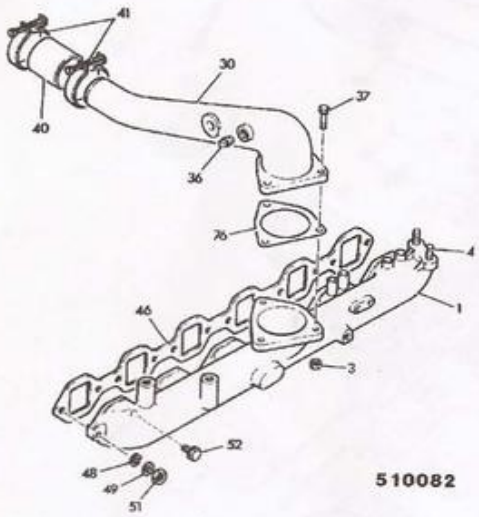

K3-1-2 MANIFOLD, INDUCTION

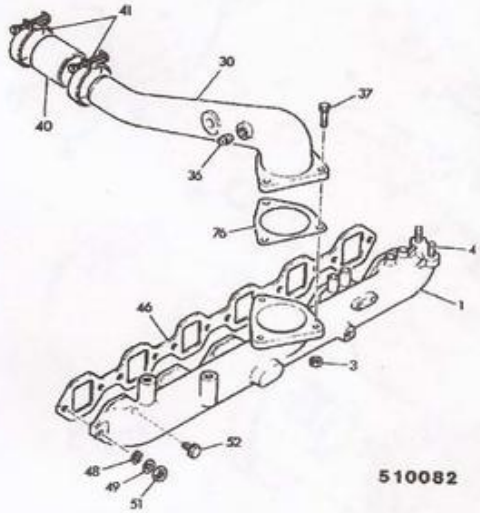

K3-2-1 MANIFOLD, EXHAUST

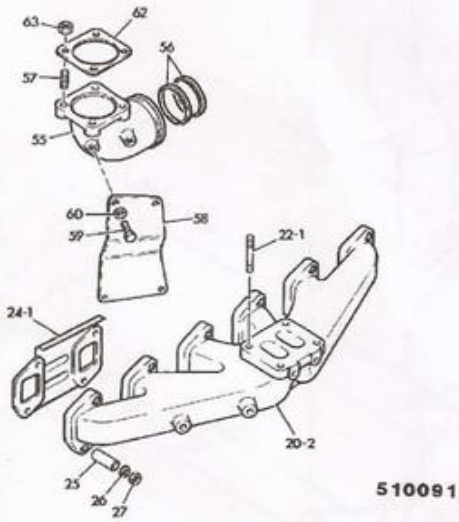

K3-2-2 MANIFOLD, EXHAUST

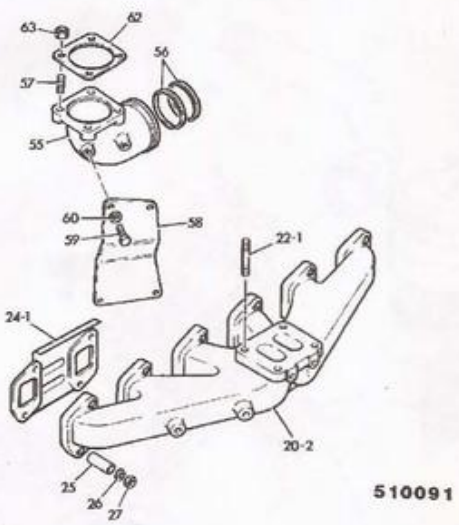

K3-3-1 FILTER, AIR

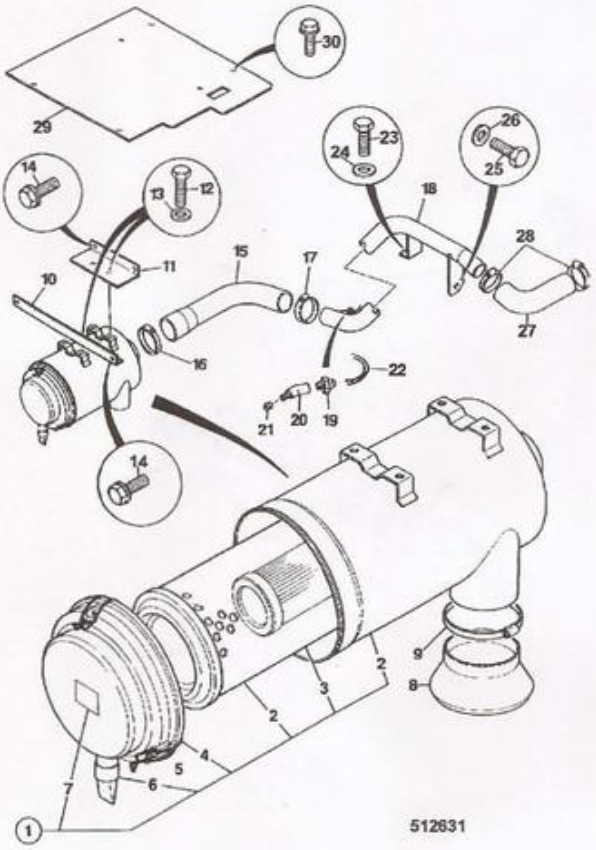

K3-3-2 FILTER, AIR

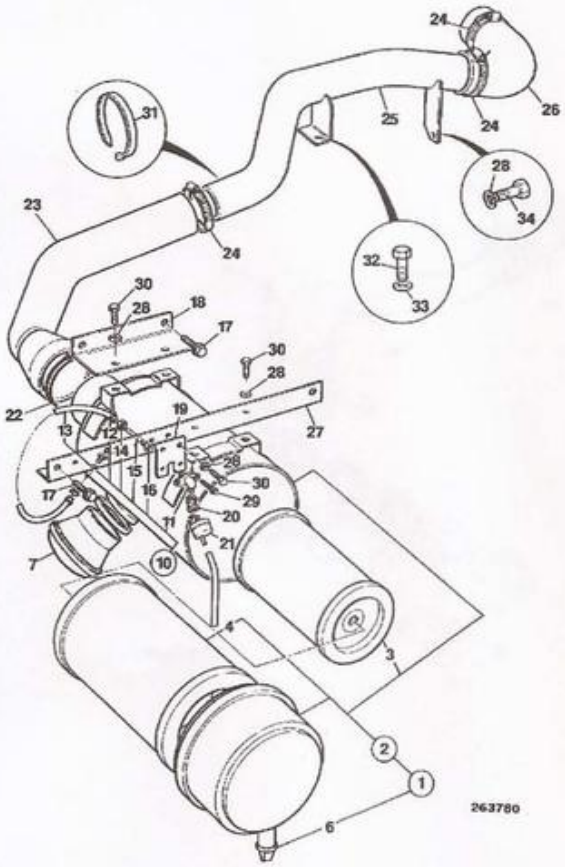

K3-3-3 FILTER, AIR, HEAVY DUTY

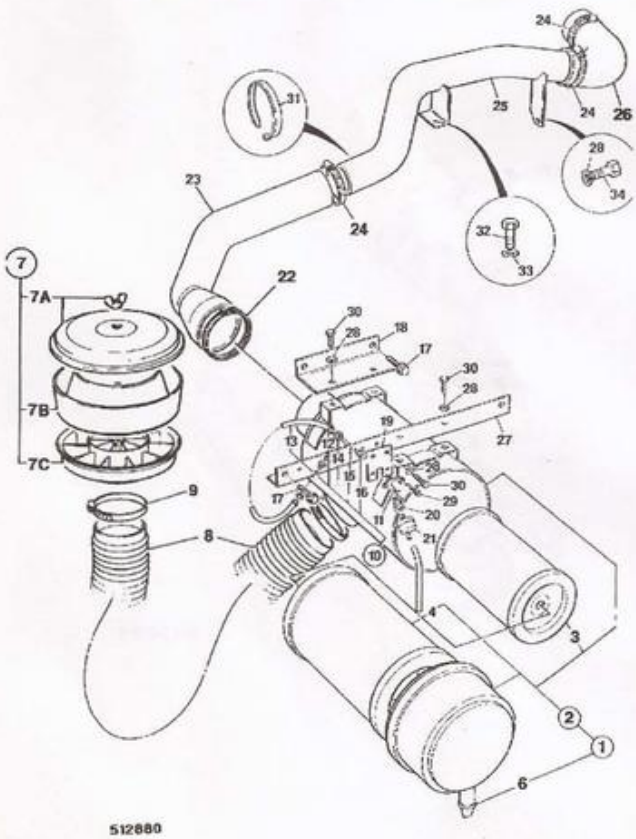

K3-4-1 EXHAUST SYSTEM

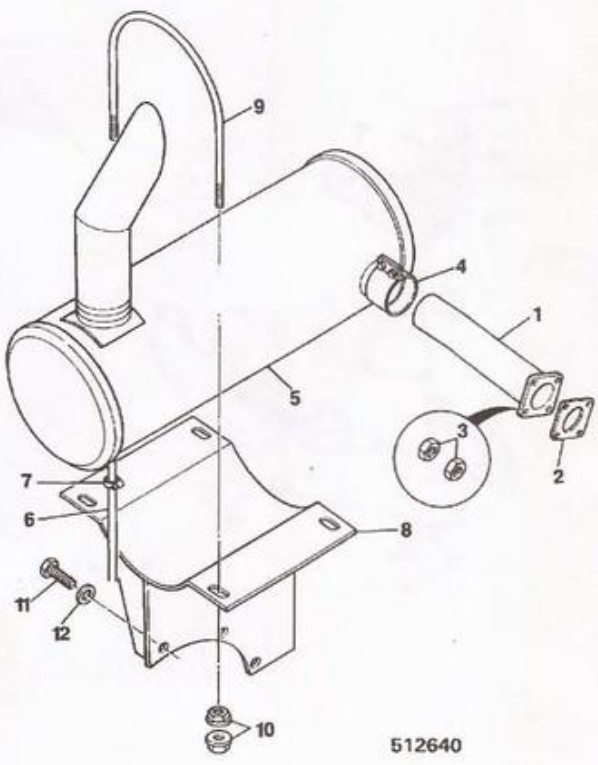

K3-4-2 EXHAUST SYSTEM

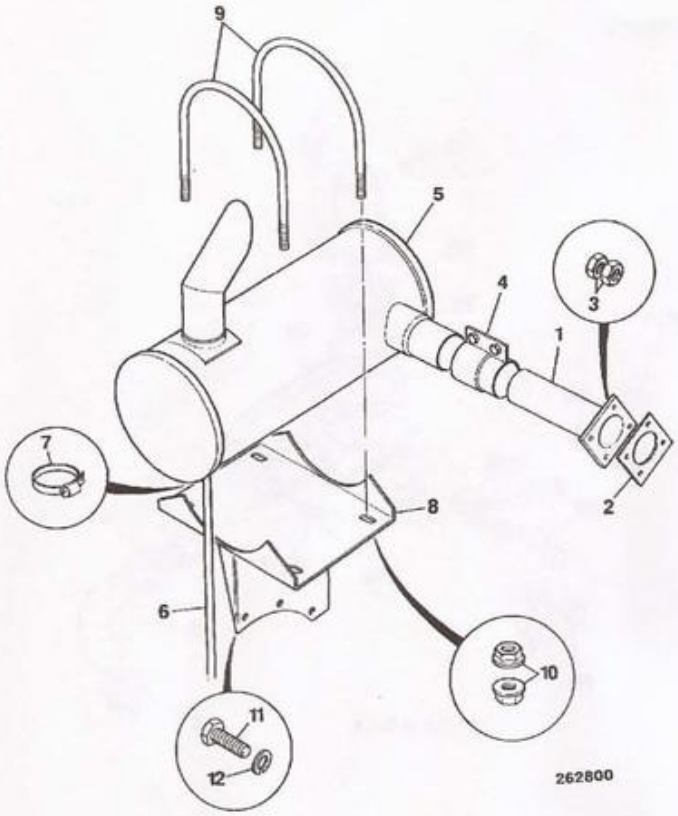

K3-4-3 EXHAUST SYSTEM

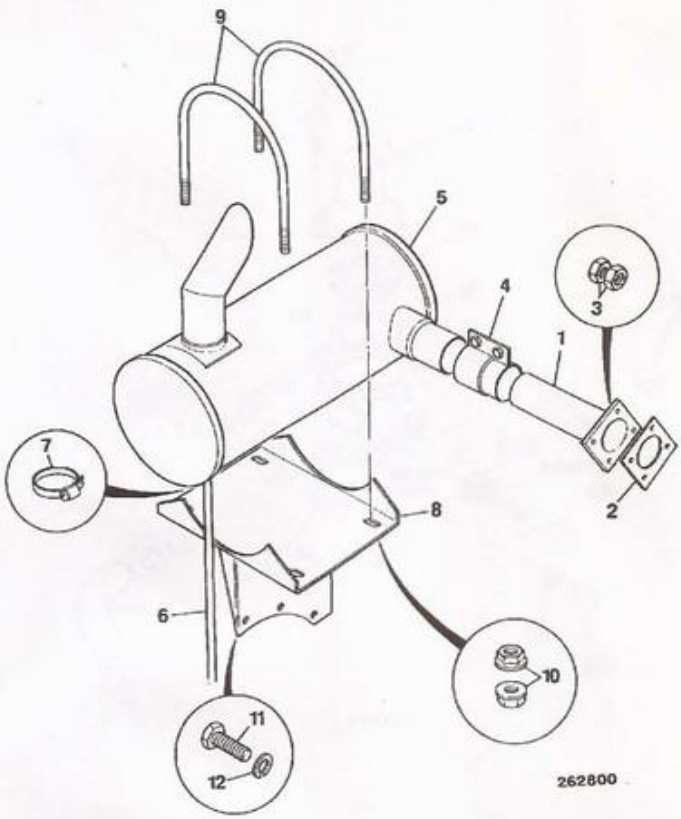

K4-1-1 PUMP, WATER

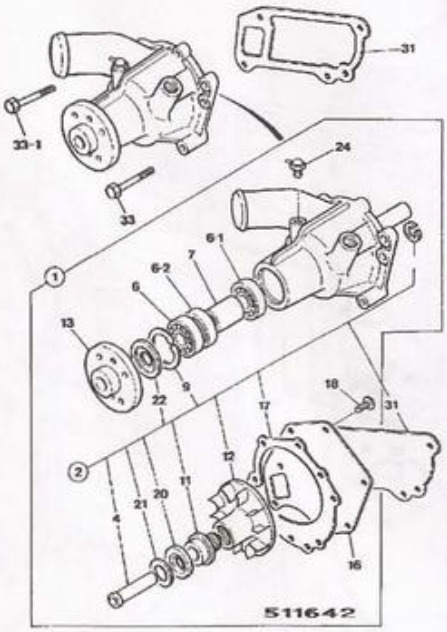

K4-1-2 PUMP, WATER

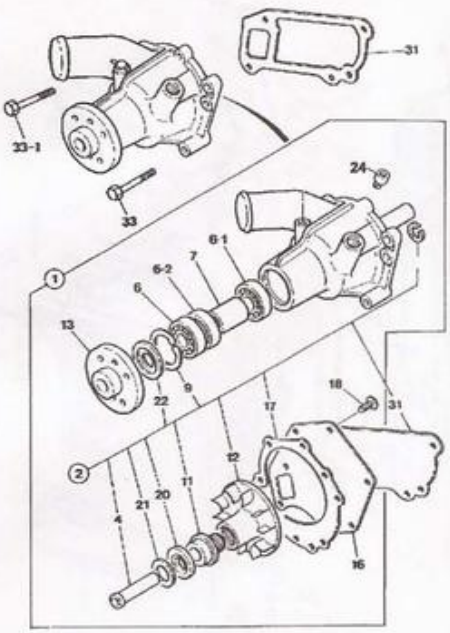

K4-2-1 THERMOSTAT, HOUSING, INLET & OUTLET

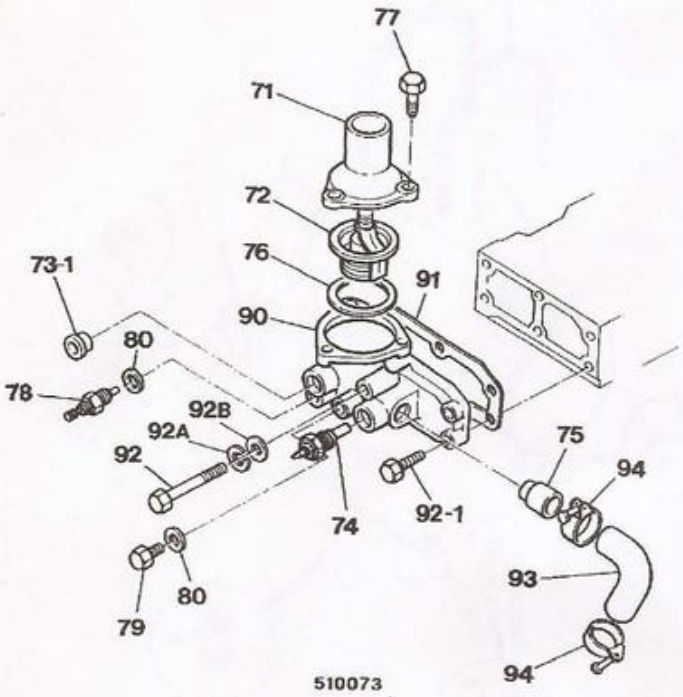

K4-2-2 THERMOSTAT, HOUSING, INLET & OUTLET

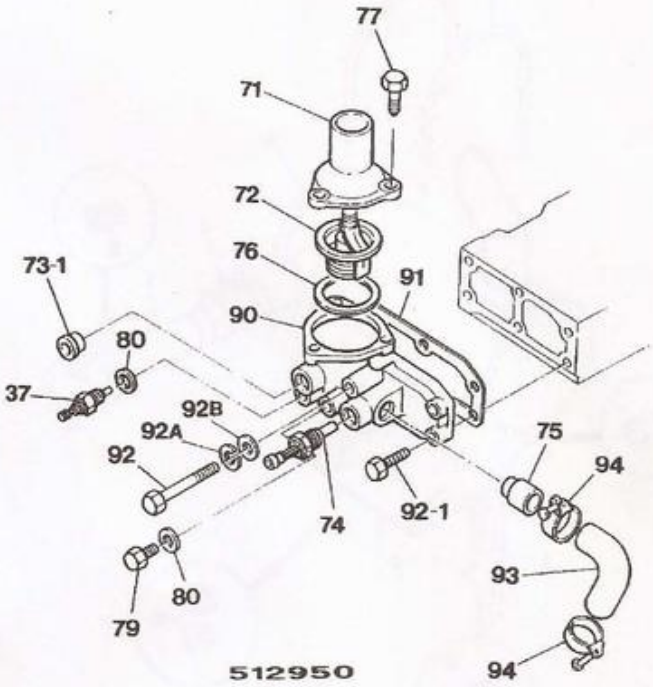

K4-3-1 RADIATOR, FITTINGS & MOUNTINGS

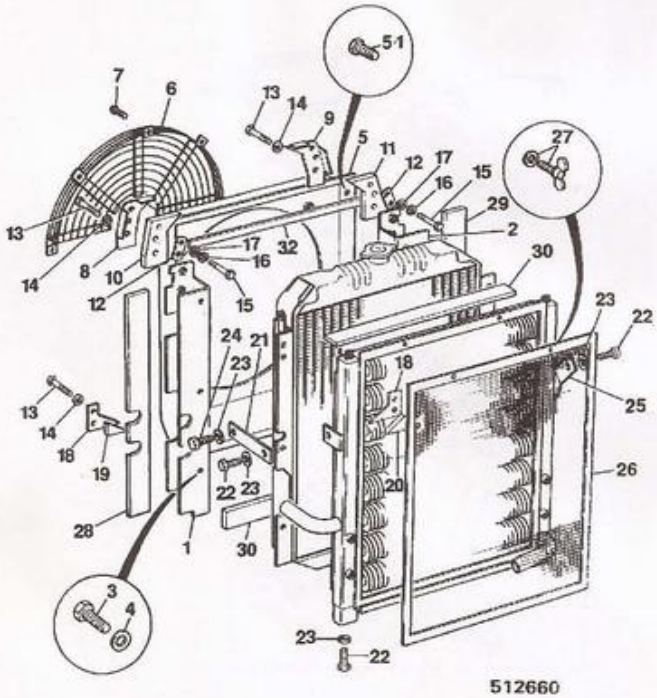

K4-3-2 RADIATOR, FITTINGS & MOUNTINGS

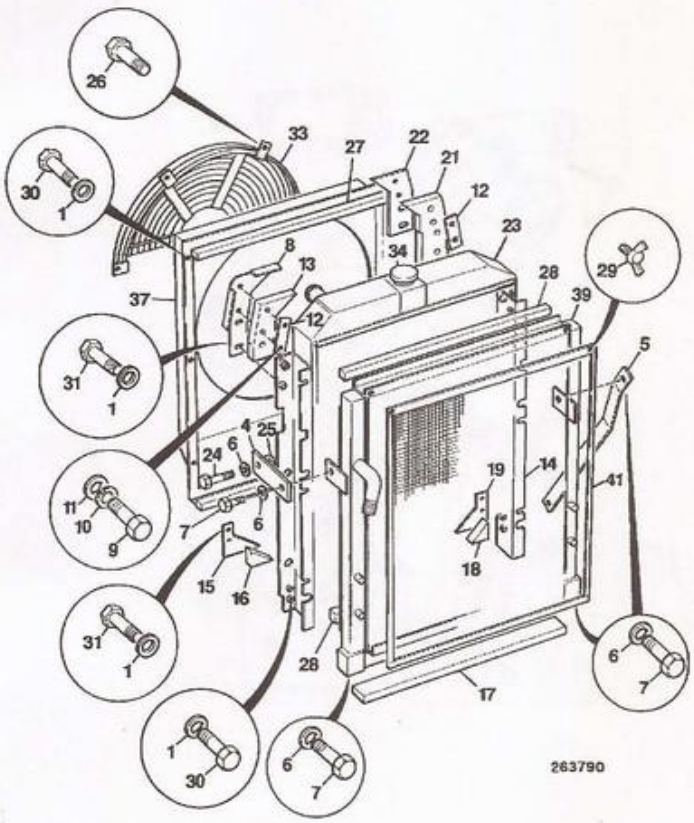

K4-4-1 RADIATOR, HOSES & FITTINGS

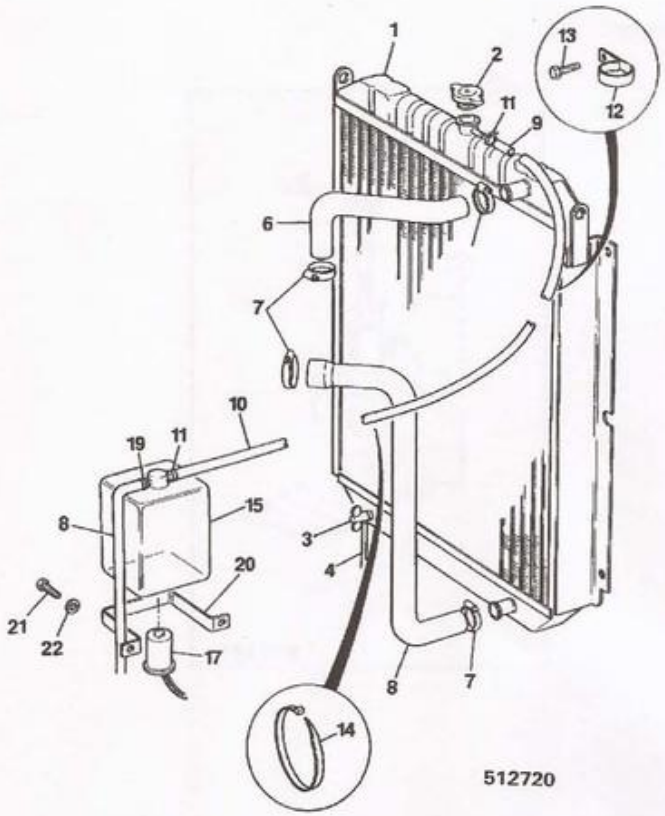

K4-4-2 RADIATOR, HOSES & FITTINGS

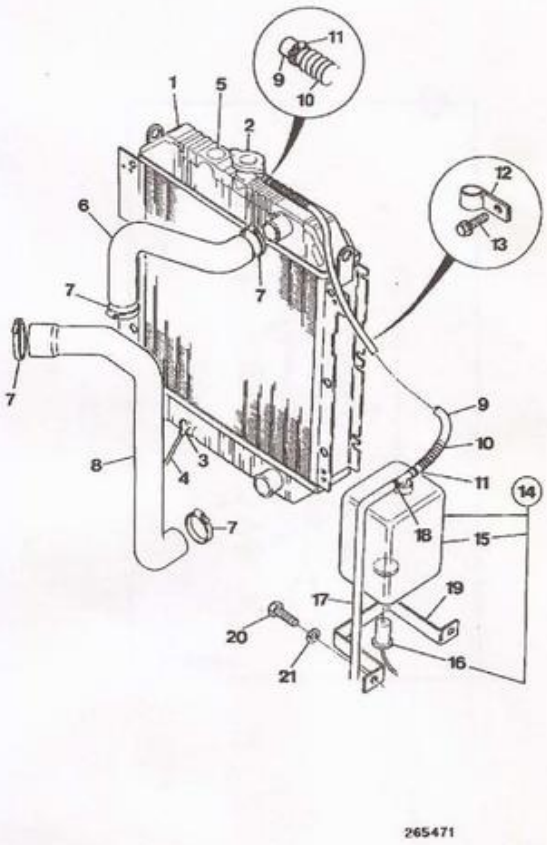

K5-1-1 SUMP, OIL, & FITTINGS

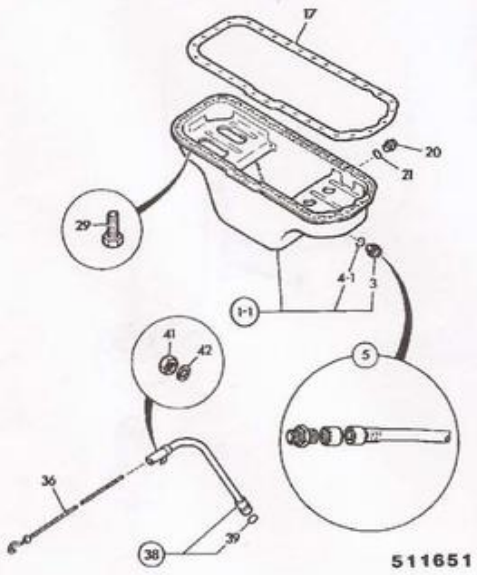

K5-1-2 SUMP, OIL, & FITTINGS

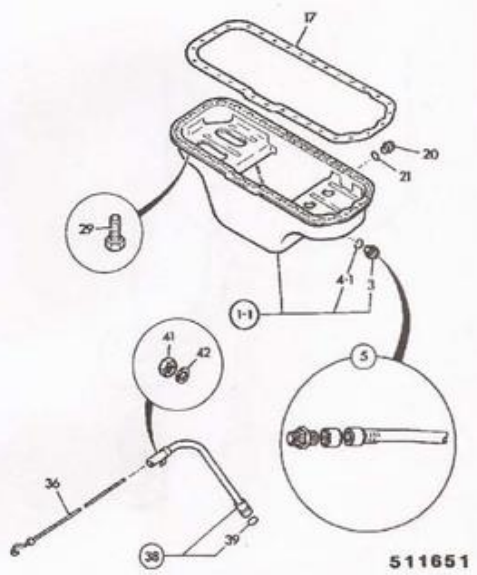

K5-2-1 PUMP, OIL

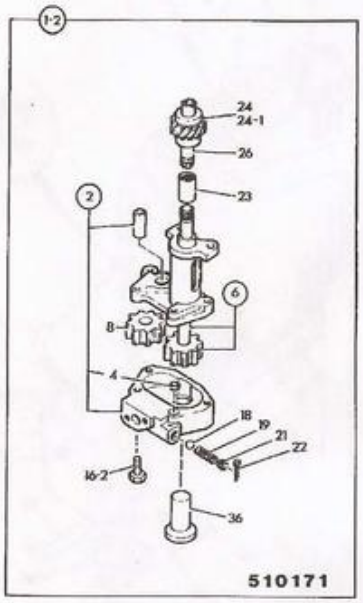

K5-2-2 PUMP, OIL

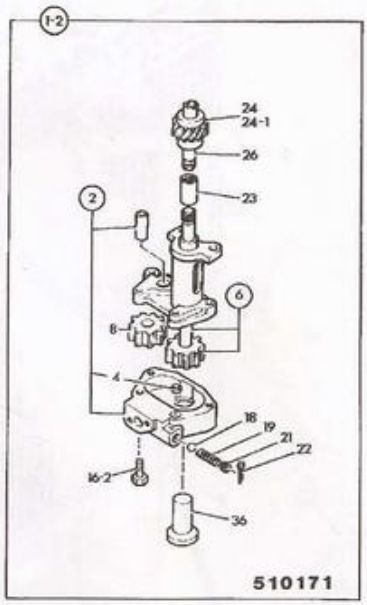

K5-3-1 PISTON COOLING JETS

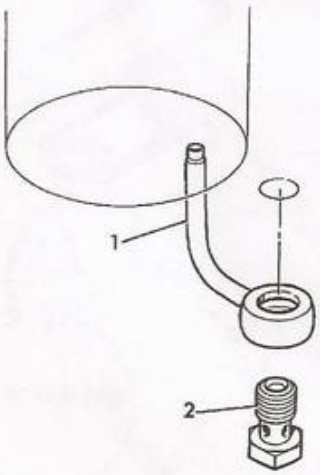

168620

K5-3-2 PISTON COOLING JETS

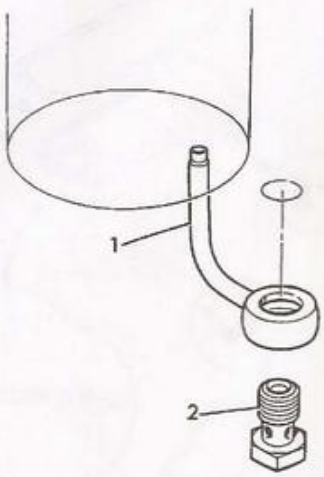

168620

K5-4-1 FILTER, OIL

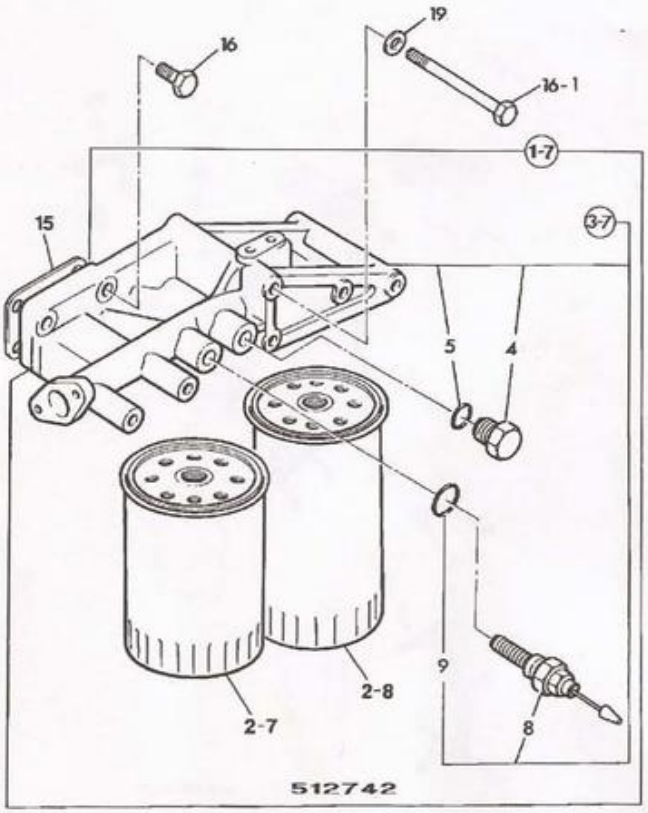

K5-4-2 FILTER, OIL

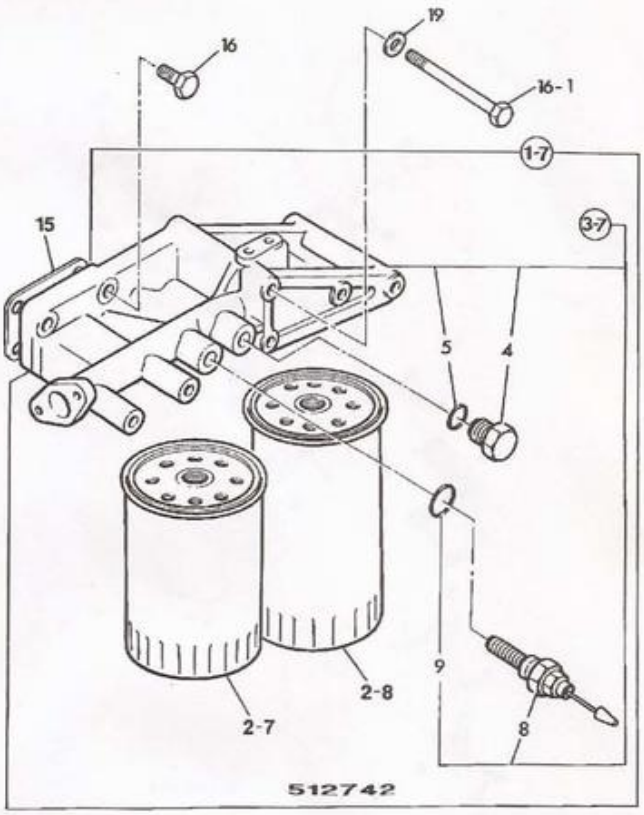

K5-5-1 COOLER, OIL

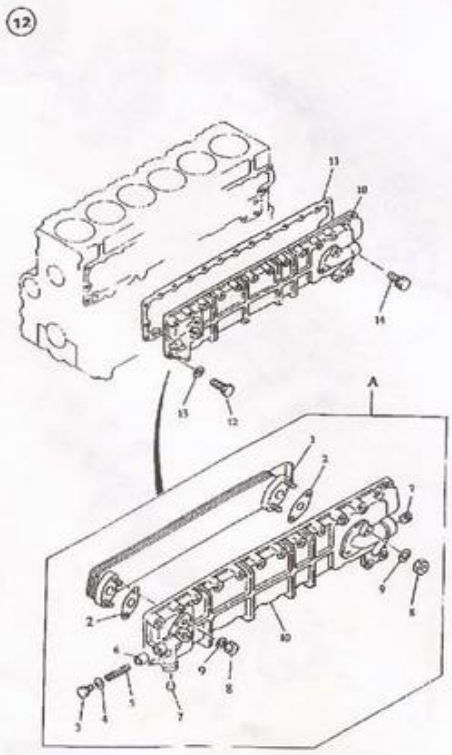

K5-5-2 COOLER, OIL

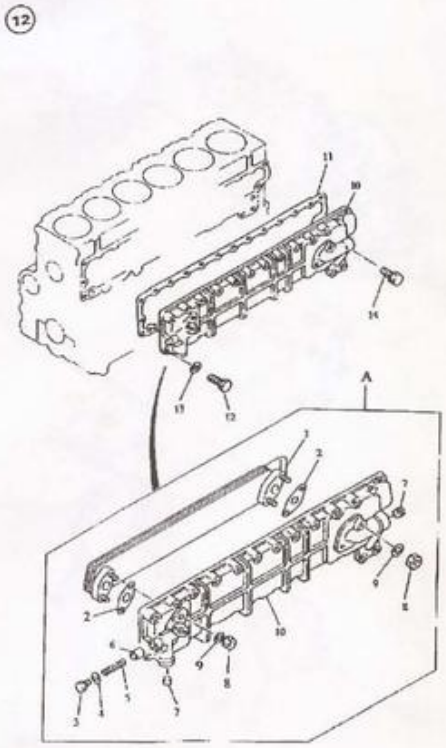

K6-1-10 PUMP, FUEL INJECTION

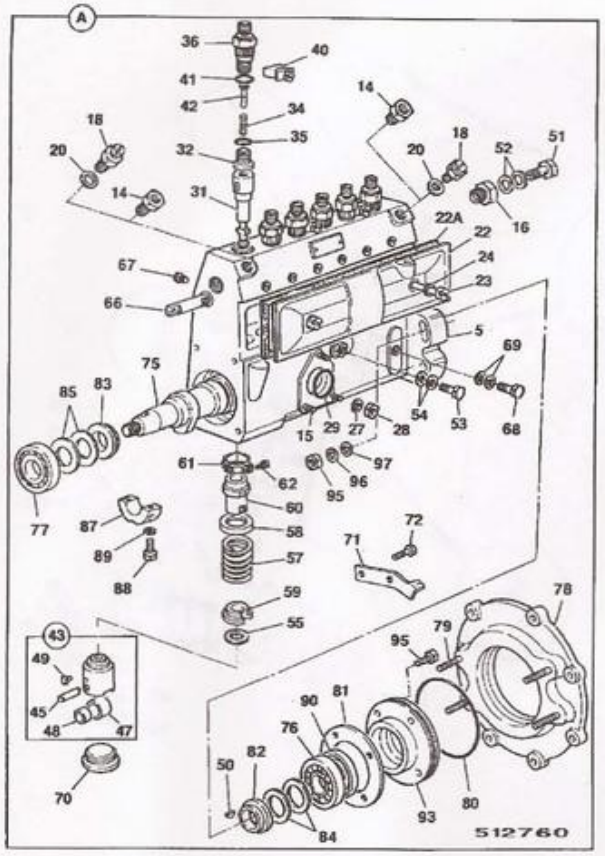

K6-1-11 PUMP, FUEL INJECTION

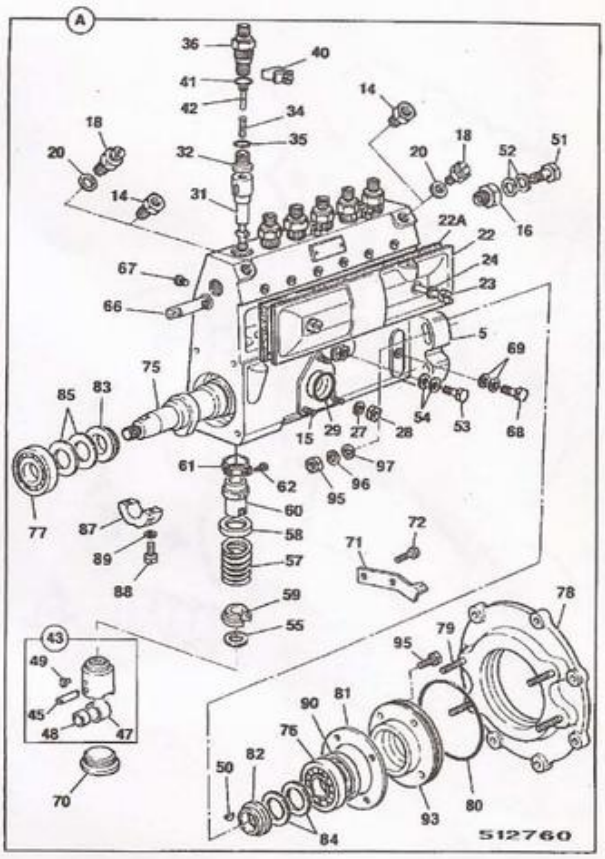

K6-1-20 GOVERNOR ASSEMBLY, FUEL INJECTION PUMP

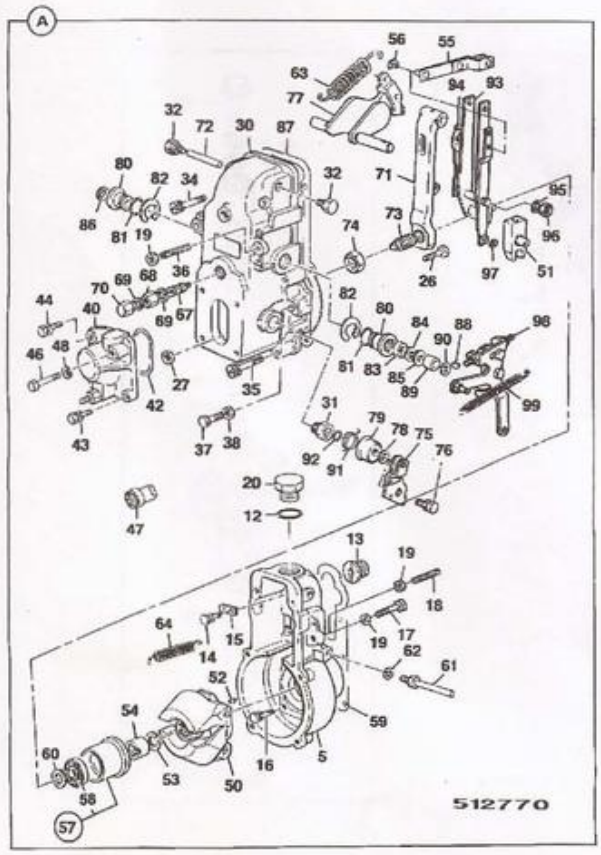

K6-1-21 GOVERNOR ASSEMBLY, FUEL INJECTION PUMP

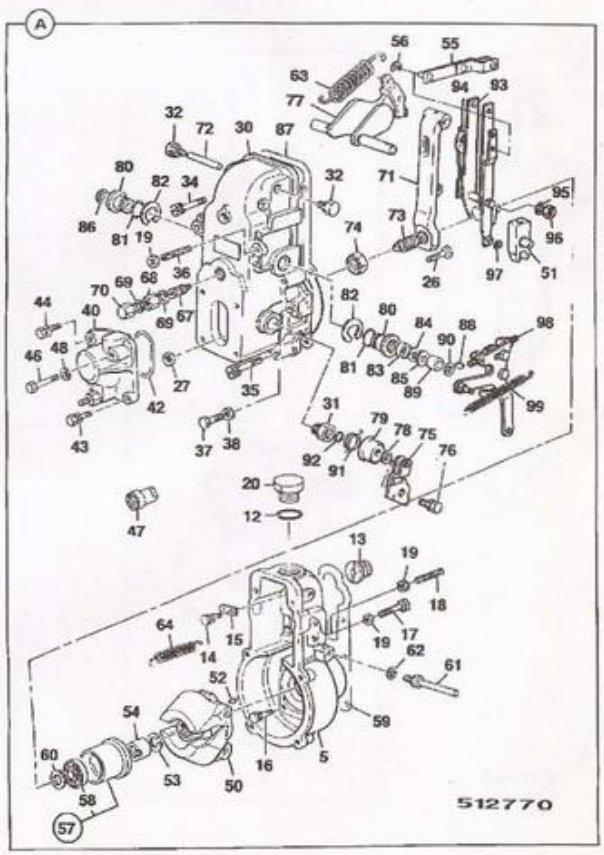

K6-2-1 FUEL SYSTEM

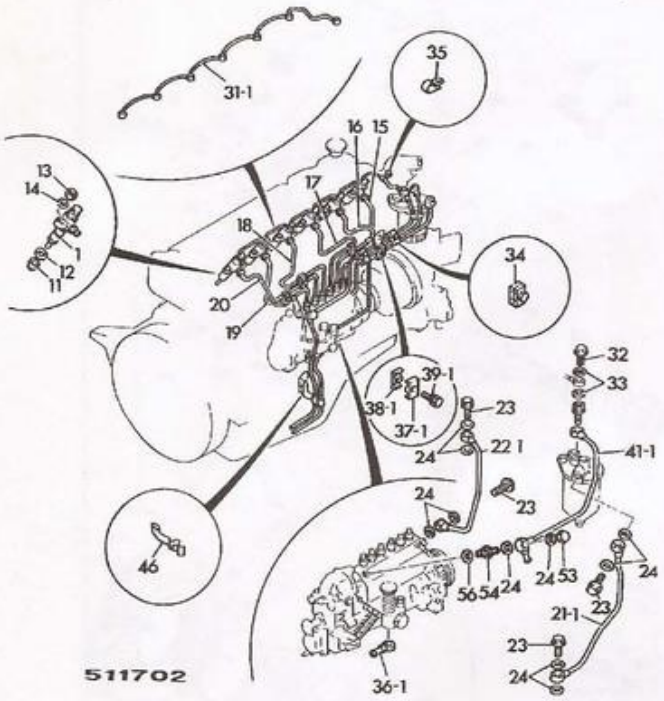

K6-2-2 FUEL SYSTEM

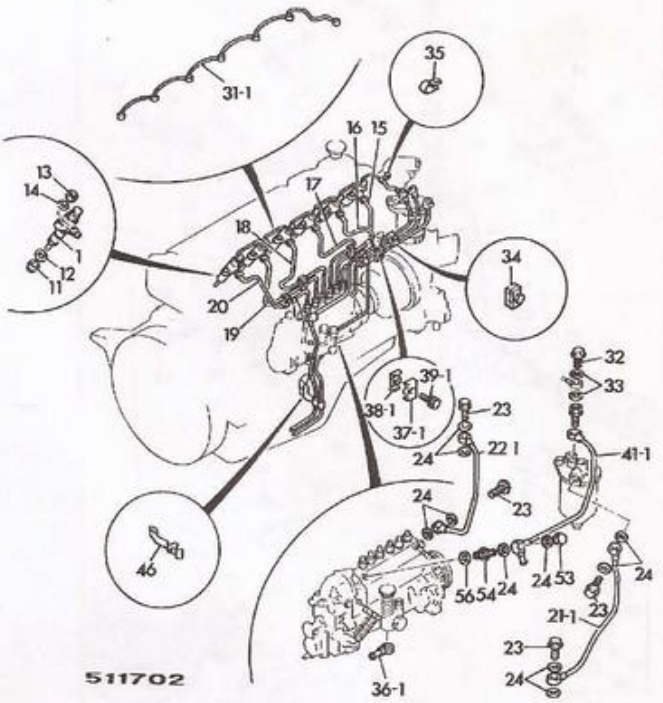

K6-2-11 INJECTORS, FUEL

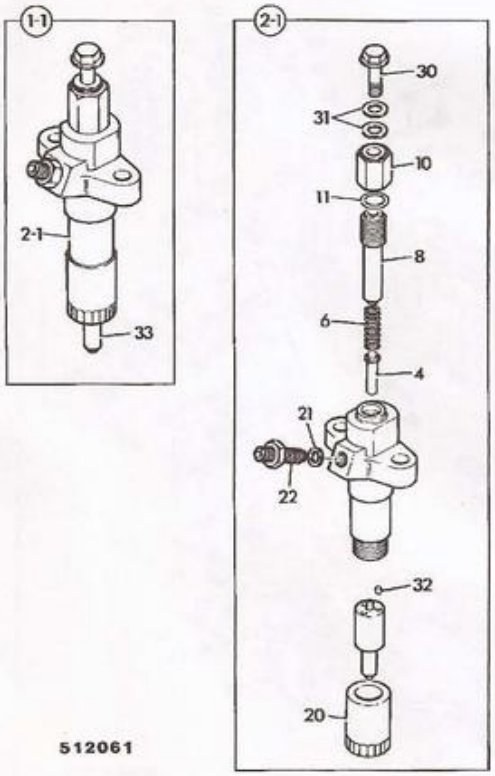

K6-2-21 INJECTORS, FUEL

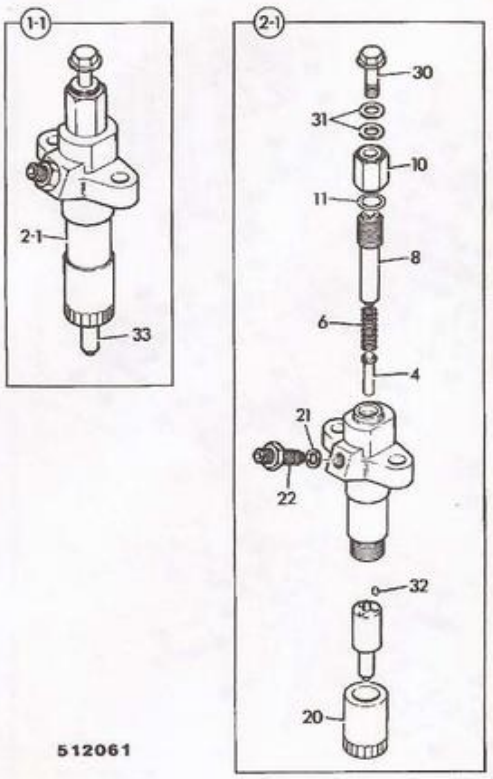

K6-4-1 FUEL PIPES, FUEL TANK TO FILTER

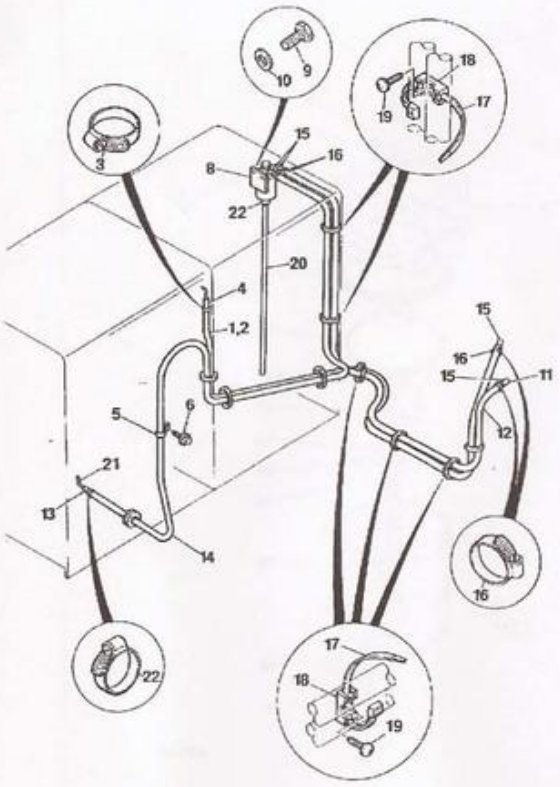

K6-4-2 FUEL PIPES, FUEL TANK TO FILTER

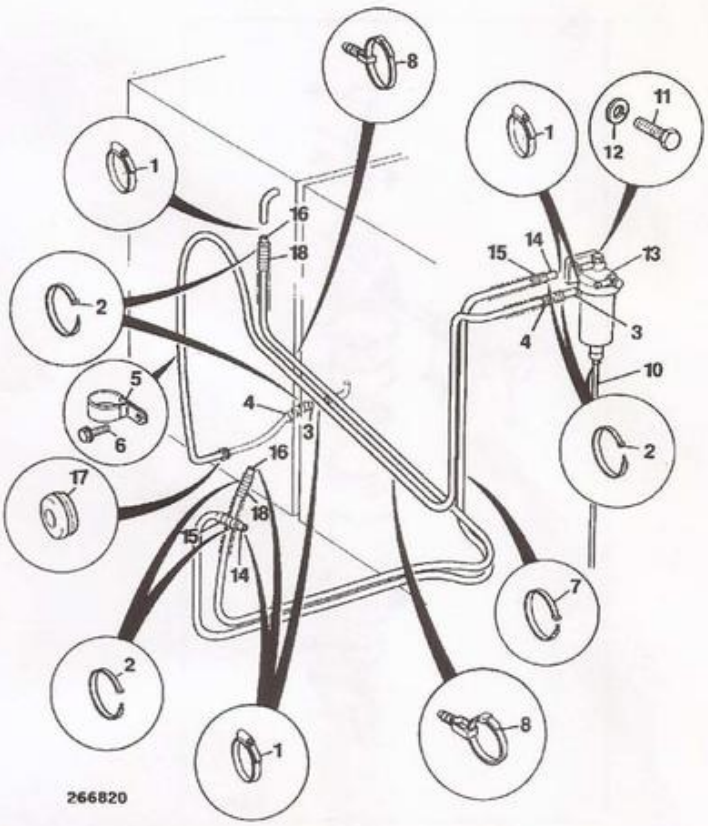

K6-4-3 FUEL PIPES, FUEL TANK TO FILTER

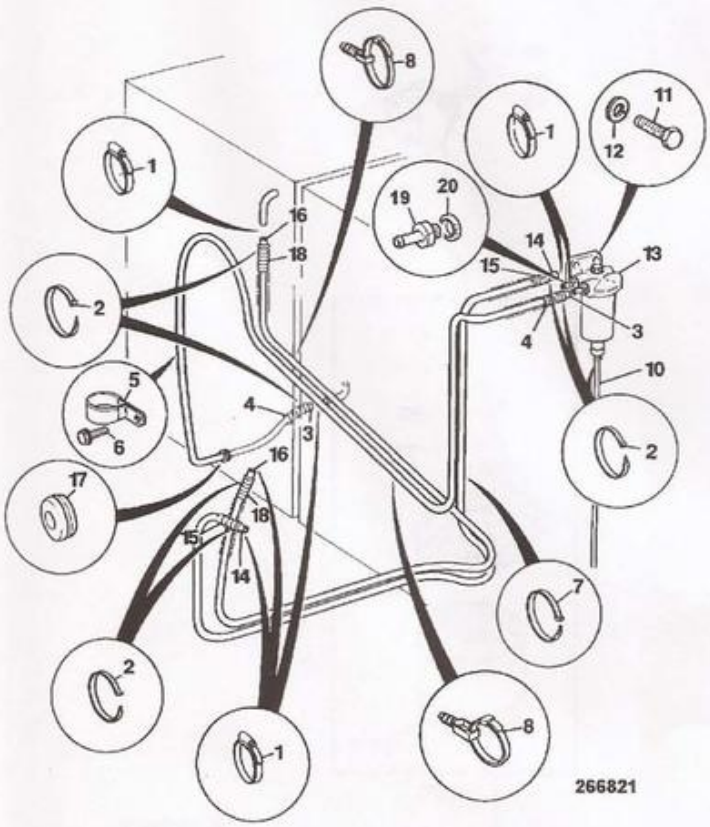

K6-6-1 FILTER, FUEL SEDIMENT

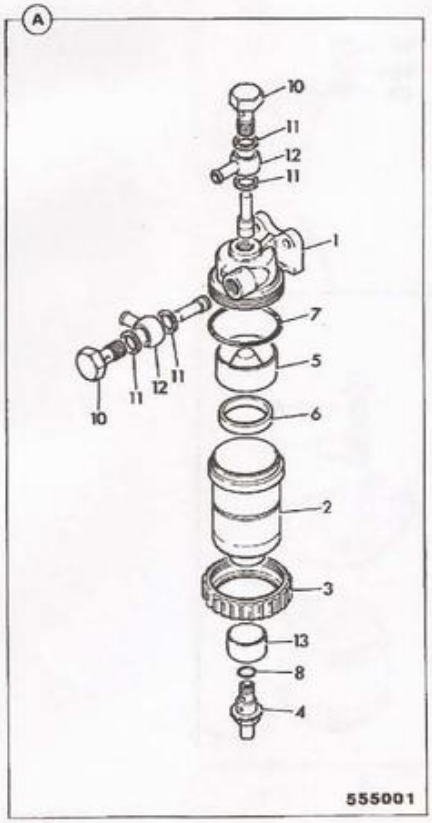

K6-6-2 FILTER, FUEL SEDIMENT

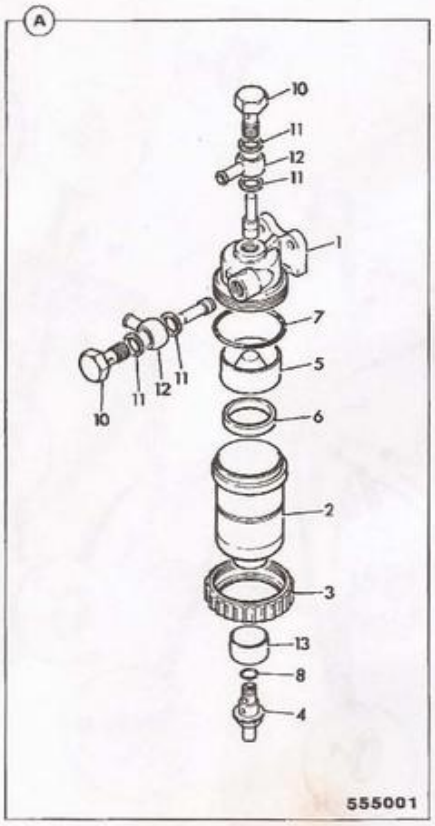

K6-6-3 FILTER, FUEL SEDIMENT

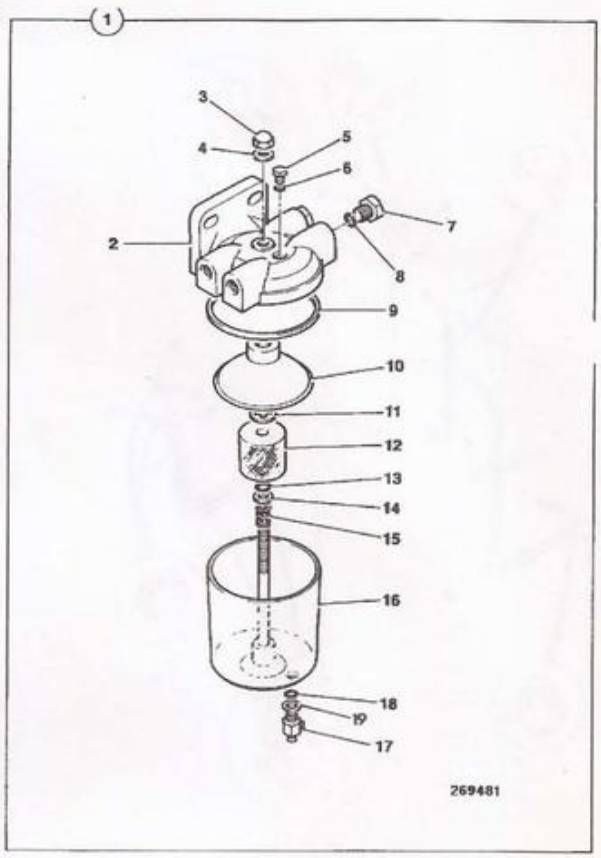

K6-7-1 FILTER, FUEL

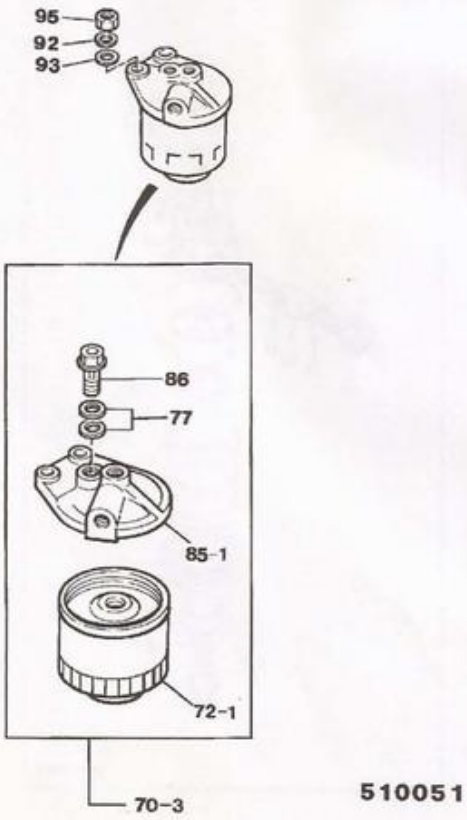

K6-7-2 FILTER, FUEL

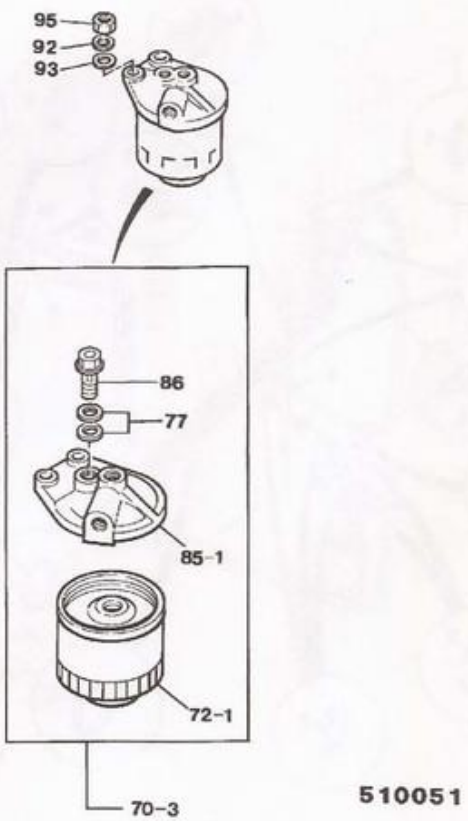

K6-8-1 PUMP, FUEL LIFT

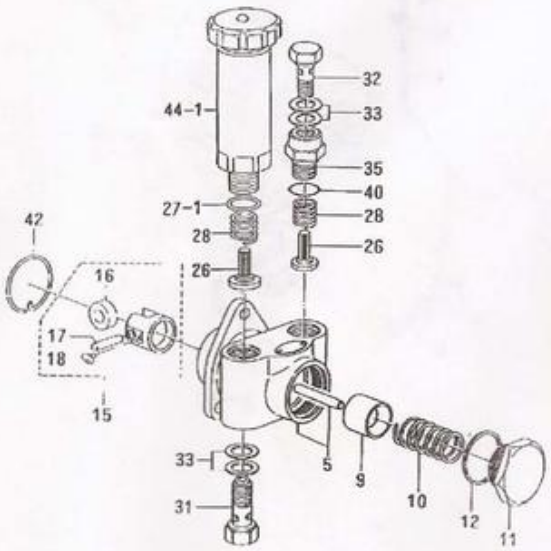

511720

K6-8-2 PUMP, FUEL LIFT

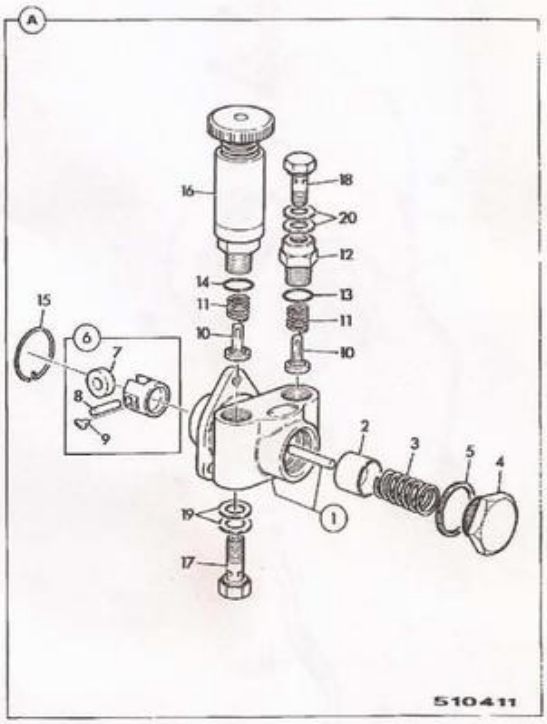

K7-1-1 TURBOCHARGER

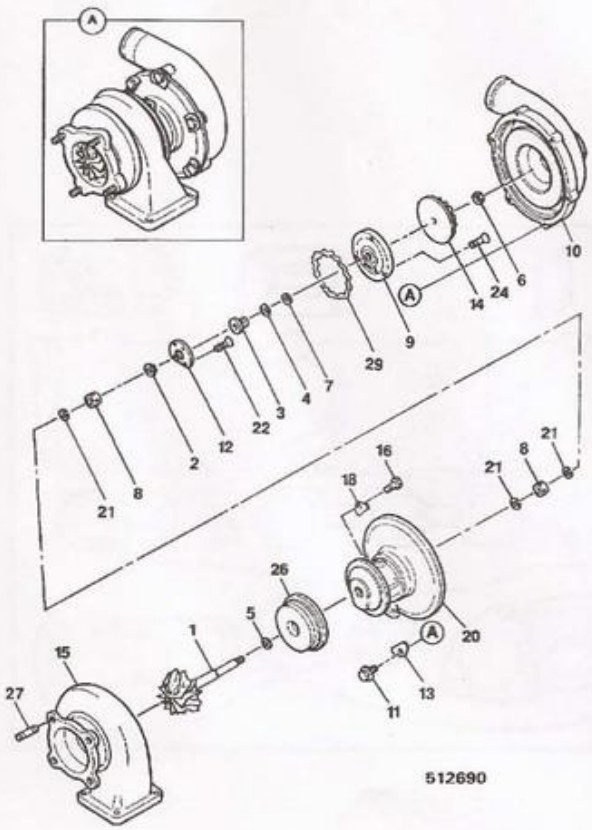

512690

K7-1-2 TURBOCHARGER

Illustration Not Available at Time of Publication

K7-2-1 TURBO, PIPEWORK

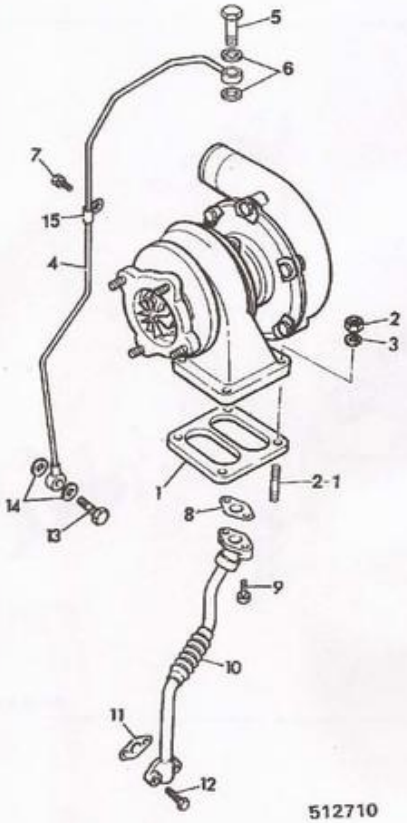

K7-2-2 TURBO, PIPEWORK

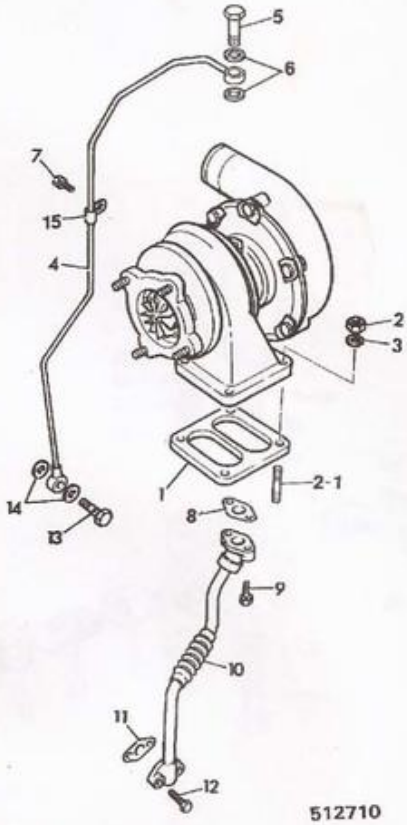

K8-1-1 GASKET SET, OVERHAUL

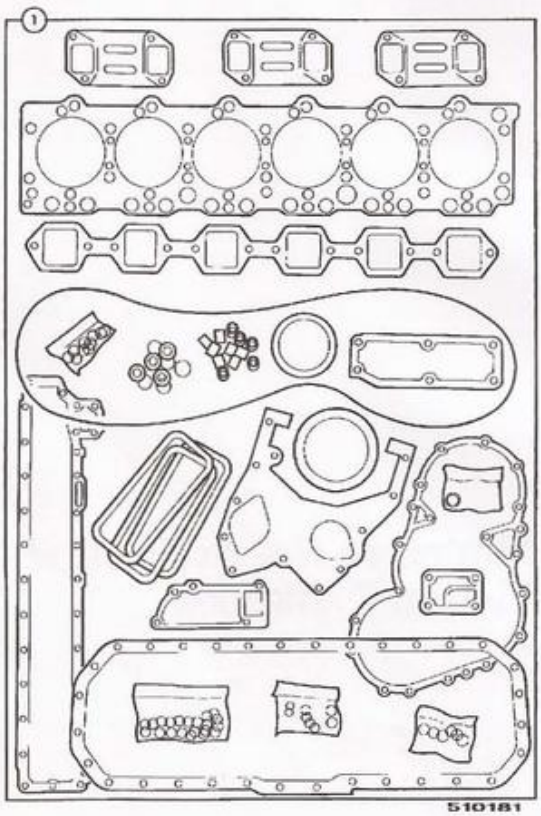

K8-1-2 GASKET SET, OVERHAUL, TOP

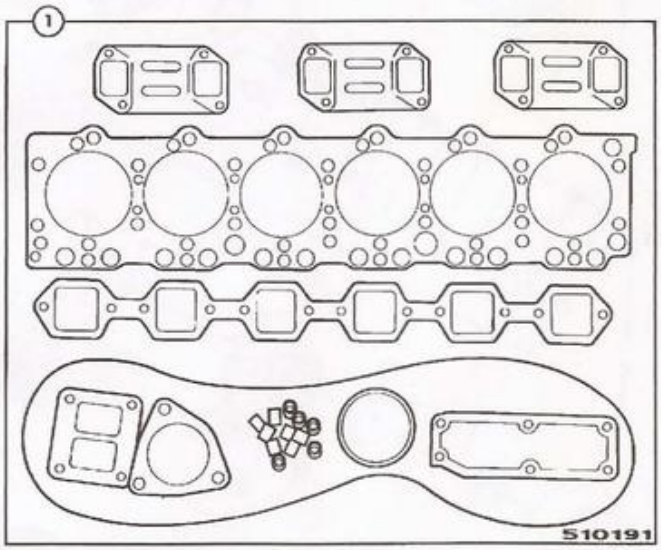

K8-1-11 GASKET SET, OVERHAUL

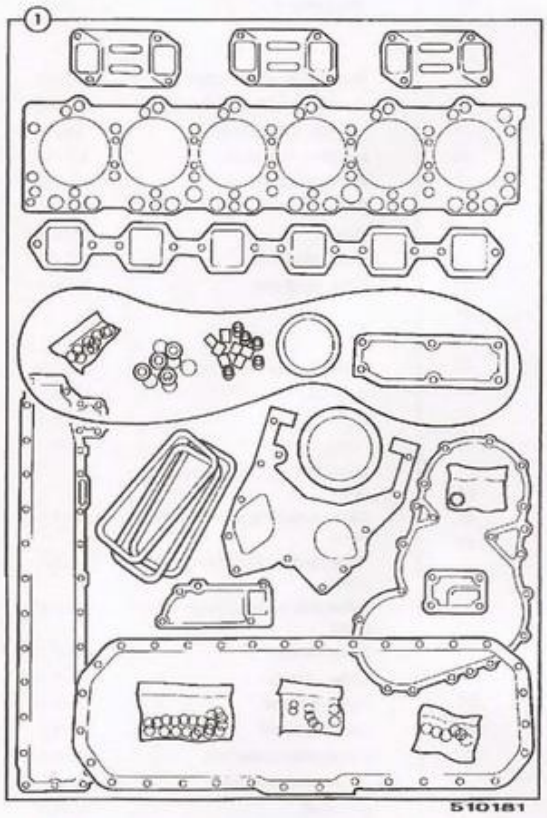

K8-1-12 GASKET SET, OVERHAUL, TOP

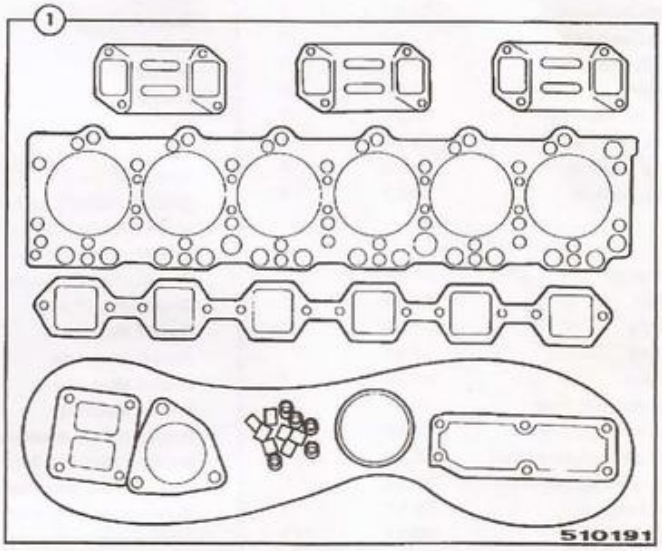

K8-2-1 KIT, PISTON & LINER

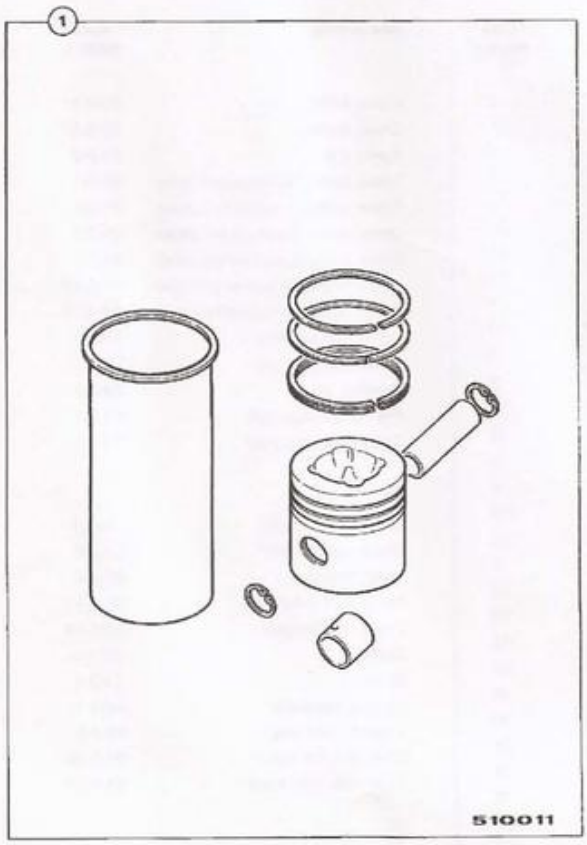

K8-2-11 KIT, PISTON & LINER

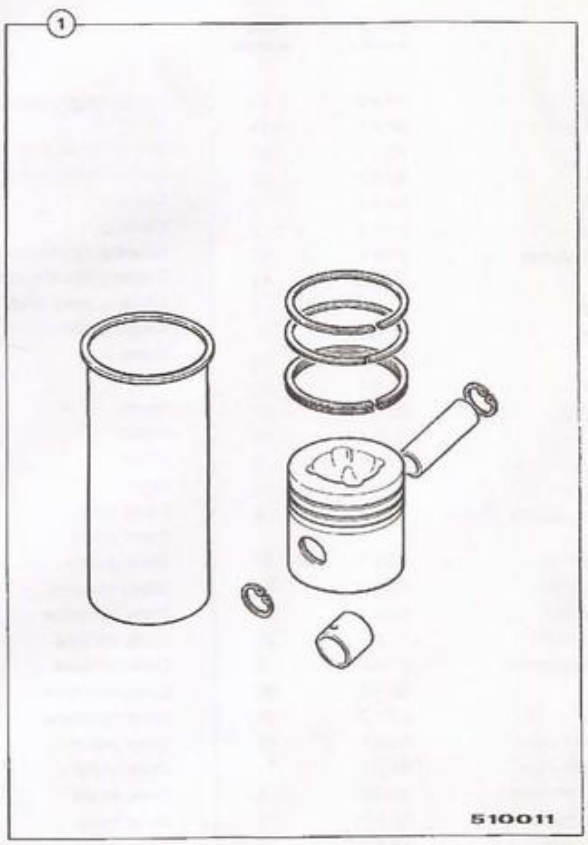

DESCRIPTION	PAGE NUMBER	ITEM NUMBER
A		
Adapter, tooth, V33	A2-1-13	2
Alternator, assembly	C2-1-1	7
Alternator, assembly	C2-1-2	7
Alternator, assembly	C2-3-1	0
Alternator, assembly	C2-3-2	0
Alternator, assembly	C2-3-3	1
Arm, rocker	K2-2-2	51
Arm, rocker, assembly	K2-2-1	51
Armature, assembly	C2-5-1	6
Armature, assembly	C2-5-2	6
Armature, Armature	C2-5-3	5
B		
Ball, expander	E3-14-2	8
Base, filter	E1-8-2	13
Battery, dry	C1-3-1	2
Battery, dry	C1-3-1	1
Battery, wet	C1-3-3	1
Bearing, camshaft, front	K1-3-1	5
Bearing, camshaft, front	K1-3-2	5
Bearing, camshaft, inter & rear	K1-3-1	5
Bearing, camshaft, inter & rear	K1-3-2	5
Bearing, needle	D2-1-1	13
Bearing, needle	D2-1-2	13
Belt, fan	K1-5-1	64
Belt, fan, pair	K1-5-2	64
Block, assembly, cylinder	K1-3-1	1
Block, cylinder assembly	K1-3-2	1
Body, air filter	K3-3-2	2
Body, air filter	K3-3-3	2
Body, cooler	K5-5-1	10
Body, cooler	K5-5-2	10
Boom, mono	B3-1-1	1
Bowl, filter	K6-6-3	16
Box, fuse	C1-2-1	17
Bracket	B2-10-1	27
Bracket	C1-4-2	7
Bracket	C1-6-1	6
Bracket	D2-1-1	38
Bracket	D2-1-2	38
Bracket	K6-1-1	40
Bracket	K6-1-2	40
Bracket, alternator mounting	C2-6-1	11
Bracket, alternator mounting	C2-6-2	11
Bracket, engine mounting	K1-8-1	2
Bracket, engine mounting	K1-8-1	1
Bracket, lifting, front	K2-4-1	41
Bracket, lifting, front	K2-4-2	41
Bracket, lifting, rear	K2-4-1	41
Bracket, lifting, rear	K2-4-2	41
Bracket, mounting	E1-8-2	13
Bracket, radiator mounting	K4-3-1	1
Bracket, rocker arm, front	K2-2-1	58
Bracket, rocker arm, front	K2-2-2	58
Bracket, rocker arm, intermediate	K2-2-1	58
Bracket, rocker arm, intermediate	K2-2-2	58
Bracket, rocker arm, rear	K2-2-1	58
Bracket, seal retaining	K4-3-1	2
Bracket, silencer mounting	K3-4-1	8
Bracket, silencer mounting	K3-4-2	8
Bracket, silencer mounting	K3-4-3	8
Bracket, stop	E3-14-2	1
Bracket, throttle reaction	D2-1-1	5
Bracket, throttle reaction	D2-1-2	5
Bracket, valve, low flow	E1-30-30	4
Breather, engine oil	K1-3-1	58
Breather, engine oil	K1-3-2	58
Bush	E4-7-10	2
Bush	E4-7-10	1
Bush, small end	K1-4-1	9
Bush, small end	K1-4-2	9
C		
Cable, battery	C1-1-2	46
Cable, battery	C1-1-2	12
Cable, battery	C1-3-3	8
Cable, battery	C1-3-3	7
Cable, battery lead, clamp and cover	C1-1-1	15
Cable, battery lead, clamp and cover	C1-1-1	13
Cable, battery lead, clamp and cover	C1-1-1	12
Cable, battery lead, clamp and cover	C1-1-1	46
Cable, control	D2-1-1	1
Cable, control	D2-1-2	1
Cable, hot/cold	C3-5-4	11
Cable, hot/cold	C3-5-5	11
Cable, recirculate/fresh	C3-5-4	12
Cable, recirculate/fresh	C3-5-5	12
Camshaft	K1-6-2	1
Camshaft	K1-6-12	1
Cap	B1-4-1	14
Cap, assembly	K4-4-1	15

DESCRIPTION	PAGE NUMBER	ITEM NUMBER
Cap, assembly	K4-4-2	14
Cap, filler with lock	B1-4-1	14
Cap, oil filler	K2-3-1	30
Cap, oil filler	K2-3-2	30
Cap, pressure	K4-4-1	2
Cap, pressure	K4-4-2	2
Capscrew, M8 st.steel	E1-8-2	13
Case, filter	E1-8-2	13
Casing, timing	K1-6-1	1
Casing, timing	K1-6-11	1
Catch	B1-5-1	23
Catch, assembly	B1-5-1	22
Catch, assembly	B1-5-1	21
Catch, plate	B1-5-1	23
Clamp	E4-3-5	5
Clamp, assembly	E4-3-5	4
Clutch, Clutch assembly, Starter motor	C2-5-3	8
Coil, field, assembly	C2-3-1	20
Coil, field, assembly	C2-3-2	20
Coil, field, assembly	C2-5-1	23
Coil, field, assembly	C2-5-2	23
Coil, Coil, field, assembly	C2-5-3	2
Condenser	C2-3-1	26
Condenser	C2-3-2	26
Connector, water outlet	K4-2-1	71
Connector, water outlet	K4-2-2	71
Console, fixed, left hand	B2-4-2	1
Console, fixed, right hand	B2-5-2	1
Cooler, oil, assembly	K5-5-1	0
Cooler, oil, assembly	K5-5-2	0
Counterweight, rear, JS200N, JS210	B1-6-2	1
Counterweight, rear, JS200N, JS210	B1-6-3	1
Counterweight, rear, JS220	B1-6-20	1
Counterweight, rear, JS220XD	B1-6-30	1
Coupling	K5-2-1	23
Coupling	K5-2-2	23
Coupling, injection pump	K6-1-1	11
Coupling, injection pump	K6-1-2	11
Coupling, pump drive	E2-1-1	1
Coupling, rotary	E3-14-2	8
Cover	B2-4-2	8
Cover	B2-5-2	8
Cover	B2-10-1	14
Cover	B2-10-1	13
Cover	E3-14-2	8
Cover	E3-14-2	8
Cover, centre	B1-5-10	14
Cover, centre	B1-5-11	14
Cover, engine	B1-5-1	1
Cover, inspection	K1-6-1	18
Cover, inspection	K1-6-11	18
Cover, left hand	B2-4-2	15
Cover, left hand	B2-5-2	15
Cover, right hand	B2-4-2	16
Cover, right hand	B2-5-2	16
Cover, rocker	K2-3-1	29
Cover, rocker	K2-3-2	29
Cover, tappet	K1-3-1	27
Cover, tappet	K1-3-1	27
Cover, tappet	K1-3-2	27
Cover, tappet	K1-3-2	27
Cover, timing	K1-6-1	7
Cover, timing	K1-6-11	7
Cover, toolbox	B1-5-30	2
Cover, top	E1-8-2	13
Cover, under, no inspection cover	B1-2-1	10
Cover, under, no inspection cover	B1-2-1	8
Cover, under, no inspection cover	B1-2-2	10
Cover, under, no inspection cover	B1-2-2	8
Cover, under, no inspection cover	B1-2-10	8
Cover, under, no inspection cover	B1-2-10	10
Cover, with air outlet	C3-4-2	16
Cover, with air outlet	C3-4-3	16
Cowling, fan	K4-3-1	5
Crankshaft, assembly	K1-4-1	14
Crankshaft, assembly	K1-4-2	14
D		
Decal, control panel	C3-5-4	18
Decal, control panel	C3-5-5	18
Decal, fuse box	B5-2-1	35
Decal, JCB Insignia	B5-1-13	5
Decal, JCB Insignia	B5-1-14	5
Diode	C1-1-1	1
Diode	C1-2-1	19
Dipstick, assembly	K5-1-1	36
Dipstick, assembly	K5-1-2	36
Door, side, left hand	B1-5-20	1
Door, side, right hand	B1-5-20	5
E		
Elbow, exhaust	K3-2-1	55
Element, air filter, main	K3-3-1	2
Element, air filter, safety	K3-3-1	3

DESCRIPTION	PAGE NUMBER	ITEM NUMBER
Element, air, inner	K3-3-2	3
Element, air, inner	K3-3-3	3
Element, air, outer	K3-3-2	4
Element, air, outer	K3-3-3	4
Element, filter bypass, nephron	E1-8-2	13
Element, oil cooler	K5-5-1	1
Element, oil cooler	K5-5-2	1
Element, oil filter, main	E3-15-1	4
Element, oil filter, main	K5-4-1	2
Element, oil filter, main	K5-4-2	2
Element, oil filter, secondary	K5-4-1	2
Element, oil filter, secondary	K5-4-2	2
Engine, complete, turbocharged	K1-1-1	1
Engine, complete, turbocharged	K1-1-2	1
F		
Fan, alternator	C2-3-1	24
Fan, alternator	C2-3-2	24
Fan, alternator	K1-5-1	25
Fan, alternator	K1-5-2	25
Fan, cooling	K1-5-1	54
Fan, cooling	K1-5-2	54
Filter	B1-4-1	15
Filter, air, assembly	K3-3-1	1
Filter, bypass	E1-8-2	13
Filter, fuel assembly	K6-7-1	70
Filter, fuel assembly	K6-7-2	70
Filter, fuel sedimentor	K6-6-3	1
Filter, heater	C3-5-4	14
Filter, heater	C3-5-5	14
Filter, oil assembly	K5-4-1	1
Filter, oil assembly	K5-4-2	1
Filter, pre-cleaner	K3-3-3	7
Filter, sediment assembly	K6-6-1	0
Filter, sediment assembly	K6-6-2	0
Flange, boot	B2-4-2	9
Flange, boot	B2-5-2	9
Flinger, oil	K1-4-1	38
Flinger, oil	K1-4-2	38
Flywheel, assembly	K1-7-1	26
Flywheel, assembly	K1-7-2	26
G		
Gasket	K6-1-1	26
Gasket, cylinder head	K2-1-1	21
Gasket, cylinder head	K2-1-2	21
Gasket, exhaust	K3-4-2	2
Gasket, exhaust	K3-4-3	2
Gasket, exhaust tail pipe	K3-4-1	2
Gasket, inj/pump to t/case	K6-1-2	26
Gasket, inspection cover	K1-6-1	19
Gasket, inspection cover	K1-6-11	19
Gasket, rocker cover	K2-3-1	49
Gasket, rocker cover	K2-3-2	49
Gasket, timing cover	K1-6-1	8
Gasket, timing cover	K1-6-11	8
Gauge, diesel fuel level	B1-4-1	13
Gauge, diesel fuel level	B1-4-1	1
Gauge, diesel fuel level, with sealing gasket	B1-4-1	17
Gear, camshaft	K1-6-2	6
Gear, camshaft	K1-6-12	6
Gear, crankshaft	K1-4-1	37
Gear, crankshaft	K1-4-2	37
Gear, idler	K1-6-2	22
Gear, idler	K1-6-12	22
Gear, injection pump	K6-1-1	16
Gear, injection pump	K6-1-2	16
Gear, injection pump drive	K1-6-1	70
Gear, oil pump drive	K5-2-1	24
Gear, oil pump drive	K5-2-1	8
Gear, oil pump drive	K5-2-1	6
Gear, oil pump drive	K5-2-2	24
Gear, oil pump drive	K5-2-2	8
Gear, oil pump drive	K5-2-2	6
Gear, ring	K1-7-1	27
Gear, ring	K1-7-2	27
Governor, assembly	K6-1-1	3
Governor, assembly	K6-1-2	3
Governor, assembly	K6-1-20	0
Governor, assembly	K6-1-21	0
Guard, fan	K4-3-1	6
Guide, valve, inlet & exhaust	K2-1-1	9
Guide, valve, inlet & exhaust	K2-1-2	9
H		
Handle, bonnet, locking	B1-5-1	22
Handle, bonnet, locking	B1-5-1	21
Handle, sliding window	B2-2-2	2
Handle, sliding window	B2-2-3	2
Harness	C1-1-1	45
Harness	C1-2-1	19
Harness	C1-2-1	19
Harness	C1-6-1	11
Harness	E1-30-10	79
Harness	E1-30-20	30

DESCRIPTION	PAGE NUMBER	ITEM NUMBER
Harness, cab	C1-2-1	19
Harness, cab panel	C1-2-1	19
Harness, cab panel	C1-2-1	19
Harness, cab panel	C1-2-1	19
Harness, extension, rear	C1-4-2	5
Harness, low flow	E1-30-30	6
Harness, main	C1-1-1	1
Harness, main	C1-1-1	1
Harness, main	C1-1-1	1
Harness, main	C1-1-1	1
Harness, radio	C1-1-1	59
Harness, radio	C1-1-2	59
Harness, travel alarm	C1-10-1	2
Harness, vacuum sensor	K3-3-1	22
Harness, wire	C1-1-1	45
Harness, wire	C1-6-1	11
Harness, wire	E1-30-30	6
Head, assembly, cylinder	K2-1-1	1
Head, assembly, cylinder	K2-1-2	1
Head, fuel filter	K6-7-1	85
Head, fuel filter	K6-7-2	85
Heater, assembly cab	C3-4-2	1
Heater, assembly cab	C3-5-4	0
Heater, c/w air con	C3-4-3	1
Heater, c/w air con	C3-5-5	0
Holder, assembly	K6-2-11	2
Holder, assembly	K6-2-21	2
Horn	C1-1-1	47
Horn, low 24 volt	C1-1-1	47
Hose, air	K3-3-2	13
Hose, air	K3-3-3	13
Hose, air inlet	K3-3-1	27
Hose, air, (inlet)	K3-3-1	15
Hose, bottom	K4-4-1	8
Hose, bottom	K4-4-2	8
Hose, by-pass	K4-2-1	93
Hose, by-pass	K4-2-2	93
Hose, drain	K1-3-1	64
Hose, drain	K1-3-2	64
Hose, hydraulic	E1-35-1	6
Hose, hydraulic	E1-35-2	6
Hose, top	K4-4-1	6
Hose, top	K4-4-2	6
Housing	E3-14-2	8
Housing, flywheel	K1-7-1	1
Housing, flywheel	K1-7-2	1
Housing, thermostat	K4-2-1	90
Housing, thermostat	K4-2-2	90
I		
Injector, assembly	K6-2-1	1
Injector, assembly	K6-2-2	1
Insert, exhaust valve	K2-1-1	8
Insert, exhaust valve	K2-1-2	8
Insert, inlet valve	K2-1-1	7
Insert, inlet valve	K2-1-2	7
J		
Jet, piston cooling	K5-3-1	1
Jet, piston cooling	K5-3-2	1
Joint, rod end	D2-1-1	8
Joint, rod end	D2-1-1	2
Joint, rod end	D2-1-2	2
Joint, rod end	D2-1-2	8
K		
Key, engine cover catch	B1-5-1	21
Key, engine cover catch	B1-5-1	22
Key, engine cover lock	B1-5-1	21
Key, engine cover lock	B1-5-1	22
Kit-bearing, Big end, Standard	K1-4-1	13
Kit-bearing, Big end, Standard	K1-4-2	13
Kit-brush	C2-3-3	14
Kit-brush (+)	C2-5-1	38
Kit-brush (+)	C2-5-2	38
Kit-brush (-)	C2-5-1	37
Kit-brush (-)	C2-5-2	37
Kit-brush mounting, Kit-brush mounting, start	C2-5-3	11
Kit-brush, Kit-brush	C2-5-3	4
Kit-drive end	C2-5-1	55
Kit-drive end	C2-5-2	55
Kit-engine oil drain	K5-1-1	5
Kit-engine oil drain	K5-1-2	5
Kit-engine overhaul	K8-2-11	1
Kit-fan & pulley, Kit-fan & pulley	C2-3-3	3
Kit-gasket, engine overhaul	K8-1-11	1
Kit-gasket, overhaul	K8-1-1	1
Kit-gasket, top overhaul	K8-1-12	1
Kit-piston & liner	K8-2-1	1
Kit-piston ring, standard	K1-4-1	4
Kit-piston ring, standard	K1-4-2	4
Kit-repair, turbocharger	K7-1-1	0
Kit-repair, water pump	K4-1-1	2
Kit-repair, water pump	K4-1-2	2
Kit-rotor, Kit-rotor	C2-3-3	8
Kit-seal	C2-5-1	99

DESCRIPTION	PAGE NUMBER	ITEM NUMBER
Kit-seal	C2-5-2	99
Kit-thrust washer, standard	K1-4-1	2
Kit-thrust washer, standard	K1-4-2	2
Kit, cab guard F.O.P.S, euro cab	B2-9-15	1
Kit, seals	E3-14-2	8
L		
Label, lubrication, french	B5-2-1	24
Label, lubrication, Danish	B5-2-1	24
Label, lubrication, Dutch	B5-2-1	24
Label, lubrication, English	B5-2-1	24
Label, lubrication, Finnish	B5-2-1	24
Label, lubrication, Germany	B5-2-1	24
Label, lubrication, Italian	B5-2-1	24
Label, lubrication, Norwegian	B5-2-1	24
Label, lubrication, Portuguese	B5-2-1	24
Label, lubrication, Spanish	B5-2-1	24
Label, lubrication, Swedish	B5-2-1	24
Label, spl	K4-4-1	5
Label, spl	K4-4-2	5
Lever	B2-10-1	31
Lever, adjusting,alternator	C2-6-1	69
Lever, adjusting,alternator	C2-6-2	69
Lever, engaging	C2-5-1	76
Lever, engaging	C2-5-2	76
Lever, left hand track, with bracket	D1-1-2	40
Lever, right hand track, with bracket	D1-1-2	40
Lever, throttle	D2-1-1	28
Lever, throttle	D2-1-2	28
Light, assembly	C1-4-2	6
Light, assembly	C1-6-1	1
Light, assembly	C1-6-1	1
Light, assembly	C1-6-1	5
Light, assembly	C1-6-1	5
Lighter, cigarette, 24 volt	C1-2-1	27
Liner, cylinder	K1-3-1	7
Liner, cylinder	K1-3-2	7
Link	B2-10-1	26
Link, control	D2-1-1	11
Link, control	D2-1-2	11
Lock, side doors, and tool box	B1-5-20	5
Lock, side doors, and tool box	B1-5-20	5
Lock, side doors, and tool box	B1-5-20	1
Lock, side doors, and tool box	B1-5-30	2
Lock, side doors, and tool box	B1-5-30	2
M		
Manifold	K3-2-1	20
Manifold, exhaust	K3-2-2	20
Manifold, induction	K3-1-1	1
Manifold, induction	K3-1-2	1
Motor, starter	C2-5-3	1
Motor, starter, 24v-4.5kw	C2-1-1	3
Motor, starter, 24v-4.5kw	C2-1-2	3
Motor, starter, 24v-4.5kw	C2-5-1	0
Motor, starter, 24v-4.5kw	C2-5-2	0
Motor, throttle	D2-1-1	30
Motor, throttle	D2-1-2	30
Mounting, metalastik	K1-8-1	15
Mounting, metalastik	K1-8-1	6
N		
Nozzle, injector	K6-2-11	33
Nozzle, injector	K6-2-21	33
Nut, high strength, M10	B1-5-1	46
Nut, M8 plain st.steel	E1-8-2	13
O		
O Ring	E1-8-2	13
O Ring	E1-8-2	13
P		
Paint, undercoat, 0.5 litre, two pack yellow	B5-5-1	1
Panel, acoustic	B1-5-10	27
Panel, acoustic	B1-5-11	27
Part number, Not Yet Known	K1-6-11	71
Part number, Not Yet Known	K1-6-11	70
Part number, Not Yet Known	K1-6-11	86
Part number, Not Yet Known	K2-2-2	58
Part number, Not Yet Known	K3-2-2	55
Pin, attachment	B3-5-10	18
Pin, attachment	B3-5-10	17
Pin, locking	B3-5-1	25
Pin, locking, V33	A2-1-13	7
Pipe, air inlet	K3-1-1	30
Pipe, air inlet	K3-1-2	30
Pipe, air inlet	K3-3-1	18
Pipe, assembly	E1-35-1	2
Pipe, assembly	E1-35-1	1
Pipe, assembly	E1-35-2	2
Pipe, assembly	E1-35-2	1
Pipe, bucket	E4-3-5	12
Pipe, bucket	E4-3-5	2
Pipe, bucket ram, rod side	E1-53-2	2
Pipe, drain	K1-3-1	64

DESCRIPTION	PAGE NUMBER	ITEM NUMBER
Pipe, drain	K1-3-2	64
Pipe, drain	K4-4-2	4
Pipe, exhaust	K3-4-2	1
Pipe, exhaust	K3-4-3	1
Pipe, exhaust tail	K3-4-1	1
Pipe, f/tank to sedimenter	K6-2-1	36
Pipe, f/tank to sedimenter	K6-2-2	36
Pipe, fuel filter to pump	K6-2-1	22
Pipe, fuel filter to pump	K6-2-2	22
Pipe, fuel filter/pump, leak-off	K6-2-1	41
Pipe, fuel filter/pump, leak-off	K6-2-2	41
Pipe, fuel leak-off	K6-2-1	31
Pipe, fuel leak-off	K6-2-2	31
Pipe, fuel pump to filter	K6-2-1	21
Pipe, fuel pump to filter	K6-2-2	21
Pipe, injector No.1	K6-2-1	15
Pipe, injector No.1	K6-2-2	15
Pipe, injector No.2	K6-2-1	16
Pipe, injector No.2	K6-2-2	16
Pipe, injector No.3	K6-2-1	17
Pipe, injector No.3	K6-2-2	17
Pipe, injector No.4	K6-2-1	18
Pipe, injector No.4	K6-2-2	18
Pipe, injector No.5	K6-2-1	19
Pipe, injector No.5	K6-2-2	19
Pipe, injector No.6	K6-2-1	20
Pipe, injector No.6	K6-2-2	20
Pipe, lube oil to inj/pump	K5-6-1	21
Pipe, lube oil to inj/pump	K5-6-2	21
Pipe, lube oil, inj. pump	K5-6-2	9
Pipe, lube oil, inj/pump	K5-6-1	9
Pipe, oil drain	K7-2-1	10
Pipe, oil drain	K7-2-2	10
Pipe, oil filter	K5-6-1	4
Pipe, oil filter	K5-6-2	4
Pipe, oil pump feed	K5-6-1	1
Pipe, oil pump feed	K5-6-2	1
Pipe, turbo oil feed	K7-2-1	4
Pipe, turbo oil feed	K7-2-2	4
Pipe, water bypass	K4-2-1	75
Pipe, water bypass	K4-2-2	75
Piston, standardd	K1-4-2	3
Piston, std	K1-4-1	3
Plate, clamp	B2-7-1	5
Plug	E3-14-2	8
Plug, oil drain	K5-1-1	3
Plug, oil drain	K5-1-2	3
Plug, single diode	C1-1-1	1
Plug, single diode	C1-2-1	19
Plug, water drain	K4-2-1	73
Plug, water drain	K4-2-2	73
Pointer, timing	K1-6-1	12
Pointer, timing	K1-6-11	12
Poppet	E3-2-2	52
Pulley, alternator	C2-3-1	25
Pulley, alternator	C2-3-2	25
Pulley, alternator	K1-5-1	26
Pulley, alternator	K1-5-2	26
Pulley, crankshaft	K1-5-1	60
Pulley, crankshaft	K1-5-2	60
Pulley, water pump	K1-5-1	50
Pulley, water pump	K1-5-2	50
Pump, assembly, servo	E2-2-1	73
Pump, assembly, servo	E2-2-3	0
Pump, fuel injection	K6-1-1	1
Pump, fuel injection, assembly	K6-1-2	1
Pump, fuel lift	K6-1-1	5
Pump, fuel lift	K6-1-2	5
Pump, fuel lift	K6-8-1	0
Pump, fuel lift	K6-8-2	0
Pump, oil, assembly	K5-2-1	1
Pump, oil, assembly	K5-2-2	1
Pump, priming	K6-8-1	44
Pump, water	K4-1-2	1
Pump, water, assembly	K4-1-1	1
R		
Radiator, assembly	K4-4-1	1
Radiator, assembly	K4-4-2	1
Radio, cassette unit, 12 volt	C3-11-2	1
Ram, bucket	E4-3-4	0
Rectifier, assembly	C2-3-1	17
Rectifier, assembly	C2-3-2	17
Rectifier, Rectifier, assembly	C2-3-3	16
Regulator, & brush box, assembly	C2-3-3	13
Regulator, assembly	C2-3-1	14
Regulator, assembly	C2-3-2	14
Relay, thermostart	C2-1-1	52
Relay, thermostart	C2-1-2	52
Relay, 24 volt	C1-2-1	20
Ring, guide, axial	E3-14-2	8
Ring, seal	E3-14-2	7
Rod, connecting, assembly	K1-4-1	8
Rod, connecting, assembly	K1-4-2	8
Rod, end	D2-1-1	25
Rod, end	D2-1-2	25

DESCRIPTION	PAGE NUMBER	ITEM NUMBER
Rod, push	K2-2-1	44
Rod, push	K2-2-2	44
Rod, threaded	D2-1-1	24
Rod, threaded	D2-1-2	24
Rotor, assembly	C2-3-1	1
Rotor, assembly	C2-3-2	1
S		
Screen, filter	K4-3-1	26
Screw	B2-7-1	6
Screw, pan head	C1-2-1	44
Screw, ST	C3-4-2	28
Screw, ST	C3-4-3	28
Seal, oil, front	K1-6-1	9
Seal, oil, front	K1-6-1	86
Seal, oil, front	K1-6-11	9
Seal, oil, rear	K1-7-1	48
Seal, oil, rear	K1-7-2	48
Seal, valve guide, inlet & exhaust	K2-1-1	20
Seal, valve guide, inlet & exhaust	K2-1-2	20
Seal, wiper	E4-7-10	25
Seal, wiper	E4-7-10	26
Sender, temperature, water/ hydraulic oil	C2-1-1	31
Sender, temperature, water/ hydraulic oil	C2-1-2	31
Sender, temperature, water/ hydraulic oil	K4-2-1	74
Sender, temperature, water/ hydraulic oil	K4-2-2	74
Sender, temperature,, water/ hydraulic oil	C1-1-1	18
Sensor, low water level	K4-4-1	17
Sensor, low water level	K4-4-2	16
Shaft, drive	K1-6-1	71
Shaft, rocker	K2-2-1	56
Shaft, rocker	K2-2-2	56
Silencer	K3-4-1	5
Silencer	K3-4-2	5
Silencer, exhaust	K3-4-3	5
Sleeve	E3-2-2	52
Solenoid	C2-5-1	80
Solenoid	C2-5-2	80
Solenoid, engine stop	C2-1-1	82
Solenoid, engine stop	C2-1-2	82
Solenoid, engine stop	D2-1-1	33
Solenoid, engine stop	D2-1-2	33
Spacer, fan-pulley, T=55.6	K1-5-1	51
Spacer, fan, T=15	K1-5-1	51
Spacer, fan, T=61.5	K1-5-2	51
Spring, assembly	D2-1-1	16
Spring, assembly	D2-1-2	16
Stator, assembly	C2-3-1	21
Stator, assembly	C2-3-2	21
Stator, Stator	C2-3-3	10
Strainer, assembly	K5-2-1	36
Strainer, oil suction	K5-2-2	36
Strut, gas	B1-5-1	45
Sump, assembly	K5-1-1	1
Sump, assembly	K5-1-2	1
Switch, assembly	C2-5-1	40
Switch, assembly	C2-5-2	40
Switch, limit	B2-10-1	32
Switch, limit, water level	C2-1-1	8
Switch, limit, water level	C2-1-2	8
Switch, oil indicator, filter by-pass	C2-1-1	17
Switch, oil indicator, filter by-pass	C2-1-2	17
Switch, oil indicator, filter by-pass	K5-4-1	8
Switch, oil indicator, filter by-pass	K5-4-2	8
Switch, oil pressure	C2-1-1	22
Switch, oil pressure	C2-1-2	22
Switch, pressure	C1-1-1	29
Switch, pressure	C1-1-1	56
Switch, pressure	E1-30-10	46
Switch, pressure, lever pressure	C1-1-1	16
Switch, rotary control	C3-5-4	16
Switch, rotary control	C3-5-5	16
Switch, sender tacho	C2-1-1	99
Switch, sender tacho	C2-1-2	99
Switch, temperature sender	C2-1-1	37
Switch, temperature sender	C2-1-2	37
Switch, temperature sender	K4-2-1	78
Switch, temperature sender	K4-2-2	78
Switch, thermo	C1-1-1	19
Switch, vacuum sensor	C2-1-1	16
Switch, vacuum sensor	C2-1-2	16
Switch, vacuum sensor	K3-3-1	19
Switch, vacuum sensor	K3-3-2	21
Switch, vacuum sensor	K3-3-3	21
T		
Tank, diesel fuel	B1-4-1	13
Tank, diesel fuel	B1-4-1	13
Tank, expansion	K4-4-1	15
Tank, expansion	K4-4-2	14
Tap, drain	K4-4-1	3
Tap, drain	K4-4-2	3

DESCRIPTION	PAGE NUMBER	ITEM NUMBER
Tap, drain	K6-6-3	17
Tap, water drain	K1-3-1	47
Tap, water drain	K1-3-2	47
Tappet	K2-2-1	43
Tappet	K2-2-2	43
Thermostart, (24v)	C2-1-1	41
Thermostart, (24v)	C2-1-2	41
Thermostat	K4-2-1	72
Thermostat	K4-2-2	72
Tooth, type V33SYL	A2-1-13	6
Tooth, V29 series, SYL	A2-1-14	6
Tube, dipstick	K5-1-1	38
Tube, dipstick	K5-1-2	38
Turbocharger	K7-1-1	0
Turbocharger	K7-1-2	0
V		
Valve, bypass	K5-5-1	6
Valve, bypass	K5-5-2	6
Valve, check, assembly	K5-3-1	2
Valve, check, assembly	K5-3-2	2
Valve, control	E3-1-1	1
Valve, control	E3-1-1	1
Valve, control, includes solenoid	A2-6-10	1
Valve, cushion	E1-13-10	45
Valve, dump	K3-3-1	6
Valve, exhaust	K2-2-1	32
Valve, exhaust	K2-2-2	32
Valve, hand control, left hand	E3-6-2	0
Valve, hand control, right hand	E3-6-2	0
Valve, inlet	K2-2-1	31
Valve, inlet	K2-2-2	31
Valve, low flow	E1-30-30	43
Valve, non-return	K6-7-1	86
Valve, non-return	K6-7-2	86
Valve, oil relief, assembly	K1-3-1	96
Valve, oil relief, assembly	K1-3-2	96
Valve, overflow	K6-2-1	54
Valve, overflow	K6-2-2	54
Valve, switch	E3-16-1	4
W		
Washer, lock	B1-5-1	47
Washer, spring	C2-6-1	32
Washer, spring	C2-6-2	32
Washer, spring, st. steel	E1-8-2	13
Washer, M8 PLAIN ST.S	E1-8-2	13