RUTHZIL TRATOR COMERCIAL DE PEÇAS LTDA 11 97083-6812 ROLANDO CITRANGULO

9822/0355 A210-5-1 STANDARD BUCKET GENERAL PURPOSE 54"

JS200LC

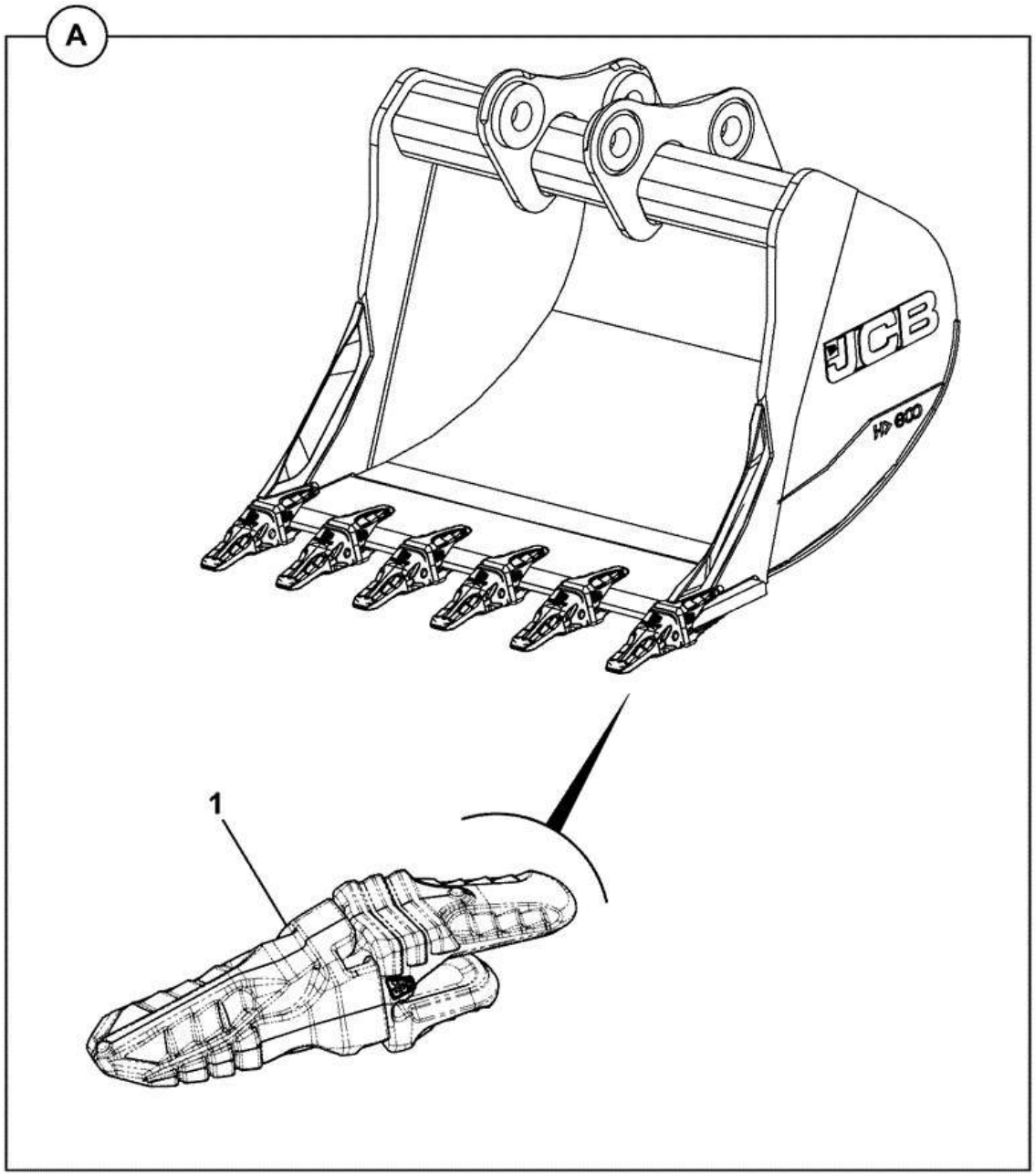

335-B0566-1

Item	Part #	Change No	Description	Usage Code	QTY
A	335/A9761		Bucket 54"		1

1	****		Tooth Assembly		1

9822/0355 A210-10-1 STANDARD BUCKET TOOTH ASSEMBLY

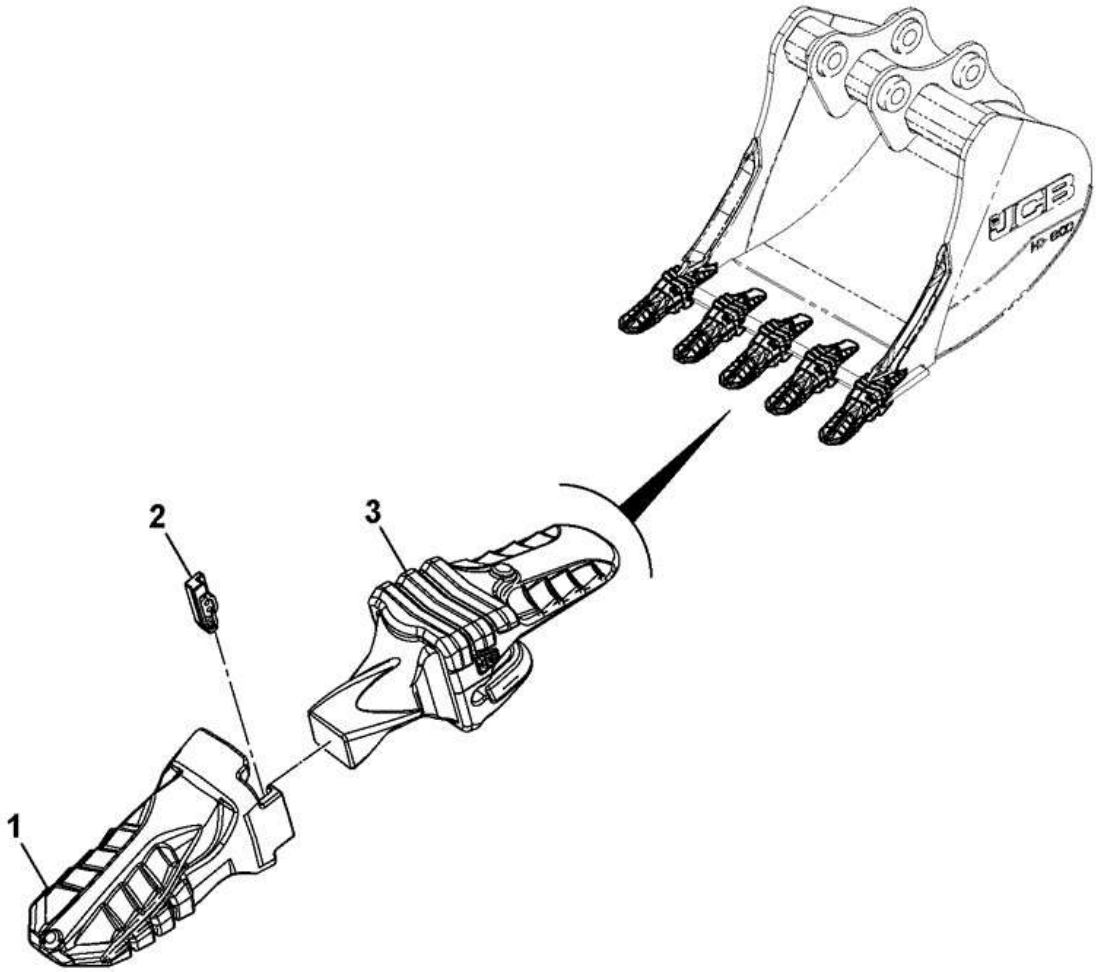

Item	Part #	Change No	Description	Usage Code	QTY
1	333/F1388		Tooth General Purpose, S29 - GP		1

2	333/F1399		Pin Locking, S29		1
3	333/F1394		Adapter Twin Strap - 35 mm, S29		1

Product Catalog \ CONSTRUCTION \ NORTH AMERICA \ CONSTRUCTION / INDUSTRIAL \ JS TRACKED EXCAVATORS \ JS200LC BR E 02451101-02451200 9822/0355 \ A ATTACHMENTS \ A02 BUCKETS

9822/0355 A210-15-1 STANDARD BUCKET GENERAL PURPOSE, 60 INCH

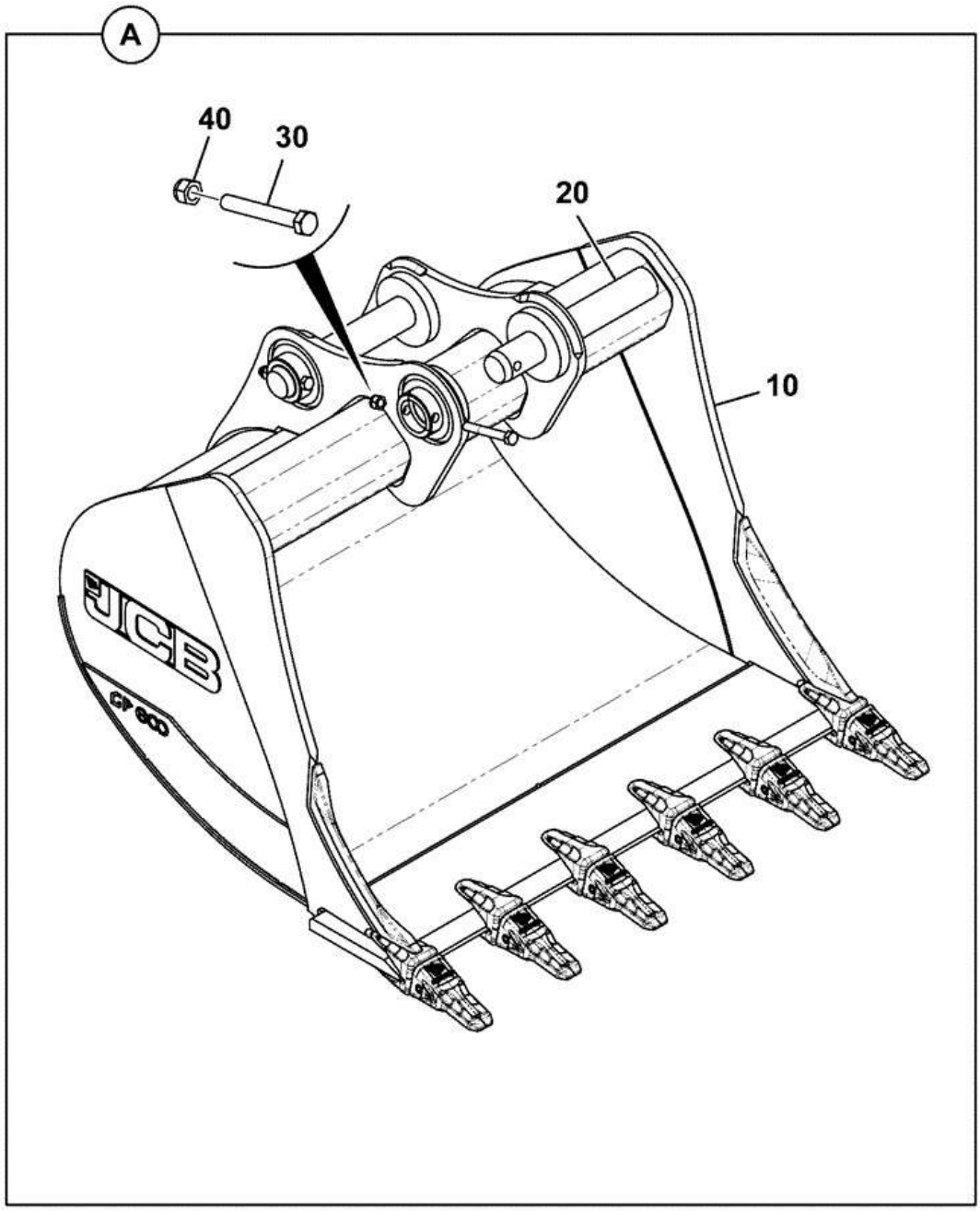

980-A0376-2

Item	Part #	Change No	Description	Usage Code	QTY
A	980/A0376		Bucket GP 60"		1

10	:980/A9046		Bucket GP 60"		1
20	:811/50575		Pin Pivot		2
30	:1315/3825Z		Bolt M20x150mm		2
40	:1370/0703Z		Nut LOCK NUT (M20)		2

Product Catalog \ CONSTRUCTION \ NORTH AMERICA \ CONSTRUCTION / INDUSTRIAL \ JS TRACKED EXCAVATORS \ JS200LC BR E 02451101-02451200 9822/0355 \ A ATTACHMENTS \ A02 BUCKETS

9822/0355 A210-20-1 STANDARD BUCKET ABI GENERAL PURPOSE, 60 INCH

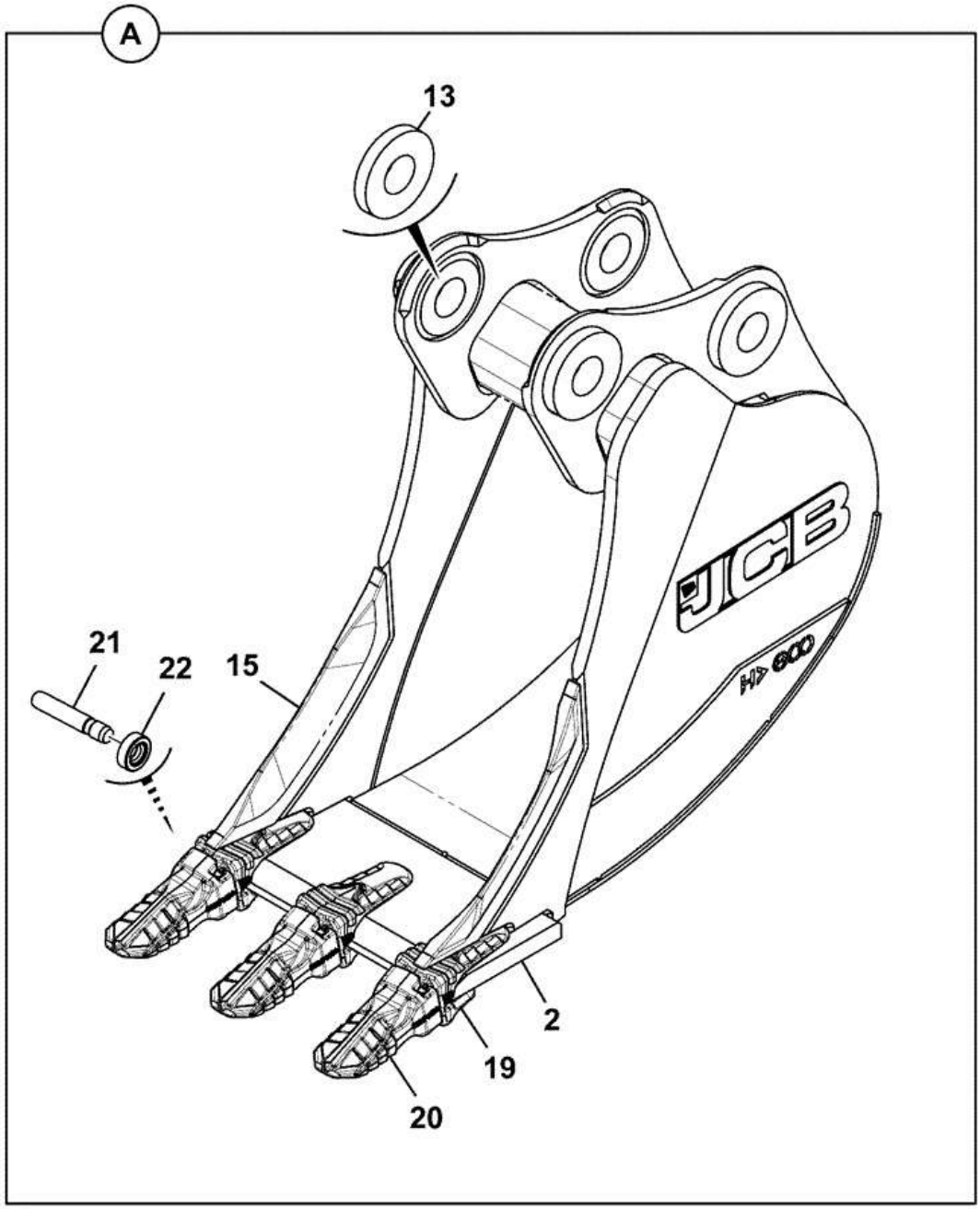

980-A9046-4

Item	Part #	Change No	Description	Usage Code	QTY
A	980/A9046		Bucket GP 60"		1

2	980/A9026		Toeplate 1500mm wide No holes		1
13	980/84720		Pivot Boss		4
15	980/84730		Insert side cutter		2
19	980/84769		Tooth Adaptor		6
20	980/84670		Tooth tip		6
21	980/84671		Pin locking		6
22	980/84672		Washer (13.5mm x 30.8mm x 8mm)		6

CONSTRUCTION \ NORTH AMERICA \ CONSTRUCTION / INDUSTRIAL \ JS TRACKED EXCAVATORS \ JS200LC BR E 02451101-02451200 9822/0355 \ A ATTACHMENTS \ A02 BUCKETS

9822/0355 A290-5-1 OTHER BUCKETS HEAVY DUTY 1200mm 48IN JS200, OPTONAL

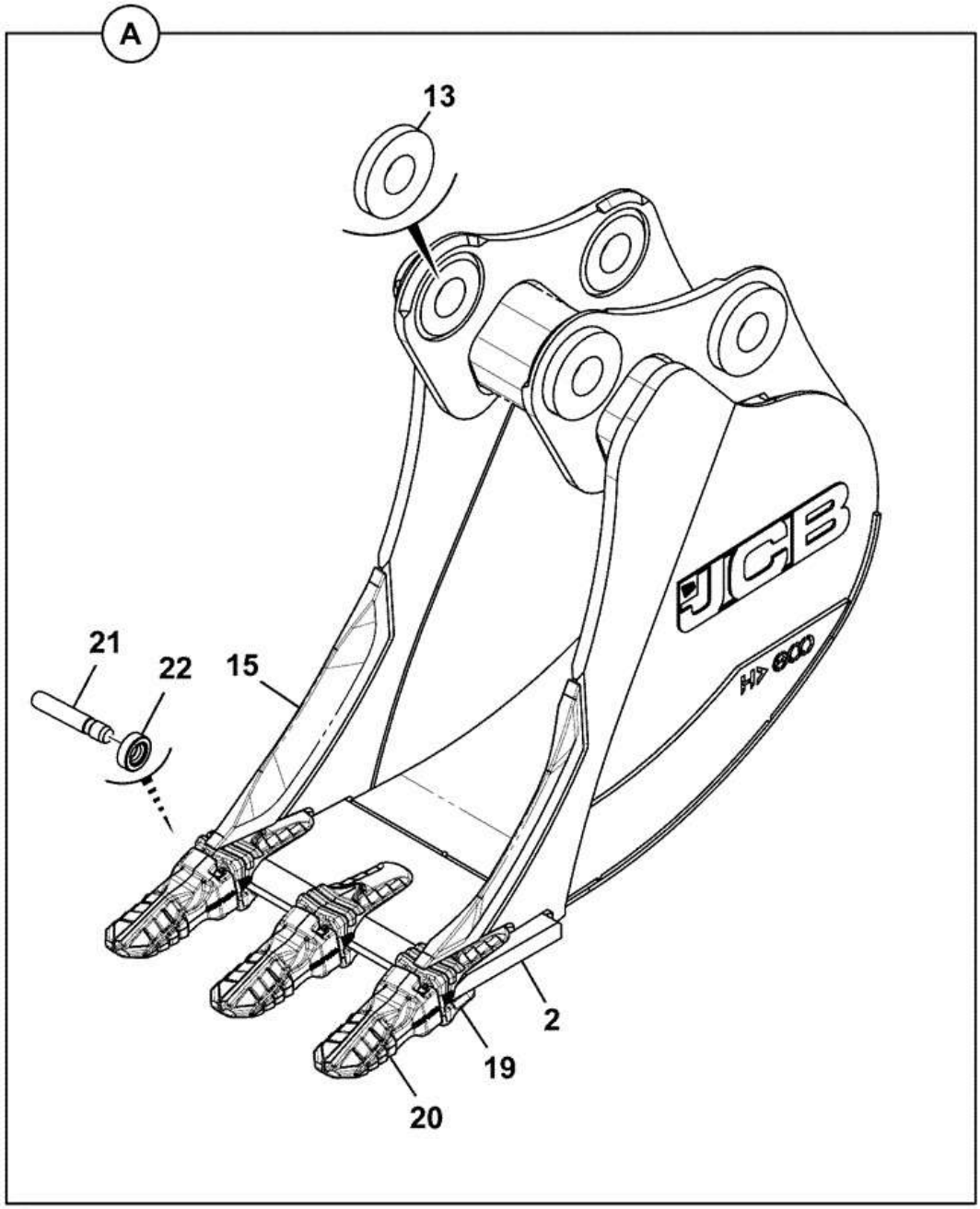

Item	Part #	Change No	Description	Usage Code	QTY
A	332/B2433		Bucket Heavy Duty 48IN JS200		1

2	980/A9014		Toeplate 1200mm wide No holes		1
13	980/84720		Pivot Boss		4
15	332/A9495		Insert Side Cutter		2
19	980/84766		Tooth tip long		5
20	980/84768		Washer		5
21	980/84765		Adapter tooth		5
22	980/84767		Pin locking		5

CONSTRUCTION \ NORTH AMERICA \ CONSTRUCTION / INDUSTRIAL \ JS TRACKED EXCAVATORS \ JS200LC BR E 02451101-02451200 9822/0355 \ A ATTACHMENTS \ A02 BUCKETS

9822/0355 A290-10-1 OTHER BUCKETS GENERAL PURPOSE 60 INCHES WIDE

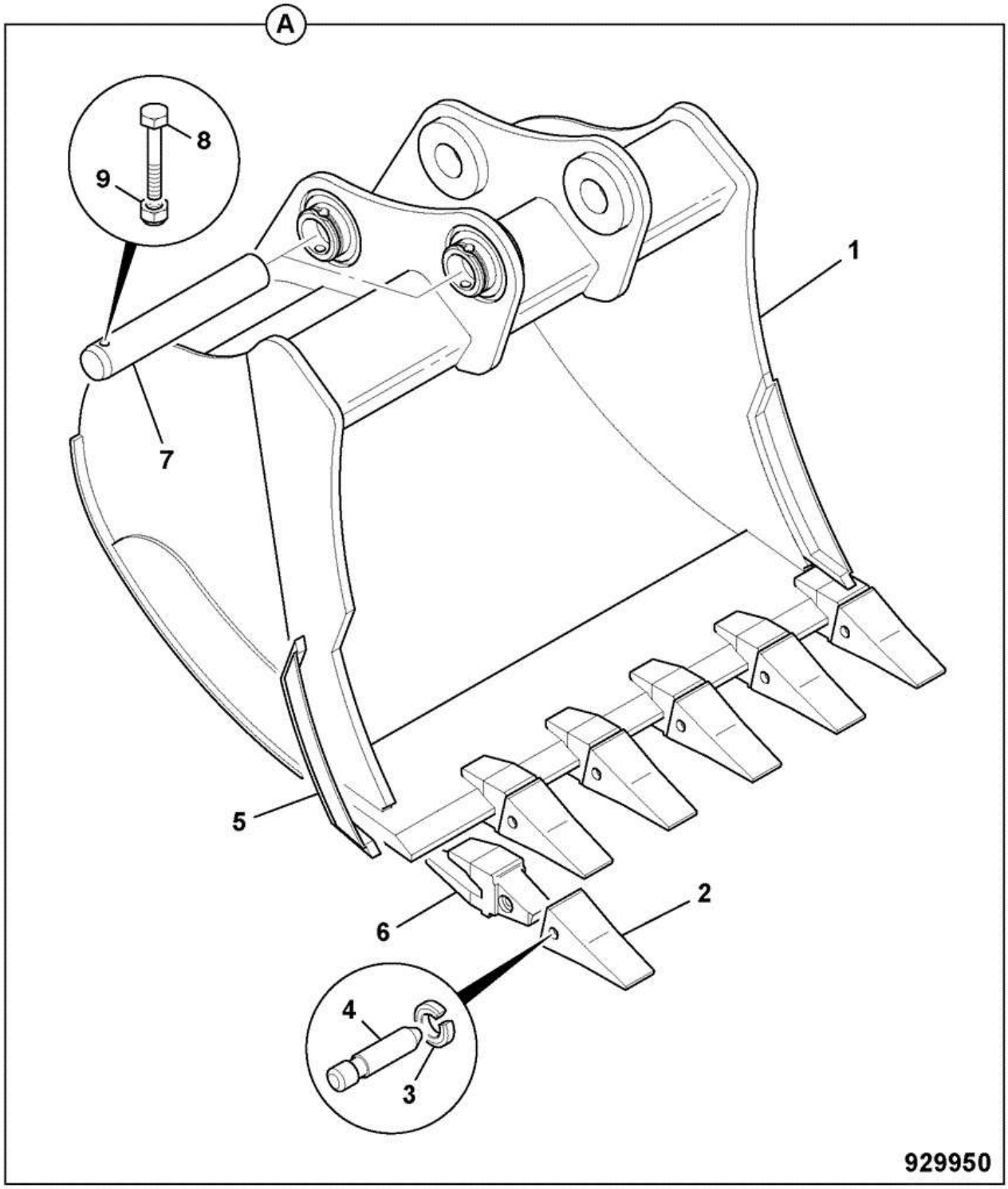

Item	Part #	Change No	Description	Usage Code	QTY
A	980/A2609		Bucket 60 inch wide		1

1	:980/86142		Bucket GP 1524mm wide		1
2	:980/84766		Tooth tip long		6
3	:980/84768		Washer		6
4	:980/84767		Pin locking		6
5	:980/84730		Insert side cutter		2
6	:980/84765		Adapter tooth		6
7	:811/50575		Pin Pivot		2
8	:1315/3825Z		Bolt M20x150mm		2
9	:1370/0703Z		Nut LOCK NUT (M20)		2

9822/0355 A920-1-5 REFUELLING PUMP ASSEMBLY

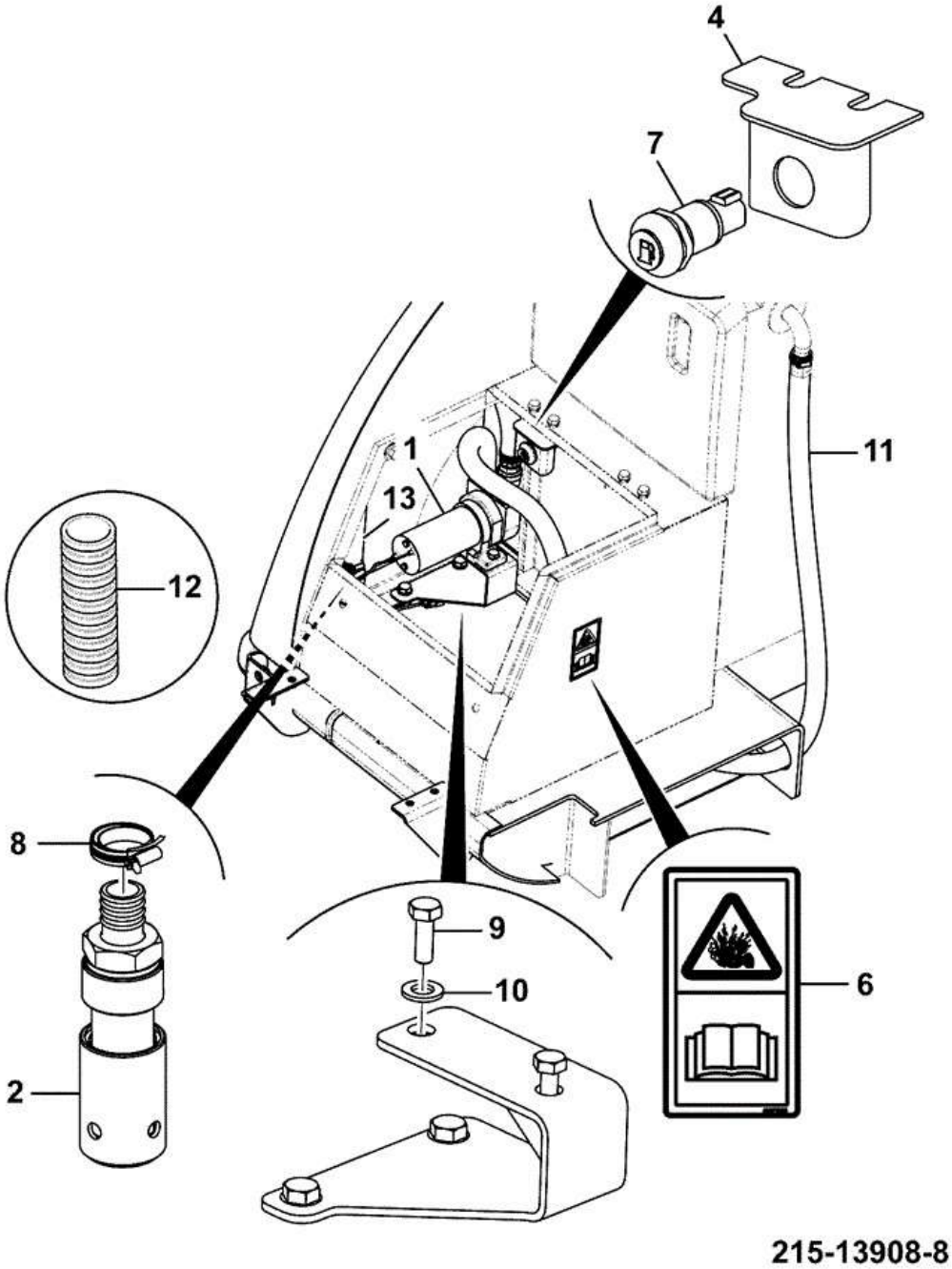

Item	Part #	Change No	Description	Usage Code	QTY
1	20/925675		Pump refuelling		1
2	215/11319		Strainer assembly		1
4	335/10692		Bracket switch mounting		1

6	332/F5855		Decal ISO -- 06A		1
7	701/80310		Switch Push Button		1
8	2201/0007		Clip Wormdrive		4
9	1316/0409D		Screw M10X35		2
10	1420/0008D		Washer (M10)		2
11	834/10904		Hose refuelling 2000mm long		1
12	JSR0006		Hose		1
13	834/10901		Hose refuelling 3500mm long		1

9822/0355 A920-5-1 REFUELLING PUMP

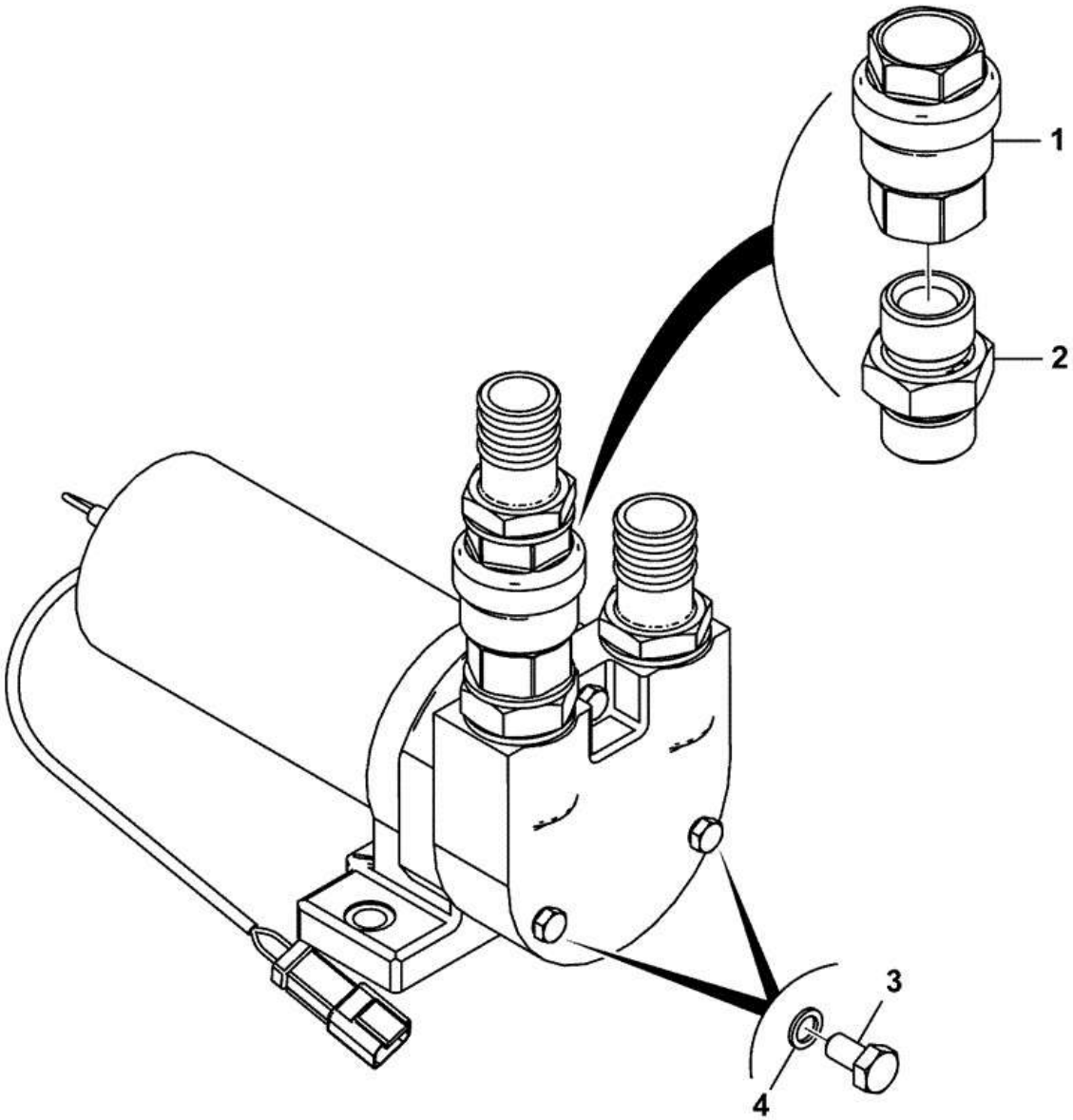

Item	Part #	Change No	Description	Usage Code	QTY
1	25/222924		Valve check refuelling		1
2	1604/0006		Adaptor 3/4" Bsp mm		1
3	1316/0201Z		Screw		5

4	1425/0006Z		Washer Spring (M6)		3

9822/0355 A920-5-1 REFUELLING PUMP

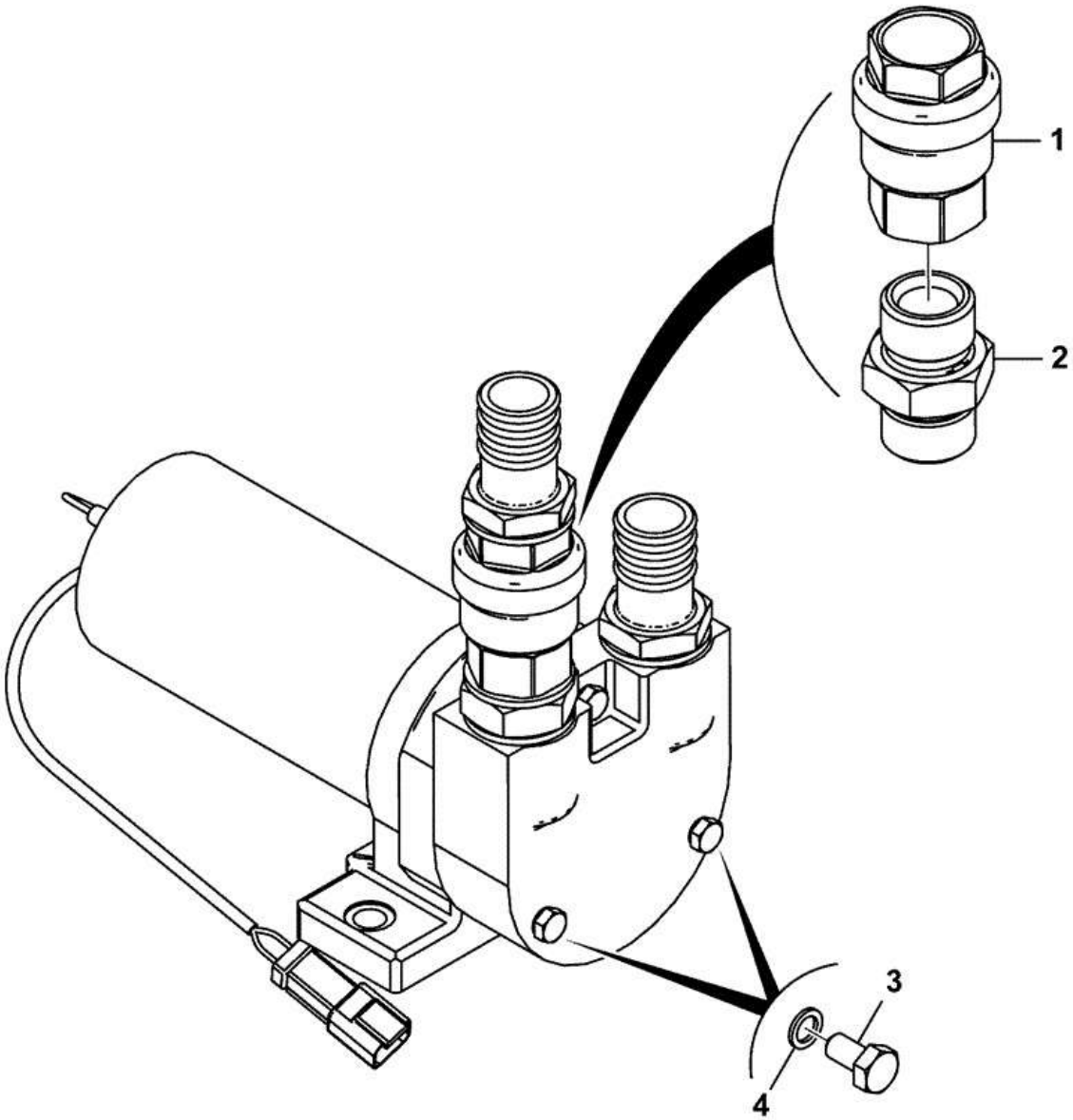

Item	Part #	Change No	Description	Usage Code	QTY
1	25/222924		Valve check refuelling		1
2	1604/0006		Adaptor 3/4" Bsp mm		1
3	1316/0201Z		Screw		5

4	1425/0006Z		Washer Spring (M6)		3

9822/0355 A920-10-1 REFUELLING PUMP STRAINER SUCTION

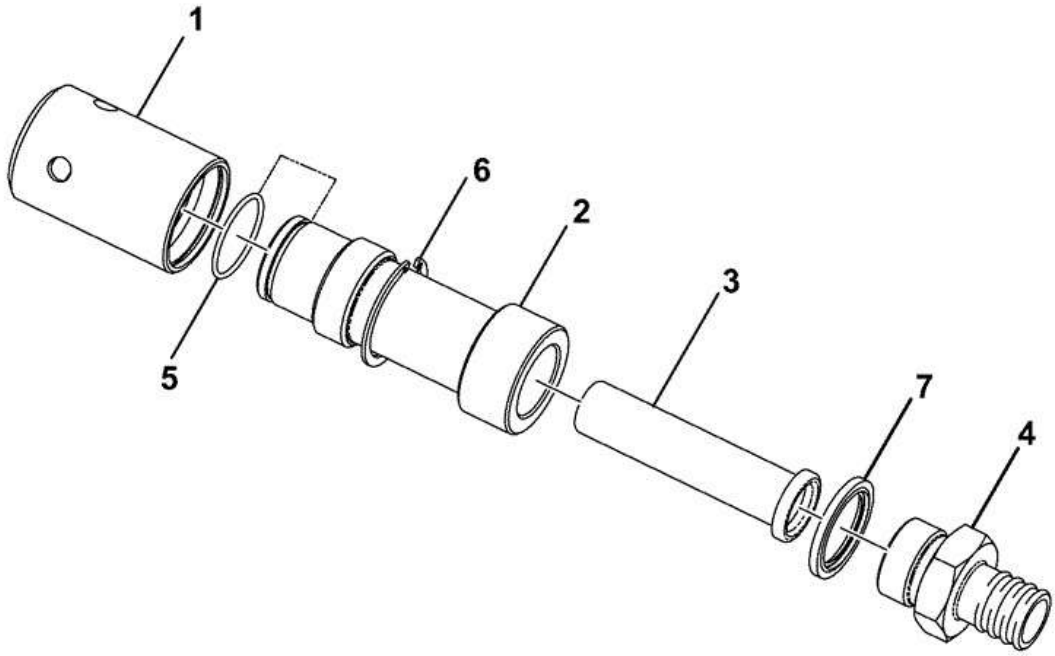

215-11319-3

Item	Part #	Change No	Description	Usage Code	QTY
1	32/925434		Cap end		1

2	32/925433		Housing strainer		1
3	32/925435		Filter mesh		1
4	32/925436		Hose tail fitting		1
5	2400/0024		O Ring		1
6	32/925542		Circlip internal		1
7	1406/0026		Washer Seal		1

CONSTRUCTION \ NORTH AMERICA \ CONSTRUCTION / INDUSTRIAL \ JS TRACKED EXCAVATORS \ JS200LC BR E 02451101-02451200 9822/0355 \ A ATTACHMENTS \ A09 MISCELLANEOUS

9822/0355 A990-1-1 OTHER MISCELLANEOUS ITEMS

MISCELLANEOUS ITEMS GROUP

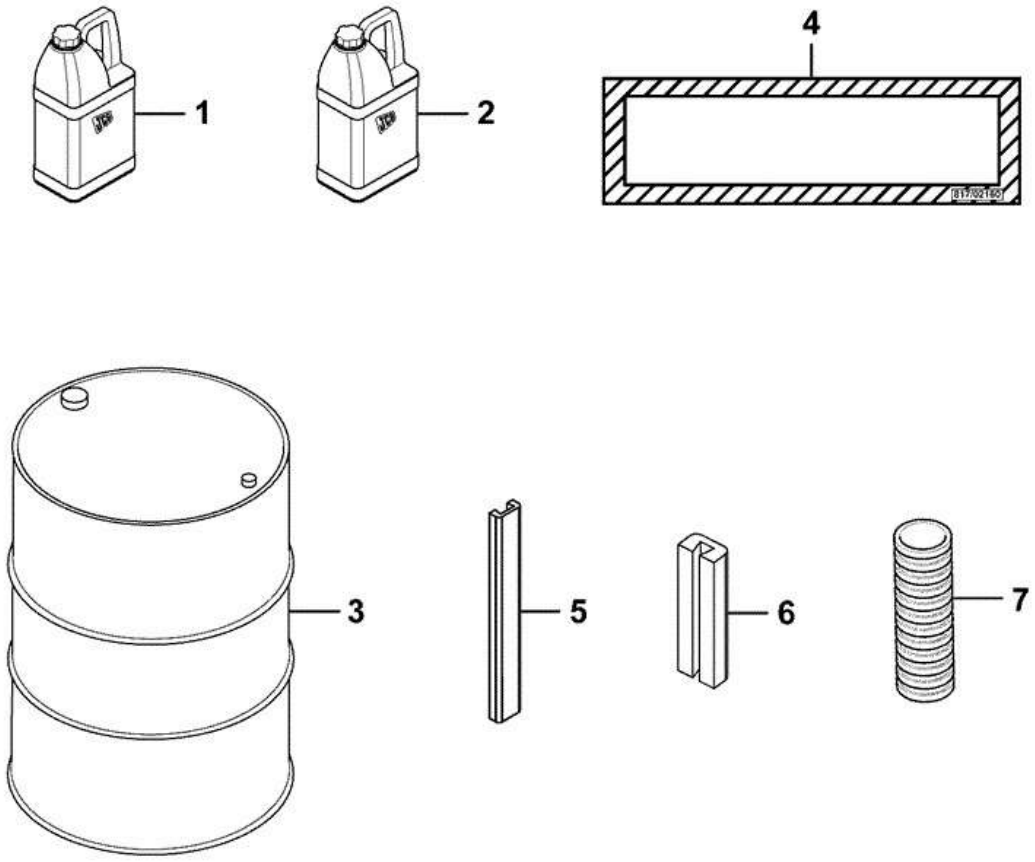

4000-0300-MC

Item	Part #	Change No	Description	Usage Code	QTY
1	4000/0300		Fluid Gear Oil		1

2	****		Diesel Fuel Pink		1
3	4006/0104		Fluid anti-freeze 200 Ltr		1
4	****		Label Chassis Stamping		1
5	JLJ0471		Strip edging (Roll length 30m)		1
6	JLN0051		Strip edging (Roll length 30m)		1
7	JSH0001		Tube corrugated		1

CONSTRUCTION \ NORTH AMERICA \ CONSTRUCTION / INDUSTRIAL \ JS TRACKED EXCAVATORS \ JS200LC BR E 02451101-02451200 9822/0355 \ B BODYWORK \ B01 BODYWORK/FRAME

9822/0355 B100-10-5 BODYWORK INSTALLATION ASSEMBLIES FRAME HOUSE

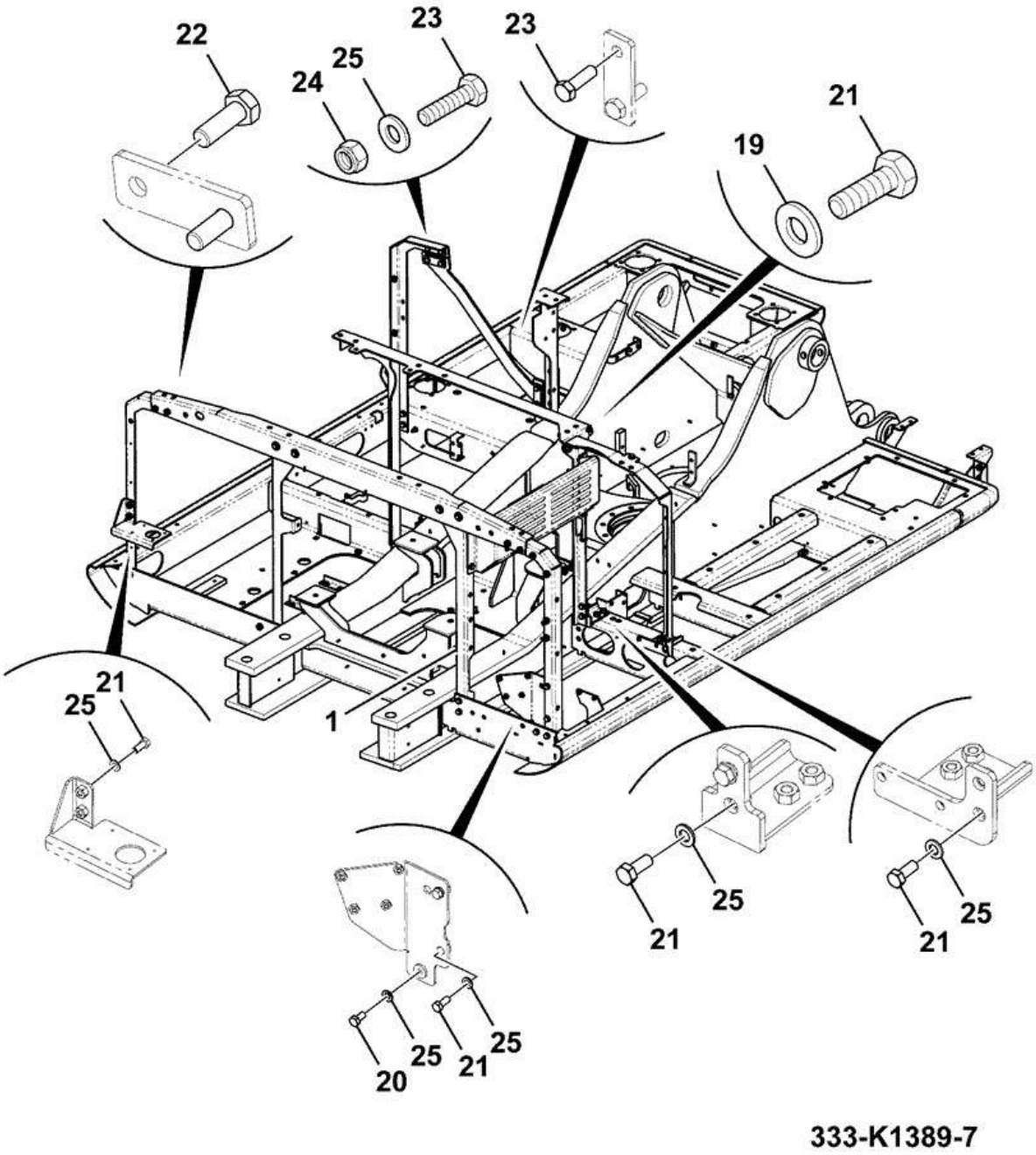

Item	Part #	Change No	Description	Usage Code	QTY
1	334/J5621		Kit Houseframe		1

19	JHP0049		Washer		8
20	1316/0507D		Setscrew M12 x 25 grade 10.9		1
21	1316/0508D		Screw M12 X 30		37
22	1316/0509D		Screw M12x35 long		7
23	1316/0510D		Screw		4
24	1370/0403D		Nut Lock M12		2
25	1420/0009D		Washer (M12)		33

9822/0355 B120-10-1 FUEL TANK ASSEMBLY C/W ACCESS

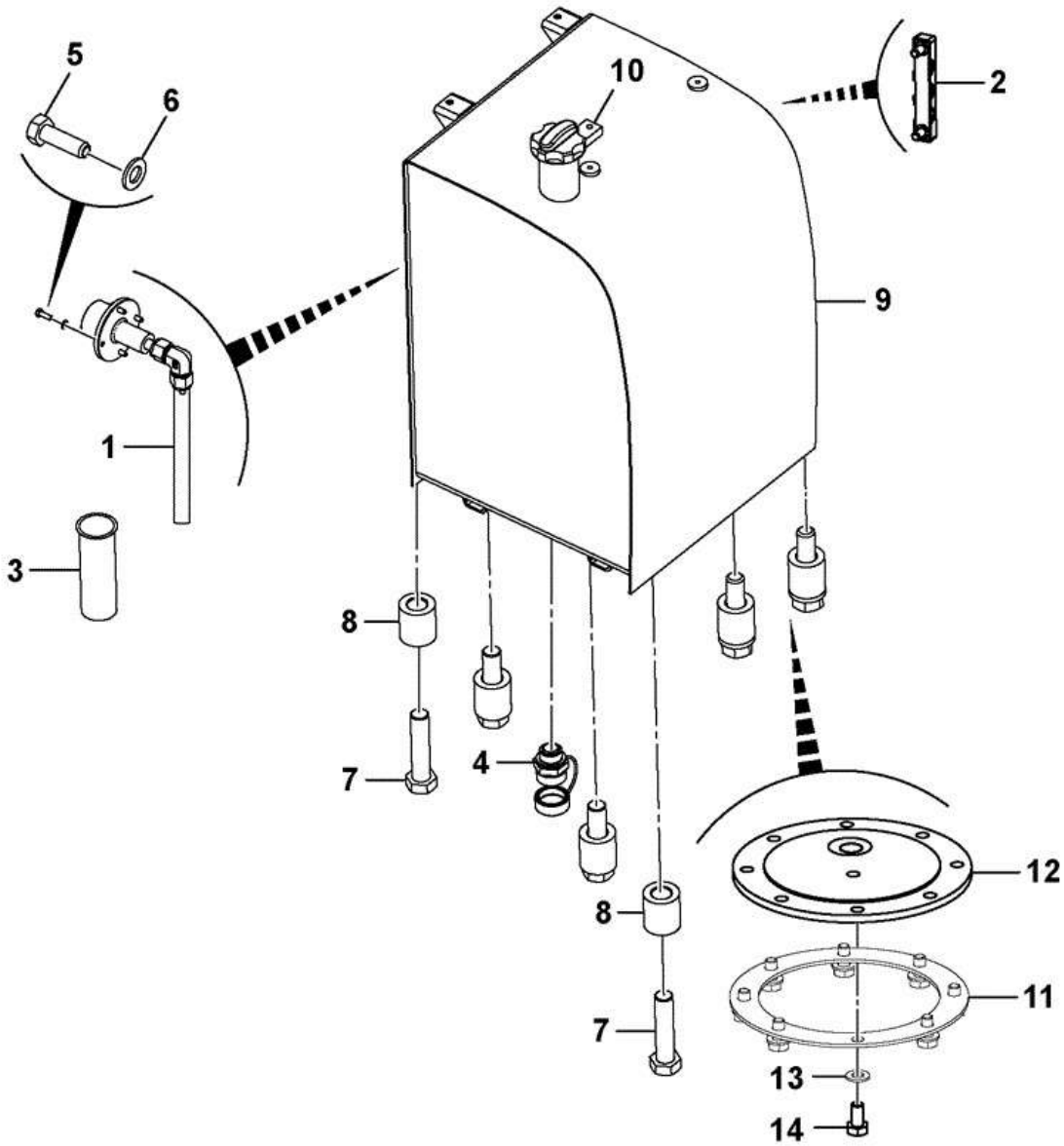

335-D8121-1

Item	Part #	Change No	Description	Usage Code	QTY
1	333/J9738		Sensor fuel		1
2	333/K3520		Guage Sight Fuel/Oil		1
3	JRH0083		Strainer fuel filter		1

4	32/926004		Plug drain		1
5	1315/0103Z		Screw		4
6	1420/0005Z		Washer (M5)		4
7	1316/3716Z		Bolt		6
8	JSJ0042		Spacer		6
9	335/D8125		Tank Fuel, C/W Access		1
10	333/K5769		Cap lockable		1
11	KSH0503		Gasket		1
12	335/C6635		Cover		1
13	1316/0405D		Screw M10 x 20		8
14	1420/0008D		Washer (M10)		8

CONSTRUCTION \ NORTH AMERICA \ CONSTRUCTION / INDUSTRIAL \ JS TRACKED EXCAVATORS \ JS200LC BR E 02451101-02451200 9822/0355 \ B BODYWORK \ B01 BODYWORK/FRAME

9822/0355 B130-1-15 HYDRAULIC TANK ASSEMBLY

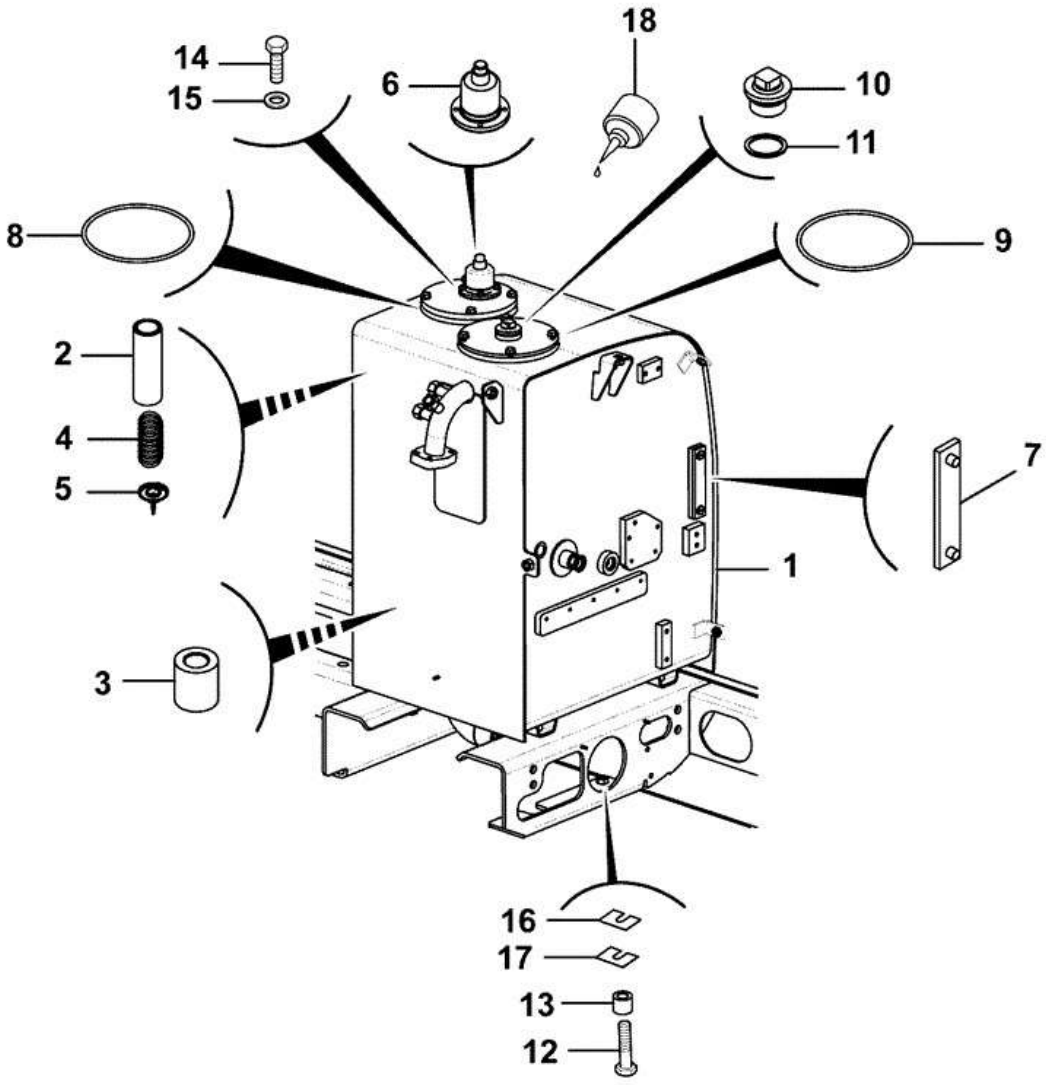

Item	Part #	Change No	Description	Usage Code	QTY
1	333/J9453		Tank hydraulic ABI		1
2	335/C7872		Filter Return		1
3	32/925359		Strainer assembly		1

4	JSJ0076		Spring compression		1
5	335/C8032		Valve Relief		1
6	32/925692		Breather air c/w rubber cap		1
7	JHH0119		Gauge		1
8	828/J0008		O Ring		1
9	828/J0009		O Ring		1
10	JHH0082		Plug		1
11	1406/0029		Washer Dowty		1
12	1316/3715D		Bolt M16 X 65mm		4
13	JSJ0042		Spacer		4
14	1391/3203D		Capscrew		4
15	1420/0006D		Washer (M6)		4
16	KHH0040		Plate Shim T=0.03"		0
17	KHH0137		Shim plate		0
18	4101/0500		Fluid Locking Loctite 262		0

CONSTRUCTION \ NORTH AMERICA \ CONSTRUCTION / INDUSTRIAL \ JS TRACKED EXCAVATORS \ JS200LC BR E 02451101-02451200 9822/0355 \ B BODYWORK \ B01 BODYWORK/FRAME

9822/0355 B130-10-1 HYDRAULIC TANK ABI

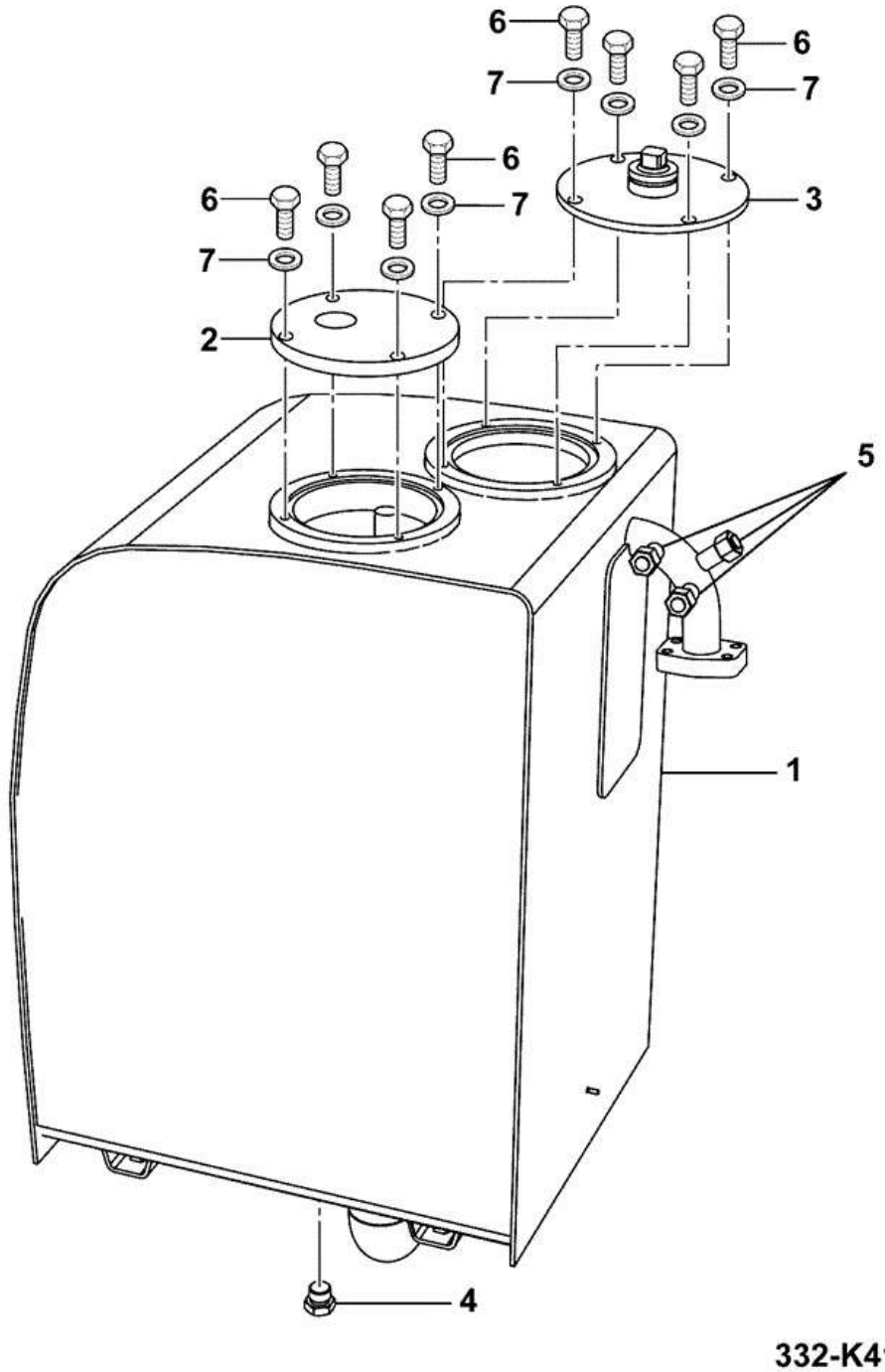

Item	Part #	Change No	Description	Usage Code	QTY
1	333/J9454		Tank Hydraulic		1
2	KNJ1822		Cover sump		1
3	JRJ0148		Cover		1

4	BRJ1286		Plug		1
5	332/K3065		Cap Pipe G1/2"		3
6	1316/0407D		Screw		8
7	1420/0008D		Washer (M10)		8

9822/0355 B160-1-1 MOUNTING BRACKETS ENGINE ASSEMBLY

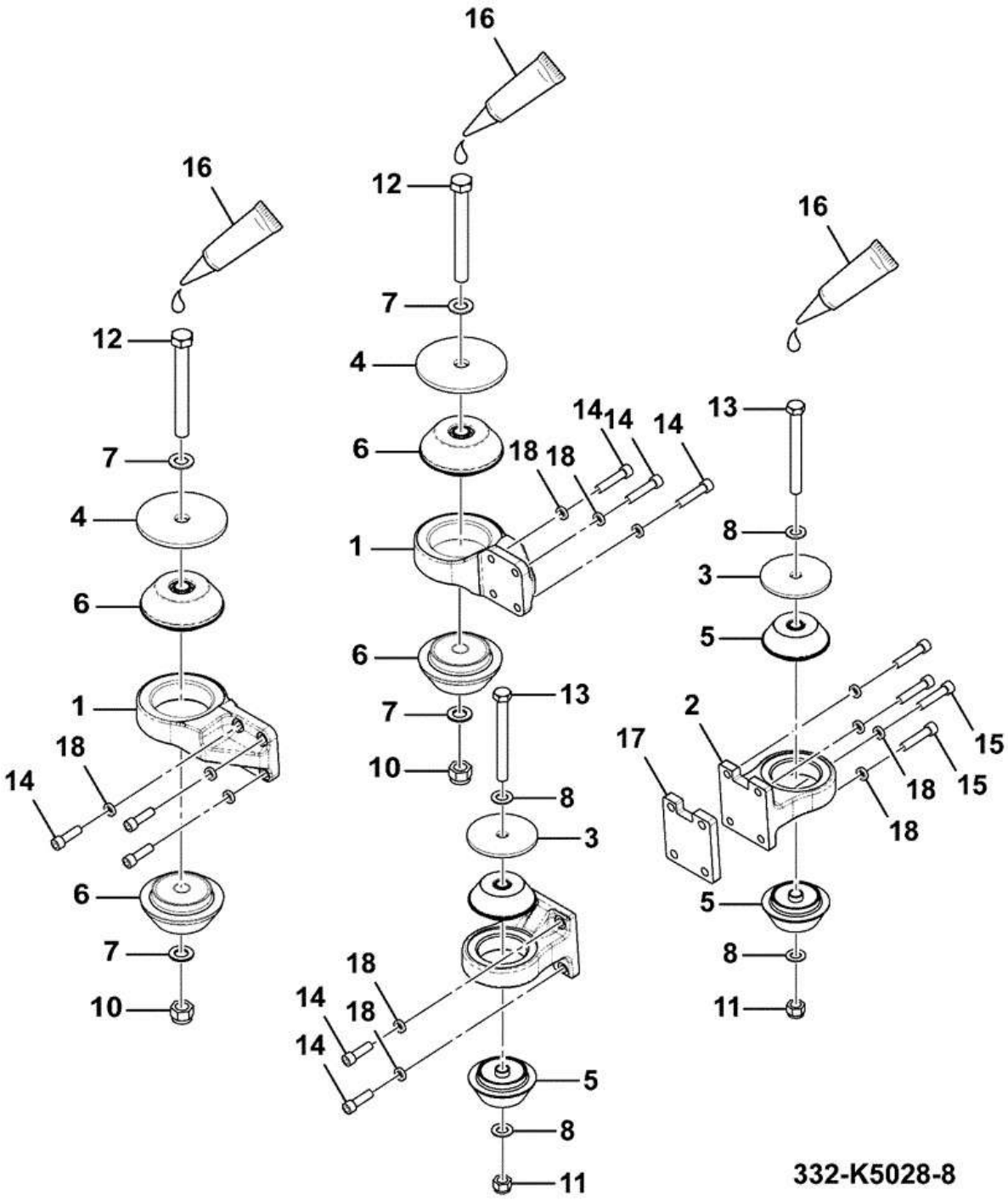

Item	Part #	Change No	Description	Usage Code	QTY
1	332/K5027		Mount engine rear		2

2	332/K5026		Mount engine front		2
3	332/K2899		Washer rebound		2
4	332/K2895		Washer rebound		2
5	332/K0390		Rubber engine mount		4
6	332/K0952		Rubber engine mount		4
7	1422/0012D		Washer Hard		4
8	1420/0011D		Washer (M16)		4
10	1371/0703D		Nut		2
11	1371/0603D		Nut M16 self locking		2
12	1316/3827D		Bolt M20 x 170		2
13	1316/3725D		Bolt M16x150 10.9		2
14	1391/3510D		Capscrew		12
15	1391/3513D		Capscrew		4
16	****		Fluid Locking		0
17	333/J0611		Spacer		1
18	334/J3758		Washer M12, Hardened		16

9822/0355 B170-5-1 BONNET/ ENGINE COVERS/ GRILLES FIREWALL

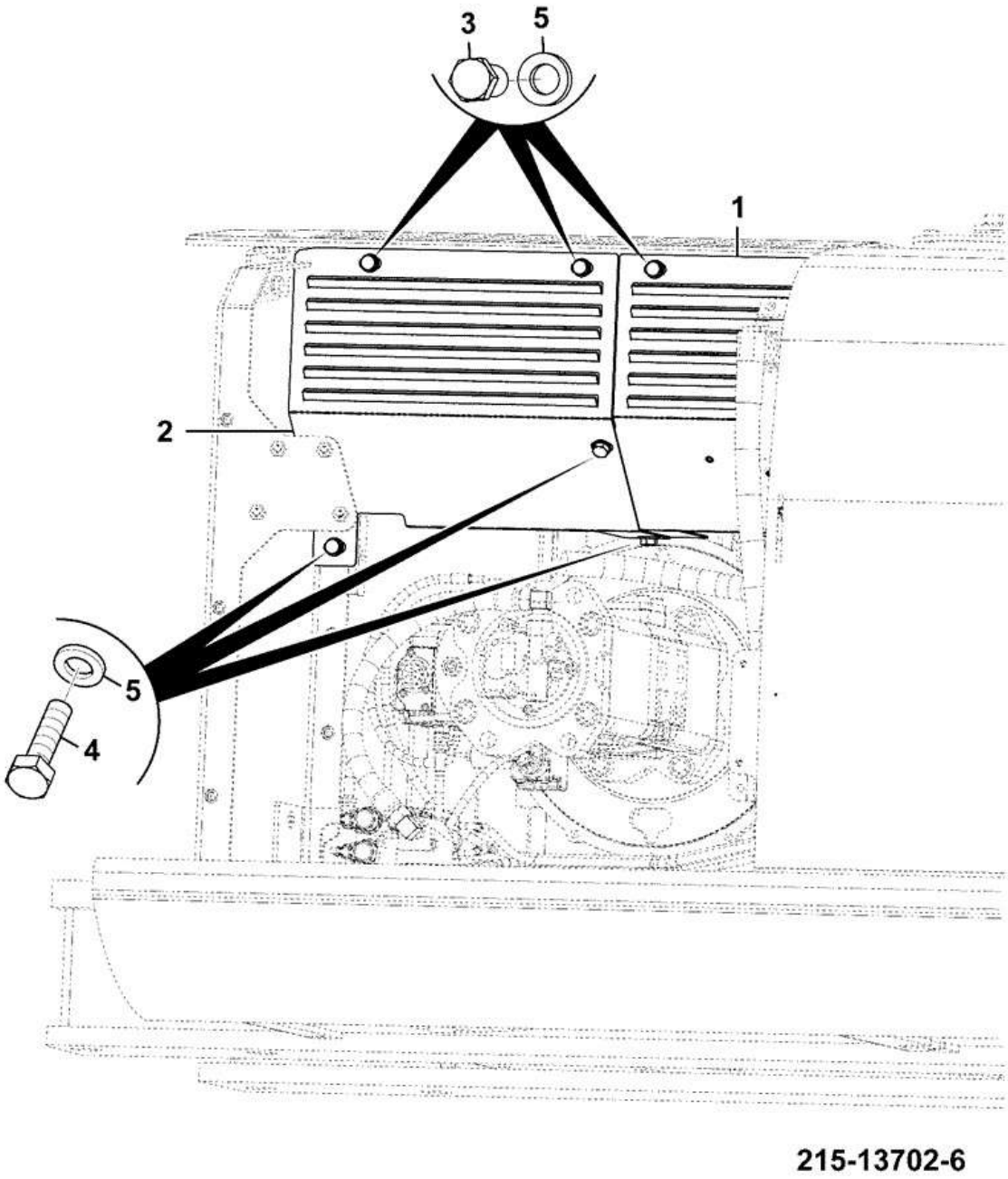

Item	Part #	Change No	Description	Usage Code	QTY
1	332/J0924		Plate firewall front		1

2	332/J5108		Plate firewall rear		1
3	1316/0505D		Bolt M12 x 20mm		4
4	1316/0507D		Setscrew M12 x 25 grade 10.9		4
5	1420/0009D		Washer (M12)		8

9822/0355 B170-30-1 BONNET/ ENGINE COVERS/ GRILLES TREAD PLATES & GRILLES

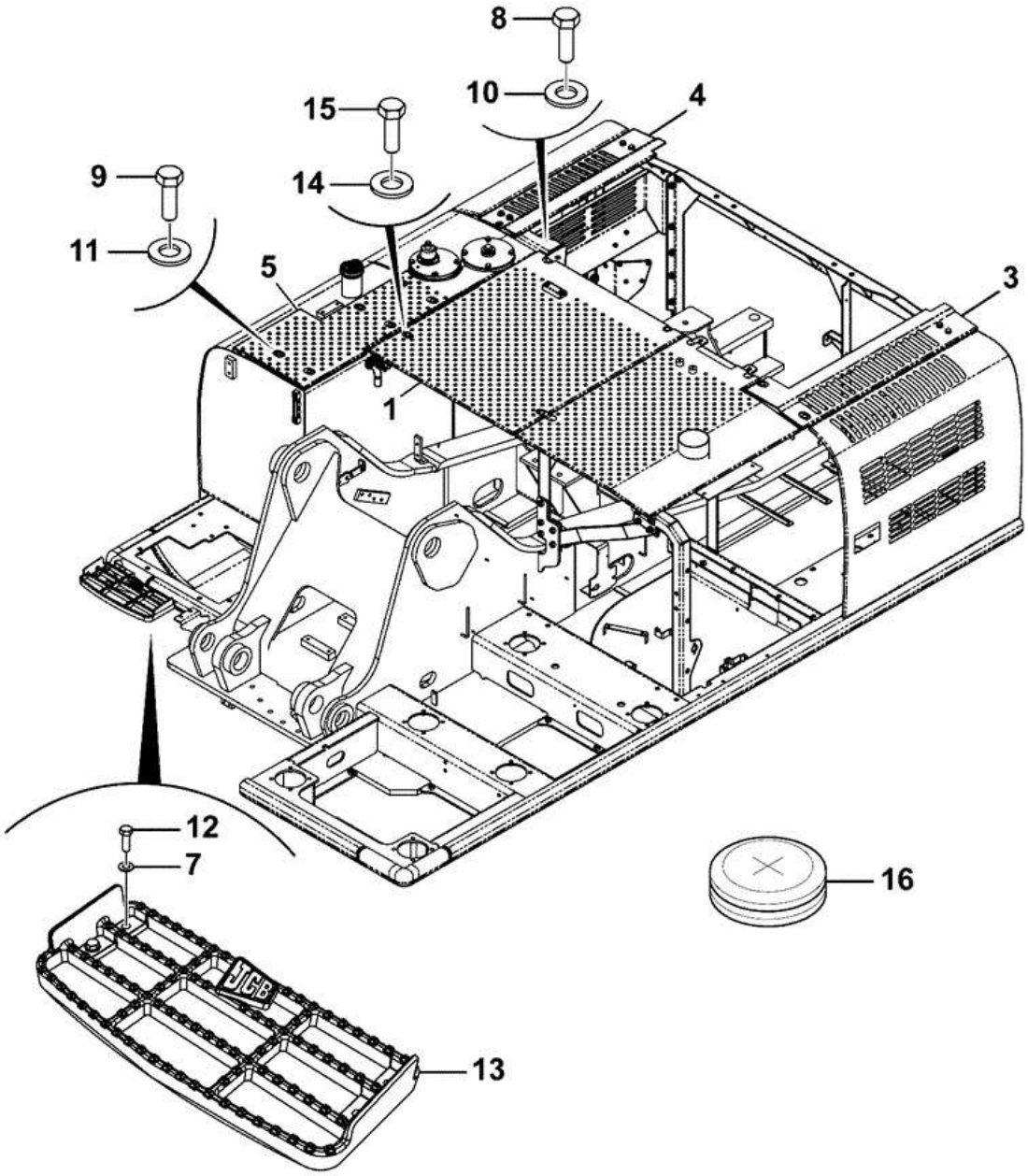

Item	Part #	Change No	Description	Usage Code	QTY
1	333/K7377		Plate Cover Central		1

3	333/K7193		Cover Cooling Pack		1
4	333/K8730		Plate Cover, Exhaust		1
5	334/J3844		Plate Cover, Front Right		1
7	1420/0007D		Washer (M8)		4
8	1316/0507D		Setscrew M12 x 25 grade 10.9		9
9	1316/0403D		Screw		6
10	1420/0009D		Washer (M12)		11
11	1420/0008D		Washer (M10)		6
12	1316/0307D		Screw		4
13	331/27034		Step		1
14	331/46341		Bush collared		1
15	1316/0508D		Screw M12 X 30		3
16	2410/1209		Grommet		2

9822/0355 B170-35-1 BONNET/ ENGINE COVERS/ GRILLES BONNET NO POC

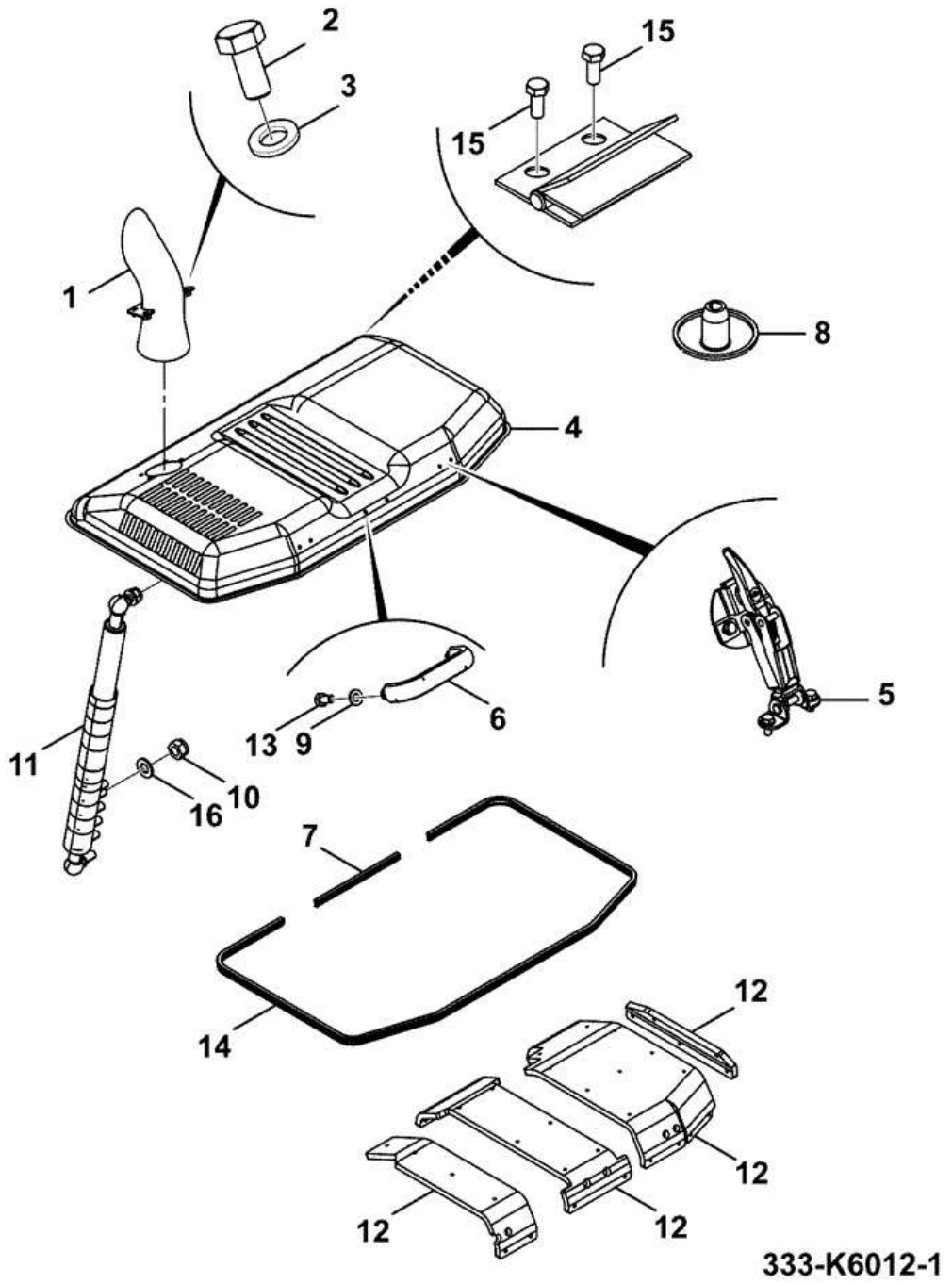

Item	Part #	Change No	Description	Usage Code	QTY
1	333/J7826		Pipe Exhaust		1

2	1316/0507D		Setscrew M12 x 25 grade 10.9		4
3	1420/0009D		Washer (M12)		8
4	333/K7047		Bonnet NON POC		1
5	****		Plate Latch and Catch Assembly		2
6	331/61434		Handle		1
7	333/K0396		Seal edge 510 long		1
8	826/01308		Button Fastener		30
9	1420/0007D		Washer (M8)		2
10	1370/0303D		Nut Self Lock M10		2
11	333/J4482		Strut Gas, 1260N		1
12	333/K7051		Soundproofing Bonnet		1
13	1316/0303D		Screw M8 x 16mm		2
14	333/K1676		Seal edge 3990 long		1
15	1316/0508D		Screw M12 X 30		4
16	1420/0008D		Washer (M10)		2

9822/0355 B170-40-1 BONNET/ ENGINE COVERS/ GRILLES DOOR ASSEMBLY, HD AIR CLEANER

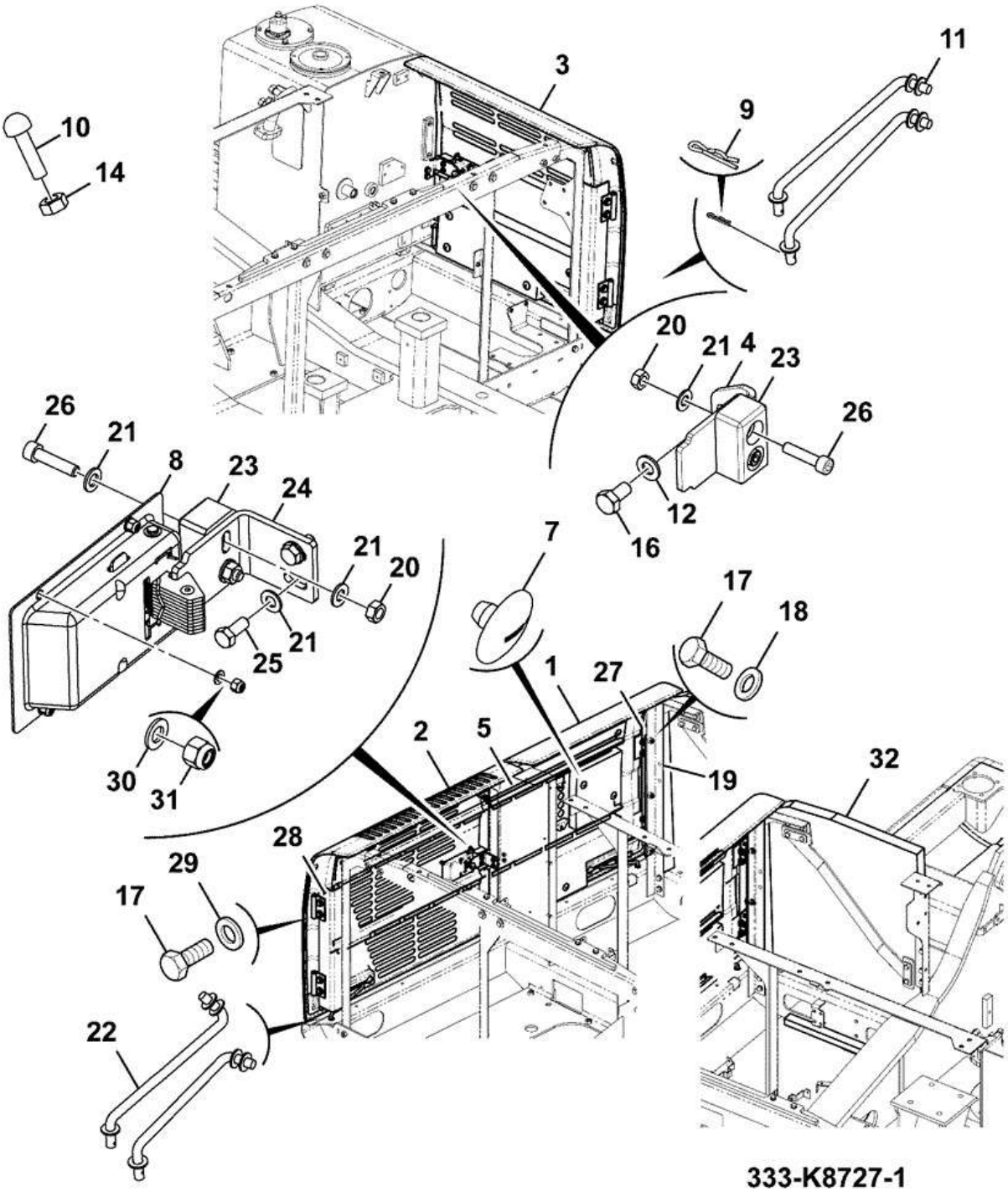

Item	Part #	Change No	Description	Usage Code	QTY
1	333/K9948		Door Front		1

2	333/K0922		Door rear left side		1
3	333/K0923		Door rear right side		1
4	333/K1061		Bracket support		1
5	333/K9957		Soundproofing Kit, Door		1
7	826/01308		Button Fastener		16
8	333/K1035		Latch paddle yellow		2
9	KRJ1588		Pin		3
10	KHN1395		Stop Rubber		6
11	333/J1800		Stay bar		2
12	1420/0008D		Washer (M10)		2
14	1370/0301D		Nut (M10)		6
16	1316/0405D		Screw M10 x 20		2
17	1316/0508D		Screw M12 X 30		21
18	JHP0049		Washer		9
19	331/65955		Foam rear cab left hand		1
20	1370/0201D		Nut Plain M8		6
21	1420/0007D		Washer (M8)		16
22	333/J1825		Stay bar		1
23	333/J3188		Block Door Buffer ABI		3
24	334/P8621		Bracket Support		2
25	1316/0305D		Screw M8 X 20		4
26	1391/3309D		Capscrew M8 X 35		6
27	333/J5564		Hinge mounting plate		1
28	333/J5468		Hinge mounting plate		2
29	1411/0005D		Washer		12
30	1420/0006Z		Washer (M6)		8
31	1370/0103Z		Nut Self Lock M6		8
32	331/65954		Foam back of cab		1

9822/0355 B170-45-1 BONNET/ ENGINE COVERS/ GRILLES BULKHEAD SOUNDPROOFING KIT

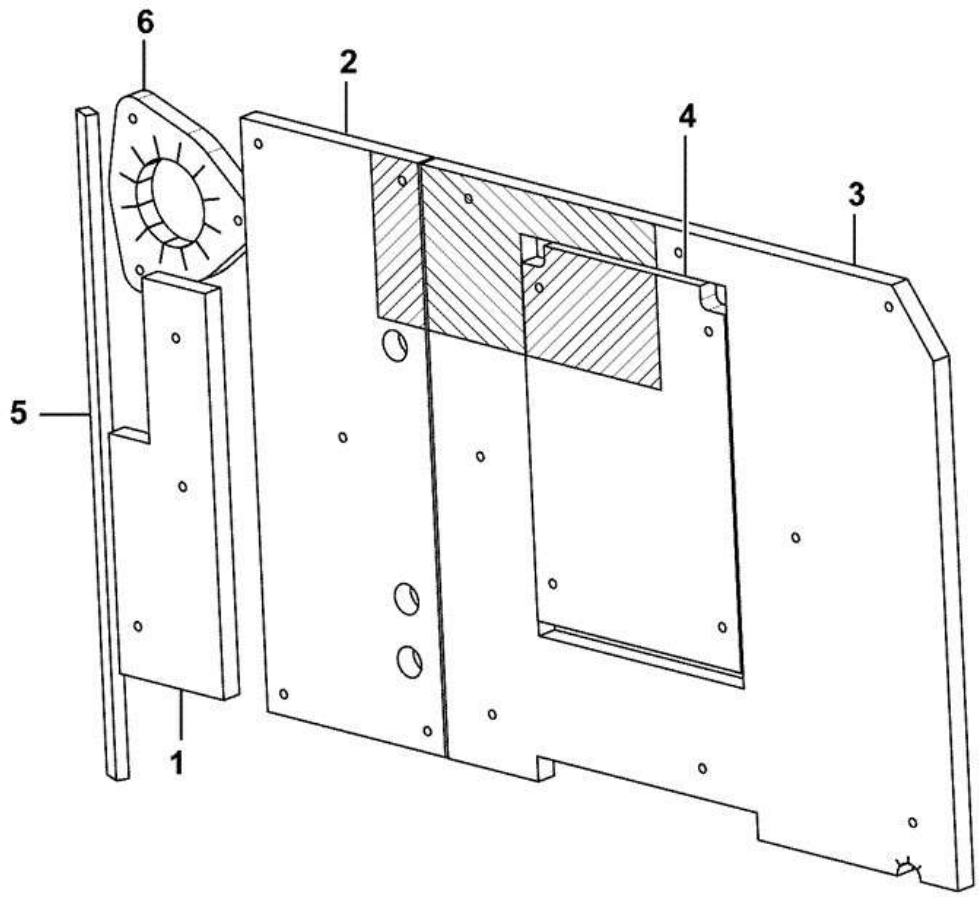

333-K6252-1

Item	Part #	Change No	Description	Usage Code	QTY
1	333/K6253		Soundproofing Air Cleaner		1

2	333/J0221		Panel soundproofing		1
3	332/J3801		Soundproofing service bay		1
4	332/J3769		Foam access panel - soundproofing		1
5	331/65655		Panel Foam Bulkhead to Cowl		1
6	333/J0271		Panel soundproofing induction hose		1

9822/0355 B170-50-1 BONNET/ ENGINE COVERS/ GRILLES SOUNDPROOFING ABI

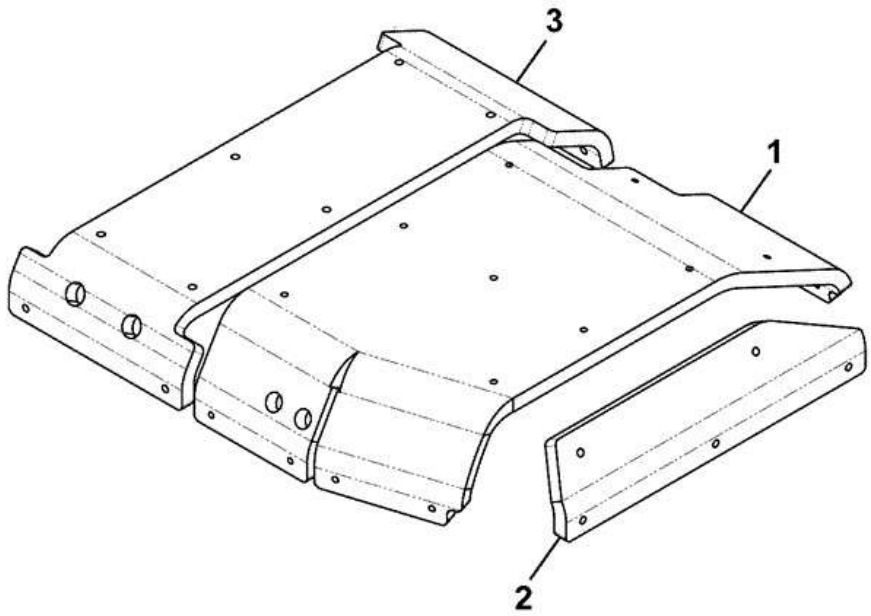

333-K7051-1

Item	Part #	Change No	Description	Usage Code	QTY
1	333/K0231		Soundproofing Panel Left Side		1

2	333/K1218		Soundproofing Left Side		1
3	333/K0176		Soundproofing Main Panel		1

CONSTRUCTION \ NORTH AMERICA \ CONSTRUCTION / INDUSTRIAL \ JS TRACKED EXCAVATORS \ JS200LC BR E 02451101-02451200 9822/0355 \ B BODYWORK \ B01 BODYWORK/FRAME

9822/0355 B180-5-1 COUNTER WEIGHTS ASSEMBLY FOAM PACK

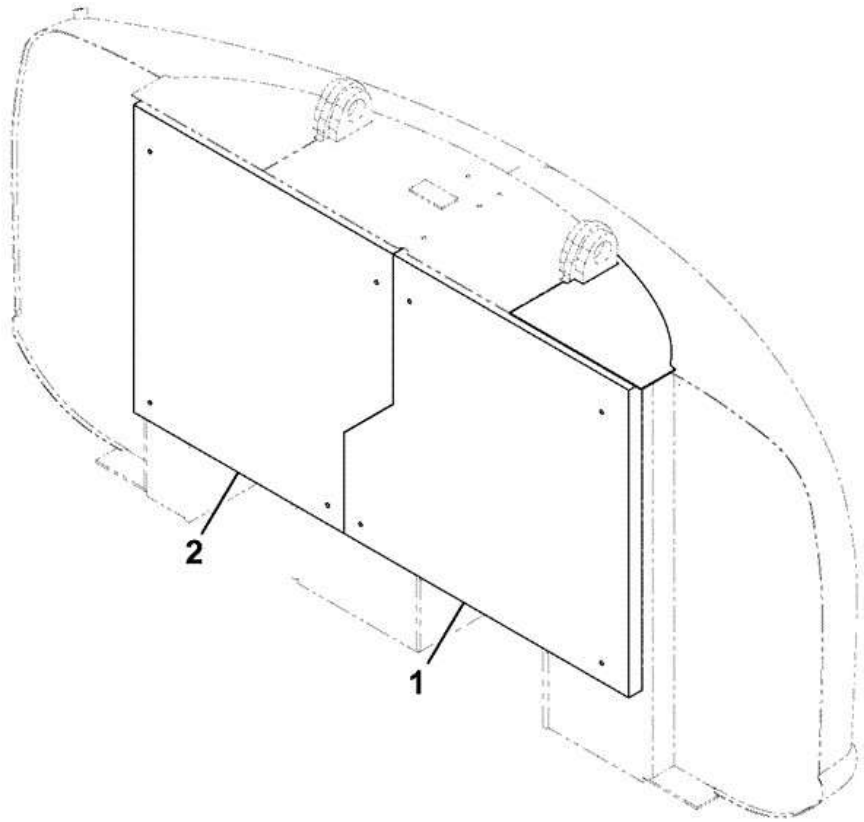

332-J7787-3

Item	Part #	Change No	Description	Usage Code	QTY
1	331/62475		Panel soundproofing counterweight LH		1

2	331/62476		Panel soundproofing counterweight RH		1

9822/0355 B180-15-1 COUNTER WEIGHTS ASSEMBLY 3.7T

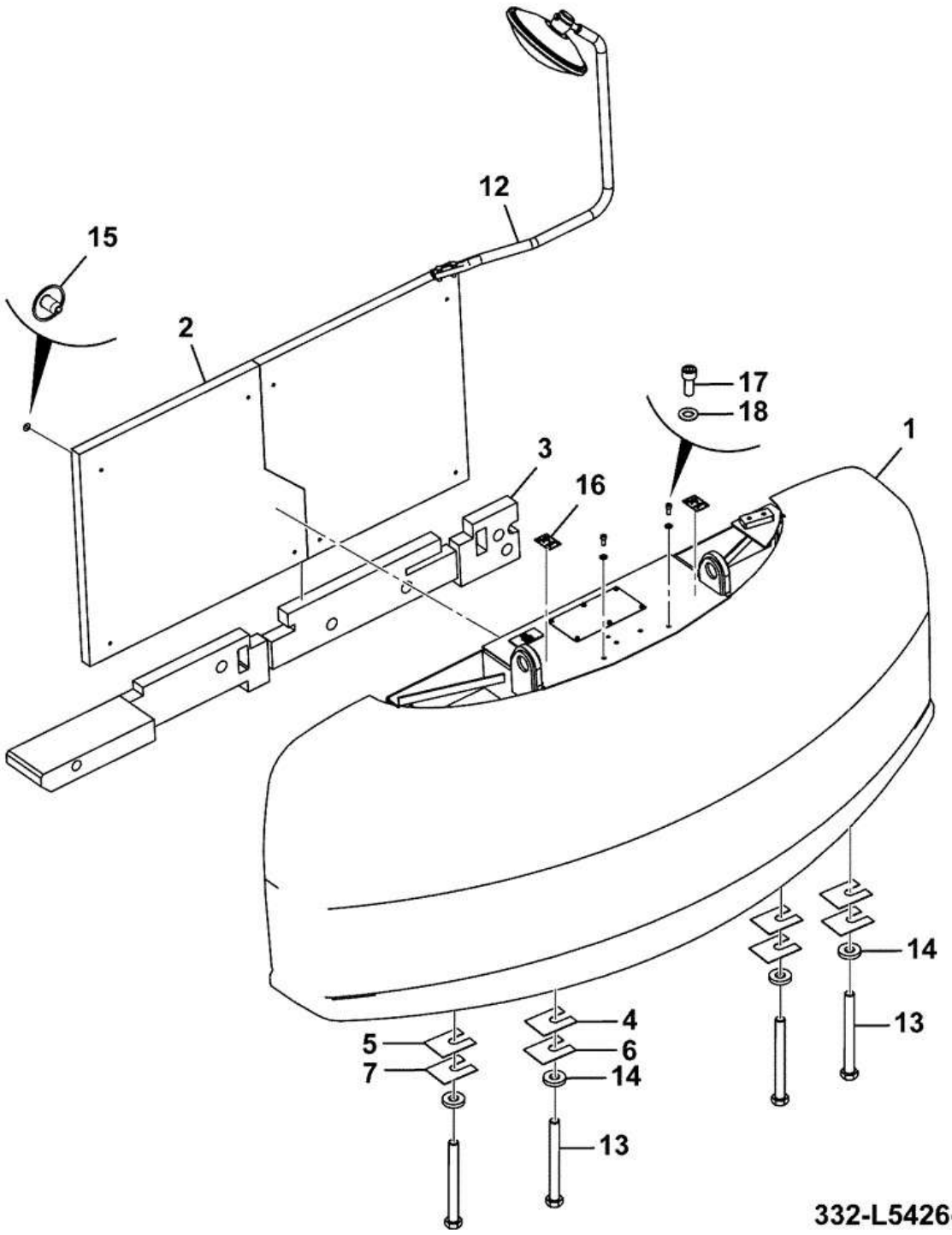

Item	Part #	Change No	Description	Usage Code	QTY
1	334/L0356		Counterweight filled 3700KG		1
2	332/J7787		Foam pack counterweight		1
3	333/K5991		Kit Soundproofing, Revolving Frame		1

4	KRB0736		Shim t=0.8		2
5	KRB0737		Shim t=1.2		2
6	KRB0738		Shim t=2.3		2
7	KRB0739		Shim t=4.5		2
12	****		Mirror Counterweight, Assembly		1
13	332/K6285		Bolt M30 x 300mm		4
14	332/K6292		Washer M30 x 13mm thick		4
15	826/01308		Button Fastener		10
16	333/J2724		Decal not point lift		2
17	1391/3407D		Capscrew M10 x 25mm		2
18	1420/0008D		Washer (M10)		2

9822/0355 B180-20-1 COUNTER WEIGHTS ABI

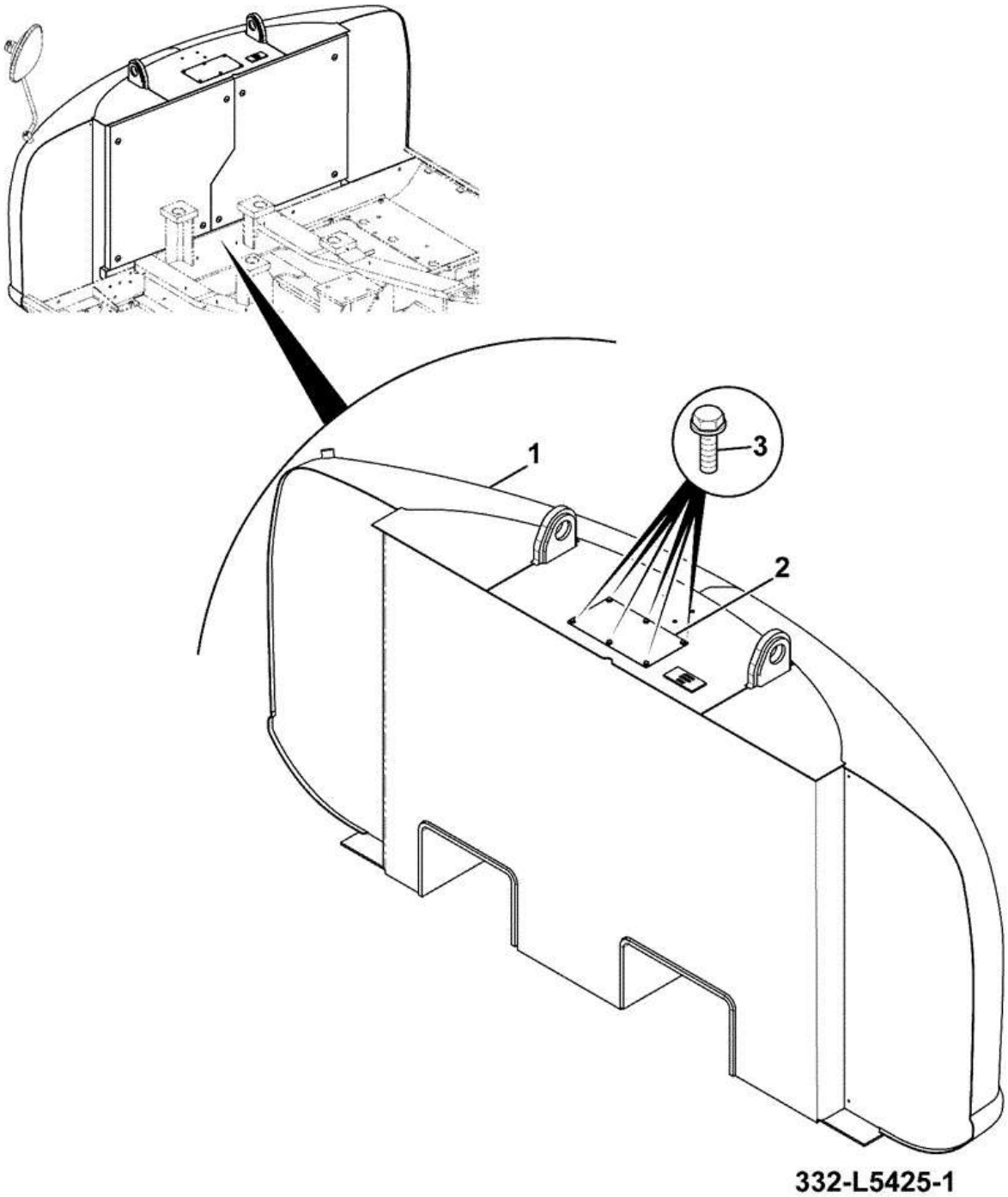

Item	Part #	Change No	Description	Usage Code	QTY
1	334/L0355		Counterweight WA		1
2	332/L5220		Plate cover		1
3	332/L6110		Screw head washer		6

9822/0355 B190-5-5 OTHER BODYWORK ITEMS
UNDERCOVERS

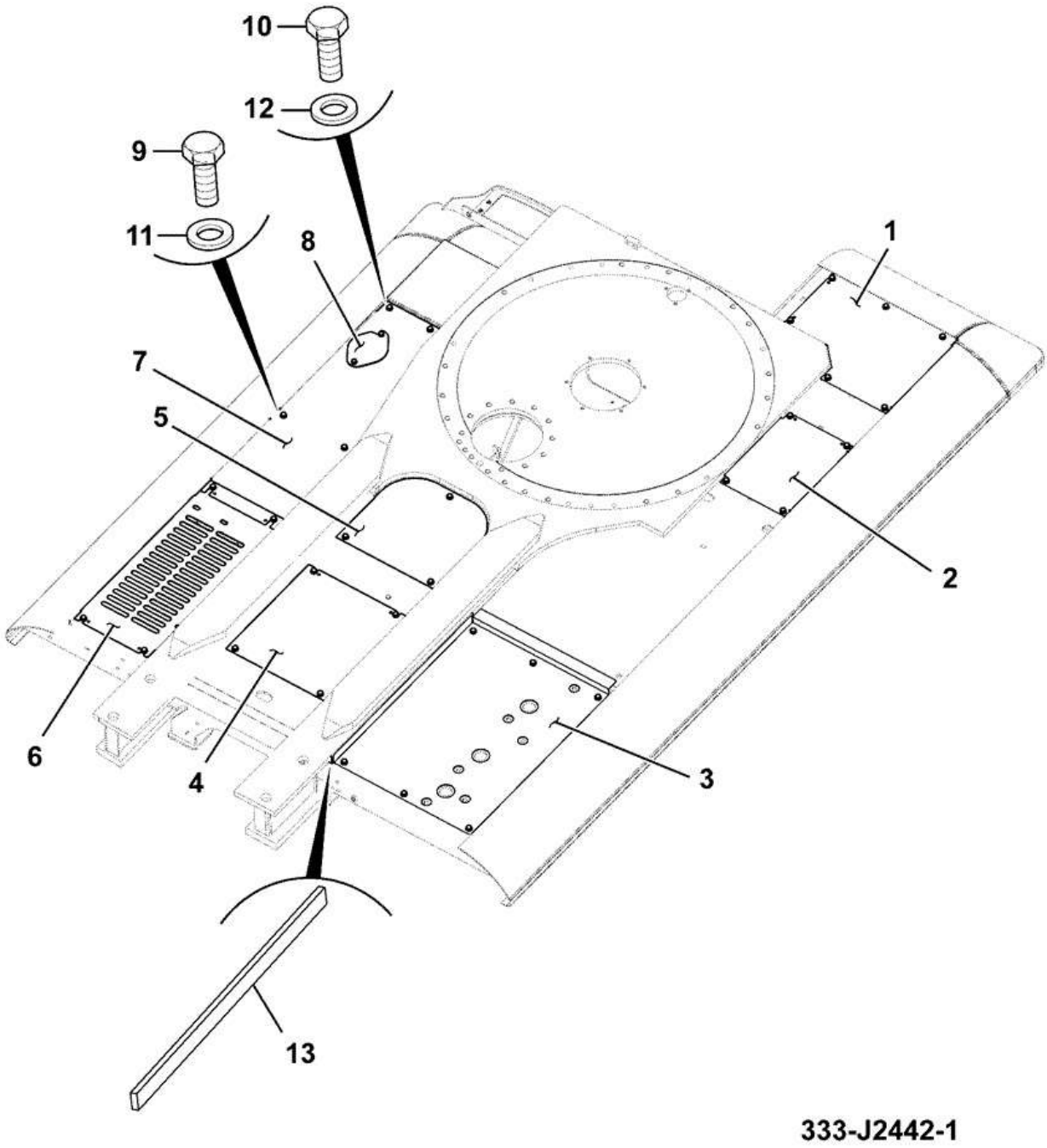

Item	Part #	Change No	Description	Usage Code	QTY
1	331/35462		Cover Under		1

2	331/35464		Cover Under Front		1
3	332/J0814		Plate left hand rear under cover		1
4	334/L1306		Cover under centre rear		1
5	JRB0113		Cover under center		1
6	334/J4492		Panel Undercover - Pump Bay		1
7	335/12552		Cover under righthand side front		1
8	331/31978		Cover under access panel		1
9	1316/0509D		Screw M12x35 long		31
10	1316/0405D		Screw M10 x 20		2
11	JHP0049		Washer		31
12	1420/0008D		Washer (M10)		2
13	331/68022		Strip undercover foam		1

9822/0355 B190-10-1 OTHER BODYWORK ITEMS
REVOLVING FRAME ASSEMBLY

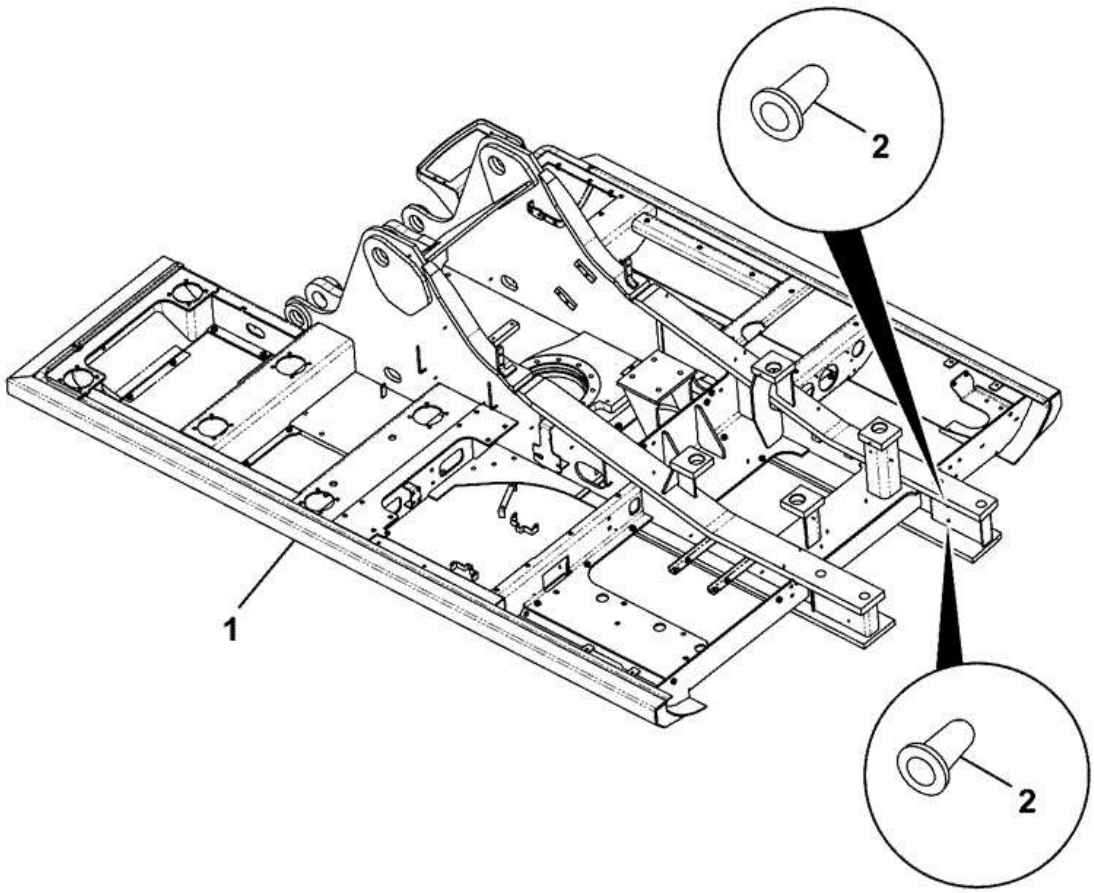

332-J1783-4

Item	Part #	Change No	Description	Usage Code	QTY
1	333/K2725		Frame Revolving Assembly T4i		1

2	826/01810		Nut rivet, M6		2

9822/0355 B190-15-1 OTHER BODYWORK ITEMS

BULKHEAD & BAFFLES

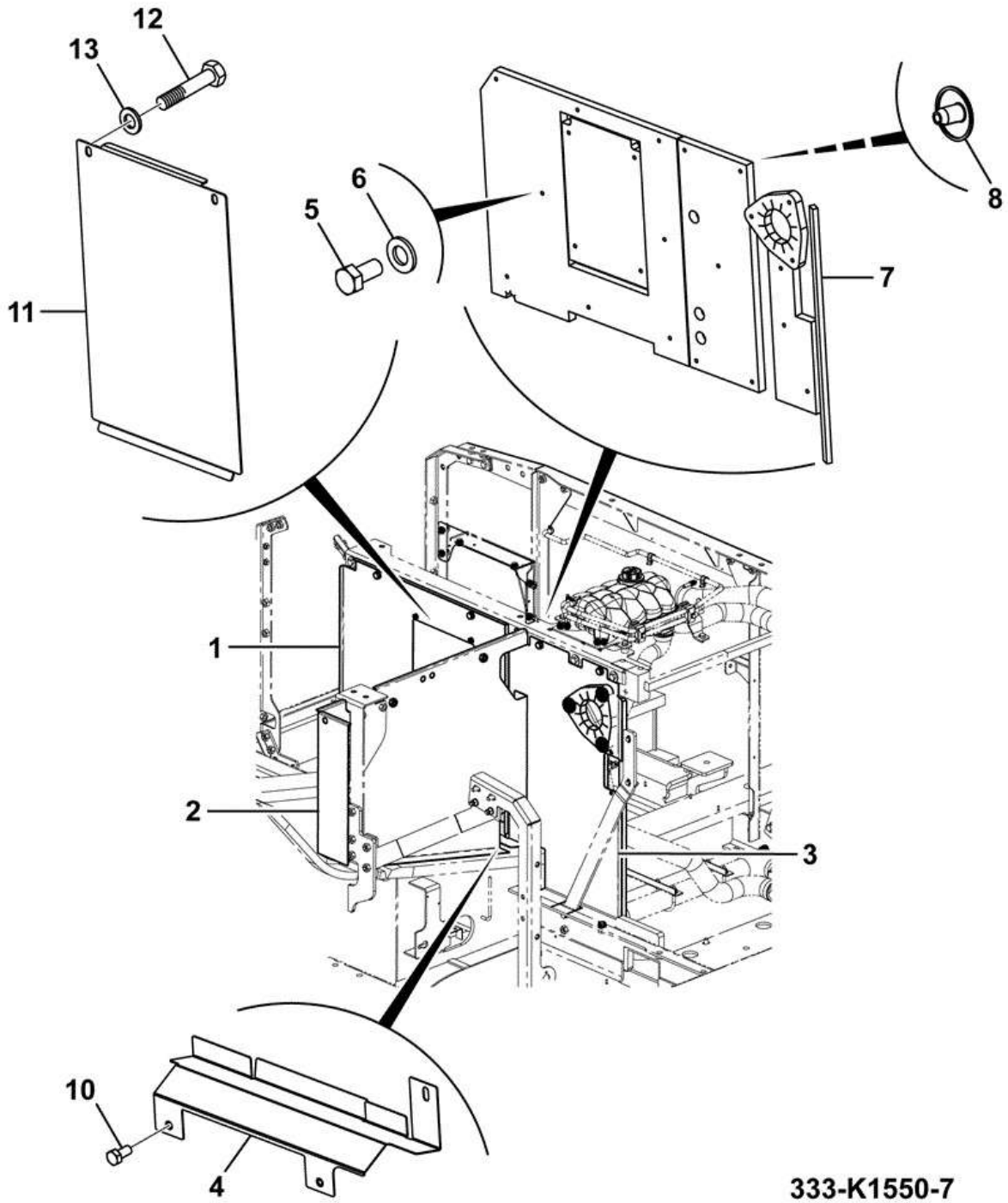

Item	Part #	Change No	Description	Usage Code	QTY
1	332/J9709		Baffle Right Side		1

2	334/J0744		Plate Cosmetic, Left Side		1
3	333/K8013		Baffle Induction Assembly		1
4	332/J9713		Bulkhead lower		1
5	1316/0507D		Setscrew M12 x 25 grade 10.9		12
6	1420/0009D		Washer (M12)		14
7	333/K6252		Bulkhead Soundproofing Kit		1
8	826/01308		Button Fastener		24
10	1316/0508D		Screw M12 X 30		2
11	332/J9711		Cover Inspection		1
12	1316/0301D		Screw		2
13	1420/0007D		Washer (M8)		2

CONSTRUCTION \ NORTH AMERICA \ CONSTRUCTION / INDUSTRIAL \ JS TRACKED EXCAVATORS \ JS200LC BR E 02451101-02451200 9822/0355 \ B BODYWORK \ B01 BODYWORK/FRAME

9822/0355 B190-20-1 OTHER BODYWORK ITEMS
HANDRAIL ASSEMBLY

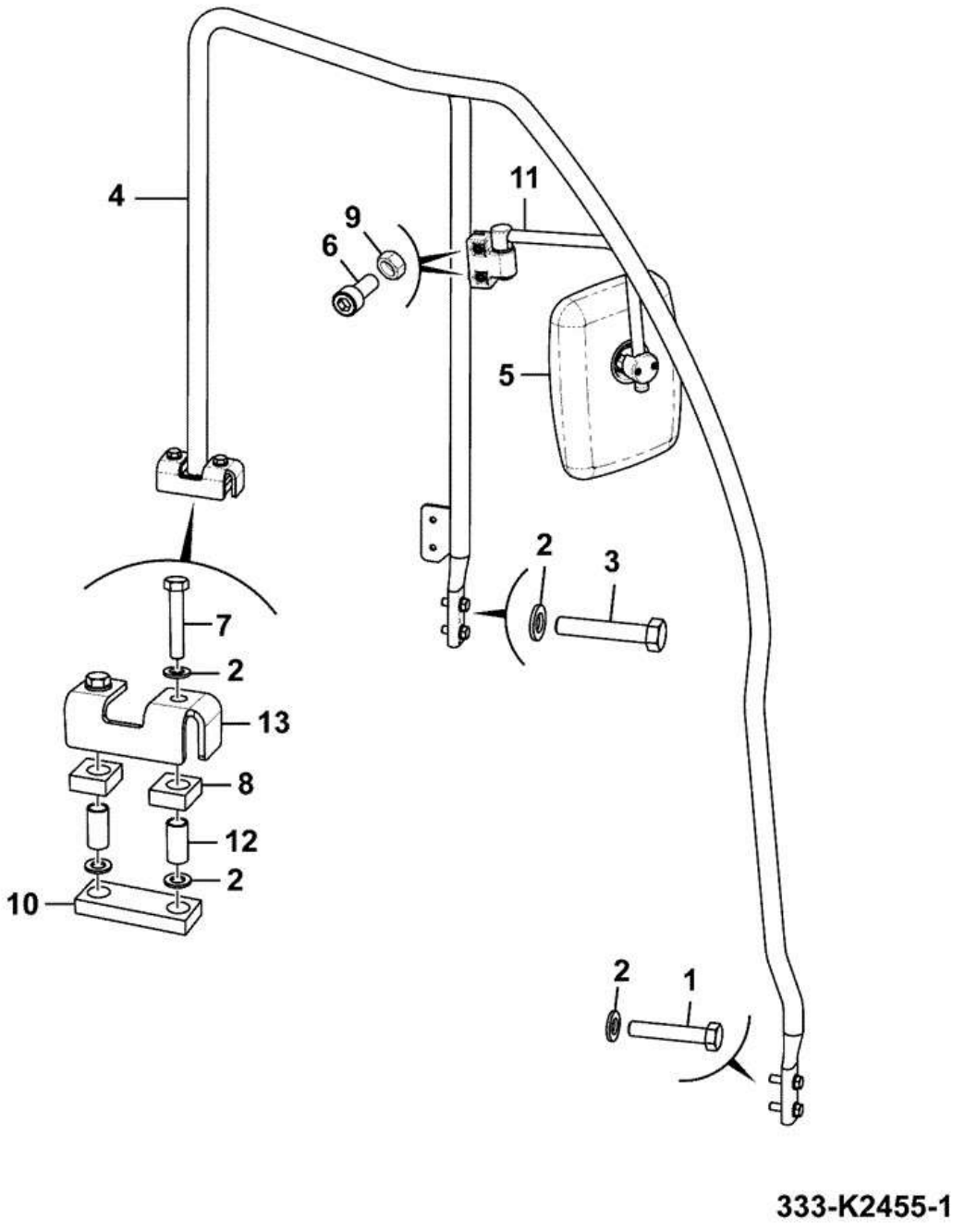

Item	Part #	Change No	Description	Usage Code	QTY
1	1316/0511D		Bolt M12 x 45		2

2	1420/0009D		Washer (M12)		8
3	1316/0509D		Screw M12x35 long		2
4	333/K2171		Handrail		1
5	332/J7324		Mirror side, 1400mm rad		1
6	1391/3407D		Capscrew M10 x 25mm		2
7	1316/3515D		Bolt		2
8	332/K7719		Block		2
9	1371/0301D		Nut High Strength		2
10	332/K7295		Block		1
11	332/U3153		Arm mirror mounting		1
12	332/K7299		Spacer		2
13	332/K8222		Plate cover		1

CONSTRUCTION \ NORTH AMERICA \ CONSTRUCTION / INDUSTRIAL \ JS TRACKED EXCAVATORS \ JS200LC BR E 02451101-02451200 9822/0355 \ B BODYWORK \ B01 BODYWORK/FRAME

9822/0355 B190-25-1 OTHER BODYWORK ITEMS PLATE LATCH & CATCH

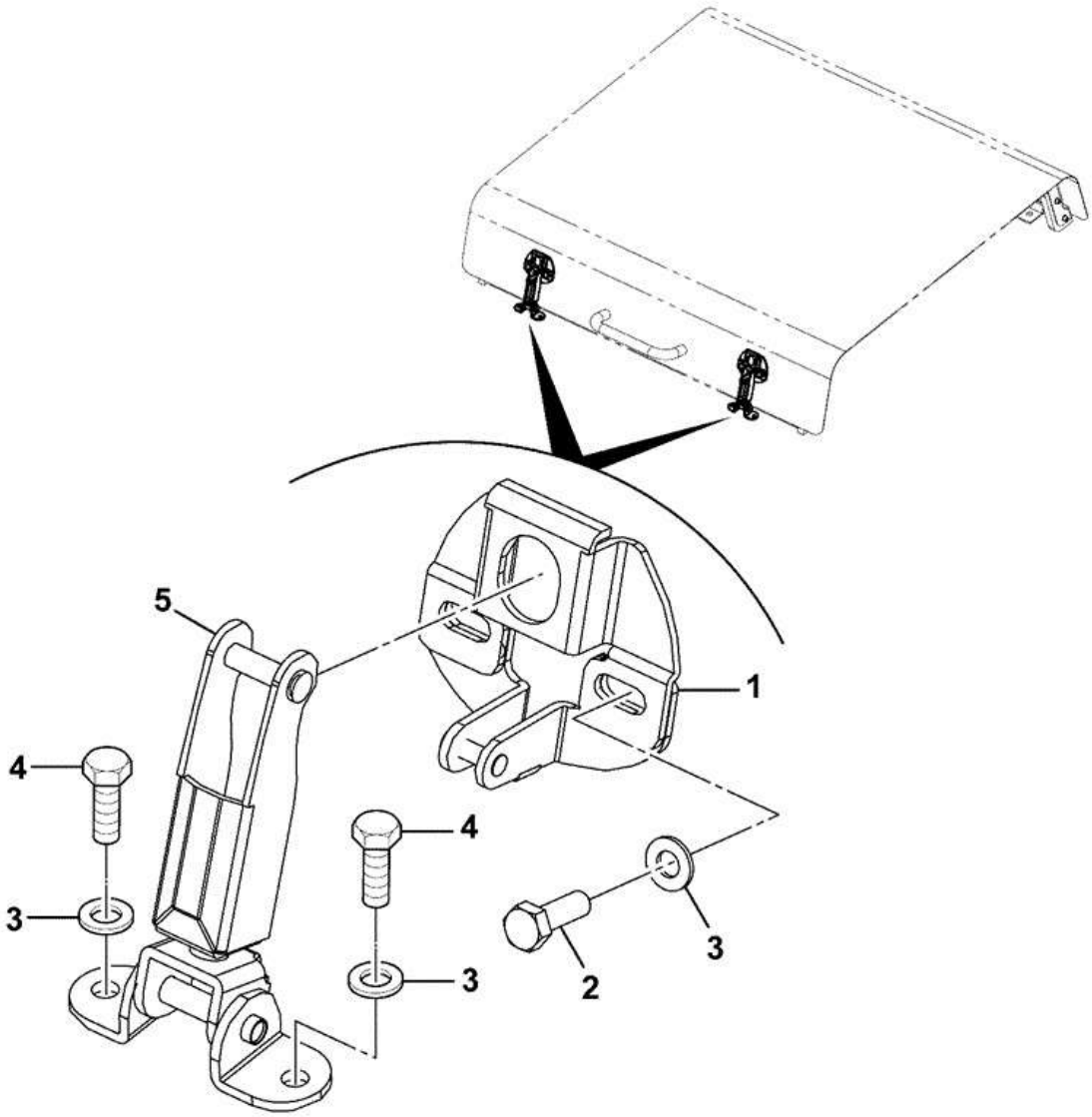

333-K0375-1

Item	Part #	Change No	Description	Usage Code	QTY
1	332/K5085		Plate catch		1

2	1316/0307D		Screw		2
3	1420/0007D		Washer (M8)		4
4	1316/0305D		Screw M8 X 20		2
5	332/K5078		Latch		1

CONSTRUCTION \ NORTH AMERICA \ CONSTRUCTION / INDUSTRIAL \ JS TRACKED EXCAVATORS \ JS200LC BR E 02451101-02451200 9822/0355 \ B BODYWORK \ B01 BODYWORK/FRAME

9822/0355 B190-30-1 OTHER BODYWORK ITEMS
SOUNDPROOFING KIT, REVOLVING FRAME

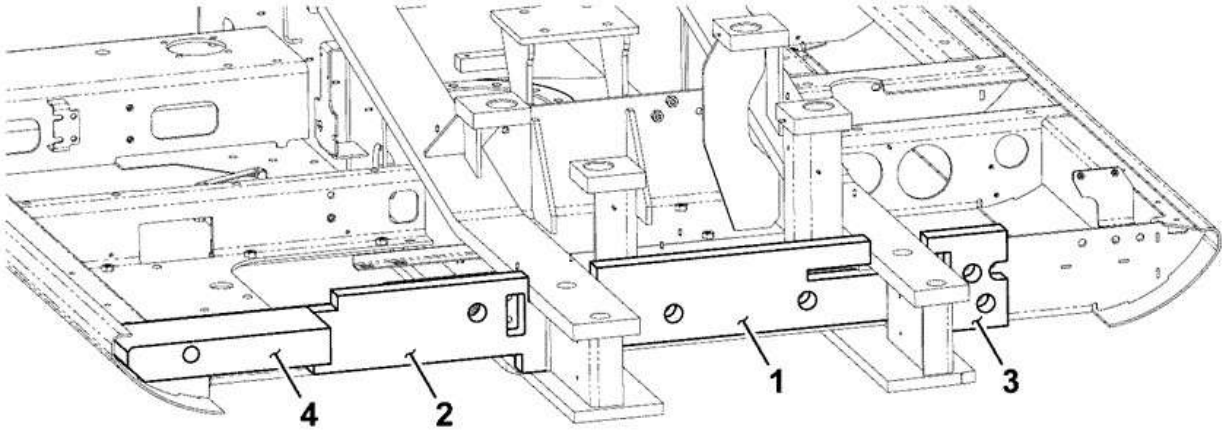

333-K5991-1

Item	Part #	Change No	Description	Usage Code	QTY
1	333/K3007		Seal Centre Counterweight		1

2	332/J0768		Seal left hand side		1
3	332/K9771		Seal right hand side		1
4	332/J8130		Seal left hand side		1

9822/0355 B190-35-1 OTHER BODYWORK ITEMS KIT HOUSEFRAME

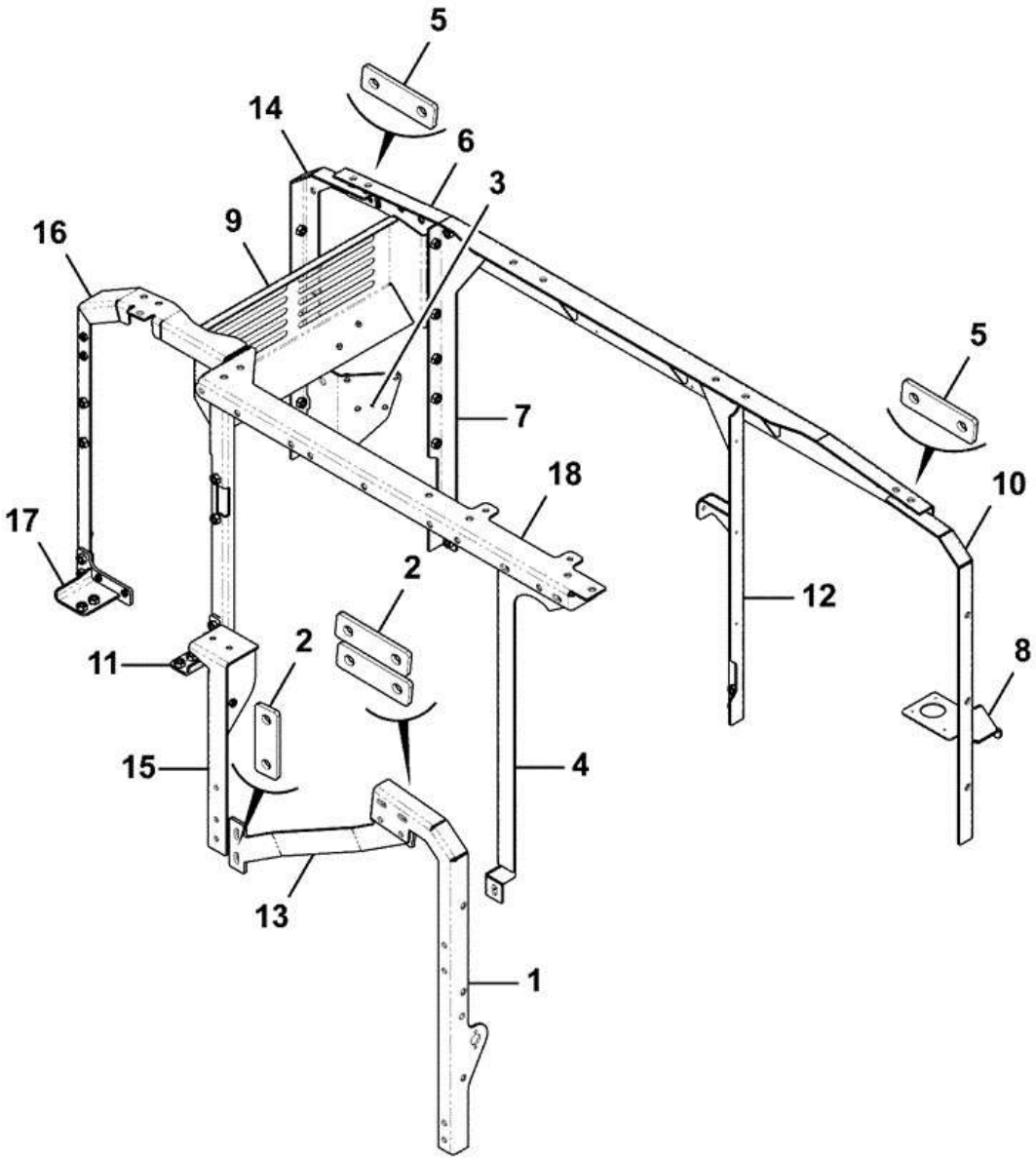

Item	Part #	Change No	Description	Usage Code	QTY
1	333/J1544		Frame front LH leg		1

2	333/J5744		Plate		3
3	333/K4674		Bracket Filter		1
4	334/J5622		Leg Left Side, Inner		1
5	333/J5742		Plate		2
6	333/K6892		Frame Housing Rear X-member		1
7	333/K9160		Frame Housing, Rear Inner Leg, Right Side		1
8	333/K8243		Bracket Fuse And Relay		1
9	334/J2540		Wall Fire		1
10	333/K8144		Frame Housing, Rear Leg, Left Side		1
11	333/K8103		Mount Houseframe, Right Side		1
12	333/J9729		Leg LH,house frame		1
13	333/J4680		Bar tie		1
14	333/J9510		Leg RH,house frame		1
15	334/L1820		Frame Housing Front Leg		1
16	333/K2400		Frame House, Tank		1
17	333/K2370		Mount Houseframe, Left Side		1
18	334/J2982		Frame Frount Cross Member		1

CONSTRUCTION \ NORTH AMERICA \ CONSTRUCTION / INDUSTRIAL \ JS TRACKED EXCAVATORS \ JS200LC BR E 02451101-02451200 9822/0355 \ B BODYWORK \ B01 BODYWORK/FRAME

9822/0355 B190-40-1 OTHER BODYWORK ITEMS
REVOLVING FRAME ASSEMBLY, JS200 T4i

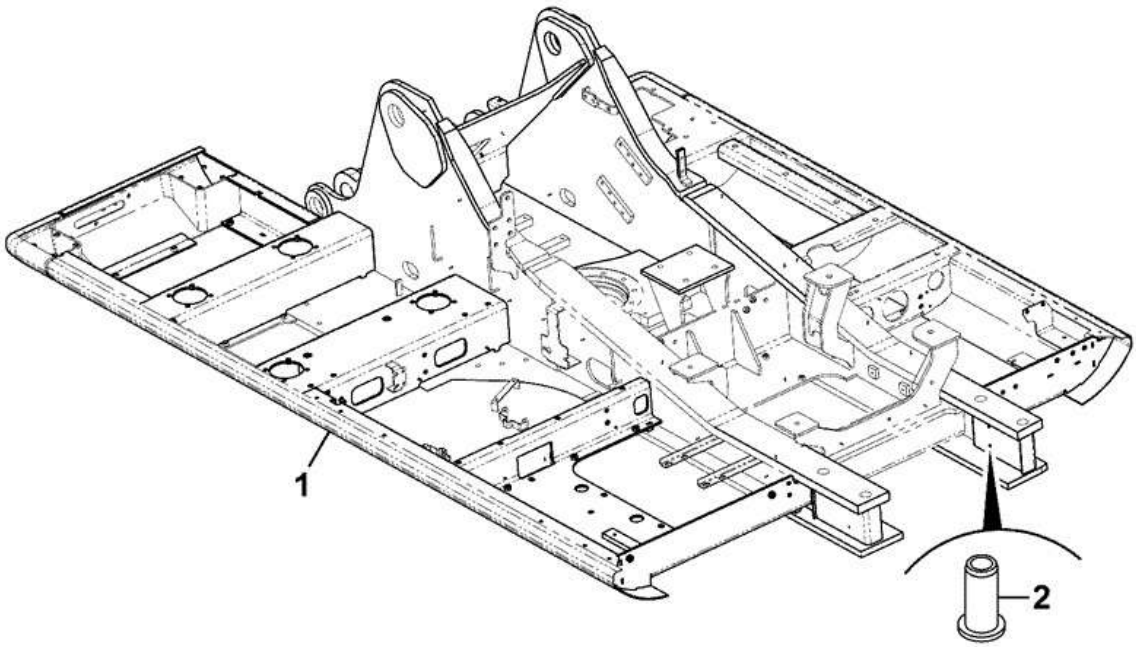

333-K2718-1

Item	Part #	Change No	Description	Usage Code	QTY
1	333/K2720		Frame Revolving Assembly 200JCB		1

2	826/01810		Nut rivet, M6		2

9822/0355 B200-10-1 OPERATOR ENCLOSURE INSTALLATION ASSEMBLIES CAB NON ROPs

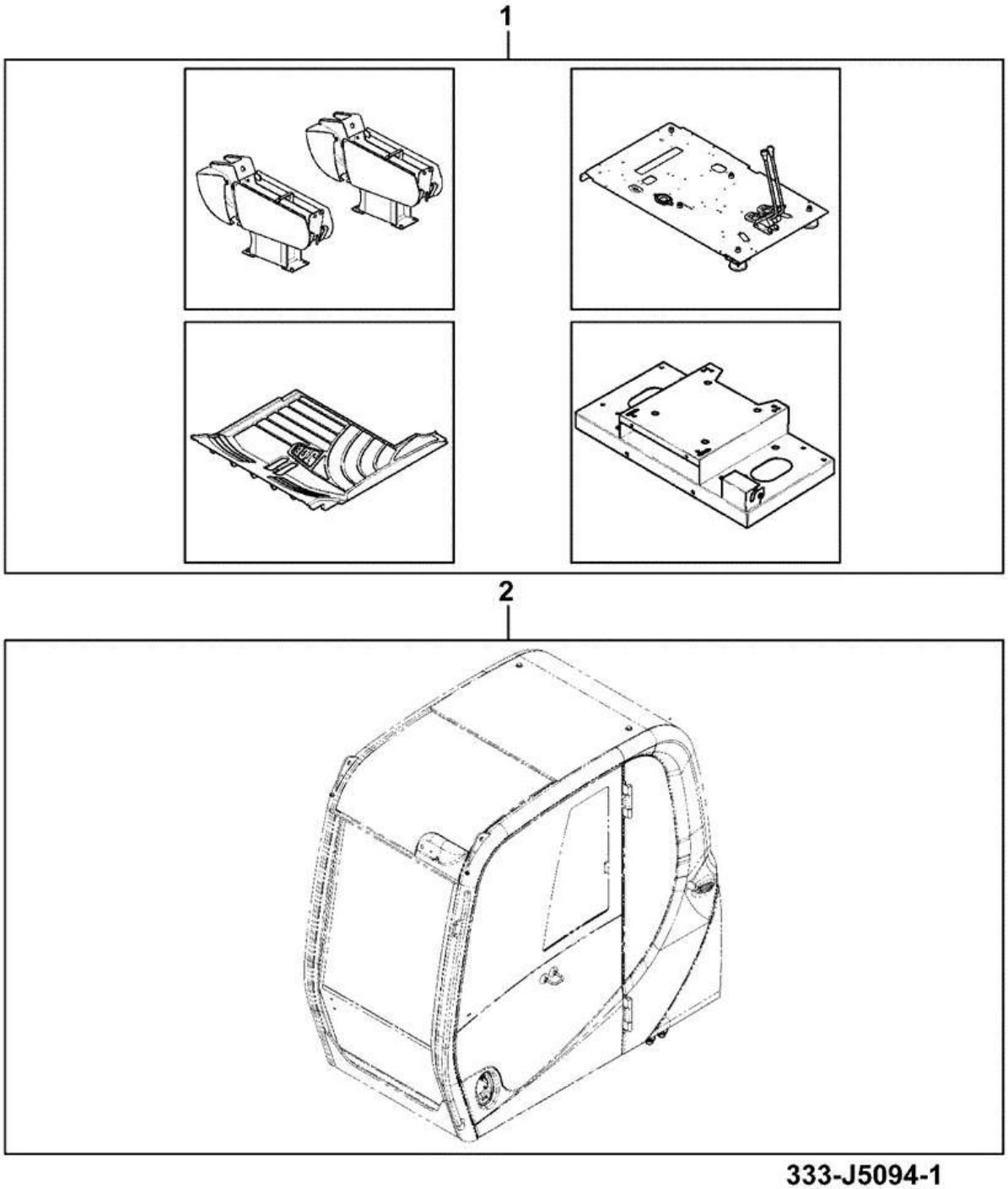

Item	Part #	Change No	Description	Usage Code	QTY
1	****		Base cab assembly		1

2	****		Cab operators, Non ROPs assembly		1

CONSTRUCTION \ NORTH AMERICA \ CONSTRUCTION / INDUSTRIAL \ JS TRACKED EXCAVATORS \ JS200LC BR E 02451101-02451200 9822/0355 \ B BODYWORK \ B02 CAB / CANOPY

9822/0355 B200-15-1 OPERATOR ENCLOSURE INSTALLATION ASSEMBLIES NON ROPs

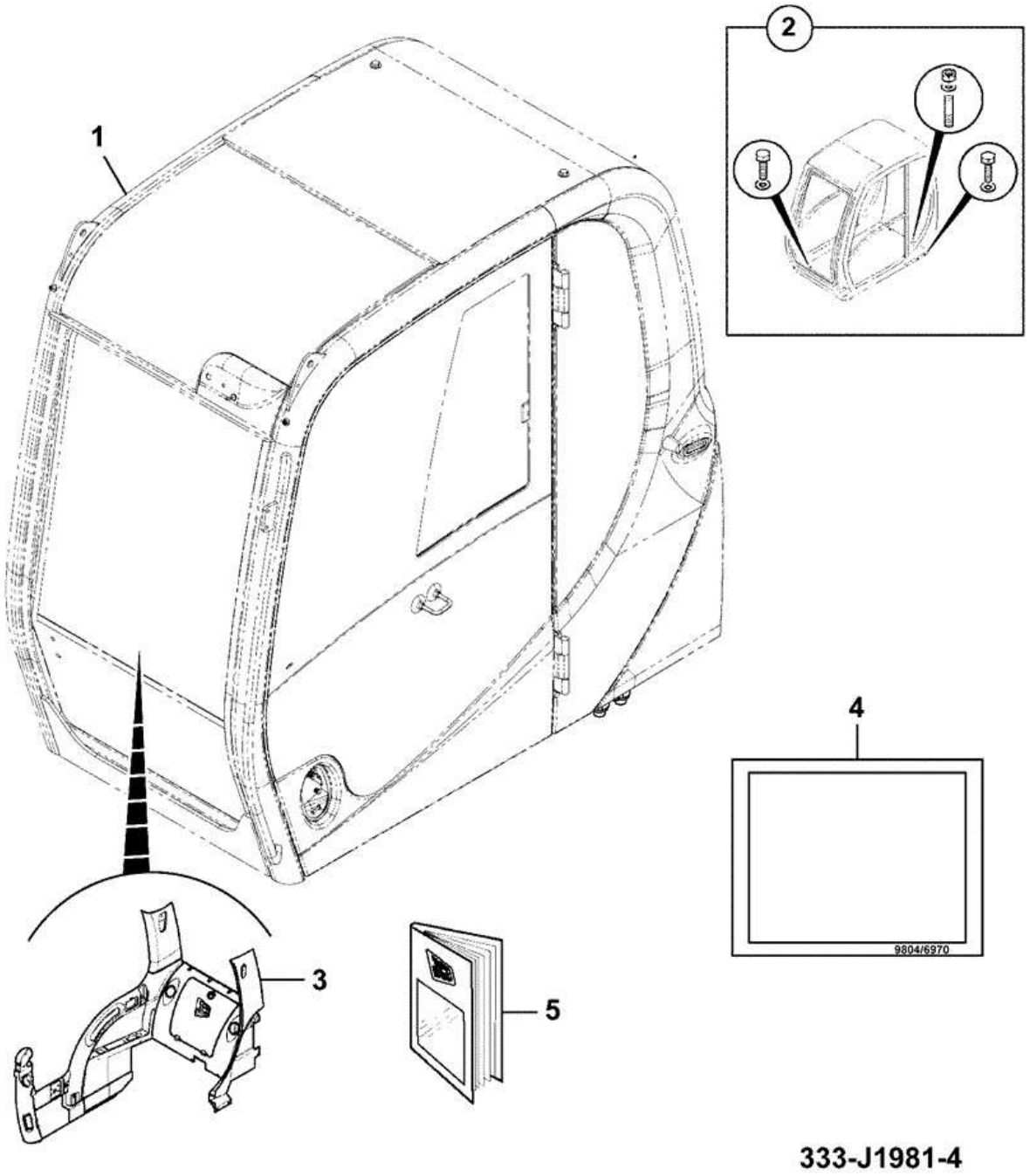

Item	Part #	Change No	Description	Usage Code	QTY
1	332/K9714		Cab ABI (Non ROPS)		1

2	****		Fasteners cab mounting assembly		1
3	331/37601		Panel noise damping		1
4	9804/6970		Label despatch english		1
5	9804/6979		Handbook		1

9822/0355 B200-15-5 OPERATOR ENCLOSURE INSTALLATION ASSEMBLIES NON ROPs

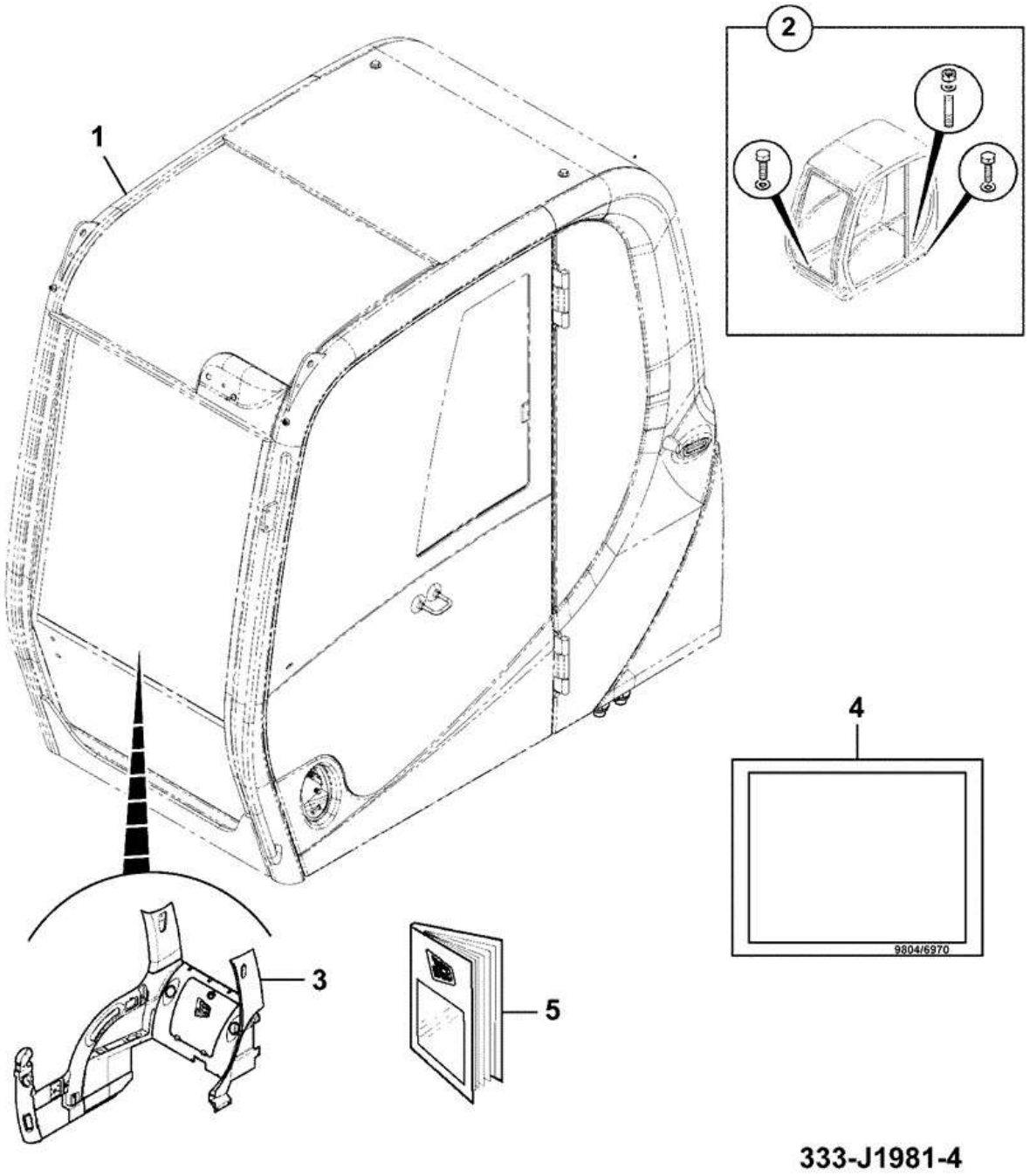

Item	Part #	Change No	Description	Usage Code	QTY
1	332/K9714		Cab ABI (Non ROPS)		1

2	****		Fasteners Mounting Cab		1
3	331/37601		Panel noise damping		1
4	9804/6970		Label despatch english		1
5	9804/6979		Handbook		1

CONSTRUCTION \ NORTH AMERICA \ CONSTRUCTION / INDUSTRIAL \ JS TRACKED EXCAVATORS \ JS200LC BR E 02451101-02451200 9822/0355 \ B BODYWORK \ B02 CAB / CANOPY

9822/0355 B200-20-1 OPERATOR ENCLOSURE INSTALLATION ASSEMBLIES CAB NON ROPs

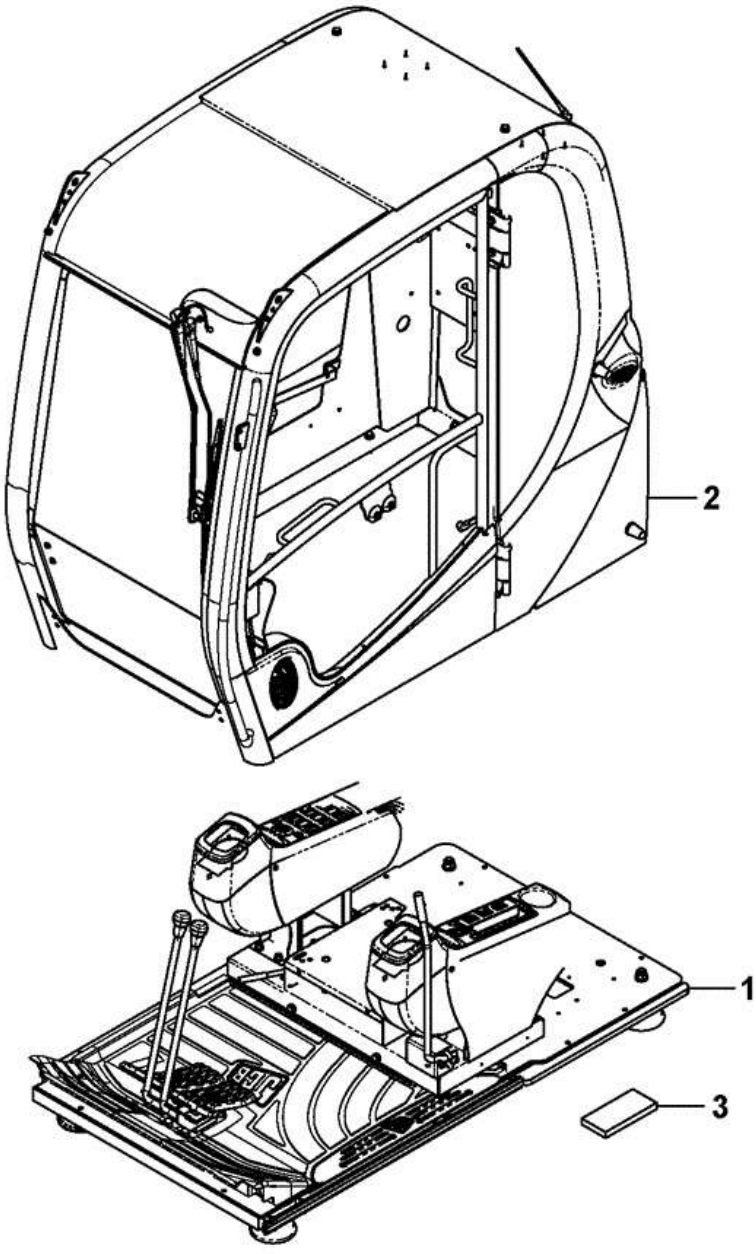

Item	Part #	Change No	Description	Usage Code	QTY
1	****		Base Cab Assembly		1

2	****		Cab Assembly Non ROPs		1
3	334/J1453	From 31/01/2014	Seal Base Cab		1

CONSTRUCTION \ NORTH AMERICA \ CONSTRUCTION / INDUSTRIAL \ JS TRACKED EXCAVATORS \ JS200LC BR E 02451101-02451200 9822/0355 \ B BODYWORK \ B02 CAB / CANOPY

9822/0355 B200-25-1 OPERATOR ENCLOSURE INSTALLATION ASSEMBLIES BASE CAB

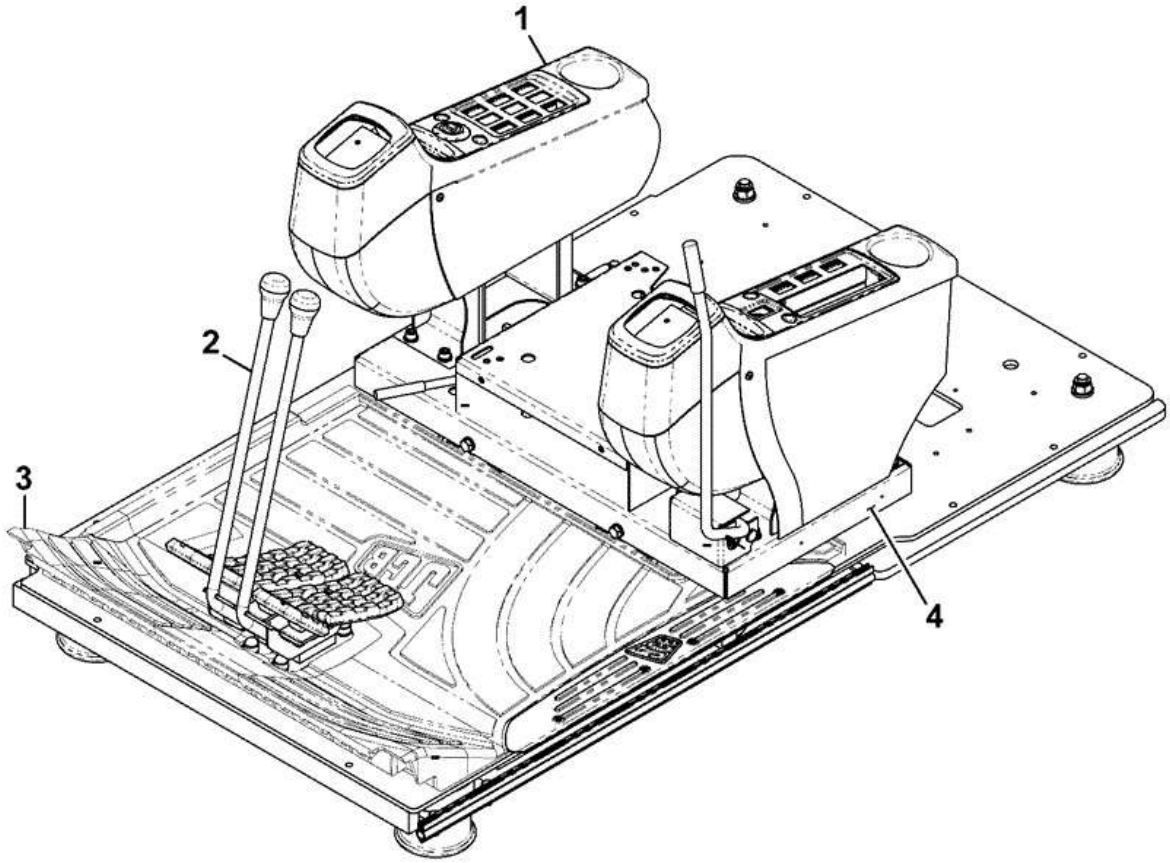

333-K1891-2

Item	Part #	Change No	Description	Usage Code	QTY
1	****		Console tracked		1

2	****		Control Joystick Assembly		1
3	****		Floormat assembly		1
4	****		Lever Slide Seat Assembly		1

CONSTRUCTION \ NORTH AMERICA \ CONSTRUCTION / INDUSTRIAL \ JS TRACKED EXCAVATORS \ JS200LC BR E 02451101-02451200 9822/0355 \ B BODYWORK \ B02 CAB / CANOPY

9822/0355 B200-30-1 OPERATOR ENCLOSURE INSTALLATION ASSEMBLIES CAB ROPs

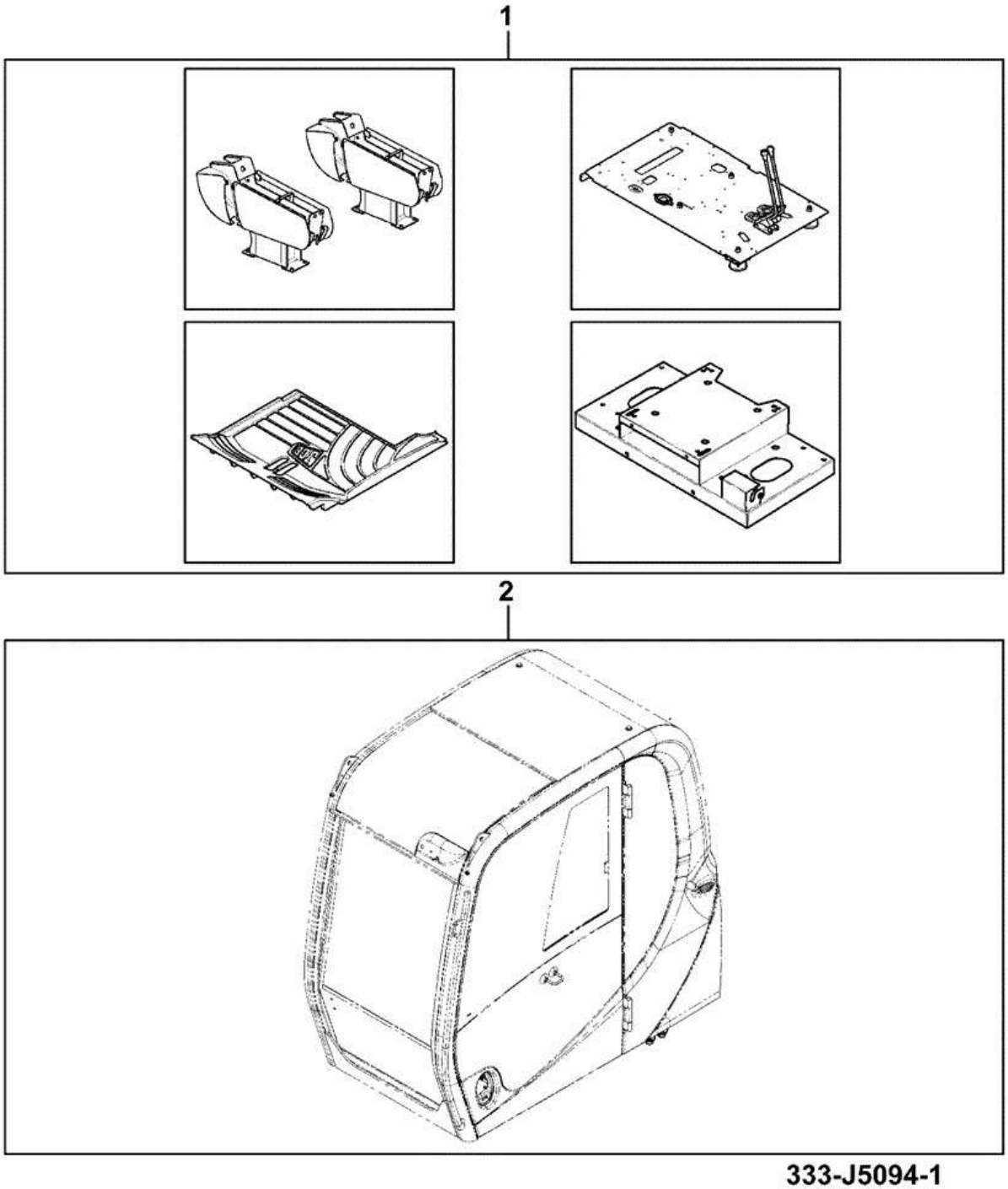

Item	Part #	Change No	Description	Usage Code	QTY
1	****		Base cab assembly		1

2	****		Cab operator, ROPs assembly		1

CONSTRUCTION \ NORTH AMERICA \ CONSTRUCTION / INDUSTRIAL \ JS TRACKED EXCAVATORS \ JS200LC BR E 02451101-02451200 9822/0355 \ B BODYWORK \ B02 CAB / CANOPY

9822/0355 B210-35-1 OPERATOR ENCLOSURE CAB BASE

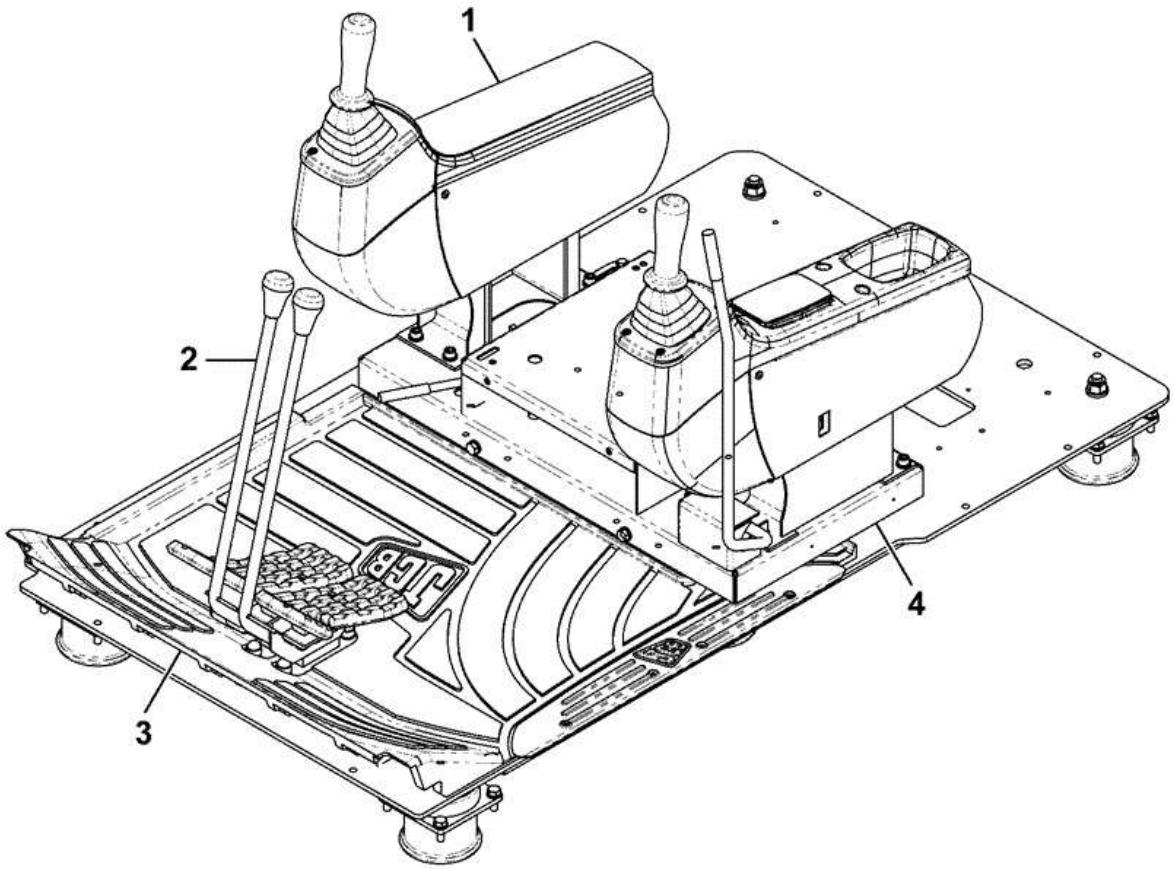

333-J1984-1

Item	Part #	Change No	Description	Usage Code	QTY
1	****		Console assembly		1
2	****		Control joystick assembly		1
3	****		Floormat assembly		1

4	****		Lever / seat slide assembly		1

CONSTRUCTION \ NORTH AMERICA \ CONSTRUCTION / INDUSTRIAL \ JS TRACKED EXCAVATORS \ JS200LC BR E 02451101-02451200 9822/0355 \ B BODYWORK \ B02 CAB / CANOPY

9822/0355 B210-35-5 OPERATOR ENCLOSURE CAB BASE

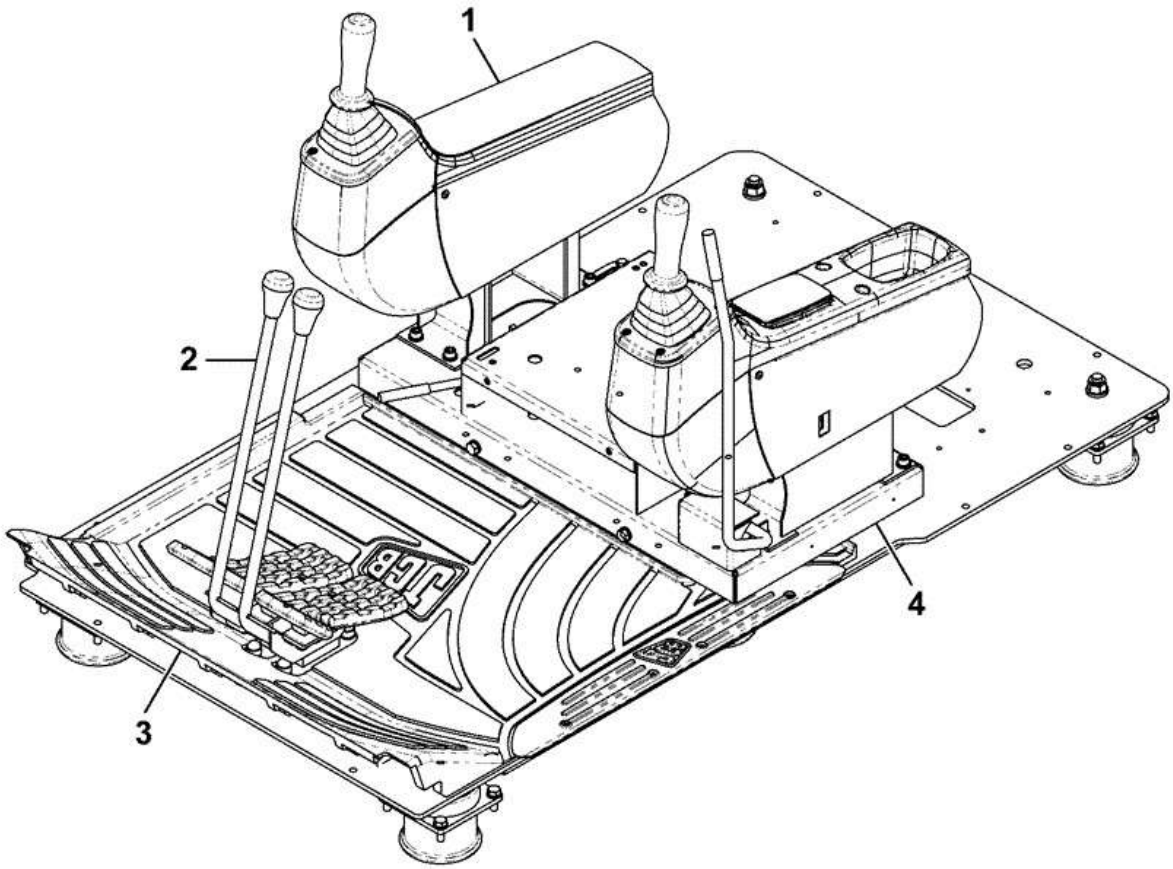

333-J1984-1

Item	Part #	Change No	Description	Usage Code	QTY
1	****		Console assembly		1
2	****		Control Joystick Assembly		1
3	****		Floormat assembly		1

4	****		Lever Slide Seat Assembly		1

CONSTRUCTION \ NORTH AMERICA \ CONSTRUCTION / INDUSTRIAL \ JS TRACKED EXCAVATORS \ JS200LC BR E 02451101-02451200 9822/0355 \ B BODYWORK \ B02 CAB / CANOPY

9822/0355 B210-40-1 OPERATOR ENCLOSURE CAB ABI

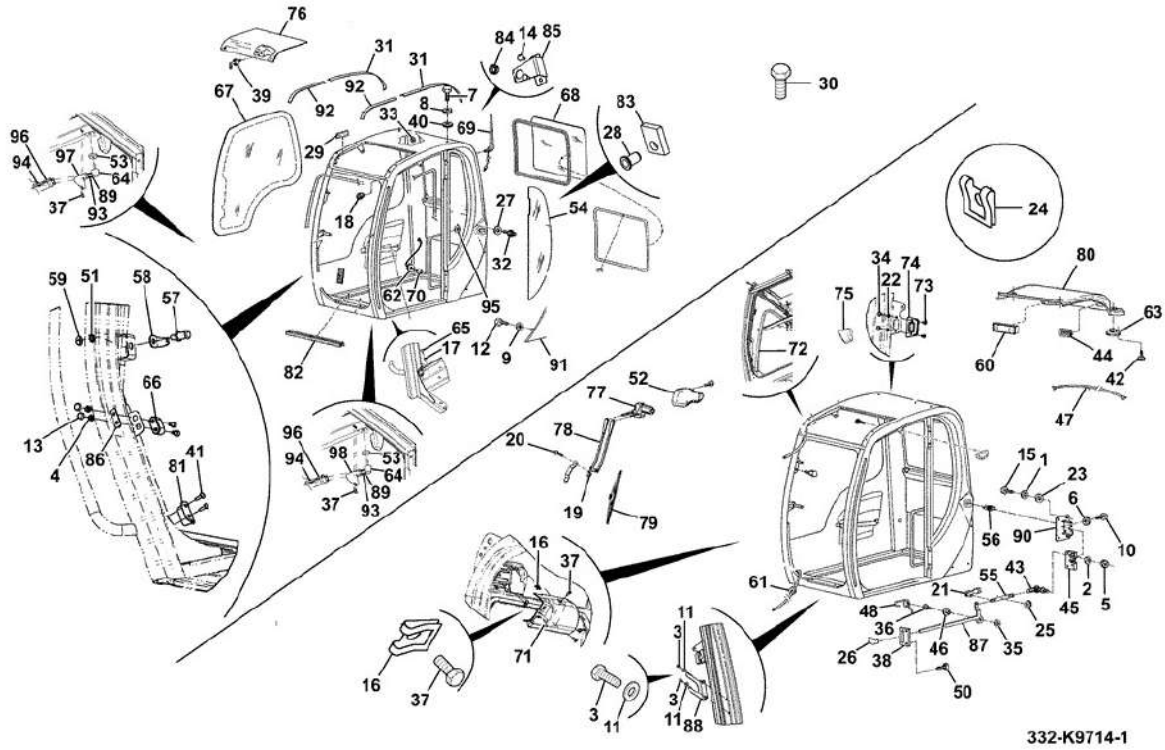

Item	Part #	Change No	Description	Usage Code	QTY
A	332/K9714		Cab ABI (Non ROPS)		1
B	:333/E3358		Door assembly		1
1	:332/F8597		Washer M8 (DIN 6798)		4
2	:6900/0637		Washer		1
3	:331/36385		Screw handle support		2
4	:6900/0571		Nut		4
5	:6900/0551		Nut		1
6	:6900/0550		Washer		4
7	:6900/0566		Screw		2
8	:6900/0567		Washer		2
9	:6900/0570		Washer		3
10	:6900/0608		Screw		4
11	:6900/0640		Washer		2
12	:331/68649		Pin		3
13	:6900/0572		Cap nut		2
14	:333/E2492		Screw M6 x 20mm		4
15	:6900/0599		Screw		4
16	:6900/0552		Clip		2
17	:6900/0607		Nut		2
18	:333/E2494		Grommet		1
19	:333/E2495		Washer		1
20	:333/E2496		Screw M6 x 20mm		1

21	:6900/0523		Clip axle		1
22	:333/E2497		Nut		4
23	:6900/0569		Washer		4
24	:821/10267		Clip		8
25	:333/E2498		Grommet		1
26	:331/19929		Knob		1
27	:6900/0563		Washer		1
28	:333/E2499		Rivet		2
29	:334/L0052		Label identification		1
30	:333/E2500		Screw M6 x 12mm		2
31	:333/E2501		Seal 2.2mts		2
32	:6900/0562		Stopper		1
32A	:333/J8919		Buffer spacer *Added to prevent lower glass door breakage*		1
33	:331/41517		Grommet		4
34	:333/E2502		Cap		2
35	:6900/0605		Spacer plastic		1
36	:6900/0603		Screw		1
37	:6900/0554		Screw		7
38	:6900/0541		Guide		1
39	:332/F8598		Connector elbow		1
40	:6900/0568		Washer fiber		2
41	:6900/0619		Screw		4
42	:826/11108		Screw		8
43	:6900/0627		Joint ball		1
44	:6900/0587		Light roof		1
45	:6900/0543		Latch		1
46	:6900/0604		Spacer		1
47	:6900/0580		Harness speaker		1
48	:6900/0606		Spring		1
50	:334/L0056		Screw screw M6 x 30		2
51	:331/41516		Washer		1
52	:333/E2503		Switch		1
53	:331/37333		Washer foam		2
54	:827/80219		Glass cab l/hand rear		1
55	:331/36359		Rod axle		1
56	:331/37334		Grommet		1
57	:331/36334		Striker		1
58	:331/36335		Guard		1
59	:331/36336		Nut		1
60	:331/58570		Cover radio		1
61	:331/41519		Grommet		2
62	:333/E2504		Grommet		1
63	:332/F8593		Speaker Loudspeaker 20W		2
64	:333/E2505		Bumper Stop		2
65	:333/E2506		Bumper stop		2
66	:333/E2507		Lock lower window		2
67	:333/E2509		Window RH		1
68	:333/E2511		Window rear		1
69	:333/E2512		Mast antenna		1
70	:333/E2514		Harness Main		1

71	:333/E2515		Cover wiper		1
72	:333/E2518		Foam		1
73	:333/E2519		Screw M5 x 12mm		8
74	:333/E2520		Guide window lock		4
75	:333/E2521		Shield Protection		1
76	:333/E2522		Window roof		1
77	:333/E2523		Motor wiper		1
78	:333/E2524		Arm wiper		1
79	:333/E2525		Blade wiper		1
80	:333/E2526		Lining Headliner		1
81	:333/E2527		Guide lower window		2
82	:333/E2528		Seal front window		1
83	:333/E2529		Support rear window		2
84	:333/E2530		Grommet		2
85	:333/E2570		Bracket lower front glass		2
86	:333/E2571		Washer		2
87	:333/E2572		Lever door latch		1
88	:333/E2573		Bracket wiper blade		1
89	:6900/0557		Nut		4
90	:6900/0544		Cover		1
91	:331/36343		Cover rear		1
92	****		None serviced part		1
93	:6900/0559		Washer		4
94	:333/E2574		Screw M5 x16mm		4
95	:334/L0057		Cap		2
96	:333/E2575		Screen sun		1
97	:333/E2576		Bracket LH		1
98	:333/E2577		Bracket RH		1

9822/0355 B210-40-5 OPERATOR ENCLOSURE CAB ABI, NON-ROPS

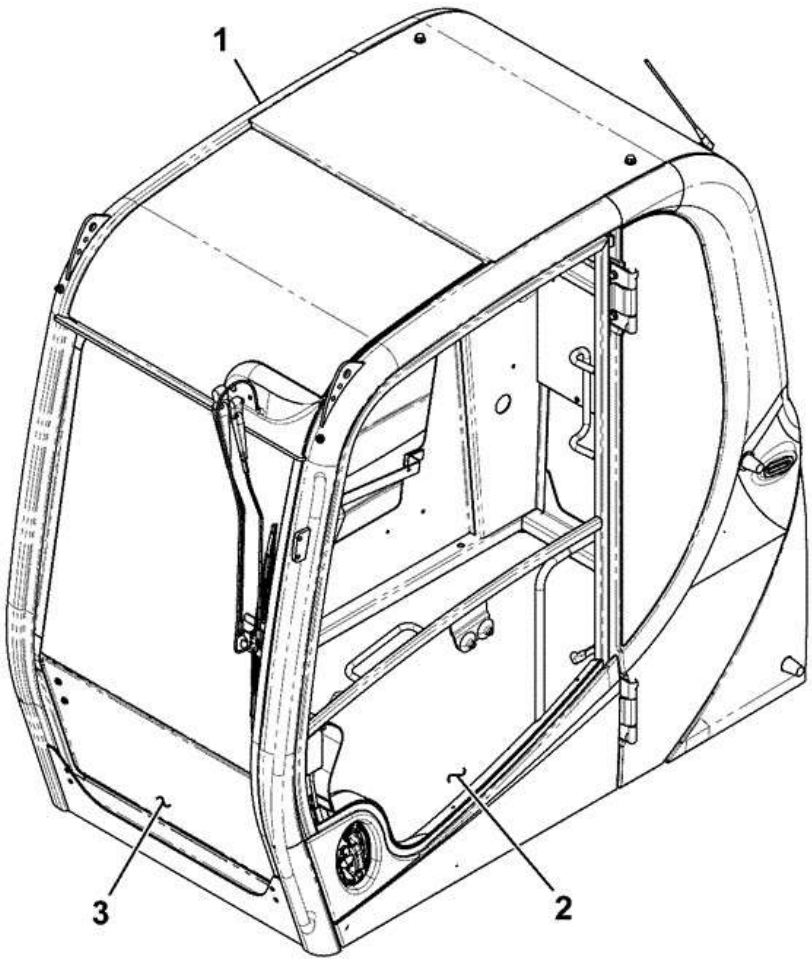

332-K9714-3

Item	Part #	Change No	Description	Usage Code	QTY
1	334/P1145		Cab assembly		1

2	334/P0604		Door assembly		1
3	334/P1071		Windscreen assembly		1

9822/0355 B210-45-1 OPERATOR ENCLOSURE CAB ASSEMBLY

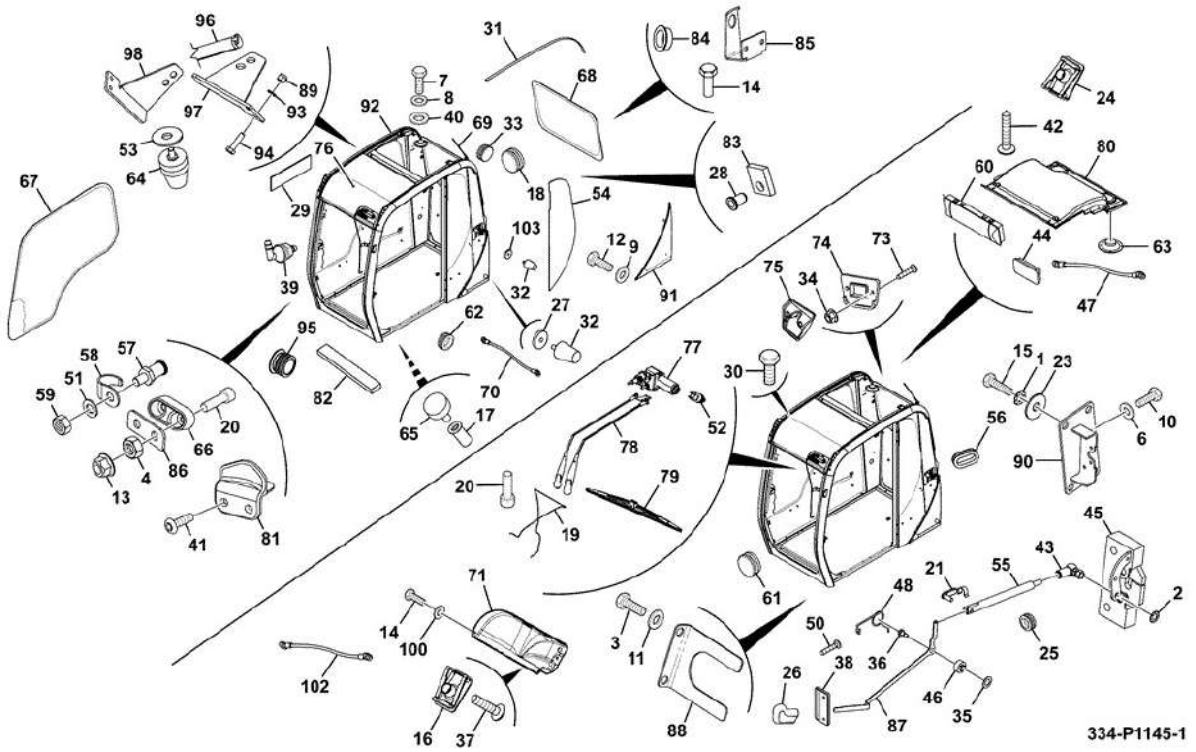

Item	Part #	Change No	Description	Usage Code	QTY
1	1423/0009Z		Washer lock,toothed		4
2	1423/0007Z		Washer lock,toothed		1
3	1315/0205D		Setscrew M6 x 20		2
4	1370/0201D		Nut Plain M8		4
6	1420/0006D		Washer (M6)		5
7	1315/0509D		Screw M12x35mm		2
8	1420/0009D		Washer (M12)		2
9	1420/0007D		Washer (M8)		3
10	1315/0207D		Setscrew M6 x 25mm		4
11	823/10578		Washer M6 Black		2
12	1315/0303D		Setscrew M8 x 16mm		3
13	229/01495		Nut cap (tim-100830)		2
14	1316/0205D		Screw set		5
15	1315/0307D		Setscrew M8 x 25 mm		4
16	826/10651		Nut U type		2
17	826/01099		Rivet Nut M6		2
18	332/P8518		Grommet Blind		1
19	334/P1492		Washer tube		1
20	1391/3303D		Capscrew		4
21	6900/0523		Clip axle		1
23	6900/0569		Washer		4

24	821/10267		Clip		8
25	828/00320		Grommet		1
26	331/19929		Knob		1
27	333/J8919		Buffer spacer		1
28	332/C6303		Rivet pop 4mm diameter		2
29	332/L1522		Plate identity		1
30	826/11591		Screw button head		2
31	334/P1486		Seal - 2.2m anti drip		2
32	6900/0562		Stopper		2
33	331/41517		Grommet		4
34	334/P2542		Nut cap M5		2
35	6900/0605		Spacer plastic		1
36	6900/0603		Screw		1
37	826/10887		Screw button head torx		6
38	6900/0541		Guide		1
39	332/L1580		Cab connection		1
40	823/00521		Washer rubber		2
41	826/11069		Screw M6x20 button head Black		4
42	1430/1002		Screw self tap		8
43	6900/0627		Joint ball		1
44	6900/0587		Light roof		1
45	6900/0543		Latch		1
46	6900/0604		Spacer		1
47	332/L1592		Wire speaker		1
48	6900/0606		Spring		1
50	826/01077		Screw		2
51	1410/0005D		Washer 1/2in small		1
52	334/P2541		Switch		1
53	331/37333		Washer foam		2
54	827/80219		Glass cab l/hand rear		1
55	331/36359		Rod axle		1
56	331/37334		Grommet		1
57	331/36334		Striker		1
58	331/36335		Guard		1
59	1371/0401D		Nut M12		1
60	331/36346		Cover		1
61	333/P9202		Grommet		2
62	334/P2522		Grommet		1
63	332/L8736		Speaker loud		2
64	331/19926		Stop cab roof		2
65	334/P1417		Bumper window		2
66	334/P1162		Lock window,lower		2
67	333/J3865		Window right side		1
68	333/J3869		Window rear		1
69	334/P2528		Cab antenna		1
70	334/P2527		Harness		1
71	334/P0610		Cover wiper motor		1
73	826/11459		Screw c/sk M5x12		8
74	334/P1416		Guide		4
75	334/P1415		Cab protector		1
76	333/J3863		Window roof		1

77	334/P2530		Motor wiper 24V left		1
78	334/P2531		Arm wiper		1
79	334/P2532		Blade wiper		1
80	334/P1414		Cab headliner		1
81	334/P1413		Retainer		2
82	334/P1412		Seal window,front		1
83	334/P1411		Retainer		2
84	334/P1410		Grommet		2
85	334/P1161		Support glass,rear		2
86	334/P1163		Washer lower window		2
87	334/P1160		Lever		1
88	334/P1159		Bracket wiper blade		1
89	826/11430		Nut nyloc M5		8
90	334/L8565		Cover		1
91	331/36343		Cover rear		1
92	334/L8476		Frame cab		1
93	1420/0005Z		Washer (M5)		4
94	1315/0105Z		Setscrew M5 x 20		4
95	828/10333		Plug Blanking		2
96	334/P3059		Roller assembly		1
97	334/P4613		Bracket sunscreen left side		1
98	334/P2999		Bracket sunscreen right side		1
100	1370/0101D		Nut Plain M6		1
102	334/P3635		Cable M4-M6 earth strap		1
103	334/P3902		Washer 50-11-1		1

9822/0355 B210-50-1 OPERATOR ENCLOSURE CAB/CANOPY/ROPS FRAME INSTALLATION ASSEMBLIES

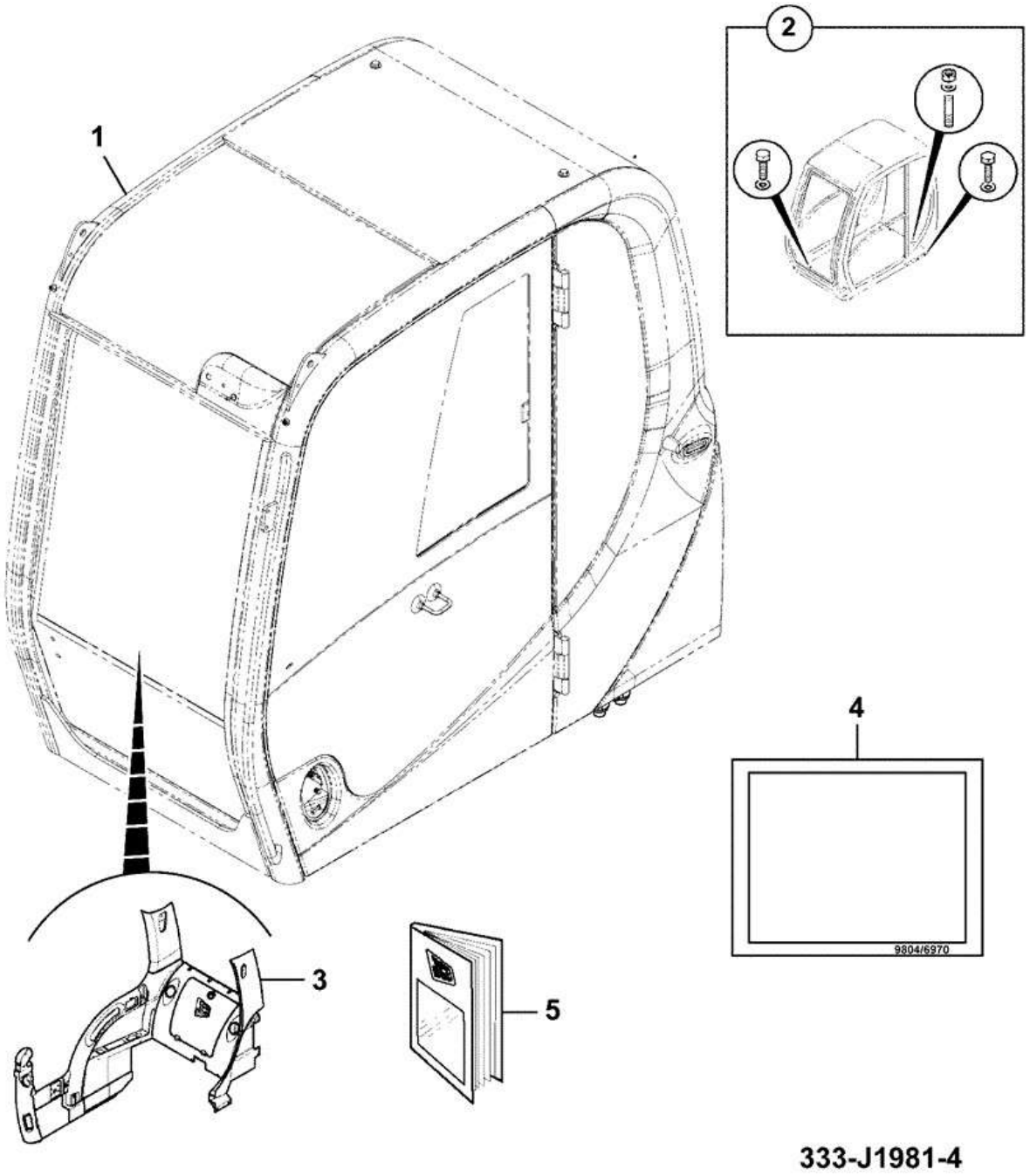

Item	Part #	Change No	Description	Usage Code	QTY
1	****		Cab Non ROPS, Assembly		1

2	****		Fasteners Mounting Cab		1
3	331/37601		Panel noise damping		1
4	9804/6970		Label despatch english		1
5	9804/6979		Handbook		1

Product Catalog \ CONSTRUCTION \ NORTH AMERICA \ CONSTRUCTION / INDUSTRIAL \ JS TRACKED EXCAVATORS \ JS200LC BR E 02451101-02451200 9822/0355 \ B BODYWORK \ B02 CAB / CANOPY

9822/0355 B210-55-1 OPERATOR ENCLOSURE CAB NON ROPS

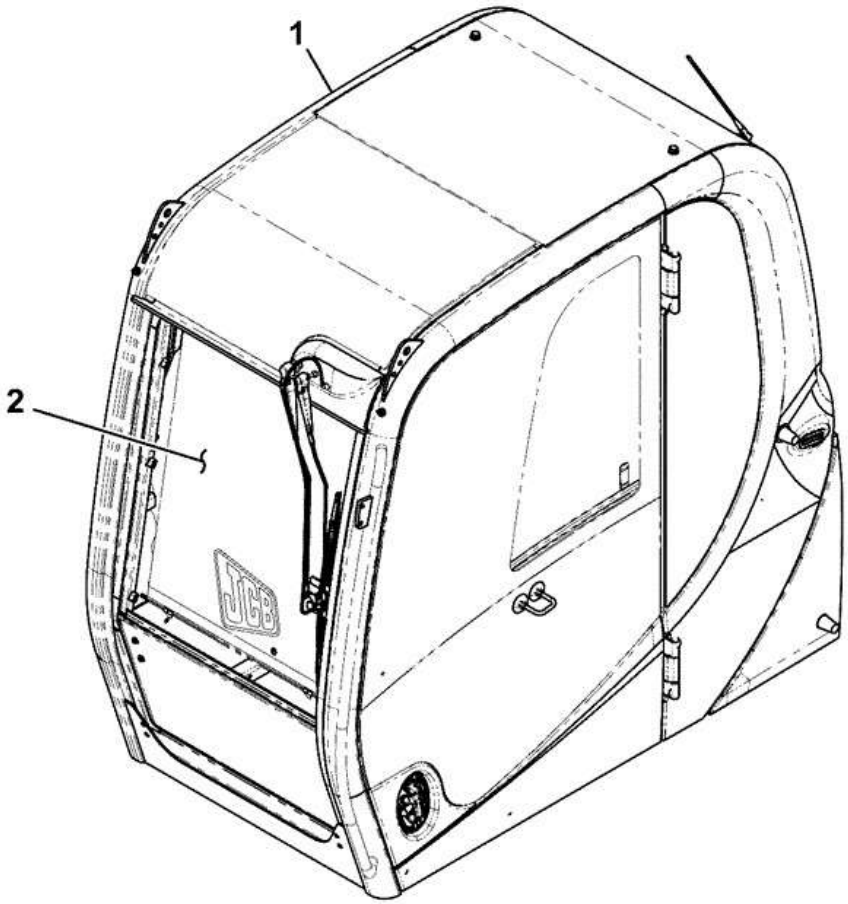

332-B1464-1

Item	Part #	Change No	Description	Usage Code	QTY
1	****		Cab Non ROPS, Assembly		1

2	****		Blind front, assembly full length		1

9822/0355 B210-60-1 OPERATOR ENCLOSURE CAB NON ROPS, T4i, UK

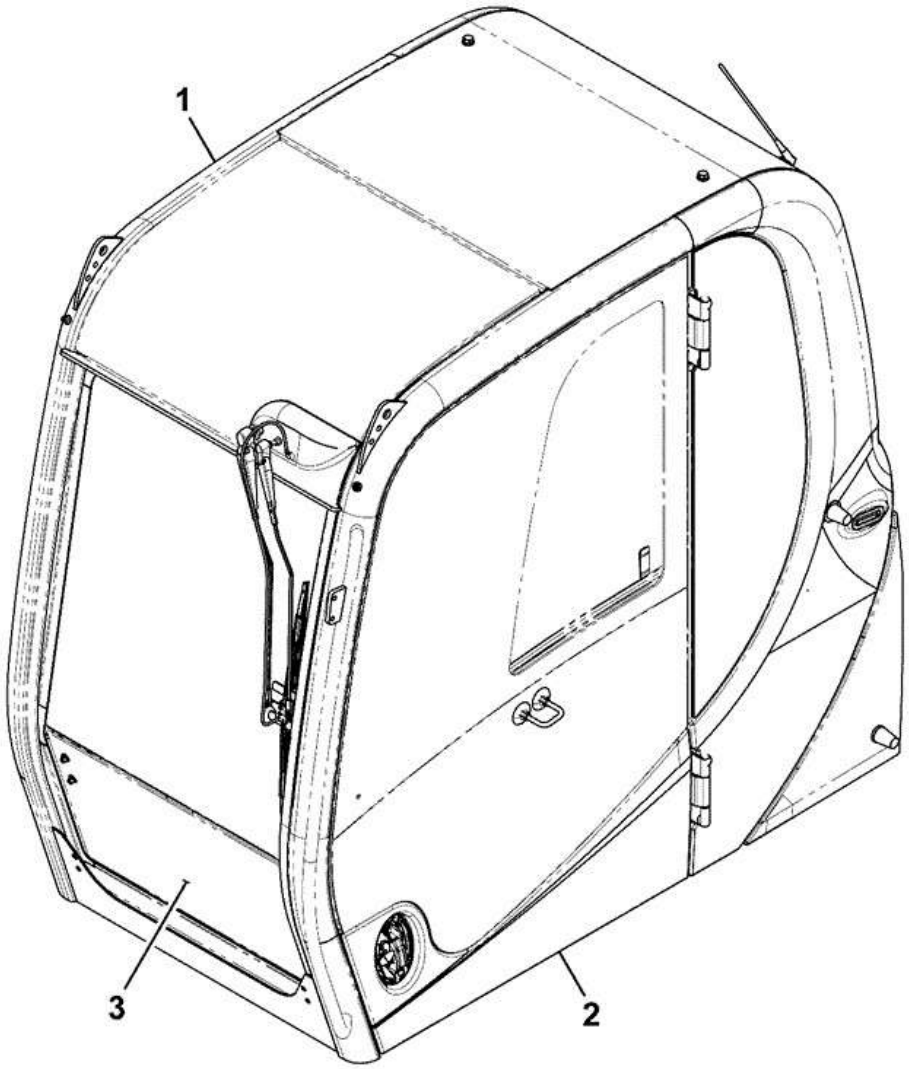

333-J9007-3

Item	Part #	Change No	Description	Usage Code	QTY
1	333/K2104		Cab Assembly		1

2	334/P0604		Door assembly		1
3	334/P1071		Windscreen assembly		1

CONSTRUCTION \ NORTH AMERICA \ CONSTRUCTION / INDUSTRIAL \ JS TRACKED EXCAVATORS \ JS200LC BR E 02451101-02451200 9822/0355 \ B BODYWORK \ B02 CAB / CANOPY

9822/0355 B210-65-1 OPERATOR ENCLOSURE ASSEMBLY

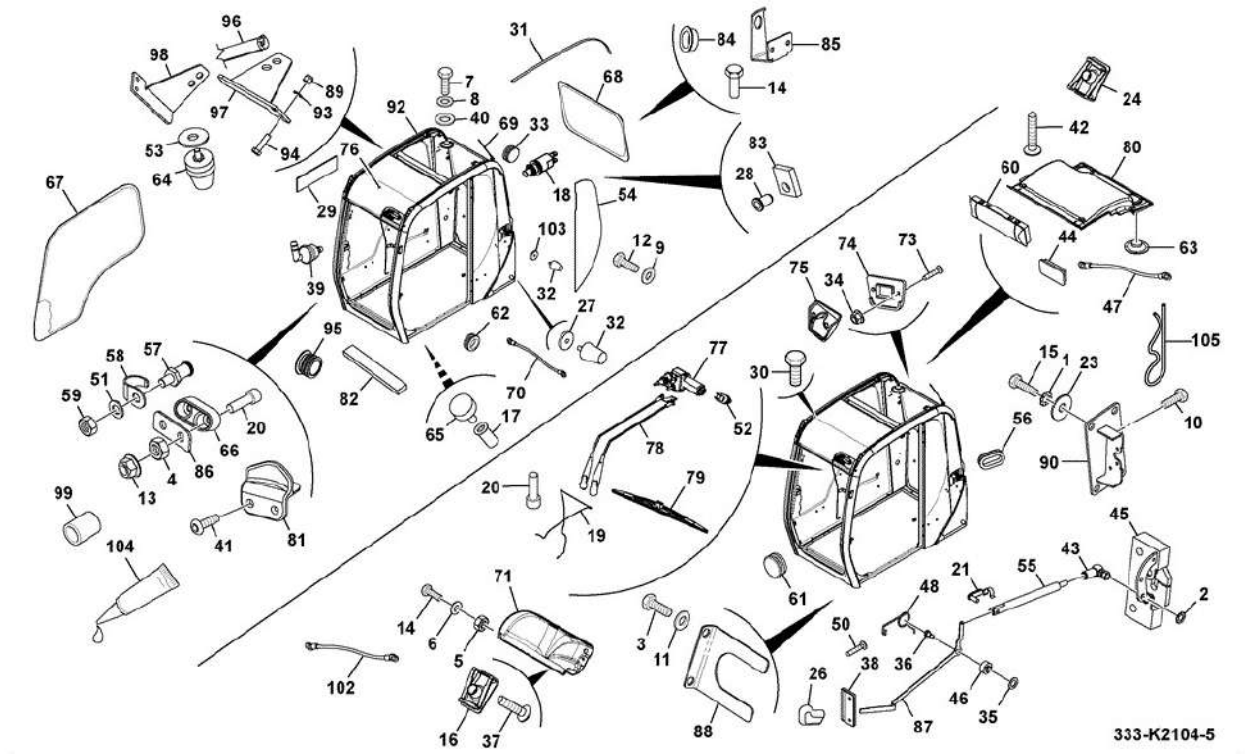

Item	Part #	Change No	Description	Usage Code	QTY
1	1423/0009Z		Washer lock,toothed		4
2	1423/0007Z		Washer lock,toothed		1
3	1315/0205D		Setscrew M6 x 20		2
4	1370/0201D		Nut Plain M8		4
5	1370/0101D		Nut Plain M6		2
6	1420/0006D		Washer (M6)		5
7	1315/0509D		Screw M12x35mm		2
8	1420/0009D		Washer (M12)		2
9	1420/0007D		Washer (M8)		1
10	1315/0207D		Setscrew M6 x 25mm		4
11	823/10578		Washer M6 Black		2
12	1315/0303D		Setscrew M8 x 16mm		1
13	229/01495		Nut cap (tim-100830)		2
14	1316/0205D		Screw set		5
15	1315/0307D		Setscrew M8 x 25 mm		4
16	826/10651		Nut U type		2
17	826/01099		Rivet Nut M6		2
18	333/K7230		Switch Single Pole		1
19	334/P1492		Washer tube		1
20	1391/3303D		Capscrew		4
21	6900/0523		Clip axle		1
23	6900/0569		Washer		4

24	821/10267		Clip		8
26	331/19929		Knob		1
27	333/J8919		Buffer spacer		1
28	332/C6303		Rivet pop 4mm diameter		2
29	332/L1522		Plate identity		1
30	826/11591		Screw button head		2
31	334/P1486		Seal - 2.2m anti drip		2
32	6900/0562		Stopper		2
33	331/41517		Grommet		4
34	334/P2542		Nut cap M5		2
35	6900/0605		Spacer plastic		1
36	6900/0603		Screw		1
37	826/10887		Screw button head torx		6
38	6900/0541		Guide		1
39	332/L1580		Cab connection		1
40	823/00521		Washer rubber		2
41	826/11069		Screw M6x20 button head Black		4
42	1430/1002		Screw self tap		8
43	6900/0627		Joint ball		1
44	6900/0587		Light roof		1
45	6900/0543		Latch		1
46	6900/0604		Spacer		1
47	332/L1592		Wire speaker		1
48	6900/0606		Spring		1
50	826/01077		Screw		2
51	1410/0005D		Washer 1/2in small		1
52	334/P2541		Switch		1
53	331/37333		Washer foam		2
54	827/80219		Glass cab l/hand rear		1
55	331/36359		Rod axle		1
56	331/37334		Grommet		1
57	331/36334		Striker		1
58	331/36335		Guard		1
59	1371/0401D		Nut M12		1
60	331/36346		Cover		1
61	333/P9202		Grommet		2
62	334/P2522		Grommet		1
63	332/L8736		Speaker loud		2
64	331/19926		Stop cab roof		2
65	334/P1417		Bumper window		2
66	334/P1162		Lock window,lower		2
67	333/J3865		Window right side		1
68	333/J3869		Window rear		1
69	334/P2528		Cab antenna		1
70	333/K0017		Harness Cab Roof		1
71	333/K2295		Cover Motor Wiper		1
73	826/11459		Screw c/sk M5x12		8
74	334/P1416		Guide		4
75	334/P1415		Cab protector		1
76	333/K1995		Glass Top		1
77	334/P6424		Motor Wiper 24V 1SP 65 deg		1

78	334/P2531		Arm wiper		1
79	334/P2532		Blade wiper		1
80	334/P1414		Cab headliner		1
81	334/P1413		Retainer		2
82	334/P1412		Seal window,front		1
83	334/P1411		Retainer		2
84	334/P1410		Grommet		2
85	334/P1161		Support glass,rear		2
86	334/P1163		Washer lower window		2
87	334/P1160		Lever		1
88	334/P1159		Bracket wiper blade		1
89	826/11430		Nut nyloc M5		8
90	334/L8565		Cover		1
92	335/G7090		Frame Cab		1
93	1420/0005Z		Washer (M5)		4
94	1315/0105Z		Setscrew M5 x 20		4
95	828/10333		Plug Blanking		2
96	334/P3059		Roller assembly		1
97	334/P4613		Bracket sunscreen left side		1
98	334/P2999		Bracket sunscreen right side		1
99	823/10605		Spacer		4
102	334/P3635		Cable M4-M6 earth strap		1
103	334/P3902		Washer 50-11-1		1
104	4101/1100		Loctite 243		0
105	335/H2686		Pin Dia 2mm		1

CONSTRUCTION \ NORTH AMERICA \ CONSTRUCTION / INDUSTRIAL \ JS TRACKED EXCAVATORS \ JS200LC BR E 02451101-02451200 9822/0355 \ B BODYWORK \ B02 CAB / CANOPY

9822/0355 B220-1-1 MOUNTINGS FASTENERS CAB

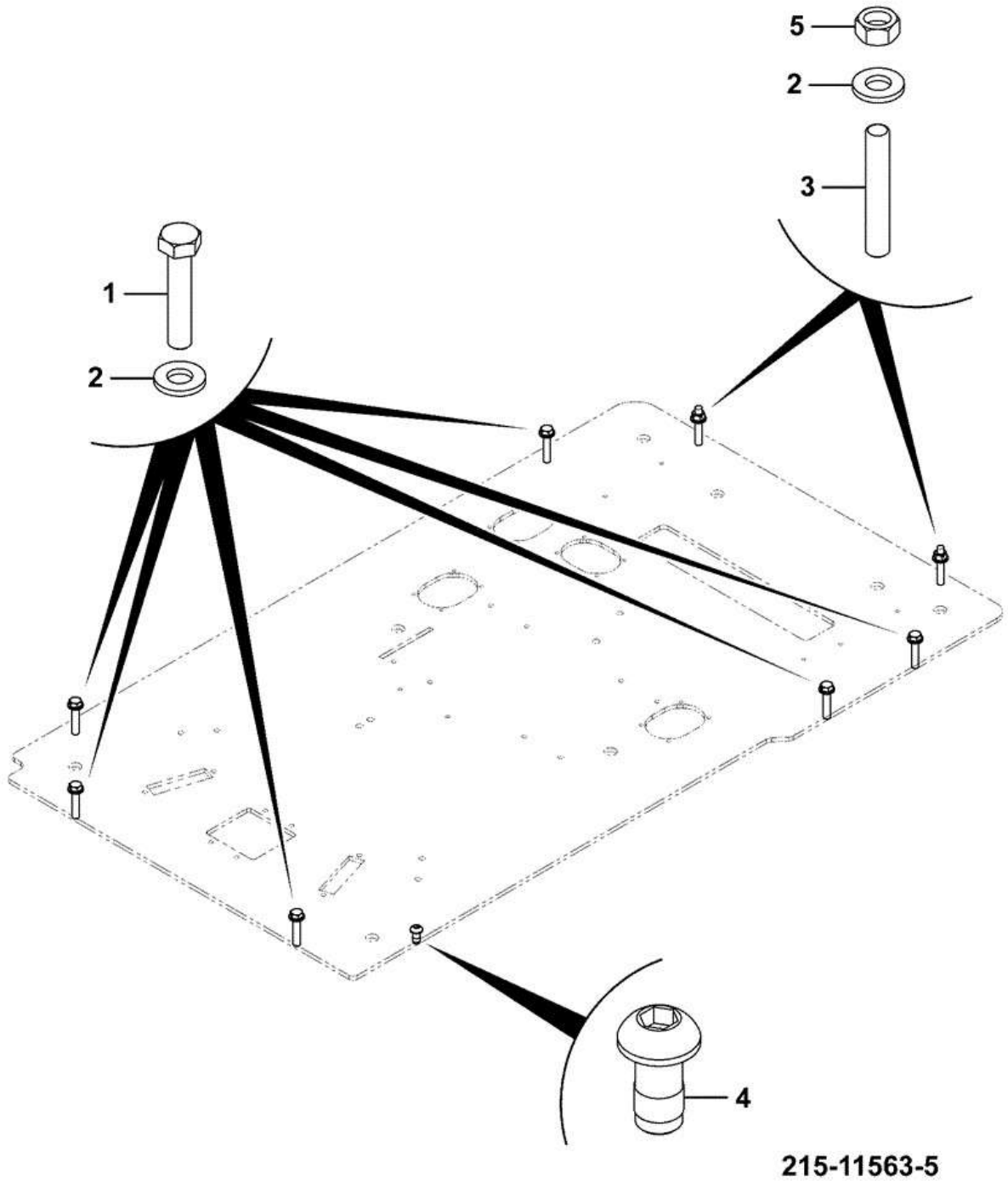

Item	Part #	Change No	Description	Usage Code	QTY
1	1316/3514D		Bolt M12 x 60		6
2	JHP0042		Washer M12		8
3	KHN1256		Bolt		2

4	826/01649		Bolt Dome Head Tuf-lock		1
5	1371/0401D		Nut M12		2

CONSTRUCTION \ NORTH AMERICA \ CONSTRUCTION / INDUSTRIAL \ JS TRACKED EXCAVATORS \ JS200LC BR E 02451101-02451200 9822/0355 \ B BODYWORK \ B02 CAB / CANOPY

9822/0355 B220-10-1 MOUNTINGS CAB ASSEMBLY

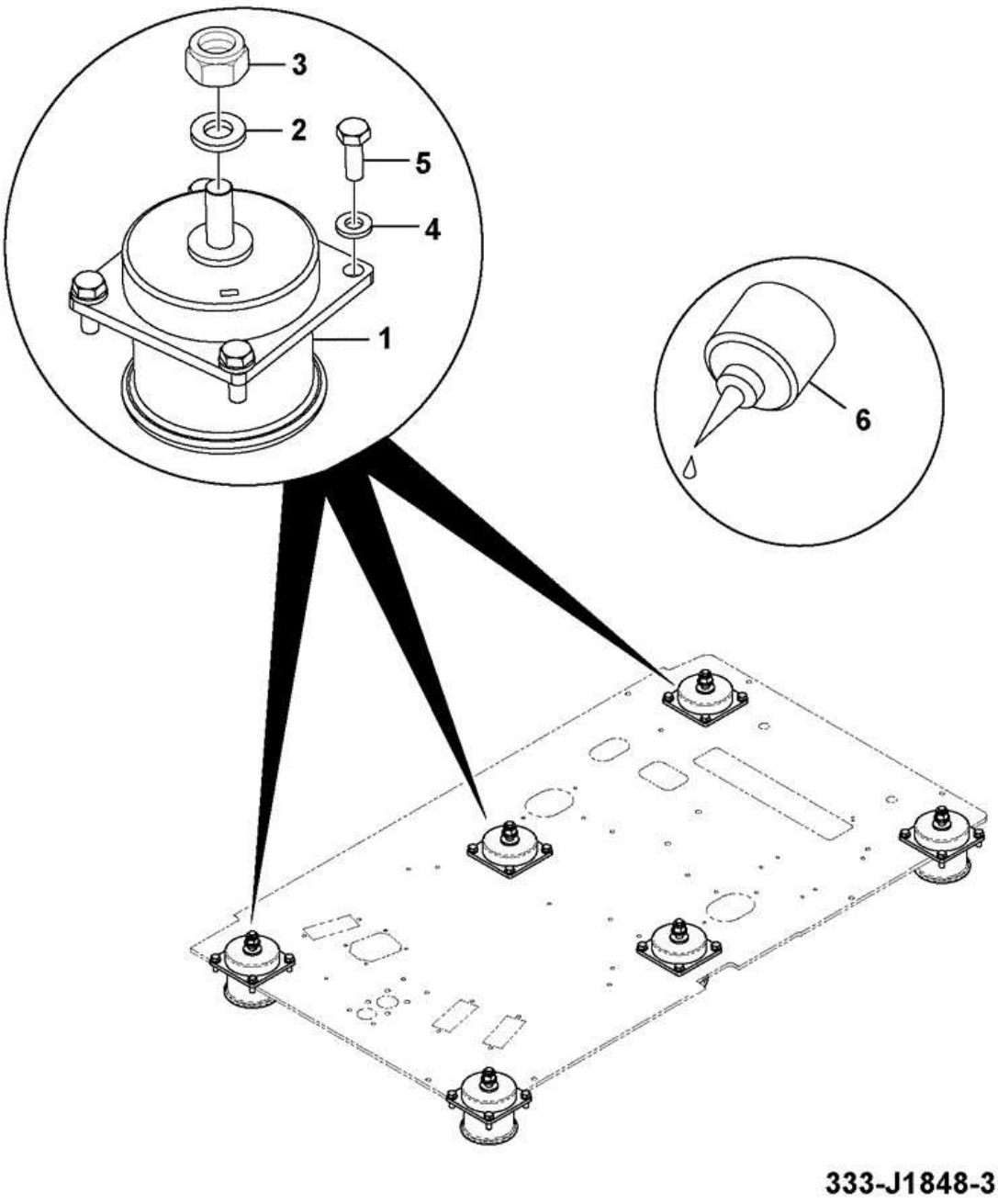

Item	Part #	Change No	Description	Usage Code	QTY
1	333/J5301		Rubber mount		6
2	JHP0043		Washer M16		6
3	1371/0603D		Nut M16 self locking		6

4	JHP0046		Washer M10		24
5	1316/0408D		Setscrew		24
6	4101/0500		Fluid Locking Loctite 262		0

CONSTRUCTION \ NORTH AMERICA \ CONSTRUCTION / INDUSTRIAL \ JS TRACKED EXCAVATORS \ JS200LC BR E 02451101-02451200 9822/0355 \ B BODYWORK \ B02 CAB / CANOPY

9822/0355 B240-20-1 DOORS COMPONENTS

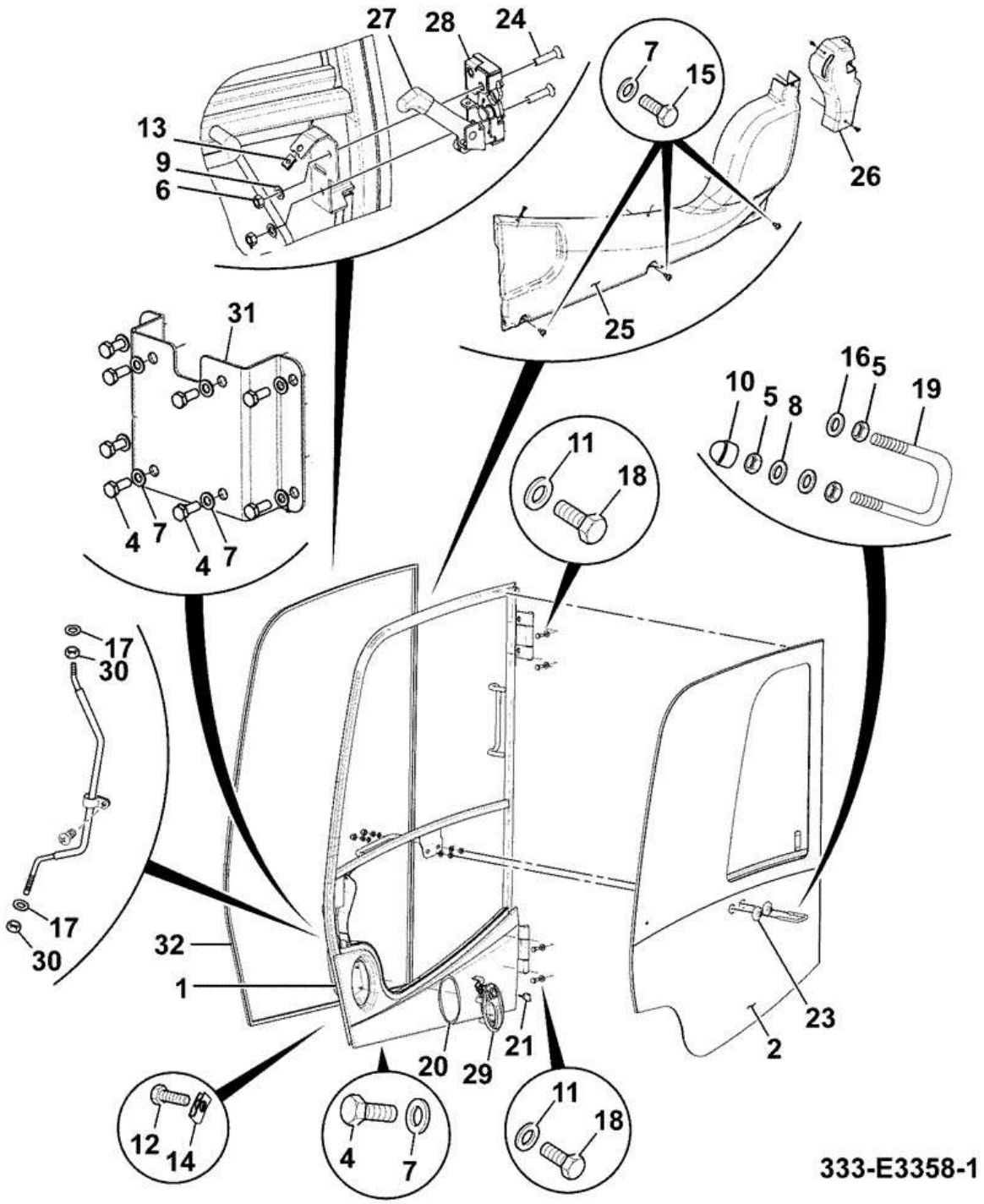

Item	Part #	Change No	Description	Usage Code	QTY
A	333/E3358		Door assembly		1
1	:333/E3359		Frame door		1
2	:333/J3903		Door glass assembly (3 pieces)		1

2A	::333/J3904		Glass sliding		1
2B	::333/J3902		Glass lower door		1
4	:331/36385		Screw handle support		8
5	:6900/0574		Nut		4
6	:6900/0571		Nut		2
7	:6900/0550		Washer		8
8	:6900/0644		Washer		2
9	:6900/0570		Washer		2
10	:331/36379		Cap nut M12		2
11	:6900/0992		Washer		4
12	:331/37557		Screw		5
13	:821/10267		Clip		5
14	:333/E3361		Clip		1
15	:6900/0554		Screw		2
16	:331/41504		Washer		2
17	:331/36382		Washer lock rod		2
18	:331/36392		Screw		4
19	:331/36378		Hook door lock back		1
20	:331/36390		Seal handle		1
21	:331/36391		Key cab door		1
23	:334/L0064		Seal circular rubber		2
24	:332/F8659		Screw M8 x 35 (DIN 7991)		2
25	:333/E3363		Cover lower		1
26	:333/E3364		Cover upper		1
27	:333/E3365		Rod lock		1
28	:333/E3366		Latch door		1
29	:333/E3367		Handle outer door		1
30	:333/E3368		Nut M4		2
31	:333/E3369		Bracket door latch		1
32	:333/E3370		Seal door		1

CONSTRUCTION \ NORTH AMERICA \ CONSTRUCTION / INDUSTRIAL \ JS TRACKED EXCAVATORS \ JS200LC BR E 02451101-02451200 9822/0355 \ B BODYWORK \ B02 CAB / CANOPY

9822/0355 B240-21-1 DOORS CAB ASSEMBLY

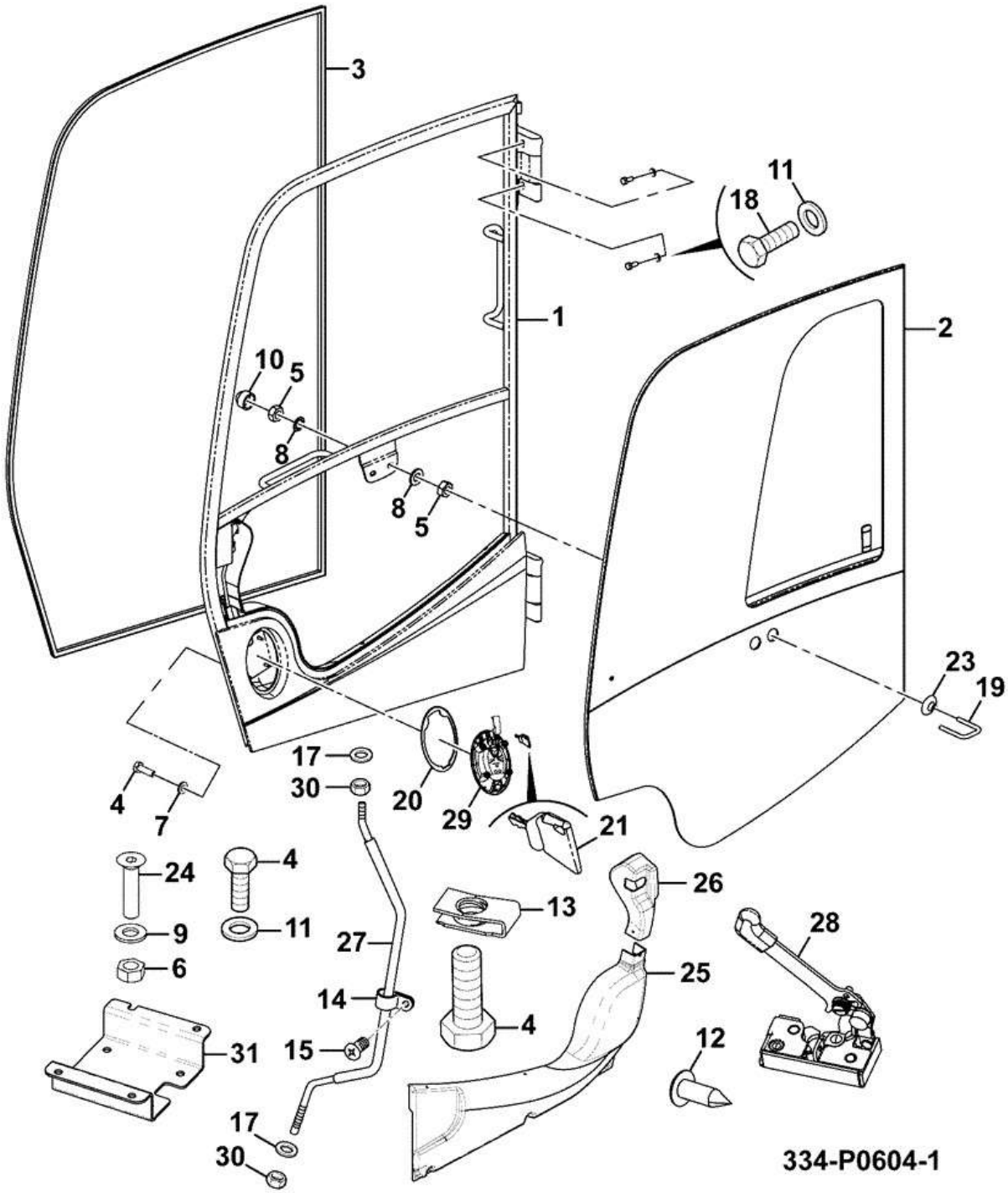

Item	Part #	Change No	Description	Usage Code	QTY
1	334/L8487		Door		1
2	334/P1061		Door glass assembly (3 piece)		1
3	334/P1045		Seal door		1

4	1315/0205D		Setscrew M6 x 20		8
5	1370/0301D		Nut (M10)		4
6	1370/0201D		Nut Plain M8		2
7	1420/0006D		Washer (M6)		8
8	1424/0010Z		Washer lock, toothed		2
9	1420/0007D		Washer (M8)		2
10	331/36379		Cap nut M12		2
11	1420/0008D		Washer (M10)		6
12	332/L8509		Screw 4,8 X 16		5
13	821/10267		Clip		1
14	332/L8505		Ring		1
15	826/10887		Screw button head torx		3
17	1420/0004D		Washer plain M4		2
18	1316/0407D		Screw		4
19	334/P1047		Bar latch		1
20	333/Y2927		Gasket Door Handle		1
21	334/P2524		Key		1
23	332/L8512		Seal		2
24	826/01814		Screw Countersunk M8x35		2
25	334/P0609		Moulding interior door lower		1
26	334/P0605		Moulding interior door upper		1
27	334/P1053		Bar		1
28	334/P2618		Latch door		1
29	333/E3367		Handle outer door		1
30	1370/9401D		Nut plain M4		2
31	334/P1056		Bracket door handle		1
50	331/41515		Switch Safety Cab Door *High Raise Cab*		1

CONSTRUCTION \ NORTH AMERICA \ CONSTRUCTION / INDUSTRIAL \ JS TRACKED EXCAVATORS \ JS200LC BR E 02451101-02451200 9822/0355 \ B BODYWORK \ B02 CAB / CANOPY

9822/0355 B240-24-1 DOORS SLIDING WINDOW

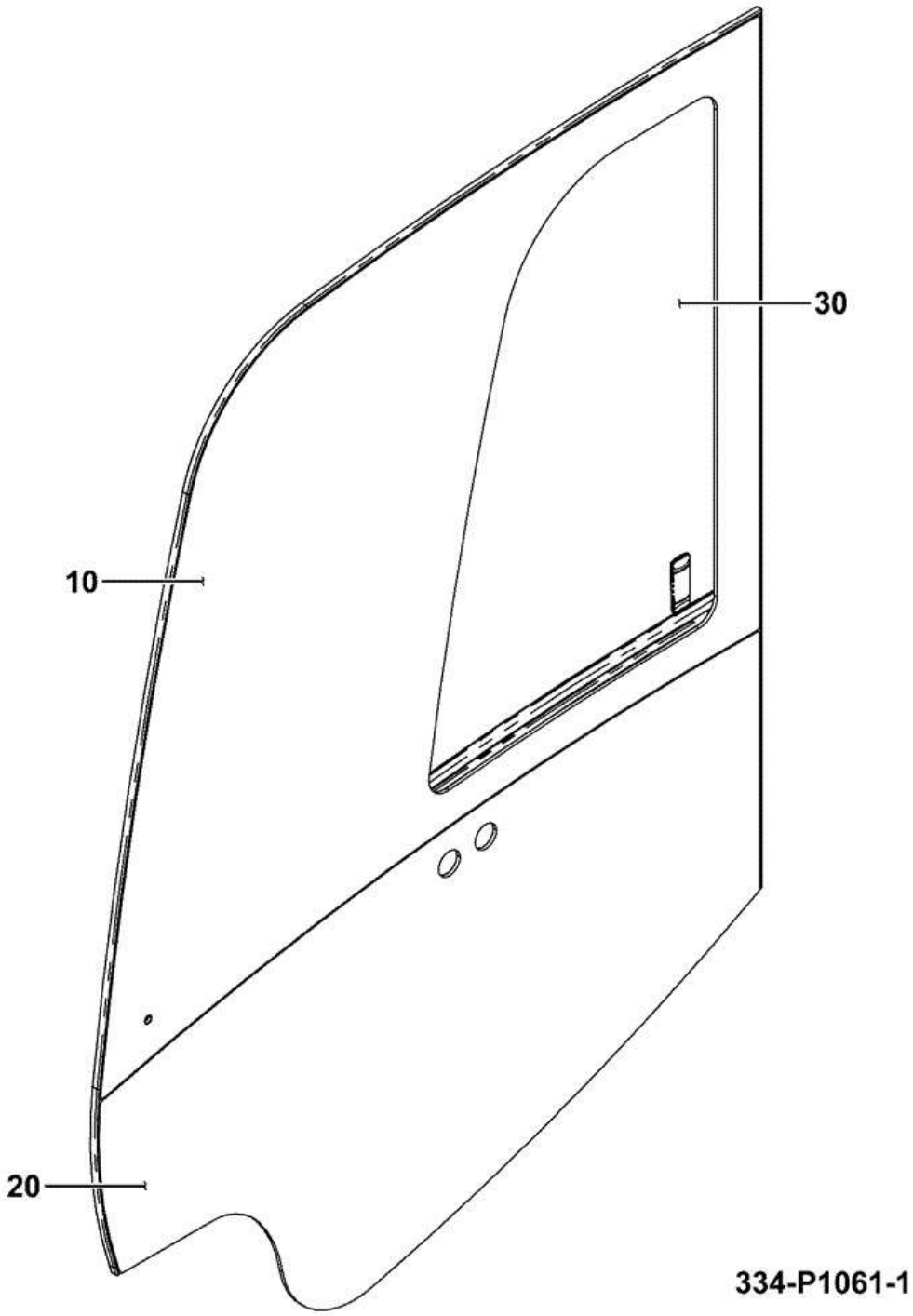

Item	Part #	Change No	Description	Usage Code	QTY
10	333/J3903		Door glass assembly (3 pieces)		1
20	333/J3902		Glass lower door		1
30	333/J3904		Glass sliding		1

CONSTRUCTION \ NORTH AMERICA \ CONSTRUCTION / INDUSTRIAL \ JS TRACKED EXCAVATORS \ JS200LC BR E 02451101-02451200 9822/0355 \ B BODYWORK \ B02 CAB / CANOPY

9822/0355 B240-25-1 DOORS ASSEMBLY SLIDING WINDOW GLASS

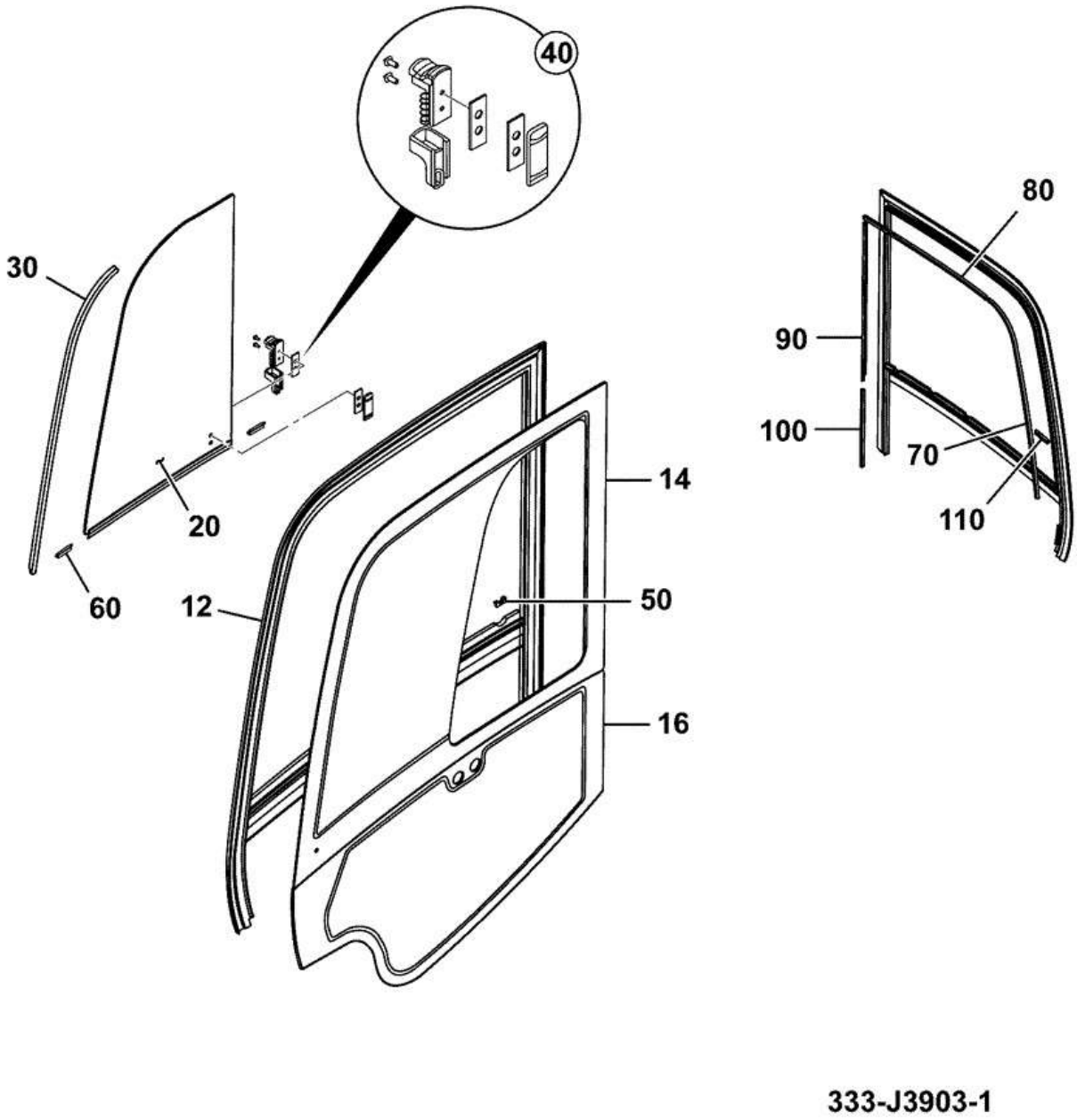

Item	Part #	Change No	Description	Usage Code	QTY
A	333/J3903		Door glass assembly (3 pieces)		1

12	****		None serviced part		1
14	:333/E4559		Window top		1
16	:333/J3902		Glass lower door		1
20	:333/E4563		Kit sliding screen		1
30	:333/E4560		Seal bar		1
40	:333/E4561		Handle assembly		1
50	****		T.B.A		3
60	:333/E4564		Kit sliding element		2
70	:333/E4562		Kit-seal rubbers *Includes items 70 to 110*		1
80	****		None serviced part		1
90	****		None serviced part		1
100	****		None serviced part		1
110	****		None serviced part		1

CONSTRUCTION \ NORTH AMERICA \ CONSTRUCTION / INDUSTRIAL \ JS TRACKED EXCAVATORS \ JS200LC BR E 02451101-02451200 9822/0355 \ B BODYWORK \ B02 CAB / CANOPY

9822/0355 B260-30-1 SEATS BELT 2", RETRACTABLE, T4i

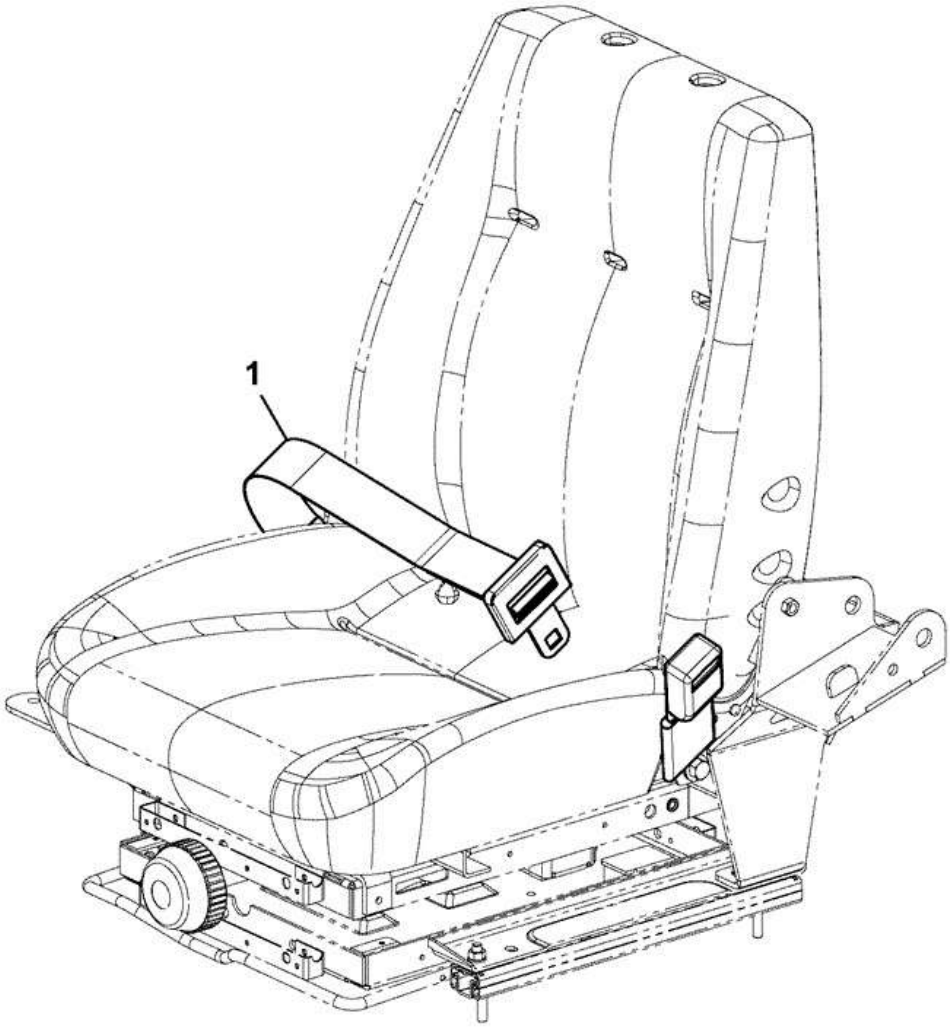

332-W0338-3

Item	Part #	Change No	Description	Usage Code	QTY
1	333/K3057		Seat Belt Retractable 2" Assembly		1

CONSTRUCTION \ NORTH AMERICA \ CONSTRUCTION / INDUSTRIAL \ JS TRACKED EXCAVATORS \ JS200LC BR E 02451101-02451200 9822/0355 \ B BODYWORK \ B02 CAB / CANOPY

9822/0355 B260-35-1 SEATS MECHANICAL

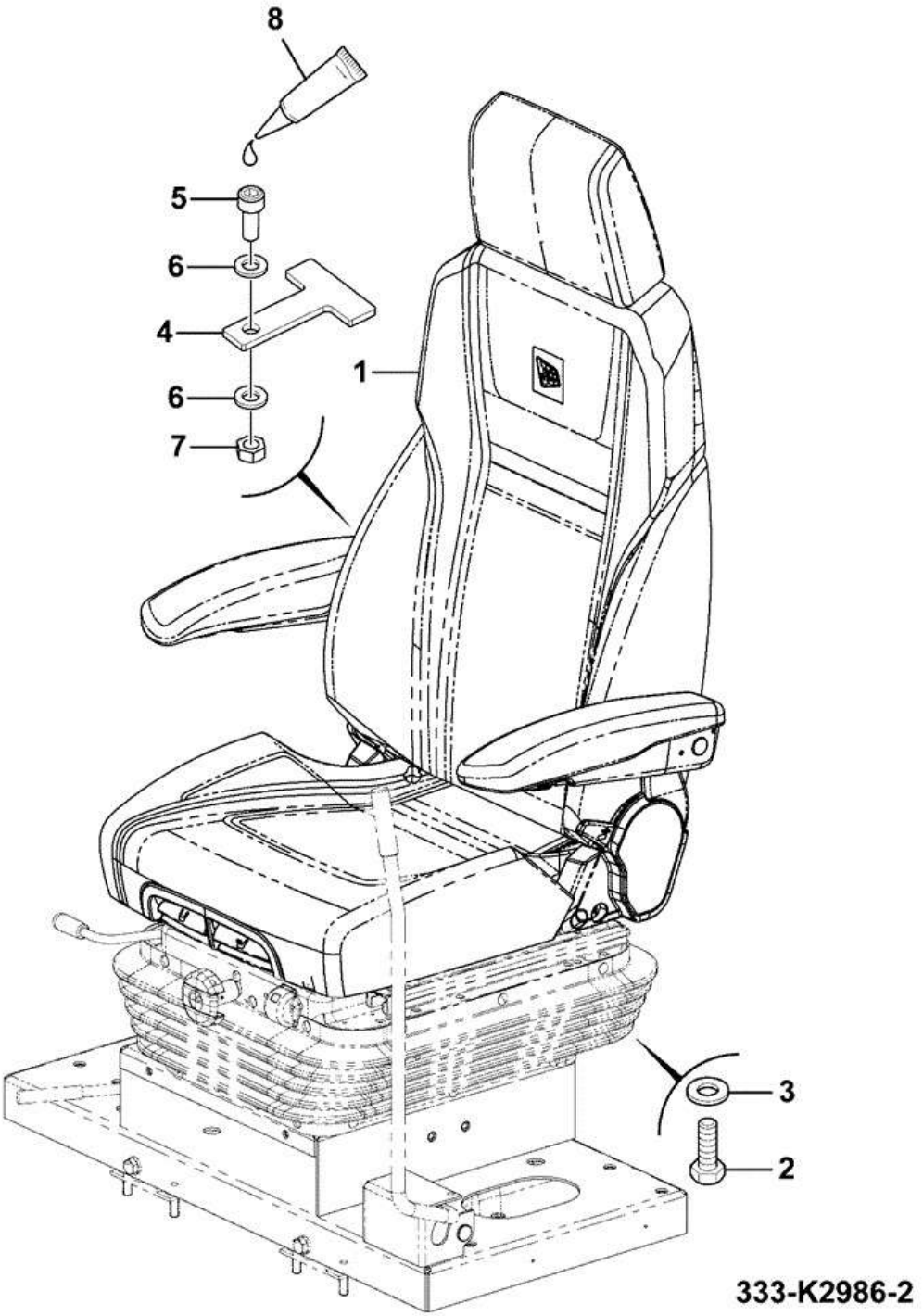

Item	Part #	Change No	Description	Usage Code	QTY
1	333/K2813		Seat Mechanical Standard		1
2	1316/0305D		Screw M8 X 20		4
3	1420/0007D		Washer (M8)		4

4	333/K3040	From 17/10/13	Stop Seat		1
5	1391/3203D	From 17/10/13	Capscrew		1
6	1420/0006D	From 17/10/13	Washer (M6)		2
7	1371/0101D	From 17/10/13	Nut hex M6 high strength		1
8	4101/0500	From 17/10/13	Fluid Locking Loctite 262		0

CONSTRUCTION \ NORTH AMERICA \ CONSTRUCTION / INDUSTRIAL \ JS TRACKED EXCAVATORS \ JS200LC BR E 02451101-02451200 9822/0355 \ B BODYWORK \ B02 CAB / CANOPY

9822/0355 B260-40-1 SEATS COMPONENTS

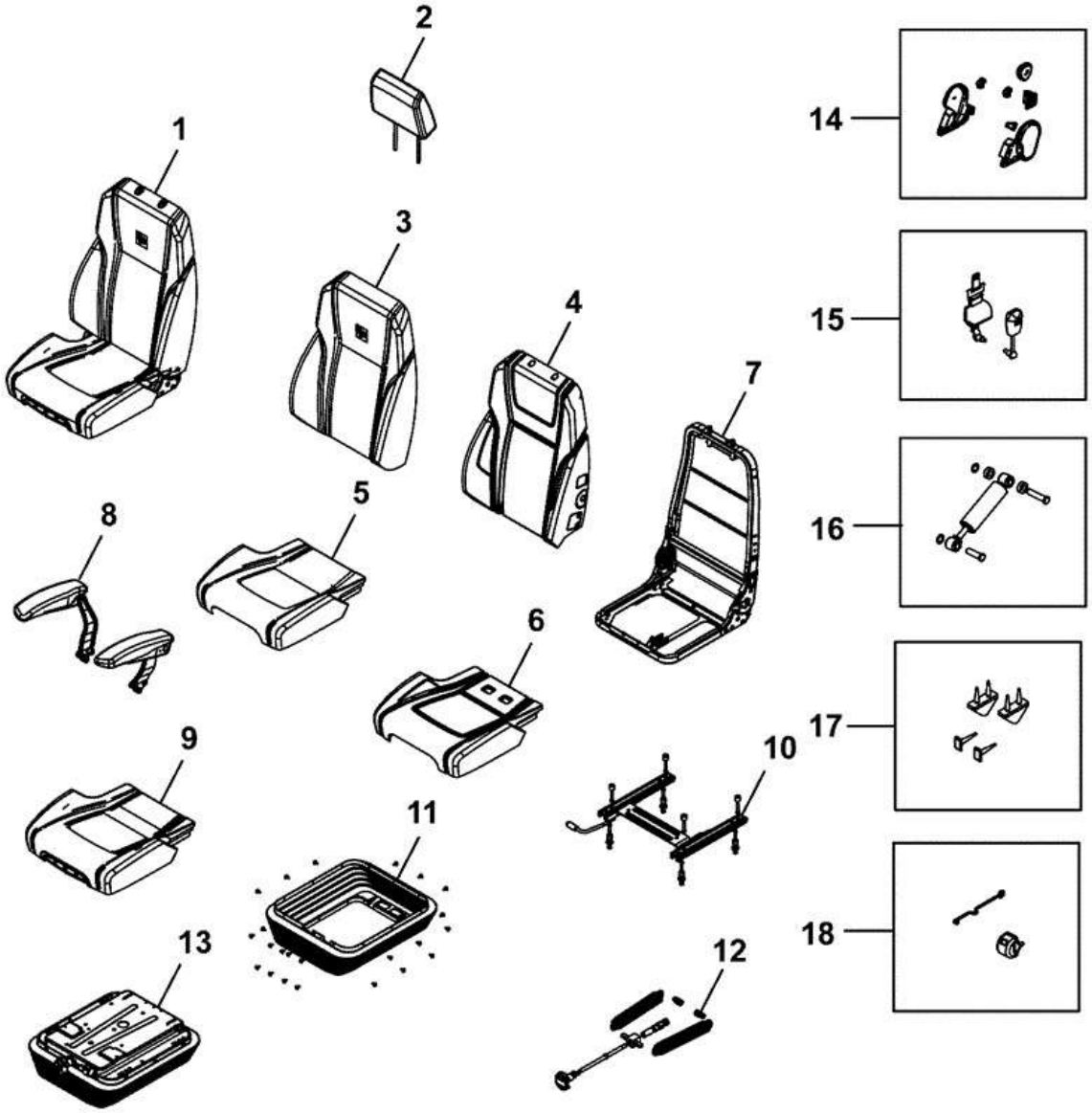

Item	Part #	Change No	Description	Usage Code	QTY
A	333/K2813		Seat Mechanical Standard		1
1	:334/E3942		Kit-seat upper		1
2	:334/C1185		Kit-headrest		1

3	:334/C1186		Kit-back cover Havana fabric		1
4	:334/C1187		Kit-back foam		1
5	:334/C1188		Kit-seat cover Havana fabric		1
6	:334/C1189		Kit-seat foam		1
7	:334/C1191		Kit-frame		1
8	:334/C1193		Kit-armrest		1
9	:334/E3944		Kit cushion		1
10	:334/C1195		Kit fore & aft. adjuster		1
11	:334/E3945		Kit-suspension cover		1
12	:333/F2941		Kit height adjuster		1
13	:333/F2935		Kit suspension		1
14	:334/C1197		Kit plastic parts		1
15	:334/C1198		Kit-seat belt		1
16	:334/E3946		Kit-damper		1
17	:40/910676		Kit Bump Stop		1
18	:333/F2943		Kit ride indicator		1

CONSTRUCTION \ NORTH AMERICA \ CONSTRUCTION / INDUSTRIAL \ JS TRACKED EXCAVATORS \ JS200LC BR E 02451101-02451200 9822/0355 \ B BODYWORK \ B02 CAB / CANOPY

9822/0355 B270-35-1 MOULDINGS/TRIM CAB ROP's

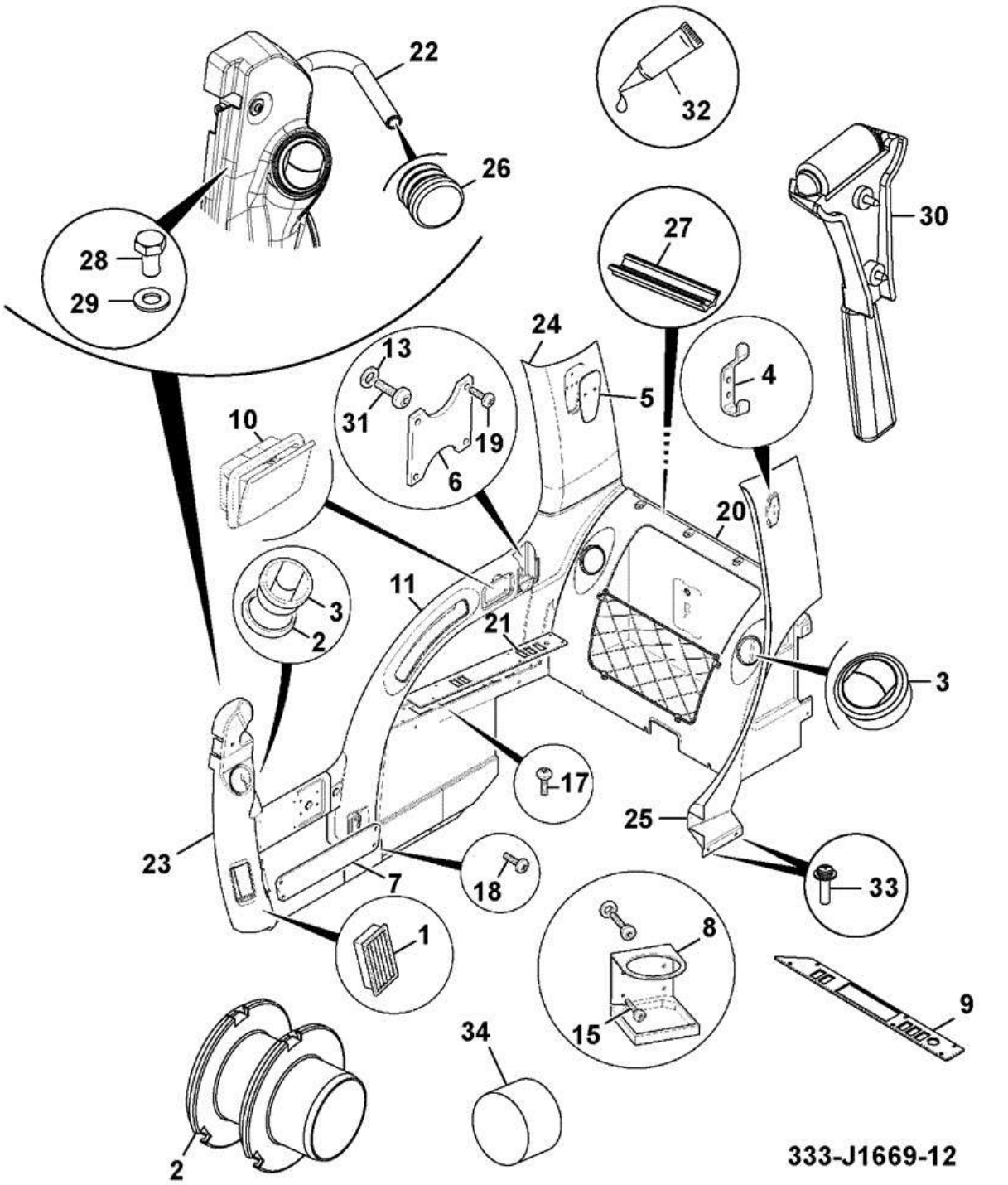

Item	Part #	Change No	Description	Usage Code	QTY
1	30/925586		Vent air (rectangular)		1
2	30/925732		Adaptor Air Vent		2
3	331/26974		Vent Air(76.5mm dia.hole)		4

4	331/27259		Hook Coat (Two screw mounting)		1
5	332/J1436		Plate Hammer Retainiing		1
6	332/J1441		Retainer mobile phone		1
7	332/J2776		Panel stowage, side		1
8	331/31695		Holder cup		1
9	332/J0446		Panel fascia heater		1
10	331/32481		Ashtray		1
11	333/J5722		Moulding centre console		1
13	823/00516		Washer Nylon M6		26
15	826/10996		Screw Button Head M4 x 10mm		4
17	826/01428		Screw Button Head M6 x 16		8
18	826/01281		Capscrew button head		4
19	1391/9402		Capscrew		4
20	333/J1640		Rear stowage ABI		1
21	701/60010		Blank switch panel Panel		3
22	333/J1629		Bracket		1
23	333/J4193		Moulding A post assembly		1
24	333/J3351		Moulding C post RH		1
25	333/J3447		Cover C pillar LH		1
26	835/10070		Plug Blanking		1
27	334/J4373		Channel Flock Sprayed		2
28	1316/0303D		Screw M8 x 16mm		2
29	1420/0007D		Washer (M8)		2
30	****		Hammer emergency assembly		1
31	826/01560		Screw M6x25		24
32	4103/3500		Loctite 424		1
33	KHR0737		Screw Pan Head		5
34	333/K9137		Pad		4

CONSTRUCTION \ NORTH AMERICA \ CONSTRUCTION / INDUSTRIAL \ JS TRACKED EXCAVATORS \ JS200LC BR E 02451101-02451200 9822/0355 \ B BODYWORK \ B02 CAB / CANOPY

9822/0355 B270-40-1 MOULDINGS/TRIM CAB TRIM ASSEMBLY

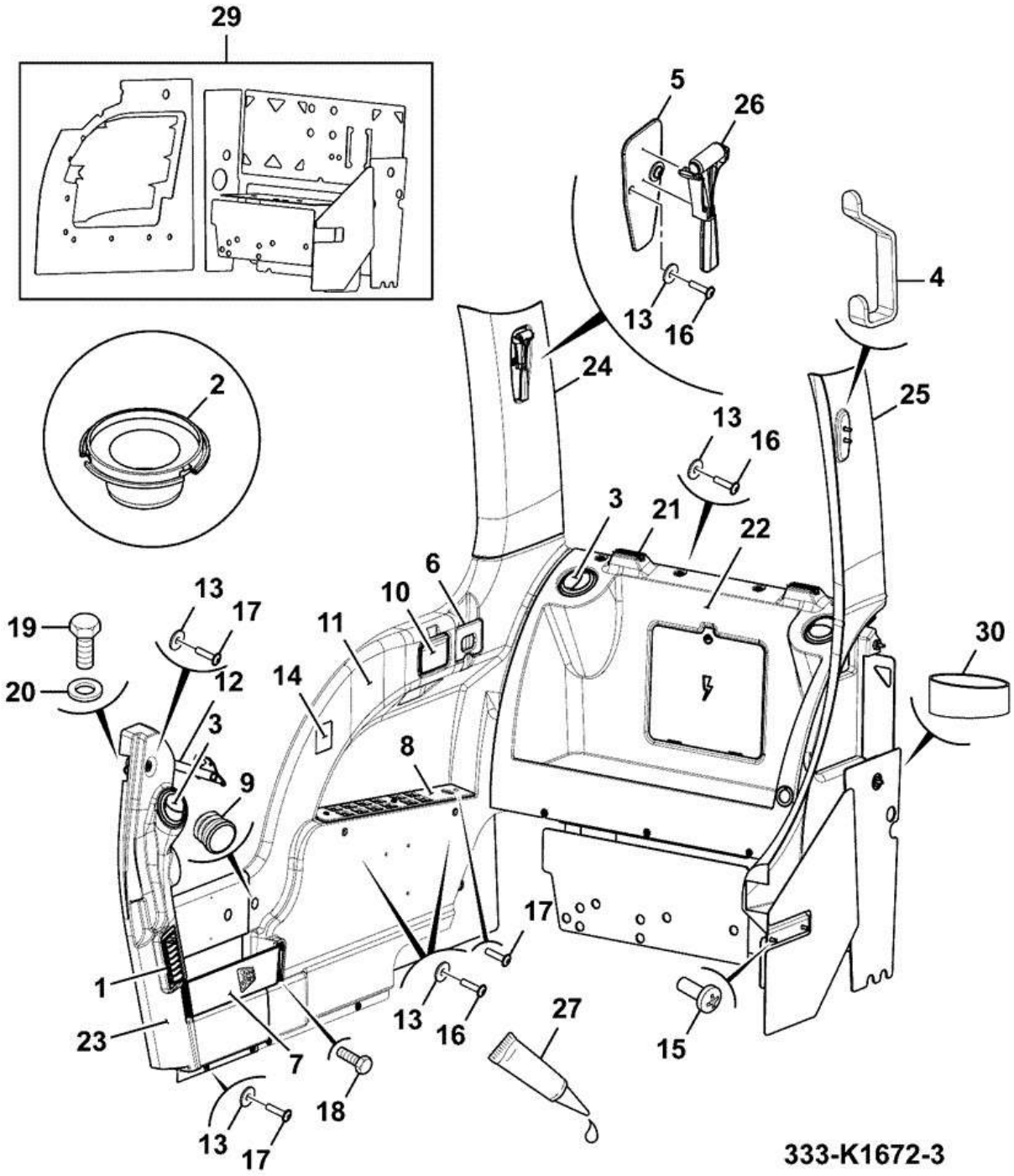

Item	Part #	Change No	Description	Usage Code	QTY
1	30/925586		Vent air (rectangular)		1

2	30/925732		Adaptor Air Vent		2
3	331/26974		Vent Air(76.5mm dia.hole)		4
4	331/27259		Hook Coat (Two screw mounting)		1
5	332/J1436		Plate Hammer Retainiing		1
6	333/K1068		Plate Retainer Mobile Phone		1
7	332/J2776		Panel stowage, side		1
8	333/K0954		Panel Fascia		1
9	333/K1860		Cap Blanking		2
10	331/32481		Ashtray		1
11	333/K0666		Moulding Centre Console		1
12	333/K0494		Bracket Display Mounting		1
13	333/J7747		Washer Nylon, Black		28
14	333/K1021		Blank Audio Remote		1
15	KHR0737		Screw Pan Head		2
16	826/01560		Screw M6x25		25
17	826/01428		Screw Button Head M6 x 16		6
18	826/01281		Capscrew button head		4
19	1316/0303D		Screw M8 x 16mm		2
20	1420/0007D		Washer (M8)		2
21	334/J4373		Channel Flock Sprayed		2
22	333/K1996		Rear Stowage		1
23	333/K1990		Moulding Assembly A-Post		1
24	333/J3351		Moulding C post RH		1
25	333/J3447		Cover C pillar LH		1
26	****		Hammer emergency assembly		1
27	4103/3500		Loctite 424		1
29	****		Suppression Noise Assembly		1
30	333/K9137		Pad		1

CONSTRUCTION \ NORTH AMERICA \ CONSTRUCTION / INDUSTRIAL \ JS TRACKED EXCAVATORS \ JS200LC BR E 02451101-02451200 9822/0355 \ B BODYWORK \ B02 CAB / CANOPY

9822/0355 B270-45-1 MOULDINGS/TRIM CONSOLE BOX ASSEMBLY

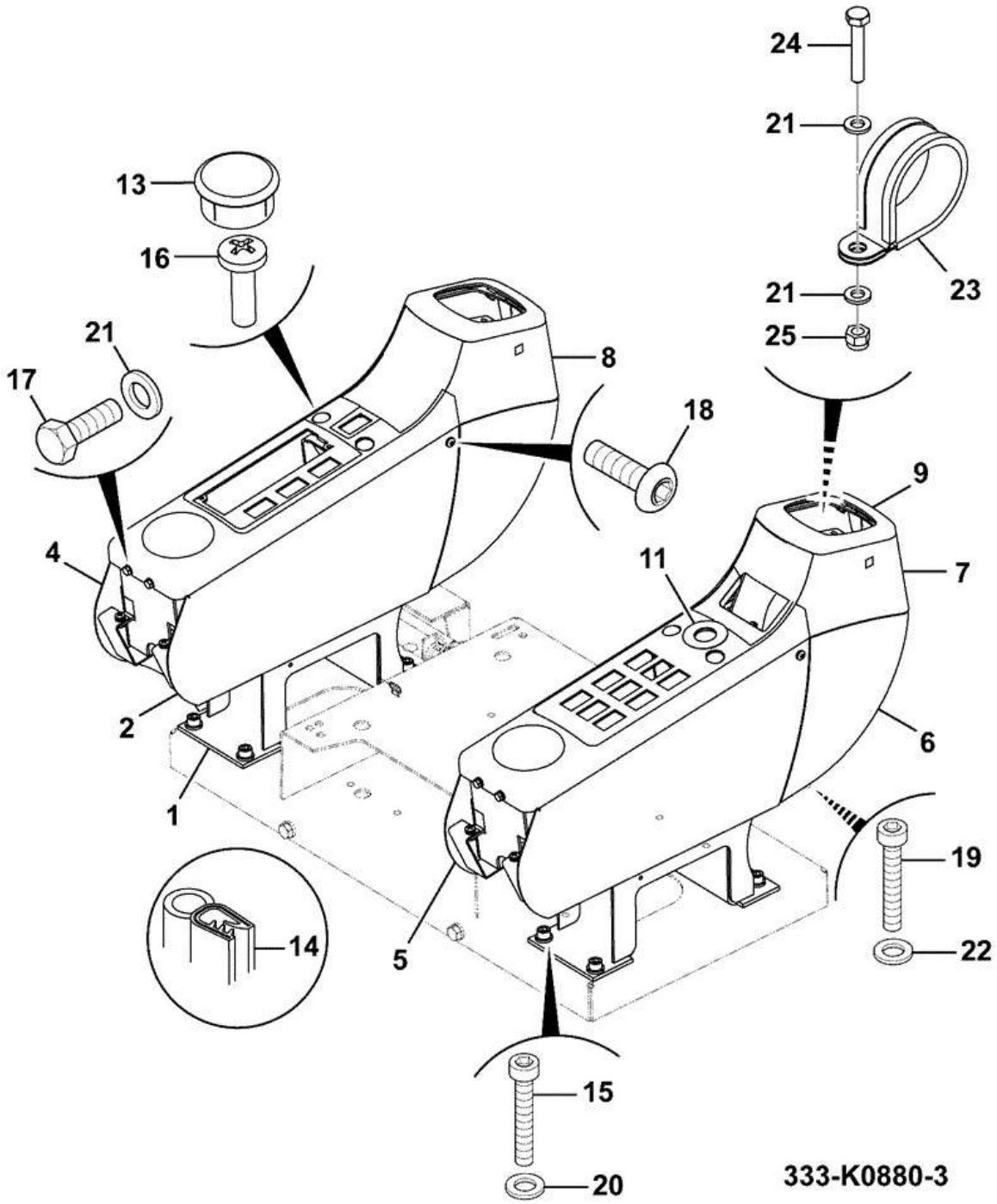

Item	Part #	Change No	Description	Usage Code	QTY
1	334/J5436		Console DOG Fixed		2

2	333/L6829		Panel side console right side		2
4	333/K0882		Plate Side Console		1
5	333/L9979		Panel side console left side		1
6	333/J8927		Cover Console Lower		2
7	333/K0482		Console Right Side		1
8	333/K1064		Console Left Side No Panel		1
9	333/K0635		Controller Bezel		2
11	333/J1826		Decal Console Cab Right Side		1
13	332/K5436		Cap blanking black		4
14	JHH0111		Strip Edging		2
15	1391/3407D		Capscrew M10 x 25mm		8
16	KHR0738		Screw pan head		4
17	1316/0203D		Screw		4
18	KHR0736		Screw pan head		12
19	826/01281		Capscrew button head		8
20	JHP0046		Washer M10		8
21	1420/0006D		Washer (M6)		8
22	823/00516		Washer Nylon M6		4
23	KHR1447		Clamp		2
24	1316/0205D		Screw set		2
25	1370/0103D		Nut (M6)		2

CONSTRUCTION \ NORTH AMERICA \ CONSTRUCTION / INDUSTRIAL \ JS TRACKED EXCAVATORS \ JS200LC BR E 02451101-02451200 9822/0355 \ B BODYWORK \ B02 CAB / CANOPY

9822/0355 B270-50-1 MOULDINGS/TRIM PANELS REAR STOWAGE ABI

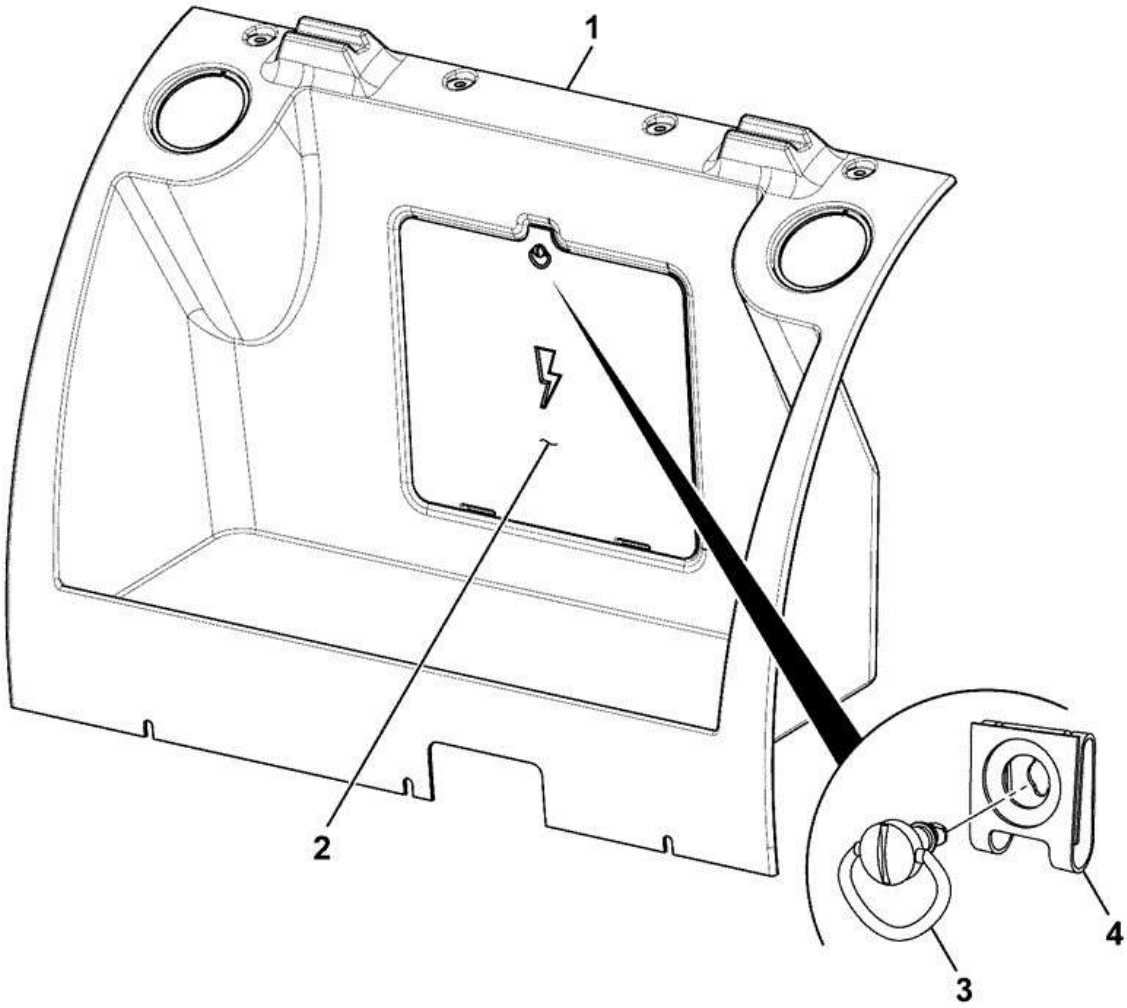

333-J1640-1

Item	Part #	Change No	Description	Usage Code	QTY
1	333/K1994		Panel Storage Rear		1

2	333/J3587		Fusebox cover		1
3	331/37941		Stud 1/4 turn bail		1
4	331/37942		Receptacle		1

CONSTRUCTION \ NORTH AMERICA \ CONSTRUCTION / INDUSTRIAL \ JS TRACKED EXCAVATORS \ JS200LC BR E 02451101-02451200 9822/0355 \ B BODYWORK \ B02 CAB / CANOPY

9822/0355 B290-10-1 OTHER OPERATOR ENCLOSURE ITEMS CAB MIRROR

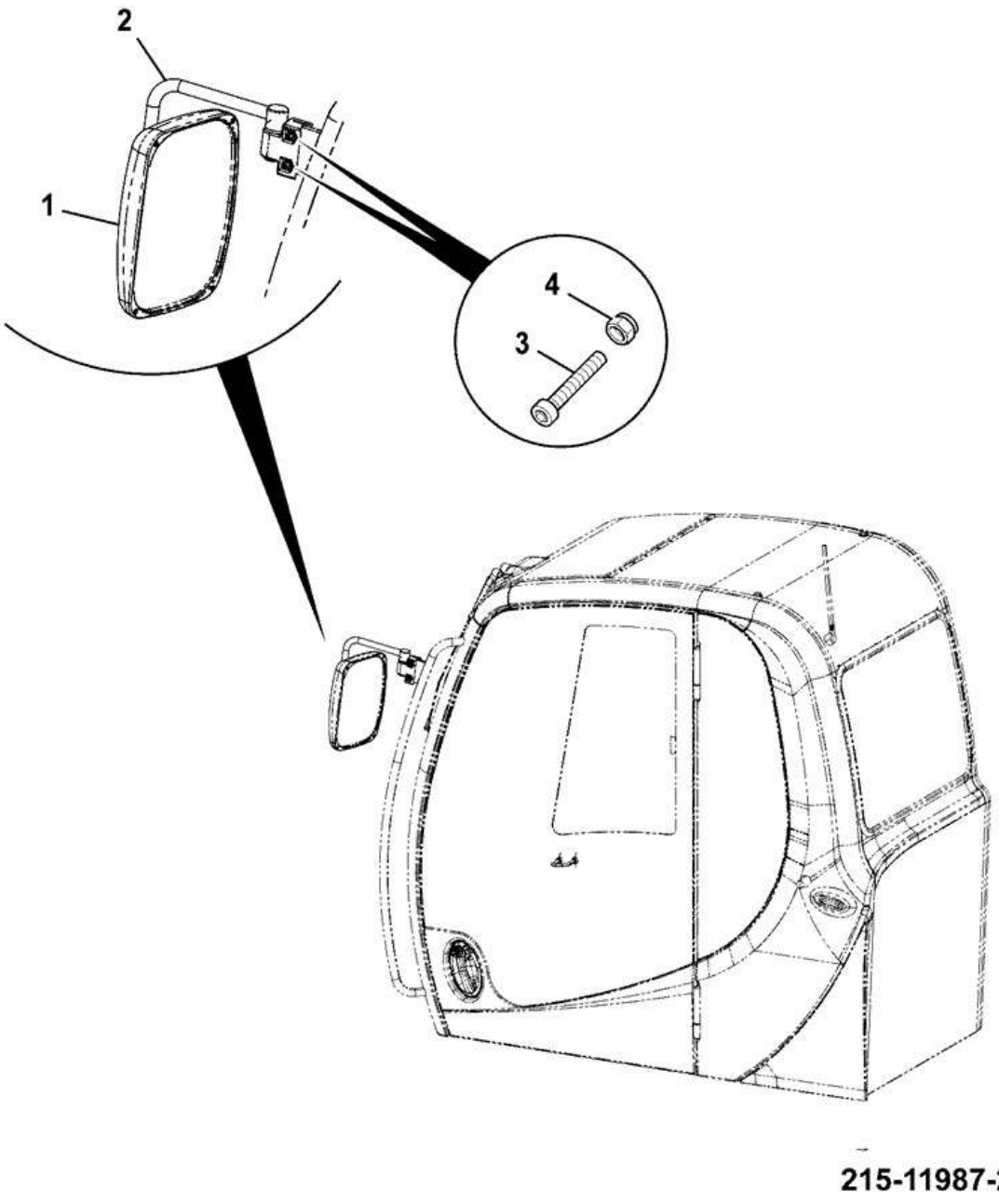

Item	Part #	Change No	Description	Usage Code	QTY
1	332/J7324		Mirror side, 1400mm rad		1
2	332/U3153		Arm mirror mounting		1

3	1391/3407Z		Capscrew socket head		2
4	1371/0301Z		Nut High Strength, M10		2

CONSTRUCTION \ NORTH AMERICA \ CONSTRUCTION / INDUSTRIAL \ JS TRACKED EXCAVATORS \ JS200LC BR E 02451101-02451200 9822/0355 \ B BODYWORK \ B02 CAB / CANOPY

9822/0355 B290-20-1 OTHER OPERATOR ENCLOSURE ITEMS SEAT SLIDE AND LEVER

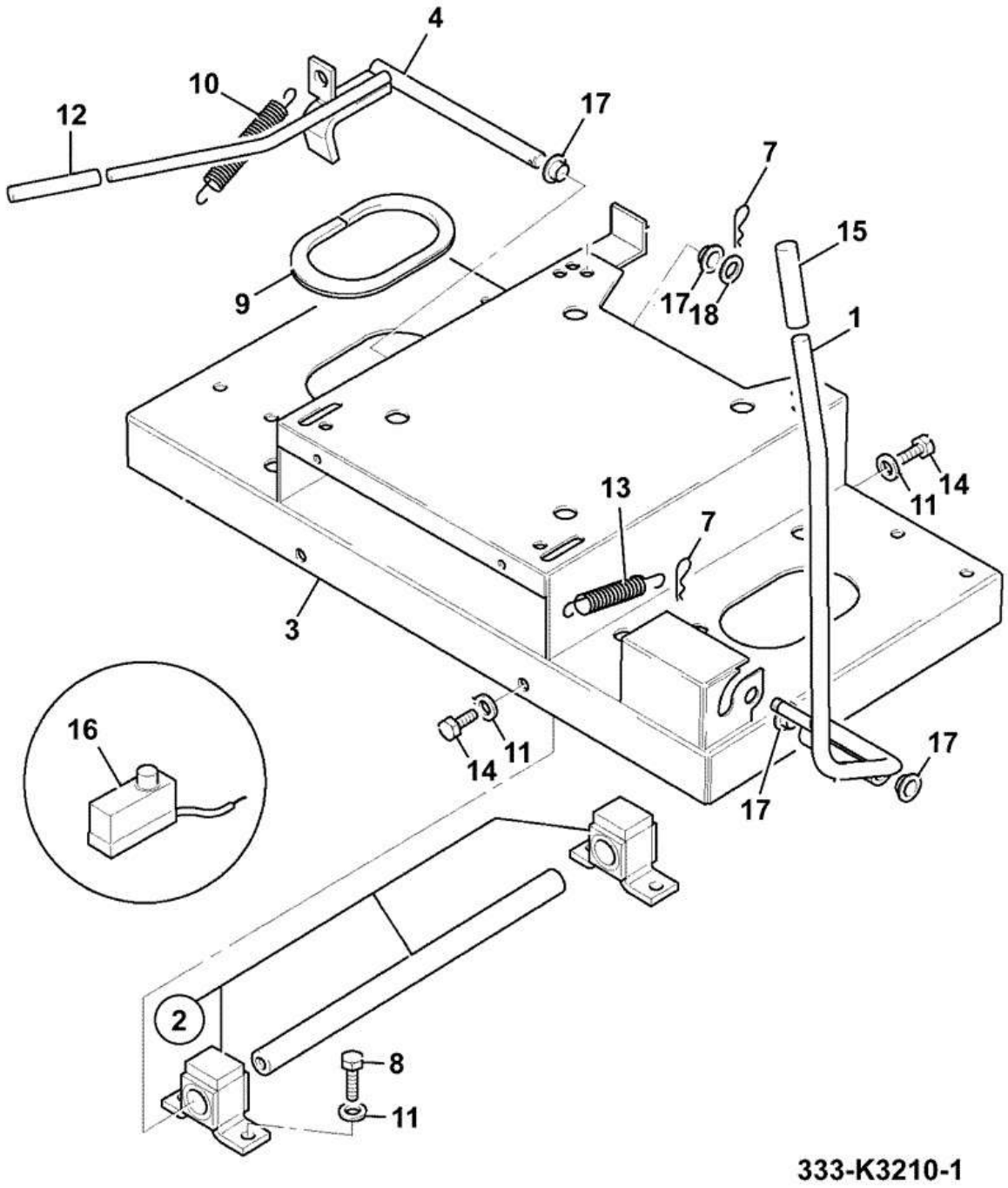

Item	Part #	Change No	Description	Usage Code	QTY
1	JHN0210		Lever lock		1

2	JHN0204		Kit linear bearing		1
3	JHN0209		Base seat		1
4	335/05454		Lever console index, seat		1
7	JLV0521		Clip R		2
8	1391/3408D		Capscrew M10 x 30mm		8
9	JHH0074		Strip Edging		2
10	KHN1127		Spring extension		1
11	JHP0046		Washer M10		12
12	KHN1122		Cap		1
13	KHN1436		Spring extension		1
14	1316/0405D		Screw M10 x 20		4
15	KHN1542		Cap		1
16	701/80215		Switch limit		1
17	KHN1442		Bush oilless		4
18	1420/0011Z		Washer (M16)		1

CONSTRUCTION \ NORTH AMERICA \ CONSTRUCTION / INDUSTRIAL \ JS TRACKED EXCAVATORS \ JS200LC BR E 02451101-02451200 9822/0355 \ B BODYWORK \ B02 CAB / CANOPY

9822/0355 B290-20-5 OTHER OPERATOR ENCLOSURE ITEMS SEAT SLIDE AND LEVER

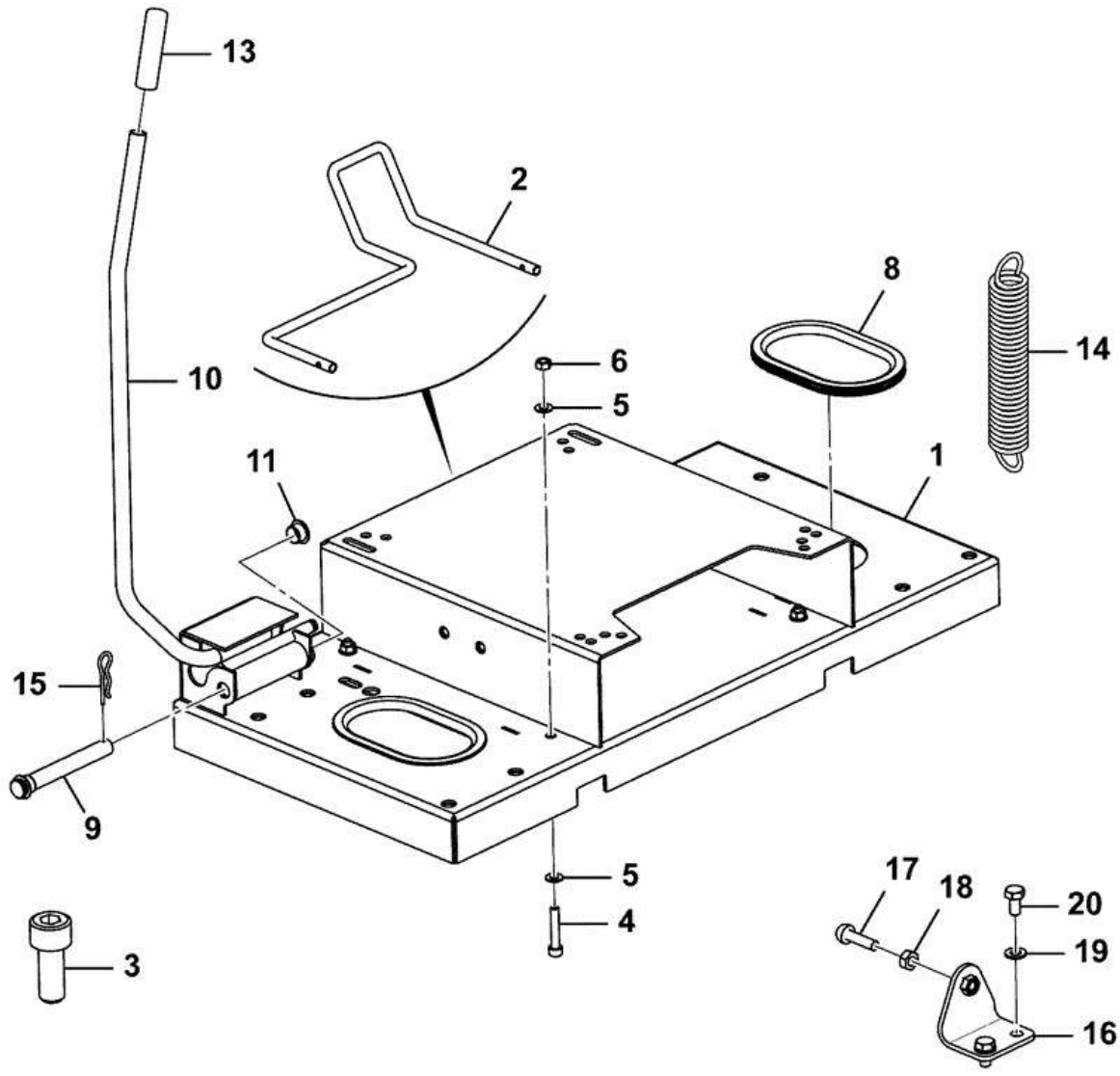

Item	Part #	Change No	Description	Usage Code	QTY
1	334/K1221		Base Seat		1

2	334/J2129		Slide Seat Runner		1
3	1391/3305D		Capscrew		4
4	1391/3311D		Capscrew M8 x 45mm		4
5	1420/0007D		Washer (M8)		8
6	1370/0201D		Nut Plain M8		4
8	333/K4209		Strip Edging 400mm		2
9	JHN0211		Spindle		1
10	JHN0210		Lever lock		1
11	KHN1442		Bush oilless		2
13	KHN1542		Cap		1
14	334/K2303		Spring Tension		1
15	JLV0521		Clip R		1
16	333/K4824		Bracket Stop		1
17	KHN1395		Stop Rubber		1
18	1370/0301D		Nut (M10)		1
19	1420/0008D		Washer (M10)		2
20	1316/0405D		Screw M10 x 20		2

CONSTRUCTION \ NORTH AMERICA \ CONSTRUCTION / INDUSTRIAL \ JS TRACKED EXCAVATORS \ JS200LC BR E 02451101-02451200 9822/0355 \ B BODYWORK \ B02 CAB / CANOPY

9822/0355 B290-25-1 OTHER OPERATOR ENCLOSURE ITEMS KIT LINEAR BEARING

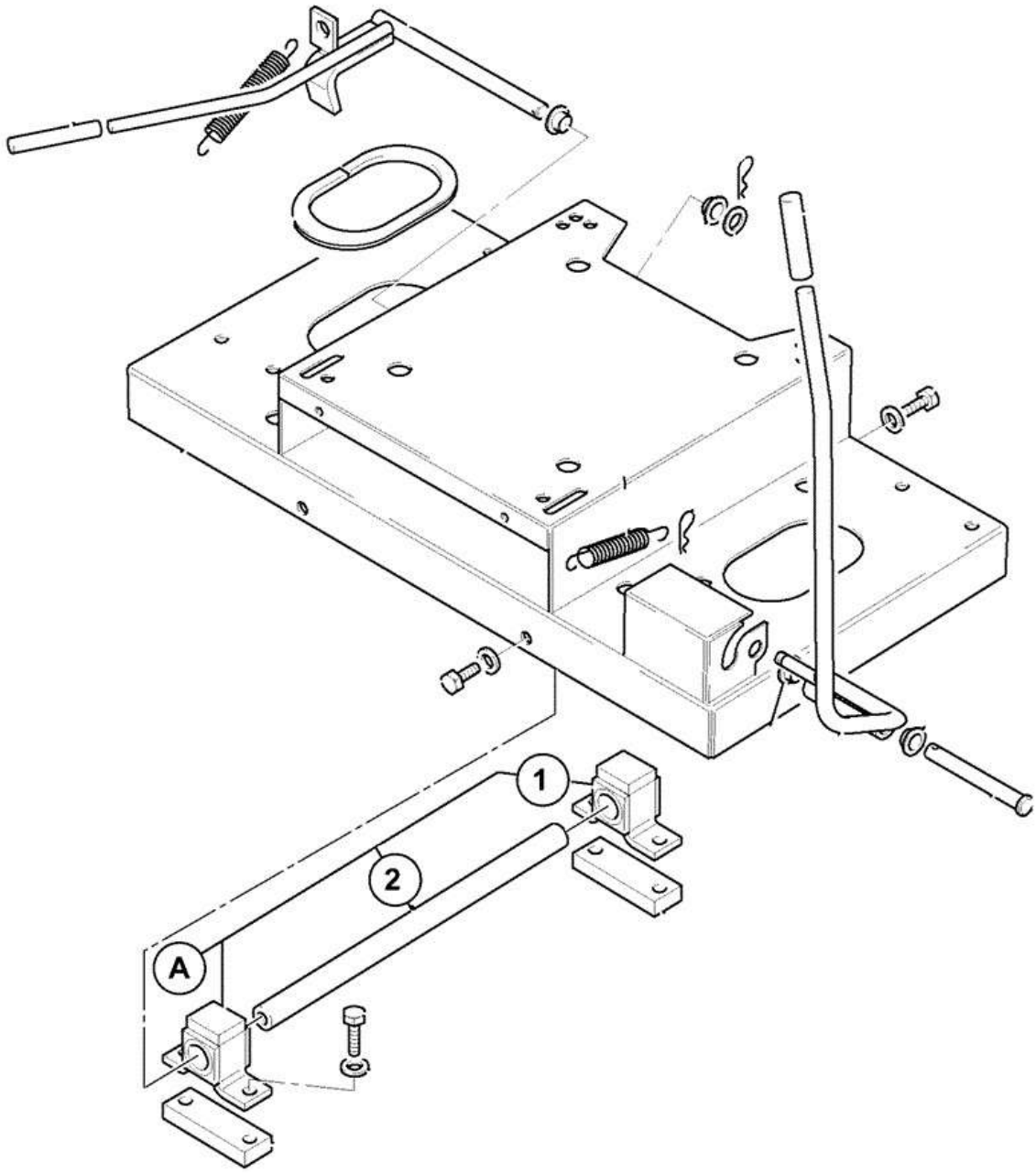

Item	Part #	Change No	Description	Usage Code	QTY
A	JHN0204		Kit linear bearing		1

1	:JHN0205		Bearing linear		4
2	:JHN0206		Shaft		2

CONSTRUCTION \ NORTH AMERICA \ CONSTRUCTION / INDUSTRIAL \ JS TRACKED EXCAVATORS \ JS200LC BR E 02451101-02451200 9822/0355 \ B BODYWORK \ B02 CAB / CANOPY

9822/0355 B290-45-5 OTHER OPERATOR ENCLOSURE ITEMS COUNTERWEIGHT MIRROR

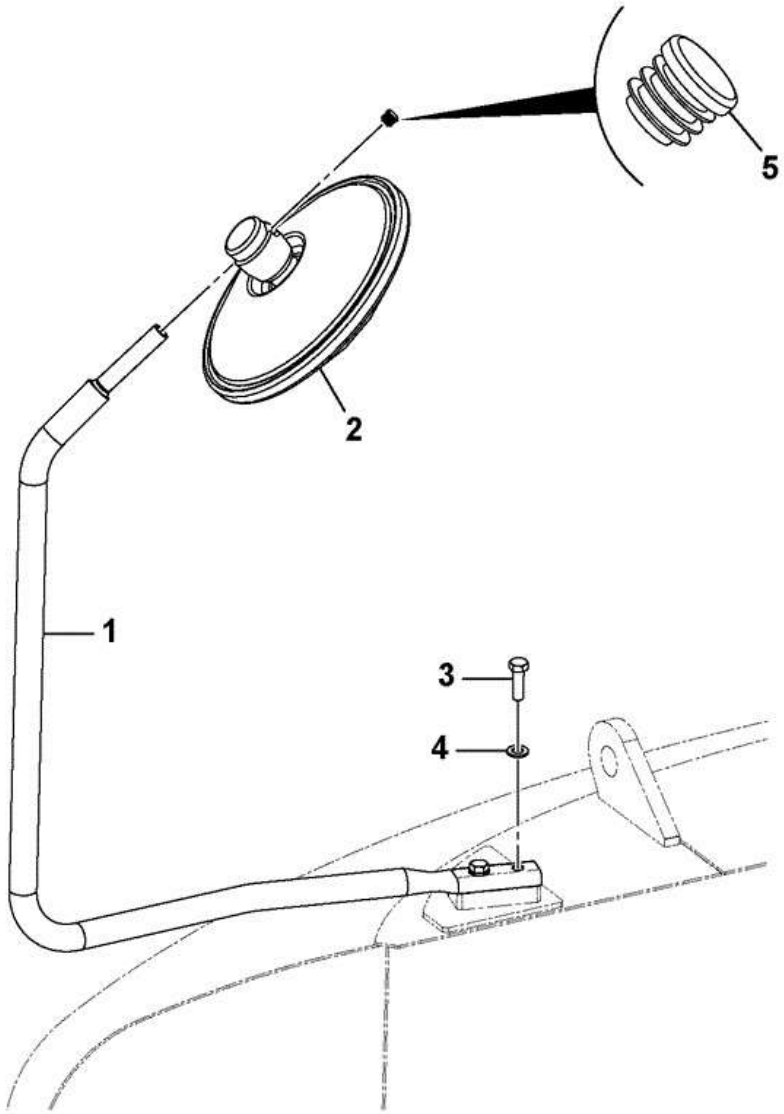

333-K8315-1

Item	Part #	Change No	Description	Usage Code	QTY
1	333/K8314		Bracket Mirror, Counterweight		1

2	332/J7749		Mirror		1
3	1316/0510D		Screw		2
4	1420/0009D		Washer (M12)		2
5	835/10070		Plug Blanking		1

CONSTRUCTION \ NORTH AMERICA \ CONSTRUCTION / INDUSTRIAL \ JS TRACKED EXCAVATORS \ JS200LC BR E 02451101-02451200 9822/0355 \ B BODYWORK \ B02 CAB / CANOPY

9822/0355 B290-65-1 OTHER OPERATOR ENCLOSURE ITEMS STOWAGE REAR ABI

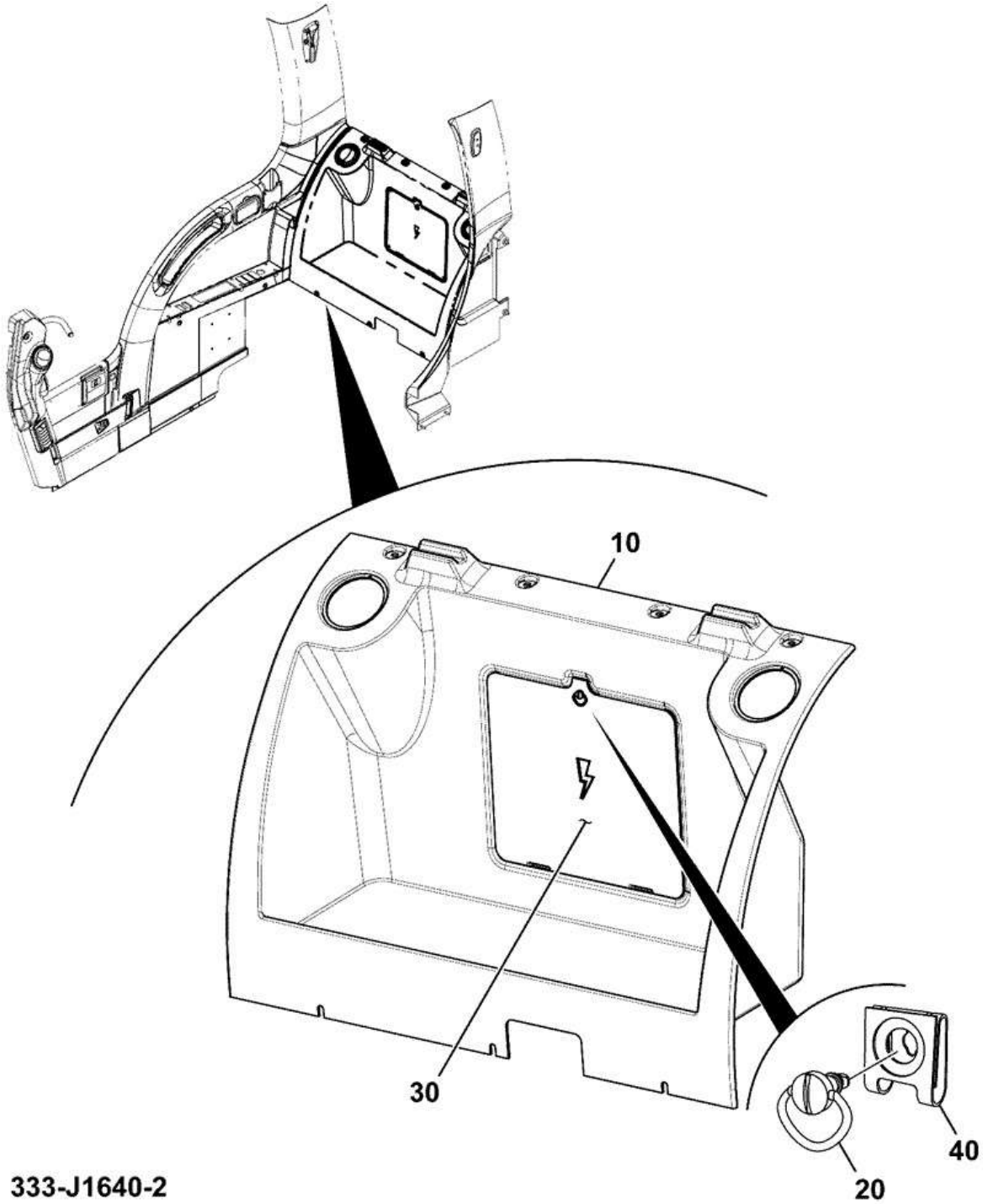

Item	Part #	Change No	Description	Usage Code	QTY
10	333/J3777		Panel rear stowage		1

20	331/37941		Stud 1/4 turn bail		1
30	333/J3587		Fusebox cover		1
40	331/37942		Receptacle		1

CONSTRUCTION \ NORTH AMERICA \ CONSTRUCTION / INDUSTRIAL \ JS TRACKED EXCAVATORS \ JS200LC BR E 02451101-02451200 9822/0355 \ B BODYWORK \ B02 CAB / CANOPY

9822/0355 B290-70-1 OTHER OPERATOR ENCLOSURE ITEMS FLOOR MATS (TRACKED)

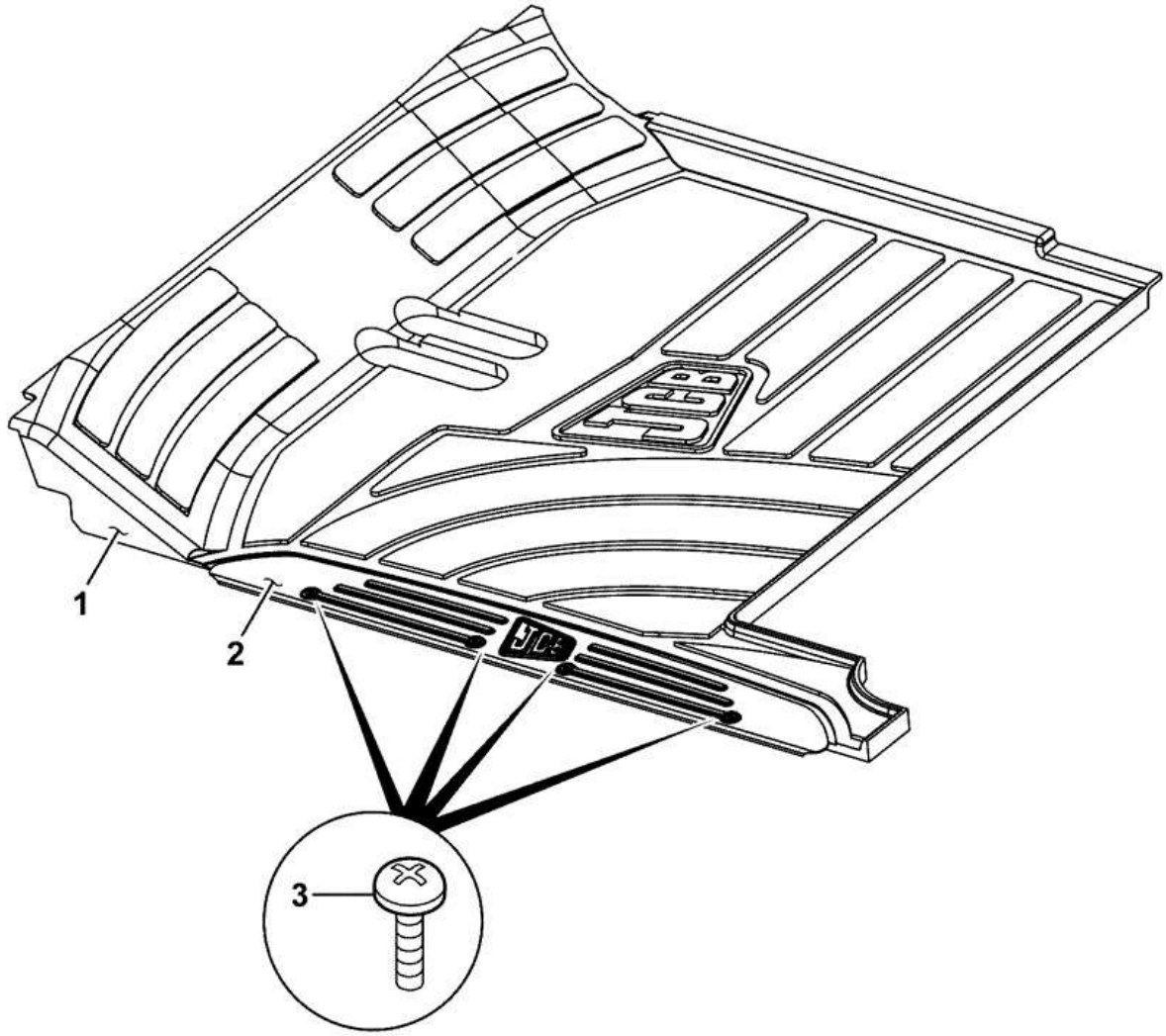

Item	Part #	Change No	Description	Usage Code	QTY
1	333/J4662		Floormat		1

2	333/J4757		Plate kick		1
3	333/J9885		Screw c'sk M5 x16mm		4

CONSTRUCTION \ NORTH AMERICA \ CONSTRUCTION / INDUSTRIAL \ JS TRACKED EXCAVATORS \ JS200LC BR E 02451101-02451200 9822/0355 \ B BODYWORK \ B02 CAB / CANOPY

9822/0355 B290-75-1 OTHER OPERATOR ENCLOSURE ITEMS KIT FOAM - CAB BASE

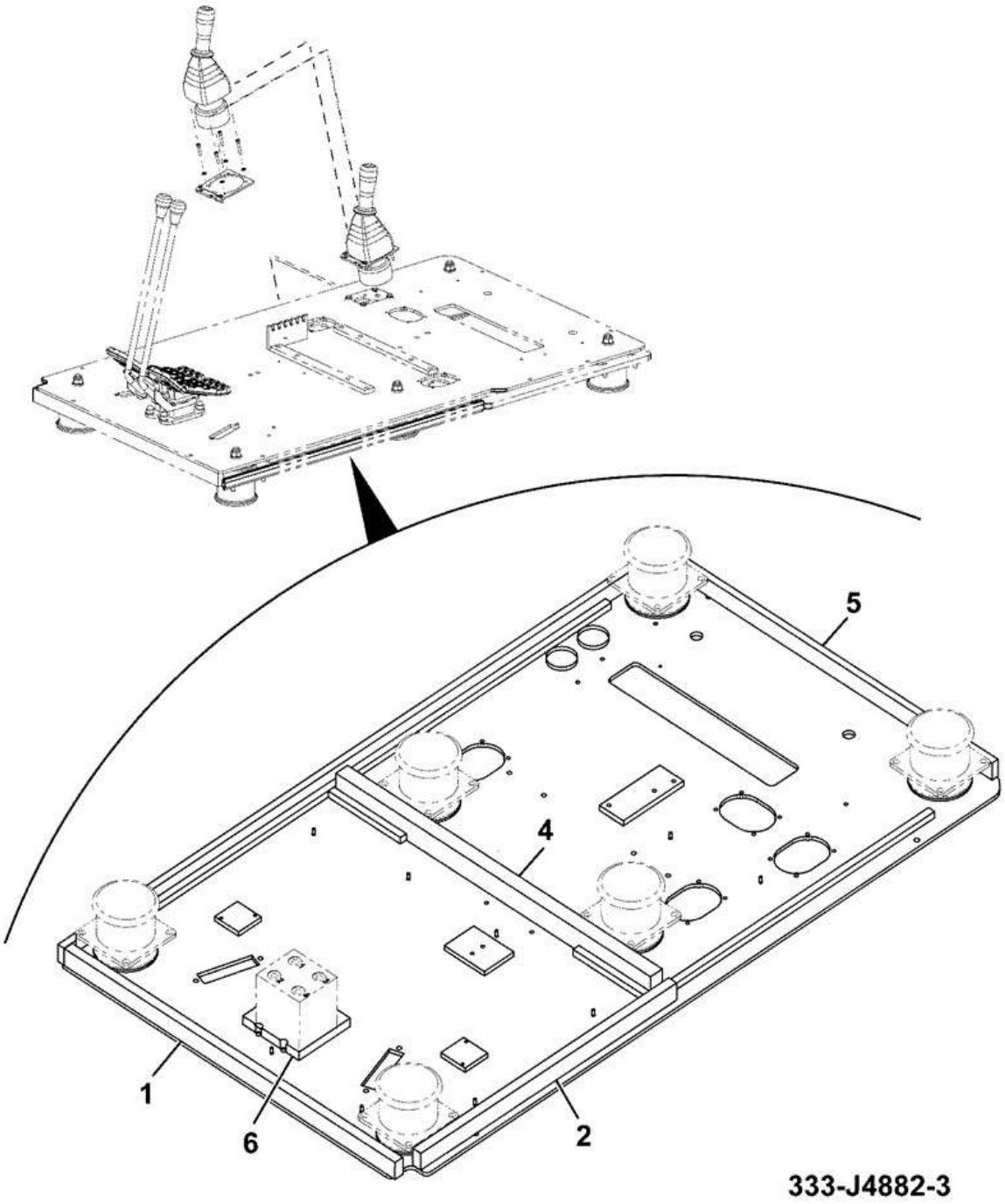

Item	Part #	Change No	Description	Usage Code	QTY
1	333/J4951		Foam cab base front		1

2	333/J4902		Foam cab base right side		1
4	332/J9448		Foam - cab base middle		1
5	333/J1529		Seal cushion		1
6	332/J9465		Foam - cab base valve		1

CONSTRUCTION \ NORTH AMERICA \ CONSTRUCTION / INDUSTRIAL \ JS TRACKED EXCAVATORS \ JS200LC BR E 02451101-02451200 9822/0355 \ B BODYWORK \ B02 CAB / CANOPY

9822/0355 B290-80-1 OTHER OPERATOR ENCLOSURE ITEMS WINDSCREEN

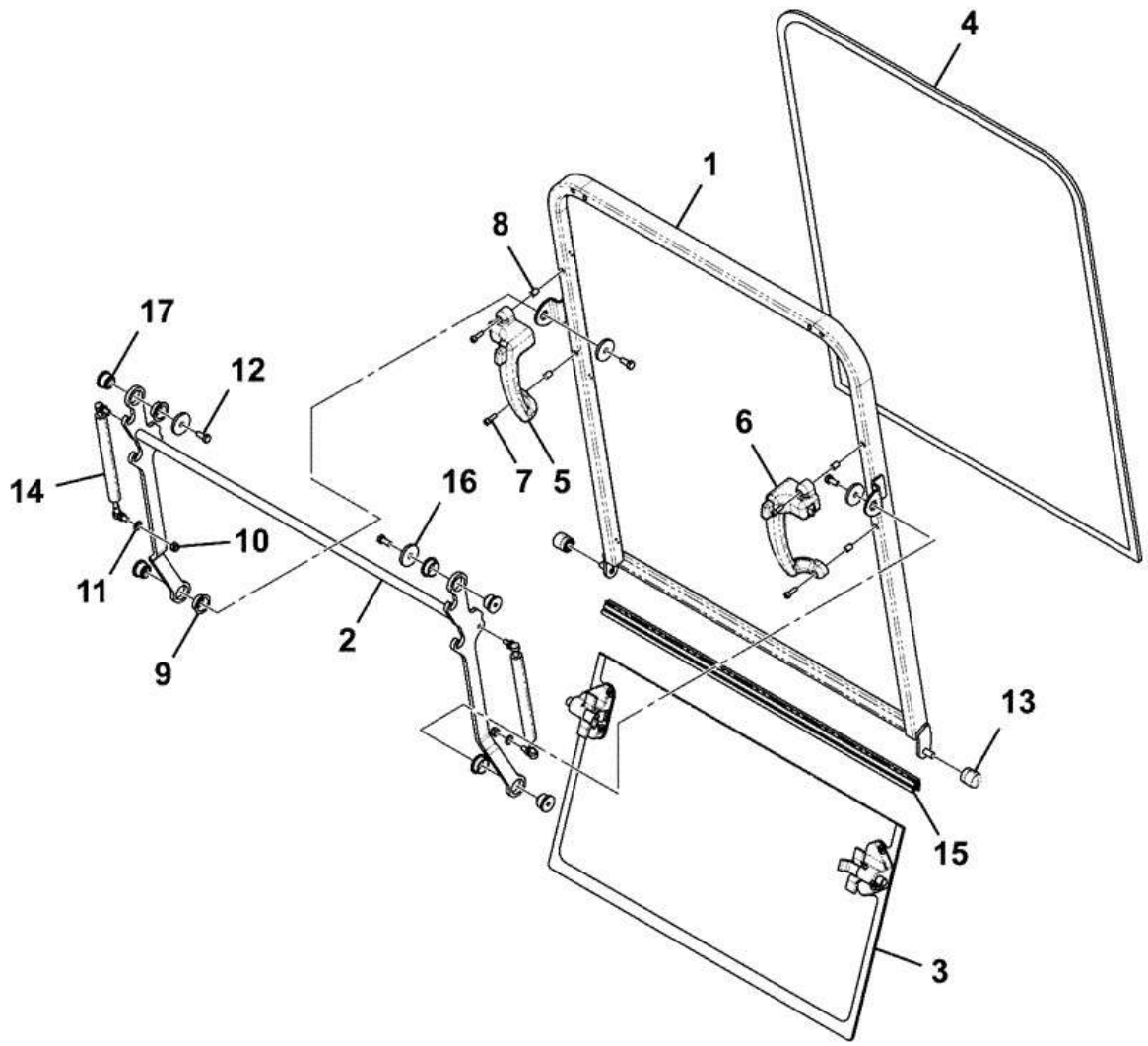

Item	Part #	Change No	Description	Usage Code	QTY
A	334/P1071		Windscreen assembly		1

1	:334/L8568		Frame windscreen		1
2	:334/L8483		Lever		1
3	:334/P0606		Windscreen assembly lower		1
4	:333/J3882		Windscreen		1
5	:334/P1091		Handle left		1
6	:334/P1095		Handle right		1
7	:1391/3205D		Capscrew M6x20		4
8	:826/11523		Nut Rivet Nut M6		8
9	:331/36373		Washer		4
10	:1371/0203D		Nut M8 locking Grade 12		2
11	:1420/0007D		Washer (M8)		2
12	:1315/0305D		Setscrew M8 x 20mm		4
13	:334/L5912		Roller		2
14	:334/P1099		Strut gas		2
15	:334/P1102		Seal		1
16	:6900/0569		Washer		4
17	:331/36372		Spacer		4

CONSTRUCTION \ NORTH AMERICA \ CONSTRUCTION / INDUSTRIAL \ JS TRACKED EXCAVATORS \ JS200LC BR E 02451101-02451200 9822/0355 \ B BODYWORK \ B02 CAB / CANOPY

9822/0355 B290-85-1 OTHER OPERATOR ENCLOSURE ITEMS WINDSCREEN LOWER

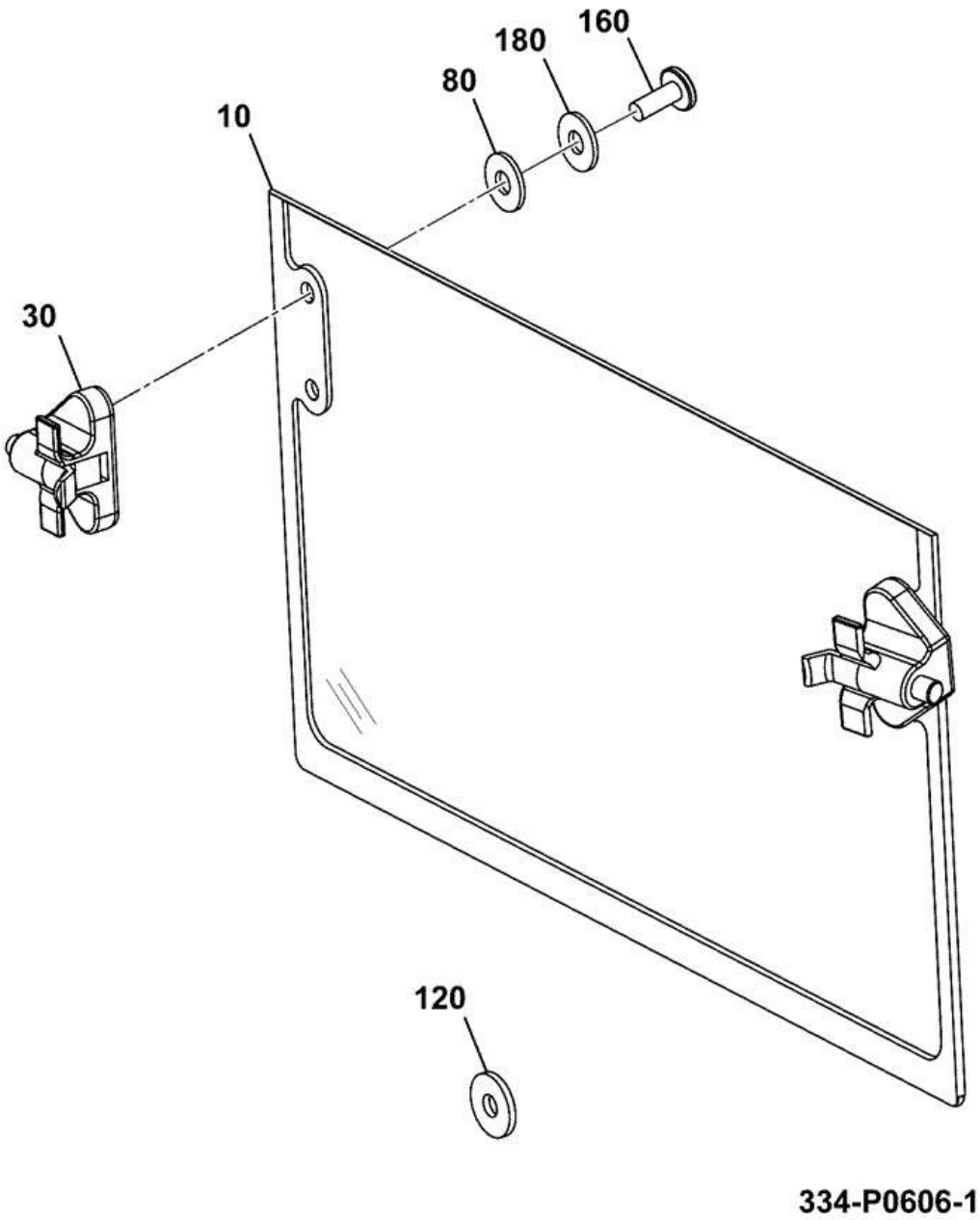

Item	Part #	Change No	Description	Usage Code	QTY
10	333/J3878		Glass front lower		1

30	334/P0998		Lever fixing-lower		2
80	823/00426		Washer		4
120	823/00568		Washer copper		1
160	826/10887		Screw button head torx		4
180	1414/0013Z		Washer (0BA)		4

CONSTRUCTION \ NORTH AMERICA \ CONSTRUCTION / INDUSTRIAL \ JS TRACKED EXCAVATORS \ JS200LC BR E 02451101-02451200 9822/0355 \ B BODYWORK \ B02 CAB / CANOPY

9822/0355 B290-90-1 OTHER OPERATOR ENCLOSURE ITEMS NOISE SUPPRESSION

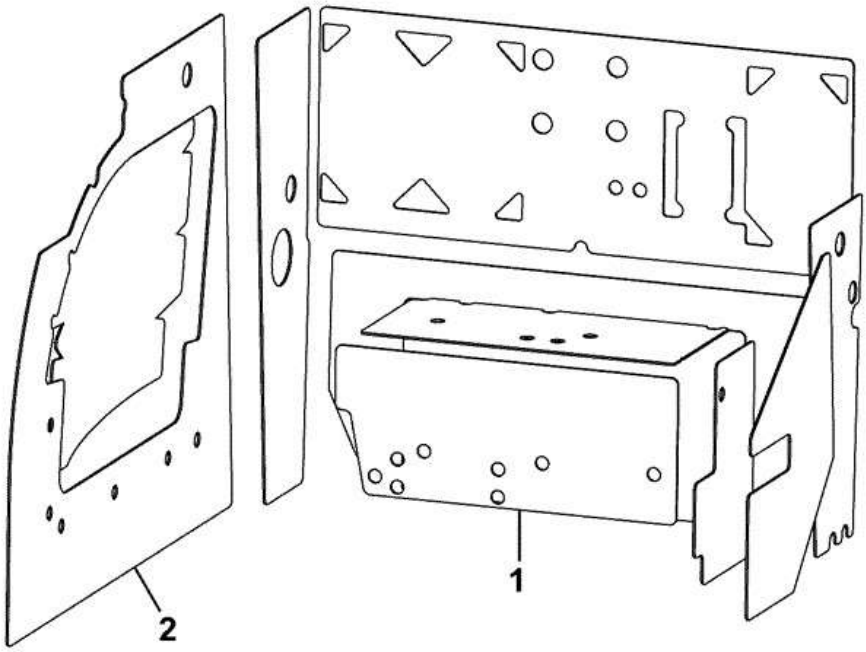

333-K4115-1

Item	Part #	Change No	Description	Usage Code	QTY
1	334/J4703		Soundproofing Kit ABI		1

2	333/K4368		Soundproofing ABI Cab		1

CONSTRUCTION \ NORTH AMERICA \ CONSTRUCTION / INDUSTRIAL \ JS TRACKED EXCAVATORS \ JS200LC BR E 02451101-02451200 9822/0355 \ B BODYWORK \ B02 CAB / CANOPY

9822/0355 B290-95-1 OTHER OPERATOR ENCLOSURE ITEMS SOUNDPROOFING KIT- DOORS

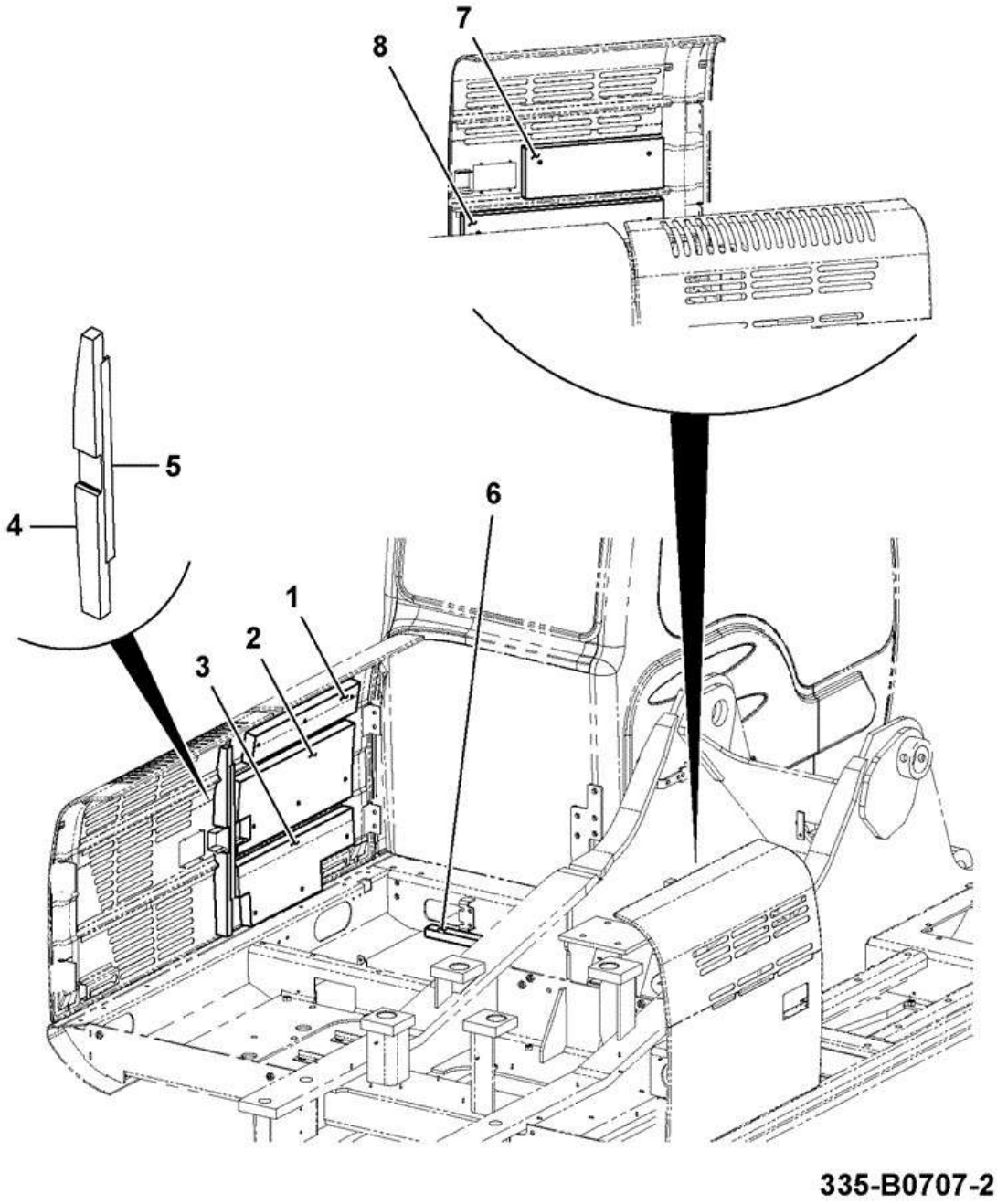

Item	Part #	Change No	Description	Usage Code	QTY
1	335/B0702		Soundproofing Door Rear Top		1

2	333/K9958		Soundproofing Center		2
3	335/B0714		Soundproofing Door Rear Bottom		1
4	333/J1398		Foam door closure		1
5	333/K8452		Seal		1
6	KNJ2233		Seal cushion		1
7	335/B0709		Soundproofing Door Top		1
8	335/B0708		Soundproofing Door Bottom		1

CONSTRUCTION \ NORTH AMERICA \ CONSTRUCTION / INDUSTRIAL \ JS TRACKED EXCAVATORS \ JS200LC BR E 02451101-02451200 9822/0355 \ B BODYWORK \ B02 CAB / CANOPY

9822/0355 B290-100-1 OTHER OPERATOR ENCLOSURE ITEMS FASTENERS MOUNTING, CAB

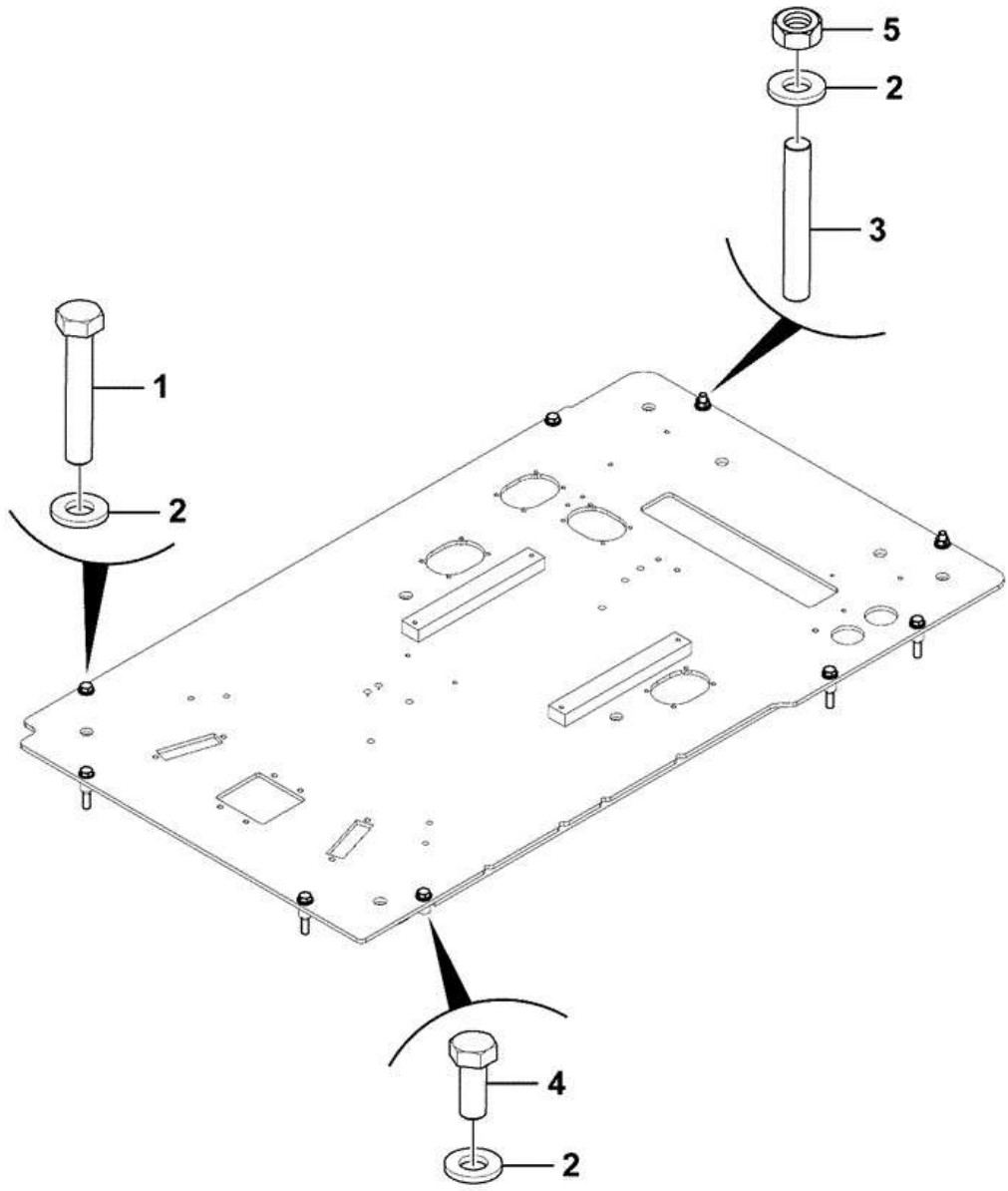

Item	Part #	Change No	Description	Usage Code	QTY
1	1316/3516D		Bolt M12 x 70		6

2	JHP0042		Washer M12		9
3	334/J1138		Stud M12 X 80		2
4	1316/0508Z		Screw M12 x 30mm		1
5	1371/0401D		Nut M12		2

CONSTRUCTION \ NORTH AMERICA \ CONSTRUCTION / INDUSTRIAL \ JS TRACKED EXCAVATORS \ JS200LC BR E 02451101-02451200 9822/0355 \ B BODYWORK \ B02 CAB / CANOPY

9822/0355 B290-105-1 OTHER OPERATOR ENCLOSURE ITEMS NOISE SUPPRESSION CAB, ABI

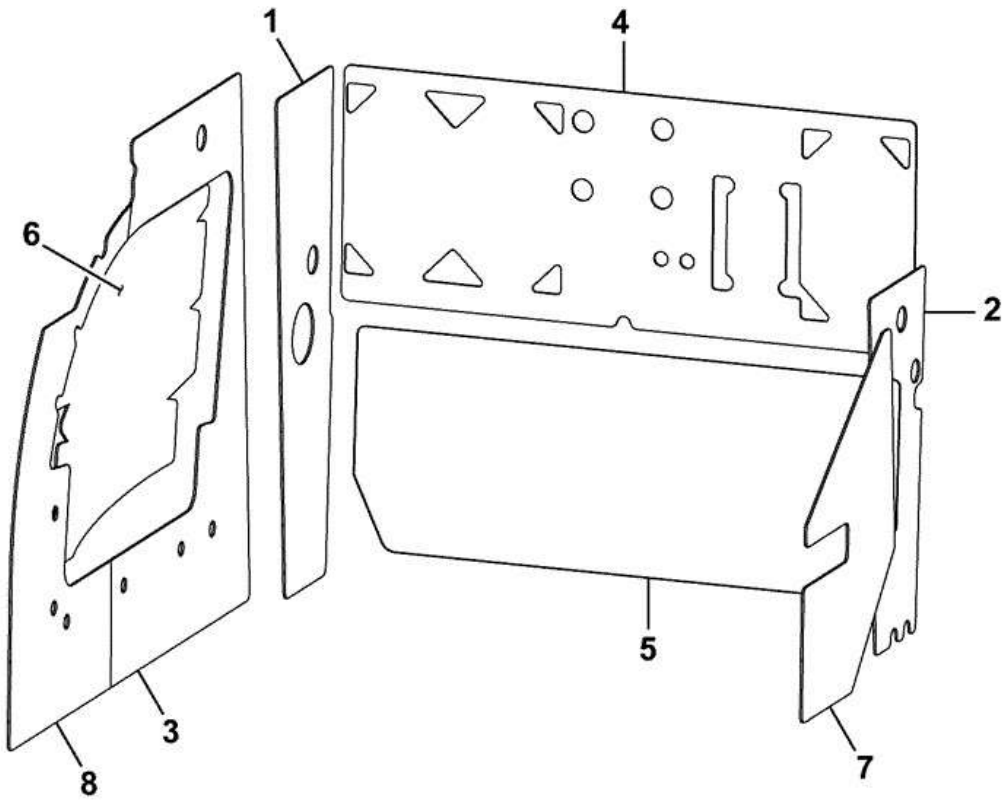

333-K4368-3

Item	Part #	Change No	Description	Usage Code	QTY
1	333/K4187		Damping sheet Cab Right Side Upper		1

2	333/K4185		Damping sheet Cab Left Side Upper		1
3	333/K5238		Damping sheet Cab Right Hand Side		1
4	333/K4189		Damping sheet Cab Rear Upper		1
5	333/K4188		Damping sheet Cab Rear Lower		1
6	333/K4202		Damping sheet Cab Right Side Inner		1
7	333/K4184		Damping sheet Cab Left Side Lower		1
8	333/K5033		Damping sheet Right Hand Side		1

CONSTRUCTION \ NORTH AMERICA \ CONSTRUCTION / INDUSTRIAL \ JS TRACKED EXCAVATORS \ JS200LC BR E 02451101-02451200 9822/0355 \ B BODYWORK \ B02 CAB / CANOPY

9822/0355 B290-110-1 OTHER OPERATOR ENCLOSURE ITEMS NOISE SUPPRESSION

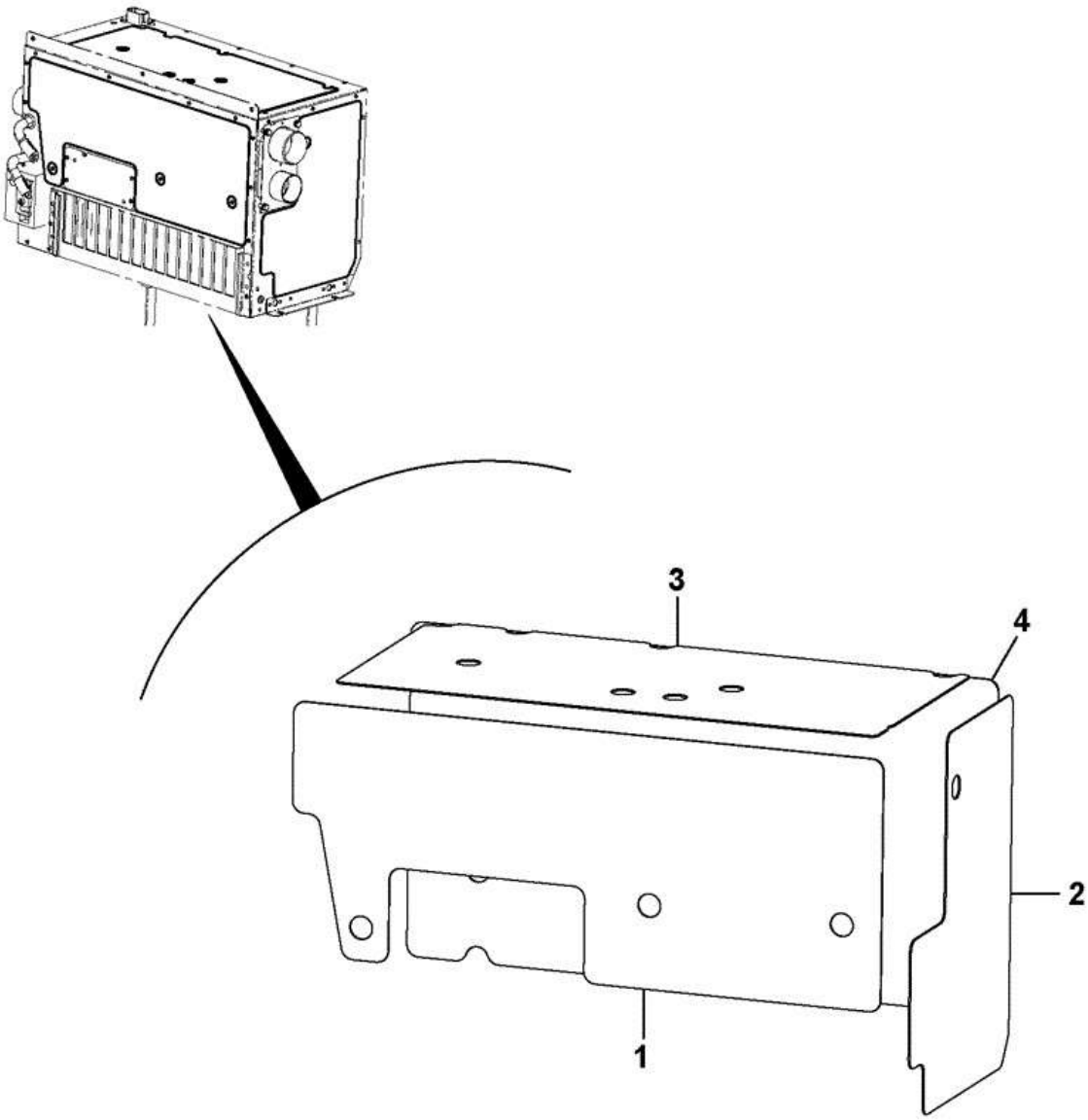

334-J4703-1

Item	Part #	Change No	Description	Usage Code	QTY
1	334/J4704		Damping sheet Heater, Front		1

2	334/J4705		Damping sheet Heater, Left Hand Side		1
3	334/J4706		Damping sheet Heater, Top		1
4	334/J4707		Damping sheet Heater, Rear		1

CONSTRUCTION \ NORTH AMERICA \ CONSTRUCTION / INDUSTRIAL \ JS TRACKED EXCAVATORS \ JS200LC BR E 02451101-02451200 9822/0355 \ B BODYWORK \ B02 CAB / CANOPY

9822/0355 B290-115-1 OTHER OPERATOR ENCLOSURE ITEMS FRONT BLIND FULL LENGTH

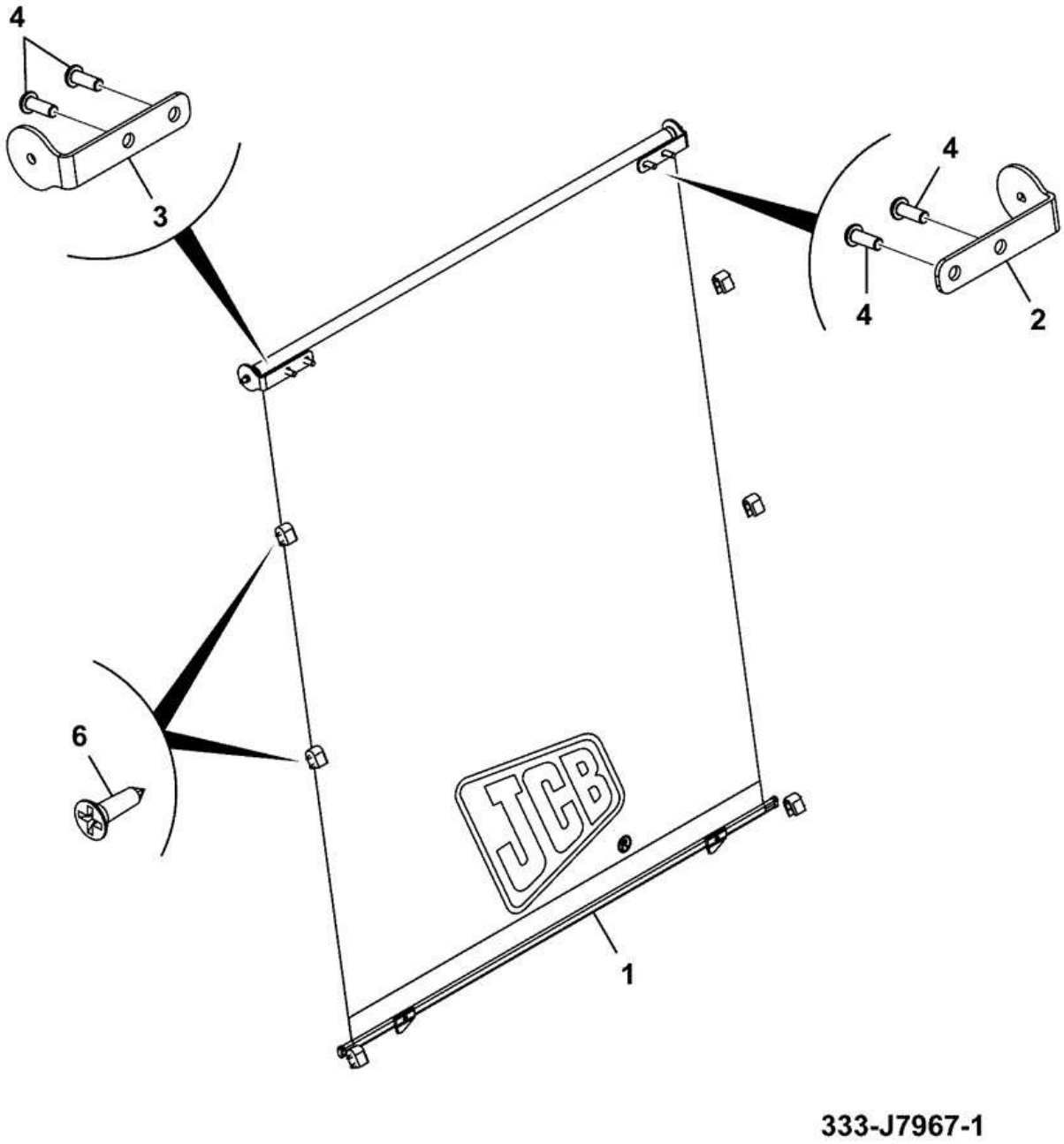

Item	Part #	Change No	Description	Usage Code	QTY
1	333/J8145		Blind front ABI, full length		1

1A	:333/H3990		Clip *Clips that hold blind in place*		6
2	333/J8177		Bracket blind left side		1
3	333/J8178		Bracket blind right side		1
4	826/01428		Screw Button Head M6 x 16		4
6	1430/1102		Screw		12

CONSTRUCTION \ NORTH AMERICA \ CONSTRUCTION / INDUSTRIAL \ JS TRACKED EXCAVATORS \ JS200LC BR E 02451101-02451200 9822/0355 \ B BODYWORK \ B02 CAB / CANOPY

9822/0355 B290-120-1 OTHER OPERATOR ENCLOSURE ITEMS AIR FILTER CARBON, CAB

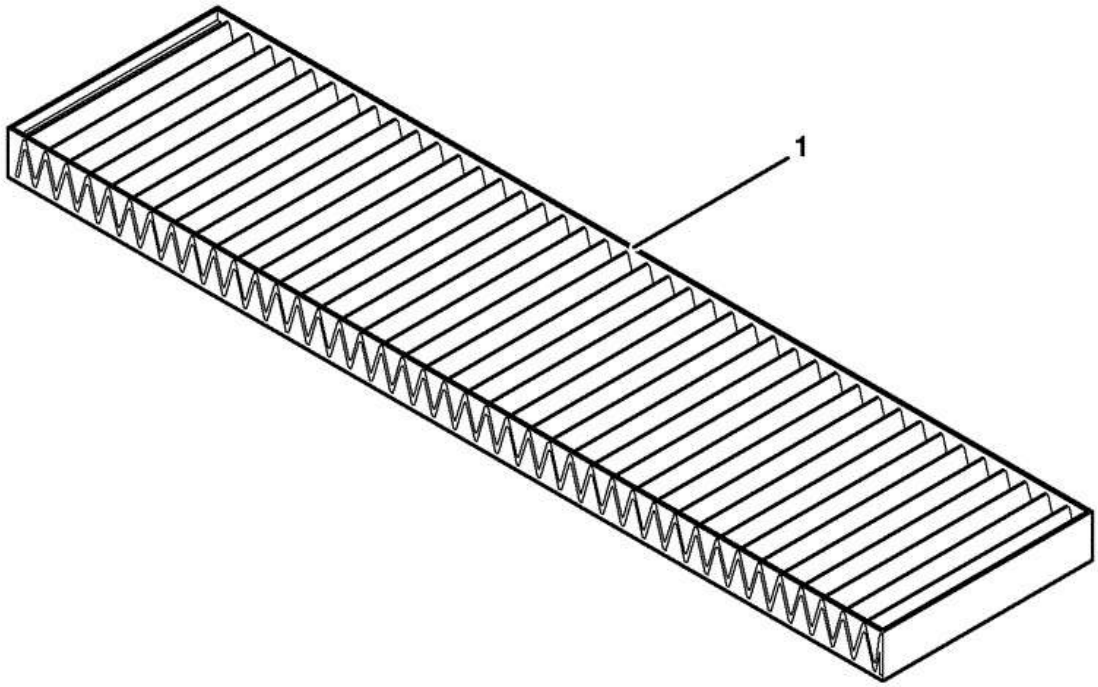

946520

Item	Part #	Change No	Description	Usage Code	QTY
1	32/925775		Filter carbon (Bergstrom)		1

CONSTRUCTION \ NORTH AMERICA \ CONSTRUCTION / INDUSTRIAL \ JS TRACKED EXCAVATORS \ JS200LC BR E 02451101-02451200 9822/0355 \ B BODYWORK \ B02 CAB / CANOPY

9822/0355 B290-125-1 OTHER OPERATOR ENCLOSURE ITEMS FRONT BLIND HALF LENGTH

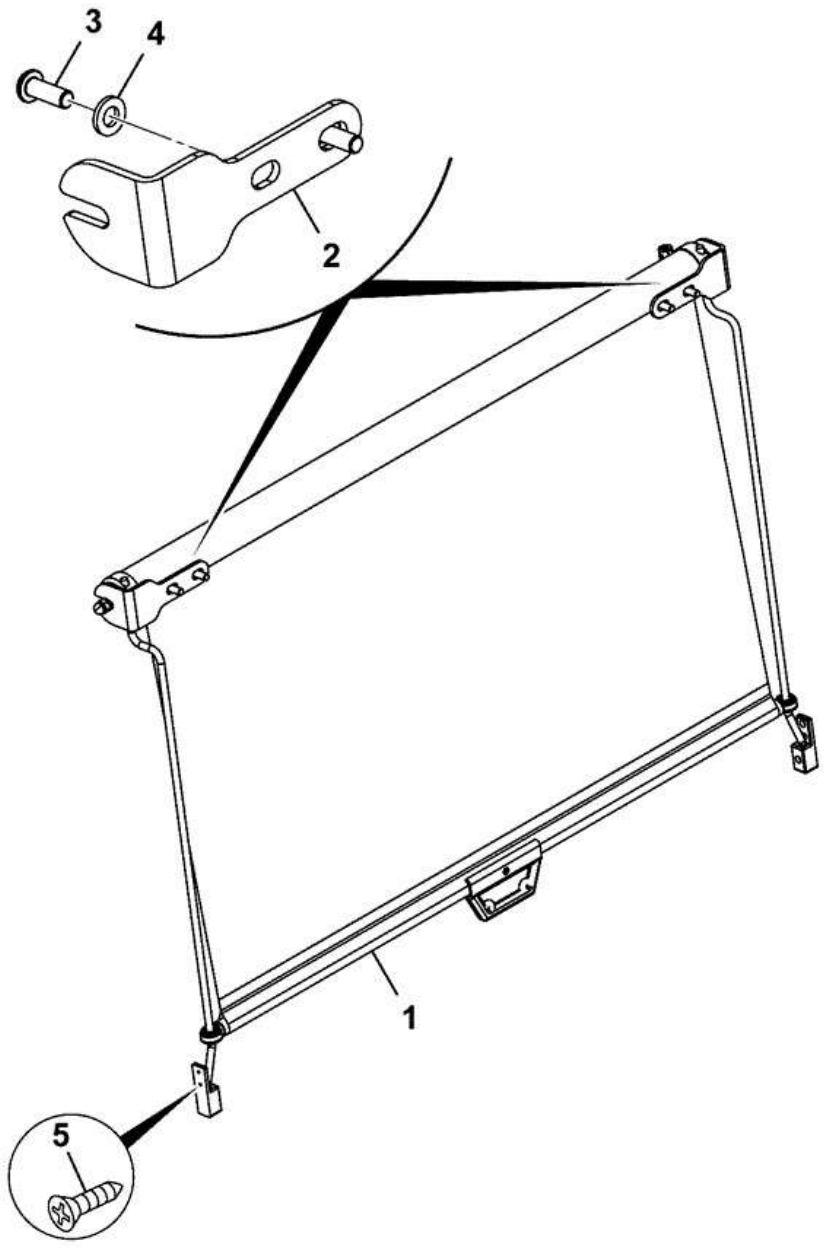

333-J7963-1

Item	Part #	Change No	Description	Usage Code	QTY
1	334/J3622		Blind Front ABI		1

2	333/J7738		Bracket blind		2
3	826/01428		Screw Button Head M6 x 16		4
4	1420/0006D		Washer (M6)		4
5	1430/1001		Screw		4

CONSTRUCTION \ NORTH AMERICA \ CONSTRUCTION / INDUSTRIAL \ JS TRACKED EXCAVATORS \ JS200LC BR E 02451101-02451200 9822/0355 \ B BODYWORK \ B04 EXCAVATOR

9822/0355 B400-1-1 EXCAVATOR INSTALLATION ASSEMBLIES RAM ASSEMBLY, BOOM/ARM- HBCV

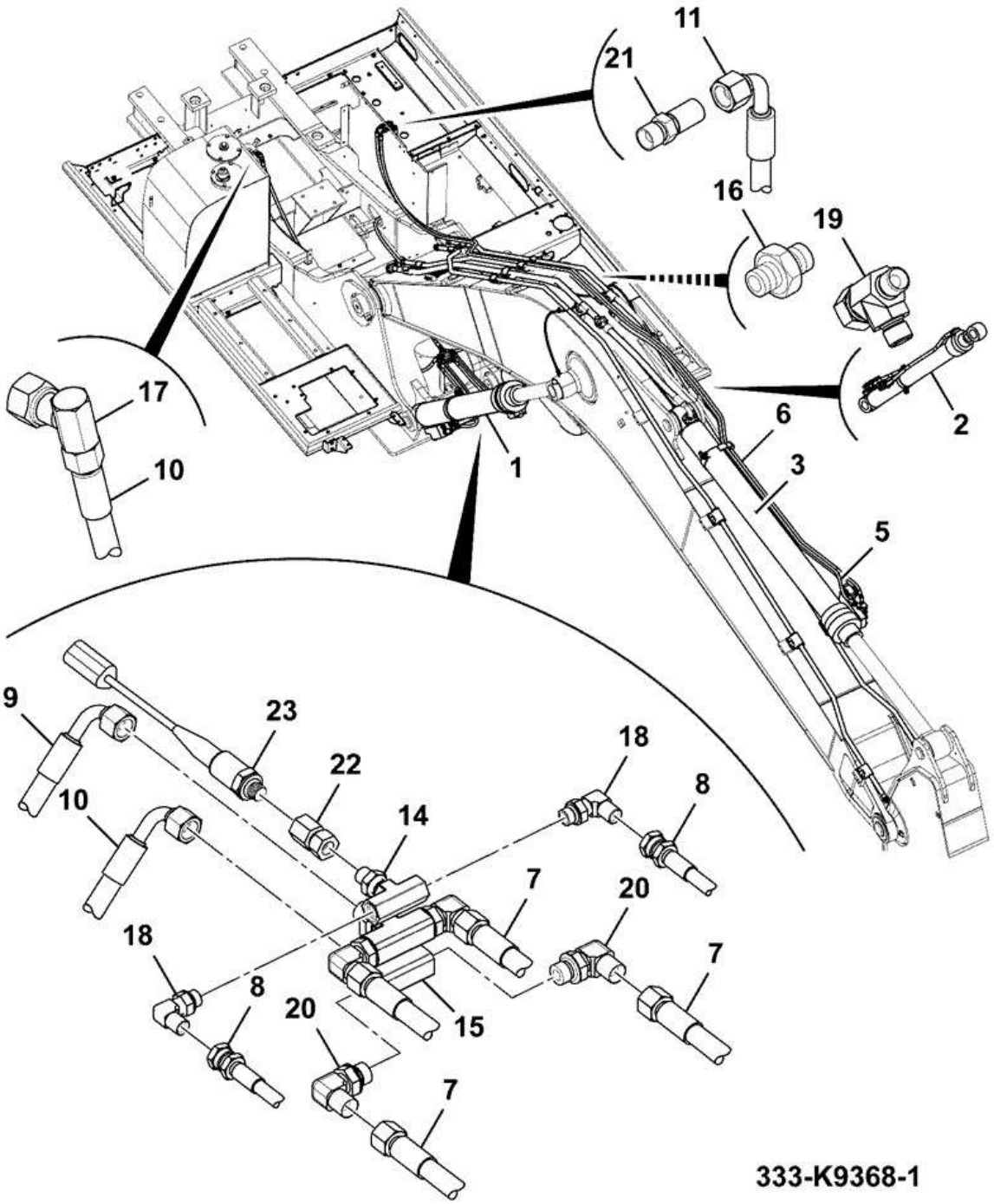

Item	Part #	Change No	Description	Usage Code	QTY
1	****		Ram Boom Assembly, HBCV, Right Side		1

2	****		Ram Boom Assembly, HBCV, Left Side		1
3	****		Arm cylinder assembly - HBCV		1
5	JRV0365		Hose		1
6	JBV0404		Hose		1
7	JRV0382		Hose 3/8" x 1020mm		4
8	333/L3570		Hose 900mm		2
9	KBJ2480		Hose		1
10	KNJ1956		Hose Nylon		1
11	JRJ0135		Hose 3/8		2
14	332/J9675		Adaptor 1/4" M/F Tee Adaptor		1
15	332/J9676		Adaptor 3/8" M/F Tee		2
16	KNJ0759		Adapter		1
17	816/90479		Adapter Elbow F/M G1/2 x G3/8A		1
18	KHJ0341		Elbow 1/4 x 1/4		2
19	JHJ0100		Adapter tee		1
20	KHJ0342		Elbow 3/8 x 3/8		6
21	816/10023		Adapter bulkhead		2
22	332/K2242		Adapter		1
23	332/J4238		Switch pressure 200 bar		1

CONSTRUCTION \ NORTH AMERICA \ CONSTRUCTION / INDUSTRIAL \ JS TRACKED EXCAVATORS \ JS200LC BR E 02451101-02451200 9822/0355 \ B BODYWORK \ B04 EXCAVATOR

9822/0355 B400-10-1 EXCAVATOR INSTALLATION ASSEMBLIES BOOM RAM ASSEMBLY , LH- HBCV

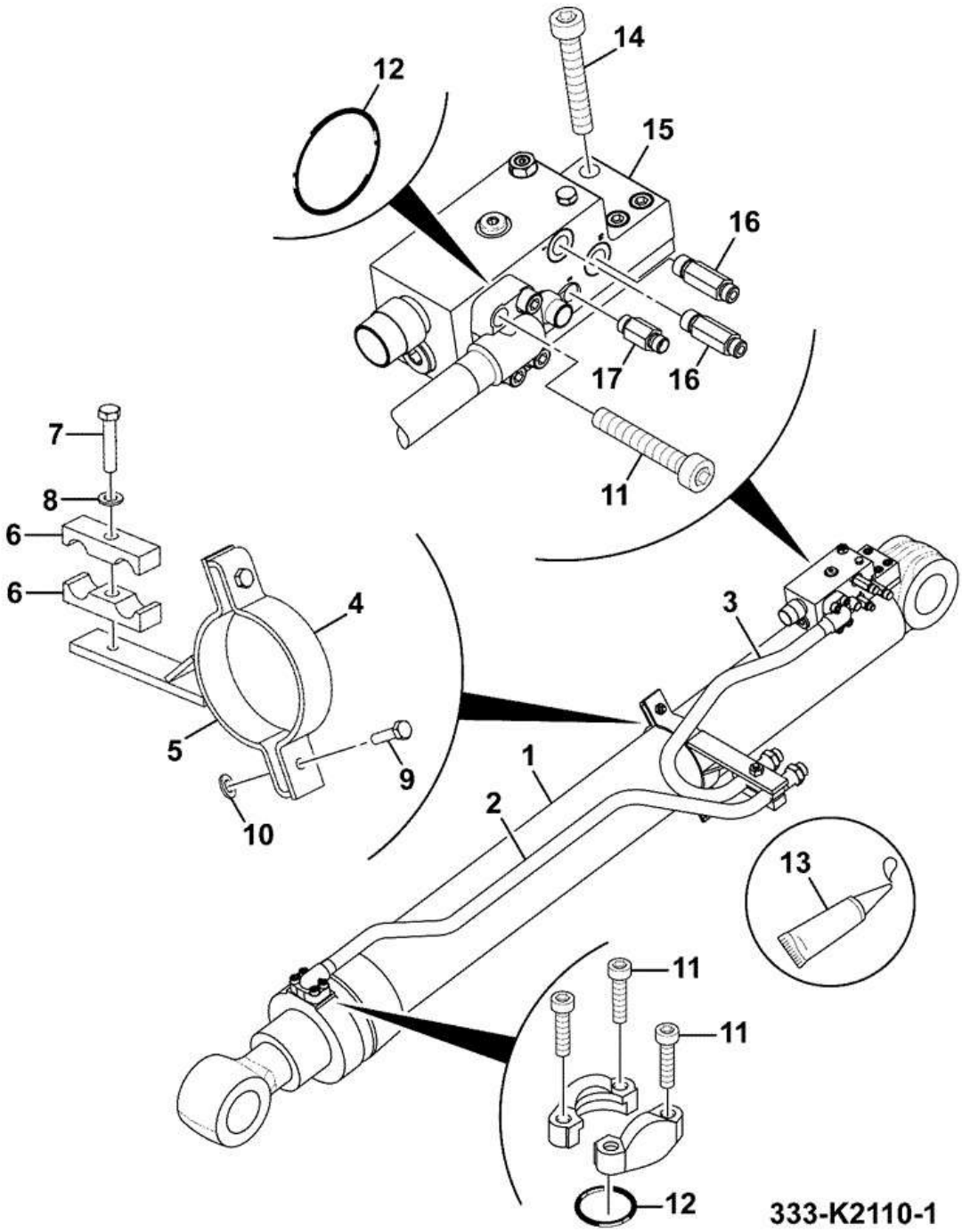

Item	Part #	Change No	Description	Usage Code	QTY
1	333/K9555		Ram Assembly- Boom		1

2	334/P0582		Pipe RH rod side		1
3	333/K2112		Pipe High Speed Left Side		1
4	333/J8647		Clamp		1
5	332/J8152		Clamp Boom Cylinder		1
6	JRJ0218		Clamp pipe		2
7	1316/3517D		Bolt M12 x 75		1
8	1420/0009D		Washer (M12)		1
9	1316/3410D		Bolt		2
10	1420/0008D		Washer (M10)		2
11	1391/3409D		Capscrew M10x35mm		8
12	2409/0205		O Ring		2
13	4101/0500		Fluid Locking Loctite 262		0
14	1391/3410D		Capscrew M10 x 40		4
15	332/K1633		Valve HBCV		1
16	JHV0216		Adapter		2
17	JHV0215		Adapter		1

CONSTRUCTION \ NORTH AMERICA \ CONSTRUCTION / INDUSTRIAL \ JS TRACKED EXCAVATORS \ JS200LC BR E 02451101-02451200 9822/0355 \ B BODYWORK \ B04 EXCAVATOR

9822/0355 B400-15-1 EXCAVATOR INSTALLATION ASSEMBLIES BOOM RAM ASSEMBLY, RH - HBCV

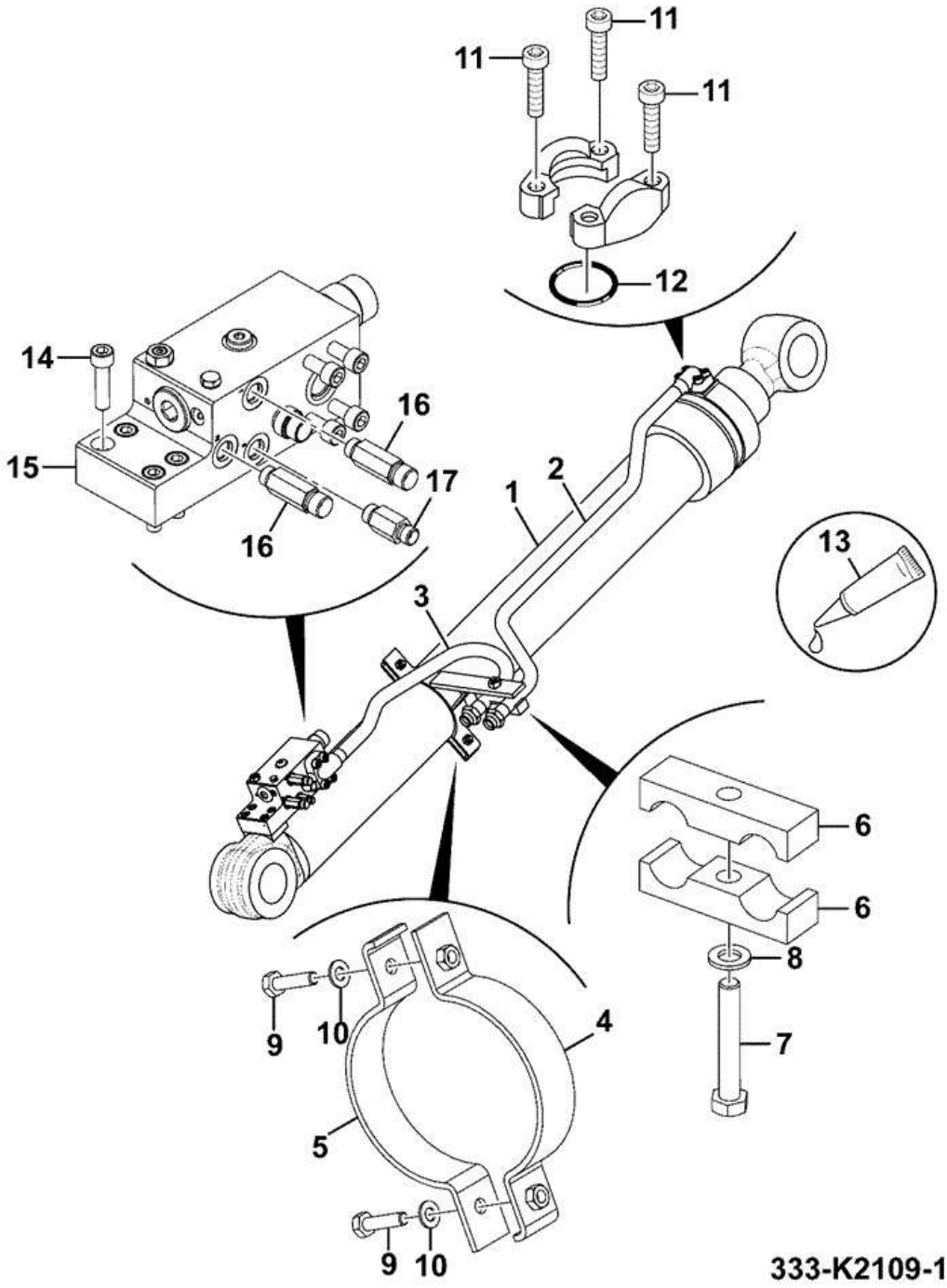

Item	Part #	Change No	Description	Usage Code	QTY
1	333/K9555		Ram Assembly- Boom		1

2	334/P0571		Pipe RH rod side		1
3	333/K2111		Pipe High Speed Right Side		1
4	333/J8647		Clamp		1
5	332/J8152		Clamp Boom Cylinder		1
6	JRJ0218		Clamp pipe		2
7	1316/3517D		Bolt M12 x 75		1
8	1420/0009D		Washer (M12)		1
9	1316/3410D		Bolt		2
10	1420/0008D		Washer (M10)		2
11	1391/3409D		Capscrew M10x35mm		8
12	2409/0205		O Ring		2
13	4101/0500		Fluid Locking Loctite 262		0
14	1391/3410D		Capscrew M10 x 40		4
15	332/K3211		Valve HBCV		1
16	JHV0216		Adapter		2
17	JHV0215		Adapter		1

CONSTRUCTION \ NORTH AMERICA \ CONSTRUCTION / INDUSTRIAL \ JS TRACKED EXCAVATORS \ JS200LC BR E 02451101-02451200 9822/0355 \ B BODYWORK \ B04 EXCAVATOR

9822/0355 B430-25-1 BOOM MONOBOOM STANDARD

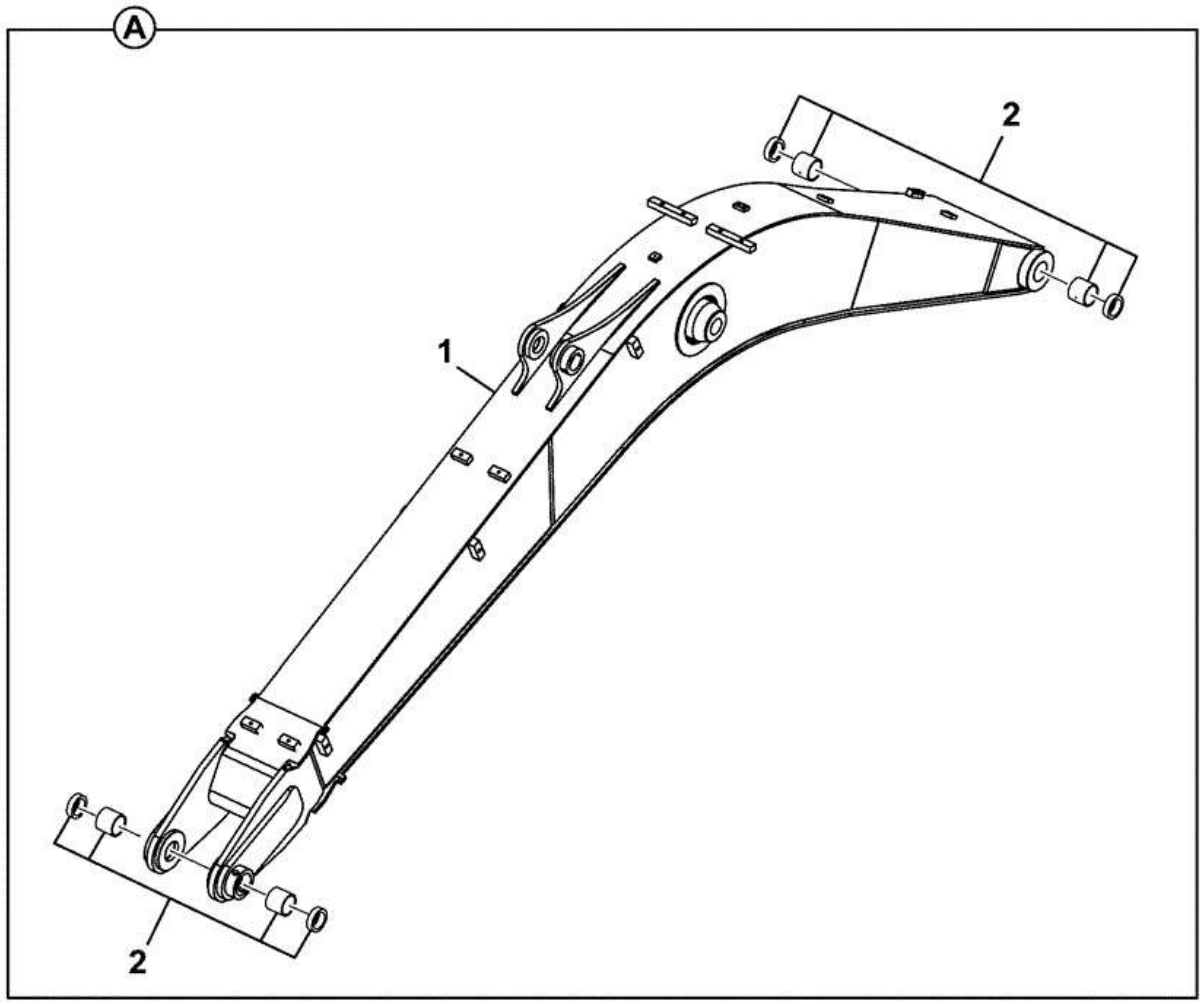

333-K1322-2

Item	Part #	Change No	Description	Usage Code	QTY
A	333/K1322		Boom Mono Assembly, Standard		1
1	****		Boom Standard		1
2	****		Bearing and Seals, Monoboom, Assembly		1

CONSTRUCTION \ NORTH AMERICA \ CONSTRUCTION / INDUSTRIAL \ JS TRACKED EXCAVATORS \ JS200LC BR E 02451101-02451200 9822/0355 \ B BODYWORK \ B04 EXCAVATOR

9822/0355 B430-30-1 BOOM MONOBOOM COMMON PARTS

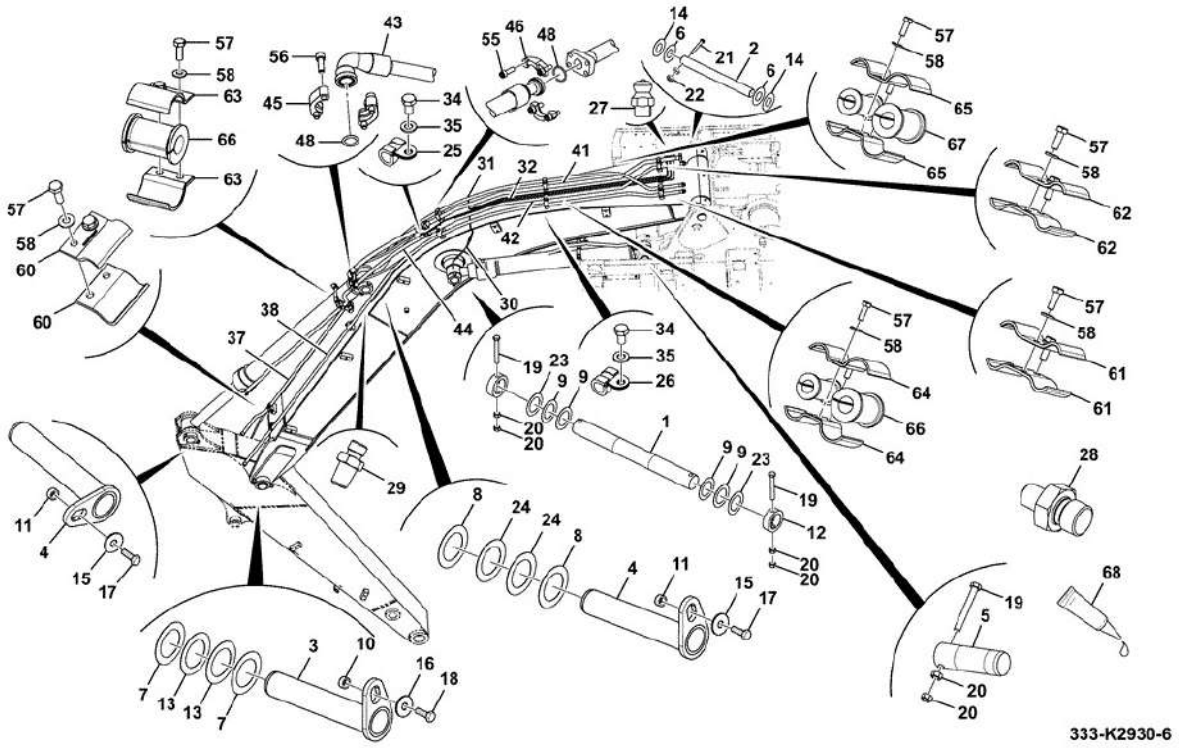

Item	Part #	Change No	Description	Usage Code	QTY
1	KRV1122		Pin Pivot		1
2	KRV1572		Pin attachment		1
3	335/D0344		Pin Pivot		1
4	333/J3939		Pin pivot 80mm x 224mm		2
5	KRV1124		Pin Pivot		2
6	JRV0582		Shim 0.8mm thick		2
7	KSP0268		Shim 91mmx160mmx1.2mm		2
8	KRV1197		Shim Plate		2
9	KRV1178		Shim 1.2mm Thick		4
10	333/K7982		Spacer 1 3/16" x 6" SWG		1
11	333/K7980		Spacer 1" X 8" SWG		2
12	KRV1156		Shim Locking		2
13	823/10579		Shim 91mmx160mmx0.8mm		2
14	KRV1180		Shim 1.2mm thick		2
15	1412/0007D		Washer (5/8" Large)		2
16	334/J3964		Washer M20 (Large)		1
17	1316/0710D		Bolt		2
18	1316/0811D		Screw M20 x 45		1
19	1316/3826D		Bolt M20 x 160mm		4
20	1371/0701D		Nut Plain M20		8
21	1316/4028D		Bolt M24 x 180mm		1
22	1371/0901D		Nut Full M24 (Grade 10.9)		2

23	333/K7317		Shim ID 86 X OD 130 X 0.8		4
24	333/K7448		Shim ID 81 X OD 140 X 0.8		2
25	821/00410		Clip P 10mm		3
26	KHR1326		Clamp 18mm dia.		3
27	JHP0037		Nipple Grease Straight		3
28	JLV1547		Adapter		3
29	1609/0002		Adapter		3
30	333/K8619		Hose Grease 2550 LG		1
31	333/K8620		Hose Grease 2450 LG		1
32	333/K8621		Hose Grease 3000 LG		1
34	1316/0203D		Screw		6
35	1420/0006D		Washer (M6)		6
37	333/K6026		Pipe Head Side, Bucket Line		1
38	333/K6044		Pipe Rod Side, Bucket Line		1
41	333/K5990		Pipe Head Side, Arm Line		1
42	333/K6008		Pipe Rod Side, Arm Line		1
43	JRV0325		Hose		1
44	627/10648		Hose		1
45	210/92901		Clamp Flange		2
46	KRJ2682		Flange Split		2
48	2409/0210		O Ring		2
55	1391/3409D		Capscrew M10x35mm		4
56	1391/3511D		Capscrew		4
57	1316/0408D		Setscrew		24
58	2208/00110		Washer M10		24
60	333/K5367		Clamp Single Pipe		4
61	333/K5380		Clamp Double Pipe		4
62	333/K5376		Clamp Double Pipe		4
63	333/K5370		Clamp Single Pipe		8
64	333/K5389		Clamp Double Pipe		2
65	333/K5491		Clamp Double Pipe		2
66	333/K5482		Rubber Insert Dia 40		7
67	333/K5359		Rubber Insert Dia 56		1
68	4101/0500		Fluid Locking Loctite 262		0

9822/0355 B430-35-1 BOOM MONOBOOM SEALS AND BEARINGS

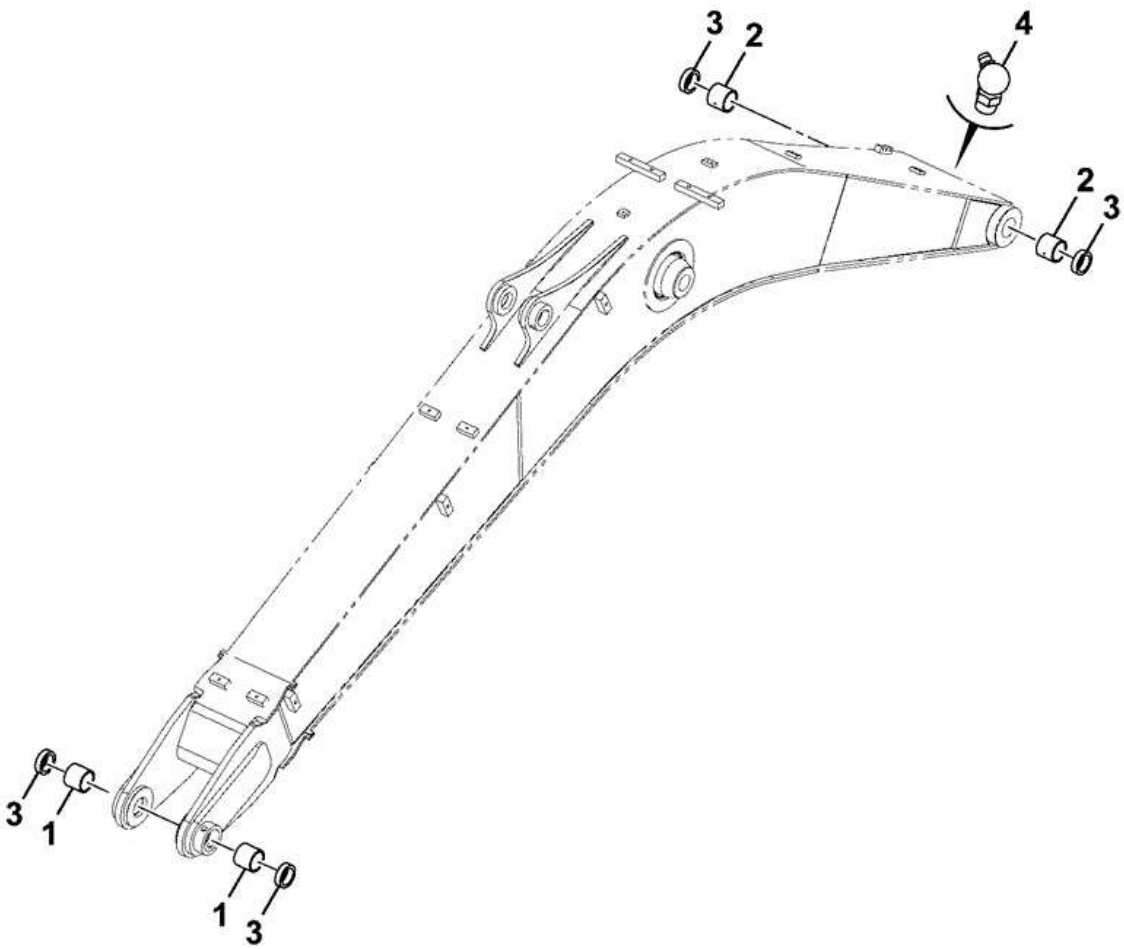

333-K3077-1

Item	Part #	Change No	Description	Usage Code	QTY
1	JRV0597		Bush steel		2

2	831/10291		Bush bearing		2
3	KHV0103		Seal dust		4
4	JHP0037		Nipple Grease Straight		3

CONSTRUCTION \ NORTH AMERICA \ CONSTRUCTION / INDUSTRIAL \ JS TRACKED EXCAVATORS \ JS200LC BR E 02451101-02451200 9822/0355 \ B BODYWORK \ B04 EXCAVATOR

9822/0355 B440-5-1 DIPPER LOW FLOW 2.4

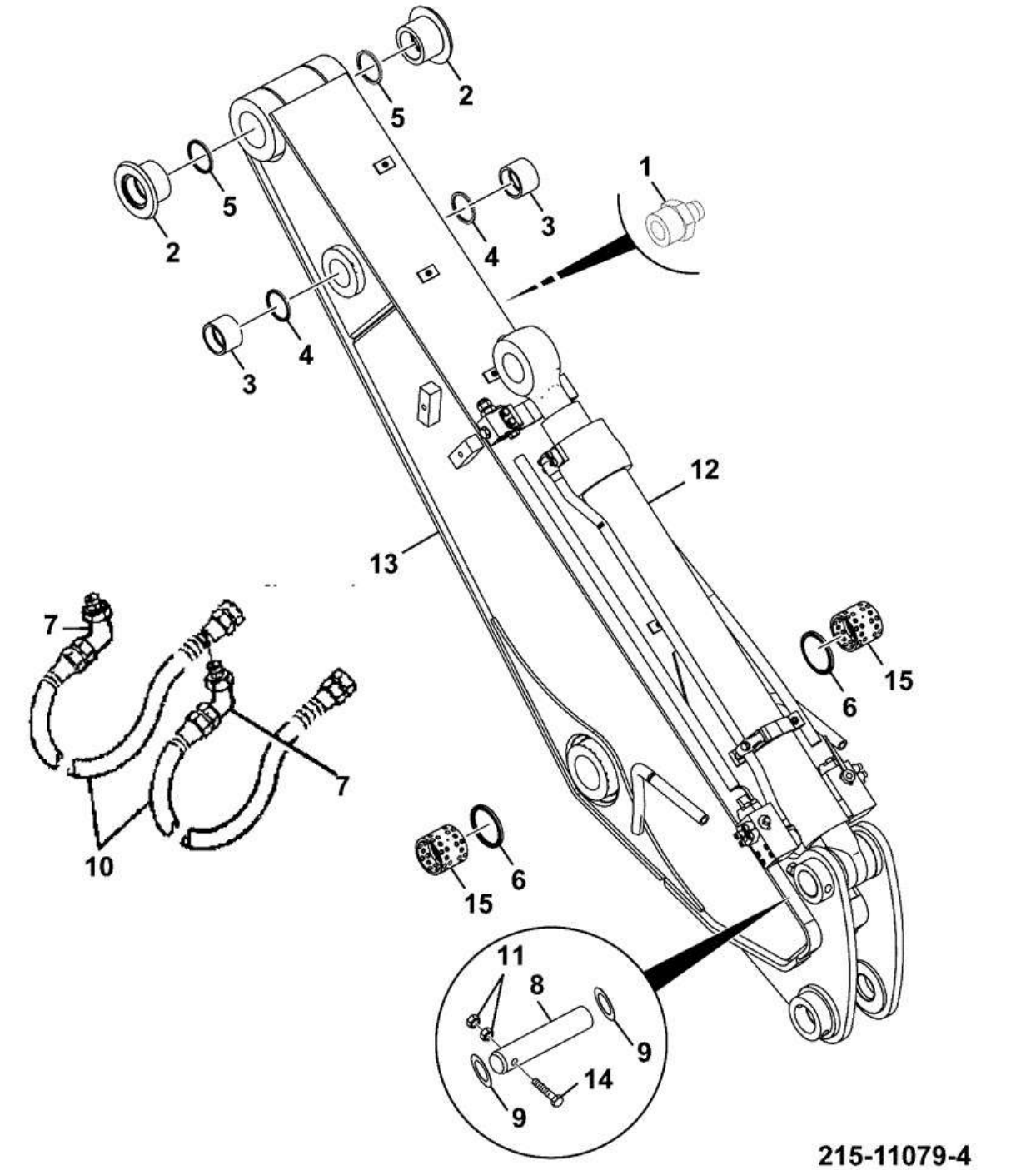

Item	Part #	Change No	Description	Usage Code	QTY
1	JHP0037		Nipple Grease Straight		2
2	JRV0594		Bush steel		2
3	JRV0595		Bush steel		2

4	KHV0100		Seal Dust		2
5	KHV0101		Seal dust		2
6	KHV0103		Seal dust		2
7	KNJ0605		Adapter Hose		2
8	KRV1127		Pin attachment		1
9	KRV1176		Shim 76mm ID x 130mm OD 1.2mm thick		2
10	627/10646		Hose		2
11	1371/0701D		Nut Plain M20		2
12	****		Assembly cylinder bucket		1
13	335/02221		Dipper 2.4m , low flow		1
14	1316/3825D		Bolt M20 x 150mm		1
15	831/10291		Bush bearing		2

CONSTRUCTION \ NORTH AMERICA \ CONSTRUCTION / INDUSTRIAL \ JS TRACKED EXCAVATORS \ JS200LC BR E 02451101-02451200 9822/0355 \ B BODYWORK \ B04 EXCAVATOR

9822/0355 B440-30-1 DIPPER HEAVY DUTY 2.4M, SUB-ASSEMBLY

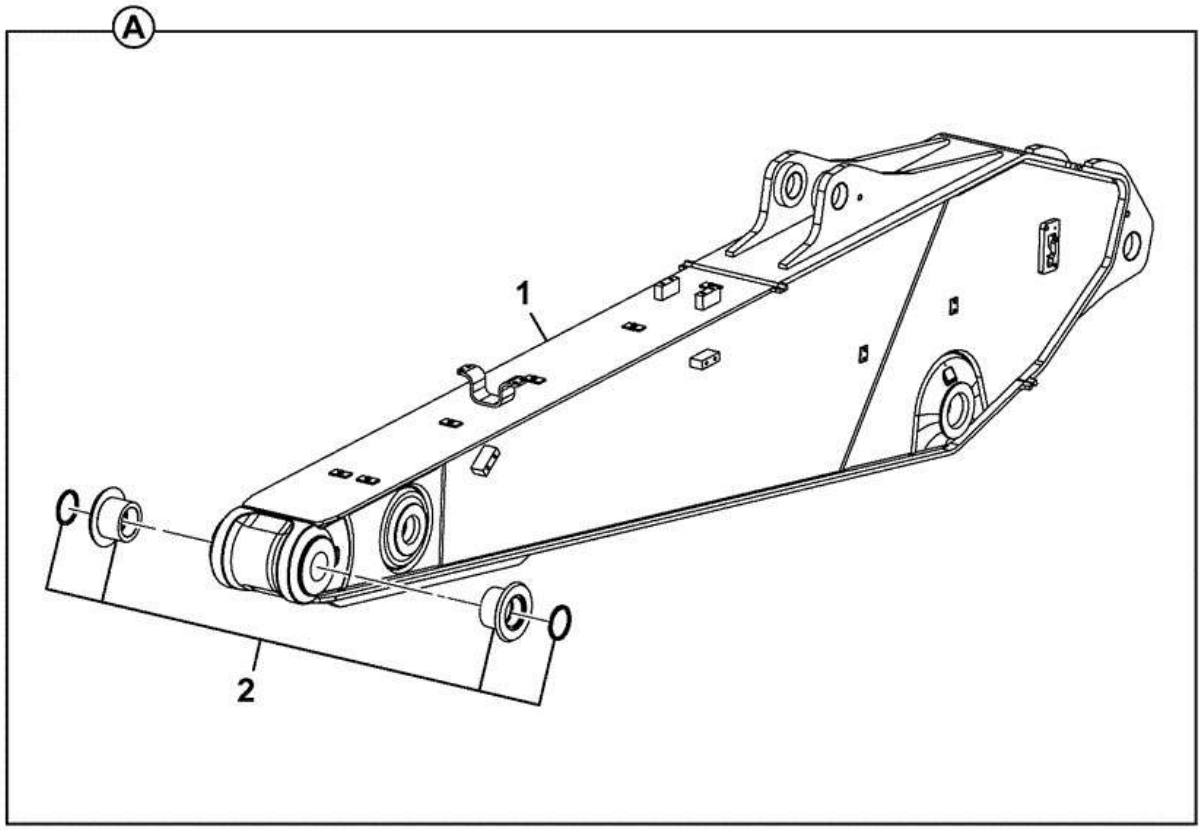

333-K2131-1

Item	Part #	Change No	Description	Usage Code	QTY
A	333/K2130		Dipper 2.4m HD Hammer, Assembly		1

1	****		Dipper Heavy Duty 2.4m		1
2	****		Dipper Seal & Bearing Assembly		1

Product Catalog \ CONSTRUCTION \ NORTH AMERICA \ CONSTRUCTION / INDUSTRIAL \ JS TRACKED EXCAVATORS \ JS200LC BR E 02451101-02451200 9822/0355 \ B BODYWORK \ B04 EXCAVATOR

9822/0355 B440-35-1 DIPPER SEALS AND BEARINGS

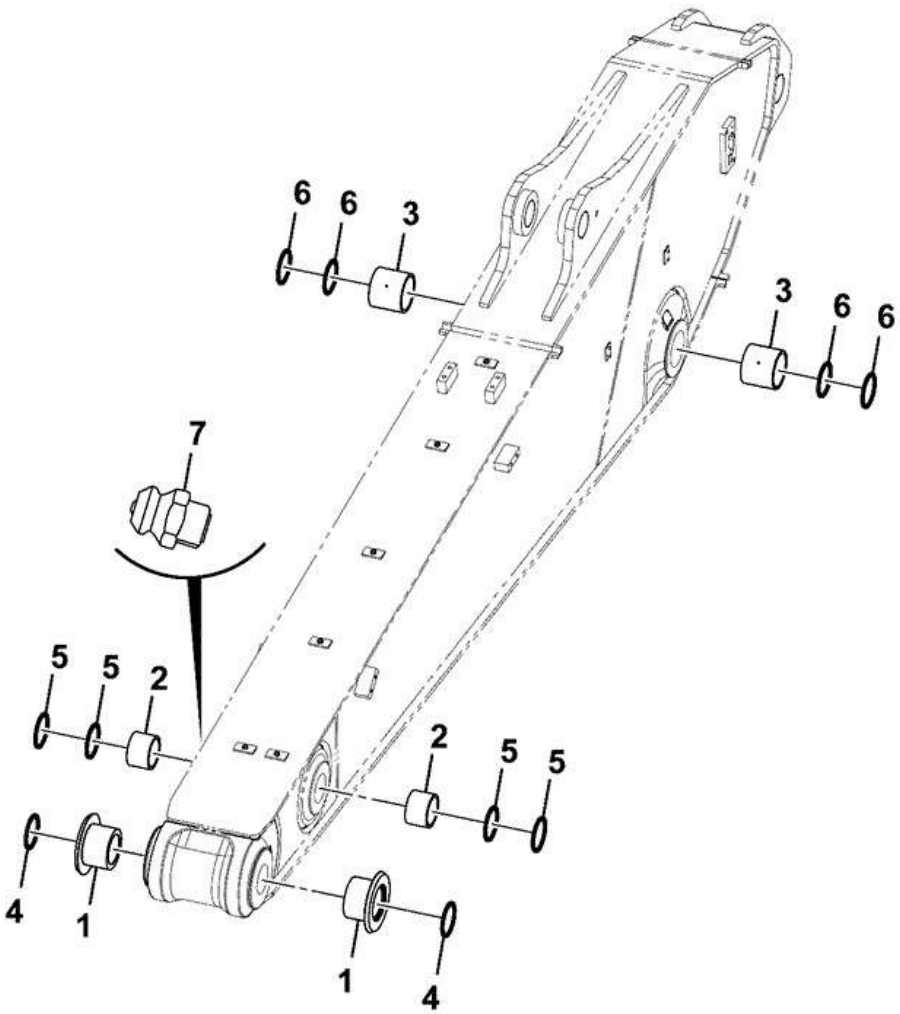

333-K3107-1

Item	Part #	Change No	Description	Usage Code	QTY
1	JRV0594		Bush steel		2
2	JRV0595		Bush steel		2
3	831/10291		Bush bearing		2

4	KHV0101		Seal dust		2
5	KHV0100		Seal Dust		2
6	KHV0103		Seal dust		2
7	JHP0037		Nipple Grease Straight		3

9822/0355 B460-10-1 TIPPING LINK MAX CAP SHACKLE

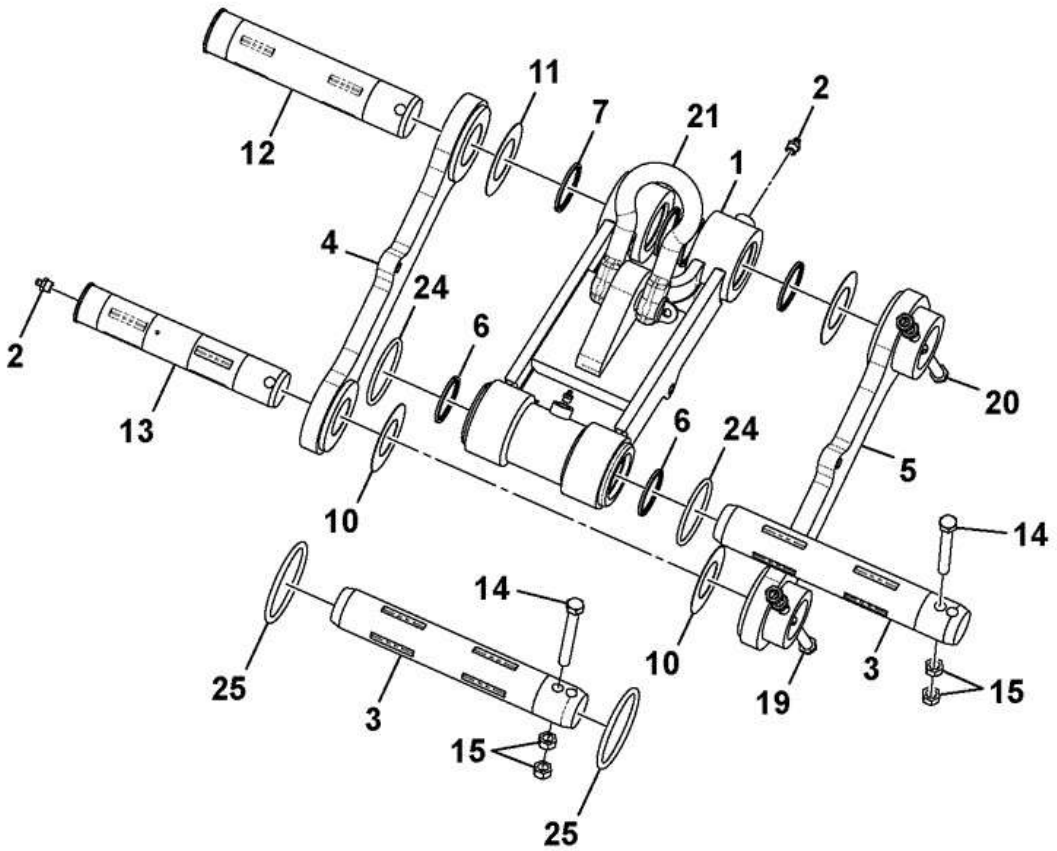

Item	Part #	Change No	Description	Usage Code	QTY
1	333/K9583		Link Bucket, 17T LUG, ABI		1
2	JHP0037		Nipple Grease Straight		4
3	JRV0071		Pin pivot		2

4	JRV0208		Link arm right hand		1
5	JRV0209		Link arm left hand		1
6	KHV0101		Seal dust		2
7	KHV0102		Seal dust		4
10	KHV0169		Shim 140 x 76 x 1.2mm thick		2
11	KHV0170		Shim 150 x 86 x 1.2mm thick		2
12	KRV1120		Pin attachment 85 x 425		1
13	KRV1121		Pin attachment 75 x 425		1
14	1316/3825D		Bolt M20 x 150mm *USE ON ITEM 3*		2
15	1371/0701D		Nut Plain M20		8
19	1316/3826D		Bolt M20 x 160mm		1
20	1316/3827D		Bolt M20 x 170		1
21	JBV0015		Link bow shackle		1
24	KHV0114		O Ring		2
25	KHV0117		O Ring		2

CONSTRUCTION \ NORTH AMERICA \ CONSTRUCTION / INDUSTRIAL \ JS TRACKED EXCAVATORS \ JS200LC BR E 02451101-02451200 9822/0355 \ B BODYWORK \ B04 EXCAVATOR

9822/0355 B460-25-1 TIPPING LINK ABI 17T LUG

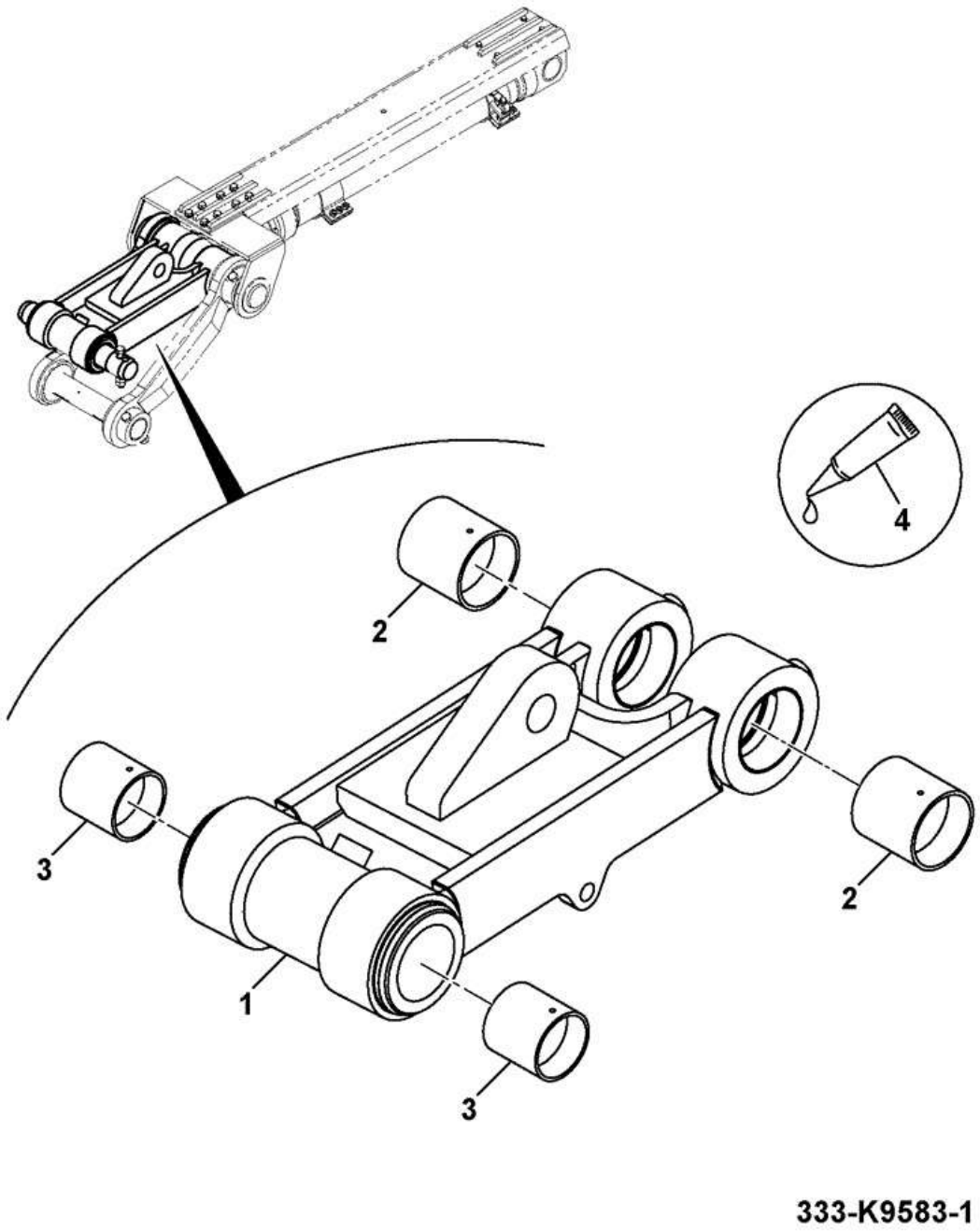

Item	Part #	Change No	Description	Usage Code	QTY
1	333/K9580		Link Bucket, 17T LUG		1
2	JRV0593		Bush steel		2
3	JRV0598		Bush steel		2

4	4101/0500		Fluid Locking Loctite 262		0

CONSTRUCTION \ NORTH AMERICA \ CONSTRUCTION / INDUSTRIAL \ JS TRACKED EXCAVATORS \ JS200LC BR E 02451101-02451200 9822/0355 \ B BODYWORK \ B05 REFURBISHMENTS

9822/0355 B510-10-1 DECALS MACHINE IDENTIFICATION JCB DIESELMAX

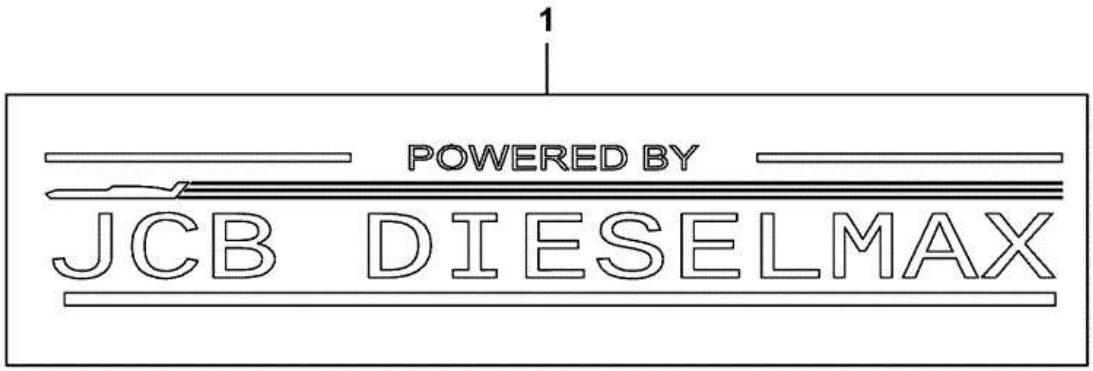

332-B0459-1

Item	Part #	Change No	Description	Usage Code	QTY
1	332/B0459		Decal JCB Dieselmax		1

CONSTRUCTION \ NORTH AMERICA \ CONSTRUCTION / INDUSTRIAL \ JS TRACKED EXCAVATORS \ JS200LC BR E 02451101-02451200 9822/0355 \ B BODYWORK \ B05 REFURBISHMENTS

9822/0355 B510-15-1 DECALS MACHINE IDENTIFICATION MONOBOOM INSIGNIA, JS200LC, GLOBAL BOOM & ARM

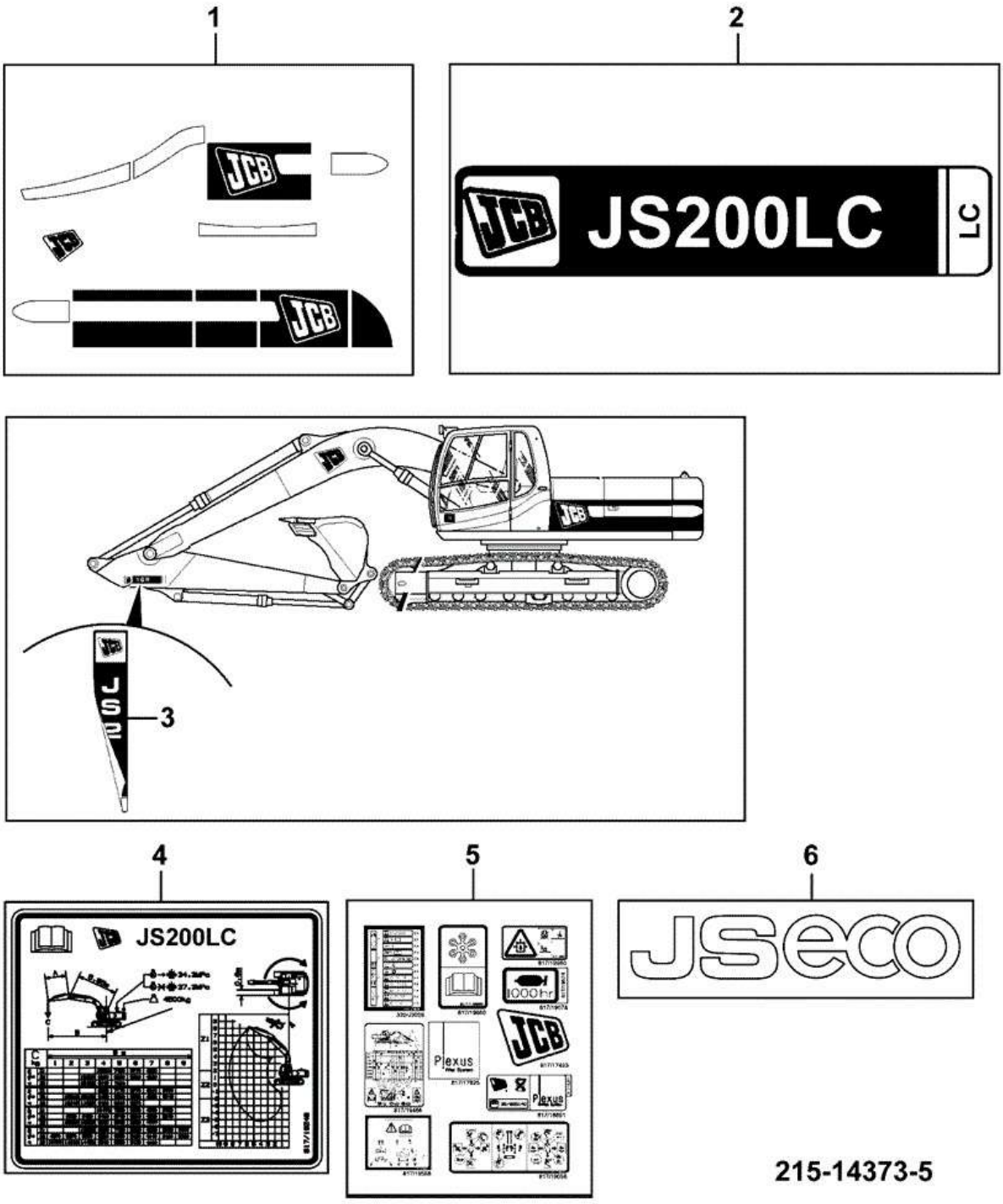

Item	Part #	Change No	Description	Usage Code	QTY
1	****		Decals Common, JS200/260		1

2	333/J3141		Decal I.D. machine		2
3	332/K4048		Decal arm		2
4	333/K7603		Chart Lifting, JS200LC		1
5	****		Label Pack		1
6	333/J6535		Decal JSeco		1

CONSTRUCTION \ NORTH AMERICA \ CONSTRUCTION / INDUSTRIAL \ JS TRACKED EXCAVATORS \ JS200LC BR E 02451101-02451200 9822/0355 \ B BODYWORK \ B05 REFURBISHMENTS

9822/0355 B510-20-1 DECALS MACHINE IDENTIFICATION COMMON PARTS

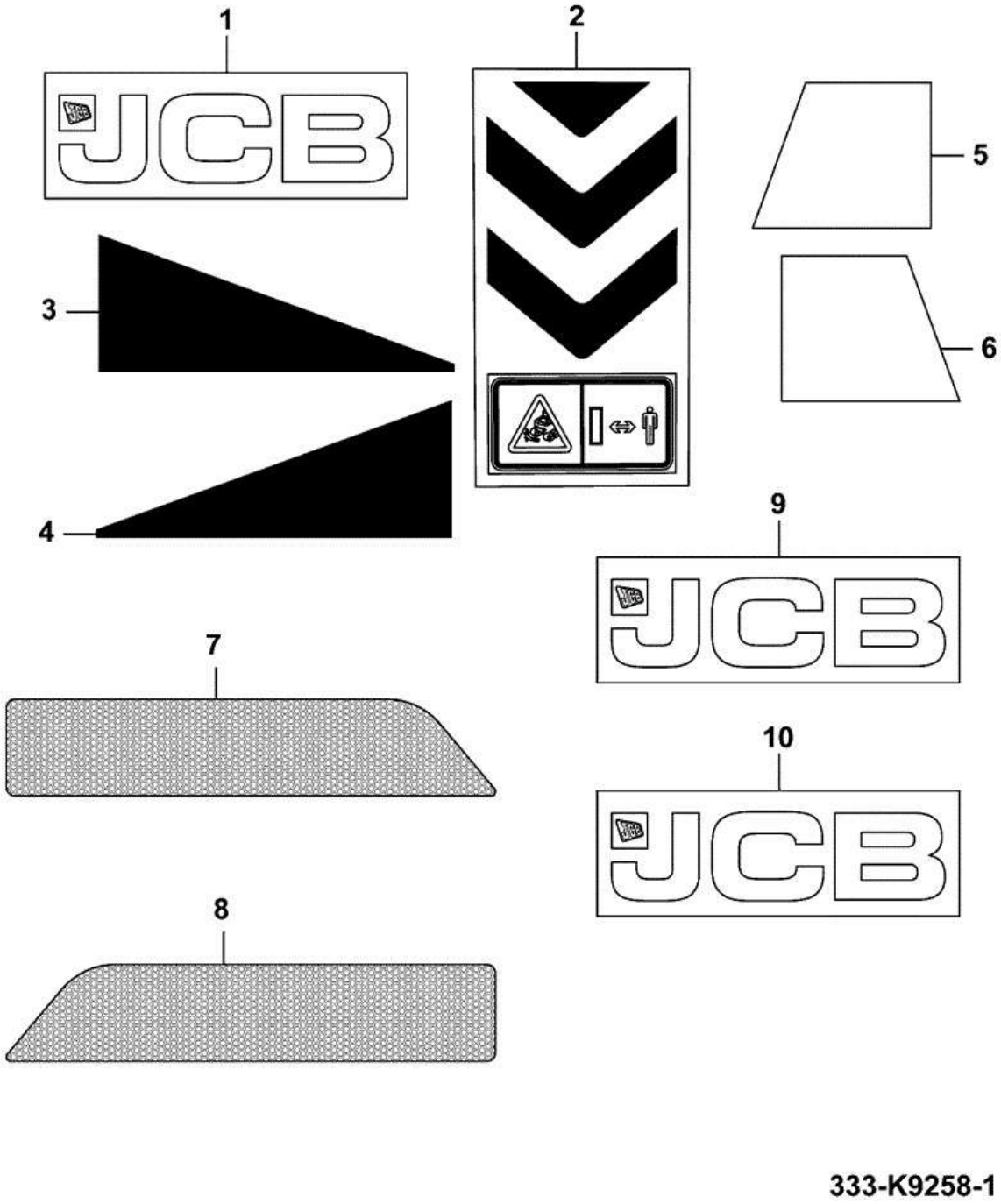

Item	Part #	Change No	Description	Usage Code	QTY
1	333/J5047		Decal JCB 1630mm x 440mm		1

2	333/J2439		Decal chevron		2
3	333/J3266		Decal door, left side		1
4	333/J3270		Decal door, right side		1
5	333/J3228		Decal skirt left hand side		1
6	333/J3243		Decal skirt right hand side		1
7	333/J7093		Reflector sheet red		1
8	333/J7099		Reflector sheet red		1
9	333/K9179		Decal Boom		2
10	333/K9198		Decal Side		2

CONSTRUCTION \ NORTH AMERICA \ CONSTRUCTION / INDUSTRIAL \ JS TRACKED EXCAVATORS \ JS200LC BR E 02451101-02451200 9822/0355 \ B BODYWORK \ B05 REFURBISHMENTS

9822/0355 B520-15-1 LABELS WARNING/INFORMATION DECALS 200 REST OF WORLD

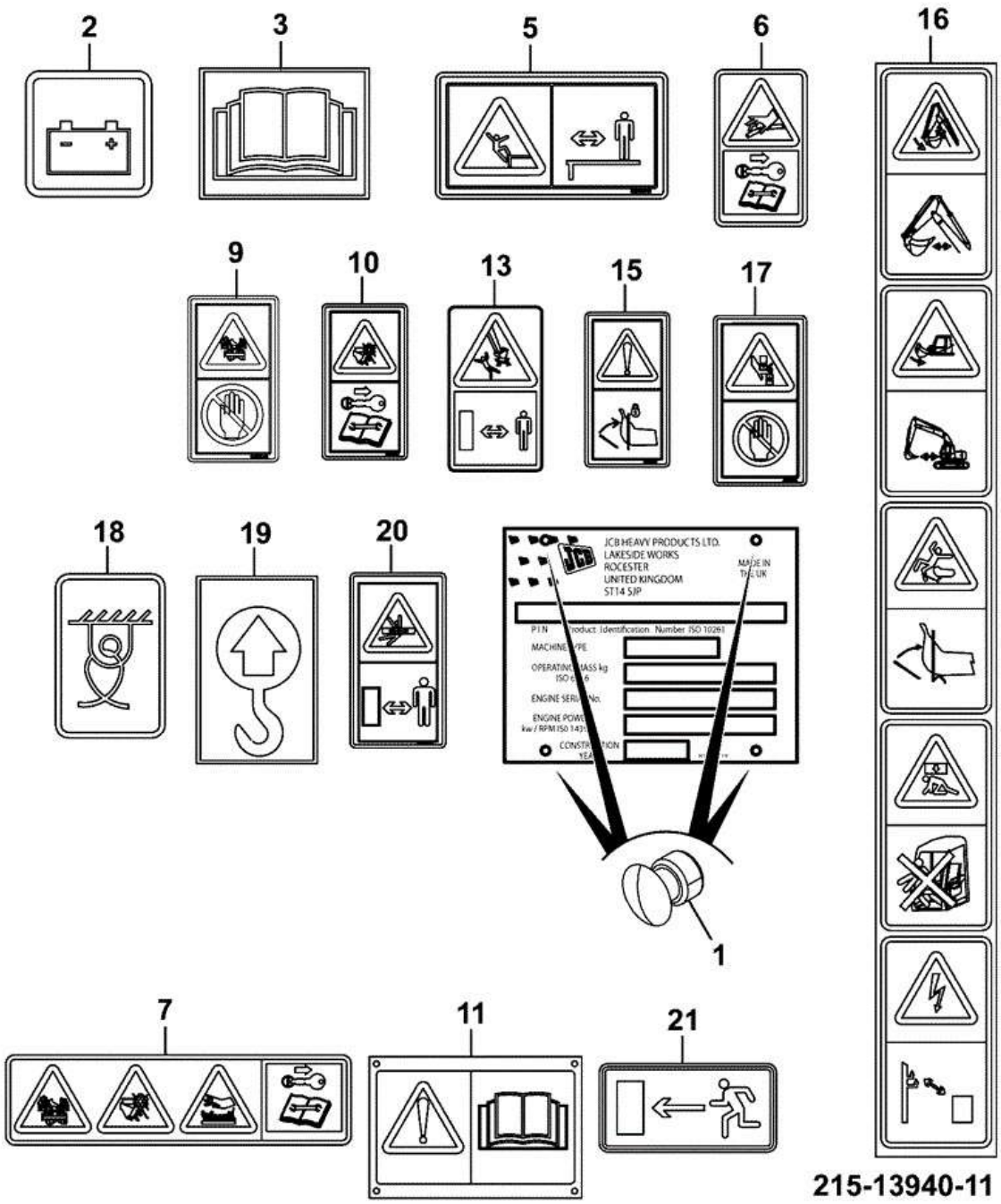

Item	Part #	Change No	Description	Usage Code	QTY
1	332/K9063		Rivet pop		4

2	332/J7387		Decal 24v		1
3	332/T4796		Label Diesel Fuel		1
5	817/70001		Label Safety		1
6	817/18532		Decal JS Information / Warning		1
7	332/J2896		Label warning sign ; engine bay		1
9	817/70005		Decal warning,hot fluid under pressure		1
10	332/P4679		Decal Warning Fan Blades Remove Key Fom Ignition		1
11	817/18541		Decal JS information / warning		1
12	****		Dataplate ROW		1
13	817/19470		Decal Warning Label - Dipper		2
14	****		Guide stamping and fixing install		1
15	817/70116		Decal warning sign : Lock lever		1
16	332/J9693		Decal warning sign; europian union multiple		1
17	817/70003		Label Warning- Hazard to Hands		1
18	332/S5833		Label Tie Down Point		4
19	817/01803		Label Sling Point		4
20	817/70027		Label ISO-07D		3
21	817/19457		Decal Emergency Exit		1

CONSTRUCTION \ NORTH AMERICA \ CONSTRUCTION / INDUSTRIAL \ JS TRACKED EXCAVATORS \ JS200LC BR E 02451101-02451200 9822/0355 \ B BODYWORK \ B05 REFURBISHMENTS

9822/0355 B520-20-1 LABELS WARNING/INFORMATION PACK

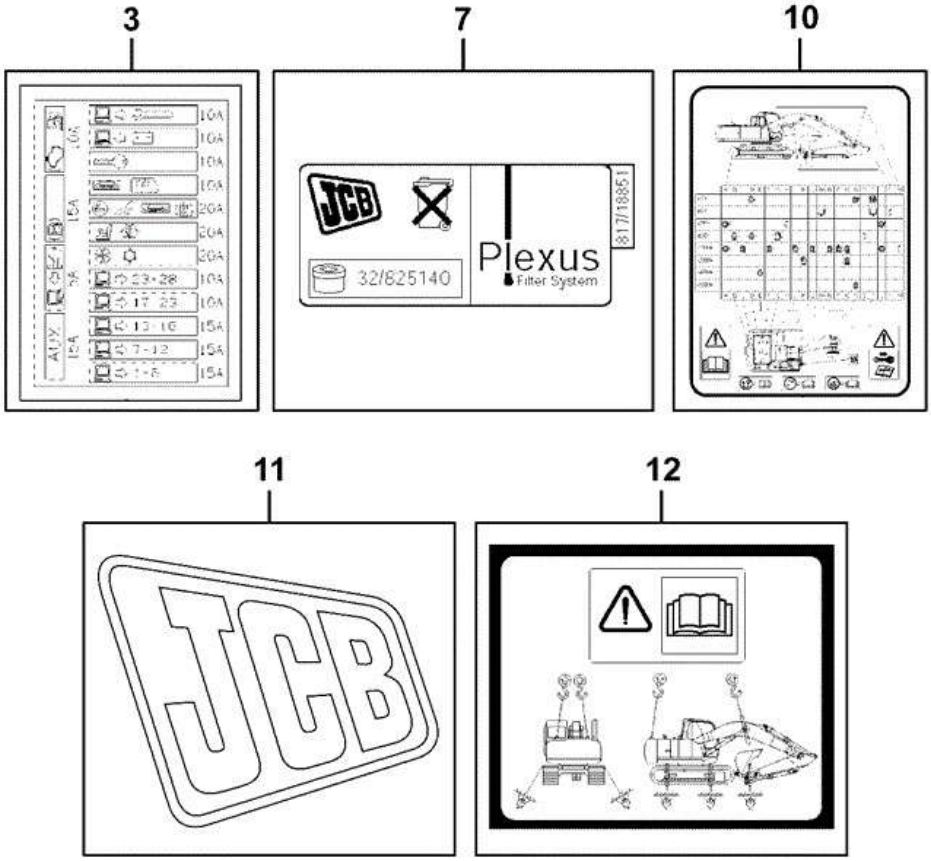

215-11326-20

Item	Part #	Change No	Description	Usage Code	QTY
3	332/J3026		Decal Fusebox		1

7	817/18851		Label plexus filter		1
10	817/19466		Decal lubrication chart		1
11	332/K5067		Decal , JCB Logo - Yellow		1
12	817/19558		Decal lift & tie-down		1

CONSTRUCTION \ NORTH AMERICA \ CONSTRUCTION / INDUSTRIAL \ JS TRACKED EXCAVATORS \ JS200LC BR E 02451101-02451200 9822/0355 \ B BODYWORK \ B05 REFURBISHMENTS

9822/0355 B520-30-1 LABELS WARNING/INFORMATION DECALS AND HANDBOOK - PROTUGUESE

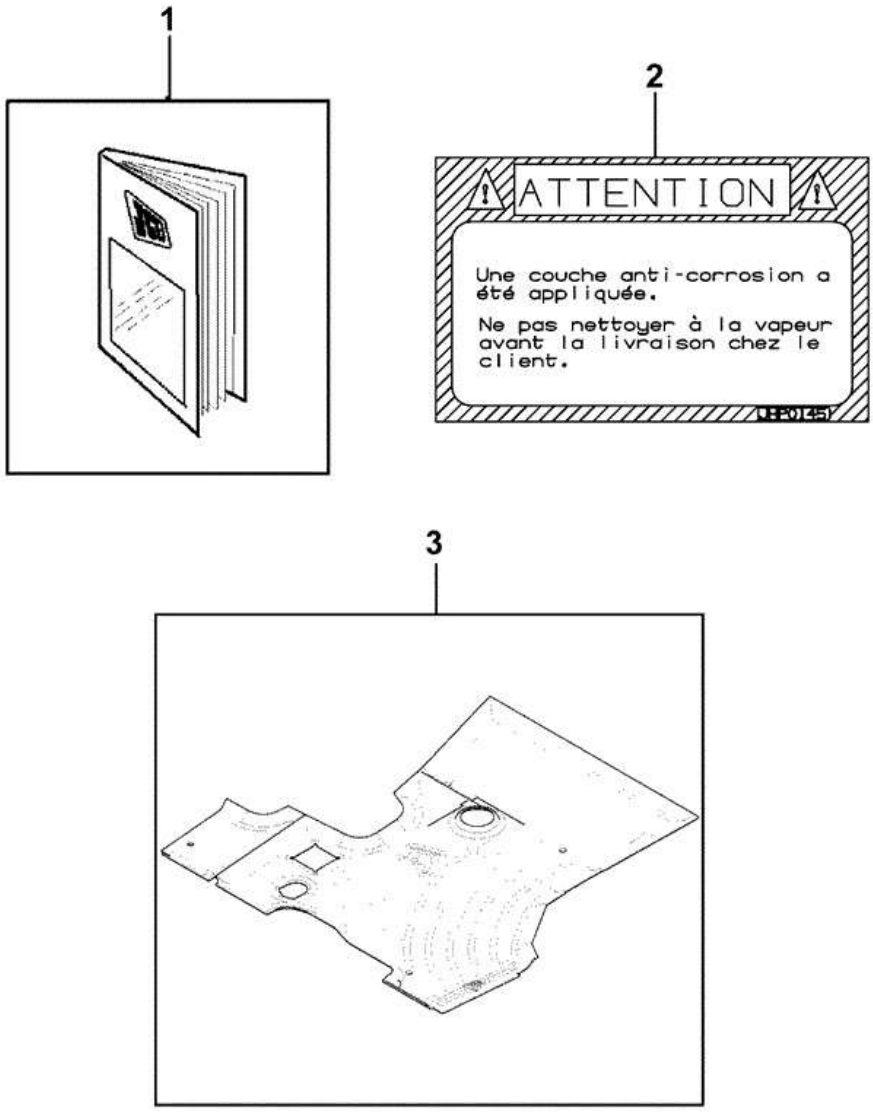

334-L6325-1

Item	Part #	Change No	Description	Usage Code	QTY
1	9821/9720		Handbook Portugese Brazil		1

2	****		Decal pre-delivery		1
3	jhp0095		Floormat (Transit Protn)		2

CONSTRUCTION \ NORTH AMERICA \ CONSTRUCTION / INDUSTRIAL \ JS TRACKED EXCAVATORS \ JS200LC BR E 02451101-02451200 9822/0355 \ B BODYWORK \ B05 REFURBISHMENTS

9822/0355 B520-35-1 LABELS WARNING/INFORMATION TRACKED ISO CONTROLS

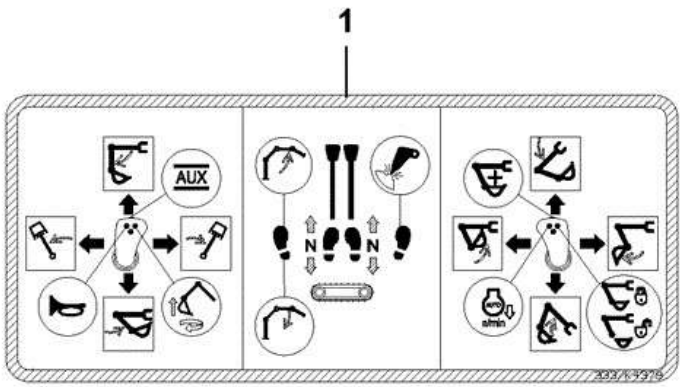

333-K4379-1

Item	Part #	Change No	Description	Usage Code	QTY
1	333/K4379		Decal ISO Controls		1

CONSTRUCTION \ NORTH AMERICA \ CONSTRUCTION / INDUSTRIAL \ JS TRACKED EXCAVATORS \ JS200LC BR E 02451101-02451200 9822/0355 \ B BODYWORK \ B05 REFURBISHMENTS

9822/0355 B530-1-5 TOOLS TOOLBOX & SIDESKIN

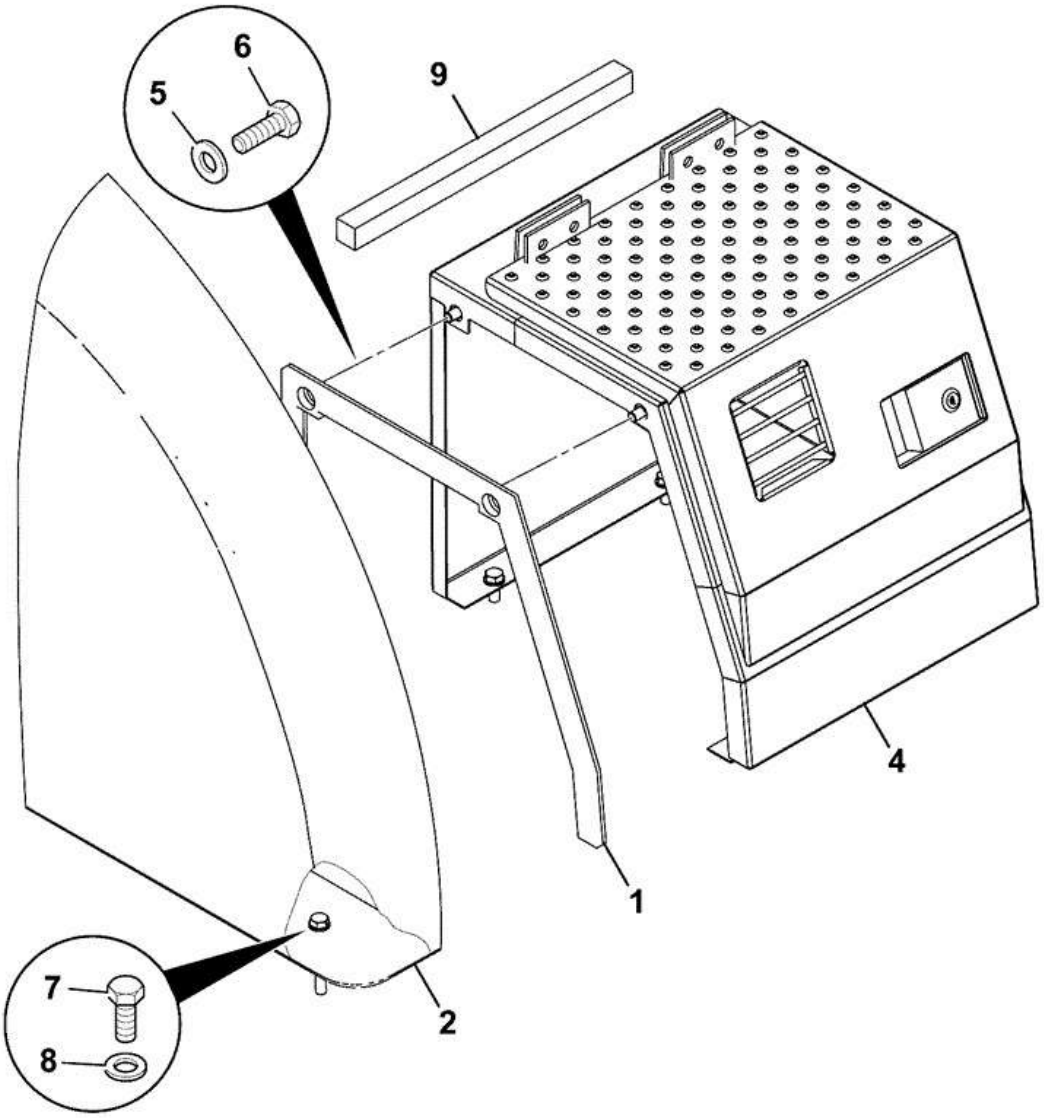

215-13716-4

Item	Part #	Change No	Description	Usage Code	QTY
1	332/J9496		Seal Toolbox		1
2	332/K1545		Toolbox Sideskin		1
4	****		Toolbox assembly		1

5	331/35176		Washer square		2
6	1316/0505D		Bolt M12 x 20mm		2
7	1316/0508D		Screw M12 X 30		8
8	1420/0009D		Washer (M12)		8
9	332/L2549		Foam seal		1

CONSTRUCTION \ NORTH AMERICA \ CONSTRUCTION / INDUSTRIAL \ JS TRACKED EXCAVATORS \ JS200LC BR E 02451101-02451200 9822/0355 \ B BODYWORK \ B05 REFURBISHMENTS

9822/0355 B530-5-5 TOOLS TOOLBOX

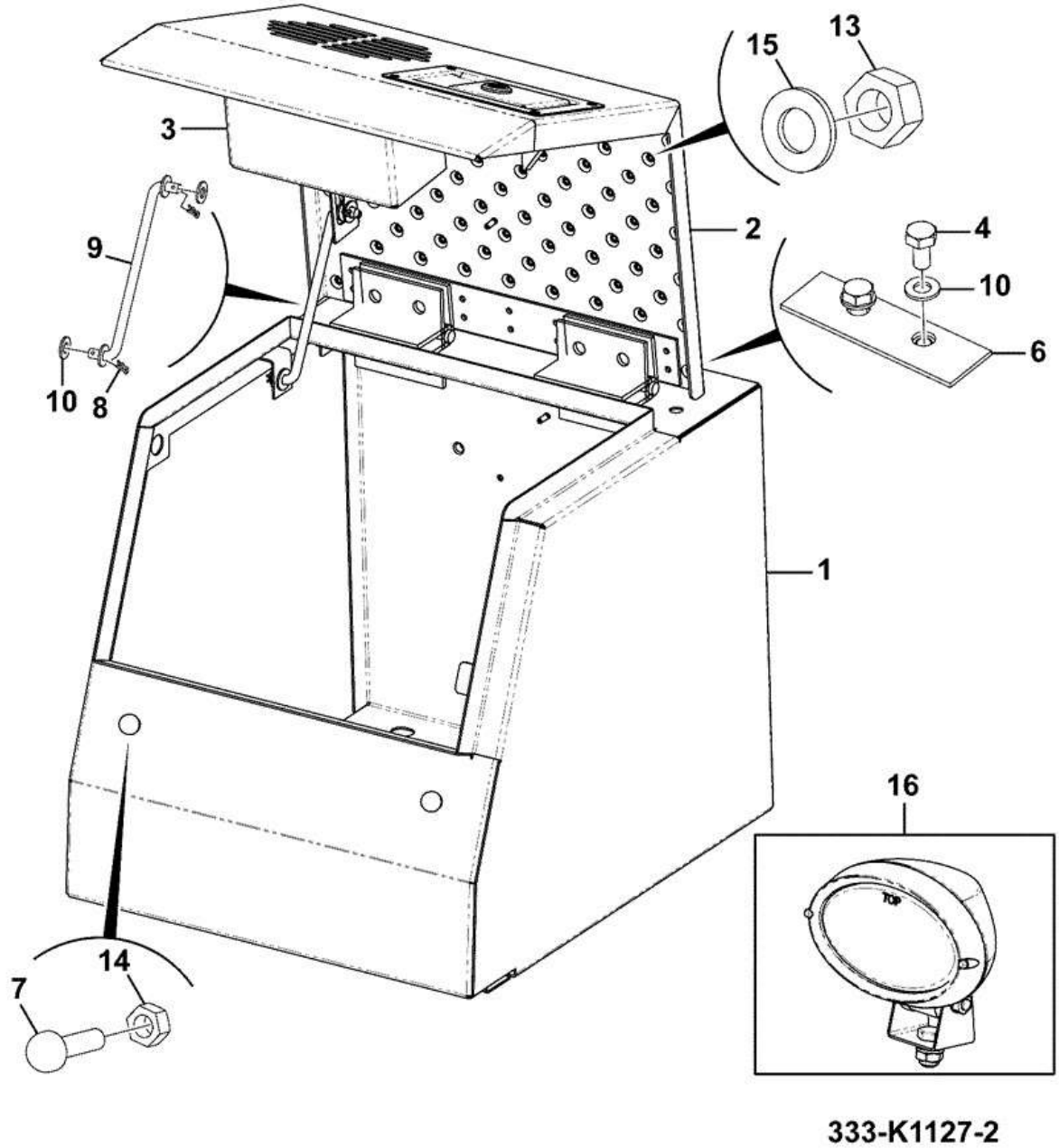

Item	Part #	Change No	Description	Usage Code	QTY
1	333/K8842		Toolbox		1
2	****		Toolbox LID assembly		1
3	333/J5039		Box light		1

4	1316/0405D		Screw M10 x 20		4
6	331/34946		Hinge packer		2
7	KHN1395		Stop Rubber		2
8	KRJ1588		Pin		2
9	KRN1418		Stay		1
10	1420/0008D		Washer (M10)		6
13	1370/0001Z		Nut (M5)		4
14	1371/0301D		Nut High Strength		2
15	1420/0005Z		Washer (M5)		4
16	333/J6448		Work light oval 24V		1

CONSTRUCTION \ NORTH AMERICA \ CONSTRUCTION / INDUSTRIAL \ JS TRACKED EXCAVATORS \ JS200LC BR E 02451101-02451200 9822/0355 \ B BODYWORK \ B05 REFURBISHMENTS

9822/0355 B530-5-10 TOOLS TOOLBOX

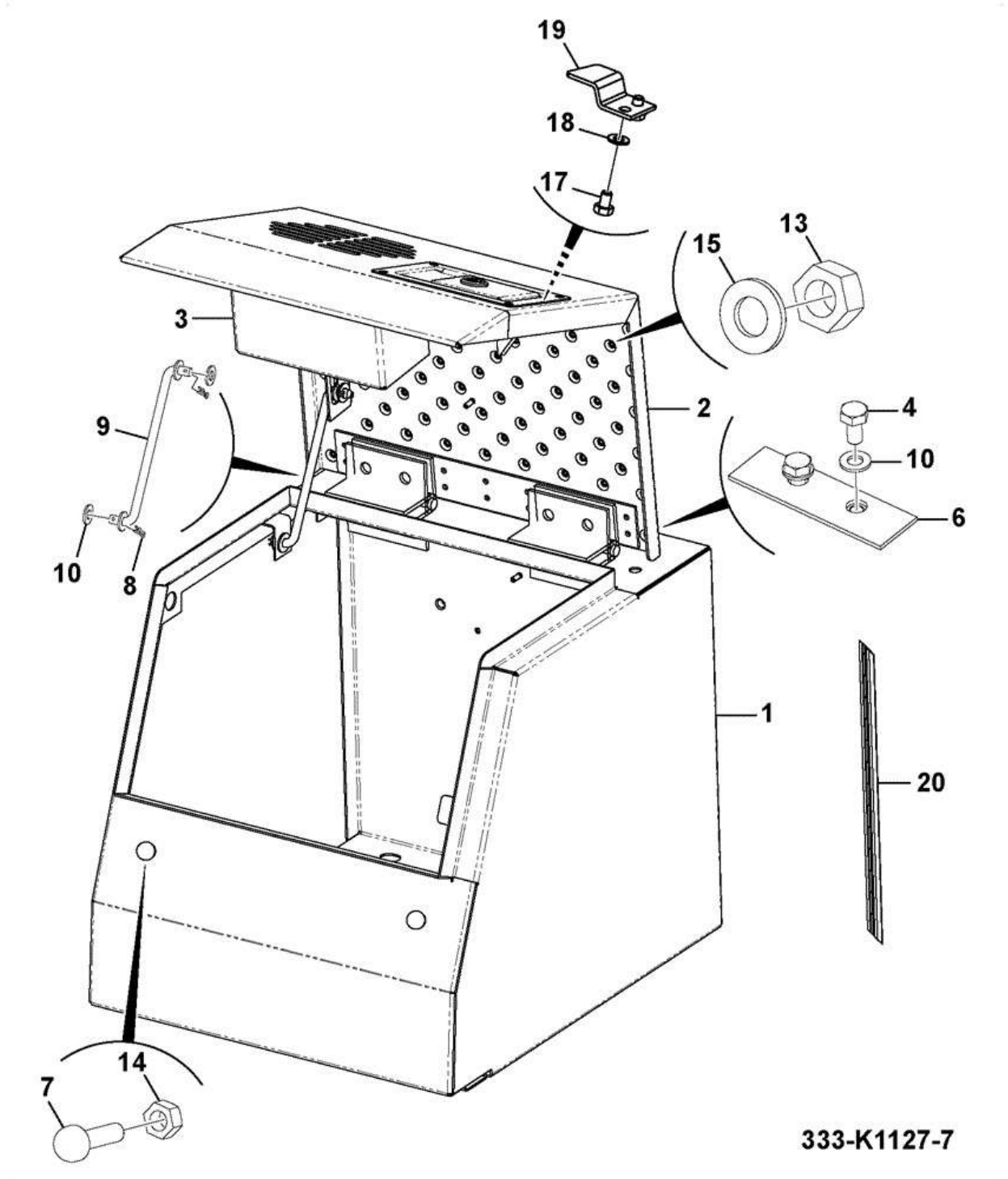

Item	Part #	Change No	Description	Usage Code	QTY
1	333/K9041		Toolbox		1
2	****		Toolbox Lid Assembly		1
3	335/E2593		Box Work Light		1

4	1316/0405D		Screw M10 x 20		4
6	331/34946		Hinge packer		2
7	KHN1395		Stop Rubber		2
8	KRJ1588		Pin		2
9	KRN1418		Stay		1
10	1420/0008D		Washer (M10)		6
13	1370/0001Z		Nut (M5)		4
14	1371/0301D		Nut High Strength		2
15	1420/0005Z		Washer (M5)		4
17	1316/0301D		Screw		2
18	1420/0007D		Washer (M8)		2
19	333/K9038		Plate Latch		1
20	JHH0106		Cushion Rubber		1

CONSTRUCTION \ NORTH AMERICA \ CONSTRUCTION / INDUSTRIAL \ JS TRACKED EXCAVATORS \ JS200LC BR E 02451101-02451200 9822/0355 \ B BODYWORK \ B05 REFURBISHMENTS

9822/0355 B530-10-1 TOOLS KIT

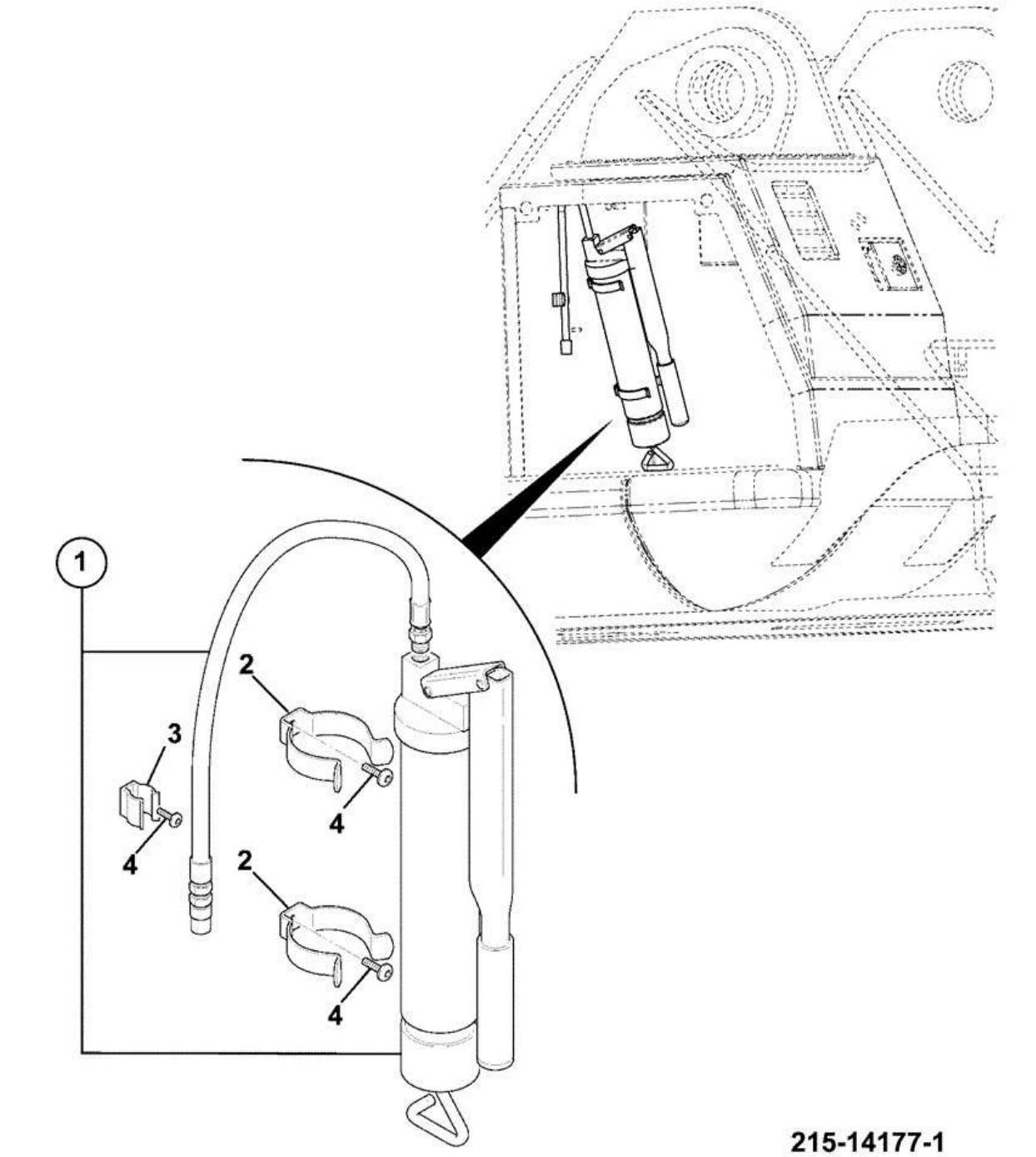

Item	Part #	Change No	Description	Usage Code	QTY
1	JG0HP011		Tool kit		1
2	821/10271		Clip grease gun retainer		2
3	JLP0145		Clip		1

4	826/10996		Screw Button Head M4 x 10mm		5

CONSTRUCTION \ NORTH AMERICA \ CONSTRUCTION / INDUSTRIAL \ JS TRACKED EXCAVATORS \ JS200LC BR E 02451101-02451200 9822/0355 \ B BODYWORK \ B05 REFURBISHMENTS

9822/0355 B530-15-1 TOOLS KIT

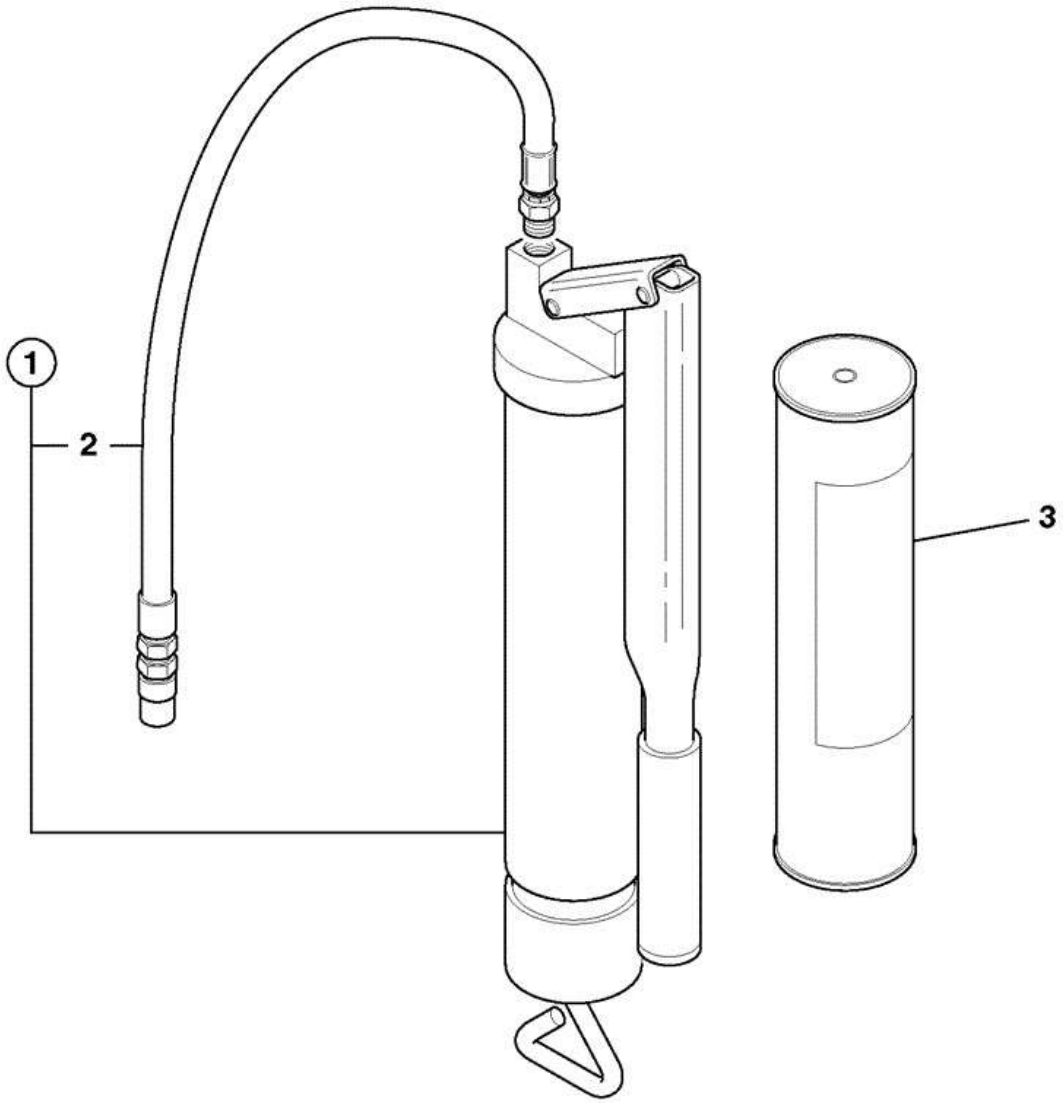

925430

Item	Part #	Change No	Description	Usage Code	QTY
1	992/11300		Tool grease gun		1
2	:915/07301		Connector flexible		1
3	4003/2017		Grease High Pressure 400g x 24		0

CONSTRUCTION \ NORTH AMERICA \ CONSTRUCTION / INDUSTRIAL \ JS TRACKED EXCAVATORS \ JS200LC BR E 02451101-02451200 9822/0355 \ B BODYWORK \ B05 REFURBISHMENTS

9822/0355 B530-20-1 TOOLS HAMMER EMERGENCY

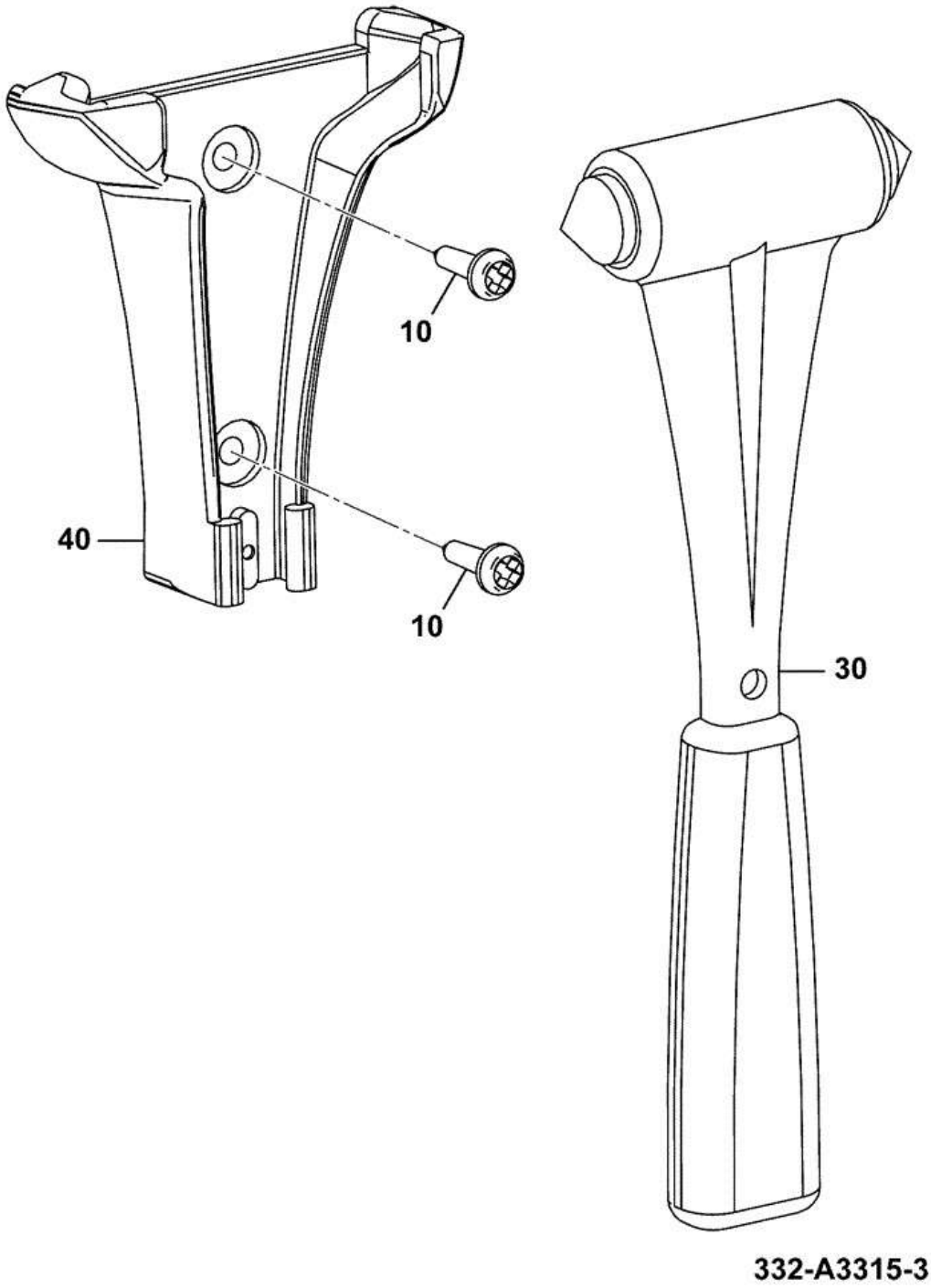

Item	Part #	Change No	Description	Usage Code	QTY
10	1430/0102		Screw		2
30	265/00678		Hammer Emergency Glass Breaker		1
40	332/U4206		Bracket Breaker Tool Holder		1

CONSTRUCTION \ NORTH AMERICA \ CONSTRUCTION / INDUSTRIAL \ JS TRACKED EXCAVATORS \ JS200LC BR E 02451101-02451200 9822/0355 \ B BODYWORK \ B05 REFURBISHMENTS

9822/0355 B570-10-1 LUBRICANT HYDRAULIC OIL

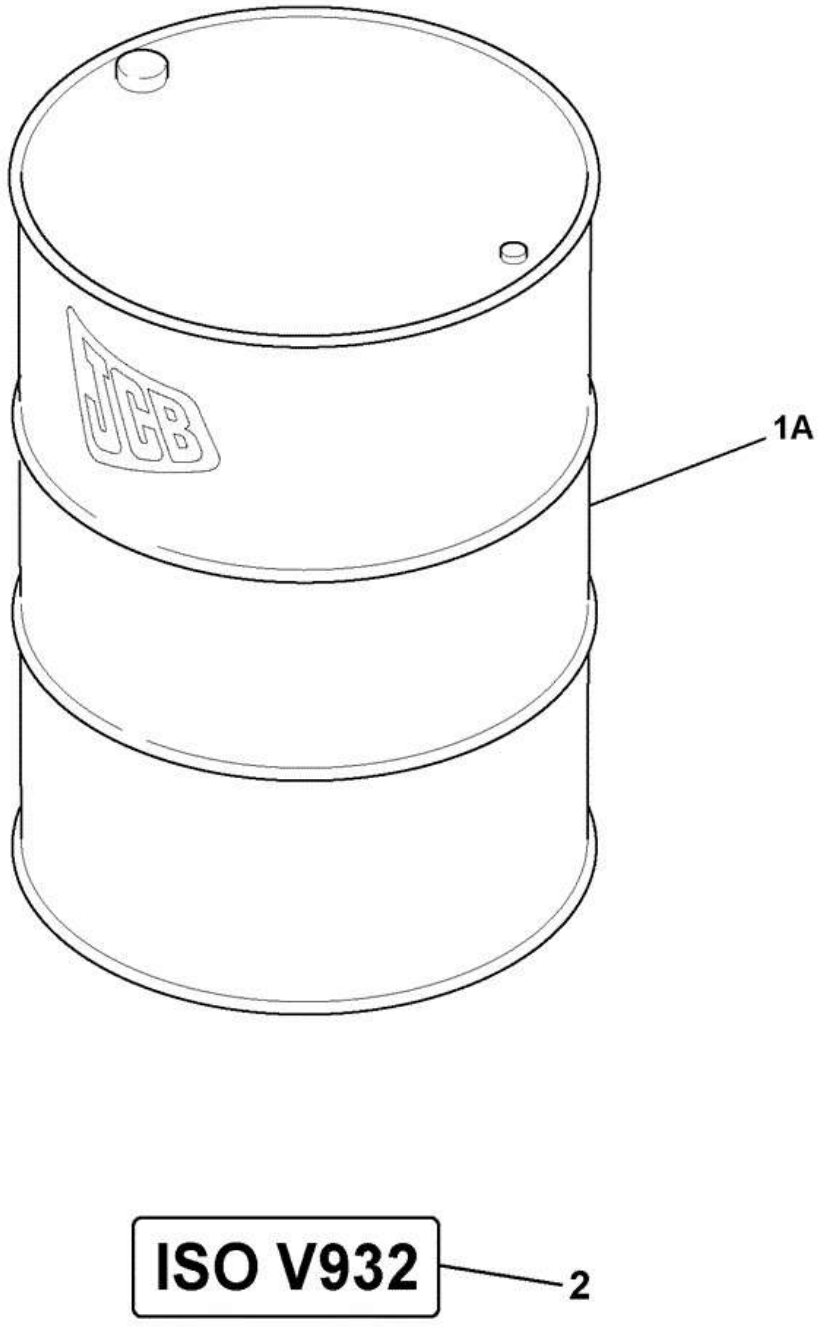

Item	Part #	Change No	Description	Usage Code	QTY
1A	4002/0701		Fluid hydraulic ISO68 200 litre		1
2	817/20651		Label hydraullic oil (HP68)		1

CONSTRUCTION \ NORTH AMERICA \ CONSTRUCTION / INDUSTRIAL \ JS TRACKED EXCAVATORS \ JS200LC BR E 02451101-02451200 9822/0355 \ B BODYWORK \ B05 REFURBISHMENTS

9822/0355 B570-35-1 LUBRICANT GREASE HEAVY DUTY

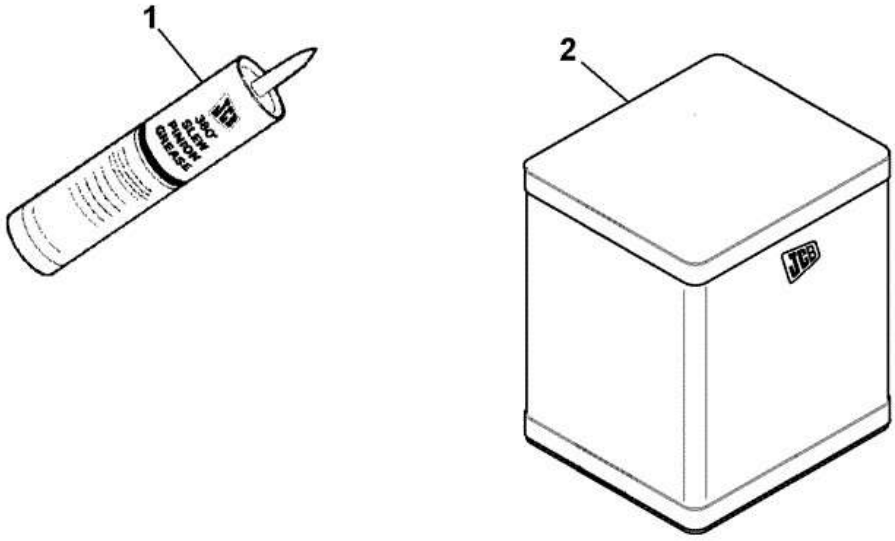

4003-1600-1

Item	Part #	Change No	Description	Usage Code	QTY
A	4003/1600		Grease heavy duty		1
1	4003/1619		Grease heavy duty cartridge, 400 gram *QTY:A/R*		0

2	4003/1602		Grease heavy duty 5kg tub *QTY:A/R*		0

CONSTRUCTION \ NORTH AMERICA \ CONSTRUCTION / INDUSTRIAL \ JS TRACKED EXCAVATORS \ JS200LC BR E 02451101-02451200 9822/0355 \ B BODYWORK \ B05 REFURBISHMENTS

9822/0355 B570-40-1 LUBRICANT GREASE HIGH PRESSURE

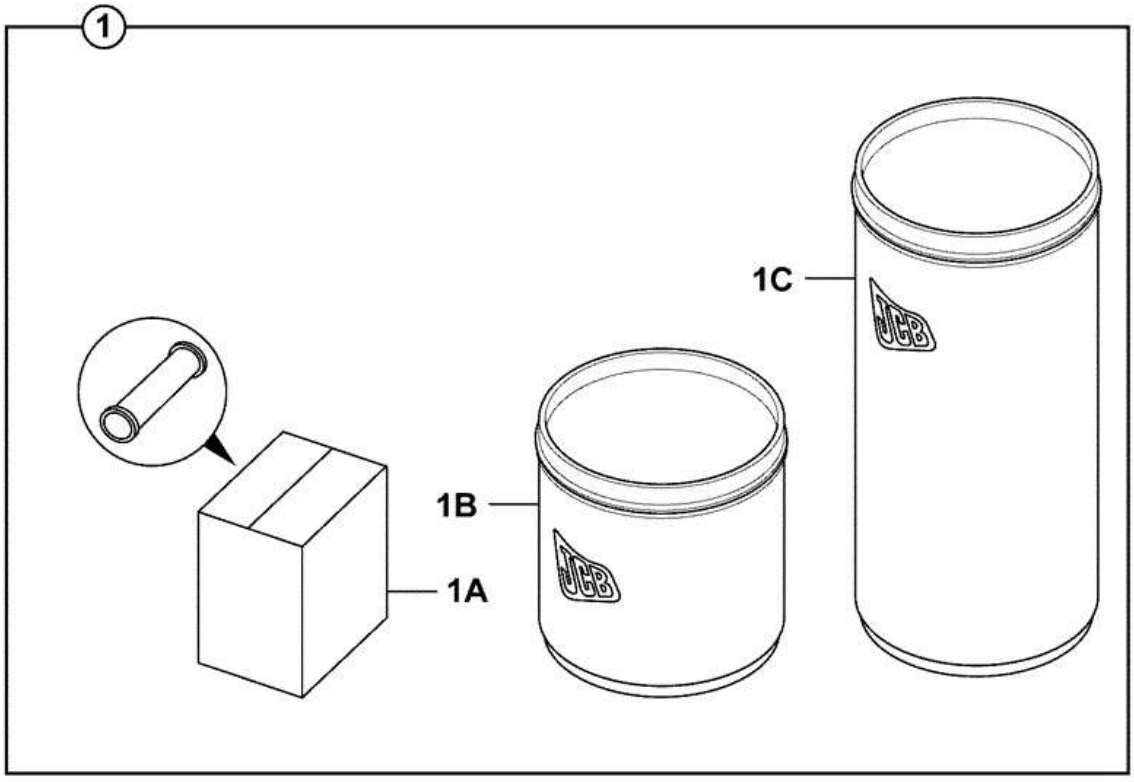

4003-2000-1

Item	Part #	Change No	Description	Usage Code	QTY
1	4003/2000		Grease High Pressure		1

1A	4003/2017		Grease High Pressure 400g x 24 *Qty:A/R*		0
1B	4003/2006		Grease High Pressure 12.5kg *Qty:A/R*		0
1C	4003/2005		Grease High Pressure 50kg *Qty:A/R*		0

CONSTRUCTION \ NORTH AMERICA \ CONSTRUCTION / INDUSTRIAL \ JS TRACKED EXCAVATORS \ JS200LC BR E 02451101-02451200 9822/0355 \ B BODYWORK \ B05 REFURBISHMENTS

9822/0355 B590-1-5 OTHER REFURBISHMENT ITEMS TOOLBOX LID

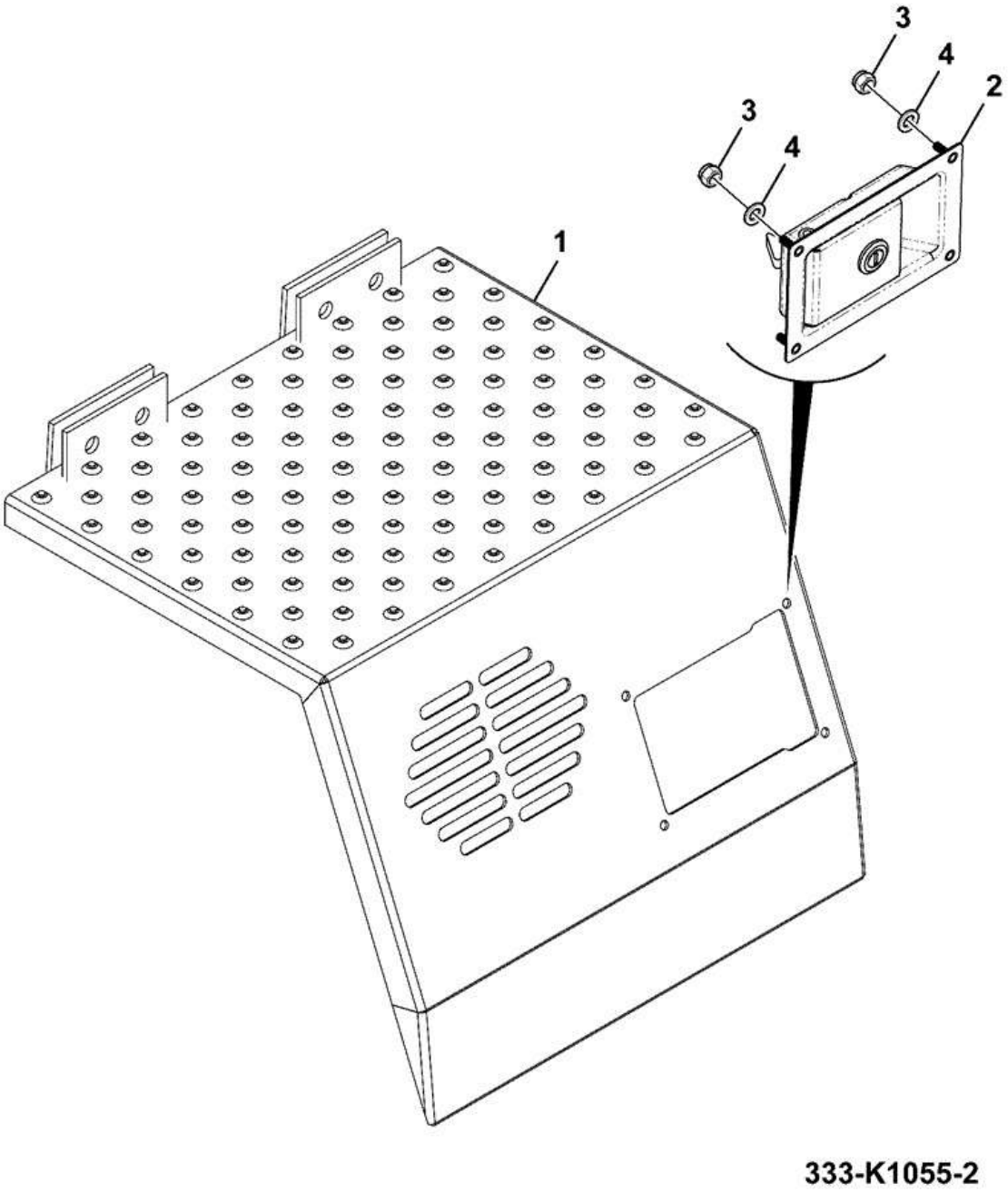

Item	Part #	Change No	Description	Usage Code	QTY
1	333/K0890		Toolbox LID		1

2	333/K1035		Latch paddle yellow		1
3	1370/0103Z		Nut Self Lock M6		4
4	1420/0006Z		Washer (M6)		4

CONSTRUCTION \ NORTH AMERICA \ CONSTRUCTION / INDUSTRIAL \ JS TRACKED EXCAVATORS \ JS200LC BR E 02451101-02451200 9822/0355 \ B BODYWORK \ B05 REFURBISHMENTS

9822/0355 B590-1-10 OTHER REFURBISHMENT ITEMS TOOLBOX LID

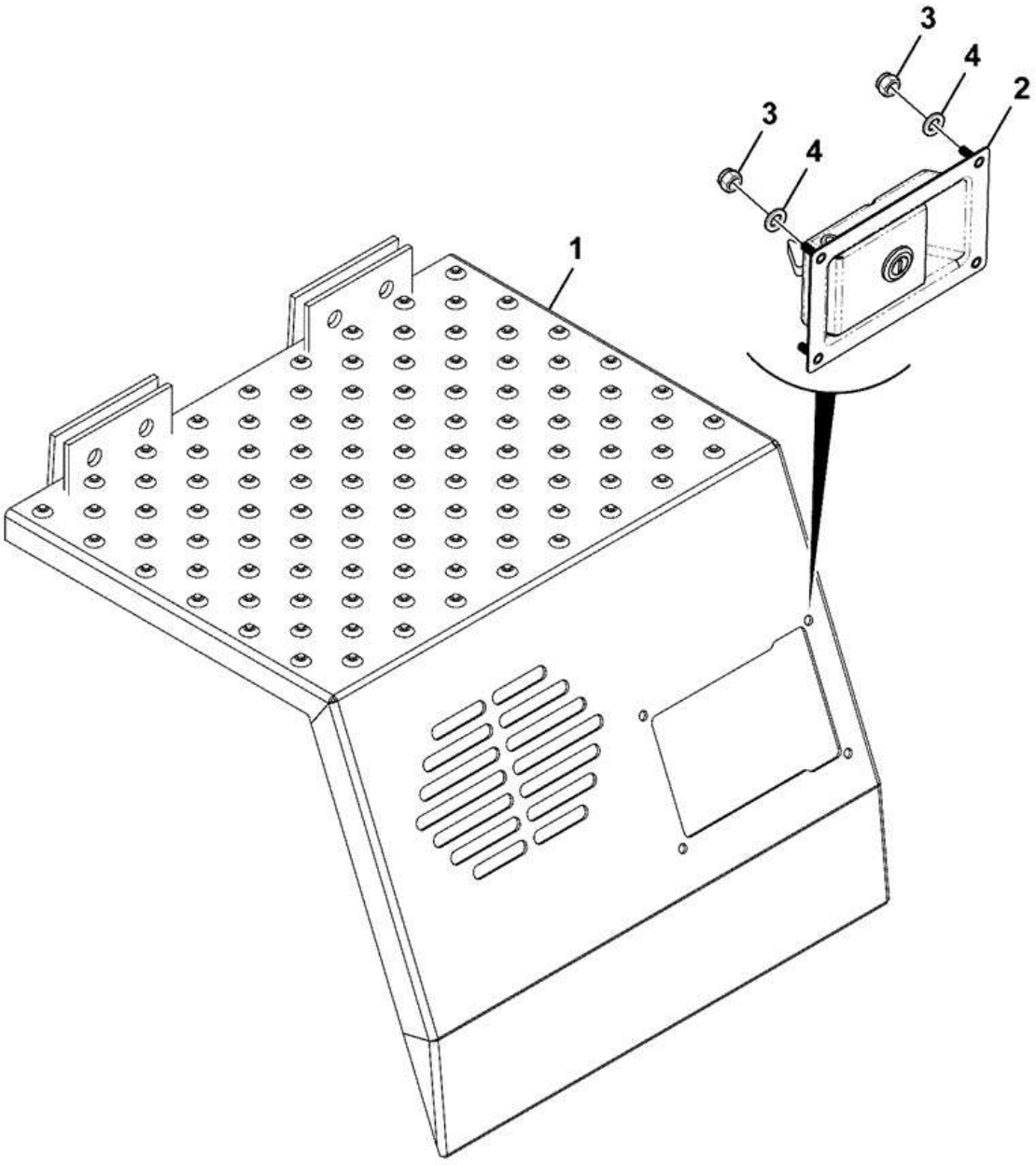

Item	Part #	Change No	Description	Usage Code	QTY
1	333/J8542		Toolbox Lid		1

2	333/K1035		Latch paddle yellow		1
3	1370/0103Z		Nut Self Lock M6		4
4	1420/0006Z		Washer (M6)		4

CONSTRUCTION \ NORTH AMERICA \ CONSTRUCTION / INDUSTRIAL \ JS TRACKED EXCAVATORS \ JS200LC BR E 02451101-02451200 9822/0355 \ C ELECTRICS \ C01 ELECTRICAL

9822/0355 C100-5-1 ELECTRICAL INSTALLATION ASSEMBLIES ELECTRICAL SYSTEM ASSEMBLY, T2

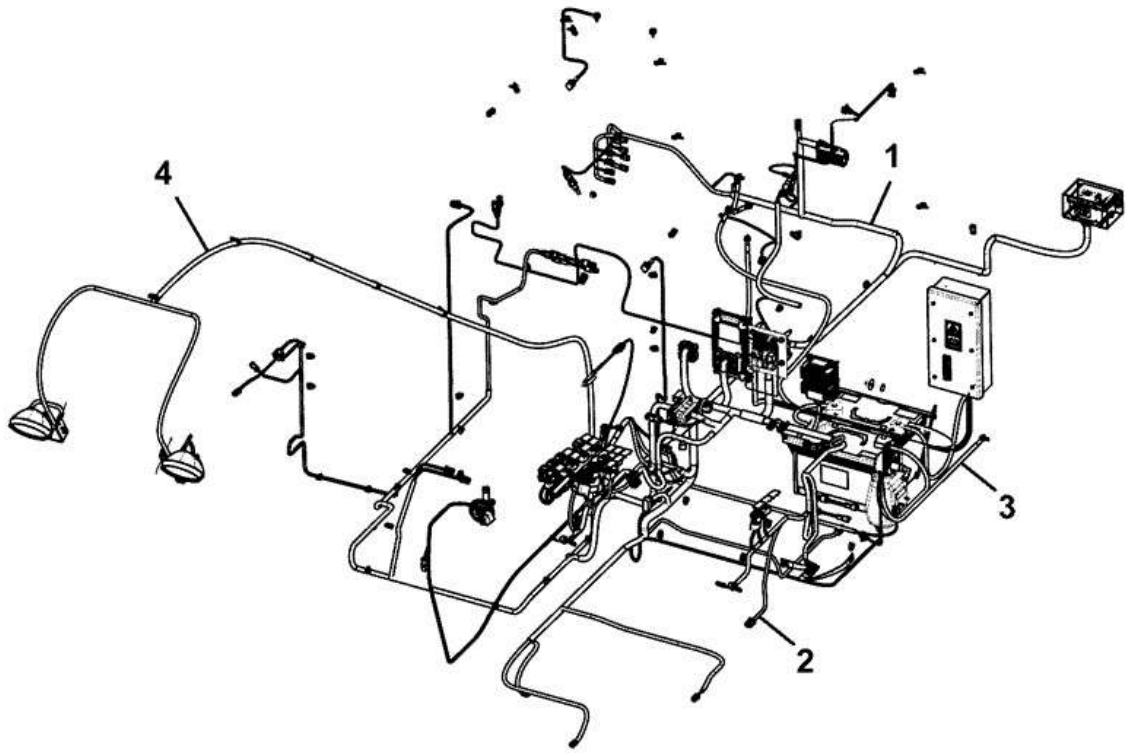

333-K8056-1

Item	Part #	Change No	Description	Usage Code	QTY
1	****		Frame Revolving Electrics T2		1

2	****		Electrics Cab Assembly		1
3	****		Battery Installation Assembly		1
4	****		Electrics Assembly, Boom		1

CONSTRUCTION \ NORTH AMERICA \ CONSTRUCTION / INDUSTRIAL \ JS TRACKED EXCAVATORS \ JS200LC BR E 02451101-02451200 9822/0355 \ C ELECTRICS \ C01 ELECTRICAL

9822/0355 C100-10-1 ELECTRICAL INSTALLATION ASSEMBLIES ELECTRICS ASSEMBLY, REVOLVING FRAME

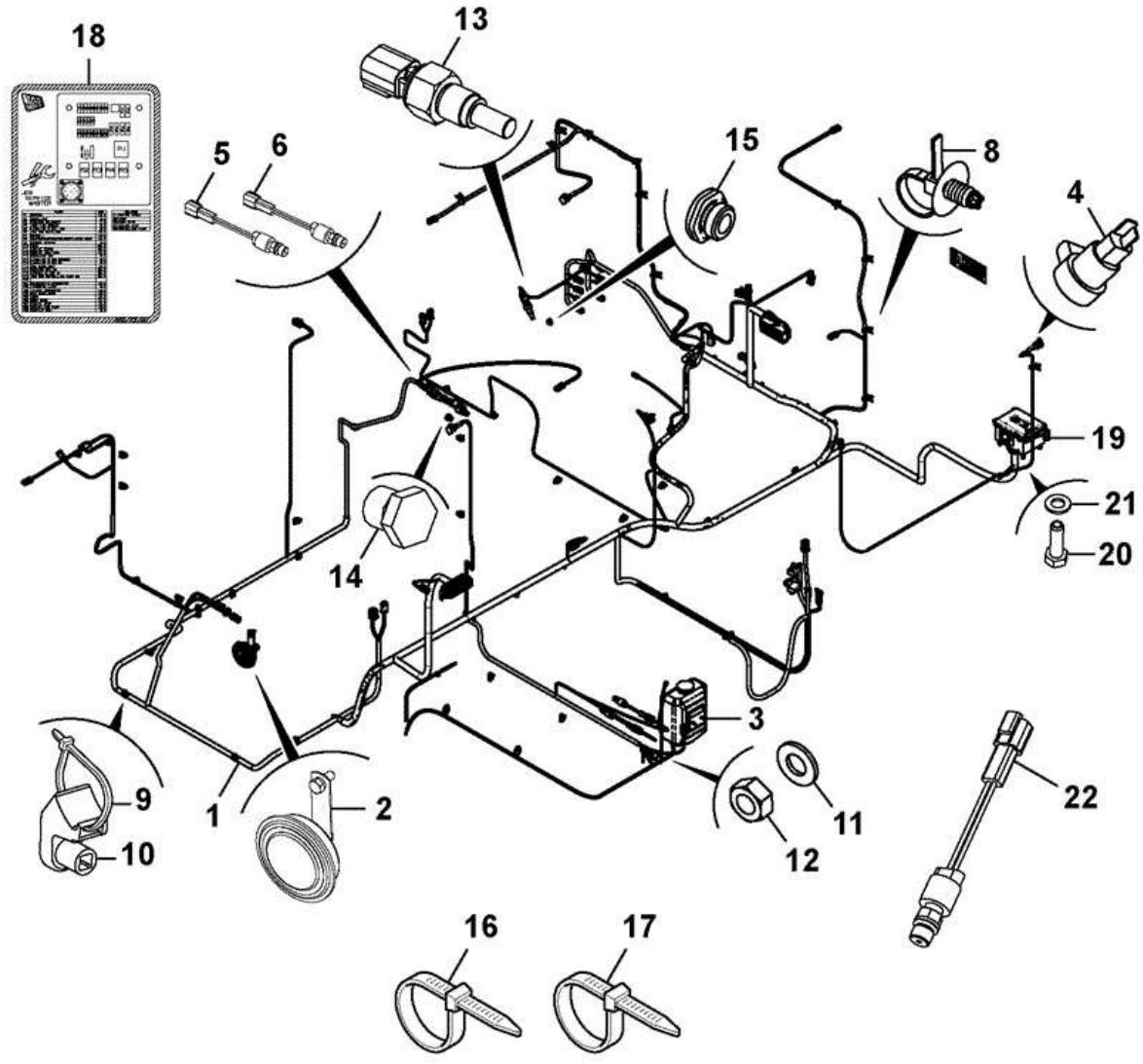

Item	Part #	Change No	Description	Usage Code	QTY
1	333/K8818		Harness , Revolving Frame		1

2	****		Horn assembly		1
3	****		Bottle washer assembly		1
4	715/04300		Socket Beacon		3
5	332/J0671		Switch Travel Pressure 20 bar		1
6	332/J0670		Switch Upper Servo Pressure 12bar		1
8	242/00290		Tie Panel Fixing Cable		8
9	270/00106		Tie Cable 385mm		11
10	826/01274		Cradle Cable Tie Mount		44
11	1420/0008D		Washer (M10)		2
12	1370/0301D		Nut (M10)		2
13	333/K3082		Sensor temperature		1
14	KHJ0363		Plug		1
15	816/90806		Plug M16		1
16	KAR0016		Tie Cable		35
17	826/01453		Tie cable Double Head		3
18	333/K3192		Decal Fusebox		1
19	333/J5686		Fuse and relay module engine ABI		1
20	1315/0103Z		Screw		4
21	1420/0005Z		Washer (M5)		4
22	332/J0669		Switch Low Pressure 5bar 1/4" BSP		2

CONSTRUCTION \ NORTH AMERICA \ CONSTRUCTION / INDUSTRIAL \ JS TRACKED EXCAVATORS \ JS200LC BR E 02451101-02451200 9822/0355 \ C ELECTRICS \ C01 ELECTRICAL

9822/0355 C120-15-1 BATTERY ISOLATOR

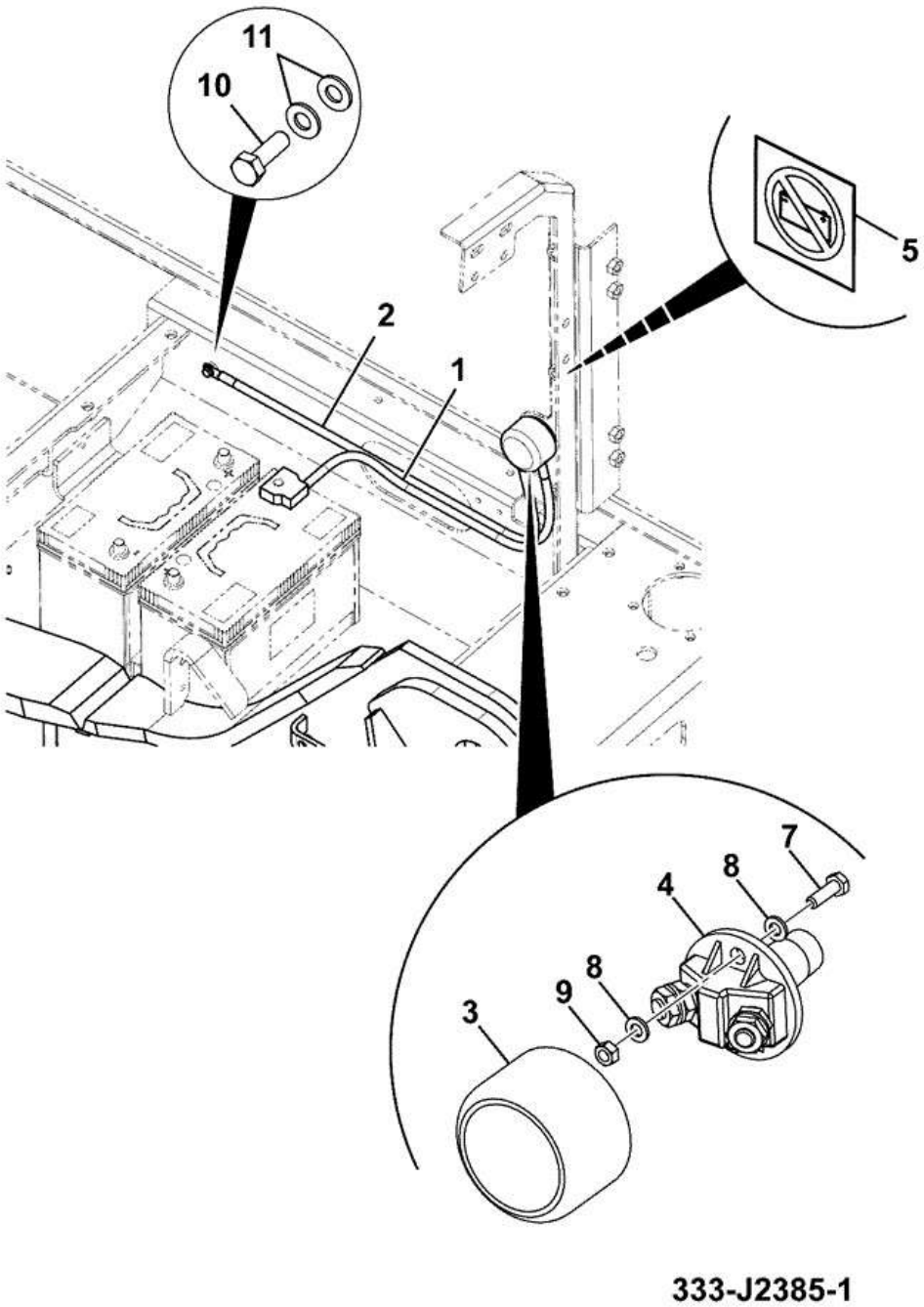

Item	Part #	Change No	Description	Usage Code	QTY
1	718/20066		Lead battery negative		1
2	718/20243		Lead Battery -VE		1
3	265/00893		Cover Battery Isolator		1

4	701/47400		Switch Isolator		1
5	333/K0304		Decal isolator key		1
7	1316/0205D		Screw set		2
8	1420/0006D		Washer (M6)		4
9	1370/0101D		Nut Plain M6		2
10	1370/0303D		Nut Self Lock M10		1
11	1420/0008D		Washer (M10)		1

CONSTRUCTION \ NORTH AMERICA \ CONSTRUCTION / INDUSTRIAL \ JS TRACKED EXCAVATORS \ JS200LC BR E 02451101-02451200 9822/0355 \ C ELECTRICS \ C01 ELECTRICAL

9822/0355 C120-20-1 BATTERY INSTALLATION ASSEMBLY, 129kW, JS220HRC T4i

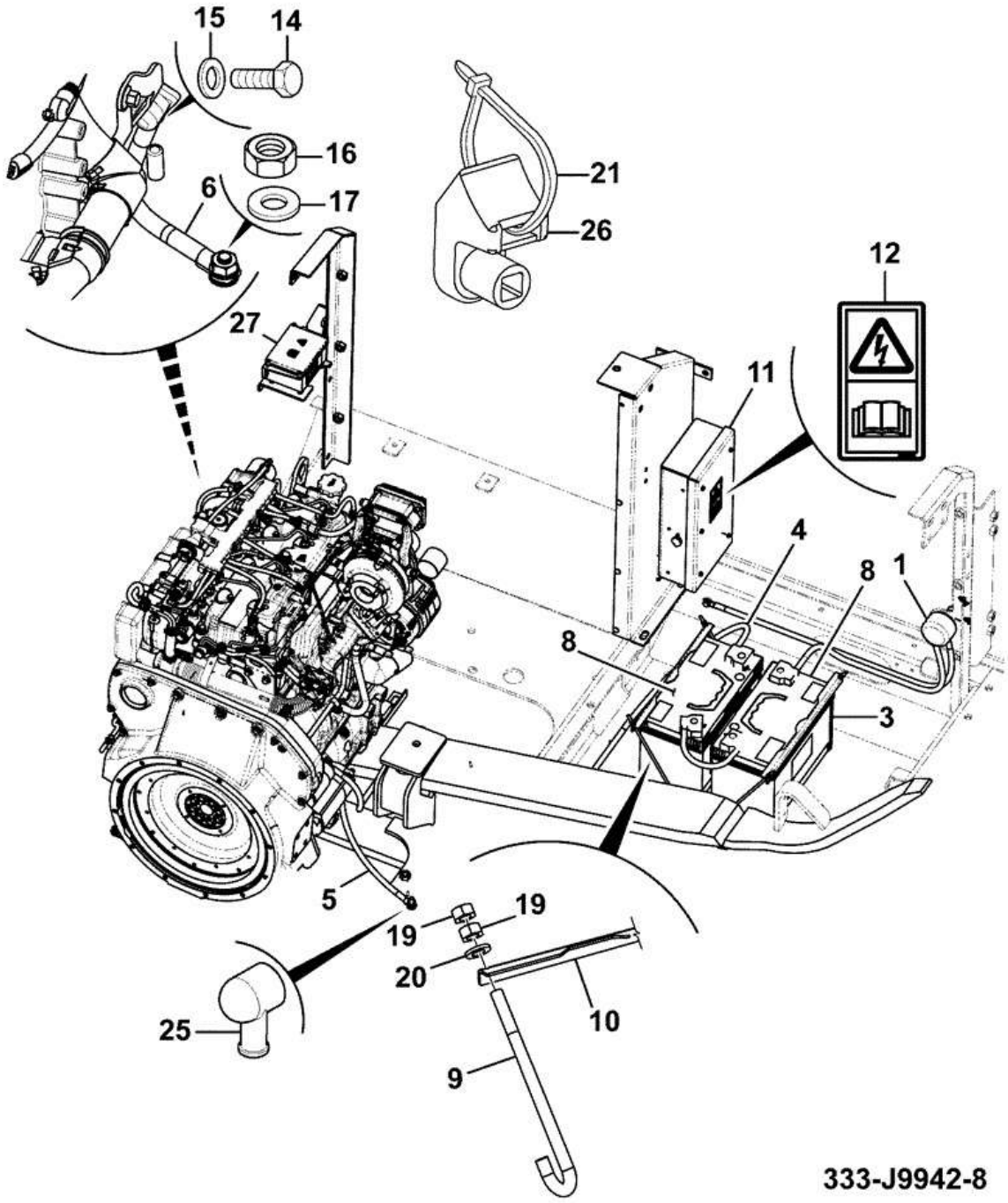

Item	Part #	Change No	Description	Usage Code	QTY
1	****		Isolator battery assembly		1

3	JHR0162		Cable battery lead clamp and cover		1
4	333/K2020		Cable Starter		1
5	333/J2138		Cable engine earth		1
6	332/U2412		Cable Isolator		1
8	332/F3103		Battery Wet Charge 12V 110AH		2
9	826/01763		Bolt Swing M6 x 255mm		4
10	332/L2990		Clamp battery		2
11	****		Relay Battery Assembly		1
12	817/70032		Label read operator handbook		1
14	1316/0305D		Screw M8 X 20		1
15	1420/0007D		Washer (M8)		3
16	1370/0301D		Nut (M10)		2
17	1420/0008D		Washer (M10)		6
19	1370/0101D		Nut Plain M6		8
20	1420/0006D		Washer (M6)		4
21	826/01347		Tie Cable 160mm		3
25	KHR1716		Cap Terminal		1
26	826/01274		Cradle Cable Tie Mount		1
27	333/K5191		Relay Cover		1

CONSTRUCTION \ NORTH AMERICA \ CONSTRUCTION / INDUSTRIAL \ JS TRACKED EXCAVATORS \ JS200LC BR E 02451101-02451200 9822/0355 \ C ELECTRICS \ C01 ELECTRICAL

9822/0355 C160-20-1 WORKING LAMPS AND MOUNTINGS 24VOLT COMPONENTS

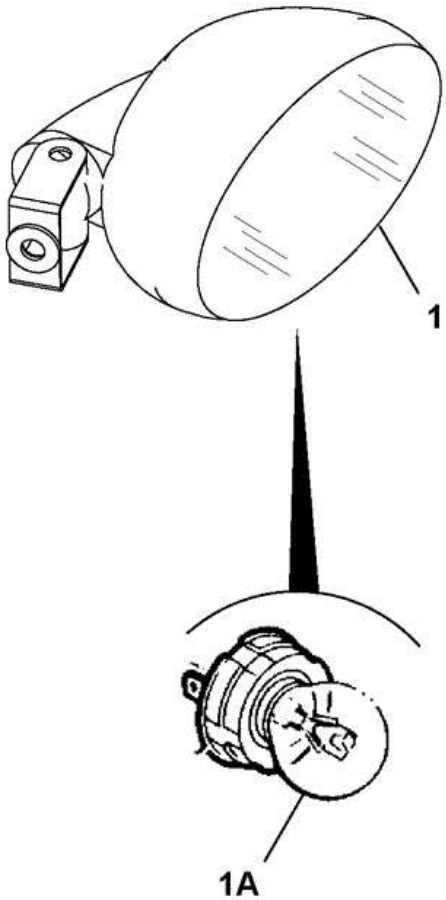

333-J6448-1

Item	Part #	Change No	Description	Usage Code	QTY
1	333/J6448		Work light oval 24V		1

1A	720/20032		Bulb H3 24V 70W		1

CONSTRUCTION \ NORTH AMERICA \ CONSTRUCTION / INDUSTRIAL \ JS TRACKED EXCAVATORS \ JS200LC BR E 02451101-02451200 9822/0355 \ C ELECTRICS \ C01 ELECTRICAL

9822/0355 C160-25-1 WORKING LAMPS AND MOUNTINGS ELECTRICS ASSEMBLY, BOOM

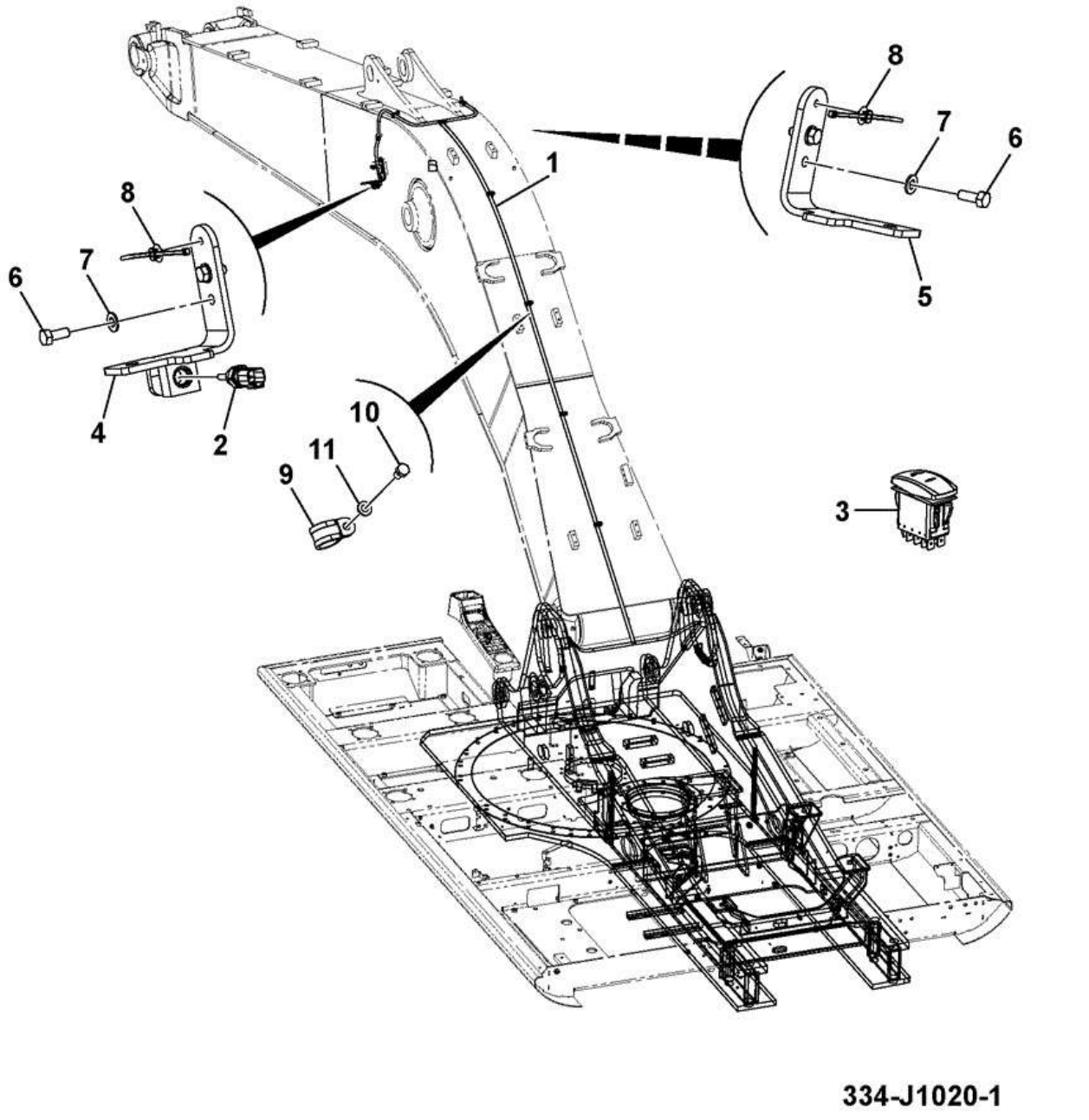

Item	Part #	Change No	Description	Usage Code	QTY
1	333/K0181		Harness Boom Work Lights/Ambient		1

2	716/C9471		Sender ambient temperature		1
3	****		Switch Worklight Assembly		1
4	333/J6092		Bracket Worklight		1
5	333/J6062		Bracket Boom Light		1
6	1316/0305D		Screw M8 X 20		4
7	1420/0007D		Washer (M8)		4
8	333/K2028		Tie Cable		2
9	826/00864		Clip P 16mm		9
10	1316/0201D		Screw		5
11	1420/0006D		Washer (M6)		5

CONSTRUCTION \ NORTH AMERICA \ CONSTRUCTION / INDUSTRIAL \ JS TRACKED EXCAVATORS \ JS200LC BR E 02451101-02451200 9822/0355 \ C ELECTRICS \ C01 ELECTRICAL

9822/0355 C160-30-1 WORKING LAMPS AND MOUNTINGS ADDITIONAL

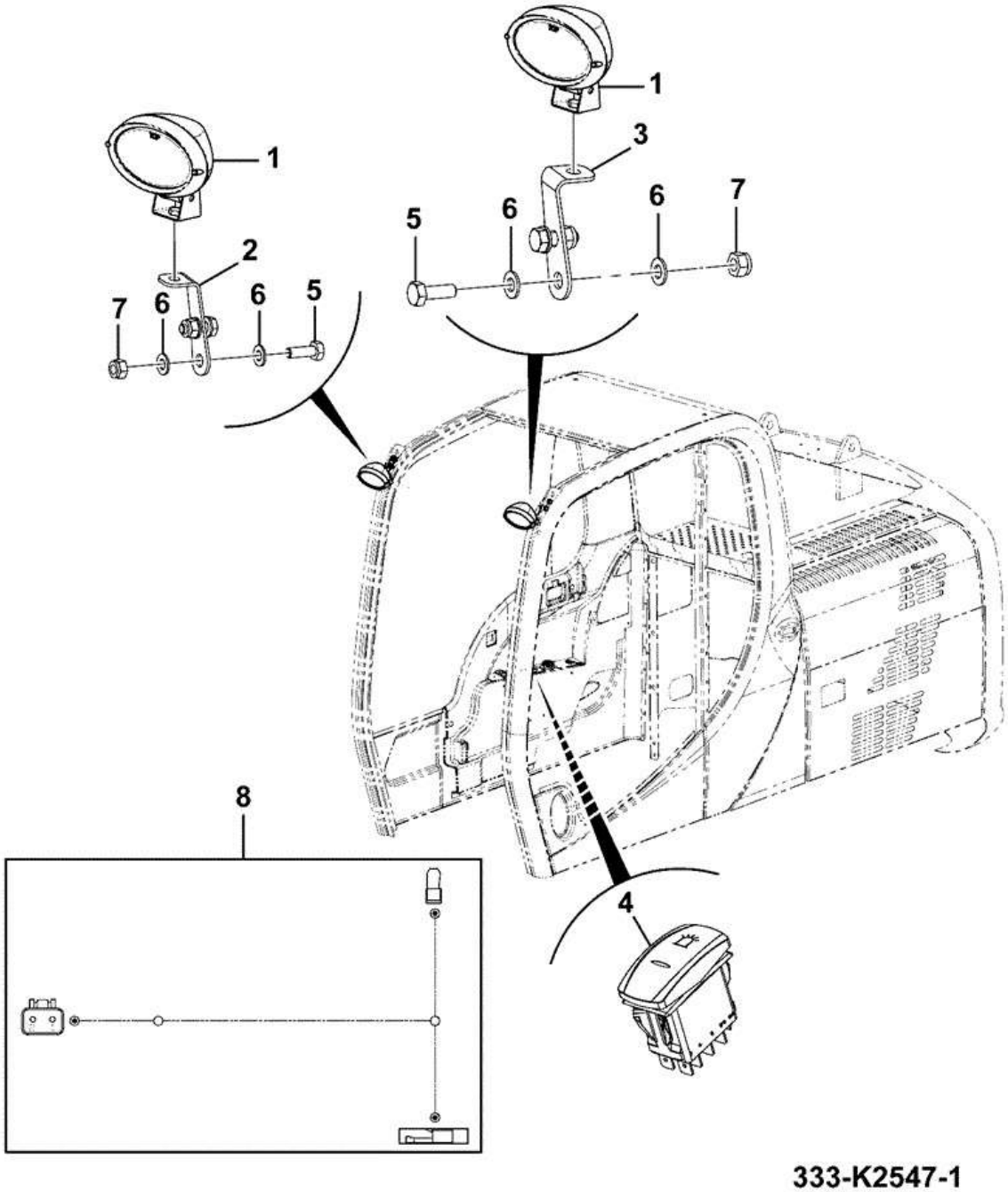

Item	Part #	Change No	Description	Usage Code	QTY
1	333/J6448		Work light oval 24V		2

2	333/J5990		Mounting bracket right side		1
3	333/J5904		Mounting bracket left side		1
4	****		Switch Worklight Assembly		1
5	1316/0408D		Setscrew		4
6	1420/0008D		Washer (M10)		8
7	1370/0303D		Nut Self Lock M10		4
8	332/J6983		Harness link		2

CONSTRUCTION \ NORTH AMERICA \ CONSTRUCTION / INDUSTRIAL \ JS TRACKED EXCAVATORS \ JS200LC BR E 02451101-02451200 9822/0355 \ C ELECTRICS \ C01 ELECTRICAL

9822/0355 C160-35-1 WORKING LAMPS AND MOUNTINGS STANDARD

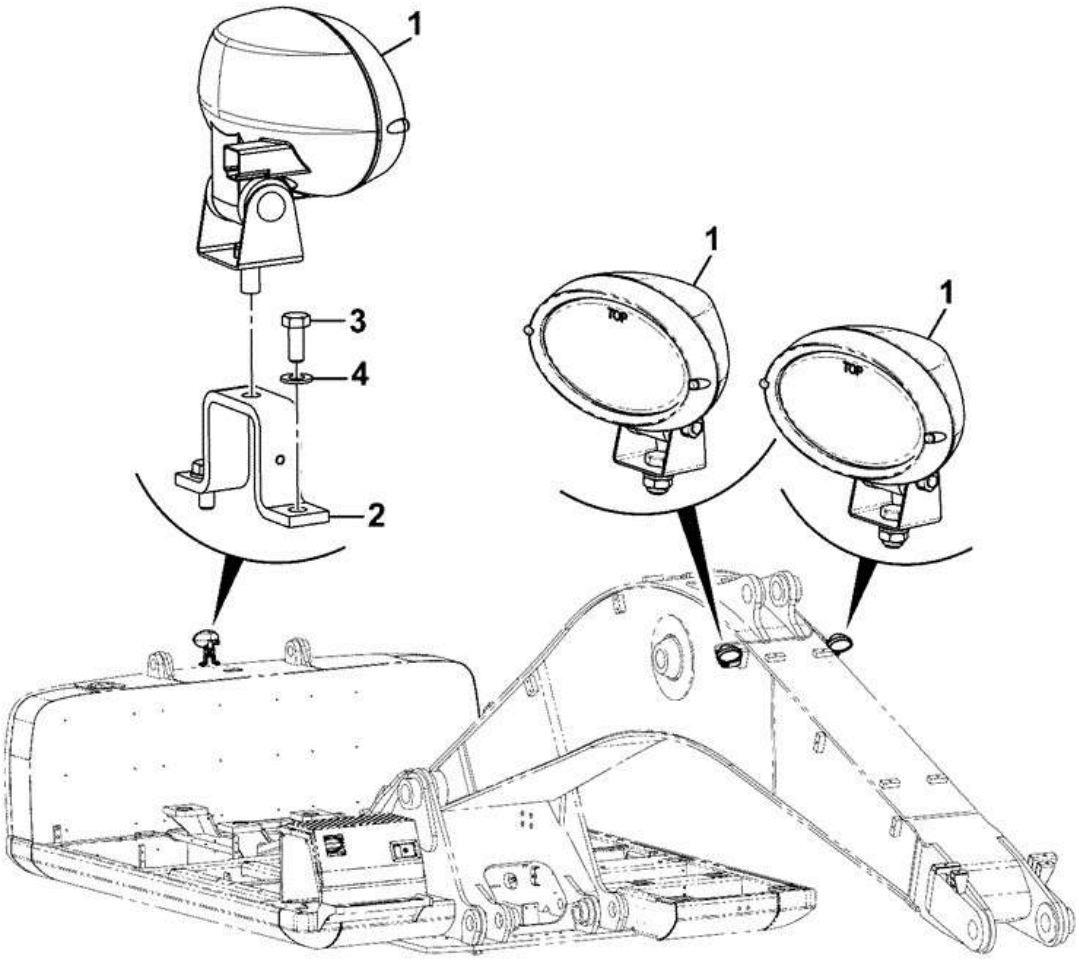

333-K4471-1

Item	Part #	Change No	Description	Usage Code	QTY
1	333/J6448		Work light oval 24V		4

2	JHR0025		Bracket rear light		1
3	1316/0407D		Screw		2
4	JHP0046		Washer M10		2

CONSTRUCTION \ NORTH AMERICA \ CONSTRUCTION / INDUSTRIAL \ JS TRACKED EXCAVATORS \ JS200LC BR E 02451101-02451200 9822/0355 \ C ELECTRICS \ C01 ELECTRICAL

9822/0355 C170-1-1 ALARMS/HORN TRAVEL

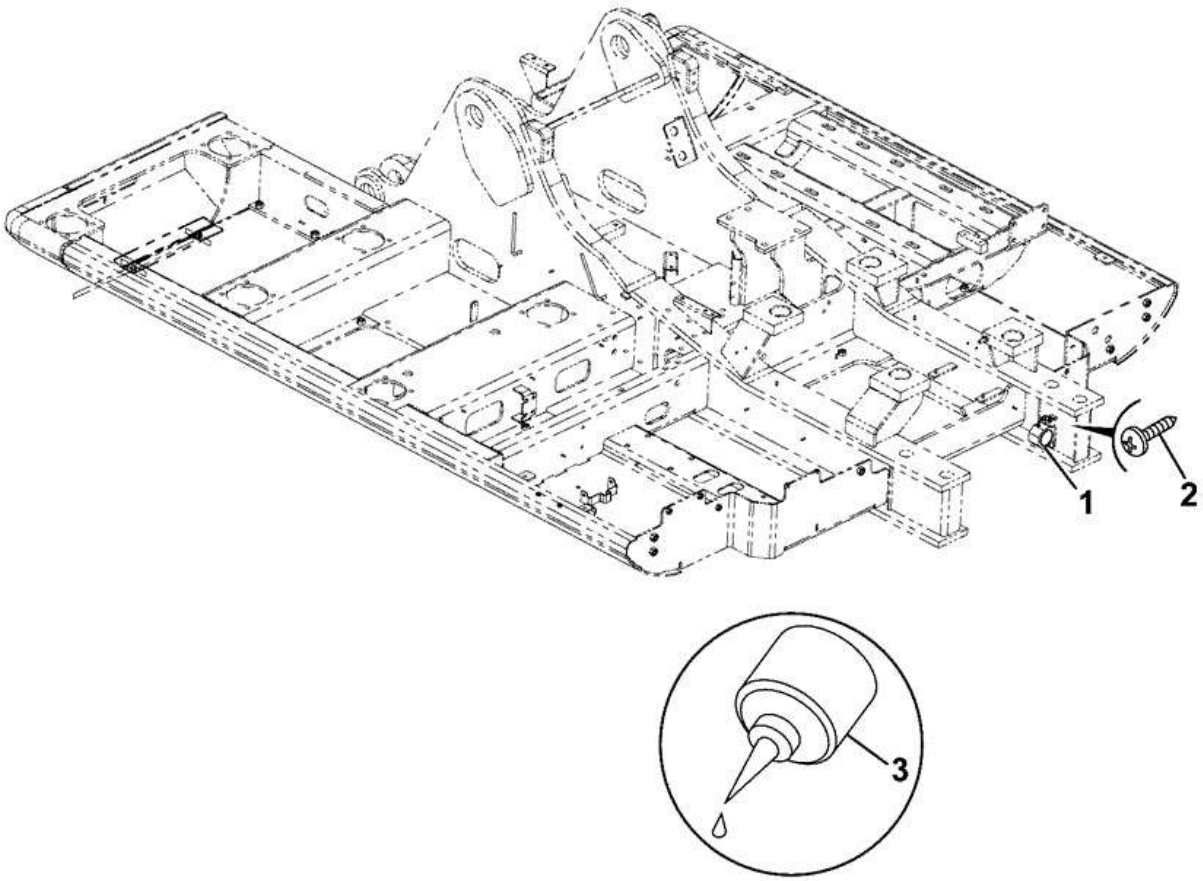

215-10493-2

Item	Part #	Change No	Description	Usage Code	QTY
1	717/07700		Alarm Reverse 102dB (A)		1
2	KHR0738		Screw pan head		2
3	4101/0500		Fluid Locking Loctite 262		0

CONSTRUCTION \ NORTH AMERICA \ CONSTRUCTION / INDUSTRIAL \ JS TRACKED EXCAVATORS \ JS200LC BR E 02451101-02451200 9822/0355 \ C ELECTRICS \ C01 ELECTRICAL

9822/0355 C170-5-1 ALARMS/HORN REVERSE

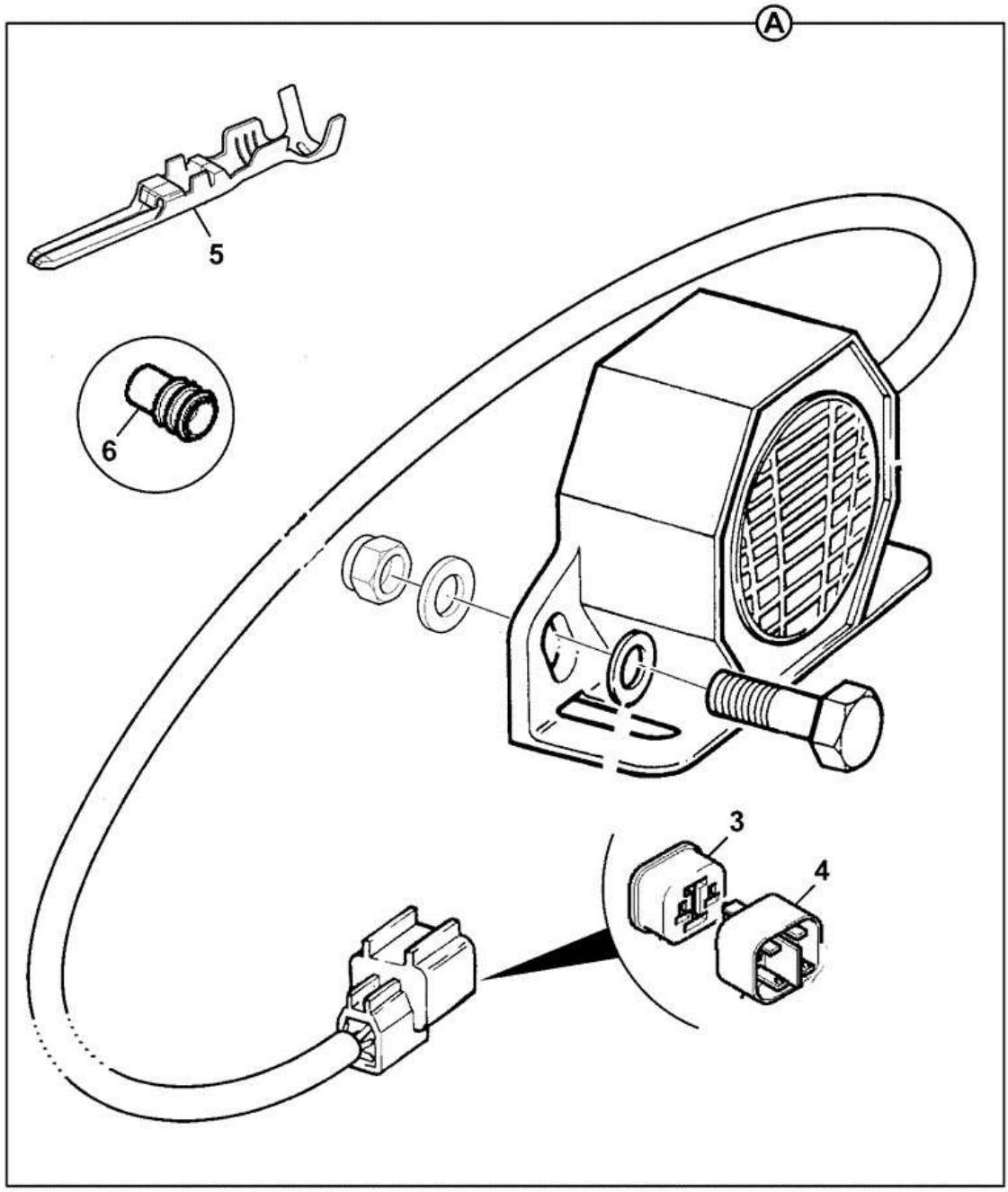

717-07700-1

Item	Part #	Change No	Description	Usage Code	QTY
A	717/07700		Alarm Reverse 102dB (A) *Complete*		1
3	:7212/0002		Housing 2 Way Pin		1

4	:7212/0004		Retainer 2 Way Pin		1
5	:7204/0001		Connector male		2
6	:7210/0002		Seal wire 1.4-2.2mm OD blue		2

Product Catalog \ CONSTRUCTION \ NORTH AMERICA \ CONSTRUCTION / INDUSTRIAL \ JS TRACKED EXCAVATORS \ JS200LC BR E 02451101-02451200 9822/0355 \ C ELECTRICS \ C01 ELECTRICAL

9822/0355 C170-10-1 ALARMS/HORN

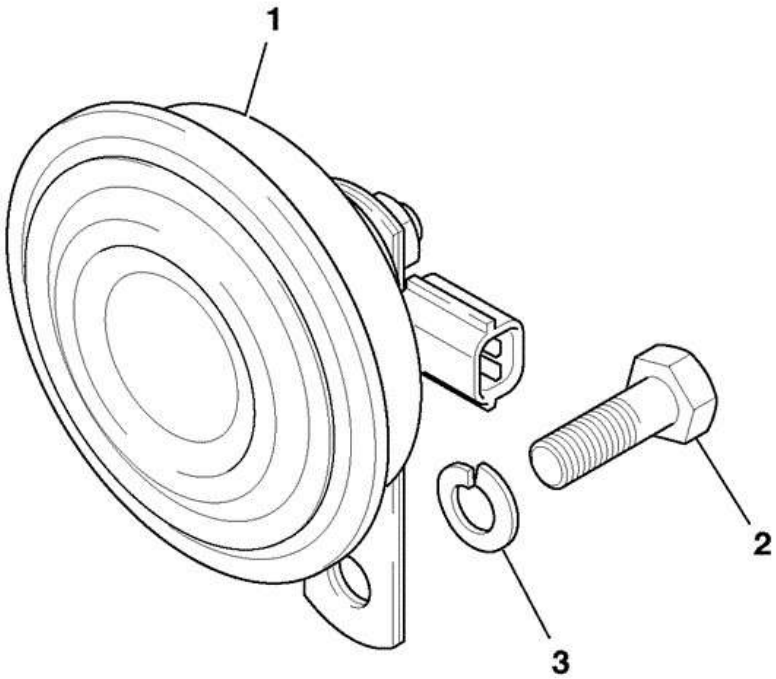

923210

Item	Part #	Change No	Description	Usage Code	QTY
1	335/B4671		Horn 24 volt		1
2	1316/0305D		Screw M8 X 20		1
3	1420/0007D		Washer (M8)		1

Product Catalog \ CONSTRUCTION \ NORTH AMERICA \ CONSTRUCTION / INDUSTRIAL \ JS TRACKED EXCAVATORS \ JS200LC BR E 02451101-02451200 9822/0355 \ C ELECTRICS \ C01 ELECTRICAL

9822/0355 C170-15-1 ALARMS/HORN SINGLE TONE

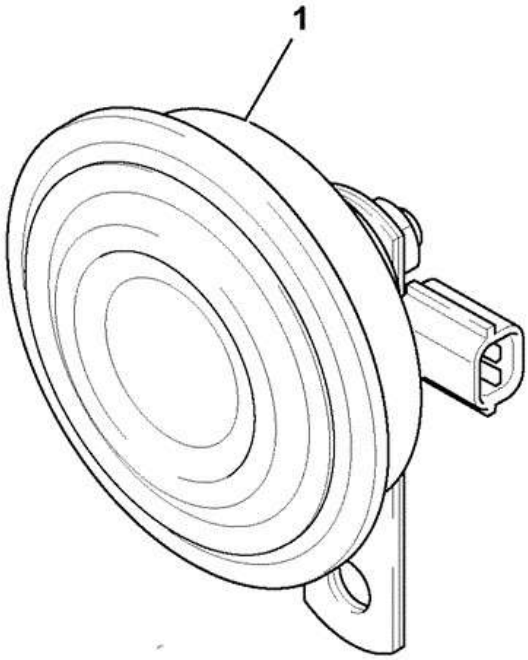

717-20152-1

Item	Part #	Change No	Description	Usage Code	QTY
1	717/20152		Horn 24 volt		1

Product Catalog \ CONSTRUCTION \ NORTH AMERICA \ CONSTRUCTION / INDUSTRIAL \ JS TRACKED EXCAVATORS \ JS200LC BR E 02451101-02451200 9822/0355 \ C ELECTRICS \ C01 ELECTRICAL

9822/0355 C190-1-1 OTHER ELECTRICAL CIRCUITS SEAL KITS RELAY COVER

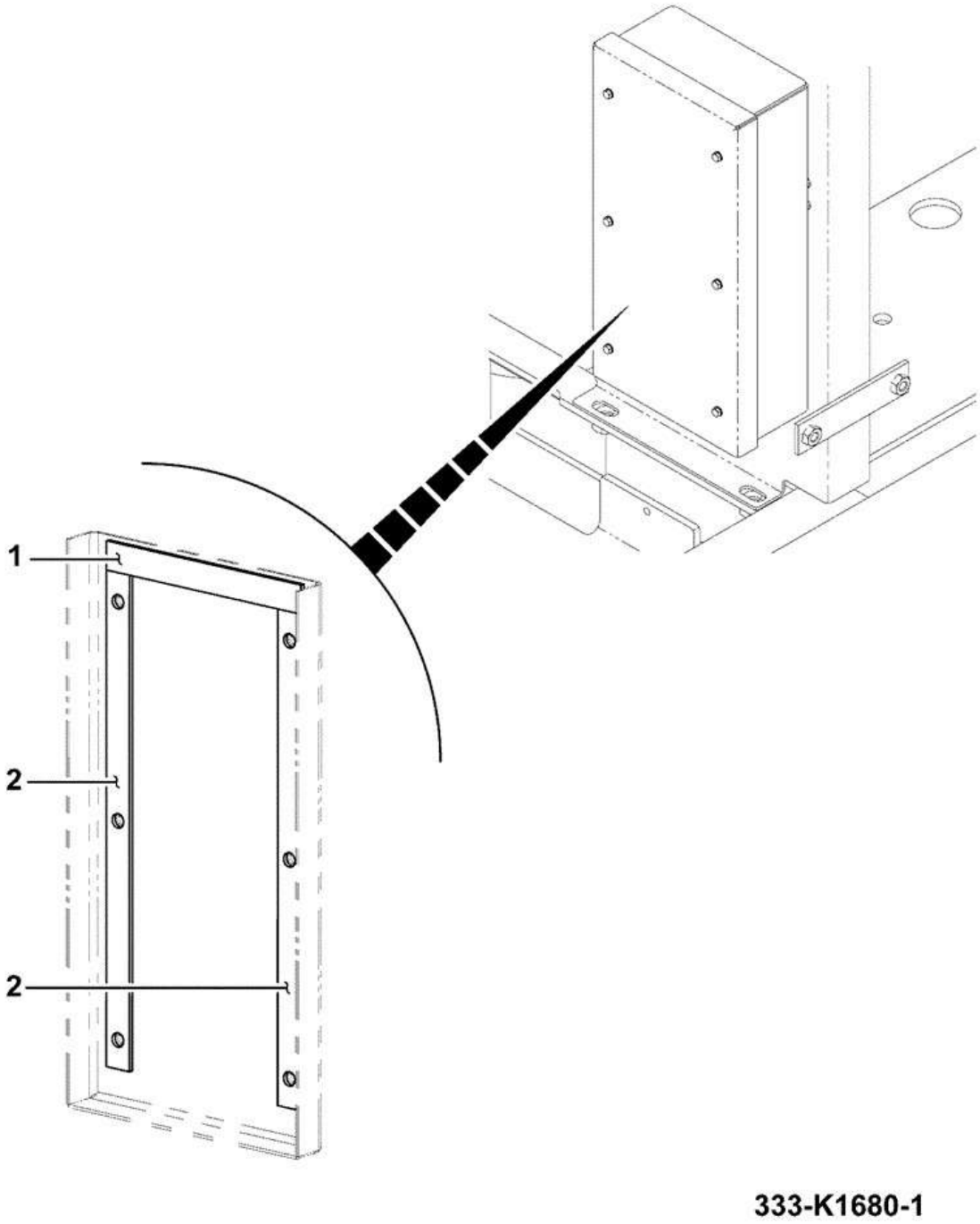

Item	Part #	Change No	Description	Usage Code	QTY
1	333/J9518		Seal		1

2	333/J9519		Seal		2

CONSTRUCTION \ NORTH AMERICA \ CONSTRUCTION / INDUSTRIAL \ JS TRACKED EXCAVATORS \ JS200LC BR E 02451101-02451200 9822/0355 \ C ELECTRICS \ C03 ELECTRICS, CAB

9822/0355 C300-10-1 ELECTRICS CAB INSTALLATION ASSEMBLIES ELECTRICS ASSEMBLY- CAB, TRACKED

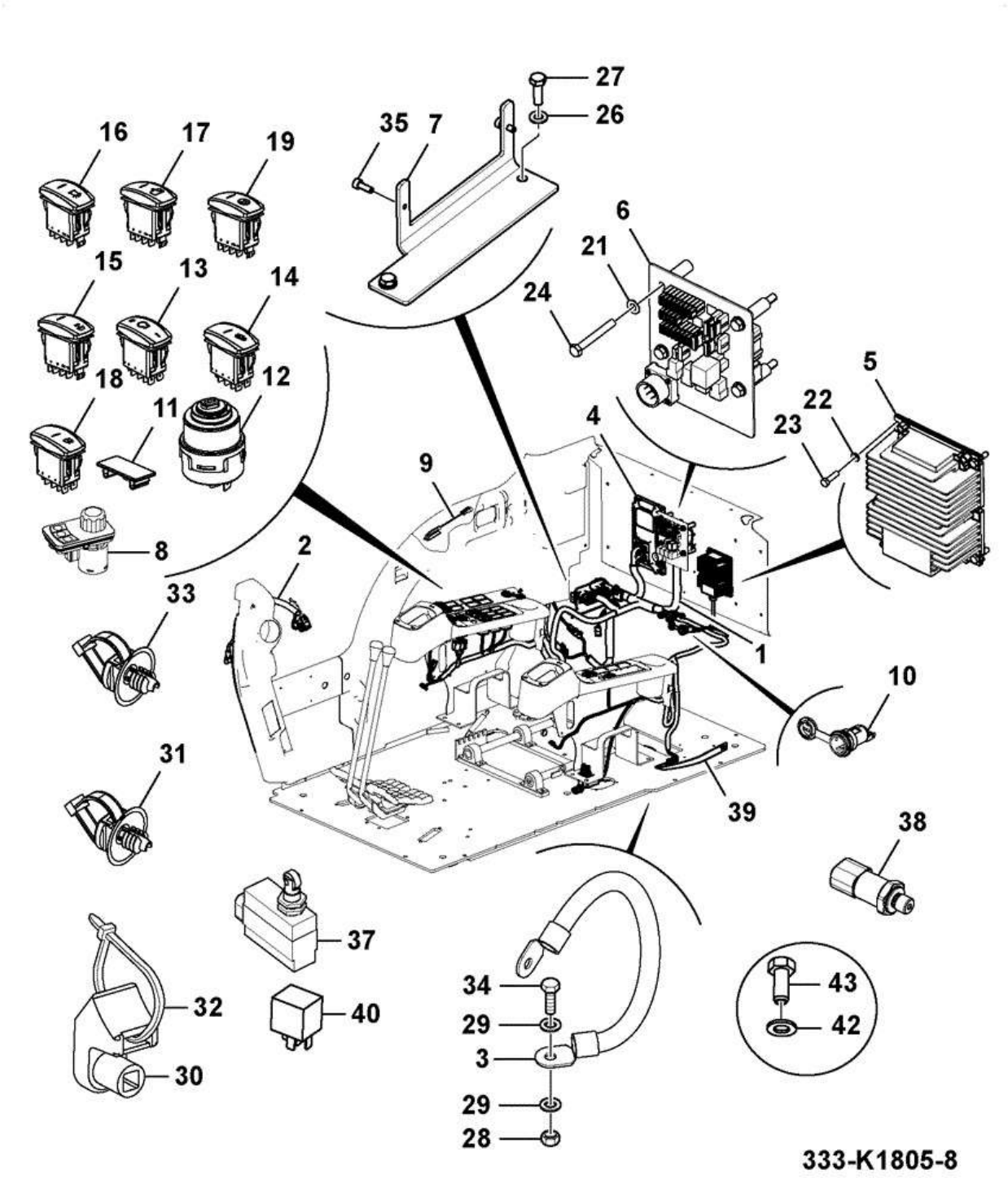

Item	Part #	Change No	Description	Usage Code	QTY
1	334/J4255		Harness Cabin, JCB T3-T4i		1

2	333/K9798		Harness Fascia		1
3	332/E4773		Lead braided earth		1
4	****		Unit Machine ECU Assembly		1
5	717/C5945		Convertor Die Cast Housing 24/12 Volt (15 AMP)		1
6	333/J2050		Electrics Fuse & Relay PCB		1
7	333/K3813		Bracket Mounting Connector		1
8	333/J3967		Controller RPM		1
9	333/J7550		Light Led, Red/White, 12/24 Volt		1
10	332/L6105		Socket Accessory		2
11	701/60010		Blank switch panel Panel		17
12	701/80184		Switch ignition (Ignition key 701/45501)		1
13	****		Switch Stop Engine, Assembly		1
14	****		Switch Isolate Controls, Assembly		1
15	****		Switch Lock Slew, Assembly		1
16	****		Switch Cushion Assembly		1
17	****		Switch Wiper Assembly		1
18	****		Switch Screenwash assembly		1
19	****		Switch Mute Radio, Assembly		1
21	1420/0007D		Washer (M8)		5
22	823/00493		Washer M5 black		4
23	1316/0105Z		Screw Screw M5X20		4
24	1316/3315D		Bolt M8x65		4
26	1420/0006D		Washer (M6)		2
27	1316/0205D		Screw set		2
28	1371/0301D		Nut High Strength		2
29	1420/0008D		Washer (M10)		3
30	826/01274		Cradle Cable Tie Mount		9
31	242/00290		Tie Panel Fixing Cable		10
32	KAR0016		Tie Cable		12
33	333/K2028		Tie Cable		19
34	1316/0409D		Screw M10X35		1
35	1391/9402Z		Capscrew M4 x 12mm		2
37	701/80215		Switch limit		2
38	333/K8558		Transducer 60 Bar Pressure		1
39	333/K7988		Lead Earth, Braided		1
40	334/J8604		Relay Mini, 24V		1
42	1420/0005Z		Washer (M5)		1
43	1315/0101Z		Screw		1

CONSTRUCTION \ NORTH AMERICA \ CONSTRUCTION / INDUSTRIAL \ JS TRACKED EXCAVATORS \ JS200LC BR E 02451101-02451200 9822/0355 \ C ELECTRICS \ C03 ELECTRICS, CAB

9822/0355 C330-1-1 SWITCHES WORKLIGHTS STANDARD BUILD

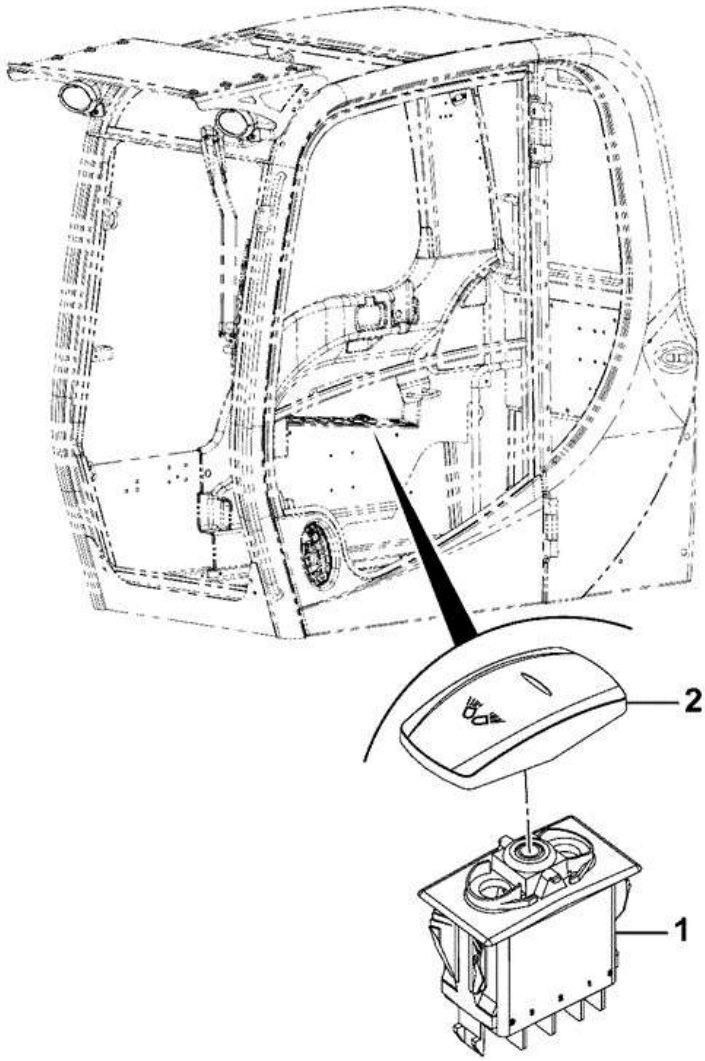

333-L1791-1

Item	Part #	Change No	Description	Usage Code	QTY
1	701/E0089		Panel Switch 24V		1

2	701/E8892		Actuator worklight		1

9822/0355 C330-5-1 SWITCHES WORKLIGHTS OPTIONAL

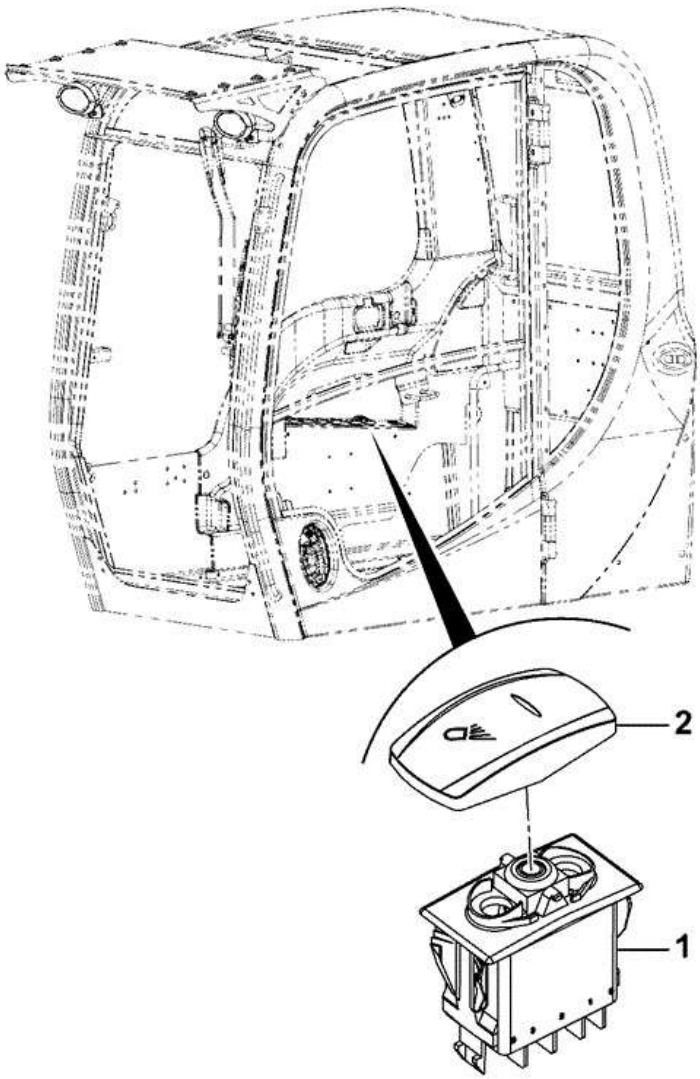

333-L1953-1

Item	Part #	Change No	Description	Usage Code	QTY
1	701/E0034		Switch 24V		1
2	701/E8826		Actuator Front Working Lamps		1

9822/0355 C330-10-1 SWITCHES ENGINE STOP

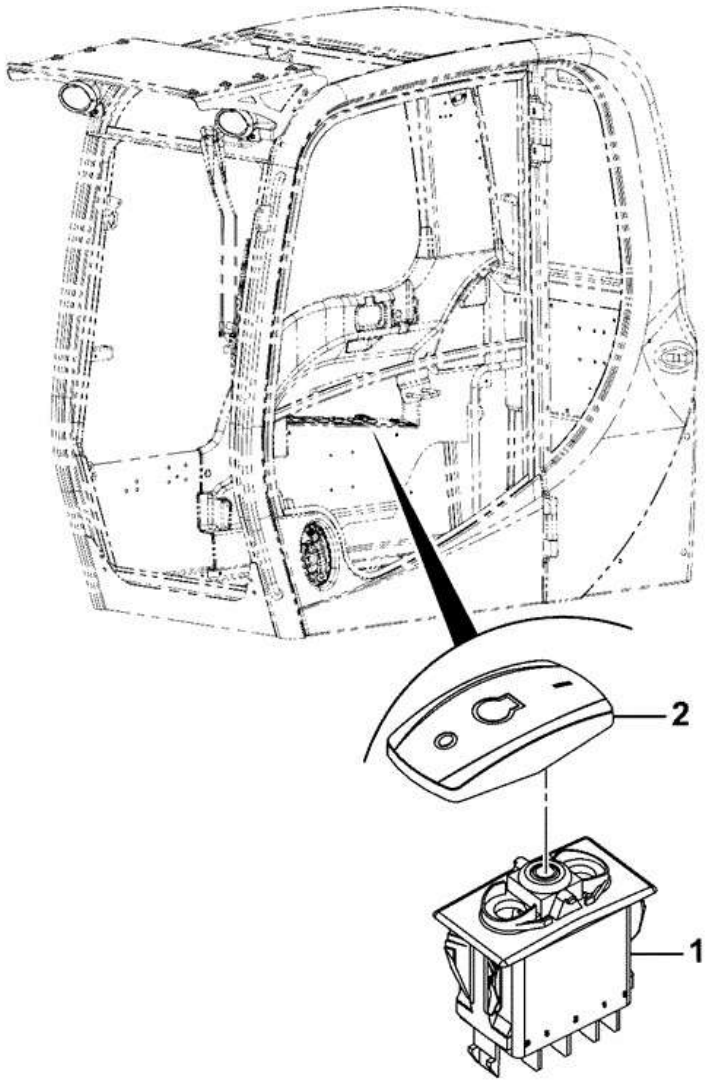

333-L1962-1

Item	Part #	Change No	Description	Usage Code	QTY
1	701/E0032		Switch 24V		1
2	333/L1754		Actuator engine stop		1

9822/0355 C330-15-1 SWITCHES SLEW LOCK

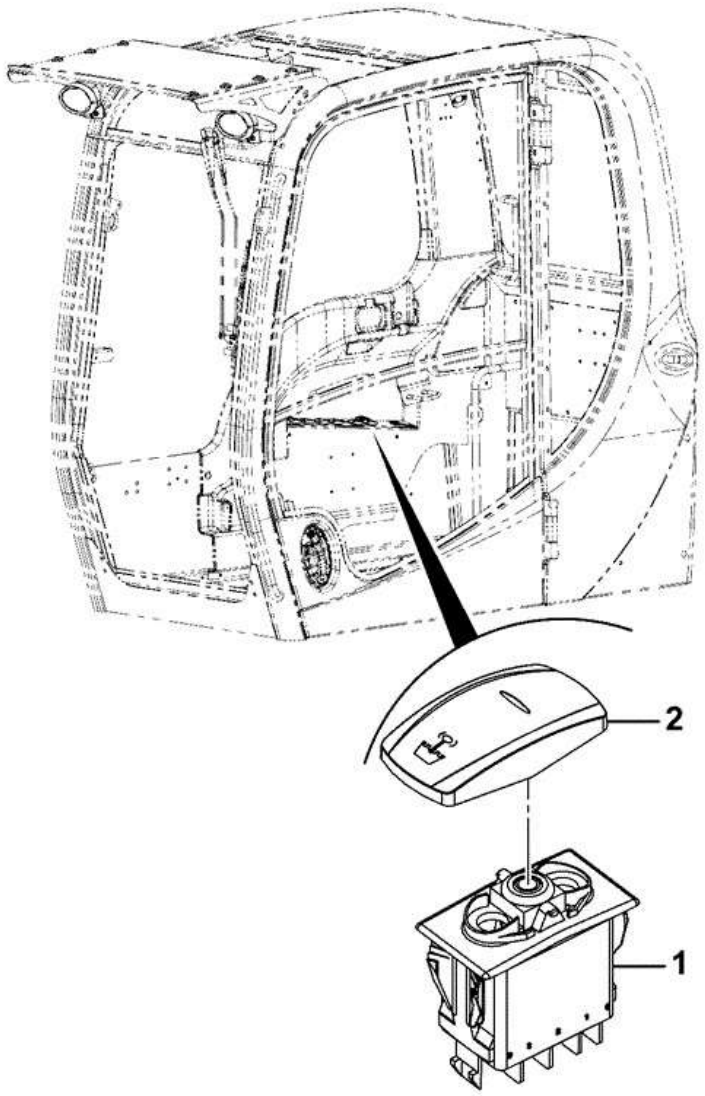

333-L1984-1

Item	Part #	Change No	Description	Usage Code	QTY
1	701/E0032		Switch 24V		1
2	335/G2022		Cover Switch- Actuator Swing Lock		1

9822/0355 C330-20-1 SWITCHES CUSHION

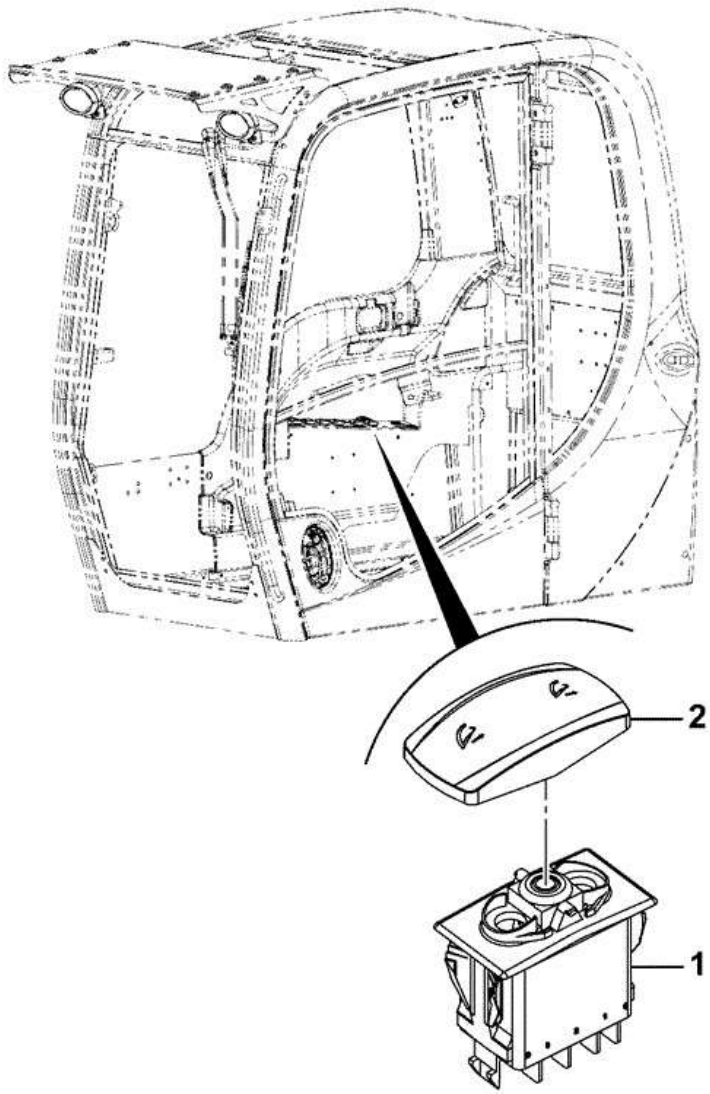

Item	Part #	Change No	Description	Usage Code	QTY
1	701/E0034		Switch 24V		1
2	333/L1758		Actuator cushion black		1

9822/0355 C330-25-1 SWITCHES CONTROL ISOLATE

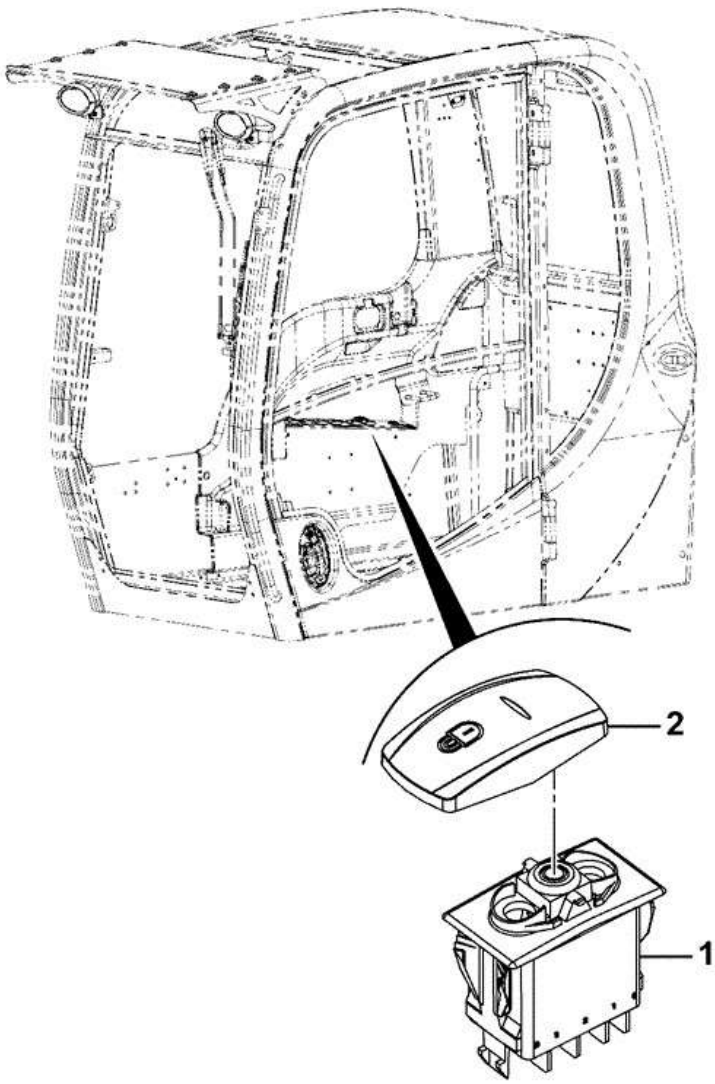

333-L2099-1

Item	Part #	Change No	Description	Usage Code	QTY
1	333/K1654		Switch Panel 24V		1
2	701/E8895		Actuator Stabiliser		1

9822/0355 C330-30-1 SWITCHES WIPER MOTORS

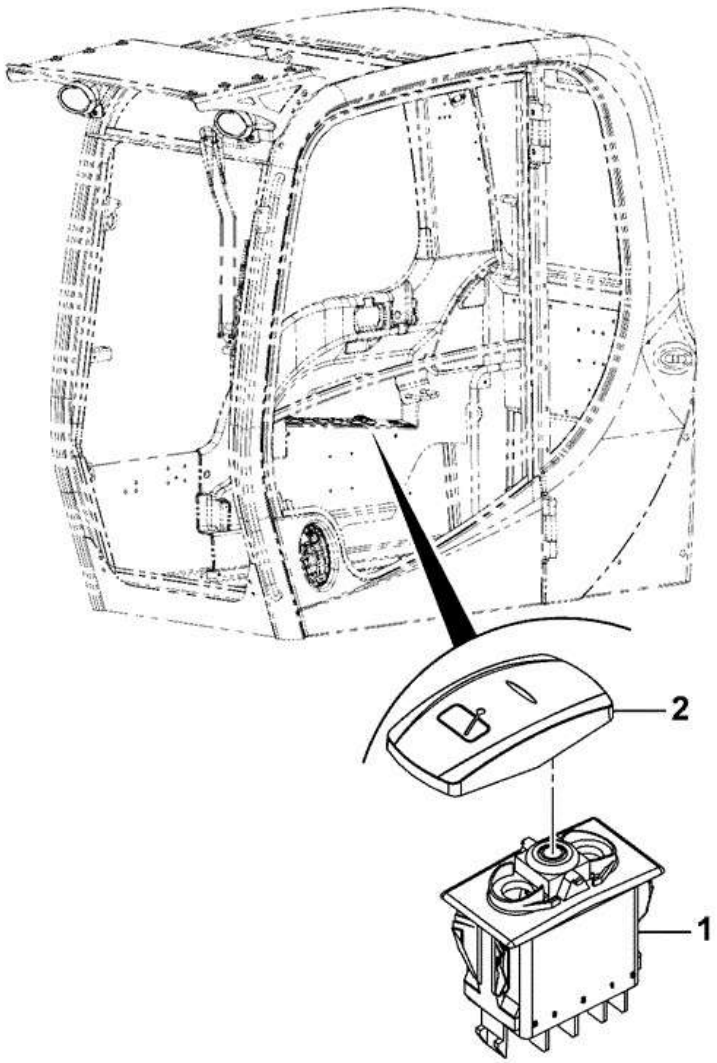

333-L2111-1

Item	Part #	Change No	Description	Usage Code	QTY
1	701/E0089		Panel Switch 24V		1
2	701/E8920		Actuator Wiper Rear		1

9822/0355 C330-35-1 SWITCHES SCREEN WASH

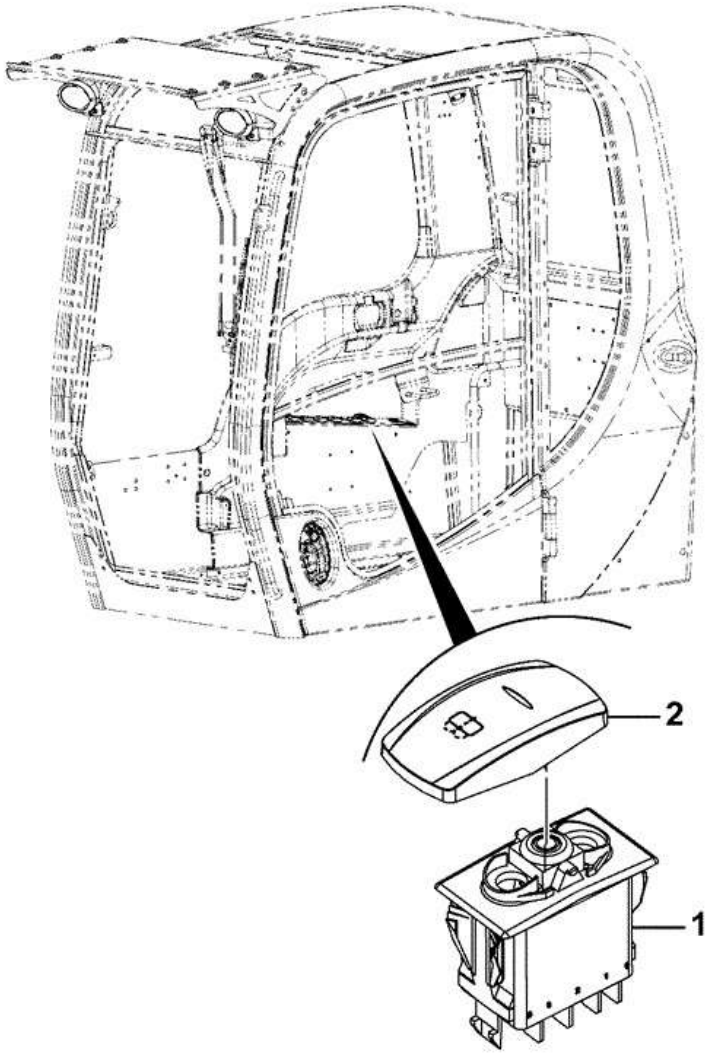

333-L2118-1

Item	Part #	Change No	Description	Usage Code	QTY
1	333/K1654		Switch Panel 24V		1
2	701/E8921		Actuator Screen Wash Rear		1

9822/0355 C330-40-1 SWITCHES RADIO MUTE

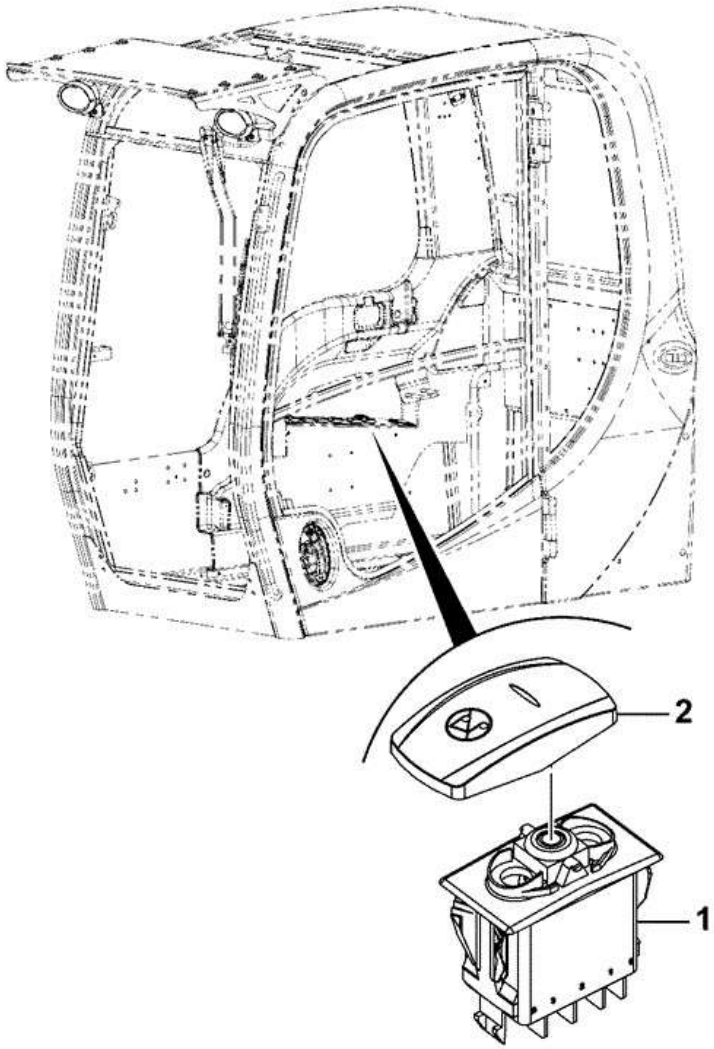

334-P6495-1

Item	Part #	Change No	Description	Usage Code	QTY
1	701/E0001		Panel , 12Volts, 2 Position		1
2	701/E8855		Actuator etched mute		1

CONSTRUCTION \ NORTH AMERICA \ CONSTRUCTION / INDUSTRIAL \ JS TRACKED EXCAVATORS \ JS200LC BR E 02451101-02451200 9822/0355 \ C ELECTRICS \ C03 ELECTRICS, CAB

9822/0355 C340-20-1 HEATER/AIR CON ASSEMBLY ATC CONTROL PANEL

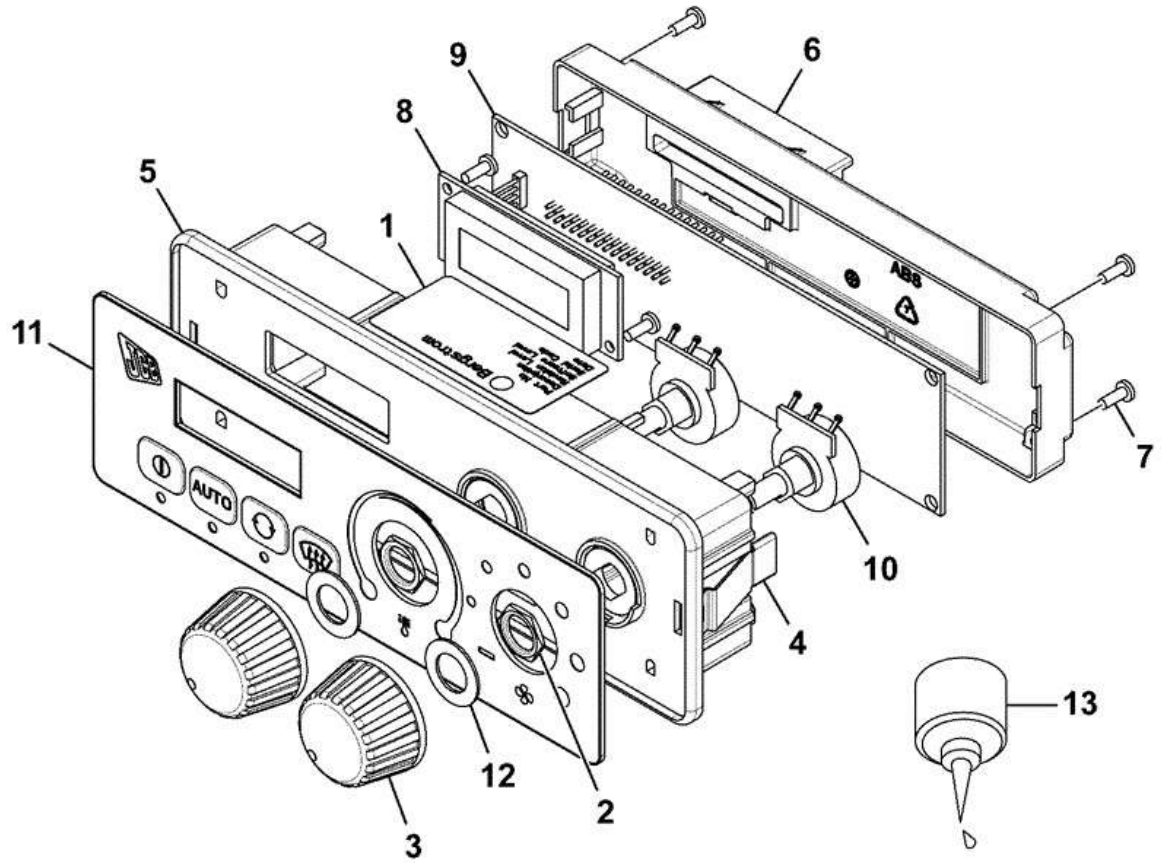

333-K2768-1

Item	Part #	Change No	Description	Usage Code	QTY
1	****		None serviced part		1

2	997/16500		Nut 7/16"		2
3	331/36910		Knob Blower A/C		2
4	335/E2771		Clip Control Retaining		2
5	335/E2772		Cover Control		1
6	335/E2773		Housing Rear		1
7	335/E2774		Screw		6
8	335/E2775		Unit LCD PCB		1
9	335/E2778		Unit PCB, ATC Control		1
10	335/E2779		Potentiometer		2
11	335/E2781		Decal		1
12	335/E2786		Washer Nylon		2
13	335/E2787		Seal		0

CONSTRUCTION \ NORTH AMERICA \ CONSTRUCTION / INDUSTRIAL \ JS TRACKED EXCAVATORS \ JS200LC BR E 02451101-02451200 9822/0355 \ C ELECTRICS \ C03 ELECTRICS, CAB

9822/0355 C340-30-1 HEATER/AIR CON ASSEMBLY

HEATER COMMON PARTS

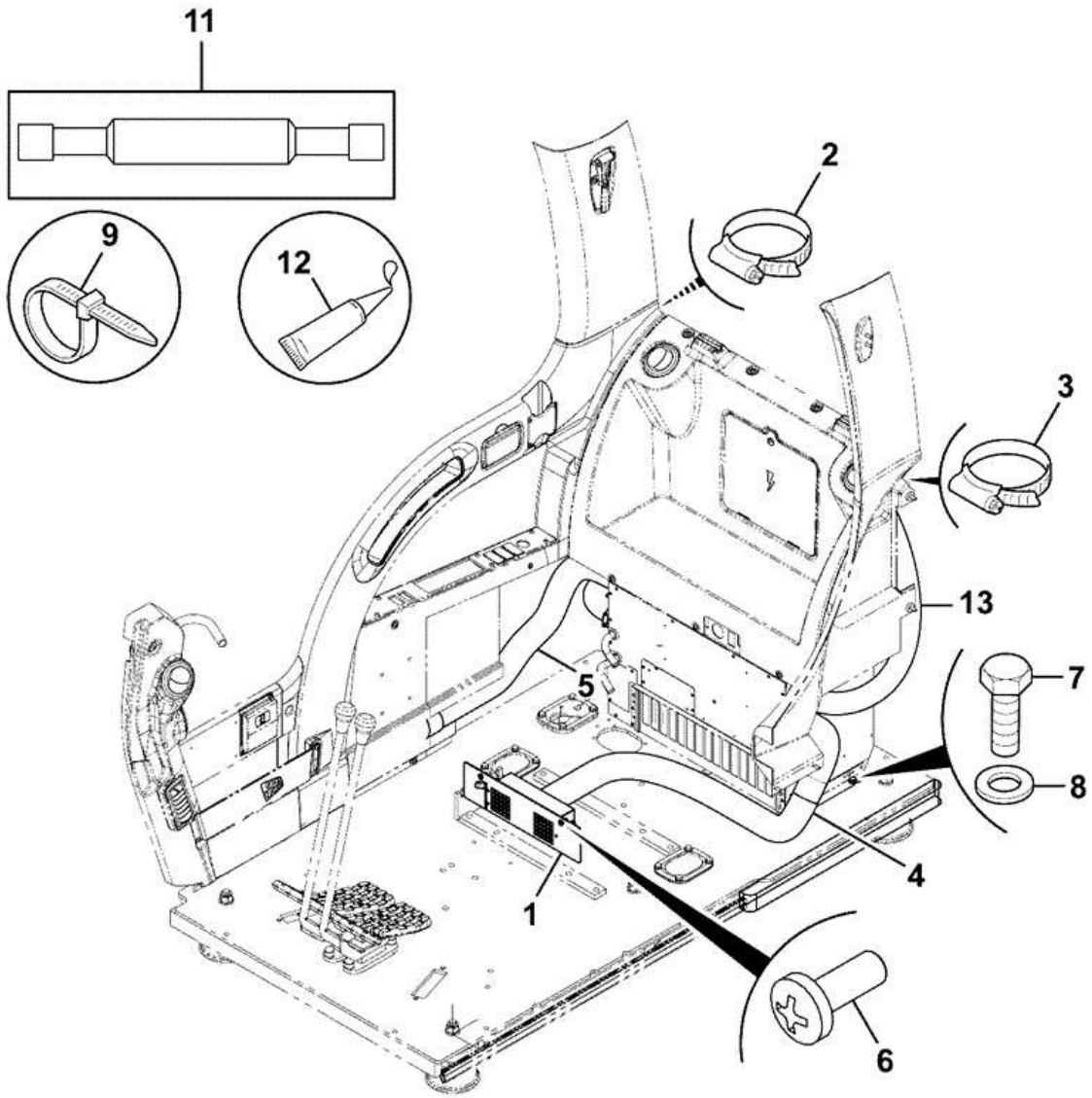

215-11264-11

Item	Part #	Change No	Description	Usage Code	QTY
1	331/28366		Plate foot vent		1

2	2201/0012		Clip Jubilee, 46/70mm		2
3	2201/0011		Clip Worm Drive 40/64mm		4
4	30/925755		Hose air duct 60x1250L foot vent		1
5	30/925756		Hose air duct 60x1450L front vents		1
6	KHR0737		Screw Pan Head		2
7	1316/0305D		Screw M8 X 20		4
8	1420/0007D		Washer (M8)		4
9	826/11447		Tie Cable Locking		8
11	331/32454		Drawing ducting master		0
12	4101/0500		Fluid Locking Loctite 262		0
13	334/L0266		Duct		2

CONSTRUCTION \ NORTH AMERICA \ CONSTRUCTION / INDUSTRIAL \ JS TRACKED EXCAVATORS \ JS200LC BR E 02451101-02451200 9822/0355 \ C ELECTRICS \ C03 ELECTRICS, CAB

9822/0355 C340-50-1 HEATER/AIR CON ASSEMBLY ASSEMBLY ATC UNIT, T2

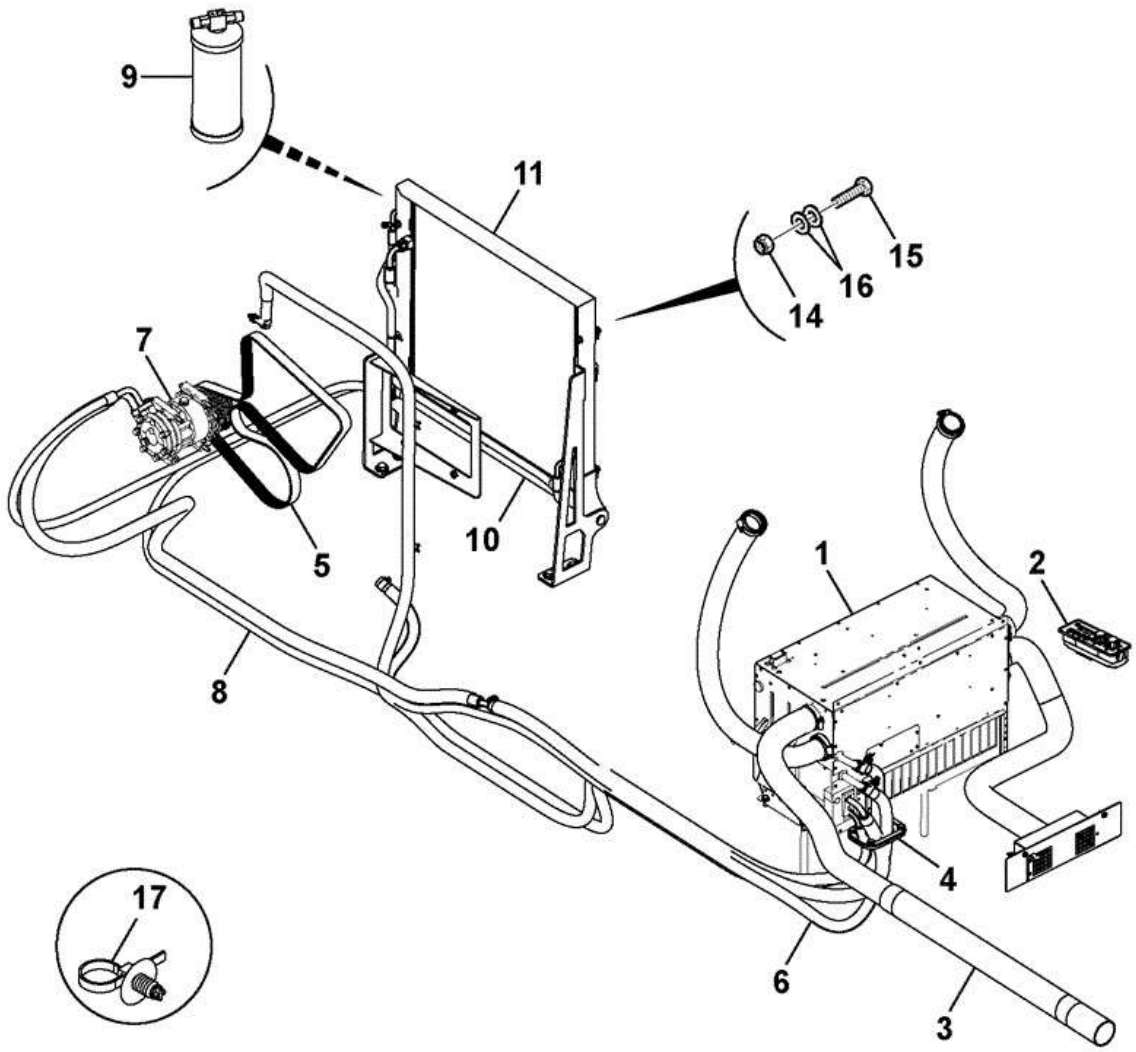

Item	Part #	Change No	Description	Usage Code	QTY
1	333/K0445		Unit ATC Cab		1

2	333/K2768		Panel Control Air Condition		1
3	****		Heater Common Parts		1
4	****		Grommet Assembly Air Conditionsing		1
5	****		Belt Drive And Air Condition Assembly		1
6	****		Hose Heater, Assembly		1
7	****		Compressor assembly		1
8	334/J4493		Kit Hose		1
9	333/K6849		Kit Receiver /Dryer Kit		1
10	332/T4785		Condenser		1
11	334/J1720		Mounting Air Conditioning		1
12	****		Canister Gas Charge Refrigerant		1
14	1370/0203D		Nut Lock M8		4
15	1316/3315D		Bolt M8x65		4
16	1420/0007D		Washer (M8)		8
17	242/00290		Tie Panel Fixing Cable		7

9822/0355 C340-55-1 HEATER/AIR CON ASSEMBLY UNIT ATC, CAB, COMPONENTS

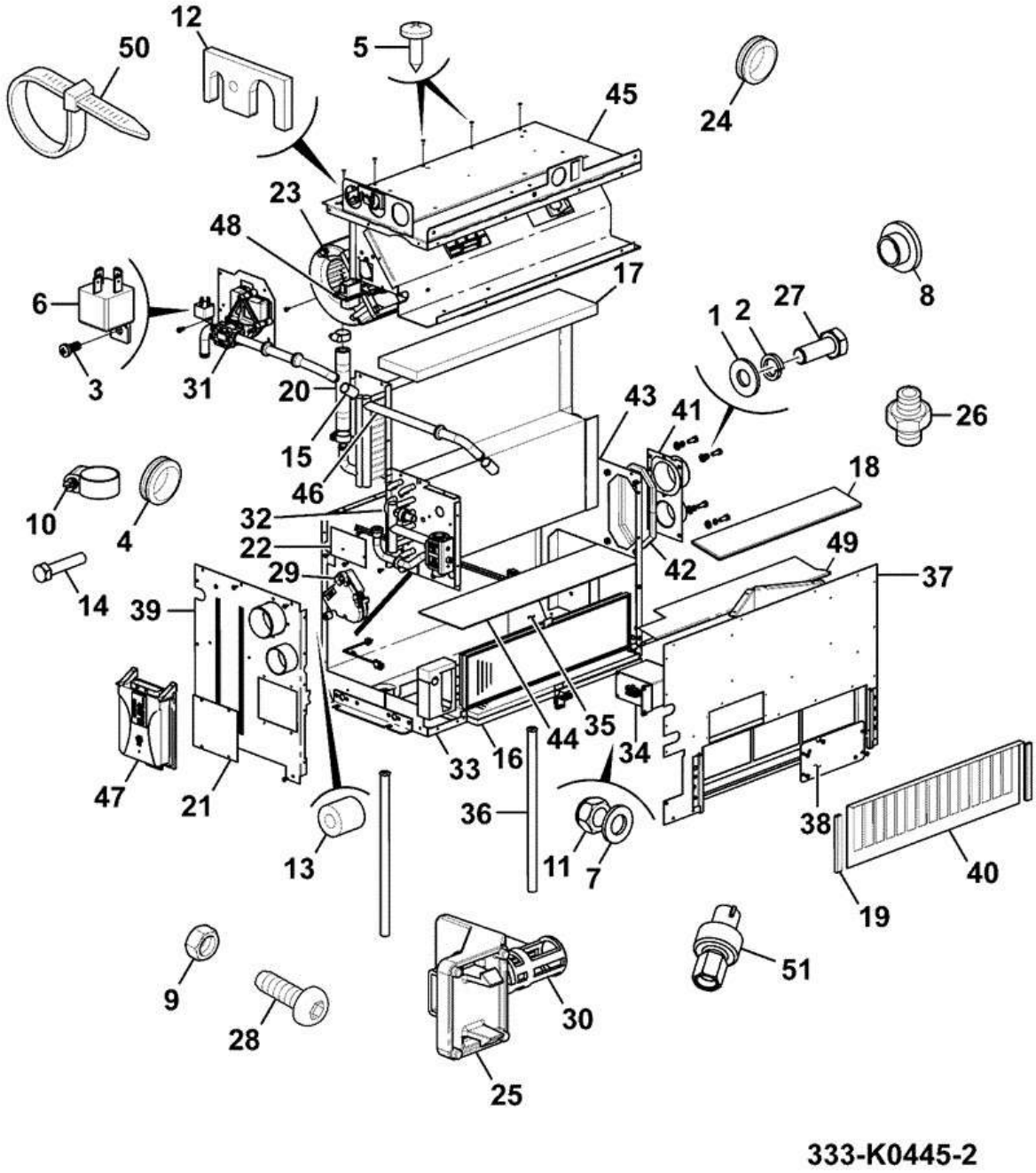

Item	Part #	Change No	Description	Usage Code	QTY
A	333/K0445		Unit ATC Cab		1

1	:335/C6378		Washer M6		4
2	:335/C6379		Washer Spring, M6		4
3	:332/D9702		Screw self tapping no.8x1/2 "		5
4	:30/925898		Grommet		3
5	:30/925900		Screw		64
6	:30/926015		Relay 24v spst		1
7	:332/D9708		Washer M5		5
8	:30/925906		Washer shoulder 6.2 I/D		1
9	:335/E0927		Nut M6		2
10	:30/925907		Clip Jubilee		2
11	:331/36622		Nut M5		2
12	:30/925914		Plate clamp TXV		1
13	:332/D9715		Spacer nylon		3
14	:332/D9716		Setscrew hex M5x25		3
15	:923/10138		Cap		2
16	:30/926020		Filter fresh air		2
16	:32/925775		Filter carbon (Bergstrom)		2
17	:30/926002		Seal coil		1
18	:30/926004		Seal flap		1
19	:30/926021		Seal filter cover		2
20	:30/927144		Hose		1
21	:332/D9724		Panel thermostat access		1
22	:332/H7296		Cover thermostat		1
23	:332/H7297		Blower assembly		1
24	:332/H7298		Grommet		1
25	:332/H7299		Clip sensor		1
26	:30/926653		Adapter		1
27	:334/P1287		Screw M16 x 16		4
28	:332/H7300		Screw		4
29	:30/926005		Actuator 12v		1
30	:30/927140		Thermostat		1
31	:332/F6577		Valve water counter clockwise rotation		1
32	:332/H7301		Evaporator coil		1
33	:335/C6386		Seal		1
34	:332/G2543		Unit PWM Module		1
35	:332/G2418		Sensor Thermister, 9k		2
36	:332/H7307		Tube Drain		2
37	:335/C6389		Cover		1
38	:335/C6390		Panel PWM Acess		1
39	:335/C6391		Cover End		1
40	:335/C6392		Cover Filter		1
41	:335/C6394		Duct Outlet		1
42	:335/C6395		Seal Filter Box		1
43	:335/C6397		Plate		1
44	:335/C6399		Seal Coil		1
45	:335/E0951		Cover Top		1
46	:335/E0179		Coil Heater		1
47	:334/C0464		ECU		1
48	:335/E0928		Harness Wire		1
49	:334/C0730		Door Flap re-circ		1
50	:332/H7308		Tie Band		1

51	:332/R0240		Switch low pressure *Located in the evaporator coil area*		1

9822/0355 C340-60-1 HEATER/AIR CON ASSEMBLY AIR CONDITIONING GROMMET

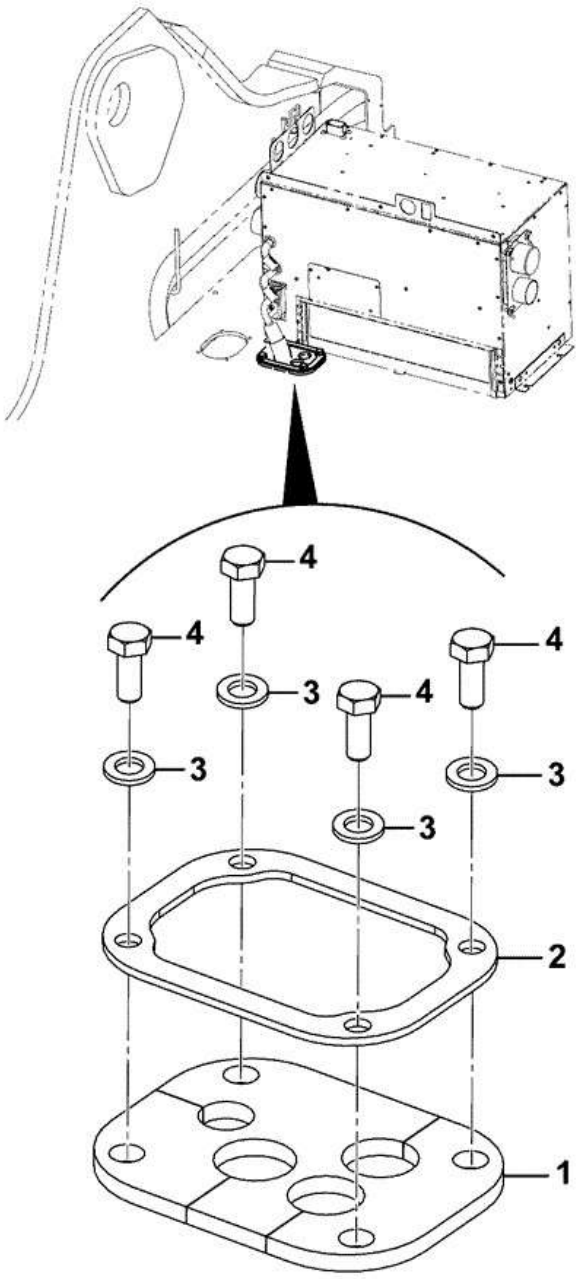

333-K1717-1

Item	Part #	Change No	Description	Usage Code	QTY
1	333/J4811		Grommet		1

2	333/J1258		Plate retainer		1
3	1420/0007D		Washer (M8)		4
4	1316/0305D		Screw M8 X 20		4

9822/0355 C340-65-1 HEATER/AIR CON ASSEMBLY AIR CONDITIONING SYSTEM FEAD ASSEMBLY, HD

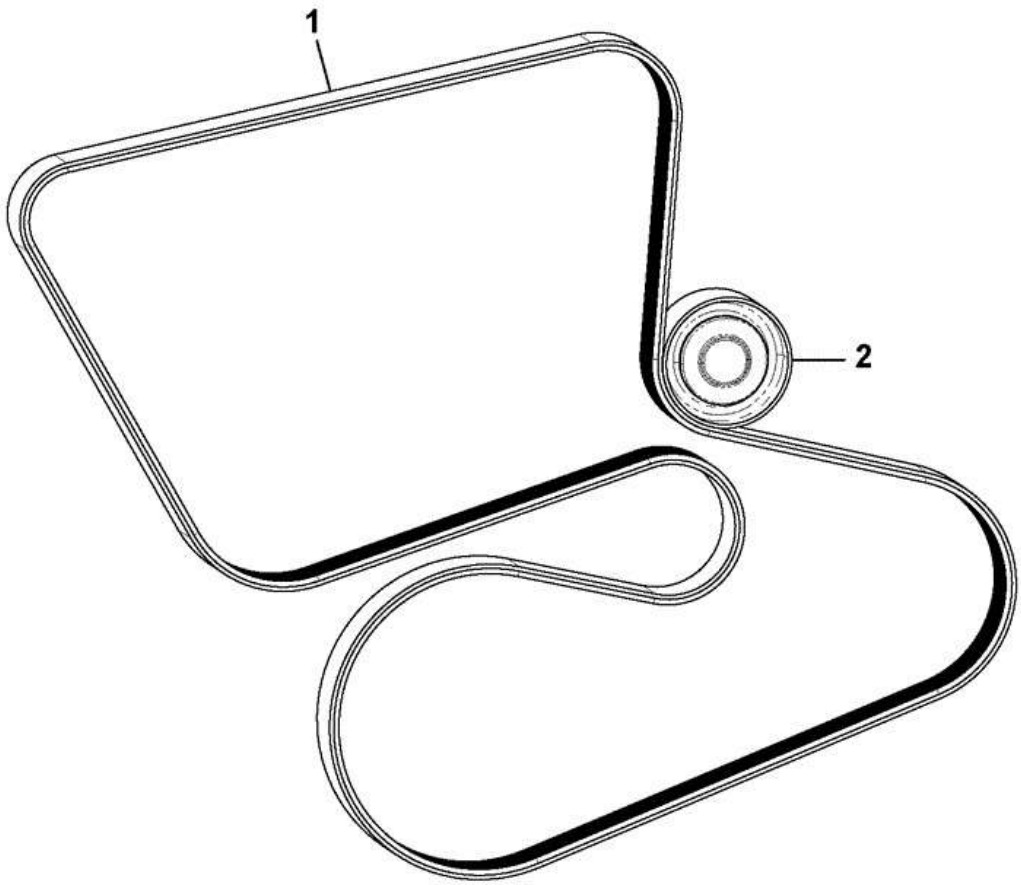

320-21483-1

Item	Part #	Change No	Description	Usage Code	QTY
1	320/08869		Belt Aramid Cord		1

2	320/08773		Idler pulley Aircon		1

Product Catalog \ CONSTRUCTION \ NORTH AMERICA \ CONSTRUCTION / INDUSTRIAL \ JS TRACKED EXCAVATORS \ JS200LC BR E 02451101-02451200 9822/0355 \ C ELECTRICS \ C03 ELECTRICS, CAB

9822/0355 C340-70-1 HEATER/AIR CON ASSEMBLY HEATER HOSES ASSEMBLY, T2

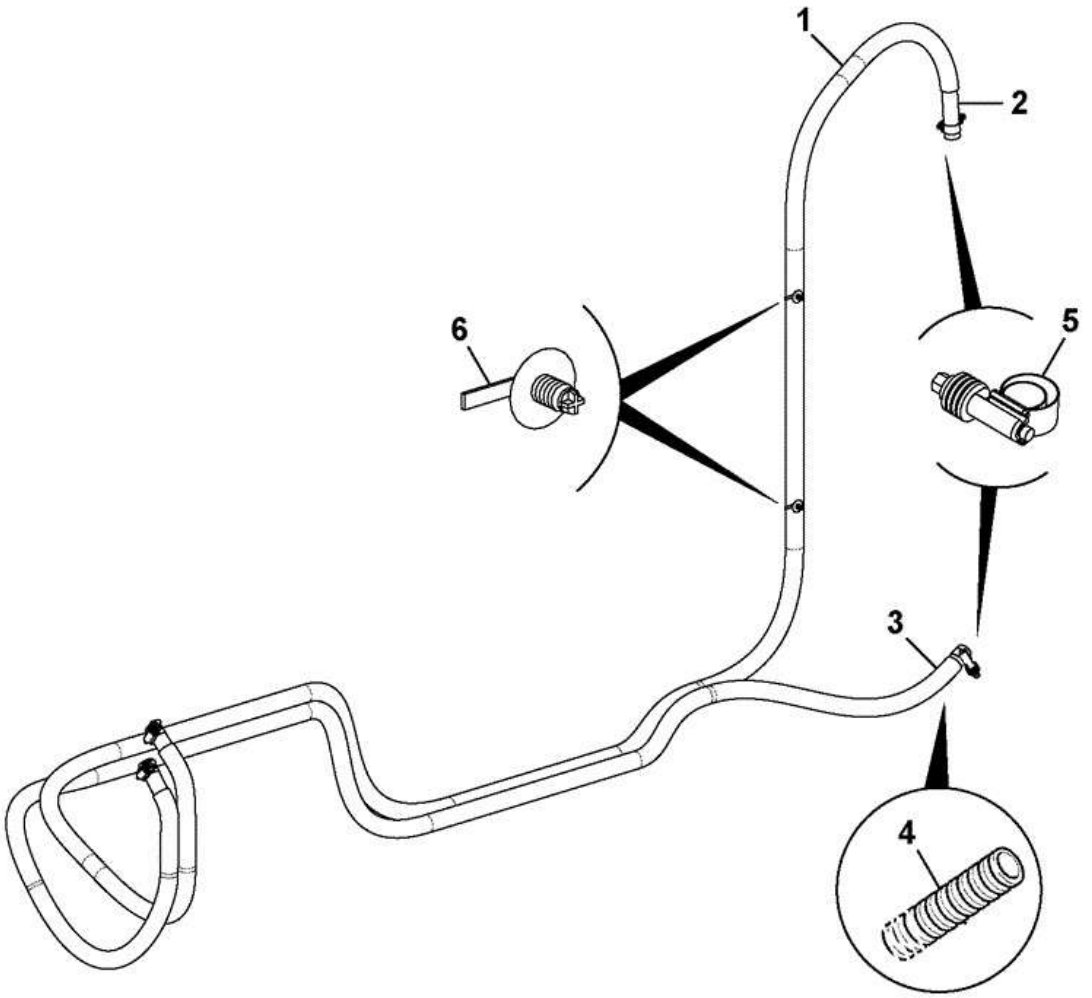

333-K1312-2

Item	Part #	Change No	Description	Usage Code	QTY
1	335/A9008		Hose Water, 3.5m		1

2	331/22053		Hose Guide		1
3	834/10980		Hose water		1
4	JSR0053		Tube corrugated		1
5	334/J4514		Clip Constant-Torque Worm		4
6	242/00290		Tie Panel Fixing Cable		2

9822/0355 C340-75-1 HEATER/AIR CON ASSEMBLY HOSE KIT

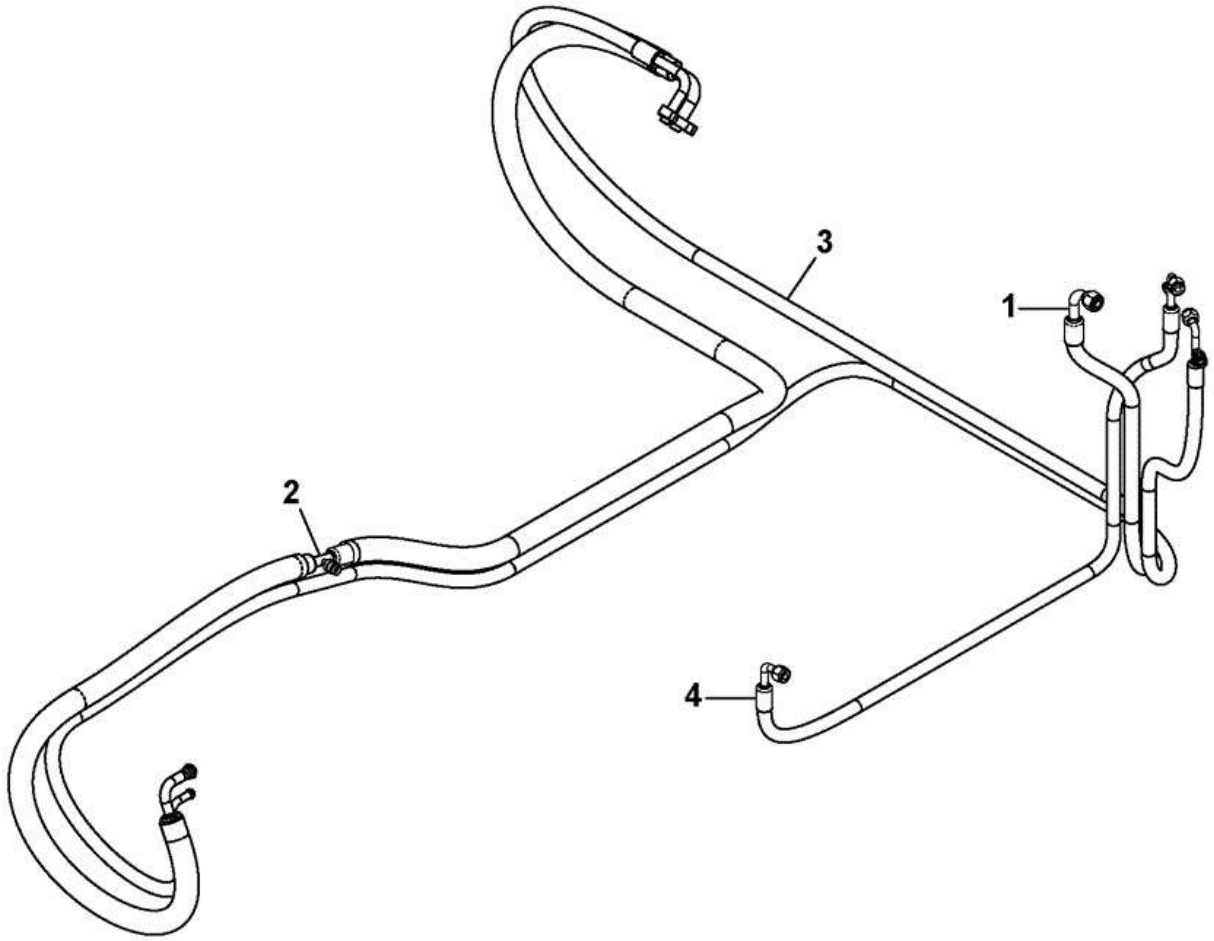

334-J4493-1

Item	Part #	Change No	Description	Usage Code	QTY
1	333/K2674		Hose A/C Compressor To Condenser		1

2	333/J2265		Hose A/C Evaporator to Compressor		1
3	334/J5776		Hose Receiver Drier		1
4	334/J5775		Hose Receiver Drier To Condenser		1

CONSTRUCTION \ NORTH AMERICA \ CONSTRUCTION / INDUSTRIAL \ JS TRACKED EXCAVATORS \ JS200LC BR E 02451101-02451200 9822/0355 \ C ELECTRICS \ C03 ELECTRICS, CAB

9822/0355 C350-1-1 FUSES AND RELAYS ABI POD BOX, ENGINE

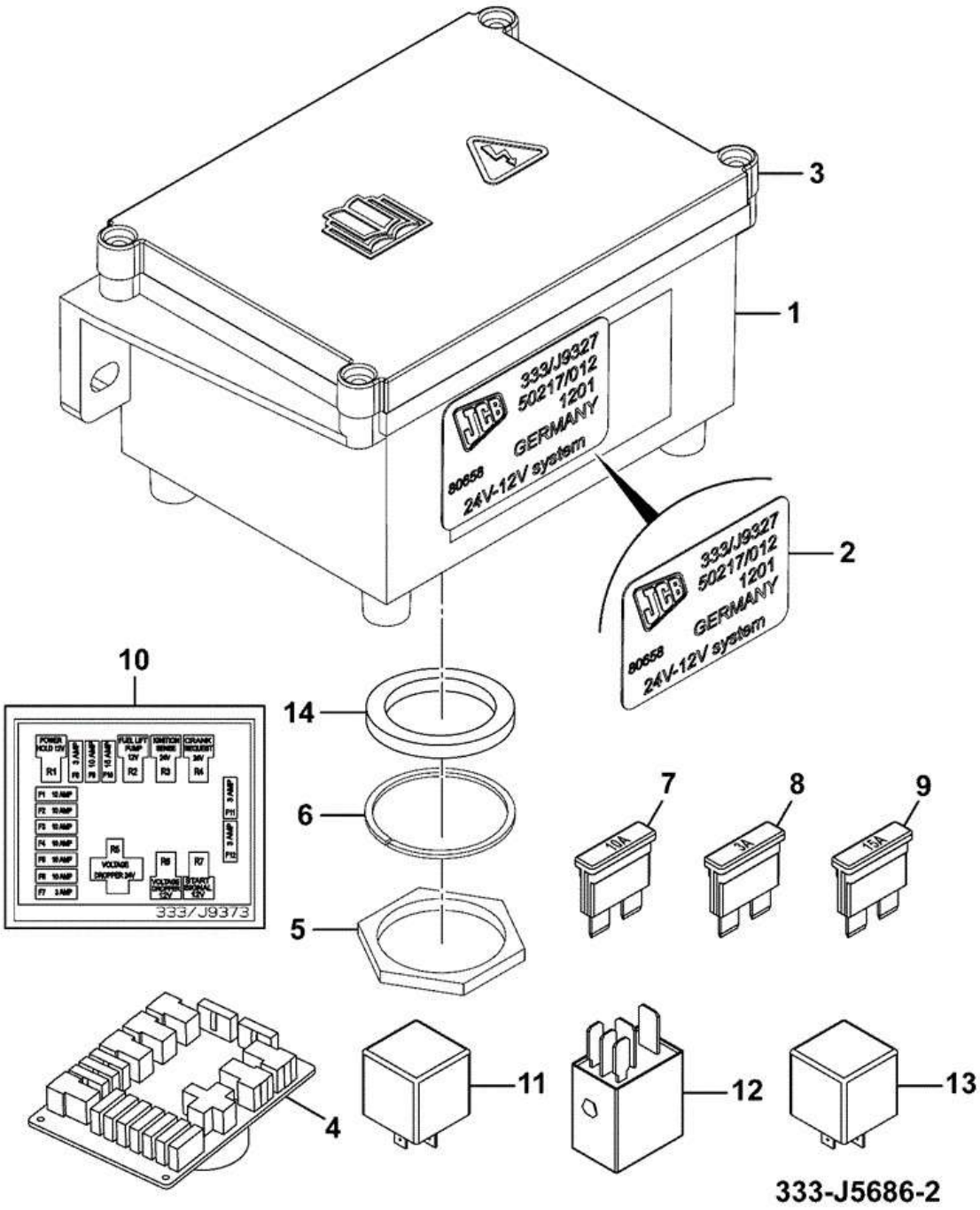

Item	Part #	Change No	Description	Usage Code	QTY
1	333/K3803		Moulding Fuse Box		1

2	333/F3981		Decal Engine Fuse And Relay Module		1
3	333/K3804		Fusebox Lid Black		1
4	320/09733		Circuit board Pod Box 24V		1
5	7210/0048		Nut Deutsch size 24		1
6	7210/0047		Washer lock,Deutsch size 24		1
7	716/05705		Fuse 10 amp		7
8	716/05701		Fuse 3 amp		4
9	716/05706		Fuse 15 amp		1
10	333/J9373		Decal fuse location		1
11	332/W1815		Relay 24V 30A		1
12	332/C3148		Relay 12V micro High Capacity (Black)		4
13	333/S5959		Relay micro 24V, Panasonic		2
14	333/K4024		Gasket Pod Box		1

CONSTRUCTION \ NORTH AMERICA \ CONSTRUCTION / INDUSTRIAL \ JS TRACKED EXCAVATORS \ JS200LC BR E 02451101-02451200 9822/0355 \ C ELECTRICS \ C03 ELECTRICS, CAB

9822/0355 C350-10-1 FUSES AND RELAYS BATTERY RELAY ASSEMBLY

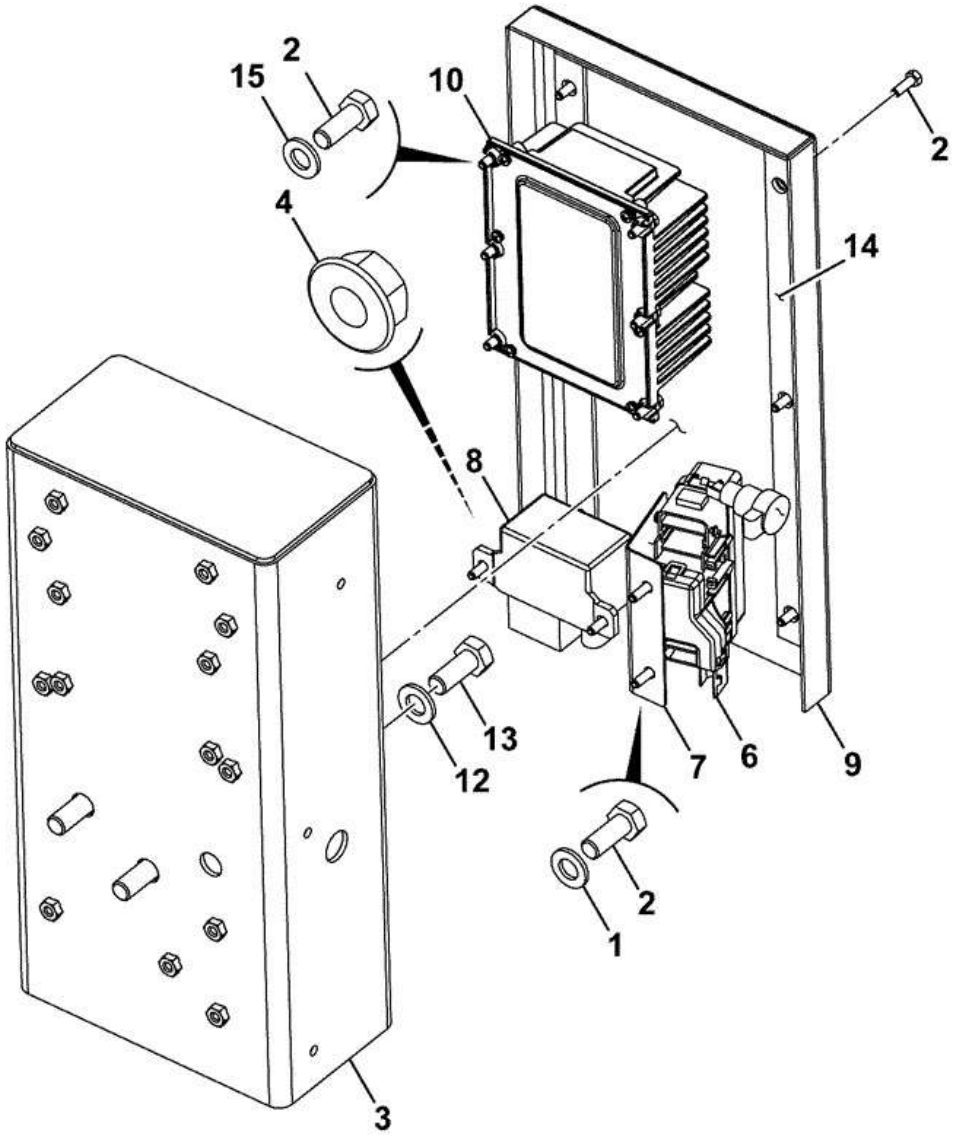

333-J9956-4

Item	Part #	Change No	Description	Usage Code	QTY
1	1420/0005Z		Washer (M5)		10

2	1315/0103Z		Screw		16
3	333/K7414		Box Mounting Relay		1
4	1370/0108Z		Nut M6 flange head		2
6	****		Box fuselink assembly		1
7	333/J9498		Mount fuse link box		1
8	716/30295		Relay 24 volt		1
9	333/J9491		Cover relay		1
10	717/C5945		Convertor Die Cast Housing 24/12 Volt (15 AMP)		1
12	1420/0009D		Washer (M12)		3
13	1316/0509D		Screw M12x35 long		3
14	333/K1680		Kit-seal		1
15	1420/0005D		Washer (M5)		6

9822/0355 C350-15-1 FUSES AND RELAYS FUSELINK BOX

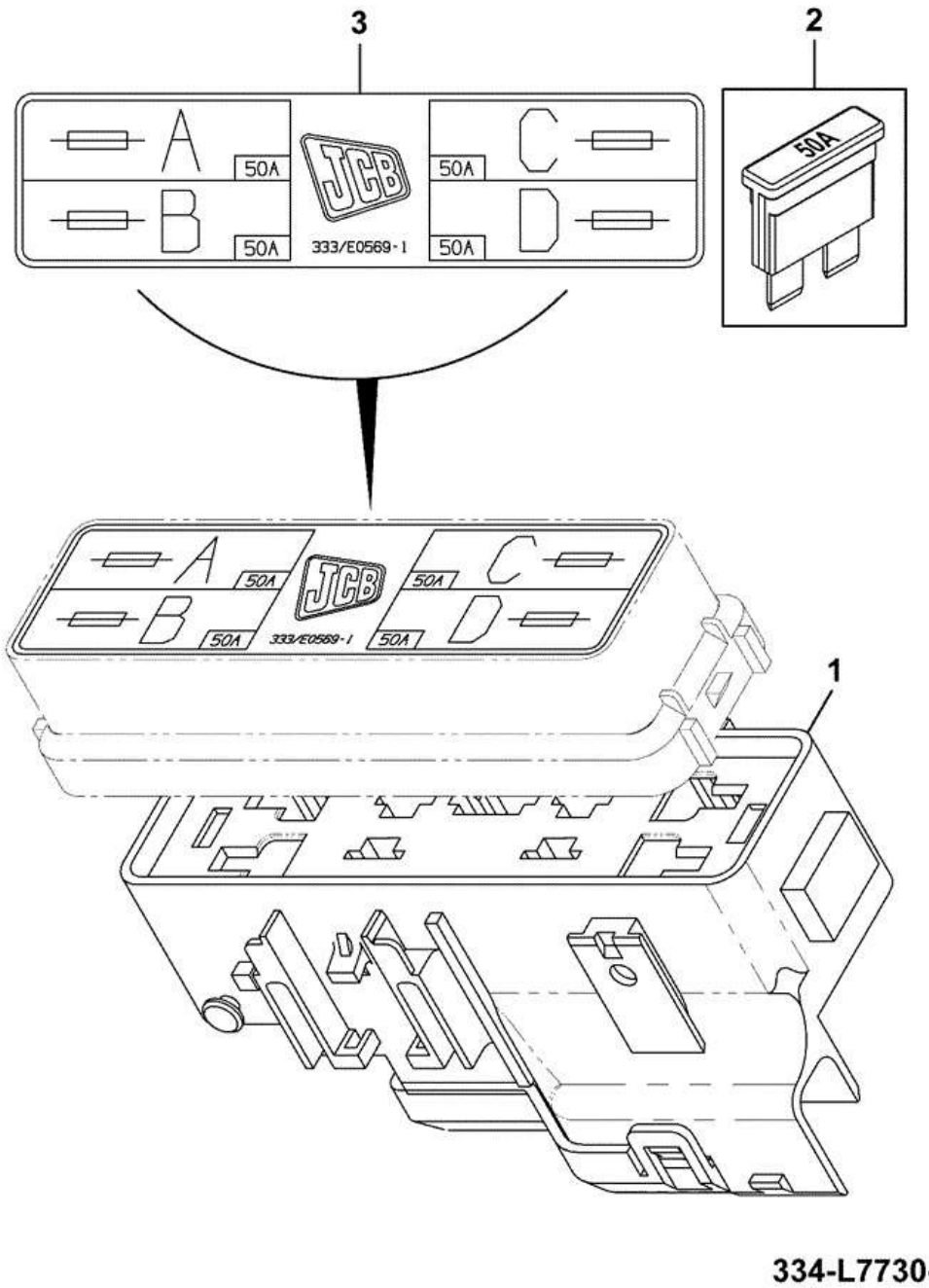

Item	Part #	Change No	Description	Usage Code	QTY
1	716/30077		Box Fuselink (Not supplied 7232/0009 + 7232/0001 + 7201/00079 + 7201/0078)		1
2	716/30081		Fuse Maxi 50Amp		4

3	333/E0569		Decal Primary Fuse		1

CONSTRUCTION \ NORTH AMERICA \ CONSTRUCTION / INDUSTRIAL \ JS TRACKED EXCAVATORS \ JS200LC BR E 02451101-02451200 9822/0355 \ C ELECTRICS \ C03 ELECTRICS, CAB

9822/0355 C350-20-1 FUSES AND RELAYS FUSELINK BOX, 4 WAY

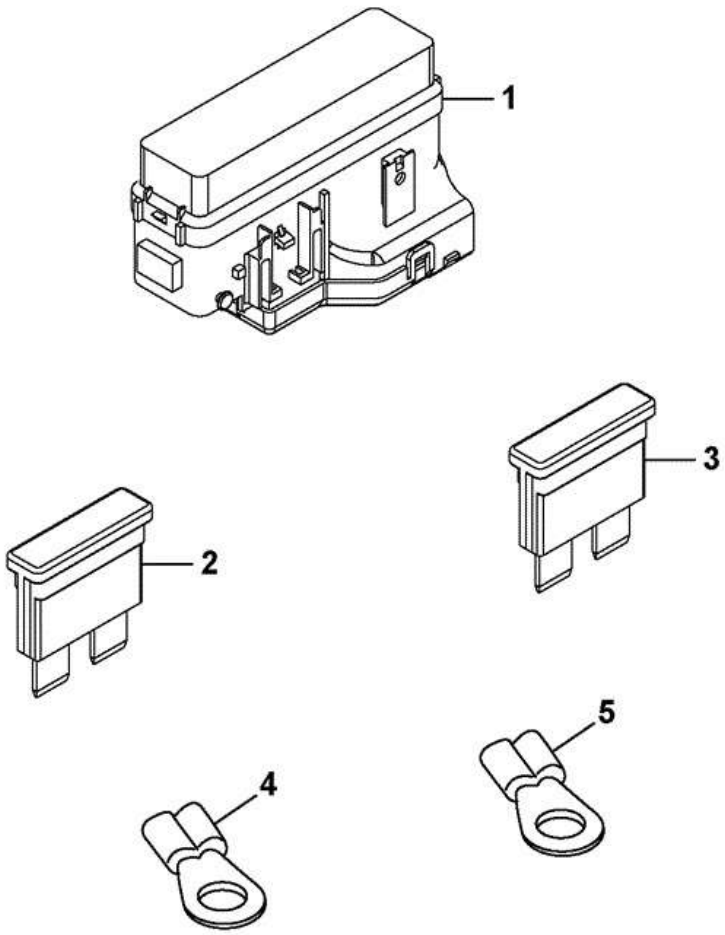

716-30077-2

Item	Part #	Change No	Description	Usage Code	QTY
1	716/30077		Box Fuselink (Not supplied 7232/0009 + 7232/0001 + 7201/00079 + 7201/0078)		1

2	7232/0008		Housing 2 WAY MAXIVAL FEM HS MTA PRIMARY FUSEBOX *Grey*		1
3	7232/0009		Housing 2 way (Blue) *Blue*		1
4	7201/0079		Terminal crimp 4 - 6MM		1
5	7201/0078		Terminal Crimp 8 to 10 mm		1

CONSTRUCTION \ NORTH AMERICA \ CONSTRUCTION / INDUSTRIAL \ JS TRACKED EXCAVATORS \ JS200LC BR E 02451101-02451200 9822/0355 \ C ELECTRICS \ C03 ELECTRICS, CAB

9822/0355 C350-25-1 FUSES AND RELAYS ABI TRACKED

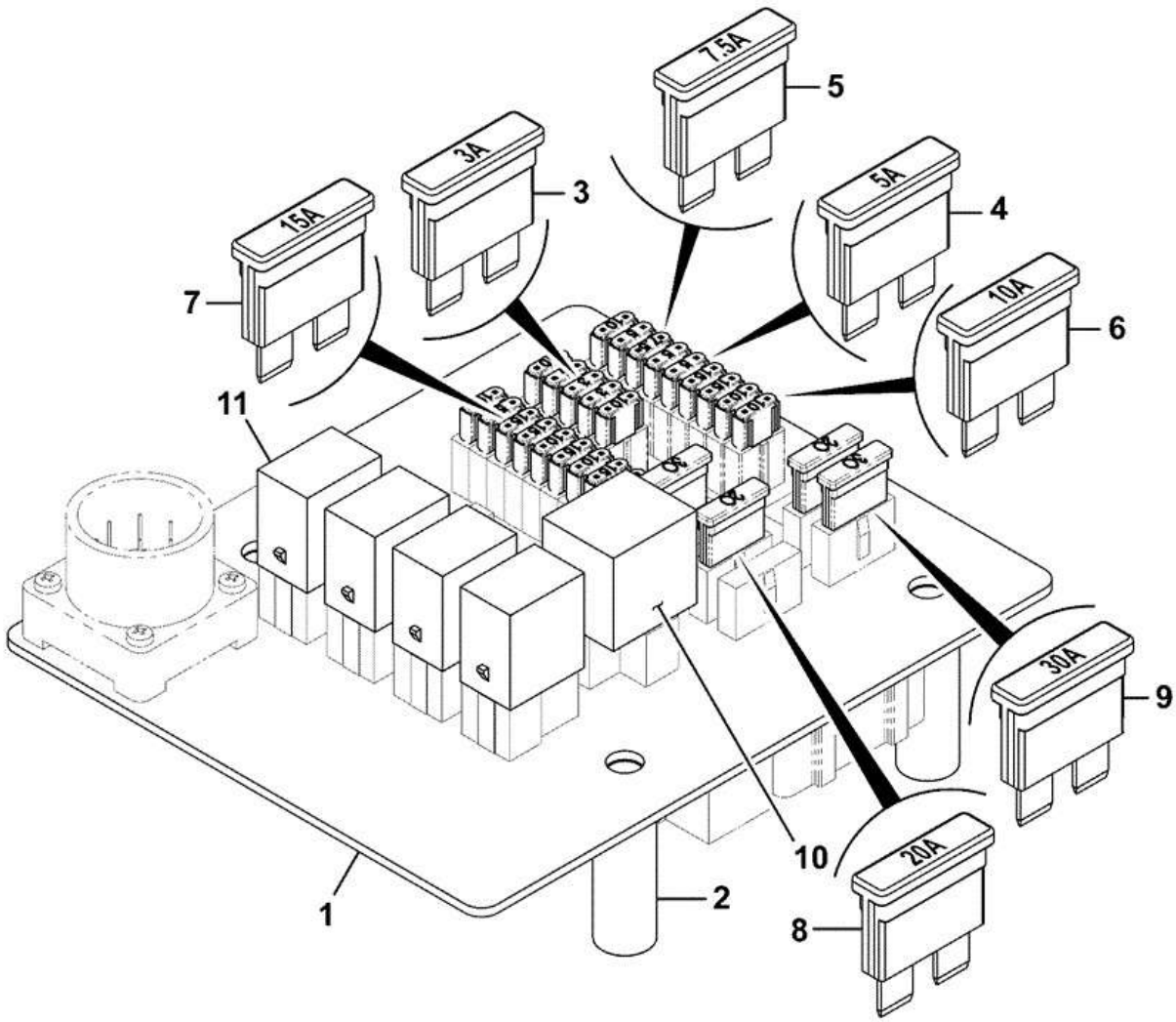

333-J2050-1

Item	Part #	Change No	Description	Usage Code	QTY
1	333/J2052		Electrics Fuse and Relay PCB		1
2	333/J0389		Spacer		4
3	716/30350		Fuse Mini 3Amp VIOLET		2

4	716/30351		Fuse Mini 5Amp		5
5	716/30352		Fuse Mini 7.5Amp Brown		1
6	716/30353		Fuse Mini 10Amp RED		8
7	716/30354		Fuse mini 15Amp BLUE		7
8	716/05707		Fuse 20 amp		2
9	716/05709		Fuse 30 amp		2
10	334/J8604		Relay Mini, 24V		1
11	347/20478		Relay 24V		4

CONSTRUCTION \ NORTH AMERICA \ CONSTRUCTION / INDUSTRIAL \ JS TRACKED EXCAVATORS \ JS200LC BR E 02451101-02451200 9822/0355 \ C ELECTRICS \ C03 ELECTRICS, CAB

9822/0355 C380-1-1 LIVE LINK SYSTEM T4i

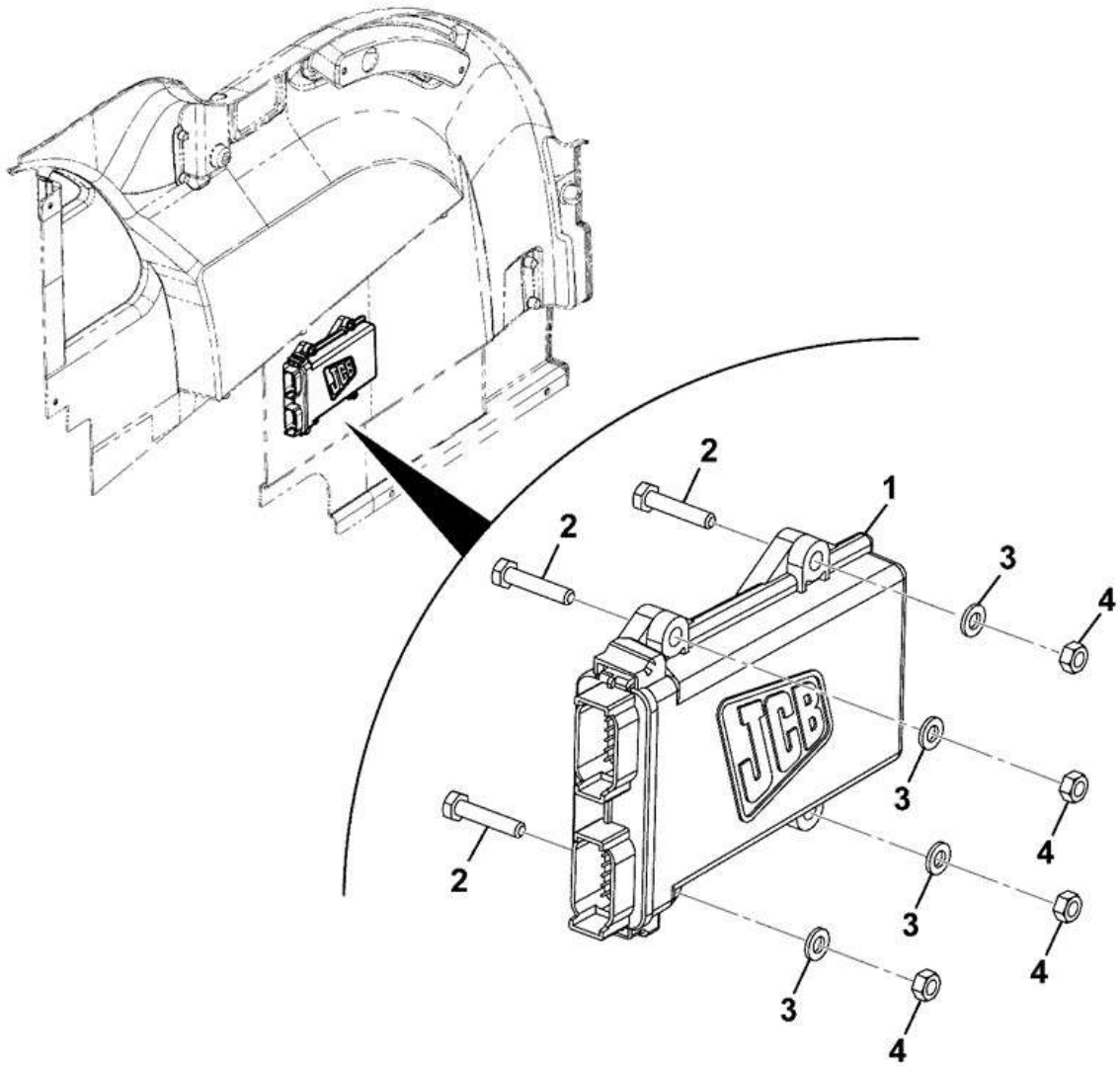

Item	Part #	Change No	Description	Usage Code	QTY
1	****		ECU Livelink		1
2	826/11692		Screw Torx M6x35		4
3	1420/0006D		Washer (M6)		4

4	1370/0101D		Nut Plain M6		4
5	333/K4377		Technical info Documents, Live Link		1

CONSTRUCTION \ NORTH AMERICA \ CONSTRUCTION / INDUSTRIAL \ JS TRACKED EXCAVATORS \ JS200LC BR E 02451101-02451200 9822/0355 \ C ELECTRICS \ C03 ELECTRICS, CAB

9822/0355 C380-5-1 LIVE LINK 2 2014 ECU 12/24

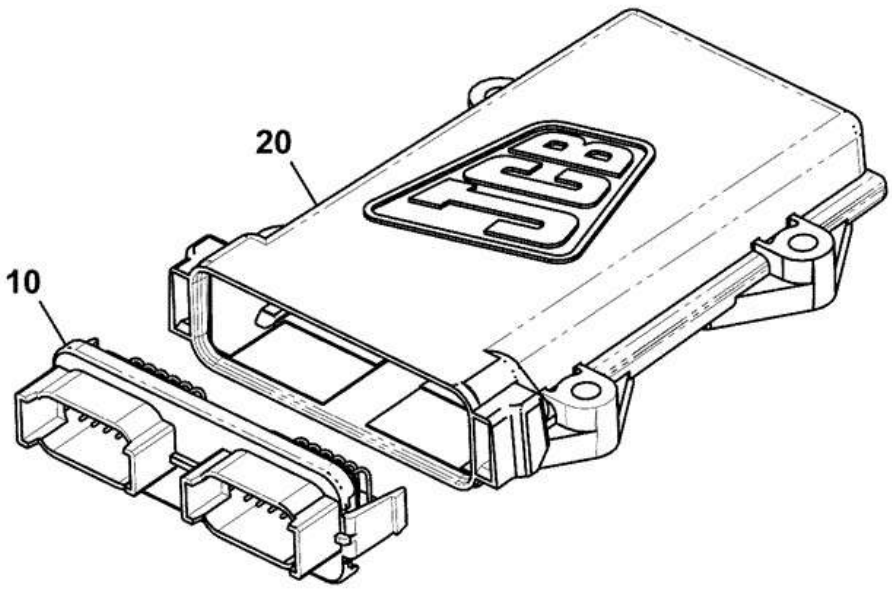

728-C6423-1

Item	Part #	Change No	Description	Usage Code	QTY
10	7220/0081		Key Header DTM 24 way		1
20	717/H1097		Unit DTM Enclosure		1

CONSTRUCTION \ NORTH AMERICA \ CONSTRUCTION / INDUSTRIAL \ JS TRACKED EXCAVATORS \ JS200LC BR E 02451101-02451200 9822/0355 \ C ELECTRICS \ C03 ELECTRICS, CAB

9822/0355 C390-15-1 OTHER ELECTRICAL ITEMS CAB DISPLAY 3.5"

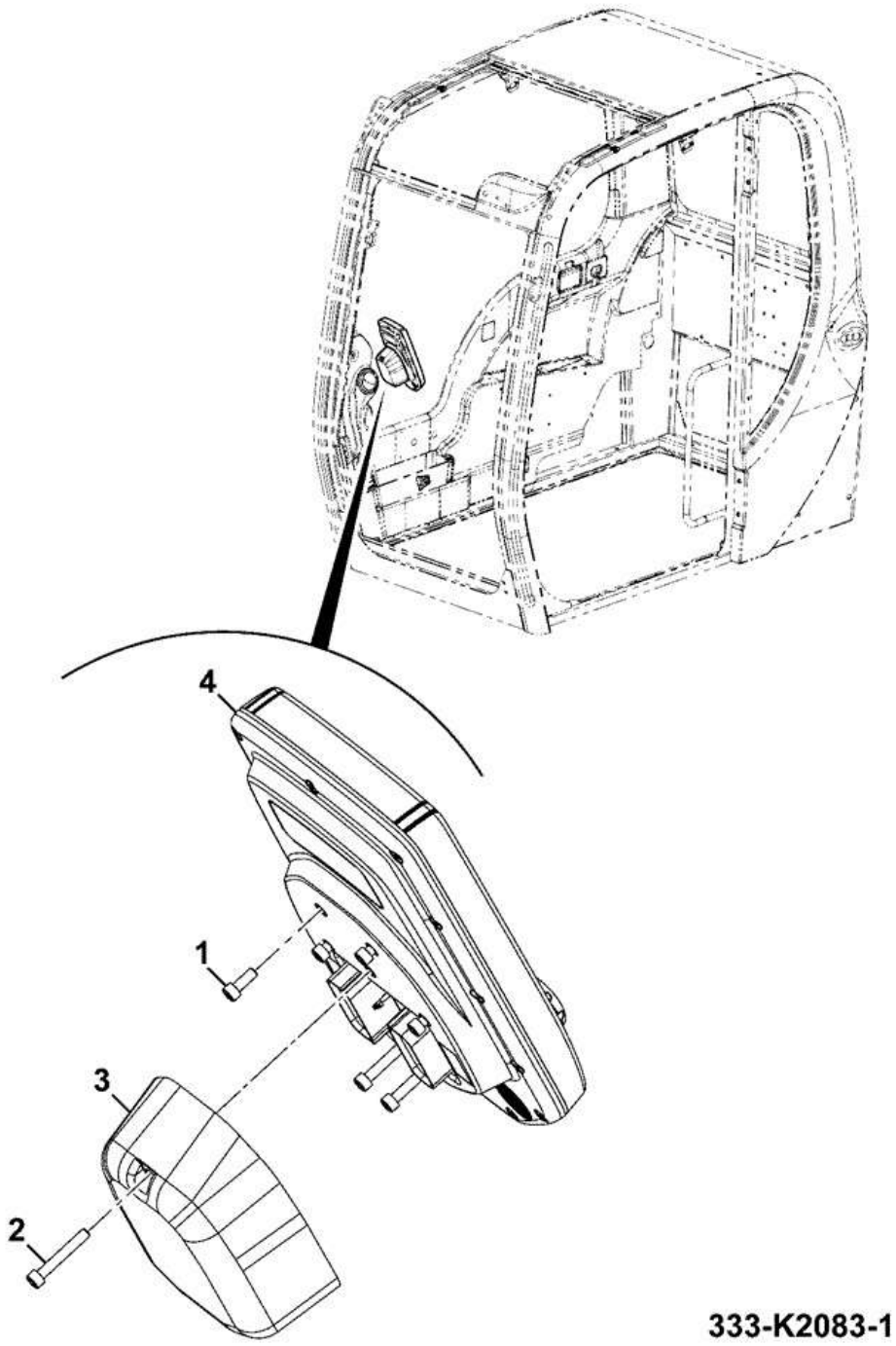

Item	Part #	Change No	Description	Usage Code	QTY
1	333/J8451		Capscrew #10-32 UNF x 1/2"		4

2	333/J8462		Capscrew #10-32 UNF x 1 1/4"		3
3	333/J8256		Cover back display		1
4	333/K2440		Screen (Display) with encoder 3.5		1

CONSTRUCTION \ NORTH AMERICA \ CONSTRUCTION / INDUSTRIAL \ JS TRACKED EXCAVATORS \ JS200LC BR E 02451101-02451200 9822/0355 \ C ELECTRICS \ C03 ELECTRICS, CAB

9822/0355 C390-20-1 OTHER ELECTRICAL ITEMS WASHER BOTTLE

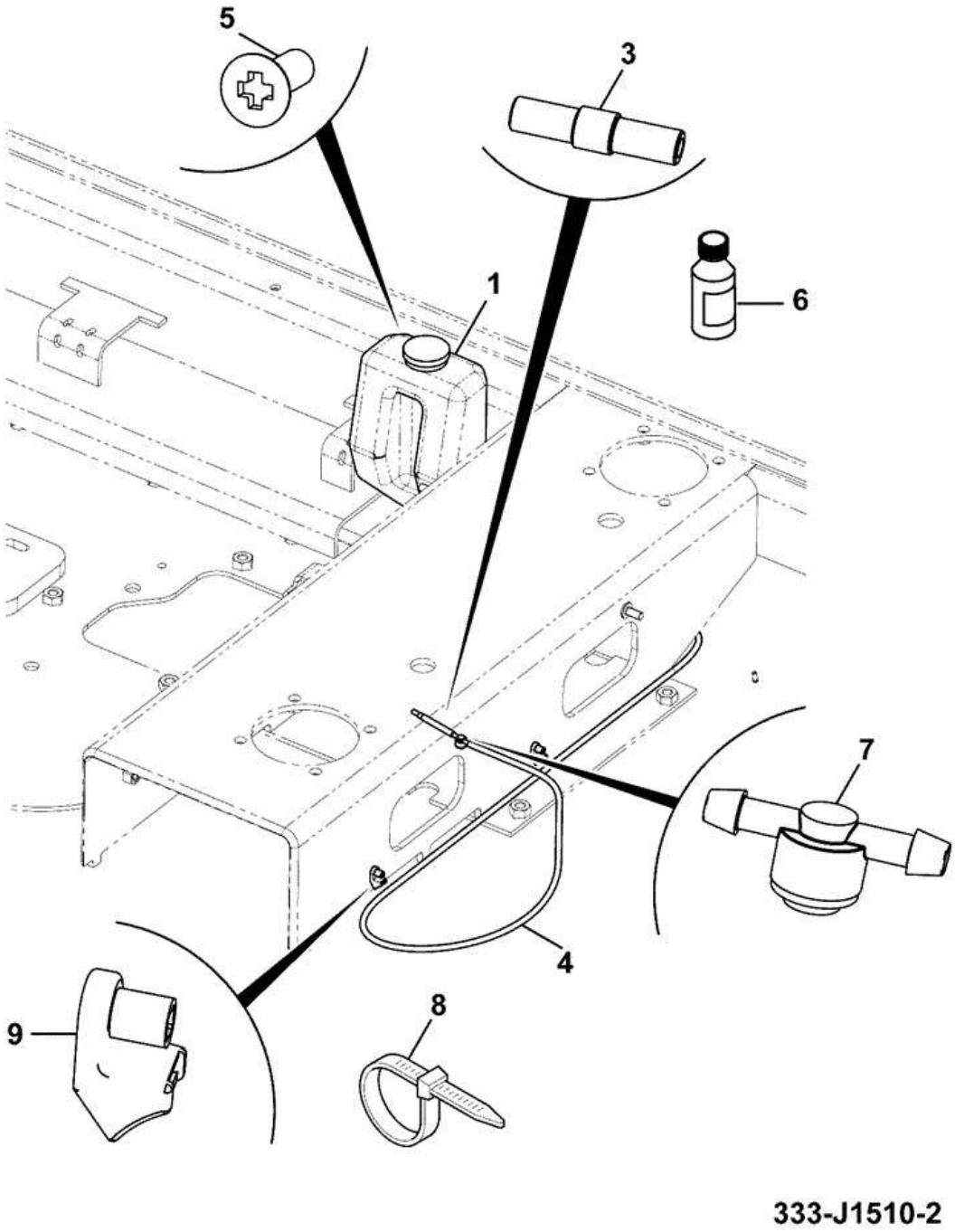

Item	Part #	Change No	Description	Usage Code	QTY
1	JHN0160		Tank screen wash with pump		1

3	KHR1178		Adapter fir tree		1
4	KHR1181		Tube		1
5	6013/0103Z		Screw countersunk		2
6	4006/0500		Screen wash		1
7	534/09703		Valve non-return		1
8	270/00106		Tie Cable 385mm		3
9	826/01274		Cradle Cable Tie Mount		2

9822/0355 C390-25-1 OTHER ELECTRICAL ITEMS CONTROLLER (MECU)

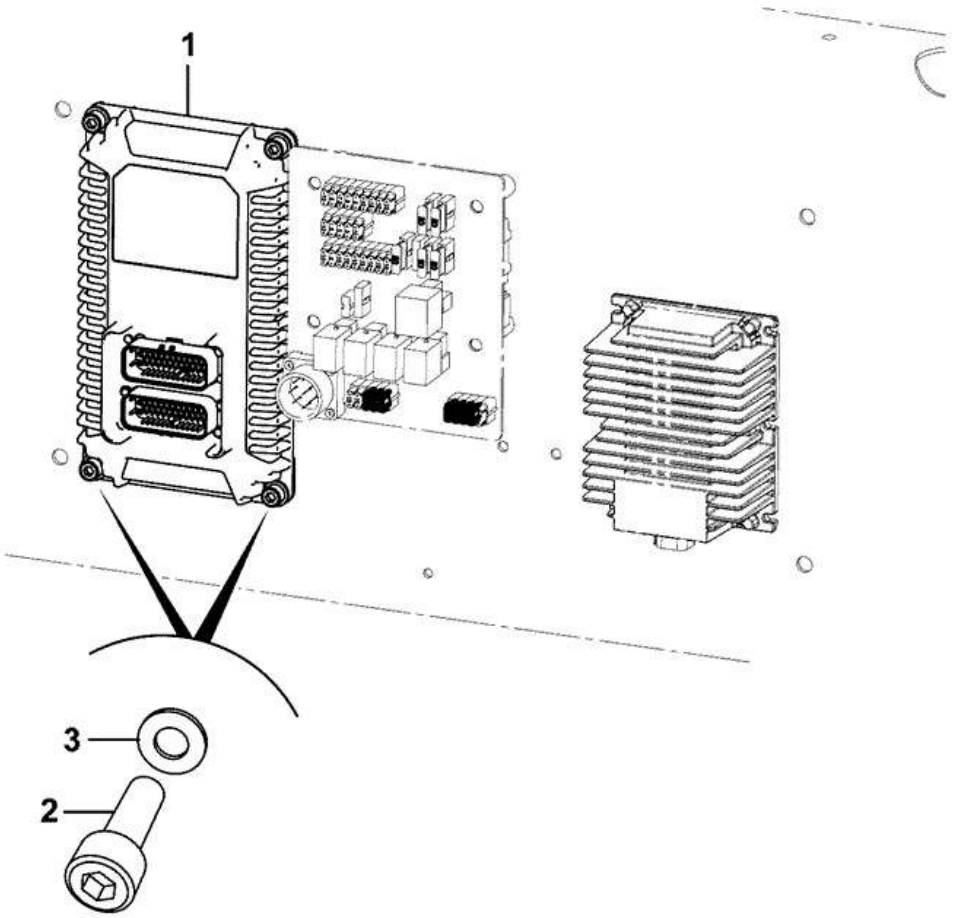

333-K1729-1

Item	Part #	Change No	Description	Usage Code	QTY
1	728/J3013		ECU Hardware		1

2	1391/3307D		Capscrew M8X25		4
3	1420/0007D		Washer (M8)		4

CONSTRUCTION \ NORTH AMERICA \ CONSTRUCTION / INDUSTRIAL \ JS TRACKED EXCAVATORS \ JS200LC BR E 02451101-02451200 9822/0355 \ D CONTROLS \ D01 CONTROLS

9822/0355 D120-1-1 EXCAVATOR CONTROLS ASSEMBLY CONSOLES

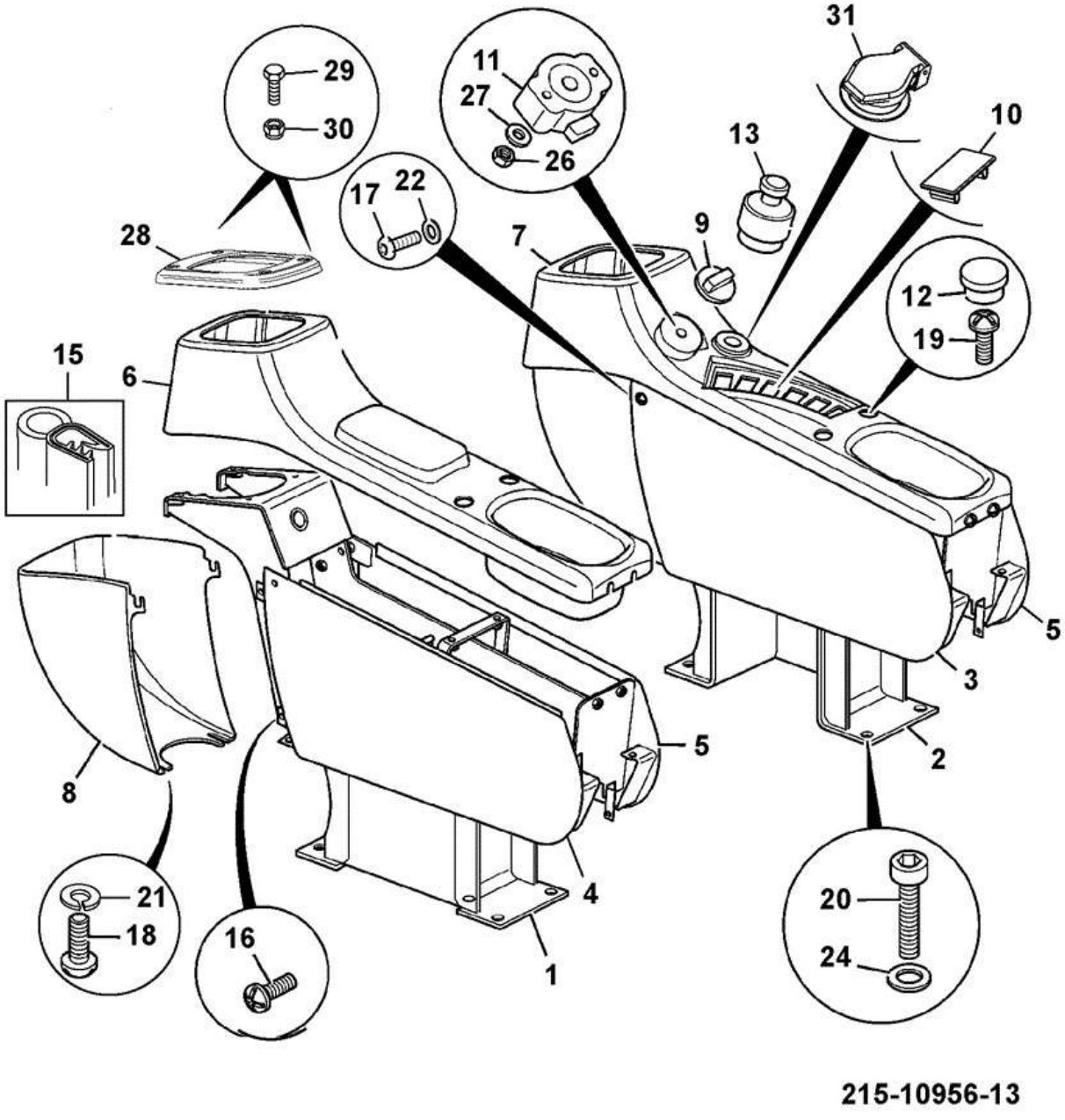

Item	Part #	Change No	Description	Usage Code	QTY
1	335/05915		Stand console left side		1

2	335/01348		Stand console right side		1
3	335/06229		Panel console left hand side		1
4	335/06231		Panel console left hand side		1
5	335/06230		Panel console right hand side		2
6	332/K5279		Cover console left side		1
7	332/K5277		Console cover black right side		1
8	332/K5280		Panel front console access black		2
9	331/21736		Knob throttle control		1
10	701/60010		Blank switch panel Panel		6
11	716/30155		Potentiometer		1
12	835/10071		Cap Blanking		4
13	701/80184		Switch ignition (Ignition key 701/45501)		1
15	JHH0111		Strip Edging		2
16	KHR0736		Screw pan head		12
17	826/01281		Capscrew button head		8
18	1316/0203D		Screw		4
19	KHR0738		Screw pan head		4
20	1391/3407D		Capscrew M10 x 25mm		8
21	1420/0006D		Washer (M6)		12
22	823/00516		Washer Nylon M6		4
24	JHP0046		Washer M10		8
26	1370/9401Z		Nut M4		2
27	1420/0005Z		Washer (M5)		2
28	332/K6071		Bezel joystick		2
29	1391/3205D		Capscrew M6x20		8
30	1370/0101D		Nut Plain M6		8
31	701/45502		Cap Splash		1

CONSTRUCTION \ NORTH AMERICA \ CONSTRUCTION / INDUSTRIAL \ JS TRACKED EXCAVATORS \ JS200LC BR E 02451101-02451200 9822/0355 \ D CONTROLS \ D01 CONTROLS

9822/0355 D120-10-1 EXCAVATOR CONTROLS JOYSTICK NON ROPS

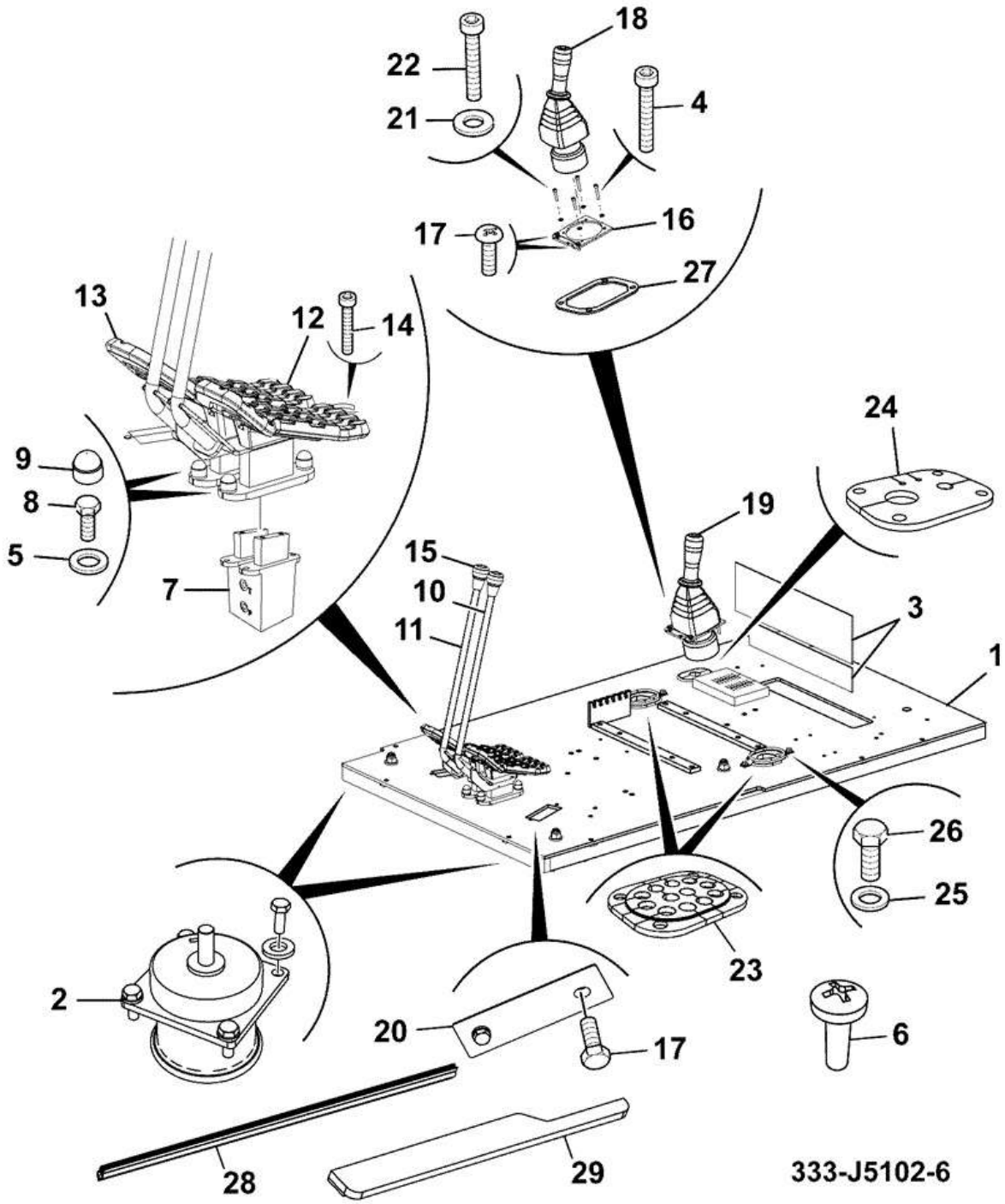

Item	Part #	Change No	Description	Usage Code	QTY
1	333/J1547		Floorplate		1

2	****		Mount cab assembly		1
3	333/J4882		Kit foam cab base		1
4	1391/3210D		Capscrew M6 x 40mm		4
5	JHP0046		Washer M10		8
6	KHR0738		Screw pan head		4
7	KSJ2465		Valve Remote Control		1
8	1316/0407D		Screw		4
9	KHJ0768		Cap spl		8
10	332/K4891		Lever Track Right Side		1
11	332/K4871		Lever Track Left Side		1
12	332/K5509		Pedal Casting Left Side		1
13	332/K5565		Pedal Casting Right Side		1
14	1391/3410D		Capscrew M10 x 40		4
15	JHJ0123		Knob		2
16	331/35486		Plate 2mm thick		2
17	1316/0403D		Screw		4
18	25/222891		Valve Hand Controller Left Hand		1
19	25/222892		Valve Hand Controler Right Hand		1
20	331/18592		Plate Mounting Control Valve		2
21	MPR2006		Washer Special		8
22	1391/3208D		Capscrew M6x30mm		4
23	333/J5713		Gaiter sock		2
24	333/J4812		Grommet		1
25	1420/0007D		Washer (M8)		12
26	1316/0305D		Screw M8 X 20		12
27	333/J1258		Plate retainer		1
28	333/J7700		Seal edge 939mm		1
29	333/J7473		Foam cab base left side		1

CONSTRUCTION \ NORTH AMERICA \ CONSTRUCTION / INDUSTRIAL \ JS TRACKED EXCAVATORS \ JS200LC BR E 02451101-02451200 9822/0355 \ D CONTROLS \ D01 CONTROLS

9822/0355 D120-10-5 EXCAVATOR CONTROLS JOYSTICK NONO ROPS

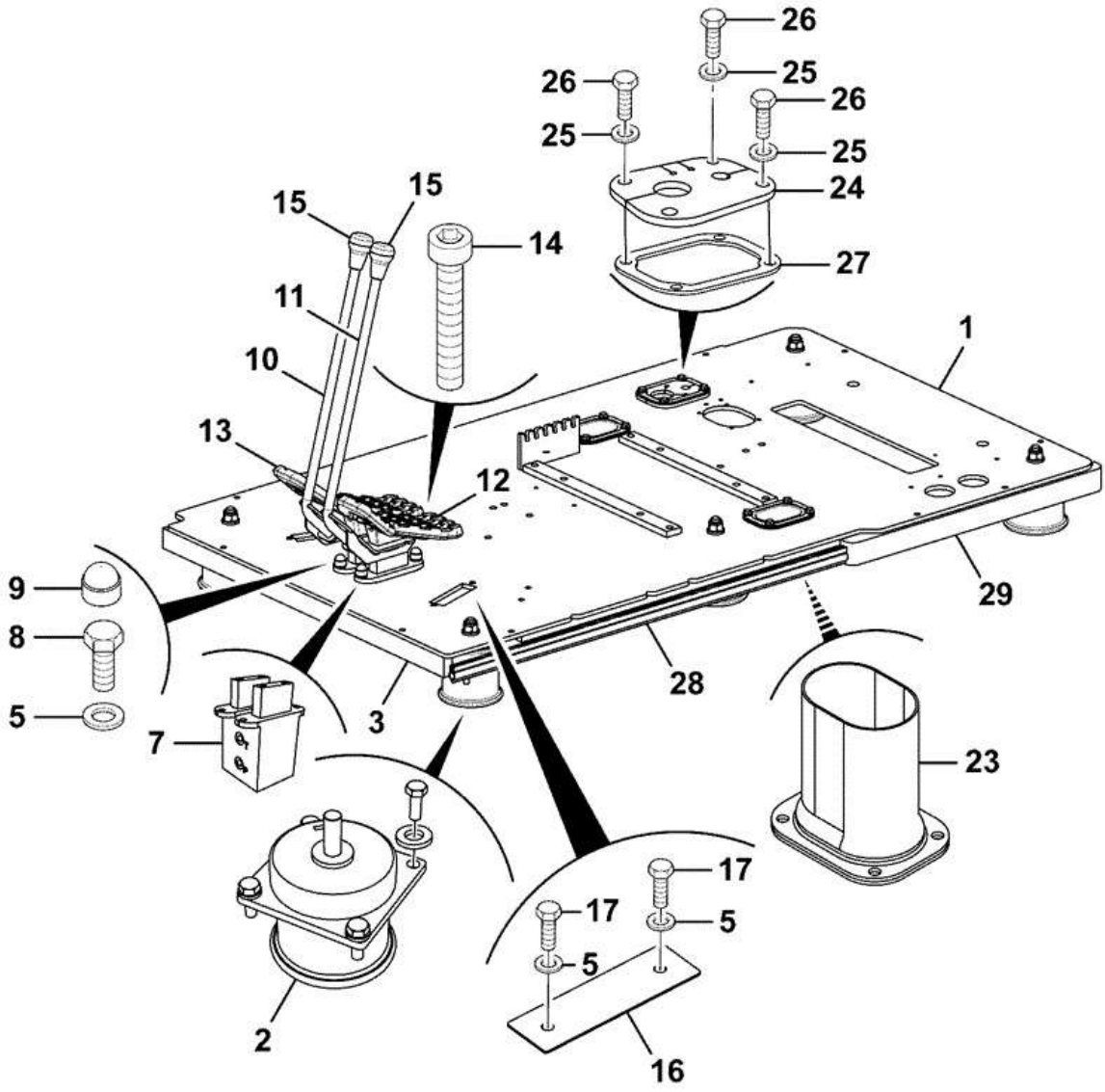

Item	Part #	Change No	Description	Usage Code	QTY
1	333/J1547		Floorplate		1

2	****		Mount cab assembly		1
3	333/J4882		Kit foam cab base		1
5	JHP0046		Washer M10		8
7	KSJ2465		Valve Remote Control		1
8	1316/0407D		Screw		4
9	KHJ0768		Cap spl		4
10	332/K4891		Lever Track Right Side		1
11	332/K4871		Lever Track Left Side		1
12	332/K5509		Pedal Casting Left Side		1
13	332/K5565		Pedal Casting Right Side		1
14	1391/3410D		Capscrew M10 x 40		4
15	JHJ0123		Knob		2
16	331/35486		Plate 2mm thick		2
17	1316/0403D		Screw		4
23	333/J5713		Gaiter sock		2
24	333/J4812		Grommet		1
25	1420/0007D		Washer (M8)		12
26	1316/0305D		Screw M8 X 20		12
27	333/J1258		Plate retainer		1
28	333/J7700		Seal edge 939mm		1
29	333/K3442		Foam Cab Base Left Side		1

CONSTRUCTION \ NORTH AMERICA \ CONSTRUCTION / INDUSTRIAL \ JS TRACKED EXCAVATORS \ JS200LC BR E 02451101-02451200 9822/0355 \ D CONTROLS \ D01 CONTROLS

9822/0355 D120-10-10 EXCAVATOR CONTROLS JOYSTICK CONTROL

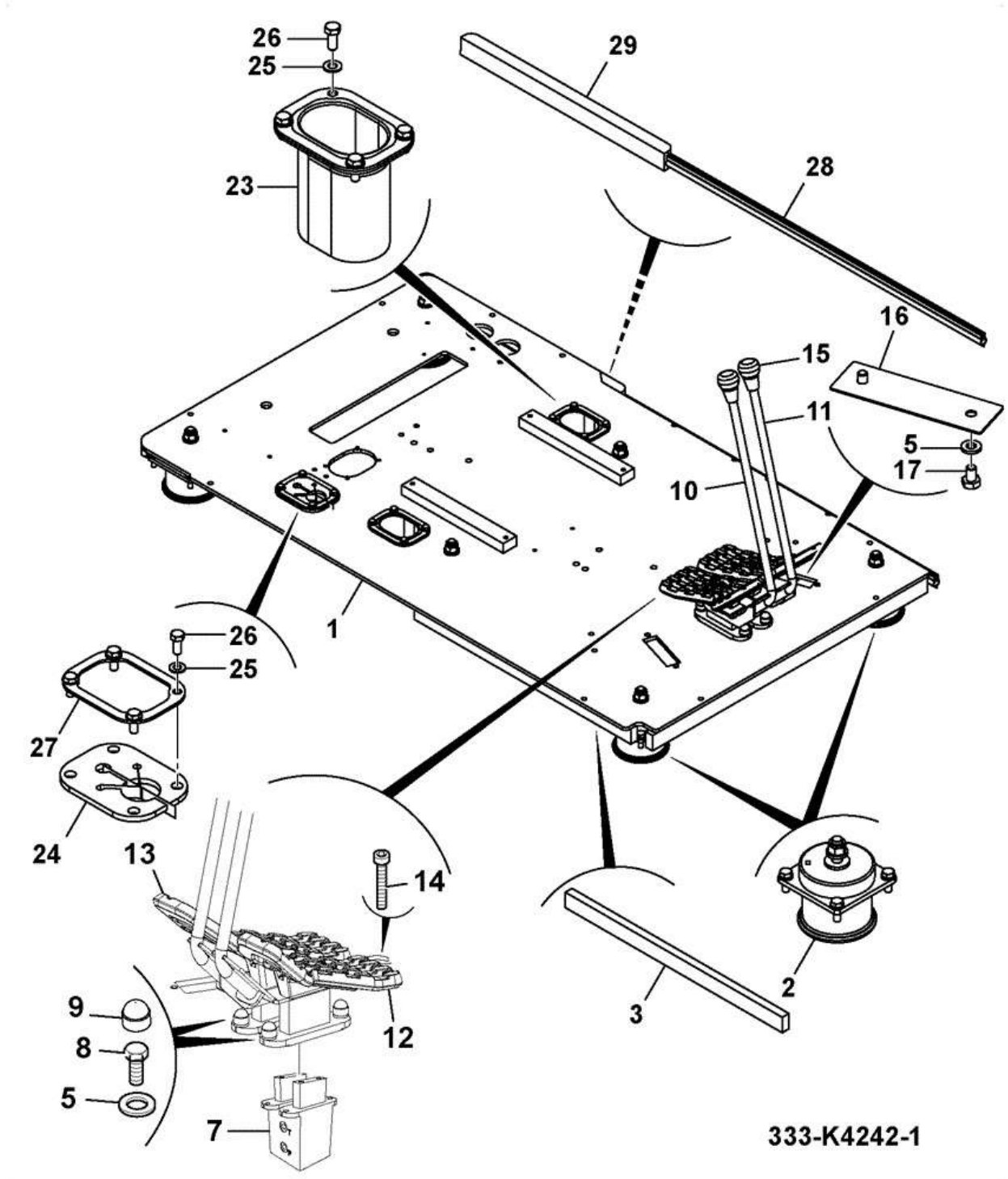

Item	Part #	Change No	Description	Usage Code	QTY
1	333/K4351		Floorplate MS		1

2	****		Mount cab assembly		1
3	333/J4882		Kit foam cab base		1
5	JHP0046		Washer M10		8
7	KSJ2465		Valve Remote Control		1
8	1316/0407D		Screw		4
9	KHJ0768		Cap spl		4
10	332/K4891		Lever Track Right Side		1
11	332/K4871		Lever Track Left Side		1
12	332/K5509		Pedal Casting Left Side		1
13	332/K5565		Pedal Casting Right Side		1
14	1391/3410D		Capscrew M10 x 40		4
15	JHJ0123		Knob		2
16	331/35486		Plate 2mm thick		2
17	1316/0403D		Screw		4
23	333/J5713		Gaiter sock		2
24	333/J4812		Grommet		1
25	1420/0007D		Washer (M8)		12
26	1316/0305D		Screw M8 X 20		12
27	333/J1258		Plate retainer		1
28	333/J7700		Seal edge 939mm		1
29	333/K3442		Foam Cab Base Left Side		1

CONSTRUCTION \ NORTH AMERICA \ CONSTRUCTION / INDUSTRIAL \ JS TRACKED EXCAVATORS \ JS200LC BR E 02451101-02451200 9822/0355 \ D CONTROLS \ D01 CONTROLS

9822/0355 D120-15-1 EXCAVATOR CONTROLS JOYSTICKS STANDARD

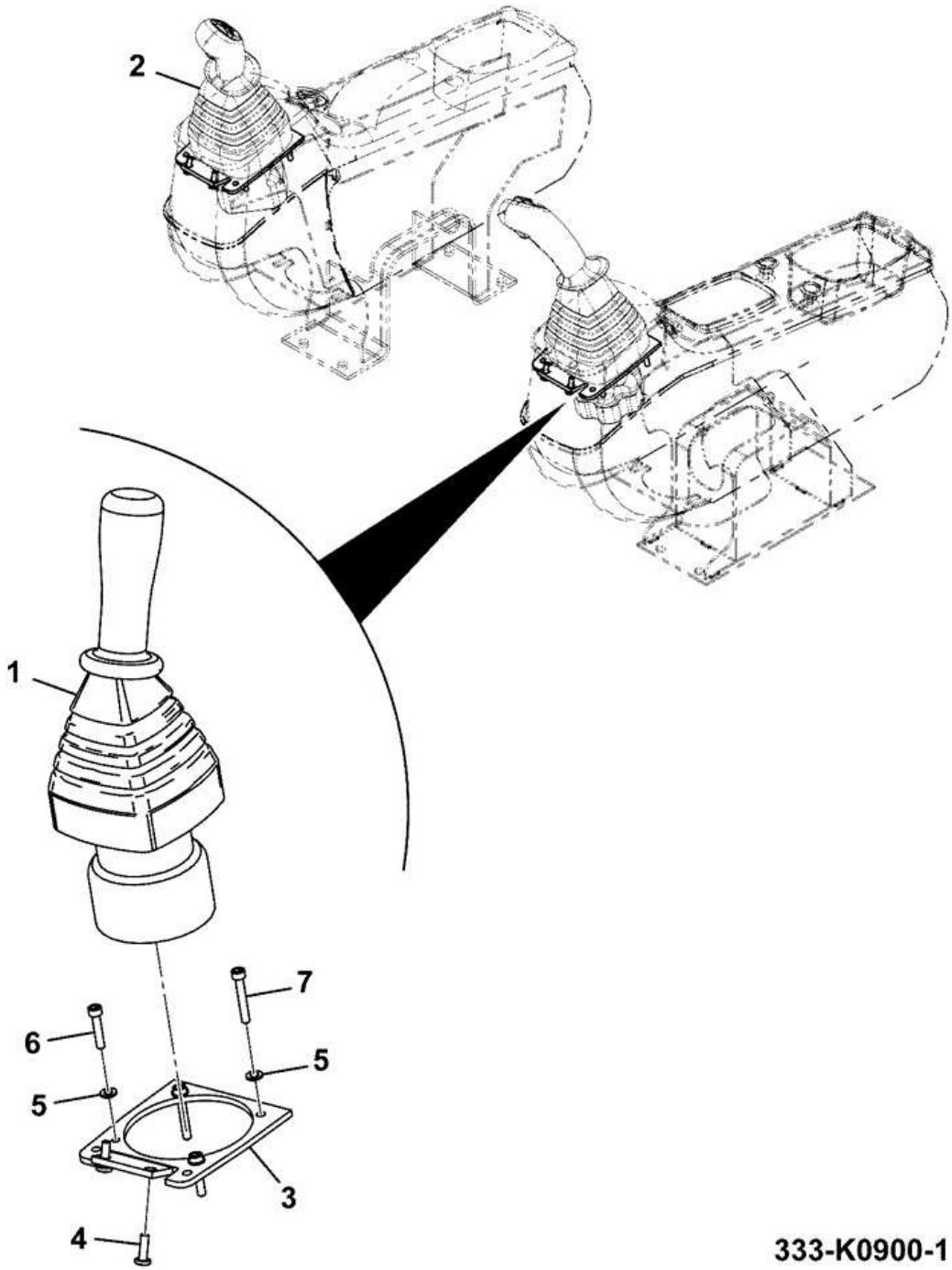

Item	Part #	Change No	Description	Usage Code	QTY
1	25/222891		Valve Hand Controller Left Hand		1

2	25/222892		Valve Hand Controler Right Hand		1
3	331/18592		Plate Mounting Control Valve		2
4	KHR0738		Screw pan head		4
5	MPR2006		Washer Special		8
6	1391/3208D		Capscrew M6x30mm		4
7	1391/3210D		Capscrew M6 x 40mm		4

CONSTRUCTION \ NORTH AMERICA \ CONSTRUCTION / INDUSTRIAL \ JS TRACKED EXCAVATORS \ JS200LC BR E 02451101-02451200 9822/0355 \ D CONTROLS \ D01 CONTROLS

9822/0355 D120-20-1 EXCAVATOR CONTROLS JOYSTICK CONTROL ASSEMBLY - STANDARD

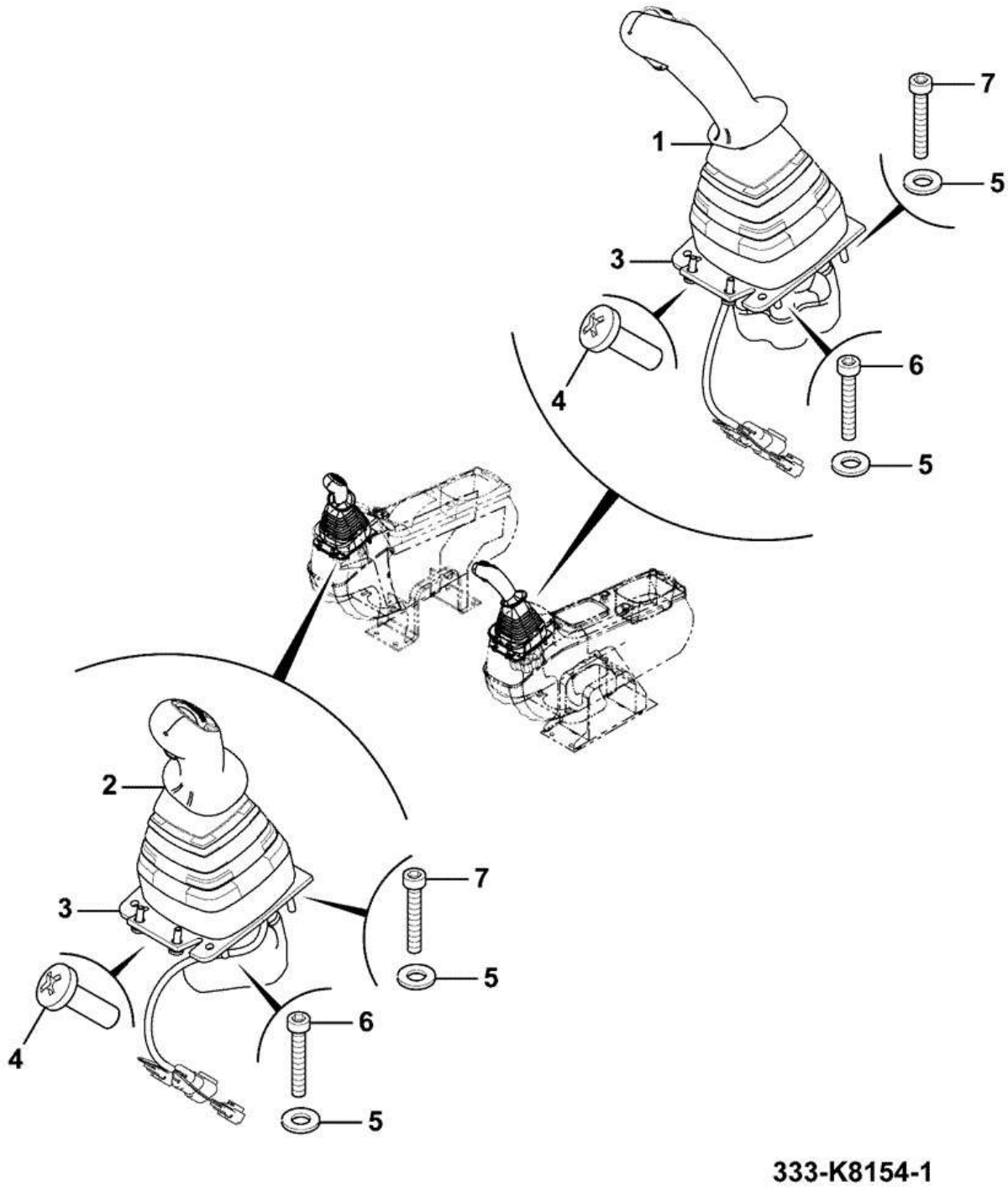

Item	Part #	Change No	Description	Usage Code	QTY
1	332/B3305		Valve Remote Control Left Side		1

2	332/B3304		Valve Remote Control Right Side		1
3	331/18592		Plate Mounting Control Valve		2
4	KHR0738		Screw pan head		4
5	MPR2006		Washer Special		8
6	1391/3208D		Capscrew M6x30mm		4
7	1391/3210D		Capscrew M6 x 40mm		4

CONSTRUCTION \ NORTH AMERICA \ CONSTRUCTION / INDUSTRIAL \ JS TRACKED EXCAVATORS \ JS200LC BR E 02451101-02451200 9822/0355 \ E HYDRAULICS \ E00 HYDRAULIC CIRCUITS

9822/0355 E0-5-1 HYDRAULIC INSTALLATION ASSEMBLIES T2

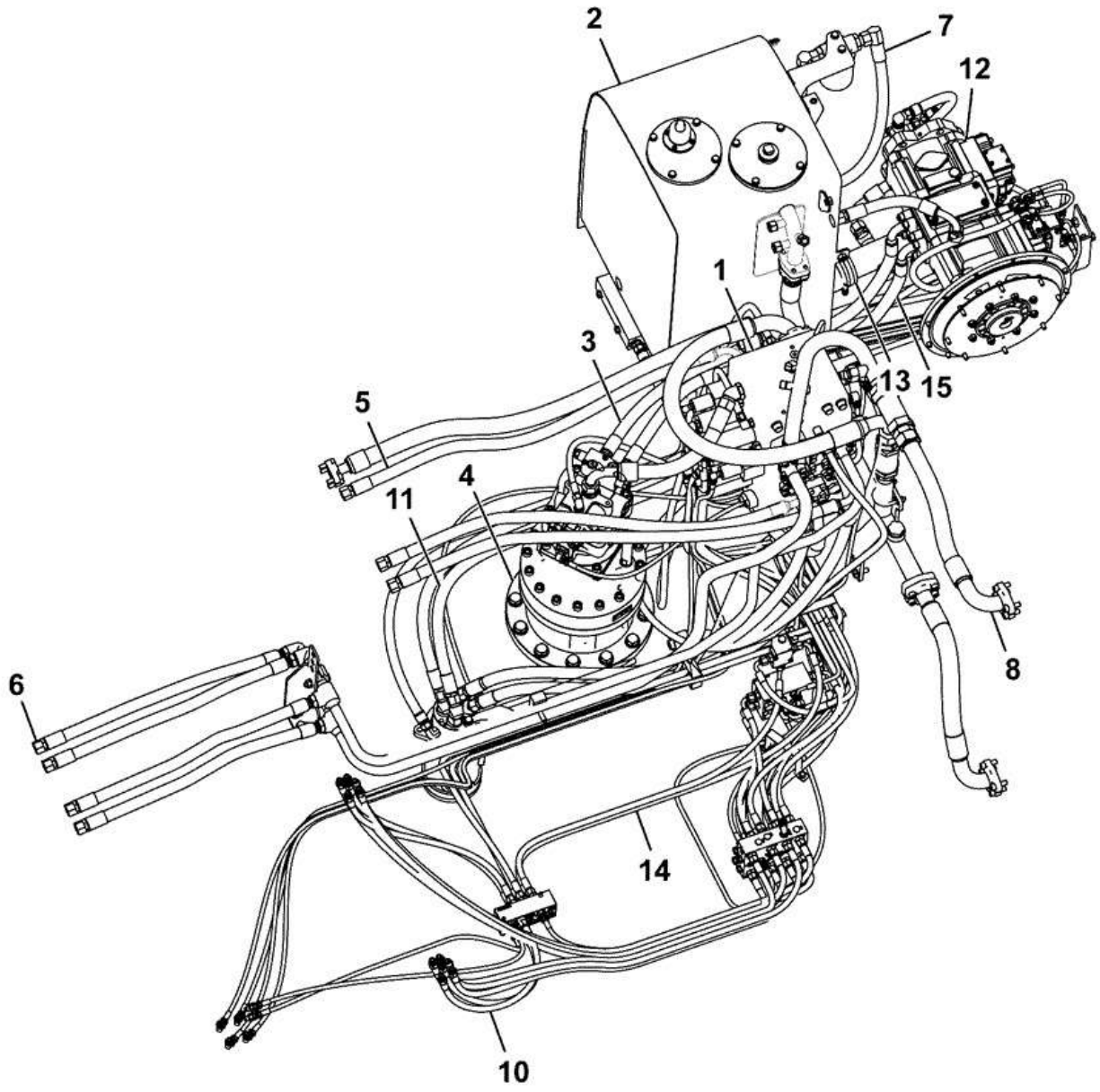

Item	Part #	Change No	Description	Usage Code	QTY
1	****		Valve control assembly		1

2	****		Tank hydraulic assembly		1
3	****		Circuit swing line assembly		1
4	****		Swing equipment assembly		1
5	****		Circuit bucket & arm line, assembly		1
6	****		Circuit Boom Line, Assembly		1
7	****		Circuit Drain Line		1
8	****		Line Return And Oil Cooler Assembly		1
10	****		Circuit Pilot Control Line, Assembly		1
11	****		Circuit traction line assembly		1
12	****		Pump Main, Assembly		1
13	****		Circuit Suction Line, assembly		1
14	****		Circuit Pilot Pressure And Return Line, Assembly		1
15	****		Circuit pressure lines, assembly		1

CONSTRUCTION \ NORTH AMERICA \ CONSTRUCTION / INDUSTRIAL \ JS TRACKED EXCAVATORS \ JS200LC BR E 02451101-02451200 9822/0355 \ E HYDRAULICS \ E01 HYDRAULIC CIRCUITS

9822/0355 E100-40-1 HYDRAULIC CIRCUIT INSTALLATION ASSEMBLIES MONO T HAMMER,STD

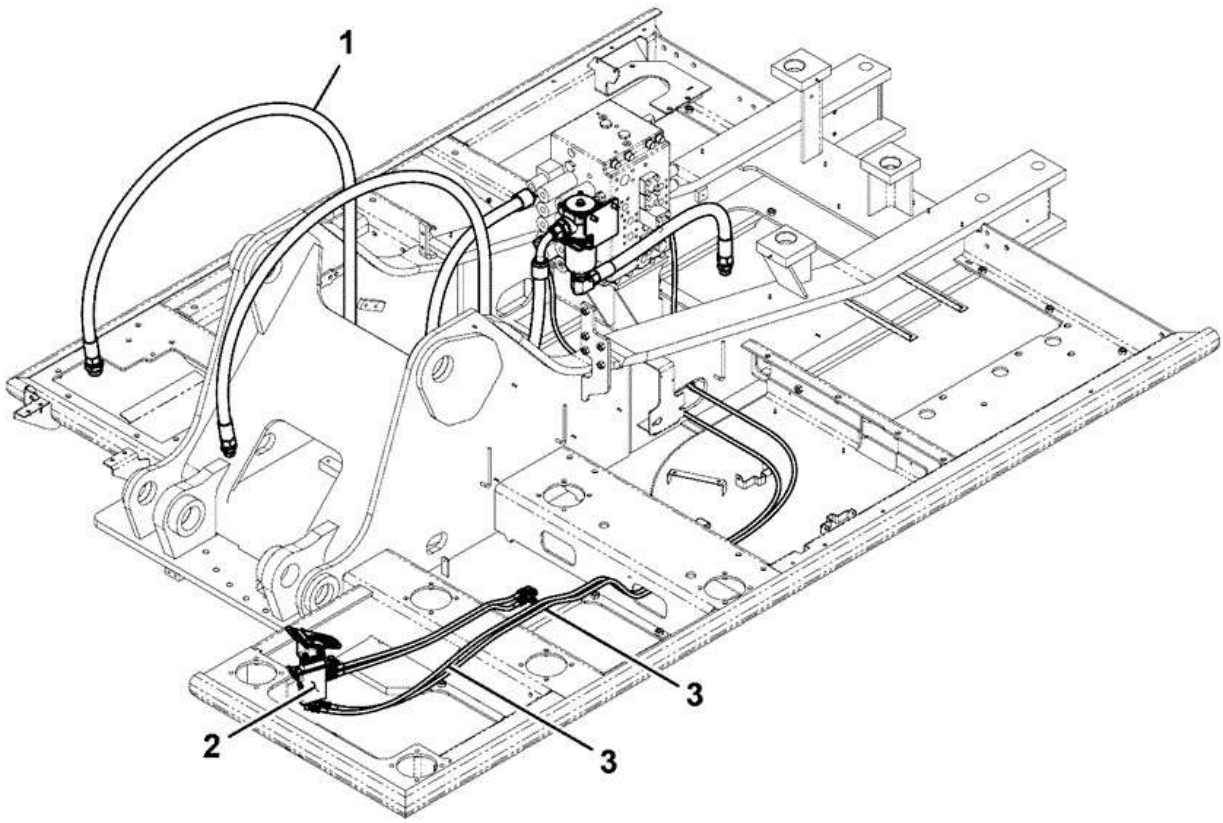

333-K6566-1

Item	Part #	Change No	Description	Usage Code	QTY
1	****		Circuit Hydraulic, Hammer Reverse Line, Monoboom, Assembly		1

2	****		Hammer Cab Lines (T Hammer)		1
3	333/J9460		Kit-hose Hammer Standard		1

CONSTRUCTION \ NORTH AMERICA \ CONSTRUCTION / INDUSTRIAL \ JS TRACKED EXCAVATORS \ JS200LC BR E 02451101-02451200 9822/0355 \ E HYDRAULICS \ E01 HYDRAULIC CIRCUITS

9822/0355 E110-5-1 HYDRAULIC CIRCUITS ATTACHMENTS TRACTION LINE

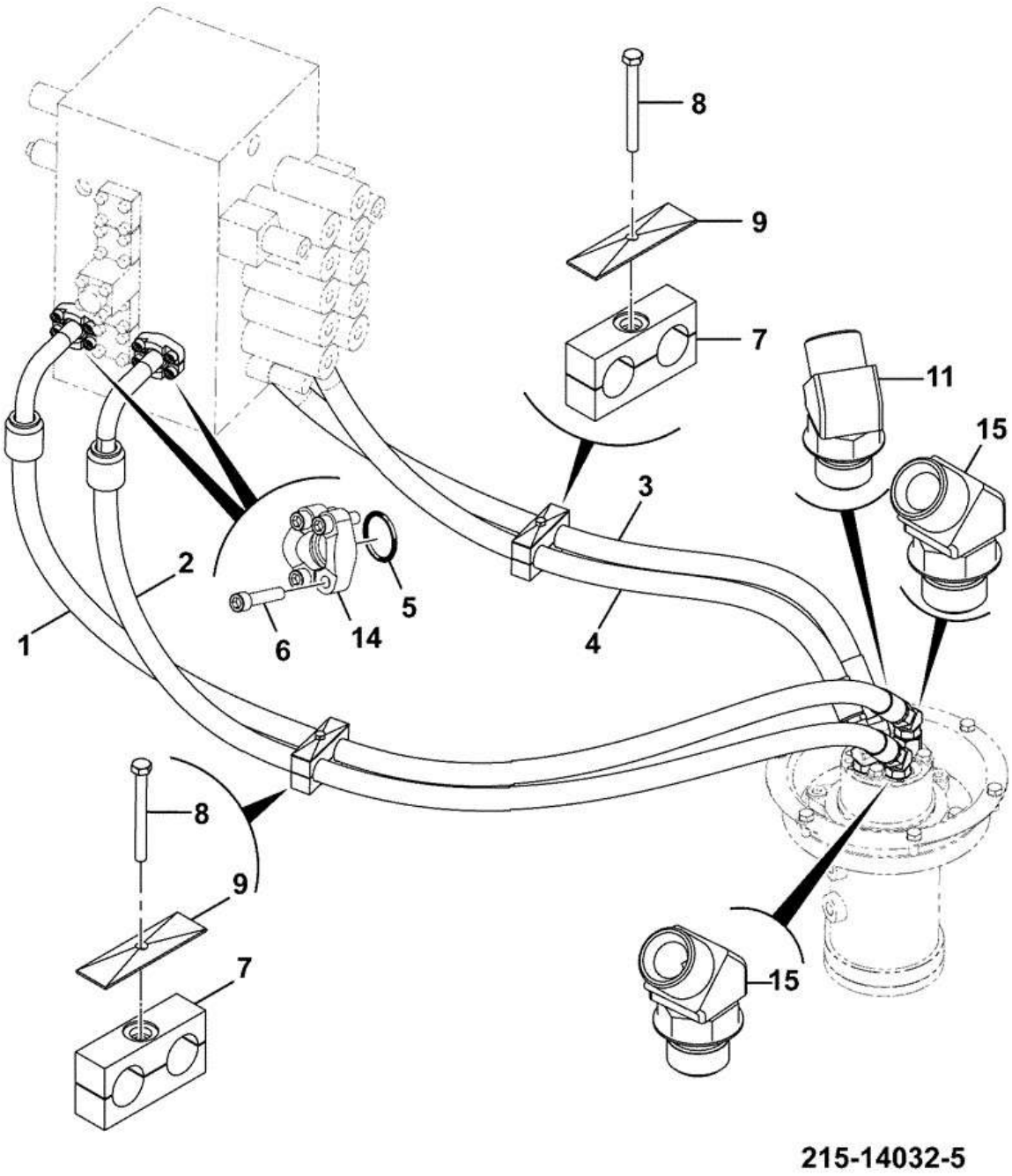

Item	Part #	Change No	Description	Usage Code	QTY
1	332/J7601		Hose 1" SAE CD61 150DP - 3/4"bsp Str		1

2	332/J7602		Hose 1" SAE CD61 150DP - 3/4"BSP STR		1
3	627/10336		Hose		1
4	332/J5316		Hose		1
5	2409/0210		O Ring		4
6	1391/3409D		Capscrew M10x35mm		16
7	821/00270		Clamp		4
8	1316/0318D		Bolt		2
9	821/00271		Plate cover M8 x 65mm		2
11	KNJ1936		Adapter		1
14	KRJ2682		Flange Split		8
15	KHJ0351		Adapter elbow 135deg		4

CONSTRUCTION \ NORTH AMERICA \ CONSTRUCTION / INDUSTRIAL \ JS TRACKED EXCAVATORS \ JS200LC BR E 02451101-02451200 9822/0355 \ E HYDRAULICS \ E01 HYDRAULIC CIRCUITS

9822/0355 E110-120-1 HYDRAULIC CIRCUITS ATTACHMENTS HOSES & FITTINGS SWING LINE

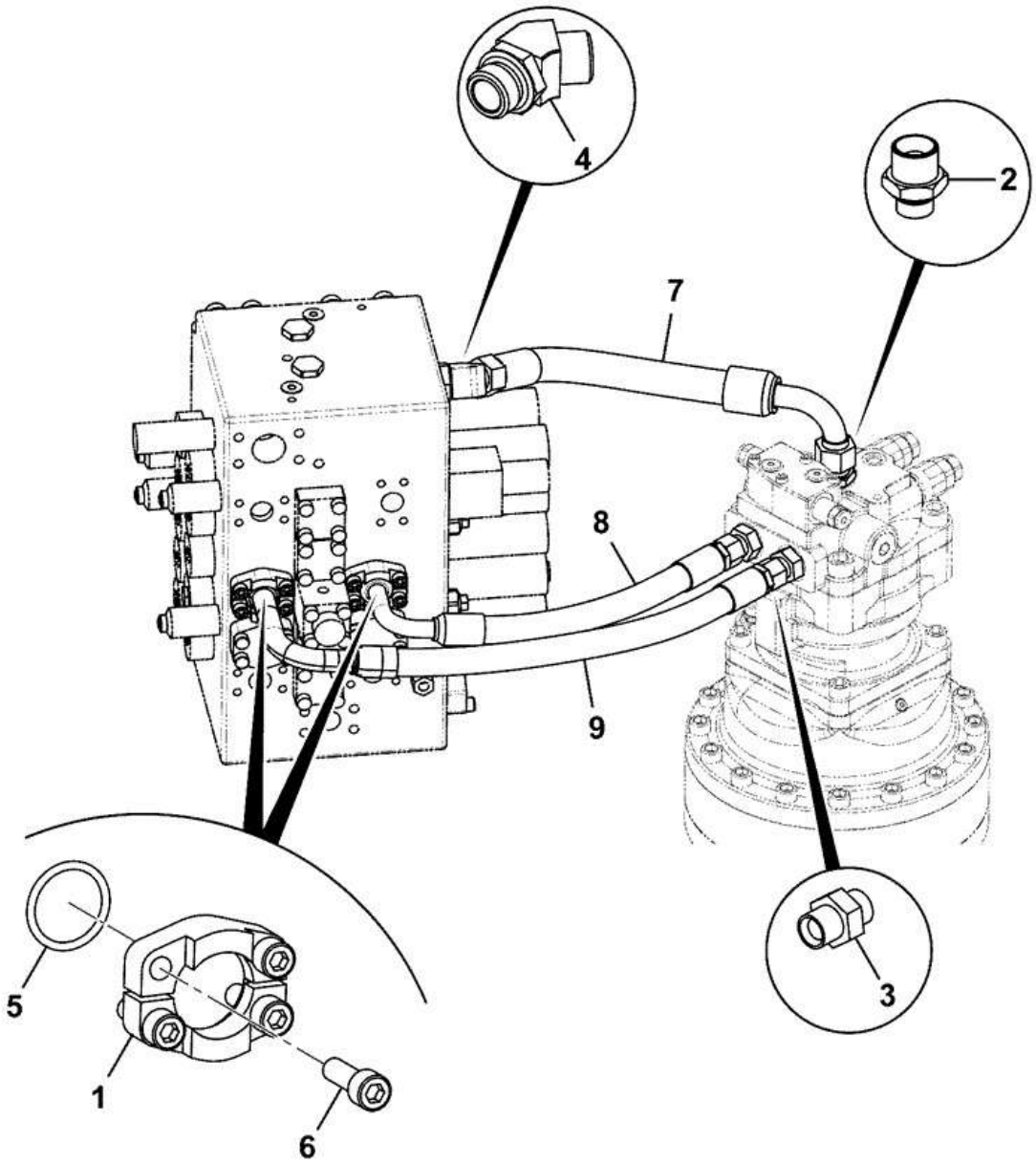

Item	Part #	Change No	Description	Usage Code	QTY
1	KRJ2682		Flange Split		4

2	KRJ1391		Adapter		1
3	KNJ0605		Adapter Hose		2
4	KHJ0352		Elbow		1
5	2409/0210		O Ring		2
6	1391/3408D		Capscrew M10 x 30mm		8
7	627/10047		Hose 1"BSP ST-90 480LG		1
8	333/J0903		Hose 12-16 BSP-SAE 480L		1
9	334/J7134		Hose -12 BSP-SAE EHP		1

CONSTRUCTION \ NORTH AMERICA \ CONSTRUCTION / INDUSTRIAL \ JS TRACKED EXCAVATORS \ JS200LC BR E 02451101-02451200 9822/0355 \ E HYDRAULICS \ E01 HYDRAULIC CIRCUITS

9822/0355 E130-10-1 HYDRAULIC CIRCUITS CHASSIS PRESSURE HOSES

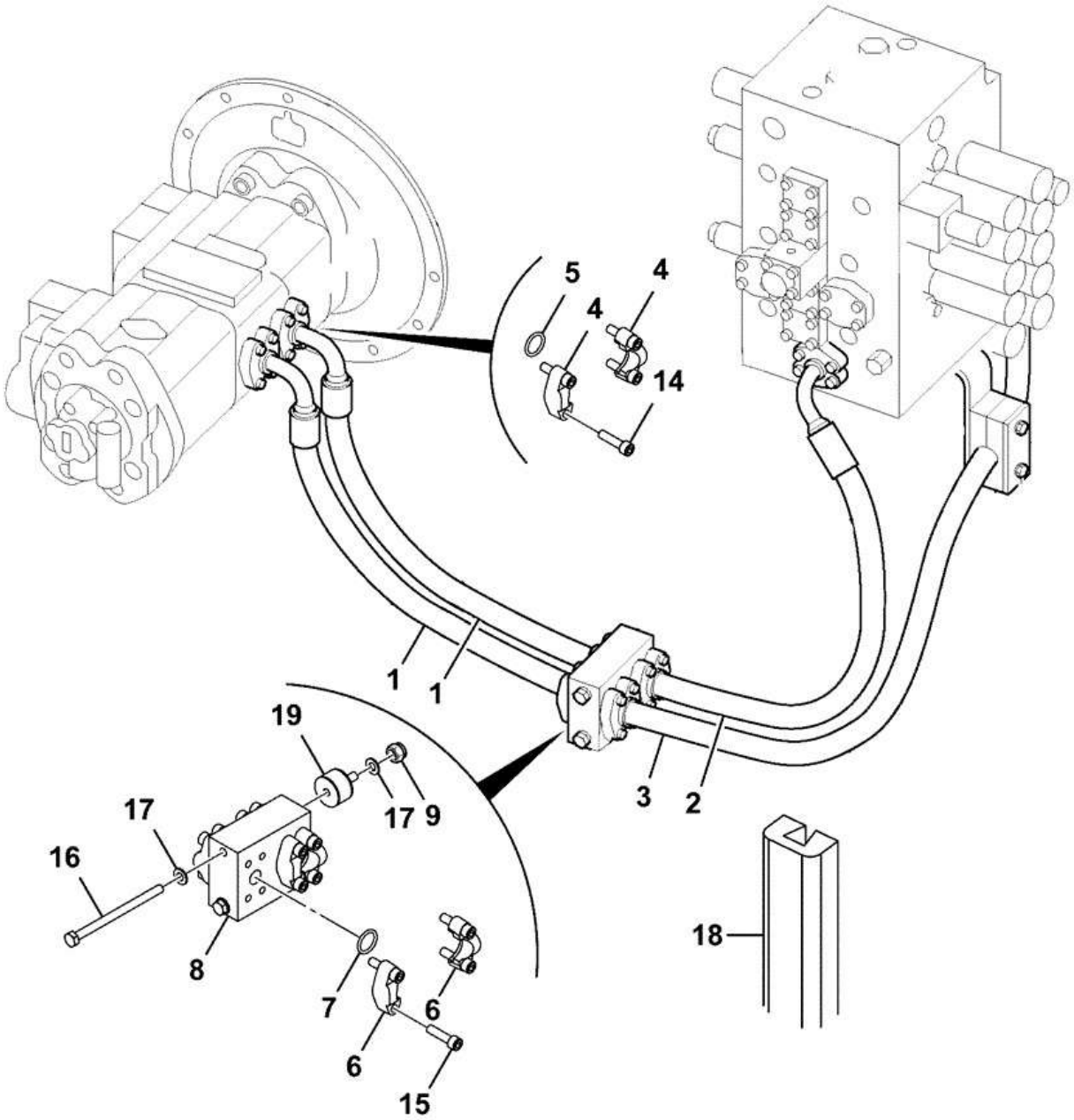

215-13611-15

Item	Part #	Change No	Description	Usage Code	QTY
1	334/J7231		Hose 740 mm		2

2	616/80324		Hose 3/4"BSP x 590mm		1
3	616/80325		Hose 3/42BSP x 1020mm		1
4	210/92901		Clamp Flange		8
5	2409/0210		O Ring		4
6	KRJ0963		Flange split		8
7	2409/0205		O Ring		4
8	331/67476		Manifold pressure line		1
9	1371/0303D		Nut M10 grade 10.9		2
14	1391/3511D		Capscrew		16
15	1391/3410D		Capscrew M10 x 40		16
16	1316/3424D		Bolt		2
17	JHP0046		Washer M10		4
18	332/L1931		Strip Edging		1
19	335/C4485		Mounting		2

CONSTRUCTION \ NORTH AMERICA \ CONSTRUCTION / INDUSTRIAL \ JS TRACKED EXCAVATORS \ JS200LC BR E 02451101-02451200 9822/0355 \ E HYDRAULICS \ E01 HYDRAULIC CIRCUITS

9822/0355 E130-25-1 HYDRAULIC CIRCUITS CHASSIS HOSE KIT - TRAVEL PEDALS

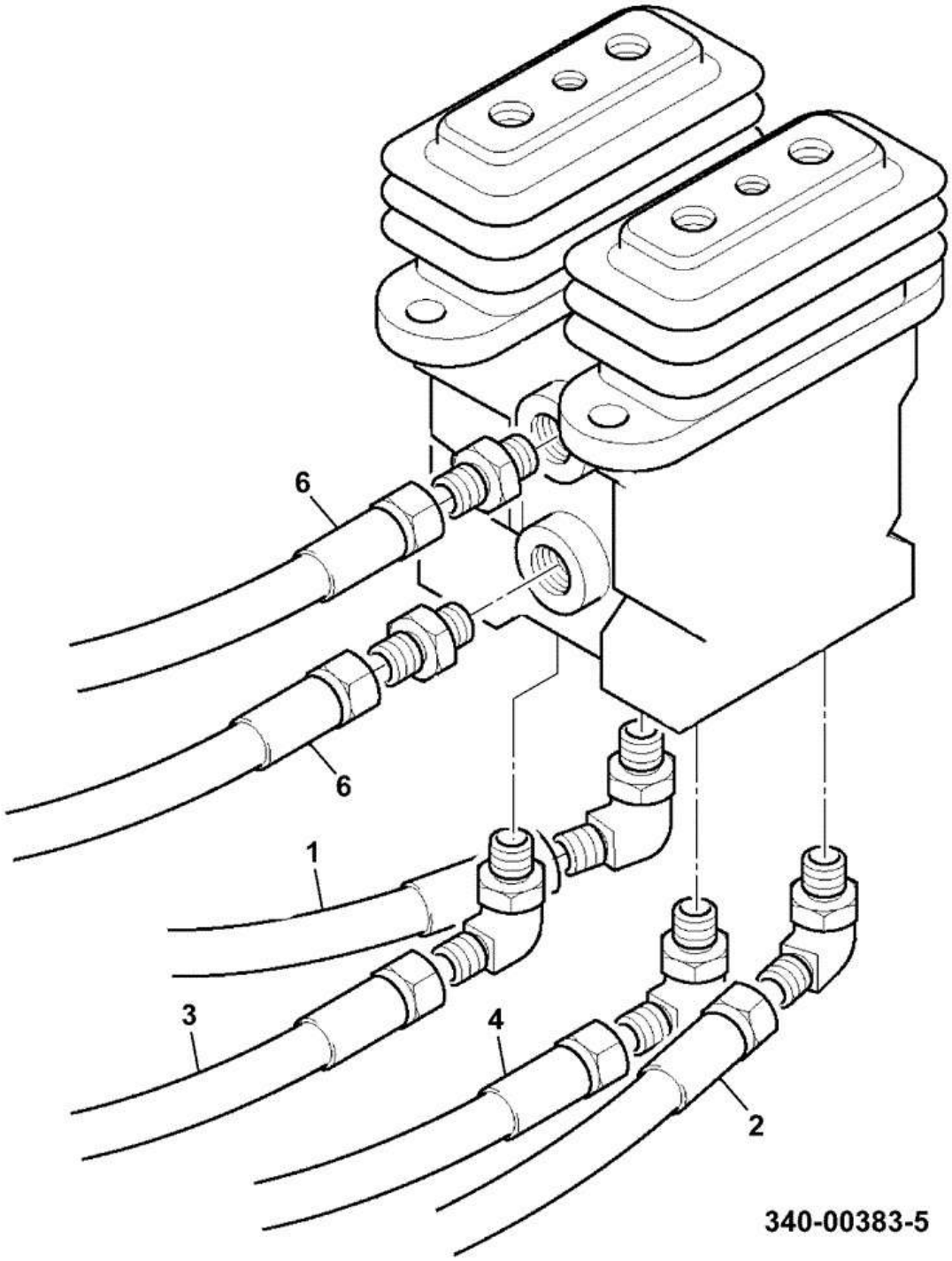

Item	Part #	Change No	Description	Usage Code	QTY
1	JRJ0186		Hose nylon		1

2	KTJ0812		Hose 1/4" BSP ST-ST x 3250mm		1
3	627/10071		Hose 1_4 str-str		1
4	JRJ0079		Hose 1/4"BSP ST-ST x 3000mm		1
6	KTJ0907		Hose 1/4"BSP ST-ST x 1100mm		2

CONSTRUCTION \ NORTH AMERICA \ CONSTRUCTION / INDUSTRIAL \ JS TRACKED EXCAVATORS \ JS200LC BR E 02451101-02451200 9822/0355 \ E HYDRAULICS \ E01 HYDRAULIC CIRCUITS

9822/0355 E130-35-5 HYDRAULIC CIRCUITS CHASSIS HOSE KIT JOYSTICK RIGHT HAND SIDE

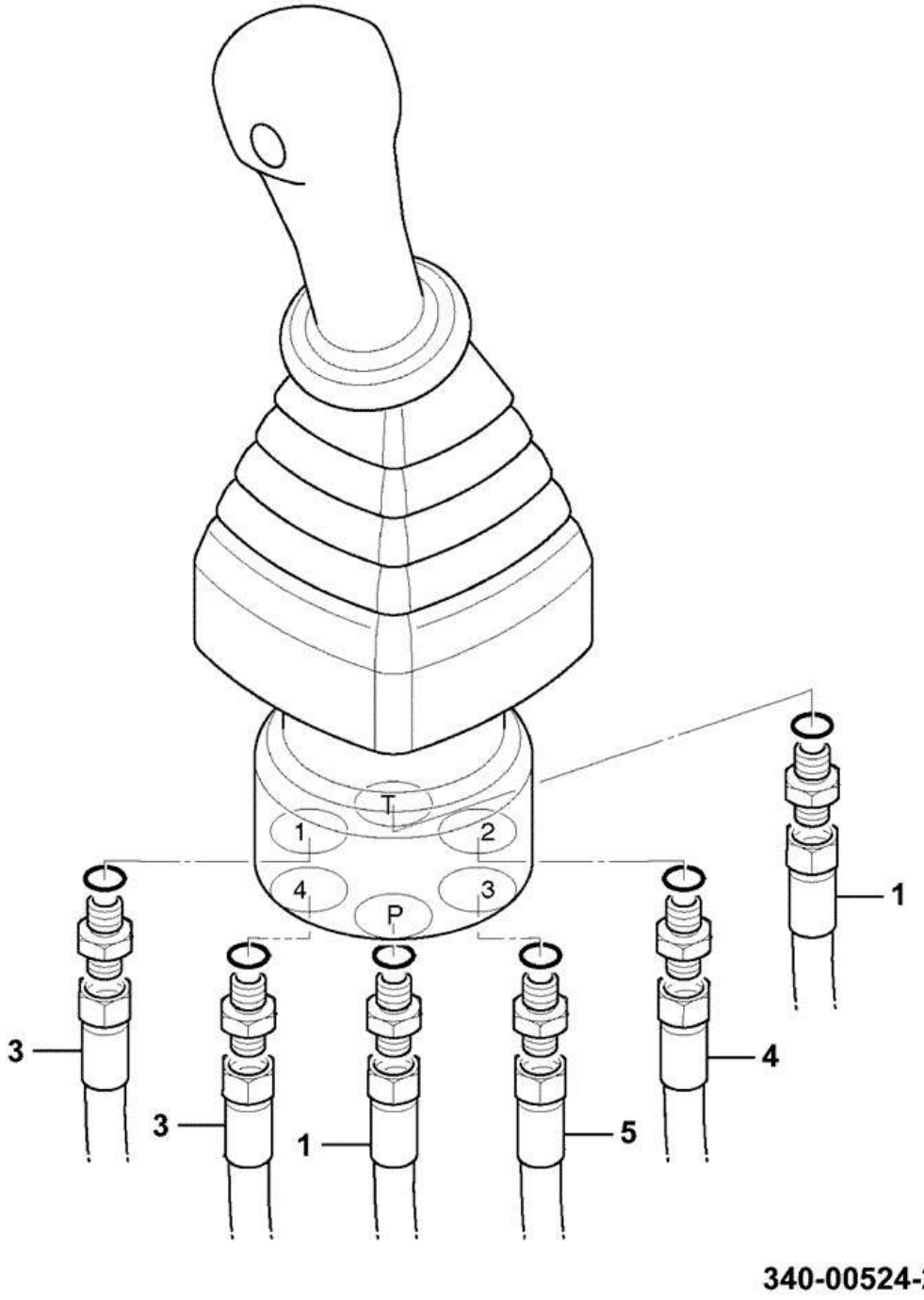

Item	Part #	Change No	Description	Usage Code	QTY
1	KNJ1109		Hose 3/8" 1000mm 180/180		2

3	JRJ0119		Hose 3/8" BSP 2100mm ST/ST		2
4	KNJ1123		Hose 3/8" 2000mm 180/180		1
5	KNJ1122		Hose 3/8"BSP ST-ST x 1900mm		1

CONSTRUCTION \ NORTH AMERICA \ CONSTRUCTION / INDUSTRIAL \ JS TRACKED EXCAVATORS \ JS200LC BR E 02451101-02451200 9822/0355 \ E HYDRAULICS \ E01 HYDRAULIC CIRCUITS

9822/0355 E130-40-5 HYDRAULIC CIRCUITS CHASSIS HOSE KIT JOYSTICK LEFT HAND SIDE

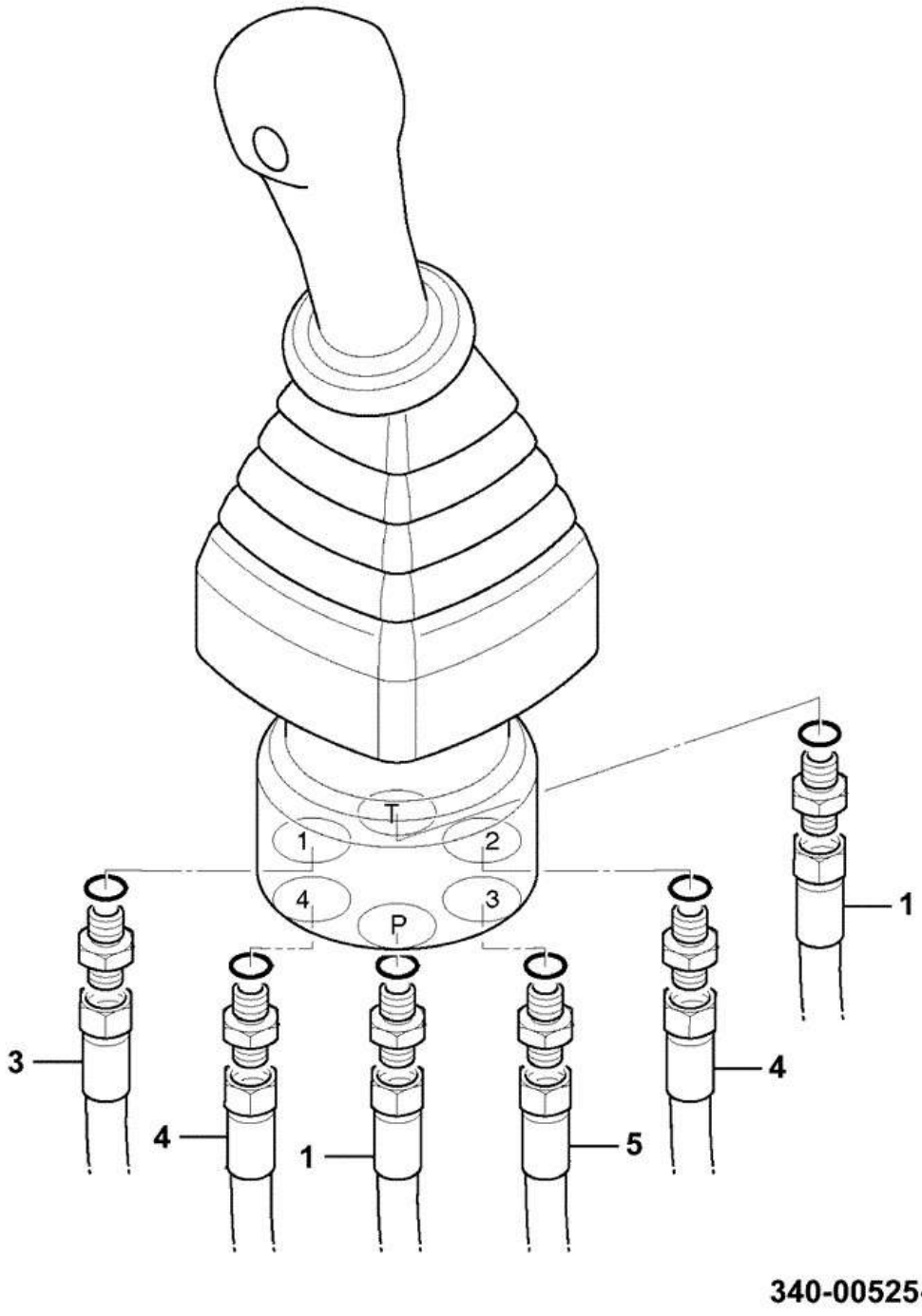

Item	Part #	Change No	Description	Usage Code	QTY
1	KNJ1109		Hose 3/8" 1000mm 180/180		2

3	KSJ1132		Hose 3/8"BSP ST-ST x 1800mm		1
4	KNJ1314		Hose 3/8"BSP ST-ST x 1650mm		2
5	KNJ1072		Hose 3/8"BSP ST-ST x 1700mm		1

9822/0355 E130-45-1 HYDRAULIC CIRCUITS CHASSIS HOSE KIT CUSHION VALVE

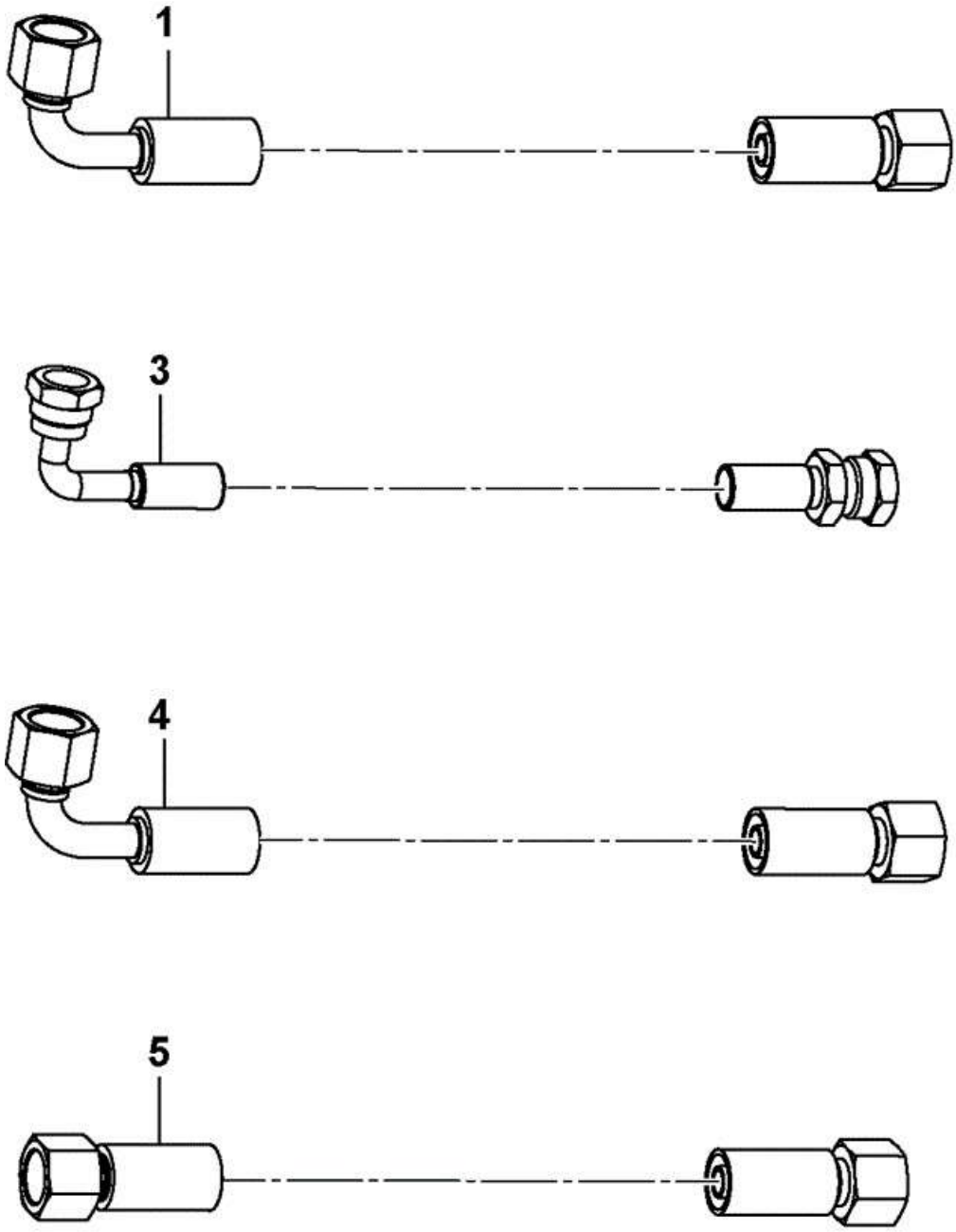

340-00739-2

Item	Part #	Change No	Description	Usage Code	QTY
1	JNJ0404		Hose 3/8" x 1450, blue		2
3	KBJ2207		Hose 1/4 BSP ST-90 1500mm		1
4	JLV0614		Hose yellow/red		1
5	KNJ1118		Hose		1

CONSTRUCTION \ NORTH AMERICA \ CONSTRUCTION / INDUSTRIAL \ JS TRACKED EXCAVATORS \ JS200LC BR E 02451101-02451200 9822/0355 \ E HYDRAULICS \ E01 HYDRAULIC CIRCUITS

9822/0355 E130-55-1 HYDRAULIC CIRCUITS CHASSIS HOSE KIT - BOOM PRIORITY

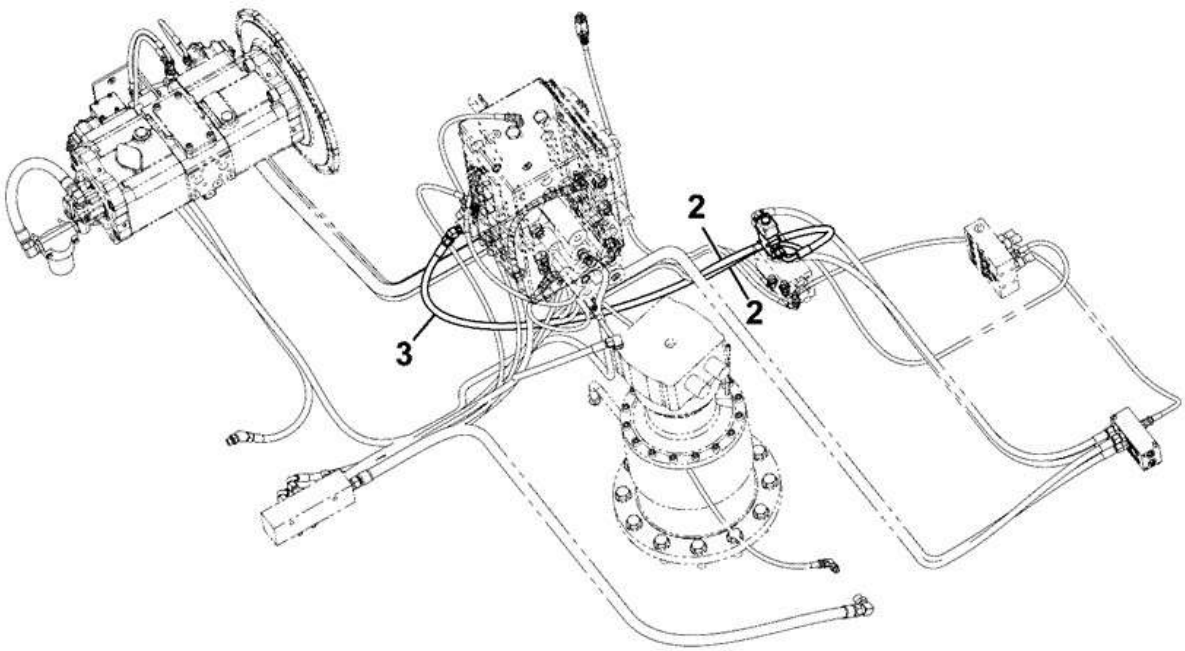

332-J0564-1

Item	Part #	Change No	Description	Usage Code	QTY
2	627/10074		Hose *CLEAR/WHITE*		2

3	627/10605		Hose 3/8"BSP ST-ANG 2200mm *BLUE*		1

CONSTRUCTION \ NORTH AMERICA \ CONSTRUCTION / INDUSTRIAL \ JS TRACKED EXCAVATORS \ JS200LC BR E 02451101-02451200 9822/0355 \ E HYDRAULICS \ E01 HYDRAULIC CIRCUITS

9822/0355 E130-75-1 HYDRAULIC CIRCUITS CHASSIS HOSE KIT SHUTTLE VALVE

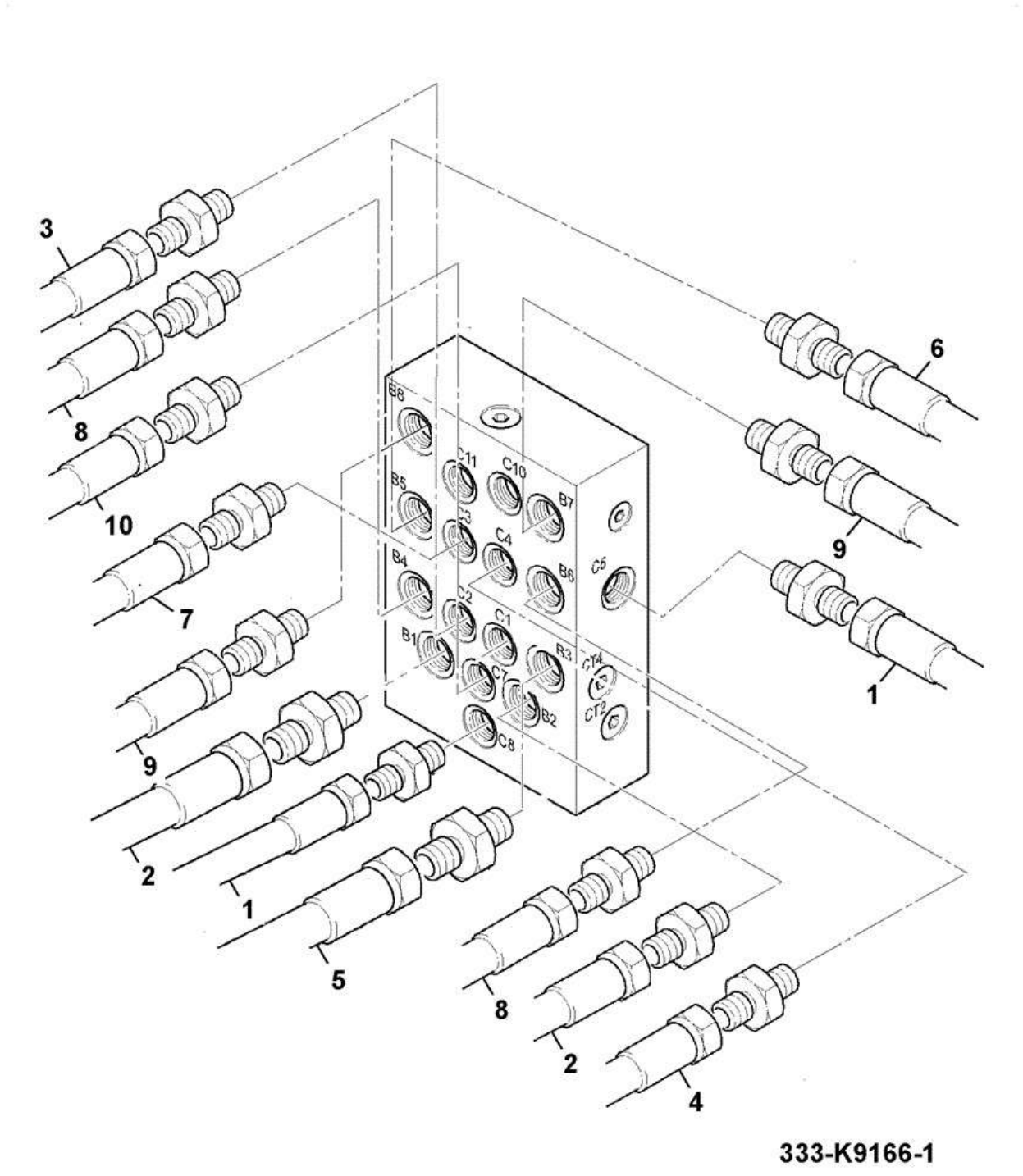

Item	Part #	Change No	Description	Usage Code	QTY
1	KBJ2439		Hose 1/4" BSP ST-ST 2150mm		1

2	KNJ1122		Hose 3/8"BSP ST-ST x 1900mm		2
3	KNJ1067		Hose 1/4"BSP ST-ST x 1800mm		2
4	KNA0363		Hose 1/4"BSP ST-ST 2000mm		1
5	627/10653		Hose 3/8 625 ST-90 HOSE		1
6	JLV0752		Hose 180/90 600mm		1
7	KTJ1133		Hose 1/4"BSP ST-ST x 1850mm		1
8	627/10609		Hose 3/8x450 long ST-90		2
9	KNJ1072		Hose 3/8"BSP ST-ST x 1700mm		2
10	KTJ0812		Hose 1/4" BSP ST-ST x 3250mm		1

CONSTRUCTION \ NORTH AMERICA \ CONSTRUCTION / INDUSTRIAL \ JS TRACKED EXCAVATORS \ JS200LC BR E 02451101-02451200 9822/0355 \ E HYDRAULICS \ E01 HYDRAULIC CIRCUITS

9822/0355 E130-80-1 HYDRAULIC CIRCUITS CHASSIS HOSE AND PIPEWORK SUCTION

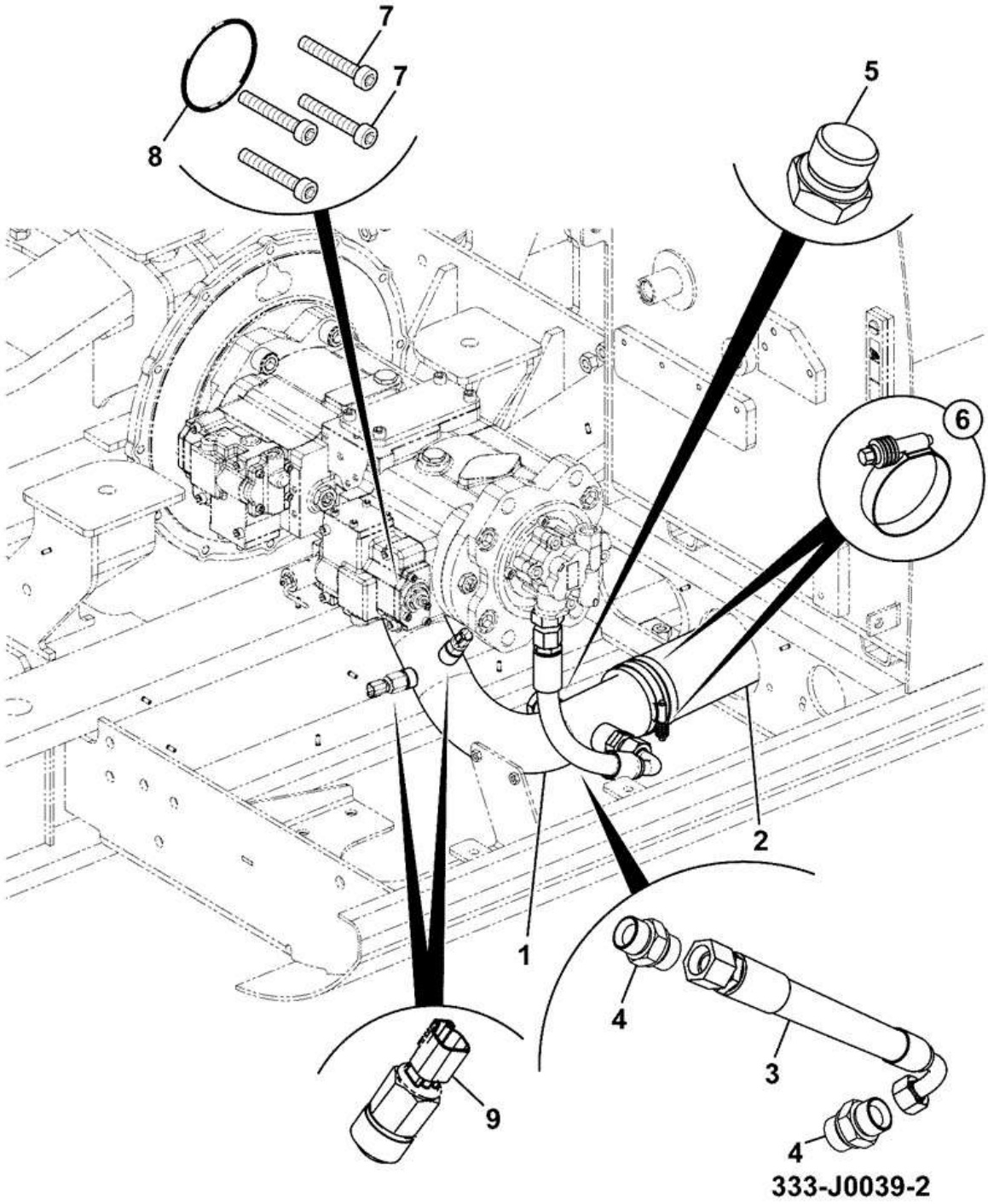

Item	Part #	Change No	Description	Usage Code	QTY
1	332/K7992		Pipe suction		1

2	834/11583		Hose suction		1
3	627/10085		Hose 3/4"BSP LP x 370mm		1
4	KNJ0605		Adapter Hose		2
5	BRJ1286		Plug		1
6	332/K3479		Clip worm		4
7	1391/3508		Capscrew M12 x 30		4
8	828/J0004		O Ring		1
9	1406/0015		Washer Bonded 3/8"		2
10	KHR0319		Clamp special		1
11	1391/3202D		Capscrew		1

CONSTRUCTION \ NORTH AMERICA \ CONSTRUCTION / INDUSTRIAL \ JS TRACKED EXCAVATORS \ JS200LC BR E 02451101-02451200 9822/0355 \ E HYDRAULICS \ E01 HYDRAULIC CIRCUITS

9822/0355 E130-90-1 HYDRAULIC CIRCUITS CHASSIS HOSE KIT MISCELLANEOUS

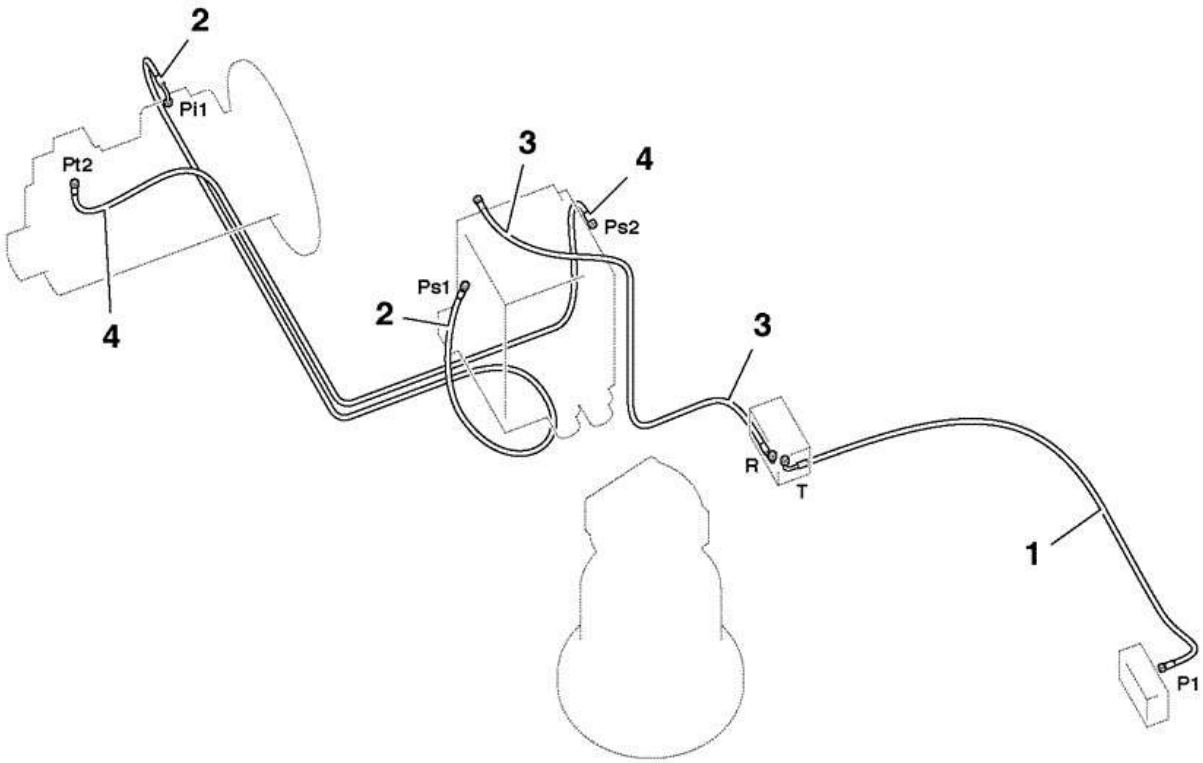

923390

Item	Part #	Change No	Description	Usage Code	QTY
1	KBJ2207		Hose 1/4 BSP ST-90 1500mm		1

2	333/J3520		Hose 08 BSP LP x 3600mm		1
3	JNV0329		Hose 1/4" BSP ST-90 1200mm		1
4	333/J3518		Hose 08 BSP LP x 3600mm		1

CONSTRUCTION \ NORTH AMERICA \ CONSTRUCTION / INDUSTRIAL \ JS TRACKED EXCAVATORS \ JS200LC BR E 02451101-02451200 9822/0355 \ E HYDRAULICS \ E01 HYDRAULIC CIRCUITS

9822/0355 E130-95-1 HYDRAULIC CIRCUITS CHASSIS HOSE AND PIPEWORK RETURN & OIL COOLER LINE

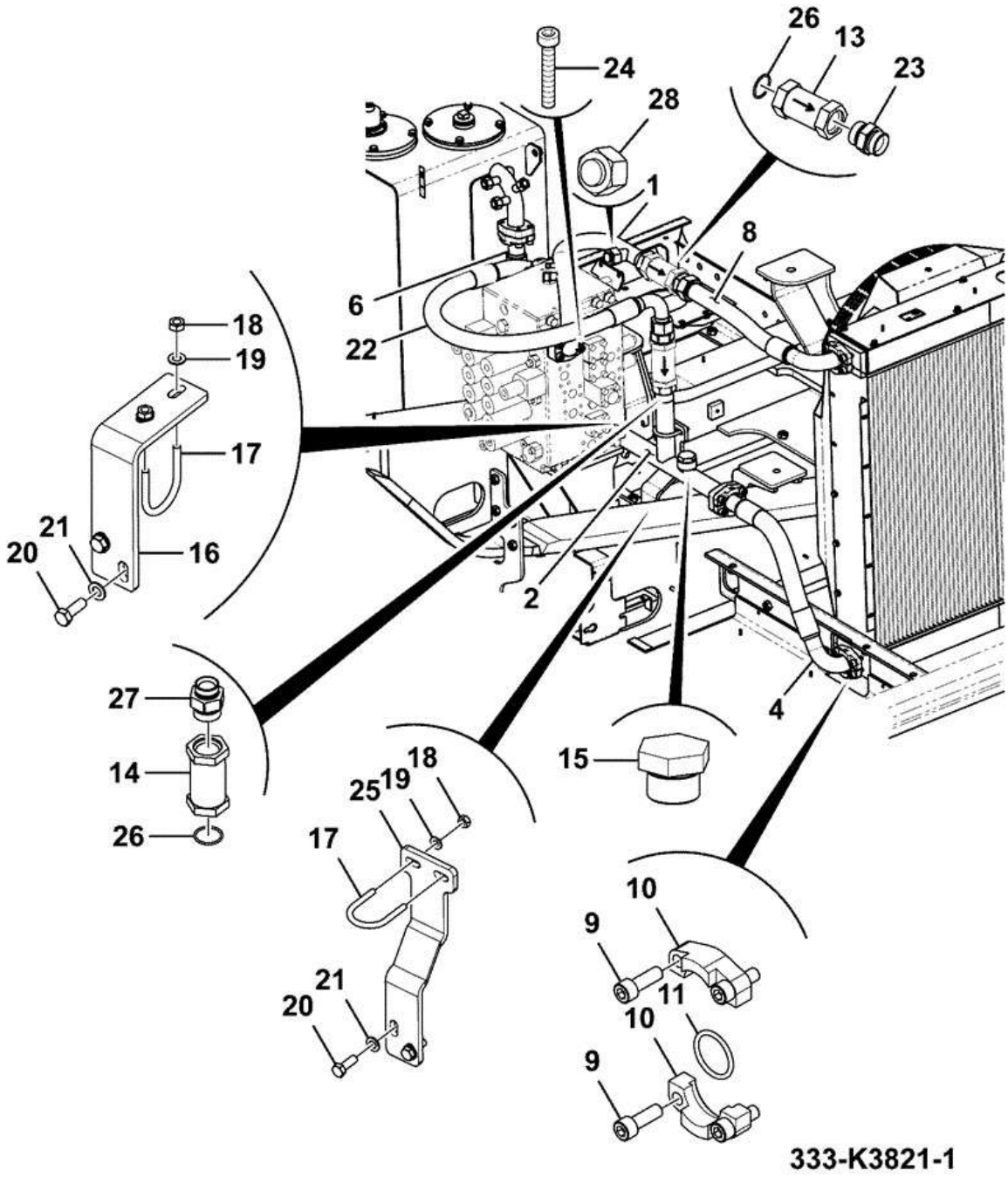

Item	Part #	Change No	Description	Usage Code	QTY
1	333/K3826		Pipe Oil Cooler		1

2	333/J5986		Pipe return and oil cooler		1
4	616/80327		Hose 1-1/2" x 640mm long str-90		1
6	332/K7294		Hose 24mm bore x 460mm		1
8	333/J8071		Hose 24 BSP-SAE MP 610mm		1
9	1391/3509D		Capscrew M12x35mm		24
10	KTJ1663		Flange Split		12
11	2409/0216		O Ring		7
13	25/222140		Valve Relief 3bar		1
14	333/K1048		Valve relief 5 bar		1
15	BRJ0174		Plug		1
16	333/J6013		Bracket pipe clamp		1
17	KNJ0720		Bolt U		2
18	1371/0301Z		Nut High Strength, M10		4
19	1420/0008D		Washer (M10)		4
20	1316/0509D		Screw M12x35 long		4
21	1420/0009D		Washer (M12)		4
22	332/J9347		Hose 1 1/4" x 1100mm		1
23	332/J4530		Adaptor 1 1/2 BSP Male		1
24	1391/3511D		Capscrew		4
25	332/J9890		Bracket pipe clamp		1
26	2409/0215		O Ring		2
27	333/J6027		Adapter		1
28	332/K2142		Cap blanking		1
29	816/90045		Cap Blanking 1/4"BSP Steel		1

CONSTRUCTION \ NORTH AMERICA \ CONSTRUCTION / INDUSTRIAL \ JS TRACKED EXCAVATORS \ JS200LC BR E 02451101-02451200 9822/0355 \ E HYDRAULICS \ E01 HYDRAULIC CIRCUITS

9822/0355 E130-100-1 HYDRAULIC CIRCUITS CHASSIS HOSES & FITTINGS PILOT PRESSURE AND RETURN LINE

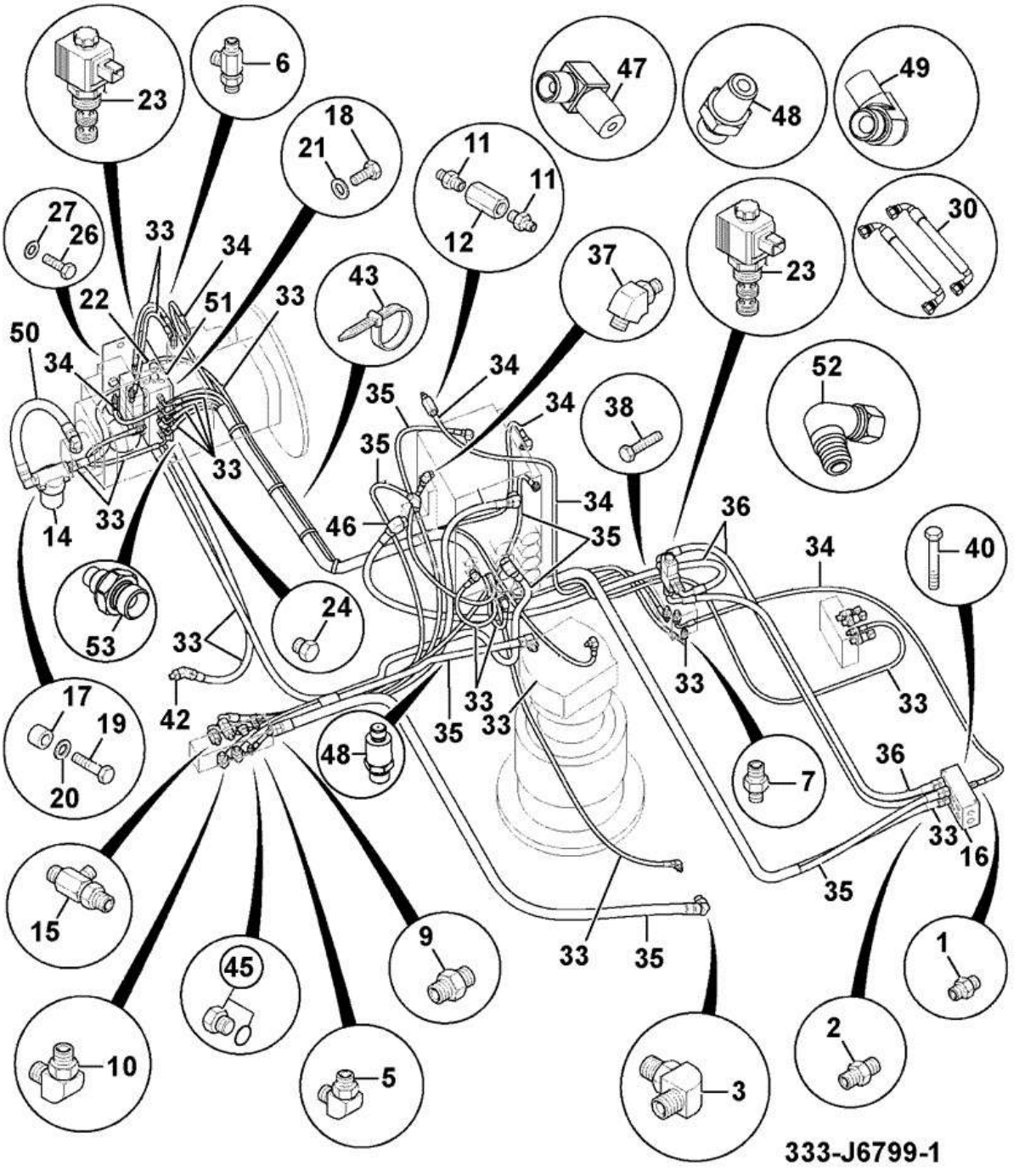

Item	Part #	Change No	Description	Usage Code	QTY
1	KNJ0758		Adapter		11

2	KNJ0759		Adapter		8
3	KHJ0343		Adapter Elbow 1/2 x 1/2		2
5	KHJ0341		Elbow 1/4 x 1/4		6
6	KHJ0869		Adapter Tee		1
7	KAJ2176		Adapter		2
9	KNJ0604		Adaptor		1
10	KHJ0342		Elbow 3/8 x 3/8		7
11	UBJ0311		Adapter		1
12	333/K3339		Filter Line		1
14	32/925214		Filter Assembly		1
15	KHJ0973		Adapter Tee		1
16	333/K7777		Manifold Pilot, Cab		1
17	KRN0081		Spacer		2
18	1316/0305D		Screw M8 X 20		4
19	1316/3218D		Bolt		2
20	1420/0006D		Washer (M6)		4
21	1420/0007D		Washer (M8)		6
22	332/J4523		Valve 8 station solenoid inc. accumulator		1
23	25/221009		Valve solenoid		1
24	KHJ0363		Plug		5
26	1316/0508D		Screw M12 X 30		3
27	1420/0009D		Washer (M12)		3
30	AWV0019		Hose Hydraulic		1
33	333/K2868		Kit-hose 8 Station		1
34	****		Kit-hose miscellaneous		1
35	333/K9094		Kit-hose Tank Manifold		1
36	332/J0564		Kit hose, boom priority		1
37	KHJ0348		Adapter elbow		1
38	1316/0209D		Bolt		2
40	1316/3317D		Bolt M8 x 75mm		2
42	KHJ0884		Adapter Tee		1
43	826/01347		Tie Cable 160mm		8
45	JHJ0092		Plug 1/2in.		1
46	KHJ0605		Adapter elbow		1
47	C4E5507		Adapter 90 deg		2
48	333/J5233		Restrictor 0.5mm		2
49	BHS0182		Adapter 1/2" BSP x M18		1
50	CNA0584		Adapter Strainer		1
51	333/J1360		Mounting plate		1
52	KHJ0641		Adapter Elbow		1
53	333/J5413		Adapter		2

CONSTRUCTION \ NORTH AMERICA \ CONSTRUCTION / INDUSTRIAL \ JS TRACKED EXCAVATORS \ JS200LC BR E 02451101-02451200 9822/0355 \ E HYDRAULICS \ E01 HYDRAULIC CIRCUITS

9822/0355 E130-105-1 HYDRAULIC CIRCUITS CHASSIS HOSES & FITTINGS PILOT CONTROL LINE

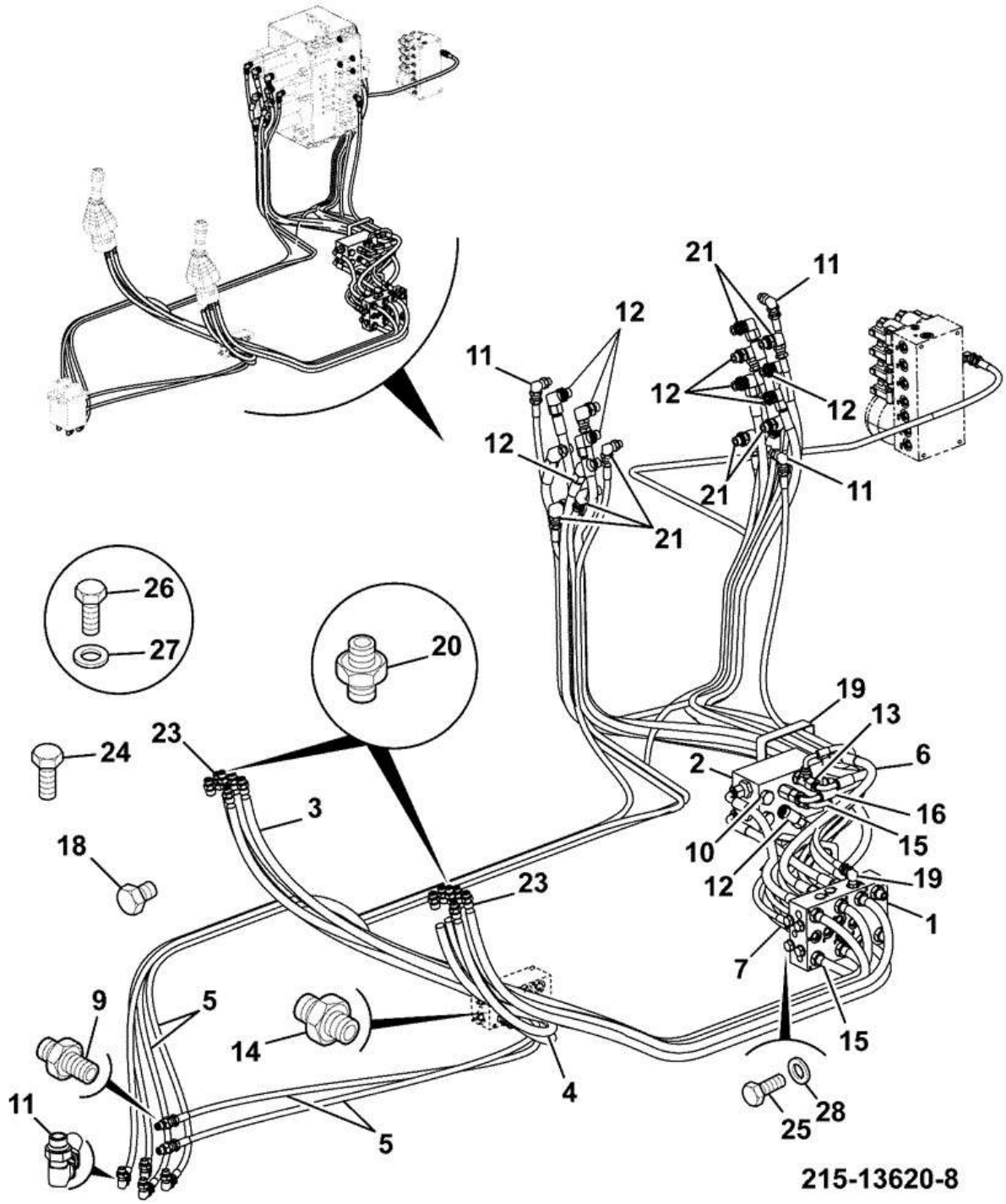

Item	Part #	Change No	Description	Usage Code	QTY
1	25/222638		Valve shuttle		1

2	25/220041		Valve Cushion		1
3	340/00524		Kit-hose RH joystick		1
4	340/00525		Kit-hose LH joystick		1
5	340/00383		Kit-hose Travel Pedals		1
6	340/00739		Kit hose cushion valve		1
7	333/K9166		Kit-hose Shuttle Valve		1
9	CNA0584		Adapter Strainer		1
10	BRJ1545		Plug		2
11	KHJ0341		Elbow 1/4 x 1/4		9
12	KHJ0342		Elbow 3/8 x 3/8		9
13	KHJ0973		Adapter Tee		1
14	KNJ0758		Adapter		8
15	KNJ0759		Adapter		21
16	KNJ1311		Adapter Hose		1
18	KHJ0363		Plug		4
19	KHJ0811		Clamp		2
20	JHJ0168		Adapter Filtered		2
21	KHJ0640		Elbow		7
23	1620/0003		Adapter		10
24	1316/0301D		Screw		4
25	1316/0405D		Screw M10 x 20		4
26	1316/0407D		Screw		2
27	1420/0007D		Washer (M8)		4
28	1420/0008D		Washer (M10)		6

CONSTRUCTION \ NORTH AMERICA \ CONSTRUCTION / INDUSTRIAL \ JS TRACKED EXCAVATORS \ JS200LC BR E 02451101-02451200 9822/0355 \ E HYDRAULICS \ E01 HYDRAULIC CIRCUITS

9822/0355 E130-110-1 HYDRAULIC CIRCUITS CHASSIS DRAIN LINE

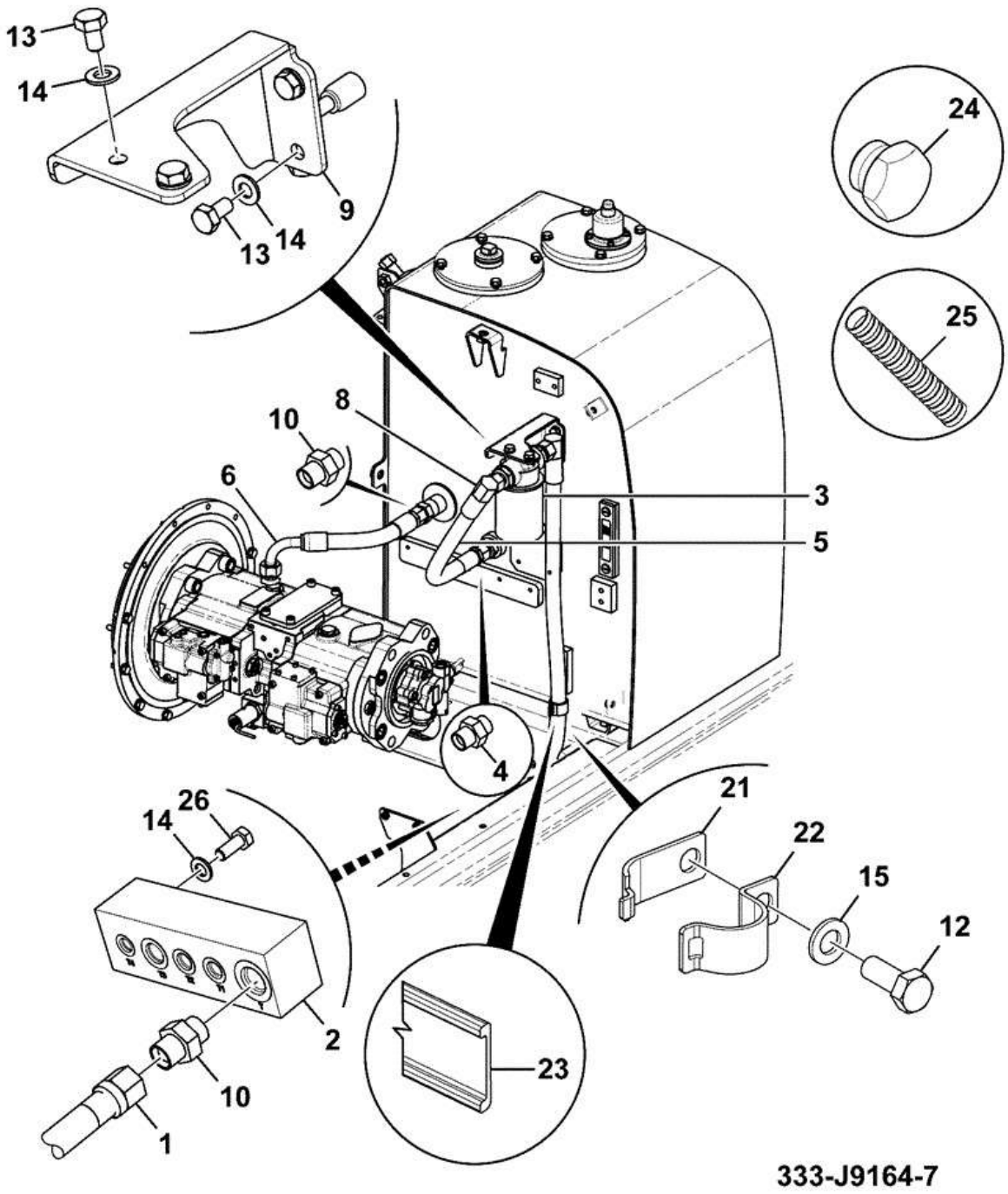

Item	Part #	Change No	Description	Usage Code	QTY
1	333/K9710		Hose -12 BSP LP 1225mm B		1

2	332/K0085		Manifold		1
3	KNJ0287		Filter Inlet		1
4	JLJ0054		Adapter 3/4		1
5	627/10656		Hose 3/4 575 ST-90		1
6	333/K6361		Hose -12 BSP LP 370mm B		1
8	MPV2193		Adapter		2
9	333/K3063		Bracket Filter, Drain Line		1
10	KNJ0605		Adapter Hose		3
12	1316/0508D		Screw M12 X 30		1
13	1316/0405D		Screw M10 x 20		4
14	1420/0008D		Washer (M10)		6
15	1420/0009D		Washer (M12)		1
21	821/00184		Clamp Base		1
22	821/00183		Clamp Top		1
23	821/00185		Insert Clamp		1
24	KHJ0363		Plug		1
25	333/K2827		Tube Corrugated		1
26	1316/0408D		Setscrew		2

CONSTRUCTION \ NORTH AMERICA \ CONSTRUCTION / INDUSTRIAL \ JS TRACKED EXCAVATORS \ JS200LC BR E 02451101-02451200 9822/0355 \ E HYDRAULICS \ E01 HYDRAULIC CIRCUITS

9822/0355 E130-115-1 HYDRAULIC CIRCUITS CHASSIS HOSE KIT 8 STATION

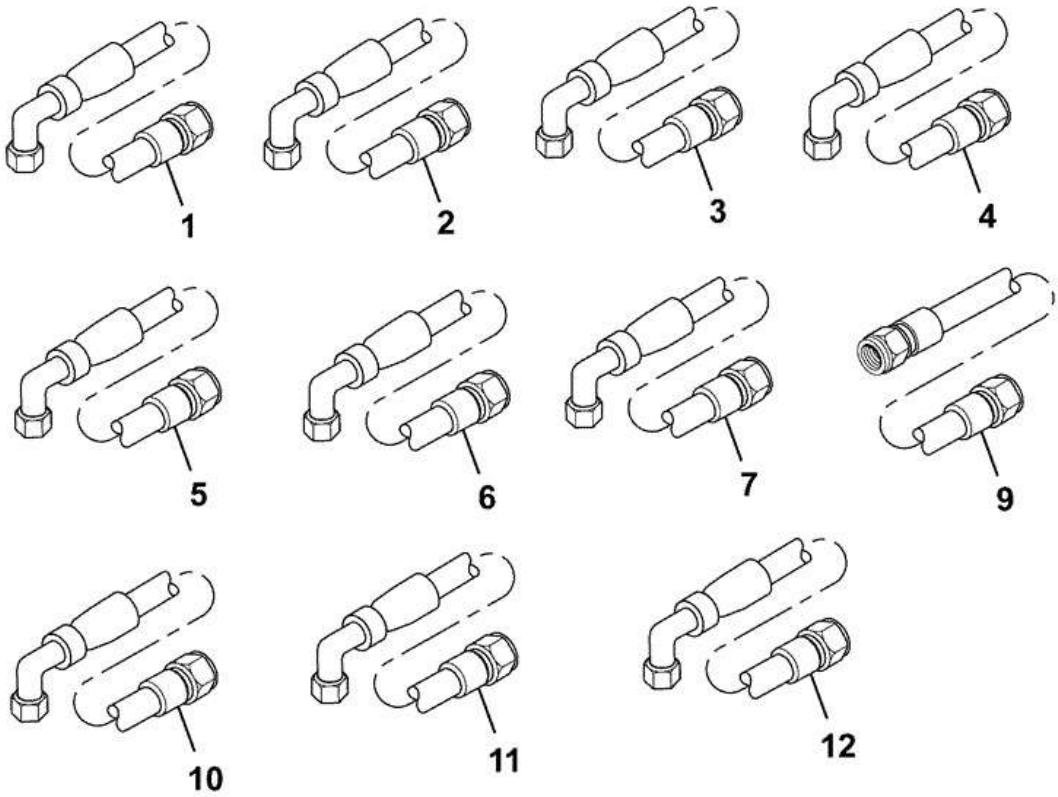

333-K2868-1

Item	Part #	Change No	Description	Usage Code	QTY
1	KNJ1846		Hose 1/4"BSP ST-90 x 500mm *JHV0056 LT.GREEN*		1

2	JRJ0135		Hose 3/8 *JHV0059 CLEAR*		1
3	JLV0752		Hose 180/90 600mm *JHV0059 BROWN*		1
4	KLJ0402		Hose 1/4" BSP ST-90, 2750mm *JHV0056 CLEAR*		1
5	KRJ3671		Hose 1/4"BSP ST-90 x 650mm *JHV0056 CLEAR*		1
6	KRJ3949		Hose 1/4"BSP ST-90 x 3250mm *JHV0056 RED*		1
7	KAJ2843		Hose 1/4"BSP ST-90 x 2800mm *JHV0056 GREEN & BLUE*		2
9	KNJ1232		Hose nylon *JHV0058 WHITE*		1
10	JNJ0418		Hose *JHV0056 YELLOW*		1
11	JLV1634		Hose *JHV0056 BLUE / PINK*		1
12	KBJ2346		Hose 1/4" BSP ST-90 450mm *JHV0056 LT.GREEN*		1

CONSTRUCTION \ NORTH AMERICA \ CONSTRUCTION / INDUSTRIAL \ JS TRACKED EXCAVATORS \ JS200LC BR E 02451101-02451200 9822/0355 \ E HYDRAULICS \ E01 HYDRAULIC CIRCUITS

9822/0355 E130-120-1 HYDRAULIC CIRCUITS CHASSIS HOSE KIT TANK MANIFOLD

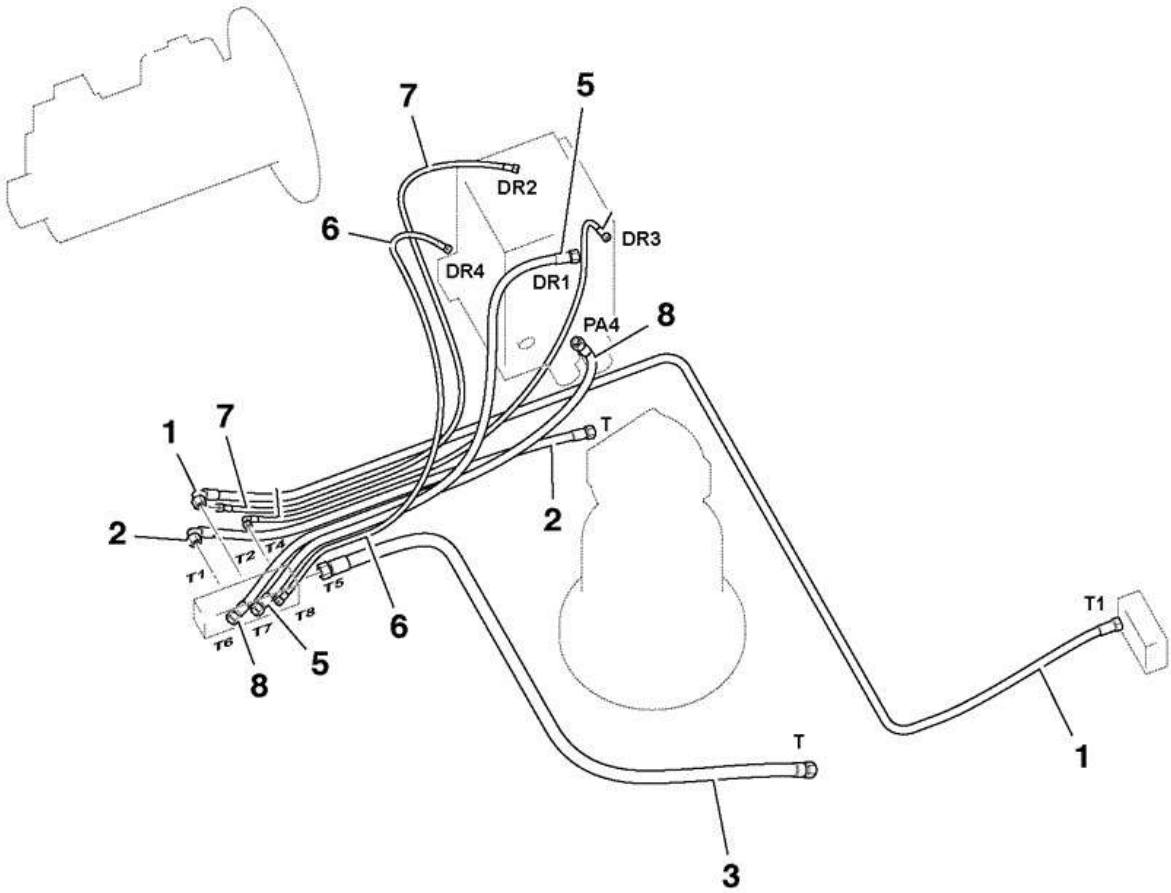

333-K9094-1

Item	Part #	Change No	Description	Usage Code	QTY
1	JLJ0311		Hose *JHV0059 WHITE / RED*		1

2	KRJ3935		Hose 3/8" BSP ST-90 1750mm *JHV0059 CLEAR T1 (TA*		1
3	KLA0014		Hose *JHV0061 CLEAR T (CEN*		1
5	KSJ1132		Hose 3/8"BSP ST-ST x 1800mm *JHV0058 WHITE / BLUE*		1
6	JLV1433		Hose 1/4"BSP ST-90 x 1300mm *JHV0056 WHITE / ORAN*		1
7	KSJ0968		Hose 1/4"BSP ST-ST x 1600mm *JHV0055 WHITE / BROW*		1
8	KNJ1118		Hose *JHV0058 WHITE / GREY*		1

9822/0355 E130-125-1 HYDRAULIC CIRCUITS CHASSIS HOSE KIT

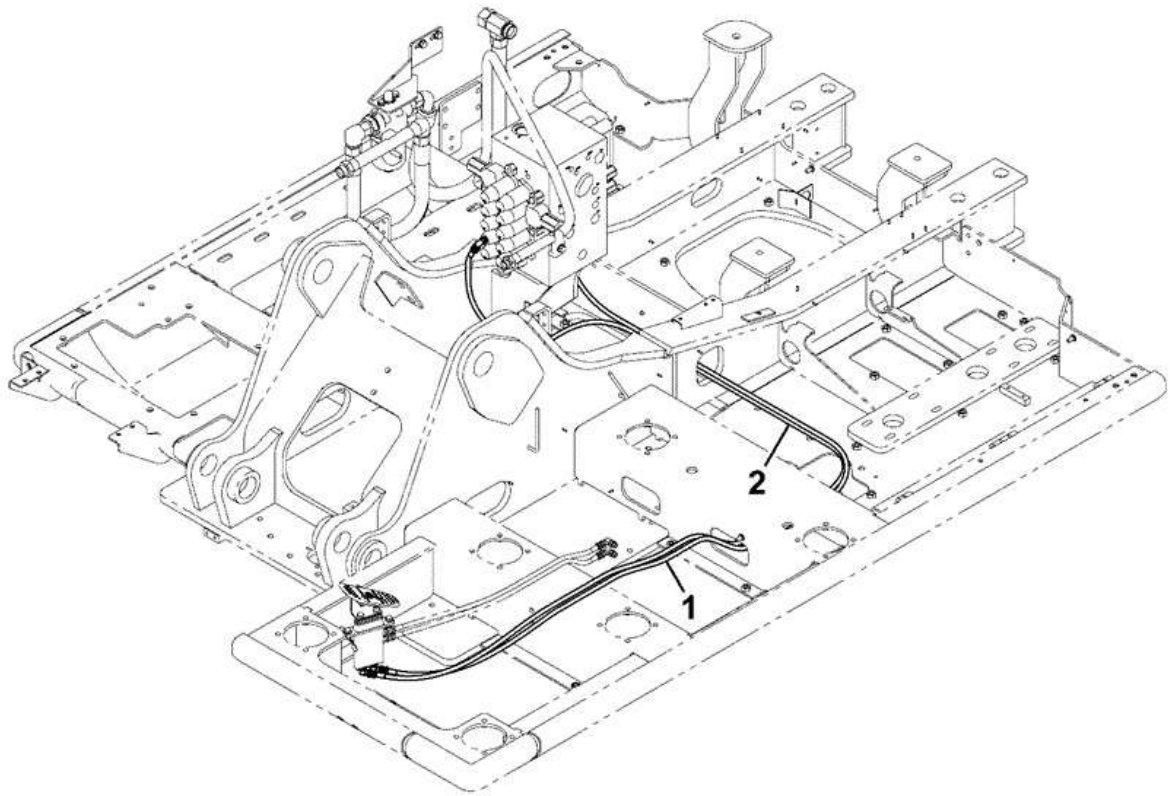

333-J9460-1

Item	Part #	Change No	Description	Usage Code	QTY
1	KTJ0674		Hose 04 BSP LP x 3700mm		1

2	KSJ2209		Hose		1

9822/0355 E130-125-1 HYDRAULIC CIRCUITS CHASSIS HOSE KIT

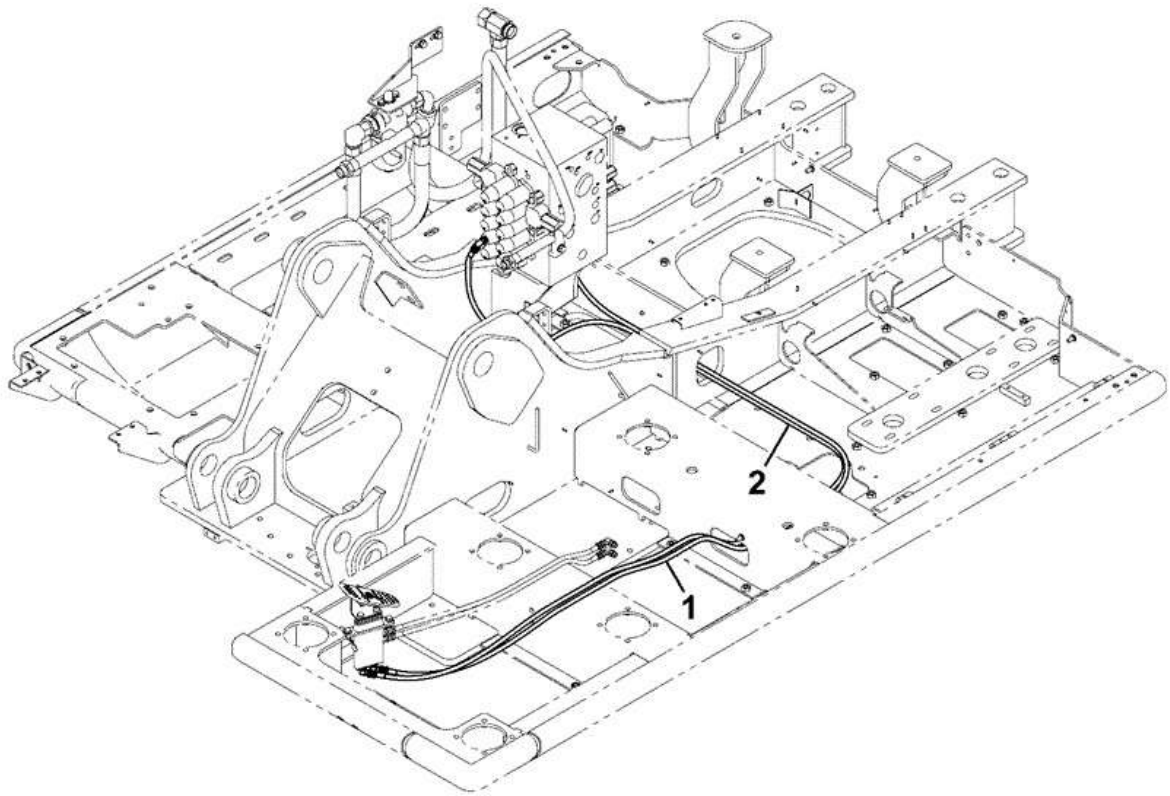

333-J9460-1

Item	Part #	Change No	Description	Usage Code	QTY
1	KTJ0674		Hose 04 BSP LP x 3700mm		1

2	KSJ2209		Hose		1

9822/0355 E130-130-1 HYDRAULIC CIRCUITS CHASSIS HOSE AND PIPEWORK MONOBOOM, HAMMER REVERSE LINE

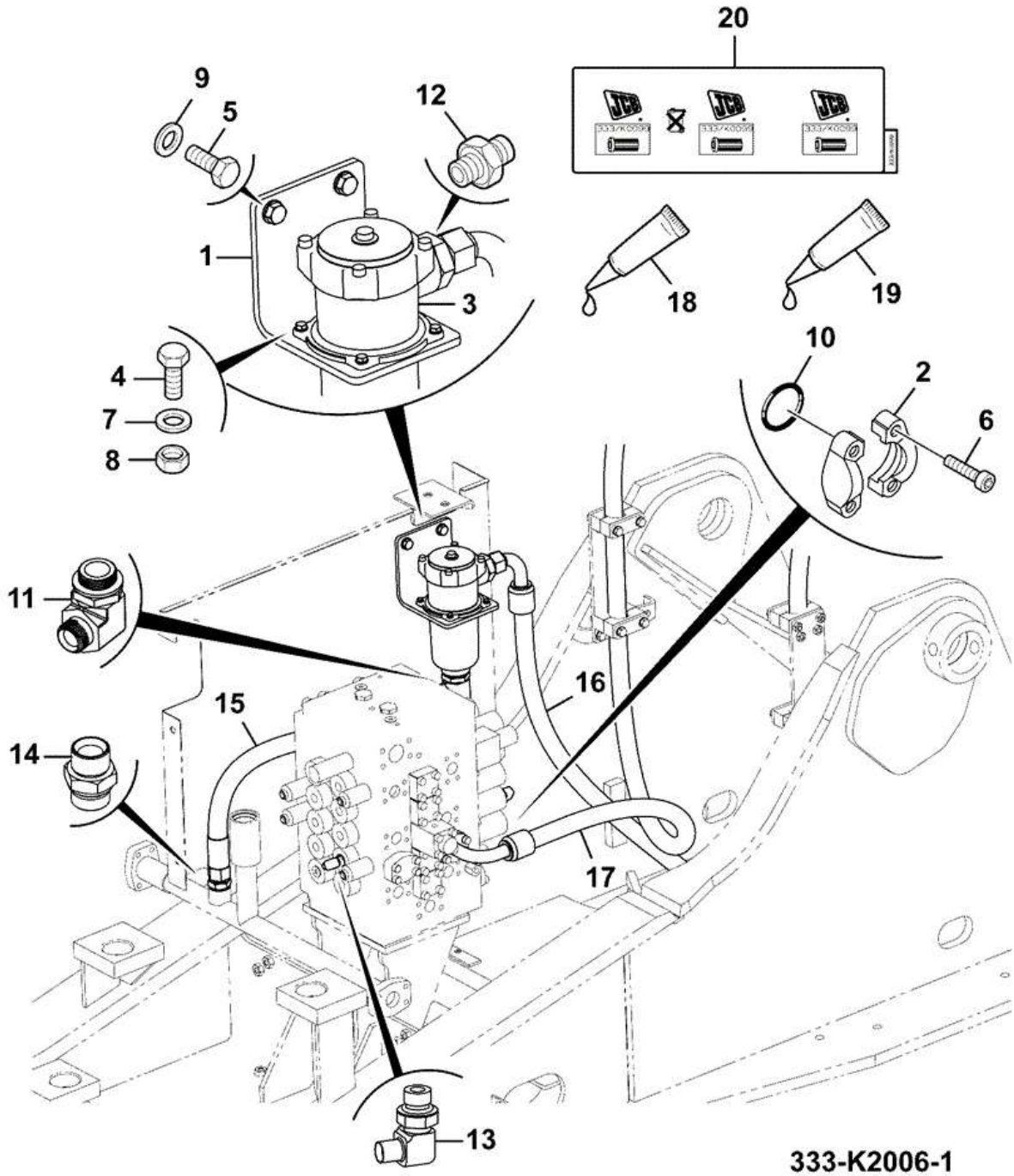

Item	Part #	Change No	Description	Usage Code	QTY
1	333/J9425		Mounting bracket		1

2	KRJ2682		Flange Split		2
3	333/J9896		Filter		1
4	1316/0207Z		Bolt		4
5	1316/0508D		Screw M12 X 30		2
6	1391/3408D		Capscrew M10 x 30mm		4
7	1420/0006Z		Washer (M6)		8
8	1371/0101Z		Nut high strength		4
9	1420/0009D		Washer (M12)		2
10	2409/0210		O Ring		1
11	332/J6411		Elbow		1
12	816/13121		Adapter		2
13	KHJ0640		Elbow		2
14	KNJ0606		Adapter		2
15	332/J8761		Hose 1" BSP 875mm ST-ST		1
16	332/L9289		Hose -16 BSP UHP 3690mm		1
17	332/L9290		Hose -16 BSP UHP 3710mm		1
18	4101/0500		Fluid Locking Loctite 262		0
19	****		Fluid Locking		0
20	333/K0112		Label hammer filter		1

CONSTRUCTION \ NORTH AMERICA \ CONSTRUCTION / INDUSTRIAL \ JS TRACKED EXCAVATORS \ JS200LC BR E 02451101-02451200 9822/0355 \ E HYDRAULICS \ E01 HYDRAULIC CIRCUITS

9822/0355 E130-135-1 HYDRAULIC CIRCUITS CHASSIS HOSE KIT HAMMER CAB LINES

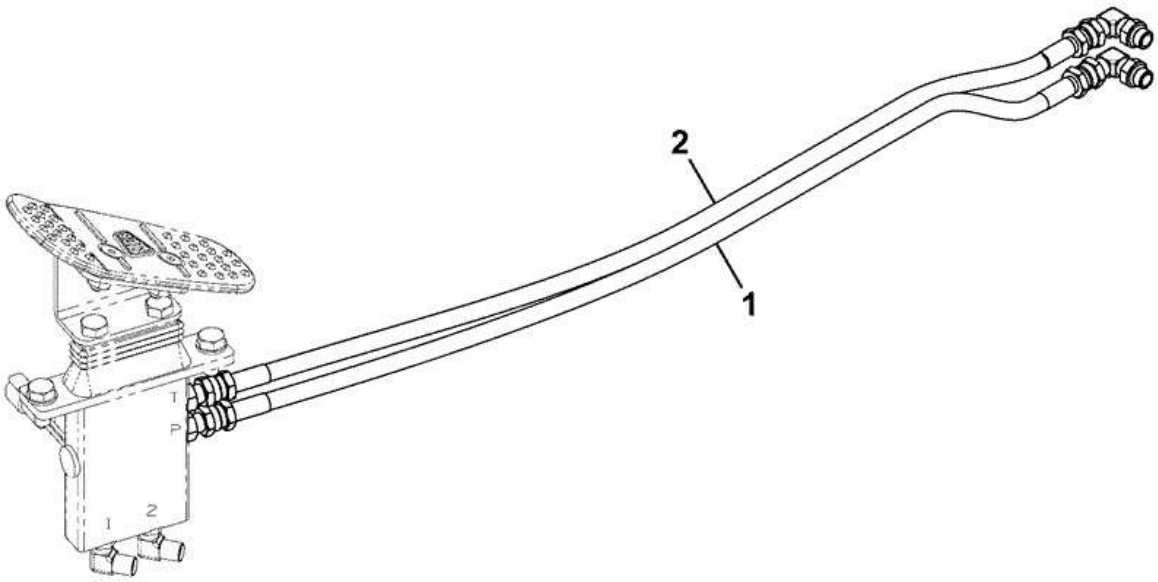

333-J9436-1

Item	Part #	Change No	Description	Usage Code	QTY
1	KAJ1927		Hose 1/4" 900mm 180/180 Yellow/White		1

2	KTJ0672		Hose nylon		1

CONSTRUCTION \ NORTH AMERICA \ CONSTRUCTION / INDUSTRIAL \ JS TRACKED EXCAVATORS \ JS200LC BR E 02451101-02451200 9822/0355 \ E HYDRAULICS \ E01 HYDRAULIC CIRCUITS

9822/0355 E140-30-1 HYDRAULIC CIRCUITS EXCAVATOR END TRACTION LINE

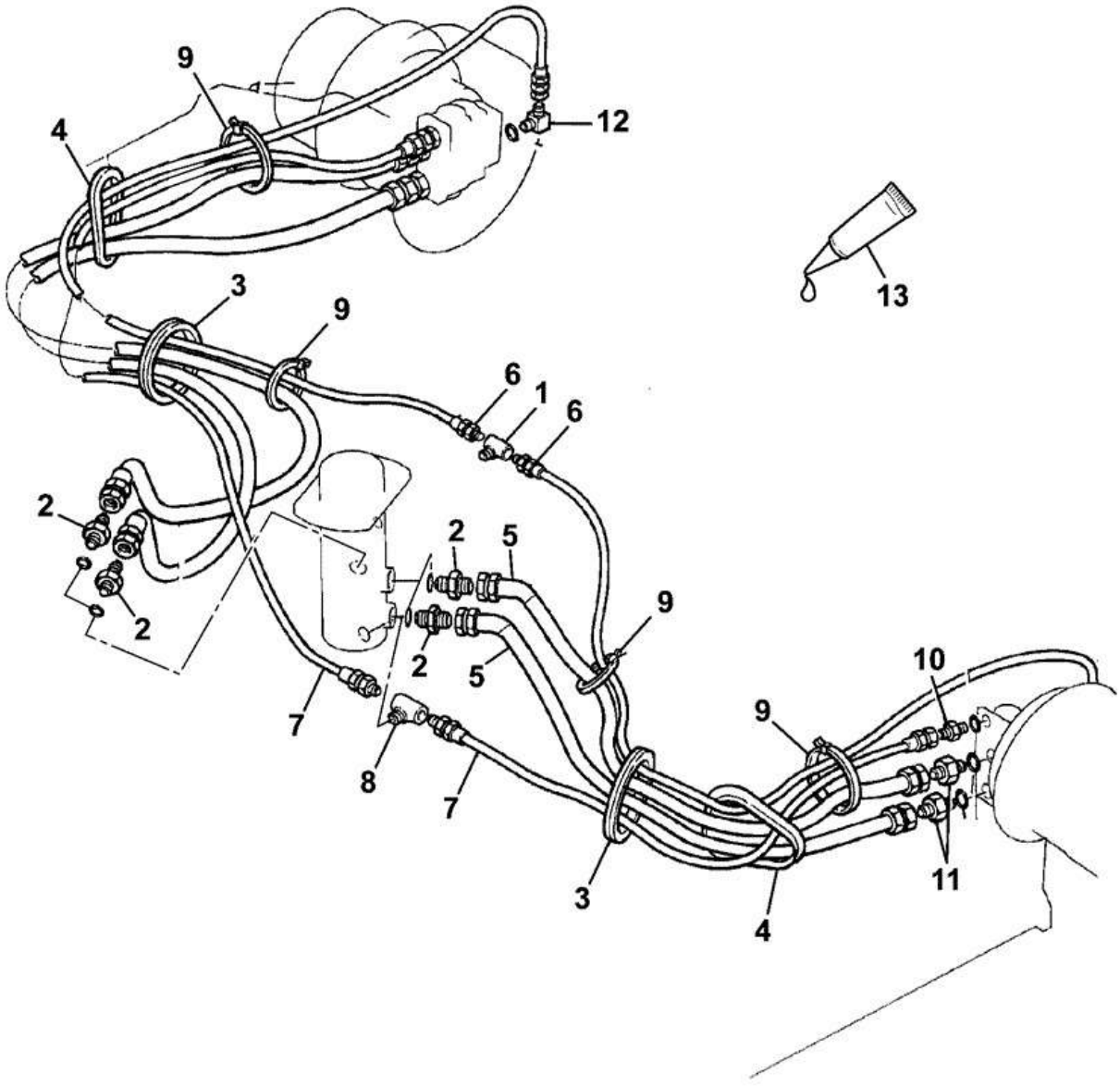

Item	Part #	Change No	Description	Usage Code	QTY
1	KSA0891		Tee adapter		1

2	KRJ1391		Adapter		4
3	KRA1138		Cushion Rubber 129mm		2
4	KNA0520		Cushion Rubber		2
5	KRA1228		Hose		4
6	KTJ0809		Hose 1/4"BSP ST-ST x 2550mm		2
7	KRA0873		Hose		2
8	KRA0789		Adapter Tee		1
9	270/00106		Tie Cable 385mm		8
10	KNJ0604		Adaptor		2
11	KNJ0606		Adapter		4
12	KHJ0341		Elbow 1/4 x 1/4		2
13	****		Fluid Locking		0

CONSTRUCTION \ NORTH AMERICA \ CONSTRUCTION / INDUSTRIAL \ JS TRACKED EXCAVATORS \ JS200LC BR E 02451101-02451200 9822/0355 \ E HYDRAULICS \ E01 HYDRAULIC CIRCUITS

9822/0355 E140-65-10 HYDRAULIC CIRCUITS EXCAVATOR END PIPELINES BOOM

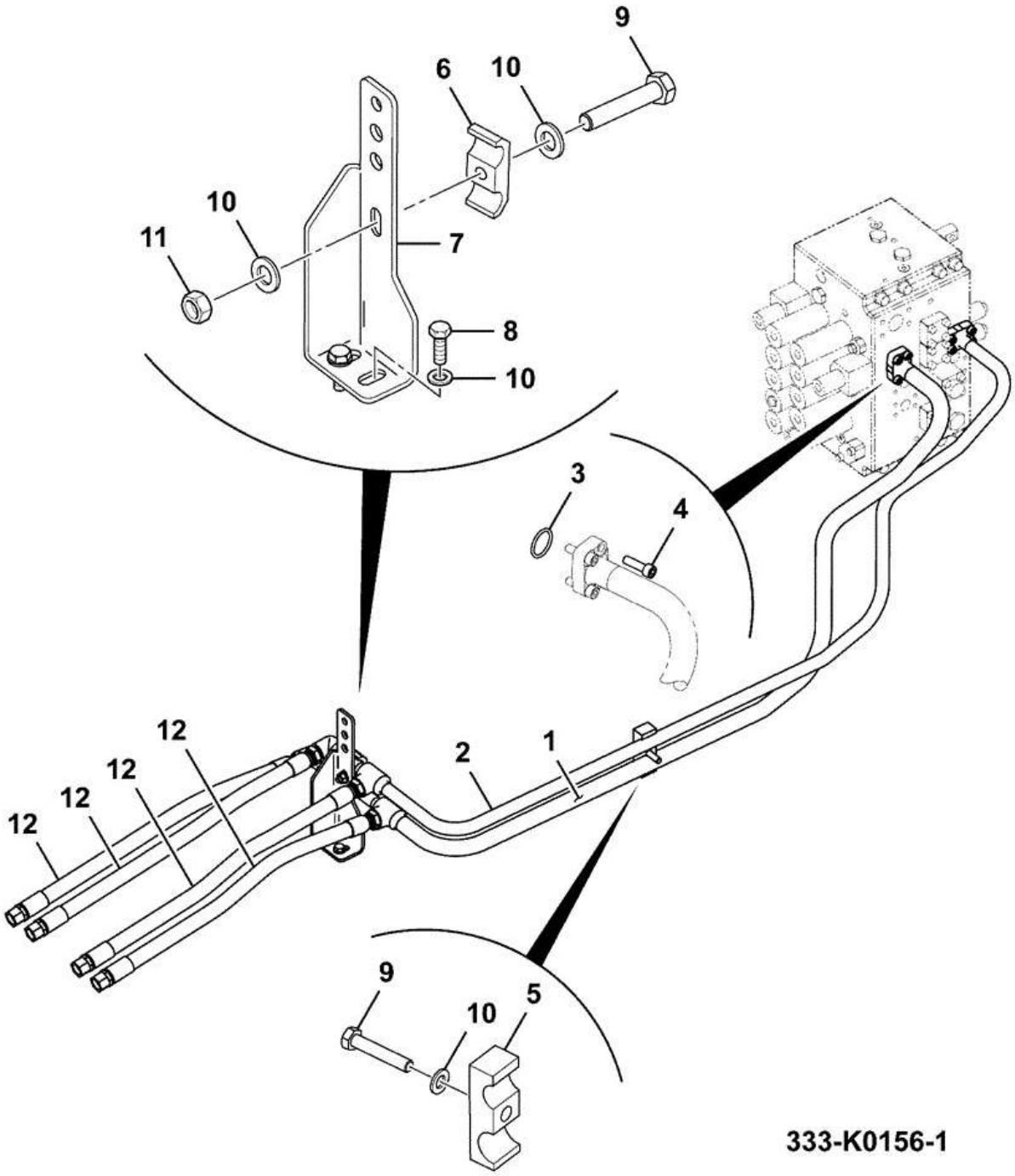

Item	Part #	Change No	Description	Usage Code	QTY
1	830/10949		Pipe assembly		1

2	830/10950		Pipe assembly		1
3	2409/0210		O Ring		2
4	1391/3409D		Capscrew M10x35mm		8
5	KBJ1595		Clamp pipe		1
6	JRJ0126		Clamp		1
7	333/J9928		Bracket Support,Pipe		1
8	1316/0507D		Setscrew M12 x 25 grade 10.9		2
9	1316/3515D		Bolt		2
10	1420/0009D		Washer (M12)		5
11	1371/0401D		Nut M12		1
12	KRJ3868		Hose hyd (l=800)		4

CONSTRUCTION \ NORTH AMERICA \ CONSTRUCTION / INDUSTRIAL \ JS TRACKED EXCAVATORS \ JS200LC BR E 02451101-02451200 9822/0355 \ E HYDRAULICS \ E01 HYDRAULIC CIRCUITS

9822/0355 E140-70-1 HYDRAULIC CIRCUITS EXCAVATOR END BUCKET & ARM

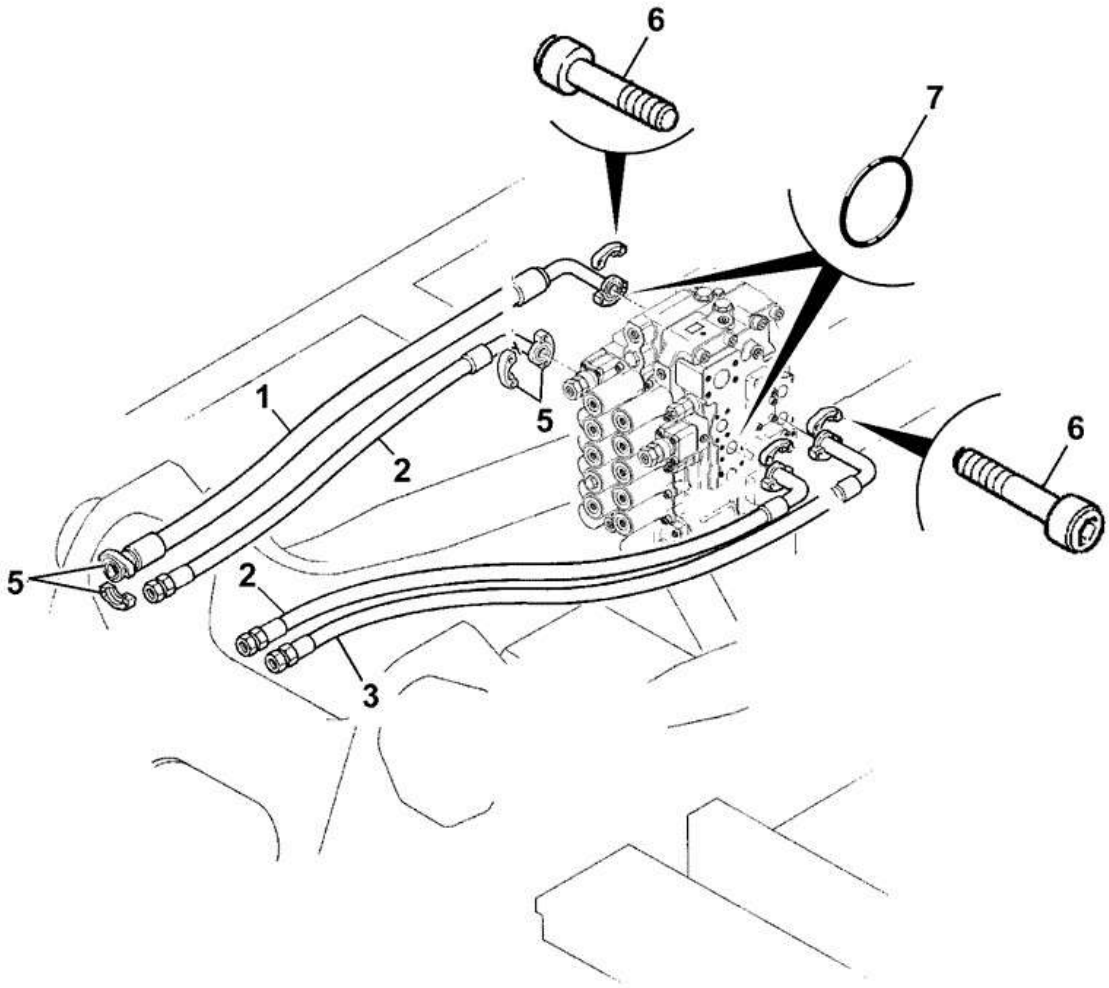

215-10992-5

Item	Part #	Change No	Description	Usage Code	QTY
1	KSJ2308		Hose hydaulic		1

2	627/10042		Hose 3/4"BSP x 1300mm		2
3	333/J5668		Hose 12 BSP UHP x 1440mm		1
5	KRJ2682		Flange Split		10
6	1391/3409D		Capscrew M10x35mm		20
7	2409/0210		O Ring		5

CONSTRUCTION \ NORTH AMERICA \ CONSTRUCTION / INDUSTRIAL \ JS TRACKED EXCAVATORS \ JS200LC BR E 02451101-02451200 9822/0355 \ E HYDRAULICS \ E01 HYDRAULIC CIRCUITS

9822/0355 E140-90-1 HYDRAULIC CIRCUITS EXCAVATOR END HOSE KIT BUCKET LINES

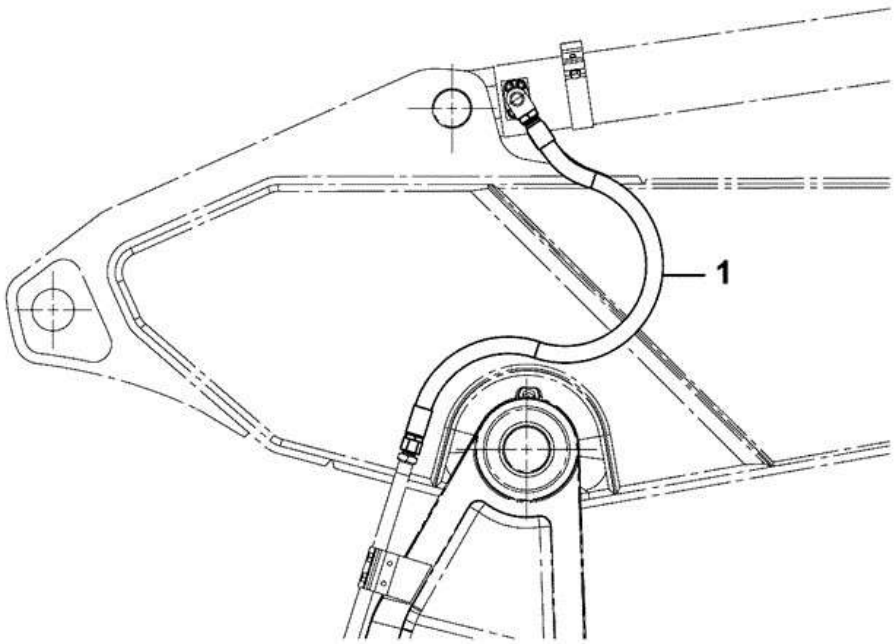

333-K3124-2

Item	Part #	Change No	Description	Usage Code	QTY
1	KRV0926		Hose hydraulic 12 EHP 1500 B		2

2	:335/E9205		O Ring 17.1 x 1.6mm *Only For India*		4

CONSTRUCTION \ NORTH AMERICA \ CONSTRUCTION / INDUSTRIAL \ JS TRACKED EXCAVATORS \ JS200LC BR E 02451101-02451200 9822/0355 \ E HYDRAULICS \ E01 HYDRAULIC CIRCUITS

9822/0355 E140-95-1 HYDRAULIC CIRCUITS EXCAVATOR END PIPEWORK HAMMER LINE, MONOBOOM

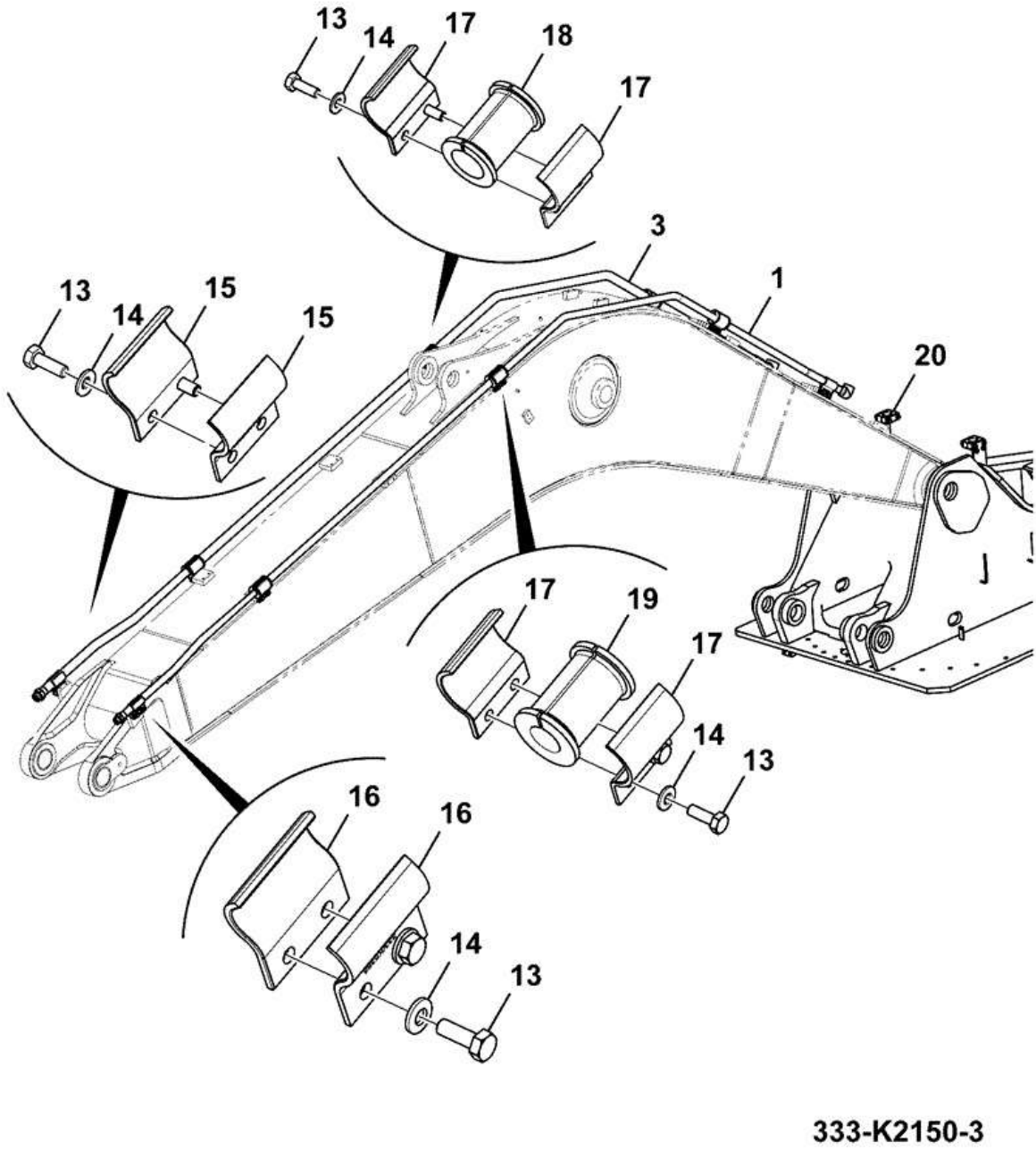

Item	Part #	Change No	Description	Usage Code	QTY
1	333/K6062		Pipe Feed, Hammer Line		1

3	333/K6072		Pipe Return, Hammer Line		1
13	1316/0408D		Setscrew		20
14	2208/00110		Washer M10		20
15	333/K5338		Clamp Single Pipe		4
16	333/K5365		Clamp Single Pipe		4
17	333/K5199		Clamp Single pipe Dia 56		12
18	333/K5181		Rubber Insert Dia 56		3
19	333/K5359		Rubber Insert Dia 56		3
20	****		Clamp Hammer, Assembly		1

CONSTRUCTION \ NORTH AMERICA \ CONSTRUCTION / INDUSTRIAL \ JS TRACKED EXCAVATORS \ JS200LC BR E 02451101-02451200 9822/0355 \ E HYDRAULICS \ E01 HYDRAULIC CIRCUITS

9822/0355 E140-100-1 HYDRAULIC CIRCUITS EXCAVATOR END CLAMP HAMMER

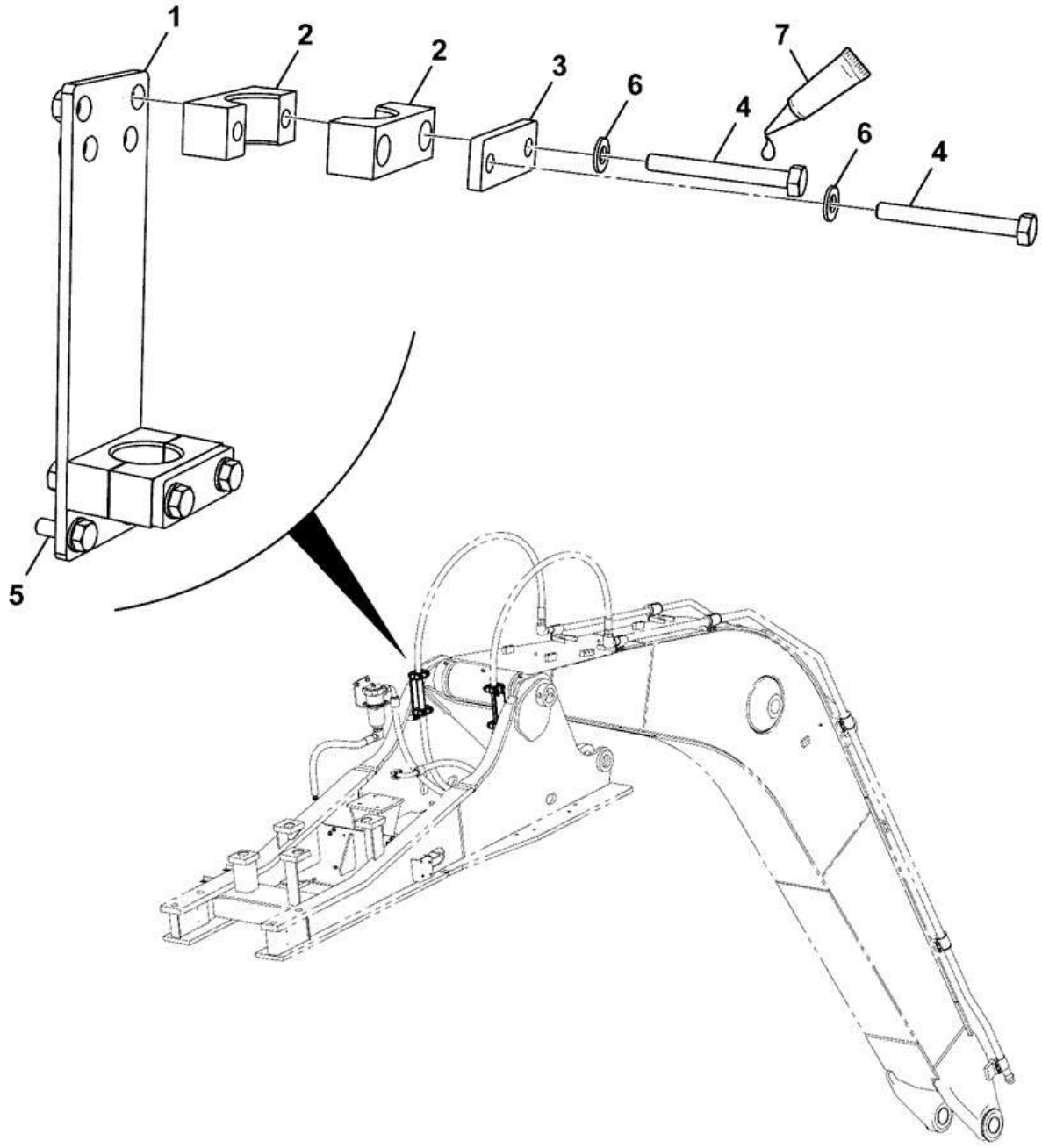

333-K5161-1

Item	Part #	Change No	Description	Usage Code	QTY
1	332/K9888		Mounting Hose		2

2	332/K2165		Clamp Half, DIA4		4
3	821/00126		Plate clamp cover		2
4	1316/3419D		Bolt		4
5	1316/3408D		Bolt		4
6	1420/0008D		Washer (M10)		8
7	4101/0500		Fluid Locking Loctite 262		0

CONSTRUCTION \ NORTH AMERICA \ CONSTRUCTION / INDUSTRIAL \ JS TRACKED EXCAVATORS \ JS200LC BR E 02451101-02451200 9822/0355 \ E HYDRAULICS \ E01 HYDRAULIC CIRCUITS

9822/0355 E140-105-1 HYDRAULIC CIRCUITS EXCAVATOR END HOSES AND PIPEWORK HAMMER LINE MTT, ARM 2.4M

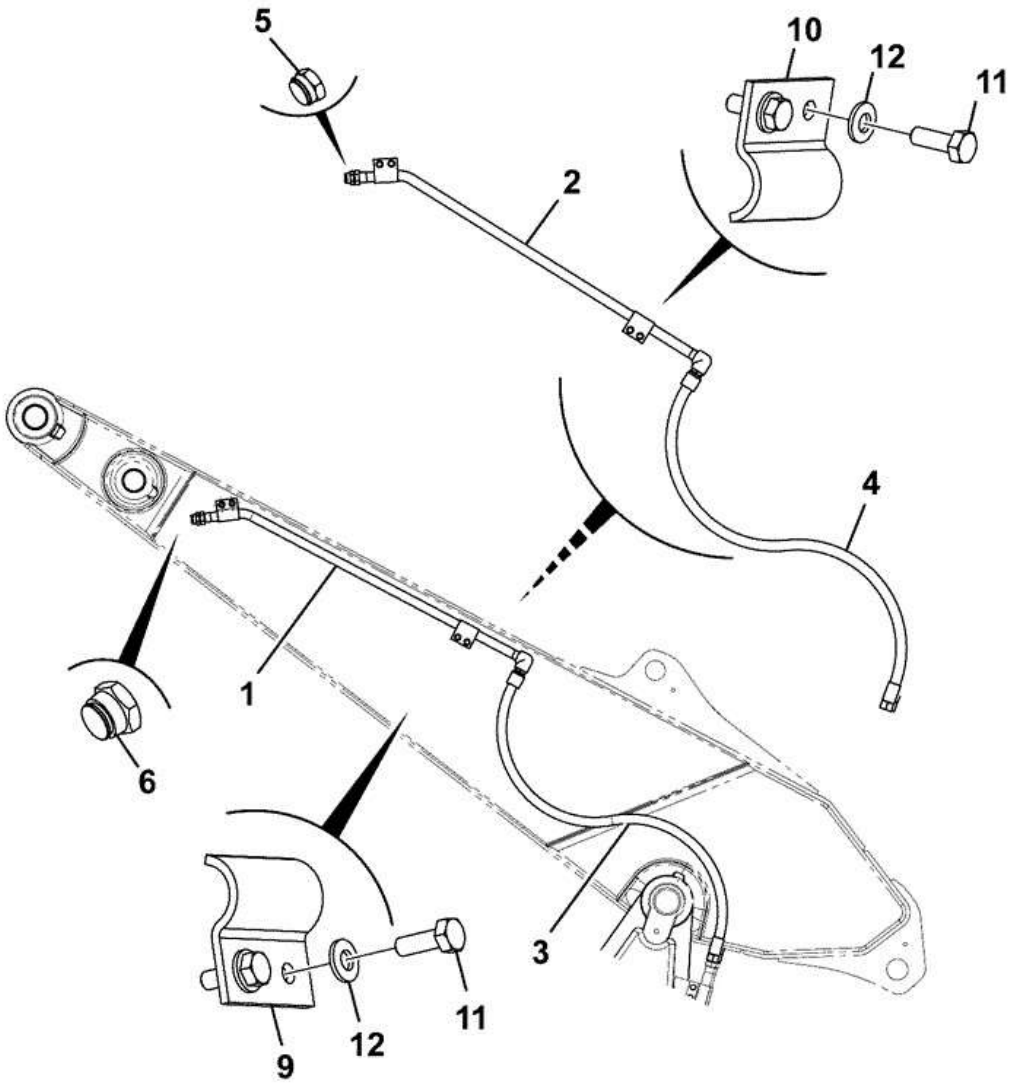

Item	Part #	Change No	Description	Usage Code	QTY
1	335/11388		Pipe hammer feed 2.4M arm		1

2	335/11389		Pipe hammer return 2.4M arm		1
3	JRV0331		Hose		1
4	JRV0332		Hose		1
5	816/80010		Plug		1
6	816/00193		Cap blanking 1"BSP steel		1
9	333/K5365		Clamp Single Pipe		4
10	333/K5338		Clamp Single Pipe		4
11	1316/0408D		Setscrew		8
12	2208/00110		Washer M10		8

CONSTRUCTION \ NORTH AMERICA \ CONSTRUCTION / INDUSTRIAL \ JS TRACKED EXCAVATORS \ JS200LC BR E 02451101-02451200 9822/0355 \ E HYDRAULICS \ E01 HYDRAULIC CIRCUITS

9822/0355 E190-15-1 OTHER HYDRAULIC CIRCUITS T HAMMER CAB LINES

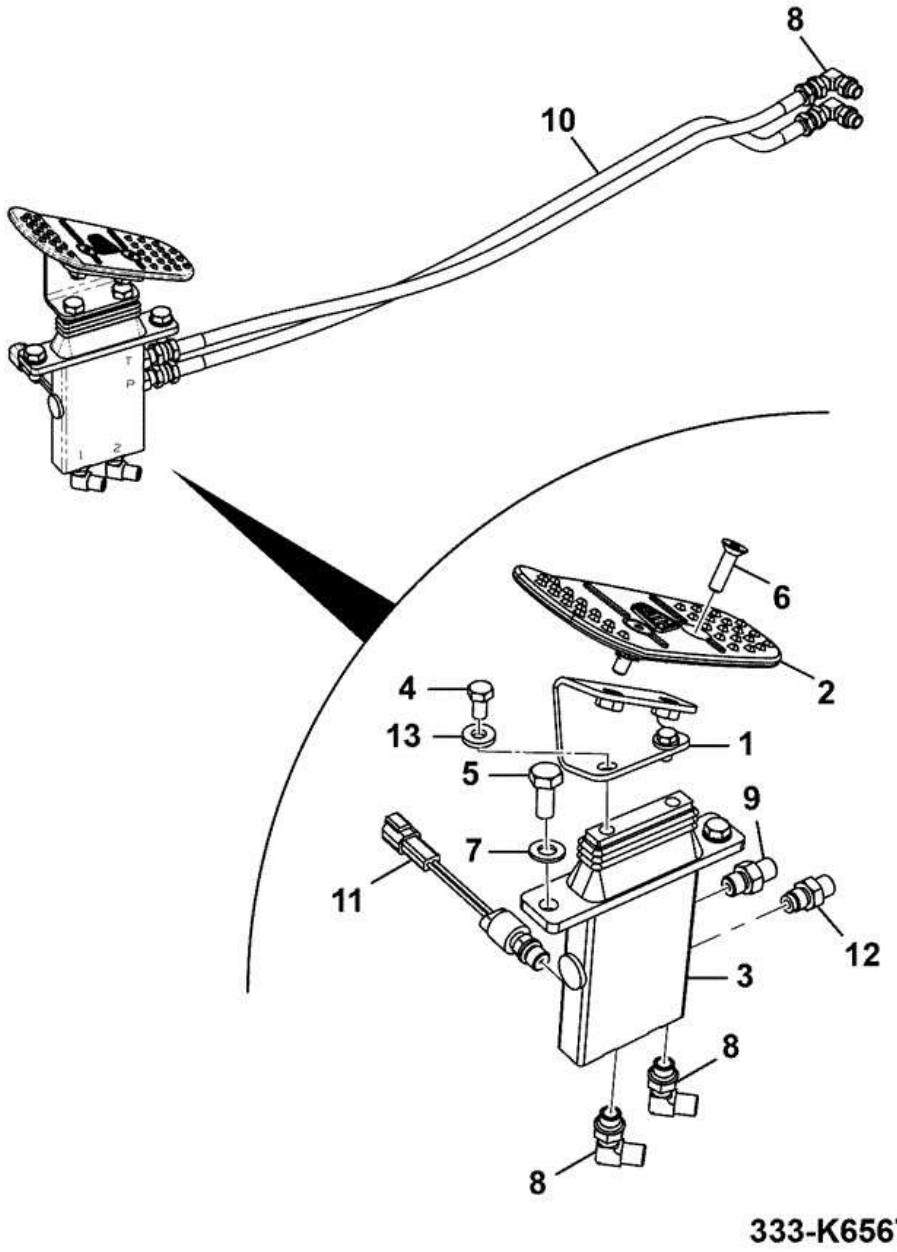

Item	Part #	Change No	Description	Usage Code	QTY
1	331/38327		Bracket Pedal Right Side		1

2	589/10161		Pedal		1
3	928/60339		Valve hammer, auxiliary foot operated		1
4	1316/0303D		Screw M8 x 16mm		2
5	1316/0407D		Screw		2
6	826/10811		Screw countersunk, socket head M8 x 30		2
7	1420/0008D		Washer (M10)		2
8	KHJ0341		Elbow 1/4 x 1/4		4
9	KNJ0758		Adapter		1
10	333/J9436		Kit-hose Hammer		1
11	332/J0669		Switch Low Pressure 5bar 1/4" BSP		1
12	CNA0584		Adapter Strainer		1
13	JHP0080		Washer (M8)		2

CONSTRUCTION \ NORTH AMERICA \ CONSTRUCTION / INDUSTRIAL \ JS TRACKED EXCAVATORS \ JS200LC BR E 02451101-02451200 9822/0355 \ E HYDRAULICS \ E02 PUMP & M0T0RS

9822/0355 E200-15-1 PUMP/MOTOR INSTALLATION ASSEMBLIES MAIN HYDRAULICS

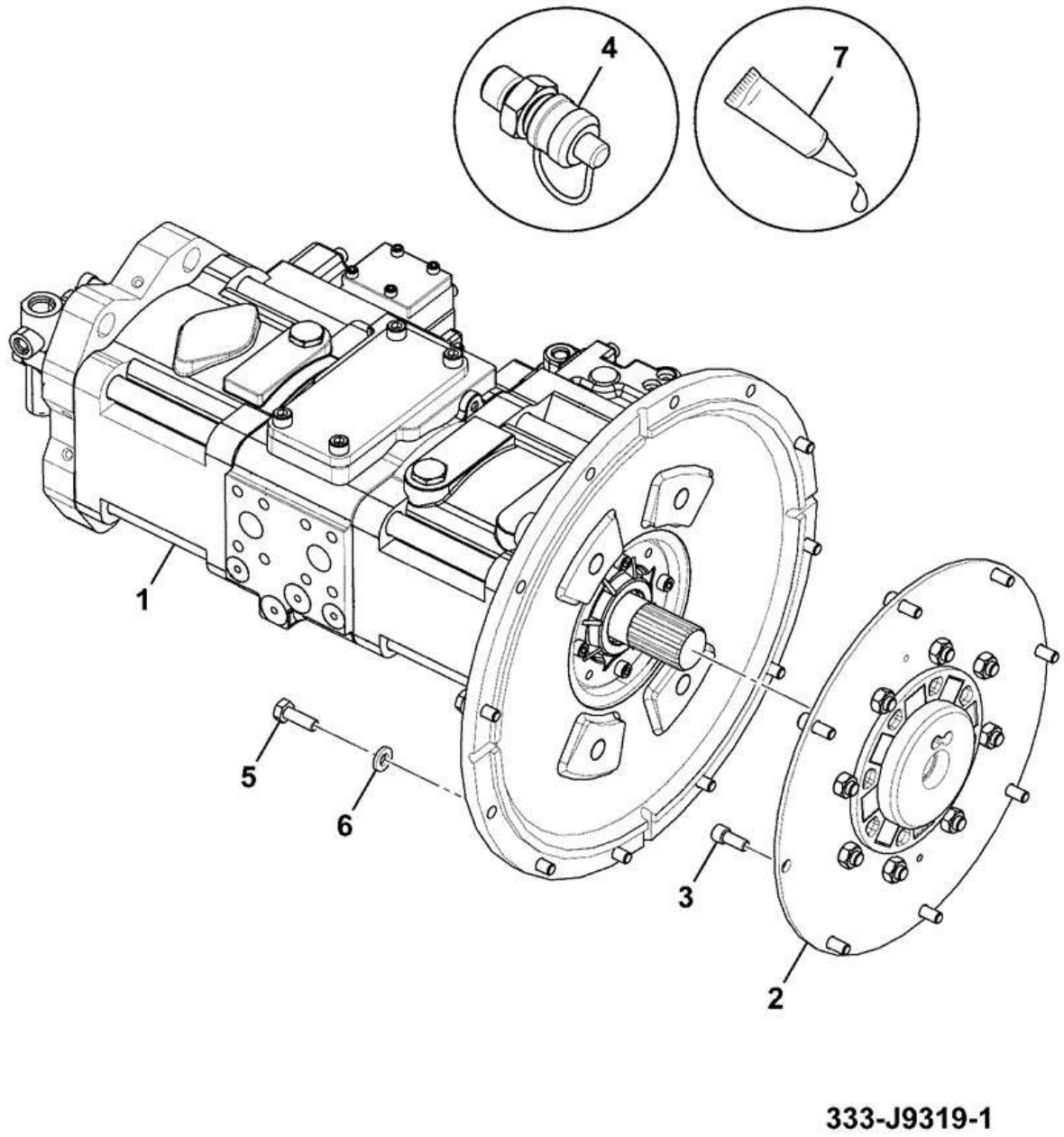

Item	Part #	Change No	Description	Usage Code	QTY
1	333/J9330		Pump Assembly		1

2	333/J2311		Coupling		1
3	333/J2590		Capscrew 3/8"UNC x 3/4"		8
4	333/J5928		Adapter test point		3
5	1316/0408D		Setscrew		8
6	JHP0046		Washer M10		8
7	4101/0500		Fluid Locking Loctite 262		0

CONSTRUCTION \ NORTH AMERICA \ CONSTRUCTION / INDUSTRIAL \ JS TRACKED EXCAVATORS \ JS200LC BR E 02451101-02451200 9822/0355 \ E HYDRAULICS \ E02 PUMP & M0T0RS

9822/0355 E200-20-1 PUMP/MOTOR INSTALLATION ASSEMBLIES MAIN T4i, ECO

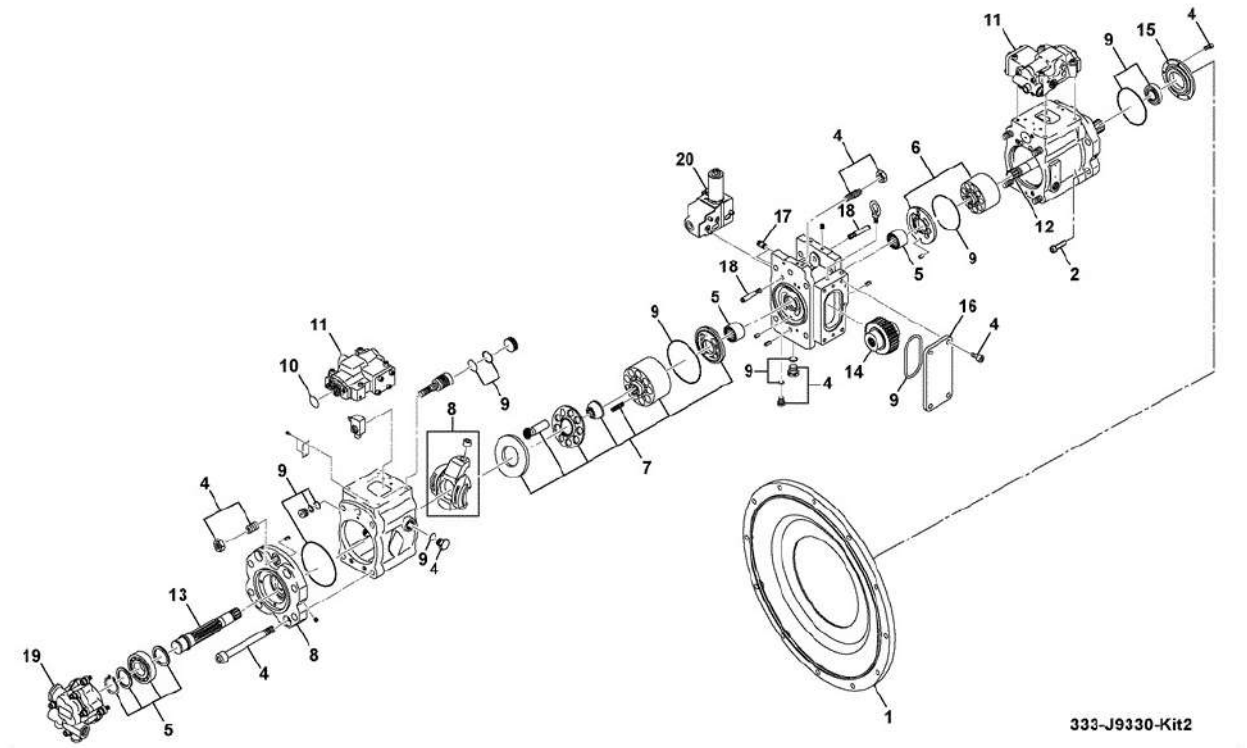

Item	Part #	Change No	Description	Usage Code	QTY
1	334/J0025		Plate Mounting, Main Pump		1
2	1391/3813D		Capscrew		4
4	334/E2983		Transmission Bolts and plugs kits		1
5	334/E2422		Transmission Bearing kit		1
6	334/E2451		Transmission Rotary kit (front drive)		1
7	334/E2468		Transmission Rotary kit (rear drive)		1
8	334/E2486		Transmission Swash kit		1
9	334/E2503		Kit-seal pump		1
10	334/E2805		Kit-seal regulator interface		1
11	334/E0578		Kit Valve regulator		1
12	LJP0035		Shaft drive front		1
13	LJP0036		Shaft drive rear		1
14	334/D1597		Gear		1
15	LZP0176		Cover front oil seal		1
16	20/951650		Cover		1
17	LZP0179		Valve		1
18	LNP0178		Valve check assembly		1
19	20/952543		Pump assembly, servo		1
20	20/950631		Valve proportional reducing		1

CONSTRUCTION \ NORTH AMERICA \ CONSTRUCTION / INDUSTRIAL \ JS TRACKED EXCAVATORS \ JS200LC BR E 02451101-02451200 9822/0355 \ E HYDRAULICS \ E03 VALVES

9822/0355 E300-1-5 VALVE INSTALLATION ASSEMBLIES CONTROL

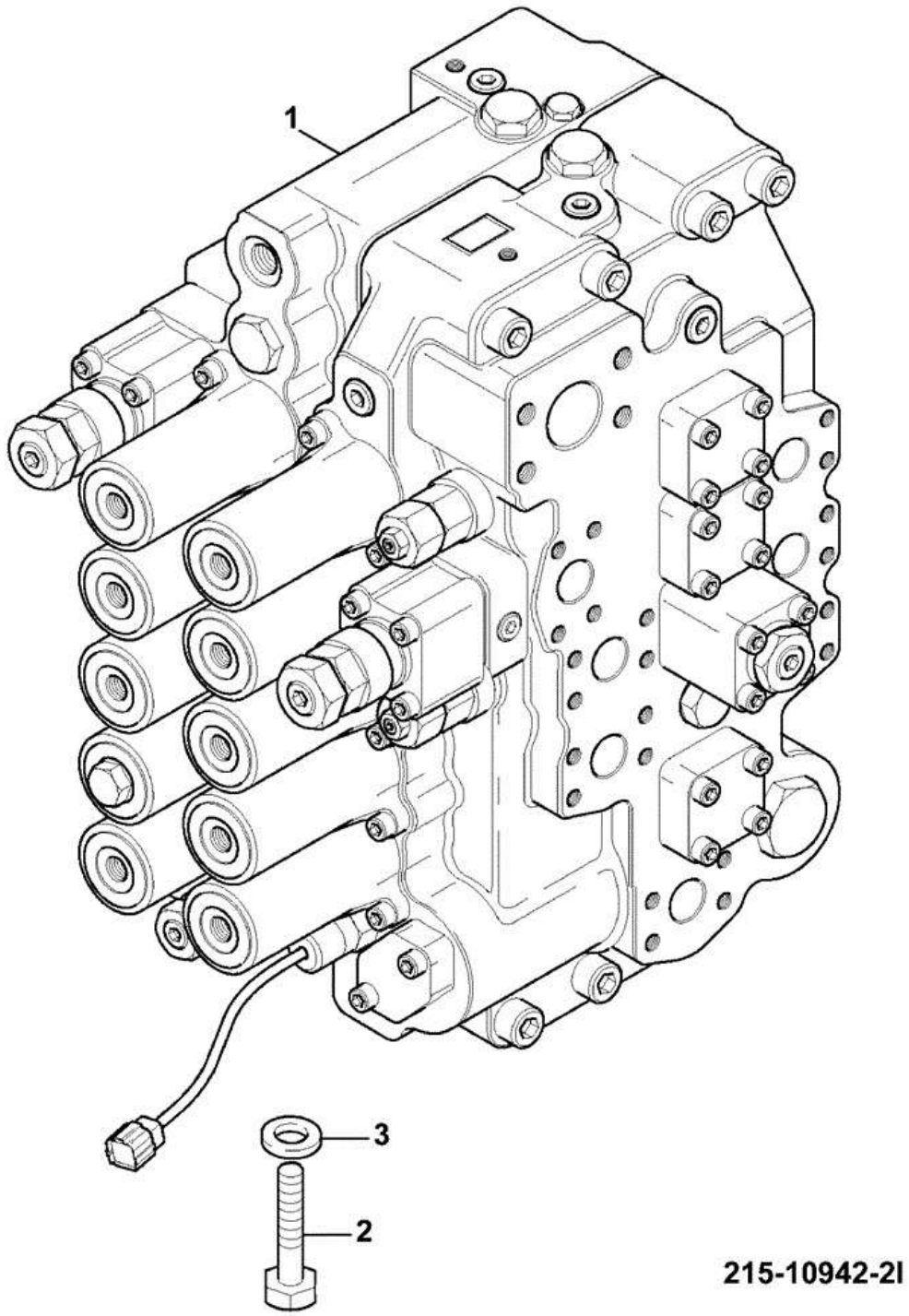

Item	Part #	Change No	Description	Usage Code	QTY
1	333/K6733		Valve Control,Main JS200		1

2	1316/0711D		Setscrew M16 x 45		4
3	JHP0043		Washer M16		4

CONSTRUCTION \ NORTH AMERICA \ CONSTRUCTION / INDUSTRIAL \ JS TRACKED EXCAVATORS \ JS200LC BR E 02451101-02451200 9822/0355 \ E HYDRAULICS \ E03 VALVES

9822/0355 E320-5-1 VALVES EXCAVATOR MAIN CONTROL VALVE

Item	Part #	Change No	Description	Usage Code	QTY
A	333/K6733		Valve Control,Main JS200		1
1	:25/221761		O Ring seal		20
2	:25/221762		Cap		10
3	:25/221763		Cap		10
4	:25/221764		Cap		1
5	:25/221635		Seat spring		2
6	:25/221765		Spring		1
7	:25/221766		End spool		1
8	:25/221767		O Ring seal		1
9	:25/221768		Plug		1
10	:25/221769		O Ring seal		1
11	:25/221770		Spring		1
12	:25/221771		Spool assy		1
13	:25/221772		O Ring seal		1
14	:25/221773		Ring Back-up		2
15	:25/221774		Poppet		2
16	:25/221775		Spring		2
17	:25/221630		Valve poppet		7
18	:25/221631		Spring		8
19	:25/221776		O Ring seal		9
20	:25/221777		Flange		7
21	:25/221778		Poppet		2
22	:25/221779		Spring		2
23	:25/221780		Spacer assy.		2
24	:25/221781		O Ring seal		2
25	:25/221782		O Ring seal		2
26	:332/D7142		Flange		1
27	:332/D7143		Poppet		1
28	:336/A1182		Spring		1
29	:25/221685		Plug		1
30	:25/221686		Seal O-ring		1
31	:25/221678		Spring		1
32	:332/C1460		Poppet		1
33	:25/221787		Poppet		1
34	:332/C1448		Flange		1
35	:25/221632		Spacer valve		2
36	:25/221633		Seal O ring		2
37	:25/221634		Ring back-up		2
38	:25/221788		Spacer		1
39	:25/221671		Plug assembly		1
40	:25/221789		Plug		1
41	:25/221653		Seal O ring		2

42	:25/221790		Plug orifice		1
43	:332/C1429		O Ring		14
44	:332/C1432		O Ring		7
45	:25/221791		Valve anti-drift,assy.		2
46	:25/221792		Valve Relief Main		1
47	:25/221793		Valve relief. 31.4		2
48	:25/221794		Valve relief 39.2		5
49	:25/221795		Kit -relief valve,26.4		1
50	:25/221796		Valve relief, assy		2
51	:25/221691		Plug assembly		1
52	:25/221690		Plug assembly		10
53	:25/221797		Bolt socket-head M10		4
54	:25/221798		Bolt socket-head M10		40
55	:25/221695		Bolt socket-head M10		40
56	:25/221799		Bolt socket-head M10		8
57	:25/221800		Bolt socket-head M16		8
58	:25/221716		Capscrew M6		2
59	:25/221801		Washer		8
60	:25/221802		Cap		2
61	:25/221723		Seal O-ring		2
62	:25/221803		Plug		1
63	:25/221804		Plug assy.		3
64	:25/221806		Plug		1
65	:25/221807		Piston		1
66	:332/C1468		Body		1
67	:25/221809		Piston		1
68	:25/221810		Spring		1
69	:25/221811		Sleeve		1
70	:335/E7534		Poppet Assy		1
71	:25/221813		Bolt socket-head M10		4
72	:25/221639		Seal O-ring		1
73	:25/221814		Ring back-up		1
74	:25/221815		O Ring		1
75	:25/221816		Plug assy.		1

CONSTRUCTION \ NORTH AMERICA \ CONSTRUCTION / INDUSTRIAL \ JS TRACKED EXCAVATORS \ JS200LC BR E 02451101-02451200 9822/0355 \ E HYDRAULICS \ E03 VALVES

9822/0355 E340-1-1 VALVES SERVO CONTROL (PILOT CONTROL) JOYSTICK CONTROL LEFT HAND SIDE

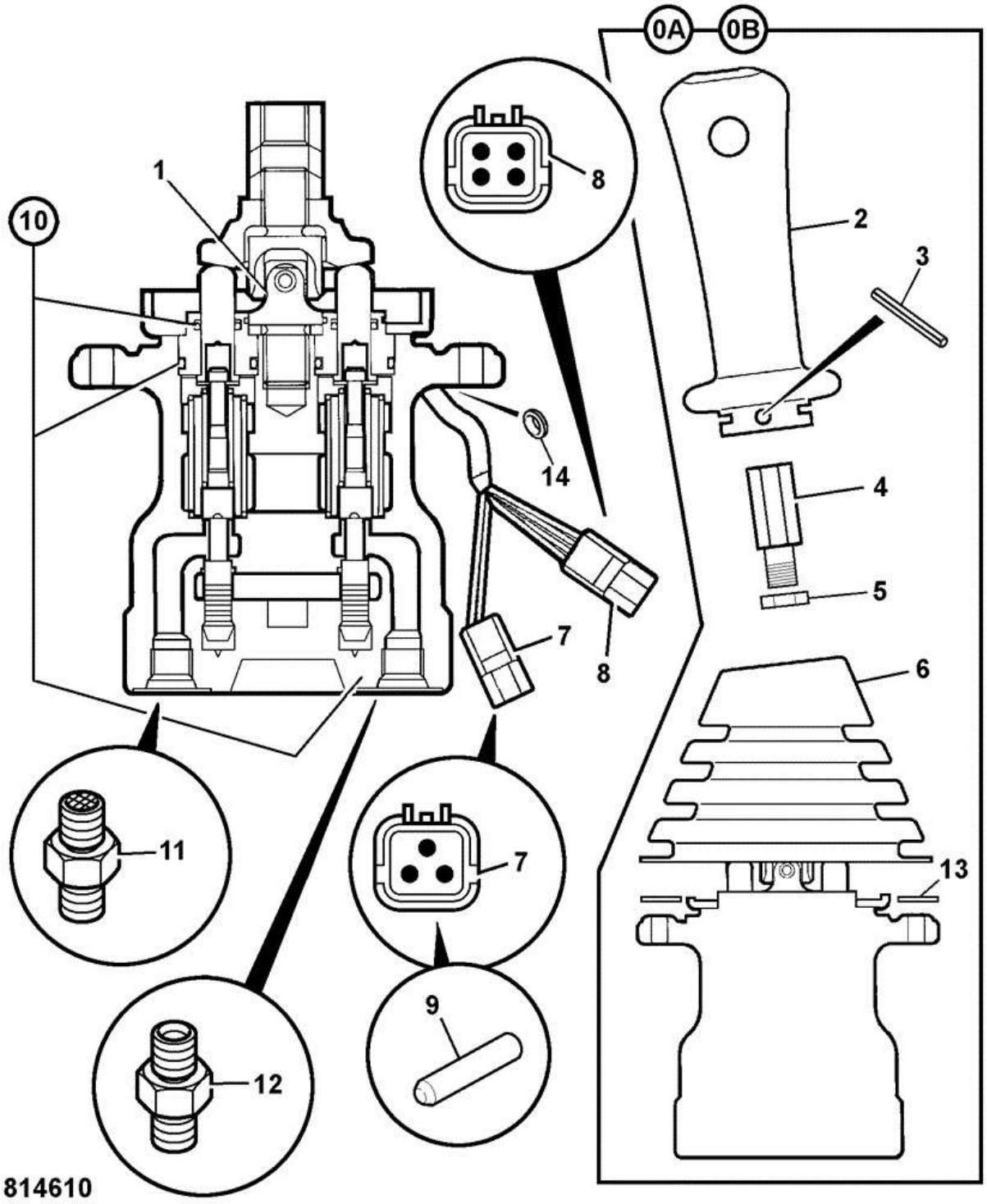

Item	Part #	Change No	Description	Usage Code	QTY
A	:25/222891		Valve Hand Controller Left Hand		1

1	:331/11565		Joint knuckle		1
2	:331/14366		Handle with switch		1
3	:826/10591		Pin roll		1
4	:331/11043		Lever		1
5	:826/10628		Nut locking		1
6	:331/20582		Gaiter Joystick		1
7	:721/10400		Connector 3 pin		0
8	:721/10100		Connector 4 pin		0
9	:721/10401		Connector		8
10	:998/10318		Kit-seal (To suit all four plungers)		1
11	JHJ0168		Adapter Filtered		1
12	1620/2052		Adaptor 3/8BSP X 9/16		5
13	25/221280		Plate		1
14	:828/10020		Grommet		1

CONSTRUCTION \ NORTH AMERICA \ CONSTRUCTION / INDUSTRIAL \ JS TRACKED EXCAVATORS \ JS200LC BR E 02451101-02451200 9822/0355 \ E HYDRAULICS \ E03 VALVES

9822/0355 E340-5-1 VALVES SERVO CONTROL (PILOT CONTROL) JOYSTICK CONTROL RIGHT HAND SIDE

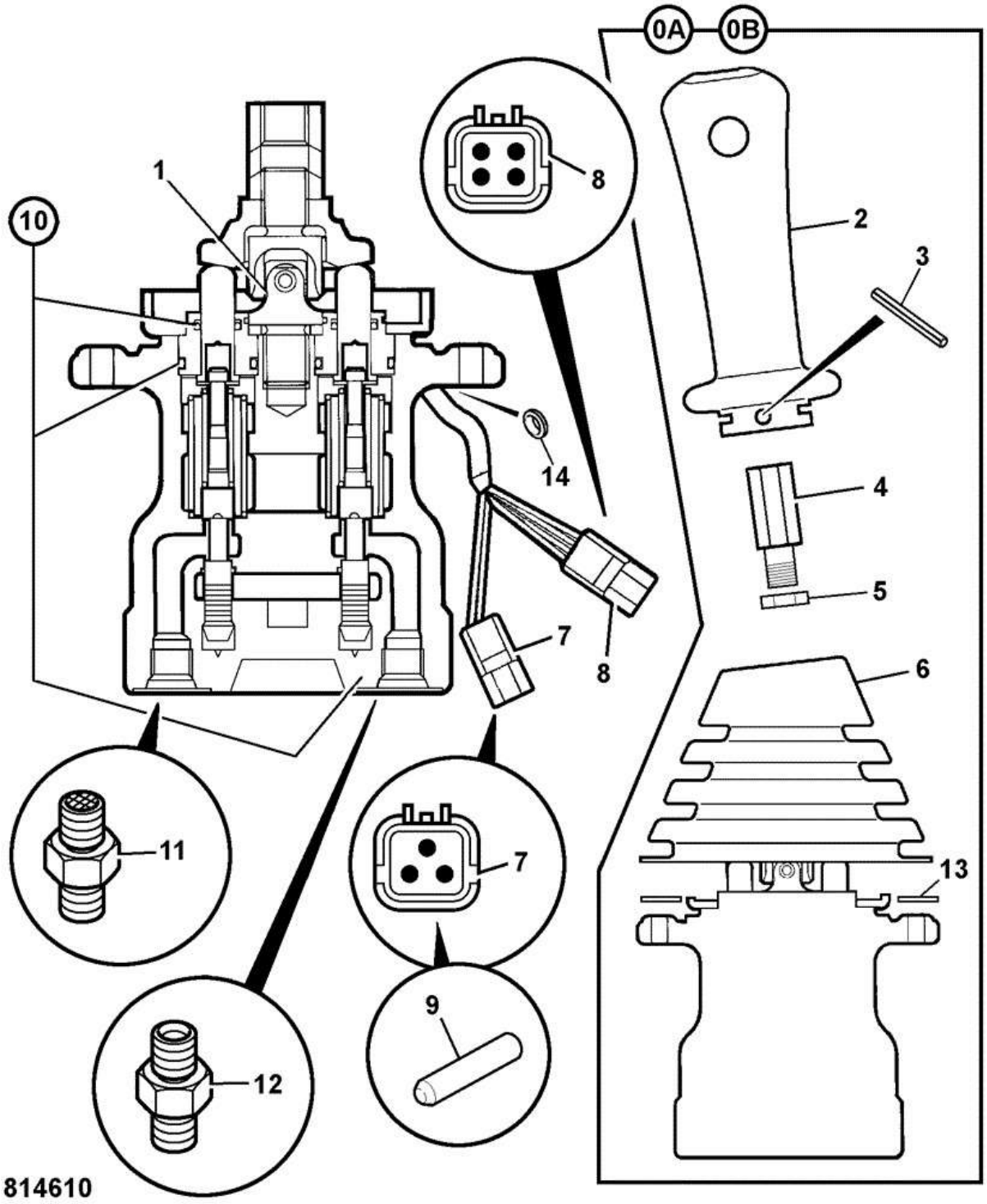

Item	Part #	Change No	Description	Usage Code	QTY
B	:25/222892		Valve Hand Controler Right Hand		1

1	:331/11565		Joint knuckle		1
2	:331/14366		Handle with switch		1
3	:826/10591		Pin roll		1
4	:331/11043		Lever		1
5	:826/10628		Nut locking		1
6	:331/20582		Gaiter Joystick		1
7	:721/10400		Connector 3 pin		0
8	:721/10100		Connector 4 pin		0
9	:721/10401		Connector		8
10	:998/10318		Kit-seal (To suit all four plungers)		1
11	JHJ0168		Adapter Filtered		1
12	1620/2052		Adaptor 3/8BSP X 9/16		5
13	25/221280		Plate		1
14	:828/10020		Grommet		1

9822/0355 E340-10-1 VALVES SERVO CONTROL (PILOT CONTROL) JOYSTICK CONTROL

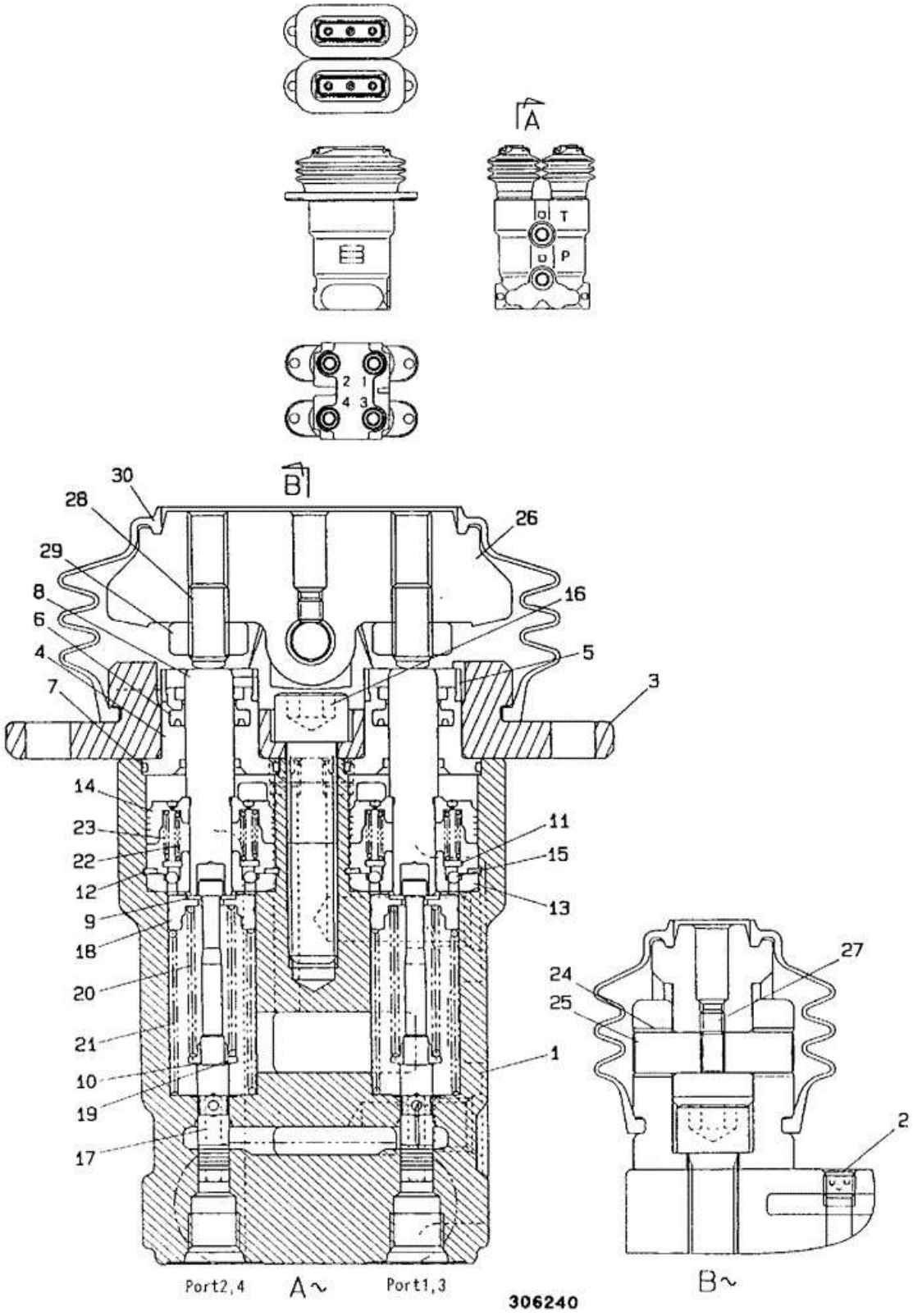

Item	Part #	Change No	Description	Usage Code	QTY
0	KSJ2465		Valve Remote Control		1
1	:LWC0003		Case		1
2	:LLP0114		Plug		2
3	:LZC0158		Cover		2
4	:LLC0128		Plug		4

5	:LWC0004		Cap grease		4
6	:LEC0025		Seal		4
7	:LBQ5025		O Ring		4
8	:LPC0213		Rod push		4
9	:LUC0107		Washer		8
10	:LUC0106		Washer		4
11	:LSC0237		Seat spring		4
12	:LMC0107		Retainer		4
13	:LKC0005		Bush		4
14	:LPC0203		Piston		4
15	:LPC0204		Ball		12
16	:6004/3513		Capscrew		2
17	:N.S.P.		None serviced part		4
18	:LSC0238		Seat spring		4
19	:LUC0104		Washer		4
20	:LSC0236		Spring		4
21	:LSC0214		Spring		4
22	:LSC0239		Spring		4
23	:LSC0240		Spring		4
24	:LKC0001		Bush		4
25	:LJC0003		Shaft cam		2
26	:LMC0085		Cam		2
27	:LLC0118		Screw		2
28	:LUC0102		Bolt		4
29	:LUC0101		Nut lock		4
30	:LCC0014		Gaiter rubber bellows		2
31	:LQC0034		Kit casing		1
32	:LQC0035		Kit-seal		1

9822/0355 E340-15-1 VALVES SERVO CONTROL (PILOT CONTROL) CUSHION

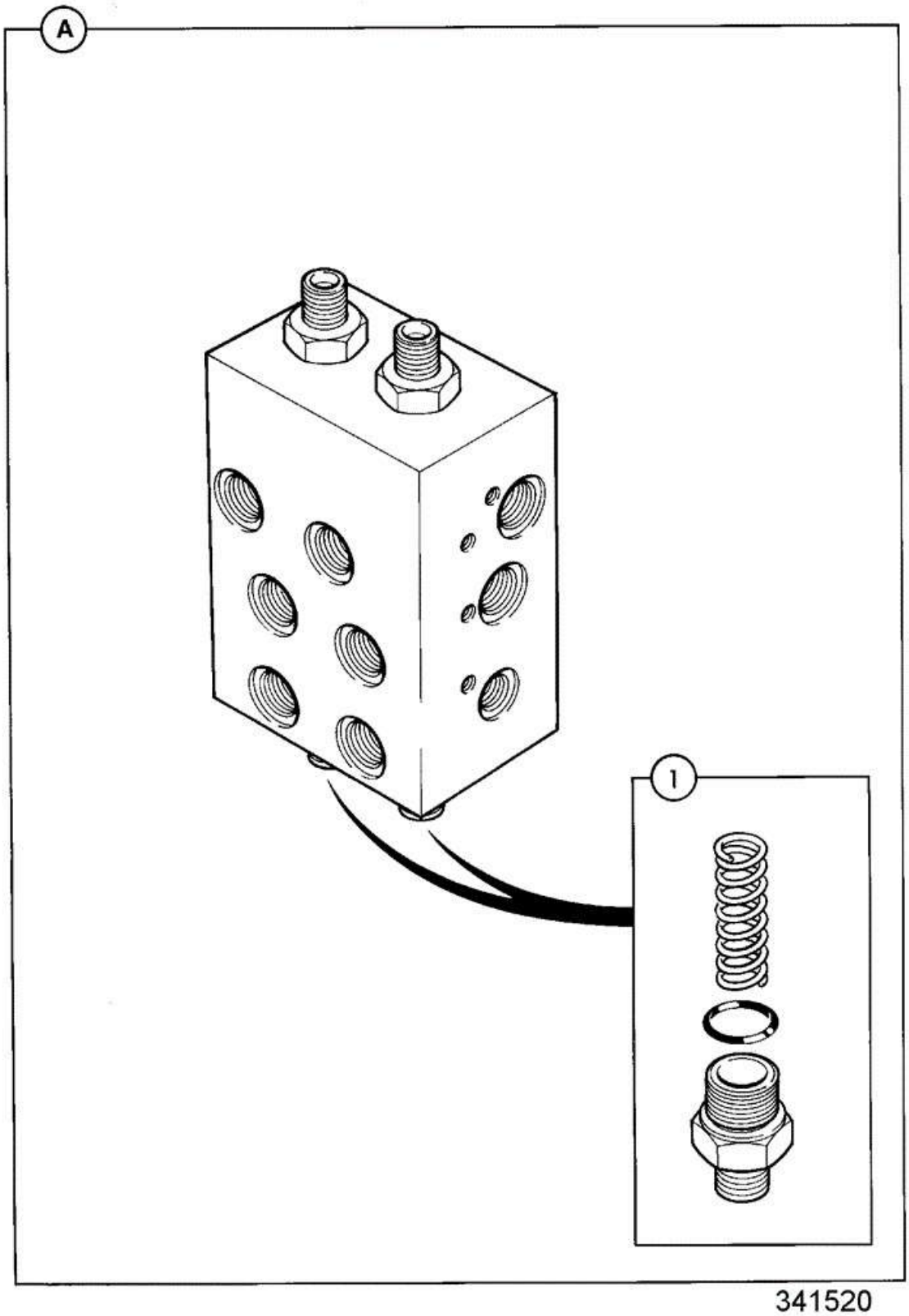

Item	Part #	Change No	Description	Usage Code	QTY
A	25/220041		Valve Cushion		1
1	340/00055		Kit repair		1

CONSTRUCTION \ NORTH AMERICA \ CONSTRUCTION / INDUSTRIAL \ JS TRACKED EXCAVATORS \ JS200LC BR E 02451101-02451200 9822/0355 \ E HYDRAULICS \ E03 VALVES

9822/0355 E390-1-1 OTHER VALVES BOOM HOSE BURST

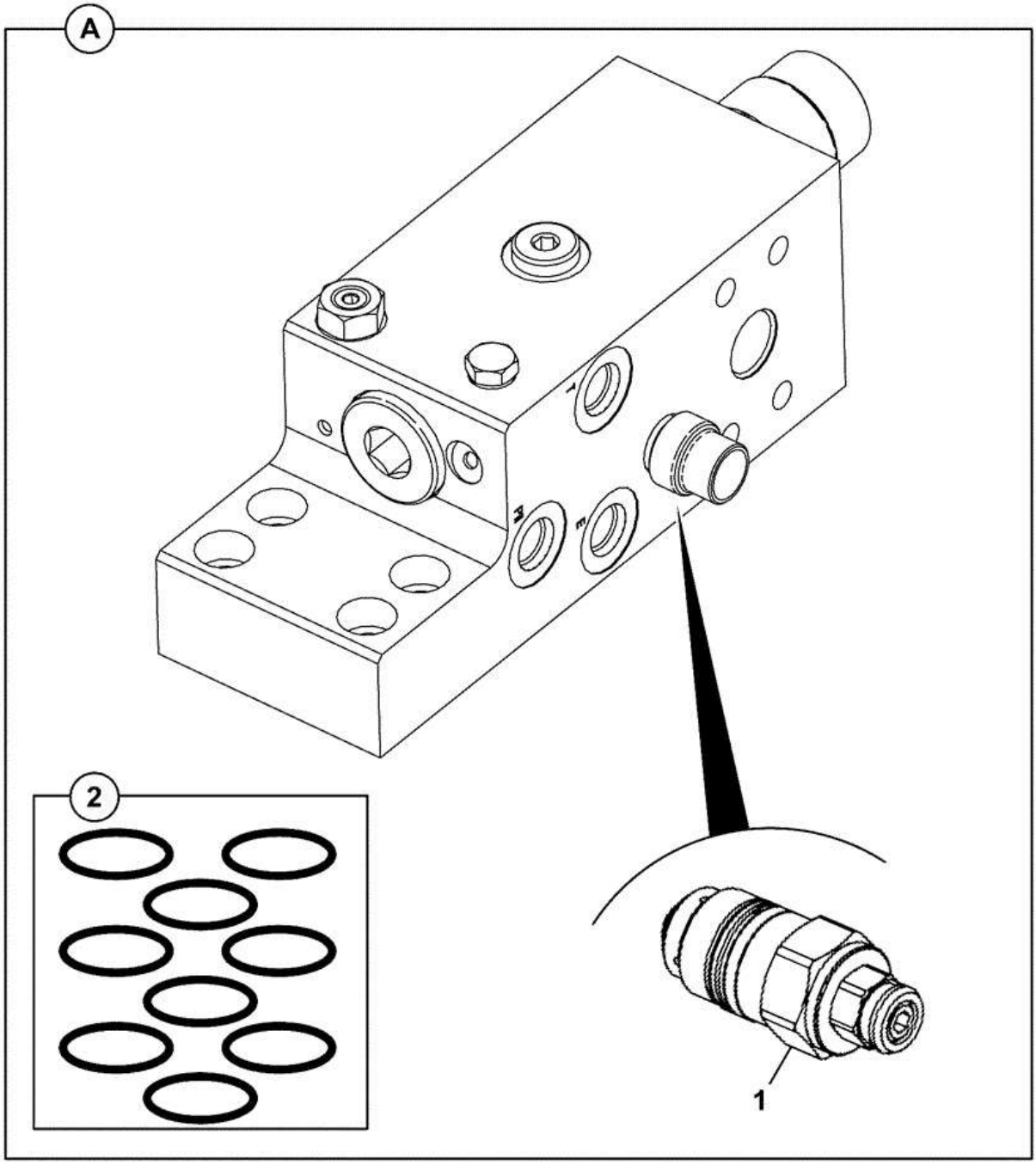

Item	Part #	Change No	Description	Usage Code	QTY
A	332/K3211		Valve HBCV		1
1	334/L0165		Valve relief		1
2	334/L0229		Kit-seal		1

CONSTRUCTION \ NORTH AMERICA \ CONSTRUCTION / INDUSTRIAL \ JS TRACKED EXCAVATORS \ JS200LC BR E 02451101-02451200 9822/0355 \ E HYDRAULICS \ E03 VALVES

9822/0355 E390-5-1 OTHER VALVES ARM HOSE BURST

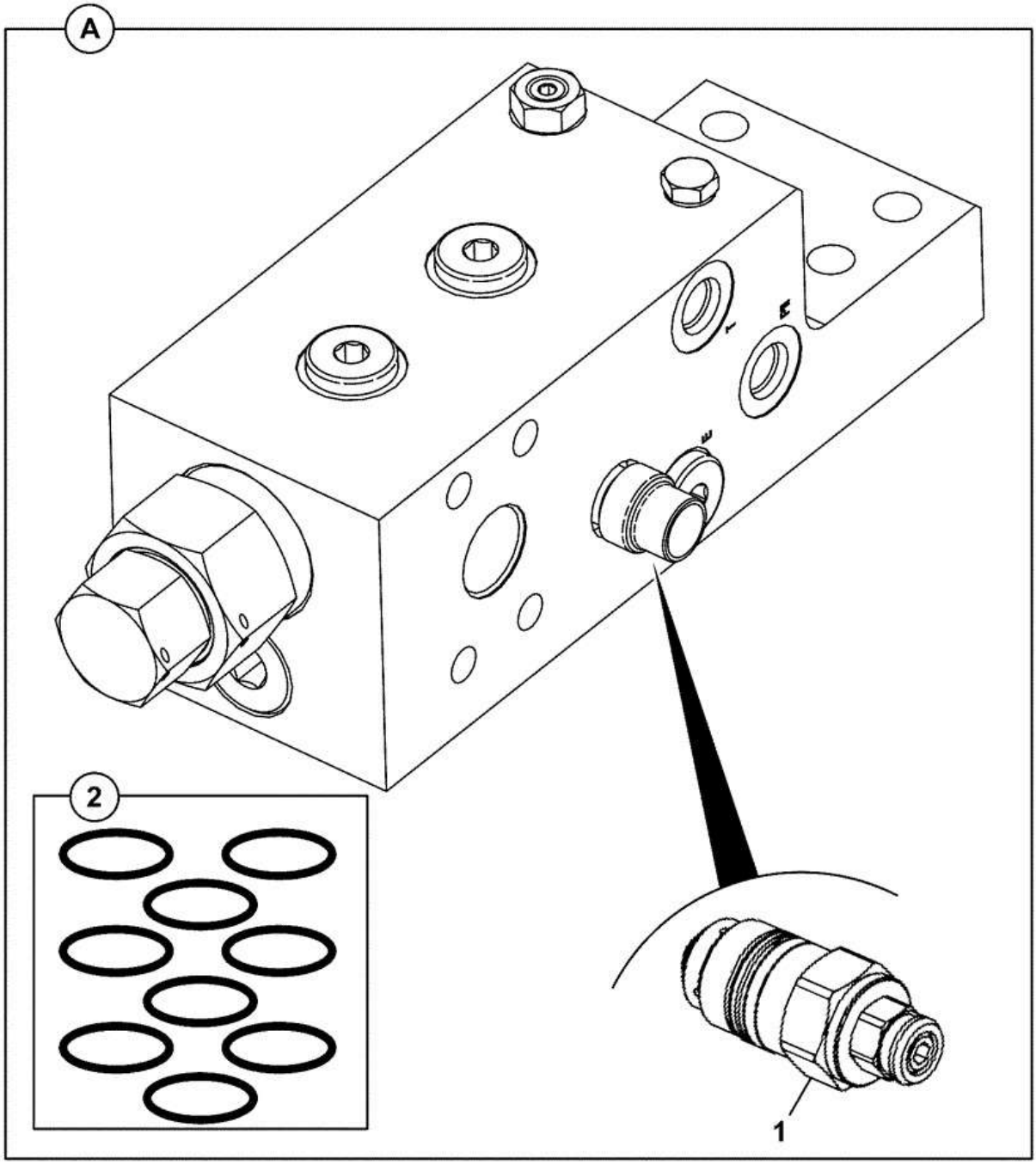

Item	Part #	Change No	Description	Usage Code	QTY
A	332/K3753		Valve HBCV		1
1	334/L0165		Valve relief		1
2	334/L0166		Kit seal		1

CONSTRUCTION \ NORTH AMERICA \ CONSTRUCTION / INDUSTRIAL \ JS TRACKED EXCAVATORS \ JS200LC BR E 02451101-02451200 9822/0355 \ E HYDRAULICS \ E03 VALVES

9822/0355 E390-15-1 OTHER VALVES SOLENOID

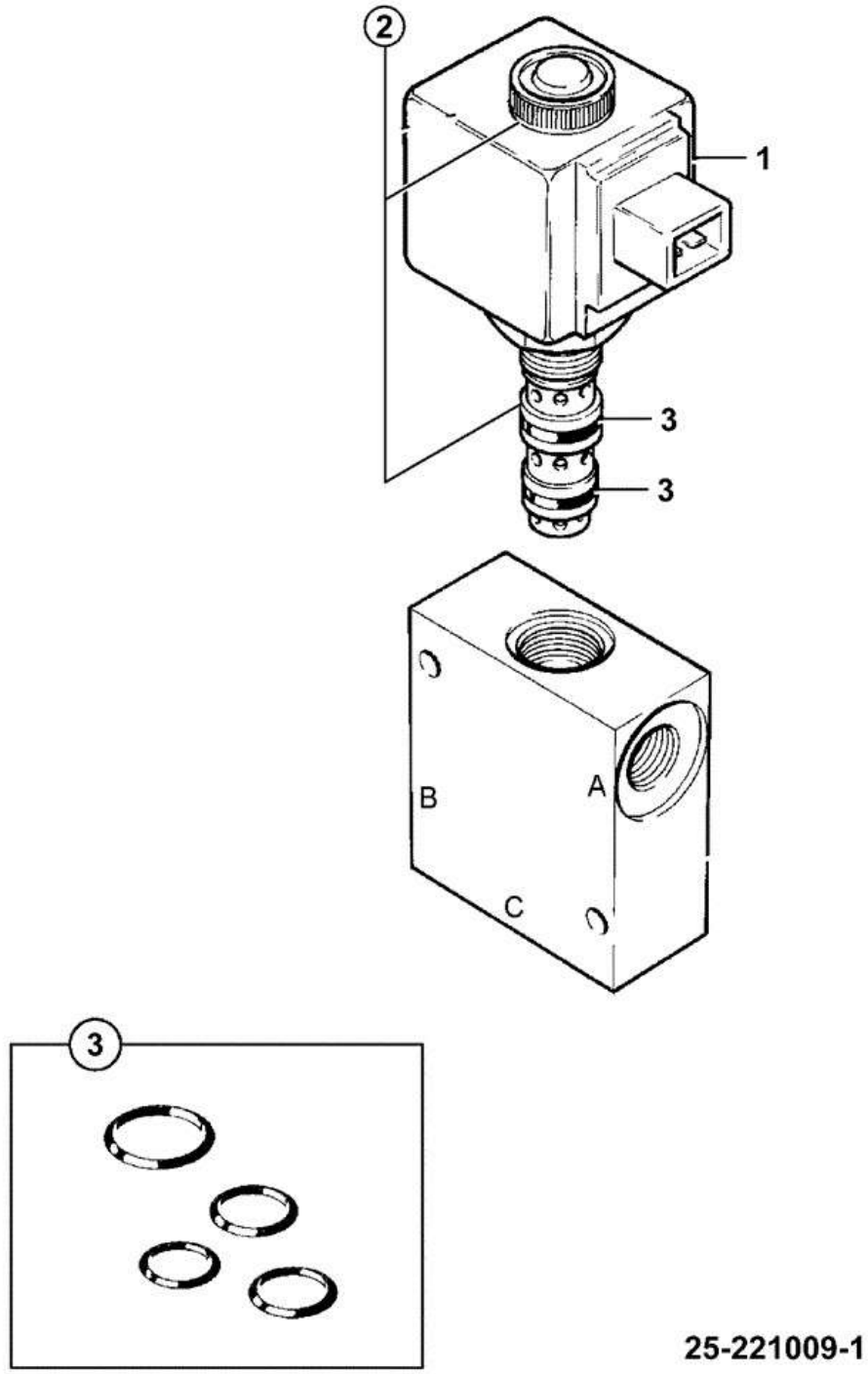

Item	Part #	Change No	Description	Usage Code	QTY
A	25/221009		Valve solenoid		1
1	:25/221263		Coil 24V		1
2	:25/220555		Cartridge valve excl. coil		1

3	::25/220533		Kit seal		1

9822/0355 E390-20-1 OTHER VALVES SOLENOID 8 STATION

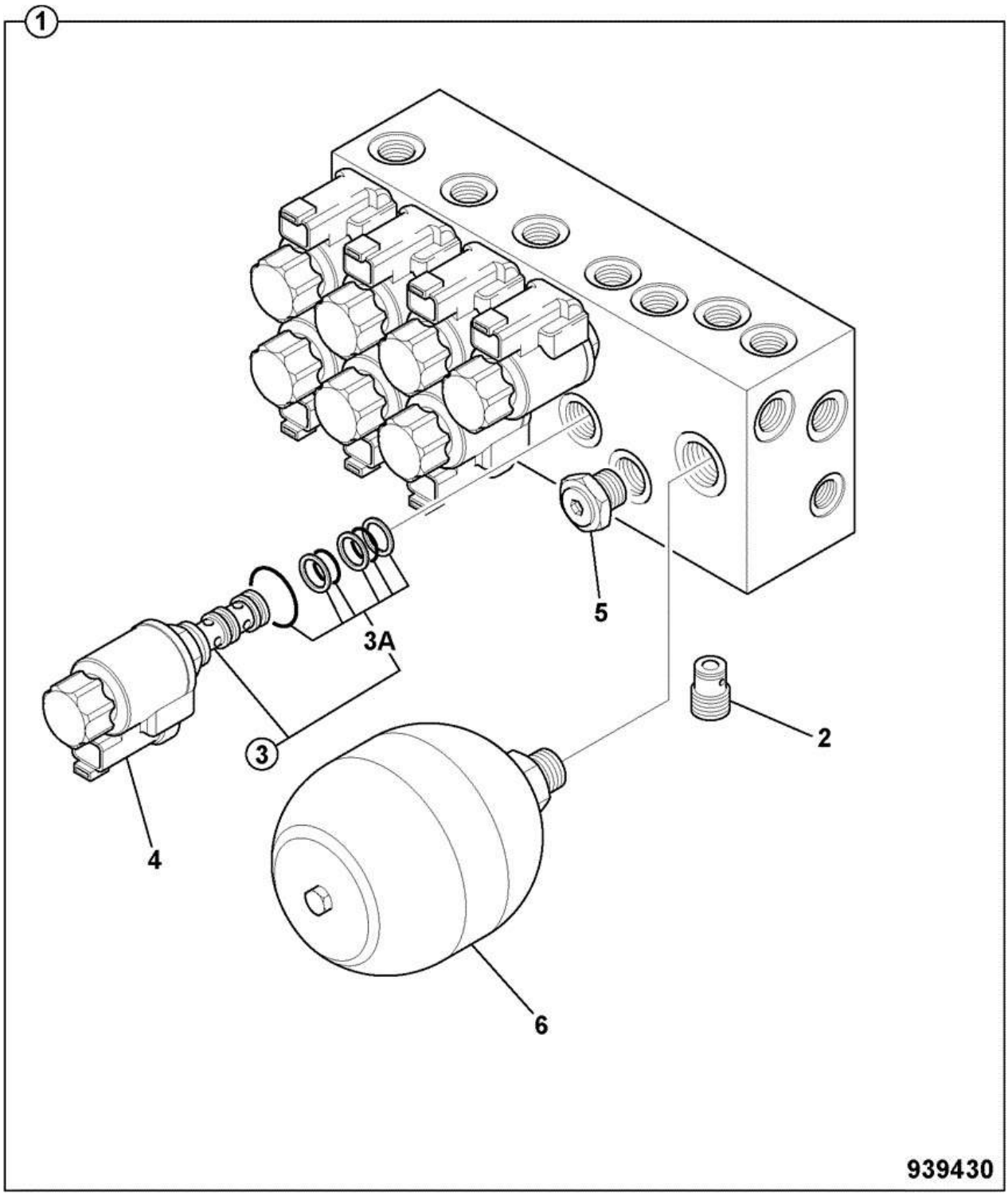

Item	Part #	Change No	Description	Usage Code	QTY
1	332/J4523		Valve 8 station solenoid inc. accumulator		1

2	:332/D7870		Valve		1
3	:332/D7866		Valve cartridge		8
3A	::332/F0075		Kit-seal valve stem		1
4	:332/D6317		Coil		8
5	:332/D7867		Valve		1
6	:JHJ0050		Accumulator		1

9822/0355 E390-35-1 OTHER VALVES VALVE HOSE BURST-BOOM

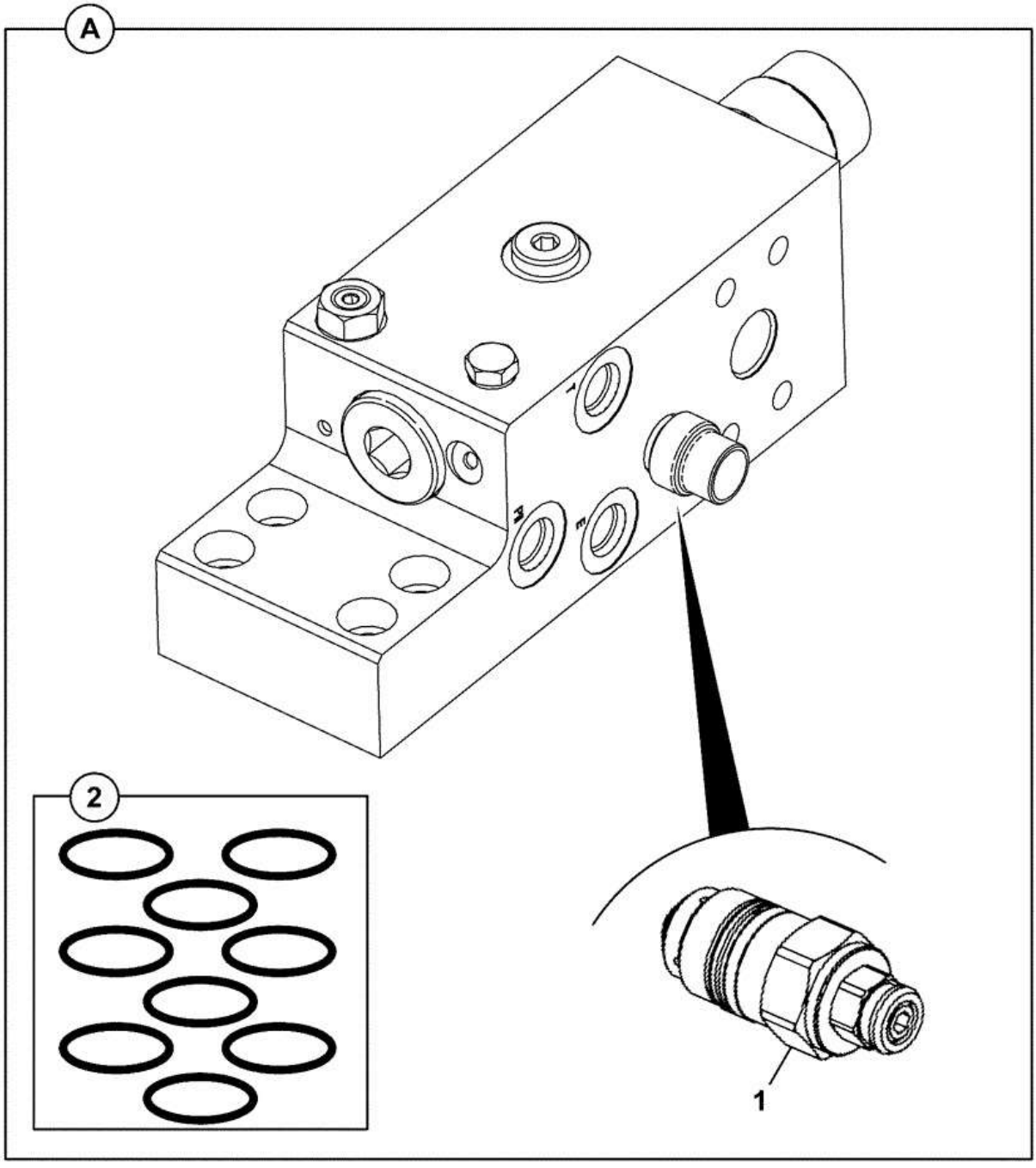

Item	Part #	Change No	Description	Usage Code	QTY
A	332/K1633		Valve HBCV		1

1	334/L0165		Valve relief		1
2	334/L0229		Kit-seal		1

CONSTRUCTION \ NORTH AMERICA \ CONSTRUCTION / INDUSTRIAL \ JS TRACKED EXCAVATORS \ JS200LC BR E 02451101-02451200 9822/0355 \ E HYDRAULICS \ E03 VALVES

9822/0355 E390-40-1 OTHER VALVES AUXILIARY FOOT CONTROL

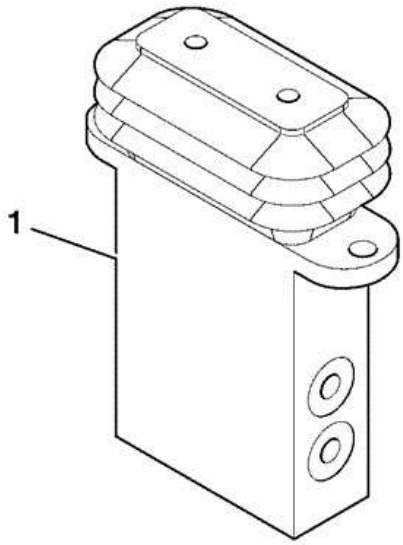

708570

Item	Part #	Change No	Description	Usage Code	QTY
1	928/60339		Valve hammer, auxiliary foot operated		1

1A	:333/P8446		Bellows gaiter		1

CONSTRUCTION \ NORTH AMERICA \ CONSTRUCTION / INDUSTRIAL \ JS TRACKED EXCAVATORS \ JS200LC BR E 02451101-02451200 9822/0355 \ E HYDRAULICS \ E04 RAMS

9822/0355 E400-5-1 RAM INSTALLATION ASSEMBLIES BUCKET STANDARD

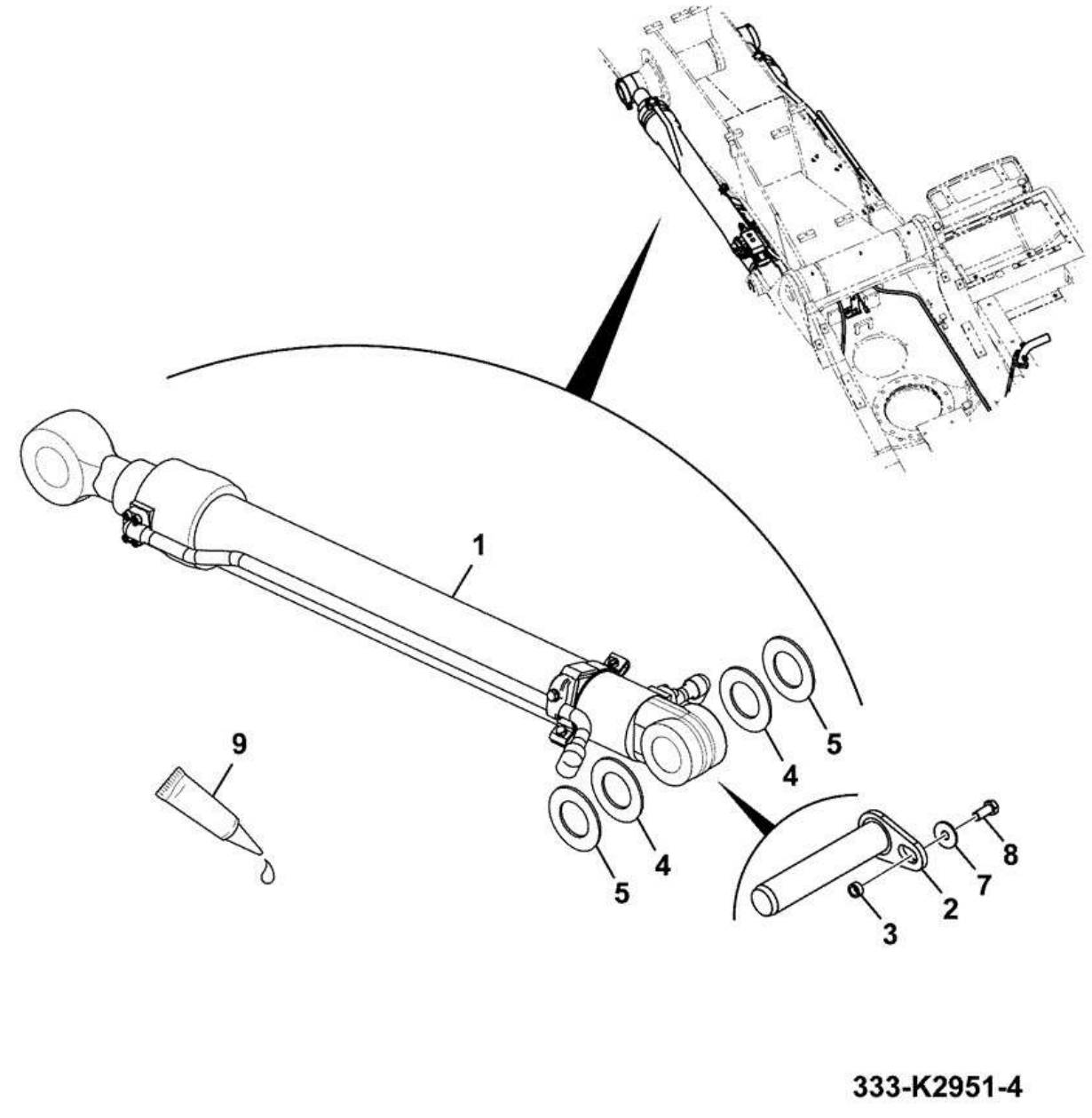

Item	Part #	Change No	Description	Usage Code	QTY
1	****		Assembly cylinder bucket		1

2	333/J5557		Pin Pivot 75mm x 204mm		1
3	333/K7980		Spacer 1" X 8" SWG		1
4	KRV1176		Shim 76mm ID x 130mm OD 1.2mm thick		2
5	333/K7449		Shim ID 76 X OD 130 X 0.8		2
7	1412/0007D		Washer (5/8" Large)		1
8	1316/0710D		Bolt		1
9	4101/0500		Fluid Locking Loctite 262		0

CONSTRUCTION \ NORTH AMERICA \ CONSTRUCTION / INDUSTRIAL \ JS TRACKED EXCAVATORS \ JS200LC BR E 02451101-02451200 9822/0355 \ E HYDRAULICS \ E04 RAMS

9822/0355 E465-5-1 RAMS DIPPER HBCV, ASSEMBLY

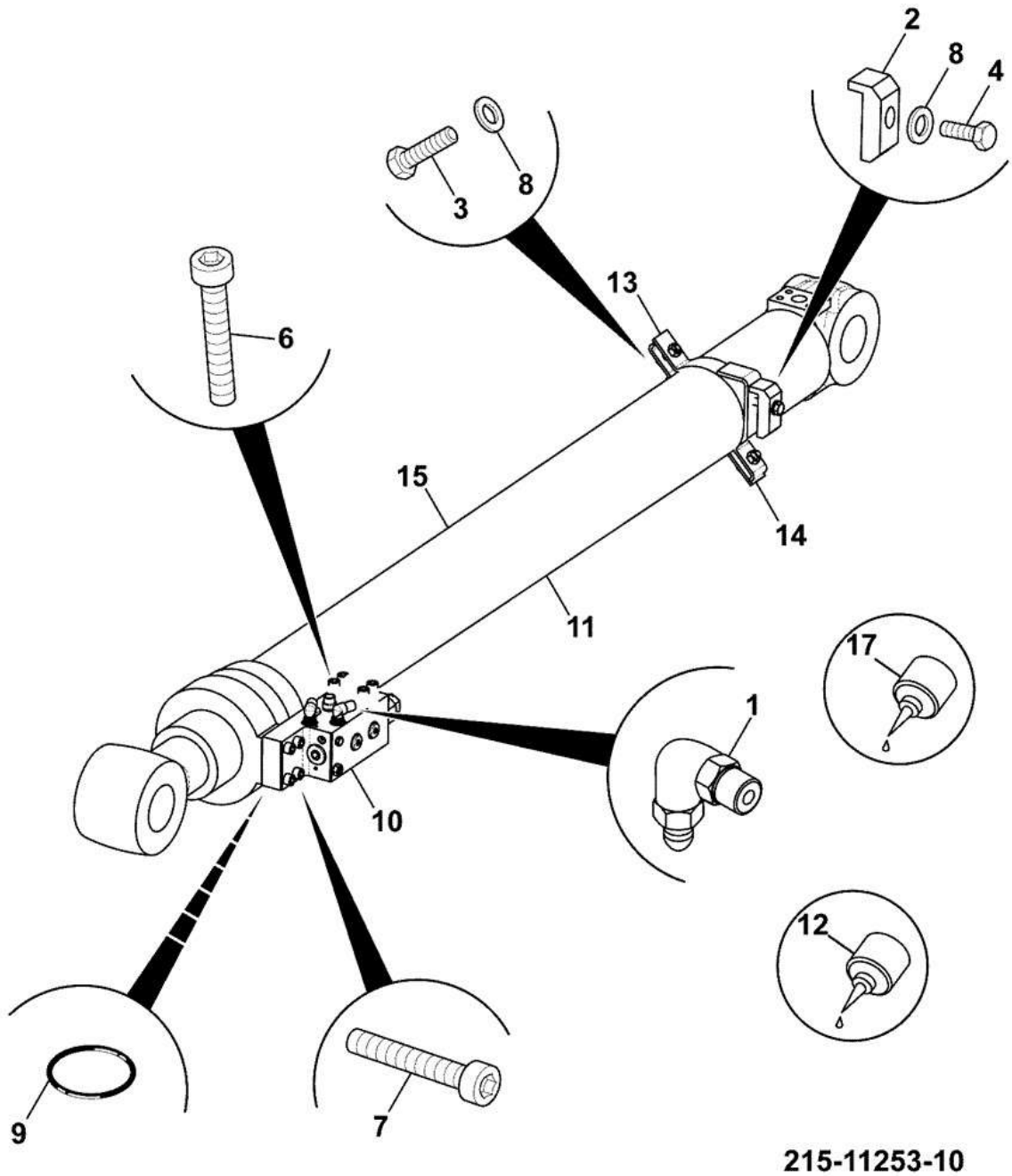

Item	Part #	Change No	Description	Usage Code	QTY
1	JHJ0037		Adapter elbow 9/16UNF-3/8BSP		2
2	KMJ1714		Clamp pipe		1
3	1316/3510D		Bolt M12x40 grade 10.9		2
4	1316/3513D		Bolt		1
6	1391/3510D		Capscrew		4
7	1391/3513D		Capscrew		4

8	1420/0009D		Washer (M12)		3
9	2409/0210		O Ring		2
10	332/K3753		Valve HBCV		1
11	333/J5022		Ram dipper arm 130mm cyl x 95mm rod		2
12	4101/0500		Fluid Locking Loctite 262		0
13	332/J8087		Clamp		1
14	332/J8088		Clamp		1
15	332/J8089		Pipe arm rod side		1
17	****		Fluid Locking		0

CONSTRUCTION \ NORTH AMERICA \ CONSTRUCTION / INDUSTRIAL \ JS TRACKED EXCAVATORS \ JS200LC BR E 02451101-02451200 9822/0355 \ E HYDRAULICS \ E04 RAMS

9822/0355 E465-10-1 RAMS DIPPER COMPONENTS

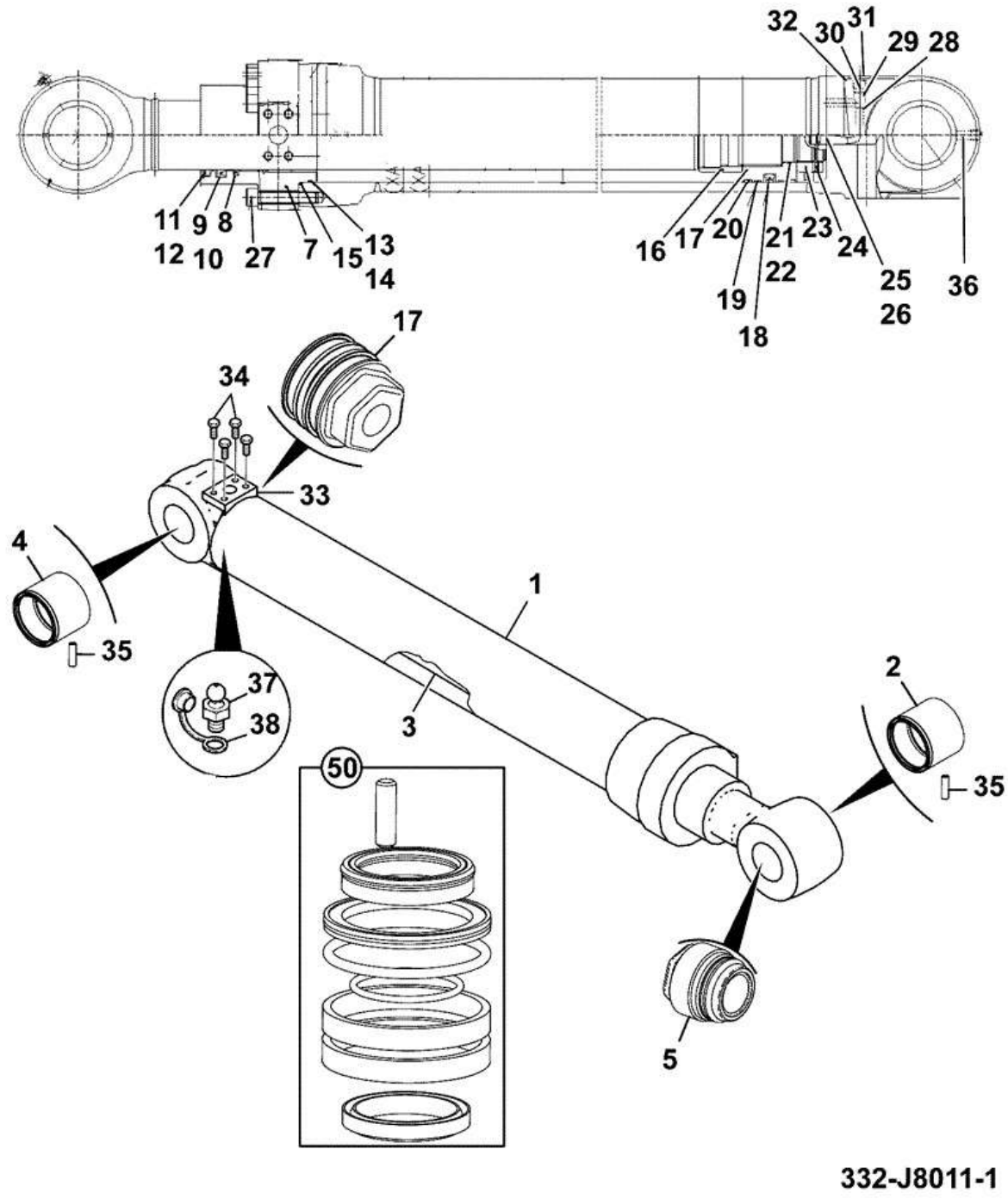

Item	Part #	Change No	Description	Usage Code	QTY
A	333/J5022		Ram dipper arm 130mm cyl x 95mm rod		1
1	:332/H0416		Cylinder		1
2	:332/H5523		Pin bush		1

3	:332/H0297		Rod assembly		1
4	:332/H5523		Pin bush		1
5	:332/H0417		Cover rod		1
7	:332/G3320		Ring Retaining		1
8	:332/H5525		Seal buffer		1
9	:332/H5526		Seal		1
10	:332/H5527		Ring back up		1
11	:332/H5528		Wiper dust		1
12	:332/H5529		Ring retaining		1
13	:332/H5530		O Ring		1
14	:332/H5531		Ring back up		1
15	:332/H5532		O Ring		1
16	:332/H5555		Ring cushion		1
17	:333/G7461		Piston Head		1
18	:332/H5533		Seal		1
19	****		T.B.A		2
20	:332/H6486		Ring dust		2
21	:332/H5536		O Ring		1
22	:332/H5537		Ring back up		2
23	:332/H5538		Nut piston		1
24	:332/H5539		Setscrew		1
25	:332/H5540		Plunger		1
26	:332/H5541		Ring stop		1
27	:332/H5542		Bolt		14
28	:332/H5543		Valve check		1
29	:332/H5544		Spring		1
30	:332/H5545		Bracket		1
31	:332/H5546		Plug		1
32	:332/H5547		O Ring		1
33	:332/H5548		Cover dust		2
34	:332/H5549		Bolt		8
35	:332/H5551		Wiper pin		4
36	:332/H5552		Cap		1
37	:332/H5553		Nipple grease		1
38	:332/C7320		Cap		1
50	:334/P0176		Kit seal		1

CONSTRUCTION \ NORTH AMERICA \ CONSTRUCTION / INDUSTRIAL \ JS TRACKED EXCAVATORS \ JS200LC BR E 02451101-02451200 9822/0355 \ E HYDRAULICS \ E04 RAMS

9822/0355 E480-1-1 RAMS BUCKET (JAW BUCKET)

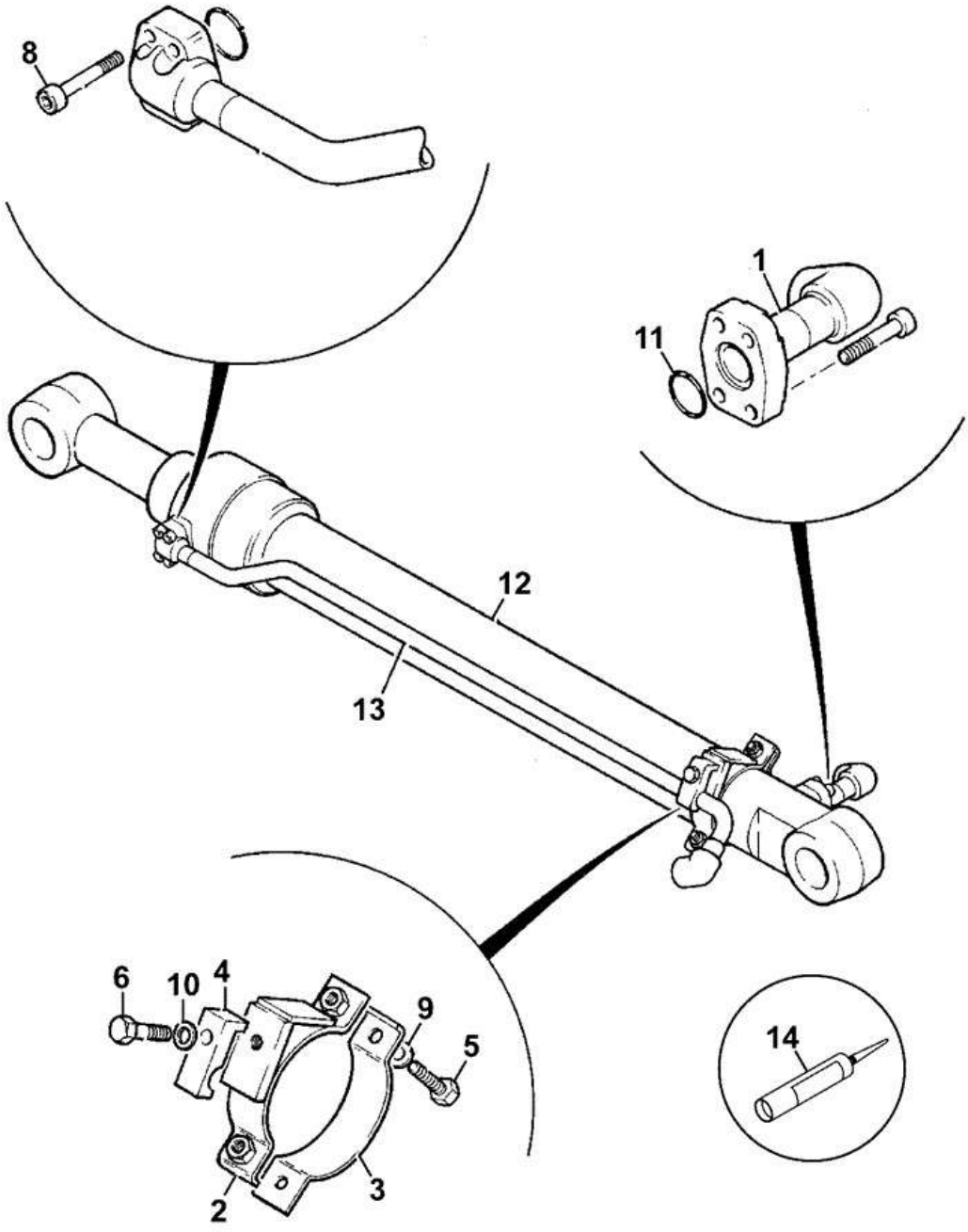

Item	Part #	Change No	Description	Usage Code	QTY
1	332/J8014		Adaptor bucket cylinder		1
2	332/J8019		Clamp bucket cylinder		1
3	332/J8017		Clamp		1

4	KRV0548		Clamp		1
5	1316/3410D		Bolt		2
6	1316/3511D		Bolt		1
8	1391/3409D		Capscrew M10x35mm		8
9	1420/0008D		Washer (M10)		2
10	1420/0009D		Washer (M12)		1
11	2409/0205		O Ring		2
12	332/J8010		Ram Bucket 115mm cyl x 85mm rod		1
13	332/J8015		Pipe Bucket Rod		1
14	4101/0500		Fluid Locking Loctite 262		0

CONSTRUCTION \ NORTH AMERICA \ CONSTRUCTION / INDUSTRIAL \ JS TRACKED EXCAVATORS \ JS200LC BR E 02451101-02451200 9822/0355 \ E HYDRAULICS \ E05 FILTER

9822/0355 E510-1-1 FILTER MAIN HYDRAULIC RETURN

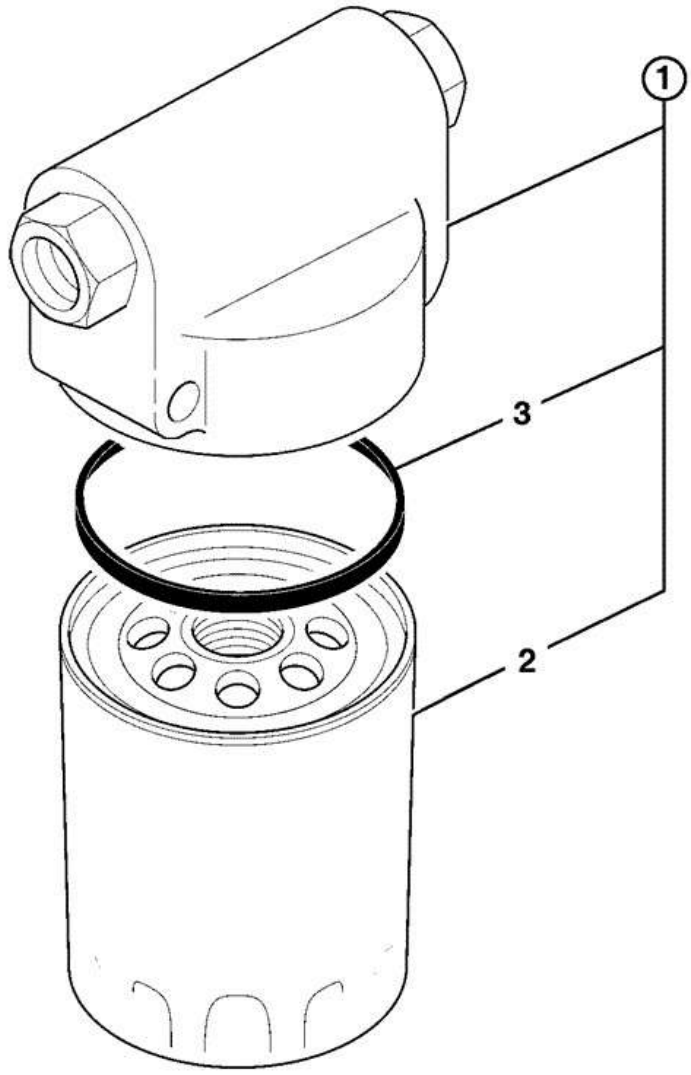

959790

Item	Part #	Change No	Description	Usage Code	QTY
1	32/925214		Filter Assembly		1
2	:KBJ1691		Element servo filter		1
3	:KHJ1032		O Ring		1

CONSTRUCTION \ NORTH AMERICA \ CONSTRUCTION / INDUSTRIAL \ JS TRACKED EXCAVATORS \ JS200LC BR E 02451101-02451200 9822/0355 \ E HYDRAULICS \ E05 FILTER

9822/0355 E520-1-1 FILTER OTHER HYDRAULIC ASSEMBLY DRAIN LINE

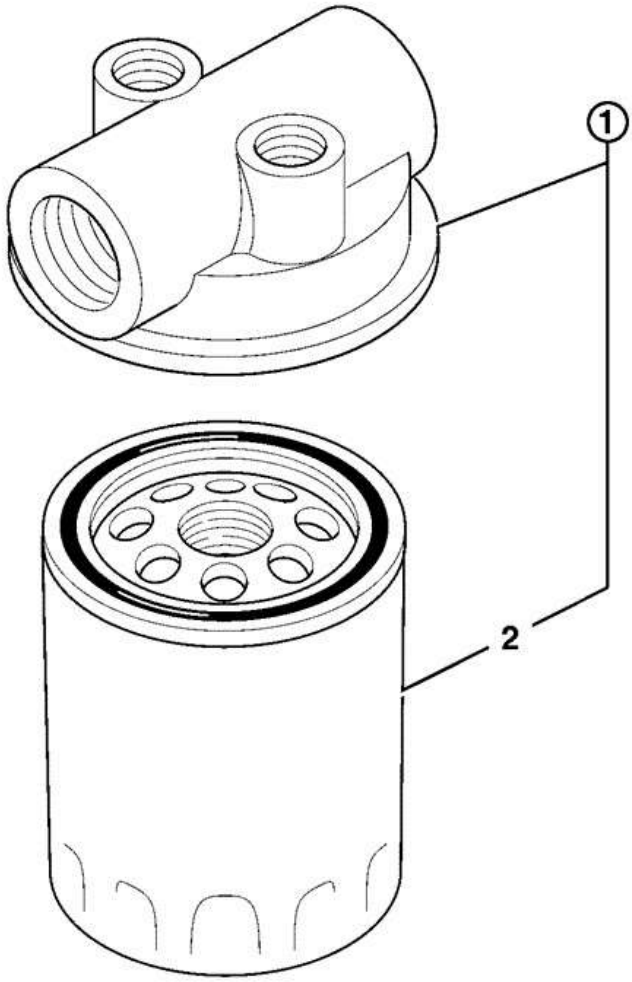

959800

Item	Part #	Change No	Description	Usage Code	QTY
1	KNJ0287		Filter Inlet		1

2	:KNJ0288		Element oil filter		1

CONSTRUCTION \ NORTH AMERICA \ CONSTRUCTION / INDUSTRIAL \ JS TRACKED EXCAVATORS \ JS200LC BR E 02451101-02451200 9822/0355 \ E HYDRAULICS \ E05 FILTER

9822/0355 E540-2-1 FILTER RETURN HAMMER CIRCUIT

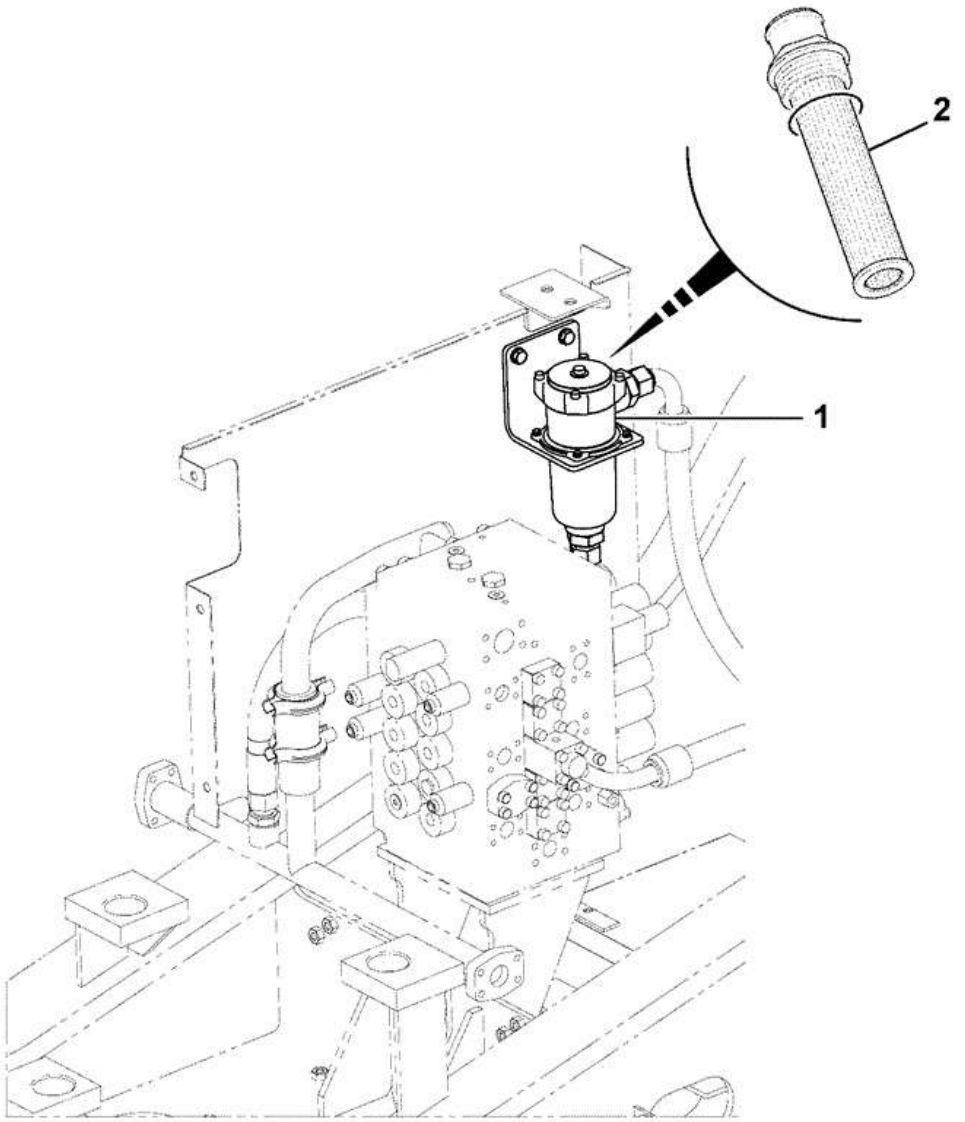

333-J9896-1

Item	Part #	Change No	Description	Usage Code	QTY
1	333/J9896		Filter		1
2	:333/K0099		Filter element		1
3	:334/D2780		O Ring 3.53 x 91.67mm		1

CONSTRUCTION \ NORTH AMERICA \ CONSTRUCTION / INDUSTRIAL \ JS TRACKED EXCAVATORS \ JS200LC BR E 02451101-02451200 9822/0355 \ F TRANSMISSION \ F04 GEARBOX ASSEMBLY

9822/0355 F430-1-1 SLEW/SWING MOTOR INSTALLATION GEARBOX COMPONENTS

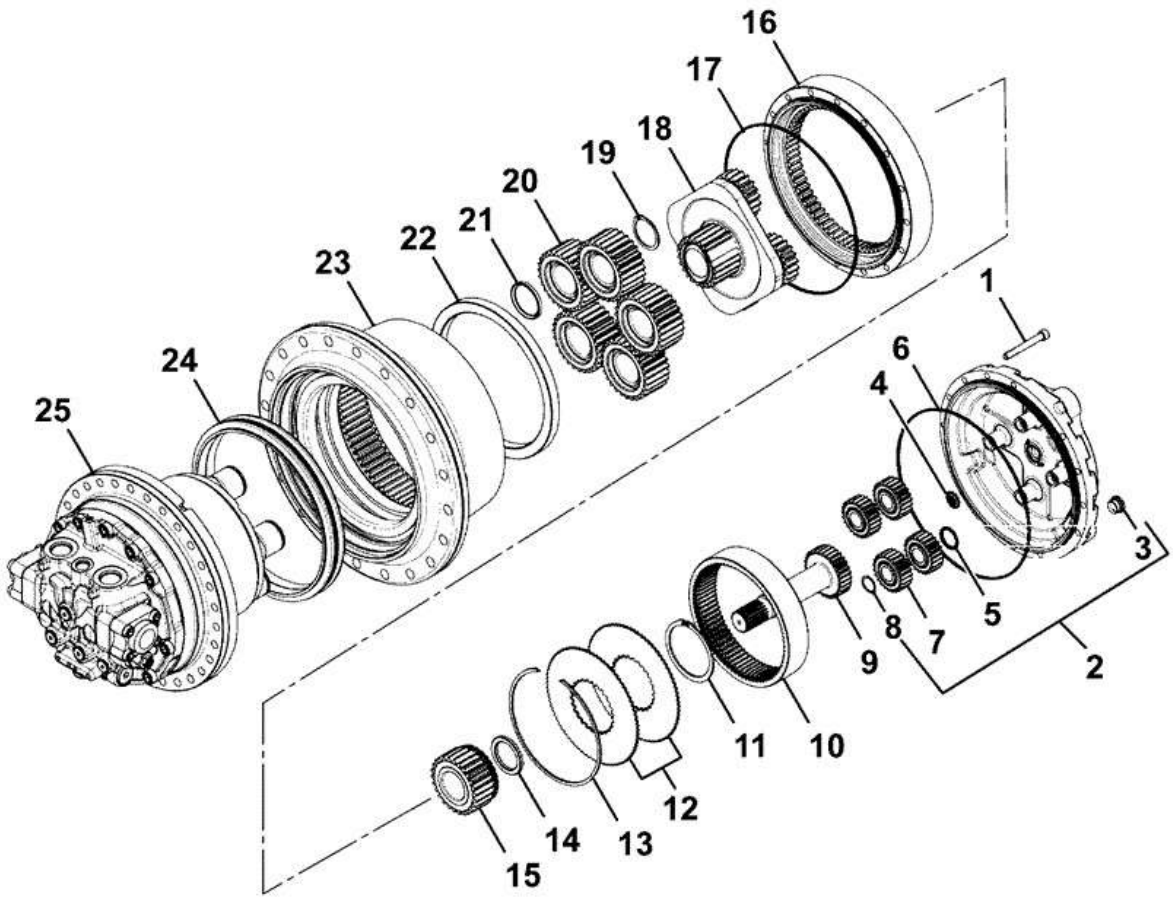

332-K1192-1

Item	Part #	Change No	Description	Usage Code	QTY
A	332/K1192		Motor Travel, BONFIGLIOLI		1

1	:332/H3901		Screw M10 x 80mm		13
2	:332/H3904		Kit Cover assembly		1
3	:332/H3913		Plug oil breather		2
4	:20/950518		Pad		1
5	:332/H3914		Spacer		4
6	:05/903819		O Ring		1
7	:332/H3915		Gear planetary		4
8	:332/H3916		Circlip		4
9	:332/H3917		Gear sun		1
10	:332/H3918		Ring toothed		1
11	:332/H3919		Circlip		1
12	:332/H3920		Disc		2
13	:332/H3923		Circlip		1
14	:332/H3924		Ring centering		1
15	:332/H3925		Gear sun		1
16	:332/H3926		Ring toothed		1
17	:05/903819		O Ring		1
18	:332/H3928		Gear reduction assembly		1
19	:332/H3929		Circlip		5
20	:332/H3930		Gear Planetary		5
21	:332/H3931		Spacer		5
22	:332/H3932		Nut		1
23	:332/H3933		Housing & bearing		1
24	:05/903811		Seal assembly		1
25	:332/H3935		Motor hydraulic		1

CONSTRUCTION \ NORTH AMERICA \ CONSTRUCTION / INDUSTRIAL \ JS TRACKED EXCAVATORS \ JS200LC BR E 02451101-02451200 9822/0355 \ F TRANSMISSION \ F04 GEARBOX ASSEMBLY

9822/0355 F430-5-1 SLEW/SWING MOTOR INSTALLATION TRACK

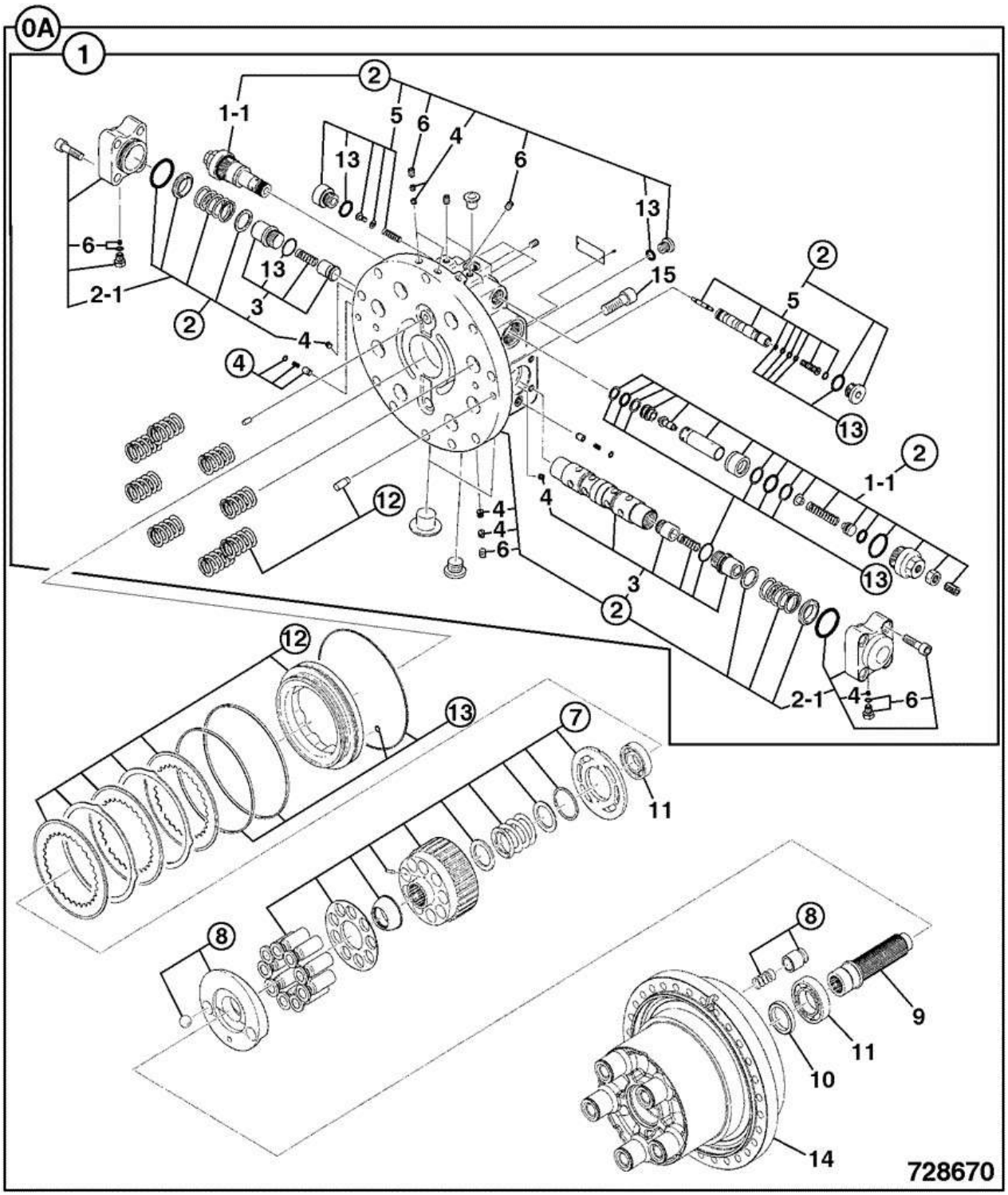

Item	Part #	Change No	Description	Usage Code	QTY
A	332/H3935		Motor hydraulic		1

1	****		None serviced part		1
1-1	:25/222665		Valve relief		2
2	:332/H5576		Kit-valve assembly		1
3	:332/H5577		Kit-plunger		1
4	:332/H5579		Kit orifice		1
5	:332/H5580		Kit-plug assembly		1
6	:332/H5578		Kit-plug & o ring		1
7	****		None serviced part		1
8	:332/H5581		Kit-plug & o ring		1
9	:20/925674		Shaft motor drive		1
10	:332/H5585		Seal ring		1
11	:20/951604		Bearing Bearing Kit Track Motor/Gearbox		1
12	:332/H5586		Kit-repair brake assembly		1
13	:332/H5587		Kit-seal		1
14	****		None serviced part		1
15	:05/903833		Screw		10

CONSTRUCTION \ NORTH AMERICA \ CONSTRUCTION / INDUSTRIAL \ JS TRACKED EXCAVATORS \ JS200LC BR E 02451101-02451200 9822/0355 \ F TRANSMISSION \ F04 GEARBOX ASSEMBLY

9822/0355 F430-15-5 SLEW/SWING MOTOR INSTALLATION TURNTABLE BEARING (J903)

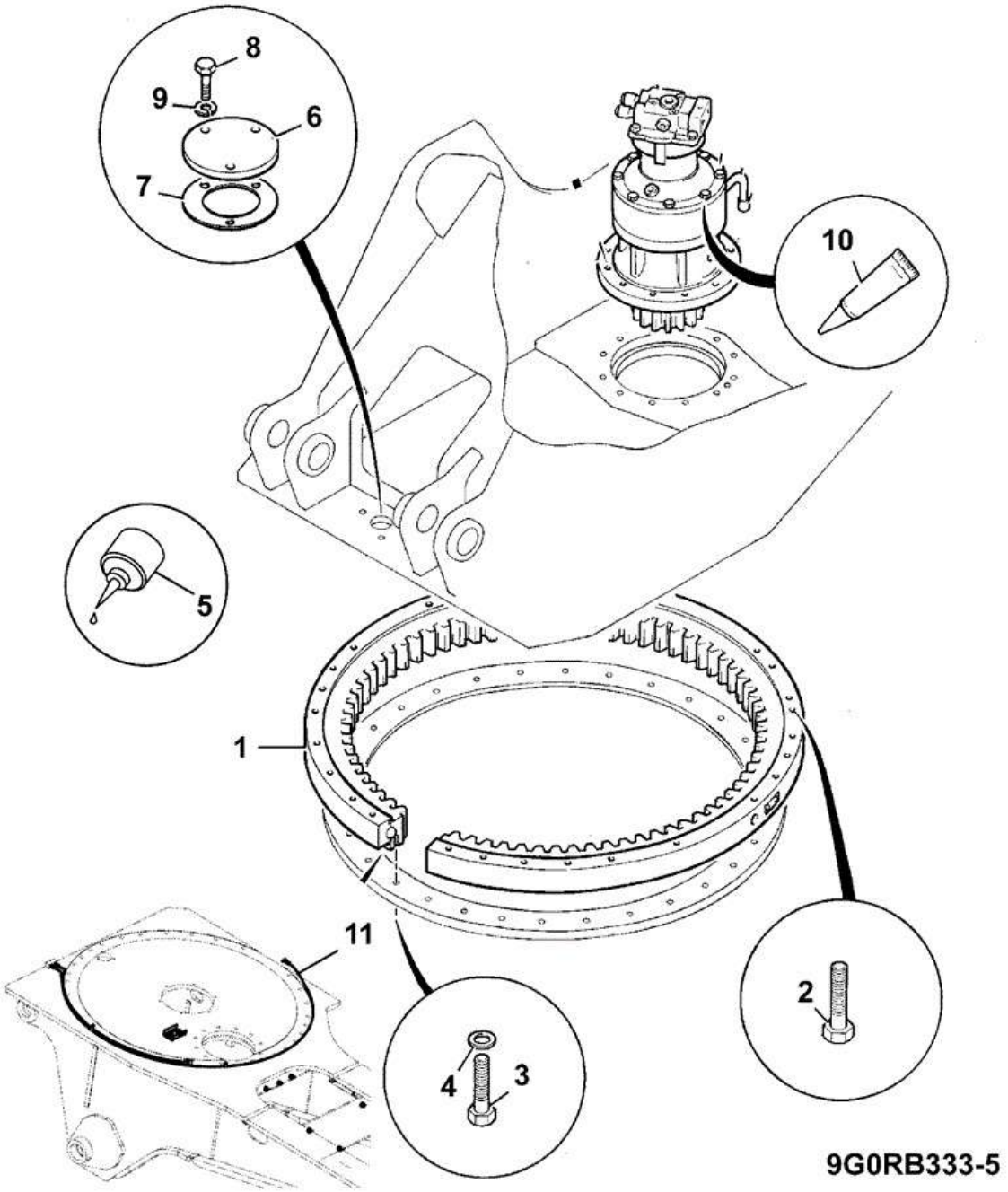

Item	Part #	Change No	Description	Usage Code	QTY
1	JRB0017		Ring slew		1

2	332/P6830		Bolt High Strength M20 x105mm		31
3	1316/3815D		Bolt M20 X 65		36
4	JHP0044		Washer		67
5	4101/0500		Fluid Locking Loctite 262		0
6	KRB0681		Plate Cover		1
7	KRB0682		Packing Cork		1
8	1316/0507D		Setscrew M12 x 25 grade 10.9		3
9	1420/0009D		Washer (M12)		3
10	JHC0001		Sealant liquid packing, Gasket		0
11	****		Circuit grease line, assembly		1

9822/0355 F430-20-1 SLEW/SWING MOTOR INSTALLATION TRACK MOTOR COMPONENTS

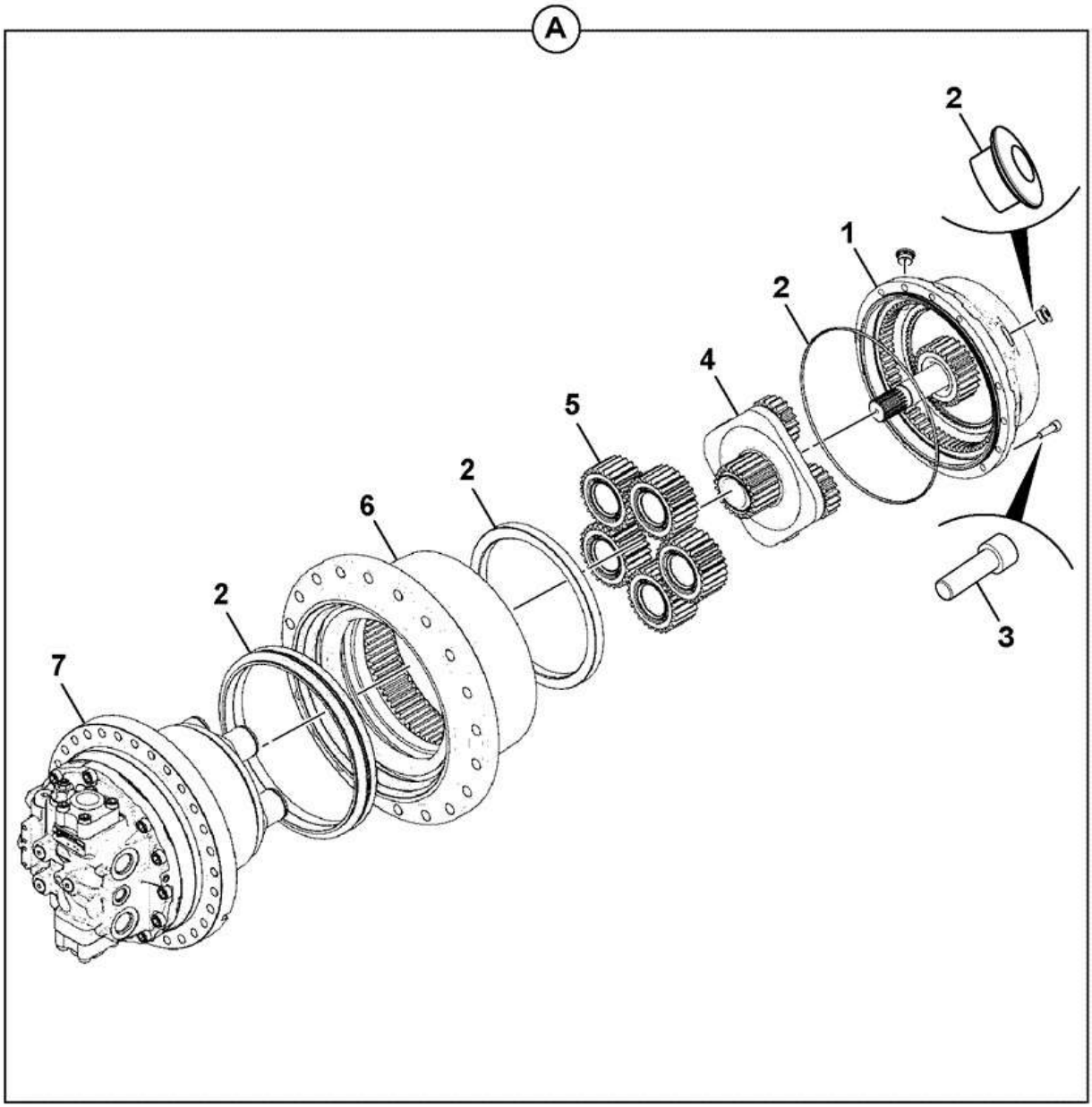

333-K0684-KIT-1

Item	Part #	Change No	Description	Usage Code	QTY
A	333/K0684		Motor Track, Assembly		1

1	:334/D1837		Cover Cover Reduction		1
2	:334/D1838		Kit Seal Kit		1
3	:334/D1840		Kit Screw Kit		1
4	:334/D1842		Reducer REDUCTION ASSEMBLY		1
5	:334/D1843		Gear Planetary Assembly		1
6	:332/H3933		Housing & bearing		1
7	:332/H3935		Motor hydraulic		1

CONSTRUCTION \ NORTH AMERICA \ CONSTRUCTION / INDUSTRIAL \ JS TRACKED EXCAVATORS \ JS200LC BR E 02451101-02451200 9822/0355 \ F TRANSMISSION \ F04 GEARBOX ASSEMBLY

9822/0355 F440-10-1 GEARBOX SLEW/SWING SWING EQUIPMENT

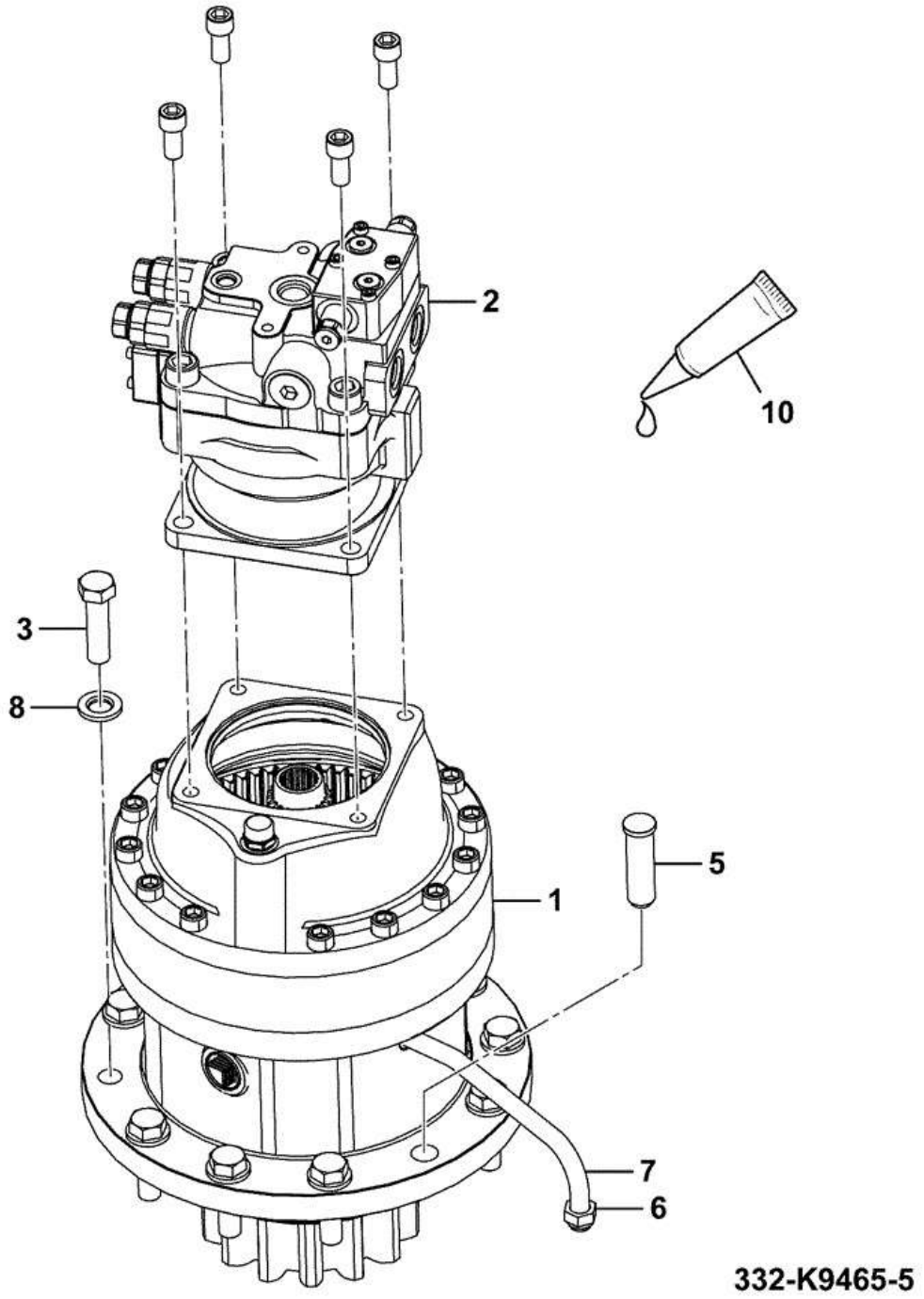

Item	Part #	Change No	Description	Usage Code	QTY
1	333/K3452		Gearbox Swing		1

2	333/K7185		Motor Swing		1
2A	:334/D3787		Seal oil		1
3	1316/3817D		Bolt		11
5	KRC0105		Pin headed		1
6	C4E9301		Adapter Plug		1
7	JBC0004		Pipe assembly		1
8	JHP0044		Washer		11
10	4101/0500		Fluid Locking Loctite 262		0

CONSTRUCTION \ NORTH AMERICA \ CONSTRUCTION / INDUSTRIAL \ JS TRACKED EXCAVATORS \ JS200LC BR E 02451101-02451200 9822/0355 \ F TRANSMISSION \ F04 GEARBOX ASSEMBLY

9822/0355 F440-25-1 GEARBOX SLEW/SWING ASSEMBLY

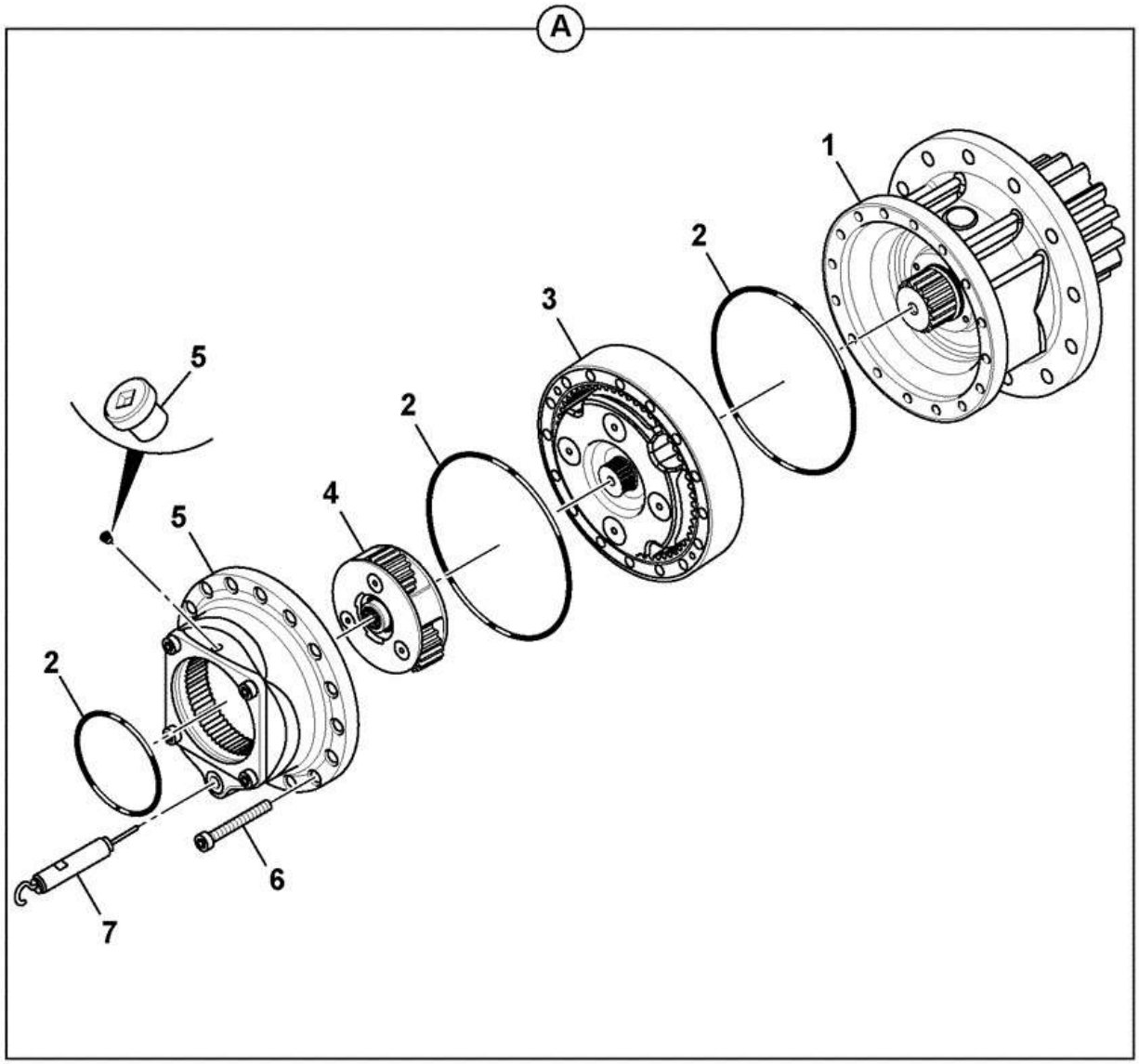

333-K3452-KIT-1

Item	Part #	Change No	Description	Usage Code	QTY
A	333/K3452		Gearbox Swing		1
1	:333/Y3141		Shaft Out put, Assembly		1
2	:334/D1858		Kit Seal Kit		1

3	:334/D1866		Reducer Reduction Stage		1
4	:334/D1868		Kit Reduction Assembly		1
5	:334/D1869		Kit Cover Kit		1
6	:334/D1871		Kit Screw kit		1
7	:334/D1872		Kit Lubrication Kit		1

CONSTRUCTION \ NORTH AMERICA \ CONSTRUCTION / INDUSTRIAL \ JS TRACKED EXCAVATORS \ JS200LC BR E 02451101-02451200 9822/0355 \ F TRANSMISSION \ F04 GEARBOX ASSEMBLY

9822/0355 F440-30-1 GEARBOX SLEW/SWING SWING COMPONENTS ASSEMBLY

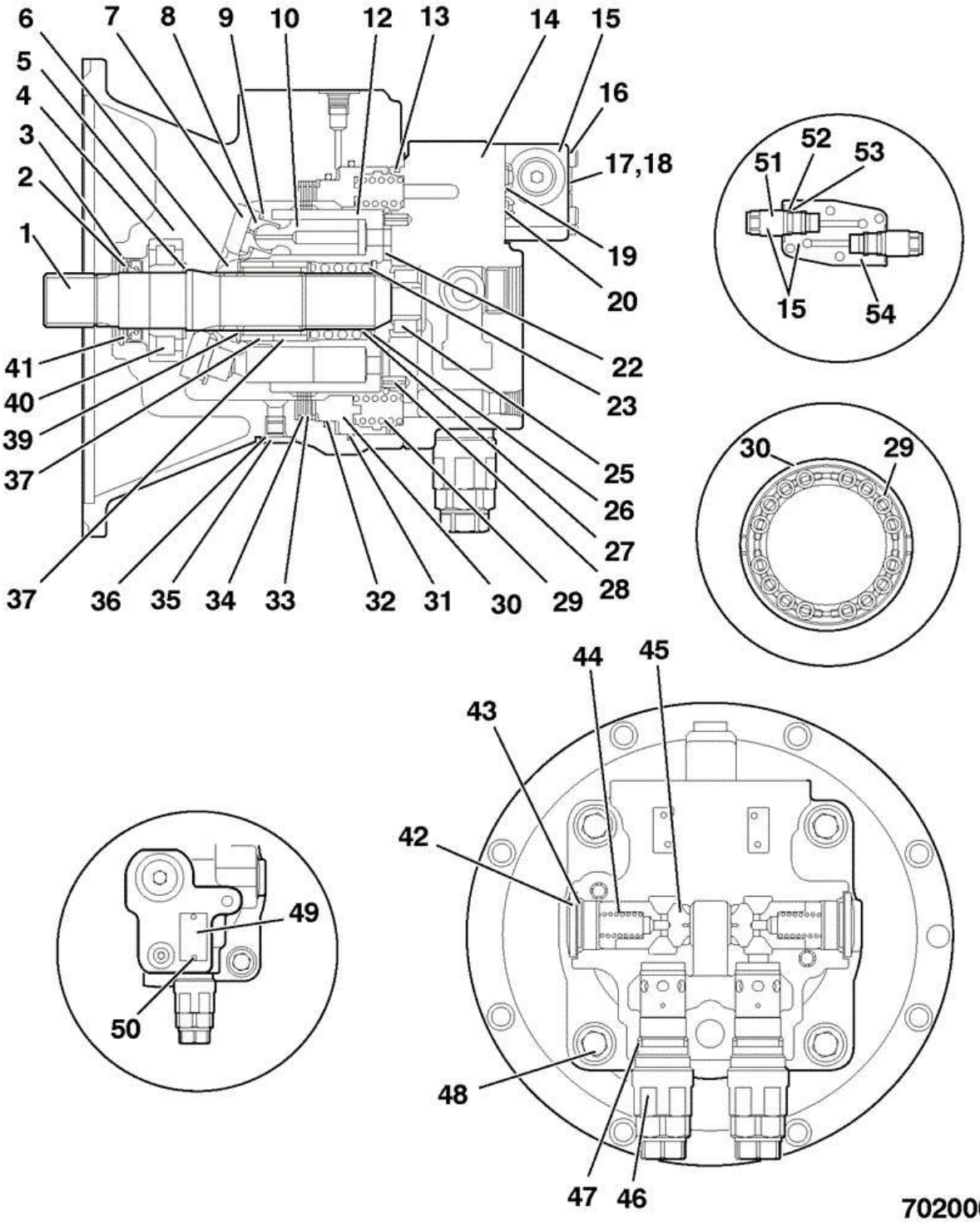

Item	Part #	Change No	Description	Usage Code	QTY
A	333/K7185		Motor Swing		1

1	:20/951528		Shaft drive		1
2	:20/951517		Cover seal		1
3	:20/950990		Ring snap		1
4	:20/951527		Spacer bearing		1
5	:20/951518		Casing b1		1
6	:20/951525		Retainer		1
7	:20/951520		Plate shoe		1
8	::N.S.P.		None serviced part		1
9	:20/951521		Plate set		1
10	::N.S.P.		None serviced part		1
12	:20/951526		Cylinder		1
13	:20/951509		O Ring		1
14	:N.S.P.		None serviced part		1
15	:20/951501		Valve relief assembly *composed:16,17,18,19,20,51,52,53,54*		1
16	::N.S.P.		None serviced part		1
17	::N.S.P.		None serviced part		1
18	::N.S.P.		None serviced part		1
19	::N.S.P.		None serviced part		1
20	::N.S.P.		None serviced part		1
22	:20/951519		Plate valve		1
23	:20/951522		Spacer		3
25	:20/951511		Bearing roller		1
26	:20/951513		Ring snap		1
27	:20/951524		Spring cylinder		1
28	N.S.P.		None serviced part		1
29	:20/951506		Spring brake		16
30	:20/951507		Piston brake		1
31	:20/951531		O Ring		1
32	:20/951532		O Ring seal		1
33	:20/951505		Plate friction		3
34	:20/951504		Plate separator		4
35	:20/950858		Plug		1
36	:LBQ0112		O Ring		1
37	:20/951523		Rod push		12
39	:20/951522		Spacer		3
40	:20/951512		Bearing roller		1
41	:334/D3787		Seal oil		1
42	:20/951510		Plug		2
43	:20/951508		O Ring		2
44	:20/950993		Spring		2
45	:20/950994		Plunger		2
46	:20/951503		Valve relief		2
47	:828/10221		Seal O ring		2
48	:20/951514		Screw hexagon head		4
49	N.S.P.		None serviced part		1
50	N.S.P.		None serviced part		1
51	:20/951500		Valve swing reactionless		2
52	:20/951068		Ring back up		2
53	:828/10228		Seal O ring		2
54	:20/951534		Casing valve swing reactionless		1

55	:20/951502		Seal kit assembly *Composed Items 13,31,32,36,41,43*		1
56	:20/951529		Valve casing assembly *Composed Items 14,28*		1
57	:20/951530		Piston assembly *Composed Items 8,10*		1

CONSTRUCTION \ NORTH AMERICA \ CONSTRUCTION / INDUSTRIAL \ JS TRACKED EXCAVATORS \ JS200LC BR E 02451101-02451200 9822/0355 \ F TRANSMISSION \ F04 GEARBOX ASSEMBLY

9822/0355 F480-1-1 CIRCUIT SLEW/SWING GREASING PIPELINES TTB GREASE LINE

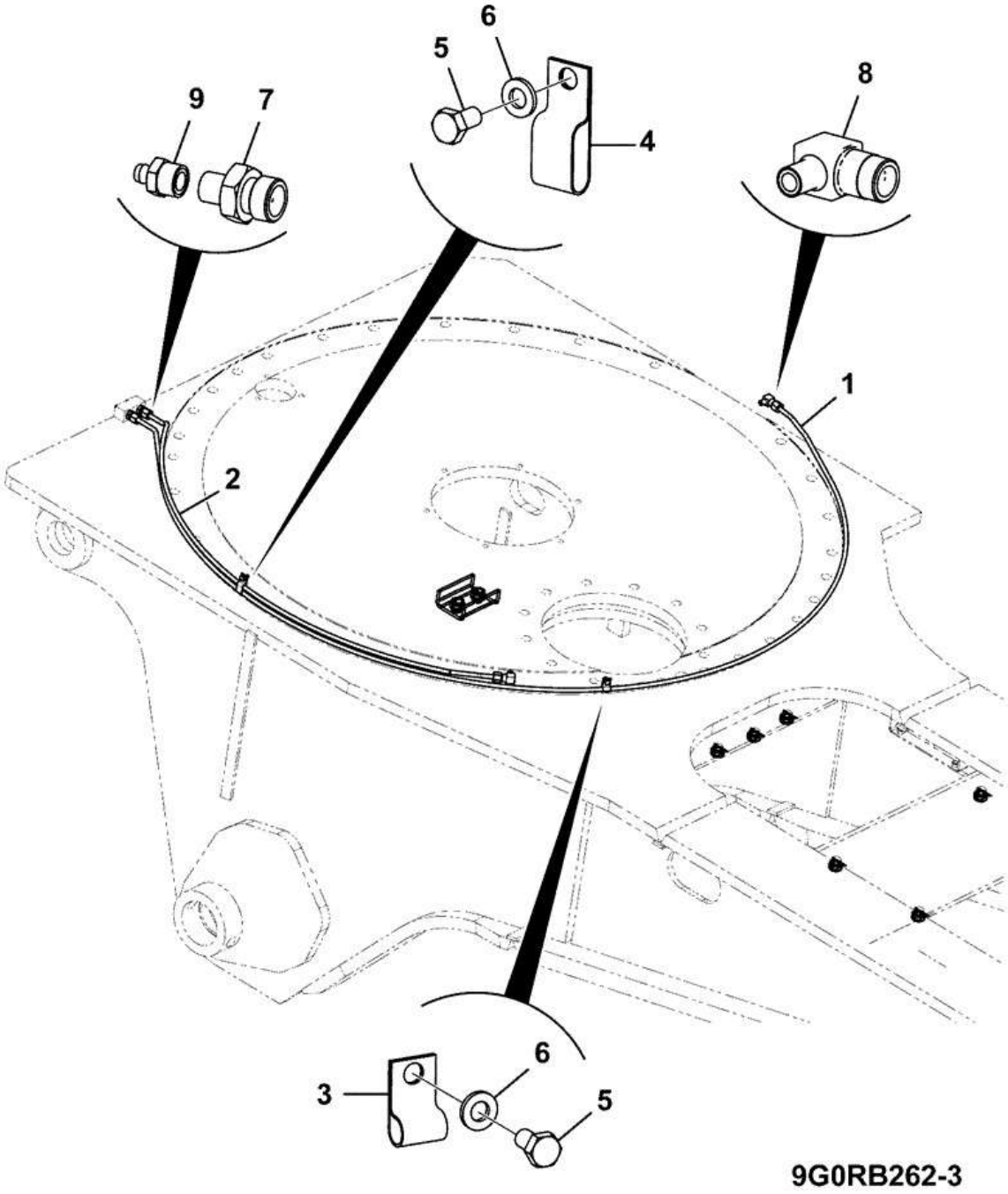

Item	Part #	Change No	Description	Usage Code	QTY
1	KRB0696		Pipe assembly grease line		1

2	KRB0697		Pipe assembly grease line		1
3	333/J2461		Clamp Zinc plated		1
4	333/J2458		Clamp Zinc plated		1
5	1316/0201D		Screw		2
6	1420/0006D		Washer (M6)		2
7	KMJ0964		Connector		2
8	KMJ0985		Adapter elbow		2
9	JHP0037		Nipple Grease Straight		2

CONSTRUCTION \ NORTH AMERICA \ CONSTRUCTION / INDUSTRIAL \ JS TRACKED EXCAVATORS \ JS200LC BR E 02451101-02451200 9822/0355 \ J UNDERCARRIAGE \ J01 UNDERCARRIAGE

9822/0355 J100-5-1 UNDERCARRIAGE INSTALLATION ASSEMBLIES UNDERCARRIAGE ASSEMBLY, JS220 LC, BRAZIL

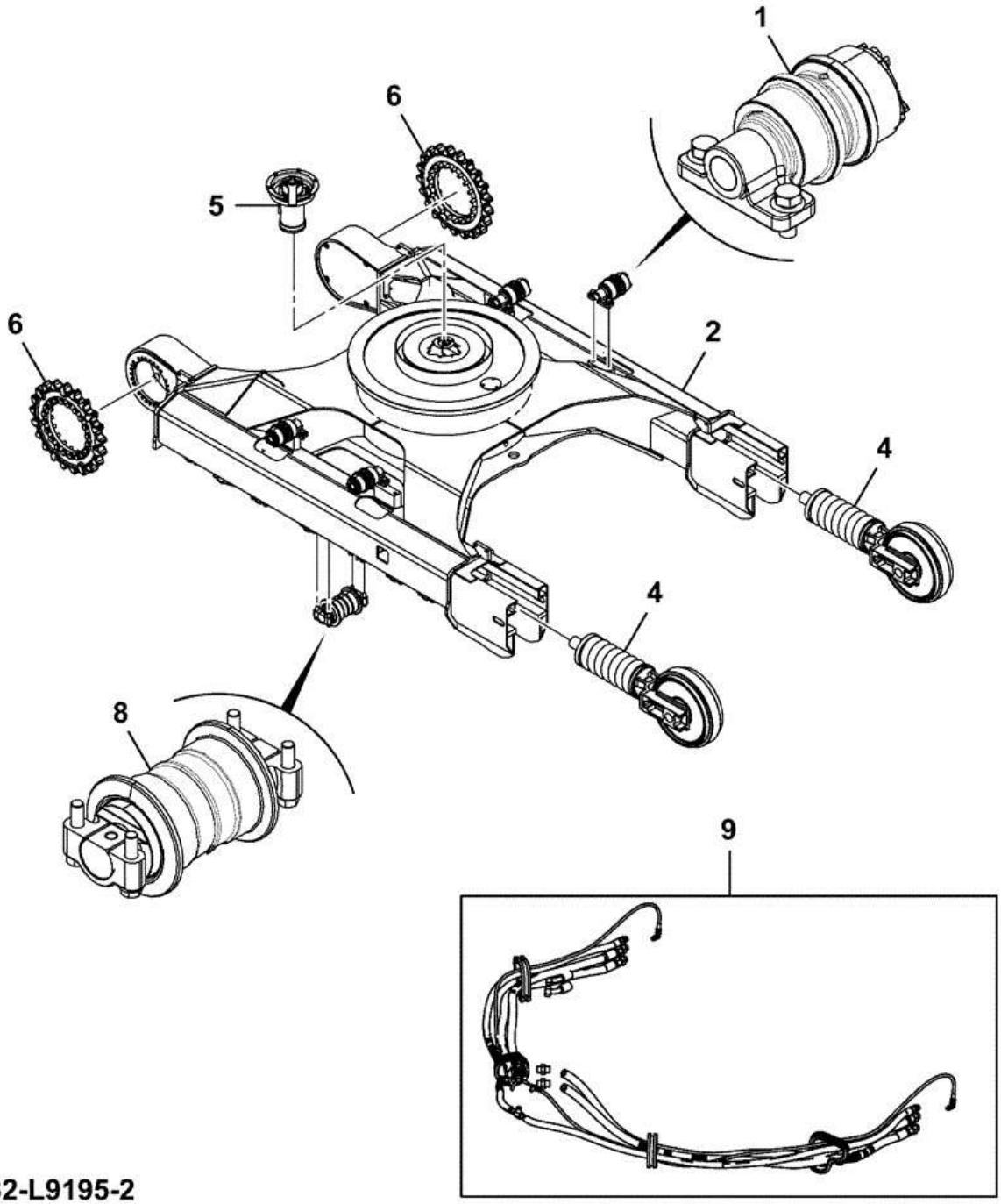

Item	Part #	Change No	Description	Usage Code	QTY
1	****		Roller upper assembly		1

2	****		Frame lower assembly		1
4	****		Assembly take up roller		1
5	****		Joint centre assembly		1
6	****		Assembly traction equipment		1
8	****		Roller lower assembly		1
9	****		Circuit motor line traction assembly		1

CONSTRUCTION \ NORTH AMERICA \ CONSTRUCTION / INDUSTRIAL \ JS TRACKED EXCAVATORS \ JS200LC BR E 02451101-02451200 9822/0355 \ J UNDERCARRIAGE \ J01 UNDERCARRIAGE

9822/0355 J110-1-1 UNDERCARRIAGE ASSEMBLY CENTRE JOINT

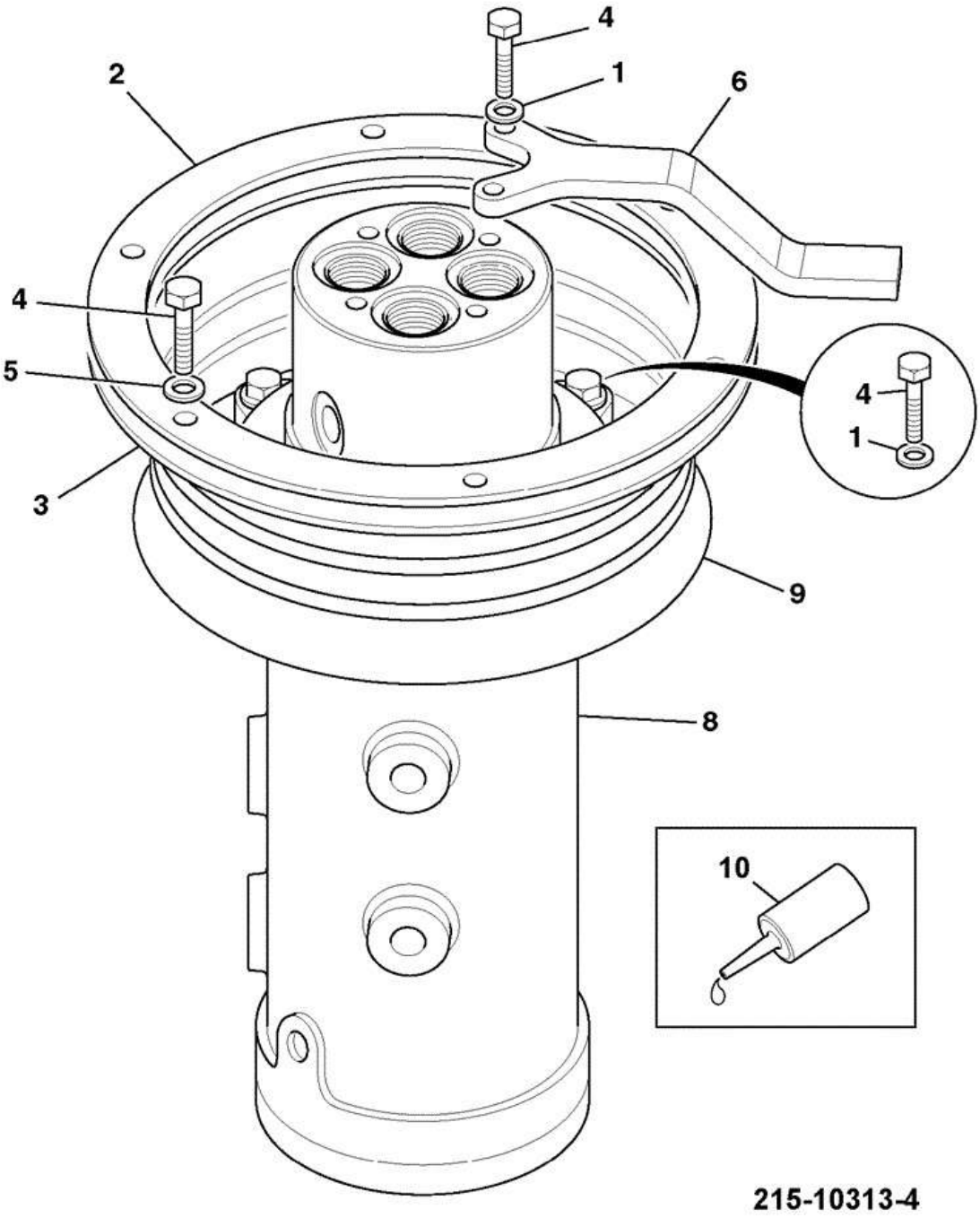

Item	Part #	Change No	Description	Usage Code	QTY
1	JHP0042		Washer M12		5

2	KRA0999		Retainer Seal		1
3	KRA1000		Packing Rubber		1
4	1316/0508D		Screw M12 X 30		11
5	1406/0011		Washer Bonded (1/4")		6
6	331/14076		Bracket stop		1
8	45/920115		Coupling rotary		1
9	904/20126		Ring Seal		1
10	****		Fluid Locking		1

CONSTRUCTION \ NORTH AMERICA \ CONSTRUCTION / INDUSTRIAL \ JS TRACKED EXCAVATORS \ JS200LC BR E 02451101-02451200 9822/0355 \ J UNDERCARRIAGE \ J01 UNDERCARRIAGE

9822/0355 J110-5-1 UNDERCARRIAGE LOWER FRAME

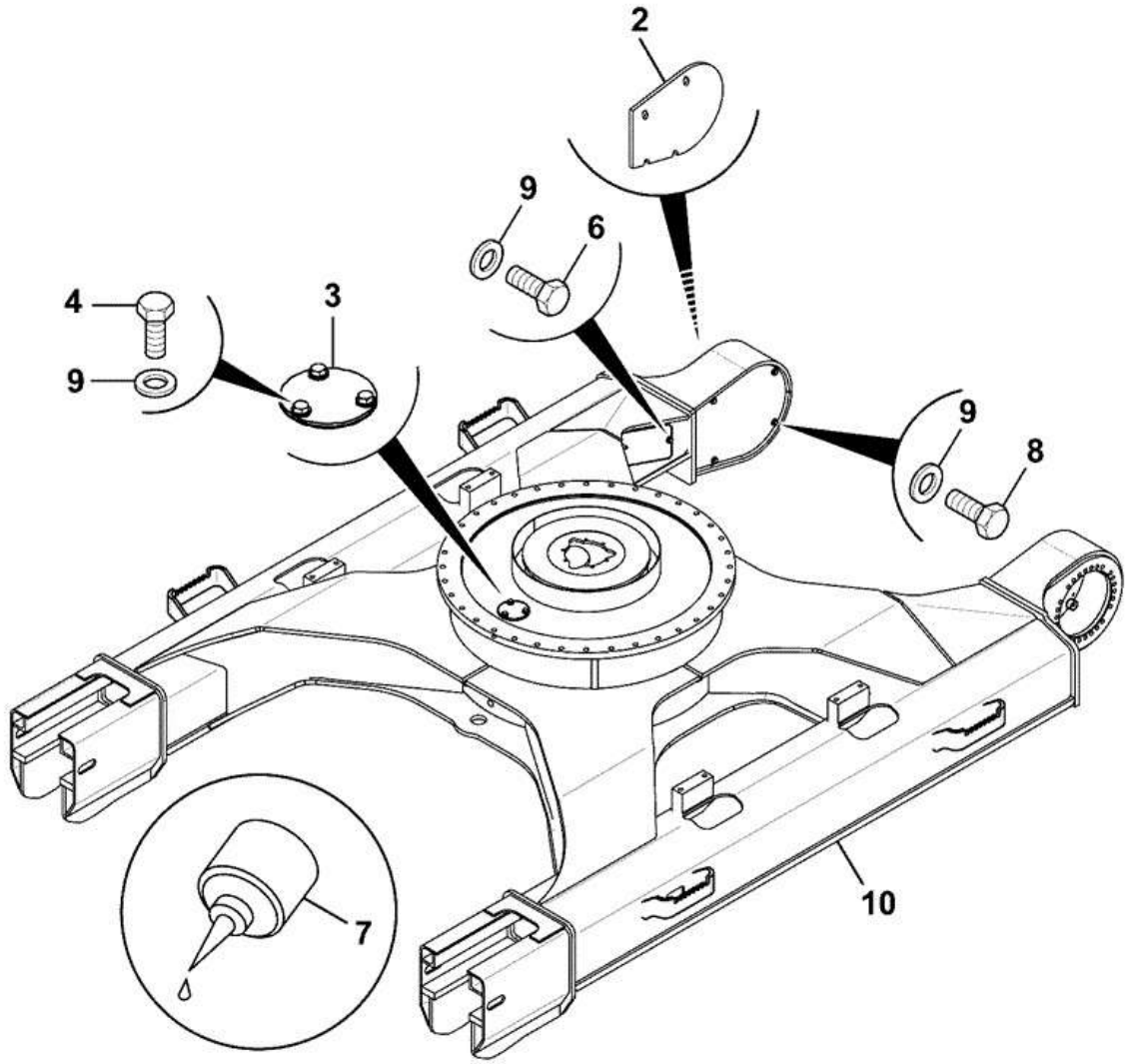

JG0RA021-5

Item	Part #	Change No	Description	Usage Code	QTY
1	335/10537		Frame undercarriage LC		1
2	****		Covers lower		1
3	KRB0682		Packing Cork		1

4	1316/0505D		Bolt M12 x 20mm		3
6	1316/0507D		Setscrew M12 x 25 grade 10.9		4
7	4101/0500		Fluid Locking Loctite 262		0
8	1316/0509D		Screw M12x35 long		8
9	JHP0042		Washer M12		15

CONSTRUCTION \ NORTH AMERICA \ CONSTRUCTION / INDUSTRIAL \ JS TRACKED EXCAVATORS \ JS200LC BR E 02451101-02451200 9822/0355 \ J UNDERCARRIAGE \ J01 UNDERCARRIAGE

9822/0355 J120-35-1 RECOIL AND IDLER ASSEMBLY ROLLER TAKE-UP ASSEMBLY

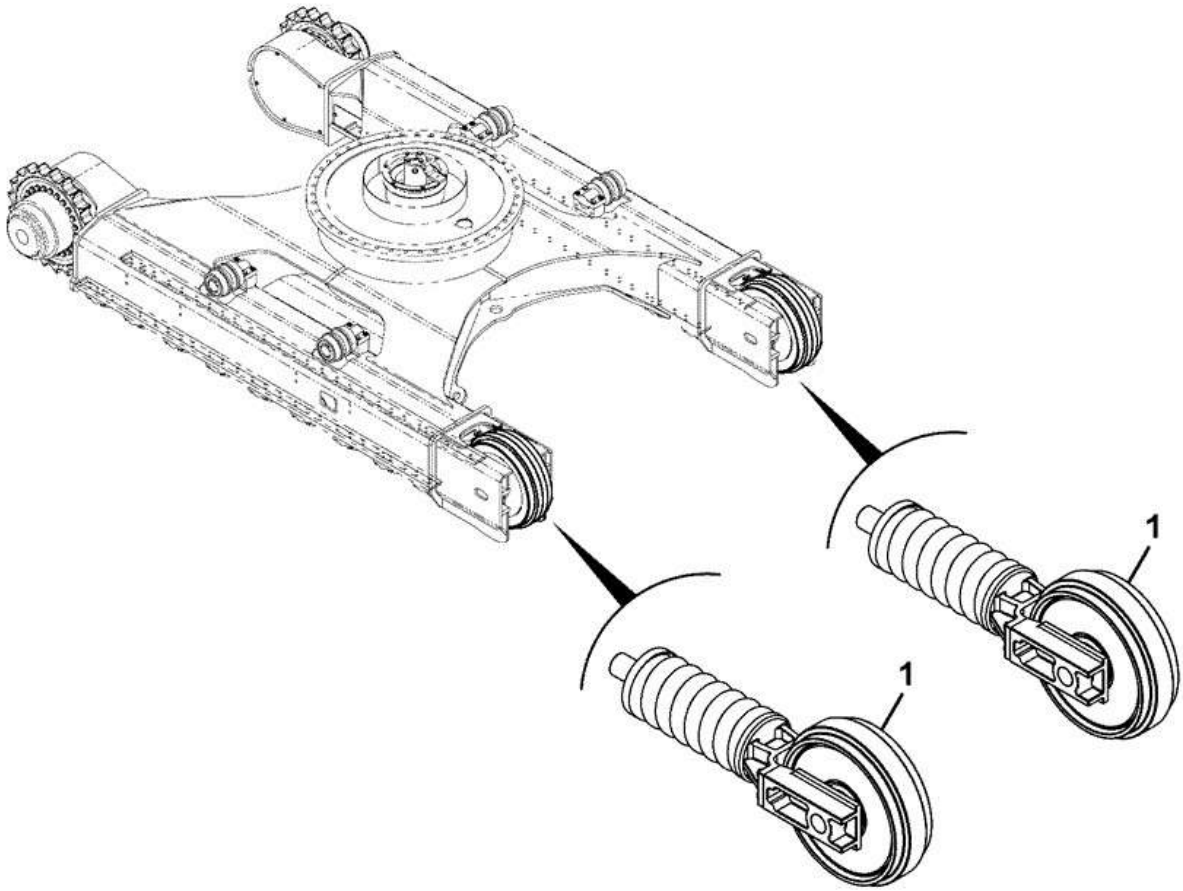

332-B0053-1

Item	Part #	Change No	Description	Usage Code	QTY
1	332/L9198		Tensioner track		2

CONSTRUCTION \ NORTH AMERICA \ CONSTRUCTION / INDUSTRIAL \ JS TRACKED EXCAVATORS \ JS200LC BR E 02451101-02451200 9822/0355 \ J UNDERCARRIAGE \ J01 UNDERCARRIAGE

9822/0355 J120-40-1 RECOIL AND IDLER ASSEMBLY IDLER ASSEMBLY WITH BRACKETS

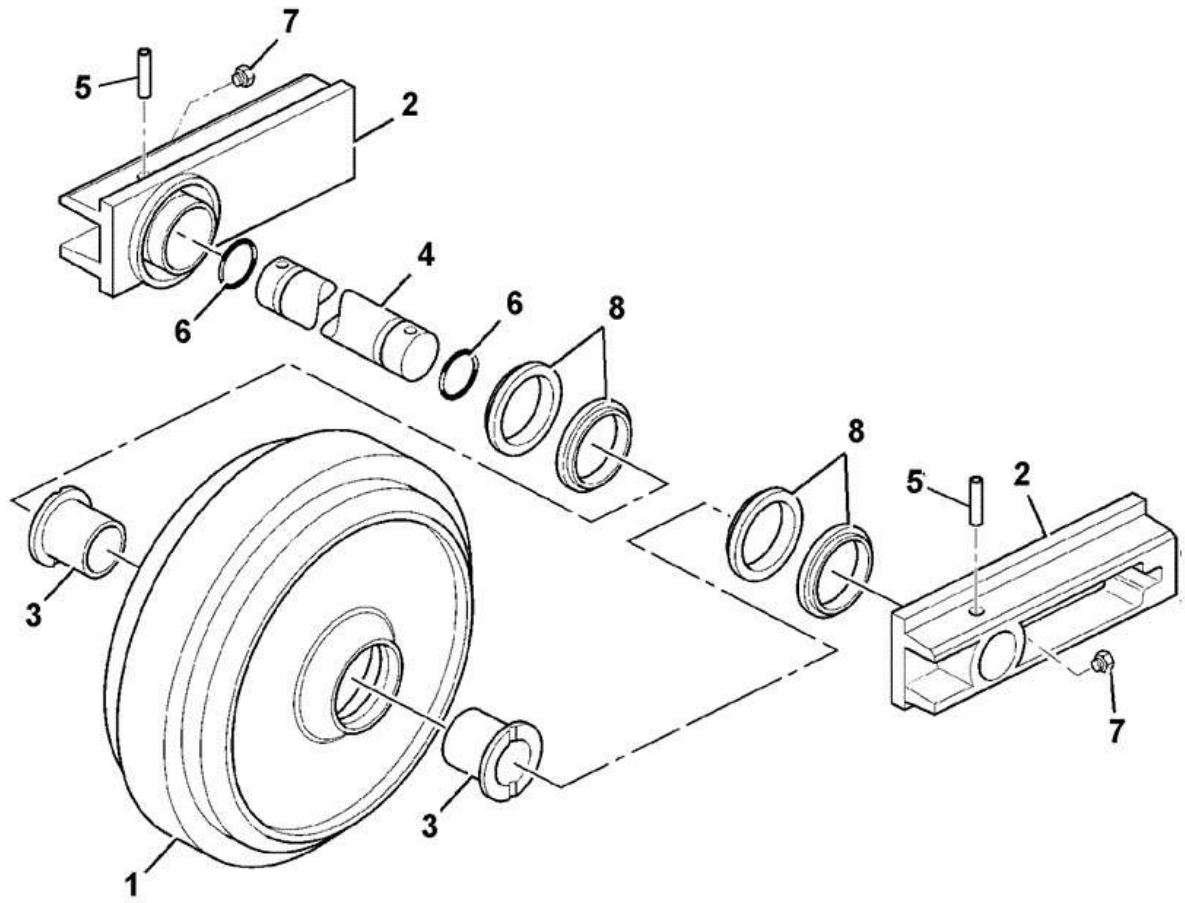

335-C3884-1

Item	Part #	Change No	Description	Usage Code	QTY
A	335/C3884		Wheel Idler With Bracket		1

1	****		None serviced part		1
2	:335/C3892		Collar		2
3	:335/C3893		Bush		2
4	:335/C3894		Shaft		1
5	:335/C3896		Pin		2
6	:828/10316		O Ring		2
7	:335/C3897		Seal		2
8	:335/C3898		Ring Seal		4
9	:335/C3899		O Ring		4

CONSTRUCTION \ NORTH AMERICA \ CONSTRUCTION / INDUSTRIAL \ JS TRACKED EXCAVATORS \ JS200LC BR E 02451101-02451200 9822/0355 \ J UNDERCARRIAGE \ J01 UNDERCARRIAGE

9822/0355 J130-5-1 RECOIL UNIT SPRING ASSEMBLY

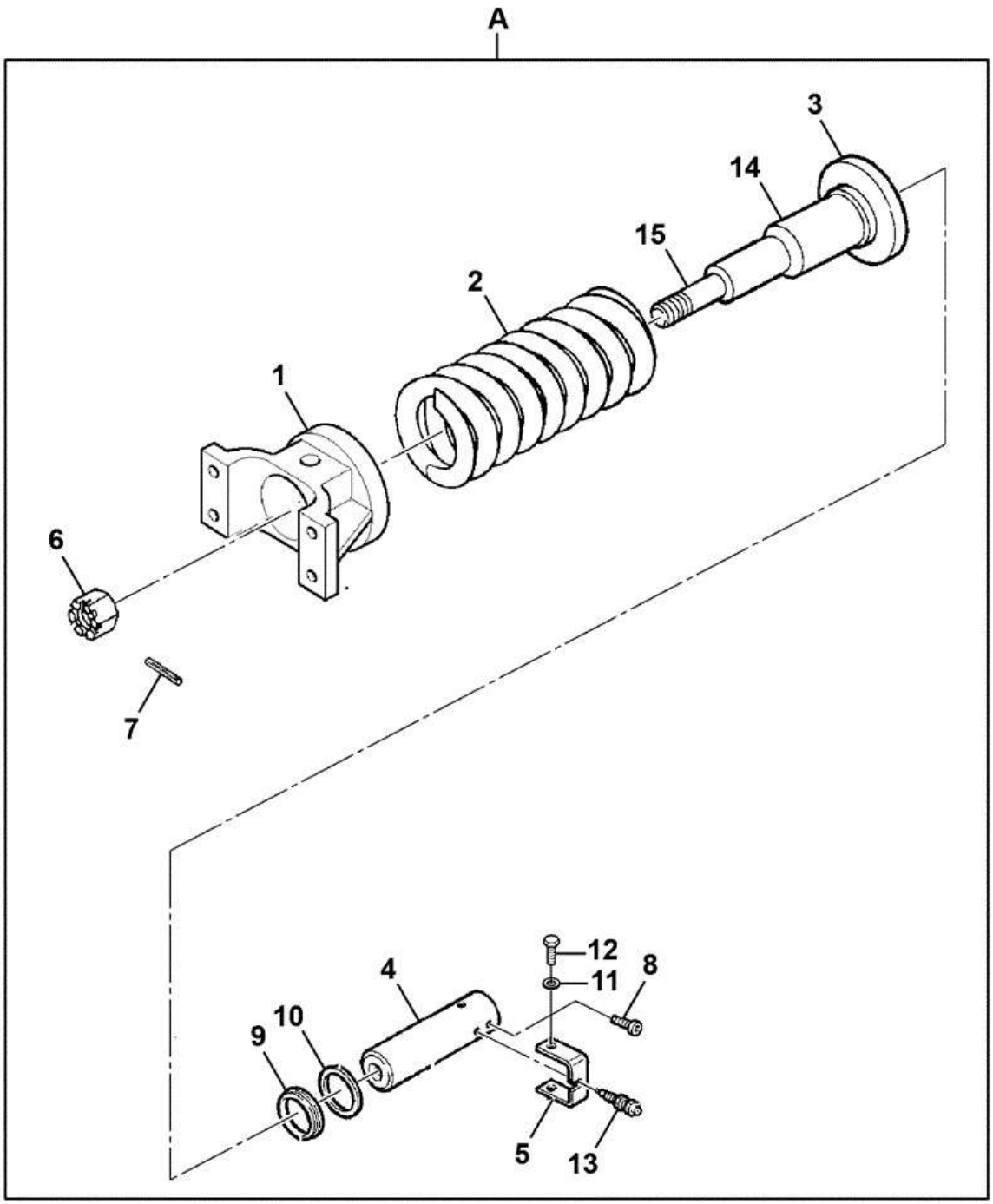

Item	Part #	Change No	Description	Usage Code	QTY
A	335/C3885		Spring Tension Device With Valve		1
1	:335/C3901		Yoke		1
2	:335/C3902		Spring		1

3	:335/C3903		Plate		1
4	:335/C3904		Piston		1
5	:335/C3905		Bracket Protection		1
6	:335/C3906		Nut		1
7	:335/C3907		Pin Dowel		1
8	:335/C3908		Screw		2
9	:335/C3909		Seal		1
10	:335/C3910		Spring Scraper		1
11	:823/10612		Washer spring		2
12	:335/C3912		Bolt		2
13	:335/C3913		Valve		1
14	:335/C3914		Cylinder		1
15	:335/C3915		Rod		1

CONSTRUCTION \ NORTH AMERICA \ CONSTRUCTION / INDUSTRIAL \ JS TRACKED EXCAVATORS \ JS200LC BR E 02451101-02451200 9822/0355 \ J UNDERCARRIAGE \ J01 UNDERCARRIAGE

9822/0355 J150-1-1 TRACK ROLLERS LOWER

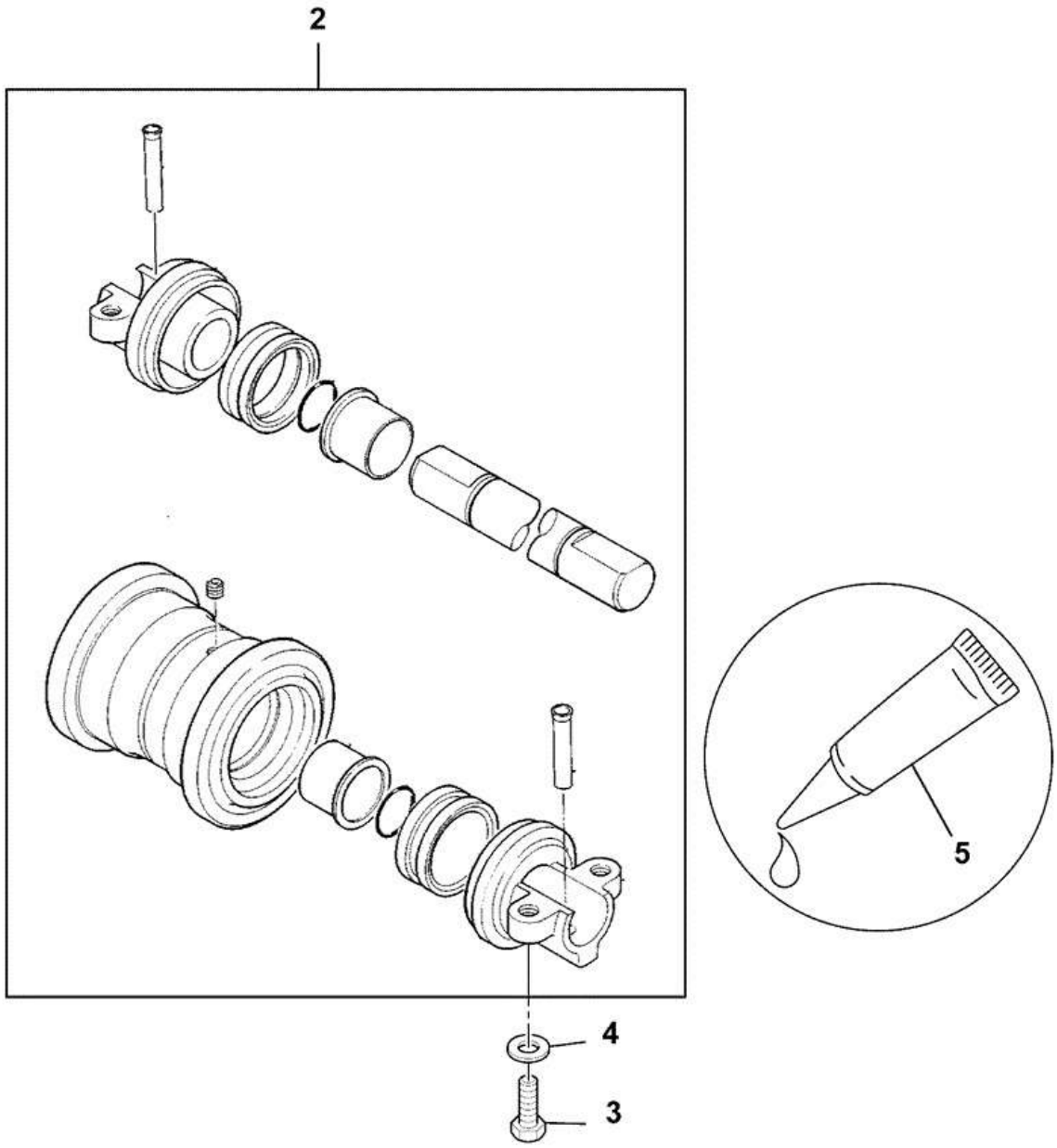

Item	Part #	Change No	Description	Usage Code	QTY
2	331/42639		Roller lower, Assembly		16
3	1316/9519D		Bolt M18 X 90		64
4	JHP0079		Washer (19mm x 36mm x 4.5mm)		64

5	4101/0500		Fluid Locking Loctite 262		0

CONSTRUCTION \ NORTH AMERICA \ CONSTRUCTION / INDUSTRIAL \ JS TRACKED EXCAVATORS \ JS200LC BR E 02451101-02451200 9822/0355 \ J UNDERCARRIAGE \ J01 UNDERCARRIAGE

9822/0355 J150-5-1 TRACK ROLLERS UPPER

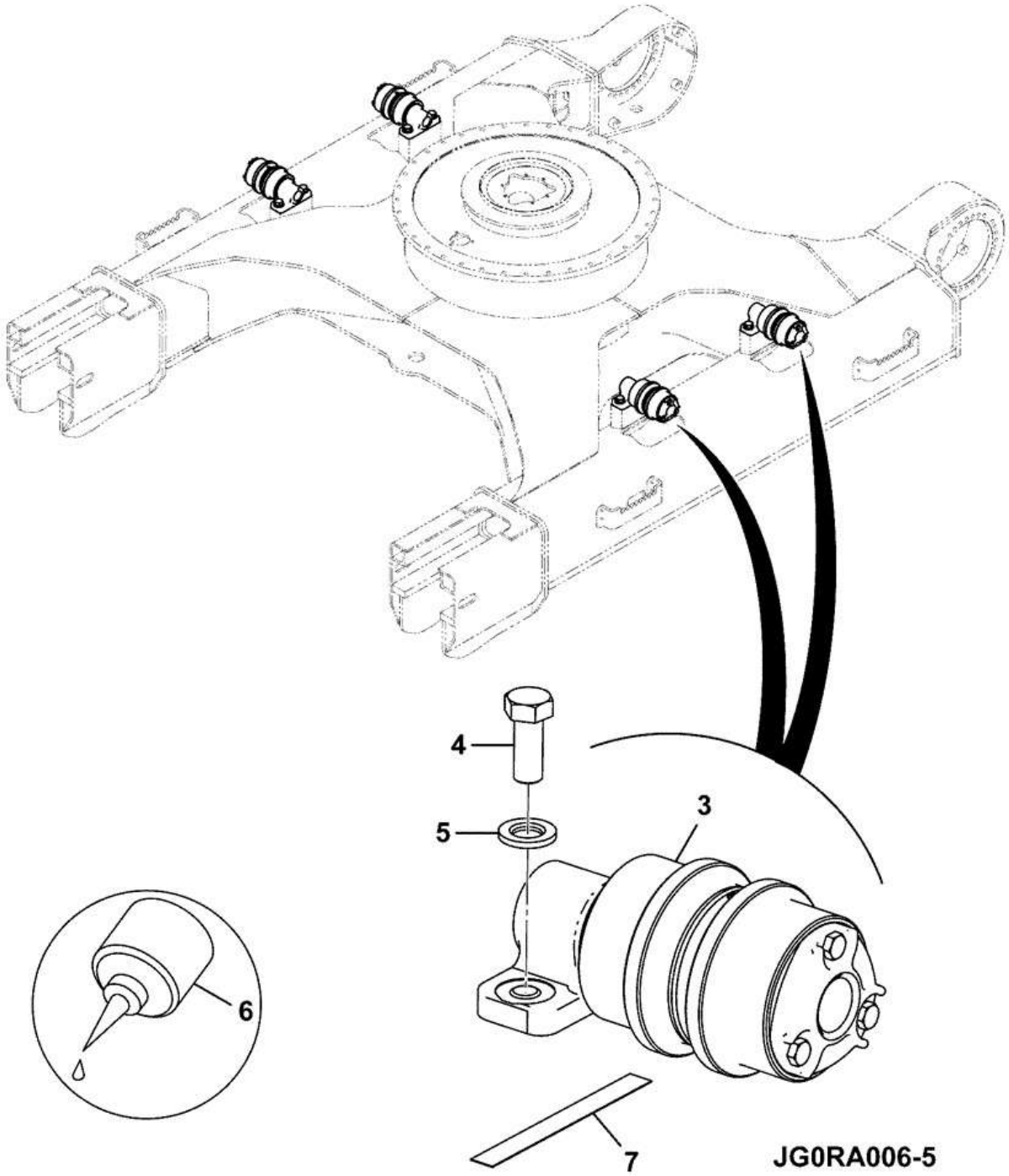

Item	Part #	Change No	Description	Usage Code	QTY
3	331/42441		Roller Carrier, Assembly		4
4	1316/3812D		Bolt M20 X 50		8
5	JHP0044		Washer		8

6	4101/0500		Fluid Locking Loctite 262		0
7	JHA0005		Shim		4

Product Catalog \ CONSTRUCTION \ NORTH AMERICA \ CONSTRUCTION / INDUSTRIAL \ JS TRACKED EXCAVATORS \ JS200LC BR E 02451101-02451200 9822/0355 \ J UNDERCARRIAGE \ J01 UNDERCARRIAGE

9822/0355 J150-10-1 TRACK ROLLERS LOWER

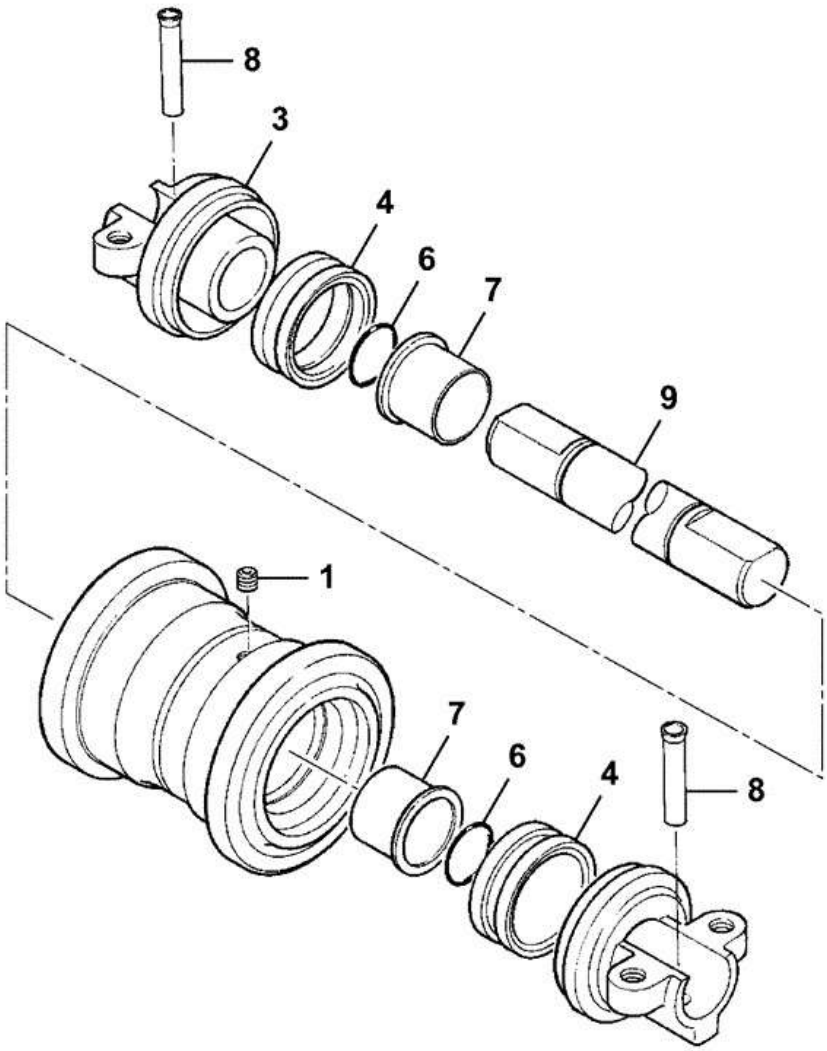

331-42639-3

Item	Part #	Change No	Description	Usage Code	QTY
1	32/925629		Plug Tapered		1
2	****		None serviced part		1
3	331/42649		Bracket		2

4	331/42650		Seal assembly		4
6	828/10312		O Ring		2
7	831/10330		Bush		4
8	913/10281		Pin		2
9	914/60247		Shaft		1

CONSTRUCTION \ NORTH AMERICA \ CONSTRUCTION / INDUSTRIAL \ JS TRACKED EXCAVATORS \ JS200LC BR E 02451101-02451200 9822/0355 \ J UNDERCARRIAGE \ J01 UNDERCARRIAGE

9822/0355 J150-15-1 TRACK ROLLERS CARRIER

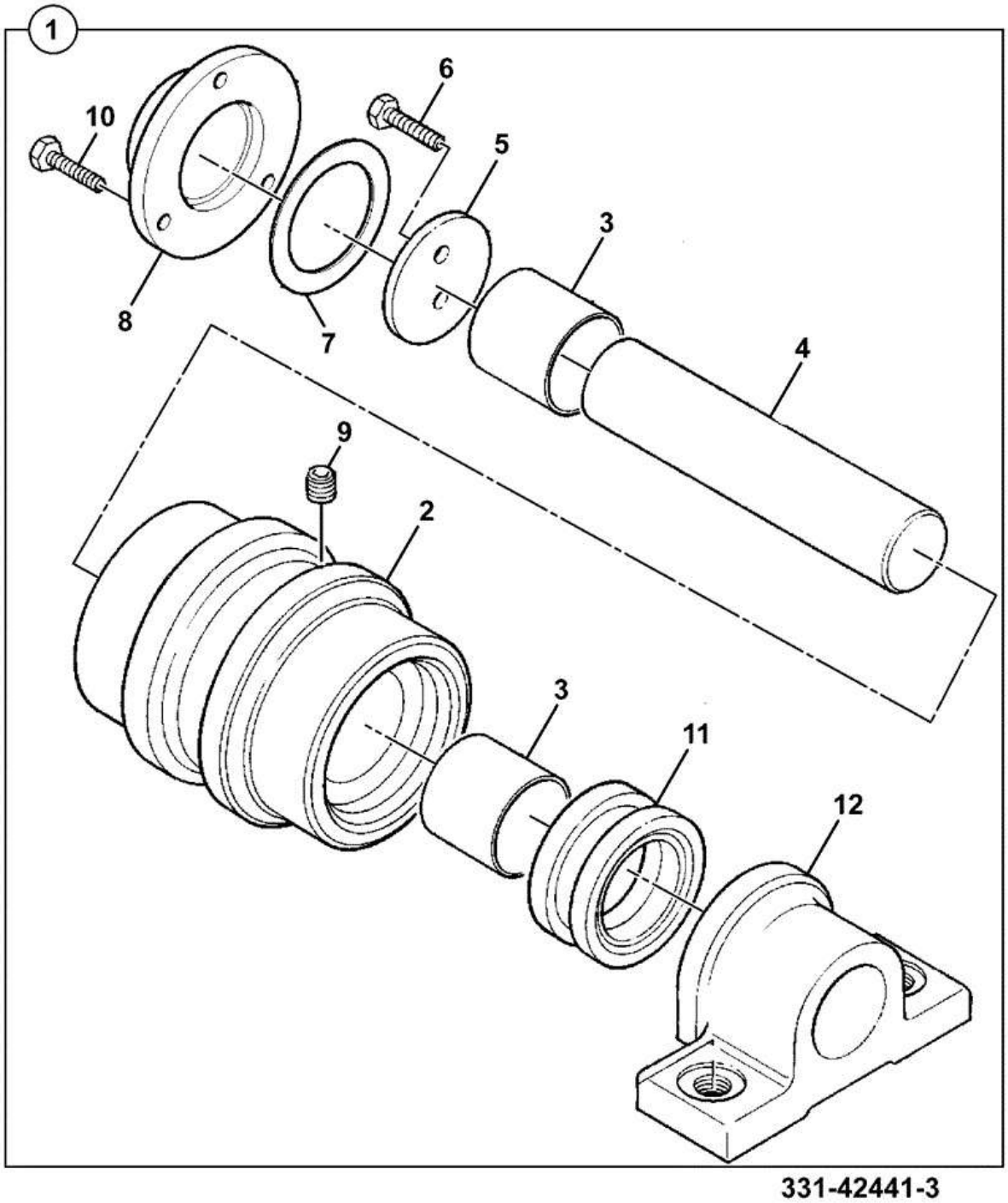

Item	Part #	Change No	Description	Usage Code	QTY
1	331/42441		Roller Carrier, Assembly		2
2	****		None serviced part		1
3	::831/10328		Bush		2

4	****		None serviced part		1
5	:331/42447		Plate thrust		1
6	:826/11187		Bolt		2
7	:828/10306		O Ring		1
8	:331/42452		Cover		1
9	:32/925629		Plug Tapered		1
10	:826/11187		Bolt		3
11	:331/42450		Seal assembly		1
12	****		None serviced part		1

CONSTRUCTION \ NORTH AMERICA \ CONSTRUCTION / INDUSTRIAL \ JS TRACKED EXCAVATORS \ JS200LC BR E 02451101-02451200 9822/0355 \ J UNDERCARRIAGE \ J01 UNDERCARRIAGE

9822/0355 J160-75-1 TRACK CHAIN & SHOE, 49 LINKS, 700MM

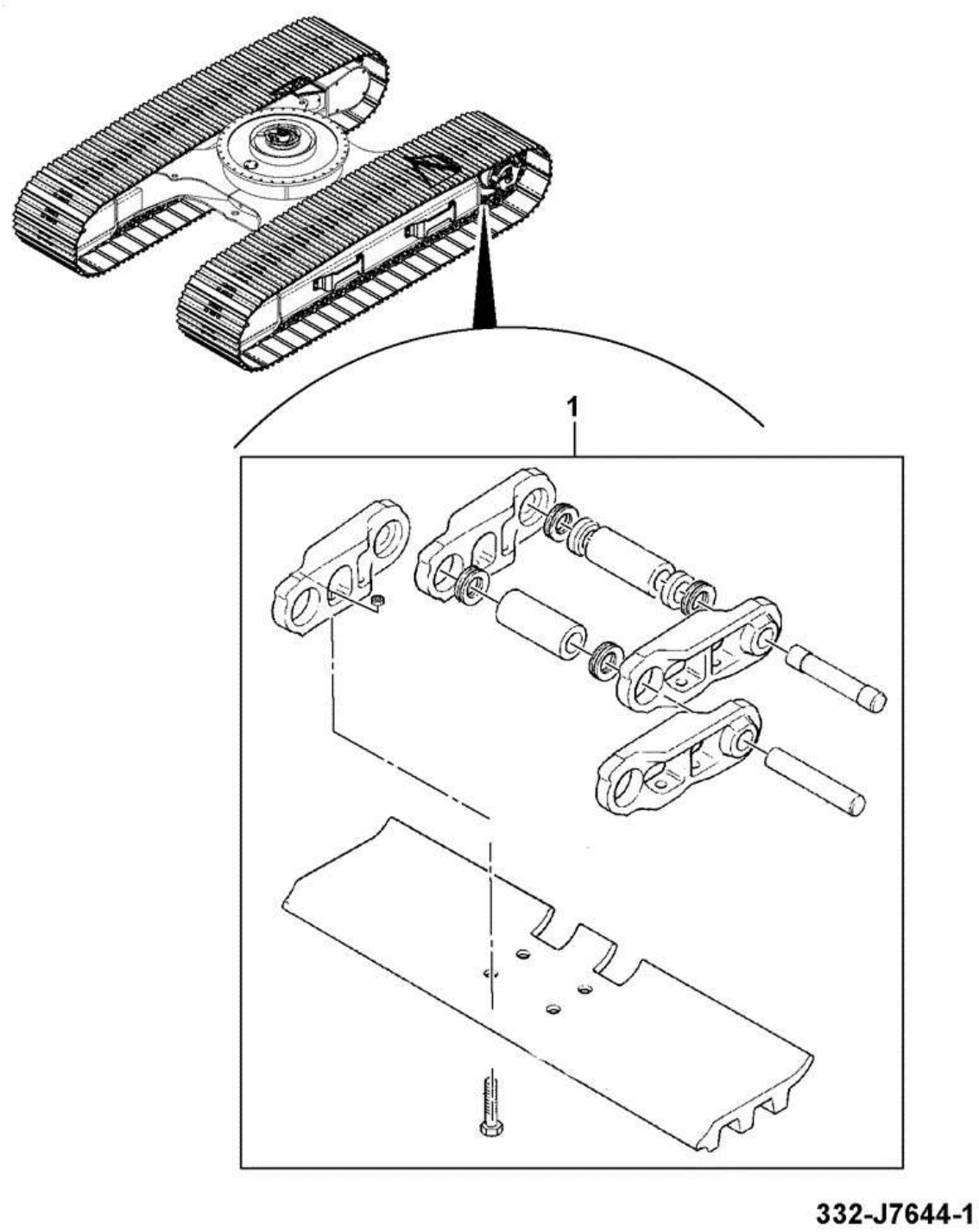

Item	Part #	Change No	Description	Usage Code	QTY
1	****		Chain & shoe assy 49 links 700mm		2

CONSTRUCTION \ NORTH AMERICA \ CONSTRUCTION / INDUSTRIAL \ JS TRACKED EXCAVATORS \ JS200LC BR E 02451101-02451200 9822/0355 \ J UNDERCARRIAGE \ J01 UNDERCARRIAGE

9822/0355 J160-80-1 TRACK CHAIN & SHOE, 49 LINKS, 700MM

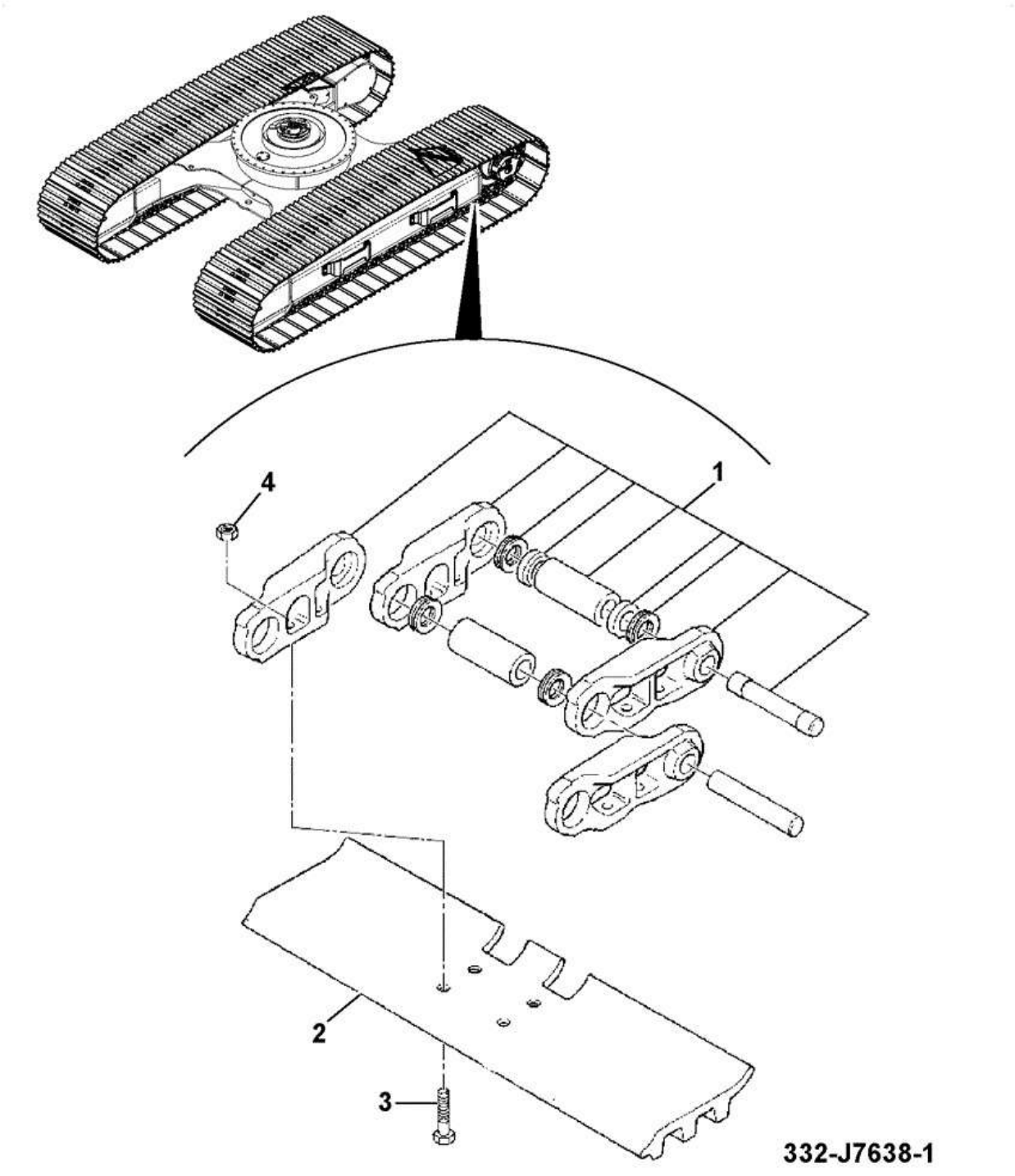

Item	Part #	Change No	Description	Usage Code	QTY
1	332/L9205		Chain track link 49 assy		1

2	332/L9206		Plate track 700mm		49
3	332/L9207		Bolt track - M20 x 5		196
4	332/L9208		Nut shoe		196

CONSTRUCTION \ NORTH AMERICA \ CONSTRUCTION / INDUSTRIAL \ JS TRACKED EXCAVATORS \ JS200LC BR E 02451101-02451200 9822/0355 \ J UNDERCARRIAGE \ J01 UNDERCARRIAGE

9822/0355 J160-85-1 TRACK CHAIN 49 LINK

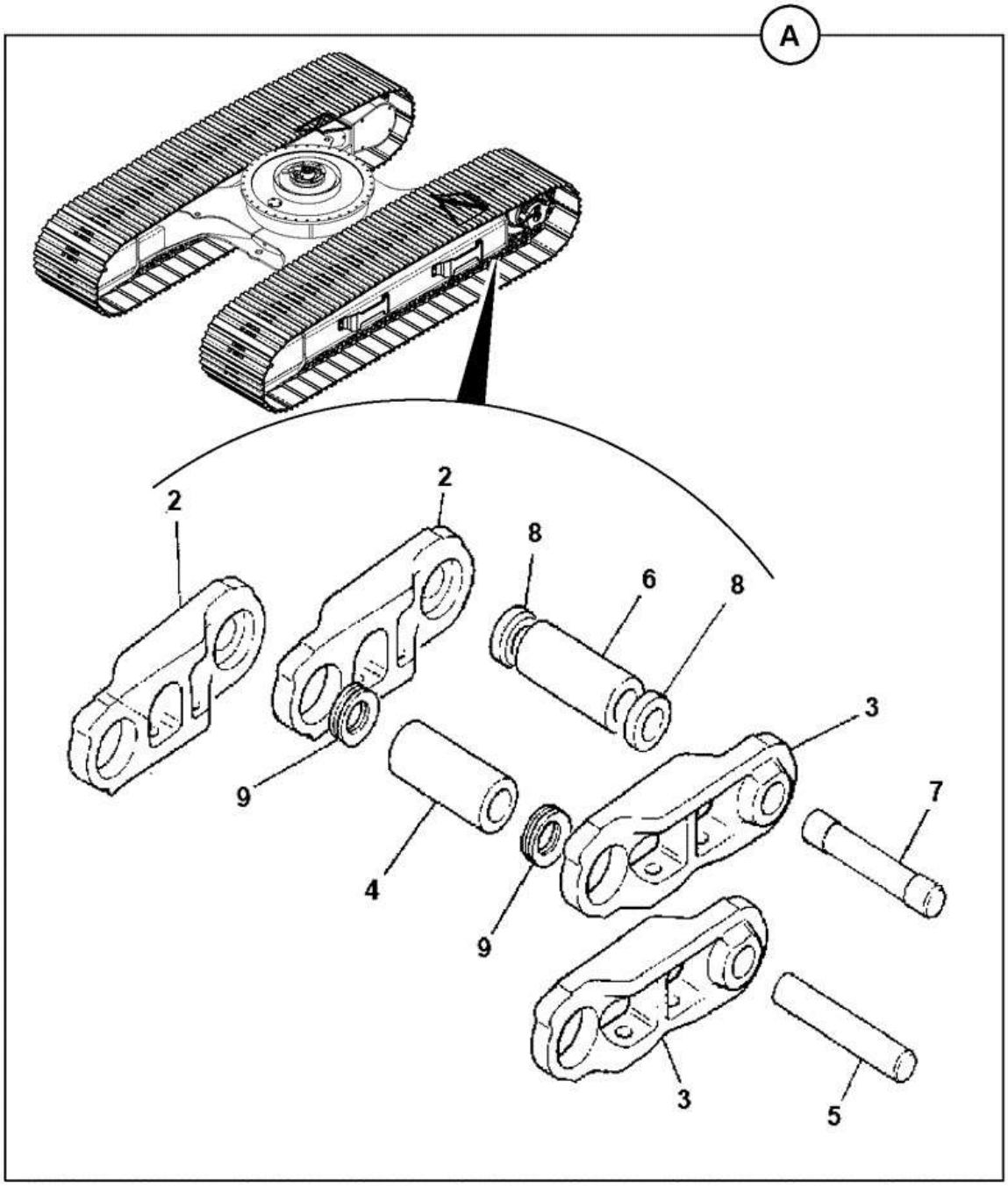

Item	Part #	Change No	Description	Usage Code	QTY
A	332/L9205		Chain track link 49 assy		1
2	:334/P8999		Link Chain right hand side		49
3	:334/P9001		Link Chain left hand side		49

4	:334/P9006		Bush		48
5	:334/P9023		Pin		48
6	:334/P9025		Bush master		1
7	:334/P9053		Pin master		1
8	:334/P9059		Spacer		96
9	:334/P9061		Seal washer		96

CONSTRUCTION \ NORTH AMERICA \ CONSTRUCTION / INDUSTRIAL \ JS TRACKED EXCAVATORS \ JS200LC BR E 02451101-02451200 9822/0355 \ J UNDERCARRIAGE \ J01 UNDERCARRIAGE

9822/0355 J170-1-1 TRACK GEARBOX WITH SPROCKET

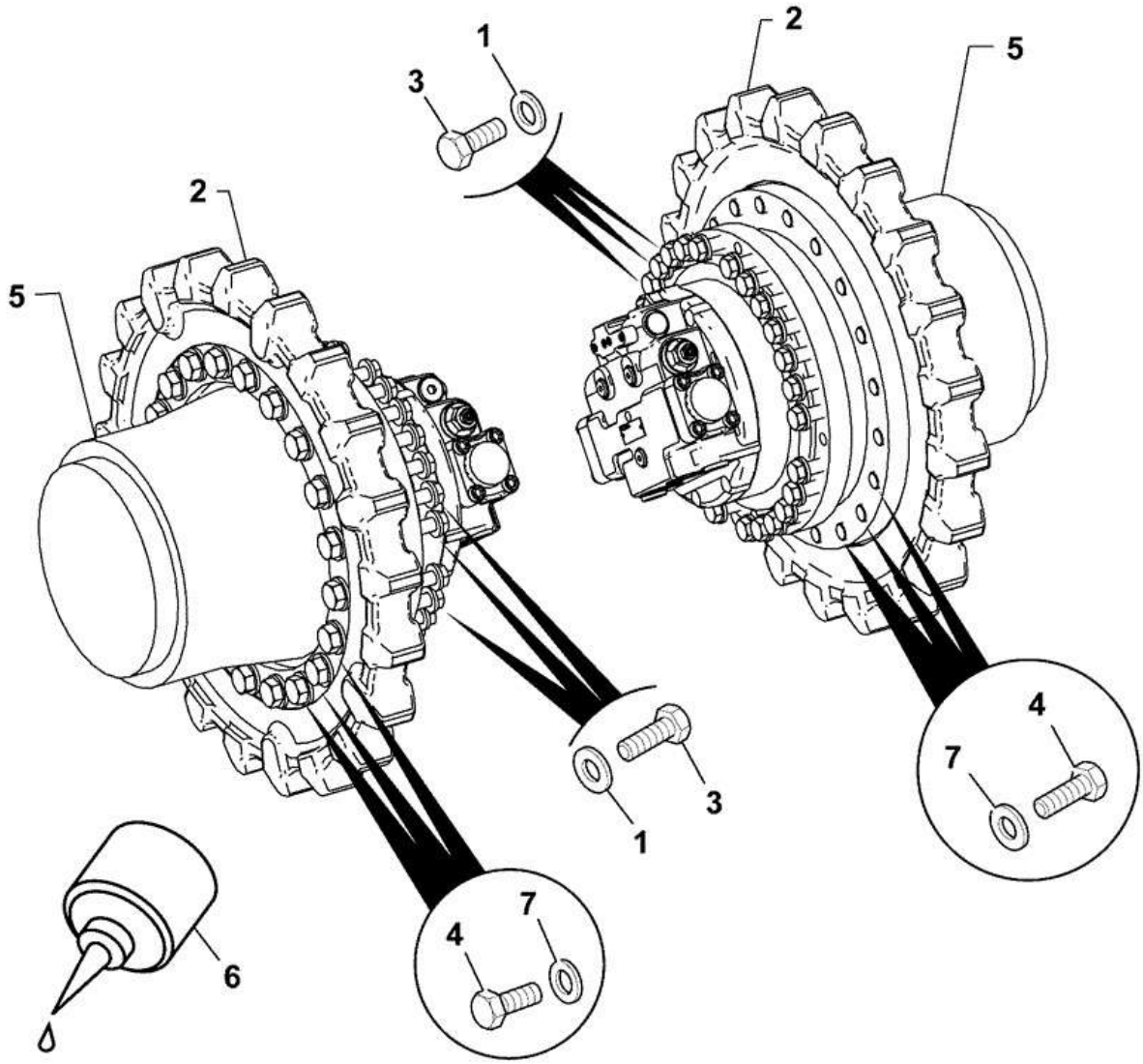

215-11005-4

Item	Part #	Change No	Description	Usage Code	QTY
1	JHP0043		Washer M16		52
2	332/J0022		Sprocket Drive 21 Teeth & 20 Holes		2
3	1316/3713D		Bolt M16 x 55mm		52

4	1316/3816D		Bolt M20 X 70		40
5	332/K1192		Motor Travel, BONFIGLIOLI		2
6	4101/0500		Fluid Locking Loctite 262		0
7	JHP0044		Washer		40

CONSTRUCTION \ NORTH AMERICA \ CONSTRUCTION / INDUSTRIAL \ JS TRACKED EXCAVATORS \ JS200LC BR E 02451101-02451200 9822/0355 \ J UNDERCARRIAGE \ J01 UNDERCARRIAGE

9822/0355 J170-1-2 TRACK GEARBOX WITH SPROCKET

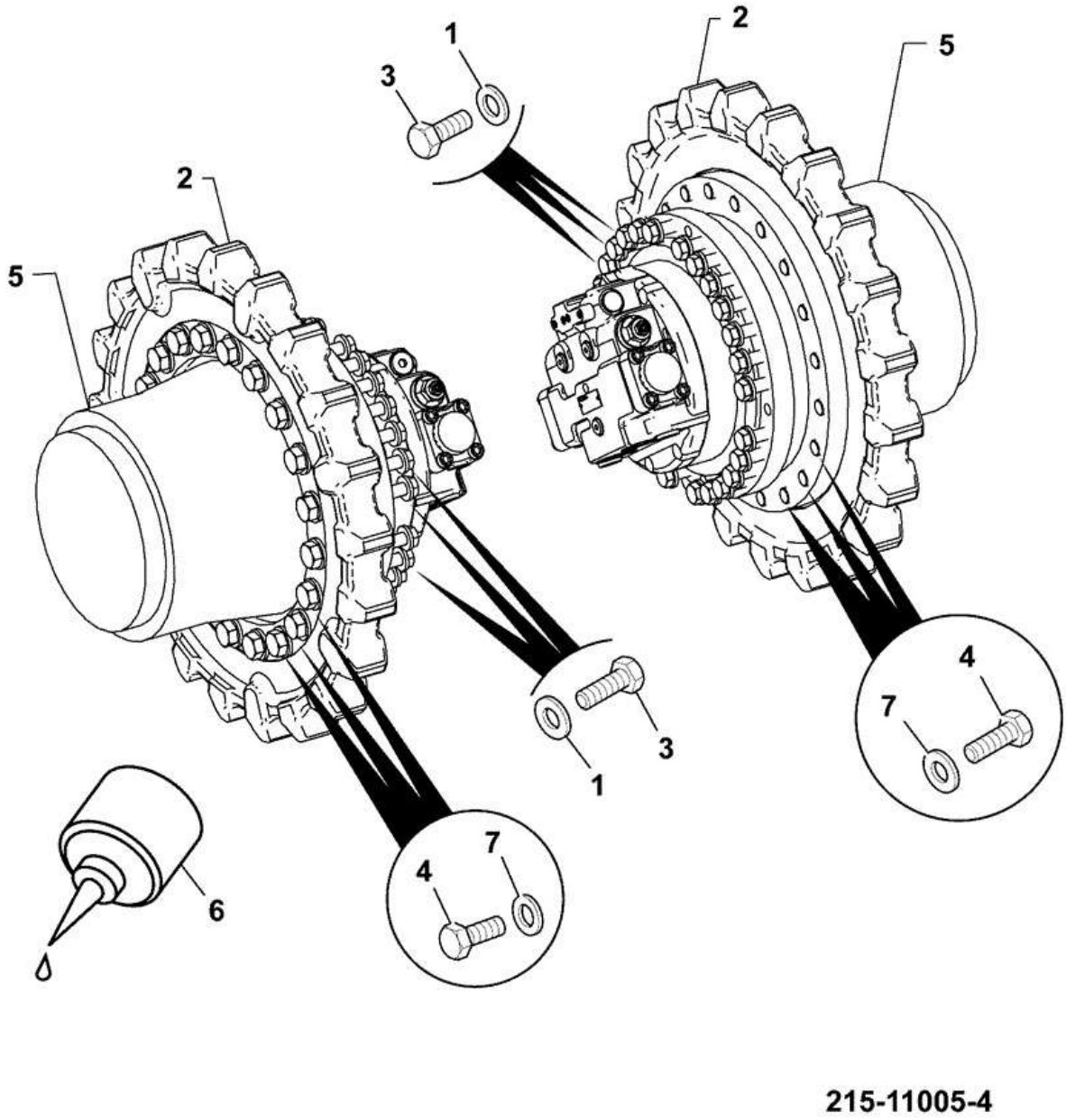

215-11005-4

Item	Part #	Change No	Description	Usage Code	QTY
1	JHP0043		Washer M16		52
2	332/J0022		Sprocket Drive 21 Teeth & 20 Holes		2
3	1316/3713D		Bolt M16 x 55mm		52

4	1316/3816D		Bolt M20 X 70		40
5	333/K0684		Motor Track, Assembly		2
6	4101/0500		Fluid Locking Loctite 262		0
7	JHP0044		Washer		40

CONSTRUCTION \ NORTH AMERICA \ CONSTRUCTION / INDUSTRIAL \ JS TRACKED EXCAVATORS \ JS200LC BR E 02451101-02451200 9822/0355 \ J UNDERCARRIAGE \ J01 UNDERCARRIAGE

9822/0355 J190-1-1 OTHER UNDERCARRIAGE PARTS ASSEMBLY UNDER COVERS

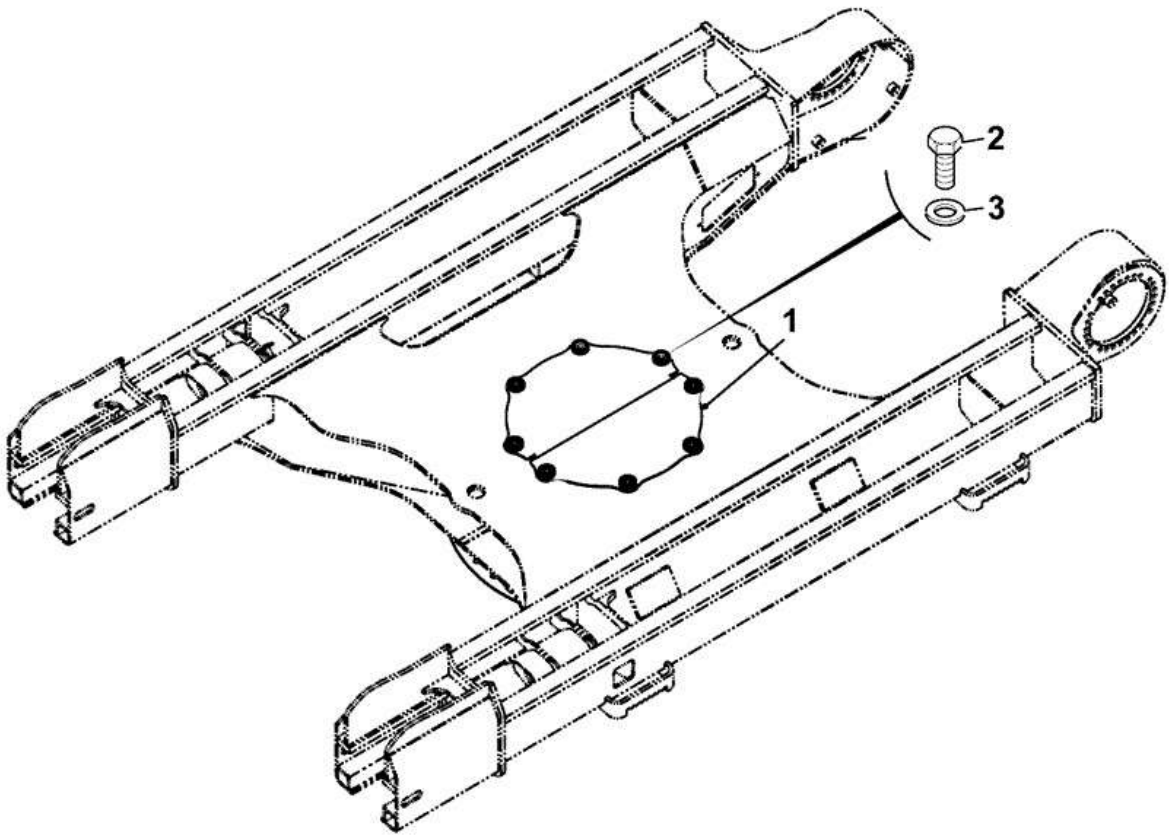

215-13175-2

Item	Part #	Change No	Description	Usage Code	QTY
1	KRA0814		Cover under		2

2	JHP0042		Washer M12		8
3	1316/0511D		Bolt M12 x 45		8

CONSTRUCTION \ NORTH AMERICA \ CONSTRUCTION / INDUSTRIAL \ JS TRACKED EXCAVATORS \ JS200LC BR E 02451101-02451200 9822/0355 \ J UNDERCARRIAGE \ J01 UNDERCARRIAGE

9822/0355 J190-10-1 OTHER UNDERCARRIAGE PARTS COUPLING ROTARY

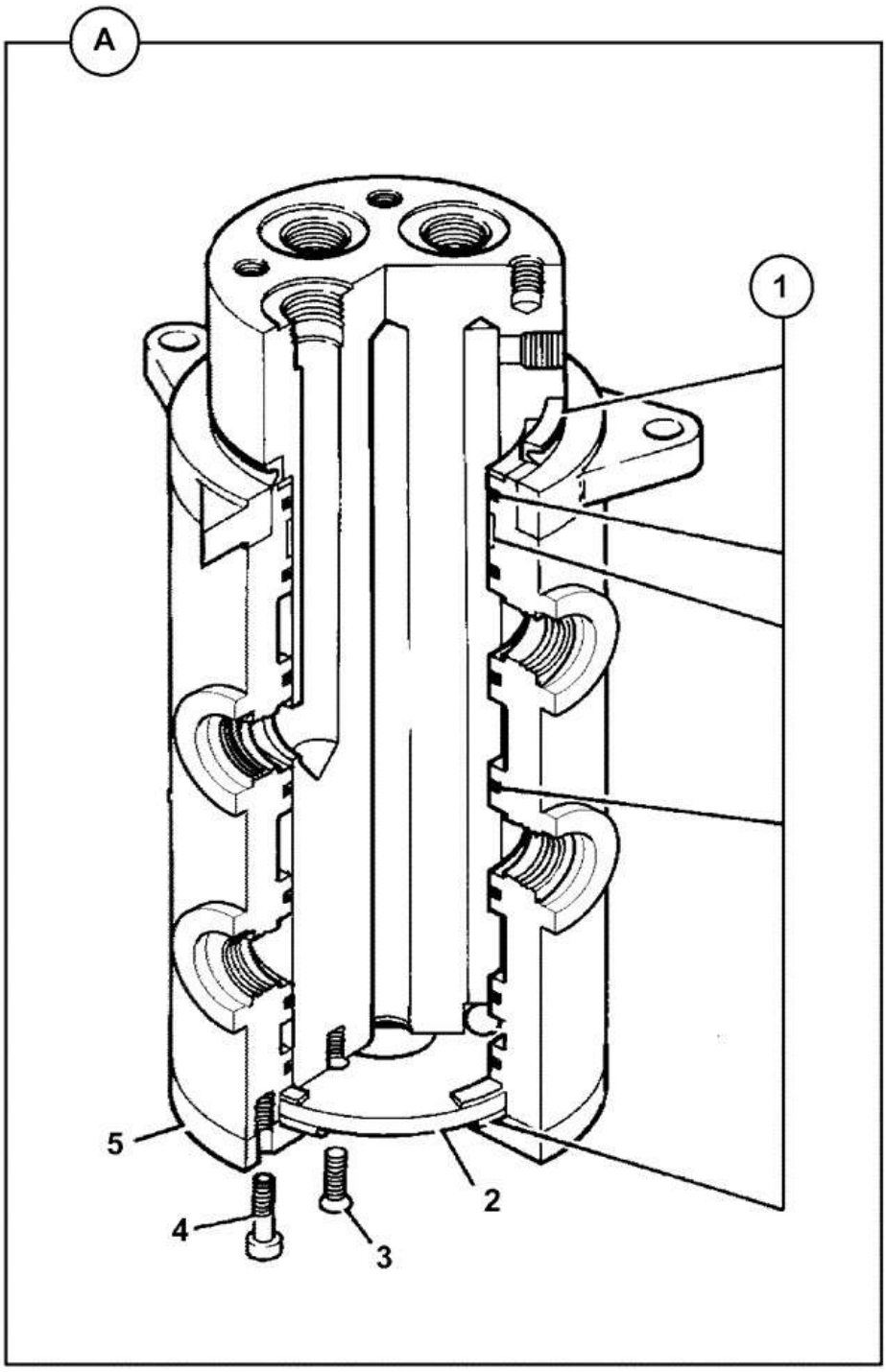

Item	Part #	Change No	Description	Usage Code	QTY
A	45/920115		Coupling rotary		1

1	:828/10371		Kit seal		1
2	:331/53239		Cover		1
3	:826/01399		Screw countersunk		1
4	:1391/3305		Capscrew M8 x 20		1
5	:331/53240		Cover		1

CONSTRUCTION \ NORTH AMERICA \ CONSTRUCTION / INDUSTRIAL \ JS TRACKED EXCAVATORS \ JS200LC BR E 02451101-02451200 9822/0355 \ J UNDERCARRIAGE \ J01 UNDERCARRIAGE

9822/0355 J190-15-1 OTHER UNDERCARRIAGE PARTS COVERS LOWER

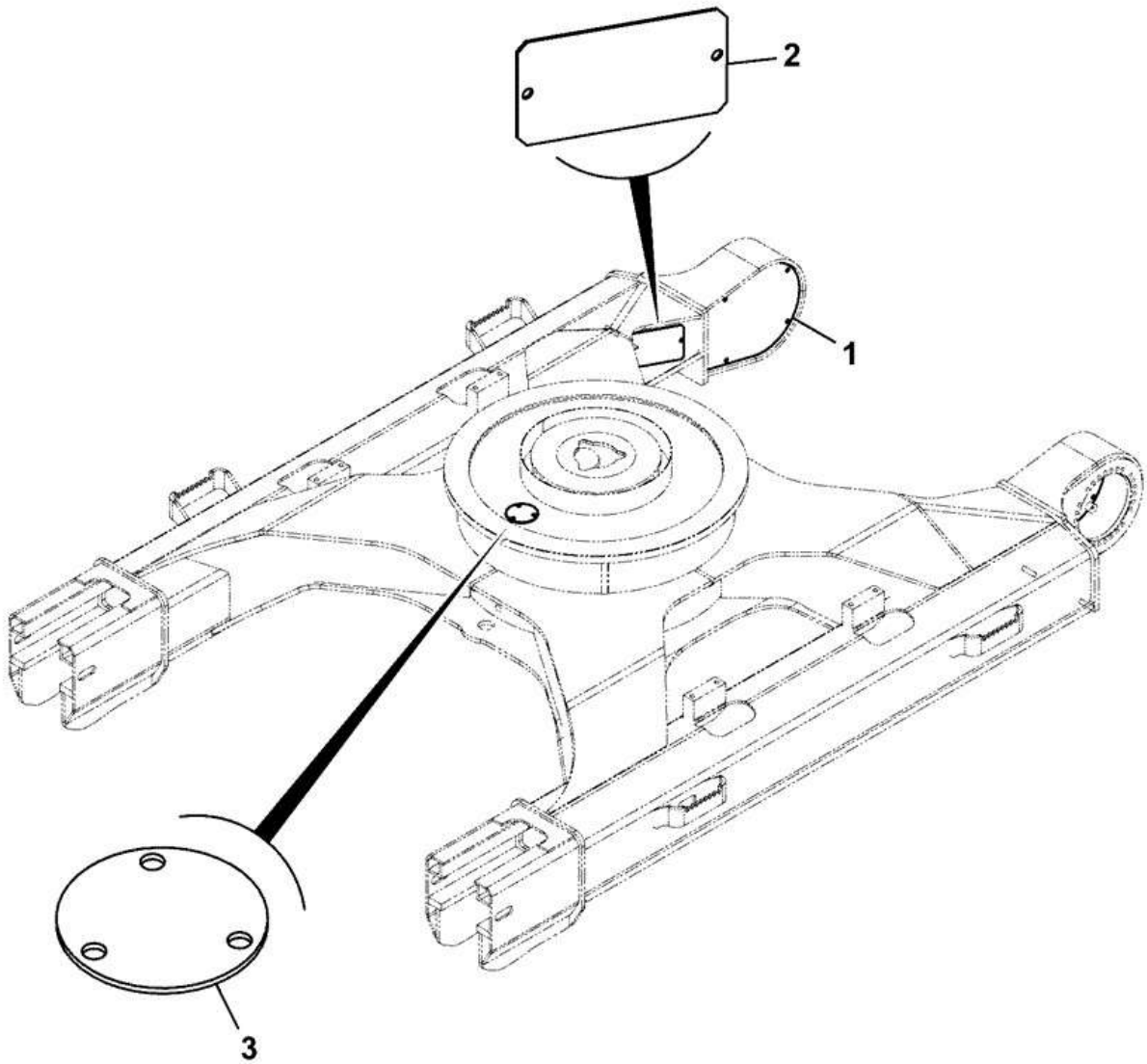

JG0RA069-2

Item	Part #	Change No	Description	Usage Code	QTY
1	JRA0306		Cover track motor		2

2	KRA1107		Cover		2
3	KRB0681		Plate Cover		1

9822/0355 J190-25-1 OTHER UNDERCARRIAGE PARTS TRACK GUIDES

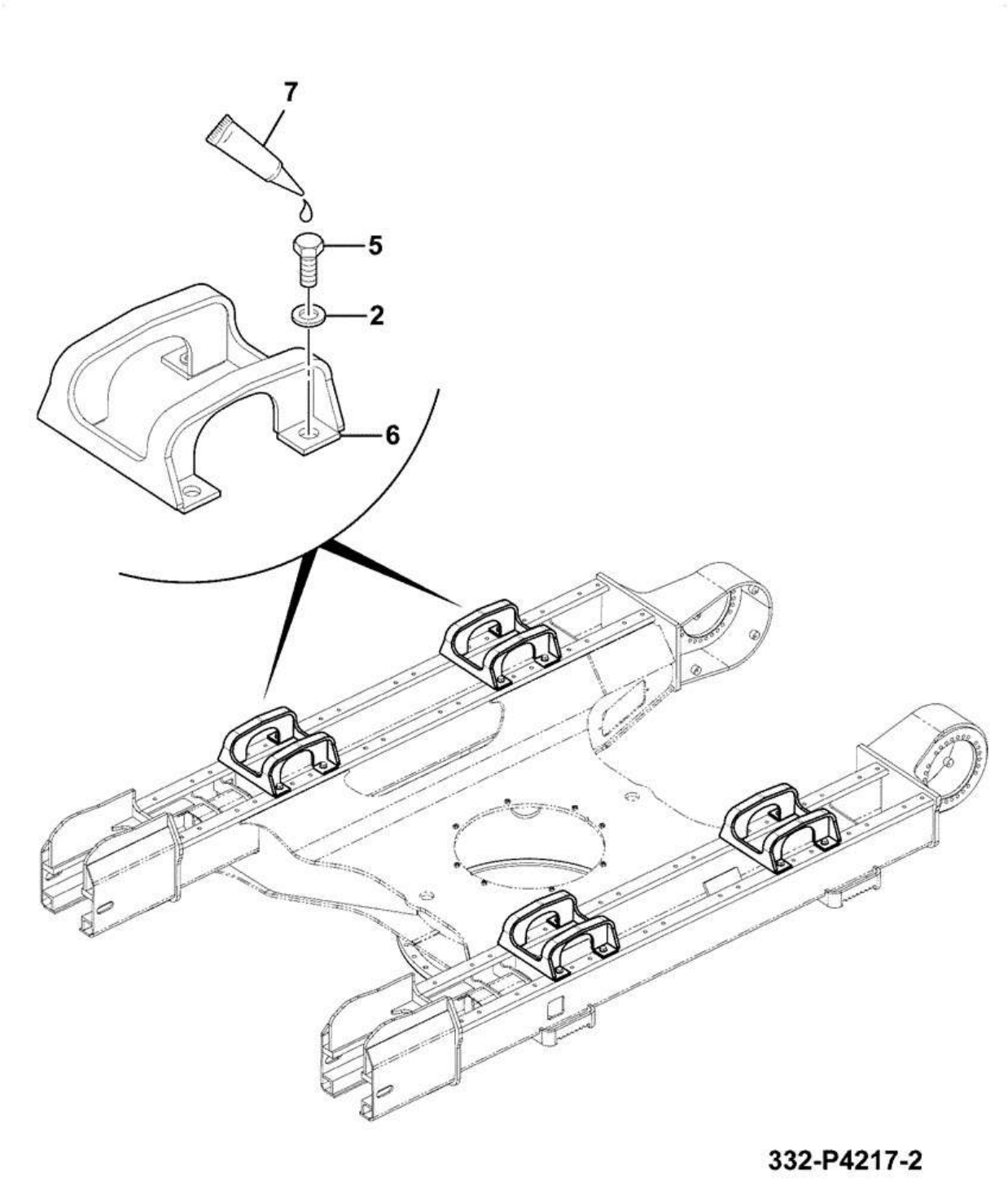

Item	Part #	Change No	Description	Usage Code	QTY
2	JHP0079		Washer (19mm x 36mm x 4.5mm)		16

5	1316/9512D		Bolt M18 x 50		16
6	331/22432		Guide track		4
7	4101/0500		Fluid Locking Loctite 262		0

CONSTRUCTION \ NORTH AMERICA \ CONSTRUCTION / INDUSTRIAL \ JS TRACKED EXCAVATORS \ JS200LC BR E 02451101-02451200 9822/0355 \ J UNDERCARRIAGE \ J01 UNDERCARRIAGE

9822/0355 J190-30-1 OTHER UNDERCARRIAGE PARTS TRACK TENSION DEVICE

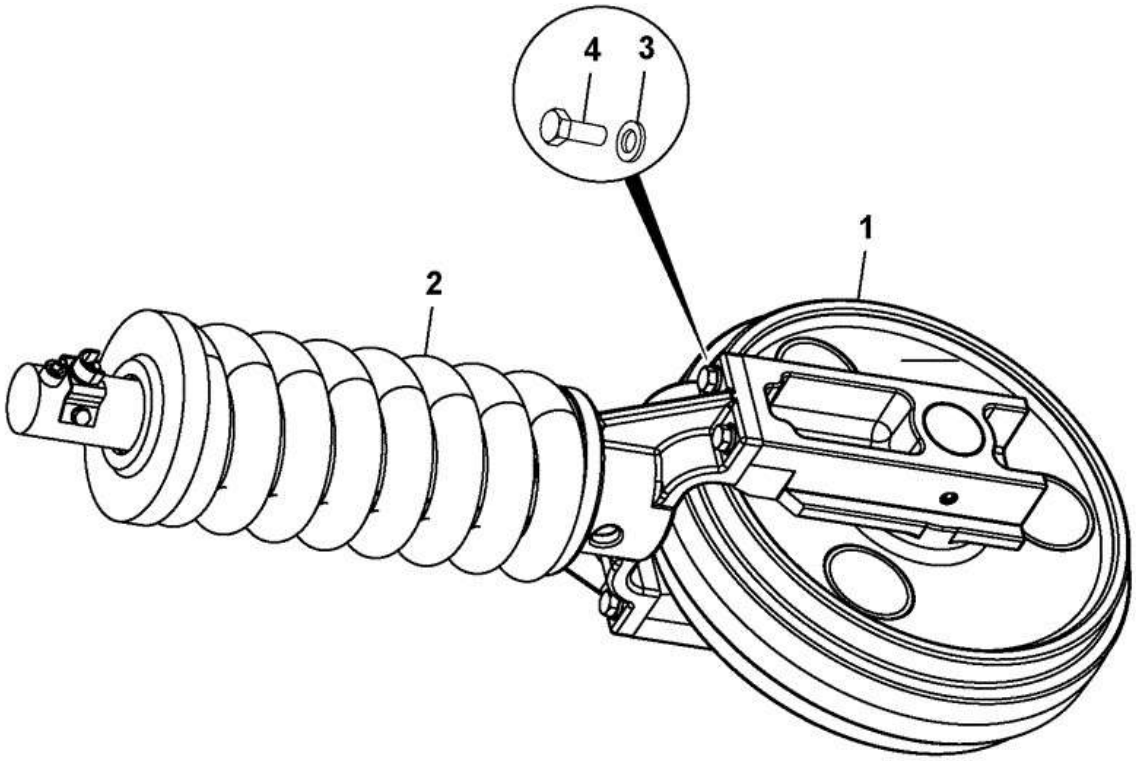

332-L9198-1

Item	Part #	Change No	Description	Usage Code	QTY
A	332/L9198		Tensioner track		1

1	:335/C3884		Wheel Idler With Bracket		1
2	:335/C3885		Spring Tension Device With Valve		1
3	:335/C3886		Washer		4
4	:335/C3887		Bolt M16 x 50mm		4

CONSTRUCTION \ NORTH AMERICA \ CONSTRUCTION / INDUSTRIAL \ JS TRACKED EXCAVATORS \ JS200LC BR E 02451101-02451200 9822/0355 \ L ENGINE ANCILLARIES \ L01 ENGINE INSTALLATION ASSEMBLIES

9822/0355 L100-5-1 ENGINE INSTALLATION ASSEMBLIES 448 T2 129kW

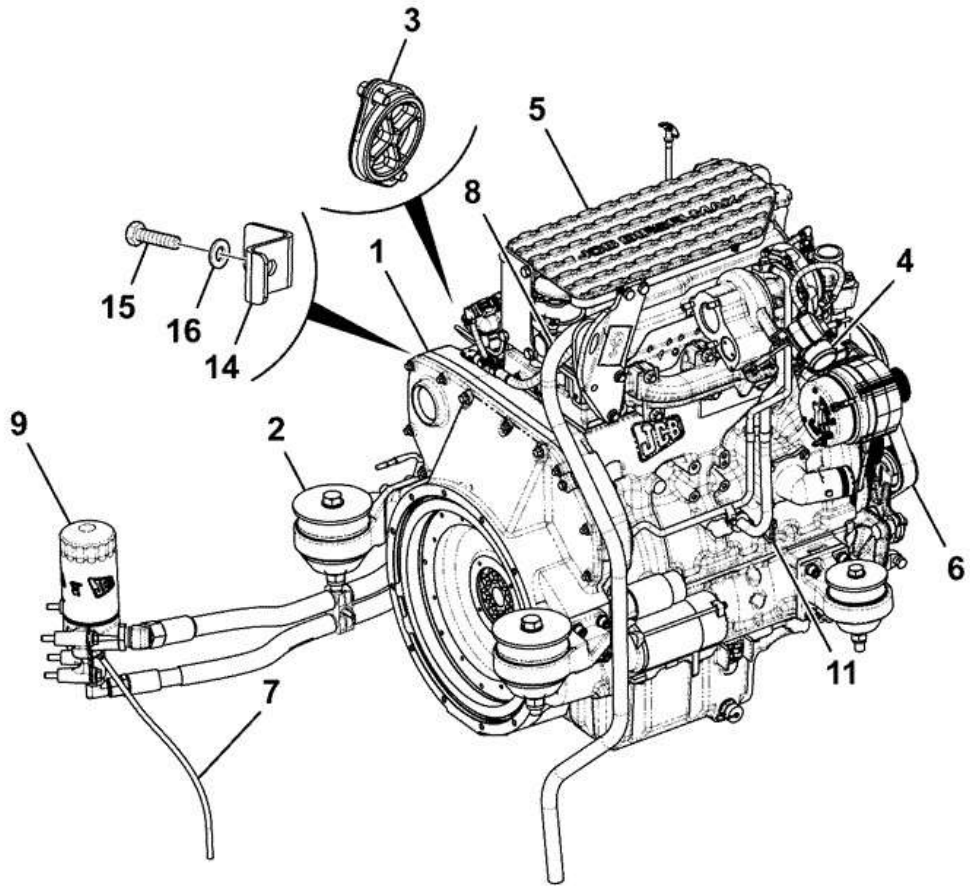

333-K6336-3

Item	Part #	Change No	Description	Usage Code	QTY
1	320/40812		Engine assembly TCA 129kW 24V eT2 ROW		1

2	****		Mount engine assembly		1
3	****		Installation Blanking Plate SAE		1
4	****		Adaptor Assembly, Turbo		1
5	****		Plate tread assy		1
6	****		Fan Drive, Assembly 1.025 Ratio		1
7	333/K3563		Hose - Oil Drain		1
8	****		Hose & pipework CCV, Assembly		1
9	****		Filter Assembly, Remote Oil		1
11	****		Clip Harness Alternator Assembly		1
14	333/J2451		Plate		1
15	1420/0007D		Washer (M8)		1
16	1316/0305D		Screw M8 X 20		1

CONSTRUCTION \ NORTH AMERICA \ CONSTRUCTION / INDUSTRIAL \ JS TRACKED EXCAVATORS \ JS200LC BR E 02451101-02451200 9822/0355 \ L ENGINE ANCILLARIES \ L01 ENGINE INSTALLATION ASSEMBLIES

9822/0355 L150-1-1 CRANKCASE VENTILATION ASSEMBLY CCV

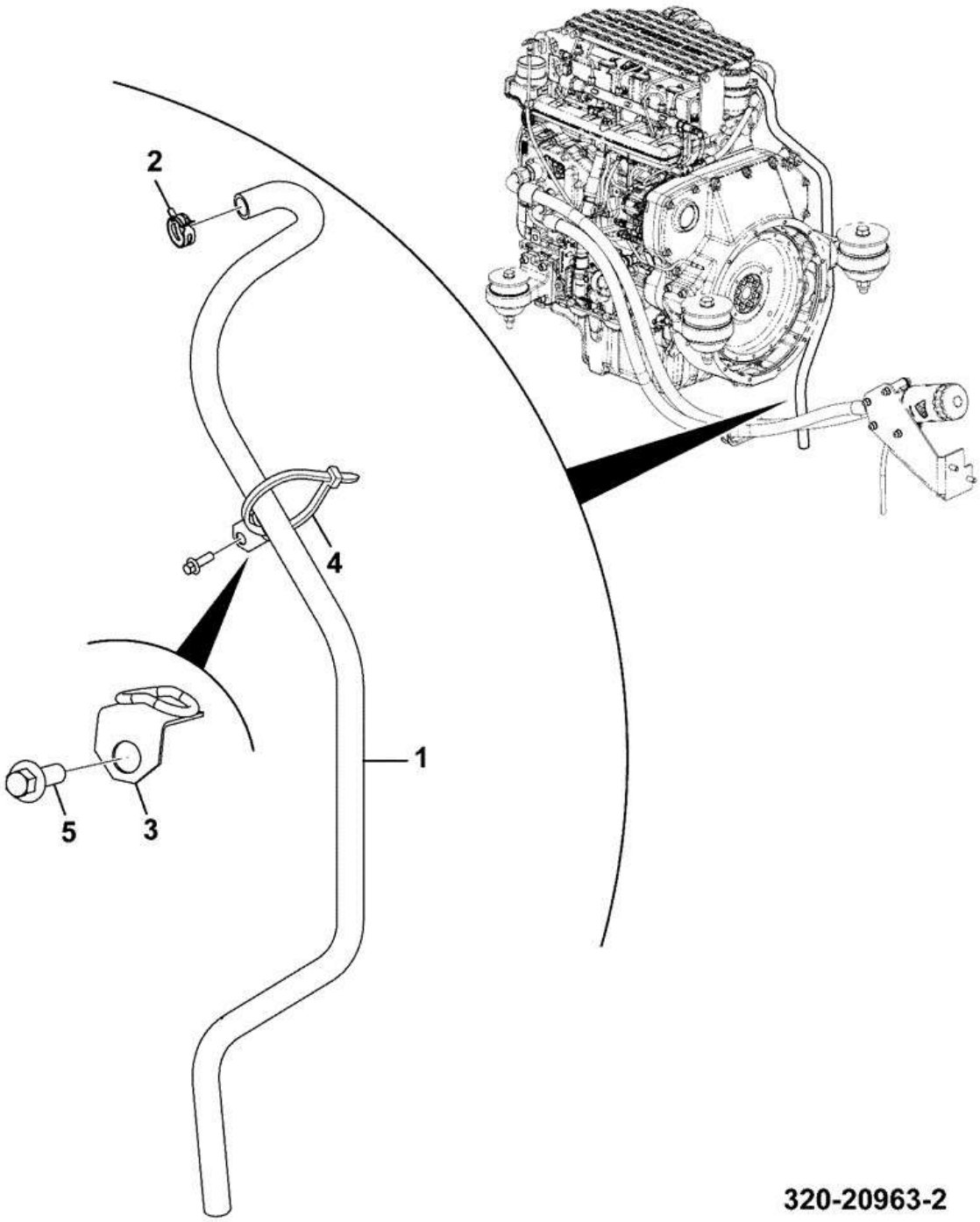

Item	Part #	Change No	Description	Usage Code	QTY
1	320/07793		Hose CCV		1

2	821/10477		Clamp hose springband		1
3	263/34900		Harness Clip		1
4	826/01144		Tie Cable 200mm		1
5	1317/3307Z		Bolt flanged M8 x 25 Flange Reduced Hex		1

CONSTRUCTION \ NORTH AMERICA \ CONSTRUCTION / INDUSTRIAL \ JS TRACKED EXCAVATORS \ JS200LC BR E 02451101-02451200 9822/0355 \ L ENGINE ANCILLARIES \ L01 ENGINE INSTALLATION ASSEMBLIES

9822/0355 L190-1-1 OTHER ENGINE RELATED PARTS TREAD PLATES

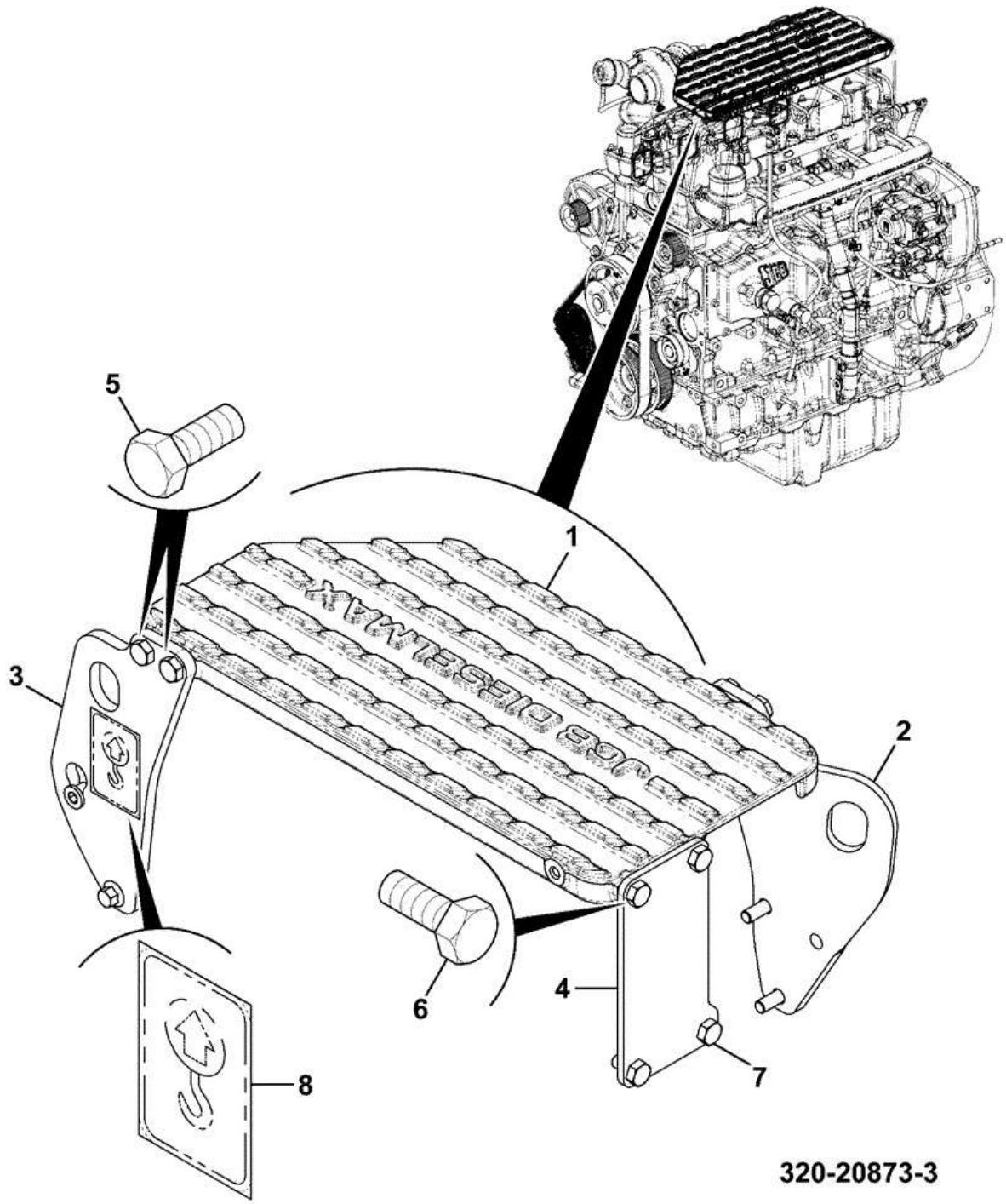

Item	Part #	Change No	Description	Usage Code	QTY
1	320/09176		Plate tread machining		1

2	320/09177		Bracket lift		1
3	320/09185		Mount tread plate front		1
4	320/09397		Bracket		1
5	1316/0417D		Setscrew M10 x 75mm		4
6	1316/0410D		Bolt M10 x 40mm		2
7	1316/0405D		Screw M10 x 20		2
8	817/01803		Label Sling Point		2

CONSTRUCTION \ NORTH AMERICA \ CONSTRUCTION / INDUSTRIAL \ JS TRACKED EXCAVATORS \ JS200LC BR E 02451101-02451200 9822/0355 \ L ENGINE ANCILLARIES \ L01 ENGINE INSTALLATION ASSEMBLIES

9822/0355 L190-5-1 OTHER ENGINE RELATED PARTS BLANKING KIT

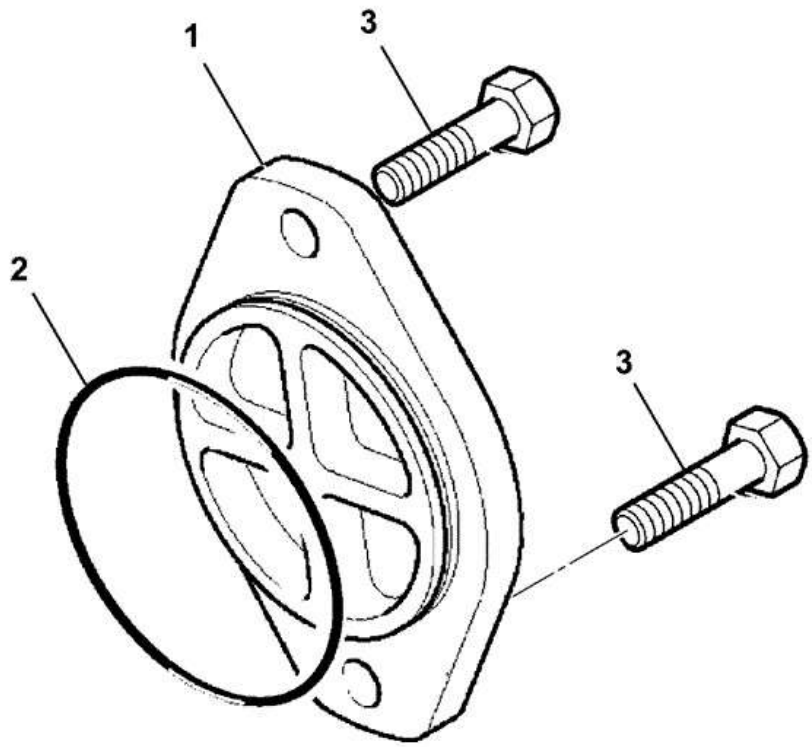

320-20060-3

Item	Part #	Change No	Description	Usage Code	QTY
1	320/08012		Cover		1

2	320/08009		O Ring		1
3	1317/3405Z		Bolt M10 X 20 Flange Reduced		2

CONSTRUCTION \ NORTH AMERICA \ CONSTRUCTION / INDUSTRIAL \ JS TRACKED EXCAVATORS \ JS200LC BR E 02451101-02451200 9822/0355 \ L ENGINE ANCILLARIES \ L01 ENGINE INSTALLATION ASSEMBLIES

9822/0355 L190-25-1 OTHER ENGINE RELATED PARTS MOUNTING REMOTE OIL FILTER

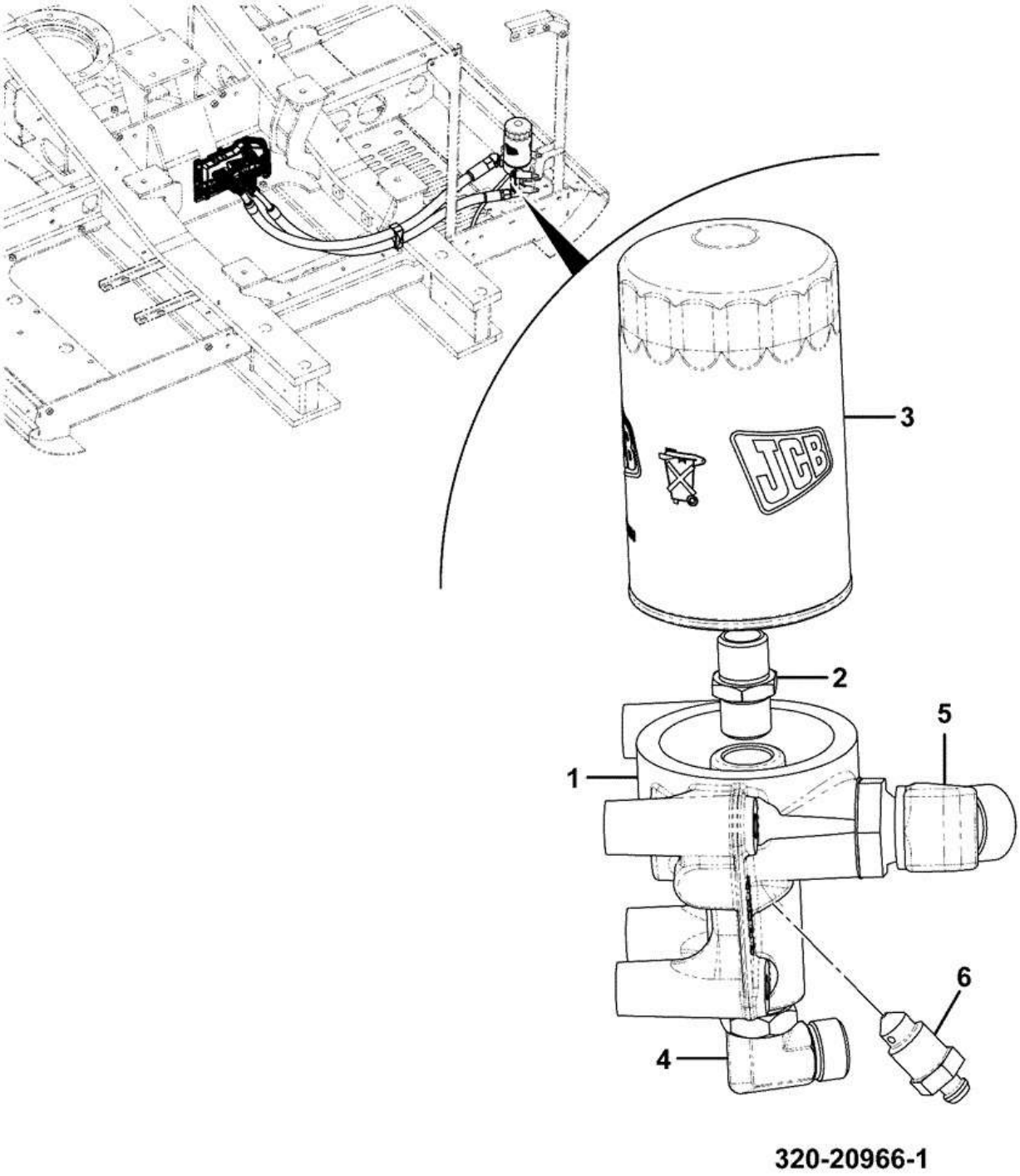

Item	Part #	Change No	Description	Usage Code	QTY
1	320/04345		Mounting remote filter		1

2	320/07903		Adaptor oil filter		1
3	320/04133		Filter engine oil		1
4	320/07905		Elbow 90 DEG		1
5	320/07904		Elbow 45 DEG		1
6	816/60040		Nipple Screw		1

CONSTRUCTION \ NORTH AMERICA \ CONSTRUCTION / INDUSTRIAL \ JS TRACKED EXCAVATORS \ JS200LC BR E 02451101-02451200 9822/0355 \ L ENGINE ANCILLARIES \ L01 ENGINE INSTALLATION ASSEMBLIES

9822/0355 L190-30-1 OTHER ENGINE RELATED PARTS TURBO ADAPTOR

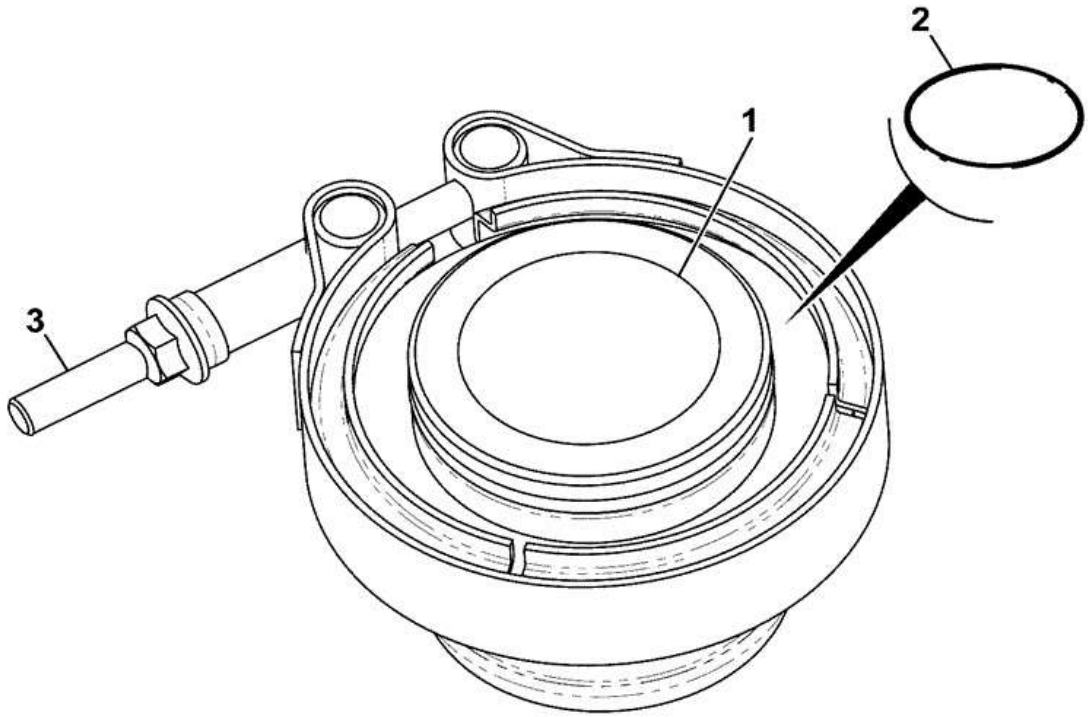

333-J3740-1

Item	Part #	Change No	Description	Usage Code	QTY
1	333/J1687		Clamp V band		1

2	333/J1684		O Ring		1
3	333/J1674		Insert adapter		1

CONSTRUCTION \ NORTH AMERICA \ CONSTRUCTION / INDUSTRIAL \ JS TRACKED EXCAVATORS \ JS200LC BR E 02451101-02451200 9822/0355 \ L ENGINE ANCILLARIES \ L01 ENGINE INSTALLATION ASSEMBLIES

9822/0355 L190-40-1 OTHER ENGINE RELATED PARTS HARNESS

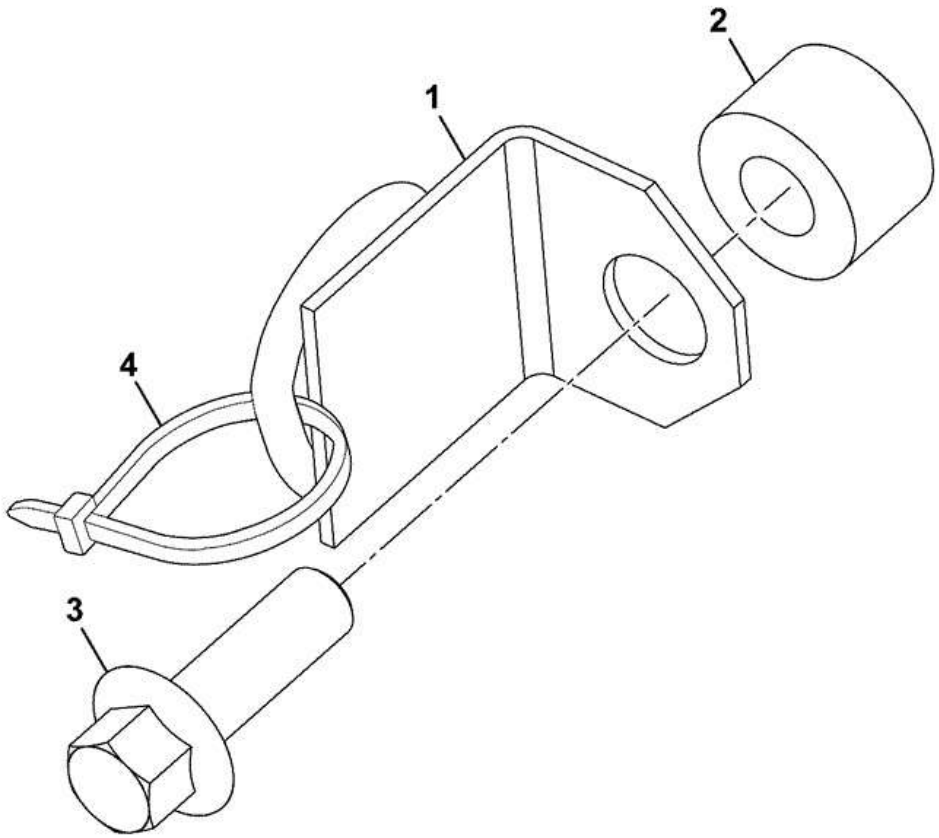

333-K3262-1

Item	Part #	Change No	Description	Usage Code	QTY
1	263/34900		Harness Clip		1

2	829/30160		Boss		1
3	1317/3307Z		Bolt flanged M8 x 25 Flange Reduced Hex		1
4	270/00106		Tie Cable 385mm		1

CONSTRUCTION \ NORTH AMERICA \ CONSTRUCTION / INDUSTRIAL \ JS TRACKED EXCAVATORS \ JS200LC BR E 02451101-02451200 9822/0355 \ L ENGINE ANCILLARIES \ L01 ENGINE INSTALLATION ASSEMBLIES

9822/0355 L190-45-1 OTHER ENGINE RELATED PARTS FILTER ASSEMBLY, REMOTE OIL

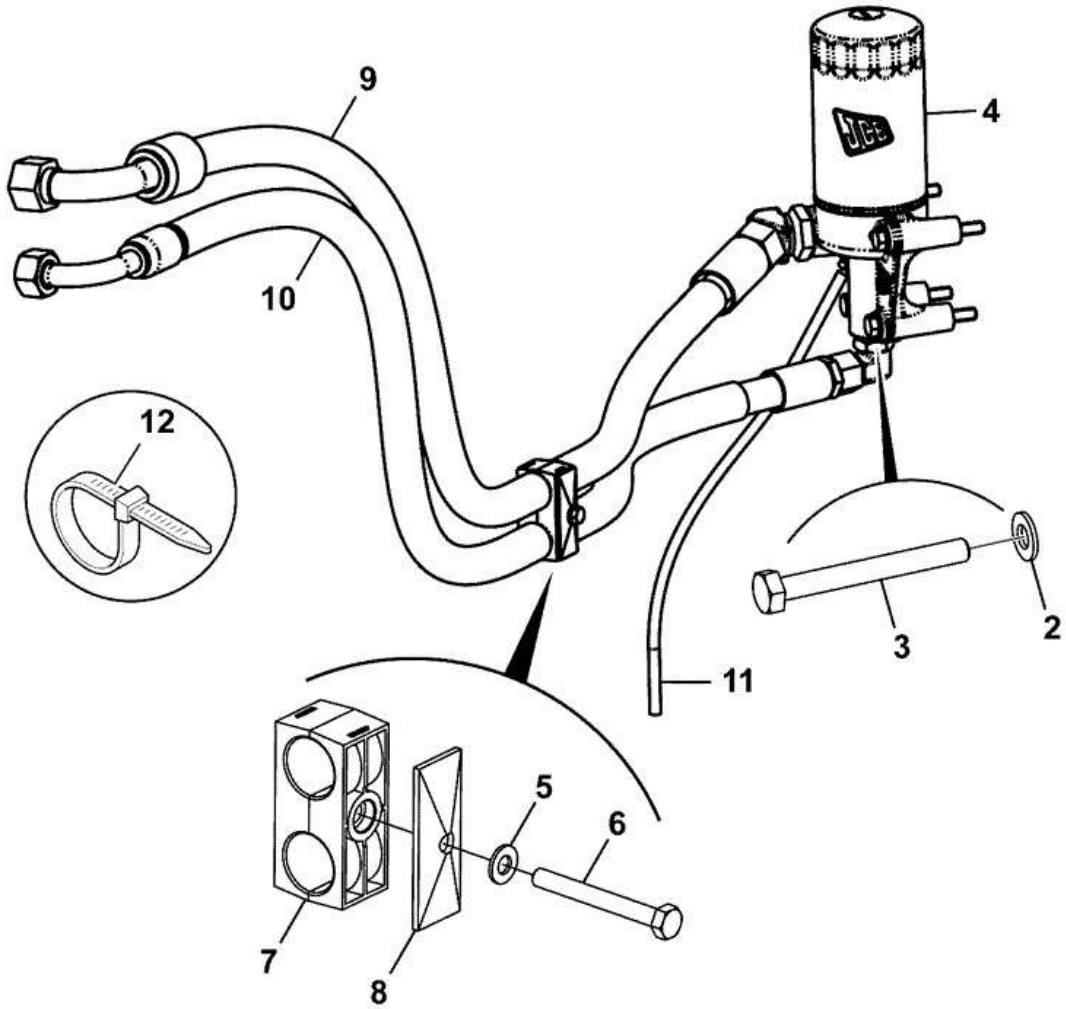

333-K1756-2

Item	Part #	Change No	Description	Usage Code	QTY
2	1420/0008D		Washer (M10)		4

3	1316/3419D		Bolt		4
4	****		Assembly remote filter mounting		1
5	1420/0007D		Washer (M8)		1
6	1316/0316D		Screw Set M8 x 70		1
7	333/J6194		Clamp body (Pair)		1
8	821/00443		Plate Cover		1
9	333/K0801		Hose - 12 BSP		1
10	333/K0800		Hose - 12 BSP		1
11	JHH0047		Hose vinyl		0
12	KAR0016		Tie Cable		1

CONSTRUCTION \ NORTH AMERICA \ CONSTRUCTION / INDUSTRIAL \ JS TRACKED EXCAVATORS \ JS200LC BR E 02451101-02451200 9822/0355 \ L ENGINE ANCILLARIES \ L02 EXHAUST SYSTEM

9822/0355 L200-10-1 EXHAUST SYSTEM INSTALLATION ASSEMBLIES EXHAUST SYSTEM DIESELMAX T2

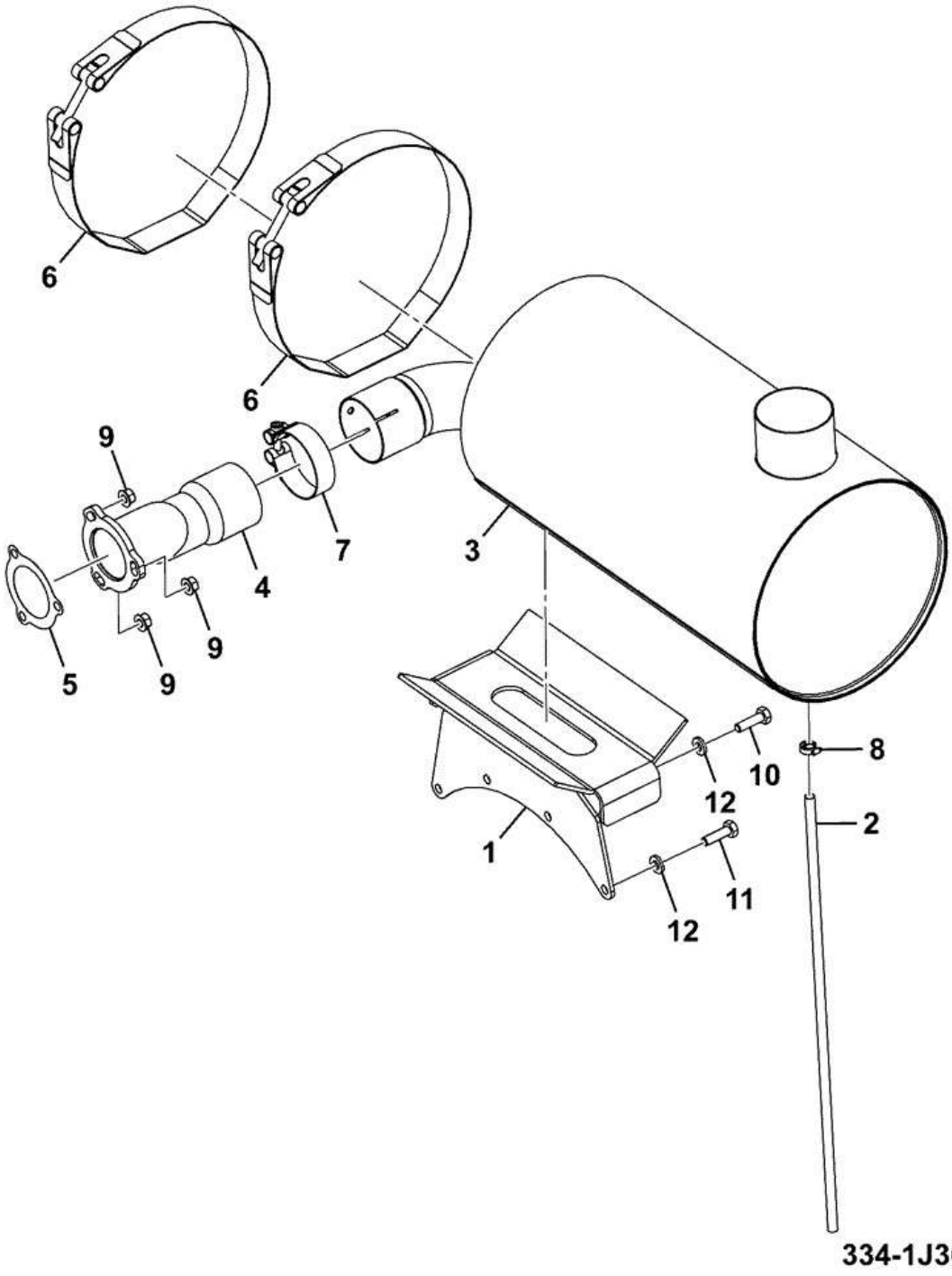

Item	Part #	Change No	Description	Usage Code	QTY
1	333/J0618		Exhaust Mtg Brkt		1

2	JHH0053		Tube teflon drain 950mm long		1
3	334/J0820		Silencer Exhaust		1
4	334/J3643		Pipe Torbo Outlet		1
5	320/06036		Gasket Turbo Outlet		1
6	333/J8473		Clamp exhaust		2
7	334/J2550		Clamp Band 80mm Heavy Duty		1
8	2201/0001		Clip Worm Drive 8/16mm		1
9	826/11377		Nut manifold M10		3
10	1316/0410D		Bolt M10 x 40mm		2
11	1316/0409D		Screw M10X35		2
12	JHP0046		Washer M10		4

9822/0355 L300-20-1 INDUCTION SYSTEM INSTALLATION ASSEMBLIES AIR CLEANER, STANDARD, TIER 2

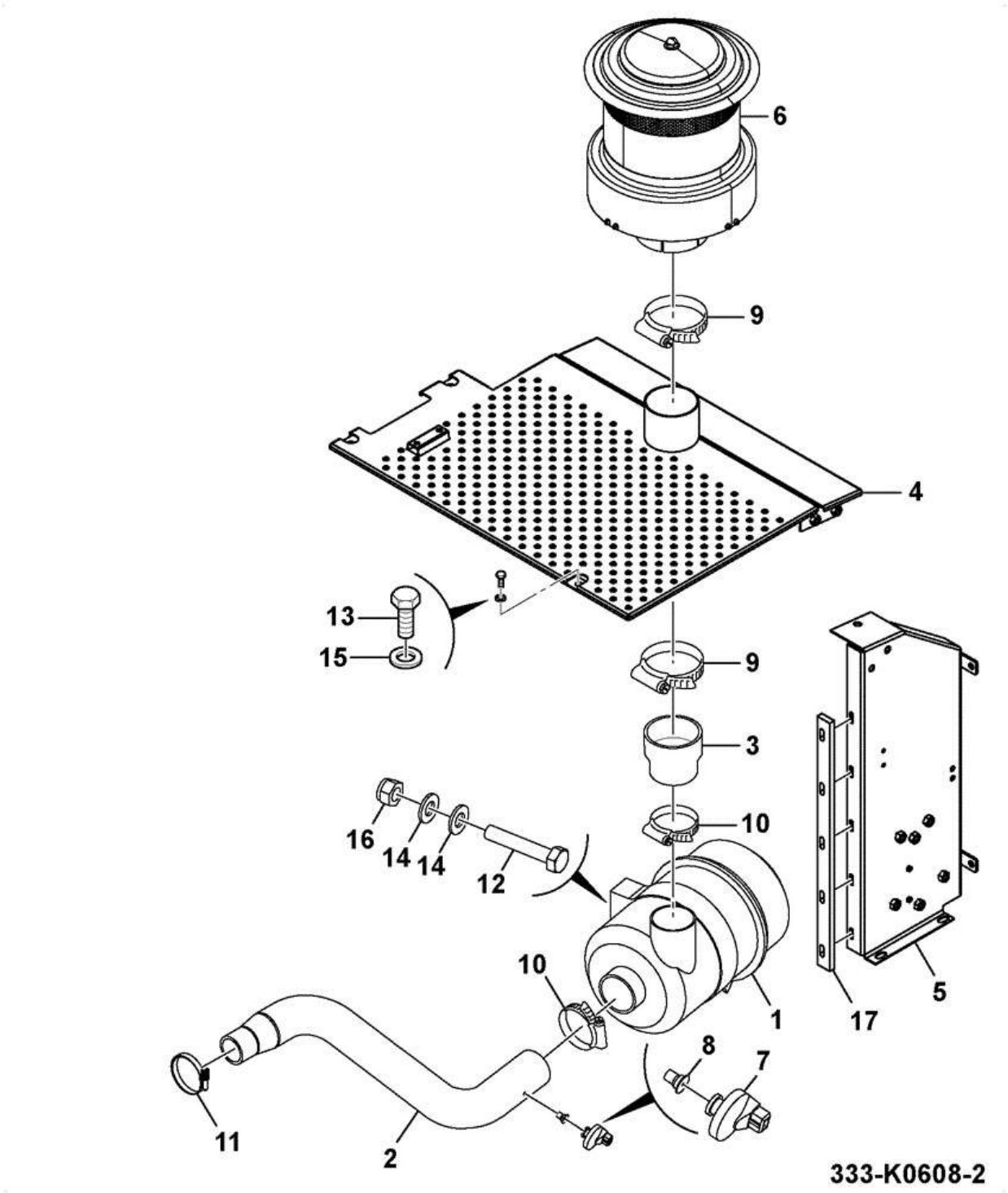

Item	Part #	Change No	Description	Usage Code	QTY
1	332/J0638		Air Cleaner		1

2	333/K0685		Hose Induction		1
3	834/11448		Hose induction pre-cleaner		1
4	333/K9425		Plate Cover, Front, Left Side		1
5	335/G8130		Frame Work		1
6	32/925394		Cap rain		1
7	701/60011		Sensor vacuum - 70Mbar		1
8	162/02674		Sensor Adapter Vacuum		1
9	2201/0017		Clip Worm Drive 110-140mm		2
10	332/S8033		Clamp constant torque (95-118mm)		2
11	332/K3479		Clip worm		1
12	1316/0310D		Screw		2
13	1316/0507D		Setscrew M12 x 25 grade 10.9		4
14	1420/0007D		Washer (M8)		4
15	1420/0009D		Washer (M12)		4
16	1370/0203D		Nut Lock M8		2
17	333/K9238		Seal		1

9822/0355 L310-1-1 INDUCTION FILTER

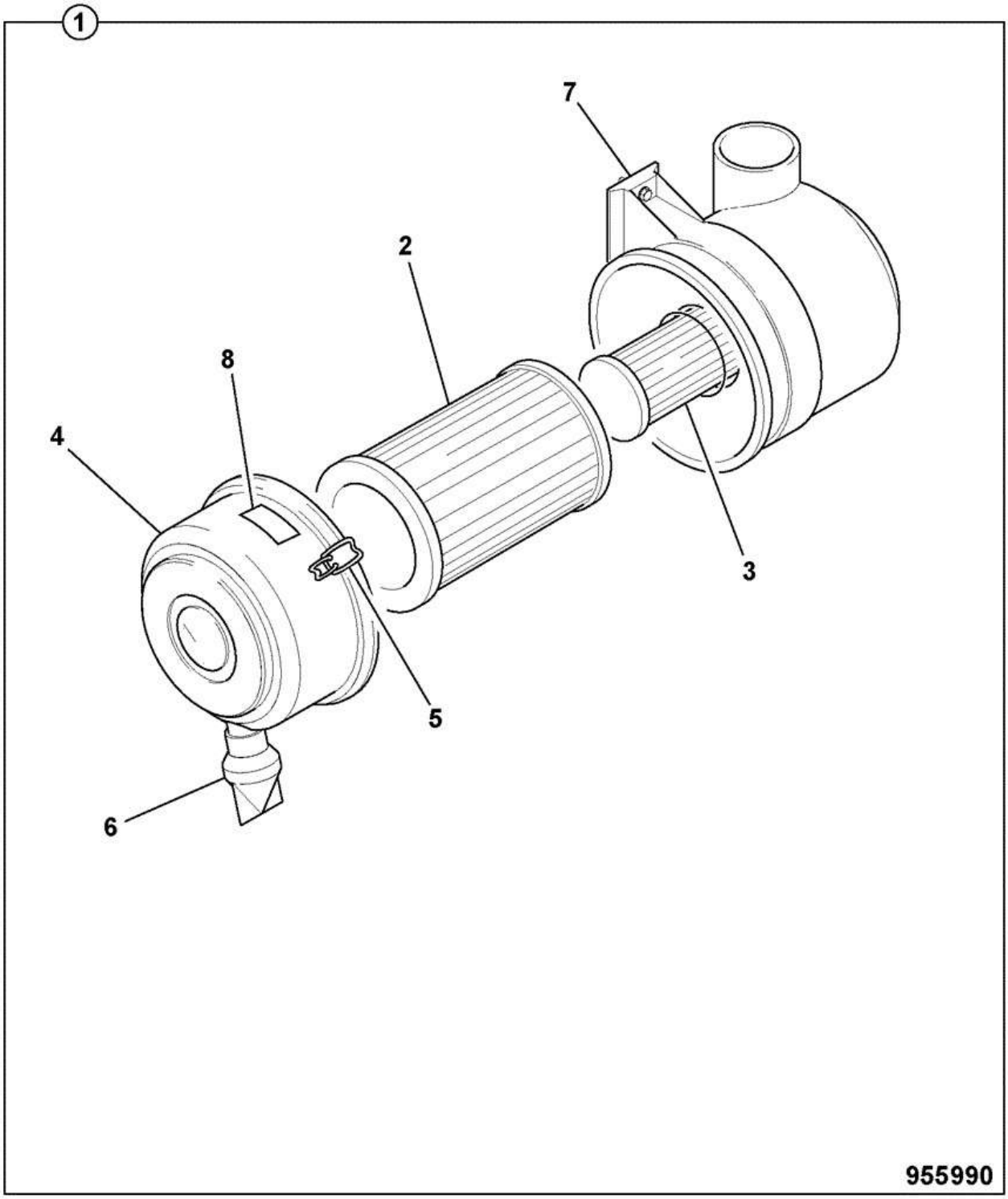

Item	Part #	Change No	Description	Usage Code	QTY
1	332/J0638		Air Cleaner		1
2	:580/12020		Element air filter main		1
3	:580/12021		Element air filter safety		1

4	:580/12022		Cover end assembly		1
5	:580/12023		Clip Retaining		1
6	:32/916603		Valve Dust		1
7	:580/12040		Bracket air filter mounting		1
8	:32/912906		Label		1

9822/0355 L390-1-1 OTHER INDUCTION SYSTEM PARTS NON-SCAVENGE

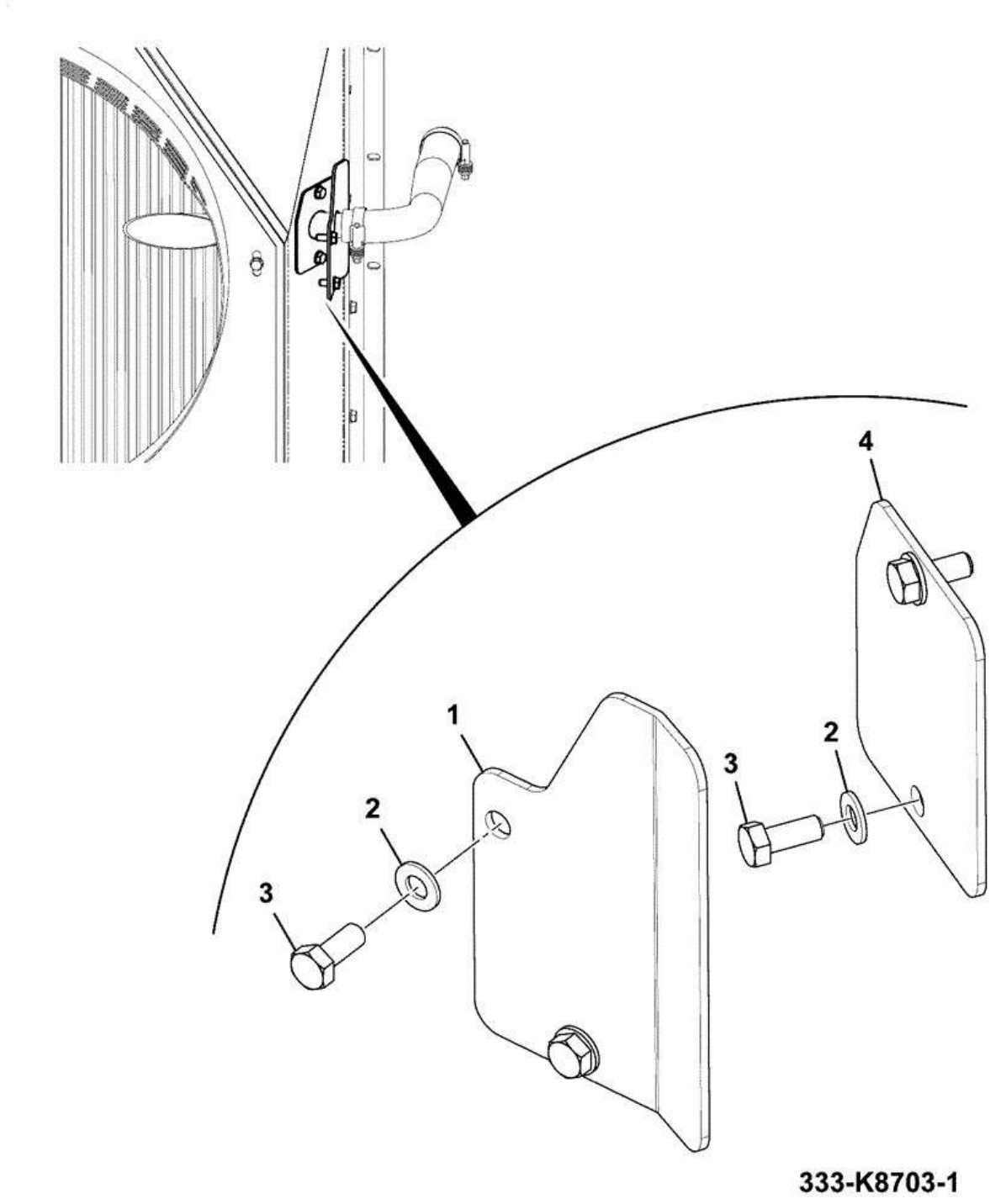

Item	Part #	Change No	Description	Usage Code	QTY
1	333/K8704		Plate Blanking		1

2	1420/0007D		Washer (M8)		4
3	1316/0305D		Screw M8 X 20		4
4	333/K6250		Plate Rad Seal		1

9822/0355 L600-10-1 COOLING INSTALLATION ASSEMBLIES COOLING ASSEMBLY - T2

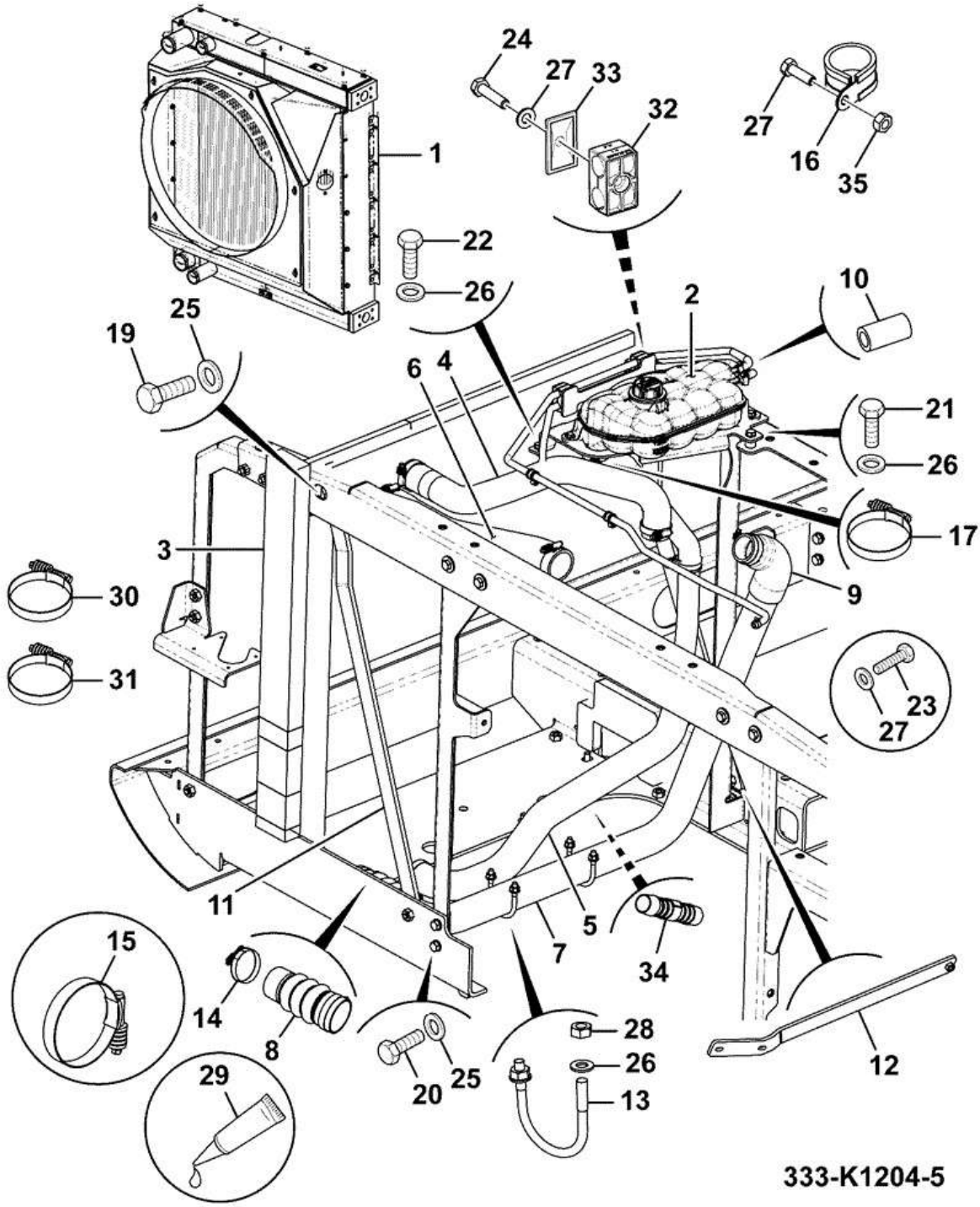

Item	Part #	Change No	Description	Usage Code	QTY
1	334/J9169		Cooling Pack T4i		1

2	****		Bottle Expansion Assembly		1
3	333/K0431		Kit Foam Coolling Pack		1
4	333/J8829		Hose top		1
5	333/K1222		Hose Radiator, Bottom		1
6	332/K9937		Hose CAC to inlet manifold		1
7	332/K9738		Pipe intercooler		1
8	834/10456		Hose air charge cooler		1
9	332/K9739		Hose turbo outlet		1
10	333/K1214		Cap Hose		1
11	331/63673		Stay radiator		1
12	335/13510		Stay radiator		1
13	KNJ0721		Bolt u		2
14	821/10191		Clip Breeze		3
15	821/10236		Clip Worm Constant Torque		5
16	821/10278		Clip Pipe, Dia 44mm		1
17	333/K2259		Clip worm torque		1
19	1316/0509D		Screw M12x35 long		3
20	1316/0507D		Setscrew M12 x 25 grade 10.9		5
21	1316/3411D		Bolt		2
22	1316/0405D		Screw M10 x 20		1
23	1316/0308D		Screw M8x30		2
24	1316/0309D		Setscrew high strength M8 x 35mm		2
25	1420/0009D		Washer (M12)		8
26	1420/0008D		Washer (M10)		7
27	1420/0007D		Washer (M8)		5
28	1370/0301D		Nut (M10)		4
29	4101/0500		Fluid Locking Loctite 262		0
30	821/10192		Clip Breeze (70-93)		2
31	334/J4514		Clip Constant-Torque Worm		3
32	334/J5291		Clamp Hose		2
33	821/00335		Clamp Plate		2
34	650/10166		Adaptor Hose Connector 16mm OD		1
35	1370/0203D		Nut Lock M8		1

9822/0355 L610-15-1 COOLING PACK INSTALLATION EXPANSION BOTTLE ASSEMBLY

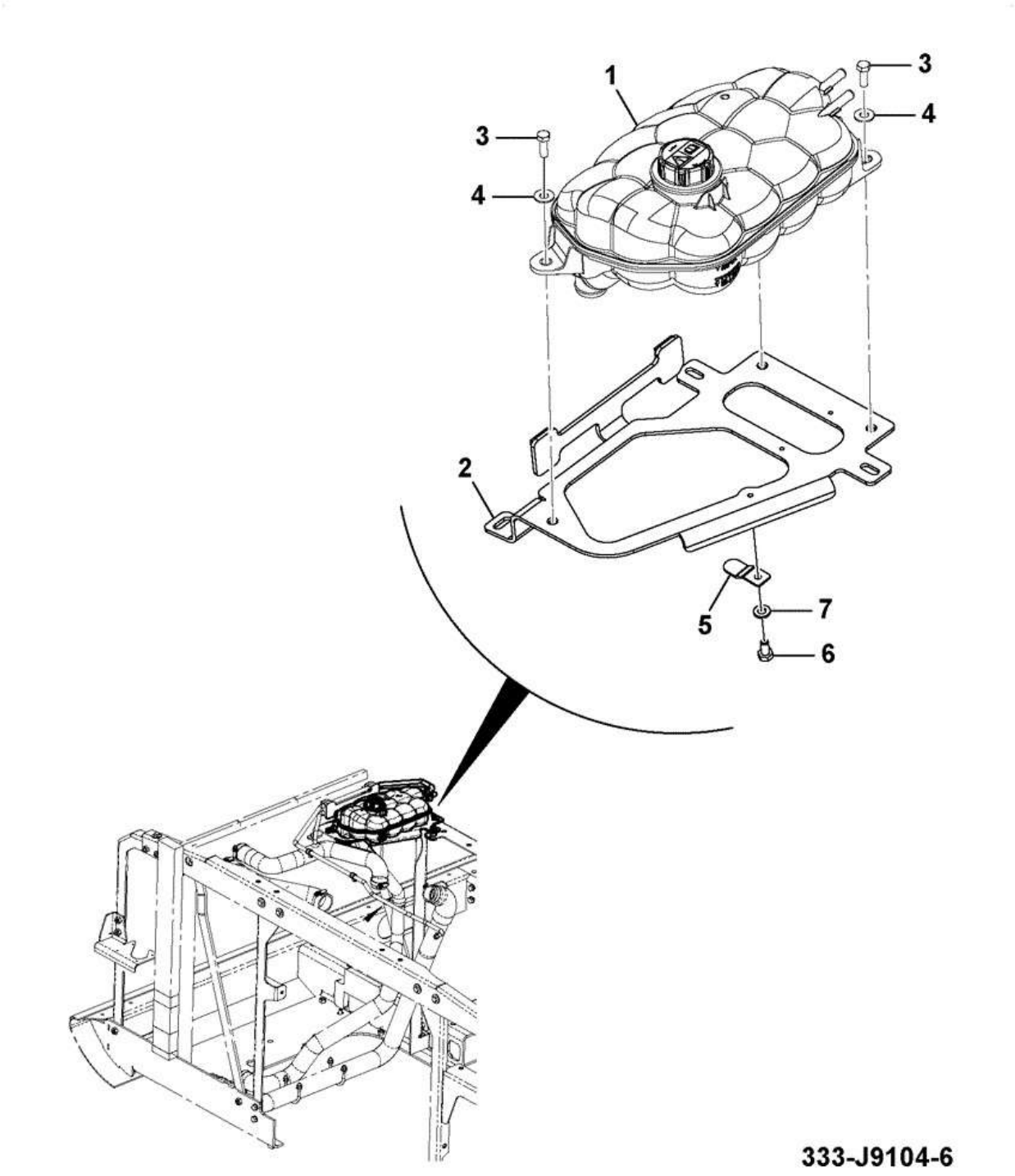

Item	Part #	Change No	Description	Usage Code	QTY
1	333/K2338		Tank Header		1

2	334/J4276		Mount Expansion		1
3	1316/0305D		Screw M8 X 20		3
4	1411/0003D		Washer		3
5	334/J4101		Retainer Bracket- Sensor		1
6	1316/0201D		Screw		1
7	1420/0006D		Washer (M6)		1

Product Catalog \ CONSTRUCTION \ NORTH AMERICA \ CONSTRUCTION / INDUSTRIAL \ JS TRACKED EXCAVATORS \ JS200LC BR E 02451101-02451200 9822/0355 \ L ENGINE ANCILLARIES \ L06 COOLING SYSTEM

9822/0355 L610-20-1 COOLING PACK INSTALLATION COOLING PACK FOAM KIT

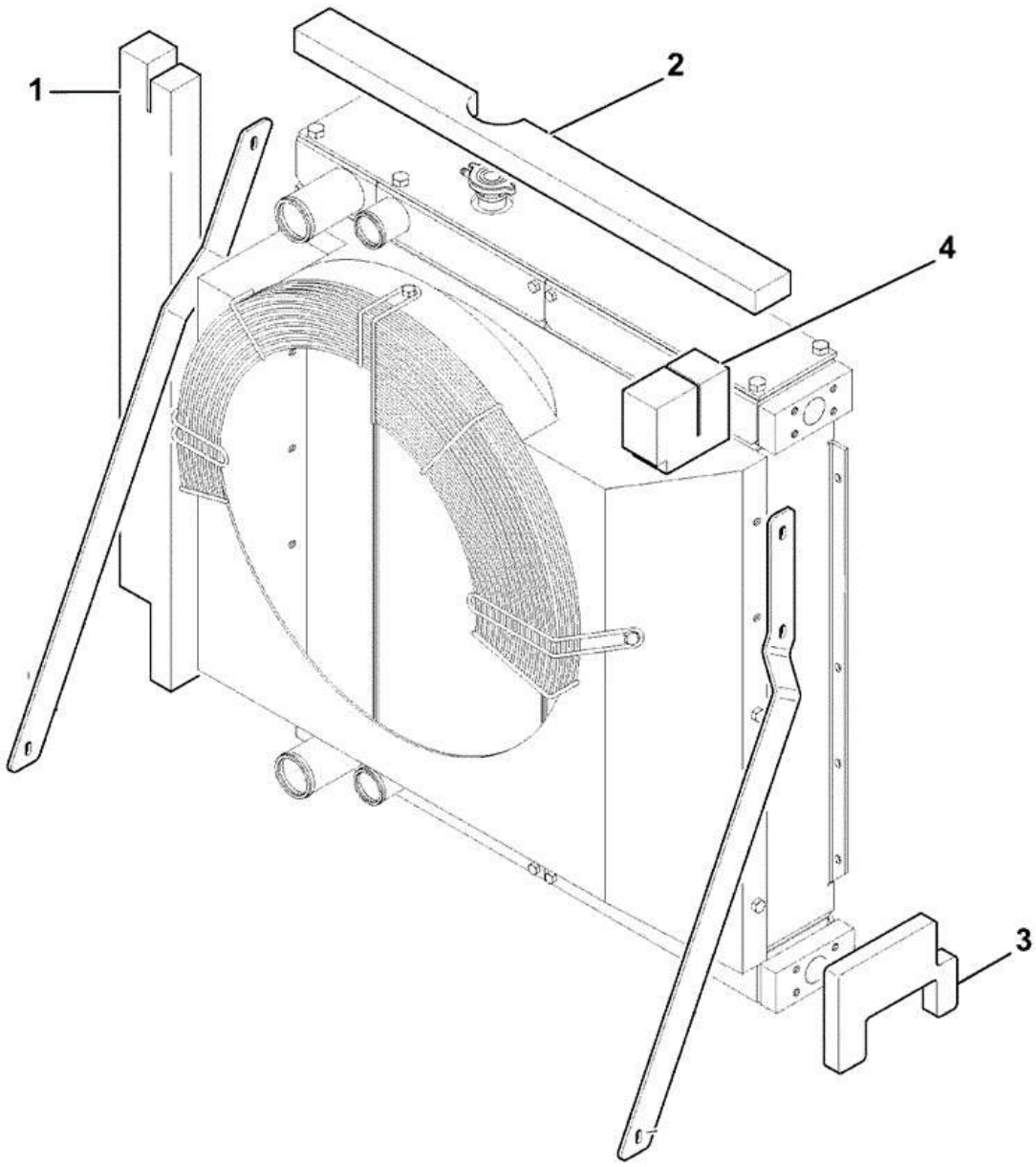

Item	Part #	Change No	Description	Usage Code	QTY
1	332/K9773		Foam rear		1

2	333/K0430		Foam Cooling Pack,Upper		1
3	331/68621		Foam Cooling Pack Front		1
4	332/K9793		Foam		1

Product Catalog \ CONSTRUCTION \ NORTH AMERICA \ CONSTRUCTION / INDUSTRIAL \ JS TRACKED EXCAVATORS \ JS200LC BR E 02451101-02451200 9822/0355 \ L ENGINE ANCILLARIES \ L06 COOLING SYSTEM

9822/0355 L610-25-1 COOLING PACK INSTALLATION ABI T4i

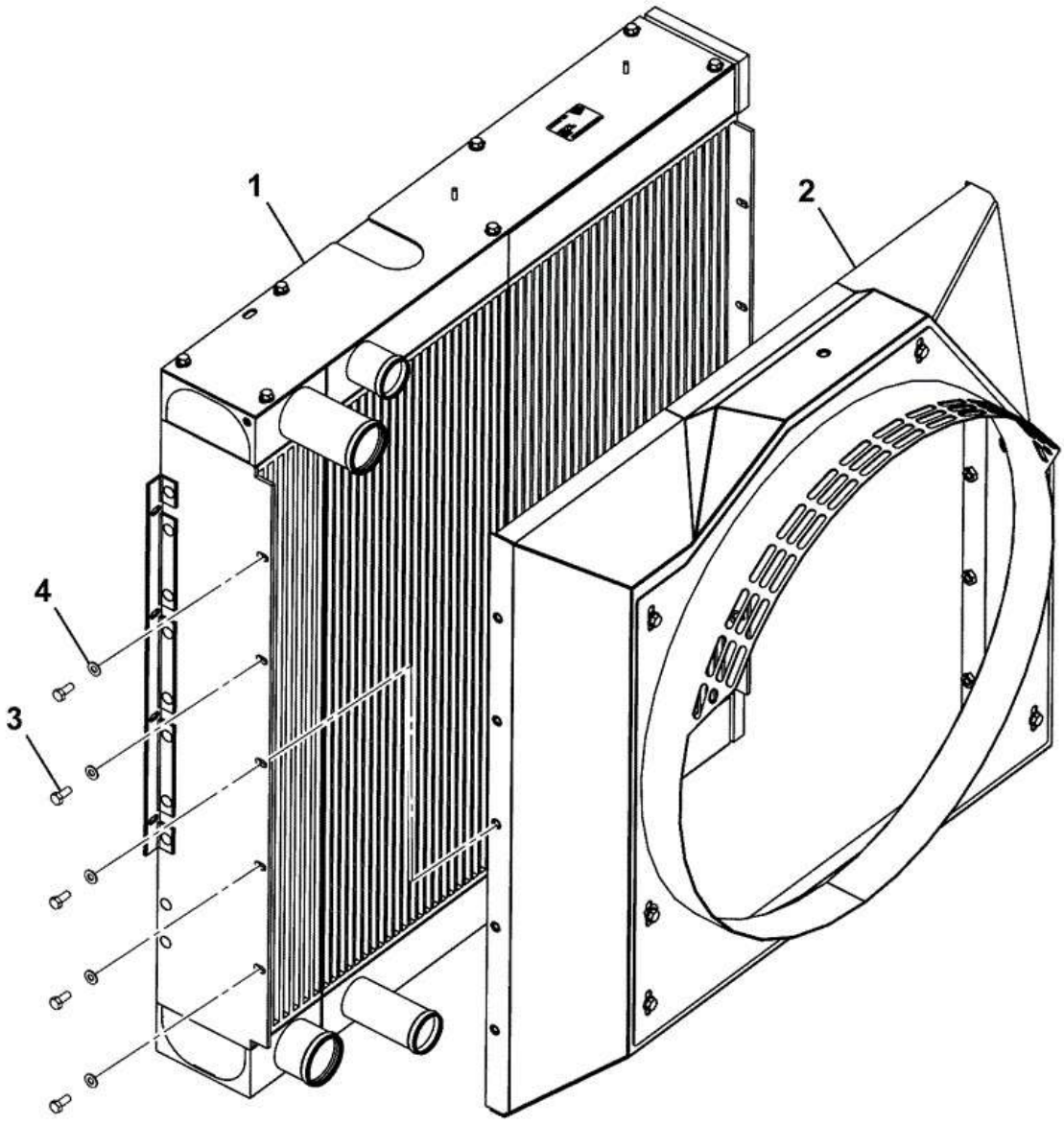

334-J9169-1

Item	Part #	Change No	Description	Usage Code	QTY
1	333/J9056		Cooling Pack		1

2	****		Fan		1
3	1316/0305D		Screw M8 X 20		8
4	1420/0007D		Washer (M8)		8

9822/0355 L620-15-1 ABI COOLING PACK HEADER TANK

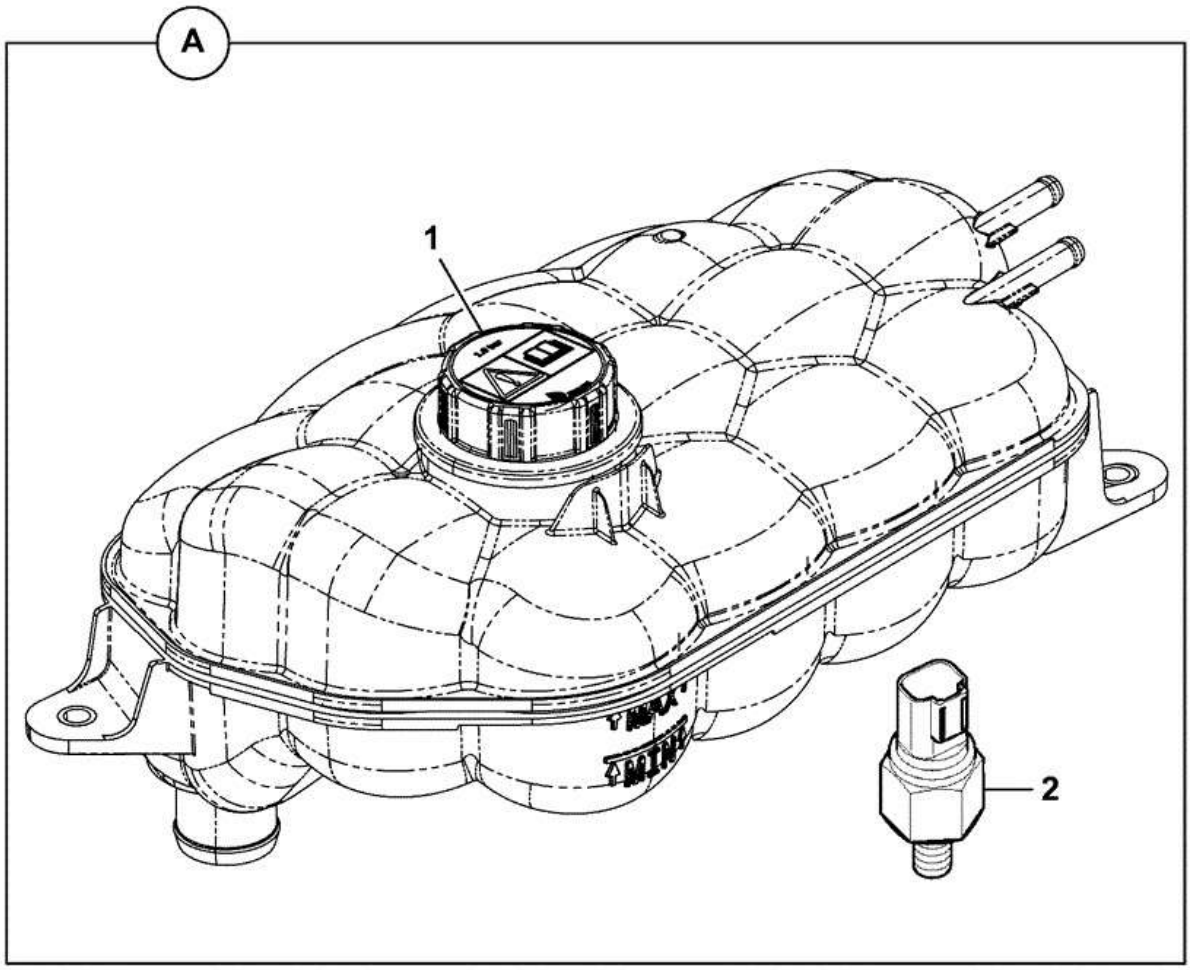

333-K2338-2

Item	Part #	Change No	Description	Usage Code	QTY
A	333/K2338		Tank Header		1
1	:333/D0031		Cap		1
2	:333/D0281		Sensor Coolant Level		1

9822/0355 L700-1-1 FAN INSTALLATION ASSEMBLIES 1.025 RATIO

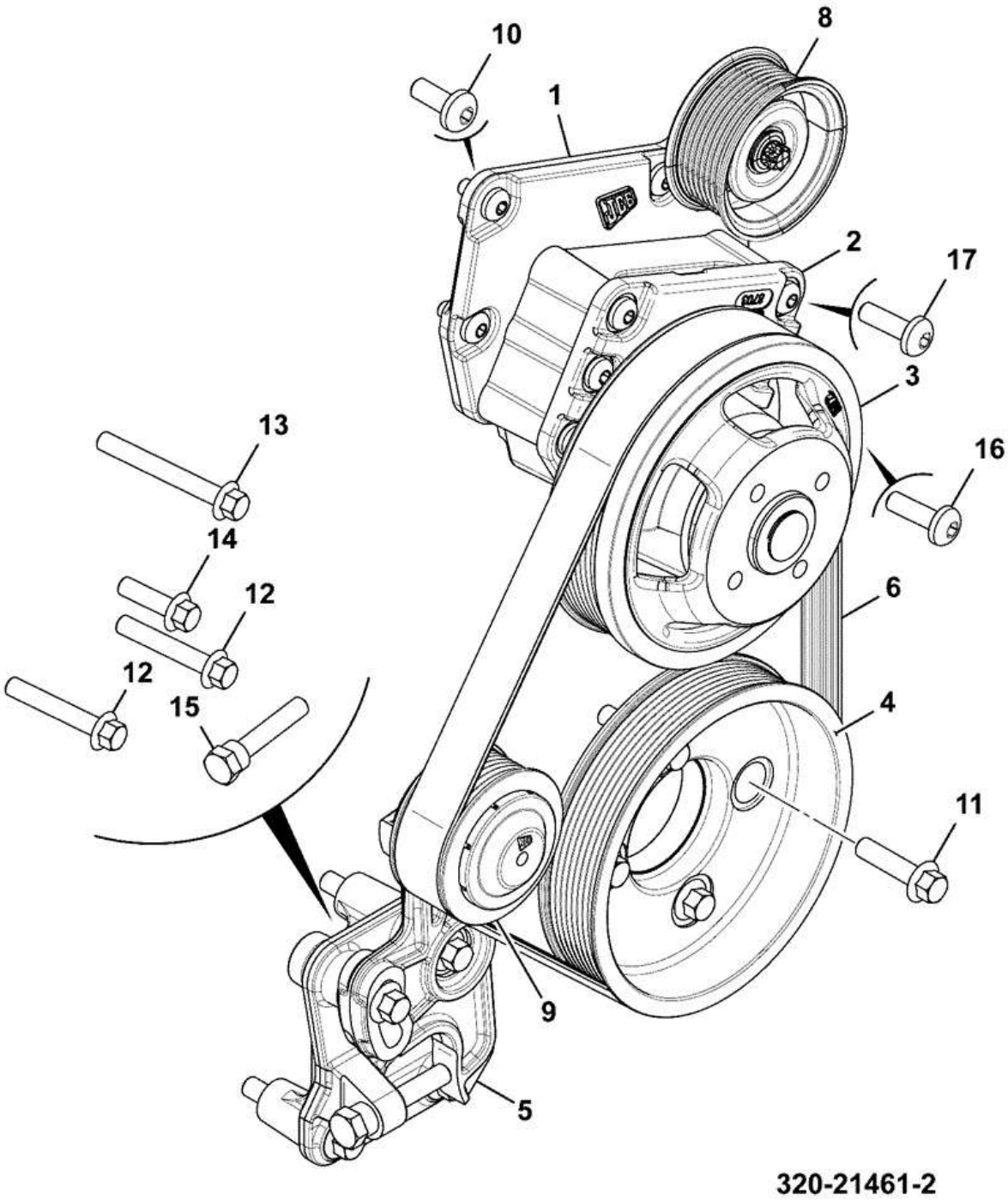

Item	Part #	Change No	Description	Usage Code	QTY
1	320/08876		Adaptor Fan Hub, Heavy duty		1

2	320/08703		Hub han interim heavy duty		1
3	320/08572		Pulley Fan, D=166 Ratio 1:1		1
4	320/08863		Pulley Fan Drive, 1.025 Ratio		1
5	320/08664		Tensioner body		1
6	320/08671		Belt fan		1
8	320/08685		Idler wheel		1
9	320/08729		Tensioner Arm Assembly		1
10	320/08877		Screw M8X20 10.9 HEX		5
11	1317/3410Z		Bolt M10 x 40 flanged hex head		4
12	1317/3414Z		Screw M10 x 60		2
13	1317/3418Z		Bolt M10 x 80		1
14	1317/3409Z		Bolt M10 x 35 Flanged		1
15	320/08866		Screw Adjuster		1
16	320/08803		Screw Pan Head M10 x 25		1
17	320/08889		Screw M8 X 25		6

Product Catalog \ CONSTRUCTION \ NORTH AMERICA \ CONSTRUCTION / INDUSTRIAL \ JS TRACKED EXCAVATORS \ JS200LC BR E 02451101-02451200 9822/0355 \ L ENGINE ANCILLARIES \ L07 FAN INSTALLATION ASSEMBLIES

9822/0355 L710-5-1 FAN ASSEMBLY 5 WIRE

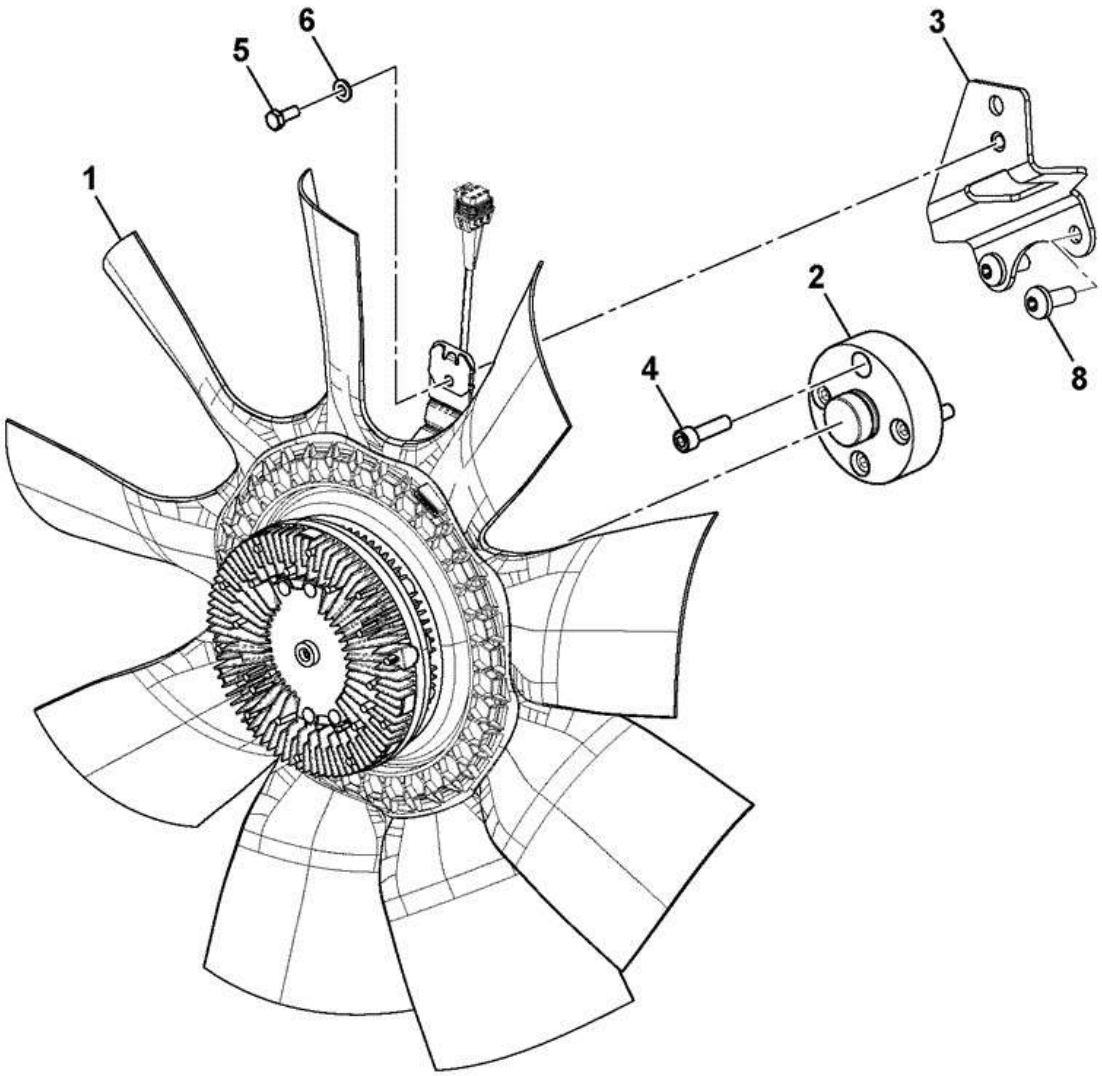

Item	Part #	Change No	Description	Usage Code	QTY
1	333/J9434		Fan Horton 5wire 650mm		1
2	332/K6921		Spacer fan		1

3	334/J3826		Support Cable		1
4	1391/3308D		Capscrew M8 x 30mm		4
5	1316/0205D		Screw set		1
6	1420/0006D		Washer (M6)		1
8	320/08802		Screw M8x20 Pan hd Encapsulated		2

Product Catalog \ CONSTRUCTION \ NORTH AMERICA \ CONSTRUCTION / INDUSTRIAL \ JS TRACKED EXCAVATORS \ JS200LC BR E 02451101-02451200 9822/0355 \ L ENGINE ANCILLARIES \ L07 FAN INSTALLATION ASSEMBLIES

9822/0355 L710-10-1 FAN COWL ASSEMBLY

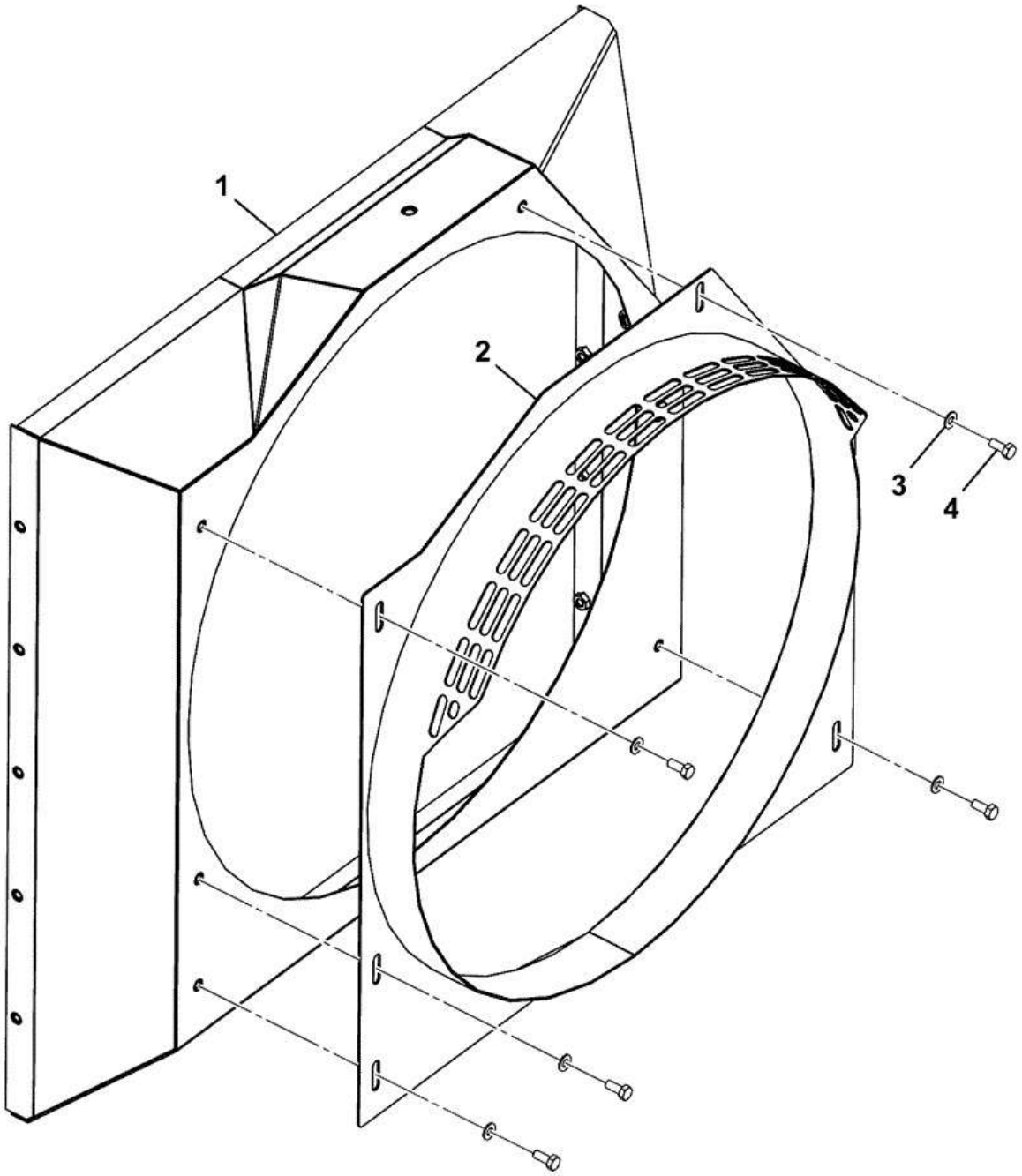

Item	Part #	Change No	Description	Usage Code	QTY
1	334/J9171		Cowling Fan		1
2	334/J9172		Cover Cowling Fan		1

3	1420/0007D		Washer (M8)		6
4	1316/0305D		Screw M8 X 20		6

CONSTRUCTION \ NORTH AMERICA \ CONSTRUCTION / INDUSTRIAL \ JS TRACKED EXCAVATORS \ JS200LC BR E 02451101-02451200 9822/0355 \ L ENGINE ANCILLARIES \ L07 FAN INSTALLATION ASSEMBLIES

9822/0355 L720-5-5 FRONT END AUXILIARY DRIVE ARM TENSIONER

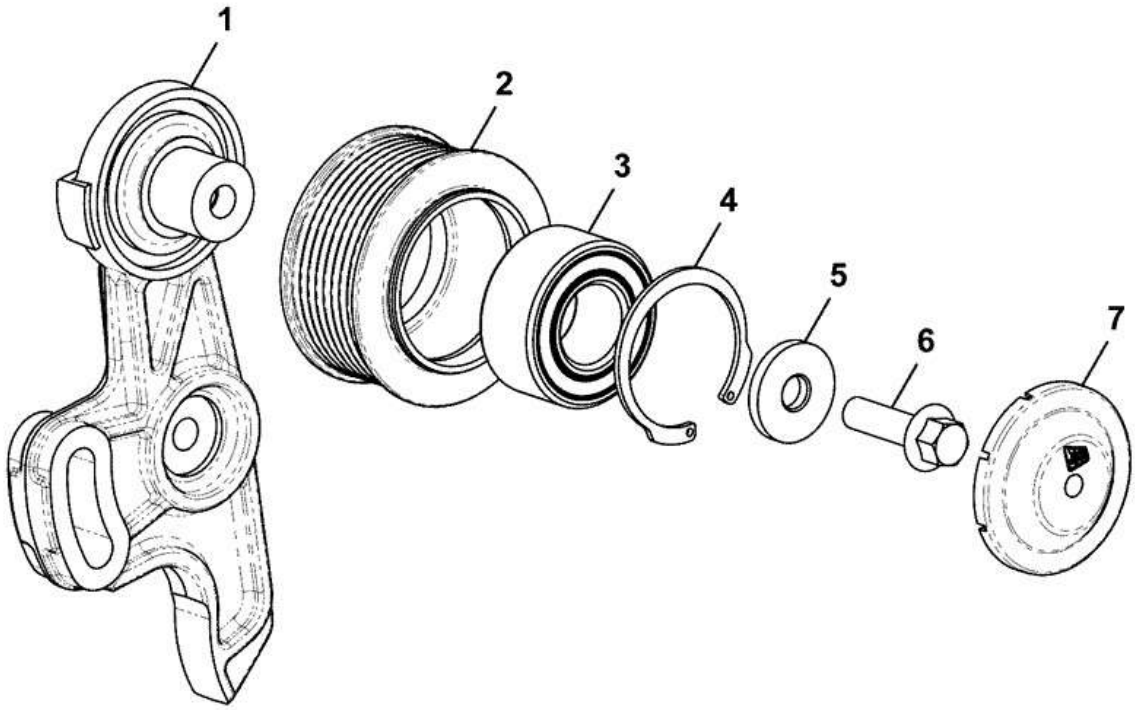

320-08729-1

Item	Part #	Change No	Description	Usage Code	QTY
1	320/08730		Arm Tensioner		1

2	320/08726		Pulley Idler Machining		1
3	320/08595		Bearing Idler Pulley		1
4	320/08594		Circlip		1
5	320/08727		Washer Idler Retainer		1
6	1317/3409Z		Bolt M10 x 35 Flanged		1
7	320/08728		Cover Dust Non AC Idler		1

9822/0355 L750-5-1 CONDENSOR MOUNTING ASSEMBLY

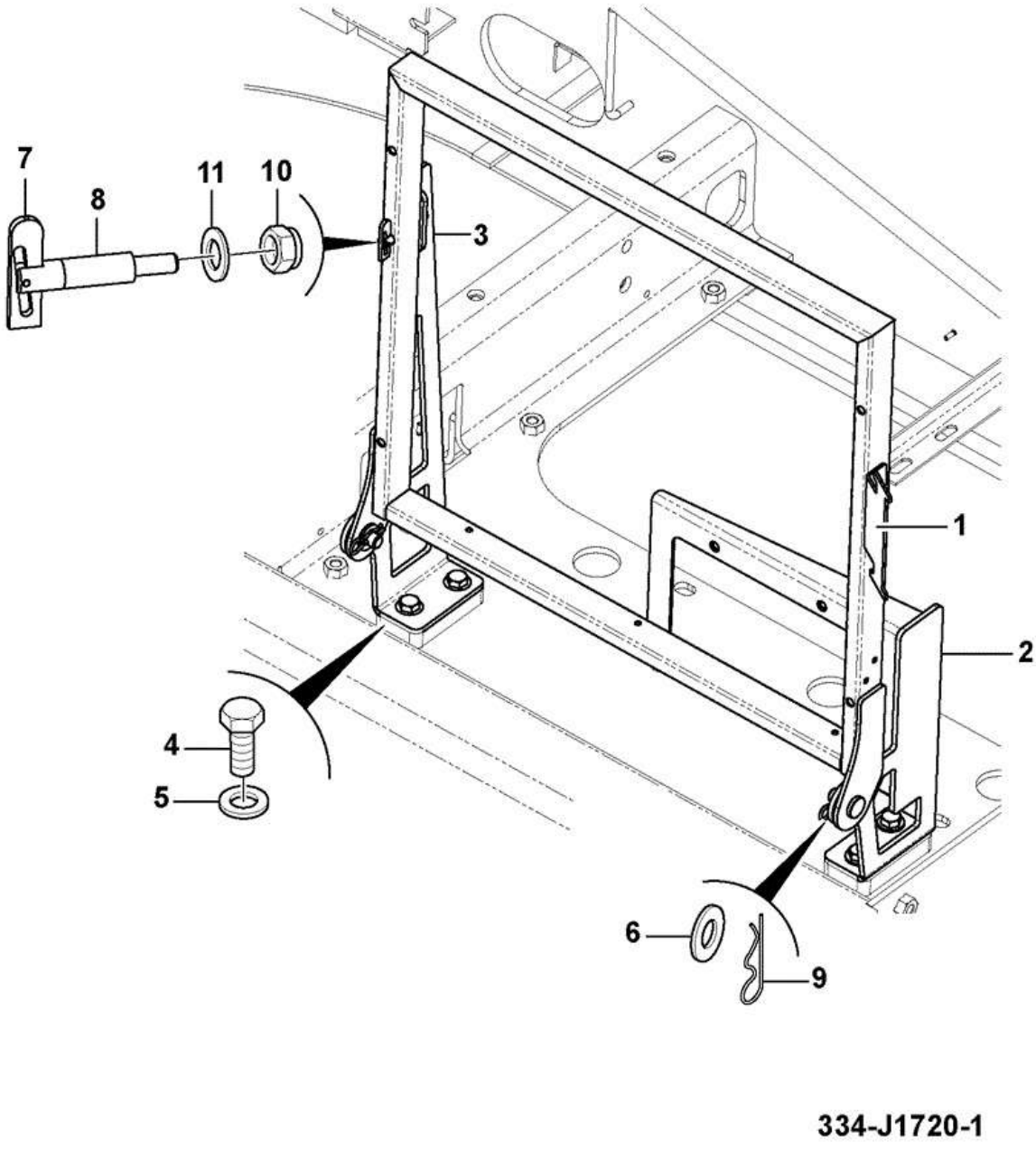

Item	Part #	Change No	Description	Usage Code	QTY
1	334/J1867		Frame Condenser Mounting		1
2	334/J1726		Bracket Pivot RH		1

3	334/J1848		Bracket Pivot LH		1
4	1316/0507D		Setscrew M12 x 25 grade 10.9		4
5	1411/0005D		Washer		4
6	1420/0011Z		Washer (M16)		4
7	265/01300		Fastener antiluce M8x50		1
8	334/J0812		Spacer Tube		1
9	JLV0521		Clip R		2
10	1370/0203D		Nut Lock M8		1
11	1420/0007D		Washer (M8)		1

9822/0355 L760-1-1 RECEIVER DRIER KIT

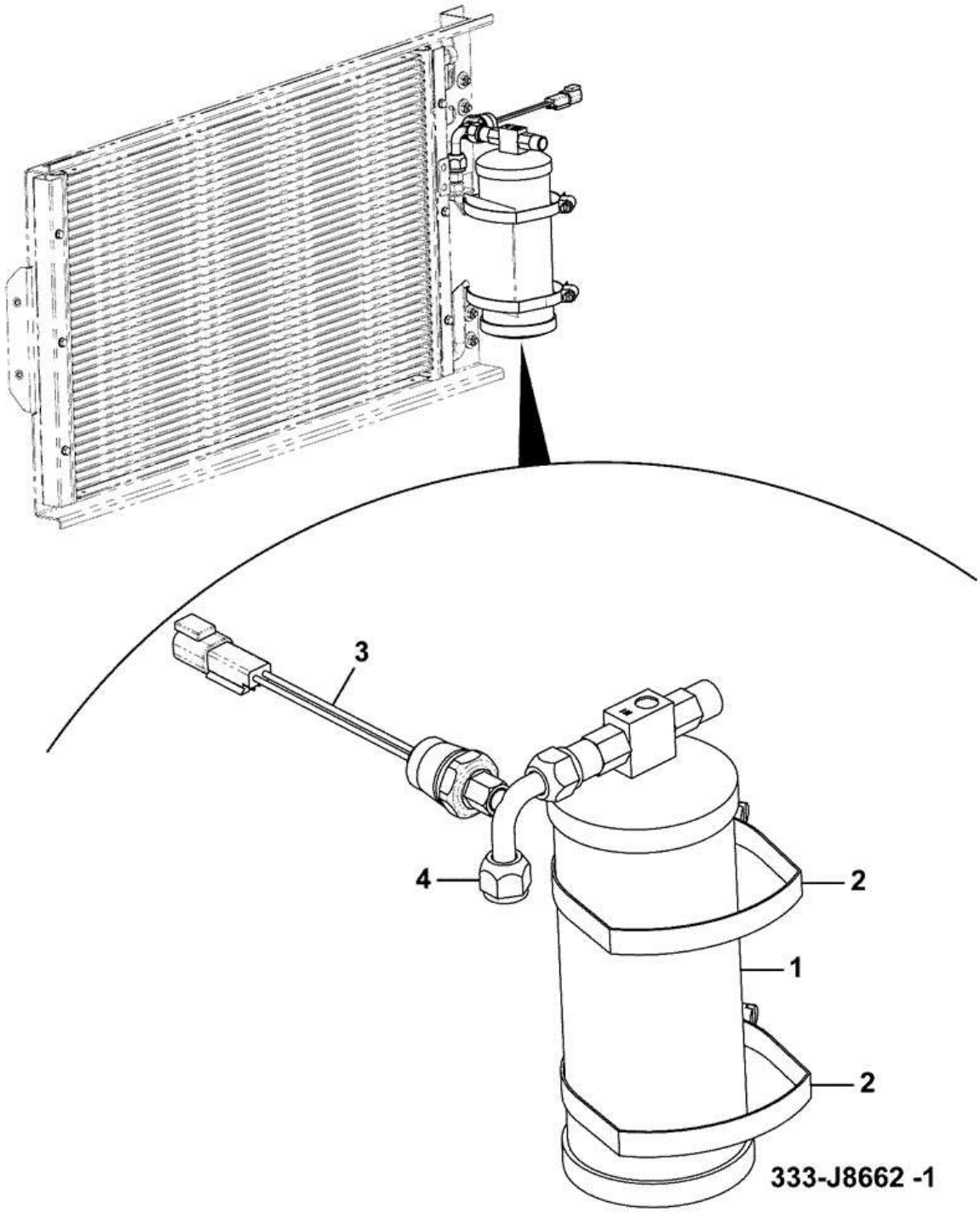

Item	Part #	Change No	Description	Usage Code	QTY
1	30/925633		Drier Receiver		1
2	334/P0172		Clip hose		2

3	332/R5898		Switch high pressure		1

Product Catalog \ CONSTRUCTION \ NORTH AMERICA \ CONSTRUCTION / INDUSTRIAL \ JS TRACKED EXCAVATORS \ JS200LC BR E 02451101-02451200 9822/0355 \ L ENGINE ANCILLARIES \ L07 FAN INSTALLATION ASSEMBLIES

9822/0355 L780-15-1 COMPRESSOR ASSEMBLY

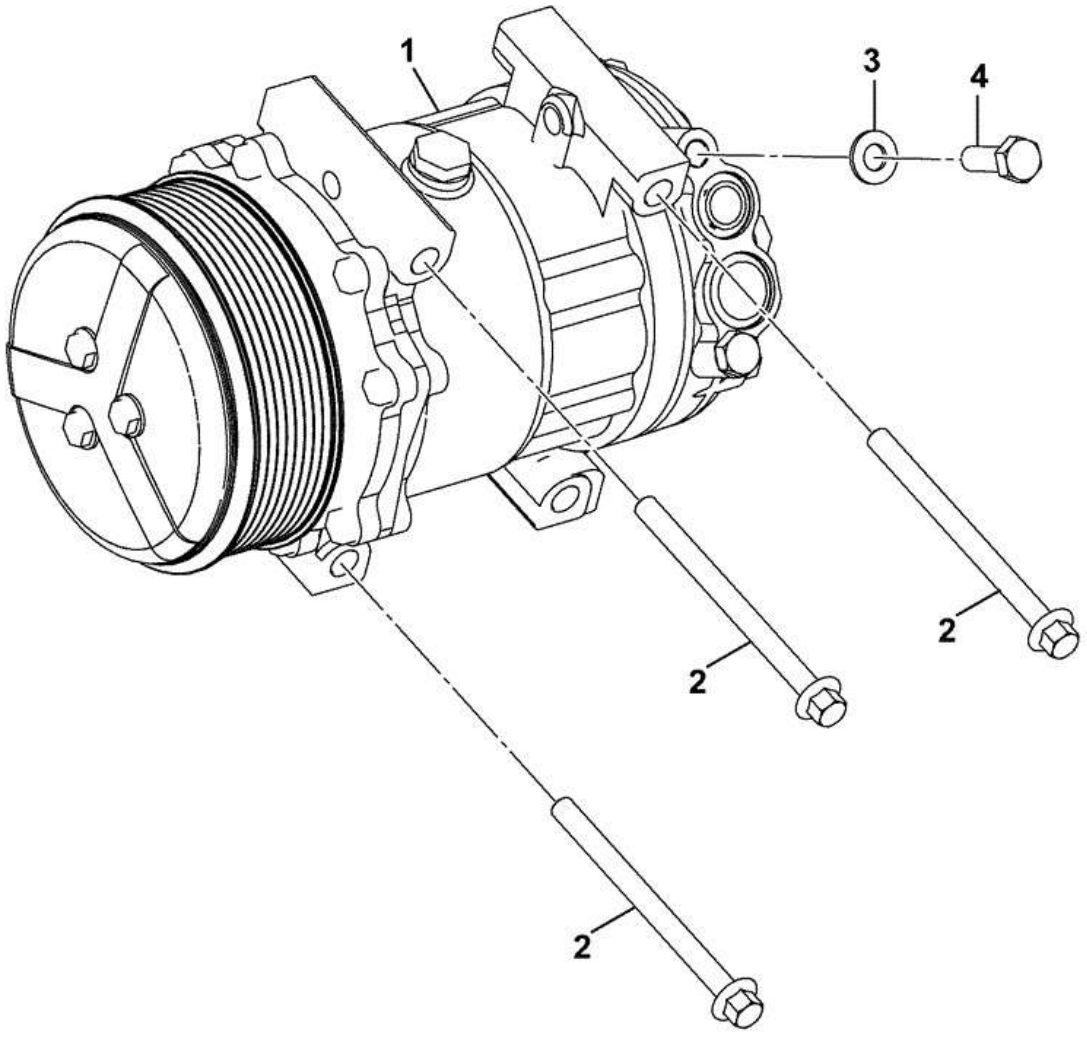

333-J2813-1

Item	Part #	Change No	Description	Usage Code	QTY
1	320/08563		Compressor Air Conditioning 24v		1
2	1317/3320Z		Bolt M8 x 100 Flange Reduced		3

3	1420/0007D		Washer (M8)		2
4	1316/0307D		Screw		2

9822/0355 L800-25-1 FUEL SYSTEM INSTALLATION ASSEMBLIES CIRCUIT FUEL LINE

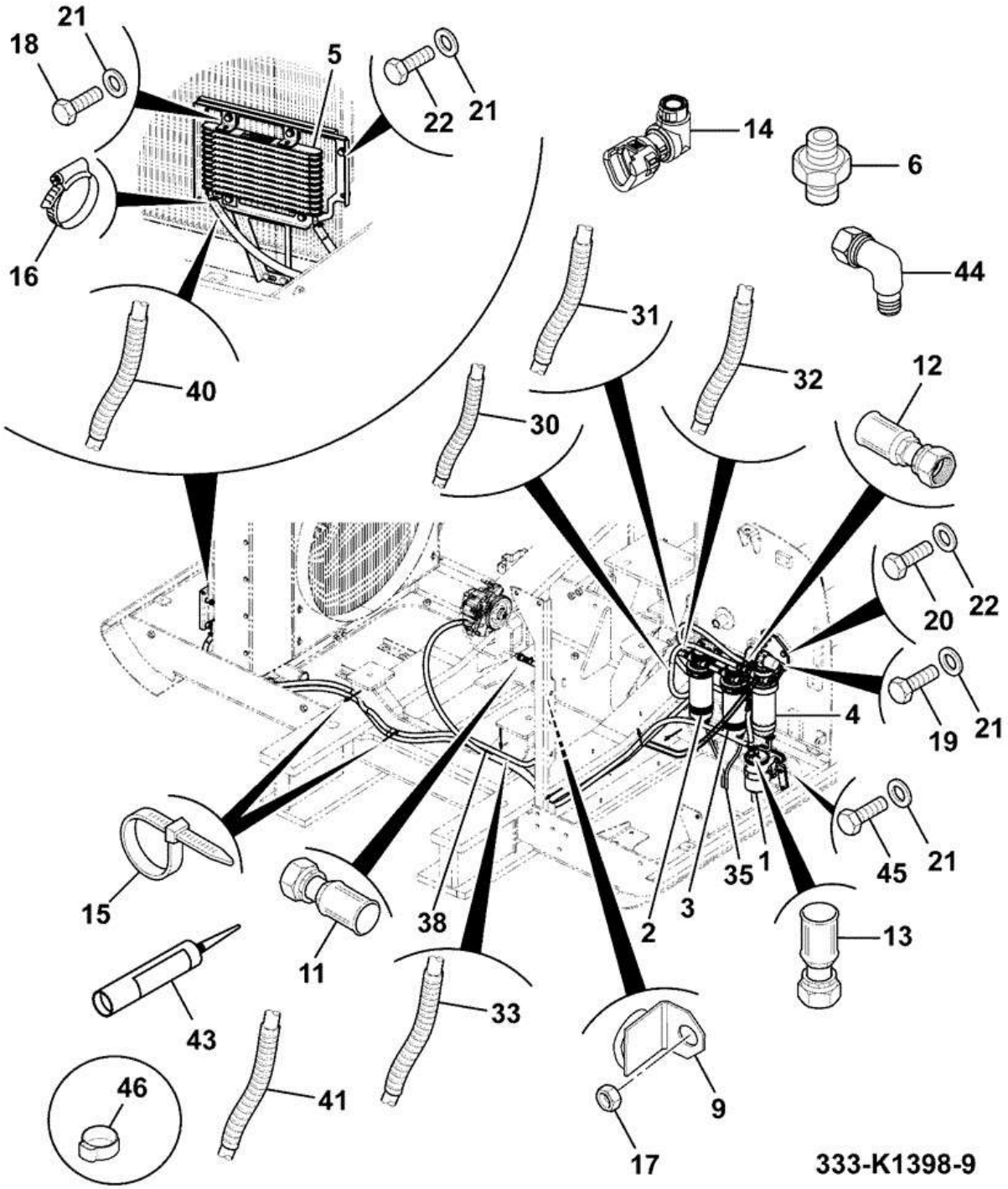

Item	Part #	Change No	Description	Usage Code	QTY
1	320/07401		Filter Fuel, T4		1

2	32/926081		Filter fuel dual 4-way ports		1
3	32/925868		Filter fuel sediment assembly 5 micron		1
4	320/07457		Pump Lift / Filter, Fuel, 30 Micron		1
5	332/J9275		Cooler fuel ABI		1
6	333/K3675		Adaptor 1/8" NPT - SAE J2044		1
9	263/34900		Harness Clip		2
11	332/K7784		Connector straight		1
12	332/K7769		Connector straight		2
13	332/K7806		Adapter elbow		1
14	333/L2240		Hose End, 9.49mm 90 DEG		1
15	826/01347		Tie Cable 160mm		9
16	2201/0001		Clip Worm Drive 8/16mm		16
17	1370/0401D		Nut (M12)		1
18	1316/0303D		Screw M8 x 16mm		4
19	1316/0307D		Screw		2
20	1316/0407D		Screw		4
21	1420/0007D		Washer (M8)		8
22	1420/0008D		Washer (M10)		4
30	JSH0006		Sleeve corrugated 2000mm long		2
31	JSH0009		Tube		1
32	JSH0046		Tube		1
33	332/K8843		Tube corrugated 2100mm		1
35	JHH0047		Hose vinyl		4
38	333/K5220		Kit Fuel Hose		1
40	JSH0003		Sleeve corrugated 1000mm long		1
41	332/K8249		Tube Corrugated		1
43	****		Sealant		0
44	333/L2244		Adaptor 90 deg 9.89mm		1
45	1316/0309D		Setscrew high strength M8 x 35mm		2
46	334/J1870		Clamp Ear, Stepless, 8.8-10.5mm		4

CONSTRUCTION \ NORTH AMERICA \ CONSTRUCTION / INDUSTRIAL \ JS TRACKED EXCAVATORS \ JS200LC BR E 02451101-02451200 9822/0355 \ L ENGINE ANCILLARIES \ L08 FUEL SYSTEM

9822/0355 L800-30-1 FUEL SYSTEM INSTALLATION ASSEMBLIES HOSE KIT FUEL SYSTEM

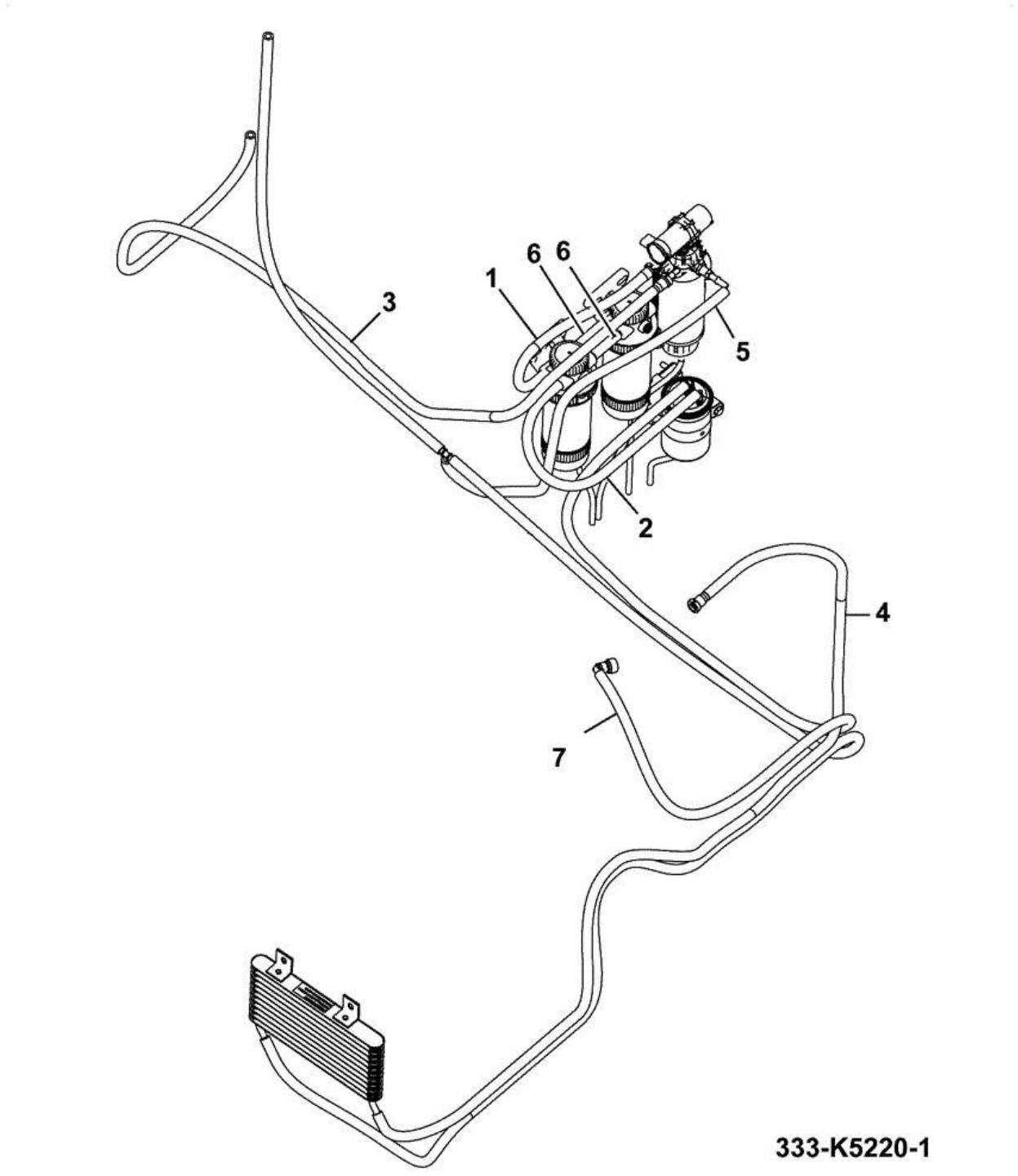

Item	Part #	Change No	Description	Usage Code	QTY
1	JHH0019		Tube vinyl		1

2	JHH0021		Tube fuel, 700mm long		1
3	JHH0029		Tube fuel, 2100mm long		1
4	JHH0030		Tube fuel, 2200mm long		1
5	333/K3591		Hose Fuel Return / Air Bleed		1
6	649/52232		Hose Diesel Fuel		2
7	320/07288		Hose fuel		1

CONSTRUCTION \ NORTH AMERICA \ CONSTRUCTION / INDUSTRIAL \ JS TRACKED EXCAVATORS \ JS200LC BR E 02451101-02451200 9822/0355 \ L ENGINE ANCILLARIES \ L08 FUEL SYSTEM

9822/0355 L810-1-1 CIRCUIT DIESEL FUEL RETURN LINE

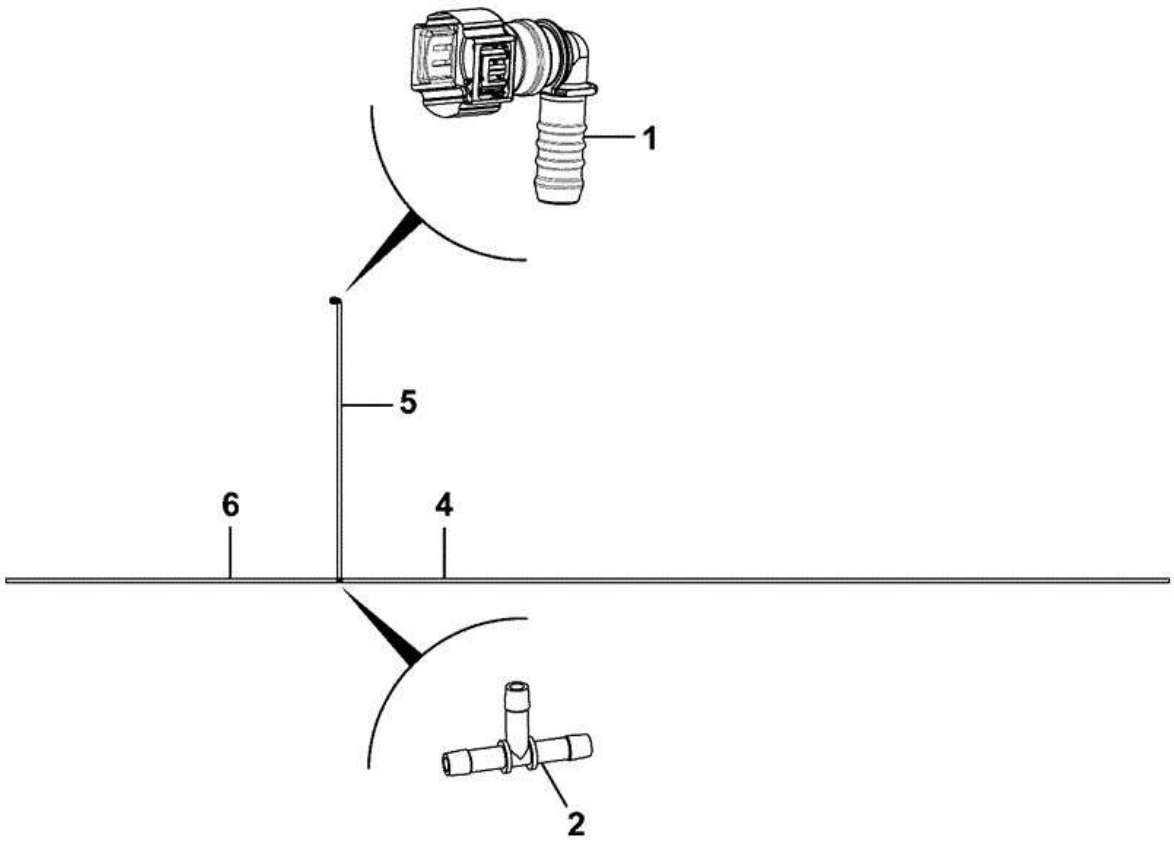

333-K3591-2

Item	Part #	Change No	Description	Usage Code	QTY
1	333/L2240		Hose End, 9.49mm 90 DEG		1
2	333/K3492		Adaptor - 3/8" (9.5mm)		1
4	JHH0033		Hose fuel		1

5	JHH0122		Tube		1
6	JHH0023		Tube fuel, 1200mm		1

CONSTRUCTION \ NORTH AMERICA \ CONSTRUCTION / INDUSTRIAL \ JS TRACKED EXCAVATORS \ JS200LC BR E 02451101-02451200 9822/0355 \ L ENGINE ANCILLARIES \ L08 FUEL SYSTEM

9822/0355 L820-1-1 FUEL FILTER 5 MICRON

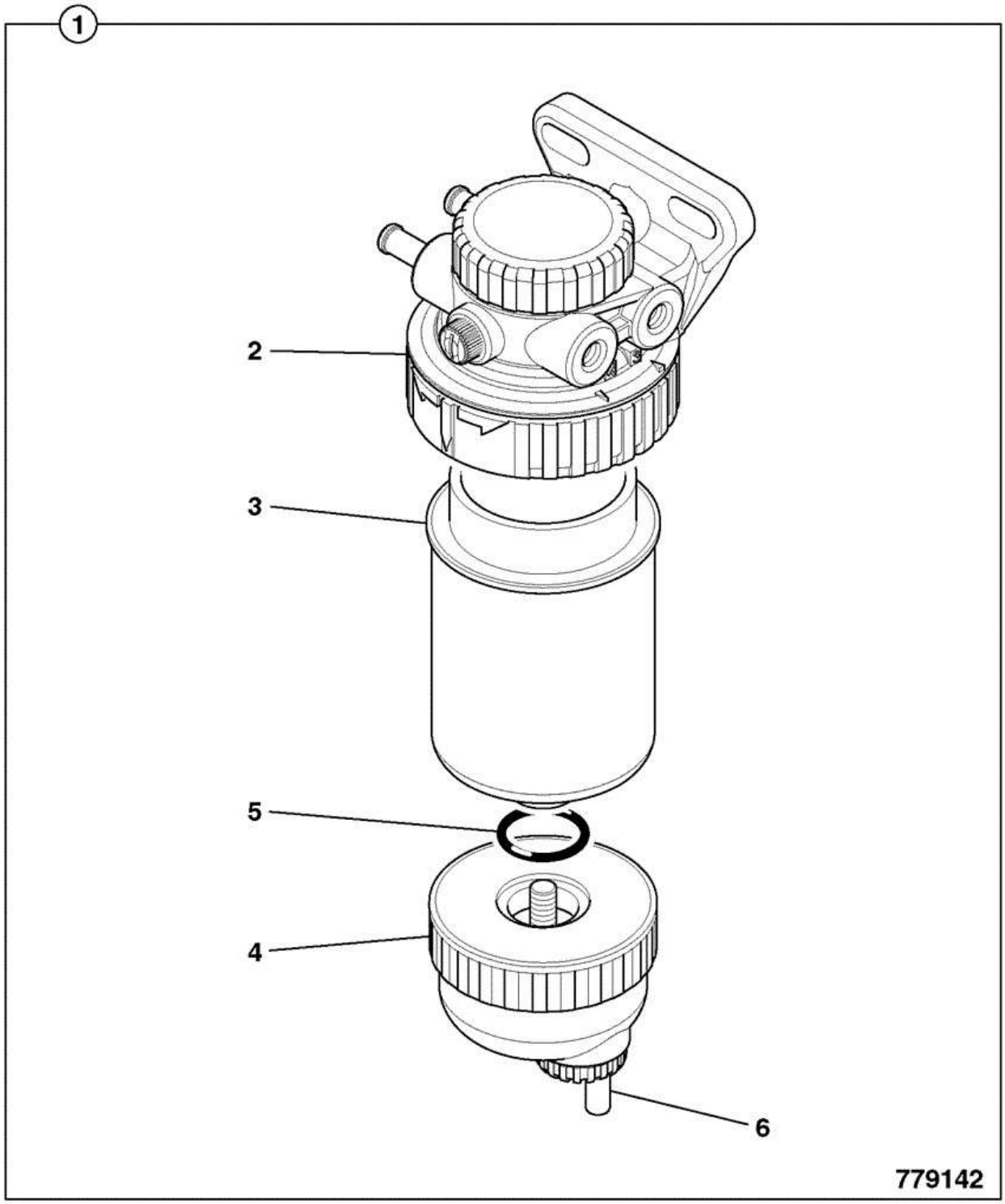

Item	Part #	Change No	Description	Usage Code	QTY
1	32/925868		Filter fuel sediment assembly 5 micron		1
2	****		None serviced part		1
3	:32/925869		Element fuel sediment filter cartridge,5 micron		1

4	:32/925708		Bowl Assembly		1
5	:32/925733		Seal O-Ring		1
6	32/925817		Kit-drain valve with seal		1

CONSTRUCTION \ NORTH AMERICA \ CONSTRUCTION / INDUSTRIAL \ JS TRACKED EXCAVATORS \ JS200LC BR E 02451101-02451200 9822/0355 \ L ENGINE ANCILLARIES \ L08 FUEL SYSTEM

9822/0355 L820-10-1 FUEL FILTER SEDIMENTOR 5 MICRON

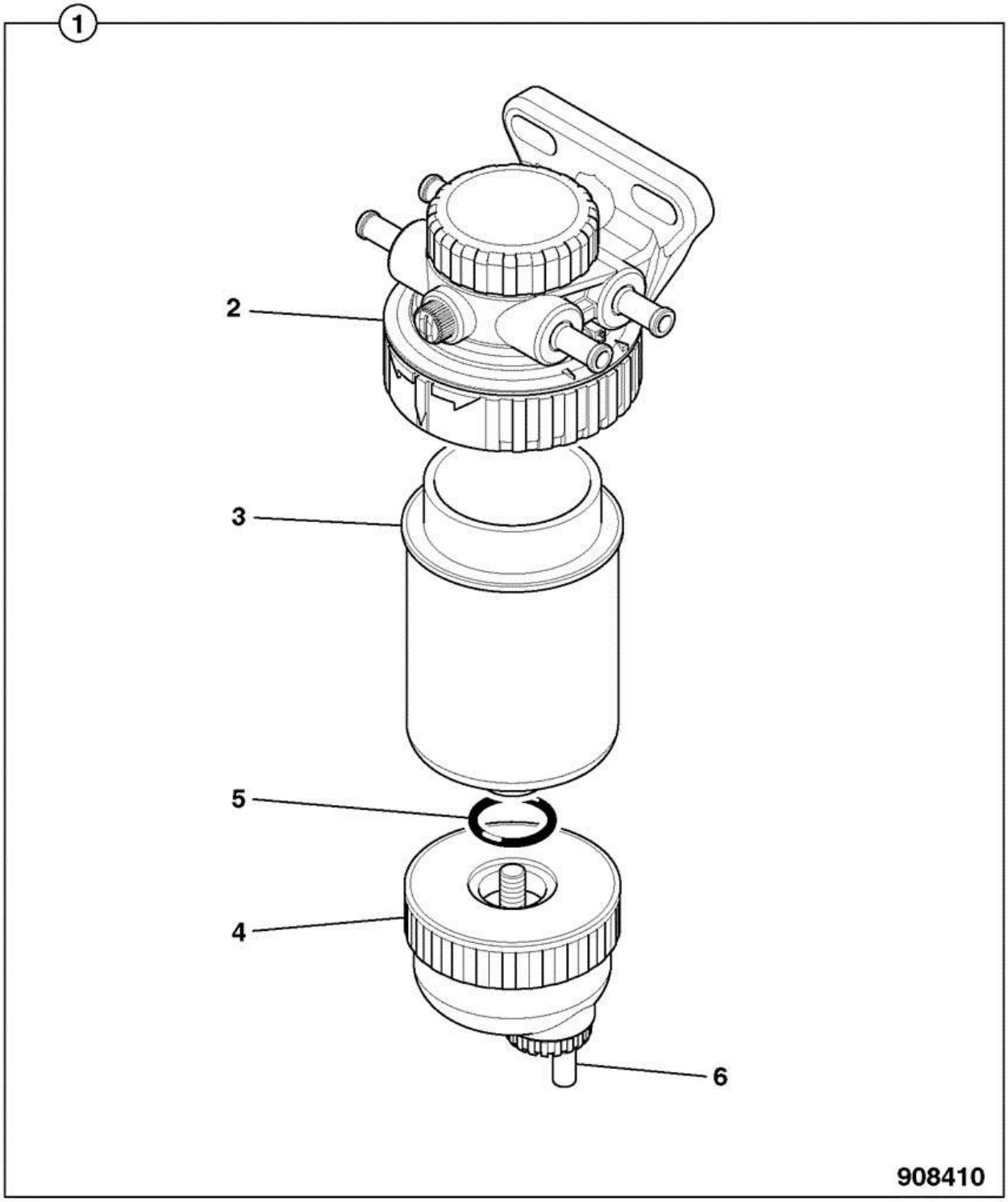

Item	Part #	Change No	Description	Usage Code	QTY
1	32/926081		Filter fuel dual 4-way ports		1

2	****		None serviced part		1
3	:32/925869		Element fuel sediment filter cartridge,5 micron		1
4	:32/925708		Bowl Assembly		1
5	:32/925733		Seal O-Ring		1
6	32/925817		Kit-drain valve with seal		1

9822/0355 L820-30-1 FUEL FILTER COMPONENTS

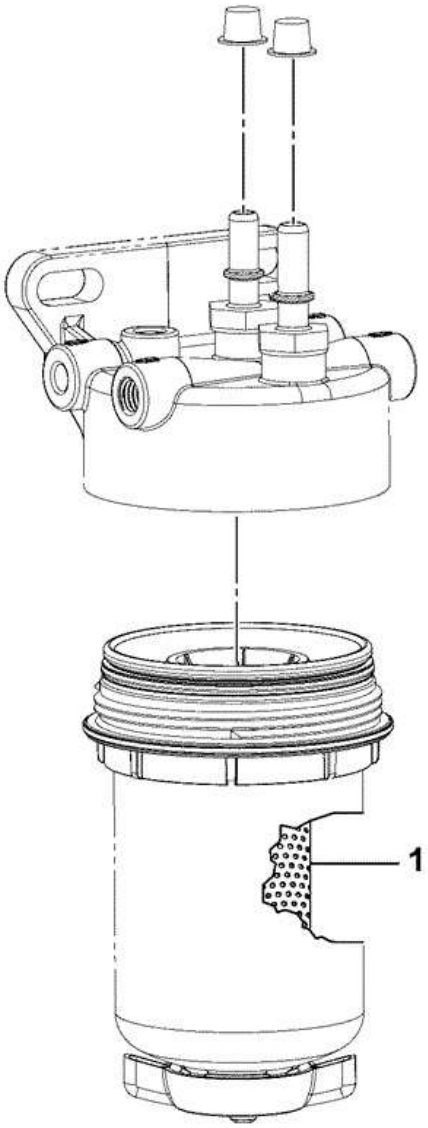

320-07381-1

Item	Part #	Change No	Description	Usage Code	QTY
A	320/07401		Filter Fuel, T4		1
1	:320/07382		Element fuel filter		1

Product Catalog \ CONSTRUCTION \ NORTH AMERICA \ CONSTRUCTION / INDUSTRIAL \ JS TRACKED EXCAVATORS \ JS200LC BR E 02451101-02451200 9822/0355 \ L ENGINE ANCILLARIES \ L08 FUEL SYSTEM

9822/0355 L820-35-1 FUEL FILTER LIFT PUMP, 30 MICRON

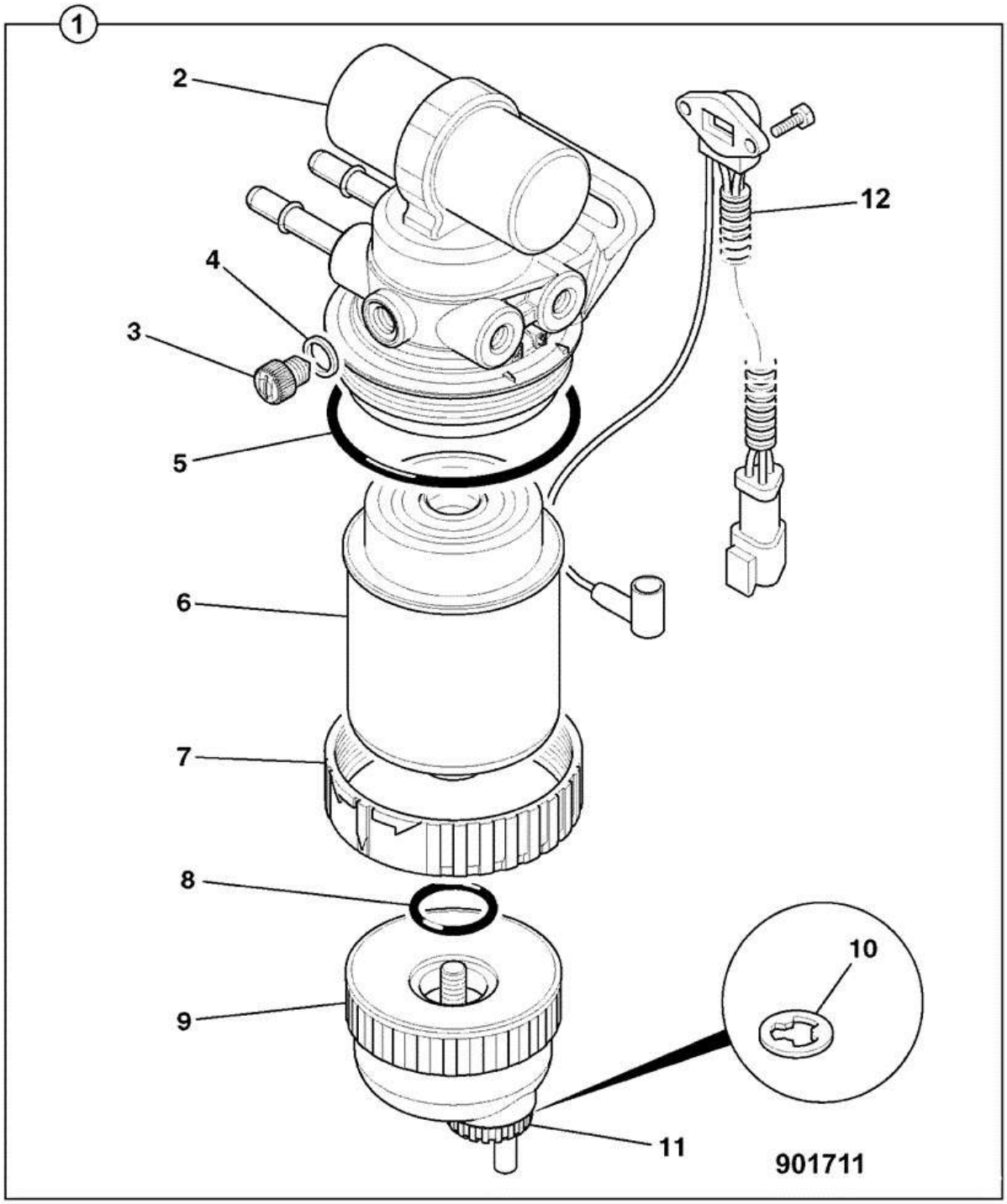

Item	Part #	Change No	Description	Usage Code	QTY
1	320/07457		Pump Lift / Filter, Fuel, 30 Micron		1
2	****		None serviced part		1
3	:32/926040		Plug Air Vent		1

4	:32/925973		O Ring		1
5	:32/921003		O Ring Dust		1
6	:32/925994		Element Fuel Sediment Filter Cartridge 30 Micron		1
7	:32/921002		Ring Retaining		1
8	:32/925733		Seal O-Ring		1
9	:32/925708		Bowl Assembly		1
10	:32/926043		Washer wif seal		1
11	:32/926087		Kit-drain valve		1
12	:32/925709		Kit-sensor Water In Fuel		1

9812/8000 V8-1-5 ENGINE 320/40332

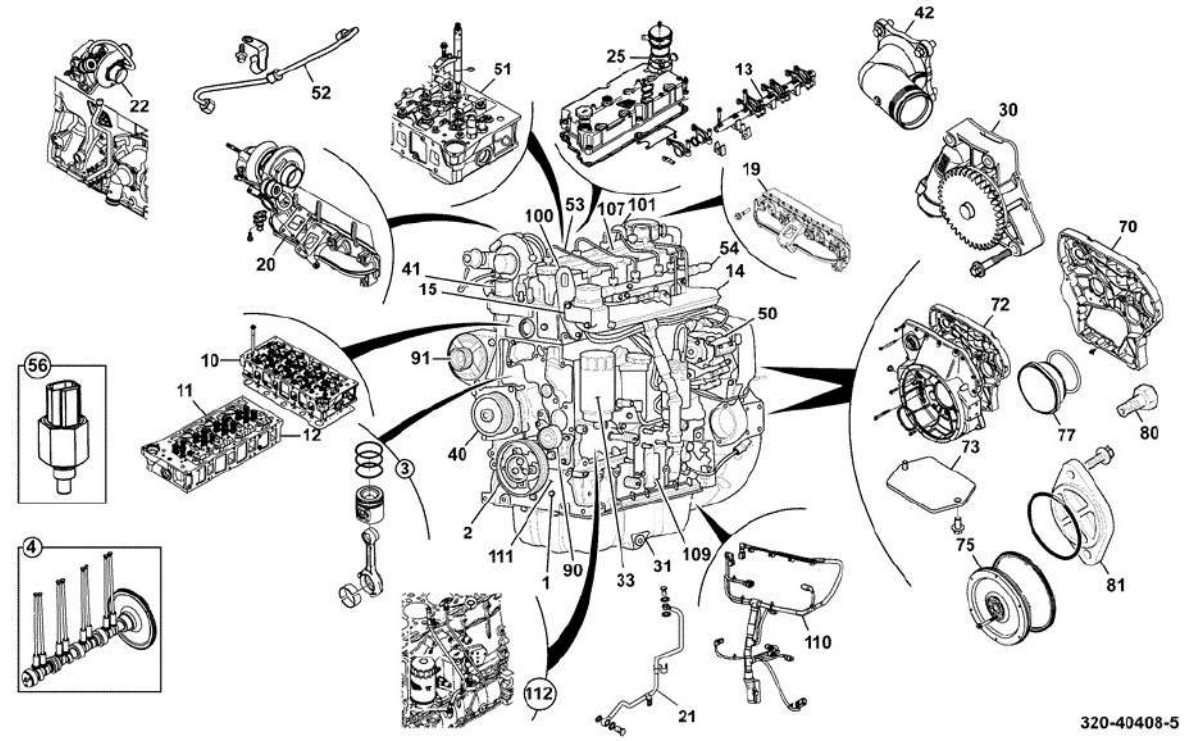

Item	Part #	Change No	Description	Usage Code	QTY
A	320/40332		Engine assembly 129kW 24V		1
1	****		Block cylinder Assembly		1
2	****		Crankshaft Assembly		1
3	****		Piston assembly		4
4	****		Camshaft assembly		1
10	****		Head cylinder assembly		1
11	****		Valve Inlet Assembly		8
12	****		Valve Exhaust Assembly		8
13	****		Shaft Rocker Assembly		1
14	****		Manifold Inlet Assembly		1
15	****		Plate Blanking Heat Intake		1
19	****		Manifold Exhaust Assembly		1
20	****		Turbocharger S200G		1
21	****		Turbocharger lubrication feed		1
22	****		Turbocharger Lubrication Drain		1
25	****		Cover Rocker Assembly		1
30	****		Pump Oil Assembly		1
31	****		Sump Assy.		1
33	****		Cooler oil cover 9 plate		1
40	****		Pump Water Assembly		1
41	****		Thermostat Housing		1
42	****		Pipe Water Inlet Assembly		1

50	****		Pump Fuel Injection Assembly		1
51	****		Injector assembly		4
52	****		Pipes Fuel High Pressure		1
53	****		Pipes LP fuel		1
54	****		Rail Common Fuel		1
56	****		Sensor Cold Start Advance		1
70	****		Casing Timing Gear		1
72	****		Housing Flywheel		1
73	****		Plate Flywheel Access		1
75	****		Flywheel 11.5"		1
77	****		Cover Flywheel Housing Fuel Injection Pump		1
80	****		Plate idler blanking		1
81	****		Installation Blanking Plate SAE B		1
90	****		Adjuster Autotensioner Assembly		1
91	****		Installation Alternator Assembly ,24V 55amp		1
100	****		Bracket Lifting		1
101	****		Motor Starter Assembly		1
105	****		'See Remark' *320/20275 Lable Kit*		1
106	****		'See Remark' *320/20122*		1
107	****		Cover Injectors		1
108	****		'See Remark' *320/20129 Protection Kit*		1
109	****		Unit ECU - 120kW - CR		1
110	****		Harness Engine		1
111	****		Sensor kit		1
112	****		Dipstick Assembly		1

9812/8000 W0-1-8 CYLINDER BLOCK 320/20463 8

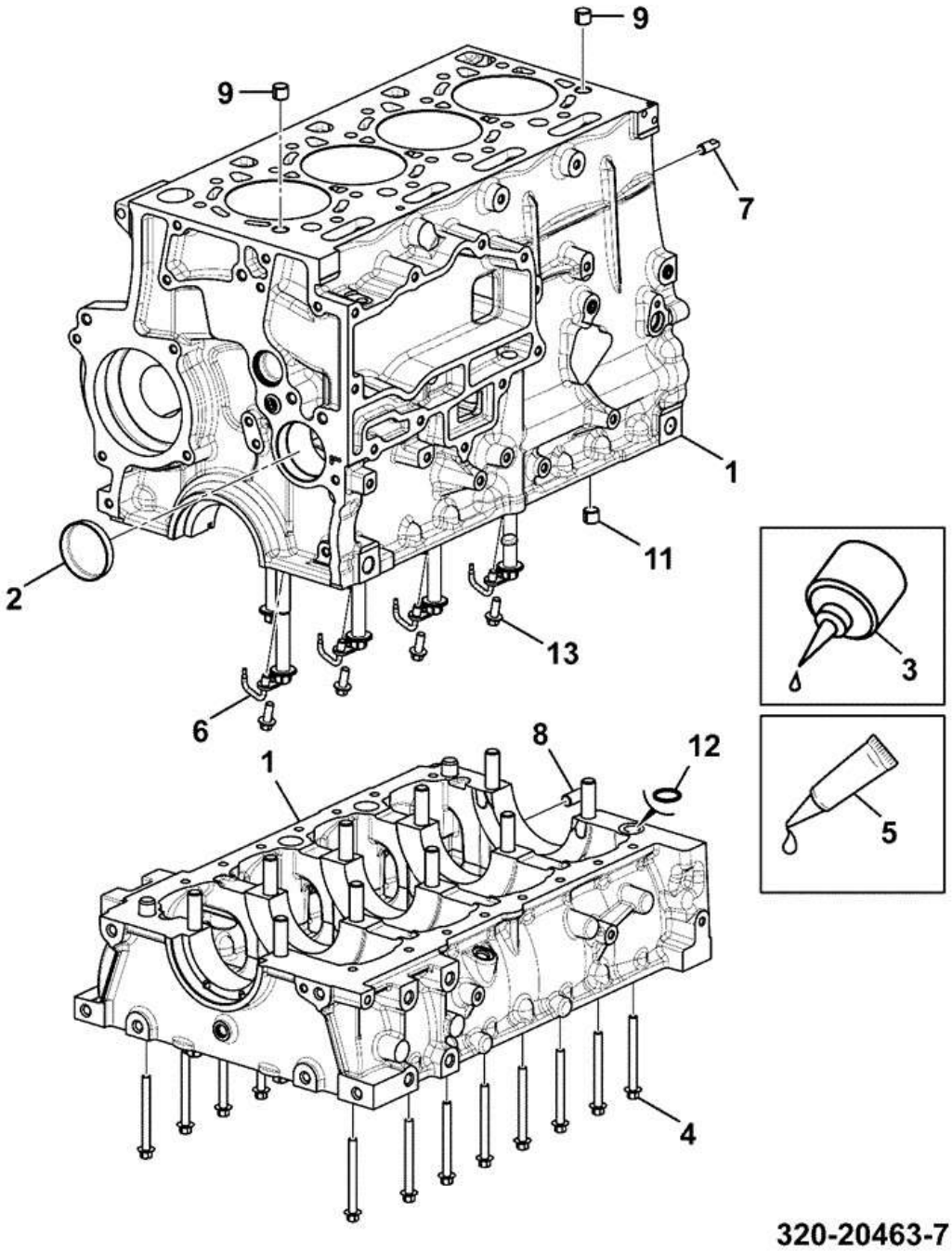

Item	Part #	Change No	Description	Usage Code	QTY
1	320/01921		Block and bedplate assy		1
2	320/00804		Plug core d=62mm		1
3	320/00812		Sealant omnifit 100M		0

4	1317/3318Z		Bolt M8 x 80 flange reduced hex		16
5	4102/4100		Adhesive Loctite 5182		0
6	320/04288		Jet piston cooling		4
7	320/01526		Dowel flatted M10 x 25		1
8	320/01528		Dowel M12 x 25		1
9	320/02525		Dowel ring		2
11	320/00805		Plug core d=16mm		1
12	320/01656		O Ring 20 x 25mm		1
13	1317/3305Z		Bolt Flanged M8 x 20 lg		4

9812/8000 W0-1-17 . BLOCK BEDPLATE 4.8L 320/01833

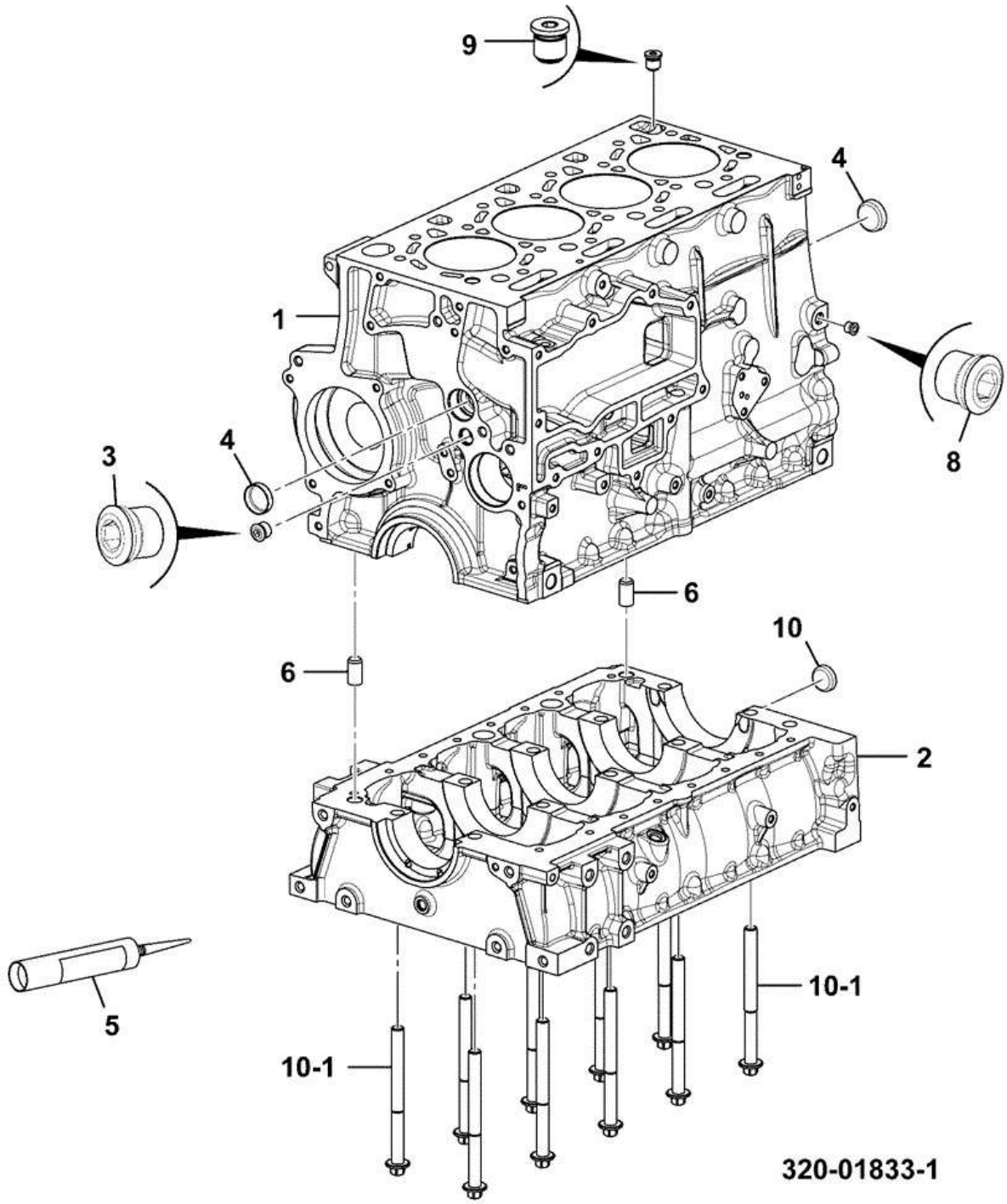

Item	Part #	Change No	Description	Usage Code	QTY
1	320/01663		Block cylinder		1
2	****		Bedplate cylinder block		1
3	320/04082		Plug Zero Leak M18 x 1.5		1

4	320/00802		Plug core d=36mm		2
5	4101/0600		Sealant		0
6	320/01717		Dowel 16 x 30		2
8	320/04080		Plug M12 x 1.5 Zero Leak		2
9	320/07715		Valve Drain CCV		1
10	320/00883		Plug Core 30mm		1
10-1	320/00917		Bolt M14 X 164 main bearing		10

9812/8000 W0-2-5 CRANK DRIVE GEAR 320/03132

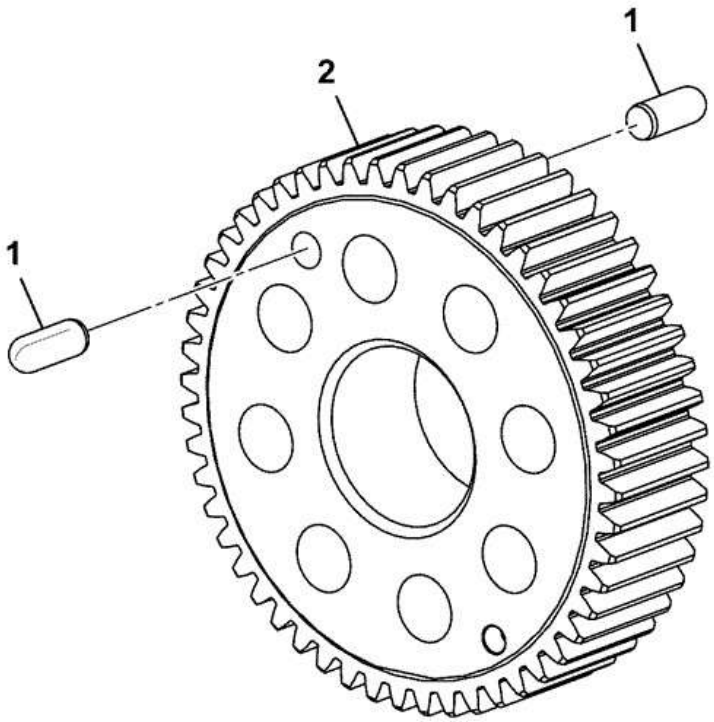

320-03132-2

Item	Part #	Change No	Description	Usage Code	QTY
1	2105/1405		Dowel pin		2
2	320/03132		Gear Crankshaft Assembly		1

Product Catalog \ CONSTRUCTION \ NORTH AMERICA \ MISCELLANEOUS PRODUCTS \ JCB DIESELMAX ENGINES \ 320/40332 DIESELMAX ENGINE 9812/8000 \ W ENGINE SUB-ASSEMBLIES \ W00 ENGINE ASSEMBLIES

9812/8000 W0-2-11 CRANKSHAFT ASSEMBLY 320/09419 1

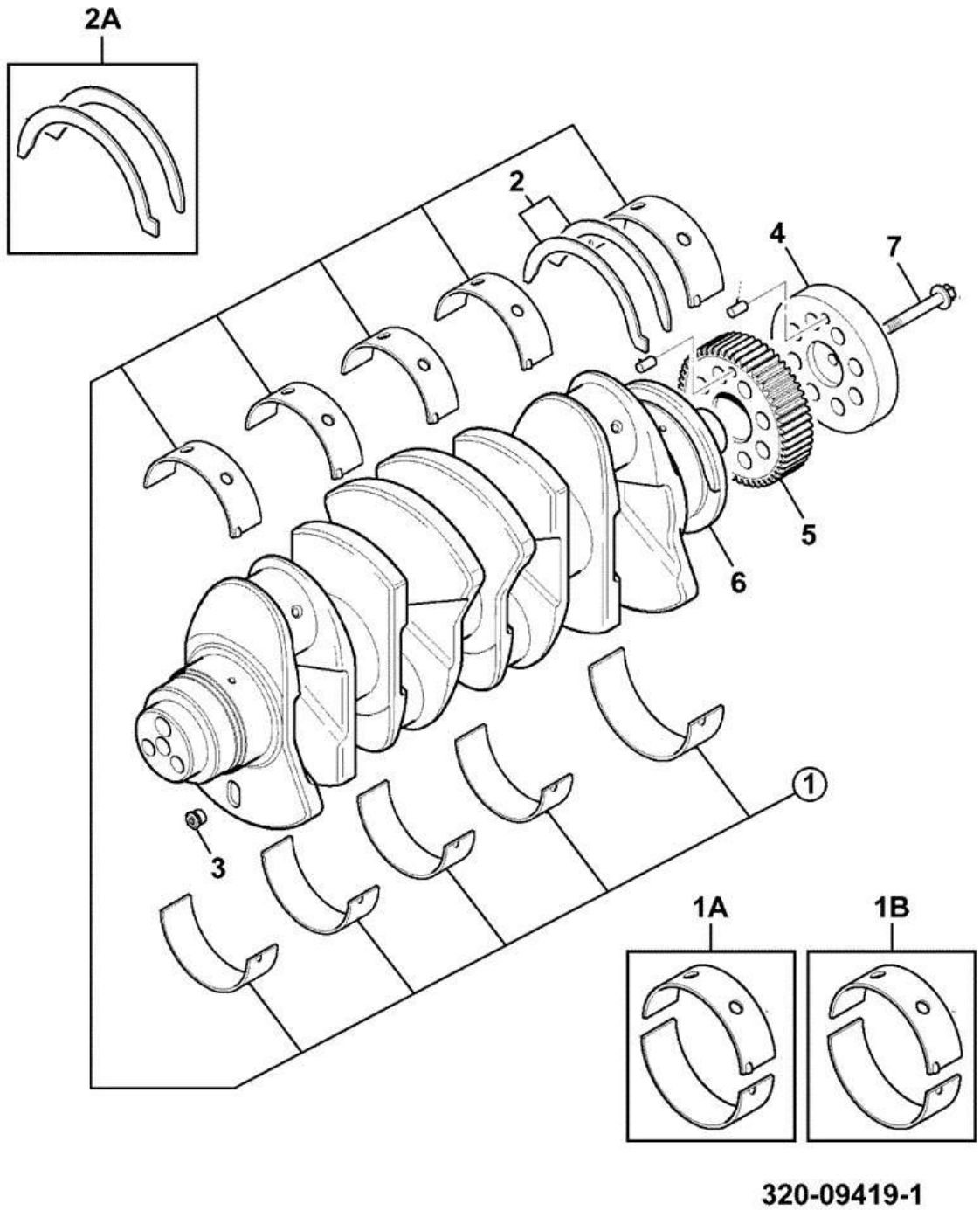

Item	Part #	Change No	Description	Usage Code	QTY
A	320/09419		Crankshaft kit 4.8L (11.5) FW		1
1	:320/09335		Kit-main bearing Standard		1
1A	320/09336		Kit-main bearing undersize - 0.25mm		1

1B	320/09337		Kit-main bearing undersize - 0.50mm		1
2	:320/09208		Kit-thrust washer standard		1
2A	320/09209		Kit-thrust washer oversize - 0.20mm		1
3	:320/04080		Plug M12 x 1.5 Zero Leak		1
4	:320/03075		Hub flywheel		1
5	:320/03132		Gear Crankshaft Assembly		1
6	:320/03376		Crankshaft		1
7	:1317/3411Z		Bolt M10 x 45 flange reduced head		1

9812/8000 W0-3-9 PISTON & CON-ROD 320/20835

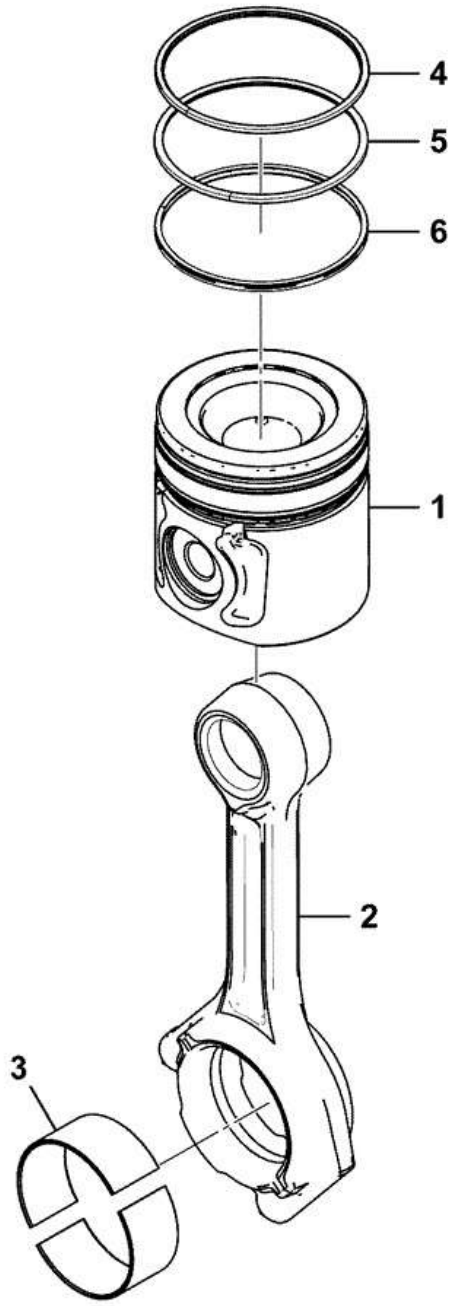

11-11110

Item	Part #	Change No	Description	Usage Code	QTY
1	320/09421		Piston and Rings Standard		1
2	320/03377		Conrod assembly		1
3	320/03270		Bearing big end std		2

3	****		Bearing big end u/s -0.25mm *QTY:A/R*		0
3	320/03272		Bearing big end u/s -0.50mm *QTY:A/R*		0
4	320/09106		Kit piston ring standard 4.8L *QTY:A/R*		0
5	320/09106		Kit piston ring standard 4.8L *QTY:A/R*		0
6	320/09106		Kit piston ring standard 4.8L *QTY:A/R*		0

9812/8000 W0-3-19 KIT CONROD 320/20835

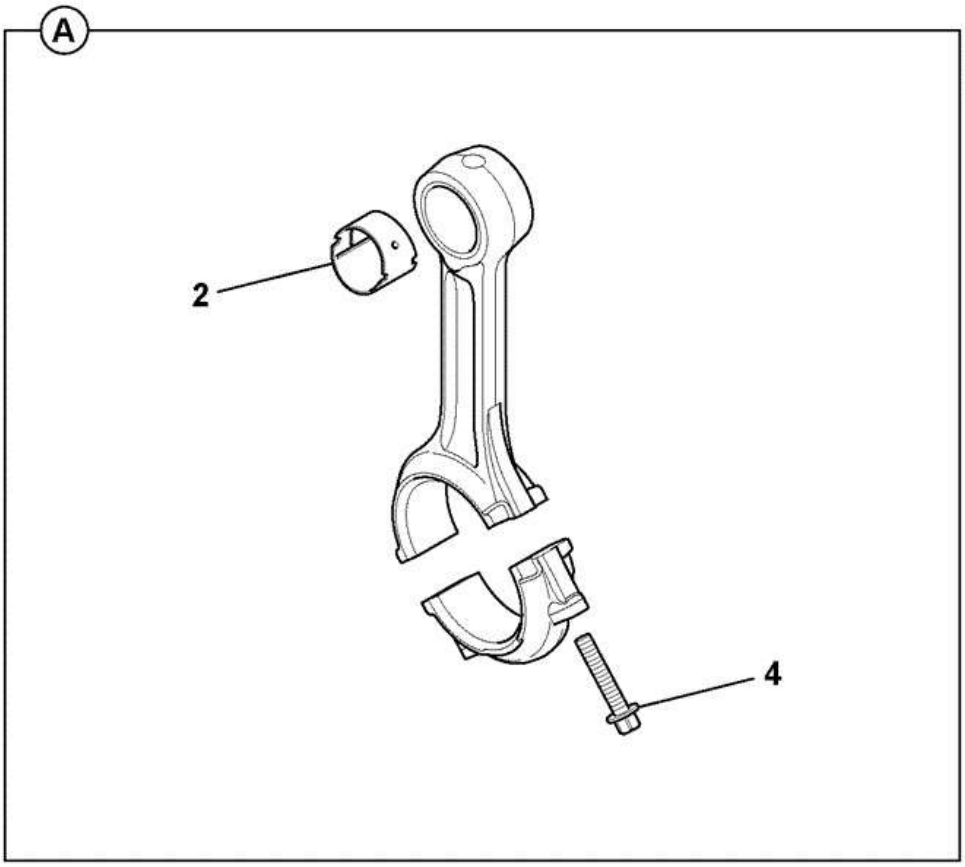

W00-10023-0-OOX
(734530)

Item	Part #	Change No	Description	Usage Code	QTY
A	320/03377		Conrod assembly		1
2	****		Bush small end		1
4	320/03040		Bolt con-rod M10 x 57		2

9812/8000 W0-3-34 PISTON AND CONROD ASSEMBLIES 4.8L

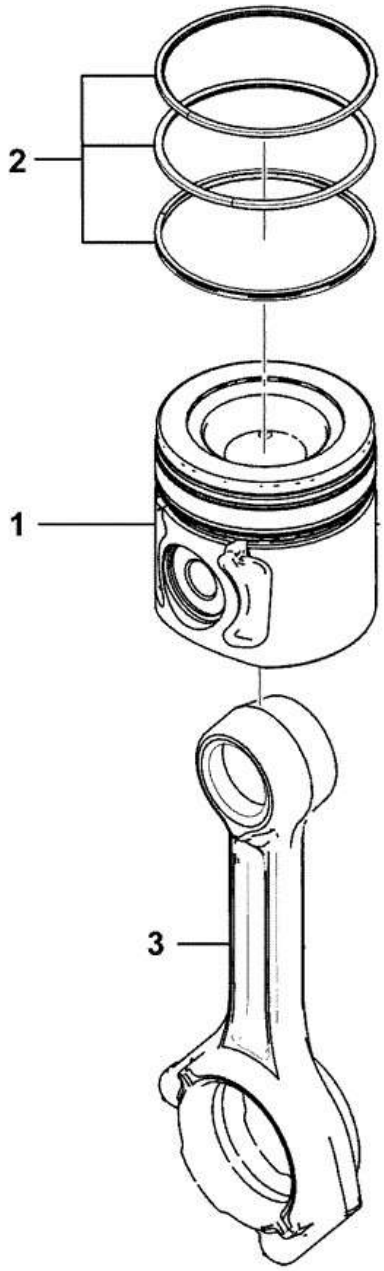

320-09421-1

Item	Part #	Change No	Description	Usage Code	QTY
A	320/09421		Piston and Rings Standard *contains items 1 and 2*		4

1	****		Piston assembly standard 4.8L		4
2	:320/09106		Kit piston ring standard 4.8L		4
3	320/03328		Connecting rod		4
4	320/09338		Kit-big end bearing standard		1
4A	320/09339		Kit-big end bearing undersize - 0.25mm (contains 4 pistons)		1
4B	320/09340		Kit-big end bearing undersize - 0.50mm		1

9812/8000 W0-4-5 CAMSHAFT ASSEMBLY 320/20503

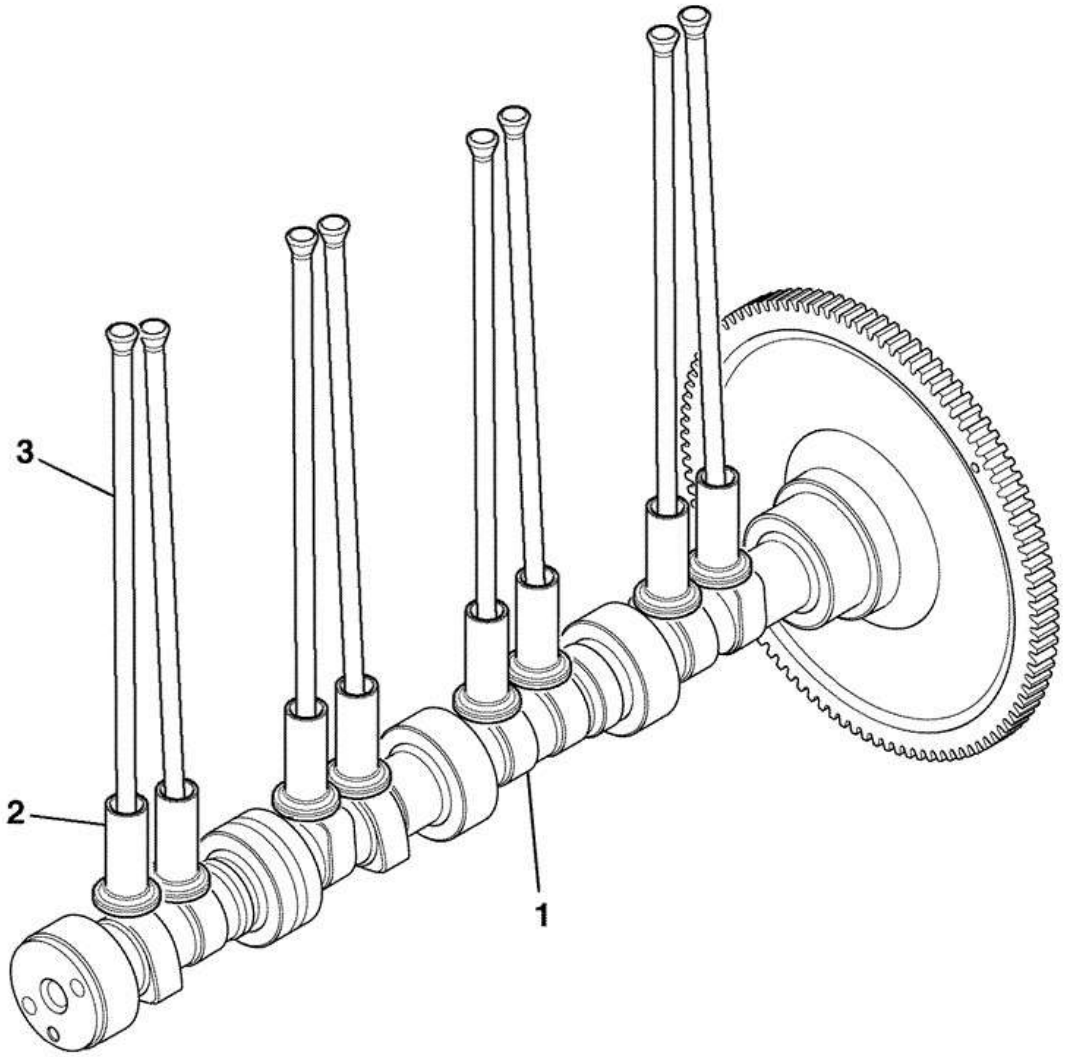

OOXV0011460

Item	Part #	Change No	Description	Usage Code	QTY
1	320/03688		Camshaft and gear assembly		1
2	320/03524		Tappet valve		8
3	320/03677		Rod push		8

Product Catalog \ CONSTRUCTION \ NORTH AMERICA \ MISCELLANEOUS PRODUCTS \ JCB DIESELMAX ENGINES \ 320/40332 DIESELMAX ENGINE 9812/8000 \ W ENGINE SUB-ASSEMBLIES \ W00 ENGINE ASSEMBLIES

9812/8000 W0-10-16 CYLINDER HEAD 320/20781/3

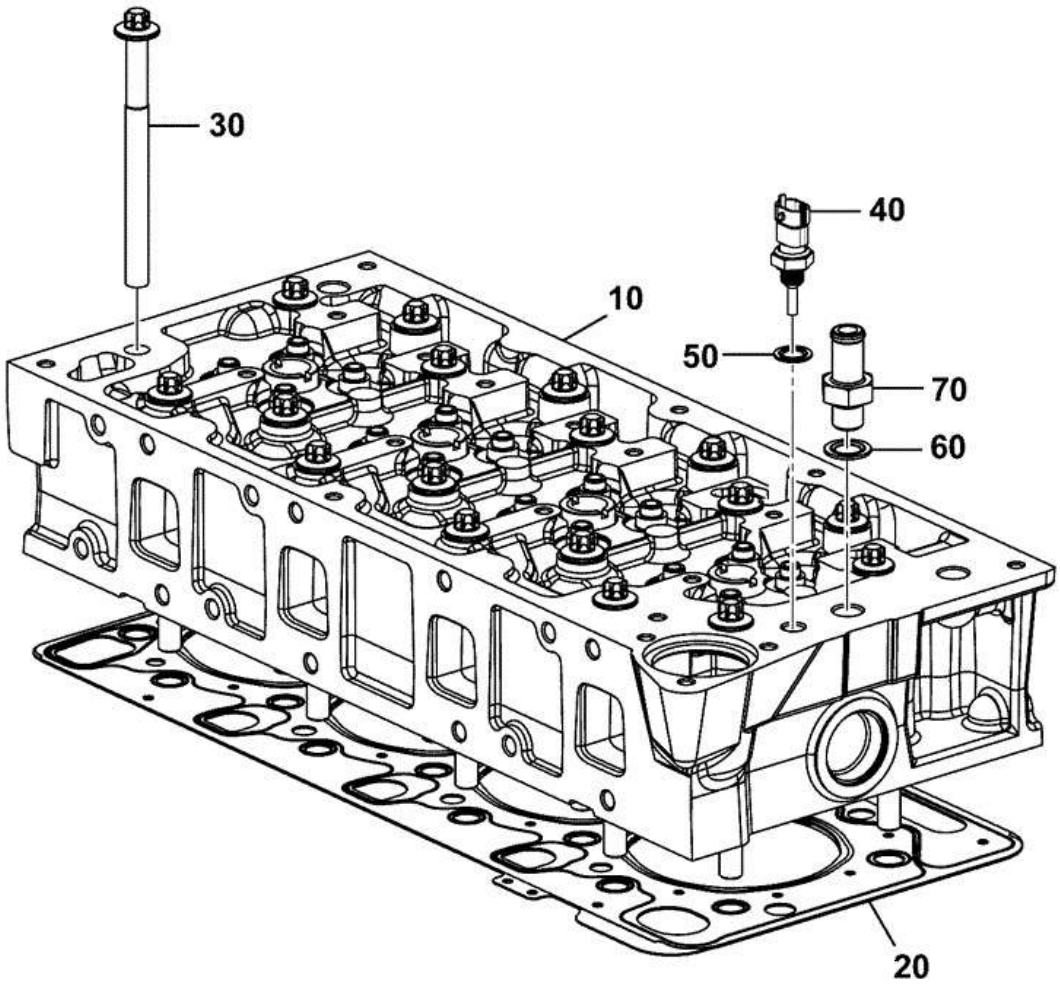

320-20781-3

Item	Part #	Change No	Description	Usage Code	QTY
10	320/02664		Cylinder Head		1
20	320/02710		Gasket cylider head		1
30	320/02711		Bolt M12 X 140		18

40	320/04555		Sensor Temperature coolant (2 pin)		1
50	****		Not applicable not available		1
60	320/04551		Washer Bonded Seal		1
70	320/04546		Connector Water Outlet		1

9812/8000 W0-10-19 CYLINDER HEAD ASSEMBLY 4.8L 320/21064 1

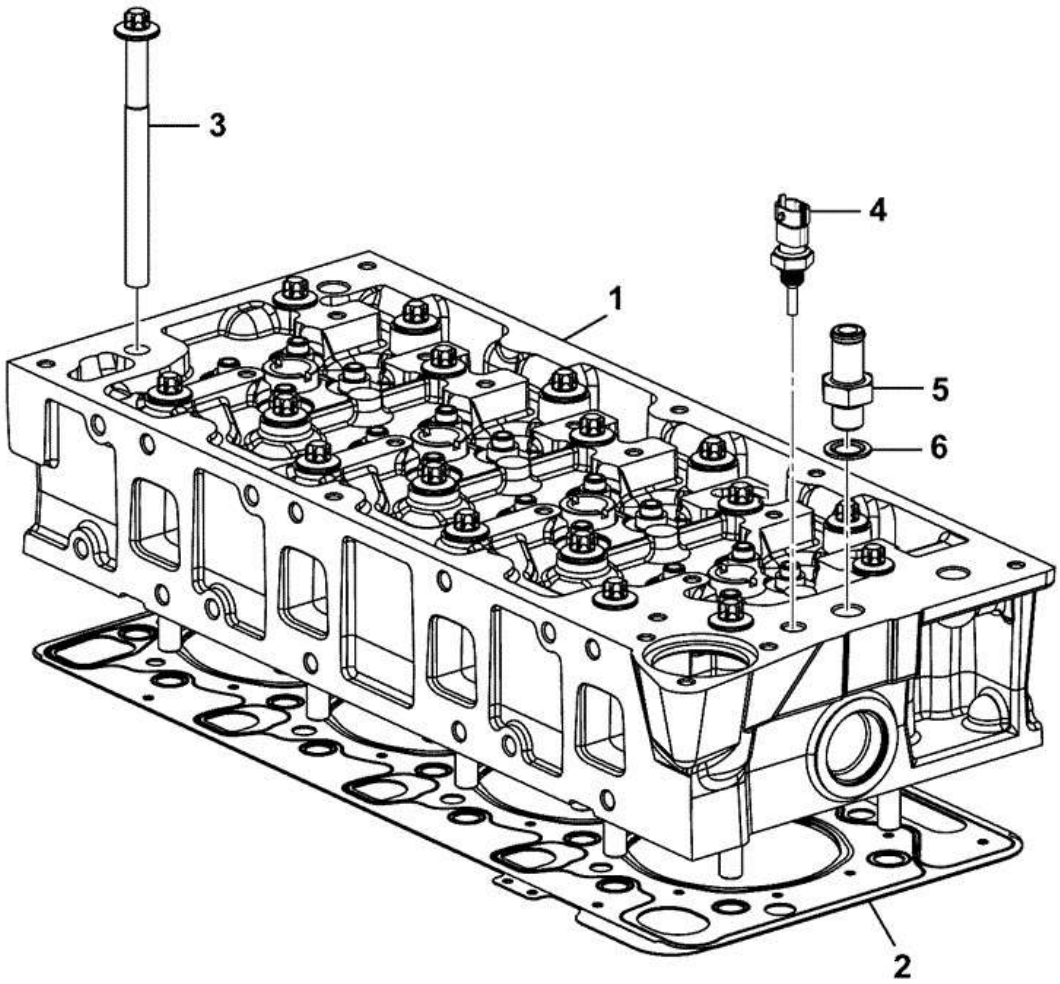

320-21064-1

Item	Part #	Change No	Description	Usage Code	QTY
1	320/02760		Head cylinder machining 4.8L		1

2	320/02710		Gasket cylider head		1
3	320/02711		Bolt M12 X 140		18
4	320/04555		Sensor Temperature coolant (2 pin)		1
5	320/04546		Connector Water Outlet		1
6	320/04551		Washer Bonded Seal		1

9812/8000 W0-10-20 CYLINDER HEAD MACHINING 4.8L 320/02760 2

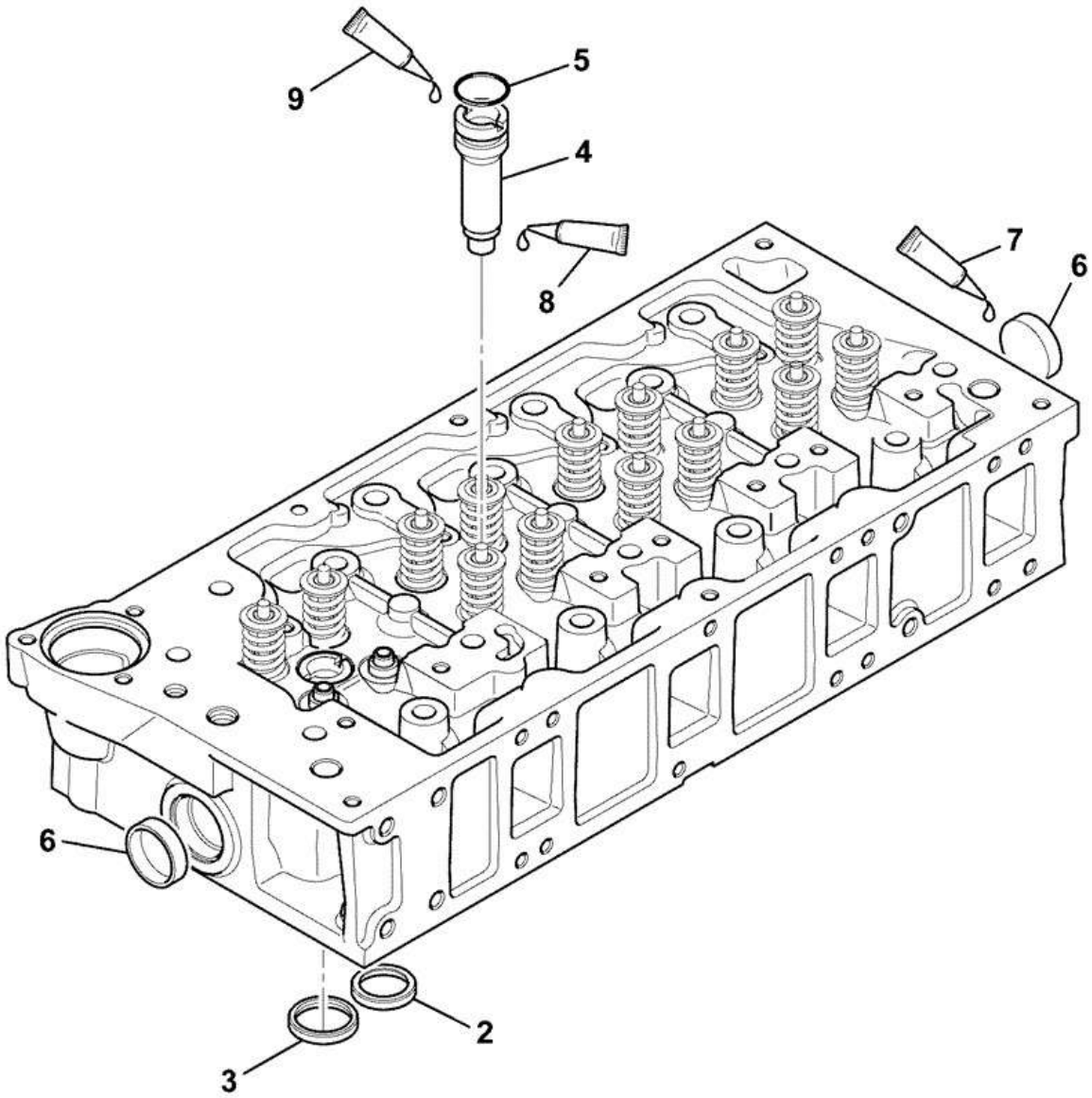

W00-10019-0-OOX

Item	Part #	Change No	Description	Usage Code	QTY
2	320/02756		Seat Exhaust Valve		8

3	320/02691		Seat Inlet Valve		8
4	320/02643		Sleeve injector		4
5	320/02595		O Ring injector		4
6	320/00803		Plug core d=40mm		2
7	4101/0600		Sealant		0
8	320/00828		Sealant 620		0
9	320/00829		Lubricant O Ring P80		0

9812/8000 W0-10-21 CYLINDER HEAD OVERHAUL KIT 4.8L 320/09420 1

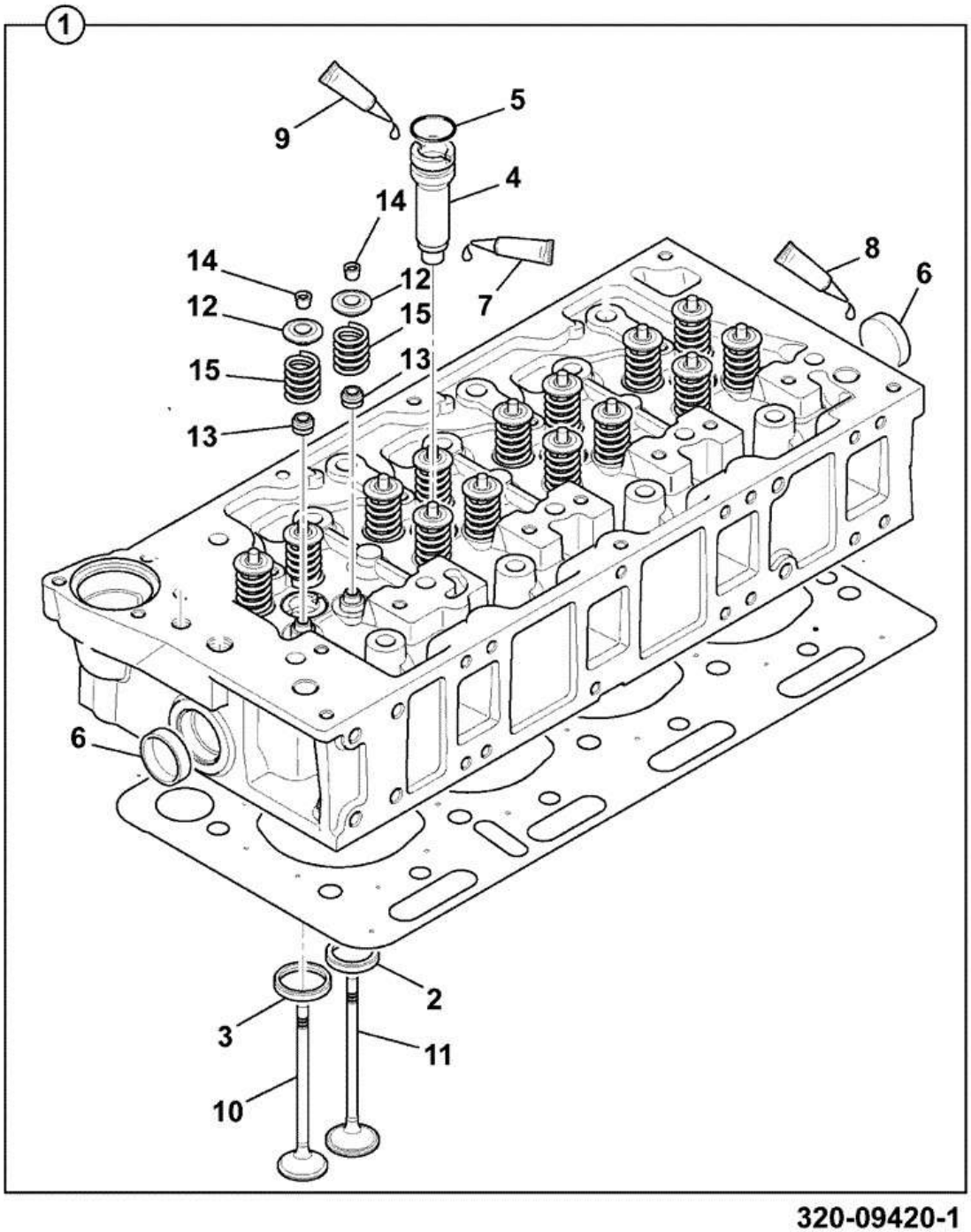

Item	Part #	Change No	Description	Usage Code	QTY
1	320/09420		Head cylinder kit 4.8L		1

2	:320/02756		Seat Exhaust Valve		8
3	:320/02691		Seat Inlet Valve		8
4	:320/02643		Sleeve injector		4
5	:320/02595		O Ring injector		4
6	:320/00803		Plug core d=40mm		2
7	:4101/0600		Sealant *QTY:A/R*		0
8	:320/00828		Sealant 620 *QTY:A/R*		0
9	:320/00829		Lubricant O Ring P80 *QTY:A/R*		0
10	:320/03612		Valve inlet		8
11	:320/03616		Valve exhaust		8
12	:320/03689		Retainer valve spring		16
13	:320/03533		Seal valve stem		16
14	:320/03528		Valve cotter		32
15	:320/03674		Spring valve		16

Product Catalog \ CONSTRUCTION \ NORTH AMERICA \ MISCELLANEOUS PRODUCTS \ JCB DIESELMAX ENGINES \ 320/40332 DIESELMAX ENGINE 9812/8000 \ W ENGINE SUB-ASSEMBLIES \ W00 ENGINE ASSEMBLIES

9812/8000 W0-11-2 INLET VALVE 320/20194

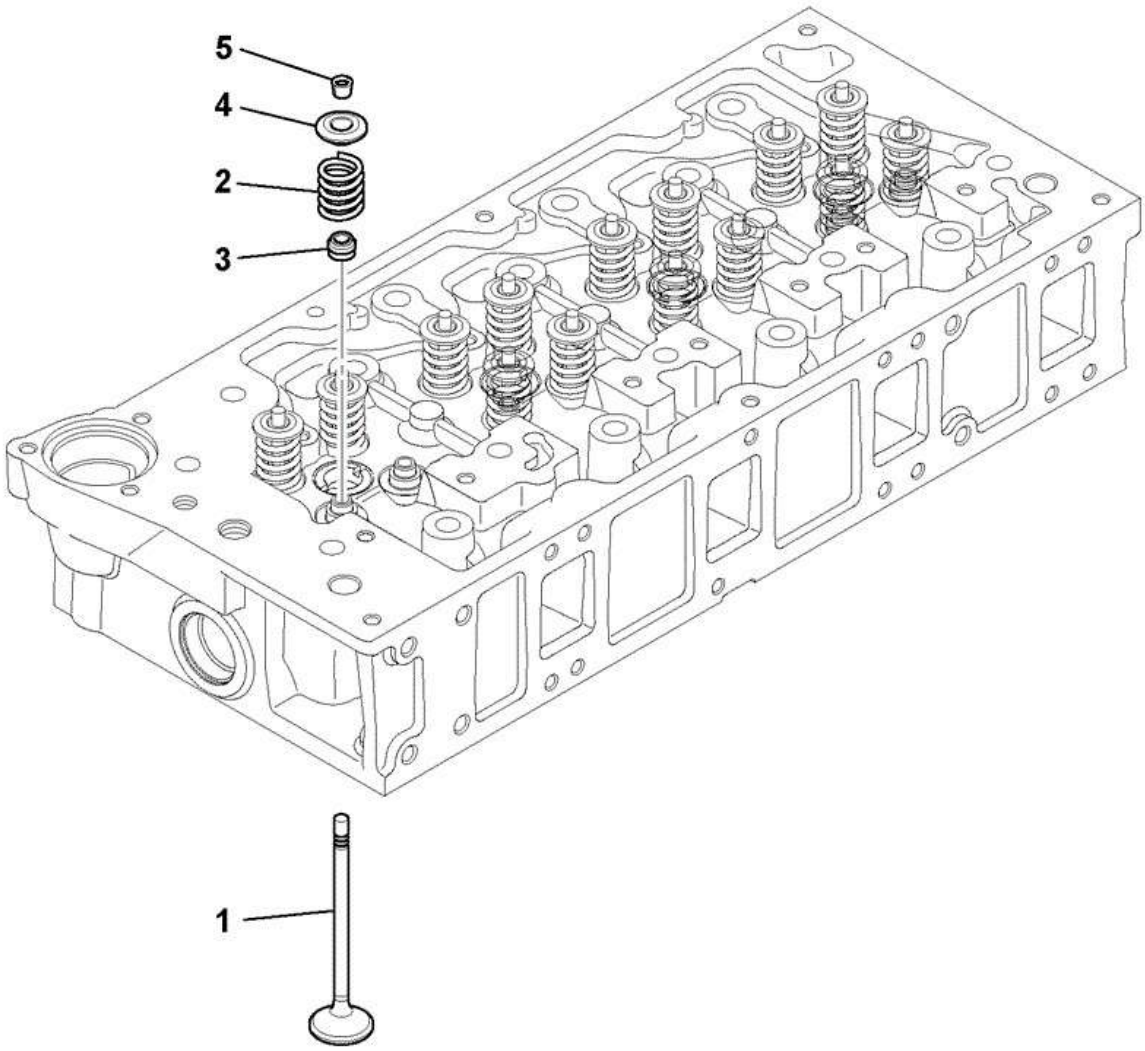

W00-10020-0-OOX
(778340)

Item	Part #	Change No	Description	Usage Code	QTY
1	320/03612		Valve inlet		1
2	320/03674		Spring valve		1
3	320/03533		Seal valve stem		1

4	320/03689		Retainer valve spring		1
5	320/03528		Valve cotter		2

9812/8000 W0-12-2 VALVE EXHAUST 320/20195

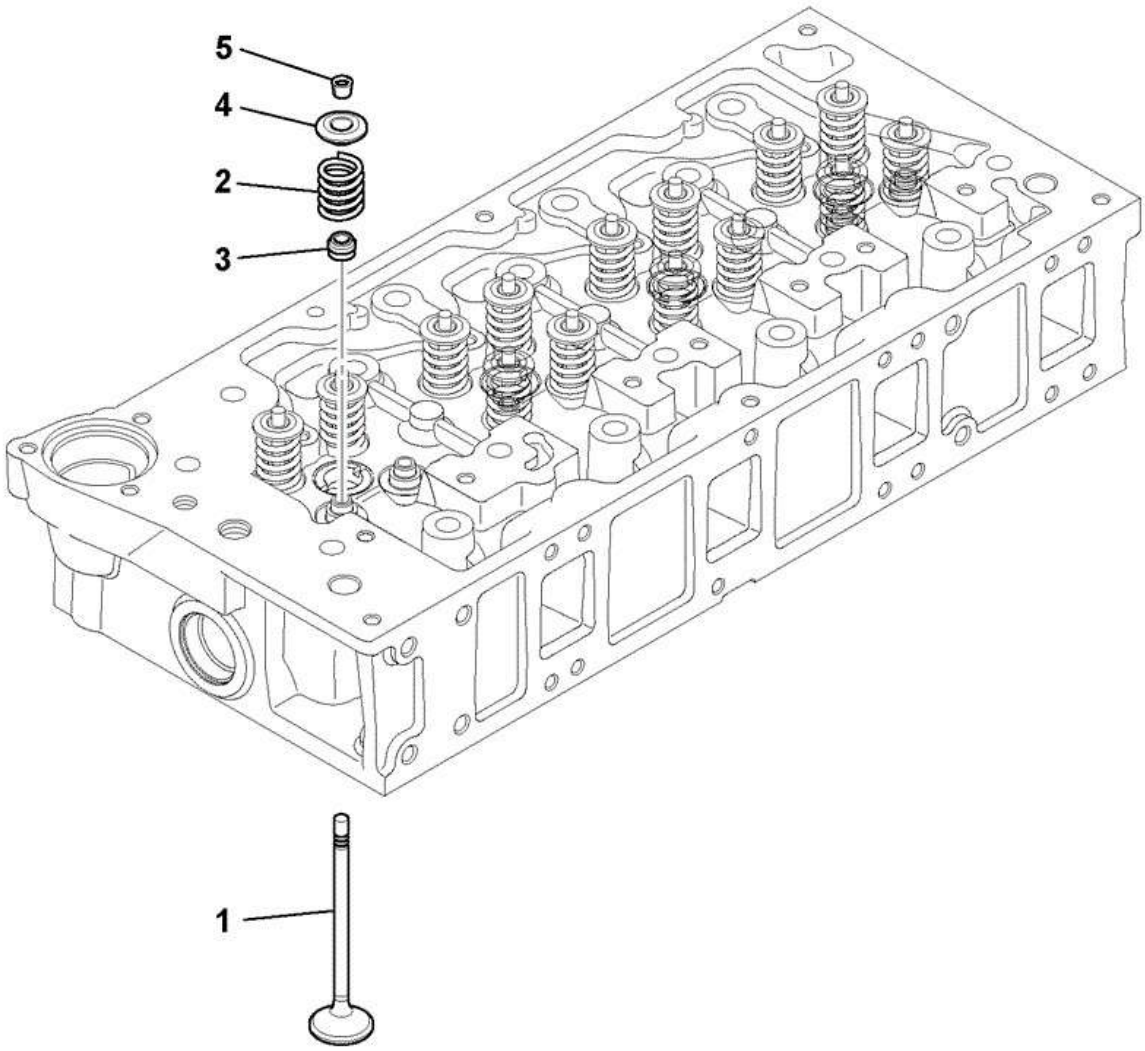

W00-10020-0-OOX
(778340)

Item	Part #	Change No	Description	Usage Code	QTY
1	320/03616		Valve exhaust		1
2	320/03674		Spring valve		1
3	320/03533		Seal valve stem		1

4	320/03689		Retainer valve spring		1
5	320/03528		Valve cotter		2

Product Catalog \ CONSTRUCTION \ NORTH AMERICA \ MISCELLANEOUS PRODUCTS \ JCB DIESELMAX ENGINES \ 320/40332 DIESELMAX ENGINE 9812/8000 \ W ENGINE SUB-ASSEMBLIES \ W00 ENGINE ASSEMBLIES

9812/8000 W0-13-3 ROCKER SHAFT ASSEMBLY 320/21077 1

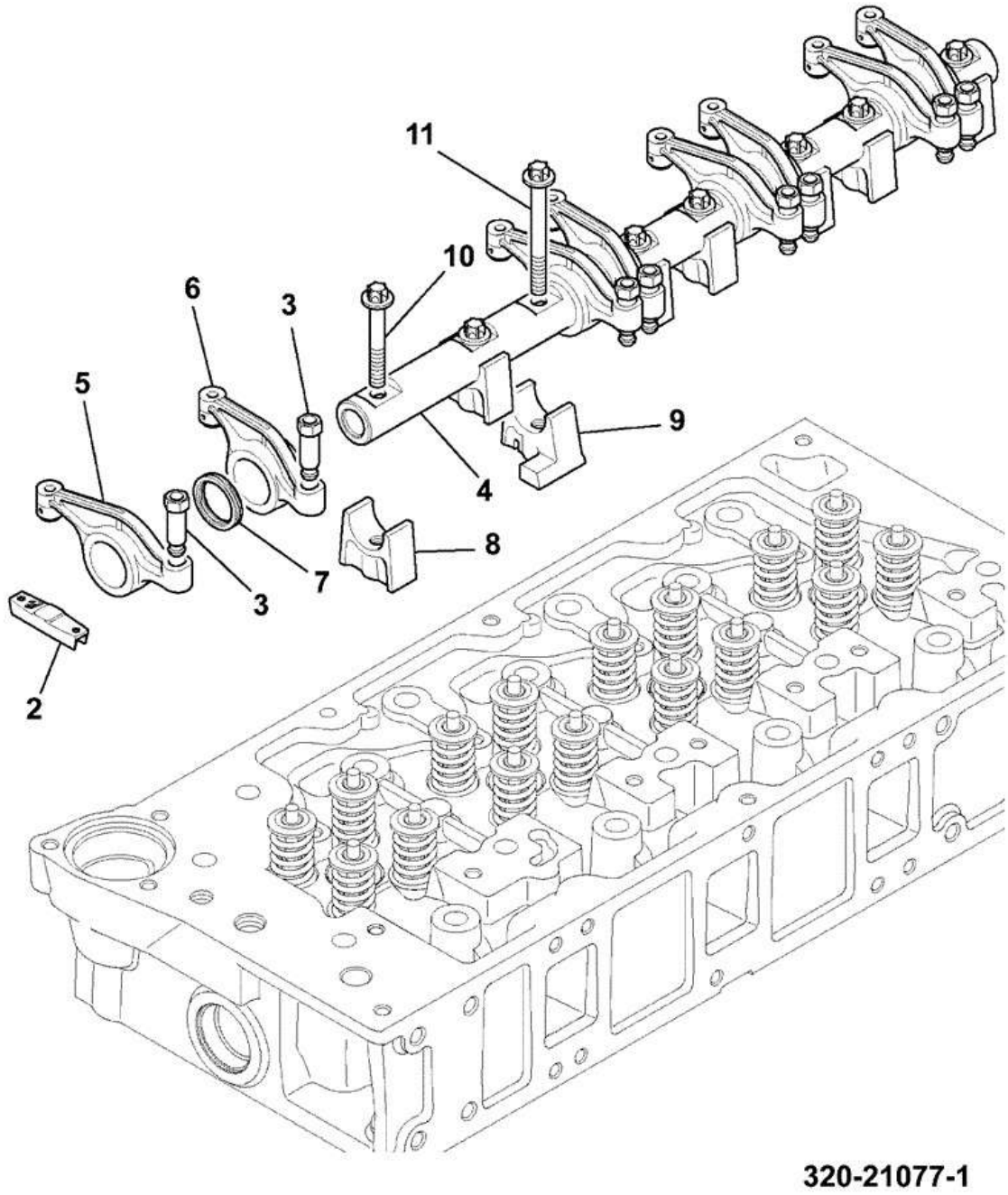

Item	Part #	Change No	Description	Usage Code	QTY
2	320/03647		Piece bridge		8

3	320/03511		Adjuster valve lash		8
4	320/03617		Shaft Rocker		1
5	320/03650		Arm exhaust rocker		4
6	320/03653		Arm inlet rocker		4
7	320/03709		Washer spring		4
8	320/03656		Pedestal rocker shafy		7
9	320/03657		Pedestal rocker shaft oil feed		1
10	1317/3312Z		Bolt M8 x 50		7
11	1317/3315Z		Bolt Flange Head M8 x 65		1

CONSTRUCTION \ NORTH AMERICA \ MISCELLANEOUS PRODUCTS \ JCB DIESELMAX ENGINES \ 320/40332 DIESELMAX ENGINE 9812/8000 \ W ENGINE SUB-ASSEMBLIES \ W00 ENGINE ASSEMBLIES

9812/8000 W0-14-8 MANIFOLD INDUCTION 320/20197 2

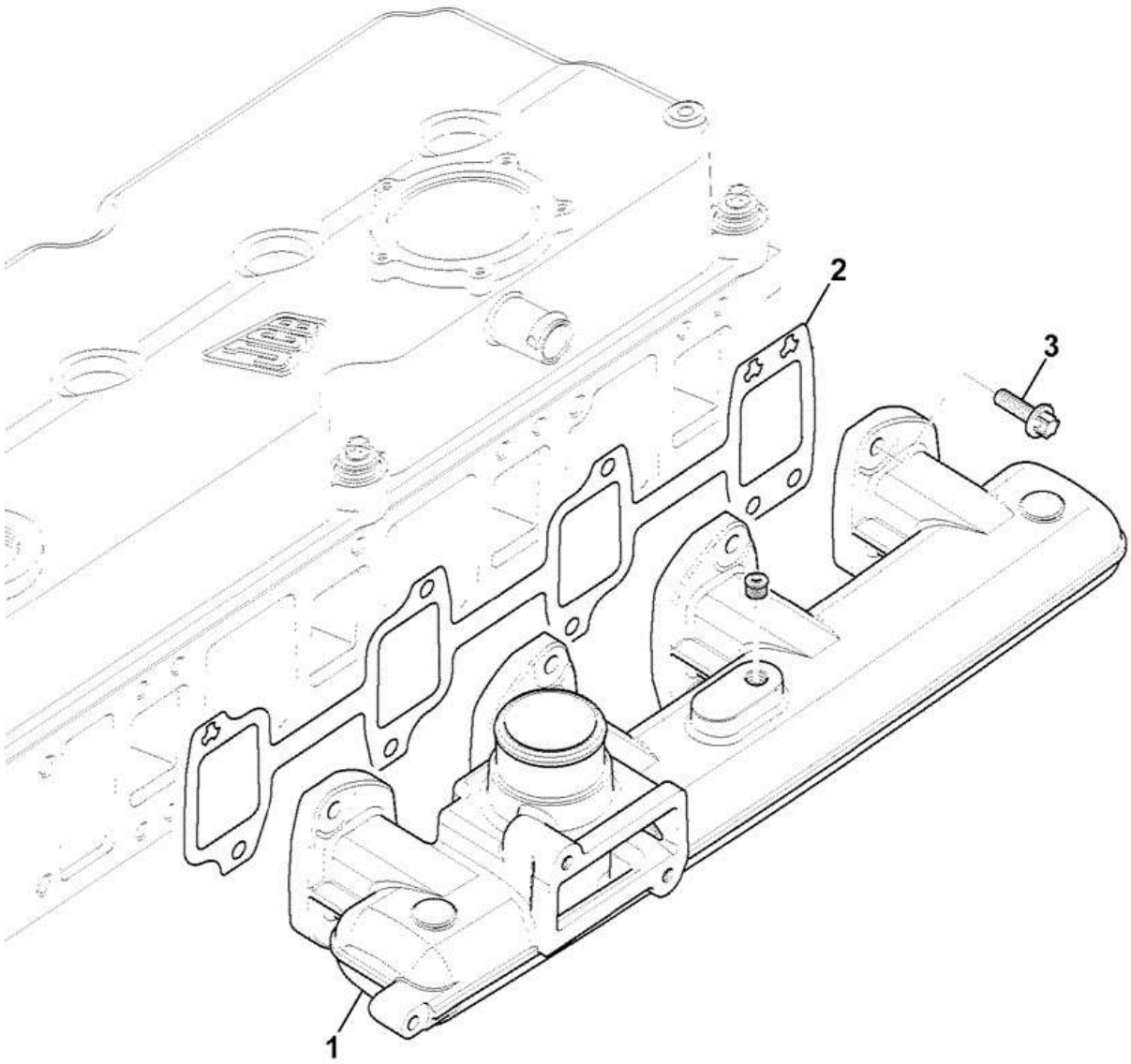

320-20197-2

Item	Part #	Change No	Description	Usage Code	QTY
1	320/05581		Manifold Inlet Machining		1
2	320/05550		Gasket inlet manifold		1
3	1317/3307Z		Bolt flanged M8 x 25 Flange Reduced Hex		8

4	****		Not applicable not available		1

CONSTRUCTION \ NORTH AMERICA \ MISCELLANEOUS PRODUCTS \ JCB DIESELMAX ENGINES \ 320/40332 DIESELMAX ENGINE 9812/8000 \ W ENGINE SUB-ASSEMBLIES \ W00 ENGINE ASSEMBLIES

9812/8000 W0-15-3 BLANKING KIT INTAKE 320/20232

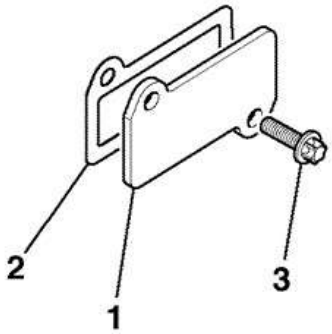

OOXV0011400

Item	Part #	Change No	Description	Usage Code	QTY
1	320/05511		Plate blanking intake heater		1
2	320/05567		Gasket intake heater		1
3	1317/3307Z		Bolt flanged M8 x 25 Flange Reduced Hex		2

CONSTRUCTION \ NORTH AMERICA \ MISCELLANEOUS PRODUCTS \ JCB DIESELMAX ENGINES \ 320/40332 DIESELMAX ENGINE 9812/8000 \ W ENGINE SUB-ASSEMBLIES \ W00 ENGINE ASSEMBLIES

9812/8000 W0-19-4 MANIFOLD, EXHAUST 320/20014 6

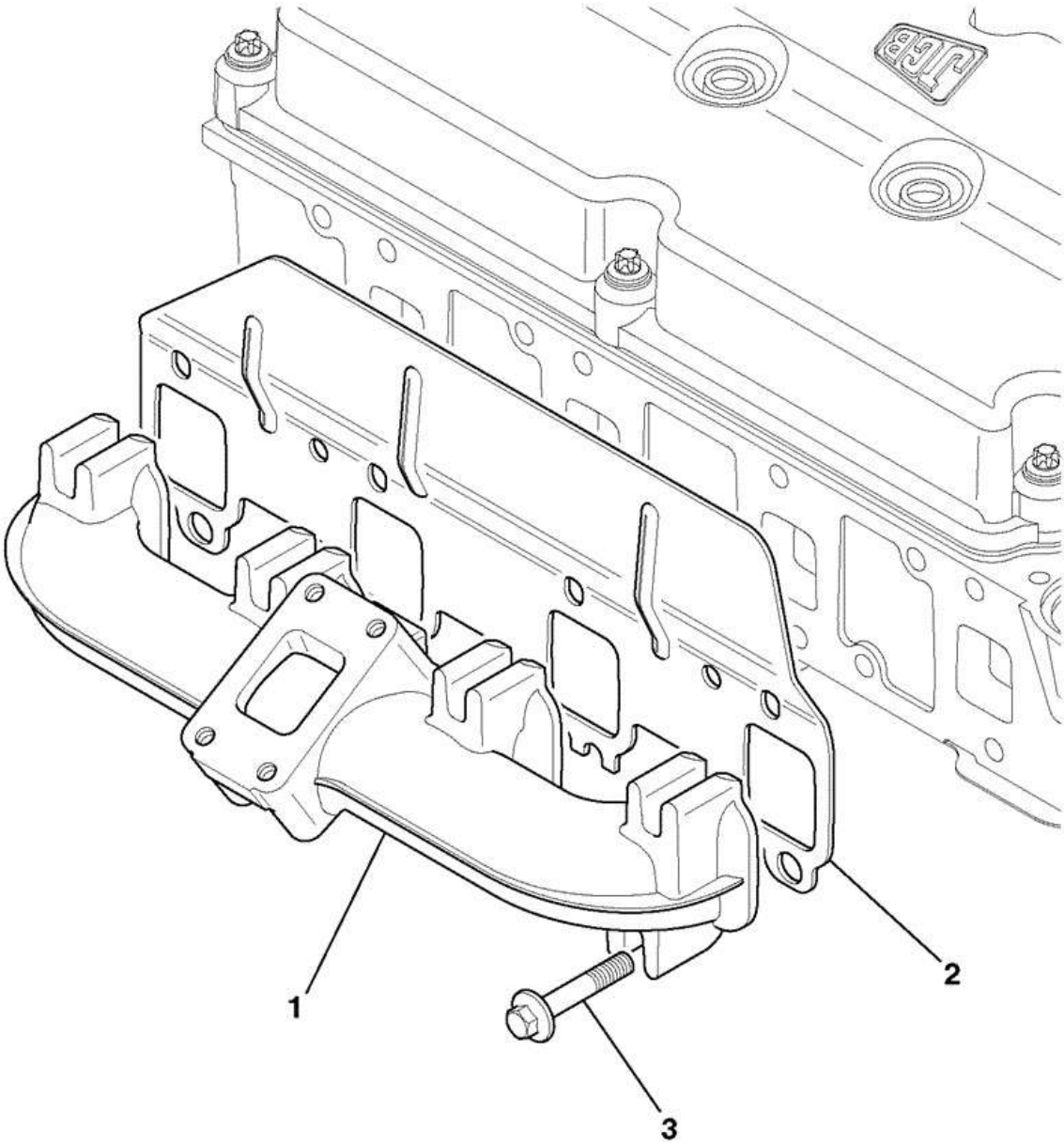

734210

Item	Part #	Change No	Description	Usage Code	QTY
1	320/06000		Manifold exhaust		1
2	320/06249		Gasket /heatshield		1
3	320/06045		Bolt M10 x 57		8

CONSTRUCTION \ NORTH AMERICA \ MISCELLANEOUS PRODUCTS \ JCB DIESELMAX ENGINES \ 320/40332 DIESELMAX ENGINE 9812/8000 \ W ENGINE SUB-ASSEMBLIES \ W00 ENGINE ASSEMBLIES

9812/8000 W0-20-17 TURBOCHARGER 320/20912

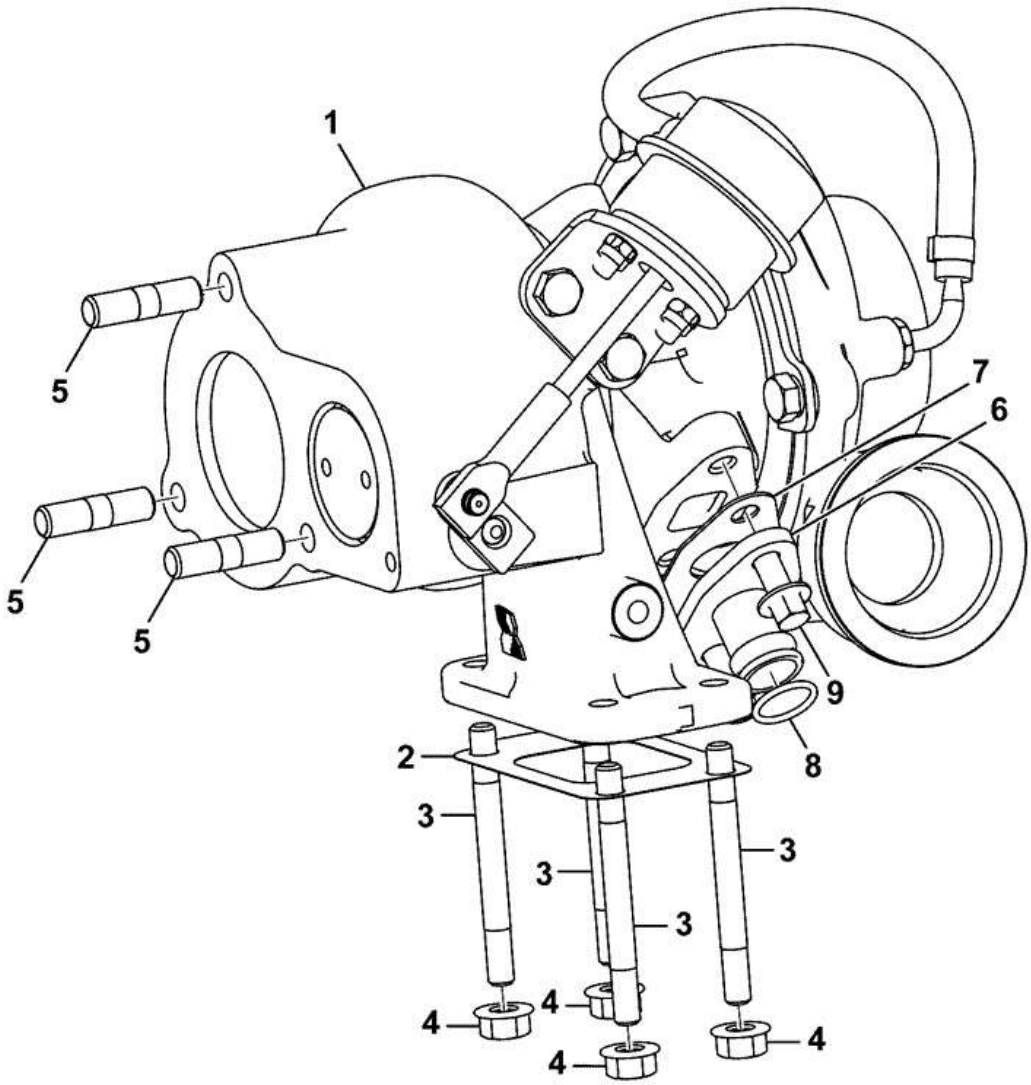

320-20912-1

Item	Part #	Change No	Description	Usage Code	QTY
1	320/06296		Turbocharger 129kw (Dn) T2		1
2	320/06053		Gasket single tc to manifold		1
3	320/06007		Stud M8 x 75		4

4	320/06008		Nut lock M8 special		4
5	826/11384		Stud M10 X 37		3
6	320/04302		Adaptor turbo oil drain		1
7	320/04322		Gasket adaptor turbo oil drain		1
8	320/00851		O Ring		1
9	1317/3305Z		Bolt Flanged M8 x 20 lg		2

CONSTRUCTION \ NORTH AMERICA \ MISCELLANEOUS PRODUCTS \ JCB DIESELMAX ENGINES \ 320/40332 DIESELMAX ENGINE 9812/8000 \ W ENGINE SUB-ASSEMBLIES \ W00 ENGINE ASSEMBLIES

9812/8000 W0-21-6 TURBOCHARGER LUBRICATION PIPING 320/20586/3

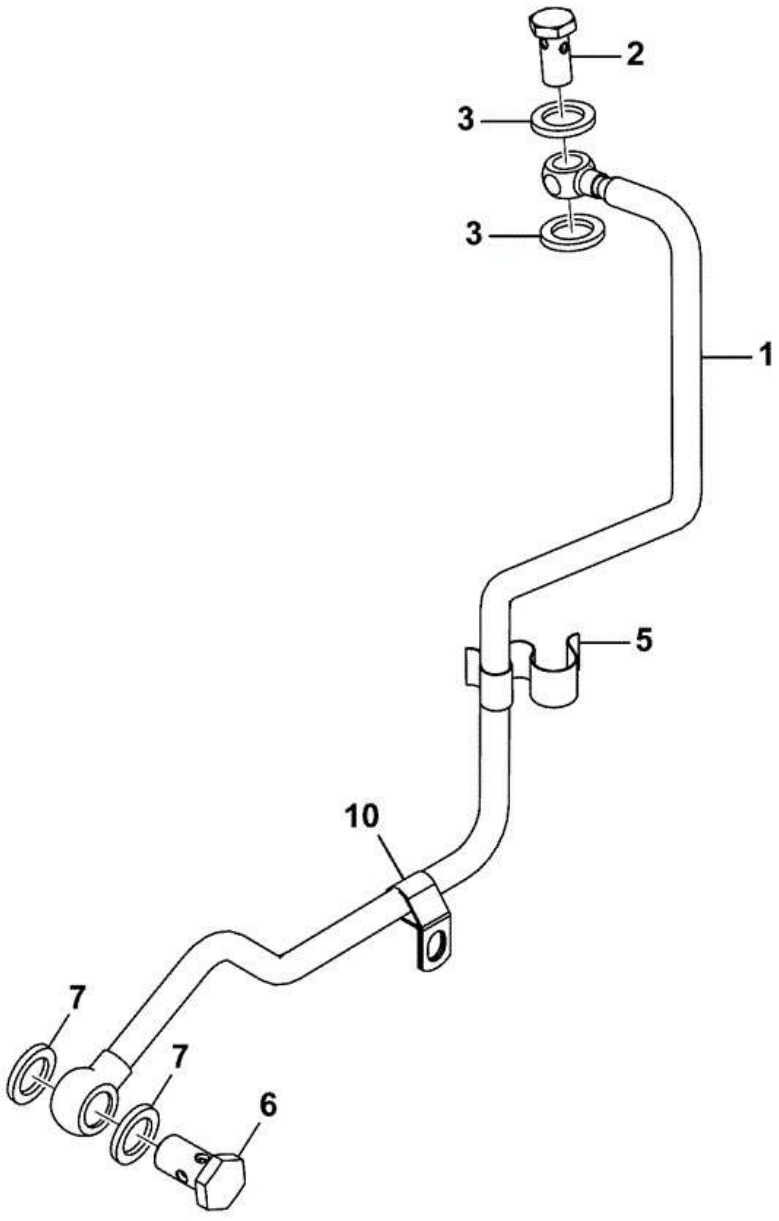

Item	Part #	Change No	Description	Usage Code	QTY
1	320/04374		Pipe turbo oil feed		1

10	:320/00882		Clip pipe		1
2	320/06039		Bolt banjo M12		1
3	823/00372		Washer Copper (M12)		2
5	320/04259		Clip 'W'		1
6	320/04264		Bolt banjo M16		1
7	320/04265		Washer copper M16		2

CONSTRUCTION \ NORTH AMERICA \ MISCELLANEOUS PRODUCTS \ JCB DIESELMAX ENGINES \ 320/40332 DIESELMAX ENGINE 9812/8000 \ W ENGINE SUB-ASSEMBLIES \ W00 ENGINE ASSEMBLIES

9812/8000 W0-22-4 TURBOCHARGER LUBRICATION PIPING OIL DRAIN 320/20222 2

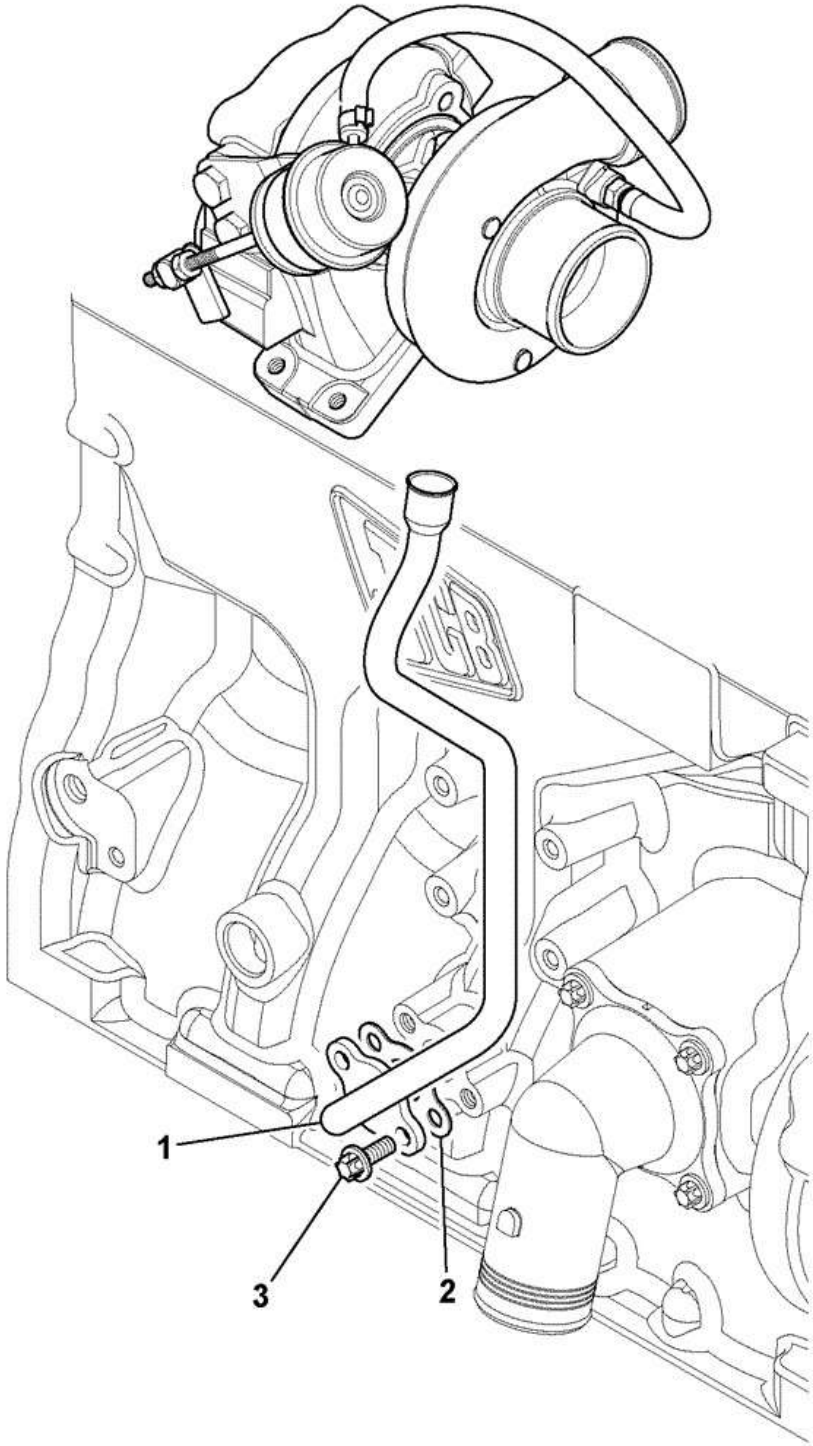

OOXV0011520
(734912)

Item	Part #	Change No	Description	Usage Code	QTY
1	320/04221		Pipe turbo oil drain		1

2	320/04208		Gasket blk to o/drain pipe		1
3	1317/3305Z		Bolt Flanged M8 x 20 lg		2

CONSTRUCTION \ NORTH AMERICA \ MISCELLANEOUS PRODUCTS \ JCB DIESELMAX ENGINES \ 320/40332 DIESELMAX ENGINE 9812/8000 \ W ENGINE SUB-ASSEMBLIES \ W00 ENGINE ASSEMBLIES

9812/8000 W0-25-5 COVER ROCKER COVER ASSEMBLY 320/20583/4

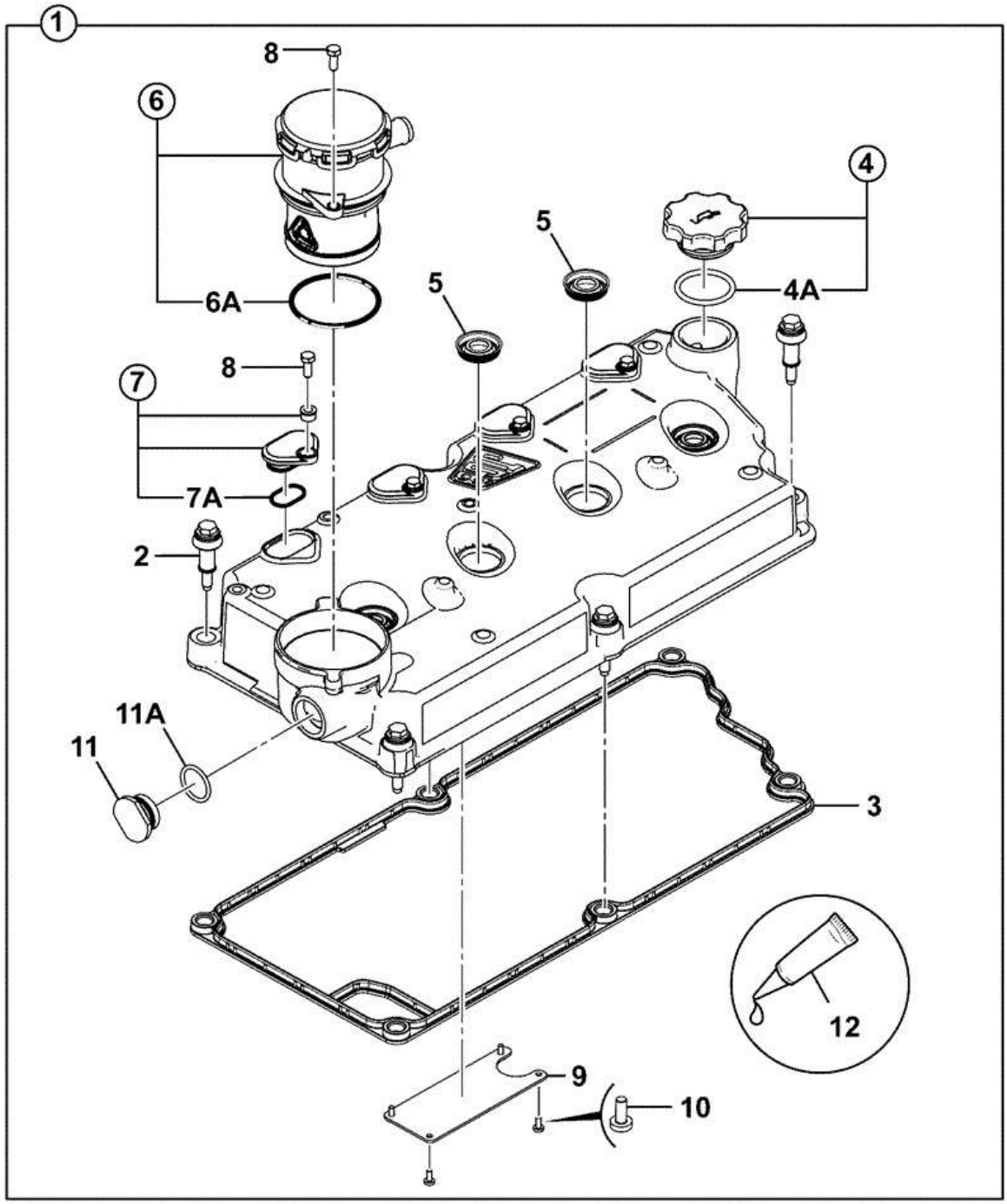

Item	Part #	Change No	Description	Usage Code	QTY
A	****		Cover Rocker Assembly		1

1	320/07722		Cover rocker ABI		1
2	:320/07615		Bolt Isolated 63mm x M8 Star Drive		6
3	:320/07580		Seal Rocker Cover		1
4	:320/04090		Cap Oil Filler Assembly		1
4A	::320/04092		O Ring oil filler cap		1
5	:320/07504		Seal Fuel Injector		4
6	:320/07701		Unit Oil Seperator Cyclone		1
6A	::320/07718		Seal		1
7	:320/07683		Cover valve adjusting		4
7A	::320/04040		O Ring		4
8	:1315/0203V		Screw set m6 x 16 grade 8.8		6
9	:320/07690		Plate CCV Closure		1
10	:320/07609		Screw Torx Socket Pan Head M5 x12		4
11	:320/07730		Plug assembly		1
11A	::320/07728		O Ring		1
12	:332/D5695		Sealant HYLOMAR 607		1

CONSTRUCTION \ NORTH AMERICA \ MISCELLANEOUS PRODUCTS \ JCB DIESELMAX ENGINES \ 320/40332 DIESELMAX ENGINE 9812/8000 \ W ENGINE SUB-ASSEMBLIES \ W00 ENGINE ASSEMBLIES

9812/8000 W0-25-7 CYCLONE ASSEMBLY 320/07701/3

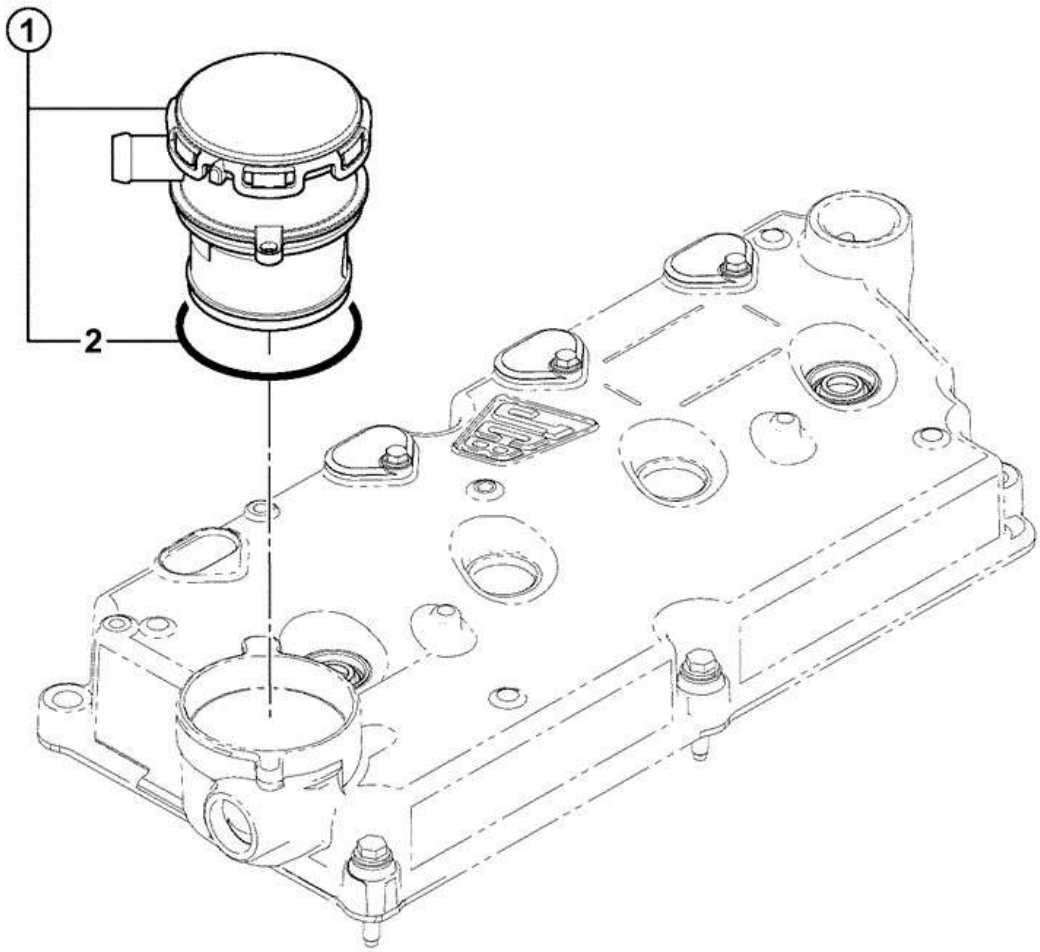

320-07701-3

Item	Part #	Change No	Description	Usage Code	QTY
1	320/07701		Unit Oil Seperator Cyclone		1
2	:320/07718		Seal		1

CONSTRUCTION \ NORTH AMERICA \ MISCELLANEOUS PRODUCTS \ JCB DIESELMAX ENGINES \ 320/40332 DIESELMAX ENGINE 9812/8000 \ W ENGINE SUB-ASSEMBLIES \ W00 ENGINE ASSEMBLIES

9812/8000 W0-25-8 CAP OIL FILLER ASSEMBLY 320/04090/3

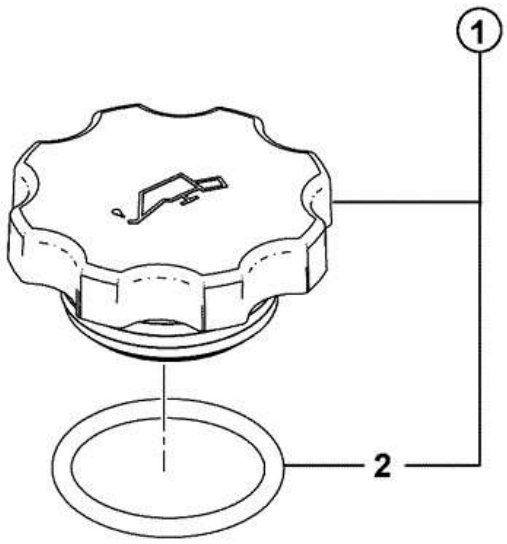

320-0490-3

Item	Part #	Change No	Description	Usage Code	QTY
1	320/04090		Cap Oil Filler Assembly		1

2	:320/04092		O Ring oil filler cap		1

CONSTRUCTION \ NORTH AMERICA \ MISCELLANEOUS PRODUCTS \ JCB DIESELMAX ENGINES \ 320/40332 DIESELMAX ENGINE 9812/8000 \ W ENGINE SUB-ASSEMBLIES \ W00 ENGINE ASSEMBLIES

9812/8000 W0-30-2 OIL PUMP 320/20202

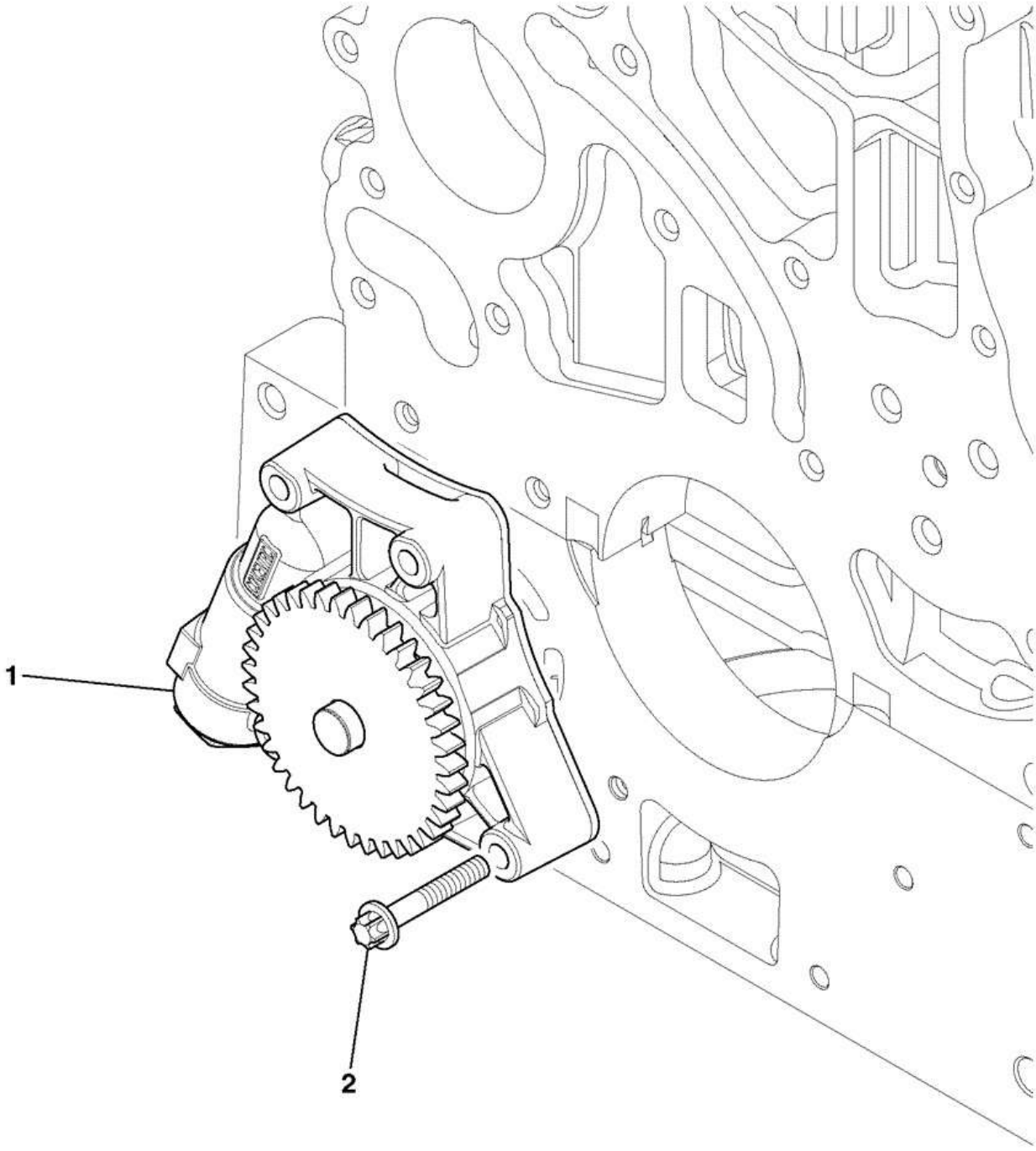

735090

Item	Part #	Change No	Description	Usage Code	QTY
1	320/04186		Pump oil HCR		1
2	1317/3312Z		Bolt M8 x 50		4

CONSTRUCTION \ NORTH AMERICA \ MISCELLANEOUS PRODUCTS \ JCB DIESELMAX ENGINES \ 320/40332 DIESELMAX ENGINE 9812/8000 \ W ENGINE SUB-ASSEMBLIES \ W00 ENGINE ASSEMBLIES

9812/8000 W0-31-13 OIL PAN ASSEMBLY 320/20814 10

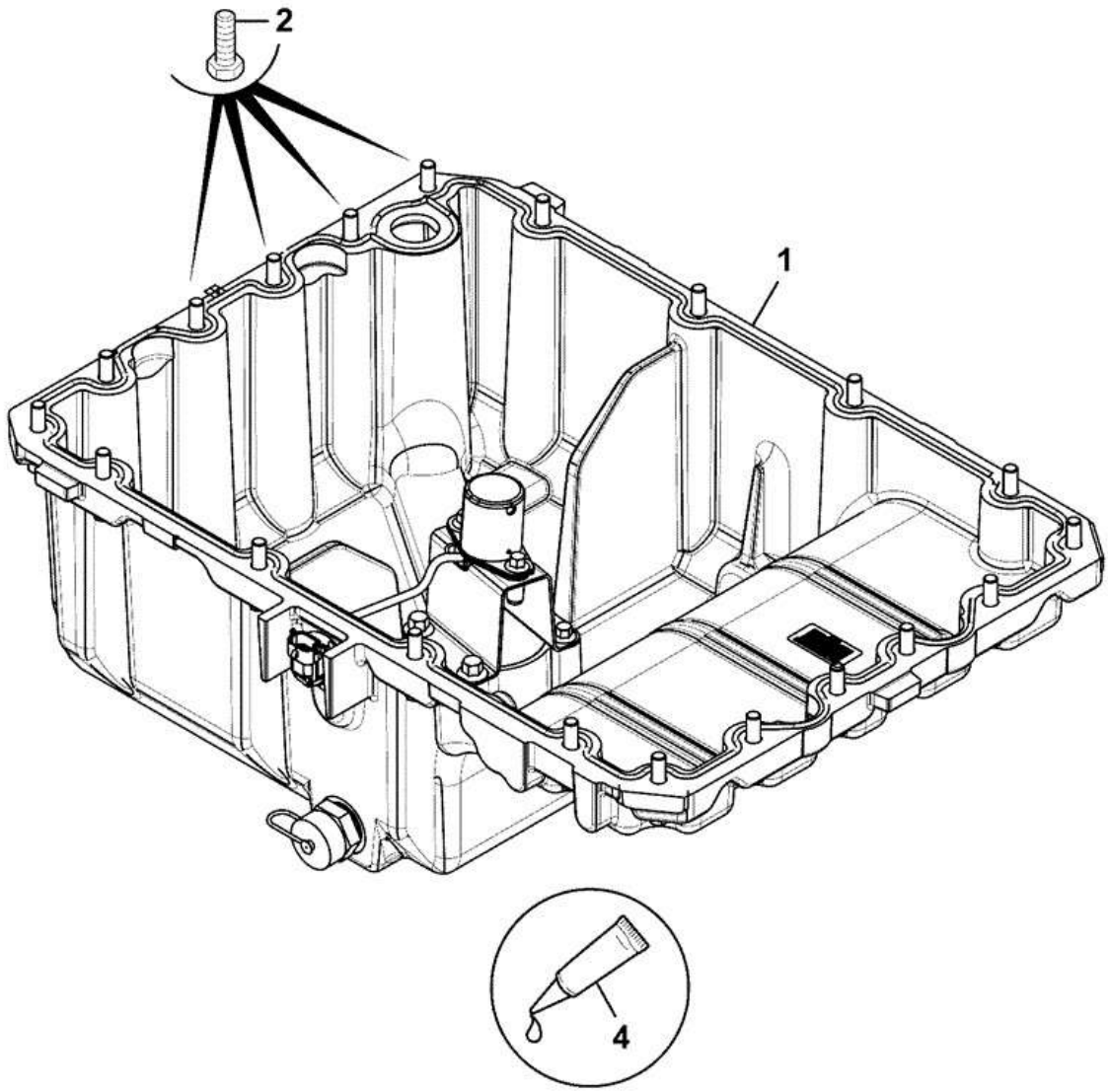

320-20814-4

Item	Part #	Change No	Description	Usage Code	QTY
1	320/A4028		Sump oil ABI		1
2	1317/3309Z		Bolt M8 X 35		20
4	320/00811		Sealant loctite 5901		0

CONSTRUCTION \ NORTH AMERICA \ MISCELLANEOUS PRODUCTS \ JCB DIESELMAX ENGINES \ 320/40332 DIESELMAX ENGINE 9812/8000 \ W ENGINE SUB-ASSEMBLIES \ W00 ENGINE ASSEMBLIES

9812/8000 W0-31-14 OIL PAN FITTINGS & ADAPTERS 320/A4028 2

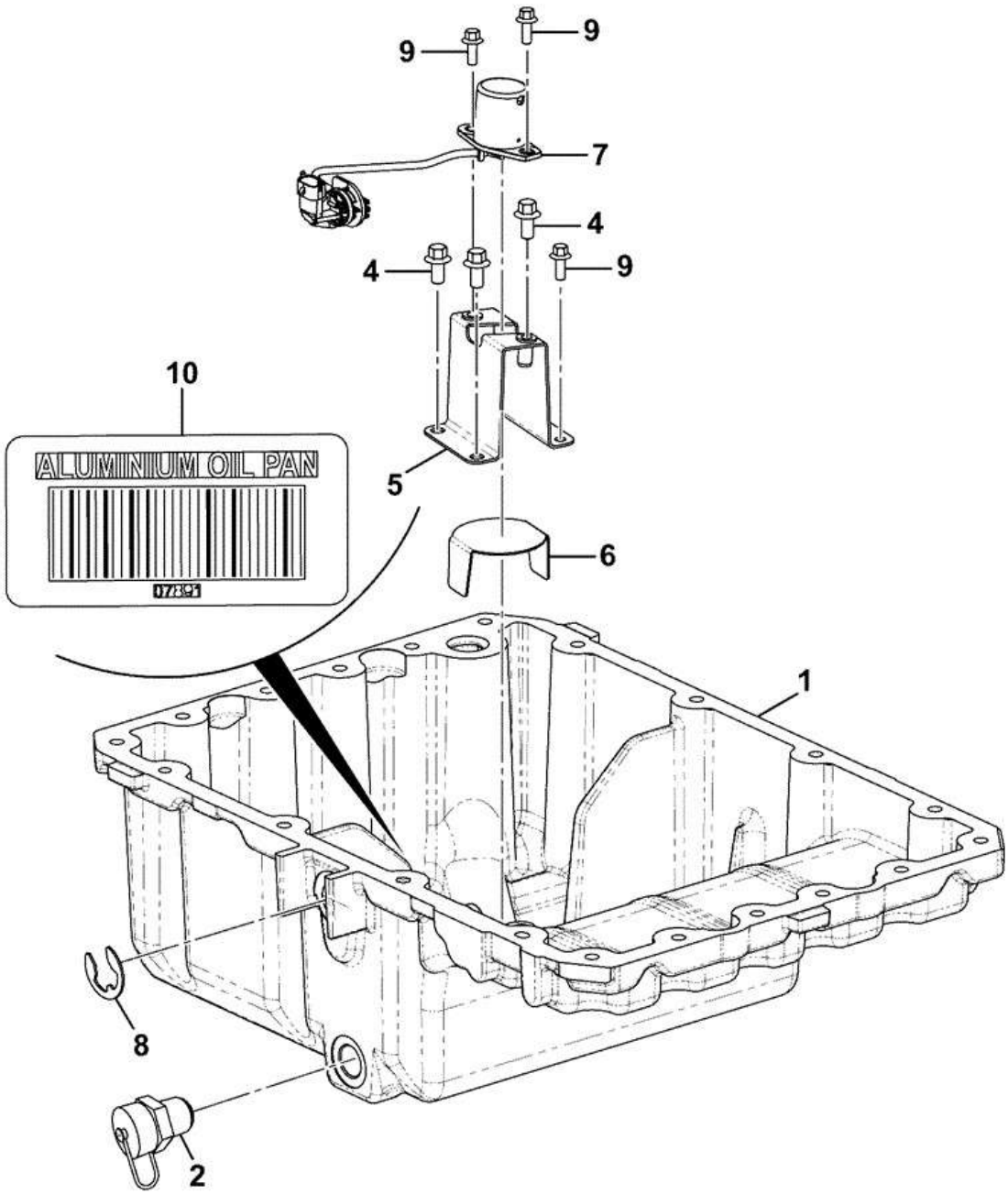

Item	Part #	Change No	Description	Usage Code	QTY
1	****		None serviced part		1

2	320/00914		Sump Drain Valve/Cap Assembly		1
4	****		None serviced part		3
5	****		None serviced part		1
6	****		None serviced part		1
7	320/04378		Switch Oil Level		1
8	320/04379		Circlip		1
9	****		None serviced part		3
10	****		None serviced part		1

CONSTRUCTION \ NORTH AMERICA \ MISCELLANEOUS PRODUCTS \ JCB DIESELMAX ENGINES \ 320/40332 DIESELMAX ENGINE 9812/8000 \ W ENGINE SUB-ASSEMBLIES \ W00 ENGINE ASSEMBLIES

9812/8000 W0-33-7 OIL COOLER ASSEMBLY 320/20924

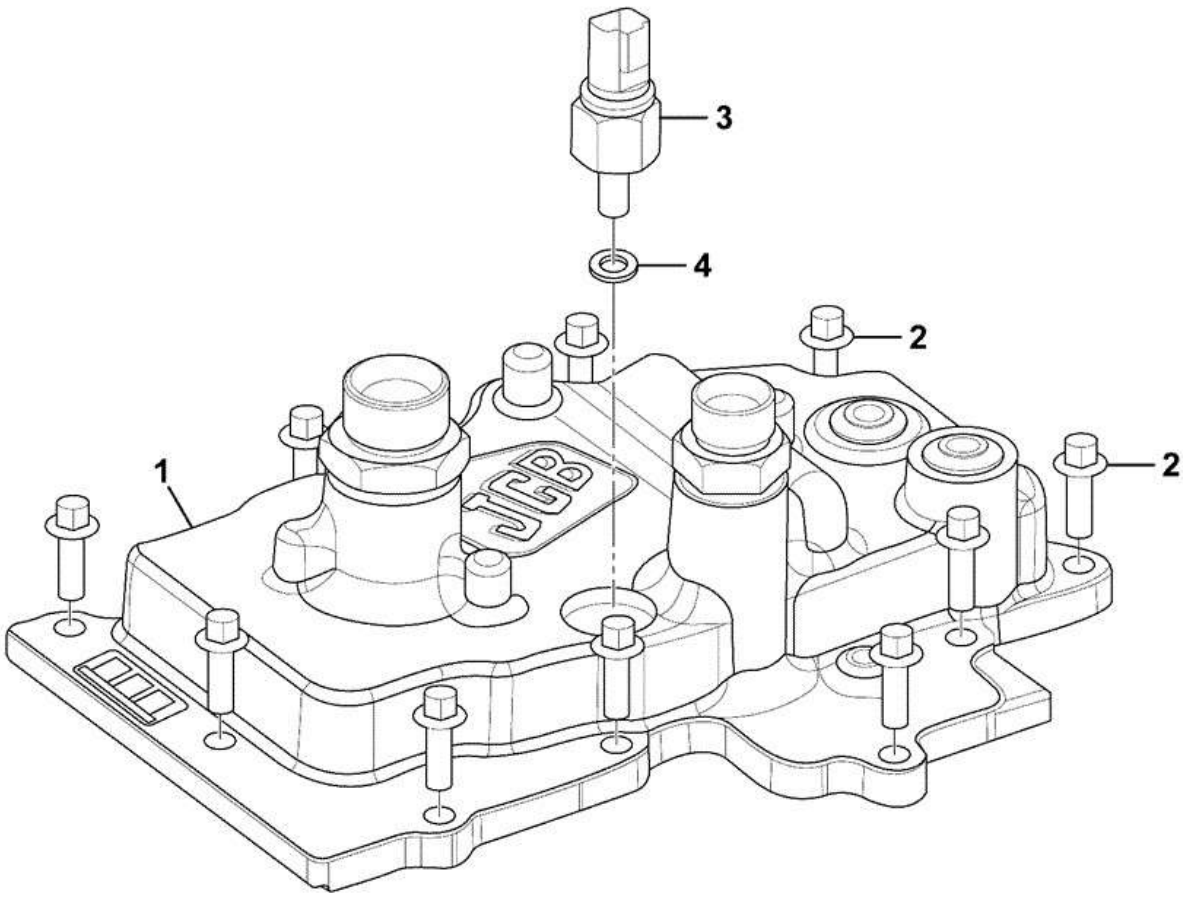

11-11200

Item	Part #	Change No	Description	Usage Code	QTY
1	320/04482		Cooler oil cover assembly 9 plate		1
2	1317/3307Z		Bolt flanged M8 x 25 Flange Reduced Hex		10
3	320/04046		Switch oil pressure		1

4	320/04057		Seal bonded		1

CONSTRUCTION \ NORTH AMERICA \ MISCELLANEOUS PRODUCTS \ JCB DIESELMAX ENGINES \ 320/40332 DIESELMAX ENGINE 9812/8000 \ W ENGINE SUB-ASSEMBLIES \ W00 ENGINE ASSEMBLIES

9812/8000 W0-33-17 OIL COOLER AND COVER PARTS 320/04482

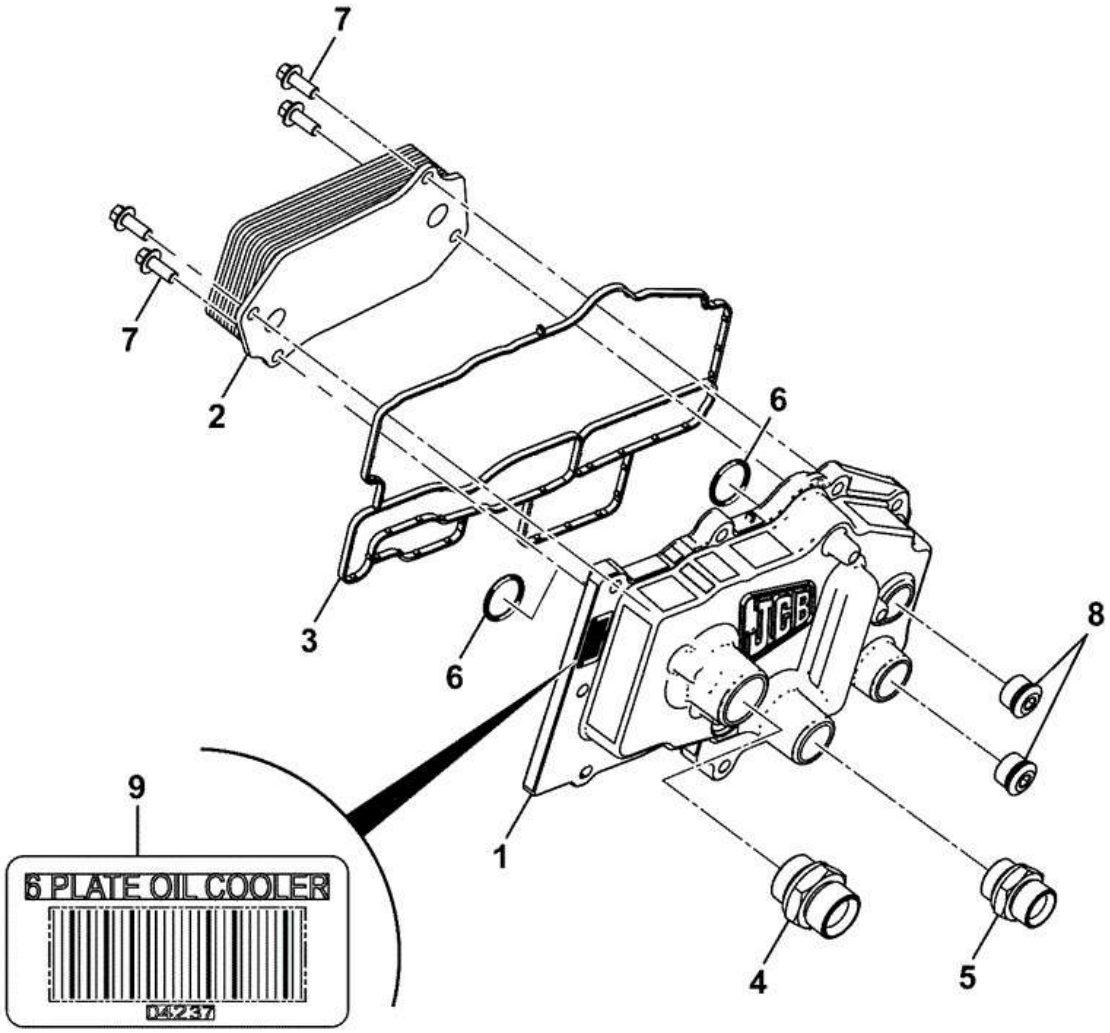

Item	Part #	Change No	Description	Usage Code	QTY
A	320/04482		Cooler oil cover assembly 9 plate		1

2	320/04660		Oil Cooler		1
3	320/04113		Gasket Oil Cooler Cover		1
4	320/04458		Adapter		1
5	320/04455		Adapter		1
6	320/04040		O Ring		2
7	1317/3305Z		Bolt Flanged M8 x 20 lg		4
8	320/04078		Plug M22 x 1.5 ZL		2

CONSTRUCTION \ NORTH AMERICA \ MISCELLANEOUS PRODUCTS \ JCB DIESELMAX ENGINES \ 320/40332 DIESELMAX ENGINE 9812/8000 \ W ENGINE SUB-ASSEMBLIES \ W00 ENGINE ASSEMBLIES

9812/8000 W0-40-1 WATER PUMP 320/20025

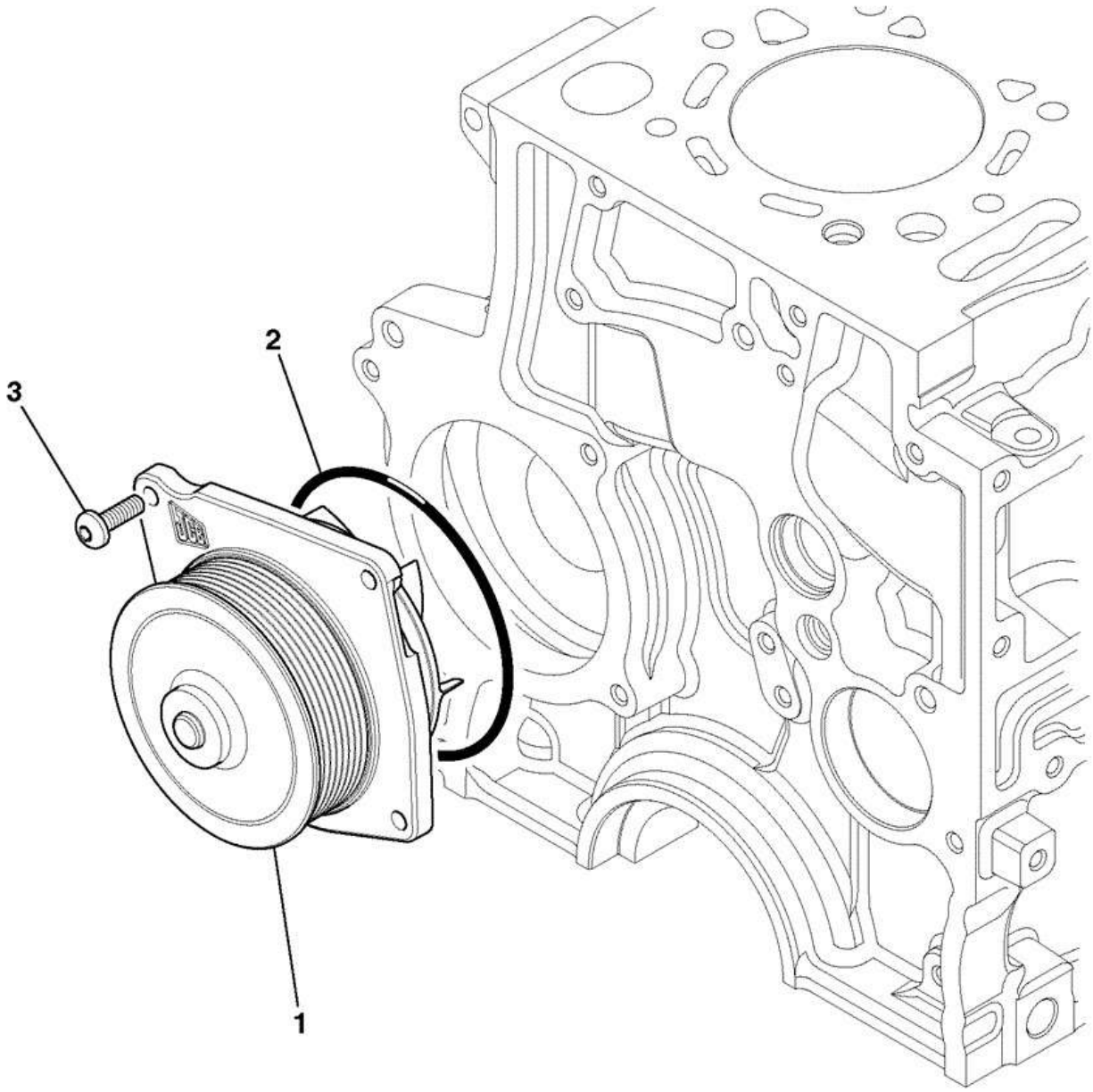

734450

Item	Part #	Change No	Description	Usage Code	QTY
1	320/04542		Pump water assembly		1
2	:320/04510		Gasket water pump		1
3	:320/04514		Screw pan head M8 x 25		4

CONSTRUCTION \ NORTH AMERICA \ MISCELLANEOUS PRODUCTS \ JCB DIESELMAX ENGINES \ 320/40332 DIESELMAX ENGINE 9812/8000 \ W ENGINE SUB-ASSEMBLIES \ W00 ENGINE ASSEMBLIES

9812/8000 W0-41-2 THERMOSTAT & HOUSING 320/200264

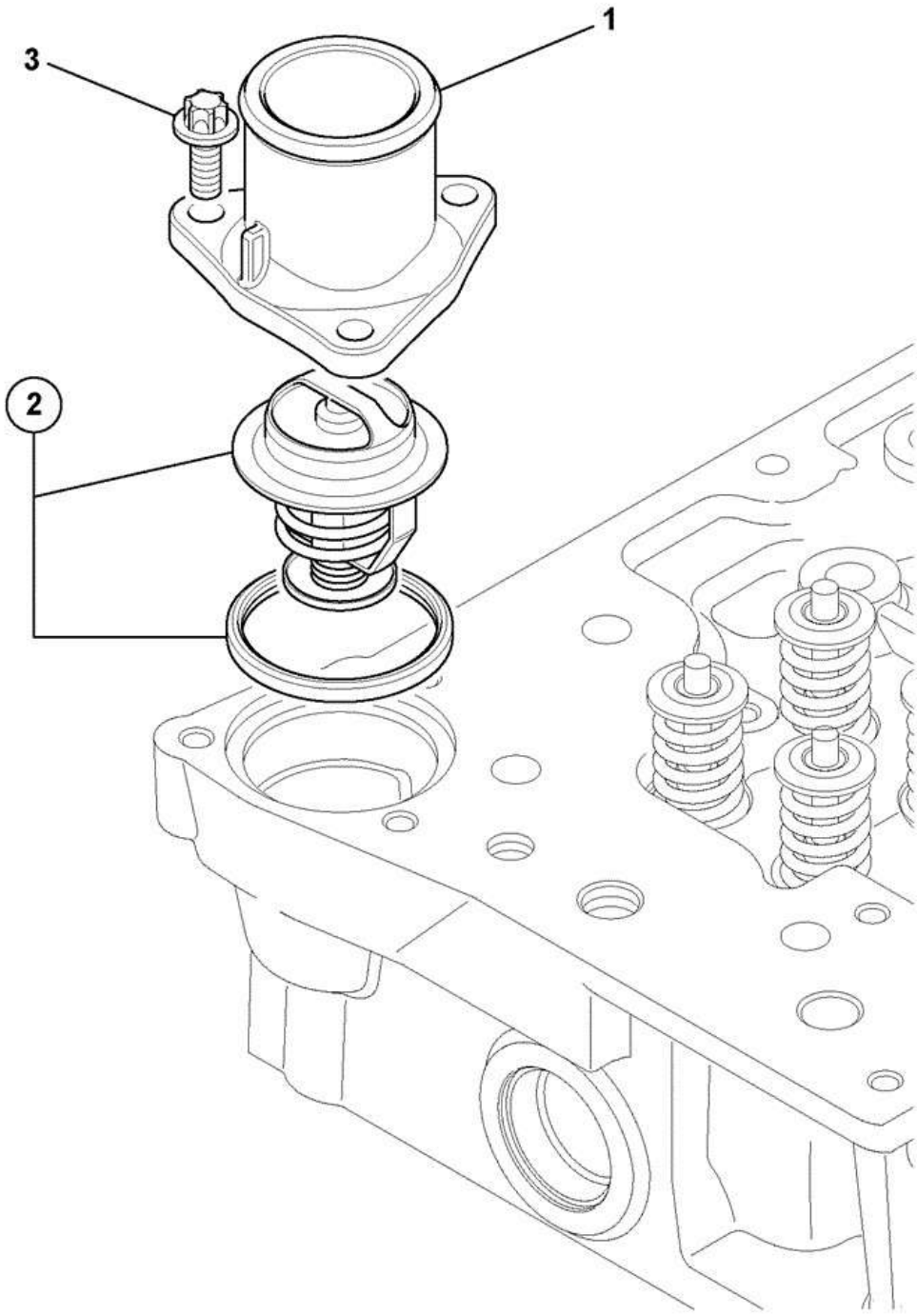

OOXV0011580
(734340)

Item	Part #	Change No	Description	Usage Code	QTY
1	320/04890		Thermostat Housing		1

2	320/04618		Thermostat ABI		1
3	1317/3307Z		Bolt flanged M8 x 25 Flange Reduced Hex		3

CONSTRUCTION \ NORTH AMERICA \ MISCELLANEOUS PRODUCTS \ JCB DIESELMAX ENGINES \ 320/40332 DIESELMAX ENGINE 9812/8000 \ W ENGINE SUB-ASSEMBLIES \ W00 ENGINE ASSEMBLIES

9812/8000 W0-42-2 WATER INLET 320/20027

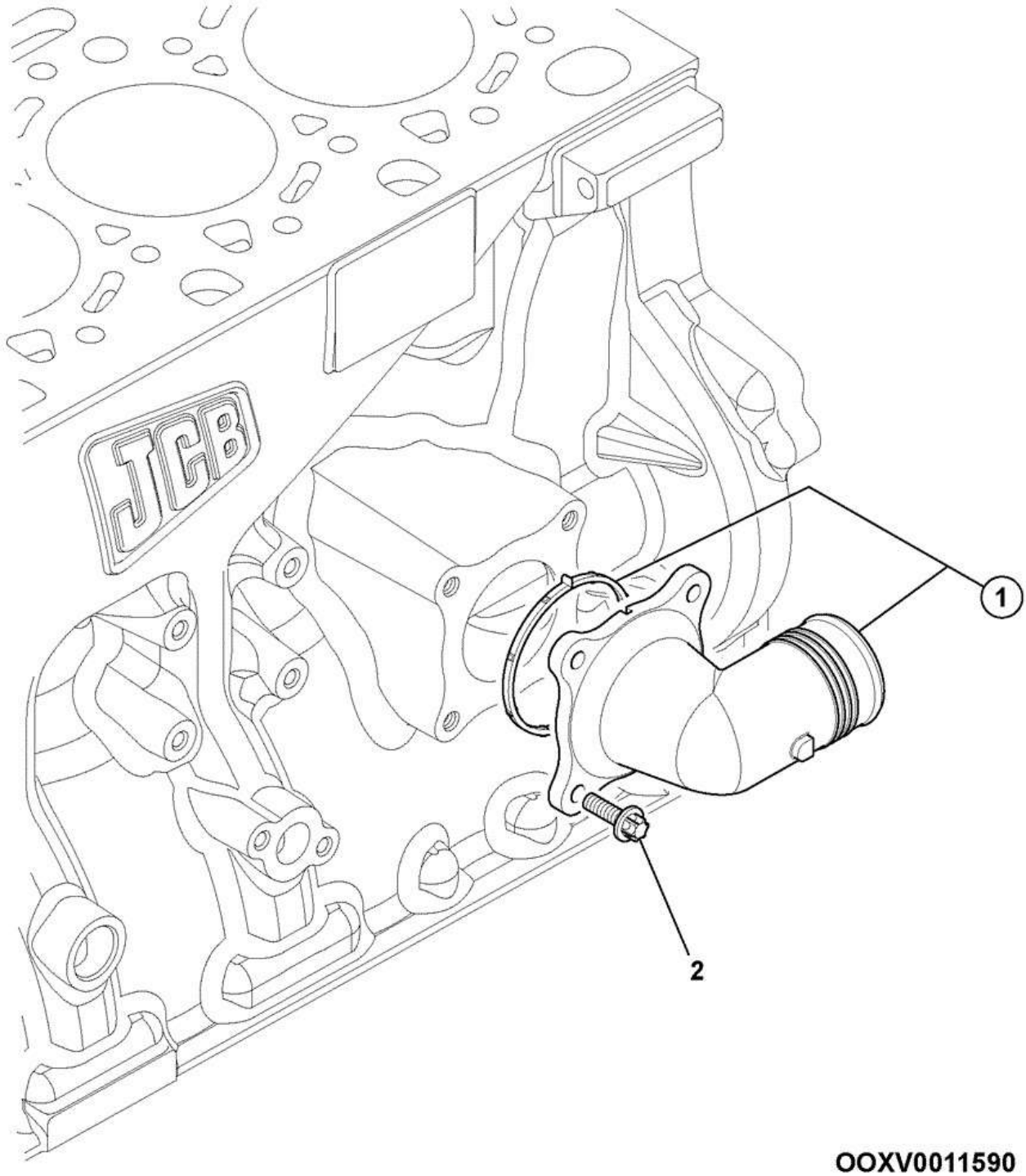

Item	Part #	Change No	Description	Usage Code	QTY
1	320/04547		Connector water inlet assembly		1
1A	:320/04501		Gasket water inlet pipe		1
2	1317/3305Z		Bolt Flanged M8 x 20 lg		4

CONSTRUCTION \ NORTH AMERICA \ MISCELLANEOUS PRODUCTS \ JCB DIESELMAX ENGINES \ 320/40332 DIESELMAX ENGINE 9812/8000 \ W ENGINE SUB-ASSEMBLIES \ W00 ENGINE ASSEMBLIES

9812/8000 W0-50-32 FUEL INJECTION PUMP 320/20204 1

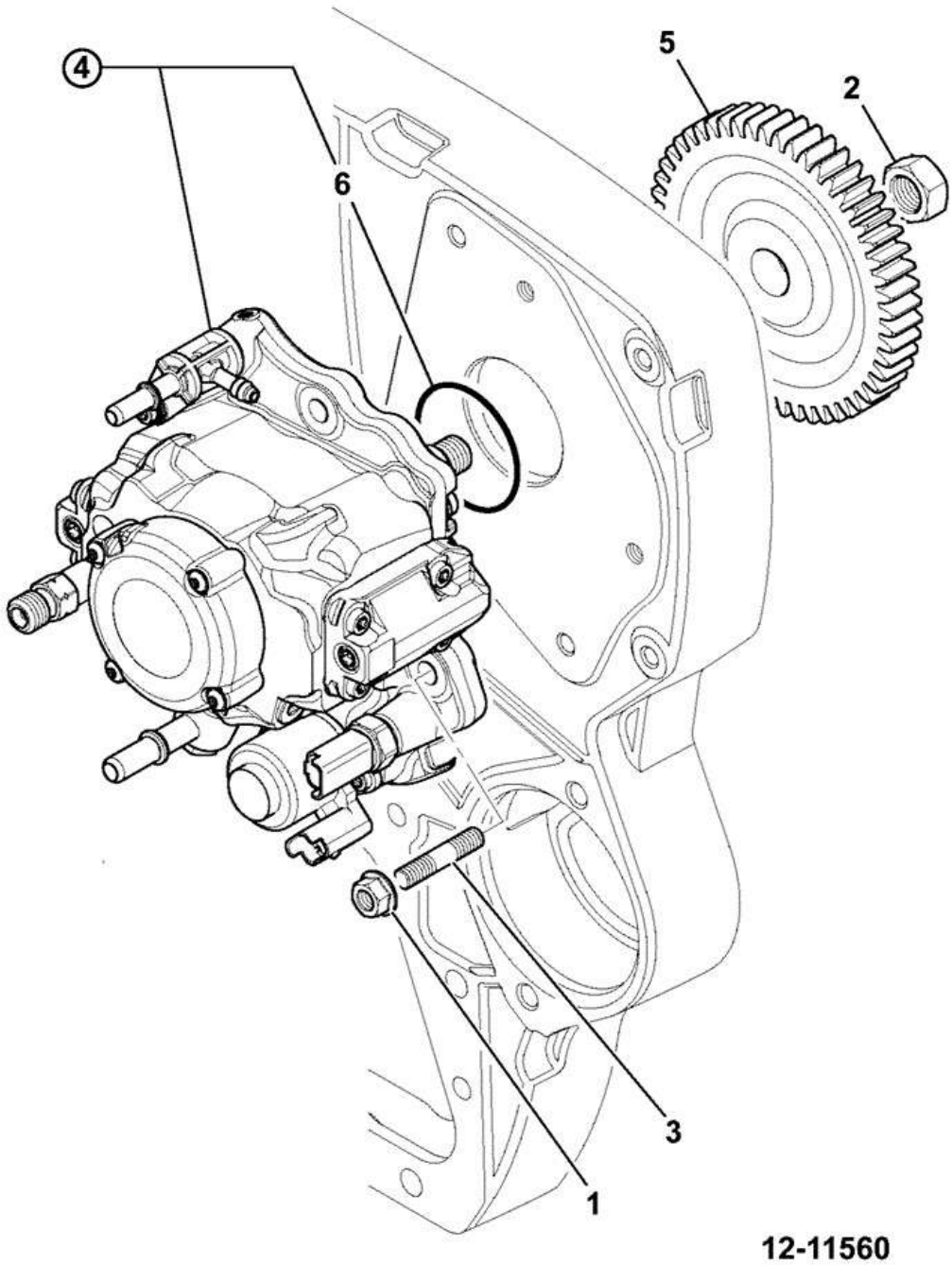

Item	Part #	Change No	Description	Usage Code	QTY
1	320/06564		Nut M8 Flange Head		3
2	320/06577		Nut M14 Fuel Injection Pump Gear		1
3	320/07063		Stud M8 X 1.25		3

4	320/06620		Pump injection (common rail) *Includes item 6*		1
5	320/06637		Gear injection pump 52T		1
6	320/06868		Seal o-ring 62.5X3 pump to case		1

CONSTRUCTION \ NORTH AMERICA \ MISCELLANEOUS PRODUCTS \ JCB DIESELMAX ENGINES \ 320/40332 DIESELMAX ENGINE 9812/8000 \ W ENGINE SUB-ASSEMBLIES \ W00 ENGINE ASSEMBLIES

9812/8000 W0-51-15 INJECTOR FUEL 320/20920/2

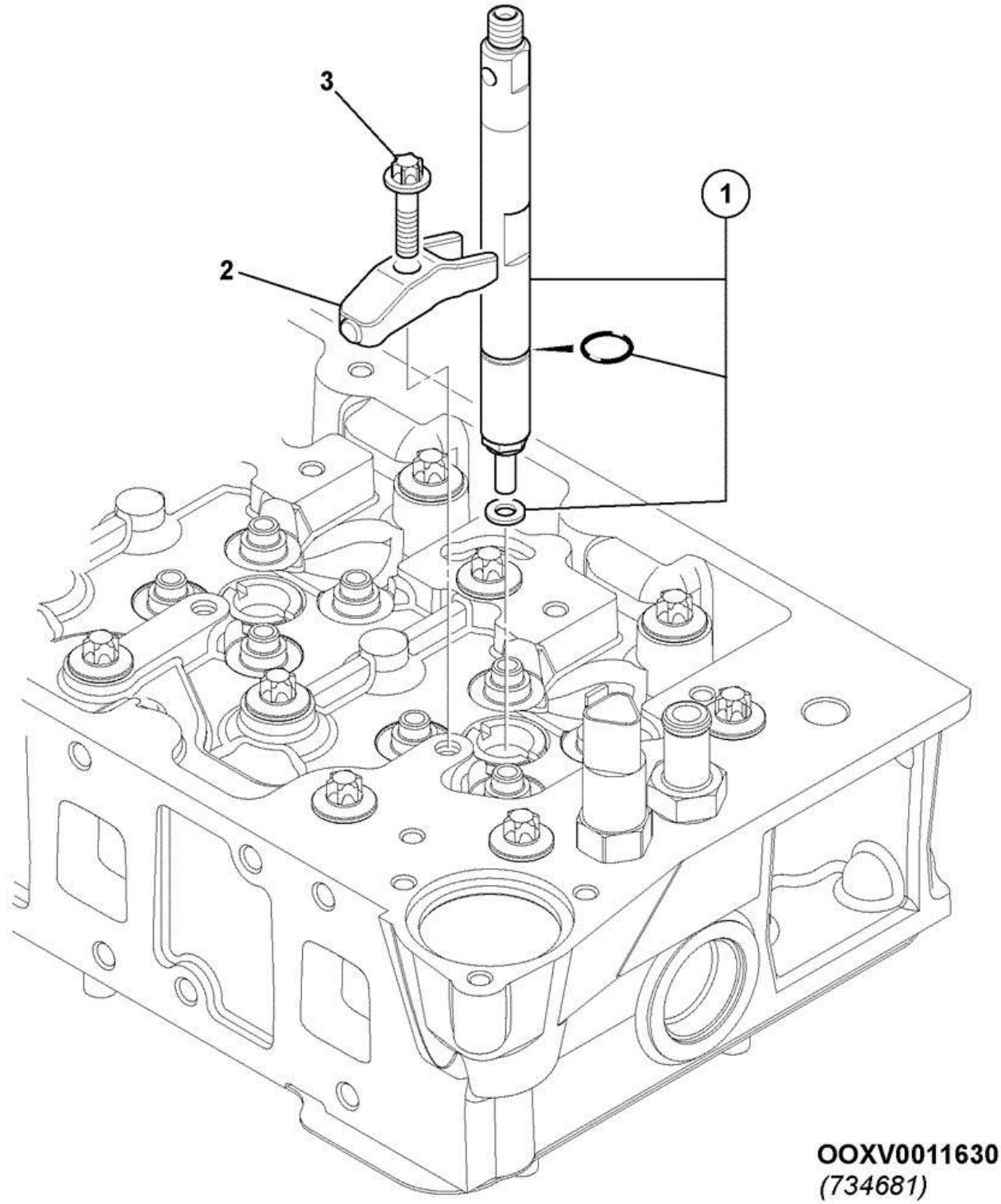

Item	Part #	Change No	Description	Usage Code	QTY
1	320/06833		Injector		1
2	320/02639		Clamp fuel injector		1
3	320/00891		Bolt injection clamp		1

CONSTRUCTION \ NORTH AMERICA \ MISCELLANEOUS PRODUCTS \ JCB DIESELMAX ENGINES \ 320/40332 DIESELMAX ENGINE 9812/8000 \ W ENGINE SUB-ASSEMBLIES \ W00 ENGINE ASSEMBLIES

9812/8000 W0-52-3 PIPEWORK FUEL INJECTION Common Rail 320/20207

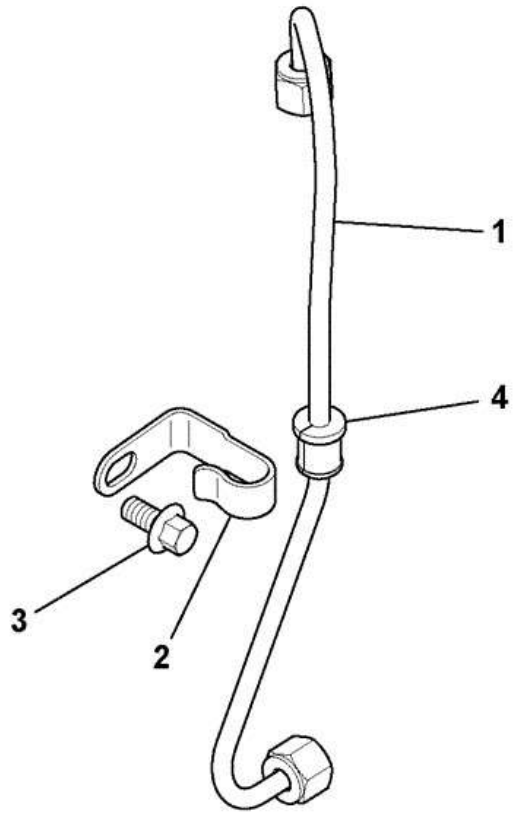

W00-10008-0-OOX

Item	Part #	Change No	Description	Usage Code	QTY
1	320/06682		Kit-fuel pipe HP		1

2	320/06681		Bracket HP pipe support		1
3	1317/3405Z		Bolt M10 X 20 Flange Reduced		1
4	320/06632		Grommet split		1

CONSTRUCTION \ NORTH AMERICA \ MISCELLANEOUS PRODUCTS \ JCB DIESELMAX ENGINES \ 320/40332 DIESELMAX ENGINE 9812/8000 \ W ENGINE SUB-ASSEMBLIES \ W00 ENGINE ASSEMBLIES

9812/8000 W0-52-13 PIPEWORK FUEL INJECTION Common Rail 320/06682

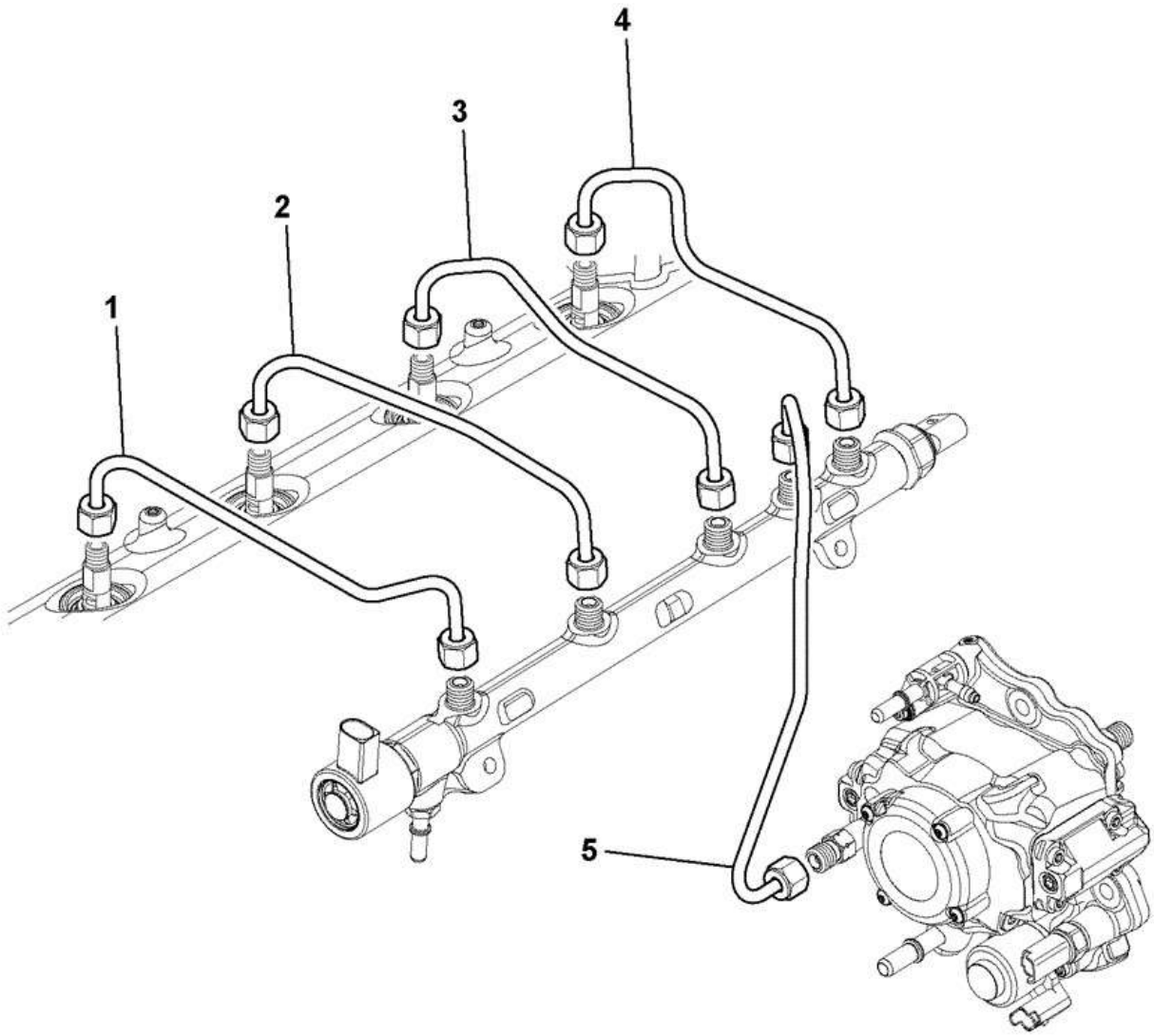

W00-10004-0-OOX

Item	Part #	Change No	Description	Usage Code	QTY
1	320/06676		Pipe fuel injector No.1		1

2	320/06677		Pipe fuel injector No.2		1
3	320/06678		Pipe fuel injector No.3		1
4	320/06679		Pipe fuel injector No.4		1
5	320/06680		Pipe HP fuel CR		1

CONSTRUCTION \ NORTH AMERICA \ MISCELLANEOUS PRODUCTS \ JCB DIESELMAX ENGINES \ 320/40332 DIESELMAX ENGINE 9812/8000 \ W ENGINE SUB-ASSEMBLIES \ W00 ENGINE ASSEMBLIES

9812/8000 W0-53-7 PIPE FUEL LOW PRESSURE 320/208952

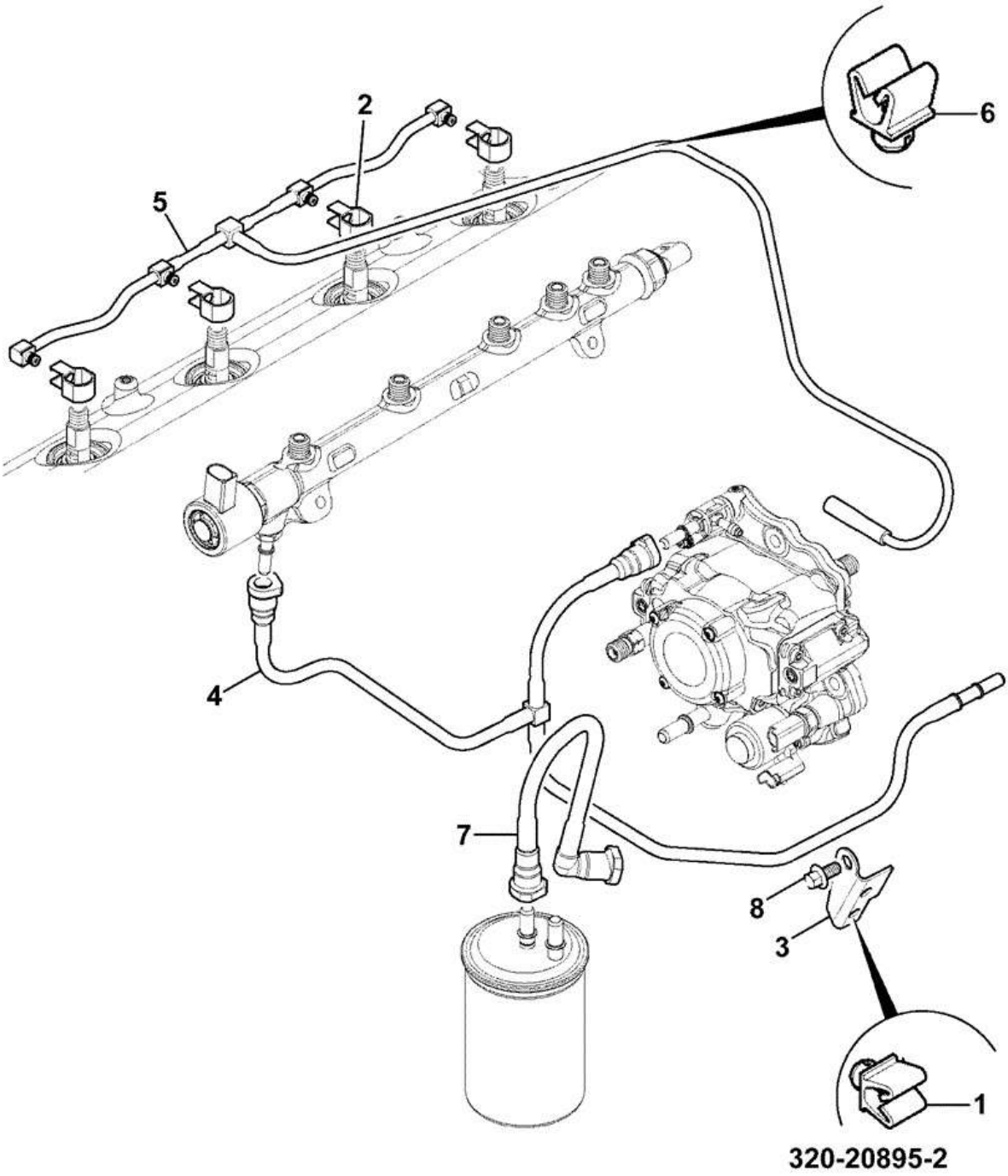

Item	Part #	Change No	Description	Usage Code	QTY
1	320/07121		Clip pipe 10mm		2

2	320/07189		Clip		4
3	320/07120		Bracket pipe clip mounting		1
4	320/07160		Pipe fuel dump assembly CR		1
5	320/07225		Pipe LP Leak Off		1
6	320/07055		Clip Pipe		2
7	320/07256		Pipe Assembly		1
8	1317/0303Z		Screw M8 x 16		1

9812/8000 W0-54-4 HEATER, COLD START ASSEMBLY 320/20031 2

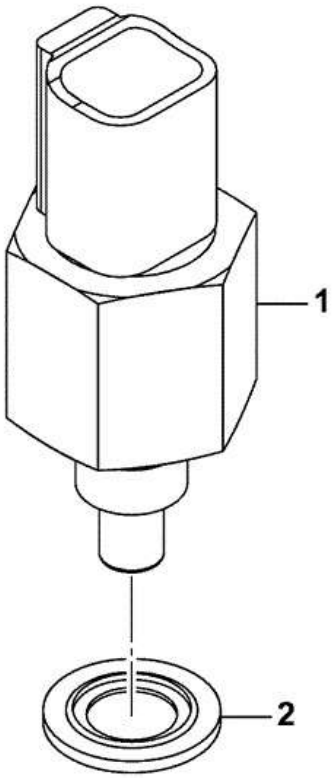

320-20031-2

Item	Part #	Change No	Description	Usage Code	QTY
1	320/04554		Switch cold start advance		1

2	320/04521		Seal Bonded		1

9812/8000 W0-54-5 FUEL RAIL 320/20206 2

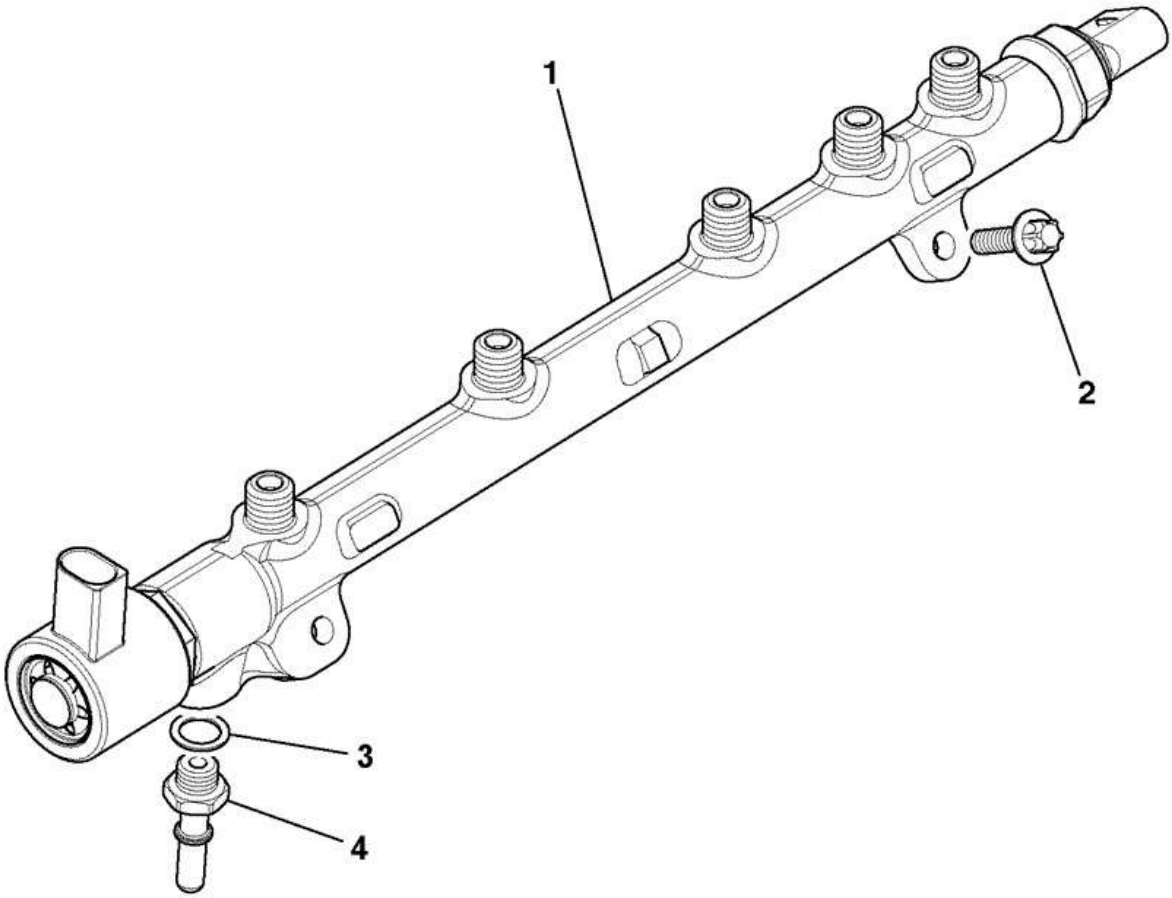

W00-10012-0-OOX
(877210)

Item	Part #	Change No	Description	Usage Code	QTY
1	320/06624		Rail fuel		1
2	826/11621		Setscrew M7 x 25 hex flange head		2
3	320/06688		Washer copper		1

4	320/06689		Connector fuel return		1

CONSTRUCTION \ NORTH AMERICA \ MISCELLANEOUS PRODUCTS \ JCB DIESELMAX ENGINES \ 320/40332 DIESELMAX ENGINE 9812/8000 \ W ENGINE SUB-ASSEMBLIES \ W00 ENGINE ASSEMBLIES

9812/8000 W0-70-3 TIMING CASE 320/20211 5

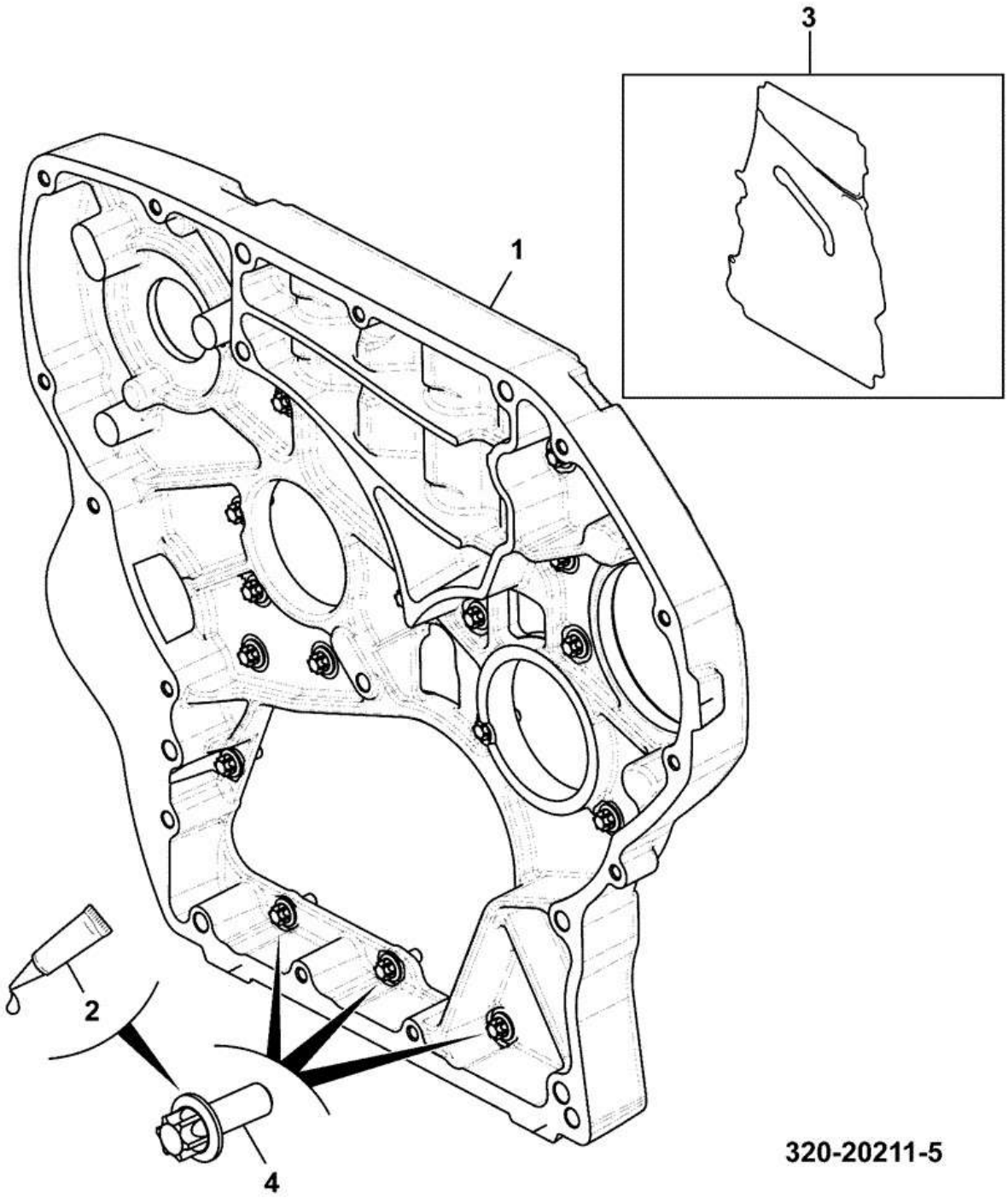

Item	Part #	Change No	Description	Usage Code	QTY
1	320/05279		Gear case		1
2	4102/4100		Adhesive Loctite 5182		0
3	****		Sealant Path - G/CAS		0

4	320/05125		Setscrew M8 x 20		19

CONSTRUCTION \ NORTH AMERICA \ MISCELLANEOUS PRODUCTS \ JCB DIESELMAX ENGINES \ 320/40332 DIESELMAX ENGINE 9812/8000 \ W ENGINE SUB-ASSEMBLIES \ W00 ENGINE ASSEMBLIES

9812/8000 W0-72-6 FLYWHEEL HOUSING 320/20212 3

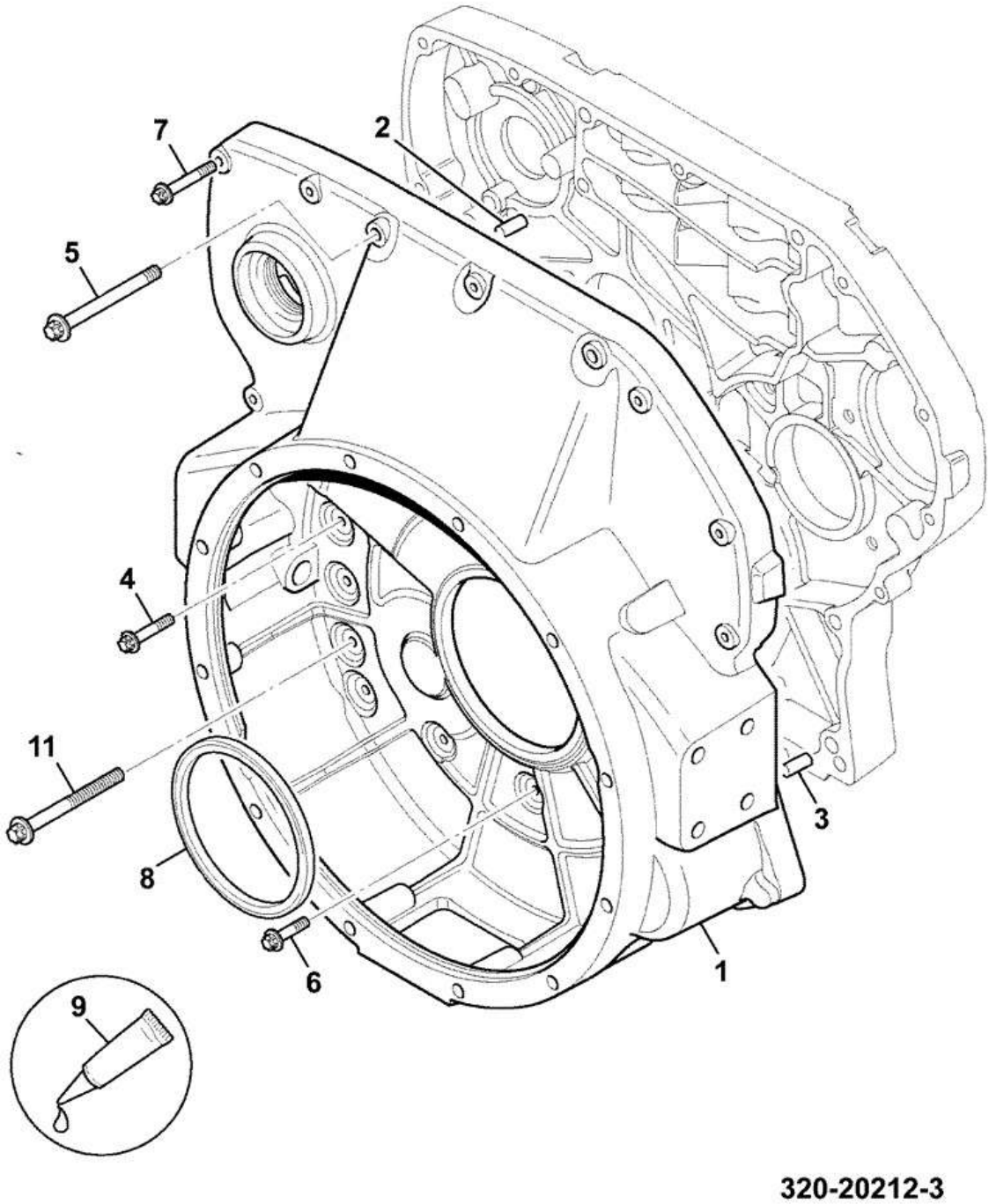

Item	Part #	Change No	Description	Usage Code	QTY
1	320/05277		Flywheel housing		1
2	320/01527		Dowel M10 x 25		1
3	320/01528		Dowel M12 x 25		1

4	1317/3416Z		Bolt M10 x 70 flange reduced hex		4
5	1317/3420Z		Bolt M10 x 100 flange reduced hex		2
6	1317/3307Z		Bolt flanged M8 x 25 Flange Reduced Hex		4
7	1317/3312Z		Bolt M8 x 50		8
8	320/03029		Seal rear oil		1
9	4102/4100		Adhesive Loctite 5182 *AS REQ.*		0
11	1317/3316Z		Bolt M8 x 70 flange reduced hex		1

CONSTRUCTION \ NORTH AMERICA \ MISCELLANEOUS PRODUCTS \ JCB DIESELMAX ENGINES \ 320/40332 DIESELMAX ENGINE 9812/8000 \ W ENGINE SUB-ASSEMBLIES \ W00 ENGINE ASSEMBLIES

9812/8000 W0-73-2 FLYWHEEL COVER PLATE 320/20064

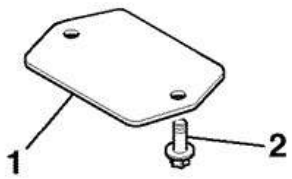

OOXV0011360

Item	Part #	Change No	Description	Usage Code	QTY
1	320/05021		Cover flywheel access		1
2	1317/3303Z		Bolt flanged M8 x 16 flange reduced		2

CONSTRUCTION \ NORTH AMERICA \ MISCELLANEOUS PRODUCTS \ JCB DIESELMAX ENGINES \ 320/40332 DIESELMAX ENGINE 9812/8000 \ W ENGINE SUB-ASSEMBLIES \ W00 ENGINE ASSEMBLIES

9812/8000 W0-75-34 FLYWHEEL ASSEMBLY 320/20993 1

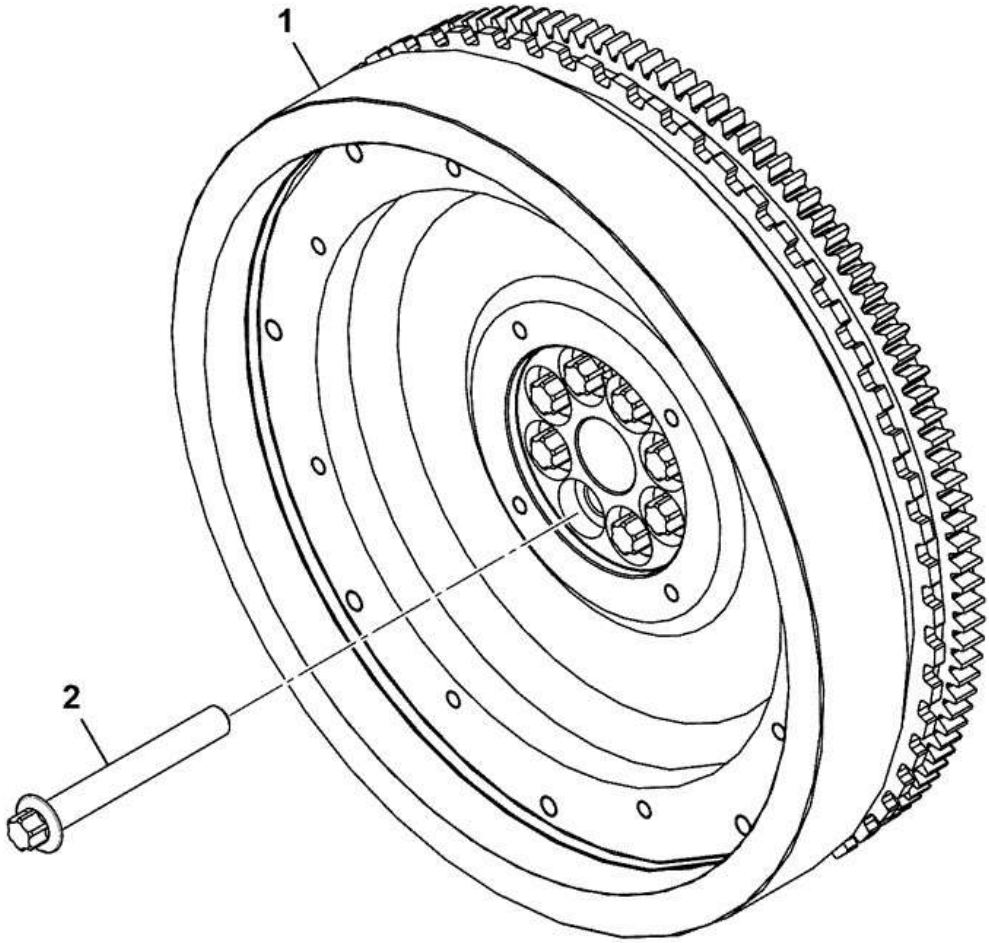

320-20993-1

Item	Part #	Change No	Description	Usage Code	QTY
1	320/03439		Flywheel assembly CR 11.5		1
2	320/03042		Bolt M14 x 108mm		8

CONSTRUCTION \ NORTH AMERICA \ MISCELLANEOUS PRODUCTS \ JCB DIESELMAX ENGINES \ 320/40332 DIESELMAX ENGINE 9812/8000 \ W ENGINE SUB-ASSEMBLIES \ W00 ENGINE ASSEMBLIES

9812/8000 W0-75-35 FLYWHEEL 320/03439 1

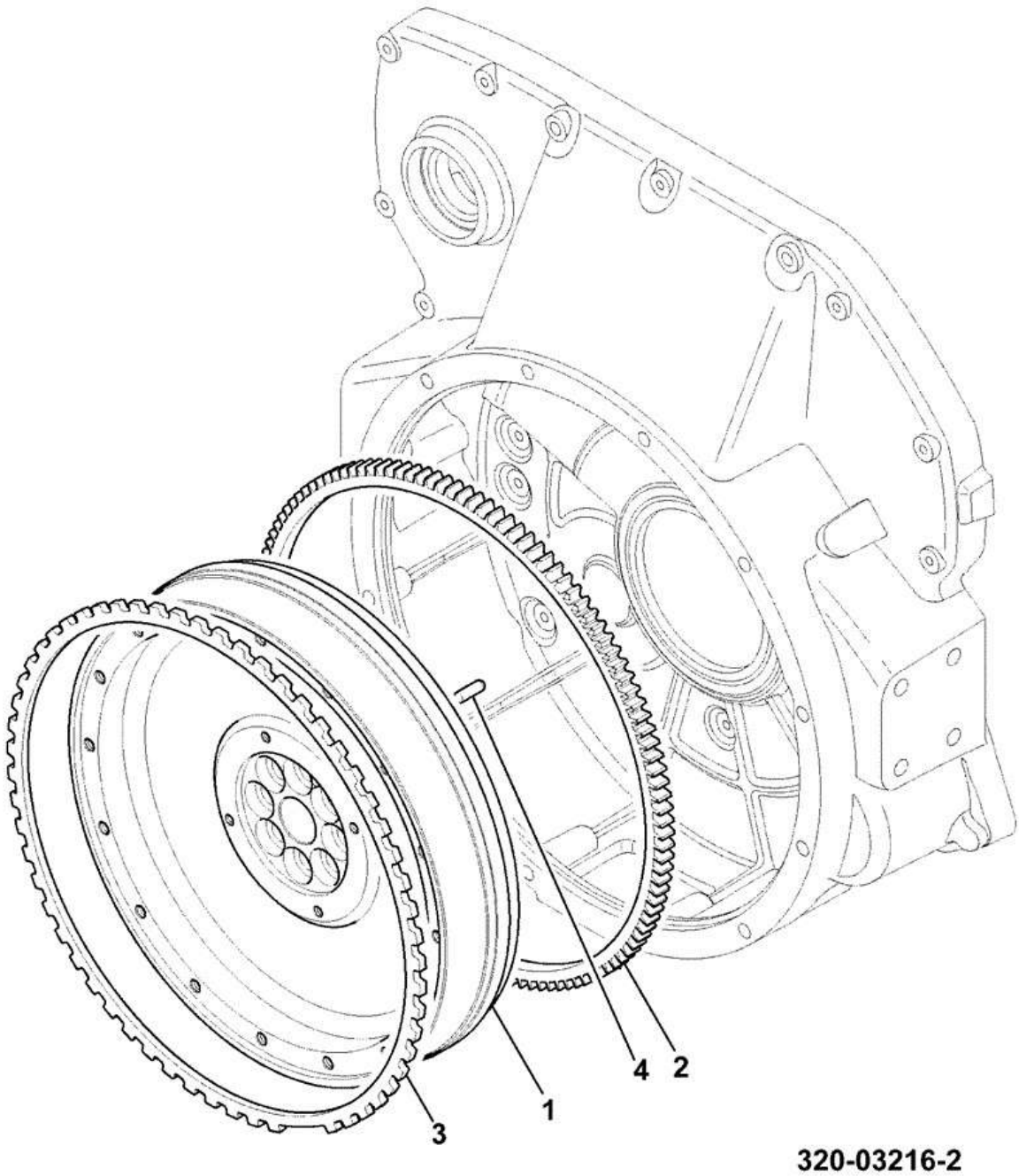

Item	Part #	Change No	Description	Usage Code	QTY
1	****		None serviced part		1
2	320/03102		Gear flywheel ring T=122		1
3	320/03202		Gear timing ring		1

4	826/10498		Dowel locating		1

CONSTRUCTION \ NORTH AMERICA \ MISCELLANEOUS PRODUCTS \ JCB DIESELMAX ENGINES \ 320/40332 DIESELMAX ENGINE 9812/8000 \ W ENGINE SUB-ASSEMBLIES \ W00 ENGINE ASSEMBLIES

9812/8000 W0-77-3 PLATE BLANKING KIT Injection Gear 320/20227

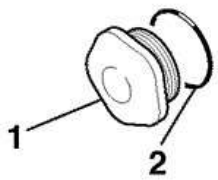

OOXV0011370

Item	Part #	Change No	Description	Usage Code	QTY
1	320/05183		Cover f.i.p gear		1

2	320/05140		O Ring		1

CONSTRUCTION \ NORTH AMERICA \ MISCELLANEOUS PRODUCTS \ JCB DIESELMAX ENGINES \ 320/40332 DIESELMAX ENGINE 9812/8000 \ W ENGINE SUB-ASSEMBLIES \ W00 ENGINE ASSEMBLIES

9812/8000 W0-80-1 BLANKING KIT IDLER BLANKING 320/20058



OOXV0011330

Item	Part #	Change No	Description	Usage Code	QTY
1	320/05136		Plug idler gear blanking M8 x 18		1

9812/8000 W0-81-2 PTO BLANKING KIT SAE B 320/20061 4

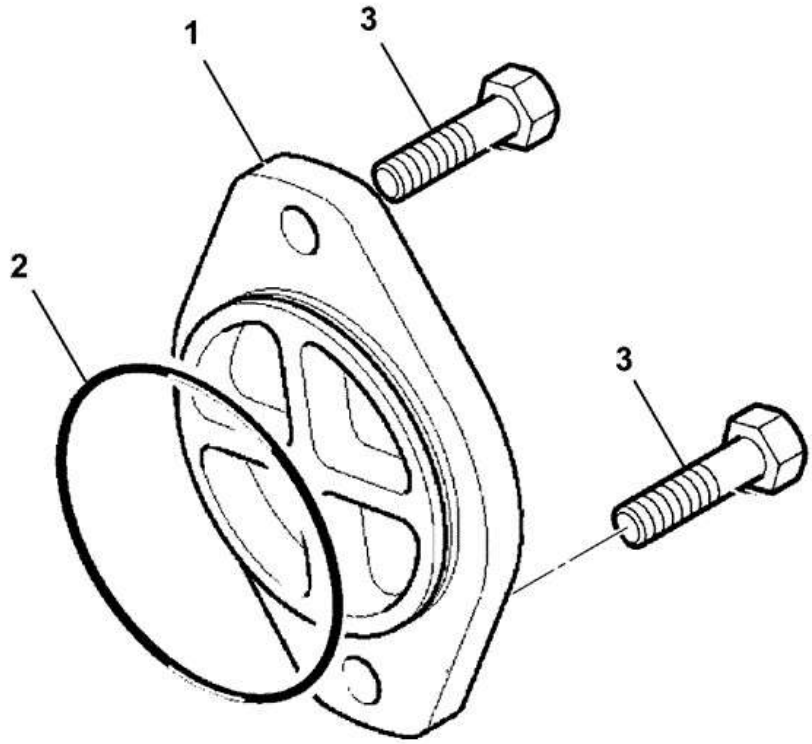

320-20060-3

Item	Part #	Change No	Description	Usage Code	QTY
1	320/08014		Plate PTO Blanking		1
2	320/08007		O Ring		1
3	1317/3507Z		Bolt M12 X 25mm reduce flange hex		2

Product Catalog \ CONSTRUCTION \ NORTH AMERICA \ MISCELLANEOUS PRODUCTS \ JCB DIESELMAX ENGINES \ 320/40332 DIESELMAX ENGINE 9812/8000 \ W ENGINE SUB-ASSEMBLIES \ W00 ENGINE ASSEMBLIES

9812/8000 W0-90-2 AUTOTENSIONER 320/20046/3

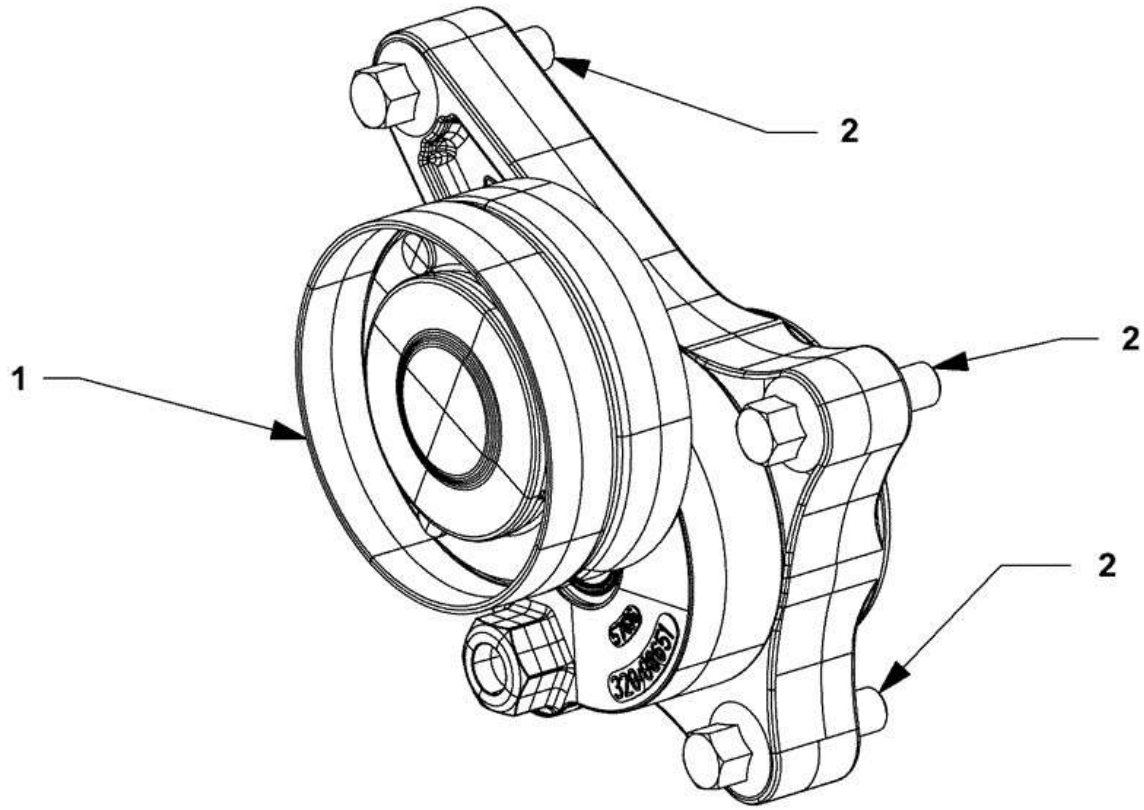

320-20046-3

Item	Part #	Change No	Description	Usage Code	QTY
1	320/08651		Adjuster Autotensioner		1
2	1317/3308Z		Bolt M8 x 30 flange reduced hex		3

Product Catalog \ CONSTRUCTION \ NORTH AMERICA \ MISCELLANEOUS PRODUCTS \ JCB DIESELMAX ENGINES \ 320/40332 DIESELMAX ENGINE 9812/8000 \ W ENGINE SUB-ASSEMBLIES \ W00 ENGINE ASSEMBLIES

9812/8000 W0-91-4 . ALTERNATOR 24V 55A 320/20892

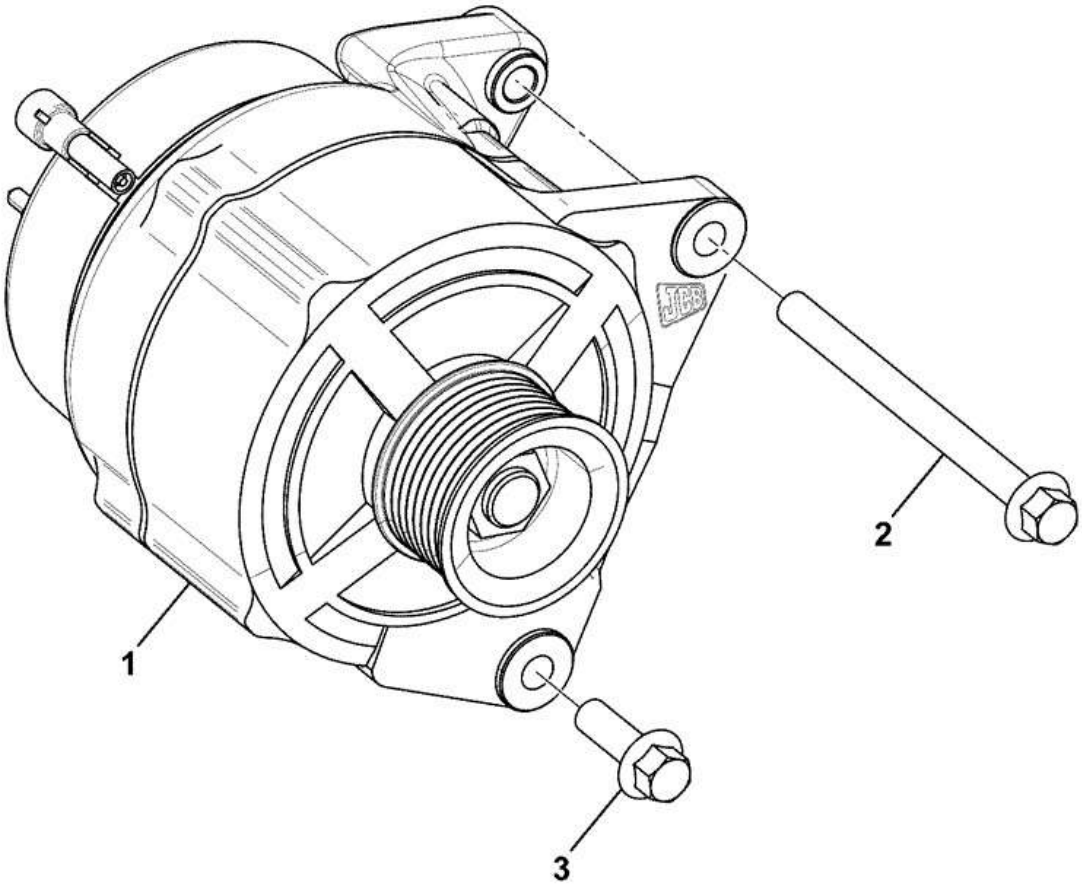

320-20892-1

Item	Part #	Change No	Description	Usage Code	QTY
1	320/08678		Alternator 24V 55A		1
2	1317/3422Z		Bolt M10 x 120 Flange R0educed Hex		1
3	1317/3408Z		Bolt M10 x 30 Flange Reduced		1

9812/8000 W1-0-3 LIFTING BRACKETS 320/20251 4

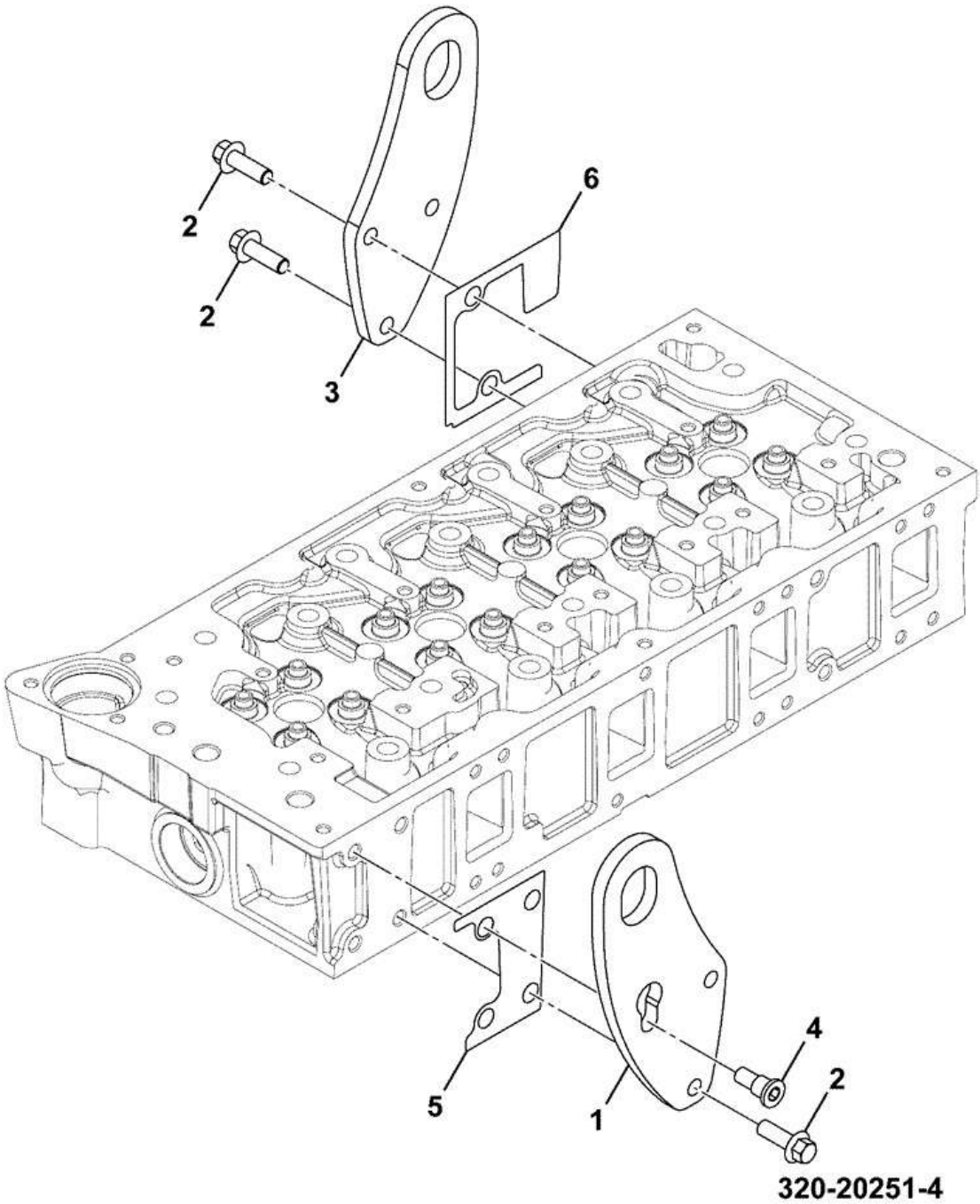

Item	Part #	Change No	Description	Usage Code	QTY
1	320/09019		Bracket engine lifting		1
2	1317/3408Z		Bolt M10 x 30 Flange Reduced		3
3	320/09020		Bracket engine lifting		1

4	826/11609		Bolt shoulder M10		1
5	320/09039		Label front lifting eye		1
6	320/09040		Label rear lifting eye		1

CONSTRUCTION \ NORTH AMERICA \ MISCELLANEOUS PRODUCTS \ JCB DIESELMAX ENGINES \ 320/40332 DIESELMAX ENGINE 9812/8000 \ W ENGINE SUB-ASSEMBLIES \ W01 ENGINE ASSEMBLIES

9812/8000 W1-1-1 STARTER MOTOR 24V 320/20053

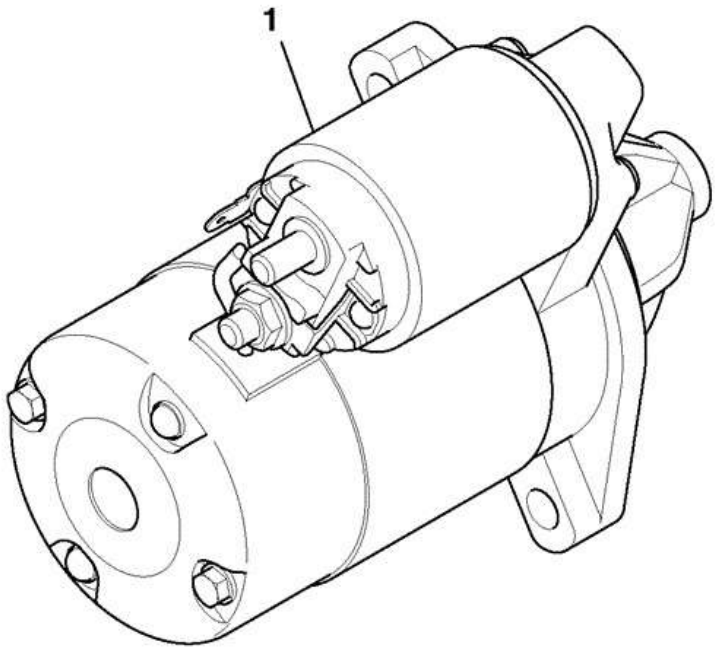

788520

Item	Part #	Change No	Description	Usage Code	QTY
1	320/09347		Motor Starter 24v FR		1
2	1317/3408Z		Bolt M10 x 30 Flange Reduced		3

CONSTRUCTION \ NORTH AMERICA \ MISCELLANEOUS PRODUCTS \ JCB DIESELMAX ENGINES \ 320/40332 DIESELMAX ENGINE 9812/8000 \ W ENGINE SUB-ASSEMBLIES \ W01 ENGINE ASSEMBLIES

9812/8000 W1-7-3 COVERS FUEL INJECTION 320/20216

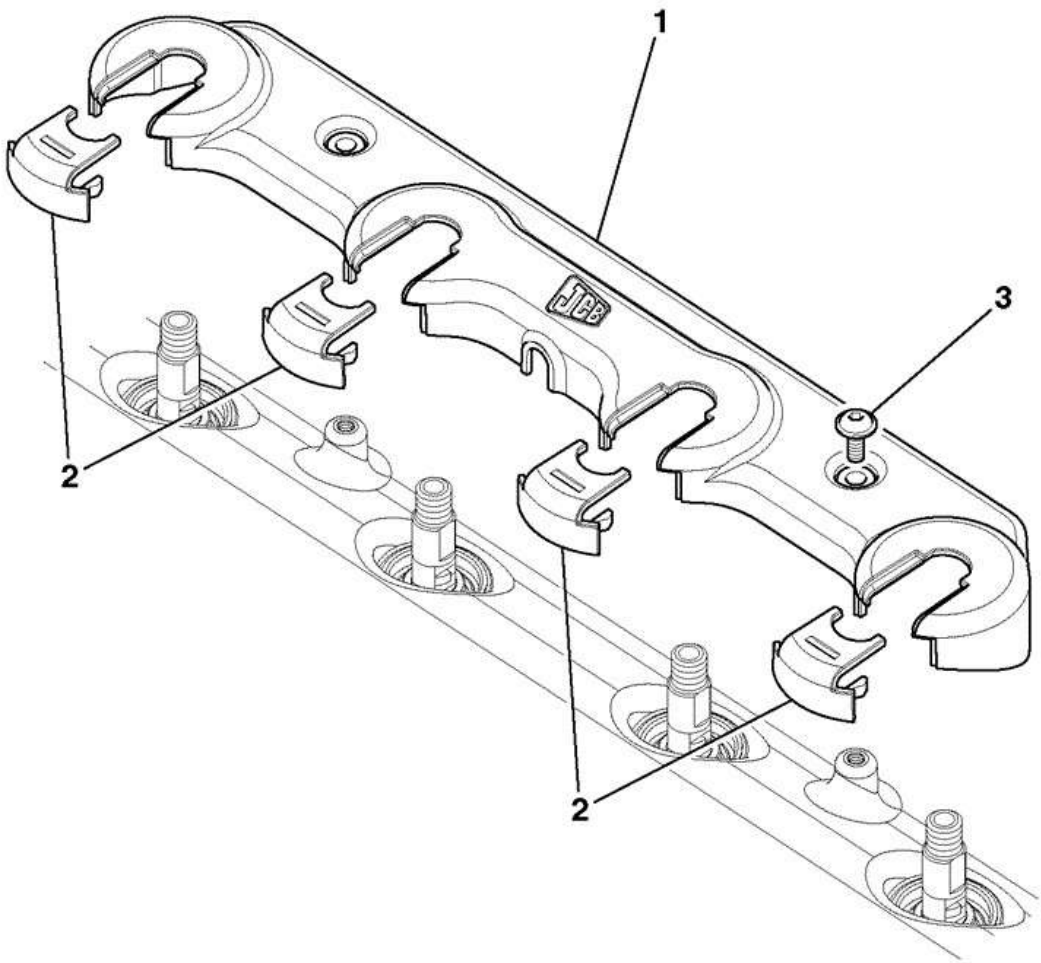

931660

Item	Part #	Change No	Description	Usage Code	QTY
1	320/07731		Cover fuel injector		1
2	320/07629		Insert injector seal cover CR		4
3	826/01559		Flange Button Head Socket		2

CONSTRUCTION \ NORTH AMERICA \ MISCELLANEOUS PRODUCTS \ JCB DIESELMAX ENGINES \ 320/40332 DIESELMAX ENGINE 9812/8000 \ W ENGINE SUB-ASSEMBLIES \ W01 ENGINE ASSEMBLIES

9812/8000 W1-9-3 ECU UNIT 320/20244

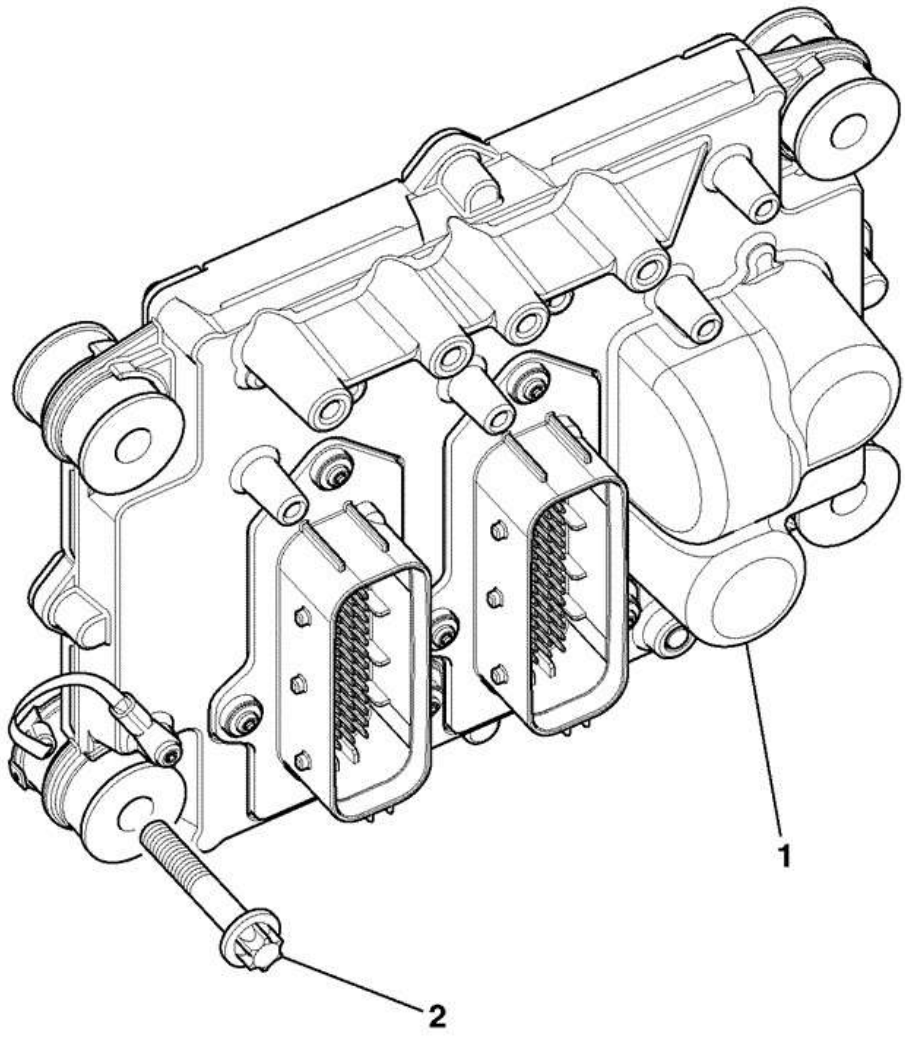

877280

Item	Part #	Change No	Description	Usage Code	QTY
1	320/09582		Controller ECU 120kW		1
2	1317/3311Z		Bolt Flanged Hex (M8 x 45)		4

CONSTRUCTION \ NORTH AMERICA \ MISCELLANEOUS PRODUCTS \ JCB DIESELMAX ENGINES \ 320/40332 DIESELMAX ENGINE 9812/8000 \ W ENGINE SUB-ASSEMBLIES \ W01 ENGINE ASSEMBLIES

9812/8000 W1-9-4 ECU 129kw 320/09754R

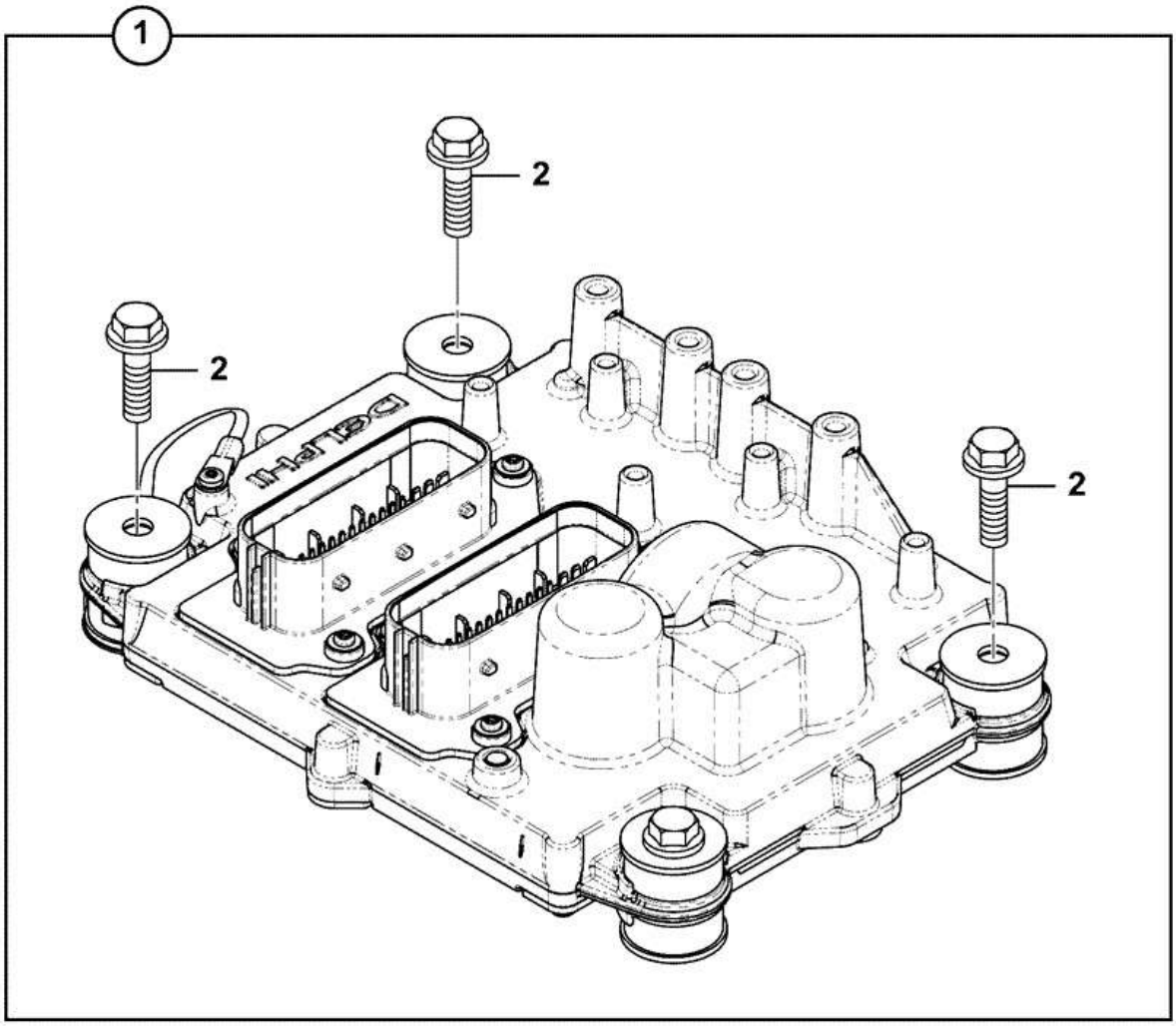

320-09754-1

Item	Part #	Change No	Description	Usage Code	QTY
1	320/09754R		Computer ECU with software		1
2	1317/3311Z		Bolt Flanged Hex (M8 x 45)		4

CONSTRUCTION \ NORTH AMERICA \ MISCELLANEOUS PRODUCTS \ JCB DIESELMAX ENGINES \ 320/40332 DIESELMAX ENGINE 9812/8000 \ W ENGINE SUB-ASSEMBLIES \ W01 ENGINE ASSEMBLIES

9812/8000 W1-10-2 HARNESS ENGINE 320/21096 1

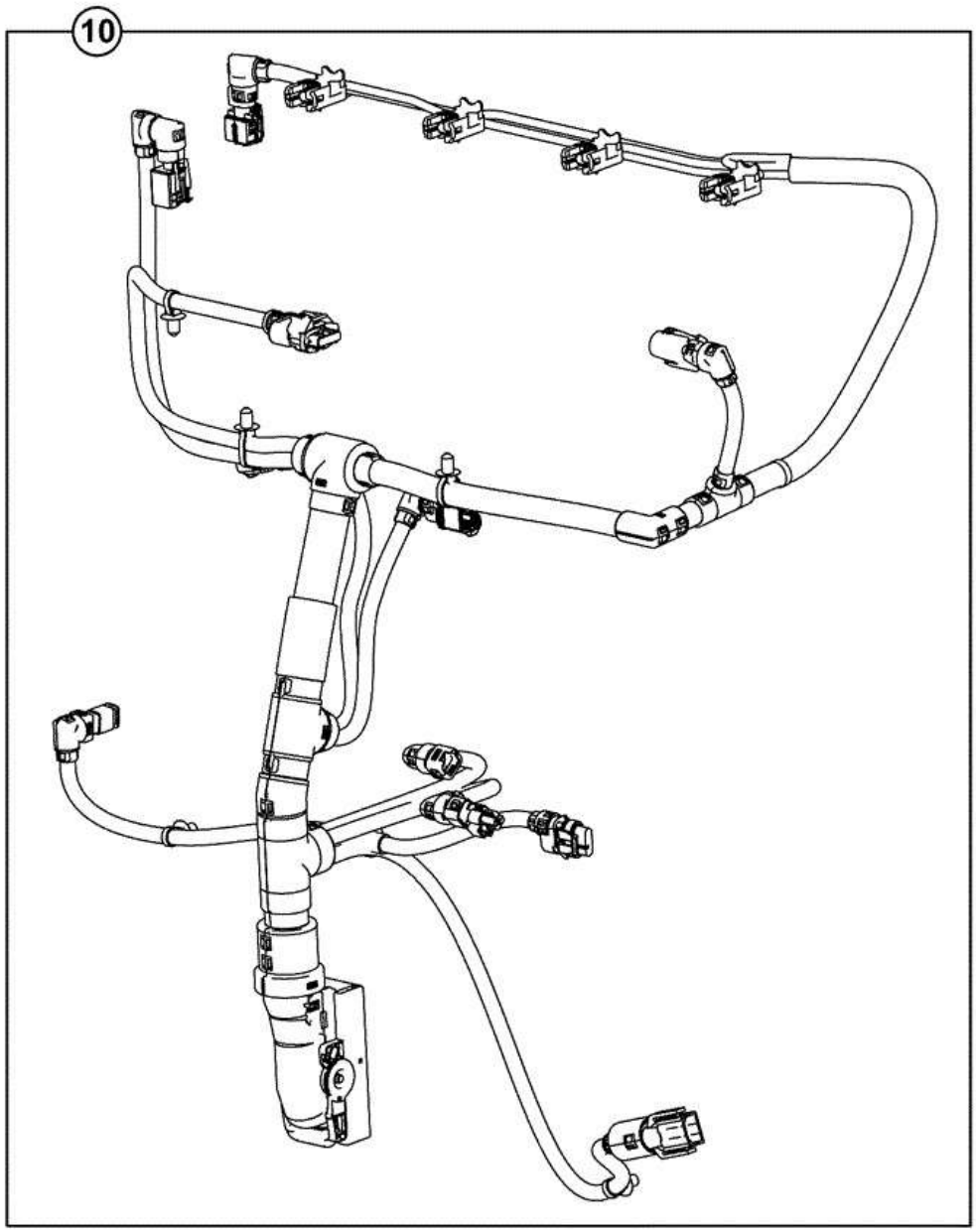

320-21096-1

Item	Part #	Change No	Description	Usage Code	QTY
10	320/09727		Harness engineT3 CR		1

CONSTRUCTION \ NORTH AMERICA \ MISCELLANEOUS PRODUCTS \ JCB DIESELMAX ENGINES \ 320/40332 DIESELMAX ENGINE 9812/8000 \ W ENGINE SUB-ASSEMBLIES \ W01 ENGINE ASSEMBLIES

9812/8000 W1-11-3 SENSORS 320/20219 4

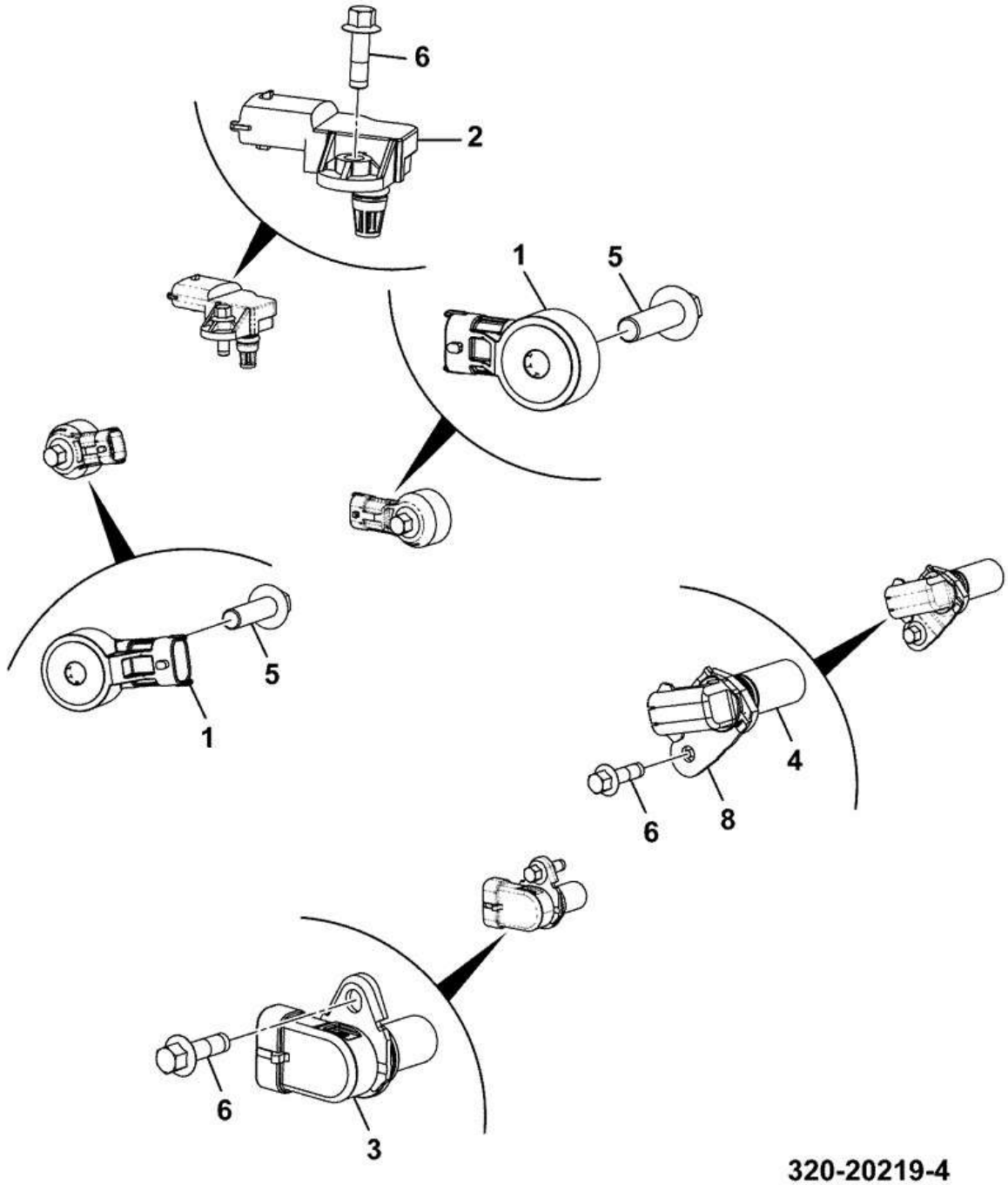

Item	Part #	Change No	Description	Usage Code	QTY
1	320/09514		Sensor accelerometer		2
2	320/05558		Sensor tamp		1
3	320/09524		Sensor camshaft position		1

4	320/09522		Sensor VR crankshaft		1
5	1317/3308Z		Bolt M8 x 30 flange reduced hex		2
6	332/C3960		Screw M6 x 20 flange head		3
8	320/09565		Plate sensor clamping		1

CONSTRUCTION \ NORTH AMERICA \ MISCELLANEOUS PRODUCTS \ JCB DIESELMAX ENGINES \ 320/40332 DIESELMAX ENGINE 9812/8000 \ W ENGINE SUB-ASSEMBLIES \ W01 ENGINE ASSEMBLIES

9812/8000 W1-12-4 DIPSTICK 320/20872 3

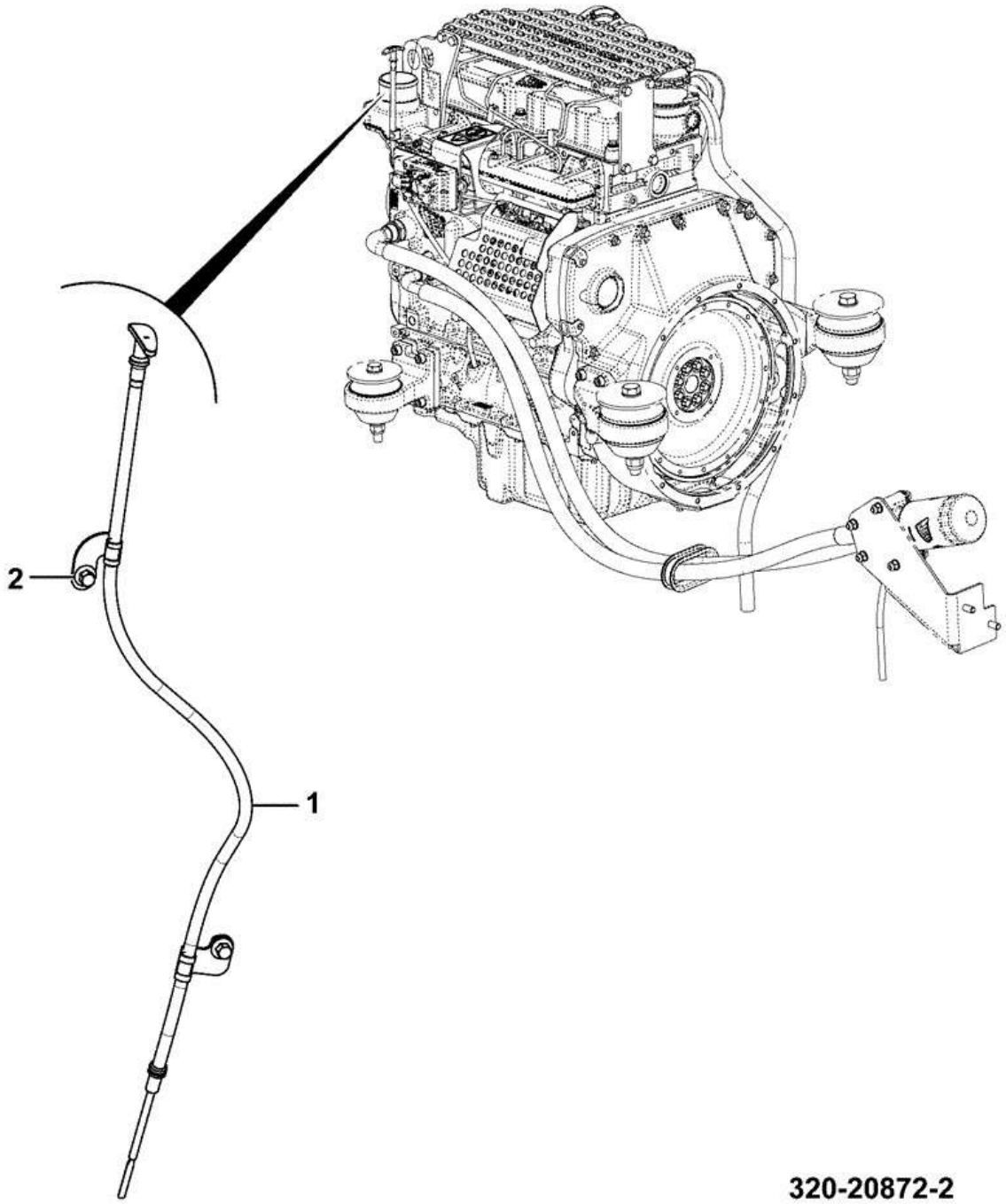

Item	Part #	Change No	Description	Usage Code	QTY
1	320/07958		Dipstick ABI		1
2	1317/3303Z		Bolt flanged M8 x 16 flange reduced		2

CONSTRUCTION \ NORTH AMERICA \ MISCELLANEOUS PRODUCTS \ JCB DIESELMAX ENGINES \ 320/40332 DIESELMAX ENGINE 9812/8000 \ W ENGINE SUB-ASSEMBLIES \ W01 ENGINE ASSEMBLIES

9812/8000 W1-12-5 DIPSTICK ASSEMBLY 320/07958 1

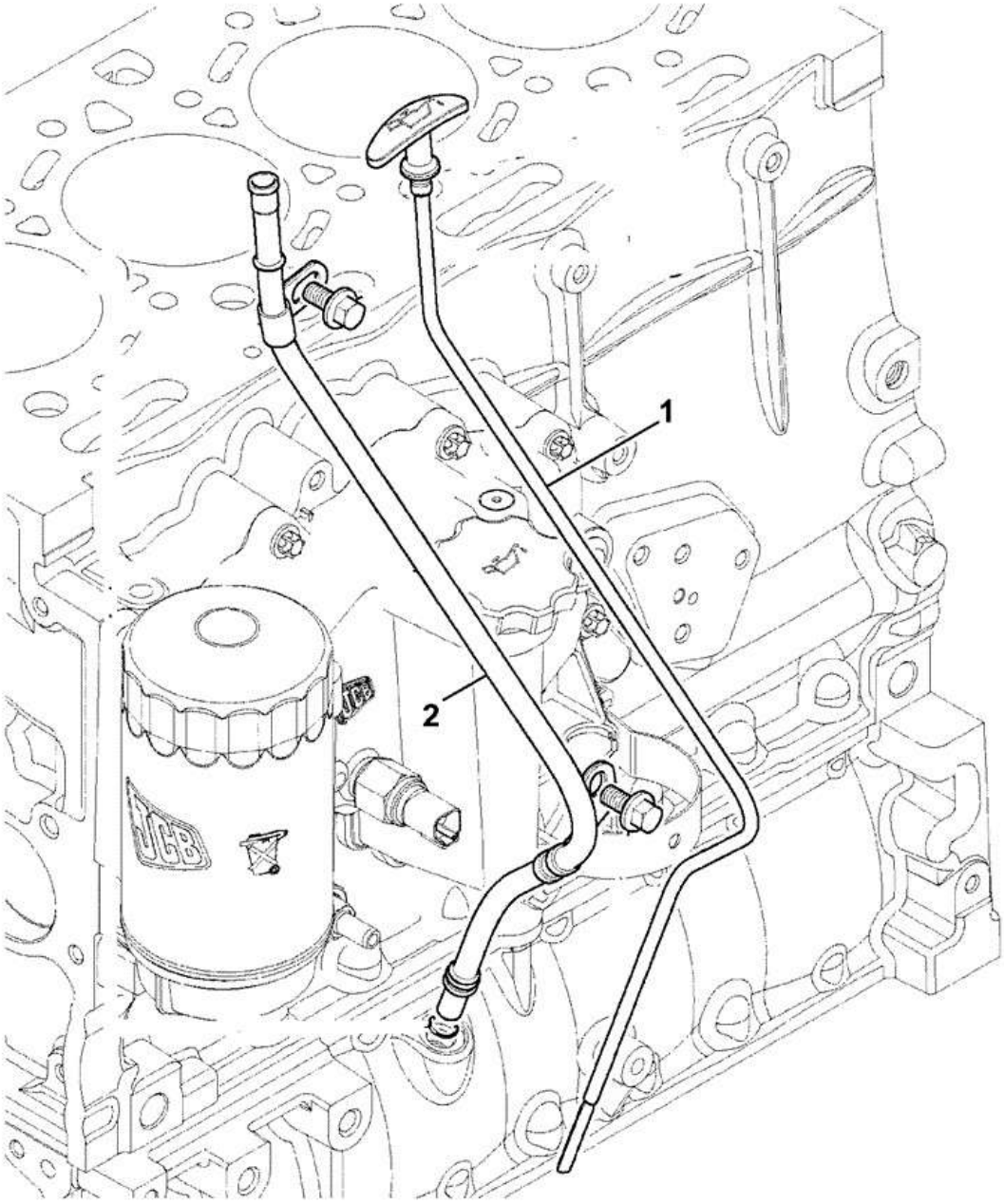

320-04487-2

Item	Part #	Change No	Description	Usage Code	QTY
1	320/07956		Blade assy		1
2	320/04485		Tube Assembly 644mm		1

CONSTRUCTION \ NORTH AMERICA \ MISCELLANEOUS PRODUCTS \ JCB DIESELMAX ENGINES \ 320/40332 DIESELMAX ENGINE 9812/8000 \ W ENGINE SUB-ASSEMBLIES \ W01 ENGINE ASSEMBLIES

9812/8000 W1-99-96 BLOCK HEATER OPTIONAL 120V

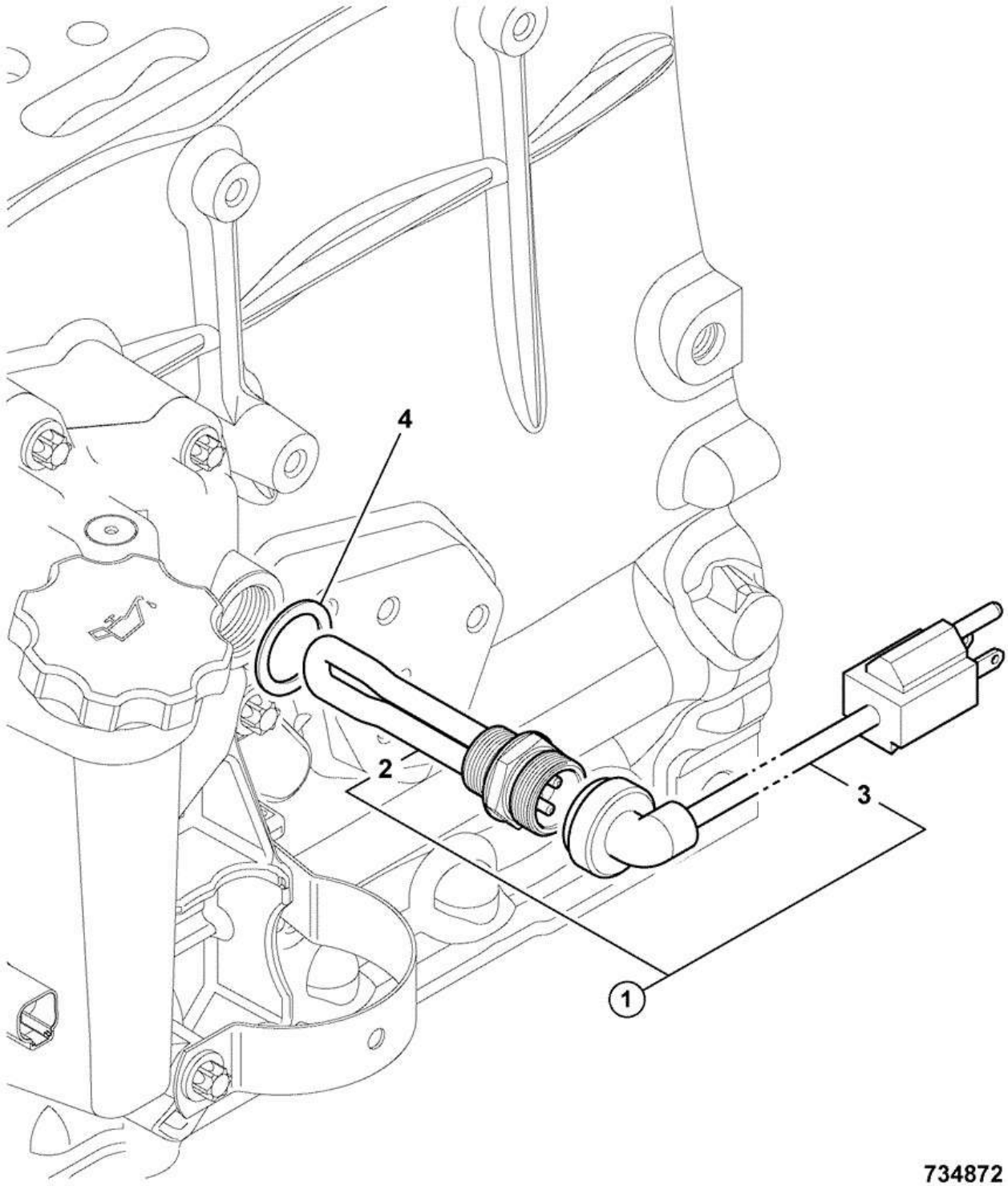

Item	Part #	Change No	Description	Usage Code	QTY
1	320/20082		Kit-heater Engine Block 120V		1
2	:320/04550		Heater Cylinder Block 1000W - 120V Mains		1
3	:721/11976		Harness Block Heater USA		1

4	320/04553		Washer Copper Sealing		1

CONSTRUCTION \ NORTH AMERICA \ MISCELLANEOUS PRODUCTS \ JCB DIESELMAX ENGINES \ 320/40332 DIESELMAX ENGINE 9812/8000 \ W ENGINE SUB-ASSEMBLIES \ W01 ENGINE ASSEMBLIES

9812/8000 W1-99-97 BLOCK HEATER OPTIONAL 240V

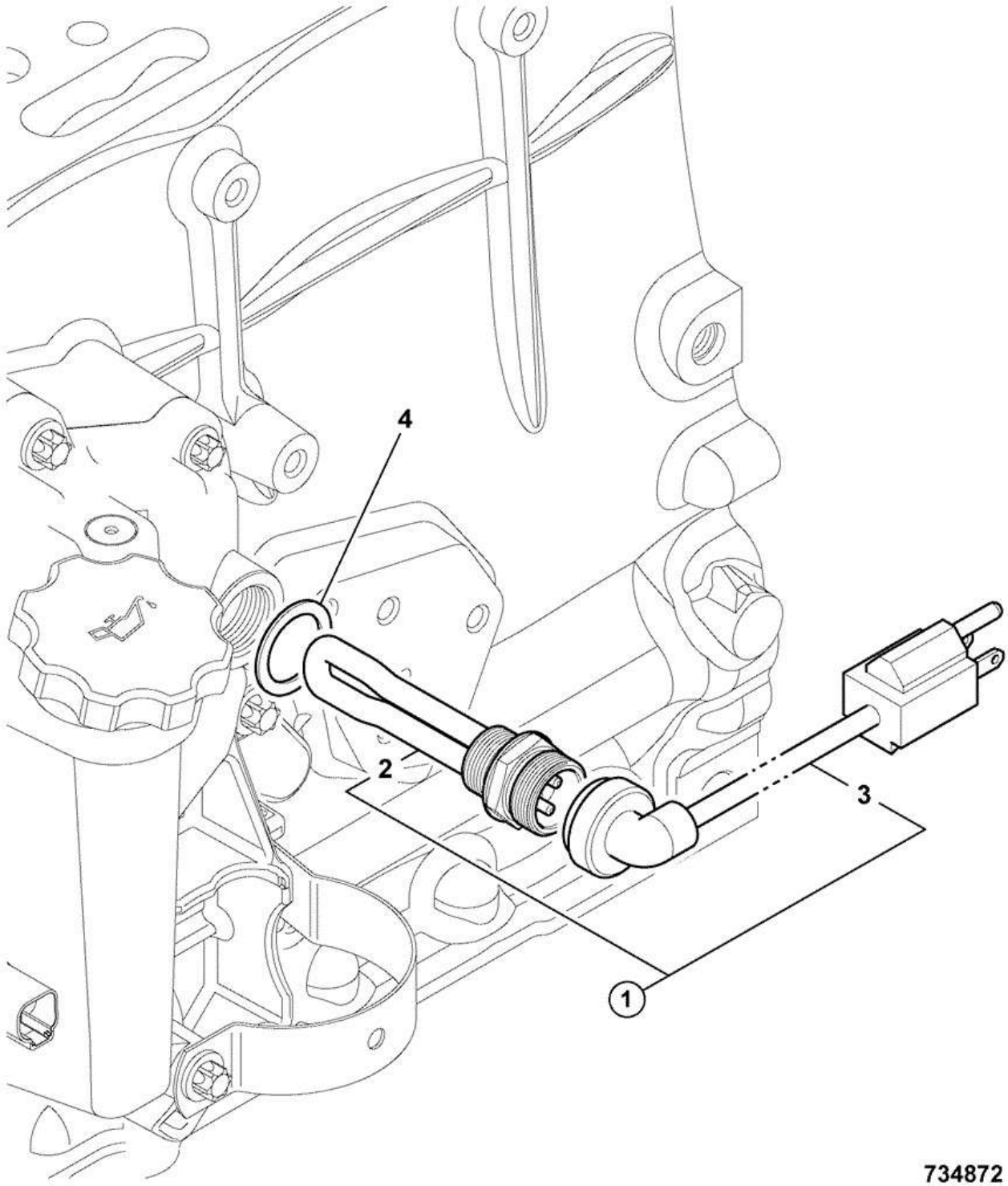

Item	Part #	Change No	Description	Usage Code	QTY
1	320/09639		Kit-block heater engine 240v		1
2	:320/04559		Element Engine Block Heater 230v 1000w		1
4	::320/04553		Washer Copper Sealing		1

3	:320/09638		Harness Block Heater L=1500mm		1
5	:721/12094		Cable 230v mains L=2500mm *Not Shown*		1