RUTHZIL TRATOR COMERCIAL DE PEÇAS LTDA 11 97083-6812 ROLANDO CITRANGULO

JCB

PARTS BOOK

JS205

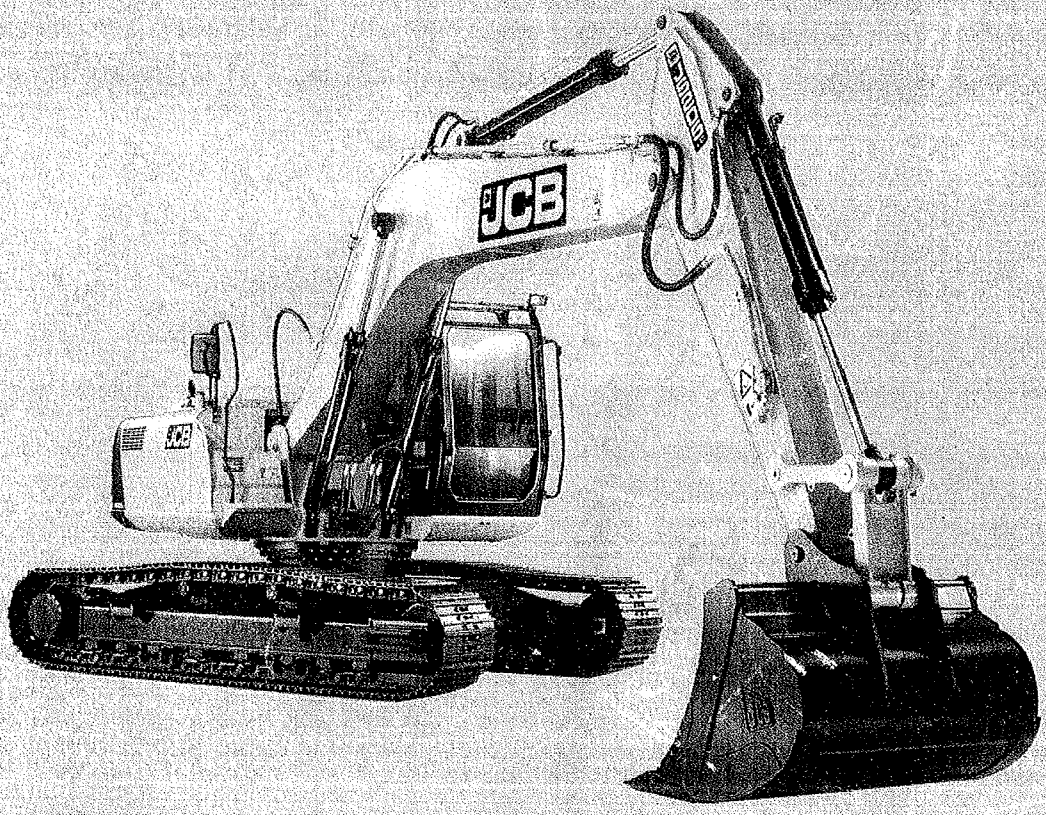

JS205

335/C2784/I

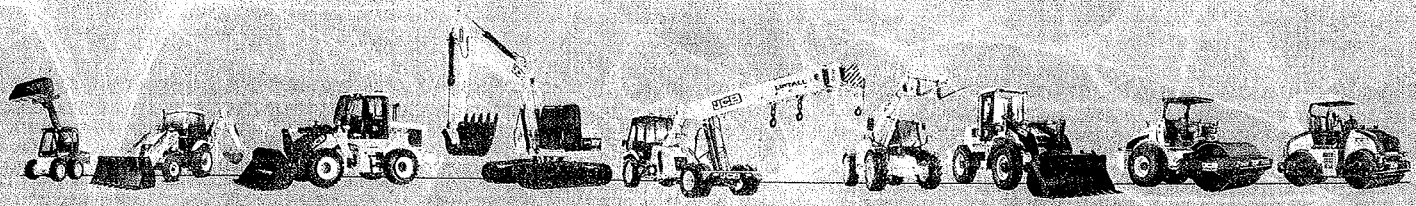

Dear JCB Customer

Even if you have operated this type of equipment before, it is very important that your new machines operations and functions are explained to you by a JCB Dealer Representative following delivery of your new machine.

Following the installation you will know how to gain maximum productivity and performance from your new product.

Please contact your local JCB dealer if the Installation Form has not yet been completed with you.

Your Local JCB Dealer is:

OWNERS PARTS BOOK

JS205 GLOBAL EXCAVATOR INDIA

ENGLISH - 9820/0692A - ISSUE 1 - JUL 13 M2236650> 2241511

Copyright © 2010 JCB SERVICE. All rights reserved. No part of this publication may be reproduced, stored in a retrieval system, or transmitted in any form or by any other means, electronic, mechanical, photocopying or otherwise, without prior permission from JCB SERVICE.

A5-4-Range - Printed In England

Notes:

JS205 INDIA

1 MAIN INDEX – JS205 INDIA

9820/0692A
ISSUE 1

TITLE	PAGE NUMBER	CHANGE NUMBER
A ATTACHMENTS		
SHOVELS	**A01**	
CLAM SHOVEL ASSEMBLY, MAIN, BODY, OPTIONAL	A120-1-1	
CLAM SHOVEL DETAILS, ROTATOR, ASSEMBLY, OPTIONAL	A125-1-1	
CLAM SHOVEL DETAILS, ROTARY COUPLING, OPTIONAL	A125-5-1	
OTHER SHOVELS, GRABBER, OPTIONAL	A190-1-1	
BUCKETS	**A02**	
BUCKET INSTALLATION ASSEMBLIES, 0.9 CU.M	A200-1-1	
BUCKET, ASSEMBLY, 54 INCHES, OPTIONAL	A210-1-1	
STANDARD BUCKET, ASSEMBLY, 48 INCHES	A210-10-1	
HEAVY DUTY BUCKET, 0.9 CUM - STANDARD	A230-1-1	
HEAVY DUTY BUCKET, 0.9CUM - OPTIONAL	A230-2-1	
HEAVY DUTY BUCKET, COMPONENTS	A230-5-1	
ROCKBREAKER/POWERBREAKER	**A04**	
ROCK BREAKERS, OPTIONAL	A400-1-1	
OTHER ROCK BREAKERS, HOUSING, OPTIONAL	A490-1-1	
OTHER ROCK BREAKERS, BRACKET, HANGER, OPTIONAL	A490-5-1	
OTHER ROCK BREAKERS, AUTO, GREASER HM2180, OPTIONAL	A490-10-1	
OTHER ROCK BREAKERS, AUTO GREASING, OPTIONAL	A490-15-1	
MISCELLANEOUS	**A09**	

Continue...

TITLE	PAGE NUMBER	CHANGE NUMBER
OTHER MISCELLANEOUS ITEMS, KIT, NITROGEN CHARGING, OPTIONAL	A990-1-1	
OTHER MISCELLANEOUS ITEMS, GAS BOTTLE, OPTIONAL	A990-5-1	
OTHER MISCELLANEOUS ITEMS, KIT, PRESSURE METER, OPTIONAL	A990-10-1	
OTHER MISCELLANEOUS ITEMS, FIRST AID KIT, OPTIONAL	A990-15-1	
OTHER MISCELLANEOUS ITEMS, REFLECTOR, OPTIONAL	A990-20-1	

B BODYWORK

BODYWORK/FRAME B01

BODYWORK INSTALLATION ASSEMBLIES, UPPER STRUCTURE	B100-10-1	
FUEL TANK, ASSEMBLY	B120-1-1	
FUEL TANK, Assembly ABI	B120-5-1	
HYDRAULIC TANK, ASSEMBLY	B130-1-1	
HYDRAULIC TANK	B130-5-1	
BONNET/ ENGINE COVERS/ GRILLES, TOP COVER	B170-1-1	
BONNET/ ENGINE COVERS/ GRILLES, BONNET, ASSEMBLY	B170-5-1	
COUNTER WEIGHTS, ASSEMBLY	B180-1-1	
OTHER BODYWORK ITEMS, UNDER COVERS	B190-1-1	
OTHER BODYWORK ITEMS, FLOOR, STEP - NO RBC	B190-5-1	
OTHER BODYWORK ITEMS, FRAME HOUSE	B190-10-1	
OTHER BODYWORK ITEMS, BULKHEAD	B190-15-1	
OTHER BODYWORK ITEMS, HANDRAIL	B190-20-1	

2 MAIN INDEX – JS205 INDIA

9820/0692A
ISSUE 1

TITLE	PAGE NUMBER	CHANGE NUMBER
OTHER BODYWORK ITEMS, FRAME, WORK	B190-25-1	

CAB / CANOPY B02

OPERATOR ENCLOSURE INSTALLATION ASSEMBLIES, CAB, SHELL	B200-1-1	
OPERATOR ENCLOSURE INSTALLATION ASSEMBLIES, CAB, SHELL, ASIA	B200-5-1	
OPERATOR ENCLOSURE, CAB, ABI	B210-1-1	
ROOF, HATCH, ASSEMBLY, JS205LC	B230-1-1	
ROOF, TOP, LINER, JS205LC	B230-5-1	
DOORS, ASSEMBLY, CAB	B240-1-1	
DOORS, ASSEMBLY	B240-5-1	
DOORS, SUB ASSEMBLY	B240-10-1	
GLASS/FRAMES, FRONT SCREEN, DOOR, CAB, JS205LC	B250-1-1	
GLASS/FRAMES, FRONT, BOTTOM	B250-5-1	
SEATS, LEVER ASSY, AND SEAT BASE	B260-1-1	
SEATS, STANDARD, OPERATOR	B260-5-1	
SEATS, ASSEMBLY, OPERATOR - ATC, ASIA	B260-10-1	
SEATS, COMPONENTS, OPERATOR SEAT	B260-15-1	
SEATS, ASSEMBLY, REAR, JS205LC	B260-20-1	
MOULDINGS/TRIM, RIGHT HAND SIDE, JS205LC	B270-1-1	
MOULDINGS/TRIM, CAB, DUCTED AC	B270-5-1	
MOULDINGS/TRIM, STOWAGE, REAR	B270-10-1	
OTHER OPERATOR ENCLOSURE ITEMS, GUARDS, CAB	B290-2-1	

Continue...

TITLE	PAGE NUMBER	CHANGE NUMBER
OTHER OPERATOR ENCLOSURE ITEMS, KIT, KNOCK DOWN	B290-5-1	
OTHER OPERATOR ENCLOSURE ITEMS, LATCH, JS205LC	B290-10-1	
OTHER OPERATOR ENCLOSURE ITEMS, BRACKET, COVER, RIGHT HAND SIDE	B290-15-1	
OTHER OPERATOR ENCLOSURE ITEMS, BRACKET, TOP, LEFT HAND SIDE	B290-20-1	
OTHER OPERATOR ENCLOSURE ITEMS, KIT, REAR PANEL	B290-25-1	
EXCAVATOR	**B04**	
BOOM, MONOBOOM, NON HBCV	B430-1-1	
BOOM, MONOBOOM, STANDARD	B430-5-1	
BOOM, MONOBOOM, COMMON PARTS	B430-10-1	
BOOM, MONOBOOM, SEALS AND BEARINGS	B430-15-1	
DIPPER, 2400mm	B440-1-1	
DIPPER, HEAVY DUTY, 3000mm, OPTIONAL	B440-2-1	
DIPPER, HEAVY DUTY, 2.4M, SUB-ASSEMBLY	B440-5-1	
DIPPER, HEAVY DUTY, 3000mm, SUB-ASSEMBLY, OPTIONAL	B440-6-1	
DIPPER, SEALS AND BEARINGS	B440-10-1	
TIPPING LINK, BUCKET, LINKAGE, JS205	B460-1-1	
REFURBISHMENTS	**B05**	
REFURBISHMENT INSTALLATION ASSEMBLIES, LUBRICANTS AND FLUIDS	B500-1-1	
DECALS MACHINE IDENTIFICATION, JS205LC	B510-1-1	

3 MAIN INDEX – JS205 INDIA

9820/0692A
ISSUE 1

TITLE	PAGE NUMBER	CHANGE NUMBER
DECALS MACHINE IDENTIFICATION, HEAVY DUTY, OPTIONAL	B510-5-1	
DECALS MACHINE IDENTIFICATION, STYLING	B510-25-1	
DECALS, JS205SC		
LABELS WARNING/INFORMATION, DECAL, PACK	B520-1-1	
LABELS WARNING/INFORMATION, LABEL PACK	B520-10-1	
LABELS WARNING/INFORMATION, LABEL PACK	B520-15-1	
LABELS WARNING/INFORMATION, JS205LC	B520-20-1	
TOOLS, KIT	B530-1-1	
TOOLS, KIT, STD	B530-5-1	
TOOLS, HAMMER, EMERGENCY	B530-10-1	
TOOLS, BOX, AREA	B530-15-1	
TOOLS, BOX, ASSEMBLY	B530-20-1	
TOOLS, BOX, LID	B530-25-1	
FIRE EXTINGUISHER, OPTIONAL	B560-1-1	
LUBRICANT, GREASE, HIGH PRESSURE	B570-1-1	
C ELECTRICAL		
ELECTRICAL	**C01**	
ELECTRICAL INSTALLATION ASSEMBLIES, CAB	C100-1-1	
HARNESSES, PANELS, WIRING	C110-1-1	
BATTERY, INSTALLATION, ASSEMBLY	C120-1-1	
WORKING LAMPS AND MOUNTINGS	C160-1-1	

Continue...

TITLE	PAGE NUMBER	CHANGE NUMBER
ALARMS/HORN	C170-1-1	
ELECTRICS, CAB	**C03**	
ELECTRICS CAB INSTALLATION ASSEMBLIES, MAIN	C300-1-1	
ELECTRICS CAB INSTALLATION ASSEMBLIES, MAIN, ASIA	C300-5-1	
ELECTRICS CAB INSTALLATION ASSEMBLIES, CAB, ASIA	C300-15-1	
GAUGES, MONITOR SYSTEM	C320-1-1	
GAUGES, MONITOR SYSTEM, ASIA	C320-5-1	
HEATER/AIR CON ASSEMBLY, AUTOMATIC TEMPERATURE CONTROL (ATC), OPTIONAL	C340-1-1	
HEATER/AIR CON ASSEMBLY, KIT, ATC, OPTIONAL	C340-5-1	
HEATER/AIR CON ASSEMBLY, HOSE KIT, HEATER, OPTIONAL	C340-10-1	
HEATER/AIR CON ASSEMBLY, COMMON PARTS, HEATER, OPTIONAL	C340-15-1	
HEATER/AIR CON ASSEMBLY, HOSE KIT, AIR CONDITIONING, OPTIONAL	C340-20-1	
HEATER/AIR CON ASSEMBLY, HOSE KIT, AIR CONDITIONING, OPTIONAL	C340-21-1	
HEATER/AIR CON ASSEMBLY, KIT, MOUNT AND DRIVE, OPTIONAL	C340-25-1	
FUSES AND RELAYS, ROW	C350-1-1	
FUSES AND RELAYS	C350-5-1	
OTHER ELECTRICAL ITEMS, FUSE BOX, JS205LC	C390-1-1	
OTHER ELECTRICAL ITEMS, FUSE BOX	C390-2-1	
OTHER ELECTRICAL ITEMS, ELECTRICS, ROCK BREAKER	C390-5-1	
OTHER ELECTRICAL ITEMS, BRACKET, RELAY	C390-10-1	

4 MAIN INDEX – JS205 INDIA
9820/0692A
ISSUE 1

TITLE	PAGE NUMBER	CHANGE NUMBER
OTHER ELECTRICAL ITEMS, CONTROLLER	C390-15-1	
D CONTROLS		
CONTROL, MECHANICAL	**D01**	
MECHANICAL CONTROL INSTALLATION ASSEMBLIES, JOYSTICK CONTROL	D100-1-1	
MECHANICAL CONTROL INSTALLATION ASSEMBLIES, JOYSTICK CONTROL, DUCTED AC	D100-5-1	
EXCAVATOR CONTROLS, CONSOLE BOX	D120-1-1	
FOOT PEDALS, ASSEMBLY	D150-1-1	
ENGINE CONTROLS	**D02**	
ENGINE CONTROL INSTALLATION ASSEMBLIES, ENGINE CONTROL ASSEMBLY	D200-1-1	
ENGINE CONTROL INSTALLATION ASSEMBLIES	D200-5-1	
THROTTLE CONTROL, AUTO IDLER MECHANISM	D210-1-1	
THROTTLE CONTROL, CABLE, WITH SPRING	D210-5-1	
OTHER ENGINE CONTROLS, MOUNTING BRACKETS, AUTO IDLER MECHANISM	D290-1-1	
OTHER ENGINE CONTROLS, CYLINDER, MECHANISM	D290-5-1	
OTHER ENGINE CONTROLS, DOUBLE, SPRING	D290-10-1	
E HYDRAULICS		
HYDRAULIC CIRCUITS	**E01**	
HYDRAULIC CIRCUIT INSTALLATION ASSEMBLIES, HAMMER, CIRCUITRY, 2.4M ARM	E100-1-1	
HYDRAULIC CIRCUIT INSTALLATION ASSEMBLIES, HAMMER, CIRCUITRY, 3.0M ARM, OPTIONAL	E100-5-1	

Continue...

TITLE	PAGE NUMBER	CHANGE NUMBER
HYDRAULIC CIRCUITS CHASSIS, HOSE AND PIPEWORK, SUCTION LINE	E130-1-1	
HYDRAULIC CIRCUITS CHASSIS, HOSES & FITTINGS, DRAIN LINE	E130-5-1	
HYDRAULIC CIRCUITS CHASSIS, HOSES & FITTINGS, PRESSURE LINE	E130-10-1	
HYDRAULIC CIRCUITS CHASSIS, HOSES & FITTINGS, PLEXUS FILTER	E130-15-1	
HYDRAULIC CIRCUITS CHASSIS, HOSES & FITTINGS, PILOT CONTROL LINE	E130-20-1	
HYDRAULIC CIRCUITS CHASSIS, HOSES & FITTINGS, PILOT PRESSURE LINE	E130-25-1	
HYDRAULIC CIRCUITS CHASSIS, HOSES AND PIPEWORK, BOOM LINE	E130-30-1	
HYDRAULIC CIRCUITS CHASSIS, HOSES AND PIPEWORK, TRACTION LINE	E130-35-1	
HYDRAULIC CIRCUITS CHASSIS, HOSES & FITTINGS, SWING LINE	E130-40-1	
HYDRAULIC CIRCUITS CHASSIS, HOSES & FITTINGS, BUCKET AND ARM LINE	E130-45-1	
HYDRAULIC CIRCUITS CHASSIS, HOSES & FITTINGS, TRACTION MOTOR LINE	E130-50-1	
HYDRAULIC CIRCUITS CHASSIS, HOSES & FITTINGS, TRACTION MOTOR LINE, STANDARD, OPTIONAL	E130-51-1	
HYDRAULIC CIRCUITS CHASSIS, HOSES & FITTINGS, RETURN AND OIL COOLER LINE	E130-55-1	
HYDRAULIC CIRCUITS CHASSIS, HOSES & FITTINGS, HAMMER LINE AND CONTROL	E130-57-1	
HYDRAULIC CIRCUITS CHASSIS, HOSE KIT, JOYSTICK RIGHT HAND SIDE, PILOT CONTROL LINE	E130-60-1	
HYDRAULIC CIRCUITS CHASSIS, HOSE KIT, JOYSTICK LEFT HAND SIDE, PILOT CONTROL LINE	E130-65-1	
HYDRAULIC CIRCUITS CHASSIS, HOSE KIT, TRAVEL PEDALS, PILOT CONTROL LINE	E130-70-1	

5 MAIN INDEX – JS205 INDIA

9820/0692A
ISSUE 1

TITLE	PAGE NUMBER	CHANGE NUMBER
HYDRAULIC CIRCUITS CHASSIS, HOSE KIT, CHECK VALVE, PILOT CONTROL LINE	E130-75-1	
HYDRAULIC CIRCUITS CHASSIS, KIT, CLAMP, PILOT CONTROL LINE	E130-80-1	
HYDRAULIC CIRCUITS CHASSIS, HOSE KIT, SOLENOID VALVE, PILOT PRESSURE LINE	E130-85-1	
HYDRAULIC CIRCUITS CHASSIS, HOSE KIT, PUMP ASSEMBLY, PILOT PRESSURE LINE	E130-90-1	
HYDRAULIC CIRCUITS CHASSIS, HOSE KIT, TANK MANIFOLD, PILOT PRESSURE LINE	E130-95-1	
HYDRAULIC CIRCUITS EXCAVATOR END, HOSES & FITTINGS, BUCKET LINES, ARM 3.0M, OPTIONAL	E140-2-1	
HYDRAULIC CIRCUITS EXCAVATOR END, HOSE KIT, BUCKET LINES	E140-10-1	
HYDRAULIC CIRCUITS EXCAVATOR END, HOSES AND PIPEWORK, HAMMER LINE, QUICK RELEASE COUPLING, ARM 2.4M	E140-15-1	
HYDRAULIC CIRCUITS EXCAVATOR END, HOSES AND PIPEWORK, HAMMER LINE, QUICK RELEASE COUPLING, ARM 3.0M, OPTIONAL	E140-16-1	
HYDRAULIC CIRCUITS EXCAVATOR END, HOSES AND PIPEWORK, HAMMER LINE, QUICK RELEASE COUPLING, ARM 2.4M	E140-17-1	
HYDRAULIC CIRCUITS EXCAVATOR END, PIPEWORK, HAMMER LINE, MONOBOOM	E140-20-1	
PUMP & M0T0RS	**E02**	
PUMP/MOTOR INSTALLATION ASSEMBLIES, MAIN PUMP	E200-1-1	
PUMPS GEAR, MAIN HYDRAULICS, COMPONENTS	E210-1-1	

Continue...

TITLE	PAGE NUMBER	CHANGE NUMBER
PUMPS VARIFLOW, MAIN HYDRAULICS, COMPONENTS	E220-1-1	
VALVES	**E03**	
VALVES EXCAVATOR, MAIN CONTROL VALVE	E320-1-1	
VALVES EXCAVATOR, COMPONENTS, FIGURE 1	E320-5-1	
VALVES EXCAVATOR, COMPONENTS, FIGURE 2	E320-10-1	
VALVES EXCAVATOR, COMPONENTS, FIGURE 3	E320-15-1	
VALVES EXCAVATOR, COMPONENTS, FIGURE 4	E320-20-1	
VALVES SERVO CONTROL (PILOT CONTROL), JOYSTICK CONTROL, LEFT HAND SIDE	E340-1-1	
VALVES SERVO CONTROL (PILOT CONTROL), JOYSTICK CONTROL, RIGHT HAND SIDE	E340-5-1	
VALVES SERVO CONTROL (PILOT CONTROL), JOYSTICK CONTROL	E340-10-1	
OTHER VALVES, - 3STATION	E390-1-1	
OTHER VALVES, SOLENOID, COMPONENTS	E390-5-1	
RAMS	**E04**	
RAM INSTALLATION ASSEMBLIES, BUCKET, STANDARD	E400-1-1	
RAM INSTALLATION ASSEMBLIES, BOOM AND DIPPER, NON HBCV	E400-5-1	
RAMS SHOVEL (CLAM/SIDE TIP), COMPONENTS, OPTIONAL	E415-1-1	
RAMS BOOM, COMPONENTS, RIGHT HAND SIDE	E460-1-1	
RAMS BOOM, COMPONENTS, LEFT HAND SIDE	E460-5-1	
RAMS DIPPER, COMPONENTS	E465-1-1	
RAM BUCKET, COMPONENTS	E480-1-1	

6 MAIN INDEX – JS205 INDIA
9820/0692A
ISSUE 1

TITLE	PAGE NUMBER	CHANGE NUMBER
FILTER	**E05**	
FILTER MAIN HYDRAULIC, BYPASS	E510-1-1	
FILTER MAIN HYDRAULIC, PILOT RETURN	E510-5-1	
FILTER OTHER HYDRAULIC, DRAIN, LINE	E520-1-1	
FILTER RETURN, HAMMER, CIRCUIT	E540-5-1	

F TRACK/SLEW GEARBOX

TRACK & SWING GEAR BOX	**F04**	
GEARBOX ASSEMBLY & SPROCKET, TRACTION MOTOR	F410-1-1	
GEARBOX ASSEMBLY & SPROCKET, TRAVEL, MOTOR	F410-5-1	
SLEW/SWING MOTOR INSTALLATION, SWING, EQUIPMENT	F430-1-1	
SLEW/SWING MOTOR INSTALLATION	F430-5-1	
GEARBOX SLEW/SWING, COMPONENTS, ASSEMBLY	F440-1-1	
CIRCUIT SLEW/SWING GREASING, GREASE LINE	F480-1-1	
OTHER SLEW/SWING PARTS, TURNTABLE BEARING	F490-1-1	

J UNDERCARRIAGE

UNDERCARRIAGE	**J01**	
UNDERCARRIAGE INSTALLATION ASSEMBLIES, TRACK CHAIN, AND IDLER, 49 LINKS, 500MM	J100-1-1	
UNDERCARRIAGE INSTALLATION ASSEMBLIES, TRACK CHAIN, AND IDLER, 49 LINKS, 500MM, OPTIONAL	J100-2-1	
UNDERCARRIAGE INSTALLATION ASSEMBLIES, TRACK CHAIN, AND IDLER, 46 LINKS, 500MM, OPTIONAL	J100-5-1	

Continue...

TITLE	PAGE NUMBER	CHANGE NUMBER
UNDERCARRIAGE INSTALLATION ASSEMBLIES, LOWER FRAME, HEAVY DUTY, OPTIONAL	J100-10-1	
UNDERCARRIAGE INSTALLATION ASSEMBLIES, LOWER FRAME, OPTIONAL	J100-11-1	
RECOIL AND IDLER ASSEMBLY, OPTIONAL	J120-1-1	
RECOIL AND IDLER ASSEMBLY, OPTIONAL	J120-5-1	
RECOIL AND IDLER ASSEMBLY, OPTIONAL	J120-10-1	
RECOIL UNIT, OPTIONAL	J130-1-1	
RECOIL UNIT, SPRING ASSEMBLY, OPTIONAL	J130-5-1	
IDLER ASSEMBLY, OPTIONAL	J140-1-1	
IDLER ASSEMBLY, FRONT, OPTIONAL	J140-5-1	
TRACK ROLLERS, CARRIER AND LOWER	J150-1-1	
TRACK ROLLERS, CARRIER, ASSEMBLY	J150-5-1	
TRACK ROLLERS, LOWER, ASSEMBLY	J150-10-1	
TRACK CHAIN, &, SHOE 49 LINKS 500MM	J160-1-1	
TRACK CHAIN, &, SHOE ASSY 49 LINKS, 500MM, OPTIONAL	J160-5-1	
TRACK CHAIN, &, SHOE ASSEMBLY, 46 LINKS, 500MM WIDE, OPTIONAL	J160-16-1	
TRACK CHAIN, &, SHOE 49, LINKS 500MM	J160-20-1	
TRACK CHAIN, &, SHOE, 46 LINKS, 500MM, OPTIONAL	J160-35-1	
TRACK CHAIN, 49 LINK	J160-40-1	
TRACK CHAIN, 46 LINK, 500MM, OPTIONAL	J160-55-1	
OTHER UNDERCARRIAGE PARTS, CENTER JOINT	J190-1-1	
OTHER UNDERCARRIAGE PARTS, TRACK, GUIDES	J190-5-1	

7 MAIN INDEX – JS205 INDIA
9820/0692A
ISSUE 1

TITLE	PAGE NUMBER	CHANGE NUMBER
OTHER UNDERCARRIAGE PARTS, LOWER, COVERS	J190-10-1	

L ENGINE ANCILLARIES

ENGINE INSTALLATION ASSEMBLIES L01

ENGINE INSTALLATION ASSEMBLIES	L100-1-1	
ENGINE INSTALLATION ASSEMBLIES, ASIA	L100-5-1	

EXHAUST SYSTEM L02

EXHAUST SYSTEM INSTALLATION ASSEMBLIES	L200-1-1	

INDUCTION SYSTEM INSTALLATION ASSEMBLIES L03

INDUCTION SYSTEM INSTALLATION ASSEMBLIES, AIR INTAKE	L300-1-1	
INDUCTION SYSTEM INSTALLATION ASSEMBLIES, PRE-CLEANER	L300-5-1	
INDUCTION FILTER, PRE-CLEANER	L310-1-1	
INDUCTION FILTER, AIR FILTER	L310-5-1	

COOLING SYSTEM L06

COOLING INSTALLATION ASSEMBLIES, RADIATOR	L600-1-1	
COOLING INSTALLATION ASSEMBLIES, RADIATOR, ASIA	L600-5-1	
COOLING PACK INSTALLATION, KIT, RADIATOR FOAM	L610-1-1	
COOLING PACK INSTALLATION, TANK, RESERVE ASSEMBLY	L610-5-1	
ABI COOLING PACK, RADIATOR, AND OIL COOLER	L620-1-1	

FAN INSTALLATION ASSEMBLIES L07

Continue...

TITLE	PAGE NUMBER	CHANGE NUMBER
RECEIVER DRIER, ASSEMBLY, OPTIONAL	L760-1-1	
RECEIVER DRIER	L760-5-1	
COMPRESSOR, 24VOLT, AIR CONDITIONING, OPTIONAL	L780-1-1	
FUEL SYSTEM	**L08**	
FUEL SYSTEM INSTALLATION ASSEMBLIES, HOSES & FITTINGS, FUEL LINE	L800-1-1	
V ENGINE		
ENGINE INSTALLATION ASSEMBLIES	**V01**	
ENGINE BLOCK AND SUB ASSEMBLIES, COVER, CAM FOLLOWER	V110-1-1	
ENGINE BLOCK AND SUB ASSEMBLIES, CYLINDER HEAD	V110-5-1	
CYLINDER BLOCK	V120-1-1	
PISTON AND CONROD ASSEMBLIES, PISTON	V140-1-1	
CAMSHAFT	V150-1-1	
TIMING CASE, OVERCRANK	V160-1-1	
FLYWHEEL, DAMPER, MOUNTING	V180-1-1	
FLYWHEEL, HOUSING	V180-5-1	
ENGINE MOUNTINGS, THROTTLE, LEVER PIN	V190-1-1	
ENGINE MOUNTINGS, LIFTING BRACKETS	V190-10-1	
ENGINE MOUNTINGS, COVER, ACCESS HOLE	V190-15-1	
ENGINE MOUNTINGS, ACCESS, COVER, DRIVE	V190-20-1	
CYLINDER HEAD & SUB ASSEMBLIES	**V02**	

8 MAIN INDEX – JS205 INDIA
9820/0692A
ISSUE 1

TITLE	PAGE NUMBER	CHANGE NUMBER
ROCKER SHAFT, AND, LEVER	V240-1-1	
ROCKER COVER, COVER, VALVE	V250-1-1	
INDUCTION SYSTEM	**V03**	
INTAKE MANIFOLD	V310-1-1	
EXHAUST MANIFOLD	V330-1-1	
COOLING SYSTEM	**V04**	
COOLING SYSTEM, VENT, ENGINE	V400-1-1	
COOLING SYSTEM, THERMOSTAT, AND HOUSING	V400-5-1	
WATER PUMP	V410-1-1	
COOLANT INLET	V430-1-1	
LUBRICATION SYSTEM	**V05**	
OIL PUMP, LUBRICATION	V510-1-1	
OIL PAN, AND, MOUNTING ASSEMBLY	V520-1-1	
DIPSTICK, AND, MOUNTINGS	V540-1-1	
DIPSTICK, MOUNTING	V540-5-1	
OIL FILTER, AND, OIL COOLER	V550-1-1	
FUEL SYSTEM	**V06**	
FUEL SYSTEM, FUEL LINES	V600-1-1	
FUEL SYSTEM, SOLENOID, AND FUEL TANSFER ASSEMBLY	V600-5-1	
FUEL SYSTEM, FUEL FILTER, AND PIPES	V600-10-1	
FUEL SYSTEM, RAISED	V600-15-1	
INJECTOR, FUEL	V620-1-1	

Continue...

TITLE	PAGE NUMBER	CHANGE NUMBER
ENGINE FUEL FILTER, STAINER	V660-1-1	
FUEL SYSTEM, FUEL INJECTION PUMP	V680-1-1	
FUEL SYSTEM, COUPLING	V680-10-1	
FRONT END DRIVE	**V07**	
FRONT END DRIVE, COVER, GEAR	V700-1-1	
DRIVE BELT AND PULLEYS, DAMPER, VIBRATION	V720-1-1	
COOLING FAN	V740-1-1	
AUXILIARY EQUIPMENT	**V08**	
TURBOCHARGER, AND, PIPEWORK	V810-1-1	
ALTERNATOR, AND, MOUNTING ASSEMBLY	V840-1-1	
ALTERNATOR, DRIVE BELT	V840-5-1	

A

- A01 SHOVELS
- • A02 BUCKETS
- A04 ROCKBREAKER/POWERBREAKER
- A09 MISCELLANEOUS

JS205 INDIA

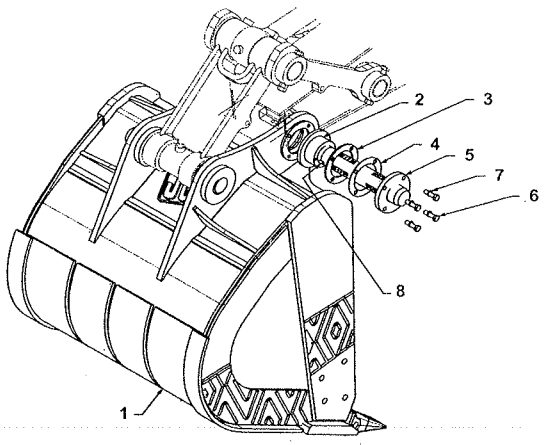

ITEM	Part #	CHANGE NO	DESCRIPTION	USAGE CODE	QTY
1	333/P6950		Bucket 0.9CUM Refer A230-1-1		1
2	333/P1949		Bush		1
3	333/P2207		Shim - 1.2THK		5
4	333/P8210		Shim - 0.5THK		4
5	333/P2156		Cap End		1
6	1316/3714Z		Bolt		4
7	1425/0011Z		Washer spring M16		4
8	2105/1605		Pin dowel		2

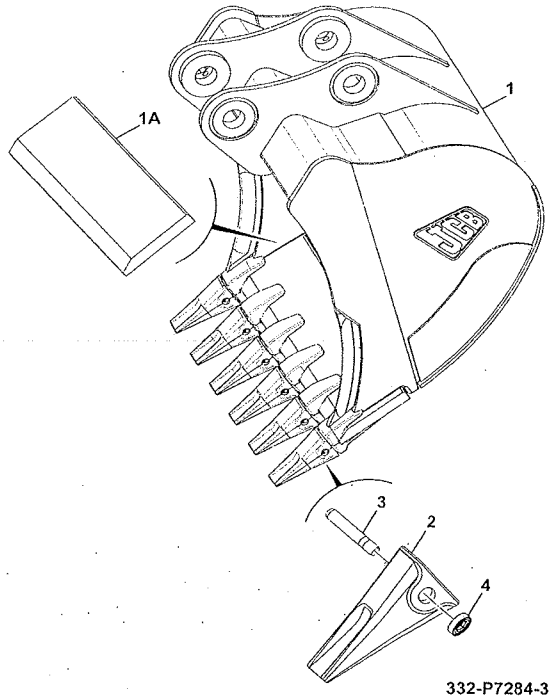

332-P7284-3

JS205 INDIA

ITEM	Part #	CHANGE NO	DESCRIPTION	USAGE CODE	QTY
A	332/P7284		Bucket 54 inches		1
1			Bucket 54"		1
1A	980/84757		Toeplate 54"		1
1B	980/84720		Pivot Boss		1
2	333/P7952		Tooth Tip		6
3	980/84767		Pin locking		6
4	980/84768		Washer		6

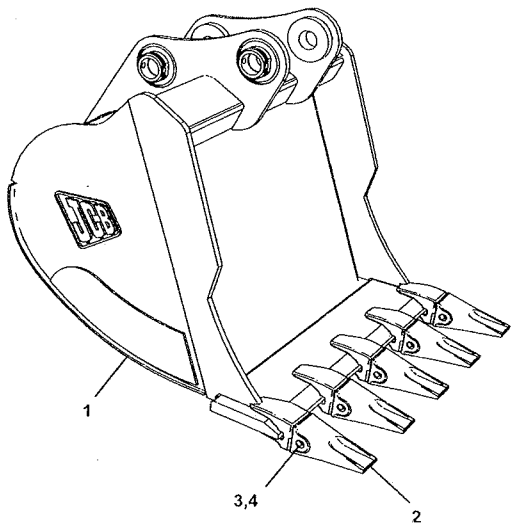

332-P6588-1

JS205 INDIA

ITEM	Part #	CHANGE NO	DESCRIPTION	USAGE CODE	QTY
A	332/P7251		Bucket Exc 48INCH Comprises of #1-4		1
1			Bucket GP 48" 0.9 Cu m		1
1A	980/84720		Pivot Boss		4
1B	980/84756		Toeplate		1
2	333/P7952		Tooth Tip		5
3	980/84767		Pin locking		5
4	980/84768		Washer		5

JS205 INDIA

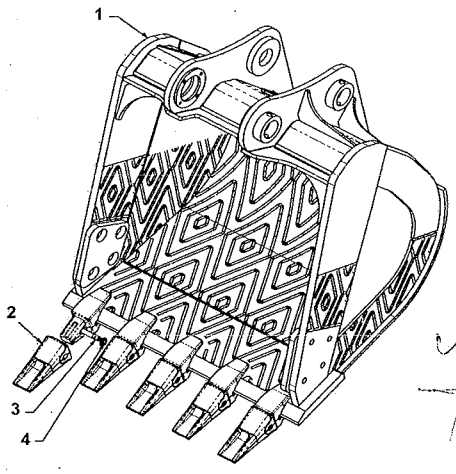

ITEM	Part #	CHANGE NO	DESCRIPTION	USAGE CODE	QTY
A	333/P6950		Bucket 0.9CUM		1
1			Bucket 0.9CUM Refer A230-5-1		1
2	333/P7952		Tooth Tip		5
3	980/84767		Pin locking		5
4	980/84768		Washer		5



JS205 INDIA

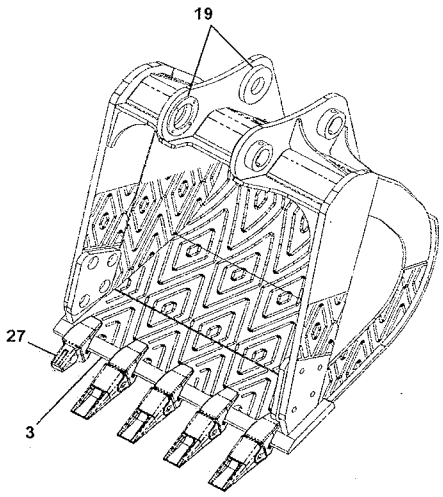

332-L5660-1

ITEM	Part #	CHANGE NO	DESCRIPTION	USAGE CODE	QTY
3	333/P7624		Plate - Toe		1
19	333/P7972		Pivot Boss Inner		4
27	333/P7968		Tooth Adaptor		5

A

A01 SHOVELS
A02 BUCKETS
• A04 ROCKBREAKER/POWERBREAKER
A09 MISCELLANEOUS

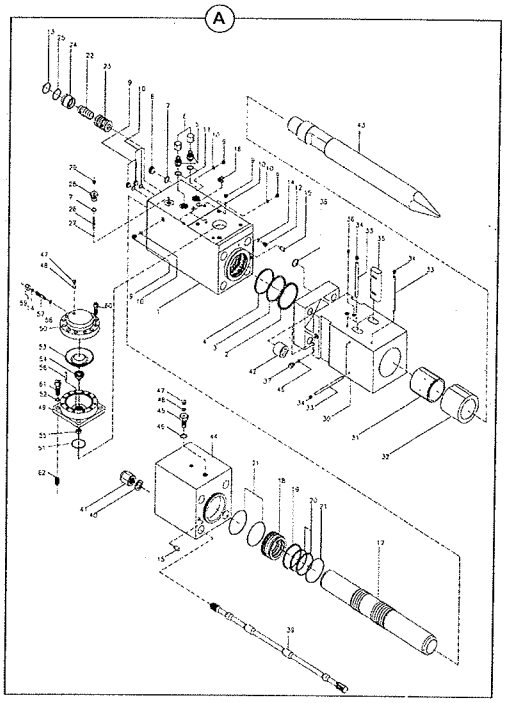

980-A1702

JS205 INDIA

ITEM	Part #	CHANGE NO	DESCRIPTION	USAGE CODE	QTY
A	980/90573		Rockbreaker Assembly JS200		1
1	331/67255		Cylinder HM2180		1
1A	332/E4217		Cylinder		1
2	331/67257		Seal DUST		1
3	331/67258		Ring Packing		1
4	331/67259		Buffer		1
5	331/67366		Adapter		2
6	332/A2281		Cap Union		2
7	331/67260		O Ring		3
8	331/67261		Plug		1
9	331/67262		Plug RO		2
10	331/67263		O Ring		4
11	331/67264		Plug RO		7
12	331/67265		O Ring		7
13	331/67266		O Ring		1
14	331/67267		O Ring		2
15	331/67268		Pin		2

Continue...

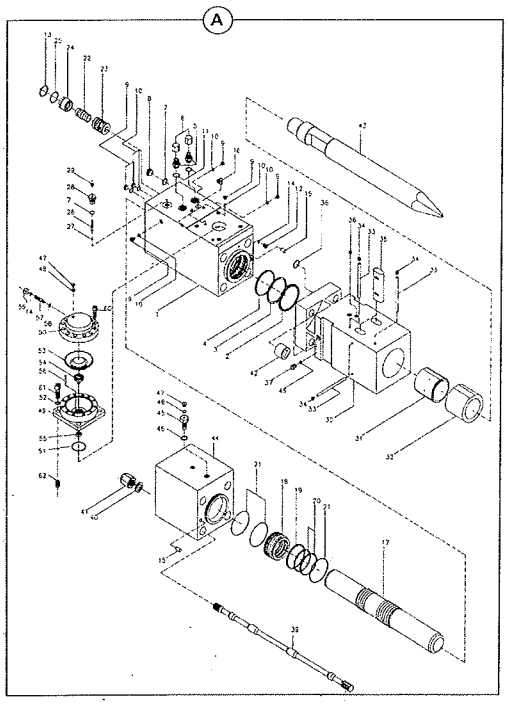

980-A1702

ITEM	PART NO	CHANGE NO	DESCRIPTION	USAGE CODE	QTY
16	332/A2282		Nipple Grease		1
16A	332/A2291		Elbow 90 degree		1
17	331/67270		Piston		1
17	331/67270		Piston Was B222B-11200		1
18	331/67271		Bush cylinder		1
19	331/67272		Seal gas		1
20	331/67278		Seal ring		2
21	331/67280		O Ring		3
.	331/67281		Kit valve set QTY:1.0		1
.	332/E4218		Kit valve QTY:1.0		1
22	331/67282		Valve HM2100		1
22A	332/E4223		Valve RBC Sl.no < 1452011		1
23	331/67283		Valve Bush		1
23A	332/E4225		Bush valve RBC Sl.no < 1452011		1
24	331/67284		Valve Cap		1

A400-1-1 ROCK BREAKERS, OPTIONAL
9820/0692A
ISSUE 1

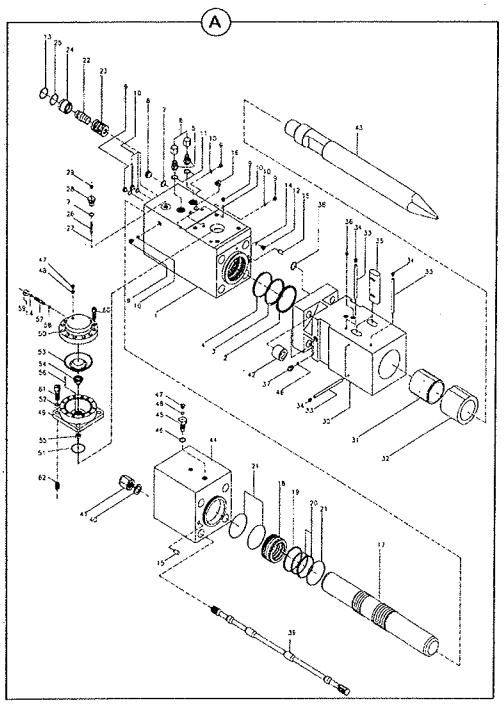

980-A1702

ITEM	PART NO	CHANGE NO	DESCRIPTION	USAGE CODE	QTY
24A	332/E4228		Cap valve RBC Sl.no < 1452011		1
25	331/67367		O Ring HM2100		1
.	331/67286		Kit adjuster Includes 14, 27 26,28,29		0
26	331/67287		Adjuster HM2100		1
27	331/67288		O Ring		1
28	331/67289		Adjuster HM2100		1
29	331/67290		Adjuster Nut		1
30	331/67291		Head hammer		1
31	331/67292		Bush		1
32	331/67293		Collar		1
33	331/67294		Pin stopper		4
34	331/67297		Pin plug rubber		4
35	331/67298A		Pin Chisel Locking		2
36	331/67299		Plug hollow		1
37	331/67301		Plug		1
38	331/67302		O Ring		1

Continue...

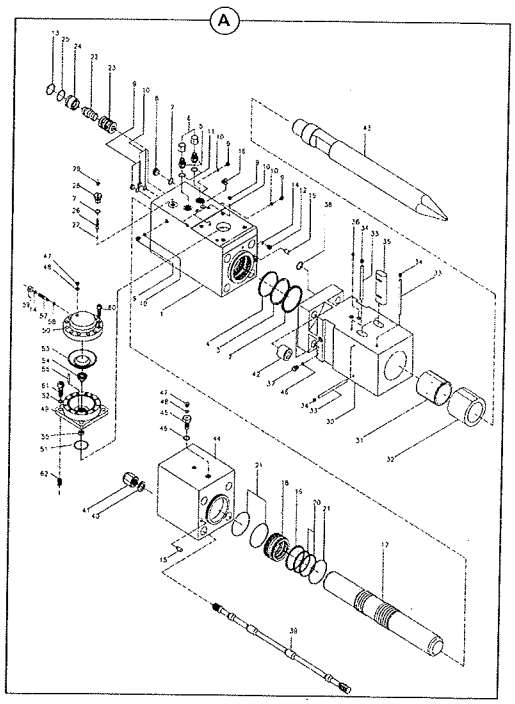

980-A1702

ITEM	PART NO	CHANGE NO	DESCRIPTION	USAGE CODE	QTY
.	331/67303		Kit Through Bolt Set QTY:4.0		4
39	331/67304		Bolt HM2100 THROUG BOLT S		4
40	331/67305		Washer		4
41	331/67306		Nut - Top		4
42	331/67307		Nut - Bottom		4
43	-		'See Remark'		1
43-1	331/67308		Tool Conical Point		1
43-2	331/67310		Tool Moil		1
43-3	331/67311		Tool Crosscut		1
43-4	331/67312		Tool Inline Chisel		1
43-5	331/67313		Tool Flat End		1
44	331/67314		Head block		1
.	331/67315		Kit Gas Valve QTY:1.0		1
45	331/67316		Valve		1
46	331/67318		O Ring		1
47	331/67319		Valve cap		2
48	331/67320		O Ring		2

A400-1-1 ROCK BREAKERS, OPTIONAL 9820/0692A
ISSUE 1

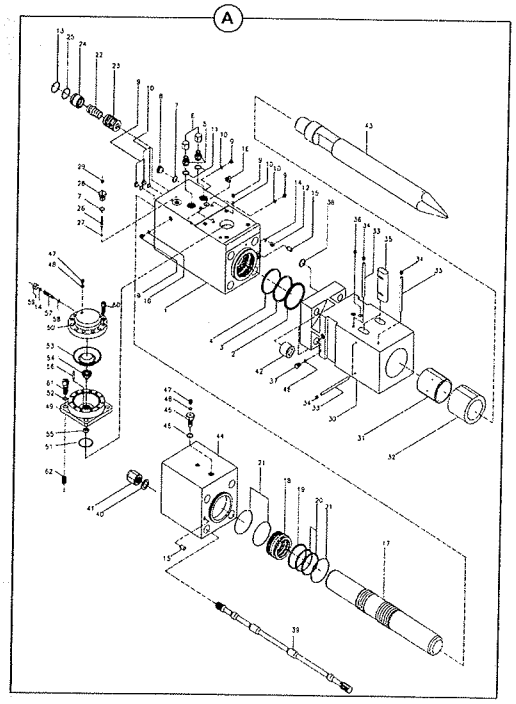

980-A1702

ITEM	PART NO	CHANGE NO	DESCRIPTION	USAGE CODE	QTY
.	331/67322		Kit Accumulator Items 10,47 to 62 QTY:1.0		0
49	331/67323		Accumulator Body		1
50	331/67325		Accumulator Cover		1
51	331/67326		Seal - Face		1
52	331/67327		Washer Ribbed		1
53	331/67329		Diaphragm		1
.	331/67330		Kit Poppet Valve includes 54,55,56		0
54	331/67331		Poppet Valve		1
55	331/67337		Poppet Valve Nut		1
56	331/67338		Pin Knock		1
.	331/67339		Kit Needle Valve includes 10, 57,58,59		1
57	331/67340		Pin Needle		1
58	331/67341		O Ring Spare		1
59	331/67342		Needle Cap		1
60	331/67343		Bolt		12
61	331/67344		Bolt		4

Continue...

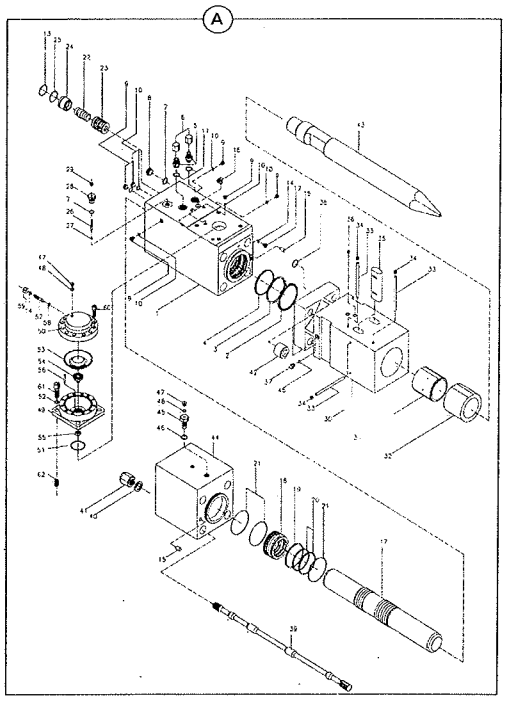

980-A1702

ITEM	PART NO	CHANGE NO	DESCRIPTION	USAGE CODE	QTY
62	331/67345		Insert Helicoil QTY:4.0		4
.	331/67346		Kit Complete Seal Kit QTY:1.0		0

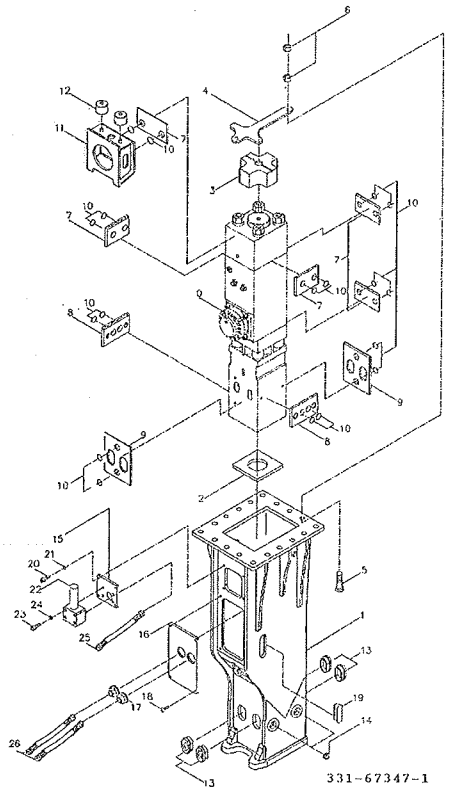

331-67347-1

JS205 INDIA

ITEM	Part #	CHANGE NO	DESCRIPTION	USAGE CODE	QTY
1	331/67347		Bracket Set		1
2	331/67348		Damper Lower		1
3	331/67349		Damper Upper		1
4			None serviced part		1
5	332/Y7041		Bolt HEX BOLT HEX BOLT		2
6	332/Y7042		Nut Hex		4
7	331/67350		Pad		5
8	331/67351		Pad		2
9	331/67353		Pad		2
10	331/67354		O Ring		18
11	331/67355		Plate Head QTY:1.0		1
12	331/67356		Damper Head QTY:2.0		2
13	331/67357		Cover Rubber		4
14	331/67358		Cover Rubber QTY:4.0		4
15	332/A2285		Cover - Auto Greaser		1

Continue...

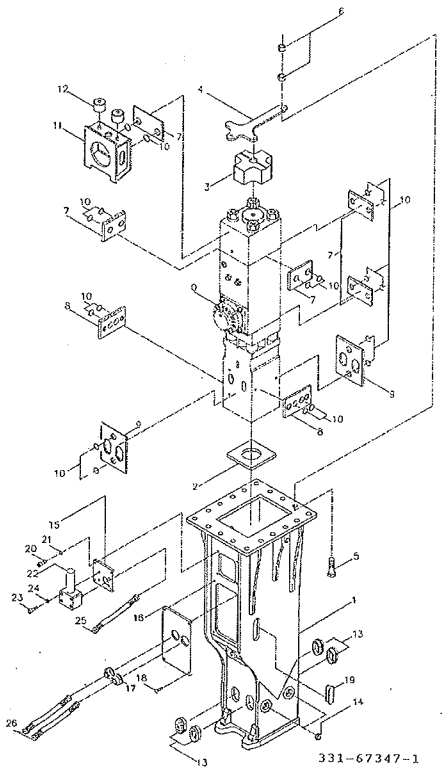

ITEM	PART NO	CHANGE NO	DESCRIPTION	USAGE CODE	QTY
16	331/67360		Cover Main		1
17	331/67361		Hose Cover QTY:2.0		0
18	331/67362		Bolt		4
19	332/A2286		Cover - Side Hose		2
20	331/67364		Bolt		4
21	331/67365		Washer		4
22	332/A2287		GREASER Auto Complete QTY:1.0 Refer A490-15-1		0
23	332/A2288		Bolt Wrench QTY:4.0		0
24	332/A2289		Washer QTY:4.0		0
25	332/A2290		Hose Grease		1
26	625/80002		Hose - Hydraulic		2

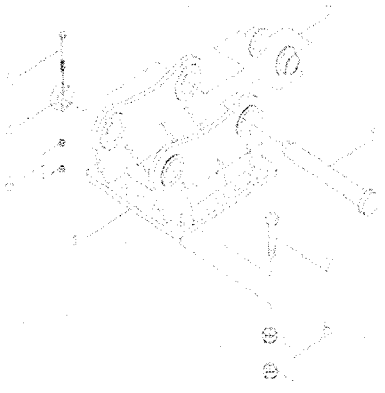

JS205 INDIA

ITEM	Part #	CHANGE NO	DESCRIPTION	USAGE CODE	QTY
1	332/Y7036		Cap Mount Cap Mount Cap (Adapter)		1
2	332/Y7039		Bracket BRACKET PIN BUSH BRACKET PIN BUSH		4
3	550/43789		Bracket Pin		2
4	550/43786		Ring Stop		2
5	332/Y7045		Bolt HEX BOLT HEX Bolt		2
6	332/Y7040		Nut HEX NUT HEX NUT		4
7	332/Y7041		Bolt HEX BOLT HEX BOLT		18
8	332/Y7042		Nut Hex		36

332-Y7306

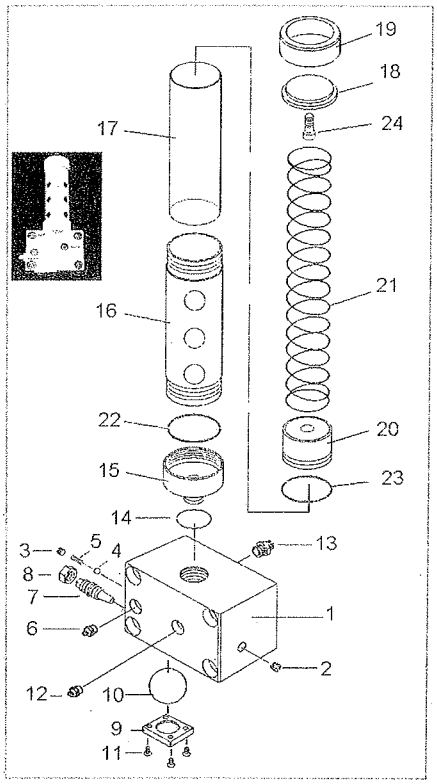

JS205 INDIA

ITEM	Part #	CHANGE NO	DESCRIPTION	USAGE CODE	QTY
A	332/Y9133		Grease COMPLETE AUTO GREASE COMPLETE AUTO GREASE		1
1-13	332/Y9134		Body PUMP BODY ASSY PUMP BODY ASS Y Kit		1
1	332/Y9135		Body BODY BODY		1
2	332/y7901		Plug 3/8"		1
3	332/Y7902		Plug 1/4"		1
4	332/Y7904		Ball BALL DIA 8.7 BALL DIA 8.7		1
5	332/Y7903		Spring SPRING 8X30 SPRING 8X30		1
6	332/y7905		Grease Nipple		1
7	332/Y7906		Adjuster ADJUSTER M8 ADJUSTER M8		1
8	332/Y7907		Nut NUT M8 NUT M8		1

A490-10-1 OTHER ROCK BREAKERS, AUTO, GREASER HM2180, OPTIONAL 9820/0692A ISSUE 1

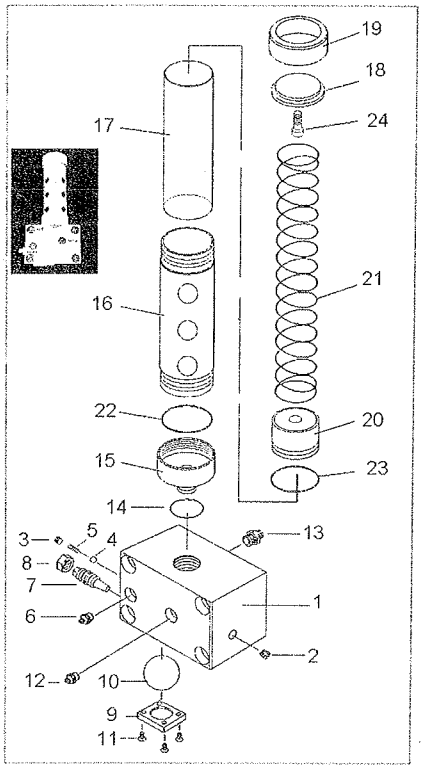

ITEM	PART NO	CHANGE NO	DESCRIPTION	USAGE CODE	QTY
9	332/Y7910		Cover COVER COVER		1
10	332/Y9136		Ball BALL BALL		1
11	332/Y7911		Bolt BOLT M6 BOLT M6		1
12	332/y7905		Grease Nipple		1
13	332/Y7912		Nipple OUT PUT NIPPLE PF1/4 OUT PUT NIPPLE PF1/4		1
14-24	332/Y9137		Cartridge CARTRIDGE ASSY CARTRIDGE ASS Y		1
14	332/Y9138		O Ring O-RING O-RING		1
22	332/Y9139		O Ring O-RING O-RING		1
23	332/Y9140		O Ring O-RING O-RING		1

JS205 INDIA

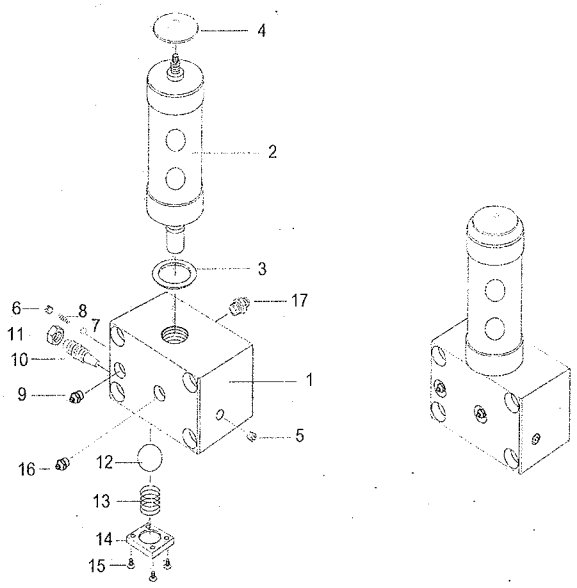

332-A2287

ITEM	Part #	CHANGE NO	DESCRIPTION	USAGE CODE	QTY
1	332/Y7897		Body BODY BODY		1
2	332/Y7898		Cylinder Compress		1
3	332/Y7899		Seal		1
4	332/y7900		Handle		1
5	332/y7901		Plug 3/8"		1
6 & 17	332/Y7902		Plug 1/4"		2
7	332/Y7903		Spring SPRING 8X30 SPRING 8X30		1
8	332/Y7904		Ball BALL DIA 8.7 BALL DIA 8.7		1
9 & 16	332/y7905		Grease Nipple		2
10	332/Y7906		Adjuster ADJUSTER M8 ADJUSTER M8		1
11	332/Y7907		Nut NUT M8 NUT M8		1
12	332/Y7908		Ball BALL DIA 35 BALL DIA 35		1

A490-15-1 OTHER ROCK BREAKERS, AUTO GREASING, OPTIONAL 9820/0692A ISSUE 1

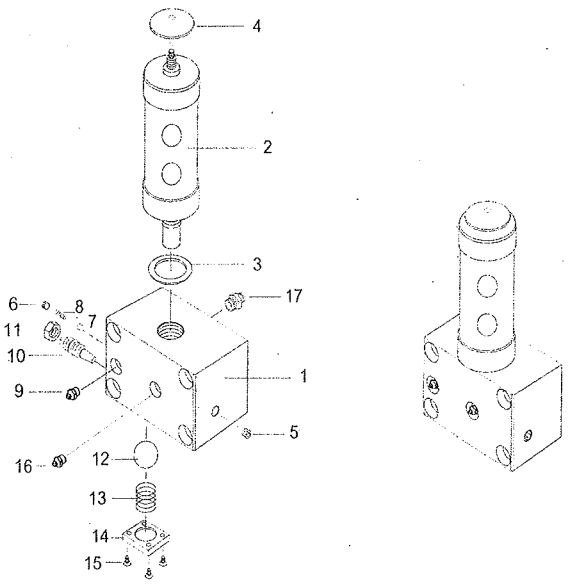

332-A2287

ITEM	PART NO	CHANGE NO	DESCRIPTION	USAGE CODE	QTY
13	332/Y7909		Spring SPRING DIA32X80L SPRING DIA32X80L		1
14	332/Y7910		Cover COVER COVER		1
15	332/Y7911		Bolt BOLT M6 BOLT M6		4
18	332/Y7912		Nipple OUT PUT NIPPLE PF1/4 OUT PUT NIPPLE PF1/4		1
19	332/Y5141		Grease Block-Cartridge Set Includes no 2,3,4		1

A

A01 SHOVELS

A02 BUCKETS

A04 ROCKBREAKER/POWERBREAKER

• A09 MISCELLANEOUS

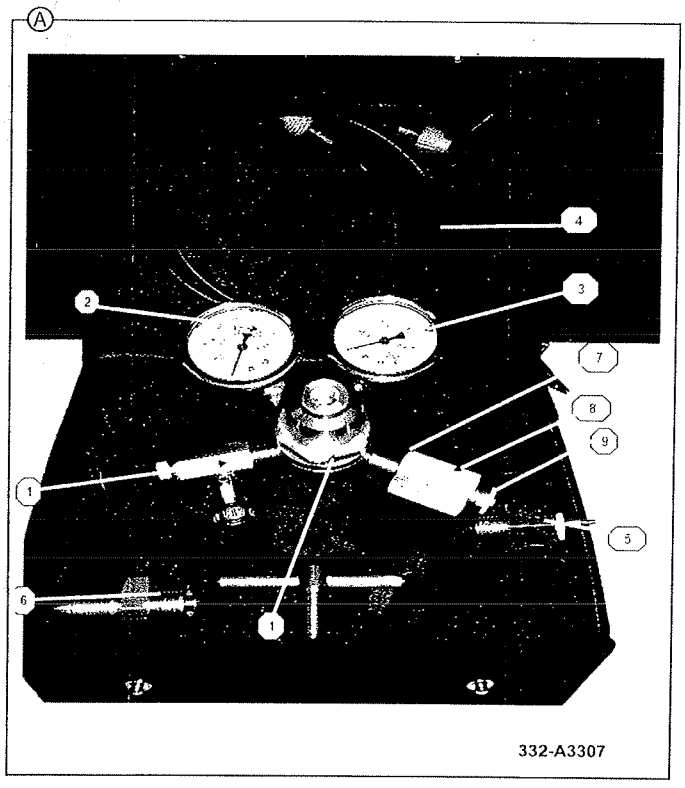

332-A3307

JS205 INDIA

ITEM	Part #	CHANGE NO	DESCRIPTION	USAGE CODE	QTY
A	332/A3307		Kit gas charging		1
1	332/A3308		Regulator		1
2	332/A3309		Meter pressure, 100 bar		1
3	332/A2632		Meter pressure, 250 bar		1
4	332/A2578		Hose gas		1
5	332/A2577		Adaptor Gas charging		1
6	332/A3310		Adaptor pneumatic		1
7	332/A3311		Coupling		1
8	332/A3312		Nut		1
9	332/A3313		Ring		1
10	332/A3314		Valve drain		1

JS205 INDIA

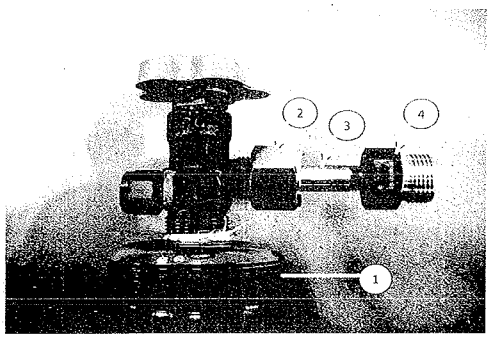

ITEM	Part #	CHANGE NO	DESCRIPTION	USAGE CODE	QTY
1	332/Y3280		Bottle Nitrogen Gas Bottle Nitrogen Gas Bottle		1
2	TBA		Part number not yet known		1
3	TBA		Part number not yet known		1
4	892/01196		Adaptor		1
5	332/A2636		Bottle GAS BOTTLE (NITROGEN GAS BOTTLE (NITROGEN		1
6	332/Y7841		Bottle GAS BOTTLE GAS BOTTLE		1
7	892/01194		Tool Nitrogen cylinder 2L		1

332-Y3280

JS205 INDIA

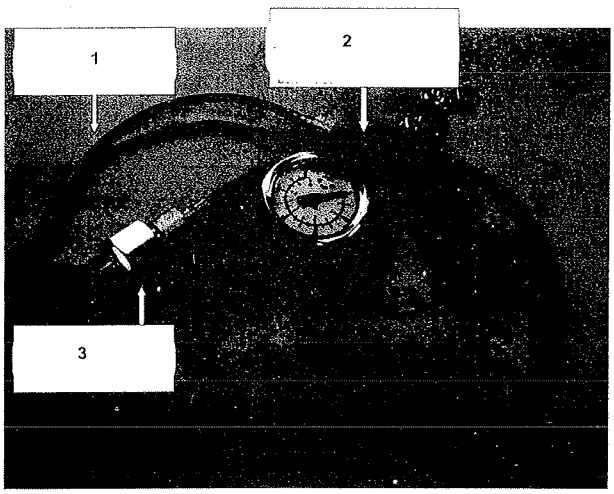

ITEM	Part #	CHANGE NO	DESCRIPTION	USAGE CODE	QTY
1	332/A2578		Hose gas		1
3	332/A2577		Adaptor Gas charging		1

998-11321

JS205 INDIA

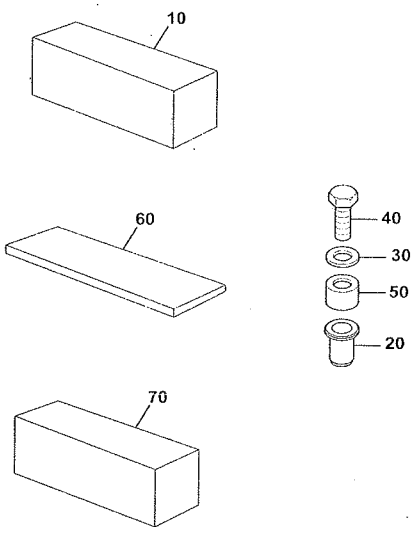

ITEM	Part #	CHANGE NO	DESCRIPTION	USAGE CODE	QTY
10	730/00336		Box First Aid		1
20	826/01103		Nut Rivet,M8 Open Ended		2
30	1420/0007Z		Washer Plain M8		2
40	1315/0308Z		Setscrew M8X30		2
50	40/301555		Spacer		2
60	40/301592		Mat First Aid Box		1
70	332/P3168		Kit - First Aid		1

229-02194-1

JS205 INDIA

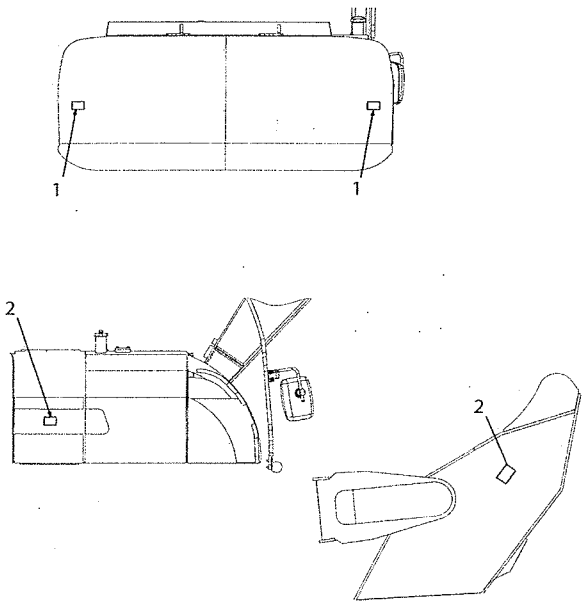

ITEM	Part #	CHANGE NO	DESCRIPTION	USAGE CODE	QTY
1	40/302642		Reflector Reflex Red		2
2	40/302643		Reflector Amber		4

229-02203-1

B

- **B01 BODYWORK/FRAME**
- **B02 CAB / CANOPY**
- **B04 EXCAVATOR**
- **B05 REFURBISHMENTS**

BODYWORK INSTALLATION ASSEMBLIES, UPPER STRUCTURE

JS205 INDIA

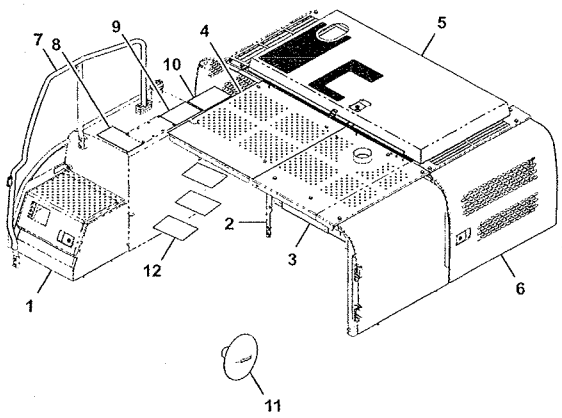

334-P0200-1

ITEM	Part #	CHANGE NO	DESCRIPTION	USAGE CODE	QTY
1			Toolbox Assembly Refer B530-15-1		1
2			Frame House Assembly Refer B190-10-1		1
3			Bulkhead Assembly Refer B190-15-1		1
4			Cover Top Assembly Refer B170-1-1		1
5			Bonnet Assembly Refer B170-5-1		1
6			Door Assembly Refer B240-5-1		1
7			Handrail Assembly Refer B190-20-1		1
8	332/P2107		Pad Anti Slip		1
9	332/P2108		Pad Anti Slip		1
10	332/P2127		Pad Anti Slip		1
11	826/01308		Retainer Insulation		4
12	229/01215		Pad Anti-Slip 200 x 300		8

B120-1-1 FUEL TANK, ASSEMBLY

9820/0692A
ISSUE 1

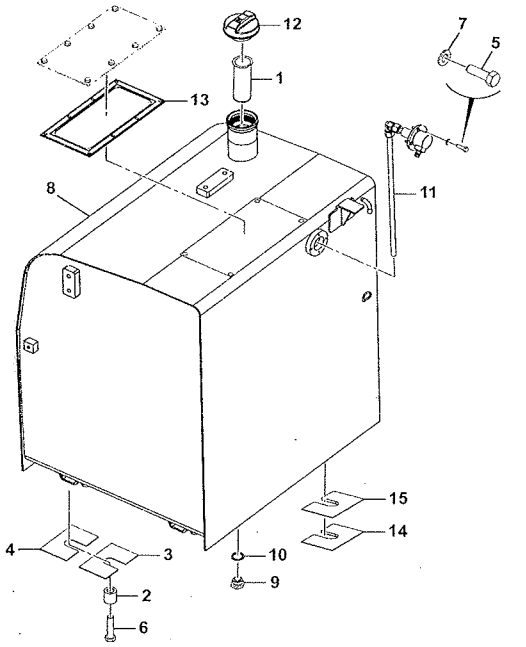

229-01280-7

JS205 INDIA

ITEM	Part #	CHANGE NO	DESCRIPTION	USAGE CODE	QTY
1	580/01200		Strainer Diesel-Filler		1
2	JSJ0042		Spacer		6
3	KHH0040		Plate Shim T=0.03"		6
4	KHH0137		Shim plate		6
5	1315/0103Z		Screw		4
6	1316/3716Z		Bolt		6
7	1420/0005Z		Washer Plain		4
8	229/01282		Fuel tank Refer B120-5-1		1
9	816/80012		Plug Magnetic 3/4"BSP		1
10	1406/0021		Washer Bonded		1
11	333/J9738		Sensor fuel		1
12	332/F8215		Cap Filler,Vented Diesel Locking		1
13	332/P5028		Gasket Tank Top		1
14	333/L9293		Shim Plate		2
15	333/L9295		Shim Plate		2

B120-5-1 FUEL TANK, Assembly ABI

9820/0692A
ISSUE 1

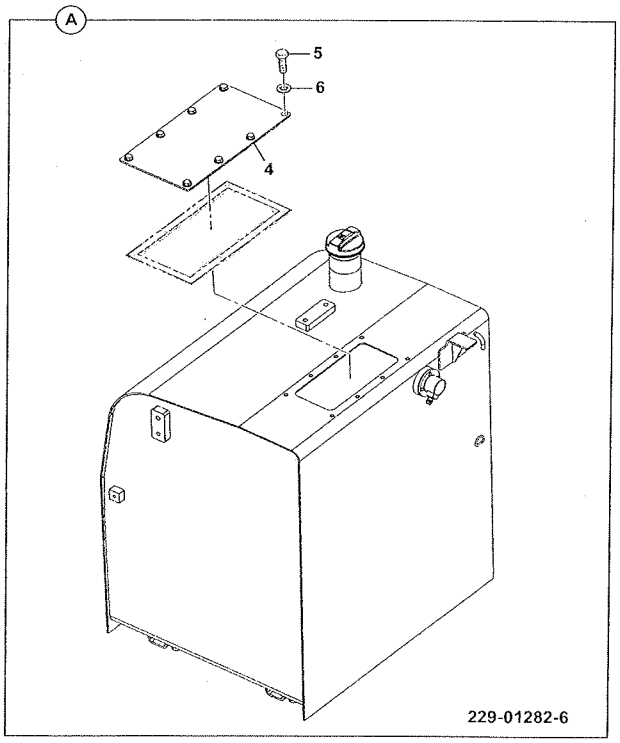

229-01282-6

JS205 INDIA

ITEM	Part #	CHANGE NO	DESCRIPTION	USAGE CODE	QTY
1	229/01283		Tank fuel		2
4	229/00606		Cover Inspection		2
5	1315/0305Z		Setscrew M8X20		16
6	1420/0007Z		Washer Plain M8		16

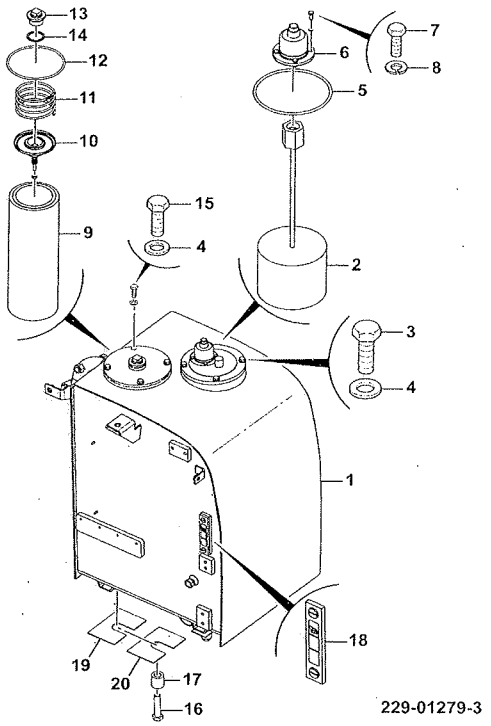

JS205 INDIA

ITEM	Part #	CHANGE NO	DESCRIPTION	USAGE CODE	QTY
1			Tank Hydraulic Assembly Refer B130-5-1		1
2	32/925359		Strainer assembly		1
3	1316/0408Z		Screw M10x30		4
4	JHP0046		Washer M10		8
5	CSP0161		O Ring		1
6	32/925692		Breather air c/w rubber cap		1
7	1316/0203Z		Screw		4
8	1425/0006Z		Washer Spring		4
9	KRJ3836		Filter		1
10	KRJ2246		Valve relief		1
11	KRJ3457		Spring compression		1
12	KNJ0381		O Ring		1
13	JHH0082		Plug		1
14	1406/0029		Washer Dowty		1
15	1316/0405Z		Screw M10 X 20		4

B130-1-1 HYDRAULIC TANK, ASSEMBLY
9820/0692A
ISSUE 1

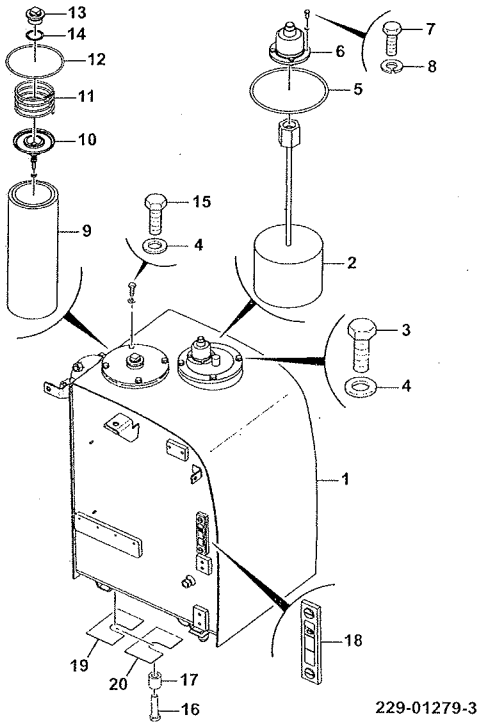

ITEM	PART NO	CHANGE NO	DESCRIPTION	USAGE CODE	QTY
16	1316/3716Z		Bolt		4
17	JSJ0042		Spacer		4
18	JHH0119		Gauge		1
19	KHH0040		Plate Shim T=0.03"		4
20	KHH0137		Shim plate		4

JS205 INDIA

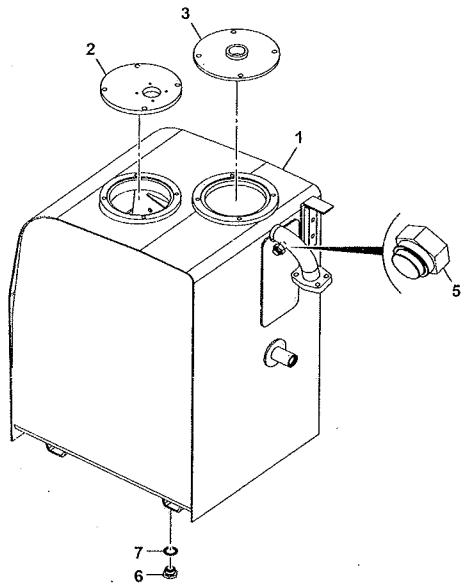

229-01286-4

ITEM	Part #	CHANGE NO	DESCRIPTION	USAGE CODE	QTY
1	229/01287		Tank Hydraulic		1
2	KNJ1822		Cover sump		1
3	JRJ0148		Cover		1
5	816/00190		Cap		1
6	816/80012		Plug Magnetic 3/4"BSP		1
7	1406/0021		Washer Bonded		1

JS205 INDIA

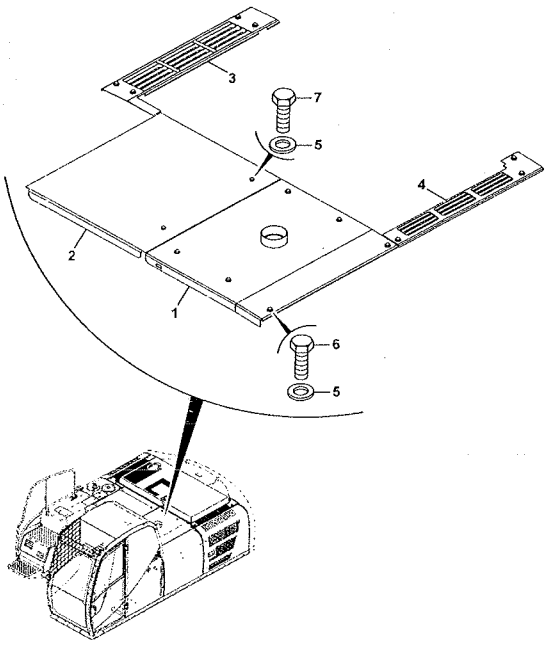

332-P2630-6

ITEM	Part #	CHANGE NO	DESCRIPTION	USAGE CODE	QTY
1	334/P0925		Cover Cab Rear		1
2	334/L4283		Cover Middle		1
3	334/L4262		Grill Right Side		1
4	333/L3155		Grille		1
5	1411/0005Z		Washer		15
6	1316/0507Z		Screw		13
7	1316/0508Z		Screw		2

JS205 INDIA

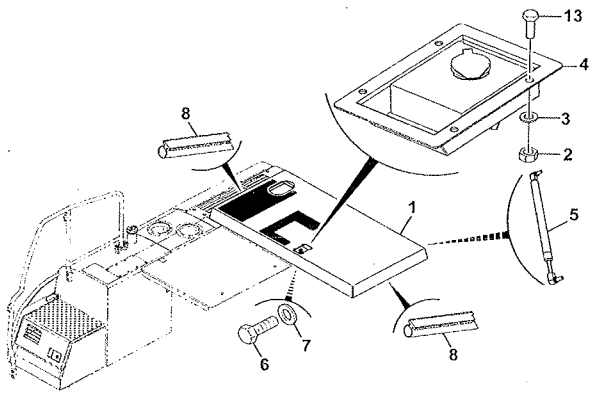

ITEM	Part #	CHANGE NO	DESCRIPTION	USAGE CODE	QTY
1	229/01110		Bonnet Bonnet		1
2	1370/0001Z		Nut M5		4
3	1420/0005Z		Washer Plain		4
4	826/11245		Latch paddle engine cover		1
5	332/P6503		Strut - Gas		2
6	1316/0507Z		Screw		4
7	1420/0009Z		Washer Plain M12		4
8	334/L4847		Strip Edging		4
13	826/01406		Screw		4

229-01020-6

JS205 INDIA

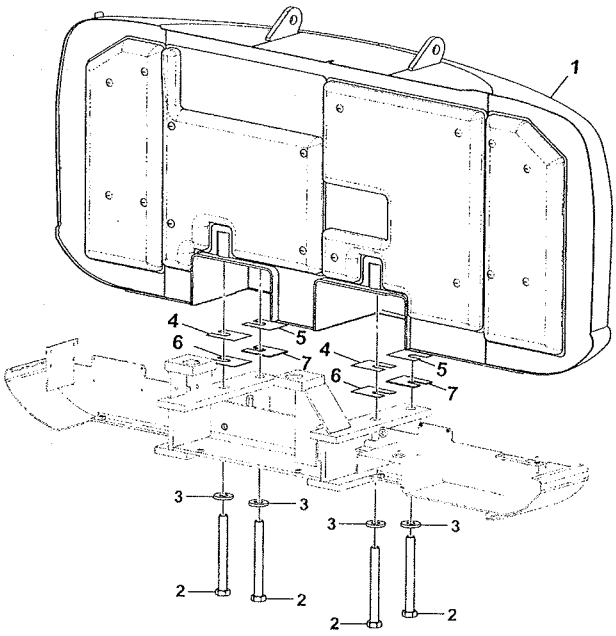

ITEM	Part #	CHANGE NO	DESCRIPTION	USAGE CODE	QTY
1	331/35416		Counterweight 3700Kg		1
2	KBB0445		Bolt		4
3	KHB0063		Washer high strength M30		4
4	KRB0736		Shim t=0.8		2
5	KRB0737		Shim t=1.2		2
6	KRB0738		Shim t=2.3		2
7	KRB0739		Shim t=4.5		2

229-01050-1

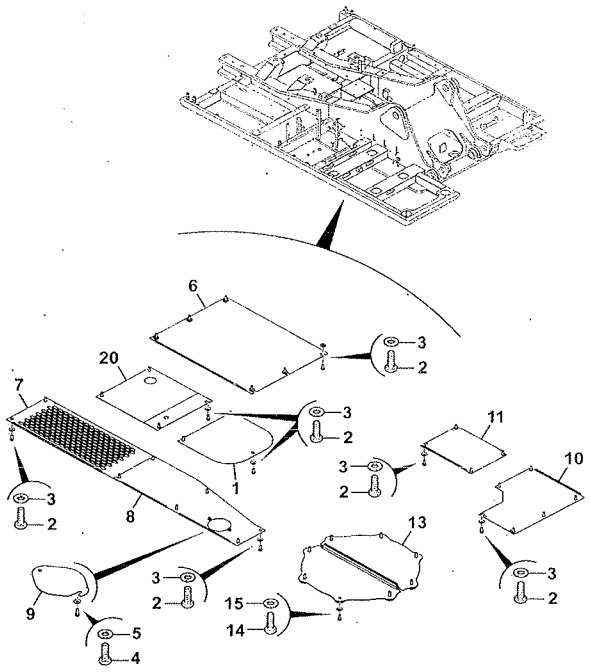

JS205 INDIA

ITEM	Part #	CHANGE NO	DESCRIPTION	USAGE CODE	QTY
1	JRB0113		Cover under center		1
2	1315/0509Z		Setscrew M12 x 35mm		31
3	JHP0049		Washer		31
4	1316/0405Z		Screw M10 X 20		2
5	1420/0008Z		Washer Plain M10		2
6	331/43566		Cover under left hand rear		1
7	332/P5474		Cover - Under		1
8	331/31977		Cover under hyd & fuel tanks		1
9	331/31978		Cover under access panel		1
10	331/35462		Cover Under		1
11	331/35464		Cover Under Front		1
13	KRA0814		Cover under		2
14	1316/0511Z		Bolt		8
15	JHP0042		Washer M12		8
20	335/06827		Cover		1

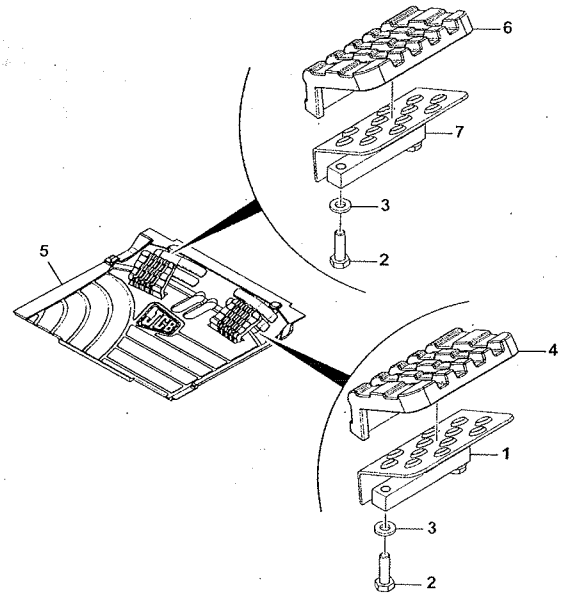

JS205 INDIA

ITEM	Part #	CHANGE NO	DESCRIPTION	USAGE CODE	QTY
1	335/A2542		Foot Rest Right Side		1
2	1315/0409Z		Set Screw M10X35		4
3	JHP0046		Washer M10		4
4	335/A1274		Plate Boot Right Side		1
5	335/C1200		Floormat		1
6	334/L9862		Plate Boot Left Side		1
7	335/A2539		Foot Rest Left Side		1

JS205 INDIA

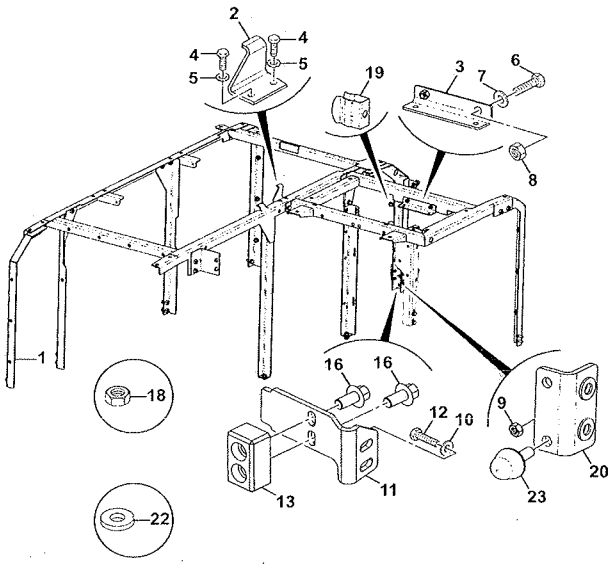

215-14970-8

ITEM	Part #	CHANGE NO	DESCRIPTION	USAGE CODE	QTY
1			Frame Work Refer B190-25-1		1
2	229/01117		Bonnet Catch		1
3	334/P0780		Bracket		1
4	1316/0205Z		Screw		2
5	1420/0006Z		Washer Plain M6		2
6	1316/0507Z		Screw		2
7	1420/0009Z		Washer Plain M12		2
8	1371/0401Z		Nut Hex 12		2
9	1370/0301Z		Nut M10		6
10	1420/0008D		Washer Plain		4
11	334/P1341		Bracket Support		1
12	1316/0405Z		Screw M10 X 20		2
13	333/J3188		Block Door Buffer ABI		1
16	1317/3309Z		Bolt M8X35		2
18	1370/0201Z		Nut		2
19	JLP0145		Clip		1
20	334/L3314		Plate		1

B190-10-1 OTHER BODYWORK ITEMS, FRAME HOUSE
9820/0692A
ISSUE 1

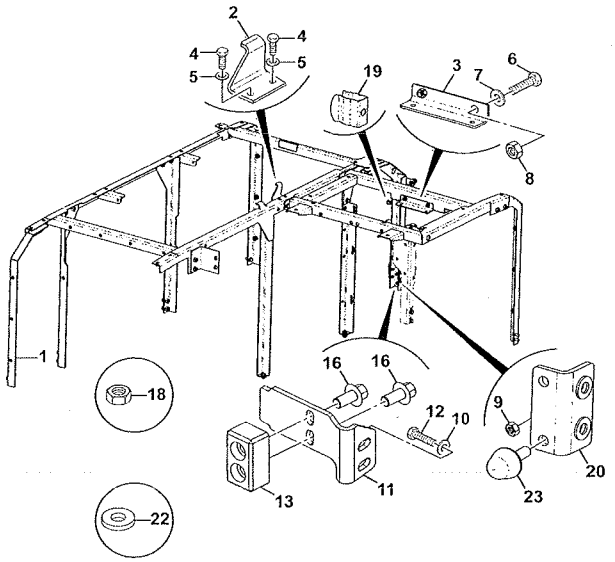

215-14970-8

ITEM	PART NO	CHANGE NO	DESCRIPTION	USAGE CODE	QTY
22	JHP0080		Washer		2
23	334/L1393		Buffer Rubber		6

JS205 INDIA

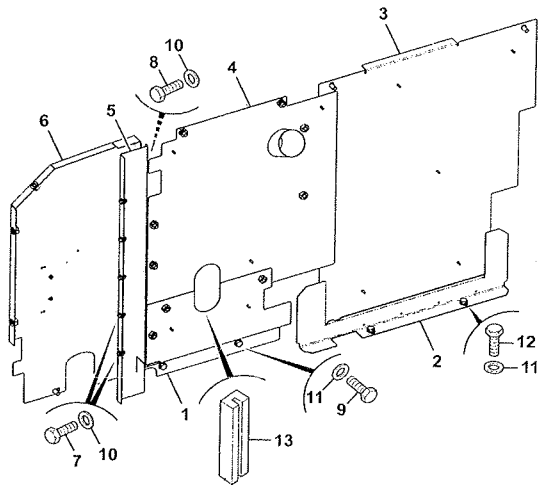

ITEM	Part #	CHANGE NO	DESCRIPTION	USAGE CODE	QTY
1	229/01549		Bulkhead		1
2	335/07437		Guide baffle		1
3	335/11296		Baffle right hand		1
4	229/01666		Plate		1
5	335/11299		Bracket inner baffle support		1
6	332/P2984		Baffle LH Outer		1
7	1316/0303Z		Screw		5
8	1316/0305Z		Bolt High Tensile		2
9	1316/0507Z		Screw		9
10	1420/0007Z		Washer Plain M8		7
11	1420/0009Z		Washer Plain M12		17
12	1316/0505Z		Screw M12x20		5
13	JHH0074		Strip Edging		1

332-P2983-4

JS205 INDIA

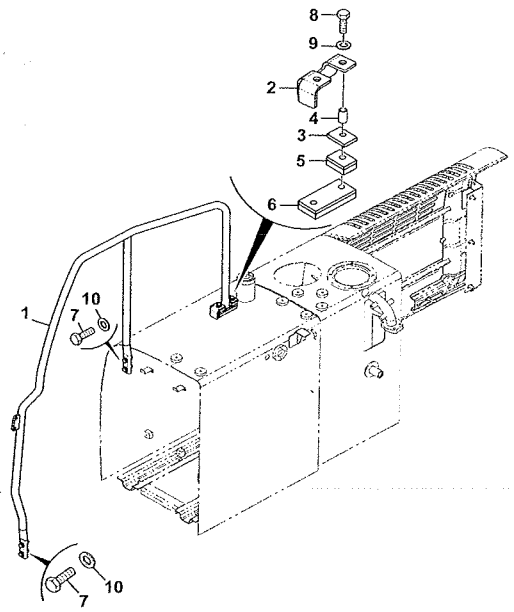

ITEM	Part #	CHANGE NO	DESCRIPTION	USAGE CODE	QTY
1	332/L6977		Handrail		1
2	332/K8222		Plate cover		1
3	332/K7721		Plate		2
4	332/K7299		Spacer		2
5	332/K7719		Block		2
6	332/K7295		Block		1
7	1316/0510		Bolt		4
8	1316/3515Z		Bolt		2
9	1420/0009Z		Washer Plain M12		2
10	JHP0042		Washer M12		4

334-P0403-1

JS205 INDIA

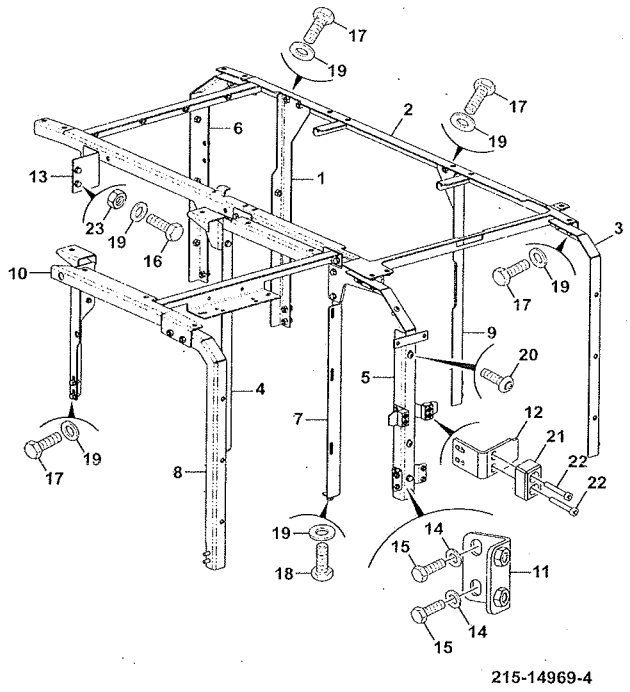

ITEM	Part #	CHANGE NO	DESCRIPTION	USAGE CODE	QTY
1	335/07529		Leg Right Hand Rear Inner		1
2	335/15010		Top Frame		1
3	335/11022		Leg Left Hand Rear		1
4	335/07335		Leg Right Hand Mid Centre		1
5	335/07336		Leg Left Hand Mid		1
6	335/11024		Bracket Right Hand Door Support		1
7	335/11025		Leg Left Hand Inner		1
8	332/P2408		Front Leg Left Side		1
9	331/42872		Leg Left Hand Rear		1
10	335/15009		Frame Work Cab		1
11	334/L3314		Plate		2
12	332/K7311		Bracket Support		2
13	335/08267		Bracket Hydraulic Tank		1
14	JHP0080		Washer		12
15	1316/0305Z		Bolt High Tensile		8

B190-25-1 OTHER BODYWORK ITEMS, FRAME, WORK
9820/0692A
ISSUE 1

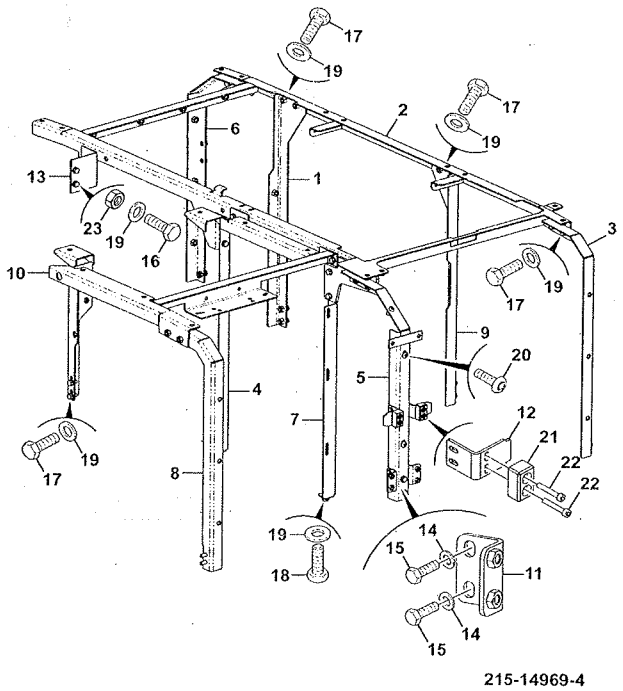

ITEM	PART NO	CHANGE NO	DESCRIPTION	USAGE CODE	QTY
16	1316/0505Z		Screw M12x20		3
17	1316/0507Z		Screw		20
18	1316/0508Z		Screw		15
19	1420/0009Z		Washer Plain M12		41
20	826/11192		Screw Button Head		3
21	333/J3188		Block Door Buffer ABI		2
22	1317/3309Z		Bolt M8X35		4
23	1370/0201Z		Nut		4

B

- B01 BODYWORK/FRAME
- • B02 CAB / CANOPY
- B04 EXCAVATOR
- B05 REFURBISHMENTS

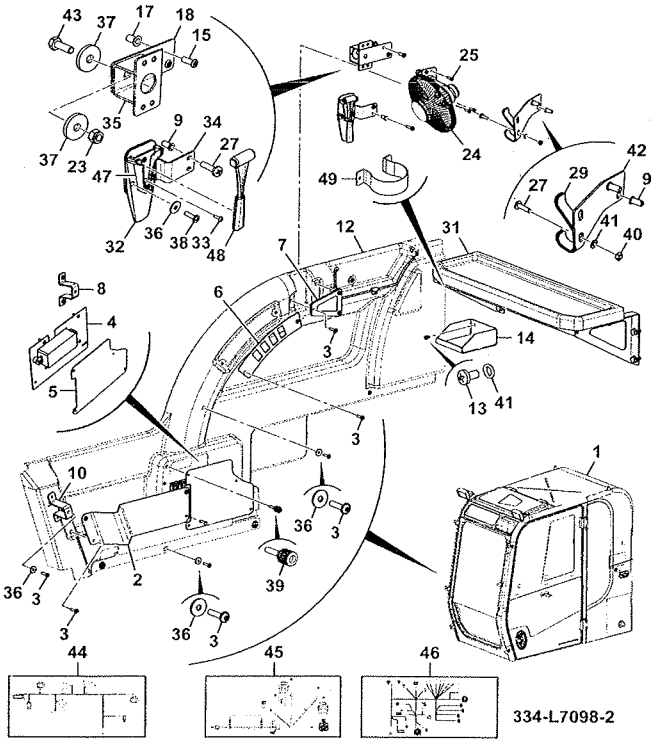

JS205 INDIA

ITEM	Part #	CHANGE NO	DESCRIPTION	USAGE CODE	QTY
2	334/P1051		Plate Stowage		1
3	826/01560		Screw M6x25		17
4			Box Fuse Assembly Refer C390-1-1		1
5	334/L9788		Plate Cover Fuse Box		1
6	334/P1067		Plate Mounting Switch		1
7	334/P1068		Plate Holder Mobile		1
8	334/L9409		Bracket Trim		1
9	826/01101		Rivet Nut,M6		4
10	334/P1793		Bracket Trim		1
12			Trim Assembly Right Side Refer B270-1-1		1
13	KHR0736		Screw pan head		6
14	334/P9098		Holder Bottle		1
15	826/11046		Screw M8x20		2
17	826/01103		Nut Rivet,M8 Open Ended		2

Continue...

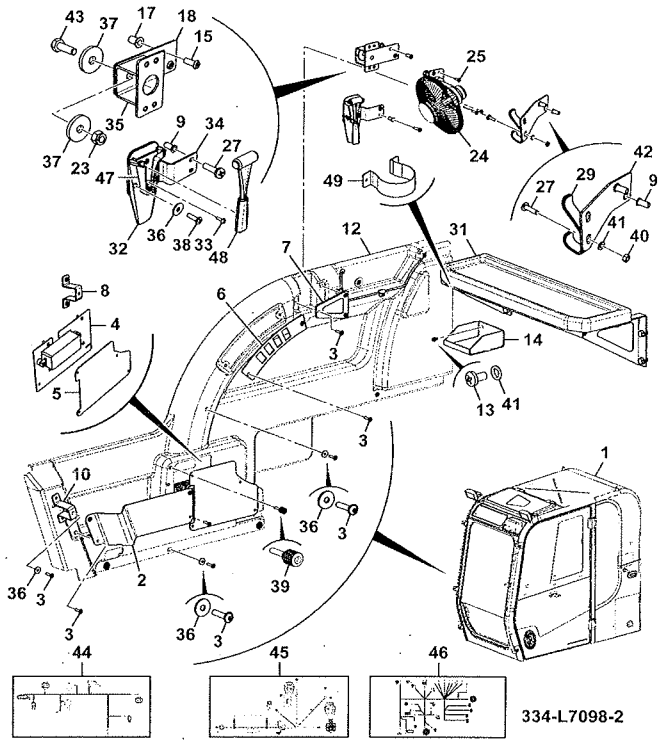

ITEM	PART NO	CHANGE NO	DESCRIPTION	USAGE CODE	QTY
18	334/L7067		Bracket Mounting Fan		1
23	1370/0303Z		Lock Nut M10		1
24	332/L3052		Fan Cabin - 24V		1
25	826/01406		Screw		4
27	826/01519		Screw M6x25		4
29	142/01083		Hook coat		1
30	646/04635		Light Cab		1
31			Seat Rear Assembly Refer B260-20-1		1
32	332/J1436		Plate hammer retainiing		1
33	1430/0102		Screw		2
34	335/B2119		Bracket Hammer		1
35	333/P0024		Bracket Fan Support		1
36	823/00516		Washer Nylon M6		9
37	229/00737		Washer Nylon		2
38	KHR0738		Screw pan head		2
39	40/303133		Knob Screw		4
40	1371/0101Z		Nut high strength		1

B200-1-1 OPERATOR ENCLOSURE INSTALLATION ASSEMBLIES, CAB, SHELL 9820/0692A ISSUE 1

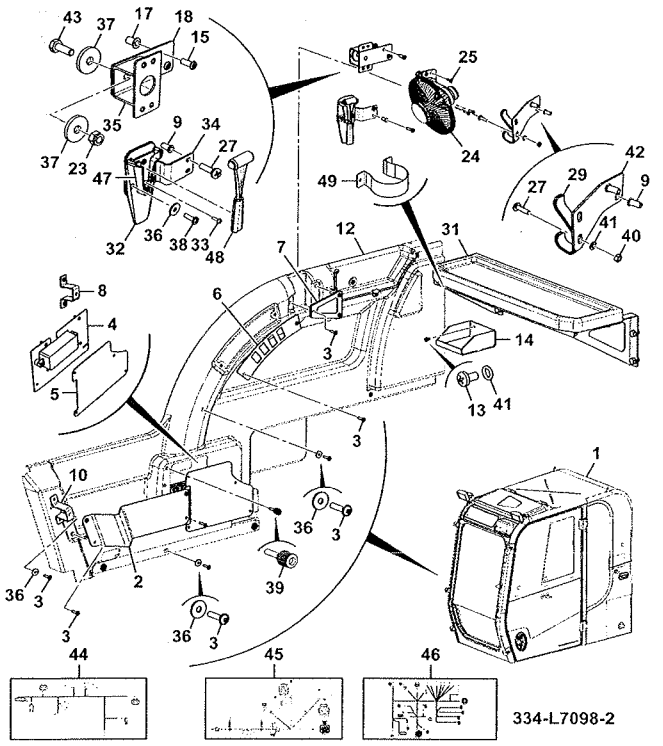

ITEM	PART NO	CHANGE NO	DESCRIPTION	USAGE CODE	QTY
41	1420/0006Z		Washer Plain M6		1
42	334/L6220		Bracket Top Left Side		1
43	1315/0408Z		Setscrew M10 x 30mm		1
44	334/L5397		Harness Roof Cab		1
45	334/P1442		Harness Facia/Instrument		1
46	334/P1439		Harness Cab Base		1
47	332/U4206		Bracket breaker tool holder		1
48	265/00678		Hammer emergency glass breaker		1
49	334/P9095		Strap Holder Bottle		1

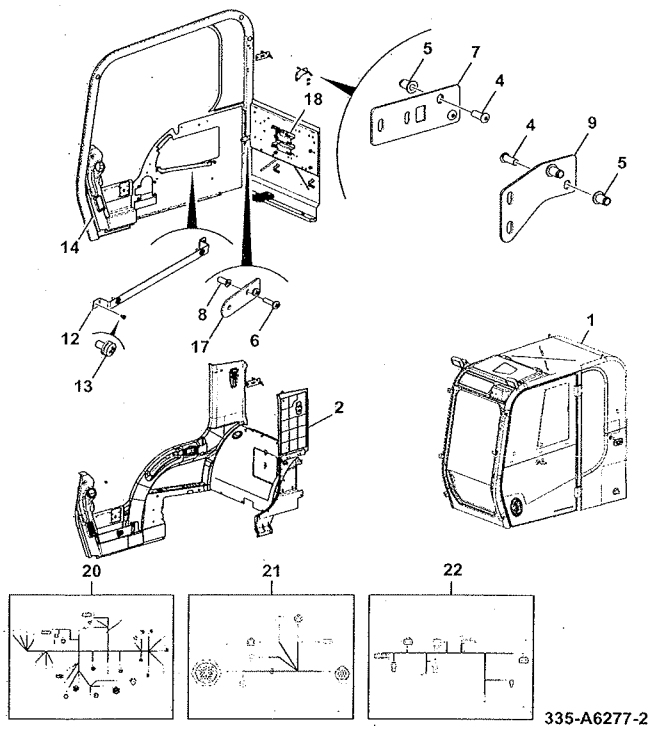

JS205 INDIA

ITEM	Part #	CHANGE NO	DESCRIPTION	USAGE CODE	QTY
1	333/T7326		Cab ABI Refer B210-1-1		1
2			Trim Cab Assembly, Ducted AC Refer B270-5-1		1
4	826/11046		Screw M8x20		4
5	826/01103		Nut Rivet,M8 Open Ended		4
6	826/01519		Screw M6x25		2
7			Bracket Mounting Cover Col Right Side Refer B290-15-1		1
8	826/01101		Rivet Nut,M6		2
9			Bracket Top Left Side Refer B290-20-1		1
12	334/P6964		Bracket Mounting Panel Right Side		1
13	KHR0736		Screw pan head		2
14	334/P5556		Foam Corner		1

B200-5-1 OPERATOR ENCLOSURE INSTALLATION ASSEMBLIES, CAB, SHELL, ASIA 9820/0692A ISSUE 1

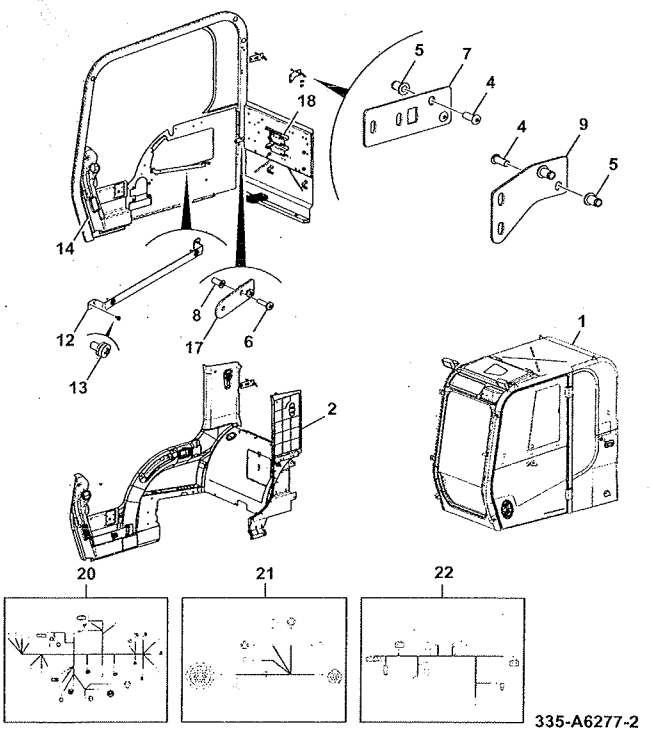

ITEM	PART NO	CHANGE NO	DESCRIPTION	USAGE CODE	QTY
17	334/L7586		Bracket Bottom Right Side		1
18			Box Fuse Assembly Refer C390-2-1		1
19	646/04635		Light Cab		1
20	335/A6153		Harness Cab		1
21	335/A7580		Harness Panel Refer C110-1-1		1
22	334/L5397		Harness Roof Cab		1

JS205 INDIA

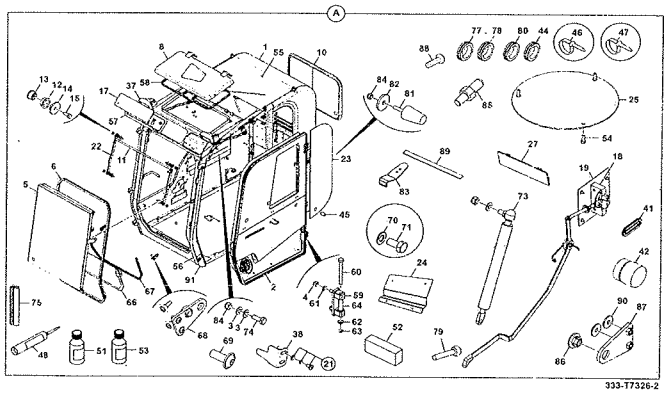

ITEM	Part #	CHANGE NO	DESCRIPTION	USAGE CODE	QTY
A	333/T7326		Cab ABI		1
1	334/L5349		Cab		1
2			Door Assembly Refer B240-1-1		1
3	1420/0007Z		Washer Plain M8		6
4	1370/0303D		Nut Self Lock		6
5			Screen Front Assembly Refer B250-1-1		1
6	333/J7154		Beading Glass Front		1
8			Roof Hatch Assembly Refer B230-1-1		1
10	333/J6869		Slide Window Rear, Assembly		1
11	333/J7166		Link		1
12	331/36373		Washer		4
13	332/P7552		Spacer		4
14	6900/0569		Washer		4
15	1315/0305		Screw Set		4

B210-1-1 OPERATOR ENCLOSURE, CAB, ABI
9820/0692A
ISSUE 1

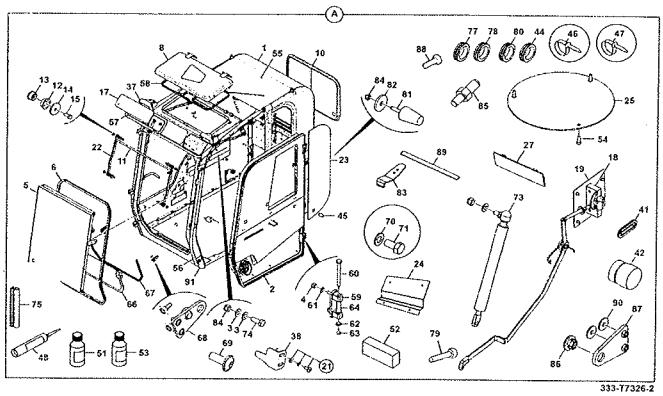

ITEM	PART NO	CHANGE NO	DESCRIPTION	USAGE CODE	QTY
17	333/J7149		Glass Top		1
18			Latch Assembly Refer B290-10-1		1
19	334/L8734		Plate Cover Latch		1
21	KHR0736		Screw pan head		10
22	333/J7228		Glass Right Side		1
23	334/L8394		Glass Quarter Left Side		1
24	334/L6866		Cover Motor Wiper		1
25	334/P2003		Plate Cover Speaker		2
27	717/08600		Cover Radio Blanking		1
37	229/00595		Light Working		2
38	334/L6953		Retainer Blade Wiper		1
41	331/37334		Grommet		1
42	334/L5912		Roller		2
44	332/L1608		Grommet		2
45	6900/0562		Stopper		1
46	KAR0016		Tie Cable		4
48	646/05321		Adhesive		0

Continue...

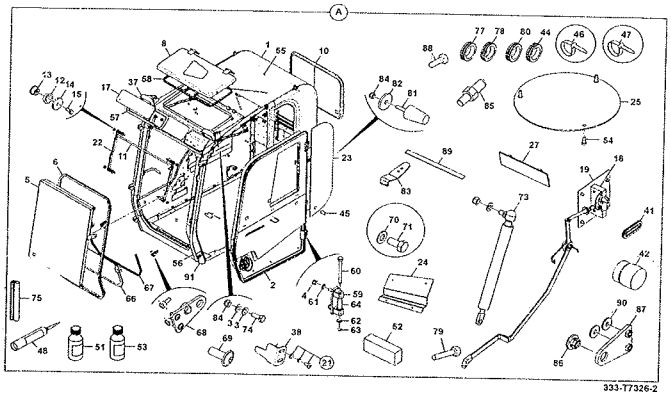

ITEM	PART NO	CHANGE NO	DESCRIPTION	USAGE CODE	QTY
51	646/05325		Cleaner Active Wiper		0
52	926/15500		Spacer Block		0
53	333/P5834		Glazing Adhesive Direct		0
54	826/10996		Screw M4 x 10mm button head		6
55			Liner Top Assembly Refer B230-5-1		1
56	334/P6301		Handrail		1
57	334/P5410		Beading Glass Top		1
58	334/L6315		Beading Screen Top		1
59	334/P5247		Hinge		2
60	334/L6913		Pin Hinge 10 x 126		2
61	1420/0008Z		Washer Plain M10		4
62	1420/0008D		Washer Plain		2
63	821/00318		Circlip		2
64	40/302877		Bush		2
66			Glass Front Assembly Refer B250-5-1		1

B210-1-1 OPERATOR ENCLOSURE, CAB, ABI 9820/0692A
ISSUE 1

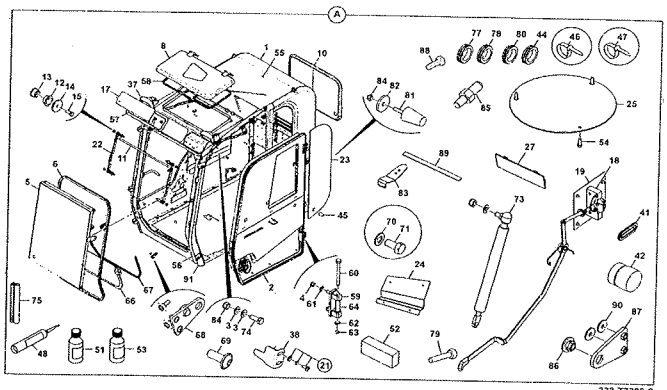

ITEM	PART NO	CHANGE NO	DESCRIPTION	USAGE CODE	QTY
67	333/J7103		Beading Glass Front Lower		1
68	333/J7116		Plate Lock Latch		2
69	826/01559		Flange Button Head Socket		8
70	1420/0009Z		Washer Plain M12		4
71	1315/0507		Setscrew		4
73	334/P8876		Strut Gas Sliding Front		2
74	334/P9127		Pin Strut Gas		4
75	334/P8949		Beading Rest Glass		1
77	332/P8518		Grommet Blind		2
78	332/P8351		Grommet Blind		1
79	KHN1395		Stop Rubber		2
80	2410/0115		Grommet STD. 44.4 DIA x 3.5 THK		6
81	332/P9609		Stopper Windscreen		3
82	333/P3021		Washer 45 x 11 x 5		3
83	331/36356		Hook		2
84	1370/0203Z		Lock Nut M8		5

Continue...

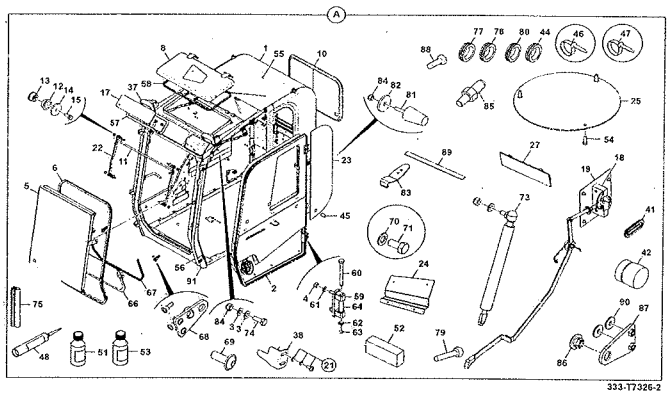

ITEM	PART NO	CHANGE NO	DESCRIPTION	USAGE CODE	QTY
85	334/P8526		Pin		1
86	335/B4278		Bush Nylon		2
87	335/B6056		Plate Lock Latch		2
88	826/01519		Screw M6x25		4
89	335/B8547		Strip Nylon		2
90	823/00516		Washer Nylon M6		4
91	1371/0301Z		Nut High Strength, M10		2

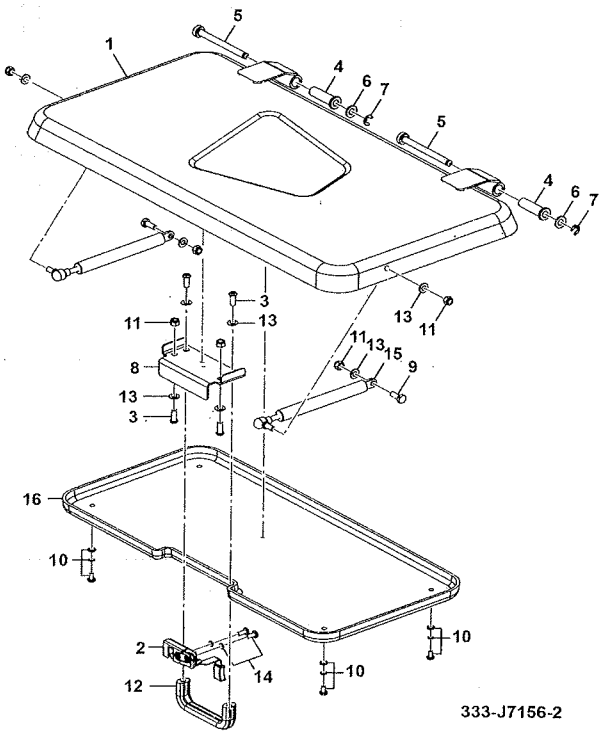

JS205 INDIA

ITEM	Part #	CHANGE NO	DESCRIPTION	USAGE CODE	QTY
1	334/L7705		Cover Top		1
2	334/P7758		Latch Hatch Top		1
3	826/11046		Screw M8x20		4
4	40/302877		Bush		2
5	334/L6913		Pin Hinge 10 x 126		2
6	1420/0008D		Washer Plain		2
7	821/00318		Circlip		2
8	335/B3618		Plate Handle		1
9	334/P9127		Pin Strut Gas		2
10	KHR0736		Screw pan head		4
11	1370/0203Z		Lock Nut M8		6
12	332/P0843		Handle		1
13	1420/0007Z		Washer Plain M8		8
14	KHR0737		Screw Pan Head		2
15	334/P6289		Strut Gas Hatch Roof		2
16	334/P8401		Liner Hatch Roof		1

JS205 INDIA

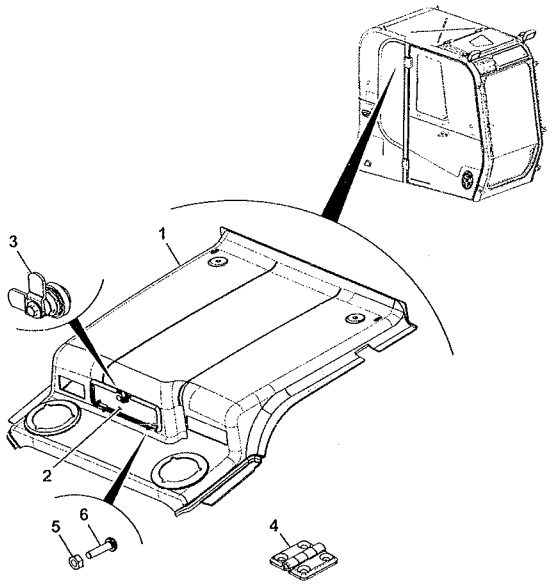

334-P7215-1

ITEM	Part #	CHANGE NO	DESCRIPTION	USAGE CODE	QTY
1	335/A4191		Liner Roof		1
2	334/P9126		Door Liner Roof		1
3	333/Y1377		Lock Grille		1
4	335/B3120		Hinge Door Roof		2
5	1370/9401Z		Nut		4
6	826/01411		Screw pan head M4 x 16		4

JS205 INDIA

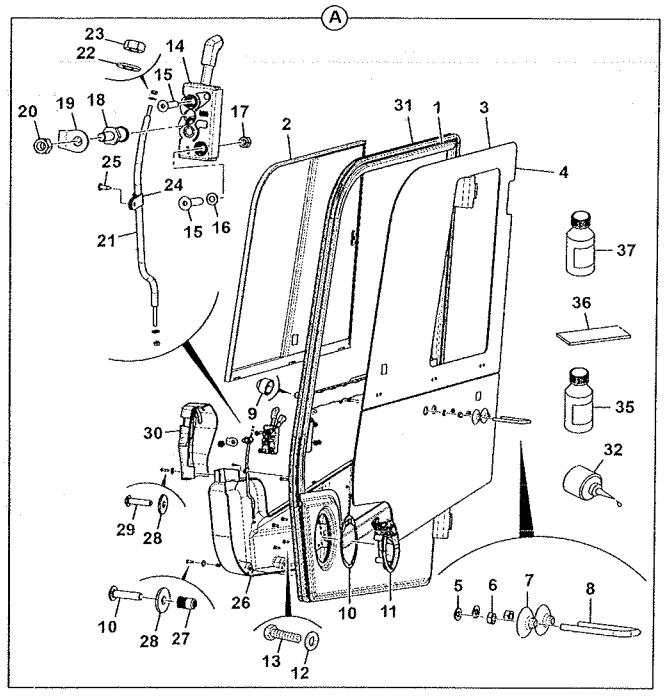

334-L4254-2

ITEM	Part #	CHANGE NO	DESCRIPTION	USAGE CODE	QTY
A			Door Assembly		1
1	334/L8746		Frame Door Left Side		1
2	334/L4897		Slide Window Door Assembly		1
3	333/J6713		Glass Upper Door		1
4	333/J7109		Glass Stable Door		1
5	1420/0008D		Washer Plain		4
6	1370/0301D		Nut M10		4
7	332/L8512		Seal		2
8	334/L6354		Striker Lockback		1
9	331/36379		Cap nut M12		2
10	333/Y2927		Gasket Door Handle		1
11	331/36386		Handle cab door		1
12	1420/0006D		Washer Plain M6		4
13	1315/0203D		Setscrew M6 x 16mm		4
14	331/36380		Lock door		1

Continue...

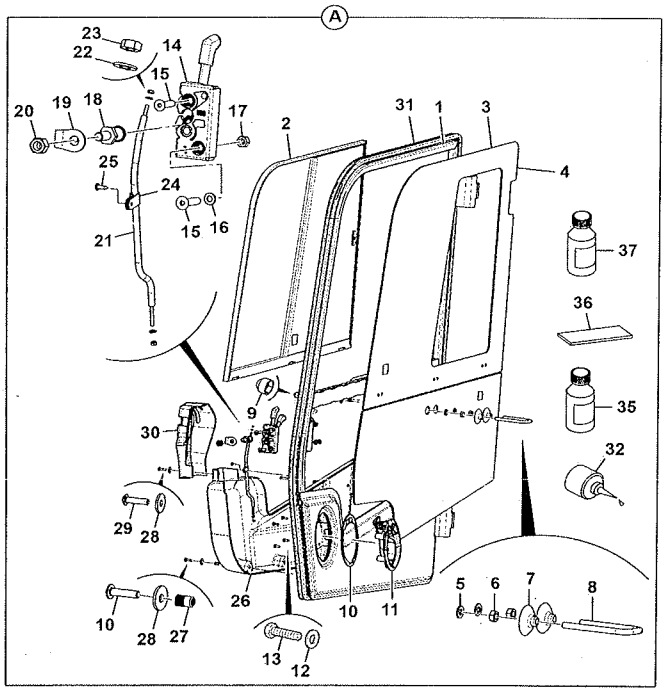

334-L4254-2

ITEM	PART NO	CHANGE NO	DESCRIPTION	USAGE CODE	QTY
15	826/01814		Screw Countersunk M8x35		2
16	1420/0007D		Washer Plain M8		2
17	1370/0203D		Nut Lock M8		2
18	331/30951		Bolt Door Striker		1
19	331/26791		Guard Striker		1
20	826/10947		Nut Plain,M12		1
21	334/L7284		Rod Lock		1
22	1420/0004D		Washer plain M4		2
23	1370/9401D		Nut plain M4		2
24	332/L8505		Ring		1
25	332/L8509		Screw 4,8 X 16		1
26	334/P7629		Panel Lower Door		1
27	826/11523		Nut Rivet Nut M6		4
28	823/00516		Washer Nylon M6		6
29	826/01560		Screw M6x25		6
30	334/L5596		Cover Latch Door		1
31	334/L7373		Beading Edge Door		1
32	646/05321		Adhesive		0
35	646/05325		Cleaner Active Wiper		0

B240-1-1 DOORS, ASSEMBLY, CAB
9820/0692A
ISSUE 1

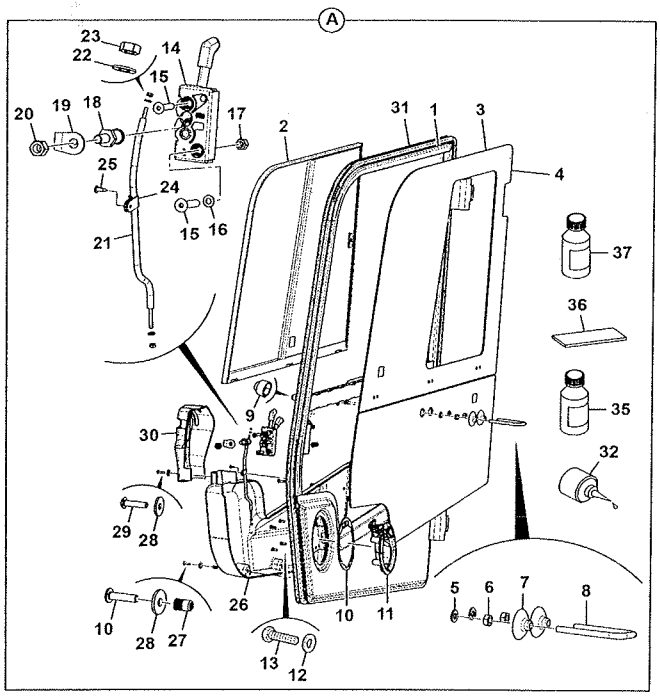

334-L4254-2

ITEM	PART NO	CHANGE NO	DESCRIPTION	USAGE CODE	QTY
36	926/15500		Spacer Block		0
37	333/P5834		Glazing Adhesive Direct		0

JS205 INDIA

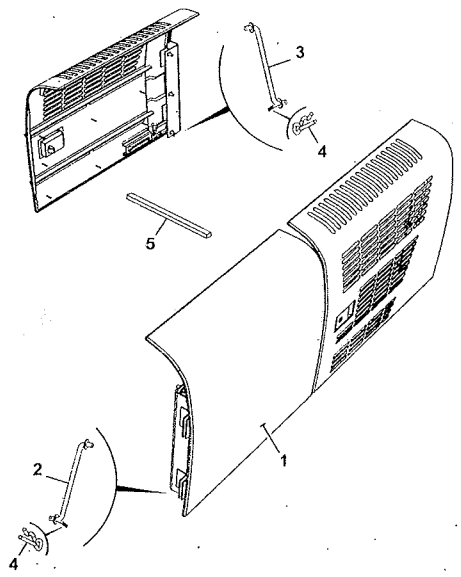

334-P5021-1

ITEM	Part #	CHANGE NO	DESCRIPTION	USAGE CODE	QTY
1			Door Sub Assembly Refer B240-10-1		1
2	334/L2316		Rod guide left side		2
3	334/L3171		Rod guide right hand		1
4	KRJ1588		Pin		3
5	334/P1172		Foam Closure Door		4

JS205 INDIA

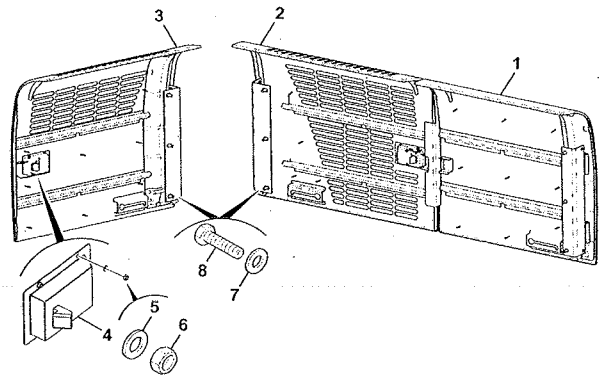

334-P5022-B

ITEM	Part #	CHANGE NO	DESCRIPTION	USAGE CODE	QTY
1	334/L4300		Door Front Left Side		1
2	334/P5024		Door Rear Left Side		1
3	334/P5025		Door Right Side		1
4	826/11027		Latch Paddle		2
5	1420/0005Z		Washer Plain		8
6	1370/0001Z		Nut M5		8
7	1411/0005Z		Washer		9
8	1316/0508Z		Screw		9

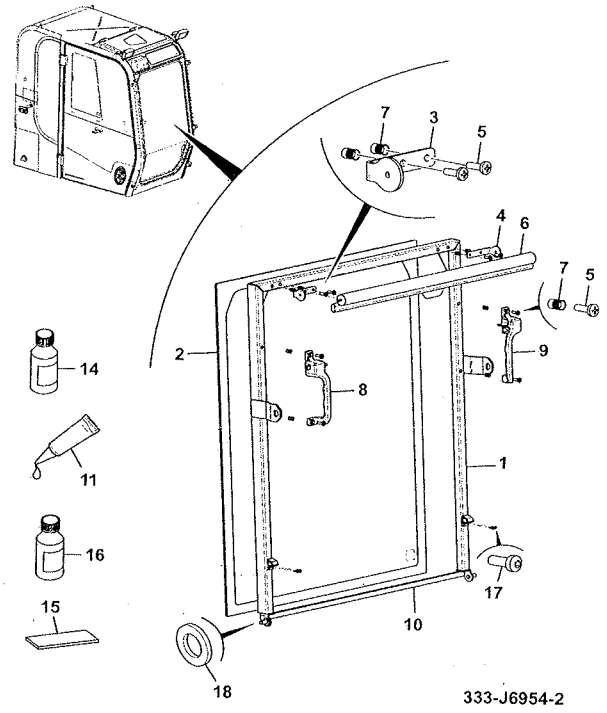

JS205 INDIA

ITEM	Part #	CHANGE NO	DESCRIPTION	USAGE CODE	QTY
1	334/L4078		Screen Front		1
2	333/J7034		Glass Front		1
3	334/L4270		Bracket Mounting Sun Screen, Left Side		1
4	333/J7221		Bracket Mounting Sun Screen, Right Side		1
5	KHR0738		Screw pan head		8
6	6900/0621		Screen Sun		1
7	826/11523		Nut Rivet Nut M6		8
8	331/28235		Latch Right Hand Assembly		1
9	331/28233		Latch Left Hand Assembly		1
10	334/L7702		Beading Screen Front Bottom		1
11	646/05321		Adhesive		0
14	646/05325		Cleaner Active Wiper		0
15	926/15500		Spacer Block		0

B250-1-1 GLASS/FRAMES, FRONT SCREEN, DOOR, CAB, JS205LC 9820/0692A
ISSUE 1

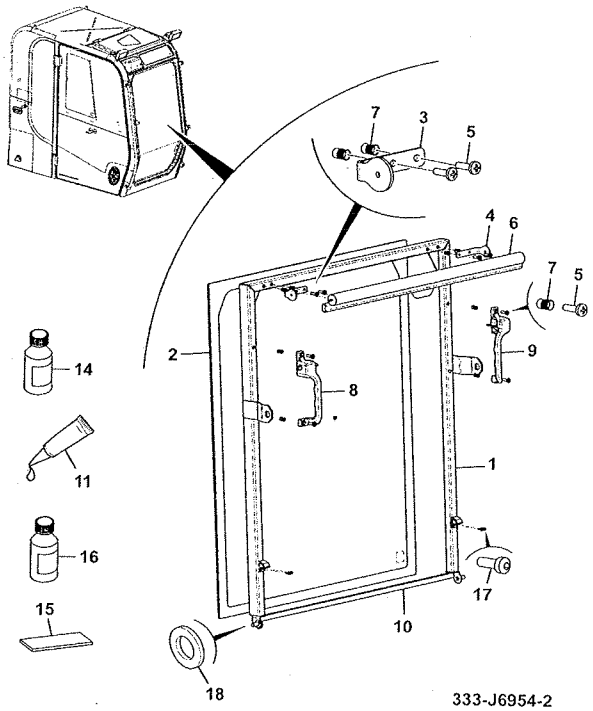

ITEM	PART NO	CHANGE NO	DESCRIPTION	USAGE CODE	QTY
16	333/P5834		Glazing Adhesive Direct		0
17	826/10996		Screw M4 x 10mm button head		4
18	1420/0008D		Washer Plain		2

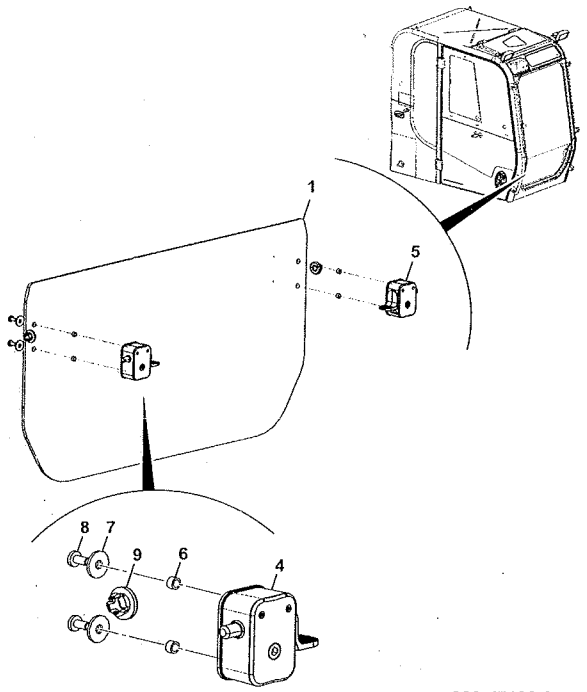

333-J7102-2

JS205 INDIA

ITEM	Part #	CHANGE NO	DESCRIPTION	USAGE CODE	QTY
1	333/J7019		Glass Bottom Front		1
4	334/P8247		Latch Left Side		1
5	334/P8246		Latch Right Side		1
6	335/B3639		Bush Nylon		4
7	823/00516		Washer Nylon M6		4
8	KHR0738		Screw pan head		4
9	335/B4278		Bush Nylon		2

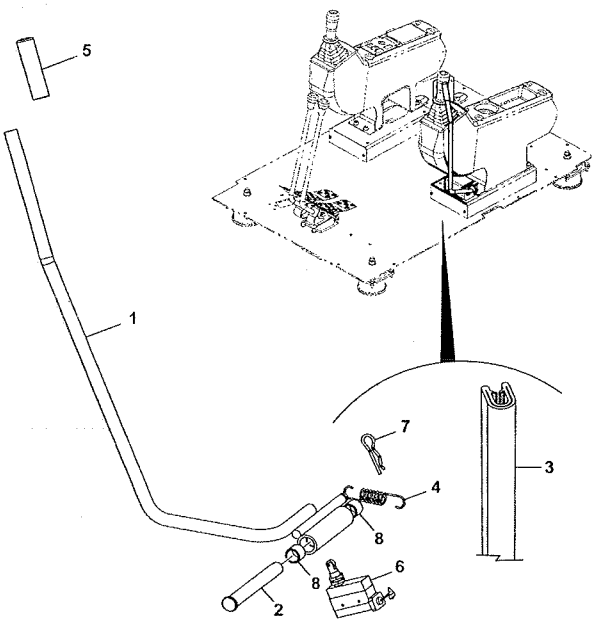

229-01098-4

JS205 INDIA

ITEM	Part #	CHANGE NO	DESCRIPTION	USAGE CODE	QTY
1	229/00070		Lever Lock		1
2	JHN0211		Spindle		1
3	JHH0074		Strip Edging		1
4	KHN1436		Spring extension		1
5	KHN1542		Cap		1
6	229/00385		Switch Limit		1
7	JLV0521		Clip R		1
8	831/00063		Bearing Lubricating Self		2

JS205 INDIA

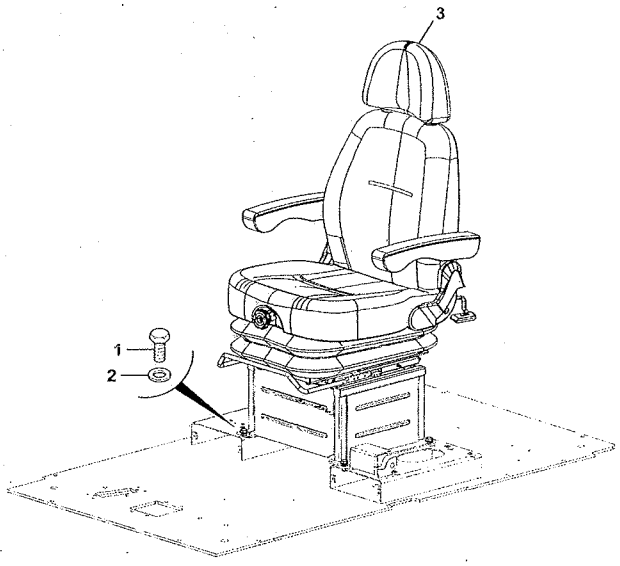

229-01653-6

ITEM	Part #	CHANGE NO	DESCRIPTION	USAGE CODE	QTY
1	1316/0407Z		Bolt High Strength		4
2	1420/0008Z		Washer Plain M10		4
3	334/L4855		Seat Operator Refer B260-15-1		1

JS205 INDIA

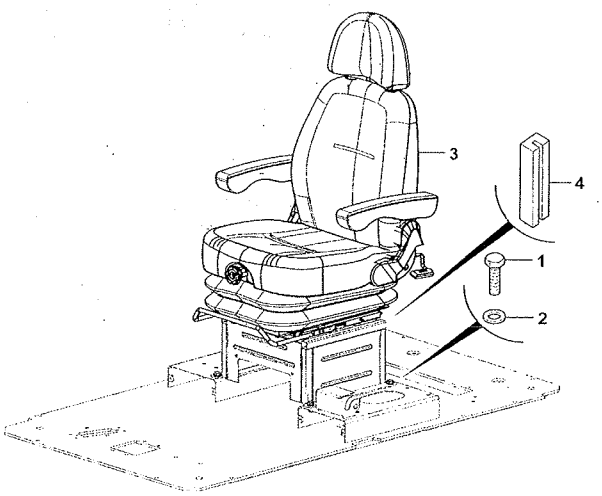

335-B0957-2

ITEM	Part #	CHANGE NO	DESCRIPTION	USAGE CODE	QTY
1	1316/0407Z		Bolt High Strength		4
2	1420/0008Z		Washer Plain M10		4
3	335/B0864		Seat Operator		1
4	JHH0132		Strip Edge		0

JS205 INDIA

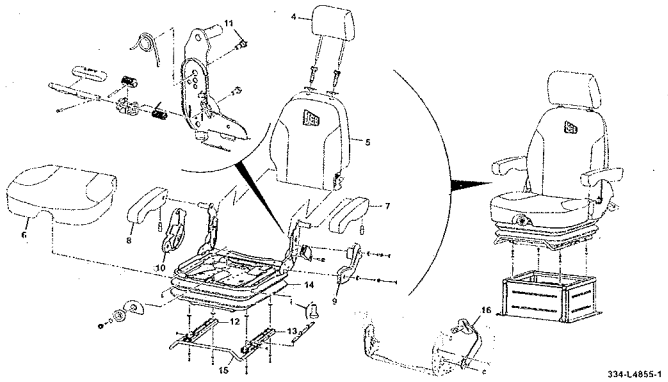

ITEM	Part #	CHANGE NO	DESCRIPTION	USAGE CODE	QTY
1	335/C4230		Headrest Upholstery		1
2	335/C4235		Seat Base Upholstery		1
3	335/C4237		Backrest Upholstery		1
4	335/C2607		Headrest		1
5	335/C2590		Rest Back		1
6	335/C2582		Base Seat		1
7	335/C2609		Pad Arm Left Side		1
8	335/C2610		Pad Arm Right Side		1
9	335/C2612		Cover Side Left Side		1
10	335/C2613		Cover Side Right Side		1
11	335/C2592		Bolt Special		2
12	335/C2560		Slide Rail Right Side		1
13	335/C2554		Slide Rail Left Side		1
14	335/C2572		Seat Suspension Mechanical		1

B260-15-1 SEATS, COMPONENTS, OPERATOR SEAT
9820/0692A
ISSUE 1

ITEM	PART NO	CHANGE NO	DESCRIPTION	USAGE CODE	QTY
15	335/C2567		Lever Locking Double		1
16	335/C2608		Belt Seat		3

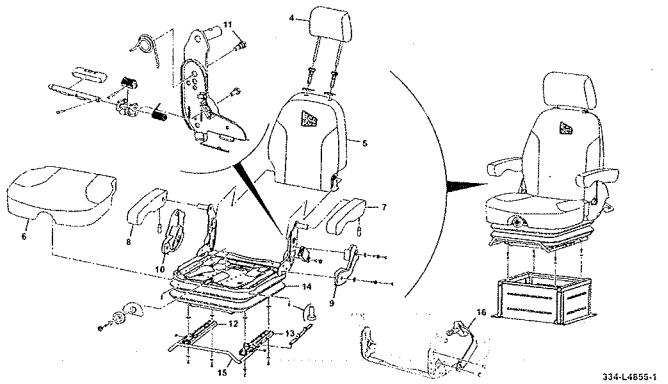

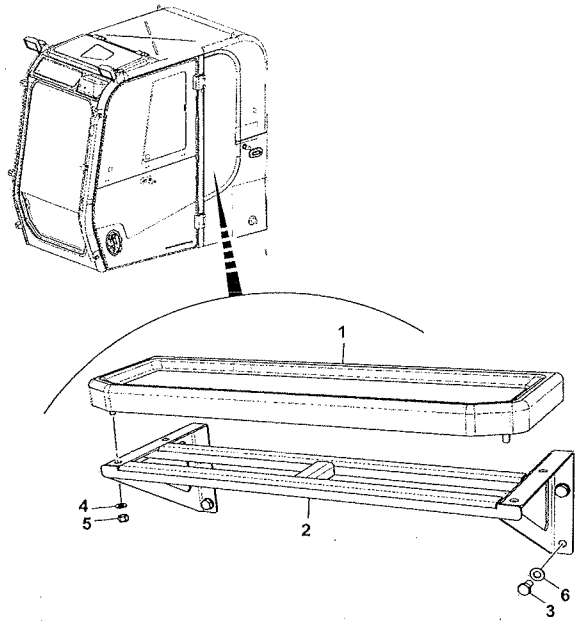

334-P9134-1

JS205 INDIA

ITEM	Part #	CHANGE NO	DESCRIPTION	USAGE CODE	QTY
1	334/P9130		Seat Rear		1
2	335/A6056		Base Seat		1
3	1315/0405		Bolt		4
4	1420/0007Z		Washer Plain M8		4
5	1370/0203D		Nut Lock M8		4
6	1420/0008Z		Washer Plain M10		4

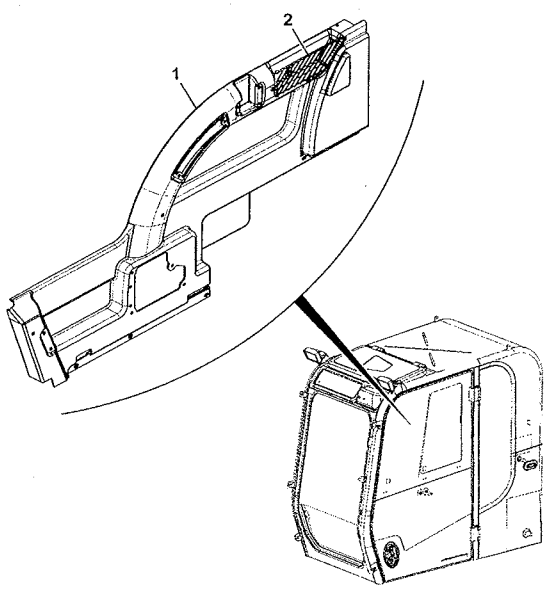

334-P9237-1

JS205 INDIA

ITEM	Part #	CHANGE NO	DESCRIPTION	USAGE CODE	QTY
1	334/L8686		Trim Right Side		1
2	334/P1085		Net Luggage		1

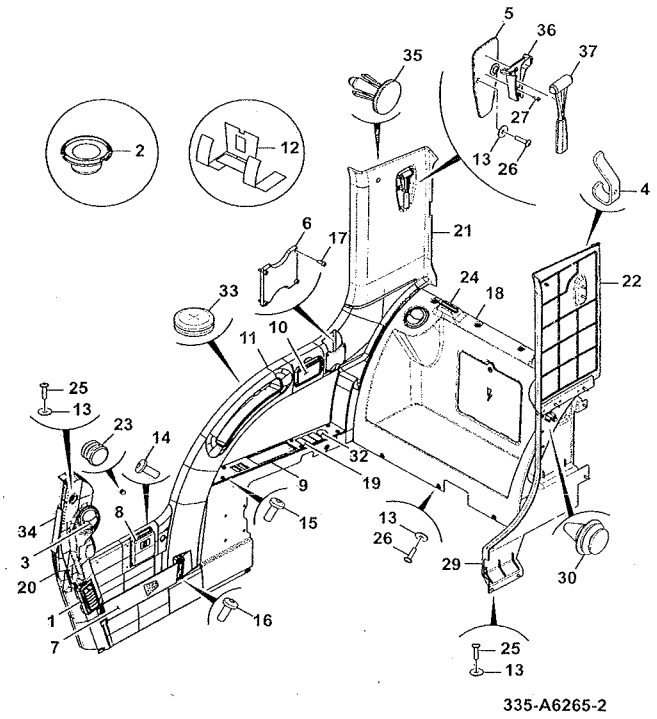

JS205 INDIA

ITEM	Part #	CHANGE NO	DESCRIPTION	USAGE CODE	QTY
1	30/925586		Vent air (rectangular)		1
2	30/925732		Adaptor Air Vent		2
3	331/26974		Vent air(76.5mm dia.hole)		4
4	142/00589		Hook coat (One screw mounting)		1
5	332/J1436		Plate hammer retaining		1
6	332/J1441		Retainer mobile phone		1
7	332/J2776		Panel stowage, side		1
8	331/31695		Holder cup		1
9	331/31995		Panel facia, heater		1
10	331/32481		Ashtray		1
11	335/A2919		Moulding Centre Console		1
12	340/00206		Kit rear panel acoustic Refer B290-25-1		1

B270-5-1 MOULDINGS/TRIM, CAB, DUCTED AC
9820/0692A
ISSUE 1

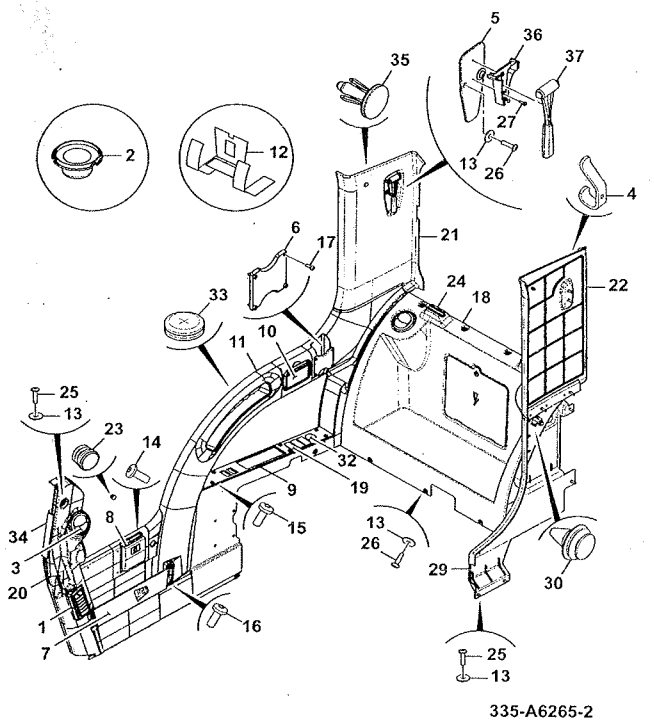

ITEM	PART NO	CHANGE NO	DESCRIPTION	USAGE CODE	QTY
13	823/00516		Washer Nylon M6		33
14	KHR0328		Screw truss		4
15	826/11096		Screw		6
16	826/01281		Capscrew button head M6 x 12		4
17	1391/9402		Capscrew		4
18	333/J1640		Rear stowage ABI Refer B270-10-1		1
19	701/60010		Blank Switch Panel		3
20	335/A5586		Moulding A Post		1
21	335/A3995		PILLER Trim Right Side		1
22	335/A3947		PILLER Trim Upper Left Side		1
23	835/10070		Plug Blanking		1
24	926/22900		Channel window		2
25	826/01559		Flange Button Head Socket		5
26	826/01560		Screw M6x25		28
27	1430/0102		Screw		2
29	335/A2238		PILLER Trim Lower Left Side		1

Continue...

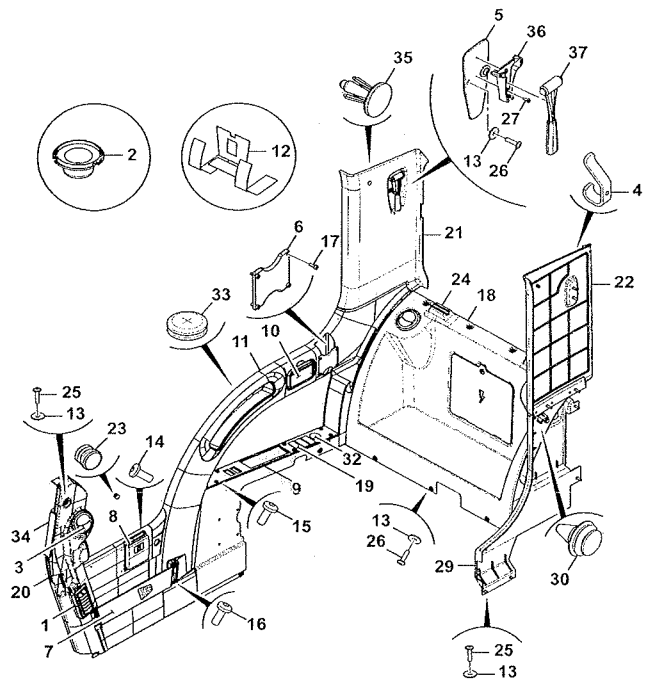

335-A6265-2

ITEM	PART NO	CHANGE NO	DESCRIPTION	USAGE CODE	QTY
30	335/A4960		Clip		1
32	2410/1312		Grommet		1
33	335/A6435		Grommet Blind		1
34	334/P1172		Foam Closure Door		1
35	335/B9213		Clip Lock Push		2
36	332/U4206		Bracket breaker tool holder		1
37	265/00678		Hammer emergency glass breaker		1

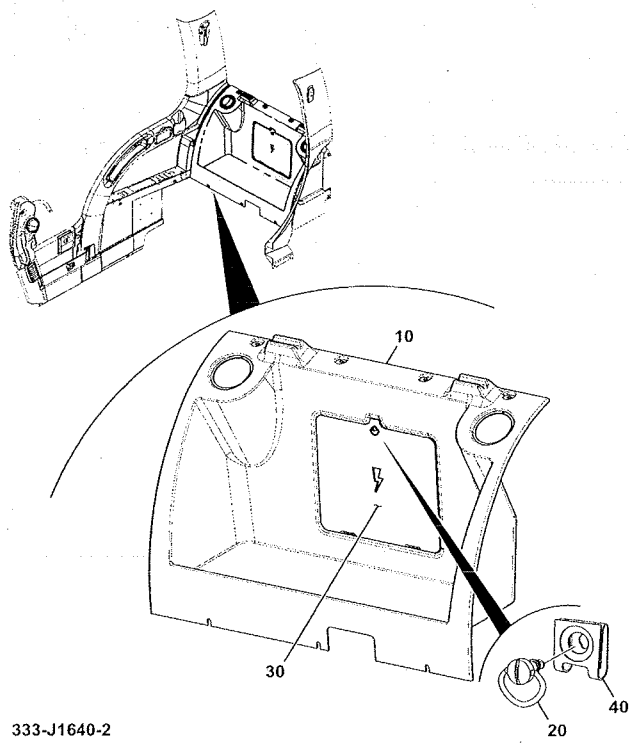

333-J1640-2

JS205 INDIA

ITEM	Part #	CHANGE NO	DESCRIPTION	USAGE CODE	QTY
10	333/J3777		Panel rear stowage		1
20	331/37941		Stud 1/4 turn bail		1
30	333/J3587		Fusebox cover		1
40	331/37942		Receptacle		1

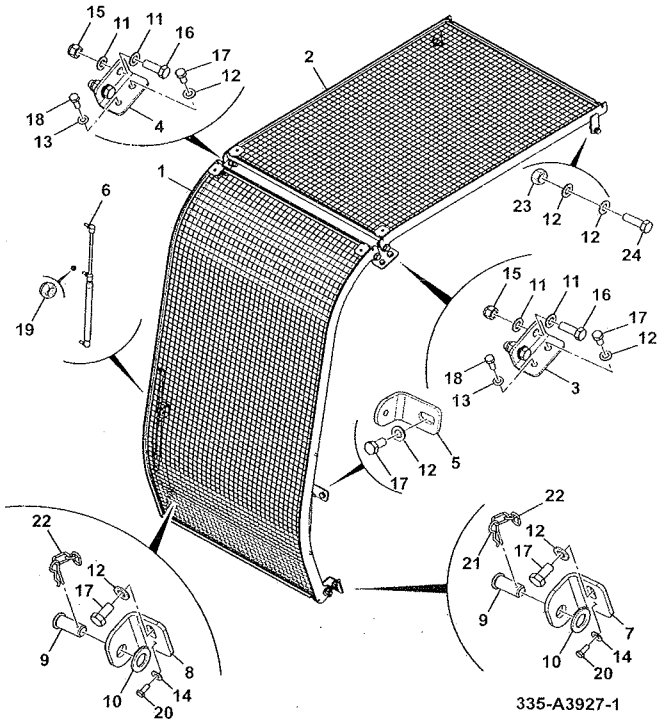

JS205 INDIA

ITEM	Part #	CHANGE NO	DESCRIPTION	USAGE CODE	QTY
1	335/A3602		Guard Cabin Front		1
2	335/A3615		Guard Cabin Top		1
3	335/A3609		Bracket Mounting Grille, Front Left Side		1
4	335/A4298		Bracket Mounting Grille, Front Right Side		1
5	335/A4656		Bracket		2
6	332/P5236		Strut - Gas		2
7	335/A4244		Bracket Left Side		1
8	335/A4245		Bracket Right Side		1
9	331/37055		Pin		2
10	1420/0012Z		Washer M20		4
11	1420/0011Z		Washer Plain M16		8
12	1420/0009Z		Washer Plain M12		10
13	1420/0008		Washer		2
14	1420/0007		Washer Plain		2
15	1371/0603Z		Nut M16		4

B290-2-1 OTHER OPERATOR ENCLOSURE ITEMS, GUARDS, CAB 9820/0692A ISSUE 1

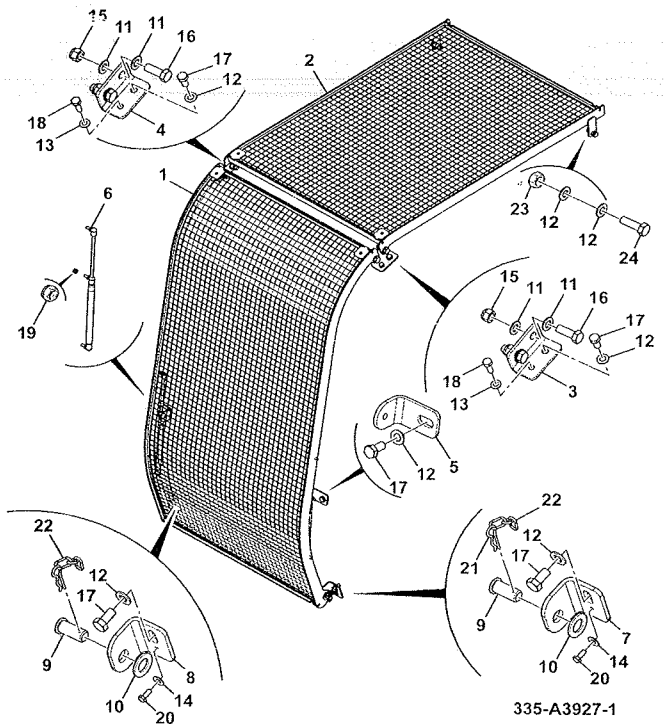

ITEM	PART NO	CHANGE NO	DESCRIPTION	USAGE CODE	QTY
16	1316/0711Z		Screw M16x45mm		4
17	1315/0507		Setscrew		6
18	1315/0408Z		Setscrew M10 x 30mm		2
19	1371/0203Z		Nut		2
20	1315/0203Z		Setscrew		2
21	JLV0521		Clip R		2
22	141/00855		Chain		2
23	826/10947		Nut Plain,M12		2
24	1316/0510Z		Screw		2

JS205 INDIA

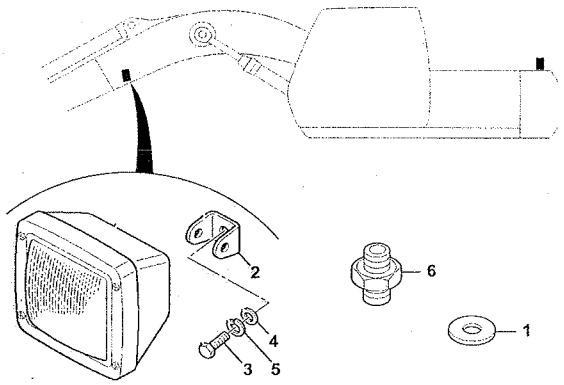

229-01299-3

ITEM	Part #	CHANGE NO	DESCRIPTION	USAGE CODE	QTY
1	KHB0063		Washer high strength M30		4
2	123/06305		Mounting Worklamp		1
3	1316/0305Z		Bolt High Tensile		1
4	1420/0007Z		Washer Plain M8		1
5	1425/0007Z		Spring Washer		1
6	1604/0006		Adapter 3/4" BSP M/M		7

JS205 INDIA

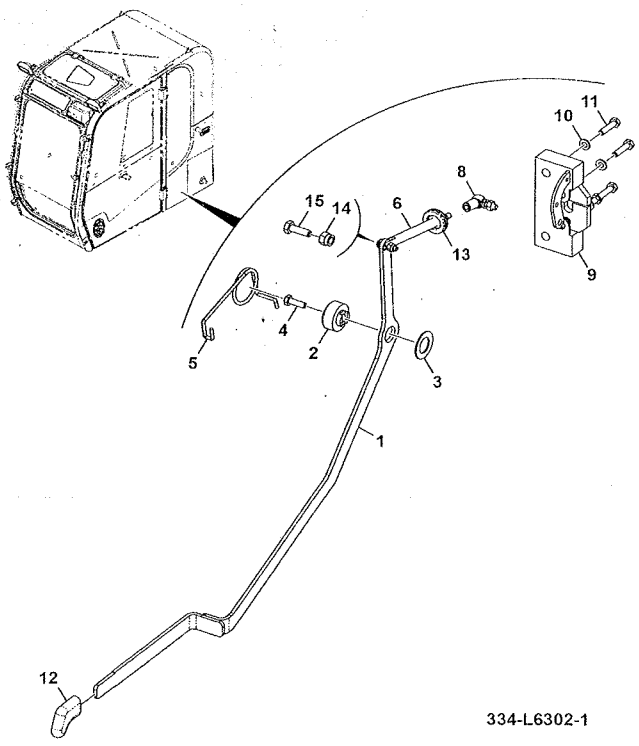

334-L6302-1

ITEM	Part #	CHANGE NO	DESCRIPTION	USAGE CODE	QTY
1	334/L9599		Lever Release Door		1
2	6900/0604		Spacer		1
3	6900/0605		Spacer plastic		1
4	1315/0205D		Setscrew M6 x 20mm		1
5	6900/0606		Spring		1
6	331/36359		Rod axle		1
8	6900/0627		Joint ball		1
9	6900/0543		Latch		1
10	1420/0006D		Washer Plain M6		4
11	1315/0207D		Setscrew M6 x 25mm		4
12	331/19929		Knob		1
13	6900/0652		Grommet		1
14	1370/0003Z		Lock Nut M5		1
15	826/01406		Screw		1

JS205 INDIA

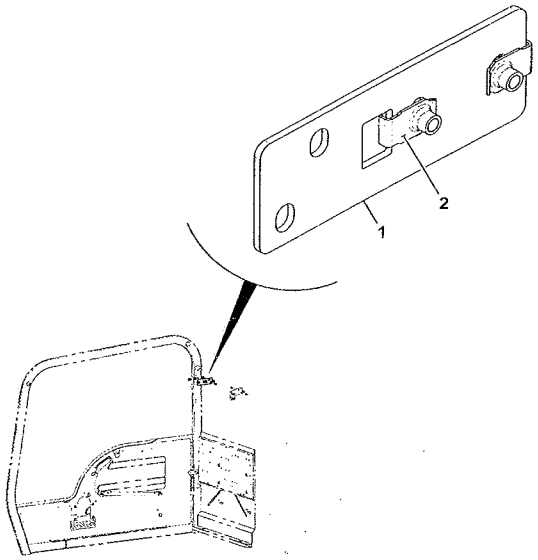

334-L7584-1

ITEM	Part #	CHANGE NO	DESCRIPTION	USAGE CODE	QTY
1	334/L6238		Bracket Top Right Side		1
2	333/Y6752		Lug Nut M6		2

JS205 INDIA

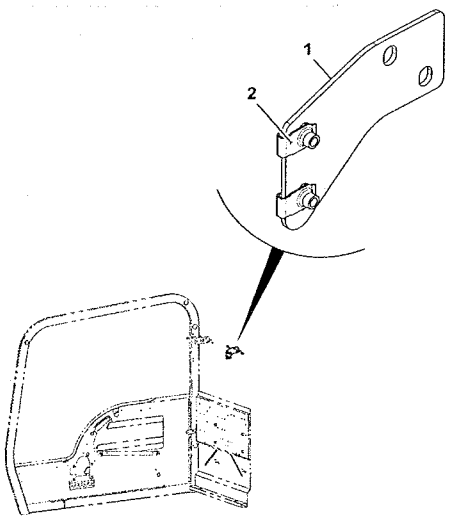

334-L7583-1

ITEM	Part #	CHANGE NO	DESCRIPTION	USAGE CODE	QTY
1	334/L6220		Bracket Top Left Side		1
2	333/Y6752		Lug Nut M6		2

OTHER OPERATOR ENCLOSURE ITEMS, KIT, REAR PANEL

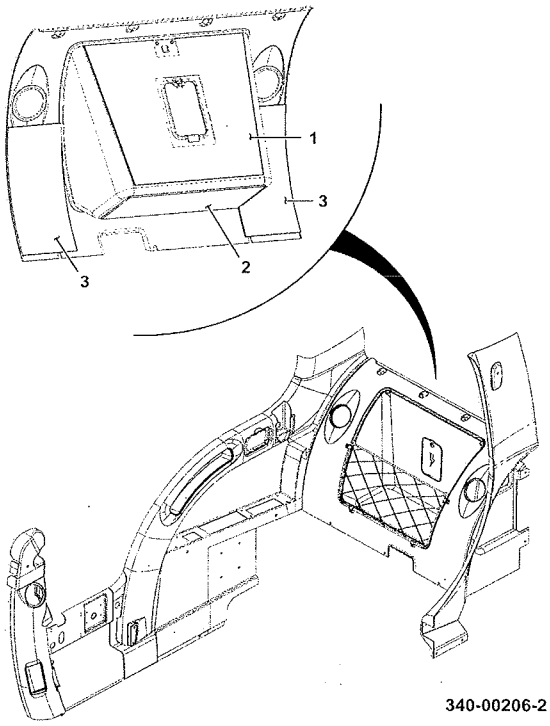

340-00206-2

JS205 INDIA

ITEM	Part #	CHANGE NO	DESCRIPTION	USAGE CODE	QTY
1	331/37602		Panel noise damping		1
2	331/37603		Panel noise damping		1
3	331/37604		Panel noise damping		2

B

B01 BODYWORK/FRAME

B02 CAB / CANOPY

• B04 EXCAVATOR

B05 REFURBISHMENTS

JS205 INDIA

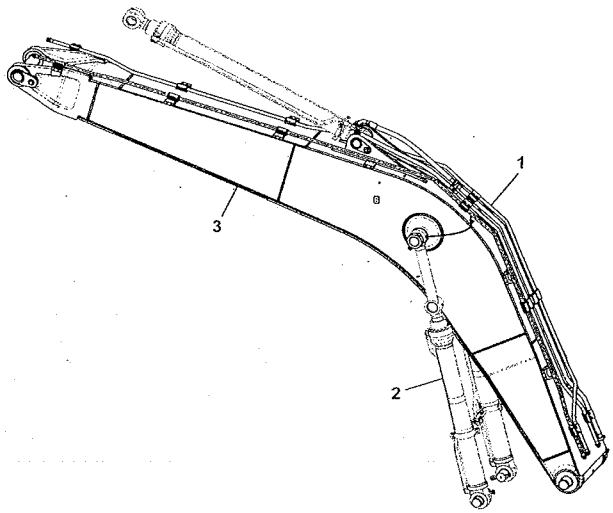

335-B9663-2

ITEM	Part #	CHANGE NO	DESCRIPTION	USAGE CODE	QTY
1			Assembly Parts Common, Mono Boom Refer B430-10-1		1
2			Ram Non HBCV Boom and Dipper Refer E400-5-1		1
3	333/K1322		Boom Mono Assembly, Standard Refer B430-5-1		1

JS205 INDIA

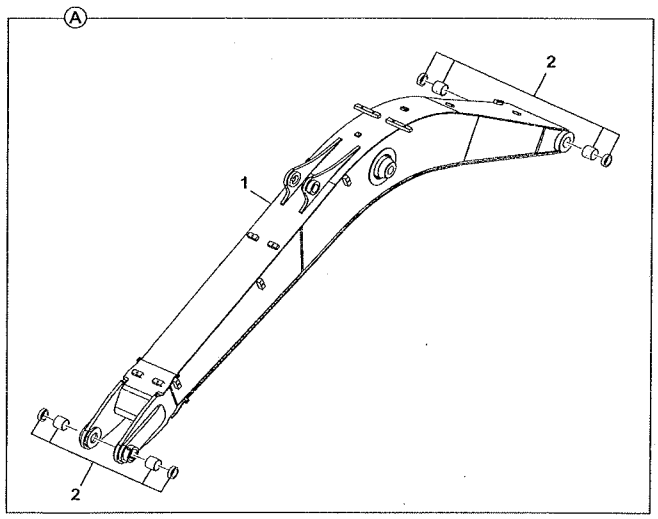

333-K1322-2

ITEM	Part #.	CHANGE NO	DESCRIPTION	USAGE CODE	QTY
A	333/K1322		Boom Mono Assembly, Standard		1
1			Boom Standard		1
2			Bearing and Seals, Monoboom, Assembly Refer B430-15-1		1

JS205 INDIA

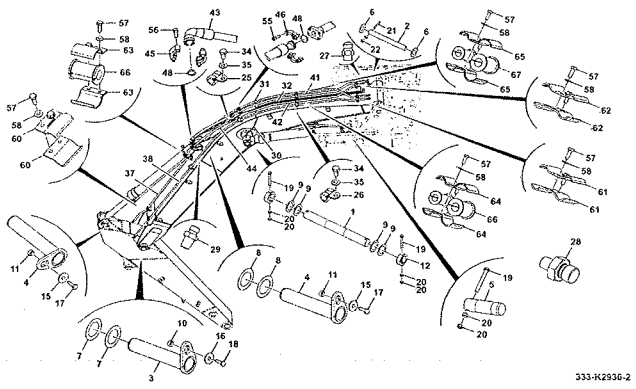

ITEM	Part #	CHANGE NO	DESCRIPTION	USAGE CODE	QTY
1	KRV1122		Pin pivot		1
2	KRV1572		Pin attachment		1
3	333/J3911		Pin pivot 90mm x 472mm		1
4	333/J3939		Pin pivot 80mm x 224mm		2
5	KRV1124		Pin pivot		2
6	JRV0582		Shim 0.8mm thick		2
7	KSP0268		Shim 91mmx160mmx1.2 mm		2
8	KRV1197		Shim Plate		2
9	KRV1178		Shim 1.2mm thick		4
10	333/K7982		Spacer 1 3/16" x 6" SWG		1
11	333/K7980		Spacer 1" X 8" SWG		2
12	KRV1156		Ring locking		2
15	1412/0007D		Washer large		2
16	823/10393		Washer large		1

Continue...

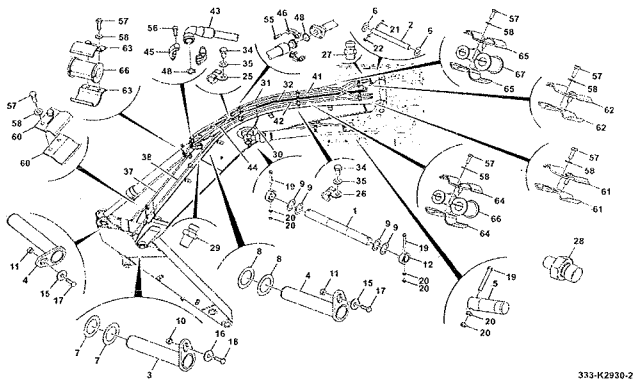

ITEM	PART NO	CHANGE NO	DESCRIPTION	USAGE CODE	QTY
17	1316/0710D		Bolt		2
18	1316/0810D		Setscrew		1
19	1316/3826D		Bolt M20 x 160mm		4
20	1371/0701D		Nut Plain M20		8
21	1316/4028D		Bolt M24 x 180mm		1
22	1371/0901D		Nut full M24		2
25	821/00410		Clip P 10mm		3
26	KHR1326		Clamp 18mm dia.		3
27	JHP0037		Nipple Grease Straight		3
28	JLV1547		Adapter		3
29	1609/0002		Adapter		3
30	333/K8619		Hose Grease 2550 LG		1
31	333/K8620		Hose Grease 2450 LG		1
32	333/K8621		Hose Grease 3000 LG		1
34	1316/0203D		Screw		6
35	1420/0006D		Washer Plain M6		6
37	333/K6026		Pipe Head Side, Bucket Line		1

B430-10-1 BOOM, MONOBOOM, COMMON PARTS
9820/0692A
ISSUE 1

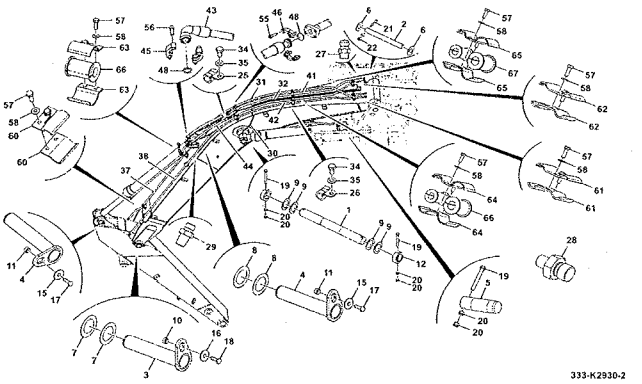

ITEM	PART NO	CHANGE NO	DESCRIPTION	USAGE CODE	QTY
38	333/K6044		Pipe Rod Side, Bucket Line		1
41	333/K5990		Pipe Head Side, Arm Line		1
42	333/K6008		Pipe Rod Side, Arm Line		1
43	JRV0325		Hose		1
44	627/10648		Hose		1
45	210/92901		Clamp Flange 1"		2
46	KRJ2682		Flange Split		2
48	2409/0210		O Ring		2
55	1391/3409D		Capscrew M10 x 35mm		4
56	1391/3511D		Capscrew		4
57	1316/0408D		Setscrew		24
58	2208/00110		Washer M10		24
60	333/K5367		Clamp Single Pipe		4
61	333/K5380		Clamp Double Pipe		4
62	333/K5376		Clamp Double Pipe		4
63	333/K5370		Clamp Single Pipe		8
64	333/K5389		Clamp Double Pipe		2

Continue...

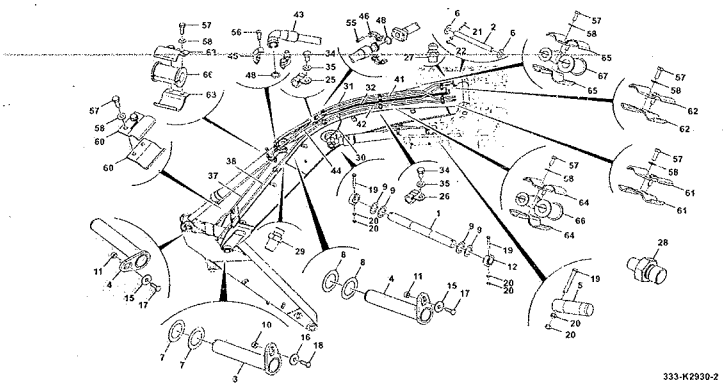

ITEM	PART NO	CHANGE NO	DESCRIPTION	USAGE CODE	QTY
65	333/K5491		Clamp Double Pipe		2
66	333/K5482		Rubber Insert Dia 40		7
67	333/K5359		Rubber Insert Dia 56		1

JS205 INDIA

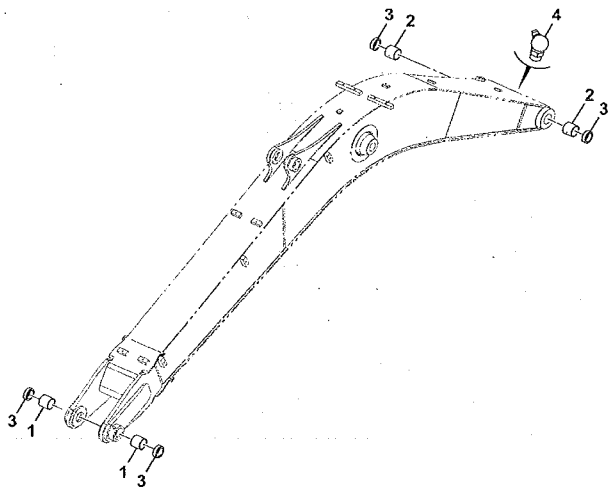

ITEM	Part #	CHANGE NO	DESCRIPTION	USAGE CODE	QTY
1	JRV0597		Bush steel		2
2	831/10291		Bush bearing		2
3	KHV0103		Seal dust		4
4	JHP0037		Nipple Grease Straight		3

JS205 INDIA

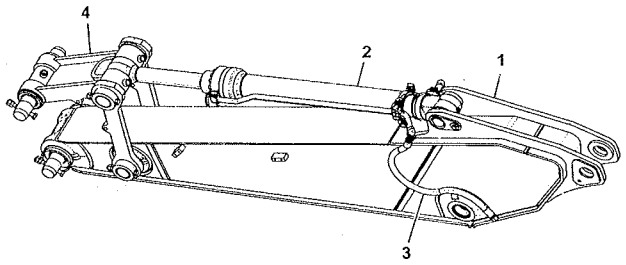

ITEM	Part #	CHANGE NO	DESCRIPTION	USAGE CODE	QTY
1	333/K2130		Arm 2.4m HD Hammer, Assembly Refer B440-5-1		1
2			Ram Bucket Standard Assembly Refer E400-1-1		1
3			Circuit Bucket Lines, 2.4m, Assembly Refer E140-10-1		1
4			Bucket linkage assembly Refer B460-1-1		1

335-B9666-1

JS205 INDIA

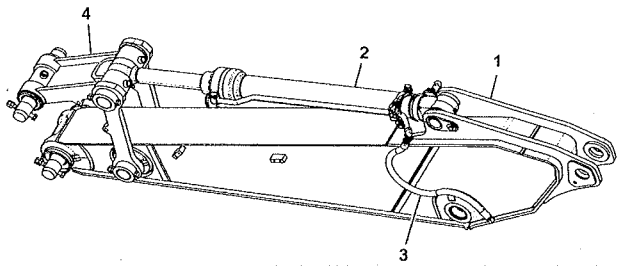

ITEM	Part #	CHANGE NO	DESCRIPTION	USAGE CODE	QTY
1	333/K2128		Arm 3.0m HD Hammer, Assembly Refer B440-6-1		1
2			Ram Bucket Standard Assembly Refer E400-1-1		1
3			Circuit Bucket Lines, 3.0m, Assembly Refer E140-2-1		1
4			Bucket linkage assembly Refer B460-1-1		1

JS205 INDIA

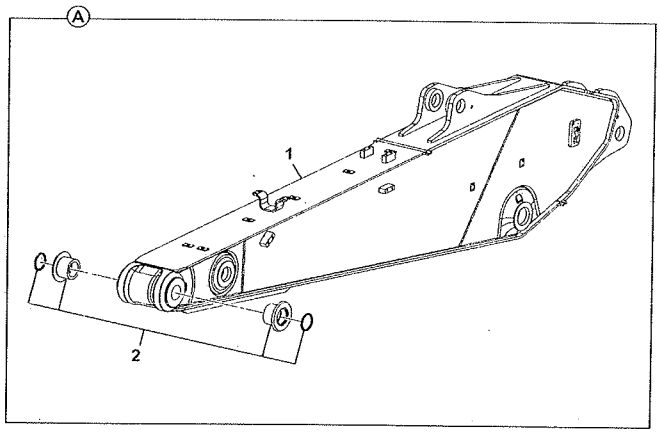

ITEM	Part #	CHANGE NO	DESCRIPTION	USAGE CODE	QTY
A	333/K2130		Arm 2.4m HD Hammer, Assembly		1
1			Arm Heavy Duty 2.4m		1
2			Arm Seal & Bearing Assembly Refer B440-10-1		1

333-K2131-1

JS205 INDIA

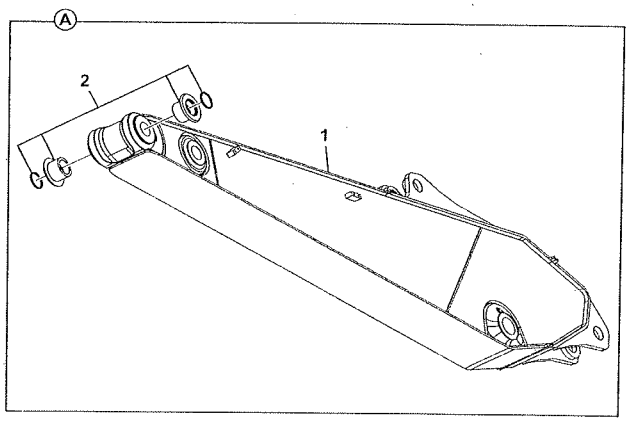

ITEM	Part #	CHANGE NO	DESCRIPTION	USAGE CODE	QTY
A	333/K2128		Arm 3.0m HD Hammer, Assembly		1
1			Arm 3.0m Heavy Duty		1
2			Arm Seal & Bearing Assembly Refer B440-10-1		1

333-K2128-1

JS205 INDIA

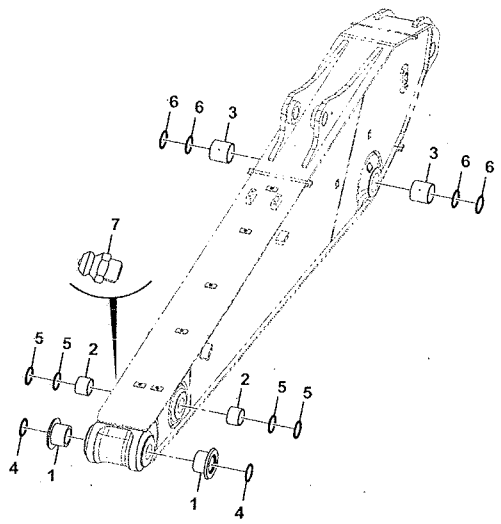

333-K3107-1

ITEM	Part #	CHANGE NO	DESCRIPTION	USAGE CODE	QTY
1	JRV0594		Bush steel		2
2	JRV0595		Bush steel		2
3	831/10291		Bush bearing		2
4	KHV0101		Seal dust		2
5	KHV0100		Seal Dust		4
6	KHV0103		Seal dust		4
7	JHP0037		Nipple Grease Straight		3

JS205 INDIA

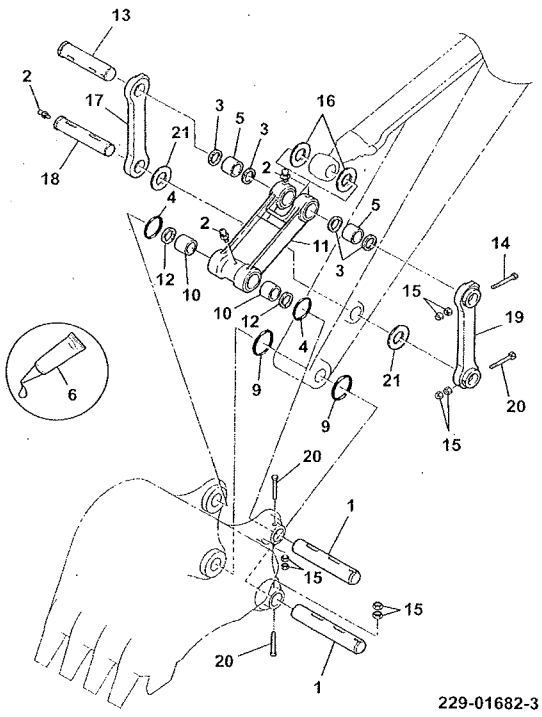

229-01682-3

ITEM	Part #	CHANGE NO	DESCRIPTION	USAGE CODE	QTY
1	JRV0071		Pin pivot		2
2	JHP0037		Nipple Grease Straight		4
3	KHV0101		Seal dust		4
4	KHV0117		O Ring		2
5	JRV0593		Bush steel		2
6	4101/0500		Fluid Locking Loctite 262		0
9	KHV0114		O Ring		2
10	jrv0077k		Bush Steel		2
11	JRV0210		Link bucket standard		1
12	KHV0102		Seal dust		4
13	KRV1120		Pin attachment 85 x 425		1
14	6009/3827Z		Bolt		1
15	173R020VZ		Nut		8
16	KHV0170		Shim 150 x 86 x 1.2mm thick		2
17	JRV0208		Link arm right hand		1

Continue...

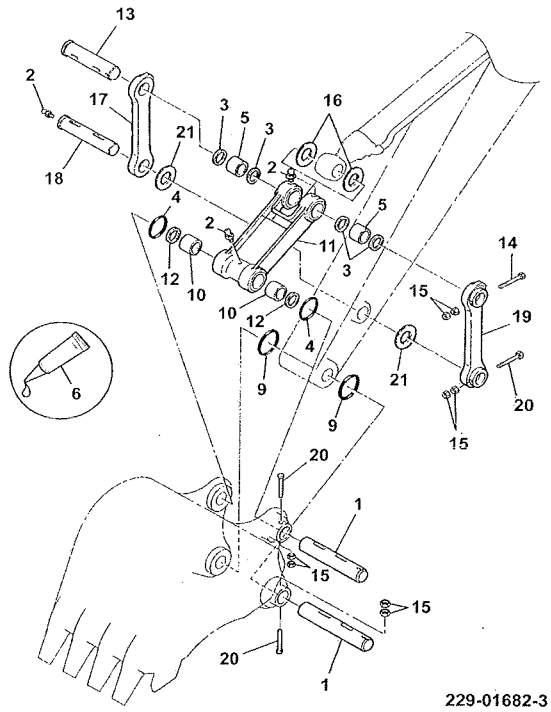

ITEM	PART NO	CHANGE NO	DESCRIPTION	USAGE CODE	QTY
18	KRV1121		Pin attachment 75 x 425		1
19	JRV0209		Link arm left hand		1
20	6009/3826Z		Bolt		3
21	KHV0169		Shim 140 x 76 x 1.2mm thick		2

B

B01 BODYWORK/FRAME

B02 CAB / CANOPY

B04 EXCAVATOR

• B05 REFURBISHMENTS

JS205 INDIA

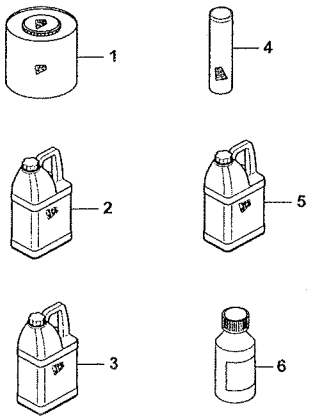

ITEM	Part #	CHANGE NO	DESCRIPTION	USAGE CODE	QTY
1			Fluid Gear Oil LTRS		6
2	4001/1800		Oil EP 15W40 LTRS		15
3	229/00024		Fluid Hydraulic LTRS		250
4			Grease High Pressure KG Refer B570-1-1		22
5	130/77705		Diesel LTRS		90
6	229/01233		Fluid Anti-Freeze LTRS		14

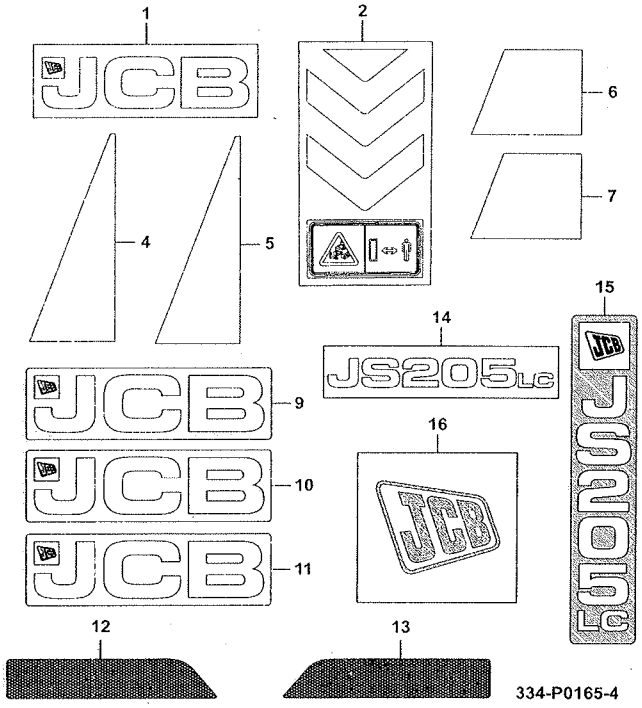

JS205 INDIA

ITEM	Part #	CHANGE NO	DESCRIPTION	USAGE CODE	QTY
1	333/J5047		Decal JCB 1630mm x 440mm		1
2	333/J2439		Decal chevron		2
4	333/J3266		Decal door, left side		1
5	333/J3270		Decal door, right side		1
6	333/J3228		Decal skirt left hand side		1
7	333/J3243		Decal skirt right hand side		1
9	333/K9179		Decal Boom		2
10	333/K9198		Decal Side		1
11	332/W5376		Decal JCB 640 x 200		1
12	333/J7093		Reflector sheet red		1
13	333/J7099		Reflector sheet red		1
14	335/B5684		Decal Machine JS205LC		2
15	335/B5677		Decal Arm JS205LC		2

B510-1-1 DECALS MACHINE IDENTIFICATION, JS205LC
9820/0692A
ISSUE 1

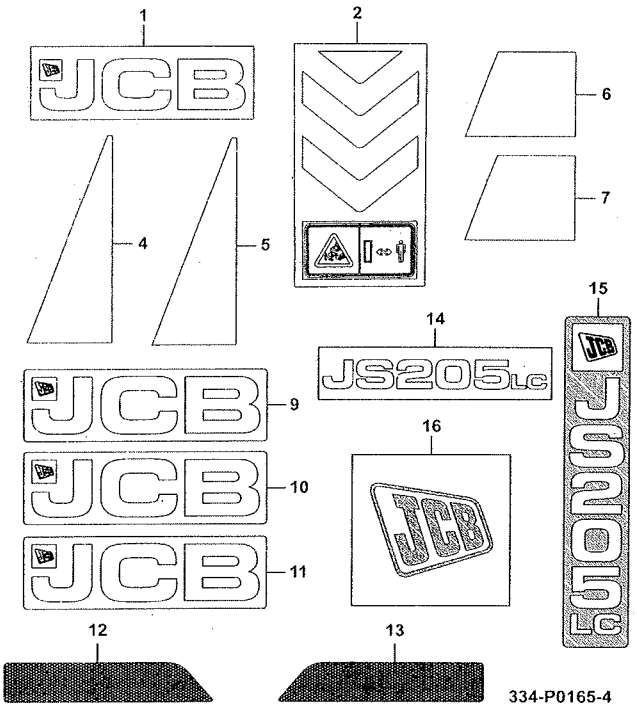

ITEM	PART NO	CHANGE NO	DESCRIPTION	USAGE CODE	QTY
16	332/K5067		Decal JCB Yellow		1

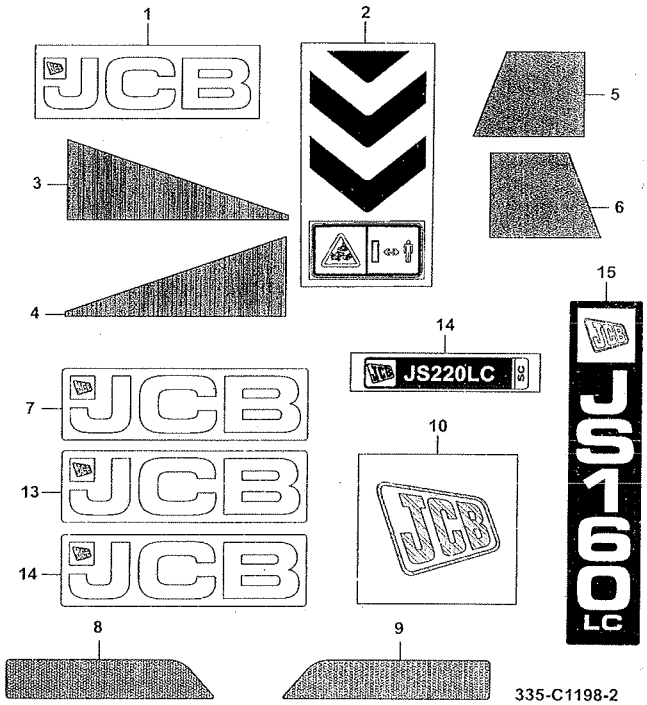

JS205 INDIA

ITEM	Part #	CHANGE NO	DESCRIPTION	USAGE CODE	QTY
1	333/J5047		Decal JCB 1630mm x 440mm		1
2	333/J2439		Decal chevron		2
4	333/J3266		Decal door, left side		1
5	333/J3270		Decal door, right side		1
6	333/J3228		Decal skirt left hand side		1
7	333/J3243		Decal skirt right hand side		1
9	333/K9179		Decal Boom		2
10	333/K9198		Decal Side		1
11	332/W5376		Decal JCB 640 x 200		1
12	333/J7093		Reflector sheet red		1
13	333/J7099		Reflector sheet red		1
14	335/B9860		Decal Machine Nomenclature JS205		2

B510-5-1 DECALS MACHINE IDENTIFICATION, HEAVY DUTY, OPTIONAL 9820/0692A ISSUE 1

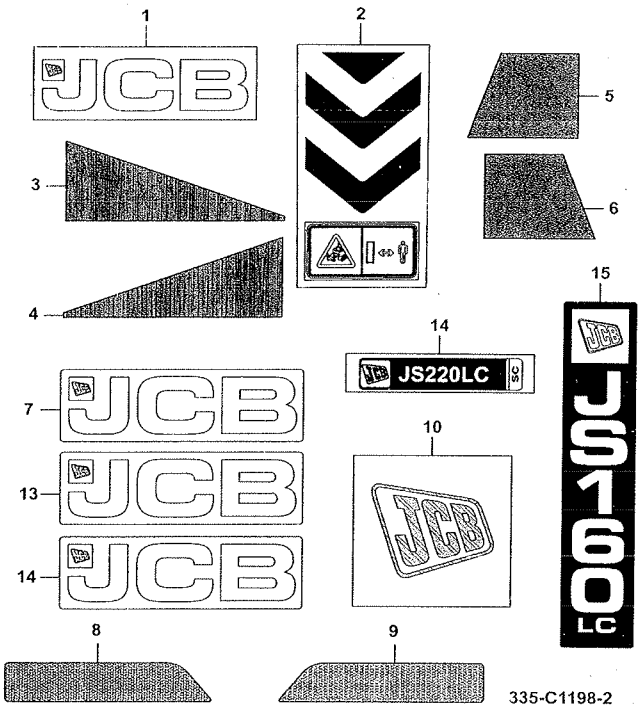

ITEM	PART NO	CHANGE NO	DESCRIPTION	USAGE CODE	QTY
15	335/B9838		Decal Arm Nomenclature JS205		2
16	332/K5067		Decal JCB Yellow		1

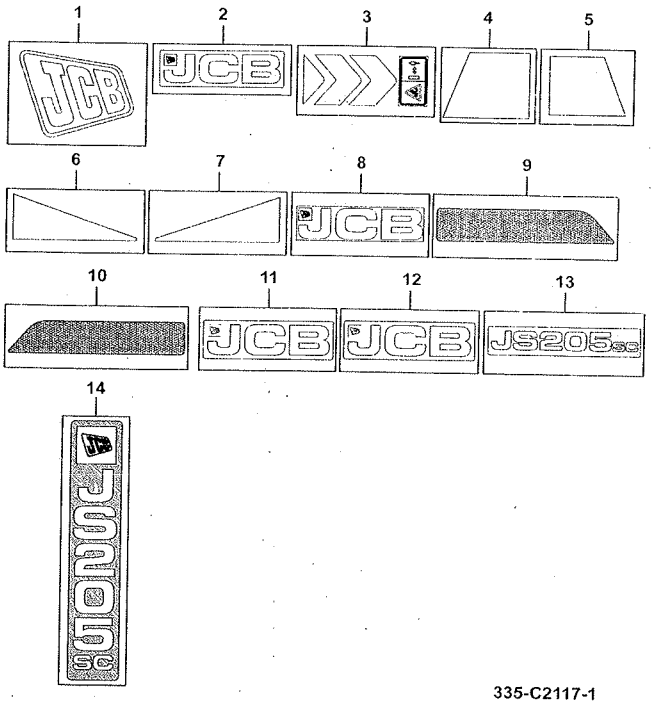

335-C2117-1

JS205 INDIA

ITEM	Part #	CHANGE NO	DESCRIPTION	USAGE CODE	QTY
1	332/K5067		Decal JCB Yellow		1
2	332/W5376		Decal JCB 640 x 200		1
3	333/J2439		Decal chevron		2
4	333/J3228		Decal skirt left hand side		1
5	333/J3243		Decal skirt right hand side		1
6	333/J3266		Decal door, left side		1
7	333/J3270		Decal door, right side		1
8	333/J5047		Decal JCB 1630mm x 440mm		1
9	333/J7093		Reflector sheet red		1
10	333/J7099		Reflector sheet red		1
11	333/K9179		Decal Boom		2
12	333/K9198		Decal Side		1
13	335/B9853		Decal Machine JS205SC		2

B510-25-1 DECALS MACHINE IDENTIFICATION, STYLING DECALS, JS205SC 9820/0692A
ISSUE 1

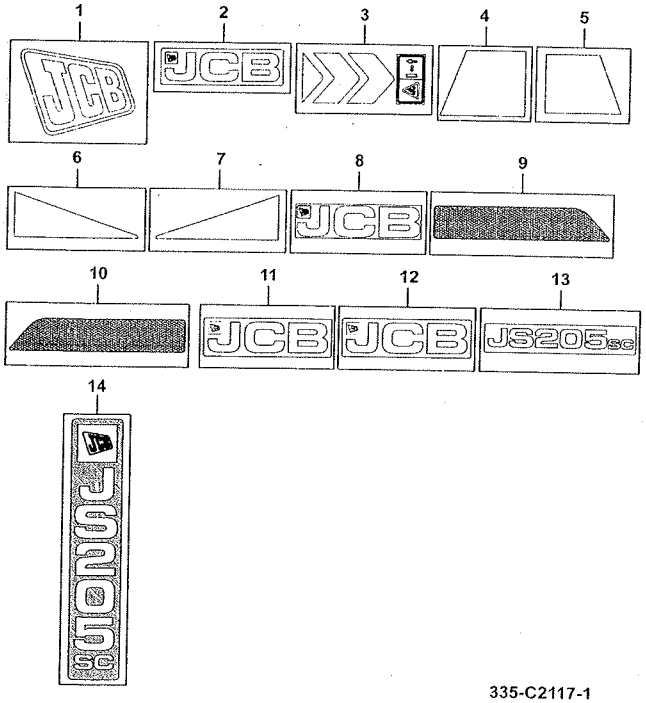

335-C2117-1

ITEM	PART NO	CHANGE NO	DESCRIPTION	USAGE CODE	QTY
14	335/B9779		Decal Arm JS205SC		2

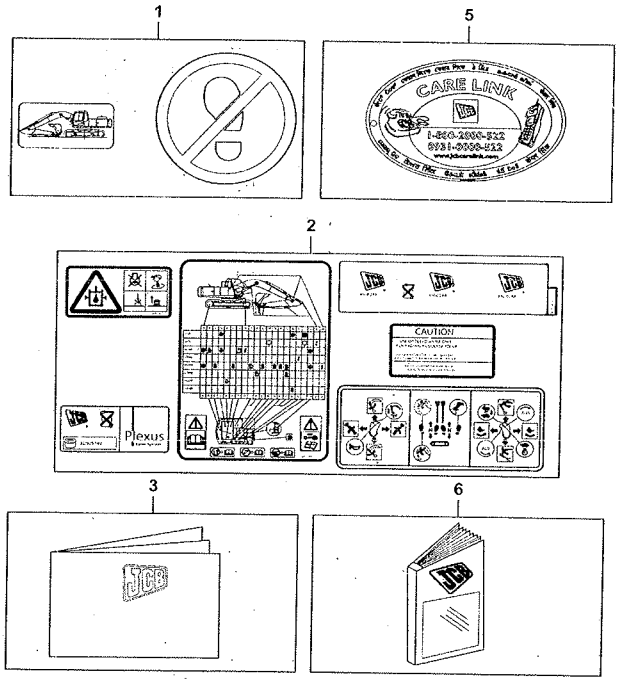

332-L7808-2

JS205 INDIA

ITEM	Part #	CHANGE NO	DESCRIPTION	USAGE CODE	QTY
1	229/01384		Label Pack JS200 Refer B520-10-1		1
2	229/01298		Label Pack Refer B520-15-1		1
3	9821/1350		Handbook Operator		1
5	333/P2440		Decal Care Link		1
6	333/L2347		Handbook		1

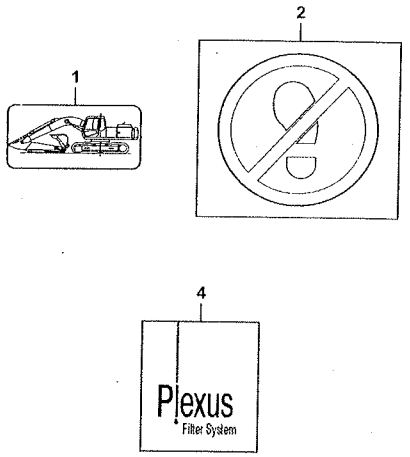

229-01384-4

JS205 INDIA

ITEM	Part #	CHANGE NO	DESCRIPTION	USAGE CODE	QTY
1	JHP0096		Label oil level		1
2	817/18566		Decal Warning No Step		1
4	817/17826		Label Plexus filter adhesive on front		1

JS205 INDIA

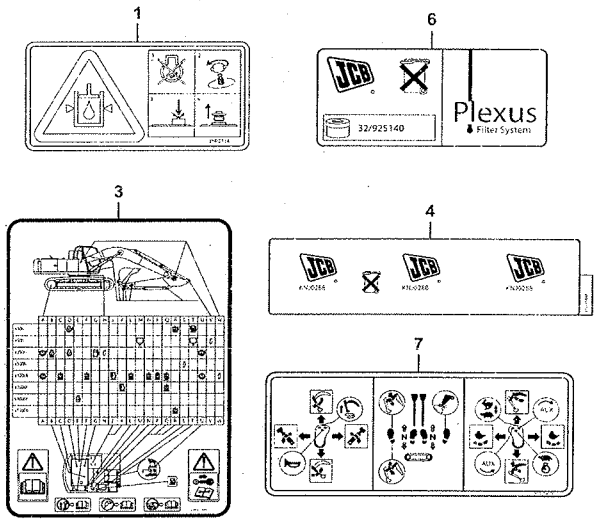

229-01298-4

ITEM	Part #	CHANGE NO	DESCRIPTION	USAGE CODE	QTY
1	JHP0134		Label hyd tank vent		1
3	229/01289		Decal Lubrication		1
4	817/18848		Label return oil		1
6	817/18851		Label plexus filter		1
7	817/19056		Label Controls Track iso		1

JS205 INDIA

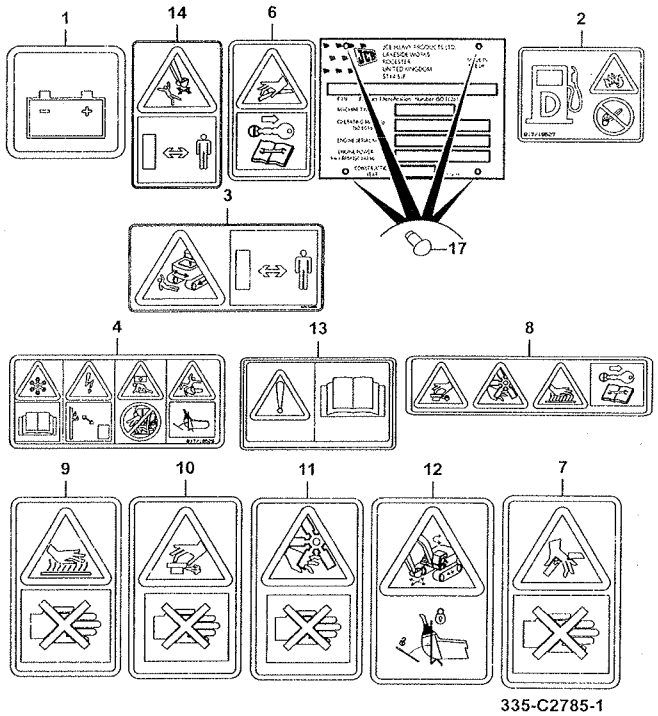

335-C2785-1

ITEM	Part #	CHANGE NO	DESCRIPTION	USAGE CODE	QTY
1	332/J7387		Decal 24v		1
2	817/18527		Label Warning No Naked Flame		1
3	817/18528		Decal JS Infomation/ Warning		2
4	817/18529		Decal Warning Cab Sign		1
6	817/18532		Decal JS Information / Warning		1
7	817/18533		Decal Warning Keep Hands Away		1
8	817/18535		Decal Information / Warning Coolant Pressure		1
9	817/18536		Decal JS Information / Warning Hot Surfaces		2
10	817/18537		Decal Information / Warning High Pressure & Hot		1

Continue...

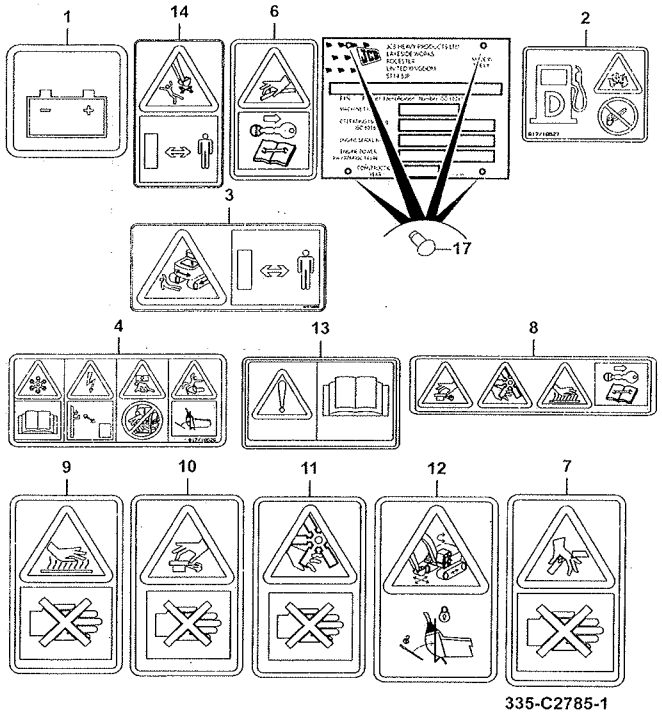

335-C2785-1

ITEM	PART NO	CHANGE NO	DESCRIPTION	USAGE CODE	QTY
11	817/18538		Decal Information /Warning Rotating Parts		1
12	229/01954		Isolator Label		1
13	333/P5908		Decal Warning Product		1
14	817/19470		Decal Warning Label - Dipper		2
16	335/C2784		Book Parts JS205		1
17	JHP0168		Rivet		4

JS205 INDIA

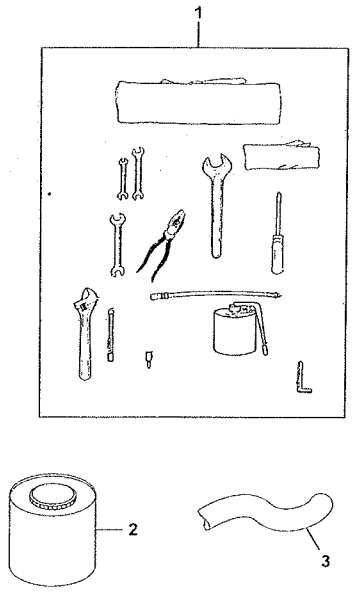

ITEM	Part #	CHANGE NO	DESCRIPTION	USAGE CODE	QTY
1	229/00561		Tool Kit Refer B530-5-1		1
2	40/301494		Grease		1
3	130/14018		Tube Extension		1

229-00560-1

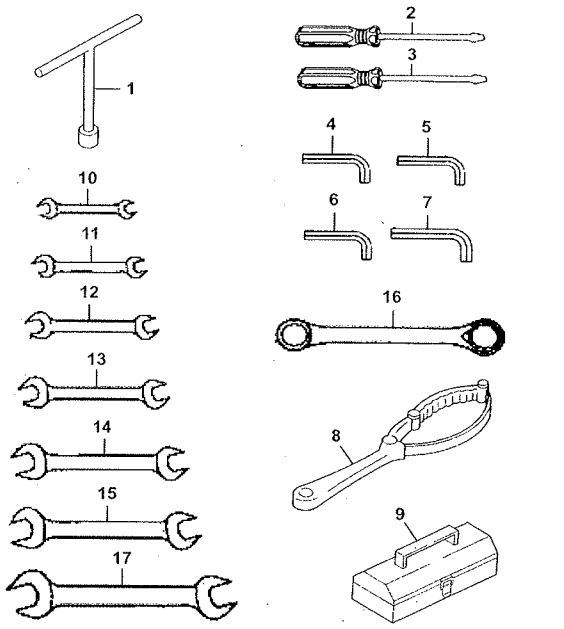

229-00561-1

JS205 INDIA

ITEM	Part #	CHANGE NO	DESCRIPTION	USAGE CODE	QTY
1	JHP0068		Box spanner		1
2	JHP0069		Tool screwdriver pozidrive, 75mm		1
3	JHP0070		Tool screwdriver pozidrive, 100mm		1
4	130/14053		Key Allen 8 mm		1
5	40/301594		Key allen 6mm		1
6	JRP0086		Key allen, 5mm		1
7	JRP0087		Key allen, 10mm		1
8	229/01545		Tool Filter Wrench		1
9	130/99510		Tool Bag		1
10	130/14011		Spanner Double Ended 10 x 11 mm		1
11	130/14012		Spanner Double Ended 12 x 13 mm		1
12	130/14013		Spanner D.E. 14 x 17mm		1
13	130/14014		Spanner D.E. 19 x 22mm		1
14	130/99557		Spanner D.E. 20 x 22mm		1

B530-5-1 TOOLS, KIT, STD

9820/0692A
ISSUE 1

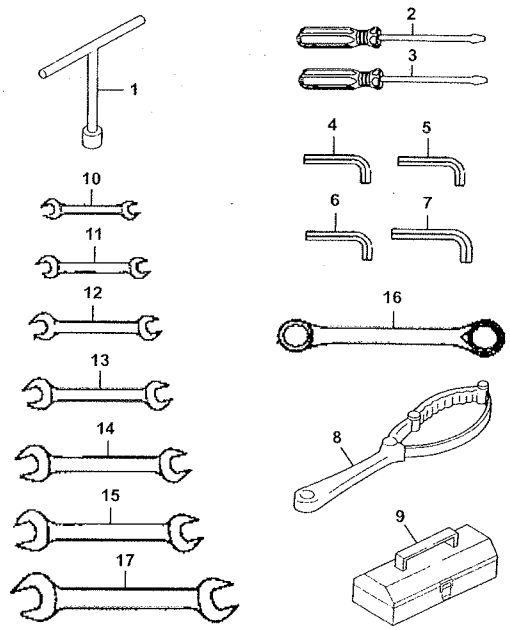

229-00561-1

ITEM	PART NO	CHANGE NO	DESCRIPTION	USAGE CODE	QTY
15	130/14015		Spanner D.E. 24 x 26mm		1
16	130/99560		Spanner Ring 18 - 19mm		1
17	130/99555		Spanner D.E. 36 x 41mm		1

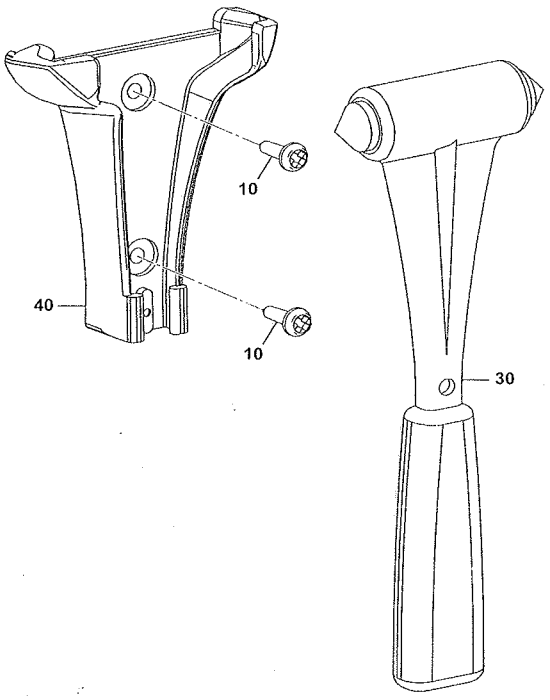

332-A3315-3

JS205 INDIA

ITEM	Part #	CHANGE NO	DESCRIPTION	USAGE CODE	QTY
10	1430/0102		Screw		2
30	265/00678		Hammer emergency glass breaker		1
40	332/U4206		Bracket breaker tool holder		1

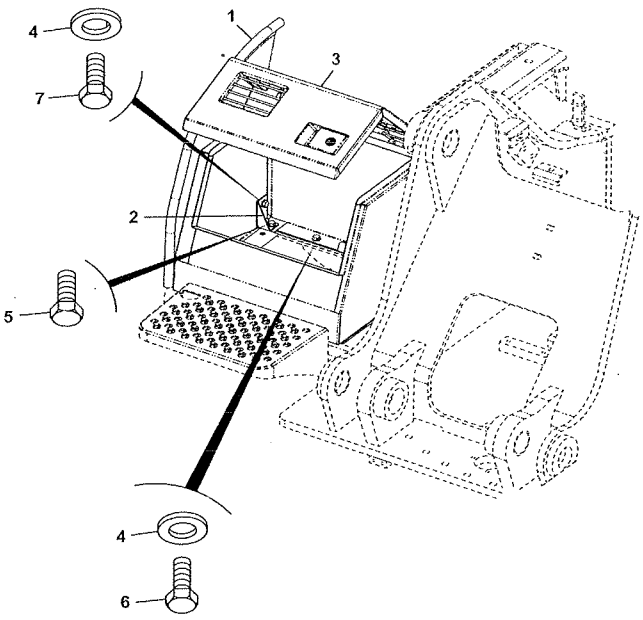

229-01046-7

JS205 INDIA

ITEM	Part #	CHANGE NO	DESCRIPTION	USAGE CODE	QTY
1	229/01205		Toolbox Side RH fab		1
2	229/01199		Support Side Skin		2
3			Toolbox Assembly Refer B530-20-1		1
4	1420/0009Z		Washer Plain M12		10
5	1316/0510Z		Screw		2
6	1316/0509Z		Setscrew		6
7	1316/0505Z		Screw M12x20		2
8	1316/0308Z		Screw		1
10	332/P4405		Washer		1
11	1411/0005D		Washer		2

JS205 INDIA

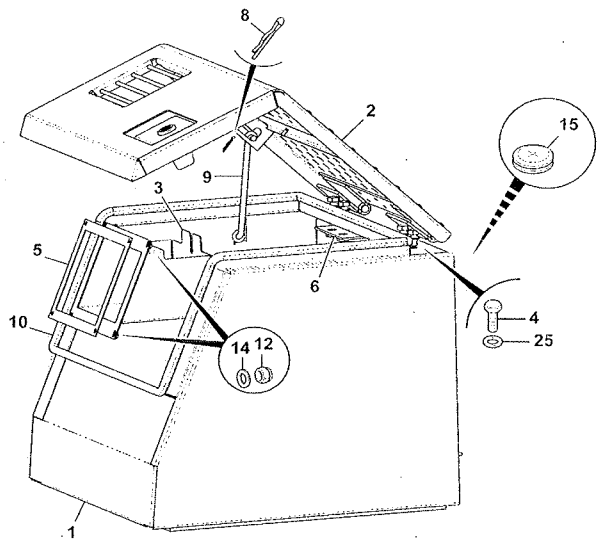

ITEM	Part #	CHANGE NO	DESCRIPTION	USAGE CODE	QTY
1	229/01150		Base tool box		1
2			Tool Box LID Refer B530-25-1		1
3	229/01138		Light Box		1
4	1318/0405Z		Setscrew M10 x 20mm		4
5	229/01203		Gasket		1
6	331/34946		Hinge packer		2
8	KRJ1588		Pin		2
9	KRN1418		Stay		1
10	KSN0939		Cushion rubber		1
12	1370/0001Z		Nut M5		4
14	1420/0005Z		Washer Plain		4
15	2410/0015		Grommet		1
25	1420/0008Z		Washer Plain M10		6

229-01140-7

JS205 INDIA

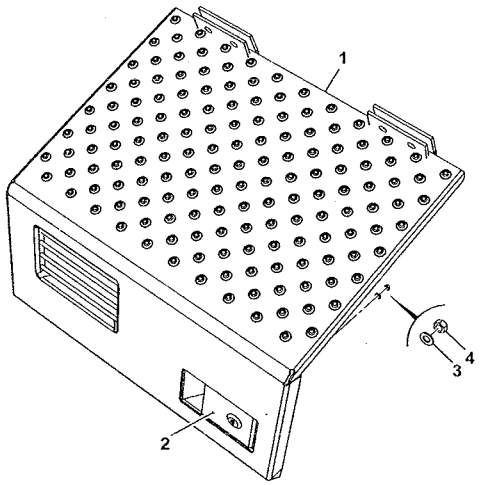

ITEM	Part #	CHANGE NO	DESCRIPTION	USAGE CODE	QTY
1	229/01142		Toolbox LID		1
2	826/11027		Latch Paddle		1
3	1420/0005Z		Washer Plain		4
4	1371/0001Z		Nut		4

229-01141-4

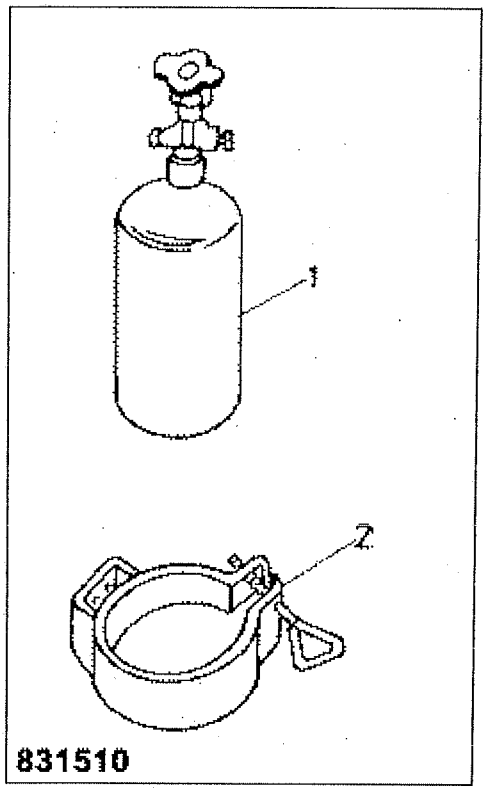

JS205 INDIA

ITEM	Part #	CHANGE NO	DESCRIPTION	USAGE CODE	QTY
1	730/03601		Extinguisher Fire		1
2	730/03602		Band		1
3	826/01103		Nut Rivet,M8 Open Ended		2
4	1420/0007Z		Washer Plain M8		2
5	1315/0308Z		Setscrew M8X30		2

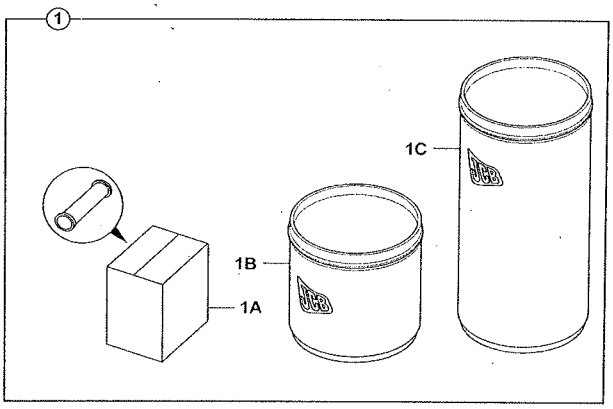

JS205 INDIA

ITEM	Part #	CHANGE NO	DESCRIPTION	USAGE CODE	QTY
1			Grease High Pressure		1
1A	4003/2017		Grease High Pressure 400g x 24 QTY:A/R		0
1B	4003/2006		Grease High Pressure 12.5kg QTY:A/R		0
1C	4003/2005		Grease High Pressure 50kg QTY:A/R		0

C

- C01 ELECTRICAL
- C03 ELECTRICS, CAB

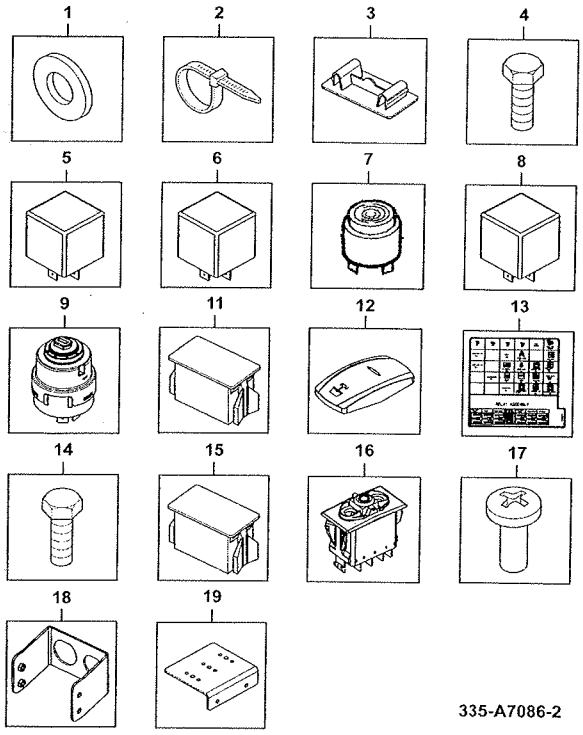

JS205 INDIA

ITEM	Part #	CHANGE NO	DESCRIPTION	USAGE CODE	QTY
1	1420/0005Z		Washer Plain		4
2	826/01144		Tie Cable 200mm		4
3	701/60010		Blank Switch Panel		3
4	826/01518		Screw		4
5	332/L4321		Relay Delay Time		1
6	334/L7791		Relay 24 VDC		4
7	696/01487		Relay Buzzer		1
8	696/01480		Relay ESOS		2
9	701/80184		Switch Ignition (Supplied with x2 Keys 701/45501)		1
10	701/58900		Label Front Lower Window		1
11	701/60034		Switch 24V		3
12	701/58809		Actuator switch, swing lock		1
13	334/P2267		Decal Fusebox Refer C350-5-1		1
14	826/01406		Screw		2
15	701/60030		Switch 24V		1

Continue...

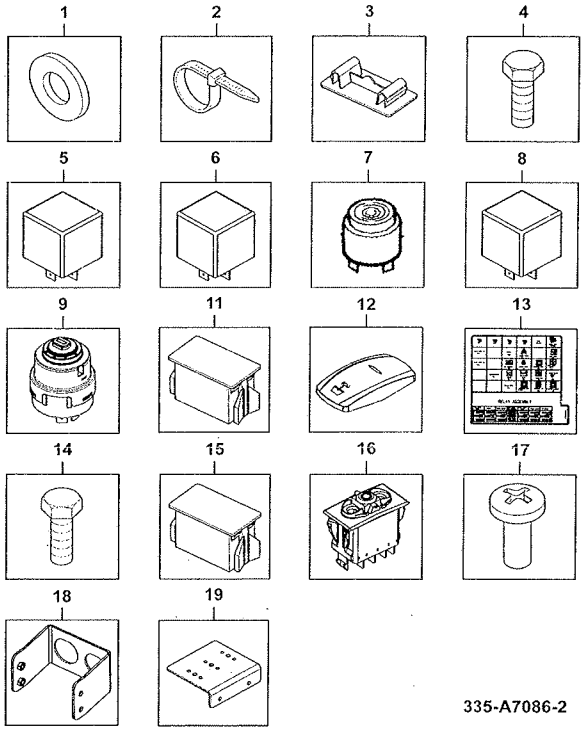

335-A7086-2

ITEM	PART NO	CHANGE NO	DESCRIPTION	USAGE CODE	QTY
16	701/58807		Actuator switch, isolator		2
17	KHR0737		Screw Pan Head		4
18	335/A6276		Bracket Mounting Connector		1
19	335/A6137		Bracket Mounting Connector		1

JS205 INDIA

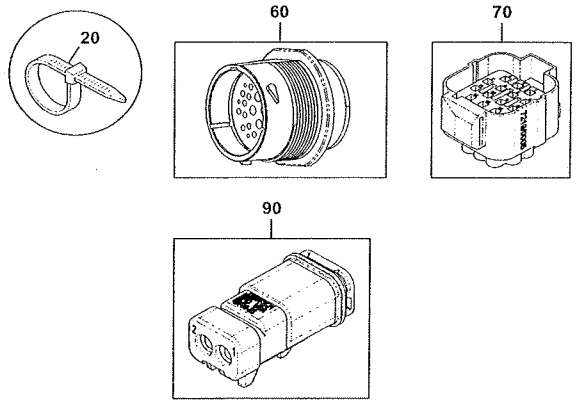

335-A7580-C

ITEM	Part #	CHANGE NO	DESCRIPTION	USAGE CODE	QTY
10	826/01144		Tie Cable 200mm		2
60	7220/0060		Connector Bulkhead 29 Way		1
70	7219/0005		Connector 14 way female socket		1
80	7212/0052		Housing socket,2 way Deutsch		5

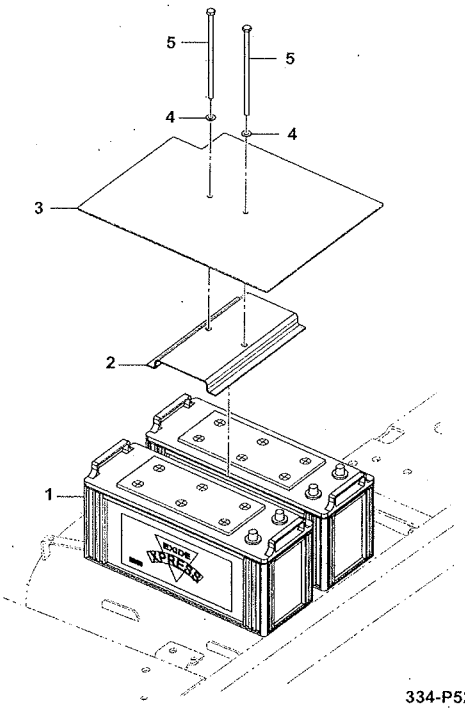

334-P5202-1

JS205 INDIA

ITEM	Part #	CHANGE NO	DESCRIPTION	USAGE CODE	QTY
1	40/302290		Battery		2
2	229/00598		Battery Clamp : Battery		1
3	333/L4042		Cover battery		1
4	1420/0008Z		Washer Plain M10		2
5	JHR0099		Bolt		2

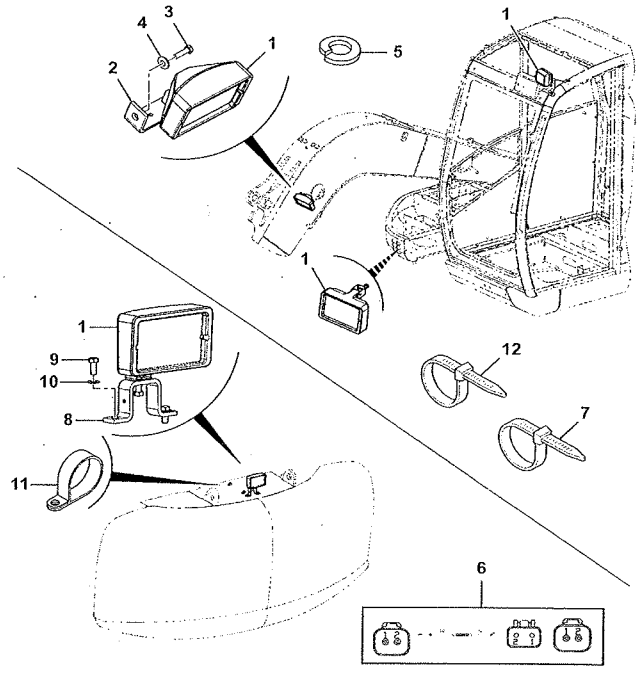

334-P5204-2

JS205 INDIA

ITEM	Part #	CHANGE NO	DESCRIPTION	USAGE CODE	QTY
1	334/P1576		Work light		5
2	332/K3601		Bracket		1
3	1316/0308Z		Screw		1
4	2208/00110		Washer M10		1
5	1425/0008Z		Spring Washer M10		1
6	334/L5447		Harness Wiring		1
7	826/01144		Tie Cable 200mm		8
8	JHR0025		Bracket rear light		1
9	1316/0305Z		Bolt High Tensile		2
10	1420/0007Z		Washer Plain M8		2
11	821/00410		Clip P 10mm		2
12	KHH0142		Harness Band		1

JS205 INDIA

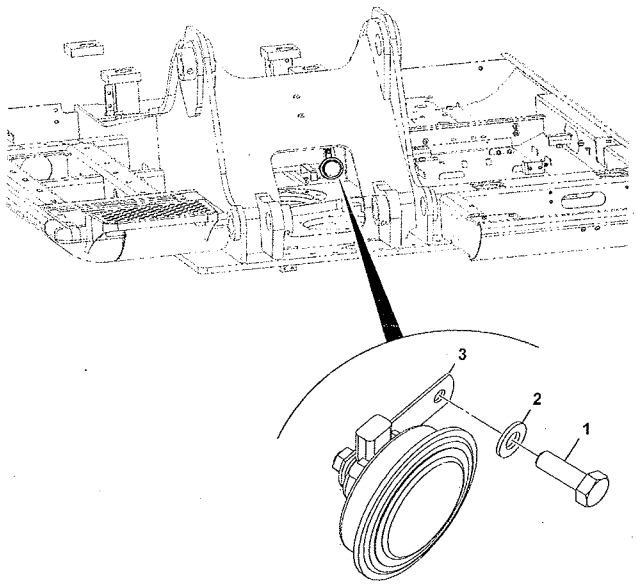

229-01242-3

ITEM	Part #	CHANGE NO	DESCRIPTION	USAGE CODE	QTY
1	1316/0305Z		Bolt High Tensile		1
2	1425/0007Z		Spring Washer		1
3	229/01228		Horn		1

C01 ELECTRICAL

- C03 ELECTRICS, CAB

C

JS205 INDIA

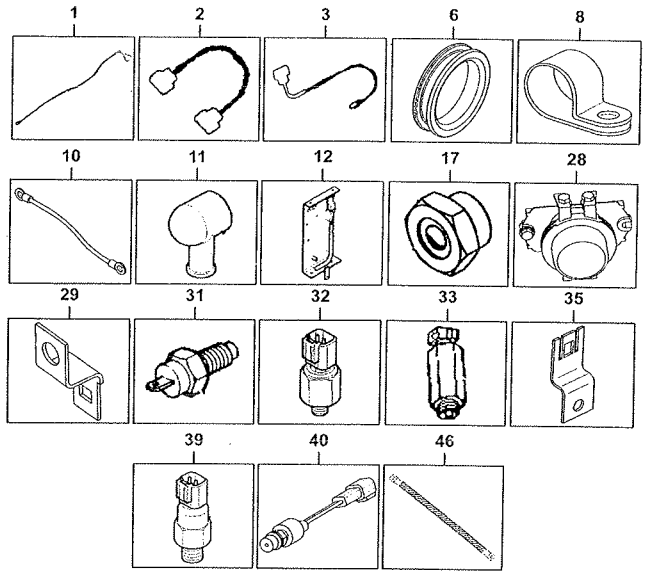

334-P5200-2

ITEM	Part #	CHANGE NO	DESCRIPTION	USAGE CODE	QTY
1	229/00601		Lead Positive Lead		1
2	229/00602		Battery Cable, Link		1
3	229/01660		Cable Battery, Negative		1
4	229/01238		Cable Positive, Battery		1
5	001/00233		Harness Band		29
6	KAR0576		Grommet		1
7	KHH0142		Harness Band		14
8	KHR0319		Clamp special		3
9	KHR0737		Screw Pan Head		17
10	KHR1451		Cable Earth		1
11	KHR1716		Cap Terminal		2
12	332/L2381		Bracket		1
13	1316/0301Z		Screw		1
14	1316/0305Z		Bolt High Tensile		1
15	1316/0405Z		Screw M10 X 20		1
16	1316/0507Z		Screw		2

Continue...

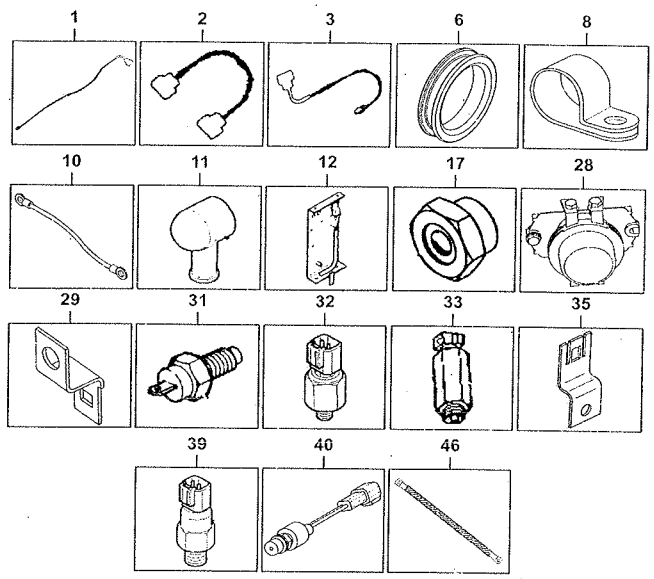

334-P5200-2

ITEM	PART NO	CHANGE NO	DESCRIPTION	USAGE CODE	QTY
17	229/01377		Adaptor M/F 1/2?NPTF		1
18	1420/0007Z		Washer Plain M8		6
19	1420/0008Z		Washer Plain M10		1
20	1420/0009Z		Washer Plain M12		2
21	1425/0007Z		Spring Washer		4
22	1425/0008Z		Spring Washer M10		2
23	186-106ZZ		Washer Toothed		3
24	186-108ZZ		Washer		1
25	186-110ZZ		Washer Toothed		1
26	186-112ZZ		Washer Toothed		1
27	6012/0298Z		Screw pan head		3
28	716/30205		Relay battery		1
29	821/00367		Clip		1
30	826/01347		Tie Cable 160mm		4
31	701/80327		Switch Engine Oil Pressure		1
32	701/80328		Switch Overheat Warning		2
33	40/302723		Sensor Water Temperature		1

C300-1-1 ELECTRICS CAB INSTALLATION ASSEMBLIES, MAIN 9820/0692A ISSUE 1

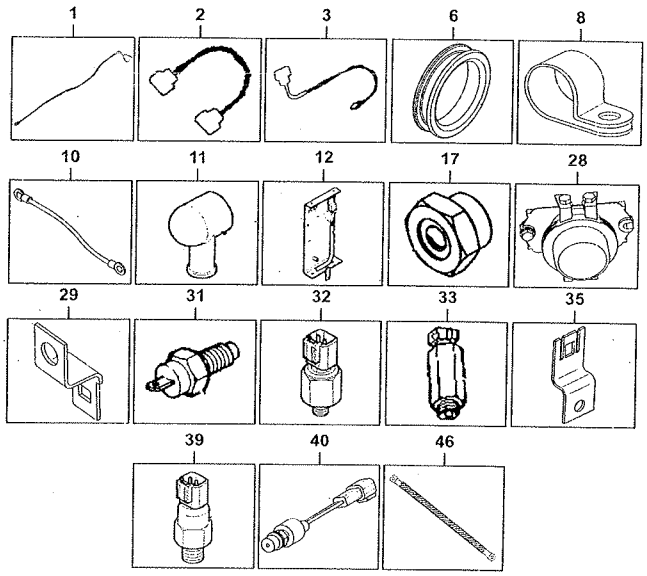

334-P5200-2

ITEM	PART NO	CHANGE NO	DESCRIPTION	USAGE CODE	QTY
34	1370/0001Z		Nut M5		1
35	696/02136		Clip Fuse		1
36	333/P0065		Relay Cover		1
37	1315/0309Z		Setscrew M8x35		2
38	1370/0201Z		Nut		2
39	332/J0670		Switch Upper Servo Pressure 12bar		1
40	332/J0671		Switch Travel Pressure 20 bar		1
41	826/01144		Tie Cable 200mm		14
42	1417/0014Z		Washer Lock		1
45	334/P1440		Harness Wiring Chassis		1
46	332/L8387		Cable Alternator to starter motor		1

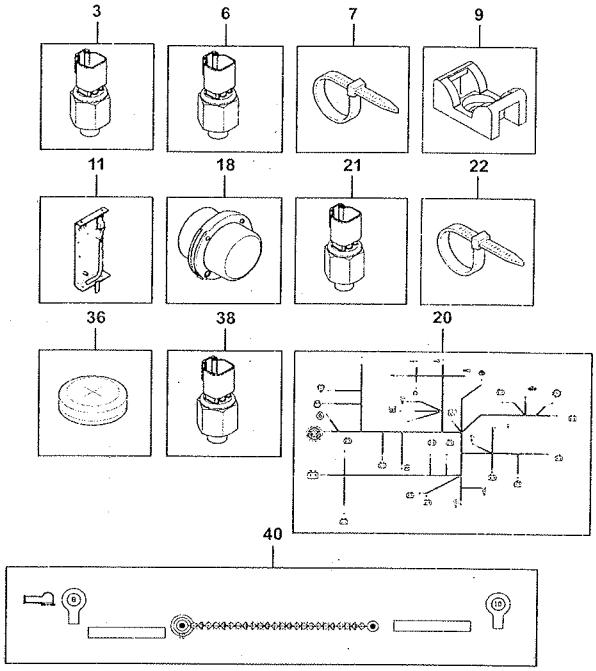

335-C2109-1

JS205 INDIA

ITEM	Part #	CHANGE NO	DESCRIPTION	USAGE CODE	QTY
1	229/00601		Lead Positive Lead		1
2	229/00602		Battery Cable, Link		1
3	701/80328		Switch Overheat Warning		1
4	186-108ZZ		Washer		1
5	1315/0309Z		Setscrew M8x35		2
6	701/80327		Switch Engine Oil Pressure		1
7	KHH0142		Harness Band		14
8	1420/0007Z		Washer Plain M8		6
9	KHR0319		Clamp special		5
10	229/01238		Cable Positive, Battery		1
11	332/L2381		Bracket		1
12	1316/0305Z		Bolt High Tensile		1
13	826/01144		Tie Cable 200mm		14
14	333/P0065		Relay Cover		1
15	1420/0008Z		Washer Plain M10		1
16	1316/0507Z		Screw		2

C300-5-1 ELECTRICS CAB INSTALLATION ASSEMBLIES, MAIN, ASIA 9820/0692A ISSUE 1

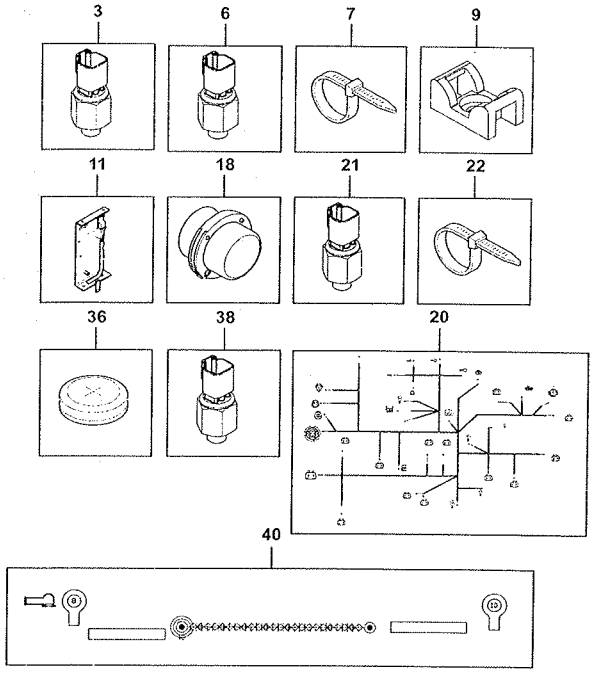

335-C2109-1

ITEM	PART NO	CHANGE NO	DESCRIPTION	USAGE CODE	QTY
17	229/01377		Adaptor M/F 1/2?NPTF		1
18	716/30205		Relay battery		1
19	696/02136		Clip Fuse		1
20	335/A8135		Harness Chassis		1
21	40/302723		Sensor Water Temperature		1
22	826/01347		Tie Cable 160mm		4
23	1417/0014Z		Washer Lock		1
24	KHR0737		Screw Pan Head		1
25	1370/0201Z		Nut		2
26	186-106ZZ		Washer Toothed		2
27	1370/0001Z		Nut M5		1
28	186-110ZZ		Washer Toothed		1
29	6012/0298Z		Screw pan head		4
30	001/00233		Harness Band		12
31	1316/0405Z		Screw M10 X 20		1
32	332/J0671		Switch Travel Pressure 20 bar		1
33	KHR1716		Cap Terminal		2
34	1316/0301Z		Screw		1

Continue...

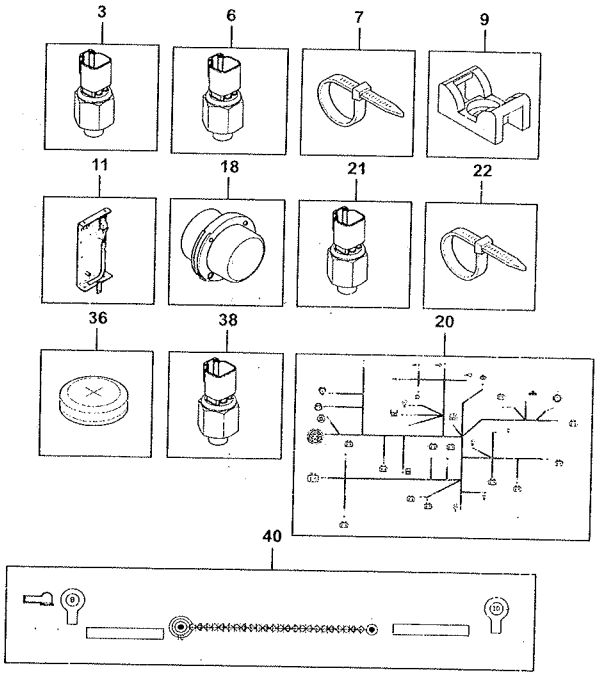

335-C2109-1

ITEM	PART NO	CHANGE NO	DESCRIPTION	USAGE CODE	QTY
35	229/01660		Cable Battery, Negative		1
36	KAR0576		Grommet		1
37	KHR1451		Cable Earth		1
38	332/J0670		Switch Upper Servo Pressure 12bar		1
39	1425/0008Z		Spring Washer M10		2
40	332/L8387		Cable Alternator to starter motor		1
41	186-112ZZ		Washer Toothed		1

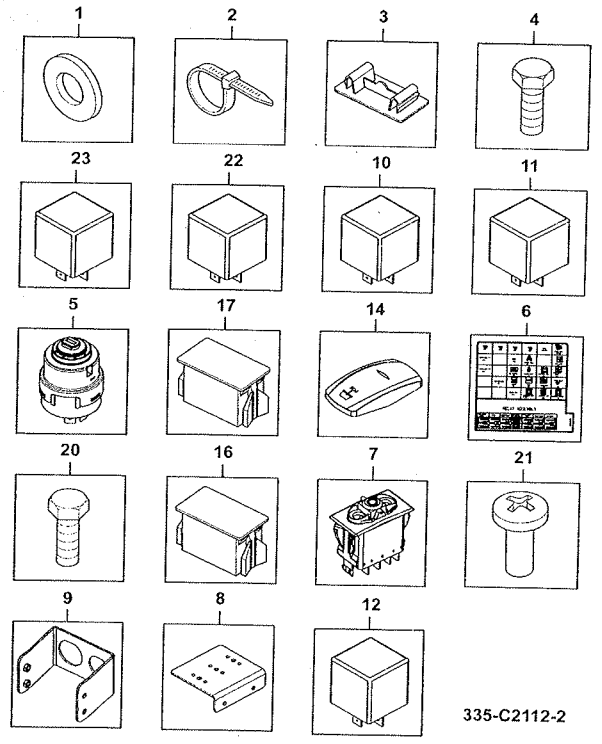

335-C2112-2

JS205 INDIA

ITEM	Part #	CHANGE NO	DESCRIPTION	USAGE CODE	QTY
1	1420/0005Z		Washer Plain		4
2	826/01144		Tie Cable 200mm		4
3	701/60010		Blank Switch Panel		1
4	826/01518		Screw		4
5	701/80184		Switch Ignition (Supplied with x2 Keys 701/45501)		1
6	334/P0398		Decal Fuse Box Refer C350-1-1		1
7	701/58807		Actuator switch, isolator		2
8	335/A6137		Bracket Mounting Connector		1
9	335/A6276		Bracket Mounting Connector		1
10	696/01480		Relay ESOS		2
11	229/01389		Relay N/O		4
12	696/01479		Relay		1
13	696/01487		Relay Buzzer		2
14	701/58809		Actuator switch, swing lock		1

Continue...

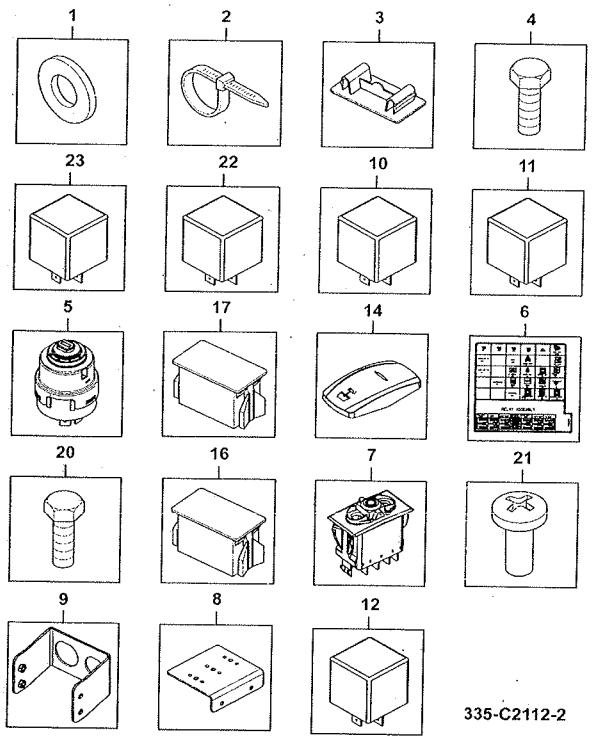

335-C2112-2

ITEM	PART NO	CHANGE NO	DESCRIPTION	USAGE CODE	QTY
15	701/58900		Label Front Lower Window		1
16	701/60030		Switch 24V		1
17	701/60034		Switch 24V		3
20	826/01406		Screw		2
21	KHR0737		Screw Pan Head		4
22	334/L7791		Relay 24 VDC		2
23	332/L4321		Relay Delay Time		1

JS205 INDIA

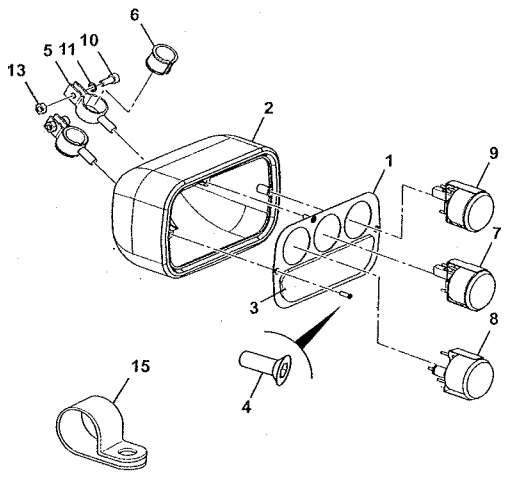

335-C0539-1

ITEM	Part #	CHANGE NO	DESCRIPTION	USAGE CODE	QTY
1	229/01125		Panel Plate		1
2	229/01126		Panel Moulding		1
3	334/L5466		Cluster Warning		1
4	229/01128		Screw Counter Sunk		3
5	229/01129		Clamp - Mounting		2
6	229/01130		Bush		2
7	229/01131		Gauge Fuel		1
8	334/L5477		Meter Hour		1
9	229/01133		Gauge Temp		1
10	1391/3203D		Capscrew		3
11	1425/0006Z		Washer Spring		2
13	1371/0101Z		Nut high strength		2
15	KHR1407		Clamp 25mm dia.		1

JS205 INDIA

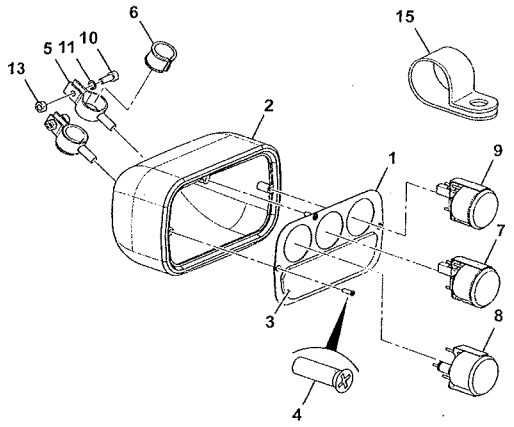

ITEM	Part #	CHANGE NO	DESCRIPTION	USAGE CODE	QTY
1	229/01125		Panel Plate		1
2	229/01126		Panel Moulding		1
3	229/01127		Cluster Warning		1
4	229/01128		Screw Counter Sunk		3
5	229/01129		Clamp - Mounting		2
6	229/01130		Bush		2
7	229/01131		Gauge Fuel		1
8	334/L5477		Meter Hour		1
9	229/01133		Gauge Temp		1
10	1391/3203D		Capscrew		3
11	1420/0005		Washer 'P'		3
13	1371/0101Z		Nut high strength		2
15	KHR1407		Clamp 25mm dia.		1

229-01229-9

JS205 INDIA

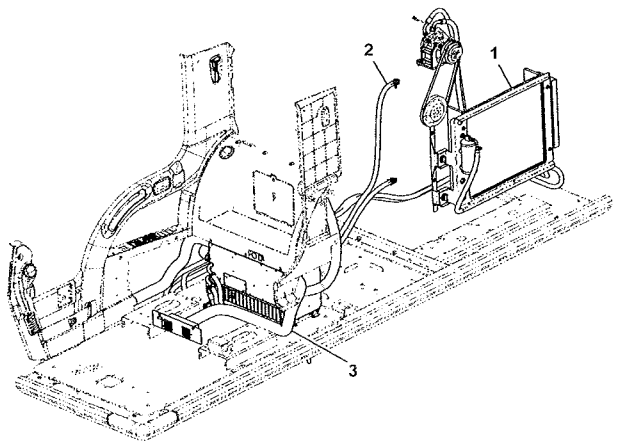

ITEM	Part #	CHANGE NO	DESCRIPTION	USAGE CODE	QTY
1			Kit ATC Refer C340-5-1		1
2			Kit-hose Heater Refer C340-10-1		1
3			Heater Common Parts Refer C340-15-1		1

335-A6298-2

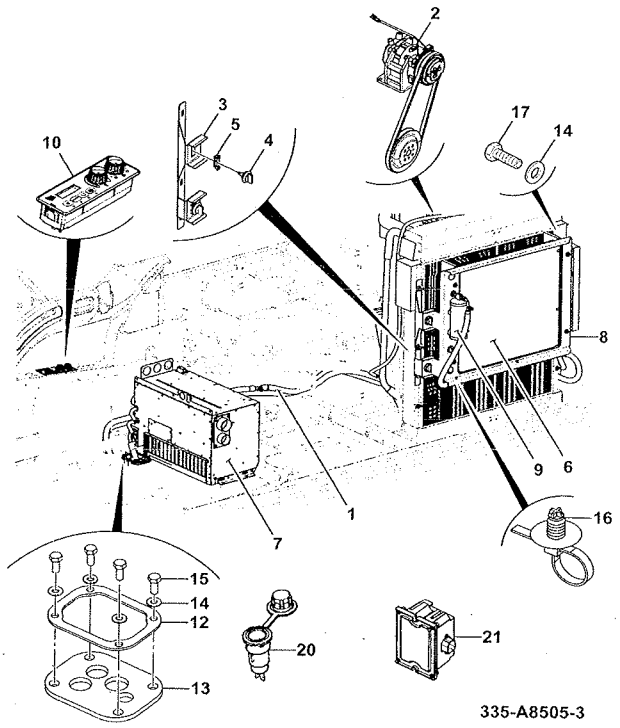

JS205 INDIA

ITEM	Part #	CHANGE NO	DESCRIPTION	USAGE CODE	QTY
1			Kit-hose Air Conditioning Refer C340-20-1		1
2	333/L2545		Kit Drive And Mount Refer C340-25-1		1
3	335/A9097		Bracket Condenser		1
4	826/10532		Fastener 1/4 turn		2
5	478/00288		Retainer		2
6	332/T4785		Condenser		1
7	333/J1053		Unit Air Condition		1
8	335/A8897		Bracket Condenser		1
9	30/926117		Drier receiver Refer L760-5-1		1
10	333/K2768		Panel Control Air Condition		1
12	333/J1258		Plate retainer		1
13	333/J4811		Grommet		1
14	1420/0007Z		Washer Plain M8		11
15	1316/0305Z		Bolt High Tensile		4

C340-5-1 HEATER/AIR CON ASSEMBLY, KIT, ATC, OPTIONAL 9820/0692A
ISSUE 1

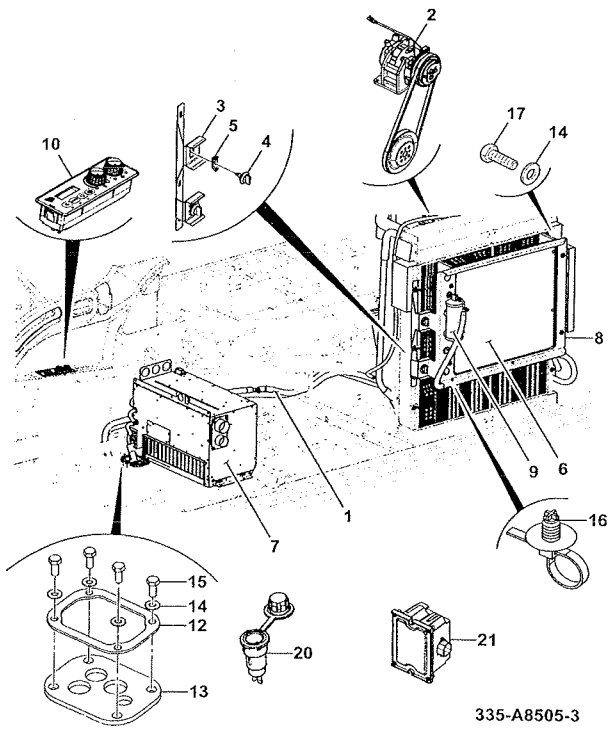

ITEM	PART NO	CHANGE NO	DESCRIPTION	USAGE CODE	QTY
16	242/00290		Tie panel fixing cable		2
17	1316/0307Z		Screw		4
20	715/20041		Socket Mobile Charging		1
21	717/C5944		Convertor 24/12volt (8 AMP) die cast housing		1

JS205 INDIA

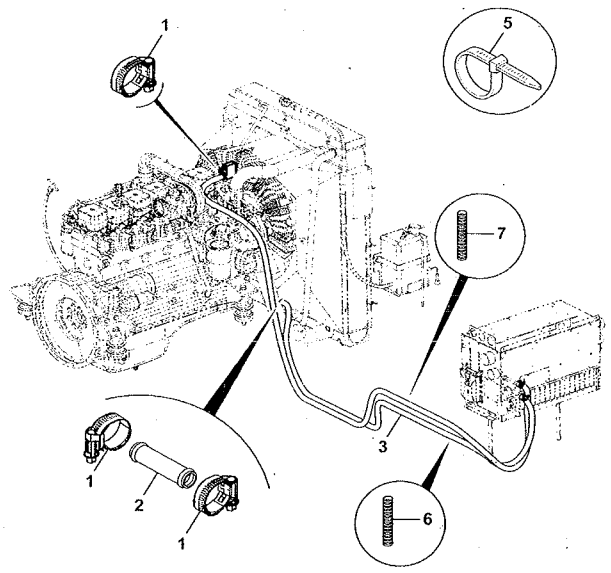

335-A8662-3

ITEM	Part #	CHANGE NO	DESCRIPTION	USAGE CODE	QTY
1	332/L2995		Clip constant tension		5
2	7242/50417		Connector Hose		1
3	JRR0012		Hose heater roll		2
5	826/11447		Tie Cable Locking		8
6	647/10501		Tube corrugated		1
7	JSR0034		Tube Corrugated 28mm		1

JS205 INDIA

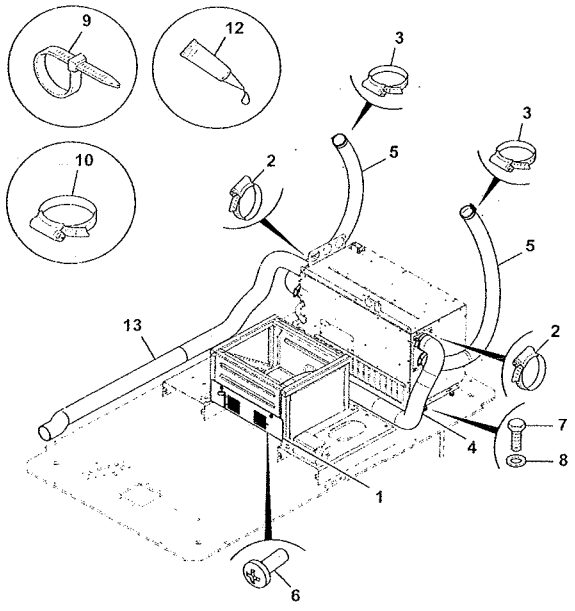

335-A8723-2

ITEM	Part #	CHANGE NO	DESCRIPTION	USAGE CODE	QTY
1	331/28366		Plate foot vent		1
2	2201/0012		Clip Jubilee, 46/70mm		2
3	2201/0011		Clip Worm Drive 40/64MM		4
4	30/925755		Hose air duct 60x1250L foot vent		1
5	334/L0266		Duct		2
6	KHR0737		Screw Pan Head		2
7	1316/0305Z		Bolt High Tensile		4
8	1420/0007Z		Washer Plain M8		4
9	826/11447		Tie Cable Locking		8
10	332/L2995		Clip constant tension		4
12	4101/0500		Fluid Locking Loctite 262		0
13	30/925756		Hose air duct 60x1450L front vents		1

JS205 INDIA

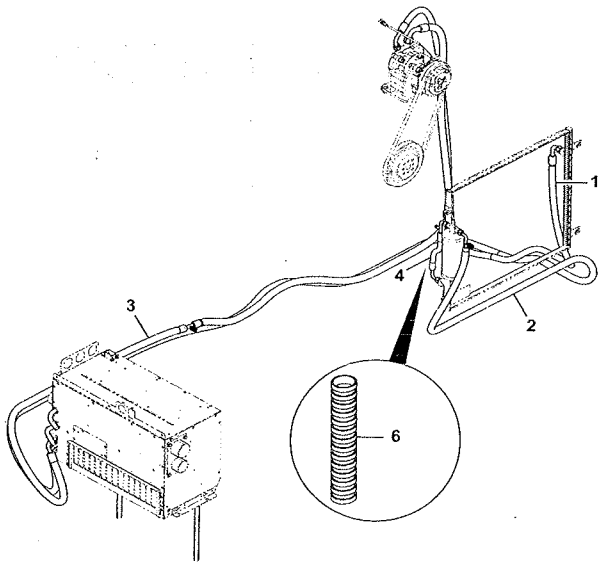

335-A8506-2

ITEM	Part #	CHANGE NO	DESCRIPTION	USAGE CODE	QTY
1	335/A9002		Hose Compressor to Condenser		1
2	333/K2653		Hose Receiver Drier		1
3	335/A9004		Hose Evaporator to Compressor		1
4	333/K2652		Hose Receiver Drier To Condenser		1
6	JSR0034		Tube Corrugated 28mm		3

not applicable

JS205 INDIA

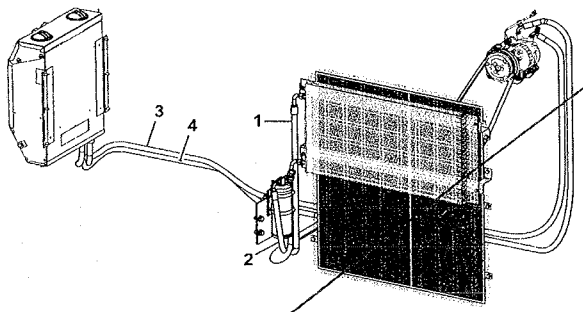

333-L8001-3

ITEM	Part #	CHANGE NO	DESCRIPTION	USAGE CODE	QTY
1	334/L8839		Hose Compressure to Condenser		1
2	334/L8840		Hose Condenser to Drier		1
3	334/L8841		Hose Drier to Evaporator		1
4	334/L8838		Hose Evaporator to Compressure		1

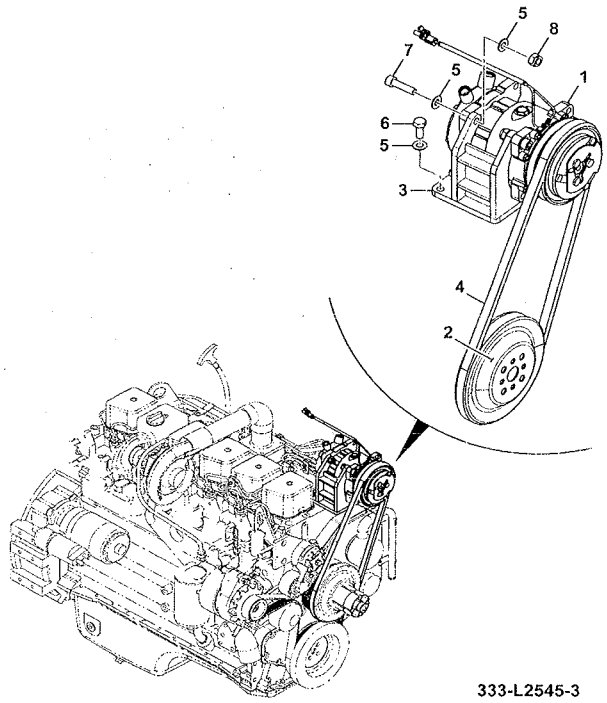

333-L2545-3

JS205 INDIA

ITEM	Part #	CHANGE NO	DESCRIPTION	USAGE CODE	QTY
1	123/04999		Compressor Refer L780-1-1		1
2	333/L6669		Pulley Accessory		1
3	333/L9965		Mounting Compressor		1
4	331/44674		Belt drive L=1138		1
5	1420/0008D		Washer Plain		11
6	1316/0407Z		Bolt High Strength		3
7	1391/3410D		Capscrew M10 x 40		4
8	1371/0303Z		Nut		4

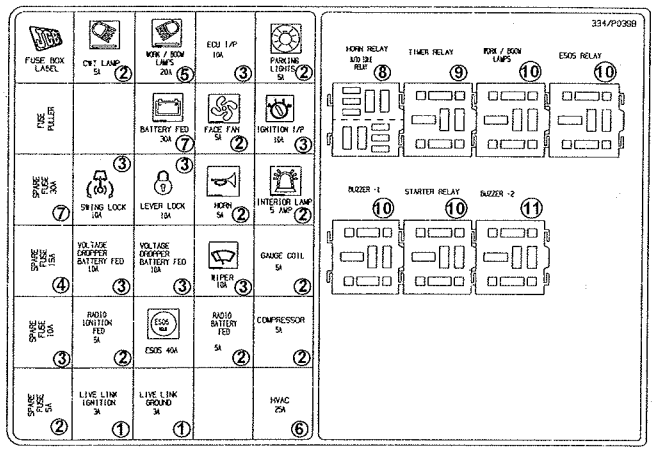

334-P0398-2

JS205 INDIA

ITEM	Part #	CHANGE NO	DESCRIPTION	USAGE CODE	QTY
1	716/05701		Fuse 3 amp		1
2	716/05703		Fuse 5 Amp		1
3	716/05705		Fuse 10 amp		1
4	716/05706		Fuse 15 Amp		1
5	716/05707		Fuse 20 amp		1
6	716/05708		Fuse 25 amp		1
7	716/05709		Fuse 30 amp		1
8	696/01480		Relay ESOS		2
9	332/L4321		Relay Delay Time		1
10	334/L7791		Relay 24 VDC		4
11	696/01487		Relay Buzzer		1

JS205 INDIA

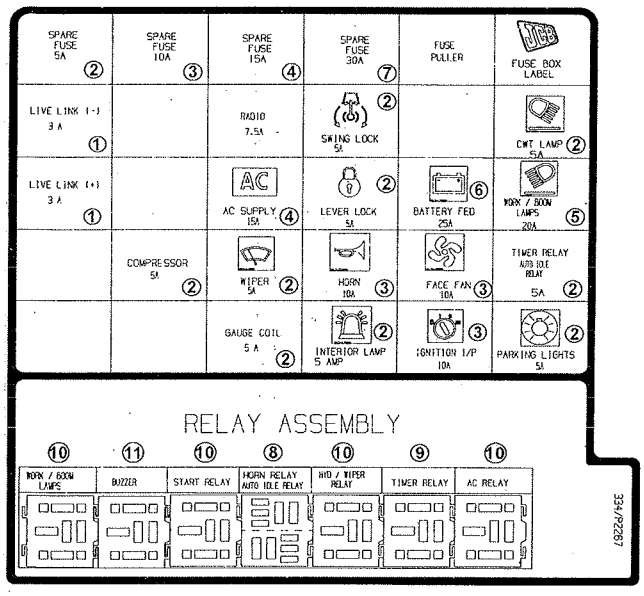

334-P2267-2

ITEM	Part #	CHANGE NO	DESCRIPTION	USAGE CODE	QTY
1	716/05701		Fuse 3 amp		1
2	716/05703		Fuse 5 Amp		1
3	716/05705		Fuse 10 amp		1
4	716/05706		Fuse 15 Amp		1
5	716/05707		Fuse 20 amp		1
6	716/05708		Fuse 25 amp		1
7	716/05709		Fuse 30 amp		1
8	696/01480		Relay ESOS		2
9	332/L4321		Relay Delay Time		1
10	334/L7791		Relay 24 VDC		4
11	696/01487		Relay Buzzer		1

JS205 INDIA

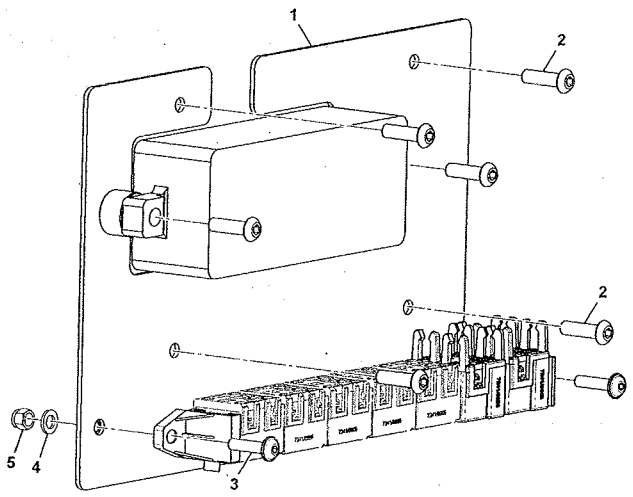

334-L9284-1

ITEM	Part #	CHANGE NO	DESCRIPTION	USAGE CODE	QTY
1	334/P0459		Fusebox		1
2	826/11021		Screw Button Head M6x20		6
3	826/01406		Screw		2
4	1420/0005Z		Washer Plain		1
5	1370/0003Z		Lock Nut M5		1

JS205 INDIA

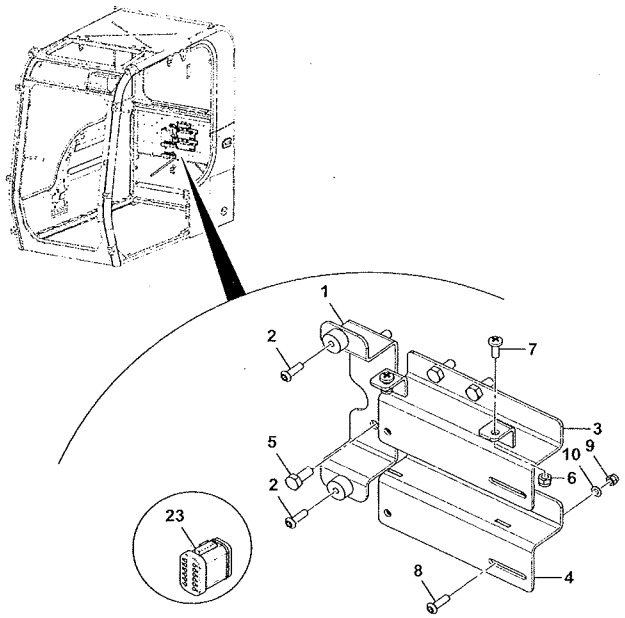

335-A7190-1

ITEM	Part #	CHANGE NO	DESCRIPTION	USAGE CODE	QTY
1	335/A7193		Box Fuse		1
2	826/11021		Screw Button Head M6x20		2
3	335/A7362		Bracket Mounting Relay		1
4	335/A7369		Bracket Mounting Relay		1
5	1316/0305Z		Bolt High Tensile		6
6	1370/0103Z		Nut Self Lock M6		2
7	KHR0737		Screw Pan Head		2
8	826/01406		Screw		4
9	1370/0003Z		Lock Nut M5		2
10	1420/0005Z		Washer Plain		2
23	7219/0016		Socket housing 12 way		1

JS205 INDIA

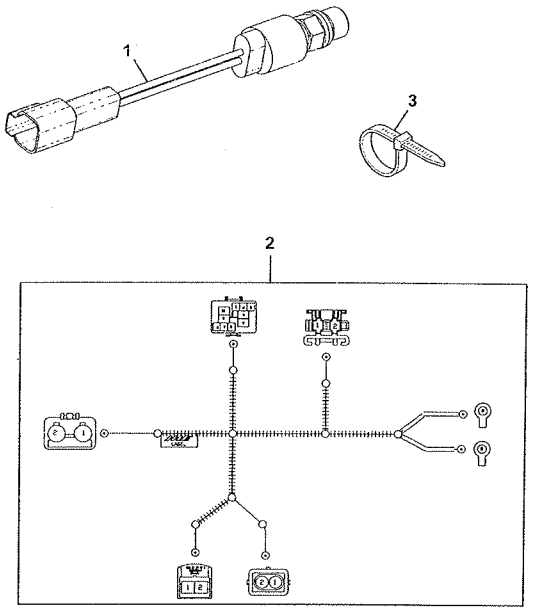

332-P3902-1

ITEM	Part #	CHANGE NO	DESCRIPTION	USAGE CODE	QTY
1	332/J0671		Switch Travel Pressure 20 bar		1
2	332/P3085		Harness Rock breaker		1
3	826/01144		Tie Cable 200mm		4

Not Applicable

JS205 INDIA

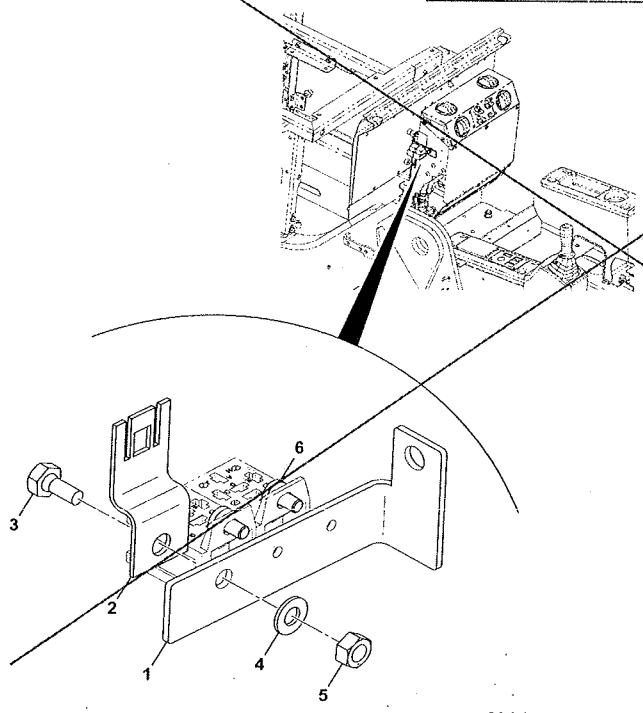

334-L5451-2

ITEM	Part #	CHANGE NO	DESCRIPTION	USAGE CODE	QTY
1	334/P5962		Relay Bracket 334/P5962		1
2	696/02136		Clip Fuse		1
3	1316/0303Z		Screw		1
4	1420/0007Z		Washer Plain M8		1
5	1370/0201Z		Nut		1
6	KHR0736		Screw pan head		2

JS205 INDIA

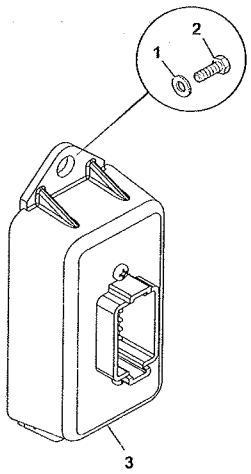

229-01227-1

ITEM	Part #	CHANGE NO	DESCRIPTION	USAGE CODE	QTY
1	1420/0006Z		Washer Plain M6		2
2	826/01519		Screw M6x25		2
3	728/28300		ECU Engine Protection		1

D

- **D01 CONTROL, MECHANICAL**
- **D02 ENGINE CONTROLS**

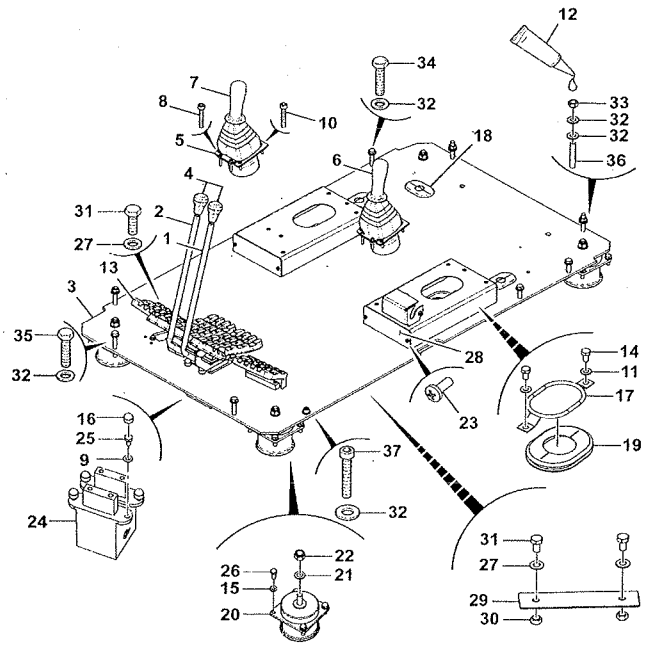

335-A6275-2

JS205 INDIA

ITEM	Part #	CHANGE NO	DESCRIPTION	USAGE CODE	QTY
1	332/K4871		Lever Track Left Side		1
2	332/K4891		Lever Track Right Side		1
3	335/A4975		Plate Floor		1
4	JHJ0123		Knob		2
5	331/18592		Plate Mounting Control Valve		2
6	25/222891		Valve Hand Controller Left Hand Refer E340-1-1		1
7	25/222892		Valve Hand Controler Right Hand Refer E340-5-1		1
8	1391/3208D		Capscrew M6 x 30mm		4
9	1420/0008Z		Washer Plain M10		4
10	1391/3210D		Capscrew M6 x 40mm		8
11	1420/0007Z		Washer Plain M8		4

Continue...

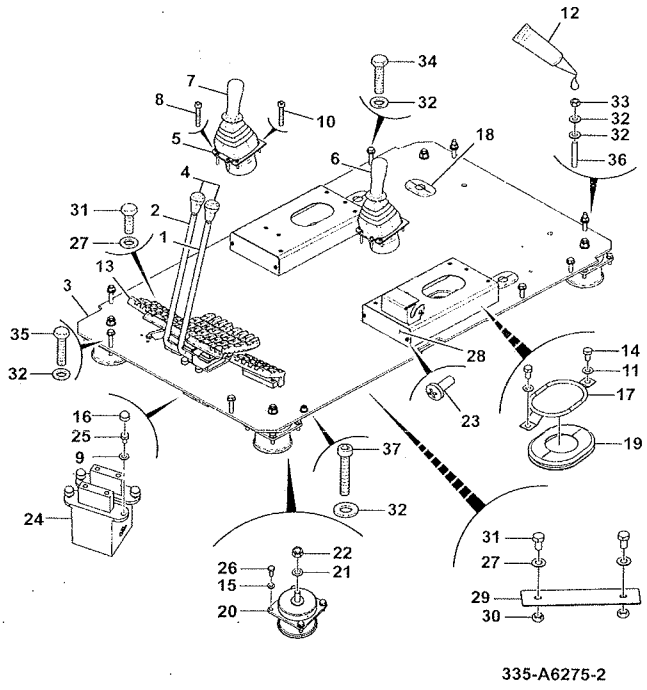

335-A6275-2

ITEM	PART NO	CHANGE NO	DESCRIPTION	USAGE CODE	QTY
12	4101/0500		Fluid Locking Loctite 262		1
13			Pedal Assembly Refer D150-1-1		1
14	1316/0303Z		Screw		4
15	JHP0046		Washer M10		24
16	KHJ0768		Cap spl		4
17	KHJ0947		Guide		2
18	KHJ0948		Grommet		3
19	KHJ0950		Grommet		2
20	332/K7887		Rubber Mount		6
21	1420/0011Z		Washer Plain M16		6
22	1370/0603Z		Nut M16		6
23	KHR0737		Screw Pan Head		4
24	KSJ2465		Valve Remote Control Refer E340-10-1		1
25	1316/0405Z		Screw M10 X 20		4
26	1316/0408Z		Screw M10x30		24
27	JHP0080		Washer		4
28	229/01518		Plate Seat Base Cover		2

D100-1-1 MECHANICAL CONTROL INSTALLATION ASSEMBLIES, JOYSTICK CONTROL 9820/0692A ISSUE 1

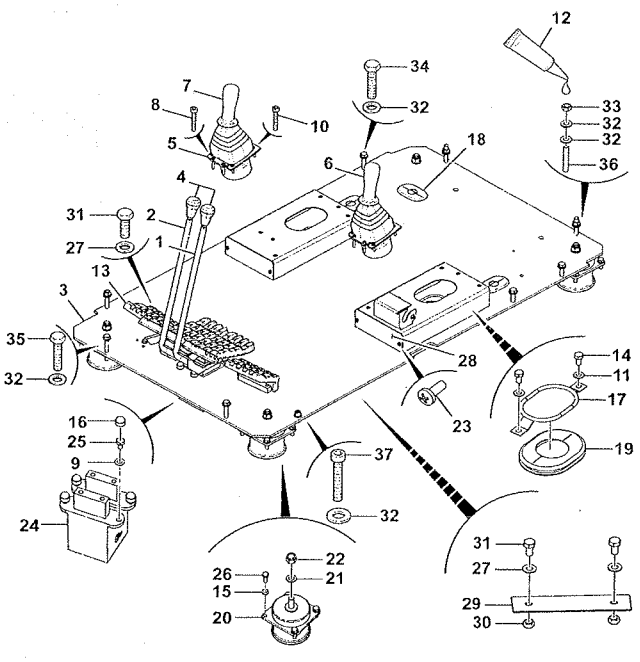

335-A6275-2

ITEM	PART NO	CHANGE NO	DESCRIPTION	USAGE CODE	QTY
29	331/35486		Plate 2mm thick		1
30	1370/0201Z		Nut		2
31	1316/0308Z		Screw		2
32	JHP0042		Washer M12		12
33	1371/0401Z		Nut Hex 12		3
34	1316/3514Z		Bolt		3
35	1316/3516Z		Bolt		2
36	KHN1256		Bolt		3
37	1391/3508D		Capscrew M12 x 30		1

JS205 INDIA

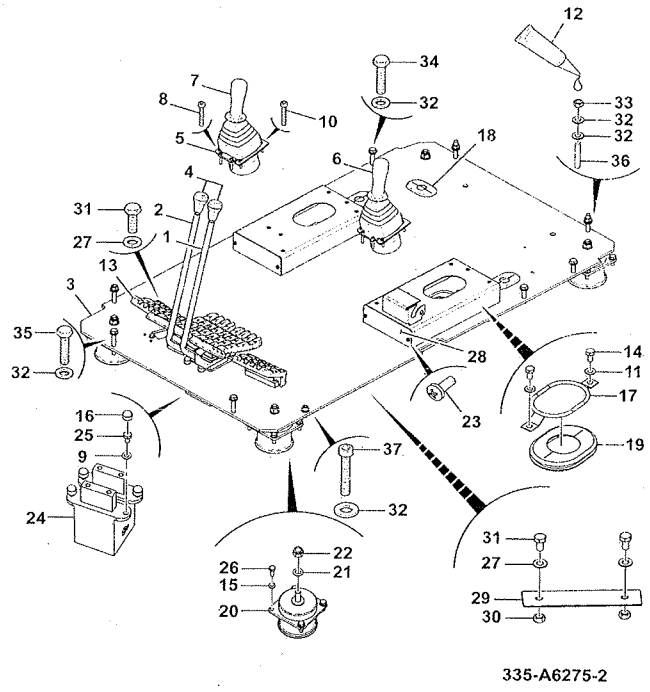

335-A6275-2

ITEM	Part #	CHANGE NO	DESCRIPTION	USAGE CODE	QTY
1	332/K4871		Lever Track Left Side		1
2	332/K4891		Lever Track Right Side		1
3	335/A6533		Plate Floor		1
4	JHJ0123		Knob		2
5	331/18592		Plate Mounting Control Valve		2
6	25/222891		Valve Hand Controller Left Hand Refer E340-1-1		1
7	25/222892		Valve Hand Controler Right Hand Refer E340-5-1		1
8	1391/3208D		Capscrew M6 x 30mm		4
9	1420/0008Z		Washer Plain M10		4
10	1391/3210D		Capscrew M6 x 40mm		8
11	1420/0007Z		Washer Plain M8		4

D100-5-1 MECHANICAL CONTROL INSTALLATION ASSEMBLIES, JOYSTICK CONTROL, DUCTED AC 9820/0692A ISSUE 1

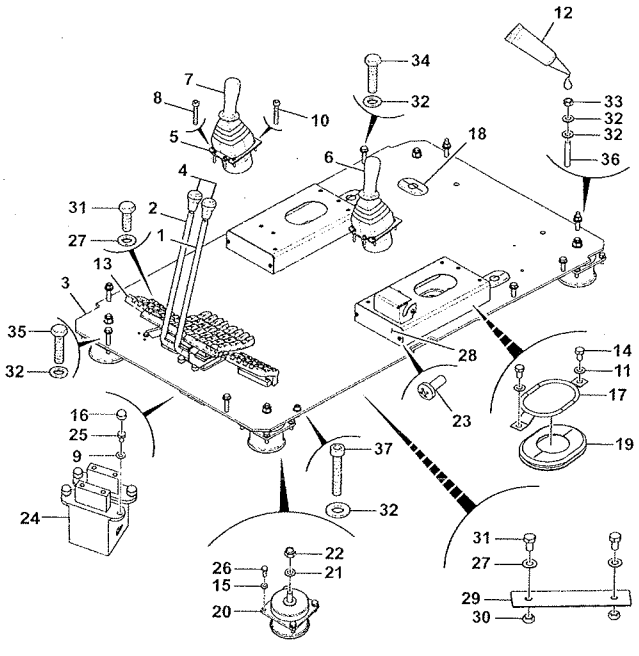

335-A6275-2

ITEM	PART NO	CHANGE NO	DESCRIPTION	USAGE CODE	QTY
12	4101/0500		Fluid Locking Loctite 262		1
13			Pedal Assembly Refer D150-1-1		1
14	1316/0303Z		Screw		4
15	JHP0046		Washer M10		24
16	KHJ0768		Cap spl		4
17	KHJ0947		Guide		2
18	KHJ0948		Grommet		1
19	KHJ0950		Grommet		2
20	332/K7887		Rubber Mount		6
21	1420/0011Z		Washer Plain M16		6
22	1370/0603Z		Nut M16		6
23	KHR0737		Screw Pan Head		4
24	KSJ2465		Valve Remote Control Refer E340-10-1		1
25	1316/0405Z		Screw M10 X 20		4
26	1316/0408Z		Screw M10x30		24
27	JHP0080		Washer		4
28	229/01518		Plate Seat Base Cover		2

Continue...

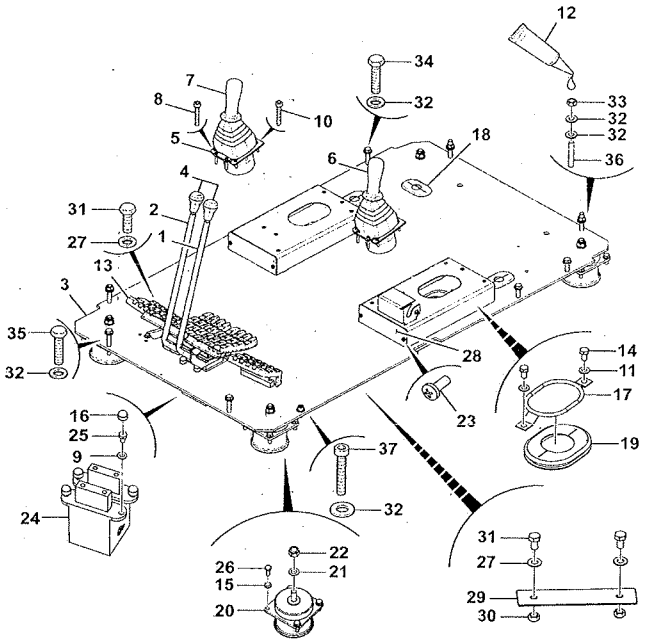

335-A6275-2

ITEM	PART NO	CHANGE NO	DESCRIPTION	USAGE CODE	QTY
29	331/35486		Plate 2mm thick		1
30	1370/0201Z		Nut		2
31	1316/0308Z		Screw		2
32	JHP0042		Washer M12		12
33	1371/0401Z		Nut Hex 12		3
34	1316/3514Z		Bolt		3
35	1316/3516Z		Bolt		2
36	KHN1256		Bolt		3
37	1391/3508D		Capscrew M12 x 30		1

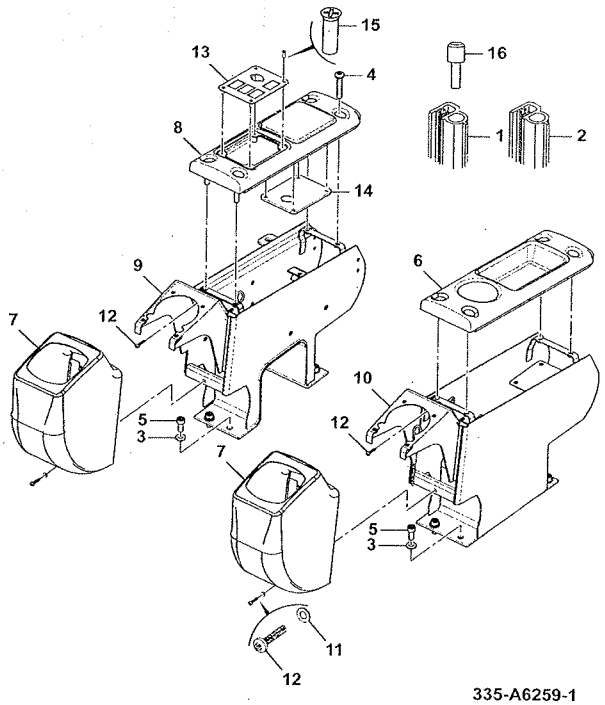

335-A6259-1

JS205 INDIA

ITEM	Part #	CHANGE NO	DESCRIPTION	USAGE CODE	QTY
1	JHH0115		Strip Edge		2
2	JHH0111		Strip Edging		2
3	JHP0046		Washer M10		8
4	826/01519		Screw M6x25		8
5	1391/3407D		Capscrew M10 x 25mm		8
6	229/01169		Cover Console Left Side		1
7	229/01137		Cover Console		2
8	229/01170		Console Top Panel Right Hand		1
9	335/A6264		Frame Console Right Side		1
10	335/A6268		Frame Console Left Side		1
11	1420/0005Z		Washer Plain		2
12	826/01518		Screw		6
13	229/01135		Switch Plate		1
14	335/A6457		Cover Console		1

Continue...

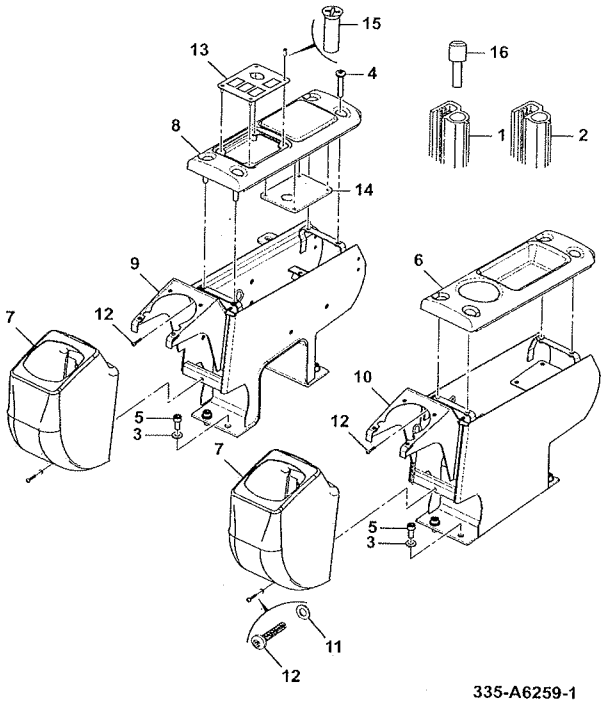

335-A6259-1

ITEM	PART NO	CHANGE NO	DESCRIPTION	USAGE CODE	QTY
15	229/01128		Screw Counter Sunk		4
16	826/01570		Screw Thumb M5		4

JS205 INDIA

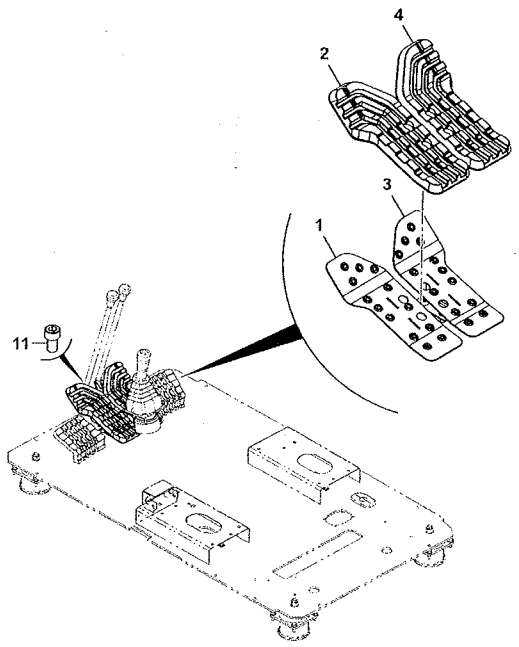

334-L6710-3

ITEM	Part #	CHANGE NO	DESCRIPTION	USAGE CODE	QTY
1	334/L6343		Pedal Left Side		1
2	334/L6348		Boot Pedal Left Side		1
3	334/L9241		Pedal Right Side		1
4	334/L9263		Boot Pedal Right Side		1
11	1391/3405D		Capscrew M10 X 20		4

D

D01 CONTROL, MECHANICAL

• D02 ENGINE CONTROLS

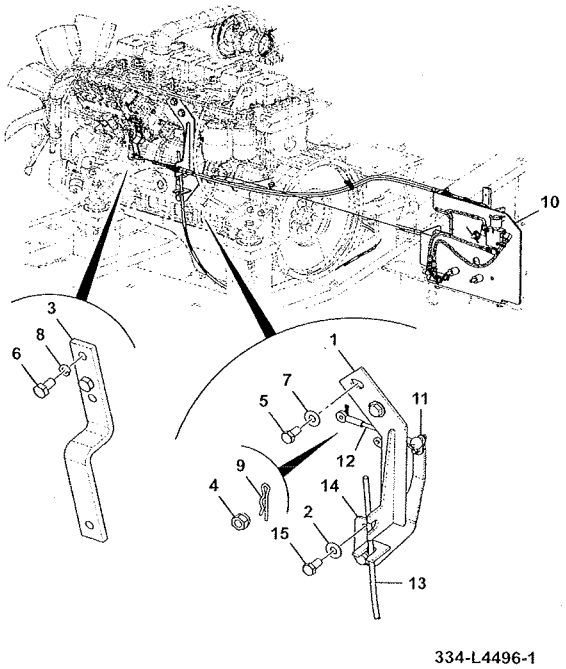

334-L4496-1

JS205 INDIA

ITEM	Part #	CHANGE NO	DESCRIPTION	USAGE CODE	QTY
1	229/01202		Bracket		1
2	1411/0005D		Washer		2
3	229/01209		Lever Bracket		1
4	1370/0103Z		Nut Self Lock M6		1
5	229/01397		Screw		2
6	1315/0201Z		Setscrew		2
7	1411/0005Z		Washer		2
8	1425/0006Z		Washer Spring		2
9	KRJ1588		Pin		1
10			Idler Auto Mechanism Refer D210-1-1		1
11	332/L9166		Lever		1
12	333/L0298		Link		1
13	332/L5749		Engine Stop Cable		1
14	332/L8988		Bracket Stop Cable Engine		1
15	1315/0505Z		Bolt M12x20		2

JS205 INDIA

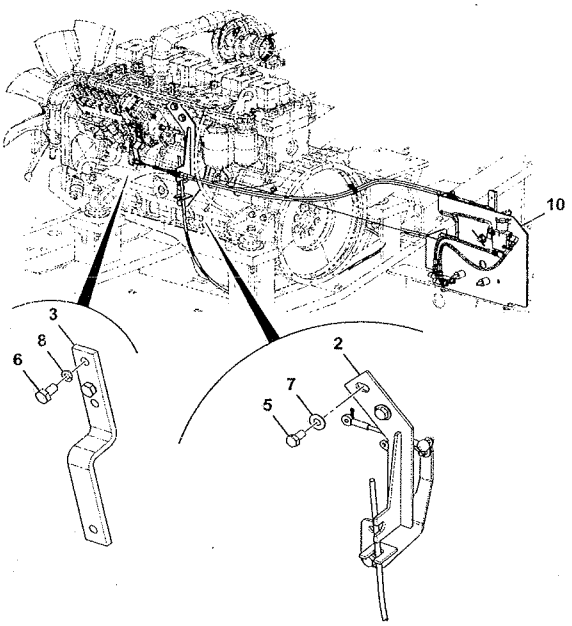

229-01025-8

ITEM	Part #	CHANGE NO	DESCRIPTION	USAGE CODE	QTY
2	229/01202		Bracket		1
3	229/01209		Lever Bracket		1
5	229/01397		Screw		2
6	1316/0203Z		Screw		2
7	1411/0005D		Washer		2
8	1420/0006Z		Washer Plain M6		2
10			Idler Auto Mechanism Refer D210-1-1		1

JS205 INDIA

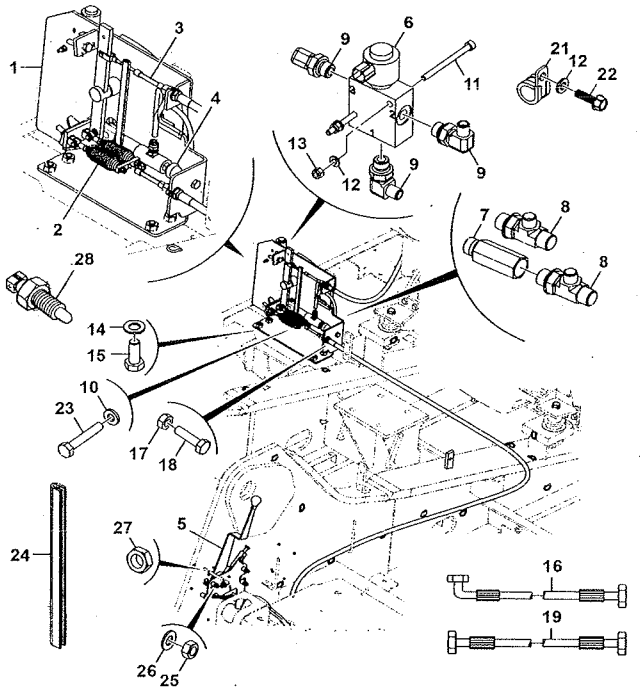

333-L0240-6

ITEM	Part #	CHANGE NO	DESCRIPTION	USAGE CODE	QTY
1	332/L2327		Mounting Bracket assembly lever Refer D290-1-1		1
2	332/L2328		Throttle Cable Refer D210-5-1		1
3	332/L2330		Throttle Cable Assembly FIP		1
4	332/L2331		Cylinder Mechanism Assembly Refer D290-5-1		1
5	333/L9945		Lever Throttle		1
6	333/P0375		Valve Solenoid Refer E390-5-1		1
7	229/01354		Adapter Adaptor		1
8	334/L6255		Tee adaptor		2
9	334/L6554		Elbow adaptor		3
10	JHP0046		Washer M10		2
11	1391/3217Z		Cap Screw		2
12	1420/0006Z		Washer Plain M6		5
13	1370/0103Z		Nut Self Lock M6		2

Continue...

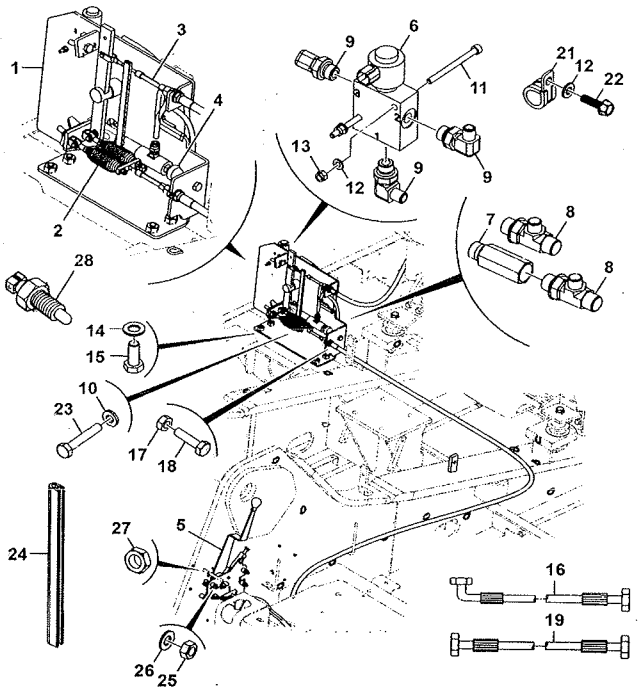

333-L0240-6

ITEM	PART NO	CHANGE NO	DESCRIPTION	USAGE CODE	QTY
13	1371/0101Z		Nut high strength		1
14	1420/0009Z		Washer Plain M12		4
15	1316/0508Z		Screw		4
16	332/L4305		Hose		1
17	1371/0301Z		Nut High Strength, M10		1
18	1316/0410Z		Screw M10 x 40 High Tensile		1
19	KSJ1134		Hose 1/4"BSP ST-ST x 500mm		1
19	KTJ0670		Hose nylon		1
21	KHR1326		Clamp 18mm dia.		1
22	JHR0128Y/A		Set Pin SPL		1
23	1315/3414Z		Bolt M10x60		2
24	333/L8669		Strip Edging JS200		1
25	1370/0201Z		Nut		3
26	1420/0007		Washer Plain		3
27	1370/0402Z		Nut M12		1
28	701/42000		Switch Hand Brake, Micro Yellow Top		1

JS205 INDIA

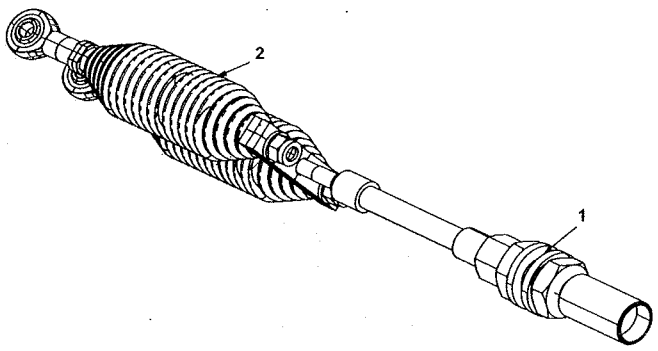

332-L2328-1

ITEM	Part #	CHANGE NO	DESCRIPTION	USAGE CODE	QTY
1	333/L0248		Cable Throttle		1
2			Spring Double Assembly Refer D290-10-1		1

JS205 INDIA

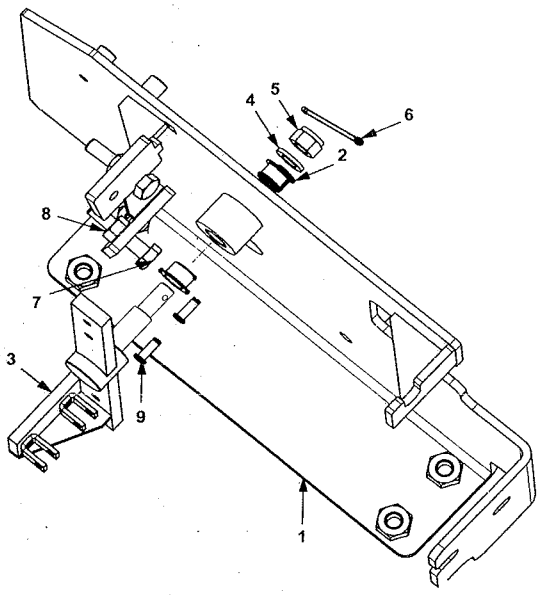

ITEM	Part #	CHANGE NO	DESCRIPTION	USAGE CODE	QTY
1	332/L8382		Bracket Mounting		1
2	332/L8383		Lever		1
3	831/10237		Bush Flanged		2
4	823/00309		Washer hardened		1
5	1371/0403Z		Nut philedas		1
6	2103/0715		Pin Split Cotter 1/8"		1
7	1315/0412Z		Bolt M10 x 1.5 x 50		2
8	1370/0301Z		Nut M10		2
9	333/L1198		Pin Clevis		2

332-L2327-2

JS205 INDIA

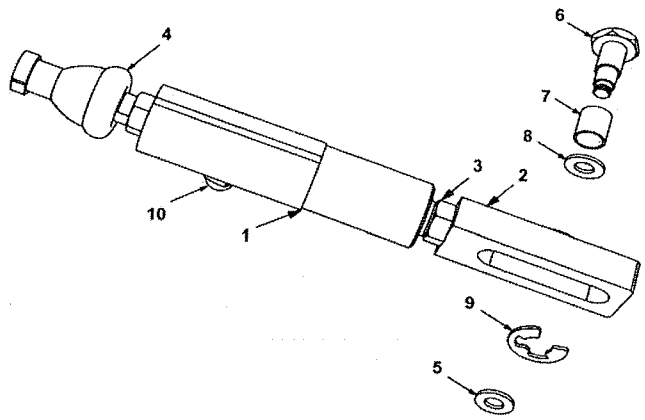

ITEM	Part #	CHANGE NO	DESCRIPTION	USAGE CODE	QTY
1	333/L0806		Cylinder JS200 Al		1
2	333/L0807		Bracket		1
3	1371/0301Z		Nut High Strength, M10		2
4	332/L1595		Coupling - Cylinder		1
5	1420/0009D		Washer M12		1
6	333/P5741		Pin - Throttle		1
7	332/L1196		Roller		1
8	1420/0007Z		Washer Plain M8		1
9	821/00464		Clip 'E'		1
10	332/L5821		Adaptor		1

332-L2331-2

JS205 INDIA

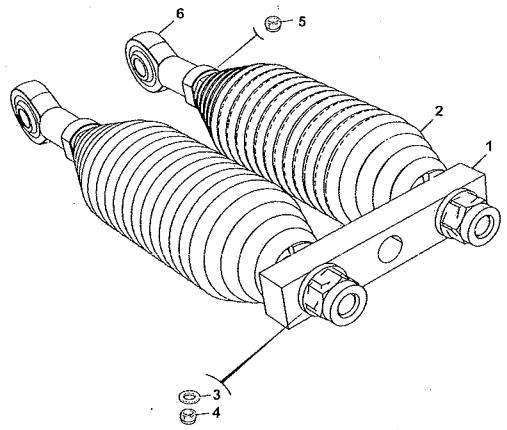

332-L4610-1

ITEM	Part #	CHANGE NO	DESCRIPTION	USAGE CODE	QTY
1	332/L4664		Plate		1
2	333/P5077		Spring Tension		2
3	1420/0006Z		Washer Plain M6		2
4	1371/0103Z		Nut		2
5	1371/0101Z		Nut high strength		2
6	332/L4607		Rod End		2

E

- E01 HYDRAULIC CIRCUITS
- E02 PUMP & MOTORS
- E03 VALVES
- E04 RAMS
- E05 FILTER

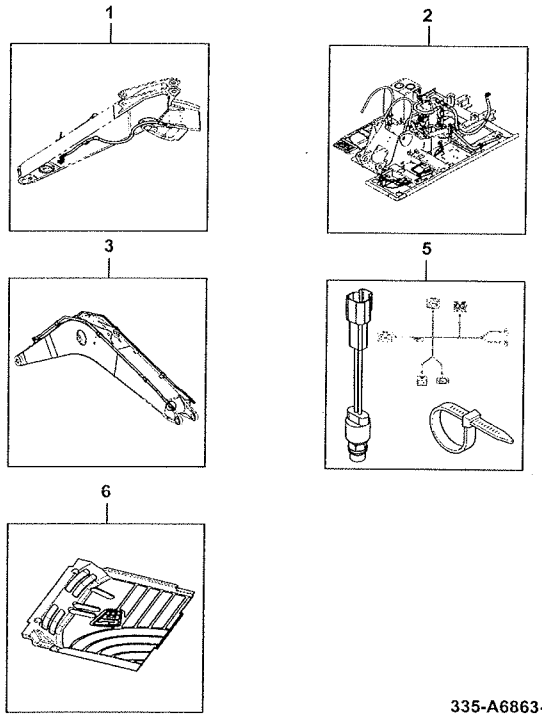

335-A6863-5

JS205 INDIA

ITEM	Part #	CHANGE NO	DESCRIPTION	USAGE CODE	QTY
1			Circuit Hammer Line QRC, Assembly Refer E140-15-1		1
2			Circuit Hammer and Control Line, Assembly Refer E130-57-1		1
3			Pipe Work, Hammer, Assembly - Mono Boom Refer E140-20-1		1
5			Electrics Rockbreaker Assembly Refer C390-5-1		1
6	335/B0655		Floormat		1

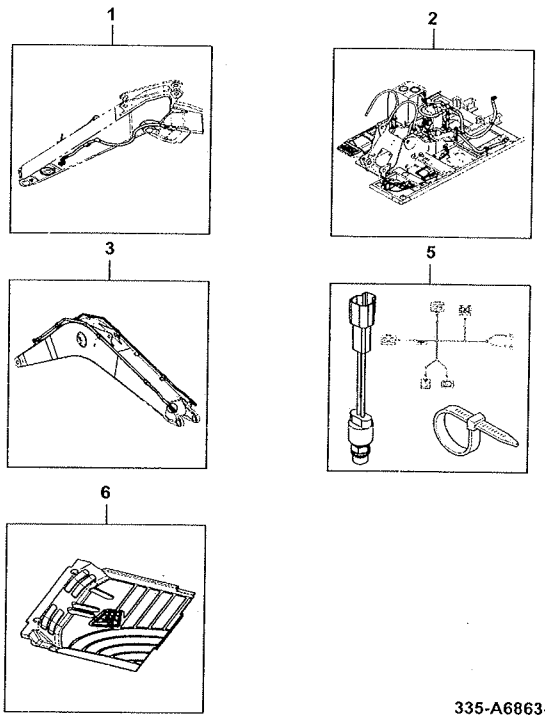

335-A6863-5

JS205 INDIA

ITEM	Part #	CHANGE NO	DESCRIPTION	USAGE CODE	QTY
1			Circuit Hammer Line, Arm 3.0m, QRC, Assembly Refer E140-16-1		1
2			Circuit Hammer and Control Line, Assembly Refer E130-57-1		1
3			Pipe Work, Hammer, Assembly - Mono Boom Refer E140-20-1		1
5			Electrics Rockbreaker Assembly Refer C390-5-1		1
6	335/B0655		Floormat		1

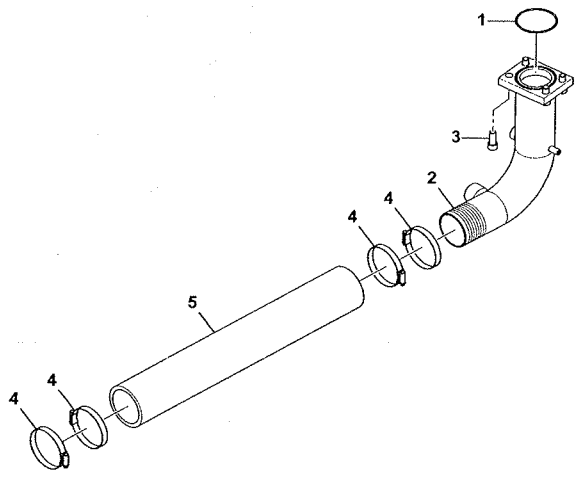

229-01380-4

JS205 INDIA

ITEM	Part #	CHANGE NO	DESCRIPTION	USAGE CODE	QTY
1	BRA0127		O Ring		1
2	229/01378		Pipe - Suction		1
3	1391/3508D		Capscrew M12 x 30		4
4	334/L7498		Clip wormdrive		4
5	834/10661		Hose Suction		1

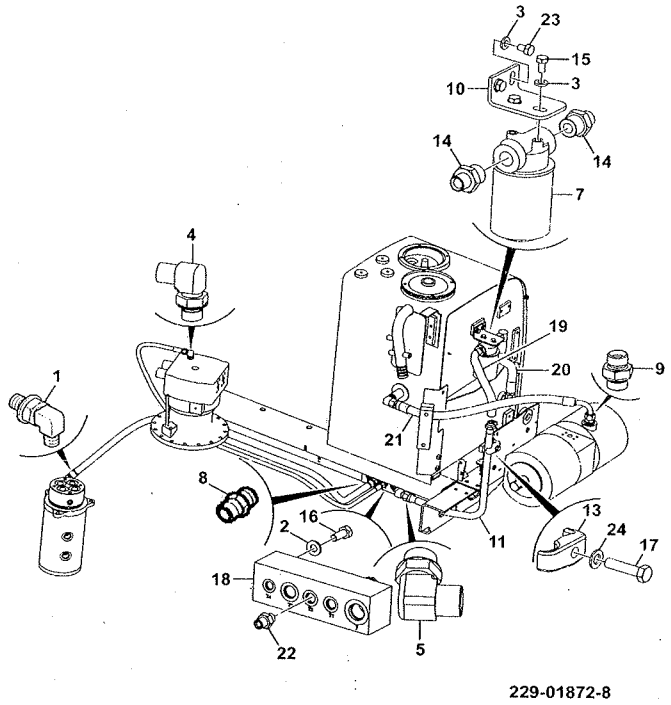

229-01872-8

JS205 INDIA

ITEM	Part #	CHANGE NO	DESCRIPTION	USAGE CODE	QTY
1	334/L6384		Elbow Adaptor 90 male		1
2	JHP0042		Washer M12		2
3	JHP0046		Washer M10		4
4	KHJ0342		Elbow 3/8 x 3/8		1
5	334/L6548		Elbow adaptor		3
7	KNJ0287		Filter Inlet Refer E520-1-1		1
8	334/L0979		Adaptor male 1/2 ST		1
9	JLJ0054		Adapter 3/4		1
10	229/01703		Adaptor		1
11	KRJ4229		Pipe		1
13	KRV0548		Clamp		1
14	MPV2193		Adapter		2
15	1316/0405Z		Screw M10 X 20		2
16	1316/0508Z		Screw		2
17	1316/3512Z		Bolt M12x50		1
18	331/27235		Manifold		1

E130-5-1 HYDRAULIC CIRCUITS CHASSIS, HOSES & FITTINGS, DRAIN LINE 9820/0692A ISSUE 1

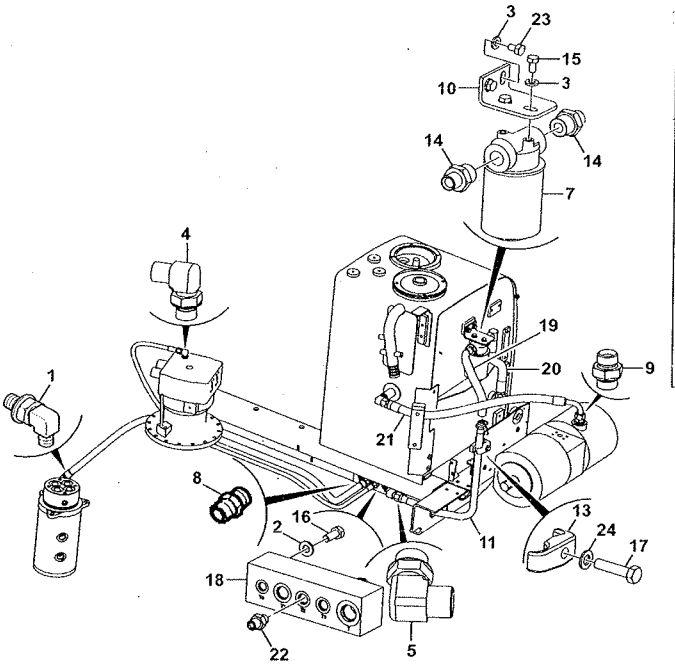

229-01872-8

ITEM	PART NO	CHANGE NO	DESCRIPTION	USAGE CODE	QTY
19	627/10083		Hose		1
20	627/10084		Hose		1
21	635/80037		Hose		1
22	334/L6615		Adapter 3/8 male		1
23	1316/0403Z		Screw		2
24	1420/0009Z		Washer Plain M12		1
25	UBJ0158		O Ring		1
26	UBJ0157		O Ring		1
27	BRP0007		O Ring		1
28	UEJ0360		O Ring		2

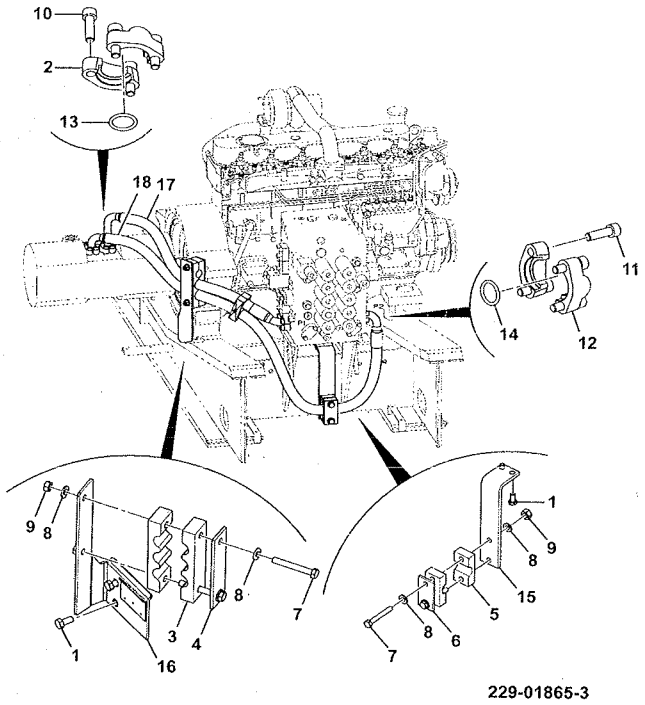

JS205 INDIA

ITEM	Part #	CHANGE NO	DESCRIPTION	USAGE CODE	QTY
1	1316/0507Z		Screw		4
2	KRJ0963		Flange split		4
3	KRJ4279		Clamp pipe		2
4	KRJ4280		Plate		1
5	KRJ4442		Clamp hose		2
6	KRJ4443		Plate		1
7	1316/3519Z		Bolt		4
8	JHP0042		Washer M12		8
9	1371/0401Z		Nut Hex 12		4
10	1391/3408D		Capscrew M10 x 30mm		8
11	1391/3510D		Capscrew		8
12	210/92901		Clamp Flange 1"		4
13	2407/0205		O Ring		2
14	2407/0210		O Ring		2
15	331/27334		Bracket		1
16	335/11305		Bracket hose retaining		1
17	229/01553		Hose		1

E130-10-1 HYDRAULIC CIRCUITS CHASSIS, HOSES & FITTINGS, PRESSURE LINE 9820/0692A
ISSUE 1

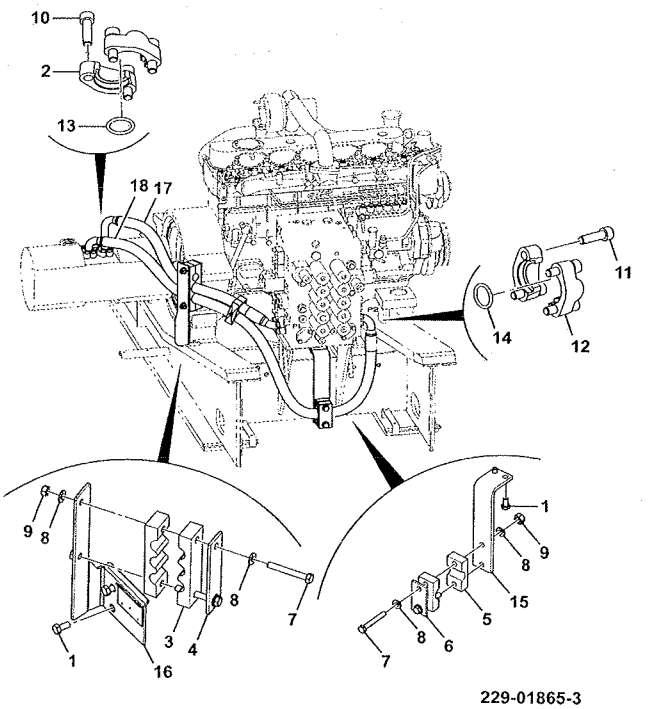

ITEM	PART NO	CHANGE NO	DESCRIPTION	USAGE CODE	QTY
18	627/10046		Hose		1

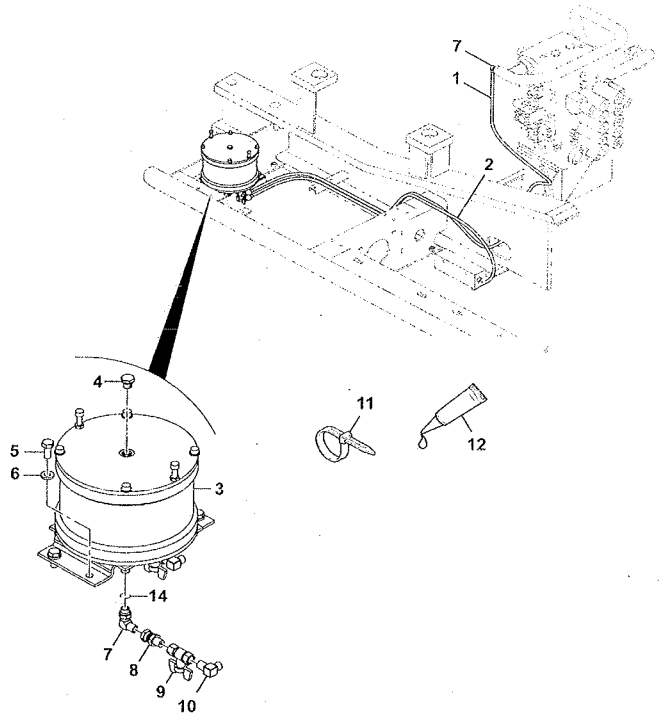

215-10984-9

JS205 INDIA

ITEM	Part #	CHANGE NO	DESCRIPTION	USAGE CODE	QTY
1	JRJ0095		Hose Nylon		1
2	KSJ0968		Hose 1/4"BSP ST-ST x 1600mm		1
3	JRJ0238		Filter Bypass Refer E510-1-1		1
4	KHJ0739		Plug		2
5	1316/0407D		Screw		4
6	JHP0046		Washer M10		4
7	334/L6374		Elbow Adaptor 1/4		4
8	C4E7327		Adapter		2
9	KHJ0897		Tap Drain		2
10	C4E5507		Adapter 90 deg		2
11	KHH0143		Band Harness Retainer		4
12	4101/1500		Fluid Locking		0
14	UEJ0360		O Ring		1

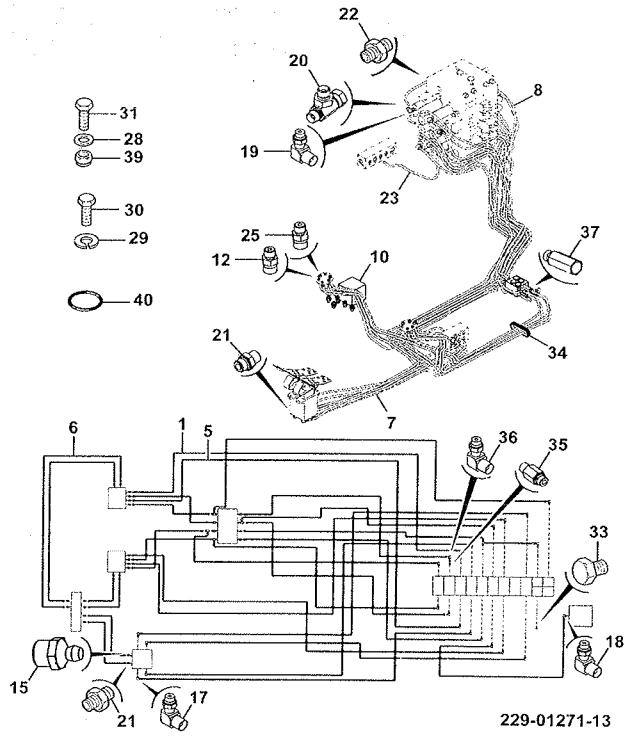

229-01271-13

JS205 INDIA

ITEM	Part #	CHANGE NO	DESCRIPTION	USAGE CODE	QTY
1	333/P0428		Valve - Pilot		1
5			Kit-hose Joystick Right Hand Refer E130-60-1		1
6			Kit-hose Joystick Left Hand Refer E130-65-1		1
7			Kit-hose Pedals Travel Refer E130-70-1		1
8			Kit-hose Valve Check Refer E130-75-1		1
10	334/L1679		Kit Clamp Refer E130-80-1		2
12	JHJ0168		Adapter Filtered		2
15	CNA0584		Adapter Strainer		1
17	334/L6374		Elbow Adaptor 1/4		6
18	334/L6662		Elbow Adaptor 1/4		10
19	334/L6554		Elbow adaptor		7
20	334/L6255		Tee adaptor		5

Continue...

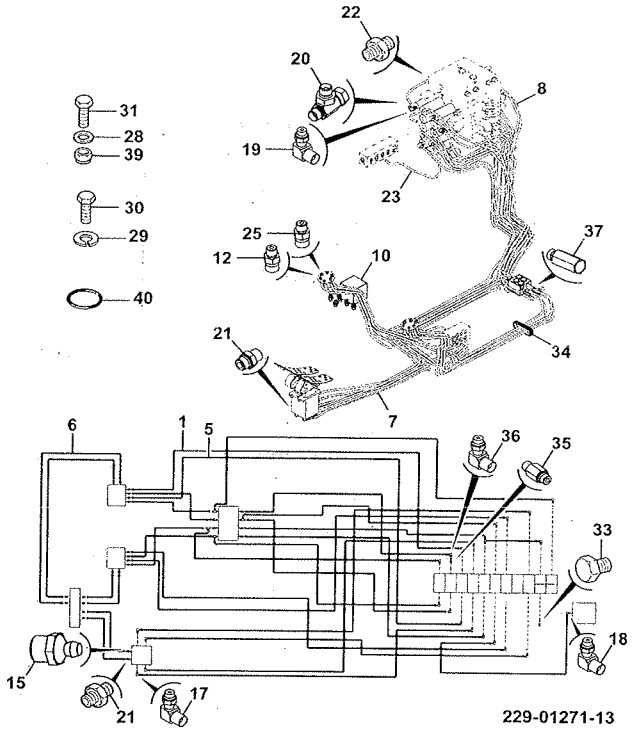

ITEM	PART NO	CHANGE NO	DESCRIPTION	USAGE CODE	QTY
21	334/L6367		Adaptor Male		3
22	334/L6615		Adapter 3/8 male		8
23	KNJ1115		Hose		1
25	1620/0003		Adapter		10
28	1420/0008Z		Washer Plain M10		4
29	1425/0007Z		Spring Washer		2
30	1316/0301Z		Screw		2
31	1316/0407Z		Bolt High Strength		4
33	KHJ0363		Plug		1
34	KHJ0575		Rubber Grommet		6
35	334/P3837		Hose adaptor S2		1
36	KRJ3357		Adapter Elbow		1
37	229/01354		Adapter Adaptor		2
39	1370/0301Z		Nut M10		2
40	BRP0007		O Ring		12

JS205 INDIA

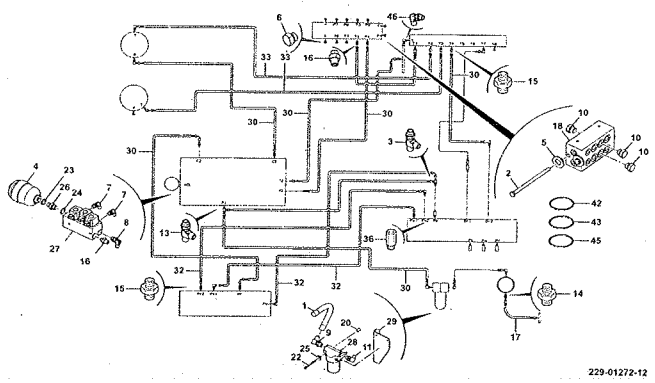

ITEM	Part #	CHANGE NO	DESCRIPTION	USAGE CODE	QTY
1	AWV0019		Hose hydraulic		1
2	BLH0487		Bolt		2
3	334/L6407		Adaptor tee 1/4"		1
4	333/P1906		Accumulator -0.35L		1
5	JHP0044		Washer		2
6	KHJ0363		Plug		8
7	334/L6374		Elbow Adaptor 1/4		6
8	KHJ0342		Elbow 3/8 x 3/8		1
9	334/L6384		Elbow Adaptor 90 male		2
10	BRJ1545		Plug		3
11	KHJ0641		Adapter Elbow		1
13	334/L6255		Tee adaptor		1
14	JLJ0054		Adapter 3/4		1
15	334/L6367		Adaptor Male		4
16	334/L6615		Adapter 3/8 male		5
17	KNJ1821		Hose hyd (l=470)		1
18	KNJ1933		Manifold		1

Continue...

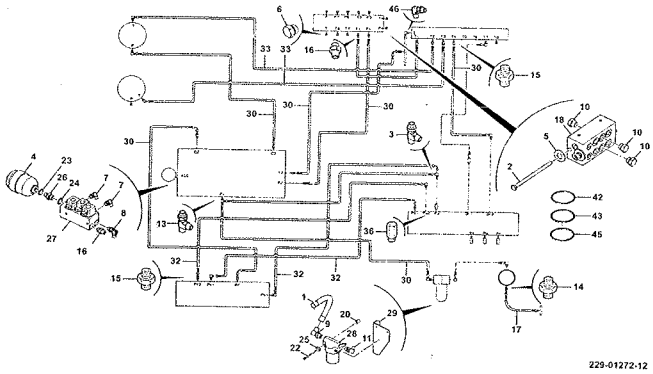

ITEM	PART NO	CHANGE NO	DESCRIPTION	USAGE CODE	QTY
20	KRN0081		Spacer		2
22	1316/3218Z		Bolt		2
23	1406/0017		Seal		1
24	1406/0018		Washer Bonded		1
25	1420/0007Z		Washer Plain M8		2
26	332/U9813		Adapter M18 x 1/2"		1
27	333/P1847		Solenoid 3 Station Refer E390-1-1		1
28	32/925214		Filter assembly Refer E510-5-1		1
29	229/01710		Bracket		1
30			Kit-hose Valve Solenoid Refer E130-85-1		1
32			Kit-hose Pump Refer E130-90-1		1
33			Kit-hose Tank Manifold Refer E130-95-1		1
36	KHJ0894		Adapter		1
42	UBJ0158		O Ring		1
43	UBJ0157		O Ring		2
45	BRP0007		O Ring		9

E130-25-1 HYDRAULIC CIRCUITS CHASSIS, HOSES & FITTINGS, PILOT PRESSURE LINE 9820/0692A ISSUE 1

ITEM	PART NO	CHANGE NO	DESCRIPTION	USAGE CODE	QTY
46	KHJ0344		Adapter Elbow		1

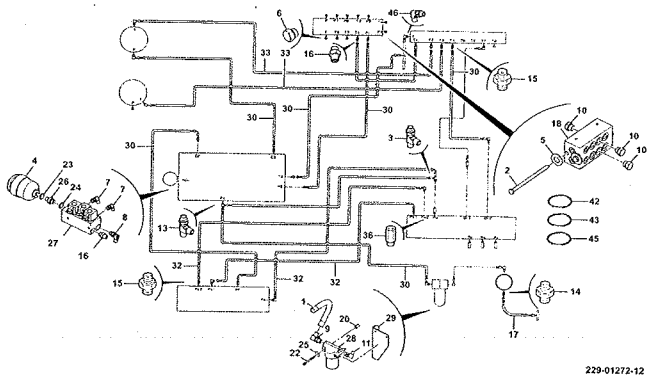

JS205 INDIA

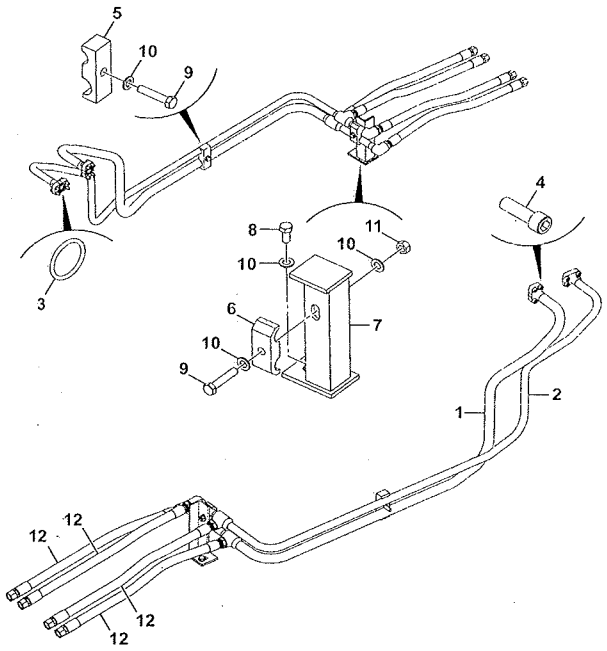

ITEM	Part #	CHANGE NO	DESCRIPTION	USAGE CODE	QTY
1	830/10949		Pipe assembly		1
2	830/10950		Pipe assembly		1
3	2407/0210		O Ring		2
4	1391/3409D		Capscrew M10 x 35mm		8
5	KBJ1595		Clamp pipe		1
6	JRJ0126		Clamp		1
7	332/P1535		Bracket		1
8	1316/0507Z		Screw		2
9	1316/3514Z		Bolt		2
10	1420/0009Z		Washer Plain M12		5
11	1371/0401Z		Nut Hex 12		1
12	627/10644		Hose		4

332-P1676-4

JS205 INDIA

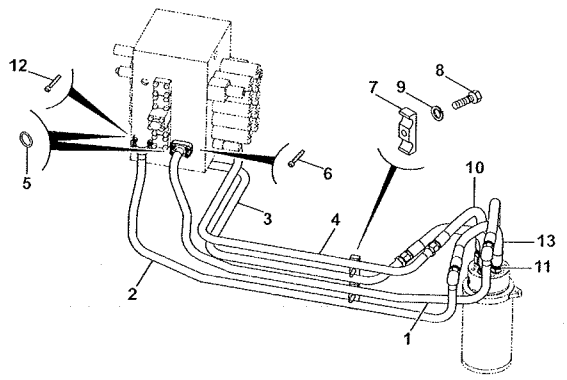

ITEM	Part #	CHANGE NO	DESCRIPTION	USAGE CODE	QTY
1	830/10951		Pipe assembly		1
2	830/10952		Pipe assembly		1
3	830/10953		Pipe assembly		1
4	830/10954		Pipe assembly		1
5	2407/0205		O Ring		4
6	1391/3409		Capscrew		12
7	JRJ0218		Clamp pipe		2
8	1316/3513D		Bolt		2
9	1420/0009D		Washer M12		2
10	KRJ2370		Hose		1
11	KNJ1936		Adapter		1
12	1391/3413D		Capscrew		4
13	KRJ4551		Hose		3

215-10946-6

JS205 INDIA

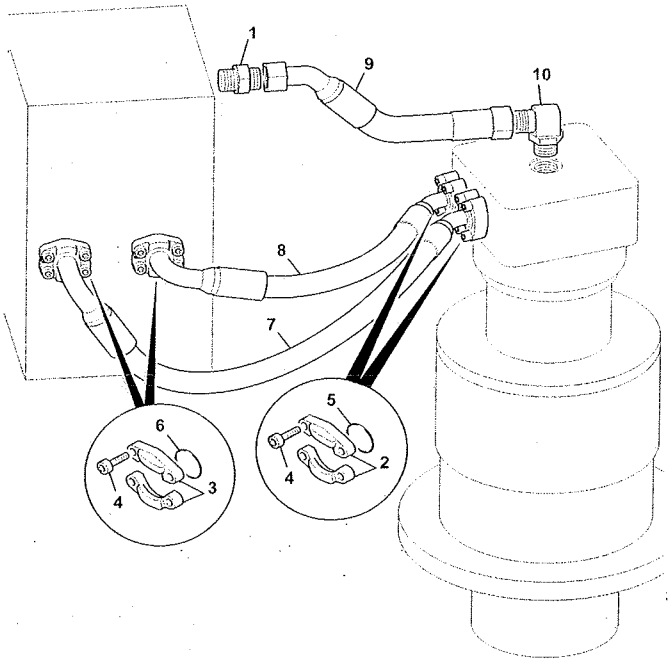

215-10953-7

ITEM	Part #	CHANGE NO	DESCRIPTION	USAGE CODE	QTY
1	334/L6394		Adaptor male 1/4 ST		1
2	KRJ2681		Flange split		4
3	KRJ2682		Flange Split		4
4	1391/3408D		Capscrew M10 x 30mm		16
5	2409/0205		O Ring		2
6	2409/0210		O Ring		2
7	627/10043		Hose		1
8	627/10044		Hose		1
9	627/10284		Hose		1
10	KHJ0345		Elbow Adaptor Male		1

JS205 INDIA

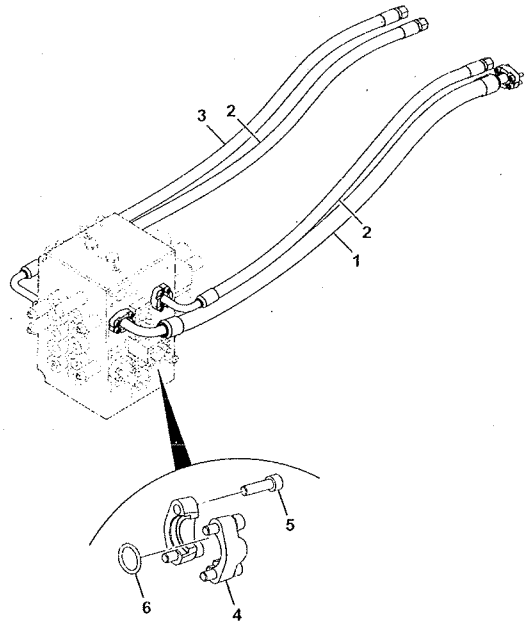

335-C0536-1

ITEM	Part #	CHANGE NO	DESCRIPTION	USAGE CODE	QTY
1	KSJ2308		Hose hydaulic		1
2	627/10042		Hose 3/4"BSP x 1300mm		2
3	333/J5668		Hose 12 BSP UHP x 1440mm		1
4	KRJ2682		Flange Split		10
5	1391/3409D		Capscrew M10 x 35mm		20
6	2409/0210		O Ring		5

JS205 INDIA

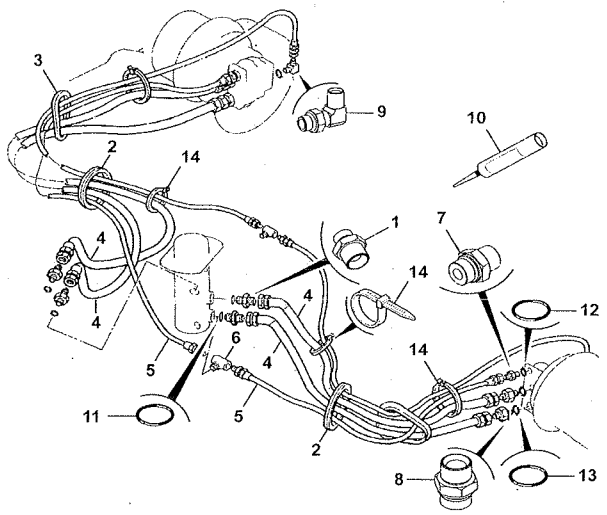

334-L6148-4

ITEM	Part #	CHANGE NO	DESCRIPTION	USAGE CODE	QTY
1	KRJ1391		Adapter		4
2	KRA1138		Cushion rubber 129mm I/D		2
3	KNA0520		Cushion Rubber		2
4	KRA1228		Hose		4
5	KRA0873		Hose		2
6	KRA0789		Adapter tee		1
7	334/L0979		Adaptor male 1/2 ST		2
8	334/L6394		Adaptor male 1/4 ST		4
9	334/L6384		Elbow Adaptor 90 male		1
10	4101/1500		Fluid Locking		0
11	UBJ0158		O Ring		4
12	UBJ0157		O Ring		2
13	BHJ0795		O Ring		1
14	KAR0017		Tie Harness Retainer		8

JS205 INDIA

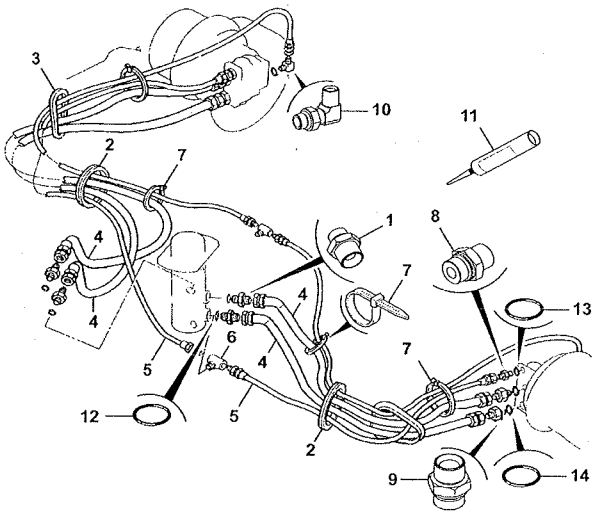

334-P2290-2

ITEM	Part #	CHANGE NO	DESCRIPTION	USAGE CODE	QTY
1	KRJ1391		Adapter		4
2	KRA1138		Cushion rubber 129mm I/D		2
3	KNA0520		Cushion Rubber		2
4	KRA1238		Hose 1" BSP STR-45 1950mm		4
5	KRA0791		Hose		2
6	KRA0789		Adapter tee		1
7	KAR0017		Tie Harness Retainer		16
8	334/L0979		Adaptor male 1/2 ST		2
9	334/L6394		Adaptor male 1/4 ST		4
10	BHS0182		Adapter 1/2" BSP x M18		1
11	4101/1500		Fluid Locking		0
12	UBJ0158		O Ring		4
13	UBJ0157		O Ring		2
14	BHJ0795		O Ring		4

JS205 INDIA

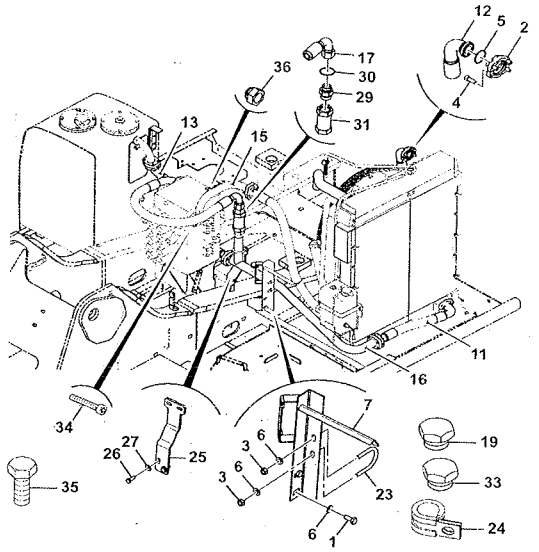

335/C0542-1

ITEM	Part #	CHANGE NO	DESCRIPTION	USAGE CODE	QTY
1	1316/0407Z		Bolt High Strength		2
2	KTJ1663		Flange Split		14
3	1371/0301Z		Nut High Strength, M10		4
4	1391/3509D		Capscrew M12 x 35mm		28
5	2400/0216		O Ring		8
6	1420/0008Z		Washer Plain M10		6
7	335/A2400		Bracket Cooler Oil		1
11	627/10274		Hose Oil Cooler Return		1
12	335/B2193		Hose 1 1/2"-24 SAE-SAE LP 2690MM		1
13	616/80221		Hose		1
15	332/J9306		Pipe oil cooler		1
16	335/C0493		Pipe Oil Cooler Return		1
17	332/J9347		Hose 1 1/4" x 1100mm		1
19	BRJ0174		Plug		1

E130-55-1 HYDRAULIC CIRCUITS CHASSIS, HOSES & FITTINGS, RETURN AND OIL COOLER LINE 9820/0692A ISSUE 1

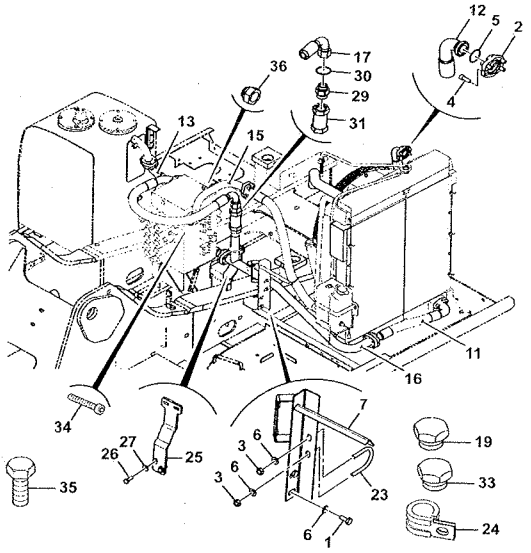

335/C0542-1

ITEM	PART NO	CHANGE NO	DESCRIPTION	USAGE CODE	QTY
23	KNJ0720		Bolt U		2
24	821/10292		Clip P, 50mm dia.		2
25	332/J9890		Bracket pipe clamp		1
26	1316/0509Z		Setscrew		2
27	1411/0005D		Washer		2
29	333/J6027		Adapter		1
30	2400/0215		O Ring		1
31	25/222140		Valve Relief 3bar		1
33	KHJ0363		Plug		1
34	1391/3511D		Capscrew		4
35	JHR0128		Bolt		2
36	816/00190		Cap		1
37	KRJ3823		Valve Check		1

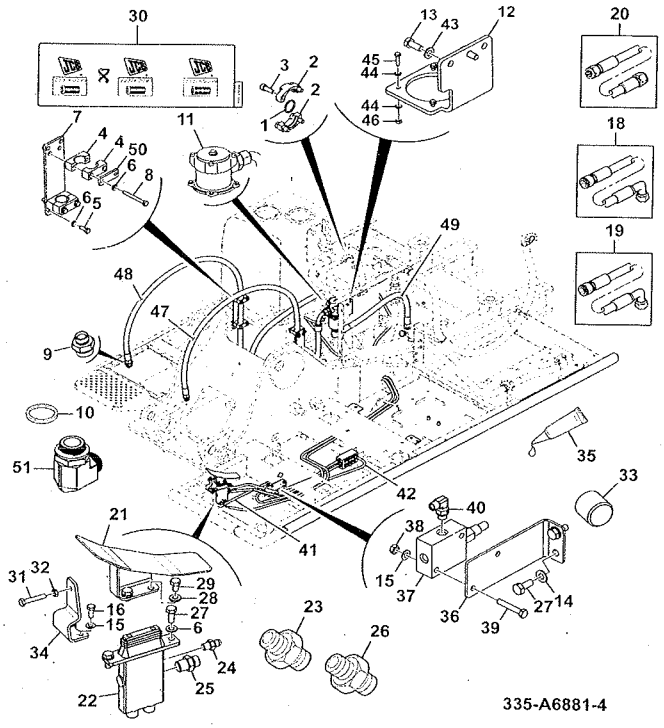

JS205 INDIA

ITEM	Part #	CHANGE NO	DESCRIPTION	USAGE CODE	QTY
1	2400/0208		O Ring		1
2	KRJ2682		Flange Split		2
3	1391/3408D		Capscrew M10 x 30mm		4
4	332/K2165		Clamp Half, DIA4		8
5	1316/3408D		Bolt		4
6	1420/0008D		Washer Plain		12
7	332/K9888		Mounting Hose		2
8	1316/3420D		Bolt high strength		8
9	816/13121		Adapter		2
10	1406/0029		Washer Dowty		1
11	333/J9896		Filter Refer E540-5-1		1
12	335/C1691		Bracket Mounting		1
13	1316/0508D		Screw M12 X 30		2
14	1420/0008Z		Washer Plain M10		4
15	1420/0007Z		Washer Plain M8		4
16	1316/0305Z		Bolt High Tensile		2

E130-57-1 HYDRAULIC CIRCUITS CHASSIS, HOSES & FITTINGS, HAMMER LINE AND CONTROL 9820/0692A ISSUE 1

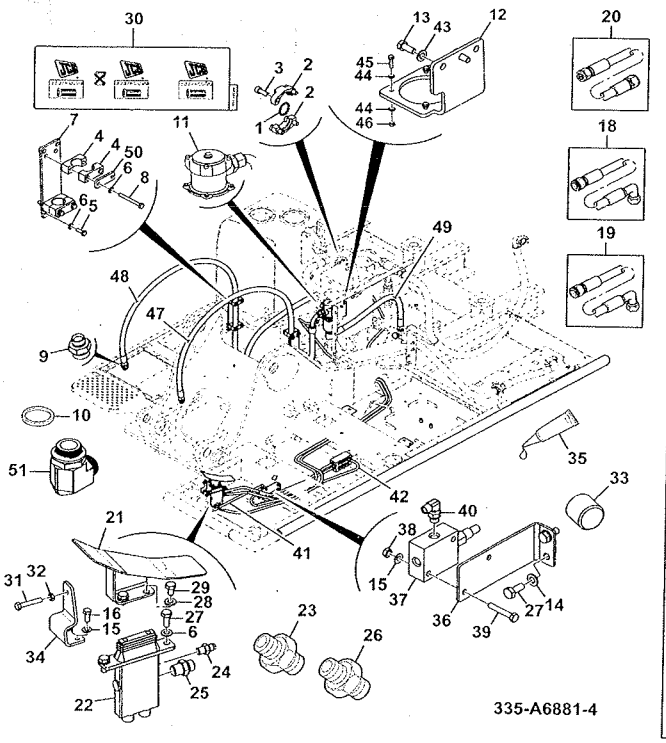

ITEM	PART NO	CHANGE NO	DESCRIPTION	USAGE CODE	QTY
18	KBJ2205		Hose 1/4"BSP ST-90 x 3400mm		2
19	JSV0319		Hose		1
20	KTJ0907		Hose 1/4"BSP ST-ST x 1100mm		2
21	229/02139		Pedal - Hammer		1
22	928/60339		Valve hammer, auxiliary foot operated		1
23	334/L6394		Adaptor male 1/4 ST		2
24	CNA0584		Adapter Strainer		1
25	334/L6367		Adaptor Male		8
26	334/L0979		Adaptor male 1/2 ST		2
27	1316/0407Z		Bolt High Strength		4
28	JHP0046		Washer M10		2
29	1316/0403Z		Screw		2
30	333/K0112		Label hammer filter		1
31	1316/0311Z		Bolt M8 x 45mm		1
32	1370/0202Z		Nut M8		1
33	816/80052		Plug Taper 1/4" BSP		1

Continue...

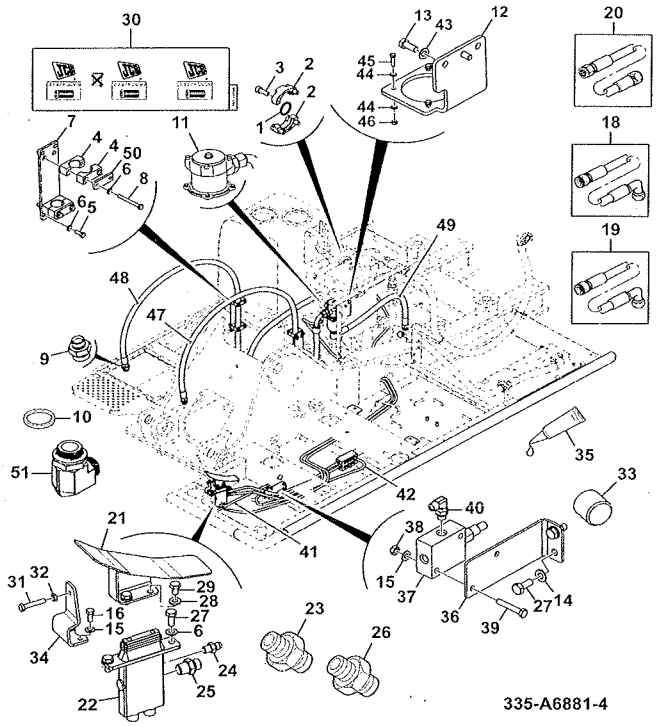

ITEM	PART NO	CHANGE NO	DESCRIPTION	USAGE CODE	QTY
34	229/02138		Bracket Stopper		1
35	4102/2700		Loctite		1
36	332/P7215		Bracket		1
37	332/P7120		Valve - Pressure Reducer		1
38	1370/0201Z		Nut		2
39	1315/3312Z		Bolt		2
40	334/L6374		Elbow Adaptor 1/4		1
41	229/00433		Hose 1/4"		1
42	229/00687		Hose		1
43	1420/0009D		Washer M12		2
44	1420/0006Z		Washer Plain M6		8
45	1316/0207Z		Bolt		4
46	1371/0101Z		Nut high strength		4
47	332/L9290		Hose -16 BSP UHP 3710mm		1
48	332/L9289		Hose -16 BSP UHP 3690mm		1
49	332/J8761		Hose 1" BSP 875mm ST-ST		1
50	821/00126		Plate clamp cover		4

E130-57-1 HYDRAULIC CIRCUITS CHASSIS, HOSES & FITTINGS, HAMMER LINE AND CONTROL 9820/0692A ISSUE 1

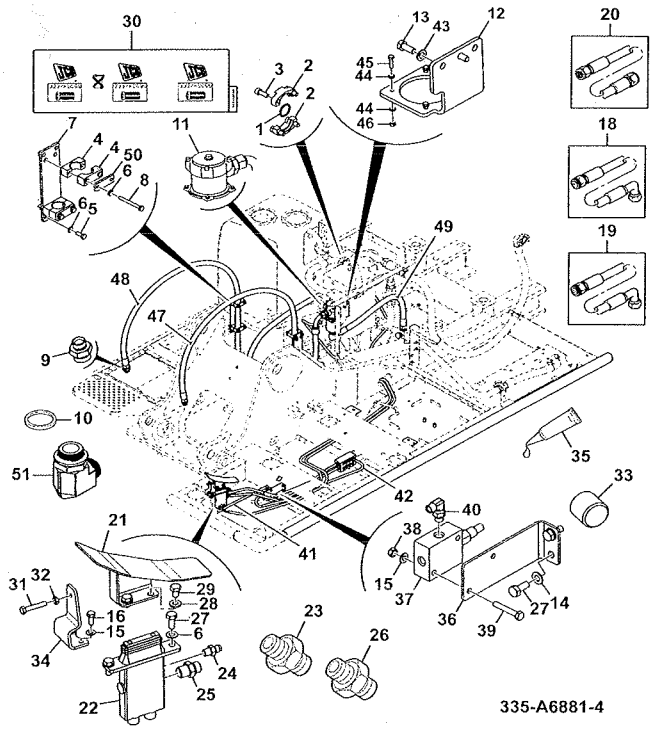

ITEM	PART NO	CHANGE NO	DESCRIPTION	USAGE CODE	QTY
51	332/J6411		Elbow		1

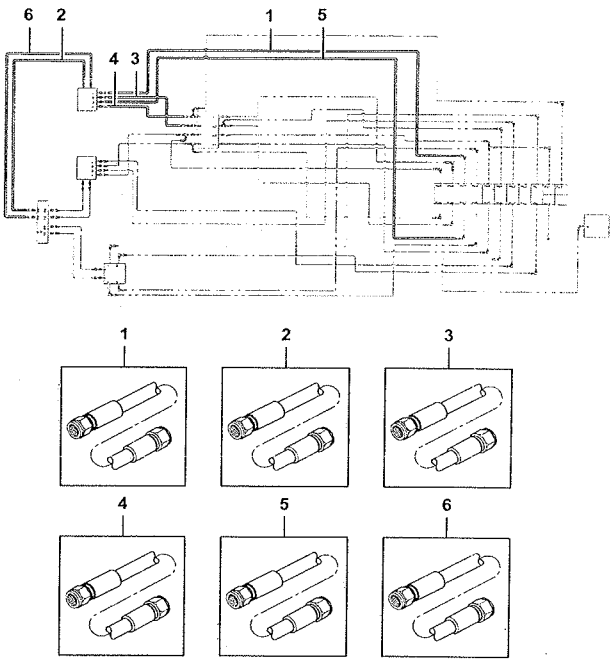

229-01575-1

JS205 INDIA

ITEM	Part #	CHANGE NO	DESCRIPTION	USAGE CODE	QTY
1	627/10076		Hose 3_8 str-str YELLOW		1
2	JRJ0115		Hose white WHITE		1
3	JRJ0117		Hose blue BLUE		1
4	JRJ0119		Hose 3/8" BSP 2100mm ST/ST RED		1
5	KNJ1133		Hose 3/8"BSP ST-ST x 3000mm GREEN		1
6	KNJ1998		Hose hydraulic (L=1200)		1

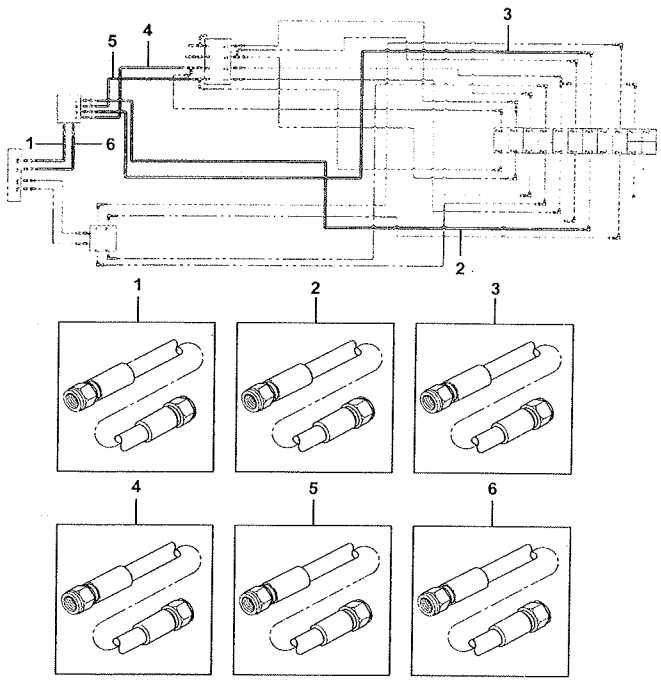

229-01293-2

JS205 INDIA

ITEM	Part #	CHANGE NO	DESCRIPTION	USAGE CODE	QTY
1	JRJ0116		Hose white WHITE		1
2	KNJ1231		Hose nylon ORANGE		1
3	KNJ1134		Hose nylon VOILET		1
4	JRJ0123		Hose pink PINK		1
5	JRJ0124		Hose l green LT GREEN		1
6	KNJ1997		Hose hydraulic (L=1150)		1

E130-70-1 HYDRAULIC CIRCUITS CHASSIS, HOSE KIT, TRAVEL PEDALS, PILOT CONTROL LINE

9820/0692A
ISSUE 1

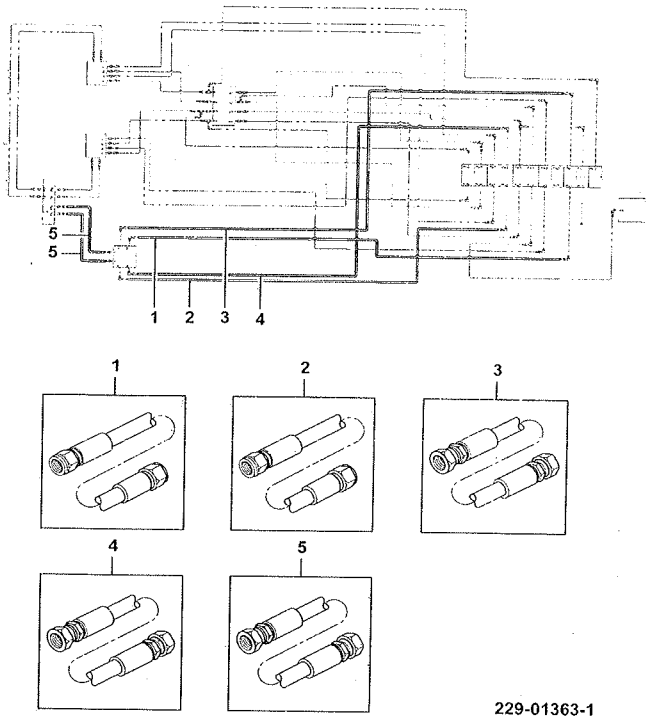

229-01363-1

JS205 INDIA

ITEM	Part #	CHANGE NO	DESCRIPTION	USAGE CODE	QTY
1	KTJ0674		Hose 04 BSP LP x 3700mm YELLOW-GREEN		1
2	KTJ0812		Hose 1/4" BSP ST-ST x 3250mm BROWN		1
3	627/10071		Hose 1_4 str-str LT BLUE		1
4	JRJ0079		Hose 1/4"BSP ST-ST x 3000mm GREY		1
5	KTJ0907		Hose 1/4"BSP ST-ST x 1100mm WHITE		2

E130-75-1 HYDRAULIC CIRCUITS CHASSIS, HOSE KIT, CHECK VALVE, PILOT CONTROL LINE

9820/0692A
ISSUE 1

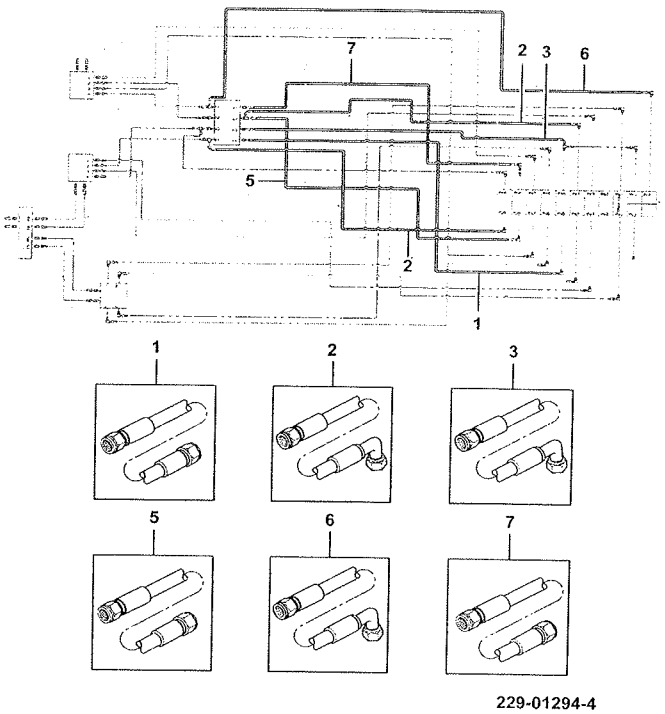

229-01294-4

JS205 INDIA

ITEM	Part #	CHANGE NO	DESCRIPTION	USAGE CODE	QTY
1	JRJ0100		Hose white, blue		1
2	627/10060		Hose 1/4 BSP ST-90 1700mm		2
3	JRJ0110		Hose		1
5	KRJ4133		Hose hyd (l=1750)		1
6	JNJ0427		Hose 1/4" x 1850		2
7	KNJ1072		Hose 3/8"BSP ST-ST x 1700mm		1

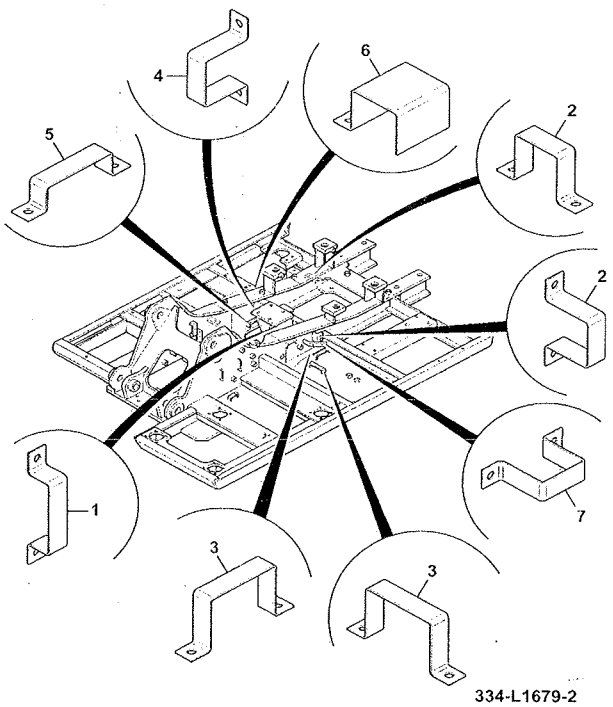

JS205 INDIA

ITEM	Part #	CHANGE NO	DESCRIPTION	USAGE CODE	QTY
1	KHJ0723		Clamp		1
2	333/L9326		Clamp		2
3	334/L2788		Clamp		2
4	KHJ0722		Clamp		1
5	KHJ0749		Clamp Hose		1
6	KRJ5478		Clamp		1
7	KHJ1022		Clamp		1

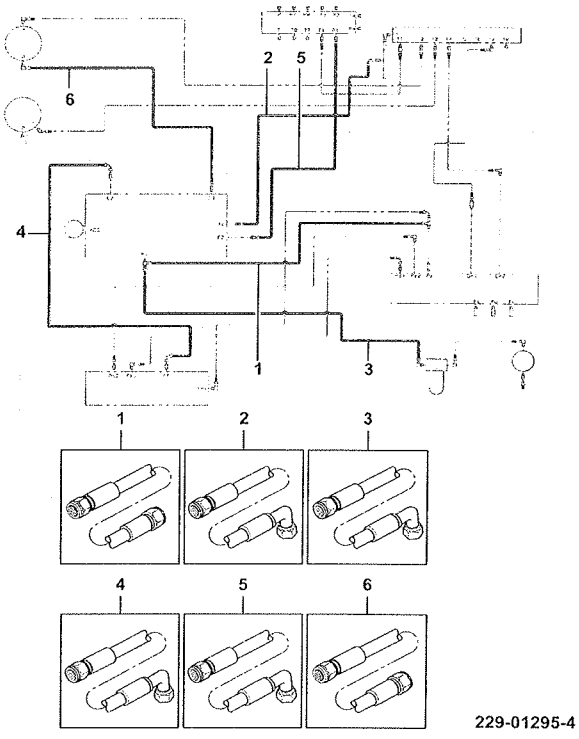

JS205 INDIA

ITEM	Part #	CHANGE NO	DESCRIPTION	USAGE CODE	QTY
1	KTJ1133		Hose 1/4"BSP ST-ST x 1850mm		1
2	627/10073		Hose		1
3	JLV0288		Hose		1
4	JNV0329		Hose 1/4" BSP ST-90 1200mm		1
5	KRJ3566		Hose		1
6	KTJ0677		Hose		1

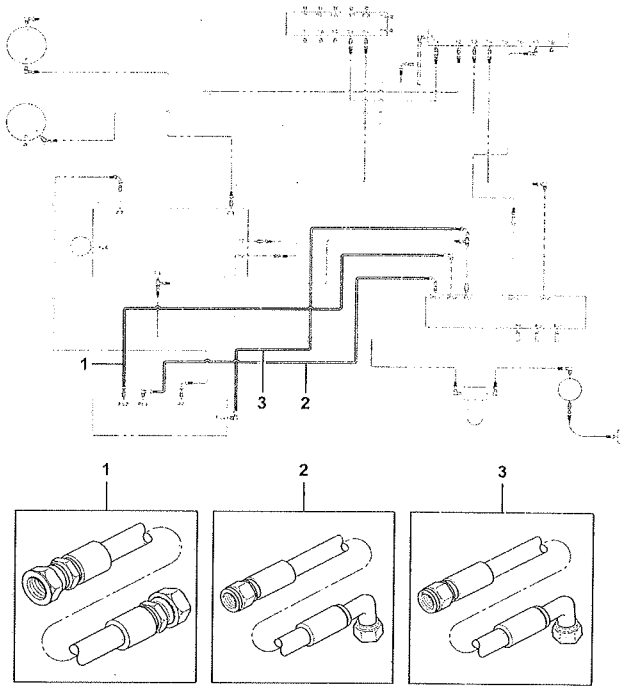

229-01297-3

JS205 INDIA

ITEM	Part #	CHANGE NO	DESCRIPTION	USAGE CODE	QTY
1	JRJ0079		Hose 1/4"BSP ST-ST x 3000mm GREY		1
2	JRJ0094		Hose red, red RED		1
3	JNJ0441		Hose 1/4" x 2400 red/blue		1

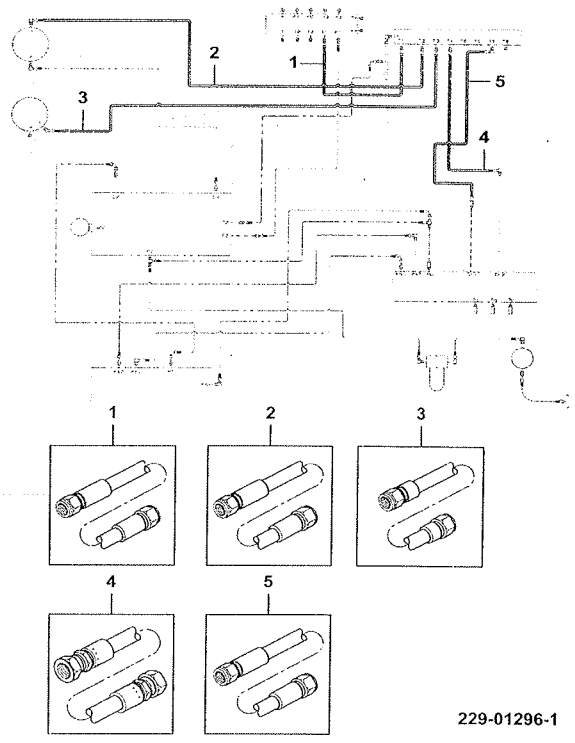

229-01296-1

JS205 INDIA

ITEM	Part #	CHANGE NO	DESCRIPTION	USAGE CODE	QTY
1	JRJ0100		Hose white, blue		1
2	KRJ4450		Hose hyd (l=1750)		1
3	KNA0362		Hose		1
4	KTJ1133		Hose 1/4"BSP ST-ST x 1850mm		1
5	KNJ1122		Hose 3/8"BSP ST-ST x 1900mm		1

JS205 INDIA

ITEM	Part #	CHANGE NO	DESCRIPTION	USAGE CODE	QTY
1	KRV1667		Hose hyd (l=1700)		2

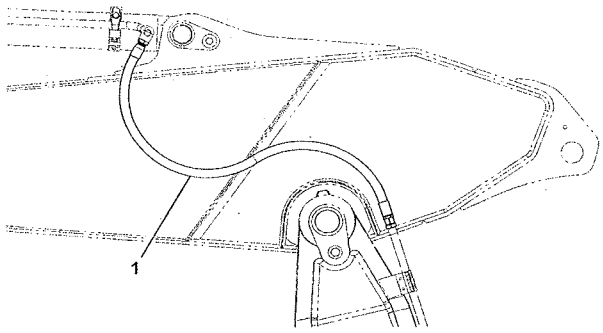

333-K3121-1

JS205 INDIA

ITEM	Part #	CHANGE NO	DESCRIPTION	USAGE CODE	QTY
1	KRV0926		Hose hydraulic 12 EHP 1500 B		2

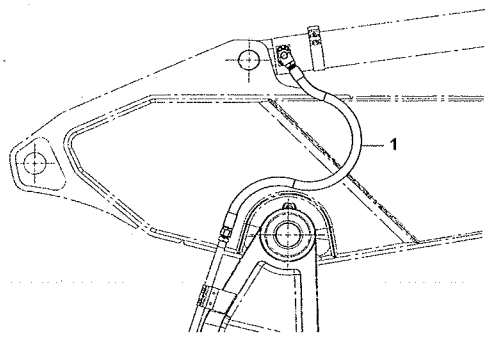

333-K3124-2

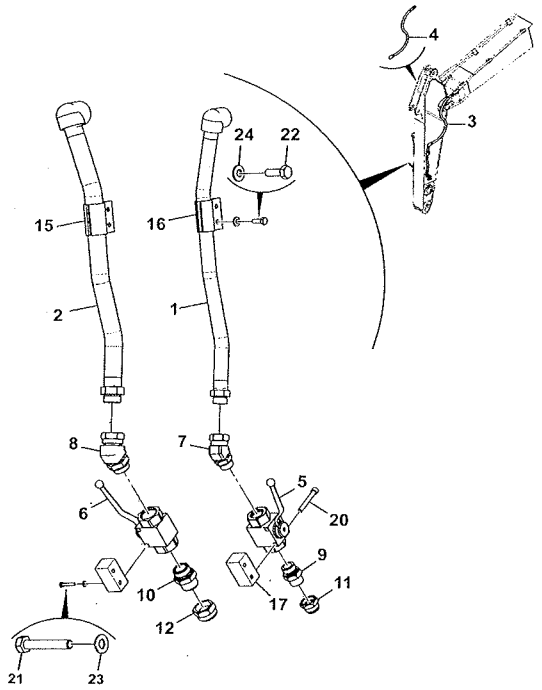

335-C0982-1

JS205 INDIA

ITEM	Part #	CHANGE NO	DESCRIPTION	USAGE CODE	QTY
1	333/K6208		Pipe Feed, Hammer 2.4m Arm (SVT)		1
2	333/K6221		Pipe Return, Hammer 2.4m Arm (SVT)		1
3	JRV0331		Hose		1
4	JRV0332		Hose		1
5	333/K2182		Valve Shut Off		1
6	333/K2183		Valve Shut Off 1 1/4"		1
7	816/90656		Elbow 135 degree adapter		1
8	JSJ0073		Elbow		1
9	334/L6394		Adaptor male 1/4 ST		1
10	BDJ0218		Adaptor		1
11	816/00193		Cap blanking 1"BSP steel		1
12	816/80010		Plug		1
15	333/K5338		Clamp Single Pipe		2

E140-15-1 HYDRAULIC CIRCUITS EXCAVATOR END, HOSES AND PIPEWORK, HAMMER LINE, QUICK RELEASE COUPLING, ARM 2.4M 9820/0692A ISSUE 1

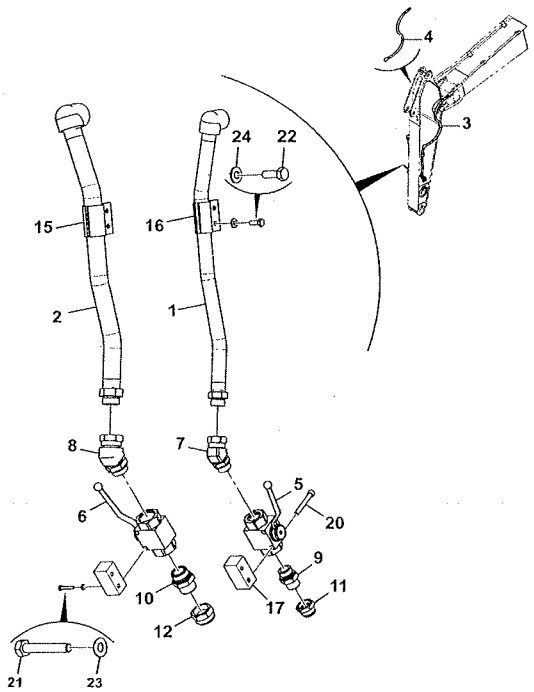

335-C0982-1

ITEM	PART NO	CHANGE NO	DESCRIPTION	USAGE CODE	QTY
16	333/K5365		Clamp Single Pipe		2
17	333/K5833		Block Mounting		2
20	1391/3417D		Screw cap, M10		4
21	1316/3414D		Bolt M10 X 60		4
22	1316/0408D		Setscrew		4
23	1420/0008D		Washer Plain		4
24	2208/00110		Washer M10		4

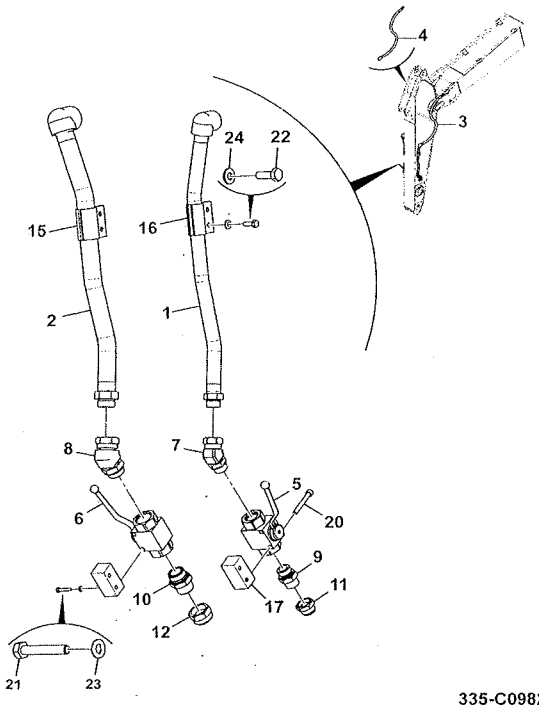

335-C0982-1

JS205 INDIA

ITEM	Part #	CHANGE NO	DESCRIPTION	USAGE CODE	QTY
1	333/K6172		Pipe Feed		1
2	333/K6144		Pipe Return		1
3	JRV0334		Hose		1
4	JRV0335		Hose		1
5	333/K2182		Valve Shut Off		1
6	333/K2183		Valve Shut Off 1 1/4"		1
7	816/90656		Elbow 135 degree adapter		1
8	JSJ0073		Elbow		1
9	334/L6394		Adaptor male 1/4 ST		1
10	BDJ0218		Adaptor		1
11	816/00193		Cap blanking 1"BSP steel		1
12	816/80010		Plug		1
15	333/K5338		Clamp Single Pipe		2
16	333/K5365		Clamp Single Pipe		2
17	333/K5833		Block Mounting		2

E140-16-1 HYDRAULIC CIRCUITS EXCAVATOR END, HOSES AND PIPEWORK, HAMMER LINE, QUICK RELEASE COUPLING, ARM 3.0M, OPTIONAL 9820/0692A ISSUE 1

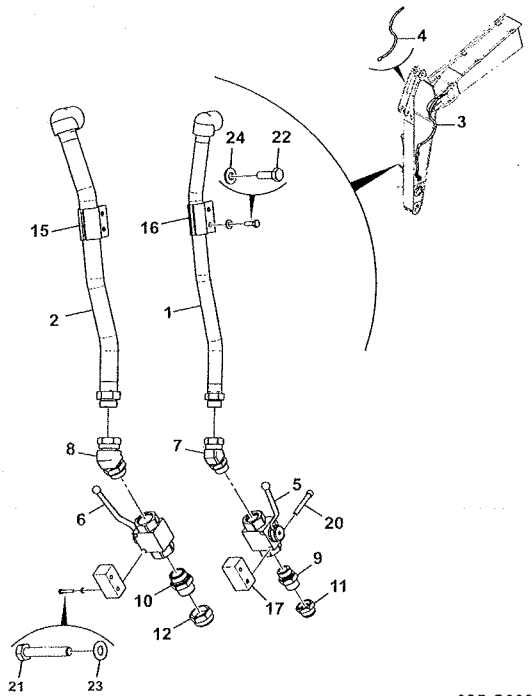

335-C0982-1

ITEM	PART NO	CHANGE NO	DESCRIPTION	USAGE CODE	QTY
20	1391/3417D		Screw cap, M10		4
21	1316/3414D		Bolt M10 X 60		4
22	1316/0408D		Setscrew		4
23	1420/0008D		Washer Plain		4
24	2208/00110		Washer M10		4

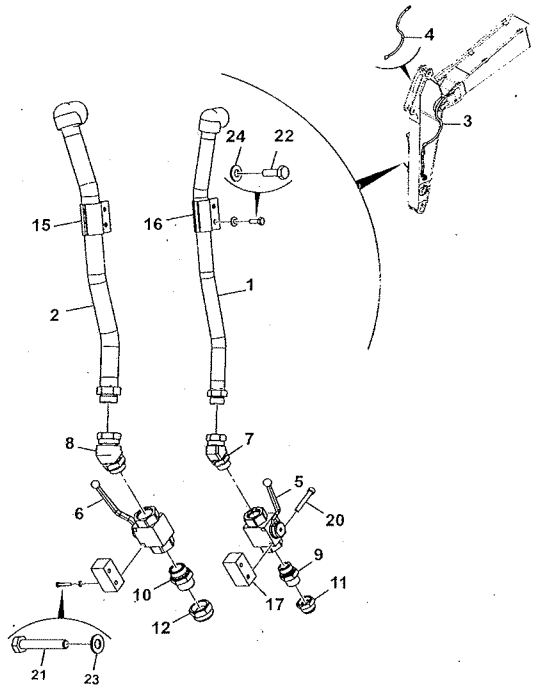

333-K2147-1

JS205 INDIA

ITEM	Part #	CHANGE NO	DESCRIPTION	USAGE CODE	QTY
1	333/K6208		Pipe Feed, Hammer 2.4m Arm (SVT)		1
2	333/K6221		Pipe Return, Hammer 2.4m Arm (SVT)		1
3	JRV0331		Hose		1
4	JRV0332		Hose		1
5	333/K2182		Valve Shut Off		1
6	333/K2183		Valve Shut Off 1 1/4"		1
7	816/90656		Elbow 135 degree adapter		1
8	JSJ0073		Elbow		1
9	KNJ0606		Adapter		1
10	BDJ0218		Adaptor		1
11	816/00193		Cap blanking 1"BSP steel		1
12	816/80010		Plug		1
15	333/K5338		Clamp Single Pipe		2
16	333/K5365		Clamp Single Pipe		2

E140-17-1 HYDRAULIC CIRCUITS EXCAVATOR END, HOSES AND PIPEWORK, HAMMER LINE, QUICK RELEASE COUPLING, ARM 2.4M 9820/0692A ISSUE 1

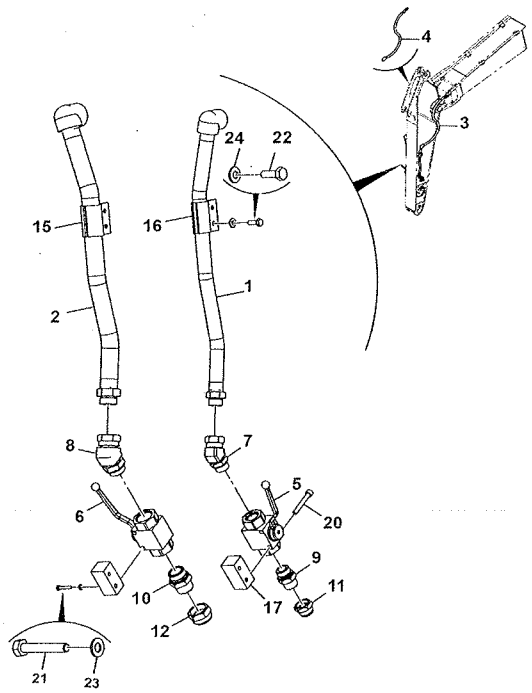

333-K2147-1

ITEM	PART NO	CHANGE NO	DESCRIPTION	USAGE CODE	QTY
17	333/K5833		Block Mounting		2
20	1391/3417D		Screw cap, M10		4
21	1316/3414D		Bolt M10 X 60		4
22	1316/0408D		Setscrew		4
23	1420/0008D		Washer Plain		4
24	2208/00110		Washer M10		4

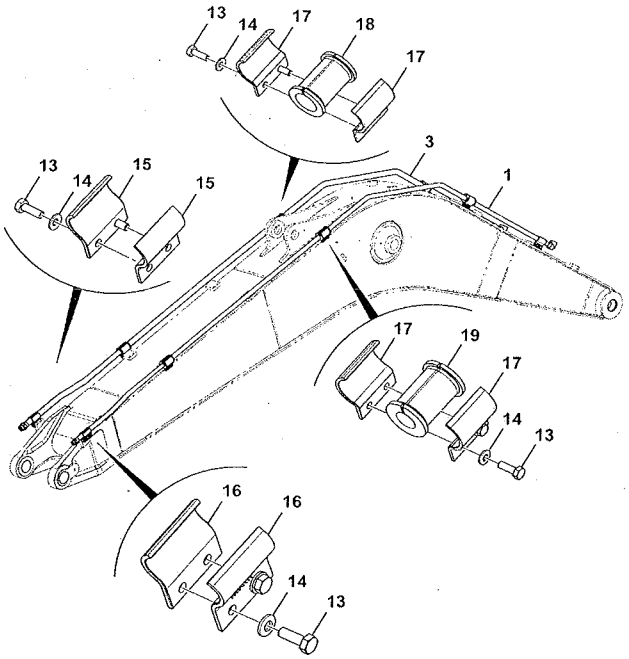

333-K2150-2

JS205 INDIA

ITEM	Part #	CHANGE NO	DESCRIPTION	USAGE CODE	QTY
1	333/K6062		Pipe Feed, Hammer Line		1
3	333/K6072		Pipe Return, Hammer Line		1
13	1316/0408D		Setscrew		20
14	2208/00110		Washer M10		20
15	333/K5338		Clamp Single Pipe		4
16	333/K5365		Clamp Single Pipe		4
17	333/K5199		Clamp Single pipe Dia 56		12
18	333/K5181		Rubber Insert Dia 56		3
19	333/K5359		Rubber Insert Dia 56		3

E

- E01 HYDRAULIC CIRCUITS
- • E02 PUMP & M0T0RS
- E03 VALVES
- E04 RAMS
- E05 FILTER

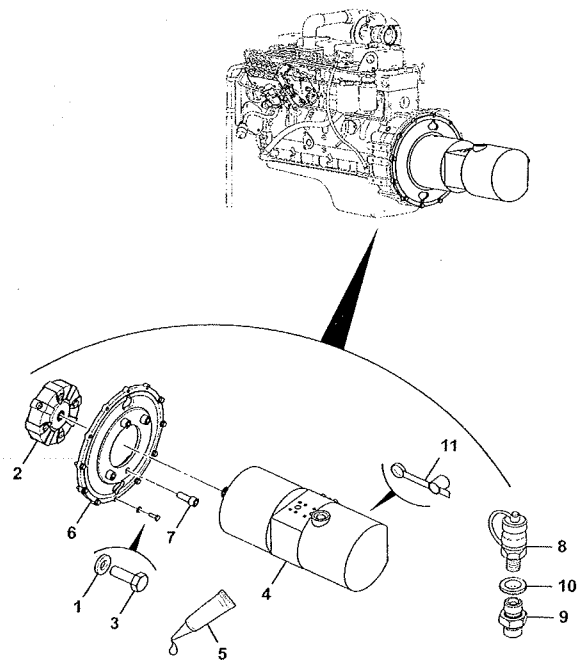

229-01274-7

JS205 INDIA

ITEM	Part #	CHANGE NO	DESCRIPTION	USAGE CODE	QTY
1	JHP0046		Washer M10		8
2	JRJ0213		Coupling pump drive		1
3	1316/0408Z		Screw M10x30		8
4	332/P0924		Pump Refer E220-1-1		1
5	4101/0500		Fluid Locking Loctite 262		0
6	903/21459		Flange - Pump		1
7	1391/3813Z		Capscrew		4
8	45/920152		Coupling Male		3
9	JLJ0050		Adapter		3
10	1406/0011		Washer Bonded		3
11	30/600139		Cap Coupling <UnresolvedLine><Part>30/600139</Part></UnresolvedLine>		3

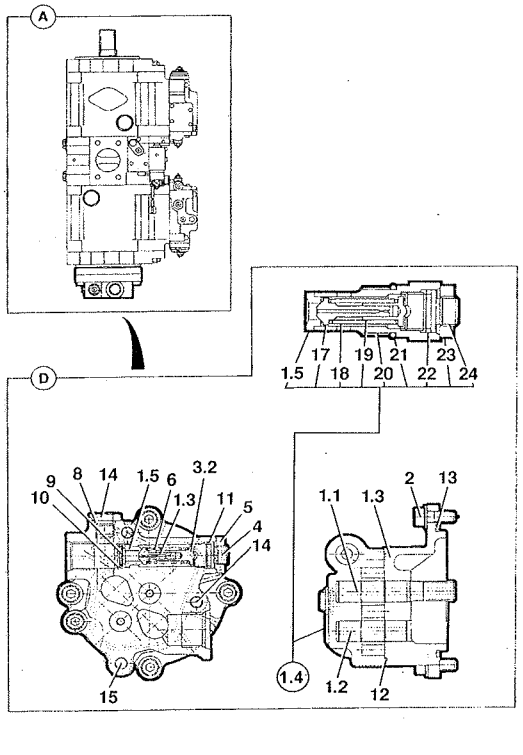

431351

JS205 INDIA

ITEM	Part #	CHANGE NO	DESCRIPTION	USAGE CODE	QTY
A	:332/P0924		Pump See page E2-2-1 Refer E220-1-1		1
D	::20/952543		Pump assembly, servo		1
1			None serviced part		1
1-1			None serviced part		1
1-2			None serviced part		1
1-3			None serviced part		1
1-4			None serviced part		1
1-5			None serviced part		1
2	::20/951285		Screw skt head shouldered cap		4
3			None serviced part		1
3-1			None serviced part		1
3-2			None serviced part		1
4	:::20/950680		Screw adjusting		1
5			None serviced part		1
6			None serviced part		1

E210-1-1 PUMPS GEAR, MAIN HYDRAULICS, COMPONENTS
9820/0692A
ISSUE 1

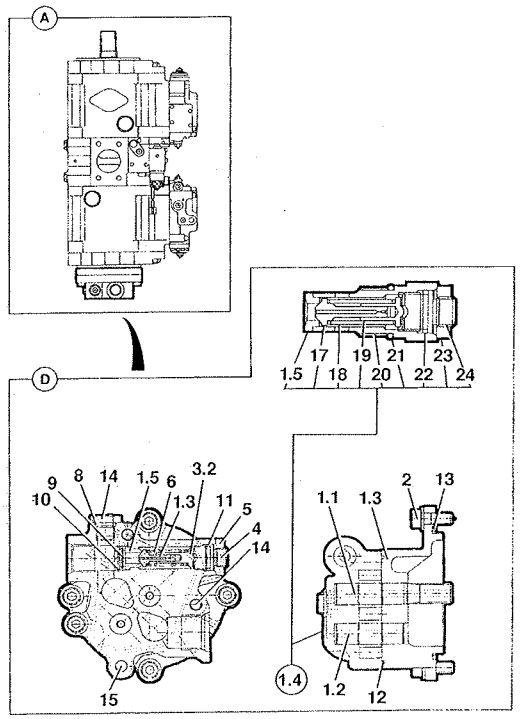

431351

ITEM	PART NO	CHANGE NO	DESCRIPTION	USAGE CODE	QTY
7	:::LLM0028		Plug		1
8	:::LBQ0112		O Ring		1
9			None serviced part		1
10			None serviced part		1
11	:::828/10212		Seal O ring		1
12	:::828/10236		Seal ring		1
13	:::828/10219		Seal O ring		1
14	:::826/10691		Screw skt head shouldered cap		2
15			None serviced part		2

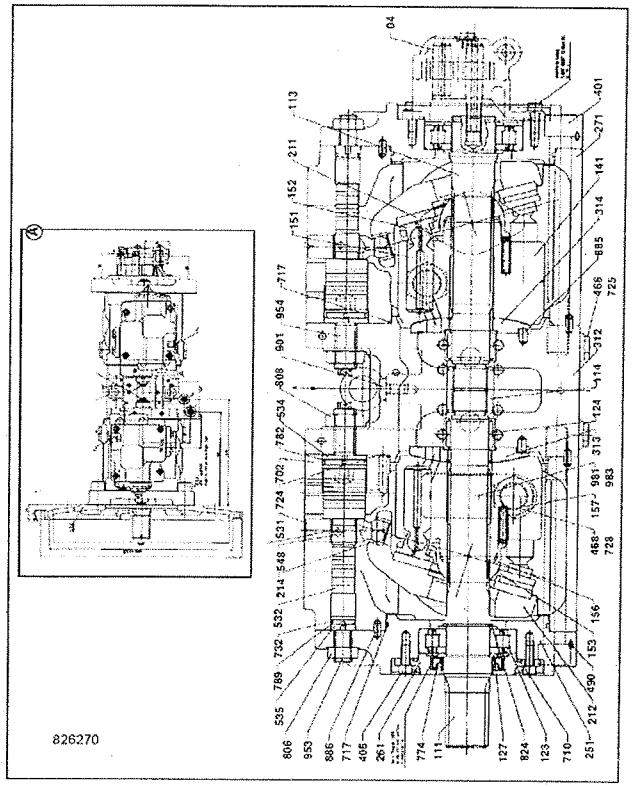

JS205 INDIA

ITEM	Part #	CHANGE NO	DESCRIPTION	USAGE CODE	QTY
A	332/P0924		Pump		1
111	LJP0035		Shaft drive front		1
113	LJP0036		Shaft drive rear		1
114	LCP0036		Coupling spline		1
123	LTP0044		Bearing		2
124	LTP0045		Bearing		2
824	LMP0147		Spacer		4
153	331/37712		Bush spherical bush		2
157	LSP0109		Spring		18
156	LB00502		Spacer Spacer, special		1
211	LMP0208		Plate		2
212	LMP0210		Plate swash support		2
261	LZP0176		Cover front oil seal		1
271	LWP0006		Casing pump		2
312	LPP0097		Valve block		1
401	1391/3310		Capscrew		8

E220-1-1 PUMPS VARIFLOW, MAIN HYDRAULICS, COMPONENTS 9820/0692A
ISSUE 1

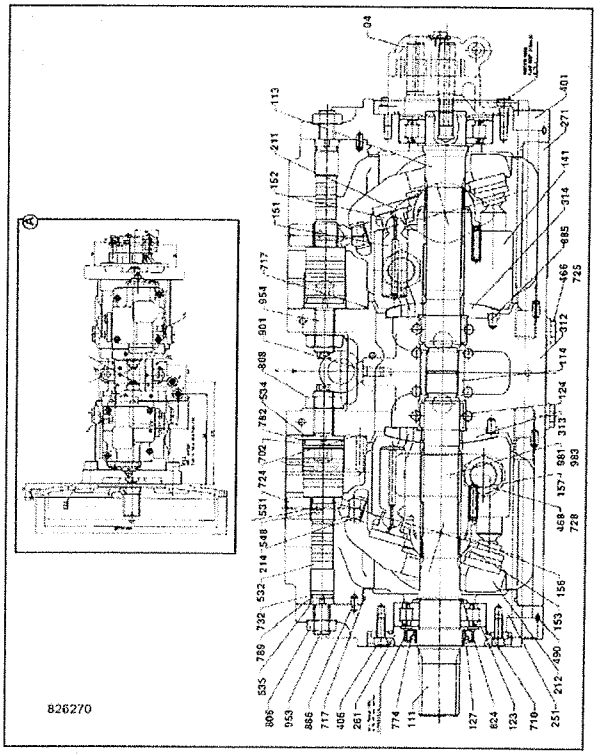

ITEM	PART NO	CHANGE NO	DESCRIPTION	USAGE CODE	QTY
406	1391/3305		Capscrew M8 x 20		4
426	LLP0041		Plug		2
468	LLM0028		Plug		4
490	LLP0114		Plug		24
532	LPP0100		Piston servo		2
534	LMP0212		Stopper		2
535	LMP0213		Stopper		2
702	LBQ0353		O Ring		2
710	LBQ0953		O Ring		2
717	LBQ1453		O Ring		4
724	LBQ0082		O Ring		16
725	LBQ0112		O Ring		4
728	LBQ0242		O Ring		4
732	LBQ0182		O Ring		2
774	331/38027		Seal		1
789	LBB0182		Ring back-up		2
792	LBB0353		Ring back-up		2
806	162R016VN		Nut high strength		2
808	162R020VN		Nut high strength		2
127	370A0400Z		Ring stop		2

Continue...

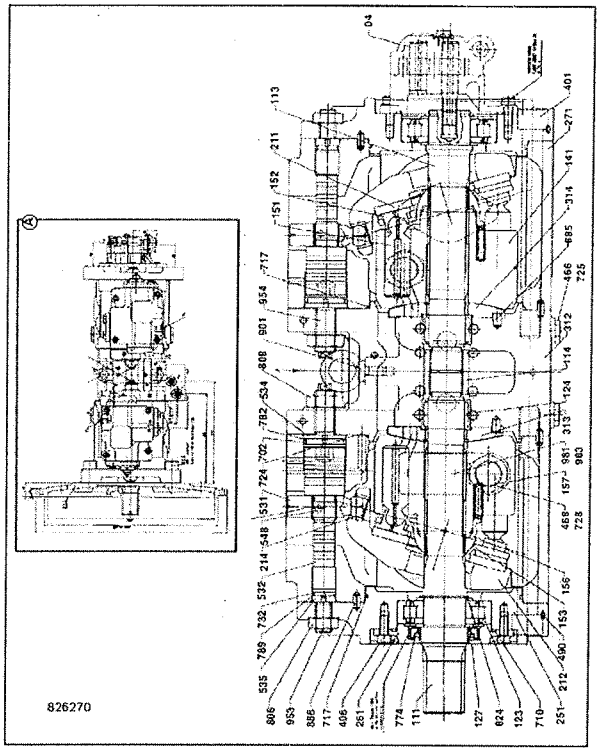

ITEM	PART NO	CHANGE NO	DESCRIPTION	USAGE CODE	QTY
885	LMP0108		Pin plate		2
886	LMP0217		Pin spring		4
901	126R010SN		Bolt eye		2
953	LUP0189		Screw		2
954	LUP0190		Screw		2
981			None serviced part		2
983	LMP0218		Pin		2
151	LNP0173		Kit piston sub-assembly 9 off		2
313	LNP0174		Cylinder sub assembly		1
141	LNP0175		Cylinder sub assembly		1
214	LNP0176		Kit-swash plate sub assembly		2
548	LNP0180		Pin assembly tilting		2
4	20/925164		Pump assembly servo		1
	20/951656		Kit-seal hydraulic pump		1
	20/951844		Cover & seal assembly		1

E

E01 HYDRAULIC CIRCUITS
E02 PUMP & M0T0RS
• E03 VALVES
E04 RAMS
E05 FILTER

JS205 INDIA

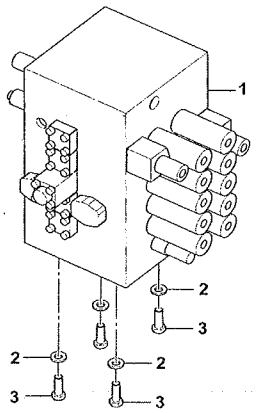

ITEM	Part #	CHANGE NO	DESCRIPTION	USAGE CODE	QTY
1	229/01001		Valve Valve, main control Refer E320-15-1		1
2	JHP0043		Washer M16		4
3	1316/0711Z		Screw M16x45mm		4

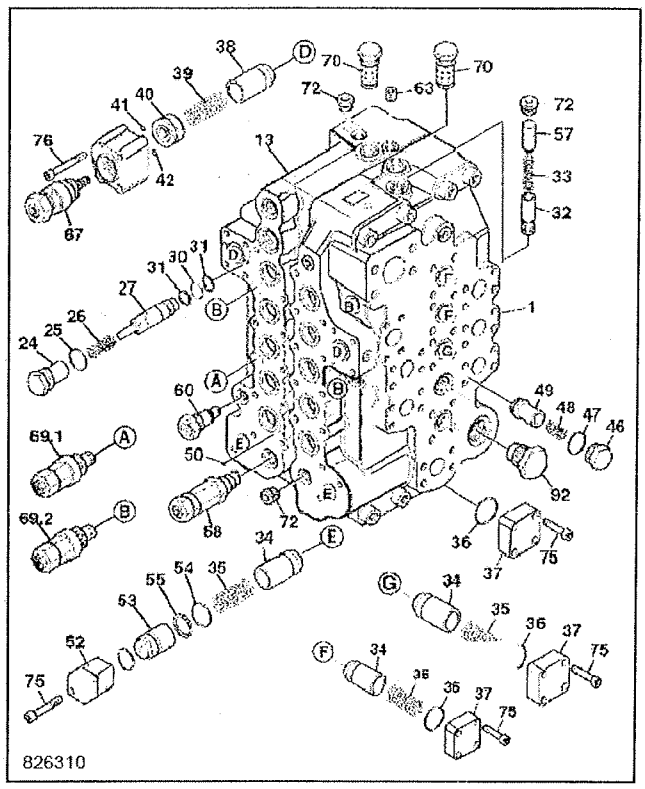

JS205 INDIA

ITEM	Part #	CHANGE NO	DESCRIPTION	USAGE CODE	QTY
13			None serviced part		1
24	25/221768		Plug		1
25	25/221769		O Ring seal		1
26	25/221770		Spring		1
27	25/221771		Spool assy		1
30	25/221772		O Ring seal		1
31	25/221773		Ring Back-up		2
32	25/221774		Poppet		2
33	25/221775		Spring		2
34	25/221630		Valve poppet		8
35	25/221631		Spring		9
36	25/221776		O Ring seal		10
37	25/221777		Flange		8
38	25/221778		Poppet		2
39	25/221779		Spring		2
40	25/221780		Spacer assy.		2
41	25/221781		O Ring seal		2
42	25/221782		O Ring seal		2

E320-5-1 VALVES EXCAVATOR, COMPONENTS, FIGURE 1 9820/0692A ISSUE 1

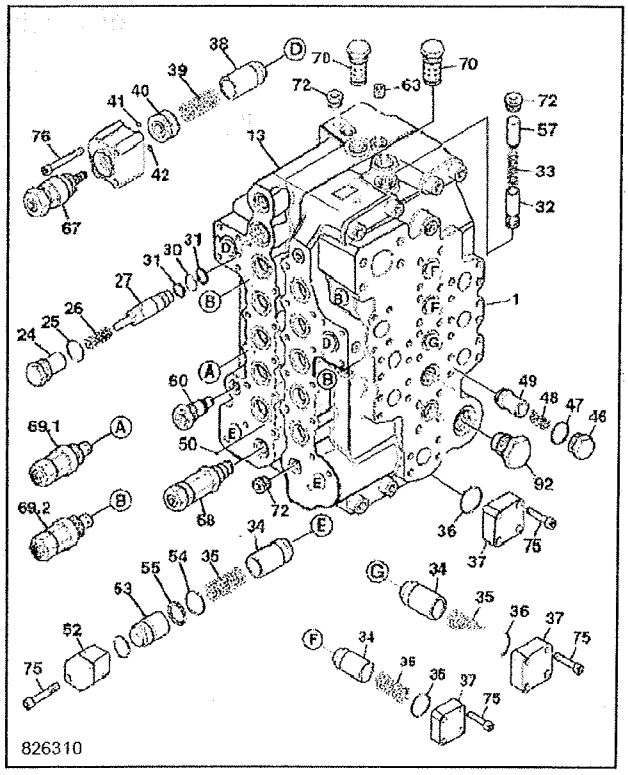

ITEM	PART NO	CHANGE NO	DESCRIPTION	USAGE CODE	QTY
46	25/221685		Plug		1
47	25/221666		Valve Bucket Section		1
48	25/221678		Spring		1
49	25/221786		Poppet		1
52	25/221688		Flange		2
53	25/221632		Spacer valve		2
54	25/221633		Seal O ring		2
55	25/221634		Ring back-up		2
57	25/221788		Spacer		1
60	25/221671		Plug assembly		1
63	25/221790		Plug orifice		1
67	25/221791		Valve anti-drift,assy.		2
68	333/Y1855		Valve - Main Relief		1
69.1	25/221793		Valve relief. 31.4		2
69.2	25/221794		Valve relief 39.2		5
70	25/221796		Valve relief, assy		2
72	701/80371		Switch Power Boost pressure 335bar		1

Continue...

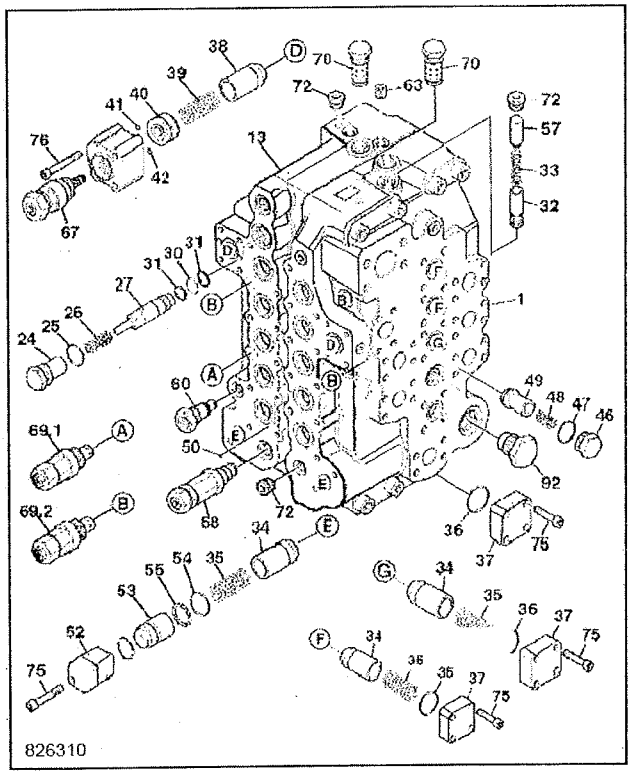

ITEM	PART NO	CHANGE NO	DESCRIPTION	USAGE CODE	QTY
75	25/221695		Bolt socket-head M10		44
76	25/221799		Bolt socket-head M10		8

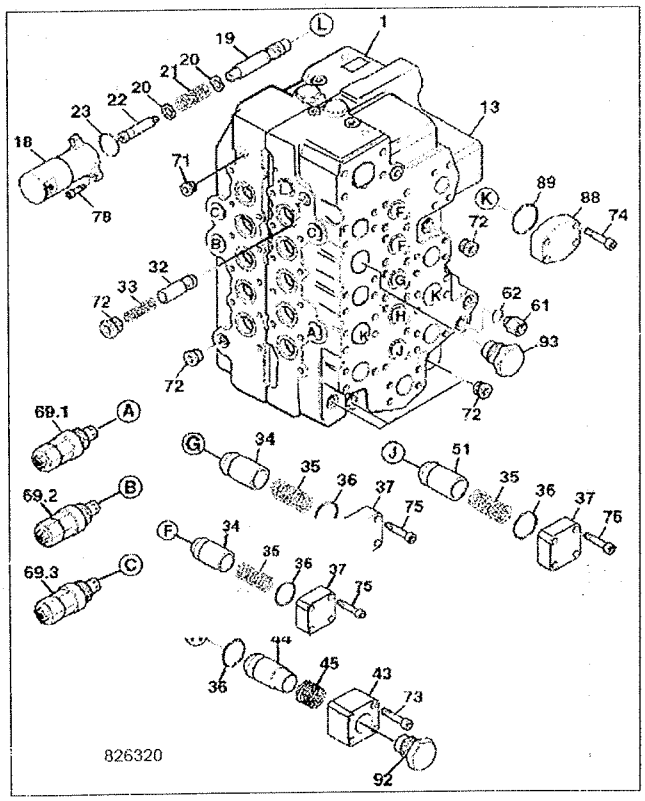

JS205 INDIA

ITEM	Part #	CHANGE NO	DESCRIPTION	USAGE CODE	QTY
13			None serviced part		1
18	25/221764		Cap		1
19			None serviced part		1
20	25/221635		Seat spring		2
21	25/221765		Spring		1
22	25/221766		End spool		1
23	25/221767		O Ring seal		1
32	25/221774		Poppet		2
33	25/221775		Spring		2
34	25/221630		Valve poppet		8
35	25/221631		Spring		9
36	25/221776		O Ring seal		10
37	25/221777		Flange		10
43	25/221783		Flange		1
44	25/221784		Poppet		1
45	25/221785		Spring		1
51	25/221787		Poppet		1

Continue...

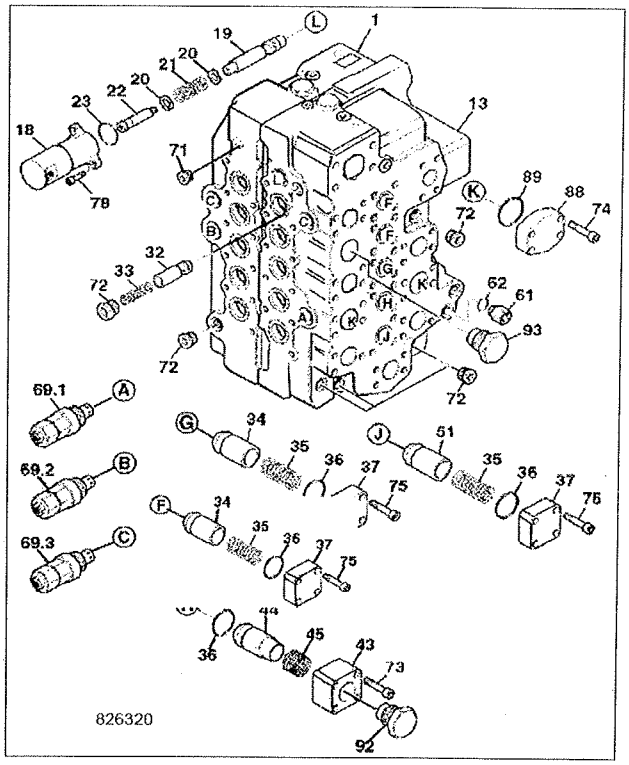

ITEM	PART NO	CHANGE NO	DESCRIPTION	USAGE CODE	QTY
61	701/80374		Switch Upper servo pressure 12bar		1
61.1	701/80375		Switch Travel pressure 20bar		1
62	25/221653		Seal O ring		2
69-1	25/221793		Valve relief. 31.4		2
69-2	25/221794		Valve relief 39.2		5
69-3	25/221795		Kit -relief valve,26.4		1
71	25/221691		Plug assembly		1
72	25/221690		Plug assembly		11
73	25/221797		Bolt socket-head M10		4
74	25/221798		Bolt socket-head M10		40
75	25/221695		Bolt socket-head M10		44
78	25/221716		Capscrew M6		2
83	25/221813		Bolt socket-head M10		8
88	25/221802		Cap		2
89	25/221723		Seal O-ring		2
92	25/221804		Plug assy.		2

E320-10-1 VALVES EXCAVATOR, COMPONENTS, FIGURE 2
9820/0692A
ISSUE 1

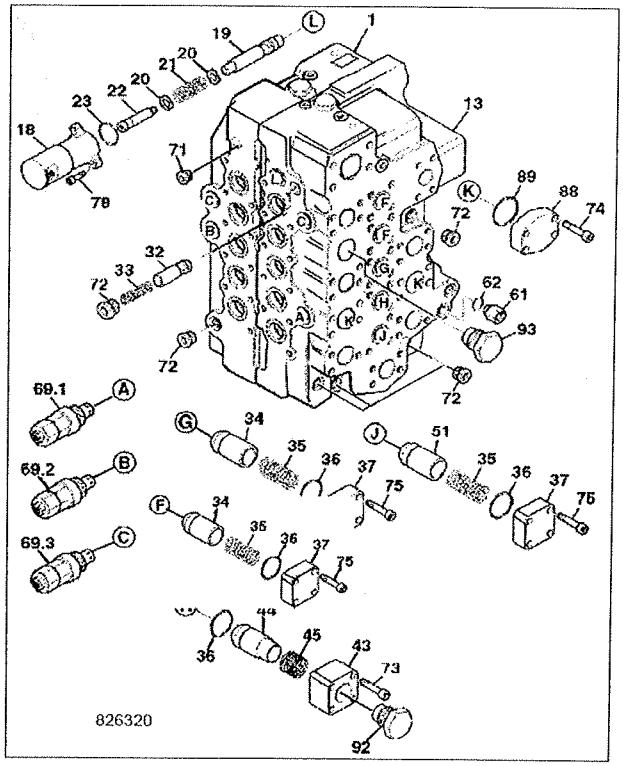

ITEM	PART NO	CHANGE NO	DESCRIPTION	USAGE CODE	QTY
93	25/221805		Plug assy.		1
0	550/43490		Kit-seal Control Valve		1

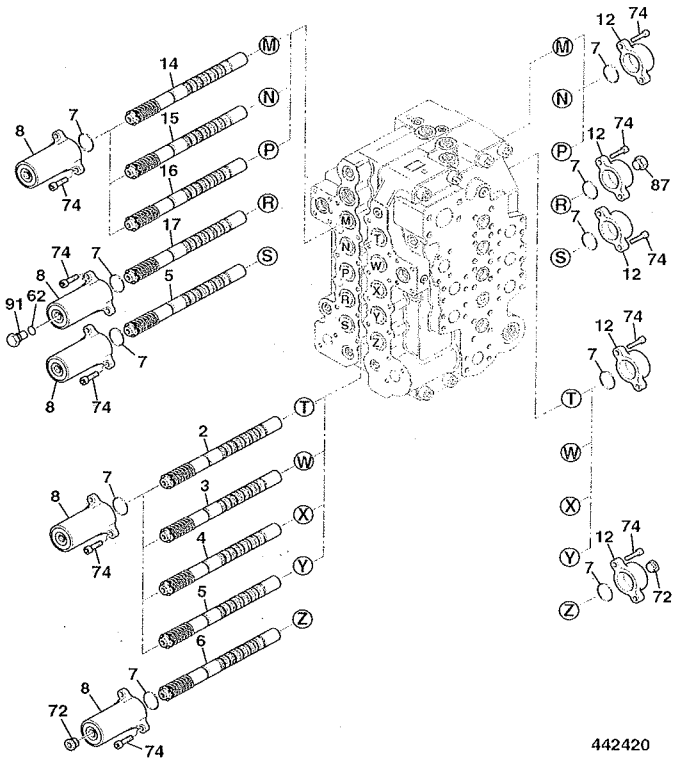

JS205 INDIA

ITEM	Part #	CHANGE NO	DESCRIPTION	USAGE CODE	QTY
2			None serviced part		1
3			None serviced part		1
4			None serviced part		1
5			None serviced part		2
6			None serviced part		1
7	25/221761		O Ring seal		20
8	25/221762		Cap		10
12	25/221763		Cap		10
14			None serviced part		1
15			None serviced part		1
16	N.S.P.		None serviced part		1
17			None serviced part		1
62	25/221653		Seal O ring		2
72	25/221690		Plug assembly		11
74	25/221798		Bolt socket-head M10		40
87	25/221816		Plug assy.		1
91	25/221803		Plug		1

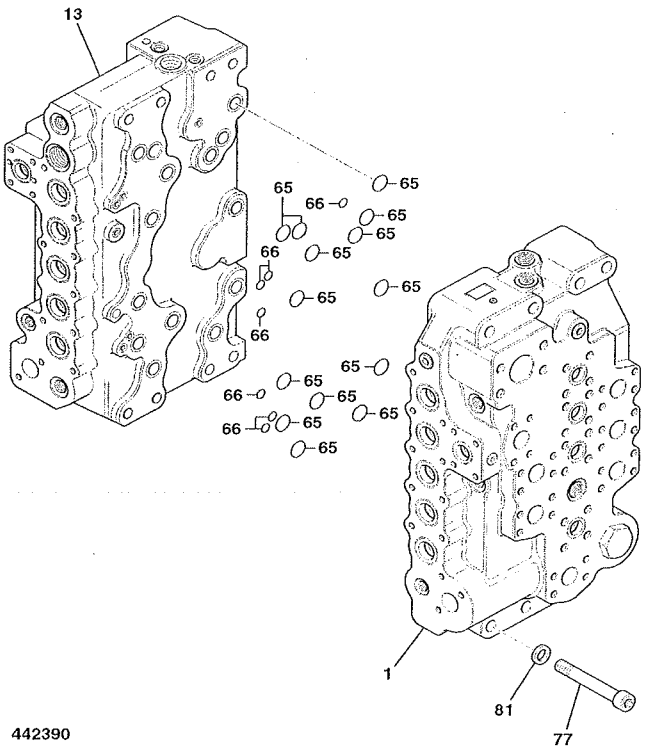

JS205 INDIA

ITEM	Part #	CHANGE NO	DESCRIPTION	USAGE CODE	QTY
13			None serviced part		1
65	25/221700		Seal O-ring		14
66	25/221702		Seal O-ring		7
77	25/221800		Bolt socket-head M16		8
81	25/221801		Washer		8

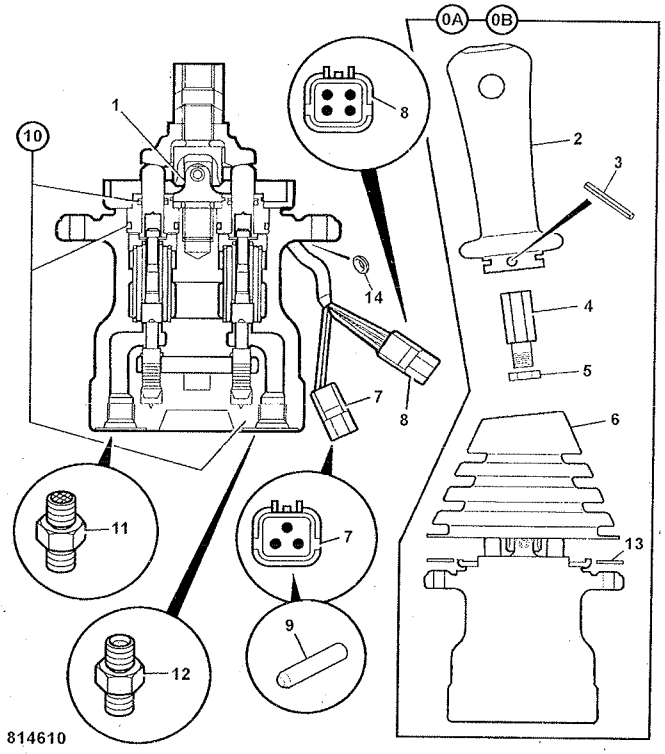

JS205 INDIA

ITEM	Part #	CHANGE NO	DESCRIPTION	USAGE CODE	QTY
A	:25/222891		Valve Hand Controller Left Hand		1
1	:331/11565		Joint knuckle		1
2	:331/14366		Handle with switch		1
3	:826/10591		Pin roll		1
4	:331/11043		Lever		1
5	:826/10628		Nut locking		1
6	:331/20582		Gaiter Joystick		1
7	:721/10400		Connector 3 pin		0
8	:721/10100		Connector 4 pin		0
9	:721/10401		Connector		8
10	:998/10318		Kit-seal (To suit all four plungers)		1
11	JHJ0168		Adapter Filtered		1
12	1620/2052		Adaptor 3/8BSP X 9/16		5
13	25/221280		Plate		1
14	:828/10020		Grommet		1

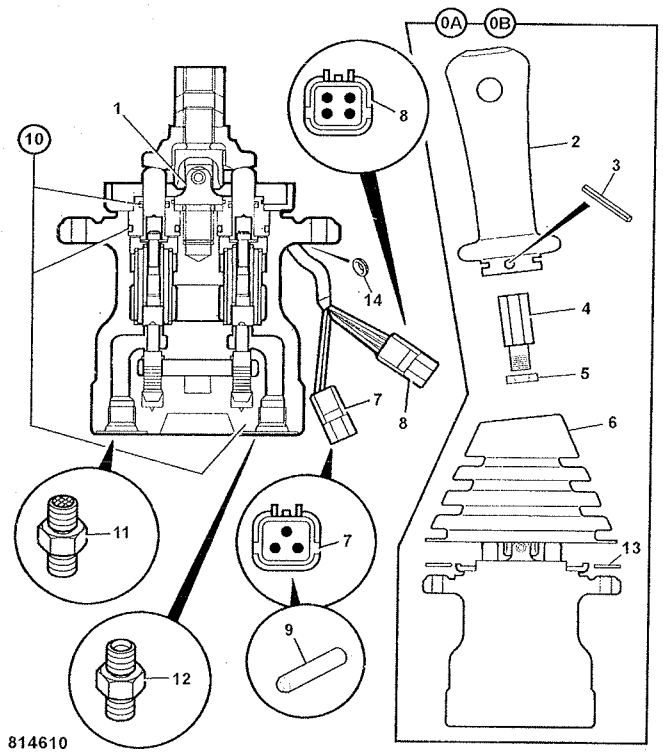

JS205 INDIA

ITEM	Part #	CHANGE NO	DESCRIPTION	USAGE CODE	QTY
B	:25/222892		Valve Hand Controler Right Hand		1
1	:331/11565		Joint knuckle		1
2	:331/14366		Handle with switch		1
3	:826/10591		Pin roll		1
4	:331/11043		Lever		1
5	:826/10628		Nut locking		1
6	:331/20582		Gaiter Joystick		1
7	:721/10400		Connector 3 pin		0
8	:721/10100		Connector 4 pin		0
9	:721/10401		Connector		8
10	:998/10318		Kit-seal (To suit all four plungers)		1
11	JHJ0168		Adapter Filtered		1
12	1620/2052		Adaptor 3/8BSP X 9/16		5
13	25/221280		Plate		1
14	:828/10020		Grommet		1

E340-1-1 VALVES SERVO CONTROL (PILOT CONTROL), JOYSTICK CONTROL, LEFT HAND SIDE

9820/0692A
ISSUE 1

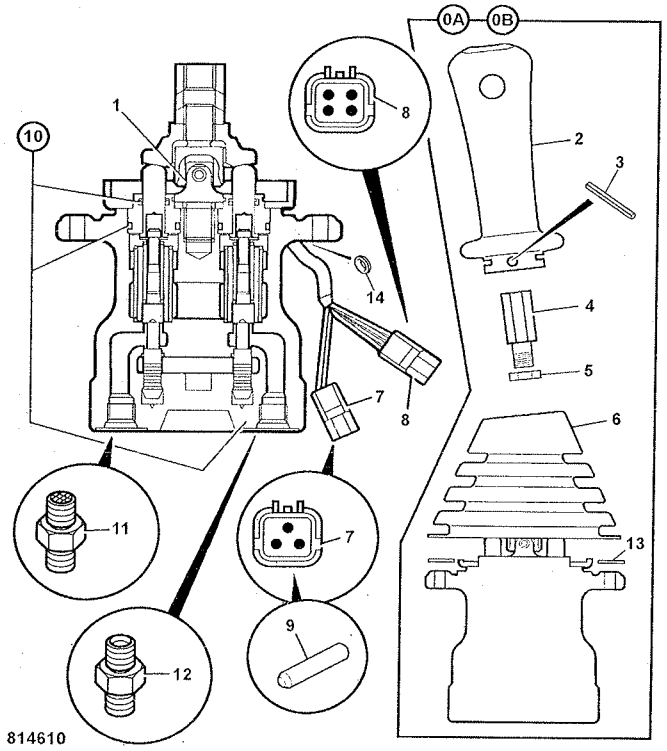

JS205 INDIA

ITEM	Part #	CHANGE NO	DESCRIPTION	USAGE CODE	QTY
A	:25/222891		Valve Hand Controller Left Hand		1
1	:331/11565		Joint knuckle		1
2	:331/14366		Handle with switch		1
3	:826/10591		Pin roll		1
4	:331/11043		Lever		1
5	:826/10628		Nut locking		1
6	:331/20582		Gaiter Joystick		1
7	:721/10400		Connector 3 pin		0
8	:721/10100		Connector 4 pin		0
9	:721/10401		Connector		8
10	:998/10318		Kit-seal (To suit all four plungers)		1
11	JHJ0168		Adapter Filtered		1
12	1620/2052		Adaptor 3/8BSP X 9/16		5
13	25/221280		Plate		1
14	:828/10020		Grommet		1

E340-5-1 VALVES SERVO CONTROL (PILOT CONTROL), JOYSTICK CONTROL, RIGHT HAND SIDE

9820/0692A
ISSUE 1

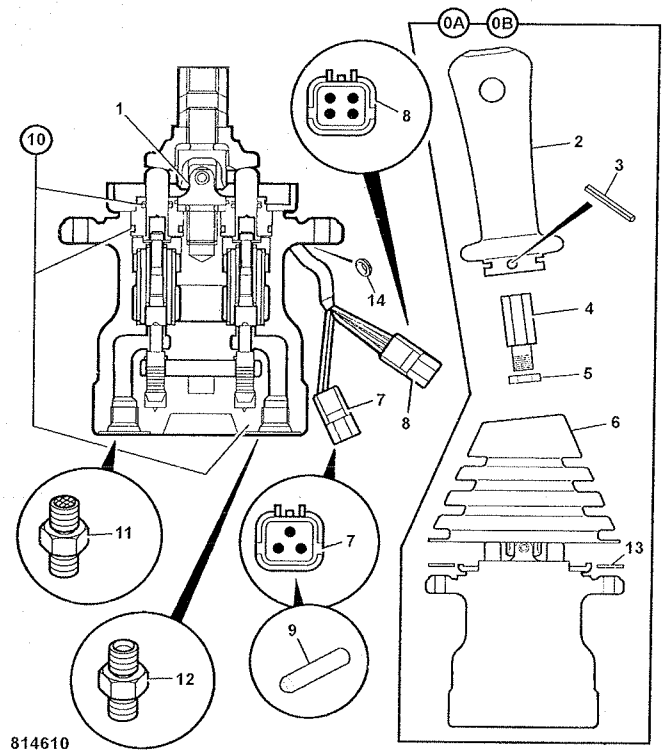

JS205 INDIA

ITEM	Part #	CHANGE NO	DESCRIPTION	USAGE CODE	QTY
B	:25/222892		Valve Hand Controler Right Hand		1
1	:331/11565		Joint knuckle		1
2	:331/14366		Handle with switch		1
3	:826/10591		Pin roll		1
4	:331/11043		Lever		1
5	:826/10628		Nut locking		1
6	:331/20582		Gaiter Joystick		1
7	:721/10400		Connector 3 pin		0
8	:721/10100		Connector 4 pin		0
9	:721/10401		Connector		8
10	:998/10318		Kit-seal (To suit all four plungers)		1
11	JHJ0168		Adapter Filtered		1
12	1620/2052		Adaptor 3/8BSP X 9/16		5
13	25/221280		Plate		1
14	:828/10020		Grommet		1

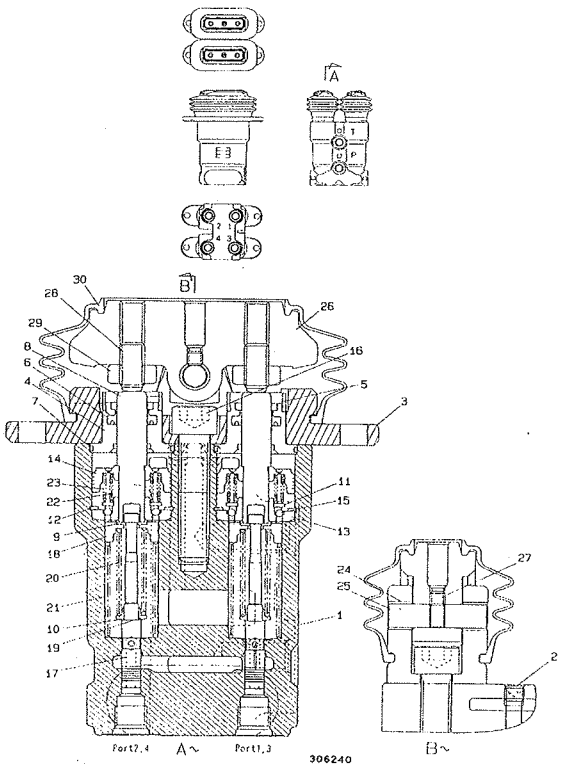

JS205 INDIA

ITEM	Part #	CHANGE NO	DESCRIPTION	USAGE CODE	QTY
0	KSJ2465		Valve Remote Control		1
1	:LWC0003		Case		1
2	:LLP0114		Plug		2
3	:LZC0158		Cover		2
4	:LLC0128		Plug		4
5	:LWC0004		Cap grease		4
6	:LEC0025		Seal		4
7	:LBQ5025		O Ring		4
8	:LPC0213		Rod push		4
9	:LUC0107		Washer		8
10	:LUC0106		Washer		4
11	:LSC0237		Seat spring		4
12	:LMC0107		Retainer		4
13	:LKC0005		Bush		4
14	:LPC0203		Piston		4
15	:LPC0204		Ball		12
16	:6004/3513		Capscrew		2

E340-10-1 VALVES SERVO CONTROL (PILOT CONTROL), JOYSTICK CONTROL 9820/0692A
ISSUE 1

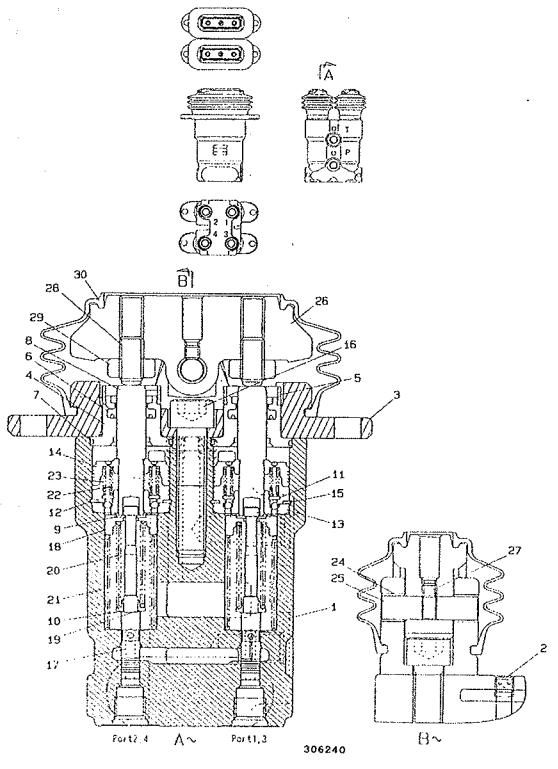

ITEM	PART NO	CHANGE NO	DESCRIPTION	USAGE CODE	QTY
17	:N.S.P.		None serviced part		4
18	:LSC0238		Seat spring		4
19	:LUC0104		Washer		4
20	:LSC0236		Spring		4
21	:LSC0214		Spring		4
22	:LSC0239		Spring		4
23	:LSC0240		Spring		4
24	:LKC0001		Bush		4
25	:LJC0003		Shaft cam		2
26	:LMC0085		Cam		2
27	:LLC0118		Screw		2
28	:LUC0102		Bolt		4
29	:LUC0101		Nut lock		4
30	:LCC0014		Gaiter rubber bellows		2
31	:LQC0034		Kit casing		1
32	:LQC0035		Kit-seal		1

JS205 INDIA

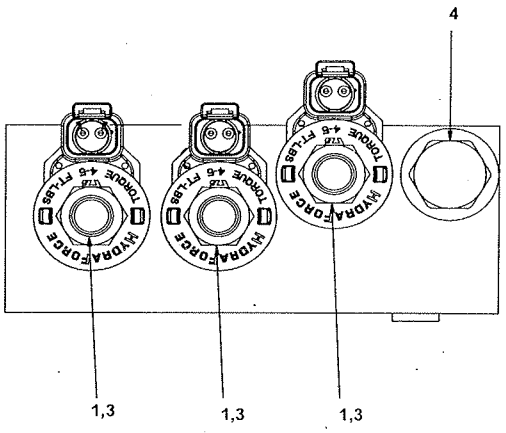

ITEM	Part #	CHANGE NO	DESCRIPTION	USAGE CODE	QTY
1	332/Y7913		Valve - Solenoid		3
2	332/Y7916		Kit Seal - Solenoid Valve		1
3	332/Y7914		Coil for Solenoid		3
4	332/Y7917		Valve - Check		1
5	332/Y7918		Kit Seal - Complete Block		1

333-P1847-1

JS205 INDIA

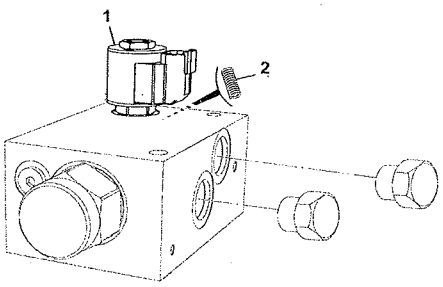

ITEM	Part #	CHANGE NO	DESCRIPTION	USAGE CODE	QTY
A	333/P0375		Valve Solenoid		1
1	:347/22261		Valve Solenoid		1
2	:332/H4123		Coil		1

333-S1066-1

E

E01 HYDRAULIC CIRCUITS
E02 PUMP & M0T0RS
E03 VALVES
• E04 RAMS
E05 FILTER

JS205 INDIA

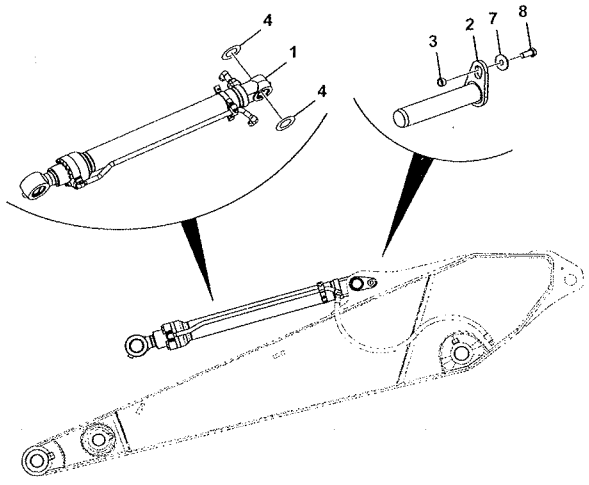

335-A6597-3

ITEM	Part #	CHANGE NO	DESCRIPTION	USAGE CODE	QTY
1	335/A8197		Ram Bucket Refer E480-1-1		1
2	333/J5557		Pin pivot 75mm x 204mm		1
3	333/K7980		Spacer 1" X 8" SWG		1
4	KRV1176		Shim 76mm ID x 130mm OD 1.2mm thick		2
7	1412/0007D		Washer large		1
8	1316/0710D		Bolt		1

JS205 INDIA

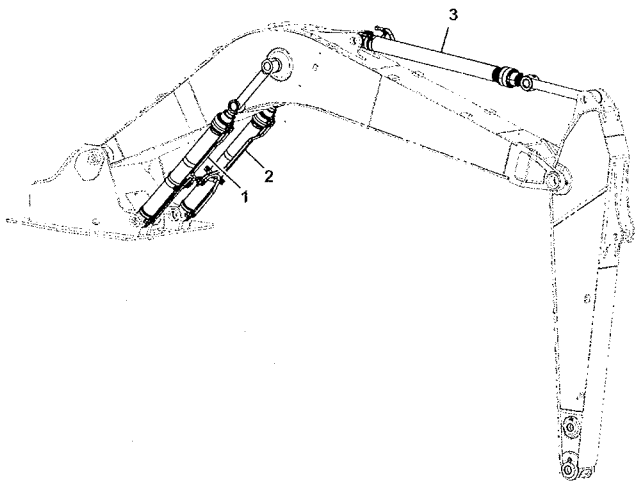

335-A6745-2

ITEM	Part #	CHANGE NO	DESCRIPTION	USAGE CODE	QTY
1	335/B7426		Ram Boom Left Side Refer E460-5-1		1
2	335/B7425		Ram Boom Right Side Refer E460-1-1		1
3	333/P5358		Ram Arm Refer E465-1-1		1

JS205 INDIA

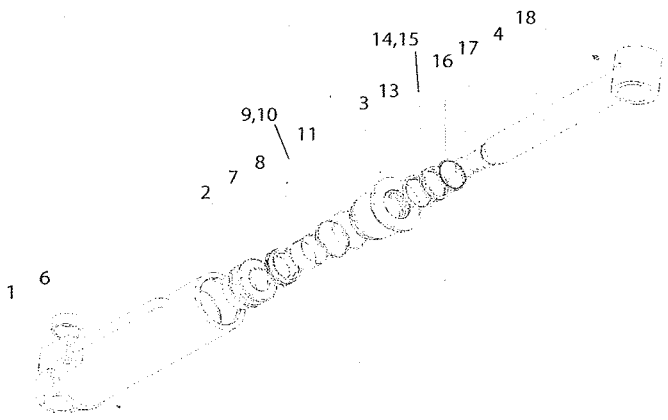

333-Y0481

ITEM	Part #	CHANGE NO	DESCRIPTION	USAGE CODE	QTY
1	333/Y0465		Tube TUBE ASS,Y TUBE ASS,Y		1
2	333/Y0466		Piston PISTON PISTON		1
3	333/Y0467		Tube TUBE COVER TUBE COVER		1
4	333/Y0468		Rod ROD ROD		1
6	333/Y0480		Cylinder BUSHING CYLINDER BUSHING CYLINDER		2
7	333/Y0469		Seal COMPACT SEAL COMPACT SEAL		1
8	333/Y0470		Bush DU-BUSH DU-BUSH		1
9	333/Y0471		Ring O-RING O-RING		1
10	333/Y0472		Ring BACK UP RING BACK UP RING		1

Continue...

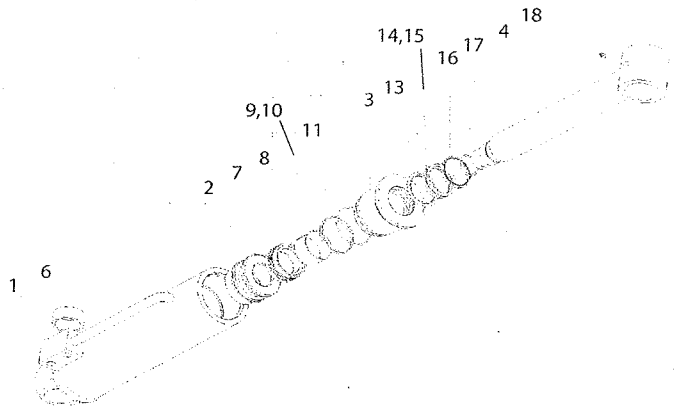

ITEM	PART NO	CHANGE NO	DESCRIPTION	USAGE CODE	QTY
11	333/Y0473		Ring O-RING O-RING		1
13	333/Y0474		Seal STEP SEAL STEP SEAL		1
14	333/Y0475		Packing U-PACKING U-PACKING		1
15	333/Y0476		Ring BACK UP RING BACK UP RING		1
16	333/Y0477		Seal DUST SEAL DUST SEAL		1
17	333/Y0478		Ring O-RING O-RING		2
18	333/Y0479		Nipple GREASE NIPPLE GREASE NIPPLE		2
	333/Y0481		Seal SEAL KIT CYLINDER SEAL KIT CYLINDER		1

333-Y0481

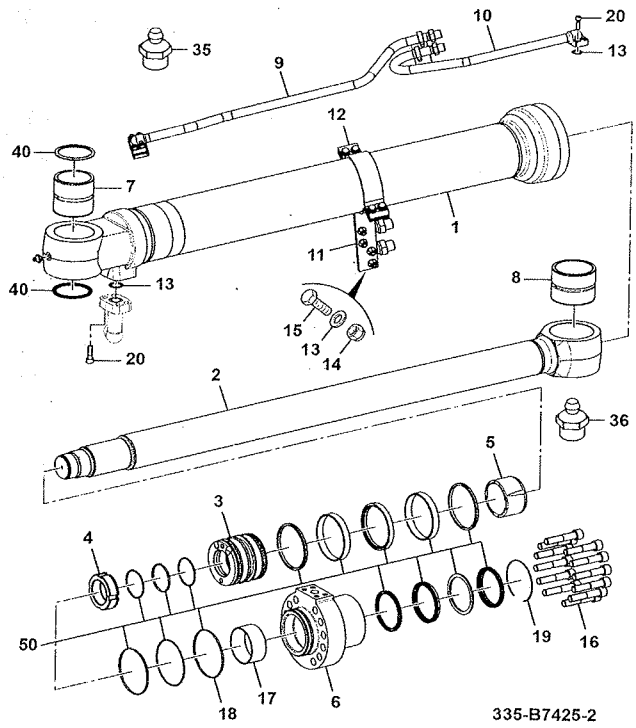

335-B7425-2

JS205 INDIA

ITEM	Part #	CHANGE NO	DESCRIPTION	USAGE CODE	QTY
A	335/B7425		Ram Boom Right Side		1
1	335/C2903		Tube		1
2	550/41737		Piston Rod S/A		1
3	550/41726		Piston Cylinder Boom		1
4	550/41936		Nut Rod Piston		1
5	550/41931		Bush Cushioning Head End		1
6	550/41729		Cover Head End		1
7	550/41733		Bush		1
8	550/41734		Bush Rod End		1
9	335/C2913		Pipe Pipe Left Side		1
10	335/C2914		Pipe Pipe HE Left Side		1
11	335/C2916		Clamp		1
12	550/41940		Clamp		2
13	550/41158		Washer		8
14	550/41920		Nut Nyloc		4

Continue...

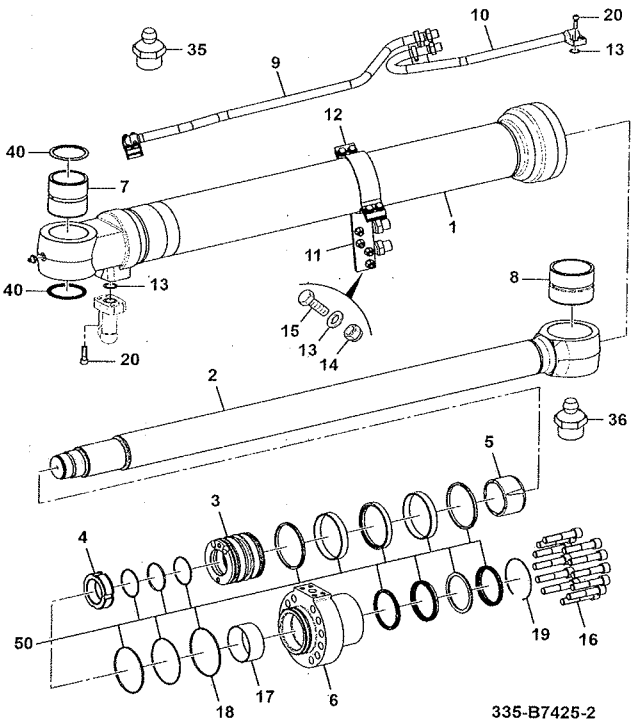

ITEM	PART NO	CHANGE NO	DESCRIPTION	USAGE CODE	QTY
15	550/41125		Bolt HD		4
16	550/41915		Capscrew HD		12
17	335/C2897		Bush Bi Metal		1
18	335/C2918		Ring Snap		1
19	550/41922		Ring Snap		1
20	550/41916		Capscrew HD		8
35	335/C2920		Cap Protection		1
36	550/41919		Nipple Grease		1
37	335/C2898		Cap Cap		1
38	335/C2901		Guard Wiper		1
39	335/C2924		Cap Protection		2
40	335/C2926		Washer Sealing		2
50	335/C2927		Kit Seal		1

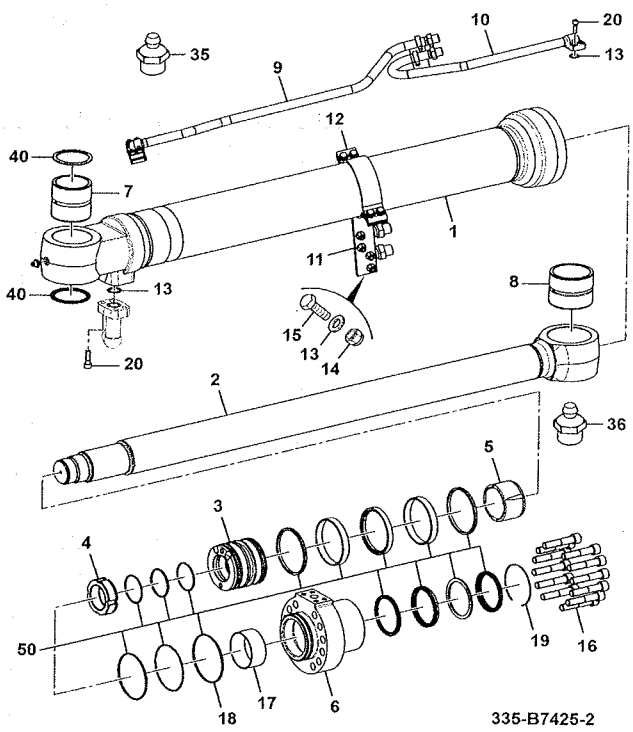

JS205 INDIA

ITEM	Part #	CHANGE NO	DESCRIPTION	USAGE CODE	QTY
A	335/B7426		Ram Boom Left Side		1
1	335/C2903		Tube		1
2	550/41737		Piston Rod S/A		1
3	550/41726		Piston Cylinder Boom		1
4	550/41936		Nut Rod Piston		1
5	550/41931		Bush Cushioning Head End		1
6	550/41729		Cover Head End		1
7	550/41733		Bush		1
8	550/41734		Bush Rod End		1
9	335/C2946		Pipe S/A 2 Right Side		1
10	335/C2947		Pipe S/A 1 Right Side		1
11	335/C2916		Clamp		1
12	550/41940		Clamp		2
13	550/41158		Washer		8
14	550/41920		Nut Nyloc		4

Continue...

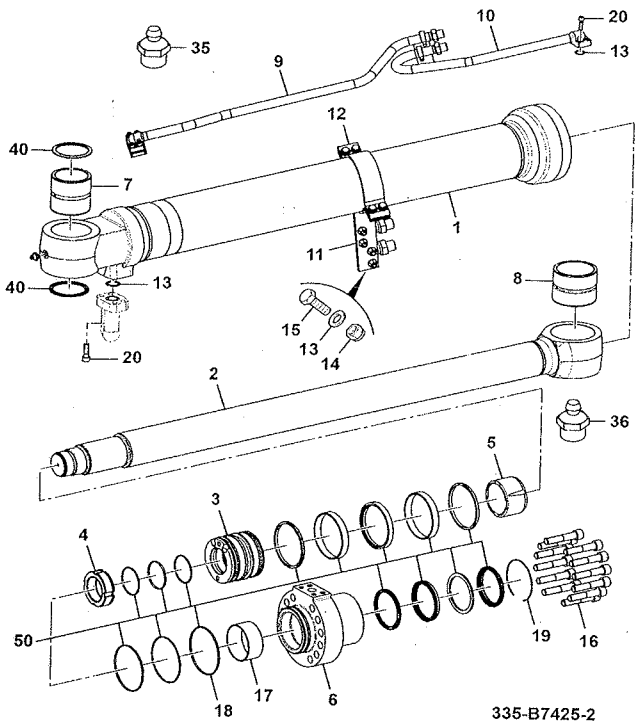

ITEM	PART NO	CHANGE NO	DESCRIPTION	USAGE CODE	QTY
15	550/41125		Bolt HD		4
16	550/41915		Capscrew HD		12
17	335/C2897		Bush Bi Metal		1
18	335/C2918		Ring Snap		1
19	550/41922		Ring Snap		1
20	550/41916		Capscrew HD		8
35	550/41919		Nipple Grease		1
36	550/41919		Nipple Grease		1
40	335/C2926		Washer Sealing		2
50	335/C2927		Kit Seal		1

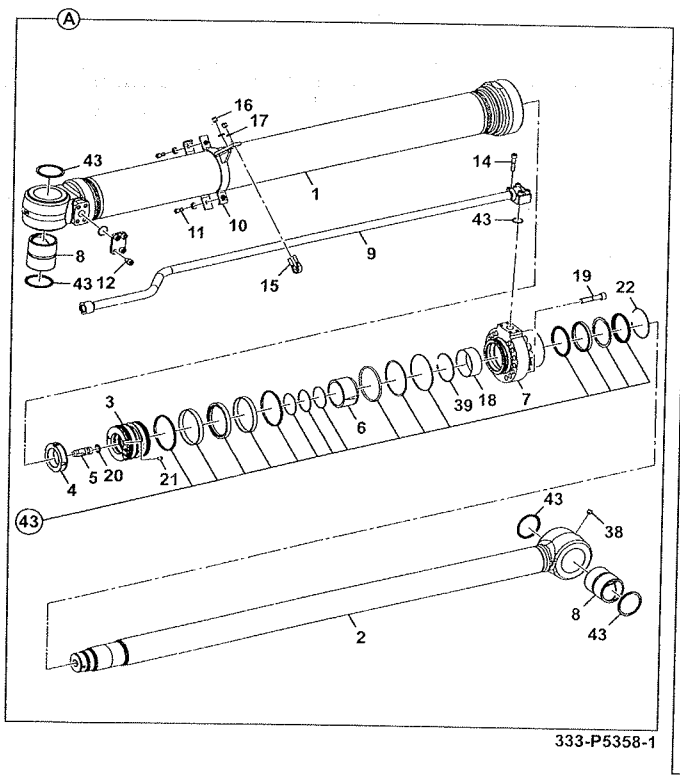

JS205 INDIA

ITEM	Part #	CHANGE NO	DESCRIPTION	USAGE CODE	QTY
A	333/P5358		Ram Arm		1
1	550/42220		Tube S/A		1
2	332/Y7750		Piston Rod		1
3	550/42222		Piston		1
4	332/Y7752		Nut for arm cylinder		1
5	550/41930		Bush cush H.E		1
6	550/42225		Bush H.E. Cush		1
7	550/42226		Cover H.E.		1
8	550/41735		Bush		2
9	550/42227		Pipe S/A		1
10	333/Y9169		Clamp S/A		1
11	550/43328		Hex. Soc. Set Screw		2
12	333/Y9168		Screw Hex.		1
14	550/41914		Capscrew Hex Soc HD		4
15	550/41940		Clamp		1
16	550/41920		Nut Nyloc		2
17	550/41941		Washer		4

Continue...

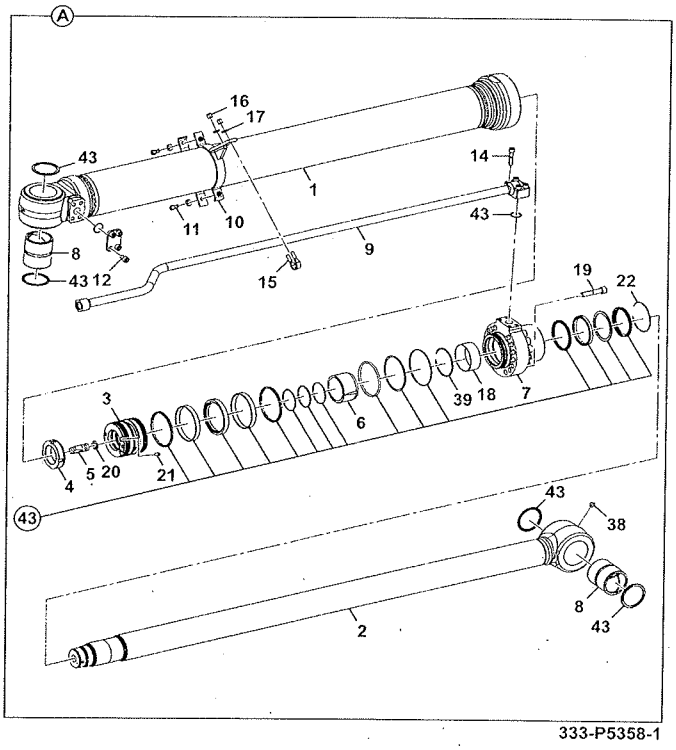

333-P5358-1

ITEM	PART NO	CHANGE NO	DESCRIPTION	USAGE CODE	QTY
18	550/42231		Bush Bimetal		1
19	550/41915		Capscrew HD		14
20	550/43334		Ball Steel Challoy		12
21	333/Y9165		Setscrew		1
22	550/42232		Ring Snap		1
38	333/Y9166		Nipple - Grease		1
39	333/Y9167		Ring - Snap		1
43	550/42243		Kit-seal Spare		1

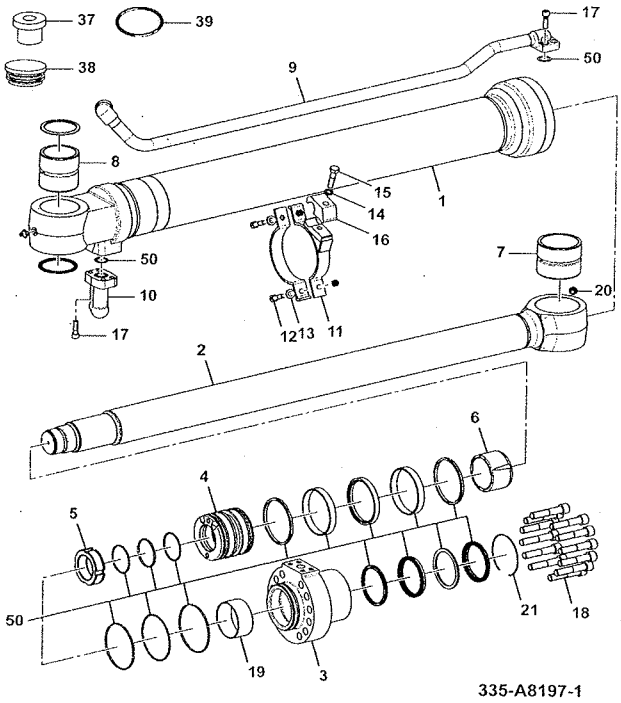

335-A8197-1

JS205 INDIA

ITEM	Part #	CHANGE NO	DESCRIPTION	USAGE CODE	QTY
A	335/A8197		Ram Bucket		1
1	550/42199		Tube S/A		1
2	335/C2892		Rod Rod Piston		1
3	550/42201		Cover Head End		1
4	550/42202		Piston		1
5	550/41936		Nut Rod Piston		1
6	550/41931		Bush Cushioning Head End		1
7	550/41731		Bush Rod End		1
8	550/41732		Bush (CE)		1
9	550/42204		Pipe S/A		1
10	550/41938		Port		1
11	335/C2896		Clamp Clamp		1
12	550/42206		Bolt Hexagonal HD		2
13	550/41158		Washer		2
14	550/41917		Washer Machined		1
15	550/41912		Bolt HD		1
16	550/41939		Clamp		1

Continue...

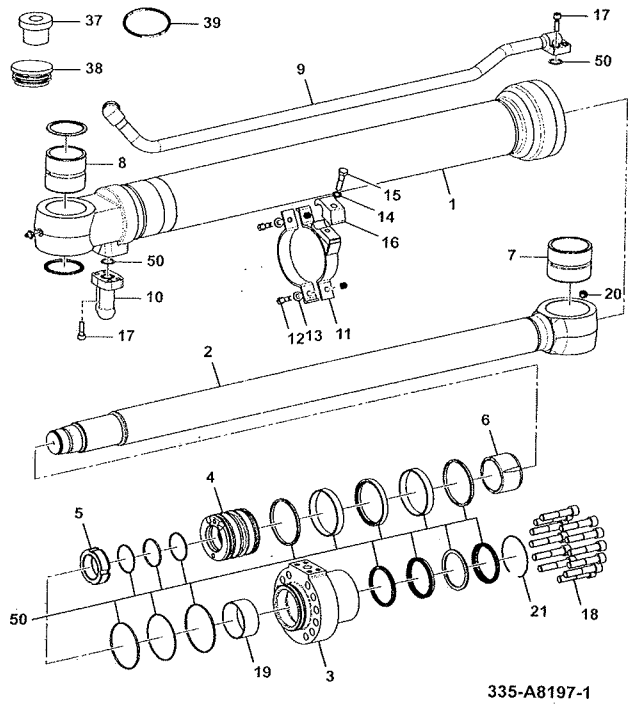

335-A8197-1

ITEM	PART NO	CHANGE NO	DESCRIPTION	USAGE CODE	QTY
17	550/41916		Capscrew HD		8
18	550/41915		Capscrew HD		12
19	335/C2897		Bush Bi Metal		1
20	550/41919		Nipple Grease		2
21	550/41922		Ring Snap		1
37	335/C2898		Cap Cap		2
38	335/C2900		Plug Plug		2
39	696/00990		O Ring		2
40	335/C2901		Guard Wiper		1
50	550/42219		Kit-seal Spare		1

E

E01 HYDRAULIC CIRCUITS
E02 PUMP & MOTORS
E03 VALVES
E04 RAMS
• E05 FILTER

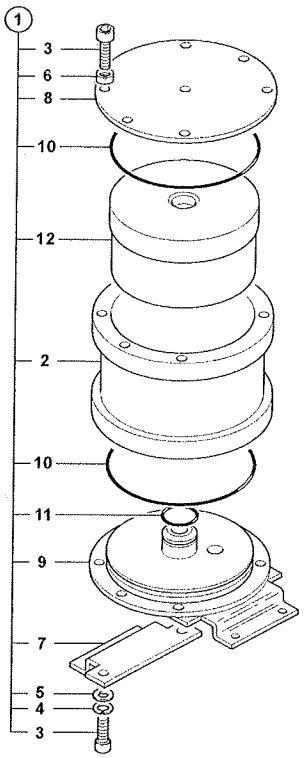

787490

JS205 INDIA

ITEM	Part #	CHANGE NO	DESCRIPTION	USAGE CODE	QTY
1	JRJ0238		Filter Bypass		1
2	:32/925120		Case filter		1
3	:826/10302		Capscrew M8 strainless steel		10
4	:823/10181		Washer spring strainless steel		8
5	:823/10201		Washer M8, strainless steel		8
6	:826/10321		Nut M8 plain st.steel		2
7	:32/925121		Bracket mounting		2
8	:581/18108		Cover top		1
9	:32/925123		Base filter		1
10	:828/10080		O Ring		2
11	:828/10081		O Ring		1
12	:32/925140		Element filter bypass Plexus		1

JS205 INDIA

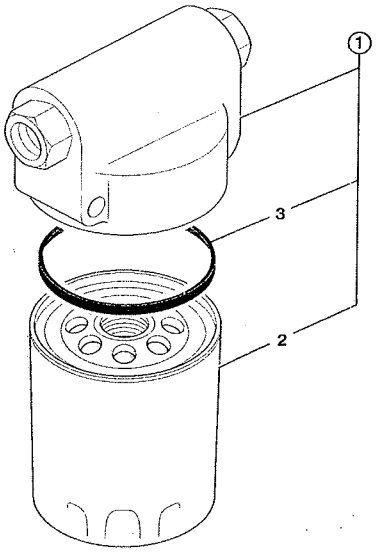

ITEM	Part #	CHANGE NO	DESCRIPTION	USAGE CODE	QTY
1	32/925214		Filter assembly		1
2	:KBJ1691		Element servo filter		1
3	:KHJ1032		O Ring		1

959790

JS205 INDIA

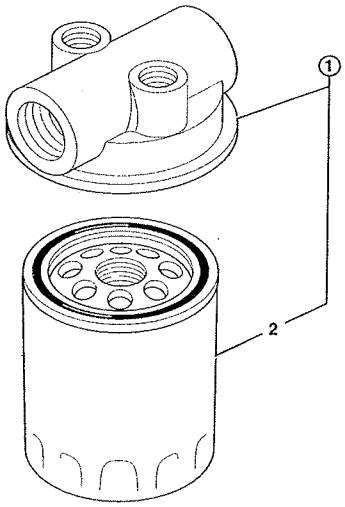

ITEM	Part #	CHANGE NO	DESCRIPTION	USAGE CODE	QTY
1	KNJ0287		Filter Inlet		1
2	:KNJ0288		Element oil filter		1

959800

JS205 INDIA

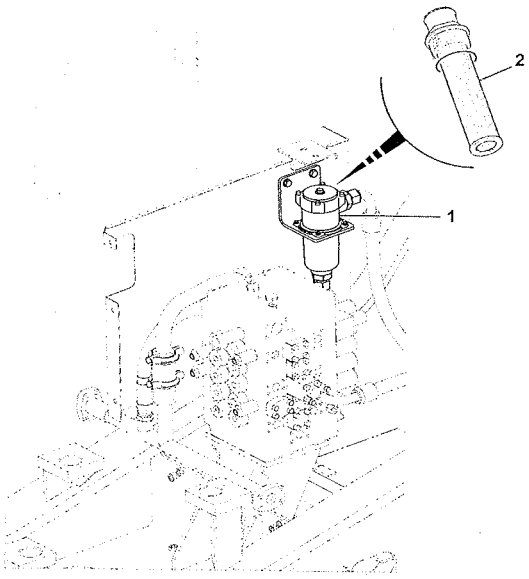

333-J9896-1

ITEM	Part #	CHANGE NO	DESCRIPTION	USAGE CODE	QTY
1	333/J9896		Filter		1
2	:333/K0099		Filter element		1

• F04 TRACK & SWING GEAR BOX

F

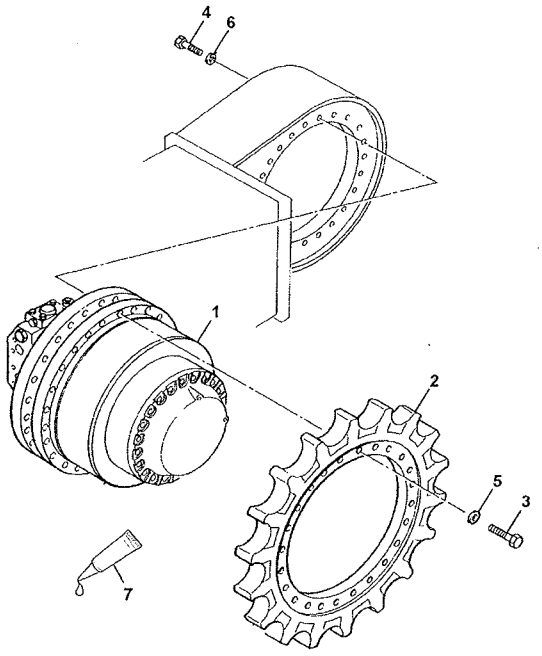

334-L5501-1

JS205 INDIA

ITEM	Part #	CHANGE NO	DESCRIPTION	USAGE CODE	QTY
1	332/L9328		Motor Travel Refer F410-5-1		2
2	332/J0022		Sprocket		2
3	1316/3816Z		Bolt M20x70		40
4	1316/3713Z		Bolt M16x55		52
5	JHP0044		Washer		40
6	JHP0043		Washer M16		52
7	4101/0500		Fluid Locking Loctite 262		1

JS205 INDIA

ITEM	Part #	CHANGE NO	DESCRIPTION	USAGE CODE	QTY
A	332/L9328		Motor Travel		1

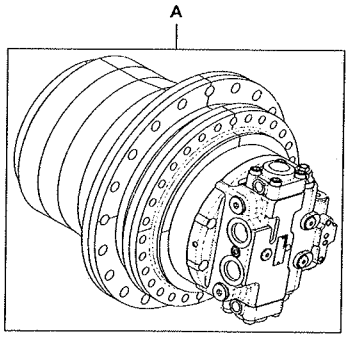

332-L9328-1

JS205 INDIA

ITEM	Part #	CHANGE NO	DESCRIPTION	USAGE CODE	QTY
1	C4E9301		Capscrew		1
2	JBC0004		Pipe assembly		1
3	JHP0044		Washer		11
4	333/P1196		Gearbox Swing Refer F440-1-1		1
5	KRC0105		Pin headed		1
6	1316/3817D		Bolt		11
7	1391/3509D		Capscrew M12 x 35mm		16
8	20/925315		Motor swing Refer F430-5-1		1

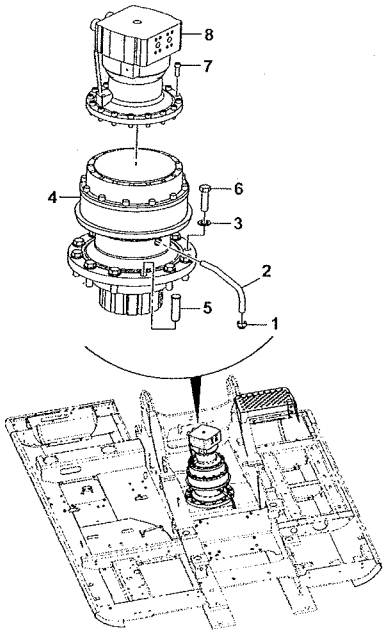

229-01689-5

JS205 INDIA

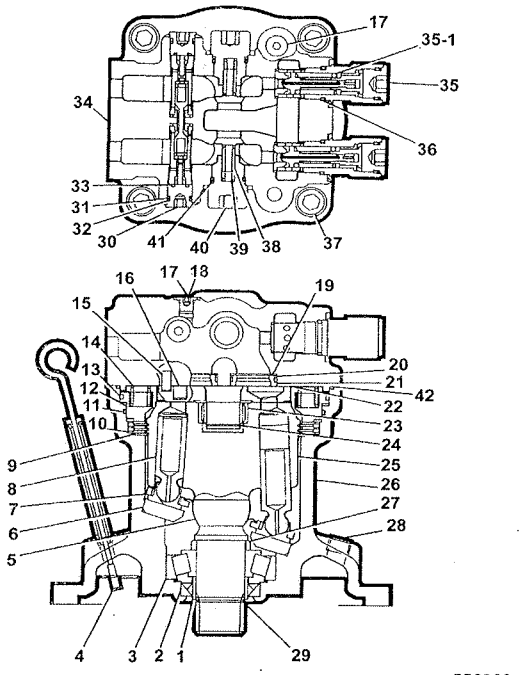

556800

ITEM	Part #	CHANGE NO	DESCRIPTION	USAGE CODE	QTY
A	20/925315		Motor swing		1
1	:LMM0338		Spacer		1
2	:LAM0037		Seal oil		1
3	:LTM0129		Bearing		1
4	:LZM0343		Gauge oil level with tube		1
5	:LSM0080		Spring		1
6	:LMM0334		Plate		1
7	:LMM0335		Plate return		1
8			None serviced part		9
9	:LMM0337		Plate friction		3
10	:LMM0336		Plate mating		3
11	:LBQ5262		O Ring		1
12	:LPM0117		Piston		1
13	:LBQ5263	Superseded	O Ring		2
13	:828/00329		O Ring to suit 187.4 groove		2
14	:LSM0082		Spring		18
15	:LMM0545		Pin		2

F430-5-1 SLEW/SWING MOTOR INSTALLATION 9820/0692A
ISSUE 1

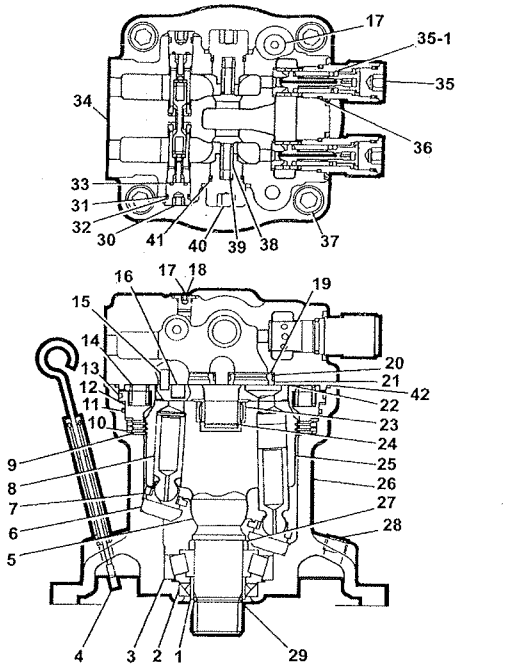

556800

ITEM	PART NO	CHANGE NO	DESCRIPTION	USAGE CODE	QTY
16	:LPM0115		Piston		2
17	:LZC0076		Plug blanking		3
18	:LBQ0112		O Ring		3
19	:LSM0135		Spring		4
20	:LPM0112		Ring tef		4
21	:LKM0106		Bush		4
22	:LZM0335		Plate balance		1
23	:LTM0130		Bearing		1
24	:LMM0330		Ring lock		1
25			None serviced part		1
26			None serviced part		1
27	:LMM0605		Collar		1
28	:UBJ0384		Plug		2
29	:LMM0329		Ring lock		1
30	:LNM0428		Valve bypass assembly		2
31	:LBQ0182		O Ring		2
32	:LBC0201		Ring back up		2
33	:LBQ0122		O Ring		2
34			None serviced part		1

Continue...

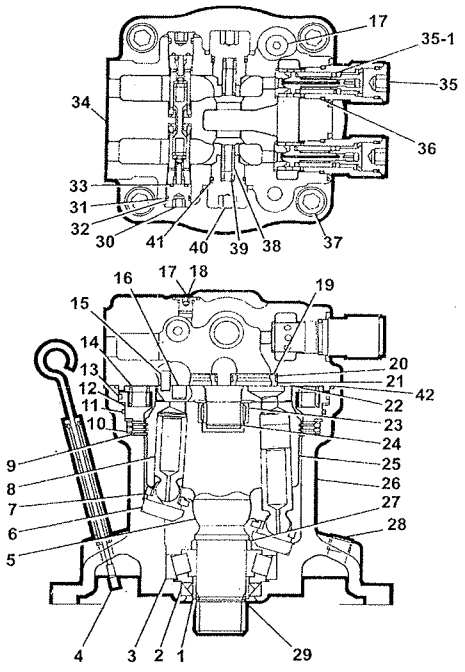

556800

ITEM	PART NO	CHANGE NO	DESCRIPTION	USAGE CODE	QTY
35	:20/951767		Valve relief 289 bar		1
35	:20/951768		Valve relief 270 bar		1
35-1	::LMC0102	Superseded	Kit-shim relief valve		1
35-1	::LQM0021		Shim		1
36	:LBQ0262		O Ring		4
37	:6004/3714	Superseded	Capscrew		4
37	:1391/3714		Capscrew		4
38	:LPM0052		Valve check		2
39	:LSM0075		Spring		2
40	:LZM0191		Cap		2
41	:LBB0262		Ring back-up		2
42	:333/F7868		O Ring I/D 183.74mm O/D 190.8mm Underneath the line of 20		1

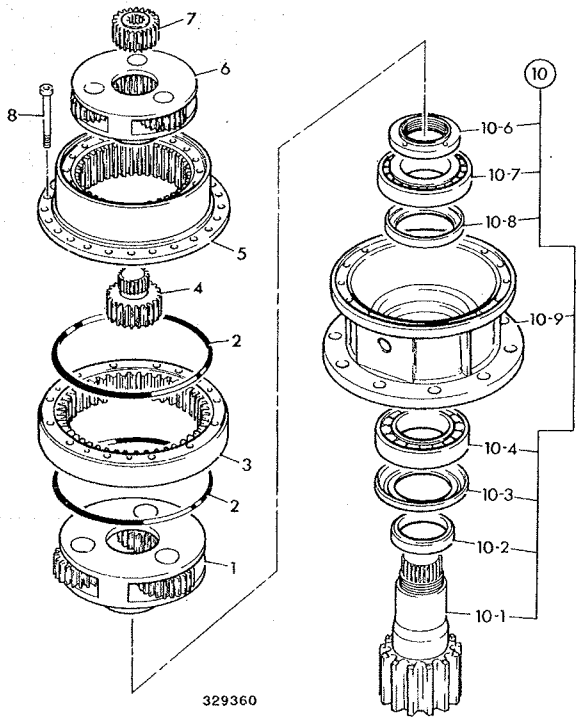

329360

JS205 INDIA

ITEM	Part #	CHANGE NO	DESCRIPTION	USAGE CODE	QTY
A	333/P1196		Gearbox Swing		1
1	550/43168		Gear Reduction Assembly		1
2	05/903861		O Ring		2
3	05/903862		Ring Toothed		1
4	05/903863		Gear Sun		1
5	05/903864		Cover		1
5A	05/903865		Ring Toothed		1
6	05/903866		Gear Reduction Assembly		1
7	05/903867		Gear Sun		1
8	05/903868		Screw		16
10	333/Y3141		Shaft Out put, Assembly		1
10-1	333/Y3140		Pinion Shaft		1
10-2	05/903870		Spacer		1
10-3	05/903871		Ring		1
10-4	05/903872		Bearing		1
10-6	333/Y3148		Nut		1

Continue...

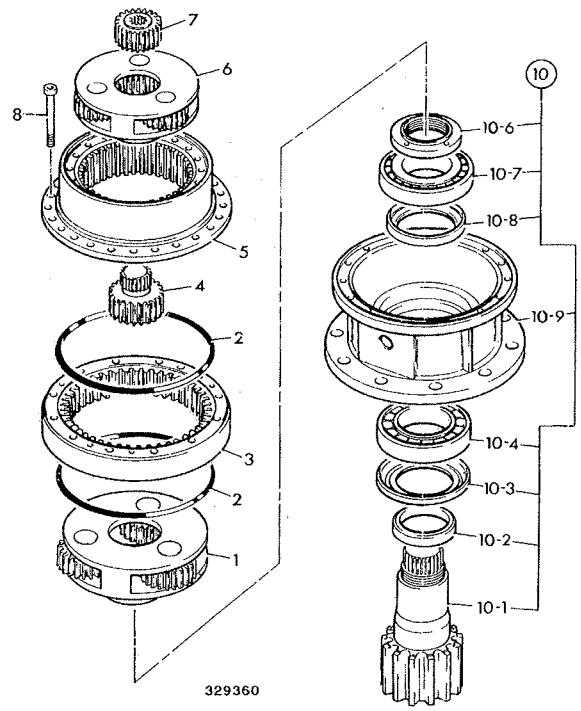

ITEM	PART NO	CHANGE NO	DESCRIPTION	USAGE CODE	QTY
10-7	333/Y3146		Bearing		1
10-8	550/43236		Seal Ring		1
10-9	333/Y3145		Gearbox Housing		1

JS205 INDIA

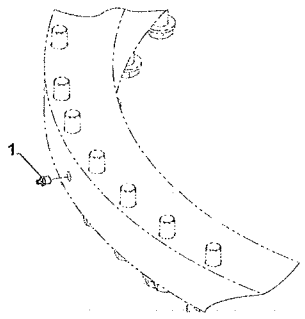

ITEM	Part #	CHANGE NO	DESCRIPTION	USAGE CODE	QTY
1	JHP0037		Nipple Grease Straight		3

JS205 INDIA

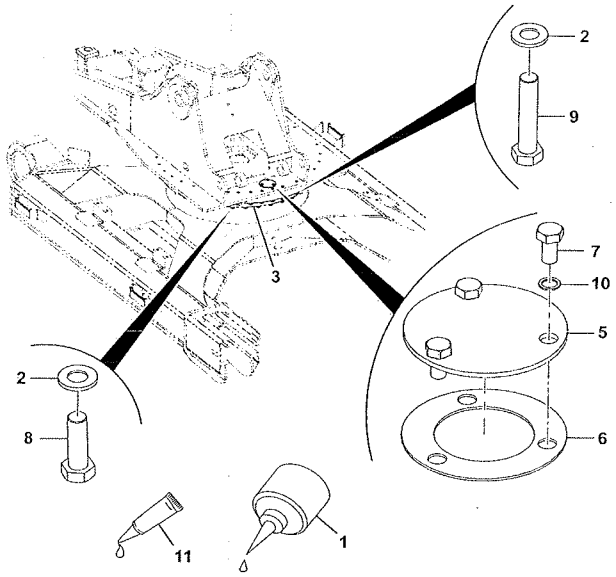

ITEM	Part #	CHANGE NO	DESCRIPTION	USAGE CODE	QTY
1	229/00535		Loctite		1
2	JHP0044		Washer		69
3	333/P7280		Bearing Slew JS200		1
3A	335/A7694		Seal Dust Slew Bearing		1
5	KRB0681		Plate Cover		1
6	KRB0682		Packing Cork		1
7	1316/0507Z		Screw		3
8	1316/3815Z		Bolt		36
9	332/P6830		Bolt High Strength M20 x105mm		33
10	1425/0009Z		Washer Spring M12		3
11	4101/0500		Fluid Locking Loctite 262		1

229-01891-5

• J01 UNDERCARRIAGE

J

UNDERCARRIAGE INSTALLATION ASSEMBLIES, TRACK CHAIN, AND IDLER, 49 LINKS, 500MM

JS205 INDIA

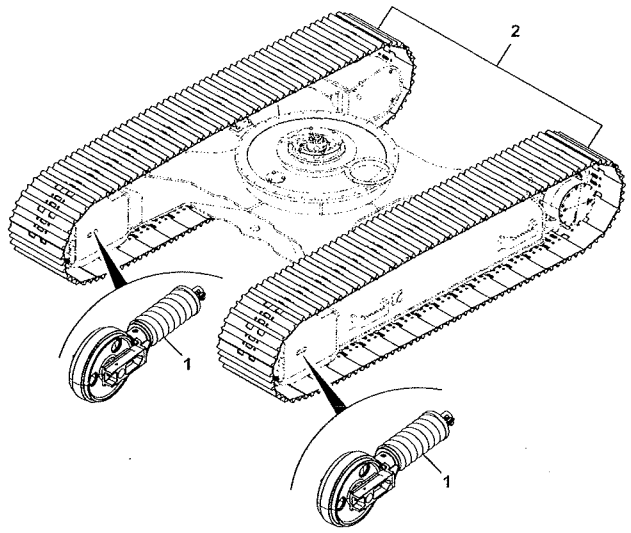

334-P5800-2

ITEM	Part #	CHANGE NO	DESCRIPTION	USAGE CODE	QTY
1	332/L9198		Tensioner track Refer J120-1-1		2
2			Assembly track chain/shoe - 500 49 Refer J160-1-1		1

UNDERCARRIAGE INSTALLATION ASSEMBLIES, TRACK CHAIN, AND IDLER, 49 LINKS, 500MM, OPTIONAL

JS205 INDIA

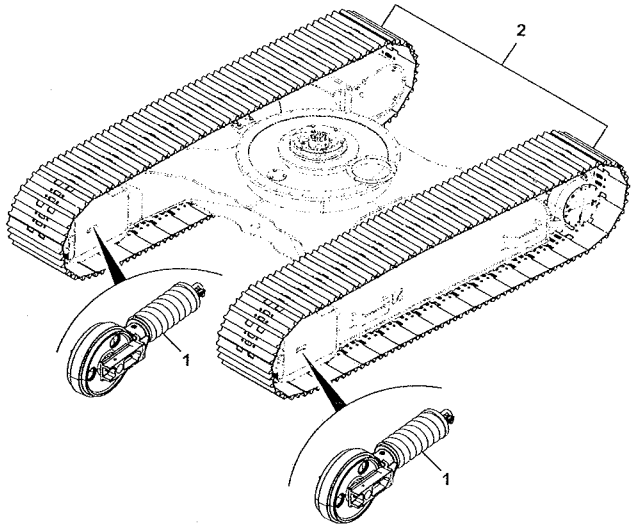

334-P5800-2

ITEM	Part #	CHANGE NO	DESCRIPTION	USAGE CODE	QTY
1	215/12229		Spring recoil & tensioner c/w idler assembly Refer J120-5-1		2
2			Chain and shoe assy 49 Refer J160-5-1		1

UNDERCARRIAGE INSTALLATION ASSEMBLIES, TRACK CHAIN, AND IDLER, 46 LINKS, 500MM, OPTIONAL

JS205 INDIA

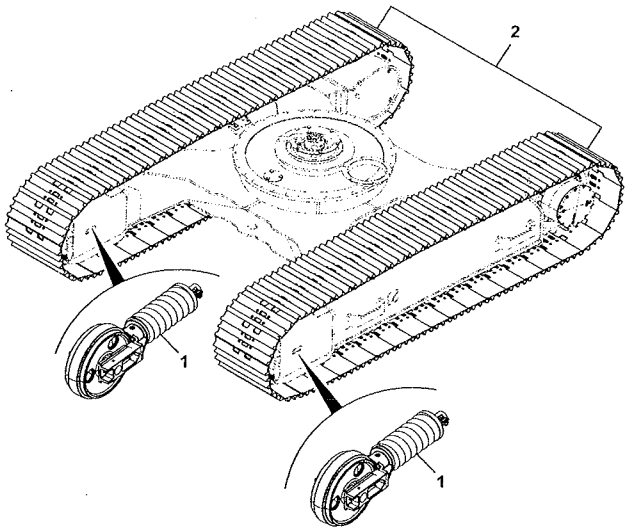

334-P5800-2

ITEM	Part #	CHANGE NO	DESCRIPTION	USAGE CODE	QTY
1	215/12229		Spring recoil & tensioner c/w idler assembly Refer J120-5-1		2
2			Assembly track chain/shoe - 500 46 Refer J160-16-1		1

JS205 INDIA

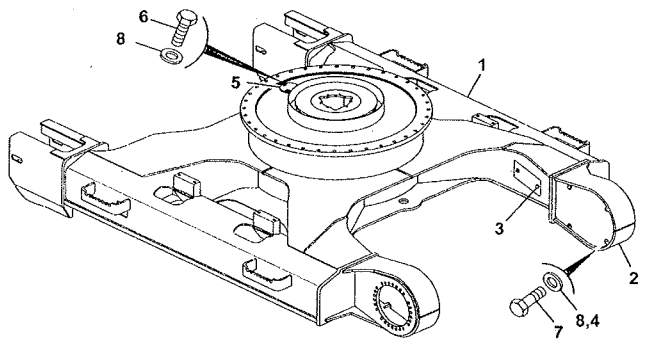

ITEM	Part #	CHANGE NO	DESCRIPTION	USAGE CODE	QTY
1	332/P1647		Frame Lower Heavy Duty		1
2			Covers lower Refer J190-10-1		1
3	JHN0048		Bolt		4
4	JHP0042		Washer M12		8
5	KRB0682		Packing Cork		1
6	1316/0505Z		Screw M12x20		3
7	1316/0509Z		Setscrew		8
8	1425/0009Z		Washer Spring M12		11

332-P2581-1

JS205 INDIA

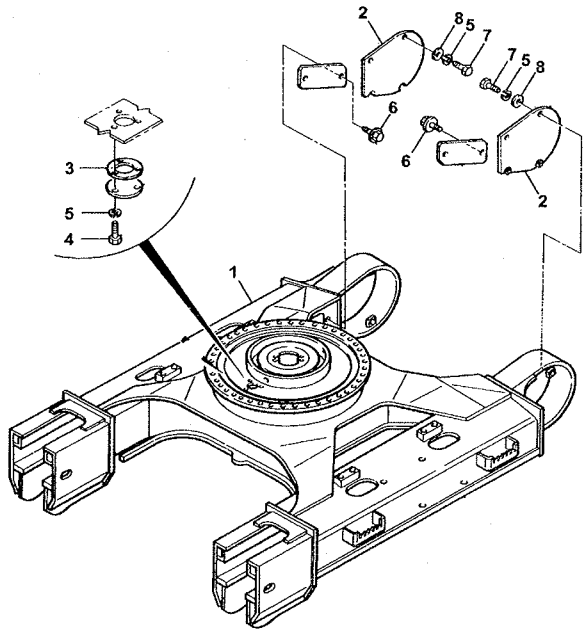

ITEM	Part #	CHANGE NO	DESCRIPTION	USAGE CODE	QTY
1	229/02598		Frame Lower WA		1
2			Covers lower Refer J190-10-1		1
3	KRB0682		Packing Cork		1
4	1316/0505Z		Screw M12x20		3
5	1425/0009Z		Washer Spring M12		11
6	JHN0048		Bolt		4
7	1316/0509Z		Setscrew		8
8	JHP0042		Washer M12		8

215-14183-3

JS205 INDIA

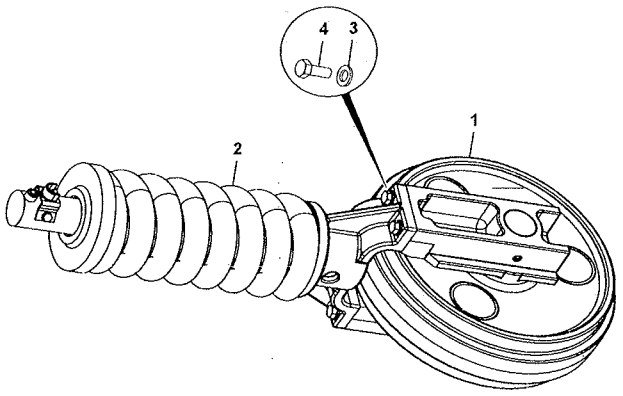

332-L9198-1

ITEM	Part #	CHANGE NO	DESCRIPTION	USAGE CODE	QTY
A	332/L9198		Tensioner track		1
1	:335/C3884		Wheel Idler With Bracket Refer J140-1-1		1
2	:335/C3885		Spring Tension Device With Valve Refer J130-1-1		1
3	:335/C3886		Washer		4
4	:335/C3887		Bolt		4

JS205 INDIA

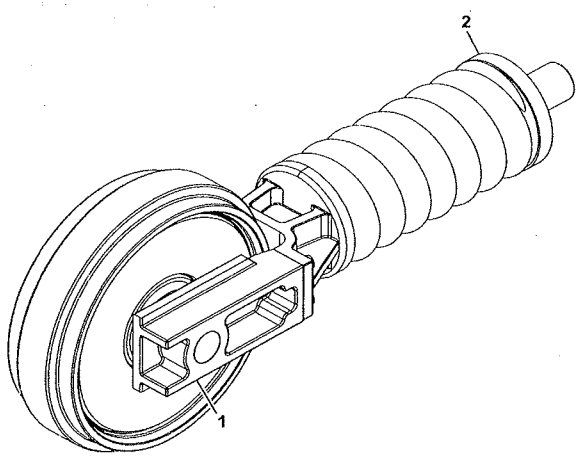

215-12229-2

ITEM	Part #	CHANGE NO	DESCRIPTION	USAGE CODE	QTY
1	215/12230		Wheel track idler assembly Refer J140-5-1		1
2	215/12231		Spring recoil assembly Refer J130-5-1		1

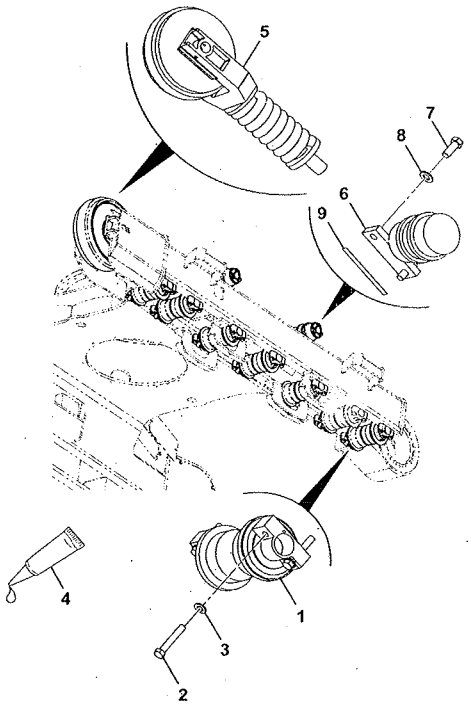

333-L5667-1

JS205 INDIA

ITEM	Part #	CHANGE NO	DESCRIPTION	USAGE CODE	QTY
1	331/42639		Roller lower, Assembly Refer J150-10-1		7
2	1316/9519Z		Bolt		28
3	JHP0079		Washer		28
4	4101/0500		Fluid Locking Loctite 262		1
5	215/12229		Spring recoil & tensioner c/w idler assembly Refer J120-5-1		1
6	331/42441		Roller assy, carrier Refer J150-5-1		2
7	1316/3812Z		Bolt		4
8	JHP0044		Washer		4
9	JHA0005		Shim		2

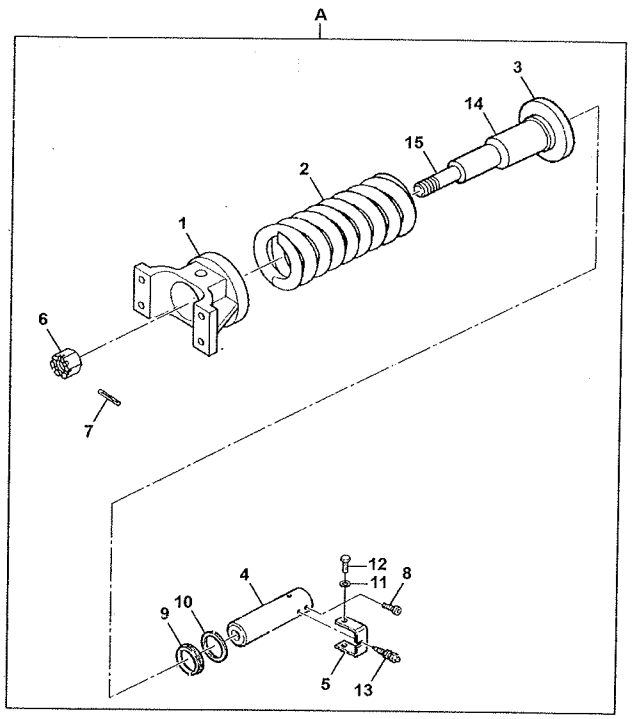

335-C3885-1

JS205 INDIA

ITEM	Part #	CHANGE NO	DESCRIPTION	USAGE CODE	QTY
A	335/C3885		Spring Tension Device With Valve		1
1	:335/C3901		Yoke		1
2	:335/C3902		Spring		1
3	:335/C3903		Plate		1
4	:335/C3904		Piston		1
5	:335/C3905		Bracket Protection		1
6	:335/C3906		Nut		1
7	:335/C3907		Pin Dowel		1
8	:335/C3908		Screw		2
9	:335/C3909		Seal		1
10	:335/C3910		Spring Scraper		1
11	:823/10612		Washer spring		2
12	:335/C3912		Bolt		2
13	:335/C3913		Valve		1
14	:335/C3914		Cylinder		1
15	:335/C3915		Rod		1

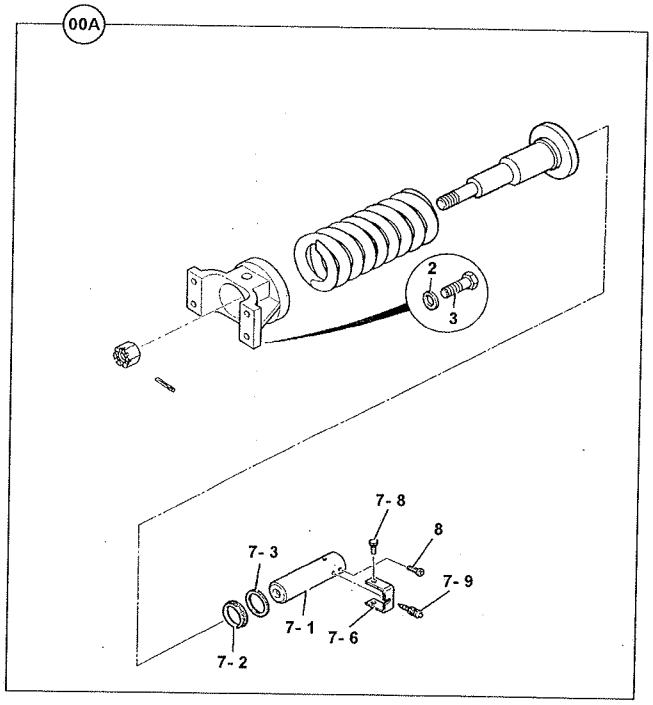

735500

JS205 INDIA

ITEM	Part #	CHANGE NO	DESCRIPTION	USAGE CODE	QTY
A	215/12231		Spring recoil assembly		2
2	JHP0043		Washer M16		8
3	1316/3712Z		Bolt M16 X 50MM		8
7-1	:JRA0230		Rod piston		1
7-2	:JRA0231		Seal		1
7-3	:JRA0232		Seal dust		1
7-6	:JRA0234		Bracket		1
7-8	:1316/0403Z		Screw		2
7-9	:JRA0233		Valve check		1
8	:6011/0707Z		Capscrew		1

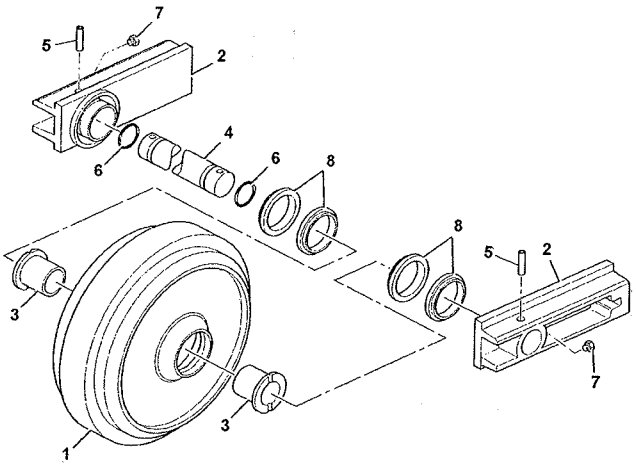

335-C3884-1

JS205 INDIA

ITEM	Part #	CHANGE NO	DESCRIPTION	USAGE CODE	QTY
A	335/C3884		Wheel Idler With Bracket		1
1			None serviced part		1
2	:335/C3892		Collar		2
3	:335/C3893		Bush		2
4	:335/C3894		Shaft		1
5	:335/C3896		Pin		2
6	:828/10316		O Ring		2
7	:335/C3897		Seal		2
8	:335/C3898		Ring Seal		4
9	:335/C3899		O Ring		4

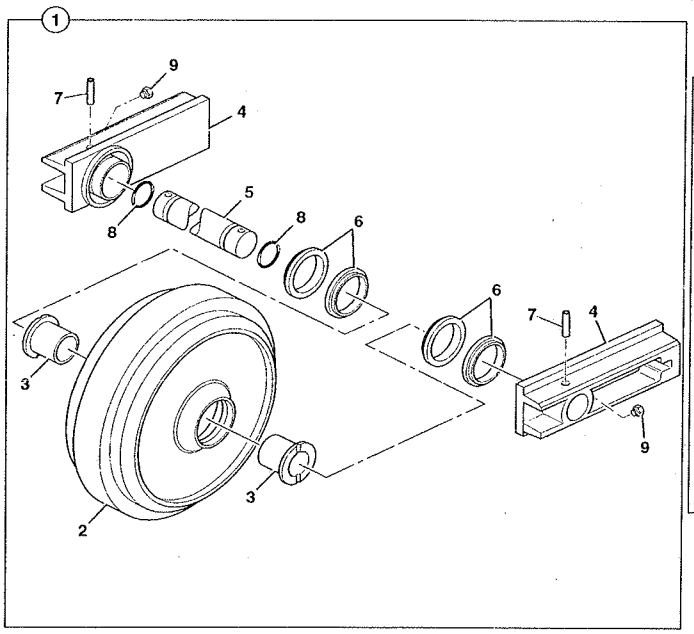

JS205 INDIA

ITEM	Part #	CHANGE NO	DESCRIPTION	USAGE CODE	QTY
1	215/12230		Wheel track idler assembly		2
2			None serviced part		1
3	:JRA0221		Bush		2
4	:331/44163		Bracket Idler Mounting		2
5	:914/60259		Shaft		1
6	:JRA0218		Seal Oil Floating		2
7	:826/11225		Pin spring		2
8	:JRA0223		O Ring		2
9	:JRA0226		Plug		1
10	:JRA0227		O Ring		1

735490

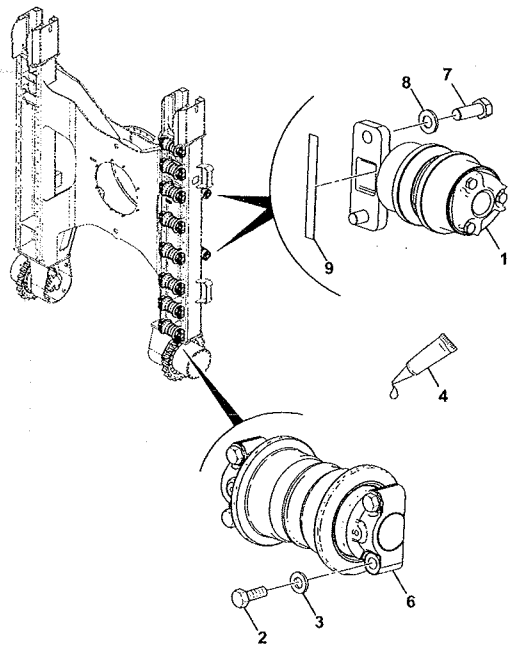

JS205 INDIA

ITEM	Part #	CHANGE NO	DESCRIPTION	USAGE CODE	QTY
1	331/42441		Roller assy, carrier Refer J150-5-1		2
2	1316/9519Z		Bolt		32
3	JHP0079		Washer		32
4	4101/0500		Fluid Locking Loctite 262		1
6	331/42639		Roller lower, Assembly Refer J150-10-1		8
7	1316/3812Z		Bolt		4
8	JHP0044		Washer		4
9	JHA0005		Shim		2

333-L5630-2

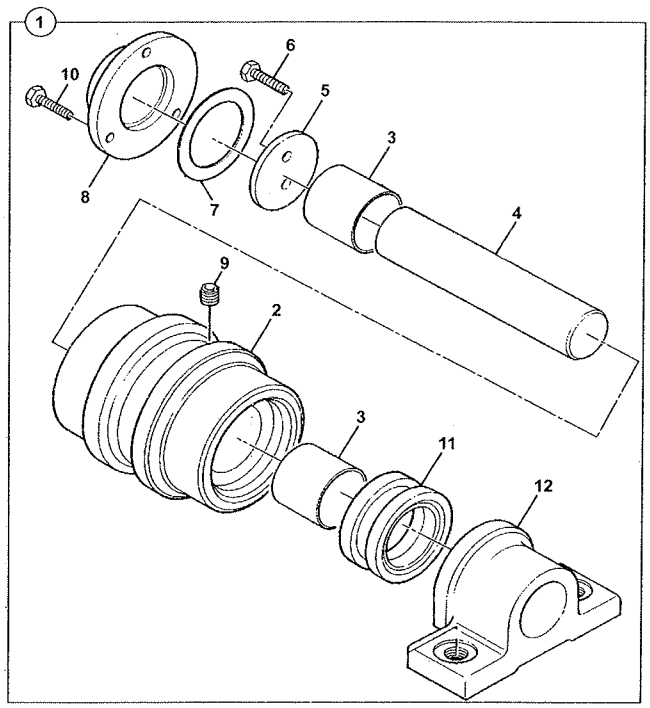

331-42441-3

JS205 INDIA

ITEM	Part #	CHANGE NO	DESCRIPTION	USAGE CODE	QTY
1	331/42441		Roller assy, carrier		2
2			None serviced part		1
3	::831/10328		Bush		2
4			None serviced part		1
5	:331/42447		Plate thrust		1
6	:826/11187		Bolt		2
7	:828/10306		O Ring		1
8	:331/42452		Cover		1
9	:32/925629		Plug tapered		1
10	:826/11187		Bolt		3
11	:331/42450		Seal assembly		1
12			None serviced part		1

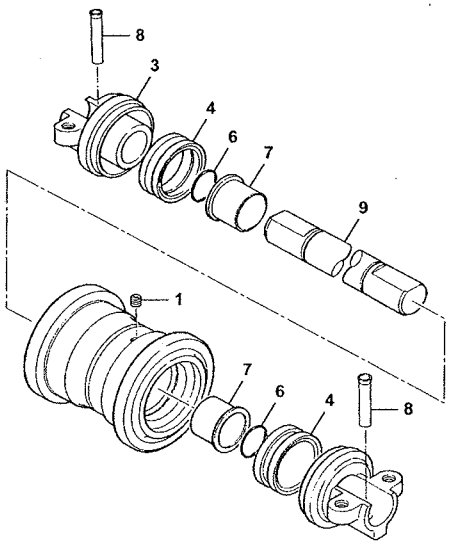

JS205 INDIA

ITEM	Part #	CHANGE NO	DESCRIPTION	USAGE CODE	QTY
1	32/925629		Plug tapered		1
2			None serviced part		1
3	331/42649		Bracket		2
4	331/42650		Seal assembly		4
6	828/10312		O Ring		2
7	831/10330		Bush		4
8	913/10281		Pin		2
9	914/60247		Shaft		1

331-42639-3

JS205 INDIA

ITEM	Part #	CHANGE NO	DESCRIPTION	USAGE CODE	QTY
1			Chain & shoe assy 49 links 500mm Refer J160-20-1		2

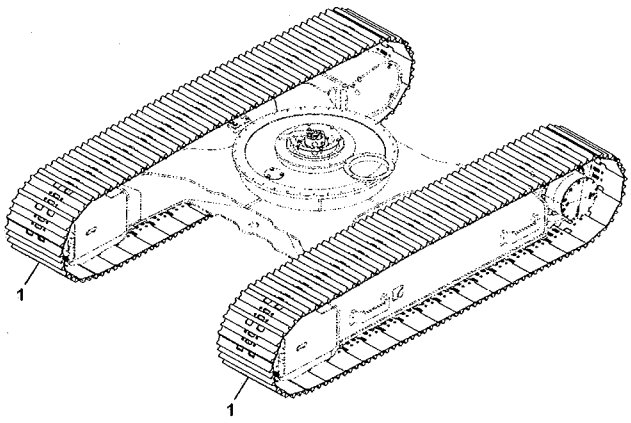

332-J7341-2

JS205 INDIA

ITEM	Part #	CHANGE NO	DESCRIPTION	USAGE CODE	QTY
1	332/J0656		Assembly instructions track chain		1
2	332/P4258		Link Track Chain 49		1
3	JSA0038		Nut track plate		196
4	332/P4259		Shoe triple grouser 500mm		49
5	332/J2833		Bolt track M20 x 5		196

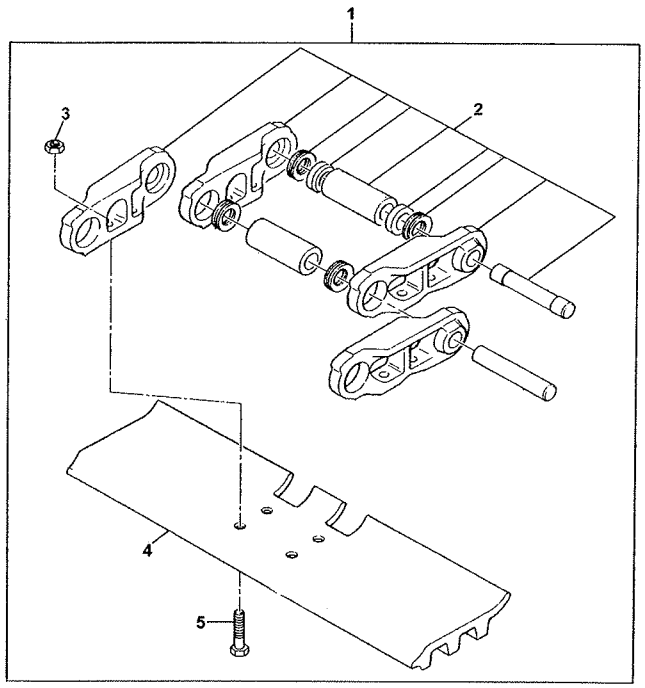

332-P4257-1

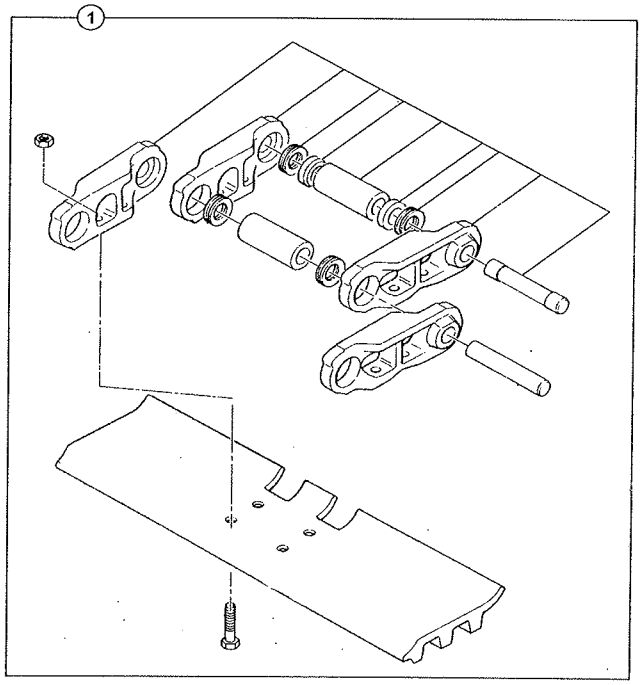

332-J7641-1

JS205 INDIA

ITEM	Part #	CHANGE NO	DESCRIPTION	USAGE CODE	QTY
1			Chain / shoe track - 500 46 assy Refer J160-35-1		2

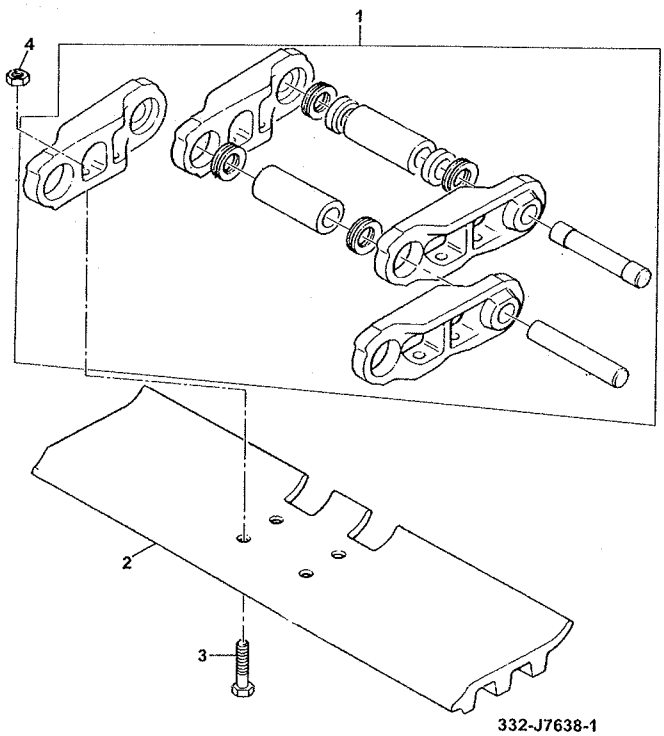

332-J7638-1

JS205 INDIA

ITEM	Part #	CHANGE NO	DESCRIPTION	USAGE CODE	QTY
1	332/L9205		Chain track link 49 assy Refer J160-40-1		1
2	332/L9246		Plate track 500mm		49
3	332/L9207		Bolt track - M20 x 5		196
4	332/L9208		Nut shoe		196

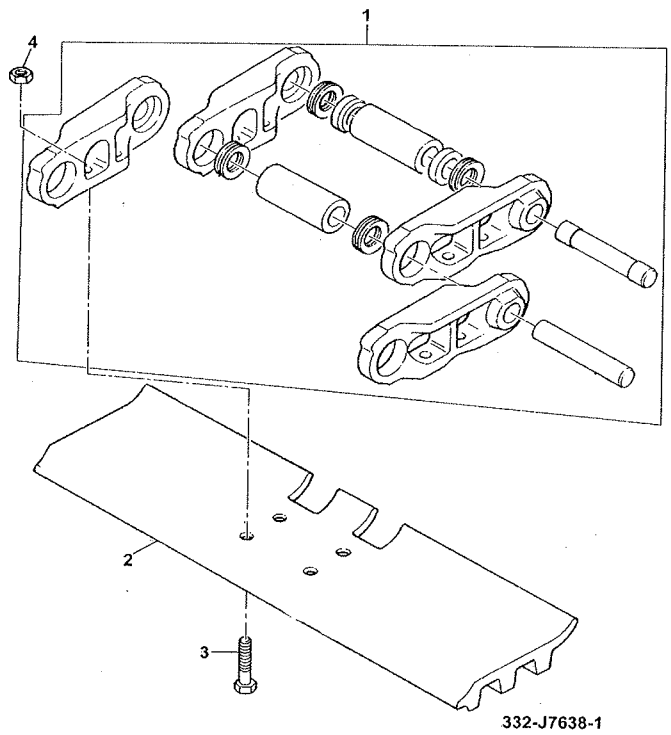

332-J7638-1

JS205 INDIA

ITEM	Part #	CHANGE NO	DESCRIPTION	USAGE CODE	QTY
1	332/J7632		Chain Assembly - 46 Link Refer J160-55-1		1
2	332/P4259		Shoe triple grouser 500mm		46
3	332/J2833		Bolt track M20 x 5		184
4	JSA0038		Nut track plate		184

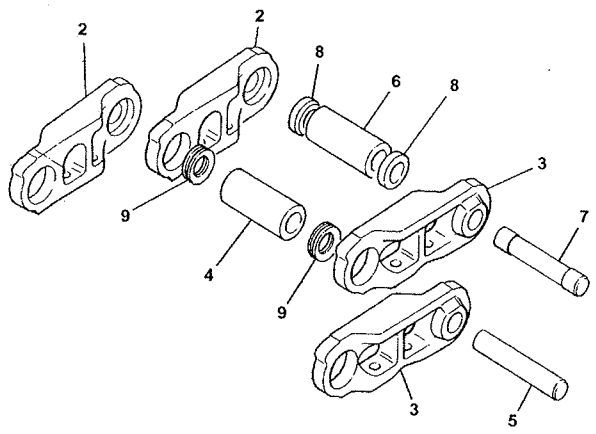

332-L9205-1

JS205 INDIA

ITEM	Part #	CHANGE NO	DESCRIPTION	USAGE CODE	QTY
1	332/L9205		Chain track link 49 assy		1
2	334/P8999		Link Chain right hand side		49
3	334/P9001		Link Chain left hand side		49
4	334/P9006		Bush		48
5	334/P9023		Pin		48
6	334/P9025		Bush master		48
7	334/P9053		Pin master		48
8	334/P9059		Spacer		96
9	334/P9061		Seal washer		96

JS205 INDIA

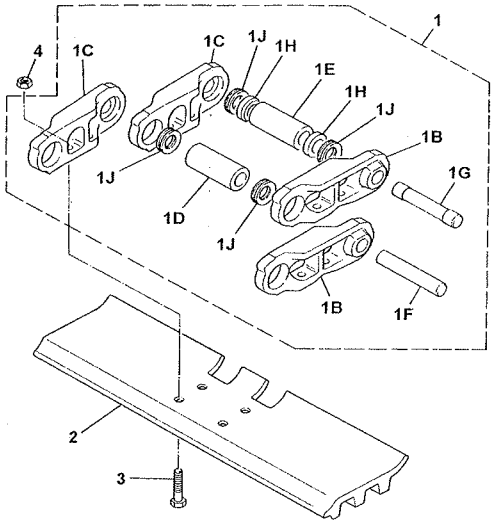

ITEM	Part #	CHANGE NO	DESCRIPTION	USAGE CODE	QTY
1	332/J7632		Chain Assembly - 46 Link		1
1B	:332/D5953		Link right		46
1C	:332/D5955		Link left		46
1D	:332/D5956		Bush track		45
1E	:332/D5957		Bush master		1
1F	:332/D5958		Pin		45
1G	:332/D5959		Pin master		1
1H	:332/D5960		Spacer		2
1J	:332/D5964		O Ring		90

935700

JS205 INDIA

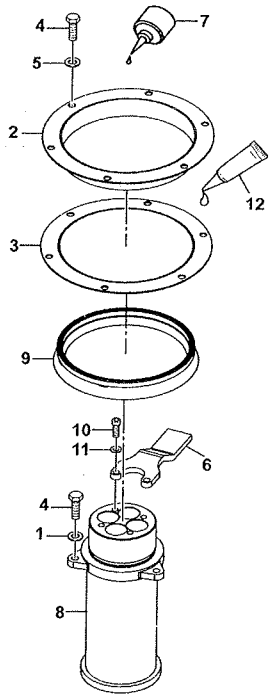

ITEM	Part #	CHANGE NO	DESCRIPTION	USAGE CODE	QTY
1	JHP0042		Washer M12		3
2	KRA0999		Retainer Seal		1
3	KRA1000		Packing Rubber		1
4	1316/0508Z		Screw		9
5	1406/0011		Washer Bonded		6
6	332/P7057		Bracket Stop		1
7	4101/0500		Fluid Locking Loctite 262		1
8	334/L0351		Coupling rotary		1
9	904/20126		Ring Seal		1
10	1391/3508D		Capscrew M12 x 30		2
11	1425/0009Z		Washer Spring M12		2
12	333/P9926		Loctite - 415		0

229-01069-9

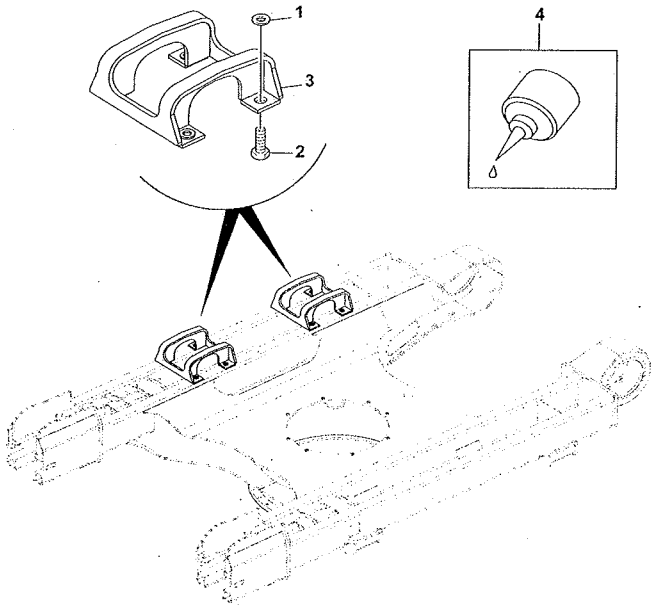

229-01071-7

JS205 INDIA

ITEM	Part #	CHANGE NO	DESCRIPTION	USAGE CODE	QTY
1	JHP0079		Washer		16
2	1316/9512Z		Bolt		16
3	333/L9737		Guide track		4
4	4101/0500		Fluid Locking Loctite 262		1

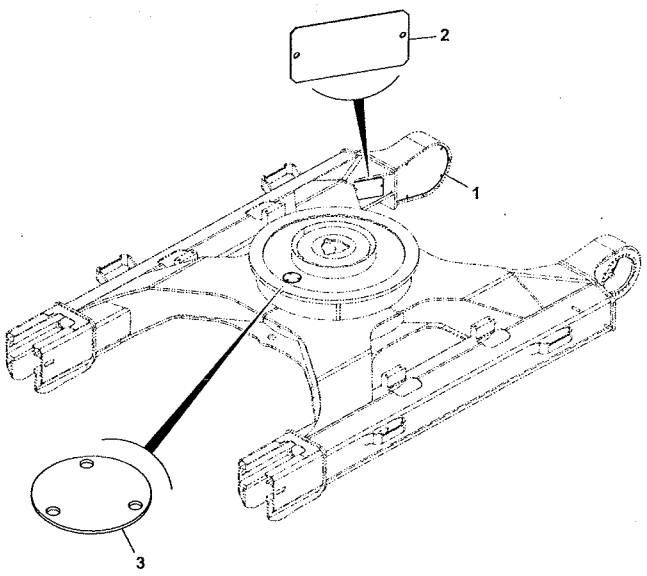

JG0RA069-2

JS205 INDIA

ITEM	Part #	CHANGE NO	DESCRIPTION	USAGE CODE	QTY
1	JRA0306		Cover track motor		2
2	KRA1107		Cover		2
3	KRB0681		Plate Cover		1

L

- L01 ENGINE INSTALLATION ASSEMBLIES
- L02 EXHAUST SYSTEM
- L03 INDUCTION SYSTEM INSTALLATION ASSEMBLIES
- L06 COOLING SYSTEM
- L07 FAN INSTALLATION ASSEMBLIES
- L08 FUEL SYSTEM

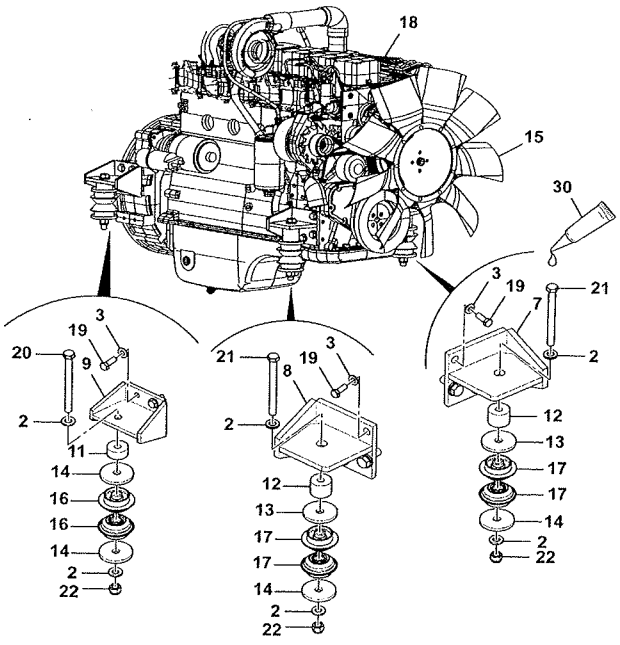

334-P2673-3

JS205 INDIA

ITEM	Part #	CHANGE NO	DESCRIPTION	USAGE CODE	QTY
2	JHP0043		Washer M16		8
3	JHP0042		Washer M12		14
7	229/01101		Bracket Mounting Engine Left Side		1
8	229/01102		Bracket Mounting Engine Right Side		1
9	229/01103		Bracket Mounting Engine Rear		2
11	229/01106		Spacer Mounting Engine Rear		2
12	229/01107		Spacer Mounting Engine Front		2
13	229/01108		Washer Large		2
14	KNH0589		Plate		6
15	30/925695		Fan 24" cooling		1
16	KRH0780		Mounting metalastik		4
17	KRH0781		Mounting metalastik		4
18	334/P2159		Engine		1
19	1316/0509Z		Setscrew		14

Continue...

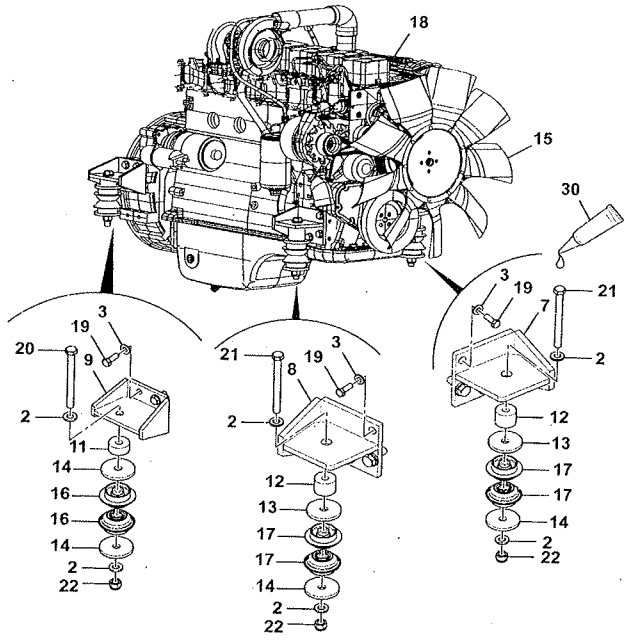

334-P2673-3

ITEM	PART NO	CHANGE NO	DESCRIPTION	USAGE CODE	QTY
20	1316/3727D		Bolt M16 x170		2
21	1316/3729D		Bolt M16 X 180		2
22	1371/0603D		Nut M16 self locking		4
30	4101/0500		Fluid Locking Loctite 262 AS REQUIRED		1

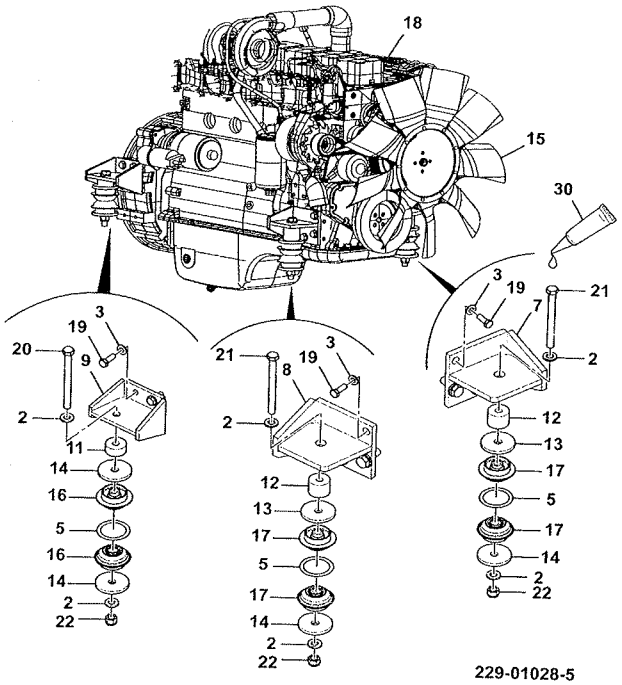

229-01028-5

JS205 INDIA

ITEM	Part #	CHANGE NO	DESCRIPTION	USAGE CODE	QTY
2	JHP0043		Washer M16		8
3	JHP0042		Washer M12		14
5	JRB0129		Shim		4
7	229/01101		Bracket Mounting Engine Left Side		1
8	229/01102		Bracket Mounting Engine Right Side		1
9	229/01103		Bracket Mounting Engine Rear		2
11	229/01106		Spacer Mounting Engine Rear		2
12	229/01107		Spacer Mounting Engine Front		2
13	229/01108		Washer Large		2
14	KNH0589		Plate		6
15	30/925695		Fan 24" cooling		1
16	KRH0780		Mounting metalastik		4
17	KRH0781		Mounting metalastik		4

Continue...

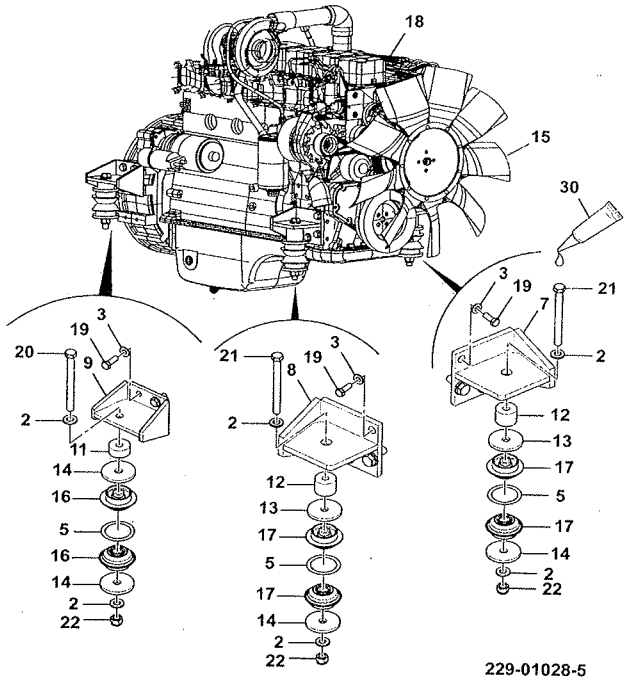

229-01028-5

ITEM	PART NO	CHANGE NO	DESCRIPTION	USAGE CODE	QTY
18	229/01010		Engine See T Section		1
19	1316/0509Z		Setscrew		14
20	1316/3727D		Bolt M16 x170		2
21	1316/3729D		Bolt M16 X 180		2
22	1371/0603D		Nut M16 self locking		4
30	4101/0500		Fluid Locking Loctite 262 LOCTITE-262		1

L

L01 ENGINE INSTALLATION ASSEMBLIES
• L02 EXHAUST SYSTEM
L03 INDUCTION SYSTEM INSTALLATION ASSEMBLIES
L06 COOLING SYSTEM
L07 FAN INSTALLATION ASSEMBLIES
L08 FUEL SYSTEM

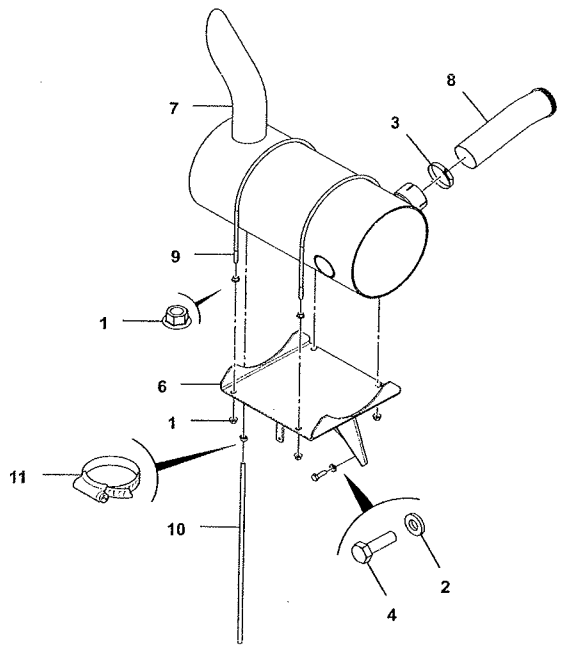

229-01030-4

JS205 INDIA

ITEM	Part #	CHANGE NO	DESCRIPTION	USAGE CODE	QTY
1	826/01787		Nut Flanged		8
2	JHP0046		Washer M10		4
3	JSH0085		Clamp exhaust		1
4	1316/0409Z		Screw M10x35		4
6	229/01032		Bracket Mounting Silencer		1
7	229/01031		Silencer Silencer, exhaust		1
8	229/01033		Pipe Pipe exhaust		1
9	826/10713		Bolt 'U' D=282		2
10	JHH0053		Tube teflon drain 950mm long		1
11	2201/0001		Clip Worm Drive 8/16mm		1

L

L01 ENGINE INSTALLATION ASSEMBLIES
L02 EXHAUST SYSTEM
• L03 INDUCTION SYSTEM INSTALLATION ASSEMBLIES
L06 COOLING SYSTEM
L07 FAN INSTALLATION ASSEMBLIES
L08 FUEL SYSTEM

JS205 INDIA

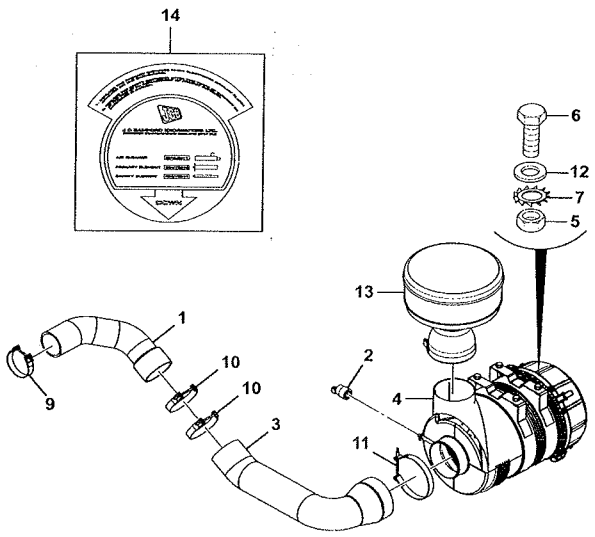

335-C0865-2

ITEM	Part #	CHANGE NO	DESCRIPTION	USAGE CODE	QTY
1	229/01036		Hose Air Inlet		1
2	701/58721		Switch Vacuum Pressure		1
3	334/P0910		Hose Induction		1
4	334/L8811		Air Cleaner Refer L310-5-1		1
5	1371/0303Z		Nut		4
6	1316/0407Z		Bolt High Strength		4
7	186-110ZZ		Washer Toothed		2
9	229/01555		Clamp T Bolt		1
10	229/01556		Clamp T Bolt		2
11	332/P8254		Bolt -T		1
12	1420/0008Z		Washer Plain M10		4
13	332/P0579		Precleaner Assembly Refer L300-5-1		1
14	335/C2199		Decal Air Filter		1

JS205 INDIA

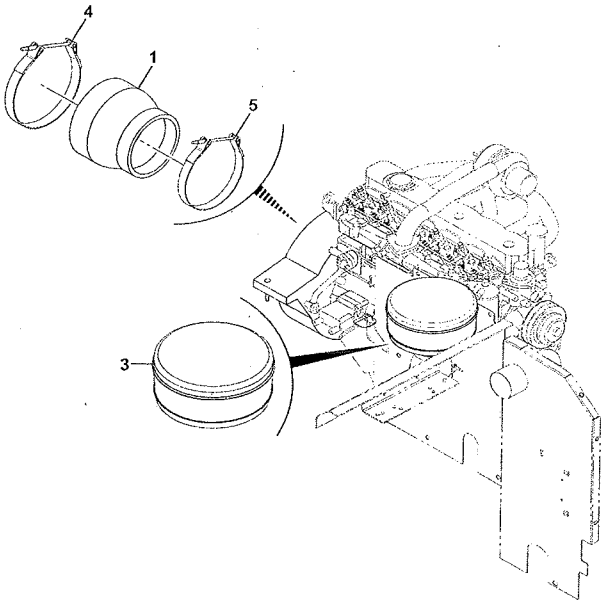

332-P0579-3

ITEM	Part #	CHANGE NO	DESCRIPTION	USAGE CODE	QTY
1	334/L9087		Hose Induction		1
3	32/925395		Filter Assembly Pre-Cleaner Refer L310-1-1		1
4	332/P8254		Bolt -T		1
5	332/P9502		Bolt T clamp		1

JS205 INDIA

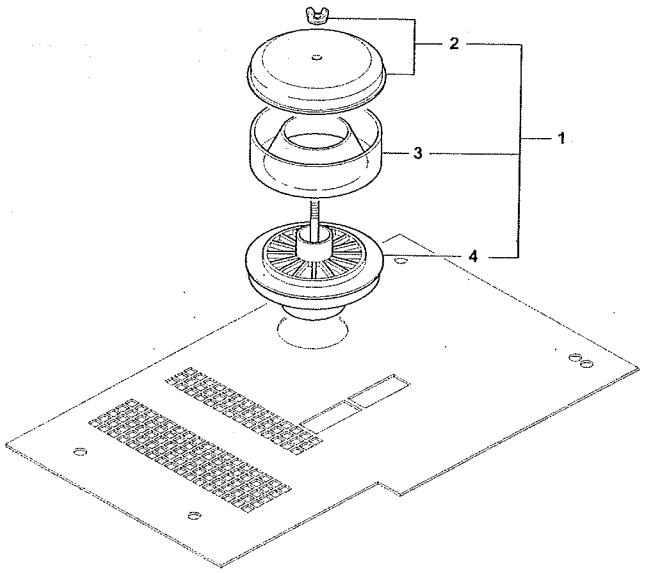

32-925395-2

ITEM	Part #	CHANGE NO	DESCRIPTION	USAGE CODE	QTY
1	32/925395		Filter Assembly Pre-Cleaner		1
2	:JSH0038		Cover & wing nut assembly		1
3	:JSH0039		Bowl		1
4	:JSH0040		Adapter assembly		1

JS205 INDIA

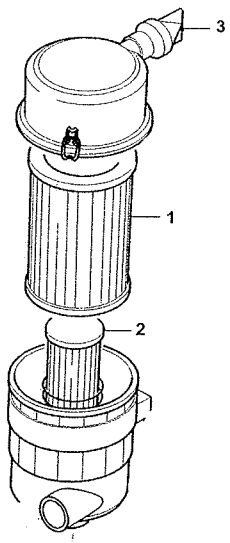

334-L8811-1

ITEM	Part #	CHANGE NO	DESCRIPTION	USAGE CODE	QTY
A	334/L8811		Air Cleaner		1
1	334/Y2810		Air Filter Primary		1
2	334/Y2811		Air Filter Safety		1
3	334/Y2812		Valve Ejector		1

L

L01 ENGINE INSTALLATION ASSEMBLIES
L02 EXHAUST SYSTEM
L03 INDUCTION SYSTEM INSTALLATION ASSEMBLIES
• L06 COOLING SYSTEM
L07 FAN INSTALLATION ASSEMBLIES
L08 FUEL SYSTEM

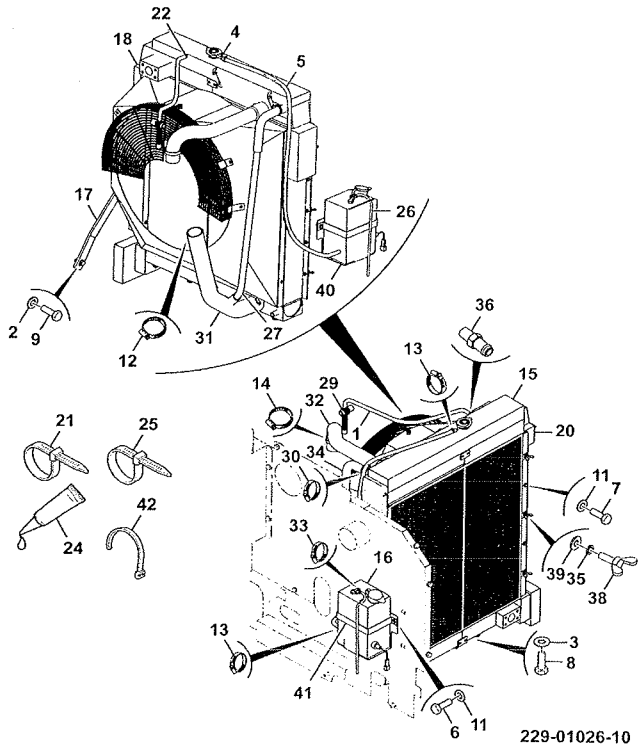

229-01026-10

JS205 INDIA

ITEM	Part #	CHANGE NO	DESCRIPTION	USAGE CODE	QTY
1	332/W9426		Radiator Hose 930mm		1
2	JHP0042		Washer M12		2
3	1411/0005Z		Washer		8
4	650/10218		Tube Corrugated L=1520mm		1
5	KHH0258		Hose rubber 8mm x 2000mm long		1
6	1316/0307Z		Screw		2
7	1316/0305Z		Bolt High Tensile		4
8	1316/0507Z		Screw		9
9	1316/0509Z		Setscrew		1
11	1420/0007Z		Washer Plain M8		6
12	334/L7502		Clip Worm Drive 50-70		2
13	334/L7504		Clip jubliee		2
14	334/L7501		Clip Jubilee		2
15	229/01120		Radiator and Oil Cooler Assy Refer L620-1-1		1

Continue...

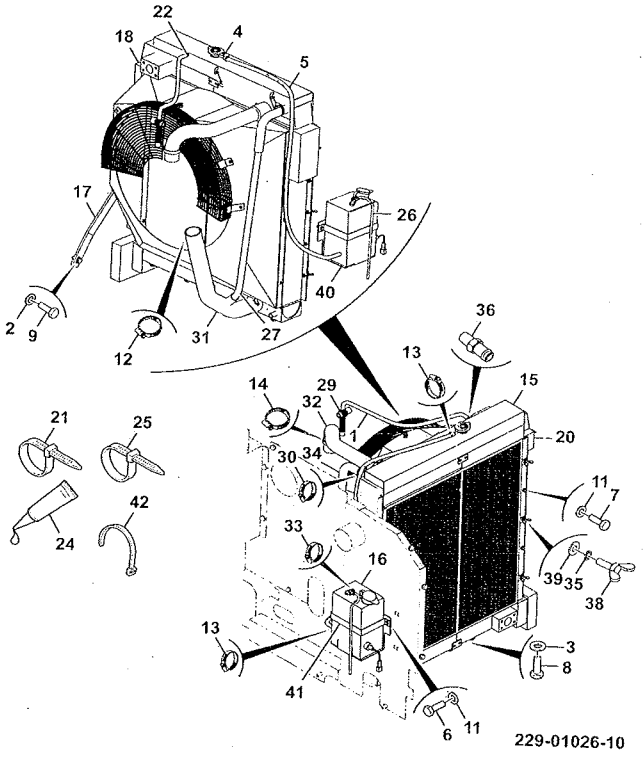

ITEM	PART NO	CHANGE NO	DESCRIPTION	USAGE CODE	QTY
16	333/P9579		Tank Expansion Refer L610-5-1		1
17	229/01773		Radiator Stay		1
18	229/01774		Plate Sealing		1
20	229/01119		Kit Radiator Foam Refer L610-1-1		1
21	826/01347		Tie Cable 160mm		1
22	JHH0039		Tube PVC		1
24	4101/0500		Fluid Locking Loctite 262		1
25	826/01144		Tie Cable 200mm		3
26	JSH0009		Tube		1
27	229/01039		Hose Make up line		1
29	229/01671		Adaptor Tee		1
30	2201/0008		Clip Jubilee		1
31	229/01038		Hose Radiator		1
32	229/01037		Hose Radiator-Top		1
33	2201/0003		Clip Jubilee		1
34	229/01399		Hose Connection		1
35	1425/0007Z		Spring Washer		6
36	816/91040		Adapter Adapter		1

L600-1-1 COOLING INSTALLATION ASSEMBLIES, RADIATOR 9820/0692A
ISSUE 1

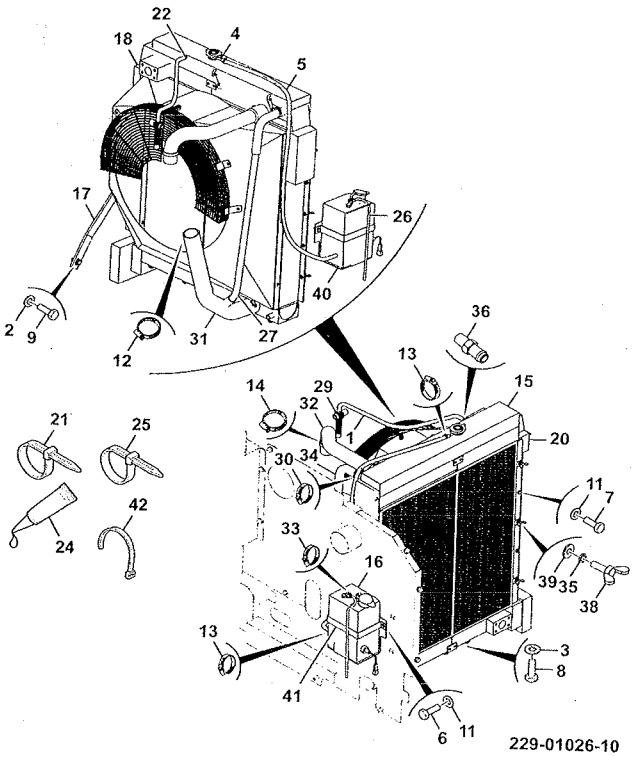

ITEM	PART NO	CHANGE NO	DESCRIPTION	USAGE CODE	QTY
38	229/02612		Bolt Wing M8x25		6
39	332/L0347		Washer M8		6
40	332/L0929		Mounting Bracket		1
41	333/P7317		Bracket Mounting		1
42	332/L0192		Strap		1

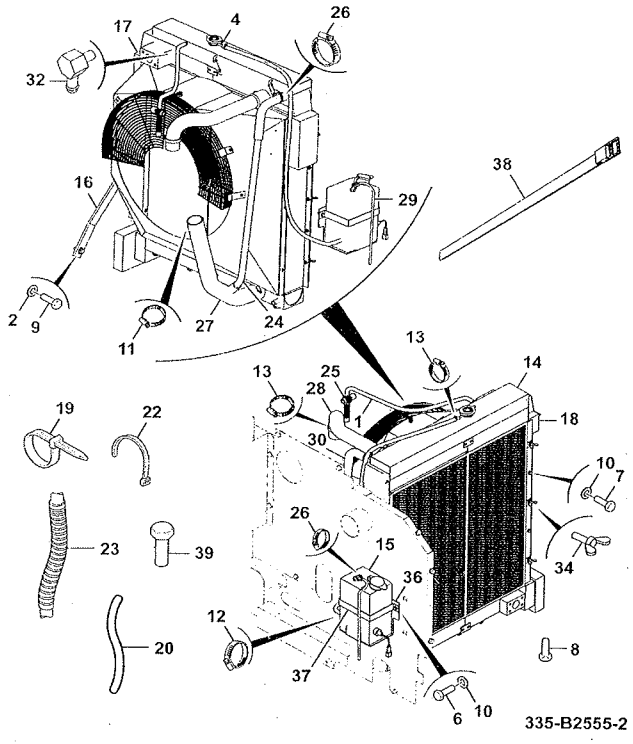

JS205 INDIA

ITEM	Part #	CHANGE NO	DESCRIPTION	USAGE CODE	QTY
1	JHH0125		Tube		1
2	JHP0042		Washer M12		2
4	650/10218		Tube Corrugated L=1520mm		1
6	1316/0307Z		Screw		2
7	1316/0305Z		Bolt High Tensile		4
8	1316/0507Z		Screw		9
9	1316/0509Z		Setscrew		1
10	1420/0007Z		Washer Plain M8		4
11	334/L7502		Clip Worm Drive 50-70		2
12	334/L7504		Clip jubliee		2
13	334/L7501		Clip Jubilee		2
14	229/01120		Radiator and Oil Cooler Assy Refer L620-1-1		1
15	333/P9579		Tank Expansion Refer L610-5-1		1
16	331/38381		Stay radiator		1
17	229/01774		Plate Sealing		1

L600-5-1 COOLING INSTALLATION ASSEMBLIES, RADIATOR, ASIA 9820/0692A ISSUE 1

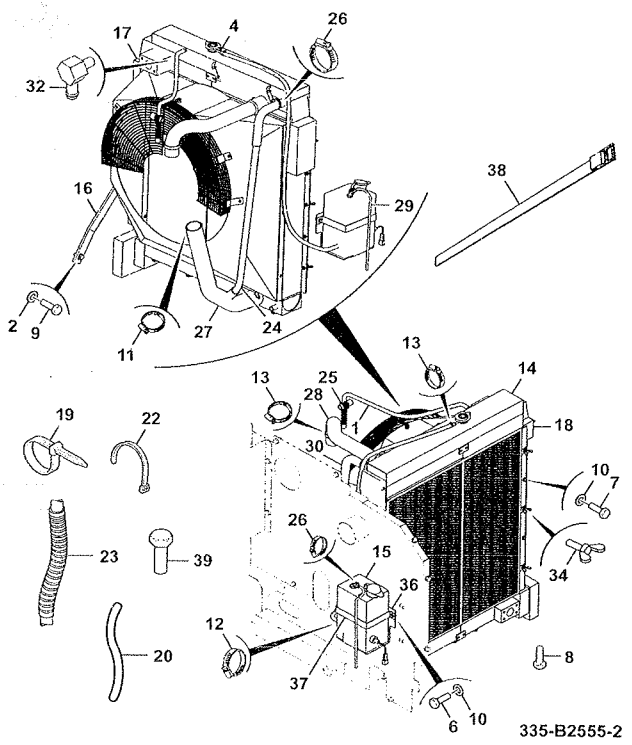

ITEM	PART NO	CHANGE NO	DESCRIPTION	USAGE CODE	QTY
18	229/01119		Kit Radiator Foam Refer L610-1-1		1
19	826/01347		Tie Cable 160mm		2
20	JHH0039		Tube PVC		1
22	826/01144		Tie Cable 200mm		2
23	JSH0009		Tube		1
24	229/01039		Hose Make up line		1
25	335/C5533		Adaptor Tee		1
26	2201/0008		Clip Jubilee		2
27	335/A9615		Hose Radiator Bottom		1
28	229/01037		Hose Radiator-Top		1
29	2201/0003		Clip Jubilee		1
30	229/01399		Hose Connection		1
32	816/91040		Adapter Adapter		1
34	229/02612		Bolt Wing M8x25		6
36	332/L0929		Mounting Bracket		1
37	333/P7317		Bracket Mounting		1
38	332/L0192		Strap		1
39	1315/0103Z		Screw		2

JS205 INDIA

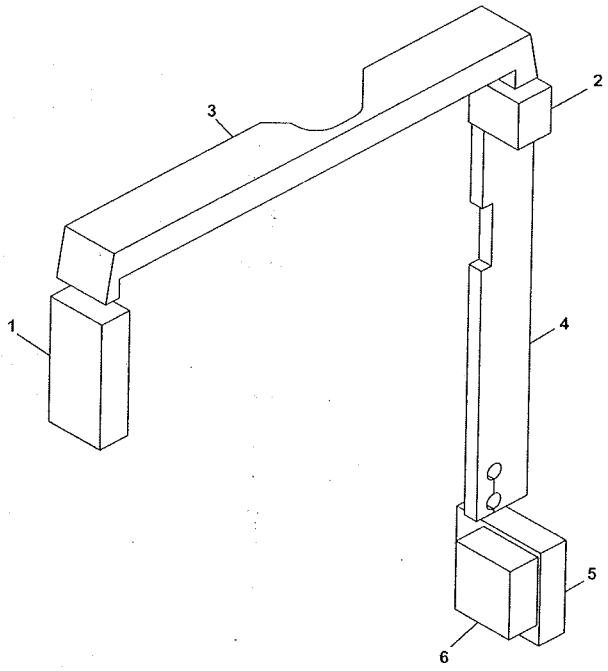

229-01119-3

ITEM	Part #	CHANGE NO	DESCRIPTION	USAGE CODE	QTY
1	331/36793		Foam radiator L/H top		1
2	331/38391		Foam radiator R/H top		1
3	333/L2813		Foam Radiator		1
4	331/36776		Foam radiator R/H		1
5	331/38404		Foam radiator R/H bottom		1
6	331/38390		Foam radiator R/H bottom		1

JS205 INDIA

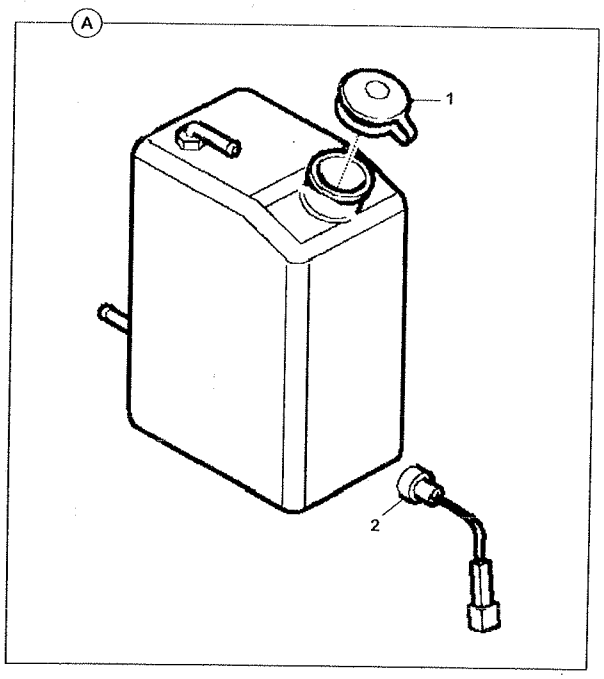

333-P9579-2

ITEM	Part #	CHANGE NO	DESCRIPTION	USAGE CODE	QTY
A	333/P9579		Tank Expansion		1
1	331/15712		Cap expansion tank		1
2	716/30071		Sensor low water level		1

JS205 INDIA

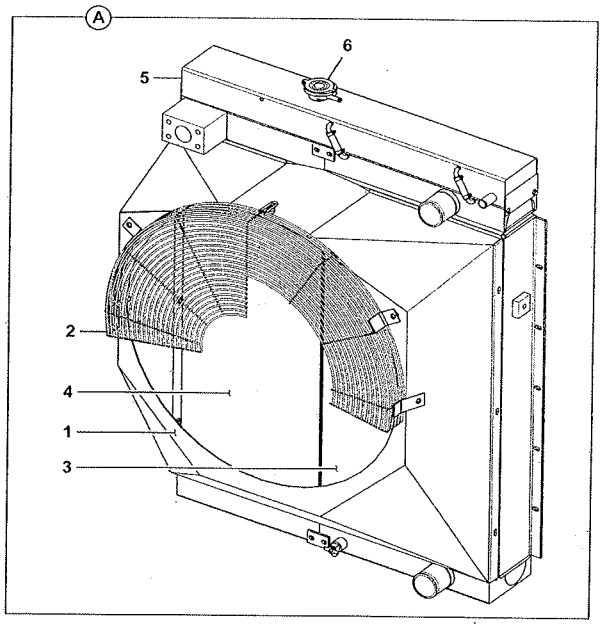

229-01120-6

ITEM	Part #	CHANGE NO	DESCRIPTION	USAGE CODE	QTY
A	229/01120		Radiator and Oil Cooler Assy		1
1	229/01121		Cowling Fan		1
2	229/01124		Fan Gaurd		1
3	332/Y6220		Radiator		1
4	332/Y6221		Cooler Oil - Hydraulic		1
5	333/Y4517		Radiator Tank De-Aeration		1
6	332/Y4005		Cap Radiator		1

L

L01 ENGINE INSTALLATION ASSEMBLIES
L02 EXHAUST SYSTEM
L03 INDUCTION SYSTEM INSTALLATION ASSEMBLIES
L06 COOLING SYSTEM
• L07 FAN INSTALLATION ASSEMBLIES
L08 FUEL SYSTEM

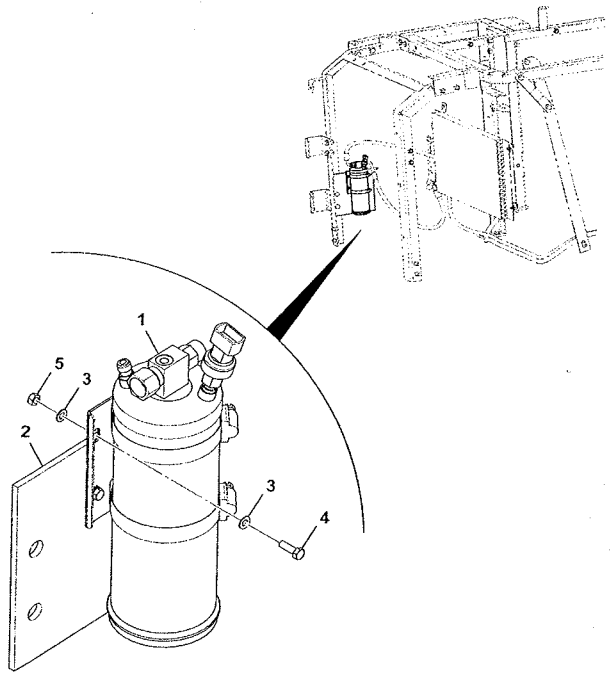

334-L7343-1

JS205 INDIA

ITEM	Part #	CHANGE NO	DESCRIPTION	USAGE CODE	QTY
1	30/926390		Receiver drier		1
2	333/L4917		Bracket Receiver / Drier		1
3	1420/0005Z		Washer Plain		8
4	1316/0103Z		Screw M5 X 16		4
5	1370/0001Z		Nut M5		4

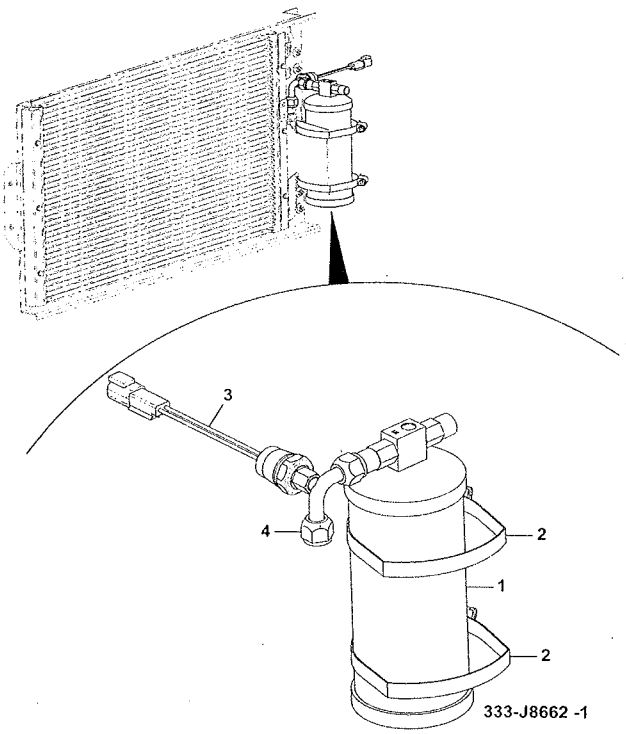

JS205 INDIA

ITEM	Part #	CHANGE NO	DESCRIPTION	USAGE CODE	QTY
1	30/925633		Drier receiver		1
2	334/P0172		Clip hose		2
3	701/80404		Switch binary female		1

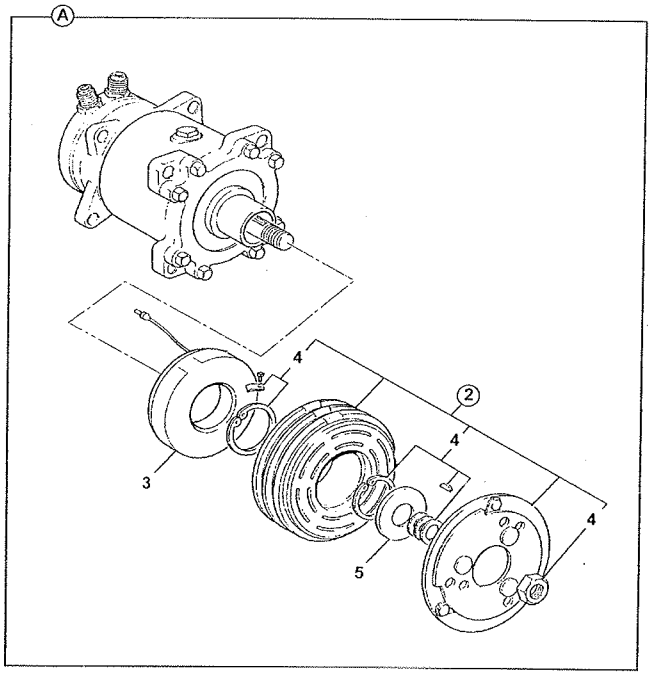

JS205 INDIA

ITEM	Part #	CHANGE NO	DESCRIPTION	USAGE CODE	QTY
A	123/04999		Compressor		1
2	:331/48057		Clutch & coil assembly		1
3	:265/00984		Coil Field		1
4	::998/11025		Kit-sundry parts		1
5	:141/00867		Cover bearing dust		1

L

L01 ENGINE INSTALLATION ASSEMBLIES
L02 EXHAUST SYSTEM
L03 INDUCTION SYSTEM INSTALLATION ASSEMBLIES
L06 COOLING SYSTEM
L07 FAN INSTALLATION ASSEMBLIES
• L08 FUEL SYSTEM

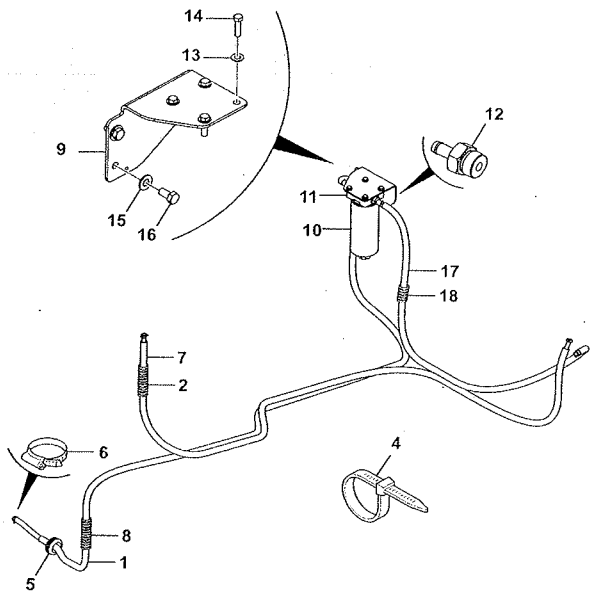

229-01027-7

JS205 INDIA

ITEM	Part #	CHANGE NO	DESCRIPTION	USAGE CODE	QTY
1	JHH0063		Tube Vinyl		1
2	JHH0067		Tube corrugated		1
4	826/01144		Tie Cable 200mm		8
5	KAR0576		Grommet		1
6	334/L7504		Clip jubliee		6
7	JHH0064		Tube Rubber		1
8	JHH0066		Tube corrugated		1
9	332/P9045		Bracket - Mounting		1
10	32/925968		Filter Element		1
11	335/C1046		Head Filter		1
12	332/P9046		Adaptor		2
13	1420/0008		Washer		4
14	1305/1709Z		Bolt		4
15	1411/0005D		Washer		2
16	1316/0507Z		Screw		2
17	JHH0025		Tube fuel, L=1700		1
18	JSH0005		Tube		1

V

- V01 ENGINE INSTALLATION ASSEMBLIES
- V02 CYLINDER HEAD & SUB ASSEMBLIES
- V03 INDUCTION SYSTEM
- V04 COOLING SYSTEM
- V05 LUBRICATION SYSTEM
- V06 FUEL SYSTEM
- V07 FRONT END DRIVE
- V08 AUXILIARY EQUIPMENT

JS205 INDIA

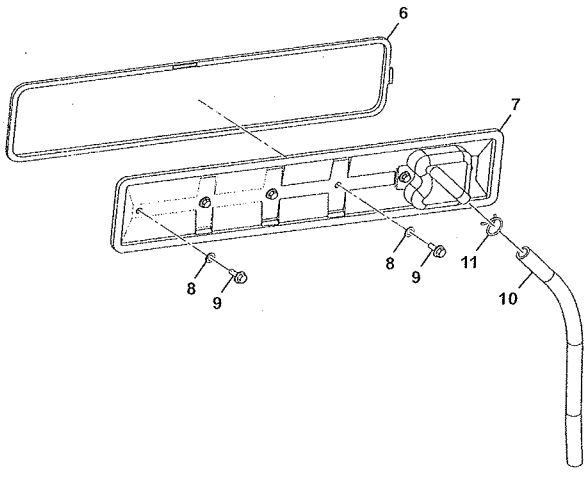

ITEM	Part #	CHANGE NO	DESCRIPTION	USAGE CODE	QTY
6	02/910022		Gasket Push Rod Cover		1
7	02/910023		Cover Push Rod		1
8	02/910855		Grommet Seal		4
9	02/911009		Screw		4
10	02/910026		Hose Plain		1
11	02/910027		Clamp Hose Clip		1

13-10950

JS205 INDIA

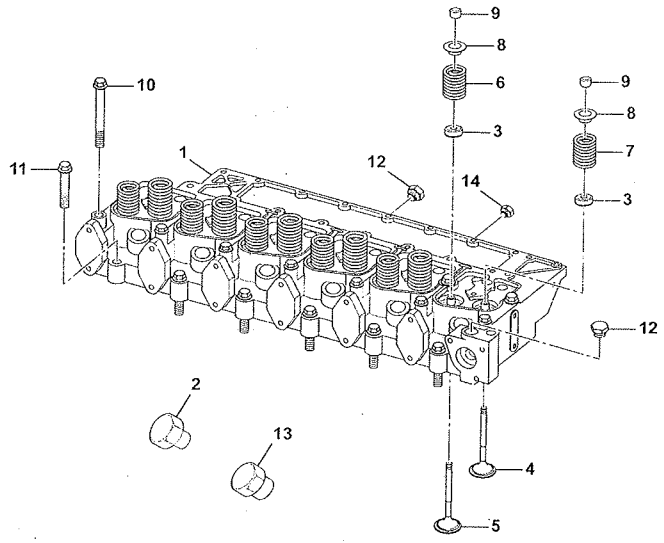

13-10080

ITEM	Part #	CHANGE NO	DESCRIPTION	USAGE CODE	QTY
1	335/C4859		Cylinder		1
2	02/910099		Plug D=21mm		5
3	02/911904		Seal Valve Stem		12
4	02/910102		Valve Inlet		6
5	02/910105		Valve Exhaust		6
6	02/910106		Spring Valve		6
7	814/10101		Spring Exhaust Valve, Heavy Duty		6
8	02/911905		Retainer Valve Spring		12
9	02/910103		Collet		24
10	02/911044		Bolt Cylinder Head		14
11	02/911043		Bolt Cylinder Head		6
12	335/C4875		Plug		4
13	335/C4863		Plug		1
14	335/C4864		Plug		1

JS205 INDIA

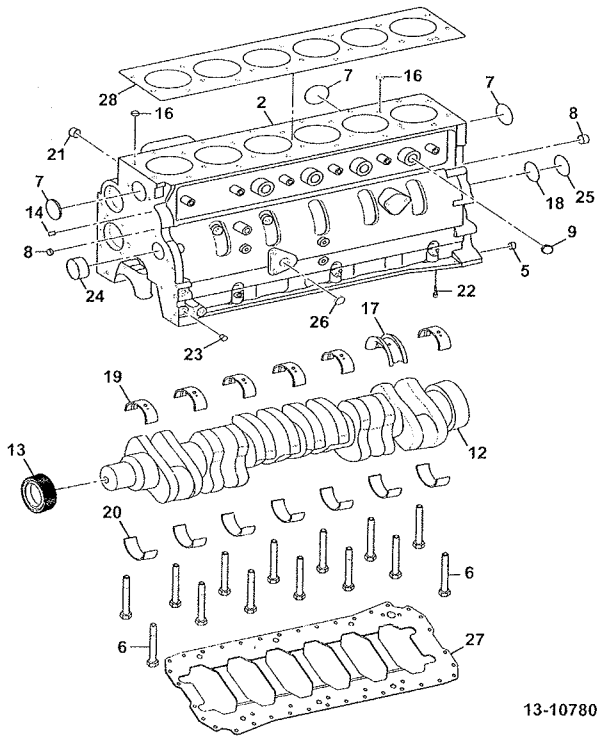

13-10780

ITEM	Part #	CHANGE NO	DESCRIPTION	USAGE CODE	QTY
2	333/Y1467		Block Cylinder		1
5	02/910009		Thimble		2
6	02/911001		Screw M14 x 119mm		14
7	02/910006		Plug Expansion D=58mm		5
8	02/910008		Plug Expansion 17.73mm		2
9	02/910007		Plug Expansion D=26mm		4
12	333/Y1462		Crankshaft Engine		1
13	02/919991		Gear Crankshaft		1
14	02/910014		Dowel Pin		1
16	02/910011		Dowel Ring		2
17	333/Y2334		Bearing Thrust, Crankshaft		2
18	02/910795		Seal O Ring		2
19	02/911537		Bearing Main, Upper		1
20	02/911539		Bearing Main, Lower		1

Continue...

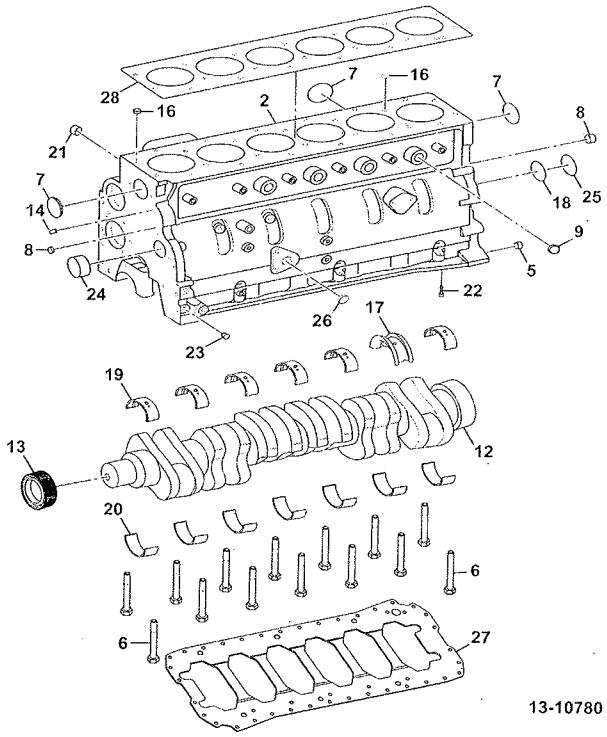

ITEM	PART NO	CHANGE NO	DESCRIPTION	USAGE CODE	QTY
21	335/C4761		Plug		6
22	02/910798		Nozzle Piston Cooling		7
23	335/C4762		Plug		1
24	02/910002		Bush Camshaft		6
25	02/910013		Plug Expansion, D=60mm		1
26	02/910020		Plug Expansion, D=32mm		1
27	335/C4763		Plate		1
28			'See Remark' 332/Y3340		1

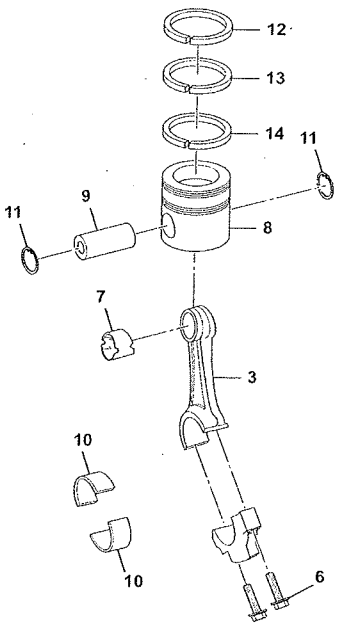

JS205 INDIA

ITEM	Part #	CHANGE NO	DESCRIPTION	USAGE CODE	QTY
3	333/Y1461		Rod Connecting, Engine		1
6	333/Y2302		Screw Connecting Rod		2
7	333/Y2494		Bush		1
8	333/Y1509		Piston Engine		6
9	333/Y2436		Pin Piston		6
10	333/Y2471		Bearing Connecting Rod		12
11	333/Y2379		Ring Retaining		12
12	333/Y2313		Ring Compression		6
13	333/Y2369		Ring Compression		6
14	333/Y1457		Ring Compression		6

JS205 INDIA

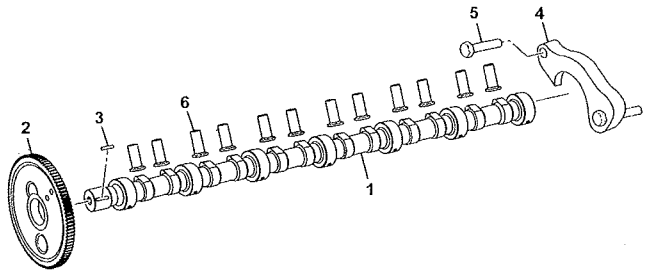

ITEM	Part #	CHANGE NO	DESCRIPTION	USAGE CODE	QTY
1	02/910410		Camshaft		1
2	02/910411		Gear Camshaft		1
3	02/910062		Key		1
4	02/910063		Bracket Cam Thrust		1
5	02/911013		Screw		2
6	02/910634		Tappet		12

13-10730

JS205 INDIA



ITEM	Part #	CHANGE NO	DESCRIPTION	USAGE CODE	QTY
1	332/Y5370		Timer Overcrank		1
2	333/Y2435		Washer Plain		1
3	333/Y2439		Bracket Governor		1
4	333/Y2496		Harness Wiring		1
5	333/Y2440		Nut Lock		1

JS205 INDIA

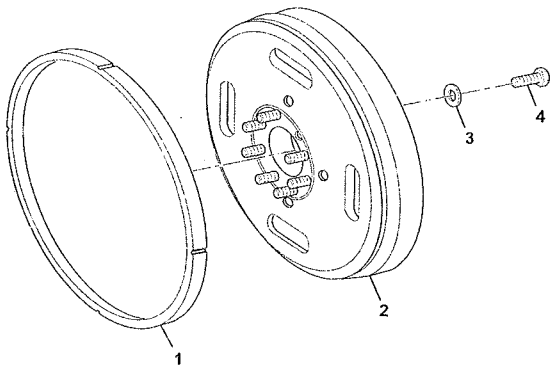

13-10940

ITEM	Part #	CHANGE NO	DESCRIPTION	USAGE CODE	QTY
1	332/Y5833		Ring Gear Flywheel Ring Gear Flywheel Ring		1
2	335/C4772		Flywheel		1
3	02/911018		Washer Plain		8
4	02/911017		Screw		8

JS205 INDIA

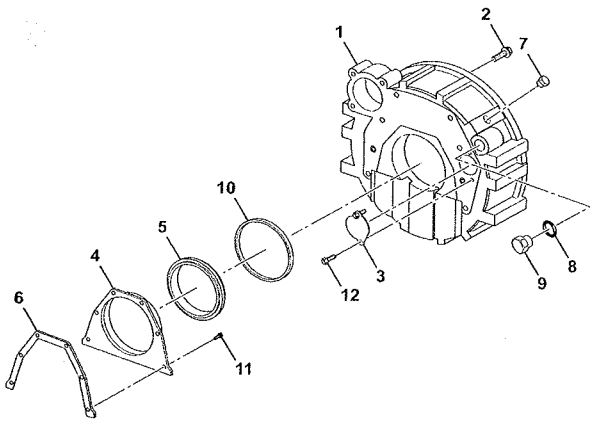

13-10740

ITEM	Part #	CHANGE NO	DESCRIPTION	USAGE CODE	QTY
1	333/Y2281		Housing Flywheel		1
2	02/911015		Screw		8
3	02/910069		Plate Cover		1
4	02/911543		Cover Plate, Rear		2
5	02/912635		Kit-seal Rear Crankshaft Oil		1
6	02/910029		Gasket Rear Seal Housing		1
7	02/910571		Plug		1
8	02/910067		O Ring		1
9	02/910068		Plug		1
10	02/910028		Seal Rectangular Ring		1
11	02/911014		Screw Flange Head 8.8		6
12	333/Y2287		Screw SCREW,HEXAGON HEAD SCREW,HEXAGON HEAD		2

JS205 INDIA

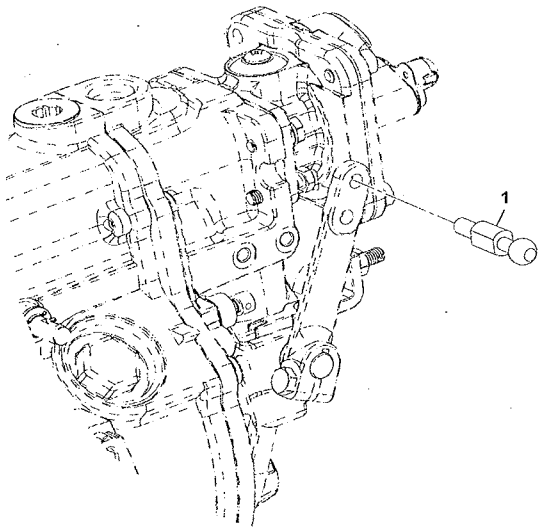

13-10550

ITEM	Part #	CHANGE NO	DESCRIPTION	USAGE CODE	QTY
1	333/Y2433		Pin Throttle Lever		1

JS205 INDIA

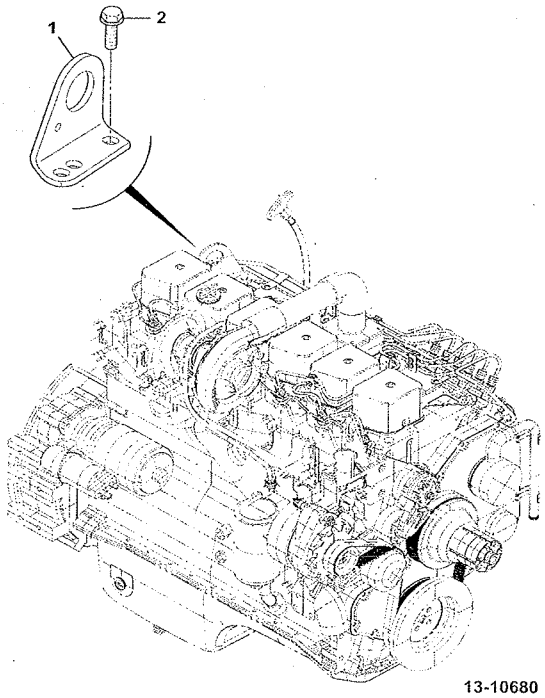

13-10680

ITEM	Part #	CHANGE NO	DESCRIPTION	USAGE CODE	QTY
1	333/Y2275		Bracket Lifting		1
2	333/Y2343		Screw Flange, Hex		2

JS205 INDIA

ITEM	Part #	CHANGE NO	DESCRIPTION	USAGE CODE	QTY
1	333/Y2319		Cover Access Hole		1
2	332/Y3324		Seal Rectangular Ring		1

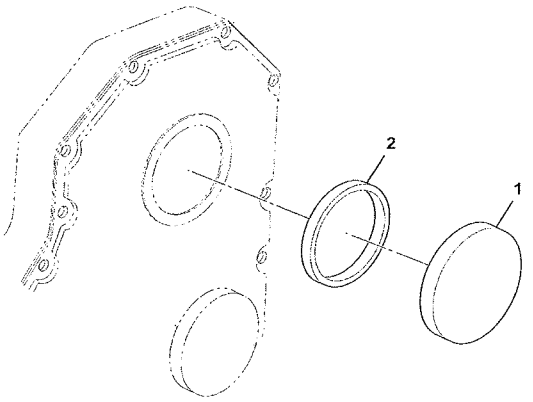

13-10750

JS205 INDIA

ITEM	Part #	CHANGE NO	DESCRIPTION	USAGE CODE	QTY
1	333/Y2274		Plate Cover		1
2	333/Y2273		Gasket		1
3	333/Y2306		Screw Flange, Hex		2

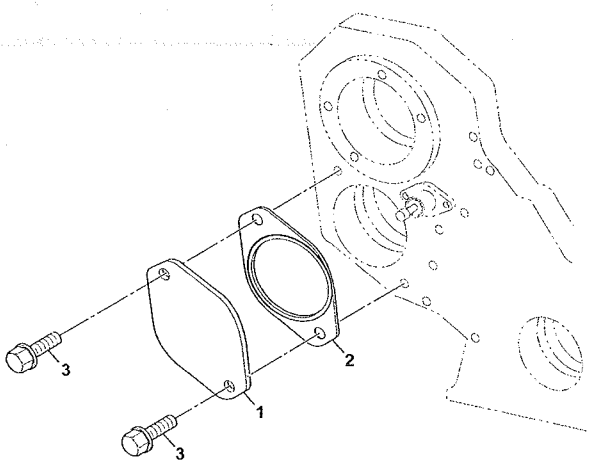

13-10370

V

V01 ENGINE INSTALLATION ASSEMBLIES
• V02 CYLINDER HEAD & SUB ASSEMBLIES
V03 INDUCTION SYSTEM
V04 COOLING SYSTEM
V05 LUBRICATION SYSTEM
V06 FUEL SYSTEM
V07 FRONT END DRIVE
V08 AUXILIARY EQUIPMENT

JS205 INDIA

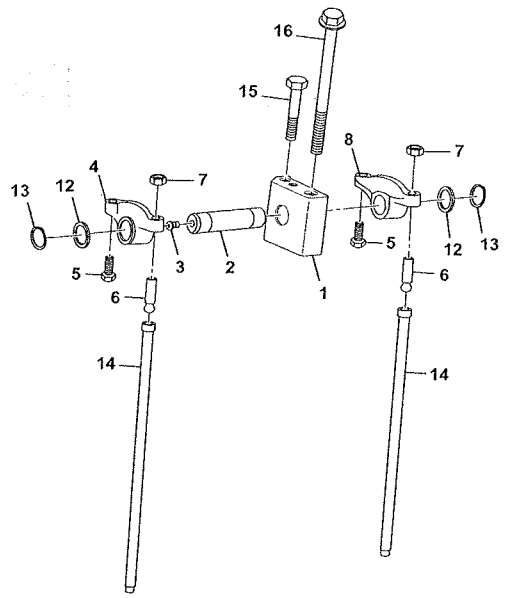

ITEM	Part #	CHANGE NO	DESCRIPTION	USAGE CODE	QTY
1	02/911676		Bracket		1
2	333/Y1456		Shaft Rocker Lever		1
3	02/910822		Plug		1
4	02/911674		Lever		1
5	02/911139		Insert Rocker Lever		2
6	02/911138		Screw Adjusting		2
7	02/910821		Nut 3/8"-24UNF, Heavy Hexagon		2
8	02/911673		Lever		1
12	02/911024		Washer Plain		2
13	02/910083		Circlip		2
14	02/910084		Rod Push		12
15	02/911025		Bolt		6
16	02/911030		Bolt		6

JS205 INDIA

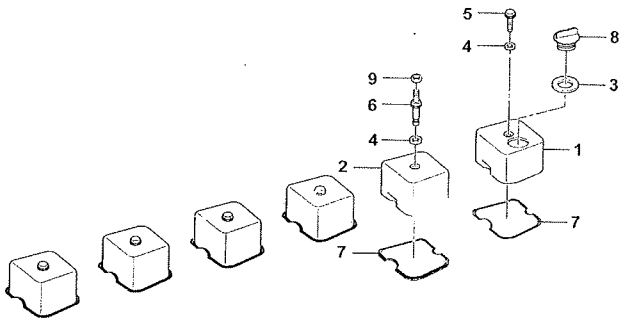

ITEM	Part #	CHANGE NO	DESCRIPTION	USAGE CODE	QTY
1	333/Y2420		Cover Valve		1
2	333/Y2419		Cover Valve		5
3	333/Y2460		Seal Rectangular		1
4	332/Y5363		Isolator Noise		6
5	333/Y2337		Screw Flange, Hex		5
6	335/C4775		Screw		1
7	332/Y3300		Gasket Valve Cover		6
8	333/Y2311		Cap Filler		1
9	335/C4777		Nut		1

13-10580

V

V01 ENGINE INSTALLATION ASSEMBLIES
V02 CYLINDER HEAD & SUB ASSEMBLIES
• V03 INDUCTION SYSTEM
V04 COOLING SYSTEM
V05 LUBRICATION SYSTEM
V06 FUEL SYSTEM
V07 FRONT END DRIVE
V08 AUXILIARY EQUIPMENT

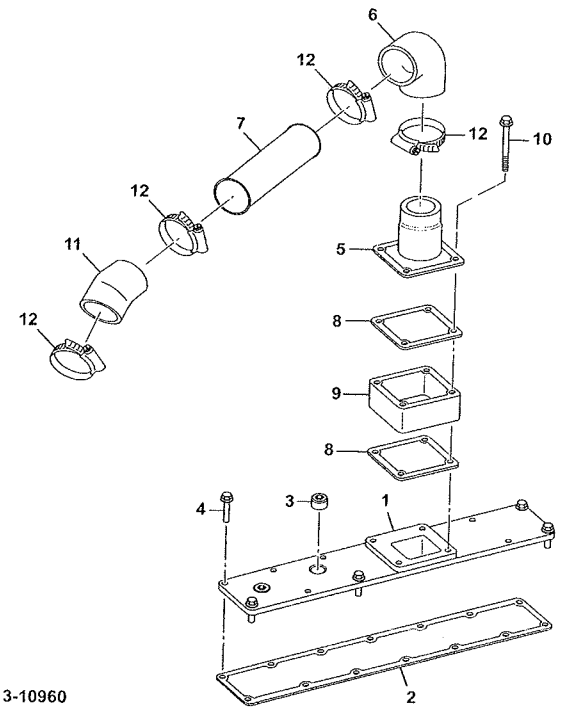

13-10960

JS205 INDIA

ITEM	Part #	CHANGE NO	DESCRIPTION	USAGE CODE	QTY
1	02/910878		Manifold induction		1
2	02/910183		Gasket cooler to manifold		1
3	333/Y2455		Plug PLUG PIPE PLUG PIPE		2
4	02/911376		Screw		6
5	333/Y1547		Hydraulic Connector Air Intake		1
6	332/Y3327		Hose Elbow		1
7	333/Y2768		Tube Air		1
8	332/Y3328		Gasket		2
9	333/Y9123		Spacer Connector		1
10	02/911379		Screw Flange Head Cap		4
11	335/C4753		Hose		1
12	332/Y3292		Clamp Hose		4

JS205 INDIA

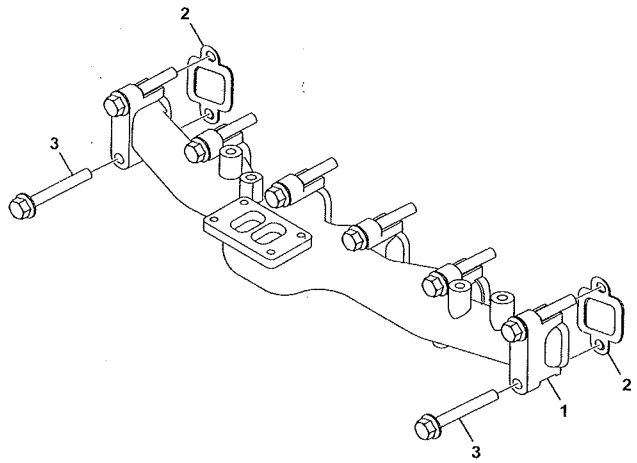

13-10600

ITEM	Part #	CHANGE NO	DESCRIPTION	USAGE CODE	QTY
1	02/910412		Manifold exhaust		1
2	02/910174		Gasket exhaust manifold		6
3	02/911037		Bolt		12

V

V01 ENGINE INSTALLATION ASSEMBLIES
V02 CYLINDER HEAD & SUB ASSEMBLIES
V03 INDUCTION SYSTEM
• V04 COOLING SYSTEM
V05 LUBRICATION SYSTEM
V06 FUEL SYSTEM
V07 FRONT END DRIVE
V08 AUXILIARY EQUIPMENT

JS205 INDIA

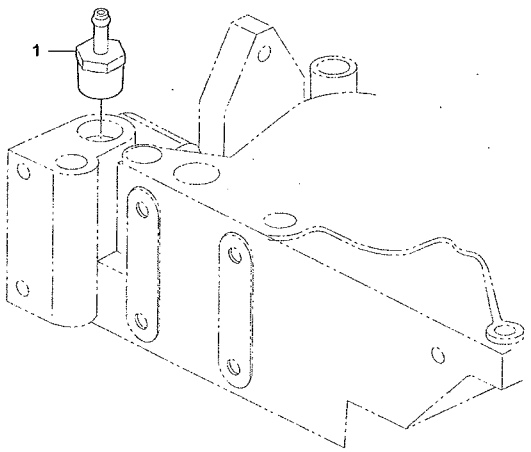

ITEM	Part #	CHANGE NO	DESCRIPTION	USAGE CODE	QTY
1	333/Y2443		Connector Male		1

JS205 INDIA

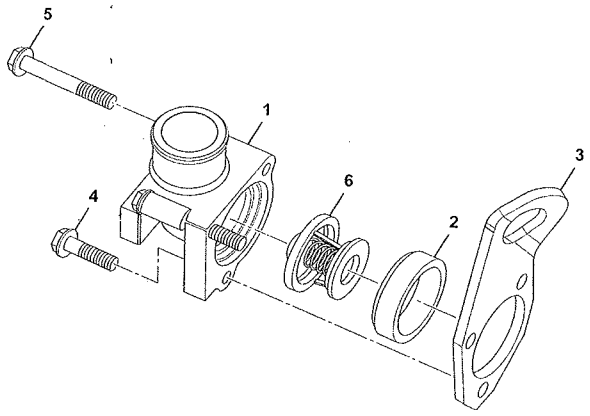

ITEM	Part #	CHANGE NO	DESCRIPTION	USAGE CODE	QTY
1	02/910981		Housing Thermostat		1
2	02/910096		Gasket Thermostat Housing		1
3	02/910093		Bracket Lifting		1
4	02/911027		Bolt M8x35		1
5	02/911133		Screw		2
6	332/Y3293		Thermostat		1

13-10060

JS205 INDIA

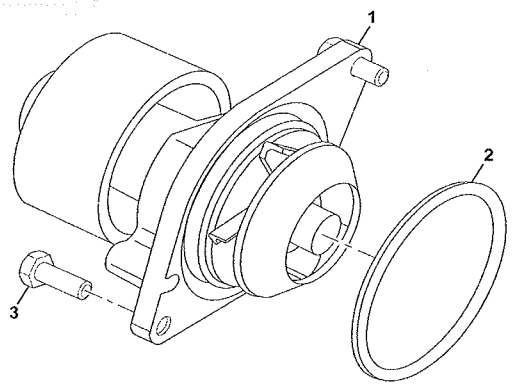

ITEM	Part #	CHANGE NO	DESCRIPTION	USAGE CODE	QTY
1	332/Y3313		Pump Water		1
2	332/Y3295		Seal Rectangular Ring		1
3	333/Y2288		Screw Hexagonal Head		2

13-10670

JS205 INDIA

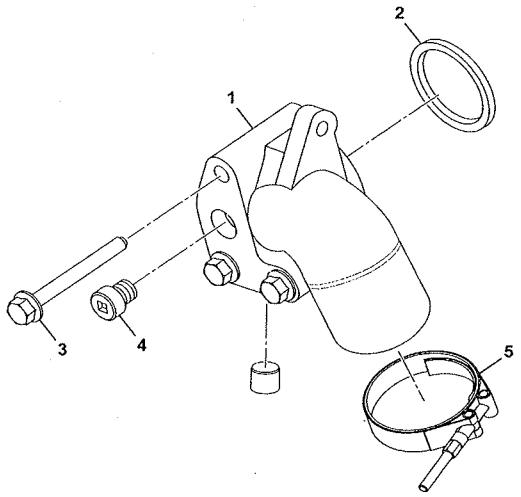

13-10870

ITEM	Part #	CHANGE NO	DESCRIPTION	USAGE CODE	QTY
1	335/C4827		Connector Hydraulic		1
2	02/910098		Seal rectangular ring		1
3	02/911029		Bolt		3
4	02/910015		Plug pipe 1/2"NPT		2
5	335/C4831		Clamp		1

JS205 INDIA

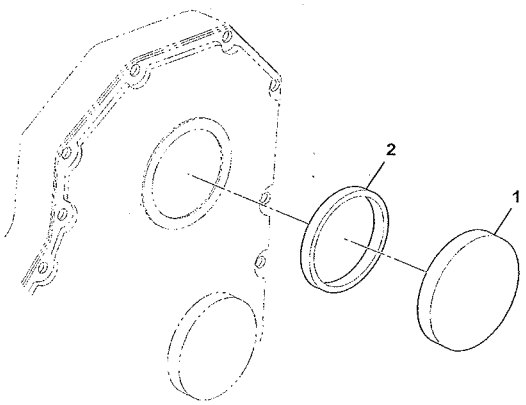

ITEM	Part #	CHANGE NO	DESCRIPTION	USAGE CODE	QTY
1	333/Y2319		Cover Access Hole		1
2	332/Y3324		Seal Rectangular Ring		1

13-10750

JS205 INDIA

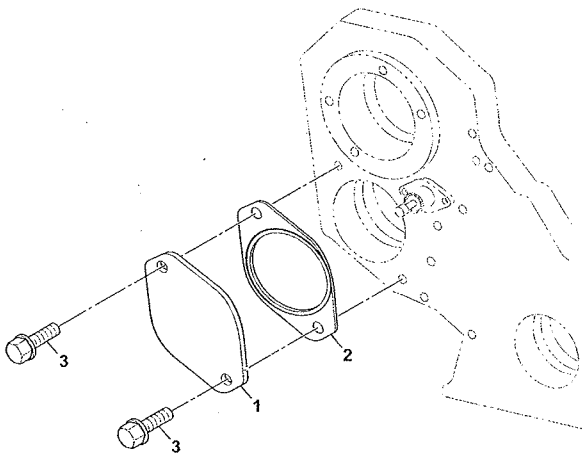

ITEM	Part #	CHANGE NO	DESCRIPTION	USAGE CODE	QTY
1	333/Y2274		Plate Cover		1
2	333/Y2273		Gasket		1
3	333/Y2306		Screw Flange, Hex		2

13-10370

V

V01 ENGINE INSTALLATION ASSEMBLIES
• V02 CYLINDER HEAD & SUB ASSEMBLIES
V03 INDUCTION SYSTEM
V04 COOLING SYSTEM
V05 LUBRICATION SYSTEM
V06 FUEL SYSTEM
V07 FRONT END DRIVE
V08 AUXILIARY EQUIPMENT

JS205 INDİA

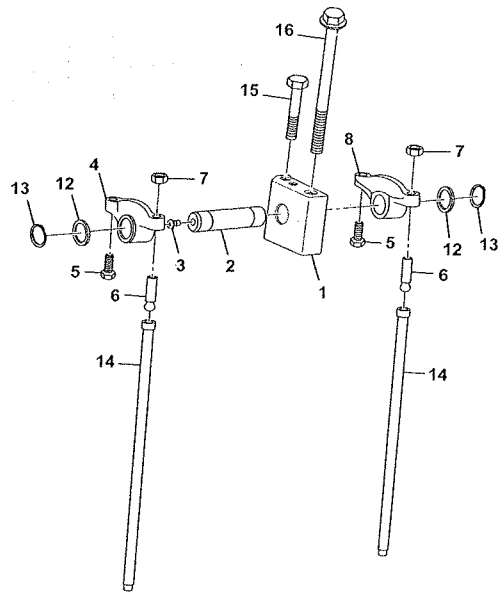

ITEM	Part #	CHANGE NO	DESCRIPTION	USAGE CODE	QTY
1	02/911676		Bracket		1
2	333/Y1456		Shaft Rocker Lever		1
3	02/910822		Plug		1
4	02/911674		Lever		1
5	02/911139		Insert Rocker Lever		2
6	02/911138		Screw Adjusting		2
7	02/910821		Nut 3/8"-24UNF, Heavy Hexagon		2
8	02/911673		Lever		1
12	02/911024		Washer Plain		2
13	02/910083		Circlip		2
14	02/910084		Rod Push		12
15	02/911025		Bolt		6
16	02/911030		Bolt		6

JS205 INDIA

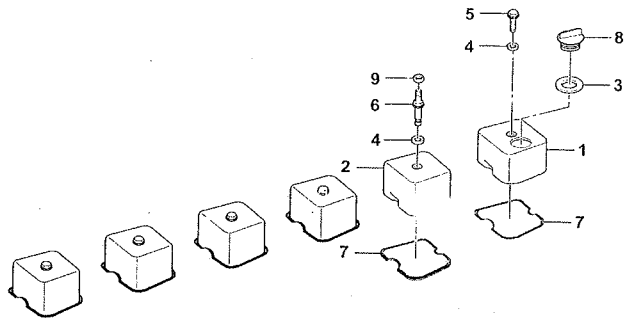

ITEM	Part #	CHANGE NO	DESCRIPTION	USAGE CODE	QTY
1	333/Y2420		Cover Valve		1
2	333/Y2419		Cover Valve		5
3	333/Y2460		Seal Rectangular		1
4	332/Y5363		Isolator Noise		6
5	333/Y2337		Screw Flange, Hex		5
6	335/C4775		Screw		1
7	332/Y3300		Gasket Valve Cover		6
8	333/Y2311		Cap Filler		1
9	335/C4777		Nut		1

13-10580

V

V01 ENGINE INSTALLATION ASSEMBLIES
V02 CYLINDER HEAD & SUB ASSEMBLIES
• V03 INDUCTION SYSTEM
V04 COOLING SYSTEM
V05 LUBRICATION SYSTEM
V06 FUEL SYSTEM
V07 FRONT END DRIVE
V08 AUXILIARY EQUIPMENT

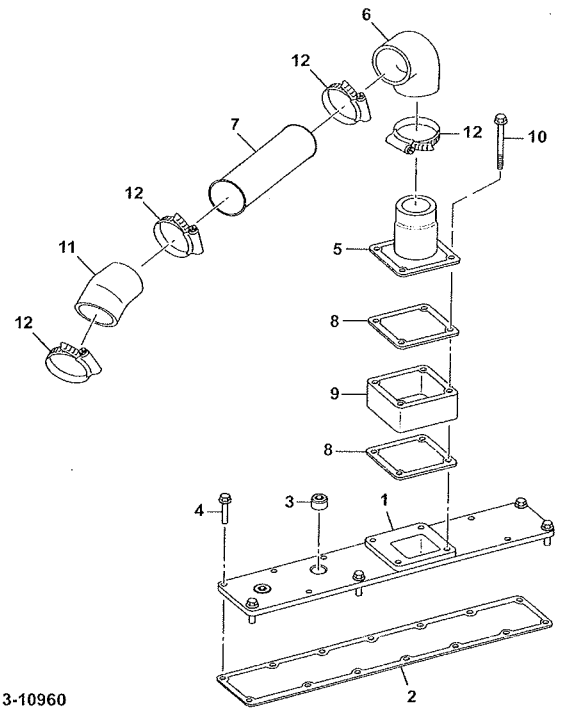

13-10960

JS205 INDIA

ITEM	Part #	CHANGE NO	DESCRIPTION	USAGE CODE	QTY
1	02/910878		Manifold induction		1
2	02/910183		Gasket cooler to manifold		1
3	333/Y2455		Plug PLUG PIPE PLUG PIPE		2
4	02/911376		Screw		6
5	333/Y1547		Hydraulic Connector Air Intake		1
6	332/Y3327		Hose Elbow		1
7	333/Y2768		Tube Air		1
8	332/Y3328		Gasket		2
9	333/Y9123		Spacer Connector		1
10	02/911379		Screw Flange Head Cap		4
11	335/C4753		Hose		1
12	332/Y3292		Clamp Hose		4

JS205 INDIA

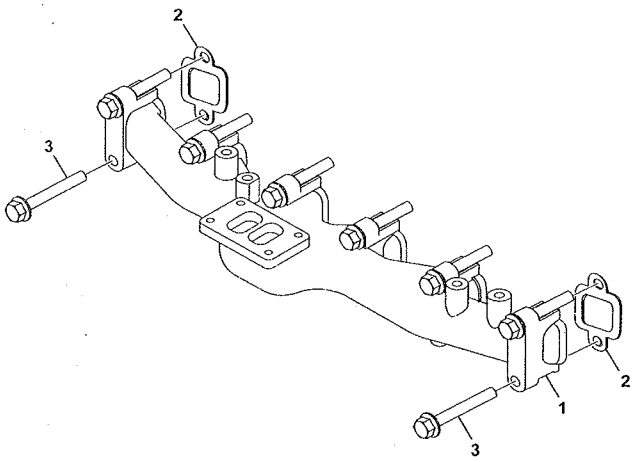

13-10600

ITEM	Part #	CHANGE NO	DESCRIPTION	USAGE CODE	QTY
1	02/910412		Manifold exhaust		1
2	02/910174		Gasket exhaust manifold		6
3	02/911037		Bolt		12

V

V01 ENGINE INSTALLATION ASSEMBLIES
V02 CYLINDER HEAD & SUB ASSEMBLIES
V03 INDUCTION SYSTEM
• V04 COOLING SYSTEM
V05 LUBRICATION SYSTEM
V06 FUEL SYSTEM
V07 FRONT END DRIVE
V08 AUXILIARY EQUIPMENT

JS205 INDIA

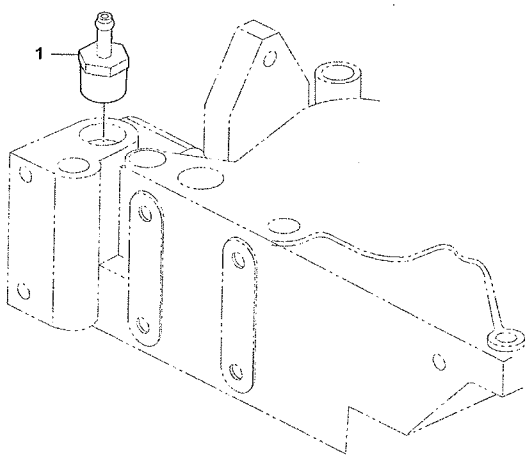

ITEM	Part #	CHANGE NO	DESCRIPTION	USAGE CODE	QTY
1	333/Y2443		Connector Male		1

JS205 INDIA

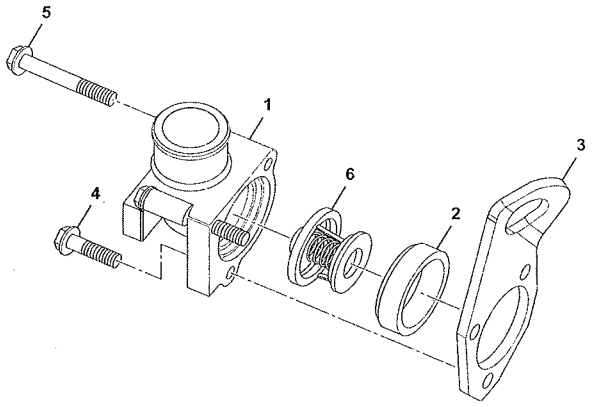

ITEM	Part #	CHANGE NO	DESCRIPTION	USAGE CODE	QTY
1	02/910981		Housing Thermostat		1
2	02/910096		Gasket Thermostat Housing		1
3	02/910093		Bracket Lifting		1
4	02/911027		Bolt M8x35		1
5	02/911133		Screw		2
6	332/Y3293		Thermostat		1

13-10060

JS205 INDIA

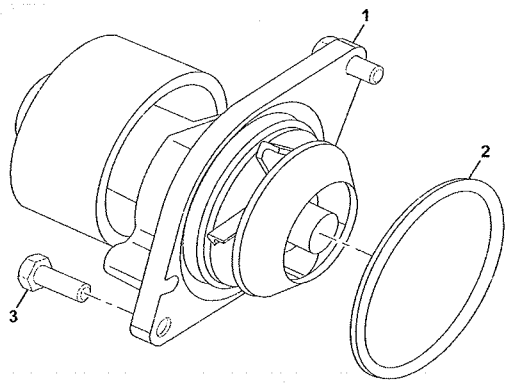

ITEM	Part #	CHANGE NO	DESCRIPTION	USAGE CODE	QTY
1	332/Y3313		Pump Water		1
2	332/Y3295		Seal Rectangular Ring		1
3	333/Y2288		Screw Hexagonal Head		2

13-10670

JS205 INDIA

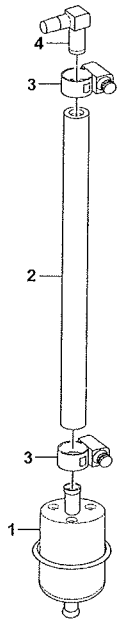

13-10650

ITEM	Part #	CHANGE NO	DESCRIPTION	USAGE CODE	QTY
1	332/Y3299		Strainer Fuel		1
2	333/Y2785		Hose Plain		1
3	332/Y5356		Clamp		1
4	333/Y2264		Coupling Elbow Hose		1

JS205 INDIA

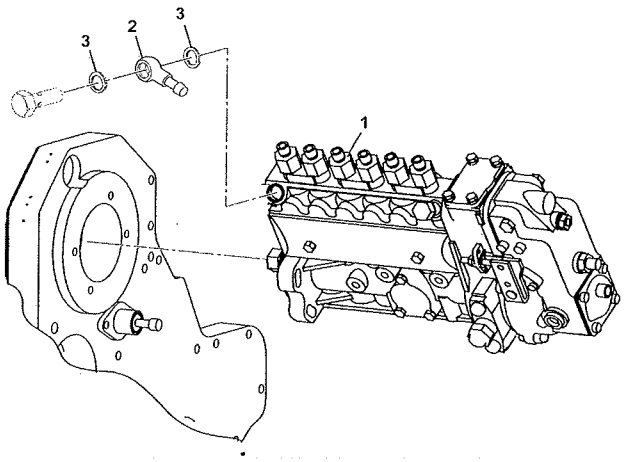

13-10540

ITEM	Part #	CHANGE NO	DESCRIPTION	USAGE CODE	QTY
1	332/Y7386		Pump Fuel Injection		1
2	332/Y3297		Banjo Connector		1
3	02/910158		Washer Seal		2

JS205 INDIA

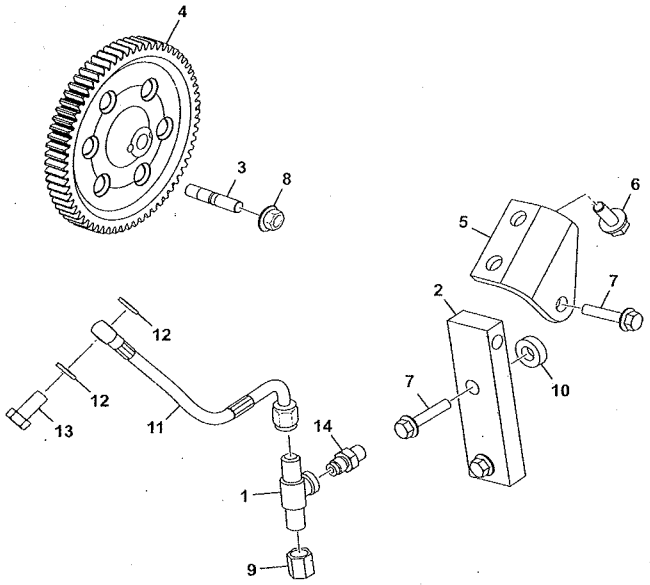

13-10850

ITEM	Part #	CHANGE NO	DESCRIPTION	USAGE CODE	QTY
1	02/910447		Adapter Tee		1
2	335/C4836		Bracket		1
3	02/911114		Stud		4
4	02/910897		Gear Pump, Fuel Injection		1
5	335/C4837		Bracket		1
6	02/911005		Bolt		2
7	02/911027		Bolt M8x35		3
8	02/911020		Nut		4
9	02/910449		Cap Blanking		1
10	335/C4838		Spacer		1
11	335/C4840		Hose		1
12	02/910237		Washer Sealing		2
13	02/910834		Bolt Banjo M10 x 1.00 x 19		1
14	333/Y2272		Nipple Hexagon Plain		1

JS205 INDIA

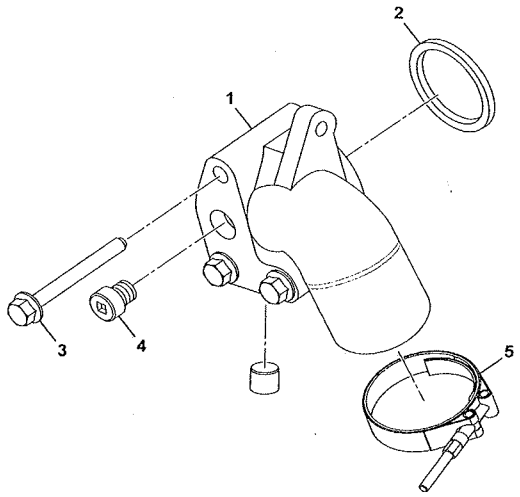

13-10870

ITEM	Part #	CHANGE NO	DESCRIPTION	USAGE CODE	QTY
1	335/C4827		Connector Hydraulic		1
2	02/910098		Seal rectangular ring		1
3	02/911029		Bolt		3
4	02/910015		Plug pipe 1/2"NPT		2
5	335/C4831		Clamp		1

V

V01 ENGINE INSTALLATION ASSEMBLIES
V02 CYLINDER HEAD & SUB ASSEMBLIES
V03 INDUCTION SYSTEM
V04 COOLING SYSTEM
V05 LUBRICATION SYSTEM
V06 FUEL SYSTEM
• V07 FRONT END DRIVE
V08 AUXILIARY EQUIPMENT

JS205 INDIA

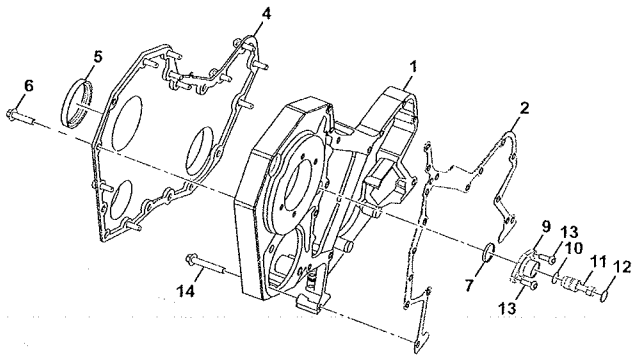

ITEM	Part #	CHANGE NO	DESCRIPTION	USAGE CODE	QTY
1	333/Y2434		Housing Gear		1
2	333/Y2362		Gasket Gear, Housing		1
4	333/Y2373		Cover Gear		1
5	332/Y3341		Seal Oil		1
6	333/Y2398		Screw Flange,HEX		17
7	333/Y2360		Seal Rectangular,Ring		1
9	333/Y2377		Housing Timing Pin		1
10	333/Y2355		Seal O-Ring		1
11	333/Y2324		Pin Timing		1
12	333/Y2330		Ring Retaining		1
13	333/Y2339		Screw Round Head Cap		2
14	333/Y2298		Screw Hexagon Head		11

JS205 INDIA

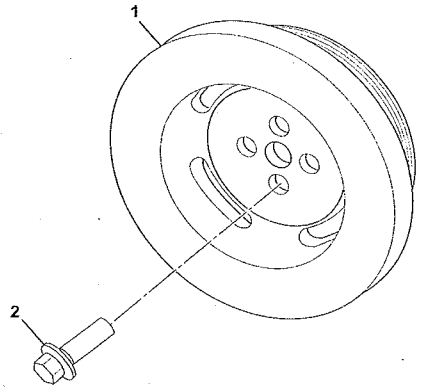

ITEM	Part #	CHANGE NO	DESCRIPTION	USAGE CODE	QTY
1	333/Y2804		Damper Vibration		1
2	333/Y2323		Screw Flange HEX		4

13-10610

JS205 INDIA

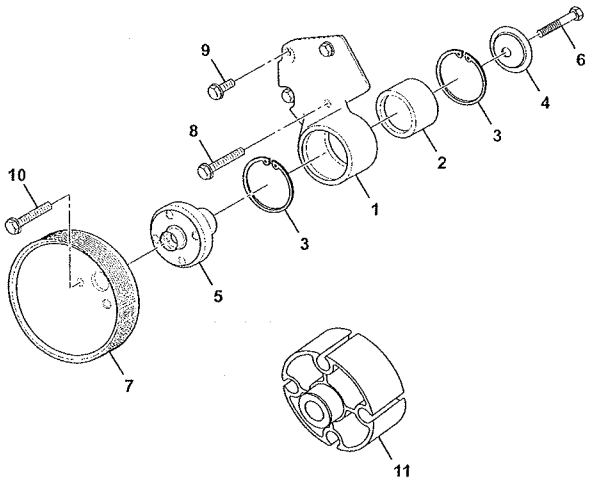

ITEM	Part #	CHANGE NO	DESCRIPTION	USAGE CODE	QTY
1	335/C4884		Unit		1
2	02/910032		Bearing		1
3	02/910033		Circlip		2
4	02/910793		Retainer fan hub		1
5	02/910035		Hub fan		1
6	02/911035		Screw		1
7	335/C4885		Pulley		1
8	826/10757		Screw Screw hex flange hea		1
9	02/911062		Screw		3
10	02/911029		Bolt		4
11			'See Remark'		2

13-10570

V

V01 ENGINE INSTALLATION ASSEMBLIES
V02 CYLINDER HEAD & SUB ASSEMBLIES
V03 INDUCTION SYSTEM
V04 COOLING SYSTEM
V05 LUBRICATION SYSTEM
V06 FUEL SYSTEM
V07 FRONT END DRIVE
• V08 AUXILIARY EQUIPMENT

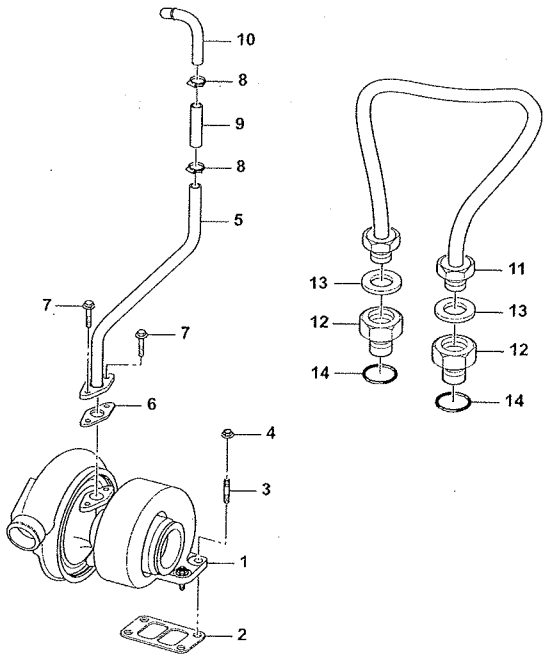

13-10920

JS205 INDIA

ITEM	Part #	CHANGE NO	DESCRIPTION	USAGE CODE	QTY
1	332/Y5121		Turbocharger		1
2	02/910171		Gasket Turbo To Manifold		1
3	02/911078		Stud		4
4	02/911036		Nut		4
5	02/910166		Pipe Drain, Turbo Oil		1
6	02/910167		Gasket Oil Drain Pipe		1
7	02/911002		Screw M8 x 20mm		2
8	333/Y2452		Clamp Hose		2
9	333/Y2454		Hose Plain		1
10	02/910169		Elbow Turbo Oil Drain		1
11	02/910163		Hose Turbo Oil Feed		1
12	333/Y2278		Connector Female		2
13	02/910146		O Ring		2
14	02/910165		O Ring		2

JS205 INDIA

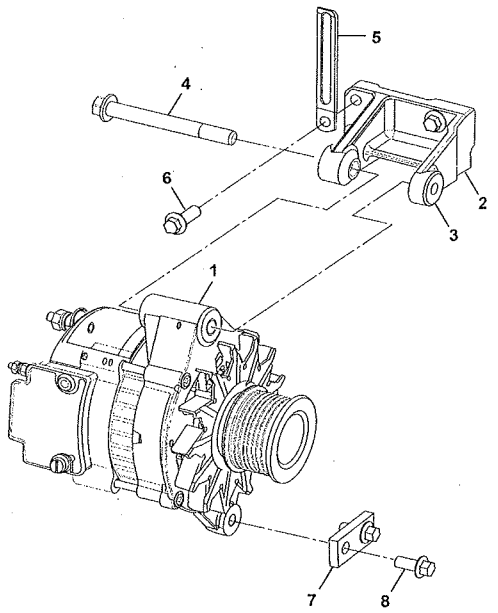

13-10390

ITEM	Part #	CHANGE NO	DESCRIPTION	USAGE CODE	QTY
1	335/C4730		Alternator		1
2	02/910160		Bracket Alternator Mounting		1
3	02/910161		Spacer		1
4	02/911632		Screw Flange Headed Cap		1
5	335/C4731		Clamp		1
6	02/911007		Bolt M8x1.25x25		3
7	335/C4732		Plate		1
8	02/911002		Screw M8 x 20mm		2

JS205 INDIA

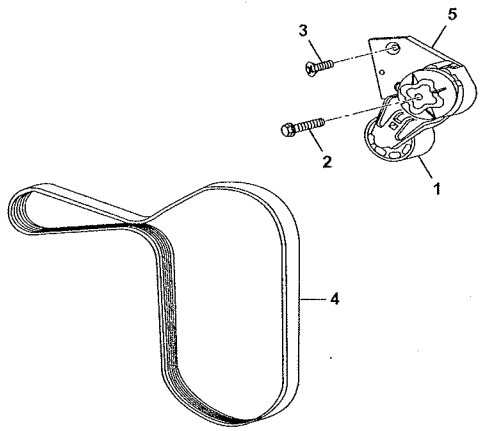

13-10760

ITEM	Part #	CHANGE NO	DESCRIPTION	USAGE CODE	QTY
1	02/910046		Adjuster Belt Tensioner		1
2	02/911131		Screw Flange Head Cap, M10 X 1.50 X 70		1
3	02/911008		Screw		2
4	332/Y3296		Belt V Ribbed		1
5	335/C4844		Bracket		1