E-17

RUTHZIL TRATOR COMERCIAL DE PEÇAS LTDA 11 97083-6812 ROLANDO CITRANGULO

Parts Book

JCB

JS210LC

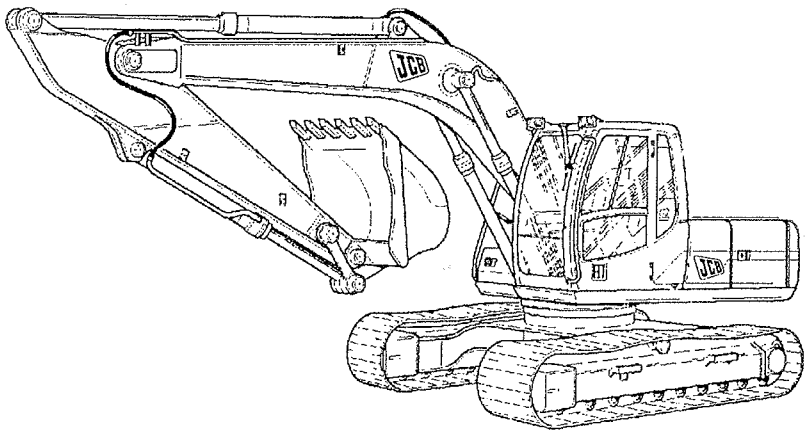

JS 210 LC

TRACKED EXCAVATOR
M110027 on

Part No.: 332 / L0399



A product of Hardwork

JCB INDIA LTD.

MODEL JS 210LC

CRAWLER EXCAVATOR
M110027 on
Publication No. 332 / L0399 Issue 3

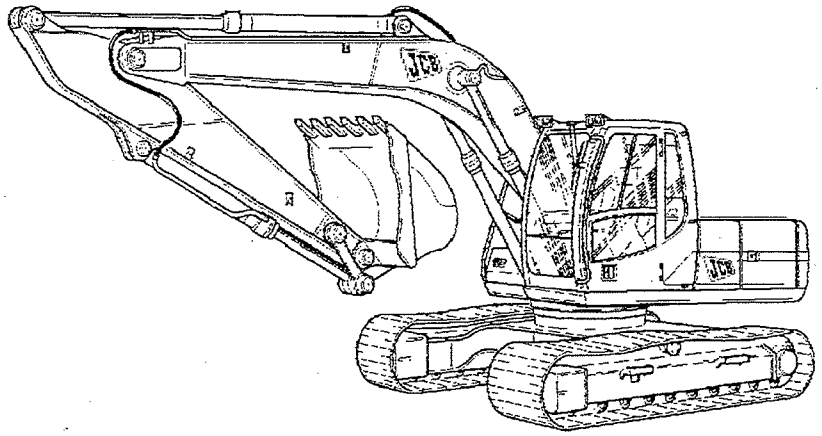

INDEX

ATTACHMENTS — A

BODYWORK, CAB, LOADER END — B

ELECTRICS-MACHINE, CAB & ENGINE — C

CONTROLS-MACHINE, ENGINE — D

HYDRAULICS & AIR — E

TRACK/SLEW GEARBOX — F

TRACK & RUNNING GEAR, UNDERCARRIAGE — J

ENGINE — T

LIGHTS — L

PARTS LOCATION PROCEDURE

- REFER TO MACHINE DATE PLATE_____
  1 Machine Serial No.
  2 Engine Serial No.
  3 Gearbox Serial No.
  4 Torque Converter Serial No.
  5 Axle Serial No.

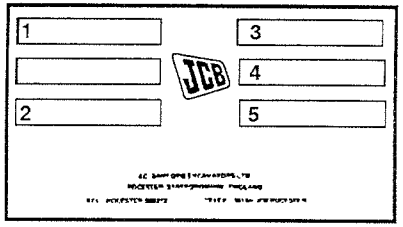

- SELECT SECTION _____

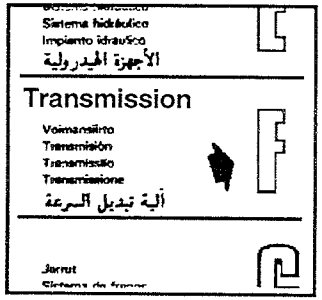

- REFER TO INDEX _____

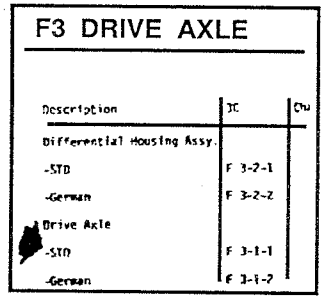

- LOCATE ITEM _____

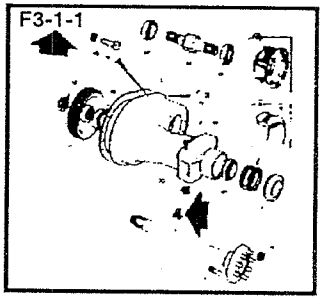

All item Nos. within a box or attached to another line are part of a assembly

PARTS ORDERING PROCEDURE

- MACHINE MODEL NO.
  AND SERIAL NO. _____

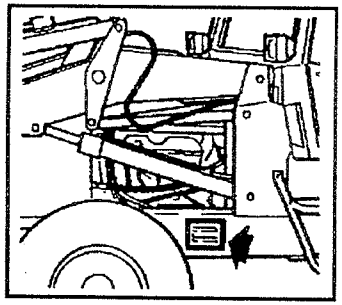

- PAGE REFERENCE NO._____

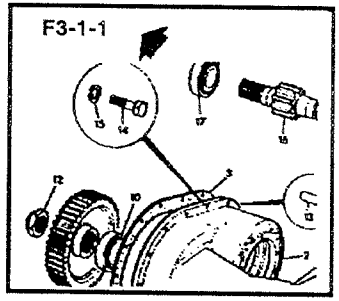

- ILLUSTRATION ITEM NO._____

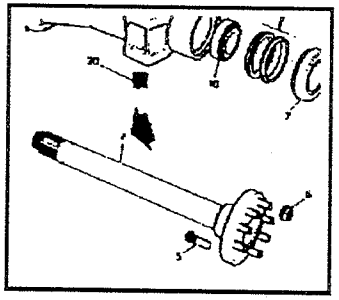

The purpose of this book is to assist the operator in ordering parts quickly and easily from a JCB Dealer. The index at the beginning of each section MUST be used with refereecnce to the machine type and seial number, to find the correct page for the part required.

JCB INDIA LTD.

PART NO. / ISSUE NO. : 332 / L0399
ISSUE DATE : MARCH, 2010

TITLE	PAGE NO.
A - ATTACHMENTS	
BUCKETS	**A2**
BUCKET, 600MM WIDE, 0.40 CUBIC METRES	A2-1-1
BUCKET, 900MM WIDE, 0.70 CUBIC METRES	A2-1-3
BUCKET, 1000MM WIDE, 0.81 CUBIC METRES	A2-1-4
BUCKET, WIDE, 0.89 CUBIC METRES STD.	A2-1-5
BUCKET, WIDE, 1.02 CUBIC METRES	A2-1-6
BUCKET, WIDE, 1.20 CUBIC METRES	A2-1-7
BUCKET, 1350MM WIDE, 1.045 CUBIC METRES	A2-1-8
BUCKET, 1450MM WIDE, 1.140 CUBIC METRES	A2-1-9
BUCKET, 1500MM WIDE, 1.180 CUBIC METRES	A2-1-10
0.9 CUM HD BUCKET	A2-1-11
0.9 CUM HD BUCKET	A2-1-11
0.9 CUM HD BUCKET	A2-1-11
BUCKET, WIDE, 0.90 CUBIC METERS (H.D.)	A2-1-11
BUCKET, 600MM WIDE, 0.275 CUBIC METRES	A2-2-1
BUCKET, 750MM WIDE, 0.380 CUBIC METRES	A2-2-2
BUCKET, 900MM WIDE, 0.485 CUBIC METRES	A2-2-3
RIPPER TOOTH	A2-8-1
BUCKET WITH BOLT ON SIDE CUTTER, 0.89 CUBIC METER (48")	A2-9-1
BUCKET W.H. BOLT ON SIDE CUTTER, 1.02 CUBIC METER (54")	A2-9-2
BUCKET WITH BOLT ON SIDE CUTTER, 1.20 CUBIC METER (60")	A2-9-3
MAIN BODY	A2-9-5
SILENCER BRACKET LIST	A2-9-6
HANGER BRACKET	A2-9-7
B - BODYWORK, CAB, LOADER END	
BODYWORK/FRAME	**B1**
MAINFRAME, REVOLVING	B1-1-1
COVERS, LOWER, MAINFRAME	B1-2-1
TANK, HYDRAULIC	B1-3-1
TANK, DIESEL FUEL	B1-4-1
COWLINGS, ENGINE COVER	B1-5-1
TOP COVER	B1-5-2
FRAME WORK	B1-5-10
BULK HEAD	B1-5-11
COWLINGS, DOORS	B1-5-20
COWLINGS, TOOLBOX & HANDRAIL	B1-5-30
COUNTER WEIGHT REAR (INDIAN BUILD)	B1-6-1
REAR MIRROR, COUNTER WEIGHT (OPTIONAL)	B1-6-40

JCB INDIA LTD.

PART NO. / ISSUE NO. : 332 / L0399
ISSUE DATE : MARCH, 2010

TITLE	PAGE NO.
CAB	**B2**
CAB	B2-1-1
FRONT SCREEN	B2-1-10
FRONT WIPER, & CAB COMPONENTS	B2-1-20
CAB, MOUNTING FASTENERS	B2-1-30
CAB DOOR COMPONENTS	B2-2-1
SEAT, STANDARD	B2-3-1
CONSOLE, CAB SERVO CONTROL, LEFT HAND, FIXED CONSOLE	B2-4-1
CONSOLE, CAB SERVO CONTROL, RIGHT HAND	B2-5-1
WASH/WIPE, WIND SCREEN	B2-6-1
MIRRORS, EXTERNAL	B2-7-1
CAB PANELS	B2-8-1
FLOOR COMPONENTS, SEAT SLIDE, LEVER ISOLATOR	B2-10-1
FIRE EXTINGUISHER	B2-11-1
DIRECT GLAZING, REPLACEMENT MATERIAL, CAB	B2-18-1
EXCAVATOR END	**B3**
BOOM 5.4 M	B3-1-1
DIPPER 1.91M	B3-2-1
DIPPER 2.4 M	B3-2-10
DIPPER 2.4M, HEAVY DUTY	B3-2-11

TITLE	PAGE NO.
LINK TRANSPORTATION	B3-3-1
BOOM GREASING	B3-4-1
TIPPING LINK, & LINKAGE	B3-5-1
EXCAVATOR, SHIMS	B3-12-1
REFURBISHMENTS	**B5**
DECALS, MACHINE	B5-1-1
DECALS, WARNING	B5-2-1
LABELS	B5-2-3
DECALS, WARNING, USA BUILD	B5-2-10
TOOLS	B5-3-1
C - ELECTRICS-MACHINE CAB & ENGINE	
ELECTRICS, MAIN MACHINE	**C1**
MAINFRAME REVOLVING	C1-1-1
ELECTRICS, CAB	C1-2-1
BATTERY INSTALLATION, JS 210	C1-3-1
LIGHT, WORKING, TOOLBOX	C1-4-1
LIGHT, WORKING, CAB & REAR	C1-4-10
PUMP, DIESEL, REFUELING	C1-5-1

JCB INDIA LTD.

PART NO. / ISSUE NO. : 332 / L0399

ISSUE DATE : MARCH, 2010

TITLE	PAGE NO.
ELECTRICS, ENGINE	**C2**
ELECTRICAL EQUIPMENT	C2-1-1
ELECTRICAL STATER	C2-3-1
MOTOR, STARTER	C2-3-2
ALTERNATOR	C2-4-1
ALTERNATOR	C2-4-2
MOUNTINGS & FITTINGS ALTERNATORS & STARTER	C2-5-1
ELECTRICS, CAB	**C3**
SWITCH PANEL, SIDE CONSOLE, RIGHT HAND	C3-2-1
HEATER COMMON PARTS, ASSEMBLY	C3-5-1
HEATER	C3-5-1
HEATER UNIT	C3-5-10
HEATER UNIT	C3-5-20
FUSE BOX	C3-7-1
RADIO	C3-11-1
AIR CON	C3-12-1
AIR CON	C3-12-1
AIR CON UNIT	C3-12-10
AIR CON UNIT	C3-12-10
COMBI UNIT	C3-12-20
CIGAR LIGHTER	C3-14-1

TITLE	PAGE NO.
D - CONTROLS-MACHINE, ENGINE	
CONTROLS, MACHINE	**D1**
CONTROLS, EXCAVATOR, CAB	D1-1-1
CONTROLS, ENGINE	**D2**
CONTROLS, THROTTLE & STOP, AMS	D2-1-1
E - HYDRAULICS & AIR	
HOSE & PIPEWORK	**E1**
CIRCUIT, PUMP SUCTION	E1-1-1
CIRCUIT, NEUTRAL PRESSURE	E1-2-1
CIRCUIT, NEUTRAL, RETURN & OIL COOLER	E1-3-1
CIRCUIT, TRACK MAINFRAME	E1-4-1
CIRCUIT, TRACK, UNDERCARRIAGE	E1-5-1
CIRCUIT, SWING	E1-6-1
CIRCUIT, BYPASS. HYDRAULIC FILTER	E1-8-1
CIRCUIT, DRAIN, MOTOR & SOLENIOD	E1-10-1
CIRCUIT, PUMP, PILOT PRESSURE, & RETURN LINE	E1-11-1
CIRCUIT, BOOM RAMS, MAINFRAME	E1-20-1
CIRCUIT, DIPPER & BUCKET	E1-21-1
CIRCUIT, DIPPER RAM, MONOBOOM	E1-22-1
CIRCUIT, BUCKET RAM, 1.91M DIPPER	E1-23-1

JCB INDIA LTD.

PART NO. / ISSUE NO. : 332 / L0399

ISSUE DATE : MARCH, 2010

TITLE	PAGE NO.
CIRCUIT, BUCKET RAM, 2.4M DIPPER	E1-23-10
CIRCUIT, BUCKET RAM, PIPEWORK	E1-23-40
CIRCUIT, BOOM RAM NON HBCV	E1-24-1
CIRCUIT COMBINED, HAMMER & AUXILIARY MAINFRAME	E1-30-1
CIRCUIT, HAMMER CONTROL MAINFRAME	E1-30-10
CIRCUIT, AUXILIARY/HAMMER, MAINFRAME	E1-30-20
CIRCUIT, AUXILIARY/HAMMER, MAINFRAME LOW FLOW	E1-30-30
CIRCUIT, AUXILIARY/HAMMER, MAINFRAME	E1-31-20
CIRCUIT, AUXILIARY, HAMMER, BOOM	E1-32-1
CIRCUIT, AUXILIARY/HAMMER, 1.91M DIPPER	E1-33-1
CIRCUIT, AUXILIARY/HAMMER, 2.40M DIPPER	E1-33-2
CIRCUIT, DIPPER RAM, WITHOUT HBCV	E1-43-10
CIRCUIT, HYDRAULIC COMPONENTS, LAYOUT, REVOLVING FRAME	E1-50-1
CIRCUIT, VALVE, TRACK CONTROL	E1-61-1
CIRCUIT, VALVE. LH CONTROLLER	E1-62-1
CIRCUIT VALVE RH CONTROLLER	E1-63-1
CIRCUIT. VALVE, CUSHION	E1-65-1
CIRCUIT, VALVE, SHUTTLE	E1-66-1
CIRCUIT, VALVE, SOLENOID	E1-67-1
CIRCUIT, MANIFOLD, UNDER CAB	E1-68-1
CIRCUIT, TANK MANIFOLD	E1-69-1

TITLE	PAGE NO.
CIRCUIT, PILOT LINE, MAIN CONTROL VALVE	E1-70-1
CIRCUIT, RETURN LINE, PILOT PRESSURE, MAIN CONTROL VALVE	E1-71-1
CIRCUIT, VALVE, BOOM PRIORITY	E1-73-1
PUMP/MOTOR & PUMP DRIVE	**E2**
PUMP, PISTON, MAIN HYDRAULIC, DRIVE GROUP	E2-1-1
PUMP, PISTON, MAIN HYDRAULIC & COMPONENTS	E2-2-1
PUMP, PISTON, MAIN HYDRAULIC & COMPONENTS FIG 2	E2-2-2
PUMP, PISTON, MAIN HYDRAULIC & COMPONENTS FIG 3	E2-2-3
PUMP, PISTON, MAIN HYDRAULIC & COMPONENTS FIG 4	E2-2-4
MOTOR, SWING	E2-7-1

JCB INDIA LTD.

PART NO. / ISSUE NO. : 332 / L0399
ISSUE DATE : MARCH, 2010

TITLE	PAGE NO.
VALVES & HYDRAULIC FILTERS	**E3**
VALVE, ASSEMBLY & MOUNTING	E3-1-1
VALVE, CONTROL, COMPONENTS FIG 1	E3-2-1
VALVE, CONTROL, COMPONENTS FIG 2	E3-2-2
VALVE, CONTROL, COMPONENTS FIG 3	E3-2-3
VALVE, CONTROL, COMPONENTS FIG 4	E3-2-4
VALVE, HAND CONTROL, SERVO	E3-6-1
VALVE, TRACK CONTROL, HAND AND FOOT	E3-7-1
VALVE, AUXILIARY, FOOT CONTROL	E3-7-10
VALVE SOLENOID	E3-8-1
VALVE SHUTTLE	E3-9-1
VALVE CUSHION	E3-13-1
COUPLING, ROTARY	E3-14-1
LUBRICANTS & FILTERS	E3-15-1
FILTER, HYDRAULIC, AUXILIARY CIRCUIT	E3-16-1
RAM	**E4**
BOOM RAM (LH)	E4-1-1
BOOM RAM (RH)	E4-1-2
RAM, DIPPER	E4-2-1
RAM, BUCKET	E4-3-1

TITLE	PAGE NO.
F - TRACK/SLEW GEARBOX	
SLEW/TRACK GEARBOXES	**F4**
GEARBOX, ASSEMBLY & SPROCKET	F4-1-1
MOTOR, SWING	F4-3-1
GEARBOX, SWING	F4-4-1
GEARBOX, TRACK NEBTESCO	F4-2-2
MOTOR, TRACK NEBTESCO	F4-2-3
GREARBOX, TRACK TRANSMITAL	F4-2-4
TRACK MOTRO, TRANSMITAL	F4-2-5
J - TRACK & RUNNING GEAR, UNDERCARRIAGE	
TRACK, GEAR/UNDERCARRIAGE	**J1**
UNDERCARRIAGE	J1-1-1
IDLER ASSY. WITH COLLER (TENGL)	J1-2-1
IDLER WHEEL (BERCO)	J1-2-1
ROLLER GROUP (TENGL)	J1-3-1
ROLLER TRACK BOTTOM (BERCO)	J1-3-1
CARRIER ROLLER GP WITH BRACKET (TENGL)	J1-4-1
ROLLER, TRACK TOP (BERCO)	J1-4-2
TRACK CHAIN & SHOE ASSEMBLY-500 MM (OPTIONAL)	J1-5-7

JCB INDIA LTD.

PART NO. / ISSUE NO. : 332 / L0399

ISSUE DATE : MARCH, 2010

TITLE	PAGE NO.
TRACK CHAIN & SHOE ASSEMBLY-600 MM	J1-5-8
TRACK LINE ASSEMBLY - (49 SECTION)	J1-5-9
CHAIN TRACK, GROUSER, 46 LINK	J1-5-1
CHAIN TRACK, GROUSER, 49, LINK	J1-5-10
CHAIN TRACK, GROUSER, 49, LINK	J1-5-10
CHAIN TRACK GROUSER, 49 LINK HEAVY DUTY	J1-5-20
IDLER GROUP TENGL	J1-6-1

T - ENGINE

ENGINE BLOCK & SUBASSEMBLIES	T1
ENGINE COMPLETE	T1-1-1
BLOCK ASSEMBLY	T1-3-1
CRANKSHAFT, BEARINGS, PISTONS & CON-RODS	T1-4-1
FANS, PULLEYS, & FAN BELT	T1-5-1
CAMSHAFT & GEARS, TIMINGS CASE	T1-6-1
FLYWHEEL & HOUSING	T1-7-1
ENGINE MOUNTINGS	T1-8-1

CYLINDER HEAD & SUBASSEMBLIES	T2
CYLINDER HEAD	T2-1-1
ROCKER ASSEMBLY, INLET/EXHAUST VALVES PUSH RODS & TAPPETS	T2-2-1
ROCKER COVER	T2-3-1
LIFTING PLATES, ENGINE	T2-4-1

INDUCTION & EXHAUST SYSTEM	T3
MANIFOLD, INDUCTION	T3-1-1
MANIFOLD, EXHAUST	T3-2-1
FILTER, AIR	T3-3-1
EXHAUST SYSTEM	T3-4-1

SYSTEM COOLING	T4
PUMP, WATER	T4-1-1
THERMOSTAT, HOUSING, INLET & OUTLET	T4-2-1
RADIATOR & OIL COOLER ASSEMBLY (ROC)	T4-2-2
RADIATOR, FITTINGS & MOUNTINGS	T4-3-1
COOLER ASSEMBLY (OLD TYPE IMPORTED)	T4-4-1
RADIATOR, HOSES & FITTINGS	T4-5-1

JCB INDIA LTD.

PART NO. / ISSUE NO. : 332 / L0399

ISSUE DATE : MARCH, 2010

TITLE	PAGE NO.
RADIATOR, HOSES & FITTINGS	T4-5-1
SYSTEM, LUBRICATION	**T5**
SUMP, OIL & FITTINGS	T5-1-1
PUMP OIL	T5-2-1
PISTON COOLING JETS	T5-3-1
OIL FILTER	T5-4-1
COOLER, OIL	T5-5-1
PIPES, OIL	T5-6-1
SYSTEM, FUEL	**T6**
PUMP, FUEL INJECTION, INSTALLATION	T6-1-1
PUMP, FUEL INJECTION, INSTALLATION	T6-1-1
FUEL SYSTEM	T6-2-1
FUEL PIPES, FUEL TANK TO FILTER	T6-4-1
INJECTORS, FUEL	T6-5-1
FILTER, SEDIMENTER	T6-6-1
MICO FILTER, FUEL	T6-7-1

TITLE	PAGE NO.
EQUIPMENT, AUXILIARY	**T7**
TURBO CHARGER	T7-1-1
TURBO, PIPEWORK	T7-2-1
COMPRESSOR & INSTALLATION, AIR CONDITIONING	T7-3-1
COMPRESSOR & INSTALLATION, AIR CONDITIONING	T7-3-1
GASKET SETS	**T8**
GASKET SET, OVERHAUL, TOP	T8-1-1
GASKET SET, OVERHAUL	T8-1-2
KIT, PISTON & LINER	T8-2-1
LIGHTS	**L1**
WORKING LIGHTS ADDITIONAL	L1-1-2

A

- A2 BUCKETS

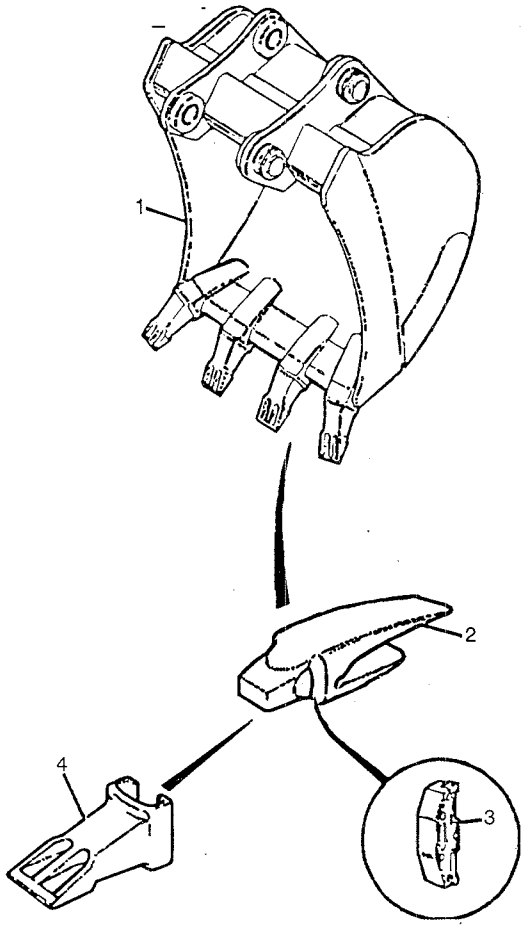

ITEM	PART NO.	CHANGE NO.	DESCRIPTION	REMARKS	QTY.
1	981/00420		Bucket, general purpose, 600mm wide		1
2	993/99638		Adapted, tooth V29		3
3	510/86204		Pin, locking, V29		3
4	993/99637		Tooth, V29 series, SYL		3

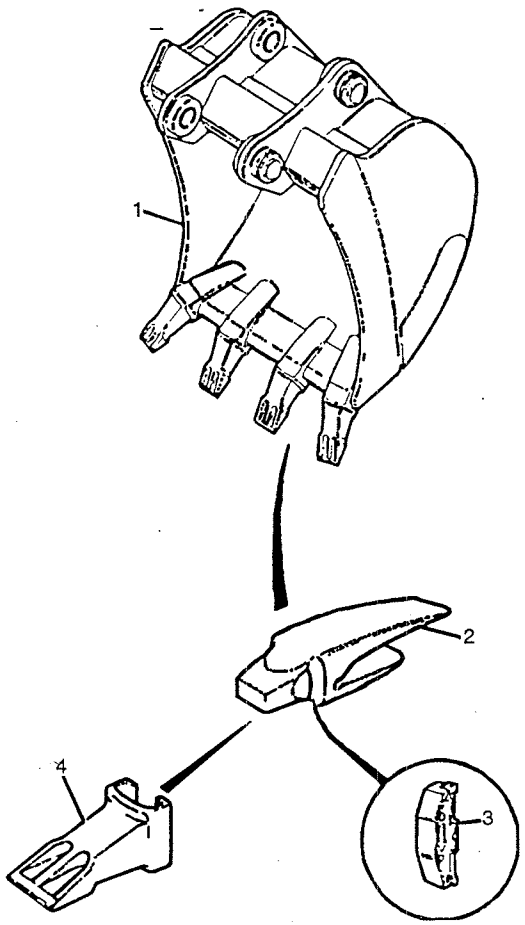

ITEM	PART NO.	CHANGE NO.	DESCRIPTION	REMARKS	QTY.
1	981/00423		Bucket, general purpose, 900mm wide		1
2	993/99638		Adapted, tooth V29		4
3	510/86204		Pin, locking, V29		4
4	993/99637		Tooth, V29 series, SYL		4

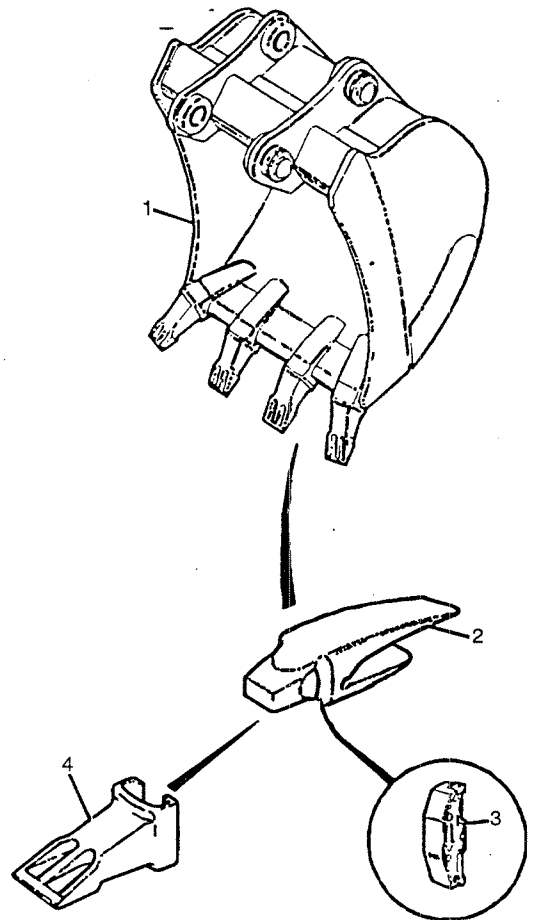

ITEM	PART NO.	CHANGE NO.	DESCRIPTION	REMARKS	QTY.
1	981/00424		Bucket, general purpose, 1000mm wide		1
2	993/99638		Adapted, tooth V29		4
3	510/86204		Pin, locking, V29		4
4	993/99637		Tooth, V29 series, SYL		4

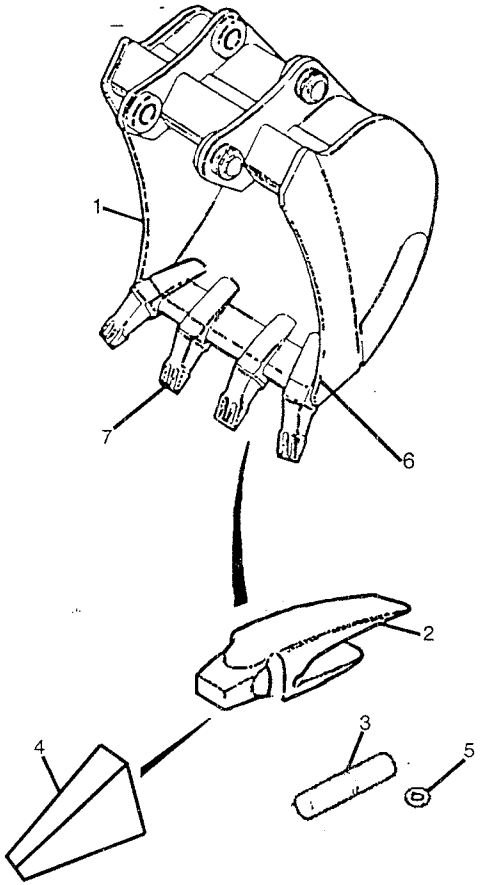

ITEM	PART NO.	CHANGE NO.	DESCRIPTION	REMARKS	QTY.
1	331/11725		GP Bucket 48"		1
2	980/84765		Tooth adaptor		4
3	980/84767		Pin, locking,		4
4	980/84766		Tooth		4
5	980/84768		Washer		4
6	980/84729		Side Cutter		2
7	980/84756		Toe plate		1

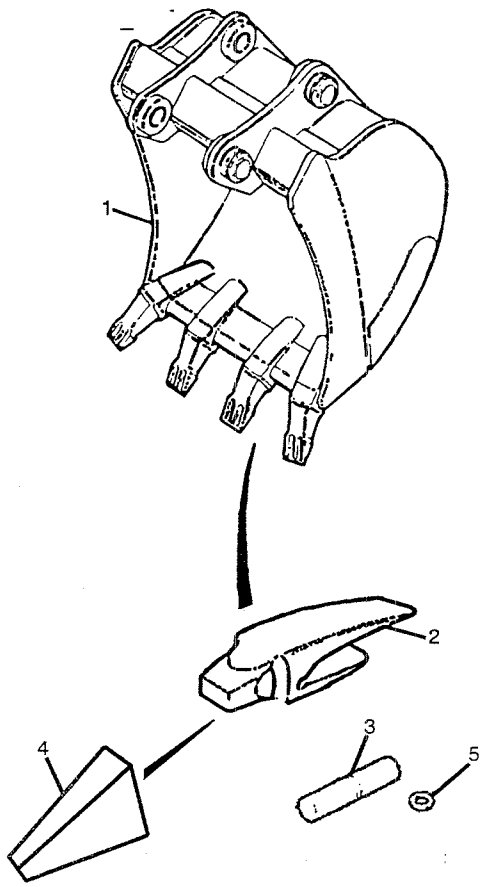

ITEM	PART NO.	CHANGE NO.	DESCRIPTION	REMARKS	QTY.
1	331/11726		Bucket		1
2	980/84765		Adapted, tooth		6
3	980/84767		Pin, locking,		6
4	980/84766		Tooth		6
5	980/84768		Washer		6

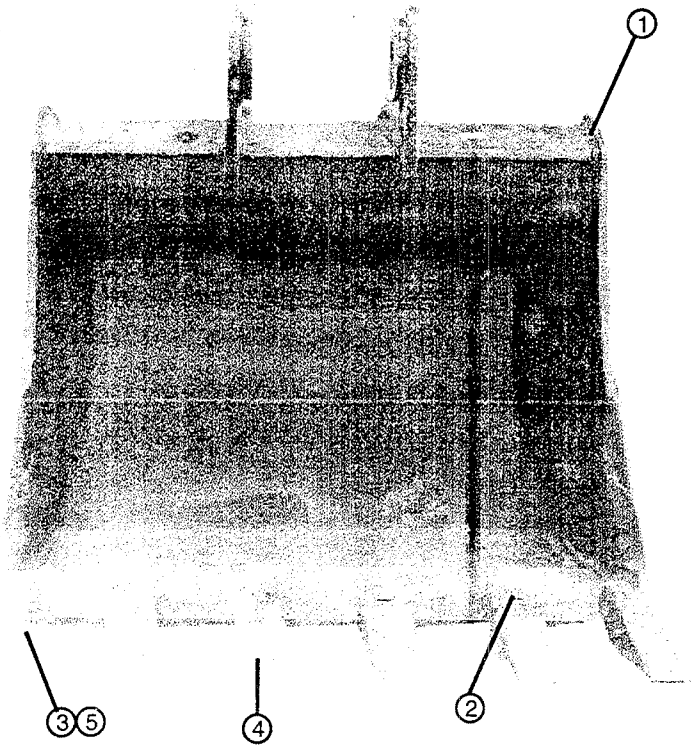

ITEM	PART NO.	CHANGE NO.	DESCRIPTION	REMARKS	QTY.
1	980/86142		Bucket		1
2	980/84765		Adaptor, tooth		6
3	980/84767		Pin, locking,		6
4	980/84766		Tooth		6
5	980/84768		Washer		6

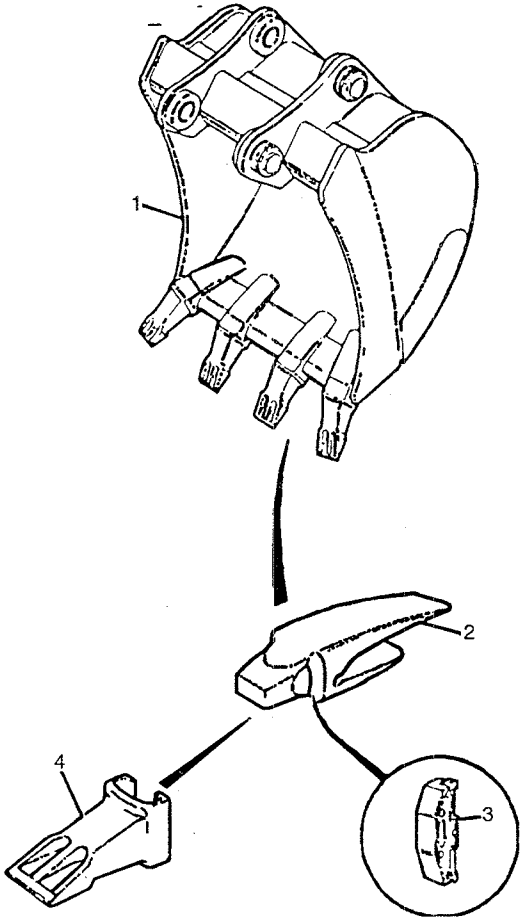

ITEM	PART NO.	CHANGE NO.	DESCRIPTION	REMARKS	QTY.
1	981/00428		Bucket, general purpose, 1350mm wide		1
2	993/99638		Adapted, tooth V29		5
3	510/86204		Pin, locking, V29		5
4	993/99637		Tooth, V29 series, SYL		5

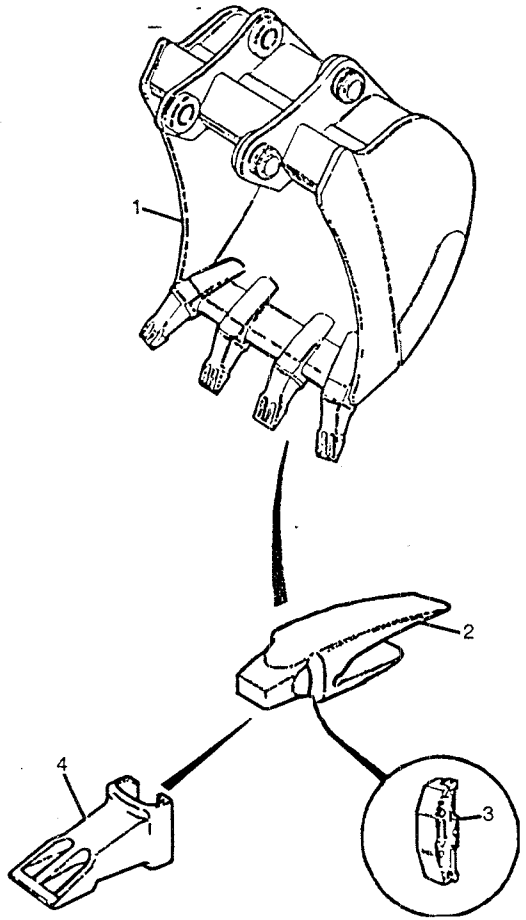

ITEM	PART NO.	CHANGE NO.	DESCRIPTION	REMARKS	QTY.
1	981/00430		Bucket, general purpose, 1450mm wide		1
2	993/99638		Adapted, tooth V29		6
3	510/86204		Pin, locking, V29		6
4	993/99637		Tooth, V29 series, SYL		6

A2-1-10 BUCKET, 1500MM WIDE, 1.180 CUBIC METRES

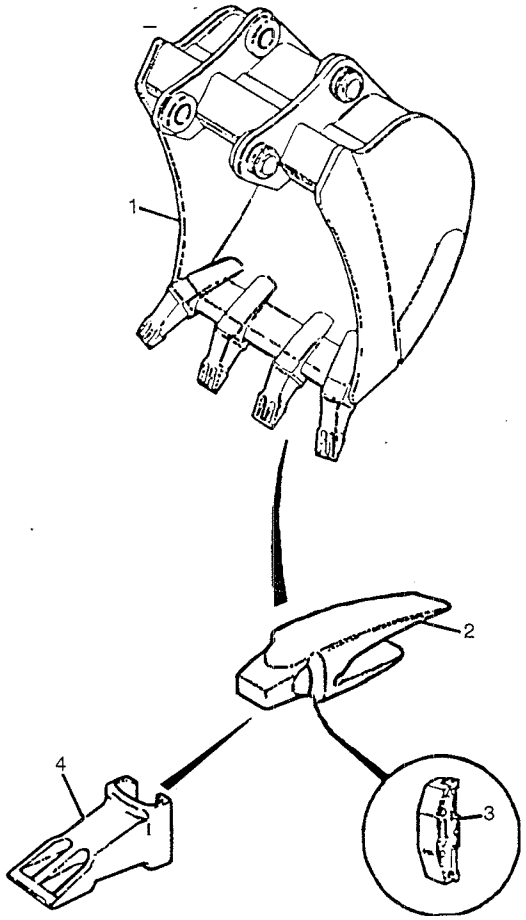

ITEM	PART NO.	CHANGE NO.	DESCRIPTION	REMARKS	QTY.
1	981/00431		Bucket, general purpose, 1500mm wide		1
2	993/99638		Adapted, tooth V29		6
3	510/86204		Pin, locking, V29		6
4	993/99637		Tooth, V29 series, SYL		6

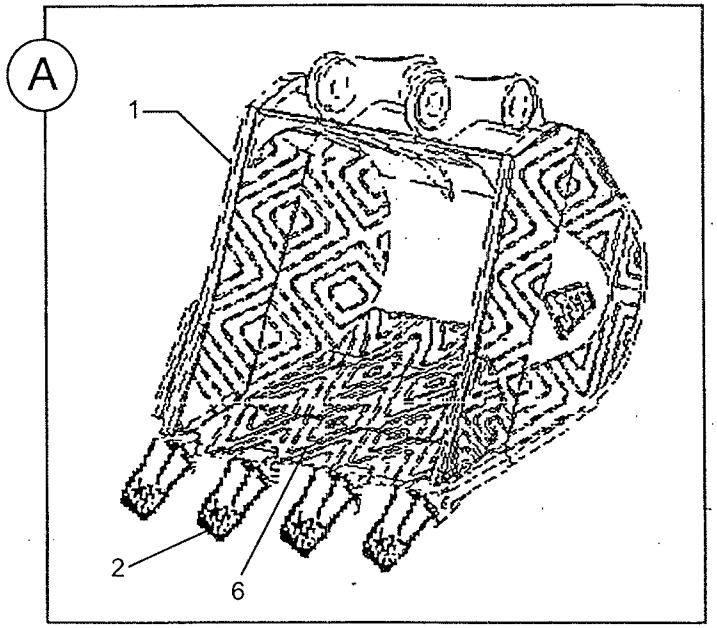

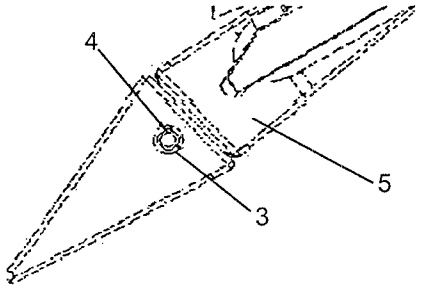

ITEM	PART NO.	CHANGE NO.	DESCRIPTION	REMARKS	QTY.
0A	332/P8470		Bucket GA	Bucket Sl. No. MBA 02 09 01onwards	1
1	332/P4777		Bucket WA(W/o Teeth)		1
2	980/84766		Tip		4
3	980/84768		Washer		4
4	980/84767		Pin		4
5	332/P6484		Tooth Adaptor		4
6	332/P4761		Toe Plate		1

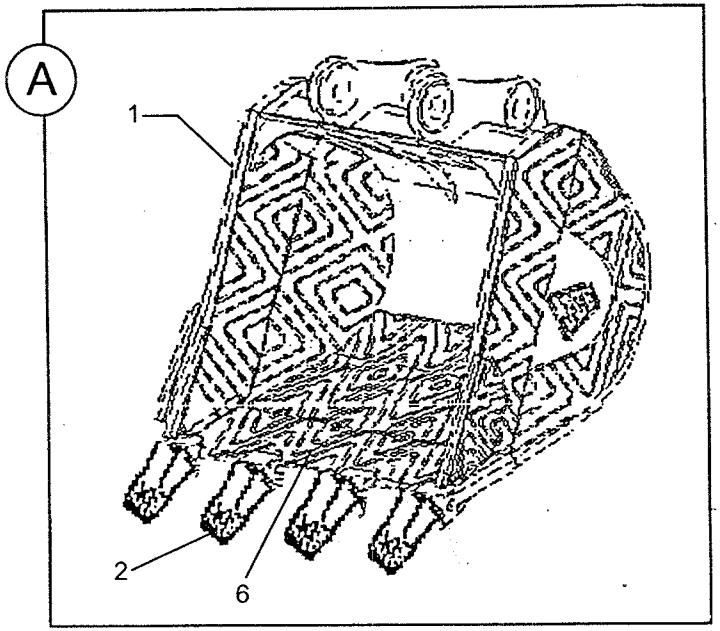

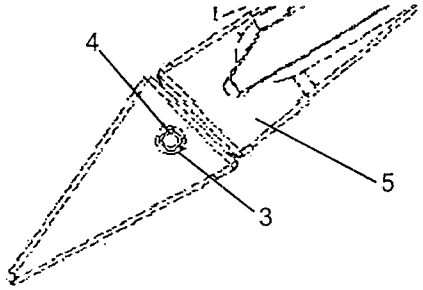

ITEM	PART NO.	CHANGE NO.	DESCRIPTION	REMARKS	QTY.
0A	332/P1087		Bucket GA	Bucket Sl. No. MBA 04 08 01 to MBA 09 08 34	1
1	332/P4574		Bucket WA(W/o Teeth)		1
2	332/P3350		Tip		4
3	332/P3387		Washer		4
4	332/P3389		Pin		4
5	332/P3343		Tooth Adaptor		4
6	332/P1088		Toe Plate		1

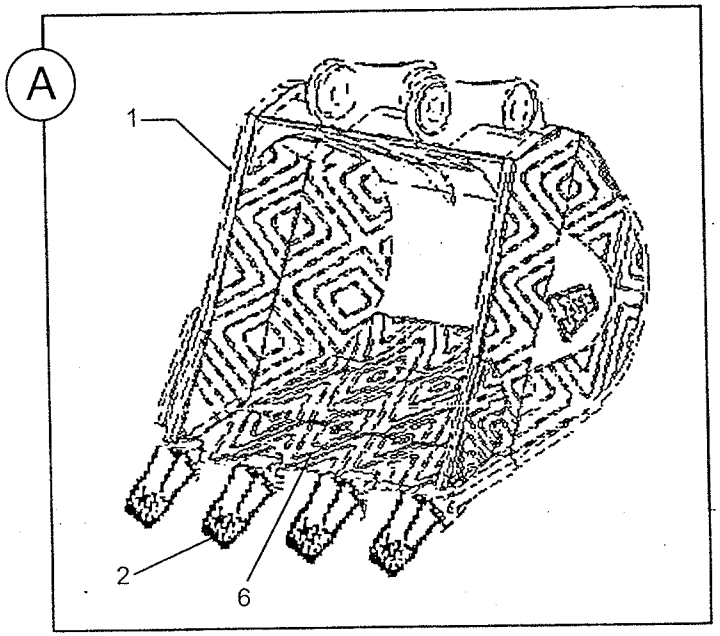

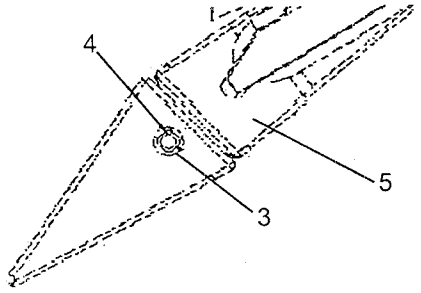

ITEM	PART NO.	CHANGE NO.	DESCRIPTION	REMARKS	QTY.
0A	332/P1087		Bucket GA	Bucket Sl. No. MBA 09 08 35 to MBA 01 09 51	1
1	TBA		Bucket WA(W/o Teeth)		1
2	229/01302		Tip		4
3	229/01304		Washer		4
4	229/01303		Pin		4
5	229/01301		Tooth Adaptor		4
6	332/P1088		Toe Plate		1

A2-1-11 BUCKET, WIDE, 0.90 CUBIC METRES (H.D.)

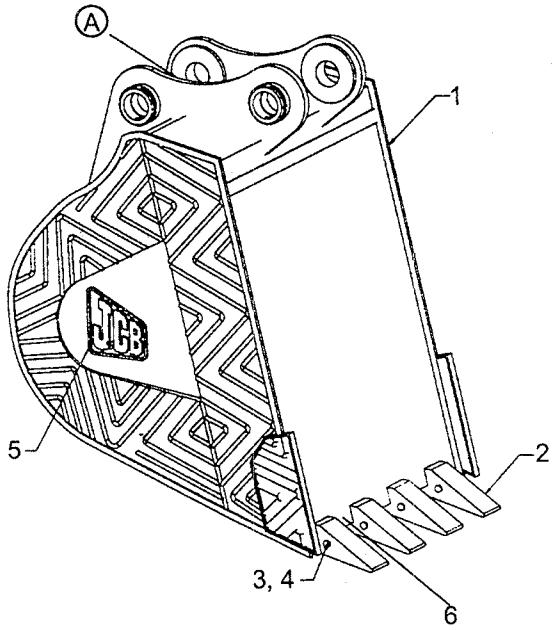

ITEM	PART NO.	CHANGE NO.	DESCRIPTION	REMARKS	QTY.
0A	229/00963		0.9M³ H.D. Bucket Complete		1
1	229/02569		0.9M³ H.D. Bucket WA		1
2	229/02570		Tooth Adapter		4
3	229/02571		Tooth Tip		4
4	229/02572		Locking Pin and Washer		4
5	980/84673		JCB Side Logo		2
6	550/43772		Toe plate		1

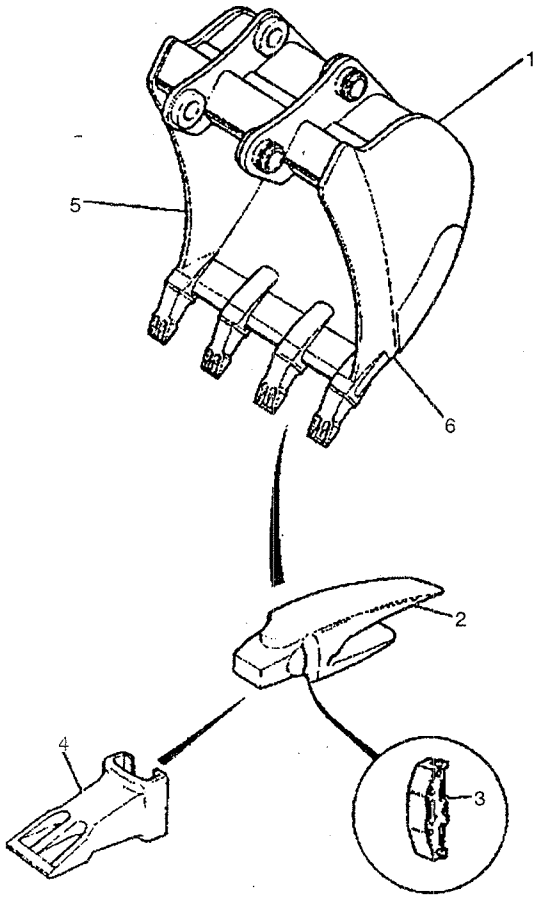

ITEM	PART NO.	CHANGE NO.	DESCRIPTION	REMARKS	QTY.
1	JNV0846		Bucket, GP 600mm wide 0.275 Cu.M		1
2	993/99577		Adapted, tooth V23		1
3	510/92002		Pin, locking		3
4	993/99634		Tooth, point		3
5	980/89219		Casting, left hand corner		1
6	980/89221		Casting, right hand corner		1

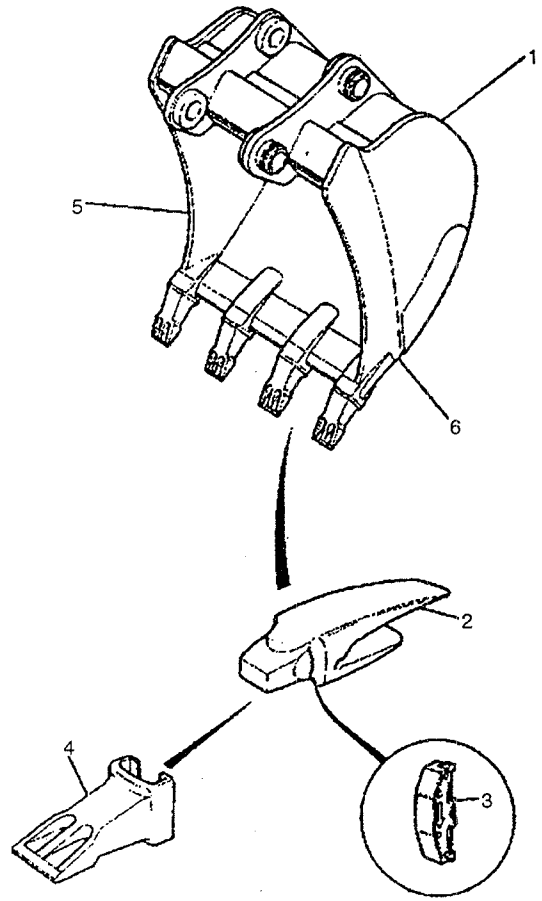

ITEM	PART NO.	CHANGE NO.	DESCRIPTION	REMARKS	QTY.
1	JNV0847		Bucket, 750mm wide		1
2	993/99577		Adapted, tooth V23		2
3	510/92002		Pin, locking		4
4	993/99634		Tooth, point		4
5	980/89219		Casting, left hand corner		1
6	980/89221		Casting, right hand corner		1

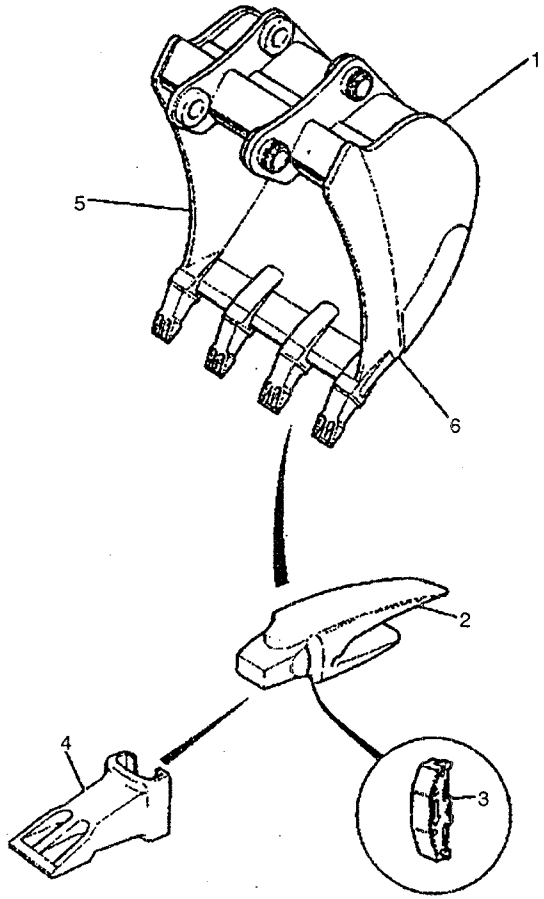

ITEM	PART NO.	CHANGE NO.	DESCRIPTION	REMARKS	QTY.
1	JNV0848		Bucket, GP 900mm wide 0.485 Cu.M		1
2	993/99577		Adapted, tooth V23		2
3	510/92002		Pin, locking		4
4	993/99634		Tooth, point		4
5	980/89219		Casting, left hand corner		1
6	980/89221		Casting, right hand corner		1

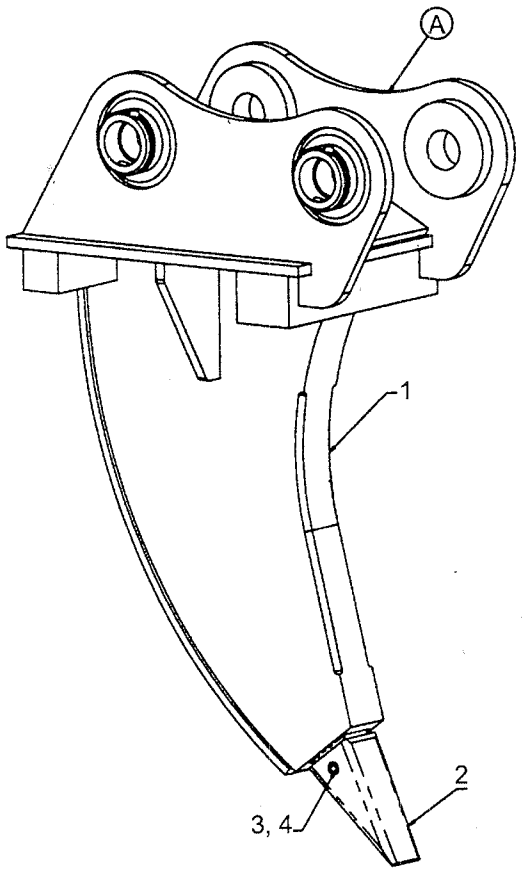

ITEM	PART NO.	CHANGE NO.	DESCRIPTION	REMARKS	QTY.
0A	229/02610		Ripper Tooth		
1	229/02616		WA Ripper Tooth		1
2	980/84766		Tooth Tip		1
3	980/84767		Lock Pin		1
4	980/84768		Washer		1

A2-9-1 BUCKET WITH BOLT ON SIDE CUTTER, 0.89 CUBIC METER (48") ISSUE - 1

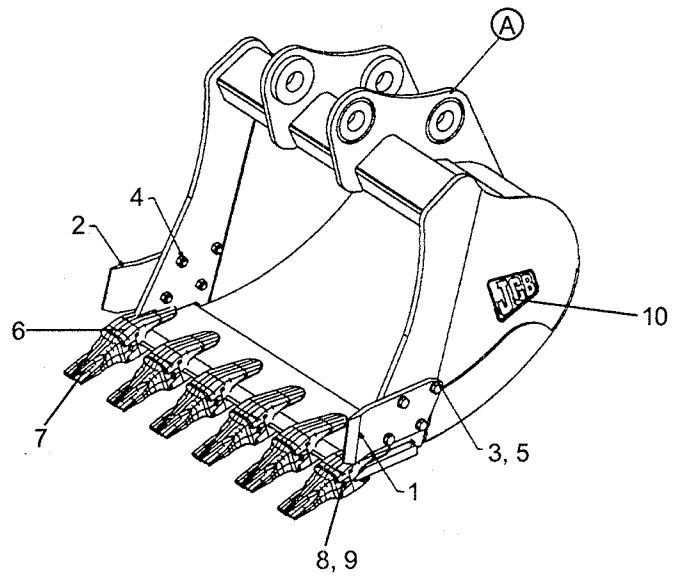

ITEM	PART NO.	CHANGE NO.	DESCRIPTION	REMARKS	QTY.
0A	335/13521		0.89M³ Bucket (48")		
1	331/65674		Bolt on side cutter RH		1
2	331/65844		Side on side Cutter LH		1
3	1316/4018Z		M24X80 Bolt		8
4	1370/0901Z		M24 Nut		8
5	1420/0014Z		Washer		8
6	980/84765		Tooth adaptor		5
7	980/84766		Tooth tip		5
8	980/84767		Lock pin		5
9	980/84768		Washer		5
10	980/84673		JCB side logo		2

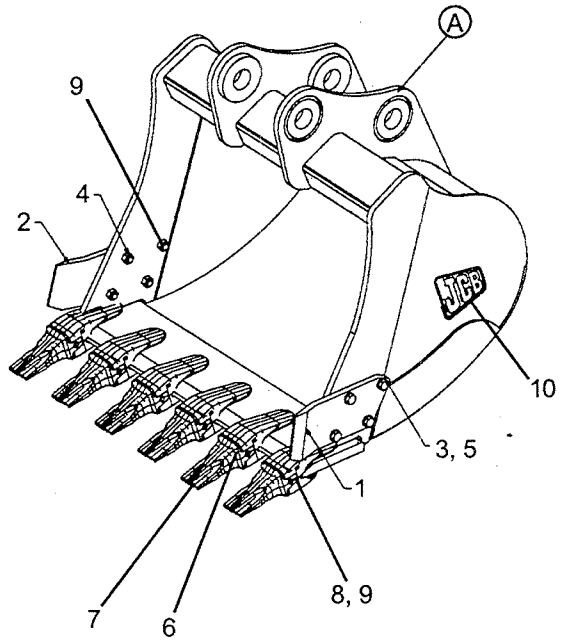

ITEM	PART NO.	CHANGE NO.	DESCRIPTION	REMARKS	QTY.
0A	335/13522		1.02M³ Bucket (54")		
1	331/65674		Bolt on side cutter RH		1
2	331/65844		Side on side Cutter LH		1
3	1316/4018Z		M24X80 Bolt		8
4	1370/0901Z		M24 Nut		8
5	1420/0014Z		Washer		8
6	980/84765		Tooth adaptor		6
7	980/84766		Tooth tip		6
8	980/84767		Lock pin		6
9	980/84768		Washer		6
10	980/84673		JCB side logo		2

A2-9-3 BUCKET WITH BOLT ON SIDE CUTTER, 1.20 CUBIC METER (60") ISSUE - 1

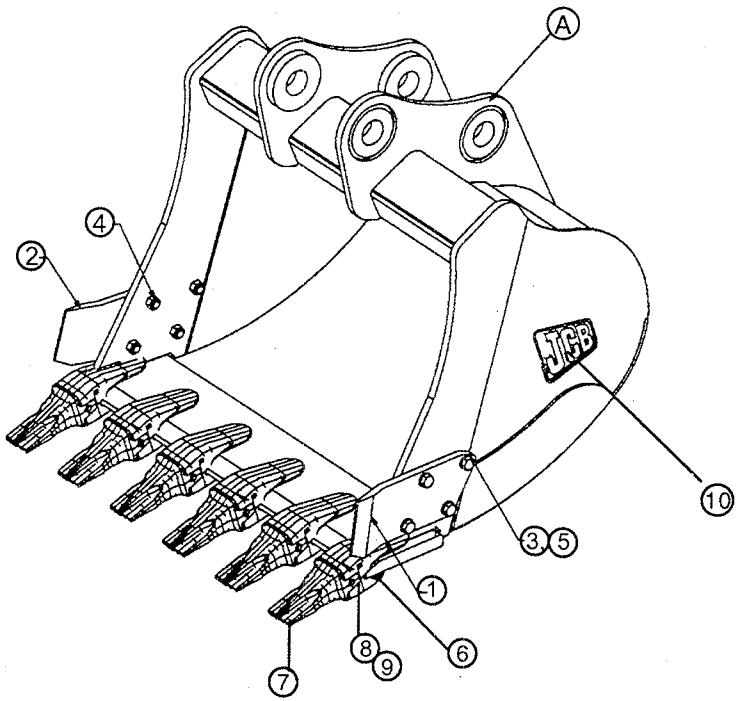

ITEM	PART NO.	CHANGE NO.	DESCRIPTION	REMARKS	QTY.
0A	335/13523		1.20M³ Bucket (60")		
1	331/65674		Bolt on side cutter RH		1
2	331/65844		Side on side Cutter LH		1
3	1316/4018Z		M24X80 Bolt		8
4	1370/0901Z		M24 Nut		8
5	1420/0014Z		Washer		8
6	980/84765		Tooth adaptor		6
7	980/84766		Tooth tip		6
8	980/84767		Lock pin		6
9	980/84768		Washer		6
10	980/84673		JCB side logo		

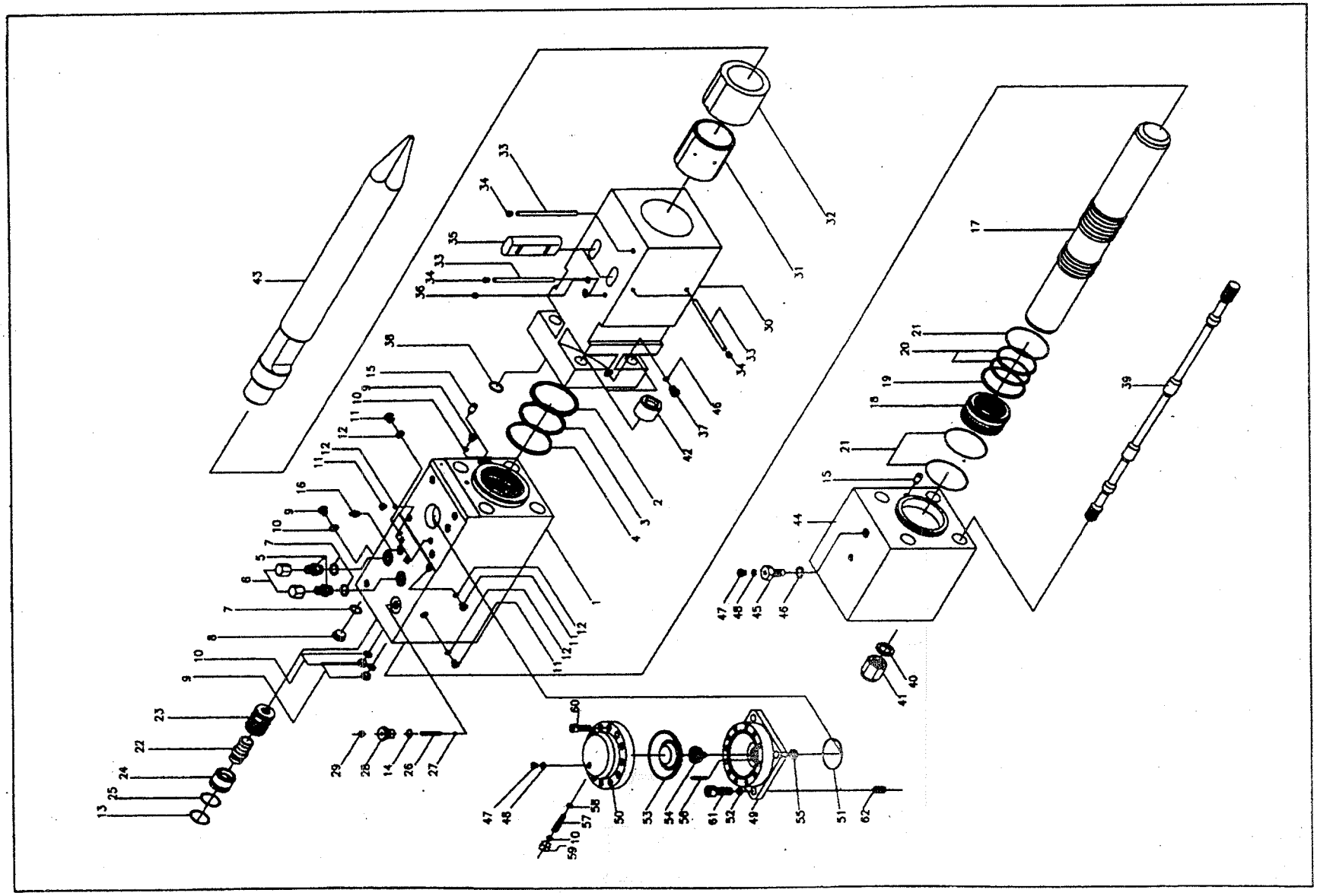

ITEM	PART NO.	CHANGE NO.	DESCRIPTION	REMARKS	QTY.
1	331/67255		Cylinder		1
2	331/62725		Dust Seal		1
3	331/67258		U-Packing		1
4	331/67259		Buffering		1
5	331/61366		Hose Adapter		2
6	32/A2281		Union Cap		2
7	331/67260		O- Ring		3
8	331/67261		Ro-plug		1
9	331/67262		Ro-plug		4
10	331/67263		O- Ring		5
11	331/67267		Ro-plug		6
12	331/67264		O- Ring		6
13	331/67266		O- Ring		1
14	331/67267		O- Ring		1
15	331/67268		Holding Pin		2
16	332/A2281		Grease Nipple		1
17	331/67270		Piston		1
18	331/67271		Cylindre Bush		1
19	331/67272		Gas Seal		1
20	331/67278		Step Seal		2
21	331/67280		O - ring		3
	331/67281		Valve Set	22,23,24,25	1(Set)
22	331/67282		Valve		1
23	331/67283		Valve Bush		1
24	331/67364		Valve cap		1
25	331/67267		O- Ring		1
	331/67286		Adjuster Set	14, 26, 27, 28, 29	1(Set)
26	331/67287		Adjuster		1
27	331/67288		O- Ring		1

ITEM	PART NO.	CHANGE NO.	DESCRIPTION	REMARKS	QTY.
28	331/67289		Adjuster Holder		1
29	331/67290		Adjuster Nut		1
30	331/67291		Front Head		1
31	331/67292		Roundre Bush		1
32	331/67293		Front cover		1
33	331/67294		Stopper Pin		4
34	331/67297		Rubber Plug		4
35	331/67298		Chisel pin		2
36	331/67299		Hollow plug		1
37	331/67301		Air plug Assy.		1
38	331/67302		O-Ring		1
	331/67303		Through Bolt set	39,40,41,42	4(1Set)
39	331/67304		Through Bolt		4
40	331/67305		Through Washer		4
41	331/67306		T/ bolt Top nut		4
42	331/67307		T/ bolt Bottem nut		4
43			Hammer Tool		1
43-1	331/67308		Coniical Point		
43-2	331/67310		Moil Point		
43-3	331/67311		Crosscut (wedgeH)		
43-4	331/67312		In line (Wedgev)		
43-5	331/67313		Flat End		
44	331/67314		Back Head		1
	331/67315		Gas valve set	45, 46, 47, 48	1(Set)
45	331/67316		Gas valve		1
46	331/67318		O- Ring		1
47	331/67319		Gas valve Cap		2
48	331/67320		O- Ring		2
	331/67322		Accumulator set	10, 47 - 62	1(Set)

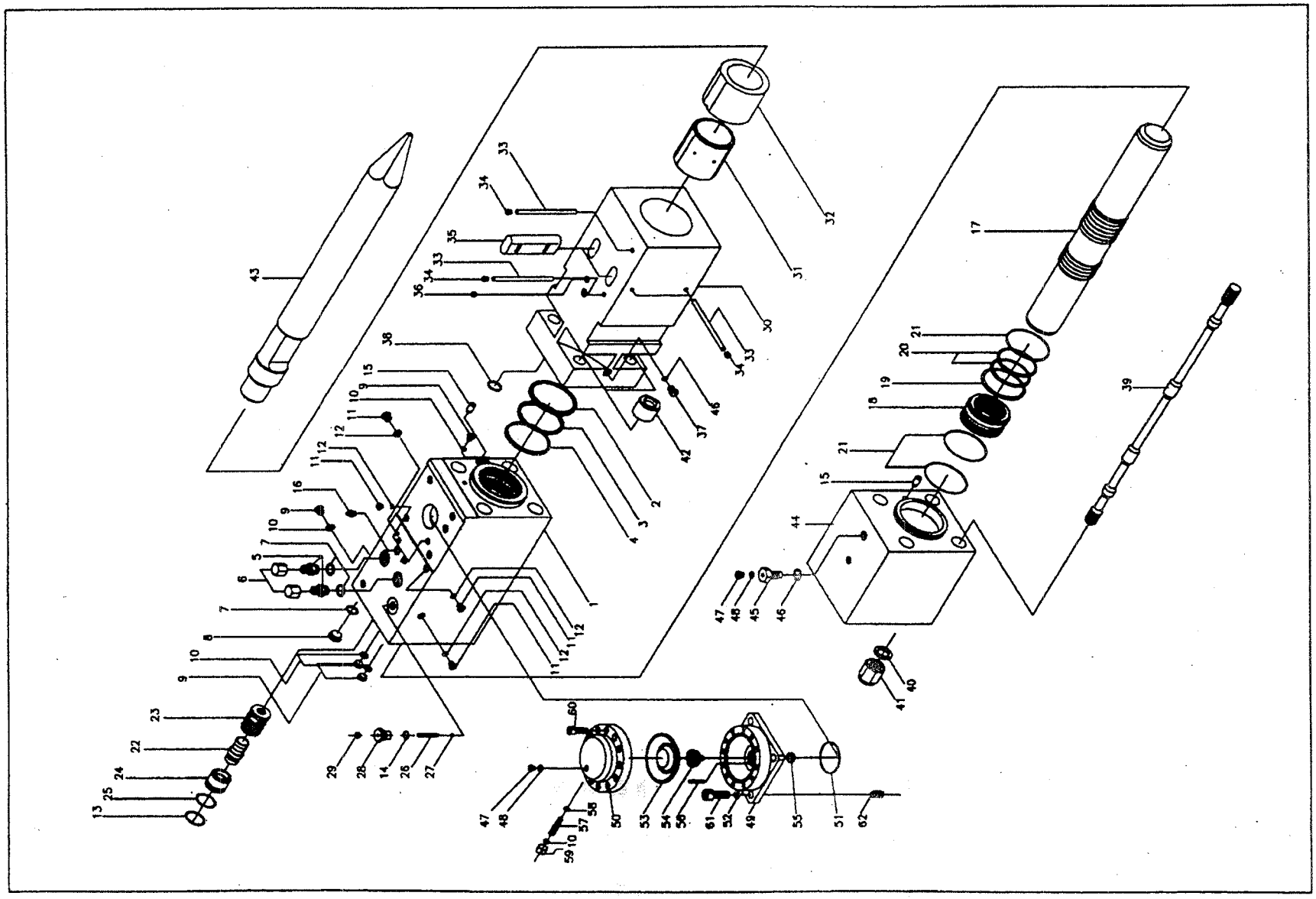

ITEM	PART NO.	CHANGE NO.	DESCRIPTION	REMARKS	QTY.
49	331/67323		Acc"body		1
50	331/67325		Acc" cover		1
51	331/67326		O- ring		1
52	331/67327		Ribbed- rock washer		1
53	331/67329		Diaphragm		1
	331/67330		Poppet valve set	54, 55, 56	1 (set)
54	331/67331		Poppet valve set (3set)		1
55	331/67337		Poppet valve set nut		1
56	331/67338		Knock Pin		1
	331/67339		Needle pin set	10, 57, 58, 59	1 (set)
57	331/67340		Needle pin		1
58	331/67341		O-ring		1
59	331/67342		Needle cap		1
60	331/67343		Socket Bolt		12
61	331/67344		Socket Bolt		4
62	331/67345		Heli Sert		4
	331/67346		Seal Kit Complete		1(Kit)

ITEM	PART NO.	CHANGE NO.	DESCRIPTION	REMARKS	QTY.

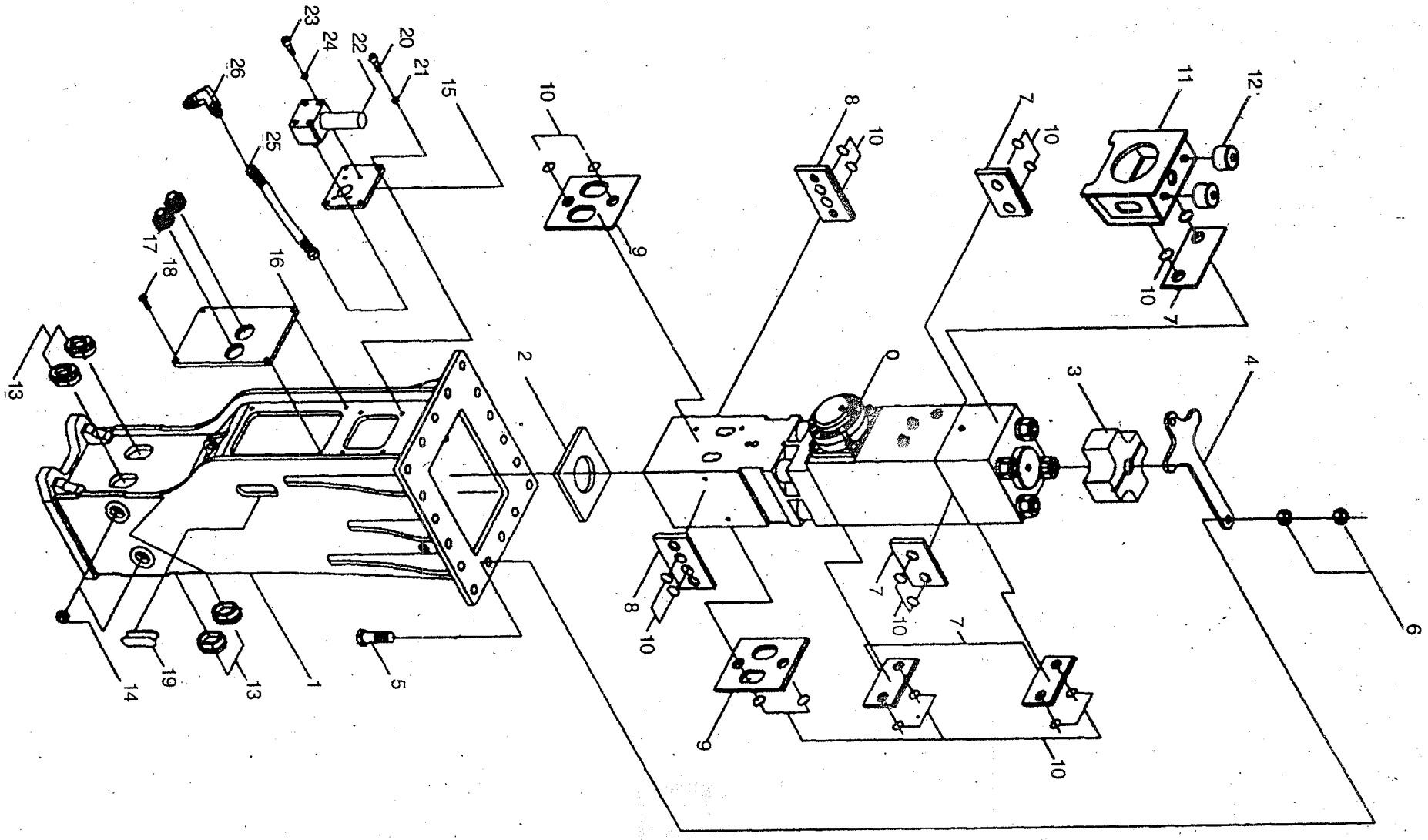
23
24
22
20
21
26
25
15
10
8
10
7
10
11
12
17
18
16
9
10
7
13
2
3
4
6
8
10
7
10
7
9
10
14
19
13
1
5

ITEM	PART NO.	CHANGE NO.	DESCRIPTION	REMARKS	QTY.
1	331/67347		Casing Main		1
2	331/67348		Damper Lower		1
3	331/67349		Damper Upper		1
4	NSS				1
5	NSS				2
6	NSS				4
7	331/67350		MC Pad		5
8	331/67351		MC Pad		2
9	331/67353		MC Pad		2
10	331/67354		O Ring		18
11	331/67355		Head Plate		1
12	331/67356		Head Damper		2
13	331/67357		Cover Rubber		4
14	331/67358		Cover Rubber		2
15	331/A2285		Auto Greaser Cover		1
16	331/67360		MC Cover		1
17	331/67361		Hose Cover		2
18	331/67362		Bolt		4
19	331/67363		Washer		2
20	331/67364		Bolt		4
21	331/67365		Washer		4
22	332/A2287		Complete Autogreaser		1
22A	332/Y3995		Auto greaser base unit new design		1
23	332/A2288		Sus wrench Bolt		4
24	332/A2289		Sus Washer		4
25	332/A2290		Grease hose		1
26	332/A2291		Elbow(90)		1
27	625/80002		Hose Rockbreaker Feed		2

ITEM	PART NO.	CHANGE NO.	DESCRIPTION	REMARKS	QTY.
28	332/ A3307		Nitrogen charging kit		1
29	550/43789		Bracket pin		2
30	550/43786		Stop ring		4
31	TBA		Bracket		1
32	TBA		Collar		4

A2-9-7 HANGER BRACKET

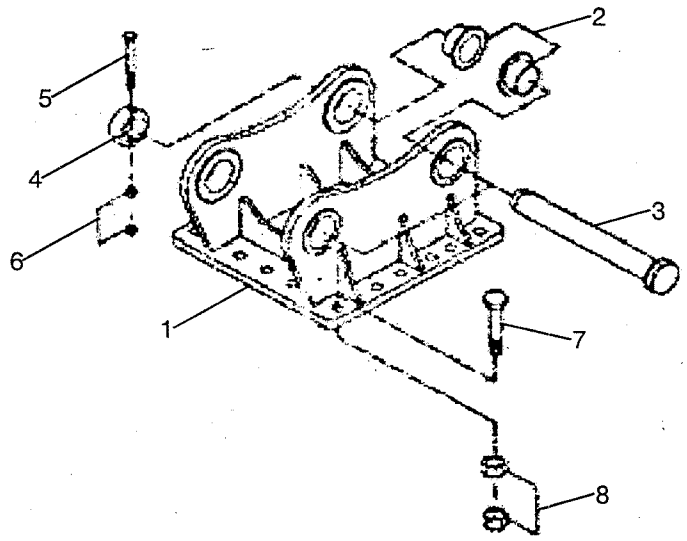

ITEM	PART NO.	CHANGE NO.	DESCRIPTION	REMARKS	QTY.
1	332/Y7036		Mount cap (Adapter)		1
2	332/Y7039		Bracket Pin Bush		4
3	550/43789		Bracket Pin		2
4	550/43786		Stop Ring		2
5	332/Y7045		Hex. Bolt		2
6	332/Y7040		Hex. Nut		4
7	332/Y7041		Hex. Bolt		18
8	332/Y7042		Hex. Nut		36

B

- B1 BODYWORK/FRAME
- B2 CAB
- B3 EXCAVATOR END
- B5 REFURBISHMENTS

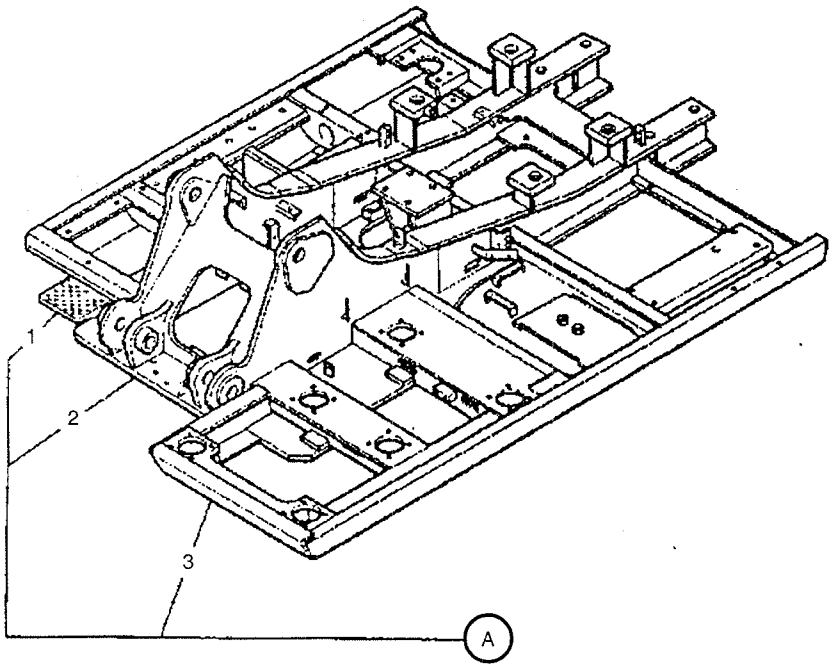

ITEM	PART NO.	CHANGE NO.	DESCRIPTION	REMARKS	QTY.
0A	229/01054		Frame, revolving WA		1
1	229/01056		Platform, right hand side		1
1A	335/05171		Step, lower	used on platform 331/24656	1
2	229/01058		Frame, revolving A&E		1
3	229/01057		Platform, left hand side		1

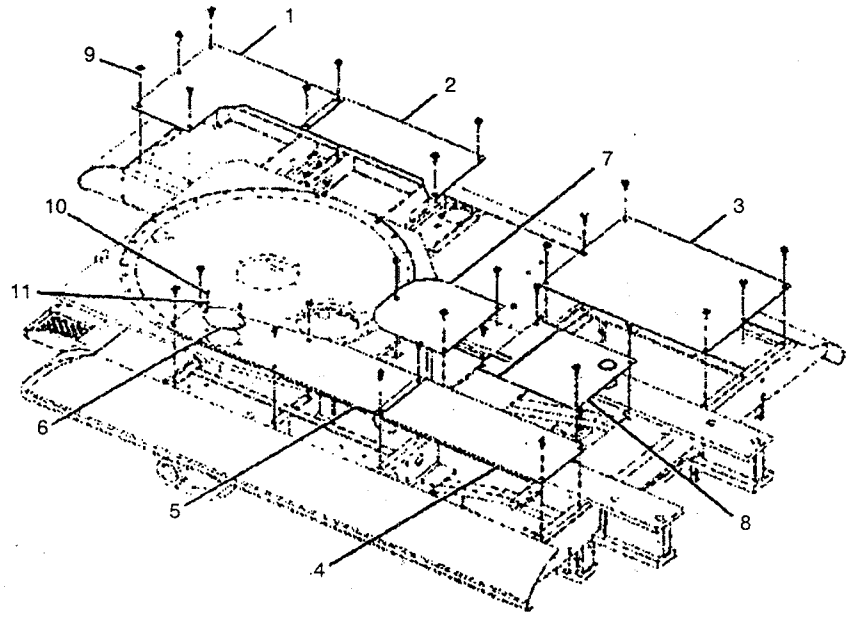

ITEM	PART NO.	CHANGE NO.	DESCRIPTION	REMARKS	QTY.
1	229/01719	JS93	Cover, under, cub front		1
2	229/01720	JS93	Cover, under, cub rear		1
3	229/02576	JS93	Cover, under, radiator assembly		1
4	229/01716	JS93	Cover, under, pump bay		1
5	229/01717	JS93	Cover, under, hyd & fuel tanks		1
6	229/01718	JS93	Cover, under, access panel	attached to item 5	1
7	229/01714	JS93	Cover, under, center		1
8	229/01721	JS93	Cover, under, engine bay		1
9	KHN1398		Bolt	used to attach at cover	29
10	1316/0405Z		Screw, M10 x M20	attach access panel to item 5	2
11	1420/0008Z		Washer, Plain	used with item 10	2

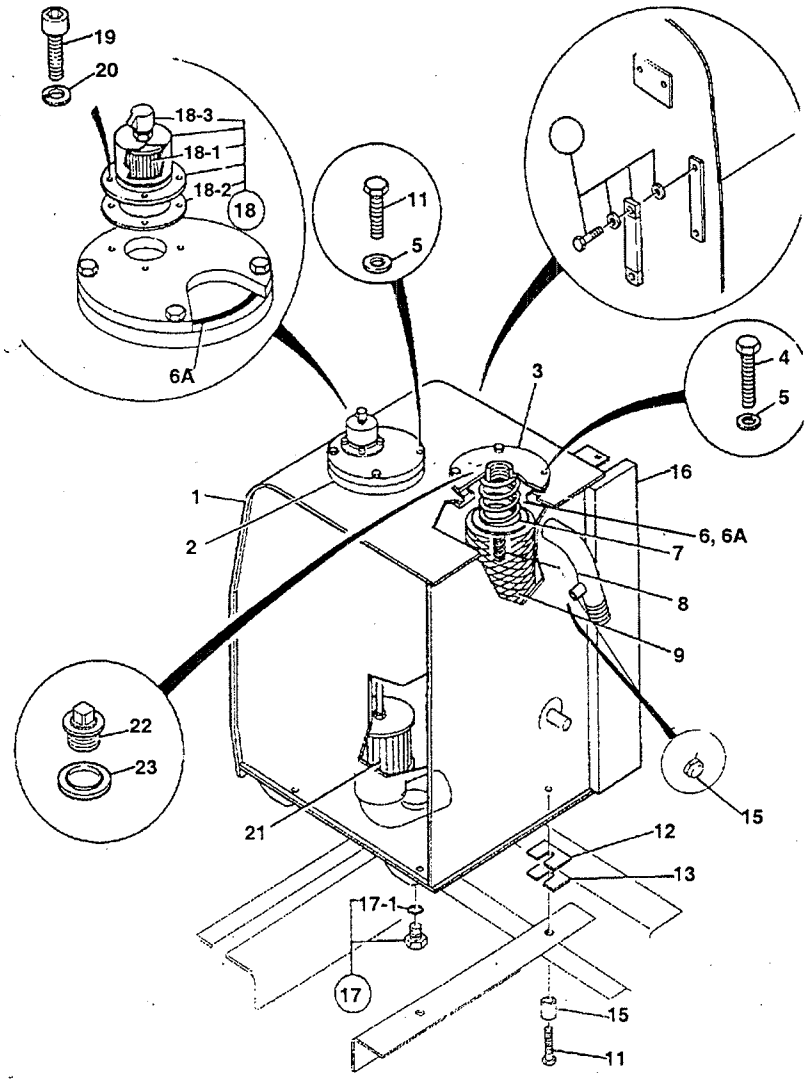

ITEM	PART NO.	CHANGE NO.	DESCRIPTION	REMARKS	QTY.
1	229/02166		Tank, hydraulic	Tank only, no fitings	1
2	KNJ1822		Cover		1
3	JRJ0148		Cover		1
4	1316/0405Z		Screw, M10 x 20		4
5	JHP0046		Washer		8
6	*KNJ0381		O Ring	Use with item 3	1
6A	CSP0161		O Ring	Use with item 2	1
7	KRJ3457		Spring, compression		1
8	KRJ2246		Valve, relief		1
9	KRJ3836		Filter, return		1
10	JHH0119		Gauge, hyd. oil sight	includes banjo bolts & seals	1
11	1316/0408Z		Screw		4
12	KHH0040		Shim, plate, T = 0.03"		4
13	KHH0137		Shim plate		4
14	1316/3716Z		Bolt		4
15	JSJ0042		Spacer		4
16	KRJ4608		Seal, cushion		1
17	816/80012		Plug		1
17 01	1406/0021		O Ring		1
18	32/925692		Breather, air		1
18 01	KRJ3461		Element		1

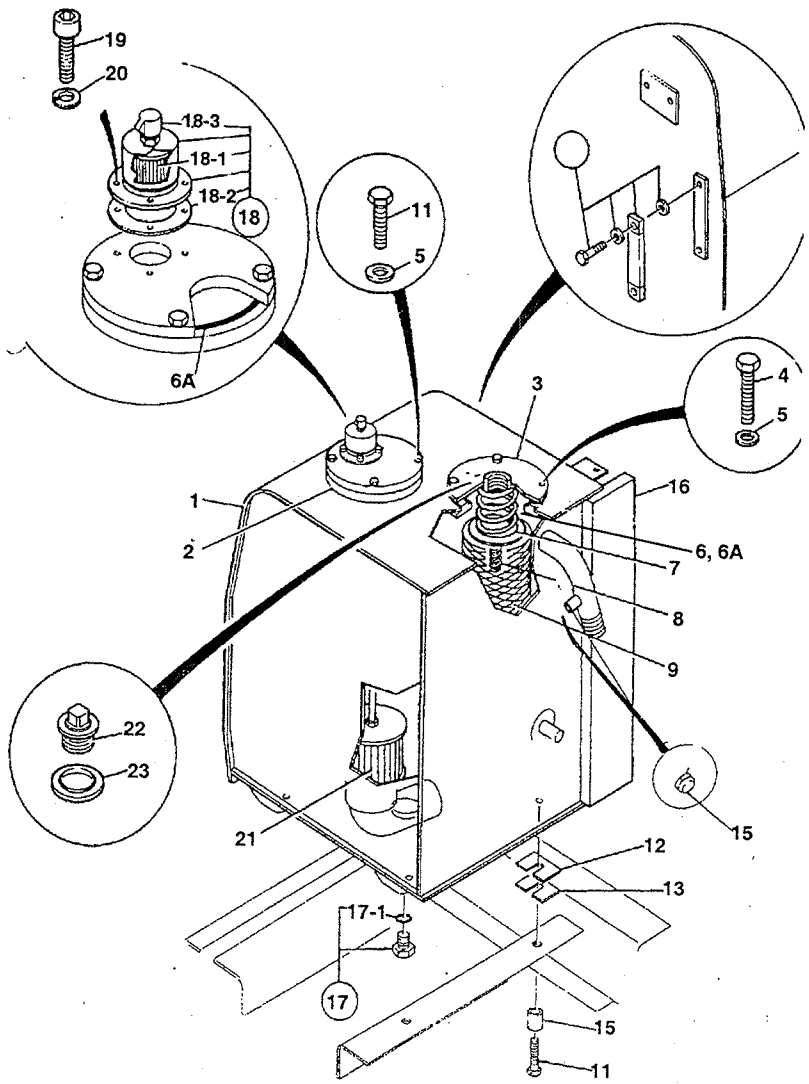

ITEM	PART NO.	CHANGE NO.	DESCRIPTION	REMARKS	QTY.
18 02	KRJ3463		Packing		1
18 03	KHJ0992		Nut		1
19	1316/0203Z		Screw		4
20	1425/0006Z		Washer, Spring		4
21	32/925359		Strainer, assembly		1
22	JHH0082		Plug		1
23	1406/0029		Seal, Dowty		1
24	JHP0134		Label, hyd tank vent	Decal, venting instructions, graphic	1

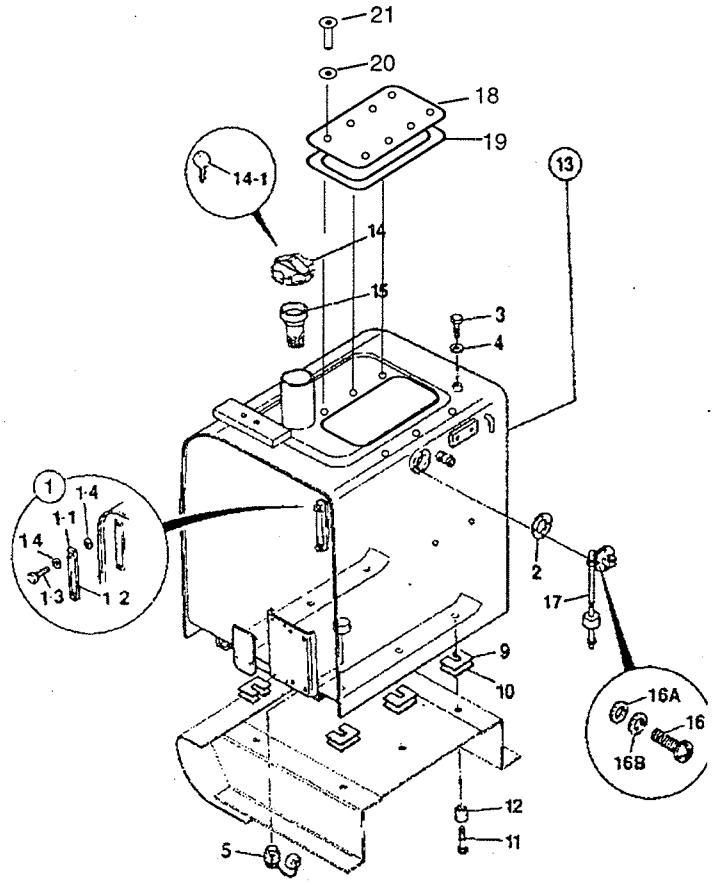

ITEM	PART NO.	CHANGE NO.	DESCRIPTION	REMARKS	QTY.
1	JHH0120		Gauge, diesel fuel level		1
2	JHC0001		Gasket, sealant, liquid packing		1
3	1316/0505Z		Screw		1
4	1420/0009Z		Washer		1
5	32/925428		Plug, drain vawe, M20 x 1 5-M22X1.5 HOSE		1
9	KHH0040		Shim, plate, T= 003"		6
10	KHHO137		Shim, plate		6
11	1316/3716Z		Bolt		6
12	JSJ0042		Spacer		6
13	229/02175		Tank,dieselfuel,assembly WA;		1
13A	229/02176		Fuel tank assy.		1
14	331/33064		Cap, filler wilh lock		1
14 01	701/45501		Key, Door/Ignition, Ref 14657		1
15	JRH0083		filter		1
16	1315/0103Z		Screw		4
16A	1420/0005Z		Washer, M5		4
17	716/30142		Sender, fuel level, with gasket		1
18	229/00606		Inspection Cover Plate		1
19	332/P5028		Gasket	1290500 onwards	1
20	1420/0007Z		Washer		8
21	1315/0305Z		Bolt		8

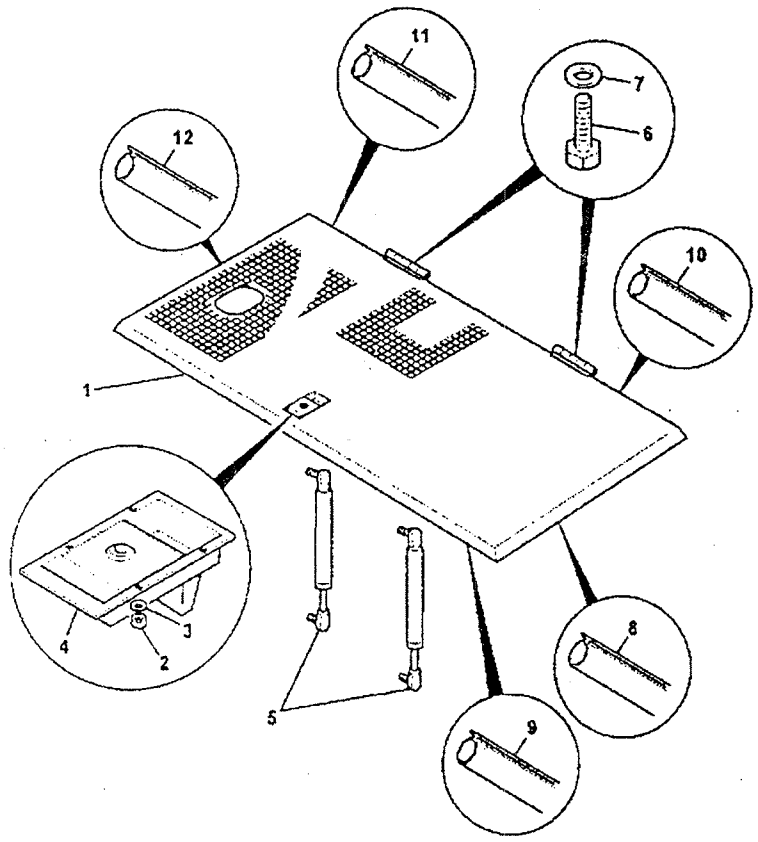

ITEM	PART NO.	CHANGE NO.	DESCRIPTION	REMARKS	QTY.
1	335/06168		Cover Engine		1
2	1370/0001Z		Nut, M5-8		4
3	1420/0005Z		Washer, M5		4
4	826/11245		Latch, paddle, bonnet		1
5	331/34453		Strut, gas, bonnet		1
6	1316/0507Z		Screw		4
7	1420/0009Z		Washer		4
8	904/20274		Seal, bonnet	(1 no = 1 metre)	1
9	904/20274		Seal, bonnet	(1 no = 1 metre)	1
10	904/20274		Seal, bonnet	(1 no = 1 metre)	1
11	904/20274		Seal, bonnet	(1 no = 1 metre)	1
12	904/20274		Seal, bonnet	(1 no = 1 metre)	1

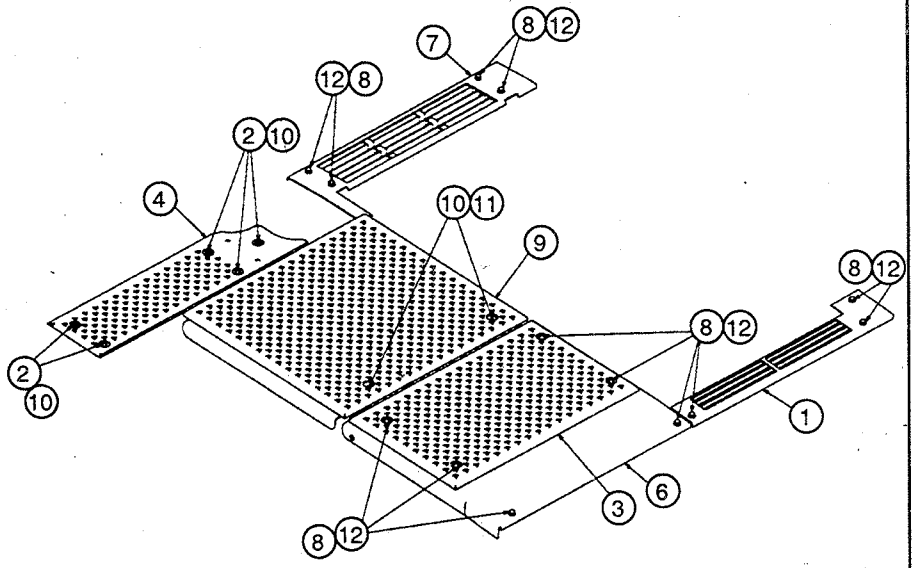

ITEM	PART NO.	CHANGE NO.	DESCRIPTION	REMARKS	QTY.
1	335/08041		WA Grill		1
2	331/35440		M10 X 12 Button Head Screw		5
3	229/02169		WA Tread Plate - LH Front		1
4	229/02173		WA Tread Plate		1
6	331/55681		Top Plate - LH Front		1
7	335/08790		WA RH Rear Grill		1
8	1316/0507Z		M12 X 25 Set Screw		13
9	229/02171		WA Tread Plate CTR		1
10	1420/0008Z		Plain Washer M10		7
11	1316/0407Z		Screw M10 X 25		9
12	1420/0009Z		Plain Washer M 12		13

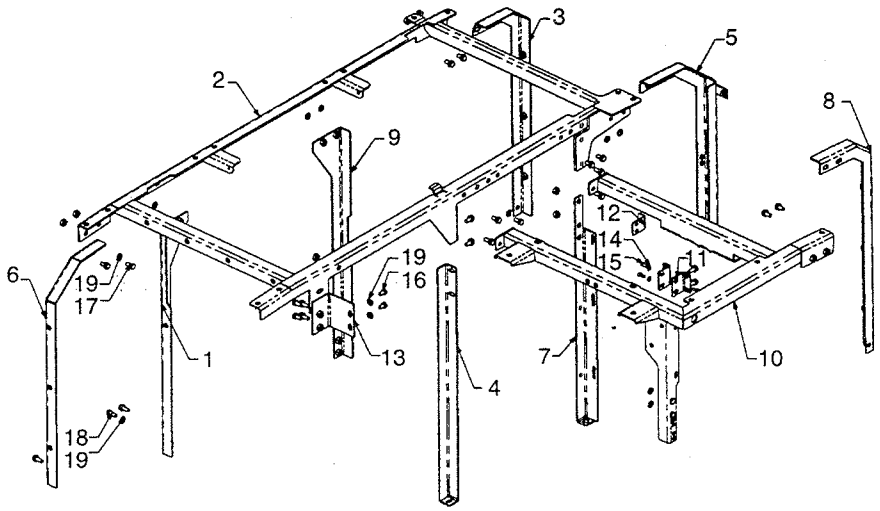

ITEM	PART NO.	CHANGE NO.	DESCRIPTION	REMARKS	QTY.
1	335/07529		WA RH RR INR leg		1
2	335/11021		WA Top frame		1
3	335/11022		WA LH Rear Leg		1
4	335/07335		WA LH Mid CTR Leg		1
5	335/07336		WA LH Mid Leg		1
6	335/11024		WA RH Rear Leg		1
7	335/11025		WA LH Mid inner Leg		1
8	335/07510		WA LH FRT Leg		1
9	331/42872		WA LH RR INR leg		1
10	335/11325		WA F/Work - Cab Rear		1
11	229/02225		WA Door Latch BRKT		2
12	229/01760		Door Retainer Bracket		1
13	335/08267		WA HYD Tank Bracket		1
14	1420/0007Z		Plain Washer		6
15	1316/0305Z		Screw M8X 20		6
16	1316/0505Z		Screw M12 X 30		3
17	1316/0507Z		M12 X 25 Set Screw		14
18	1316/0508Z		Screw M12 X 30		18
19	1420/0009Z		Plain Washer M12		37

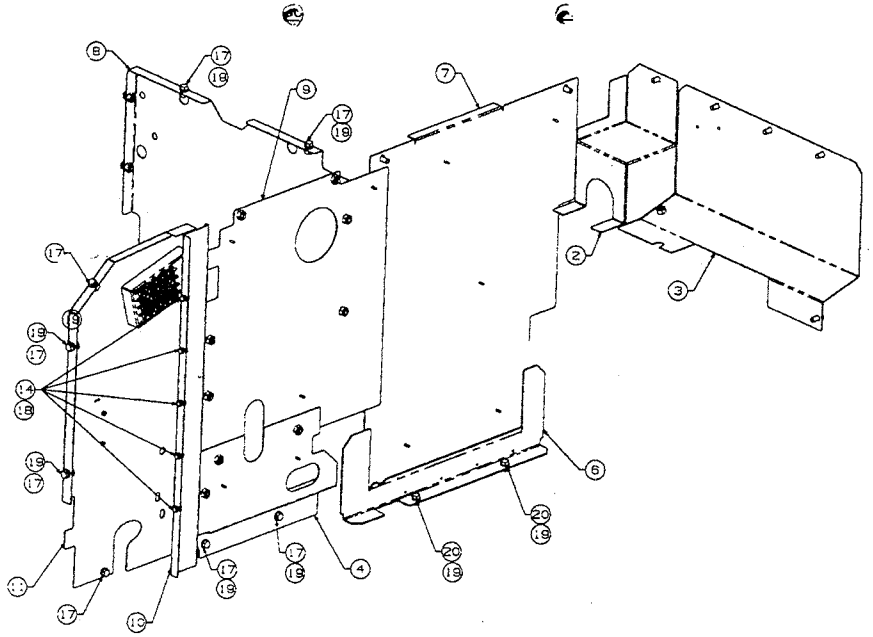

ITEM	PART NO.	CHANGE NO.	DESCRIPTION	REMARKS	QTY.
2	331/55795		Pressing		1
3	331/46291		WA Firewall RH		1
4	335/11295		WA Lower Baffle		1
6	335/07437		WA Baffle Guide		1
7	335/11296		WA RH Baffle		1
8	335/11297		WA Middle Baffle		1
9	335/11298		WA Induction Baffle		1
10	335/11299		WA Inner Baffle Support		1
11	335/11300		WA LH outer Baffle		1
14	1316/0303Z		Set Screw M8X16		5
15	1316/0305Z		M8X20		3
17	1316/0507Z		M12X25 Set Screw		22
18	1420/0007Z		Plain Washer M8		8
19	1420/0009Z		Plain Washer M12		31
20	1316/0505Z		Screw Washer		9

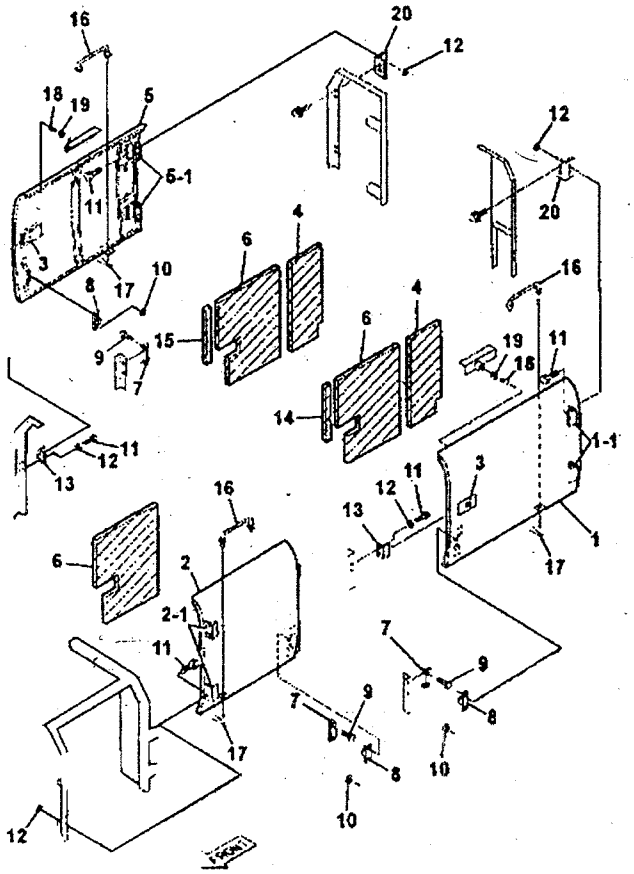

ITEM	PART NO.	CHANGE NO.	DESCRIPTION	REMARKS	QTY.
1	335/11293		Door, left hand, rad bay		1
1 01	KRN1497		Hinge		2
2	331/32706		Door, left hand, cab rear		1
2 01	KRN1497		Hinge		2
3	826/11027		Latch, paddle		2
4	331/34855		Panel, door soundproofing		1
5	335/11292		Door, right hand, pump bay		1
5 01	KRN1497		Hinge		2
6	331/34854		Panel, door soundproofing		1
6A	331/34664		Panel, soundproofing, cab rear door		1
7	331/35049		Bracket, stop		2
8	KRNO364		Stop		3
9	1316/0203Z		Screw		6
10	1420/0006Z		Washer		6
11	1316/0508Z		Screw		16
12	1420/0009Z		Washer		16
13	229/01760		Bracket, door latch		1
14	331/35138		Foam, door closure		1
15	331/35139		Foam, door closure		1
16	KRN1482		Stay		3
17	KRJ1588		Pin		3
18	KHN1395		Stop, rubber		4
19	1370/0301Z		Nut		2
20	229/02225		Bracket, door latch		1
21	JRNOO70		Cover	Add behind cab	1

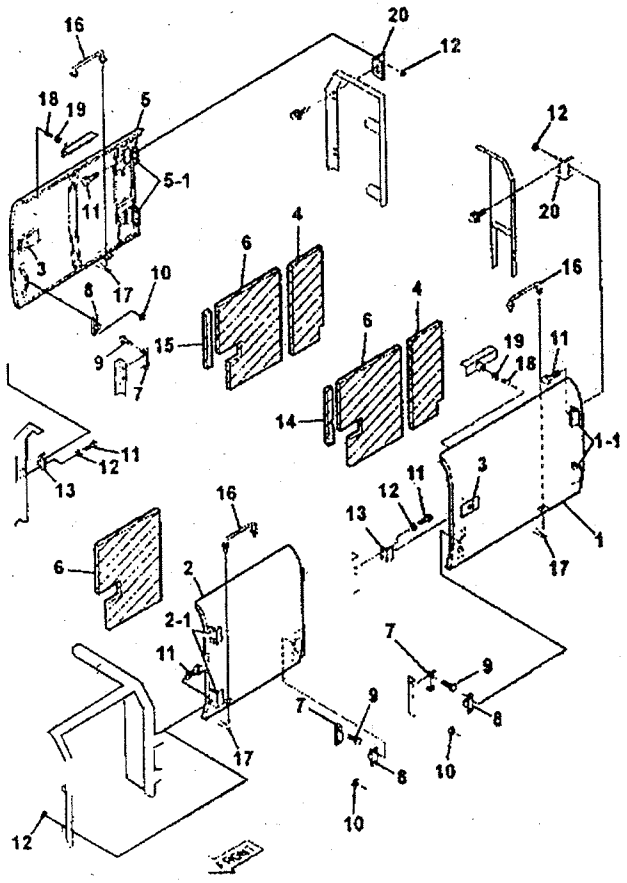

ITEM	PART NO.	CHANGE NO.	DESCRIPTION	REMARKS	QTY.
22	926/47800		Cushion, foam seal	Add behind cab to framework	1
23	331/37686		Panel, soundproofing		1
24	331/37600		Panel, noise damping		1
25	331/37601		Panel, noise damping		1
26	KNJ2233		Seal, cushion		1

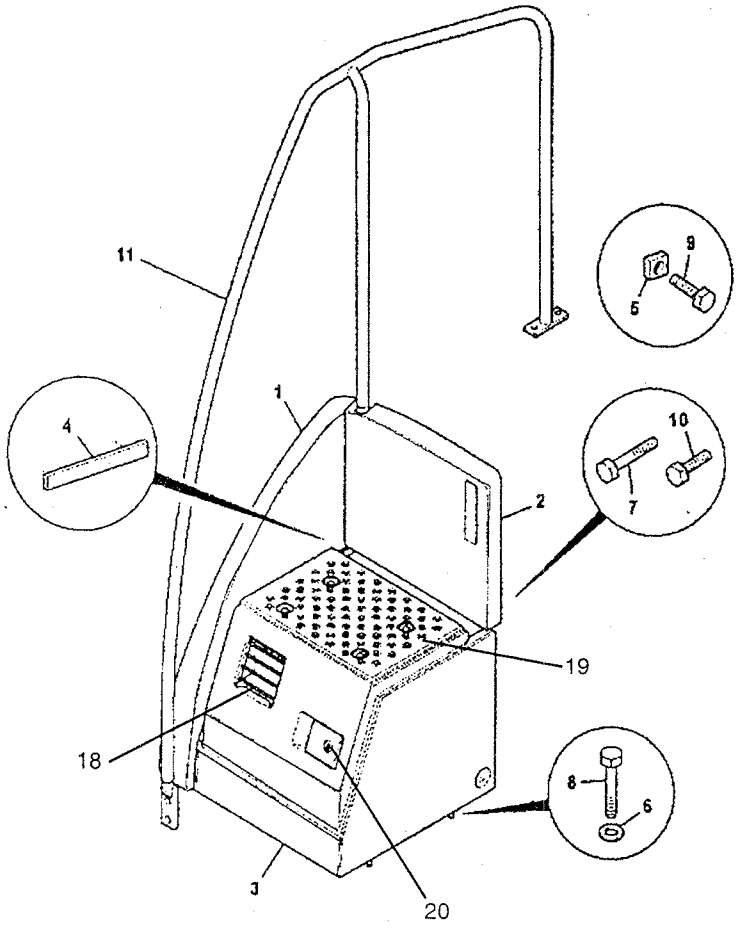

ITEM	PART NO.	CHANGE NO.	DESCRIPTION	REMARKS	QTY.
1	335/05462		Box, tool side		1
2	335/05440		Cover, tank		1
3	335/05436		Box, tool base		1
4	904/20273		Seal, strip, toolbox		1
5	331/35176		Washer, square		2
6	1420/0009Z		Washer		8
7	1316/0509Z		Bolt		2
8	1316/0509Z		Bolt		8
9	1316/0505Z		Screw		2
10	1316/0303Z		Screw		2
11	335/12446		WA, handrail		1
12	1315/0407Z		Bolt, M10 x 25		4
13	KHN1395		Stop, rubber		2
14	KRJ1588		Pin		2
15	KRN1418		Stay		1
16	KSN0939		Cushion, rubber		1
17	331/34946		Spacer, hinge packer		2
18	335/05437		Cover, toolbox		1
19	335/05439		Step		1
20	826/11027		Latch, Paddle		1
21	1371/0001Z		Nut		4
22	1420/0005Z		Washer, M5		4
23	1316/0405Z		Screw, M10 x 20		4
24	1420/0008Z		Washer, Plain		4

B1-6-1 COUNTER WEIGHT REAR (INDIAN BUILD)

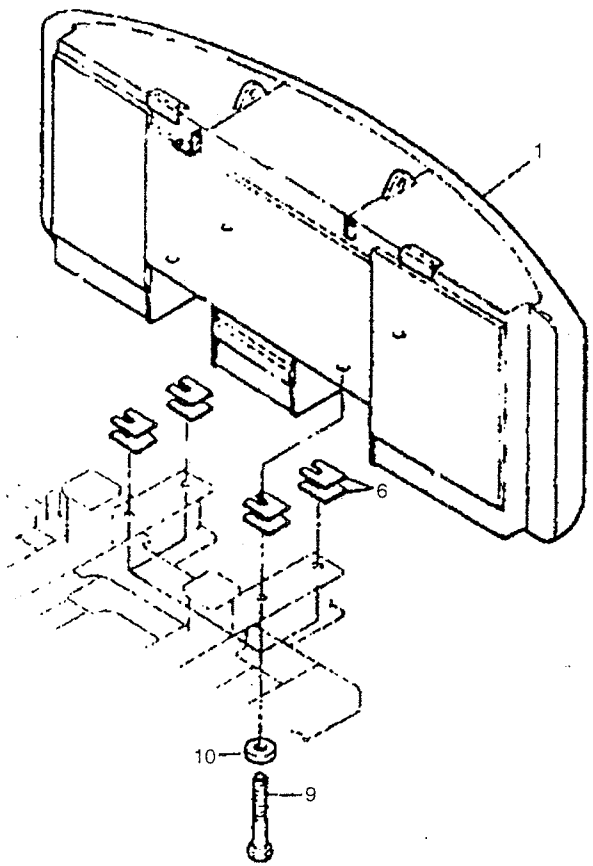

ITEM	PART NO.	CHANGE NO.	DESCRIPTION	REMARKS	QTY.
1	331/35416		Counter Weight ; 3.7 Ton		1
6	KRB0736		Shim ; t = 0.8		A/R
	KRB0737		Shim ; t = 1.2		A/R
	KRB0738		Shim ; t = 2.3		A/R
	KRB0739		Shim ; t = 4.5		A/R
9	KBB0445		Bolt ; Spl (M30 x 290)		4
10	KHB0063		Washer High Strength		4

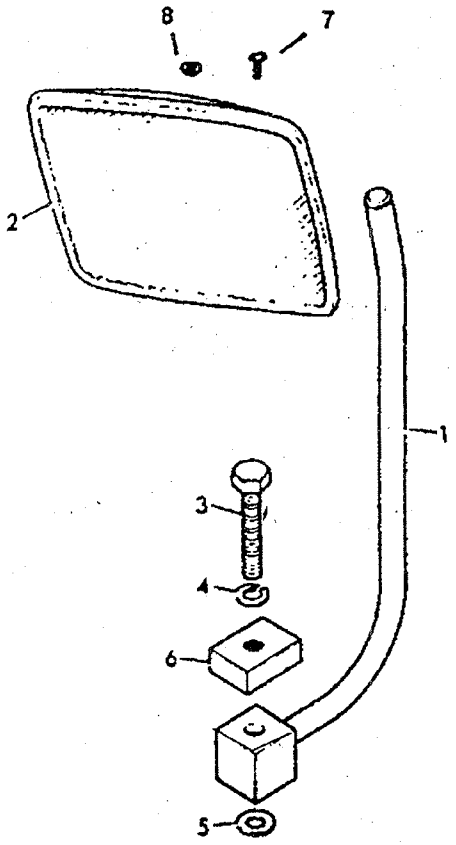

ITEM	PART NO.	CHANGE NO.	DESCRIPTION	REMARKS	QTY.
1	229/00550		Mirror Mounting		1
2	629/00724		Mirror		1
3	1316/3512Z		Bolt		1
4	1425/0009Z		Washer spring		1
5	1420/0009Z		Washer plain		1
6	JHB0001		Plate		1
7	130/06000		Bolt		1
8	1420/0006Z		Washer Plain		1

B

B1 BODYWORK/FRAME
• B2 CAB
B3 EXCAVATOR END
B5 REFURBISHMENTS

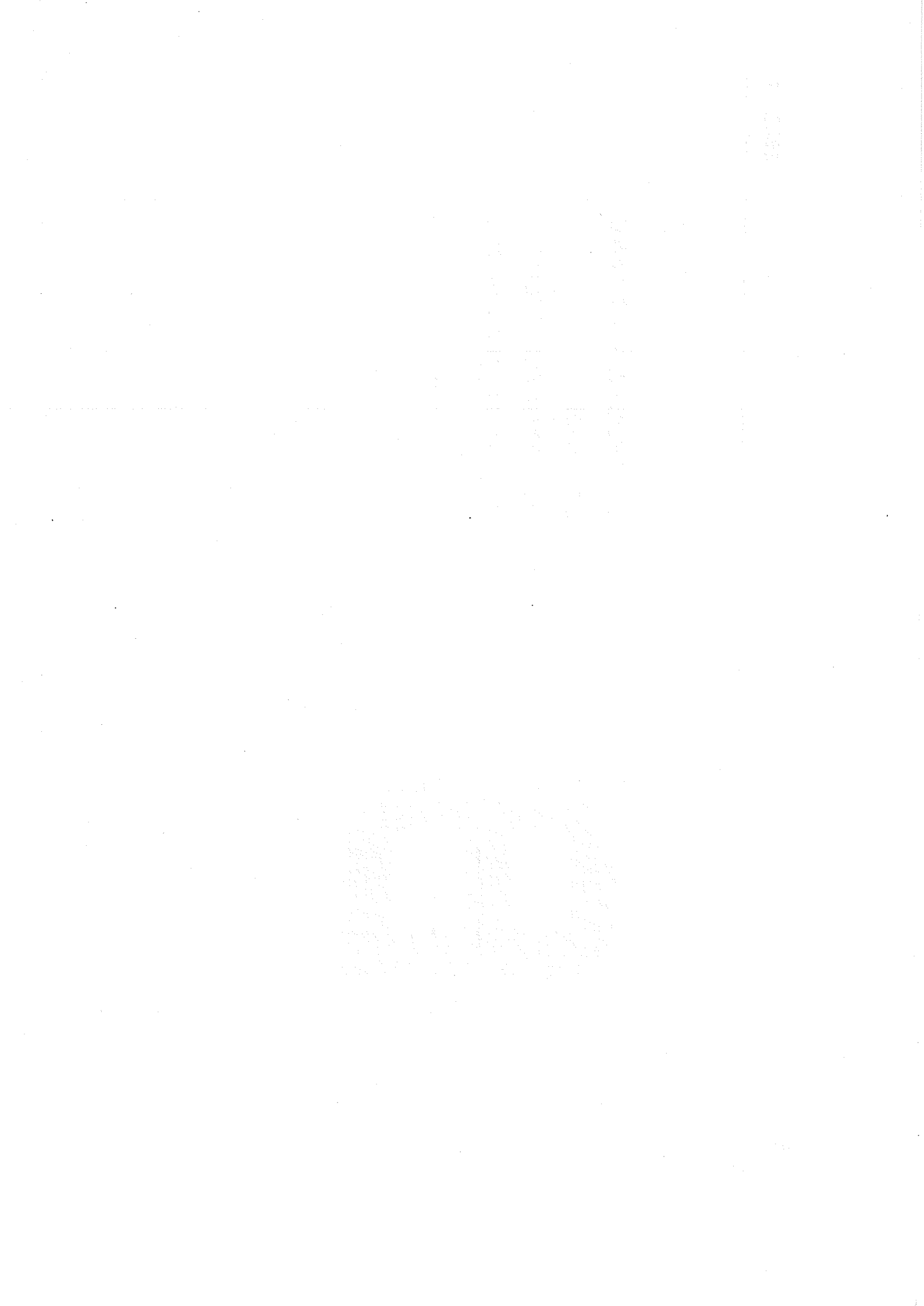

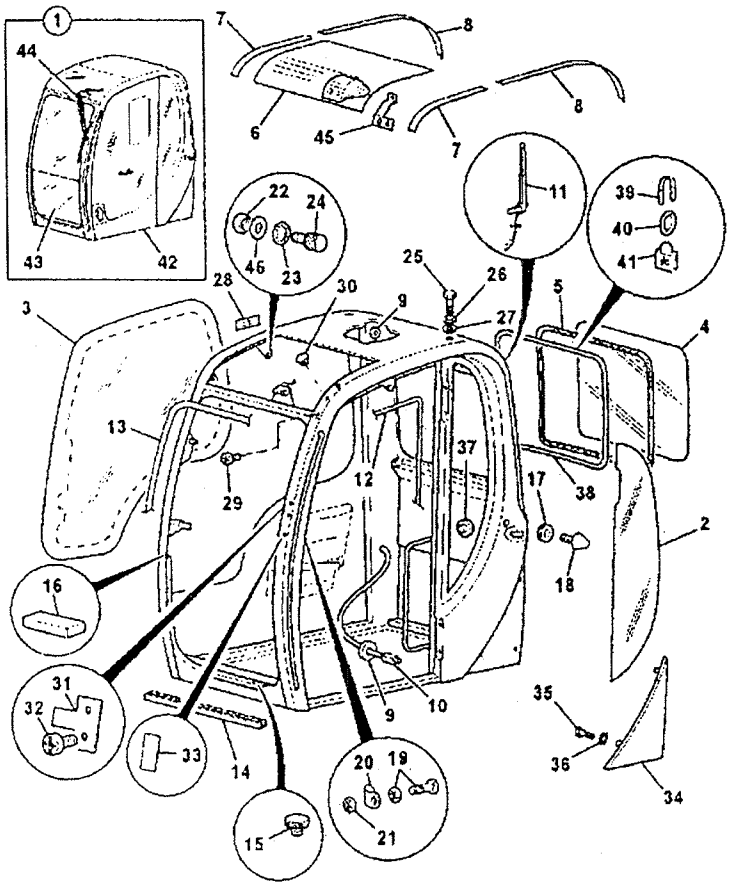

ITEM	PART NO.	CHANGE NO.	DESCRIPTION	REMARKS	QTY.
1	335/03322		Cab, operators, as bought in		1
2	827/80219		Glass, cab l/hand rear, TIM CAB		1
3	827/80217		Glass, cab r/hand, TIM CAB		1
4	827/80218		Glass, cab rear, TIM CAB		1
5	331/36329		Seal		1
6	331/36330		Screen, Top opening		1
7	331/36331		Seal		2
8	331/36332		Seal		2
9	6900/0592		Grommet		3
10	331/36328		Harness, cab		1
11	6900/0564		Aerial		1
12	331/36333		Seal, 3850 lg		1
13	6900/0532		Seal		1
14	6900/0531		Seal		1
15	6900/0597		Grommet		2
16	6900/0997		Spacer, rubber		2
17	6900/0563		Washer		1
18	6900/0562		Stopper		1
19	331/36334		Striker		1
20	331/36335		Guard		1
21	331/36336		Nut		1
22	6900/0571		Nut		4
23	331/37332		Washer		2
24	6900/0548		Striker, lower		4
25	6900/0566		Screw		4

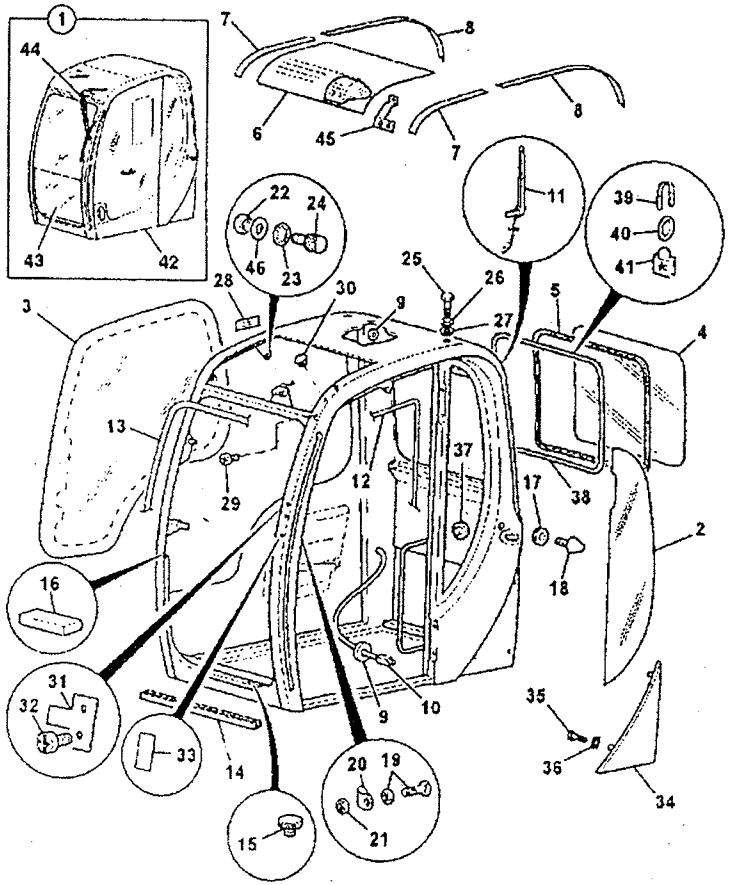

ITEM	PART NO.	CHANGE NO.	DESCRIPTION	REMARKS	QTY.
26	6900/0567		Washer		4
27	6900/0568		Washer, fiber		4
28	NSP		None serviced part		1
29	331/36337		Plug, Plastic		4
30	331/36339		Button		2
31	6900/0635		Bracket, wiper blade		1
32	6900/0995		Screw		2
33	331/36377		Adhesive		1
34	331/36343		Cover, rear		1
35	1315/0303Z		Bolt M8 x 16		3
36	6900/0570		Washer		3
37	6900/0555		Plug		2
38	331/36374		Strip,locking		1
39	331/36375		Bracket, ring		1
40	331/36376		Ring		1
42			'See Remark'	cab door See frame B2-2-1	1
43			'See Remark'	Front screen see frame B2-1-10	1
44			'See Remark'	Wiper motor see frame B2-1-20	1
45	331/37328		Bracket, motor support		1
46	6900/0569		Washer		2

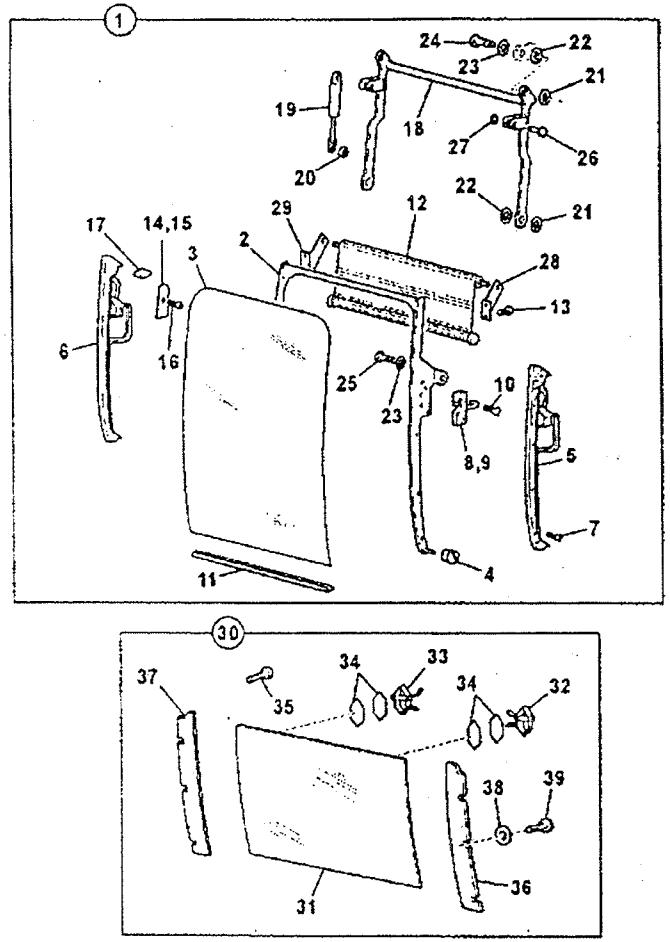

ITEM	PART NO.	CHANGE NO.	DESCRIPTION	REMARKS	QTY.
1	331/36363		Windscreen, assembly		1
2	331/36366		Frame, window		1
3	JHN0178		Glass		1
4	6900/0513		Roller		1
5	6900/0688		Slide, left hand, gray		1
6	6900/0689		Slide, right hand, grey		1
7	6900/0616		Screw		16
8	331/36367		Latch, left hand		1
9	331/36368		Latch, right hand		1
10	6900/0619		Screw		8
11	6900/0508		Seal, plastic		1
12	6900/0621		Screen, sun		1
13	6900/0995		Screw		4
14	6900/0622		Cover, left hand		1
15	6900/0623		Cover, right hand		1
16	6900/0616		Screw		2
17	331/36369		Stop foam		2
18	331/36370		Arm		1
19	331/36371		Spring, air		2
20	6900/0988		Nut		4
21	331/36372		Spacer		4
22	331/36373		Washer		4
23	6900/0569		Washer		4
24	6900/0612		Screw		2
25	1315/0303Z		Bolt, M8 x 16		2
26	*331/37335		Pin, pivot		2

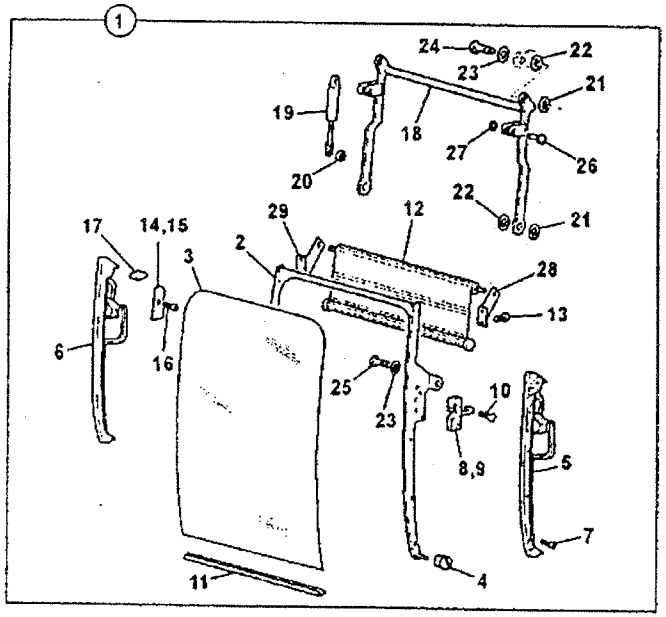

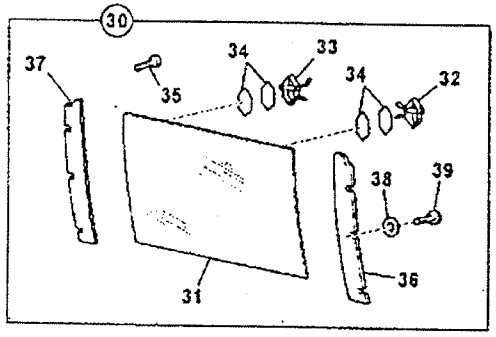

ITEM	PART NO.	CHANGE NO.	DESCRIPTION	REMARKS	QTY.
27	*331/37336		Circlip		2
28	331/37329		Bracket, sun visor, left hand side		1
29	331/37330		Brackel, sun visor, right hand side		1
30	6900/0983		Glass, complete, lower front		1
31	JHN0141		Glass, lower		1
32	6900/0984		Latch, left hand		1
33	6900/0985		Latch, right hand		1
34	6900/0986		Spacer		4
35	6900/0987		Screw		4
36	6900/0685		Slide, left hand, black		1
37	6900/0686		Slide, fight hand, black		1
38	6900/0640		Washer		6
39	6900/0560		Screw		6

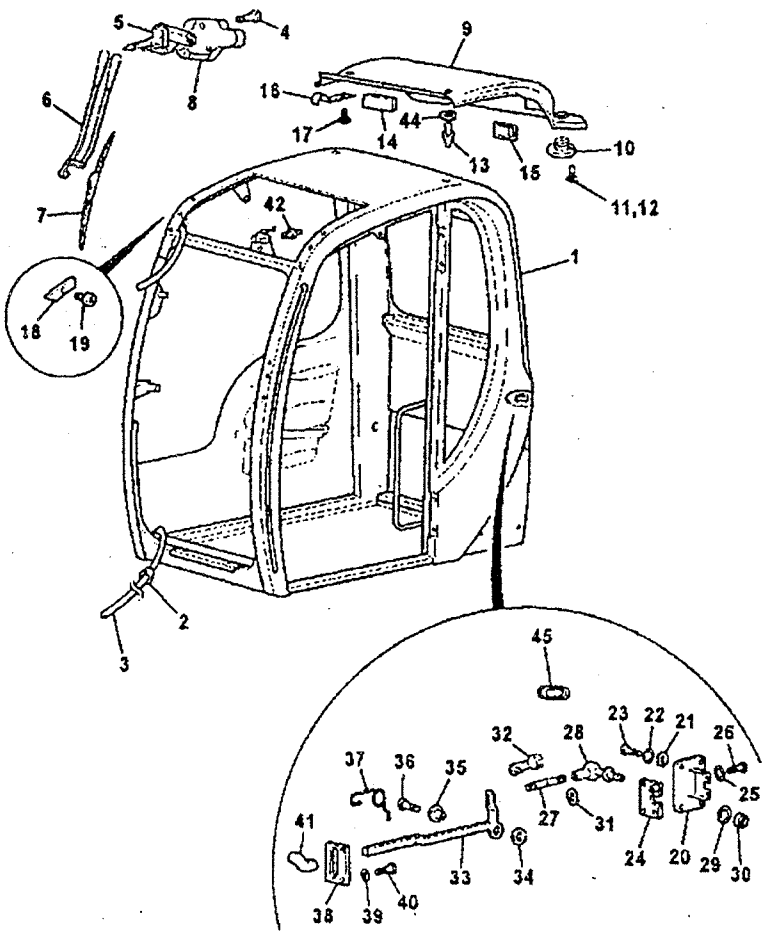

ITEM	PART NO.	CHANGE NO.	DESCRIPTION	REMARKS	QTY.
1			'See Remark'	See frame B2-1-1	1
2	331/36340		Grommet		1
3	331/36341		Hose, 4300lg		1
4	6900/0554		Screw		2
5	714/40267		Motor, wiper		1
6	714/40266		Arm, wiper		1
7	6900/0634		Blade, wiper		1
8	331/36342		Cover, wiper motor		1
9	331/36344		Trim, roof panel		1
10	6900/0585		Speaker		2
11	826/11108		Screw		8
12	821/10267		Clip		8
13	331/19926		Stop,cab roof		2
14	331/36346		Cover		1
15	8900/0587		Light, roof		1
16	331/36356		Hook		2
17	6900/0554		Screw		4
18	331/36357		Plate		2
19	6900/0554		Screw		2
20	6900/0544		Cover		1
21	6900/0569		Washer		4
22	6900/0609		Washer		4
23	6900/0599		Screw		4
24	6900/0543		Latch		1
25	6900/0550		Washer		4
26	6900/0608		Screw		4

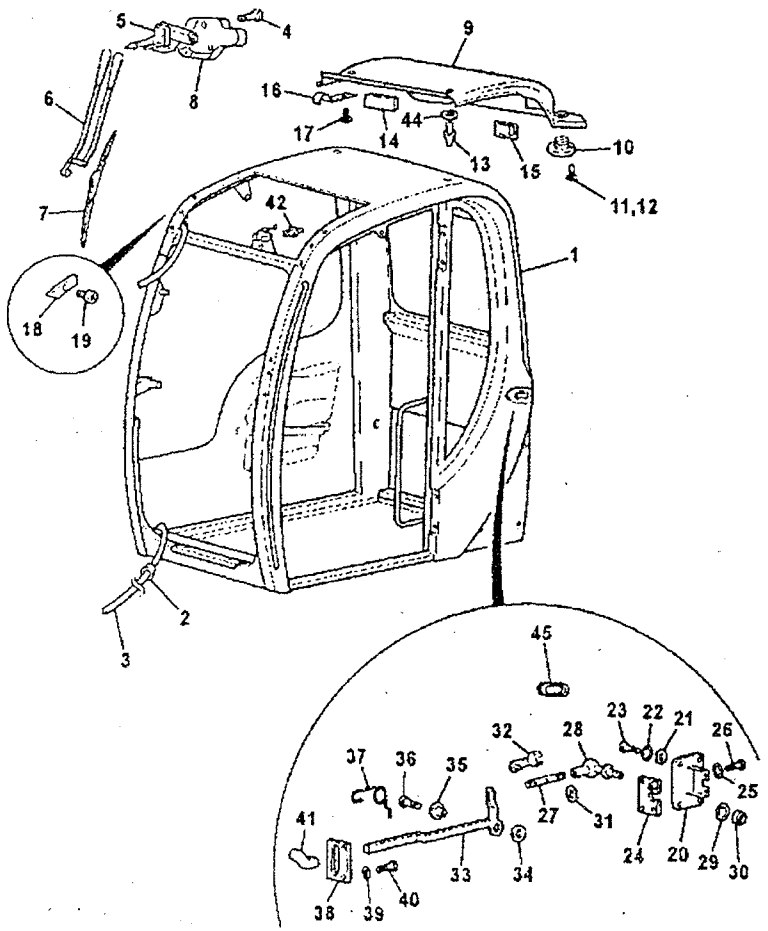

ITEM	PART NO.	CHANGE NO.	DESCRIPTION	REMARKS	QTY.
27	331/36359		Rod, axle		1
28	6900/0627		Joint, ball		1
29	6900/0637		Washer		1
30	6900/0551		Nut		1
31	6900/0652		Grommet		1
32	6900/0523		Clip, axle		1
33	331/36360		Lever		1
34	6900/0605		Spacer, plastic		1
35	6900/0604		Spacer		1
36	6900/0603		Screw		1
37	6900/0606		Spring		1
38	6900/0541		Guide		1
39	6900/0550		Washer		2
40	6900/0601		Screw		2
41	331/19929		Knob		1
42	331/36361		Jet, washer		1
43	2410/1209		Grommet	Blank off lower wiper holes	2
44	*331/37333		Washer, foam		1
45	331/37334		Grommet		1

Illustration Not Available at Time of Publication

ITEM	PART NO.	CHANGE NO.	DESCRIPTION	REMARKS	QTY.
1	KHNI256		Bolt		2
2	1316/3514		Bolt, hex head		4
3	1316/3516		Bolt		2
4	826/01649		Bolt, Dome Head, Tuf-lok		1
5	JHP0042		Washel, plain		8
6	1371/0401Z		Nut		2

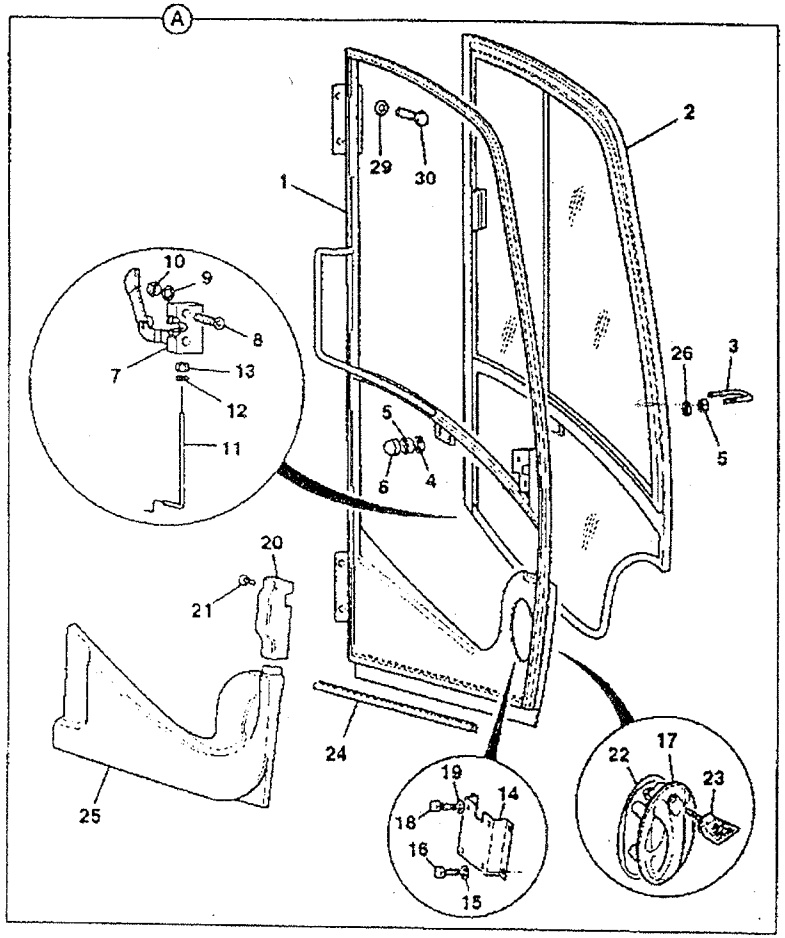

ITEM	PART NO.	CHANGE NO.	DESCRIPTION	REMARKS	QTY.
0A	331/36354		Door, assembly, JX cab		1
1	331/36358		Door, cab door, cab door frame		1
2	827/80220		Glass, Door Lower		1
2 01	827/80221		Glass, door sliding		1
2 02	331/36362		Handle, Window handle assemb, JS cab		1
2 03	331/36364		Striker, Window striker JS cab		1 3
2 04	331/36365		Screw		1
3	331/36378		Hook, door lock back		1
4	6900/0644		Washer		2
5	6900/0574		Nut		4
6	331/36379		Cap, Cap,nut, Door lock back		2
7	331/36380		Lock, door		1
8	993/99703		Screw, countersunk head		2
9	6900/0570		Washer		2
10	6900/0571		Nut		2
11	331/36381		Rod, lock		1
12	331/36382		Washer, lock rod		1
13	331/36383		Nut, safety		1
14	331/36384		Bracket, support handle		1
15	6900/0550		Waaher		4
16	331/36385		Screw, handle support		4
17	331/36386		Handle, cab door		1
18	331/36385		Screw, handle support		4

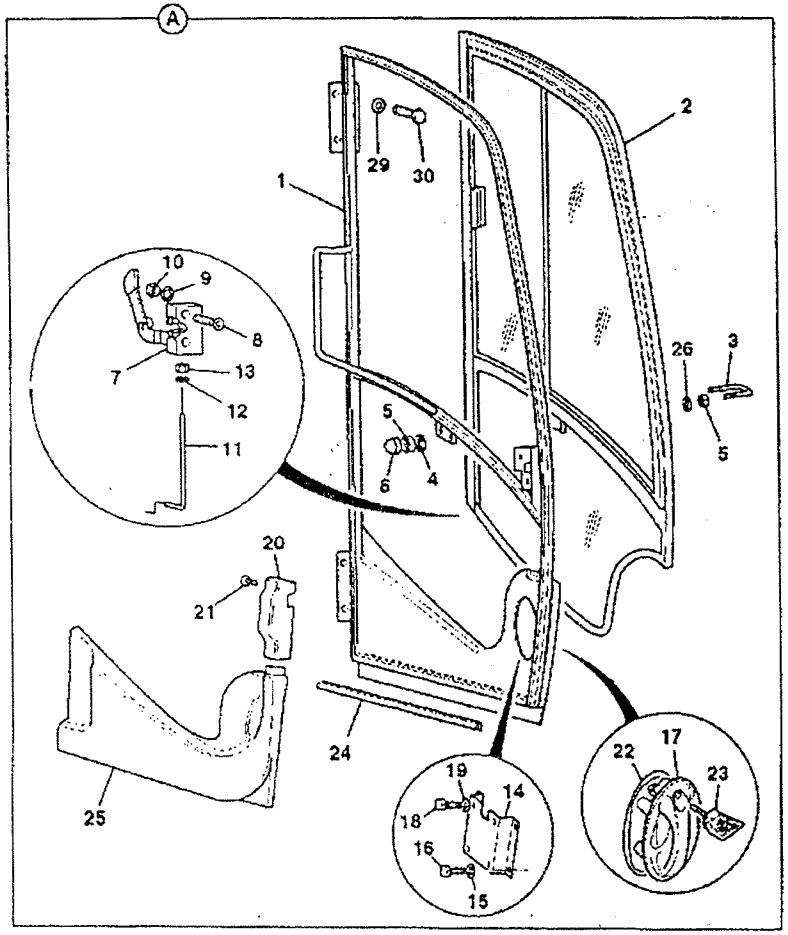

ITEM	PART NO.	CHANGE NO.	DESCRIPTION	REMARKS	QTY.
19	6900/0550		Washer		4
20	331/36389		Cover, lock		1
21	6900/0616		Screw		2
22	331/36390		Seal, handle		1
23	701/45501		Key, Door/Ignition, Ref 14657		1
24	331/36393		Seal, door lower		1
25	331/36394		Cover, inside door		1
26	331/36387		Screw, support handle		2
29	6900/0992		Washer		4
30	331/36392		Seal, door bottom		4

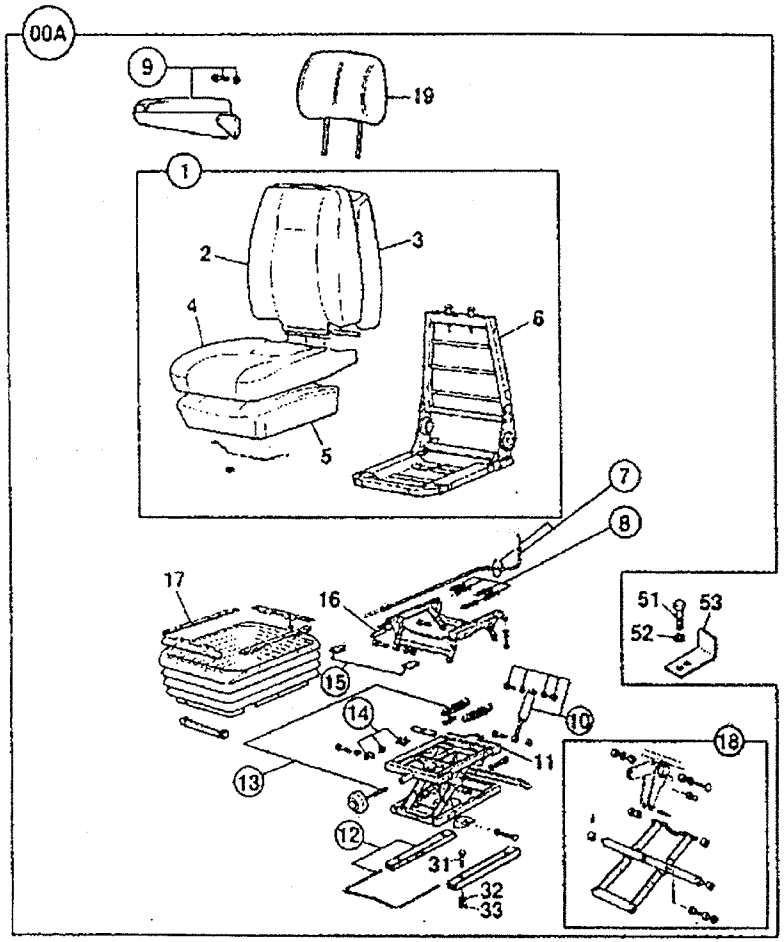

ITEM	PART NO.	CHANGE NO.	DESCRIPTION	REMARKS	QTY.
0A	40/910551		Seat, standard		1
1	40/910628		Seat		1
2	40/910629		Kit-back cover		1
3	40/212003		Kit, foam, back		1
4	40/910630		Kit seat cover		1
5	6900/0020		Kit, seat foam		1
6	NSP		None serviced part		1
7	6900/0021		Kit, cable adjustment		1
8	6900/0022		Kit, spring, height riser		1
9	40/910502		Kit, armrest		1
10	6900/0024		Damper, assembly		1
11	40/213001		Kit, suspension, assembly		1
12	40/910631		Adjuster, back handle		1
13	40/205614		Kit, knob/weight adjuster		1
14	40/205613		Kit upstop/bumpstop		1
15	6900/0027		Handle, assembly, grey		1
16	6900/0028		Kit, height riser		1
17	6900/0029		Kit, suspension cover		1
18	40/205617		Kit, bearing		1
19	40/910632	Superseded	Kit-headrest		1
	40/910607		Headrest		1
31	1391/3305Z		Capscrew		4
32	1420/0007Z		Washer,plain		4
33	1370/0203Z		Nut, self lock		4
51	1391/3307Z		Capscrew		1
52	1420/0007Z		Washer, plain		1
53	331/21990		Bracket, Seatstop		1

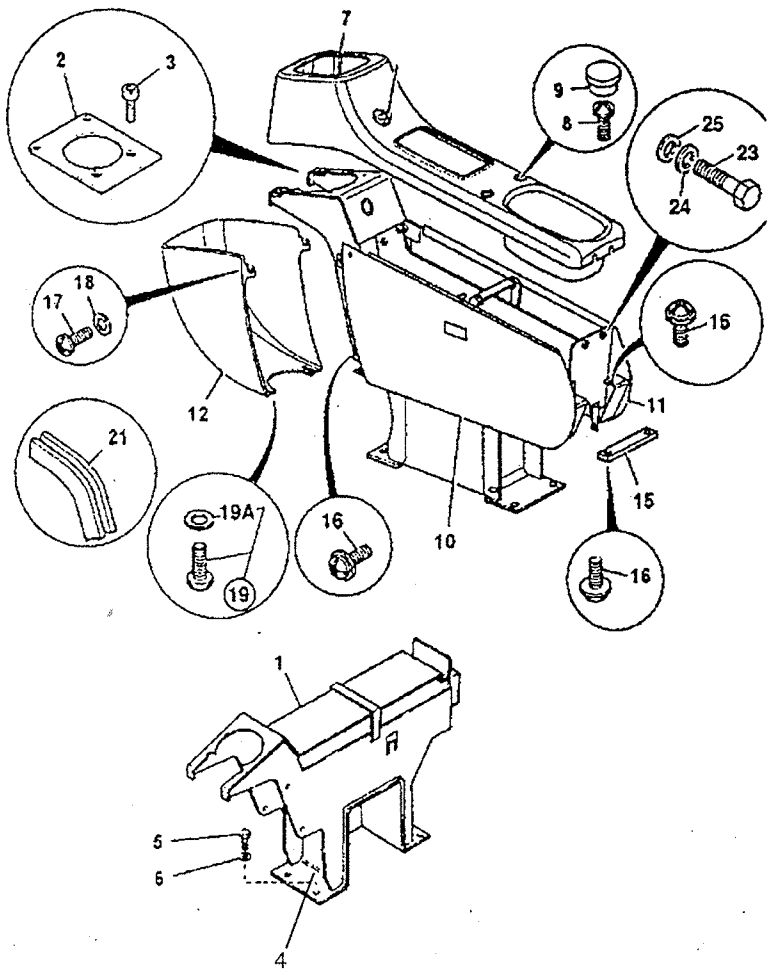

ITEM	PART NO.	CHANGE NO.	DESCRIPTION	REMARKS	QTY.
1	*335/05915		Stand, console, left hand		1
2	331/18592		Plate, mounting, control valve		1
3	KHR0737		Screw, pan head		4
4	229/00385		Switch Limit with connector		1
	701/80215		Switch Limit without Connector		1
5	1391/3407Z		Capscrew, socket head		4
6	JHP0046		Washer		4
7	331/18077		Panel, Console, No switch l/h top		1
8	KHR0738		Screw, pan head		2
9	835/10071		Cap, Blanking		2
10	335/06231		Panel, console, left hand Side panel		1
11	335/06230		Panel, Console, R/h side panel		1
12	331/18079		Panel, Console, Front access		1
15	KHN1313		Bracket		1
16	KHR0736		Screw, pan head		8
17	826/01281		Capscrew, button head M6 x 12		2
18	1425/0006Z		Washer, Spring		2
19	826/01281		Capscrew, button head M6 x 12		2
19A	823/00516		Washer, nylon M6		2

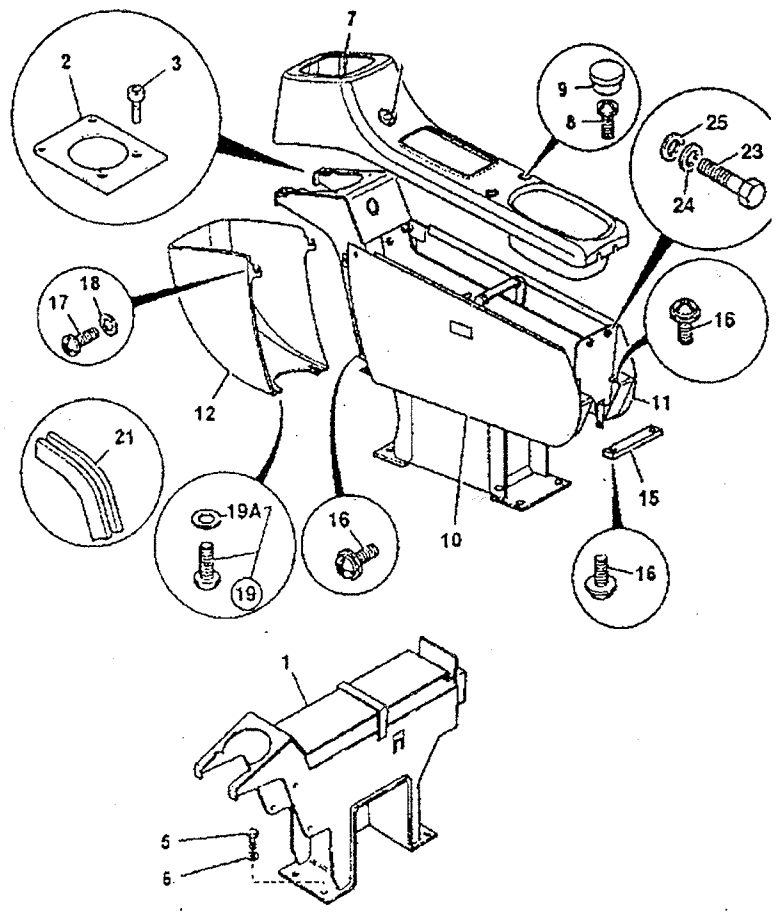

ITEM	PART NO.	CHANGE NO.	DESCRIPTION	REMARKS	QTY.
21	JHH0111		Strip, edging		1
23	1316/0203Z		Screw		2
24	1425/0006Z		Washer. Spring		2
25	1420/0006Z		Washer		2

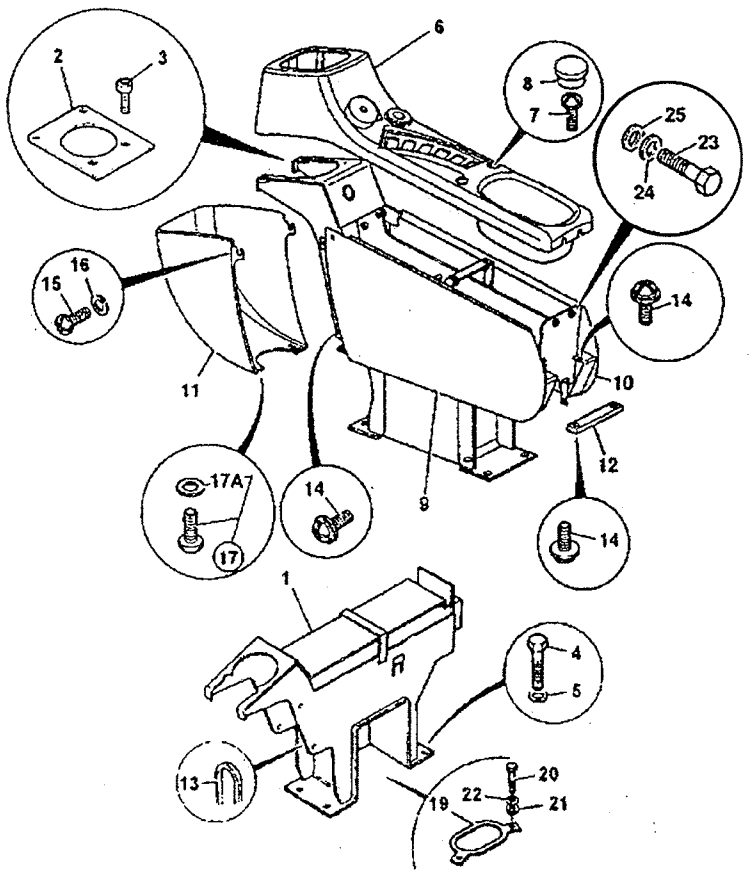

ITEM	PART NO.	CHANGE NO.	DESCRIPTION	REMARKS	QTY.
1	335/01348		Stand, console, RH		1
2	331/18592		Plate, mounting, control valve		1
3	KHR0737		Screw, pan head		4
4	1316/0407Z		Bolt, high strength		4
5	JHP0046		Washer		4
6	331/30572		Panel, Console, top right hand		1
7	KHR0738		Screw, pan head		2
8	835/10071		Cap, Blanking		2
9	335/06229		Panel, console, L/h side panel		1
10	335/06230		Panel, Console, R/h side panel		1
11	331/18079		Panel, Console, Front access		1
12	KHN1313		Bracket		1
13	JHH0111		Strip, edging		1
14	KHR0736		Screw, pan head		8
15	826/01281		Capscrew, button head M6 x 12		2
16	1425/0006Z		Washer, Spring		2
17	826/01281		Capscrew, button head M6 x 12		2
17A	823/00513		Washer, coupling flange		2
19	KHJ0947		Guide		1
20	1316/0303Z		Screw		4
21	1420/0007Z		Washer, plain		4

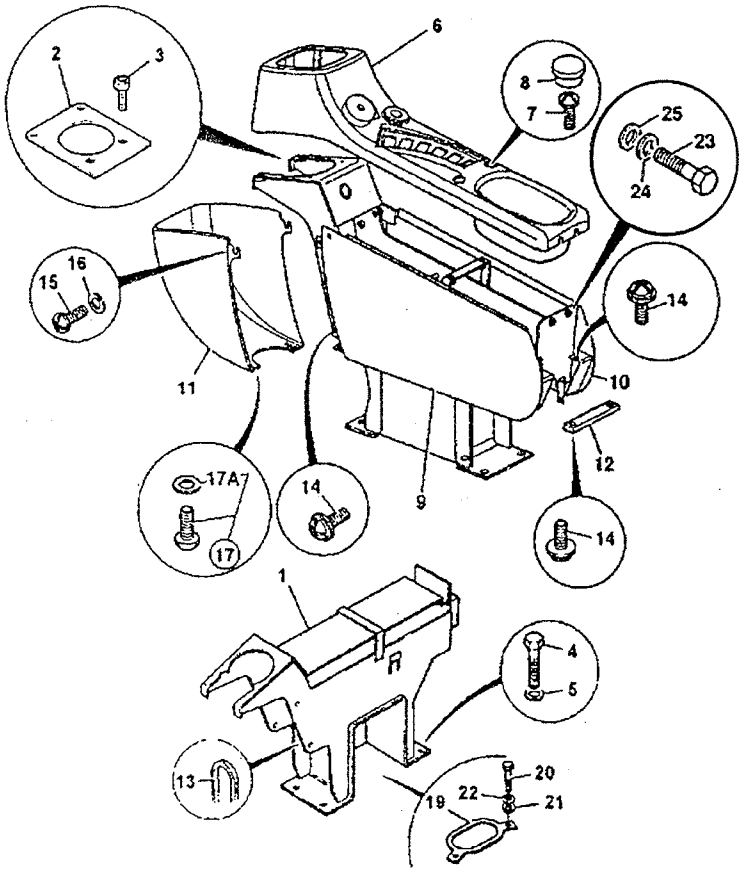

ITEM	PART NO.	CHANGE NO.	DESCRIPTION	REMARKS	QTY.
22	1420/0007Z		Washer, spring		4
23	1316/0203Z		Screw		2
24	1425/0006Z		Washer. Spring		2
25	1420/0006Z		Washer		2

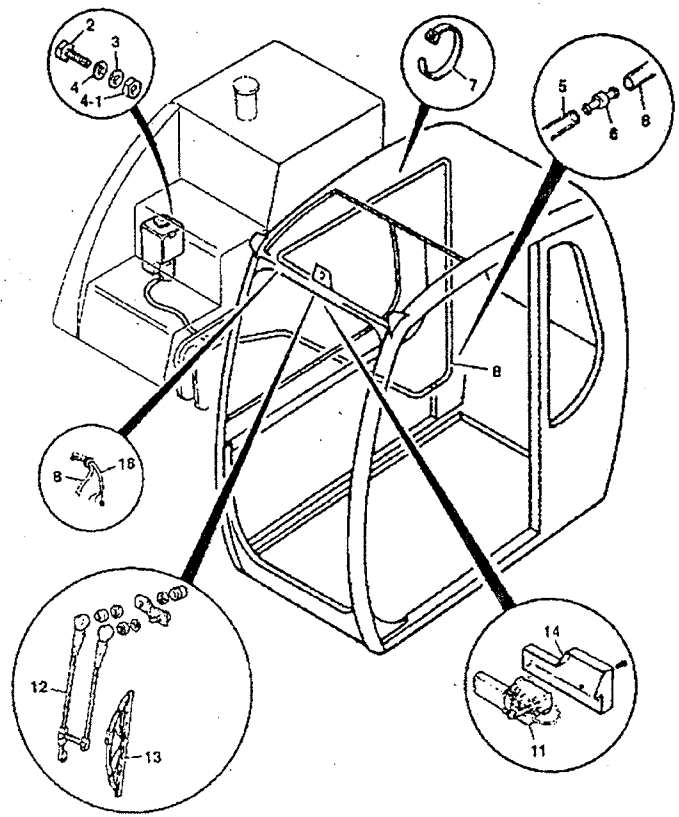

ITEM	PART NO.	CHANGE NO.	DESCRIPTION	REMARKS	QTY.
1	JHN0160		Tank, screen wash, with pump	includes bracket and cap	1
2	6013/0103Z		Bolt		2
3	1420/0005Z		Washer. M5		2
4	1425/0005Z		Washer, spring M5		2
4 01	1371/0001Z		Nut		2
5	KHR1181		Tube		1
6	KHR1178		Adaptor		1
7	KAR0017		Tie, harness retainer		10
8	331/36341		Hose, 4300lg	See frame B2-1-20	1
11	714/40267		Motor, wiper		1
12	714/40266		Arm, wiper		1
13	6900/0634		Blade, wiper		1
14	331/36343		Cover, rear		1
16	331/36328		Harness, cab	See frame B2-1-1	1

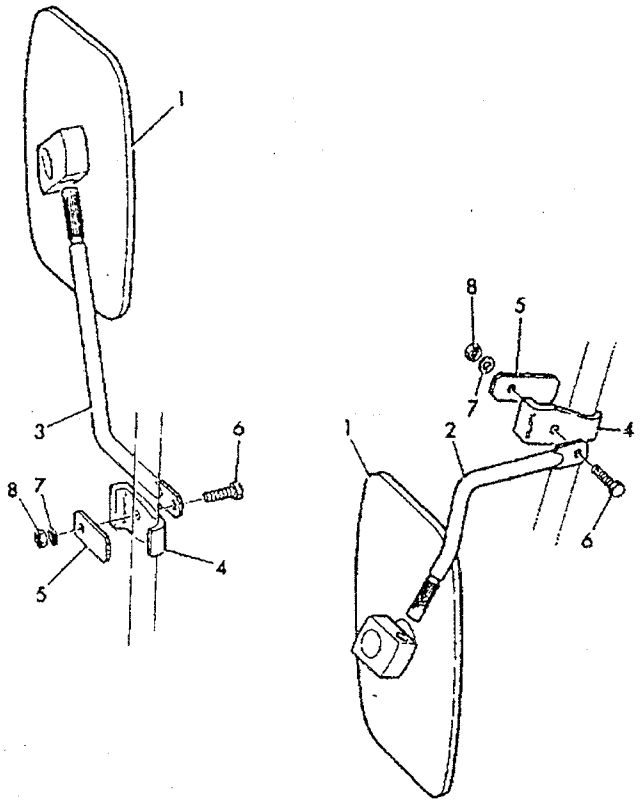

ITEM	PART NO.	CHANGE NO.	DESCRIPTION	REMARKS	QTY.
1	629/00724		Mirror		2
	263/09201		Glass		1
1A	826/10496		Retainer, glass		1
2	229/00550		Arm, mirror mounting, left hand		1
3	JTN0033		Arm, mirror mounting, right hand		1
4	JTN0053	To M 706080	Clamp		2
	KRV0548	M 706081 on	Clamp		2
5	JTN0054	To M 706080	Plate		2
	JHN0213	M 706081 on	Plate, clamp		2
6	1315/0508Z	To M 706080	Bolt, M12 X 30		2
	1315/0517Z	M 706081 on	Screw		2
7	1420/0009Z	M 706081 on	Washer		2
8	1370/0403Z	M 706081 on	Nut M12		2

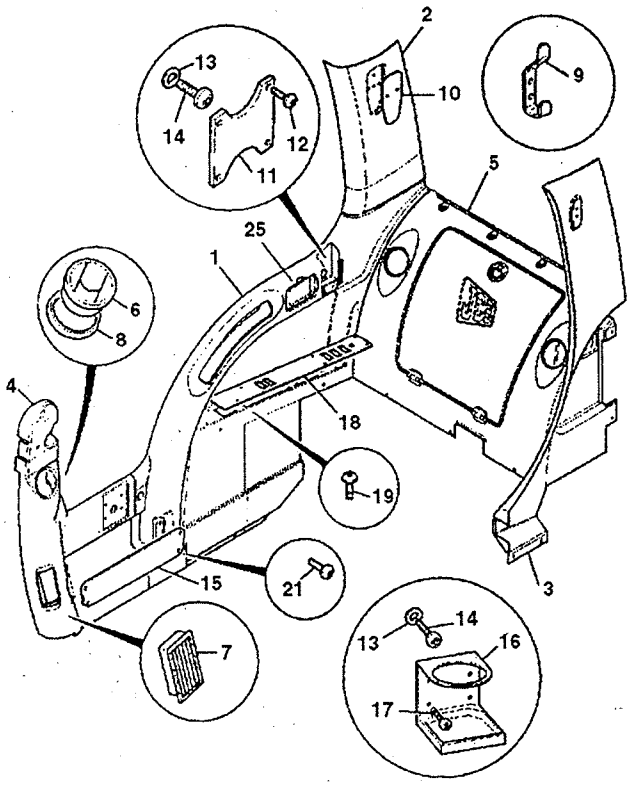

ITEM	PART NO.	CHANGE NO.	DESCRIPTION	REMARKS	QTY.
1	331/27117		Panel centre consol		1
2	331/27118		Panel, Pillar cover R/H hand		1
3	331/27119		Panel, pillar left hand		1
4	331/32400		Moulding A post plenum		1
5	331/32435		Cover rear assembly		1
5 01	331/37401		Hose connector 6		1
5 02	331/37942		Receptacle		1
6	331/26974		Vent, air (76.5mm dia hole)		4
7	30/925586		Vent, air, front & rear console		1
8	30/925732		Adapter, air vent		2
9	142/01083		Hook, Coat		1
10	331/27453		Plate, hammer retaining		1
11	331/27951		Retainer, mobile phone		1
12	826/10996		Screw		4
13	823/00516		Washer, nyton, M6		31
14	826/01519		Screw		31
15	331/31610		Panel, stowage side		1
16	331/31695		Holder, cup		1
17	KHR0328		Screw, truss		4
18	331/31995		Panel, facia, heater		1
19	826/11096		Screw		6
21	826/10995		Screw		4
22	331/37602		Panel, noise damping		1
23	331/37603		Panel, noise damping		1
24	331/37604		Panel, noise damping		1
25	331/32481		Ashtray		1

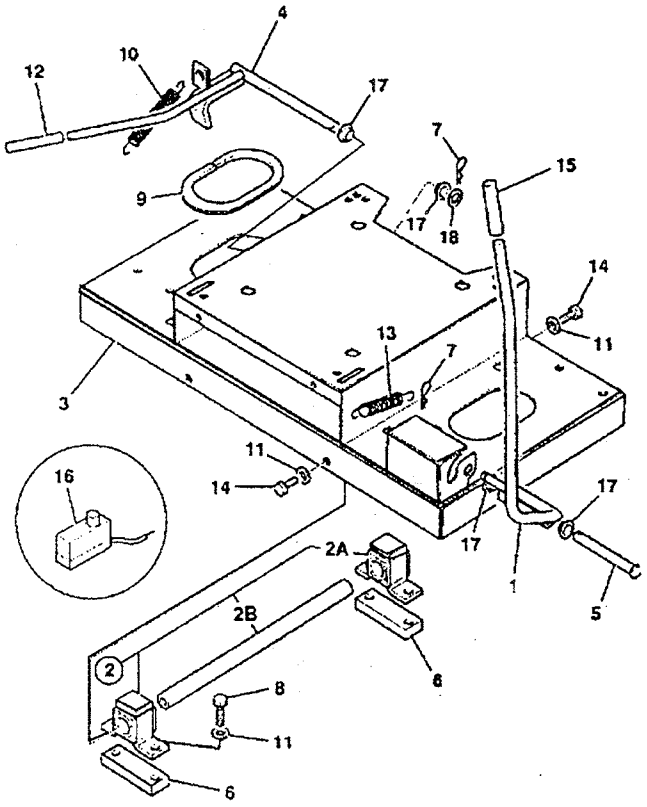

ITEM	PART NO.	CHANGE NO.	DESCRIPTION	REMARKS	QTY.
1	JHN0210		Lever, lock		1
2	JHN0204		Kit, linear, bearing		1
2A	JHN0205		Bearing, linear		4
2B	JHN0206		Shaft		2
3	JHN0209		Base, seat		1
4	JHN0202	Superseded	Lever		1
	335/05454		Lever, console index, seat		1
5	JHN0211		Spindle		1
6	JHN0214		Block, spacer		4
7	JLV0521		Clip, R		2
8	1391/3408Z		CapScrew		8
9	JHH0074		Strip, edging		1
10	KHN1127		Spring, extension		1
11	JHP0046		Washer		12
12	KHN1122		Cap		1
13	KHN1436		Spring, extension		1
14	1316/0405Z		Screw, M10 x 20		4
15	KHN1542		Cap		1
16	229/00385		Switch limit with connector		1
	701/80215		Switch limit without connector		1
17	KHN1442		Bush, oilless		4
18	1420/0011Z		Washer, M16 plain		1
19	KHR1253		Bolt		3

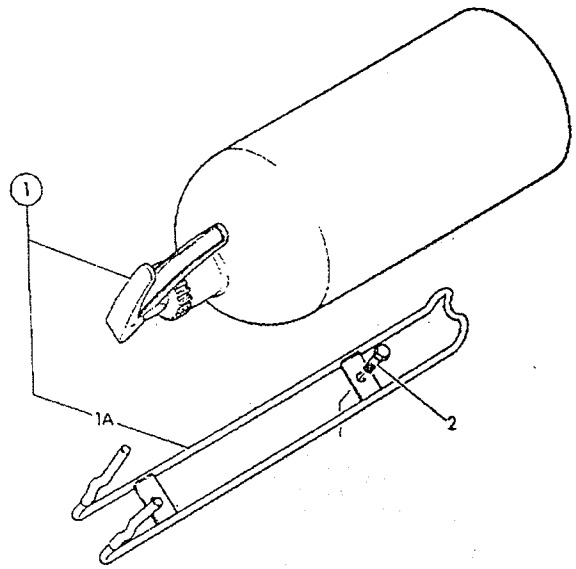

ITEM	PART NO.	CHANGE NO.	DESCRIPTION	REMARKS	QTY.
1	159/69381		Extinguisher, fire, c/w Cradle		1
1A	993/68400		Extinguisher fire, 2KG ABC Power		1
2	1315/0101Z		Screw, M5 x 12mm		2
	1370/0003Z		Nut		2

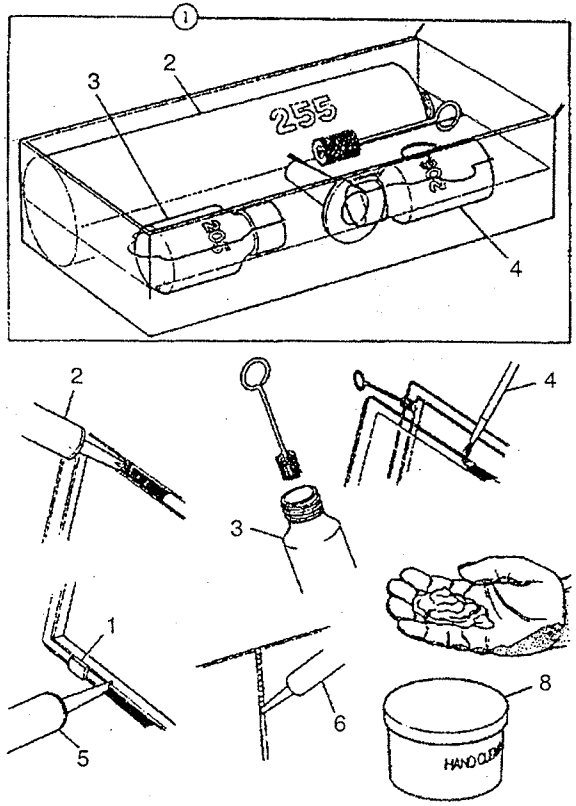

ITEM	PART NO.	CHANGE NO.	DESCRIPTION	REMARKS	QTY.
	993/55700		Adhesive, kit-JCB ultrafast glazing		1
2	4103/2109		Adhesive,JCB ultrafast 310ml cartridge		A/R
3	4104/1203		Cleaner, primer SIKA 205 250ml		A/R
4	4201/4906		Paint, black primer 206J, 30ml		A/R
5	4102/2309		Sealant, black acrylic 221, 310ml cartridge		A/R
6	4102/0901		Sealant		A/R
7	926/15500		Spacer, block		A/R
8	4104/1310		Cleaner head, polyurethane, 454gm/1lb		A/R

B

B1 BODYWORK/FRAME
B2 CAB
• B3 EXCAVATOR END
B5 REFURBISHMENTS

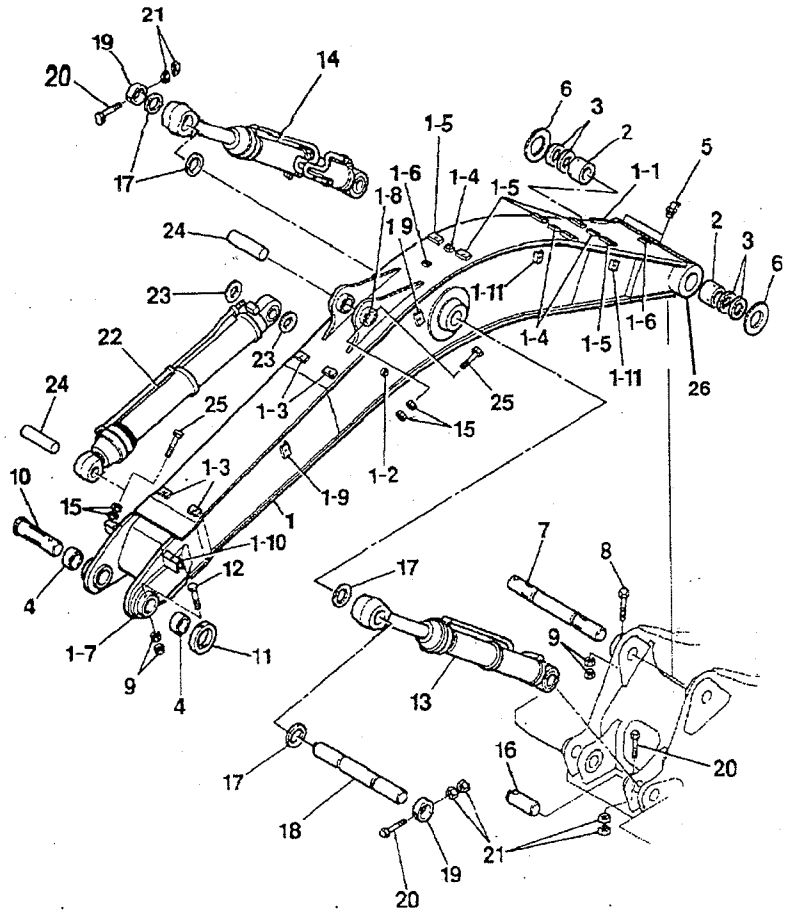

ITEM	PART NO.	CHANGE NO.	DESCRIPTION	REMARKS	QTY.
1	332/P2544		Boom H.D.		1
	331/13247		Boom, mono W.A.		1
1.1	*JSV0296*	*KSV0311*	*Manifold, 4 way*		1
1.2	KHV0060		Clamp, base		1
1.3	331/27231	JLV1827	Base, clamp		4
1.4	331/27870	KRV0481	Clamp, base		3
1.5	331/27232	KRV0695	Clamp, base		6
	KTV0700				
1.6	331/27869	KRV0252	Clamp, base		2
1.7	KHV0164		Collar		1
1.8	KHV0162		Collar		1
1.9	KHV0162		Collar		1
1.10	KHV0164		Collar		1
1.11	JBV0295		Clamp, base		4
1.12	JBV0298		Clamp, base		4
1.13	JRV0277		Clamp, base		2
2	831/10291	332/J8878	Bush, steel		2
3	KHV0103		Seal, dust		4
4	JRV0597		Bush, steel		2
5	JHP0038		Nipple, grease, angled		2
6	823/10579		Shim, 1.2mm thick		2
7	KRV1572		Pin, pivot 90mm		1
8	6009/4028Z		Bolt		1
9	173R024VZ		Nut		4
10	KRV1380	Superseded	Pin, pivot		1
	811/90382		Pin, pivot, boom to arm	Chromed pin	1
11	KRV0704		Collar, set		1

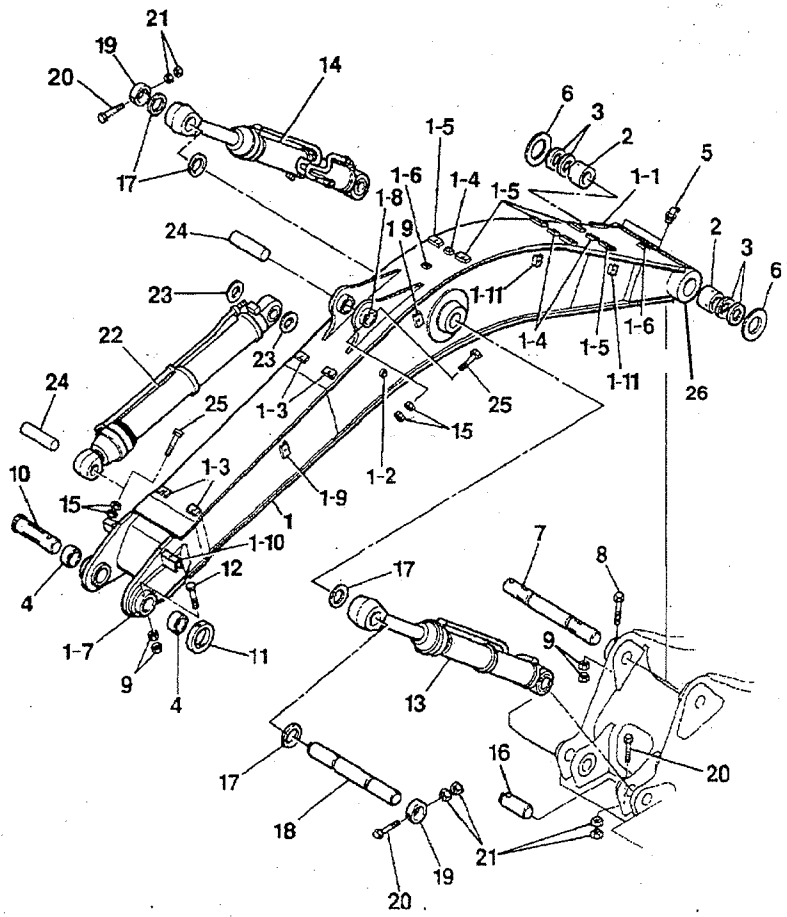

ITEM	PART NO.	CHANGE NO.	DESCRIPTION	REMARKS	QTY.
12	6009/4029Z		Bolt		1
13	229/00484		Ram, boom LH	For components see frame E4-1-1	1
14	229/00483		Ram, boom RH	For components see frame E4-1-5	1
15	173R020VZ		Nut, high strength		12
16	KRV1124		Pin, pivot		2
17	KRV1178		Shim, 1.2mm thick		4
18	KRV1122		Pin, Pivot 85mm		1
19	KRV1156		Ring, locking		2
20	6009/3826Z		Bolt		4
21	173R020VZ		Nut		8
22	JRV0288	to S/N 705409	Ram, dipper ram	For components see frame E4-2-1	1
	229/00570		Ram, dipper	For components see frame E4-2-2	1
23	KRV1197		Shim, 1.2mm thick		2
24	KRV1126		Pin, pivot		2
25	6009/3826Z		Bolt		2
26	JRV0392		Boom Foot Boss		1

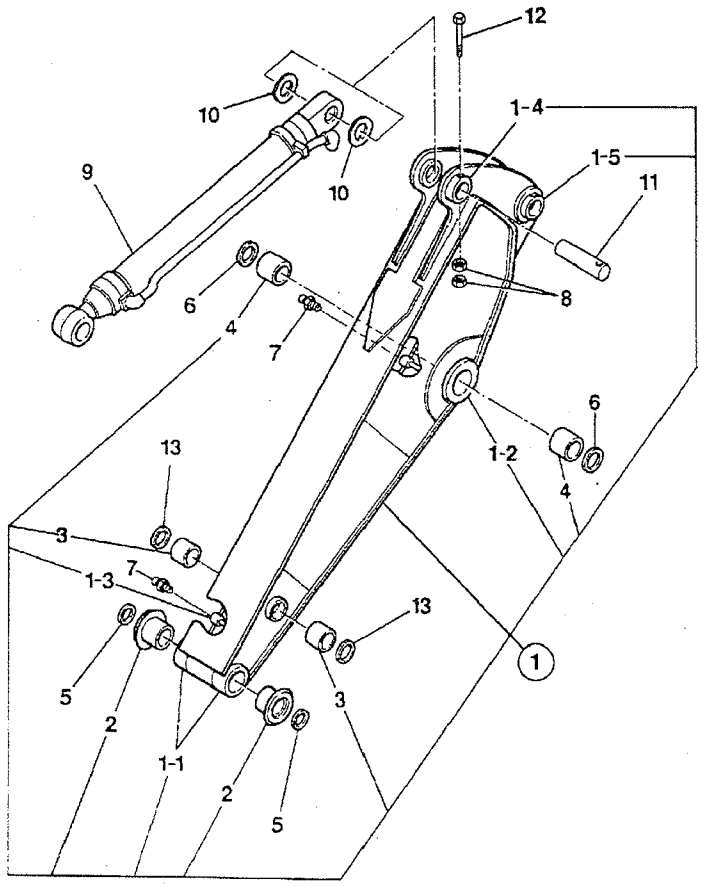

ITEM	PART NO.	CHANGE NO.	DESCRIPTION	REMARKS	QTY.
1	335/02216		Dipper, 1.91M arm		1
1 01	NSP		None serviced part		2
1 02	KRV1363		Boss forged		2
1 03	KRV0514		Adapter, tap		2
1 04	KHV0161		Collar		1
1 05	KHV0162		Collar		1
2	JRV0594		Bush, steel		2
3	JRV0595		Bush, steel		2
4	831/10291		Bush, bearing		2
5	KHV0101		Seal, dust		2
6	KHV0103		Seal, dust		2
7	JHP0037		Nipple, grease, straight		2
8	172R020VR		Nut, high, strength		2
9	331/32602		Ram, bucket, 115mm cyl x 85mm rob	For components see frame E4-3-1	1
10	KRV1176		Shim, 1.2mm thick		2
11	KRV1127		Pin, attachment		1
12	6009/3825Z		Bolt		1
13	KHV0100		Seal, dust		2
14	*JRP0142		Label, warning, bucket-boom		1

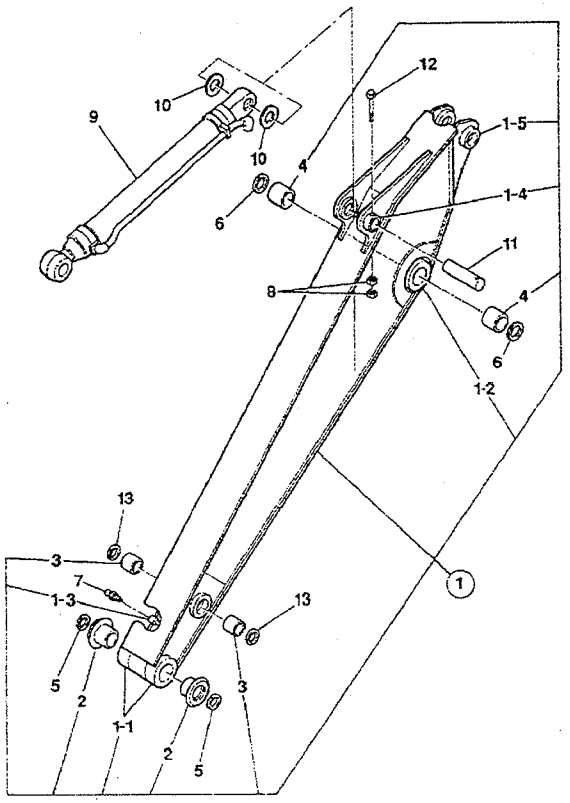

ITEM	PART NO.	CHANGE NO.	DESCRIPTION	REMARKS	QTY.
1	229/01341		GA Dipper, 2.4M HD	Service replacement only	1
1 01	229/10306		Boss		1
1 02	331/13760		Boss		2
1 03	KRV0514		Adapter, tap		2
1 04	KHV0161		Collar		1
1 05	KHV0162		Collar		1
2	KRV1128		Bush, steel		2
3	KRV1131		Bush		2
4	831/10291	KRV1132	Bush, steel		2
5	KHV0101		Seal, dust		2
6	KHV0103		Seal, dust		2
7	JHP0037		Nipple, grease, straight		2
8	1371/0701		Nut, high, strength		2
9	229/00573		Ram, bucket	For components see frame E4-3-1	1
10	KRV1176		Shim, 1.2mm thick		2
11	KRV1127		Pin, attachment		1
12	1316/3825		Bolt		1
13	KHV0100		Seal, dust		2
14	JRV0390		Boss		1

B3-2-11 DIPPER 2.4 M HEAVY DUTY

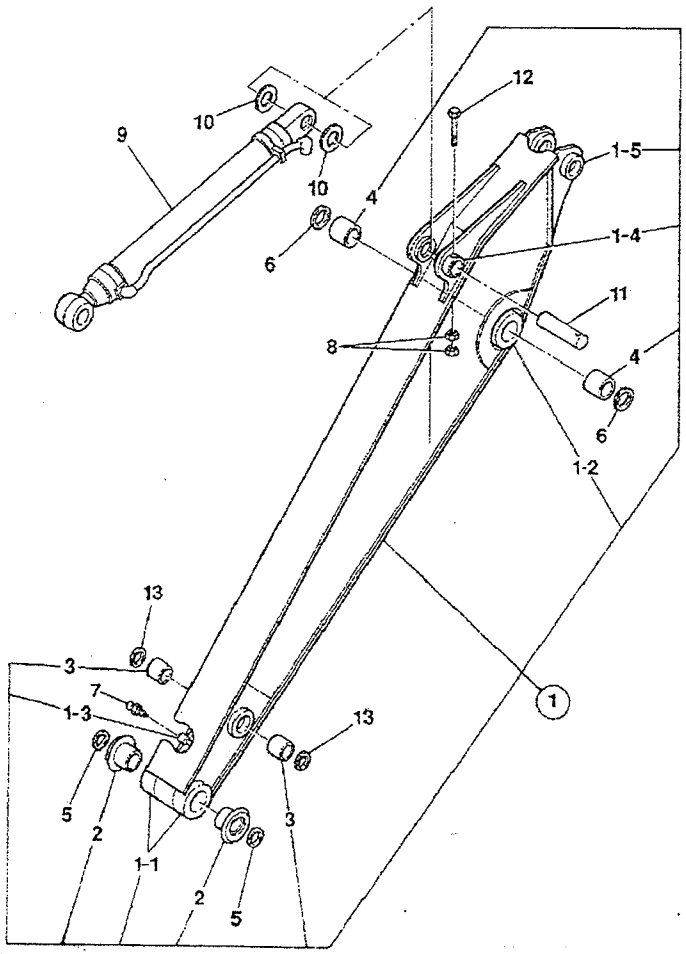

ITEM	PART NO.	CHANGE NO.	DESCRIPTION	REMARKS	QTY.
1	229/01305		Dipper, 2.4M arm Heavy Duty		1
2	JRV0594		Bush, steel		2
3	JRV0595		Bush, steel		2
4	831/10291		Bush, bearing		2
5	KHV0101		Seal, dust		2
6	KHV0103		Seal, dust		2
7	JHP0037		Nipple, grease, straight		2
8	172R020VR		Nut, high, strength		2
9	229/00573		Ram, bucket	P/Ex	1
10	KRV1176		Shim, 1.2mm thick		2
11	KRV1127		Pin, attachment		1
12	6009/3825Z		Bolt		1
13	KHV0100		Seal, dust		2

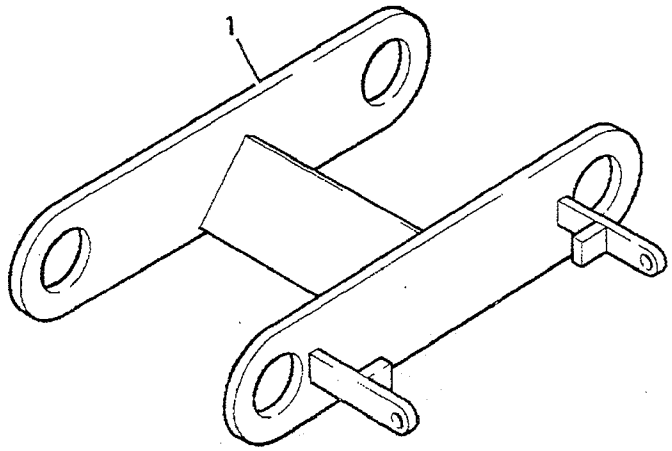

ITEM	PART NO.	CHANGE NO.	DESCRIPTION	REMARKS	QTY.
1	KRP1693		Link, transport, JS160 JS210		1
	KNP0254		Link, transport, JS130		1

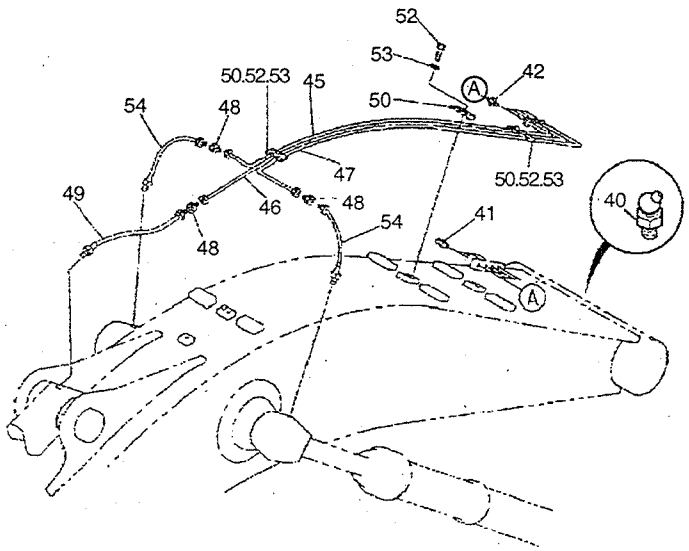

ITEM	PART NO.	CHANGE NO.	DESCRIPTION	REMARKS	QTY.
40	JHP0038		Nipple, grease, angled	Tier 1only, not fitted to Tier 2	1
41	JHP0037		Nipple, grease, straight	Tier 1 only	4
	JHP0037		Nipple, grease, straight	Tier 2 only (3 manifold & 3 Boom base)	6
42	KMJ0964		Connector		4
45	KRV1419		Pipe, grease, right hand boom ram		1
46	KRV1420		Pipe, grease, dipper ram		1
47	KRV1421		Pipe, grease, left hand boom ram		1
48	KMJ0707		Adapter		3
49	KRV0370		Hose, nylon		1
50	KRV0550		Clamp		3
52	1316/0308Z		Screw		6
53	1425/0007Z		Washer, spring		6
54	KRV0370		Hose, nylon		2

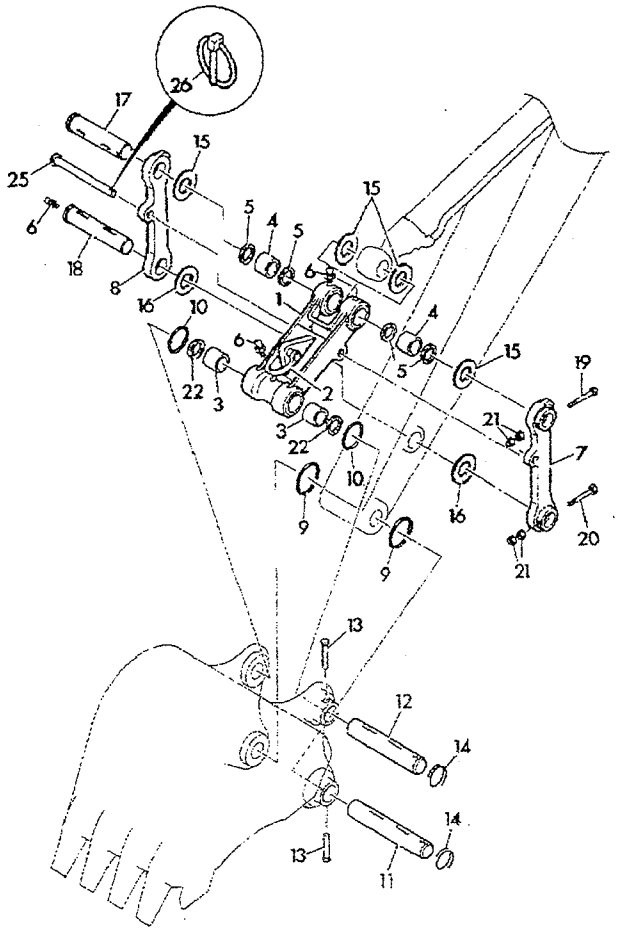

ITEM	PART NO.	CHANGE NO.	DESCRIPTION	REMARKS	QTY.
1	JRV0210		Bucket link WA		1
2	JNV0020		Link, bow shackle		1
	JBV0015		Link, bow shackle		1
3	JRV0077		Bush, steel		2
4	JRV0593		Bush, steel		2
5	KHV0102		Seal, dust		4
6	JHP0037		Nipple, grease, straight		4
7	JRV0209		Link, arm, left hand		1
8	JRV0208		Link, arm, right hand		1
9	KHV0117		O Ring		2
10	KHV0114		O Ring		2
11	JRV0071		Pin, pivot		1
12	JRV0071		Pin, pivot		1
13	KRV1161		Pin		2
14	KRV1162		Ring		2
15	KHV0170		Shim, 1.2mm thick		4
16	KHV0169		Shim, 1.2mm thick		2
17	KRV1120		Pin, attachment		1
18	KRV1121		Pin, attachment		1
19	6009/3827Z		Bolt		1
20	6009/3826Z		Bolt		1
21	173R020VZ		Nut, high, strength		4

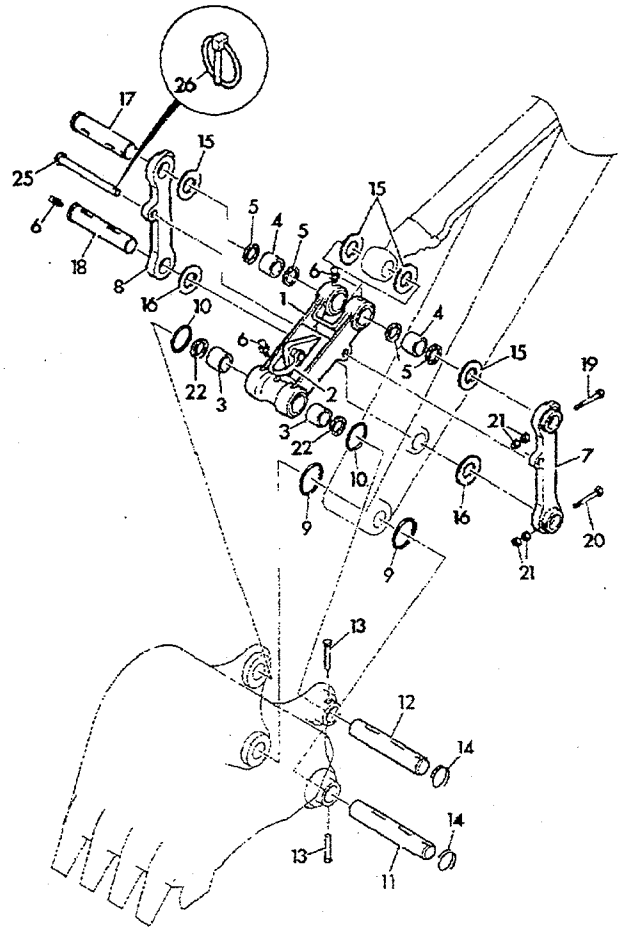

ITEM	PART NO.	CHANGE NO.	DESCRIPTION	REMARKS	QTY.
22	KHV0101		Seal, dust		4
23	JLP0283		Label, NO CRANING		1
25	331/15196		Pin, locking		1
26	JNV0377		Clip, R		1

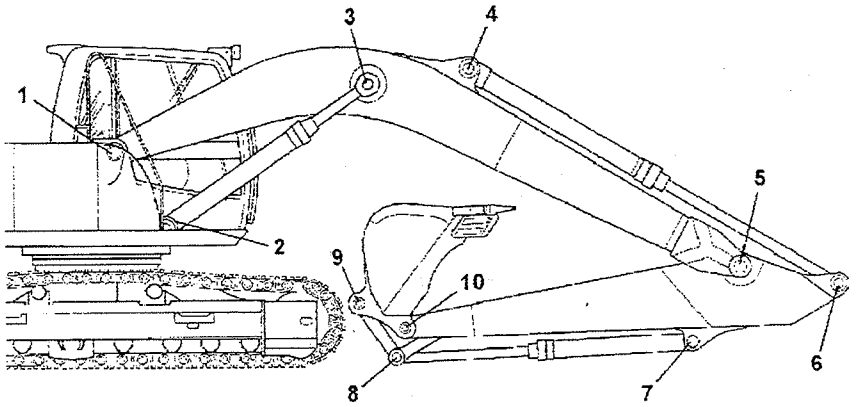

ITEM	PART NO.	CHANGE NO.	DESCRIPTION	REMARKS	QTY.
1	KSP0268		Shim, 0.8mm thick	0.8MM Thickness	A/R
	823/10579		Shim, 1.2mm thick	1.2MM Thickness	A/R
2	KRV1178		Shim, 1.2mm thick		A/R
3	KRV1178		Shim, 1.2mm thick		A/R
4	KRV1197		Shim, 1.2mm thick		A/R
5	823/10579		Shim, 91mm x 160mm x 0.8mm	0.8MM Thickness	A/R
	KSP0268		Shim, 91mm x 160mm x 1.2mm	1.2MM Thickness	A/R
6			See Remark	Not able to shim	1
7	KRV1176		Shim, 1.2mm thick		A/R
8	KHV0170		Shim, 1.2mm thick		A/R
9	KHV0169		Shim, 1.2mm thick		A/R
10	KHV0170		Shim, 1.2mm thick		A/R

B

B1 BODYWORK/FRAME
B2 CAB
B3 EXCAVATOR END
• B5 REFURBISHMENTS

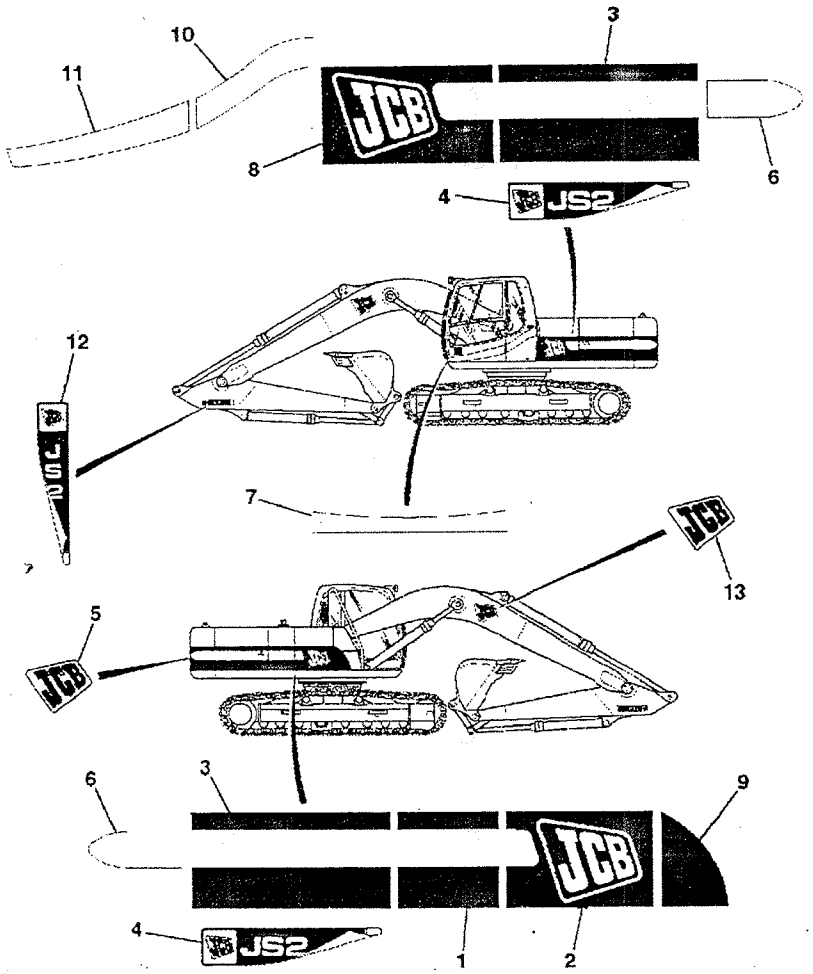

ITEM	PART NO.	CHANGE NO.	DESCRIPTION	REMARKS	QTY.
1	817/18769		Decal, strip, hydraulic tank		1
2	817/18766		Decal, fuel tank		1
3	817/18768		Decal, strip, engine & pump bay		1
4	817/18771		Decal, JS200LC		2
	817/18772		Decal, JS200NC		2
	817/18773		Decal, JS200SC		2
	817/18774		Decal. JS210LC		2
	817/18775		Decal. JS220LC		2
	817/18776		Decal. JS220SC		2
	817/18777		Decal JS220SC		2
	817/18876		Decal. JS220LR		2
5	817/17441		Decal, counterweight		1
6	817/18765		Decal, strip, counterweight		2
7	817/18761		Decal, cab, under front window		1
8	817/18764		Decal, hydraulic bay door		1
9	817/18767		Decal, toolbox		1
10	817/18763		Decal, cab side		1
11	817/18762		Decal, cab door		1
12	817/18780		Decal, JS200LC. Arm		2
	817/18781		Decal, JS200NC. Arm		2
	817/18782		Decal, JS200SC, Arm		2
	817/18783		Decal, JS210LC, Arm		2
	817/18784		Decal, JS220LC. Arm		2
	817/18785		Decal, JS200LC, Arm		2
	817/18786		Decal, JS220SC, Arm		2
	817/18877		Decal, JS220LR. Arm		2
13	817/17423		Decal, JCB Insignia (Black). Boom		2

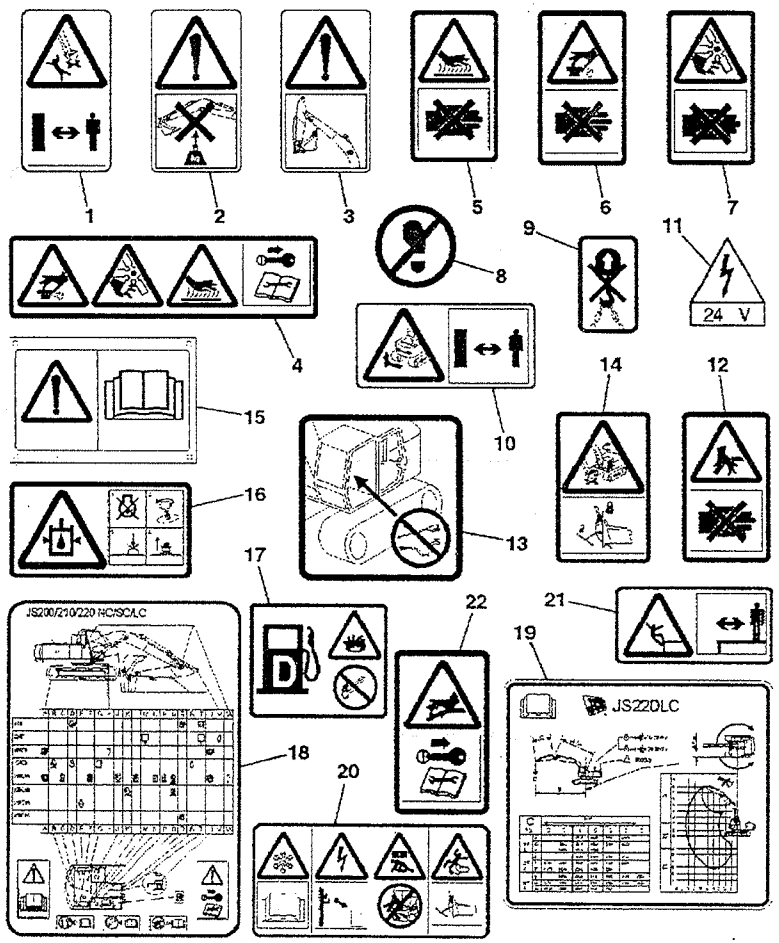

ITEM	PART NO.	CHANGE NO.	DESCRIPTION	REMARKS	QTY.
1	817/18542		Decal, WARNING, Arm Bucket KEEP CLEAR		1
2	JLP0283		Label, NO CRANING		1
3	JRP0142		Label, warning, bucket-boom		1
4	817/18535		Decal, WARNING, coolant pressure		1
5	817/18536		Decal, WARNING, Hot surfaces		1
6	817/18537		Decal, WARNING, High pressure & hot		1
7	817/18538		Decal, WARNING, Rotating parts		1
8	817/18566		Decal, WARNING, NO Step		1
9	JHP0121		Label, counterweight M/C NO LIFT		1
10	817/18528		Decal, WARNING, KEEP CLEAR		1
11	817/02370		Decal, warning 24 volt		1
12	817/18533		Decal, WARNING, KEEP HANDS AWAY		1
13	JHP0111		Label, NO wash, cab		1
14	817/18539		Decal, WARNING Sign lock lever		1
15	817/18541		Decal, WARNING PRODUCT LIABILITY		1
16	JHP0134		Label, hyd tank vent		1
17	817/18727		Label, warning		1
18	817/18523		Decal, LUBRICATION CHART, NON LANGUAGE		1

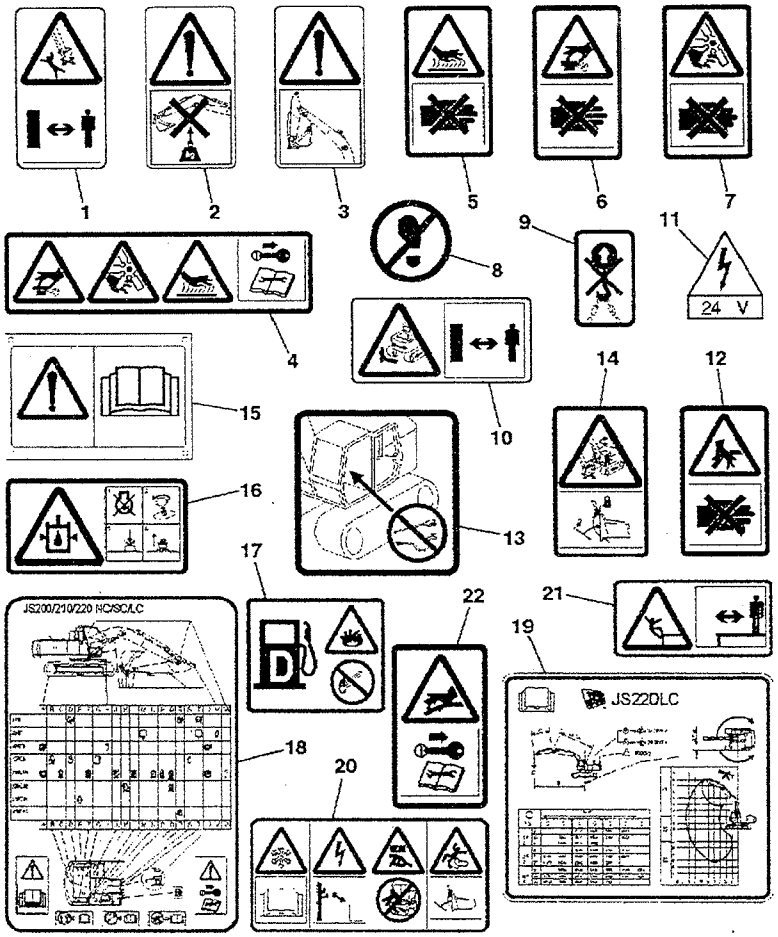

ITEM	PART NO.	CHANGE NO.	DESCRIPTION	REMARKS	QTY.
19	817/18797		Decal, LIFTING CHART, JS200NC		1
	817/18802		Decal, LIFTING CHART, JS200SC		1
	817/18806		Decal, LIFTING CHART, JS200LC		1
	817/18807		Decal, LIFTING CHART, JS210LC		1
	817/18808		Decal, LIFTING CHART, JS220NC		1
	817/18809		Decal, LIFTING CHART, JS220SC		1
	817/18530		Decal, LIFTING CHART, JS220LC		1
20	817/18529		Decal, WARNING, CAB SIGH		1
21	817/18531		Decal, WARNING, KEEP CLEAR		1
22	817/18532		Decal, WARNING, SIGN HP Hose		1
23	817/17530		Label, noise 105 LWA		1
24	817/18917		Decal, sun visor		1

Illustration Not Available at Time of Publication

ITEM	PART NO.	CHANGE NO.	DESCRIPTION	REMARKS	QTY.
1	817/18846		Label, engine oil, 02/801481		1
2	817/18847		Label, Fuel Flier		1
3	817/18848		Label, return oil		1
4	817/18849		Label, pilot kilter, KBJ1691		1
5	817/18851		Label, plexus filter, 32/925140		1
6	817/18853		Label, hammer return		1

Illustration Not Available at Time of Publication

ITEM	PART NO.	CHANGE NO.	DESCRIPTION	REMARKS	QTY.
1	JHP0200		Label, warning		1
2	215/10493		Decal, travel alarm		1
3	817/18995		Decal, WARNING SIGN, scissors point risk		1
4	*817/18996		Decal, WARNING SIGN, fluid under pressure		1
5	817/01639		Label, WARNING English, Read operating book		1
6	817/02370		Decal, warning 24 volt		1
7	817/03237		Label, hydraulic oil only		1
8	*817/18997		Decal, WARNING SIGN, seat, weight adjustment		1
9	817/18957		Decal, WARNING, sign diesel fuel		1
10	817/18958		Decal, WARNING, sigh CWT		1
11	817/18959		Decal, WARNING, SIGN CAB		1
12	817/18960		Decal, WARNING, Sign Edge		1
13	817/18961		Decal, WARNING, Sign HP Hoses		1
14	817/18962		Decal, WARNING, Sign hand trap		1
15	817/18963		Decal, WARNING, Sign Engine Bay		1
16	817/18964		Decal, WARNING, Sign Hot Surface		2
17	817/18965		Decal, WARNING, Sign HP Coolant		1

Illustration Not Available at Time of Publication

ITEM	PART NO.	CHANGE NO.	DESCRIPTION	REMARKS	QTY.
18	817/18966		Decal, WARNING, Sign Engine Fan		1
19	817/18967		Decal, WARNING, Sign Lock Lever		1
20	817/18968		Decal, WARNING, Sign Dipper bucket		2

Illustration Not Available at Time of Publication

ITEM	PART NO.	CHANGE NO.	DESCRIPTION	REMARKS	QTY.
	130/99510		Tool bag		1
	JRP0082		Wrench		1
	229/01545		Tool, filter wrench		1
	JHP0068		Spanner, box 10 x 11mm		1
	JRP0086		Allen key, 5mm		1
	40/301594		Allen key, 6mm		1
	130/14053		Allen key, 8mm		1
	JRP0087		Allen key, 10mm		1
	JHP0069		Screw driver, pozidrive		1
	JHP0070		Screw driver, pozidrive		1
	40/301494		Grease bucket		1
	130/14018		Extension tube		1
	130/14011		D.E. Spanner 10 x 11mm		1
	130/14012		D.E. Spanner 12 x 13mm		1
	130/14013		D.E. Spanner 14 x 17mm		1
	130/14014		D.E. Spanner 19 x 22mm		1
	130/99557		D.E. Spanner		1
	130/14015		D.E. Spanner 24 x 26mm		1
	130/99560		Ring Spanner		1
	130/99555		D.E. Spanner 36 x 41mm		1

C

• C1 ELECTRICS, MAIN MACHINE
C2 ELECTRICS, ENGINE
C3 ELECTRICS, CAB

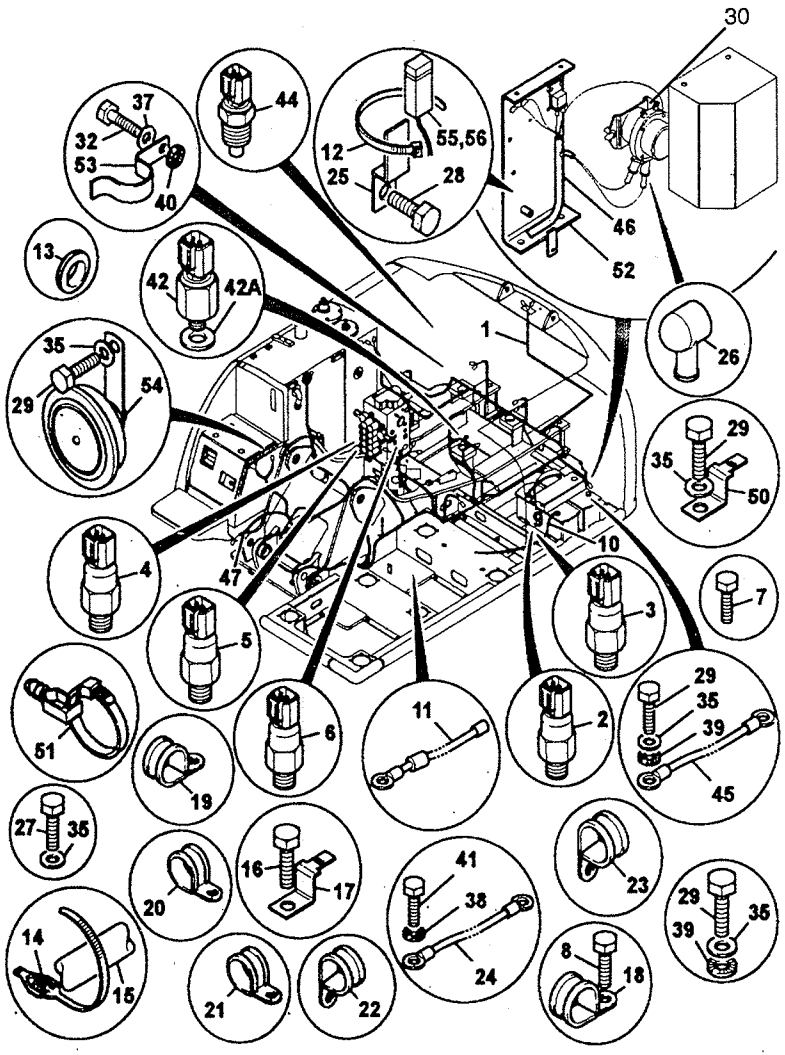

ITEM	PART NO.	CHANGE NO.	DESCRIPTION	REMARKS	QTY.
1	*721/11451		Harness, low flow, JS AUTO range		1
	721/12121		Harness, main, JS210	upto 1290686	1
	332/J3063		Harness, main, JS210	1290687 onwards	1
	721/10462		Harness, overload		1
2	701/80372		Switch, pressure 22 bar	upto 1290635	
	332/J0670		Switch, pressure 22 bar	1290636 onwards	1
	JRR0057		Cable, battery lead, clamp and cover		1
3	701/80373		Switch, pressure. 5 bar	upto 1290635	
	332/J0669		Switch, pressure. 5 bar	1290636 onwards	3
	KRR0016		Tie, cable		8
4	701/80374		Switch, pressure 12 bar	upto 1290635	
	332/J0671		Switch, pressure 12 bar	1290636 onwards	1
5	701/80375		Switch, pressure 20 bar		1
6	701/80371		Switch, pressure, 335 bar	upto 1290649	
	332/J2970		Switch, pressure, 335 bar	1290650 onwards	1
9	JHP0162		Cable, battery lead, clamp and cover		1
10	718/20024		Cable, battery		1
11	KHR1444		Clamp		2
13	KRR0152		Grommet		2
14	KRR0017		Tie, harness retainer		28
	KHH0142		Tie, harness retainer		14
16	KHR0737		Screw, pan head		17
17	KHR1957		Clip		1
18	KHR0319		Clamp, special		7

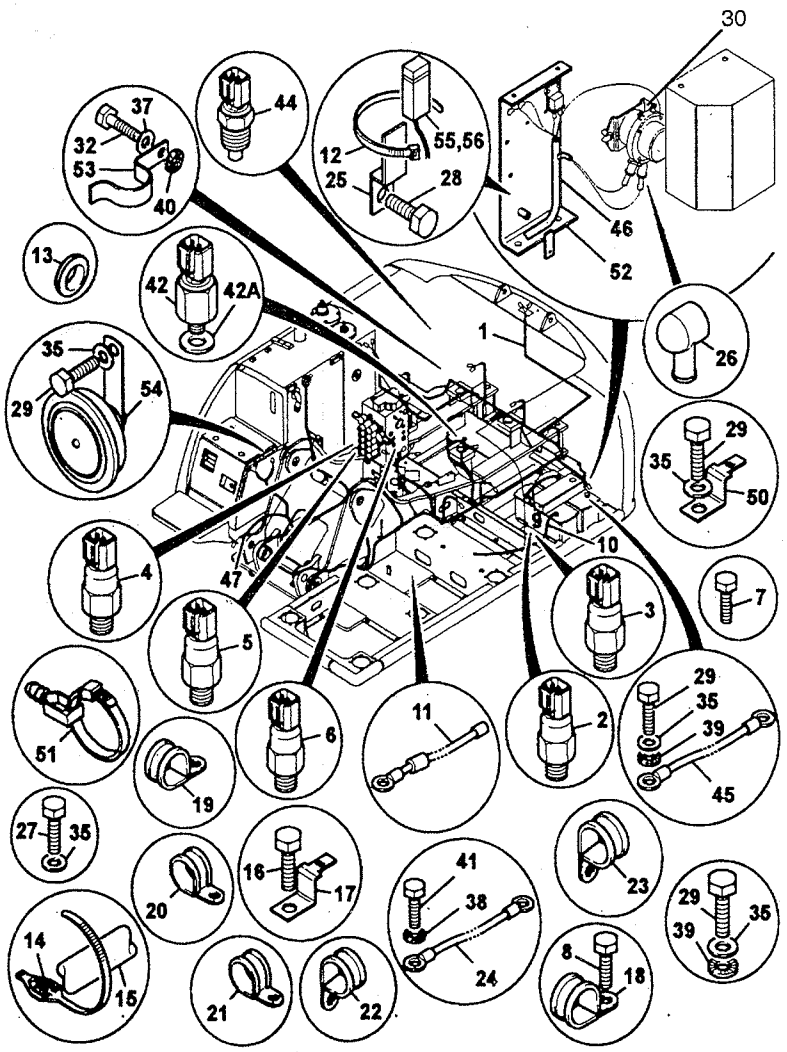

ITEM	PART NO.	CHANGE NO.	DESCRIPTION	REMARKS	QTY.
20	1315/0405Z		Screw		1
	KHR1407		Clamp		1
23	KHR1445		Clamp		3
24	KHR1451		Cable, earth		1
25	KHR1588		Clip		1
26	KHR1716		Cap, terminal		2
27	1316/0301Z		Screw		1
29	1316/0305Z		Bolt, high tensile		3
	6063/0007Z		Washer, starlock		1
30	716/30205		Relay, battery isolator		1
31	6063/0006Z		Washer, starlock		3
33	1316/0507Z		Screw		2
34	1406/0015		Washer, seal		1
35	1420/0007Z		Washer, plain		4
	1425/0007Z		Washer, spring		4
	1425/0007Z		Washer, spring		1
36	1425/0008Z		Washer, spring		2
	1420/0008Z		Washer, plain		1
37	1420/0009Z		Washer		2
	1425/0009Z		Washer, spring		2
39	715/04300		Socket		1
40	6063/0008Z		Washer, starlock		1
41	6012/0298Z		Screw, pan head		7
42	701/80328		Switch, temperature		1
44	718/30111		Sensor, temperature		1

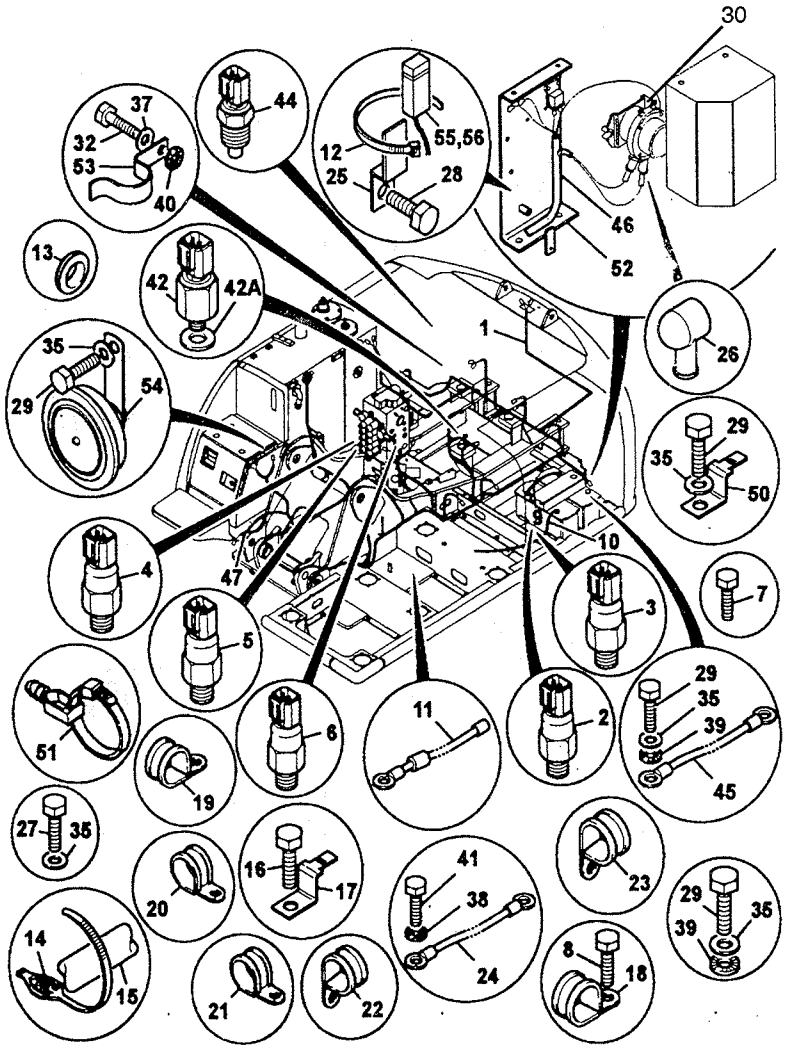

ITEM	PART NO.	CHANGE NO.	DESCRIPTION	REMARKS	QTY.
45	718/20023		Cable, battery		1
47	721/10453		Harness, boom, working lights		1
45	821/00367		Clip		1
48	721/11429		Harness, link, cab work lights		1
49	721/10673		Harness, link, merged pump		1
51	826/01347		Tie, cable c/w mounting		1
52	KRR1078		Bracket		1
54	JLR0104		Horn		1
55	716/26800		Relay Tharmostart		1

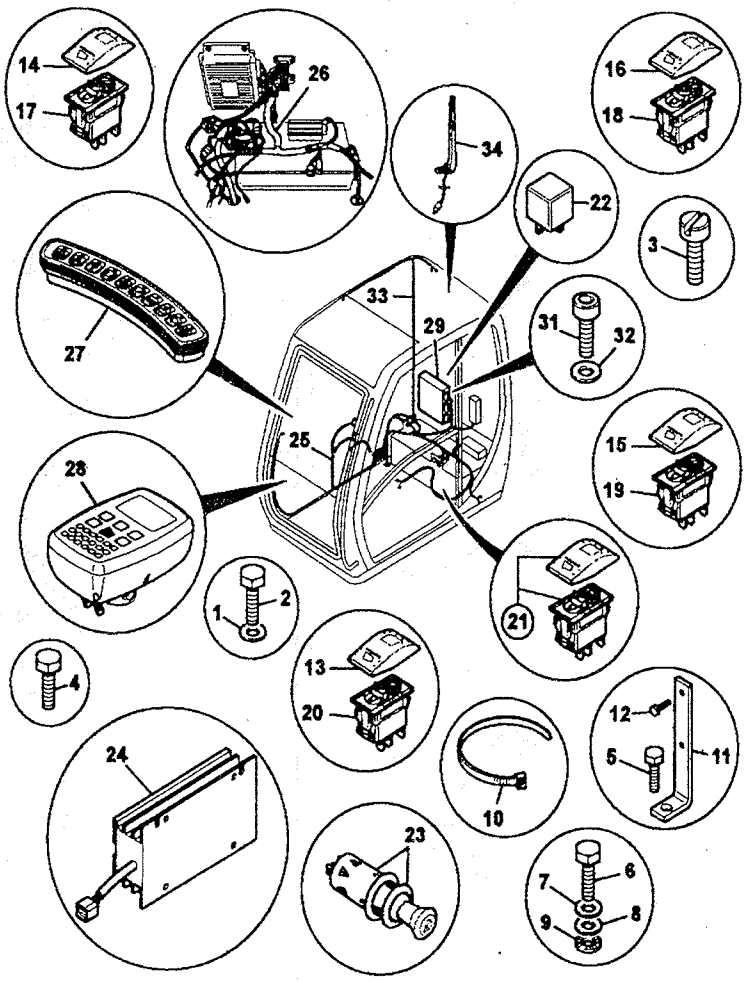

ITEM	PART NO.	CHANGE NO.	DESCRIPTION	REMARKS	QTY.
1	JHP0046		Washer		1
2	JHR0128		Bolt		2
3	KHR0611		Screw, pan head		4
4	1316/O305Z		Bolt, high tensile		4
5	1316/0405Z		Screw, M10 x 20		1
6	1316/9403Z		Screw, M4 X 16		4
7	1420/0004Z		Washer, M4		4
8	1420/0007Z		Washer, plain		4
9	6063/0008Z		Washer, starlock		1
10	242/00290		Tie, panel fixin cable		4
11	331/17400		Bracket, Earth, Harness		1
12	6012/0198Z		Screw, pan head		1
13	701/58826		Cover, front worklights, soft touch		1
14	701/58853		Cap, decal, boom priority		1
15	701/58855		Decal, mute		1
16	*701/58906		Cover decal, cab interior		1
17	701/60000		Switch, 12V		1
18	701/60030		Switch, 24V		1
19	701/60031		Switch, 24V		1
20	701/60041		Switch, 24V		1
21	701/80214		Switch, Redundancy		1
22	716/30075		Relay, Stop solenoid		1
23	717/12900		Lighter, cigarette 12 volt		1
24	717/20154		Convertor, volt, 24 volts to 12 volts		1
25	721/11637		Harness, Fascia		1

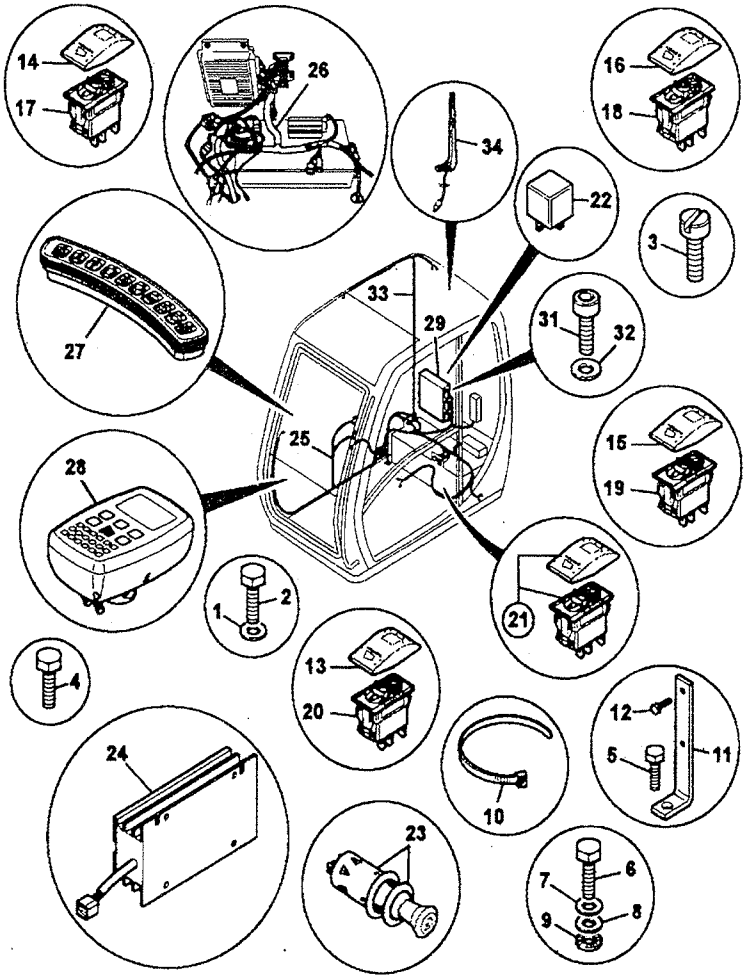

ITEM	PART NO.	CHANGE NO.	DESCRIPTION	REMARKS	QTY.
26	721/12030		Harness, cab		1
27	331/31955		Switch, panel, fascia		1
28	728/19700		Unit, EMS monitor		1
29	728/35700		Unit Electronic control, mark4	1290626 onwords	4
31	1391/340Z		Capscrew, socket head		3
32	1420/0008Z		Washer, Plain		3

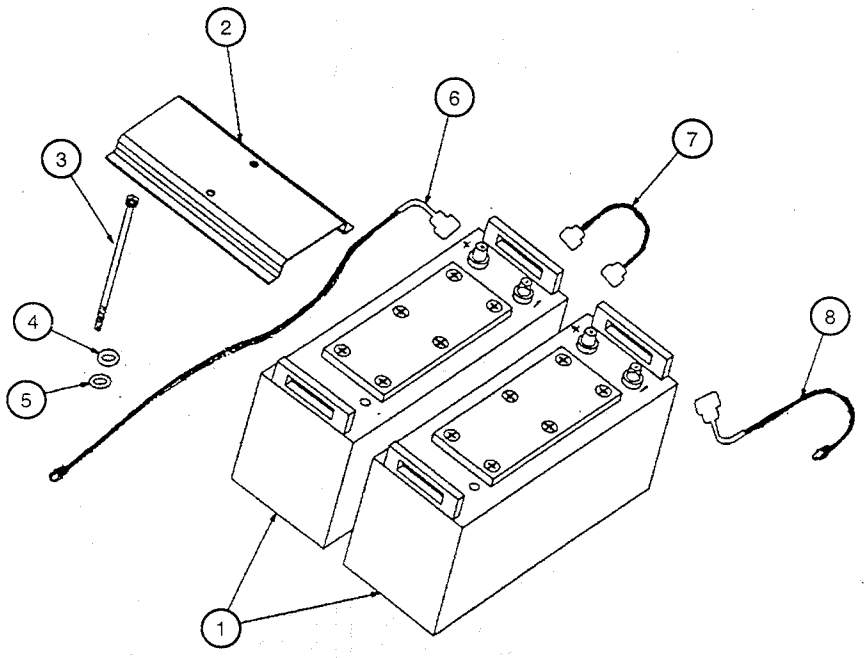

ITEM	PART NO.	CHANGE NO.	DESCRIPTION	REMARKS	QTY.
1	40/302290		Battery, MHD 1300		2
2	229/00598		Clamp Battery		1
3	JHR0099		Bolt SPL		2
4	1425/0008Z		Washer, spring		2
5	JHP0046		Washer		2
6	229/00601		Positive Lead		1
7	229/00602		Link Lead		1
8	229/00603		Negative Lead		1
	JRR0057		Battery cable		1

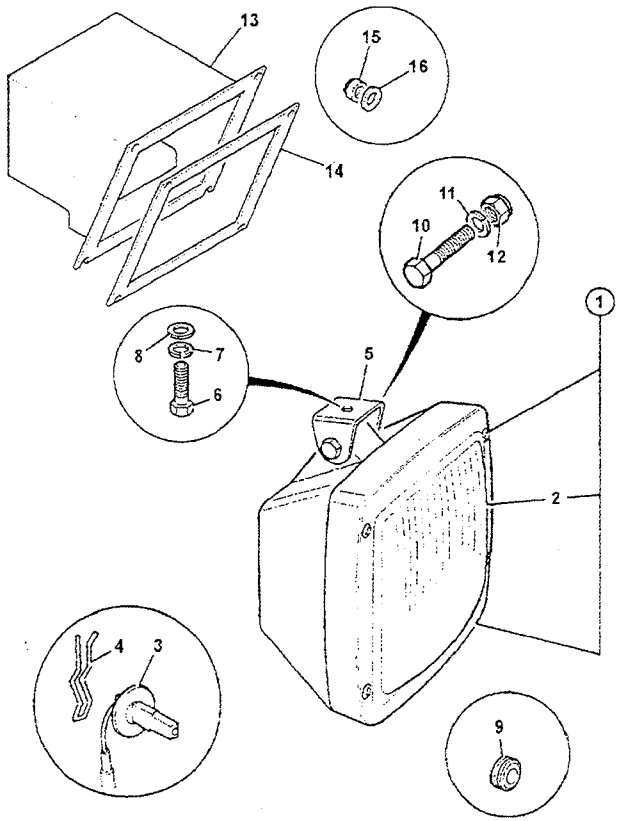

ITEM	PART NO.	CHANGE NO.	DESCRIPTION	REMARKS	QTY.
1	700/38800		Light Working		1
2	NSP		None serviced part		1
3	720/10061		Bulb, 12V-55W H3		1
4	700/10103		Spring		1
5	123/06305		Bracket		1
6	1316/0305Z		Bolt, high tensile		1
7	1420/0007Z		washer, plain		1
8	1370/0201Z		Nut, M8		1
10	1316/3315Z		Bolt		1
11	1420/0007Z		Washer, Plain		1
12	1370/0201Z		Nut, M8		1
13	335/05491		Box, work light		1
14	813/10235		Gasket		1
15	1370/0001Z		Nut, M5-8		4
16	1420/0005Z		Washer, M5		4

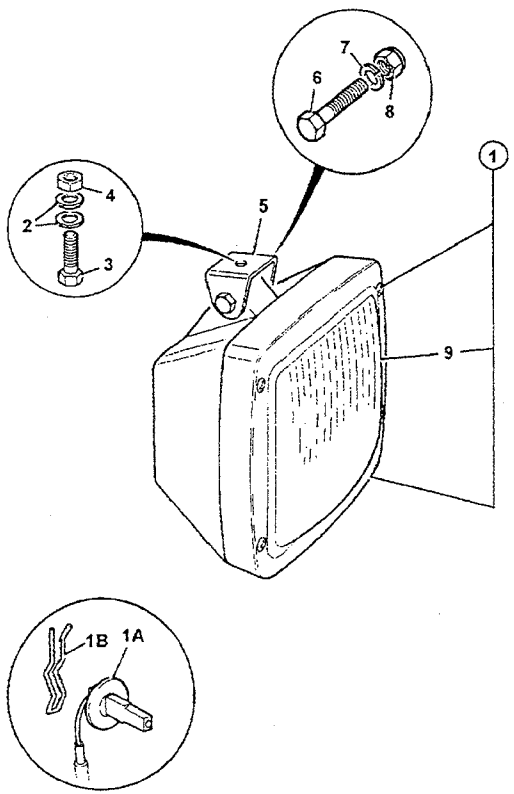

ITEM	PART NO.	CHANGE NO.	DESCRIPTION	REMARKS	QTY.
1	700/43900		Light, assembly		3
1A	720/20032		Bulb, H3 24v 70w		1
1B	700/10103		Spring		1
2	1420/0007Z		Washer, plain		6
3	1315/0305Z		Bolt		3
4	1371/0202Z		Nut		3
5	123/06305		Bracket		3
6	1316/0305Z		Bolt, high tensile		1
7	1420/0007Z		Washer, plain		1
8	1370/0201Z		Nut, M8		1
10	KHH0142		Tie, harness retainer		3
11			See Remark	Not fitted	
12	331/36877		Bracket, right hand light		1
13	331/36878		Bracket, left hand light		1
14			See Remark	Not fitted	
15			See Remark	Not fitted	
16	*721/11441		Harness, cab working		1
17	7232/0005		Housing, connector		2
18	821/00410		Clip, pipe		2
19	*1315/0305Z		Bolt		2
20	*1420/0007Z		Washer, plain		2
21	1316/0505Z		Screw		4
22	1420/0009Z		Washer		4

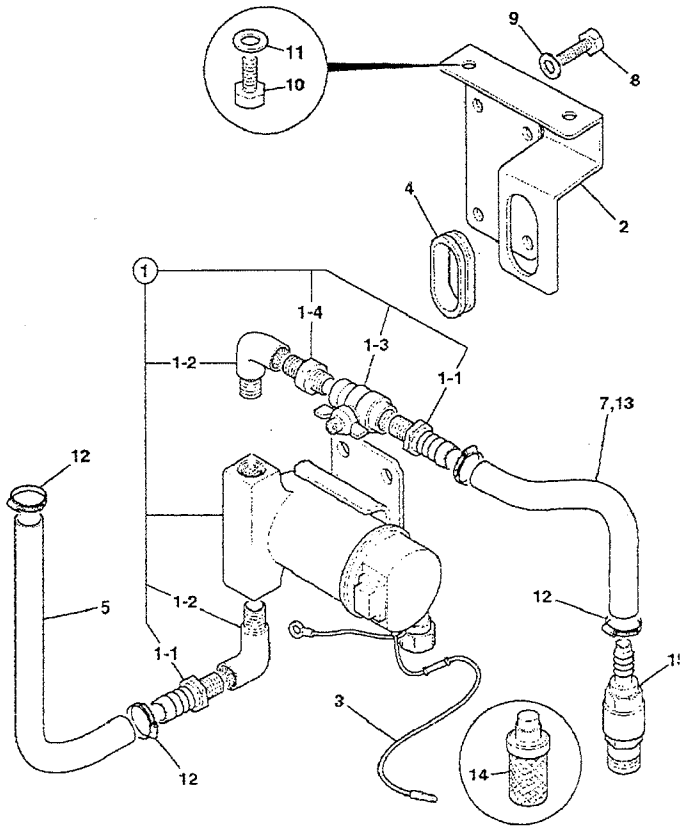

ITEM	PART NO.	CHANGE NO.	DESCRIPTION	REMARKS	QTY.
1	229/02617		Pump, refueling		1
1 03	928/60250		Valve, ball		1
1 04	1604/0006		Adapter, 3/4"BSP M/M		1
2	335/45718		Bracket, refueling pump		1
3	721/11430		Harness earth link, refueling pump		1
4	KHN1260		Grommet, rubber		1
5	834/10931		Hose 1.5 M		1
7	JSR0006		Hose		1
8	1316/0507Z		Screw		4
9	1420/0009Z		Washer		4
10	1316/0403Z		Screw		2
11	1420/0008Z		Washer, Plain		2
12	2201/0007		Cilp, jubilee		4
13	834/10901		Hose, 3500MM long		1
14	JHH0071		Valve, non return		1
15	215/11319		Strainer, assembly		1
16	701/80310		Push Button Switch		1
17	335/10692		Switch Mount		1

C

C1 ELECTRICS, MAIN MACHINE
C2 ELECTRICS, ENGINE
C3 ELECTRICS, CAB

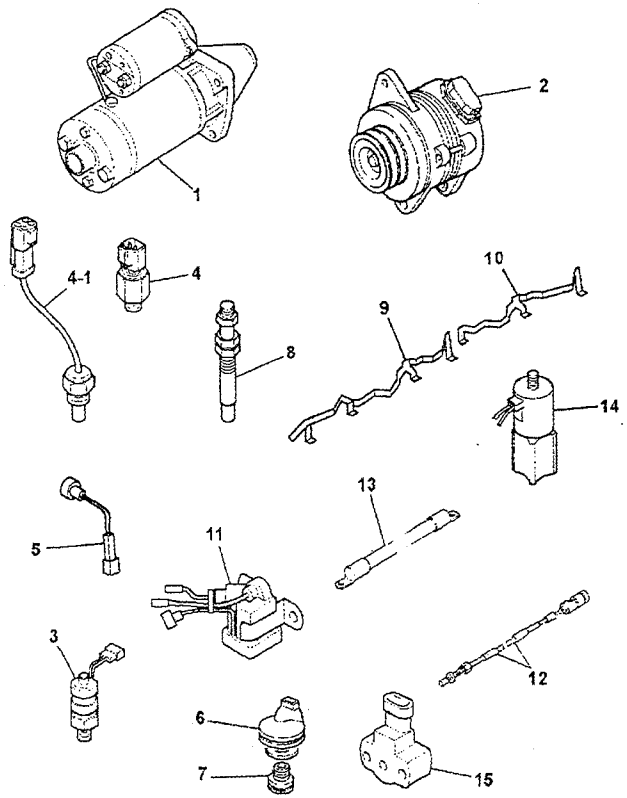

ITEM	PART NO.	CHANGE NO.	DESCRIPTION	REMARKS	QTY.
1	714/40236		Motor starter		1
	714/40294		Motor starter		1
2	714/40321		Alternator, 24V 40amp		1
	714/40237		Alternator		1
3	701/54500		Switch oil pressure		1
4	701/80328		Switch, temperature		1
4 01	716/30111		Sensor, temperature		1
5	716/30071		Sensor, low water level		1
6	JNH0070		Switch, vacuum sensor		1
7	162/02674		Adapter, vacumm sensor		1
8	717/20163		Thermostart		1
9	717/20171		Harness connector glow Plug		1
10	717/20170		Lead, connector, glow plug		1
11	716/30177		Relay, safety, pulse		1
12	701/54300		Engine Speed Sensor		1
13	9829322110		Cable, starter-frame		1
14	716/30091		Solenoid, Engine stop		1
15	716/30180		Relay, potentiomenter		1

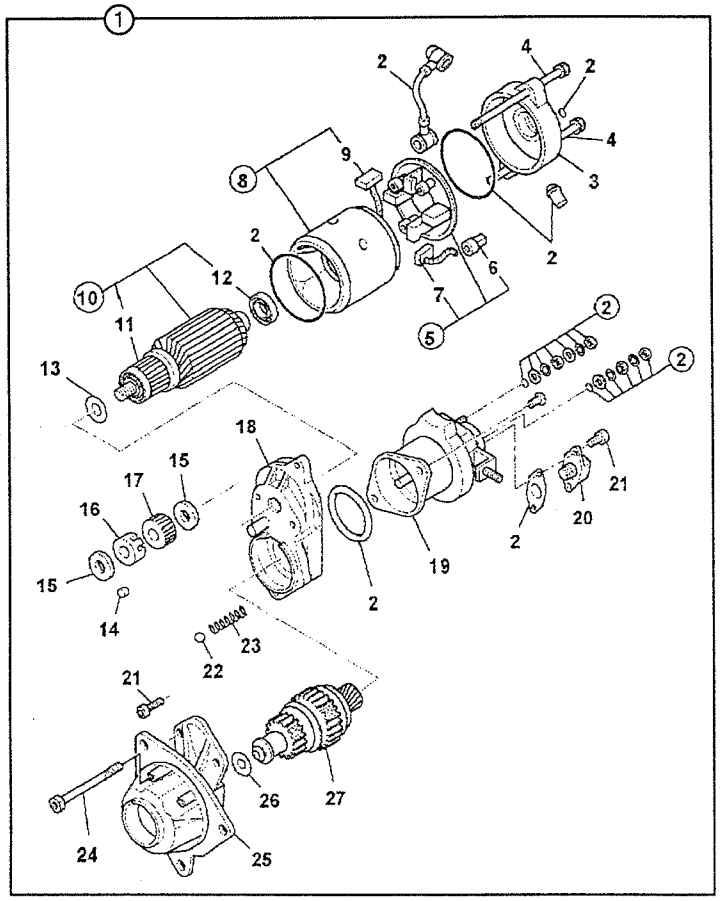

ITEM	PART NO.	CHANGE NO.	DESCRIPTION	REMARKS	QTY.
1	714/40236		Motor, starter		1
2	714/25510		Kit, seat starter		1
3	714/25530		Cover, Cover rear starter m		1
4	714/25518		Bolt, through, starter		4
5	714/25517		Kit, brush mounting starter		1
6	714/25225		Spring, brush		4
7	714/25527		Brush (-) starter		2
8	714/25513		Coil assembly		1
9	714/25516		Brush, (+) starter		2
10	714/25514		Armature starter		1
11	NSP		None serviced part		1
12	TBA		Part number, Not Yet Known		1
13	714/25231		Washer		1
14	714/25523		Roller pinion starts		5
15	714/25522		Retainer starter pin		2
16	714/25521		Retainer, pinion star		1
17	714/25524		Gear starter		1
18	714/25512		Bracket centre, start		1
19	714/25520		Switch, engage starter		1
20	714/25529		Switch micro		1
21	714/25531		Bolt		4
22	714/25515		Bearing armature, stator		1
23	714/25525		Spring pinion starter		1

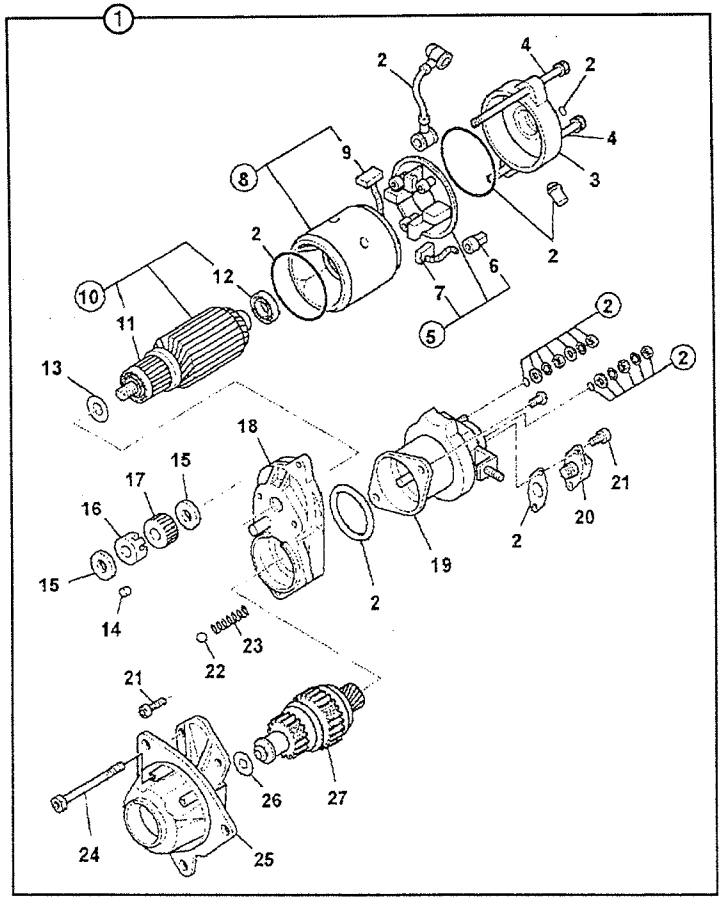

ITEM	PART NO.	CHANGE NO.	DESCRIPTION	REMARKS	QTY.
24	714/25519		Bolt through starter		4
25	714/25511		Cover, cover pinion starter		1
26	714/25532		Washer, clutch, starter		1
27	714/25528		Clutch, clutch pinion starte		1

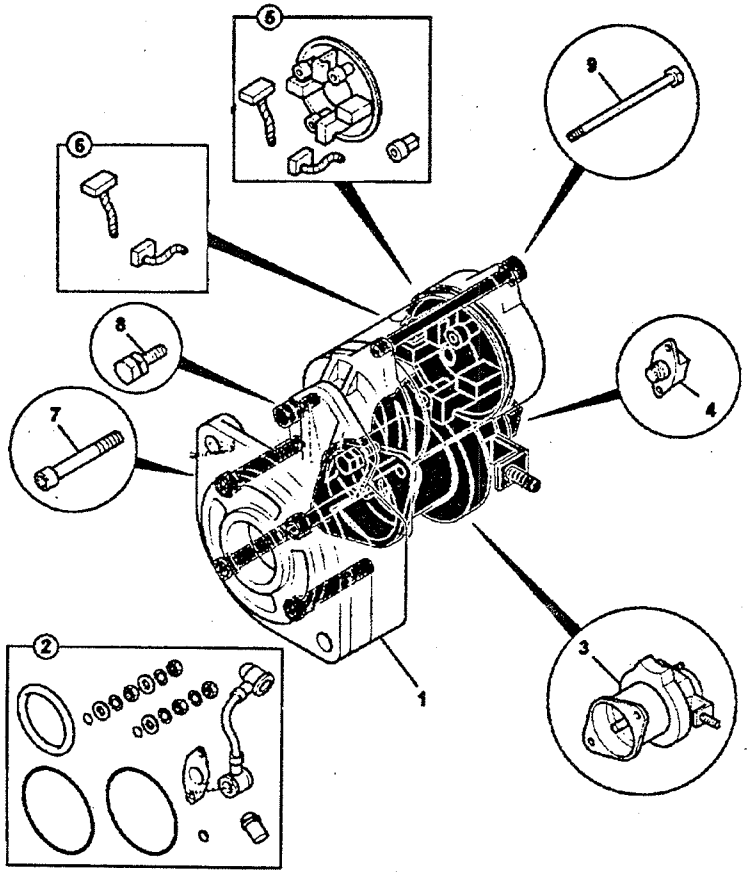

ITEM	PART NO.	CHANGE NO.	DESCRIPTION	REMARKS	QTY.
1	714/40294		Motor starter		1
2	:714/25510		Kit-seal starter		1
3	:714/25520		Switch engage starter		1
4	:714/25529		Switch micro		1
5	:714/25517		Kit-brush mounting starter		1
6	:714/25516		Brush (+) starter		1
7	:714/25519		Bolt through, starter		1
8	:714/25531		Bolt		4
9	:714/25518		Bolt through, starter		4

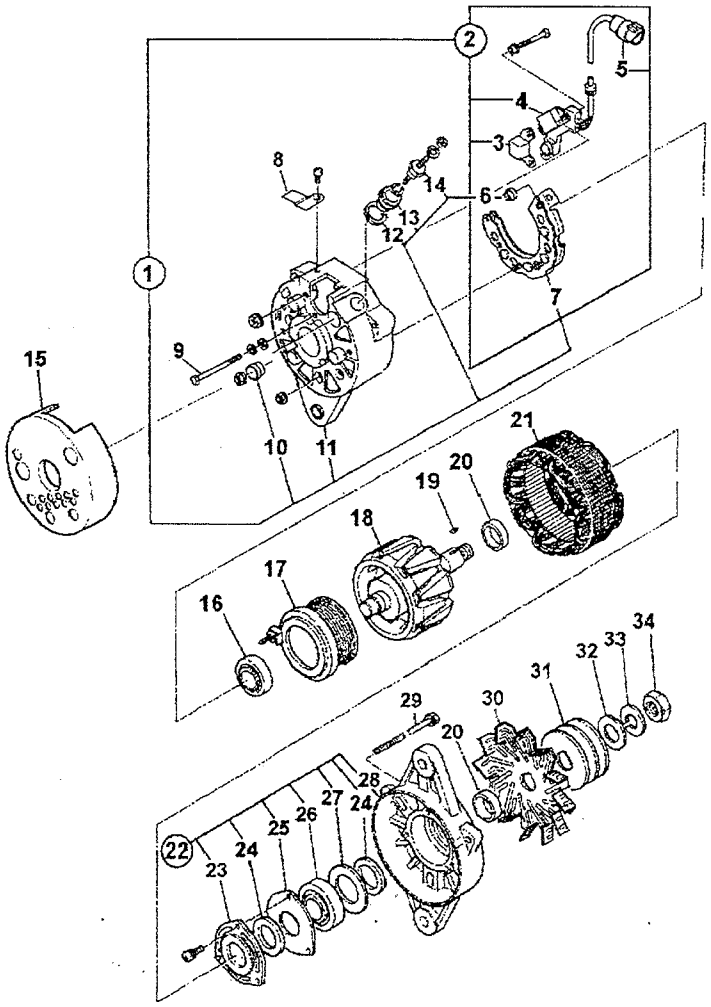

ITEM	PART NO.	CHANGE NO.	DESCRIPTION	REMARKS	QTY.
0A	714/40237	714/40321	Alternator, 24v 40amp		1
1	714/27210		Bracket, assembly, commutator end		1
2	714/27216		Rectifier, assembly, generator		1
3	714/27228		Condenser, generator		1
4	714/27215		Regulator, voltage generator		1
5	714/27214		Terminal, brush, generator		1
6	714/27227		Bush, insulating, rectifier		1
7	NSP		None serviced part		1
8	8970290590		Clamp		1
9	714/27224		Screw, rear end cover		3
10	714/27225		Bush, insulating, rectifier		1
11	714/27217		Bracket, commutator end		1
12	NSP		None serviced part		1
13	714/27226		Bush, ,insulating, rectifier		1
14	NSP		None serviced part		1
15	714/27223		Cover, end, rear cover		1
16	714/27213		Bearing slip ring end		1
17	714/27222		Coil, field, generator		1
18	714/27211		Rotor, rotor, generator		1
19	NSP		None serviced part		1
20	1812296420		Collar		2
21	714/27221		Stator, generator		1
22	714/27219		Bracket assembly front		1
23	1812296430		Retainer		1

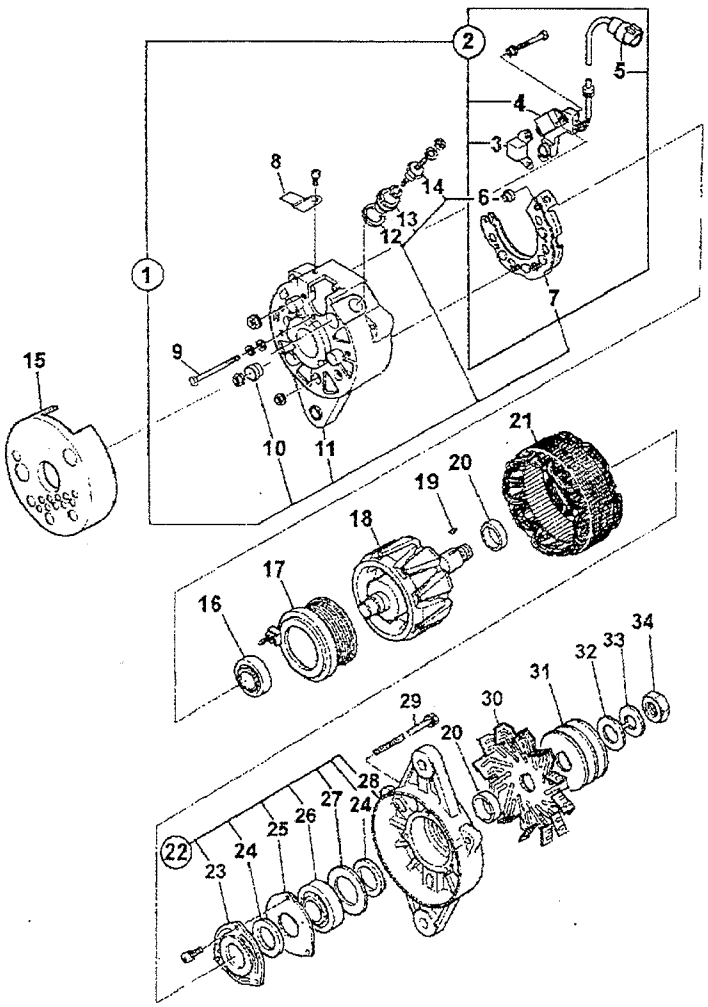

ITEM	PART NO.	CHANGE NO.	DESCRIPTION	REMARKS	QTY.
24	1812296440		Seal		2
25	714/27218		Retainer, rotor, generator		1
26	714/27212		Bearing, drive end		1
27	1812295260		Retainer		1
28	NSP		None serviced part		1
29	1812293820		Bolt		4
30	714/27220		Fan, generator		1
31	1812220550		Pulley, alternator		1
32	1812294780		Washer, plain		1
33	1812294790		Washer, spring		1
34	1812294740		Nut		1

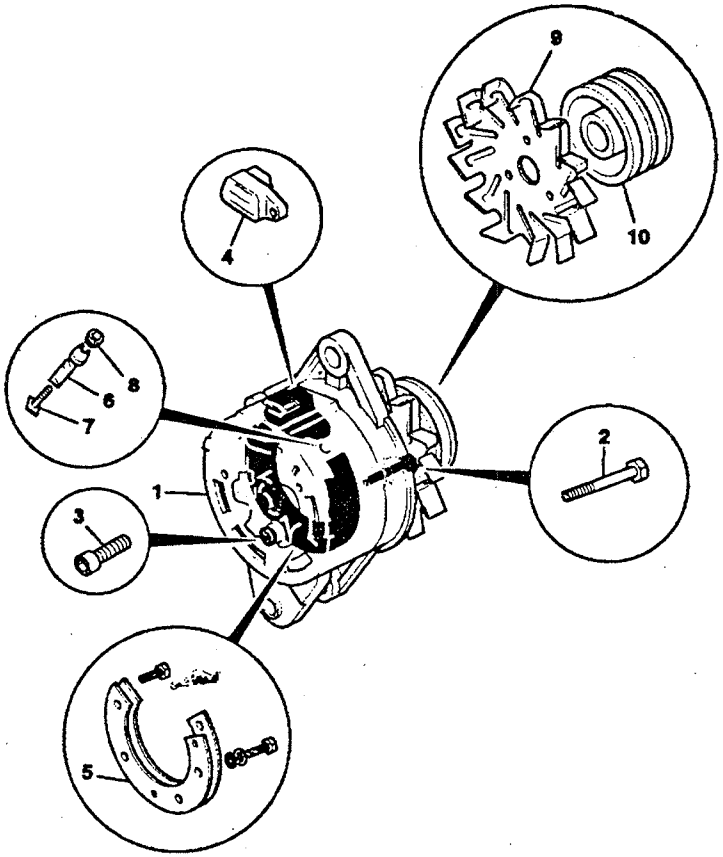

ITEM	PART NO.	CHANGE NO.	DESCRIPTION	REMARKS	QTY.
1	714/40321		Alternator assembly 24v 40amp		1
2	:1812293820		Bolt		3
3	:TBA		Part number Not Yet Known		1
4	:1812700010		Regulator assembly		1
5	:1812190560		Rectifier assembly		1
6	:1812293890		Terminal		1
7	:5812291920		Bolt		1
8	:1812290420		Bush insulating		1
9	:1812230050		Fan alternator		1
10	:714/27202		Pulley alternator		1

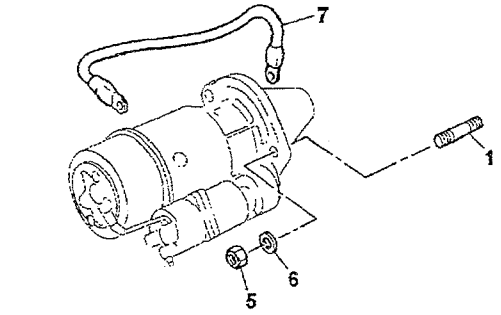

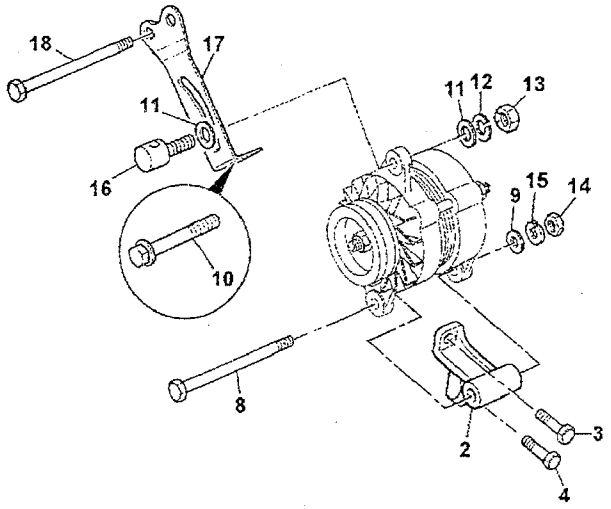

ITEM	PART NO.	CHANGE NO.	DESCRIPTION	REMARKS	QTY.
1	9944112350		Stud. M12 x 35L = 53		3
2	5197110312		Bracket, alternator mounting		1
3	02/801495		Bolt, M10 x 25		1
4	02/800939		Bolt, flange head, M10x 5mm		2
5	9991104120		Nut		3
6	9091505120		Washer, spring		3
7	9829322110		Cable, starter-frame		1
8	1090001331		Bolt L = 135		1
9	9091605140		Washer, plain		1
20	1090091141		Bolt, L = 155		1
11	9091607120		Washer, plain		2
12	9091505120		Washer, spring		1
13	9991104120		Nut		1
14	9991104140		Nut		1
15	9091505140		Washer, spring		1
16	1136741610		Adjuster		1
17	1136741192		Lever adjusting alternator		1
18	02/800484		Bolt, flange head, M10 X 40mm		2

C

C1 ELECTRICS, MAIN MACHINE
C2 ELECTRICS, ENGINE
• C3 ELECTRICS, CAB

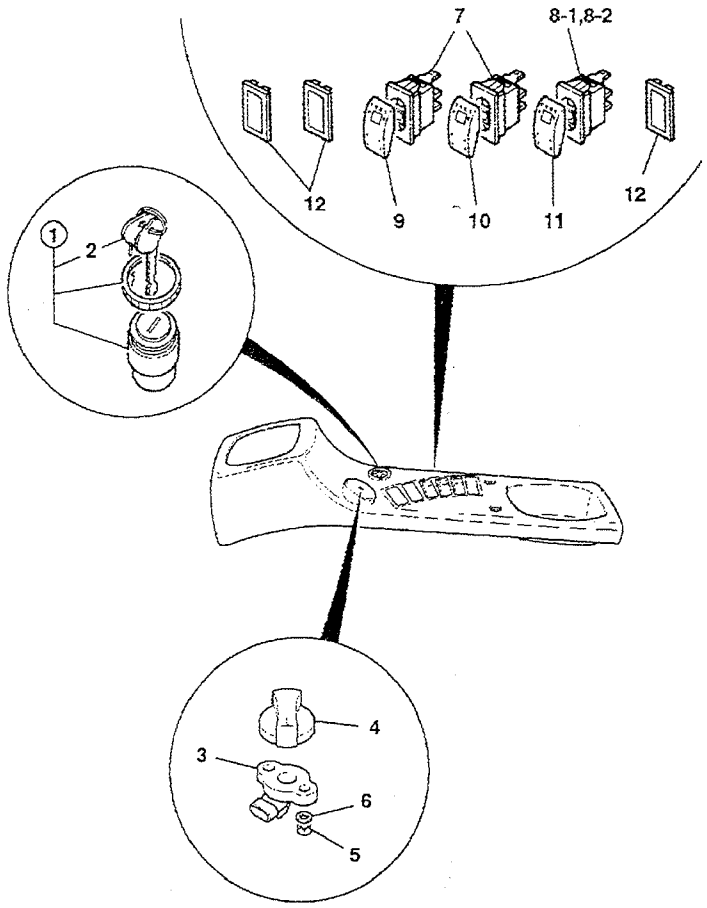

ITEM	PART NO.	CHANGE NO.	DESCRIPTION	REMARKS	QTY.
1	701/80184		Switch, Ignition		1
2	701/45501		Key, Door/Ignition Ref 14657		1
3	716/30155		Potentiometer		1
4	331/21736		Knob, throttle control		1
5	1370/9401Z		Nut		2
6	1420/0004Z		Washer, M4		2
7	701/60032		Switch 24V		1
8	701/60032		Switch 24V		1
9	701/58832		Cover Switch		1
10	701/58832		Cover Switch		1
11	701/58832		Cover Switch		1
12	701/60010		Blank		A/R

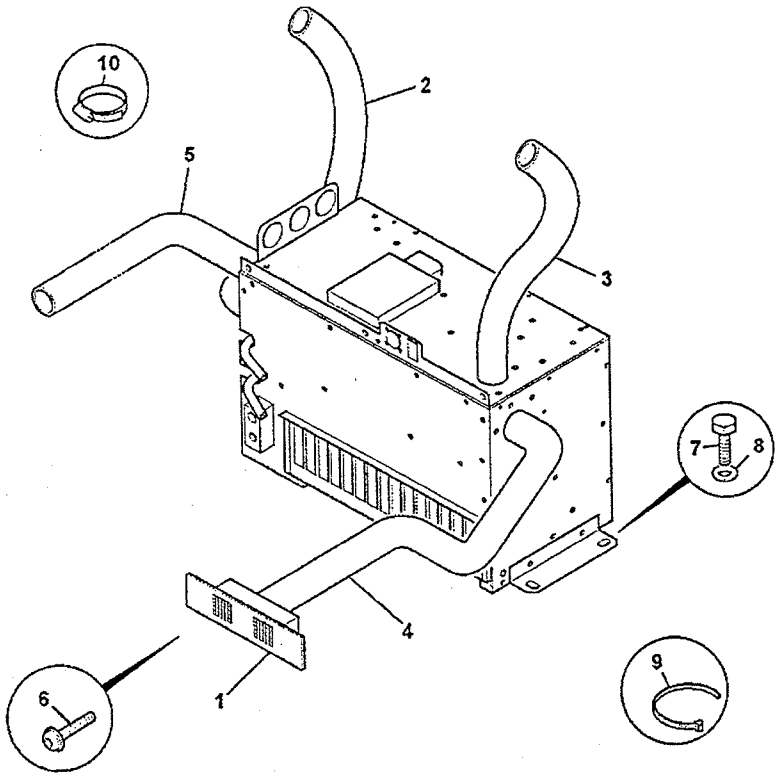

ITEM	PART NO.	CHANGE NO.	DESCRIPTION	REMARKS	QTY.
1	331/28366		Plate foot vent		1
2	30/925753		Hose air duct 50.8x750 L right and air		1
3	30/925754		Hose air duct 60x1450 L Left and rear		1
4	30/925755		Hose air duct 60x1250 L foot vent		1
5	30/925756		Hose air duct 60x1450 L front vents		1
6	KHR0737		Screw pan head		2
7	1316/0405Z		Screw M10x20		4
8	1420/0008Z		Washer plain M10		4
9	KHH0142		Tie harness retainer		8
10	2201/0005		Clip jubilee		4
11	331/32454		Drawing ducting master		0
12	4101/0500		Fluid locking loctite 262		0

Illustration Not Available at Time of Publication

ITEM	PART NO.	CHANGE NO.	DESCRIPTION	REMARKS	QTY.
1	30/925862		Heater, assembly		1
2	30/925863		Unit heater control		1
3	30/925753		Hose, air duct 50.8 x 750L, right hand rear		1
4	30/925754		Hose, air duct 50.8 x 500L, left hand rear		1
5	30/925755		Hose air duct 60 x 1250L, foot vent		1
6	30/925756		Hose, air duct 60 x 1450L, front vents		1
7	KNH0586		Bracket, engine mounting		1
8	KHH0142		Tie, harness retainer		8
9	KHR0737		Screw, pan head		2
10	1316/0405Z		Screw, M10 x 20		4
11	1420/0008Z		Washer, Plain		4
12	2201/0005		Clip, jubilee		4
13	331/28366		Plate, foot vent		1
14	JHN0158		Adapter		2
15	JSH0082		Hose, water		2
16	JSR0055		Hose, corrugated		2
17	JSR0057		Hose corrugated		2
18	KRR0830		Adapter, elbow		1
19	KRR0831		Adapter, elbow		1
20	821/10041		Clip, dual hose, 55-60 dia & 25-30 dia		1
21	331/37714		Panel, noise damping		1
22	331/37715		Panel, noise damping		1
23	331/37587		Panel, foam acousyic, cab floor		2

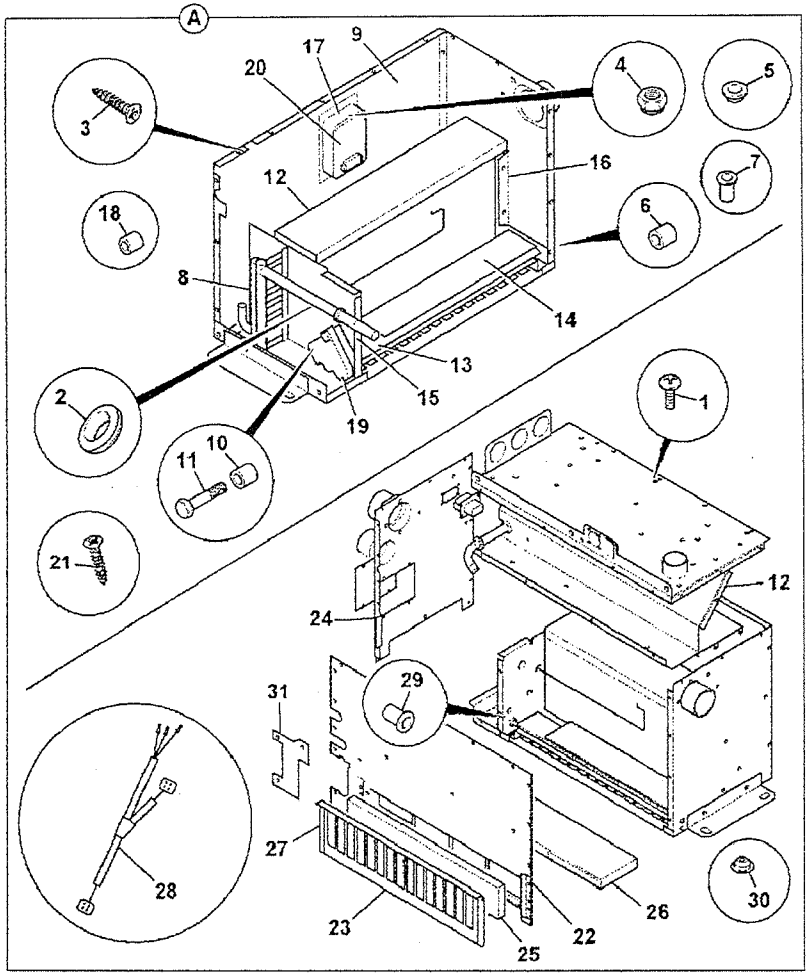

ITEM	PART NO.	CHANGE NO.	DESCRIPTION	REMARKS	QTY.
0A	30/925862		Heater, assembly		1
1	1		TBA		44
2	30/925898		Grommet		1
3	30/925900		Screw		6
4	1		TBA		2
5	30/925906		Washer, shoulder 6.2 I/D		1
6	1		TBA		1
7	1		TBA		2
8	30/926000		Coil, heater		1
9	NSP		None serviced part		1
10	1		TBA		2
11	1		TBA		2
12	1		TBA		1
13	1		TBA		1
14	30/926004		Seal, flap		1
15	1		TBA		1
16	1		TBA		1
17	1		TBA		1
18	1		TBA		1
19	30/926005		Actuator, 12v		1
20	1		TBA		1
21	1		TBA		6
22	1		TBA		1
23	1		TBA		1
24	1		TBA		1
25	30/926006		Filter		1

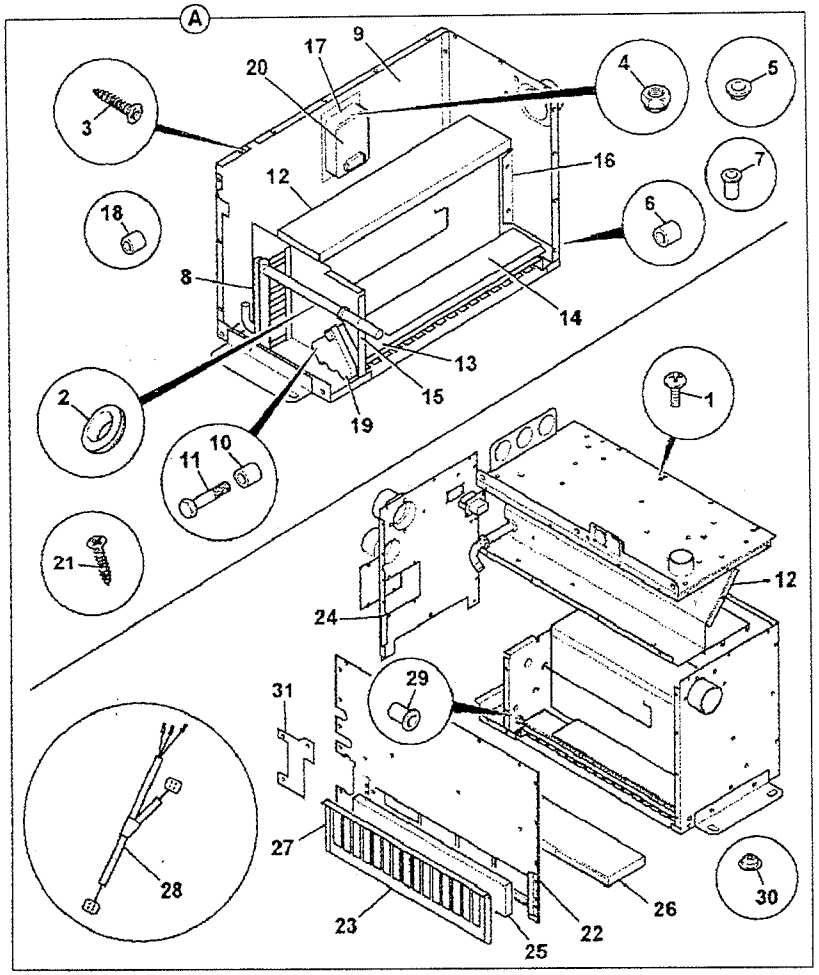

ITEM	PART NO.	CHANGE NO.	DESCRIPTION	REMARKS	QTY.
26	30/926020		Filter, fresh air		2
27	30/926021		Seal, filter cover		1
28	30/926022		Harness, heater unit		1
29	1		TBA		2
30	1		TBA		2
31	1		TBA		1

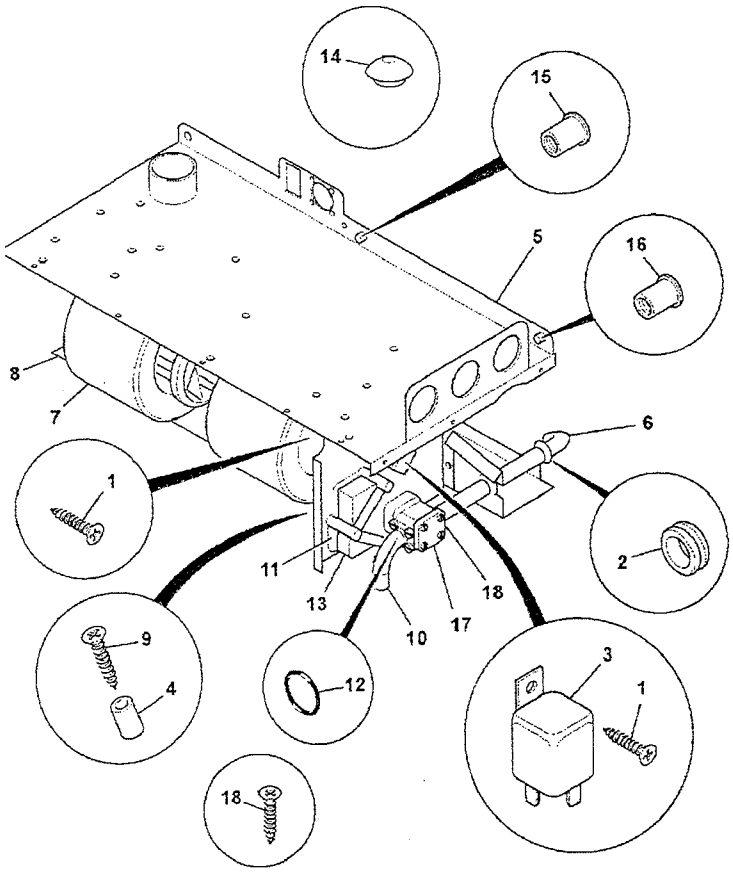

ITEM	PART NO.	CHANGE NO.	DESCRIPTION	REMARKS	QTY.
1	1		TBA		6
2	1		TBA		2
3	30/926015		Relay, 24v spst		2
4	1		TBA		2
5	1		TBA		1
6	30/926016		Pipe, water in		1
7	30/926017		Blower, 24v D700		1
8	1		TBA		1
9	1		TBA		2
10	30/926018		Pipe, 90 x 5/8 dia		1
11	1		TBA		1
12	30/926019		O Ring		2
13	30/926005		Actuator, 12v		1
14	1		TBA		1
15	1		TBA		5
16	1		TBA		3
17	1		TBA		1
18	1		TBA		8

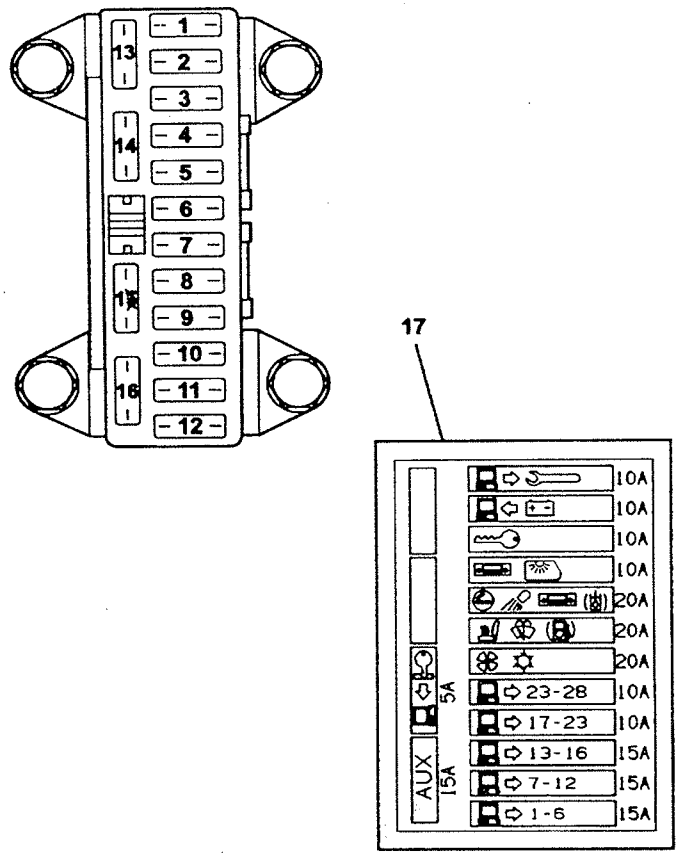

ITEM	PART NO.	CHANGE NO.	DESCRIPTION	REMARKS	QTY.
1	716/05705		Fuse, 10 amp	Diagnostic	1
2	716/05705		Fuse, 10 amp	ECU & EMS battery supply	1
3	716/05705		Fuse, 10 amp	Key Switch	1
4	716/05705		Fuse, 10 amp	Radio (memory) Interior light	1
5	716/05707		Fuse, 20 amp	Lighter, W/light, Radio (Ign), Opt./ Hydraulics	1
6	716/05707		Fuse, 20 amp	Heated Seat, Wiper Refueling Pump	1
7	716/05707		Fuse, 20 amp	Autofan, Heater/ Air-conditioning	1
8	716/05705		Fuse, 10 amp	Controller outputs 23 - 28	1
9	716/05705		Fuse, 10 amp	Controller outputs 17 - 22	1
10	716/05706		Fuse, 15 amp	Controller outputs 13 - 16	1
11	716/05706		Fuse, 15 amp	Controller outputs 7 - 12	1
12	716/05706		Fuse, 15 amp	Controller outputs 1 - 6	1
13			'See Remark'	Spare	1
14			'See Remark'	Spare	1
15	716/05703		Fuse, 5 amp	Facia, ECU and EMS Ignation supply	1
16	716/05706		Fuse, 15 amp	Auxilliary	1
17	817/18448		Decal, fuse box		1

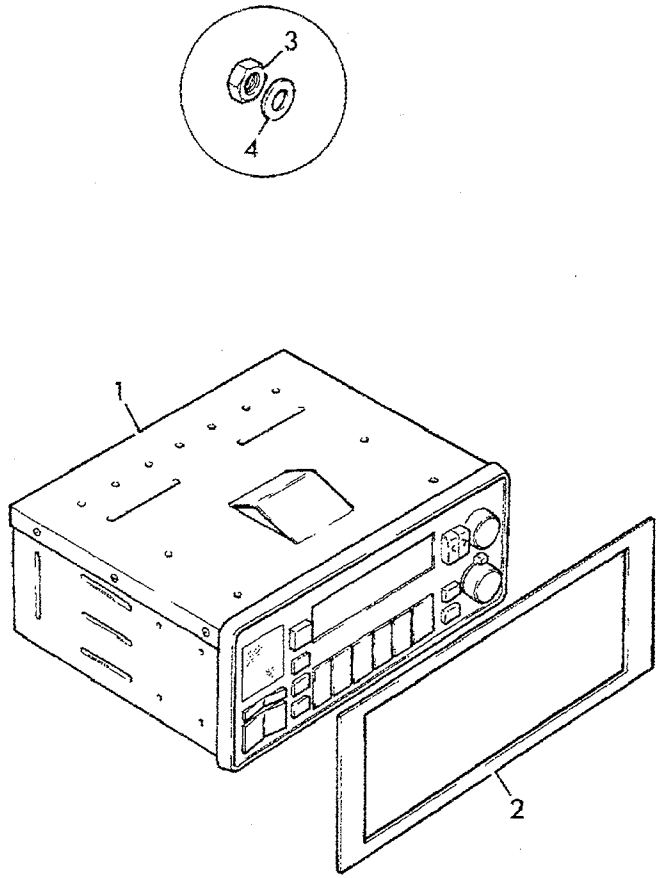

ITEM	PART NO.	CHANGE NO.	DESCRIPTION	REMARKS	QTY.
1	717/20369	340/00746	Radio, Cassette unit 12 volt Optional	upto 1290750 1290751 onwards	1
2	JHN0164		Panel, radio		1
3	137/0003Z		Nut		1
4	1420/0005Z		Washer, M5		1

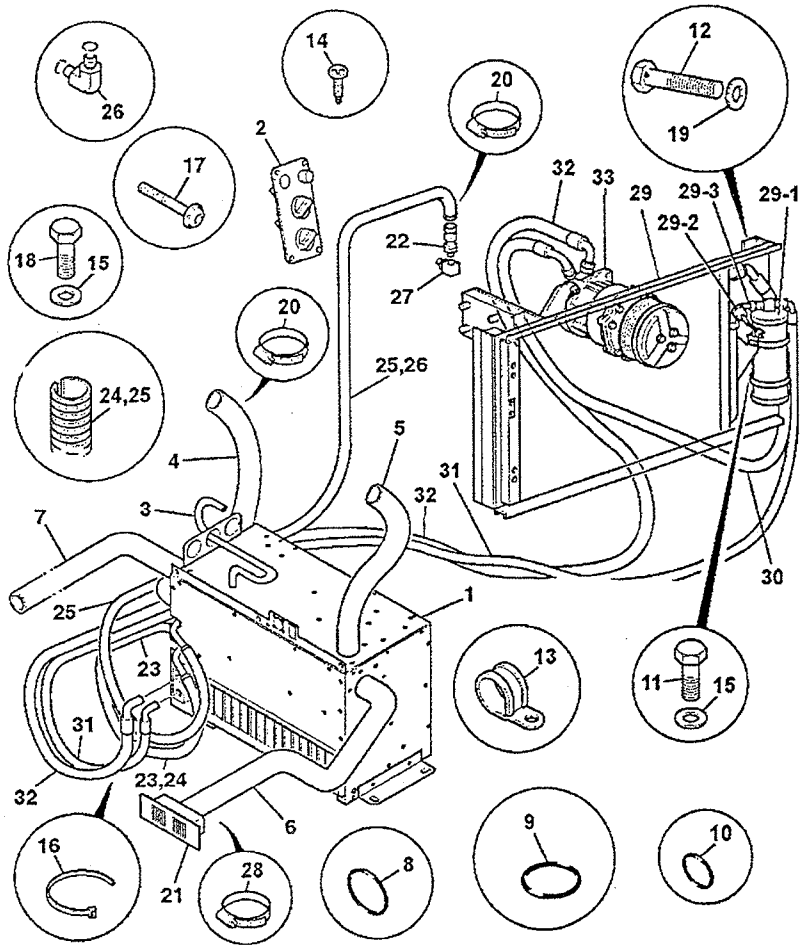

ITEM	PART NO.	CHANGE NO.	DESCRIPTION	REMARKS	QTY.
A	215/11897		Kit air con JS 200		1
1	332/J3372		Unit air con assembly		1
2	30/925588		Panel air con control		1
3	30/925752		Box hose cooler		1
4	30/925753		Hose air duct 50.8x750 L right and rear		1
5	30/925754		Hose air duct 50.8x500 L left and rear		1
6	30/925755		Hose air duct 60x1250 L foot vent		1
7	30/925756		Hose air duct 60x1450 L front vents		1
8	993/84100		O ring no 8		1
9	993/84200		O ring 8mm		1
10	993/84300		O ring 10mm		1
11	826/10769		Bolt		2
12	826/10770		Bolt		2
13	KHR0142		Clamp		2
14	1316/0205Z		Screw		1
15	1420/0006Z		Washer M6		1
16	KHH0142	Superseded	Tie harness retainer		8
16	826/01143		Tie cable L=300mmxW=3.6mm		8
17	KHR0737		Screw pan head		2
18	1316/0405Z		Screw M10x20		4
19	1420/0008Z		Washer plain M10		4
20	2201/0005		Clip jubilee		4
21	331/28366		Plate foot vent		1
22	JHN0158		Adapter		2

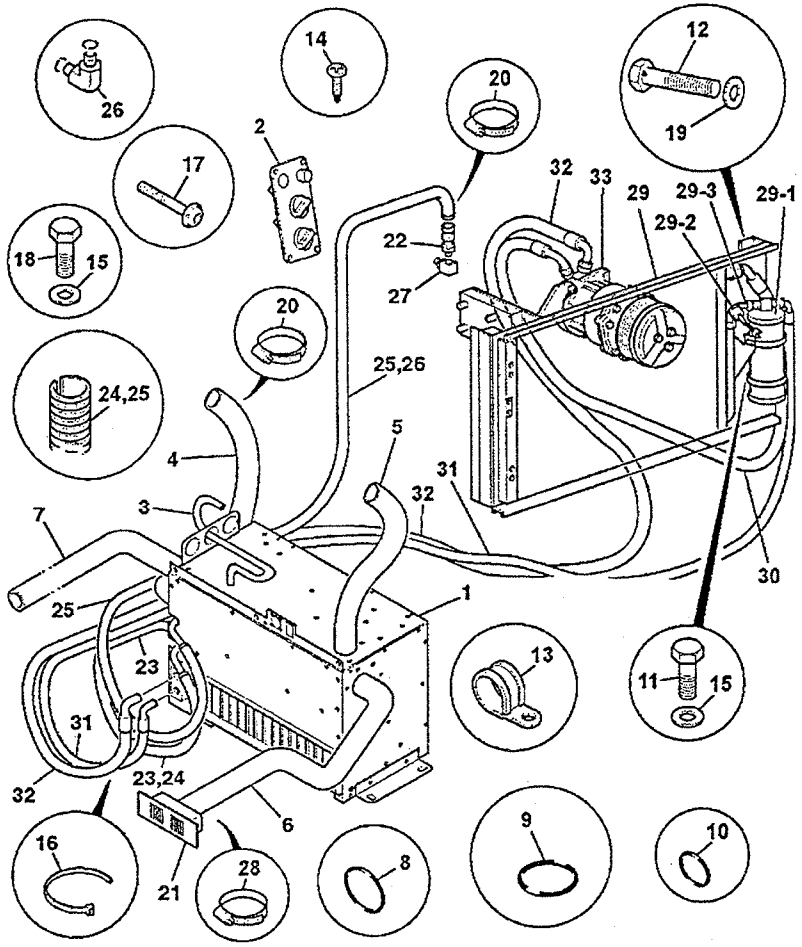

ITEM	PART NO.	CHANGE NO.	DESCRIPTION	REMARKS	QTY.
23	JSH0082		Hose water		2
24	JSR0055		Hose corrugated		2
25	JSR0057		Hose corrugated		2
26	KRR0830		Adapter elbow		1
27	KRR0831		Adapter elbow		1
28	821/10041		Clip dual hose 55-60dia & 25-30dia		1
29	30/926127		Condenser assembly, JS200		1
29-1	:30/926117		Drier receiver		1
29-2	:701/80404		Switch binary female		1
29-3	:30/926289		Elbow receiver drier		1
30	30/925749		Hose compressor to condenser		1
31	30/925750		Hose receiver drier to TXV standard build		1
31	30/926596		Hose TXV - receiver drier Hyd. raised cab Hyd. raised cab build		1
32	30/925751		Hose TXV to compressor Standard build		1
32	30/926597		Hose TXV - compressor Hyd. raised cab build		1
33	714/40226	Superseded	Compressor air con		1
33	123/04999		Compressor 24v		1

Illustration Not Available at Time of Publication

ITEM	PART NO.	CHANGE NO.	DESCRIPTION	REMARKS	QTY.
1	30/925585	332/J3372	Unit, air conditioning	Ref. C3-12-1 issue-2	1
2	30/925588		Panel, air can control		1
3	30/925752		Box, hose cooler		1
4	30/925753		Hose, air duct 50.8 x 750L, right hand rear		1
5	30/925754		Hose, air duct 50.8 x 500L, left hand rear		1
6	30/925755		Hose air duct 60 x 1250L, foot vent .		1
7	30/925756		Hose, air duct 60 x 1450L, front vents		1
8	993/84100		O Ring, 6mm		1
9	993/84200		O Ring, 8mm		1
10	993/84300		O Ring, 10mm		1
11	826/10769		Bolt		2
12	626/10770		Bolt		2
13	KHR1447		Clamp		2
14	1316/0205Z		Screw		1
15	1420/0006Z		Washer		1
16	KHH0142		Tie, harness retainer		8
17	KHR0737		Screw pan head		2
18	1316/0405Z		Screw, M10 x 20		4
19	1420/0008Z		Washer, Plain		4
20	2201/0005		Clip, jubilee		4
21	331/28366		Plate, foot vent		1
22	JHN0158		Adapter		2
23	JSH0082		Hose water		2
24	JSR0055		Hose, corrugated		2

ITEM	PART NO.	CHANGE NO.	DESCRIPTION	REMARKS	QTY.
25	JSR0057		Hose, corrugated		2
26	KRR0830		Adapter, elbow		1
27	KRR0831		Adapter, elbow		1
28	821/10041		Clip, dual hose, 55-60 dia & 25-30 dia		1
29	30/925618		Condenser, assembly, air con		1
30	30/925749		Hose compressor 10, condenser		1
31	30/925750		Hose, receiver drier 10,		1
32	30/925751		Hose, TXV 10 comoressor		1
33	714/40226		Compressor, air con		1

Illustration Not Available at Time of Publication

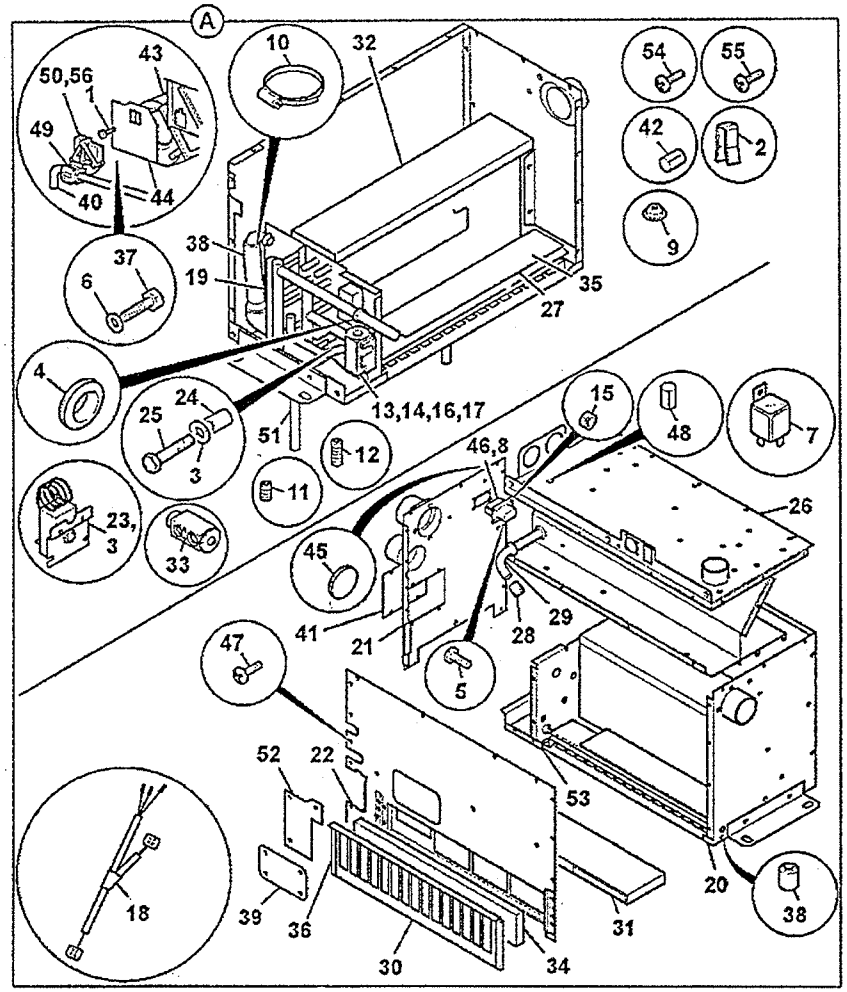

ITEM	PART NO.	CHANGE NO.	DESCRIPTION	REMARKS	QTY.
OA	332/J3372		Unit air con assembly		1
1	:332/D9702		Screw self tapping no. 8x1/		8
2	:332/C8115		Clip retaining		3
3	:TBA		Part number not yet known		1
4	:30/925898		Grommet		4
5	30/925900		Screw		57
6	:332/D9705		Washer M6 nylon		2
7	:30/926015		Relay 24v spst		2
8	:TBA		Part number not yet known		1
9	:30/925906		Washer, shoulder 6.2 I/D		1
10	:30/925907		Clip Jubilee		2
11	:30/925909		Screw allen		1
12	:30/925910		Bolt allen		2
13	:30/925911		Plate clamp TXV		1
14	:30/925933		Kit seal		1
15	:331/36622		Nut MS		2
16	:30/925913		Plate Clamp		1
17	:30/925914		Plate Clamp TXV		1
18	:30/926022		Harness heater unit		1
19	:30/926000		Coil heater		1
20	:332/D9710		Bracket main		1
21	:332/D9711		Cover end		1
22	:332/D9713		Cover front		1
23	:331/29495		Thermostat		1
24	:332/D9715		Spacer nylon		5
25	:332/D9716		Setscrew hex M5x25		3
26	:332/D9717		Cover top		1
27	:30/927146		Plate flap assembly		1
28	:923/10138		Cap		2

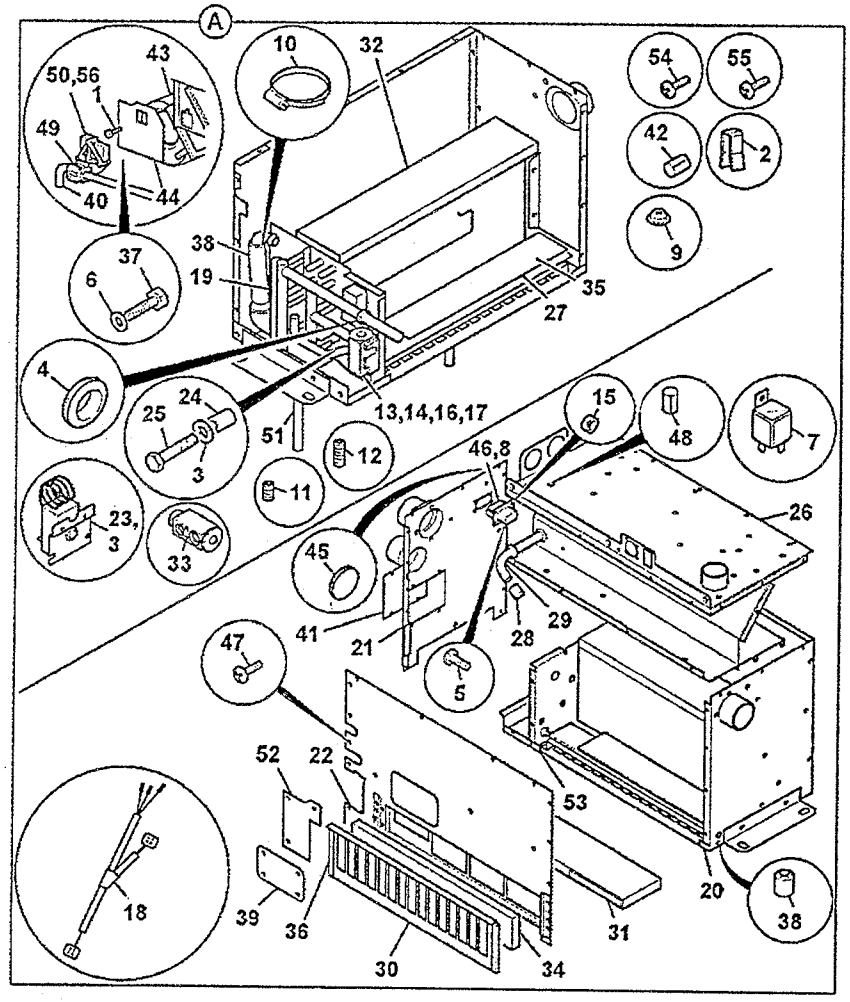

ITEM	PART NO.	CHANGE NO.	DESCRIPTION	REMARKS	QTY.
29	:30/926016		Pipe water in		1
30	:332/D9719		Cover filter		1
31	:30/926020		Filter fresh air		1
32	:30/926002		Seal coil		1
33	:30/926003		Valve TXV		1
34	:30/926006		Filter recirculating		1
35	:30/926004		Seal flap		1
36	:30/926021		Seal filter cover		2
37	:332/D9718		Screw 4.2x32		2
38	:30/927144		Hose		1
39	:332/D9723		Plate TXV blanking		1
40	:30/926018		Pipe 90x5/8 dia.		1
41	:332/D9724		Panel thermostat access		1
42	:TBA		Part number not yet known		1
43	:30/927142		Blower assembly, 24v		1
44	:332/D9726		Plate valve mounting		1
45	:332/D9727		Plug 22mm blanking		1
46	:332/D9728		Unit PWM module		1
47	:332/D9729		Plug blanking		1
48	:332/D9730		Plug blanking		1
49	:30/926023		Valve water & actuator frame		1
50	:30/926653		Adapter		2
51	:332/D6063		Tube Drain, Assy.		2
52	:TBA		Part number not yet known		1
53	:332/D9723		Plate TXV blanking		2
54	:332/D9735		Screw no.10truss head no.8-15x280		12
55	:332/D9736		Screw no.8-15x7/16		1
56	:332/D9737		Actuator		2

c/fw

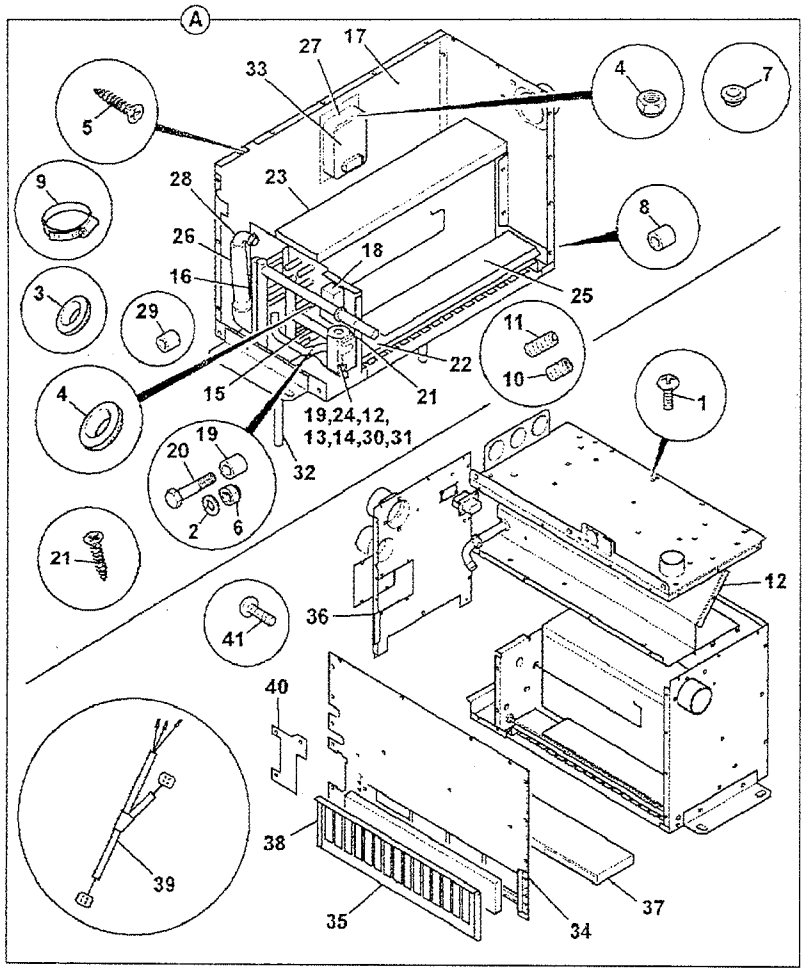

ITEM	PART NO.	CHANGE NO.	DESCRIPTION	REMARKS	QTY.
OA	30/925585	332/J3372	Unit, air conditioning	Ref. C3-12-10 issue-2	1
2	30/925896		Washer		6
5	30/925900		Screw		53
7	30/925906		Washer, shoulder 6.2 I/D		1
9	30/925907		Clip, Jubilee		2
10	30/925909		Screw, allen		1
11	30/925910		Boll, alien		2
12	30/925911		Plate,clampTXV		1
13	30/925913		Plate, clamp		1
14	30/925914		Plate, clamp TXV		1
15	30/926001		Evaporator, coil		1
16	30/926000		Coil, heater		1
18	331/29495		Thermostat, THERMOSTAT		1
23	30/926002		Seal, coil		1
24	30/926003		Valve, TXV		1
25	30/926004		Seal, flap		1
28	30/926018		Pipe, 90 x 5/8 dia		1
30	30/926005		Actuator, 12V		1
31	30/925933		Seal		1
32	30/925979		Tube, Drain Assy		2
37	30/926020		Filter, fresh air		1
38	30/926021		Seal, filter cover		2
39	30/926022		Harness, heater unit		1

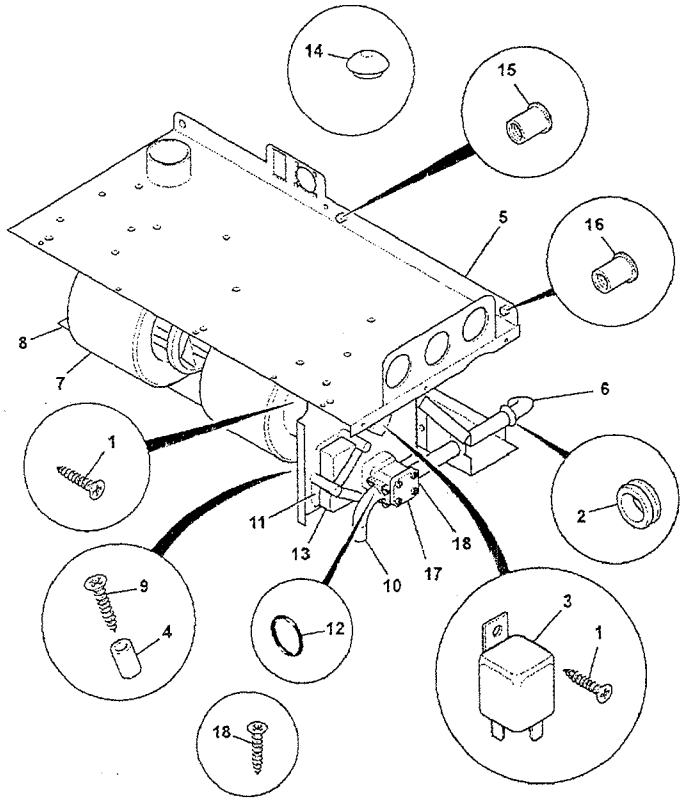

ITEM	PART NO.	CHANGE NO.	DESCRIPTION	REMARKS	QTY.
3	30/926015		Relay, 24V spst		2
4	1		TBA		2
5	1		TBA		1
6	30/926016		Pipe, water in		1
7	30/926017		Blower, 24V D700		1
8	1		TBA		1
9	1		TBA		2
10	30/926018		Pipe, 90 x 5/8 dia.		1
11	1		TBA		1
12	30/926019		O Ring		2
13	30/926005		Actuator, 12V		1
14	1		TBA		1
15	1		TBA		5
16	1		TBA		3
17	1		TBA		1
18	1		TBA		8

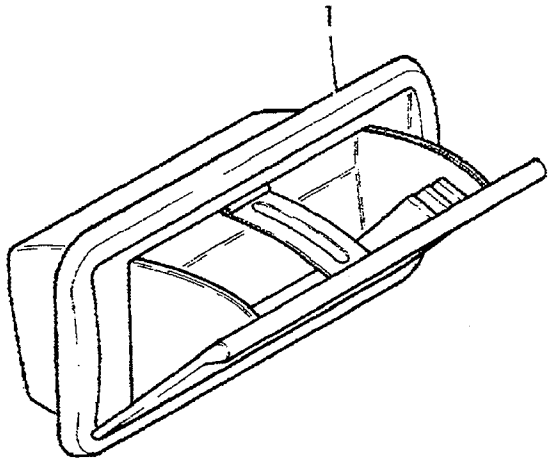

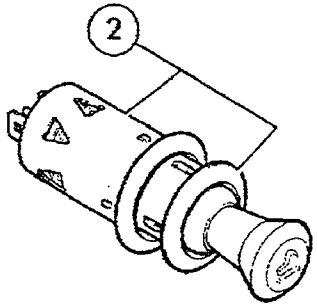

ITEM	PART NO.	CHANGE NO.	DESCRIPTION	REMARKS	QTY.
1	331/32481		Ashtray		1
2	717/12900		Light, cigarette, 12 volt	upto 1290696	1
	715/08100		Power socket	1290697 onwards	1

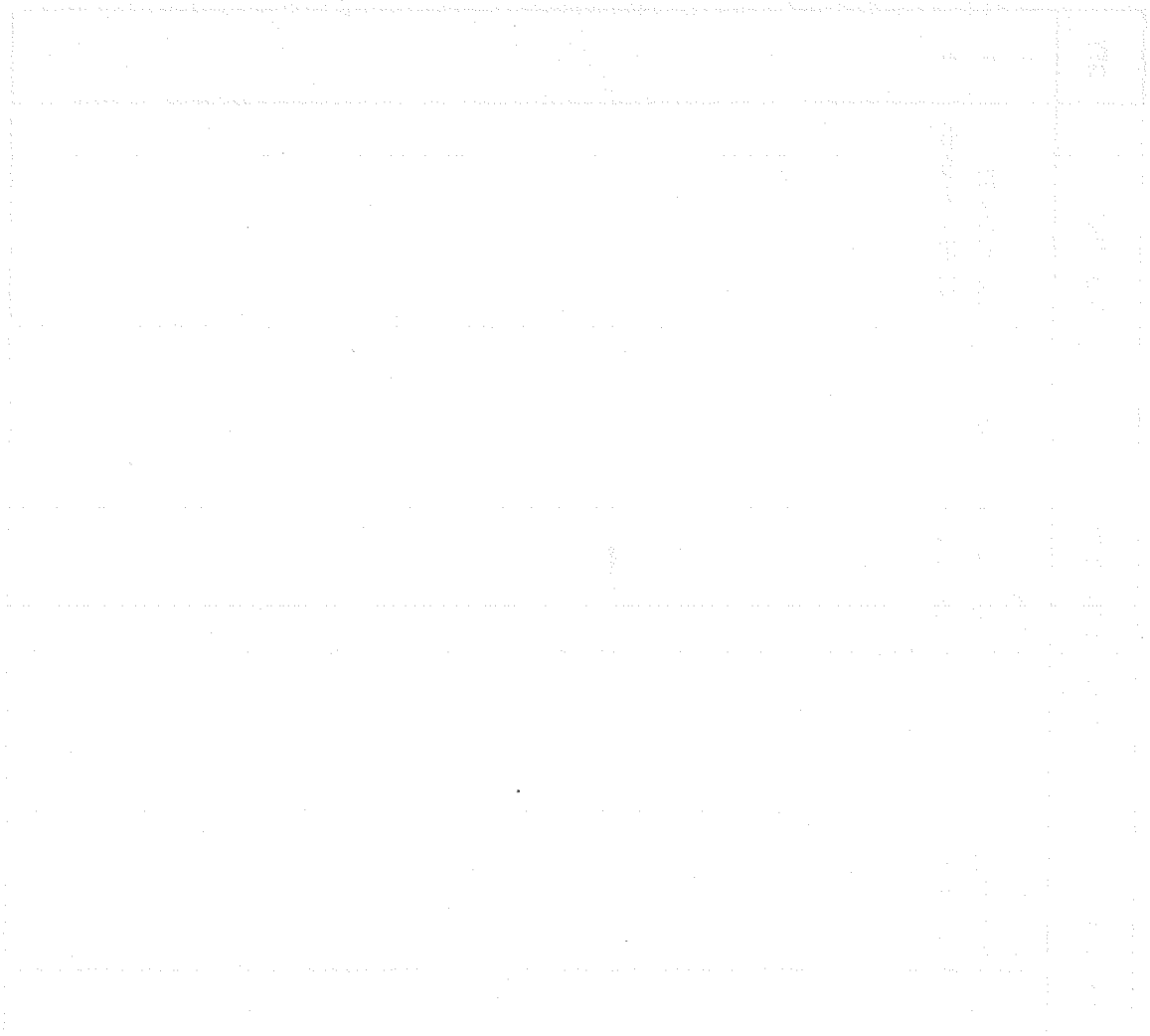

D

• D1 CONTROLS MACHINE
D2 CONTROLS, ENGINE

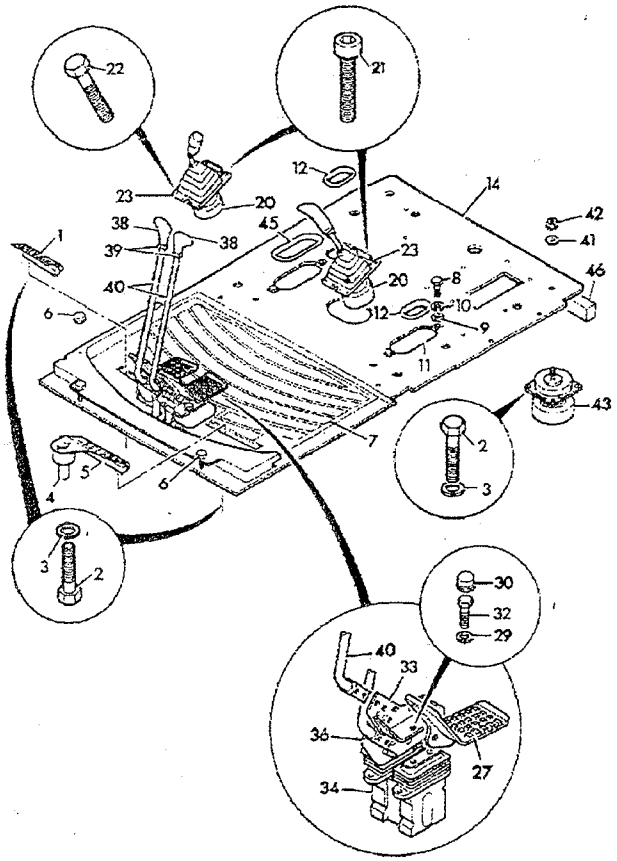

ITEM	PART NO.	CHANGE NO.	DESCRIPTION	REMARKS	QTY.
	1316/0407Z		Bolt, high strength		4
	1316/0408Z		Screw		24
3	JHP0046		Washer		28
4	KHJ0843		Cover spl		1
5	JBN0012		Bracket, footrest, left		1
6	KHJ0769		Cap, spl		3
7	331/32116		Mat, cab floor		1
8	1316/0305Z		Bolt, high tensile		4
9	1420/0007Z		Washer, plain		4
10	1425/0007Z		Washer, spring		4
11	KHJ0947		Guide		2
12	KHJ0948		Grommet	with 30mm hole	1
14	229/01722		Plate, cab floor		1
20	25/222892		Valve, hand control, right hand	Right hand controller E3-6-1 for components	1
	25/222891		Valve, hand control, left hand	Left hand controller E3-6-1 for components	1
21	1391/3210Z		Capscrew		4
22	KHR0737		Screw, pan head		4
23	331/18592		Plate, mounting, control valve		2
27	331/57200		Pedal, foot left track	Left hand pedal	1
	331/57201		Pedal, foot right track	Right hand pedal	1
29	1420/0008Z		Washer, Plain		4
30	KHJ0768		Cap, spl		4
32	1316/0403Z		Screw		4

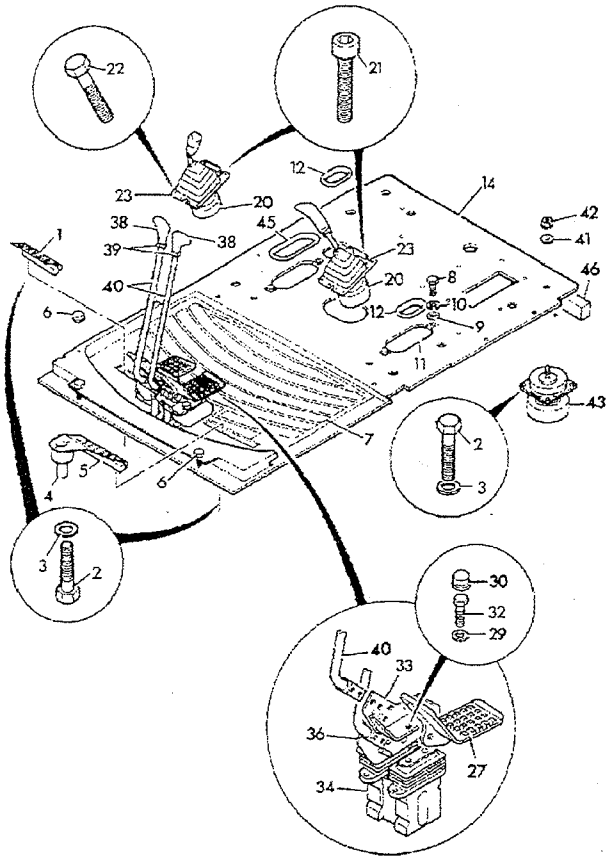

ITEM	PART NO.	CHANGE NO.	DESCRIPTION	REMARKS	QTY.
34	KSJ2465		Valve, remote control	See frame E3-7-2 for components	1
36	335/05581		Bracket right hand		
38	331/35578		Knob, track level, c/w clear cap		2
39			See Remark	not used on the assembly	1
40	331/35606		Lever track		2
41	KHN0243		Washer, special		6
42	KHN0268		Nut, U		6
43	KHJ1211		Rubber, mount		6
45	KHJ0950		Grommet		2
46	KHJ0951		Seal, cushion		1
47	331/35486		Plate, shim 2mm		2
48	817/18824		Decal, track lever		2
49	331/31353		Plate, Kick		1
50	828/11031		Screw		4
51	1391/3208Z		Screw, cap		4
52	MPR2006		Washer, special		8
53	1316/0405Z		Screw, M10 x 20		4
54	826/10611		Screw, c/sunk socket head, M8 x 30		4
55	JHP0080		Washer		4

D

D1 CONTROLS MACHINE
• D2 CONTROLS, ENGINE

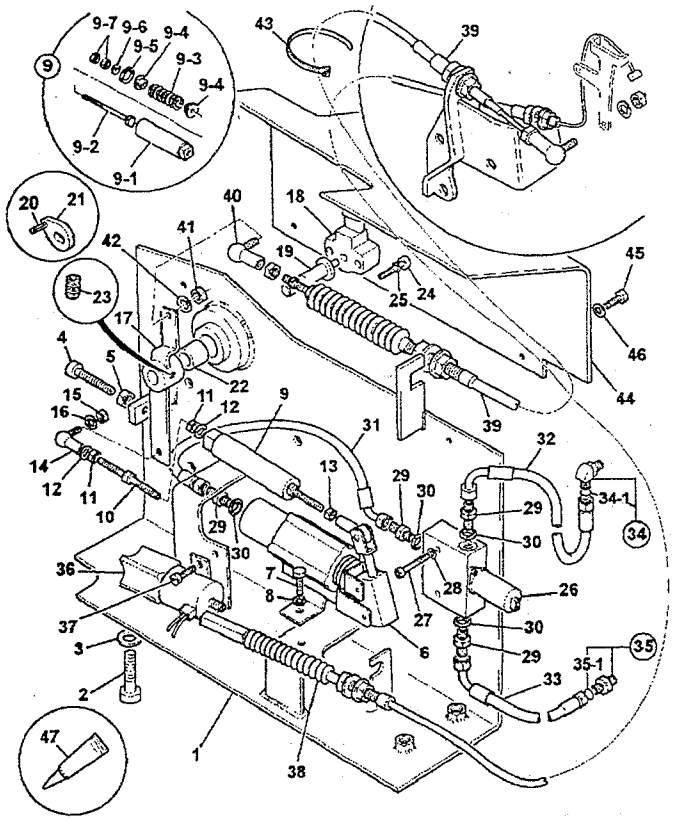

ITEM	PART NO.	CHANGE NO.	DESCRIPTION	REMARKS	QTY.
1	229/02587		Bracket, mounting, engine control		1
2	1316/0508Z		Screw		4
3	JHP0042		Washer, plain		4
4	1391/3410Z		Capscrew		1
5	1371/0301Z		Nut, high strength, M10		1
6	331/14519		Actuator, Cylinder slave		1
7	1316/0203Z		Screw		2
8	1425/0006Z		Washer, Spring		2
9	KHH0158		Spring, assembly		1
9 01	KHH0157		Coupling, cylinder, throttle		1
9 02	JHH0017		Bolt		1
9 03	KHH0159		Spring compression		1
9 04	KHH0130		Collar, special		2
9 05	380A0220Z		Ring, snap		1
9 06	1420/0006Z		Washer		1
9 07	1371/0101Z		Nut, high strength		2
10	JHH0161		Rod, threaded		1
11	1371/0201Z		Nut		2
12	1425/0007Z		Washer, spring		2
13	1371/0101Z		Nut, high strength		2
14	JHH0113		Rod, end		1
15	1371/0201Z		Nut		1
16	1425/0007Z		Washer, spring		1
17	331/33076		Lever		1
18	215/13482		Relay, potentiometer		1
19	331/60149		Shaft, engine control		1

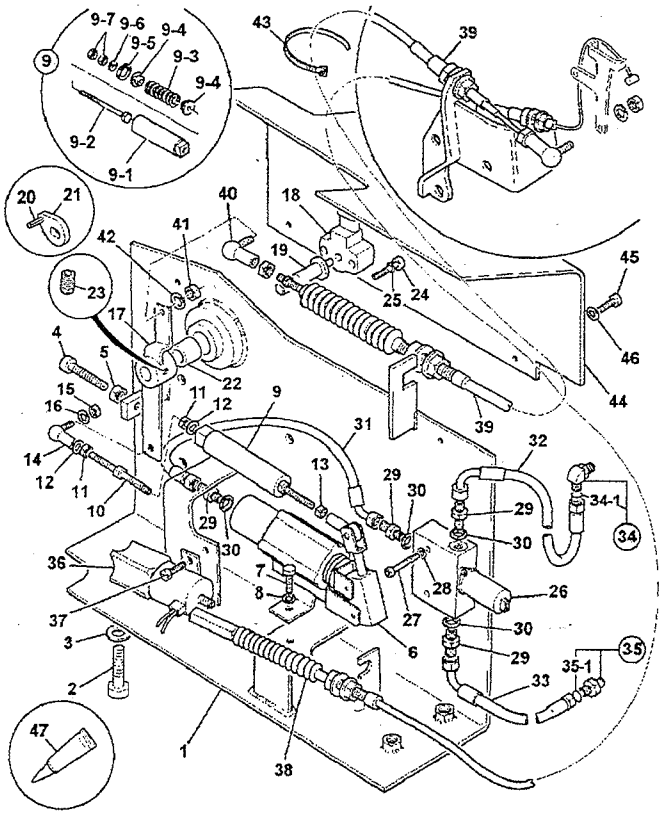

ITEM	PART NO.	CHANGE NO.	DESCRIPTION	REMARKS	QTY.
20	2102/0207		PIN, tension		1
21	331/36705		Plate, spring		1
22	831/10237		Bush, Flanged		2
23	1390/0304Z		Screw, grub Cup		2
24	1391/9402		Capscrew		2
25	1425/0004Z		Washer, spring		2
26	928/60027		Valve, Solenoid Proportional		1
27	1391/3212Z		Capscrew, M6 x 50		2
28	1420/0006Z		Washer		2
29	1604/0002		Adapter, 1/4" BSP M/M		4
30	1406/0011		Seal, bonded		1
31	627/10016		Hose 1/ 4"ST x 135 x 480mm		1
32	KRJ3671		Hose, nylon		1
33	KRJ3895		Hose		1
34	KHJ0348		Adapter, elbow		1
34 01	LBQ0112		O Ring		1
35	KNJ0758		Adapter		1
35 01	LBQ0112		O Ring		1
36	716/30091		Solenoid, Engine stop		1
37	KHR0738		Screw, pan head		2
38	910/60086		Cable, engine control REPLACES KRH0746		1
39	910/60144		Cable, engine stop		1
40	JHH0112		Rod, end		2
41	1371/0101Z		Nut, high strength		2
42	1425/0006Z		Washer, Spring		2

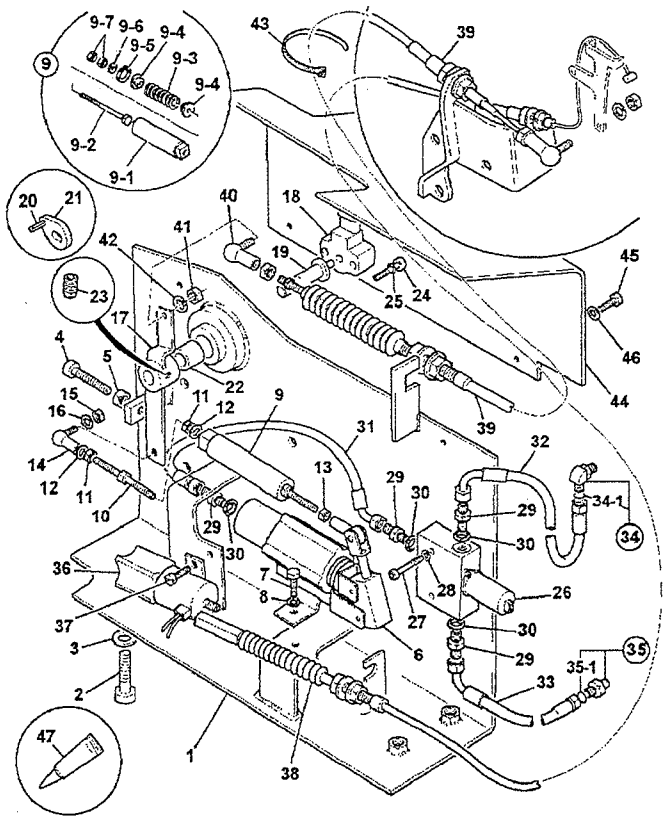

ITEM	PART NO.	CHANGE NO.	DESCRIPTION	REMARKS	QTY.
43	KAR0016		Tie, cable		2
44	331/34297		Cover, throttle control		1
45	1316/0205Z		Screw		2
46	1420/0008Z		Washer, Plain		2
47	4101/0552Z		Loctite, threadlock, 200ml		A/R

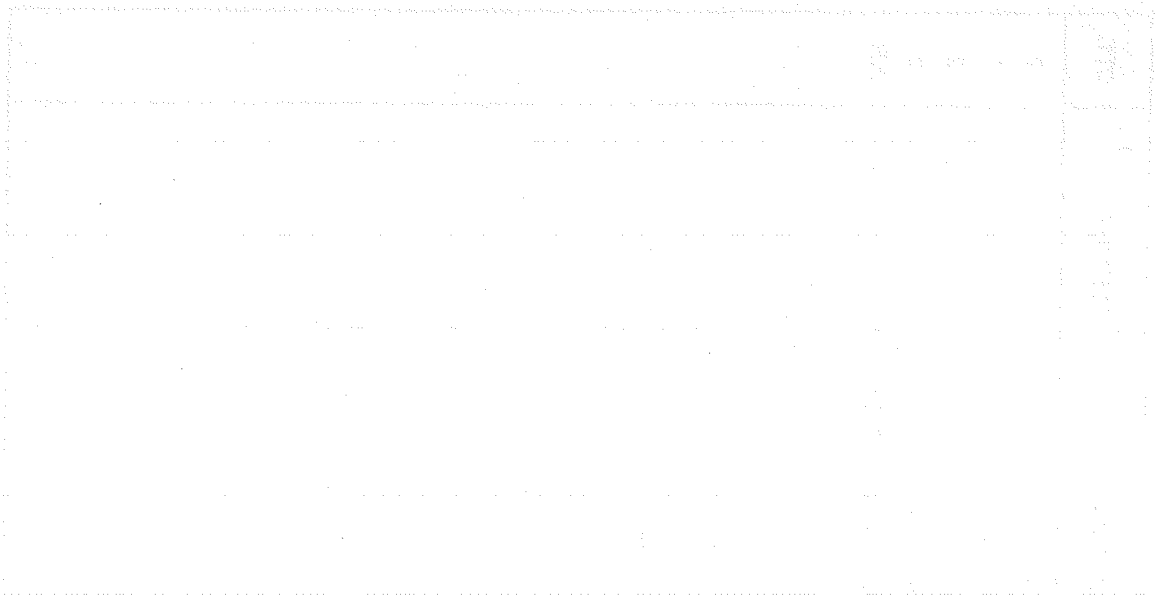

E

• E1 HOSE & PIPEWORK
E2 PUMP/MOTOR & PUMP DRIVE
E3 VALVES & HYDRAULIC FILTERS
E4 RAMS

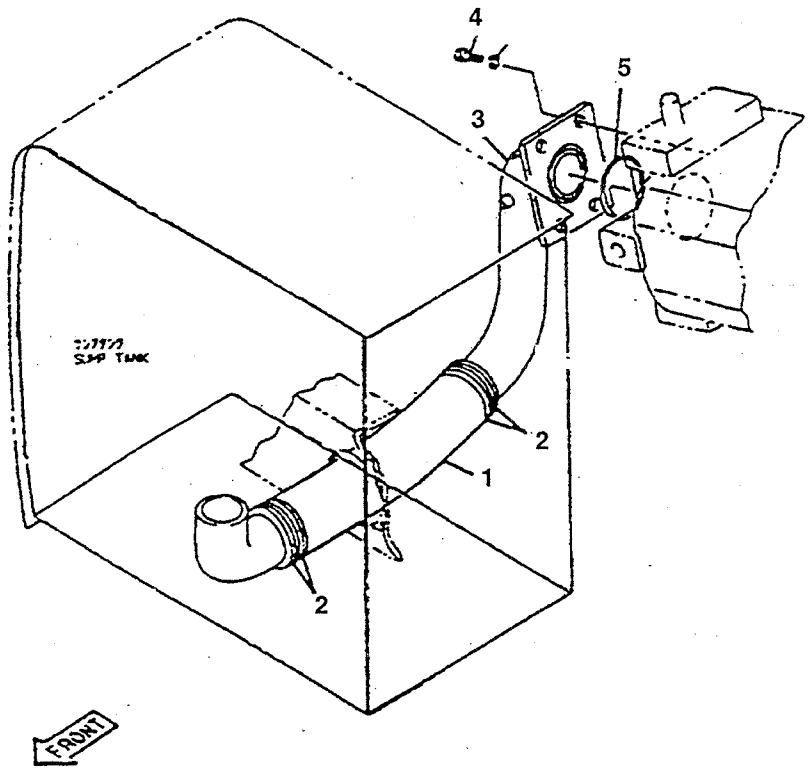

ITEM	PART NO.	CHANGE NO.	DESCRIPTION	REMARKS	QTY.
1	834/10661		Hose		1
2	2201/0015		Clip, jubilee		4
3	229/01378		Pipe, assembly, suction		1
4	1391/3508Z		Capscrew, M12x30		4
5	BRA0127		O Ring		1

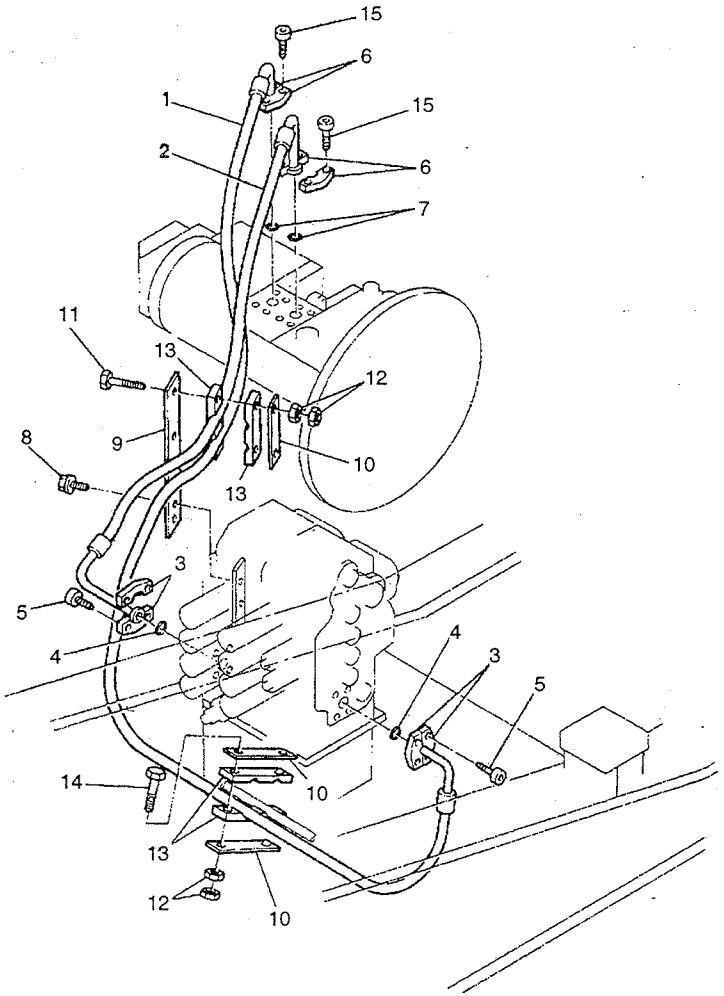

ITEM	PART NO.	CHANGE NO.	DESCRIPTION	REMARKS	QTY.
1	627/10046		Hose		1
2	229/01553		Hose		1
3	210/92901		Clamp, flange 1"		4
4	2407/0210		Seal, O ring		2
5	1391/3408Z		Capscrew		8
6	KRJ0963		Flange, split		4
7	2407/0205		Seal, O Ring		2
8	1316/0507Z		Screw		4
9	*331/27334		Bracket		1
10	*KRJ4280		Plate, triple clamp		1
11	1316/3520Z		Bolt		2
12	1371/0401Z		Nut		8
13	*KRJ4279		Clamp, triple		2
14	1316/3519Z		Bolt		2
15	1391/3508Z		Capscrew, M12 x 30		8
16	331/30964		Bracket, bulkhead		1
17	KRJ4442		Clamp, hose		2
18	KRJ4443		Plate		1
19	1420/0009Z		Washer		1
20	1411/0005Z		Washer		2

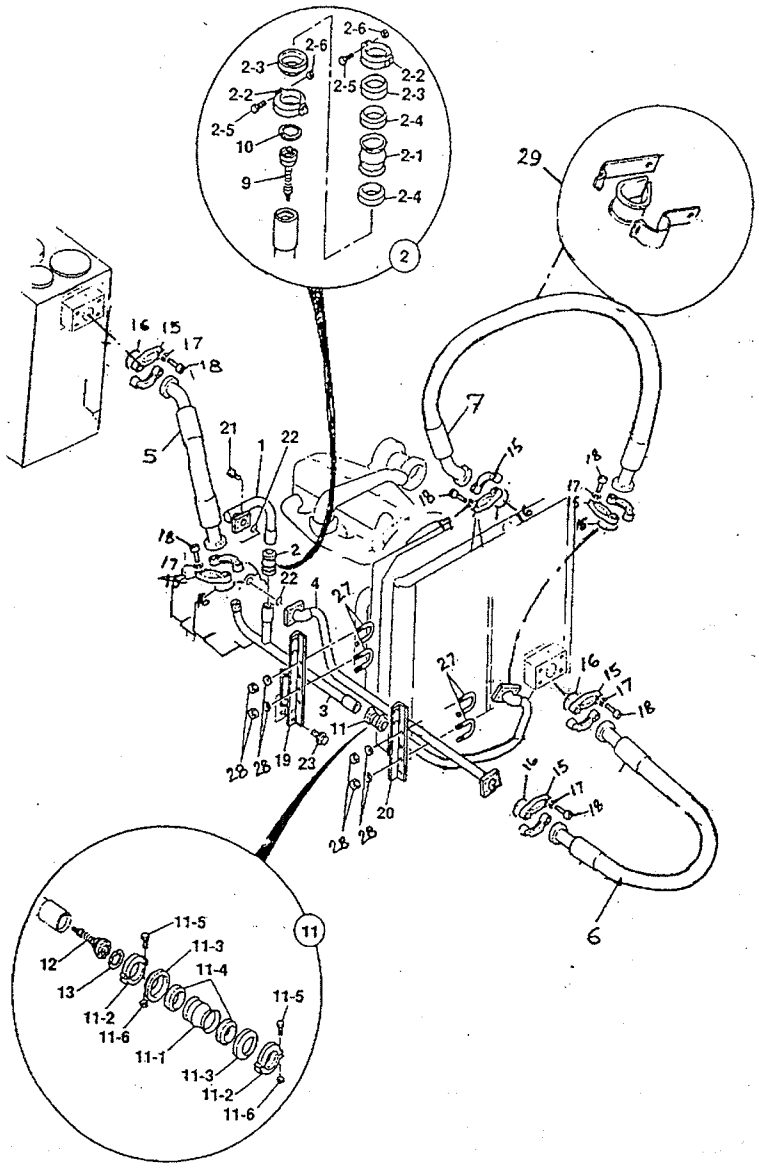

ITEM	PART NO.	CHANGE NO.	DESCRIPTION	REMARKS	QTY.
1	830/11754		Pipe, assembly		1
2	KRJ3818		Shaft, cplg spl		1
2 01	KRJ3819		Sleeve, spl		1
2 02	KRJ3820		shaft, cplg, spl		2
2 03	KRJ3821		Retainer, spl		2
2 04	KRJ3822		Gasket, spl		2
2 05	KRJ3512		Bolt, spl		2
2 06	KRJ3513		Nut spl		2
3	830/11572		Pipe, oil return		1
4	229/01670		Pipe assembly		1
5	616/80221		Hose, Return		1
6	627/10274		Hose		1
7	229/01387		Hose, oil cooler		1
8			Pipe assembly		1
9	KRJ3515		Valve, check		1
10	380A0500Z		Ring, snap		1
11	KRJ3820		Shaft, cplg, spl		1
11 01	KRJ3814		Sleeve, spl		1
11 02	KRJ3815		Shaft cplg, spl		2
11 03	KRJ3816		Retainer, spl		2
11 04	KRJ3817		Gasket, spl		2
11 05	KRJ3512		Bolt, spl		2
11 06	KRJ3513		Nut, spl		2
12	KRJ3823		Valve, check		1
13	380A0400Z		Ring, snap		1
14	KRJ3507		Shaft, cplg, spl		1

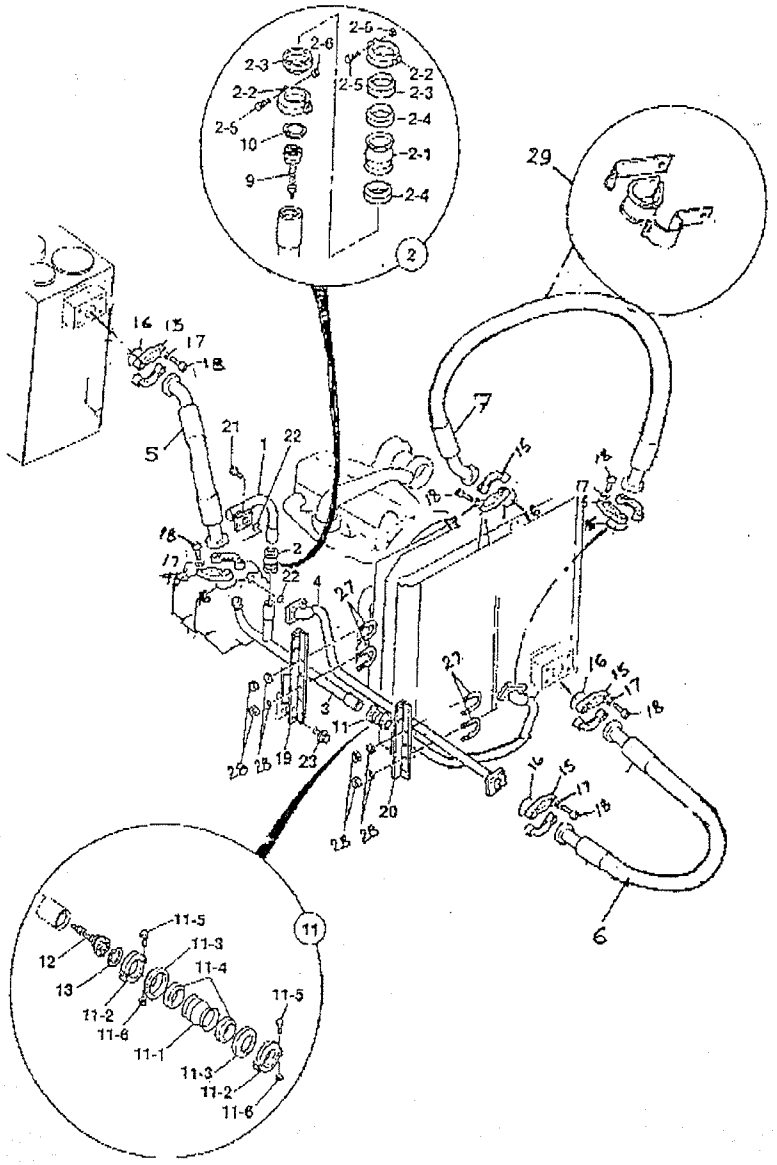

ITEM	PART NO.	CHANGE NO.	DESCRIPTION	REMARKS	QTY.
14 01	KRJ3508		Sleeve, spl		1
14 02	KRJ3509		Shaft cplg, spl		2
14 03	KRJ3510		Retainer, spl		2
14 04	KRJ3511		Gasket, spl		2
14 05	KRJ3512		Bolt, spl		2
14 06	KRJ3513		Nut, spl		2
15	KTJ1663		Flang		12
16	2400/0216		O-Ring		5
17	1411/0005Z		Washer		26
18	1391/3509Z		Cap Screw		24
19	331/29264		Bracket		1
20	335/06186		Bracket		1
21	1391/3509Z		Capscrew		8
22	BHA0956		O Ring		2
23	TBA		Part number, Not yet known		4
24	BRJ0174		Plug		1
24 01	LBQ0292		O Ring		1
25	1316/0407Z		Screw	Use with item 20 & 26	2
26	1420/0008Z		Washer, Plain		2

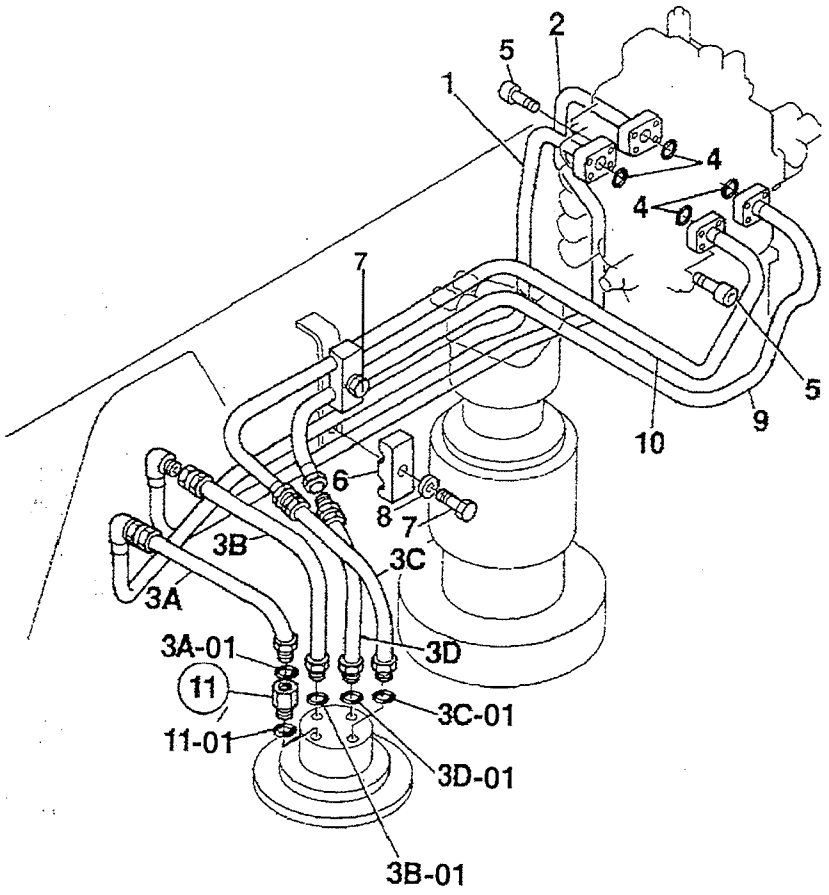

ITEM	PART NO.	CHANGE NO.	DESCRIPTION	REMARKS	QTY.
1	830/10951		Pipe assembly		1
2	830/10952		Pipe assembly		1
3A	KRJ4551		Hose		1
3A 01	2400/0204		Seal, O ring		1
3B	KRJ4551		Hose		1
3B 01	2400/0204		Seal, O ring		1
3C	KRJ2370		Hose		1
3C 01	2400/0204		Seal, O ring		1
3D	KRJ4553		Hose		1
3D 01	2400/0204		Seal, O ring		1
4	2407/0210		Seal, O Ring		4
5	1391/3409Z		Capscrew, M10 x 35mm		12
	1391/3413Z		Capscrew	Port B	4
6	JRJ0218		Clamp, pipe		2
7	1316/3513Z		Bolt		2
8	JHP0042		Washer, plan		2
9	830/10953		Pipe assembly		1
10	830/10954		Pipe assembly		1
11	KNJ1936		Adapter		1
11 01	2400/0204		Seal, O ring		1

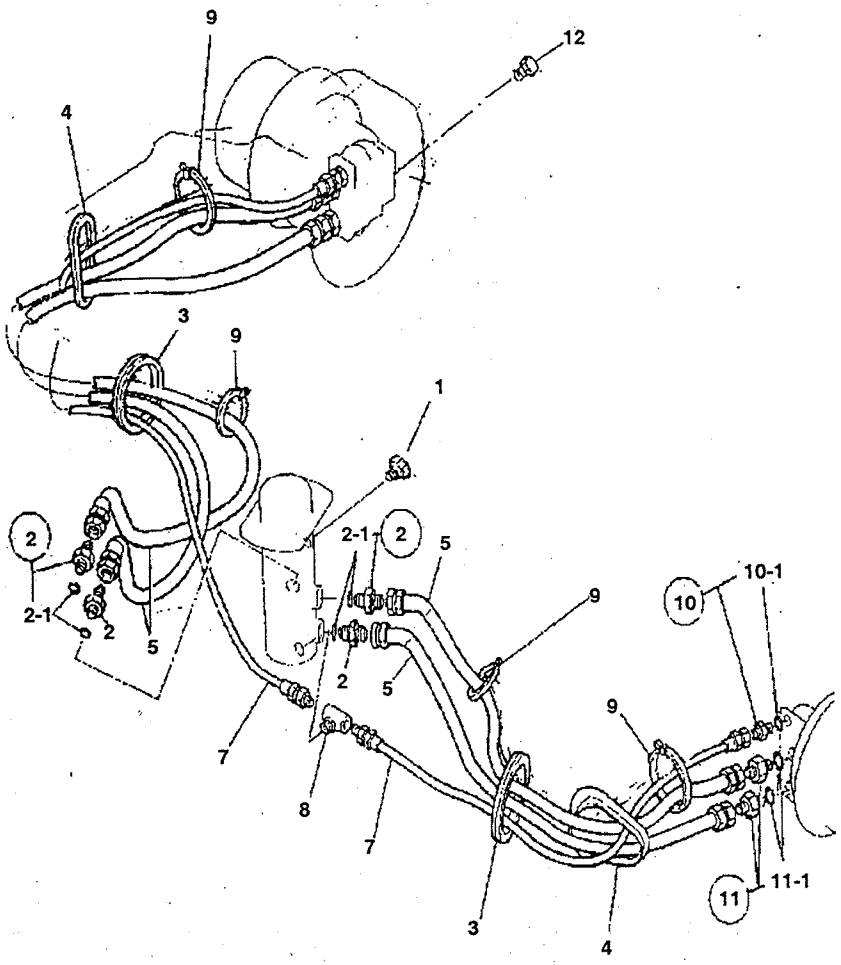

ITEM	PART NO.	CHANGE NO.	DESCRIPTION	REMARKS	QTY.
1	KHJ0363		Plug		1
2	KRJ1391		Adapter		4
2 01	UBJ0158		O Ring		1
3	KRA1138		Cushion, rubber		2
4	KNA0520		Cushion, rubber		2
5	KRA1238		Hose	JS200S	4
7	KRA0791		Hose	JS200S	2
8	KRA0789		Adapter, tee		1
9	001/00233		Tie harness retainer		4
10	KNJ0604		Adapter, 1/2" M/M		2
10 01	UBJ0157		O Ring		1
11	KNJ0606		Adapter		4
11 01	BHJ0795		O Ring		1
12	816/00468		Plug		2

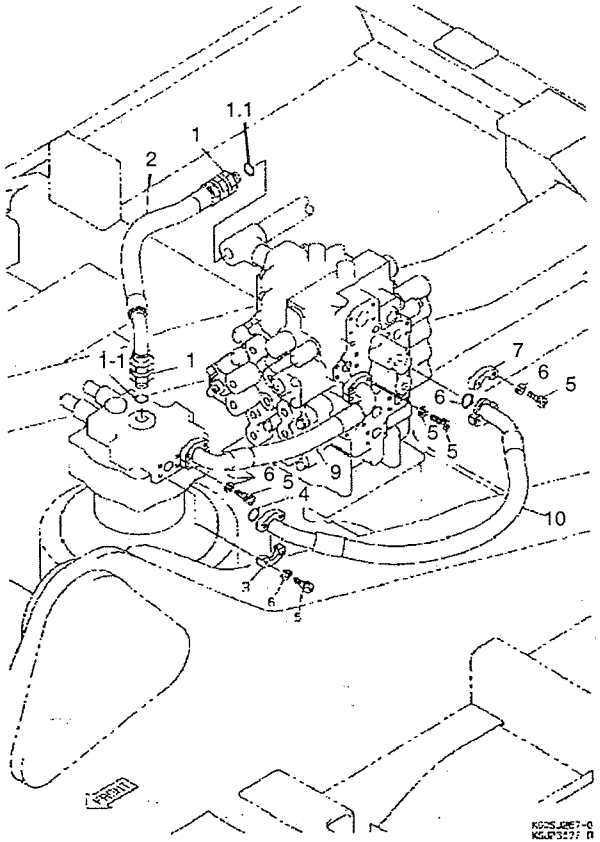

ITEM	PART NO.	CHANGE NO.	DESCRIPTION	REMARKS	QTY.
1	KNJ0606		Adapter		2
1 01	BHJ0795		O Ring		2
2	627/10284		Hose		1
3	KRJ2681		Flange, split		4
4	2407/0210		Seal, O Ring		2
5	1391/3408Z		Capscrew		16
6	1425/0008Z		Washer, spring		16
7	KRJ2682		Flange, split		4
8	2407/0210		Seal, O ring		2
9	627/10044		Hose		1
10	627/10043		Hose		1

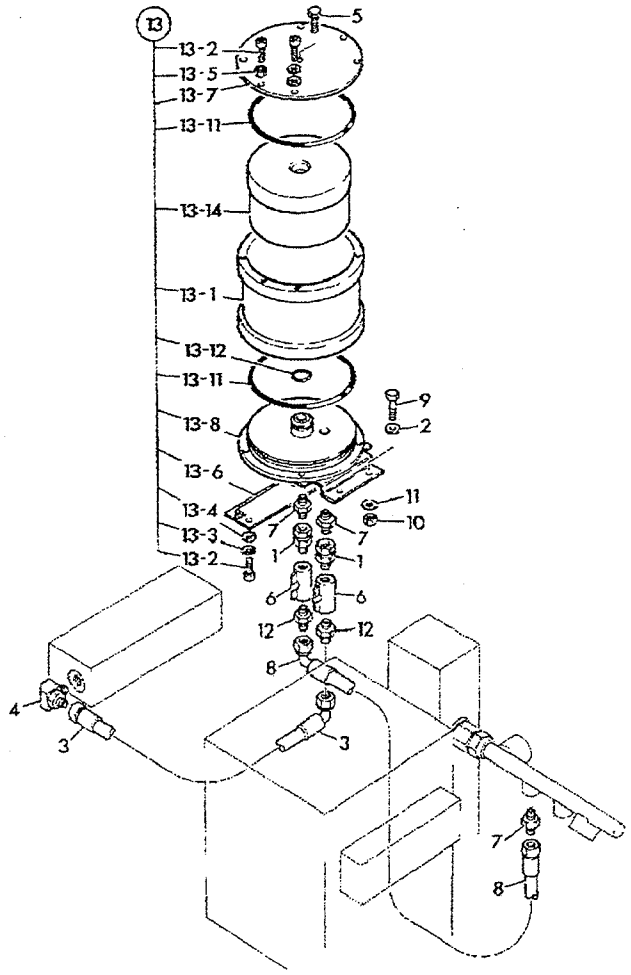

ITEM	PART NO.	CHANGE NO.	DESCRIPTION	REMARKS	QTY.
1	C4E7327		Adapter		2
2	JHPO046		Washer		4
3	KSJ0968		Hose, nylon, blue		1
4			See Remark		1
5	KHJ0739		Screw, pan head		1
5 01	*UEJ0360		O Ring		1
6	KHJ0897		Tap, drain		2
7	KHJ0341		Adapter elbow		1
7 01	*UEJ0360		O Ring		1
8	KSJ0806		Hose nylon		1
9	1316/0407Z		Bolt, high strength		4
10	1425/0008Z		Washer, spring		4
11	1420/0008Z		Washer, Plain		4
12	CRE5507		See Remark Adoptor		
13	JRJ0238		Filter, bypass		1
13 01	32/925120		Case filter		1
13 02	826/10302		Capscrew, M8 st. steel		10
13 03	823/10181		Washer, spring, st. steel		8
13 04	823/10201		Washer, M8, st. steel		8
13 05	826/10321		Nut, M8 plain st. steel		2
13 06	32/925121		Bracket, mounting		2
13 07	32/925122		Cover top		1
13 08	32/925123		Base, filter		1
13 11	828/10080		O Ring		2
13 12	828/10081		O Ring		1
13 14	32/925140		Element, filter bypass Plexus		1

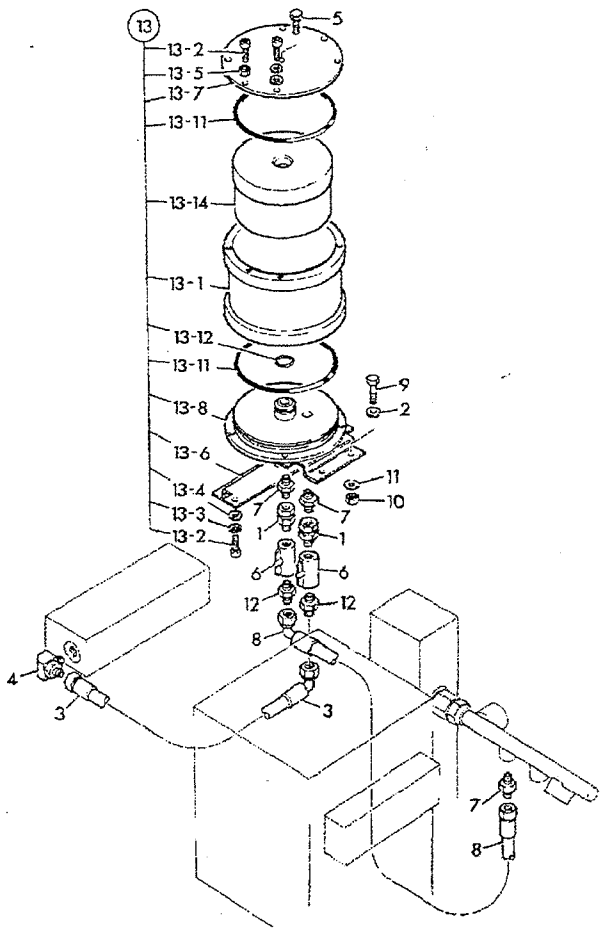

ITEM	PART NO.	CHANGE NO.	DESCRIPTION	REMARKS	QTY.
15	KHH0143		Band harness retainer		4
16	KHJ0348		Adapter, elbow		1
16 01	UEJ0360		O Ring		1
17	KNJ0815		Adoptor		2

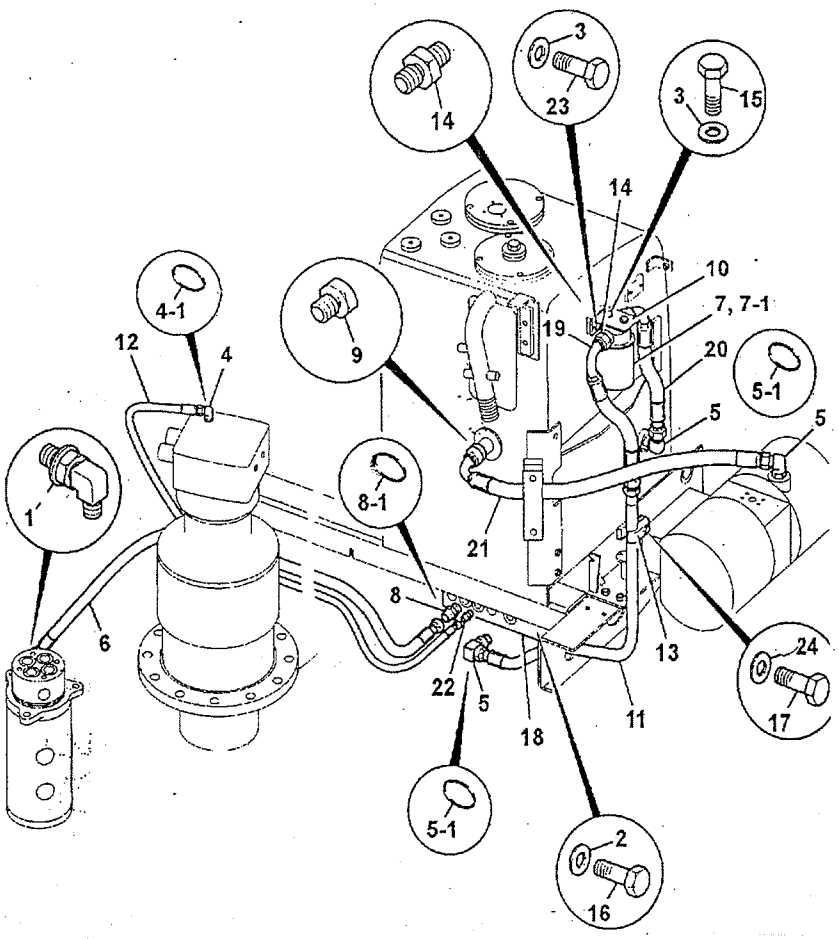

ITEM	PART NO.	CHANGE NO.	DESCRIPTION	REMARKS	QTY.
1	BHS0182		Adaptor		1
2	JHP0042		Washer, Plain		2
3	JHP0046		Washer, M10		4
4	KHJ0342		Adaptor, Elbow		1
4.1	BRP0007		O Ring		1
5	KHJ0344		Adaptor, Elbow		3
5.1	UBJ0158		O Ring		1
6	KNA0362		Hose		1
7	KNJ0287		Filter, Hydraulic		1
7.1	KNJ0288		Element, Oil, Filter		1
8	KNJ0604		Adaptor, 1/2" M/M		1
8.1	UBJ0157		O Ring		1
9	KNJ0605		Adaptor		1
10	KRJ2662		Bracket		1
11	KRJ4229		Pipe		1
12	KRJ4450		Hose, Hyd. (1=1750)		1
13	KRV0548		Clamp		1
14	MPV2193		Adaptor		1
15	1316/0405Z		Screw, M10x20		2
16	1316/0508Z		Screw		2
17	1316/3512Z		Bolt, M12x50		1
18	331/27235		Manifold		1
19	627/10083		Hose		1
20	627/10084		Hose		1
21	635/80037		Hose		1
22	KNJ0759		Adaptor		1
23	1316/0403Z		Screw		2
24	1420/0009Z		Washer, Plain M12		1

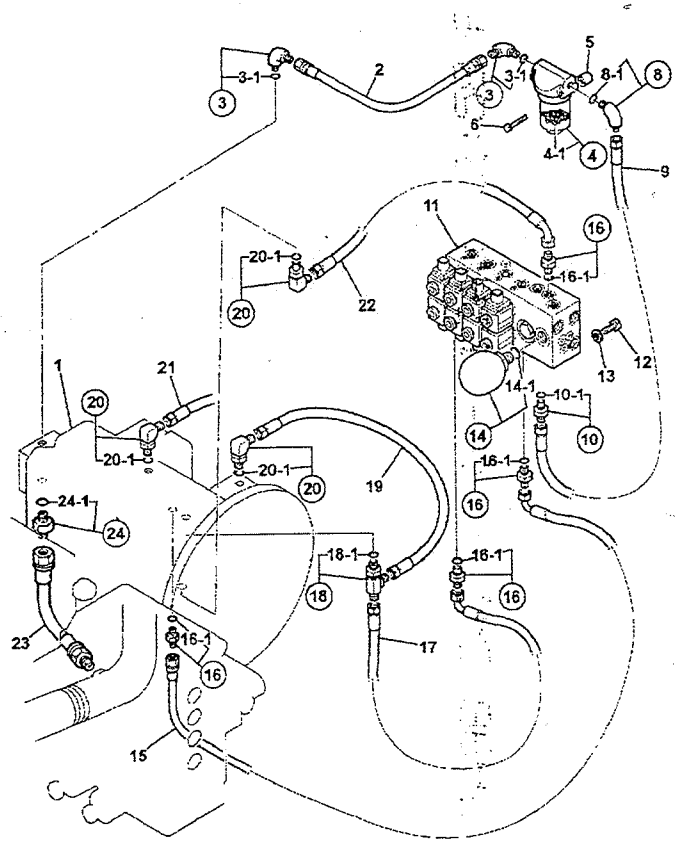

ITEM	PART NO.	CHANGE NO.	DESCRIPTION	REMARKS	QTY.
1			'See Remark'	Pump see frame E2-1-1	1
2	AWV0019		Hose, hydraulic		1
3	KHJ0343		Adapter, elbow		2
3 01	UBJ0157		O Ring		1
4	32/925214		Filter, assembly, servo		1
4 01	KBJ1691		Element, servo, filter		1
4 02	KHJ1032		O Ring		1
5	KRN0081		Spacer		2
6	1316/3218Z		Bolt		2
8	KHJ0641		Adapter, elbow		1
8 01	UBJ0157		O Ring		1
9	JLV0288		Hose		1
10	KNJ0759		Adapter		1
10 01	BRP0007		O Ring		1
11	25/222885		Solenoid, valve assembly		1
12	1		TBA		2
13	1		TBA		2
14	JHJ0050		Accumulator		1
14 01	LBQ0182		O Ring		1
15	JNV0329		Hose Colour (none)		1
16	KNJ0758		Adapter		1
16 01	LBQ0112		O Ring		1
17	627/10058		Hose		1
18	KHJ0869		Adapter, tee		1
1801	LBQ0112		O Ring		1
19	KTJ0670		Hose, nylon		1

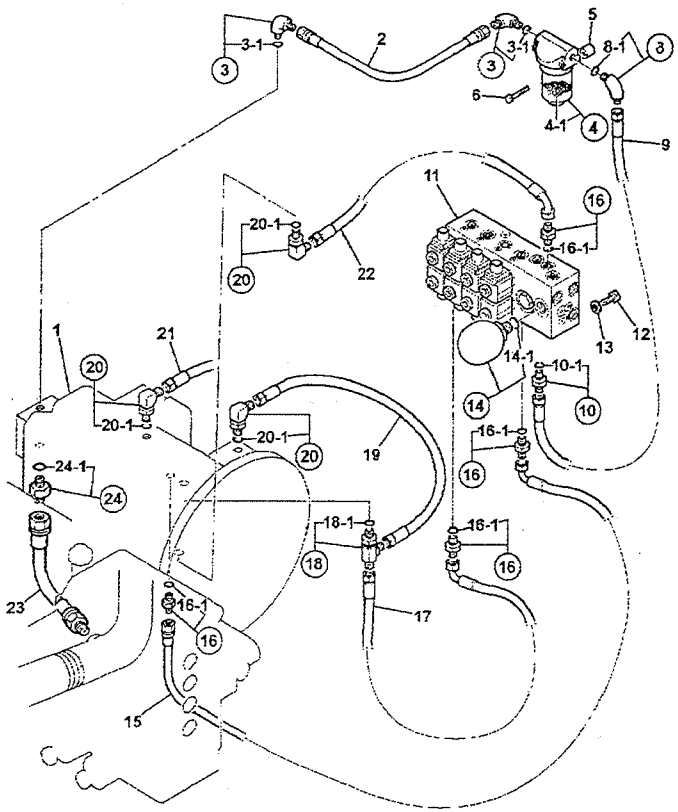

ITEM	PART NO.	CHANGE NO.	DESCRIPTION	REMARKS	QTY.
20	KHJ0348		Adapter, elbow		3
20 01	LBQ0112		O Ring		1
21	KAJ2843		Hose, nylon		1
22	649/51226		Hose		1
23	KNJ1821		Hose hyd, (L = 470)		1
24	KNJ0605		Adapter		2
24 01	LBQ0112		O Ring		1
25	331/27941		Bracket, return line filter		1

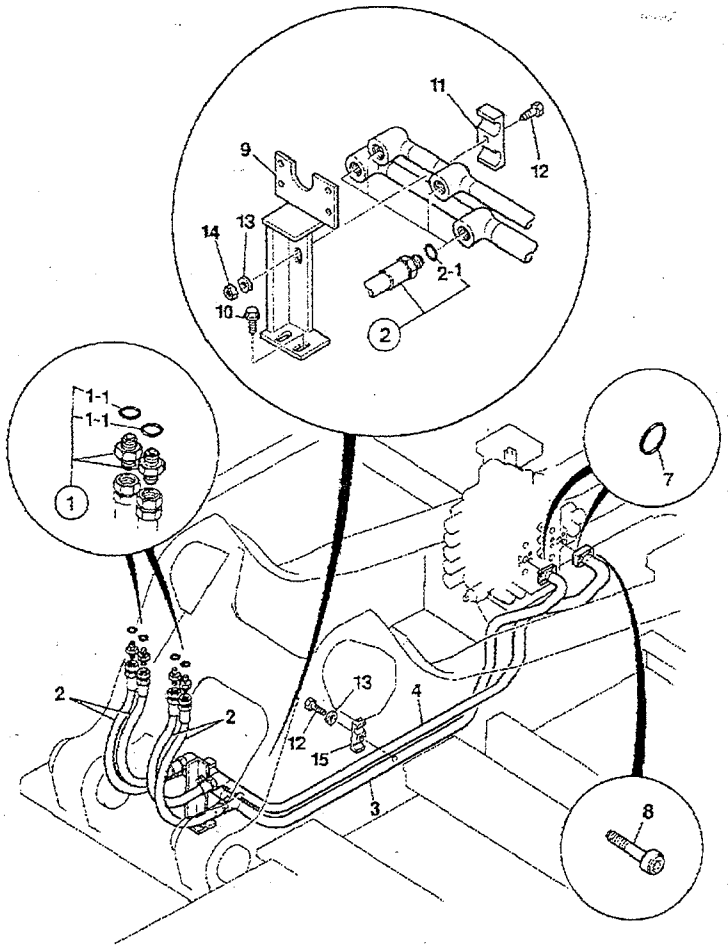

ITEM	PART NO.	CHANGE NO.	DESCRIPTION	REMARKS	QTY.
1	KNJ0605		Adapter		4
1 01	2400/0204		Seal, O ring		1
2	KRJ3868		Hose, hyd, (L = 800)		4
2 01	2400/0204		Seal, O ring		1
3	830/10949		Pipe assembly		1
4	830/10950		Pipe assembly		1
7	2407/0210		Seal, O ring		2
8	1391/3409Z		Capscrew, M10 x 35mm		8
9	JRJ0133		Bracket		1
10	JHN0048		Bolt		2
11	JRJ0126		Clamp		1
12	1316/3515Z		Bolt		2
13	JHP0042		Washer, plain		2
14	1371/0401Z		Nut		1
15	KBJ1595		Clamp, pipe		1

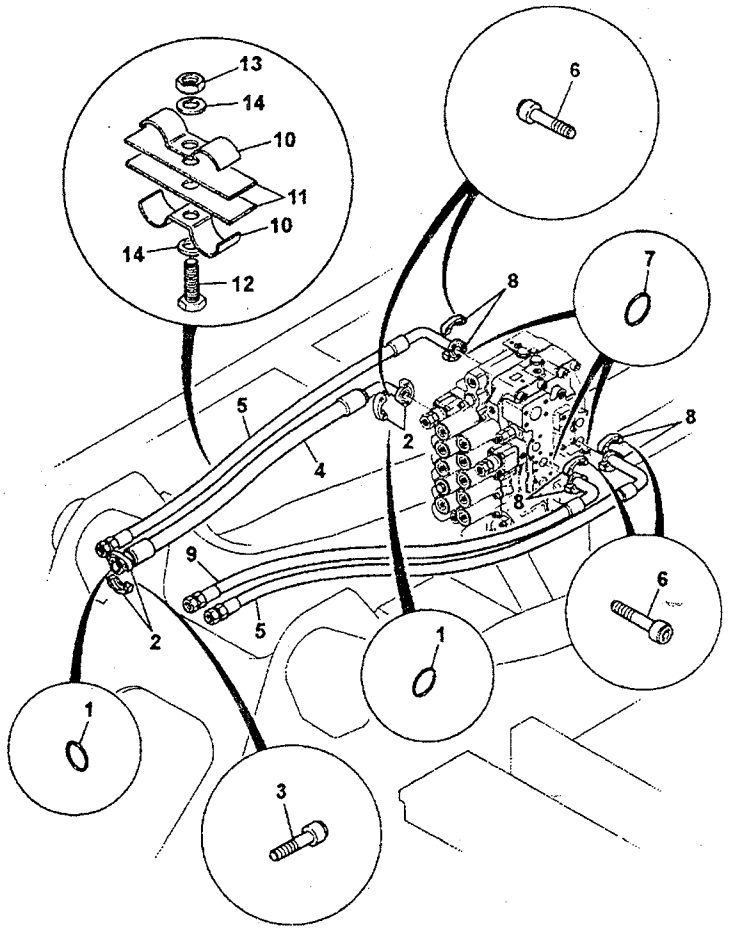

ITEM	PART NO.	CHANGE NO.	DESCRIPTION	REMARKS	QTY.
1	2407/0210		Seal, O ring		2
2	KRJ2682		Flange, split		4
3	1391/3409Z		Capscrew, M10 x 35mm		4
4	KSJ2308		Hose, hydaulic		1
5	627/10041		Hose		1
6	1391/3409Z		Capscrew, M10 x 35mm		16
7	2407/0210		Seal, O ring		3
8	KRJ2682		Flange, split		6
9	627/10048		Hose		1
10	KRJ4447		Clamp, hose		2
11	KRJ4448		Cushion, rubber		2
12	1316/0309Z		Bolt		1
13	1371/0201Z		Nut		2
14	JHP0080		Washer		4
15	627/10042		Hose		1

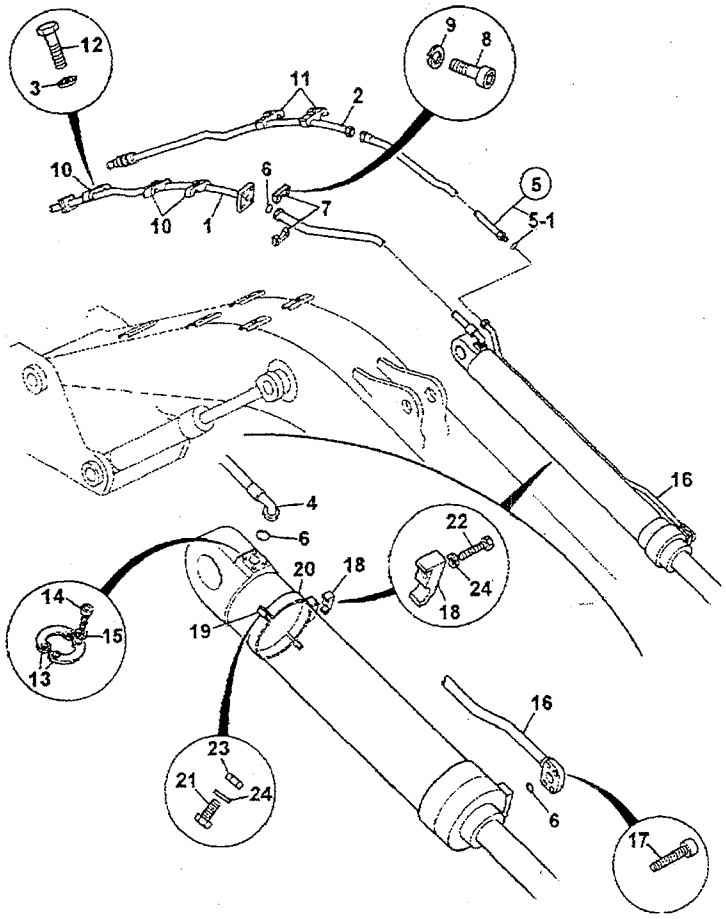

ITEM	PART NO.	CHANGE NO.	DESCRIPTION	REMARKS	QTY.
1	830/10958		Pipe assembly left hand dipper ram		1
2	830/10959		Pipe assembly right hand dipper ram		1
3	6060/0011Z		Washer spring		5
4	JRV0325		Hose		1
5	JLV0143		Hose		1
5.1	UBJ0158		O Ring		1
6	2407/0210		Seal, O ring		3
7	KRJ2682		Flange split		2
8	1391/3409Z		Capscrew M10 x 35mm		4
9	6061/0008R		Washer spring		4
10	KRV0549		Clamp		3
11	KRV1200		Clamp pipe		2
12	1316/3716Z		Bolt		5
13	210/92901		Clamp flange 1"		2
14	1391/3511Z		Capscrew		4
15	1425/0009Z		Washer, spring		4
16	JRVO361		Pipe, dipper ram rod side		1
17	1391/3510Z		Capscrew		4
18	KMJI714		Clamp pipe		1
19	JRV0292		Clamp		1
20	JRV0291		Clamp assembly		1
21	1316/3510Z		Bolt		2
22	1316/3513Z		Bolt		1
23	1371/0401Z		Nut		2
24	823/00394		Washer, spring		3

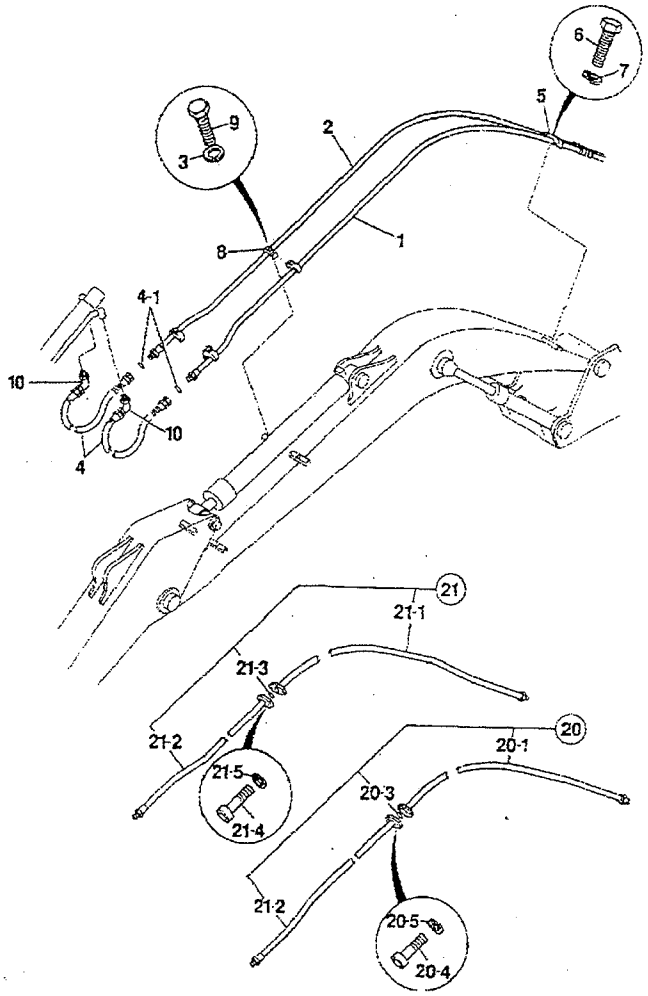

ITEM	PART NO.	CHANGE NO.	DESCRIPTION	REMARKS	QTY.
1	KRV1204		Pipe left hand, bucket ram		1
2	KRV1203		Pipe right hand bucket ram		1
3	823/00394		Washer, special		4
4	JLV0326		Hose		2
4 01	UBJ0158		O Ring		1
5	KRV1200		Clamp, pipe		1
6	1316/3716Z		Bolt		1
7	823/00409		Washer, special		1
8	KRV0548		Clamp		4
9	*1316/3514Z		Bolt		4
10	KNJ0605		Adapter		2
20	KRV1769		Pipe assembly bucket ram left hand		1
20 01	KRV1767		Pipe, bucket ram, left hand		1
20 02	KRV1766		Pipe, bucket ram, left hand		1
20 03	UHJ0415		O Ring		1
20 04	6004/3409R		Capscrew		4
20 05	6061/0008R		Washer, spring		4
21	KRV1768		Pipe, assembly bucket ram, right hand		1
21 01	KRV1765		Pipe, bucket ram, right hand		1
21 02	KRV1764		Pipe, bucket ram, right hand		1
21 03	UHJ0415		O Ring		1
20 04	6004/3409R		Capscrew		4
20 05	6061/0008R		Washer, spring		4

E1-23-10 CIRCUIT, BUCKET RAM, 2.4M DIPPER

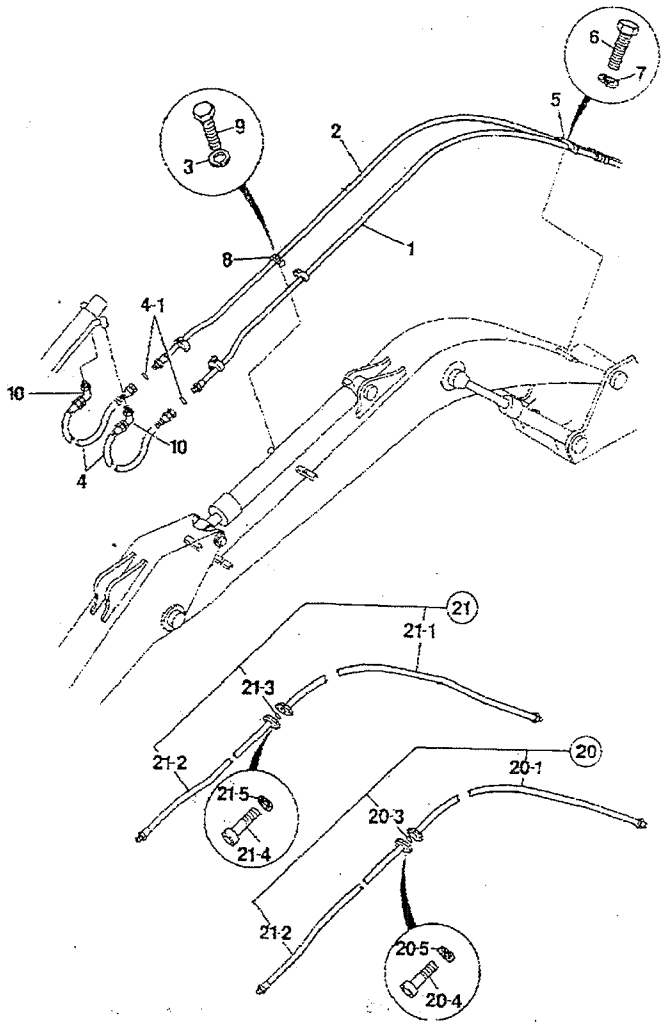

ITEM	PART NO.	CHANGE NO.	DESCRIPTION	REMARKS	QTY.
1	KRV1204		Pipe left hand, bucket ram		1
2	KRV1203		Pipe right hand bucket ram		1
3	823/00394		Washer, special		4
4	KRV1932		Hose		2
4 01	UBJ0158		O Ring		1
5	KRV1200		Clamp, pipe		1
8	1316/3716Z		Bolt		1
7	823/00409		Washer, special		1
8	KRV0548		Clamp		4
9	1316/3714Z		Bolt		4
10	KNJ0605		Adapter		2
20	KRV1769		Pipe assembly bucket ram left hand		1
20 01	KRV1767		Pipe, bucket ram, left hand		1
20 02	KRV1766		Pipe, bucket ram, left hand		1
20 03	UHJ0415		O Ring		1
20 04	6004/3409R		Capscrew		4
20 05	6061/0008R		Washer, spring		4
21	KRV1768		Pipe, assembly bucket ram, right hand		1
21 01	KRV1765		Pipe, bucket ram, right hand		1
21 02	KRV1764		Pipe, bucket ram, right hand		1
21 03	UHJ0415		O Ring		1
20 04	6004/3409R		Capscrew		4
20 05	6061/0008R		Washer, spring		4

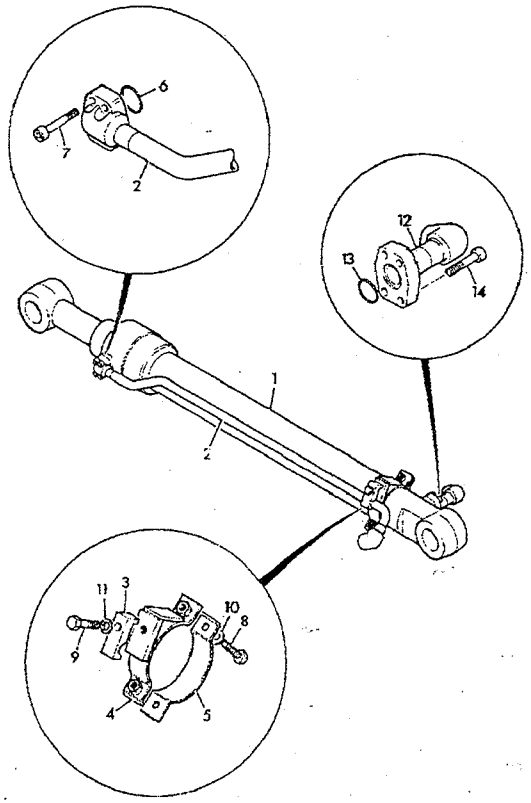

ITEM	PART NO.	CHANGE NO.	DESCRIPTION	REMARKS	QTY.
1	229/00573		Ram, bucket, 115mm cly x 85mm rod		1
2	NSP		Pipe bucket	Ref. E4-3-1	1
3	NSP		Clamp	Ref. E4-3-1	1
4	NSP		Clamp, assembly	Ref. E4-3-1	1
5	NSP		Clamp	Ref. E4-3-1	1
6	2407/0205		Seal, O Ring		1
7	1391/3409Z		Capscrew, M10 x 35mm		4
8	1316/3410Z		Bolt		2
9	1316/3511Z		Bolt		1
10	1425/0008Z		Washer, spring		2
11	1425/0009Z		Washer, spring		1
12	NSP		Pipe bucket	Ref. E4-3-1	1
13	2407/0205		Seal, O Ring		1
14	1391/3409Z		Capscrew, M10 x 35mm		4
15	1371/0301Z		Nut, high strength, M10		2

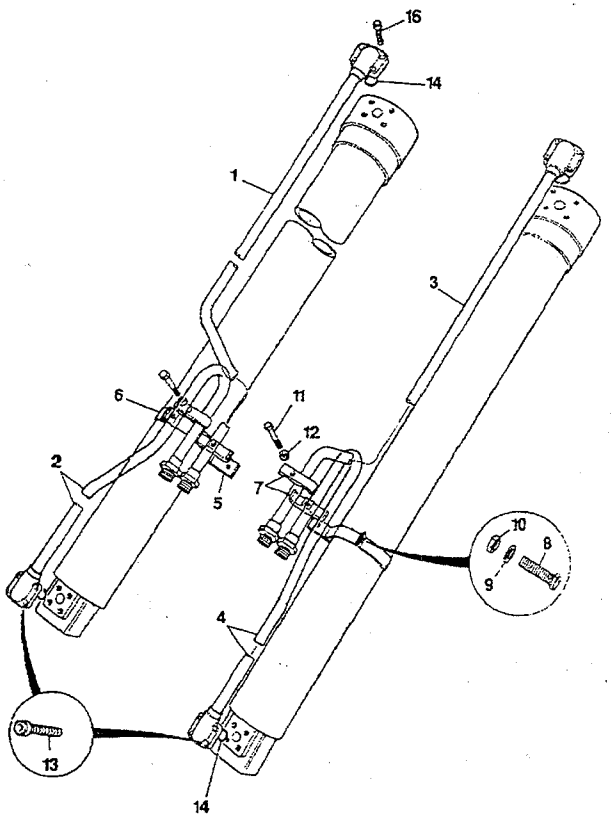

ITEM	PART NO.	CHANGE NO.	DESCRIPTION	REMARKS	QTY.
1	NSP		Pipe, boom left, left hand	Ref. E4-1-1	1
2	NSP		Pipe, boom lift left hand, none HBCV	Ref. E4-1-1	1
3	NSP		Pipe, boom left, right hand	Ref. E4-1-2	1
4	NSP		Pipe, boom lift right hand, none HBCV	Ref. E4-1-2	1
5	NSP		Clamp		2
6	NSP		Clamp		2
7	NSP		Clamp, pipe		4
8	1316/3410Z		Bolt		4
9	*1425/0008Z		Washer, spring		2
10	*1371/0301Z		Nut, high strength, M10		4
11	*1316/3514Z		Bolt		2
12	*1425/0009Z		Washer, spring		2
13	*1391/3409Z		Capscrew, M10 x 35mm		8
14	2407/0205		Seal, O Ring		4
15	1420/0009Z		Washer		2
16	*1391/3409Z		Capscrew, M10 x 35mm		8

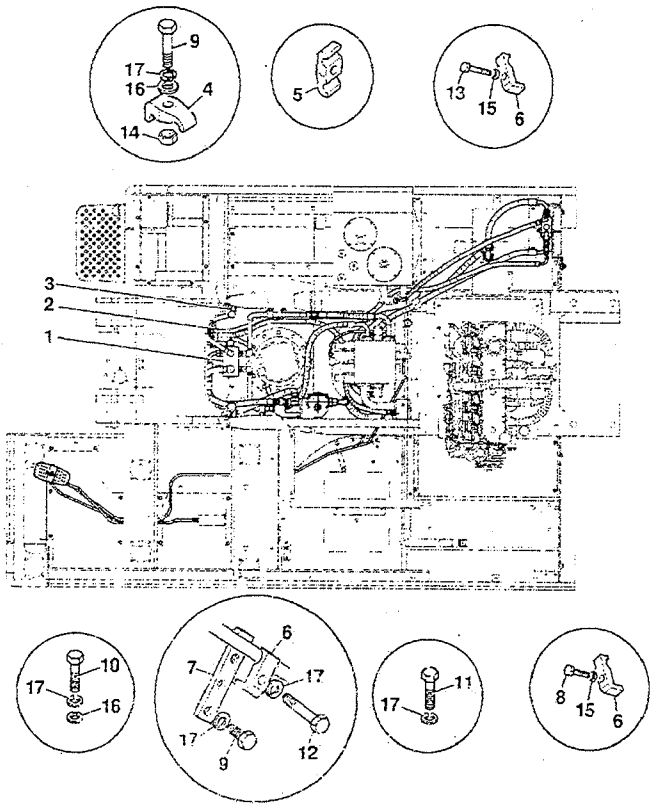

ITEM	PART NO.	CHANGE NO.	DESCRIPTION	REMARKS	QTY.
1			'See Remark'	See E1-30-1	1
2			'See Remark'	See E1-30-20	1
3			'See Remark'	See E1-30-30	1
4	JRV0422		Clamp, 1/2" x 3/4"		3
5	JRV0423		Clamp, 1/2" x 1"		7
6	JRV0424		Clamp		5
7	KRV1641		Bar, base		4
8	1316/3514Z		Bolt		2
9	1316/3712Z		Bolt		8
10	1316/3715Z		Bolt		2
11	1316/3717Z		Bolt		5
12	1316/3718Z		Bolt		2
13	1316/3719Z		Bolt		3
14	1371/0603Z		Nut, M16		2
15	1420/0009Z		Washer		2
16	1420/0011Z		Washer, M16 plain		2
17	1425/0011Z		Washer, spring		20

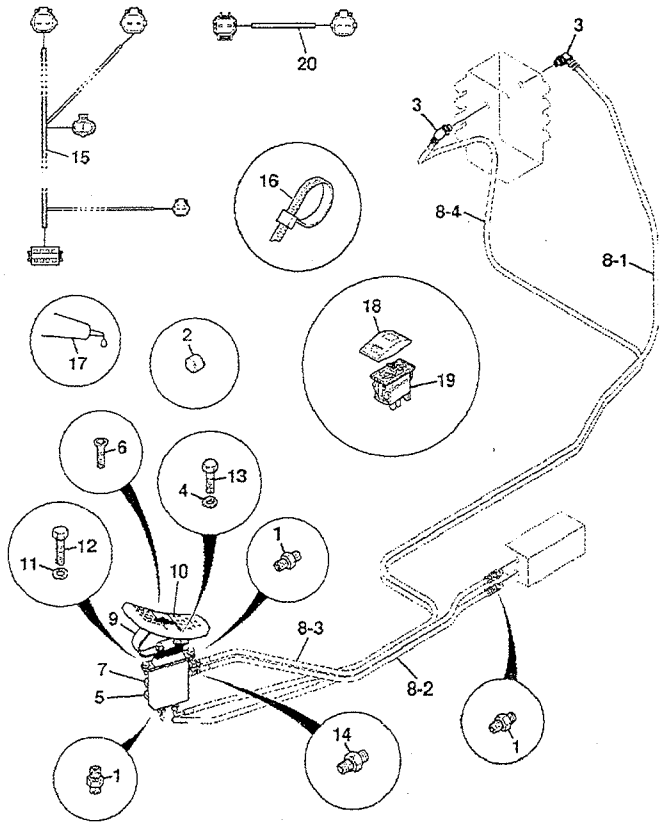

ITEM	PART NO.	CHANGE NO.	DESCRIPTION	REMARKS	QTY.
1	KNJ0758		Adapter		5
2	KHJ0768		Cap, spl		2
3	KHJ0640		Elbow		2
4	JHP0046		Washer		2
5	928/60339		Valve, remote control, hammer pedal		1
6	826/10811		Screw, c/sunk socket head, M8 x 30		2
7	332/J0669		Switch, pressure 5 bar		1
8 01	KTJ0907		Hose nylon		1
8 02	KBJ2205		Hose, nylon		1
8 03	JSV0319		Hose		1
8 04	KTJ0907		Hose, nylon		1
9	335/04915		Pedal, hammer		1
10	331/32621		Pedal, foot, Hammer Aux.		1
11	1420/0008Z		Washer, Plain		2
12	1316/0407Z		Bolt, high strength		2
13	1316/0403Z		Screw		2
14	CNA0584		Adapter		1
15	721/10455		Harness, breaker		1
16	204/07006		Tie cable		1
17			See Remark		1
18	701/58832		Cover rock breaker switch soft touch		1
19	701/60032		Switch, 24V		2
20	721/10456		Harness, hammer auxiliary		1

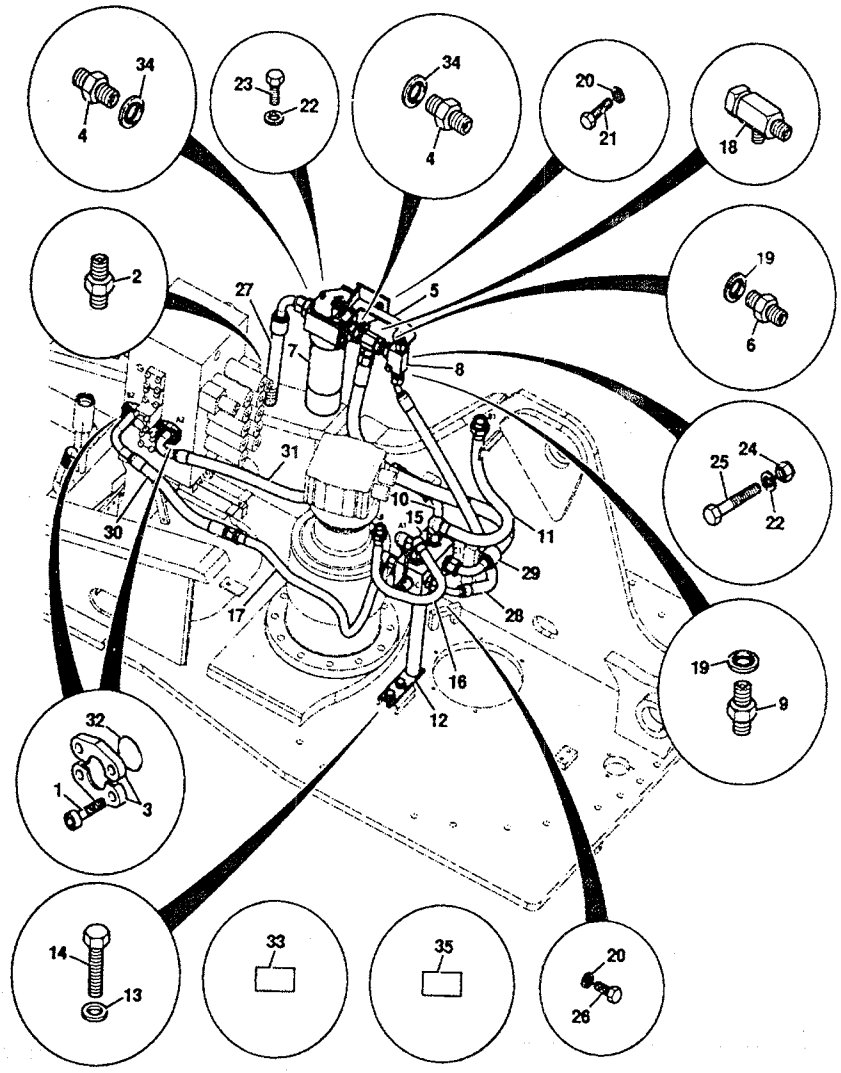

ITEM	PART NO.	CHANGE NO.	DESCRIPTION	REMARKS	QTY.
1	1391/3408Z		Capscrew		8
2	KNJ0606		Adapter		1
3	KRJ2682		Flange, split		4
4	1606/0015		Adapter		2
5	JBJ0064		Bracket, filter mounting		1
6	816/20033		Adapter, straight		1
7	JBJ0066		Filter, hydraulic	For components see E3-16-1	1
8	JBJ0038		Valve, relief		1
9	1604/0006		Adapter, 3/4" BSP M/M		1
10	JRJ0146		Pipe assembly		1
11	JRJ0145		Pipe, assembly		1
12	JRJ0181		Bracket, valve mount		1
13	1420/0011Z		Washer, M16 plain		2
14	1316/0710Z		Screw		2
15	JBJ0037		Valve, change over		1
16	JRJ0144		Pipe assembly change over valve		1
17	830/11597		Pipe		1
18	816/00019		Adapter, T		1
19	1406/0021		Seal, bonded 3/4" BSP		2
20	1420/0008Z		Washer, Plain		6
21	1316/0408Z		Screw		2
22	1420/0007Z		Washer, plain		6
23	1316/0305Z		Bolt, high tensile		4
24	1371/0303Z		Nut		1
25	1316/3415Z		Bolt		1

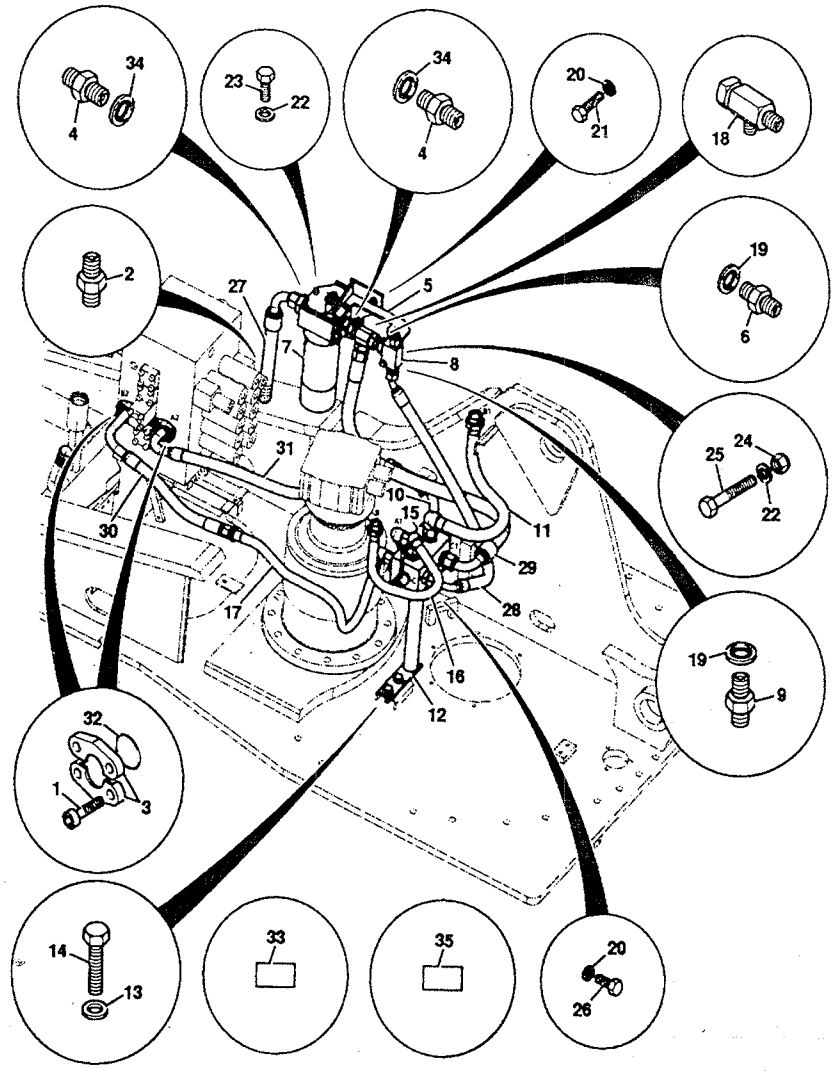

ITEM	PART NO.	CHANGE NO.	DESCRIPTION	REMARKS	QTY.
26	1316/0405Z		Screw, M10 x 20		6
27	627/10183		Hose		1
28	JRJ0151		Hose		1
29	JNV0070		Hose		1
30	627/10180		Hose		1
31	627/10243		Hose		1
32	2407/0210		Seal, O ring		2
33	817/18853		Label, hammer return		1
34	1406/0029		Seal, Dowty		2
35	JRP0139		Decal, combined valve		1

Illustration Not Available at Time of Publication

ITEM	PART NO.	CHANGE NO.	DESCRIPTION	REMARKS	QTY.
1	JRJ0343		Valve, low flow		1
2	1391/3109Z		Capscrew		4
3	331/34479		Bracket, valve mounting		1
4	1606/0007		Adapter		4
5	1406/0015		Washer, seal		4
6	1420/0009Z		Washer		2
7	1316/0508Z		Screw		2
8	JRJ0169		Pipe, assembly		1
9	JRJ0168		Pipe assembly		1
10	210/92901		Clamp, flange 1"		2
11	1391/3510Z		Capscrew		8
12	1406/0018		Seat, bonded		2
13	1604/0004		Adapter, male/male		1
14	331/34440		Bracket, Bracket Priority Va, used for valves 35/9		1
15	1606/0012		Adapter		2
16	928/60044		Valve check		1
17	1606/0010		Adapter		1
18	25/221758		Valve, priority now, control		1
19	1406/0011		Seal, bonded		1
20	1606/0004		Adapter		1
21	1391/3318Z		Capscrew		3
22	1420/0007Z		Washer, plain		3
23	1370/0203Z		Nut, self lock		3
24	1391/3408Z		Capscrew		8
25	KRJ0963		Flange, split		2

ITEM	PART NO.	CHANGE NO.	DESCRIPTION	REMARKS	QTY.
26	1406/0026		Washer, seal		3
27	627/10214		Hose		1
28	627/10046		Hose		1
29	627/10241		Hose		1
30	627/10215		Hose		1
31	627/10216		Hose		1
32	627/10217		Hose		1
33	627/10213		Hose		1
34	2407/0210		Seal, O ring		2
35	2407/0205		Seal, O Ring		2
36	721/11451		Harness low flow, JS AUTO range		1
37	627/10039		Hose		1

Illustration Not Available at Time of Publication

Illustration Not Available at Time of Publication

ITEM	PART NO.	CHANGE NO.	DESCRIPTION	REMARKS	QTY.
1	1391/3408Z		Capscrew		8
2	KNJ0606		Adapter		1
3	KRJ2682		Flange, split		4
4	1606/0015		Adapter		2
5	JBJ0064		Bracket, litter mounting		1
6	816/20033		Adapter, straight		1
7	JBJ0066		Filter, hydraulic	For components see E3-16-1	1
8	JBJ0038		Valve, relief		1
9	1604/0006		Adapter, 3/4" BSP M/M		1
10	JRJ0146		Pipe assembly		1
11	JRJ0145		Pipe, assembly		1
12	JRJ0181		Bracket, valve mount		1
13	1420/0011Z		Washer, M16 plain		2
14	1316/0710Z		Screw		2
15	JBJ0037		Valve, change over		1
16	JRJ0144		Pipe assembly change over valve		1
17	830/11597		Pipe		1
18	816/00019		Adapter, T		1
19	1406/0021		Seal, bonded 3/4" BSP		2
20	1420/0008Z		Washer, Plain		6
21	1316/0408Z		Screw		2
22	1420/0007Z		Washer, plain		6
23	1316/0305Z		Bolt, high tensile		4
24	1371/0303Z		Nut		1
25	1316/3415Z		Bolt		1

Illustration Not Available at Time of Publication

ITEM	PART NO.	CHANGE NO.	DESCRIPTION	REMARKS	QTY.
26	1316/0405Z		Screw, M10 x 20		6
27	627/10183		Hose		1
28	JRJ0151		Hose		1
29	JNV0070		Hose		1
30	627/10180		Hose		1
31	627/10243		Hose		1
32	2407/0210		Seal, O ring		2
33	817/18853		Label, hammer return		1
34	1406/0029		Seal, Dowty		2
35	JRP0139		Decal, combined valve		1

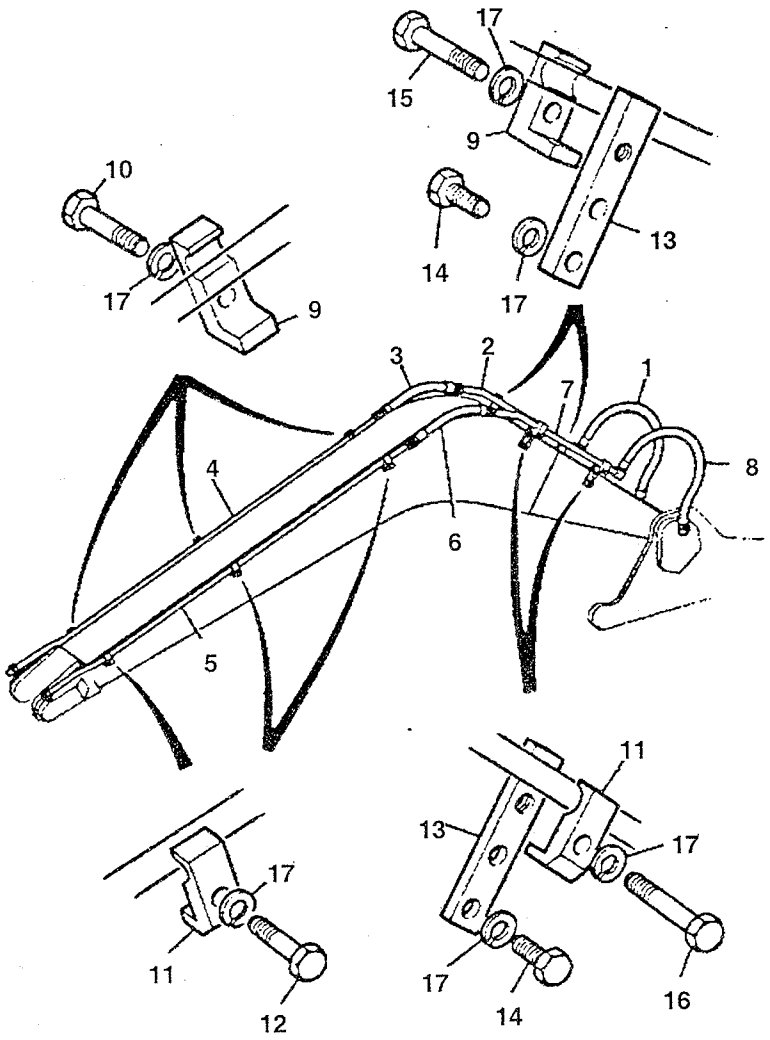

ITEM	PART NO.	CHANGE NO.	DESCRIPTION	REMARKS	QTY.
1	JRV0338		Hose		1
2	JRV0273		Pipe boom feed		1
3	KRV1645		Hose hydraulic		1
4	JRV0274		Pipe boom feed		1
5	JRV0275		Pipe boom return		1
6	JRV0337		Hose		1
7	JRV0276		Pipe boom return		1
8	JRV0339		Hose		1
9	JRV0423		Clamp ½"x1" Hammer & Low flow		5
10	1316/3717Z		Bolt		3
12	1316/3719Z		Bolt		3
13	KRV1641		Bar base		4
14	1316/0712Z		Bolt		8
15	1316/3715Z		Bolt		2
16	1316/3718Z		Bolt M16x80		2
17	1420/0011Z		Washer Schnorr heavy duty M16		18

E1-33-1 CIRCUIT, AUXILIARY / HAMMER, 1.91M DIPPER

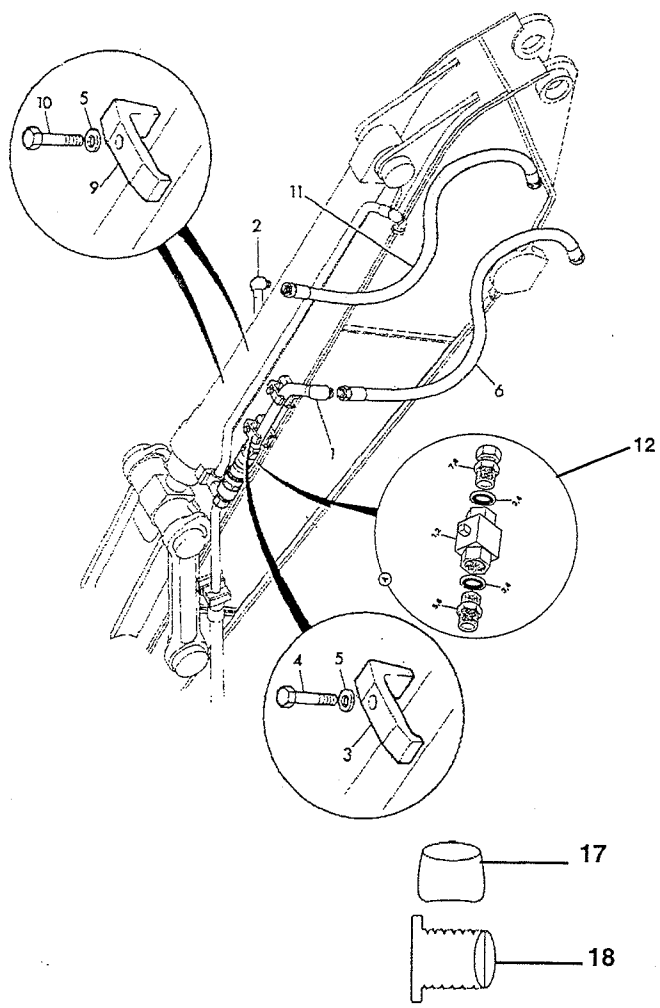

ITEM	PART NO.	CHANGE NO.	DESCRIPTION	REMARKS	QTY.
1	JRV0345		Pipe auxiliary return		1
2	JRV0344		Pipe auxiliary feed		1
3	JRV0278		Clamp		2
4	1316/3719Z		Bolt		2
5	*823/00409		Washer, special		4
6	JRV0336		Hose		1
10	1316/3717Z		Bolt		2
11	JLV0733		Hose		1
12	980/89670		Kit installation ball valve		1
12 1	25/222220		Valve ball 1 BSP	Feed 1 BSP	1
12 2	25/222221		Valve ball 1 1/4 BSP	Return 1-1/4" BSP	1
12 3	1406/0026		Washer seal		2
12 4	1406/0029		Seal Dowty		2
12 5	1606/2065		Adaptor		1
12 6	1604/0009		Adaptor		1
12 7	1612/0008		Adaptor		1
12 8	1612/0009		Adaptor		1
12 9	9814/0432		Kit-installation fitting instructions ball valve		
17	835/10066		Cap, male thered cover	Protects threads of part 45/909900	
18	835/10065		Cap, female thered cover	Protects threads of part JLV0535	

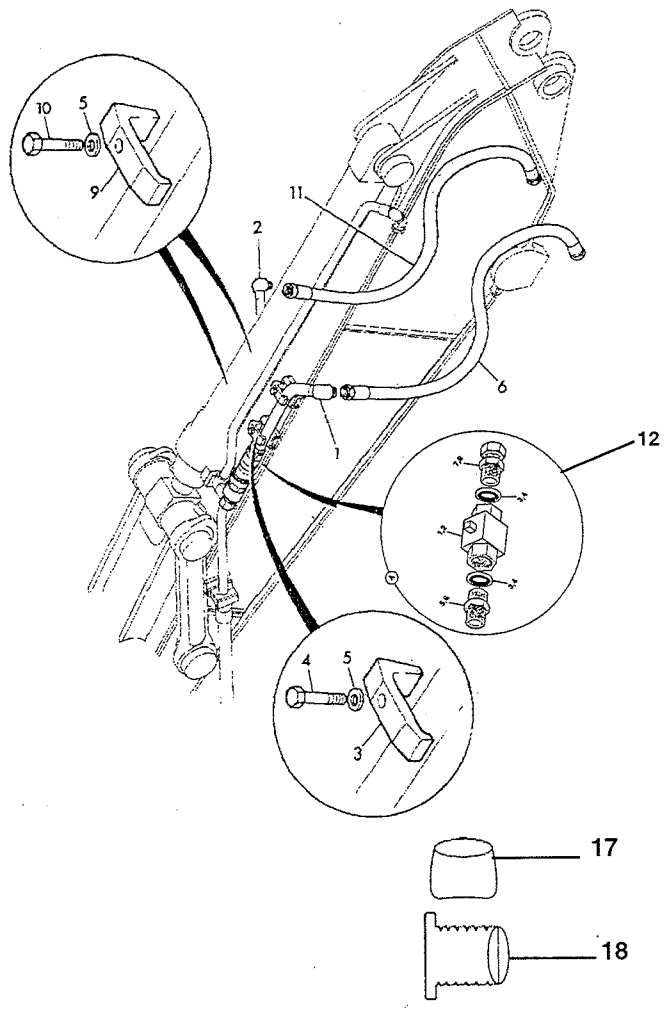

ITEM	PART NO.	CHANGE NO.	DESCRIPTION	REMARKS	QTY.
1	JRV0343		Pipe, auxillary return		1
2	JRV0342		Pipe, auxillary feed		1
3	JRV0278		Clamp		2
4	1316/3719Z		Bolt		2
5	*823/00409		Washer, special		4
6	JRV0332		Hose		1
7	JHV0195		Coupling, female, 11/4"BSP		1
8	1406/0029		Seal, dowty		1
9	KSV0282		Clamp, pipe		2
10	1316/3717Z		Bolt		2
11	JRV0331		Hose		1
12	980/89670		Kit installation ball valve		1
12 1	25/222220		Valve ball 1 BSP	Feed 1 BSP	1
12 2	25/222221		Valve ball 1 1/4 BSP	Return 1-1/4" BSP	1
12 3	1406/0026		Washer seal		2
12 4	1406/0029		Seal Dowty		2
12 5	1606/2065		Adaptor		1
12 6	1604/0009		Adaptor		1
12 7	1612/0008		Adaptor		1
12 8	1612/0009		Adaptor		1
12 9	9814/0432		Kit-installation fitting instructions ball valve		
17	835/10066		Cap, male thered cover	Protects threads of part 45/909900	
18	835/10065		Cap, female thered cover	Protects threads of part JLV0535	

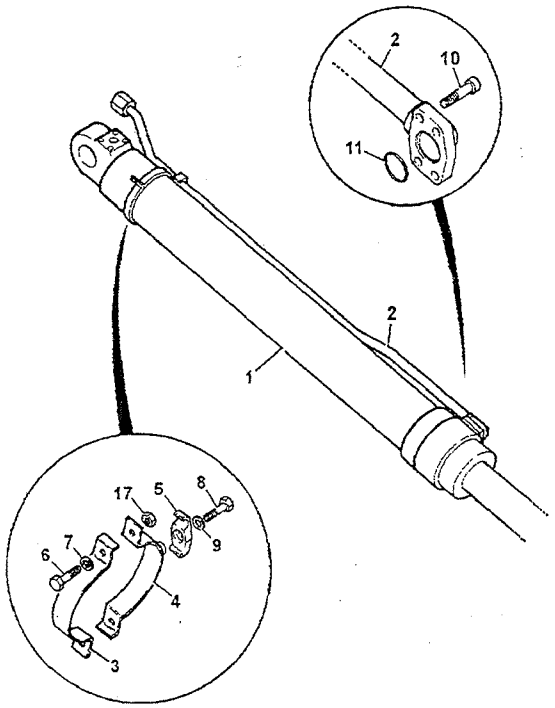

ITEM	PART NO.	CHANGE NO.	DESCRIPTION	REMARKS	QTY.
1	229/00570		Ram, dipper arm, 130mm cyl, 95mm rod	For components see frame E4-2-1	1
2	NSP		Pipe dipper ram, rod Side	Ref. E4-2-1	1
3	NSP		Clamp	Ref. E4-2-1	1
4	NSP		Clamp	Ref. E4-2-1	1
5	NSP		Clamp, pipe	Ref. E4-2-1	1
6	1316/3510Z		Bolt		2
7	1425/0009Z		Washer, spring		2
8	1316/3513Z		Bolt		1
9	1425/0009Z		Washer, spring		1
10	1391/3510Z		Capscrew		4
11	2407/0210		Seal, O ring		1
17	1371/0401Z		Nut		2

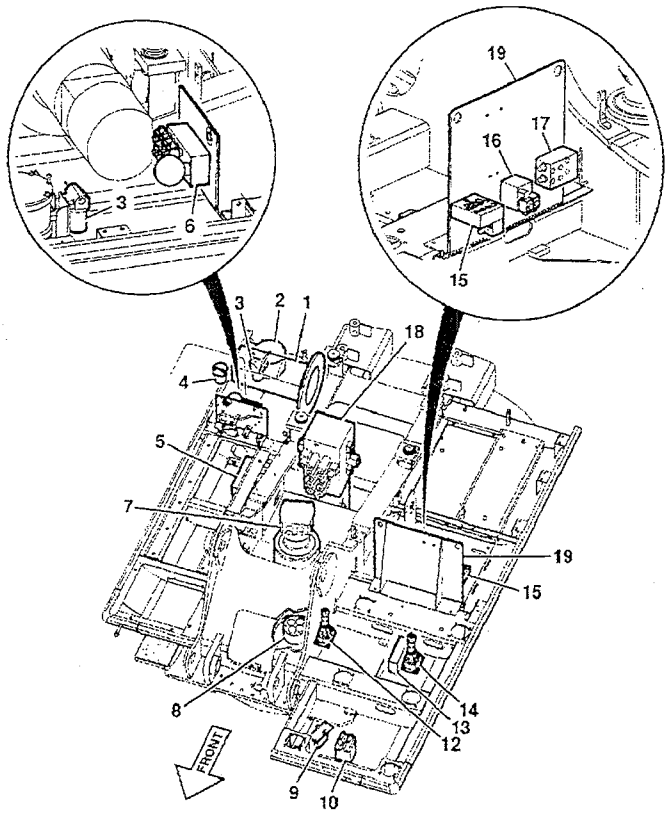

ITEM	PART NO.	CHANGE NO.	DESCRIPTION	REMARKS	QTY.
1 01	20/925309		Pump, main		1
1 02	KRJ3449		Mounting, flange		1
1 03	1391/3813Z		Capscrew		4
2	JRJ0238		Filter, bypass		1
3	32/925214		Filter, assembly, servo		1
4	KNJ0287		Filter, hydraulic		1
5	331/27235		Manifold		1
6	25/222885		Solenoid, valve assembly	For adapters & hoses see E1-67-1	1
7	20/925315		Motor, swing		1
8	229/01008		Coupling, rotary		1
9	928/60339		Valve, remote control hammer pedal		1
10	KSJ2465		Valve, remote control		1
11			See Remark		
12	25/222891		Valve, hand control, left hand	For adapters & hoses see E1-62-1	1
13	KNJ1933		Manifold	For adapters & hoses see E1-68-1	1
14	25/222892		Valve, hand control, light hand	For adapters & hoses see E1-63-1	1
15	25/220830		Valve, shuttle assembly	For adapters & 1 hoses see E1-66-1	
16	25/221009		Valve, Boom Priority	For adapters & hoses see E 1-64-1	1

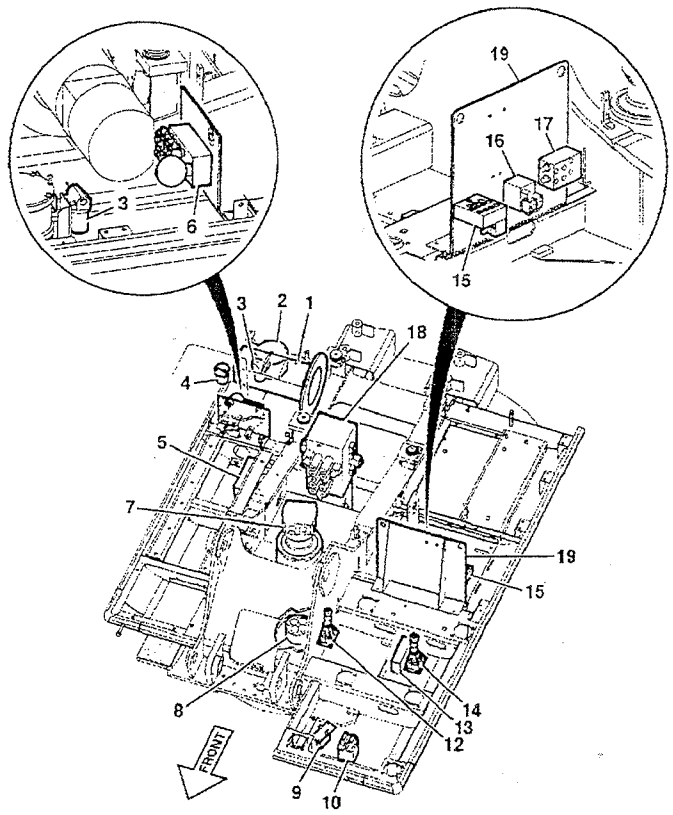

ITEM	PART NO.	CHANGE NO.	DESCRIPTION	REMARKS	QTY.
17	25/220041		Valve, cushion	For adapters & hoses see E 1-65-1	1
18	25/220822		Valve, main control	For adapters & hoses see E1-70-1 & E1-71-1	1
19	229/01707		Bracket, valve mounting		1
	*335/05592		Bracket, valve		1
20	JHJ0088		Clamp		1

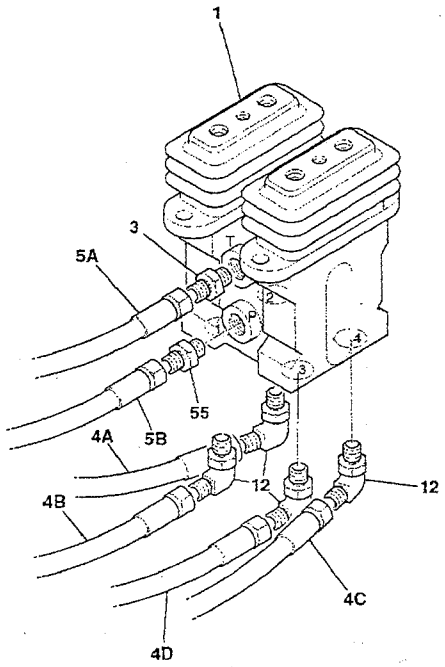

ITEM	PART NO.	CHANGE NO.	DESCRIPTION	REMARKS	QTY.
1	KSJ2465		Valve, remote control		1
3	KNJ0758		Adapter		1
4A	JRJ0186		Hose nylon	port 2 to main control valve port Pa1	1
4B	627/10071		Hose, 1_4 str-str	port 1 to main control valve port Pb1	1
4C	KTJ0812		Hose nylon red	port 4 to main control valve port Pa6	1
4D	JRJ0079		Hose, gray, gray	port 3 to main control valve port Pb6	1
5A	JRJ0093		Hose red orange	port T to manifold port T5	1
5B	JRJ0092		Hose red yellow	port P to manifold 1 port P5	1
12	KHJ0341		Adapter, elbow		4
55	CNA0584		Adapter		1

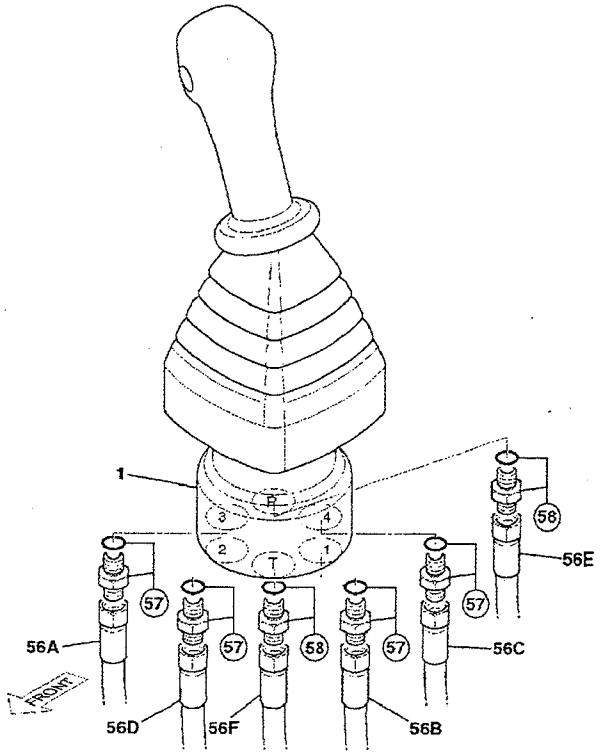

ITEM	PART NO.	CHANGE NO.	DESCRIPTION	REMARKS	QTY.
1	25/222891		Valve, hand control, lelf hand		1
56A	JRJ0122		Hose violet	port 3 to shuttle valve port A1	1
56B	JRJ0121		Hose, orange	port 1 to shuttle valve port A2	1
56C	JRJ0123		Hose, pink	port 4 to shuttle valve port A6	1
56D	JRJ0124		Hose I green	port 2 to shuttle valve port A5	1
56E	JRJ0116		Hose, white	port P to manifold port P6	1
56F	KNJ1997		Hose hydraulic (L=1150)	port T to manifold port T6	1
57	1620/0003		Adapter		4
	2401/0505		O Ring		1
58	JHJ0168		Adapter, filtered		2
	2401/0505		O Ring		1

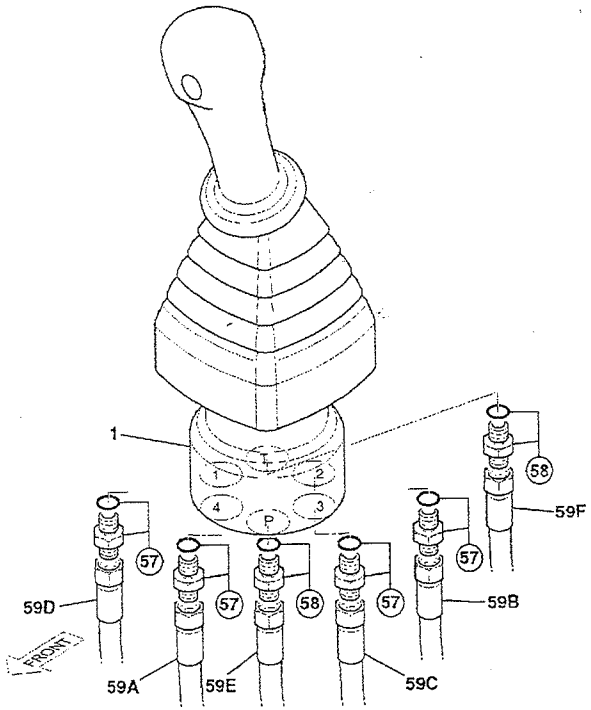

ITEM	PART NO.	CHANGE NO.	DESCRIPTION	REMARKS	QTY.
1	25/222892		Valve, hand control, right hand		1
57	1620/0005		Adapter		4
57 01	2401/0505		O Ring		1
58	JHJ0168		Adapter, filtered		2
58 01	2401/0505		O Ring		1
59A	JRJ0119		Hose red	port 4 to shuttle valve port A4	1
59B	JRJ0117		Hose blue	port 2 to shuttle valve port A3	1
59C	JRJ0113		Hose nylon	port 3 to main valve port Pb7 bucket ram	1
59D	627/10076		Hose 3_8 str-str	port 1 to main valva port Pa7 bucket ram	1
59E	JRJ0115		Hose white	port P to manifold port P2	1
59F	KNJ1998		Hose hydraulic, (L=1200)	port T to manifold port T2	1

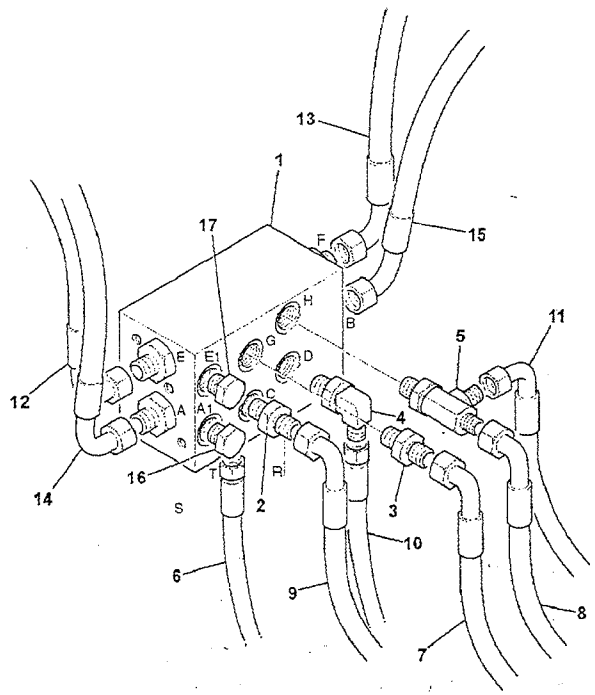

ITEM	PART NO.	CHANGE NO.	DESCRIPTION	REMARKS	QTY.
1	25/220041		Valve, cushion		1
2	KNJ0759		Adapter		1
3	KNJ1311		Adapter, hose		1
4	KHJ0342		Adapter, elbow		2
5	KHJ0973		Adapter, tee		1
6	JRJ0098		Hose, red white	Pori T to manifold port T	1
7	JNJ0178		Hose, nylon, red	Port G to main control valve port pb8	1
8	JRJ0110		Hose blue	Port H tee to main control valve port pa8	1
9	627/10074		Hose	Port C to main control valve pori pb5	1
10	627/10075		Hose	Port D to main control valve port pa5	1
11	KRJ3577		Hose nylon	Port H tee to main control valve port pb4	1
12	JRJ0I06		Hose, red	Port E to shuttle valve port B4	1
13	JRJ0104		Hose, blue	Port F 10 shuttle valve pori B3	1
14	JRJ0107		Hose pink	Port A to shuttle valve pori B6	1
15	JRJ0105		Hose, l green	Port B to shuttle valve pori B5	1
16	BRJ1545		Plug		1

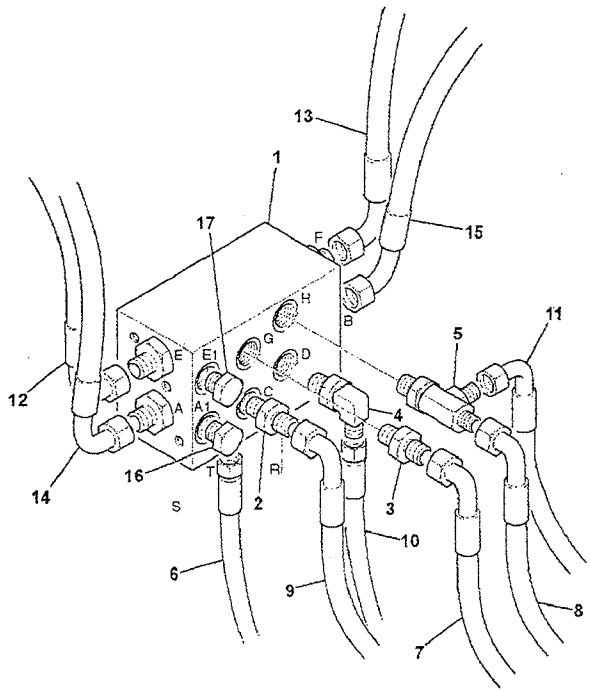

ITEM	PART NO.	CHANGE NO.	DESCRIPTION	REMARKS	QTY.
17	BRJ1545		Plug		1
18	KAJ3248		Hose, nylon	Port R to tank	1
19	JRJ0095		Hose yellow, yellow	Port S to solenoid valve port C4	1

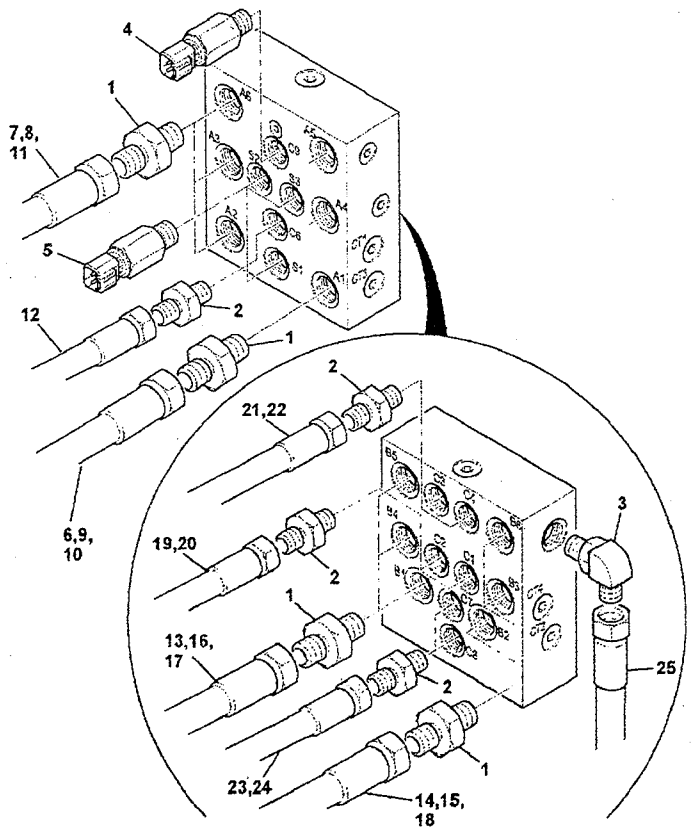

ITEM	PART NO.	CHANGE NO.	DESCRIPTION	REMARKS	QTY.
1	KNJ0759		Adapter		11
2	KNJ0758		Adapter		5
3	KNJ0341		Adapter, elbow		2
4	701/80372		Switch, pressure, 22 bar		1
5	701/80372		Switch, pressure, 22 bar		3
6	JRJ0122		Hose, violet	Port A1 to LH controler port 3	1
7	JRJ0121		Hose, orange	Port A2 to LH controler port 1	1
8	JRJ0117		Hose, blue	Port A3 to RH controler port 2	1
9	JRJ0119		Hose, red	Port A4 to RH controler port 4	1
10	JRJ0124		Hose, l green	Port A5 to LH controler port 2	1
11	JRJ0123		Hose, pink	Port A6 to LH controler port 4	1
12	JRJ0094		Hose, red, red	Port C6 to solenoid value C3	1
13	627/10077		Hose	Port B1 to main control value port pb3	1
14	627/10079		Hose	Port B2 to main control value pa3	1
15	JRJ0104		Hose, blue	Port B3 to cushion value port F	1
16	JRJ0106		Hose, red	Port B4 to cushion value port E	1
17	JRJ0105		Hose, l green	Port B5 to cushion value port B	1

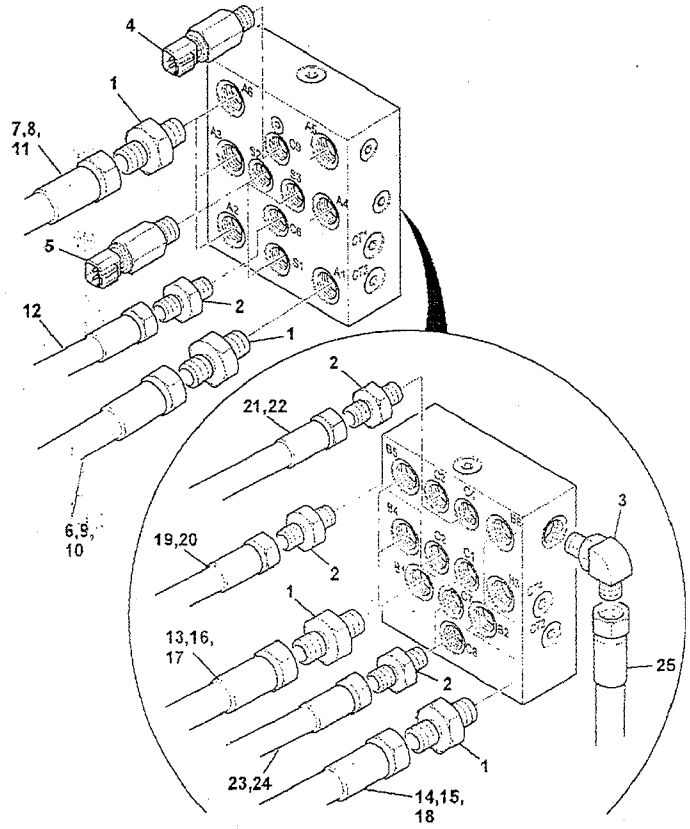

ITEM	PART NO.	CHANGE NO.	DESCRIPTION	REMARKS	QTY.
18	JRJ0107		Hose, pink	Port B6 to cushion value port A	1
19	KSJ0806		Hose, nylon	Port C1 to main control value port p1	1
20	JSV0179		Hose	Port C2 to main control value port pc2	1
21	MPJ5068		Hose, nylon, green	Port C3 to main control value Pa9	1
22	KSJ0806		Hose, nylon	Port C4 to main control value port pb9	1
23	KTJ0672		Hose, nylon	Port C7 to Swing value port A	1
24	KTJ0678		Hose	Port C8 to main control value port pc3	1
25	MPJ5070		Hose, nylon	Port C5 to main control value port pc1	1

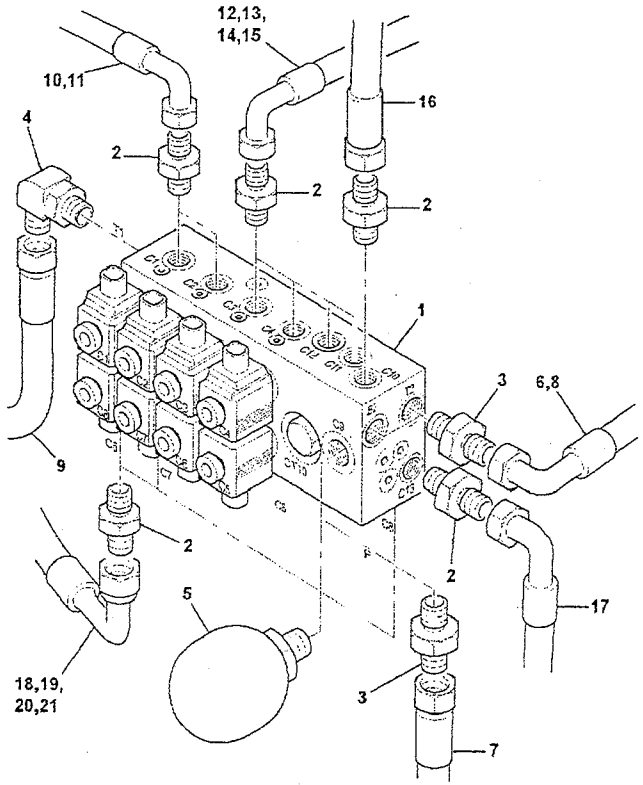

ITEM	PART NO.	CHANGE NO.	DESCRIPTION	REMARKS	QTY.
1	25/222885		Solenoid, valve assembly		1
2	KNJ0758		Adapter		12
3	KNJ0759		Adapter		3
4	KHJ0348		Adapter, elbow		1
5	JHJ0050		Accumulator		1
6	JRJ0101		Hose, pink, pink	Port B2 to cab manifold P1	1
7	JLV0288		Hose	Port P to filter	1
8	627/10073		Hose	Port T2 to Tank Manifold RTV	1
9	KRJ3895		Hose	Port T1 to throttle solenoid valve	1
10	JLV1641		Hose	Port C7 to Ph M.C.V	1
11	JRJ0094		Hose, red, red	Port C2 to shuttle valve port C8	1
12	627/10056		Hose	Port C3 to main control valve port ph	1
13	JRJ0095		Hose, yellow, yellow	Port C4 to cushion valve port S	1
14	627/10057		Hose	Port C12 to main control valve port pp	1
15	649/51226		Hose	Port C11 to pump port Psv	1
16	KRJ3671		Hose, nylon	Port C10 to throttle solenoid valve port P	1
17	627/10467		Hose	C5 to P (Rotary Coupling)	1

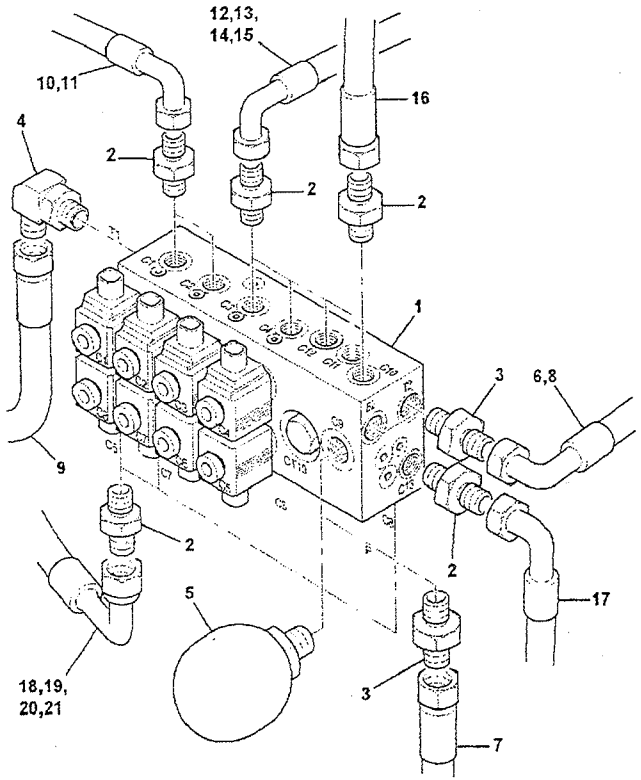

ITEM	PART NO.	CHANGE NO.	DESCRIPTION	REMARKS	QTY.
18	JNV0329		Hose Colour (none)	Port C6 to pump port P12	1
19	627/10058		Hose	Port C4 to pump port Pm2	1
20	627/10060		Hose	Port C5 to main control valve P12	1
21	KTJ0809		Hose, white, orange	Port B to P (swing motor)	1

E1-68-1 CIRCUIT, MANIFOLD, UNDER CAB

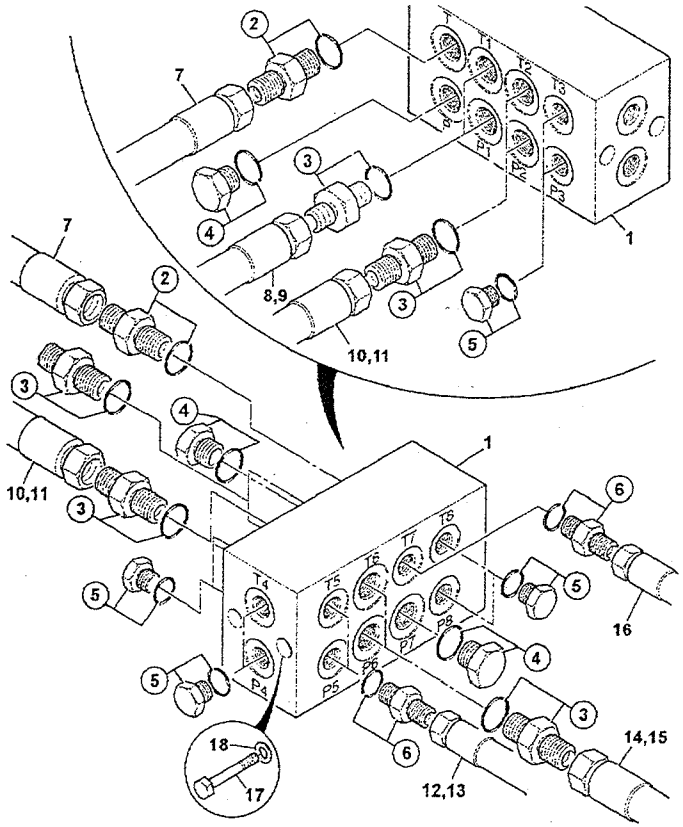

ITEM	PART NO.	CHANGE NO.	DESCRIPTION	REMARKS	QTY.
1	KNJ1933		Manifold		1
2	KAJ2176		Adapter	Port T	1
3	KNJ0759		Adapter	Port T1,T2,T6,P1, P2,P6	6
4	CEA0399		Plug	Port P7	2
5	KHJ0363		Plug	Port T3, T4, T8,P3, P4' P8	6
6	KNJ0758		Adapter	Port T5,T7,P5	3
7	KNJ1109		Hose, red white	Port T to cushion vallie Port T	1
8	JRJ0100		Hose white, blue	Port T1 to tank manifold Port T1	1
9	JRJ0101		Hose, pink, pink	Port P1 to solenoid valve Port B2	1
10	JRJ0115		Hose, white	Port P2 to RH controller Pori P	1
11	KNJ1998		Hose, hydraulic (L=1200)	Port T2 to RH controller Port T	1
12	JRJ0099		Hose, white, orange	Port T5 to tracking vallie Port T	1
13	JRJ0092		Hose, red yellow	Port P5 to tracking valve Port P	1
14	JRJ0116		Hose,white	Port P6 to LH controller Port P	1
15	KNJ1997		Hose,hydraulic, (L=1150)	Port T 6 to LH controller Port T	1
16	JRJ0098		Hose, nlyon	Port T7 to Swing T cushion	1
17	BLH0487		Bolt		2
18	JHP0046		Washer		2

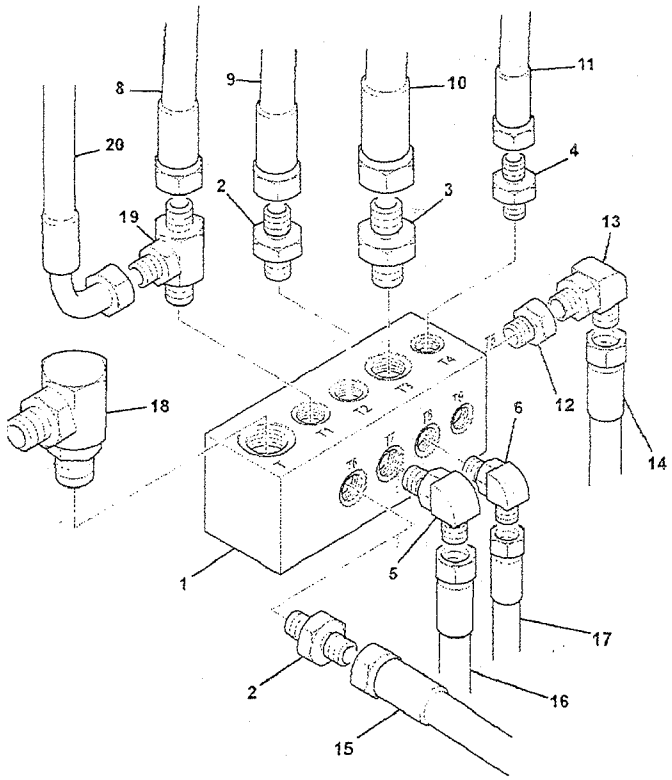

ITEM	PART NO.	CHANGE NO.	DESCRIPTION	REMARKS	QTY.
1	331/27235		Manifold		1
2	KNJ0759		Adapter		2
3	KNJ0604		Adapter, 1/2" M/M		1
4	KNJ0758		Adapter		1
5	KHJ0342		Adapter, elbow		2
6	KHJ0341		Adapter, elbow		1
7	627/10073		Hose	Port T to solenoid valve port T2	1
8	JRJ0100		Hose, white, blue	Port T1 to cab manifold port T1	1
9	KRJ4450		Hose, hyd, (L=1750)	Port T2 to swing motor port T	1
10	KNA0362		Hose	Port T3 to rotary coupling port T	1
11	KTJ0675		Hose, nylon	Port T4 to main control valve port Dr3	1
12	KNJ0815		Adapter	Port T5	1
13	C4E5507		Adapter	Port T5	1
14	1		TBA		1
15	KNJ1118		Hose nlyon	Port T6 to main control valve port Pa4	1
16	KNJ1122		Hose, nlyon	Port T7 to main control valve port Dr1	1
17	JLV1433		Hose	Port T8 to main control valve port Dr4	13

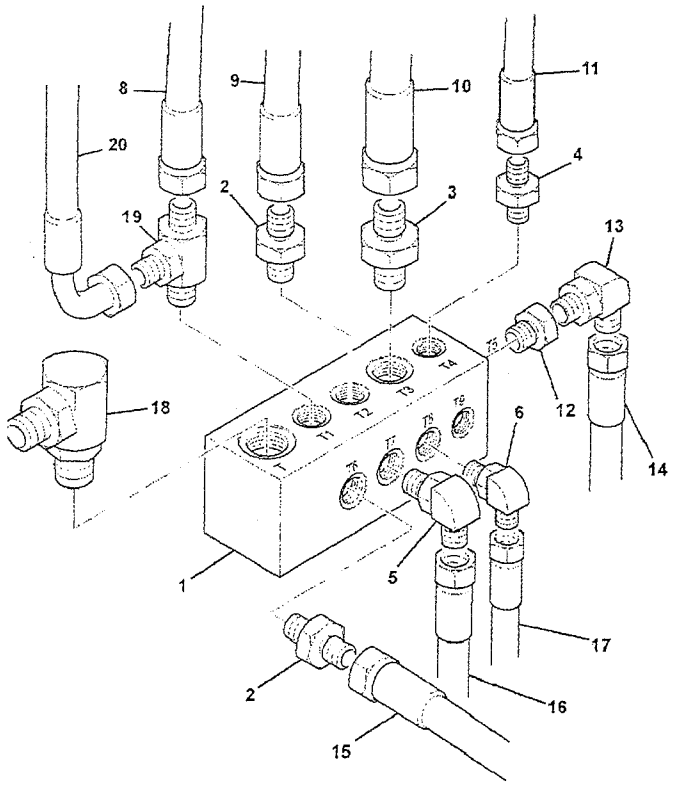

ITEM	PART NO.	CHANGE NO.	DESCRIPTION	REMARKS	QTY.
18	KHJ0344		Adapter, elbow		1
19	KHJ0973		Adapter, tee		1
20	KRJ3577		Hose nylon	Tee adapter to main, control valve port Dr2	1
21	BRJ0190		Plug		1

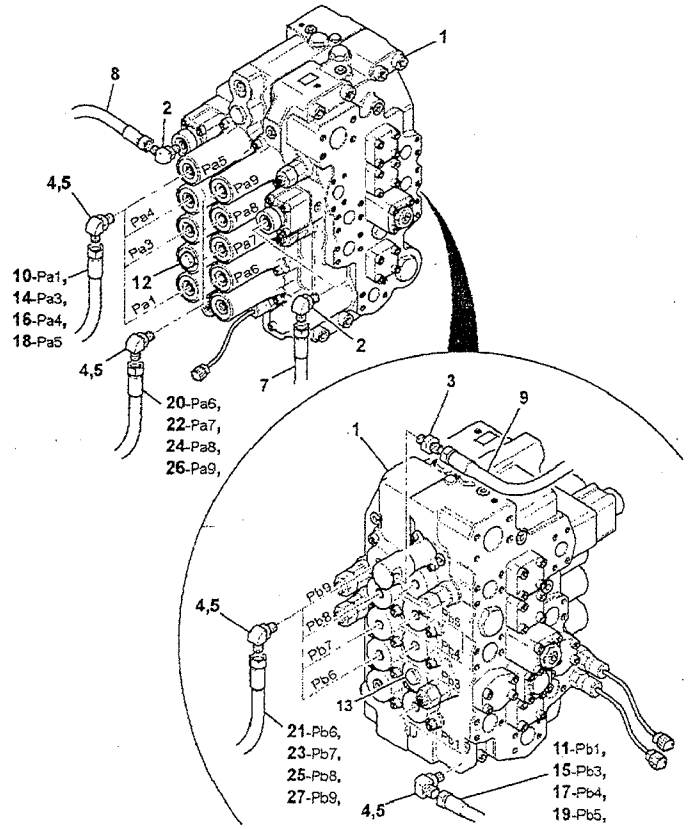

ITEM	PART NO.	CHANGE NO.	DESCRIPTION	REMARKS	QTY.
1	25/220822		Valve, main control		1
2	KHJ0341		Adapter, elbow		3
3	KNJ0759		Adapter		1
4	KHJ0640		Elbow		7
5	KHJ0342		Adapter, elbow		7
6	KSJ0806		Hose, nylon	Port P1 to shuttle valve port C1	1
7	JSV0179		Hose	Port Pc2 to shuttle valve port C2	1
8	MPJ5070	To M	Hose, nylon	Port Pc 1 to shuttle valve port C5	1
	*KTJ0682		Hose nylon		1
	*MPJ5072		Hose, nylon	Hammer merged flow option	1
9	KTJ0678		Hose	Port Pc3 to shuttle valve port C8	1
10	JRJ0186		Hose nylon	LH Traval Port Pe1 to traval pedal port 2	1
11	627/10071		Hose, 1-4 str-str	LH Travel port Pb1 to travel pedal port 1	1
12	1		TBA	Opbon port Pa2	1
13	1		TBA	Option port Pb2	1
14	627/10079	Superseded	Hose Swing	Port Pa3 to shuttle valve port B2	1
	*KNJ1135		Hose nylon		1
	*627/10079		Hose	Hammer merged option	1
15	627/10077		Hose	Swing Port Pa3 to shuttle valve B1	1

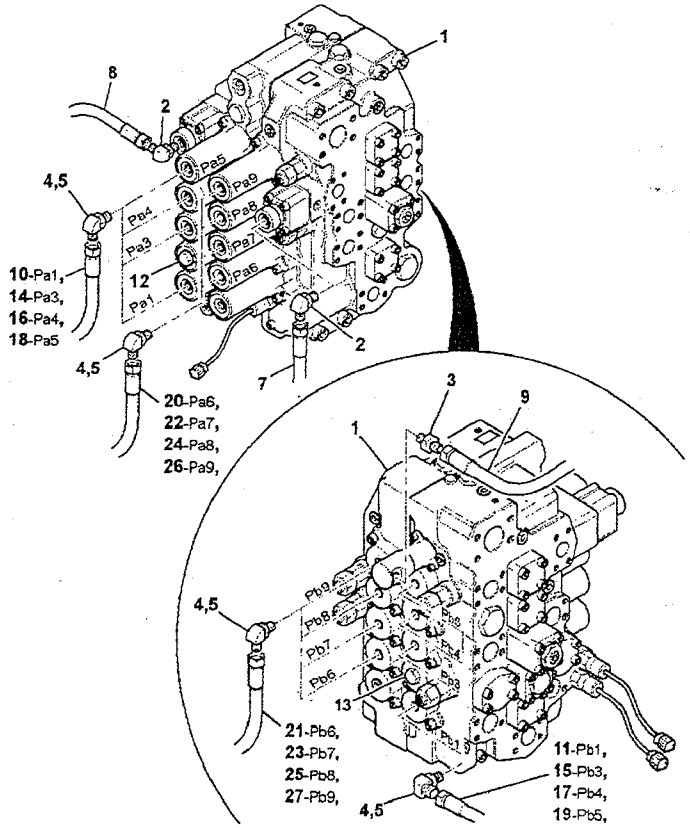

ITEM	PART NO.	CHANGE NO.	DESCRIPTION	REMARKS	QTY.
16	KNJ1118		Hose nylon	Boom 2, Port Pa4 to manifold T6	1
17	KRJ3577		Hose nylon	Boom 2, Port Pb4 to cushion valve port H	1
18	627/10075		Hose	Arm 1 Port Pa5 to cushion Valve port D	1
19	627/10074		Hose	Arm 1 Port Pb5 to cushion valve port C	1
20	KTJ0812		Hose, nylon, red	RH Travel Port Pa6 to travel pedal port 4	1
21	JRJ0079		Hose gray, gray	RH Travel Port Pb6 to travel pedal port 3	1
22	627/10076		Hose, 3_8 str-str	Bucket Por1 Pa7 to RH joystick port 1	1
23	KNJ1113		Hose nylon	Bucket Port Pb7 to RH joystick port 3	1
24	JRJ0110		Hose, blue	Boom 1 Port Pa8 to cushion valve port H	1
25	JNJ0178		Hose nylon, red	Boom 1 Port Pb8 to cushion valve port G	1
26	MPJ5068		Hose, nylon, green	Arm 2 Port Pa9 to shuttle Valve port C3	1
27	KSJ0806		Hose, nylon	Arm 2 Port Pb9 to shuttle valve port C4	1
			See Remark	Hammer merged option	1

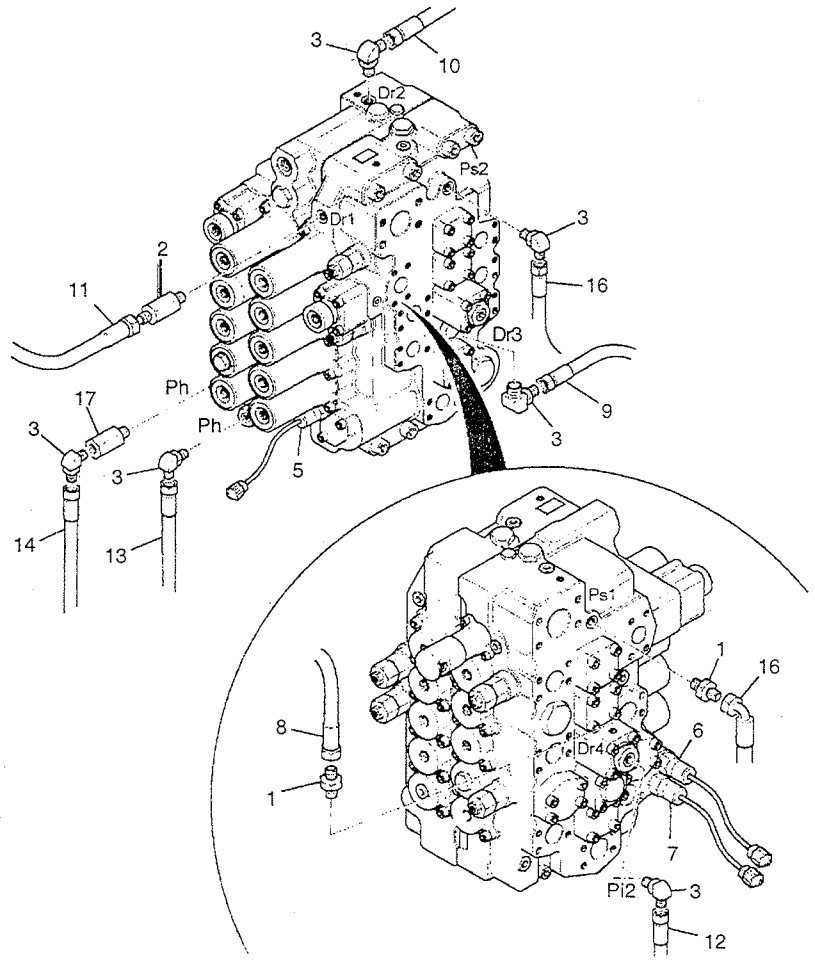

ITEM	PART NO.	CHANGE NO.	DESCRIPTION	REMARKS	QTY.
1	KNJ0758		Adapter		2
2	KNJ0759		Adapter		1
3	KHJ0341		Adapter, elbow		6
4	816/50018		Adapter, Tee M/F/M		1
5	701/80371		Switch, pressure 335 bar	Upto 1290649	1
	332/J2970		Switch, pressure 335 bar	1290650 onwards	1
6	701/80375		Switch, pressure 20 bar		1
7	701/80374		Switch, pressure, 12 bar	Upto 1290635	1
	332/J0671		Switch, pressure, 12 bar	1290636 onwards	
8	KRJ4102		Hose	Port Dr4 to tank manifold pori T8	1
9	KTJ0675		Hose nylon	Port Dr3 to tank manifold port T4	1
10	KRJ3577		Hose nylon	Port Dr2 to tank manifold pori T1	1
11	KNJ1122		Hose nylon	Port Dr1 tee to tank manifold T7	1
12	627/10060		Hose	Port P12 to solenoid valve port C5	1
13	627/10056		Hose	Port Ph to solenoid valve port C3	1
14	627/10057		Hose	Port Pp to solenoid valve port C12	1
15	KSJ1135		Hose while, orange	Port Ps2 to pump Negative control (2)	1
16	JLJ0309		Hose, nylon	Port Ps1 to pump port Negative control (1)	1
17	KHJ0894		Adapter	Port Pp	

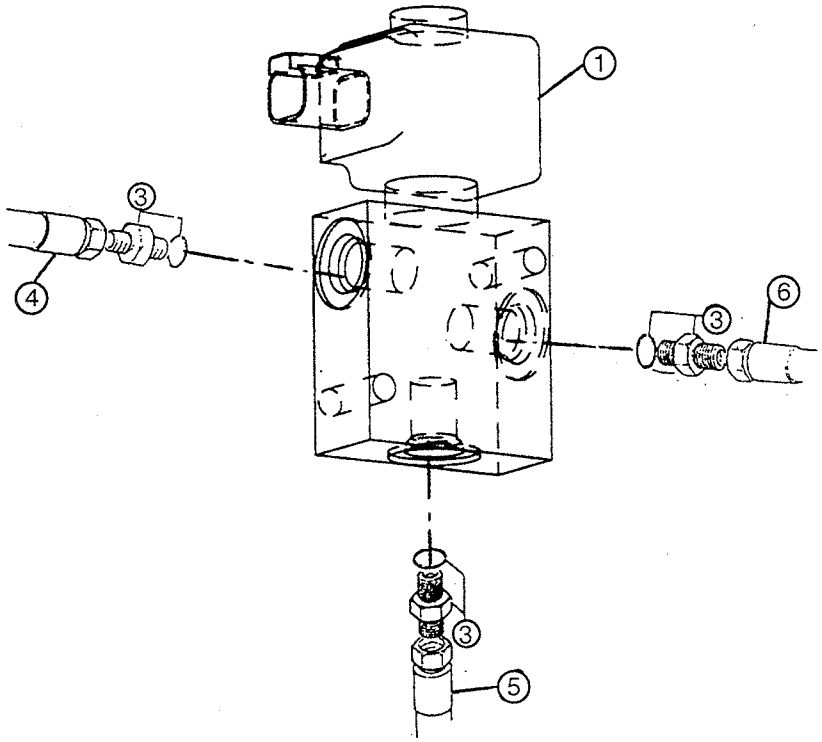

ITEM	PART NO.	CHANGE NO.	DESCRIPTION	REMARKS	QTY.
1	25/221009		Valve, Boom priority		1
2	JSN0086		Valve, Bracket		1
3	KNJ0759		Adaptor		3
	BRP0007		O-Ring		
4	KNJ1109		Hose	Port 1 to T of Cab manifold	1
5	KNJ1956		Hose	Port 2 to Pi2 of Main Control valve	1
6	JLJ0486		Hose	Port 3 To P of Manifold	1

E

E1 HOSE & PIPEWORK
• E2 PUMP/MOTOR & PUMP DRIVE
E3 VALVES & HYDRAULIC FILTERS
E4 RAMS

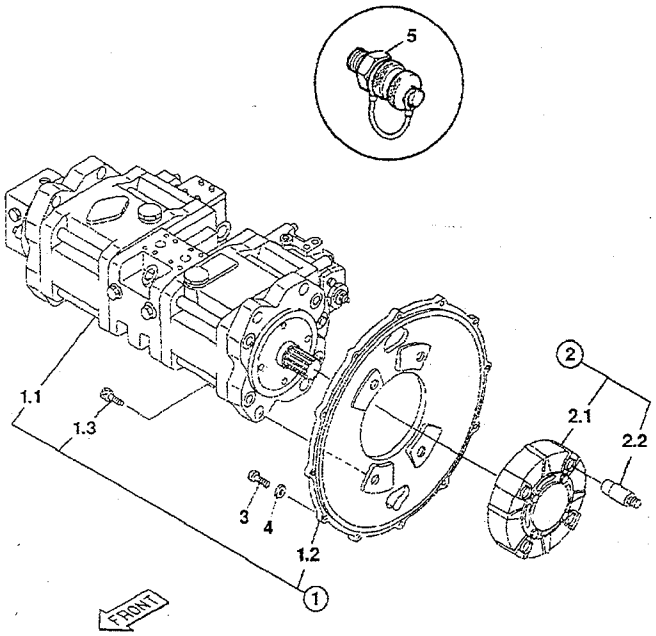

ITEM	PART NO.	CHANGE NO.	DESCRIPTION	REMARKS	QTY.
1 01	20/925309		Pump, main		1
1 02	KRJ3449		Mouting, flange		1
1 03	1316/3813Z		Bolt		4
2	JRJ0213		Coupling, pump drive		1
2 01	KRJ3451		Coupling, rubber		1
2 02	KRJ2657		Pin, special		4
3	1316/3813Z		Bolt		9
4	JHP0046		Washer		9
5	JTJ0028		Connector, pressure test		3
	45/920152		Male coupling1/4 BSP	1290618 onwords	3
	30/600139		Cap for connector	1290618 onwords	3

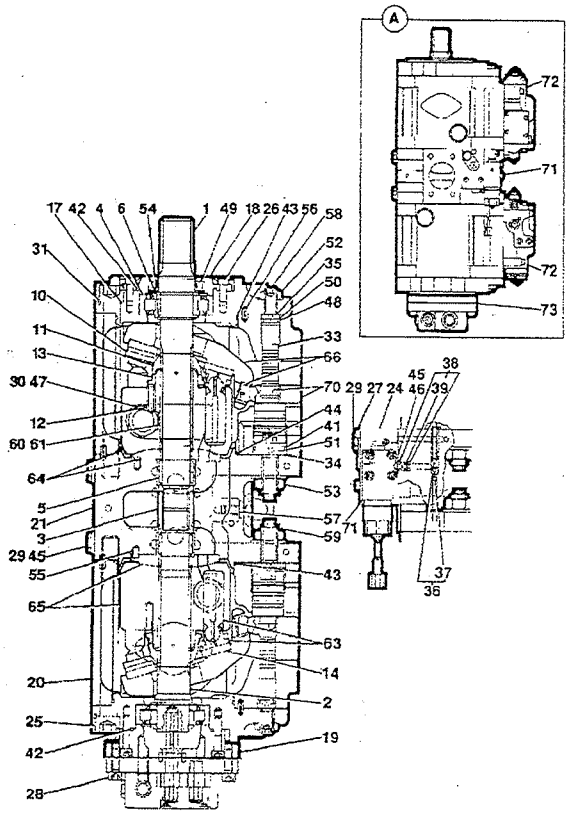

ITEM	PART NO.	CHANGE NO.	DESCRIPTION	REMARKS	QTY.
0A	20/925309		Pump, main		1
1	LJP0035		Shaft, drive, front		1
2	LJP0036		Shaft, drive, rear		1
3	LCP0036		Coupling, spline		1
4	LTP0044		Bearing		2
5	LTP0045		Bearing		2
6	LMP0147		Spacer		4
10	LMP0185		Clamp		2
11	331/37712		Bush, spherical bush		2
12	LSP0109		Spring		18
13	LB00502		Spacer, special	Also replaces item 11 LKP0030	1
14	LMP0208		Plate		2
17	LMP0210		Plate, swash support		2
18	LZP0176		Cover, front oil seal		1
19	LZP0177		Cover, rear oil seal		1
20	LWP0006		Casing pump		2
21	LPP0097		Valve, block		1
24	LWP0007		Casing, valve		1
25	1391/3310		Capscrew		8
26	1391/3305		Capscrew M8 x 20		4
27	1391/3214		Capscrew		3
28	LUP0188		Capscrew		4
29	LLP0041		Plug		2
30	LLM0028		Plug		4

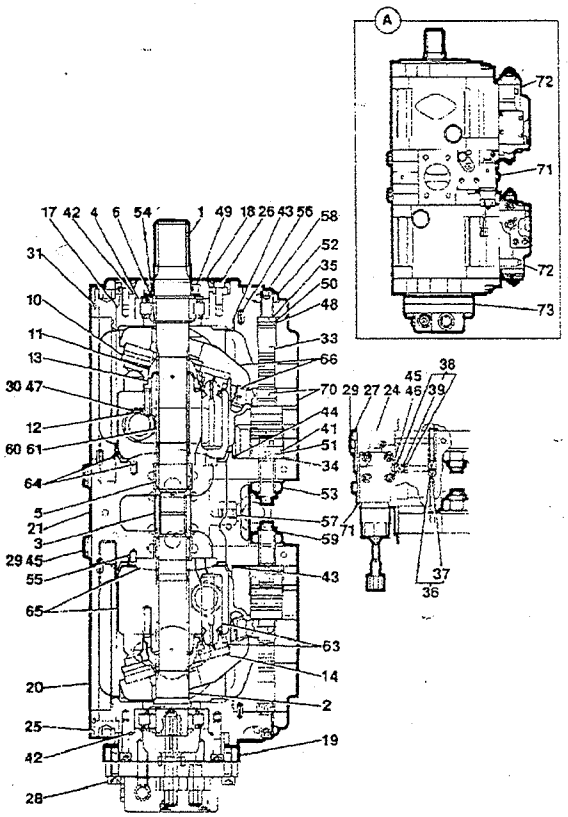

ITEM	PART NO.	CHANGE NO.	DESCRIPTION	REMARKS	QTY.
31	LLP0114		Plug		24
33	LPP0100		Piston, servo		2
34	LMP0212		Stopper		2
35	LMP0213		Stopper		2
36	LNP0178		Valve, check assembly		2
37	NSP		None serviced part		2
38	LNP0177		Valve, check assembly		2
39	NSP		None serviced part		2
41	LBQ0353		O Ring		2
42	LBQ0953		O Ring		2
43	LBQ1453		O Ring		4
44	LBQ0082		O Ring		16
45	LBQ0112		O Ring		4
46	LBQ9142		O Ring		1
47	LBQ0242		O Ring		4
48	LBQ0182		O Ring		2
49	331/38027		Seal		1
50	LBB0182		Ring, back-up		2
51	LBB0353		Ring, back-up		2
52	162R016VN		Nut, high, strength		2
53	162R020VN		Nut, high, strength		2
54	370A0400Z		Ring, stop		2
55	LMP0108		Pin, plate		2
56	LMP0217		Pin spring		4
57	126R010SN		Bolt, eye		2
58	LUP0189		Screw		2

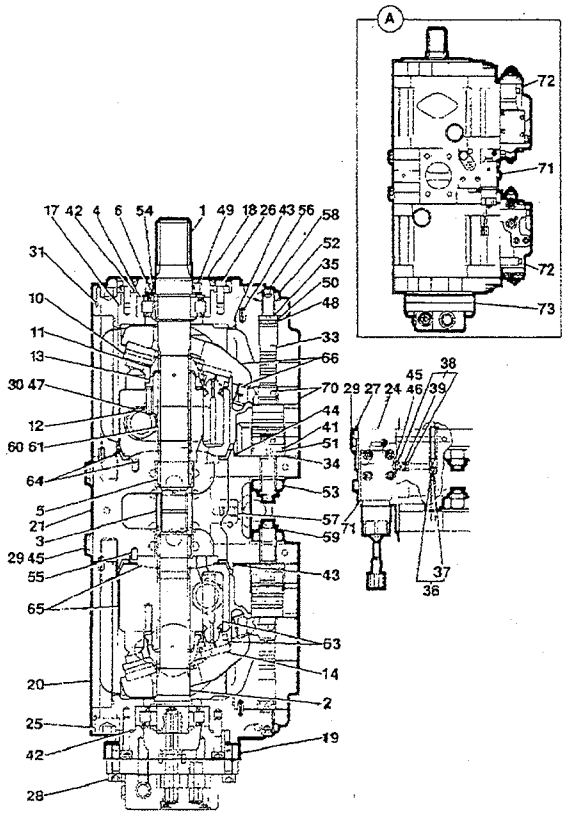

ITEM	PART NO.	CHANGE NO.	DESCRIPTION	REMARKS	QTY.
59	LUP0190		Screw		2
60	NSP		None serviced part		2
61	LMP0218		Pin		2
63	LNP0173		Piston, sub assembly		2
64	LNP0174		Cylinder, sub assembly		1
65	LNP0175		Cylinder, sub assembly		1
66	LNP0176		Kit-swash plate, sub assembly		2
70	LNP0180		Pin, assembly, tilting		2
71	*LZP0179		Valve		1
72	LNP0181		Valve, regulator assembly		1
73	*20/925164		**Pump, assembly, servo**		1
	20/951844		**Seal & seal carrier assy**		1
	20/951656		**Seal kit**		1

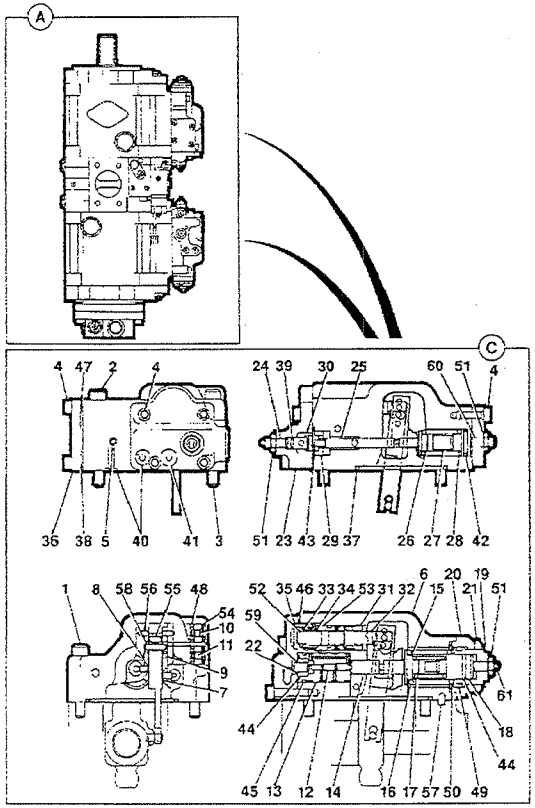

ITEM	PART NO.	CHANGE NO.	DESCRIPTION	REMARKS	QTY.
0A			See Remarks	See frame E2-2-1	1
0C	LNP0181		Valve, regulator assembly		1
1	1391/3312		Capscrew		2
2	1391/3316		Capscrew M8 x 70 long		2
3	1391/3208		Capscrew		2
4	6004/3205		Capscrew		10
5	LLP0114		Plug		5
6	NSP		None serviced part		1
7	NSP		None serviced part		1
8	NSP		None serviced part		1
9	NSP		None serviced part		1
10	NSP		None serviced part		1
11	NSP		None serviced part		1
12	NSP		None serviced part		1
13	NSP		None serviced part		1
14	NSP		None serviced part		1
15	NSP		None serviced part		1
16	NSP		None serviced part		1
17	NSP		None serviced part		1
18	NSP		None serviced part		1
19	NSP		None serviced part		1
20	NSP		None serviced part		1
21	NSP		None serviced part		1
22	NSP		None serviced part		1
23	NSP		None serviced part		1
24	NSP		None serviced part		1

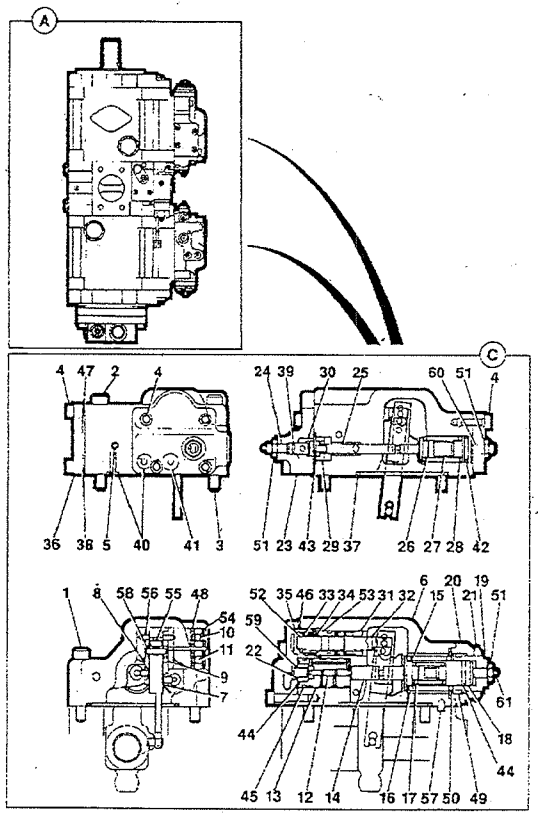

ITEM	PART NO.	CHANGE NO.	DESCRIPTION	REMARKS	QTY.
25	NSP		None serviced part		1
26	NSP		None serviced part		1
27	NSP		None serviced part		1
28	NSP		None serviced part		1
29	NSP		None serviced part		1
30	NSP		None serviced part		1
31	NSP		None serviced part		1
32	NSP		None serviced part		1
33	NSP		None serviced part		1
34	NSP		None serviced part		1
35	NSP		None serviced part		1
36	NSP		None serviced part		1
37	LBQ0753		O Ring		1
38	LBQ0062		O Ring		3
39	LBQ0072		O Ring		1
40	LBQ0082		O Ring		9
41	LBQ0102		O Ring		1
42	LBQ0182		O Ring		1
43	LBQ0222		O Ring		1
44	LBQ0162		O Ring		2
45	LBQ0202		O Ring		1
46	LBQ0253		O Ring		1
47	LBQ8122		O Ring		1
48	LBQ0112		O Ring		2
49	LBQ0262		O Ring		1
50	LBQ0353		O Ring		1

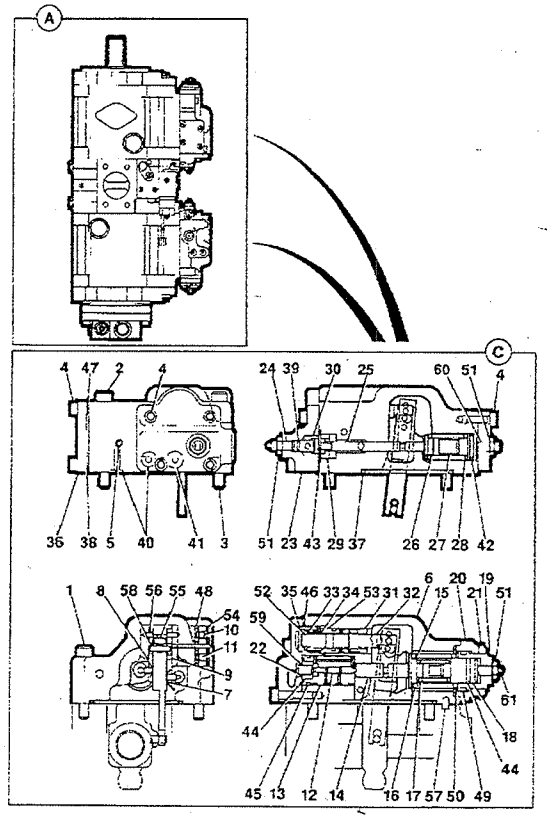

ITEM	PART NO.	CHANGE NO.	DESCRIPTION	REMARKS	QTY.
51	162R008SN		Nut		3
52	370A0100Z		Ring, snap		1
53	NSP		None serviced part		1
54	380A0150Z		Ring, snap		2
55	NSP		None serviced part		1
56	NSP		None serviced part		4
57	NSP		None serviced part		1
58	NSP		None serviced part		1
59	NSP		None serviced part		1
60	LUP0044		Screw, set		1
61	NSP		None serviced part		1

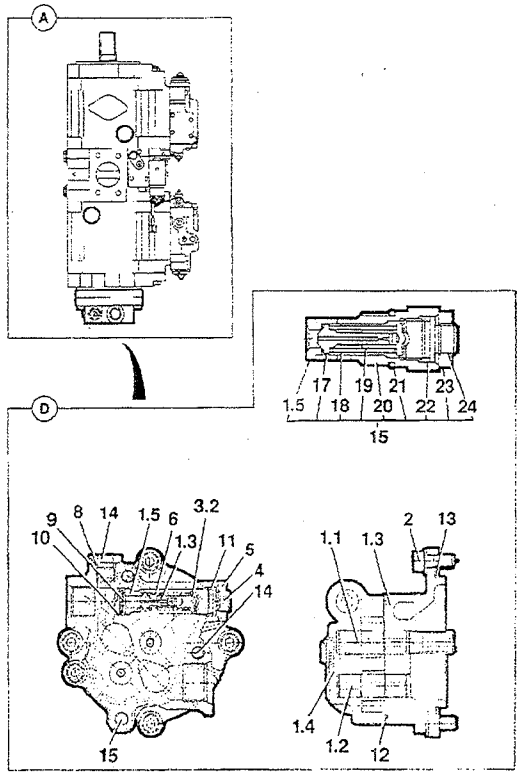

ITEM	PART NO.	CHANGE NO.	DESCRIPTION	REMARKS	QTY.
0A			'See Remark'	See page E2-2-1	1
0D	**20/925164**		**Pump, assembly, servo**		1
1	20/951284		Gear, case assembly		1
1 01	NSP		None serviced part		1
1 02	NSP		None serviced part		1
1 03	NSP		None serviced part		1
1 04	NSP		None serviced part		1
1 05	NSP		None serviced part		1
2	20/951285		Screw skt head shouldered, cap		4
3	20/950672		Poppet, assembly		1
3 01	NSP		None serviced part		1
3 02	NSP		None serviced part		1
4	20/950680		Screw, adjusting		1
5	20/950679		Nut		1
6	20/950681		Spring		1
7	LLM0028		Plug		1
8	LBQ0112		O Ring		1
9	20/950675		Filter		1
10	20/950673		Ring, snap		1
11	828/10212		Seal, O ring		1
12	828/10236		Seal, ring		1
13	20/951286		Seal, O ring		1
14	826/10691		Screw, skt head shouldered, cap		2
15	826/10092		Screw, skt head shouldered, cap		2

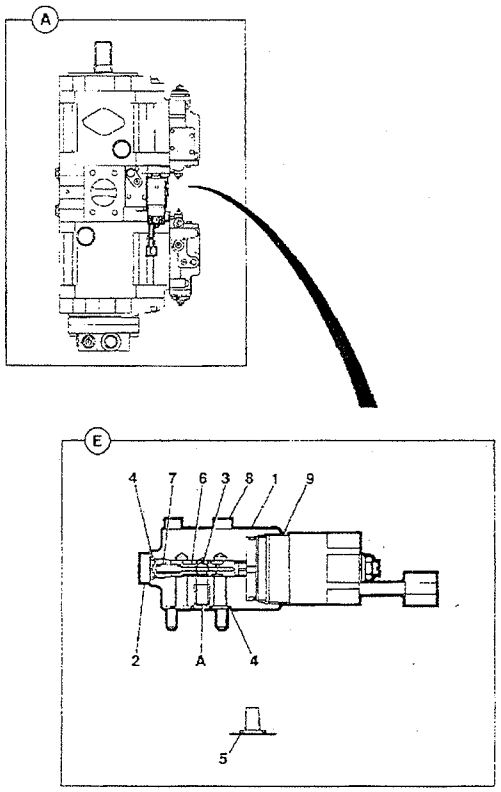

ITEM	PART NO.	CHANGE NO.	DESCRIPTION	REMARKS	QTY.
0A			See Remaks	See frame E2-2-1	1
0E	***LZP0179**		**Valve proportionate solenoid**		1
1	LWP0012		Casing		1
2	LPP0109		Plug		1
3	LLS0005		Plug		1
4	LBQ0082		O Ring		3
5	LBQ0102		O Ring		1
6	LPP0110		Spool		1
7	LSP0129		Spring		1
8	6004/3112		Capscrew		4
9	NSP		None serviced part		1

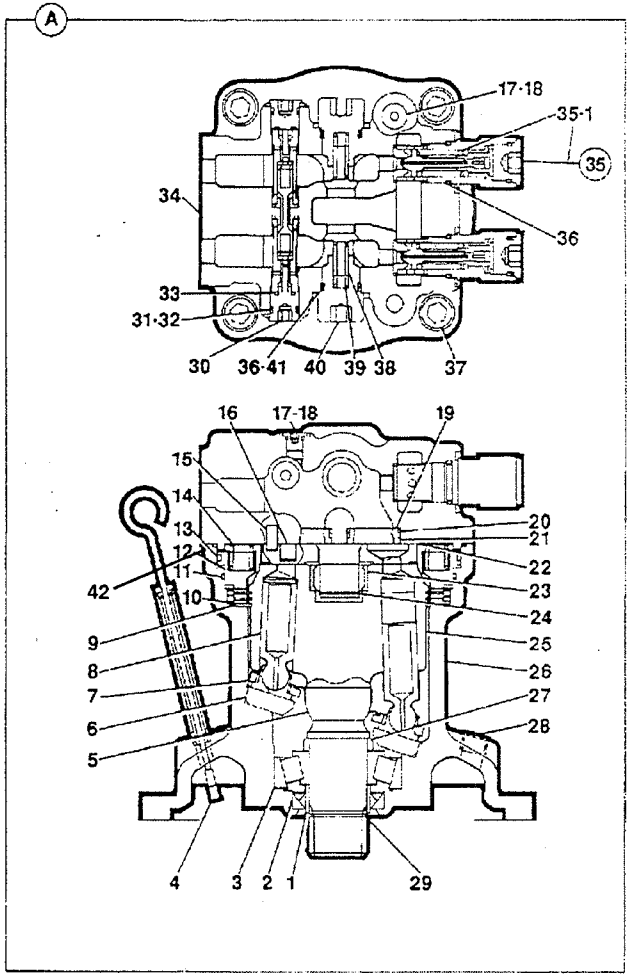

ITEM	PART NO.	CHANGE NO.	DESCRIPTION	REMARKS	QTY.
A	20/925315		Motor, swing		1
1	LMM0338		Spacer		1
2	LAM0037		Seal, oil		1
3	LTM0129		Bearing		1
4	332/Y6902		Gauge, oil level without tube		1
5	LSM0080		Spring		1
6	LMM0334		Plate		1
7	LMM0335		Plate, return		1
8	NSP		None serviced part		9
9	LMM0337		Plate, friction		3
10	LMM0336		Plate, mating		3
11	LBQ5262		O Ring		1
12	LPM0117		Piston		1
13	828/00329		O Ring		2
14	LSM0082		Spring		18
15	LMM0545		Pin		2
16	LPM0115		Piston		2
17	LZC0076		Plug, blanking		3
18	LBQ0112		O Ring		3
19	LSM0135		Spring		4
20	LPM0112		Ring, tef		4
21	LKM0106		Bush		4
22	LZM0335		Plate, balance		1
23	LTM0130		Bearing		1
24	LMM0330		Ring lock		1
25	NSP		None serviced pant		1

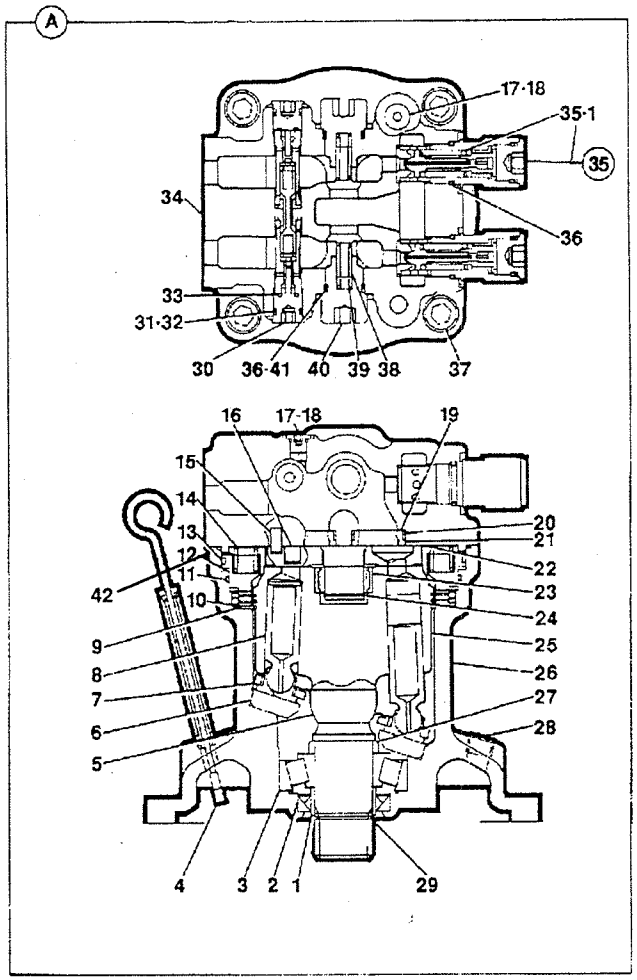

ITEM	PART NO.	CHANGE NO.	DESCRIPTION	REMARKS	QTY.
26	NSP		None serviced part		1
27	LMM0605		Collar		1
28	UBJ0384		Plug		2
29	LMM0329		Ring, lock		1
30	LNM0428		Valve, bypass assembly		2
31	LBQ0182		O Ring		2
32	LBC0201		Ring, back up		2
33	LBQ0122		O Ring		2
34	NSP		None serviced part		1
35 A	20/951967		Valve relief assy. (289 BAR)		2
B	20/951768		Valve relief assy. (270 BAR)		2
35 01	LMQ0021		Kit-shim, relief valve		1
36	LBQ0262		O Ring		4
37	6004/3714		Capscrew		4
38	LPM0052		Valve, check		2
39	LSM0075		Spring		2
40	LZM0191		Cap		2
41	LBB0262		Ring, back-up		2
42	828/00329		Top cover O Ring		9

E

E1 HOSE & PIPEWORK
E2 PUMP/MOTOR & PUMP DRIVE
• E3 VALVES & HYDRAULIC FILTERS
E4 RAMS

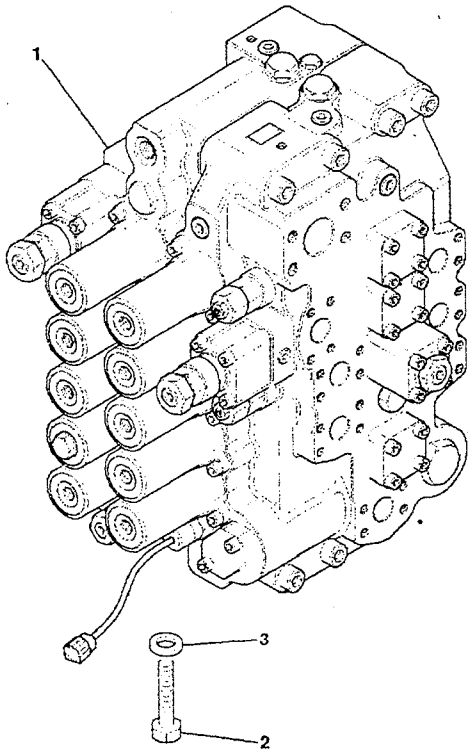

ITEM	PART NO.	CHANGE NO.	DESCRIPTION	REMARKS	QTY.
1	25/220822		Valve, main control		1
2	1316/0711Z		Screw		4
3	JHP0043		Washer		4

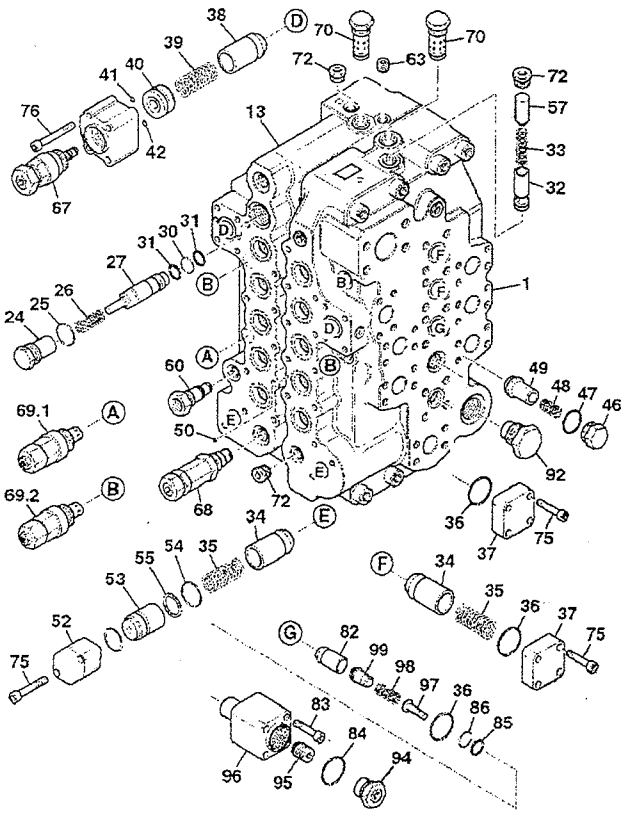

ITEM	PART NO.	CHANGE NO.	DESCRIPTION	REMARKS	QTY.
1			See Ramarks	See frame E3-1-1	1
13	NSP		None serviced part		1
24	25/221768		Plug		1
25	25/221769		O Ring, seal		1
26	25/221770		Spring		1
27	25/221771		Spring, assy		1
30	25/221772		O Ring, seal		1
31	25/221773		Ring, Back-up		2
32	25/221774		Poppet		2
33	25/221775		Spring		2
34	25/221630		Valve, poppet		6
35	25/221631		Spring		7
36	25/221776		O Ring, seal		9
37	25/221777		Flange		6
38	25/221778		Poppet		2
39	25/221779		Spring		2
40	25/221780		Spacer assy		2
41	25/221781		O Ring, seal		2
42	25/221782		O Ring, seal		2
46	25/221685		Plug		1
47	25/221686		Seal, O-ring		1
48	25/221678		Spring		1
49	25/221786		Poppet		1
50	1		TBA		13
51	25/221787		Poppet		1
52	25/221688		Flange		2
53	25/221632		Spacer, valve		2

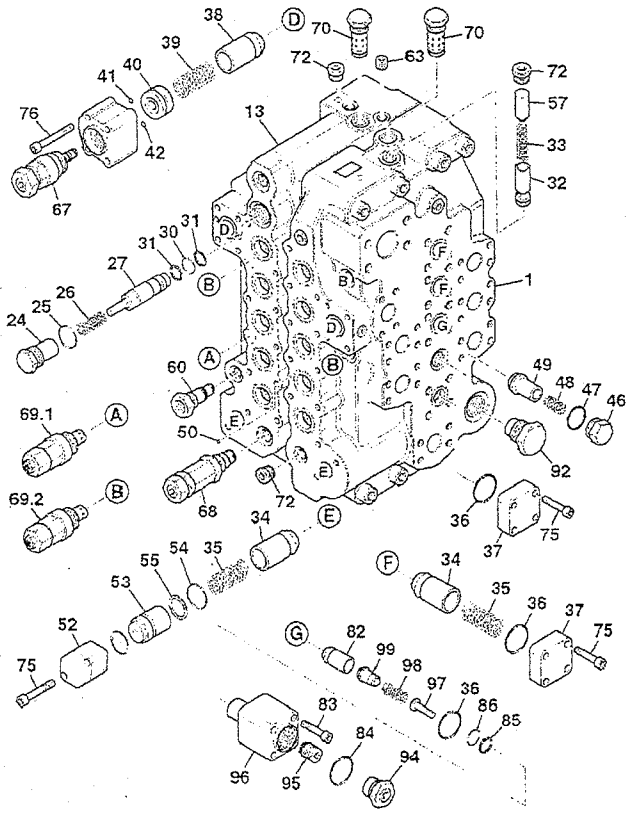

ITEM	PART NO.	CHANGE NO.	DESCRIPTION	REMARKS	QTY.
54	25/221633		Seal, O ring		2
55	25/221634		Ring back-up		2
57	25/221788		Spacer		1
60	25/221671		Plug, assembly		1
63	25/221790		Plug, orifice		1
67	25/221791		Valve, anti-drift, assy		2
68	25/221792		Kit-relief valve		1
69 01	25/221793		Kit-relief valve 31.4		2
69 02	25/221794		Kit-relief valve, 39.2		5
70	25/221796		Valve, relief, assy		2
72	701/80371		Switch, pressure, 335 bar		1
75	25/221695		Bolt socket-head M10		36
76	25/221799		Bolt socket-head M10		8
82	25/221812		Poppet, assy		2
83	25/221813		Bolt, socket-head M10		8
84	25/221639		Seal. O ring		2
85	25/221814		Ring back-up		2
86	25/221815		O Ring		2
92	25/221804		Plug, assy		2
95	25/221807		Piston		2
96	25/221808		Body		2
97	25/221809		Piston		2
98	25/221810		Spring		2
99	25/221811		Sleeve		2

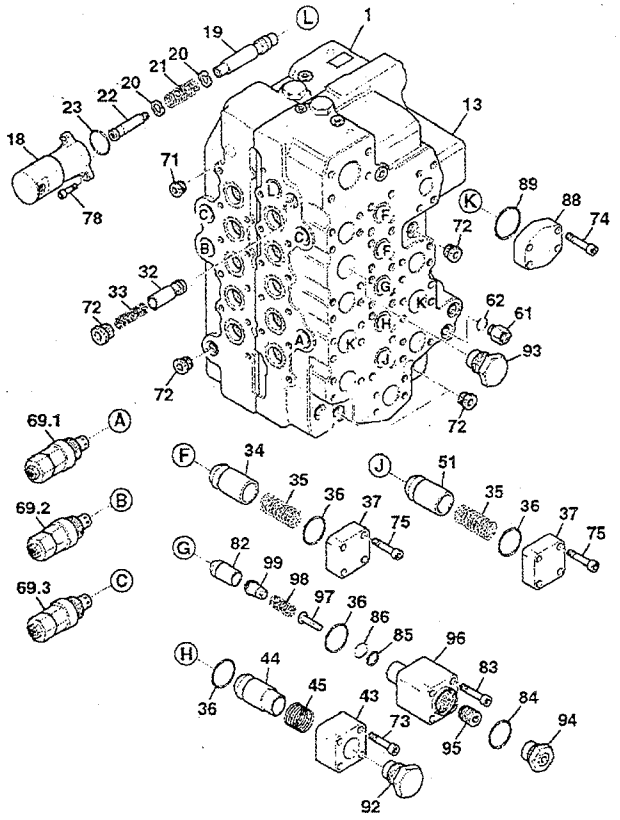

ITEM	PART NO.	CHANGE NO.	DESCRIPTION	REMARKS	QTY.
1			'See Remark'	See frame E3-1-1	1
13	NSP		None serviced part		1
18	25/221764		Cap		1
19	NSP		None serviced part		1
20	25/221635		Seat, spring		2
21	25/221765		Spring		1
22	25/221766		End, spool		1
23	25/221767		O Ring, seal		1
32	25/221774		Poppet		2
33	25/221775		Spring		2
34	25/221630		Valve, poppet		6
35	25/221631		Spring		7
36	25/221776		O Ring, seal		9
37	25/221777		Flange		8
43	25/221783		Flange		1
44	25/221784		Poppet		1
45	25/221785		Spring		1
51	25/221787		Poppet		1
61	701/80374		Switch, pressure 12 bar	Replaces plug	1
61 01	701/80375		Switch, pressure 20 bar		1
62	25/221653		Seal, O ring		2
69 01	25/221793		Kit-refief valve, 31.4		2
69 02	25/221794		Kit,-refief valve, 39.2		5
69 03	25/221795		Kit-refief valve 26.4		1
71	25/221691		Plug, assembly		1
72	25/221690		Plug assembly		11

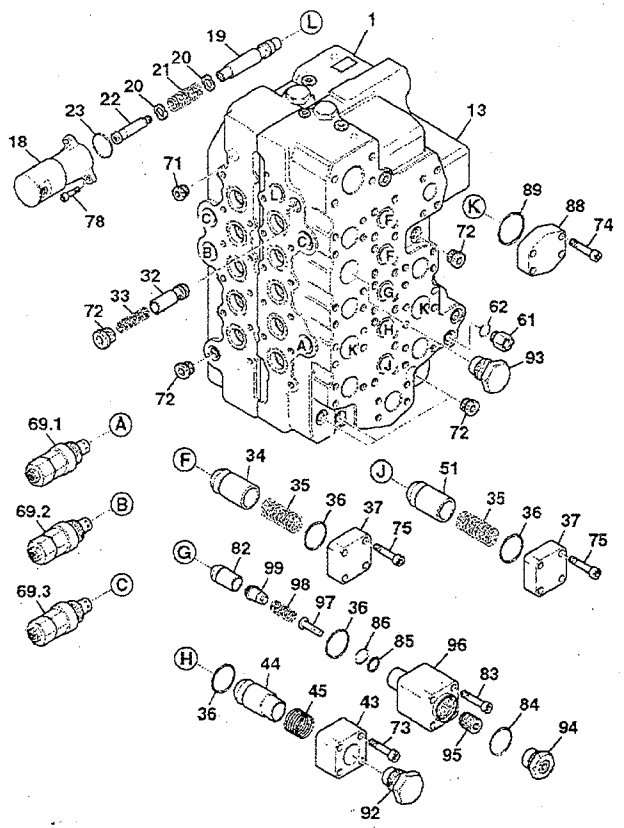

ITEM	PART NO.	CHANGE NO.	DESCRIPTION	REMARKS	QTY.
73	25/221797		Bolt, socket-head M10		4
74	25/221798		Bolt, sockel-head M10		40
75	25/221695		Bolt, socket-head M10		36
78	25/221716		Bolt, socket-head M6		2
82	25/221812		Poppet, assy		2
83	25/221813		Bolt socket head M10		8
84	25/221639		Seal, O-ring		2
85	25/221814		Ring, back-up		2
86	25/221815		O Ring		2
88	25/221802		Cap		2
89	25/221723		Seal, O ring		2
92	25/221804		Plug assy		2
93	25/221805		Plug assy		1
94	25/221806		Plug		2
95	25/221807		Piston		2
96	25/221808		Body		2
97	25/221809		Piston		2
98	25/221810		Spring		2
99	25/221811		Sleeve		2

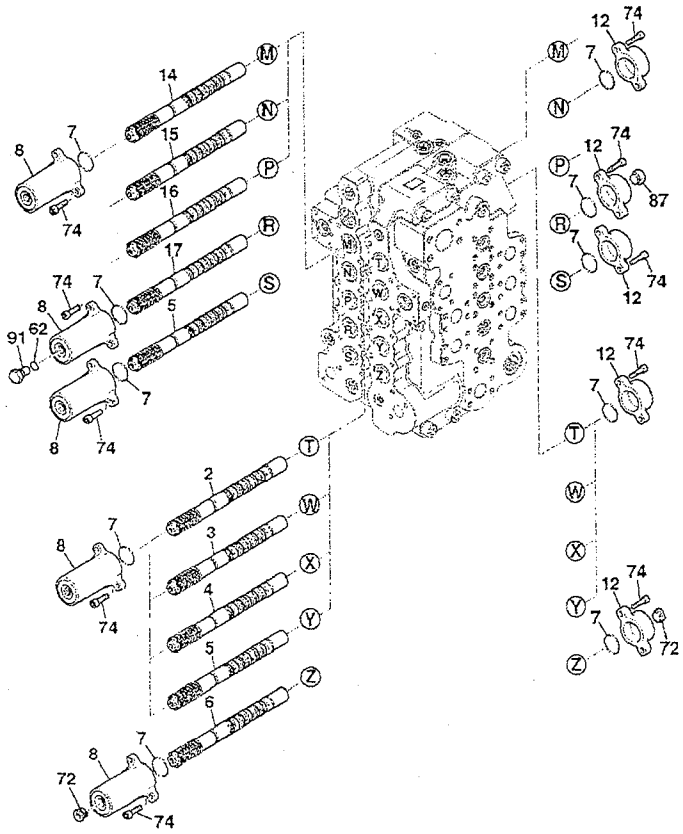

ITEM	PART NO.	CHANGE NO.	DESCRIPTION	REMARKS	QTY.
2	NSP		None serviced part		1
3	NSP		None serviced part		1
4	NSP		None serviced part		1
5	NSP		None serviced part		2
6	NSP		None serviced part		1
7	25/221761		O Ring, seal		20
8	25/221762		Cap		10
12	25/221763		Cap		10
14	NSP		None serviced part		1
15	NSP		None serviced part		1
16	N.S.P.		None serviced part		1
17	NSP		None serviced part		1
62	25/221653		Seal, O ring		2
72	25/221690		Plug assembly		11
74	25/221798		Bolt, socket-head M10		40
87	25/221816		Plug, assy		1
91	25/221803		Plug		1

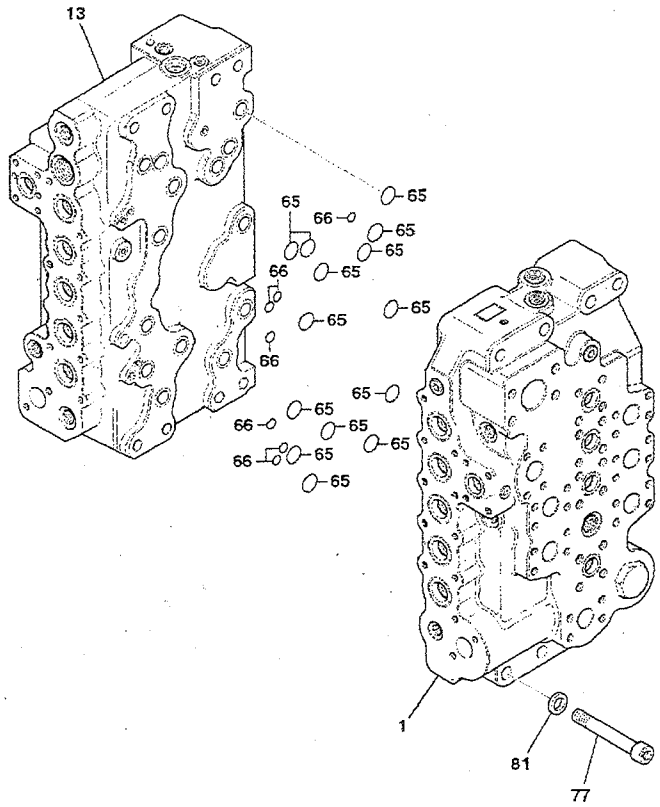

ITEM	PART NO.	CHANGE NO.	DESCRIPTION	REMARKS	QTY.
1	1		TBA	Seeframe E3-1-1	1
13	NSP		None serviced part		1
65	25/221700		Seal, O ring		1
66	25/221702		Seal, O-ring		7
77	25/221800		Bolt socket-head M16		8
81	25/221801		Washer		8
	550/43490		Seal kit		1

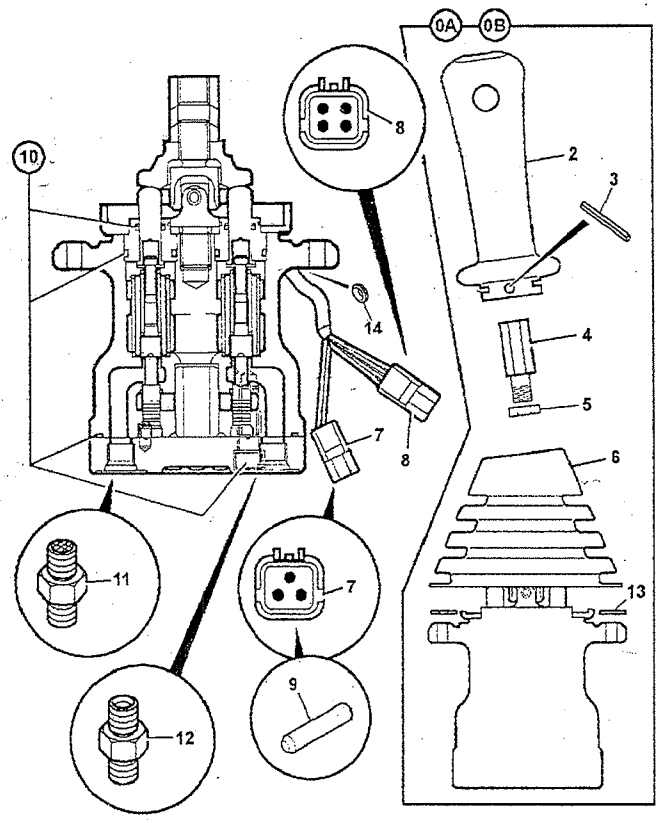

ITEM	PART NO.	CHANGE NO.	DESCRIPTION	REMARKS	QTY.
0A	25/222891		Valve, hand control, left hand	Left hand controller	1
0B	25/222892		Velve, hand control, right hand	Right hand controller	1
2	331/23382		Handle, with swtch, AMS		10
3	826/10591		Pin roll		1
4	331/11043		Lever		1
5	826/10628		Nut, locking		1
6	331/20582		Gaiter, Joystick		1
7	721/10400		Connector, 3 pin	left hand 2 filted, not fitted to right hand	A/R
8	721/10100		Connector, 4 pin	left hand 1 fitted, right hand 2 fitted	A/R
9	721/10401		Connector	8 per controller	8
10	998/10318		Kit-seal		1
11	JHJ0168		Adapter, filtered	1 per controller port P	1
12	1620/0003		Adapter	5 per controller	5
13	25/221280		Plate		1
14	828/10020		Grommet		1

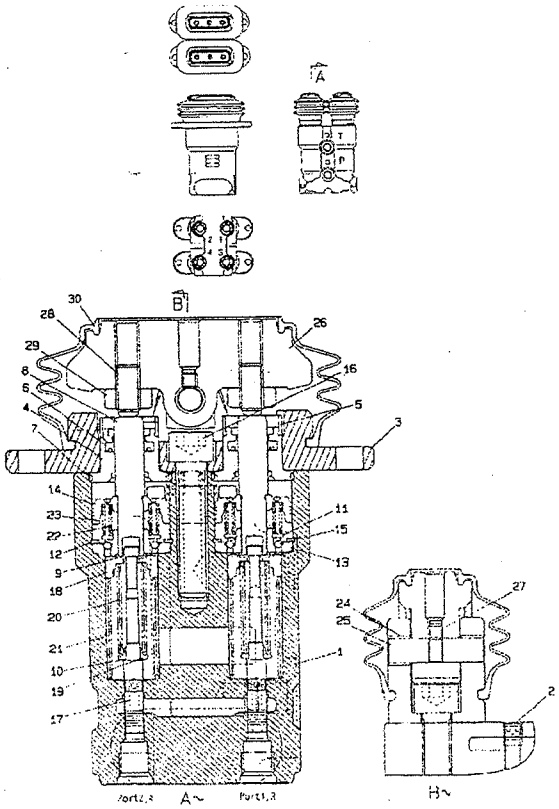

ITEM	PART NO.	CHANGE NO.	DESCRIPTION	REMARKS	QTY.
0	KSJ2465		Valve, remote control		1
1	LWC0003		Case		1
2	LLP0114		Plug		2
3	LZC0158		Cover		2
4	LLC0128		Plug		4
5	LWC0004		Cap, grease		4
6	LEC0025		Seal		4
7	LBQ5025		O Ring		4
8	LPC0213		Rod, push		4
9	LUC0107		Washer		8
10	LUC0106		Washer		4
11	LSC0237		Seat, spring		4
12	LMC0107		Retainer		4
13	LKC0005		Bush		4
14	LPC0203		Piston		4
15	LPC0204		Ball		12
16	6004/3513		Capscrew		2
17	LPC0205		Spool		4
18	LSC0238		Seat, spring		4
19	LUC0104		Washer		4
20	LSC0236		Spring		4
21	LSC0214		Spring		4
22	LSC0239		Spring		4
23	LSC0240		Spring		4
24	LKC0001		Bush		4
25	LJC0003		Shaft, cam		2

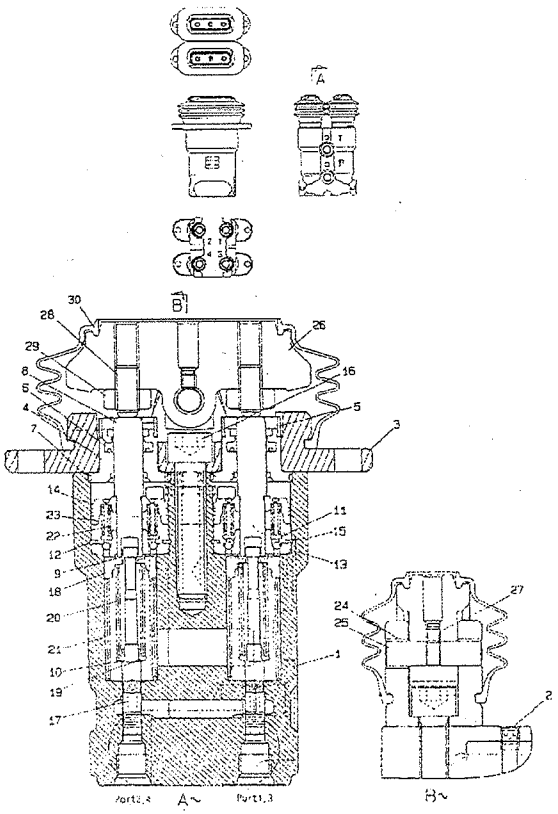

ITEM	PART NO.	CHANGE NO.	DESCRIPTION	REMARKS	QTY.
26	LMC0085		Cam		2
27	LLC0118		Screw		2
28	LUC0102		Bolt		4
29	LUC0101		Nut, lock		4
30	LCC0014		Gaiter, rubber bellows		2
31	LQC0034		Kit casing	Includes items 1 and 17	1
32	LQC0035		Kit-seal, 1	Includes items 6 and 7	1

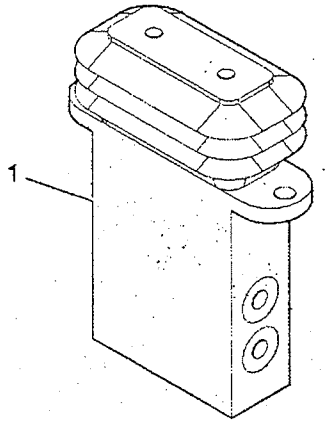

ITEM	PART NO.	CHANGE NO.	DESCRIPTION	REMARKS	QTY.
1	928/60339		Valve, remote control, hammer pedal		1

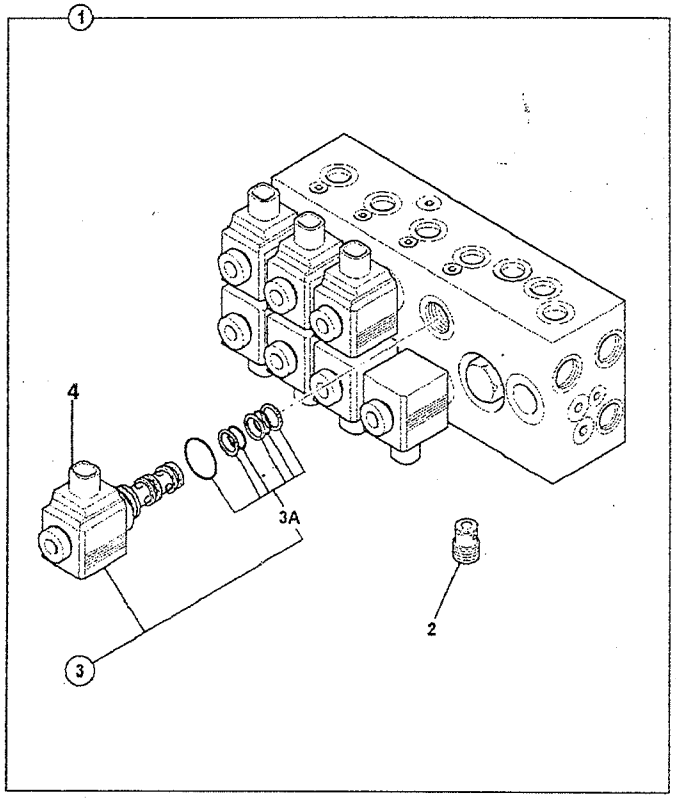

ITEM	PART NO.	CHANGE NO.	DESCRIPTION	REMARKS	QTY.
1	25/222885		Solenoid, valve assembly		1
2	25/208213		Valve, shuttle		1
3	25/220555		Cartridge, valve		8
3A	25/220533		Kit, seal		1
4	25/221263		Coil		8

JCB INDIA LTD.

E3-9-1 VALVE SHUTTLE

ISSUE - 1

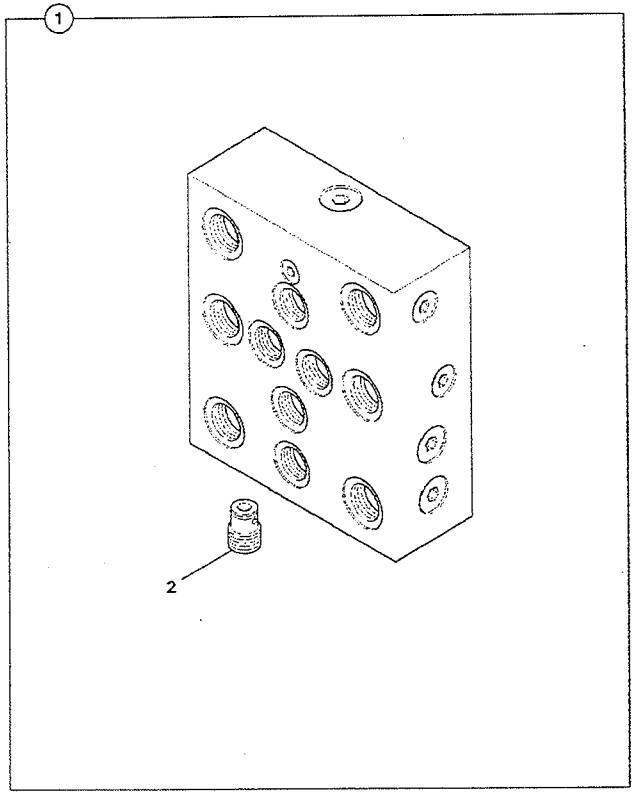

ITEM	PART NO.	CHANGE NO.	DESCRIPTION	REMARKS	QTY.
1	25/220830		Valve shuttle assembly		1
2	25/208213		Valve, shuttle		6

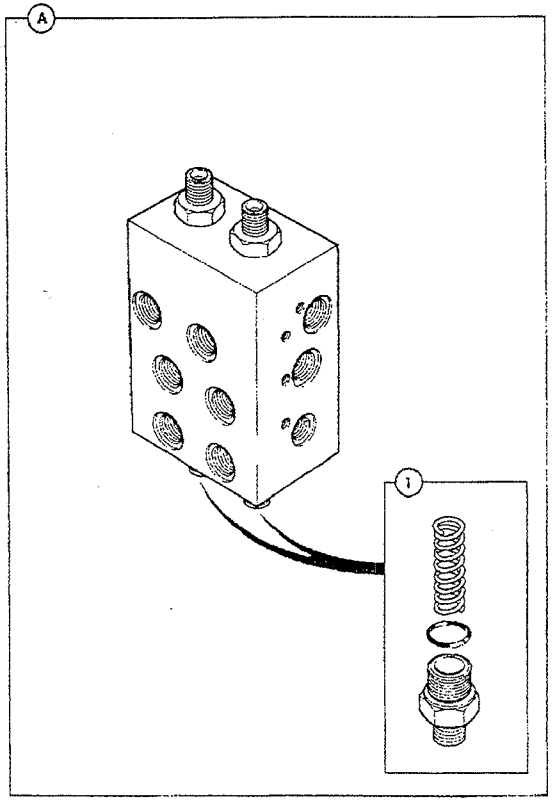

ITEM	PART NO.	CHANGE NO.	DESCRIPTION	REMARKS	QTY.
0A	25/220041		Valve, cushion		1
1	998/10376	Superseded	Kit, repair		4
	340/00055		Kit repair	Contains 4 springs & 4 "O"-rings	1

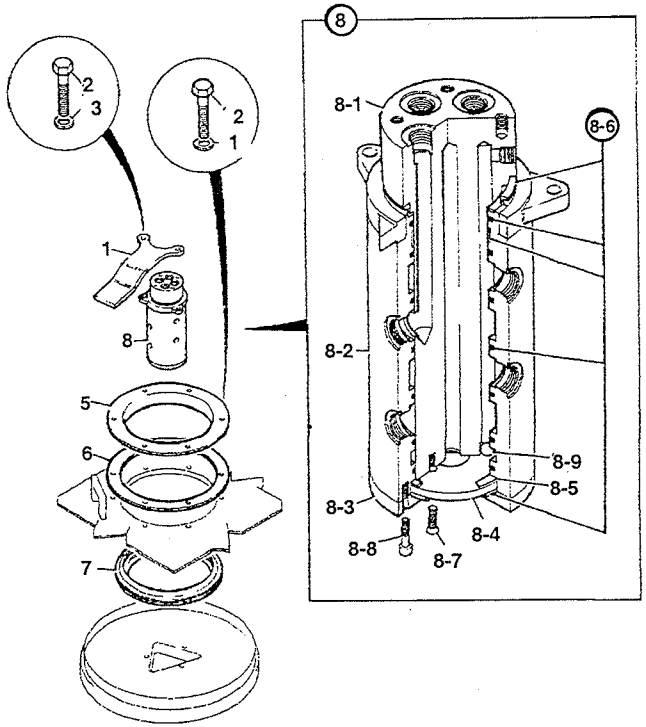

ITEM	PART NO.	CHANGE NO.	DESCRIPTION	REMARKS	QTY.
1	229/01729		Bracket, stop		1
2	1316/0508Z		Screw		12
3	JHP0042		Washer, plain		6
4	1406/0011		Seal, bonded		6
5	KRA0999		Retainer seal		1
6	KRA1000		Gasket, rubber		1
7	904/20126		Ring, seal		1
8	**229/01008**		**Coupling, rolary (Yuken)**		**1**
8 01			Plug		1
8 02			Housing		1
8 03			Cover		1
8 04			Cover		1
8 05			Ring guide axial		2
8 06	550/43174		Kit, seals (Yuken)		1
8 07			Screw, countersunk		4
8 08			Capscrew, M8 x 20		6
8 09			Ball, expander		1
	45/920115		**Coupling rotary (imported)**		
	998/10336		**Seal kit (imported)**		

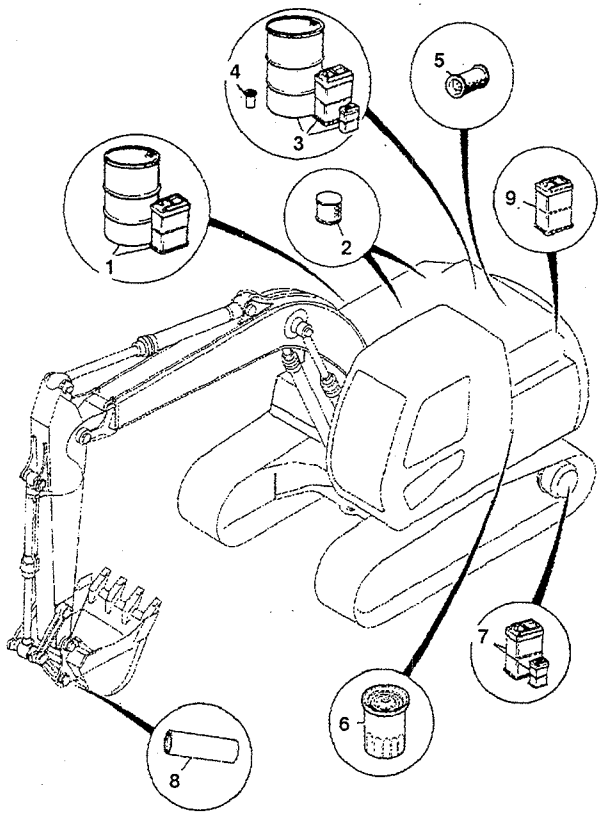

ITEM	PART NO.	CHANGE NO.	DESCRIPTION	REMARKS	QTY.
1	4002/0801		Fluid, hydraulic, 5 litre		1
	4002/0802		Fluid, hydraulic, 25 litre		1
	229/00024		Fluid, hydraulic 200 lilre		1
2	KRJ3836		Fiter, return	Main, hydraulic	1
	*KNJ0381		O Ring		1
	32/925140		Element filter bypass Plexus		1
	*828/10080		O Ring	For 32/925140	2
	828/10081		O Ring	For 32/925140	1
	KBJ1691		Element, servo, filter	Servo filter	1
	KNJ0288		Element oil, filter	Drain line	1
	6900/0051		Element filter	Auxiliary filter	1
3	4004/0301		Oil, JCB super universal, agricultural 25 l		1
	4004/0302		Oil, JCB super universal, agricultural 200 l		1
	4001/0801		Oil, JCB Multigrade, 15W/40 - 5 litre		1
	4001/0802		Oil, JCB Multigrade, 15W/40 - 25 litre		1
	4001/0803		Oil, JCB Multigrade, 15W/40 - 200 litre		1
7	4000/0301		Oil, HD90 gear, 5 litre	Track gearbox	1
8	4003/2000		Grease, 12.5 Kg	12.5Kg	1
9	229/01233		Fluid anti-freeze, 14 litre		1
10	229/01232		Distilled water, 14 litre		

E3-16-1 FILTER, HYDRAULIC, AUXILIARY CIRCUIT

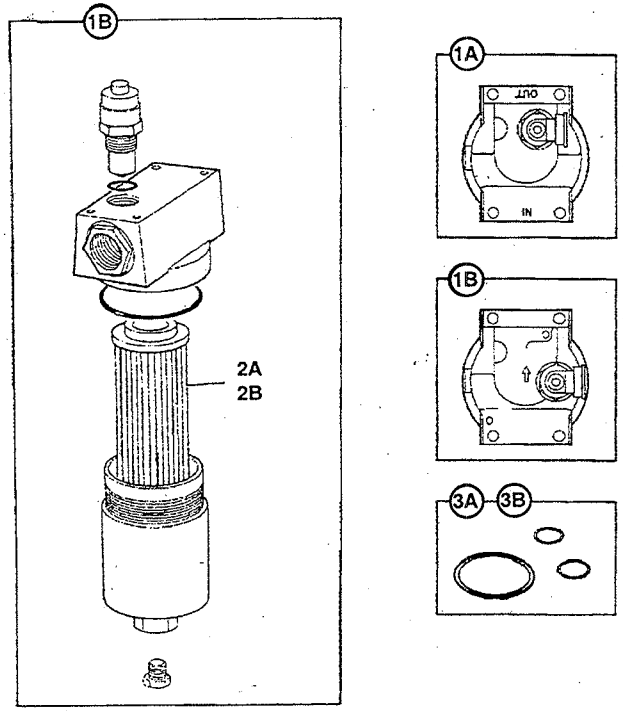

ITEM	PART NO.	CHANGE NO.	DESCRIPTION	REMARKS	QTY.
1B	JBJ0066		Filter, hydraulic		1
2B	6900/0051		Element, filter breaker		1
3B	6900/0841		Kit-seal, filter		1
4B	928/60040		Valve, visual indicator		1

E

E1 HOSE & PIPEWORK
E2 PUMP/MOTOR & PUMP DRIVE
E3 VALVES & HYDRAULIC FILTERS
E4 RAMS

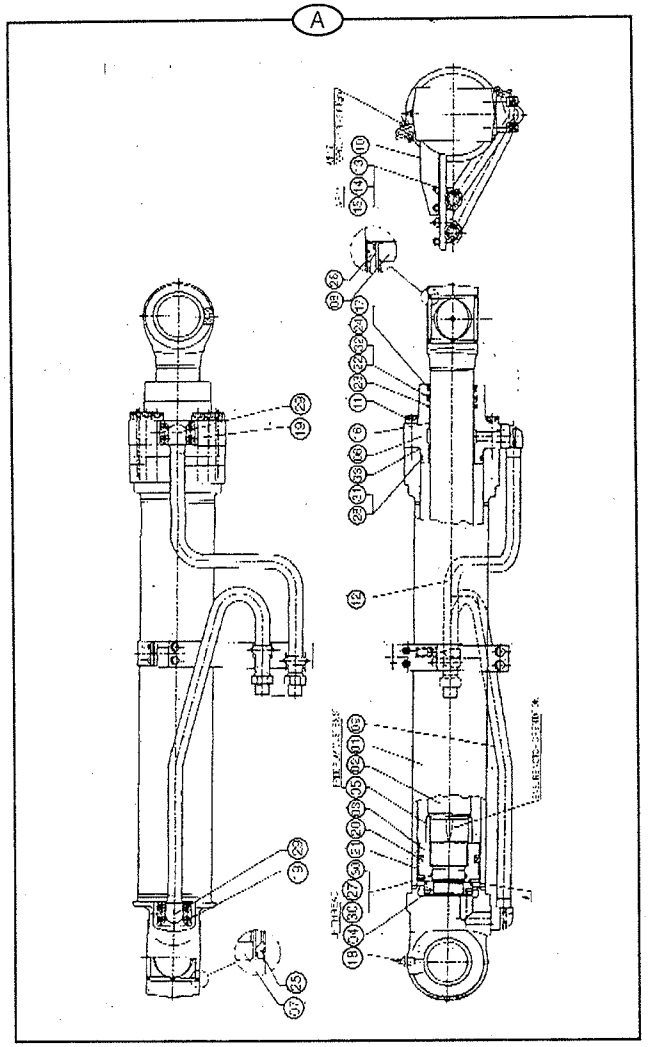

ITEM	PART NO.	CHANGE NO.	DESCRIPTION	REMARKS	QTY.
A.	229/00484		Boom Ram Assy. (LH)		1
1.	550/41740		Tube S/A		1
2.	550/41737		Piston Rod S/A		1
3.	550/41926		Piston		1
4.	550/41936		Piston Road Nut		1
5.	550/41931		H.E. Cush. Bush		1
6.	550/41729		H.E. Cover		1
7.	550/41934		Bush (CE)		1
8.	550/41734		Bush (RE)		1
9.	550/41950		Pipe S/A - CE (RH)		1
10.	550/41947		Clamp S/A		1
11.	550/41915		Hex. Soc. HD. Cap Screw		1
12.	550/41951		Pipe S/A - HE (RH)		12
13.	550/41940		Clamp		1
14.	550/41920		Nyloc Nut		2
15.	550/41941		Washer		4
16.	550/41723		Bimetal Bush		4
17.	550/41922		Snap Ring		1
18.	550/41919		Grease Nipple		1
19.	550/41913		Hex. Soc. HD. Cap Screw		1
20.	N.S.P		Piston Seal		8
21.	N.S.P		Piston BRG.		1
22.	N.S.P		Rod Seal		2
23.	N.S.P		Rod Seal.		1
24.	N.S.P		Wiper.		1
25.	N.S.P		Wiper (CE)		1
26.	N.S.P		Wiper (RE)		2
27.	N.S.P		STD. O-Ring (PISTON)		2
28.	N.S.P		STD. O-Ring (HEC)		1
29.	N.S.P		STD. O-Ring (ELBOW)		1
30.	N.S.P		Back Up Ring (PISTON)		2
31.	N.S.P		Back Up Ring (HEC)		2
32.	N.S.P		Back Up Ring (R. Seal)		1
33.	N.S.P		STD. O-Ring (TUBE CHMF.)		1
34.	550/41747		Spare Seal Kit		1

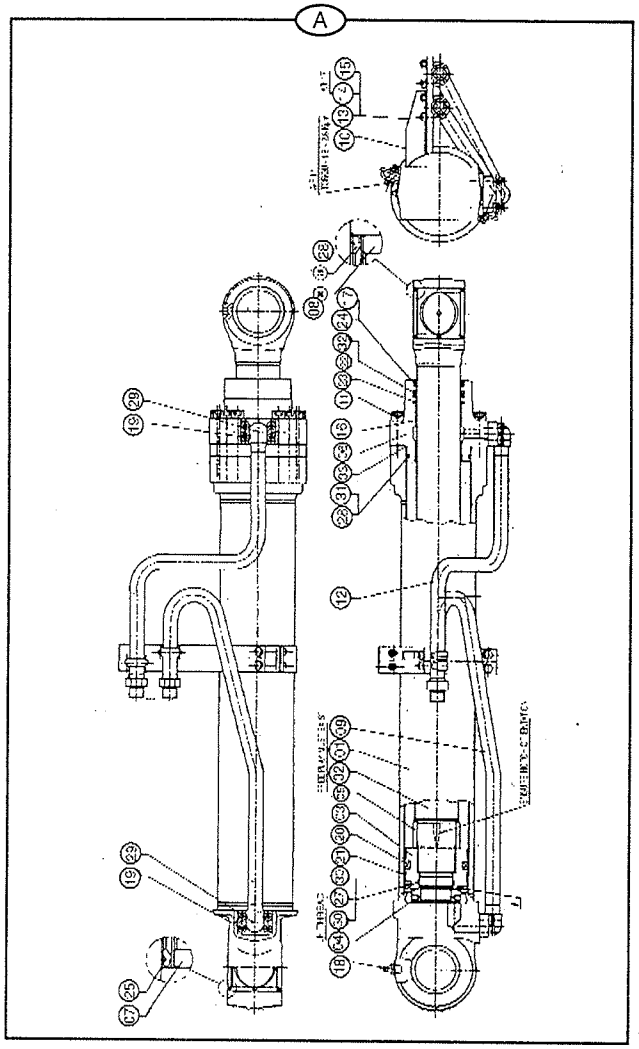

ITEM	PART NO.	CHANGE NO.	DESCRIPTION	REMARKS	QTY.
A.	229/00483		Boom Ram Assy. RH		1
1.	550/41740		Tube S/A		1
2.	550/41737		Piston Rod S/A		1
3.	550/41926		Piston		1
4.	550/41936		Piston Rod Nut		1
5.	550/41931		H.E. Cush. Bush		1
6.	550/41729		H.E. Cover		1
7.	550/41934		Bush (CE)		1
8.	550/41734		Bush (RE)		1
9.	550/41950		Pipe S/A - CE (RH)		1
10.	550/41947		Clamp S/A		1
11.	550/41915		Hex. Soc. HD. Cap Screw		12
12.	550/41951		Pipe S/A - HE (RH)		1
13.	550/41940		Clamp		2
14.	550/41920		Nyloc Nut		4
15.	550/41941		Washer		4
16.	550/41723		Bimetal Bush		1
17.	550/41922		Snap Ring		1
18.	550/41919		Grease Nipple		1
19.	550/41913		Hex. Soc. HD. Cap Screw		8
20.	N.S.P		Piston Seal		1
21.	N.S.P		Piston BRG.		2
22.	N.S.P		Rod Seal		1
23.	N.S.P		Rod Seal		1
24.	N.S.P		Wiper.		1
25.	N.S.P		Wiper (CE)		2
26.	N.S.P		Wiper (RE)		2
27.	N.S.P		STD. O-Ring (PISTON)		1
28.	N.S.P		STD. O-Ring (HEC)		1
29.	N.S.P		STD. O-Ring (ELBOW)		2
30.	N.S.P		Back Up Ring (PISTON)		2
31.	N.S.P		Back Up Ring (HEC)		1
32.	N.S.P		Back Up Ring (R. Seal)		1
33.	N.S.P		STD. O-Ring (TUBE CHMF.)		1
34.	550/41747		Spare Seal Kit		1

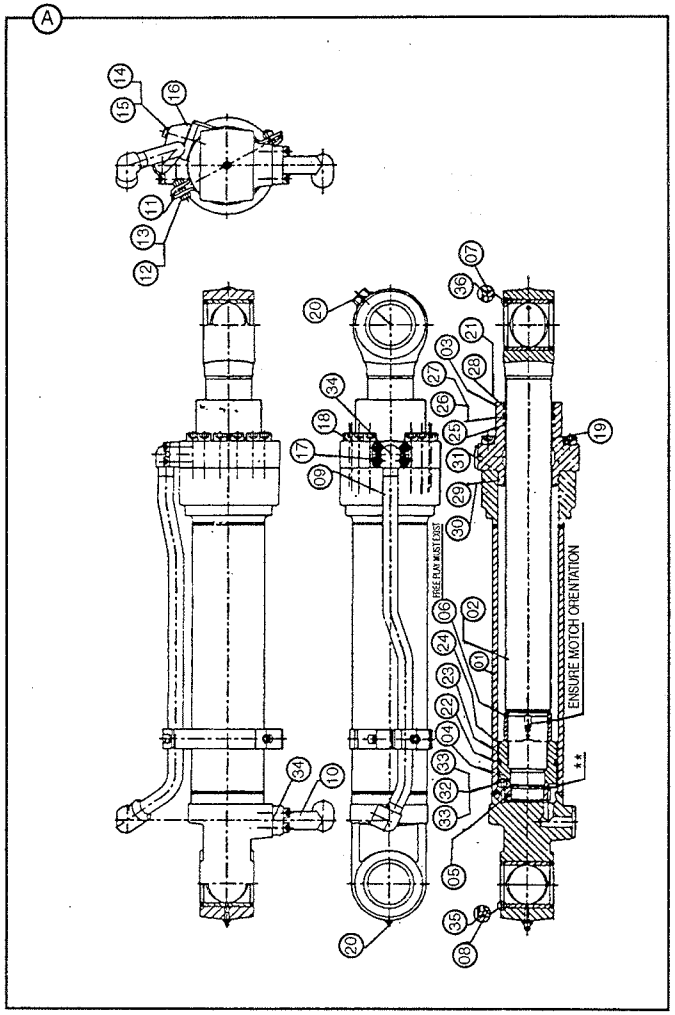

ITEM	PART NO.	CHANGE NO.	DESCRIPTION	REMARKS	QTY.
A	229/00570		Ram Dipper		1
1	550/42220		Tube S/A		1
2	550/42221		Piston Rod S/A		1
3	550/42222		Piston		1
4	550/42223		Piston Rod Nut		1
5	550/42224		C.E. Cush Bush		1
6	550/42225		H.E. Cush Bush		1
7	550/42226		H.E. Cover		1
8	550/41735		Bush		2
9	550/42227		Pipe S/A		1
10	550/42228		Pipe S/A		1
11	550/42229		Hex HD Bolt		2
12	550/42230		Grease Nipple		1
13	550/41914		Hex Soc HD Cap Screw		4
14	550/41940		Clamp		1
15	550/41920		Nyloc Nut		2
14	550/41917		Machined Washer		2
16	550/41941		Washer		1
17	550/42231		Bimelal Bush		1
18	550/41915		Hex Sockel HD Cap Screw		14
19	550/41918		Ch. Alloy Steel valve		12
20	550/41916		Hex Socket Set Screw		1
21	550/42232		Snap Ring		1
22	N.S.P		Piston Seal		1
23	N.S.P		Piston Bearing		2
24	N.S.P		Piston Bearing		2

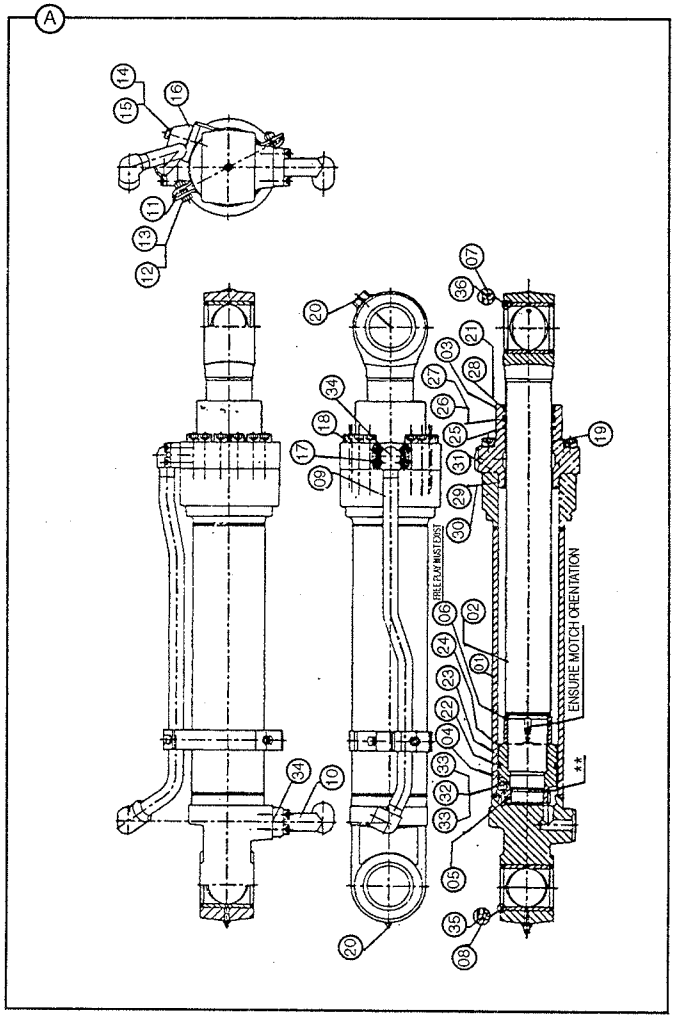

ITEM	PART NO.	CHANGE NO.	DESCRIPTION	REMARKS	QTY.
25	N.S.P		Wipper		1
26	N.S.P		Wipper (CE & RE)		4
27	N.S.P		STD O-Ring (Piston)		1
28	N.S.P		STD O-Ring (HEC)		1
29	N.S.P		STD O-Ring (Elbow & Port)		1
30	N.S.P		Back-up Ring (Piston)		2
31	N.S.P		Back-up Ring (Rod Seal)		1
32	N.S.P		Back-up Ring (HEC O-Ring)		1
33	N.S.P		STD O-Ring (Tube CHME)		1
34	N.S.P		Rod Seal (Primary)		1
35	N.S.P		Rod Seal (Secondary)		1
36	550/42243		Spare Seal Kit		1

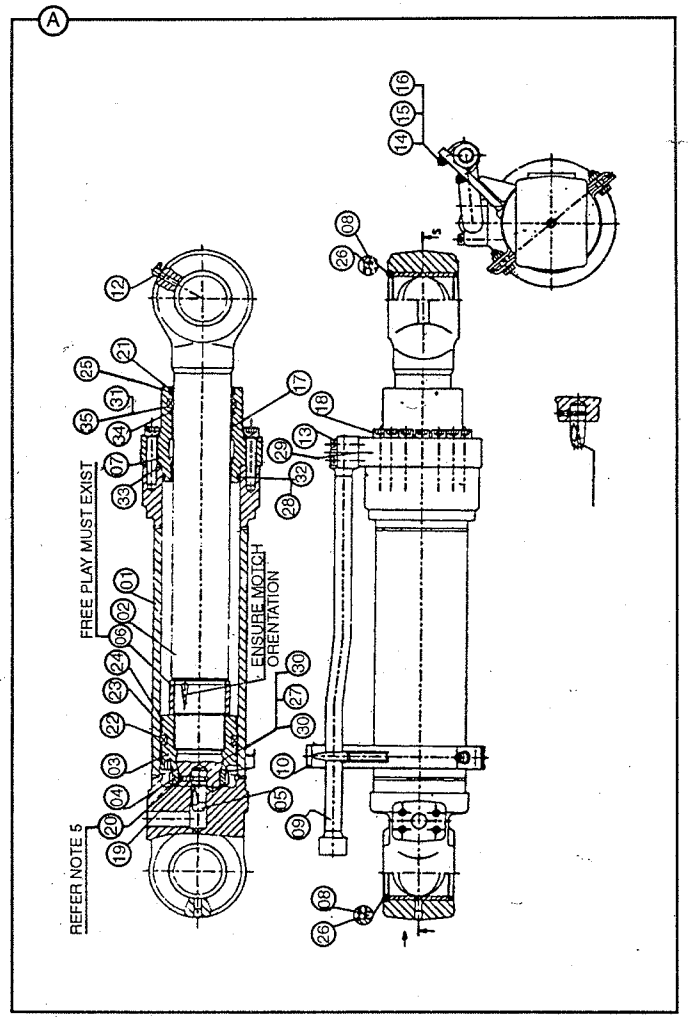

ITEM	PART NO.	CHANGE NO.	DESCRIPTION	REMARKS	QTY.
A	229/00573		Ram Bucket		1
1	550/42199		Tube S/a		1
2	550/42200		Piston Rod S/A		1
3	550/42201		H.E.Cover		1
4	550/42202		Piston		1
5	550/42203		Piston Rod Nut		1
6	550/41931		H.E. Cush Bush		1
7	550/41731		Bush (RE)		1
8	550/41732		Bush (CE)		1
9	550/42204		Pipe S/A		1
10	550/41938		Port		1
11	550/42205		Clamp		1
12	550/42206		Hex. HD Bolt		2
13	550/41941		Washer		2
14	550/41917		Machined Washer		1
15	550/41912		Hex HD Bolt		1
16	550/41939		Clamp		1
17	550/41913		Hex Sco HD Cap Screw		8
18	550/41915		Hex Sco HD Cap Screw		12
19	550/41723		Metal Bush		1
20	550/41919		Grease Nipple		2
21			Snap Ring		1
22	N.S.P		Piston Seal		1
23	N.S.P		Piston Bearing		2
24	N.S.P		Piston Bearing		2
25	N.S.P		Rod Seal (Primary)		1

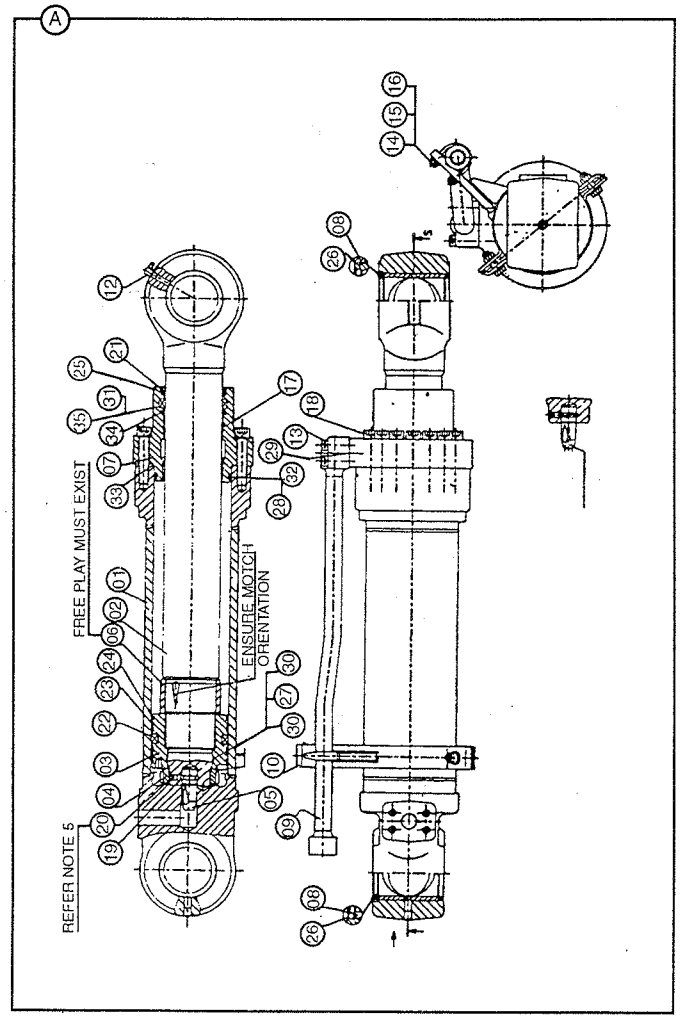

ITEM	PART NO.	CHANGE NO.	DESCRIPTION	REMARKS	QTY.
26	N.S.P		Rod Seal (Secondary)		1
27	N.S.P		Back-Up Ring (Rod Seal)		1
28	N.S.P		Wipper		1
29	N.S.P		Back-Up Ring (HEC)		1
30	N.S.P		STD O-Ring (HEC)		1
31	N.S.P		STD O-Ring (Tube CHMF)		1
32	N.S.P		STD-O-Ring (Piston)		1
33	N.S.P		Back-up Ring (Piston)		2
34	N.S.P		STD O-Ring		2
35	N.S.P		Wiper (CE)		2
36	N.S.P		Wiper (RE)		2
37	550/42219		Spare Seal Kit		1

F

• F4 SLEW/TRACK GEARBOXES

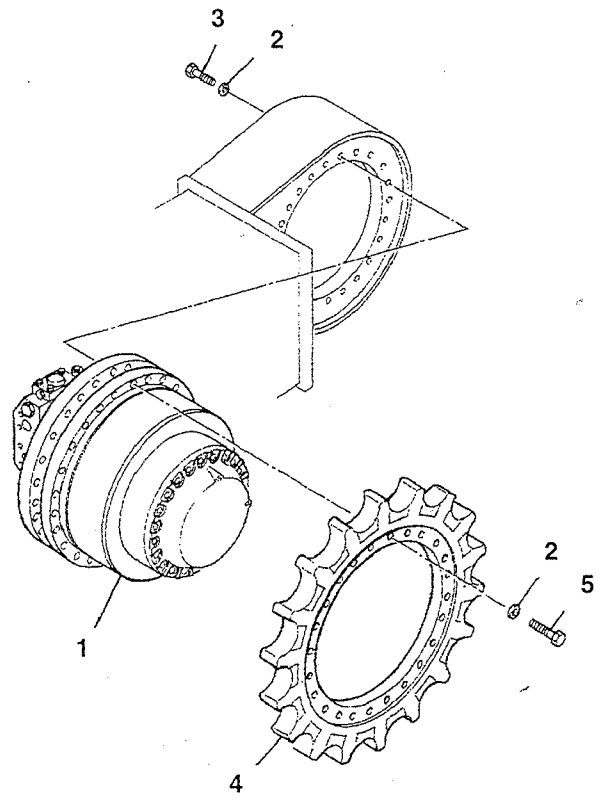

ITEM	PART NO.	CHANGE NO.	DESCRIPTION	REMARKS	QTY.
1	229/01002		Motor, & track motor	Trasmital upto 1290587	2
	229/02188		Motor & gearbox track	Nabtesco M/c No. 1290588 onwards	2
2	JHP0043		Washer		96
3	1316/3713Z		Bolt		52
4	331/42641		Sprocket, drive, 21 teeth & 22 holes	Trasmital	2
	229/01084		Sprocket	Trasmital upto 1290587	2
	229/02558		Sprocket	Nabtesco M/c No. 1290588 onwards	2
5	1316/3715Z		Bolt sprocket mtg.		44

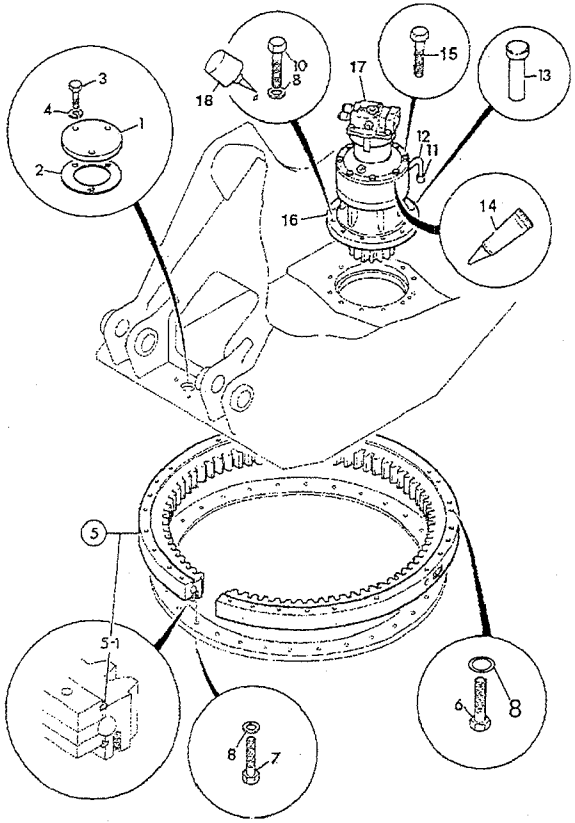

ITEM	PART NO.	CHANGE NO.	DESCRIPTION	REMARKS	QTY.
1	KRB0681		Plate, cover		1
2	KRB0682		Packing, cork		1
3	1316/0507Z		Screw		3
4	1425/0009Z		Washer, spring		3
5	JRB0017		Ring, slew		1
5 01	6900/0035		Seal		1
6	1316/3820Z		Bolt	upto 1290743	
	332/P6830		Bolt	1290744 onward	31
7	1316/3815Z		Bolt		36
8	JHP0044		Washer		78
10	1316/3817Z		Bolt		11
11	C4E9301		Capscrew		1
12	JBC0004		Pipe assembly		1
13	KRC0105		Pin, headed		1
14	4102/0551		Sealant threaclocker, 50ml	Liquid gasket seal 50ml	A/R
15	1391/3509Z		Capscrew		16
16	229/01006		Gearbox. swing	For components see frame F4-4-1	1
17	20/925315		Motor, swing	For components see frame E2-7-1	1
18	4101/0500		Fluid, locking, Loctite 262		A/R

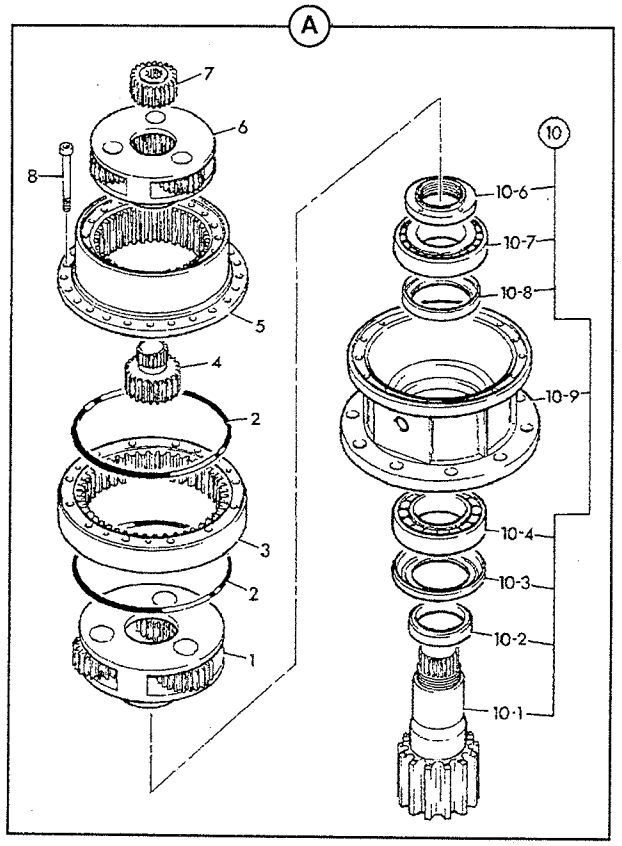

ITEM	PART NO.	CHANGE NO.	DESCRIPTION	REMARKS	QTY.
A	JRC0007		Gearbox, swing STD		1
1	05/903860		Gear, reduction assembly		1
2	05/903861		O Ring		2
3	05/903862		Ring, toothed		1
4	05/903863		Gear, sun		1
5	05/903864		Cover		1
5A	05/903865		Ring, toothed		1
6	05/903866		Gear, reduction assembly		1
7	05/903867		Gear, sun		1
8	05/903868		Screw		16
10	05/903873		Gear, output assembly		1
10 01	05/903869		Shaft, pinion		1
10 02	05/903870		Spacer		1
10 03	05/903871		Ring		1
10 04	05/903872		Bearing		1
10 06	051903874		Nut		1
10 07	05/903875		Bearing		1
10 08	05/903876		Seal, ring		1
10 09	05/903877		Housing, gearbox		1
11			See Remark	Gauge,oil level see page E2-7-3, Swing motor	1
			FOR HEAVY DUTY GEAR BOX		
A	229/01006		Gear box swing HD		
10-8	550/43236		Seal ring		1
10-9	550/43237		Housing gearbox		1
1	550/43168		Gear reduction assy. (4 gear)		1

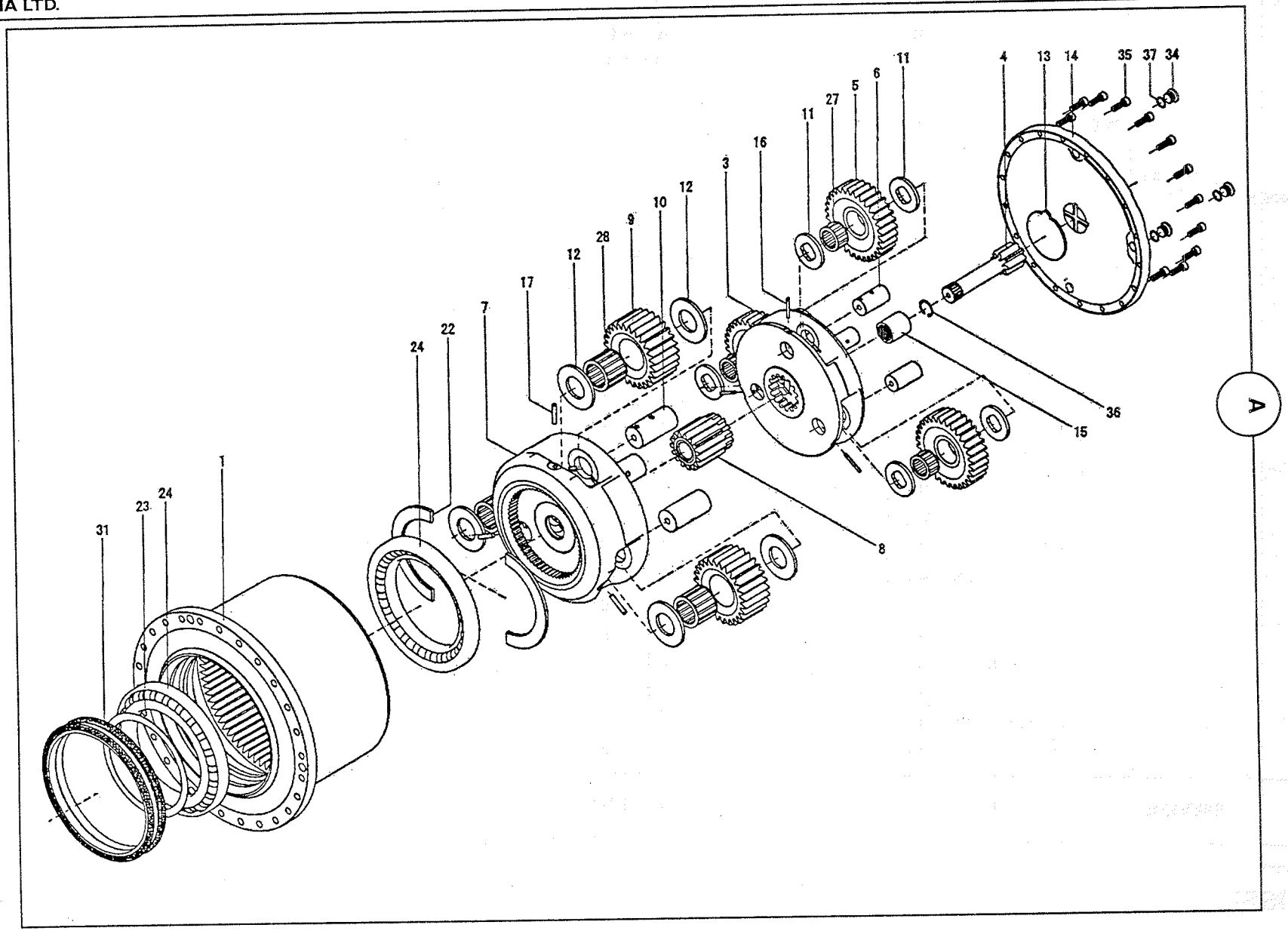
4
13
14
35
37
34
11
6
5
27
11
16
3
12
10
9
28
12
17
7
22
24
1
24
23
31
8
15
36
A

ITEM	PART NO.	CHANGE NO.	DESCRIPTION	REMARKS	QTY.
A	229/02188		Reduction gears	Along with motor	1
1	550/43626		Hub		1
3	550/43628		Carrier(1)		1
4	550/43629		Sun gear shaft(1)		1
5	550/43630		Planetary Gear(1)		3
6	550/43631		Carrier Pin(1)		3
7	550/43632		Carrier(2)		1
8	550/43633		Sun Gear(2)		1
9	550/43634		Planetary Gear(2)		3
10	550/43635		Carrier Pin(2)		3
11	550/43636		Thrust washer(1)		6
12	550/43637		Thrust washer(2)		6
13	550/43532		Thrust Plate		1
14	550/43638		Cover		1
15	550/43639		Coupling		1
16	550/43640		Parallel pin(1)		3
17	550/43584		Parallel pin(2)		3
22	550/43641		Lock Washer		2
23	550/43642		Shim		1
24	550/43655		Angular Ball Bearing		2
27	550/43656		Needle roller Bearing		3
28	550/43657		Needle roller Bearing		3
31	550/43658		Floating Seal		1
34	550/43570		Plug		3
37	550/43592		O Ring		3
35	550/43591		Hex, Socket bolt		18
36	550/43711		Snap,ring		1

ITEM	PART NO.	CHANGE NO.	DESCRIPTION	REMARKS	QTY.
			Shim Kit(for Angular Ball Bearing No.23 Clearance adjustment)		
	550/43643		Shim 0.9mm		1
	550/43644		Shim 1.0mm		1
	550/43645		Shim 1.1mm		1
	550/43646		Shim 1.2mm		1
	550/43647		Shim 1.3mm		1
	550/43648		Shim 1.4mm		1
	550/43649		Shim 1.5mm		1
	550/43650		Shim 1.6 mm		1
	550/43651		Shim 1.7mm		1
	550/43652		Shim 1.8mm		1
	550/43653		Shim 1.9mm		1
	550/43654		Shim 2.0mm		1

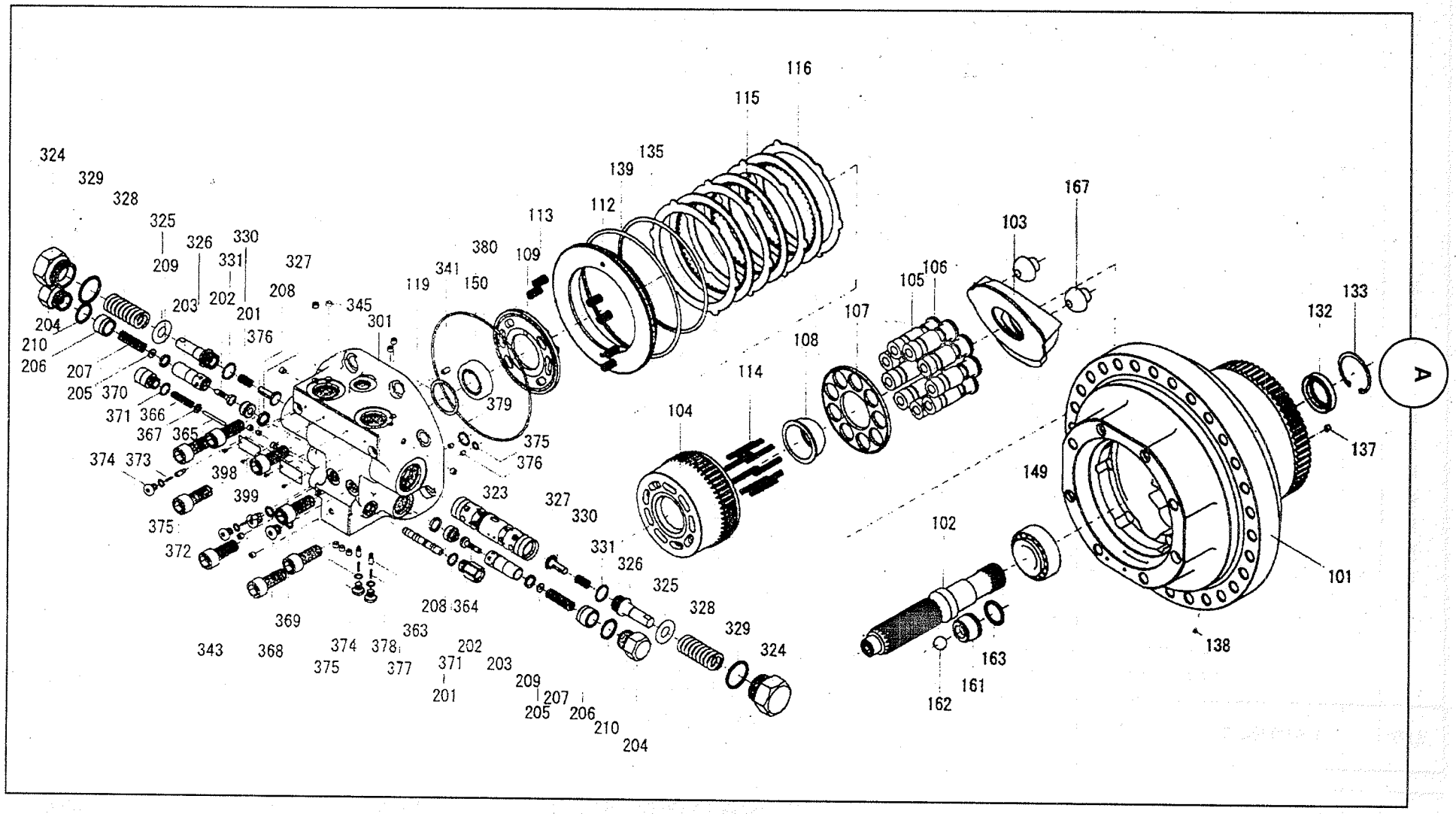
116
115
135
139
112
113
380
109
341
119
150
324
329
328
325
326
330
209
331
327
208
203
202
201
345
301
376
204
210
206
207
205
370
371
366
367
365
374
373
398
399
375
372
369
343
368
374
378
375
377
363
208
364
323
327
330
331
326
325
328
329
324
379
375
376
104
114
108
107
105
106
103
167
102
149
101
138
163
161
162
132
133
137
A

ITEM	PART NO.	CHANGE NO.	DESCRIPTION	REMARKS	QTY.
A	550/43808		Hydraulic Motor	1290588 onwards	
101	550/43627		Spindle		1
137	550/43612		Hex, Socket plug		1
138	550/43611		Expander		1
	550/43678		Piston, kit		1
	N.S.P.		Piston assy		9
105	N.S.P.		Piston		1
106	N.S.P.		Shoe		1
104	550/43660		Cylinder block		1
	550/43674		Piston assy		1
	N.S.P.		Piston		1
163	550/43617		Seal		1
162	550/43708		Steel ball		1
10∠	550/43659		Shaft		1
	550/43677		Swash plate kit		1
103	N.S.P.		Swash plate		1
167	N.S.P.		Pivot		2
107	550/43663		Retainer plate		1
108	550/43664		Thrust ball		1
109	550/43665		Timing plate		1
112	550/43666		Piston		1
113	550/43667		Spring		8
114	550/43668		Spring		9
115	550/43669		Friction plate		3
116	550/43670		Mating plate		4
119	550/43593		Shim		1 ~ 2
132	550/43620		Oil seal		1
133	550/43616		Snap ring		1
135	550/43671		D ring		1
139	550/43672		D ring		1
149	550/43623		Tapered roller bearing		1
150	550/43624		Tapered roller bearing		1
	550/43679		Relief valve set		1
	550/43687		Relief assy.		2
201	N.S.P.		Valve seat		1
202	N.S.P.		Valve		1
203	N.S.P.		Sleeve		1
204	N.S.P.		Plug		1
205	N.S.P.		Spring retainer		1
206	N.S.P.		Piston		1
207	N.S.P.		Spring		1
208	550/43713		Piston seal		1
209	550/43712		Piston seal		1
210	550/43619		O ring		1
	550/43702		Control valve		1
	550/43705		Rear flange assy		1
301	550/43703		Rear flange		1
	550/43695		Spool assy		1
323	N.S.P.		Spool		1
326	N.S.P.		Plug		2
327	N.S.P.		Valve		2
330	N.S.P.		Spring		2
331	550/43618		O ring		2
324	550/43689		Plug		2
325	550/43690		Spring retainer		2
328	550/43693		Spring		2
329	550/43710		O ring		2
341	550/43600		Parallel pin		1
343	550/43707		Hex socket bolt		8
345	550/43613		Hex socket plug		13
363	550/43704		Spool		1
364	550/43607		Plug		1
365	550/43609		Pin		1
366	550/43621		Spring		1
367	550/43608		Spring retainer		1
368	550/43606		Plug		2
369	550/43576		O ring		2
370	550/43610		Plug		2
371	550/43587		O ring		2
372	550/43602		Throttle valve		2
373	550/43605		Spring		2
374	550/43614		Plug		4
375	550/43581		O ring		5

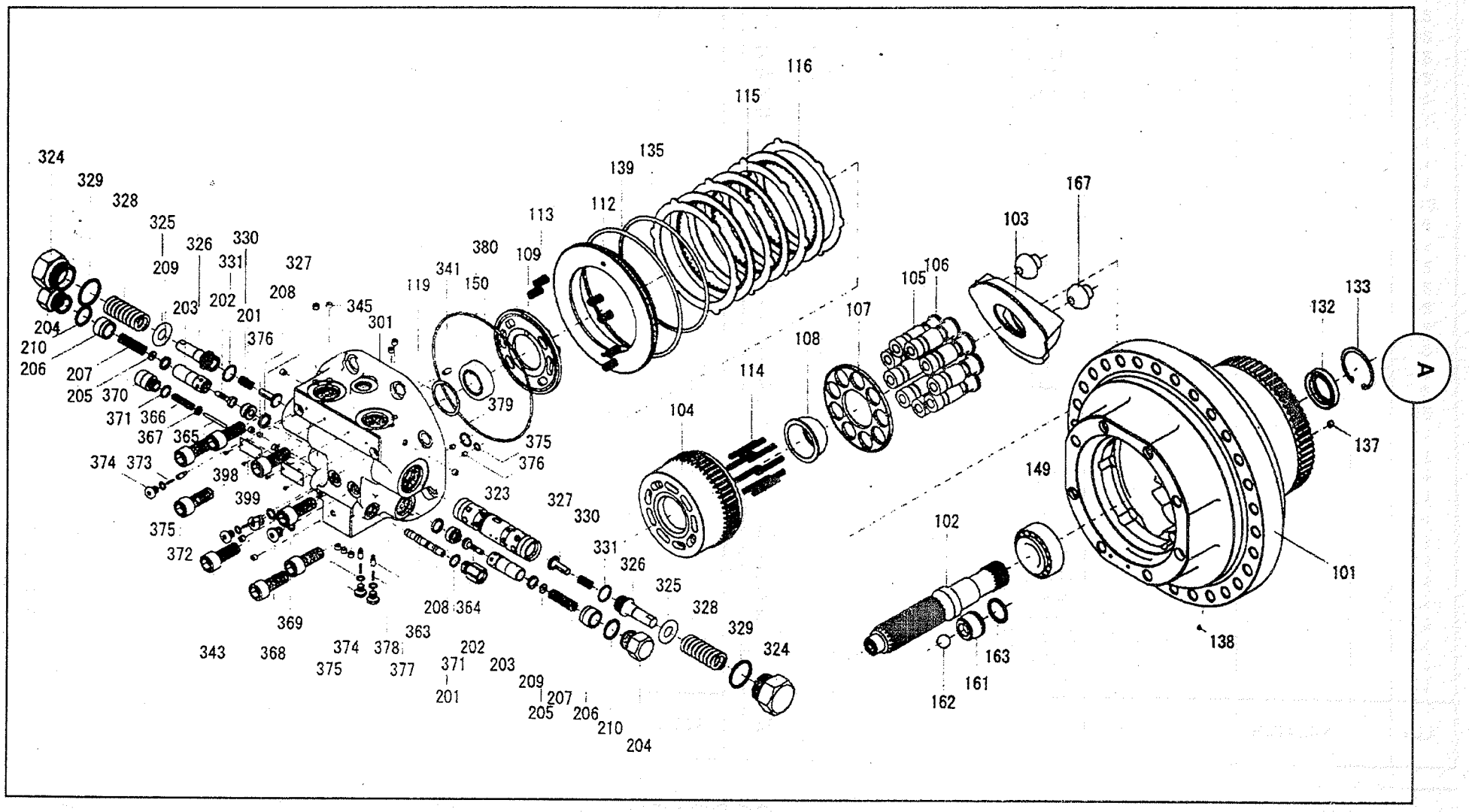
116
115
135
139
112
113
380
109
341
150
119
345
301
376
379
375
376
323
327
330
331
326
325
328
329
324
208 364
369
363
374
378
202
343
368
375
377
371
203
201
209
207
205
206
210
204
324
329
328
325
209
326
330
331
327
208
203
202
201
204
210
206
207
205
370
371
366
367
365
374
373
398
399
375
372
104
114
108
107
105
106
103
167
149
102
163
161
162
138
101
132
133
137
A

ITEM	PART NO.	CHANGE NO.	DESCRIPTION	REMARKS	QTY.
376	550/43603		Orifice		3
377	550/43601		Valve		2
378	550/43622		Spring		2
379	550/43709		O ring		1
380	550/43706		O ring		1
398	550/43604		Rivet		4
399	550/43625		Name plate		2

ITEM	PART NO.	CHANGE NO.	DESCRIPTION	REMARKS	QTY.
			Seal Kit		
	550/43592		O ring		3
	550/43620		Oil Seal		1
	550/43671		D Ring		1
	550/43672		D Ring		1
	550/43619		O Ring		2
	550/43710		O Ring		2
	550/43576		O Ring		2
	550/43587		O Ring		2
	550/43581		O Ring		5
	550/43709		O Ring		1
	550/43706		O Ring		1
			Shim Kit (for Tapered rollar Bearing No. 119 Clearance adjustment)		
	550/43594		Shim Kit 0.4mm		1
	550/43595		Shim Kit 0.5mm		2
	550/43596		Shim Kit 0.6mm		1
	550/43597		Shim Kit 0.7mm		1
	550/43598		Shim Kit 0.8mm		1
	550/43599		Shim Kit 0.9mm		1

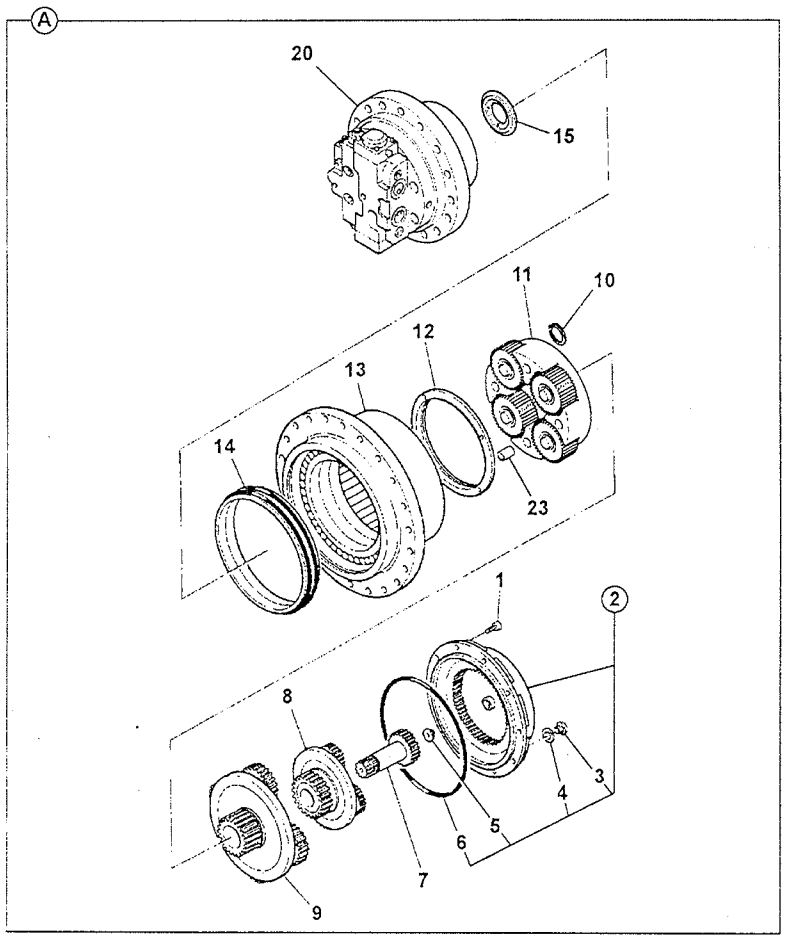

ITEM	PART NO.	CHANGE NO.	DESCRIPTION	REMARKS	QTY.
A	20/925318		Motor & gearbox	upto 1290587	2
1	:05/901963		Capscrew		10
2	:05/903801	Superseded	Cover set		1
2	:05/903821		Cover assembly		1
3	:05/903822	Superseded	Plug breather		2
3	:05/903802		Plug breather		2
4	:05/903803		Washer		2
5	:05/903820	Superseded	Pad		1
5	:05/901926		Pad thrust		1
6	:05/903819		O Ring		1
7	:20/951592		Gear Sun Gear Track Motor/Gearbox		1
8	:05/903805		Gear reduction set 1st planet		1
9	:05/903806		Gear reduction set 2nd planet		1
10	:05/903807		Circlip		5
11	:20/951596		Gear Plantary Gear Assem Track Motor/Gearbox		5
12	:05/903809		Nut		1
13	:05/903859		Housing with bearing		1
14	:05/903811		Seal assembly		1
15	:05/903812		Ring centering		1
20	:05/903899		Motor track		1
23	:05/903838		Spacer		5

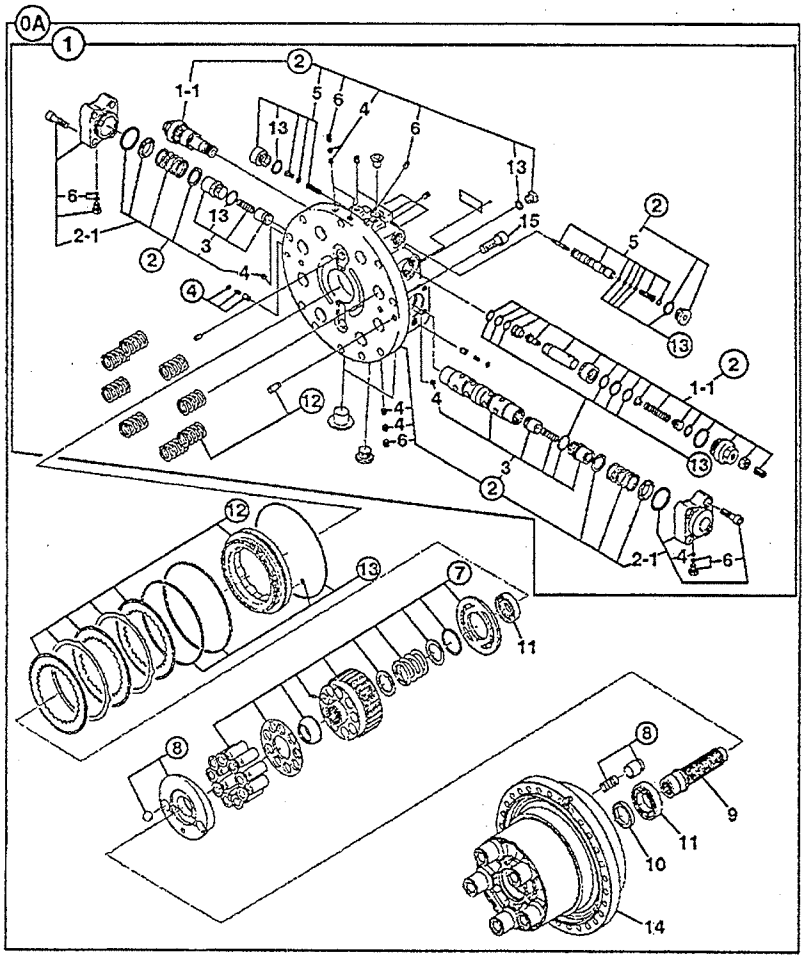

ITEM	PART NO.	CHANGE NO.	DESCRIPTION	REMARKS	QTY.
A	05/903899		Motor Track		1
1	:NSP		None serviced part		1
1-1	::25/222665		Valve relief		2
2	:NSP		None serviced part		1
3	:NSP		None serviced part		1
4	:20/951813		Kit orifice, assembly		1
5	:NSP		None serviced part		1
6	:20/951606		Plug plug assembly track motor/gearbox		1
7	:NSP		None serviced part		1
8	:NSP		None serviced part		1
9	:20/925674		Shaft motor drive		1
10	:20/951603		Seal motor seal ring track motor/gearbox		1
11	:20/951604		Bearing Bearing kit track motor/gearbox		1
12	:20/951814		Kit-repair brake assembly		1
13	:20/951607		Seal seal assembly track motor/gearbox		1
14	:NSP		None serviced part		1
15	:6004/3610		Capscrew		9

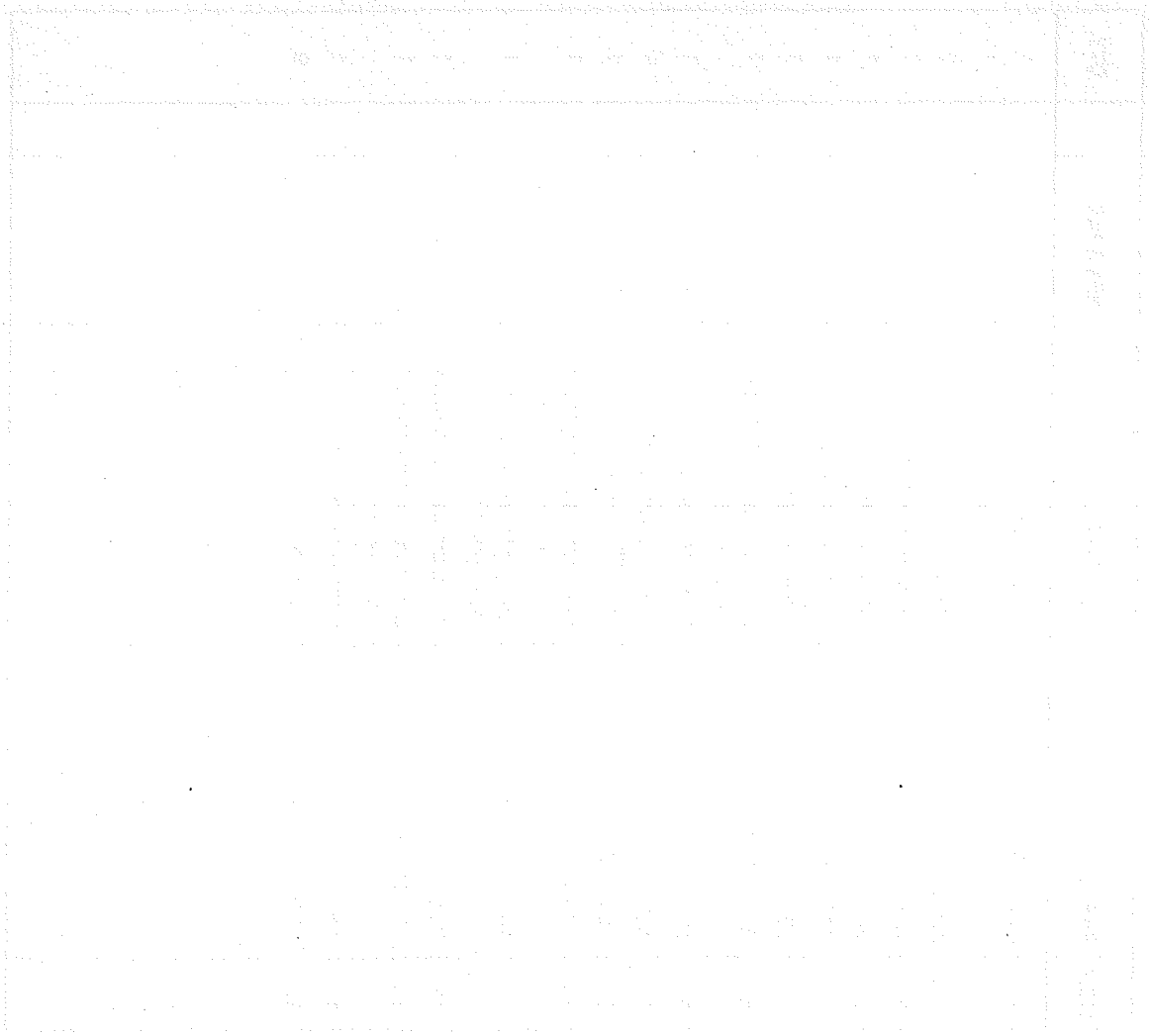

J

- J1 TRACK, GEAR/ UNDERCARRIAGE

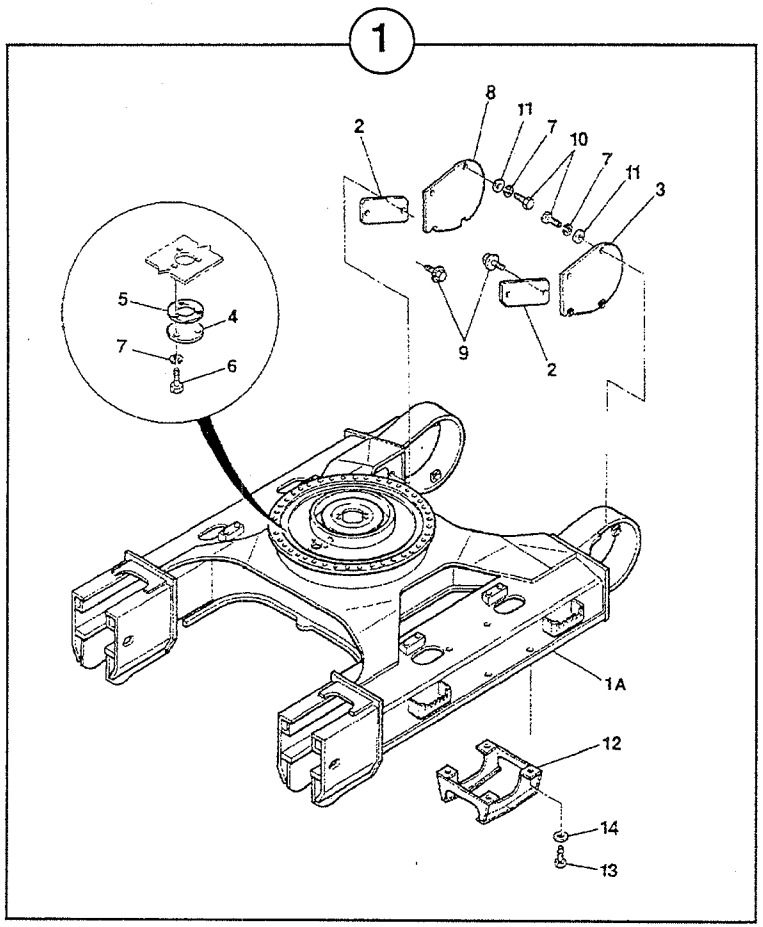

ITEM	PART NO.	CHANGE NO.	DESCRIPTION	REMARKS	QTY.
1	JGORA21		Frame, undercarriage GA	JS210	1
1 A	335/10537		Frame, undercarriage WA	JS210	1
2	KRA1107		Cover		2
	KNA0531		Cover		2
3	KRA1246		Cover, track motor, left hand		1
4	KRB0681		Plate, cover		1
5	KRB0682		Packing, cork		1
6	1316/0505Z		Screw		3
7	6060/0009Z		Washer, spring		11
8	KRA1247		cover track motor, right hand		1
9	JHN0048		Bolt		4
10	1316/0509Z		Bolt		8
11			See Remark		8
	JHP0042		Washer, Plain		8
	JHP0046		Washer		8
12	229/01212		Guide, track	Round leading edge	2
13	1316/9515 .		Bolt		8
14	*KHN1323		Washer, high, strength		8
15	JHPoo79		Block, top roller		2

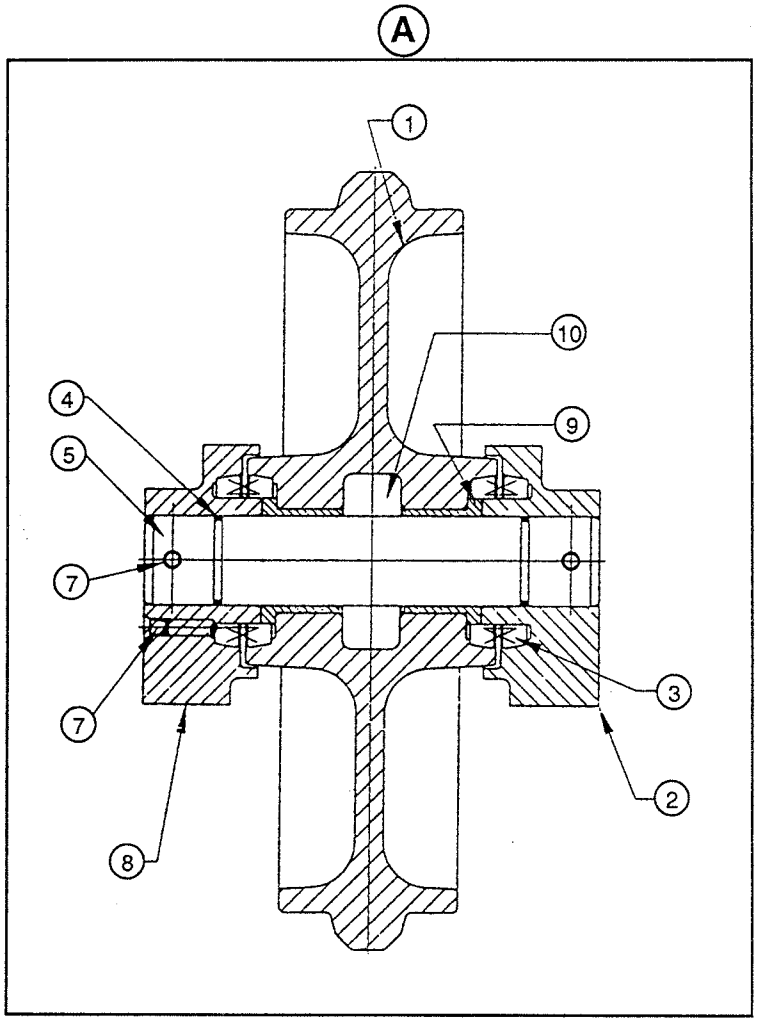

ITEM	PART NO.	CHANGE NO.	DESCRIPTION	REMARKS	QTY.
A	550/42799		Idler assy. complete		1
1	550/43185		Idler		1
2	550/42818		Idler end collar		1
3	550/42773		Seal Group		2
4	550/42779		Seal - O - Ring		2
5	550/42819		Shaft		1
6	550/42800		Spring Dowel		2
7	550/42289		Plug		1
8	550/42820		End Collar - Plug Side		1
9	550/42778		Bronze Bush		2

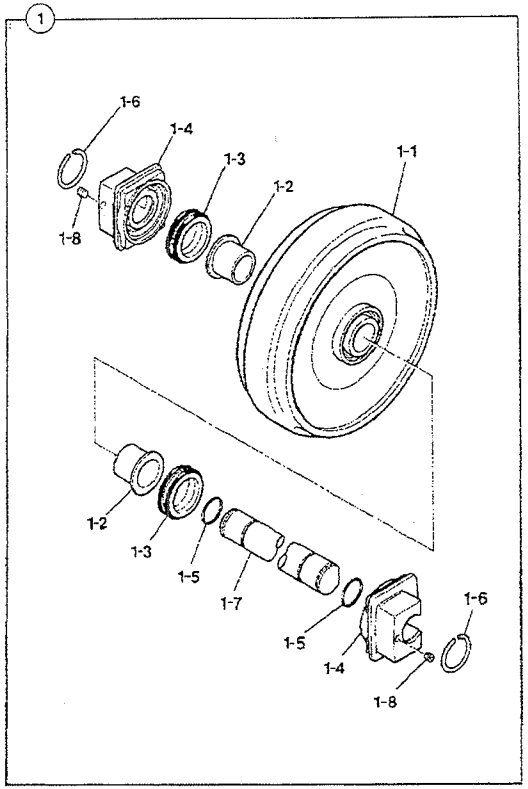

ITEM	PART NO.	CHANGE NO.	DESCRIPTION	REMARKS	QTY.
1	JRA0214		Wheel, idler		2
1 01	JRA0217		Wheel, track idler		1
1 02	JRA0221		Bush		2
1 03	JRA0218		Seal, oil floating		2
1 04	JRA0222		Hub		2
1 05	JRA0223		O Ring		2
1 06	JRA0228		Wire		2
1 07	JRA0220		Shaft, idler		1
1 08	JRA0226		Plug		1

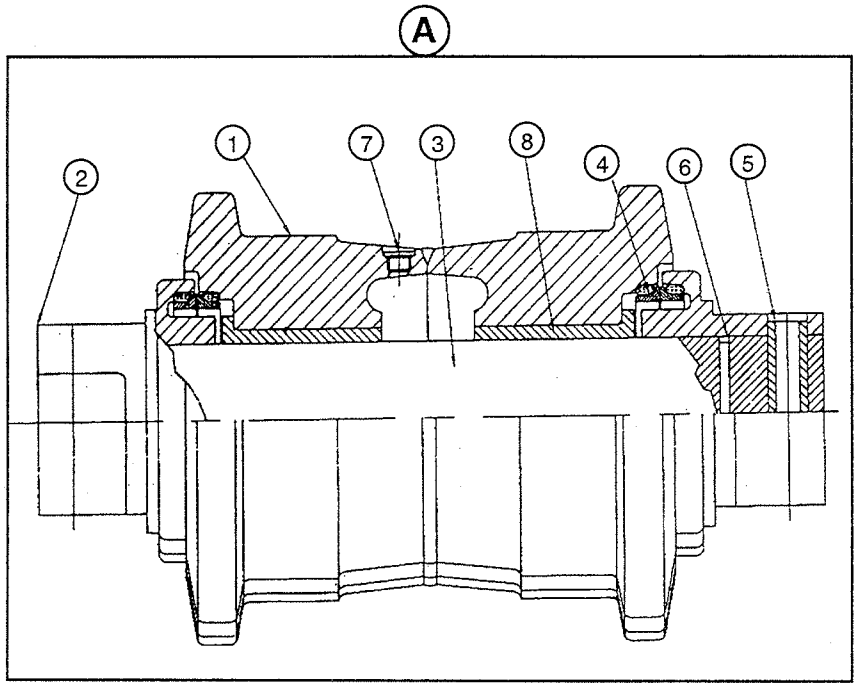

ITEM	PART NO.	CHANGE NO.	DESCRIPTION	REMARKS	QTY.
A	229/01082		Bottom Roller		1
1	550/42788		Roller Assy.		1
2	550/42813		Roller End Coller		2
3	550/42812		Roller Shaft		1
4	550/42825		Seal Group		2
5	550/42814		Spring Dowel		2
6	550/42771		Seal O Ring (Shaft)		2
7	550/42289		Plug		2
8	550/42789		Bronze Bushing		2
9			Oil		200 cc

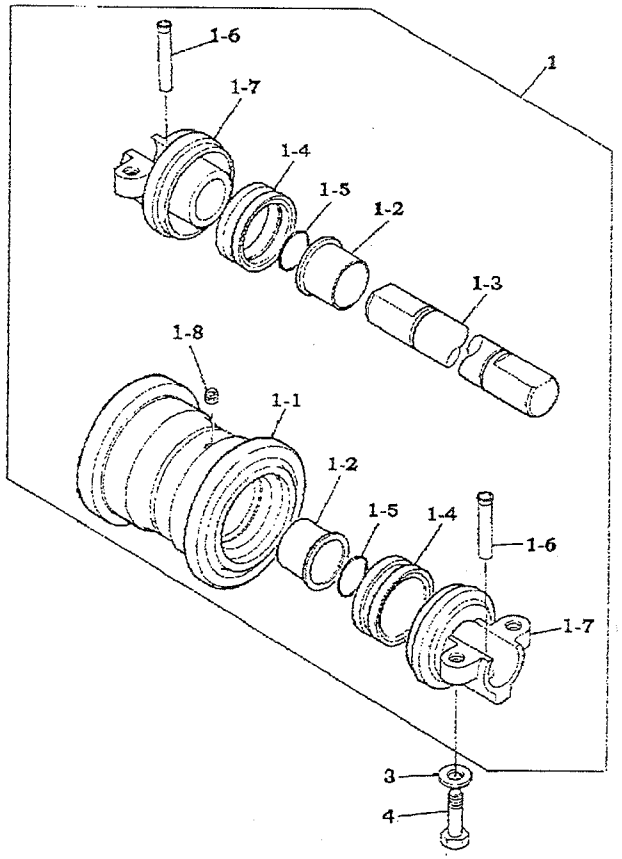

ITEM	PART NO.	CHANGE NO.	DESCRIPTION	REMARKS	QTY.
1			Roller, track		14
	*331/35387		Roller track		14
1 01	JRA0099		Roller, track shell		1
1 02	6900/0921		Bush		2
1 03	6900/0919		Shaft		1
1 04	JRA0238		Seal, oil, floating		2
1 05	6900/0923		O Ring		2
1 06	6900/0924		Dowel		2
1 07	6900/0922		Bracket		2
1 08	6900/0920		Plug		1
3	JHP0079		Washer		56
4	1316/9519Z		Bolt		56

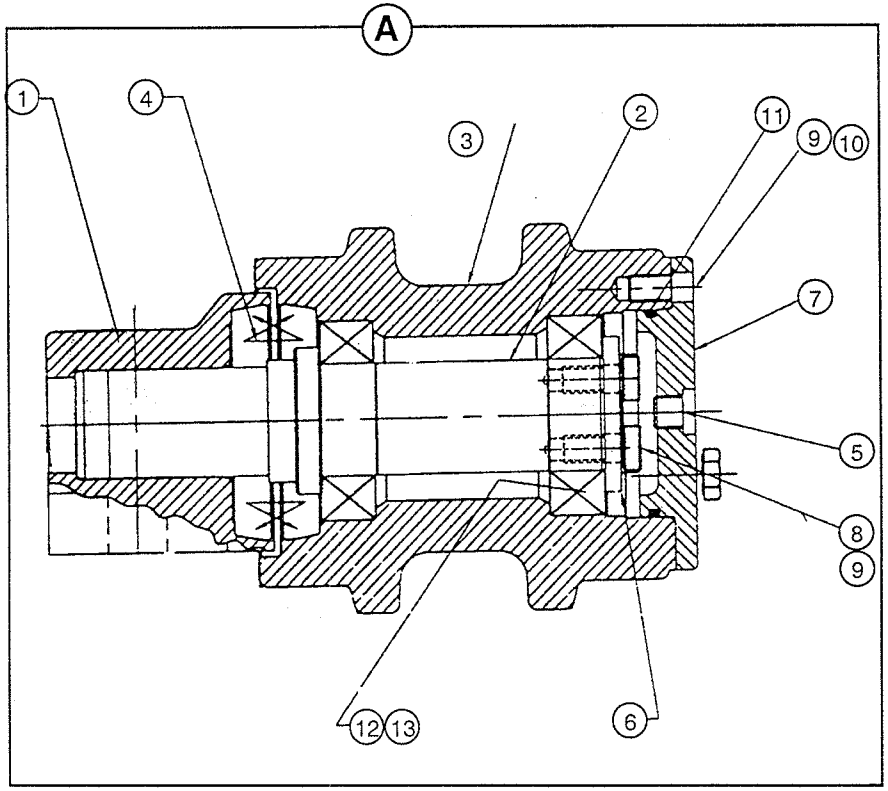

ITEM	PART NO.	CHANGE NO.	DESCRIPTION	REMARKS	QTY.
A	229/01083		Carrier Roller Assy.		1
1	550/42815		Carrier Roller Bracket		1
2	550/42794		Carrier Roller Shaft		1
3	550/42793		Carrier Roller Shell		1
4	550/42774		Seal Group		1
5	550/42775		Plug - Taper		1
6	550/42795		Plate		1
7	550/42780		Carrier Roller Cover		1
8	550/42777		Lock - Plate		1
9	550/42776		Bolt Hex.		5
10	550/42769		Washer Spring		3
11	550/42796		Seal O ring		1
12	550/42797		Cone - Tapered Roller BRG.		2
13	550/42798		Cup-Tapered Roller BRG.		2

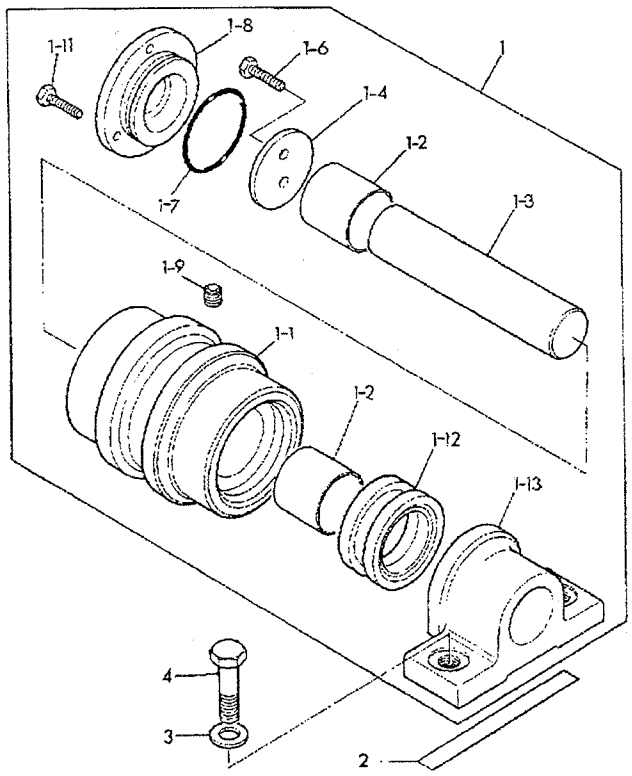

ITEM	PART NO.	CHANGE NO.	DESCRIPTION	REMARKS	QTY.
1			Roller, assembly, top		4
1 01	JNA0104		Roller		1
1 02	M00116		Bush		2
1 03	M00115		Shaft		1
1 04	M00160		Plate, thrust		1
1 06	M00161		Capscrew		2
1 07	M00122		O Ring		1
1 08	M00120		Cover		1
1 09	M00099		Plug		1
1 11	M00123		Bolt		4
1 12	JNA0105		Seal, oil, floating		1
1 13	M00119		Bracket		1
2	JHA0005		Shim		4
3	JHP0044		Washer		8
4	1316/3812Z		Bolt		8

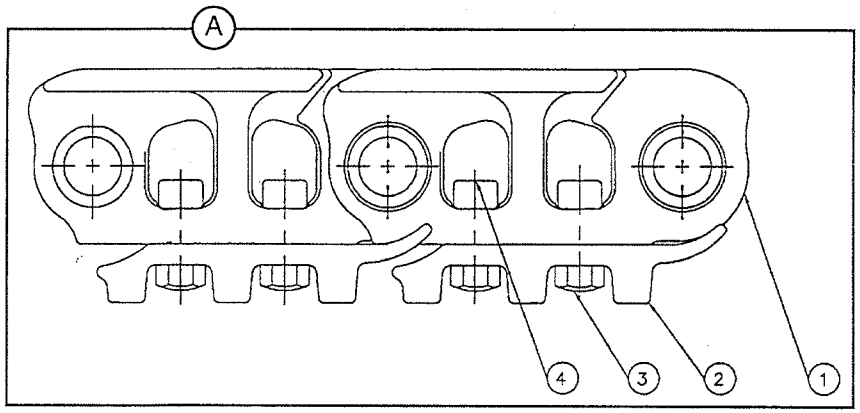

ITEM	PART NO.	CHANGE NO.	DESCRIPTION	REMARKS	QTY.
A	229/02554	550/42865	Track Chain & Shoe Assy. 500 mm		1
1	550/42817		Track link assy.		1
2	550/42790		Track shoe-reg. 500 mm		49
3	550/42809		Track bolt		196
4	550/42810		Track nut		196

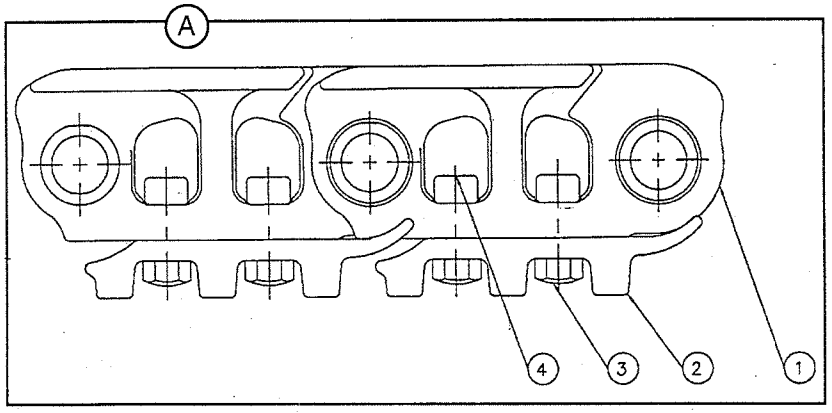

ITEM	PART NO.	CHANGE NO.	DESCRIPTION	REMARKS	QTY.
A	229/02553		Track chain & shoe assembly 600 mm shoe		1
1	550/42817		Track link assembly		1
2	550/42816		Track shoe-reg. 600 mm		49
3	550/42809		Track Bolt		196
4	550/42810		Track nut		196

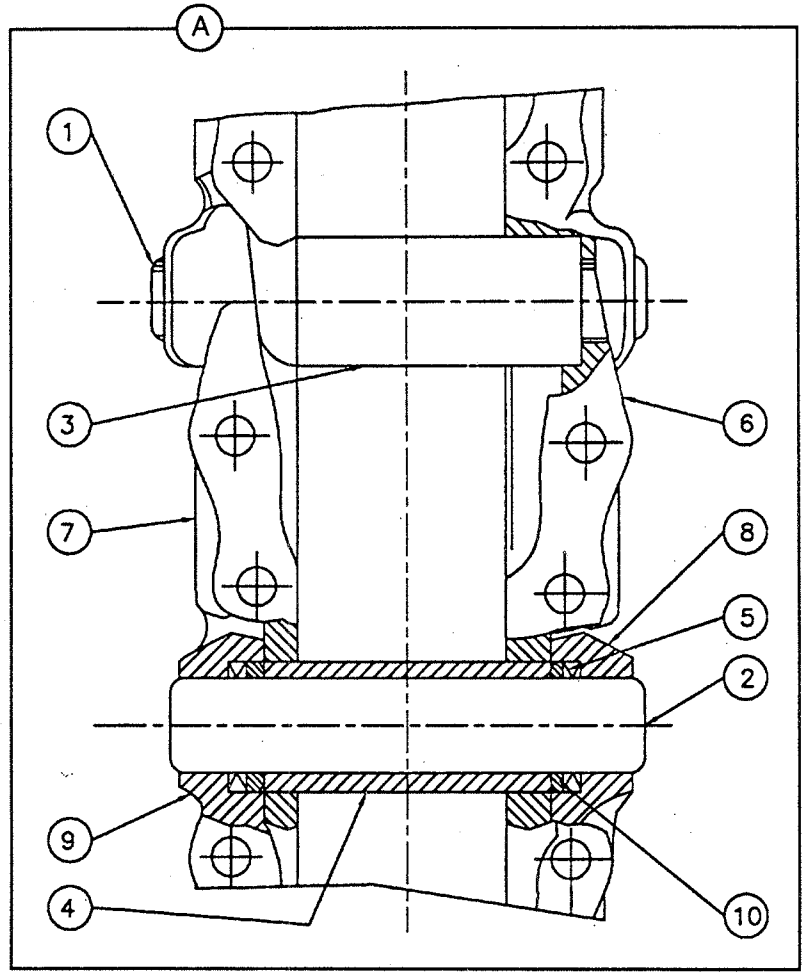

ITEM	PART NO.	CHANGE NO.	DESCRIPTION	REMARKS	QTY.
A	550/42817		Track link assy.		1
1	550/42784		Track pin-reg.		48
2	550/42823		Track pin-master		1
3	550/42782		Track bushing-regular		48
4	550/42783		Track bushing-master		1
5	550/42785		Cone seal washer		196
6	550/42791		Track link-regular (RH)		48
7	550/42792		Track link-regular (LH)		48
8	550/42821		Track link-master (RH)		1
9	550/42822		Track link-master (LH)		1
10	550/42786		Track spacer		2

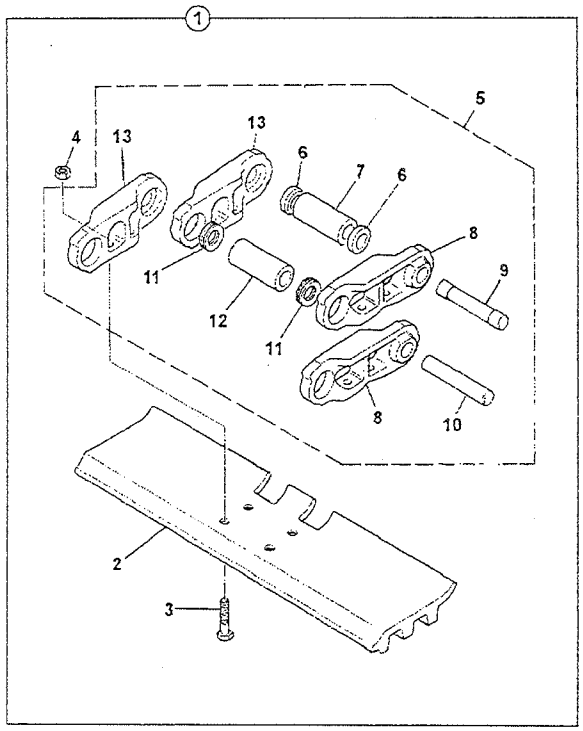

ITEM	PART NO.	CHANGE NO.	DESCRIPTION	REMARKS	QTY.
1	229/02553		Chain, & shoe assembly 600mm wide STD duty		2
	229/02554	550/42865	Chain, & shoe assy 49 link 500mm wide STD duty		2
	331/21589		Chain, & shoe assy 49 link 800mm wide STD duty		2
	331/21593		Chain, & shoe assembly 900mm, wide 50mm duty		2
	331/22025		Chain, LH & shoe assy 600mm, wide 50mm offset 46L		1
	331/22026		Chain, RH & shoe assy 600mm, wide 50mm offset 49L		1
2	JRA0182		Plate, 500mm track grouser		49
	JRA0101		Plate, 600mm track grouser		49
	JRA0107		Plate, 700mm track grousar		49
	*JRA0108		Plate, 800mm track grousar		49
	15/920075		Plate, 600mm track grouser, right hand offset	600mm offset	49
	15/920076		Plata, 600mm track grouser, left hand offset		49
3	JRA0102		Bolt track plate		196
4	JSA0038		Nut, track plate		196

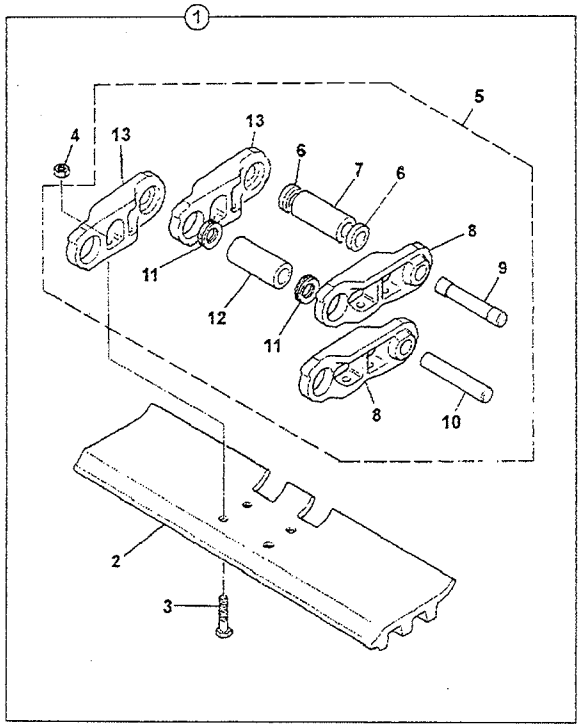

ITEM	PART NO.	CHANGE NO.	DESCRIPTION	REMARKS	QTY.
6	331/30985		Spacer master		2
7	JRA0105		Bush, master		1
8	JRA0104		Link, track, left hand		49
9	JRA0093		Pin master		1
10	JRA0092		Pin, track		48
11	331/30984		Seal, dust		96
12	331/30983		Bush		48
13	JRA0103		Link, track, right hand		49

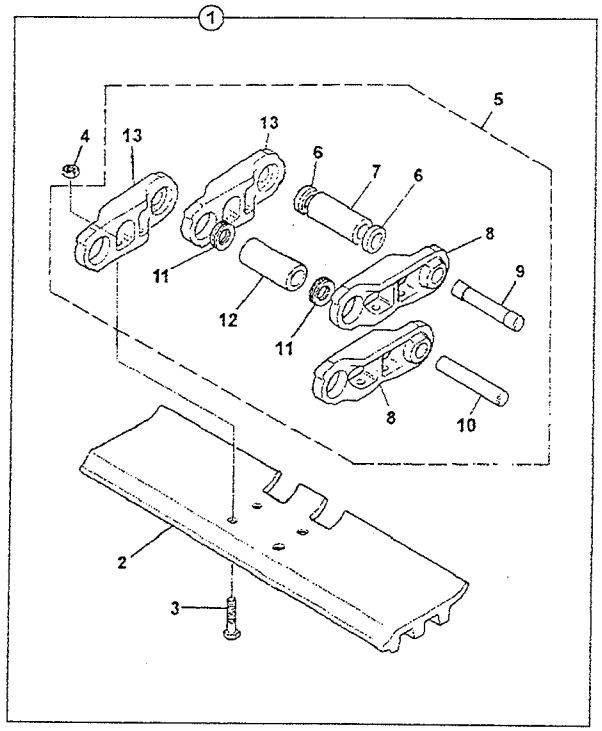

ITEM	PART NO.	CHANGE NO.	DESCRIPTION	REMARKS	QTY.
1	331/22066		Chain, & shoe assembly 600mm wide H duty		2
	331/22067		Chain, & shoe assy 49 link 700mm wide H duty		2
	331/21619		Chain, & shoe assy 49 link 800mm wide H duty		2
	331/22068		Chain, & shoe assembly 900mm, wide heavy duty		2
2	JBA0235		Plate, 600mm track grouser heavy duty		49
	JBA0232		Plate, 700mm track grouser heavy duty		49
	JBA0236		Plate, 800mm track grousar heavy duty		49
	JBA0194		Plate, 900mm track grousar heavy duty		49
	15/920076		Plata, 600mm track grouser, left hand offset		49
3	JBA0195		Bolt track plate		196
4	JSA0038		Nut, track plate		196
5	331/21574		Chain, track assy 49 link		1
6	331/30985		Spacer master		2
7	JRA0105		Bush, master		1
8	JRA0104		Link, track, left hand		49
9	JRA0093		Pin master		1
10	JRA0092		Pin, track		48
11	331/30984		Seal, dust		96
12	331/30983		Bush		48
13	JRA0103		Link, track, right hand		49

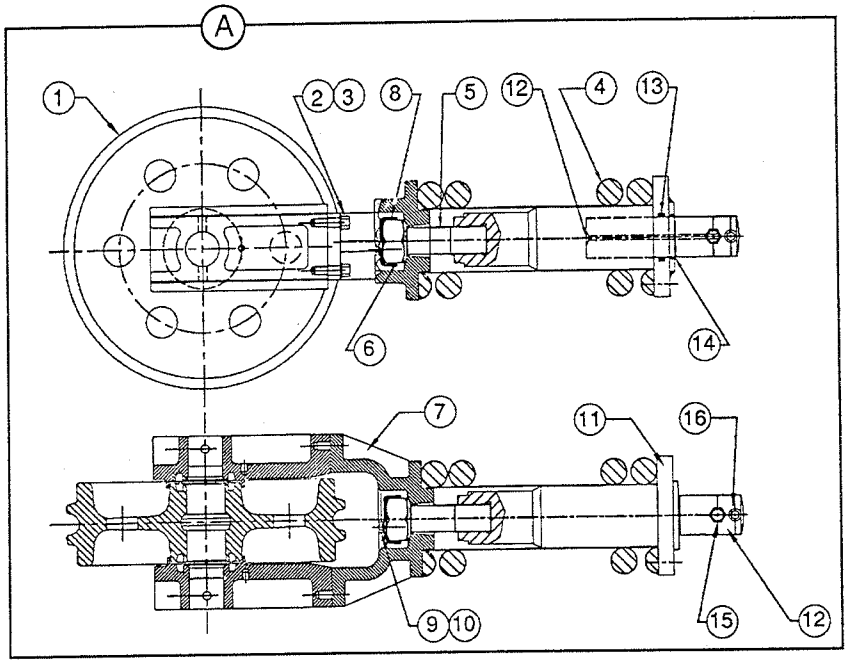

ITEM	PART NO.	CHANGE NO.	DESCRIPTION	REMARKS	QTY.
A	229/01085		Idler group		1
1	550/42799		Idler assy. with collar		1
2	N.S.P.		Hex. screw		4
3	550/42770		Spring washer		4
4	550/42806		Recoil spring		1
5	550/42805		Stud recoil		1
6	550/42804		Nut recoil		1
7	550/42807		Yoke		1
8	550/42787		Lock plate		1
9	N.S.P.		Hex. soc. hd. screw		1
10	550/42772		Washer		1
11	N.S.P.		Cylinder		1
12	N.S.P.		Piston		1
13	550/42801		Seal-piston		1
14	550/42802		Seal-scrapper		1
15	550/42824		Grease nipple		1
16	N.S.P.		Hex. socket headed screw		1

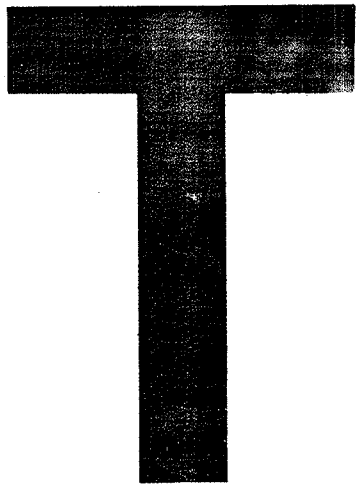

- T1 ENGINE BLOCK & SUB-ASSEMBLIES
- T2 CYLINDER HEAD & SUB-ASSEMBLIES
- T3 INDUCTION & EXHAUST SYSTEMS
- T4 SYSTEM, COOLING
- T5 SYSTEM, LUBRICATION
- T6 SYSTEM, FUEL
- T7 EQUIPMENT, AUXILIARY
- T8 GASKET SETS

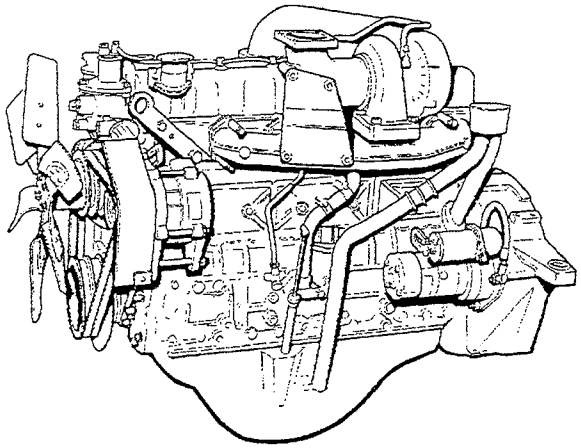

ITEM	PART NO.	CHANGE NO.	DESCRIPTION	REMARKS	QTY.
1	01/145301		Engine, complete		1

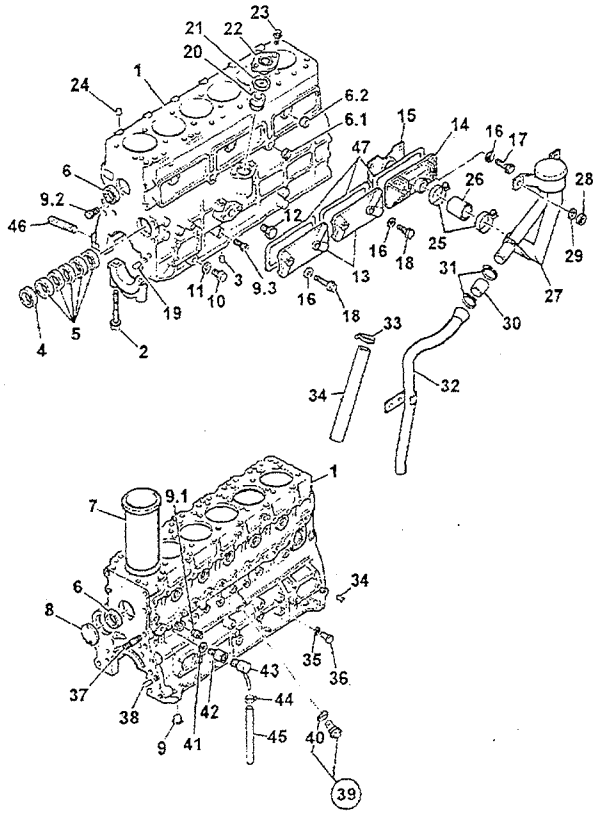

ITEM	PART NO.	CHANGE NO.	DESCRIPTION	REMARKS	QTY.
	02/801540		Block, cylinder, assembly		1
2	02/801541		Bolt		14
3	02/800012		Dowel		1
4	9116910480		Bearing, camshaft, front		1
5	9116930350		Bearing, centre & rear		5
6	1096000520		Plug, d=60		2
6 01	5112190140		Plug, d=28		2
6 02	1096000121		Plug, tappet chamber D-32		3
7	02/801542		Liner, cylinder	use (02/801539) LP. kit	6
8	9098600190		Plug		1
9	1096050660		Plug, D=3/8"		1
9 01	5096050180		Plug, D=1/8"		11
9 02	1096050681		Plug		1
9 03	1096050681		Plug		1
10	9992023140		Plug		1
11	9095720140		Washer, seal		1
12	1096601010		Connector		1
13	02/801548		Cover tappet chamber		2
14	02/801549		Cover tappet chamber		1
15	02/801552		Plate, guide,tappet chamber		1
16	9095720060		Washer, seal		6
17	1090520221		Bolt L=84		2
18	02/800007		Bolt, L=56		4
19	02/800013		Pin, D=10 x L=50		1
20	9112246021		Bush,oil pump drive shaft		1
21	1096234650		O Ring		1

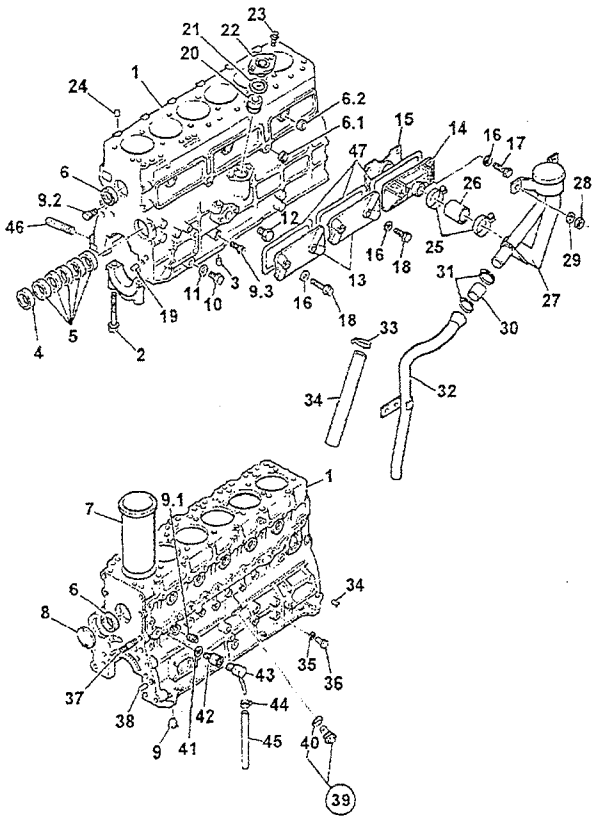

ITEM	PART NO.	CHANGE NO.	DESCRIPTION	REMARKS	QTY.
22	1112191291		Cover oil pump		1
23	0501408220		Bolt		2
24	8941480790		Dowel, D=16		2
25	02/801545		Clip, jubiee, ID=45		3
26	02/801547		Hose breather-cover L=53		1
27	02/801543		Breather, engine oil		1
28	02/800882		Nut		2
29	9091646080		Washer, plain		2
30	02/801550		Hose breather - pipe		1
31	02/801546		Clip, jublee, ID=48		1
32	02/801544		Pipe drain		1
33	9099156661		Clip hose		1
34	9081508160		Pin		2
	9097130740		Hose, drain		1
35	02/801551		Washer, seal		1
36	9992023120		Plug M12 x 9		1
37	5093000231		Stud		1
38	9081510180		Pin, D=10, L=18		2
39	8970233390		Valve, oil relief assembly		1
40	5096230350		O Ring		1
41	1096301150		Washer, seal		1
42	1096660360		Connector		1
43	1096800240		Tap, water drain		1
44	8970157540		Clip, hose		1
45	02/800619		Pipe, oil drain		1
46	1093000550		Stud, L1-45		1
47	1112920200		Gasket		3

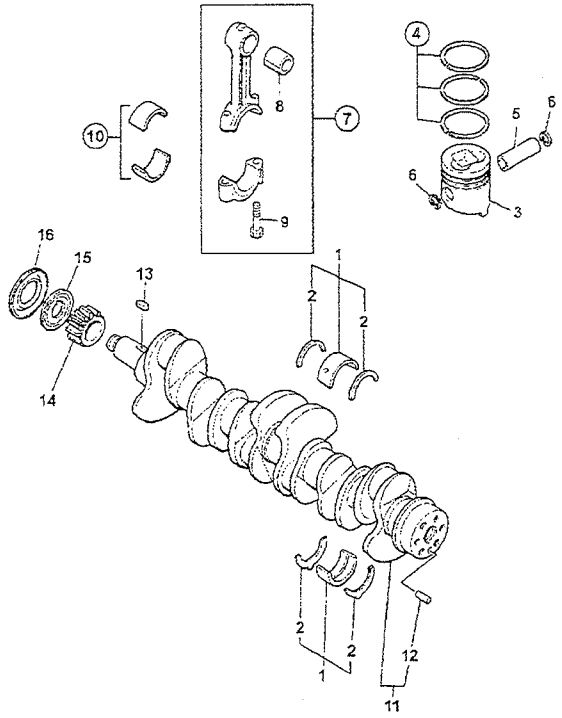

ITEM	PART NO.	CHANGE NO.	DESCRIPTION	REMARKS	QTY.
1	02/801514		Kit, main bearing, standard		1
2	02/801515		Kit-thrust washer standard		2
3	02/801516		Piston, grade=AX	Use 02/801539 liner piston kit	A/R
	02/801517		Piston, grade=CX	Use 02/801539 liner piston kit	A/R
4	02/801518		Kit-piston ring, standard		6
5	02/800305		Pin gudgeon		6
6	02/801519		Ring, snap, piston pin		12
7	02/800310		Rod, connecting, assembly		6
8	02/800306		Bush, small end		1
9	1122350271		Bolt		2
10	9122716080		Kit-big end, Standard		6
	9122736080		Kit-big end, undersize - 025		A/R
	9122746080		Kit, big end, undersize - 050		A/R
11	1123104700		Crankshaft, assembly		1
12	9081512200		Pin		1
13	5097380010		Key		1
14	02/800318		Gear, crankshaft		1
15	1123620031		Flinger, oil		1
16	5123620031		Seal, dust, thrower		1

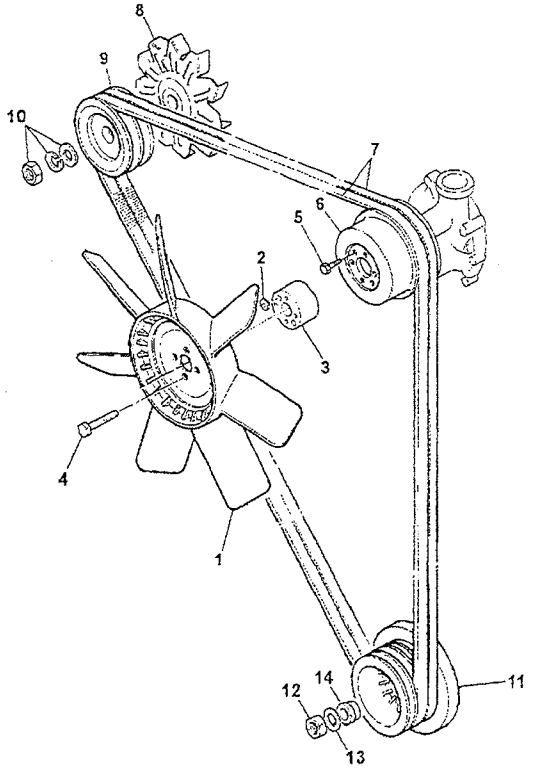

ITEM	PART NO.	CHANGE NO.	DESCRIPTION	REMARKS	QTY.
1	30/925695		Fan, 24" cooling		1
2	331/35722		Collar, fan mounting		1
3	829/31408		Spacer, fan		1
4	229/02202		Bolt, M8x95mm long		4
5	9034906100		Screw		2
6	02/801500		Pulley water pump		1
7	02/801499		Belt, fan		1
8	714/27220		Fan, generator	See C2-4-1	1
9	1812220550		Pulley alternator	See C2-4-1	1
10			See Remark'	See C2-4-1	1
11	1123712480		Pulley crankshaft		1
12	9098401071		Nut		1
13	9098514310		Washer		1
14	02/801586		Bush		1

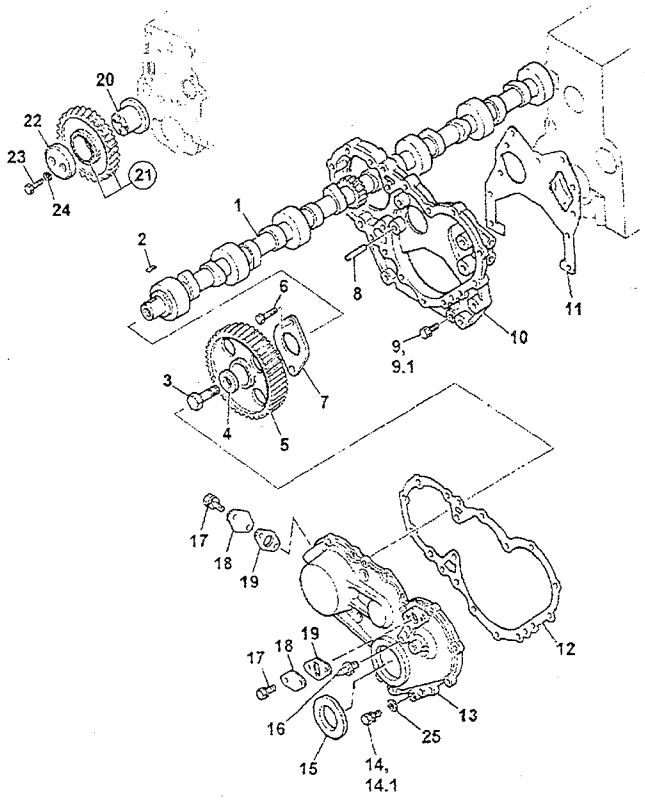

ITEM	PART NO.	CHANGE NO.	DESCRIPTION	REMARKS	QTY.
1	02/800431		Camshalt		1
2	9080307130		Key		1
3	9920614280		Bolt		1
4	02/800009		Washer cam		1
5	02/801528		Gear, camshaft		1
6	0500408250		Bolt		2
7	9116810150		Plate, thrust		1
8	9081510180		Pin, D=10 x L=18		1
9	02/800915		Bolt, Bolt flange head M8 x 45mm		2
9 01	02/800949		Bolt, ftange head, M8x20mm		4
10	5113110113		Casing, timing		1
11	02/800322		Gasket, timing case		1
12	02/801527		Gasket, Gasket, timing cover		1
13	1113210790		Cover timing		1
14	02/801303		Bolt, Range head, M8 x 50		3
14 01	02/800911		Bolt, Range head M8x25mm		6
15	1096254380		Seal, oil, front		1
16	5113270090		Pointer, timing		1
17	0280806120		Bolt, flange head, M6 x 12		4
18	02/800254		Cover inspection		2
19	02/800430		Gesket, inspection cover		2
20	9125310300		Hub, idler gear		1
21	02/800327		Gear, idler		1
22	5125350011		Collar, thrust		1
23	0108110550		Bolt		2
24	9091505100		Washer, spring		2
25	9091605080		Washer, plain		5

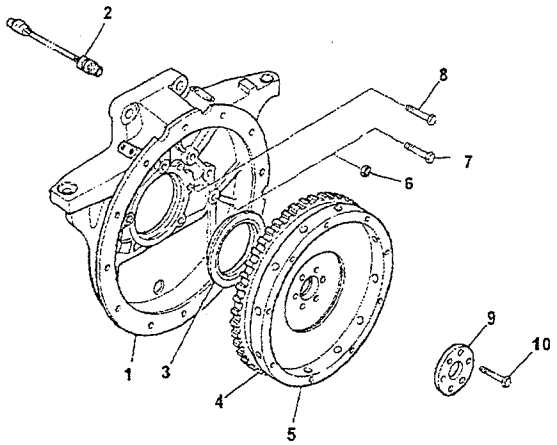

ITEM	PART NO.	CHANGE NO.	DESCRIPTION	REMARKS	QTY.
1	02/801521		Housing, flywheel		1
2	701/54300		Switch, sender tacho		1
3	02/801525		Seal, oil rear		1
4	1123330170		Gear, ring		1
5	02/800433		Flywheel, assembly		1
6	02/801522		Nut		1
7	0500408250		Bolt		7
8	02/801523		Bolt, M14 x 45		5
	02/801524		Bolt M14 x 60		2
9	5123360081		Washer		1
10	9920616380		Bolt		6

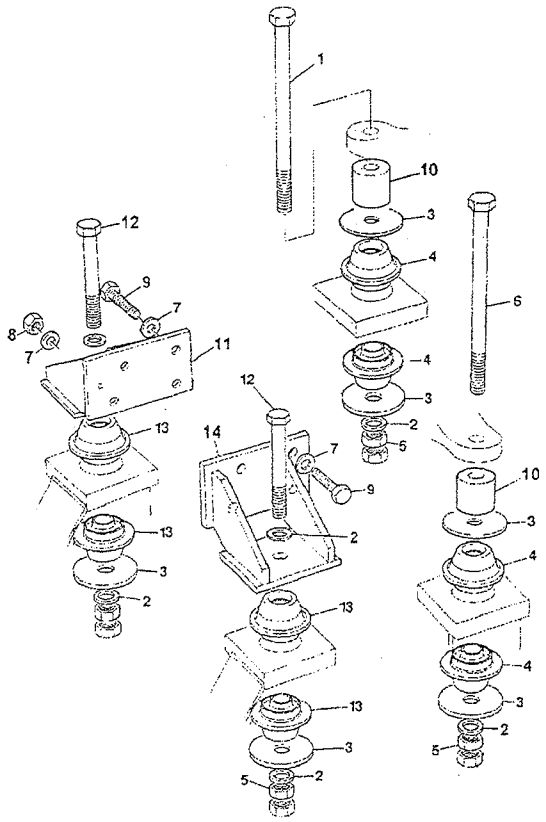

ITEM	PART NO.	CHANGE NO.	DESCRIPTION	REMARKS	QTY.
1	1316/3731Z		Bolt M16 x 220		1
2	JHP0043		Washer		6
3	KNH0589		Plate		6
4	KRH0780		Mounting, metalastik	Colour coded blue	1
5	162R016VZ		Nut, high strength (1371/0601Z)		8
6	1316/3731Z		Bolt M16 x 220		1
7	JHP0046		Washer		8
8	C4E7863		Nut, high, strength		1
9	KEH0122		Bolt high strength		7
10	KRH0479		Spacer		2
11	229/01727		Bracket, engine mounting		1
12	1316/3724Z		Bolt		2
13	KRH0781		Mounting matalastik	Colour coded yellow	4
14	KNH0586	KNH0527	Bracket, engine mounting		1

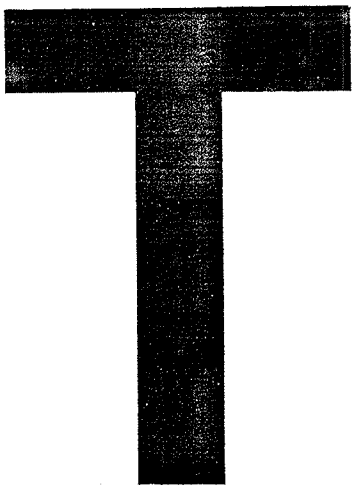

T1 ENGINE BLOCK & SUB-ASSEMBLIES
• T2 CYLINDER HEAD & SUB-ASSEMBLIES
T3 INDUCTION & EXHAUST SYSTEMS
T4 SYSTEM, COOLING
T5 SYSTEM, LUBRICATION
T6 SYSTEM, FUEL
T7 EQUIPMENT, AUXILIARY
T8 GASKET SETS

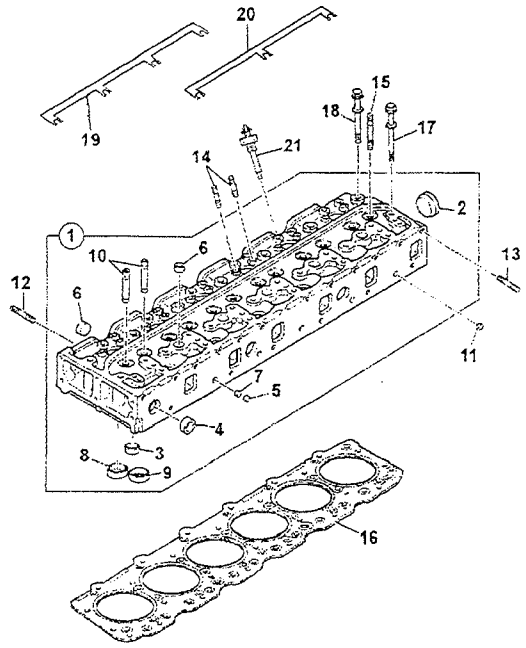

ITEM	PART NO.	CHANGE NO.	DESCRIPTION	REMARKS	QTY.
1	02/801511		Head, assembly, cylinder		1
2	1096000051		Plug, D=45		1
3	9111291280		Plug, sealing, D=20		3
4	5112190150		Plug, D=32		3
5	5096000130		Plug, D=12		6
6	1096000160		Plug, D=25		11
7	9096600340		Plug		6
8	8970376860		Seat, inlet valve		6
9	5117110280		Seat, exhaust valve		6
10	02/801513		Guide, valve, inlet and exhaust		12
11	9111296010		Plug sealing		5
12	9041108250		Stud M8 x 25 L=37		6
13	9096300260		Stud		12
14	1093000180		Stud,L1=40		12
15	9098301630		Stud		4
16	02/801512		Gasket, cylinder head		1
17	1090701010		Bolt, L=113		20
18	1090701000		Bolt L=100		6
19	717/20171		Harness connector glow plug		1
20	717/20170		Lead, connector, glow plug		1
21	717/20163		Thermostart		6

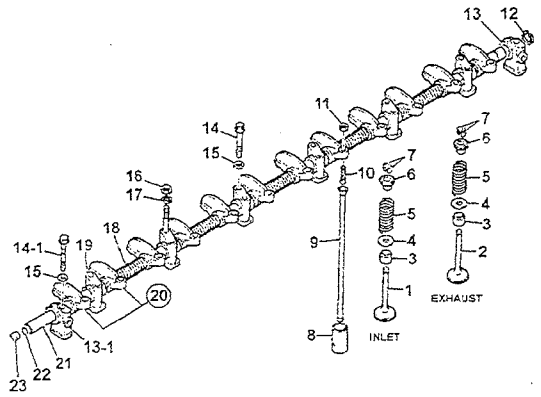

ITEM	PART NO.	CHANGE NO.	DESCRIPTION	REMARKS	QTY.
1	02/801529		Valve, inlet		6
2	02/801530		Valve, exhaust		6
3	02/801531		Seal, valve guide		12
4	5125630010		Seat, valve spring, lower, O/D=34mm		12
5	02/801532		Spring, valve		12
6	8941145790		Seat, valve spring, upper		12
7	5125650060		Collar, split		24
8	5125710032		Tappet		12
9	1125750360		Rod, push		12
10	9126160420		Screw, adjusting		12
11	9091115080		Nut, lock		12
12	9091800190		Ring snap		1
13	TBA		Part number, Not yet Known		1
13 01	5126280120		Bracket, rocker arm front		1
14	1090005670		Bolt, L=65		8
14 01	9096021480		Bolt		1
15	9098514300		Washer, plain		9
16	1094001160		Nut		4
17	9098514300		Washer, plain		4
18	02/800577		Spring, rocker shaft		5
19	9126281050		Bracket, rocker arm intermediate		6
20	02/801533		Arm, rocker		12
21	02/801534		Shaft rocker		1
22	5096230600		O Ring		1
23	9126260050		Plug		2

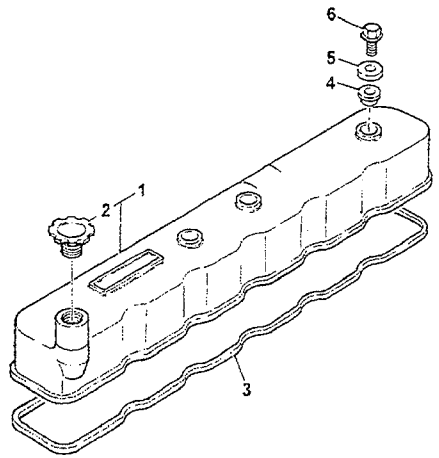

ITEM	PART NO.	CHANGE NO.	DESCRIPTION	REMARKS	QTY.
1	02/800215		Cover rocker		1
2	9117510381		Cap,oil filter		1
3	1111730590		Gasket, rocker cover		1
4	1096390320		Bush, rubber		4
5	9111791050		Washer		4
6	9111750110		Nut		4

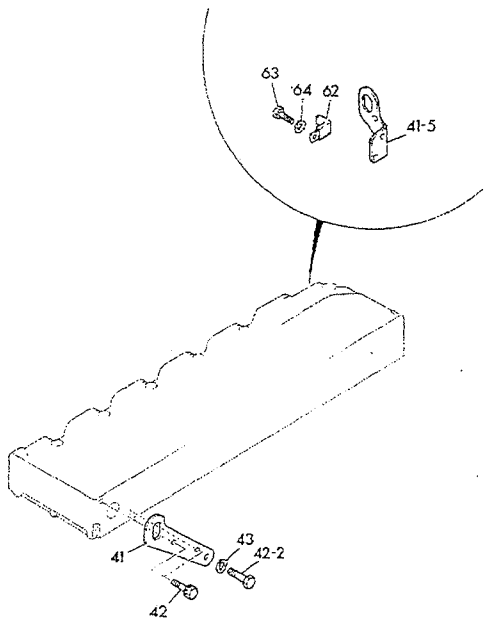

ITEM	PART NO.	CHANGE NO.	DESCRIPTION	REMARKS	QTY.
41	5117770551		Bracket, lifting, front		1
41 05	9117776121		Brackety, lifting, rear		1
42	02/801333		Bolt, flange head M10x12		3
42 02	0208014250		Bolt		1
43	9091505140		Washer, spring		1
62	9099167550		Clip harness		1
63	02/801526		Bolt		1
64	9091505060		Washer, spring		1

T

T1 ENGINE BLOCK & SUB-ASSEMBLIES
T2 CYLINDER HEAD & SUB-ASSEMBLIES
• T3 INDUCTION & EXHAUST SYSTEMS
T4 SYSTEM, COOLING
T5 SYSTEM, LUBRICATION
T6 SYSTEM, FUEL
T7 EQUIPMENT, AUXILIARY
T8 GASKET SETS

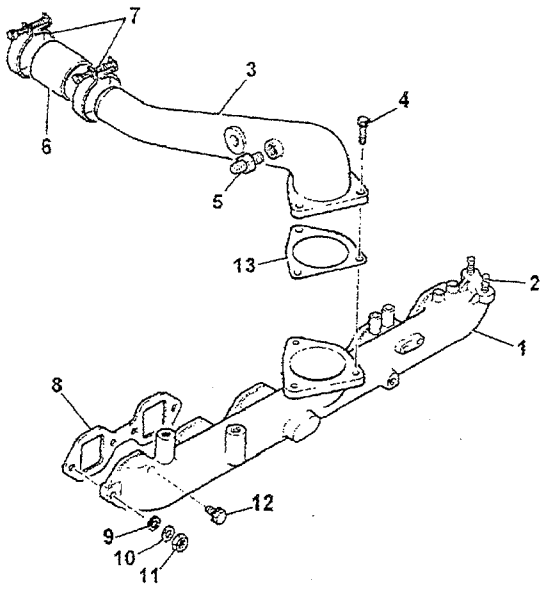

ITEM	PART NO.	CHANGE NO.	DESCRIPTION	REMARKS	QTY.
1	02/800437		Manifold, induction		1
2	9044110280		Stud		2
3	02/800441		Pipe air inlet		1
4	02/800494		Bolt, flange head, M8 x 35		3
5	02/800674		Adapter		1
6	1093607820		Hose, turbo, air inlet		1
7	8943169910		Clip, hose		2
8	02/800957		Gasket, inlet manifold		3
9	9091605080		Washer, Plain		6
10	9091505080		Washer, spring		6
11	9091104080		Nut		6
12	0501408280		Bolt		6
13	02/800440		Gasket		1

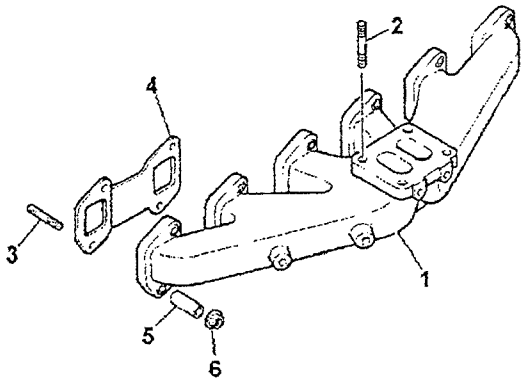

ITEM	PART NO.	CHANGE NO.	DESCRIPTION	REMARKS	QTY.
1	02/800442		Manifold, exhaust		1
2	9047310250		Stud		3
	02/800089		Stud L1=85		1
3	9096300260		Stud		12
4	8944046100		Gasket		3
5	1141491701		Spacer, tube		12
6	1094400401		Nut		12

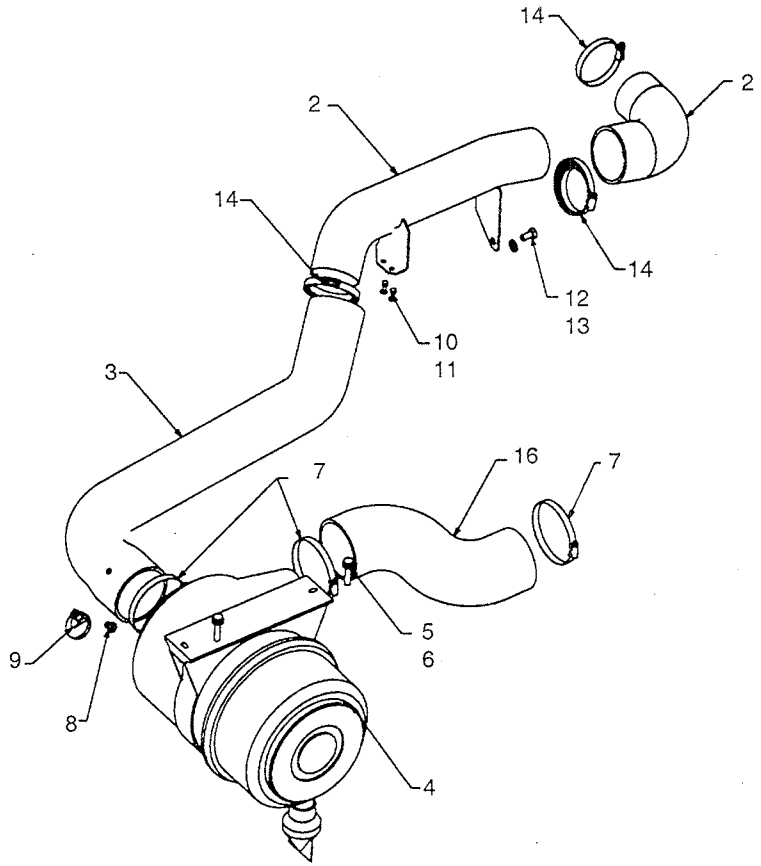

ITEM	PART NO.	CHANGE NO.	DESCRIPTION	REMARKS	QTY.
1	335/11341		WA Induction Pipe		1
2	834/10592		Induction Hose		1
3	834/11294		Induction Hose		1
4	580/12162		Air Cleaner		1
5	1370/0301Z		Plain Nut M10		2
6	1316/0411Z		Screw - M10 X 45		2
7	2201/0021		Clip wormdrive 105/127 mm		3
8	162/02674		Adaptor vacuum sensor		1
9	JNH0070		Service Switch		1
10	1420/0006Z		Plain Washer M6		2
11	1316/0203Z		Screw - M10 X 45		2
12	JHP0046		Washer M10		5
13	KBN0324		Bolt - High Strength		1
14	2201/0015		Clip wormdrive 78/102mm		3
16	834/11057		IND Hose - Air Cleaner Inlet		1

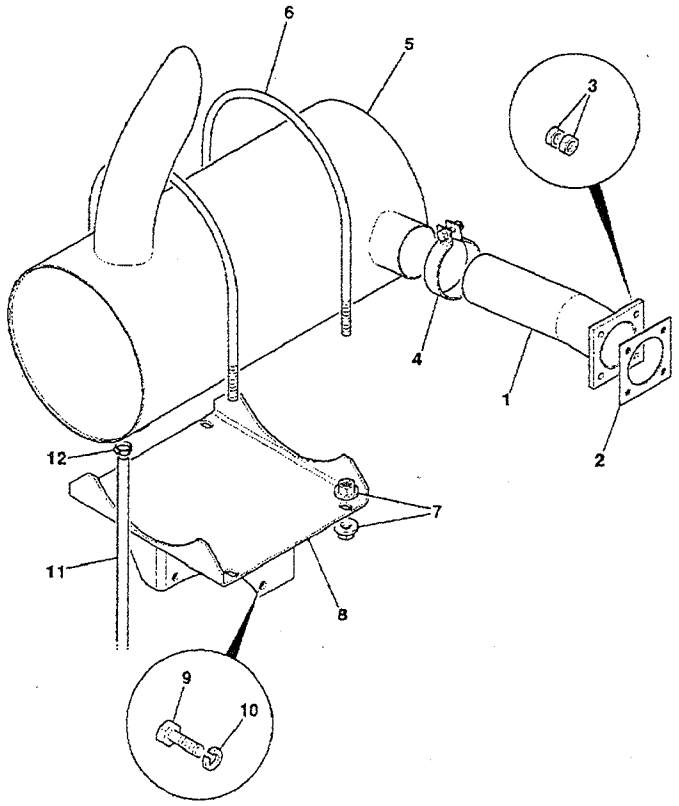

ITEM	PART NO.	CHANGE NO.	DESCRIPTION	REMARKS	QTY.
1	331/35481		Pipe exhaust		1
2	02/800444		Gasket		1
3	1371/0201Z		Nut		8
4	JSH0085		Clamp, exhaust		1
5	331/43098	331/69651	Silencer, exhaust		1
6	826/10713		Bolt, 'U' D=282		2
7	JHH0043		Nut, flanged, M10		8
8	229/01725		Bracket, silencer mounting		1
9	1316/3409Z		Bolt		3
10	JHP0046		Washer		3
11	JHH0053		Tube, teflon drain, 950mm long		1
12	2201/0001		Clip, jubilee		1

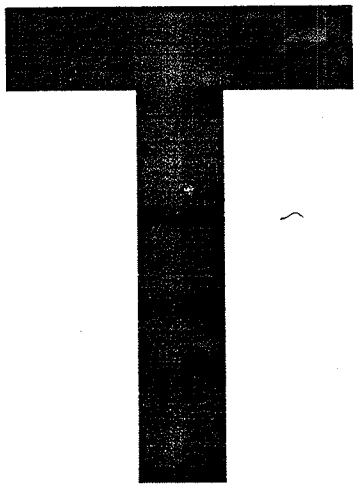

T1 ENGINE BLOCK & SUB-ASSEMBLIES
T2 CYLINDER HEAD & SUB-ASSEMBLIES
T3 INDUCTION & EXHAUST SYSTEMS
• T4 SYSTEM, COOLING
T5 SYSTEM, LUBRICATION
T6 SYSTEM, FUEL
T7 EQUIPMENT, AUXILIARY
T8 GASKET SETS

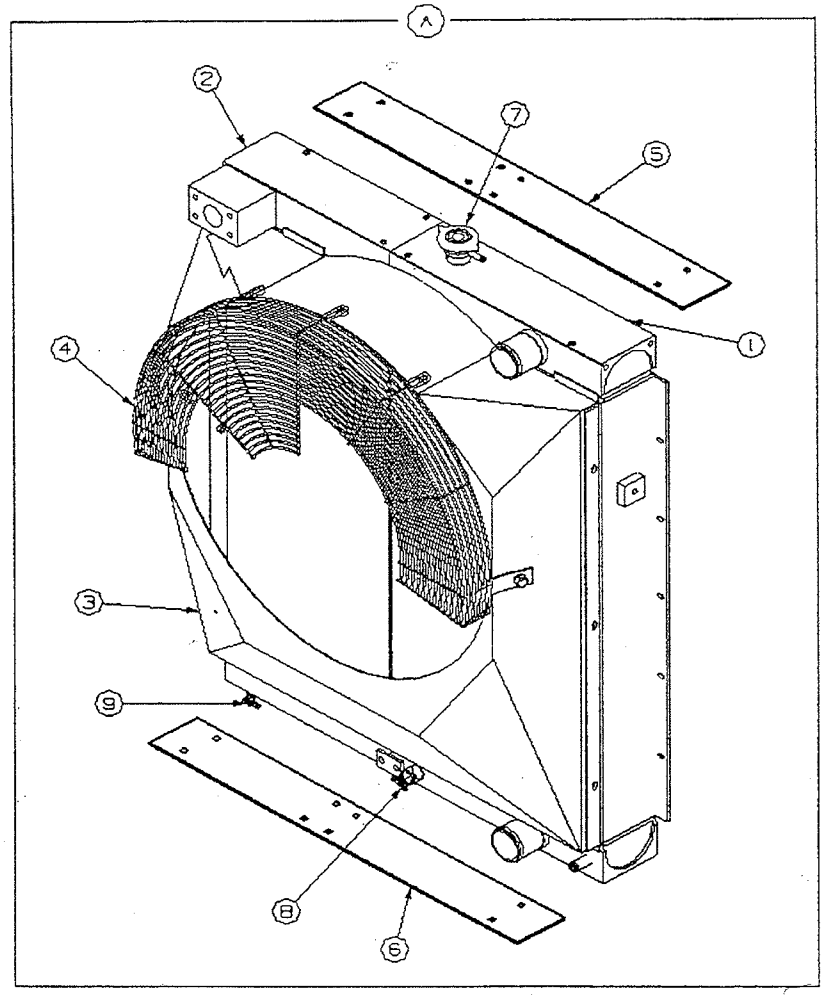

ITEM	PART NO.	CHANGE NO.	DESCRIPTION	REMARKS	QTY.
A	30/927120		ROC assembly		1
1	332/Y6947		Radiator		1
2	332/Y6948		Hydraulic Oil cooler		1
3	N.S.P.		Fan cowl		1
4	N.S.P.		Fan guard		1
5	N.S.P.		ROC joining plate top		1
6	N.S.P.		ROC joining plate bottom		1
7	332/Y4005		Pressure cap with chain		1
8	N.S.P.		Drain plug assy. radiator		1
9	N.S.P.		Drain plug assy. oil cooler		1

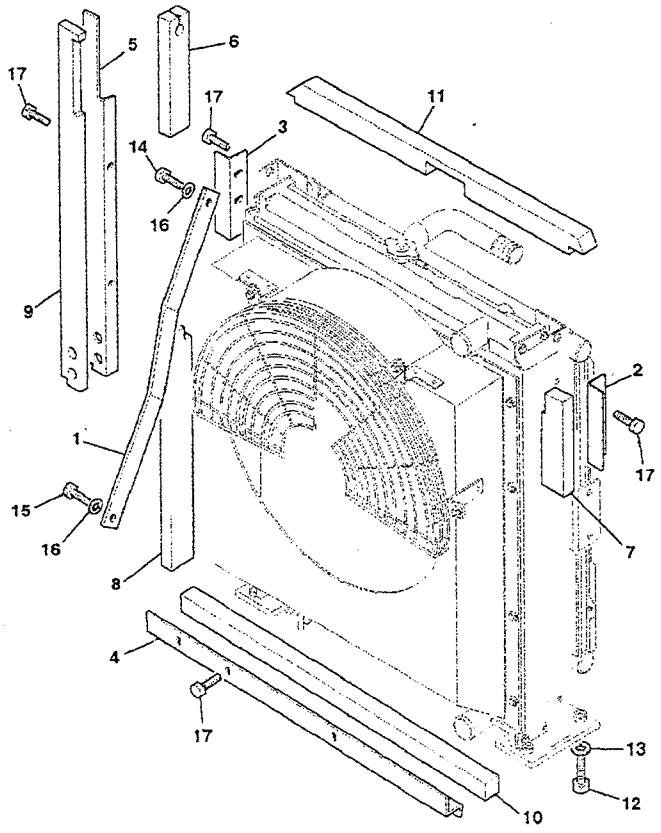

ITEM	PART NO.	CHANGE NO.	DESCRIPTION	REMARKS	QTY.
1	331/32919		Stay, radiator support		1
2	331/33134		Plate, baffle		1
3	331/33136		Plate, baffle		1
4	331/33138		Plale, baffle		1
5	331/33140		Plale, baffle		1
6	331/33142		Seal, anti-recirculation		1
7	331/33143		Seal, anti-recirculation		1
8	331/33145		Seal, anti-recirculation		1
9	331/33146		Seal, anti-recirculation		1
10	331/33147		Seal, anti-recirculation		1
11	331/33141		Seal, anti-recirculation		4
12	1316/0710Z		Screw		4
13	JHP0043		Washer		4
14	1316/0507Z		Screw		1
15	1316/0509Z		Bolt		1
16	JHP0042		Washer, plain		2
17	1316/0305Z		Bolt high tensile		9

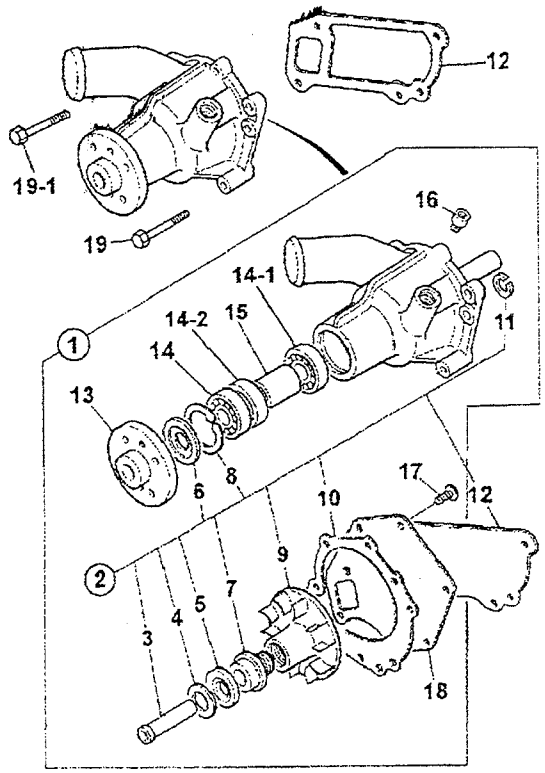

ITEM	PART NO.	CHANGE NO.	DESCRIPTION	REMARKS	QTY.
1	02/800990		Pump, pump water		1
2	02/801505		Kit-repair, water pump	Contains items with usage code A	1
3	02/800401		Shaft		1
4	1095030700		Washer		1
5	5096250550		Seal, secondary		1
6	5136390010		Disc, dust thrower		1
7	02/801506		Seal, water pump		1
8	9091801520		Ring, snap		1
9	02/801507		Impellor, water pump		1
10	02/801508		Gasket, cover to body		1
11	9099521430		Ring, snap		1
12	02/800341		Gasket		1
13	5136420072		Hub, pulley, water pump		1
14	5098000510		Bearing, ball, front		1
14 01	5098000500		Bearing, ball, rear		1
14 02	TBA		Part number, Not yet known		1
15	5136340020		Spacer, bearing		1
16	02/801381		Connector, water pump		1
17	9030908200		Screw		3
18	02/801509		Cover, water pump		1
19	02/800951		Bolt, flange head, M10 x 50mm		2
	02/801510		Bolt, M10 x 70 flange		1
20	02/800939		Bolt flange head, M10 x 35mm		1

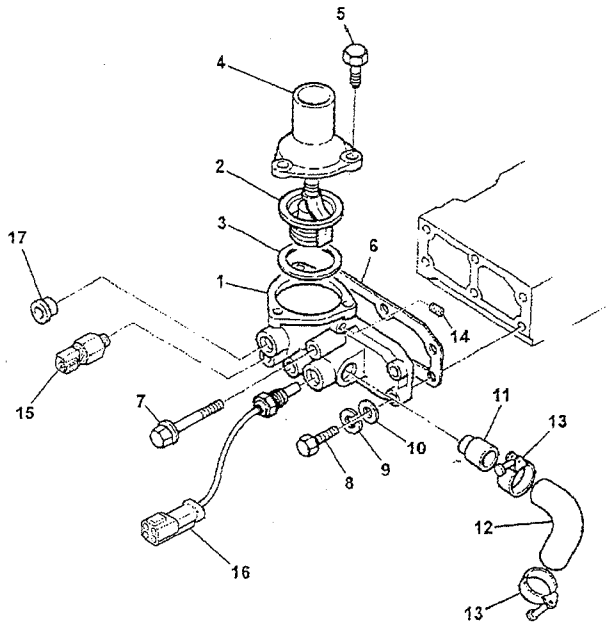

ITEM	PART NO.	CHANGE NO.	DESCRIPTION	REMARKS	QTY.
1	02/801501		Housing, thermostat		1
2	1137700700		Thermostat, 82c - 95c		1
3	1137430160		Gasket		1
4	02/801502		Connector, water outlet		1
5	0501408250		Bolt		3
6	02/800836		Gasket		1
7	02/800939		Bolt, flanged head, M10 x 35mm		1
8	0108060950		Bolt		3
9	9091505100		Washer, spring		3
10	9091605100		Washer, plain		3
11	02/801503		Pipe, water, bypass		1
12	02/801585		Hose by-pass		1
13	5097040460		Clip, hose		2
14	5096050050		Plug		1
15	701/80328		Switch, temperature		1
16	716/30111		Sensor, temperature		1
17	02/801504		Pipe Pipe heater		1

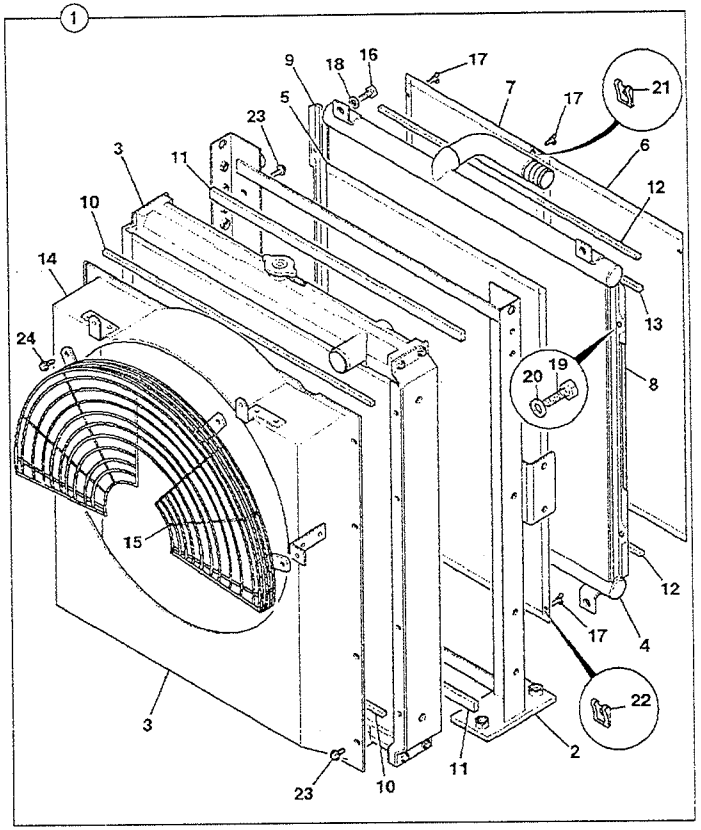

ITEM	PART NO.	CHANGE NO.	DESCRIPTION	REMARKS	QTY.
1	30/926651		Cooler, radiator+oil cooler, assembly		1
2	30/925850		Frame, mounting, rad/oil clr		1
3	30/926007		Radiator, assembly		1
4	30/925852		Cooler, oil		1
5	30/925858		Guard		1
6	30/926009		Screen, protection, left hand		1
7	30/926010		Screen, protection, rignt hand		1
8	30/925856		Bracket, oil cooler		1
9	30/925855		Bracket, oil cooler		1
10	30/925789		Seal, anti, recirculation		1
11	30/925836		Damper		1
12	30/926011		Seal, Seal anti-recirculat		2
13	30/926012		Seal, Seal anti-recirculat		2
14	30/926008		Cowling, Cowling fan		1
15	30/922703		Guard, fan		1
16	30/926014		Bolt		4
17	30/922707		Bolt wing 16 x 1.0		4
18	1420/0008Z		Washer, Plain		4
19	30/925833		Bolt, hex head M6		4
20	30/925829		Washer		6
21	30/925832		Nut, U-Nut M6		8
22	30/926013		Nut, Nut U		4
23	30/925859		Bolt, hex-head M8		16
24	30/925817		Bolt hex nead M8		4

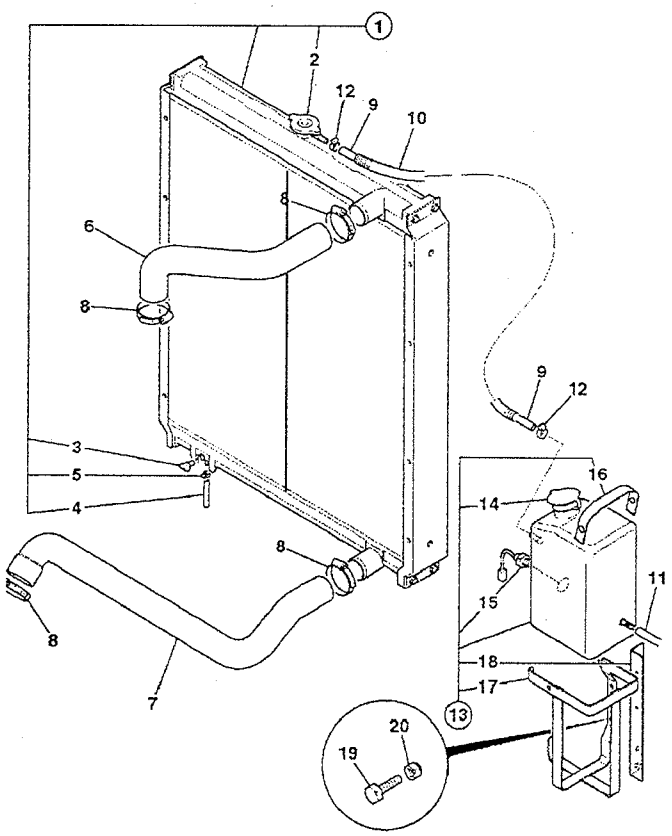

ITEM	PART NO.	CHANGE NO.	DESCRIPTION	REMARKS	QTY.
1	30/927120		Radiator, assembly and cooler assembly (indigenous)	Ref. T4-2-2	1
2	30/922701		Cap, pressure		1
3	30/921802		Tap water drain		1
4	30/925853		Hose, overflow		1
5	30/921804		Clamp, hose		1
6	834/10860		Hose, radiator top		1
7	834/10861		Hose, radiator bottom		1
8	2201/0011		Clip, jubilee		4
9	KHH0258		Hose		1
10	JSR0018		Tube, corrugated		1
11	JHH0125		Tube, 700mm long		1
12	2201/0001		Clip, Jubilee		2
13	331/13929		Tank, expansion		1
14	331/15712		Cap, expansion tank		1
15	716/30071		Sensor, low water level		1
16	331/18023		Strap, Strap, retaining		1
17	331/15711		Bracket, Bracket mounting, coolant, expansion tank		1
18	331/30478		Brecket, angle		1
19	1316/0103Z		Screw, M5 x 16		2
20	1420/0005Z		Washer, M5		2

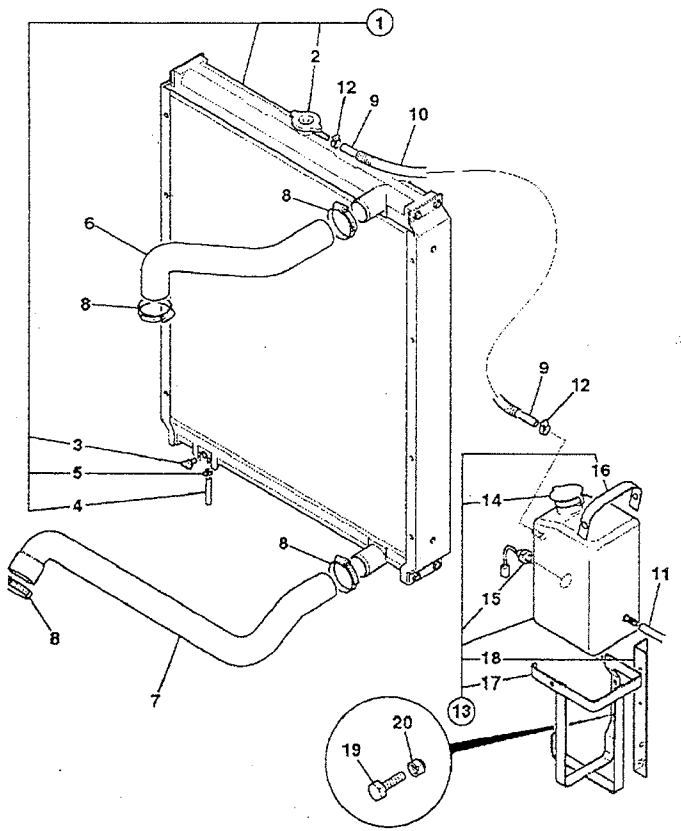

ITEM	PART NO.	CHANGE NO.	DESCRIPTION	REMARKS	QTY.
1	30/926007		Radiator, assembly		1
2	30/922701		Cap, pressure		1
3	30/921802		Tap water drain		1
4	30/925853		Hose, overflow		1
5	30/921804		Clamp, hose		1
6	834/10476		Hose, radiator top		1
7	834/10477		Hose, radiator bottom		1
8	2201/0011		Clip, jubilee		4
9	KHH0258		Hose		1
10	JSR0018		Tube, corrugated		1
11	JHH0125		Tube, 700mm long		1
12	2201/0001		Clip, Jubilee		2
13	331/13929		Tank, expansion		1
14	331/15712		Cap, expansion tank		1
15	716/30071		Sensor, low water level		1
16	331/18023		Strap, Strap, retaining		1
17	331/15711		Bracket, Bracket mounting, coolant, expansion tank		1
18	331/30478		Brecket, angle		1
19	1316/0103Z		Screw, M5 x 16		2
20	1420/0005Z		Washer, M5		2

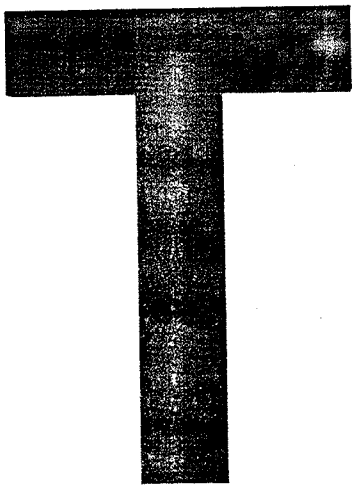

T1 ENGINE BLOCK & SUB-ASSEMBLIES
T2 CYLINDER HEAD & SUB-ASSEMBLIES
T3 INDUCTION & EXHAUST SYSTEMS
T4 SYSTEM, COOLING
T5 SYSTEM, LUBRICATION
T6 SYSTEM, FUEL
T7 EQUIPMENT, AUXILIARY
T8 GASKET SETS

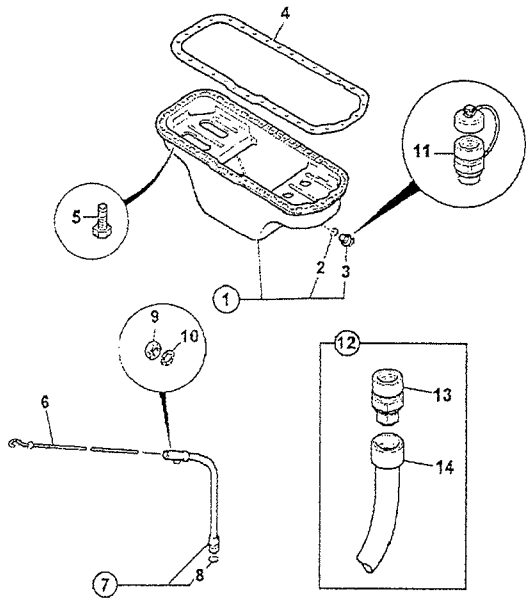

ITEM	PART NO.	CHANGE NO.	DESCRIPTION	REMARKS	QTY.
1	02/800092		Sump assembly		1
2	1096230570		Washer, seal		1
3	9096620120		Plug, oil drain		1
4	02/800447		Gasket, oil sump		1
5	0500408180		Bolt		32
6	02/800093		Dipstick, assembly		1
7	02/800448		Tube, dipstick		1
8	5096230020		O Ring		1
9	9091105080		Nut		1
10	9091505080		Washer spring		1
11	32/925428		Plug, drain valve, M20 x 1.5 M22x1.5 HOSE		1
12	340/00183		Kit, engine oil drain M22 x 1.5 & M8 keeper		1
13	32/925440		Plug, drain M22 X 1.5		1
14	32/925508		Hose, drain assembly M22 X 1000MM		1

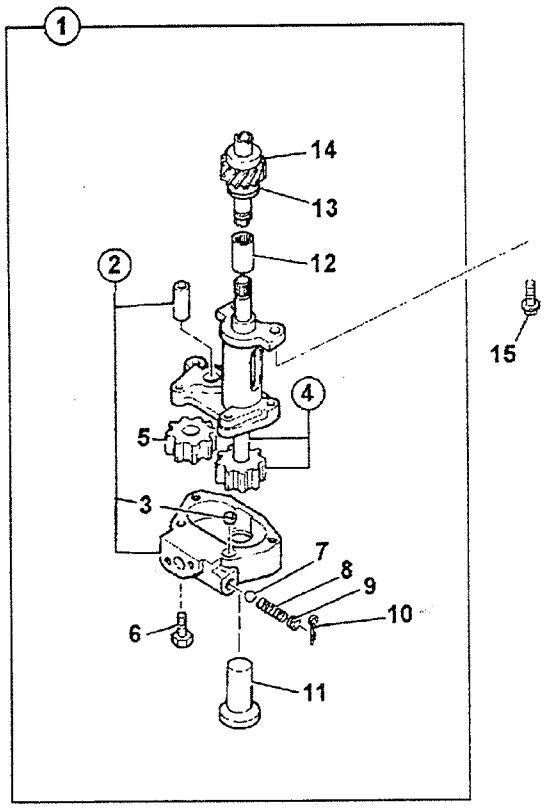

ITEM	PART NO.	CHANGE NO.	DESCRIPTION	REMARKS	QTY.
1	02/800449		Pump, oil, asaembly		1
2	1131130470		Cover, assembly		1
3	1131190030		Dowel		1
4	5131210050		Gear, oil pump drive		1
5	5131250010		Gear, oil pump drive		1
6	1090440470		Bolt		4
7	5098430030		Ball		1
8	5095800980		Spring, coil		1
9	5131650040		Seat, Spring		1
10	02/801567		Pin split		1
11	021800355		Strainer, oil suction		1
12	1131230160		Coupling		1
13	9131190100		Collar		1
14	1131280180		Gear, oil pump drive		1
15	02/800914		Bolt, flange head, M10 X 25mm		2

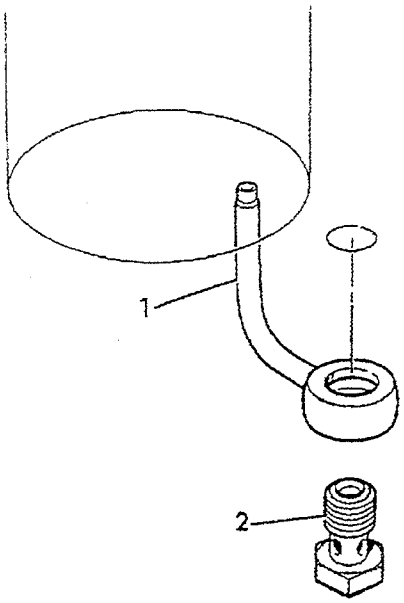

ITEM	PART NO.	CHANGE NO.	DESCRIPTION	REMARKS	QTY.
1	02/800450		Jet, piston cooling		6
2	1131610120		Valve, check, assembly		6

Illustration Not Available at Time of Publication

ITEM	PART NO.	CHANGE NO.	DESCRIPTION	REMARKS	QTY.
1	02/801480		Filter, oil assembly		1
2	02/801481		Element, oil filter, cartridge		1
3	02/801479		Cover, oil port		1
4	02/800361		Gasket		1

JCB INDIA LTD.

T5-5-1 COOLER, OIL

ISSUE - 1

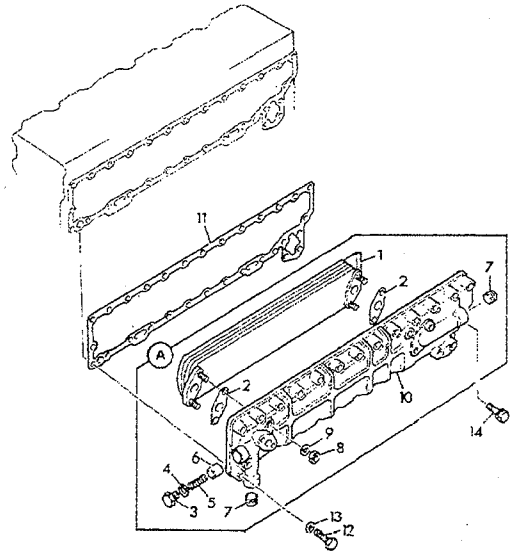

ITEM	PART NO.	CHANGE NO.	DESCRIPTION	REMARKS	QTY.
0A	02/801535		Cooler, oil, assembly		1
1	1112820180		Element, oil cooler		1
2	02/801536		Gasket		2
3	9132630100		Pulg		1
4	9095622150		Washer, seal		1
5	5095800920		Spring		1
6	5112680010		Valve, bypass		1
7	5096050170		Plug, taper		2
8	9091114100		Nut		4
9	9091645100		Washer, plain		4
10	02/801537		Body, cooler		1
11	02/801538		Gasket		1
12	8942059861		Bolt, L=65		1
13	9091605080		Washer plain		1
14	0501408450		Bolt		12
	0501408280		Bolt		15
	1090300910		Bolt		2
	0500408700		Bolt, L=70		1

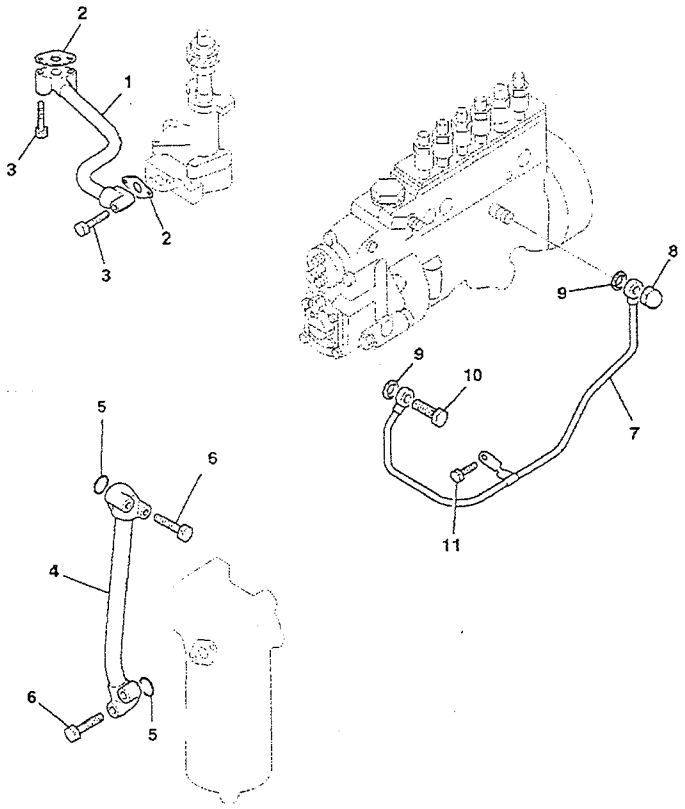

ITEM	PART NO.	CHANGE NO.	DESCRIPTION	REMARKS	QTY.
1	1133115322		Pipe oil pump feed		1
2	9099211880		Gasket		2
3	0500408400		Bolt		4
4	5133111190		Pipe oil filter		1
5	1096234620		O Ring		2
6	02/801566		Bolt, flange head M8 x 40		4
7	02/801564		Pipe, oil filt. to inj pump		1
8	9098440220		Nut, cap		1
9	1096300830		Washer. seal		2
10	1096750770		Bolt, banjo M10 x 21		2
11	0280808160		Bolt		1

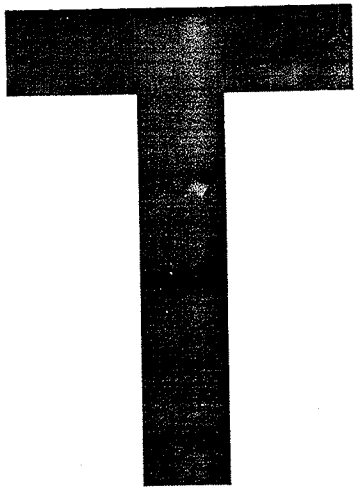

T1 ENGINE BLOCK & SUB-ASSEMBLIES
T2 CYLINDER HEAD & SUB-ASSEMBLIES
T3 INDUCTION & EXHAUST SYSTEMS
T4 SYSTEM, COOLING
T5 SYSTEM, LUBRICATION
• T6 SYSTEM, FUEL
T7 EQUIPMENT, AUXILIARY
T8 GASKET SETS

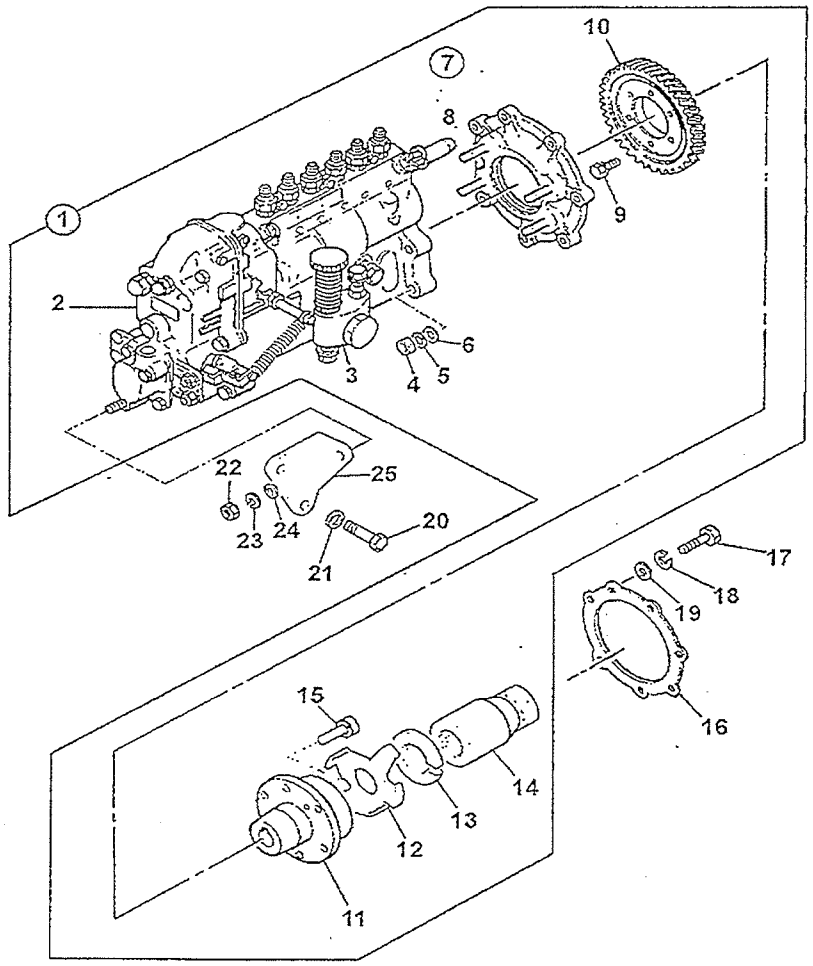

ITEM	PART NO.	CHANGE NO.	DESCRIPTION	REMARKS	QTY.
1	17/923600		Pump, fuel injection		1
2	:N.S.P		None serviced part Governer assy		1
3	:17/919706		Pump fuel feed		1
4	:5156390020		Nut		4
5	:9091505100		Washer, spring		4
6	: 02/800935		Washer		4
7	:17/919704		Bracket, fuel pump		1
8	::TBA		Part number, Not Yet known Stud		4
9	:8944575170		Bolt		6
10	:TBA		Part number, Not Yet known Gear		1
11	:17/919701		Coupling, injection pump		1
12	:17/919703		Plate, locking		1
13	:17/919705		Washer, spring		1
14	:17/919702		Nut, coupling		1
15	:9019106120		Bolt		2
16	02/800015		Gasket, inj/pump to t/case		1
17	02/800103		Bolt		7
18	9091505080		Washer, spring		7
19	9091605080		Washer, plain		7
20	0500410200		Bolt		2
21	02/800130		Washer		2
22	9091104100		Nut		1
23	9091505100		Washer spring		1
24	02/800130		Washer		1
25	02/801570		Bracket, fuel pump		1

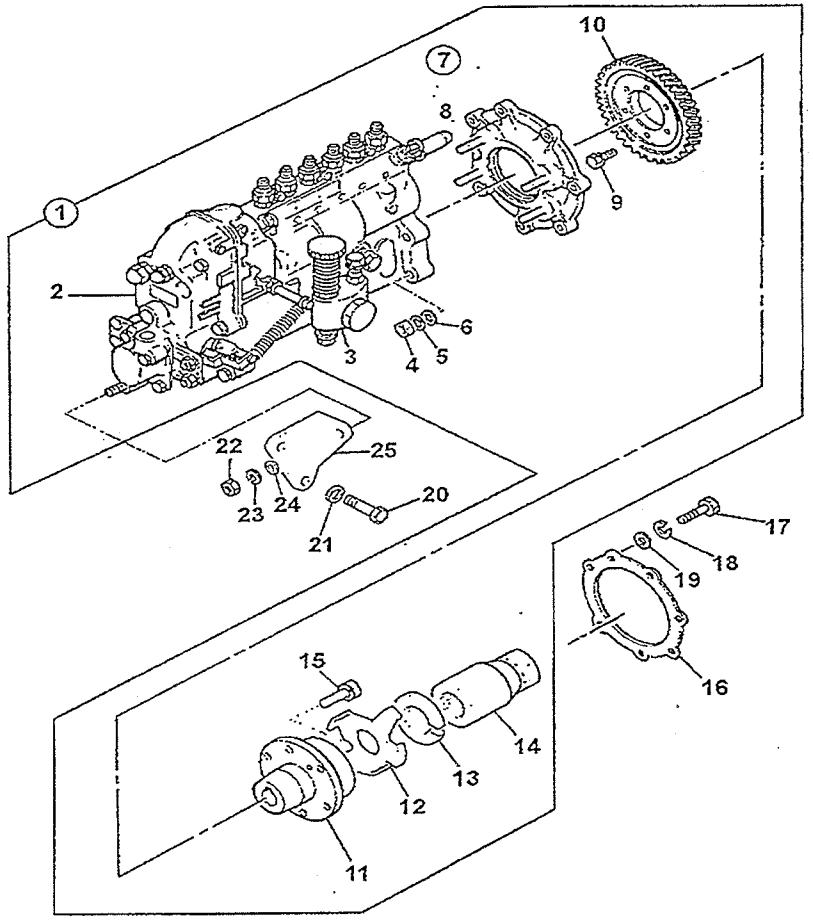

ITEM	PART NO.	CHANGE NO.	DESCRIPTION	REMARKS	QTY.
1	17/919700	17/923600	Pump, fuel injection	See T6-1-1 issue-2	1
2	TBA		Part number, Not Yet known	Goverrner assy.	1
3	17/919706		Pump, fuel lift		1
4	5156390020		Nut		4
5	9091505100		Washer, spring		4
6	02/800935		Washer		4
7	17/919704		Bracket, fuel pump		1
8	TBA		Part number, Not Yet known	Stud	4
9	8944575170		Bolt		6
10	TBA		Part number, Not Yet known	Gear	1
11	17/919701		Coupling, injection pump		1
12	17/919703		Plate, locking		1
13	17/919705		Washer, spring		1
14	17/919702		Nut, coupling		1
15	9019106120		Bolt		2
16	02/800015		Gasket, inj/pump to t/case		1
17	TBA		Part number, Not Yet known	Bolt	7
18	9091505080		Washer, spring		7
19	9091605080		Washer, plain		7
20	0500410200		Bolt		2
21	02/800130		Washer		2
22	9091104100		Nut		1
23	9091505100		Washer spring		1
24	02/800130		Washer		1
25	02/801570		Bracket, fuel pump		1

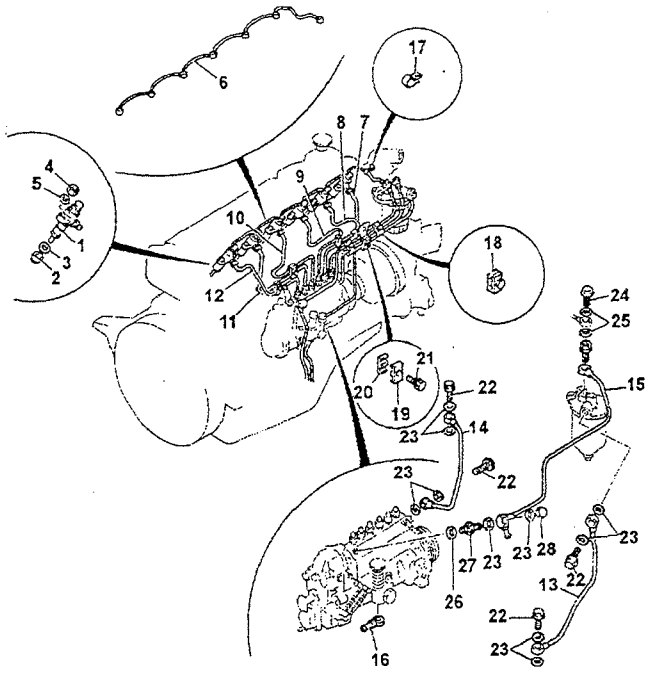

ITEM	PART NO.	CHANGE NO.	DESCRIPTION	REMARKS	QTY.
1	17/919800		Injector, assembly		6
2	5153150030		Washer, coned seal copper		6
3	9153390510		Cover, dust		6
4	9091104080		Nut		12
5	9091505080		Washer, spring		12
6	1154124711		Pipe, fuel leak-off		1
7	1154158470		Pipe,injector No 1		1
8	1154158480		Pipe,injector No 2		1
9	1154158490		Pipe,injector No 3		1
10	1154158500		Pipe,injector No 4		1
11	1154158511		Pipe,injector No 5		1
12	1154158521		Pipe,injector No 6		1
13	1154158440		Pipe fuel pump to filter		1
14	1154158450		Pipe fuel filter to pump		1
15	02/801568		Pipe, fuel filter leak-off		1
16	02/800512		Pipe fuel		1
17	9095245550		Clip, pipe		1
18	9154196120		Clip, pipe		6
19	5091091030		Clip, pipe		3
20	5097091040		Clip, pipe		3
21	0500406300		Bolt		3
22	1096150860		Bolt, banjo, M14 x 21		4
23	1096300850		Washer, seal		10
24	1096750371		Bolt, eye		1
25	1096300820		Washer, seal		2
26	1096230850		O Ring		1
27	17/305211		Valve, overflow		1
28	1094680021		Nut, cap		1

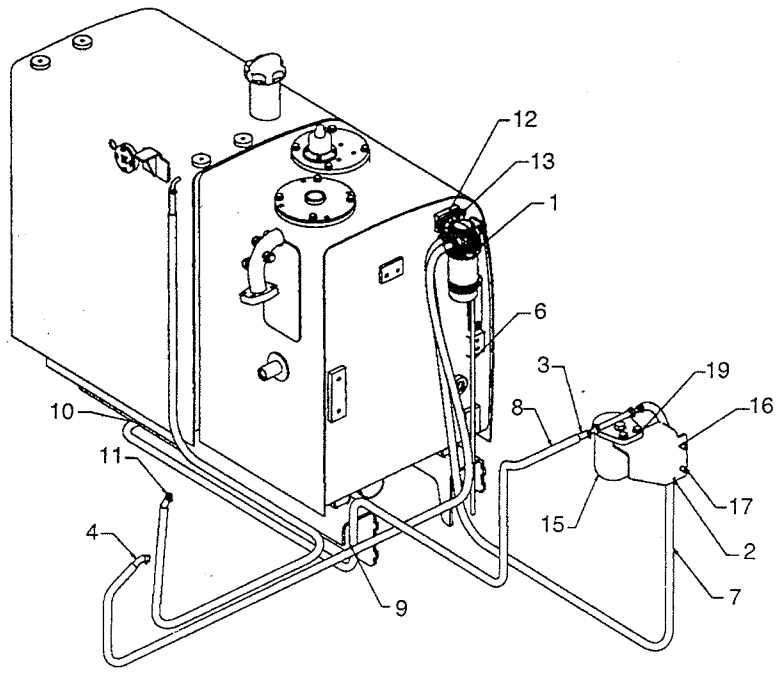

ITEM	PART NO.	CHANGE NO.	DESCRIPTION	REMARKS	QTY.
1	32/925757		Fuel Filter/Sedimenter		1
2	826/01347		Cable Tie 160 mm		8
3	JHH0141		Tube : Vinyl		1
4	JHH0064		Tube : Vinyl		3
5	4102/2700		Loctite 2431		0
6	JHH0125		Tube : PVC		1
7	JSH0007		Tube : Corrugated		3
8	JHH0066		Tube : Corrugated		1
9	KAR0016		Band : Harness		9
10	KAR0576		Rubber : Grommet		1
11	2201/0001		Clip wormdrive 8/16mm		8
12	1420/0008Z		Plain washer M10		2
13	1316/0405Z		Screw : M10X20		2
15	001/00114		Mud Filter (India only)		1
16	229/02567		Assy. Mud Filter Bracket		1
17	1316/0507Z		M12 x 25 Hex. Bolt		2
19	1420/0009Z		Washer		4

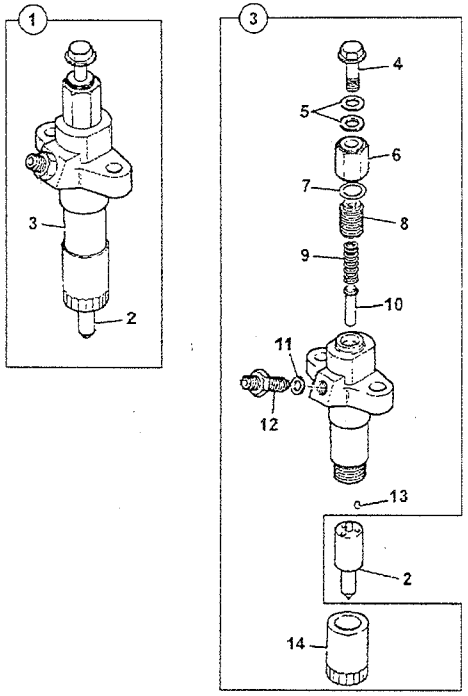

ITEM	PART NO.	CHANGE NO.	DESCRIPTION	REMARKS	QTY.
1	17/919800		Injector, assembly	P/Ex	1
2	17/919801		Nozzle, injector		1
3	17/305701		Holder, assembly		1
4	1096750371		Bolt, eye		1
5	1096300820		Washer, seal		2
6	5153320060		Nut, cap		1
7	5153390600		Gasket		1
8	8941695030		Screw adjusting		
9	5153430050		Spring, nozzle		1
10	8941695020		Rod, push		1
11	5153390030		Gasket		1
12	8943203080		Connector		1
13	9153470030		Pin		2
14	TBA		Part number, Not Yet known		1

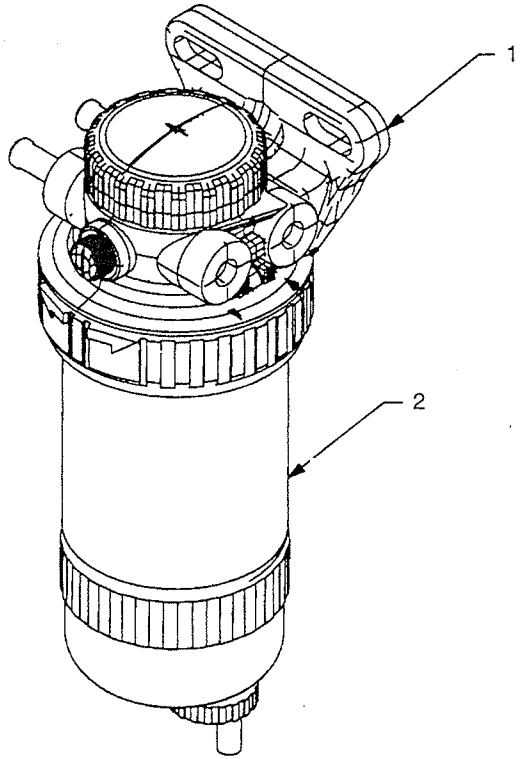

ITEM	PART NO.	CHANGE NO.	DESCRIPTION	REMARKS	QTY.
1	32/925757		Fuel Filter / Sedimenter		1
2	32/925760		Filter Element		1

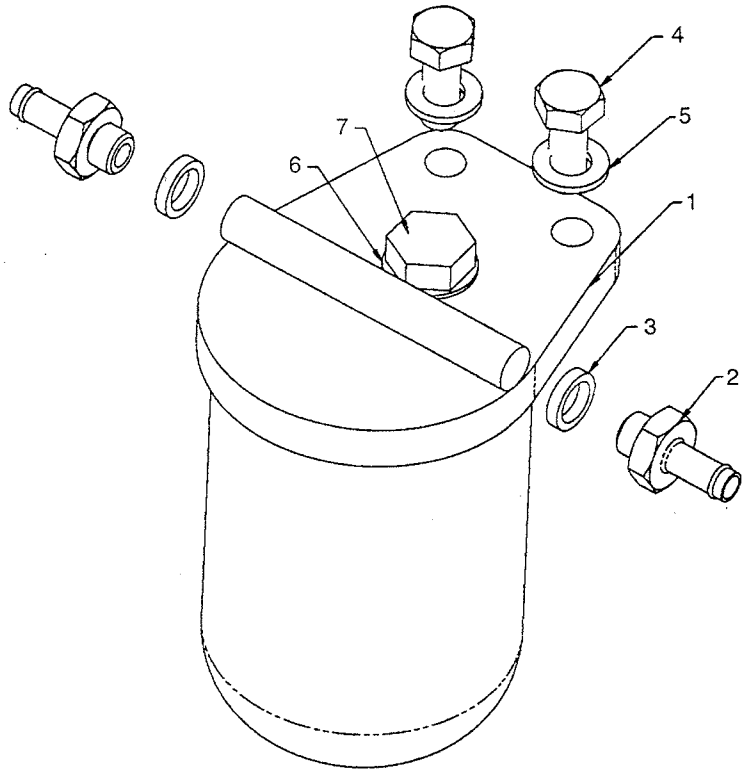

ITEM	PART NO.	CHANGE NO.	DESCRIPTION	REMARKS	QTY.
1	001/00114		Mud Filter (India Only)		1
2	JHH0124		Adaptor		2
3	823/00583		Washer		2
4	1315/0508Z		M12 X 30 Hex. Bolt		2
5	1420/0009Z		Washer		4
6	03/035077		Banjo Washer		1
7	03/305065		Plug		1
8	500/00214		Element filter		1

T

T1 ENGINE BLOCK & SUB-ASSEMBLIES
T2 CYLINDER HEAD & SUB-ASSEMBLIES
T3 INDUCTION & EXHAUST SYSTEMS
T4 SYSTEM, COOLING
T5 SYSTEM, LUBRICATION
T6 SYSTEM, FUEL
T7 EQUIPMENT, AUXILIARY
T8 GASKET SETS

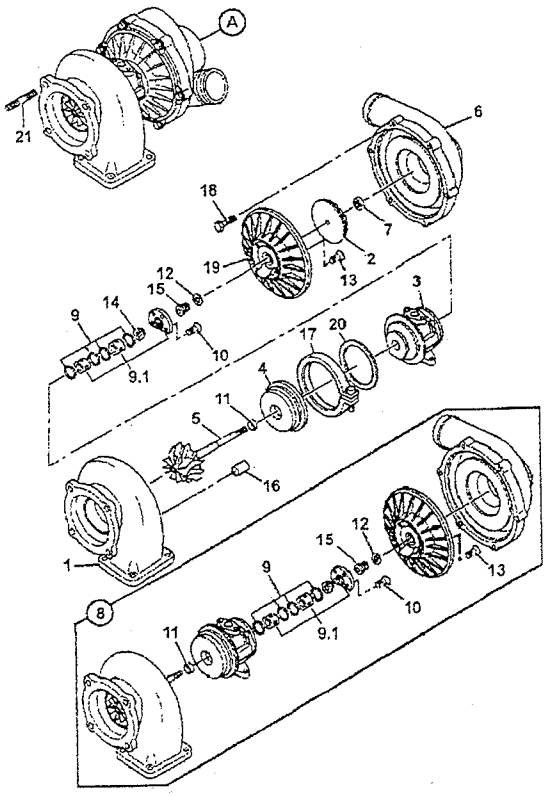

ITEM	PART NO.	CHANGE NO.	DESCRIPTION	REMARKS	QTY.
0A	02/801553		Turbo charger		1
1	02/801554		Housing, turbine		1
2	02/801555		Impellor		1
3	02/801094		Housing, centre assembly		1
4	02/801556		Shield heat		1
5	02/801557		Shan, turbine		1
6	02/801558		Housing, compressor		1
7	1094000410		Nut, lock		1
8	02/801096		Kit-repair, turbo charger		1
9	02/800804		Ring, journal bearing		3
9 01	NSP		None serviced part		1
10	02/801097		Screw thrust bearing		4
11	02/800808		Ring, seal		1
12	02/800809		Ring, seal		1
13	02/801101		Screw seal plate		4
14	02/801560		Bush, thrust		1
15	02/801561		Flanger, oil		1
16	02/801092		Pin		1
17	02/801099		Clamp		1
18	02/801559		Bolt		6
19	02/801562		Plate, seal		1
20	02/801098		Gasket		1
21	02/800813		Stud		4

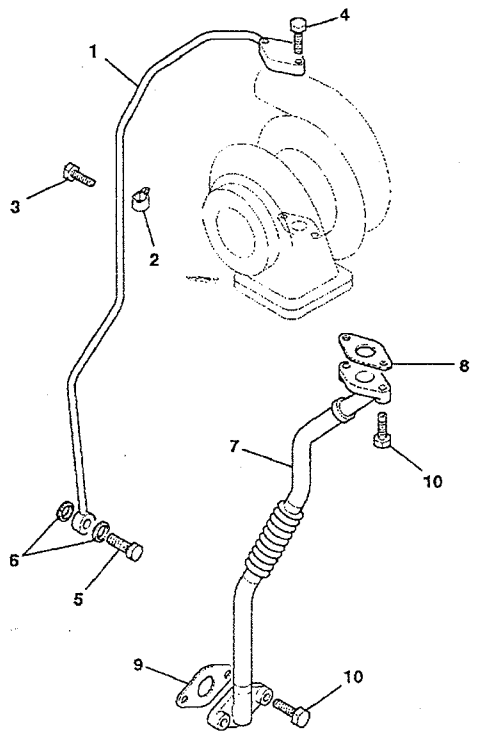

ITEM	PART NO.	CHANGE NO.	DESCRIPTION	REMARKS	QTY.
1	02/801574		Pipe, turbo oil feed		1
2	5097040541		Clip, pipe		1
3	0280808120		Bolt		1
4	02/801303		Bolt, flange head, M8x50		2
5	1096750810		Bolt, banjo		1
6	TBA		Pari number, Not Yet known		1
7	02/801563		Pipe, Pipe oil drain-t/cha		1
8	1096370581		Gasket		1
9	1096370600		Gasket		1
10	02/801566		Bolt, flange head, M8x40		4

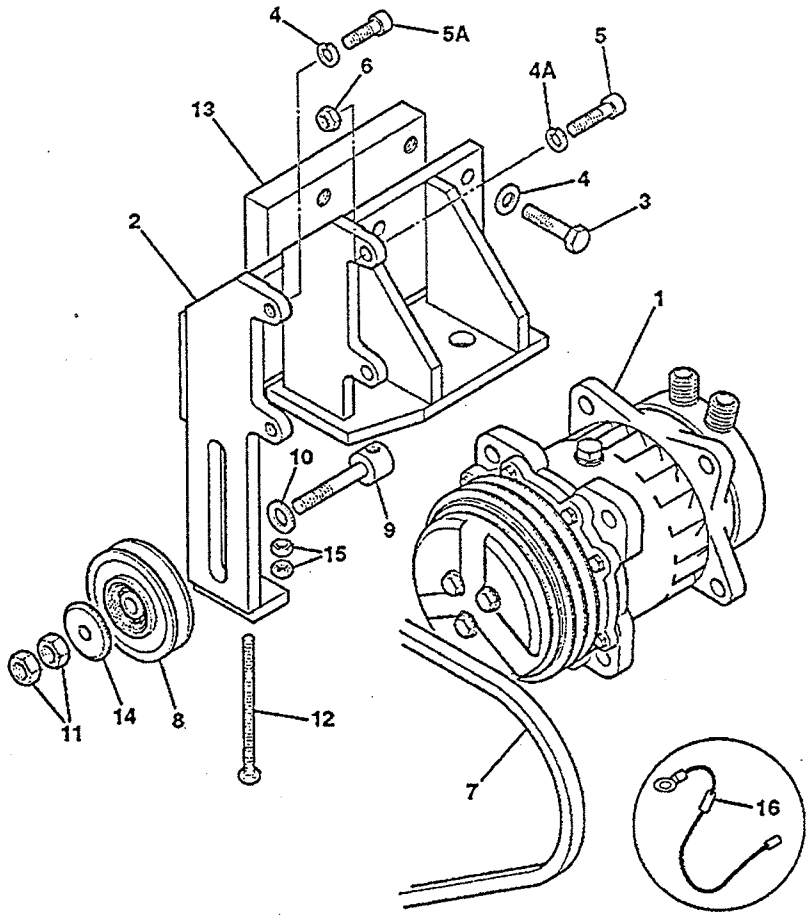

ITEM	PART NO.	CHANGE NO.	DESCRIPTION	REMARKS	QTY.
1	714/40226	Superseded	Compressor air con		1
1	113/04999		Compressor 24v		1
2	335/06804		Bracket		1
3	6009/3414D		Bolt		4
4	1420/0008Z		Washer plain M10		4
4A	1425/0008Z		Washer spring M10		5
5	1391/3410D		Capscrew M10x40		2
5A	1391/3408D		Capscrew M10x30		2
6	1370/0303Z		Nut Lock M10		2
7	331/44674		Belt drive L=1138		1
8	331/40407		Pulley assembly		1
9	331/41382		Bolt slider		1
10	823/00377		Washer plain M10		1
11	826/11612		Nut M10x1.25P		2
12	826/11085		Bolt M10x150L		1
13	331/40517		Plate		1
14	331/40447		Cap pulley protection		1
15	1371/0301D		Nut M10 high strength		2
16	721/11425		Harness A/C link		1

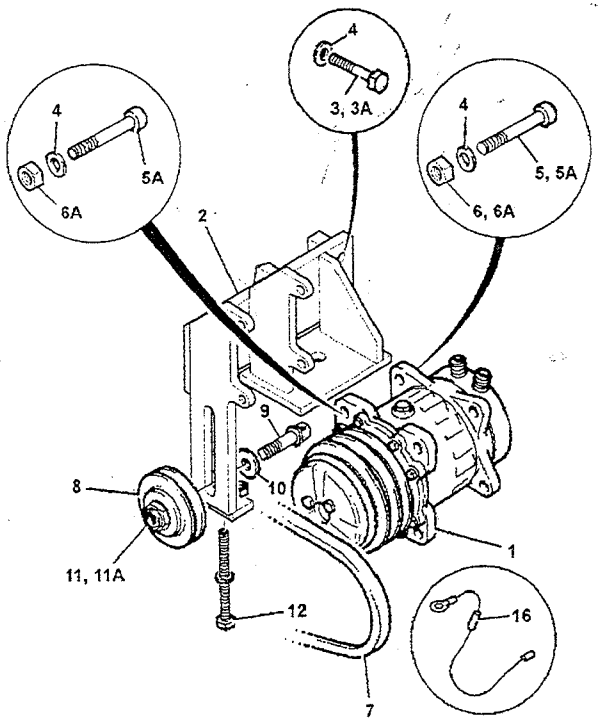

ITEM	PART NO.	CHANGE NO.	DESCRIPTION	REMARKS	QTY.
1	714/40226		Compressor, air con		1
2	335/05052		Bracket, mounting, aircon compressor		1
3	6009/3414Z		Bolt, M10X1.25 x 60		4
4	1420/0008Z		Washer, Plain		9
5	1391/3410Z		Capscrew		2
5A	1391/3408Z		Capscrew		2
6	1371/0303Z		Nut		4
7	JHR0171		Bolt, vee		1
8	JHR0167		Pulley idler assembly		1
9	331/33693		Bolt, slider		1
10	JHR0169		Washer, idler pulley		1
11	826/01391		Nut		2
11A	6063/0007Z		Washer, starlock		1
12	826/11085		Bolt, M10x150L		1
16	721/11425		Harness, A/C link		1

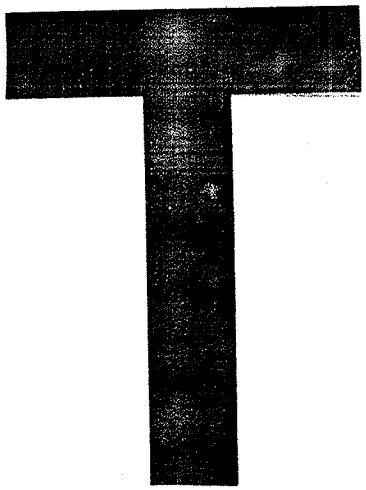

- T1 ENGINE BLOCK & SUB-ASSEMBLIES
- T2 CYLINDER HEAD & SUB-ASSEMBLIES
- T3 INDUCTION & EXHAUST SYSTEMS
- T4 SYSTEM, COOLING
- T5 SYSTEM, LUBRICATION
- T6 SYSTEM, FUEL
- T7 EQUIPMENT, AUXILIARY
- • T8 GASKET SETS

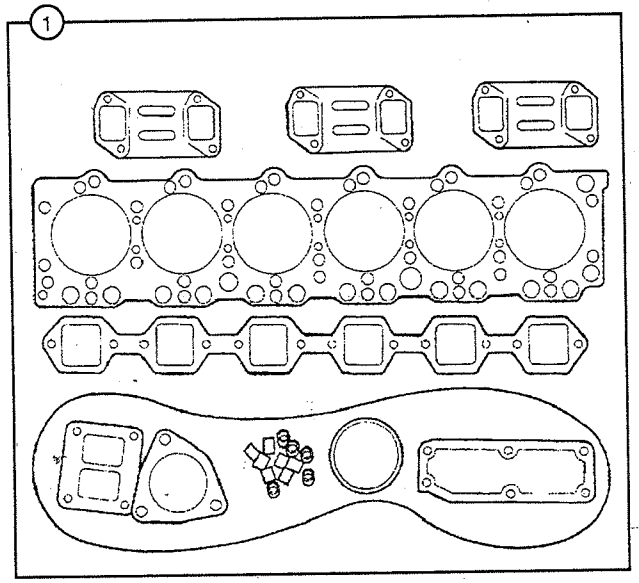

ITEM	PART NO.	CHANGE NO.	DESCRIPTION	REMARKS	QTY.
1	02/801583		Kit-gasket, top overhaul		1

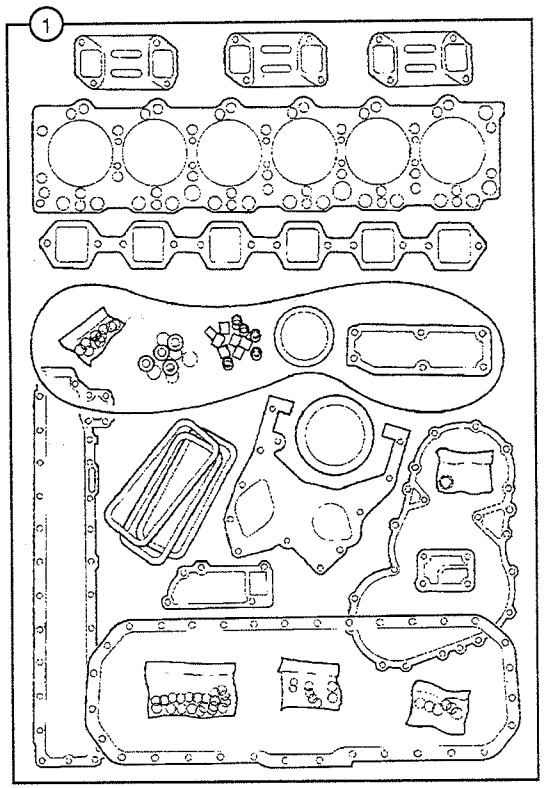

ITEM	PART NO.	CHANGE NO.	DESCRIPTION	REMARKS	QTY.
	02/801584		Kit-gasket, engine overhaul		1

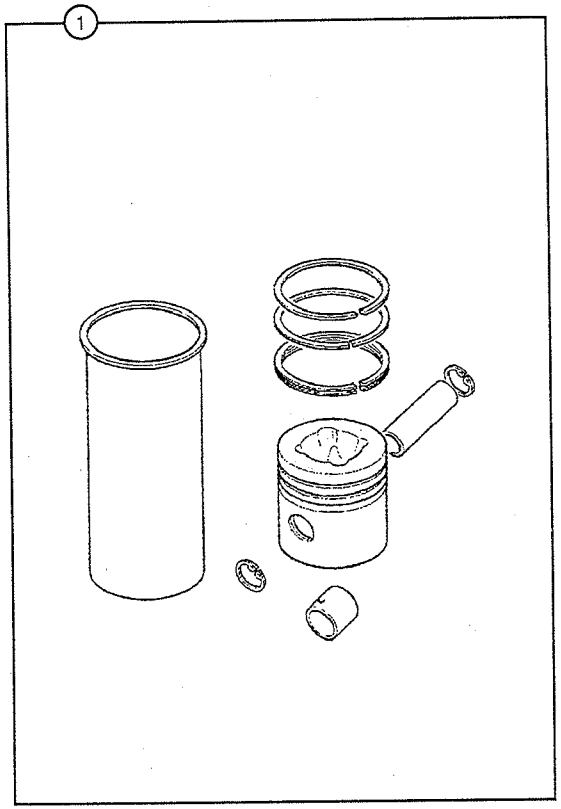

ITEM	PART NO.	CHANGE NO.	DESCRIPTION	REMARKS	QTY.
	02/801539		Kit-engine overhaul	Piston and liner kit	1

L

• L1 WORKING LIGHTS ADDITIONAL

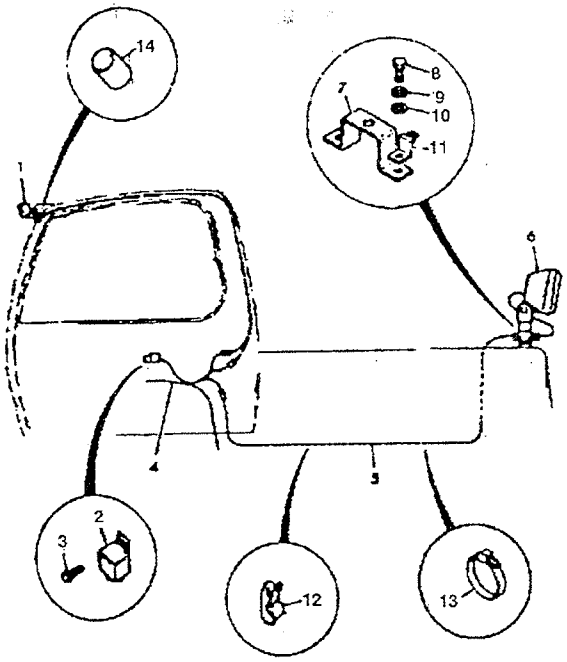

ITEM	PART NO.	CHANGE NO.	DESCRIPTION	REMARKS	QTY.
1	700/43900		Light, Working		2
1-1	720/20032		Bulb		1
2	716/11100		Relay 24V Dioded		1
3	KHR0736		Screw Pan Head		1
4	721/11441		Harness, Cab Lights		1
5	229/00596		Harness Extension, Rear		1
6	229/00595		Light Assemly		1
7	JHR0025		Bracket Rear Light	To M705982	1
	123/06305		Bracket	M705983 on	1
8	1315/0305Z		Bolt		2
9	1425/0007Z		Washer Spring		2
10	1420/0007Z		Washer Plain		2
11	821/00367		Clip		1
12	KMR0242		Clip		4
13	204/07006		Tie; Cable		10
14	JHR0158		Boot		1

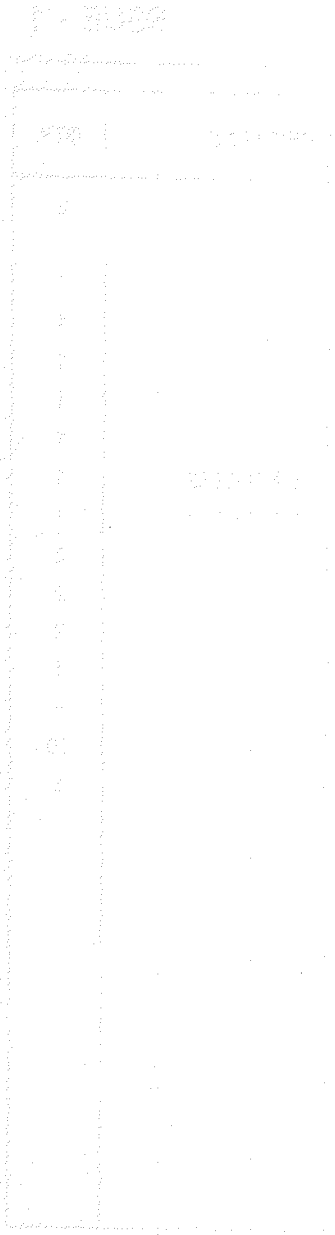

JCB INDIA LTD.

NUMERICAL INDEX - 210 LC

PART NO.	FIGURE NO.	ITEM NO.	PART NO.	FIGURE NO.	ITEM NO.	PART NO.	FIGURE NO.	ITEM NO.	PART NO.	FIGURE NO.	ITEM NO.
21800355	T5-2-1	11	1095030700	T4-1-1	4	1123330170	T1-7-1	4	5095800920	T5-5-1	5
51903874	F4-4-1	10 06	1096000051	T2-1-1	2	1123620031	T1-4-1	15	5095800980	T5-2-1	8
108060950	T4-2-1	8	1096000121	T1-3-1	6 02	1123712480	T1-5-1	11	5096000130	T2-1-1	5
108110550	T1-6-1	23	1096000160	T2-1-1	6	1125750360	T2-2-1	9	5096050050	T4-2-1	14
208014250	T2-4-1	42 02	1096000520	T1-3-1	6	1131130470	T5-2-1	2	5096050170	T5-5-1	7
280806120	T1-6-1	17	1096050660	T1-3-1	9	1131190030	T5-2-1	3	5096050180	T1-3-1	9 01
280808120	T7-2-1	3	1096050681	T1-3-1	9 02	1131230160	T5-2-1	12	5096230020	T5-1-1	8
280808160	T5-6-1	11	1096050681	T1-3-1	9 03	1131280180	T5-2-1	14	5096230350	T1-3-1	40
500406300	T6-2-1	21	1096150860	T6-2-1	22	1131610120	T5-3-1	2	5096230600	T2-2-1	22
500408180	T5-1-1	5	1096230570	T5-1-1	2	1133115322	T5-6-1	1	5096250550	T4-1-1	5
500408250	T1-6-1	6	1096230850	T6-2-1	26	1136741192	C2-5-1	17	5097040460	T4-2-1	13
500408250	T1-7-1	7	1096234620	T5-6-1	5	1136741610	C2-5-1	16	5097040541	T7-2-1	2
500408400	T5-6-1	3	1096234650	T1-3-1	21	1137430160	T4-2-1	3	5097091040	T6-2-1	20
500408700	T5-5-1		1096254380	T1-6-1	15	1137700700	T4-2-1	2	5097380010	T1-4-1	13
500410200	T6-1-1	20	1096300820	T6-2-1	25	1141491701	T3-2-1	5	5098000500	T4-1-1	14 01
500410200	T6-1-1	20	1096300820	T6-5-1	5	1154124711	T6-2-1	6	5098000510	T4-1-1	14
501408220	T1-3-1	23	1096300830	T5-6-1	9	1154158440	T6-2-1	13	5098430030	T5-2-1	7
501408250	T4-2-1	5	1096300850	T6-2-1	23	1154158450	T6-2-1	14	5112190140	T1-3-1	6 01
501408280	T3-1-1	12	1096301150	T1-3-1	41	1154158470	T6-2-1	7	5112190150	T2-1-1	4
501408280	T5-5-1		1096370581	T7-2-1	8	1154158480	T6-2-1	8	5112680010	T5-5-1	6
501408450	T5-5-1	14	1096370600	T7-2-1	9	1154158490	T6-2-1	9	5113110113	T1-6-1	10
1090001331	C2-5-1	8	1096390320	T2-3-1	4	1154158500	T6-2-1	10	5113270090	T1-6-1	16
1090005670	T2-2-1	14	1096601010	T1-3-1	12	1154158511	T6-2-1	11	5117110280	T2-1-1	9
1090091141	C2-5-1	20	1096660360	T1-3-1	42	1154158521	T6-2-1	12	5117770551	T2-4-1	41
1090300910	T5-5-1		1096750371	T6-2-1	24	1812220550	C2-4-1	31	5123360081	T1-7-1	9
1090440470	T5-2-1	6	1096750371	T6-5-1	4	1812220550	T1-5-1	9	5123620031	T1-4-1	16
1090520221	T1-3-1	17	1096750770	T5-6-1	10	1812293820	C2-4-1	29	5125350011	T1-6-1	22
1090701000	T2-1-1	18	1096750810	T7-2-1	5	1812294740	C2-4-1	34	5125630010	T2-2-1	4
1090701010	T2-1-1	17	1096800240	T1-3-1	43	1812294780	C2-4-1	32	5125650060	T2-2-1	7
1093000180	T2-1-1	14	1111730590	T2-3-1	3	1812294790	C2-4-1	33	5125710032	T2-2-1	8
1093000550	T1-3-1	46	1112191291	T1-3-1	22	1812295260	C2-4-1	27	5126280120	T2-2-1	13 01
1093607820	T3-1-1	6	1112820180	T5-5-1	1	1812296420	C2-4-1	20	5131210050	T5-2-1	4
1094000410	T7-1-1	7	1112920200	T1-3-1	47	1812296430	C2-4-1	23	5131250010	T5-2-1	5
1094001160	T2-2-1	16	1113210790	T1-6-1	13	1812296440	C2-4-1	24	5131650040	T5-2-1	9
1094400401	T3-2-1	6	1122350271	T1-4-1	9	5091091030	T6-2-1	19	5133111190	T5-6-1	4
1094680021	T6-2-1	28	1123104700	T1-4-1	11	5093000231	T1-3-1	37	5136340020	T4-1-1	15

JCB INDIA LTD.

NUMERICAL INDEX - 210 LC

PART NO.	FIGURE NO.	ITEM NO.	PART NO.	FIGURE NO.	ITEM NO.	PART NO.	FIGURE NO.	ITEM NO.	PART NO.	FIGURE NO.	ITEM NO.
5136390010	T4-1-1	6	9091104100	T6-1-1	22	9096300260	T2-1-1	13	9153470030	T6-5-1	13
5136420072	T4-1-1	13	9091105080	T5-1-1	9	9096300260	T3-2-1	3	9154196120	T6-2-1	18
5153150030	T6-2-1	2	9091114100	T5-5-1	8	9096600340	T2-1-1	7	9829322110	C2-1-1	13
5153320060	T6-5-1	6	9091115080	T2-2-1	11	9096620120	T5-1-1	3	9829322110	C2-5-1	7
5153390030	T6-5-1	11	9091505060	T2-4-1	64	9097130740	T1-3-1		9920614280	T1-6-1	3
5153390600	T6-5-1	7	9091505080	T3-1-1	10	9098301630	T2-1-1	15	9920616380	T1-7-1	10
5153430050	T6-5-1	9	9091505080	T5-1-1	10	9098401071	T1-5-1	12	9944112350	C2-5-1	1
5156390020	T6-1-1	4	9091505080	T6-1-1	18	9098440220	T5-6-1	8	9991104120	C2-5-1	5
5197110312	C2-5-1	2	9091505080	T6-1-1	18	9098514300	T2-2-1	15	9991104120	C2-5-1	13
8941145790	T2-2-1	6	9091505080	T6-2-1	5	9098514300	T2-2-1	17	9991104140	C2-5-1	14
8941480790	T1-3-1	24	9091505100	T1-6-1	24	9098514310	T1-5-1	13	9992023120	T1-3-1	36
8941695020	T6-5-1	10	9091505100	T4-2-1	9	9098600190	T1-3-1	8	9992023140	T1-3-1	10
8941695030	T6-5-1	8	9091505100	T6-1-1	23	9099156661	T1-3-1	33	1.3662E+12		3336
8942059861	T5-5-1	12	9091505100	T6-1-1	5	9099167550	T2-4-1	62	550/43711	F4-2-2	36
8943169910	T3-1-1	7	9091505100	T6-1-1	23	9099211880	T5-6-1	2	*1315/0305Z	C1-4-10	19
8943203080	T6-5-1	12	9091505120	C2-5-1	6	9099521430	T4-1-1	11	*1316/3514Z	E1-23-1	9
8944046100	T3-2-1	4	9091505120	C2-5-1	12	9111291280	T2-1-1	3	*1316/3514Z	E1-24-1	11
8944575170	T6-1-1	9	9091505140	C2-5-1	15	9111296010	T2-1-1	11	*1371/0301Z	E1-24-1	10
8970157540	T1-3-1	44	9091505140	T2-4-1	43	9111750110	T2-3-1	6	*1391/3409Z	E1-24-1	13
8970233390	T1-3-1	39	9091605080	T1-6-1	25	9111791050	T2-3-1	5	*1391/3409Z	E1-24-1	16
8970290590	C2-4-1	8	9091605080	T3-1-1	9	9112246021	T1-3-1	20	*1420/0007Z	C1-4-10	20
8970376860	T2-1-1	8	9091605080	T5-5-1	13	9116810150	T1-6-1	7	*1425/0008Z	E1-24-1	9
9019106120	T6-1-1	15	9091605080	T6-1-1	19	9116910480	T1-3-1	4	*1425/0009Z	E1-24-1	12
9030908200	T4-1-1	17	9091605080	T6-1-1	19	9116930350	T1-3-1	5	*20/925164	E2-2-1	73
9034906100	T1-5-1	5	9091605100	T4-2-1	10	9117510381	T2-3-1	2	*331/27334	E1-2-1	9
9041108250	T2-1-1	12	9091605140	C2-5-1	9	9117776121	T2-4-1	41 05	*331/35387	J1-3-1	
9044110280	T3-1-1	2	9091607120	C2-5-1	11	9122716080	T1-4-1	10	*331/37333	B2-1-20	44
9047310250	T3-2-1	2	9091645100	T5-5-1	9	9122736080	T1-4-1		*331/37335	B2-1-10	26
9080307130	T1-6-1	2	9091646080	T1-3-1	29	9122746080	T1-4-1		*331/37336	B2-1-10	27
9081508160	T1-3-1	34	9091800190	T2-2-1	12	9125310300	T1-6-1	20	*335/05592	E1-50-1	
9081510180	T1-3-1	38	9091801520	T4-1-1	8	9126160420	T2-2-1	10	*335/05915	B2-4-1	1
9081510180	T1-6-1	8	9095245550	T6-2-1	17	9126260050	T2-2-1	23	*627/10079	E1-70-1	
9081512200	T1-4-1	12	9095622150	T5-5-1	4	9126281050	T2-2-1	19	*701/58906	C1-2-1	16
9091104080	T3-1-1	11	9095720060	T1-3-1	16	9131190100	T5-2-1	13	*721/11441	C1-4-10	16
9091104080	T6-2-1	4	9095720140	T1-3-1	11	9132630100	T5-5-1	3	*721/11451	C1-1-1	1
9091104100	T6-1-1	22	9096021480	T2-2-1	14 01	9153390510	T6-2-1	3	*817/18996	B5-2-10	4

JCB INDIA LTD.

NUMERICAL INDEX - 210 LC

PART NO.	FIGURE NO.	ITEM NO.	PART NO.	FIGURE NO.	ITEM NO.	PART NO.	FIGURE NO.	ITEM NO.	PART NO.	FIGURE NO.	ITEM NO.
*817/18997	B5-2-10	8	:05/903822	F4-2-4	3	:30/926003	C3-12-10	33	:332/D9729	C3-12-10	47
*823/00409	E1-33-1	5	:05/903838	F4-2-4	23	:30/926004	C3-12-10	35	:332/D9730	C3-12-10	48
*823/00409	E1-33-2	5	:05/903859	F4-2-4	13	:30/926006	C3-12-10	34	:332/D9735	C3-12-10	54
*828/10080	E3-15-1		:05/903899	F4-2-4	20	:30/926015	C3-12-10	7	:332/D9736	C3-12-10	55
*JRA0108	J1-5-10		:17/919701	T6-1-1	11	:30/926016	C3-12-10	29	:332/D9737	C3-12-10	56
*JRP0142	B3-2-1	14	:17/919702	T6-1-1	14	:30/926018	C3-12-10	40	:5156390020	T6-1-1	4
*KHN1323	J1-1-1	14	:17/919703	T6-1-1	12	:30/926020	C3-12-10	31	:5812291920	C2-4-2	7
*KNJ0381	B1-3-1	6	:17/919704	T6-1-1	7	:30/926021	C3-12-10	36	:6004/3610	F4-2-5	15
*KNJ0381	E3-15-1		:17/919705	T6-1-1	13	:30/926022	C3-12-10	18	:701/80404	C3-12-1	29-2
*KNJ1135	E1-70-1		:17/919706	T6-1-1	3	:30/926023	C3-12-10	49	:714/25510	C2-3-2	2
*KRJ4279	E1-2-1	13	:1812190560	C2-4-2	5	:30/926117	C3-12-1	29-1	:714/25516	C2-3-2	6
*KRJ4280	E1-2-1	10	:1812230050	C2-4-2	9	:30/926289	C3-12-1	29-3	:714/25517	C2-3-2	5
*KTJ0682	E1-70-1		:1812290420	C2-4-2	8	:30/926653	C3-12-10	50	:714/25518	C2-3-2	9
*LZP0179	E2-2-1	71	:1812293820	C2-4-2	2	:30/927142	C3-12-10	43	:714/25519	C2-3-2	7
*LZP0179	E2-2-4	0E	:1812293890	C2-4-2	6	:30/927144	C3-12-10	38	:714/25520	C2-3-2	3
*MPJ5072	E1-70-1		:1812700010	C2-4-2	4	:30/927146	C3-12-10	27	:714/25529	C2-3-2	4
*UEJ0360	E1-8-1	5 01	:20/925674	F4-2-5	9	:331/29495	C3-12-10	23	:714/25531	C2-3-2	8
*UEJ0360	E1-8-1	7 01	:20/951592	F4-2-4	7	:331/36622	C3-12-10	15	:714/27202	C2-4-2	10
: 02/800935	T6-1-1	6	:20/951596	F4-2-4	11	:332/C8115	C3-12-10	2	:8944575170	T6-1-1	9
: TBA	C3-12-10	8	:20/951603	F4-2-5	10	:332/D6063	C3-12-10	51	:9019106120	T6-1-1	15
::25/222665	F4-2-5	1 01	:20/951604	F4-2-5	11	:332/D9702	C3-12-10	1	:9091505100	T6-1-1	5
::TBA	T6-1-1	8	:20/951606	F4-2-5	6	:332/D9705	C3-12-10	6	:923/10138	C3-12-10	28
:05/901926	F4-2-4	5	:20/951607	F4-2-5	13	:332/D9710	C3-12-10	20	:TBA	C2-4-2	3
:05/901963	F4-2-4	1	:20/951813	F4-2-5	4	:332/D9711	C3-12-10	21	:TBA	C3-12-10	3
:05/903801	F4-2-4	2	:20/951814	F4-2-5	12	:332/D9713	C3-12-10	22	:TBA	C3-12-10	42
:05/903802	F4-2-4	3	:30/925898	C3-12-10	4	:332/D9715	C3-12-10	24	:TBA	C3-12-10	52
:05/903803	F4-2-4	4	:30/925906	C3-12-10	9	:332/D9716	C3-12-10	25	:TBA	T6-1-1	10
:05/903805	F4-2-4	8	:30/925907	C3-12-10	10	:332/D9717	C3-12-10	26	001/00114	T6-4-1	15
:05/903806	F4-2-4	9	:30/925909	C3-12-10	11	:332/D9718	C3-12-10	37	001/00114	T6-7-1	1
:05/903807	F4-2-4	10	:30/925910	C3-12-10	12	:332/D9719	C3-12-10	30	001/00233	E1-5-1	9
:05/903809	F4-2-4	12	:30/925911	C3-12-10	13	:332/D9723	C3-12-10	39	01/145301	T1-1-1	1
:05/903811	F4-2-4	14	:30/925913	C3-12-10	16	:332/D9723	C3-12-10	53	02/800007	T1-3-1	18
:05/903812	F4-2-4	15	:30/925914	C3-12-10	17	:332/D9724	C3-12-10	41	02/800009	T1-6-1	4
:05/903819	F4-2-4	6	:30/925933	C3-12-10	14	:332/D9726	C3-12-10	44	02/800012	T1-3-1	3
:05/903820	F4-2-4	5	:30/926000	C3-12-10	19	:332/D9727	C3-12-10	45	02/800013	T1-3-1	19
:05/903821	F4-2-4	2	:30/926002	C3-12-10	32	:332/D9728	C3-12-10	46	02/800015	T6-1-1	16

JCB INDIA LTD.

NUMERICAL INDEX - 210 LC

PART NO.	FIGURE NO.	ITEM NO.	PART NO.	FIGURE NO.	ITEM NO.	PART NO.	FIGURE NO.	ITEM NO.	PART NO.	FIGURE NO.	ITEM NO.
02/800015	T6-1-1	16	02/800619	T1-3-1	45	02/801501	T4-2-1	1	02/801538	T5-5-1	11
02/800089	T3-2-1		02/800674	T3-1-1	5	02/801502	T4-2-1	4	02/801539	T8-2-1	
02/800092	T5-1-1	1	02/800804	T7-1-1	9	02/801503	T4-2-1	11	02/801540	T1-3-1	
02/800093	T5-1-1	6	02/800808	T7-1-1	11	02/801504	T4-2-1	17	02/801541	T1-3-1	2
02/800103	T6-1-1	17	02/800809	T7-1-1	12	02/801505	T4-1-1	2	02/801542	T1-3-1	7
02/800130	T6-1-1	21	02/800813	T7-1-1	21	02/801506	T4-1-1	7	02/801543	T1-3-1	27
02/800130	T6-1-1	24	02/800836	T4-2-1	6	02/801507	T4-1-1	9	02/801544	T1-3-1	32
02/800130	T6-1-1	21	02/800882	T1-3-1	28	02/801508	T4-1-1	10	02/801545	T1-3-1	25
02/800130	T6-1-1	24	02/800911	T1-6-1	14 01	02/801509	T4-1-1	18	02/801546	T1-3-1	31
02/800215	T2-3-1	1	02/800914	T5-2-1	15	02/801510	T4-1-1		02/801547	T1-3-1	26
02/800254	T1-6-1	18	02/800915	T1-6-1	9	02/801511	T2-1-1	1	02/801548	T1-3-1	13
02/800305	T1-4-1	5	02/800935	T6-1-1	6	02/801512	T2-1-1	16	02/801549	T1-3-1	14
02/800306	T1-4-1	8	02/800939	C2-5-1	4	02/801513	T2-1-1	10	02/801550	T1-3-1	30
02/800310	T1-4-1	7	02/800939	T4-1-1	20	02/801514	T1-4-1	1	02/801551	T1-3-1	35
02/800318	T1-4-1	14	02/800939	T4-2-1	7	02/801515	T1-4-1	2	02/801552	T1-3-1	15
02/800322	T1-6-1	11	02/800949	T1-6-1	9 01	02/801516	T1-4-1	3	02/801553	T7-1-1	0A
02/800327	T1-6-1	21	02/800951	T4-1-1	19	02/801517	T1-4-1		02/801554	T7-1-1	1
02/800341	T4-1-1	12	02/800957	T3-1-1	8	02/801518	T1-4-1	4	02/801555	T7-1-1	2
02/800361	T5-4-1	4	02/800990	T4-1-1	1	02/801519	T1-4-1	6	02/801556	T7-1-1	4
02/800401	T4-1-1	3	02/801092	T7-1-1	16	02/801521	T1-7-1	1	02/801557	T7-1-1	5
02/800430	T1-6-1	19	02/801094	T7-1-1	3	02/801522	T1-7-1	6	02/801558	T7-1-1	6
02/800431	T1-6-1	1	02/801096	T7-1-1	8	02/801523	T1-7-1	8	02/801559	T7-1-1	18
02/800433	T1-7-1	5	02/801097	T7-1-1	10	02/801524	T1-7-1		02/801560	T7-1-1	14
02/800437	T3-1-1	1	02/801098	T7-1-1	20	02/801525	T1-7-1	3	02/801561	T7-1-1	15
02/800440	T3-1-1	13	02/801099	T7-1-1	17	02/801526	T2-4-1	63	02/801562	T7-1-1	19
02/800441	T3-1-1	3	02/801101	T7-1-1	13	02/801527	T1-6-1	12	02/801563	T7-2-1	7
02/800442	T3-2-1	1	02/801303	T1-6-1	14	02/801528	T1-6-1	5	02/801564	T5-6-1	7
02/800444	T3-4-1	2	02/801303	T7-2-1	4	02/801529	T2-2-1	1	02/801566	T5-6-1	6
02/800447	T5-1-1	4	02/801333	T2-4-1	42	02/801530	T2-2-1	2	02/801566	T7-2-1	10
02/800448	T5-1-1	7	02/801381	T4-1-1	16	02/801531	T2-2-1	3	02/801567	T5-2-1	10
02/800449	T5-2-1	1	02/801479	T5-4-1	3	02/801532	T2-2-1	5	02/801568	T6-2-1	15
02/800450	T5-3-1	1	02/801480	T5-4-1	1	02/801533	T2-2-1	20	02/801570	T6-1-1	25
02/800484	C2-5-1	18	02/801481	T5-4-1	2	02/801534	T2-2-1	21	02/801570	T6-1-1	25
02/800494	T3-1-1	4	02/801495	C2-5-1	3	02/801535	T5-5-1	0A	02/801574	T7-2-1	1
02/800512	T6-2-1	16	02/801499	T1-5-1	7	02/801536	T5-5-1	2	02/801583	T8-1-1	1
02/800577	T2-2-1	18	02/801500	T1-5-1	6	02/801537	T5-5-1	10	02/801584	T8-1-2	

JCB INDIA LTD.

NUMERICAL INDEX - 210 LC

PART NO.	FIGURE NO.	ITEM NO.	PART NO.	FIGURE NO.	ITEM NO.	PART NO.	FIGURE NO.	ITEM NO.	PART NO.	FIGURE NO.	ITEM NO.
02/801585	T4-2-1	12	130/99510	B5-3-1		1316/0305Z	D1-1-1	8	1316/0505Z	B1-5-10	16
02/801586	T1-5-1	14	130/99555	B5-3-1		1316/0305Z	E1-30-20	23	1316/0505Z	B1-5-11	20
03/035077	T6-7-1	6	130/99557	B5-3-1		1316/0305Z	E1-31-20	23	1316/0505Z	B1-5-30	9
03/305065	T6-7-1	7	130/99560	B5-3-1		1316/0305Z	T4-3-1	17	1316/0505Z	C1-4-10	21
05/903860	F4-4-1	1	1315/0101Z	B2-11-1	2	1316/0308Z	B3-4-1	52	1316/0505Z	J1-1-1	6
05/903861	F4-4-1	2	1315/0103Z	B1-4-1	16	1316/0309Z	E1-21-1	12	1316/0507Z	B1-5-1	6
05/903862	F4-4-1	3	1315/0303Z	B2-1-1	35	1316/0403Z	C1-5-1	10	1316/0507Z	B1-5-2	8
05/903863	F4-4-1	4	1315/0303Z	B2-1-10	25	1316/0403Z	D1-1-1	32	1316/0507Z	B1-5-10	17
05/903864	F4-4-1	5	1315/0305Z	B1-4-1	21	1316/0403Z	E1-10-1	23	1316/0507Z	B1-5-11	17
05/903865	F4-4-1	5A	1315/0305Z	C1-4-10	3	1316/0403Z	E1-30-10	13	1316/0507Z	C1-1-1	33
05/903866	F4-4-1	6	1315/0305Z	L1-1-2	8	1316/0405Z	B1-2-1	10	1316/0507Z	C1-5-1	8
05/903867	F4-4-1	7	1315/0405Z	C1-1-1	20	1316/0405Z	B1-3-1	4	1316/0507Z	E1-2-1	8
05/903868	F4-4-1	8	1315/0407Z	B1-5-30	12	1316/0405Z	B1-5-30	23	1316/0507Z	F4-3-1	3
05/903869	F4-4-1	10 01	1315/0508Z	B2-7-1	6	1316/0405Z	B2-10-1	14	1316/0507Z	T4-3-1	14
05/903870	F4-4-1	10 02	1315/0508Z	T6-7-1	4	1316/0405Z	C1-2-1	5	1316/0507Z	T6-4-1	17
05/903871	F4-4-1	10 03	1315/0517Z	B2-7-1		1316/0405Z	C3-5-1	7	1316/0508Z	B1-5-10	18
05/903872	F4-4-1	10 04	1316/0103Z	T4-5-1	19	1316/0405Z	C3-5-1	10	1316/0508Z	B1-5-20	11
05/903873	F4-4-1	10	1316/0103Z	T4-5-1	19	1316/0405Z	C3-12-1	18	1316/0508Z	D2-1-1	2
05/903875	F4-4-1	10 07	1316/0203Z	B1-3-1	19	1316/0405Z	C3-12-1	18	1316/0508Z	E1-10-1	16
05/903876	F4-4-1	10 08	1316/0203Z	B1-5-20	9	1316/0405Z	D1-1-1	53	1316/0508Z	E1-30-30	7
05/903877	F4-4-1	10 09	1316/0203Z	B2-4-1	23	1316/0405Z	E1-10-1	15	1316/0508Z	E3-14-1	2
05/903899	F4-2-5	A	1316/0203Z	B2-5-1	23	1316/0405Z	E1-30-20	26	1316/0509Z	B1-5-30	7
113/04999	T7-3-1	1	1316/0203Z	D2-1-1	7	1316/0405Z	E1-31-20	26	1316/0509Z	B1-5-30	8
123/04999	C3-12-1	33	1316/0203Z	T3-3-1	11	1316/0405Z	T6-4-1	13	1316/0509Z	J1-1-1	10
123/06305	C1-4-1	5	1316/0205Z	C3-12-1	14	1316/0407Z	B1-5-2	11	1316/0509Z	T4-3-1	15
123/06305	C1-4-10	5	1316/0205Z	C3-12-1	14	1316/0407Z	B2-5-1	4	1316/0710Z	E1-30-20	14
123/06305	L1-1-2		1316/0205Z	D2-1-1	45	1316/0407Z	D1-1-1		1316/0710Z	E1-31-20	14
126R010SN	E2-2-1	57	1316/0301Z	C1-1-1	27	1316/0407Z	E1-3-1	25	1316/0710Z	T4-3-1	12
130/06000	B1-6-40	7	1316/0303Z	B1-5-11	14	1316/0407Z	E1-8-1	9	1316/0711Z	E3-1-1	2
130/14011	B5-3-1		1316/0303Z	B1-5-30	10	1316/0407Z	E1-30-10	12	1316/0712Z	E1-32-1	14
130/14012	B5-3-1		1316/0303Z	B2-5-1	20	1316/0408Z	B1-3-1	11	1316/3218Z	E1-11-1	6
130/14013	B5-3-1		1316/0305Z	B1-5-10	15	1316/0408Z	D1-1-1		1316/3315Z	C1-4-1	10
130/14014	B5-3-1		1316/0305Z	B1-5-11	15	1316/0408Z	E1-30-20	21	1316/3409Z	T3-4-1	9
130/14015	B5-3-1		1316/0305Z	C1-1-1	29	1316/0408Z	E1-31-20	21	1316/3410Z	E1-23-40	8
130/14018	B5-3-1		1316/0305Z	C1-4-1	6	1316/0411Z	T3-3-1	6	1316/3410Z	E1-24-1	8
130/14053	B5-3-1		1316/0305Z	C1-4-10	6	1316/0505Z	B1-4-1	3	1316/3415Z	E1-30-20	25

JCB INDIA LTD.

NUMERICAL INDEX - 210 LC

PART NO.	FIGURE NO.	ITEM NO.	PART NO.	FIGURE NO.	ITEM NO.	PART NO.	FIGURE NO.	ITEM NO.	PART NO.	FIGURE NO.	ITEM NO.
1316/3415Z	E1-31-20	25	1316/3724Z	T1-8-1	12	1371/0101Z	D2-1-1	9 07	1391/3408D	T7-3-1	5A
1316/3510Z	E1-22-1	21	1316/3731Z	T1-8-1	1	1371/0101Z	D2-1-1	13	1391/3408Z	B2-10-1	8
1316/3510Z	E1-43-10	6	1316/3731Z	T1-8-1	6	1371/0101Z	D2-1-1	41	1391/3408Z	E1-2-1	5
1316/3511Z	E1-23-40	9	1316/3812Z	J1-4-2	4	1371/0201Z	D2-1-1	11	1391/3408Z	E1-6-1	5
1316/3512Z	B1-6-40	3	1316/3813Z	E2-1-1	1 03	1371/0201Z	D2-1-1	15	1391/3408Z	E1-30-20	1
1316/3512Z	E1-10-1	17	1316/3813Z	E2-1-1	3	1371/0201Z	E1-21-1	13	1391/3408Z	E1-30-30	24
1316/3513Z	E1-4-1	7	1316/3815Z	F4-3-1	7	1371/0201Z	T3-4-1	3	1391/3408Z	E1-31-20	1
1316/3513Z	E1-22-1	22	1316/3817Z	F4-3-1	10	1371/0202Z	C1-4-10	4	1391/3408Z	T7-3-1	5A
1316/3513Z	E1-43-10	8	1316/3820Z	F4-3-1	6	1371/0301D	T7-3-1	15	1391/3409Z	E1-4-1	5
1316/3514	B2-1-30	2	1316/3825	B3-2-10	12	1371/0301Z	D2-1-1	5	1391/3409Z	E1-20-1	8
1316/3514Z	E1-30-1	8	1316/4018Z	A2-9-1	3	1371/0301Z	E1-23-40	15	1391/3409Z	E1-21-1	3
1316/3515Z	E1-20-1	12	1316/4018Z	A2-9-2	3	1371/0303Z	E1-30-20	24	1391/3409Z	E1-21-1	6
1316/3516	B2-1-30	3	1316/4018Z	A2-9-3	3	1371/0303Z	E1-31-20	24	1391/3409Z	E1-22-1	8
1316/3519Z	E1-2-1	14	1316/9403Z	C1-2-1	6	1371/0303Z	T7-3-1	6	1391/3409Z	E1-23-40	7
1316/3520Z	E1-2-1	11	1316/9515	J1-1-1	13	1371/0401Z	B2-1-30	6	1391/3409Z	E1-23-40	14
1316/3712Z	E1-30-1	9	1316/9519Z	J1-3-1	4	1371/0401Z	E1-2-1	12	1391/340Z	C1-2-1	31
1316/3713Z	F4-1-1	3	1316/O305Z	C1-2-1	4	1371/0401Z	E1-20-1	14	1391/3410D	T7-3-1	5
1316/3714Z	E1-23-10	9	137/0003Z	C3-11-1	3	1371/0401Z	E1-22-1	23	1391/3410Z	D2-1-1	4
1316/3715Z	E1-30-1	10	1370/0001Z	B1-5-1	2	1371/0401Z	E1-43-10	17	1391/3410Z	T7-3-1	5
1316/3715Z	E1-32-1	15	1370/0001Z	C1-4-1	15	1371/0603Z	E1-30-1	14	1391/3413Z	E1-4-1	
1316/3715Z	F4-1-1	5	1370/0003Z	B2-11-1		1371/0701	B3-2-10	8	1391/3508Z	E1-1-1	4
1316/3716Z	B1-3-1	14	1370/0201Z	C1-4-1	8	1390/0304Z	D2-1-1	23	1391/3508Z	E1-2-1	15
1316/3716Z	B1-4-1	11	1370/0201Z	C1-4-1	12	1391/3109Z	E1-30-30	2	1391/3509Z	E1-3-1	18
1316/3716Z	E1-22-1	12	1370/0201Z	C1-4-10	8	1391/3208	E2-2-2	3	1391/3509Z	E1-3-1	21
1316/3716Z	E1-23-1	6	1370/0203Z	B2-3-1	33	1391/3208Z	D1-1-1	51	1391/3509Z	F4-3-1	15
1316/3716Z	E1-23-10	8	1370/0203Z	E1-30-30	23	1391/3210Z	D1-1-1	21	1391/3510Z	E1-22-1	17
1316/3717Z	E1-30-1	11	1370/0301Z	B1-5-20	19	1391/3212Z	D2-1-1	27	1391/3510Z	E1-30-30	11
1316/3717Z	E1-32-1	10	1370/0301Z	T3-3-1	5	1391/3214	E2-2-1	27	1391/3510Z	E1-43-10	10
1316/3717Z	E1-33-1	10	1370/0303Z	T7-3-1	6	1391/3305	E2-2-1	26	1391/3511Z	E1-22-1	14
1316/3717Z	E1-33-2	10	1370/0403Z	B2-7-1	8	1391/3305Z	B2-3-1	31	1391/3813Z	E1-50-1	1 03
1316/3718Z	E1-30-1	12	1370/0901Z	A2-9-1	4	1391/3307Z	B2-3-1	51	1391/9402	D2-1-1	24
1316/3718Z	E1-32-1	16	1370/0901Z	A2-9-2	4	1391/3310	E2-2-1	25	1406/0011	D2-1-1	30
1316/3719Z	E1-30-1	13	1370/0901Z	A2-9-3	4	1391/3312	E2-2-2	1	1406/0011	E1-30-30	19
1316/3719Z	E1-32-1	12	1370/9401Z	C3-2-1	5	1391/3316	E2-2-2	2	1406/0011	E3-14-1	4
1316/3719Z	E1-33-1	4	1371/0001Z	B1-5-30	21	1391/3318Z	E1-30-30	21	1406/0015	C1-1-1	34
1316/3719Z	E1-33-2	4	1371/0001Z	B2-6-1	4 01	1391/3407Z	B2-4-1	5	1406/0015	E1-30-30	5

JCB INDIA LTD.

NUMERICAL INDEX - 210 LC

PART NO.	FIGURE NO.	ITEM NO.	PART NO.	FIGURE NO.	ITEM NO.	PART NO.	FIGURE NO.	ITEM NO.	PART NO.	FIGURE NO.	ITEM NO.
1406/0018	E1-30-30	12	1420/0007Z	B1-5-10	14	1420/0008Z	T7-3-1	4	1425/0006Z	D2-1-1	8
1406/0021	B1-3-1	17 01	1420/0007Z	B1-5-11	18	1420/0008Z	T7-3-1	4	1425/0006Z	D2-1-1	42
1406/0021	E1-30-20	19	1420/0007Z	B2-3-1	32	1420/0009Z	B1-4-1	4	1425/0007Z	B3-4-1	53
1406/0021	E1-31-20	19	1420/0007Z	B2-3-1	52	1420/0009Z	B1-5-1	7	1425/0007Z	C1-1-1	
1406/0026	E1-30-30	26	1420/0007Z	B2-5-1	21	1420/0009Z	B1-5-2	12	1425/0007Z	C1-1-1	
1406/0026	E1-33-1	12 3	1420/0007Z	B2-5-1	22	1420/0009Z	B1-5-10	19	1425/0007Z	D1-1-1	10
1406/0026	E1-33-2	12 3	1420/0007Z	C1-1-1	35	1420/0009Z	B1-5-11	19	1425/0007Z	D2-1-1	12
1406/0029	B1-3-1	23	1420/0007Z	C1-2-1	8	1420/0009Z	B1-5-20	12	1425/0007Z	D2-1-1	16
1406/0029	E1-30-20	34	1420/0007Z	C1-4-1	7	1420/0009Z	B1-5-30	6	1425/0007Z	L1-1-2	9
1406/0029	E1-31-20	34	1420/0007Z	C1-4-1	11	1420/0009Z	B1-6-40	5	1425/0008Z	C1-1-1	36
1406/0029	E1-33-1	12 4	1420/0007Z	C1-4-10	2	1420/0009Z	B2-7-1	7	1425/0008Z	C1-3-1	4
1406/0029	E1-33-2	8	1420/0007Z	C1-4-10	7	1420/0009Z	C1-1-1	37	1425/0008Z	E1-6-1	6
1406/0029	E1-33-2	12 4	1420/0007Z	D1-1-1	9	1420/0009Z	C1-4-10	22	1425/0008Z	E1-8-1	10
1411/0005Z	E1-2-1	20	1420/0007Z	E1-30-20	22	1420/0009Z	C1-5-1	9	1425/0008Z	E1-23-40	10
1411/0005Z	E1-3-1	17	1420/0007Z	E1-30-30	22	1420/0009Z	E1-2-1	19	1425/0008Z	T7-3-1	4A
142/01083	B2-8-1	9	1420/0007Z	E1-31-20	22	1420/0009Z	E1-10-1	24	1425/0009Z	B1-6-40	4
1420/0004Z	C1-2-1	7	1420/0007Z	L1-1-2	10	1420/0009Z	E1-24-1	15	1425/0009Z	C1-1-1	
1420/0004Z	C3-2-1	6	1420/0008Z	B1-2-1	11	1420/0009Z	E1-30-1	15	1425/0009Z	E1-22-1	15
1420/0005Z	B1-4-1	16A	1420/0008Z	B1-5-2	10	1420/0009Z	E1-30-30	6	1425/0009Z	E1-23-40	11
1420/0005Z	B1-5-1	3	1420/0008Z	B1-5-30	24	1420/0009Z	T6-4-1	19	1425/0009Z	E1-43-10	7
1420/0005Z	B1-5-30	22	1420/0008Z	C1-1-1		1420/0009Z	T6-7-1	5	1425/0009Z	E1-43-10	9
1420/0005Z	B2-6-1	3	1420/0008Z	C1-2-1	32	1420/0011Z	B2-10-1	18	1425/0009Z	F4-3-1	4
1420/0005Z	C1-4-1	16	1420/0008Z	C1-5-1	11	1420/0011Z	E1-30-1	16	1425/0011Z	E1-30-1	17
1420/0005Z	C3-11-1	4	1420/0008Z	C3-5-1	8	1420/0011Z	E1-30-20	13	15/920075	J1-5-10	
1420/0005Z	T4-5-1	20	1420/0008Z	C3-5-1	11	1420/0011Z	E1-31-20	13	15/920076	J1-5-10	
1420/0005Z	T4-5-1	20	1420/0008Z	C3-12-1	19	1420/0011Z	E1-32-1	17	15/920076	J1-5-20	
1420/0006Z	B1-5-20	10	1420/0008Z	C3-12-1	19	1420/0014Z	A2-9-1	5	159/69381	B2-11-1	1
1420/0006Z	B1-6-40	8	1420/0008Z	D1-1-1	29	1420/0014Z	A2-9-2	5	1604/0002	D2-1-1	29
1420/0006Z	B2-4-1	25	1420/0008Z	D2-1-1	46	1420/0014Z	A2-9-3	5	1604/0004	E1-30-30	13
1420/0006Z	B2-5-1	25	1420/0008Z	E1-3-1	26	1425/0004Z	D2-1-1	25	1604/0006	C1-5-1	1 04
1420/0006Z	C3-12-1	15	1420/0008Z	E1-8-1	11	1425/0005Z	B2-6-1	4	1604/0006	E1-30-20	9
1420/0006Z	C3-12-1	15	1420/0008Z	E1-30-10	11	1425/0006Z	B1-3-1	20	1604/0006	E1-31-20	9
1420/0006Z	D2-1-1	9 06	1420/0008Z	E1-30-20	20	1425/0006Z	B2-4-1	18	1604/0009	E1-33-1	12 6
1420/0006Z	D2-1-1	28	1420/0008Z	E1-31-20	20	1425/0006Z	B2-4-1	24	1604/0009	E1-33-2	12 6
1420/0006Z	T3-3-1	10	1420/0008Z	T4-4-1	18	1425/0006Z	B2-5-1	16	1606/0004	E1-30-30	20
1420/0007Z	B1-4-1	20	1420/0008Z	T6-4-1	12	1425/0006Z	B2-5-1	24	1606/0007	E1-30-30	4

JCB INDIA LTD.

NUMERICAL INDEX - 210 LC

PART NO.	FIGURE NO.	ITEM NO.	PART NO.	FIGURE NO.	ITEM NO.	PART NO.	FIGURE NO.	ITEM NO.	PART NO.	FIGURE NO.	ITEM NO.
1606/0010	E1-30-30	17	173R020VZ	B3-1-1	21	2201/0001	T4-5-1	12	229/01002	F4-1-1	1
1606/0012	E1-30-30	15	173R020VZ	B3-5-1	21	2201/0001	T6-4-1	11	229/01006	F4-3-1	16
1606/0015	E1-30-20	4	173R024VZ	B3-1-1	9	2201/0005	C3-5-1	10	229/01006	F4-4-1	A
1606/0015	E1-31-20	4	20/925164	E2-2-3	0D	2201/0005	C3-5-1	12	229/01008	E1-50-1	8
1606/2065	E1-33-1	12 5	20/925309	E1-50-1	1 01	2201/0005	C3-12-1	20	229/01008	E3-14-1	8
1606/2065	E1-33-2	12 5	20/925309	E2-1-1	1 01	2201/0005	C3-12-1	20	229/01054	B1-1-1	0A
1612/0008	E1-33-1	12 7	20/925309	E2-2-1	0A	2201/0007	C1-5-1	12	229/01056	B1-1-1	1
1612/0008	E1-33-2	12 7	20/925315	E1-50-1	7	2201/0011	T4-5-1	8	229/01057	B1-1-1	3
1612/0009	E1-33-1	12 8	20/925315	E2-7-1	A	2201/0011	T4-5-1	8	229/01058	B1-1-1	2
1612/0009	E1-33-2	12 8	20/925315	F4-3-1	17	2201/0015	E1-1-1	2	229/01082	J1-3-1	A
162/02674	C2-1-1	7	20/925318	F4-2-4	A	2201/0015	T3-3-1	14	229/01083	J1-4-1	A
162/02674	T3-3-1	8	20/950672	E2-2-3	3	2201/0021	T3-3-1	7	229/01084	F4-1-1	
1620/0003	E1-62-1	57	20/950673	E2-2-3	10	229/00024	E3-15-1		229/01085	J1-6-1	A
1620/0003	E3-6-1	12	20/950675	E2-2-3	9	229/00385	B2-4-1	4	229/01212	J1-1-1	12
1620/0005	E1-63-1	57	20/950679	E2-2-3	5	229/00385	B2-10-1	16	229/01232	E3-15-1	10
162R008SN	E2-2-2	51	20/950680	E2-2-3	4	229/00483	B3-1-1	14	229/01233	E3-15-1	9
162R016VN	E2-2-1	52	20/950681	E2-2-3	6	229/00483	E4-1-2	A.	229/01301	A2-1-11	5
162R016VZ	T1-8-1	5	20/951284	E2-2-3	1	229/00484	B3-1-1	13	229/01302	A2-1-11	2
162R020VN	E2-2-1	53	20/951285	E2-2-3	2	229/00484	E4-1-1	A.	229/01303	A2-1-11	4
17/305211	T6-2-1	27	20/951286	E2-2-3	13	229/00550	B1-6-40	1	229/01304	A2-1-11	3
17/305701	T6-5-1	3	20/951656	E2-2-1		229/00550	B2-7-1	2	229/01305	B3-2-11	1
17/919700	T6-1-1	1	20/951768	E2-7-1	B	229/00570	B3-1-1		229/01341	B3-2-10	1
17/919701	T6-1-1	11	20/951844	E2-2-1		229/00570	E1-43-10	1	229/01378	E1-1-1	3
17/919702	T6-1-1	14	20/951967	E2-7-1	35 A	229/00570	E4-2-1	A	229/01387	E1-3-1	7
17/919703	T6-1-1	12	204/07006	E1-30-10	16	229/00573	B3-2-10	9	229/01545	B5-3-1	
17/919704	T6-1-1	7	204/07006	L1-1-2	13	229/00573	B3-2-11	9	229/01553	E1-2-1	2
17/919705	T6-1-1	13	210/92901	E1-2-1	3	229/00573	E1-23-40	1	229/01670	E1-3-1	4
17/919706	T6-1-1	3	210/92901	E1-22-1	13	229/00573	E4-3-1	A	229/01707	E1-50-1	19
17/919800	T6-2-1	1	210/92901	E1-30-30	10	229/00595	L1-1-2	6	229/01714	B1-2-1	7
17/919800	T6-5-1	1	2102/0207	D2-1-1	20	229/00596	L1-1-2	5	229/01716	B1-2-1	4
17/919801	T6-5-1	2	215/10493	B5-2-10	2	229/00598	C1-3-1	2	229/01717	B1-2-1	5
17/923600	T6-1-1	1	215/11319	C1-5-1	15	229/00601	C1-3-1	6	229/01718	B1-2-1	6
17/923600	T6-1-1		215/11897	C3-12-1	A	229/00602	C1-3-1	7	229/01719	B1-2-1	1
172R020VR	B3-2-1	8	215/13482	D2-1-1	18	229/00603	C1-3-1	8	229/01720	B1-2-1	2
172R020VR	B3-2-11	8	2201/0001	T3-4-1	12	229/00606	B1-4-1	18	229/01721	B1-2-1	8
173R020VZ	B3-1-1	15	2201/0001	T4-5-1	12	229/00963	A2-1-11	0A	229/01722	D1-1-1	14

JCB INDIA LTD.

NUMERICAL INDEX - 210 LC

PART NO.	FIGURE NO.	ITEM NO.	PART NO.	FIGURE NO.	ITEM NO.	PART NO.	FIGURE NO.	ITEM NO.	PART NO.	FIGURE NO.	ITEM NO.
30/926013	T4-4-1	22	32/925440	T5-1-1	13	331/21736	C3-2-1	4	331/30985	J1-5-10	6
30/926014	T4-4-1	16	32/925508	T5-1-1	14	331/21990	B2-3-1	53	331/30985	J1-5-20	6
30/926015	C3-5-20	3	32/925692	B1-3-1	18	331/22025	J1-5-10		331/31353	D1-1-1	49
30/926015	C3-12-20	3	32/925757	T6-4-1	1	331/22026	J1-5-10		331/31610	B2-8-1	15
30/926016	C3-5-20	6	32/925757	T6-6-1	1	331/22066	J1-5-20	1	331/31695	B2-8-1	16
30/926016	C3-12-20	6	32/925760	T6-6-1	2	331/22067	J1-5-20		331/31955	C1-2-1	27
30/926017	C3-5-20	7	32/A2281	A2-9-5	6	331/22068	J1-5-20		331/31995	B2-8-1	18
30/926017	C3-12-20	7	331/11043	E3-6-1	4	331/23382	E3-6-1	2	331/32116	D1-1-1	7
30/926018	C3-5-20	10	331/11725	A2-1-5	1	331/26974	B2-8-1	6	331/32400	B2-8-1	4
30/926018	C3-12-10	28	331/11726	A2-1-6	1	331/27117	B2-8-1	1	331/32435	B2-8-1	5
30/926018	C3-12-20	10	331/13247	B3-1-1		331/27118	B2-8-1	2	331/32454	C3-5-1	11
30/926019	C3-5-20	12	331/13760	B3-2-10	1 02	331/27119	B2-8-1	3	331/32481	B2-8-1	25
30/926019	C3-12-20	12	331/13929	T4-5-1	13	331/27231	B3-1-1	1.3	331/32481	C3-14-1	1
30/926020	C3-5-10	26	331/13929	T4-5-1	13	331/27232	B3-1-1	1.5	331/32602	B3-2-1	9
30/926020	C3-12-10	37	331/14519	D2-1-1	6	331/27235	E1-10-1	18	331/32621	E1-30-10	10
30/926021	C3-5-10	27	331/15196	B3-5-1	25	331/27235	E1-50-1	5	331/32706	B1-5-20	2
30/926021	C3-12-10	38	331/15711	T4-5-1	17	331/27235	E1-69-1	1	331/32919	T4-3-1	1
30/926022	C3-5-10	28	331/15711	T4-5-1	17	331/27453	B2-8-1	10	331/33064	B1-4-1	14
30/926022	C3-12-10	39	331/15712	T4-5-1	14	331/27869	B3-1-1	1.6	331/33076	D2-1-1	17
30/926127	C3-12-1	29	331/15712	T4-5-1	14	331/27870	B3-1-1	1.4	331/33134	T4-3-1	2
30/926596	C3-12-1	31	331/17400	C1-2-1	11	331/27941	E1-11-1	25	331/33136	T4-3-1	3
30/926597	C3-12-1	32	331/18023	T4-5-1	16	331/27951	B2-8-1	11	331/33138	T4-3-1	4
30/926651	T4-4-1	1	331/18023	T4-5-1	16	331/28366	C3-5-1	1	331/33140	T4-3-1	5
30/927120	T4-2-2	A	331/18077	B2-4-1	7	331/28366	C3-5-1	13	331/33141	T4-3-1	11
30/927120	T4-5-1	1	331/18079	B2-4-1	12	331/28366	C3-12-1	21	331/33142	T4-3-1	6
32/925120	E1-8-1	13 01	331/18079	B2-5-1	11	331/28366	C3-12-1	21	331/33143	T4-3-1	7
32/925121	E1-8-1	13 06	331/18592	B2-4-1	2	331/29264	E1-3-1	19	331/33145	T4-3-1	8
32/925122	E1-8-1	13 07	331/18592	B2-5-1	2	331/29495	C3-12-10	18	331/33146	T4-3-1	9
32/925123	E1-8-1	13 08	331/18592	D1-1-1	23	331/30478	T4-5-1	18	331/33147	T4-3-1	10
32/925140	E1-8-1	13 14	331/19926	B2-1-20	13	331/30478	T4-5-1	18	331/33693	T7-3-1	9
32/925140	E3-15-1		331/19929	B2-1-20	41	331/30572	B2-5-1	6	331/34297	D2-1-1	44
32/925214	E1-11-1	4	331/20582	E3-6-1	6	331/30964	E1-2-1	16	331/34440	E1-30-30	14
32/925214	E1-50-1	3	331/21574	J1-5-20	5	331/30983	J1-5-10	12	331/34453	B1-5-1	5
32/925359	B1-3-1	21	331/21589	J1-5-10		331/30983	J1-5-20	12	331/34479	E1-30-30	3
32/925428	B1-4-1	5	331/21593	J1-5-10		331/30984	J1-5-10	11	331/34664	B1-5-20	6A
32/925428	T5-1-1	11	331/21619	J1-5-20		331/30984	J1-5-20	11	331/34854	B1-5-20	6

JCB INDIA LTD.

NUMERICAL INDEX - 210 LC

PART NO.	FIGURE NO.	ITEM NO.	PART NO.	FIGURE NO.	ITEM NO.	PART NO.	FIGURE NO.	ITEM NO.	PART NO.	FIGURE NO.	ITEM NO.
331/34855	B1-5-20	4	331/36358	B2-2-1	1	331/36705	D2-1-1	21	331/62725	A2-9-5	2
331/34946	B1-5-30	17	331/36359	B2-1-20	27	331/36877	C1-4-10	12	331/65674	A2-9-1	1
331/35049	B1-5-20	7	331/36360	B2-1-20	33	331/36878	C1-4-10	13	331/65674	A2-9-2	1
331/35138	B1-5-20	14	331/36361	B2-1-20	42	331/37328	B2-1-1	45	331/65674	A2-9-3	1
331/35139	B1-5-20	15	331/36362	B2-2-1	2 02	331/37329	B2-1-10	28	331/65844	A2-9-1	2
331/35176	B1-5-30	5	331/36363	B2-1-10	1	331/37330	B2-1-10	29	331/65844	A2-9-2	2
331/35416	B1-6-1	1	331/36364	B2-2-1	2 03	331/37332	B2-1-1	23	331/65844	A2-9-3	2
331/35440	B1-5-2	2	331/36365	B2-2-1	2 04	331/37334	B2-1-20	45	331/67255	A2-9-5	1
331/35481	T3-4-1	1	331/36366	B2-1-10	2	331/37401	B2-8-1	5 01	331/67258	A2-9-5	3
331/35486	D1-1-1	47	331/36367	B2-1-10	8	331/37587	C3-5-1	23	331/67259	A2-9-5	4
331/35578	D1-1-1	38	331/36368	B2-1-10	9	331/37600	B1-5-20	24	331/67260	A2-9-5	7
331/35606	D1-1-1	40	331/36369	B2-1-10	17	331/37601	B1-5-20	25	331/67261	A2-9-5	8
331/35722	T1-5-1	2	331/36370	B2-1-10	18	331/37602	B2-8-1	22	331/67262	A2-9-5	9
331/36328	B2-1-1	10	331/36371	B2-1-10	19	331/37603	B2-8-1	23	331/67263	A2-9-5	10
331/36328	B2-6-1	16	331/36372	B2-1-10	21	331/37604	B2-8-1	24	331/67264	A2-9-5	12
331/36329	B2-1-1	5	331/36373	B2-1-10	22	331/37686	B1-5-20	23	331/67266	A2-9-5	13
331/36330	B2-1-1	6	331/36374	B2-1-1	38	331/37712	E2-2-1	11	331/67267	A2-9-5	11
331/36331	B2-1-1	7	331/36375	B2-1-1	39	331/37714	C3-5-1	21	331/67267	A2-9-5	14
331/36332	B2-1-1	8	331/36376	B2-1-1	40	331/37715	C3-5-1	22	331/67267	A2-9-5	25
331/36333	B2-1-1	12	331/36377	B2-1-1	33	331/37942	B2-8-1	5 02	331/67268	A2-9-5	15
331/36334	B2-1-1	19	331/36378	B2-2-1	3	331/38027	E2-2-1	49	331/67270	A2-9-5	17
331/36335	B2-1-1	20	331/36379	B2-2-1	6	331/40407	T7-3-1	8	331/67271	A2-9-5	18
331/36336	B2-1-1	21	331/36380	B2-2-1	7	331/40447	T7-3-1	14	331/67272	A2-9-5	19
331/36337	B2-1-1	29	331/36381	B2-2-1	11	331/40517	T7-3-1	13	331/67278	A2-9-5	20
331/36339	B2-1-1	30	331/36382	B2-2-1	12	331/41382	T7-3-1	9	331/67280	A2-9-5	21
331/36340	B2-1-20	2	331/36383	B2-2-1	13	331/42641	F4-1-1	4	331/67281	A2-9-5	
331/36341	B2-1-20	3	331/36384	B2-2-1	14	331/42872	B1-5-10	9	331/67282	A2-9-5	22
331/36341	B2-6-1	8	331/36385	B2-2-1	16	331/43098	T3-4-1	5	331/67283	A2-9-5	23
331/36342	B2-1-20	8	331/36385	B2-2-1	18	331/44674	T7-3-1	7	331/67286	A2-9-5	
331/36343	B2-1-1	34	331/36386	B2-2-1	17	331/46291	B1-5-11	3	331/67287	A2-9-5	26
331/36343	B2-6-1	14	331/36387	B2-2-1	26	331/55681	B1-5-2	6	331/67288	A2-9-5	27
331/36344	B2-1-20	9	331/36389	B2-2-1	20	331/55795	B1-5-11	2	331/67289	A2-9-5	28
331/36346	B2-1-20	14	331/36390	B2-2-1	22	331/57200	D1-1-1	27	331/67290	A2-9-5	29
331/36354	B2-2-1	0A	331/36392	B2-2-1	30	331/57201	D1-1-1		331/67291	A2-9-5	30
331/36356	B2-1-20	16	331/36393	B2-2-1	24	331/60149	D2-1-1	19	331/67292	A2-9-5	31
331/36357	B2-1-20	18	331/36394	B2-2-1	25	331/61366	A2-9-5	5	331/67293	A2-9-5	32

JCB INDIA LTD.

NUMERICAL INDEX - 210 LC

PART NO.	FIGURE NO.	ITEM NO.	PART NO.	FIGURE NO.	ITEM NO.	PART NO.	FIGURE NO.	ITEM NO.	PART NO.	FIGURE NO.	ITEM NO.
331/67294	A2-9-5	33	331/67343	A2-9-5	60	332/J2970	C1-1-1		335/01348	B2-5-1	1
331/67297	A2-9-5	34	331/67344	A2-9-5	61	332/J2970	E1-71-1		335/02216	B3-2-1	1
331/67298	A2-9-5	35	331/67345	A2-9-5	62	332/J3063	C1-1-1		335/03322	B2-1-1	1
331/67299	A2-9-5	36	331/67346	A2-9-5		332/J3372	C3-12-1	1	335/04915	E1-30-10	9
331/67301	A2-9-5	37	331/67347	A2-9-6	1	332/J3372	C3-12-1		335/05052	T7-3-1	2
331/67302	A2-9-5	38	331/67348	A2-9-6	2	332/J3372	C3-12-10	OA	335/05171	B1-1-1	1A
331/67303	A2-9-5		331/67349	A2-9-6	3	332/J3372	C3-12-10		335/05436	B1-5-30	3
331/67304	A2-9-5	39	331/67350	A2-9-6	7	332/J8878	B3-1-1		335/05437	B1-5-30	18
331/67305	A2-9-5	40	331/67351	A2-9-6	8	332/J8878	B3-2-10		335/05439	B1-5-30	19
331/67306	A2-9-5	41	331/67353	A2-9-6	9	332/P1087	A2-1-11	0A	335/05440	B1-5-30	2
331/67307	A2-9-5	42	331/67354	A2-9-6	10	332/P1087	A2-1-11	0A	335/05454	B2-10-1	
331/67308	A2-9-5	43-1	331/67355	A2-9-6	11	332/P1088	A2-1-11	6	335/05462	B1-5-30	1
331/67310	A2-9-5	43-2	331/67356	A2-9-6	12	332/P1088	A2-1-11	6	335/05491	C1-4-1	13
331/67311	A2-9-5	43-3	331/67357	A2-9-6	13	332/P2544	B3-1-1	1	335/05581	D1-1-1	36
331/67312	A2-9-5	43-4	331/67358	A2-9-6	14	332/P3343	A2-1-11	5	335/06168	B1-5-1	1
331/67313	A2-9-5	43-5	331/67360	A2-9-6	16	332/P3350	A2-1-11	2	335/06186	E1-3-1	20
331/67314	A2-9-5	44	331/67361	A2-9-6	17	332/P3387	A2-1-11	3	335/06229	B2-5-1	9
331/67315	A2-9-5		331/67362	A2-9-6	18	332/P3389	A2-1-11	4	335/06230	B2-4-1	11
331/67316	A2-9-5	45	331/67363	A2-9-6	19	332/P4574	A2-1-11	1	335/06230	B2-5-1	10
331/67318	A2-9-5	46	331/67364	A2-9-5	24	332/P4761	A2-1-11	6	335/06231	B2-4-1	10
331/67319	A2-9-5	47	331/67364	A2-9-6	20	332/P4777	A2-1-11	1	335/06804	T7-3-1	2
331/67320	A2-9-5	48	331/67365	A2-9-6	21	332/P5028	B1-4-1	19	335/07335	B1-5-10	4
331/67322	A2-9-5		331/69651	T3-4-1		332/P6484	A2-1-11	5	335/07336	B1-5-10	5
331/67323	A2-9-5	49	331/A2285	A2-9-6	15	332/P6830	F4-3-1		335/07437	B1-5-11	6
331/67325	A2-9-5	50	332/ A3307	A2-9-6	28	332/P8470	A2-1-11	0A	335/07510	B1-5-10	8
331/67326	A2-9-5	51	332/A2281	A2-9-5	16	332/Y3995	A2-9-6	22A	335/07529	B1-5-10	1
331/67327	A2-9-5	52	332/A2287	A2-9-6	22	332/Y4005	T4-2-2	7	335/08041	B1-5-2	1
331/67329	A2-9-5	53	332/A2288	A2-9-6	23	332/Y6902	E2-7-1	4	335/08267	B1-5-10	13
331/67330	A2-9-5		332/A2289	A2-9-6	24	332/Y6947	T4-2-2	1	335/08790	B1-5-2	7
331/67331	A2-9-5	54	332/A2290	A2-9-6	25	332/Y6948	T4-2-2	2	335/10537	J1-1-1	1 0A
331/67337	A2-9-5	55	332/A2291	A2-9-6	26	332/Y7036	A2-9-7	1	335/10692	C1-5-1	17
331/67338	A2-9-5	56	332/J0669	C1-1-1		332/Y7039	A2-9-7	2	335/11021	B1-5-10	2
331/67339	A2-9-5		332/J0669	E1-30-10	7	332/Y7040	A2-9-7	6	335/11022	B1-5-10	3
331/67340	A2-9-5	57	332/J0670	C1-1-1		332/Y7041	A2-9-7	7	335/11024	B1-5-10	6
331/67341	A2-9-5	58	332/J0671	C1-1-1		332/Y7042	A2-9-7	8	335/11025	B1-5-10	7
331/67342	A2-9-5	59	332/J0671	E1-71-1		332/Y7045	A2-9-7	5	335/11292	B1-5-20	5

JCB INDIA LTD.

NUMERICAL INDEX - 210 LC

PART NO.	FIGURE NO.	ITEM NO.	PART NO.	FIGURE NO.	ITEM NO.	PART NO.	FIGURE NO.	ITEM NO.	PART NO.	FIGURE NO.	ITEM NO.
335/11293	B1-5-20	1	40/910630	B2-3-1	4	550/41723	E4-1-2	16	550/41926	E4-1-1	3
335/11295	B1-5-11	4	40/910631	B2-3-1	12	550/41723	E4-3-1	19	550/41926	E4-1-2	3
335/11296	B1-5-11	7	40/910632	B2-3-1	19	550/41729	E4-1-1	6	550/41931	E4-1-1	5
335/11297	B1-5-11	8	4000/0301	E3-15-1	7	550/41729	E4-1-2	6	550/41931	E4-1-2	5
335/11298	B1-5-11	9	4001/0801	E3-15-1		550/41731	E4-3-1	7	550/41931	E4-3-1	6
335/11299	B1-5-11	10	4001/0802	E3-15-1		550/41732	E4-3-1	8	550/41934	E4-1-1	7
335/11300	B1-5-11	11	4001/0803	E3-15-1		550/41734	E4-1-1	8	550/41934	E4-1-2	7
335/11325	B1-5-10	10	4002/0801	E3-15-1	1	550/41734	E4-1-2	8	550/41936	E4-1-1	4
335/11341	T3-3-1	1	4002/0802	E3-15-1		550/41735	E4-2-1	8	550/41936	E4-1-2	4
335/12446	B1-5-30	11	4003/2000	E3-15-1	8	550/41737	E4-1-1	2	550/41938	E4-3-1	10
335/13521	A2-9-1	0A	4004/0301	E3-15-1	3	550/41737	E4-1-2	2	550/41939	E4-3-1	16
335/13522	A2-9-2	0A	4004/0302	E3-15-1		550/41740	E4-1-1	1	550/41940	E4-1-1	13
335/13523	A2-9-3	0A	4101/0500	C3-5-1	12	550/41740	E4-1-2	1	550/41940	E4-1-2	13
335/45718	C1-5-1	2	4101/0500	F4-3-1	18	550/41747	E4-1-1	34	550/41940	E4-2-1	14
340/00055	E3-13-1		4101/0552Z	D2-1-1	47	550/41747	E4-1-2	34	550/41941	E4-1-1	15
340/00183	T5-1-1	12	4102/0551	F4-3-1	14	550/41912	E4-3-1	15	550/41941	E4-1-2	15
340/00746	C3-11-1		4102/0901	B2-18-1	6	550/41913	E4-1-1	19	550/41941	E4-2-1	16
370A0100Z	E2-2-2	52	4102/2309	B2-18-1	5	550/41913	E4-1-2	19	550/41941	E4-3-1	13
370A0400Z	E2-2-1	54	4102/2700	T6-4-1	5	550/41913	E4-3-1	17	550/41947	E4-1-1	10
380A0150Z	E2-2-2	54	4103/2109	B2-18-1	2	550/41914	E4-2-1	13	550/41947	E4-1-2	10
380A0220Z	D2-1-1	9 05	4104/1203	B2-18-1	3	550/41915	E4-1-1	11	550/41950	E4-1-1	9
380A0400Z	E1-3-1	13	4104/1310	B2-18-1	8	550/41915	E4-1-2	11	550/41950	E4-1-2	9
380A0500Z	E1-3-1	10	4201/4906	B2-18-1	4	550/41915	E4-2-1	18	550/41951	E4-1-1	12
40/205613	B2-3-1	14	45/920115	E3-14-1		550/41915	E4-3-1	18	550/41951	E4-1-2	12
40/205614	B2-3-1	13	45/920152	E2-1-1		550/41916	E4-2-1	20	550/42199	E4-3-1	1
40/205617	B2-3-1	18	500/00214	T6-7-1	8	550/41917	E4-2-1	14	550/42200	E4-3-1	2
40/212003	B2-3-1	3	510/86204	A2-1-1	3	550/41917	E4-3-1	14	550/42201	E4-3-1	3
40/213001	B2-3-1	11	510/86204	A2-1-3	3	550/41918	E4-2-1	19	550/42202	E4-3-1	4
40/301494	B5-3-1		510/86204	A2-1-4	3	550/41919	E4-1-1	18	550/42203	E4-3-1	5
40/301594	B5-3-1		510/86204	A2-1-8	3	550/41919	E4-1-2	18	550/42204	E4-3-1	9
40/302290	C1-3-1	1	510/86204	A2-1-9	3	550/41919	E4-3-1	20	550/42205	E4-3-1	11
40/910502	B2-3-1	9	510/86204	A2-1-10	3	550/41920	E4-1-1	14	550/42206	E4-3-1	12
40/910551	B2-3-1	0A	510/92002	A2-2-1	3	550/41920	E4-1-2	14	550/42219	E4-3-1	37
40/910607	B2-3-1		510/92002	A2-2-2	3	550/41920	E4-2-1	15	550/42220	E4-2-1	1
40/910628	B2-3-1	1	510/92002	A2-2-3	3	550/41922	E4-1-1	17	550/42221	E4-2-1	2
40/910629	B2-3-1	2	550/41723	E4-1-1	16	550/41922	E4-1-2	17	550/42222	E4-2-1	3

JCB INDIA LTD.

NUMERICAL INDEX - 210 LC

PART NO.	FIGURE NO.	ITEM NO.	PART NO.	FIGURE NO.	ITEM NO.	PART NO.	FIGURE NO.	ITEM NO.	PART NO.	FIGURE NO.	ITEM NO.
229/01725	T3-4-1	8	2400/0204	E1-4-1	11 01	25/220822	E3-1-1	1	25/221763	E3-2-3	12
229/01727	T1-8-1	11	2400/0204	E1-20-1	1 01	25/220830	E1-50-1	15	25/221764	E3-2-2	18
229/01729	E3-14-1	1	2400/0204	E1-20-1	2 01	25/220830	E3-9-1	1	25/221765	E3-2-2	21
229/01760	B1-5-10	12	2400/0216	E1-3-1	16	25/221009	E1-50-1	16	25/221766	E3-2-2	22
229/01760	B1-5-20	13	2401/0505	E1-62-1		25/221009	E1-73-1	1	25/221767	E3-2-2	23
229/02166	B1-3-1	1	2401/0505	E1-62-1		25/221263	E3-8-1	4	25/221768	E3-2-1	24
229/02169	B1-5-2	3	2401/0505	E1-63-1	57 01	25/221280	E3-6-1	13	25/221769	E3-2-1	25
229/02171	B1-5-2	9	2401/0505	E1-63-1	58 01	25/221630	E3-2-1	34	25/221770	E3-2-1	26
229/02173	B1-5-2	4	2407/0205	E1-2-1	7	25/221630	E3-2-2	34	25/221771	E3-2-1	27
229/02175	B1-4-1	13	2407/0205	E1-23-40	6	25/221631	E3-2-1	35	25/221772	E3-2-1	30
229/02176	B1-4-1	13A	2407/0205	E1-23-40	13	25/221631	E3-2-2	35	25/221773	E3-2-1	31
229/02188	F4-1-1		2407/0205	E1-24-1	14	25/221632	E3-2-1	53	25/221774	E3-2-1	32
229/02188	F4-2-2	A	2407/0205	E1-30-30	35	25/221633	E3-2-1	54	25/221774	E3-2-2	32
229/02202	T1-5-1	4	2407/0210	E1-2-1	4	25/221634	E3-2-1	55	25/221775	E3-2-1	33
229/02225	B1-5-10	11	2407/0210	E1-4-1	4	25/221635	E3-2-2	20	25/221775	E3-2-2	33
229/02225	B1-5-20	20	2407/0210	E1-6-1	4	25/221639	E3-2-1	84	25/221776	E3-2-1	36
229/02553	J1-5-8	A	2407/0210	E1-6-1	8	25/221639	E3-2-2	84	25/221776	E3-2-2	36
229/02553	J1-5-10	1	2407/0210	E1-20-1	7	25/221653	E3-2-2	62	25/221777	E3-2-1	37
229/02554	J1-5-7	A	2407/0210	E1-21-1	1	25/221653	E3-2-3	62	25/221777	E3-2-2	37
229/02554	J1-5-10		2407/0210	E1-21-1	7	25/221671	E3-2-1	60	25/221778	E3-2-1	38
229/02558	F4-1-1		2407/0210	E1-22-1	6	25/221678	E3-2-1	48	25/221779	E3-2-1	39
229/02567	T6-4-1	16	2407/0210	E1-30-20	32	25/221685	E3-2-1	46	25/221780	E3-2-1	40
229/02569	A2-1-11	1	2407/0210	E1-30-30	34	25/221686	E3-2-1	47	25/221781	E3-2-1	41
229/02570	A2-1-11	2	2407/0210	E1-31-20	32	25/221688	E3-2-1	52	25/221782	E3-2-1	42
229/02571	A2-1-11	3	2407/0210	E1-43-10	11	25/221690	E3-2-2	72	25/221783	E3-2-2	43
229/02572	A2-1-11	4	2410/1209	B2-1-20	43	25/221690	E3-2-3	72	25/221784	E3-2-2	44
229/02576	B1-2-1	3	242/00290	C1-2-1	10	25/221691	E3-2-2	71	25/221785	E3-2-2	45
229/02587	D2-1-1	1	25/208213	E3-8-1	2	25/221695	E3-2-1	75	25/221786	E3-2-1	49
229/02610	A2-8-1	0A	25/208213	E3-9-1	2	25/221695	E3-2-2	75	25/221787	E3-2-1	51
229/02616	A2-8-1	1	25/220041	E1-50-1	17	25/221700	E3-2-4	65	25/221787	E3-2-2	51
229/02617	C1-5-1	1	25/220041	E1-65-1	1	25/221702	E3-2-4	66	25/221788	E3-2-1	57
229/10306	B3-2-10	1 01	25/220041	E3-13-1	0A	25/221716	E3-2-2	78	25/221790	E3-2-1	63
2400/0204	E1-4-1	3A 01	25/220533	E3-8-1	3A	25/221723	E3-2-2	89	25/221791	E3-2-1	67
2400/0204	E1-4-1	3B 01	25/220555	E3-8-1	3	25/221758	E1-30-30	18	25/221792	E3-2-1	68
2400/0204	E1-4-1	3C 01	25/220822	E1-50-1	18	25/221761	E3-2-3	7	25/221793	E3-2-1	69 01
2400/0204	E1-4-1	3D 01	25/220822	E1-70-1	1	25/221762	E3-2-3	8	25/221793	E3-2-2	69 01

JCB INDIA LTD.

NUMERICAL INDEX - 210 LC

PART NO.	FIGURE NO.	ITEM NO.	PART NO.	FIGURE NO.	ITEM NO.	PART NO.	FIGURE NO.	ITEM NO.	PART NO.	FIGURE NO.	ITEM NO.
25/221794	E3-2-1	69 02	25/222220	E1-33-2	12 1	30/925750	C3-12-1	31	30/925862	C3-5-10	0A
25/221794	E3-2-2	69 02	25/222221	E1-33-1	12 2	30/925751	C3-12-1	32	30/925863	C3-5-1	2
25/221795	E3-2-2	69 03	25/222221	E1-33-2	12 2	30/925751	C3-12-1	32	30/925896	C3-12-10	2
25/221796	E3-2-1	70	25/222885	E1-11-1	11	30/925752	C3-12-1	3	30/925898	C3-5-10	2
25/221797	E3-2-2	73	25/222885	E1-50-1	6	30/925752	C3-12-1	3	30/925900	C3-5-10	3
25/221798	E3-2-2	74	25/222885	E1-67-1	1	30/925753	C3-5-1	2	30/925900	C3-12-10	5
25/221798	E3-2-3	74	25/222885	E3-8-1	1	30/925753	C3-5-1	3	30/925900	C3-12-10	5
25/221799	E3-2-1	76	25/222891	D1-1-1		30/925753	C3-12-1	4	30/925906	C3-5-10	5
25/221800	E3-2-4	77	25/222891	E1-50-1	12	30/925753	C3-12-1	4	30/925906	C3-12-10	7
25/221801	E3-2-4	81	25/222891	E1-62-1	1	30/925754	C3-5-1	3	30/925907	C3-12-10	9
25/221802	E3-2-2	88	25/222891	E3-6-1	0A	30/925754	C3-5-1	4	30/925909	C3-12-10	10
25/221803	E3-2-3	91	25/222892	D1-1-1	20	30/925754	C3-12-1	5	30/925910	C3-12-10	11
25/221804	E3-2-1	92	25/222892	E1-50-1	14	30/925754	C3-12-1	5	30/925911	C3-12-10	12
25/221804	E3-2-2	92	25/222892	E1-63-1	1	30/925755	C3-5-1	4	30/925913	C3-12-10	13
25/221805	E3-2-2	93	25/222892	E3-6-1	0B	30/925755	C3-5-1	5	30/925914	C3-12-10	14
25/221806	E3-2-2	94	263/09201	B2-7-1		30/925755	C3-12-1	6	30/925933	C3-12-10	31
25/221807	E3-2-1	95	30/600139	E2-1-1		30/925755	C3-12-1	6	30/925979	C3-12-10	32
25/221807	E3-2-2	95	30/921802	T4-5-1	3	30/925756	C3-5-1	5	30/926000	C3-5-10	8
25/221808	E3-2-1	96	30/921802	T4-5-1	3	30/925756	C3-5-1	6	30/926000	C3-12-10	16
25/221808	E3-2-2	96	30/921804	T4-5-1	5	30/925756	C3-12-1	7	30/926001	C3-12-10	15
25/221809	E3-2-1	97	30/921804	T4-5-1	5	30/925756	C3-12-1	7	30/926002	C3-12-10	23
25/221809	E3-2-2	97	30/922701	T4-5-1	2	30/925789	T4-4-1	10	30/926003	C3-12-10	24
25/221810	E3-2-1	98	30/922701	T4-5-1	2	30/925817	T4-4-1	24	30/926004	C3-5-10	14
25/221810	E3-2-2	98	30/922703	T4-4-1	15	30/925829	T4-4-1	20	30/926004	C3-12-10	25
25/221811	E3-2-1	99	30/922707	T4-4-1	17	30/925832	T4-4-1	21	30/926005	C3-5-10	19
25/221811	E3-2-2	99	30/925585	C3-12-1	1	30/925833	T4-4-1	19	30/926005	C3-5-20	13
25/221812	E3-2-1	82	30/925585	C3-12-10	OA	30/925836	T4-4-1	11	30/926005	C3-12-10	30
25/221812	E3-2-2	82	30/925586	B2-8-1	7	30/925850	T4-4-1	2	30/926005	C3-12-20	13
25/221813	E3-2-1	83	30/925588	C3-12-1	2	30/925852	T4-4-1	4	30/926006	C3-5-10	25
25/221813	E3-2-2	83	30/925588	C3-12-1	2	30/925853	T4-5-1	4	30/926007	T4-4-1	3
25/221814	E3-2-1	85	30/925618	C3-12-1	29	30/925853	T4-5-1	4	30/926007	T4-5-1	1
25/221814	E3-2-2	85	30/925695	T1-5-1	1	30/925855	T4-4-1	9	30/926008	T4-4-1	14
25/221815	E3-2-1	86	30/925732	B2-8-1	8	30/925856	T4-4-1	8	30/926009	T4-4-1	6
25/221815	E3-2-2	86	30/925749	C3-12-1	30	30/925858	T4-4-1	5	30/926010	T4-4-1	7
25/221816	E3-2-3	87	30/925749	C3-12-1	30	30/925859	T4-4-1	23	30/926011	T4-4-1	12
25/222220	E1-33-1	12 1	30/925750	C3-12-1	31	30/925862	C3-5-1	1	30/926012	T4-4-1	13

JCB INDIA LTD.

NUMERICAL INDEX - 210 LC

PART NO.	FIGURE NO.	ITEM NO.	PART NO.	FIGURE NO.	ITEM NO.	PART NO.	FIGURE NO.	ITEM NO.	PART NO.	FIGURE NO.	ITEM NO.
550/42223	E4-2-1	4	550/42793	J1-4-1	3	550/42865	J1-5-10		550/43610	F4-2-3	370
550/42224	E4-2-1	5	550/42794	J1-4-1	2	550/43168	F4-4-1	1	550/43611	F4-2-3	138
550/42225	E4-2-1	6	550/42795	J1-4-1	6	550/43174	E3-14-1	8 06	550/43612	F4-2-3	137
550/42226	E4-2-1	7	550/42796	J1-4-1	11	550/43185	J1-2-1	1	550/43613	F4-2-3	345
550/42227	E4-2-1	9	550/42797	J1-4-1	12	550/43236	F4-4-1	10 08	550/43614	F4-2-3	374
550/42228	E4-2-1	10	550/42798	J1-4-1	13	550/43237	F4-4-1	10 09	550/43616	F4-2-3	133
550/42229	E4-2-1	11	550/42799	J1-2-1	A	550/43490	E3-2-4		550/43617	F4-2-3	163
550/42230	E4-2-1	12	550/42799	J1-6-1	1	550/43532	F4-2-2	13	550/43618	F4-2-3	331
550/42231	E4-2-1	17	550/42800	J1-2-1	6	550/43570	F4-2-2	34	550/43619	F4-2-3	210
550/42232	E4-2-1	21	550/42801	J1-6-1	13	550/43576	F4-2-3	369	550/43619	F4-2-3	
550/42243	E4-2-1	36	550/42802	J1-6-1	14	550/43576	F4-2-3		550/43620	F4-2-3	132
550/42289	J1-2-1	7	550/42804	J1-6-1	6	550/43581	F4-2-3	375	550/43620	F4-2-3	
550/42289	J1-3-1	7	550/42805	J1-6-1	5	550/43581	F4-2-3		550/43621	F4-2-3	366
550/42769	J1-4-1	10	550/42806	J1-6-1	4	550/43584	F4-2-2	17	550/43622	F4-2-3	378
550/42770	J1-6-1	3	550/42807	J1-6-1	7	550/43587	F4-2-3	371	550/43623	F4-2-3	149
550/42771	J1-3-1	6	550/42809	J1-5-7	3	550/43587	F4-2-3		550/43624	F4-2-3	150
550/42772	J1-6-1	10	550/42809	J1-5-8	3	550/43591	F4-2-2	35	550/43625	F4-2-3	399
550/42773	J1-2-1	3	550/42810	J1-5-7	4	550/43592	F4-2-2	37	550/43626	F4-2-2	1
550/42774	J1-4-1	4	550/42810	J1-5-8	4	550/43592	F4-2-3		550/43627	F4-2-3	101
550/42775	J1-4-1	5	550/42812	J1-3-1	3	550/43593	F4-2-3	119	550/43628	F4-2-2	3
550/42776	J1-4-1	9	550/42813	J1-3-1	2	550/43594	F4-2-3		550/43629	F4-2-2	4
550/42777	J1-4-1	8	550/42814	J1-3-1	5	550/43595	F4-2-3		550/43630	F4-2-2	5
550/42778	J1-2-1	9	550/42815	J1-4-1	1	550/43596	F4-2-3		550/43631	F4-2-2	6
550/42779	J1-2-1	4	550/42816	J1-5-8	2	550/43597	F4-2-3		550/43632	F4-2-2	7
550/42780	J1-4-1	7	550/42817	J1-5-7	1	550/43598	F4-2-3		550/43633	F4-2-2	8
550/42782	J1-5-9	3	550/42817	J1-5-8	1	550/43599	F4-2-3		550/43634	F4-2-2	9
550/42783	J1-5-9	4	550/42817	J1-5-9	A	550/43600	F4-2-3	341	550/43635	F4-2-2	10
550/42784	J1-5-9	1	550/42818	J1-2-1	2	550/43601	F4-2-3	377	550/43636	F4-2-2	11
550/42785	J1-5-9	5	550/42819	J1-2-1	5	550/43602	F4-2-3	372	550/43637	F4-2-2	12
550/42786	J1-5-9	10	550/42820	J1-2-1	8	550/43603	F4-2-3	376	550/43638	F4-2-2	14
550/42787	J1-6-1	8	550/42821	J1-5-9	8	550/43604	F4-2-3	398	550/43639	F4-2-2	15
550/42788	J1-3-1	1	550/42822	J1-5-9	9	550/43605	F4-2-3	373	550/43640	F4-2-2	16
550/42789	J1-3-1	8	550/42823	J1-5-9	2	550/43606	F4-2-3	368	550/43641	F4-2-2	22
550/42790	J1-5-7	2	550/42824	J1-6-1	15	550/43607	F4-2-3	364	550/43642	F4-2-2	23
550/42791	J1-5-9	6	550/42825	J1-3-1	4	550/43608	F4-2-3	367	550/43643	F4-2-2	
550/42792	J1-5-9	7	550/42865	J1-5-7		550/43609	F4-2-3	365	550/43644	F4-2-2	

JCB INDIA LTD.

NUMERICAL INDEX - 210 LC

PART NO.	FIGURE NO.	ITEM NO.	PART NO.	FIGURE NO.	ITEM NO.	PART NO.	FIGURE NO.	ITEM NO.	PART NO.	FIGURE NO.	ITEM NO.
550/43645	F4-2-2		550/43695	F4-2-3		6009/3826Z	B3-5-1	20	627/10058	E1-67-1	19
550/43646	F4-2-2		550/43702	F4-2-3		6009/3827Z	B3-5-1	19	627/10060	E1-67-1	20
550/43647	F4-2-2		550/43703	F4-2-3	301	6009/4028Z	B3-1-1	8	627/10060	E1-71-1	12
550/43648	F4-2-2		550/43704	F4-2-3	363	6009/4029Z	B3-1-1	12	627/10071	E1-61-1	4B
550/43649	F4-2-2		550/43705	F4-2-3		6012/0198Z	C1-2-1	12	627/10071	E1-70-1	11
550/43650	F4-2-2		550/43706	F4-2-3	380	6012/0298Z	C1-1-1	41	627/10073	E1-67-1	8
550/43651	F4-2-2		550/43706	F4-2-3		6013/0103Z	B2-6-1	2	627/10073	E1-69-1	7
550/43652	F4-2-2		550/43707	F4-2-3	343	6060/0009Z	J1-1-1	7	627/10074	E1-65-1	9
550/43653	F4-2-2		550/43708	F4-2-3	162	6060/0011Z	E1-22-1	3	627/10074	E1-70-1	19
550/43654	F4-2-2		550/43709	F4-2-3	379	6061/0008R	E1-22-1	9	627/10075	E1-65-1	10
550/43655	F4-2-2	24	550/43709	F4-2-3		6061/0008R	E1-23-1	20 05	627/10075	E1-70-1	18
550/43656	F4-2-2	27	550/43710	F4-2-3	329	6061/0008R	E1-23-1	20 05	627/10076	E1-63-1	59D
550/43657	F4-2-2	28	550/43710	F4-2-3		6061/0008R	E1-23-10	20 05	627/10076	E1-70-1	22
550/43658	F4-2-2	31	550/43712	F4-2-3	209	6061/0008R	E1-23-10	20 05	627/10077	E1-66-1	13
550/43659	F4-2-3	102	550/43713	F4-2-3	208	6063/0006Z	C1-1-1	31	627/10077	E1-70-1	15
550/43660	F4-2-3	104	550/43772	A2-1-11	6	6063/0007Z	C1-1-1		627/10079	E1-66-1	14
550/43663	F4-2-3	107	550/43786	A2-9-6	30	6063/0007Z	T7-3-1	11A	627/10079	E1-70-1	14
550/43664	F4-2-3	108	550/43786	A2-9-7	4	6063/0008Z	C1-1-1	40	627/10083	E1-10-1	19
550/43665	F4-2-3	109	550/43789	A2-9-6	29	6063/0008Z	C1-2-1	9	627/10084	E1-10-1	20
550/43666	F4-2-3	112	550/43789	A2-9-7	3	616/80221	E1-3-1	5	627/10180	E1-30-20	30
550/43667	F4-2-3	113	550/43808	F4-2-3	A	625/80002	A2-9-6	27	627/10180	E1-31-20	30
550/43668	F4-2-3	114	580/12162	T3-3-1	4	626/10770	C3-12-1	12	627/10183	E1-30-20	27
550/43669	F4-2-3	115	6004/3112	E2-2-4	8	627/10016	D2-1-1	31	627/10183	E1-31-20	27
550/43670	F4-2-3	116	6004/3205	E2-2-2	4	627/10039	E1-30-30	37	627/10213	E1-30-30	33
550/43671	F4-2-3	135	6004/3409R	E1-23-1	20 04	627/10041	E1-21-1	5	627/10214	E1-30-30	27
550/43671	F4-2-3		6004/3409R	E1-23-1	20 04	627/10042	E1-21-1	15	627/10215	E1-30-30	30
550/43672	F4-2-3	139	6004/3409R	E1-23-10	20 04	627/10043	E1-6-1	10	627/10216	E1-30-30	31
550/43672	F4-2-3		6004/3409R	E1-23-10	20 04	627/10044	E1-6-1	9	627/10217	E1-30-30	32
550/43674	F4-2-3		6004/3513	E3-7-1	16	627/10046	E1-2-1	1	627/10241	E1-30-30	29
550/43677	F4-2-3		6004/3714	E2-7-1	37	627/10046	E1-30-30	28	627/10243	E1-30-20	31
550/43678	F4-2-3		6009/3414D	T7-3-1	3	627/10048	E1-21-1	9	627/10243	E1-31-20	31
550/43679	F4-2-3		6009/3414Z	T7-3-1	3	627/10056	E1-67-1	12	627/10274	E1-3-1	6
550/43687	F4-2-3		6009/3825Z	B3-2-1	12	627/10056	E1-71-1	13	627/10284	E1-6-1	2
550/43689	F4-2-3	324	6009/3825Z	B3-2-11	12	627/10057	E1-67-1	14	627/10467	E1-67-1	17
550/43690	F4-2-3	325	6009/3826Z	B3-1-1	20	627/10057	E1-71-1	14	629/00724	B1-6-40	2
550/43693	F4-2-3	328	6009/3826Z	B3-1-1	25	627/10058	E1-11-1	17	629/00724	B2-7-1	1

JCB INDIA LTD.

NUMERICAL INDEX - 210 LC

PART NO.	FIGURE NO.	ITEM NO.	PART NO.	FIGURE NO.	ITEM NO.	PART NO.	FIGURE NO.	ITEM NO.	PART NO.	FIGURE NO.	ITEM NO.
635/80037	E1-10-1	21	6900/0567	B2-1-1	26	6900/0652	B2-1-20	31	701/58832	C3-2-1	11
649/51226	E1-11-1	22	6900/0568	B2-1-1	27	6900/0685	B2-1-10	36	701/58832	E1-30-10	18
649/51226	E1-67-1	15	6900/0569	B2-1-1	46	6900/0686	B2-1-10	37	701/58853	C1-2-1	14
6900/0020	B2-3-1	5	6900/0569	B2-1-10	23	6900/0688	B2-1-10	5	701/58855	C1-2-1	15
6900/0021	B2-3-1	7	6900/0569	B2-1-20	21	6900/0689	B2-1-10	6	701/60000	C1-2-1	17
6900/0022	B2-3-1	8	6900/0570	B2-1-1	36	6900/0841	E3-16-1	3B	701/60010	C3-2-1	12
6900/0024	B2-3-1	10	6900/0570	B2-2-1	9	6900/0919	J1-3-1	1 03	701/60030	C1-2-1	18
6900/0027	B2-3-1	15	6900/0571	B2-1-1	22	6900/0920	J1-3-1	1 08	701/60031	C1-2-1	19
6900/0028	B2-3-1	16	6900/0571	B2-2-1	10	6900/0921	J1-3-1	1 02	701/60032	C3-2-1	7
6900/0029	B2-3-1	17	6900/0574	B2-2-1	5	6900/0922	J1-3-1	1 07	701/60032	C3-2-1	8
6900/0035	F4-3-1	5 01	6900/0585	B2-1-20	10	6900/0923	J1-3-1	1 05	701/60032	E1-30-10	19
6900/0051	E3-15-1		6900/0592	B2-1-1	9	6900/0924	J1-3-1	1 06	701/60041	C1-2-1	20
6900/0051	E3-16-1	2B	6900/0597	B2-1-1	15	6900/0983	B2-1-10	30	701/80184	C3-2-1	1
6900/0508	B2-1-10	11	6900/0599	B2-1-20	23	6900/0984	B2-1-10	32	701/80214	C1-2-1	21
6900/0513	B2-1-10	4	6900/0601	B2-1-20	40	6900/0985	B2-1-10	33	701/80215	B2-4-1	
6900/0523	B2-1-20	32	6900/0603	B2-1-20	36	6900/0986	B2-1-10	34	701/80215	B2-10-1	
6900/0531	B2-1-1	14	6900/0604	B2-1-20	35	6900/0987	B2-1-10	35	701/80310	C1-5-1	16
6900/0532	B2-1-1	13	6900/0605	B2-1-20	34	6900/0988	B2-1-10	20	701/80328	C1-1-1	42
6900/0541	B2-1-20	38	6900/0606	B2-1-20	37	6900/0992	B2-2-1	29	701/80328	C2-1-1	4
6900/0543	B2-1-20	24	6900/0608	B2-1-20	26	6900/0995	B2-1-1	32	701/80328	T4-2-1	15
6900/0544	B2-1-20	20	6900/0609	B2-1-20	22	6900/0995	B2-1-10	13	701/80371	C1-1-1	6
6900/0548	B2-1-1	24	6900/0612	B2-1-10	24	6900/0997	B2-1-1	16	701/80371	E1-71-1	5
6900/0550	B2-1-20	25	6900/0616	B2-1-10	7	700/10103	C1-4-1	4	701/80371	E3-2-1	72
6900/0550	B2-1-20	39	6900/0616	B2-1-10	16	700/10103	C1-4-10	1B	701/80372	C1-1-1	2
6900/0550	B2-2-1	15	6900/0616	B2-2-1	21	700/38800	C1-4-1	1	701/80372	E1-66-1	4
6900/0550	B2-2-1	19	6900/0619	B2-1-10	10	700/43900	C1-4-10	1	701/80372	E1-66-1	5
6900/0551	B2-1-20	30	6900/0621	B2-1-10	12	700/43900	L1-1-2	1	701/80373	C1-1-1	3
6900/0554	B2-1-20	4	6900/0622	B2-1-10	14	701/45501	B1-4-1	14 01	701/80374	C1-1-1	4
6900/0554	B2-1-20	17	6900/0623	B2-1-10	15	701/45501	B2-2-1	23	701/80374	E1-71-1	7
6900/0554	B2-1-20	19	6900/0627	B2-1-20	28	701/45501	C3-2-1	2	701/80374	E3-2-2	61
6900/0555	B2-1-1	37	6900/0634	B2-1-20	7	701/54300	C2-1-1	12	701/80375	C1-1-1	5
6900/0560	B2-1-10	39	6900/0634	B2-6-1	13	701/54300	T1-7-1	2	701/80375	E1-71-1	6
6900/0562	B2-1-1	18	6900/0635	B2-1-1	31	701/54500	C2-1-1	3	701/80375	E3-2-2	61 01
6900/0563	B2-1-1	17	6900/0637	B2-1-20	29	701/58826	C1-2-1	13	714/25225	C2-3-1	6
6900/0564	B2-1-1	11	6900/0640	B2-1-10	38	701/58832	C3-2-1	9	714/25231	C2-3-1	13
6900/0566	B2-1-1	25	6900/0644	B2-2-1	4	701/58832	C3-2-1	10	714/25510	C2-3-1	2

JCB INDIA LTD.

NUMERICAL INDEX - 210 LC

PART NO.	FIGURE NO.	ITEM NO.	PART NO.	FIGURE NO.	ITEM NO.	PART NO.	FIGURE NO.	ITEM NO.	PART NO.	FIGURE NO.	ITEM NO.
714/25511	C2-3-1	25	714/27224	C2-4-1	9	716/05707	C3-7-1	6	721/10453	C1-1-1	47
714/25512	C2-3-1	18	714/27225	C2-4-1	10	716/05707	C3-7-1	7	721/10455	E1-30-10	15
714/25513	C2-3-1	8	714/27226	C2-4-1	13	716/11100	L1-1-2	2	721/10456	E1-30-10	20
714/25514	C2-3-1	10	714/27227	C2-4-1	6	716/26800	C1-1-1	55	721/10462	C1-1-1	
714/25515	C2-3-1	22	714/27228	C2-4-1	3	716/30071	C2-1-1	5	721/10673	C1-1-1	49
714/25516	C2-3-1	9	714/40226	C3-12-1	33	716/30071	T4-5-1	15	721/11425	T7-3-1	16
714/25517	C2-3-1	5	714/40226	C3-12-1	33	716/30071	T4-5-1	15	721/11425	T7-3-1	16
714/25518	C2-3-1	4	714/40226	T7-3-1	1	716/30075	C1-2-1	22	721/11429	C1-1-1	48
714/25519	C2-3-1	24	714/40226	T7-3-1	1	716/30091	C2-1-1	14	721/11430	C1-5-1	3
714/25520	C2-3-1	19	714/40236	C2-1-1	1	716/30091	D2-1-1	36	721/11441	L1-1-2	4
714/25521	C2-3-1	16	714/40236	C2-3-1	1	716/30111	C2-1-1	4 01	721/11451	E1-30-30	36
714/25522	C2-3-1	15	714/40237	C2-1-1	2	716/30111	T4-2-1	16	721/11637	C1-2-1	25
714/25523	C2-3-1	14	714/40237	C2-4-1	0A	716/30142	B1-4-1	17	721/12030	C1-2-1	26
714/25524	C2-3-1	17	714/40266	B2-1-20	6	716/30155	C3-2-1	3	721/12121	C1-1-1	
714/25525	C2-3-1	23	714/40266	B2-6-1	12	716/30177	C2-1-1	11	7232/0005	C1-4-10	17
714/25527	C2-3-1	7	714/40267	B2-1-20	5	716/30180	C2-1-1	15	728/19700	C1-2-1	28
714/25528	C2-3-1	27	714/40267	B2-6-1	11	716/30205	C1-1-1	30	728/35700	C1-2-1	29
714/25529	C2-3-1	20	714/40294	C2-1-1		717/12900	C1-2-1	23	811/90382	B3-1-1	
714/25530	C2-3-1	3	714/40294	C2-3-2	1	717/12900	C3-14-1	2	813/10235	C1-4-1	14
714/25531	C2-3-1	21	714/40321	C2-1-1		717/20154	C1-2-1	24	816/00019	E1-30-20	18
714/25532	C2-3-1	26	714/40321	C2-4-1		717/20163	C2-1-1	8	816/00019	E1-31-20	18
714/27210	C2-4-1	1	714/40321	C2-4-2	1	717/20163	T2-1-1	21	816/00468	E1-5-1	12
714/27211	C2-4-1	18	715/04300	C1-1-1	39	717/20170	C2-1-1	10	816/20033	E1-30-20	6
714/27212	C2-4-1	26	715/08100	C3-14-1		717/20170	T2-1-1	20	816/20033	E1-31-20	6
714/27213	C2-4-1	16	716/05703	C3-7-1	15	717/20171	C2-1-1	9	816/50018	E1-71-1	4
714/27214	C2-4-1	5	716/05705	C3-7-1	1	717/20171	T2-1-1	19	816/80012	B1-3-1	17
714/27215	C2-4-1	4	716/05705	C3-7-1	2	717/20369	C3-11-1	1	817/01639	B5-2-10	5
714/27216	C2-4-1	2	716/05705	C3-7-1	3	718/20023	C1-1-1	45	817/02370	B5-2-1	11
714/27217	C2-4-1	11	716/05705	C3-7-1	4	718/20024	C1-1-1	10	817/02370	B5-2-10	6
714/27218	C2-4-1	25	716/05705	C3-7-1	8	718/30111	C1-1-1	44	817/03237	B5-2-10	7
714/27219	C2-4-1	22	716/05705	C3-7-1	9	720/10061	C1-4-1	3	817/17423	B5-1-1	13
714/27220	C2-4-1	30	716/05706	C3-7-1	10	720/20032	C1-4-10	1A	817/17441	B5-1-1	5
714/27220	T1-5-1	8	716/05706	C3-7-1	11	720/20032	L1-1-2	1 01	817/17530	B5-2-1	23
714/27221	C2-4-1	21	716/05706	C3-7-1	12	721/10100	E3-6-1	8	817/18448	C3-7-1	17
714/27222	C2-4-1	17	716/05706	C3-7-1	16	721/10400	E3-6-1	7	817/18523	B5-2-1	18
714/27223	C2-4-1	15	716/05707	C3-7-1	5	721/10401	E3-6-1	9	817/18528	B5-2-1	

JCB INDIA LTD.

NUMERICAL INDEX - 210 LC

PART NO.	FIGURE NO.	ITEM NO.	PART NO.	FIGURE NO.	ITEM NO.	PART NO.	FIGURE NO.	ITEM NO.	PART NO.	FIGURE NO.	ITEM NO.
C4E7327	E1-8-1	1	JHH0071	C1-5-1	14	JHN0211	B2-10-1	5	JHP0046	J1-1-1	
C4E7863	T1-8-1	8	JHH0074	B2-10-1	9	JHN0213	B2-7-1		JHP0046	T1-8-1	7
C4E9301	F4-3-1	11	JHH0082	B1-3-1	22	JHN0214	B2-10-1	6	JHP0046	T3-3-1	12
CEA0399	E1-68-1	4	JHH0111	B2-4-1	21	JHP0037	B3-2-1	7	JHP0046	T3-4-1	10
CNA0584	E1-30-10	14	JHH0111	B2-5-1	13	JHP0037	B3-2-10	7	JHP0068	B5-3-1	
CNA0584	E1-61-1	55	JHH0112	D2-1-1	40	JHP0037	B3-2-11	7	JHP0069	B5-3-1	
CRE5507	E1-8-1	12	JHH0113	D2-1-1	14	JHP0037	B3-4-1	41	JHP0070	B5-3-1	
CSP0161	B1-3-1	6A	JHH0119	B1-3-1	10	JHP0037	B3-4-1		JHP0079	J1-3-1	3
JBA0194	J1-5-20		JHH0120	B1-4-1	1	JHP0037	B3-5-1	6	JHP0080	D1-1-1	55
JBA0195	J1-5-20	3	JHH0124	T6-7-1	2	JHP0038	B3-1-1	5	JHP0080	E1-21-1	14
JBA0232	J1-5-20		JHH0125	T4-5-1	11	JHP0038	B3-4-1	40	JHP0111	B5-2-1	13
JBA0235	J1-5-20	2	JHH0125	T4-5-1	11	JHP0042	B2-1-30	5	JHP0121	B5-2-1	9
JBA0236	J1-5-20		JHH0125	T6-4-1	6	JHP0042	D2-1-1	3	JHP0134	B1-3-1	24
JBC0004	F4-3-1	12	JHH0141	T6-4-1	3	JHP0042	E1-4-1	8	JHP0134	B5-2-1	16
JBJ0037	E1-30-20	15	JHH0161	D2-1-1	10	JHP0042	E1-10-1	2	JHP0162	C1-1-1	9
JBJ0037	E1-31-20	15	JHJ0050	E1-11-1	14	JHP0042	E1-20-1	13	JHP0200	B5-2-10	1
JBJ0038	E1-30-20	8	JHJ0050	E1-67-1	5	JHP0042	E3-14-1	3	JHPO046	E1-8-1	2
JBJ0038	E1-31-20	8	JHJ0088	E1-50-1	20	JHP0042	J1-1-1		JHPoo79	J1-1-1	15
JBJ0064	E1-30-20	5	JHJ0168	E1-62-1	58	JHP0042	T4-3-1	16	JHR0025	L1-1-2	7
JBJ0064	E1-31-20	5	JHJ0168	E1-63-1	58	JHP0043	E3-1-1	3	JHR0099	C1-3-1	3
JBJ0066	E1-30-20	7	JHJ0168	E3-6-1	11	JHP0043	F4-1-1	2	JHR0128	C1-2-1	2
JBJ0066	E1-31-20	7	JHN0048	E1-20-1	10	JHP0043	T1-8-1	2	JHR0158	L1-1-2	14
JBJ0066	E3-16-1	1B	JHN0048	J1-1-1	9	JHP0043	T4-3-1	13	JHR0167	T7-3-1	8
JBN0012	D1-1-1	5	JHN0141	B2-1-10	31	JHP0044	F4-3-1	8	JHR0169	T7-3-1	10
JBV0015	B3-5-1		JHN0158	C3-5-1	14	JHP0044	J1-4-2	3	JHR0171	T7-3-1	7
JBV0295	B3-1-1	1.11	JHN0158	C3-12-1	22	JHP0046	B1-3-1	5	JHV0195	E1-33-2	7
JBV0298	B3-1-1	1.12	JHN0158	C3-12-1	22	JHP0046	B2-4-1	6	JLJ0309	E1-71-1	16
JGORA21	J1-1-1	1	JHN0160	B2-6-1	1	JHP0046	B2-5-1	5	JLJ0486	E1-73-1	6
JHA0005	J1-4-2	2	JHN0164	C3-11-1	2	JHP0046	B2-10-1	11	JLP0283	B3-5-1	23
JHB0001	B1-6-40	6	JHN0178	B2-1-10	3	JHP0046	C1-2-1	1	JLP0283	B5-2-1	2
JHC0001	B1-4-1	2	JHN0202	B2-10-1	4	JHP0046	C1-3-1	5	JLR0104	C1-1-1	54
JHH0017	D2-1-1	9 02	JHN0204	B2-10-1	2	JHP0046	D1-1-1	3	JLV0143	E1-22-1	5
JHH0043	T3-4-1	7	JHN0205	B2-10-1	2A	JHP0046	E1-10-1	3	JLV0288	E1-11-1	9
JHH0053	T3-4-1	11	JHN0206	B2-10-1	2B	JHP0046	E1-30-10	4	JLV0288	E1-67-1	7
JHH0064	T6-4-1	4	JHN0209	B2-10-1	3	JHP0046	E1-68-1	18	JLV0326	E1-23-1	4
JHH0066	T6-4-1	8	JHN0210	B2-10-1	1	JHP0046	E2-1-1	4	JLV0521	B2-10-1	7

JCB INDIA LTD.

NUMERICAL INDEX - 210 LC

PART NO.	FIGURE NO.	ITEM NO.	PART NO.	FIGURE NO.	ITEM NO.	PART NO.	FIGURE NO.	ITEM NO.	PART NO.	FIGURE NO.	ITEM NO.
JLV0733	E1-33-1	11	JRA0218	J1-2-1	1 03	JRJ0113	E1-63-1	59C	JRJ0238	E1-8-1	13
JLV1433	E1-69-1	17	JRA0220	J1-2-1	1 07	JRJ0115	E1-63-1	59E	JRJ0238	E1-50-1	2
JLV1641	E1-67-1	10	JRA0221	J1-2-1	1 02	JRJ0115	E1-68-1	10	JRJ0343	E1-30-30	1
JLV1827	B3-1-1		JRA0222	J1-2-1	1 04	JRJ0116	E1-62-1	56E	JRJ0I06	E1-65-1	12
JNA0104	J1-4-2	1 01	JRA0223	J1-2-1	1 05	JRJ0116	E1-68-1	14	JRNOO70	B1-5-20	21
JNA0105	J1-4-2	1 12	JRA0226	J1-2-1	1 08	JRJ0117	E1-63-1	59B	JRP0082	B5-3-1	
JNH0070	C2-1-1	6	JRA0228	J1-2-1	1 06	JRJ0117	E1-66-1	8	JRP0086	B5-3-1	
JNH0070	T3-3-1	9	JRA0238	J1-3-1	1 04	JRJ0119	E1-63-1	59A	JRP0087	B5-3-1	
JNJ0178	E1-65-1	7	JRB0017	F4-3-1	5	JRJ0119	E1-66-1	9	JRP0139	E1-30-20	35
JNJ0178	E1-70-1	25	JRC0007	F4-4-1	A	JRJ0121	E1-62-1	56B	JRP0139	E1-31-20	35
JNV0020	B3-5-1	2	JRH0083	B1-4-1	15	JRJ0121	E1-66-1	7	JRP0142	B5-2-1	3
JNV0070	E1-30-20	29	JRJ0079	E1-61-1	4D	JRJ0122	E1-62-1	56A	JRR0057	C1-1-1	
JNV0070	E1-31-20	29	JRJ0079	E1-70-1	21	JRJ0122	E1-66-1	6	JRR0057	C1-3-1	
JNV0329	E1-11-1	15	JRJ0092	E1-61-1	5B	JRJ0123	E1-62-1	56C	JRV0071	B3-5-1	11
JNV0329	E1-67-1	18	JRJ0092	E1-68-1	13	JRJ0123	E1-66-1	11	JRV0071	B3-5-1	12
JNV0377	B3-5-1	26	JRJ0093	E1-61-1	5A	JRJ0124	E1-62-1	56D	JRV0077	B3-5-1	3
JNV0846	A2-2-1	1	JRJ0094	E1-66-1	12	JRJ0124	E1-66-1	10	JRV0208	B3-5-1	8
JNV0847	A2-2-2	1	JRJ0094	E1-67-1	11	JRJ0126	E1-20-1	11	JRV0209	B3-5-1	7
JNV0848	A2-2-3	1	JRJ0095	E1-65-1	19	JRJ0133	E1-20-1	9	JRV0210	B3-5-1	1
JRA0092	J1-5-10	10	JRJ0095	E1-67-1	13	JRJ0144	E1-30-20	16	JRV0273	E1-32-1	2
JRA0092	J1-5-20	10	JRJ0098	E1-65-1	6	JRJ0144	E1-31-20	16	JRV0274	E1-32-1	4
JRA0093	J1-5-10	9	JRJ0098	E1-68-1	16	JRJ0145	E1-30-20	11	JRV0275	E1-32-1	5
JRA0093	J1-5-20	9	JRJ0099	E1-68-1	12	JRJ0145	E1-31-20	11	JRV0276	E1-32-1	7
JRA0099	J1-3-1	1 01	JRJ0100	E1-68-1	8	JRJ0146	E1-30-20	10	JRV0277	B3-1-1	1.13
JRA0101	J1-5-10		JRJ0100	E1-69-1	8	JRJ0146	E1-31-20	10	JRV0278	E1-33-1	3
JRA0102	J1-5-10	3	JRJ0101	E1-67-1	6	JRJ0148	B1-3-1	3	JRV0278	E1-33-2	3
JRA0103	J1-5-10	13	JRJ0101	E1-68-1	9	JRJ0151	E1-30-20	28	JRV0288	B3-1-1	22
JRA0103	J1-5-20	13	JRJ0104	E1-65-1	13	JRJ0151	E1-31-20	28	JRV0291	E1-22-1	20
JRA0104	J1-5-10	8	JRJ0104	E1-66-1	15	JRJ0168	E1-30-30	9	JRV0292	E1-22-1	19
JRA0104	J1-5-20	8	JRJ0105	E1-65-1	15	JRJ0169	E1-30-30	8	JRV0325	E1-22-1	4
JRA0105	J1-5-10	7	JRJ0105	E1-66-1	17	JRJ0181	E1-30-20	12	JRV0331	E1-33-2	11
JRA0105	J1-5-20	7	JRJ0106	E1-66-1	16	JRJ0181	E1-31-20	12	JRV0332	E1-33-2	6
JRA0107	J1-5-10		JRJ0107	E1-65-1	14	JRJ0186	E1-61-1	4A	JRV0336	E1-33-1	6
JRA0182	J1-5-10	2	JRJ0107	E1-66-1	18	JRJ0186	E1-70-1	10	JRV0337	E1-32-1	6
JRA0214	J1-2-1	1	JRJ0110	E1-65-1	8	JRJ0213	E2-1-1	2	JRV0338	E1-32-1	1
JRA0217	J1-2-1	1 01	JRJ0110	E1-70-1	24	JRJ0218	E1-4-1	6	JRV0339	E1-32-1	8

JCB INDIA LTD.

NUMERICAL INDEX - 210 LC

PART NO.	FIGURE NO.	ITEM NO.	PART NO.	FIGURE NO.	ITEM NO.	PART NO.	FIGURE NO.	ITEM NO.	PART NO.	FIGURE NO.	ITEM NO.
817/18529	B5-2-1	20	817/18786	B5-1-1		821/10041	C3-12-1	28	826/10713	T3-4-1	6
817/18530	B5-2-1		817/18797	B5-2-1	19	821/10041	C3-12-1	28	826/10769	C3-12-1	11
817/18531	B5-2-1	21	817/18802	B5-2-1		821/10267	B2-1-20	12	826/10769	C3-12-1	11
817/18532	B5-2-1	22	817/18806	B5-2-1		823/00377	T7-3-1	10	826/10770	C3-12-1	12
817/18533	B5-2-1	12	817/18807	B5-2-1		823/00394	E1-22-1	24	826/10811	E1-30-10	3
817/18535	B5-2-1	4	817/18808	B5-2-1		823/00394	E1-23-1	3	826/10995	B2-8-1	21
817/18536	B5-2-1	5	817/18809	B5-2-1		823/00394	E1-23-10	3	826/10996	B2-8-1	12
817/18537	B5-2-1	6	817/18824	D1-1-1	48	823/00409	E1-23-1	7	826/11027	B1-5-20	3
817/18538	B5-2-1	7	817/18846	B5-2-3	1	823/00409	E1-23-10	7	826/11027	B1-5-30	20
817/18539	B5-2-1	14	817/18847	B5-2-3	2	823/00513	B2-5-1	17A	826/11085	T7-3-1	12
817/18541	B5-2-1	15	817/18848	B5-2-3	3	823/00516	B2-4-1	19A	826/11085	T7-3-1	12
817/18542	B5-2-1	1	817/18849	B5-2-3	4	823/00516	B2-8-1	13	826/11096	B2-8-1	19
817/18566	B5-2-1	8	817/18851	B5-2-3	5	823/00583	T6-7-1	3	826/11108	B2-1-20	11
817/18727	B5-2-1	17	817/18853	B5-2-3	6	823/10181	E1-8-1	13 03	826/11245	B1-5-1	4
817/18761	B5-1-1	7	817/18853	E1-30-20	33	823/10201	E1-8-1	13 04	826/11612	T7-3-1	11
817/18762	B5-1-1	11	817/18853	E1-31-20	33	823/10579	B3-1-1	6	827/80217	B2-1-1	3
817/18763	B5-1-1	10	817/18876	B5-1-1		823/10579	B3-12-1		827/80218	B2-1-1	4
817/18764	B5-1-1	8	817/18877	B5-1-1		823/10579	B3-12-1	5	827/80219	B2-1-1	2
817/18765	B5-1-1	6	817/18917	B5-2-1	24	826/01143	C3-12-1	16	827/80220	B2-2-1	2
817/18766	B5-1-1	2	817/18957	B5-2-10	9	826/01281	B2-4-1	17	827/80221	B2-2-1	2 01
817/18767	B5-1-1	9	817/18958	B5-2-10	10	826/01281	B2-4-1	19	828/00329	E2-7-1	13
817/18768	B5-1-1	3	817/18959	B5-2-10	11	826/01281	B2-5-1	15	828/00329	E2-7-1	42
817/18769	B5-1-1	1	817/18960	B5-2-10	12	826/01281	B2-5-1	17	828/10020	E3-6-1	14
817/18771	B5-1-1	4	817/18961	B5-2-10	13	826/01347	C1-1-1	51	828/10080	E1-8-1	13 11
817/18772	B5-1-1		817/18962	B5-2-10	14	826/01347	T6-4-1	2	828/10081	E1-8-1	13 12
817/18773	B5-1-1		817/18963	B5-2-10	15	826/01391	T7-3-1	11	828/10081	E3-15-1	
817/18774	B5-1-1		817/18964	B5-2-10	16	826/01519	B2-8-1	14	828/10212	E2-2-3	11
817/18775	B5-1-1		817/18965	B5-2-10	17	826/01649	B2-1-30	4	828/10236	E2-2-3	12
817/18776	B5-1-1		817/18966	B5-2-10	18	826/10092	E2-2-3	15	828/11031	D1-1-1	50
817/18777	B5-1-1		817/18967	B5-2-10	19	826/10302	E1-8-1	13 02	829/31408	T1-5-1	3
817/18780	B5-1-1	12	817/18968	B5-2-10	20	826/10321	E1-8-1	13 05	830/10949	E1-20-1	3
817/18781	B5-1-1		817/18995	B5-2-10	3	826/10496	B2-7-1	1A	830/10950	E1-20-1	4
817/18782	B5-1-1		821/00367	C1-1-1	45	826/10591	E3-6-1	3	830/10951	E1-4-1	1
817/18783	B5-1-1		821/00367	L1-1-2	11	826/10611	D1-1-1	54	830/10952	E1-4-1	2
817/18784	B5-1-1		821/00410	C1-4-10	18	826/10628	E3-6-1	5	830/10953	E1-4-1	9
817/18785	B5-1-1		821/10041	C3-5-1	20	826/10691	E2-2-3	14	830/10954	E1-4-1	10

JCB INDIA LTD.

NUMERICAL INDEX - 210 LC

PART NO.	FIGURE NO.	ITEM NO.	PART NO.	FIGURE NO.	ITEM NO.	PART NO.	FIGURE NO.	ITEM NO.	PART NO.	FIGURE NO.	ITEM NO.
830/10958	E1-22-1	1	910/60144	D2-1-1	39	980/84767	A2-9-2	8	993/99577	A2-2-2	2
830/10959	E1-22-1	2	926/15500	B2-18-1	7	980/84767	A2-9-3	8	993/99577	A2-2-3	2
830/11572	E1-3-1	3	926/47800	B1-5-20	22	980/84768	A2-1-5	5	993/99634	A2-2-1	4
830/11597	E1-30-20	17	928/60027	D2-1-1	26	980/84768	A2-1-6	5	993/99634	A2-2-2	4
830/11597	E1-31-20	17	928/60040	E3-16-1	4B	980/84768	A2-1-7	5	993/99634	A2-2-3	4
830/11754	E1-3-1	1	928/60044	E1-30-30	16	980/84768	A2-1-11	3	993/99637	A2-1-1	4
831/10237	D2-1-1	22	928/60250	C1-5-1	1 03	980/84768	A2-8-1	4	993/99637	A2-1-3	4
831/10291	B3-1-1	2	928/60339	E1-30-10	5	980/84768	A2-9-1	9	993/99637	A2-1-4	4
831/10291	B3-2-1	4	928/60339	E1-50-1	9	980/84768	A2-9-2	9	993/99637	A2-1-8	4
831/10291	B3-2-10	4	928/60339	E3-7-10	1	980/84768	A2-9-3	9	993/99637	A2-1-9	4
831/10291	B3-2-11	4	980/84673	A2-1-11	5	980/86142	A2-1-7	1	993/99637	A2-1-10	4
834/10476	T4-5-1	6	980/84673	A2-9-1	10	980/89219	A2-2-1	5	993/99638	A2-1-1	2
834/10477	T4-5-1	7	980/84673	A2-9-2	10	980/89219	A2-2-2	5	993/99638	A2-1-3	2
834/10592	T3-3-1	2	980/84673	A2-9-3	10	980/89219	A2-2-3	5	993/99638	A2-1-4	2
834/10661	E1-1-1	1	980/84729	A2-1-5	6	980/89221	A2-2-1	6	993/99638	A2-1-8	2
834/10860	T4-5-1	6	980/84756	A2-1-5	7	980/89221	A2-2-2	6	993/99638	A2-1-9	2
834/10861	T4-5-1	7	980/84765	A2-1-5	2	980/89221	A2-2-3	6	993/99638	A2-1-10	2
834/10901	C1-5-1	13	980/84765	A2-1-6	2	980/89670	E1-33-1	12	993/99703	B2-2-1	8
834/10931	C1-5-1	5	980/84765	A2-1-7	2	980/89670	E1-33-2	12	998/10318	E3-6-1	10
834/11057	T3-3-1	16	980/84765	A2-9-1	6	981/00420	A2-1-1	1	998/10336	E3-14-1	
834/11294	T3-3-1	3	980/84765	A2-9-2	6	981/00423	A2-1-3	1	998/10376	E3-13-1	1
835/10065	E1-33-1	18	980/84765	A2-9-3	6	981/00424	A2-1-4	1	AWV0019	E1-11-1	2
835/10065	E1-33-2	18	980/84766	A2-1-5	4	981/00428	A2-1-8	1	BHA0956	E1-3-1	22
835/10066	E1-33-1	17	980/84766	A2-1-6	4	981/00430	A2-1-9	1	BHJ0795	E1-5-1	11 01
835/10066	E1-33-2	17	980/84766	A2-1-7	4	981/00431	A2-1-10	1	BHJ0795	E1-6-1	1 01
835/10071	B2-4-1	9	980/84766	A2-1-11	2	9814/0432	E1-33-1	12 9	BHS0182	E1-10-1	1
835/10071	B2-5-1	8	980/84766	A2-8-1	2	9814/0432	E1-33-2	12 9	BLH0487	E1-68-1	17
8900/0587	B2-1-20	15	980/84766	A2-9-1	7	993/55700	B2-18-1		BRA0127	E1-1-1	5
904/20126	E3-14-1	7	980/84766	A2-9-2	7	993/68400	B2-11-1	1A	BRJ0174	E1-3-1	24
904/20273	B1-5-30	4	980/84766	A2-9-3	7	993/84100	C3-12-1	8	BRJ0190	E1-69-1	21
904/20274	B1-5-1	8	980/84767	A2-1-5	3	993/84100	C3-12-1	8	BRJ1545	E1-65-1	16
904/20274	B1-5-1	9	980/84767	A2-1-6	3	993/84200	C3-12-1	9	BRJ1545	E1-65-1	17
904/20274	B1-5-1	10	980/84767	A2-1-7	3	993/84200	C3-12-1	9	BRP0007	E1-10-1	4.1
904/20274	B1-5-1	11	980/84767	A2-1-11	4	993/84300	C3-12-1	10	BRP0007	E1-11-1	10 01
904/20274	B1-5-1	12	980/84767	A2-8-1	3	993/84300	C3-12-1	10	BRP0007	E1-73-1	
910/60086	D2-1-1	38	980/84767	A2-9-1	8	993/99577	A2-2-1	2	C4E5507	E1-69-1	13

JCB INDIA LTD.

NUMERICAL INDEX - 210 LC

PART NO.	FIGURE NO.	ITEM NO.	PART NO.	FIGURE NO.	ITEM NO.	PART NO.	FIGURE NO.	ITEM NO.	PART NO.	FIGURE NO.	ITEM NO.
JRV0342	E1-33-2	2	JSV0179	E1-66-1	20	KHH0159	D2-1-1	9 03	KHJ0950	D1-1-1	45
JRV0343	E1-33-2	1	JSV0179	E1-70-1	7	KHH0258	T4-5-1	9	KHJ0951	D1-1-1	46
JRV0344	E1-33-1	2	JSV0296	B3-1-1	1.1	KHH0258	T4-5-1	9	KHJ0973	E1-65-1	5
JRV0345	E1-33-1	1	JSV0319	E1-30-10	8 03	KHHO137	B1-4-1	10	KHJ0973	E1-69-1	19
JRV0390	B3-2-10	14	JTJ0028	E2-1-1	5	KHJ0341	E1-8-1	7	KHJ0992	B1-3-1	18 03
JRV0392	B3-1-1	26	JTN0033	B2-7-1	3	KHJ0341	E1-61-1	12	KHJ1032	E1-11-1	4 02
JRV0422	E1-30-1	4	JTN0053	B2-7-1	4	KHJ0341	E1-69-1	6	KHJ1211	D1-1-1	43
JRV0423	E1-30-1	5	JTN0054	B2-7-1	5	KHJ0341	E1-70-1	2	KHN0243	D1-1-1	41
JRV0423	E1-32-1	9	KAJ2176	E1-68-1	2	KHJ0341	E1-71-1	3	KHN0268	D1-1-1	42
JRV0424	E1-30-1	6	KAJ2843	E1-11-1	21	KHJ0342	E1-10-1	4	KHN1122	B2-10-1	12
JRV0593	B3-5-1	4	KAJ3248	E1-65-1	18	KHJ0342	E1-65-1	4	KHN1127	B2-10-1	10
JRV0594	B3-2-1	2	KAR0016	D2-1-1	43	KHJ0342	E1-69-1	5	KHN1260	C1-5-1	4
JRV0594	B3-2-11	2	KAR0016	T6-4-1	9	KHJ0342	E1-70-1	5	KHN1313	B2-4-1	15
JRV0595	B3-2-1	3	KAR0017	B2-6-1	7	KHJ0343	E1-11-1	3	KHN1313	B2-5-1	12
JRV0595	B3-2-11	3	KAR0576	T6-4-1	10	KHJ0344	E1-10-1	5	KHN1395	B1-5-20	18
JRV0597	B3-1-1	4	KBB0445	B1-6-1	9	KHJ0344	E1-69-1	18	KHN1395	B1-5-30	13
JRVO361	E1-22-1	16	KBJ1595	E1-20-1	15	KHJ0348	D2-1-1	34	KHN1398	B1-2-1	9
JSA0038	J1-5-10	4	KBJ1691	E1-11-1	4 01	KHJ0348	E1-8-1	16	KHN1436	B2-10-1	13
JSA0038	J1-5-20	4	KBJ1691	E3-15-1		KHJ0348	E1-11-1	20	KHN1442	B2-10-1	17
JSH0007	T6-4-1	7	KBJ2205	E1-30-10	8 02	KHJ0348	E1-67-1	4	KHN1542	B2-10-1	15
JSH0082	C3-5-1	15	KBN0324	T3-3-1	13	KHJ0363	E1-5-1	1	KHNI256	B2-1-30	1
JSH0082	C3-12-1	23	KEH0122	T1-8-1	9	KHJ0363	E1-68-1	5	KHR0142	C3-12-1	13
JSH0082	C3-12-1	23	KHB0063	B1-6-1	10	KHJ0640	E1-30-10	3	KHR0319	C1-1-1	18
JSH0085	T3-4-1	4	KHH0040	B1-3-1	12	KHJ0640	E1-70-1	4	KHR0328	B2-8-1	17
JSJ0042	B1-3-1	15	KHH0040	B1-4-1	9	KHJ0641	E1-11-1	8	KHR0611	C1-2-1	3
JSJ0042	B1-4-1	12	KHH0130	D2-1-1	9 04	KHJ0739	E1-8-1	5	KHR0736	B2-4-1	16
JSN0086	E1-73-1	2	KHH0137	B1-3-1	13	KHJ0768	D1-1-1	30	KHR0736	B2-5-1	14
JSR0006	C1-5-1	7	KHH0142	C1-1-1		KHJ0768	E1-30-10	2	KHR0736	L1-1-2	3
JSR0018	T4-5-1	10	KHH0142	C1-4-10	10	KHJ0769	D1-1-1	6	KHR0737	B2-4-1	3
JSR0018	T4-5-1	10	KHH0142	C3-5-1	9	KHJ0843	D1-1-1	4	KHR0737	B2-5-1	3
JSR0055	C3-5-1	16	KHH0142	C3-5-1	8	KHJ0869	E1-11-1	18	KHR0737	C1-1-1	16
JSR0055	C3-12-1	24	KHH0142	C3-12-1	16	KHJ0894	E1-71-1	17	KHR0737	C3-5-1	6
JSR0055	C3-12-1	24	KHH0142	C3-12-1	16	KHJ0897	E1-8-1	6	KHR0737	C3-5-1	9
JSR0057	C3-5-1	17	KHH0143	E1-8-1	15	KHJ0947	B2-5-1	19	KHR0737	C3-12-1	17
JSR0057	C3-12-1	25	KHH0157	D2-1-1	9 01	KHJ0947	D1-1-1	11	KHR0737	C3-12-1	17
JSR0057	C3-12-1	25	KHH0158	D2-1-1	9	KHJ0948	D1-1-1	12	KHR0737	D1-1-1	22

JCB INDIA LTD.

NUMERICAL INDEX - 210 LC

PART NO.	FIGURE NO.	ITEM NO.	PART NO.	FIGURE NO.	ITEM NO.	PART NO.	FIGURE NO.	ITEM NO.	PART NO.	FIGURE NO.	ITEM NO.
KHR0738	B2-4-1	8	KHV0164	B3-1-1	1.1	KNJ0758	E1-11-1	16	KNJ1998	E1-63-1	59F
KHR0738	B2-5-1	7	KHV0169	B3-5-1	16	KNJ0758	E1-30-10	1	KNJ1998	E1-68-1	11
KHR0738	D2-1-1	37	KHV0169	B3-12-1	9	KNJ0758	E1-61-1	3	KNJ2233	B1-5-20	26
KHR1178	B2-6-1	6	KHV0170	B3-5-1	15	KNJ0758	E1-66-1	2	KNP0254	B3-3-1	
KHR1181	B2-6-1	5	KHV0170	B3-12-1	8	KNJ0758	E1-67-1	2	KRA0789	E1-5-1	8
KHR1253	B2-10-1	19	KHV0170	B3-12-1	10	KNJ0758	E1-68-1	6	KRA0791	E1-5-1	7
KHR1407	C1-1-1		KMJ0707	B3-4-1	48	KNJ0758	E1-69-1	4	KRA0999	E3-14-1	5
KHR1444	C1-1-1	11	KMJ0964	B3-4-1	42	KNJ0758	E1-71-1	1	KRA1000	E3-14-1	6
KHR1445	C1-1-1	23	KMJI714	E1-22-1	18	KNJ0759	E1-10-1	22	KRA1107	J1-1-1	2
KHR1447	C3-12-1	13	KMR0242	L1-1-2	12	KNJ0759	E1-11-1	10	KRA1138	E1-5-1	3
KHR1451	C1-1-1	24	KNA0362	E1-10-1	6	KNJ0759	E1-65-1	2	KRA1238	E1-5-1	5
KHR1588	C1-1-1	25	KNA0362	E1-69-1	10	KNJ0759	E1-66-1	1	KRA1246	J1-1-1	3
KHR1716	C1-1-1	26	KNA0520	E1-5-1	4	KNJ0759	E1-67-1	3	KRA1247	J1-1-1	8
KHR1957	C1-1-1	17	KNA0531	J1-1-1		KNJ0759	E1-68-1	3	KRB0681	F4-3-1	1
KHV0060	B3-1-1	1.2	KNH0527	T1-8-1		KNJ0759	E1-69-1	2	KRB0681	J1-1-1	4
KHV0100	B3-2-1	13	KNH0586	C3-5-1	7	KNJ0759	E1-70-1	3	KRB0682	F4-3-1	2
KHV0100	B3-2-10	13	KNH0586	T1-8-1	14	KNJ0759	E1-71-1	2	KRB0682	J1-1-1	5
KHV0100	B3-2-11	13	KNH0589	T1-8-1	3	KNJ0759	E1-73-1	3	KRB0736	B1-6-1	6
KHV0101	B3-2-1	5	KNJ0287	E1-10-1	7	KNJ0815	E1-8-1	17	KRB0737	B1-6-1	
KHV0101	B3-2-10	5	KNJ0287	E1-50-1	4	KNJ0815	E1-69-1	12	KRB0738	B1-6-1	
KHV0101	B3-2-11	5	KNJ0288	E1-10-1	7.1	KNJ1109	E1-68-1	7	KRB0739	B1-6-1	
KHV0101	B3-5-1	22	KNJ0288	E3-15-1		KNJ1109	E1-73-1	4	KRC0105	F4-3-1	13
KHV0102	B3-5-1	5	KNJ0341	E1-66-1	3	KNJ1113	E1-70-1	23	KRH0479	T1-8-1	10
KHV0103	B3-1-1	3	KNJ0604	E1-5-1	10	KNJ1118	E1-69-1	15	KRH0780	T1-8-1	4
KHV0103	B3-2-1	6	KNJ0604	E1-10-1	8	KNJ1118	E1-70-1	16	KRH0781	T1-8-1	13
KHV0103	B3-2-10	6	KNJ0604	E1-69-1	3	KNJ1122	E1-69-1	16	KRJ0963	E1-2-1	6
KHV0103	B3-2-11	6	KNJ0605	E1-10-1	9	KNJ1122	E1-71-1	11	KRJ0963	E1-30-30	25
KHV0114	B3-5-1	10	KNJ0605	E1-11-1	24	KNJ1311	E1-65-1	3	KRJ1391	E1-5-1	2
KHV0117	B3-5-1	9	KNJ0605	E1-20-1	1	KNJ1821	E1-11-1	23	KRJ1588	B1-5-20	17
KHV0161	B3-2-1	1 04	KNJ0605	E1-23-1	10	KNJ1822	B1-3-1	2	KRJ1588	B1-5-30	14
KHV0161	B3-2-10	1 04	KNJ0605	E1-23-10	10	KNJ1933	E1-50-1	13	KRJ2246	B1-3-1	8
KHV0162	B3-1-1	1.8	KNJ0606	E1-5-1	11	KNJ1933	E1-68-1	1	KRJ2370	E1-4-1	3C
KHV0162	B3-1-1	1.9	KNJ0606	E1-6-1	1	KNJ1936	E1-4-1	11	KRJ2657	E2-1-1	2 02
KHV0162	B3-2-1	1 05	KNJ0606	E1-30-20	2	KNJ1956	E1-73-1	5	KRJ2662	E1-10-1	10
KHV0162	B3-2-10	1 05	KNJ0606	E1-31-20	2	KNJ1997	E1-62-1	56F	KRJ2681	E1-6-1	3
KHV0164	B3-1-1	1.7	KNJ0758	D2-1-1	35	KNJ1997	E1-68-1	15	KRJ2682	E1-6-1	7

JCB INDIA LTD.

NUMERICAL INDEX - 210 LC

PART NO.	FIGURE NO.	ITEM NO.	PART NO.	FIGURE NO.	ITEM NO.	PART NO.	FIGURE NO.	ITEM NO.	PART NO.	FIGURE NO.	ITEM NO.
KRJ2682	E1-21-1	2	KRJ3820	E1-3-1	11	KRR0831	C3-12-1	27	KRV1178	B3-12-1	3
KRJ2682	E1-21-1	8	KRJ3821	E1-3-1	2 03	KRR0831	C3-12-1	27	KRV1197	B3-1-1	23
KRJ2682	E1-22-1	7	KRJ3822	E1-3-1	2 04	KRR1078	C1-1-1	52	KRV1197	B3-12-1	4
KRJ2682	E1-30-20	3	KRJ3823	E1-3-1	12	KRV0252	B3-1-1		KRV1200	E1-22-1	11
KRJ2682	E1-31-20	3	KRJ3836	B1-3-1	9	KRV0370	B3-4-1	49	KRV1200	E1-23-1	5
KRJ3449	E1-50-1	1 02	KRJ3836	E3-15-1	2	KRV0370	B3-4-1	54	KRV1200	E1-23-10	5
KRJ3449	E2-1-1	1 02	KRJ3868	E1-20-1	2	KRV0481	B3-1-1		KRV1203	E1-23-1	2
KRJ3451	E2-1-1	2 01	KRJ3895	D2-1-1	33	KRV0514	B3-2-1	1 03	KRV1203	E1-23-10	2
KRJ3457	B1-3-1	7	KRJ3895	E1-67-1	9	KRV0514	B3-2-10	1 03	KRV1204	E1-23-1	1
KRJ3461	B1-3-1	18 01	KRJ4102	E1-71-1	8	KRV0548	B2-7-1		KRV1204	E1-23-10	1
KRJ3463	B1-3-1	18 02	KRJ4229	E1-10-1	11	KRV0548	E1-10-1	13	KRV1363	B3-2-1	1 02
KRJ3507	E1-3-1	14	KRJ4442	E1-2-1	17	KRV0548	E1-23-1	8	KRV1380	B3-1-1	10
KRJ3508	E1-3-1	14 01	KRJ4443	E1-2-1	18	KRV0548	E1-23-10	8	KRV1419	B3-4-1	45
KRJ3509	E1-3-1	14 02	KRJ4447	E1-21-1	10	KRV0549	E1-22-1	10	KRV1420	B3-4-1	46
KRJ3510	E1-3-1	14 03	KRJ4448	E1-21-1	11	KRV0550	B3-4-1	50	KRV1421	B3-4-1	47
KRJ3511	E1-3-1	14 04	KRJ4450	E1-10-1	12	KRV0695	B3-1-1		KRV1572	B3-1-1	7
KRJ3512	E1-3-1	2 05	KRJ4450	E1-69-1	9	KRV0704	B3-1-1	11	KRV1641	E1-30-1	7
KRJ3512	E1-3-1	11 05	KRJ4551	E1-4-1	3A	KRV1120	B3-5-1	17	KRV1641	E1-32-1	13
KRJ3512	E1-3-1	14 05	KRJ4551	E1-4-1	3B	KRV1121	B3-5-1	18	KRV1645	E1-32-1	3
KRJ3513	E1-3-1	2 06	KRJ4553	E1-4-1	3D	KRV1122	B3-1-1	18	KRV1764	E1-23-1	21 02
KRJ3513	E1-3-1	11 06	KRJ4608	B1-3-1	16	KRV1124	B3-1-1	16	KRV1764	E1-23-10	21 02
KRJ3513	E1-3-1	14 06	KRN0081	E1-11-1	5	KRV1126	B3-1-1	24	KRV1765	E1-23-1	21 01
KRJ3515	E1-3-1	9	KRN1418	B1-5-30	15	KRV1127	B3-2-1	11	KRV1765	E1-23-10	21 01
KRJ3577	E1-65-1	11	KRN1482	B1-5-20	16	KRV1127	B3-2-10	11	KRV1766	E1-23-1	20 02
KRJ3577	E1-69-1	20	KRN1497	B1-5-20	1 01	KRV1127	B3-2-11	11	KRV1766	E1-23-10	20 02
KRJ3577	E1-70-1	17	KRN1497	B1-5-20	2 01	KRV1128	B3-2-10	2	KRV1767	E1-23-1	20 01
KRJ3577	E1-71-1	10	KRN1497	B1-5-20	5 01	KRV1131	B3-2-10	3	KRV1767	E1-23-10	20 01
KRJ3671	D2-1-1	32	KRNO364	B1-5-20	8	KRV1156	B3-1-1	19	KRV1768	E1-23-1	21
KRJ3671	E1-67-1	16	KRP1693	B3-3-1	1	KRV1161	B3-5-1	13	KRV1768	E1-23-10	21
KRJ3814	E1-3-1	11 01	KRR0016	C1-1-1		KRV1162	B3-5-1	14	KRV1769	E1-23-1	20
KRJ3815	E1-3-1	11 02	KRR0017	C1-1-1	14	KRV1176	B3-2-1	10	KRV1769	E1-23-10	20
KRJ3816	E1-3-1	11 03	KRR0152	C1-1-1	13	KRV1176	B3-2-10	10	KRV1932	E1-23-10	4
KRJ3817	E1-3-1	11 04	KRR0830	C3-5-1	18	KRV1176	B3-2-11	10	KSJ0806	E1-8-1	8
KRJ3818	E1-3-1	2	KRR0830	C3-12-1	26	KRV1176	B3-12-1	7	KSJ0806	E1-66-1	19
KRJ3819	E1-3-1	2 01	KRR0830	C3-12-1	26	KRV1178	B3-1-1	17	KSJ0806	E1-66-1	22
KRJ3820	E1-3-1	2 02	KRR0831	C3-5-1	19	KRV1178	B3-12-1	2	KSJ0806	E1-70-1	6

JCB INDIA LTD.

NUMERICAL INDEX - 210 LC

PART NO.	FIGURE NO.	ITEM NO.	PART NO.	FIGURE NO.	ITEM NO.	PART NO.	FIGURE NO.	ITEM NO.	PART NO.	FIGURE NO.	ITEM NO.
KSJ0806	E1-70-1	27	LBQ0082	E2-2-4	4	LCP0036	E2-2-1	3	LMP0218	E2-2-1	61
KSJ0968	E1-8-1	3	LBQ0102	E2-2-2	41	LEC0025	E3-7-1	6	LMQ0021	E2-7-1	35 01
KSJ1135	E1-71-1	15	LBQ0102	E2-2-4	5	LJC0003	E3-7-1	25	LNM0428	E2-7-1	30
KSJ2308	E1-21-1	4	LBQ0112	D2-1-1	34 01	LJP0035	E2-2-1	1	LNP0173	E2-2-1	63
KSJ2465	D1-1-1	34	LBQ0112	D2-1-1	35 01	LJP0036	E2-2-1	2	LNP0174	E2-2-1	64
KSJ2465	E1-50-1	10	LBQ0112	E1-11-1	16 01	LKC0001	E3-7-1	24	LNP0175	E2-2-1	65
KSJ2465	E1-61-1	1	LBQ0112	E1-11-1	1801	LKC0005	E3-7-1	13	LNP0176	E2-2-1	66
KSJ2465	E3-7-1	0	LBQ0112	E1-11-1	20 01	LKM0106	E2-7-1	21	LNP0177	E2-2-1	38
KSN0939	B1-5-30	16	LBQ0112	E1-11-1	24 01	LLC0118	E3-7-1	27	LNP0178	E2-2-1	36
KSP0268	B3-12-1	1	LBQ0112	E2-2-1	45	LLC0128	E3-7-1	4	LNP0180	E2-2-1	70
KSP0268	B3-12-1		LBQ0112	E2-2-2	48	LLM0028	E2-2-1	30	LNP0181	E2-2-1	72
KSV0282	E1-33-2	9	LBQ0112	E2-2-3	8	LLM0028	E2-2-3	7	LNP0181	E2-2-2	0C
KSV0311	B3-1-1		LBQ0112	E2-7-1	18	LLP0041	E2-2-1	29	LPC0203	E3-7-1	14
KTJ0670	E1-11-1	19	LBQ0122	E2-7-1	33	LLP0114	E2-2-1	31	LPC0204	E3-7-1	15
KTJ0672	E1-66-1	23	LBQ0162	E2-2-2	44	LLP0114	E2-2-2	5	LPC0205	E3-7-1	17
KTJ0675	E1-69-1	11	LBQ0182	E1-11-1	14 01	LLP0114	E3-7-1	2	LPC0213	E3-7-1	8
KTJ0675	E1-71-1	9	LBQ0182	E2-2-1	48	LLS0005	E2-2-4	3	LPM0052	E2-7-1	38
KTJ0678	E1-66-1	24	LBQ0182	E2-2-2	42	LMC0085	E3-7-1	26	LPM0112	E2-7-1	20
KTJ0678	E1-70-1	9	LBQ0182	E2-7-1	31	LMC0107	E3-7-1	12	LPM0115	E2-7-1	16
KTJ0809	E1-67-1	21	LBQ0202	E2-2-2	45	LMM0329	E2-7-1	29	LPM0117	E2-7-1	12
KTJ0812	E1-61-1	4C	LBQ0222	E2-2-2	43	LMM0330	E2-7-1	24	LPP0097	E2-2-1	21
KTJ0812	E1-70-1	20	LBQ0242	E2-2-1	47	LMM0334	E2-7-1	6	LPP0100	E2-2-1	33
KTJ0907	E1-30-10	8 01	LBQ0253	E2-2-2	46	LMM0335	E2-7-1	7	LPP0109	E2-2-4	2
KTJ0907	E1-30-10	8 04	LBQ0262	E2-2-2	49	LMM0336	E2-7-1	10	LPP0110	E2-2-4	6
KTJ1663	E1-3-1	15	LBQ0262	E2-7-1	36	LMM0337	E2-7-1	9	LQC0034	E3-7-1	31
KTV0700	B3-1-1		LBQ0292	E1-3-1	24 01	LMM0338	E2-7-1	1	LQC0035	E3-7-1	32
LAM0037	E2-7-1	2	LBQ0353	E2-2-1	41	LMM0545	E2-7-1	15	LSC0214	E3-7-1	21
LB00502	E2-2-1	13	LBQ0353	E2-2-2	50	LMM0605	E2-7-1	27	LSC0236	E3-7-1	20
LBB0182	E2-2-1	50	LBQ0753	E2-2-2	37	LMP0108	E2-2-1	55	LSC0237	E3-7-1	11
LBB0262	E2-7-1	41	LBQ0953	E2-2-1	42	LMP0147	E2-2-1	6	LSC0238	E3-7-1	18
LBB0353	E2-2-1	51	LBQ1453	E2-2-1	43	LMP0185	E2-2-1	10	LSC0239	E3-7-1	22
LBC0201	E2-7-1	32	LBQ5025	E3-7-1	7	LMP0208	E2-2-1	14	LSC0240	E3-7-1	23
LBQ0062	E2-2-2	38	LBQ5262	E2-7-1	11	LMP0210	E2-2-1	17	LSM0075	E2-7-1	39
LBQ0072	E2-2-2	39	LBQ8122	E2-2-2	47	LMP0212	E2-2-1	34	LSM0080	E2-7-1	5
LBQ0082	E2-2-1	44	LBQ9142	E2-2-1	46	LMP0213	E2-2-1	35	LSM0082	E2-7-1	14
LBQ0082	E2-2-2	40	LCC0014	E3-7-1	30	LMP0217	E2-2-1	56	LSM0135	E2-7-1	19

JCB INDIA LTD.

NUMERICAL INDEX - 210 LC

PART NO.	FIGURE NO.	ITEM NO.	PART NO.	FIGURE NO.	ITEM NO.	PART NO.	FIGURE NO.	ITEM NO.	PART NO.	FIGURE NO.	ITEM NO.
LSP0109	E2-2-1	12	MPJ5068	E1-70-1	26						
LSP0129	E2-2-4	7	MPJ5070	E1-66-1	25						
LTM0129	E2-7-1	3	MPJ5070	E1-70-1	8						
LTM0130	E2-7-1	23	MPR2006	D1-1-1	52						
LTP0044	E2-2-1	4	MPV2193	E1-10-1	14						
LTP0045	E2-2-1	5	TBA	A2-1-11	1						
LUC0101	E3-7-1	29	TBA	A2-9-6	31						
LUC0102	E3-7-1	28	TBA	A2-9-6	32						
LUC0104	E3-7-1	19	TBA	C2-3-1	12						
LUC0106	E3-7-1	10	TBA	E1-3-1	23						
LUC0107	E3-7-1	9	TBA	T2-2-1	13						
LUP0044	E2-2-2	60	TBA	T4-1-1	14 02						
LUP0188	E2-2-1	28	TBA	T6-1-1	2						
LUP0189	E2-2-1	58	TBA	T6-1-1	8						
LUP0190	E2-2-1	59	TBA	T6-1-1	10						
LWC0003	E3-7-1	1	TBA	T6-1-1	17						
LWC0004	E3-7-1	5	TBA	T6-5-1	14						
LWP0006	E2-2-1	20	TBA	T7-2-1	6						
LWP0007	E2-2-1	24	UBJ0157	E1-5-1	10 01						
LWP0012	E2-2-4	1	UBJ0157	E1-10-1	8.1						
LZC0076	E2-7-1	17	UBJ0157	E1-11-1	3 01						
LZC0158	E3-7-1	3	UBJ0157	E1-11-1	8 01						
LZM0191	E2-7-1	40	UBJ0158	E1-5-1	2 01						
LZM0335	E2-7-1	22	UBJ0158	E1-10-1	5.1						
LZP0176	E2-2-1	18	UBJ0158	E1-22-1	5.1						
LZP0177	E2-2-1	19	UBJ0158	E1-23-1	4 01						
M00099	J1-4-2	1 09	UBJ0158	E1-23-10	4 01						
M00115	J1-4-2	1 03	UBJ0384	E2-7-1	28						
M00116	J1-4-2	1 02	UEJ0360	E1-8-1	16 01						
M00119	J1-4-2	1 13	UHJ0415	E1-23-1	20 03						
M00120	J1-4-2	1 08	UHJ0415	E1-23-1	21 03						
M00122	J1-4-2	1 07	UHJ0415	E1-23-10	20 03						
M00123	J1-4-2	1 11	UHJ0415	E1-23-10	21 03						
M00160	J1-4-2	1 04		A2-9-5	43						
M00161	J1-4-2	1 06									
MPJ5068	E1-66-1	21									