E-24

RUTHZIL TRATOR COMERCIAL DE PEÇAS LTDA 11 97083-6812 ROLANDO CITRANGULO

Parts Book

JS220

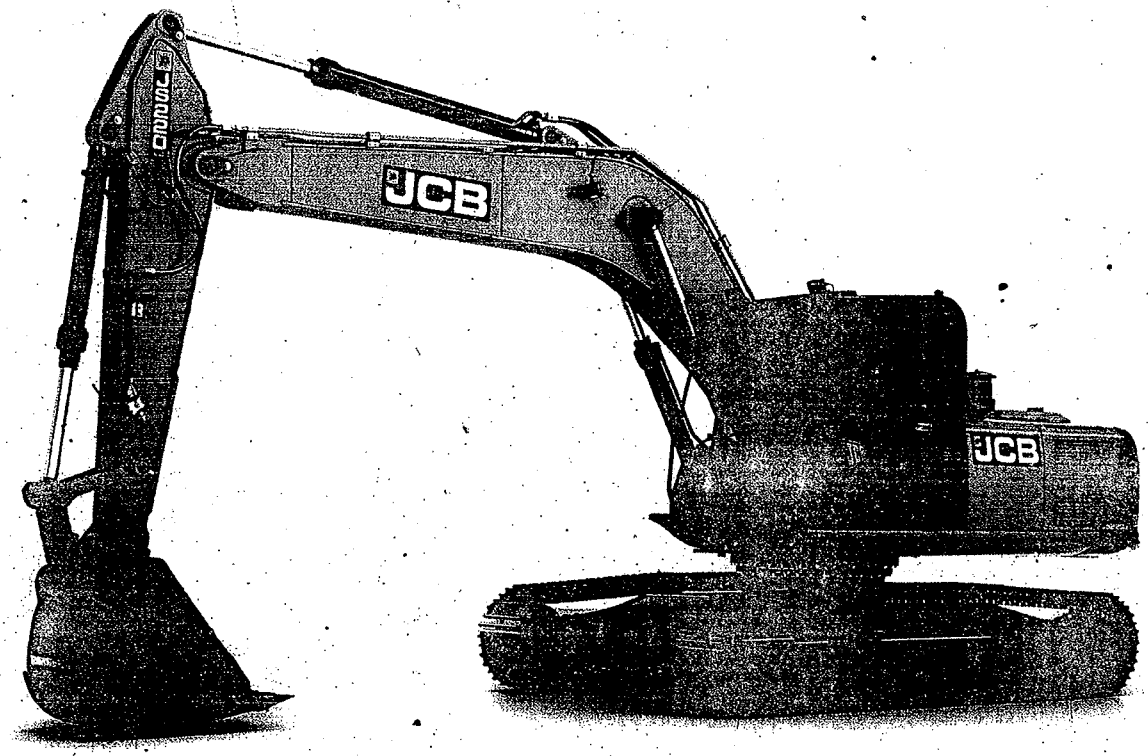

JS 220

TRACKED EXCAVATOR WITH JCB ENGINE

Part No.: 335/C2778

Serial No.: - M2163162> 2168079

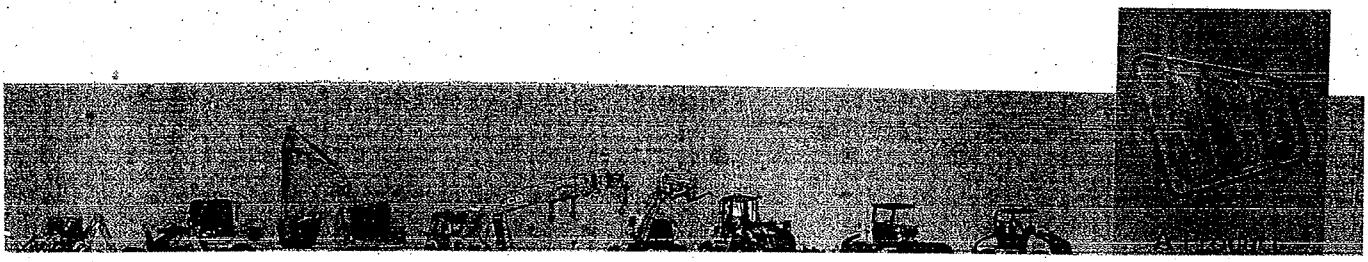

Dear JCB Customer

Even if you have operated this type of equipment before, it is very important that your new machines operations and functions are explained to you by a JCB Dealer Representative following delivery of your new machine.

Following the installation you will know how to gain maximum productivity and performance from your new product.

Please contact your local JCB dealer if the Installation Form has not yet been completed with you.

Your Local JCB Dealer is:

OWNERS PARTS BOOK

JS220LC JS220 XD JCB India

ENGLISH - 9820/0546B - ISSUE 1 - JUL 13 M2163162> 2168079

Copyright © 2010 JCB SERVICE. All rights reserved. No part of this publication may be reproduced, stored in a retrieval system, or transmitted in any form or by any other means, electronic, mechanical, photocopying or otherwise, without prior permission from JCB SERVICE.

A5-4-Range - Printed In England

Notes:

⚠ WARNING

Study the operators handbook before starting the machine

You must understand and follow the instructions in the handbook. You must observe all relevant laws and regulations. If you are unsure about anything, ask your JCB Distributor or employer. Do not guess, you or others could be killed or seriously injured.
If your machine does not have an operators handbook you must get one immediately (contact your JCB Distributor).

⚠ AVERTISSEMENT

Etudiez le manuel d'utilisateur avant de démarrer la machine

Vous devez comprendre et observer les instructions de ce manuel. Vous devez observer toutes les lois et règlements pertinents en vigueur. En cas d'incertitude concernant tout aspect de ceci, consultez votre distributeur JCB ou votre employeur. N'essayez pas de deviner car ceci peut entraîner la mort ou la blessure grave de vous-même ou d'autres personnes.
Si votre machine ne contient pas un manuel d'utilisateur, obtenez immédiatement le manuel d'utilisateur approprié (contactez votre distributeur JCB).

FR

⚠ WARNUNG

Lesen Sie vor der Inbetriebnahme der Maschine die Bedienungsanleitung

Sie müssen die Anweisungen im Handbuch verstehen und befolgen. Sie müssen alle einschlägigen Gesetze und Vorschriften einhalten. Fragen Sie den JCB-Händler oder Ihren Arbeitgeber, wenn Ihnen etwas nicht klar ist. Raten Sie nicht - das könnte zu tödlichen Unfällen oder schweren Körperverletzungen führen.

Wenn Ihre Maschine nicht über eine Bedienungsanleitung verfügt, müssen Sie sich sofort eine beschaffen (setzen Sie sich mit dem JCB-Händler in Verbindung).

DE

⚠ ADVERTENCIA

Estudie el manual del operador antes de arrancar la máquina

Debe comprender y seguir las instrucciones del manual. Debe cumplir con todas las leyes y normativas pertinentes. Si no está seguro de algo, pregunte al concesionario JCB o a la empresa. No haga suposiciones. Usted u otros podrían sufrir lesiones graves o fatales.

Si su máquina no tiene manual del operario debe obtener uno inmediatamente (contacte con el concesionario JCB).

ES

⚠ WAARSCHUWING

Lees de bedieningshandleiding aandachtig door alvorens de machine te starten

U dient de richtlijnen in de handleiding te begrijpen en op te volgen. U dient alle van toepassing zijnde wetten en voorschriften na te leven. Als u ergens niet zeker van bent, vraag het dan aan uw JCB-dealer of werkgever. Ga niet gissen, want u of anderen zouden als gevolg daarvan kunnen omkomen of ernstig gewond kunnen raken.

Als er op uw machine geen bedieningshandleiding aanwezig is, moet u er onmiddellijk voor zorgen dat u er een krijgt (neem hiervoor contact op met uw JCB-dealer).

NL

⚠ AVISO

Estude o manual do operador antes de iniciar os trabalhos com a máquina

Deve compreender e seguir as instruções do manual. Deve respeitar todas as normas e legislação pertinente. Em caso de dúvida contacte o Distribuidor JCB mais próximo ou os seus superiores. Não tente adivinhar pois pode sofrer ou provocar ferimentos graves ou mesmo fatais.

Se a sua máquina não vem acompanhada de um manual do operador solicite de imediato um exemplar (contacte o Distribuidor JCB local).

PT

⚠ AVVERTENZA

Leggere attentamente il manuale di uso e manutenzione prima di avviare la macchina

La comprensione e l'osservanza delle istruzioni contenute nel manuale sono requisiti fondamentali. Altrettanto importante è il rispetto delle leggi e delle norme vigenti. In caso di dubbi, rivolgersi al concessionario JCB oppure al diretto superiore. L'utilizzo della macchina senza conoscerne a fondo il funzionamento può provocare lesioni gravi o anche mortali.

Se la macchina è priva del manuale di uso e manutenzione, richiederne immediatamente uno (rivolgersi al concessionario JCB).

IT

⚠ ADVARSEL

Inden maskinen startes, skal håndbogen gennemlæses

Du skal forstå og følge instruktionerne i håndbogen. Du skal overholde alle relevante love og regler. Hvis der er noget, du ikke er sikker på, så spørg JCB-forhandleren eller din arbejdsgiver. Lad være med at gætte, for ellers kan du eller andre blive dræbt eller alvorligt kvæstet.

Hvis der ikke findes en håndbog i maskinen, skal du skaffe en omgående (kontakt JCB-forhandleren).

DA

⚠ تحذير

اطلع على كتيب التشغيل هذا قبل البدء في تشغيل الآلة.

يجب أن تفهم و تتبع التعليمات التي في الكتيب. يجب أن تتبع كل القوانين و اللوائح. إذا كنت غير متأكد من شيء ما، اسأل موزع JCB الخاص بك أو صاحب العمل لا تدع مكانا للتخمين، حيث من الممكن أن تقتل مصرعك أنت و غيرك أو تتعرضون لإصابات خطيرة.

إذا لم يكن لديك كتيب التشغيل، فعليك الحصول على واحد منه (اتصل بموزع JCB الخاص بك).

AR

⚠ VARNING

Läs igenom instruktionsboken innan maskinen startas

Föraren måste förstå och följa instruktionsbokens anvisningar. Det är viktigt att alla tillämpliga lagar och förordningar följs. Om osäkerhet råder om någonting, ska JCB-distributören eller arbetsgivaren frågas till råds. Gissa'ej - det kan leda till en dödsolycka eller svåra skador för föraren eller andra.
Om maskinen inte har en instruktionsbok, måste en sådan omedelbart anskaffas (kontakta JCB-distributören).

SV

⚠ VAROITUS

Tutki käyttäjän käsikirjaa ennen koneen käynnistämistä

Sinun on ymmärrettävä kaikki käsikirjan ohjeet ja noudatettava niitä. Sinun on otettava huomioon kaikki asiaan liittyvät lait ja määräykset. Jos olet epävarma jostakin, kysy neuvoa JCB:n edustajalta tai työnantajalta. Älä arvaile, muuten sinä itse tai joku muu saattaisi menettää henkensä tai loukkaantua vakavasti.

Ellei koneessasi ole käyttäjän käsikirjaa, sellainen on hankittava viipymättä (ota yhteys JCB-liikkeeseen).

FI

⚠ ADVARSEL

Les førerhåndboken før du starter maskinen

Du må forstå og følge alle anvisningene i håndboken, og du må kjenne til og rette deg etter alle aktuelle regler og bestemmelser. Hvis det er noe du ikke er sikker på, er det bare å spørre din JCB-forhandler eller din arbeidsgiver. Ikke gjett – du eller andre kan bli alvorlig skadet eller dropt.

Hvis maskinen ikke har en førerhåndbok, må du kontakte din JCB-forhandler øyeblikkelig og få en.

NO

⚠ VÝSTRAHA

Před nastartováním stroje si tuto příručku prostudujte

Pokynům v příručce musíte rozumět a řídit se jimi. Musíte dodržovat všechny platné zákony a předpisy. Pokud si nejste čímkoliv jisti, obraťte se na svého zaměstnavatele nebo na zástupce JCB a požádejte o vysvětlení. Nejednejte na základě dohadů. Vystavovali byste sebe a další osoby nebezpečí těžkého nebo smrtelného úrazu.

Pokud není váš stroj vybaven příručkou pro obsluhu, musíte si ji okamžitě opatřit (Obraťte se za tímto účelem na svého zástupce JCB).

CS

⚠ UYARI

Makinayı çalıştırmadan önce operatör el kitabını ayrıntılı olarak okuyun

El kitabında bulunan tüm talimatları anlamanız ve takip etmeniz gerekir. İlgili tüm yasa ve yönetmeliklere riayet etmeniz gerekir. Herhangi bir şey hakkında tereddüt edersenız, JCB Dağıtımcınıza veya işverenınize danışın. Tahmin yürütmeyin, kendinizin ve başkalarının ölümüne veya ağır yaralanmasına neden olabilirsiniz.

Makinanızda operatör el kitabı mevcut değilse, derhal bir adet edinmeniz gerekir (JCB Dağıtımcınıza başvurunuz).

TR

⚠ OSTRZEŻENIE

Przed rozruchem maszyny należy przestudiować podręcznik operatora

Należy w pełni rozumieć i wykonywać instrukcje podane w podręczniku. Obsługujący powinni przestrzegać wszelkich obowiązujących praw i przepisów. Osoby które nie mają pewności co do pewnych aspektów pracy, powinny skontaktować się z dystrybutorem JCB lub pracodawcą. Nie wolno zgadywać przy pracy gdyż może to spowodować poważne obrażenia ciała lub śmierć operatora lub innych osób.

Jeżeli w Waszej maszynie brak jest podręcznika operatora, należy natychmiast postarać się o nowy egzemplarz (w tym celu proszę skontaktować się z dystrybutorem JCB).

PL

⚠ ΠΡΟΕΙΔΟΠΟΙΗΣΗ

Μελετήστε το βιβλίο χειρισμού πριν εκκινήσετε το μηχάνημα

Πρέπει να καταλάβετε και να ακολουθήσετε τις οδηγίες που περιέχονται σε αυτό το βιβλίο. Πρέπει να ακολουθήσετε όλους τους σχετικούς νόμους και κανονισμούς. Εάν δεν είστε σίγουροι για κάτι, ρωτήστε τον αντιπρόσωπο της JCB ή τον εργοδότη σας. Μην κάνετε υποθέσεις για κάτι που δεν γνωρίζετε, εσείς ή οι άλλοι μπορεί να σκοτωθείτε ή να τραυματιστείτε σοβαρά.

Εάν το μηχάνημα σας δεν διαθέτει βιβλίο χειρισμού, πρέπει να προμηθευτείτε ένα αμέσως, (Επικοινωνήστε με τον αντιπρόσωπο της JCB).

EL

⚠ ПРЕДУПРЕЖДЕНИЕ

Изучить руководство для оператора перед тем, как заводить машину

Необходимо усвоить и выполнять указания, данные в руководстве. Необходимо соблюдать все действующие законы и нормы. Если в чем-либо сомневаетесь, обращайтесь к своему дистрибьютору JCB или работодателю. Не гадайте, иначе вы или другие могут погибнуть или получить тяжелые травмы.

Если в вашей машине нет руководства для оператора, необходимо получить его незамедлительно (обращаться к своему дистрибьютору JCB).

RU

⚠ UPOZORNENIE

Pred uvedením stroja do prevádzky si prečítajte túto príručku

Pokynom v príručke musíte rozumieť a riadiť sa nimi. Musíte dodržiavať všetky platné zákony a predpisy. Ak si niečím nie ste istý, obráťte sa na svojho distribútora JCB alebo svojho zamestnávateľa. Nekonajte na základe vlastných dohadov, mohli by ste vystaviť seba alebo ďalšie osoby nebezpečenstvu vážneho alebo smrteľného zranenia.

V prípade, že k vášmu stroju nebola dodaná príručka na obsluhu, musíte si ju inned zaobstarať (kontaktujte svojho distribútora JCB).

SK

PARTS LOCATION PROCEDURE

- REFER TO MACHINE DATA PLATE
  1. Machine Serial No.
  2. Engine Serial No.
  3. Gearbox Serial No.
  4. Torque Converter Serial No.
  5. Axle Serial No.

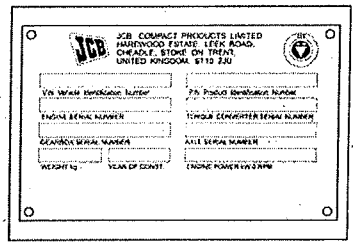

- SELECT SECTION

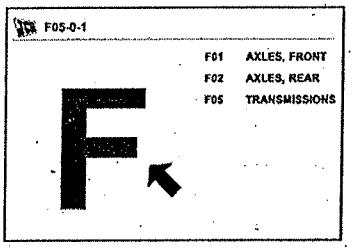

- REFER TO INDEX

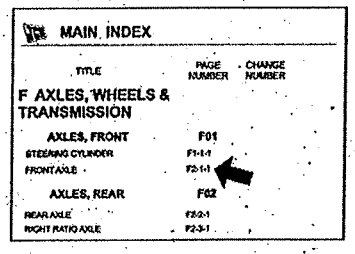

- LOCATE ITEM

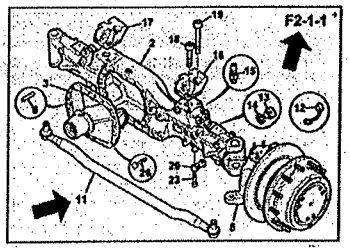

All item Nos. within a box or attached to another line are part of an assembly.

PARTS ORDERING PROCEDURE

- MACHINE MODEL NO. AND SERIAL NO.

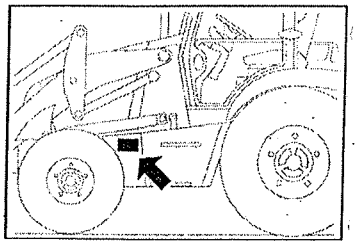

- PAGE REFERENCE NO.

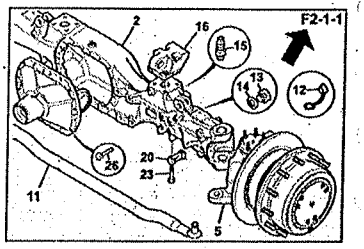

- ILLUSTRATION ITEM NO.

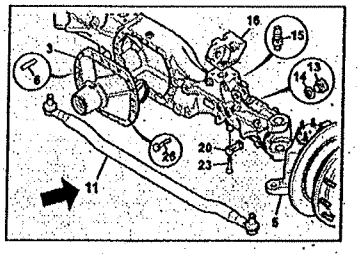

The purpose of this book is to assist the operator in ordering parts quickly and easily from a JCB Dealer. The index at the beginning of each section MUST be used with reference to the machine type and serial number, to find the correct page for the part required.

PROCEDURE DE RECHERCHE DES PIECES

- VISUALISER LA PLAQUE SIGNALETIQUE DE LA MACHINE
  1. No. de série de la machine
  2. No. de série du moteur
  3. No. de série de la boîte de vitesses
  4. No. de série du convertisseur de couple
  5. No. de série du pont

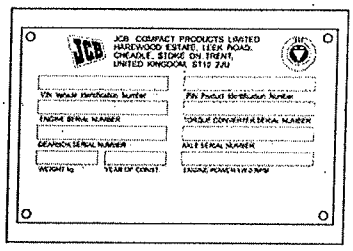

- SELECTIONNEZ LA SECTION

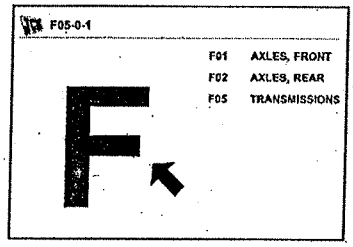

- VISUALISEZ L'INDEX

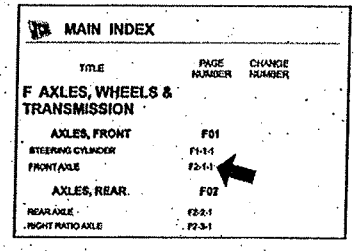

- REPEREZ L'ARTICLE

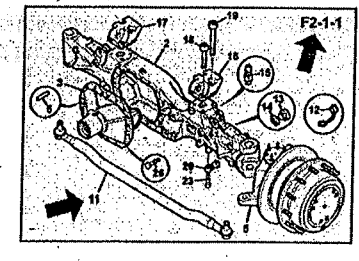

Tous les numéros d'article à l'intérieur d'une boîte ou liés à une autre ligne font partie d'un ensemble.

PROCEDURE DE COMMANDE DES PIECES

- NO. DE MODELE ET NO. DE SERIE DE LA MACHINE

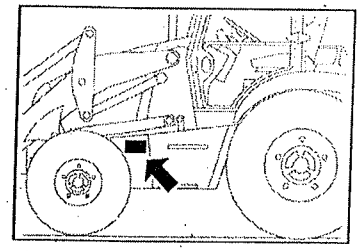

- NO. DE REFERENCE DE PAGE

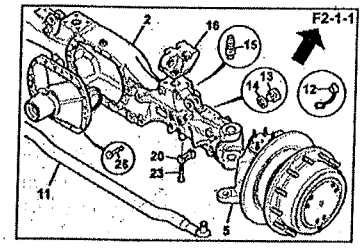

- NO. D'ARTICLE DANS L'ILLUSTRATION

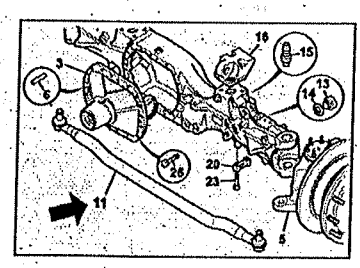

L'objectif de ce livret est d'aider l'opérateur à commander les pièces d'un stockiste d'une façon rapide et aisée. Pour trouver la page correcte de la pièce prescrite, l'index présenté au début de chaque section DOIT être utilisé en tenant compte du type de machine et du numéro de série.

AUFFINDEN VON BAUTEILEN

- SIEHE DATENSCHILD DER MASCHINE
  1. Seriennummer der Maschine
  2. Seriennummer des Motors
  3. Seriennummer des Getriebes
  4. Seriennummer des Wandlers
  5. Seriennummer der Achse

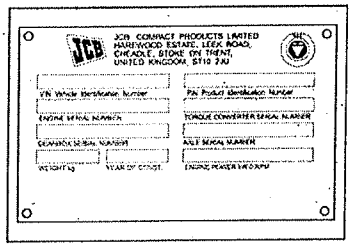

- ANLEITUNGSTEIL WÄHLEN

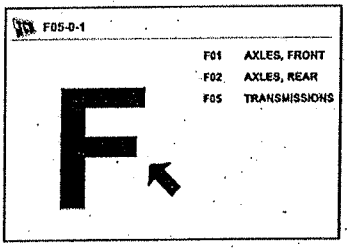

- IM SACHVERZEICHNIS NACHSCHLAGEN

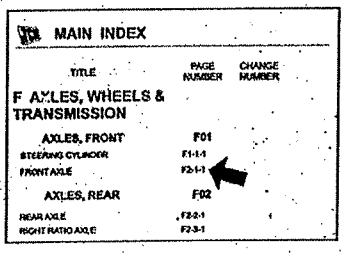

- POSITION AUFFINDEN

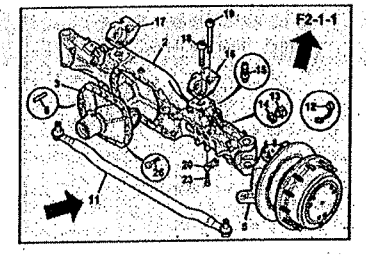

In einem Feld befindliche oder zu einer anderen Zeile gehörende Positionsnummern bilden Teile einer Baugruppe.

BESTELLUNG VON BAUTEILEN

- MODELL- UND SERIENNUMMER DER MASCHINE

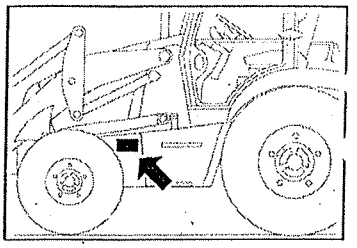

- SEITENNUMMER

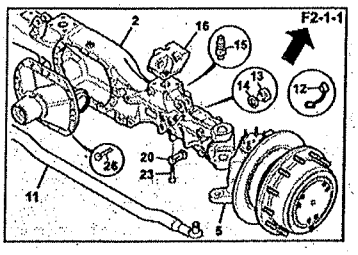

- POSITIONSNUMMER IM BILD

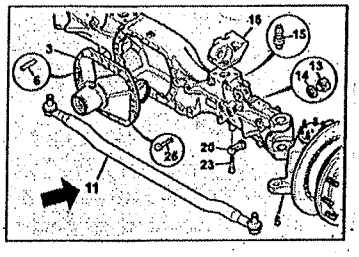

Dieses Büchlein soll dem Fahrer bei der schnellen und einfachen Bestellung von Ersatzteilen beim JCB-Händler behilflich sein. Zum Auffinden der richtigen Seite für das jeweilige Bauteil MUSS das Sachverzeichnis am Beginn der einzelnen Abschnitte mit Bezugnahme auf Maschinentyp und -seriennummer verwendet werden.

PROCEDIMIENTO PARA LOCALIZAR PIEZAS

- CONSULTE EN LA PLACA DE DATOS DE LA MÁQUINA
  1. El número de serie de la máquina
  2. El número de serie del motor
  3. El número de serie de la caja de cambios
  4. El número de serie del convertidor de par
  5. El número de serie del eje

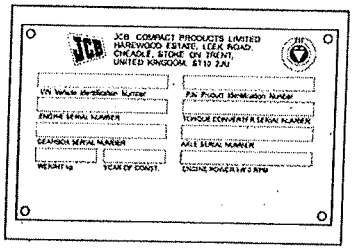

- SELECCIONE LA SECCIÓN

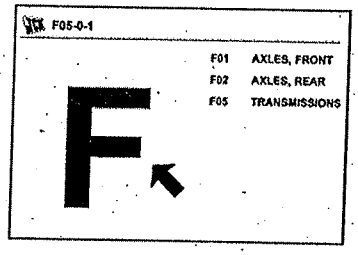

- CONSULTE EL ÍNDICE

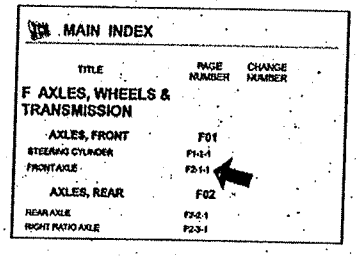

- LOCALICE EL ELEMENTO

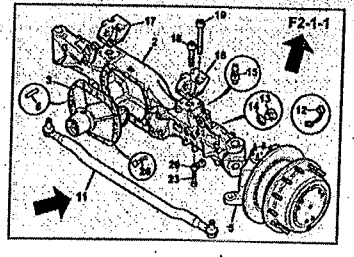

Todos los números de referencia de los elementos que aparecen dentro de una casilla o están unidos a otra línea forman parte de un conjunto.

PROCEDIMIENTO PARA PEDIR PIEZAS

- Nº DE MODELO Y Nº DE SERIE DE LA MÁQUINA

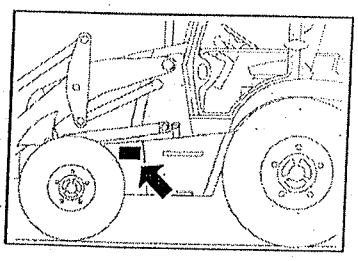

- Nº DE REFERENCIA DE LA PÁGINA

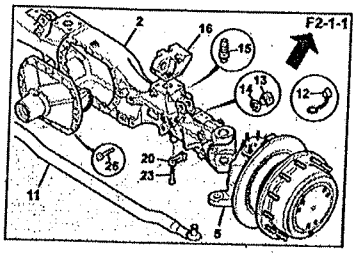

- Nº DEL ELEMENTO ILUSTRADO

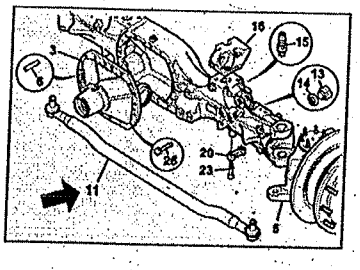

La finalidad de este catálogo es ayudar al operador a pedir piezas rápida y fácilmente a un concesionario JCB. SE DEBE usar el índice al principio de cada sección con referencia al tipo y número de serie de la máquina para hallar la página correcta para la pieza requerida.

WERKWIJZE VOOR ONDERDELEN OPZOEKEN

- ZIE KENPLAAT VAN MACHINE
  1. Serienummer machine
  2. Serienummer motor
  3. Serienummer versnellingsbak
  4. Serienummer koppelomvormer
  5. Serienummer van as

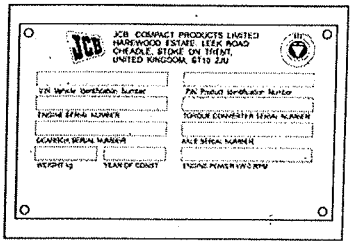

- KIES SECTIE

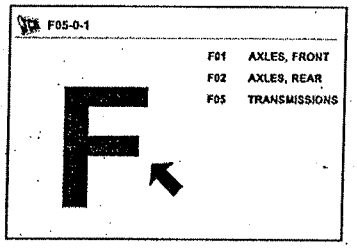

- RAADPLEEG INDEX

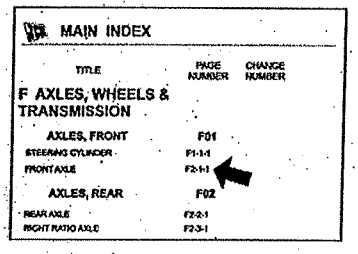

- ZOEK STUKNUMMER

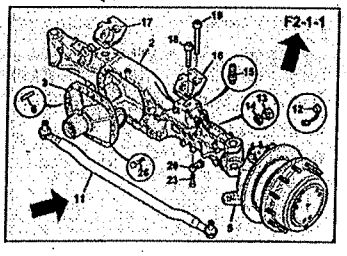

Alle stuknummers die zich binnen een kader bevinden of die met een andere lijn zijn verbonden, maken deel uit van een samenstelling.

WERKWIJZE VOOR ONDERDELEN BESTELLEN

- MODEL- EN SERIENUMMER VAN MACHINE

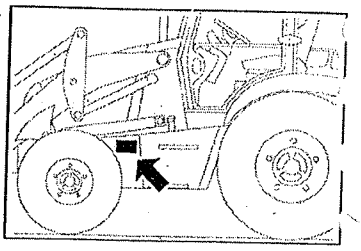

- PAGINAVERWIJZINGS NUMMER

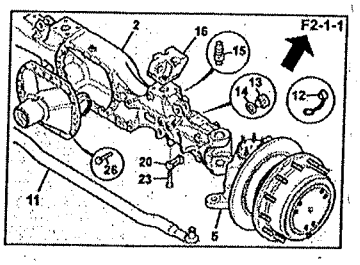

- AFBEELDING STUKNUMMER

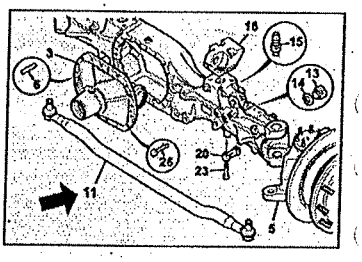

Het doel van dit handboek is de bestuurder in staat te stellen onderdelen snel en gemakkelijk bij een JCB-dealer te bestellen. De index aan het begin van elke sectie MOET worden gebruikt om aan de hand van het machinetype en serienummer de juiste pagina voor het verlangde onderdeel te kunnen vinden.

PROCEDIMENTOS PARA LOCALIZAÇÃO DE PEÇAS

- CONSULTAR A CHAPA DE DADOS DA MÁQUINA
  1. Nº Série da Máquina
  2. Nº Série do Motor
  3. Nº Série da Caixa de Velocidades
  4. Nº Série do Conversor de Torque
  5. Nº Série do Eixo

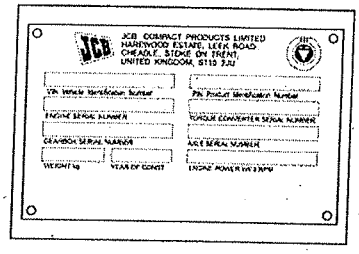

- SELECCIONAR A SECÇÃO

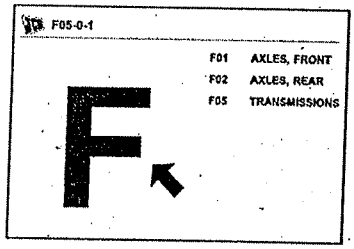

- CONSULTAR O ÍNDICE

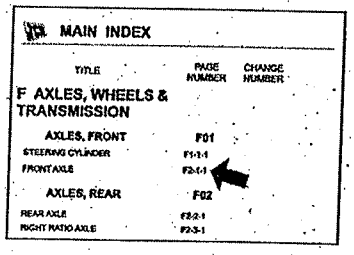

- LOCALIZAR O ITEM

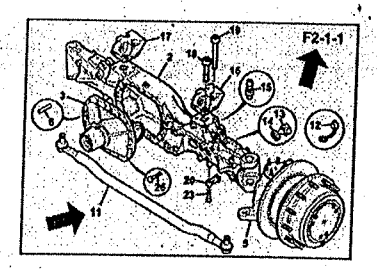

Todos os nºs dos itens inseridos numa caixa ou anexos a outra linha são parte de um conjunto.

PROCEDIMENTOS PARA ENCOMENDA DE PEÇAS

- Nº DO MODELO E Nº SÉRIE DA MÁQUINA

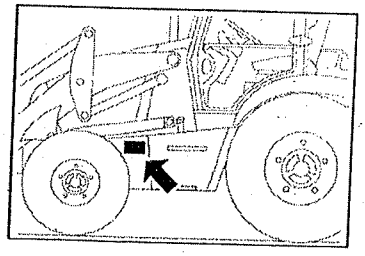

- Nº DA REFERÊNCIA DA PÁGINA

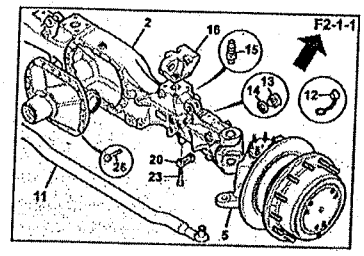

- Nº DO ITEM DA FIGURA

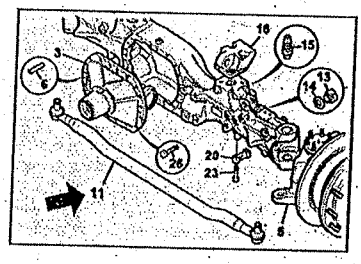

O objectivo deste manual é auxiliar o operador a encomendar de forma rápida e simples as peças necessárias a um Distribuidor JCB. O índice no início de cada secção DEVE ser usado em conformidade com a referência ao modelo e nº série da máquina para localizar a página correcta para a peça necessária.

PROCEDURA DI INDIVIDUAZIONE DEI RICAMBI

- FARE RIFERIMENTO ALLA TARGHETTA DEI DATI CARATTERISTICI DELLA MACCHINA
  1. Numero di telaio della macchina
  2. Numero di serie del motore
  3. Numero di serie del cambio
  4. Numero di serie del convertitore di coppia
  5. Numero di serie del ponte

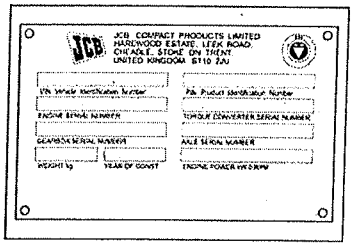

- SCEGLIERE LA SEZIONE

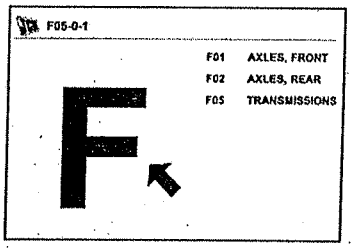

- FARE RIFERIMENTO ALL'INDICE

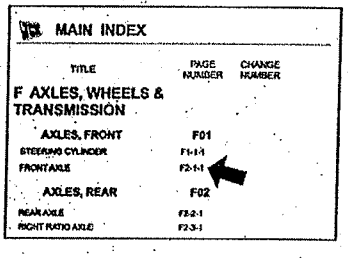

- INDIVIDUARE IL RICAMBIO

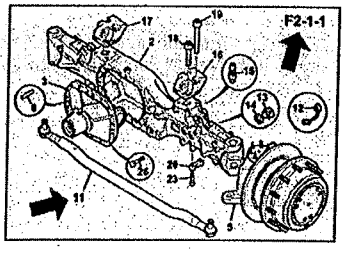

Tutti i numeri dei particolari inseriti all'interno di un riquadro o attaccati ad un'altra linea fanno parte di un complessivo.

PROCEDURA PER L'ORDINAZIONE DEI RICAMBI

- MODELLO E NUMERO DI TELAIO DELLA MACCHINA

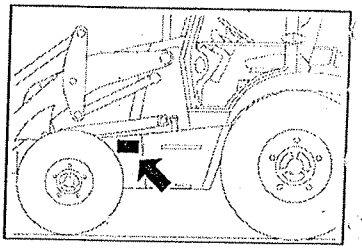

- NUMERO DELLA PAGINA DI RIFERIMENTO

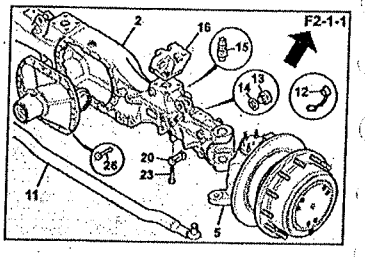

- NUMERO DEL RICAMBIO NELLA FIGURA

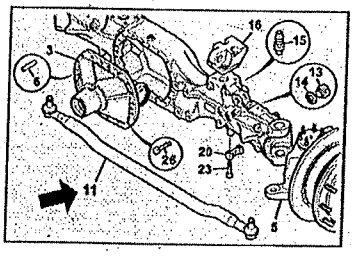

Lo scopo di questo libretto è aiutare l'operatore ad ordinare i ricambi in modo rapido ed agevole presso un concessionario JCB. L'indice all'inizio di ogni sezione DEVVE essere usato facendo riferimento al tipo e al numero di telaio della macchina, in modo da trovare la pagina esatta per il ricambio necessario.

إجراءات طلب الأجزاء

- رقم طراز الآلة و الرقم
- المسلسل

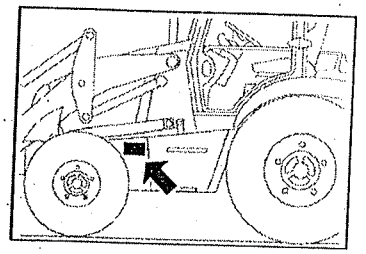

- رقم مرجع الصفحة

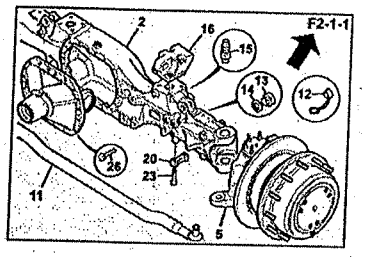

- رقم الجزء المصور

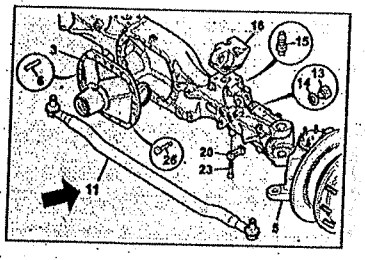

- حدد موقع الجزء

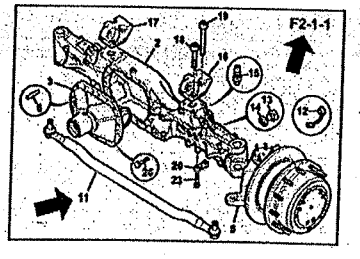

إن الغرض من هذا الكتاب هو مساعدة أخصائي التشغيل في طلب الأجزاء من موزع جاي بي سي بسرعة و سهولة.و يجب استعمال الفهرست الموجود بمقدمة كل قسم بالارتباط مع رقم طراز الآلة و الرقم المسلسل من أجل العثور على الصفحة المحتوية على بيانات الجزء المطلوب و ذلك بصورة صحيحة.

إجراءات تحديد الأجزاء

- ارجع إلى لوحة بيانات الآلة

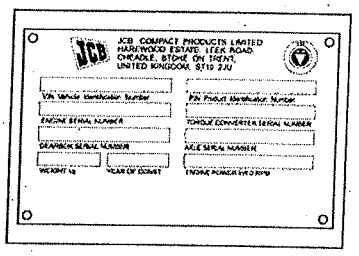

1. الرقم المسلسل الآلة
2. الرقم المسلسل للمحرك
3. الرقم المسلسل لعلبة تروس السرعة
4. الرقم المسلسل لمحول العزم
5. الرقم المسلسل للمحور

- أختر القسم

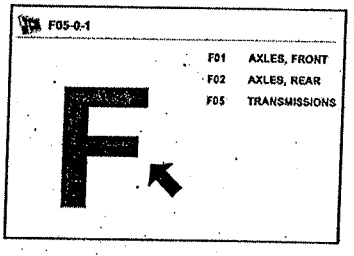

- أرجع إلى الفهرس

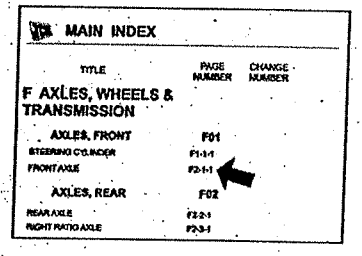

تشكل جميع أرقام الأجزاء الموجودة ضمن أحد المربعات أو المتصلة بخط أخر جزء من المعلومة.

RESERVEDELENES PLACERING

- SE MASKINENS DATAPLADE
  1. Maskinens serienr
  2. Motorens serienr
  3. Gearkassens serienr
  4. Momentomformerens serienr
  5. Akslens serienr

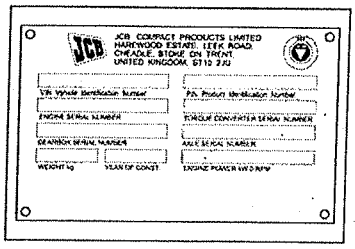

- VÆLG AFSNITTET

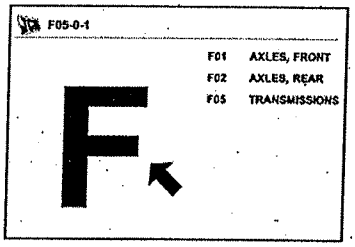

- SE INDEKSET

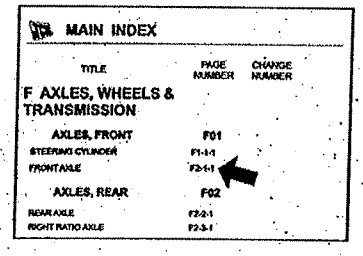

- FIND DELEN

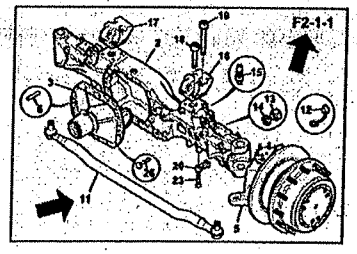

Alle reservedelsnumre i en boks eller tilknyttet en anden linie er en del af en enhed.

BESTILLING AF RESERVEDELE

- MASKINENS MODELNR. OG SERIENR.

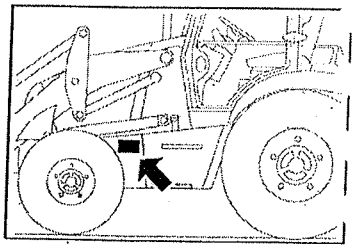

- SIDEHENVISNINGSNR.

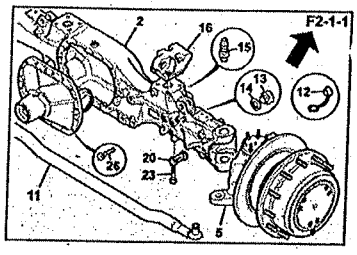

- ILLUSTRATIONS DELNR.

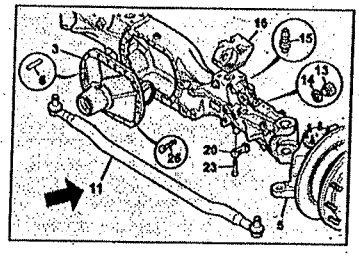

Formålet med denne bog er at hjælpe operatører med hurtigt og nemt at bestille reservedele fra en JCB-forhandler. Indekset i begyndelsen af hvert afsnit SKAL bruges med henvisning til maskinens type og serienr. for at finde den rigtige side for den ønskede reservedel.

PROCEDUR FÖR RESERVDELSLOKALISERING

- SE MASKINENS MÄRKPLÅT
  1. Maskinens serienr.
  2. Motorns serienr.
  3. Växellådans serienr.
  4. Momentomvandlaren s serienr.
  5. Axelns serienr.

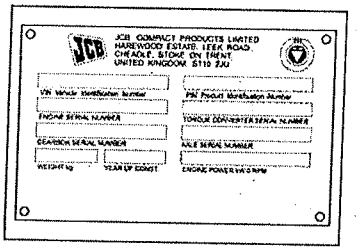

- VÄLJ AVSNITT

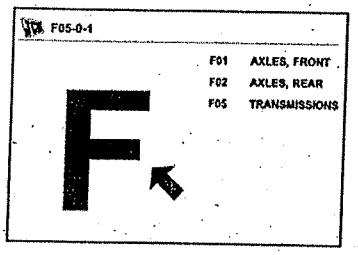

- SE REGISTRET

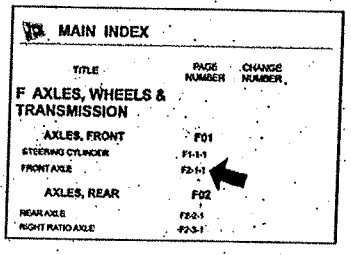

- LOKALISERA DELEN

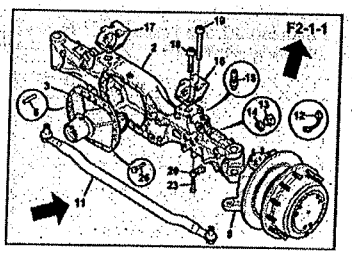

Alla delnummer som visas i en ruta eller är länkade till en annan rad är en del av en uppsättning.

PROCEDUR FÖR RESERVDELSBESTÄLLNING

- MASKINENS MODELL- OCH SERIENUMMER

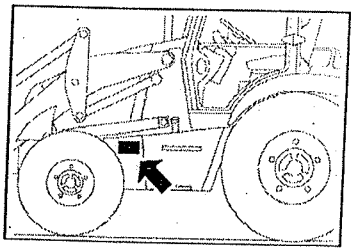

- SIDNUMMER

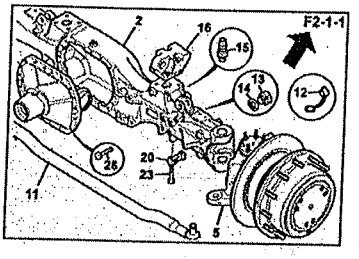

- DELNUMMER PÅ BILDEN

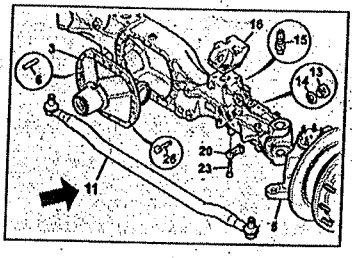

Syftet med denna bok är att hjälpa kunden att snabbt och lätt beställa reservdelar från JCB:s återförsäljare. Registret i början av varje avsnitt MÅSTE användas med avseende på maskinens typ och serienummer, så att rätt sida för den önskade reservdelen kan hittas.

VARAOSIEN PAIKANNUSMENETTELY

- KATSO KONEEN TEHOKILPEÄ
  1. Koneen valmistenumero
  2. Moottorin valmistenumero
  3. Vaihdelaatikon valmistenumero
  4. Momentinmuuntimen valmistenumero
  5. Akselin valmistenumero

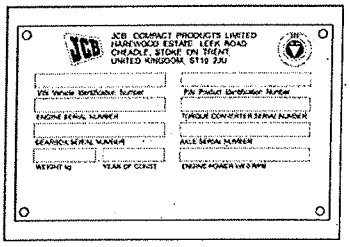

- VALITSE KIRJAN OSA

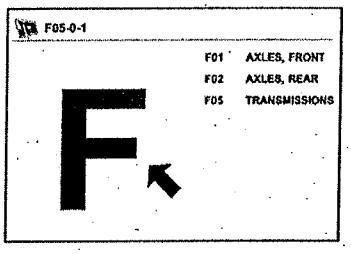

- KATSO HAKEMISTOA

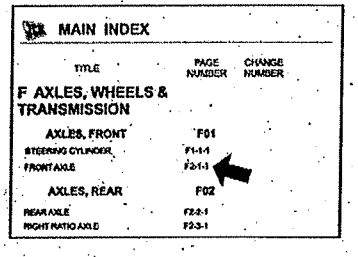

- PAIKANNA TARVITTAVA VARAOSA

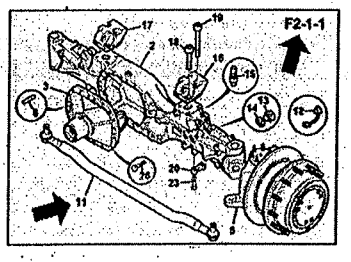

Kaikki sellaiset osat, joiden numero on sijoitettu ruutuun tai liittyy johonkin muuhun osaan, kuuluvat osana johonkin suurempaan asennuskokonaisuuteen.

VARAOSIEN TILAUSMENETTELY

- KONEEN MALLI- JA VALMISTENUMERO

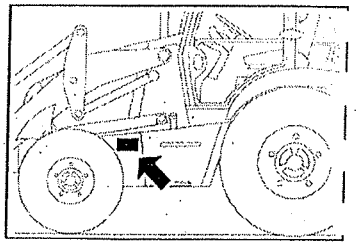

- SIVUNUMEROVIITE

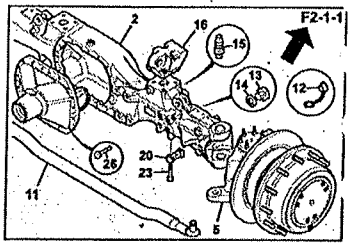

- KUVAAN MERKITTY OSAN NUMERO

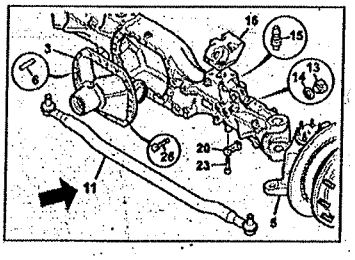

Tämän kirjan tarkoituksena on auttaa yritystä tilaamaan tarvittavat varaosat nopeasti ja vaivattomasti JCB-liikkeestä. Koneen malli- ja valmistenumeron yhteydessä on EHDOTTOMASTI käytettävä kunkin osan alussa olevaa hakemistoa, jotta tarvittavaa varaosaa koskeva oikea sivu olisi löydettävissä.

PARÇALARIN YERİNİ TESPİT ETME PROSEDÜRÜ

- MAKİNA VERİ PLAKASINA BAKINIZ
  1. Makina Seri No.
  2. Motor Seri No.
  3. Vites Kutusu Seri No.
  4. Tork Konvertörü Seri No.
  5. Dingil Seri No.

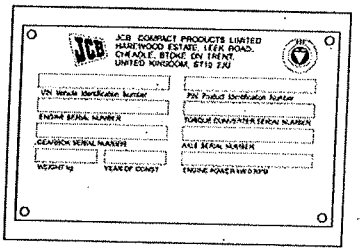

PARÇA SİPARİŞ PROSEDÜRÜ

- MAKİNA MODEL NO. VE SERİ NO.

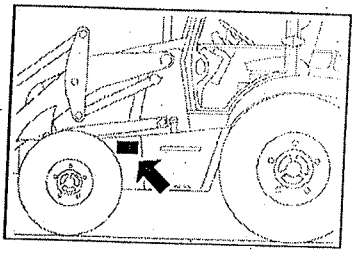

- BÖLÜMÜ SEÇİN

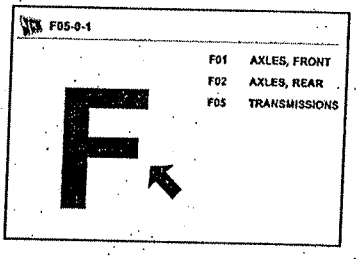

- SAYFA REFERANS NO.

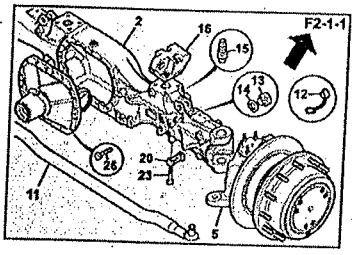

- FİHRİSTE BAKIN

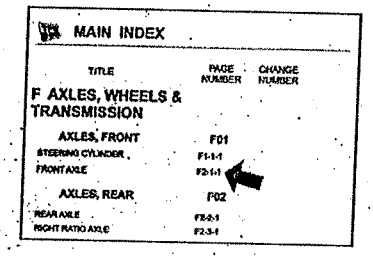

- ÇİZİM KALEMİ NO.

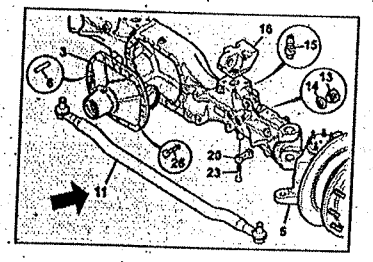

- PARÇANIN YERİNİ TESPİT EDİN

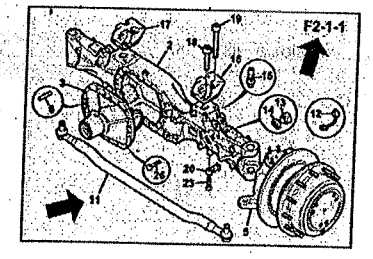

Herhangi bir kutu veya bir diğer hatta bağlı tüm parça No.ları bir montaj biriminin parçasıdır.

Bu kitabın amacı, operatörün parçaları JCB Bayilinden hızlı ve kolayca sipariş etmesine yardım etmektir. Gereken parçaya ait doğru sayfayı bulabilmek için, her bölüm başlangıcında yer alan fihristin MUTLAKA makina tipi ve seri numarası dikkate alınarak kullanılması gerekir.

PROCEDURA WYSZUKIWANIA CZĘŚCI

- ODNIEŚ SIĘ DO DANYCH Z TABLICZKI Z METRYCZKĄ MASZYNY
  1. Numer seryjny maszyny
  2. Numer seryjny silnika
  3. Numer seryjny skrzyni biegów
  4. Numer seryjny przemiennika momentu obrotowego
  5. Numer seryjny osi

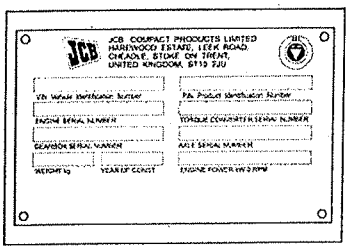

- WYBIERZ ODPOWIEDNIĄ SEKCJĘ

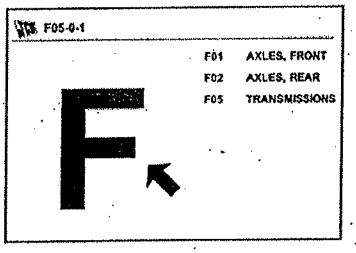

- SPRAWDŹ INDEKS

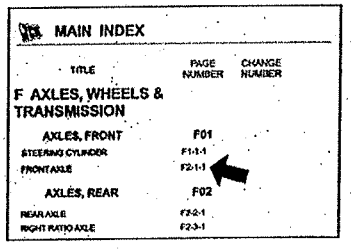

- ZLOKALIZUJ SZUKANĄ CZĘŚĆ

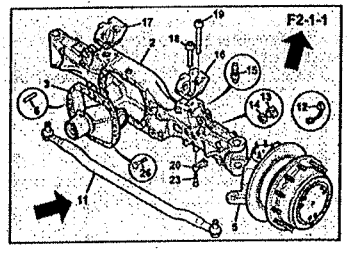

Wszystkie numery części znajdujące się w kwadraciku lub doczepiona do innej linii stanowią część podzespołu.

PROCEDURA ZAMAWIANIA CZĘŚCI

- NUMER MODELU MASZYNY I NUMER SERYJNY

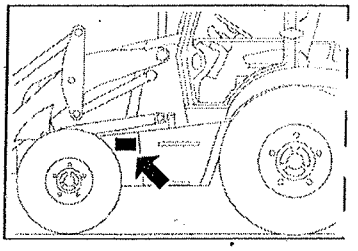

- NUMER STRONY

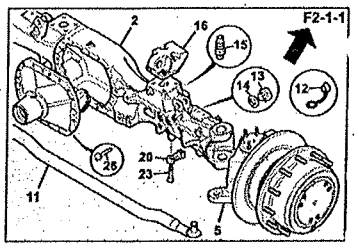

- NUMER CZĘŚCI POKAZANEJ NA ILUSTRACJI

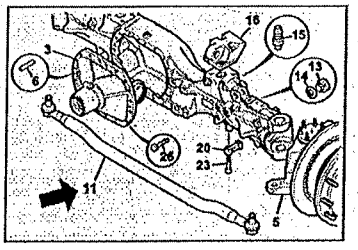

Celem niniejszego informatora jest wskazanie pomocy operatorowi przy zamawianiu części zamiennych od dystrybutora JCB w sposób szybki i prosty. Ażeby można było znaleźć właściwą stronę dla potrzebnej części, koniecznym jest korzystanie z indeksów podanych na początku każdej sekcji które MUSZĄ BYĆ użyte w odniesieniu do typu maszyny i jej numeru seryjnego.

ΔΙΑΔΙΚΑΣΙΑ ΕΥΡΕΣΕΩΣ ΤΩΝ ΕΞΑΡΤΗΜΑΤΩΝ

- ΒΡΗΤΕ ΤΑ ΑΚΟΛΟΥΘΑ ΣΤΟΙΧΕΙΑ ΤΗΣ ΜΗΧΑΝΗΣ ΣΤΗΝ ΠΙΝΑΚΙΔΑ ΤΩΝ ΣΤΟΙΧΕΙΩΝ
  1. Αύξων αριθμός μηχανής
  2. Αύξων αριθμός κινητήρος
  3. Αύξων αριθμός κιβωτίου ταχυτήτων
  4. Αύξων αριθμός περιστροφικού μετασχηματιστή
  5. Αύξων αριθμός άξονα

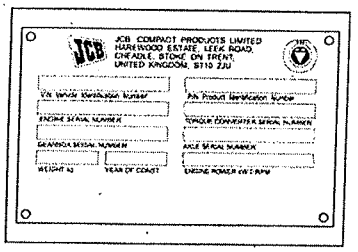

- ΔΙΑΛΕΞΕΤΕ ΤΟ ΤΜΗΜΑ (ΤΟΥ ΕΓΧΕΙΡΙΔΙΟΥ)

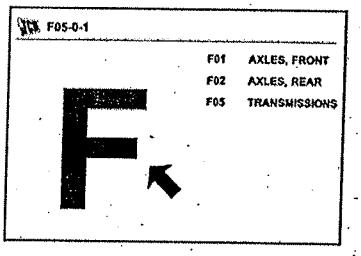

- ΑΝΑΦΕΡΘΗΤΕ ΣΤΟ ΕΥΡΕΤΗΡΙΟ

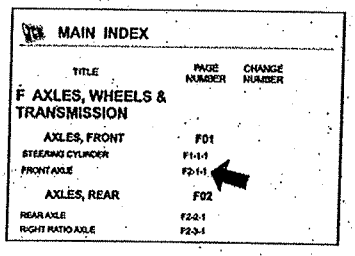

- ΒΡΗΤΕ ΤΟ ΖΗΤΟΥΜΕΝΟ ΕΙΔΟΣ

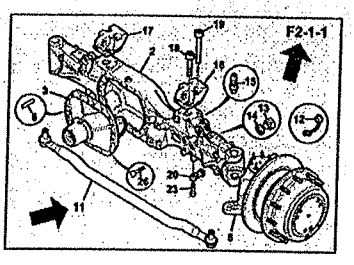

Όλοι οι αριθμοί τεμαχίων εντός πλαισίου ή αναφερόμενοι σε άλλη γραμμή αποτελούν τμήμα συγκροτήματος.

ΔΙΑΔΙΚΑΣΙΑ ΠΑΡΑΓΓΕΛΙΑΣ ΕΞΑΡΤΗΜΑΤΩΝ

- ΑΡΙΘΜΟΣ ΠΡΟΤΥΠΟΥ ΜΗΧΑΝΗΣ ΚΑΙ ΑΥΞΩΝ ΑΡΙΘΜΟΣ

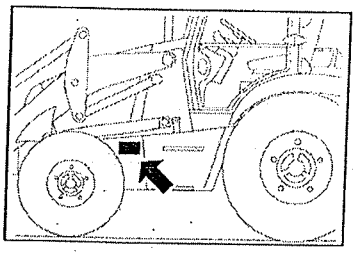

- ΑΡΙΘΜΟΣ ΣΕΛΙΔΟΣ ΠΑΡΑΠΟΜΠΗΣ

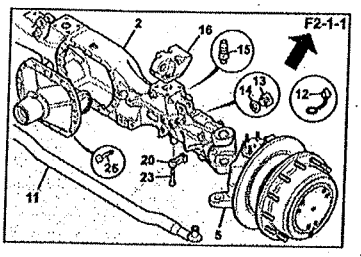

- ΑΡΙΘΜΟΣ ΑΠΕΙΚΟΝΙΖΟΜΕΝΟΥ ΕΙΔΟΥΣ

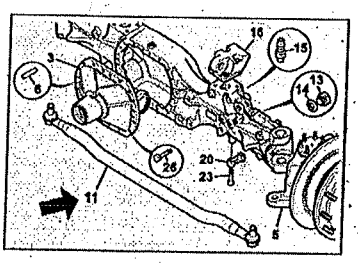

Σκοπός του παρόντος είναι να βοηθήσει τον χειριστή να παραγγείλει εύκολα και γρήγορα τα εξαρτήματα από τον αντιπρόσωπο της JCB. Το ευρετήριο στην αρχή κάθε τμήματος του εγχειριδίου ΠΡΕΠΕΙ να χρησιμοποιηθεί για την παροχή της σελίδας του απαιτούμενου εξαρτήματος για τον τύπο και τον αύξοντα αριθμό της μηχανής.

ПРОЦЕДУРА ИДЕНТИФИКАЦИИ ЗАПЧАСТЕЙ

- СМ. ИНФОРМАЦИОННУЮ ТАБЛИЧКУ МАШИНЫ
  1. Серийный номер машины
  2. Серийный номер двигателя
  3. Серийный номер коробки передач
  4. Серийный номер преобразователя крутящего момента
  5. Серийный номер моста

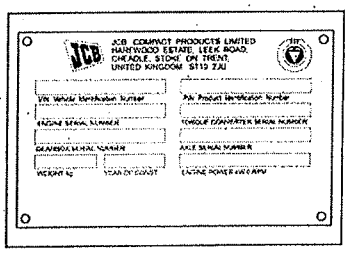

- ВЫБРАТЬ РАЗДЕЛ

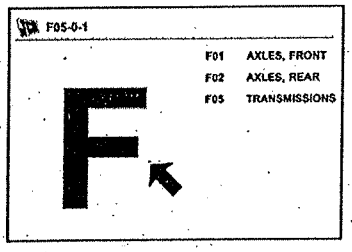

- ВЫБРАТЬ ПЕРЕЧЕНЬ

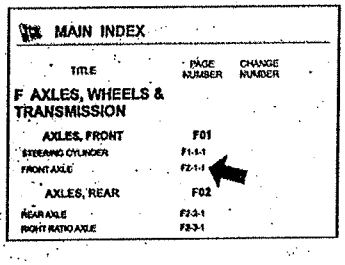

- НАЙТИ ЗАПЧАСТЬ

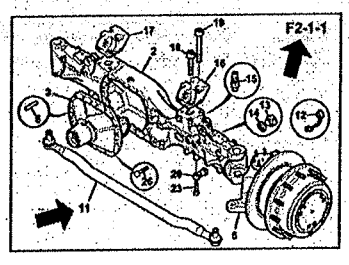

Все номера позиций, указанные в рамке или соединенные линией, являются частью одной компоновки.

ПРОЦЕДУРА ЗАКАЗА ЗАПЧАСТЕЙ

- НОМЕР МОДЕЛИ МАШИНЫ И СЕРИЙНЫЙ НОМЕР

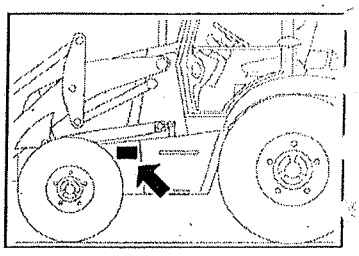

- НОМЕР СТРАНИЦЫ

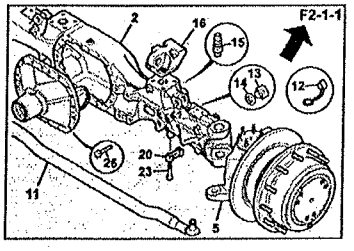

- НОМЕР ИЛЛЮСТРАЦИИ

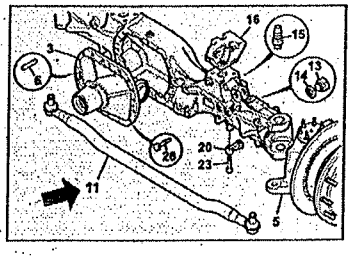

Данная брошюра предназначена для того, чтобы помочь оператору быстро и просто заказывать запасные части у дилера JCB. Для того, чтобы найти нужную страницу с требуемой запасной частью, НЕОБХОДИМО использовать перечень в начале каждого раздела со ссылкой на тип и серийный номер машины.

FREMGANGSMÅTE FOR Å FINNE RIKTIG DEL

- SE MASKINENS DATASKILT
  1. Maskinens serienr.
  2. Motorens serienr.
  3. Girkassens serienr.
  4. Momentomformerens serienr.
  5. Akselens serienr.

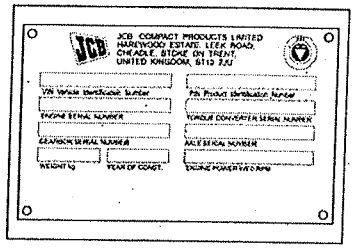

- VELG AVSNITT

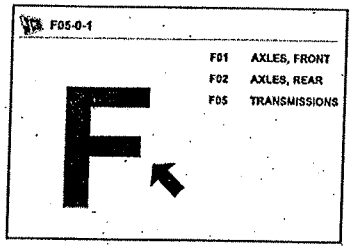

- SE PÅ INDEKSEN

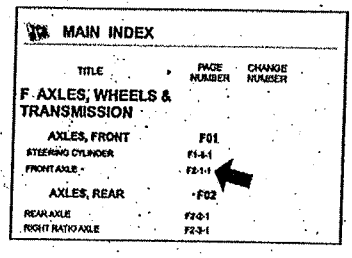

- FINN DELEN

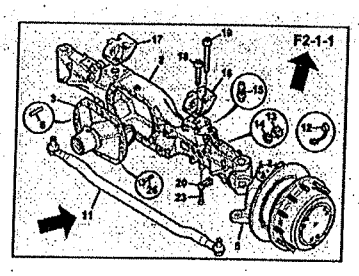

Alle artikkelnr. inne i en rute eller knyttet til en annen linje, utgjør deler av én enhet.

FREMGANGSMÅTE VED BESTILLING AV DELER

- MASKINENS MODELL- OG SERIENR.

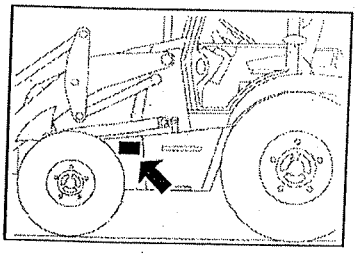

- SIDEREFERANSENR.

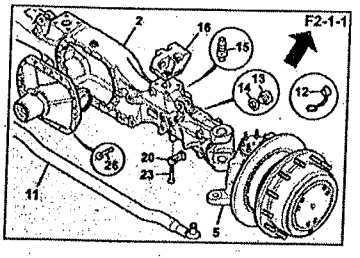

- ILLUSTRASJONSDEL NR.

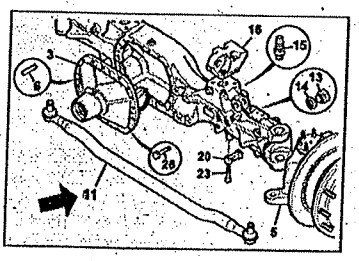

Formålet med denne boken er å gjøre det enklere og hurtigere å bestille deler fra en JCB-forhandler. Indeksen helt fremst i hvert avsnitt MÅ brukes med referanse til maskintype og serienr. for å finne riktig side for den aktuelle del.

VYHLEDÁVÁNÍ SOUČÁSTEK

- VIZ ŠTÍTEK STROJE
  1. Výrobní číslo stroje
  2. Výrobní číslo motoru
  3. Výrobní číslo převodovky
  4. Výrobní číslo násobiče momentu
  5. Výrobní číslo nápravy

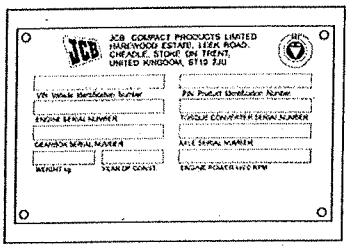

- VÝBĚR PŘÍSLUŠNÉHO ODDÍLU

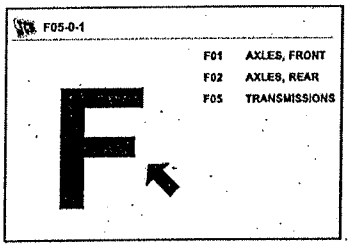

- VYHLEDÁNÍ VE VĚCNÉM REJSTŘÍKU

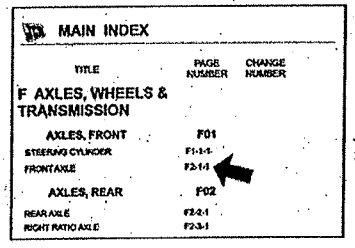

- NALEZENÍ POLOŽKY

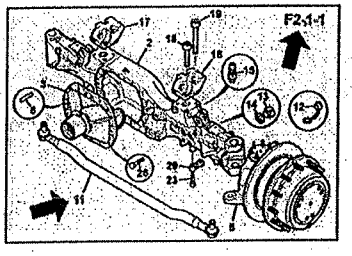

Čísla položek, která jsou v jednom rámečku nebo patří k jinému řádku, tvoří díly jednoho konstrukčního celku.

OBJEDNÁVKA SOUČÁSTEK

- MODEL A VÝROBNÍ ČÍSLO STROJE

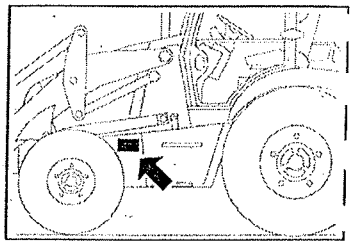

- ČÍSLO STRÁNKY

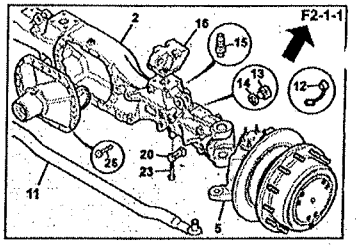

- ČÍSLO POLOŽKY NA OBRÁZKU

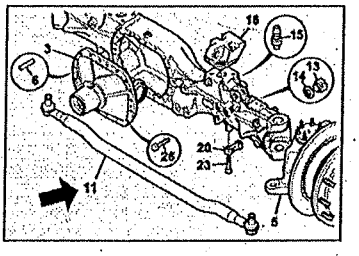

Tato knížka má pomoci řidiči při rychlém a jednoduchém objednání náhradních dílů u prodejce JCB. K nalezení správné stránky pro odpovídající díl SE MUSÍ použít věcný rejstřík na začátku seznamu volných dílů s přihlédnutím k typu stroje a výrobnímu číslu.

SPÔSOB VYHĽADÁVANIA SÚČIASTOK

- PODĽA ŠTÍTKU NA STROJI
  1. Sériové číslo stroja
  2. Sériové číslo motora
  3. Sériové číslo prevodovky
  4. Sériové číslo meniča točivého momentu
  5. Sériové číslo nápravy

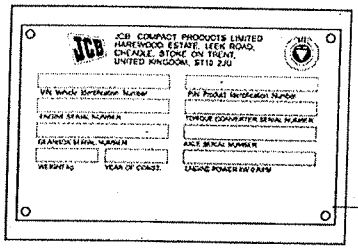

- NÁJDITE PRÍSLUŠNÚ KAPITOLU

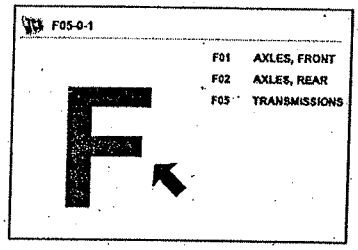

- PREZRITE REGISTER

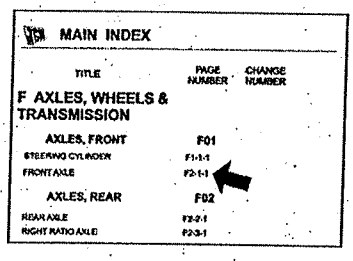

- NÁJDITE SÚČIASTKU

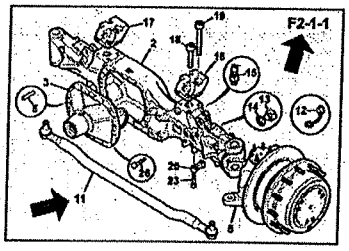

Všetky čísla súčiastok v rámčeku alebo prepojené čiarou predstavujú súčasť jednej montážnej súpravy.

SPÔSOB OBJEDNÁVANIA NÁHRADNÝCH SÚČIASTOK

- ČÍSLO MODELU STROJA A SÉRIOVÉ ČÍSLO

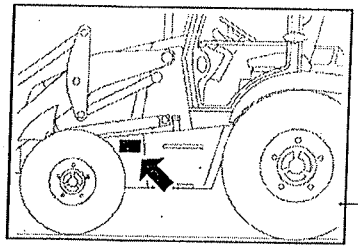

- REFERENČNÉ ČÍSLO STRANY

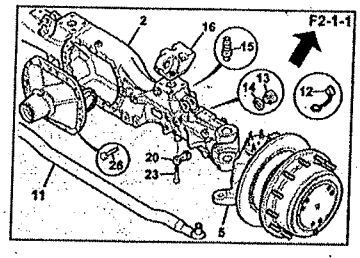

- ČÍSLO PRÍSLUŠNEJ POLOŽKY PODĽA OBRÁZKU

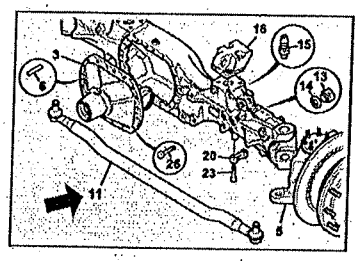

Účelom tohto návodu je pomôcť používateľom objednávať náhradné súčiastky od predajcu JCB rýchlo a jednoducho. Register na začiatku každej kapitoly MUSÍ byť použitý s odkazom na typ stroja a sériové číslo, aby bolo možné nájsť správnu stranu, na ktorej je uvedená príslušná súčiastka.

JS220 XD

1 MAIN INDEX – JS220 XD

9820/0546B
ISSUE 1

TITLE	PAGE NUMBER	CHANGE NUMBER
A ATTACHMENTS		
BUCKETS	**A02**	
BUCKET INSTALLATION ASSEMBLIES, 0.9 CU.M	A200-1-1	
BUCKET, ASSEMBLY, 54 Inches	A210-1-1	
STANDARD BUCKET, ASSEMBLY, 48 INCHES	A210-10-1	
HEAVY DUTY BUCKET, 0.9CUM - OPTIONAL	A230-1-1	
HEAVY DUTY BUCKET, 0.9 CUM - STANDARD	A230-5-1	
HEAVY DUTY BUCKET, COMPONENTS	A230-10-1	
MISCELLANEOUS	**A09**	
REFUELLING PUMP	A920-1-1	
REFUELLING PUMP, STRAINER, SUCTION	A920-5-1	
REFUELLING PUMP, COMPONENTS,	A920-10-1	
B BODYWORK		
BODYWORK	**B01**	
BODYWORK INSTALLATION ASSEMBLIES, FRAME HOUSE	B100-15-1	
CHASSIS, BULKHEAD & BAFFLES	B110-1-1	
CHASSIS, FRAME HOUSE	B110-5-1	
FUEL TANK, ASSEMBLY	B120-1-1	
FUEL TANK, Assembly ABI	B120-5-1	
HYDRAULIC TANK, ASSEMBLY	B130-1-1	
HYDRAULIC TANK, ASSEMBLY ABI	B130-5-1	
BONNET/ ENGINE COVERS/ GRILLES, ENGINE COVER	B170-1-1	

Continue...

Francis Somerset

TITLE	PAGE NUMBER	CHANGE NUMBER
BONNET/ ENGINE COVERS/ GRILLES, FIREWALL	B170-5-1	
COUNTER WEIGHTS, 3.7 TONNE	B180-1-1	
OTHER BODYWORK ITEMS, KIT, SOUNDPROOFING, COUNTERWEIGHT	B190-1-1	
OTHER BODYWORK ITEMS, TOP COVER, HOUSE	B190-5-1	2163134
OTHER BODYWORK ITEMS, TOP COVER, HOUSE	B190-5-5	2163135
OTHER BODYWORK ITEMS, KIT, SOUNDPROOFING, BULKHEAD	B190-10-1	
OTHER BODYWORK ITEMS, HANDRAIL, & DOOR ACCESS	B190-16-1	
OTHER BODYWORK ITEMS, HANDRAIL	B190-17-1	
OTHER BODYWORK ITEMS, COVER, COOLING PACK	B190-20-1	2163134
OTHER BODYWORK ITEMS, COVER, COOLING PACK	B190-20-5	2163135
OTHER BODYWORK ITEMS, BONNET, DOOR, BUFFER BLOCK	B190-25-1	
OTHER BODYWORK ITEMS, KIT, SOUNDPROOFING, BONNET	B190-30-1	
CAB / CANOPY	**B02**	
OPERATOR ENCLOSURE INSTALLATION ASSEMBLIES, CAB, SHELL	B200-5-1	
OPERATOR ENCLOSURE, CAB, ABI	B210-1-1	
ROOF, HATCH, ASSEMBLY	B230-1-1	
ROOF, TOP, LINER	B230-5-1	
DOORS, SUB - ASSEMBLY	B240-5-1	
DOORS, ASSEMBLY	B240-10-1	
DOORS, ASSEMBLY, CAB	B240-15-1	

2 MAIN INDEX – JS220 XD
9820/0546B
ISSUE 1

TITLE	PAGE NUMBER	CHANGE NUMBER
GLASS/FRAMES, FRONT SCREEN, DOOR, CAB	B250-1-1	
GLASS/FRAMES, FRONT, BOTTOM	B250-5-1	
SEATS, STANDARD, OPERATORS	B260-1-1	
SEATS, STANDARD, COMPONENTS	B260-5-1	
SEATS, BELT	B260-10-1	
MOULDINGS/TRIM, CAB	B270-2-1	
OTHER OPERATOR ENCLOSURE ITEMS, FLOOR MATS	B290-2-1	
OTHER OPERATOR ENCLOSURE ITEMS, SEAT SLIDE, AND LEVER	B290-5-1	
OTHER OPERATOR ENCLOSURE ITEMS, KIT, LINEAR BEARING	B290-10-1	
OTHER OPERATOR ENCLOSURE ITEMS, KIT, REAR PANEL	B290-15-1	
OTHER OPERATOR ENCLOSURE ITEMS, KIT, SOUNDPROOFING, DOOR	B290-25-1	
OTHER OPERATOR ENCLOSURE ITEMS, BRACKET, COVER, RIGHT HAND SIDE	B290-30-1	
OTHER OPERATOR ENCLOSURE ITEMS, BRACKET, TOP, LEFT HAND SIDE	B290-35-1	
OTHER OPERATOR ENCLOSURE ITEMS, STOWAGE, REAR	B290-40-1	
OTHER OPERATOR ENCLOSURE ITEMS, LATCH	B290-45-1	
OTHER OPERATOR ENCLOSURE ITEMS, GUARDS, CABIN	B290-50-1	
EXCAVATOR	**B04**	
BOOM, MONOBOOM, NON HBCV	B430-10-1	
BOOM, MONOBOOM, STANDARD	B430-15-1	

Continue...

TITLE	PAGE NUMBER	CHANGE NUMBER
BOOM, MONOBOOM, COMMON PARTS	B430-20-1	
BOOM, MONOBOOM, SEALS AND BEARINGS	B430-25-1	
DIPPER, 2400mm	B440-5-1	
DIPPER, HEAVY DUTY, 3000mm, OPTIONAL	B440-10-1	
DIPPER, HEAVY DUTY, 2.4M, SUB-ASSEMBLY	B440-15-1	
DIPPER, HEAVY DUTY, 3000mm, SUB-ASSEMBLY, OPTIONAL	B440-20-1	
DIPPER, SEALS AND BEARINGS	B440-25-1	
TIPPING LINK, BUCKET, LINKAGE JS200	B460-1-1	
REFURBISHMENTS	**B05**	
REFURBISHMENT INSTALLATION ASSEMBLIES, DECAL, PACK	B500-5-1	
DECALS MACHINE IDENTIFICATION, ROW, TERRITORY	B510-15-1	
DECALS MACHINE IDENTIFICATION, JS220XD	B510-20-1	
LABELS WARNING/INFORMATION, LABEL PACK	B520-10-1	
TOOLS, KIT	B530-1-1	
TOOLS, KIT, STD	B530-5-1	
TOOLS, BOX	B530-10-1	
TOOLS, BOX ASSEMBLY	B530-15-1	
TOOLS, TOOLBOX, LID	B530-20-1	
TOOLS, HAMMER, EMERGENCY	B530-25-1	
LUBRICANT, &, FLUIDS	B570-1-1	
LUBRICANT, GREASE, HIGH PRESSURE	B570-5-1	

3 MAIN INDEX – JS220 XD

9820/0546B
ISSUE 1

TITLE	PAGE NUMBER	CHANGE NUMBER
C ELECTRICS		
ELECTRICAL	**C01**	
ELECTRICAL INSTALLATION ASSEMBLIES, BATTERY	C100-1-1	
ELECTRICAL INSTALLATION ASSEMBLIES, LIGHTS	C100-5-1	
WORKING LIGHTS AND MOUNTINGS, WORKING LAMP	C160-5-1	
ALARMS/HORN, HORN ASSEMBLY	C170-1-1	
OTHER ELECTRICAL CIRCUITS, VOLTAGE DROP BOX	C190-1-1	
ELECTRICS, CAB	**C03**	
ELECTRICS CAB INSTALLATION ASSEMBLIES, MAIN, ELECTRICS	C300-1-1	
ELECTRICS CAB INSTALLATION ASSEMBLIES, CAB ELECTRICS	C300-10-1	
HEATER/AIR CON ASSEMBLY, AIR CONDITIONING	C340-2-1	
HEATER/AIR CON ASSEMBLY, KIT, ATC	C340-10-1	
HEATER/AIR CON ASSEMBLY, HOSE KIT	C340-15-1	
FUSES AND RELAYS, PCB, ABI	C350-1-1	
FUSES AND RELAYS, ABI, POD BOX, ENGINE	C350-5-1	
ELECTRICAL CONTROL UNITS, CONTROLLER	C360-1-1	
ELECTRICAL CONTROL UNITS, ECU, 1	C360-5-1	
ELECTRICAL CONTROL UNITS, SYSTEM, MONITOR	C360-10-1	
ELECTRICAL CONTROL UNITS, EMS AUTO	C360-15-1	
OTHER ELECTRICAL ITEMS, WASHER BOTTLE	C390-1-1	

Continue...

TITLE	PAGE NUMBER	CHANGE NUMBER
D CONTROLS		
CONTROLS	**D01**	
EXCAVATOR CONTROLS, CAB SERVO CONTROL, CONSOLE, LEFT SIDE AND RIGHT SIDE	D120-1-1	
EXCAVATOR CONTROLS, JOYSTICK CONTROL	D120-5-1	
E HYDRAULICS		
HYDRAULIC CIRCUITS	**E01**	
HYDRAULIC CIRCUITS ATTACHMENTS, ROCK BREAKER, ARM 2.4M	E110-1-1	
HYDRAULIC CIRCUITS ATTACHMENTS, ROCK BREAKER, ARM 3.0M	E110-5-1	
HYDRAULIC CIRCUITS CHASSIS, HOSES & FITTINGS, PILOT CONTROL LINE	E130-1-1	
HYDRAULIC CIRCUITS CHASSIS, VALVE, CUSHION	E130-5-1	
HYDRAULIC CIRCUITS CHASSIS, CLAMP, KIT	E130-10-1	
HYDRAULIC CIRCUITS CHASSIS, HOSE KIT, - TRAVEL PEDALS	E130-15-1	
HYDRAULIC CIRCUITS CHASSIS, HOSES AND PIPEWORK, OIL COOLER & RETURN LINE	E130-20-1	
HYDRAULIC CIRCUITS CHASSIS, HOSES & FITTINGS, PRESSURE LINES	E130-30-1	
HYDRAULIC CIRCUITS CHASSIS, HOSES AND PIPEWORK, TRACTION LINE	E130-35-1	
HYDRAULIC CIRCUITS CHASSIS, HOSES & FITTINGS, SWING LINE	E130-40-1	
HYDRAULIC CIRCUITS CHASSIS, HOSE AND PIPEWORK, SUCTION LINE	E130-45-1	
HYDRAULIC CIRCUITS CHASSIS, HOSES & FITTINGS, DRAIN LINE	E130-50-1	

4 MAIN INDEX – JS220 XD
9820/0546B
ISSUE 1

TITLE	PAGE NUMBER	CHANGE NUMBER
HYDRAULIC CIRCUITS CHASSIS, HOSES & FITTINGS, PLEXUS FILTER	E130-55-1	
HYDRAULIC CIRCUITS CHASSIS, HOSES & FITTINGS, PILOT PRESSURE AND RETURN LINE	E130-60-1	
HYDRAULIC CIRCUITS CHASSIS, HOSES & FITTINGS, HAMMER LINE (REVOLVING FRAME)	E130-61-1	
HYDRAULIC CIRCUITS CHASSIS, HOSES & FITTINGS, HAMMER CONTROL	E130-62-1	
HYDRAULIC CIRCUITS CHASSIS, HOSES & FITTINGS, BUCKET AND ARM LINE	E130-63-1	
HYDRAULIC CIRCUITS CHASSIS, HOSES AND PIPEWORK, BOOM LINE	E130-65-1	
HYDRAULIC CIRCUITS CHASSIS, HOSE KIT, CUSHION VALVE	E130-70-1	
HYDRAULIC CIRCUITS CHASSIS, HOSE KIT, SHUTTLE VALVE	E130-75-1	
HYDRAULIC CIRCUITS CHASSIS, HOSE KIT, BOOM PRIORITY	E130-85-1	
HYDRAULIC CIRCUITS CHASSIS, HOSE KIT, 8 STATION SOLENOID	E130-90-1	
HYDRAULIC CIRCUITS CHASSIS, HOSE KIT, PUMP	E130-95-5	
HYDRAULIC CIRCUITS CHASSIS, HOSE KIT, JOYSTICK, RIGHT SIDE	E130-100-1	
HYDRAULIC CIRCUITS CHASSIS, HOSE KIT, JOYSTICK, LEFT SIDE	E130-105-1	
HYDRAULIC CIRCUITS CHASSIS, HOSE KIT, PILOT LINES FOR HAMMER	E130-110-1	
HYDRAULIC CIRCUITS CHASSIS, HOSE KIT, TANK MANIFOLD	E130-115-1	
HYDRAULIC CIRCUITS EXCAVATOR END, HOSES & FITTINGS, TRACTION MOTOR LINE	E140-15-1	
HYDRAULIC CIRCUITS EXCAVATOR END, HOSES AND PIPEWORK, BUCKET LINES, 2.4M	E140-20-1	

Continue...

TITLE	PAGE NUMBER	CHANGE NUMBER
HYDRAULIC CIRCUITS EXCAVATOR END, HOSES & FITTINGS, BUCKET LINES, 3.0M	E140-25-1	
HYDRAULIC CIRCUITS EXCAVATOR END, PIPEWORK, HAMMER LINE, MONOBOOM	E140-30-1	
HYDRAULIC CIRCUITS EXCAVATOR END, HOSES AND PIPEWORK, HAMMER LINE, QUICK RELEASE COUPLING, ARM 2.4M	E140-35-1	
HYDRAULIC CIRCUITS EXCAVATOR END, HOSES AND PIPEWORK, HAMMER LINE, QUICK RELEASE COUPLING, ARM 3.0M, OPTIONAL	E140-40-1	
OTHER HYDRAULIC CIRCUITS, CCV	E190-5-1	
PUMP & M0T0RS	**E02**	
PUMP/MOTOR INSTALLATION ASSEMBLIES, MAIN	E200-1-1	
PUMPS VARIFLOW	E220-1-1	
PUMPS VARIFLOW, COMPONENTS	E220-5-1	
VALVES	**E03**	
VALVE INSTALLATION ASSEMBLIES, CONTROL	E300-1-1	
VALVES EXCAVATOR, CONTROL VALVES, COMPONENTS, FIGURE 1	E320-1-1	
VALVES EXCAVATOR, CONTROL VALVES, COMPONENTS, FIGURE 2	E320-2-1	
VALVES EXCAVATOR, CONTROL VALVES, COMPONENTS, FIGURE 3	E320-3-1	
VALVES SERVO CONTROL (PILOT CONTROL), JOYSTICK CONTROL, LEFT HAND SIDE	E340-1-1	
VALVES SERVO CONTROL (PILOT CONTROL), JOYSTICK CONTROL, RIGHT HAND SIDE	E340-5-1	
VALVES SERVO CONTROL (PILOT CONTROL), JOYSTICK CONTROL	E340-10-1	
OTHER VALVES, SOLENOID, 8 STATION, COMPONENTS	E390-5-1	

5 MAIN INDEX – JS220 XD

9820/0546B
ISSUE 1

TITLE	PAGE NUMBER	CHANGE NUMBER
OTHER VALVES, SOLENOID, COMPONENTS	E390-6-1	
OTHER VALVES, PROPORTIONAL, REDUCING	E390-10-1	
OTHER VALVES, SHUTTLE VALVE	E390-15-1	
RAMS	**E04**	
RAM INSTALLATION ASSEMBLIES, BOOM AND DIPPER, NON HBCV	E400-5-1	
RAM INSTALLATION ASSEMBLIES, BUCKET, STANDARD	E400-10-1	
RAMS BOOM, COMPONENTS, LEFT HAND SIDE	E460-10-1	
RAMS BOOM, COMPONENTS, RIGHT HAND SIDE	E460-15-1	
RAMS DIPPER, COMPONENTS	E465-1-1	
RAMS BUCKET (JAW BUCKET), BUCKET, CYLINDER	E480-1-5	
FILTER	**E05**	
FILTER MAIN HYDRAULIC, PILOT RETURN	E510-1-1	
FILTER MAIN HYDRAULIC, BYPASS, PLEXUS	E510-5-1	
FILTER OTHER HYDRAULIC, ASSEMBLY, DRAIN LINE	E520-1-1	
FILTER RETURN, HAMMER, CIRCUIT	E540-1-1	
F TRACK/SLEW GEARBOX		
TRACK & SWING GEAR BOX	**F04**	
GEARBOX ASSEMBLY & SPROCKET, MOTOR, TRACTION	F410-1-1	
GEARBOX ASSEMBLY & SPROCKET, GEARBOX, COMPONENTS	F410-5-1	
GEARBOX TRACK	F420-1-1	
SLEW/SWING MOTOR INSTALLATION, EQUIPMENT	F430-1-1	

Continue....

TITLE	PAGE NUMBER	CHANGE NUMBER
SLEW/SWING MOTOR INSTALLATION	F430-5-1	
GEARBOX SLEW/SWING, ASSEMBLY	F440-1-1	
CIRCUIT SLEW/SWING GREASING, PIPELINES, TTB GREASE LINE	F480-1-1	
OTHER SLEW/SWING PARTS, TURNTABLE BEARING	F490-1-1	

J UNDERCARRIAGE

UNDERCARRIAGE J01

TITLE	PAGE NUMBER	CHANGE NUMBER
UNDERCARRIAGE INSTALLATION ASSEMBLIES, TRACK CHAIN, AND IDLER, 49 LINKS, 500MM, ITM	J100-1-1	
UNDERCARRIAGE INSTALLATION ASSEMBLIES, TRACK CHAIN, AND IDLER, 49 LINKS, 500MM, OPTIONAL	J100-15-1	
UNDERCARRIAGE INSTALLATION ASSEMBLIES, TRACK CHAIN, AND IDLER, 49 LINKS, 600MM, OPTIONAL	J100-20-1	
UNDERCARRIAGE, LOWER FRAME	J110-5-1	
RECOIL AND IDLER ASSEMBLY	J120-1-1	
RECOIL AND IDLER ASSEMBLY, OPTIONAL	J120-5-1	
RECOIL UNIT, SPRING ASSEMBLY	J130-5-1	
RECOIL UNIT	J130-10-1	
IDLER ASSEMBLY, FRONT, OPTIONAL	J140-1-1	
IDLER ASSEMBLY	J140-5-1	
TRACK ROLLERS, CARRIER AND LOWER	J150-1-1	
TRACK ROLLERS, LOWER, ASSEMBLY	J150-5-1	
TRACK ROLLERS, CARRIER, ASSEMBLY	J150-10-1	
TRACK CHAIN, &, SHOE - 600MM, 49 LINKS	J160-1-1	

6 MAIN INDEX – JS220 XD
9820/0546B
ISSUE 1

TITLE	PAGE NUMBER	CHANGE NUMBER
TRACK CHAIN, /SHOE 600	J160-5-1	
TRACK CHAIN, &, SHOE, 49 LINKS, 500MM	J160-19-1	
TRACK CHAIN, &, SHOE 49, LINKS 500MM	J160-20-1	
TRACK CHAIN, 49 LINK, 600MM	J160-35-1	
TRACK CHAIN, &, SHOE ASSY 49	J160-40-1	
TRACK CHAIN, 49 LINK	J160-55-1	
OTHER UNDERCARRIAGE PARTS, TRACK, GUIDES	J190-1-1	
OTHER UNDERCARRIAGE PARTS, ROTARY COUPLING, ASSEMBLY	J190-5-1	
OTHER UNDERCARRIAGE PARTS, UNDER COVERS	J190-10-1	
OTHER UNDERCARRIAGE PARTS, LOWER, COVERS	J190-15-1	

L ENGINE ANCILLARIES

ENGINE INSTALLATION ASSEMBLIES L01

TITLE	PAGE NUMBER	CHANGE NUMBER
ENGINE INSTALLATION ASSEMBLIES, 448 T2 129kW	L100-5-1	
OTHER ENGINE RELATED PARTS, MOUNTINGS	L190-5-1	
OTHER ENGINE RELATED PARTS, OIL FILTER, REMOTE,ASSEMBLY	L190-10-1	
OTHER ENGINE RELATED PARTS, OIL, HOSE	L190-15-1	
OTHER ENGINE RELATED PARTS, MOUNTING, REMOTE OIL FILTER	L190-20-1	
OTHER ENGINE RELATED PARTS, TURBO, ADAPTOR	L190-25-1	
OTHER ENGINE RELATED PARTS, TREAD PLATES	L190-35-1	
OTHER ENGINE RELATED PARTS, BLANKING PLATE	L190-40-1	

Continue...

TITLE	PAGE NUMBER	CHANGE NUMBER
EXHAUST SYSTEM	**L02**	
EXHAUST SYSTEM INSTALLATION ASSEMBLIES	L200-1-1	
INDUCTION SYSTEM INSTALLATION ASSEMBLIES	**L03**	
INDUCTION SYSTEM INSTALLATION ASSEMBLIES	L300-1-1	
INDUCTION FILTER	L310-1-1	
HEATER	**L04**	
ENGINE HEATER INSTALLATION ASSEMBLIES, COMMON PARTS	L400-5-1	
COOLING SYSTEM	**L06**	
COOLING INSTALLATION ASSEMBLIES, COOLING PACK	L600-1-1	
COOLING PACK INSTALLATION, TANK, RESERVE ASSEMBLY	L610-10-1	
ABI COOLING PACK, KIT, FOAM	L620-1-1	
ABI COOLING PACK, RADIATOR, ASSEMBLY	L620-5-1	
FAN INSTALLATION ASSEMBLIES	**L07**	
FAN, ASSEMBLY, NON EU	L710-1-1	
FRONT END AUXILIARY DRIVE, FEAD HD AC	L720-1-1	
FRONT END AUXILIARY DRIVE, HEAVY DUTY, FEAD COMMON	L720-5-1	
FRONT END AUXILIARY DRIVE, TENSIONER,ASSEMBLY	L720-10-1	
RECEIVER DRIER	L760-1-1	
FUEL SYSTEM	**L08**	
FUEL SYSTEM INSTALLATION ASSEMBLIES, HOSES AND PIPEWORK, FUEL LINE	L800-1-1	

7 MAIN INDEX – JS220 XD
9820/0546B
ISSUE 1

TITLE	PAGE NUMBER	CHANGE NUMBER
FUEL FILTER, SEDIMENTOR, 5 MICRON	L820-1-1	
FUEL FILTER, SEDIMENTOR, 5 MICRON	L820-5-1	
FUEL FILTER, SEDIMENTOR, 30 MICRON	L820-10-1	
FUEL FILTER, 3 LAYER, 5 MICRON	L820-15-1	
FUEL FILTER, BRACKET, ASSEMBLY	L820-20-1	

JS220LC

1 MAIN INDEX – JS220LC

9820/0546B
ISSUE 1

TITLE	PAGE NUMBER	CHANGE NUMBER
A ATTACHMENTS		
BUCKETS	**A02**	
BUCKET INSTALLATION ASSEMBLIES, 0.9 CU.M	A200-1-1	
BUCKET, ASSEMBLY, 54 Inches	A210-1-1	
STANDARD BUCKET, ASSEMBLY, 48 INCHES	A210-10-1	
HEAVY DUTY BUCKET, 0.9CUM - OPTIONAL	A230-1-1	
HEAVY DUTY BUCKET, 0.9 CUM - STANDARD	A230-5-1	
HEAVY DUTY BUCKET, COMPONENTS	A230-10-1	
MISCELLANEOUS	**A09**	
REFUELLING PUMP	A920-1-1	
REFUELLING PUMP, STRAINER, SUCTION	A920-5-1	
REFUELLING PUMP, COMPONENTS,	A920-10-1	
B BODYWORK		
BODYWORK	**B01**	
BODYWORK INSTALLATION ASSEMBLIES, FRAME HOUSE	B100-15-1	
CHASSIS, BULKHEAD & BAFFLES	B110-1-1	
CHASSIS, FRAME HOUSE	B110-5-1	
FUEL TANK, ASSEMBLY	B120-1-1	
FUEL TANK, Assembly ABI	B120-5-1	
HYDRAULIC TANK, ASSEMBLY	B130-1-1	
HYDRAULIC TANK, ASSEMBLY ABI	B130-5-1	
BONNET/ ENGINE COVERS/ GRILLES, ENGINE COVER	B170-1-1	

Continue...

TITLE	PAGE NUMBER	CHANGE NUMBER
BONNET/ ENGINE COVERS/ GRILLES, FIREWALL	B170-5-1	
COUNTER WEIGHTS, 3.7 TONNE	B180-1-1	
OTHER BODYWORK ITEMS, KIT, SOUNDPROOFING, COUNTERWEIGHT	B190-1-1	
OTHER BODYWORK ITEMS, TOP COVER, HOUSE	B190-5-1	2163134
OTHER BODYWORK ITEMS, TOP COVER, HOUSE	B190-5-5	2163135
OTHER BODYWORK ITEMS, KIT, SOUNDPROOFING, BULKHEAD	B190-10-1	
OTHER BODYWORK ITEMS, HANDRAIL, & DOOR ACCESS	B190-16-1	
OTHER BODYWORK ITEMS, HANDRAIL	B190-17-1	
OTHER BODYWORK ITEMS, COVER, COOLING PACK	B190-20-1	2163134
OTHER BODYWORK ITEMS, COVER, COOLING PACK	B190-20-5	2163135
OTHER BODYWORK ITEMS, BONNET, DOOR, BUFFER BLOCK	B190-25-1	
OTHER BODYWORK ITEMS, KIT, SOUNDPROOFING, BONNET	B190-30-1	
CAB / CANOPY	**B02**	
OPERATOR ENCLOSURE INSTALLATION ASSEMBLIES, CAB, SHELL	B200-5-1	
OPERATOR ENCLOSURE, CAB, ABI	B210-1-1	
ROOF, HATCH, ASSEMBLY	B230-1-1	
ROOF, TOP, LINER	B230-5-1	
DOORS, SUB - ASSEMBLY	B240-5-1	
DOORS, ASSEMBLY	B240-10-1	
DOORS, ASSEMBLY, CAB	B240-15-1	

2 MAIN INDEX – JS220LC

9820/0546B
ISSUE 1

TITLE	PAGE NUMBER	CHANGE NUMBER
GLASS/FRAMES, FRONT SCREEN, DOOR, CAB	B250-1-1	
GLASS/FRAMES, FRONT, BOTTOM	B250-5-1	
SEATS, STANDARD, OPERATORS	B260-1-1	
SEATS, STANDARD, COMPONENTS	B260-5-1	
SEATS, BELT	B260-10-1	
MOULDINGS/TRIM, CAB	B270-2-1	
OTHER OPERATOR ENCLOSURE ITEMS, FLOOR MATS	B290-2-1	
OTHER OPERATOR ENCLOSURE ITEMS, SEAT SLIDE, AND LEVER	B290-5-1	
OTHER OPERATOR ENCLOSURE ITEMS, KIT, LINEAR BEARING	B290-10-1	
OTHER OPERATOR ENCLOSURE ITEMS, KIT, REAR PANEL	B290-15-1	
OTHER OPERATOR ENCLOSURE ITEMS, KIT, SOUNDPROOFING, DOOR	B290-25-1	
OTHER OPERATOR ENCLOSURE ITEMS, BRACKET, COVER, RIGHT HAND SIDE	B290-30-1	
OTHER OPERATOR ENCLOSURE ITEMS, BRACKET, TOP, LEFT HAND SIDE	B290-35-1	
OTHER OPERATOR ENCLOSURE ITEMS, STOWAGE, REAR	B290-40-1	
OTHER OPERATOR ENCLOSURE ITEMS, LATCH	B290-45-1	
EXCAVATOR	**B04**	
BOOM, MONOBOOM, NON HBCV	B430-10-1	
BOOM, MONOBOOM, STANDARD	B430-15-1	
BOOM, MONOBOOM, COMMON PARTS	B430-20-1	

Continue...

TITLE	PAGE NUMBER	CHANGE NUMBER
BOOM, MONOBOOM, SEALS AND BEARINGS	B430-25-1	
DIPPER, 2400mm	B440-5-1	
DIPPER, HEAVY DUTY, 3000mm, OPTIONAL	B440-10-1	
DIPPER, HEAVY DUTY, 2.4M, SUB-ASSEMBLY	B440-15-1	
DIPPER, HEAVY DUTY, 3000mm, SUB-ASSEMBLY, OPTIONAL	B440-20-1	
DIPPER, SEALS AND BEARINGS	B440-25-1	
TIPPING LINK, BUCKET, LINKAGE JS200	B460-1-1	
REFURBISHMENTS	**B05**	
REFURBISHMENT INSTALLATION ASSEMBLIES, DECAL, PACK	B500-5-1	
DECALS MACHINE IDENTIFICATION, ROW, TERRITORY	B510-15-1	
LABELS WARNING/INFORMATION, LABEL PACK	B520-10-1	
TOOLS, KIT	B530-1-1	
TOOLS, KIT, STD	B530-5-1	
TOOLS, BOX	B530-10-1	
TOOLS, BOX ASSEMBLY	B530-15-1	
TOOLS, TOOLBOX, LID	B530-20-1	
TOOLS, HAMMER, EMERGENCY	B530-25-1	
LUBRICANT, &, FLUIDS	B570-1-1	
LUBRICANT, GREASE, HIGH PRESSURE	B570-5-1	

C ELECTRICS

TITLE	PAGE NUMBER	CHANGE NUMBER
ELECTRICAL	**C01**	
ELECTRICAL INSTALLATION ASSEMBLIES, BATTERY	C100-1-1	
ELECTRICAL INSTALLATION ASSEMBLIES, LIGHTS	C100-5-1	
WORKING LIGHTS AND MOUNTINGS, WORKING LAMP	C160-5-1	
ALARMS/HORN, HORN ASSEMBLY	C170-1-1	
OTHER ELECTRICAL CIRCUITS, VOLTAGE DROP BOX	C190-1-1	
ELECTRICS, CAB	**C03**	
ELECTRICS CAB INSTALLATION ASSEMBLIES, MAIN, ELECTRICS	C300-1-1	
ELECTRICS CAB INSTALLATION ASSEMBLIES, CAB ELECTRICS	C300-10-1	
HEATER/AIR CON ASSEMBLY, AIR CONDITIONING	C340-2-1	
HEATER/AIR CON ASSEMBLY, KIT, ATC	C340-10-1	
HEATER/AIR CON ASSEMBLY, HOSE KIT	C340-15-1	
FUSES AND RELAYS, PCB, ABI	C350-1-1	
FUSES AND RELAYS, ABI, POD BOX, ENGINE	C350-5-1	
ELECTRICAL CONTROL UNITS, CONTROLLER	C360-1-1	
ELECTRICAL CONTROL UNITS, ECU, 1	C360-5-1	
ELECTRICAL CONTROL UNITS, SYSTEM, MONITOR	C360-10-1	
ELECTRICAL CONTROL UNITS, EMS AUTO	C360-15-1	
OTHER ELECTRICAL ITEMS, WASHER BOTTLE	C390-1-1	

D CONTROLS

CONTROLS	**D01**	

Continue...

3 MAIN INDEX – JS220LC
9820/0546B
ISSUE 1

TITLE	PAGE NUMBER	CHANGE NUMBER
EXCAVATOR CONTROLS, CAB SERVO CONTROL, CONSOLE, LEFT SIDE AND RIGHT SIDE	D120-1-1	
EXCAVATOR CONTROLS, JOYSTICK CONTROL	D120-5-1	

E HYDRAULICS

HYDRAULIC CIRCUITS E01

TITLE	PAGE NUMBER	CHANGE NUMBER
HYDRAULIC CIRCUITS ATTACHMENTS, ROCK BREAKER, ARM 2.4M	E110-1-1	
HYDRAULIC CIRCUITS ATTACHMENTS, ROCK BREAKER, ARM 3.0M	E110-5-1	
HYDRAULIC CIRCUITS CHASSIS, HOSES & FITTINGS, PILOT CONTROL LINE	E130-1-1	
HYDRAULIC CIRCUITS CHASSIS, VALVE, CUSHION	E130-5-1	
HYDRAULIC CIRCUITS CHASSIS, CLAMP, KIT	E130-10-1	
HYDRAULIC CIRCUITS CHASSIS, HOSE KIT, - TRAVEL PEDALS	E130-15-1	
HYDRAULIC CIRCUITS CHASSIS, HOSES AND PIPEWORK, OIL COOLER & RETURN LINE	E130-20-1	
HYDRAULIC CIRCUITS CHASSIS, HOSES & FITTINGS, PRESSURE LINES	E130-30-1	
HYDRAULIC CIRCUITS CHASSIS, HOSES AND PIPEWORK, TRACTION LINE	E130-35-1	
HYDRAULIC CIRCUITS CHASSIS, HOSES & FITTINGS, SWING LINE	E130-40-1	
HYDRAULIC CIRCUITS CHASSIS, HOSE AND PIPEWORK, SUCTION LINE	E130-45-1	
HYDRAULIC CIRCUITS CHASSIS, HOSES & FITTINGS, DRAIN LINE	E130-50-1	
HYDRAULIC CIRCUITS CHASSIS, HOSES & FITTINGS, PLEXUS FILTER	E130-55-1	
HYDRAULIC CIRCUITS CHASSIS, HOSES & FITTINGS, PILOT PRESSURE AND RETURN LINE	E130-60-1	

4 MAIN INDEX – JS220LC
9820/0546B
ISSUE 1

TITLE	PAGE NUMBER	CHANGE NUMBER
HYDRAULIC CIRCUITS CHASSIS, HOSES & FITTINGS, HAMMER LINE (REVOLVING FRAME)	E130-61-1	
HYDRAULIC CIRCUITS CHASSIS, HOSES & FITTINGS, HAMMER CONTROL	E130-62-1	
HYDRAULIC CIRCUITS CHASSIS, HOSES & FITTINGS, BUCKET AND ARM LINE	E130-63-1	
HYDRAULIC CIRCUITS CHASSIS, HOSES AND PIPEWORK, BOOM LINE	E130-65-1	
HYDRAULIC CIRCUITS CHASSIS, HOSE KIT, CUSHION VALVE	E130-70-1	
HYDRAULIC CIRCUITS CHASSIS, HOSE KIT, SHUTTLE VALVE	E130-75-1	
HYDRAULIC CIRCUITS CHASSIS, HOSE KIT, TANK MANIFOLD	E130-80-1	
HYDRAULIC CIRCUITS CHASSIS, HOSE KIT, BOOM PRIORITY	E130-85-1	
HYDRAULIC CIRCUITS CHASSIS, HOSE KIT, 8 STATION SOLENOID	E130-90-1	
HYDRAULIC CIRCUITS CHASSIS, HOSE KIT, MISCELLANEOUS	E130-95-1	
HYDRAULIC CIRCUITS CHASSIS, HOSE KIT, PUMP	E130-95-5	
HYDRAULIC CIRCUITS CHASSIS, HOSE KIT, JOYSTICK, RIGHT SIDE	E130-100-1	
HYDRAULIC CIRCUITS CHASSIS, HOSE KIT, JOYSTICK, LEFT SIDE	E130-105-1	
HYDRAULIC CIRCUITS CHASSIS, HOSE KIT, PILOT LINES FOR HAMMER	E130-110-1	
HYDRAULIC CIRCUITS CHASSIS, HOSE KIT, TANK MANIFOLD	E130-115-1	
HYDRAULIC CIRCUITS EXCAVATOR END, HOSES & FITTINGS, TRACTION MOTOR LINE	E140-15-1	
HYDRAULIC CIRCUITS EXCAVATOR END, HOSES AND PIPEWORK, BUCKET LINES, 2.4M	E140-20-1	

Continue...

TITLE	PAGE NUMBER	CHANGE NUMBER
HYDRAULIC CIRCUITS EXCAVATOR END, HOSES & FITTINGS, BUCKET LINES, 3.0M	E140-25-1	
HYDRAULIC CIRCUITS EXCAVATOR END, PIPEWORK, HAMMER LINE, MONOBOOM	E140-30-1	
HYDRAULIC CIRCUITS EXCAVATOR END, HOSES AND PIPEWORK, HAMMER LINE, QUICK RELEASE COUPLING, ARM 2.4M	E140-35-1	
HYDRAULIC CIRCUITS EXCAVATOR END, HOSES AND PIPEWORK, HAMMER LINE, QUICK RELEASE COUPLING, ARM 3.0M, OPTIONAL	E140-40-1	
OTHER HYDRAULIC CIRCUITS, CCV	E190-5-1	
PUMP & MOTORS	**E02**	
PUMP/MOTOR INSTALLATION ASSEMBLIES, MAIN	E200-1-1	
PUMPS VARIFLOW	E220-1-1	
PUMPS VARIFLOW, COMPONENTS	E220-5-1	
VALVES	**E03**	
VALVE INSTALLATION ASSEMBLIES, CONTROL	E300-1-1	
VALVES EXCAVATOR, CONTROL VALVES, COMPONENTS, FIGURE 1	E320-1-1	
VALVES EXCAVATOR, CONTROL VALVES, COMPONENTS, FIGURE 2	E320-2-1	
VALVES EXCAVATOR, CONTROL VALVES, COMPONENTS, FIGURE 3	E320-3-1	
VALVES SERVO CONTROL (PILOT CONTROL), JOYSTICK CONTROL, LEFT HAND SIDE	E340-1-1	
VALVES SERVO CONTROL (PILOT CONTROL), JOYSTICK CONTROL, RIGHT HAND SIDE	E340-5-1	
VALVES SERVO CONTROL (PILOT CONTROL), JOYSTICK CONTROL	E340-10-1	
OTHER VALVES, SOLENOID, 8 STATION, COMPONENTS	E390-5-1	

5 MAIN INDEX – JS220LC
9820/0546B
ISSUE 1

TITLE	PAGE NUMBER	CHANGE NUMBER
OTHER VALVES, SOLENOID, COMPONENTS	E390-6-1	
OTHER VALVES, PROPORTIONAL, REDUCING	E390-10-1	
OTHER VALVES, SHUTTLE VALVE	E390-15-1	
RAMS	**E04**	
RAM INSTALLATION ASSEMBLIES, BOOM AND DIPPER, NON HBCV	E400-5-1	
RAM INSTALLATION ASSEMBLIES, BUCKET, STANDARD	E400-10-1	
RAMS BOOM, COMPONENTS, LEFT HAND SIDE	E460-10-1	
RAMS BOOM, COMPONENTS, RIGHT HAND SIDE	E460-15-1	
RAMS DIPPER, COMPONENTS	E465-1-1	
RAMS BUCKET (JAW BUCKET), BUCKET, CYLINDER	E480-1-5	
FILTER	**E05**	
FILTER MAIN HYDRAULIC, PILOT RETURN	E510-1-1	
FILTER MAIN HYDRAULIC, BYPASS, PLEXUS	E510-5-1	
FILTER OTHER HYDRAULIC, ASSEMBLY, DRAIN LINE	E520-1-1	
FILTER RETURN, HAMMER, CIRCUIT	E540-1-1	
F TRACK/SLEW GEARBOX		
TRACK & SWING GEAR BOX	**F04**	
GEARBOX ASSEMBLY & SPROCKET, MOTOR, TRACTION	F410-1-1	
GEARBOX ASSEMBLY & SPROCKET, GEARBOX, COMPONENTS	F410-5-1	
GEARBOX TRACK	F420-1-1	
SLEW/SWING MOTOR INSTALLATION, EQUIPMENT	F430-1-1	

Continue...

TITLE	PAGE NUMBER	CHANGE NUMBER
SLEW/SWING MOTOR INSTALLATION	F430-5-1	
GEARBOX SLEW/SWING, ASSEMBLY	F440-1-1	
CIRCUIT SLEW/SWING GREASING, PIPELINES, TTB GREASE LINE	F480-1-1	
OTHER SLEW/SWING PARTS, TURNTABLE BEARING	F490-1-1	

J UNDERCARRIAGE

UNDERCARRIAGE J01

TITLE	PAGE NUMBER	CHANGE NUMBER
UNDERCARRIAGE INSTALLATION ASSEMBLIES, TRACK CHAIN, AND IDLER, 49 LINKS, 500MM, ITM	J100-1-1	
UNDERCARRIAGE INSTALLATION ASSEMBLIES, TRACK CHAIN, AND IDLER, 49 LINKS, 500MM, OPTIONAL	J100-15-1	
UNDERCARRIAGE INSTALLATION ASSEMBLIES, TRACK CHAIN, AND IDLER, 49 LINKS, 600MM, OPTIONAL	J100-20-1	
UNDERCARRIAGE, LOWER FRAME	J110-5-1	
RECOIL AND IDLER ASSEMBLY	J120-1-1	
RECOIL AND IDLER ASSEMBLY, OPTIONAL	J120-5-1	
RECOIL UNIT, SPRING ASSEMBLY	J130-5-1	
RECOIL UNIT	J130-10-1	
IDLER ASSEMBLY, FRONT, OPTIONAL	J140-1-1	
IDLER ASSEMBLY	J140-5-1	
TRACK ROLLERS, CARRIER AND LOWER	J150-1-1	
TRACK ROLLERS, LOWER, ASSEMBLY	J150-5-1	
TRACK ROLLERS, CARRIER, ASSEMBLY	J150-10-1	
TRACK CHAIN, &, SHOE - 600MM, 49 LINKS	J160-1-1	

6 MAIN INDEX – JS220LC
9820/0546B
ISSUE 1

TITLE	PAGE NUMBER	CHANGE NUMBER
TRACK CHAIN, /SHOE 600	J160-5-1	
TRACK CHAIN, &, SHOE, 49 LINKS, 500MM	J160-19-1	
TRACK CHAIN, &, SHOE 49, LINKS 500MM	J160-20-1	
TRACK CHAIN, 49 LINK, 600MM	J160-35-1	
TRACK CHAIN, &, SHOE ASSY 49	J160-40-1	
TRACK CHAIN, 49 LINK	J160-55-1	
OTHER UNDERCARRIAGE PARTS, TRACK, GUIDES	J190-1-1	
OTHER UNDERCARRIAGE PARTS, ROTARY COUPLING, ASSEMBLY	J190-5-1	
OTHER UNDERCARRIAGE PARTS, UNDER COVERS	J190-10-1	
OTHER UNDERCARRIAGE PARTS, LOWER, COVERS	J190-15-1	

L ENGINE ANCILLARIES

ENGINE INSTALLATION ASSEMBLIES L01

TITLE	PAGE NUMBER	CHANGE NUMBER
ENGINE INSTALLATION ASSEMBLIES, 448 T2 129kW	L100-5-1	
OTHER ENGINE RELATED PARTS, MOUNTINGS	L190-5-1	
OTHER ENGINE RELATED PARTS, OIL FILTER, REMOTE,ASSEMBLY	L190-10-1	
OTHER ENGINE RELATED PARTS, OIL, HOSE	L190-15-1	
OTHER ENGINE RELATED PARTS, MOUNTING, REMOTE OIL FILTER	L190-20-1	
OTHER ENGINE RELATED PARTS, TURBO, ADAPTOR	L190-25-1	
OTHER ENGINE RELATED PARTS, TREAD PLATES	L190-35-1	
OTHER ENGINE RELATED PARTS, BLANKING PLATE	L190-40-1	

Continue...

TITLE	PAGE NUMBER	CHANGE NUMBER
EXHAUST SYSTEM	**L02**	
EXHAUST SYSTEM INSTALLATION ASSEMBLIES	L200-1-1	
INDUCTION SYSTEM INSTALLATION ASSEMBLIES	**L03**	
INDUCTION SYSTEM INSTALLATION ASSEMBLIES	L300-1-1	
INDUCTION FILTER	L310-1-1	
HEATER	**L04**	
ENGINE HEATER INSTALLATION ASSEMBLIES, COMMON PARTS	L400-5-1	
COOLING SYSTEM	**L06**	
COOLING INSTALLATION ASSEMBLIES, COOLING PACK	L600-1-1	
COOLING PACK INSTALLATION, TANK, RESERVE ASSEMBLY	L610-10-1	
ABI COOLING PACK, KIT, FOAM	L620-1-1	
ABI COOLING PACK, RADIATOR, ASSEMBLY	L620-5-1	
FAN INSTALLATION ASSEMBLIES	**L07**	
FAN, ASSEMBLY, NON EU	L710-1-1	
FRONT END AUXILIARY DRIVE, FEAD HD AC	L720-1-1	
FRONT END AUXILIARY DRIVE, HEAVY DUTY, FEAD COMMON	L720-5-1	
FRONT END AUXILIARY DRIVE, TENSIONER,ASSEMBLY	L720-10-1	
RECEIVER DRIER	L760-1-1	
FUEL SYSTEM	**L08**	
FUEL SYSTEM INSTALLATION ASSEMBLIES, HOSES AND PIPEWORK, FUEL LINE	L800-1-1	

7 MAIN INDEX – JS220LC
9820/0546B
ISSUE 1

TITLE	PAGE NUMBER	CHANGE NUMBER
FUEL FILTER, SEDIMENTOR, 5 MICRON	L820-1-1	
FUEL FILTER, SEDIMENTOR, 5 MICRON	L820-5-1	
FUEL FILTER, SEDIMENTOR, 30 MICRON	L820-10-1	
FUEL FILTER, 3 LAYER, 5 MICRON	L820-15-1	
FUEL FILTER, BRACKET, ASSEMBLY	L820-20-1	

- A02 BUCKETS

A09 MISCELLANEOUS

A

A200-1-1 BUCKET INSTALLATION ASSEMBLIES, 0.9 CU.M

9820/0546B
ISSUE 1

[redacted]
JS220 XD
JS220LC

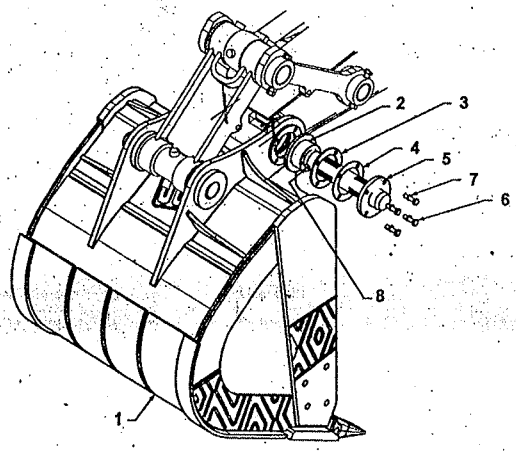

ITEM	Part #	CHANGE NO	DESCRIPTION	USAGE CODE	QTY
1	333/P6950		Bucket 0.9CUM Refer A230-5-1		1
2	333/P1949		Bush		1
3	333/P2207		Shim - 1.2THK		5
4	333/P8210		Shim - 0.5THK		4
5	333/P2156		Cap End		1
6	1316/3714Z		Bolt		4
7	1425/0011Z		Washer spring M16		4
8	2105/1605		Pin dowel		2

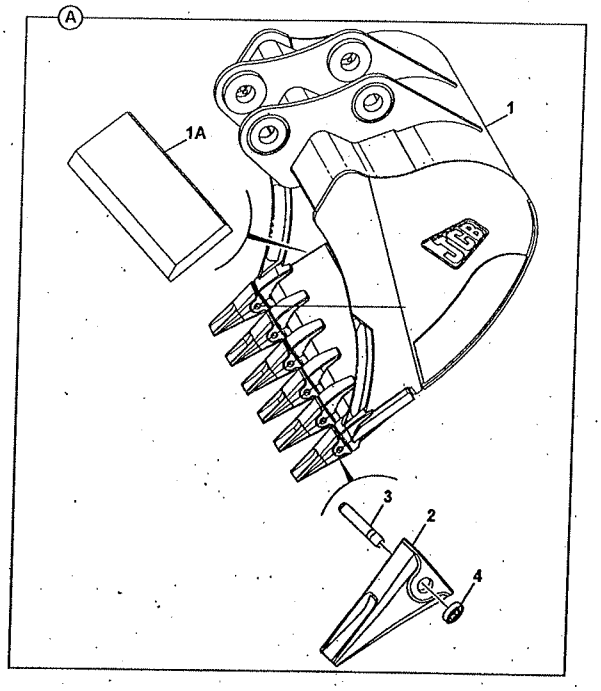

332-P7284-3

JS220 XD

JS220LC

ITEM	Part #	CHANGE NO	DESCRIPTION	USAGE CODE	QTY
A	332/P7284		Bucket 54 inches		1
1			Bucket 54"		1
1A	980/84757		Toeplate 54"		1
1B	980/84720		Pivot Boss		1
2	333/P7952		Tooth Tip		6
3	980/84767		Pin locking		6
4	980/84768		Washer		6

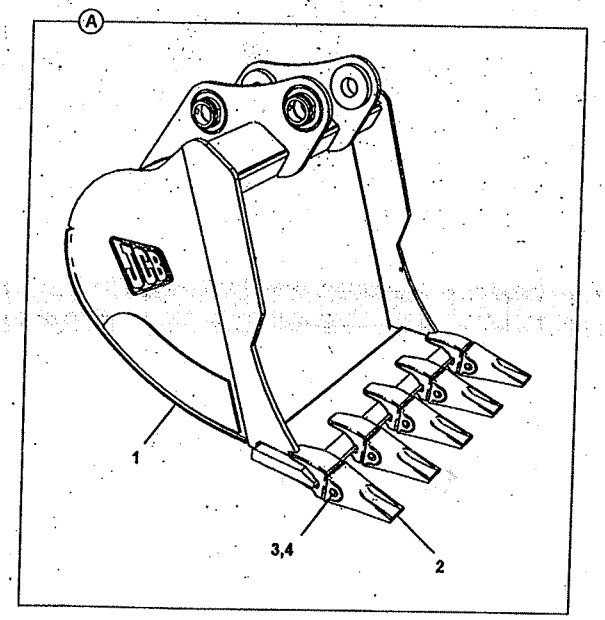

332-P6588-1

JS220 XD

JS220LC

ITEM	Part #	CHANGE NO	DESCRIPTION	USAGE CODE	QTY
A	332/P7251		Bucket Exc 48INCH Comprises of #1-4		1
1			Bucket GP 48" 0.9 Cu m		1
1A	980/84720		Pivot Boss		4
1B	980/84756		Toeplate		1
2	333/P7952		Tooth Tip		5
3	980/84767		Pin locking		5
4	980/84768		Washer		5

JS220 XD

JS220LC

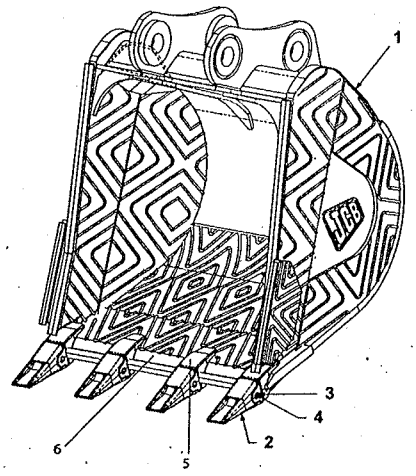

ITEM	Part #	CHANGE NO	DESCRIPTION	USAGE CODE	QTY
A	332/P8470		Bucket 0.9CUM H.D Assembly		1
1			Bucket 0.9CUM H.D.		1
2	333/P7952		Tooth Tip		4
3	980/84767		Pin locking		4
4	980/84768		Washer		4
5	333/P7968		Tooth Adaptor		4
6	332/P4761		Toeplate		1
7	332/P0261		Pivot Boss		2

332-P8470- 5

JS220 XD

JS220LC

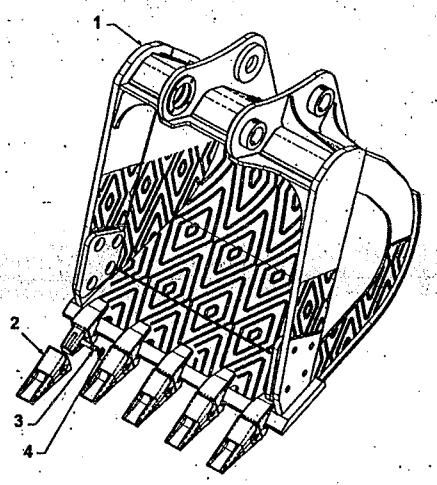

ITEM	Part #	CHANGE NO	DESCRIPTION	USAGE CODE	QTY
A	333/P6950		Bucket 0.9CUM		1
1			Bucket 0.9CUM Refer A230-10-1		1
2	333/P7952		Tooth Tip		5
3	980/84767		Pin locking		5
4	980/84768		Washer		5

333-P6950-1

JS220 XD

JS220LC

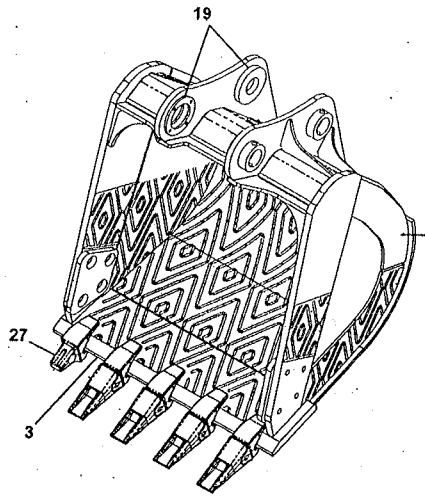

332-L5660-1

ITEM	Part #	CHANGE NO	DESCRIPTION	USAGE CODE	QTY
3	333/P7624		Plate - Toe		1
19	333/P7972		Pivot Boss Inner		4
27	333/P7968		Tooth Adaptor		5

A02 BUCKETS

• A09 MISCELLANEOUS

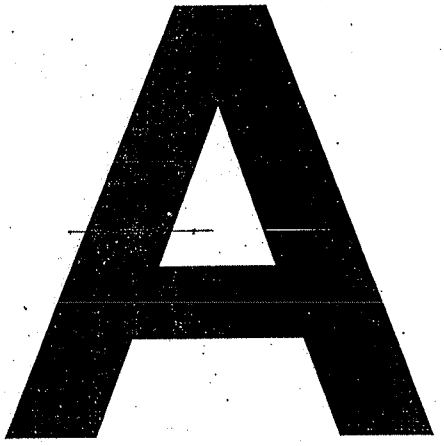

A920-1-1 REFUELLING PUMP

9820/0546B
ISSUE 1

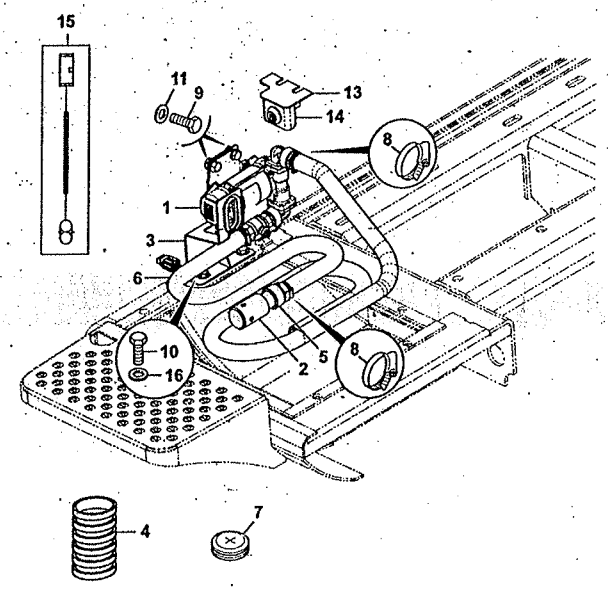

229-02568-5

JS220 XD

JS220LC

ITEM	Part No.	CHANGE NO.	DESCRIPTION	USAGE CODE	QTY
1	334/L3834		Pump refueling Refer A920-10-1		1
2	215/11319		Strainer assembly Refer A920-5-1		1
3	334/P0223		Bracket refueling pump		1
4	JSR0006		Hose CORRUGATED		1
5	834/10904		Hose refuelling 2000mm long		1
6	834/10901		Hose refuelling 3500mm long 3.5M		1
7	KHN1260		Grommet rubber		1
8	334/L7497		Clip wormdrive		3
9	1316/0505Z		Screw M12x20		4
10	1316/0509Z		Setscrew		2
11	1420/0009Z		Washer Plain M12		4
13	333/P2284		Bracket Switch		1

Continue...

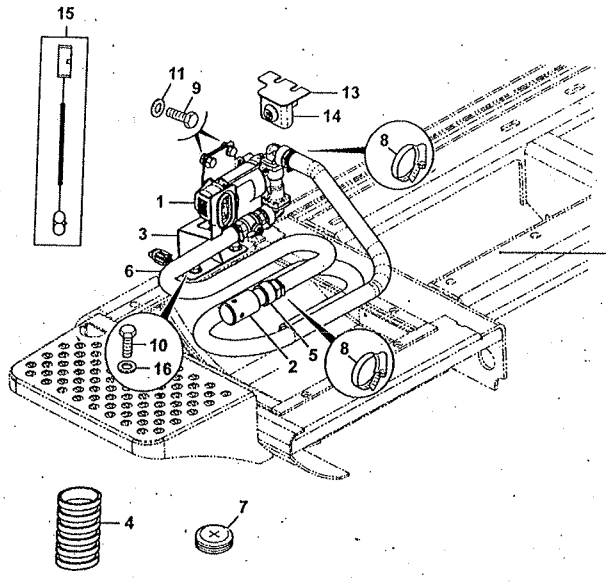

ITEM	PART NO	CHANGE NO	DESCRIPTION	USAGE CODE	QTY
14	701/80310		Switch Push Button		1
15	333/P2162		Harness refuel pump		1
16	1411/0005D		Washer		2

229-02568-5

JS220 XD

JS220LC

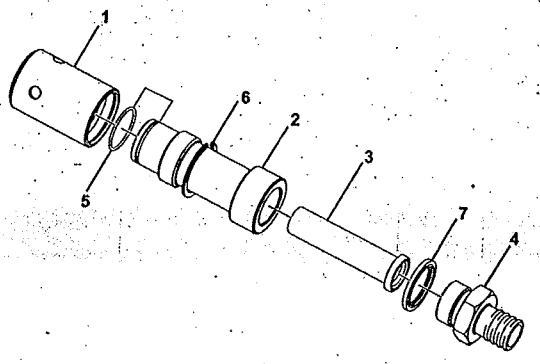

ITEM	Part #	CHANGE NO	DESCRIPTION	USAGE CODE	QTY
1	32/925434		Cap end		1
2	32/925433		Housing strainer		1
3	32/925435		Filter mesh		1
4	32/925436		Hose tail fitting		1
5	2400/0024		O Ring		1
6	32/925542		Circlip internal		1
7	1406/0026		Washer Seal		1

215-11319-3

JS220 XD

JS220LC

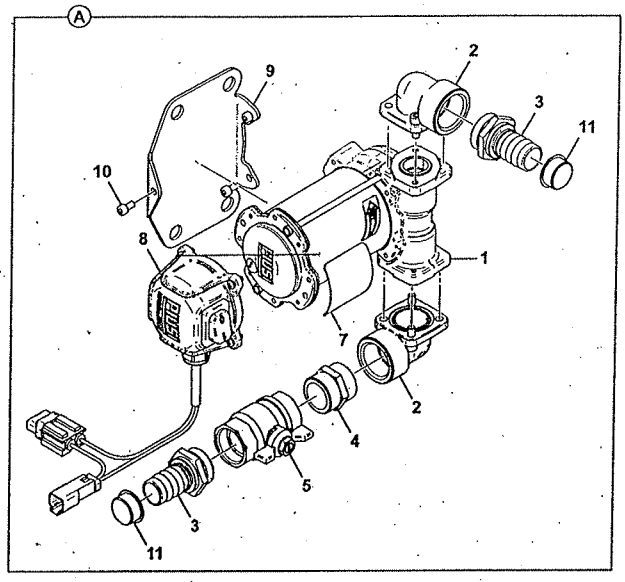

334-L3834-2

ITEM	Part #	CHANGE NO	DESCRIPTION	USAGE CODE	QTY
A	334/L3834		Pump refueling		1
1	335/C7933		Pump		1
2	335/C7934		Kit Collector		2
3	335/C7935		Adapter Hose		2
4	335/C7937		Adapter Double Hexagonal		1
5	335/C7938		Adaptor		1
7	335/C7941		Plate		1
8	335/C7942		Kit Terminal Hollow		1
9	335/C7943		Bracket Support Pump		1
10	335/C7944		Screw		3
11	335/C7947		Cap Thread Protection		2

B

- B01 BODYWORK
- B02 CAB / CANOPY
- B04 EXCAVATOR
- B05 REFURBISHMENTS

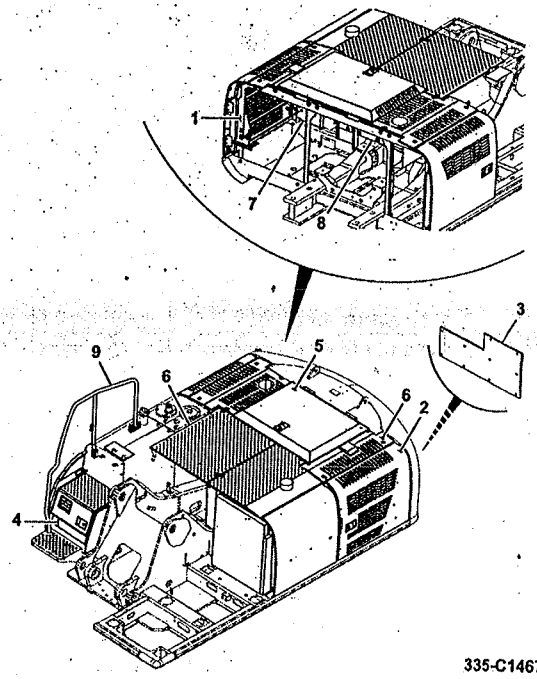

335-C1467-1

JS220 XD

JS220LC

ITEM	Part #	CHANGE NO	DESCRIPTION	USAGE CODE	QTY
1			Frame house assembly Refer B110-5-1		1
2			Door Assembly Refer B240-10-1		1
3	332/P5795		Kit Sound Proofing Refer B190-1-1		1
4			Toolbox Assembly Refer B530-10-1		1
5			Cover Engine Assembly Refer B170-1-1		1
6			Cover top Refer B190-5-5		1
7			Bulkhead & Baffles Assembly Refer B110-1-1		1
8			Head sound proofing kit Refer B190-10-1		1
9			Handrail Assembly Refer B190-16-1		1

JS220 XD

JS220LC

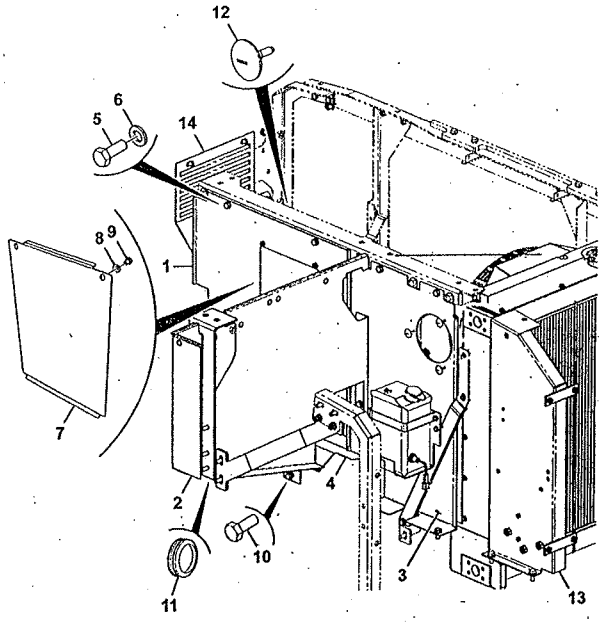

334-L6549-6

ITEM	Part#	CHANGE NO	DESCRIPTION	USAGE CODE	QTY
1	334/P4549		Baffle right side		1
2	334/P2350		Plate cosmetic left side		1
3	332/K7988		Baffle induction		1
4	332/J9713		Bulkhead lower		1
5	1316/0507D		Setscrew M12 x 25 grade 10.9		12
6	1420/0009D		Washer M12		14
7	332/J9711		Cover Inspection		1
8	1420/0007D		Washer Plain M8		2
9	1316/0301D		Screw		2
10	1316/0508D		Screw M12 X 30		2
11	KAR0152		Grommet		1
12	826/01308		Retainer Insulation		24
13	334/P6994		Frame work		1
14			Assembly Firewall Refer B170-5-1		1

JS220 XD

JS220LC

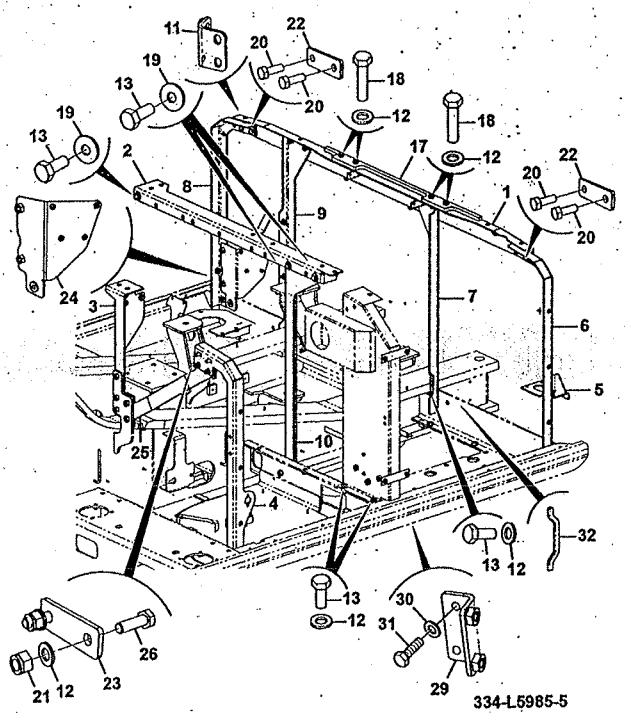

334-L5985-5

ITEM	Part#	CHANGE NO	DESCRIPTION	USAGE CODE	QTY
1	332/K8772		Frame rear member		1
2	334/L6368		Frame cross member front		1
3	334/L1820		Frame Housing Front Leg		1
4	334/P2107		Frame front leg left side		1
5	334/P5496		Bracket pod box		1
6	333/J2030		Frame rear leg left side		1
7	332/K8986		Frame left hand rear in leg		1
8	334/L6247		Frame rear leg right side		1
9	333/J1345		Frame rear inner right side		1
10	335/13346		Frame mid inner leg left hand		1
11	334/L3314		Plate		1

Continue...

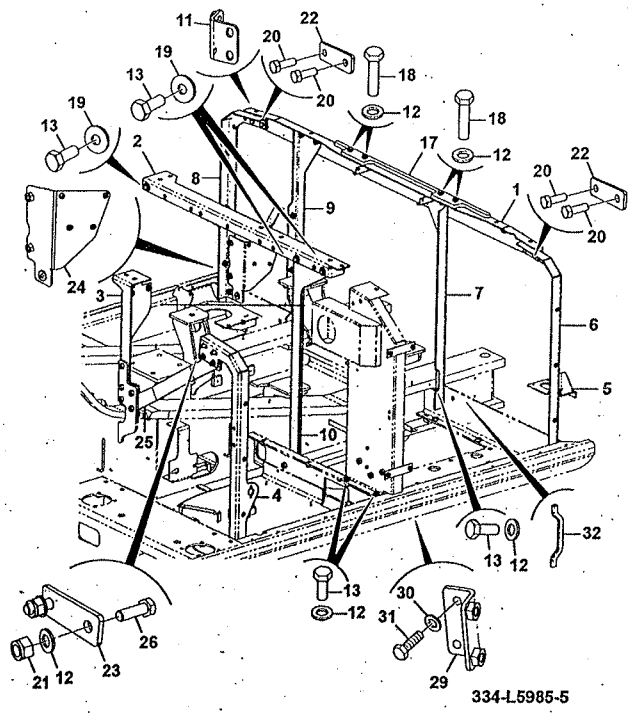

ITEM	PART NO	CHANGE NO	DESCRIPTION	USAGE CODE	QTY
12	1420/0009D		Washer M12		24
13	1316/0508D		Screw M12 X 30		24
17	332/K8816		Plate mounting		1
18	1316/3511D		Bolt		4
19	JHP0049		Washer		7
20	1316/0509D		Screw M12x35 long		7
21	1370/0403D		Nut Lock M12		2
22	333/J5742		Plate		2
23	333/J5744		Plate		3
24	333/J6056		Bracket filter		1
25	333/J4680		Bar tie		1
26	1316/0510D		Screw		4
29	229/01752		Bracket		1
30	1420/0008Z		Washer Plain M10		2
31	1316/0405Z		Screw M10 X 20		2
32	KSN0939		Cushion rubber		1

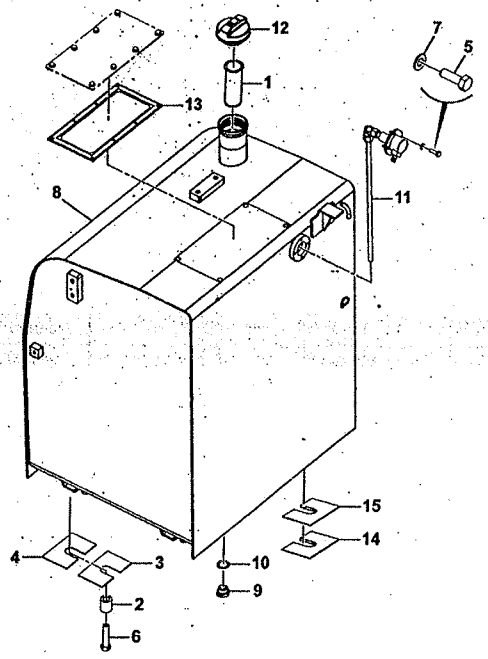

JS220 XD

JS220LC

ITEM	Part No	CHANGE NO	DESCRIPTION	USAGE CODE	QTY
1	580/01200		Strainer Diesel-Filler		1
2	JSJ0042		Spacer		6
3	KHH0040		Plate Shim T=0.03"		6
4	KHH0137		Shim plate		6
5	1315/0103Z		Screw		4
6	1316/3716Z		Bolt		6
7	1420/0005Z		Washer Plain		4
8	229/01282		Fuel tank Refer B120-5-1		1
9	816/80012		Plug Magnetic 3/4"BSP		1
10	1406/0021		Washer Bonded		1
11	333/J9738		Sensor fuel		1
12	332/F8215		Cap Filler,Vented Diesel Locking		1
13	332/P5028		Gasket Tank Top		1
14	333/L9293		Shim Plate		2

Continue...

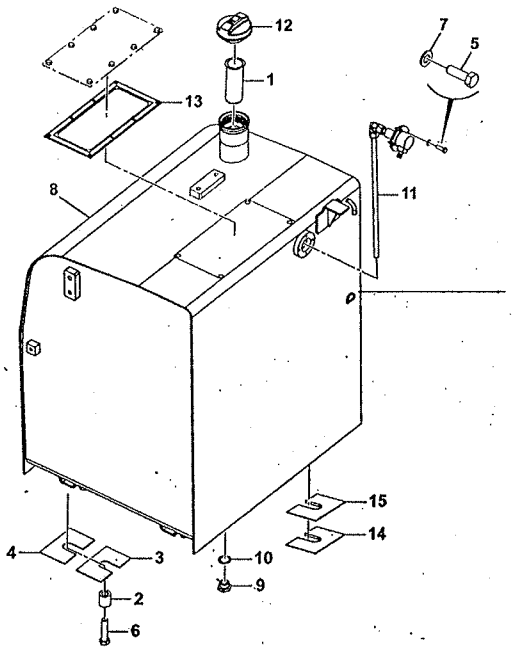

229-01280-7

ITEM	PART NO	CHANGE NO	DESCRIPTION	USAGE CODE	QTY
15	333/L9295		Shim Plate		2

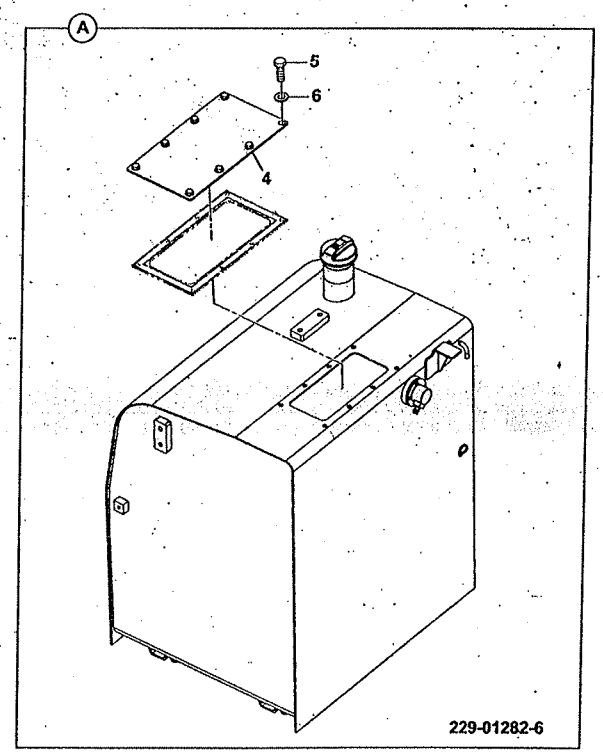

229-01282-6

JS220 XD

JS220LC

ITEM	Part #	CHANGE NO	DESCRIPTION	USAGE CODE	QTY
A	229/01282		Fuel tank		1
4	229/00606		Cover Inspection		2
5	1315/0305Z		Setscrew M8X20		16
6	1420/0007Z		Washer Plain M8		16

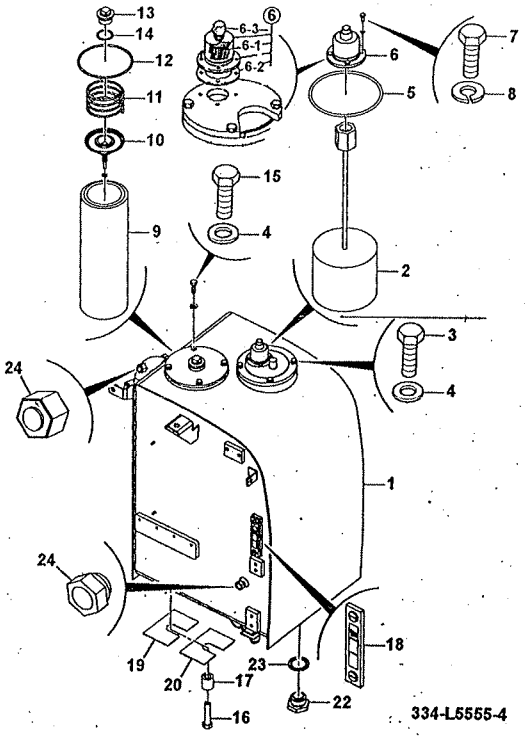

JS220 XD

JS220LC

ITEM	Part #	CHANGE NO	DESCRIPTION	USAGE CODE	QTY
1	334/L5455		Tank hydraulic Refer B130-5-1		1
2	32/925359		Strainer assembly		1
3	1316/0408Z		Screw M10x30		4
4	JHP0046		Washer M10		8
5	CSP0161		O Ring		1
6	32/925692		Breather air c/w rubber cap		1
6-1	KRJ3461		Element Tank Breather		1
6-2	KRJ3463		Packing		1
6-3	KHJ0992		Nut		1
7	1316/0203Z		Screw		4
8	1425/0006Z		Washer Spring		4
9	KRJ3836		Filter		1
10	KRJ2246		Valve relief		1
11	KRJ3457		Spring compression		1

B130-1-1 HYDRAULIC TANK, ASSEMBLY 9820/0546B
ISSUE 1

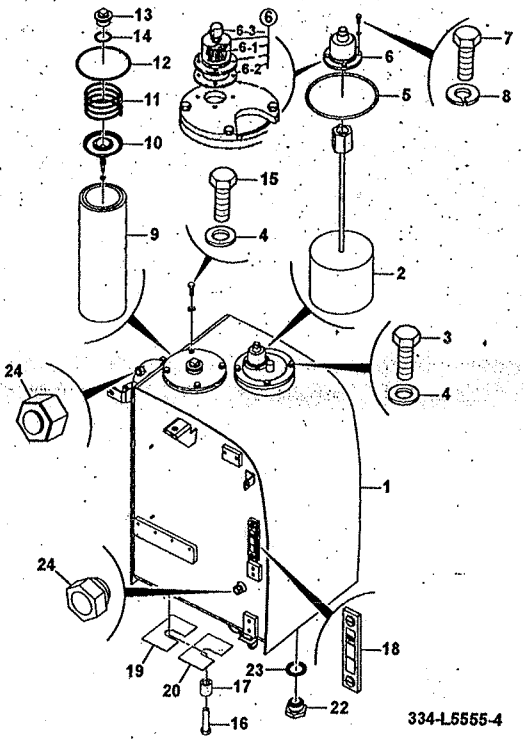

ITEM	PART NO	CHANGE NO	DESCRIPTION	USAGE CODE	QTY
12	KNJ0381		O Ring		1
13	JHH0082		Plug		1
14	1406/0029		Washer Dowty		1
15	1316/0405Z		Screw M10 X 20		4
16	1316/3716Z		Bolt		4
17	JSJ0042		Spacer		4
18	JHH0119		Gauge		1
19	KHH0040		Plate Shim T=0.03"		4
20	KHH0137		Shim plate		4
22	816/80012		Plug Magnetic 3/4"BSP		1
23	1406/0021		Washer Bonded		1
24	816/00190		Cap		4

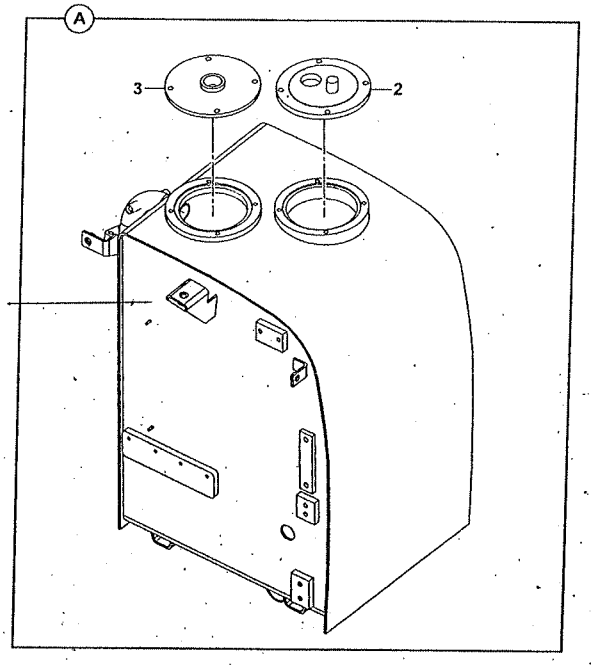

334-L5455-1

JS220 XD

JS220LC

ITEM	Part #	CHANGE NO.	DESCRIPTION	USAGE CODE	QTY
A	334/L5455		Tank hydraulic		1
2	KNJ1822		Cover sump		1
3	JRJ0148		Cover		1

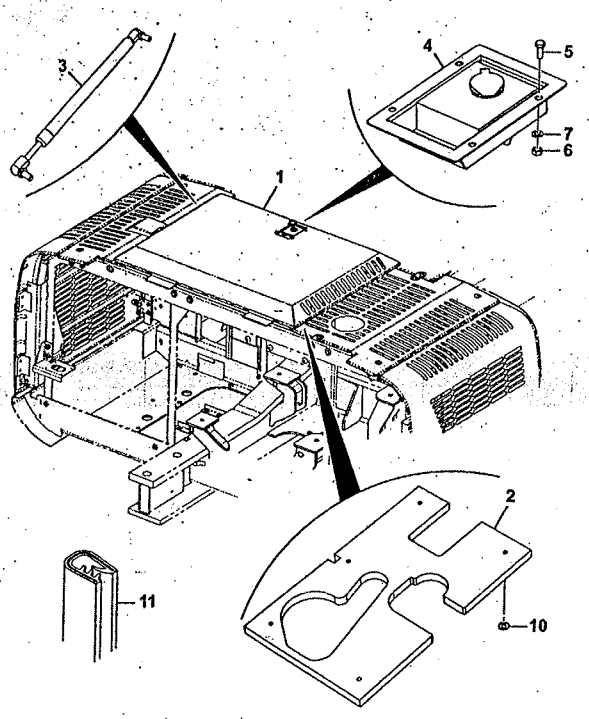

334-L4846-4

JS220 XD

JS220LC

ITEM	Part #	CHANGE NO.	DESCRIPTION	USAGE CODE	QTY
1	334/L4646		Cover engine		1
2	335/A1884		Kit Soundproofing Bonnet Refer B190-30-1		1
3	332/P6503		Strut - Gas		2
4	826/11245		Latch paddle engine cover		1
5	826/01406		Screw		4
6	1370/0001Z		Nut M5		4
7	1420/0005Z		Washer Plain		4
10	826/01308		Retainer Insulation		7
11	334/L4847		Strip Edging		1

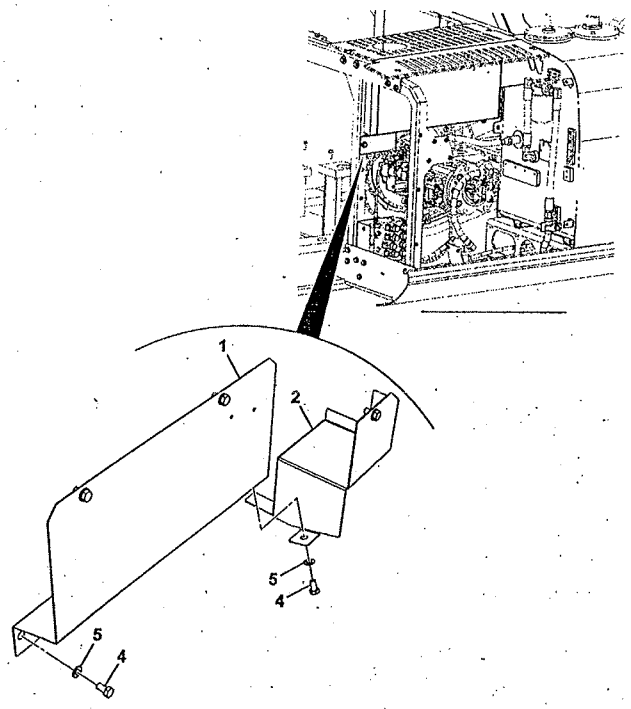

335-A1667-2

JS220 XD

JS220LC

ITEM	Part #	CHANGE NO	DESCRIPTION	USAGE CODE	QTY
1	335/A3114		Wall fire RH		1
2	331/55795		Pressing		1
4	1316/0507D		Setscrew M12 x 25 grade 10.9		5
5	1420/0009D		Washer M12		5

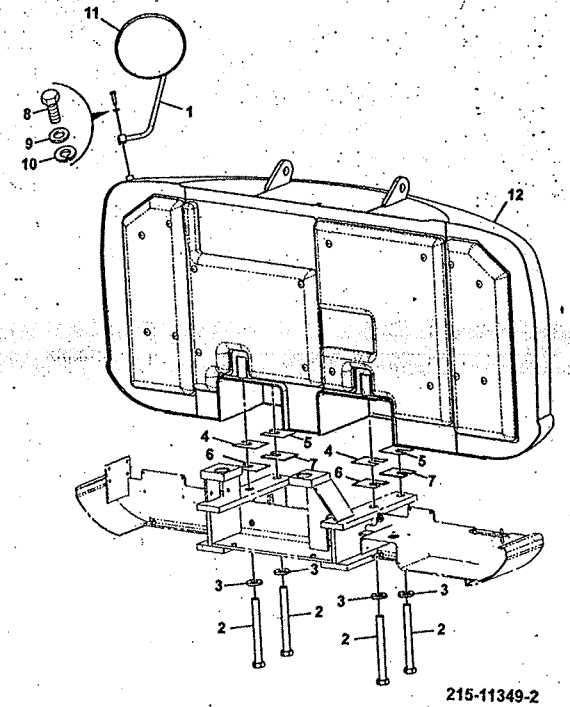

215-11349-2

JS220 XD

JS220LC

ITEM	Part #	CHANGE NO	DESCRIPTION	USAGE CODE	QTY
1	JHB0002		Mounting mirror		1
2	KBB0445		Bolt		4
3	KHB0063		Washer high strength M30		4
4	KRB0736		Shim t=0.8		2
5	KRB0737		Shim t=1.2		2
6	KRB0738		Shim t=2.3		2
7	KRB0739		Shim t=4.5		2
8	1316/3512Z		Bolt M12x50		1
9	1420/0009Z		Washer Plain M12		1
10	1425/0009Z		Washer Spring M12		1
11	158/30491		Mirror		1
12	331/35416		Counterweight 3700Kg		1

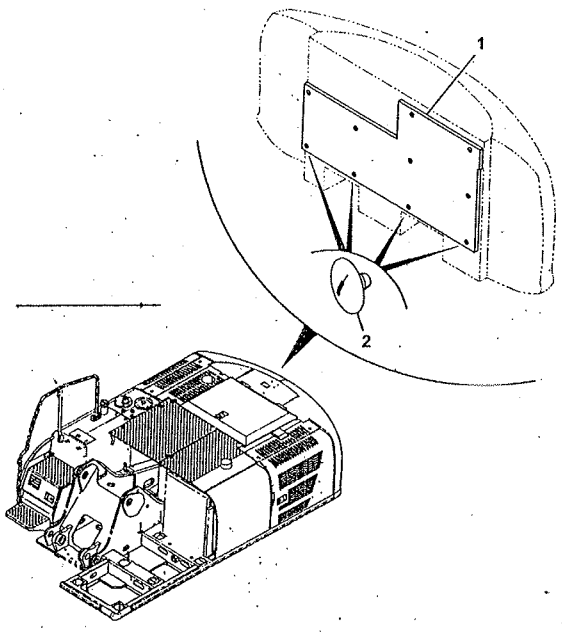

332-P5795-1

JS220 XD

JS220LC

ITEM	Part #	CHANGE NO	DESCRIPTION	USAGE CODE	QTY
1	331/33077		Panel soundproofing counterweight		1
2	826/01308		Retainer Insulation		10

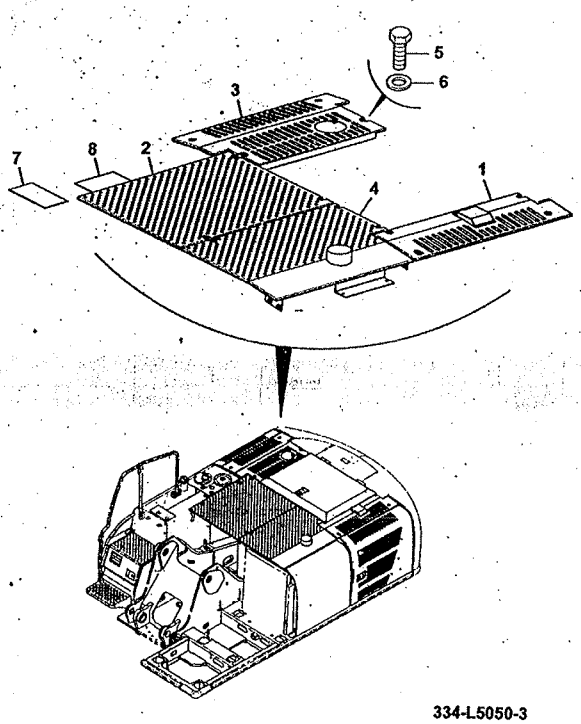

334-L5050-3

JS220 XD

JS220LC

ITEM	Part #	CHANGE NO	DESCRIPTION	USAGE CODE	QTY
1			Cover cooling pack assembly Refer B190-20-1		1
2	332/L2881		Plate centre cover		1
3	334/L4924		Plate cover exhaust		1
4	334/L4921		Plate cover front exhaust		1
5	1316/0507Z		Screw		14
6	1420/0009Z		Washer Plain M12		14
7	332/P2107		Pad Anti Slip		1
8	332/P2108		Pad Anti Slip		1

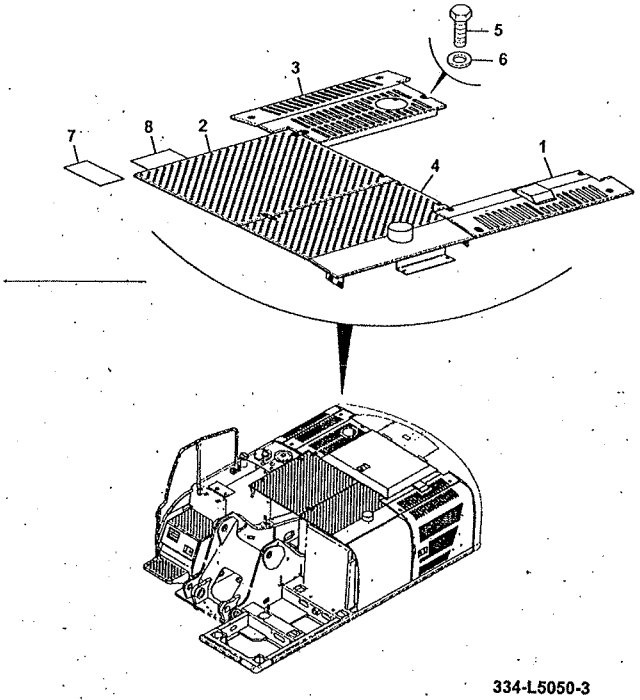

334-L5050-3

JS220 XD

JS220LC

ITEM	Part #	CHANGE NO	DESCRIPTION	USAGE CODE	QTY
1			Cover cooling pack assembly Refer B190-20-5		1
2	334/P9076		Plate cover central		1
3	334/L4924		Plate cover exhaust		1
4	332/J0635		Plate front cover LH		1
5	1316/0507Z		Screw		14
6	1420/0009Z		Washer Plain M12		14
7	332/P2107		Pad Anti Slip		1
8	332/P2108		Pad Anti Slip		1

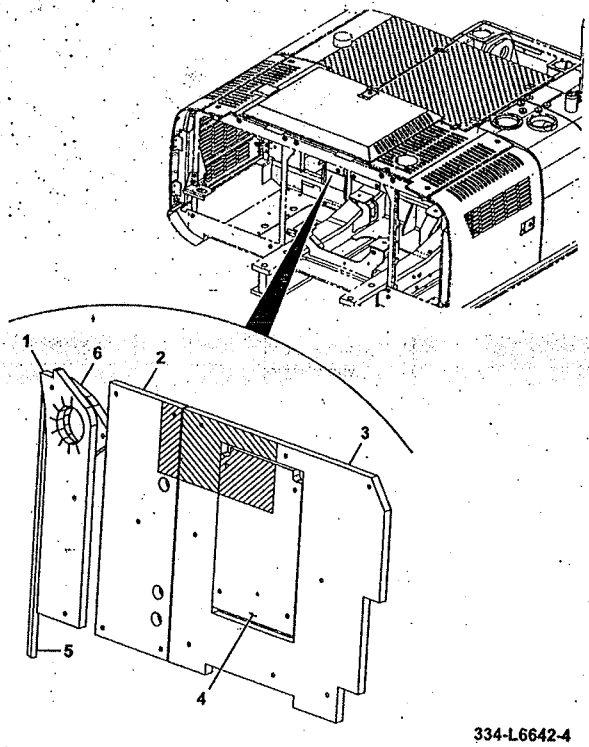

334-L6642-4

JS220 XD

JS220LC

ITEM	Part #	CHANGE NO	DESCRIPTION	USAGE CODE	QTY
1	333/L5708		Panel soundproofing air cleaner		1
2	333/J0221		Panel soundproofing		1
3	334/L6225		Soundproofing Service Bay		1
4	335/A1800		Soundproofing Access Panel		1
5	331/65655		Panel foam bulkhead to cowl		1
6	335/A1810		Soundproofing Induction Hose		1

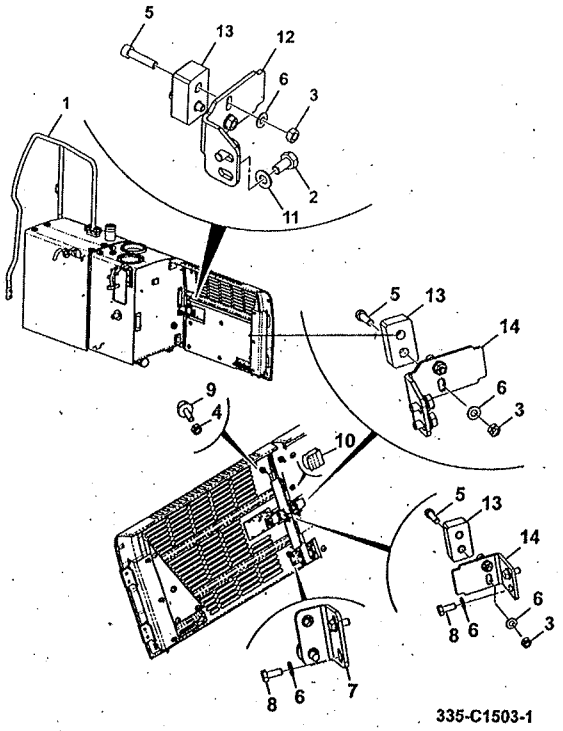

335-C1503-1

JS220 XD

JS220LC

ITEM	Part #	CHANGE NO	DESCRIPTION	USAGE CODE	QTY
1			Handrail Assembly Refer B190-17-1		1
2	1316/0405Z		Screw M10 X 20		2
3	1370/0201D		Nut Plain M8		6
4	1370/0301Z		Nut M10		6
5	1391/3309D		Capscrew M8 X 35		6
6	1420/0007Z		Washer Plain M8		14
7	334/L3314		Plate		2
8	1316/0305Z		Bolt High Tensile		8
9	334/L1393		Buffer Rubber		6
10	JLP0145		Clip		1
11	1420/0008Z		Washer Plain M10		2
12	333/J1227		Bracket support		1
13	333/J3188		Block Door Buffer ABI Refer B190-25-1		3
14	332/K7311		Bracket Support		2

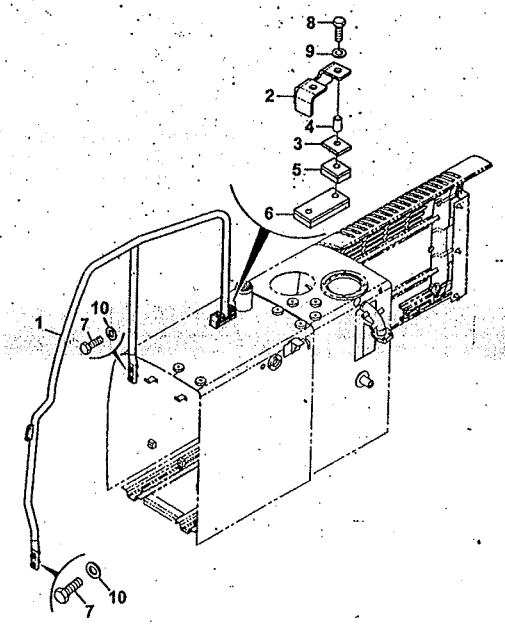

334-P0403-1

JS220 XD

JS220LC

ITEM	Part #	CHANGE NO	DESCRIPTION	USAGE CODE	QTY
1	332/L6977		Handrail		1
2	332/K8222		Plate cover		1
3	332/K7721		Plate		2
4	332/K7299		Spacer		2
5	332/K7719		Block		2
6	332/K7295		Block		1
7	1316/0510		Bolt		4
8	1316/3515Z		Bolt		2
9	1420/0009Z		Washer Plain M12		2
10	JHP0042		Washer M12		4

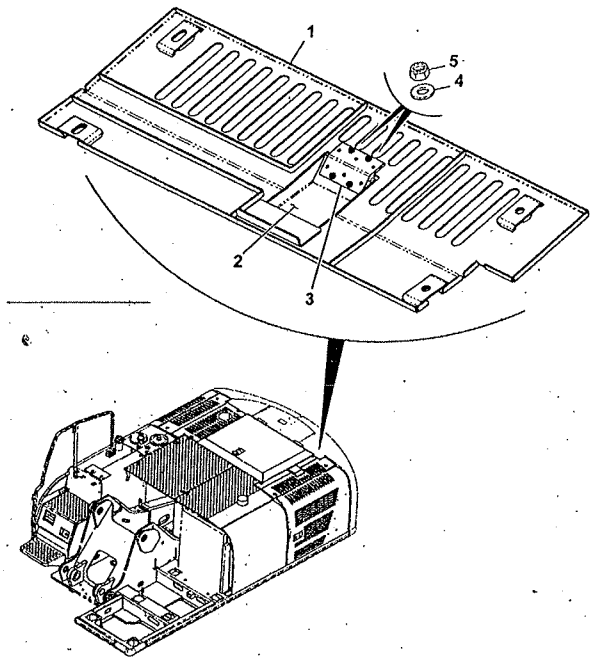

215-14507-3

JS220 XD

JS220LC

ITEM	Part #	CHANGE NO	DESCRIPTION	USAGE CODE	QTY
1	332/K2881		Cover cooling pack		1
2	335/14100		Cap cooling pack		1
3	826/11675		Hinge plastic		1
4	1420/0005D		Washer M5		4
5	1370/0001D		Nut M5 Grade 12		4

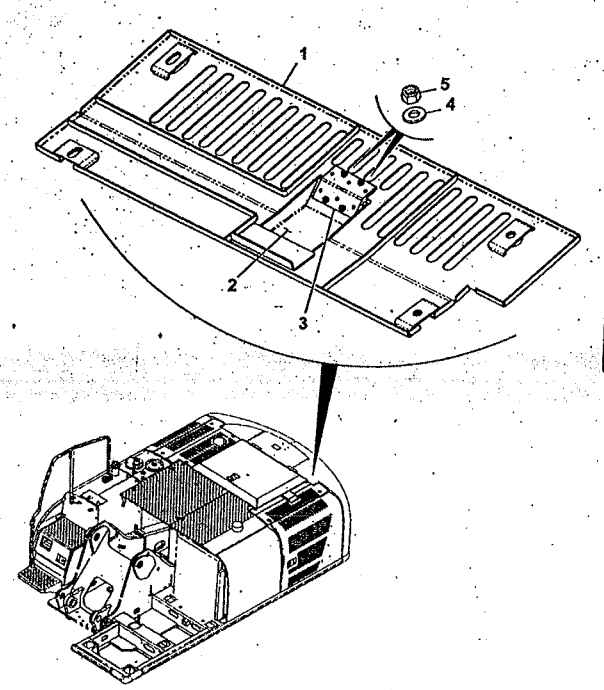

215-14507-3

JS220 XD

JS220LC

ITEM	Part #	CHANGE NO	DESCRIPTION	USAGE CODE	QTY
1	334/P4552		Cover cooling pack		1
2	335/14100		Cap cooling pack		1
3	826/11675		Hinge plastic		1
4	1420/0005D		Washer M5		4
5	1370/0001D		Nut M5 Grade 12		4

JS220 XD

JS220LC

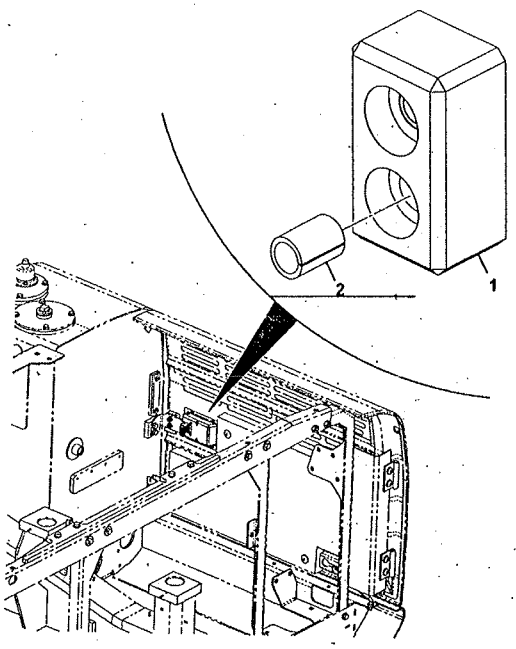

333-J3188-2

ITEM	Part #	CHANGE NO	DESCRIPTION	USAGE CODE	QTY
1			Door Buffer		1
2			Spacer M8 X 16 X 12OD		2

JS220 XD

JS220LC

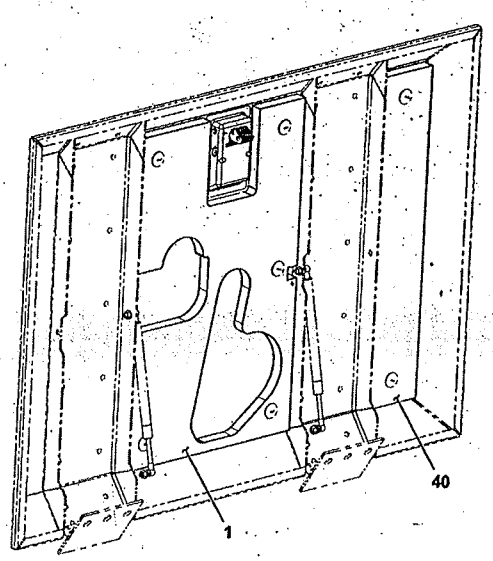

335-A1884-1

ITEM	Part #	CHANGE NO	DESCRIPTION	USAGE CODE	QTY
1	335/A1807		Soundproofing bonnet		1
40	331/62065		Panel bonnet soundproofing		1

B

- B01 BODYWORK
- • B02 CAB / CANOPY
- B04 EXCAVATOR
- B05 REFURBISHMENTS

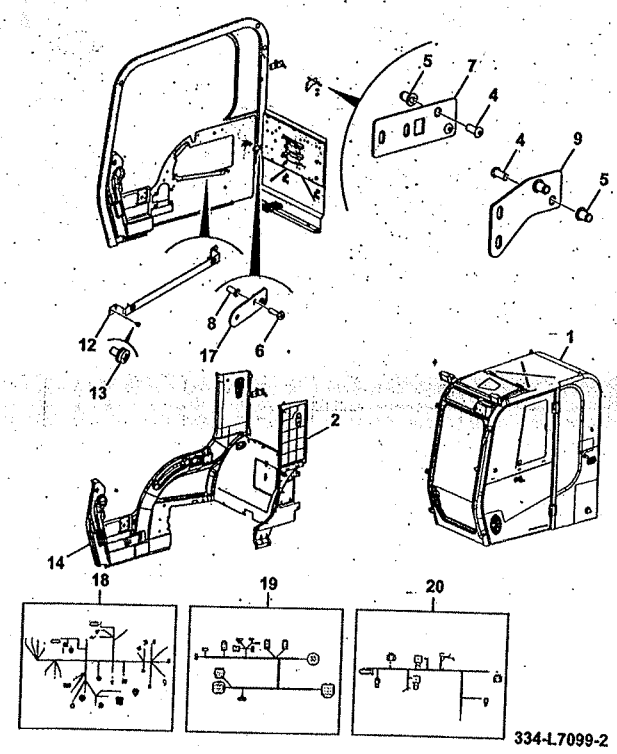

JS220 XD

JS220LC

ITEM	Part No.	CHANGE NO	DESCRIPTION	USAGE CODE	QTY
1	333/T7326		Cab ABI Refer B210-1-1		1
2			Trim Cab Assembly Refer B270-2-1		1
4	826/11046		Screw M8x20		4
5	826/01103		Nut Rivet,M8 Open Ended		4
6	826/01519		Screw M6x25		2
7			Bracket Mounting Cover Col Right Side Refer B290-30-1		1
8	826/01101		Rivet Nut,M6		2
9			Bracket Top Left Side Refer B290-35-1		1
12	334/P6964		Bracket Mounting Panel Right Side		1
13	KHR0736		Screw pan head		2
14	334/P5556		Foam Corner		1

Continue...

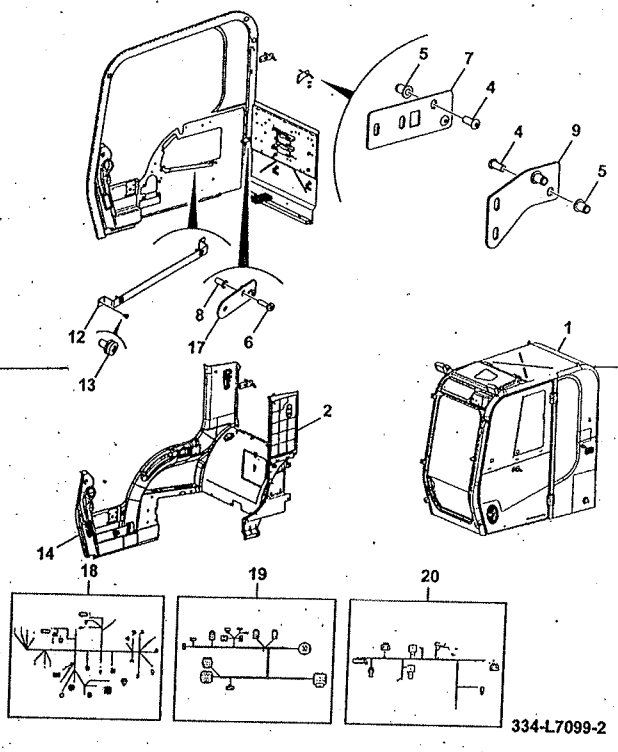

ITEM	PART NO	CHANGE NO	DESCRIPTION	USAGE CODE	QTY
17	334/L7586		Bracket Bottom Right Side		1
18	332/J2885		Harness cab		1
19	332/K2452		Harness ATC fascia		1
20	335/B7381		Harness Roof Cab		1

B210-1-1 OPERATOR ENCLOSURE, CAB, ABI

9820/0546B
ISSUE 1

JS220 XD
JS220LC

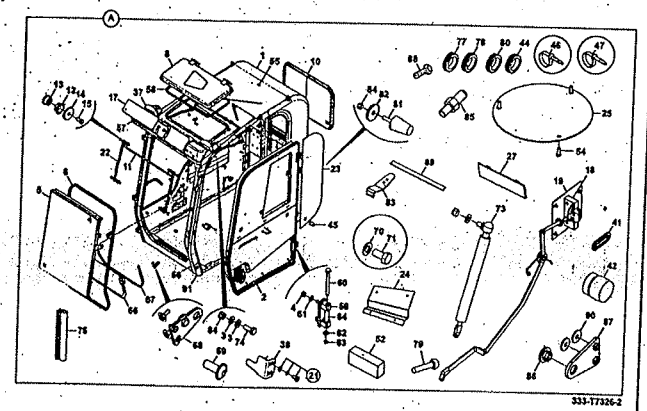

ITEM	Part #	CHANGE NO	DESCRIPTION	USAGE CODE	QTY
A	333/T7326		Cab ABI		1
1			Cab		1
2			Door Assembly Refer B240-15-1		1
3	1420/0007Z		Washer Plain M8		6
4	1370/0303D		Nut Self Lock		6
5			Screen Front Assembly Refer B250-1-1		1
6	333/J7154		Beading Glass Front		1
8			Roof Hatch Assembly Refer B230-1-1		1
10	333/J6869		Slide Window Rear, Assembly		1
11	333/J7166		Link		1
12	331/36373		Washer		4
13	332/P7552		Spacer		4

Continue...

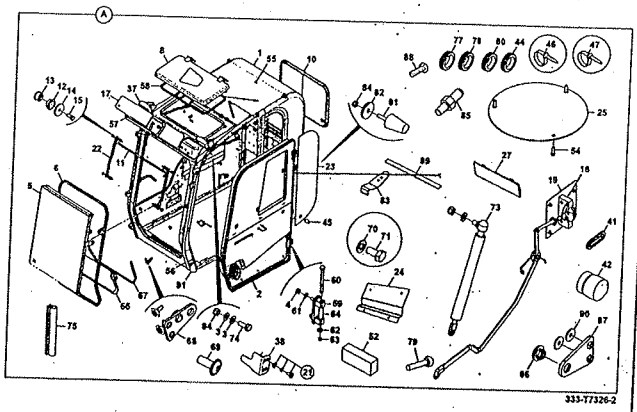

ITEM	PART NO	CHANGE NO	DESCRIPTION	USAGE CODE	QTY
14	6900/0569		Washer		4
15	1315/0305		Screw Set		4
17	333/J7149		Glass Top		1
18			Latch Assembly Refer B290-45-1		1
19	334/L8734		Plate Cover Latch		1
21	KHR0736		Screw pan head		10
22	333/J7228		Glass Right Side		1
23	334/L8394		Glass Quarter Left Side		1
24	334/L6866		Cover Motor Wiper		1
25	334/P2003		Plate Cover Speaker		2
27	717/08600		Cover Radio Blanking		1
37	229/00595		Light Working		2
38	334/L6953		Retainer Blade Wiper		1
41	331/37334		Grommet		1
42	334/L5912		Roller		2
44	332/L1608		Grommet		2
45	6900/0562		Stopper		1

B210-1-1 OPERATOR ENCLOSURE, CAB, ABI 9820/0546B
ISSUE 1

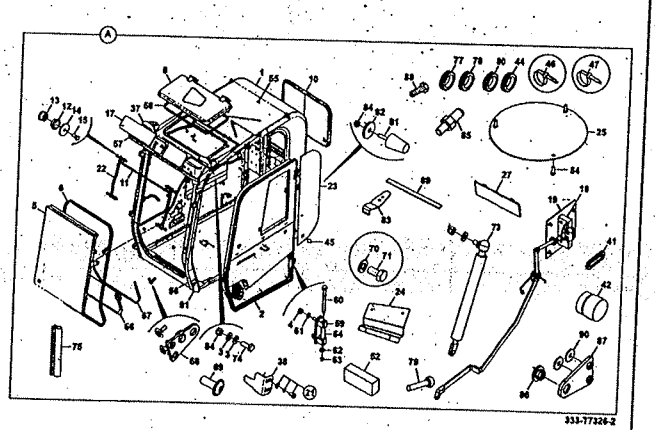

ITEM	PART NO	CHANGE NO	DESCRIPTION	USAGE CODE	QTY
46	KAR0016		Tie Cable		4
52	926/15500		Spacer Block		0
54	826/10996		Screw M4 x 10mm button head		6
55			Liner Top Assembly Refer B230-5-1		1
56	334/P6301		Handrail		1
57	334/P5410		Beading Glass Top		1
58	334/L6315		Beading Screen Top		1
59	334/P5247		Hinge		2
60	334/L6913		Pin Hinge 10 x 126		2
61	1420/0008Z		Washer Plain M10		4
62	1420/0008D		Washer Plain		2
63	821/00318		Circlip		2
64	40/302877		Bush		2
66			Glass Front Assembly Refer B250-5-1		1
67	333/J7103		Beading Glass Front Lower		1
68	333/J7116		Plate Lock Latch		2

Continue...

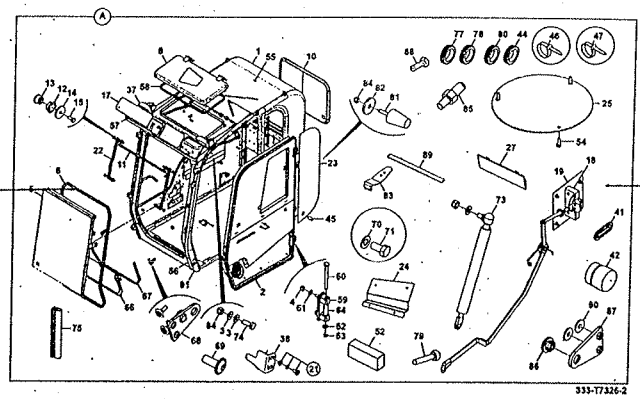

ITEM	PART NO	CHANGE NO	DESCRIPTION	USAGE CODE	QTY
69	826/01559		Flange Button Head Socket		8
70	1420/0009Z		Washer Plain M12		4
71	1315/0507		Setscrew		4
73	334/P8876		Strut Gas Sliding Front		2
74	334/P9127		Pin Strut Gas		4
75	334/P8949		Beading Rest Glass		1
77	332/P8518		Grommet Blind		2
78	332/P8351		Grommet Blind		1
79	KHN1395		Stop Rubber		2
80	2410/0115		Grommet STD. 44.4 DIA x 3.5 THK		6
81	332/P9609		Stopper Windscreen		3
82	333/P3021		Washer 45 x 11 x 5		3
83	331/36356		Hook		2
84	1370/0203Z		Lock Nut M8		5
85	334/P8526		Pin		1
86	335/B4278		Bush Nylon		2
87	335/B6056		Plate Lock Latch		2

B210-1-1 OPERATOR ENCLOSURE, CAB, ABI
9820/0546B
ISSUE 1

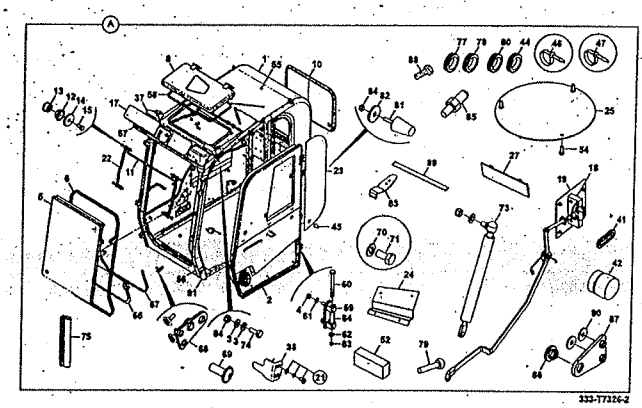

ITEM	PART NO	CHANGE NO	DESCRIPTION	USAGE CODE	QTY
88	826/01519		Screw M6x25		4
89	335/B8547		Strip Nylon		2
90	823/00516		Washer Nylon M6		4
91	1371/0301Z		Nut High Strength, M10		2

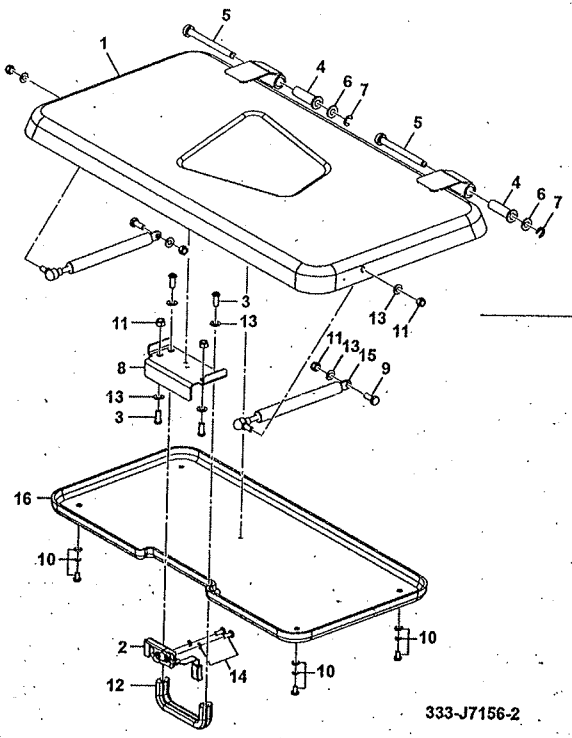

JS220 XD

JS220LC

ITEM	Part #	CHANGE NO	DESCRIPTION	USAGE CODE	QTY
1	334/L7705		Cover Top		1
2	334/P7758		Latch Hatch Top		1
3	826/11046		Screw M8x20		4
4	40/302877		Bush		2
5	334/L6913		Pin Hinge 10 x 126		2
6	1420/0008D		Washer Plain		2
7	821/00318		Circlip		2
8	335/B3618		Plate Handle		1
9	334/P9127		Pin Strut Gas		2
10	KHR0736		Screw pan head		4
11	1370/0203Z		Lock Nut M8		6
12	332/P0843		Handle		1
13	1420/0007Z		Washer Plain M8		8
14	KHR0737		Screw Pan Head		2
15	334/P6289		Strut Gas Hatch Roof		2
16	334/P8401		Liner Hatch Roof		1

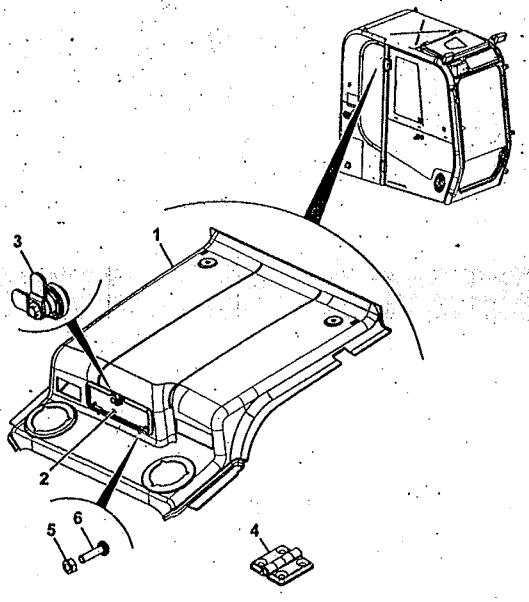

JS220 XD

JS220LC

ITEM	Part #	CHANGE NO	DESCRIPTION	USAGE CODE	QTY
1	335/A4191		Liner Roof		1
2	334/P9126		Door Liner Roof		1
3	333/Y1377		Lock Grille		1
4	335/B3120		Hinge Door Roof		2
5	1370/9401Z		Nut		4
6	826/01411		Screw pan head M4 x 16		4

JS220 XD

JS220LC

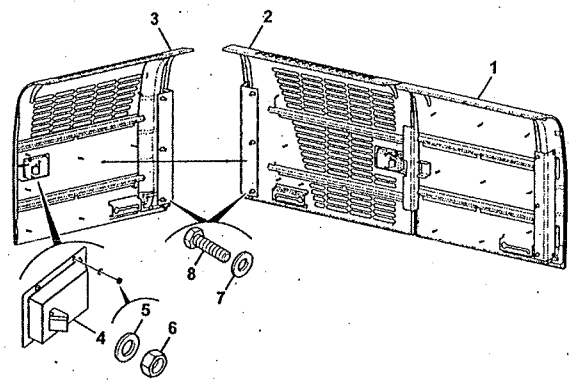

ITEM	Part #	CHANGE NO	DESCRIPTION	USAGE CODE	QTY
1	334/L4300		Door Front Left Side		1
2	334/P5024		Door Rear Left Side		1
3	334/P5025		Door Right Side		1
4	826/11027		Latch Paddle		2
5	1420/0005Z		Washer Plain		8
6	1370/0001Z		Nut M5		8
7	1411/0005Z		Washer		9
8	1316/0508Z		Screw		9

334-P5022-B

JS220 XD

JS220LC

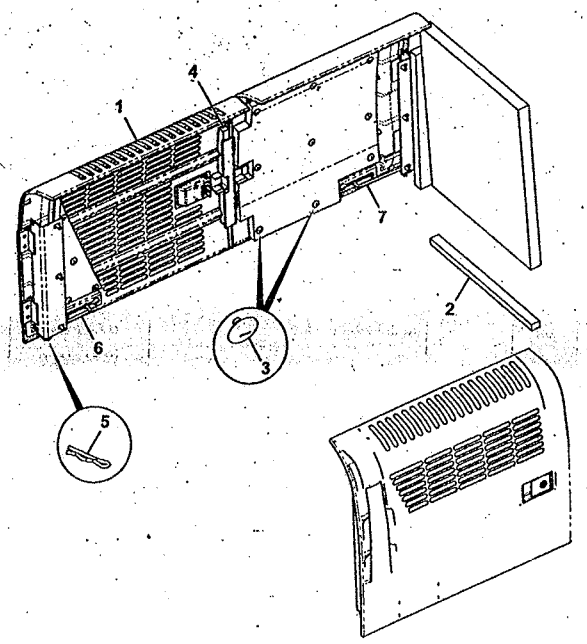

ITEM	Part #	CHANGE NO	DESCRIPTION	USAGE CODE	QTY
1			Door Sub Assembly Refer B240-5-1		1
2			Kit Soundproofing Door Refer B290-25-1		1
3	826/01308		Retainer Insulation		20
4	334/P1172		Foam Closure Door		4
5	KRJ1588		Pin		3
6	334/L3171		Rod guide right hand		1
7	334/L2316		Rod guide left side		2

335-C1457-1

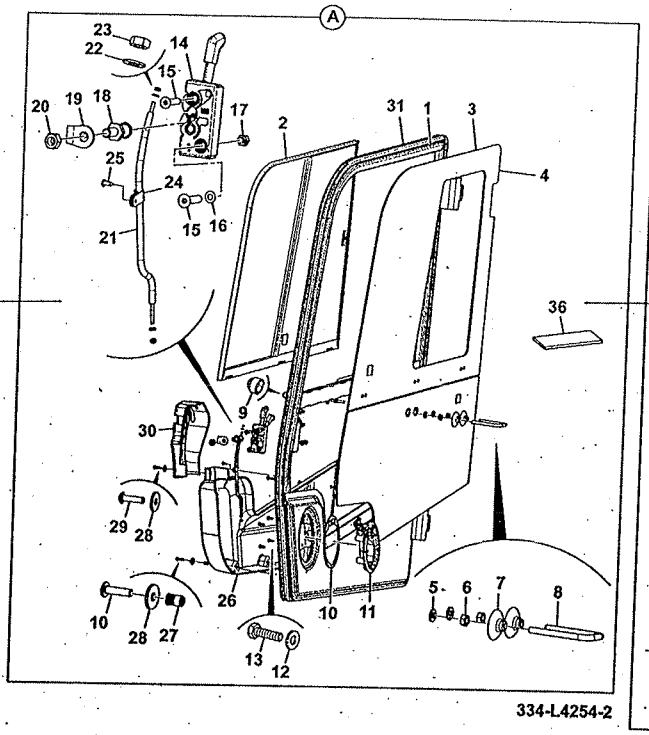

334-L4254-2

JS220 XD

JS220LC

ITEM	Part #	CHANGE NO	DESCRIPTION	USAGE CODE	QTY
A			Door Assembly		1
1	334/L8746		Frame Door Left Side		1
2	334/L4897		Slide Window Door Assembly		1
3	333/J6713		Glass Upper Door		1
4	333/J7109		Glass Stable Door		1
5	1420/0008D		Washer Plain		4
6	1370/0301D		Nut M10		4
7	332/L8512		Seal		2
8	334/L6354		Striker Lockback		1
9	331/36379		Cap nut M12		2
10	333/Y2927		Gasket Door Handle		1
11	331/36386		Handle cab door		1
12	1420/0006D		Washer Plain M6		4
13	1315/0203D		Setscrew M6 x 16mm		4

B240-15-1 DOORS, ASSEMBLY, CAB 9820/0546B
ISSUE 1

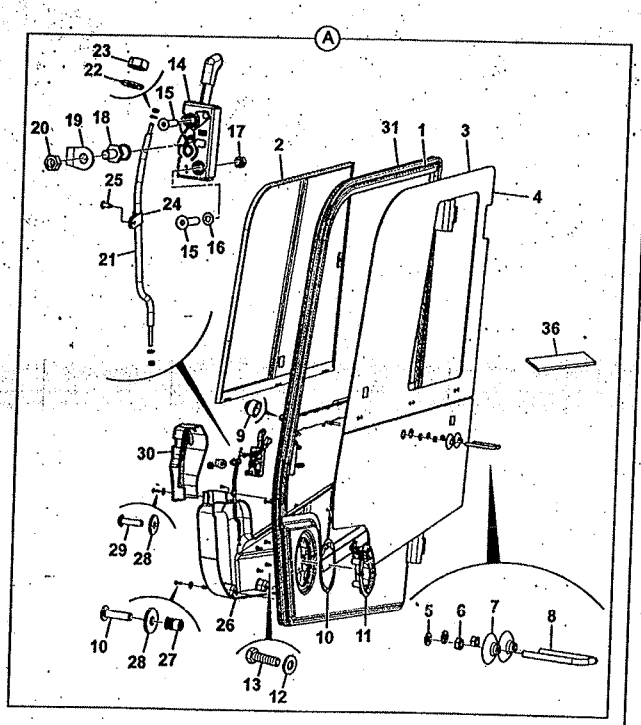

334-L4254-2

ITEM	PART NO	CHANGE NO	DESCRIPTION	USAGE CODE	QTY
14	331/36380		Lock door		1
15	826/01814		Screw Countersunk M8x35		2
16	1420/0007D		Washer Plain M8		2
17	1370/0203D		Nut Lock M8		2
18	331/30951		Bolt Door Striker		1
19	331/26791		Guard Striker		1
20	826/10947		Nut Plain,M12		1
21	334/L7284		Rod Lock		1
22	1420/0004D		Washer plain M4		2
23	1370/9401D		Nut plain M4		2
24	332/L8505		Ring		1
25	332/L8509		Screw 4,8 X 16		1
26	334/P7629		Panel Lower Door		1
27	826/11523		Nut Rivet Nut M6		4
28	823/00516		Washer Nylon M6		6
29	826/01560		Screw M6x25		6
30	334/L5596		Cover Latch Door		1
31	334/L7373		Beading Edge Door		1
36	926/15500		Spacer Block		0

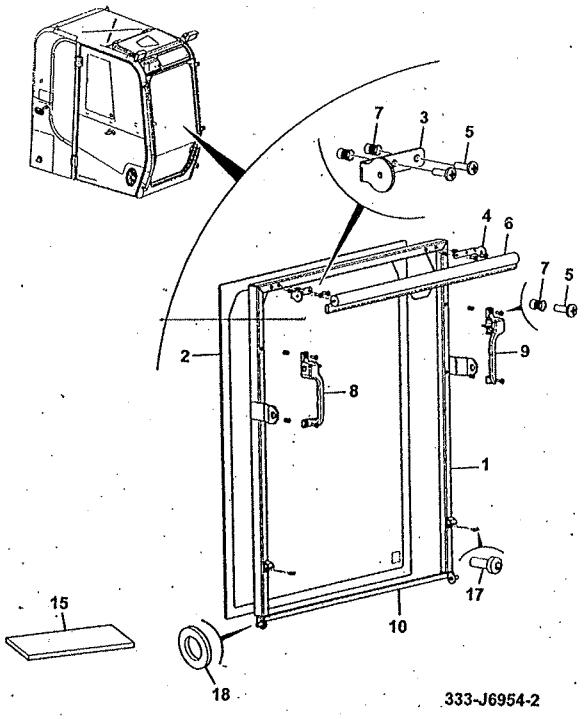

JS220 XD

JS220LC

ITEM	Part #	CHANGE NO	DESCRIPTION	USAGE CODE	QTY
1	334/L4078		Screen Front		1
2	333/J7034		Glass Front		1
3	334/L4270		Bracket Mounting Sun Screen, Left Side		1
4	333/J7221		Bracket Mounting Sun Screen, Right Side		1
5	KHR0738		Screw pan head		8
6	6900/0621		Screen Sun		1
7	826/11523		Nut Rivet Nut M6		8
8	331/28235		Latch Right Hand Assembly		1
9	331/28233		Latch Left Hand Assembly		1
10	334/L7702		Beading Screen Front Bottom		1
15	926/15500		Spacer Block		0
17	826/10996		Screw M4 x 10mm button head		4

B250-1-1 GLASS/FRAMES, FRONT SCREEN, DOOR, CAB 9820/0546B
ISSUE 1

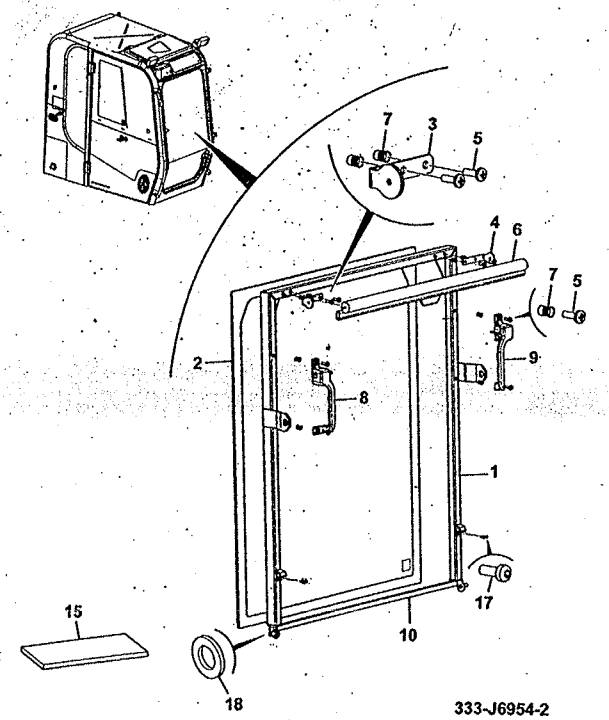

ITEM	PART NO	CHANGE NO	DESCRIPTION	USAGE CODE	QTY
18	1420/0008D		Washer Plain		2

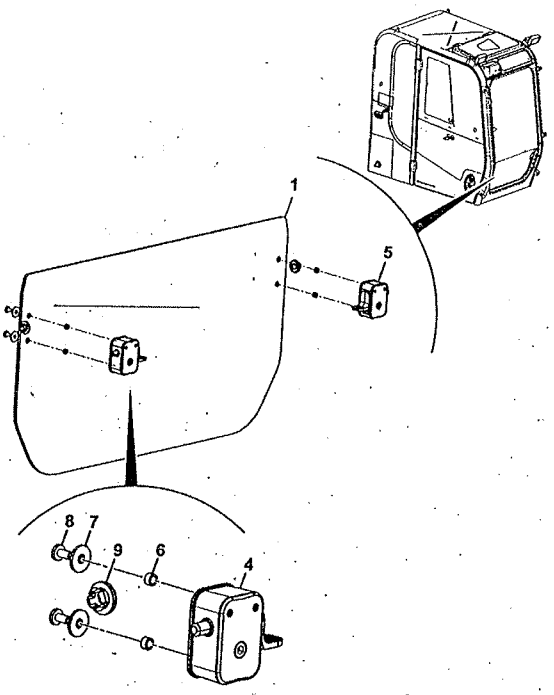

333-J7102-2

JS220 XD

JS220LC

ITEM	Part #	CHANGE NO	DESCRIPTION	USAGE CODE	QTY
1	333/J7019		Glass Bottom Front		1
4	334/P8247		Latch Left Side		1
5	334/P8246		Latch Right Side		1
6	335/B3639		Bush Nylon		4
7	823/00516		Washer Nylon M6		4
8	KHR0738		Screw pan head		4
9	335/B4278		Bush Nylon		2

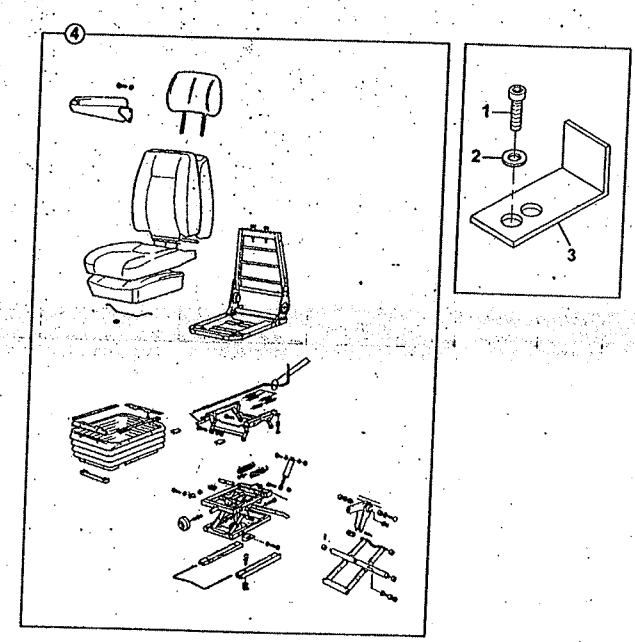

215-10959-1

JS220 XD

JS220LC

ITEM	Part #	CHANGE NO	DESCRIPTION	USAGE CODE	QTY
1	1391/3307Z		Capscrew M8x25mm		1
2	1420/0007Z		Washer Plain M8		1
3	331/21990		Bracket Seatstop		1
4	40/910551		Seat standard Refer B260-5-1		1

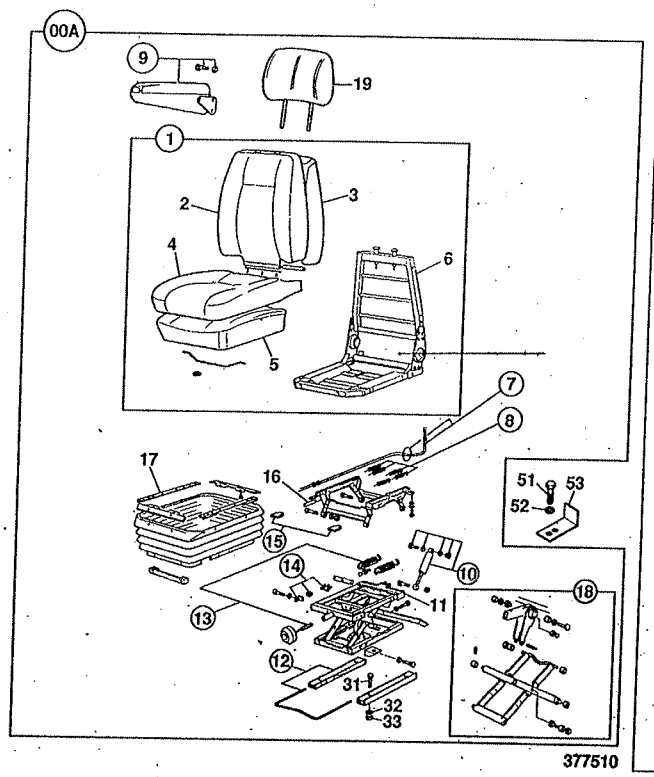

JS220 XD

JS220LC

ITEM	Part #	CHANGE NO	DESCRIPTION	USAGE CODE	QTY
A	40/910551		Seat standard		1
1	:40/910628		Seat		1
2	::40/910629		Kit-back cover fabric		1
3	::40/202804		Kit-back foam		1
4	::40/910630		Kit-seat cover		1
5	::6900/0020		Kit seat foam		1
6			None serviced part		1
7	:6900/0021		Kit cable adjustment		1
8	:6900/0022		Kit-spring height riser		1
9	:40/910502		Kit armrest LH & RH & fixings		1
10	:6900/0024		Damper assembly		1
11	:40/213001		Kit-suspension assembly		1
12	:40/910631		Adjuster black handle		1

B260-5-1 SEATS, STANDARD, COMPONENTS 9820/0546B
ISSUE 1

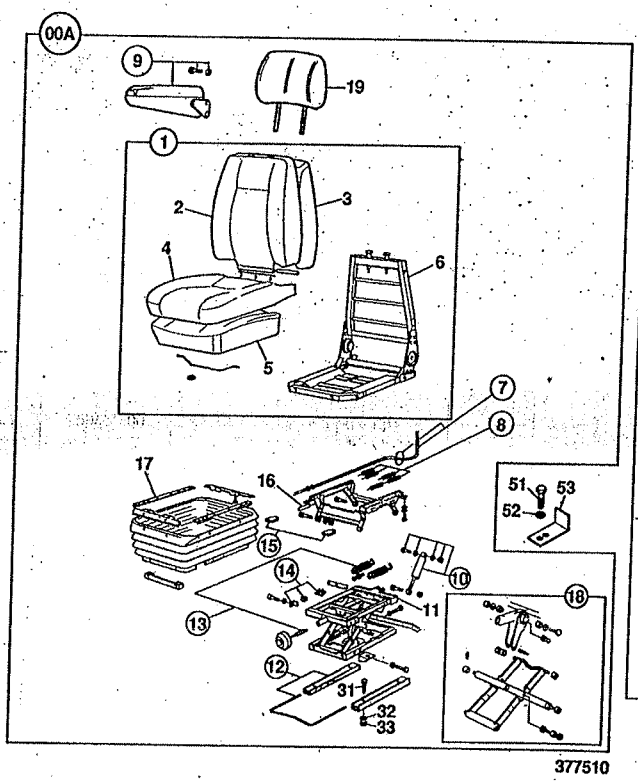

ITEM	PART NO	CHANGE NO	DESCRIPTION	USAGE CODE	QTY
13	:40/205614		Kit knob/weight adjuster		1
14	:40/205613		Kit-upstop/bumpstop		1
15	:6900/0027		Handle assembly, grey		1
16	:6900/0028		Kit height riser		1
17	:6900/0029		Kit-suspension cover		1
18	:40/205617		Kit bearing		1
19	40/910607		Headrest		1
24	259/27700		Belt seat lap, assembly Refer B260-10-1		1
31	1391/3305Z		Capscrew		4
32	1420/0007Z		Washer Plain M8		4
33	1370/0203Z		Lock Nut M8		4
51	1391/3307Z		Capscrew M8x25mm		1
52	1420/0007Z		Washer Plain M8		1
53	331/21990		Bracket Seatstop		1

JS220 XD

JS220LC

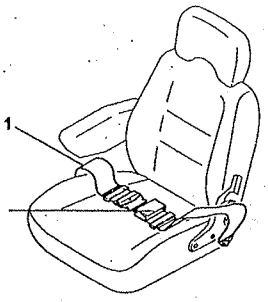

ITEM	Part #	CHANGE NO	DESCRIPTION	USAGE CODE	QTY
1	259/27700		Belt seat lap, assembly		1

903150

JS220 XD

JS220LC

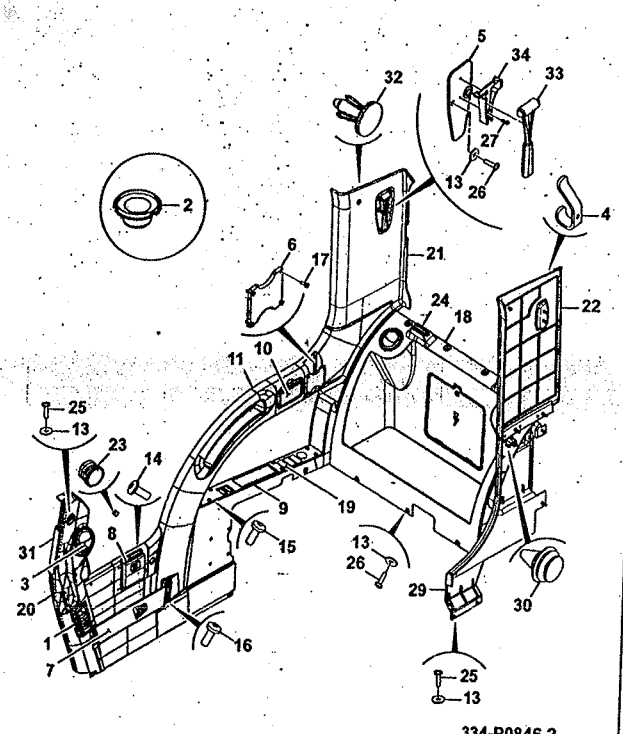

334-P0846-2

ITEM	Part #	CHANGE NO	DESCRIPTION	USAGE CODE	QTY
1	30/925586		Vent air (rectangular)		1
2	30/925732		Adaptor Air Vent		2
3	331/26974		Vent air(76.5mm dia.hole)		4
4	142/00589		Hook coat (One screw mounting)		1
5	332/J1436		Plate hammer retaining		1
6	332/J1441		Retainer mobile phone		1
7	332/J2776		Panel stowage, side		1
8	331/31695		Holder cup		1
9	331/31995		Panel facia, heater		1
10	331/32481		Ashtray		1
11	333/J5722		Moulding centre console		1
13	823/00516		Washer Nylon M6		33

Continue...

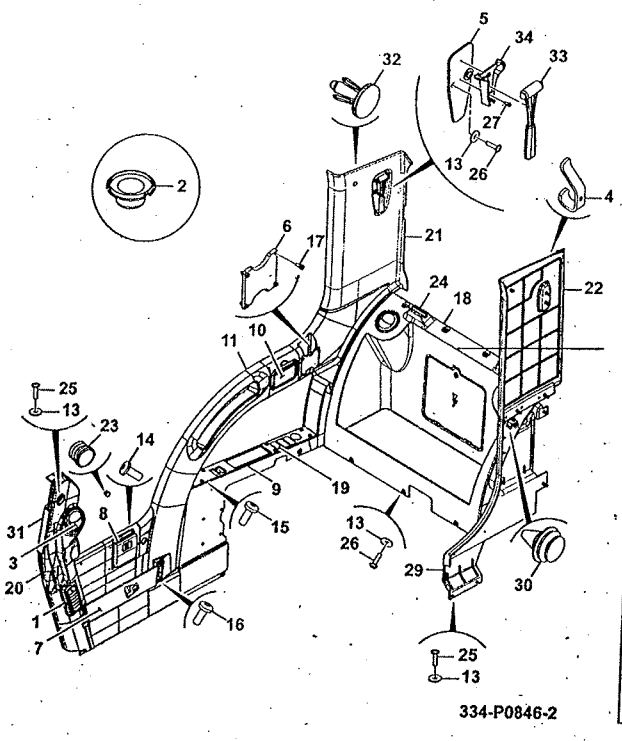

ITEM	PART NO	CHANGE NO	DESCRIPTION	USAGE CODE	QTY
14	KHR0328		Screw truss		4
15	826/11096		Screw		6
16	826/01281		Capscrew button head M6 x 12		4
17	1391/9402		Capscrew		4
18	333/J1640		Rear stowage ABI Refer B290-40-1		1
19	701/60010		Blank Switch Panel		3
20	335/A5586		Moulding A Post		1
21	335/A3995		PILLER Trim Right Side		1
22	335/A3947		PILLER Trim Upper Left Side		1
23	835/10070		Plug Blanking		1
24	926/22900		Channel window		2
25	826/01559		Flange Button Head Socket		5
26	826/01560		Screw M6x25		28
27	1430/0102		Screw		2
29	335/A2238		PILLER Trim Lower Left Side		1
30	335/A4960		Clip		1

B270-2-1 MOULDINGS/TRIM, CAB 9820/0546B
ISSUE 1

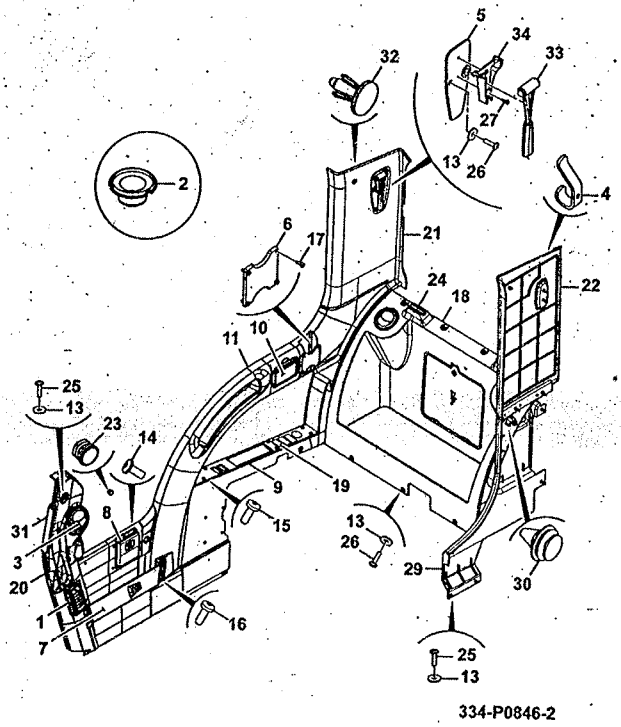

ITEM	PART NO	CHANGE NO	DESCRIPTION	USAGE CODE	QTY
31	334/P1172		Foam Closure Door		1
32	335/B9213		Clip Lock Push		2
33	265/00678		Hammer emergency glass breaker		1
34	332/U4206		Bracket breaker tool holder		1

JS220 XD

JS220LC

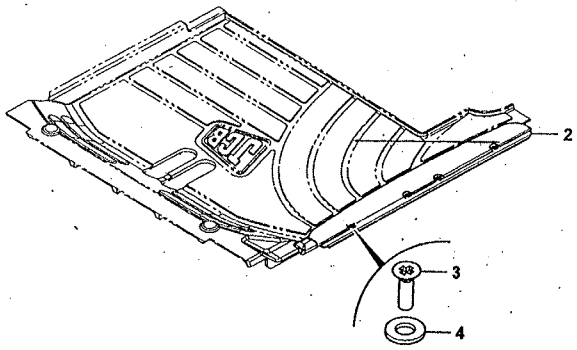

335-A8101-1

ITEM	Part #	CHANGE NO	DESCRIPTION	USAGE CODE	QTY
2	333/J4757		Plate kick		1
3	6013/0103Z		Screw countersunk		4
4	JHP0080		Washer		4

JS220 XD

JS220LC

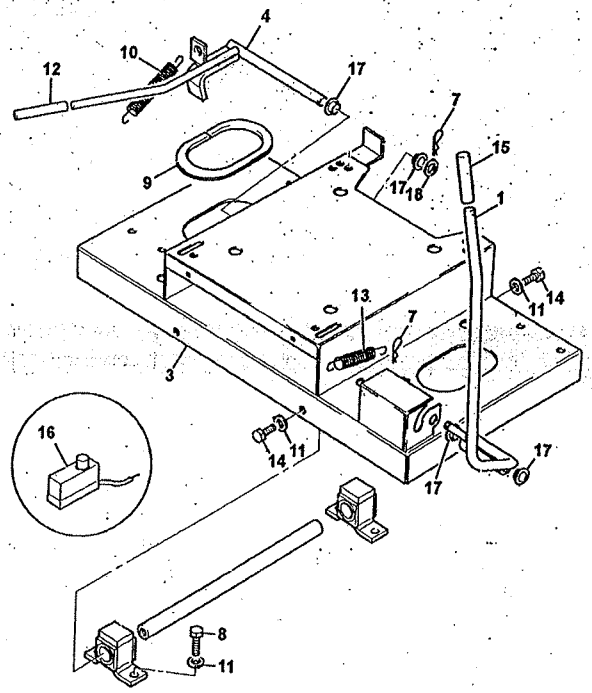

215-11982-3I

ITEM	Part #	CHANGE NO	DESCRIPTION	USAGE CODE	QTY
1	JHN0210		Lever lock		1
3	JHN0209		Base seat		1
4	335/05454		Lever console index, seat		1
7	JLV0521		Clip R		2
8	1391/3408D		Capscrew M10 x 30mm		8
9	JHH0074		Strip Edging		2
10	KHN1127		Spring extension		1
11	JHP0046		Washer M10		12
12	KHN1122		Cap		1
13	KHN1436		Spring extension		1
14	1316/0405D		Screw M10 x 20		4
15	KHN1542		Cap		1
16	701/80215		Switch limit		1
17	KHN1442		Bush oilless		4
18	1420/0011Z		Washer Plain M16		1

JS220 XD

JS220LC

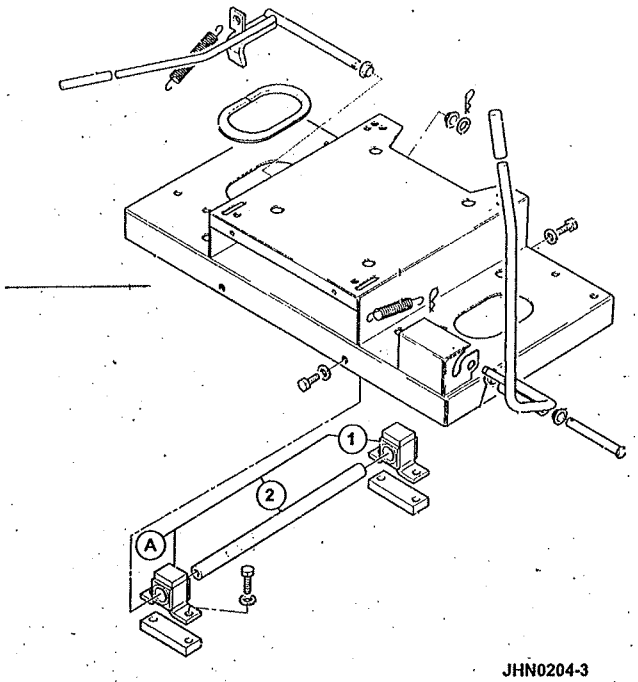

JHN0204-3

ITEM	Part #	CHANGE NO	DESCRIPTION	USAGE CODE	QTY
A	JHN0204		Kit linear bearing		1
1	:JHN0205		Bearing linear		4
2	:JHN0206		Shaft		2

JS220 XD

JS220LC

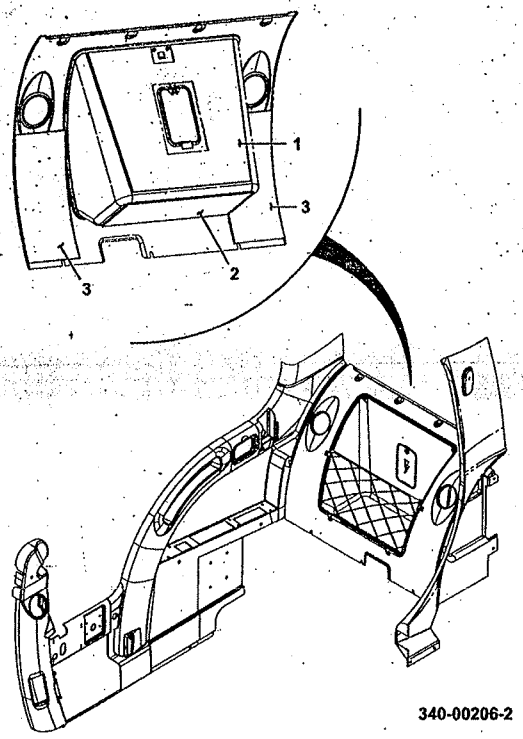

340-00206-2

ITEM	Part #	CHANGE NO	DESCRIPTION	USAGE CODE	QTY
1	331/37602		Panel noise damping		1
2	331/37603		Panel noise damping		1
3	331/37604		Panel noise damping		2

JS220 XD

JS220LC

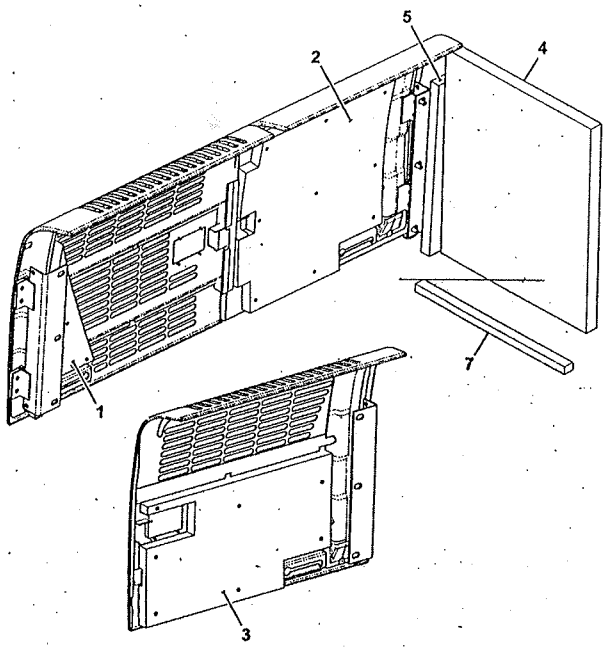

335-C1492-2

ITEM	Part #	CHANGE NO	DESCRIPTION	USAGE CODE	QTY
1	334/P1283		Foam Door Rear Left Side		1
2	334/L4346		Soundproofing Door Front Left Side		1
3	334/P1244		Soundproofing Door Right side		1
4	331/37686		Panel soundproofing back of cab		1
5	926/47800		Cushion foam seal		1
7	KNJ2233		Seal cushion		1

JS220 XD

JS220LC

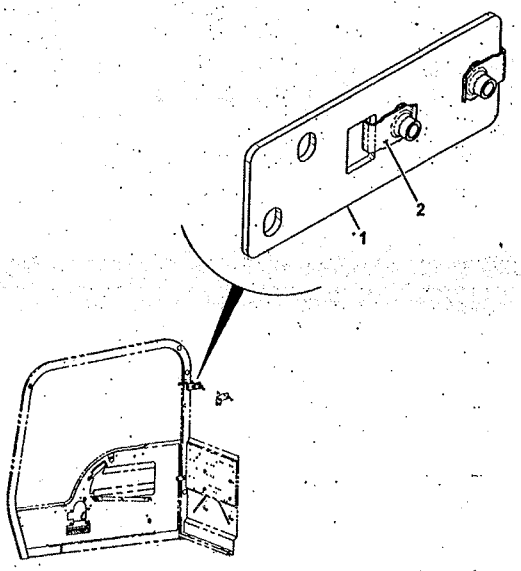

334-L7584-1

ITEM	Part #	CHANGE NO	DESCRIPTION	USAGE CODE	QTY
1	334/L6238		Bracket Top Right Side		1
2	333/Y6752		Lug Nut M6		2

JS220 XD

JS220LC

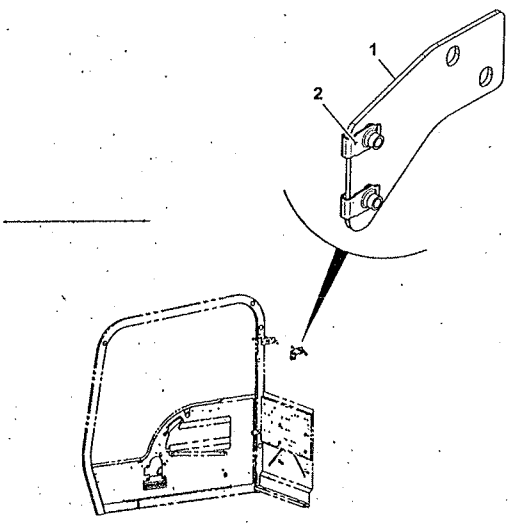

334-L7583-1

ITEM	Part #	CHANGE NO	DESCRIPTION	USAGE CODE	QTY
1	334/L6220		Bracket Top Left Side		1
2	333/Y6752		Lug Nut M6		2

JS220 XD

JS220LC

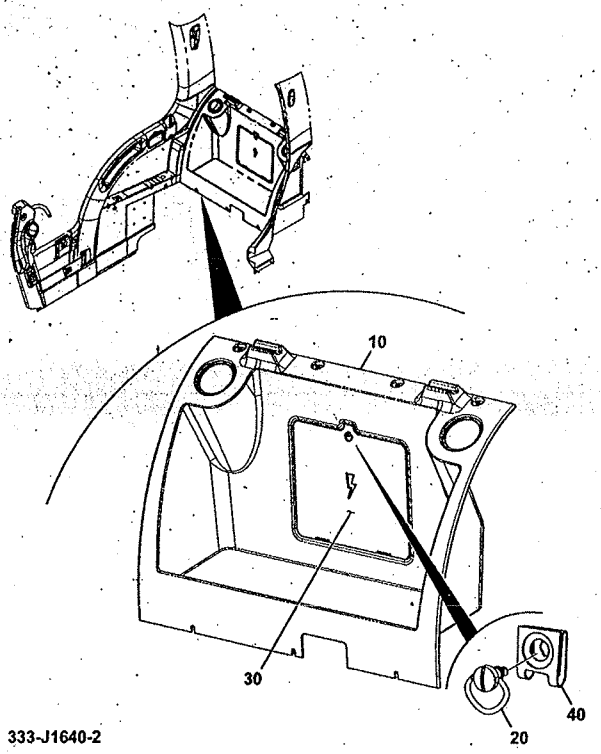

333-J1640-2

ITEM	Part #	CHANGE NO	DESCRIPTION	USAGE CODE	QTY
10	333/J3777		Panel rear stowage		1
20	331/37941		Stud 1/4 turn ball		1
30	333/J3587		Fusebox cover		1
40	331/37942		Receptacle		1

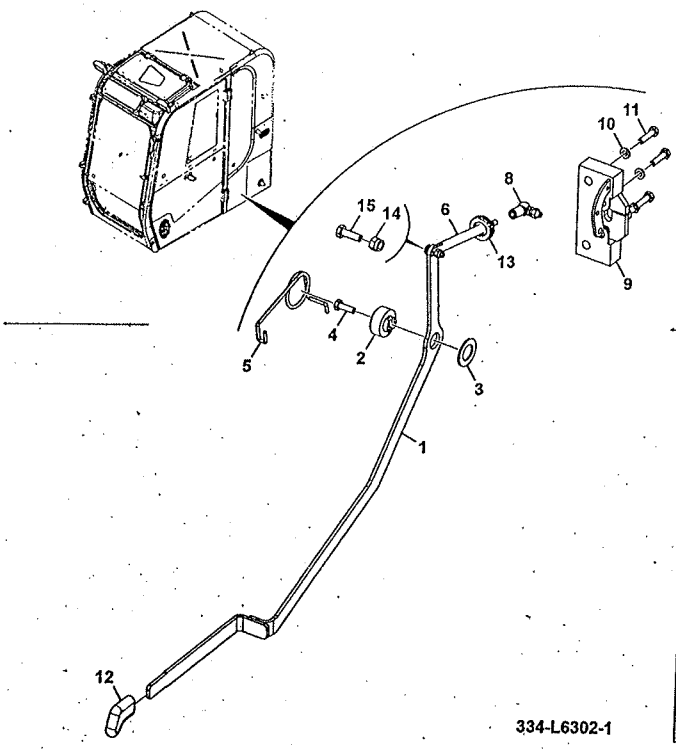

JS220 XD

JS220LC

ITEM	Part#	CHANGE NO	DESCRIPTION	USAGE CODE	QTY
1	334/L9599		Lever Release Door		1
2	6900/0604		Spacer		1
3	6900/0605		Spacer plastic		1
4	1315/0205D		Setscrew M6 x 20mm		1
5	6900/0606		Spring		1
6	331/36359		Rod axle		1
8	6900/0627		Joint ball		1
9	6900/0543		Latch		1
10	1420/0006D		Washer Plain M6		4
11	1315/0207D		Setscrew M6 x 25mm		4
12	331/19929		Knob		1
13	6900/0652		Grommet		1
14	1370/0003Z		Lock Nut M5		1
15	826/01406		Screw		1

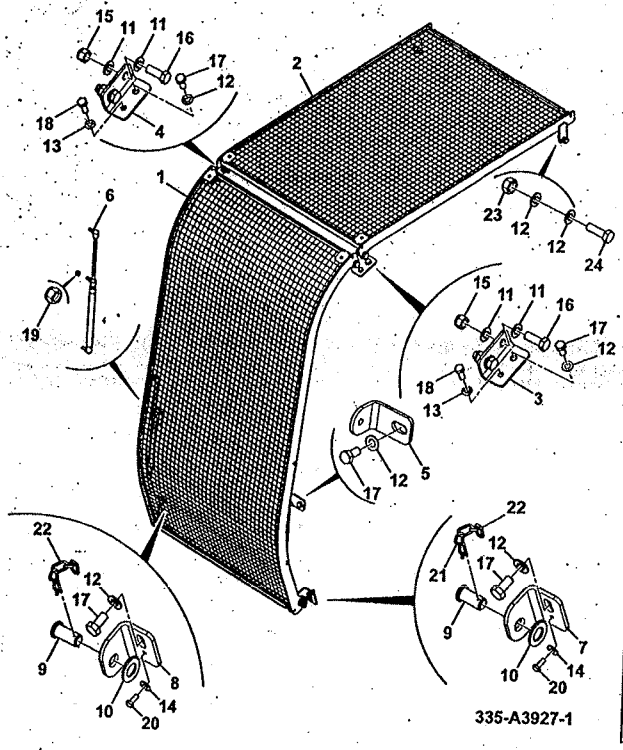

JS220 XD

ITEM	Part#	CHANGE NO	DESCRIPTION	USAGE CODE	QTY
1	335/A3602		Guard Cabin Front		1
2	335/A3615		Guard Cabin Top		1
3	335/A3609		Bracket Mounting Grille, Front Left Side		1
4	335/A4298		Bracket Mounting Grille, Front Right Side		1
5	335/A4656		Bracket		2
6	332/P5236		Strut - Gas		2
7	335/A4244		Bracket Left Side		1
8	335/A4245		Bracket Right Side		1
9	331/37055		Pin		2
10	1420/0012Z		Washer M20		4
11	1420/0011Z		Washer Plain M16		8
12	1420/0009Z		Washer Plain M12		10
13	1420/0008		Washer		2
14	1420/0007		Washer Plain		2
15	1371/0603Z		Nut M16		4

Continue...

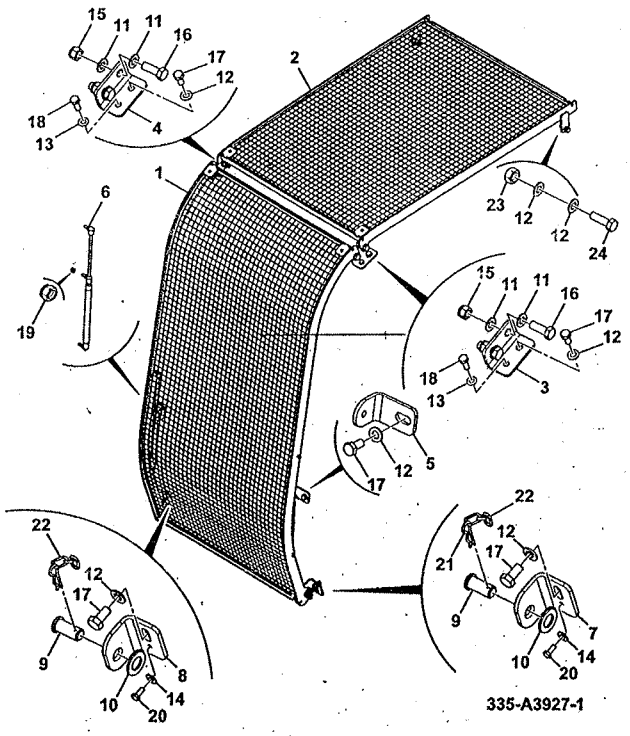

ITEM	PART NO	CHANGE NO	DESCRIPTION	USAGE CODE	QTY
16	1316/0711Z		Screw M16x45mm		4
17	1315/0507		Setscrew		6
18	1315/0408Z		Setscrew M10 x 30mm		2
19	1371/0203Z		Nut		2
20	1315/0203Z		Setscrew		2
21	JLV0521		Clip R		2
22	141/00855		Chain		2
23	826/10947		~~Nut Plain,M12~~		2
24	1316/0510Z		Screw		2

B

B01 BODYWORK

B02 CAB / CANOPY

• B04 EXCAVATOR

B05 REFURBISHMENTS

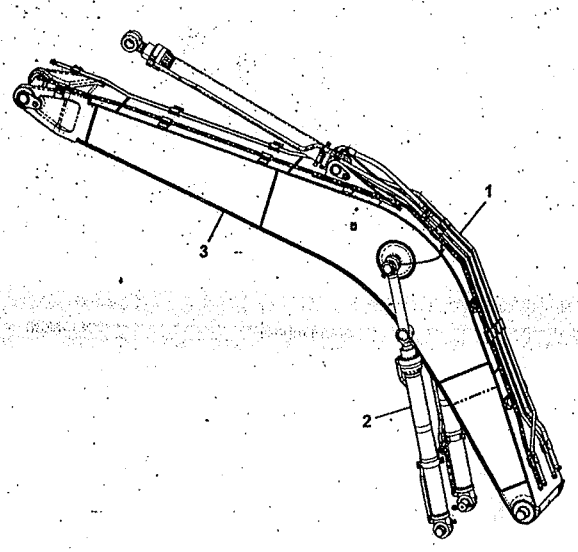

335-B9663-2

JS220 XD

JS220LC

ITEM	Part #	CHANGE NO	DESCRIPTION	USAGE CODE	QTY
1			Assembly Parts Common, Mono Boom Refer B430-20-1		1
2			Ram Non HBCV Boom and Dipper Refer E400-5-1		1
3	333/K1322		Boom Mono Assembly, Standard Refer B430-15-1		1

JS220 XD

JS220LC

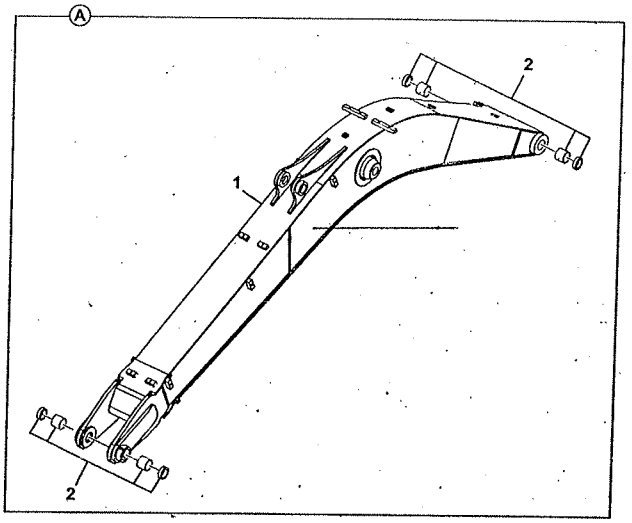

333-K1322-2

ITEM	Part#	CHANGE NO	DESCRIPTION	USAGE CODE	QTY
A	333/K1322		Boom Mono Assembly, Standard		1
1			Boom Standard		1
2			Bearing and Seals; Monoboom, Assembly Refer B430-25-1		1

JS220 XD

JS220LC

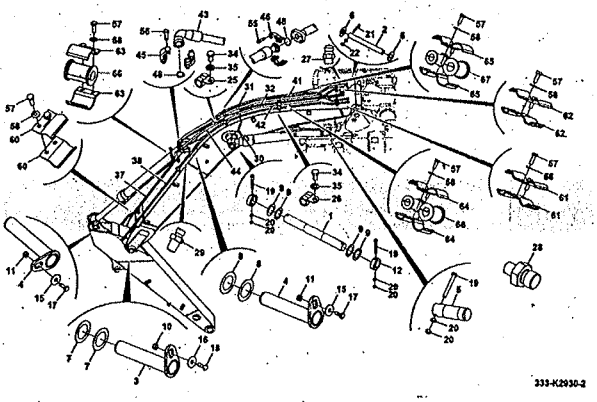

333-K2930-2

ITEM	Part#	CHANGE NO	DESCRIPTION	USAGE CODE	QTY
1	KRV1122		Pin pivot		1
2	KRV1572		Pin attachment		1
3	333/J3911		Pin pivot 90mm x 472mm		1
4	333/J3939		Pin pivot 80mm x 224mm		2
5	KRV1124		Pin pivot		2
6	JRV0582		Shim 0.8mm thick		2
7	KSP0268		Shim 91mmx160mmx1.2 mm		2
8	KRV1197		Shim Plate		2
9	KRV1178		Shim 1.2mm thick		4
10	333/K7982		Spacer 1 3/16" x 6" SWG		1
11	333/K7980		Spacer 1" X 8" SWG		2
12	KRV1156		Ring locking		2
15	1412/0007D		Washer large		2

Continue...

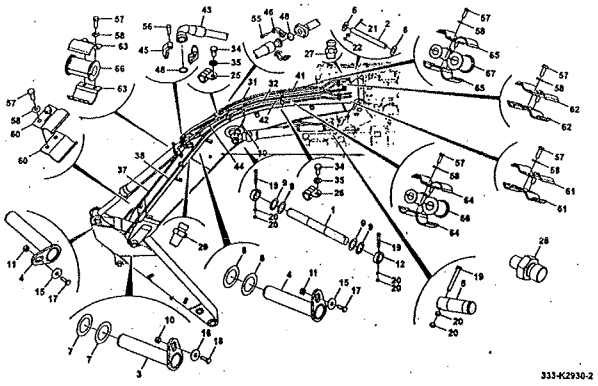

ITEM	PART NO	CHANGE NO	DESCRIPTION	USAGE CODE	QTY
16	823/10393		Washer large		1
17	1316/0710D		Bolt		2
18	1316/0810D		Setscrew		1
19	1316/3826D		Bolt M20 x 160mm		4
20	1371/0701D		Nut Plain M20		8
21	1316/4028D		Bolt M24 x 180mm		1
22	1371/0901D		Nut full M24		2
25	821/00410		Clip P 10mm		3
26	KHR1326		Clamp 18mm dia.		3
27	JHP0037		Nipple Grease Straight		3
28	JLV1547		Adapter		3
29	1609/0002		Adapter		3
30	333/K8619		Hose Grease 2550 LG		1
31	333/K8620		Hose Grease 2450 LG		1
32	333/K8621		Hose Grease 3000 LG		1
34	1316/0203D		Screw		6
35	1420/0006D		Washer Plain M6		6

B430-20-1 BOOM, MONOBOOM, COMMON PARTS
9820/0546B
ISSUE 1

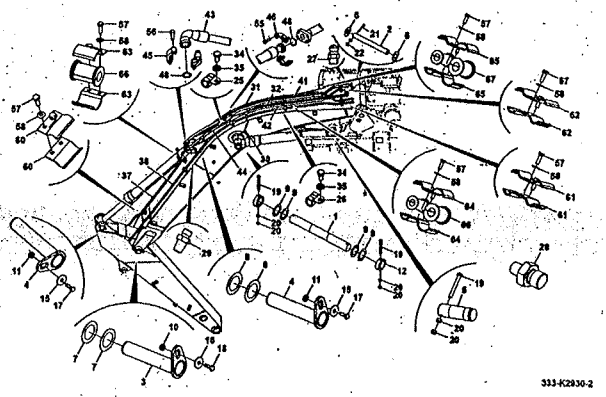

ITEM	PART NO	CHANGE NO	DESCRIPTION	USAGE CODE	QTY
37	333/K6026		Pipe Head Side, Bucket Line		1
38	333/K6044		Pipe Rod Side, Bucket Line		1
41	333/K5990		Pipe Head Side, Arm Line		1
42	333/K6008		Pipe Rod Side, Arm Line		1
43	JRV0325		Hose		1
44	627/10648		Hose		1
45	210/92901		Clamp Flange 1"		2
46	KRJ2682		Flange Split		2
48	2409/0210		O Ring		2
55	1391/3409D		Capscrew M10 x 35mm		4
56	1391/3511D		Capscrew		4
57	1316/0408D		Setscrew		24
58	2208/00110		Washer M10		24
60	333/K5367		Clamp Single Pipe		4
61	333/K5380		Clamp Double Pipe		4
62	333/K5376		Clamp Double Pipe		4
63	333/K5370		Clamp Single Pipe		8

Continue...

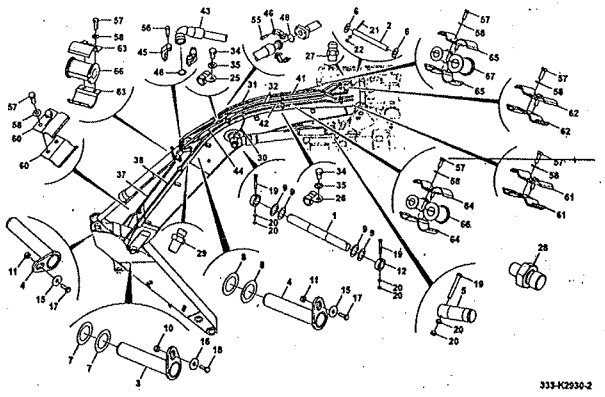

ITEM	PART NO	CHANGE NO	DESCRIPTION	USAGE CODE	QTY
64	333/K5389		Clamp Double Pipe		2
65	333/K5491		Clamp Double Pipe		2
66	333/K5482		Rubber Insert Dia 40		7
67	333/K5359		Rubber Insert Dia 56		1

JS220 XD

JS220LC

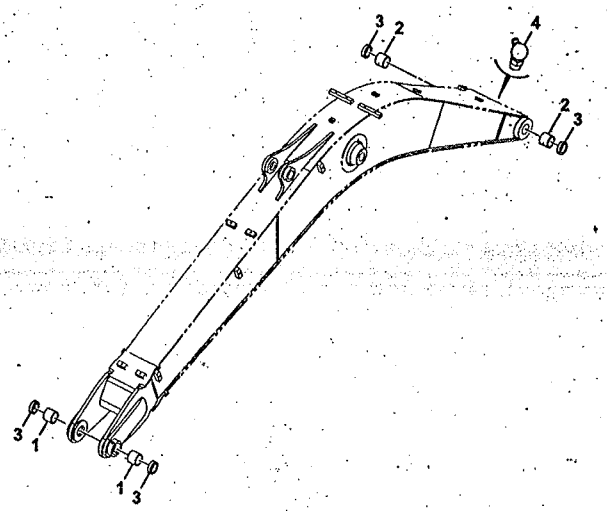

ITEM	Part #	CHANGE NO	DESCRIPTION	USAGE CODE	QTY
1	JRV0597		Bush steel		2
2	831/10291		Bush bearing		2
3	KHV0103		Seal dust		4
4	JHP0037		Nipple Grease Straight		3

JS220 XD

JS220LC

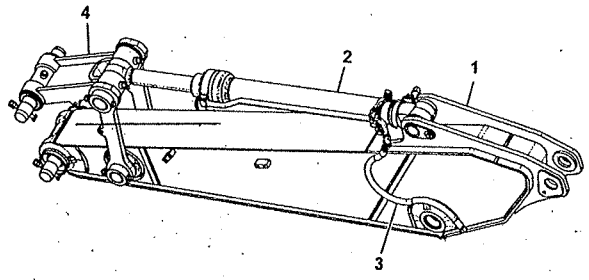

ITEM	Part #	CHANGE NO	DESCRIPTION	USAGE CODE	QTY
1	333/K2130		Arm 2.4m HD Hammer, Assembly Refer B440-15-1		1
2			Ram Bucket Standard Assembly Refer E400-10-1		1
3			Circuit Bucket Lines, 2.4m, Assembly Refer E140-20-1		1
4			Bucket linkage assembly Refer B460-1-1		1

335-B9666-1

JS220 XD

JS220LC

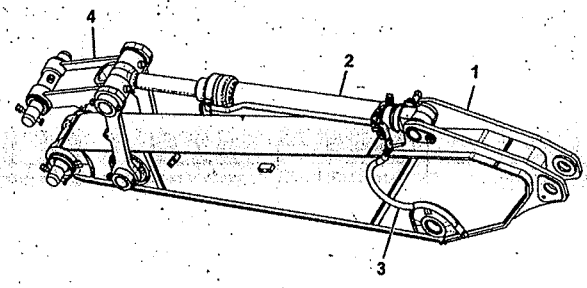

ITEM	Part #	CHANGE NO	DESCRIPTION	USAGE CODE	QTY
1	333/K2128		Arm 3.0m HD Hammer, Assembly Refer B440-20-1		1
2			Ram Bucket Standard Assembly Refer E400-10-1		1
3			Circuit Bucket Lines, 3.0m, Assembly Refer E140-25-1		1
4			Bucket linkage assembly Refer B460-1-1		1

335-B9666-1

JS220 XD

JS220LC

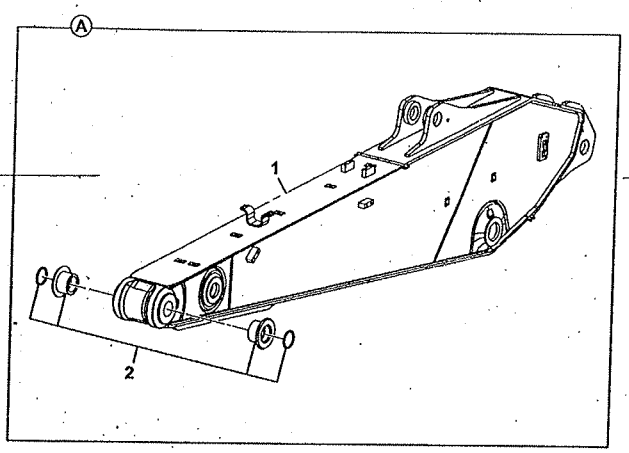

ITEM	Part #	CHANGE NO	DESCRIPTION	USAGE CODE	QTY
A	333/K2130		Arm 2.4m HD Hammer, Assembly		1
1			Arm Heavy Duty 2.4m		1
2			Arm Seal & Bearing Assembly Refer B440-25-1		1

333-K2131-1

JS220 XD

JS220LC

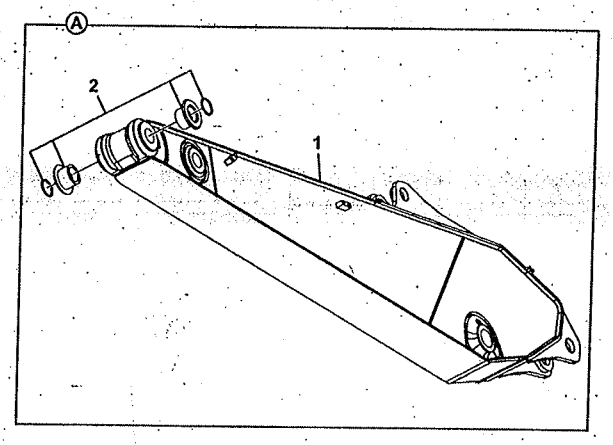

ITEM	Part #	CHANGE NO	DESCRIPTION	USAGE CODE	QTY
A	333/K2128		Arm 3.0m HD Hammer, Assembly		1
1			Arm 3.0m Heavy Duty		1
2			Arm Seal & Bearing Assembly Refer B440-25-1		1

333-K2128-1

JS220 XD

JS220LC

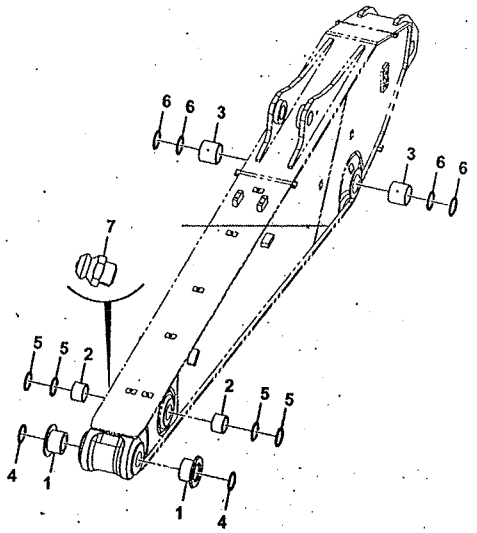

333-K3107-1

ITEM	Part #	CHANGE NO.	DESCRIPTION	USAGE CODE	QTY
1	JRV0594		Bush steel		2
2	JRV0595		Bush steel		2
3	831/10291		Bush bearing		2
4	KHV0101		Seal dust		2
5	KHV0100		Seal Dust		2
6	KHV0103		Seal dust		2
7	JHP0037		Nipple Grease Straight		3

JS220 XD

JS220LC

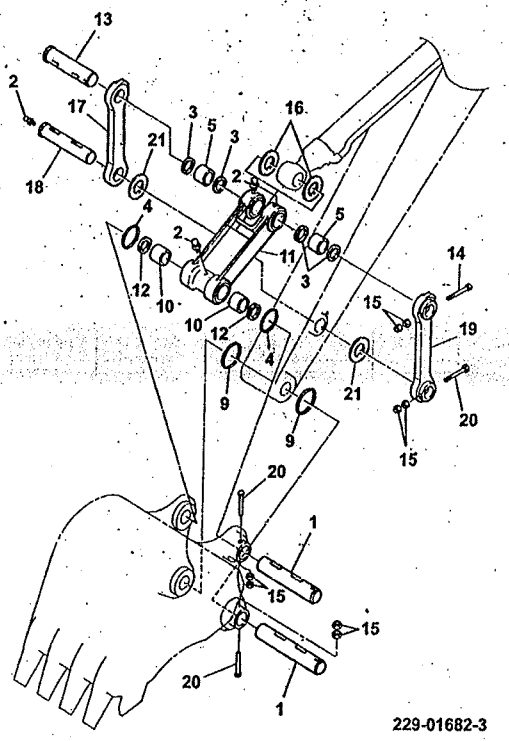

229-01682-3

ITEM	Part #	CHANGE NO.	DESCRIPTION	USAGE CODE	QTY
1	JRV0071		Pin pivot		2
2	JHP0037		Nipple Grease Straight		4
3	KHV0101		Seal dust		4
4	KHV0117		O Ring		2
5	JRV0593		Bush steel		2
9	KHV0114		O Ring		2
10	jrv0077k		Bush Steel		2
11	JRV0210		Link bucket standard		1
12	KHV0102		Seal dust		4
13	KRV1120		Pin attachment 85 x 425		1
14	6009/3827Z		Bolt		1
15	173R020VZ		Nut		8
16	KHV0170		Shim 150 x 86 x 1.2mm thick		2
17	JRV0208		Link arm right hand		1

Continue...

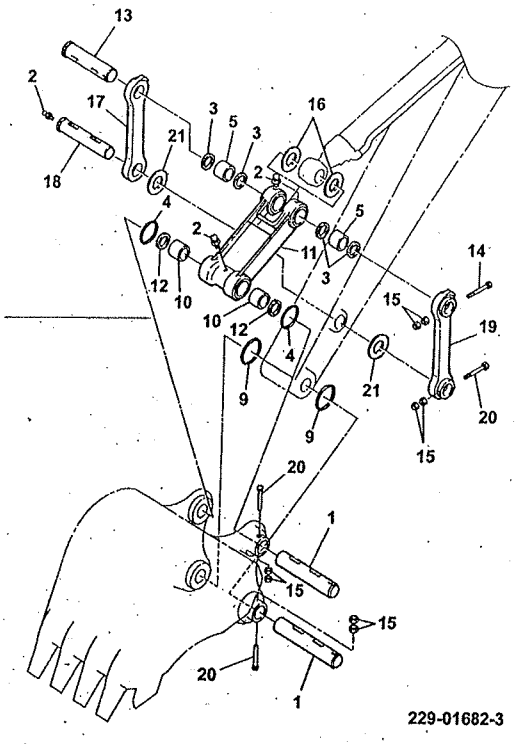

ITEM	PART NO	CHANGE NO	DESCRIPTION	USAGE CODE	QTY
18	KRV1121		Pin attachment 75 x 425		1
19	JRV0209		Link arm left hand		1
20	6009/3826Z		Bolt		3
21	KHV0169		Shim 140 x 76 x 1.2mm thick		2

B

- B01 BODYWORK
- B02 CAB / CANOPY
- B04 EXCAVATOR
- • B05 REFURBISHMENTS

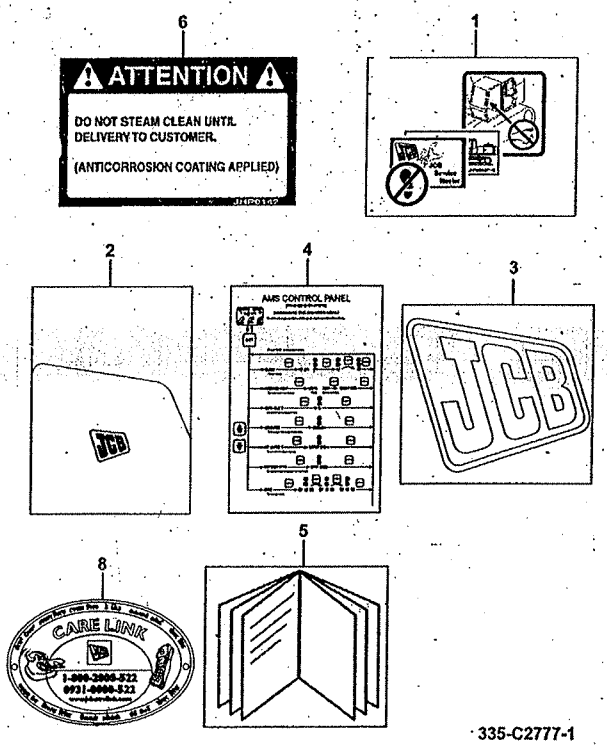

335-C2777-1

JS220 XD

JS220LC

ITEM	Part #	CHANGE NO.	DESCRIPTION	USAGE CODE	QTY
1			Label Pack Refer B520-10-1		1
2	817/17556		Label Chart, Guide Wallet		1
3	332/K5067		Decal JCB Yellow		1
4	817/20434		Label chart, guide AMS English, tracked		1
5	334/P9802		Handbook		1
6	JHP0142		Decal pre-delivery		1
7	335/C2774		Decal Service Coupon		1
8	333/P2440		Decal Care Link		1

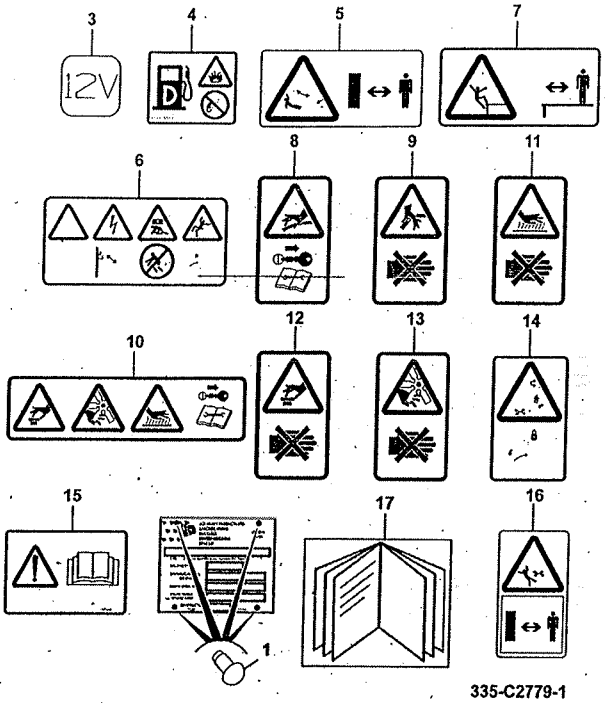

JS220 XD

JS220LC

ITEM	Part #	CHANGE NO	DESCRIPTION	USAGE CODE	QTY
1	JHP0168		Rivet		8
3	332/J7387		Decal 24v		1
4	817/18527		Label Warning No Naked Flame WARNING;DIESEL		1
5	817/18528		Decal JS Infomation/ Warning WARNING;COUNTERWEIGH		2
6	817/18529		Decal Warning Cab Sign WARNING;CAB		1
7	817/18531		Decal JS Information / Warning WARNING;EDGE		1
8	817/18532		Decal JS Information / Warning WARNING;HP HOSE		1

B510-15-1 DECALS MACHINE IDENTIFICATION, ROW, TERRITORY 9820/0546B ISSUE 1

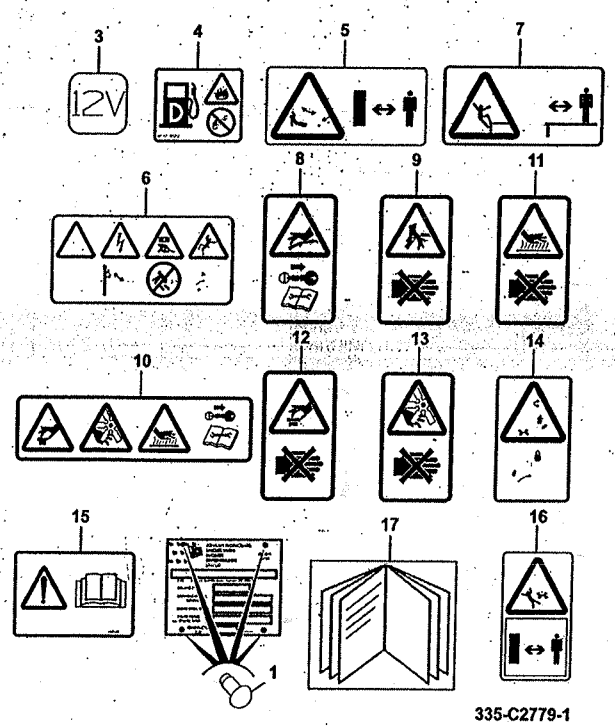

ITEM	PART NO	CHANGE NO	DESCRIPTION	USAGE CODE	QTY
9	817/18533		Decal Warning Keep Hands Away WARNING;HAND IN DOOR		1
10	817/18535		Decal Information / Warning Coolant Pressure WARNING;ENGINE BAY		1
11	817/18536		Decal JS Information / Warning Hot Surfaces WARNING;HOT SURFACES		1
12	817/18537		Decal Information / Warning High Pressure & Hot WARNING;HP COOLANT		1
13	817/18538		Decal Information /Warning Rotating Parts WARNING;FAN		1
14	817/18539		Decal Warning Sign LockLever WARNING;LOCK LEVER		1

Continue...

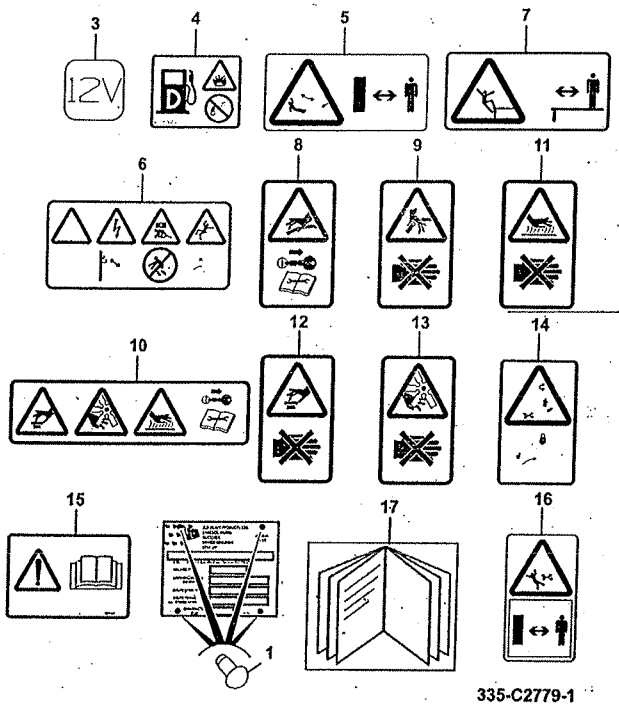

335-C2779-1

ITEM	PART NO	CHANGE NO	DESCRIPTION	USAGE CODE	QTY
15	817/18541		Decal JS information / warning WARNING;PRODUCT LIAB		1
16	817/19470		Decal Warning Label - Dipper WARNING;DIPPER/BUCKE		2
17	335/C2778		Book Parts		1

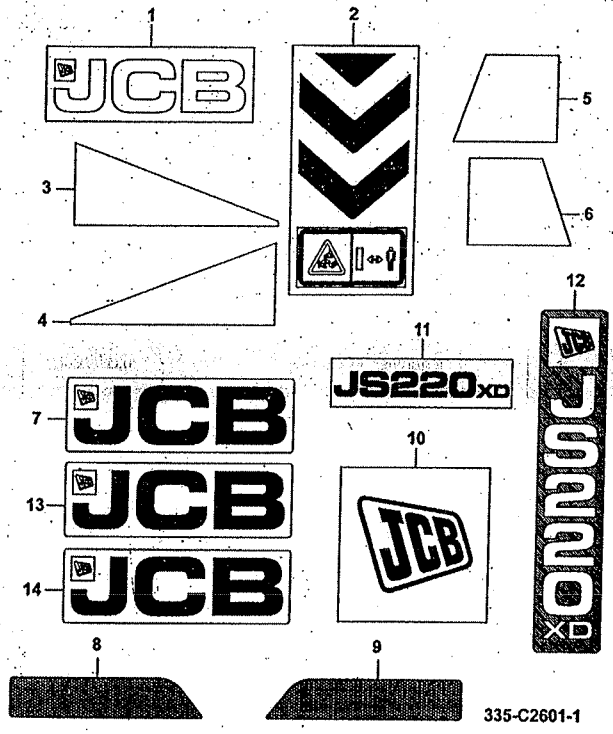

335-C2601-1

JS220 XD

ITEM	Part #	CHANGE NO	DESCRIPTION	USAGE CODE	QTY
1	333/J5047		Decal JCB 1630mm x 440mm		1
2	333/J2439		Decal chevron		2
3	333/J3266		Decal door, left side		1
4	333/J3270		Decal door, right side		1
5	333/J3228		Decal skirt left hand side		1
6	333/J3243		Decal skirt right hand side		1
7	332/W5376		Decal JCB 640 x 200		1
8	333/J7093		Reflector sheet red		1
9	333/J7099		Reflector sheet red		1
10	332/K5067		Decal JCB Yellow		1
11	335/B9917		Decal Machine ID JS220XD		2
12	335/B9868		Decal Arm JS220XD		2
13	333/K9198		Decal Side		1

Continue...

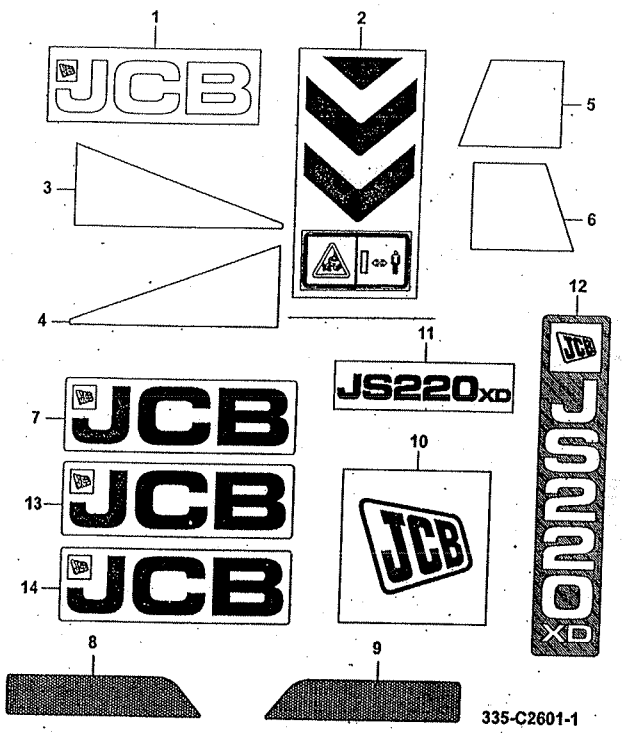

ITEM	PART NO	CHANGE NO	DESCRIPTION	USAGE CODE	QTY
14	333/K9179		Decal Boom		2

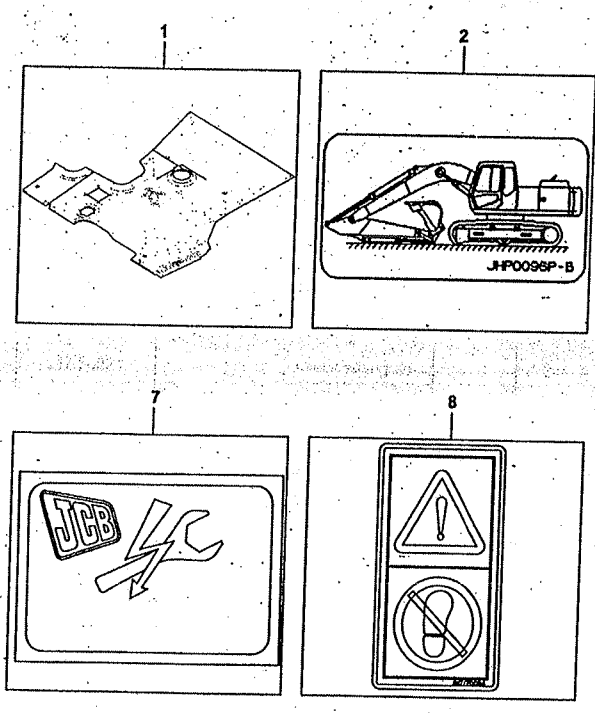

JS220 XD

JS220LC

ITEM	Part No	CHANGE NO	DESCRIPTION	USAGE CODE	QTY
1	jhp0095		Floormat (Transit Protn)		2
2	JHP0096		Label oil level		1
7	817/17540		Label Diagnostic socket		1
8	817/70024		Label warning do not use as step		3

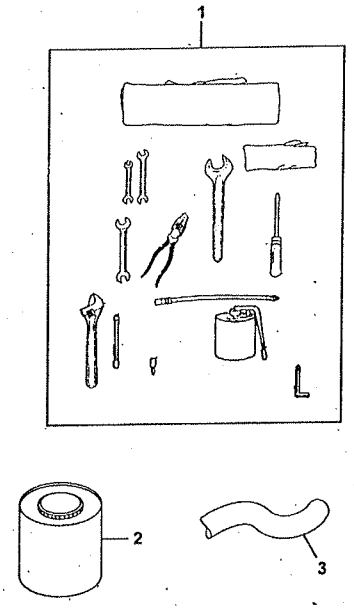

229-00560-1

JS220 XD

JS220LC

ITEM	Part #	CHANGE NO	DESCRIPTION	USAGE CODE	QTY
1			Tool Kit Refer B530-5-1		1
2	40/301494		Grease		1
3	130/14018		Tube Extension		1

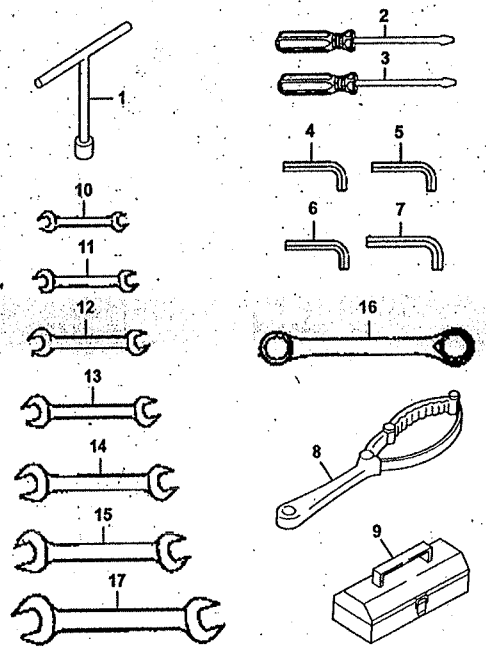

229-00561-1

JS220 XD

JS220LC

ITEM	Part #	CHANGE NO	DESCRIPTION	USAGE CODE	QTY
1	JHP0068		Box spanner		1
2	JHP0069		Tool screwdriver pozidrive, 75mm		1
3	JHP0070		Tool screwdriver pozidrive, 100mm		1
4	130/14053		Key Allen 8 mm		1
5	40/301594		Key allen 6mm		1
6	JRP0086		Key allen, 5mm		1
7	JRP0087		Key allen, 10mm		1
8	229/01545		Tool Filter Wrench		1
9	130/99510		Tool Bag		1
10	130/14011		Spanner Double Ended 10 x 11 mm		1
11	130/14012		Spanner Double Ended 12 x 13 mm		1
12	130/14013		Spanner D.E. 14 x 17mm		1
13	130/14014		Spanner D.E. 19 x 22mm		1

Continue...

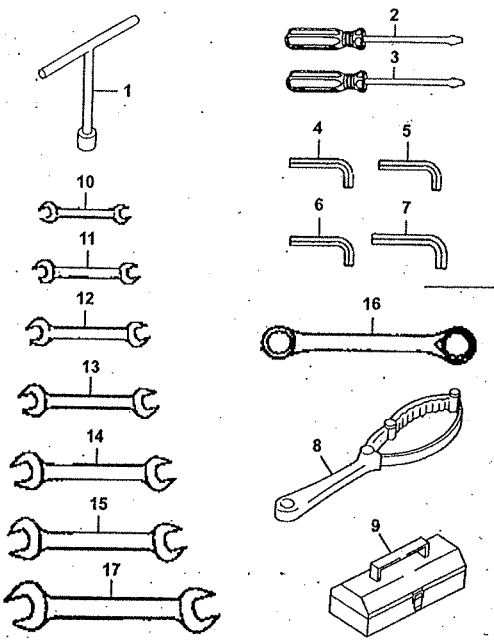

229-00561-1

ITEM	PART NO	CHANGE NO	DESCRIPTION	USAGE CODE	QTY
14	130/99557		Spanner D.E. 20 x 22mm		1
15	130/14015		Spanner D.E. 24 x 26mm		1
16	130/99560		Spanner Ring 18 - 19mm		1
17	130/99555		Spanner D.E. 36 x 41mm		1

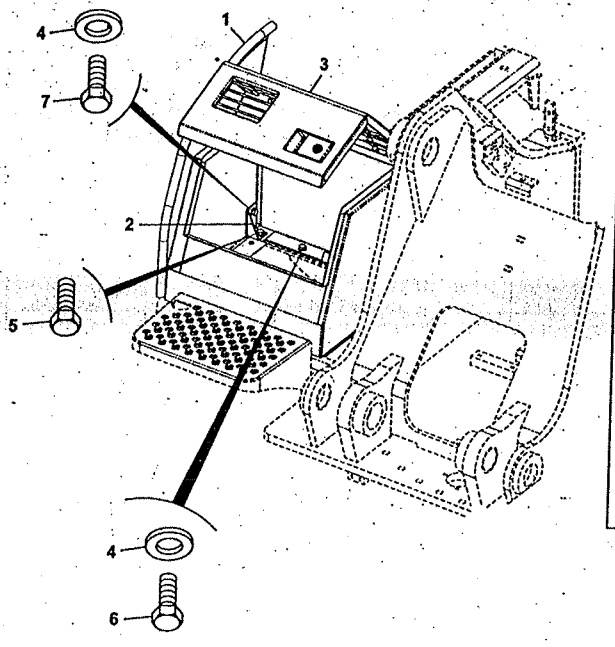

229-01046-7

JS220 XD

JS220LC

ITEM	Part #	CHANGE NO	DESCRIPTION	USAGE CODE	QTY
1	229/01205		Toolbox Side RH fab		1
2	229/01199		Support Side Skin		2
3			Toolbox Assembly Refer B530-15-1		1
4	1420/0009Z		Washer Plain M12		10
5	1316/0510Z		Screw		2
6	1316/0509Z		Setscrew		6
7	1316/0505Z		Screw M12x20		2
8	1316/0308Z		Screw		1
10	332/P4405		Washer		1
11	1411/0005D		Washer		2

JS220 XD

JS220LC

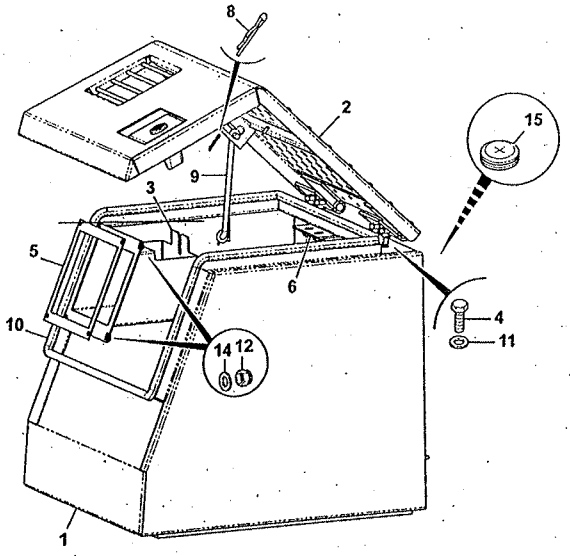

229-01140-5

ITEM	Part #	CHANGE NO	DESCRIPTION	USAGE CODE	QTY
1	229/01150		Base tool box		1
2			Tool Box LID Refer B530-20-1		1
3	229/01138		Light Box		1
4	1318/0405Z		Setscrew M10 x 20mm		4
5	229/01203		Gasket		1
6	331/34946		Hinge packer		2
8	KRJ1588		Pin		2
9	KRN1418		Stay		1
10	KSN0939		Cushion rubber		1
11	1420/0008Z		Washer Plain M10		4
12	1370/0001Z		Nut M5		4
14	1420/0005Z		Washer Plain		4
15	2410/0015		Grommet		1

JS220 XD

JS220LC

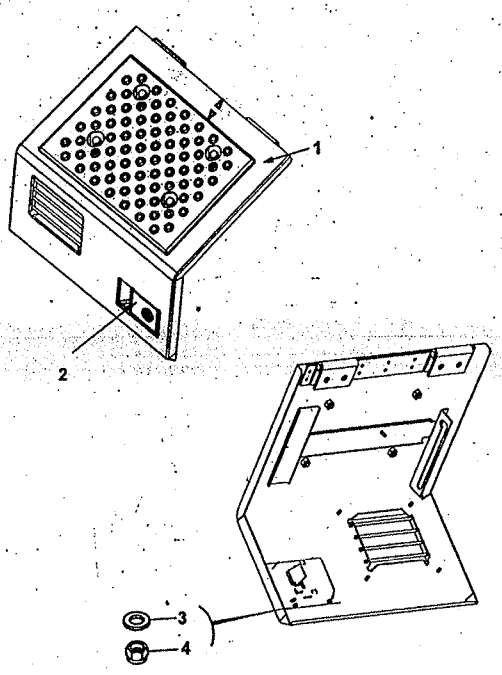

229-01141-3

ITEM	Part #	CHANGE NO	DESCRIPTION	USAGE CODE	QTY
1	229/01142		Toolbox LID		1
2	826/11027		Latch Paddle		1
3	1420/0005Z		Washer Plain		4
4	1371/0001Z		Nut		4

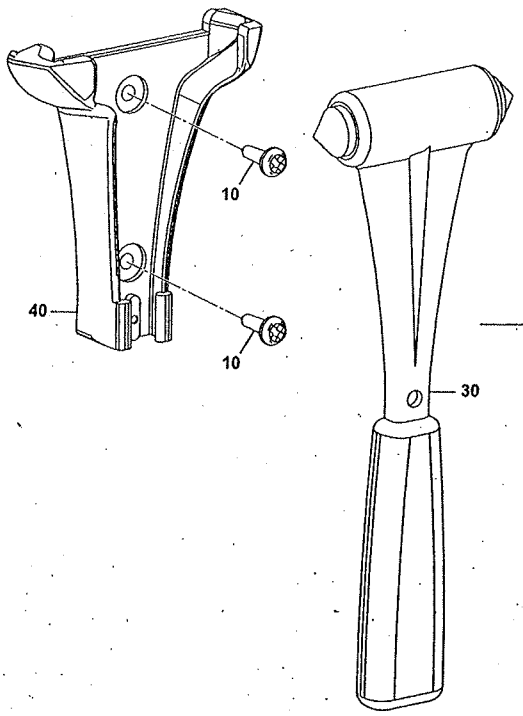

332-A3315-3

JS220 XD

JS220LC

ITEM	Part #	CHANGE NO	DESCRIPTION	USAGE CODE	QTY
10	1430/0102		Screw		2
30	265/00678		Hammer emergency glass breaker		1
40	332/U4206		Bracket breaker tool holder		1

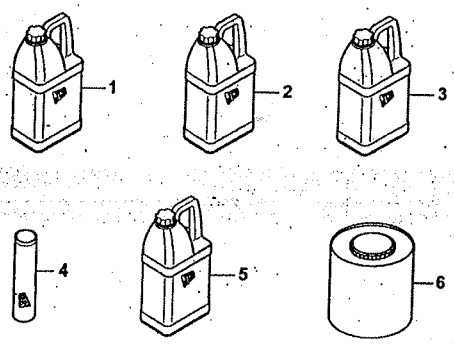

JS220 XD

JS220LC

ITEM	Part #	CHANGE NO	DESCRIPTION	USAGE CODE	QTY
1			Fluid Gear Oil LTRS		6
2	4001/1800		Oil EP 15W40 LTRS		15
3	229/00024		Fluid Hydraulic LTRS		250
4	4003/2000		Grease High Pressure KG Refer B570-5-1		22
5	130/77705		Diesel LTRS		90
6	229/01233		Fluid Anti-Freeze LTRS		14

333-L6642-2

JS220 XD

JS220LC

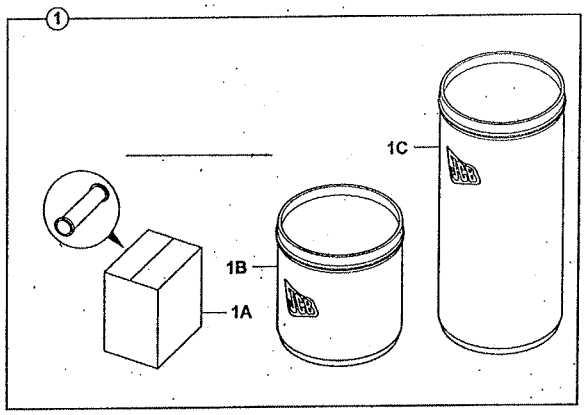

ITEM	Part #	CHANGE NO	DESCRIPTION	USAGE CODE	QTY
1	4003/2000		Grease High Pressure		1
1A	4003/2017		Grease High Pressure 400g x 24 QTY:A/R		0
1B	4003/2006		Grease High Pressure 12.5kg QTY:A/R		0
1C	4003/2005		Grease High Pressure 50kg QTY:A/R		0

4003-2000-1

- C01 ELECTRICAL
- C03 ELECTRICS, CAB

C

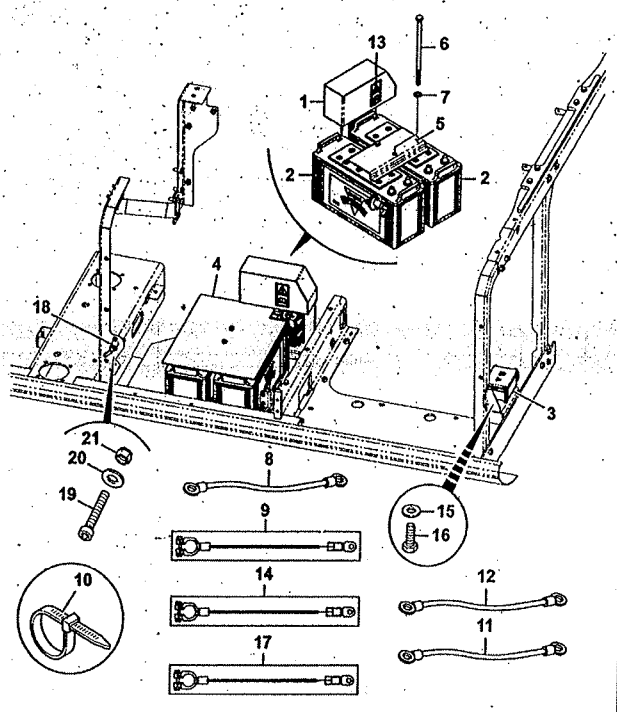

334-P6683-1

JS220 XD

JS220LC

ITEM	Part #	CHANGE NO	DESCRIPTION	USAGE CODE	QTY
1			Box voltage drop assembly Refer C190-1-1		1
3	333/J5686		Fuse and relay module engine ABI Refer C350-5-1		1
4	333/L4042		Cover battery		1
5	229/00598		Battery Clamp : Battery		1
6	JHR0099		Bolt		2
7	1420/0008Z		Washer Plain M10		2
8	333/L1178		Cable earth chassis		1
9	718/20024		Cable battery		1
10	826/01347		Tie Cable 160mm		1
11	718/20231		Cable negative battery 2100mm		1
12	229/00602		Battery Cable, Link		1
13	817/70032		Label read operator handbook		1

Continue...

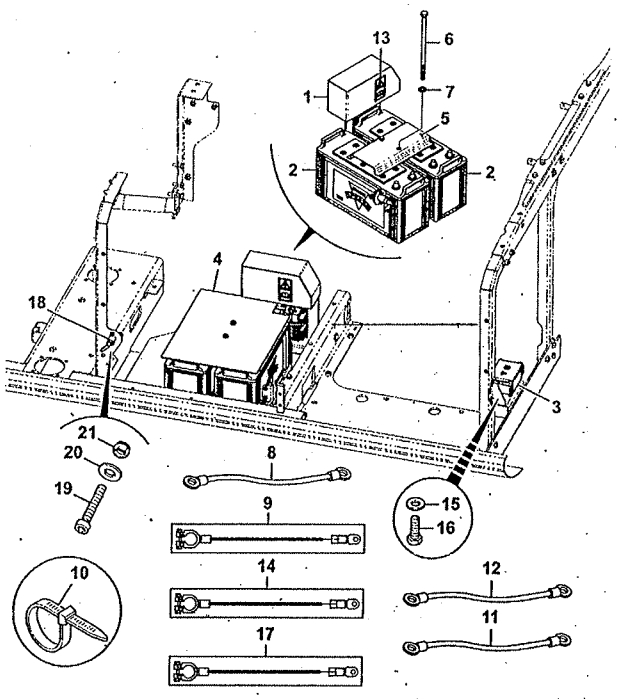

334-P6683-1

ITEM	PART NO	CHANGE NO	DESCRIPTION	USAGE CODE	QTY
14	229/00603		Lead Negative		1
15	1420/0005Z		Washer Plain		4
16	1315/0203Z		Setscrew		4
17	332/L2557		Cable Battery To Isolator		1
18	701/47400		Switch Isolator		1
19	1391/3307D		Capscrew M8X25		2
20	1420/0007Z		Washer Plain M8		4
21	1370/0203Z		Lock Nut M8		2

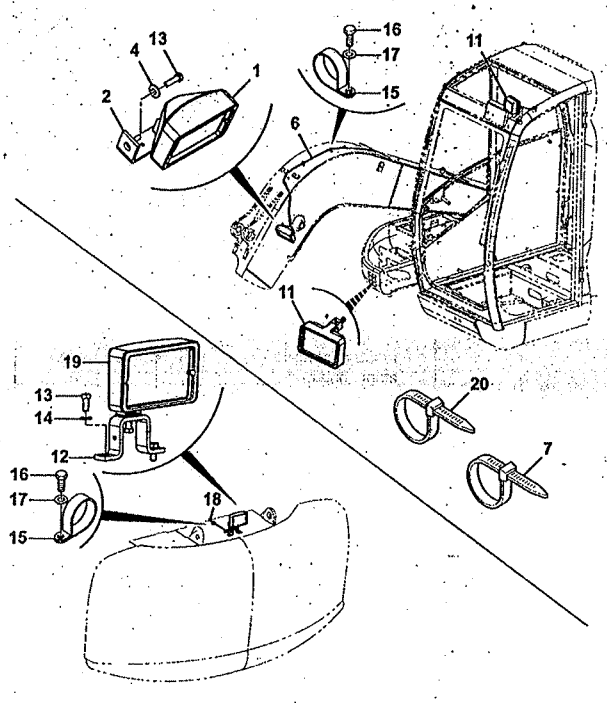

335-C1961-3

JS220 XD

JS220LC

ITEM	Part #	CHANGE NO	DESCRIPTION	USAGE CODE	QTY
1	700/43900		Light working assembly Refer C160-5-1		1
2	KHR0306		Bracket		1
4	2208/00110		Washer M10		1
6	721/10453		Harness Boom Working Lights		1
7	826/01144		Tie Cable 200mm		8
11	229/00595		Light Working		3
12	JHR0025		Bracket rear light		1
13	1316/0305Z		Bolt High Tensile		3
14	1420/0007Z		Washer Plain M8		2
15	821/00410		Clip P 10mm		9
16	1316/0201D		Screw		3
17	1420/0006D		Washer Plain M6		3
18	334/L5447		Harness Wiring		1
19	334/P1576		Work light		1

Continue...

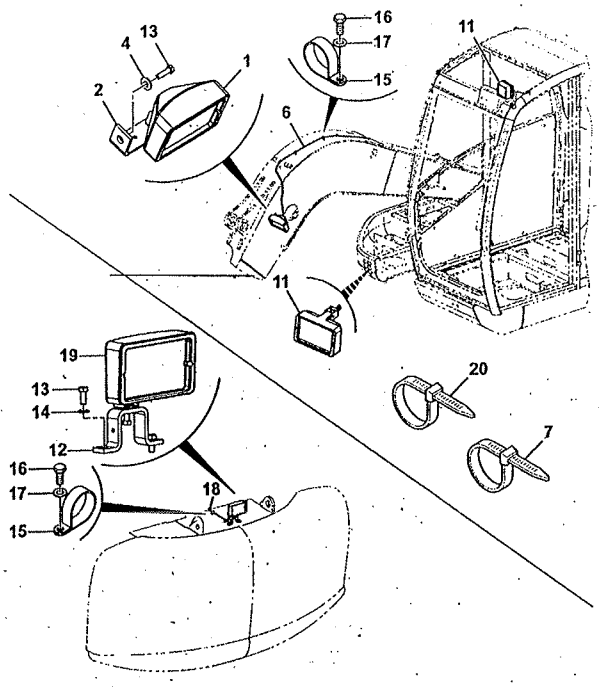

335-C1961-3

ITEM	PART NO	CHANGE NO	DESCRIPTION	USAGE CODE	QTY
20	333/J8681		Tie cable (Double loop)		2

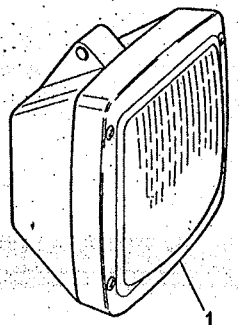

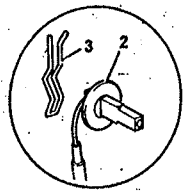

JS220 XD

JS220LC

ITEM	Part No	CHANGE NO	DESCRIPTION	USAGE CODE	QTY
1	700/43900		Light working assembly		1
2	720/20032		Bulb H3 24V 70W		1
3	700/10103		Spring		1

JS220 XD

JS220LC

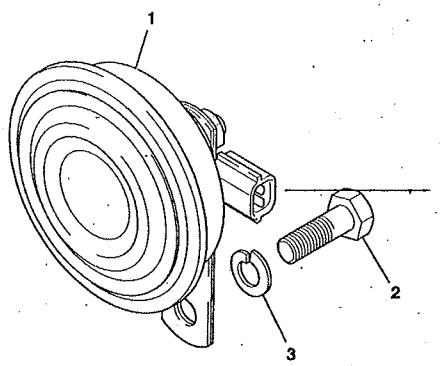

ITEM	Part #	CHANGE NO	DESCRIPTION	USAGE CODE	QTY
1	717/20152		Horn 24 volt		1
2	1316/0305D		Screw M8 X 20		1
3	1425/0007D		Washer Spring M8		1

923210

JS220 XD

JS220LC

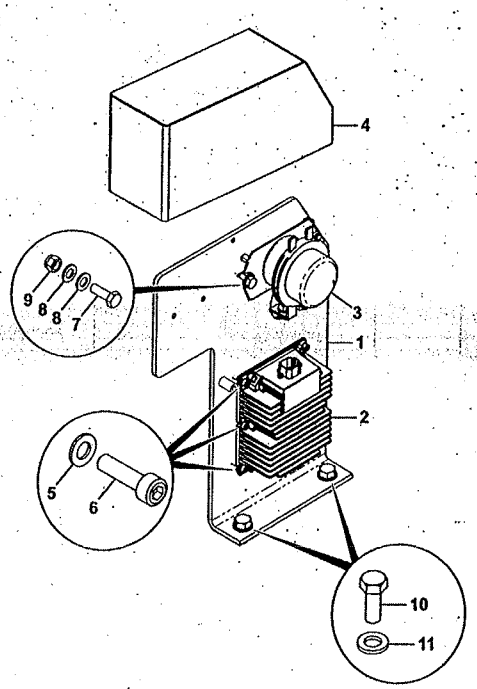

334-P2814-2

ITEM	Part #	CHANGE NO	DESCRIPTION	USAGE CODE	QTY
1	334/P2876		Bracket voltage drop box		1
2	717/C5945		Convertor Die Cast Housing 24/12 Volt (15 AMP)		1
3	716/30205		Relay battery		1
4	334/P6165		Cover relay		1
5	1420/0005Z		Washer Plain		6
6	1391/3105D		Screw Cap M5 x 20		6
7	1316/0309Z		Bolt		2
8	1420/0007Z		Washer Plain M8		4
9	1370/0201Z		Nut		2
10	1316/0507Z		Screw		2
11	1420/0009Z		Washer Plain M12		2

C01 ELECTRICAL

• C03 ELECTRICS, CAB

C

C300-1-1 ELECTRICS CAB INSTALLATION ASSEMBLIES, MAIN, ELECTRICS

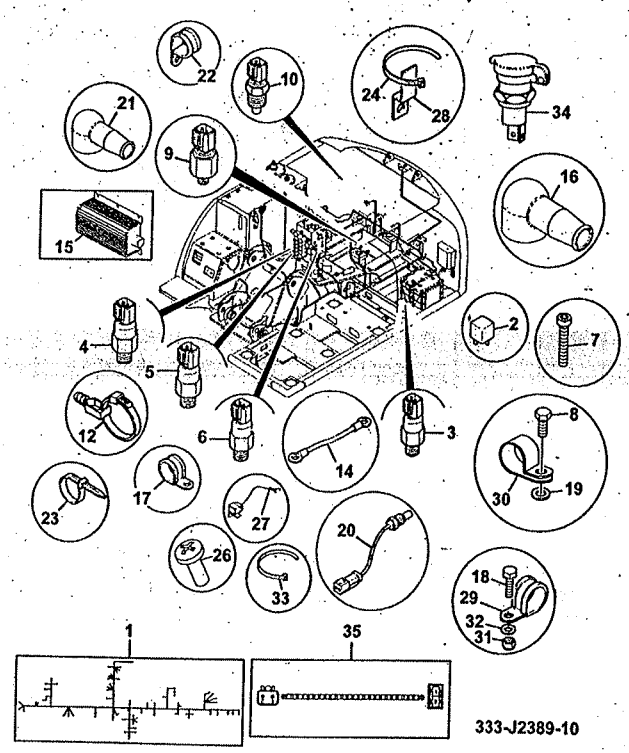

333-J2389-10

JS220 XD

JS220LC

ITEM	Part#	CHANGE NO	DESCRIPTION	USAGE CODE	QTY
1	333/J8122		Harness Main		1
2	333/J0142		Relay Timer		1
3	332/J0669		Switch Low Pressure 5bar 1/4" BSP		3
4	332/J0670		Switch Upper Servo Pressure 12bar		1
5	332/J0671		Switch Travel Pressure 20 bar		1
6	332/J2970		Switch High Pressure 328 bar		1
7	1391/3305D		Capscrew		2
8	JHR0128		Bolt		3
9	701/80328		Switch Overheat Warning		1
10	716/30129		Sensor Temperature		1
12	826/01347		Tie Cable 160mm		40
14	KHR1451		Cable Earth		1

Continue...

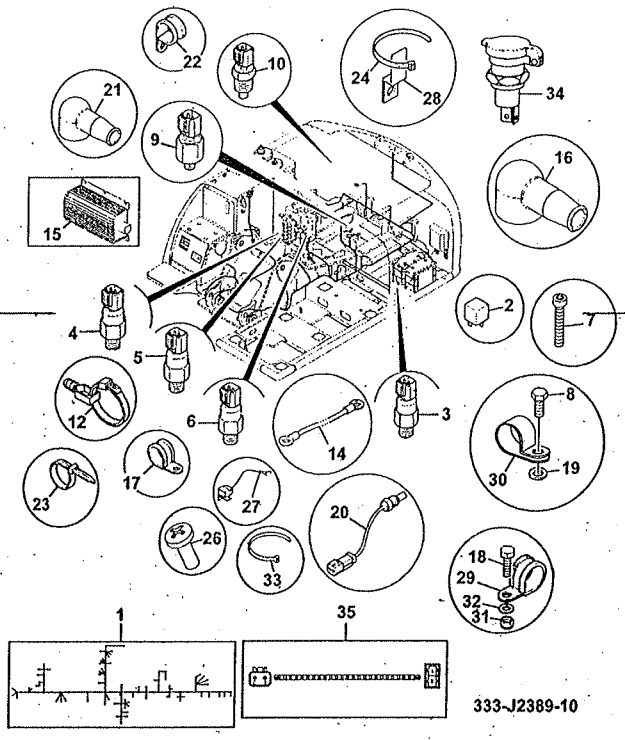

ITEM	PART NO	CHANGE NO	DESCRIPTION	USAGE CODE	QTY
15	717/C5945		Convertor Die Cast Housing 24/12 Volt (15 AMP)		1
16	KHR1716		Cap Terminal		2
17	KHR1407		Clamp 25mm dia.		2
18	1316/0507D		Setscrew M12 x 25 grade 10.9		1
19	1411/0005D		Washer		1
20	716/30111		Sensor Temperature		1
21	332/K8180		Boot Rubber		2
22	KHR1444		Clamp 12mm dia.		2
23	270/00106		Tie Cable 385mm		28
24	826/11447		Tie Cable Locking		14
26	KHR0737		Screw Pan Head		17
27	721/10453		Harness Boom Working Lights		1
28	KHR1588		Clip		2
29	821/10467		Clamp		2
30	821/10457		Clip 'P'		2
31	1370/0003Z		Lock Nut M5		6
32	1420/0005Z		Washer Plain		6

C300-1-1 ELECTRICS CAB INSTALLATION ASSEMBLIES, MAIN, ELECTRICS 9820/0546B ISSUE 1

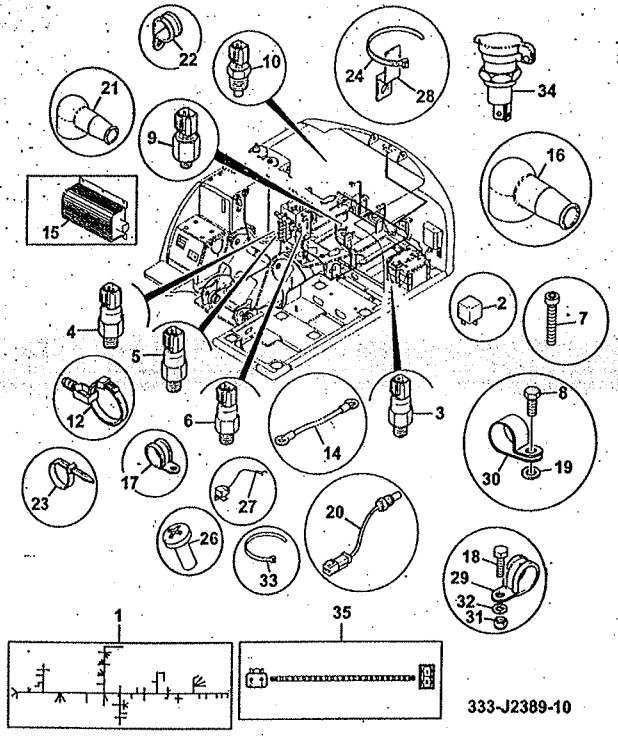

ITEM	PART NO	CHANGE NO	DESCRIPTION	USAGE CODE	QTY
33	KAR0016		Tie Cable		8
34	715/04300		Socket Beacon		1
35	333/K3889		Harness - Toolbox Worklight		1

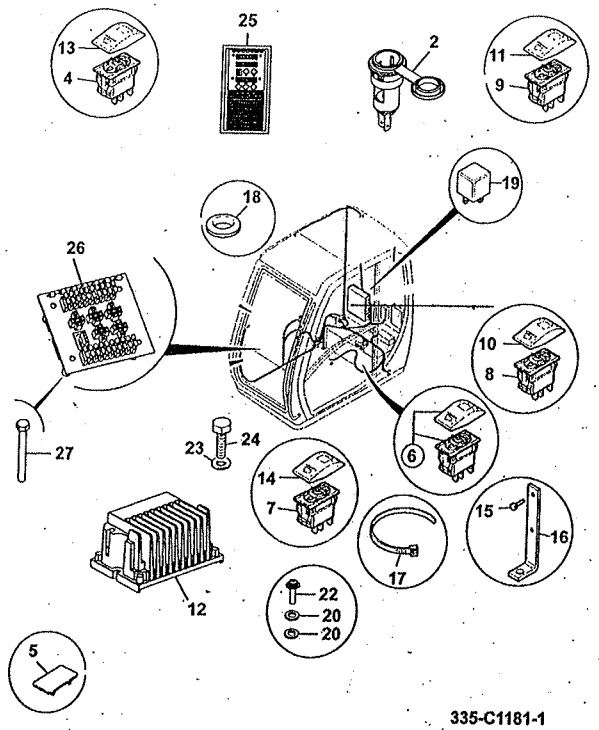

335-C1181-1

JS220 XD

JS220LC

ITEM	Part #	CHANGE NO	DESCRIPTION	USAGE CODE	QTY
2	332/L6105		Socket accessory		1
4	701/E0001		Switch Panel		1
5	701/60010		Blank Switch Panel		1
6	701/80214		Switch Redundancy locking		1
7	701/E0041		Switch 24V		1
8	701/E0034		Switch 24V		1
9	701/E0030		Switch 24V		1
10	701/E8855		Actuator etched mute		1
11	701/E8906		Actuator etched Interior lamp		1
12	717/C5944		Convertor 24/12volt (8 AMP) die cast housing		1
13	701/E8853		Cover decal boom priority		1
14	701/E8826		Actuator Front Working Lamps		1

C300-10-1 ELECTRICS CAB INSTALLATION ASSEMBLIES, CAB ELECTRICS 9820/0546B ISSUE 1

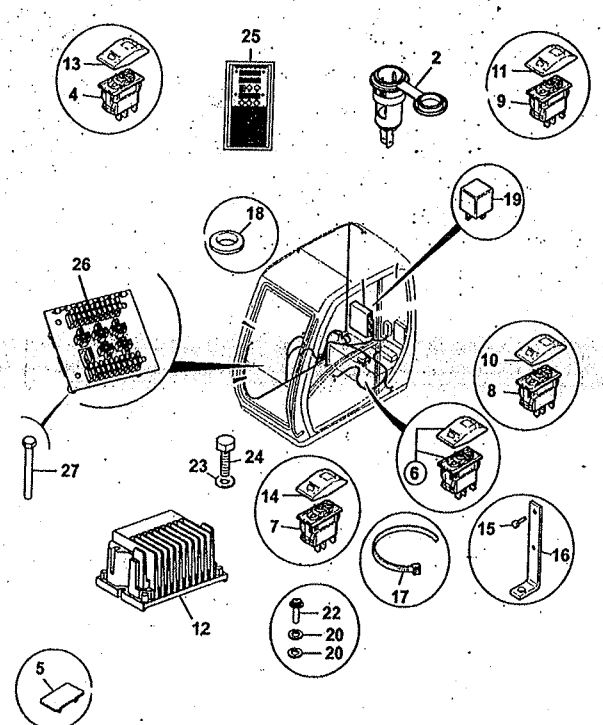

335-C1181-1

ITEM	PART NO	CHANGE NO	DESCRIPTION	USAGE CODE	QTY
15	6012/0198Z		Screw pan head		1
16	331/17400		Bracket Earth Harness		1
17	242/00290		Tie panel fixing cable		4
18	2410/1209		Grommet		2
19	JHR0174		Relay 24 volt		4
20	1420/0007D		Washer Plain M8		8
22	KHR0615		Screw		2
23	JHP0046		Washer M10		1
24	JHR0128		Bolt		2
25	333/J2918		Decal fusebox		1
26	333/J0369		Circuit board assembly fuse & relay ABI Refer C350-1-1		1
27	1316/0316D		Screw Set M8 x 70		4

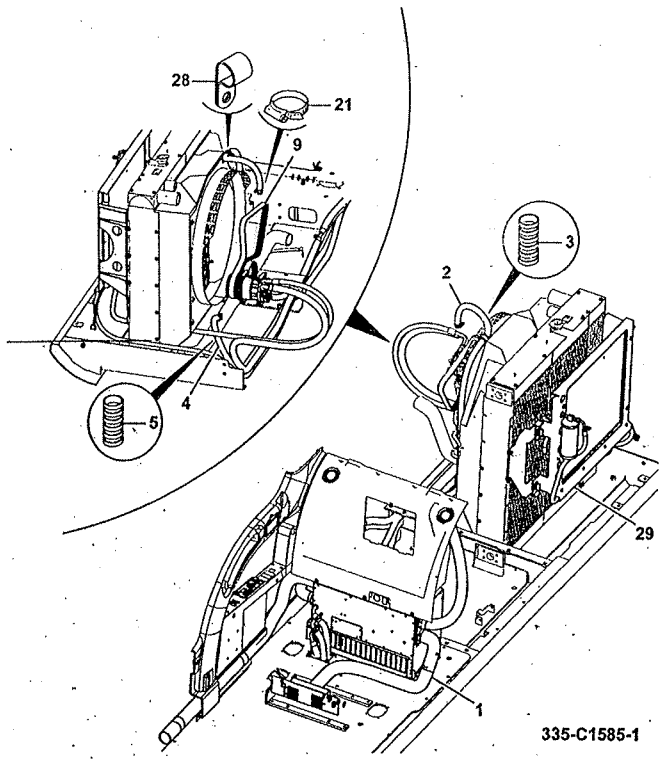

JS220 XD

JS220LC

ITEM	Part #	CHANGE NO	DESCRIPTION	USAGE CODE	QTY
1			Heater Common Parts Refer L400-5-1		1
2	JNR0049		Hose heater		1
3	JSR0058		Hose corrugated		1
4	332/K9336		Hose 16mm bore x 3400mm		1
5	332/K9342		Hose corrugated 28mm O/D x 3300mm		1
9			Drive belt front end AC installation Refer L720-1-1		1
21	332/L2995		Clip constant tension		4
28	821/10127		Clip		2
29			Kit ATC Assembly Refer C340-10-1		1

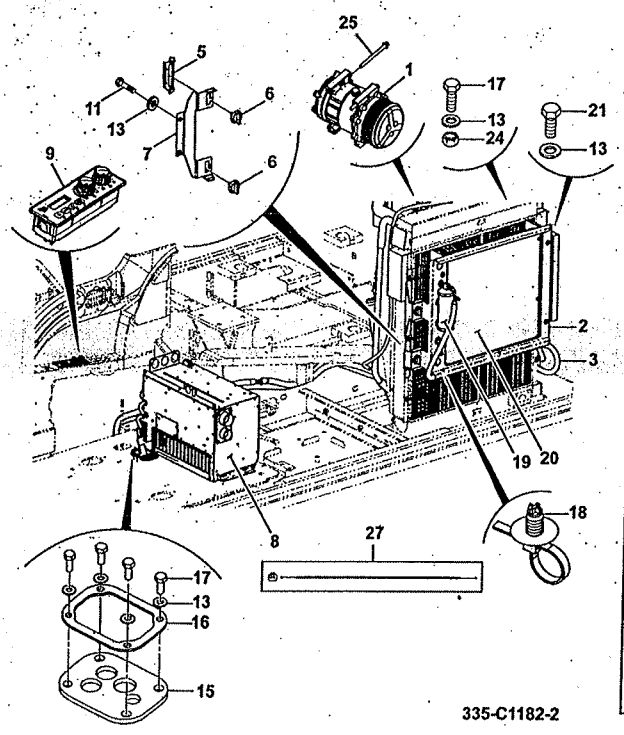

JS220 XD

JS220LC

ITEM	Part #	CHANGE NO	DESCRIPTION	USAGE CODE	QTY
1	320/08563		Compressor air conditioning 24v		1
2	333/K2642		Bracket Condenser		1
3	333/K2651		Kit-hose Refer C340-15-1		1
5	478/00288		Retainer		2
6	826/10532		Fastener 1/4 turn		2
7	333/K2676		Bracket Air Condenser		1
8	333/J1053		Unit Air Condition		1
9	333/K2768		Panel Control Air Condition		1
11	1316/0303D		Screw		2
13	1420/0007D		Washer Plain M8		18
15	333/J4811		Grommet		1
16	333/J1258		Plate retainer		1
17	1316/0305D		Screw M8 X 20		7

Continue...

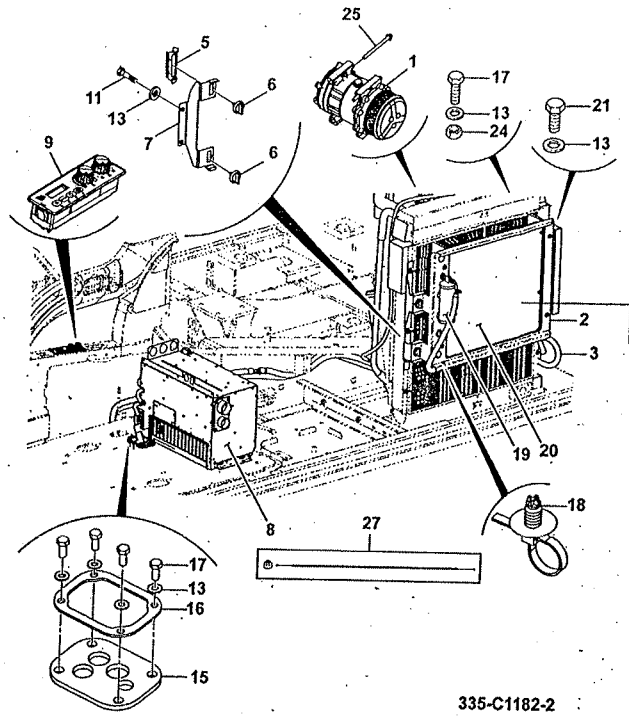

335-C1182-2

ITEM	PART NO	CHANGE NO	DESCRIPTION	USAGE CODE	QTY
18	242/00290		Tie panel fixing cable		6
19	30/926117		Drier receiver Refer L760-1-1		1
20	332/T4785		Condenser		1
21	1316/0307D		Screw		6
24	1370/0201D		Nut Plain M8		3
25	1317/3320Z		Bolt M8 x 100 Flange Reduced		3
27	333/K4445		Harness Link		1

JS220 XD

JS220LC

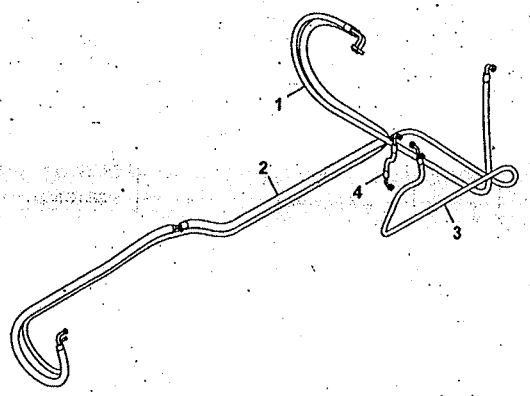

333-K2651-2

ITEM	Part#	CHANGE NO	DESCRIPTION	USAGE CODE	QTY
1	333/K2674		Hose A/C Compressor To Condenser		1
2	333/J2265		Hose A/C Evaporator to Compressor		1
3	333/K2653		Hose Receiver Drier		1
4	333/K2652		Hose Receiver Drier To Condenser		1

JS220 XD

JS220LC

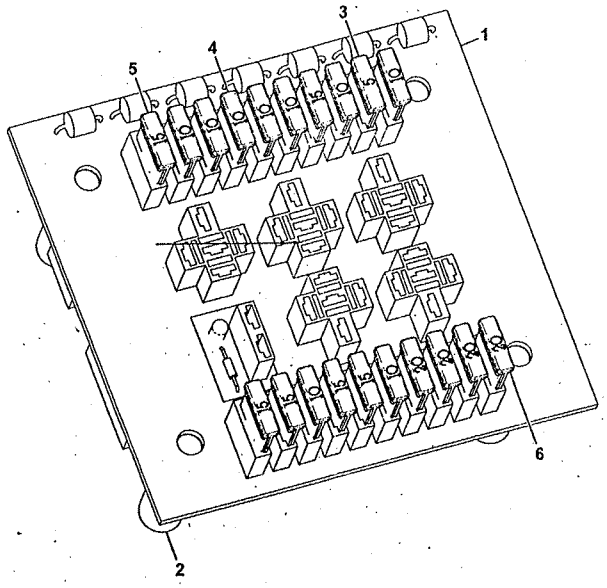

333-J0369-1

ITEM	Part #	CHANGE NO	DESCRIPTION	USAGE CODE	QTY
1	332/J9681		Fuse and relays, PCB		1
2	333/J0389		Spacer		4
3	716/05703		Fuse 5 Amp		1
4	716/05705		Fuse 10 amp		9
5	716/05706		Fuse 15 Amp		6
6	716/05707		Fuse 20 amp		4

JS220 XD

JS220LC

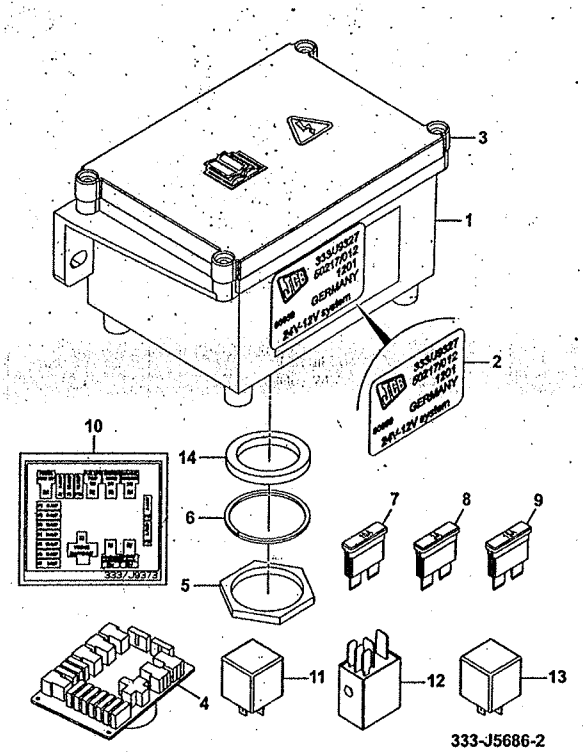

333-J5686-2

ITEM	Part #	CHANGE NO	DESCRIPTION	USAGE CODE	QTY
1	333/K3803		Moulding Fuse Box		1
2	333/F3981		Decal Engine Fuse And Relay Module		1
3	333/K3804		Fusebox Lid Black		1
4	320/09733		Circuit board Pod Box 24V		1
5	7210/0048		Nut Deutsch size 24		1
6	7210/0047		Washer lock,Deutsch size 24		1
7	716/05705		Fuse 10 amp		7
8	716/05701		Fuse 3 amp		4
9	716/05706		Fuse 15 Amp		1
10	333/J9373		Decal fuse location		1
11	332/W1815		Relay 24V 30A		1
12	332/C3148		Relay 12V Micro High Capacity (Black)		4

Continue...

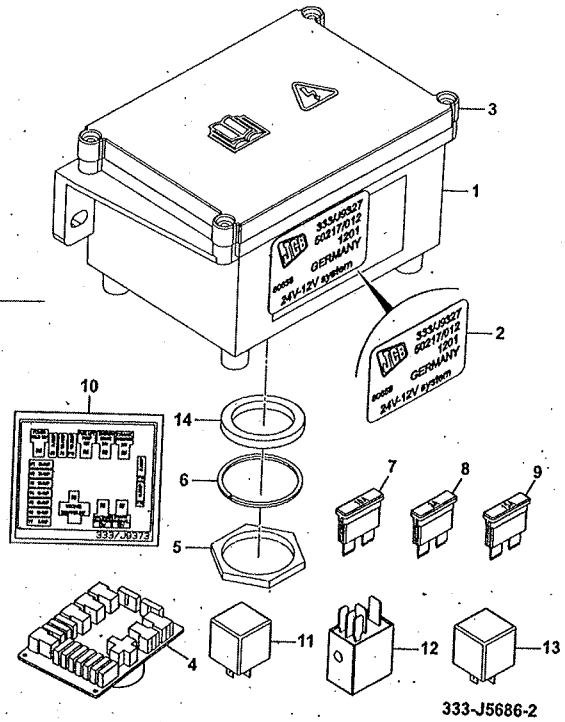

333-J5686-2

ITEM	PART NO	CHANGE NO	DESCRIPTION	USAGE CODE	QTY
13	333/S5959		Relay micro 24V, Panasonic		2
14	333/K4024		Gasket Pod Box		1

JS220 XD

JS220LC

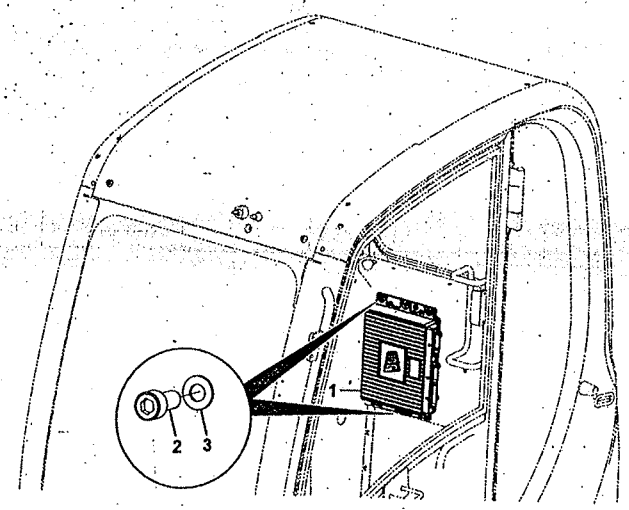

ITEM	Part #	CHANGE NO	DESCRIPTION	USAGE CODE	QTY
1	728/80071		Unit ECU1 Mk3 Programmed unit Refer C360-5-1		1
2	1391/3407D		Capscrew M10 x 25mm		3
3	1420/0008D		Washer Plain		3

215-13210-1

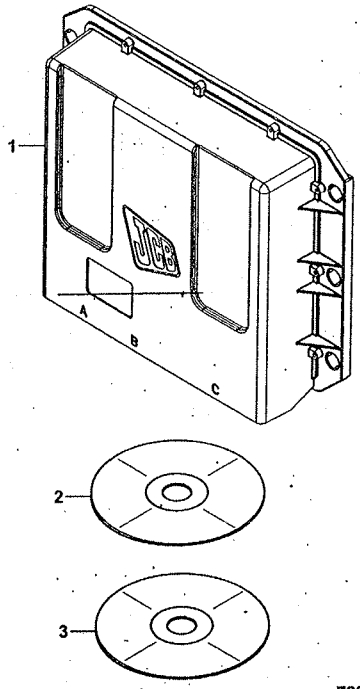

728-80071-6

JS220 XD

JS220LC

ITEM	Part #	CHANGE NO	DESCRIPTION	USAGE CODE	QTY
1	332/K6848		ECU 1		1
2			Software ECU 1 v16-00		1
3			Software specification functional		1

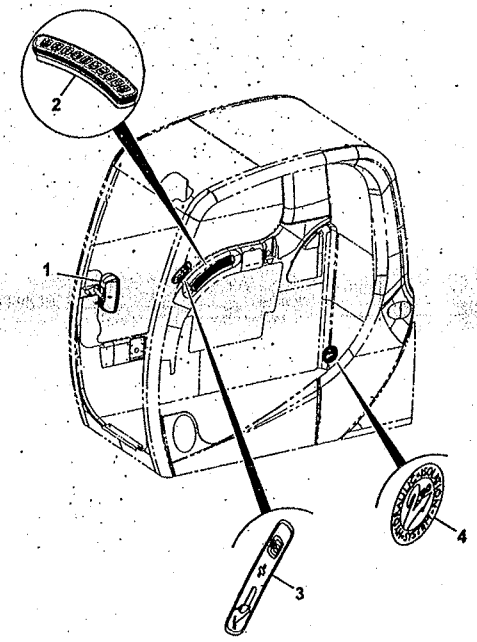

215-13255-4

JS220 XD

JS220LC

ITEM	Part #	CHANGE NO	DESCRIPTION	USAGE CODE	QTY
1	728/80073		Unit EMS monitor Programmed Refer C360-15-1		1
2	701/80369		Switch panel, fascia		1
3	333/K1984		Label isolator tracked		1
4	333/K2373		Label logo, isolation hydraulic		1

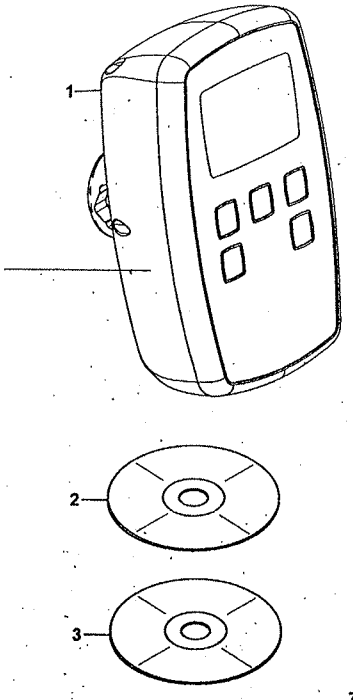

728-80073-7

JS220 XD

JS220LC

ITEM	Part #	CHANGE NO	DESCRIPTION	USAGE CODE	QTY
1	332/K4244		Monitor system electronic		1
2			Software EMS		1
3			Software specification functional		1

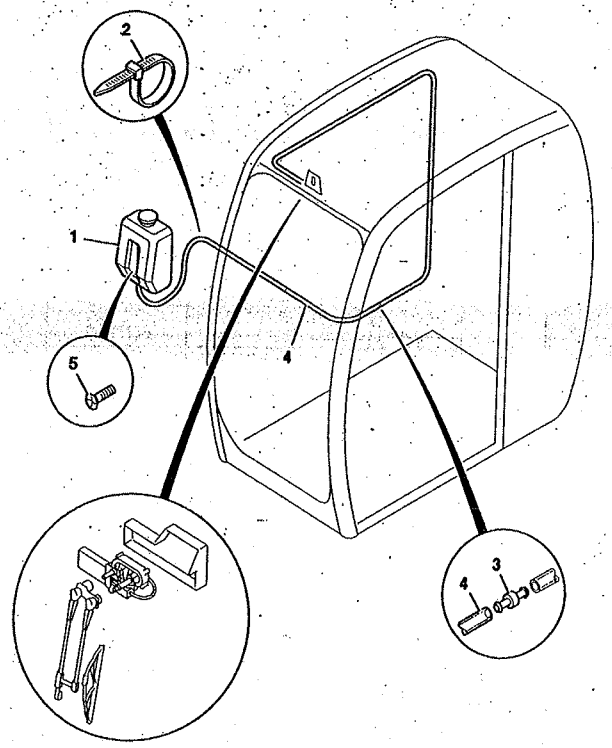

923200

JS220 XD

JS220LC

ITEM	Part #	CHANGE NO	DESCRIPTION	USAGE CODE	QTY
1	JHN0160		Tank screen wash with pump		1
2	KAR0017		Tie Harness Retainer		10
3	KHR1178		Adapter fir tree		1
4	KHR1181		Tube		1
5	6013/0103Z		Screw countersunk		2

• D01 CONTROLS

D

D120-1-1 EXCAVATOR CONTROLS, CAB SERVO CONTROL, CONSOLE, LEFT SIDE AND RIGHT SIDE

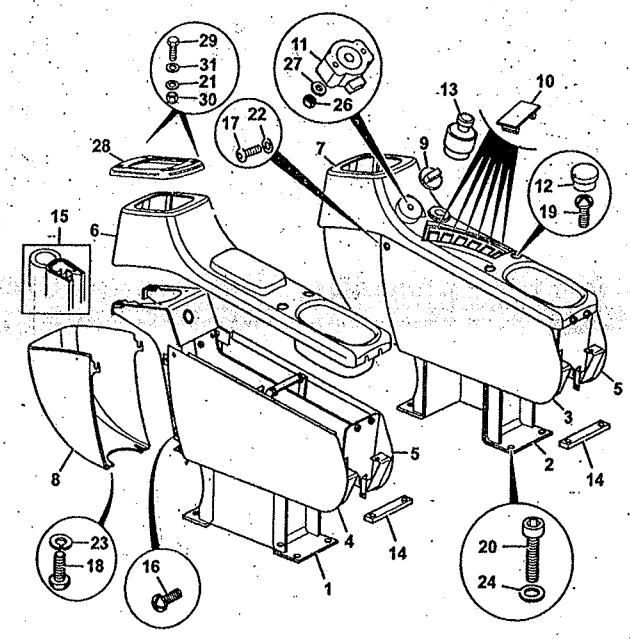

215-10956-6

JS220 XD

JS220LC

ITEM	Part #	CHANGE NO	DESCRIPTION	USAGE CODE	QTY
1	335/05915		Stand console left side		1
2	335/01348		Stand console right side		1
3	333/L9979		Panel side console left side		1
4	333/L6784		Panel side console left side		1
5	333/L6829		Panel side console right side		2
6	332/K5279		Cover console left side		1
7	332/K5277		Console cover black right side		1
8	332/K5280		Panel front console access black		2
9	331/21736		Knob throttle control		1
10	701/60010		Blank Switch Panel		6
11	716/30155		Potentiometer		1

Continue...

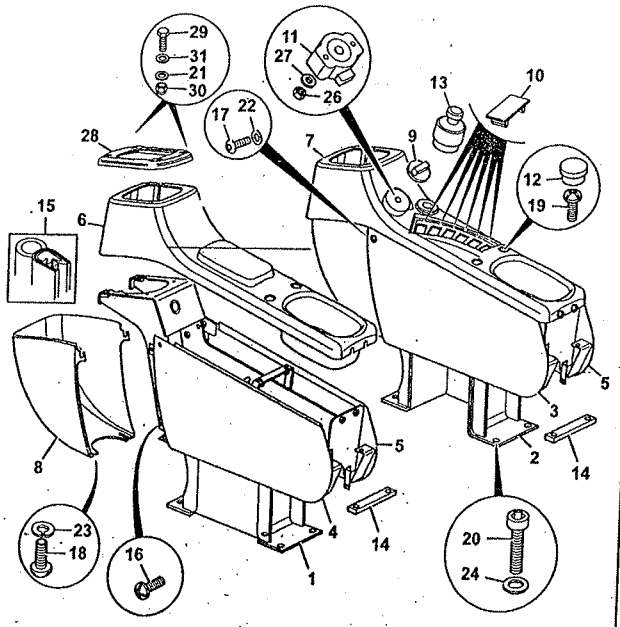

215-10956-6

ITEM	PART NO	CHANGE NO	DESCRIPTION	USAGE CODE	QTY
12	332/K5436		Cap blanking black		4
13	701/80184		Switch Ignition (Supplied with x2 Keys 701/45501)		1
14	KHN1313		Bracket		2
15	JHH0111		Strip Edging		2
16	KHR0736		Screw pan head		16
17	826/01281		Capscrew button head M6 x 12		8
18	1316/0203D		Screw		4
19	KHR0738		Screw pan head		4
20	1391/3407D		Capscrew M10 x 25mm		8
21	1420/0006D		Washer Plain M6		12
22	823/00516		Washer Nylon M6		4
24	JHP0046		Washer M10		8
26	1370/9401D		Nut plain M4		2
27	1420/0004D		Washer plain M4		2
28	332/K6071		Bezel joystick		2
29	1391/3205D		Capscrew M6 x 20		8
30	1370/0101D		Nut Plain M6		8

D120-1-1 EXCAVATOR CONTROLS, CAB SERVO CONTROL, CONSOLE, LEFT SIDE AND RIGHT SIDE 9820/0546B ISSUE 1

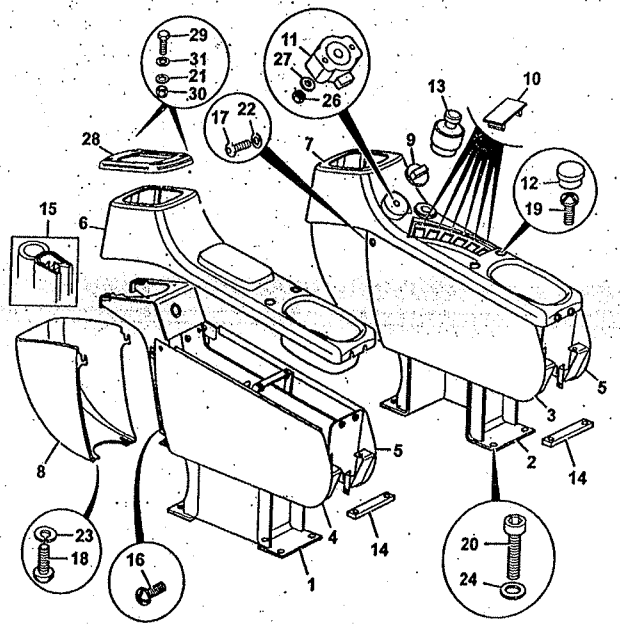

215-10956-6

ITEM	PART NO	CHANGE NO	DESCRIPTION	USAGE CODE	QTY
31	1425/0006Z		Washer Spring		8

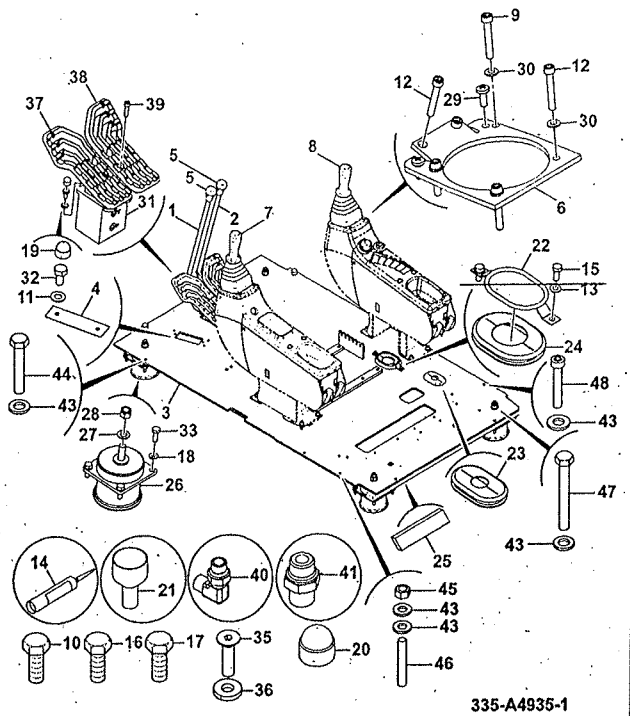

JS220 XD

JS220LC

ITEM	Part #	CHANGE NO	DESCRIPTION	USAGE CODE	QTY
1	332/K4871		Lever Track Left Side		1
2	332/K4891		Lever Track Right Side		1
3	335/B0227		Plate Floor		1
4	229/01723		Plate		2
5	JHJ0123		Knob		2
6	331/18592		Plate Mounting Control Valve		2
7	25/222891		Valve Hand Controller Left Hand Refer E340-1-1		1
8	25/222892		Valve Hand Controler Right Hand Refer E340-5-1		1
9	1391/3208D		Capscrew M6 x 30mm		4
10	1316/0407Z		Bolt High Strength		4
11	1420/0008Z		Washer Plain M10		4

D120-5-1 EXCAVATOR CONTROLS, JOYSTICK CONTROL
9820/0546B
ISSUE 1

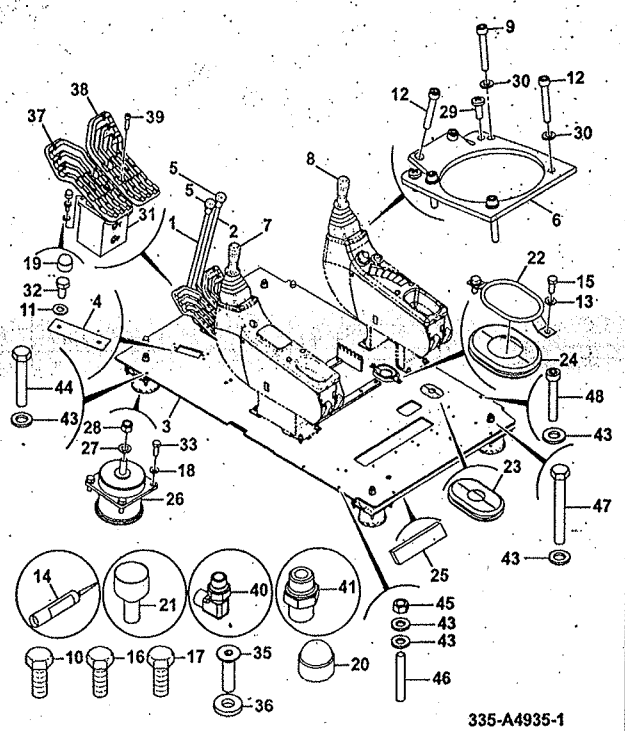

ITEM	PART NO	CHANGE NO	DESCRIPTION	USAGE CODE	QTY
12	1391/3210D		Capscrew M6 x 40mm		8
13	1420/0007Z		Washer Plain M8		4
14	4101/0502		Sealant		1
15	1316/0305Z		Bolt High Tensile		4
16	1316/0403Z		Screw		4
17	1316/0303Z		Screw		4
18	JHP0046		Washer M10		24
19	KHJ0768		Cap spl		4
20	KHJ0769		Cap Protection		3
21	KHJ0843		Cover spl		1
22	KHJ0947		Guide		2
23	KHJ0948		Grommet		1
24	KHJ0950		Grommet		2
25	KHJ0951		Seal Cushion		1
26	332/K7887		Rubber Mount		6
27	1420/0011Z		Washer Plain M16		6
28	1370/0603Z		Nut M16		6
29	KHR0737		Screw Pan Head		4
30	MPR2006		Washer Special		8

Continue...

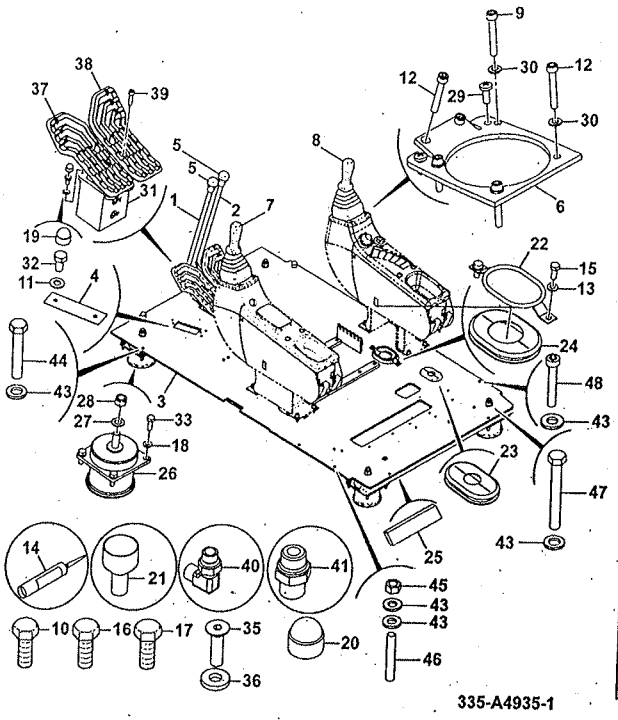

ITEM	PART NO	CHANGE NO	DESCRIPTION	USAGE CODE	QTY
31	KSJ2465		Valve Remote Control Refer E340-10-1		1
32	1316/0405Z		Screw M10 X 20		4
33	1316/0408Z		Screw M10x30		24
35	826/10811		Screw Countersunk Socket Head M8 x 30		4
36	JHP0080		Washer		4
37	332/K5509		Pedal Casting Left Side		1
38	332/K5565		Pedal Casting Right Side		1
39	1391/3410D		Capscrew M10 x 40		4
40	334/L6374		Elbow Adaptor 1/4		4
41	334/L6367		Adaptor Male		1
43	JHP0042		Washer M12		12
44	1316/3514Z		Bolt		3
45	1371/0401Z		Nut Hex 12		3
46	KHN1256		Bolt		3
47	1316/3516Z		Bolt		2

D120-5-1 EXCAVATOR CONTROLS, JOYSTICK CONTROL 9820/0546B
ISSUE 1

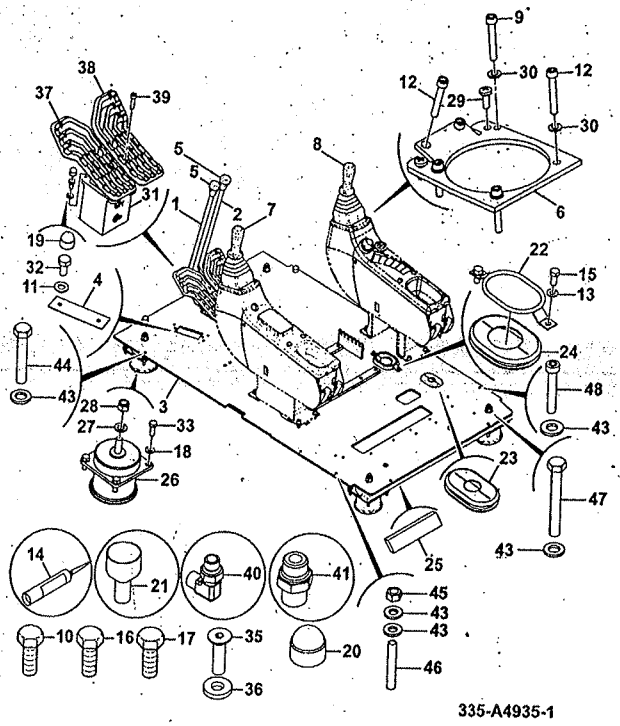

ITEM	PART NO	CHANGE NO	DESCRIPTION	USAGE CODE	QTY
48	1391/3508D		Capscrew M12 x 30		1

E

• E01 HYDRAULIC CIRCUITS
E02 PUMP & MOTORS
E03 VALVES
E04 RAMS
E05 FILTER

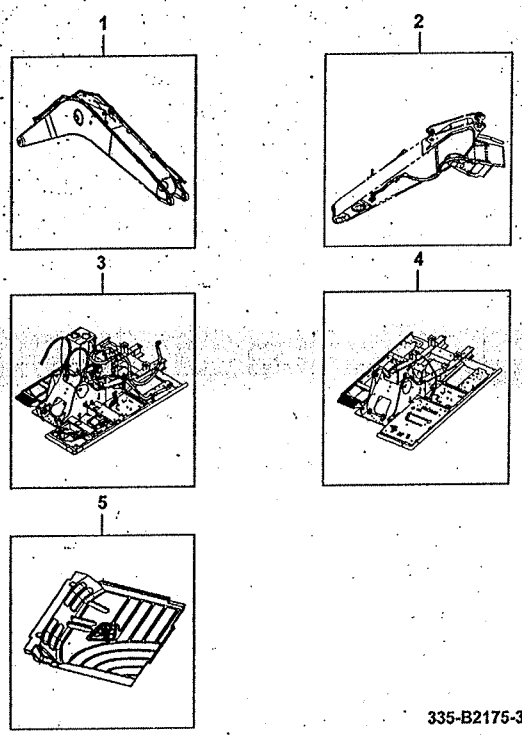

335-B2175-3

JS220 XD

JS220LC

ITEM	Part #	CHANGE NO	DESCRIPTION	USAGE CODE	QTY
1			Pipe Work, Hammer, Assembly - Mono Boom Refer E140-30-1		1
2			Circuit Hammer Line QRC, Assembly Refer E140-35-1		1
3			Circuit Hammer Line (Revolving Frame), Assembly Refer E130-61-1		1
4			Control Hammer Refer E130-62-1		1
5	335/C1276		Floormat		1

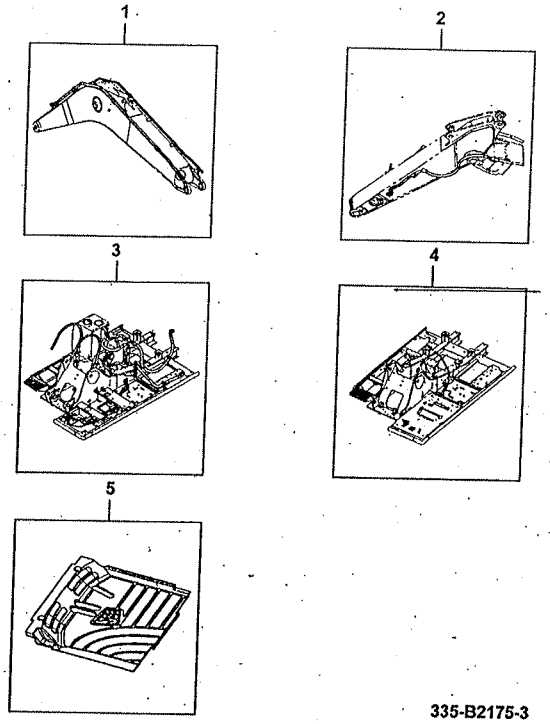

335-B2175-3

JS220 XD

JS220LC

ITEM	Part #	CHANGE NO	DESCRIPTION	USAGE CODE	QTY
1			Pipe Work, Hammer, Assembly - Mono Boom Refer E140-30-1		1
2			Circuit Hammer Line, Arm 3.0m, QRC, Assembly Refer E140-40-1		1
3			Circuit Hammer Line (Revolving Frame), Assembly Refer E130-61-1		1
4			Control Hammer Refer E130-62-1		1
5	335/C1276		Floormat		1

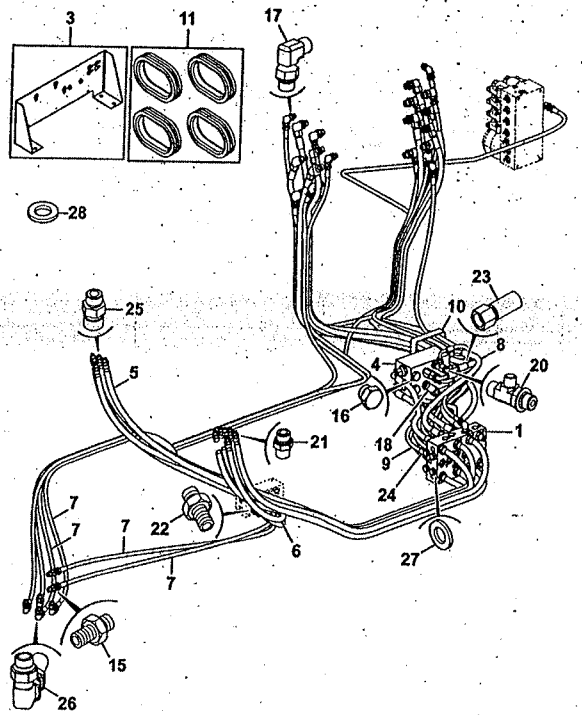

229-01869-10

JS220 XD

JS220LC

ITEM	Part #	CHANGE NO	DESCRIPTION	USAGE CODE	QTY
1	25/220830		Valve Shuttle Assembly Refer E390-15-1		1
3	332/P4948		Bracket Valve Mount		1
4	25/220041		Valve Cushion Refer E130-5-1		1
5			Kit-hose Joystick Right Hand Side Refer E130-100-1		1
6			Kit-hose Joystick Left Hand Side Refer E130-105-1		1
7	340/00383		Kit-hose Travel Pedals Refer E130-15-1		1
8			Kit-hose Cushion Valve Refer E130-70-1		1
9	335/A7075		Hose shuttle valve for low noise introd Refer E130-75-1		1

Continue...

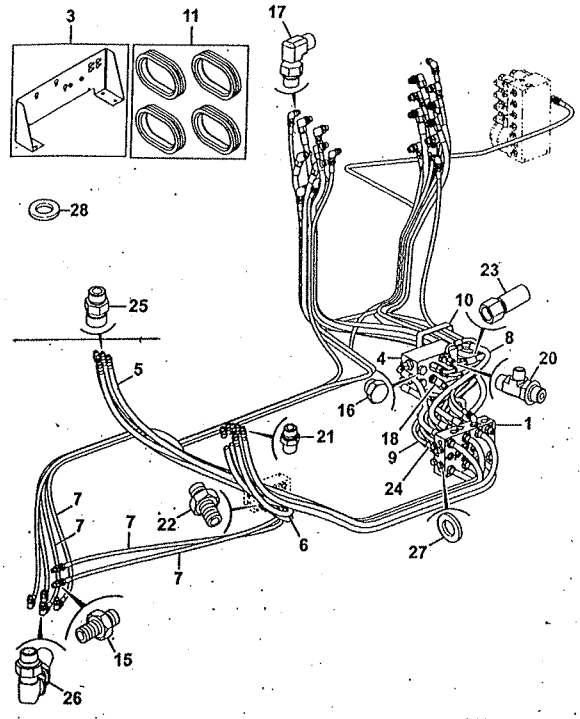

229-01869-10

ITEM	PART NO	CHANGE NO	DESCRIPTION	USAGE CODE	QTY
10	334/L1679		Kit Clamp Refer E130-10-1		1
11	926/47500		Cushion Rubber		4
15	CNA0584		Adapter Strainer		1
16	BRJ1545		Plug		3
17	334/L6374		Elbow Adaptor 1/4		8
18	334/L6662		Elbow Adaptor 1/4		10
20	334/L6255		Tee adaptor		1
21	334/L6367		Adaptor Male		16
22	334/L6615		Adapter 3/8 male		17
23	KNJ1118		Hose		1
24	334/P3837		Hose adaptor S2		3
25	1620/0003		Adapter		10
26	KRJ3357		Adapter Elbow		1
27	JHP0046		Washer M10		8
28	1420/0008Z		Washer Plain M10		4

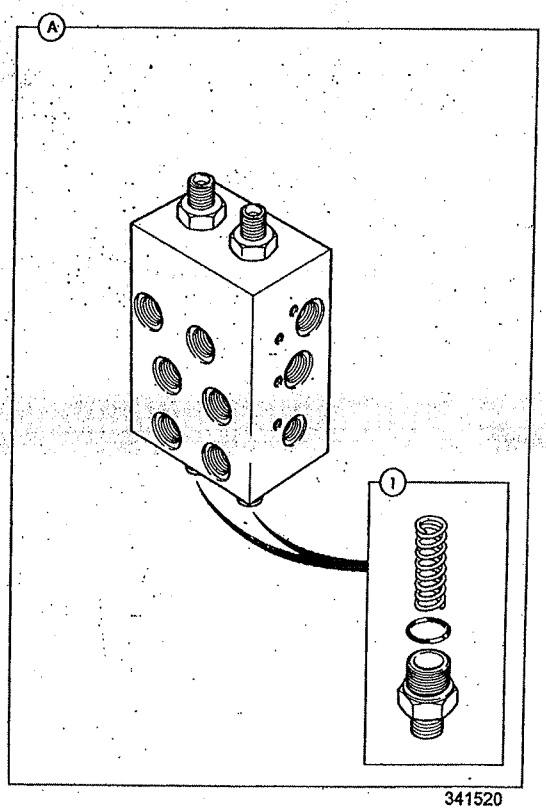

341520

JS220 XD

JS220LC

ITEM	Part #	CHANGE NO	DESCRIPTION	USAGE CODE	QTY
A	25/220041		Valve Cushion		1
1	340/00055		Kit repair		1

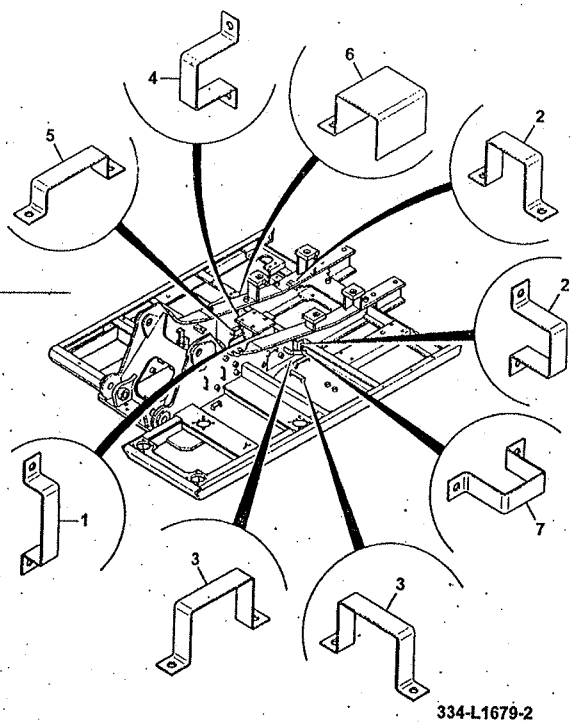

334-L1679-2

JS220 XD

JS220LC

ITEM	Part #	CHANGE NO	DESCRIPTION	USAGE CODE	QTY
1	KHJ0723		Clamp		1
2	333/L9326		Clamp		2
3	334/L2788		Clamp		2
4	KHJ0722		Clamp		1
5	KHJ0749		Clamp Hose		1
6	KRJ5478		Clamp		1
7	KHJ1022		Clamp		1

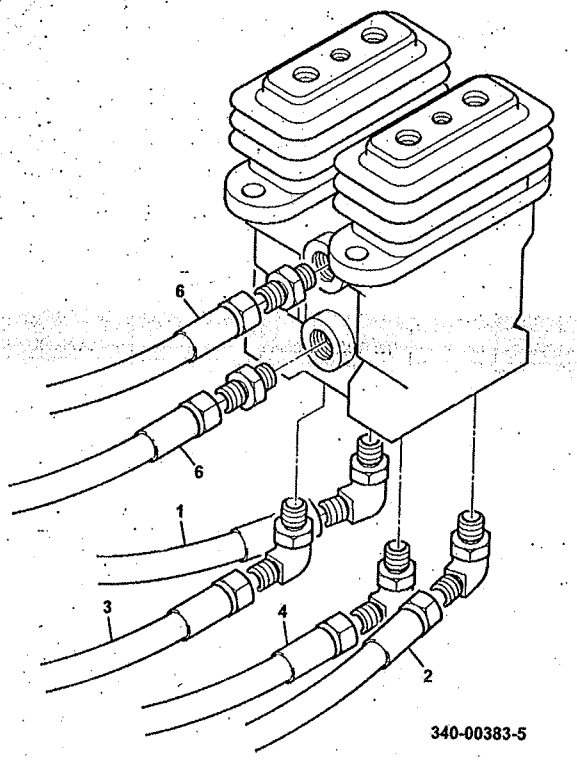

340-00383-5

JS220 XD

JS220LC

ITEM	Part #	CHANGE NO	DESCRIPTION	USAGE CODE	QTY
1	JRJ0186		Hose nylon		1
2	KTJ0812		Hose 1/4" BSP ST-ST x 3250mm		1
3	627/10071		Hose 1_4 str-str		1
4	JRJ0079		Hose 1/4"BSP ST-ST x 3000mm		1
6	KTJ0907		Hose 1/4"BSP ST-ST x 1100mm		2

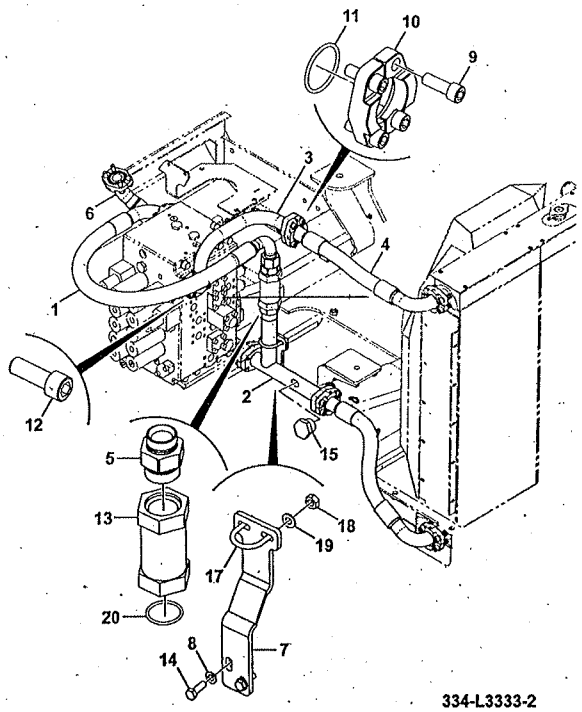

334-L3333-2

JS220 XD

JS220LC

ITEM	Part #	CHANGE NO	DESCRIPTION	USAGE CODE	QTY
1	332/J9347		Hose 1 1/4" x 1100mm		1
2	334/P1016		Pipe return		1
3	332/J9306		Pipe oil cooler		1
4	334/L5393		Hose -24 SAE LP 640mm		2
5	333/J6027		Adapter		1
6	616/80221		Hose		1
7	332/J9890		Bracket pipe clamp		1
8	1420/0009D		Washer M12		2
9	1391/3509D		Capscrew M12 x 35mm		28
10	KTJ1663		Flange Split		14
11	2400/0216		O Ring		8
12	1391/3511D		Capscrew		4
13	25/222140		Valve Relief 3bar		1
14	1316/0509D		Screw M12x35 long		2
15	BRJ0174		Plug		1

E130-20-1 HYDRAULIC CIRCUITS CHASSIS, HOSES AND PIPEWORK, OIL COOLER & RETURN LINE 9820/0546B ISSUE 1

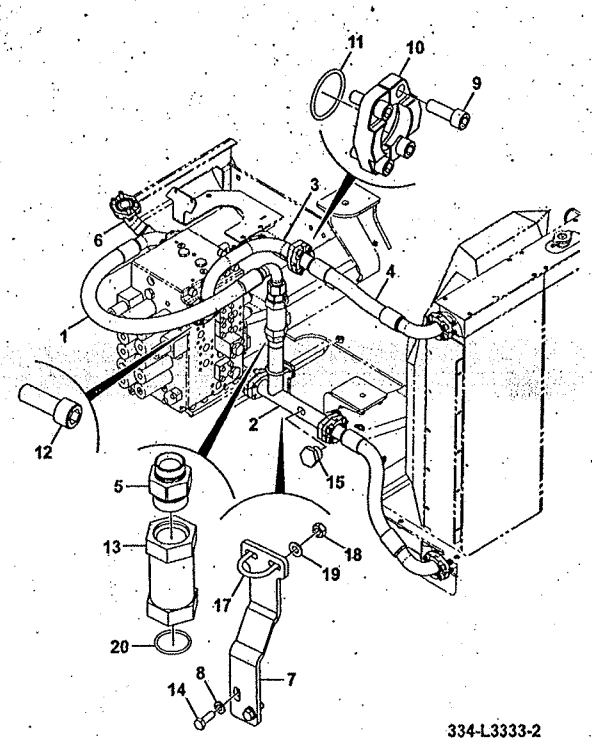

334-L3333-2

ITEM	PART NO	CHANGE NO	DESCRIPTION	USAGE CODE	QTY
17	KNJ0720		Bolt U		1
18	1371/0301Z		Nut High Strength, M10		2
19	1420/0008D		Washer Plain		2
20	2400/0215		O Ring		1

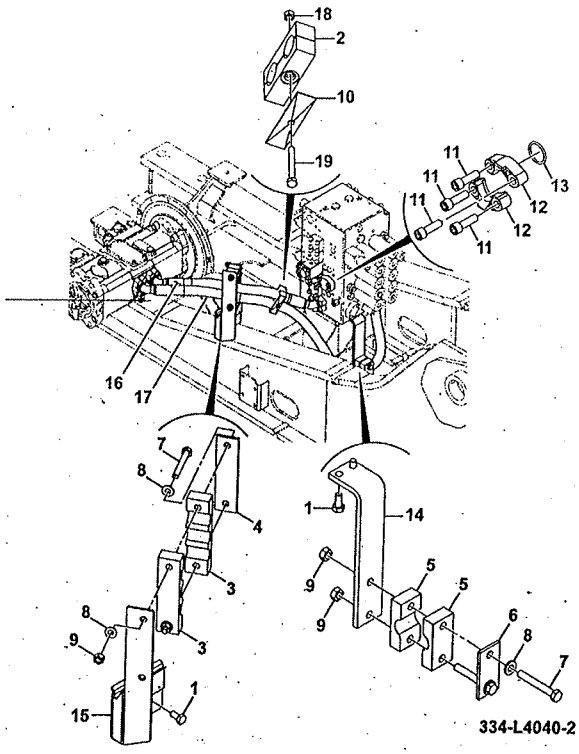

JS220 XD

JS220LC

ITEM	Part #	CHANGE NO	DESCRIPTION	USAGE CODE	QTY
1	1316/0507Z		Screw		4
2	821/00270		Clamp		1
3	KRJ4279		Clamp pipe		2
4	KRJ4280		Plate		1
5	KRJ4442		Clamp hose		2
6	KRJ4443		Plate		1
7	1316/3519Z		Bolt		4
8	JHP0042		Washer M12		8
9	1371/0401Z		Nut Hex 12		4
10	821/00271		Plate cover M8 x 65mm		2
11	1391/3510Z		Capscrew M12x40		16
12	210/92901		Clamp Flange 1"		8
13	2407/0210		O Ring		4
14	331/27334		Bracket		1
15	335/11305		Bracket hose retaining		1

E130-30-1 HYDRAULIC CIRCUITS CHASSIS, HOSES & FITTINGS, PRESSURE LINES 9820/0546B ISSUE 1

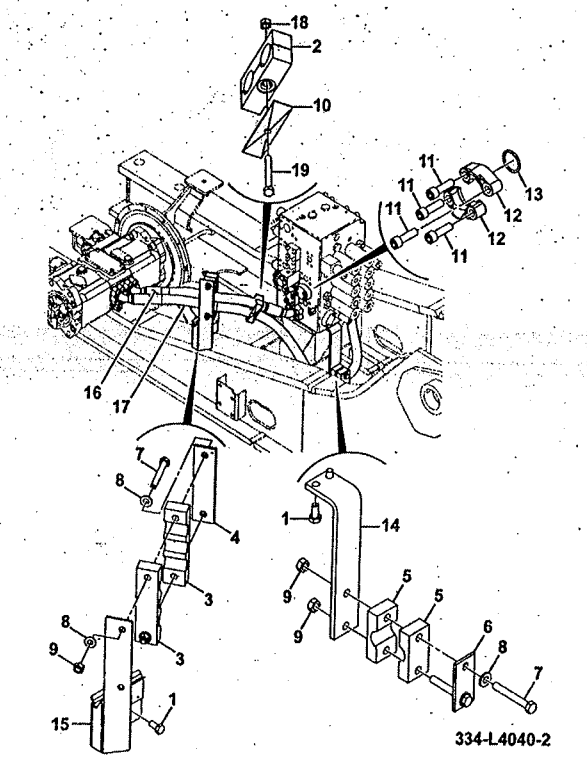

ITEM	PART NO	CHANGE NO	DESCRIPTION	USAGE CODE	QTY
16	334/L2579		Hose -12 SAE UHP 900		1
17	334/L2584		Hose -12 1-3/4 SAE U		1
18	1371/0201Z		Nut		1
19	1316/3317D		Bolt M8 x 75mm		1

JS220 XD

JS220LC

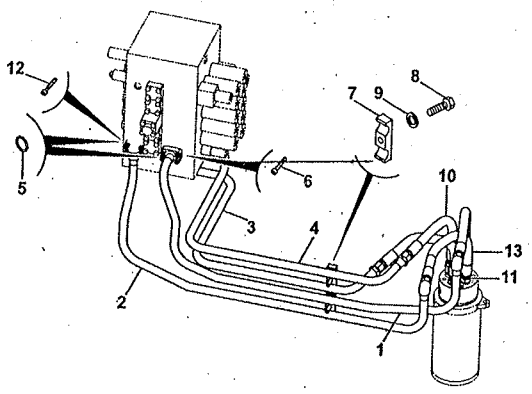

ITEM	Part #	CHANGE NO	DESCRIPTION	USAGE CODE	QTY
1	830/10951		Pipe assembly		1
2	830/10952		Pipe assembly		1
3	830/10953		Pipe assembly		1
4	830/10954		Pipe assembly		1
5	2407/0205		O Ring		4
6	1391/3409		Capscrew		12
7	JRJ0218		Clamp pipe		2
8	1316/3513D		Bolt		2
9	1420/0009D		Washer M12		2
10	KRJ2370		Hose		1
11	KNJ1936		Adapter		1
12	1391/3413D		Capscrew		4
13	KRJ4551		Hose		3

215-10946-6

JS220 XD

JS220LC

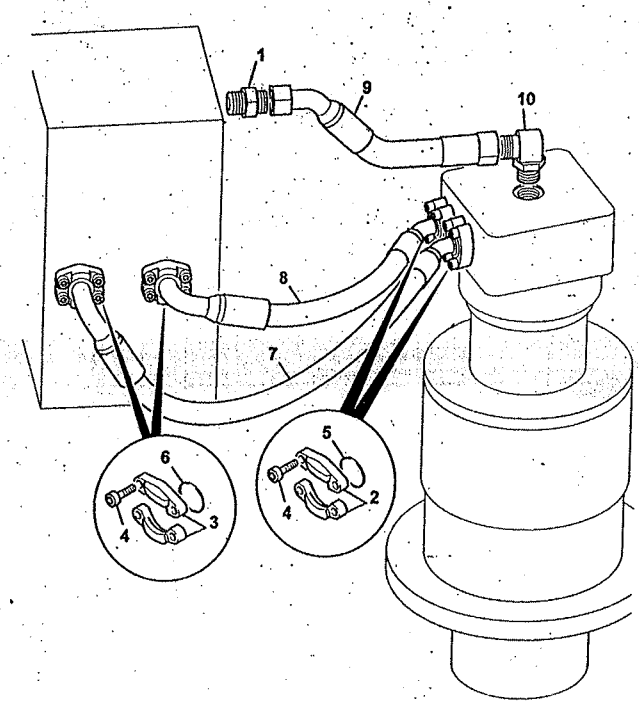

ITEM	Part #	CHANGE NO	DESCRIPTION	USAGE CODE	QTY
1	334/L6394		Adaptor male 1/4 ST		1
2	KRJ2681		Flange split		4
3	KRJ2682		Flange Split		4
4	1391/3408D		Capscrew M10 x 30mm		16
5	2409/0205		O Ring		2
6	2409/0210		O Ring		2
7	627/10043		Hose		1
8	627/10044		Hose		1
9	627/10284		Hose		1
10	KHJ0345		Elbow Adaptor Male		1

215-10953-7

JS220 XD

JS220LC

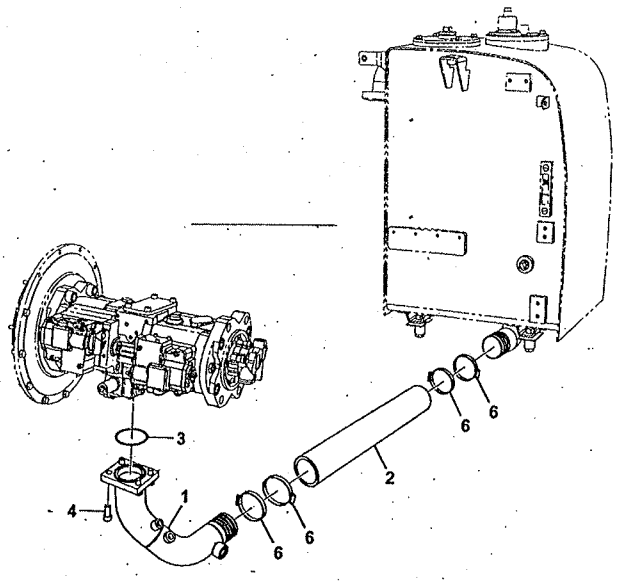

334-L3636-5

ITEM	Part #	CHANGE NO	DESCRIPTION	USAGE CODE	QTY
1	334/L3535		Pipe suction		1
2	834/10661		Hose Suction		1
3	BRA0127		O Ring		1
4	1391/3508D		Capscrew M12 x 30		4
6	334/L7498		Clip wormdrive		4

JS220 XD

JS220LC

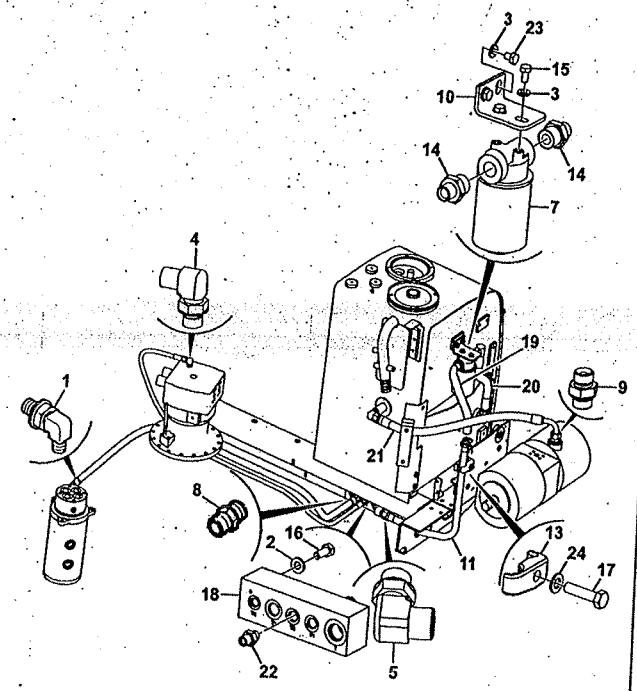

229-01872-8

ITEM	Part #	CHANGE NO	DESCRIPTION	USAGE CODE	QTY
1	334/L6384		Elbow Adaptor 90 male		1
2	JHP0042		Washer M12		2
3	JHP0046		Washer M10		4
4	KHJ0342		Elbow 3/8 x 3/8		1
5	334/L6548		Elbow adaptor		3
7	KNJ0287		Filter Inlet Refer E520-1-1		1
8	334/L0979		Adaptor male 1/2 ST		1
9	JLJ0054		Adapter 3/4		1
10	229/01703		Adaptor		1
11	KRJ4229		Pipe		1
13	KRV0548		Clamp		1
14	MPV2193		Adapter		2
15	1316/0405Z		Screw M10 X 20		2
16	1316/0508Z		Screw		2
17	1316/3512Z		Bolt M12x50		1

Continue...

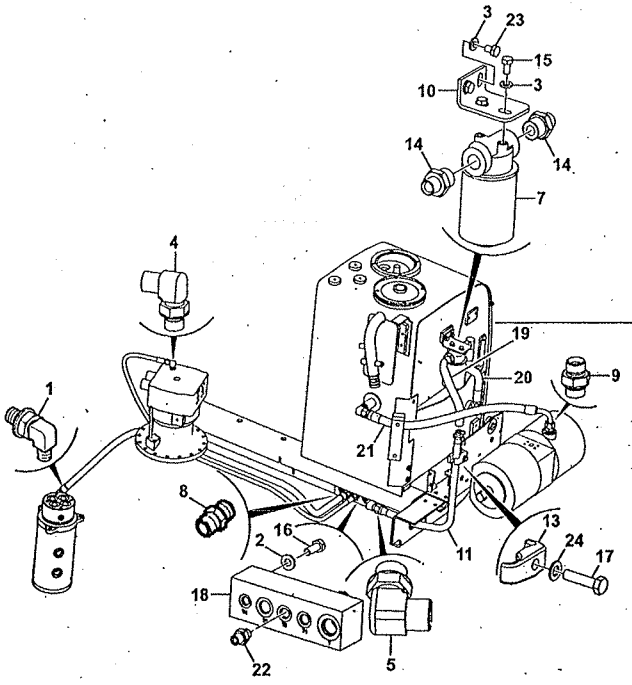

229-01872-8

ITEM	PART NO	CHANGE NO	DESCRIPTION	USAGE CODE	QTY
18	331/27235		Manifold		1
19	627/10083		Hose		1
20	627/10084		Hose		1
21	635/80037		Hose		1
22	334/L6615		Adapter 3/8 male		1
23	1316/0403Z		Screw		2
24	1420/0009Z		Washer Plain M12		1
25	UBJ0158		O Ring		1
26	UBJ0157		O Ring		1
27	BRP0007		O Ring		1
28	UEJ0360		O Ring		2

JS220 XD

JS220LC

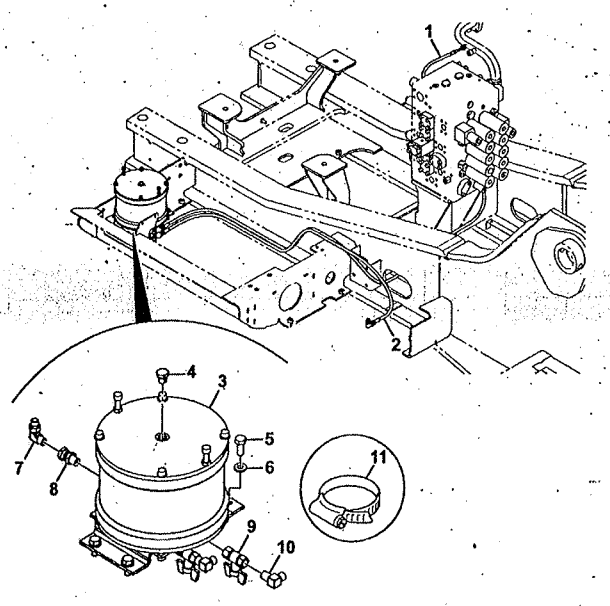

334-P9580-1

ITEM	Part#	CHANGE NO	DESCRIPTION	USAGE CODE	QTY
1	JLJ0309		Hose 1/4"BSP ST-90 x 2900mm		1
2	KSJ0968		Hose 1/4"BSP ST-ST x 1600mm		1
3	JRJ0238		Filter Bypass Refer E510-5-1		1
4	KHJ0739		Plug		1
5	1316/0407D		Screw		4
6	JHP0046		Washer M10		4
7	334/L6374		Elbow Adaptor 1/4		3
8	C4E7327		Adapter		2
9	KHJ0897		Tap Drain		2
10	C4E5507		Adapter 90 deg		2
11	KHH0143		Band Harness Retainer		4

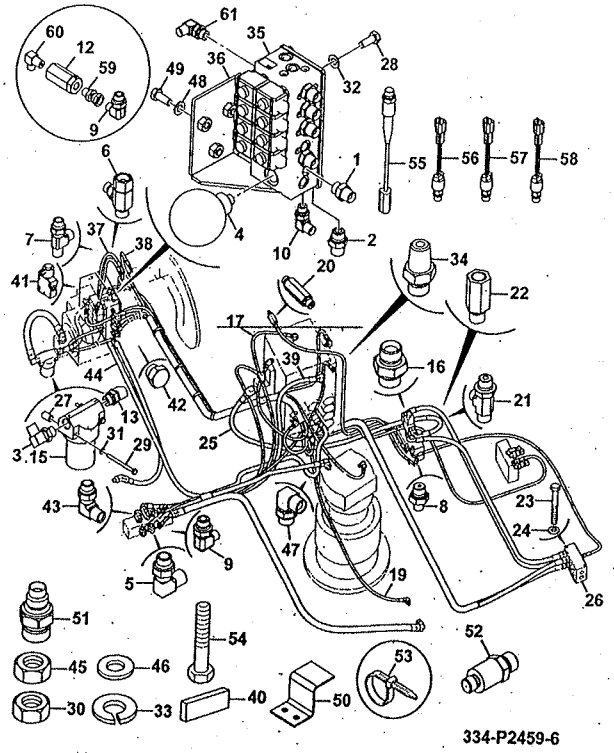

JS220 XD

JS220LC

ITEM	Part #	CHANGE NO	DESCRIPTION	USAGE CODE	QTY
1	334/L6367		Adaptor Male		13
2	334/L6615		Adapter 3/8 male		7
3	334/L6384		Elbow Adaptor 90 male		3
4	JHJ0050		Accumulator		1
5	334/L6374		Elbow Adaptor 1/4		9
6	816/50018		Adapter Tee		1
7	334/L6407		Adaptor tee 1/4"		1
8	KAJ2176		Adapter		2
9	334/L6554		Elbow adaptor		2
10	334/L6662		Elbow Adaptor 1/4		2
12	KHJ0568		Filter line		1
13	KHJ0641		Adapter Elbow		1
15	32/925214		Filter assembly Refer E510-1-1		1
16	JLJ0054		Adapter 3/4		1
17	KNJ1821		Hose hyd (l=470)		1

JCB E130-60-1 HYDRAULIC CIRCUITS CHASSIS, HOSES & FITTINGS, PILOT PRESSURE AND RETURN LINE 9820/0546B ISSUE 1

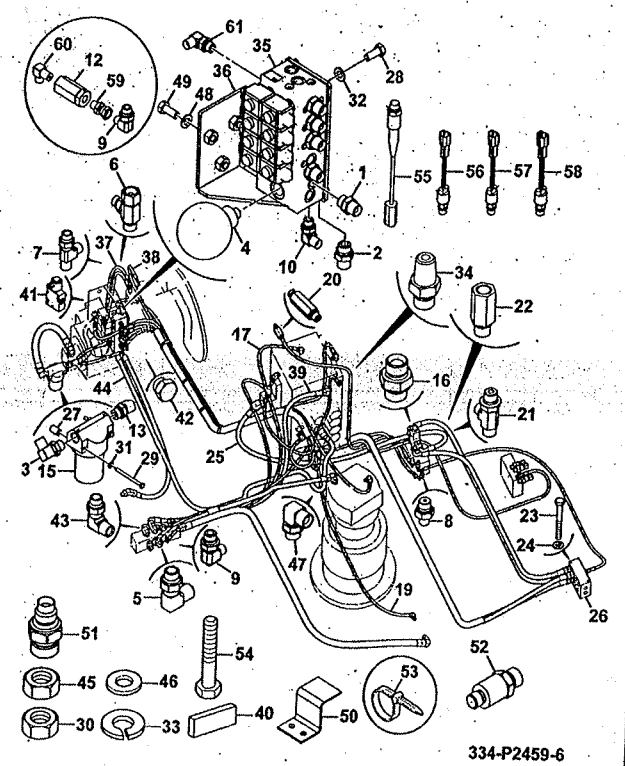

ITEM	PART NO	CHANGE NO	DESCRIPTION	USAGE CODE	QTY
18	AWV0019		Hose hydraulic		2
19	KTJ0670		Hose nylon		1
20	JHJ0106		Adapter M/M, 1/4", 50mm ext.		1
21	334/L6255		Tee adaptor		1
22	KHJ0894		Adapter		1
23	BLH0487		Bolt		2
24	JHP0044		Washer		2
25	KAJ3248		Hose nylon		1
26	KNJ1933		Manifold		1
27	KRN0081		Spacer		4
28	1316/0305Z		Bolt High Tensile		6
29	1316/3218Z		Bolt		2
30	1370/0101Z		Nut M6		2
31	1420/0006Z		Washer Plain M6		2
32	1420/0007Z		Washer Plain M8		6
33	1425/0006Z		Washer Spring		2
34	1609/0002		Adapter		2
35	25/222885		Valve 8 station solenoid Refer E390-5-1		1

Continue...

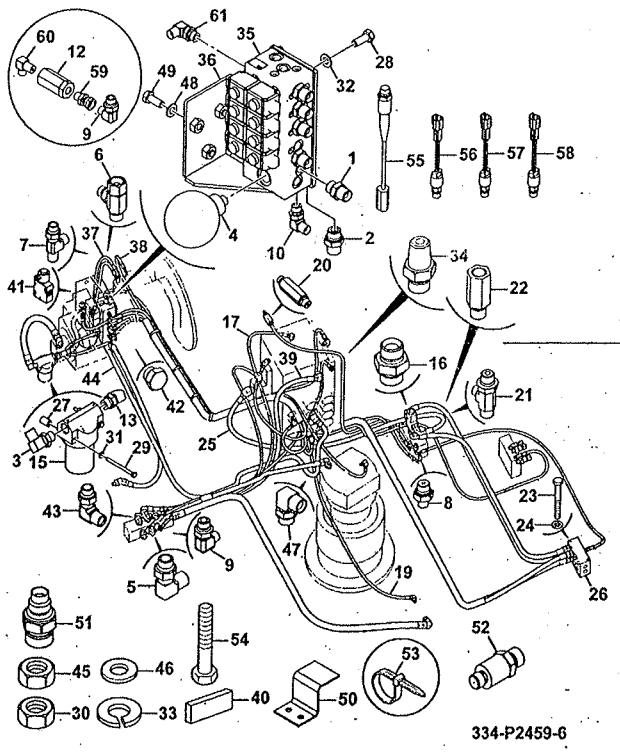

ITEM	PART NO	CHANGE NO	DESCRIPTION	USAGE CODE	QTY
36	333/J1360		Mounting plate		1
37			Kit-hose - 8 station Refer E130-90-1		1
38			Kit-hose Pump Refer E130-95-5		1
39			Kit-hose Tank Manifold Refer E130-115-1		1
40	KHJ0756		Cushion rubber		4
41	333/P0375		Valve Solenoid Refer E390-6-1		1
42	KHJ0363		Plug		10
43	334/L6379		Adaptor 1/4 - 3/8" elbow 90 male		1
44			Kit-hose boom priori Refer E130-85-1		1
45	1371/0303Z		Nut		2
46	1420/0008Z		Washer Plain M10		4
47	334/L6548		Elbow adaptor		1
48	1420/0009Z		Washer Plain M12		3
49	1316/0508Z		Screw		3
50	334/L9377		Clamp		1

E130-60-1 HYDRAULIC CIRCUITS CHASSIS, HOSES & FITTINGS, PILOT PRESSURE AND RETURN LINE 9820/0546B ISSUE 1

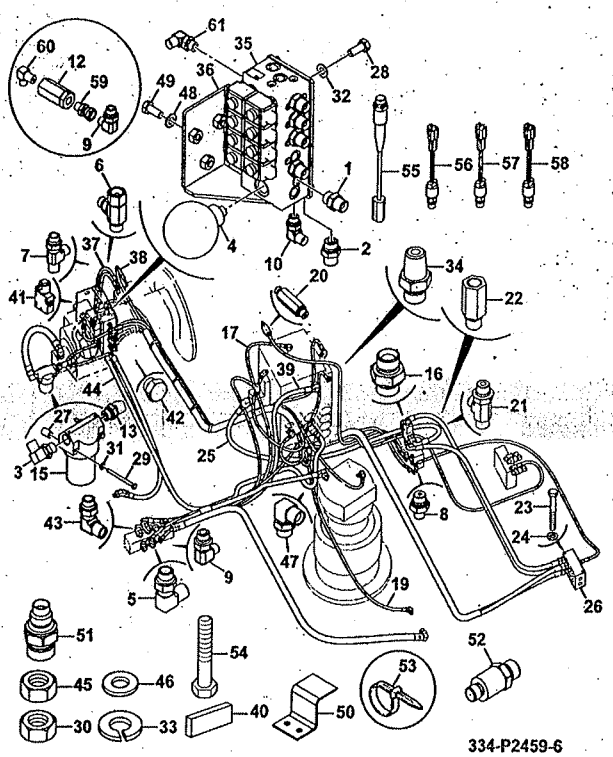

ITEM	PART NO	CHANGE NO	DESCRIPTION	USAGE CODE	QTY
51	333/J5413		Adapter		2
52	333/J5233		Restrictor 0.5mm		2
53	826/01347		Tie Cable 160mm		8
54	1391/3215Z		Capscrew		2
55	332/J2970		Switch High Pressure 328 bar		1
56	332/J0671		Switch Travel Pressure 20 bar		2
57	332/J0670		Switch Upper Servo Pressure 12bar		1
58	332/J0669		Switch Low Pressure 5bar 1/4" BSP		2
59	C4E7327		Adapter		1
60	C4E5507		Adapter 90 deg		1

JS220 XD

JS220LC

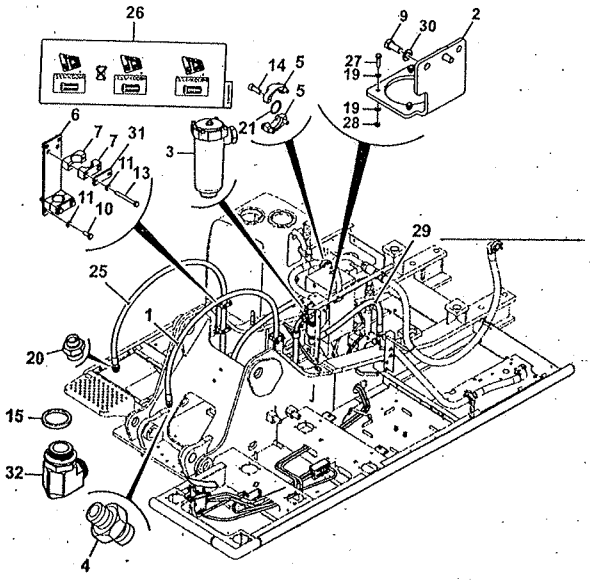

335-B1973-3

ITEM	Part #	CHANGE NO	DESCRIPTION	USAGE CODE	QTY
1	332/L9290		Hose -16 BSP UHP 3710mm		1
2	335/C1691		Bracket Mounting		1
3	333/J9896		Filter Refer E540-1-1		1
4	334/L6394		Adaptor male 1/4 ST		2
5	KRJ2682		Flange Split		2
6	332/K9888		Mounting Hose		2
7	332/K2165		Clamp Half, DIA4		8
9	1316/0508D		Screw M12 X 30		2
10	1316/3408D		Bolt		4
11	1420/0008D		Washer Plain		12
13	1316/3420D		Bolt high strength		8
14	1391/3408D		Capscrew M10 x 30mm		4
14	1391/3408Z		Capscrew		4
15	1406/0029		Washer Dowty		1

JCB E130-61-1 HYDRAULIC CIRCUITS CHASSIS, HOSES & FITTINGS, HAMMER LINE (REVOLVING FRAME) 9820/0546B ISSUE 1

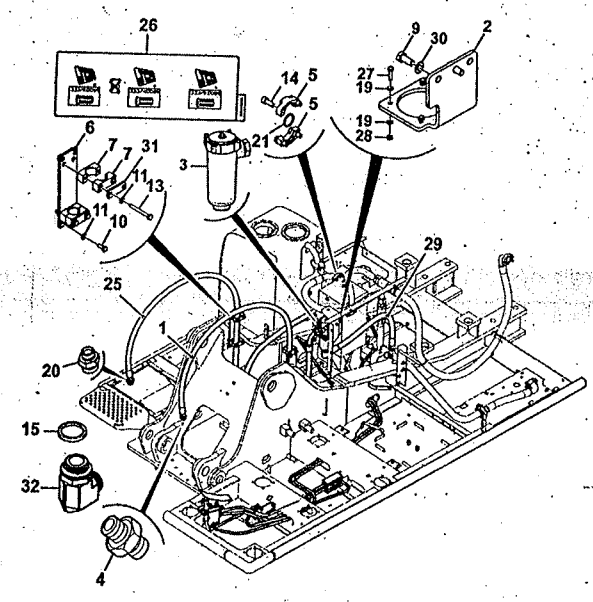

335-B1973-3

ITEM	PART NO	CHANGE NO	DESCRIPTION	USAGE CODE	QTY
19	1420/0006Z		Washer Plain M6		8
20	816/13121		Adapter		2
21	2400/0208		O Ring		2
25	332/L9289		Hose -16 BSP UHP 3690mm		1
26	333/K0112		Label hammer filter		1
27	1316/0207Z		Bolt		4
28	1371/0101Z		Nut high strength		4
29	332/J8761		Hose 1" BSP 875mm ST-ST		1
30	1420/0009D		Washer M12		2
31	821/00126		Plate clamp cover		4
32	332/J6411		Elbow		1

JS220 XD

JS220LC

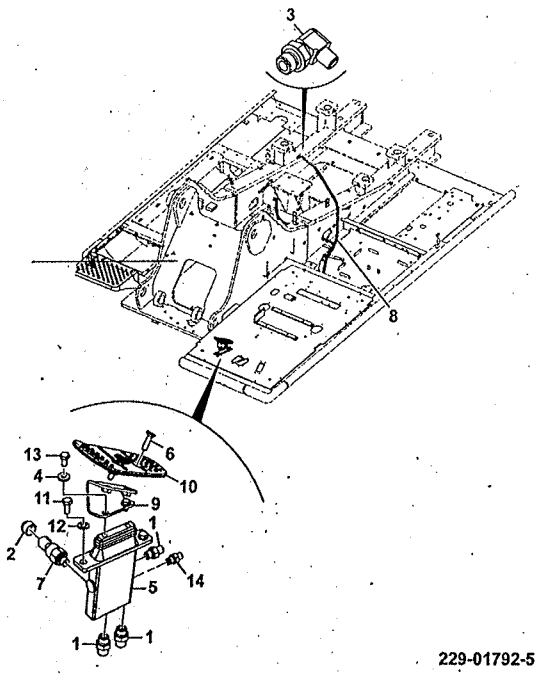

229-01792-5

ITEM	Part #	CHANGE NO	DESCRIPTION	USAGE CODE	QTY
1	334/L6367		Adaptor Male		5
2	KHJ0768		Cap spl		1
3	334/L6554		Elbow adaptor		2
4	~~JHP0080~~	———	Washer		2
5	928/60339		Valve hammer, auxiliary foot operated		1
6	826/10811		Screw Countersunk Socket Head M8 x 30		2
7	701/80373		Switch pressure 5bar 1/4" BSP		1
8			Kit-hose Refer E130-110-1		1
9	331/38327		Bracket pedal		1
10	589/10161		Pedal		1
11	1420/0008Z		Washer Plain M10		2
12	1316/0407Z		Bolt High Strength		2
13	1316/0303Z		Screw		2

E130-62-1 HYDRAULIC CIRCUITS CHASSIS, HOSES & FITTINGS, HAMMER CONTROL 9820/0546B ISSUE 1

ITEM	PART NO	CHANGE NO	DESCRIPTION	USAGE CODE	QTY
14	CNA0584		Adapter Strainer		1

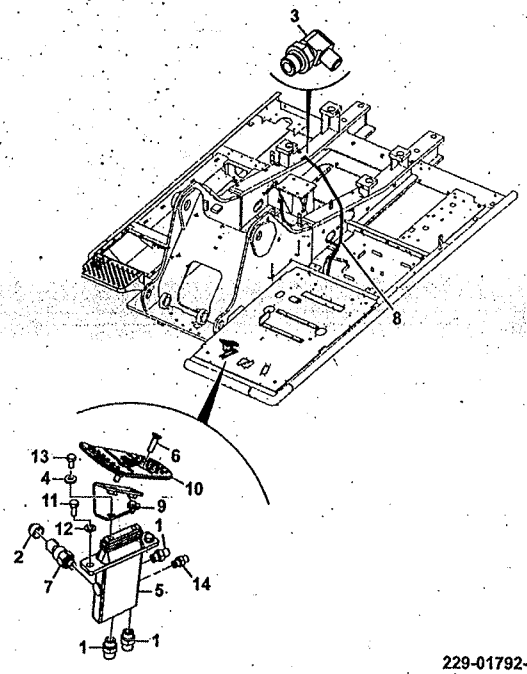

229-01792-5

JS220 XD

JS220LC

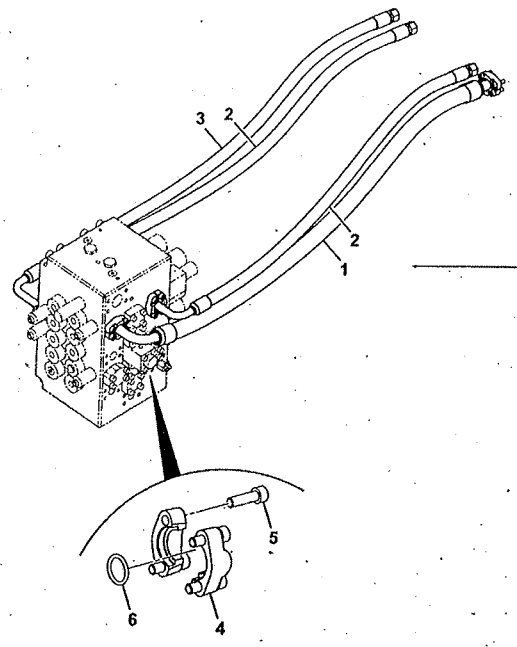

335-C0536-1

ITEM	Part #	CHANGE NO	DESCRIPTION	USAGE CODE	QTY
1	KSJ2308		Hose hydaulic		1
2	627/10042		Hose 3/4"BSP x 1300mm		2
3	333/J5668		Hose 12 BSP UHP x 1440mm		1
4	KRJ2682		Flange Split		10
5	1391/3409D		Capscrew M10 x 35mm		20
6	2409/0210		O Ring		5

JS220 XD

JS220LC

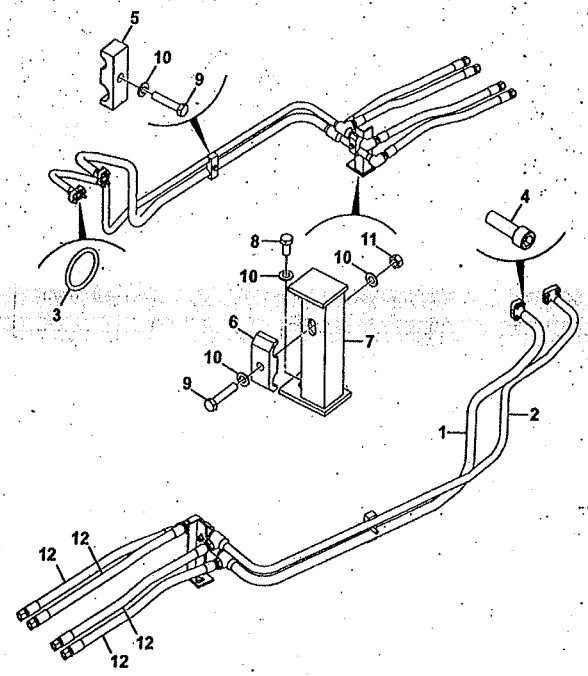

332-P1676-4

ITEM	Part #	CHANGE NO	DESCRIPTION	USAGE CODE	QTY
1	830/10949		Pipe assembly		1
2	830/10950		Pipe assembly		1
3	2407/0210		O Ring		2
4	1391/3409D		Capscrew M10 x 35mm		8
5	KBJ1595		Clamp pipe		1
6	JRJ0126		Clamp		1
7	332/P1535		Bracket		1
8	1316/0507Z		Screw		2
9	1316/3514Z		Bolt		2
10	1420/0009Z		Washer Plain M12		5
11	1371/0401Z		Nut Hex 12		1
12	627/10644		Hose		4

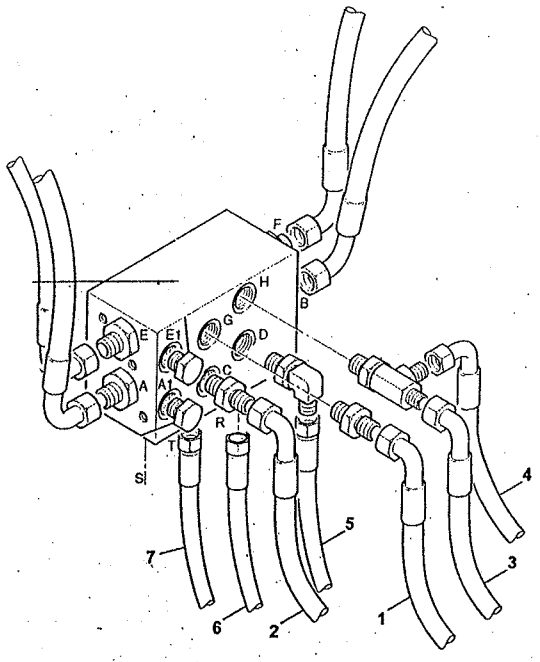

335-A8920-1

JS220 XD

JS220LC

ITEM	Part #	CHANGE NO	DESCRIPTION	USAGE CODE	QTY
1	JNJ0178		Hose nylon		1
2	627/10074		Hose		1
3	JRJ0110		Hose		1
4	KRJ3577		Hose 1/4" ST-90 1600mm		1
5	627/10075		Hose		1
6	KSJ0968		Hose 1/4"BSP ST-ST x 1600mm		1
7	JRJ0098		Hose 1/4"BSP ST-90 x 900mm		1

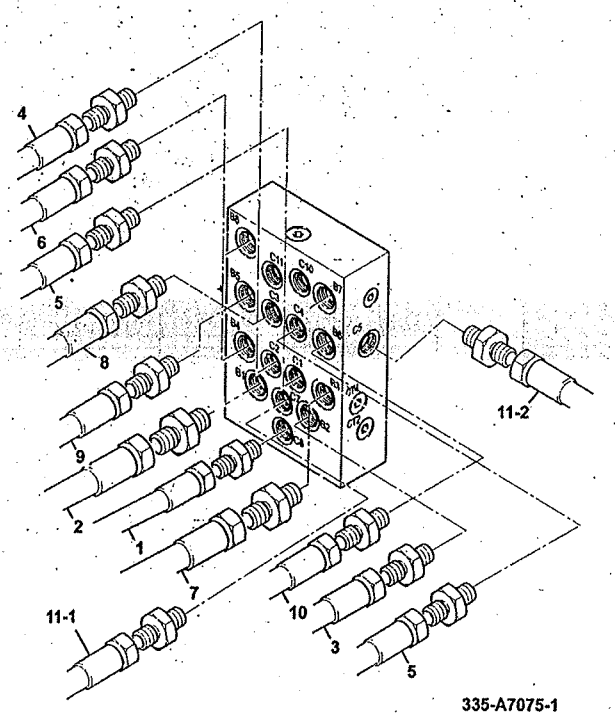

335-A7075-1

JS220 XD

JS220LC

ITEM	Part #	CHANGE NO	DESCRIPTION	USAGE CODE	QTY
1	KTJ0678		Hose 1/4" BSP ST-ST 2800mm ORANGE/GREEN		1
2	627/10077		Hose VIOLET		1
3	KNJ1135		Hose 3/8"BSP ST-ST x 3200mm ORANGE		1
4	JSV0179		Hose RED/GREEN		1
5	KSJ0806		Hose 1/4"BSP ST-ST 2600mm		2
6	JRJ0106		Hose red RED		1
7	JRJ0104		Hose blue BLUE		1
8	MPJ5068		Hose 1/4" BSP ST-ST 3000mm LT.GREEN/VIOLET		1
9	JRJ0105		Hose l green. LT.GREEN		1

Continue...

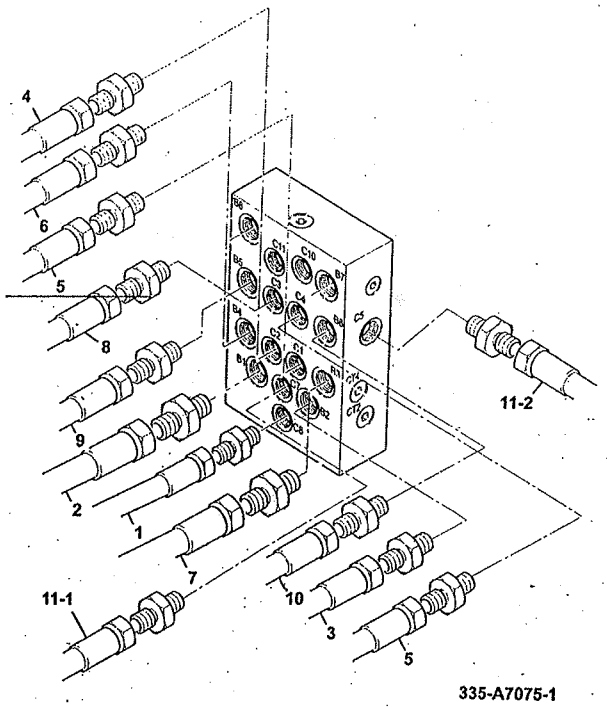

335-A7075-1

ITEM	PART NO	CHANGE NO	DESCRIPTION	USAGE CODE	QTY
10	JRJ0107		Hose 3/8" BSP ST-90 900mm PINK		1
11-1	KTJ0682		Hose 1/4" BSP ST-ST 3350mm PINK/GREEN		1
11-2	KTJ0674		Hose 04 BSP LP x 3700mm VIOLET/GREEN		1

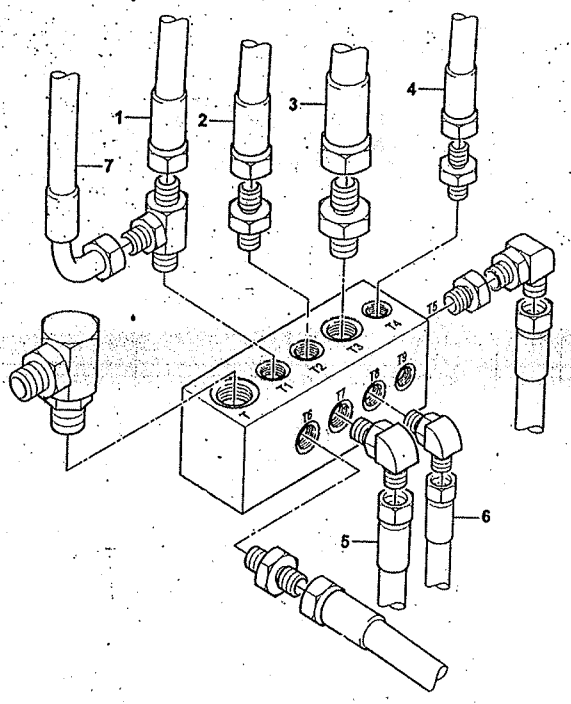

340-00380-3

[redacted]

JS220LC

ITEM	Part #	CHANGE NO	DESCRIPTION	USAGE CODE	QTY
1	JRJ0100		Hose white, blue WHITE/RED		1
2	KRJ4450		Hose hyd (l=1750)		1
3	KNA0362		Hose		1
4	KTJ0675		Hose nylon		1
5	KNJ1122		Hose 3/8"BSP ST-ST x 1900mm		1
6	JLV1433		Hose 1/4"BSP ST-90 x 1300mm		1
7	KRJ3577		Hose 1/4" ST-90 1600mm		1

JS220 XD

JS220LC

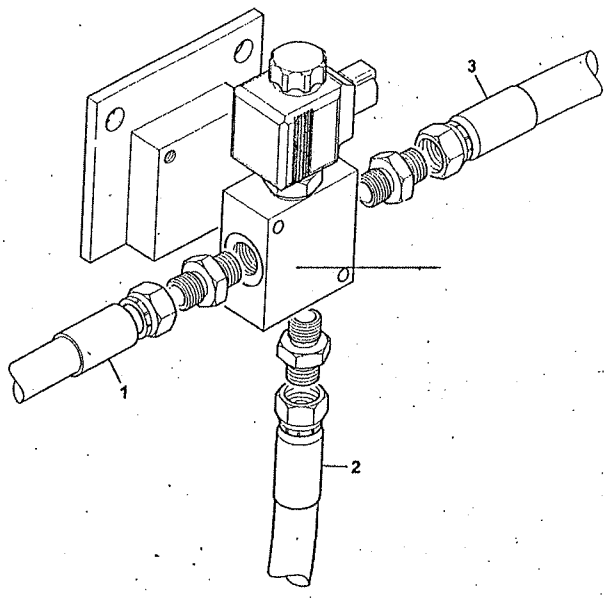

340-00515-1

ITEM	Part #	CHANGE NO	DESCRIPTION	USAGE CODE	QTY
1	KTJ0673		Hose 1/4" 1200mm 180/180		1
2	KNJ1956		Hose 3/8"BSP ST-90 x 2000mm		1
3	JLV0242		Hose 3/8" ST-135° 1560mm		1

JS220 XD

JS220LC

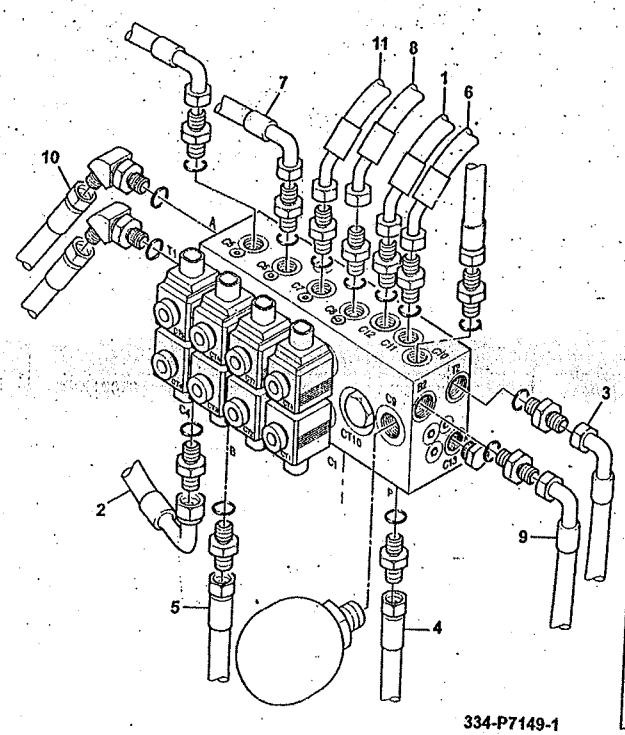

334-P7149-1

ITEM	Part #	CHANGE NO	DESCRIPTION	USAGE CODE	QTY
1	627/10057		Hose BLUE/PINK		1
2	229/00433		Hose 1/4" LT.GREEN		1
3	JRJ0135		Hose 3/8" 1300mm 180/90		1
4	627/10073		Hose BROWN		1
5	KTJ0678		Hose 1/4" BSP ST-ST 2800mm ORANGE		1
6	KBJ2346		Hose 1/4" BSP ST-90 450mm		1
7	JRJ0094		Hose red, red RED		1
8	JRJ0095		Hose Nylon GREEN		1
9	JRJ0101		Hose 1/2"BSP ST-ST x 1600mm WHITE		1

Continue...

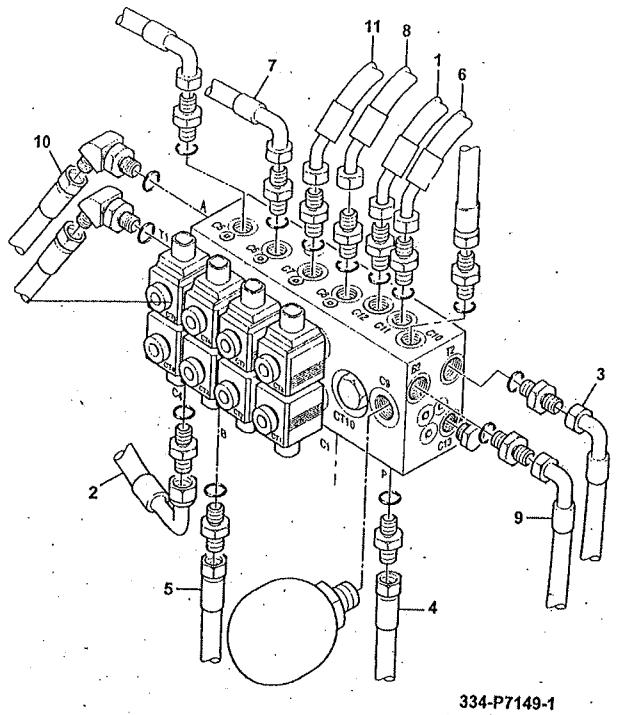

334-P7149-1

ITEM	PART NO	CHANGE NO	DESCRIPTION	USAGE CODE	QTY
10	627/10467		Hose BLUE		1
11	JLV1641		Hose YELLOW		1

JS220LC

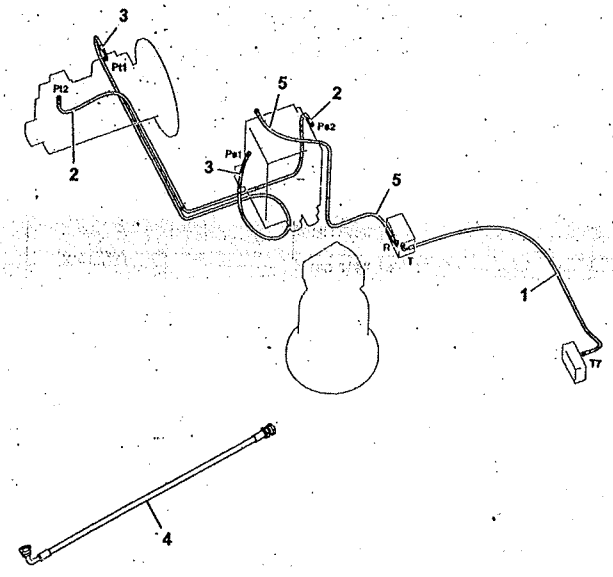

334-P8057-1

ITEM	Part #	CHANGE NO	DESCRIPTION	USAGE CODE	QTY
1	JRJ0098		Hose 1/4"BSP ST-90 x 900mm		1
2	333/J3518		Hose 08 BSP LP x 3600mm WHITE/VIOLET		1
3	333/J3520		Hose 08 BSP LP x 3600mm WHITE/GREEN		1
4	KRJ3671		Hose 1/4"BSP ST-90 x 650mm		1
5	KSJ0968		Hose 1/4"BSP ST-ST x 1600mm YELLOW/WHITE		1

JS220 XD

JS220LC

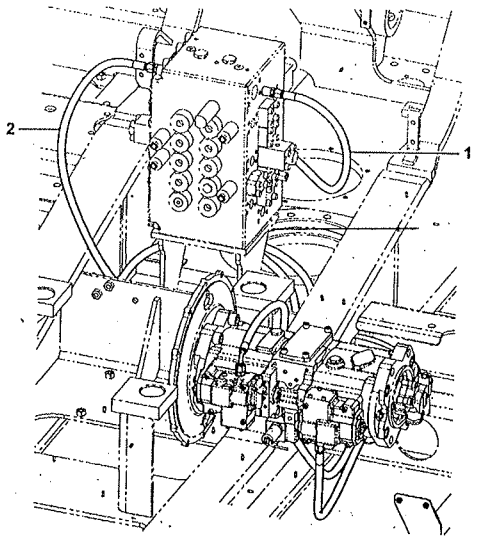

335-A8908-1

ITEM	Part #	CHANGE NO	DESCRIPTION	USAGE CODE	QTY
1	333/J3520		Hose 08 BSP LP x 3600mm		1
2	333/J3518		Hose 08 BSP LP x 3600mm		1

JS220 XD

JS220LC

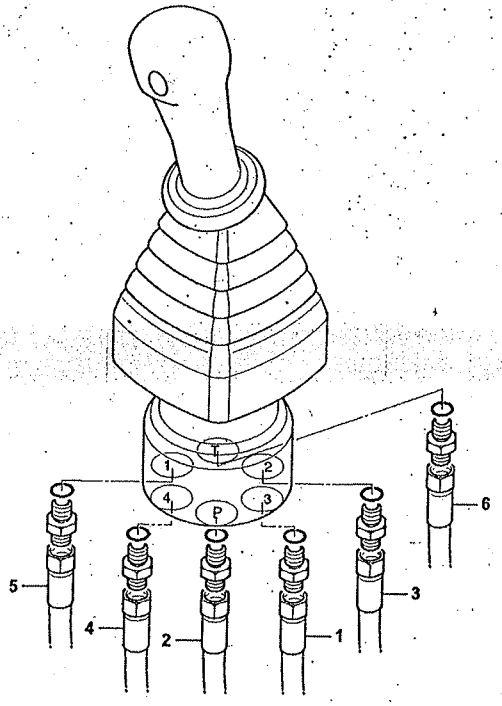

340-00381-1

ITEM	Part #	CHANGE NO	DESCRIPTION	USAGE CODE	QTY
1	627/10076		Hose 3_8 str-str YELLOW		1
2	JRJ0115		Hose white WHITE		1
3	JRJ0117		Hose blue BLUE		1
4	JRJ0119		Hose 3/8" BSP 2100mm ST/ST RED		1
5	KSJ2397		Hose GREEN		1
6	KNJ1998		Hose hydraulic (L=1200)		1

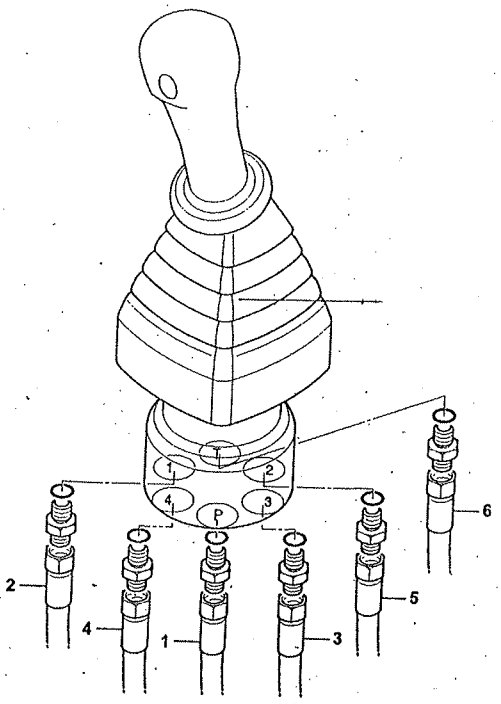

340-00382-1

JS220 XD

JS220LC

ITEM	Part #	CHANGE NO	DESCRIPTION	USAGE CODE	QTY
1	JRJ0116		Hose white WHITE		1
2	JRJ0121		Hose orange ORANGE		1
3	JRJ0122		Hose violet VIOLET		1
4	JRJ0123		Hose pink PINK		1
5	JRJ0124		Hose l green LT.GREEN		1
6	KNJ1997		Hose hydraulic (L=1150)		1

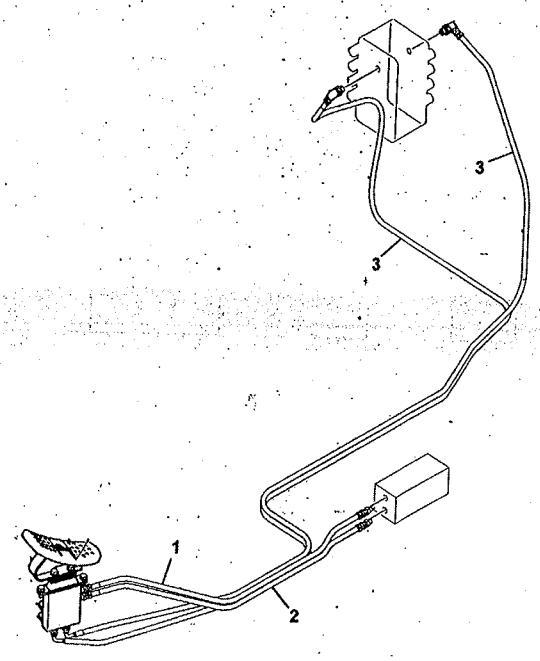

340-00168-2

JS220 XD

JS220LC

ITEM	Part #	CHANGE NO	DESCRIPTION	USAGE CODE	QTY
1	JSV0319		Hose		1
2	KBJ2205		Hose 1/4"BSP ST-90 x 3400mm		1
3	KTJ0907		Hose 1/4"BSP ST-ST x 1100mm		2

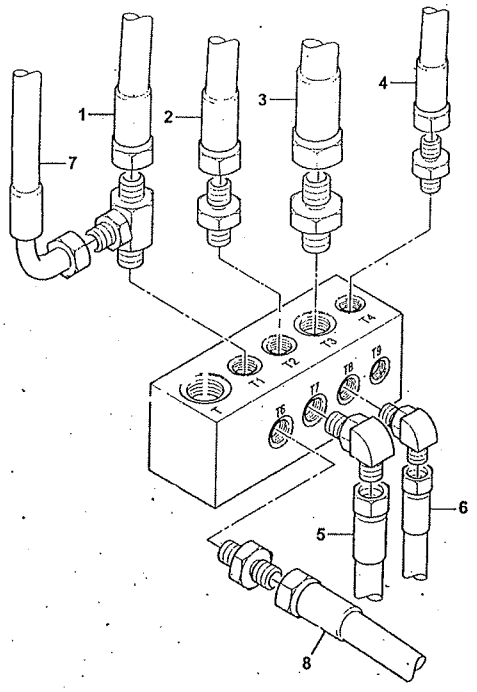

335-A8930-1

JS220 XD

JS220LC

ITEM	Part #	CHANGE NO	DESCRIPTION	USAGE CODE	QTY
1	JRJ0100		Hose white, blue		1
2	KRJ4450		Hose hyd (l=1750)		1
3	KNA0362		Hose		1
4	KTJ0675		Hose nylon		1
5	KNJ1122		Hose 3/8"BSP ST-ST x 1900mm		1
6	JLV1433		Hose 1/4"BSP ST-90 x 1300mm		1
7	KRJ3577		Hose 1/4" ST-90 1600mm		1
8	KNJ1118		Hose		1

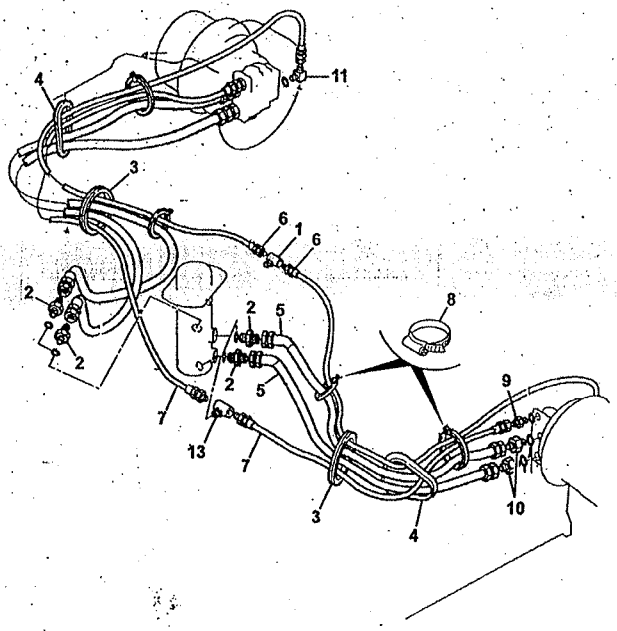

332-L3640-2

JS220 XD

JS220LC

ITEM	Part #	CHANGE NO	DESCRIPTION	USAGE CODE	QTY
1	KSA0891		Tee adapter		1
2	KRJ1391		Adapter		4
3	KRA1138		Cushion rubber 129mm I/D		2
4	KNA0520		Cushion Rubber		2
5	KRA1228		Hose		4
6	KTJ0809		Hose 1/4"BSP ST-ST x 2550mm		2
7	KRA0873		Hose		2
8	KAR0017		Tie Harness Retainer		8
9	334/L0979		Adaptor male 1/2 ST		2
10	334/L6394		Adaptor male 1/4 ST		4
11	334/L6374		Elbow Adaptor 1/4		2
13	229/02221		Tee		1

JS220 XD

JS220LC

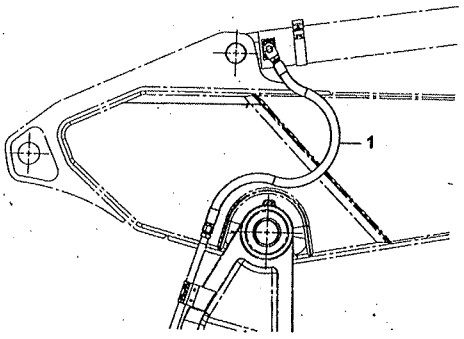

ITEM	Part #	CHANGE NO	DESCRIPTION	USAGE CODE	QTY
1	KRV0926		Hose hydraulic 12 EHP 1500 B		2

333-K3124-2

JS220 XD

JS220LC

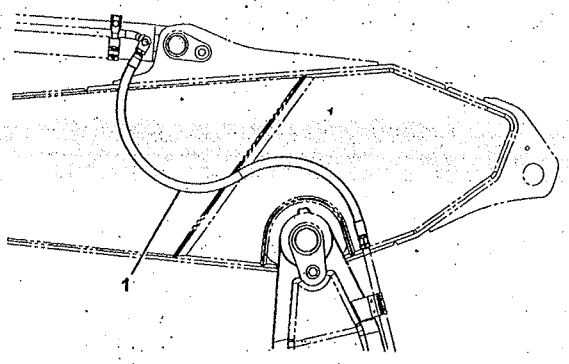

ITEM	Part #	CHANGE NO	DESCRIPTION	USAGE CODE	QTY
1	KRV1667		Hose hyd (l=1700)		2

333-K3121-1

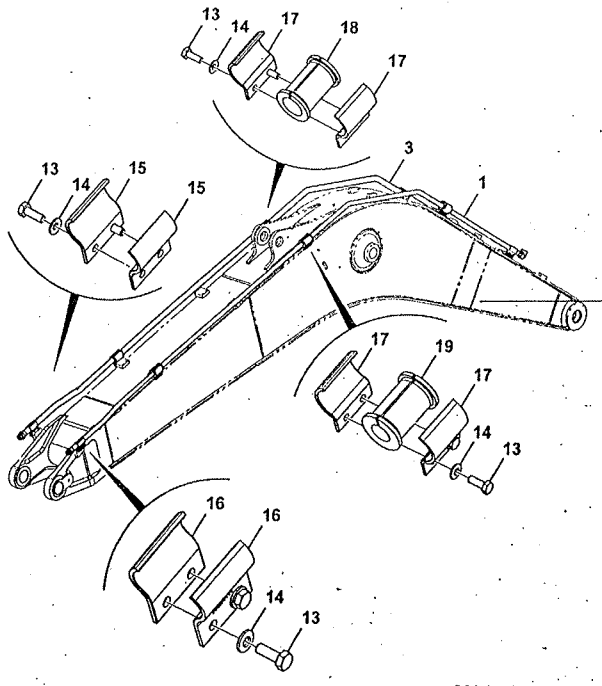

333-K2150-2

JS220 XD

JS220LC

ITEM	Part #	CHANGE NO	DESCRIPTION	USAGE CODE	QTY
1	333/K6062		Pipe Feed, Hammer Line		1
3	333/K6072		Pipe Return, Hammer Line		1
13	1316/0408D		Setscrew		20
14	2208/00110		Washer M10		20
15	333/K5338		Clamp Single Pipe		4
16	333/K5365		Clamp Single Pipe		4
17	333/K5199		Clamp Single pipe Dia 56		12
18	333/K5181		Rubber Insert Dia 56		3
19	333/K5359		Rubber Insert Dia 56		3

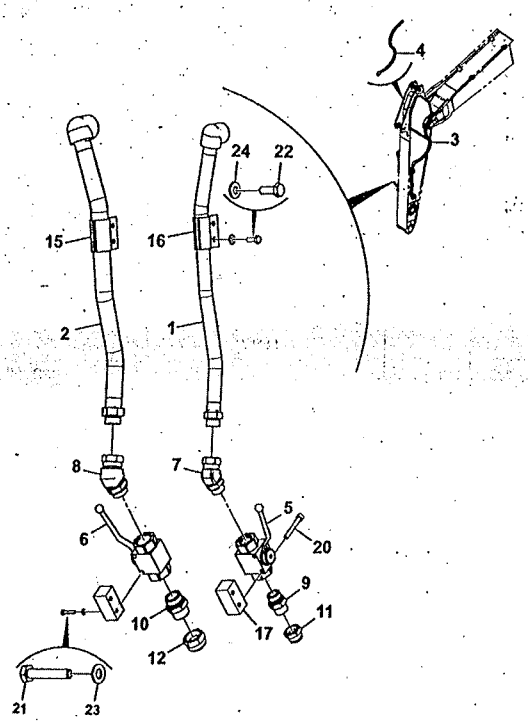

335-C0982-1

JS220 XD

JS220LC

ITEM	Part #	CHANGE NO	DESCRIPTION	USAGE CODE	QTY
1	333/K6208		Pipe Feed, Hammer 2.4m Arm (SVT)		1
2	333/K6221		Pipe Return, Hammer 2.4m Arm (SVT)		1
3	JRV0331		Hose		1
4	JRV0332		Hose		1
5	333/K2182		Valve Shut Off		1
6	333/K2183		Valve Shut Off 1 1/4"		1
7	816/90656		Elbow 135 degree adapter		1
8	JSJ0073		Elbow		1
9	334/L6394		Adaptor male 1/4 ST		1
10	BDJ0218		Adaptor		1
11	816/00193		Cap blanking 1"BSP steel		1
12	816/80010		Plug		1

Continue...

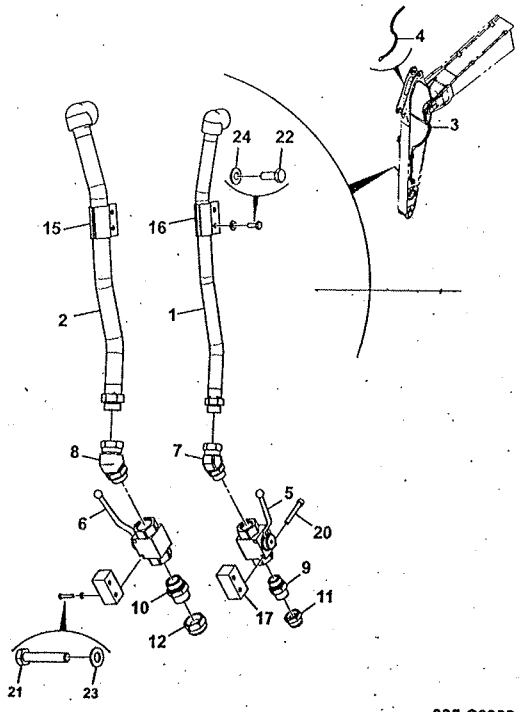

335-C0982-1

ITEM	PART NO	CHANGE NO	DESCRIPTION	USAGE CODE	QTY
15	333/K5338		Clamp Single Pipe		2
16	333/K5365		Clamp Single Pipe		2
17	333/K5833		Block Mounting		2
20	1391/3417D		Screw cap, M10		4
21	1316/3414D		Bolt M10 X 60		4
22	1316/0408D		Setscrew		4
23	1420/0008D		Washer Plain		4
24	2208/00110		Washer M10		4

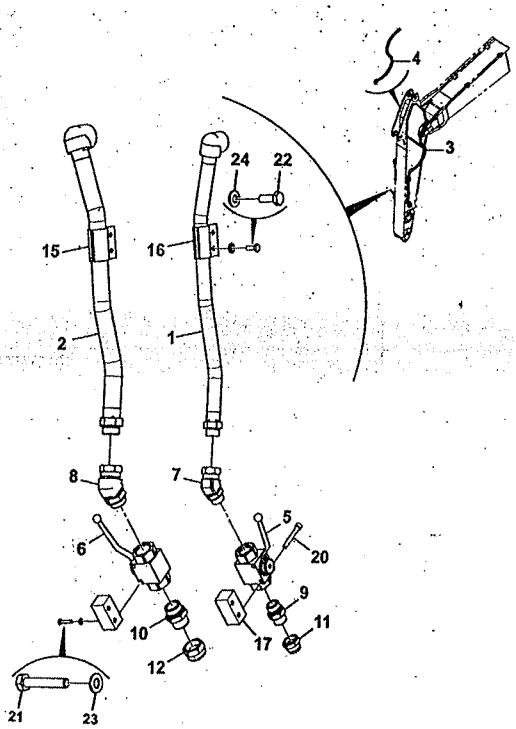

335-C0982-1

JS220 XD

JS220LC

ITEM	Part#	CHANGE NO	DESCRIPTION	USAGE CODE	QTY
1	333/K6172		Pipe Feed		1
2	333/K6144		Pipe Return		1
3	JRV0334		Hose		1
4	JRV0335		Hose		1
5	333/K2182		Valve Shut Off		1
6	333/K2183		Valve Shut Off 1 1/4"		1
7	816/90656		Elbow 135 degree adapter		1
8	JSJ0073		Elbow		1
9	334/L6394		Adaptor male 1/4 ST		1
10	BDJ0218		Adaptor		1
11	816/00193		Cap blanking 1"BSP steel		1
12	816/80010		Plug		1
15	333/K5338		Clamp Single Pipe		2
16	333/K5365		Clamp Single Pipe		2

Continue...

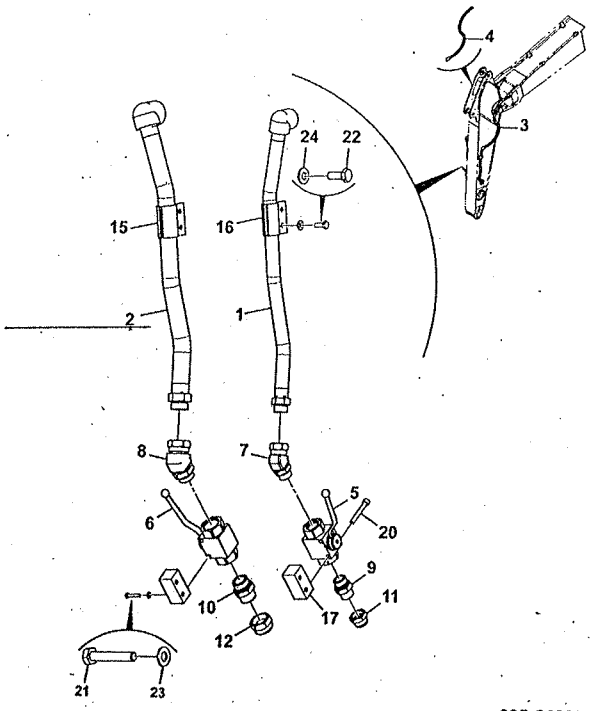

335-C0982-1

ITEM	PART NO	CHANGE NO	DESCRIPTION	USAGE CODE	QTY
17	333/K5833		Block Mounting		2
20	1391/3417D		Screw cap, M10		4
21	1316/3414D		Bolt M10 X 60		4
22	1316/0408D		Setscrew		4
23	1420/0008D		Washer Plain		4
24	2208/00110		Washer M10		4

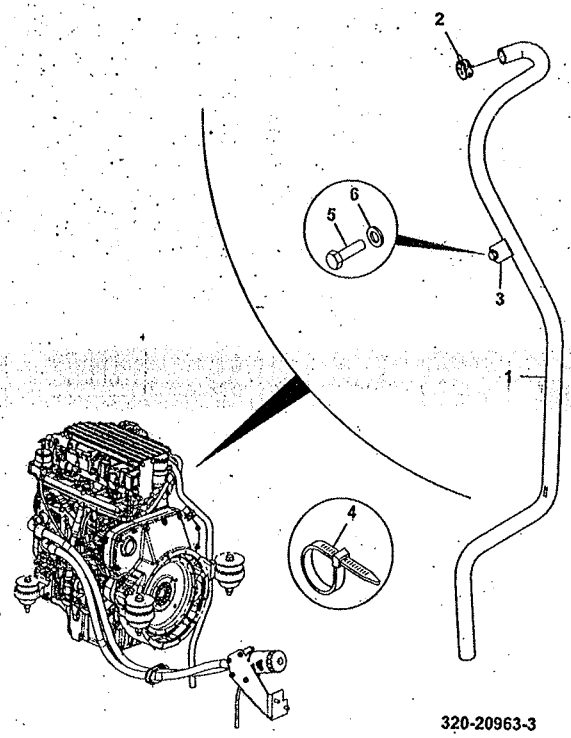

320-20963-3

JS220 XD

JS220LC

ITEM	Part No	CHANGE NO	DESCRIPTION	USAGE CODE	QTY
1	320/07793		Hose CCV		1
2	821/10477		Clamp hose springband		1
3	263/34900		Clip harness		1
4	826/01144		Tie Cable 200mm		1
5	1315/0303D		Setscrew M8 x 16mm		1
6	1420/0007D		Washer Plain M8		1

E

E01 HYDRAULIC CIRCUITS
• E02 PUMP & MOTORS
E03 VALVES
E04 RAMS
E05 FILTER

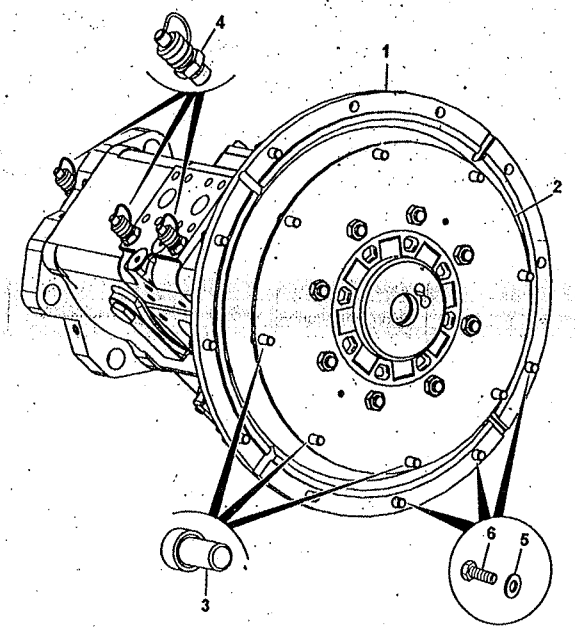

332-K9826-4I

JS220 XD

JS220LC

ITEM	Part #	CHANGE NO.	DESCRIPTION	USAGE CODE	QTY
1	333/J1487		Pump Assembly Refer E220-1-1		1
2	333/J2311		Coupling		1
3	333/J2590		Capscrew 3/8"UNC x 3/4"		8
4	333/J5928		Adapter test point		3
5	1316/0408D		Setscrew		8
6	JHP0046		Washer M10		8

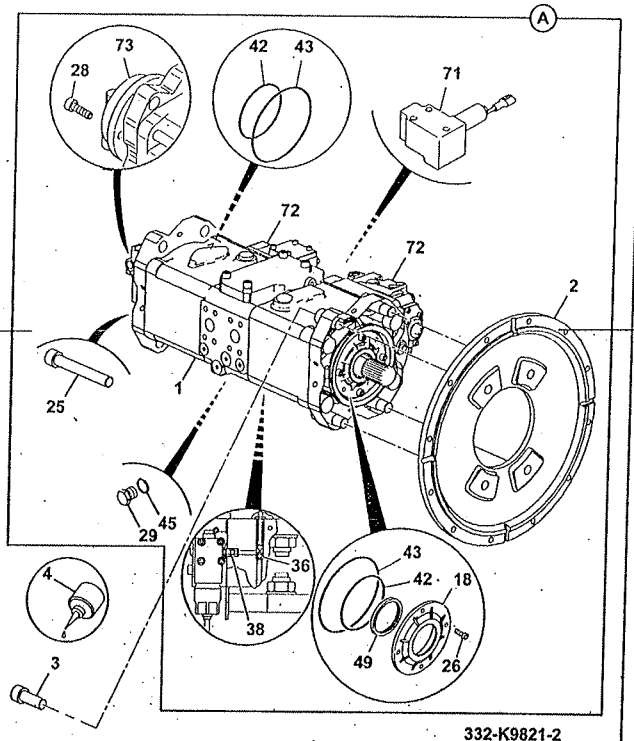

JS220 XD

JS220LC

ITEM	Part #	CHANGE NO	DESCRIPTION	USAGE CODE	QTY
A	20/925770		Pump main hydraulic Refer E220-5-1		1
C	:20/952545		Kit-seal hydraulic pump		1
1	:333/J4443		Pump Main		1
2	:332/K6336		Mounting plate		1
18	::20/951844		Cover & seal assembly		1
25	::1391/3310		Capscrew		8
26	::20/952544		Capscrew		4
28	::20/951285		Screw skt head shouldered cap		4
29	::LLP0041		Plug		2
36	::998/10431		Pump regulator replacement		2
38	::25/222469		Valve solenoid c/w housing		2
42	::LBQ0953		O Ring		2

E220-1-1 PUMPS VARIFLOW 9820/0546B
ISSUE 1

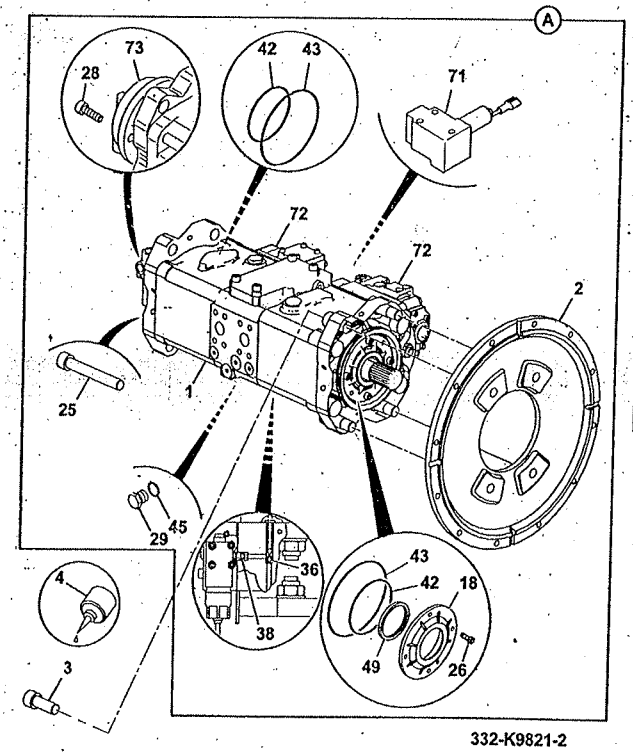

ITEM	PART NO	CHANGE NO	DESCRIPTION	USAGE CODE	QTY
43	::LBQ1453		O Ring		4
45	::LBQ0112		O Ring		4
49	::331/38027		Seal		1
71	:20/950631		Valve proportional reducing Refer E390-10-1		1
72	:333/E7308		Regulator assembly		2
73	:20/952543		Pump assembly, servo		1
3	1391/3813D		Capscrew		4
4	4101/0100		Fluid locking		1

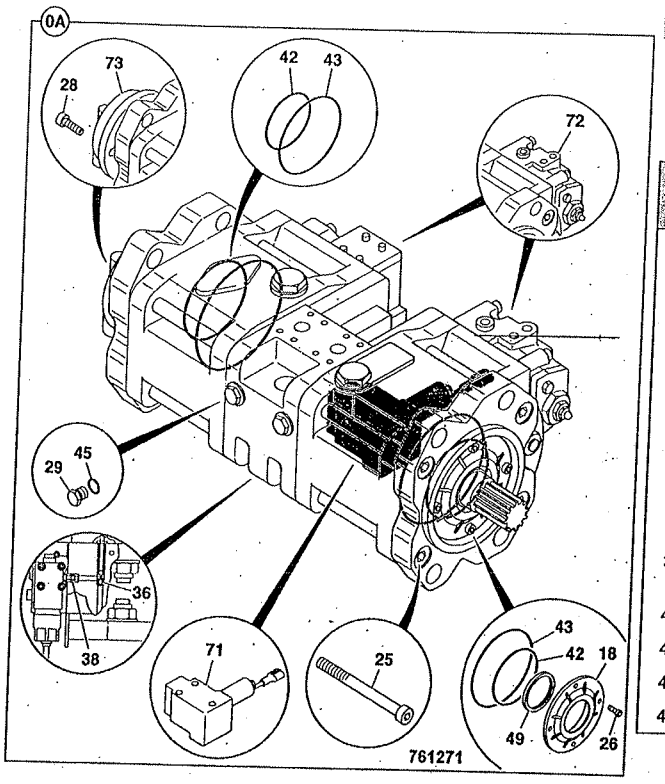

JS220 XD

JS220LC

ITEM	Part #	CHANGE NO	DESCRIPTION	USAGE CODE	QTY
B	:20/925770		Pump main hydraulic		1
18	::20/951844		Cover & seal assembly		1
25	::1391/3310		Capscrew		8
26	::20/952544		Capscrew		4
28	::20/951285		Screw skt head shouldered cap		4
29	::LLP0041		Plug		2
36	::998/10431		Pump regulator replacement		2
38	::25/222469		Valve solenoid c/w housing		2
42	::LBQ0953		O Ring		2
43	::LBQ1453		O Ring		4
45	::LBQ0112		O Ring		4
49	::331/38027		Seal		1

E220-5-1 PUMPS VARIFLOW, COMPONENTS 9820/0546B
ISSUE 1

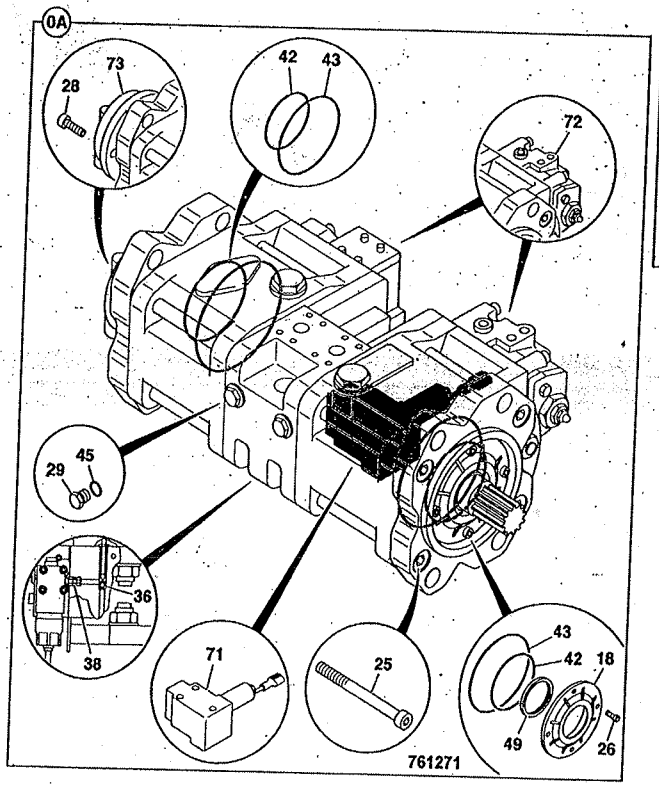

ITEM	PART NO	CHANGE NO	DESCRIPTION	USAGE CODE	QTY
71	:20/950631		Valve proportional reducing Refer E390-10-1		1
72	:333/E7308		Regulator assembly		1
73	:20/952543		Pump assembly, servo		1

E

E01 HYDRAULIC CIRCUITS
E02 PUMP & MOTORS
• E03 VALVES
E04 RAMS
E05 FILTER

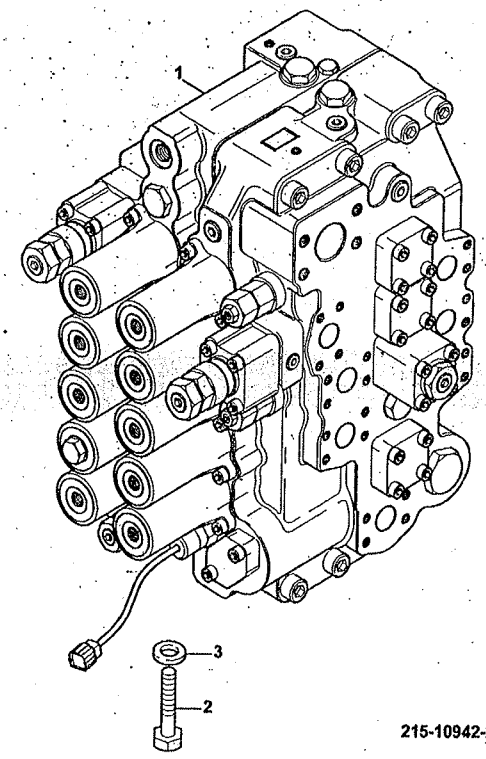

215-10942-2I

JS220 XD

JS220LC

ITEM	Part #	CHANGE NO.	DESCRIPTION	USAGE CODE	QTY
1	25/220822		Valve main control Refer E320-2-1		1
2	1316/0711D		Setscrew M16 x 45		4
3	JHP0043		Washer M16		4

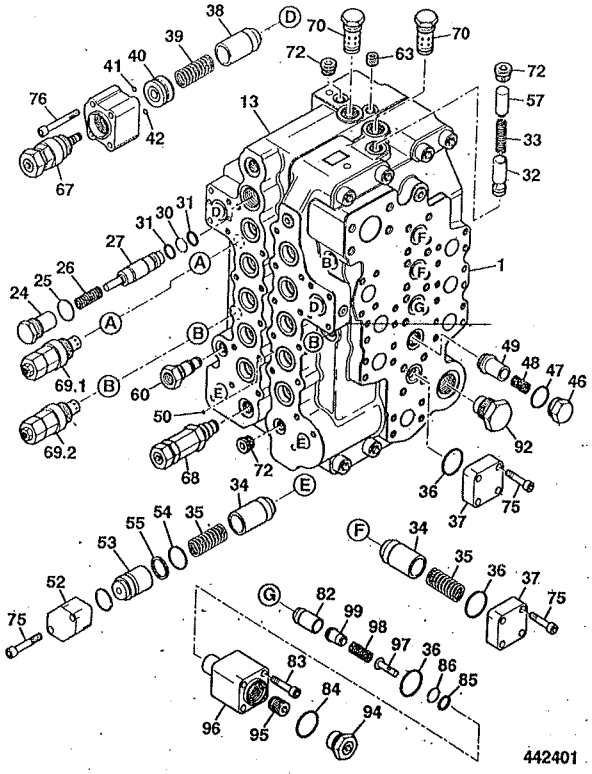

JS220 XD

JS220LC

ITEM	Part #	CHANGE NO	DESCRIPTION	USAGE CODE	QTY
1	25/220822		Valve main control Refer E320-2-1		1
13			None serviced part		1
24	:25/221768		Plug		1
25	:25/221769		O Ring seal		1
26	:25/221770		Spring		1
27	:25/221771		Spool assy		1
30	:25/221772		O Ring seal		1
31	:25/221773		Ring Back-up		2
32	:25/221774		Poppet		2
33	:25/221775		Spring		2
34	:25/221630		Valve poppet		6
35	:25/221631		Spring		7
36	:25/221776		O Ring seal		9
37	:25/221777		Flange		6
38	:25/221778		Poppet		2
39	:25/221779		Spring		2

E320-1-1 VALVES EXCAVATOR, CONTROL VALVES, COMPONENTS, FIGURE 1 9820/0546B ISSUE 1

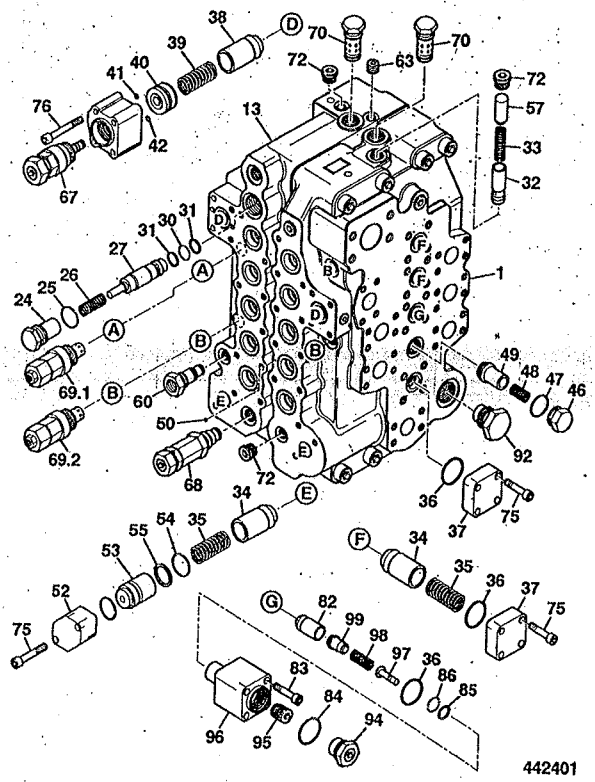

ITEM	PART NO	CHANGE NO	DESCRIPTION	USAGE CODE	QTY
40	:25/221780		Spacer assy.		2
41	:25/221781		O Ring seal		2
42	:25/221782		O Ring seal		2
46	:25/221685		Plug		1
47	:25/221686		Seal O-ring		1
48	:25/221678		Spring		1
49	:25/221786		Poppet		1
50	:TBA		Part number not yet known		1
52	:25/221688		Flange		2
53	:25/221632		Spacer valve		2
54	:25/221633		Seal O ring		2
55	:25/221634		Ring back-up		2
57	:25/221788		Spacer		1
60	:25/221671		Plug assembly		1
63	:25/221790		Plug orifice		1
67	:25/221791		Valve anti-drift,assy.		2
68	:25/221792		Valve Relief Main		1
69-1	:25/221793		Valve relief. 31.4		1
69-2	:25/221794		Valve relief 39.2		5

Continue...

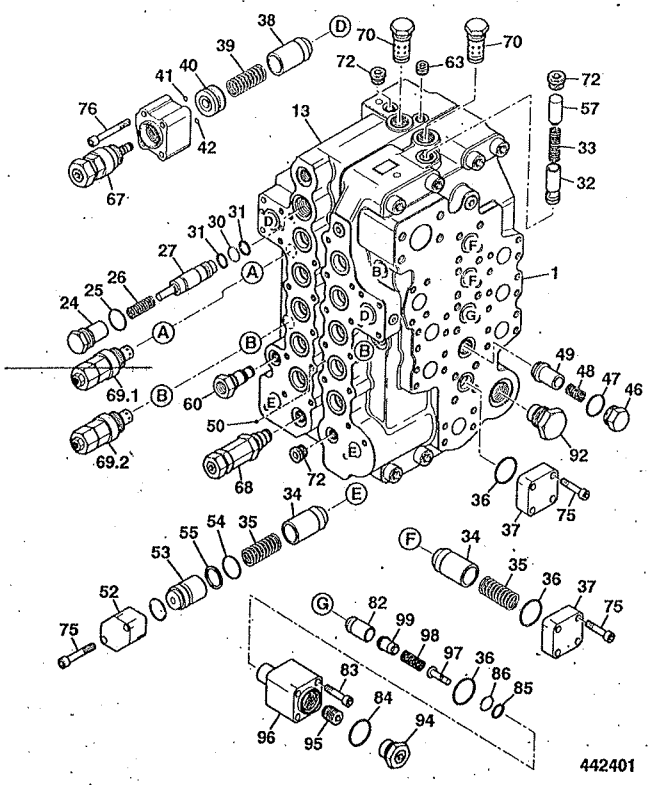

ITEM	PART NO	CHANGE NO	DESCRIPTION	USAGE CODE	QTY
70	:25/221796		Valve relief, assy		2
72	:25/221690		Plug assembly		10
72	701/80371		Switch Power Boost pressure 335bar		1
75	:25/221695		Bolt socket-head M10		36
76	:25/221799		Bolt socket-head M10		8
82	:25/221812		Poppet assy.		2
83	:25/221813		Bolt socket-head M10		8
84	:25/221639		Seal O-ring		2
85	:25/221814		Ring back-up		2
86	:25/221815		O Ring		2
92	:25/221804		Plug assy.		2
95	:25/221807		Piston		2
96	:25/221808		Body		2
97	:25/221809		Piston		2
98	:25/221810		Spring		2
99	:25/221811		Sleeve		2

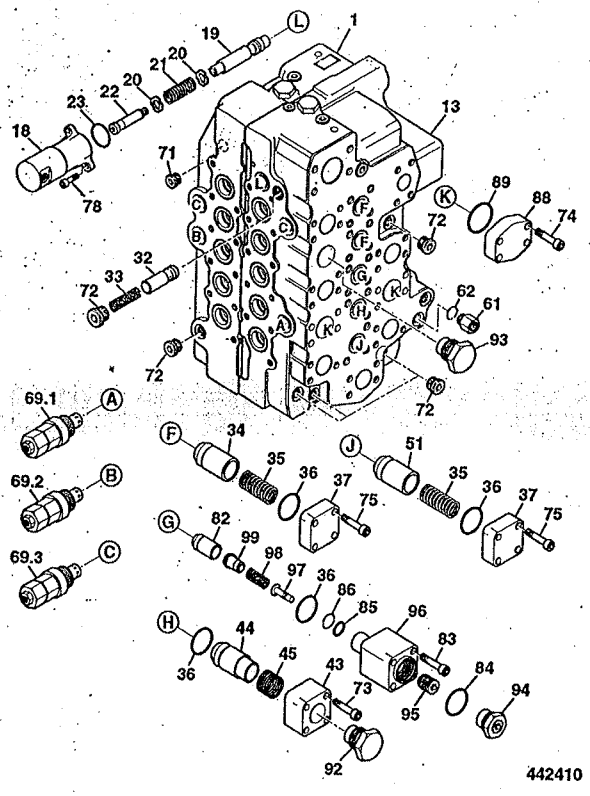

JS220 XD

JS220LC

ITEM	Part No	CHANGE NO	DESCRIPTION	USAGE CODE	QTY
1	25/220822		Valve main control Refer E320-3-1		1
13			None serviced part		1
18	25/221764		Cap		1
19	*		None serviced part		1
20	25/221635		Seat spring		2
21	25/221765		Spring		1
22	25/221766		End spool		1
23	25/221767		O Ring seal		1
32	25/221774		Poppet		2
33	25/221775		Spring		2
34	25/221630		Valve poppet		6
35	25/221631		Spring		7
36	25/221776		O Ring seal		9
37	25/221777		Flange		6
42	332/F0371		Kit-spring inc. poppet,flange,screws		1

Continue...

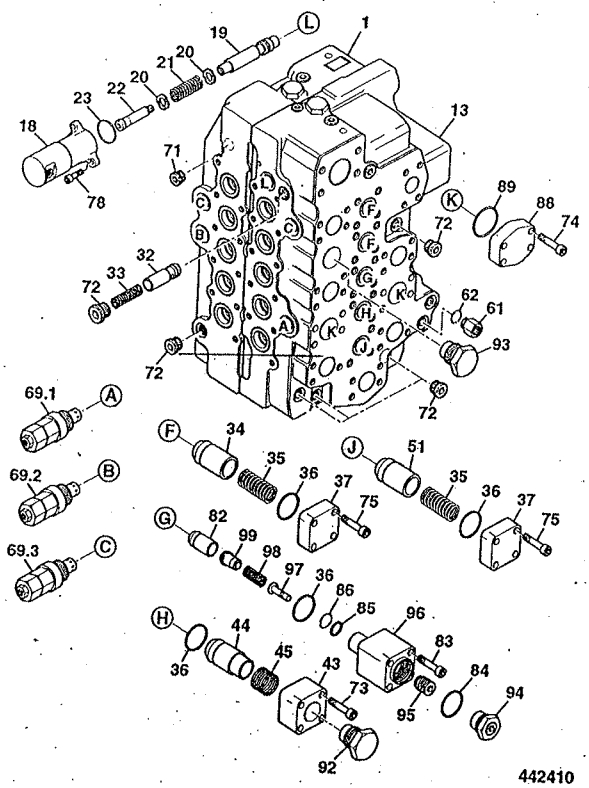

ITEM	PART NO	CHANGE NO	DESCRIPTION	USAGE CODE	QTY
43	:25/221783		Flange		1
44	:25/221784		Poppet		1
45	:25/221785		Spring		1
51	25/221787		Poppet		1
61	701/80374		Switch Upper servo pressure 12bar Replaces plug		1
61-1	701/80375		Switch Travel pressure 20bar		1
62	25/221653		Seal O ring		2
69-1	25/221793		Valve relief. 31.4		1
69-2	25/221794		Valve relief 39.2		5
69-3	25/221795		Kit -relief valve,26.4		1
71	25/221691		Plug assembly		1
72	25/221690		Plug assembly		11
73	25/221797		Bolt socket-head M10		4
74	25/221798		Bolt socket-head M10		40
75	25/221695		Bolt socket-head M10		36
78	1391/3205		Screw cap		2

E320-2-1 VALVES EXCAVATOR, CONTROL VALVES, COMPONENTS, 9820/0546B
FIGURE 2
ISSUE 1

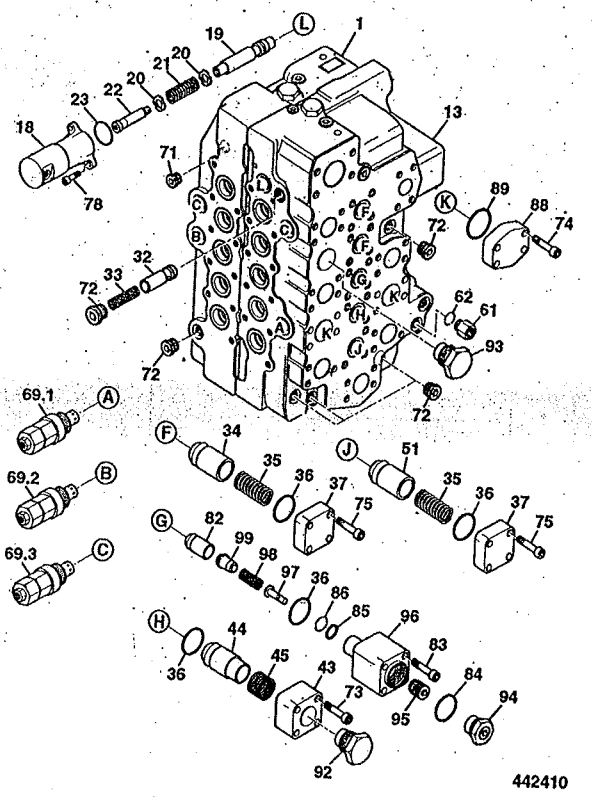

ITEM	PART NO	CHANGE NO	DESCRIPTION	USAGE CODE	QTY
82	25/221812		Poppet assy.		2
83	25/221813		Bolt socket-head M10		8
84	25/221639		Seal O-ring		2
85	25/221814		Ring back-up		2
86	25/221815		O Ring		2
88	25/221802		Cap		2
89	25/221723		Seal O-ring		2
92	25/221804		Plug assy.		2
93	25/221805		Plug assy.		1
94	25/221806		Plug		2
95	25/221807		Piston		2
96	25/221808		Body		2
97	25/221809		Piston		2
98	25/221810		Spring		2
99	25/221811		Sleeve		2

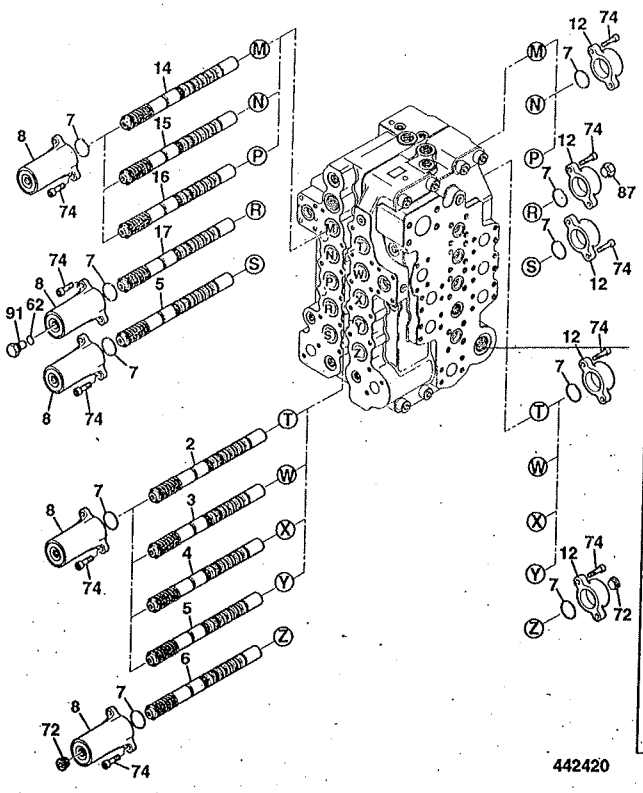

JS220 XD

JS220LC

ITEM	Part #	CHANGE NO	DESCRIPTION	USAGE CODE	QTY
2	333/G7650		Spool arm 2		1
3	333/G7651		Spool boom 1		1
4	333/G7652		Spool Bucket		1
4	:333/C0411		Spool bucket		1
5	333/G7653		Spool travel		2
6	333/G7654		Spool straight travel		1
7	25/221761		O Ring seal		20
8	25/221762		Cap		10
12	25/221763		Cap		10
14	333/G7655		Spool Arm 1		1
15	333/G7657		Spool boom 2		1
16	333/G7658		Spool Swing		1
17	333/G7659		Spool option		1
62	25/221653		Seal O ring		2
72	25/221690		Plug assembly		11

E320-3-1 VALVES EXCAVATOR, CONTROL VALVES, COMPONENTS, FIGURE 3 9820/0546B ISSUE 1

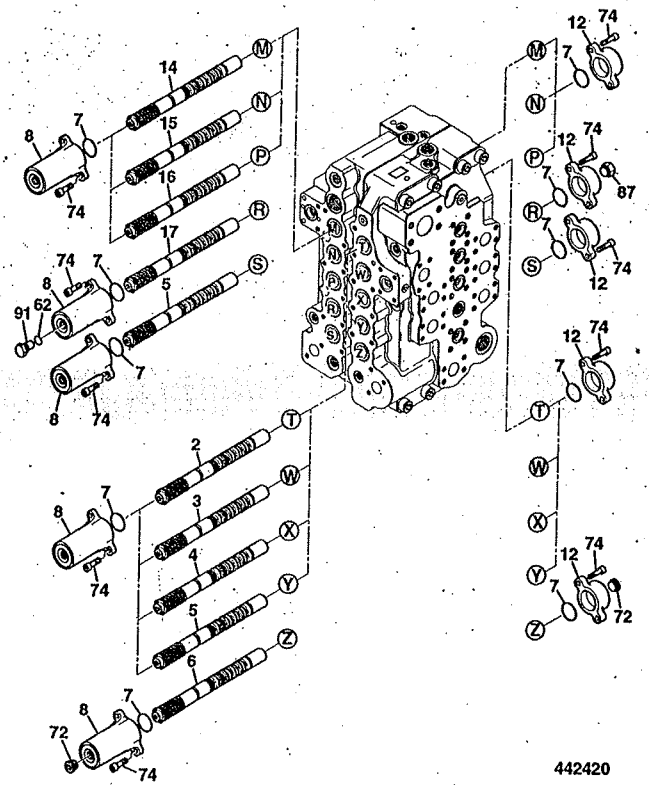

ITEM	PART NO	CHANGE NO	DESCRIPTION	USAGE CODE	QTY
74	25/221798		Bolt socket-head M10		40
87	25/221816		Plug assy.		1
91	25/221803		Plug		1

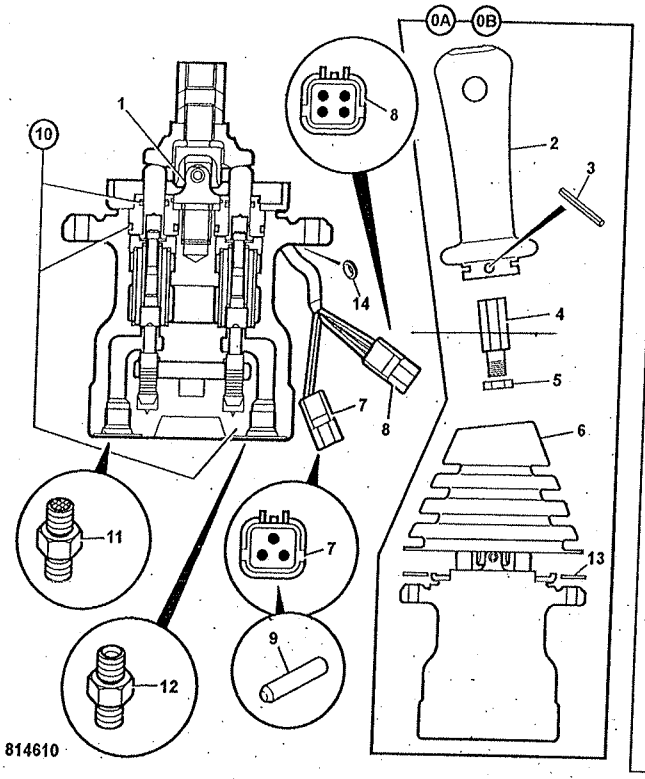

JS220 XD

JS220LC

ITEM	Part #	CHANGE NO	DESCRIPTION	USAGE CODE	QTY
A	:25/222891		Valve Hand Controller Left Hand		1
1	:331/11565		Joint knuckle		1
2	:331/14366		Handle with switch		1
3	:826/10591		Pin roll		1
4	:331/11043		Lever		1
5	:826/10628		Nut locking		1
6	:331/20582		Gaiter Joystick		1
7	:721/10400		Connector 3 pin		0
8	:721/10100		Connector 4 pin		0
9	:721/10401		Connector		8
10	:998/10318		Kit-seal (To suit all four plungers)		1
11	JHJ0168		Adapter Filtered		1
12	1620/2052		Adaptor 3/8BSP X 9/16		5
13	25/221280		Plate		1

E340-1-1 VALVES SERVO CONTROL (PILOT CONTROL), JOYSTICK CONTROL, LEFT HAND SIDE 9820/0546B
ISSUE 1

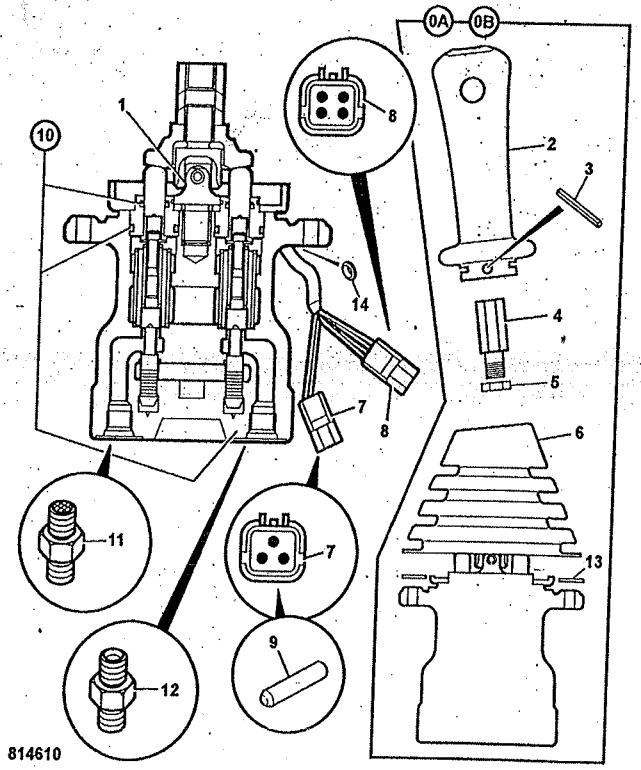

ITEM	PART NO	CHANGE NO	DESCRIPTION	USAGE CODE	QTY
14	:828/10020		Grommet		1

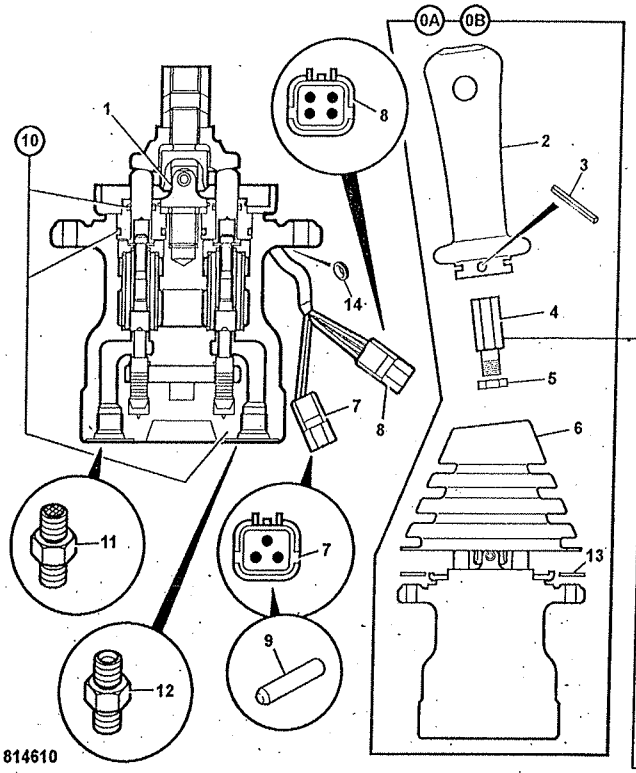

JS220 XD

JS220LC

ITEM	Part#	CHANGE NO	DESCRIPTION	USAGE CODE	QTY
B	:25/222892		Valve Hand Controler Right Hand		1
1	:331/11565		Joint knuckle		1
2	:331/14366		Handle with switch		1
3	:826/10591		Pin roll		1
4	:331/11043		Lever		1
5	:826/10628		Nut locking		1
6	:331/20582		Gaiter Joystick		1
7	:721/10400		Connector 3 pin		0
8	:721/10100		Connector 4 pin		0
9	:721/10401		Connector		8
10	:998/10318		Kit-seal (To suit all four plungers)		1
11	JHJ0168		Adapter Filtered		1
12	1620/2052		Adaptor 3/8BSP X 9/16		5
13	25/221280		Plate		1

E340-5-1 VALVES SERVO CONTROL (PILOT CONTROL), JOYSTICK CONTROL, RIGHT HAND SIDE 9820/0546B ISSUE 1

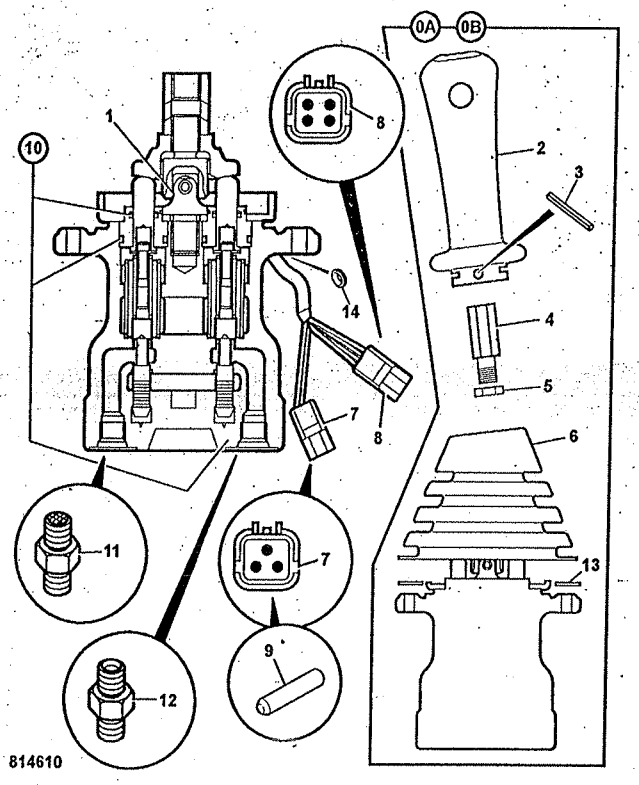

ITEM	PART NO	CHANGE NO	DESCRIPTION	USAGE CODE	QTY
14	:828/10020		Grommet		1

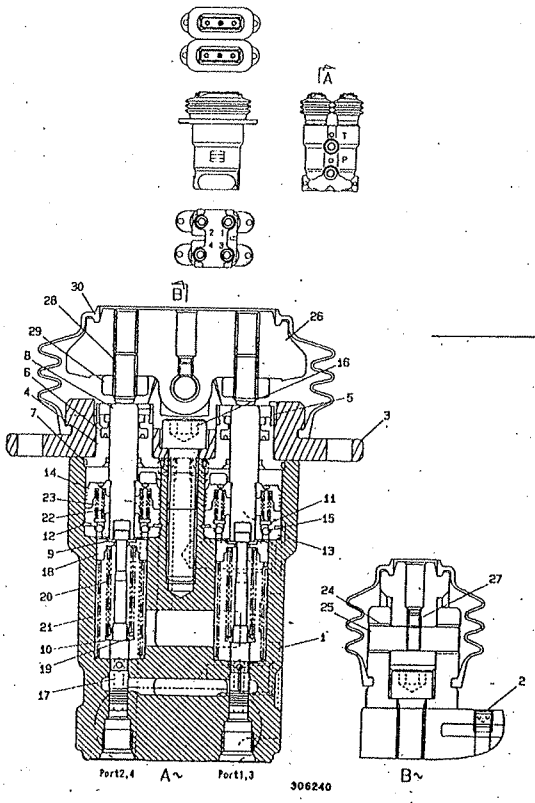

JS220 XD

JS220LC

ITEM	Part #	CHANGE NO	DESCRIPTION	USAGE CODE	QTY
0	KSJ2465		Valve Remote Control		1
1	:LWC0003		Case		1
2	:LLP0114		Plug		2
3	:LZC0158		Cover		2
4	:LLC0128		Plug		4
5	:LWC0004		Cap grease		4
6	:LEC0025		Seal		4
7	:LBQ5025		O Ring		4
8	:LPC0213		Rod push		4
9	:LUC0107		Washer		8
10	:LUC0106		Washer		4
11	:LSC0237		Seat spring		4
12	:LMC0107		Retainer		4
13	:LKC0005		Bush		4
14	:LPC0203		Piston		4
15	:LPC0204		Ball		12

E340-10-1 VALVES SERVO CONTROL (PILOT CONTROL), JOYSTICK CONTROL 9820/0546B
ISSUE 1

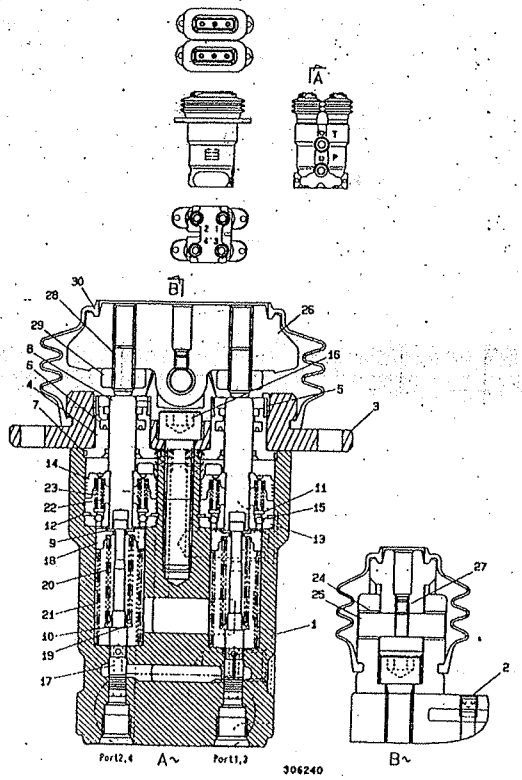

ITEM	PART NO	CHANGE NO	DESCRIPTION	USAGE CODE	QTY
16	:6004/3513		Capscrew		2
17	:N.S.P.		None serviced part		4
18	:LSC0238		Seat spring		4
19	:LUC0104		Washer		4
20	:LSC0236		Spring		4
21	:LSC0214		Spring		4
22	:LSC0239		Spring		4
23	:LSC0240		Spring		4
24	:LKC0001		Bush		4
25	:LJC0003		Shaft cam		2
26	:LMC0085		Cam		2
27	:LLC0118		Screw		2
28	:LUC0102		Bolt		4
29	:LUC0101		Nut lock		4
30	:LCC0014		Gaiter rubber bellows		2
31	:LQC0034		Kit casing		1
32	:LQC0035		Kit-seal		1

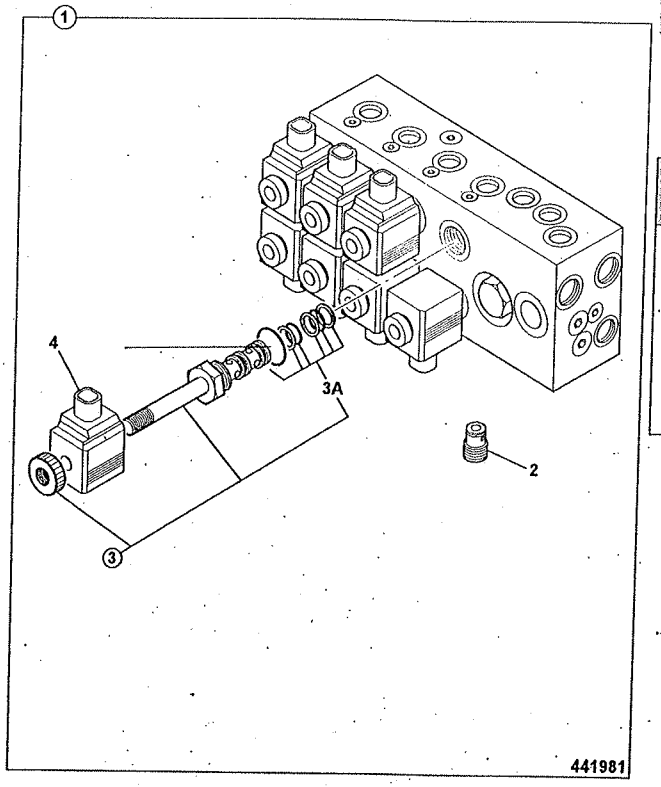

JS220 XD

JS220LC

ITEM	Part #	CHANGE NO	DESCRIPTION	USAGE CODE	QTY
1	25/222885		Valve 8 station solenoid		1
2	:25/208213		Valve shuttle		1
3	:25/220555		Cartridge valve excl. coil		8
3A	::25/220533		Kit seal		1
4	:25/221263		Coil 24V		8

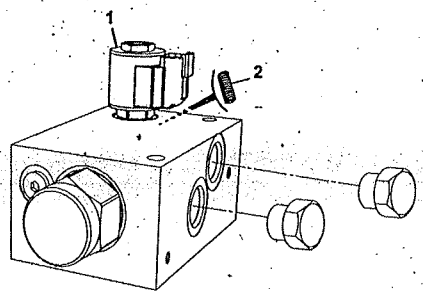

JS220 XD

JS220LC

ITEM	Part #	CHANGE NO	DESCRIPTION	USAGE CODE	QTY
A	333/P0375		Valve Solenoid		1
1	:347/22261		Valve Solenoid		1
2	:332/H4123		Coil		1

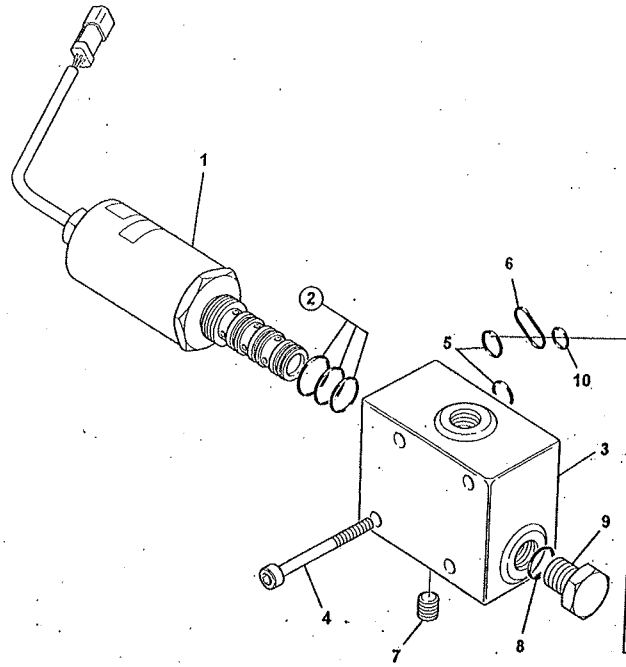

JS220 XD

JS220LC

ITEM	Part #	CHANGE NO	DESCRIPTION	USAGE CODE	QTY
1	:20/950631		Valve proportional reducing		1
2	::20/951653		Kit-seal hydraulic pump		1
3	:332/F0073		Housing		1
4	:TBA		Part number not yet known Bolt		4
5	:828/10234		Seal O ring		1
6	:828/10226		Seal O ring		1
7	:LLP0114		Plug		1
8	:828/10227		Seal O ring		1
9	:LLP0041		Plug		1
10	:828/10232		Seal O ring		1

951550

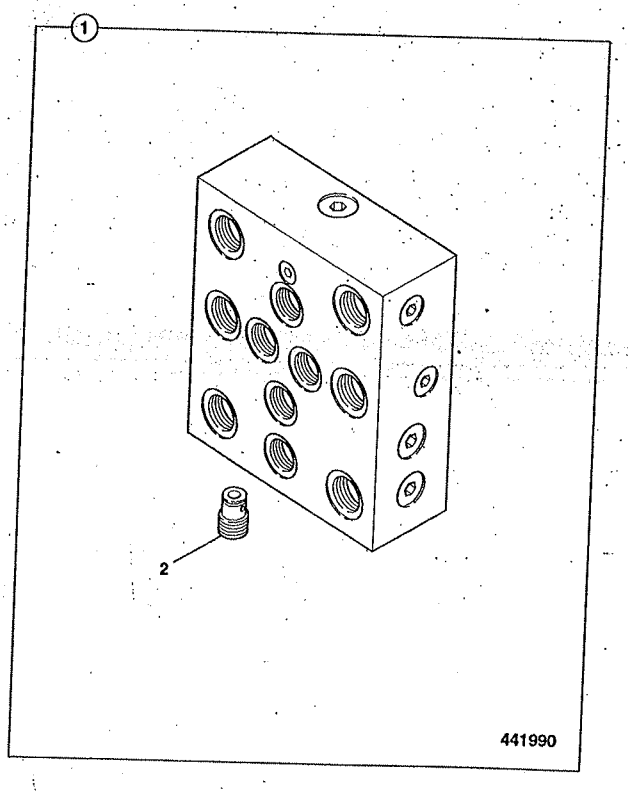

441990

JS220 XD

JS220LC

ITEM	Part #	CHANGE NO	DESCRIPTION	USAGE CODE	QTY
1	25/220830		Valve Shuttle Assembly.		1
2	:25/208213		Valve shuttle		6

E

E01 HYDRAULIC CIRCUITS
E02 PUMP & MOTORS
E03 VALVES
• E04 RAMS
E05 FILTER

JS220 XD

JS220LC

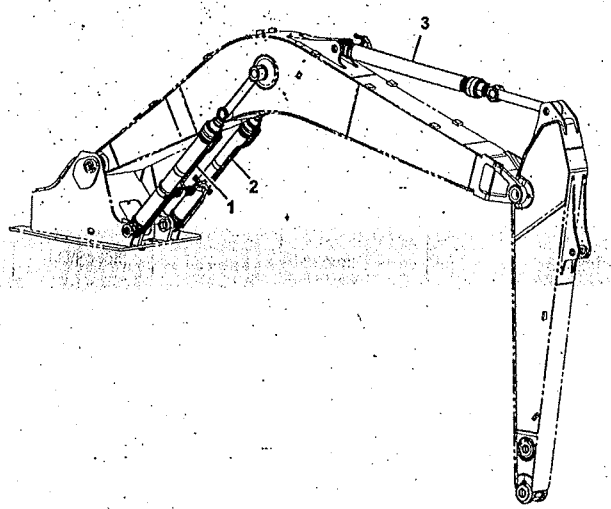

335-A6745-2

ITEM	Part #	CHANGE NO	DESCRIPTION	USAGE CODE	QTY
1	335/B7426		Ram Boom Left Side Refer E460-10-1		1
2	335/B7425		Ram Boom Right Side Refer E460-15-1		1
3	333/P5358		Ram Arm Refer E465-1-1		1

JS220 XD

JS220LC

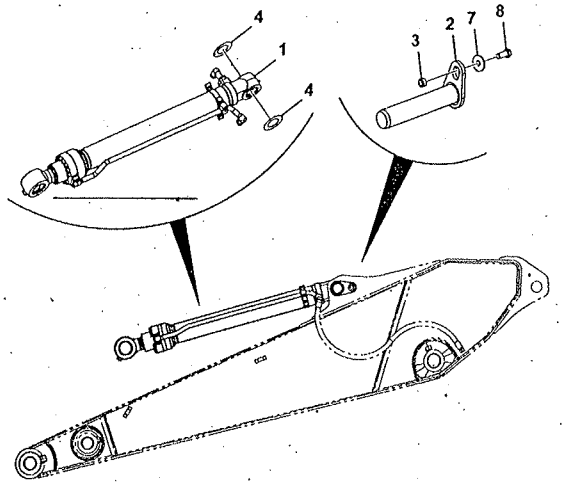

335-A6597-3

ITEM	Part #	CHANGE NO	DESCRIPTION	USAGE CODE	QTY
1	335/A8197		Ram Bucket Refer E480-1-5		1
2	333/J5557		Pin pivot 75mm x 204mm		1
3	333/K7980		Spacer 1" X 8" SWG		1
4	KRV1176		Shim 76mm ID x 130mm OD 1.2mm thick		2
7	1412/0007D		Washer large		1
8	1316/0710D		Bolt		1

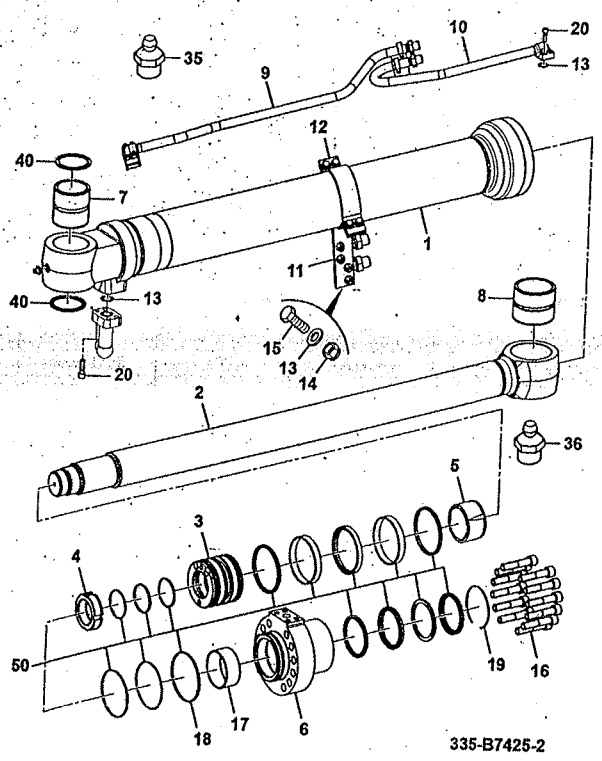

335-B7425-2

JS220 XD

JS220LC

ITEM	Part #	CHANGE NO	DESCRIPTION	USAGE CODE	QTY
A	335/B7426		Ram Boom Left Side		1
1	335/C2903		Tube		1
2	550/41737		Piston Rod S/A		1
3	550/41726		Piston Cylinder Boom		1
4	550/41936		Nut Rod Piston		1
5	550/41931		Bush Cushioning Head End		1
6	550/41729		Cover Head End		1
7	550/41733		Bush		1
8	550/41734		Bush Rod End		1
9	335/C2946		Pipe S/A 2 Right Side		1
10	335/C2947		Pipe S/A 1 Right Side		1
11	335/C2916		Clamp		1
12	550/41940		Clamp		2

Continue...

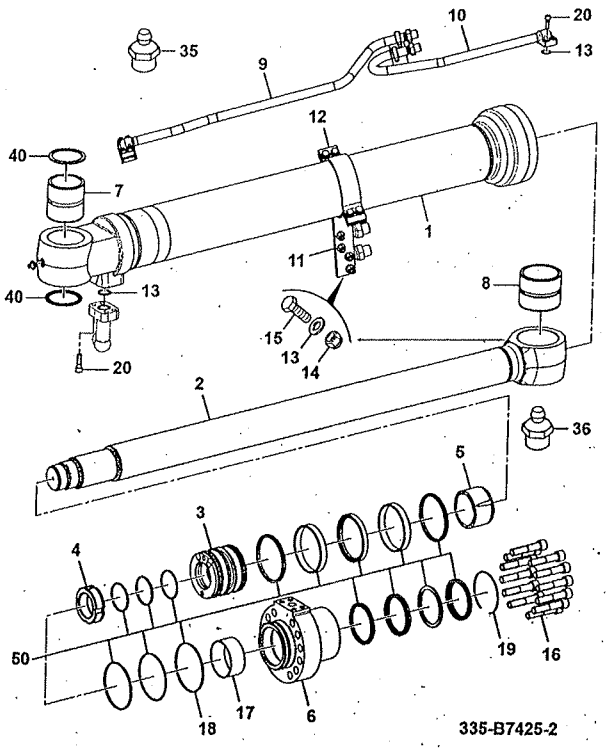

ITEM	PART NO	CHANGE NO	DESCRIPTION	USAGE CODE	QTY
13	550/41158		Washer		8
14	550/41920		Nut Nyloc		4
15	550/41125		Bolt HD		4
16	550/41915		Capscrew HD		12
17	335/C2897		Bush Bi Metal		1
18	335/C2918		Ring Snap		1
19	550/41922		Ring Snap		1
20	550/41916		Capscrew HD		8
35	550/41919		Nipple Grease		1
36	550/41919		Nipple Grease		1
40	335/C2926		Washer Sealing		2
50	335/C2927		Kit Seal		1

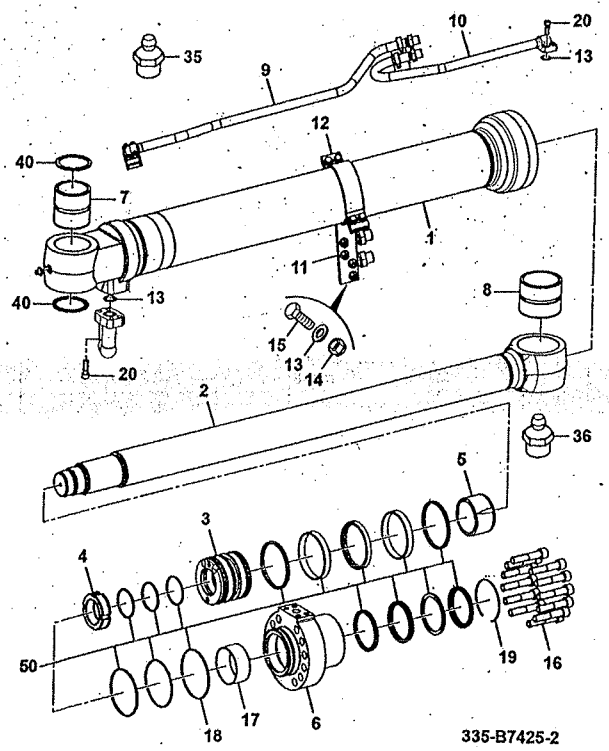

JS220 XD

JS220LC

ITEM	Part#	CHANGE NO	DESCRIPTION	USAGE CODE	QTY
A	335/B7425		Ram Boom Right Side		1
1	335/C2903		Tube		1
2	550/41737		Piston Rod S/A		1
3	550/41726		Piston Cylinder Boom		1
4	550/41936		Nut Rod Piston		1
5	550/41931		Bush Cushioning Head End		1
6	550/41729		Cover Head End		1
7	550/41733		Bush		1
8	550/41734		Bush Rod End		1
9	335/C2913		Pipe Pipe Left Side		1
10	335/C2914		Pipe Pipe HE Left Side		1
11	335/C2916		Clamp		1
12	550/41940		Clamp		2
13	550/41158		Washer		8

Continue...

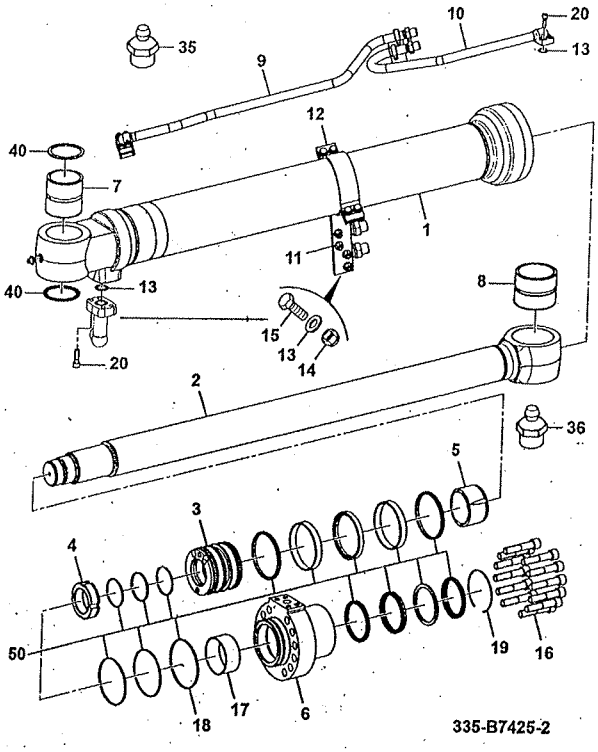

ITEM	PART NO	CHANGE NO	DESCRIPTION	USAGE CODE	QTY
14	550/41920		Nut Nyloc		4
15	550/41125		Bolt HD		4
16	550/41915		Capscrew HD		12
17	335/C2897		Bush Bi Metal		1
18	335/C2918		Ring Snap		1
19	550/41922		Ring Snap		1
20	550/41916		Capscrew HD		8
35	335/C2920		Cap Protection		1
36	550/41919		Nipple Grease		1
37	335/C2898		Cap Cap		1
38	335/C2901		Guard Wiper		1
39	335/C2924		Cap Protection		2
40	335/C2926		Washer Sealing		2
50	335/C2927		Kit Seal		1

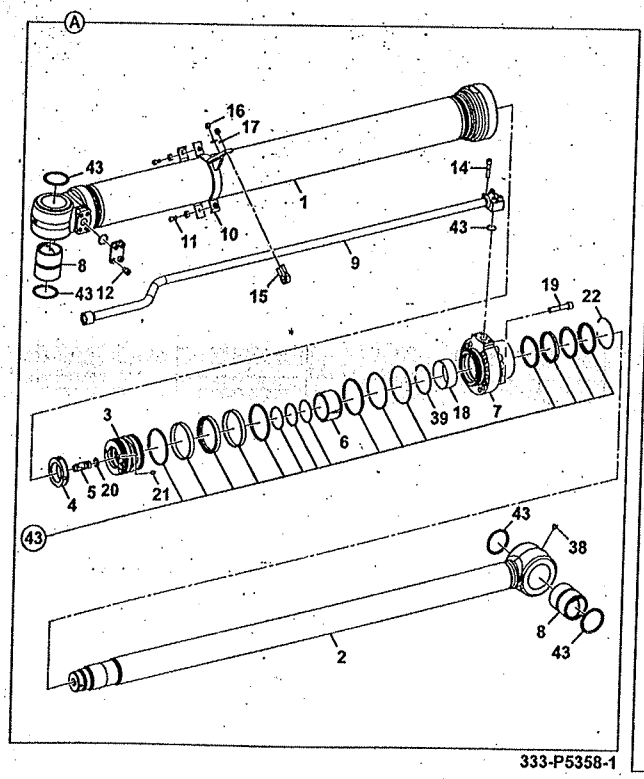

JS220 XD

JS220LC

ITEM	Part	CHANGE NO	DESCRIPTION	USAGE CODE	QTY
A	333/P5358		Ram Arm		1
1	550/42220		Tube S/A		1
2	332/Y7750		Piston Rod		1
3	550/42222		Piston		1
4	332/Y7752		Nut for arm cylinder		1
5	550/41930		Bush cush H.E		1
6	550/42225		Bush H.E. Cush		1
7	550/42226		Cover H.E.		1
8	550/41735		Bush		2
9	550/42227		Pipe S/A		1
10	333/Y9169		Clamp S/A		1
11	550/43328		Hex. Soc. Set Screw		2
12	333/Y9168		Screw Hex.		1
14	550/41914		Capscrew Hex Soc HD		4
15	550/41940		Clamp		1

Continue...

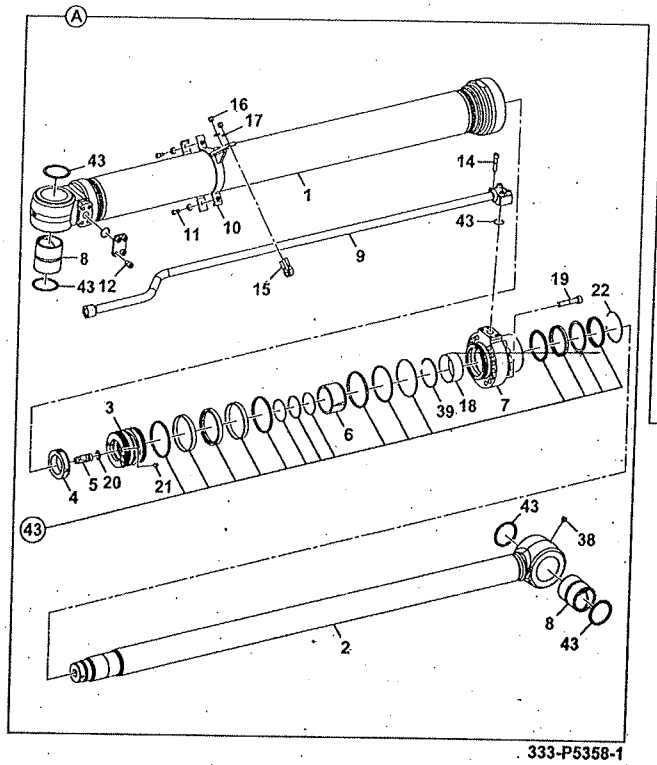

333-P5358-1

ITEM	PART NO	CHANGE NO	DESCRIPTION	USAGE CODE	QTY
16	550/41920		Nut Nyloc		2
17	550/41941		Washer		4
18	550/42231		Bush Bimetal		1
19	550/41915		Capscrew HD		14
20	550/43334		Ball Steel Challoy		12
21	333/Y9165		Setscrew		1
22	550/42232		Ring Snap		1
38	333/Y9166		Nipple - Grease		1
39	333/Y9167		Ring - Snap		1
43	550/42243		Kit-seal Spare		1

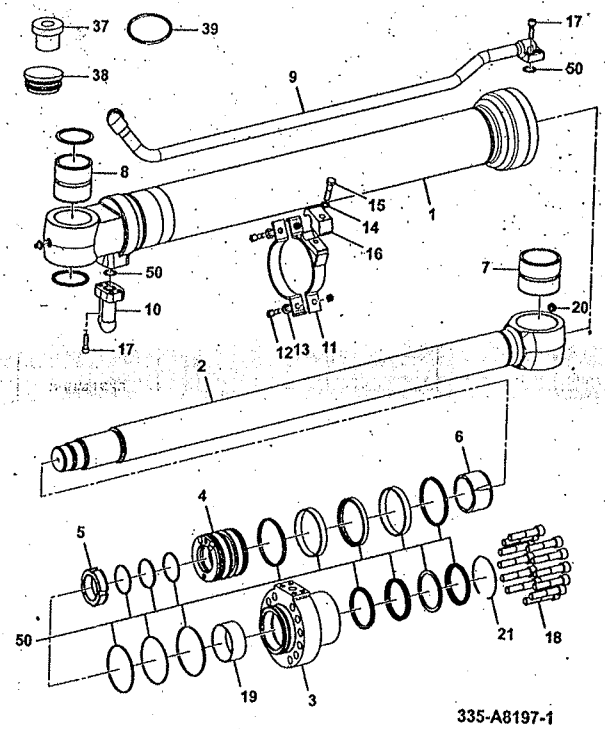

335-A8197-1

JS220 XD

JS220LC

ITEM	Part#	CHANGE NO	DESCRIPTION	USAGE CODE	QTY
A	335/A8197		Ram Bucket		1
1	550/42199		Tube S/A		1
2	335/C2892		Rod Rod Piston		1
3	550/42201		Cover Head End		1
4	550/42202		Piston		1
5	550/41936		Nut Rod Piston		1
6	550/41931		Bush Cushioning Head End		1
7	550/41731		Bush Rod End		1
8	550/41732		Bush (CE)		1
9	550/42204		Pipe S/A		1
10	550/41938		Port		1
11	335/C2896		Clamp Clamp		1
12	550/42206		Bolt Hexagonal HD		2
13	550/41158		Washer		2
14	550/41917		Washer Machined		1
15	550/41912		Bolt HD		1

Continue...

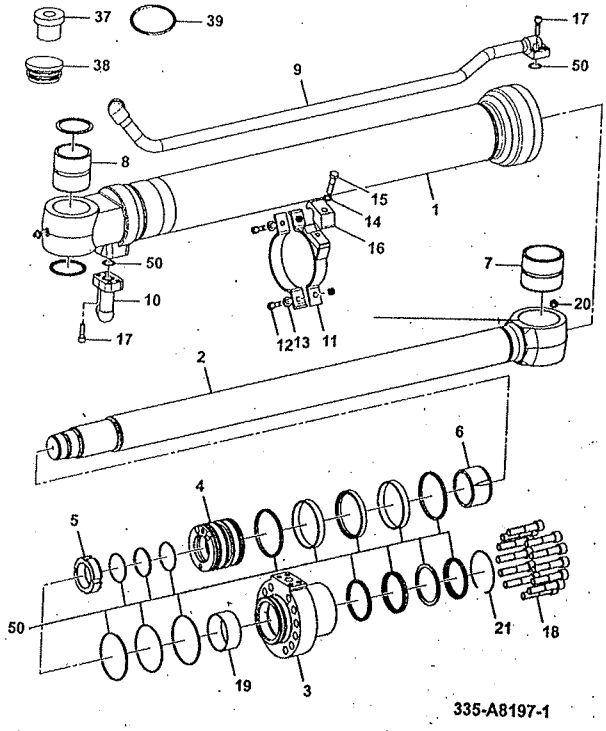

335-A8197-1

ITEM	PART NO	CHANGE NO	DESCRIPTION	USAGE CODE	QTY
16	550/41939		Clamp		1
17	550/41916		Capscrew HD		8
18	550/41915		Capscrew HD		12
19	335/C2897		Bush Bi Metal		1
20	550/41919		Nipple Grease		2
21	550/41922		Ring Snap		1
37	335/C2898		Cap Cap		2
38	335/C2900		Plug Plug		2
39	696/00990		O Ring		2
40	335/C2901		Guard Wiper		1
50	550/42219		Kit-seal Spare		1

E

E01 HYDRAULIC CIRCUITS
E02 PUMP & MOTORS
E03 VALVES
E04 RAMS
• E05 FILTER

E510-1-1 FILTER MAIN HYDRAULIC, PILOT RETURN

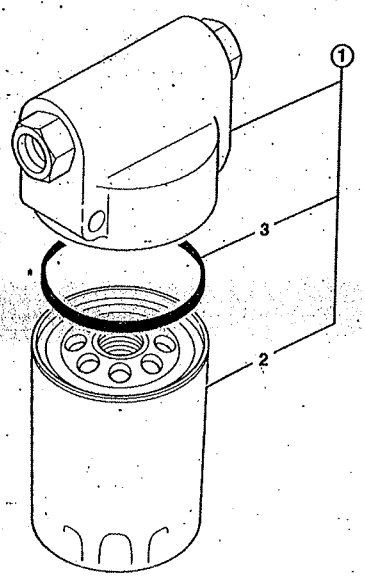

JS220 XD

JS220LC

ITEM	Part#	CHANGE NO	DESCRIPTION	USAGE CODE	QTY
1	32/925214		Filter assembly		1
2	:KBJ1691		Element servo filter		1
3	:KHJ1032		O Ring		1

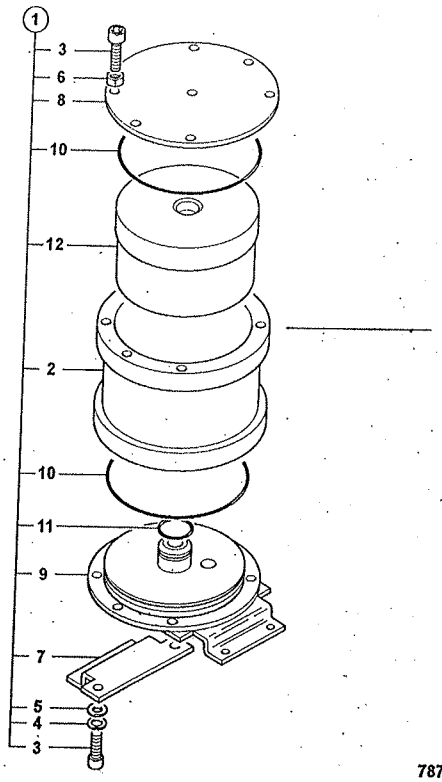

787490

JS220 XD

JS220LC

ITEM	Part #	CHANGE NO.	DESCRIPTION	USAGE CODE	QTY.
1	JRJ0238		Filter Bypass		1
2	:32/925120		Case filter		1
3	:826/10302		Capscrew M8 strainless steel		10
4	:823/10181		Washer spring strainless steel		8
5	:823/10201		Washer M8, strainless steel		8
6	:826/10321		Nut M8 plain st.steel		2
7	:32/925121		Bracket mounting		2
8	:581/18108		Cover top		1
9	:32/925123		Base filter		1
10	:828/10080		O Ring		2
11	:828/10081		O Ring		1
12	:32/925140		Element filter bypass Plexus		1

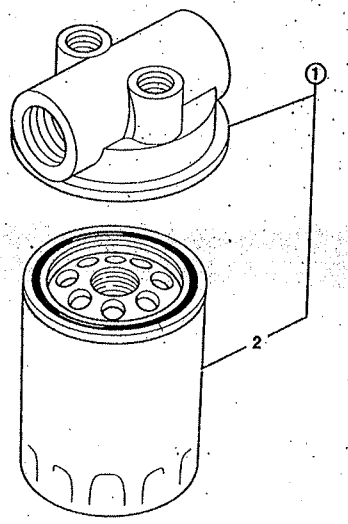

959800

JS220 XD

JS220LC

ITEM	Part #	CHANGE NO.	DESCRIPTION	USAGE CODE	QTY.
1	KNJ0287		Filter Inlet		1
2	:KNJ0288		Element oil filter		1

JS220 XD

JS220LC

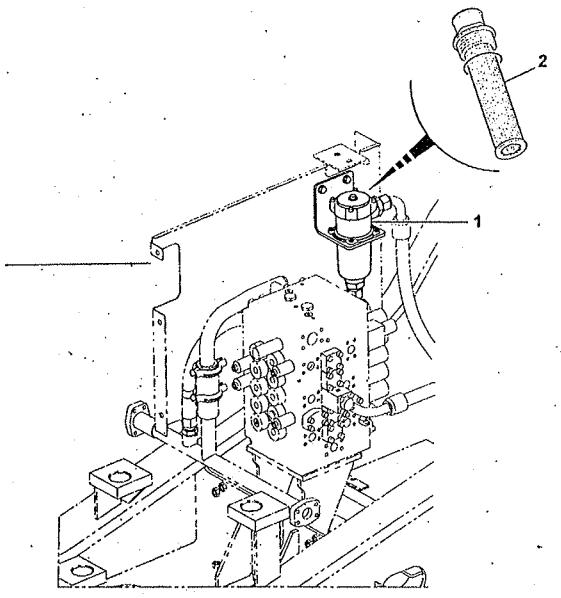

333-J9896-1

ITEM	Part #	CHANGE NO	DESCRIPTION	USAGE CODE	QTY
1	333/J9896		Filter		1
2	:333/K0099		Filter element		1

• F04 TRACK & SWING GEAR BOX

F

F410-1-1 GEARBOX ASSEMBLY & SPROCKET, MOTOR, TRACTION

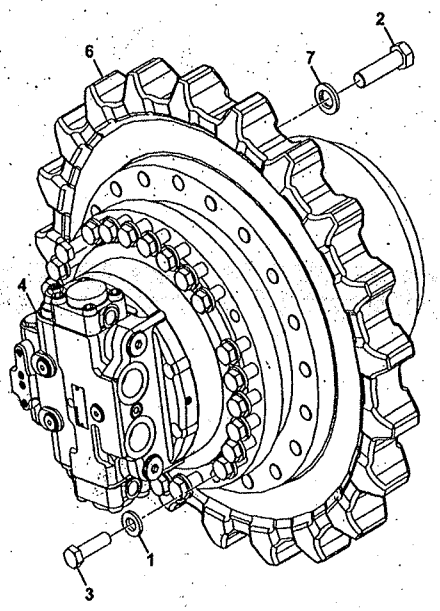

333-L4324-1

JS220 XD

JS220LC

ITEM	Part	CHANGE NO.	DESCRIPTION	USAGE CODE	QTY
1	JHP0043		Washer M16		52
2	1316/3816Z		Bolt M20x70		21
3	1316/3713Z		Bolt M16x55		52
4	332/K1192		Motor travel Refer F410-5-1		2
6	332/J0022		Sprocket		2
7	JHP0044		Washer		2

JS220 XD

JS220LC

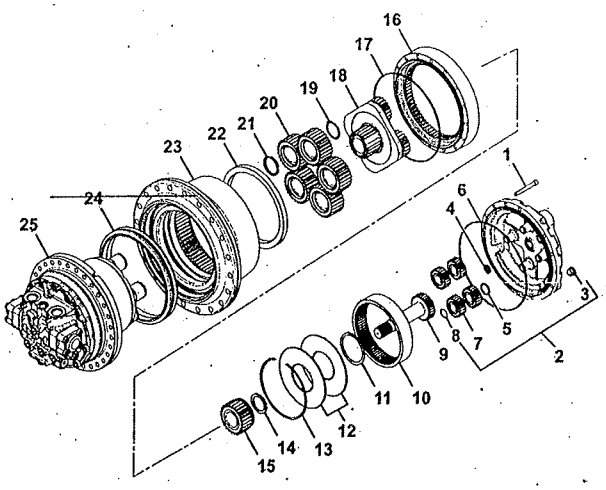

332-K1192-1

ITEM	Part#	CHANGE NO	DESCRIPTION	USAGE CODE	QTY
A	332/K1192		Motor travel		1
1	:332/H3901		Screw M10 x 80mm		13
2	:332/H3904		Kit Cover assembly		1
3	:332/H3913		Plug oil breather		2
4	:20/950518		Pad		1
5	:332/H3914		Spacer		4
6	:05/903819		O Ring		1
7	:332/H3915		Gear planetary		4
8	:332/H3916		Circlip		4
9	:332/H3917		Gear sun		1
10	:332/H3918		Ring toothed		1
11	:332/H3919		Circlip		1
12	:332/H3920		Disc		2
13	:332/H3923		Circlip		1
14	:332/H3924		Ring centering		1
15	:332/H3925		Gear sun		1

F410-5-1 GEARBOX ASSEMBLY & SPROCKET, GEARBOX, COMPONENTS 9820/0546B ISSUE 1

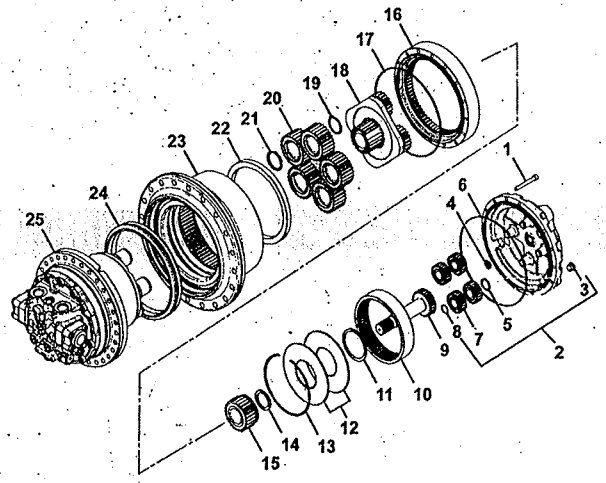

ITEM	PART NO	CHANGE NO	DESCRIPTION	USAGE CODE	QTY
16	:332/H3926		Ring toothed		1
17	:05/903819		O Ring		1
18	:332/H3928		Gear reduction assembly		1
19	:332/H3929		Circlip		5
20	:332/H3930		Gear Planetary		5
21	:332/H3931		Spacer		5
22	:332/H3932		Nut		1
23	:332/H3933		Housing & bearing		1
24	:05/903811		Seal assembly		1
25	:332/H3935		Motor hydraulic Refer F420-1-1		1

332-K1192-1

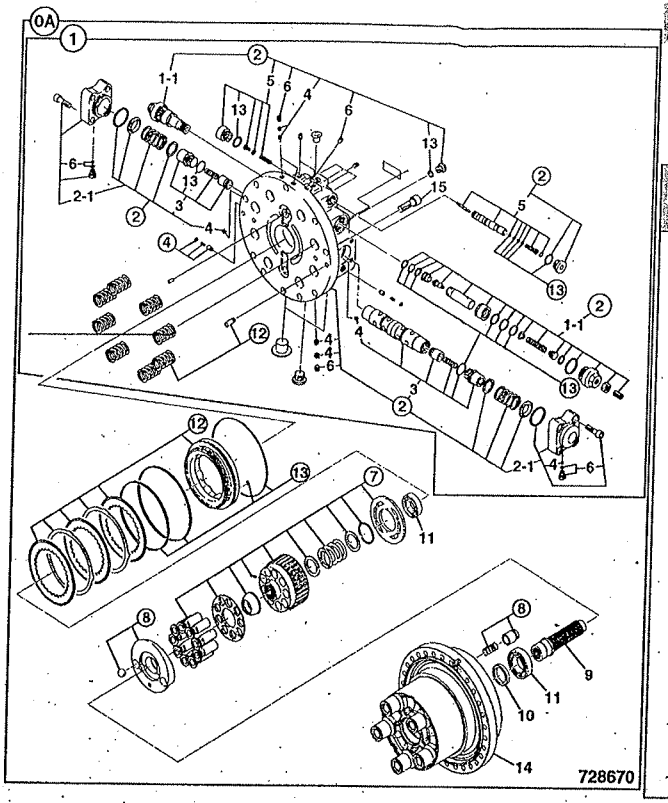

JS220 XD

JS220LC

ITEM	Part #	CHANGE NO	DESCRIPTION	USAGE CODE	QTY
A	332/H3935		Motor hydraulic		1
1			None serviced part		1
1-1	:25/222665		Valve relief		2
2	:332/H5576		Kit-valve assembly		1
3	:332/H5577		Kit-plunger		1
4	:332/H5579		Kit orifice		1
5	:332/H5580		Kit-plug assembly		1
6	:332/H5578		Kit-plug & o ring		1
7			None serviced part		1
8	:332/H5581		Kit-plug & o ring		1
9	:20/925674		Shaft motor drive		1
10	:332/H5585		Seal ring		1
11	:20/951604		Bearing Bearing Kit Track Motor/Gearbox		1
12	:332/H5586		Kit-repair brake assembly		1
13	:332/H5587		Kit-seal		1

JCB F420-1-1 GEARBOX TRACK
9820/0546B
ISSUE 1

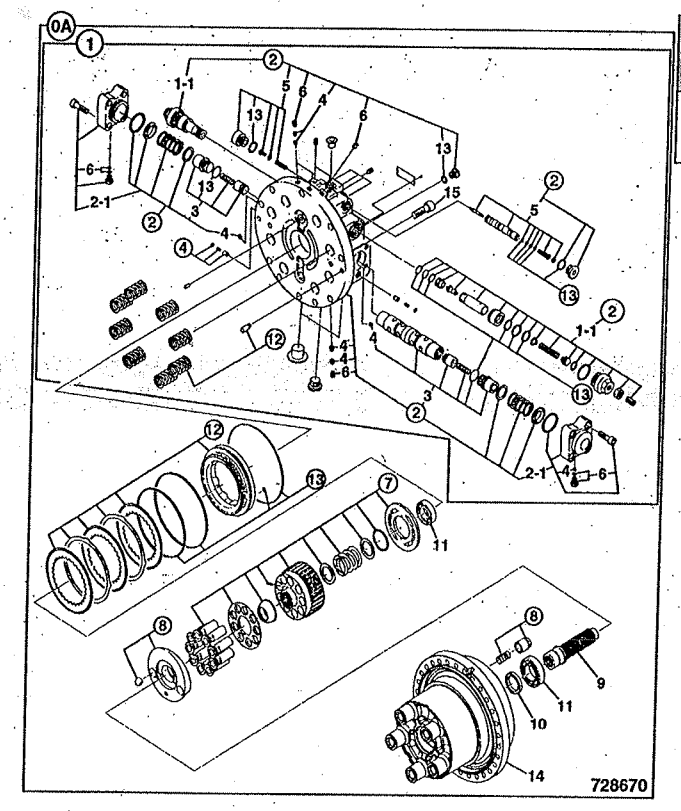

ITEM	PART NO	CHANGE NO	DESCRIPTION	USAGE CODE	QTY
14			None serviced part		1
15	:05/903833		Screw		10

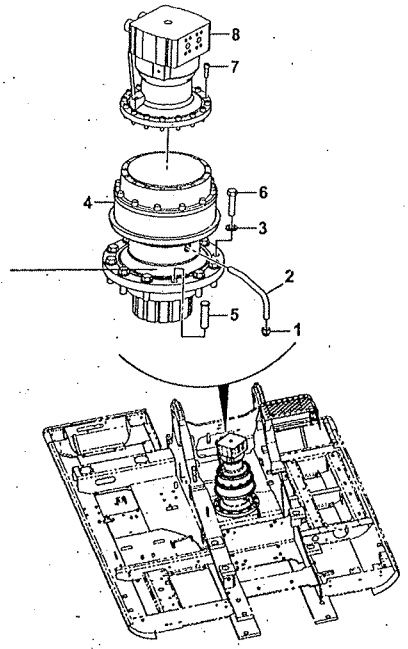

229-01689-5

JS220 XD

JS220LC

ITEM	Part #	CHANGE NO	DESCRIPTION	USAGE CODE	QTY
1	C4E9301		Capscrew		1
2	JBC0004		Pipe assembly		1
3	JHP0044		Washer		11
4	333/P1196		Gearbox Swing Refer F440-1-1		1
5	KRC0105		Pin headed		1
6	1316/3817D		Bolt		11
7	1391/3509D		Capscrew M12 x 35mm		16
8	20/925315		Motor swing Refer F430-5-1		1

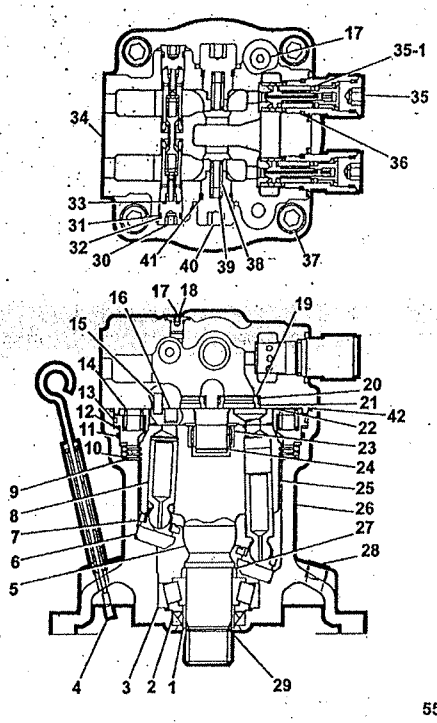

556800

JS220 XD

JS220LC

ITEM	Part #	CHANGE NO	DESCRIPTION	USAGE CODE	QTY
A	20/925315		Motor swing		1
1	:LMM0338		Spacer		1
2	:LAM0037		Seal oil		1
3	:LTM0129		Bearing		1
4	:LZM0343		Gauge oil level with tube		1
5	:LSM0080		Spring		1
6	:LMM0334		Plate		1
7	:LMM0335		Plate return		1
8			None serviced part		9
9	:LMM0337		Plate friction		3
10	:LMM0336		Plate mating		3
11	:LBQ5262		O Ring		1
12	:LPM0117		Piston		1
13	:LBQ5263	Superseded	O Ring		2
13	:828/00329		O Ring to suit 187.4 groove		2

Continue...

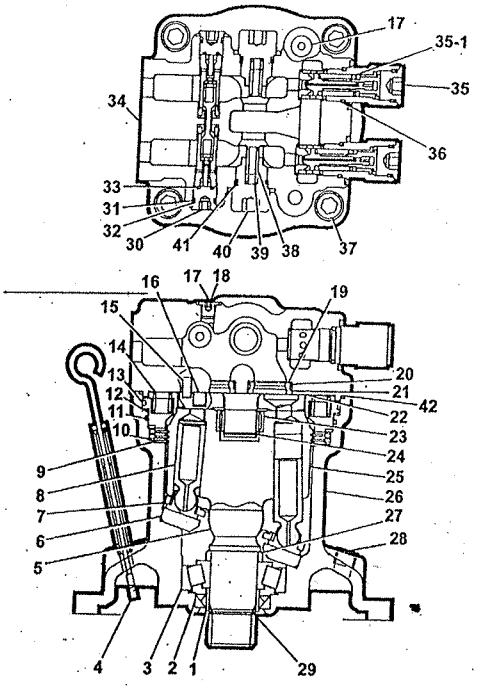

556800

ITEM	PART NO	CHANGE NO	DESCRIPTION	USAGE CODE	QTY
14	:LSM0082		Spring		18
15	:LMM0545		Pin		2
16	:LPM0115		Piston		2
17	:LZC0076		Plug blanking		3
18	:LBQ0112		O Ring		3
19	:LSM0135		Spring		4
20	:LPM0112		Ring tef		4
21	:LKM0106		Bush		4
22	:LZM0335		Plate balance		1
23	:LTM0130		Bearing		1
24	:LMM0330		Ring lock		1
25			None serviced part		1
26			None serviced part		1
27	:LMM0605		Collar		1
28	:UBJ0384		Plug		2
29	:LMM0329		Ring lock		1
30	:LNM0428		Valve bypass assembly		2
31	:LBQ0182		O Ring		2
32	:LBC0201		Ring back up		2

F430-5-1 SLEW/SWING MOTOR INSTALLATION 9820/0546B
ISSUE 1

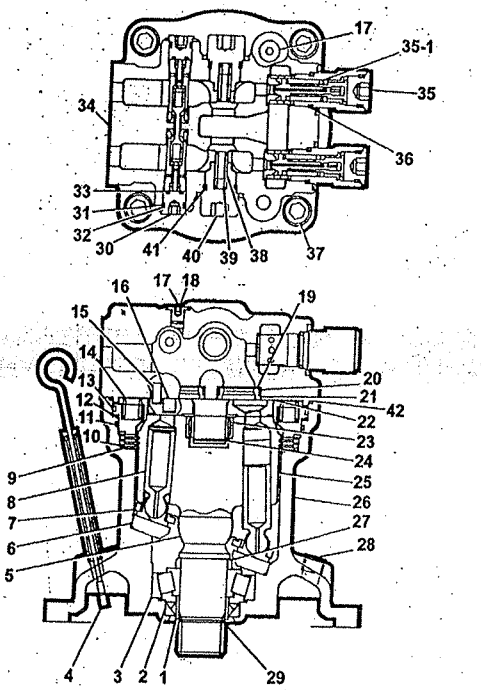

556800

ITEM	PART NO	CHANGE NO	DESCRIPTION	USAGE CODE	QTY
33	:LBQ0122		O Ring		2
34			None serviced part		1
35	:20/951767		Valve relief 289 bar		1
35	:20/951768		Valve relief 270 bar		1
35-1	::LMC0102	Superseded	Kit-shim relief valve		1
35-1	::LQM0021		Shim		1
36	:LBQ0262		O Ring		4
37	:6004/3714	Superseded	Capscrew		4
37	:1391/3714		Capscrew		4
38	:LPM0052		Valve check		2
39	:LSM0075		Spring		2
40	:LZM0191		Cap		2
41	:LBB0262		Ring back-up		2
42	:333/F7868		O Ring I/D 183.74mm O/D 190.8mm Underneath the line of 20		1

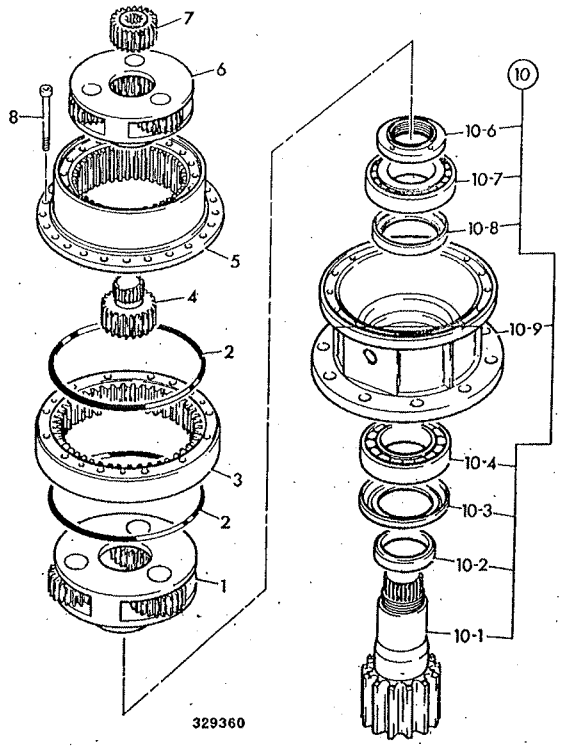

JS220 XD

JS220LC

ITEM	Part #	CHANGE NO	DESCRIPTION	USAGE CODE	QTY
A	333/P1196		Gearbox Swing		1
1	550/43168		Gear Reduction Assembly		1
2	05/903861		O Ring		2
3	05/903862		Ring Toothed		1
4	05/903863		Gear Sun		1
5	05/903864		Cover		1
5A	05/903865		Ring Toothed		1
6	05/903866		Gear Reduction Assembly		1
7	05/903867		Gear Sun		1
8	05/903868		Screw		16
10	333/Y3141		Shaft Out put, Assembly		1
10-1	333/Y3140		Pinion Shaft		1
10-2	05/903870		Spacer		1
10-3	05/903871		Ring		1
10-4	05/903872		Bearing		1

F440-1-1 GEARBOX SLEW/SWING, ASSEMBLY
9820/0546B
ISSUE 1

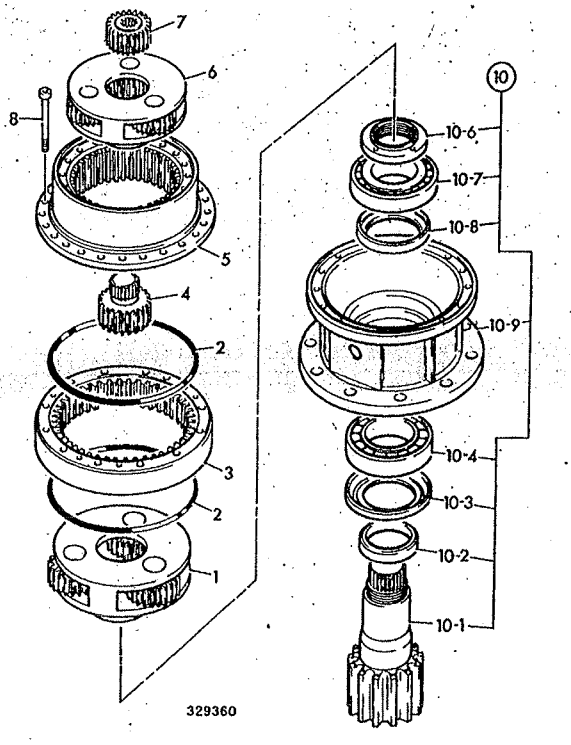

ITEM	PART NO	CHANGE NO	DESCRIPTION	USAGE CODE	QTY
10-6	333/Y3148		Nut		1
10-7	333/Y3146		Bearing		1
10-8	550/43236		Seal Ring		1
10-9	333/Y3145		Gearbox Housing		1

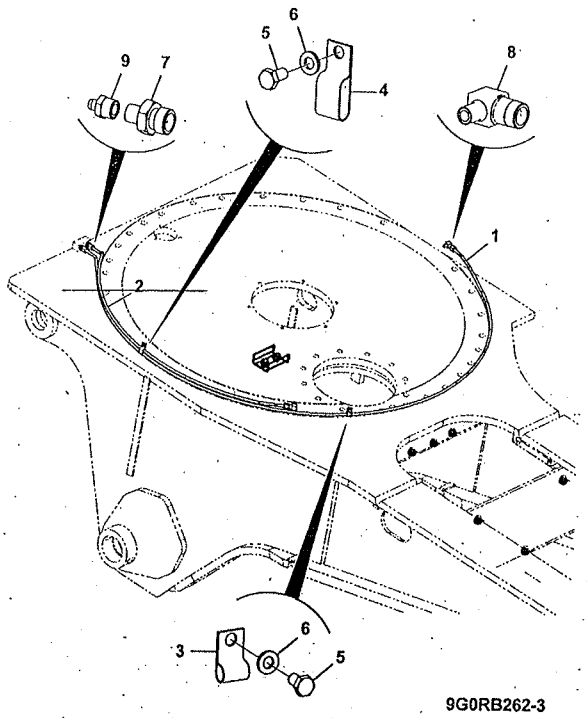

9G0RB262-3

JS220 XD

JS220LC

ITEM	Part #	CHANGE NO	DESCRIPTION	USAGE CODE	QTY
1	KRB0696		Pipe assembly grease line		1
2	KRB0697		Pipe assembly grease line		1
3	333/J2461		Clamp Zinc plated		1
4	333/J2458		Clamp Zinc plated		1
5	1316/0201D		Screw		2
6	1420/0006D		Washer Plain M6		2
7	KMJ0964		Connector		2
8	KMJ0985		Adapter elbow		2
9	JHP0037		Nipple Grease Straight		2

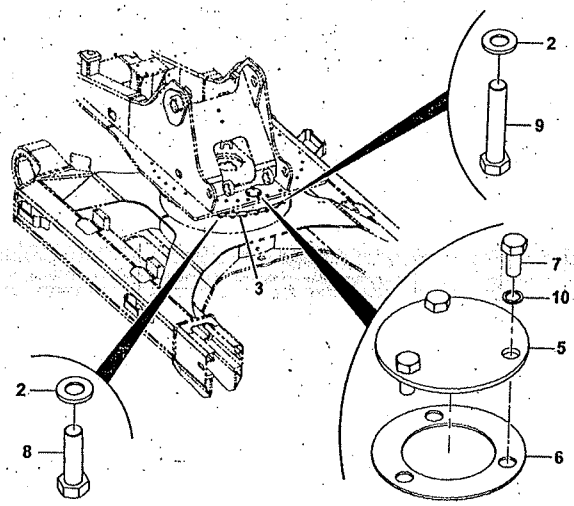

229-01891-5

JS220 XD

JS220LC

ITEM	Part #	CHANGE NO	DESCRIPTION	USAGE CODE	QTY
2	JHP0044		Washer		69
3	333/P7280		Bearing Slew JS200		1
3A	335/A7694		Seal Dust Slew Bearing		1
5	KRB0681		Plate Cover		1
6	KRB0682		Packing Cork		1
7	1316/0507Z		Screw		3
8	1316/3815Z		Bolt		36
9	332/P6830		Bolt High Strength M20 x105mm		33
10	1425/0009Z		Washer Spring M12		3

• J01 UNDERCARRIAGE

J

J100-1-1 UNDERCARRIAGE INSTALLATION ASSEMBLIES, TRACK CHAIN, AND IDLER, 49 LINKS, 500MM, ITM

9820/0546B
ISSUE 1

JS220 XD

JS220LC

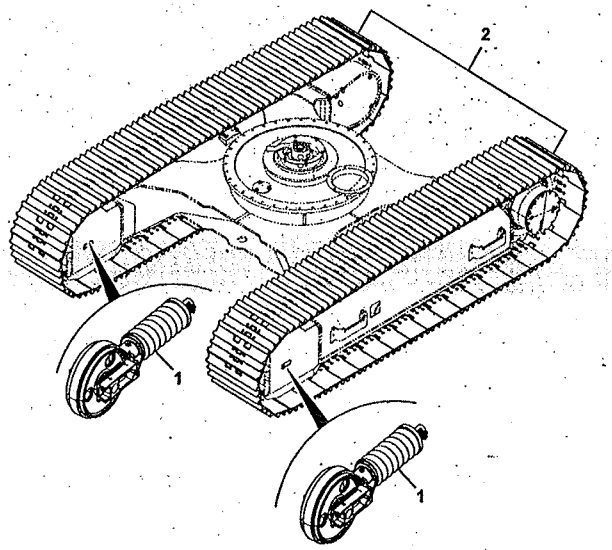

ITEM	Part#	CHANGE NO.	DESCRIPTION	USAGE CODE	QTY.
1	332/L9198		Tensioner track Refer J120-1-1		2
2			Assembly track chain/shoe - 500 49 Refer J160-19-1		1

334-P5800-2

JS220 XD

JS220LC

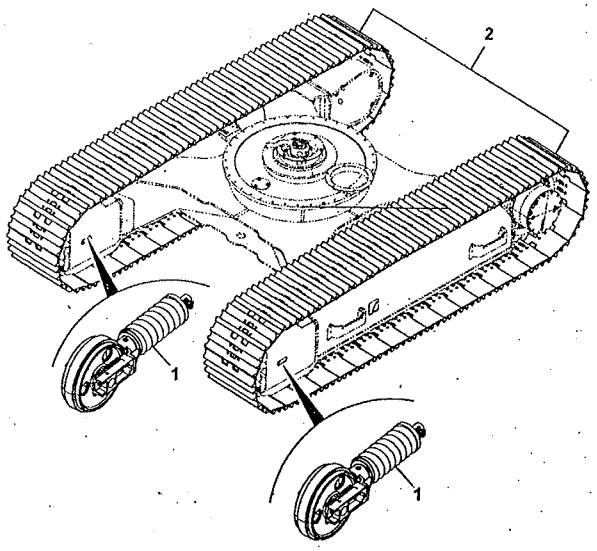

ITEM	Part #	CHANGE NO	DESCRIPTION	USAGE CODE	QTY
1	215/12229		Spring recoil & tensioner c/w idler assembly Refer J120-5-1		2
2			Chain and shoe assy 49 Refer J160-40-1		1

334-P5800-2

JS220 XD

JS220LC

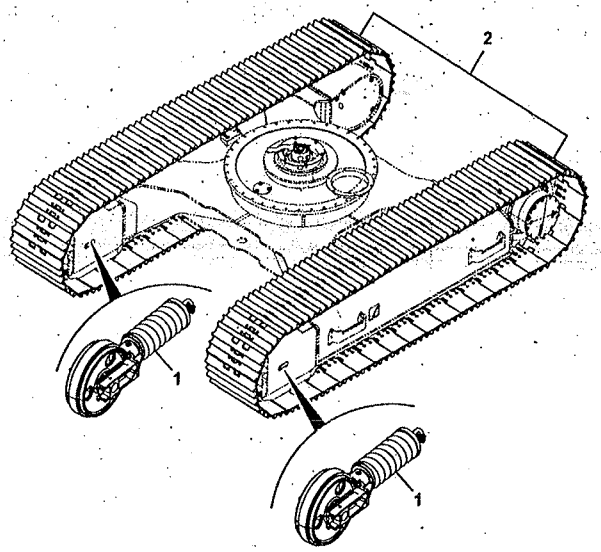

ITEM	Part #	CHANGE NO	DESCRIPTION	USAGE CODE	QTY
1	215/12229		Spring recoil & tensioner c/w idler assembly Refer J120-5-1		2
2			Track chain/shoe 600mm, 49 links, assembly Refer J160-1-1		1

334-P5800-2

JS220 XD

JS220LC

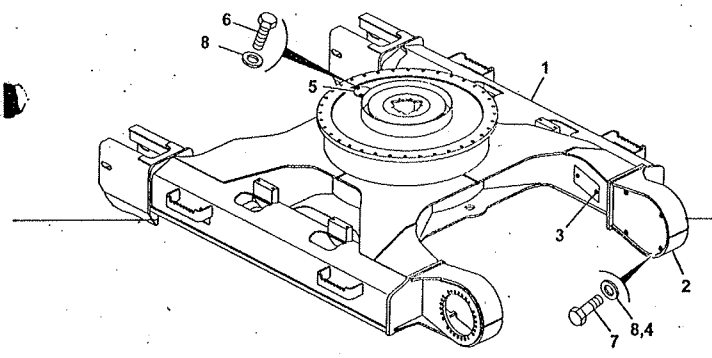

ITEM	Part #	CHANGE NO	DESCRIPTION	USAGE CODE	QTY
1	332/P1647		Frame Lower Heavy Duty		1
2			Covers lower Refer J190-15-1		1
3	JHN0048		Bolt		4
4	JHP0042		Washer M12		8
5	KRB0682		Packing Cork		1
6	1316/0505Z		Screw M12x20		3
7	1316/0509Z		Setscrew		8
8	1425/0009Z		Washer Spring M12		11

332-P2581-1

JS220 XD

JS220LC

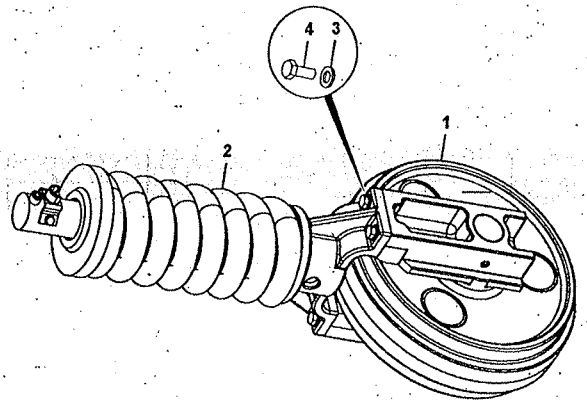

ITEM	Part #	CHANGE NO	DESCRIPTION	USAGE CODE	QTY
A	332/L9198		Tensioner track		1
1	:335/C3884		Wheel Idler With Bracket Refer J140-5-1		1
2	:335/C3885		Spring Tension Device With Valve Refer J130-10-1		1
3	:335/C3886		Washer		4
4	:335/C3887		Bolt		4

332-L9198-1

JS220 XD

JS220LC

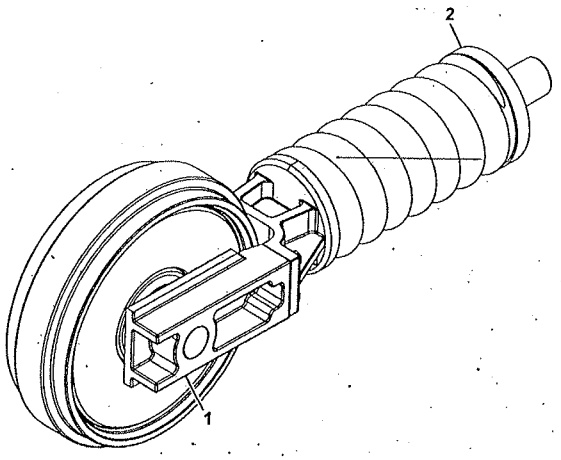

215-12229-2

ITEM	Part #	CHANGE NO	DESCRIPTION	USAGE CODE	QTY
1	215/12230		Wheel track idler assembly Refer J140-1-1		1
2	215/12231		Spring recoil assembly Refer J130-5-1		1

JS220 XD

JS220LC

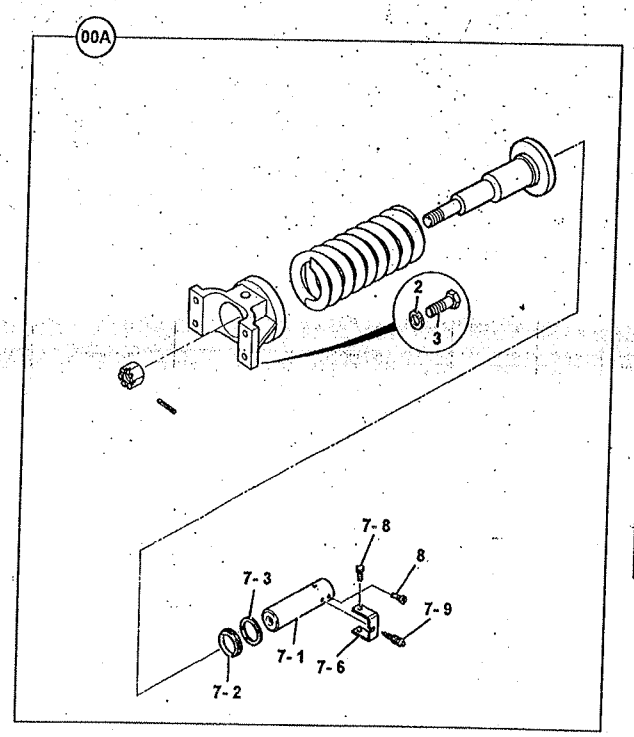

735500

ITEM	Part #	CHANGE NO	DESCRIPTION	USAGE CODE	QTY
A	215/12231		Spring recoil assembly		2
2	JHP0043		Washer M16		8
3	1316/3712Z		Bolt M16 X 50MM		8
7-1	:JRA0230		Rod piston		1
7-2	:JRA0231		Seal		1
7-3	:JRA0232		Seal dust		1
7-6	:JRA0234		Bracket		1
7-8	:1316/0403Z		Screw		2
7-9	:JRA0233		Valve check		1
8	:6011/0707Z		Capscrew		1

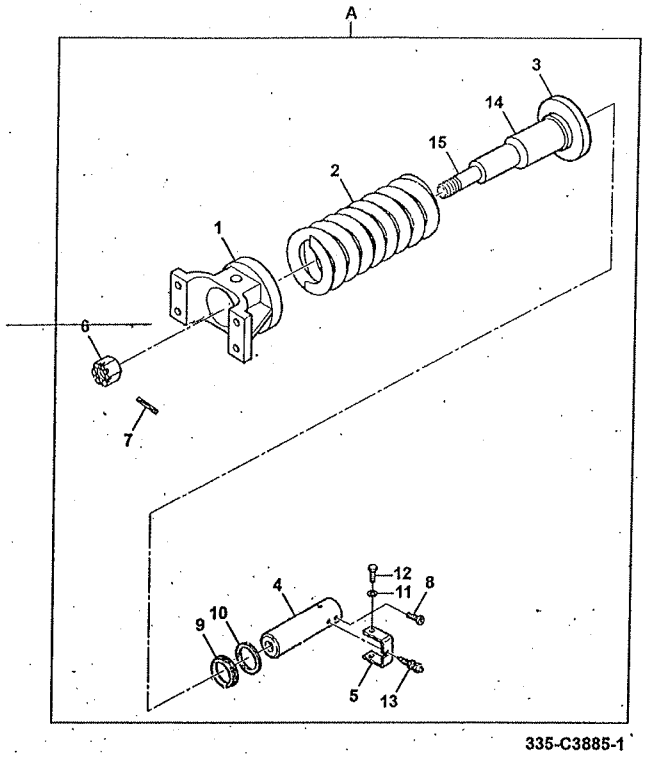

JS220 XD

JS220LC

ITEM	Part #	CHANGE NO	DESCRIPTION	USAGE CODE	QTY
A	335/C3885		Spring Tension Device With Valve		1
1	:335/C3901		Yoke		1
2	:335/C3902		Spring		1
3	:335/C3903		Plate		1
4	:335/C3904		Piston		1
5	:335/C3905		Bracket Protection		1
6	:335/C3906		Nut		1
7	:335/C3907		Pin Dowel		1
8	:335/C3908		Screw		2
9	:335/C3909		Seal		1
10	:335/C3910		Spring Scraper		1
11	:823/10612		Washer spring		2
12	:335/C3912		Bolt		2
13	:335/C3913		Valve		1
14	:335/C3914		Cylinder		1
15	:335/C3915		Rod		1

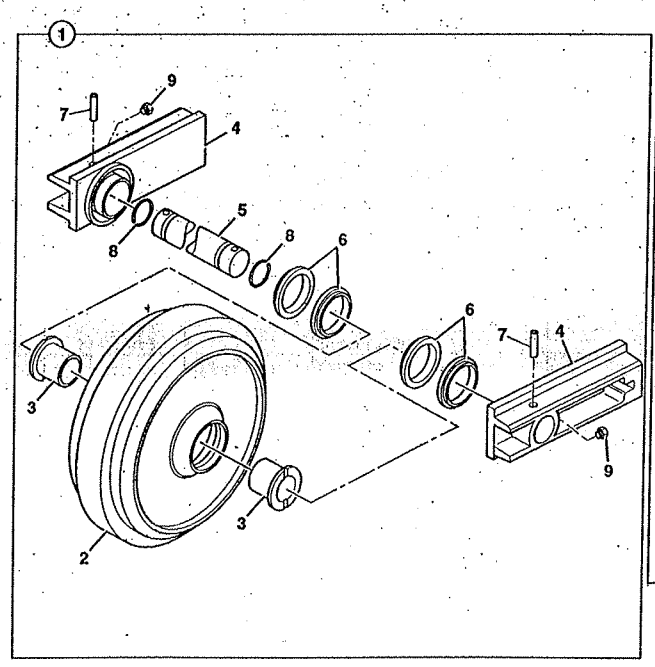

JS220 XD

JS220LC

ITEM	Part #	CHANGE NO	DESCRIPTION	USAGE CODE	QTY
1	215/12230		Wheel track idler assembly		2
2			None serviced part		1
3	:JRA0221		Bush		2
4	:331/44163		Bracket Idler Mounting		2
5	:914/60259		Shaft		1
6	:JRA0218		Seal Oil Floating		2
7	:826/11225		Pin spring		2
8	:JRA0223		O Ring		2
9	:JRA0226		Plug		1
10	:JRA0227		O Ring		1

JS220 XD

JS220LC

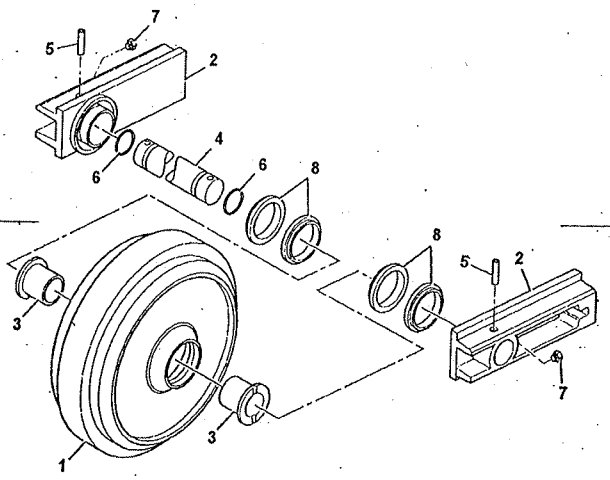

335-C3884-1

ITEM	Part #	CHANGE NO	DESCRIPTION	USAGE CODE	QTY
A	335/C3884		Wheel Idler With Bracket		1
1			None serviced part		1
2	:335/C3892		Collar		2
3	:335/C3893		Bush		2
4	:335/C3894		Shaft		1
5	:335/C3896		Pin		2
6	:828/10316		O Ring		2
7	:335/C3897		Seal		2
8	:335/C3898		Ring Seal		4
9	:335/C3899		O Ring		4

JS220 XD

JS220LC

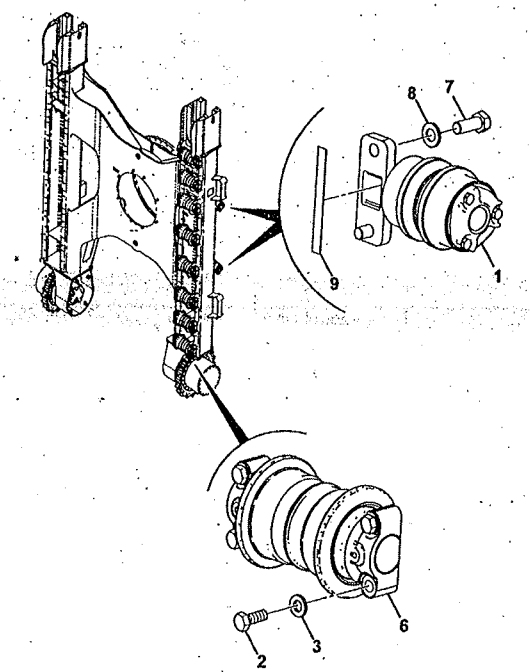

333-L5630-2

ITEM	Part #	CHANGE NO	DESCRIPTION	USAGE CODE	QTY
1	331/42441		Roller assy, carrier Refer J150-10-1		2
2	1316/9519Z		Bolt		32
3	JHP0079		Washer		32
6	331/42639		Roller lower, Assembly Refer J150-5-1		8
7	1316/3812Z		Bolt		4
8	JHP0044		Washer		4
9	JHA0005		Shim		2

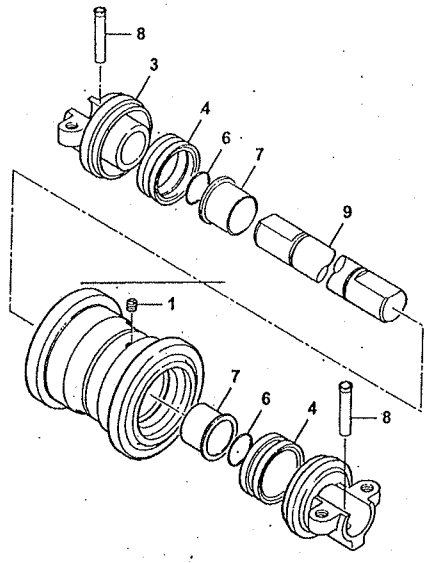

331-42639-3

JS220 XD

JS220LC

ITEM	Part #	CHANGE NO	DESCRIPTION	USAGE CODE	QTY
1	32/925629		Plug tapered		1
2			None serviced part		1
3	331/42649		Bracket		2
4	331/42650		Seal assembly		4
6	828/10312		O Ring		2
7	831/10330		Bush		4
8	913/10281		Pin		2
9	914/60247		Shaft		1

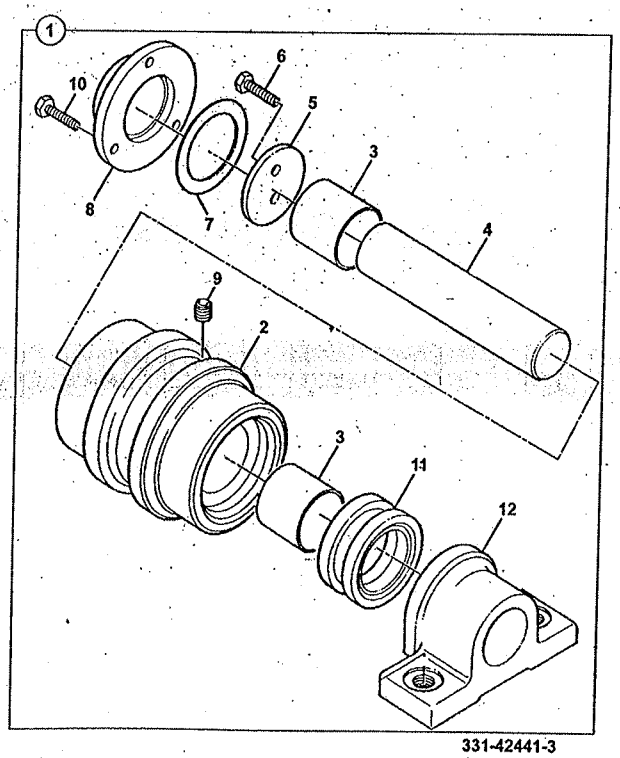

331-42441-3

JS220 XD

JS220LC

ITEM	Part #	CHANGE NO	DESCRIPTION	USAGE CODE	QTY
1	331/42441		Roller assy, carrier		2
2			None serviced part		1
3	::831/10328		Bush		2
4			None serviced part		1
5	:331/42447		Plate thrust		1
6	:826/11187		Bolt		2
7	:828/10306		O Ring		1
8	:331/42452		Cover		1
9	:32/925629		Plug tapered		1
10	:826/11187		Bolt		3
11	:331/42450		Seal assembly		1
12			None serviced part		1

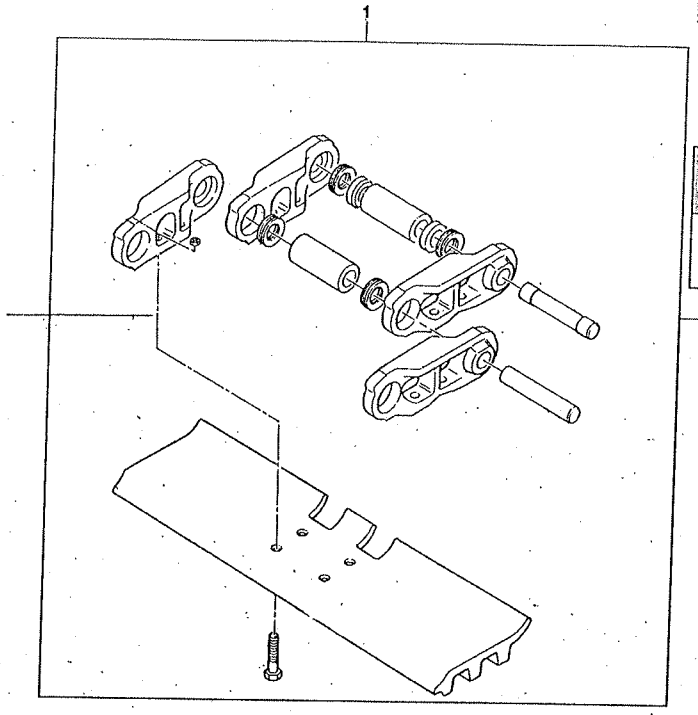

332-J7644-1

JS220 XD

JS220LC

ITEM	Part #	CHANGE NO.	DESCRIPTION	USAGE CODE	QTY
1			Chain track & shoe - 600 49 Refer J160-5-1		2

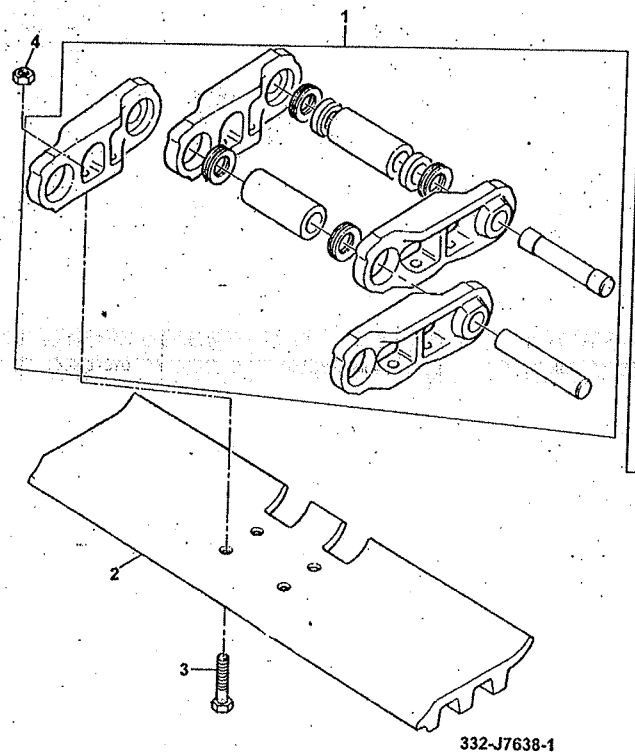

332-J7638-1

JS220 XD

JS220LC

ITEM	Part #	CHANGE NO.	DESCRIPTION	USAGE CODE	QTY
1	332/J2795	>01/03/2013	Chain track assembly XHD Refer J160-35-1		1
1	332/P4258	<28/02/2013	Link Track Chain 49		1
2	332/J1970		Plate track - 600mm		49
3	332/J2833		Bolt track M20 x 5		196
4	JSA0038		Nut track plate		196

JS220 XD

JS220LC

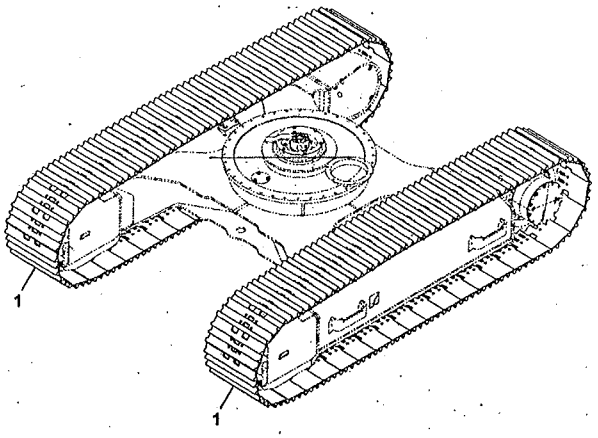

ITEM	Part #	CHANGE NO	DESCRIPTION	USAGE CODE	QTY
1			Chain & shoe assy 49 links 500mm Refer J160-20-1		2

332-J7341-2

JS220 XD

JS220LC

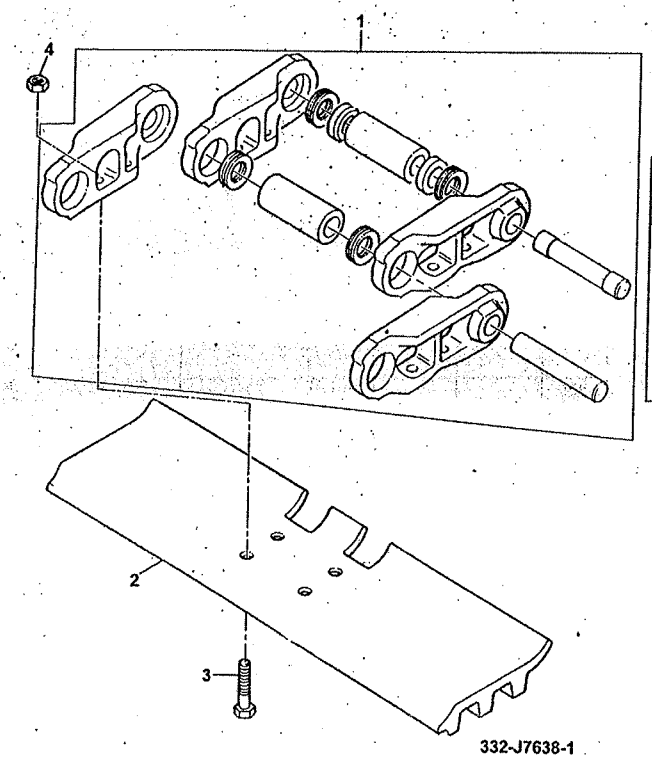

ITEM	Part #	CHANGE NO	DESCRIPTION	USAGE CODE	QTY
1	332/L9205		Chain track link 49 assy Refer J160-55-1		1
2	332/L9246		Plate track 500mm		49
3	332/L9207		Bolt track - M20 x 5		196
4	332/L9208		Nut shoe		196

332-J7638-1

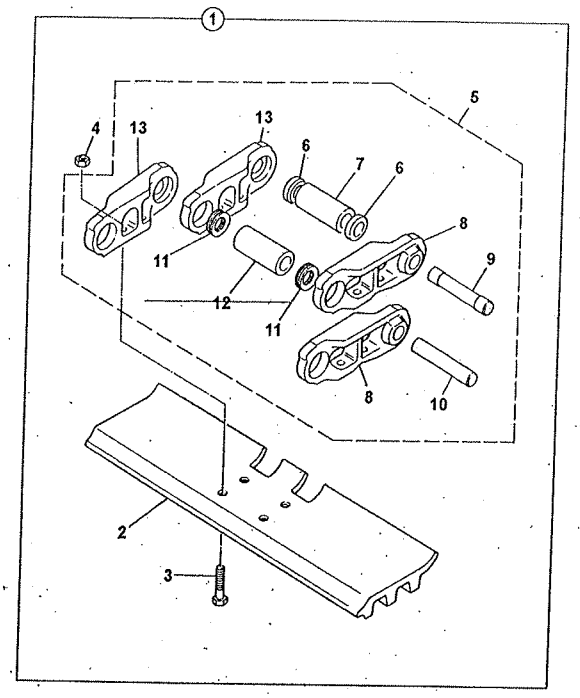

412360

JS220 XD

JS220LC

ITEM	Part #	CHANGE NO	DESCRIPTION	USAGE CODE	QTY
5	332/J2795		Chain track assembly XHD		1
6	:331/30984		Seal dust		2
7	:332/D5957		Bush master		1
8	:332/D5953		Link right		49
9	:332/D5959		Pin master		1
10	:332/D5958		Pin		48
11	:331/30984		Seal dust		96
12	:332/D5956		Bush track		48
13	:332/D5955		Link left		49

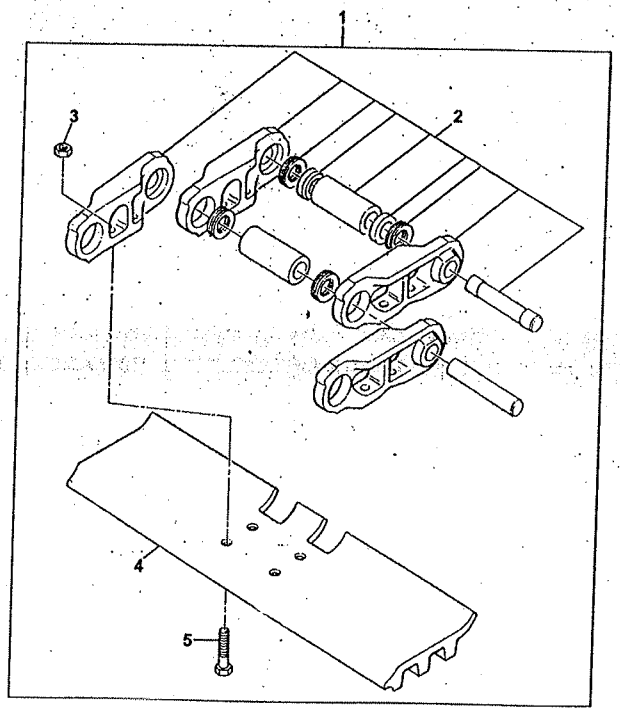

332-P4257-1

JS220 XD

JS220LC

ITEM	Part #	CHANGE NO	DESCRIPTION	USAGE CODE	QTY
1	332/J0656		Assembly instructions track chain		1
2	332/P4258		Link Track Chain 49		1
3	JSA0038		Nut track plate		196
4	332/P4259		Shoe triple grouser 500mm		49
5	332/J2833		Bolt track M20 x 5		196

JS220 XD

JS220LC

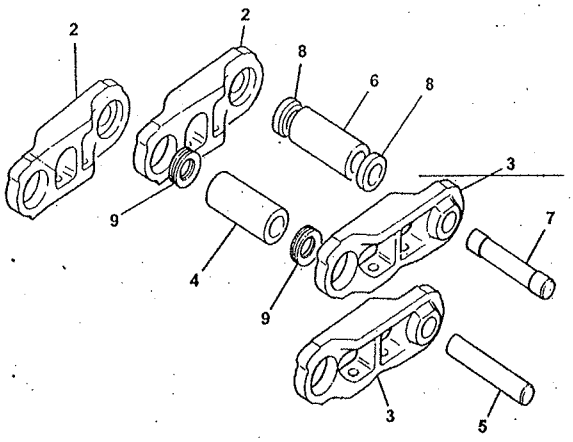

ITEM	Part #	CHANGE NO	DESCRIPTION	USAGE CODE	QTY
1	332/L9205		Chain track link 49 assy		1
2	334/P8999		Link Chain right hand side		49
3	334/P9001		Link Chain left hand side		49
4	334/P9006		Bush		48
5	334/P9023		Pin		48
6	334/P9025		Bush master		48
7	334/P9053		Pin master		48
8	334/P9059		Spacer		96
9	334/P9061		Seal washer		96

332-L9205-1

JS220 XD

JS220LC

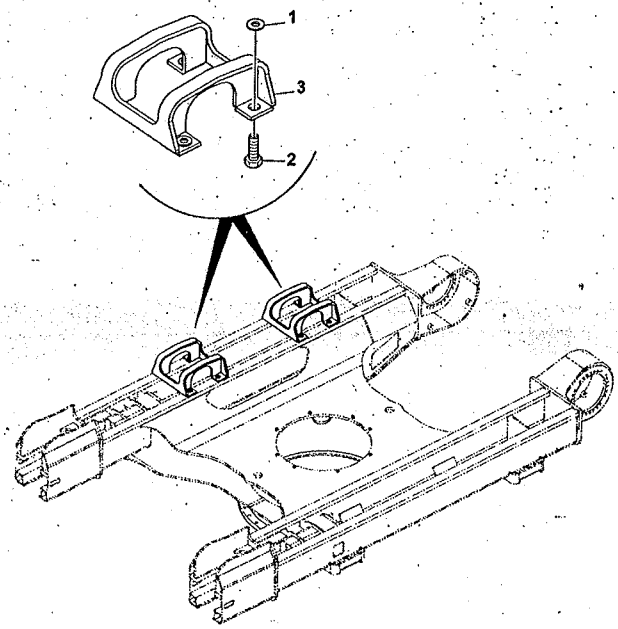

ITEM	Part #	CHANGE NO	DESCRIPTION	USAGE CODE	QTY
1	JHP0079		Washer		16
2	1316/9512Z		Bolt		16
3	333/L9737		Guide track		4

229-01071-7

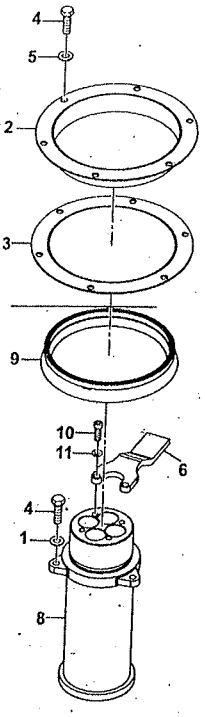

229-01069-9

JS220 XD

JS220LC

ITEM	Part #	CHANGE NO	DESCRIPTION	USAGE CODE	QTY
1	JHP0042		Washer M12		3
2	KRA0999		Retainer Seal		1
3	KRA1000		Packing Rubber		1
4	1316/0508Z		Screw		9
5	1406/0011		Washer Bonded		6
6	332/P7057		Bracket Stop		1
8	334/L0351		Coupling rotary		1
9	904/20126		Ring Seal		1
10	1391/3508D		Capscrew M12 x 30		2
11	1425/0009Z		Washer Spring M12		2

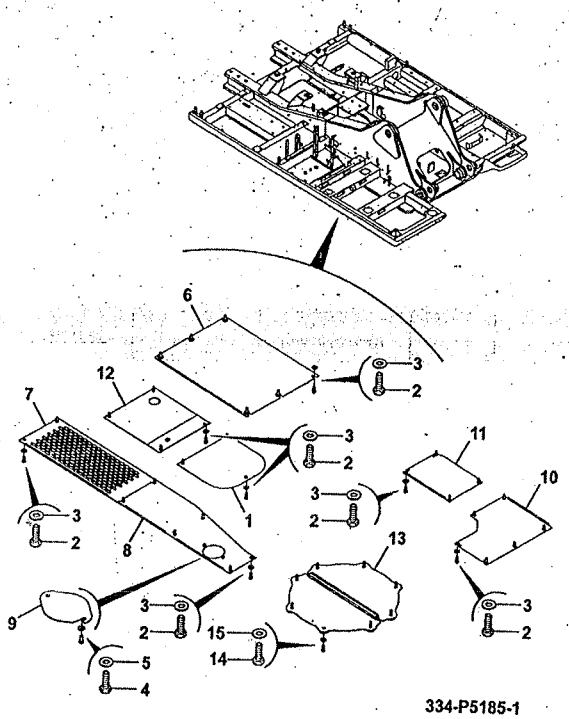

334-P5185-1

JS220 XD

JS220LC

ITEM	Part #	CHANGE NO	DESCRIPTION	USAGE CODE	QTY
1	JRB0113		Cover under center		1
2	1315/0509Z		Setscrew M12 x 35mm		31
3	JHP0049		Washer		31
4	1316/0405Z		Screw M10 X 20		2
5	1420/0008Z		Washer Plain M10		2
6	332/J0814		Plate left hand rear under cover		1
7	334/P5181		Cover under pump bottom		1
8	334/P5213		Panel under cover, tank bottom		1
9	331/31978		Cover under access panel		1
10	331/35462		Cover Under		1
11	331/35464		Cover Under Front		1
12	335/06827		Cover		1
13	KRA0814		Cover under		2

Continue...

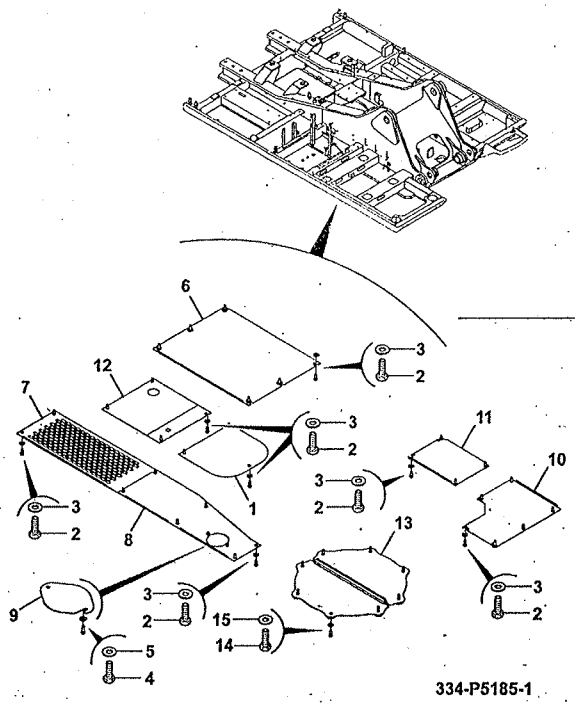

334-P5185-1

ITEM	PART NO	CHANGE NO	DESCRIPTION	USAGE CODE	QTY
14	1316/0511Z		Bolt		8
15	JHP0042		Washer M12		8

JS220 XD

JS220LC

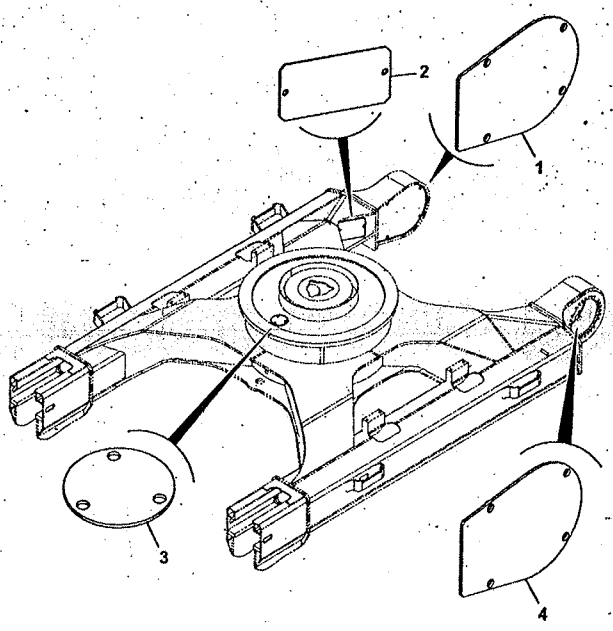

JG0RA069-3

ITEM	Part#	CHANGE NO	DESCRIPTION	USAGE CODE	QTY
1	JRA0298		Cover track motor left hand		1
2	KRA1107		Cover		2
3	KRB0681		Plate Cover		1
4	JRA0299		Cover track motor right hand		1

- L01 ENGINE INSTALLATION ASSEMBLIES
- L02 EXHAUST SYSTEM
- L03 INDUCTION SYSTEM INSTALLATION ASSEMBLIES
- L04 HEATER
- L06 COOLING SYSTEM
- L07 FAN INSTALLATION ASSEMBLIES
- L08 FUEL SYSTEM

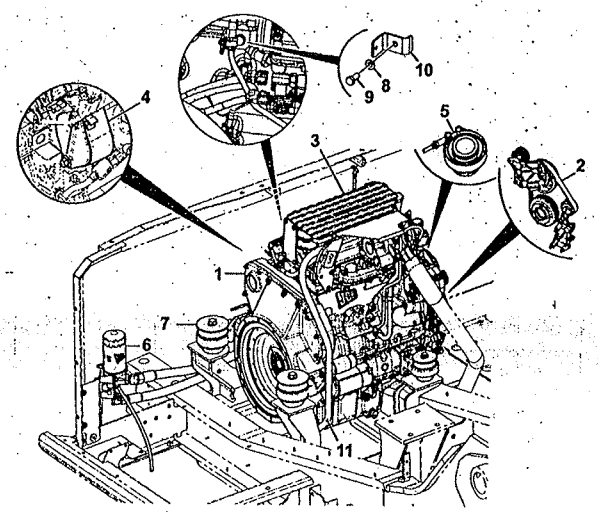

335-C3753-2

JS220 XD

JS220LC

ITEM	Part #	CHANGE NO	DESCRIPTION	USAGE CODE	# QTY
1	320/40332		Engine assembly 129kW 24V Refer V8-1-5 in 9812/8000		1
2			Installation Front End Drive HD Refer L720-5-1		1
3			Plate tread assy Refer L190-35-1		1
4			Plate Blanking Assembly Refer L190-40-1		1
5			Assembly turbo adapter Refer L190-25-1		1
6			Assembly remote oil filter Refer L190-10-1		1
7			Mount engine assembly Refer L190-5-1		1
8	1420/0007D		Washer Plain M8		1

Continue...

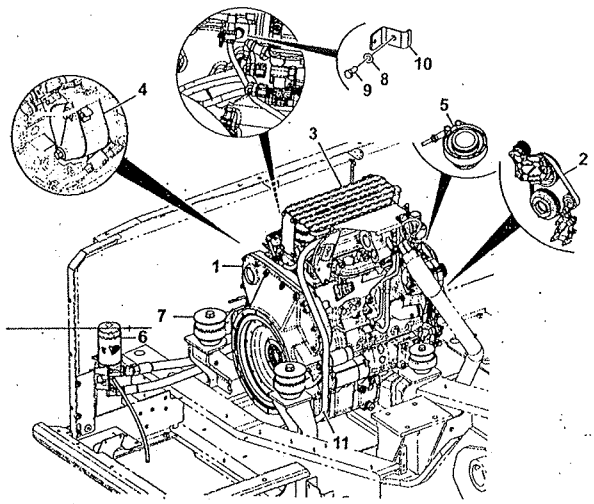

335-C3753-2

ITEM	PART NO	CHANGE NO	DESCRIPTION	USAGE CODE	QTY
9	1316/0305D		Screw M8 X 20		1
10	333/J2451		Plate		1
11			Hose & pipework CCV, Assembly Refer E190-5-1		1

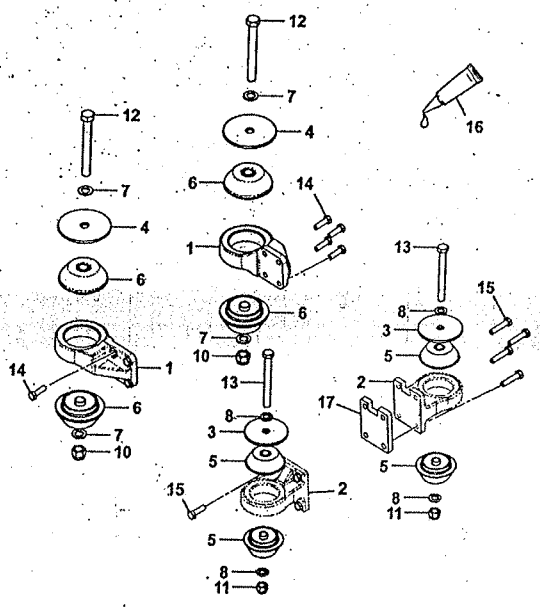

332-K5208-5

JS220 XD

JS220LC

ITEM	Part #	CHANGE NO	DESCRIPTION	USAGE CODE	QTY
1	332/K5027		Mount engine ,rear		2
2	332/K5026		Mount engine front		2
3	332/K2899		Washer rebound		2
4	332/K2895		Washer rebound		2
5	332/K0390		Rubber engine mount		4
6	332/K0952		Rubber engine mount		4
7	1422/0012D		Washer hard		4
8	1420/0011D		Washer M16		4
10	1371/0703D		Nut		2
11	1371/0603D		Nut M16 self locking		2
12	1316/3827D		Bolt M20 x 170		2
13	1316/3725D		Bolt M16x150 10.9		2
14	1391/3509D		Capscrew M12 x 35mm		12
15	1391/3512D		Capscrew		4

Continue...

ITEM	PART NO	CHANGE NO	DESCRIPTION	USAGE CODE	QTY
16	4101/0200		Fluid Locking		0
17	333/J0611		Spacer		1

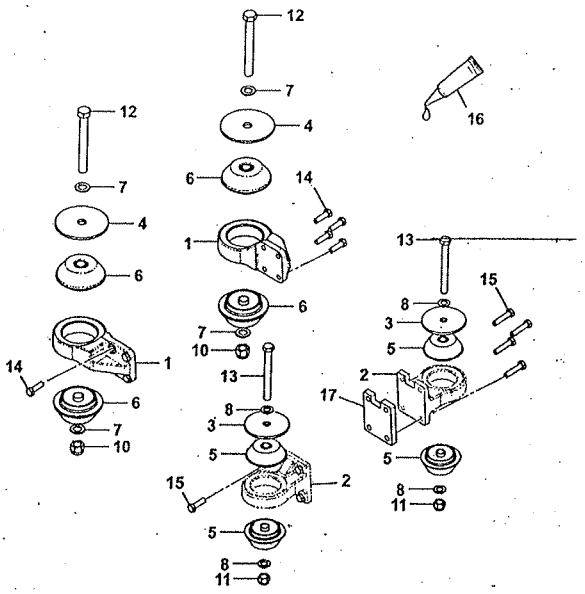

332-K5208-5

JS220 XD

JS220LC

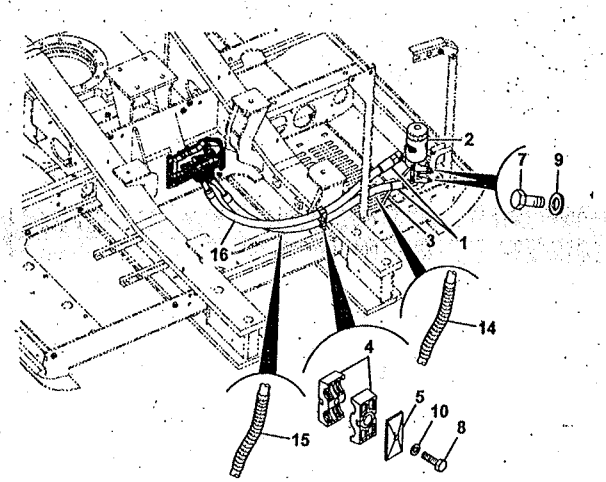

333-J3612-1

ITEM	Part No	CHANGE NO	DESCRIPTION	USAGE CODE	QTY
1			Kit-hose Refer L190-15-1		1
2			Assembly remote filter mounting Refer L190-20-1		1
3	648/31301		Hose 6mm x 400mm Long		1
4	821/00442		Clamp		2
4	333/J6194		Clamp body (Pair) Replaces 821/00442		1
5	821/00443		Plate Cover		1
7	1316/3419D		Bolt		4
8	1316/0316D		Screw Set M8 x 70		1
9	1420/0008D		Washer Plain		4
10	1420/0007D		Washer Plain M8		1
14	JSR0045		Tube corrugated		2
15	JSR0046		Tube corrugated		1
16	JSR0047		Tube		1

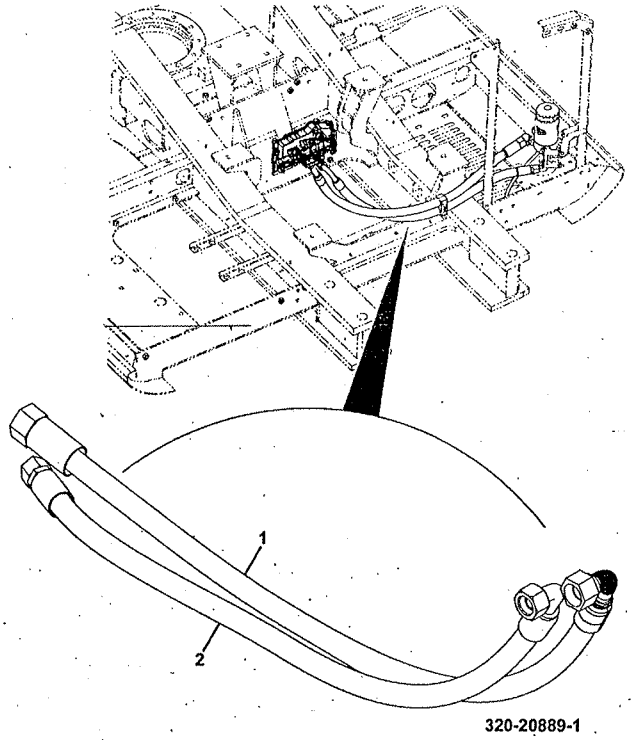

320-20889-1

JS220 XD

JS220LC

ITEM	Part #	CHANGE NO	DESCRIPTION	USAGE CODE	QTY
1	320/07906		Hose - oil filter out		1
2	320/07907		Hose - oil filter return		1

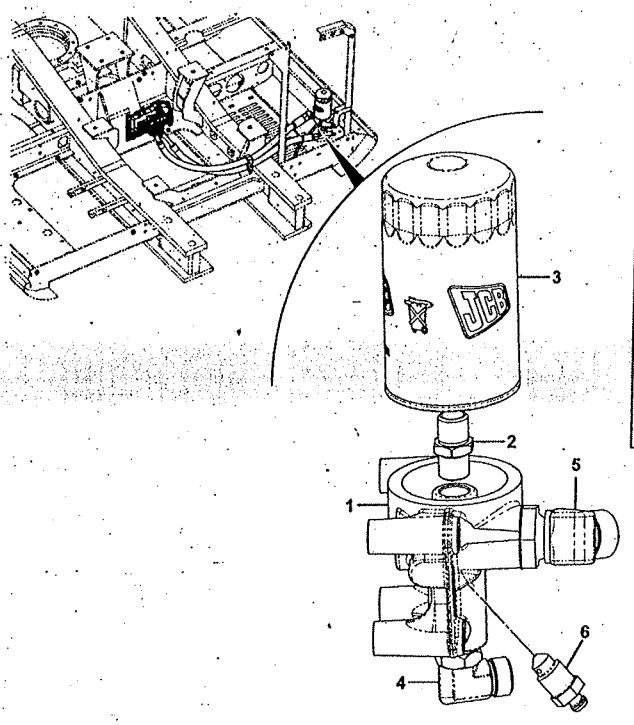

320-20966-1

JS220 XD

JS220LC

ITEM	Part #	CHANGE NO	DESCRIPTION	USAGE CODE	QTY
1	320/04345		Mounting remote filter		1
2	320/07903		Adaptor-oil filter		1
3	320/04133		Filter engine oil		1
4	320/07905		Elbow 90 DEG		1
5	320/07904		Elbow 45 DEG		1
6	816/60040		Nipple Screw		1

JS220 XD

JS220LC

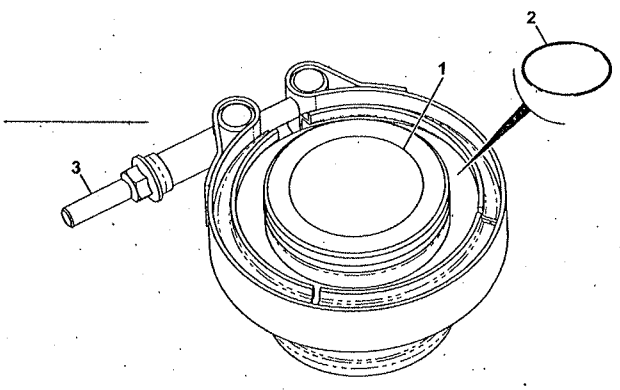

333-J3740-1

ITEM	Part #	CHANGE NO	DESCRIPTION	USAGE CODE	QTY
1	333/J1687		Clamp V band		1
2	333/J1684		O Ring		1
3	333/J1674		Insert adapter		1

JS220 XD

JS220LC

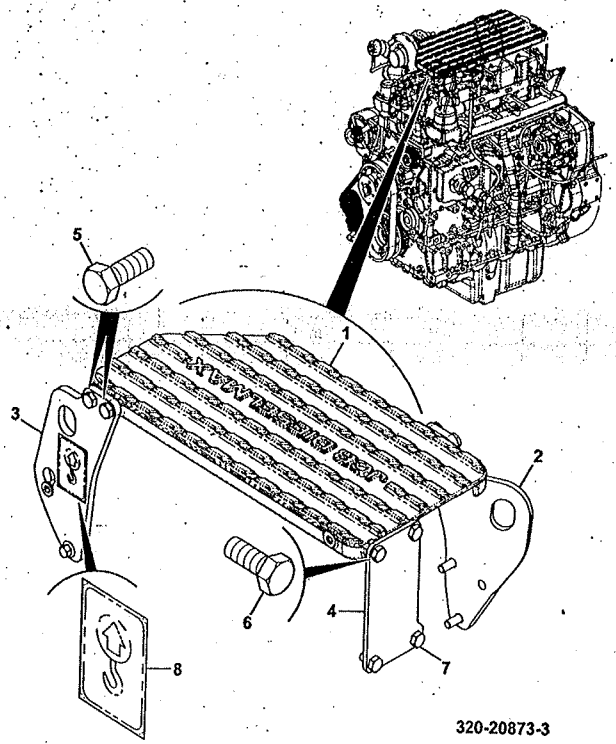

320-20873-3

ITEM	Part #	CHANGE NO	DESCRIPTION	USAGE CODE	QTY
1	320/09176		Plate tread machining		1
2	320/09177		Bracket lift		1
3	320/09185		Mount tread plate front		1
4	320/09397		Bracket		1
5	1316/0417D		Setscrew M10 x 75mm		4
6	1316/0410D		Bolt M10 x 40mm		2
7	1316/0405D		Screw M10 x 20		2
8	817/01803		Label Sling Point		2

JS220 XD

JS220LC

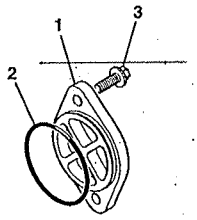

OOXV0011340

ITEM	Part #	CHANGE NO	DESCRIPTION	USAGE CODE	QTY
1	320/08017		Cover Plate PTO		1
2	320/08009		O Ring		1
3	1317/3405Z		Bolt M10 X 20 flange reduced hex		2

L

L01 ENGINE INSTALLATION ASSEMBLIES
• L02 EXHAUST SYSTEM
L03 INDUCTION SYSTEM INSTALLATION ASSEMBLIES
L04 HEATER
L06 COOLING SYSTEM
L07 FAN INSTALLATION ASSEMBLIES
L08 FUEL SYSTEM

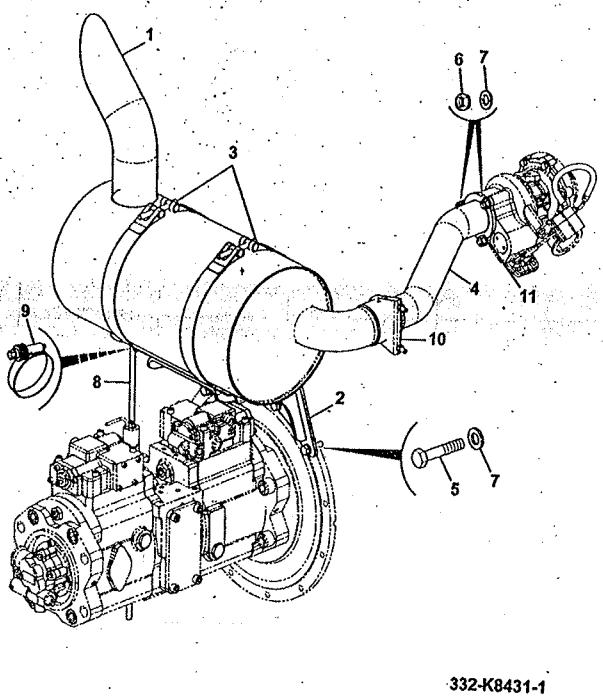

332-K8431-1

JS220 XD

JS220LC

ITEM	Part #	CHANGE NO	DESCRIPTION	USAGE CODE	QTY
1	331/45543		Silencer exhaust		1
2	333/J5508		Mounting bracket		1
3	333/J8473		Clamp exhaust		2
4	332/K7776		Pipe turbo outlet		1
5	1316/3410D		Bolt		4
6	826/11377		Nut M10		3
7	JHP0046		Washer M10		3
8	JHH0053		Tube teflon drain 950mm long		1
9	2201/0001		Clip Worm Drive 8/16mm		1
10	821/00264		Clamp exhaust D=79		1
11	320/06036		Gasket Turbo Outlet Refer B1-1-22 in 9812/8000 Refer V350-15-1 in 9822/0470		1

L01 ENGINE INSTALLATION ASSEMBLIES
L02 EXHAUST SYSTEM
• L03 INDUCTION SYSTEM INSTALLATION ASSEMBLIES
L04 HEATER
L06 COOLING SYSTEM
L07 FAN INSTALLATION ASSEMBLIES
L08 FUEL SYSTEM

JS220 XD

JS220LC

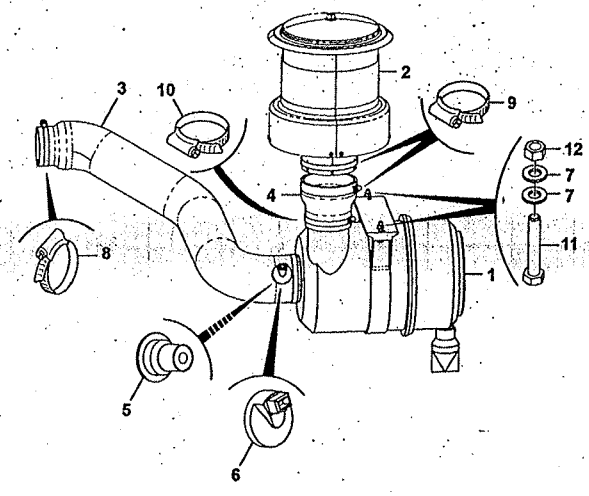

334-L4999-1

ITEM	Part #	CHANGE NO	DESCRIPTION	USAGE CODE	QTY
1	332/J0638		Filter air assembly Refer L310-1-1		1
2	334/L9595		Precleaner air assembly		1
3	332/K7864		Hose Induction		1
4	834/11448		Hose induction pre-cleaner		1
5	162/02674		Adapter vacuum sensor		1
6	JNH0070		Adaptor vacuum sensor		1
7	1420/0007D		Washer Plain M8		4
8	332/K3479		Clip worm		1
9	2201/0017		Clip worm drive 110-140mm		2
10	2201/0021		Clip worm drive 105-127mm		2
11	1316/3311D		Bolt		2
12	1370/0201D		Nut Plain M8		2

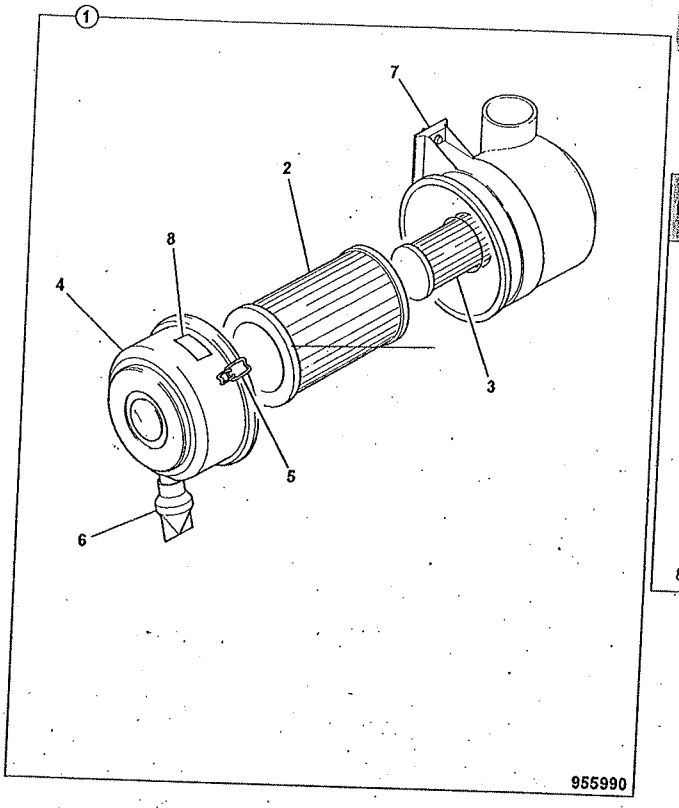

JS220 XD

JS220LC

ITEM	Part #	CHANGE NO	DESCRIPTION	USAGE CODE	QTY
1	332/J0638		Filter air assembly		1
2	:580/12020		Element air filter main		1
3	:580/12021		Element air filter safety		1
4	:580/12022		Cover end assembly		1
5	:580/12023		Clip retaining		1
6	:32/916603		Valve dust		1
7	:580/12040		Bracket air filter mounting		1
8	:32/912906		Label		1

L

L01 ENGINE INSTALLATION ASSEMBLIES
L02 EXHAUST SYSTEM
L03 INDUCTION SYSTEM INSTALLATION ASSEMBLIES
• L04 HEATER
L06 COOLING SYSTEM
L07 FAN INSTALLATION ASSEMBLIES
L08 FUEL SYSTEM

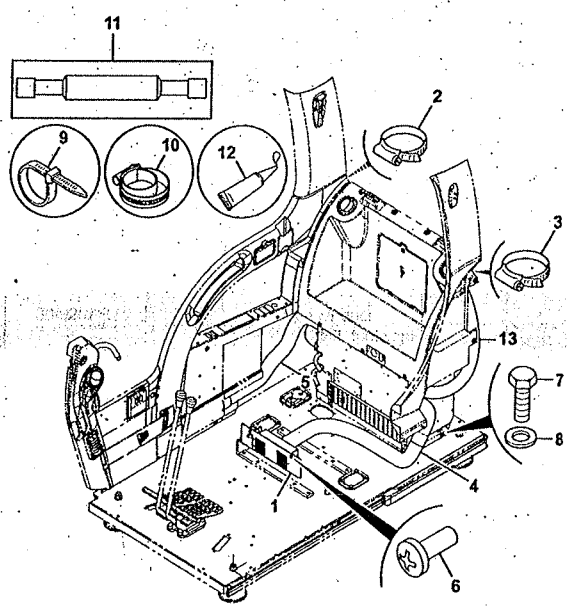

215-11264-10

JS220 XD

JS220LC

ITEM	Part #	CHANGE NO	DESCRIPTION	USAGE CODE	QTY
1	331/28366		Plate foot vent		1
2	2201/0012		Clip Jubilee, 46/70mm		2
3	2201/0011		Clip Worm Drive 40/64MM		4
4	30/925755		Hose air duct 60x1250L foot vent		1
5	30/925756		Hose air duct 60x1450L front vents		1
6	KHR0737		Screw Pan Head		2
7	1316/0305D		Screw M8 X 20		4
8	1420/0007D		Washer Plain M8		4
9	826/11447		Tie Cable Locking		8
10	332/L2995		Clip constant tension		4
11	331/32454		Drawing ducting master		0
12	4101/0500		Fluid Locking Loctite 262		0

Continue...

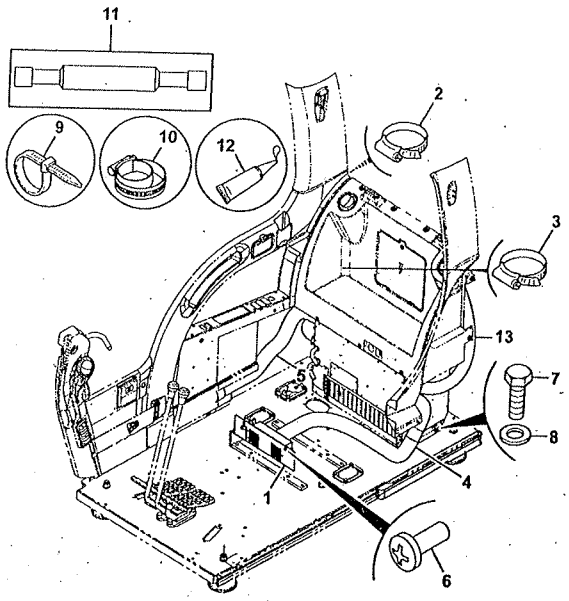

215-11264-10

ITEM	PART NO	CHANGE NO	DESCRIPTION	USAGE CODE	QTY
13	334/L0266		Duct		1

L01 ENGINE INSTALLATION ASSEMBLIES
L02 EXHAUST SYSTEM
L03 INDUCTION SYSTEM INSTALLATION ASSEMBLIES
L04 HEATER
• L06 COOLING SYSTEM
L07 FAN INSTALLATION ASSEMBLIES
L08 FUEL SYSTEM

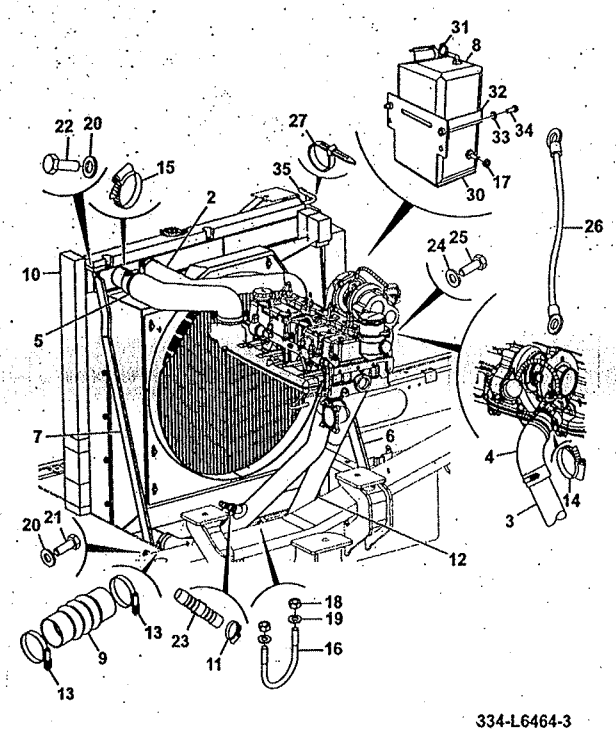

334-L6464-3

JS220 XD

JS220LC

ITEM	Part #	CHANGE NO	DESCRIPTION	USAGE CODE	QTY
1	334/L4949		Radiator Oil Cooler Refer L620-5-1		1
2	332/K9736		Hose top		1
3	332/K9738		Pipe intercooler		1
4	332/K9739		Hose turbo outlet		1
5	332/K9937		Hose CAC to inlet manifold		1
6	331/65585		Stay radiator		1
7	334/L9213		Stay radiator		1
8	333/P9579		Tank Expansion Refer L610-10-1		1
9	834/10456		Hose air charge cooler		1
10	334/L5369		Foam kit cooling pack Refer L620-1-1		1
11	2201/0005		Clip Worm Drive		1
12	333/J2156		Hose bottom		1

Continue...

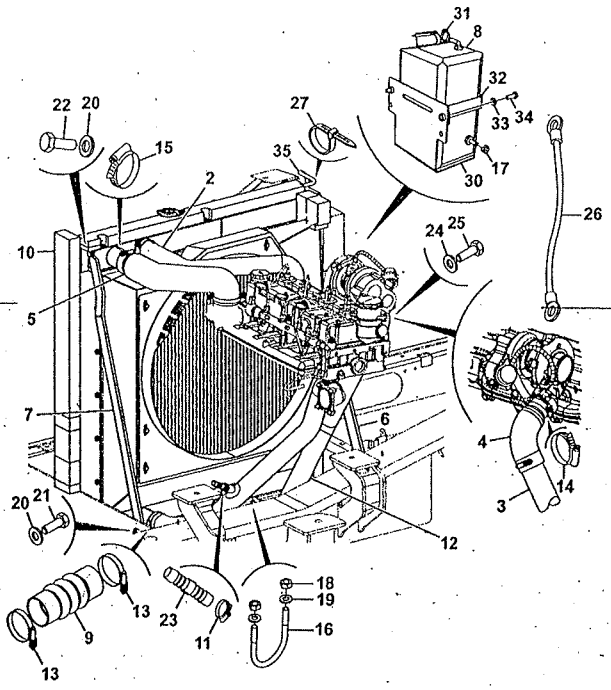

334-L6464-3

ITEM	PART NO	CHANGE NO	DESCRIPTION	USAGE CODE	QTY
13	821/10191		Clip Breeze (57-79) Constant Torque		4
14	821/10236		Clip Worm Constant Torque		5
15	821/10192		Clip Breeze (70-93)		1
16	KNJ0721		Bolt u		2
17	821/10406		Clamp ear		2
18	1370/0301D		Nut M10		4
19	JHP0045		Washer		4
20	JHP0042		Washer M12		7
21	1316/0507D		Setscrew M12 x 25 grade 10.9		5
22	1316/0509D		Screw M12x35 long		2
23	650/10166		Adaptor Hose connecter 16mm OD		1
24	JHP0080		Washer		4
25	1316/0308Z		Screw		4
26	721/11004		Harness link		1
27	826/01347		Tie Cable 160mm		4
28	4102/2502		Sealant Silicon		2

L600-1-1 COOLING INSTALLATION ASSEMBLIES, COOLING PACK 9820/0546B ISSUE 1

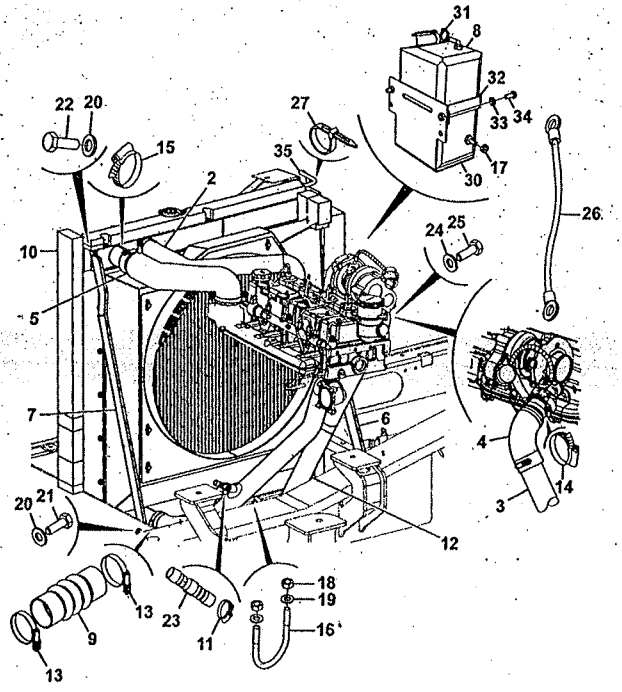

334-L6464-3

ITEM	PART NO	CHANGE NO	DESCRIPTION	USAGE CODE	QTY
30	332/L0929		Mounting Bracket		1
31	2201/0003		Clip Jubilee		1
32	333/P7317		Bracket Mounting		1
33	1420/0007Z		Washer Plain M8		2
34	1316/0307Z		Screw		2
35	KHH0258		Hose rubber 8mm x 2000mm long		1

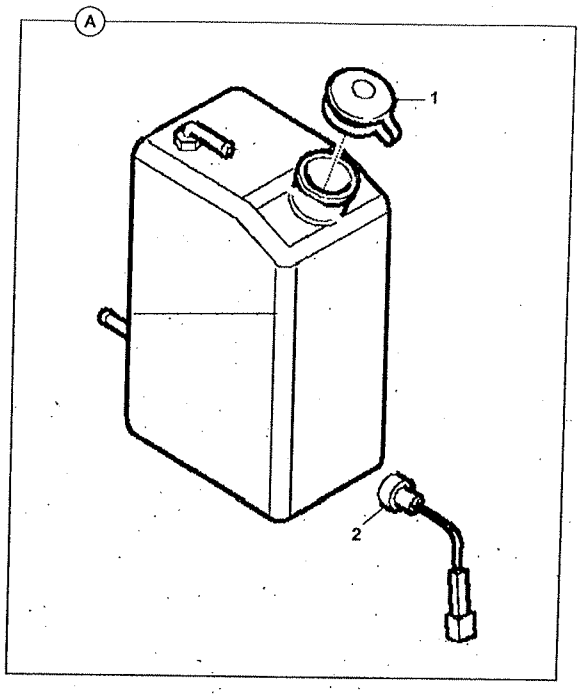

333-P9579-2

JS220 XD

JS220LC

ITEM	Part #	CHANGE NO	DESCRIPTION	USAGE CODE	QTY
A	333/P9579		Tank Expansion		1
1	331/15712		Cap expansion tank		1
2	716/30071		Sensor low water level		1

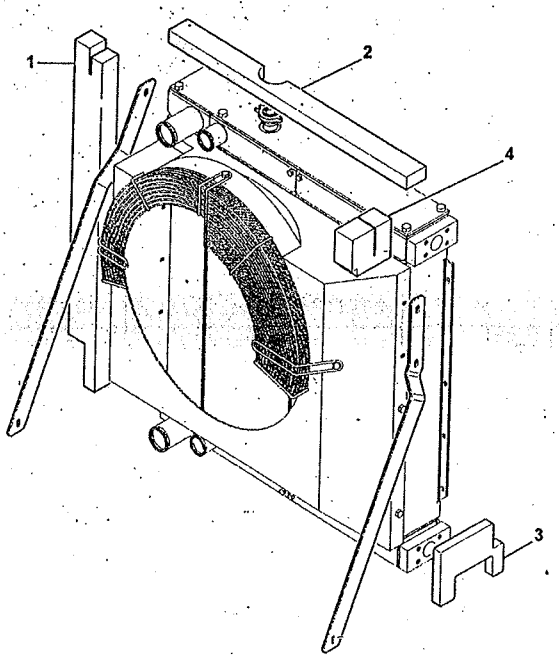

332-K9847-3

JS220 XD

JS220LC

ITEM	Part #	CHANGE NO	DESCRIPTION	USAGE CODE	QTY
1	334/L5390		Foam Cooling Pack Rear		1
2	334/L5373		Foam Cooling Pack Upper		1
3	331/68621		Foam Cooling Pack Front		1
4	335/A1806		Foam Piece Cooling Pack		1

JS220 XD

JS220LC

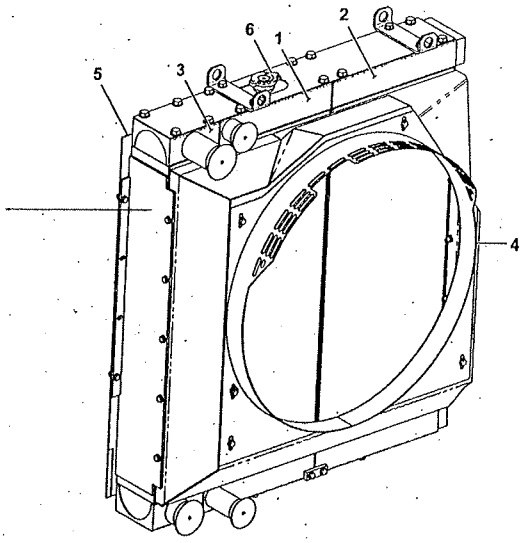

334-L4949-1

ITEM	Part #	CHANGE NO	DESCRIPTION	USAGE CODE	QTY
1	335/A8107		Radiator Assembly		1
2	335/A8108		Oil Cooler Assembly		1
3	~~335/A8109~~		Assembly CAC		1
4	335/A8110		Assembly Cowl		1
5	335/A8111		Grille		1
6	335/A8112		Pressure Cap		1

L01 ENGINE INSTALLATION ASSEMBLIES
L02 EXHAUST SYSTEM
L03 INDUCTION SYSTEM INSTALLATION ASSEMBLIES
L04 HEATER
L06 COOLING SYSTEM
• L07 FAN INSTALLATION ASSEMBLIES
L08 FUEL SYSTEM

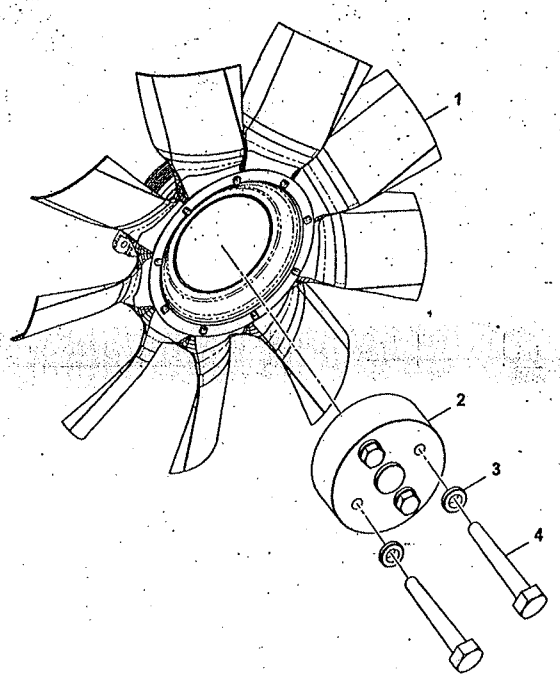

332-K9603-1

JS220 XD

JS220LC

ITEM	Part #	CHANGE NO.	DESCRIPTION	USAGE CODE	QTY.
1	333/J2748		Fan 650mm 9 blade		1
2	333/J2804		Spacer fan		1
3	1422/0007D		Washer M8 hardened		4
4	1316/3314D		Bolt M8 x 60mm		4

JS220 XD

JS220LC

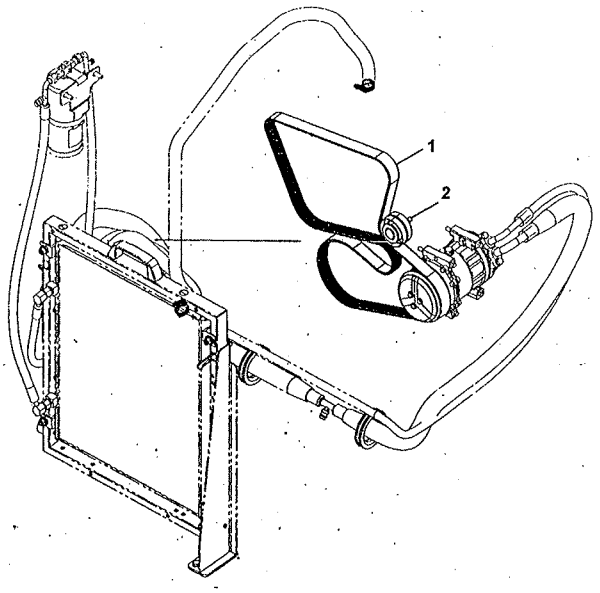

320-20933-2

ITEM	Part #	CHANGE NO	DESCRIPTION	USAGE CODE	QTY
1	320/08672		Belt drive L=2079		1
2	320/08773		Idler Pulley Aircon		1

JS220 XD

JS220LC

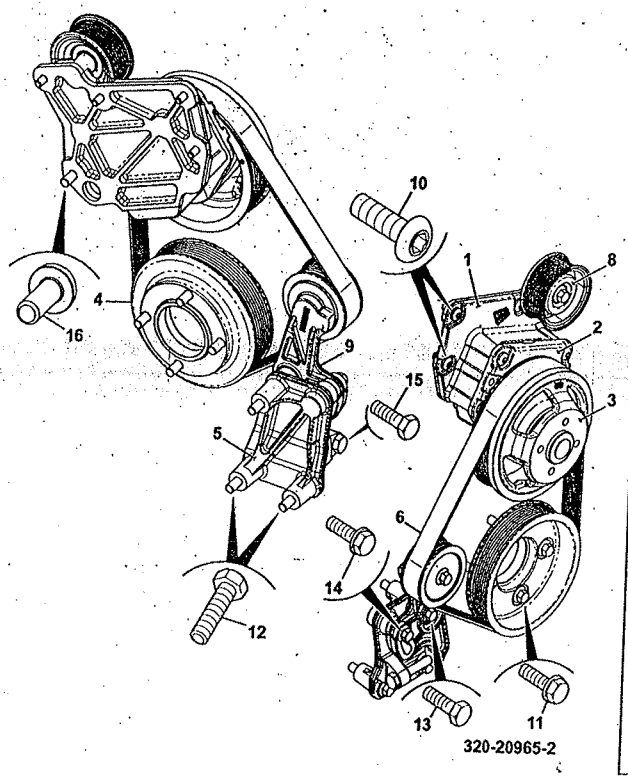

320-20965-2

ITEM	Part #	CHANGE NO	DESCRIPTION	USAGE CODE	QTY
1	320/08655		Adapter plate fan hub		1
2	320/08703		Hub han interim heavy duty		1
3	320/08572		Pulley fan, D=166 ratio 1:1		1
4	320/08673		Pulley fan drive		1
5	320/08664		Tensioner body		1
6	320/08671		Belt fan		1
8	320/08685		Idler wheel		1
9	320/08694		Tensioner arm Assembly Refer L720-10-1		1
10	320/08541		Screw Pan Head M8 x 20		8
11	1317/3410Z		Bolt M10 x 40 flanged hex head		4
12	1317/3414Z		Screw M10 x 60		2
13	1317/3418Z		Bolt M10 x 80		1

Continue...

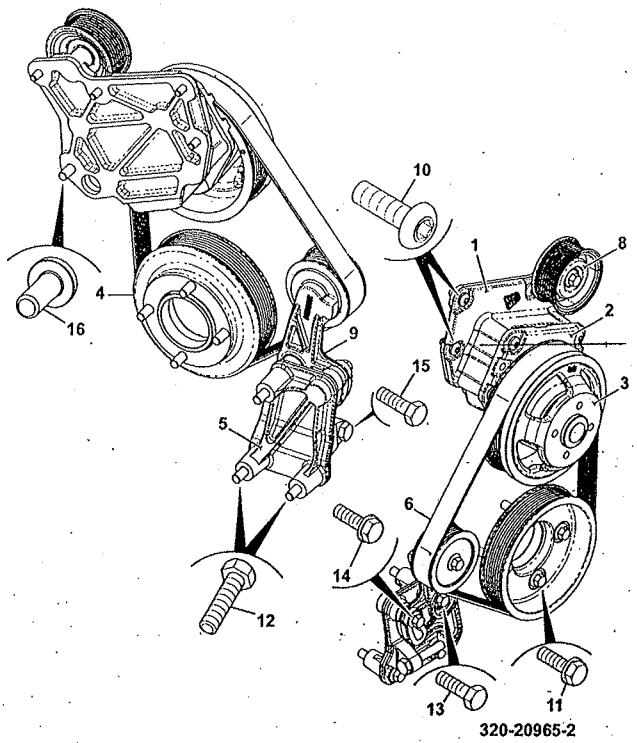

320-20965-2

ITEM	PART NO	CHANGE NO	DESCRIPTION	USAGE CODE	QTY
14	1317/3409Z		Bolt M10 x 35 Flanged		1
15	1315/0414Z		Bolt		1
16	320/08632		Screw pan head M10 x 25		1

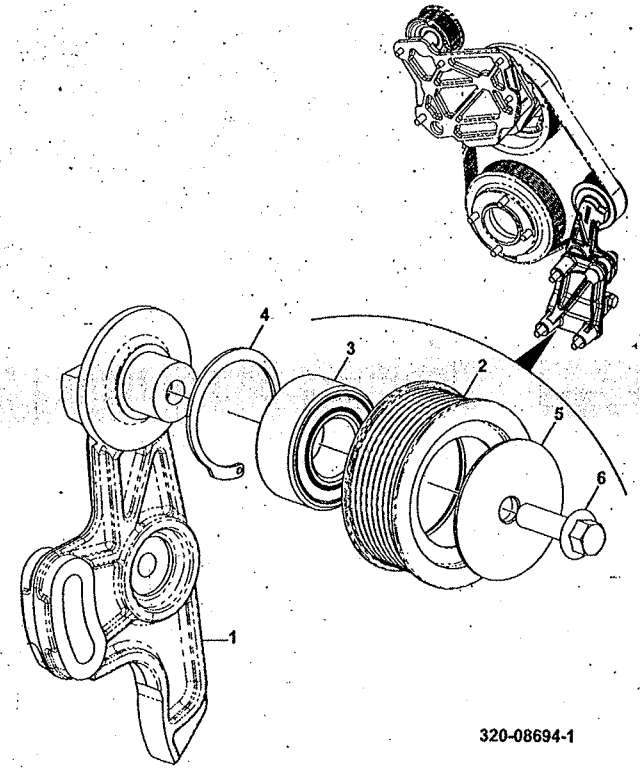

320-08694-1

JS220 XD

JS220LC

ITEM	Part #	CHANGE NO	DESCRIPTION	USAGE CODE	QTY
1	320/08693		Arm tensioner		1
2	320/08592		Pulley idler		1
3	320/08595		Bearing idler pulley		1
4	320/08594		Circlip		1
5	320/08593		Washer-idler retainer		1
6	1317/3409Z		Bolt M10 x 35 Flanged		1

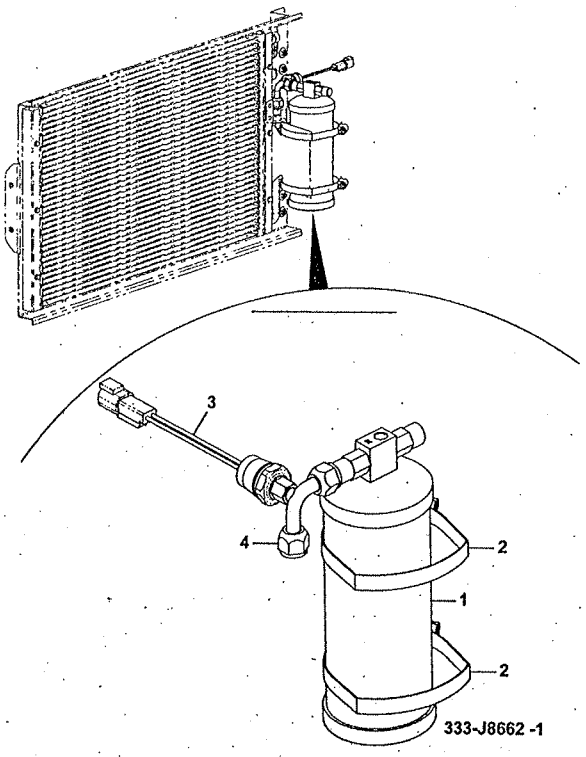

JS220 XD

JS220LC

ITEM	Part #	CHANGE NO	DESCRIPTION	USAGE CODE	QTY
1	30/925633		Drier receiver		1
2	334/P0172		Clip hose		2
3	701/80404		Switch binary female		1

L01 ENGINE INSTALLATION ASSEMBLIES
L02 EXHAUST SYSTEM
L03 INDUCTION SYSTEM INSTALLATION ASSEMBLIES
L04 HEATER
L06 COOLING SYSTEM
L07 FAN INSTALLATION ASSEMBLIES
• L08 FUEL SYSTEM

FUEL SYSTEM INSTALLATION ASSEMBLIES, HOSES AND PIPEWORK, FUEL LINE

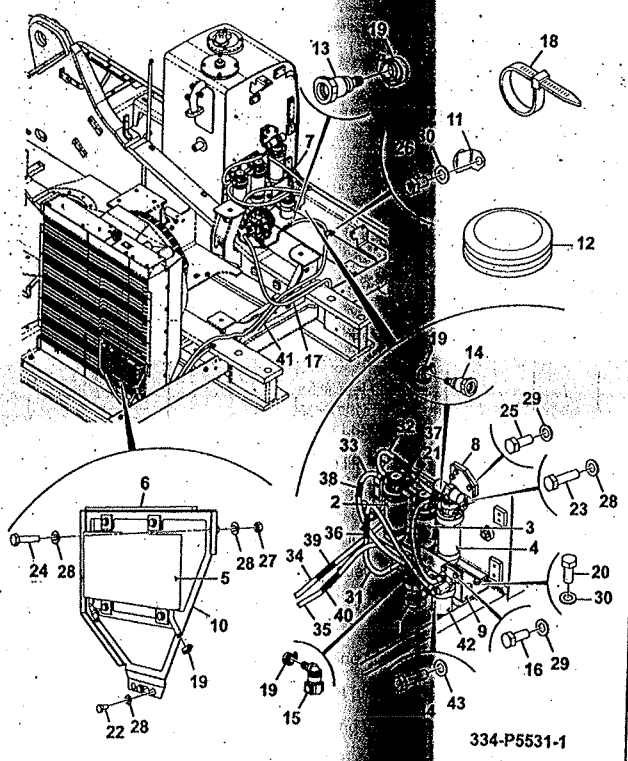

JS220 XD

JS220LC

ITEM	Part #	CHANGE NO	DESCRIPTION	USAGE CODE	QTY
1			Assembly fuel filter (3 layer) Refer L820-15-1		1
2	32/926081		Filter fuel dual 4-way ports Refer L820-5-1		1
3	32/925868		Filter fuel sediment assembly 5 micron Refer L820-1-1		1
4	320/07065		Pump lift & filter fuel - Refer L820-10-1		1
5	332/J9275		Cooler fuel ABI		1
6	331/68821		Foam fuel cooler		1
7	333/L2842		Hose - W S to prefilter		1
8	333/J1414		Mounting bracket		1
9	334/P2390		Bracket fuel filter		1
10	334/P0143		Mounting fuel cooler		1
11	263/34900		Clip harness		1

Continue...

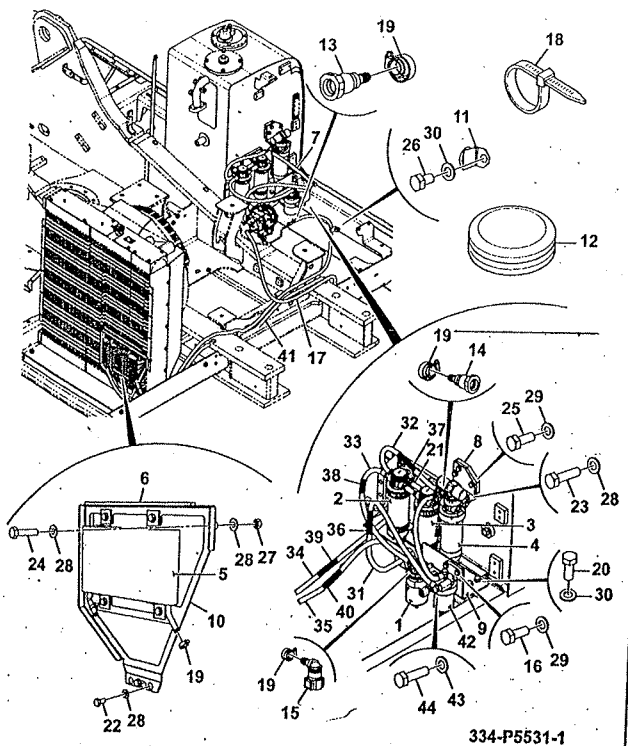

ITEM	PART NO	CHANGE NO	DESCRIPTION	USAGE CODE	QTY
12	KAR0576		Grommet		1
13	332/K7784		Connector straight		1
14	332/K7769		Connector straight		1
15	332/K7806		Adapter elbow		1
16	1316/0408D		Setscrew		2
17	7242/50241		Hose Fuel		1
18	826/01347		Tie Cable 160mm		10
19	2201/0001		Clip Worm Drive 8/16mm		13
20	1316/0508D		Screw M12 X 30		3
21	649/52232		Hose Diesel Fuel		2
22	1316/0303D		Screw		6
23	1316/0307D		Screw		6
24	1316/0309D		Setscrew high strength M8 x 35mm		1
25	1316/0407D		Screw		3
26	1316/0505D		Bolt M12 x 20mm		1
27	1370/0201D		Nut Plain M8		1
28	1420/0007D		Washer Plain M8		14
29	1420/0008D		Washer Plain		5

L800-1-1 FUEL SYSTEM INSTALLATION ASSEMBLIES, HOSES AND PIPEWORK, FUEL LINE 9820/0546B ISSUE 1

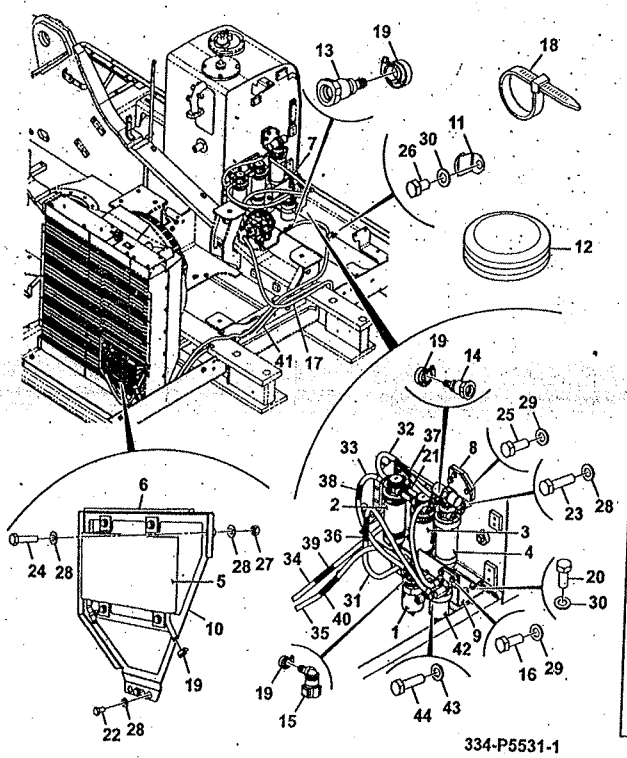

ITEM	PART NO	CHANGE NO	DESCRIPTION	USAGE CODE	QTY
30	1420/0009D		Washer M12		4
31	334/P5539		Hose tank to sedimentar		1
32	JHH0020		Hose fuel		1
33	JHH0021		Tube fuel, 700mm long		1
34	JHH0030		Tube fuel, 2200mm long		1
35	JHH0035		Hose sleeve 4500mm long		1
36	JSH0006		Sleeve corrugated 2000mm long		1
37	JSH0009		Tube		1
38	JSH0046		Tube		1
39	332/K8843		Tube corrugated 2100mm		1
40	332/P1819		Tube corrugated		1
41	JHH0047		Hose vinyl		1
42	333/Y6130		Water Seperator Assembly		1
43	03/305077		Banjo Washer		2
44	03/305076		Banjo Bolt		2

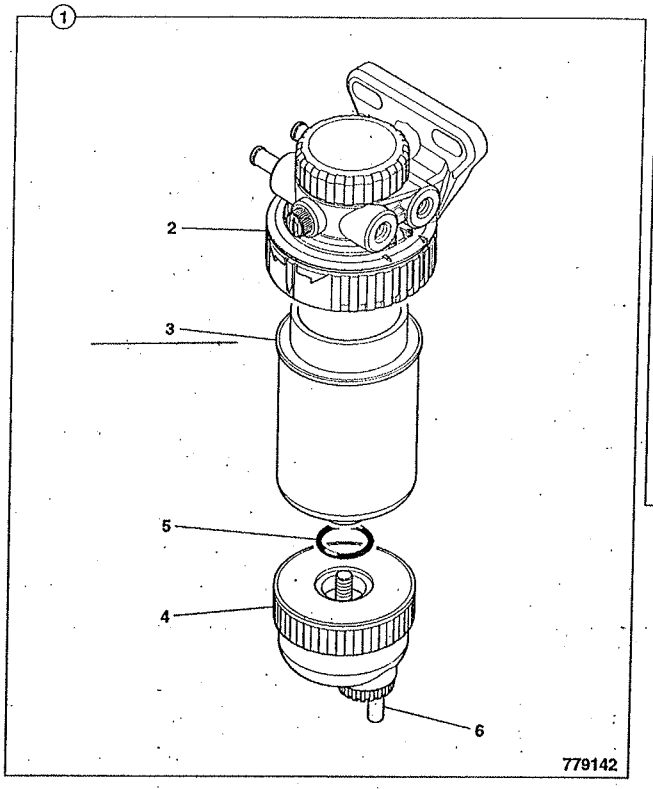

JS220 XD

JS220LC

ITEM	Part #	CHANGE NO	DESCRIPTION	USAGE CODE	QTY
1	32/925868		Filter fuel sediment assembly 5 micron		1
2			None serviced part		1
3	:32/925869		Element fuel sediment filter cartridge,5 micron		1
4	:32/925708		Bowl Assembly		1
5	:32/925733		Seal O-Ring		1
6	32/925817		Kit-drain valve with seal		1

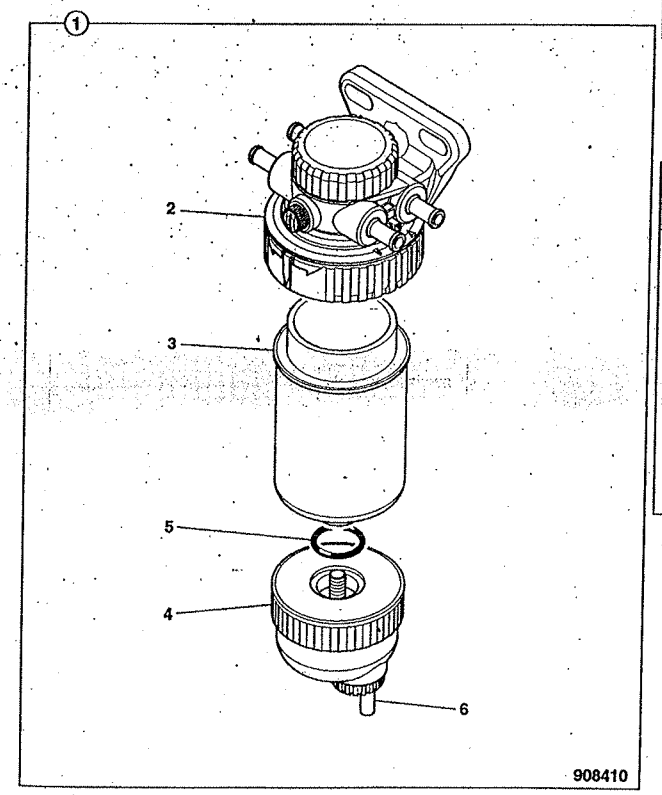

JS220 XD

JS220LC

ITEM	Part #	CHANGE NO	DESCRIPTION	USAGE CODE	QTY
1	32/926081		Filter fuel dual 4-way ports		1
2			None serviced part		1
3	:32/925869		Element fuel sediment filter cartridge,5 micron		1
4	:32/925708		Bowl Assembly		1
5	:32/925733		Seal O-Ring		1
6	32/925817		Kit-drain valve with seal		1

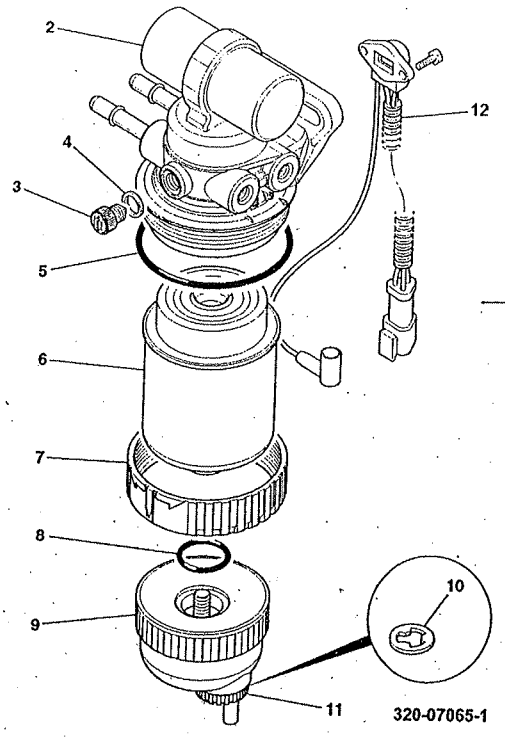

JS220 XD

JS220LC

ITEM	Part #	CHANGE NO	DESCRIPTION	USAGE CODE	QTY
A	320/07065		Pump lift & filter fuel		1
2			None serviced part		1
3	:32/926040		Plug Air Vent		1
4	:32/925973		O Ring		1
5	:32/921003		Seal Dust		1
6	:32/925994		Element Fuel Sediment Filter Cartridge 30 Micron		1
7			None serviced part		1
8	:32/925733		Seal O-Ring		1
9	:32/925708		Bowl Assembly		1
10	:32/926043		Washer wif seal		1
11	:32/926087		Kit-drain valve		1
12	:32/925709		Kit-sensor Water In Fuel		1

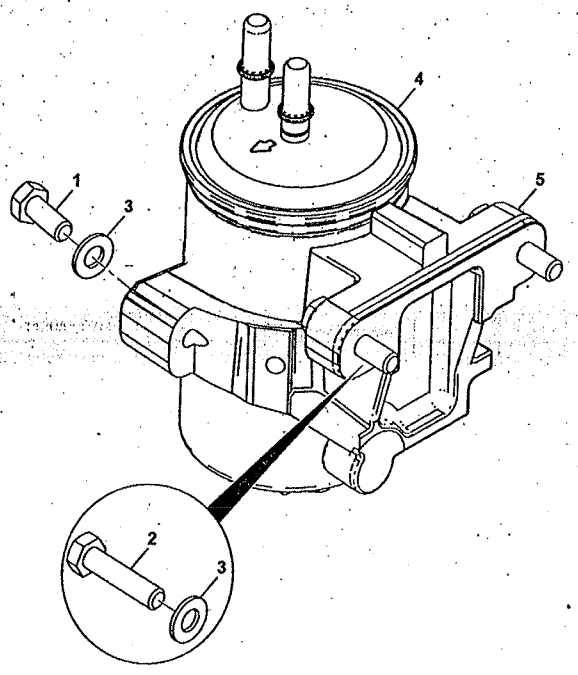

JS220 XD

JS220LC

ITEM	Part #	CHANGE NO	DESCRIPTION	USAGE CODE	QTY
1	1316/0305D		Screw M8 X 20		1
2	1316/0309D		Setscrew high strength M8 x 35mm		2
3	1420/0007D		Washer Plain M8		3
4	320/07309		Filter fuel (3 layer)		1
5	320/07215		Bracket fuel filter assy Refer L820-20-1		1

JS220 XD

JS220LC

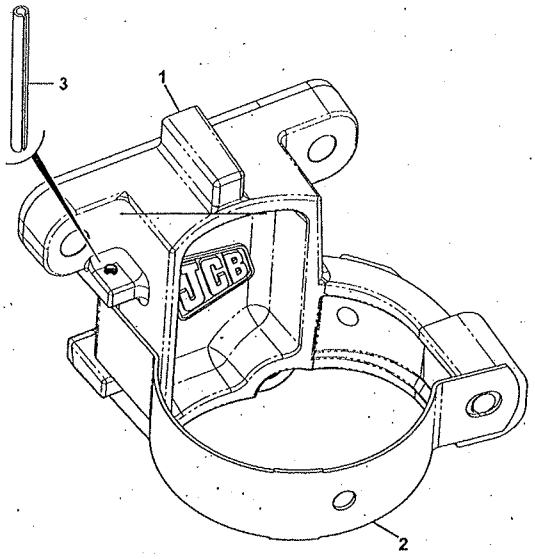

320-07215-3

ITEM	Part#	CHANGE NO	DESCRIPTION	USAGE CODE	QTY
1	320/07214		Bracket fuel filter		1
2	320/04114		Retainer fuel filter		1
3	2102/0417		Pin Tension		1