RUTHZIL TRATOR COMERCIAL DE PEÇAS LTDA 11 97083-6812 ROLANDO CITRANGULO

JCB

Parts Book

JS330NLC JS330LC JS330XD

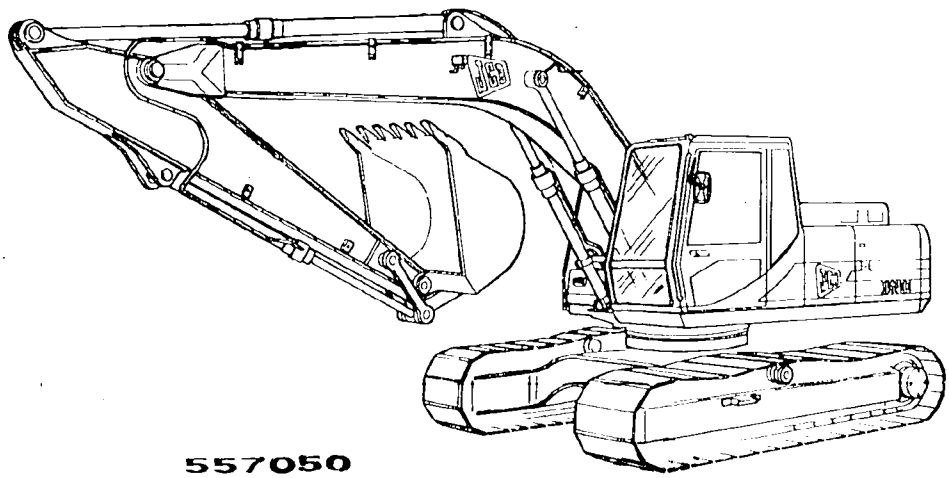

JS330NLC, JS330LC & JS330XD

CRAWLER EXCAVATOR OWNER PARTS BOOK
M712501 on

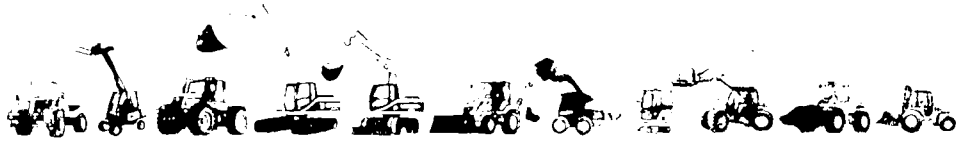

A Product
of Hard Work

Model JS330NLC & JS330LC

CRAWLER EXCAVATOR OWNER PARTS BOOK
M712501 on
Publication No. 9800/5911 Issue 3

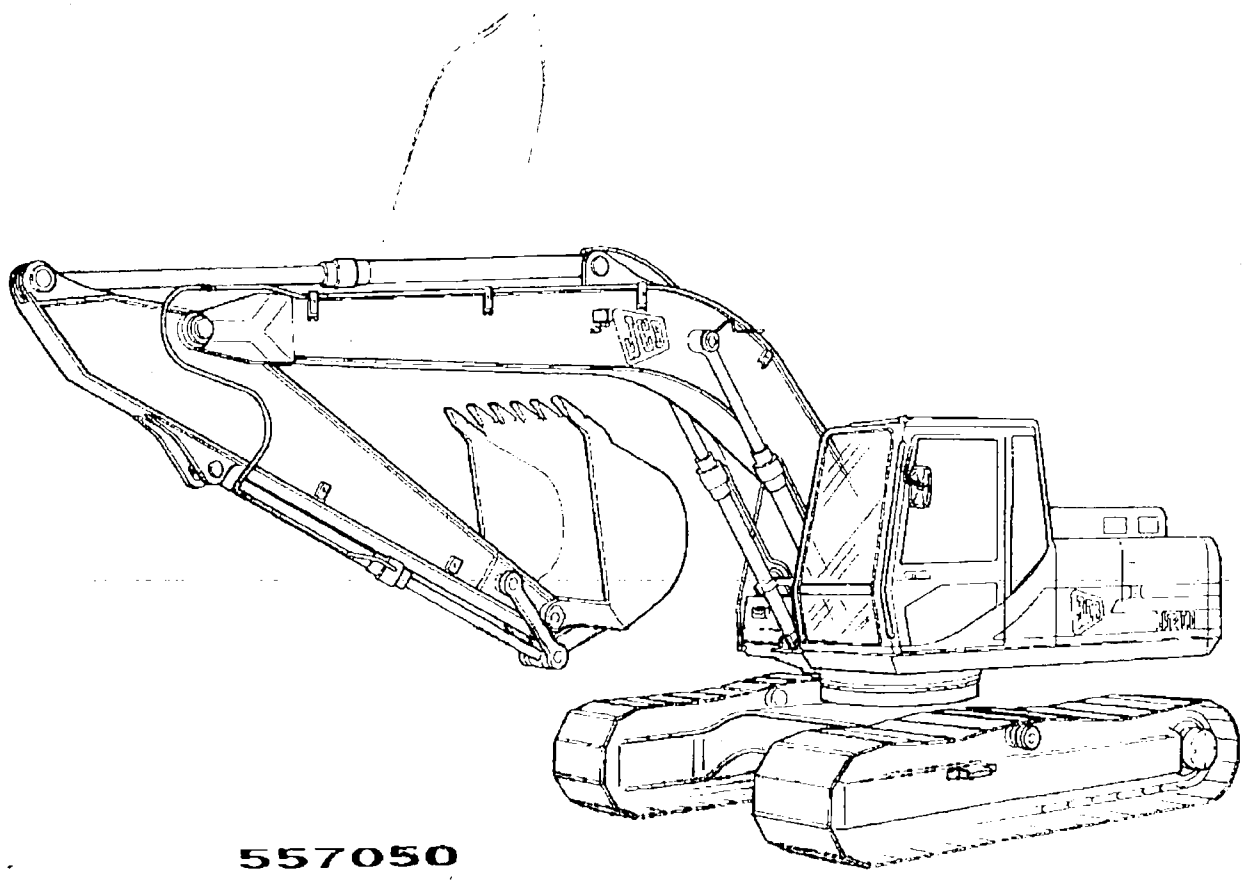

Printed in England

WARNING

Study the operators handbook before starting the machine

You must understand and follow the instructions in the handbook. You must observe all relevant laws and regulations. If you are unsure about anything, ask your JCB Distributor or employer. Do not guess - you or others could be killed or seriously injured.

If your machine does not have an operators handbook you must get one immediately (contact your JCB Distributor).

IMPORTANT

Étudiez le manuel de l'utilisateur avant de démarrer la machine

Vous devez comprendre et suivre les instructions du manuel. Vous devez respecter toutes les lois et réglementations applicables. Si quelque chose ne vous paraît pas clair, demandez à votre concessionnaire JCB ou à votre employeur. Ne supposez rien, vous ou d'autres personnes pourriez être tuées ou gravement blessées.

Si votre machine ne possède pas de manuel de l'utilisateur, vous devez vous en procurer un immédiatement (contactez votre concessionnaire JCB).

WARNUNG

Lesen Sie die Bedienungsanleitung vor der Inbetriebnahme der Maschine

Sie müssen die Anweisungen der Bedienungsanleitung verstehen und befolgen. Sie müssen alle einschlägigen Gesetze und Vorschriften einhalten. Fragen Sie den JCB Händler oder Ihren Arbeitgeber, wenn Ihnen etwas nicht klar ist. Raten Sie nicht - das könnte zu tödlichen Unfällen oder schweren Körperverletzungen führen.

Wenn Ihre Maschine keine Bedienungsanleitung hat, müssen Sie sich sofort eine beschaffen (setzen Sie sich mit dem JCB Händler in Verbindung).

ATENCION

Estudie el manual del usuario antes de arrancar la máquina

Debe comprender y seguir siempre las instrucciones en el manual. Debe cumplir con todas las leyes y reglamentaciones pertinentes. Si no está seguro de algo, pregunte al Concesionario JCB o a su patrono. No haga suposiciones. Usted u otras podrían sufrir lesiones graves o fatales.

Si su máquina no tiene un manual del usuario, debe obtener uno inmediatamente (contacte con el Concesionario JCB).

WAARSCHUWING

Bestudeer het operator-handboek voordat u de machine start

U moet de aanwijzingen en de handboek begrijpen en opvolgen. U moet alle relevante wetten en regelingen in acht nemen. Als u ergens een hekje moet u uw werkgever of JCB dealer raadplegen. Niet raden - u of andere personen kunnen gedood of ernstig gewond worden.

Als uw machine geen operator-handboek heeft, dan moet u dit onmiddellijk aanschaffen (neem contact op met uw JCB dealer).

AVISO

Leia o manual do operador antes de ligar as trabalhos

As instruções do manual devem ser compreendidas e cumpridas. Toda a legislação e normas devem ser respeitadas. Se surgirem dúvidas, contactar o Distribuidor JCB ou a sua entidade empregadora. Não tentar adivinhar pois alguém pode ficar gravemente ferido ou ser atingido mortalmente.

Se a máquina não vem acompanhada do manual do operador, deve ser imediatamente solicitado um exemplar (contactar o Distribuidor JCB da sua área).

AVVERTENZA

Leggere attentamente il manuale di uso e manutenzione prima di avviare il motore

La comprensione e l'osservanza delle istruzioni contenute nel manuale sono requisiti fondamentali. Attenersi scrupolosamente alle leggi e alle norme vigenti. In caso di dubbio rivolgersi al concessionario JCB oppure al diretto superiore. L'utilizzo della macchina senza conoscerne a fondo il funzionamento può provocare lesioni gravi e anche mortali.

Se la macchina è priva del manuale richiederne immediatamente una copia al concessionario JCB.

ADVARSEL

Inden maskinen startes, skal håndbogen gennemlæses.

Du skal forstå og følge instruktionerne i håndbogen. Du skal overholde alle relevante love og regulativer. Hvis der er noget, du ikke er sikker på, så spørg JCB-forhandleren eller din arbejdsgiver. Lad vær med at gætte, for ellers kan du eller andre blive dræbt eller alvorligt kvæstet.

Hvis der ikke findes en håndbog til maskinen, skal du straks få en anskaffet (kontakt JCB forhandleren).

تحذير

اقرأ كتيب التشغيل هذا قبل تشغيل الجرار

يجب عليك أن تفهم وتتبع التعليمات الواردة في هذا الكتيب . يجب أن تراعى كافة القوانين واللوائح المعنية . وإذا كنت غير متأكد بخصوص أي شيء عليك أن تسأل موزع جاي سي بي أو صاحب العمل . ? توخ حذرا للتخمين فقد تتعرض أنت وآخرين لإصابات خطيرة أو قد تقتل.

إذا لم يكن هناك كتيب تشغيل بالجرار فيجب عليك أن تحصل على واحدا على الفور (اتصل بموزع جاي سي بي ا

VARNING

Läs igenom instruktionsboken, innan maskinen körs igång

Förståelse måste bestå och följa instruktionsboken anvisningar. Det är viktigt att alla tillämpliga lagar och föreskrifter. Om osäkerhet råder om något, skall JCB-återförsäljaren eller arbetsgivaren frågas tillfrågas. Gissa ej - det skulle kunna leda till en dödsolycka eller svåra skador för förare eller andra.

Om maskinen inte har en instruktionsbok, måste en dylik omedelbart anskaffas (tag kontakt med JCB-distributören).

VAROITUS

Tutki käyttäjän käsikirja ennen koneen käynnistämistä

Sinun on ymmärrettävä kaikki käyttäjän ohjeet ja noudatettava niitä. Sinun on otettava huomioon kaikki sovelluksen linjaset ja määräykset. Jos olet epävarma jostakin, kysy neuvoa JCB:n edustajalta tai työnantajalta. Älä arvaile, muuten sinä itse tai jotkut muut saattavat menettää henkensä tai loukkaantua vakavasti.

Ellei koneessasi ole käyttäjän käsikirjaa, se tulee sen hankkimiseksi (ota yhteys JCB-liikkeeseen).

ADVARSEL

Les førerhåndboken før du starter maskinen

Du må forstå og følge alle anvisningene i håndboken, og du må kjenne til og rette deg etter alle aktuelle regler og bestemmelser. Hvis det er noe du ikke er sikker på, er det bare å spørre din JCB-forhandler eller din arbeidsgiver. Ikke gjett - du eller andre kan bli alvorlig skadet eller drept.

Hvis maskinen din ikke har en førerhåndbok, må du kontakte din JCB forhandler øyeblikkelig og få en.

VÝSTRAHA

Před nastartováním stroje si tuto příručku

Porozumět příručce musíte rozumět a řídit se jí. Musíte dodržovat všechny platné zákony a předpisy. Pokud si nejste jistý/á čímkoliv, obraťte se na svého zaměstnavatele nebo na zástupce JCB a požádejte o vysvětlení. Nehádejte na základě domněnek. Vystavovali byste sebe a další osoby nebezpečí těžkého nebo i smrtelného úrazu.

Pokud není vám stroj vybaven příručkou pro obsluhu, musíte si ji okamžitě opatřit (Obraťte se na firmu/místo, kde jste stroj zakoupili nebo na místního prodejce JCB).

UYARI

Makinayı çalıştırmadan önce operatörün elkitabını okuyunuz

Elkitabında yazılan talimatları anlamalı ve bu talimatlara uymalısınız. İlgili yasalar ve kurallar gözetilmelidir. Herhangi bir konuda emin değilseniz, JCB Bayiinize veya işverenine danışınız. Hiçbir şeyi tahmine bırakmayınız, aksi halde siz veya diğerleri ölebilir ya da ciddi olarak yaralanabilir.

Makinanızın bir elkitabı yoksa, de hal bunu temin etmeliyiz (JCB Bayiinize de temas ediniz).

OSTRZEŻENIE

Zanim włączysz maszynę, należy przestudiować ten podręcznik

Należy zrozumieć i postępować według instrukcji podanych w tym podręczniku. Należy przestrzegać wszystkich praw i przepisów. Jeżeli czegoś nie jesteś pewny, zwróć się do Twojego Dystrybutora JCB lub pracodawcy. Nie zgaduj. Ty lub inni mogą poważnie zranieni lub poważnie obrażeni.

Jeżeli Twoja maszyna nie posiada podręcznika obsługi, należy zwrócić się natychmiast do Dystrybutora JCB, aby go otrzymać.

ΠΡΟΕΙΔΟΠΟΙΗΣΗ

Θα πρέπει να βεβαιώνεστε ότι έχετε κατανοήσει τα μηχανήματα πριν να εκτελέσετε και να ακολουθήσετε τις οδηγίες που περιέχονται σε αυτό το βιβλίο. Πρέπει να είναι εξοικειωμένοι με όλους τους σχετικούς νόμους και κανονισμούς. Εάν δεν είστε σίγουροι για κάτι, ρωτήστε τον αντιπρόσωπο της JCB ή τον εργοδότη σας. Μην αποδίδετε, κινδυνεύει άλλοι μπορεί να σκοτωθούν ή να τραυματιστούν σοβαρά.

Εάν το μηχάνημά σας δεν διαθέτει βιβλίο χειριστή, πρέπει να προμηθευτείτε ένα αμέσως (επικοινωνήστε με τον αντιπρόσωπο JCB).

ПРЕДОСТЕРЕЖЕНИЕ

До запуска машины следует ознакомиться с руководством для оператора

Вы должны понимать и следовать инструкциям в руководстве. Вы должны соблюдать все применимые законы и предписания. Если Вы в чем-то не уверены, обратитесь к дистрибьютору или сотруднику компании JCB. Не предполагать, так как в противном случае возможно, что Вы или другие лица получат серьезные травмы или погибнут.

Если в Вашей машине нет Руководства для оператора, то Вы должны немедленно приобрести его (обратитесь к Вашему дистрибьютору компании JCB).

PARTS LOCATION PROCEDURE

- **REFER TO MACHINE DATA PLATE**
  1. Machine Serial No.
  2. Engine Serial No.
  3. Gearbox Serial No.
  4. Torque Converter Serial No.
  5. Axle Serial No.

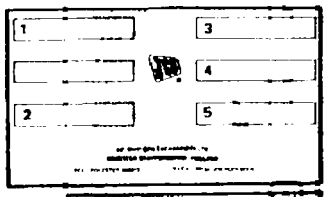

- **SELECT SECTION**

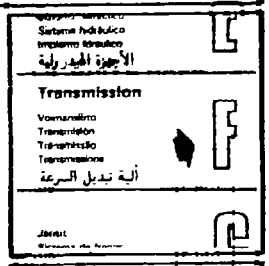

- **REFER TO INDEX**

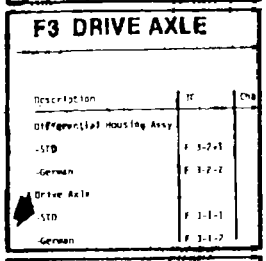

- **LOCATE ITEM**

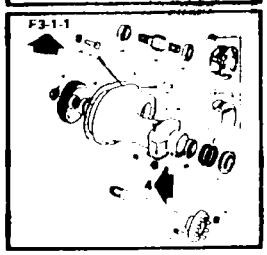

All item Nos. within a box or attached to another line are part of an assembly.

PARTS ORDERING PROCEDURE

- **MACHINE MODEL NO. AND SERIAL NO.**

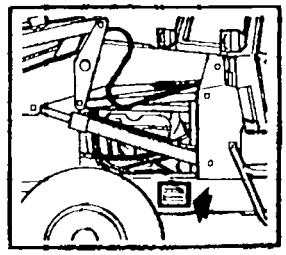

- **PAGE REFERENCE NO.**

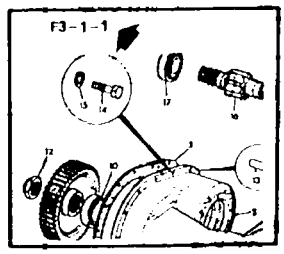

- **ILLUSTRATION ITEM NO.**

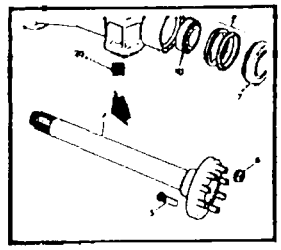

The purpose of this book is to assist the operator in ordering parts quickly and easily from a JCB Dealer. The index at the beginning of each section MUST be used with reference to the machine type and serial number, to find the correct page for the part required.

METHODE POUR TROUVER LES PIECES

- **SE REPORTER A LA PLAQUE DE FABRICATION DE L'ENGIN**
  1. N° de série de l'engin
  2. N° de série du moteur
  3. N° de série de la boîte de vitesses
  4. N° de série du convertisseur de couple
  5. N° de série de l'essieu

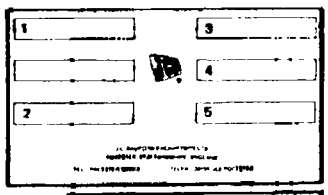

- **SELECTIONNER LA SECTION**

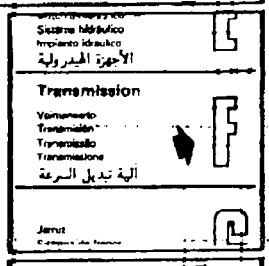

- **SE REPORTER A L'INDEX**

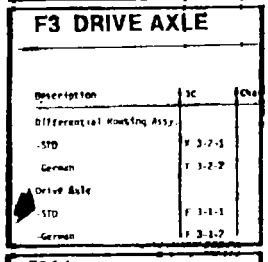

- **TROUVER LE REPERE**

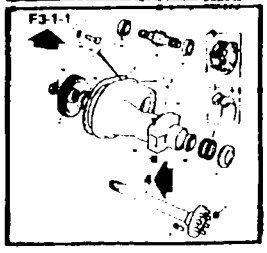

Tous les numéros de repère en médaillon ou rattachés à une autre ligne font partie d'un ensemble.

METHODE DE COMMANDE DE PIECES

- **NO DE MODELE ET DE SERIE DE L'ENGIN**

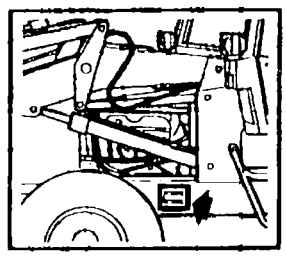

- **NO DE REFERENCE DE LA PAGE**

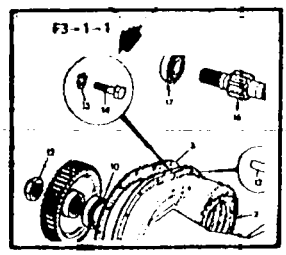

- **NO DE REPERE DE L'ILLUSTRATION**

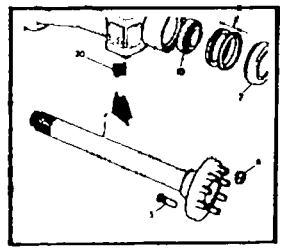

L'objet de cet ouvrage est d'aider l'utilisateur à passer ses commandes de pièces facilement et rapidement chez un Agent JCB. IL EST NECESSAIRE d'utiliser l'index au début de chaque section en se reportant au type de l'engin et à son numéro de série afin de trouver la page correcte pour la pièces requise.

AUFFINDEN VON BAUTEILEN

- **SIEHE DATENSCHILD DER MASCHINE**
  1 Seriennummer der Maschine
  2 Seriennummer des Motors
  3 Seriennummer des Getriebes
  4 Seriennummer des Wandlers
  5 Seriennummer der Achse

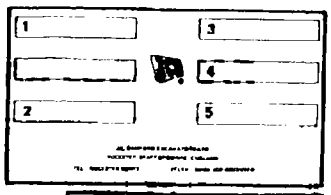

- **ANLEITUNGSTEIL WÄHLEN**

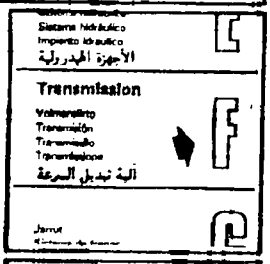

- **IM SACHVERZEICHNIS NACHSCHLAGEN**

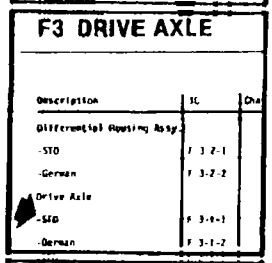

- **POSITION AUFFINDEN**

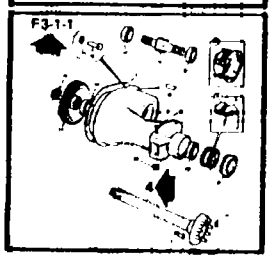

In einem Feld befindliche oder zu einer anderen Zeile gehörende Positionsnummern bilden Teile einer Baugruppe.

BESTELLUNG VON BAUTEILEN

- **MODELL-UND SERIENNUMMER DER MASCHINE**

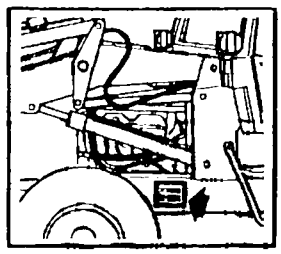

- **SEITENNUMMER**

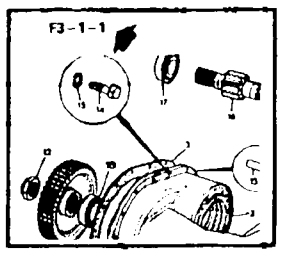

- **POSITIONSNUMMER IM BILD**

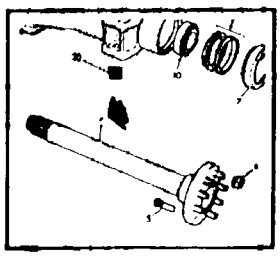

Dieses Büchlein soll dem Fahrer bei der schnellen und einfachen Bestellung von Ersatzteilen beim JCB-Händler behilflich sein. Zum Auffinden der richtigen Seite für das jeweilige Bauteil MUSS das Sachverzeichnis am Beginn der einzelnen Teile mit Bezugnahme auf Maschinen typ und -seriennummer verwendet werden.

PROCEDIMIENTO PARA LOCALIZAR PIEZAS

- **TOMAR DE LA CHAPA DE DATOS DE LA MAQUINA**
  1 El número de serie de la máquina
  2 El número de serie del motor
  3 El número de serie de la caja de cambios
  4 El número de serie del convertidor de par
  5 El número de serie del puente

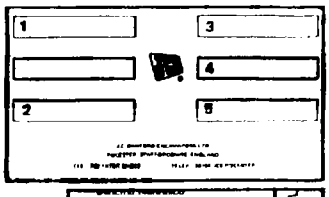

- **SELECCIONAR LA SECCION**

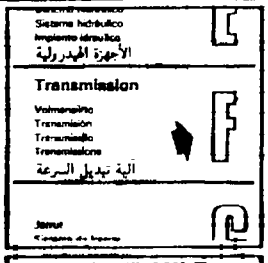

- **CONSULTAR EL INDICE**

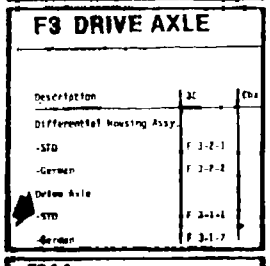

- **LOCALIZAR LA PIEZA**

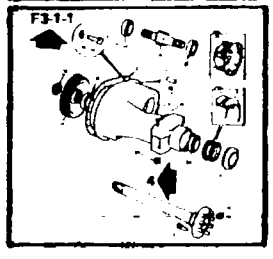

Todos los números de referencia de las piezas en los dibujos que aparecen dentro de una casilla o están unidos a otra línea forman parte de un conjunto.

PROCEDIMIENTO PARA ENCARGAR PIEZAS

- **No. DE MODELO Y No. DE SERIE DE LA MAQUINA**

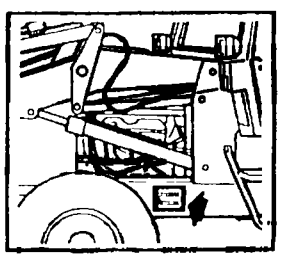

- **No. DE REF. DE LA PAGINA**

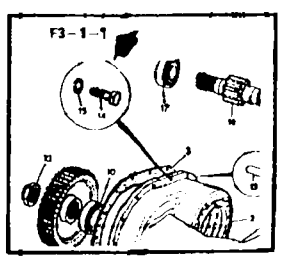

- **No. DE REF. EN LA ILUSTRACION**

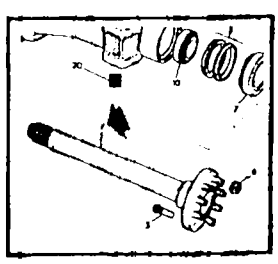

El objeto de este catálogo es ayudar al usuario a encargar piezas rápida y fácilmente a un concesionario JCB. ES PRECISO usar el índice al principio de cada sección con referencia al tipo y número de serie de la máquina para hallar la página correcta para la pieza requerida.

PROCESSO DE LOCALIZAÇÃO DE PEÇAS

- **CONSULTAR A CHAPA DE DADOS SOBRE A MÁQUINA**
  1. Número de série da máquina
  2. Número de série do motor
  3. Número de série da caixa de velocidades
  4. Número de série do conversor do binário
  5. Número de série do eixo

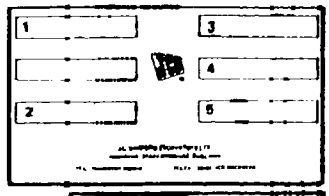

- **SELECCIONAR SECÇÃO**

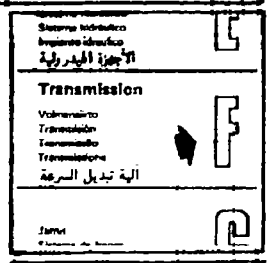

- **CONSULTAR O ÍNDICE**

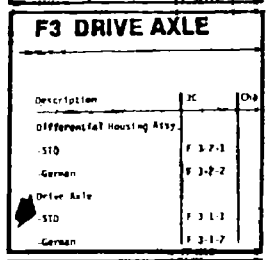

- **LOCALIZAR O ITEM**

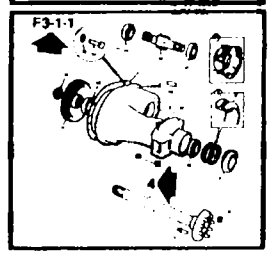

Os números de todos os items, inseridos num quadrado ou juntos a outra linha, fazem parte de um conjunto.

PROCEDIMIENTO PARA ENCOMENDA DE PEÇAS

- **NÚMERO DE MODELO E NÚMERO DE SÉRIE DA MÁQUINA**

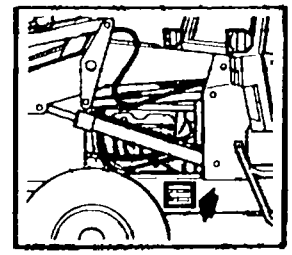

- **NÚMERO DE REFERÊNCIA DA PÁGINA**

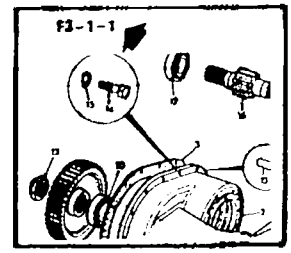

- **NÚMERO DO ITEM DE ILUSTRAÇÃO**

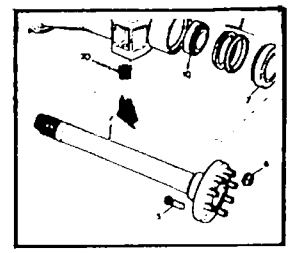

Este livro destina-se a ajudar o operador na encomenda rápida e fácil de peças a um agente JCB. O índice no início DEVE ser usado de acordo com a referência ao tipo e número de série da máquina, a fim de se encontrar a página correcta para a peça necessária.

HOE ONDERDELEN OP TE ZOEKEN

- **ZIE KENPLAAT VAN MACHINE**
  1. Volgnummer van machine
  2. Volgnummer van motor
  3. Volgnummer van tandwielkast
  4. Volgnummer van draaimoment-omvormer
  5. Volgnummer van as

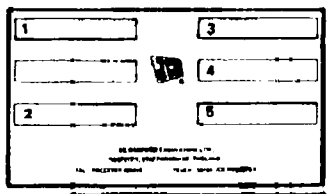

- **KIES GROEP**

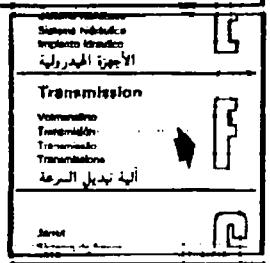

- **RAADPLEEG INHOUDSOPGAVE**

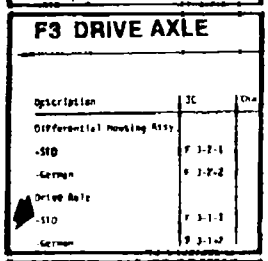

- **ONDERDEEL OPZOEKEN**

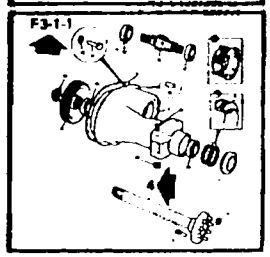

Alle stuknummers binnen een vak of die aan een andere lijn zijn bevestigd, maken deel uit van een samenstelling.

HOE ONDERDELEN TE BESTELLEN

- **MODEL EN VOLGNUMMER VAN MACHINE**

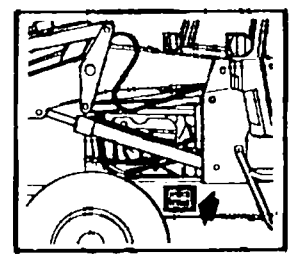

- **PAGINA KENNUMMER**

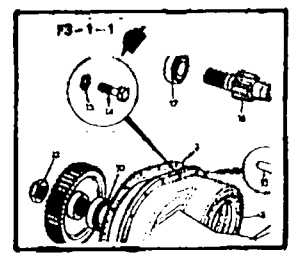

- **AFBEELDING STUKNUMMER**

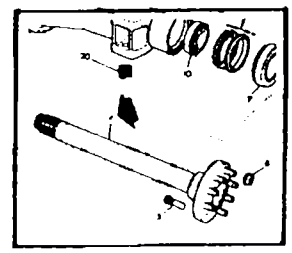

Het doel van dit boek is om de bedieningsman in staat te stellen onderdelen snel en gemakkelijk bij een JCB Dealer te bestellen. De inhoudsgave bij het begin van elk hoofdstuk MOET worden gebruikt om aan de hand van het machine type en volgnummer de juiste pagina voor het verlangde onderdeel te vinden.

COME LOCALIZZARE LE PARTI

- **FARE RIFERIMENTO ALLA TARGA COI DATI DELLA MACCHINA**
  1. Numero di matricola della macchina
  2. Numero di matricola del motore
  3. Numero di matricola della scatola del cambio
  4. Numero di matricola del convertitore di coppia
  5. Numero di matricola dell'assale

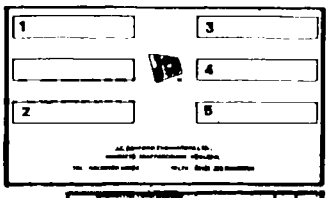

- **SCEGLIERE LA SEZIONE**

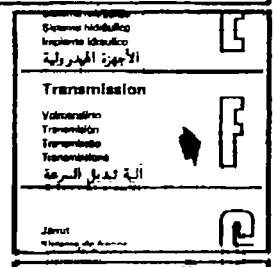

- **FARE RIFERIMENTO ALL'INDICE**

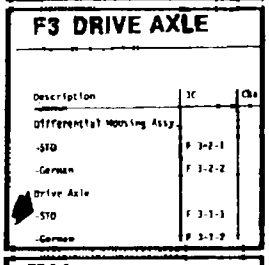

- **LOCALIZZARE LA PARTE**

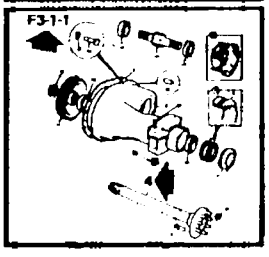

Tutti i numero di parte entro un riquadro o attacati ad un'altra linea fanno parte di un gruppo

COME ORDINARE LE PARTI

- **MODELLO E NUMERO DI MATRICOLA DELLA MACCHINA**

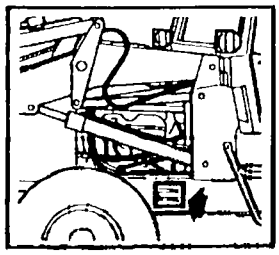

- **NUMERO DI RIFERIMENTO DELLA PAGINA**

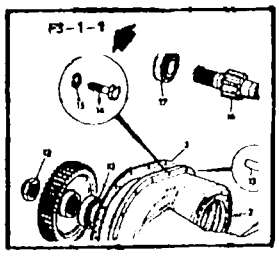

- **NUMERO DELLA PARTE NELL'ILLUSTRAZIONE**

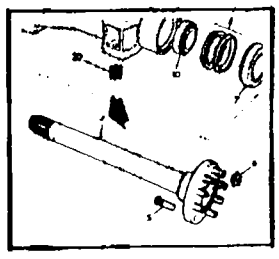

Lo scopo di questo libro è di assistere l'operatore per ordinare le parti rapidamente e facilmente da un concessionario JCB. L'indice all'inizio di ogni sezione DEVE essere usato facendo riferimento al tipo di macchina ed al numero di matricola, in modo da poter trovare la pagina giusta per la parte richiesta.

RESERVEDELENES PLACERING

- **HENVIS TIL MASKINENS DATAPLADE**
  1. Maskinens serienr.
  2. Motorens serienr.
  3. Gearkassens serienr.
  4. Momentomformerens serienr.
  5. Akslens serienr.

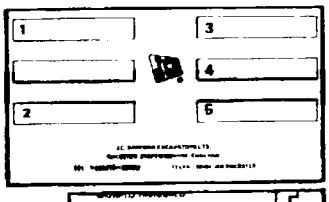

- **VÆLG AFSNITTET**

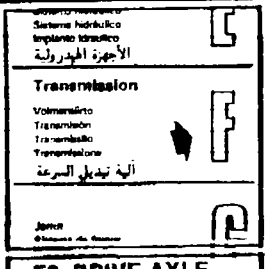

- **HENVIS TIL INDEKSET**

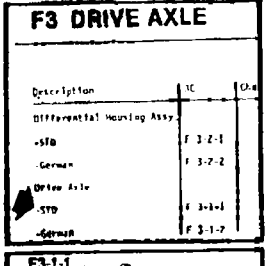

- **FIND PRODUKTETS PLACERING**

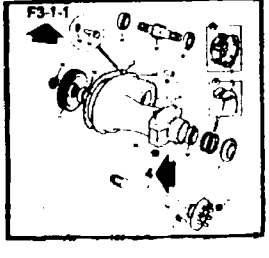

Alle produktnumre i en kvadrat eller tilknyttet en anden linie er en del af en montering.

RESERVEDELSBESTILLING

- **MASKINMODEL NR. OG SERIENR.**

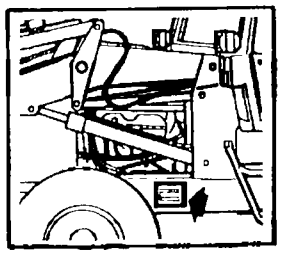

- **SIDEHENVISNING NR.**

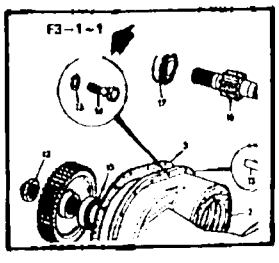

- **ILLUSTRATION NR.**

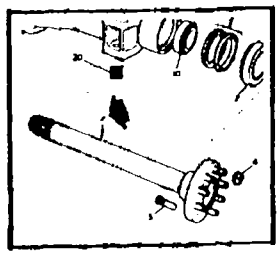

Formålet med denne bog er at hjælpe operatøren med hurtigt og nemt at bestille reservedele fra en JCB-forhandler. Indekset i begyndelsen af hvert afsnit SKAL bruges med henvisning til maskintype og serienr. for at finde den rigtige side for den ønskede reservedel.

PROCEDUR FÖR RESERVDELSLOKALISERING

- **SE MASKINENS MÄRKPLÅT** _____
  1 Maskinens serie-nr
  2 Motorns serie-nr
  3 Växellådans serie-nr
  4 Momentomvandlarens serie-nr
  5 Axelns serie-nr

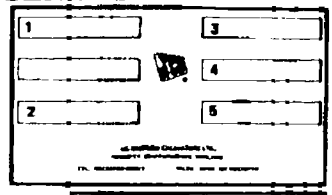

- **VÄLJ AVSNITT** _____

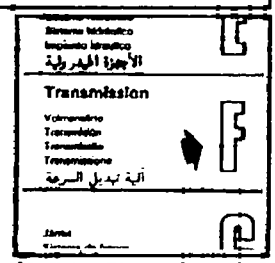

- **SE REGISTRET** _____

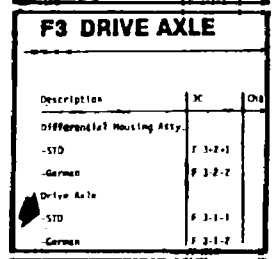

- **LOKALISERA DETALJEN** _____

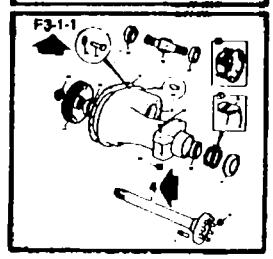

Alla positionsnummer i en ruta eller anslutna till en annan red utgör en del av ett aggregat.

PROCEDUR FÖR RESERVDELSBESTÄLLNING

- **MASKINENS MODELL- OCH SERIENUMMER** _____

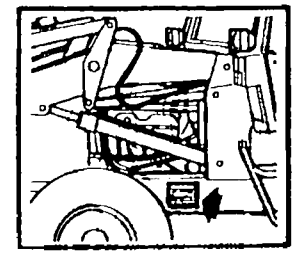

- **SIDONUMMER** _____

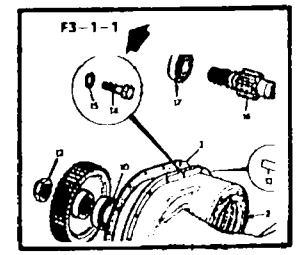

- **POSITIONSNUMMER** _____

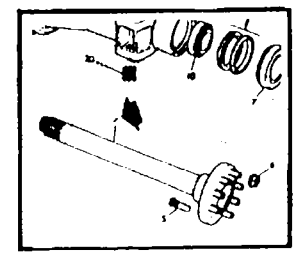

Syftet med denna bok är att hjälpa kunden att snabbt och lätt beställa reservdelar från JCB:s återförsäljare. Registret i början av varje avsnitt MÅSTE användas med avseende på maskinens typ och serienummer, så att rätt sida för den önskade reservdelen kan hittas.

VARAOSIEN PAIKANNUSMENETTELY

- **KATSO KONEEN TEHOKILPEÄ** _____
  1 Koneen valmistenumero
  2 Moottorin valmistenumero
  3 Vaihdelaatikon valmistenumero
  4 Momentinmuuntimen valmistenumero
  5 Akselin valmistenumero

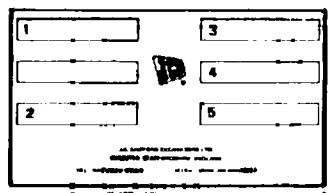

- **VALITSE KIRJAN OSA** _____

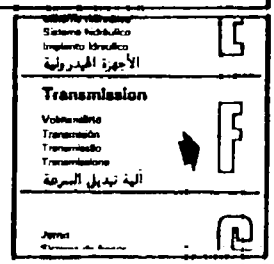

- **KATSO HAKEMISTOA** _____

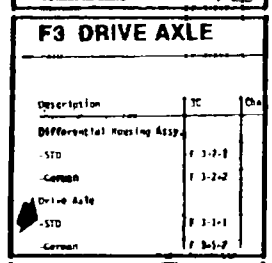

- **PAIKANNA TARVITTAVA VARAOSA** _____

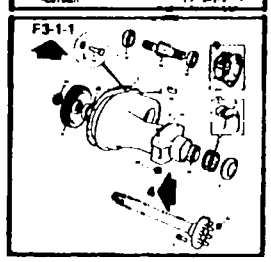

Kaikki samaiset osat, joiden numero on sijoitettu ruutuun tai liittyy johonkin muuhun osaan, kuuluvat osana johonkin suurempaan asennelmaan.

VARAOSIEN TILAUSMENETTELY

- **KONEEN MALLI- JA VALMISTENUMERO** _____

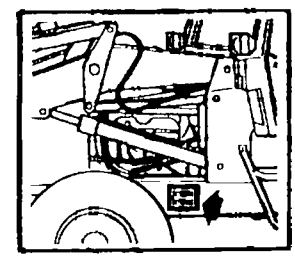

- **SIVUNUMEROVIITE** _____

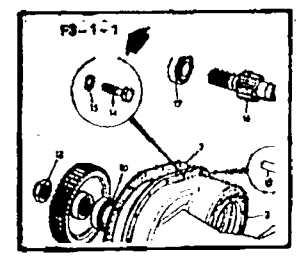

- **KUVAAN MERKITTY OSAN NUMERO** _____

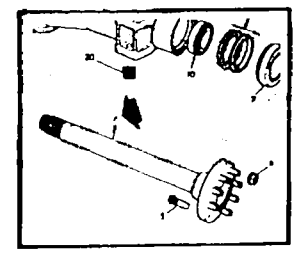

Tämän kirjan tarkoituksena on auttaa yritystä tilaamaan tarvittavat varaosat nopeasti ja vaivattomasti JCB edustajalta. Koneen malli- ja valmistenumeron yhteydessä on EHDOTTOMASTI käytettävä kunkin osan alussa olevaa hakemistoa, jotta löydettäisiin tarvittavaa varaosaa koskeva oikea sivu.

FREMGANGSMÅTE FOR Å FINNE RIKTIG DEL

- SE MASKINENS DATASKILT _____
  1 Maskinens serienr.
  2 Motorens serienr.
  3 Gearkassens serienr.
  4 Momentomformerens serienr.
  5 Akselens serienr.

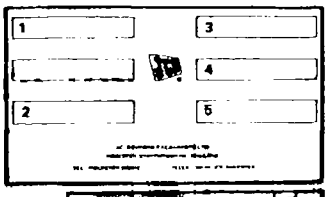

- VELG AVSNITT _____

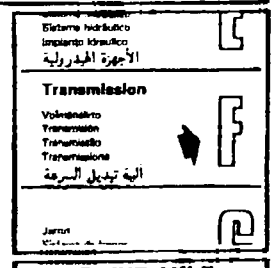

- SE PÅ INDEKSEN _____

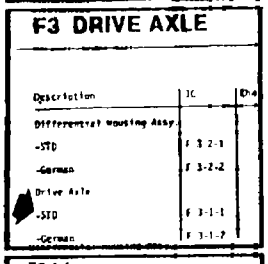

- FINN DELEN _____

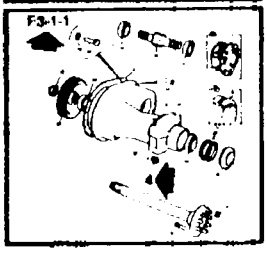

Alle artikkelnr. inne i en rute eller knyttet til en annen linje, utgjør deler av én enhet.

FREMGANGSMÅTE VED BESTILLING AV DELAR

- MASKINENS MODELL- OG SERIENR. _____

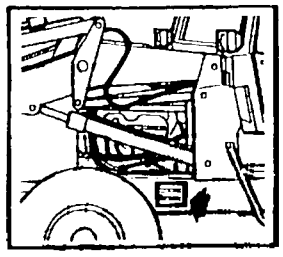

- SIDEREFERANSENR. _____

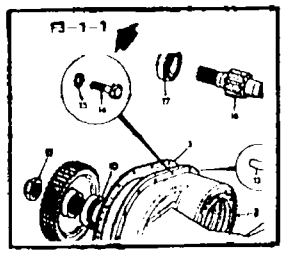

- ILLUSTRASJONSDELNR. _____

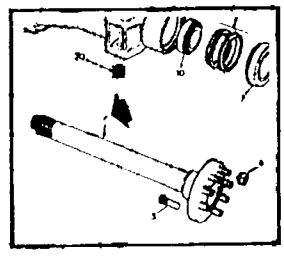

Formålet med denne boken er å gjøre det enklere og hurtigere å bestille deler fra en JCB forhandler. Indeksen helt fremst i hvert avsnitt MÅ brukes med referanse til maskintype og serienr. for å finne riktig side for den aktuelle del.

ΔΙΑΔΙΚΑΣΙΑ ΕΥΡΕΣΕΩΣ ΤΩΝ ΕΞΑΡΤΗΜΑΤΩΝ

- ΒΡΗΤΕ ΤΑ ΑΚΟΛΟΥΘΑ ΣΤΟΙΧΕΙΑ ΤΗΣ ΜΗΧΑΝΗΣ _____
  1 Αύξων αριθμός μηχανής
  2 Αύξων αριθμός κινητήρος
  3 Αύξων αριθμός κιβωτίου ταχυτήτων
  4 Αύξων αριθμός περιστροφικού μετασχηματιστή
  5 Αύξων αριθμός άξονος

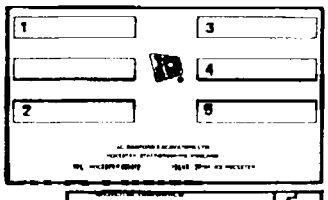

- ΔΙΑΛΕΞΕΤΕ ΤΟ ΤΜΗΜΑ (ΤΟΥ ΕΓΧΕΙΡΙΔΙΟΥ) _____

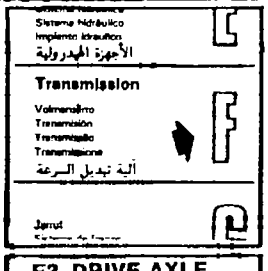

- ΑΝΑΦΕΡΘΗΤΕ ΣΤΟ ΕΥΡΕΤΗΡΙΟΝ _____

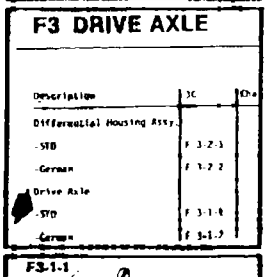

- ΒΡΗΤΕ ΤΟ ΖΗΤΟΥΜΕΝΟΝ ΕΙΔΟΣ _____

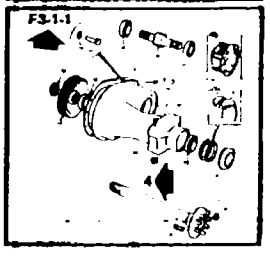

Όλοι οί αριθμοί τεμαχίων εντός πλαισίου, ή άναφερόμενοι σέ άλλη γραμμή, αποτελούν τμήμα συγκροτήματος.

ΔΙΑΔΙΚΑΣΙΑ ΠΑΡΑΓΓΕΛΙΑΣ ΕΞΑΡΤΗΜΑΤΩΝ

- ΑΡΙΘΜΟΣ ΠΡΟΤΥΠΟΥ ΜΗΧΑΝΗΣ ΚΑΙ ΑΥΞΩΝ ΑΡΙΘΜΟΣ _____

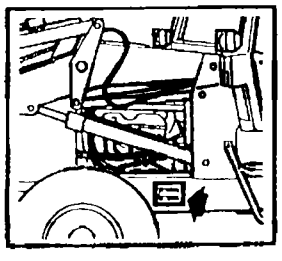

- ΑΡΙΘΜΟΣ ΣΕΛΙΔΟΣ ΠΑΡΑΠΟΜΠΗΣ _____

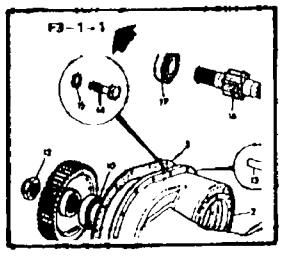

- ΑΡΙΘΜ ΑΠΕΙΚΟΝΙΖΟΜΕΝΟΥ ΕΙΔΟΥΣ _____

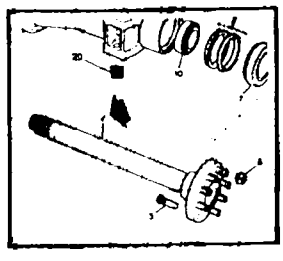

Σκοπός τού παρόντορ είναι νά βοηθήση τόν χειριστήν όταν παραγγέλλη εξαρτήματα άπό άντιπόσωπον τού JCB. Τό ευρετήριον στην αρχή κάθε τμήματος τού εγχειριδίου δίδει τήν σελίδα τού απαιτουμένου εξαρτήματος δία τόν τύπον καί σύξων αριθμόν τής μηχανής.

اجـــــراءات طـــلـــب الأجـزاء

● رقم طراز العربة والرقم المسلسل

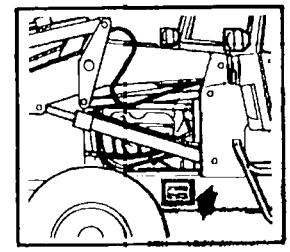

● رقم مرجع الصفحة

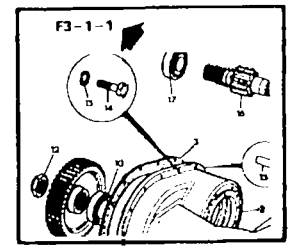

● رقم الجزء المصور

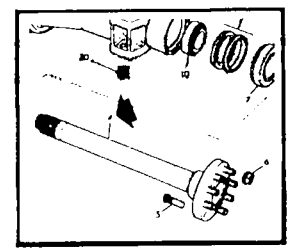

إن الغرض من هذا الكتاب هو مساعدة أخصائي التشغيل في طلب الأجزاء من وكيل جاى سي بي بسرعه وسهولة . ويجب استعمال الفهرست الموجود بمقدمة كل قسم بالارتباط مع رقم طراز العربة والرقم المسلسل من أجل العثور على الصفحة المحتوية على بيانات الجزء المطلوب وذلك بصورة صحيحة .

اجـــــراءات تـــحـــديـــد الأجـــزاء

● ارجع إلى لوحة بيانات العربة

١ الرقم المسلسل للعربة
٢ الرقم المسلسل للمحرك
٣ الرقم المسلسل لعلبة تروس السرعة
٤ الرقم المسلسل لمحول العزم
٥ الرقم المسلسل للمحور

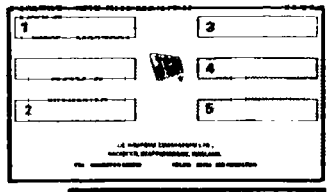

● اختر القسم

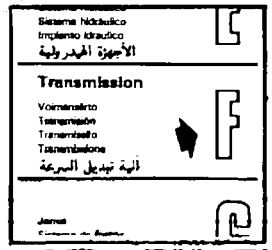

● ارجع إلى الفهرست

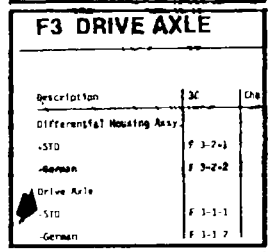

● حدد موقع الجزء

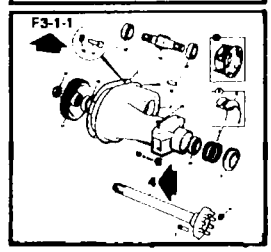

تشكل جميع أرقام الأجزاء الموجودة ضمن أحد المربعات أو المتصلة بخط آخر جزء من المجموعة .

SPÔSOB OBJEDNÁVANIA NÁHRADNÝCH SÚČIASTOK

● ČÍSLO MODELU STROJA A SÉRIOVÉ ČÍSLO

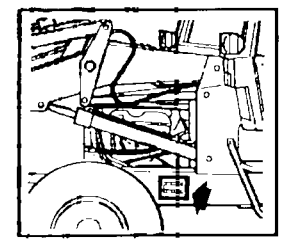

● REFERENČNÉ ČÍSLO STRANY

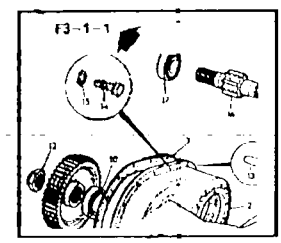

● ČÍSLO PRÍSLUŠNEJ POLOŽKY PODĽA OBRÁZKU

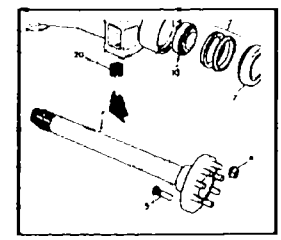

Účelom tohto návodu je pomôcť užívateľom objednávať náhradné súčiastky od dodávateľa JCB rýchlo a jednoducho. Číslo na začiatku každej kapitoly MUSÍ byť použité v súhlase s číslom stroja a sériovým číslom, aby bolo možné nájsť stranu, na ktorej je uvedená príslušná súčiastka.

SPÔSOB VYHLADÁVANIA SÚČIASTOK

- PODĽA ŠTÍTKU NA STROJI
  1 Sériové číslo stroja
  2 Sériové číslo motora
  3 Sériové číslo prevodovky
  4 Sériové číslo meniča momentu
  5 Sériové číslo nápravy

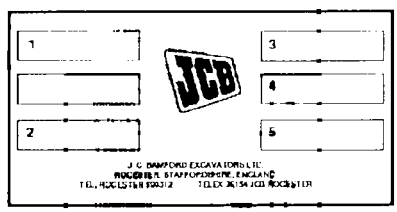

- NÁJDITE PRÍSLUŠNÚ KAPITOLU

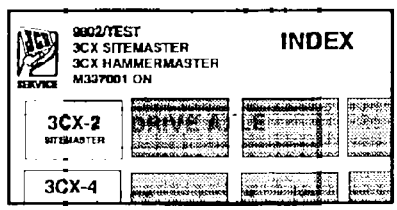

- PREZRITE REGISTER

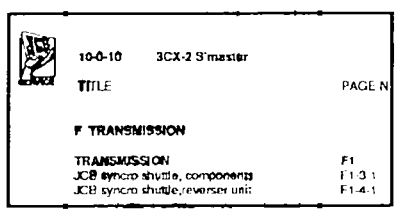

- NÁJDITE SÚČIASTKU

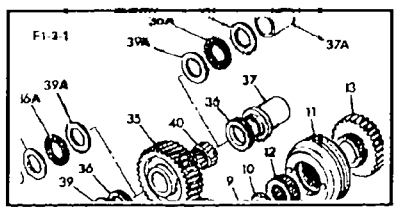

Všetky čísla súčiastok v rámčeku alebo pripojené čiarou predstavujú súčasť jednej konštrukčnej skupiny.

Vyhledávání součástek

- viz štítek stroje

1 výrobní číslo stroje
2 výrobní číslo motoru
3 výrobní číslo převodovky
4 výrobní číslo násobič momentu
5 výrobní číslo nápravy



- výběr příslušného oddílu

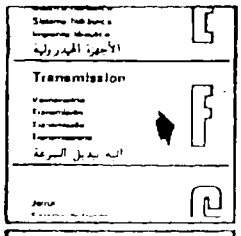

- vyhledání ve věcném rejstříku

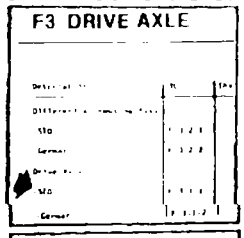

- nalezení položky

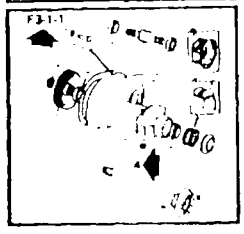

Čísla položek, která jsou v jednom rámečku nebo patří k jinému řádku tvoří díly jednoho konstrukčního celku.

Objednávka součástek

- model a výrobní číslo stroje

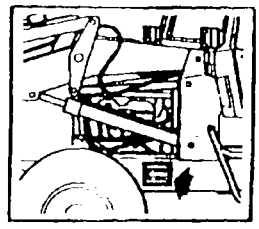

- číslo stránky

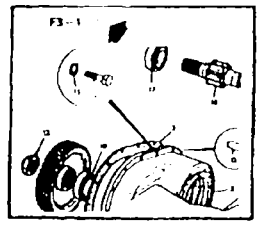

- číslo položky na obrázku

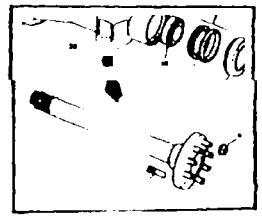

Tato knížka má pomoci řidiči při rychlém a jednoduchém objednání náhradních dílů u prodejce JCB. K nalezení správné stránky pro odpovídající díl se musí použít věcný rejstřík na začátku seznamu volných dílů s přihlédnutím k typu stroje a výrobnímu číslu.

CRAWLER EXCAVATOR OWNER PARTS BOOK

M712501 on
Model JS330NLC & JS330LC

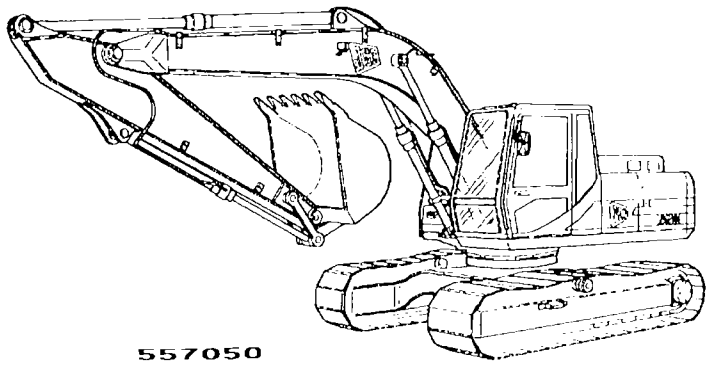

557050

ATTACHMENTS	A
BODYWORK, CAB, LOADER END	B
ELECTRICS-MACHINE, CAB & ENGINE	C
CONTROLS-MACHINE, ENGINE	D
HYDRAULICS & AIR	E
TRACK/SLEW GEARBOX	F
TRACK & RUNNING GEAR, UNDERCARRAGE	J
ENGINE 6SD1TQB02	K

JS330

TITLE	PAGE NUMBER	CHANGE NUMBER
A ATTACHMENTS		
BUCKETS	**A2**	
BUCKET HEAVY DUTY, 1150 WIDE	A2-1-4	
BUCKET HEAVY DUTY, 950 WIDE	A2-1-2	
BUCKET, GENERAL PURPOSE, 1100 WIDE	A2-1-3	
BUCKET, GENERAL PURPOSE, 1350 WIDE	A2-1-6	
BUCKET, GENERAL PURPOSE, 1450 WIDE	A2-1-8	
BUCKET, GENERAL PURPOSE, 1550 WIDE	A2-1-10	
BUCKET, GENERAL PURPOSE, 1750 WIDE	A2-1-12	
BUCKET, HEAVY DUTY, 1300 WIDE	A2-1-5	
BUCKET, HEAVY DUTY, 1450 WIDE	A2-1-7	
BUCKET, HEAVY DUTY, 1550 WIDE	A2-1-9	
BUCKET, HEAVY DUTY, 1750 WIDE	A2-1-11	
BUCKET, HEAVY DUTY, 850 WIDE	A2-1-1	
B BODYWORK, CAB, LOADER END		
BODYWORK/FRAME	**B1**	
COUNTERWEIGHT, REAR	B1-6-1	
COVER, LOWER, MAINFRAME	B1-2-1	
COWLINGS, ENGINE COVER	B1-5-1	
COWLINGS, FIG 1	B1-5-10	
COWLINGS, FIG 2	B1-5-20	
COWLINGS, FIG 3	B1-5-30	
LIFTING LUG	B1-7-1	
MAINFRAME	B1-1-1	
REAR MIRROR., COUNTERWEIGHT	B1-6-2	
TANK, DIESEL FUEL	B1-4-1	
TANK, HYDRAULIC	B1-3-1	
CAB	**B2**	
CAB, FIG 1, EURO CAB	B2-1-1	M712501 on
	B2-1-1	To M712548
	B2-1-2	M712549 on
CAB, FIG 2, EURO CAB	B2-1-10	M712501 on
	B2-1-10	To M712548
	B2-1-11	M712549 on
CAB, FIG 3, EURO CAB	B2-1-20	M712501 on
	B2-1-20	To M712548
	B2-1-21	M712549 on
CONSOLE, CAB SERVO CONTROL, LEFT HAND	B2-4-10	
CONSOLE, CAB SERVO CONTROL, LEFT HAND FIXED CONSOLE	B2-4-11	
CONSOLE, CAB SERVO CONTROL, RIGHT HAND FIXED	B2-5-1	
COVER, CAB, OVERNIGHT	B2-13-1	
DIRECT GLAZING, REPLACEMENT MATERIAL, EURO CAB	B2-18-1	
DOOR & COMPONENTS, EURO CAB	B2-2-1	M712501 on
	B2-2-1	To M712548
	B2-2-2	M712549 on
FLOOR COMPONENTS, FIG 1	B2-10-1	M712501 on
	B2-10-1	To M712641
	B2-10-2	M712642 on
FLOOR COMPONENTS, FIG 2	B2-10-10	
FLOOR COMPONENTS, FIG 2, EURO CAB	B2-10-20	M712501 on
	B2-10-20	To M712641
	B2-10-30	M712642 on
GUARD, FOPS CAGE, EURO CAB	B2-9-1	
MIRRORS, EXTERNAL	B2-7-1	
RAIN VISOR, EURO CAB	B2-12-3	
SEAT	B2-3-1	
VANDAL GUARD, EURO CAB	B2-13-4	
VISOR, SUN	B2-12-1	
WASH/WIPE, WINDSCREEN	B2-6-1	
LOADER FRONT END	**B3**	
BOOM	B3-1-1	
BOOM GREASING	B3-4-1	
DIPPER, 2.21M	B3-2-1	
DIPPER, 2.63M	B3-2-10	
DIPPER, 3.23M	B3-2-20	
DIPPER, 4.03M	B3-2-30	
EXCAVATOR, SHIMS	B3-10-1	
TIPPING LINK, & LINKAGE	B3-5-1	
REFURBISHMENTS	**B5**	
DECALS	B5-2-1	

TITLE	PAGE NUMBER	CHANGE NUMBER
DECALS, MACHINE	B5-1-10	M712501 on
	B5-1-10	To M712548
	B5-1-11	M712549 on
FIRE EXTINGUISHER	B5-7-1	
PAINT	B5-5-1	
TOOLS	B5-3-1	

C ELECTRICS-MACHINE, CAB & ENGINE

ELECTRICS, MAIN MACHINE	**C1**	
ALARM, TRAVEL, OPTIONAL	C1-10-1	
BATTERY INSTALLATION, 24 VOLT	C1-3-1	M712501 on
	C1-3-1	To M712691
	C1-3-3	M712692 on
ELECTRICS, CAB	C1-2-1	
ELECTRICS, MACHINE	C1-1-1	
	C1-1-2	
LIGHT, WORKING, ADDITIONAL, EURO CAB	C1-4-2	
LIGHT, WORKING, BOOM AND TOOLBOX	C1-4-1	
PUMP, DIESEL, REFUELLING	C1-5-1	
ELECTRICS, ENGINE	**C2**	
ALTERNATOR	C2-3-1	
	C2-3-2	
ELECTRICAL EQUIPMENT	C2-1-1	
MOTOR, STARTER	C2-5-1	
MOUNTINGS & FITTINGS, ALTERNATOR & STARTER	C2-6-1	
ELECTRICS, CAB	**C3**	
AIR CONDITIONING, INSTALLATION	C3-5-20	M712501 on
	C3-5-20	To M712679
	C3-5-21	M712680 on
	C3-5-1	
	C3-5-2	
	C3-5-19	
GAUGE, SYSTEM, CONTROL MONITOR	C3-1-1	
LIGHT, BEACON, HAZARD WARNING, AMBER	C3-9-1	
OVERLOAD WARNING, SYSTEM	C3-8-1	
RADIO	C3-11-1	
SWITCH PANEL, CONSOLE BOX	C3-2-1	

D CONTROLS-MACHINE, ENGINE

CONTROLS, MACHINE	**D1**	
CONTROLS, EXCAVATOR	D1-1-1	
CONTROLS, ENGINE	**D2**	
CONTROLS, THROTTLE & STOP	D2-1-1	

E HYDRAULICS & AIR

HOSE & PIPEWORK	**E1**	
AUXILIARY CIRCUIT, FULL FLOW, 2.63M DIPPER	E1-35-1	
AUXILIARY CIRCUIT, FULL FLOW, 3.23M DIPPER	E1-35-2	
AUXILIARY/BREAKER, COMBINED FLOW	E1-33-1	
CIRCUIT, AIR	E1-40-1	M712501 on
	E1-40-1	To M712593
CIRCUIT, AIR, PRESSURIZED, HYDRAULIC TANK	E1-40-2	M712594 on
CIRCUIT, AUXILIARY/HAMMER, MAINFRAME LOW FLOW	E1-30-1	
CIRCUIT, BOOM & DIPPER O/ LOAD, HBCV SUPPLEMENT	E1-25-1	
CIRCUIT, BOOM RAM, MAINFRAME	E1-20-5	
CIRCUIT, BOOM RAM, NONE HBCV	E1-24-1	
CIRCUIT, BOOM RAM, WITH HBCV	E1-24-10	
CIRCUIT, BREAKER LINE, MONOBOOM	E1-32-1	
CIRCUIT, BUCKET RAM	E1-23-1	
CIRCUIT, BYPASS, HYDRAULIC FILTER	E1-8-1	M712501 on
	E1-8-1	To M712641
	E1-8-2	M712642 on
CIRCUIT, DIPPER & BUCKET	E1-21-5	
CIRCUIT, DIPPER RAM, MONOBOOM	E1-22-1	
CIRCUIT, HAMMER, LOWFLOW, MONO BOOM	E1-32-5	

TITLE	PAGE NUMBER	CHANGE NUMBER
CIRCUIT, NEUTRAL PRESSURE	E1-2-1	
	E1-2-5	
CIRCUIT, NEUTRAL, RETURN & OIL COOLER	E1-3-5	
CIRCUIT, PUMP SUCTION	E1-1-1	
CIRCUIT, SERVO, CONTROLS SIDE FIG 2	E1-13-10	
CIRCUIT, SERVO, CONTROLS SIDE FIG 3	E1-13-20	
CIRCUIT, SERVO, NEUTRAL FIG 1	E1-11-1	
CIRCUIT, SERVO, NEUTRAL FIG 2	E1-11-10	
CIRCUIT, SERVO, NEUTRAL FIG 3	E1-11-20	
CIRCUIT, SWING	E1-6-5	
CIRCUIT, TRACK, MAINFRAME	E1-4-5	
CIRCUIT, TRACK, UNDERCARRIAGE	E1-5-1	
PUMP/MOTOR & PUMP DRIVE	**E2**	
COVER ASSEMBLY, MAIN HYDRAULIC PUMP	E2-1-6	
GEAR ASSEMBLY	E2-1-10	
GEAR PUMP, SERVO	E2-1-11	
PROPORTIONAL, CONTROL VALVE	E2-1-8	
PUMP, PISTON, MAIN HYDRAULIC PUMP, DRIVE GROUPS	E2-1-1	
	E2-1-3	
REGULATOR ASSEMBLY, MAIN HYDRAULIC PUMP, FIG 1	E2-1-4	
REGULATOR ASSEMBLY, MAIN HYDRAULIC PUMP, FIG 2	E2-1-5	
ROTARY GROUP, DRIVE AND IDLE GROUP	E2-1-9	
THROTTLE, VALVE ASSEMBLY	E2-1-7	
VALVES & HYDRAULIC FILTERS	**E3**	
COUPLING, ROTARY	E3-14-1	M712501 on
	E3-14-1	To M712640
	E3-14-2	M712641 on
FILTER, HYDRAULIC, AUXILIARY CIRCUIT	E3-16-1	
LUBRICANTS & FILTERS	E3-15-1	
OILS, BIODEGRADABLE, HYDRAULIC	E3-15-2	
VALVE SOLENOID	E3-8-1	
VALVE, ASSEMBLY, & MOUNTING	E3-1-1	
VALVE, CONTROL, COMPONENTS FIG 1	E3-2-1	
VALVE, CONTROL, COMPONENTS FIG 2	E3-2-2	
VALVE, CUSHION	E3-13-1	
VALVE, FOOT CONTROL, SERVO	E3-7-2	
VALVE, HAND CONTROL, SERVO	E3-6-1	M712501 on
	E3-6-1	To M712625
	E3-6-3	M712626 on
VALVE, RELIEF, SERVICE PORT	E3-2-45	
VALVE, SOLENOID	E3-9-1	
	E3-9-2	
VALVE, SWING BRAKE	E3-18-1	
RAMS	**E4**	
RAM, BOOM	E4-1-6	
RAM, BUCKET	E4-3-1	
RAM, DIPPER	E4-2-6	
RAM, DIPPER, H.B.C.V., ASSEMBLY	E4-2-20	
RAM, DIPPER, STANDARD, ASSEMBLY	E4-2-10	

F TRACK/SLEW GEARBOX

SLEW/TRACK GEARBOXES	**F4**	
CIRCUIT, SWING RING GREASING	F4-5-1	
GEARBOX, ASSEMBLY & SPROCKET	F4-1-1	
GEARBOX, TRACK	F4-2-1	
MOTOR, SWING	F4-3-1	
	F4-3-2	

J TRACK & RUNNING GEAR, UNDERCARRAGE

TRACK, GEAR/ UNDERCARRIAGE	**J1**	
CHAIN, TRACK, GROUSER	J1-5-1	
COVER, LOWER, UNDERCARRIAGE	J1-7-1	
IDLER WHEEL	J1-2-1	M712501 on

TITLE	PAGE NUMBER	CHANGE NUMBER
IDLER WHEEL	J1-2-1	To M712571
	J1-2-2	M712572 on
RECOIL UNIT	J1-6-1	M712501 on
	J1-6-1	To M712571
	J1-6-2	M712572 on
ROLLER, TRACK BOTTOM	J1-3-1	
	J1-3-2	
ROLLER, TRACK TOP	J1-4-1	
UNDERCARRIAGE	J1-1-1	M712501 on
	J1-1-1	To M712571
	J1-1-2	M712572 on

K ENGINE 6SD1TQB02

ENGINE BLOCK & SUB-ASSEMBLIES	**K1**
BLOCK ASSEMBLY	K1-3-1
CAMSHAFT, & TIMING GEARS	K1-6-2
CRANKSHAFT, BEARINGS, PISTONS & CON-RODS	K1-4-1
ENGINE MOUNTINGS	K1-8-1
ENGINE, COMPLETE	K1-1-1
FANS, PULLEYS, & FAN BELT	K1-5-1
FLYWHEEL & HOUSING	K1-7-1
TIMING CASE, & FRONT COVER	K1-6-1
CYLINDER HEAD & SUB-ASSEMBLIES	**K2**
CYLINDER HEAD	K2-1-1
LIFTING PLATES, ENGINE	K2-4-1
ROCKER ASSEMBLY, INLET/ EXHAUST VALVES, PUSH RODS & TAPPETS	K2-2-1
ROCKER COVER	K2-3-1
INDUCTION & EXHAUST SYSTEMS	**K3**
EXHAUST SYSTEM	K3-4-1
FILTER, AIR	K3-3-1
	K3-3-1
	K3-3-2
MANIFOLD, EXHAUST	K3-2-1
MANIFOLD, INDUCTION	K3-1-1
SYSTEM, COOLING	**K4**
PUMP, WATER	K4-1-1
RADIATOR, FITTINGS & MOUNTINGS	K4-3-1
RADIATOR, HOSES & FITTINGS	K4-4-1
THERMOSTAT, HOUSING, INLET & OUTLET	K4-2-1
SYSTEM, LUBRICATION	**K5**
COOLER, OIL	K5-5-1
FILTER, OIL	K5-4-1
PIPES, OIL	K5-6-1
PISTON COOLING JETS	K5-3-1
PUMP, OIL	K5-2-1
SUMP, OIL, & FITTINGS	K5-1-1
SYSTEM, FUEL	**K6**
AUTOMATIC TIMER, FUEL INJECTION PUMP	K6-1-40
DRIVE COUPLING, FUEL INJECTION PUMP	K6-1-30
FILTER, FUEL	K6-7-1
FILTER, FUEL SEDIMENT	K6-6-1
	K6-6-2
FUEL PIPES, FUEL TANK TO FILTER	K6-4-1
	K6-4-2
FUEL SYSTEM	K6-2-1
GOVERNOR ASSEMBLY, FUEL INJECTION PUMP	K6-1-20
INJECTORS, FUEL	K6-2-10
PUMP, FUEL INJECTION	K6-1-10
PUMP, FUEL INJECTION, INSTALLATION	K6-1-1
PUMP, FUEL LIFT	K6-8-1
EQUIPMENT, AUXILIARY	**K7**
COMPRESSOR, AIR	K7-4-1
COMPRESSOR, AIR, INSTALLATION	K7-3-1
COOLING PIPES, WATER, AIR COMPRESSOR	K7-5-1
TURBO, PIPEWORK	K7-2-1
TURBOCHARGER	K7-1-1
GASKET SETS	**K8**
GASKET SET, OVERHAUL	K8-1-2
GASKET SET, OVERHAUL, TOP	K8-1-1
KIT, PISTON & LINER	K8-2-1

TITLE	PAGE NUMBER	CHANGE NUMBER
	K3-3-1	To M712534
	K3-3-2	M712535 on

A

A2 BUCKETS

A2-1-1 BUCKET, HEAVY DUTY, 850 **WIDE**

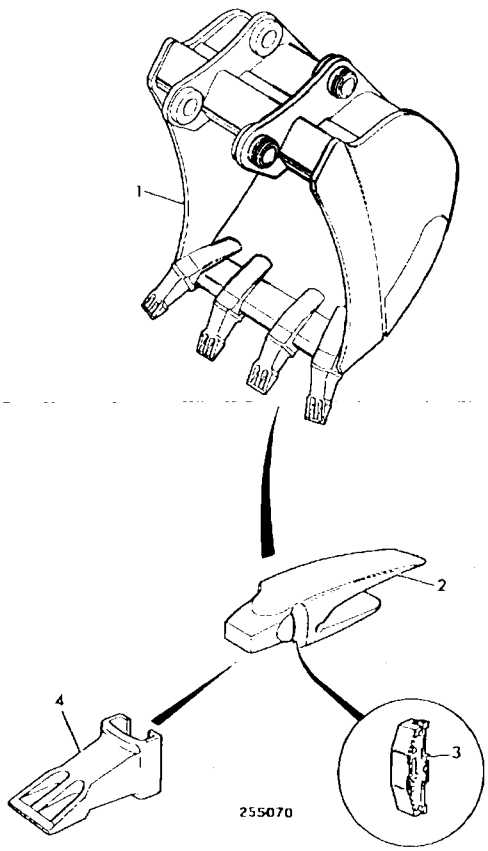

A2-1-2 BUCKET HEAVY DUTY, 950 WIDE

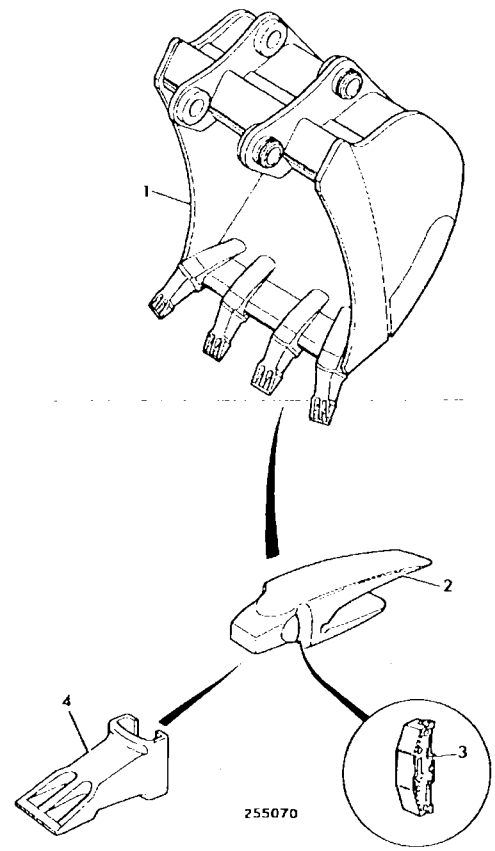

A2-1-3 BUCKET, GENERAL PURPOSE, 1100 WIDE

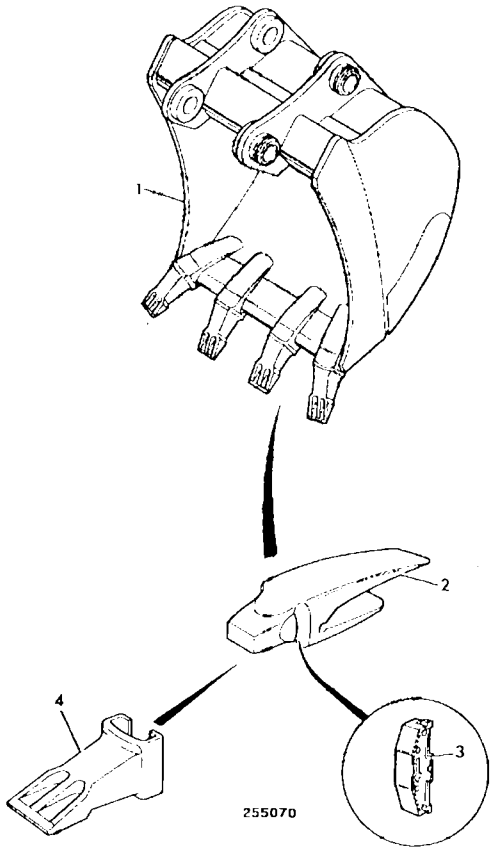

A2-1-4 BUCKET HEAVY DUTY, 1150 WIDE

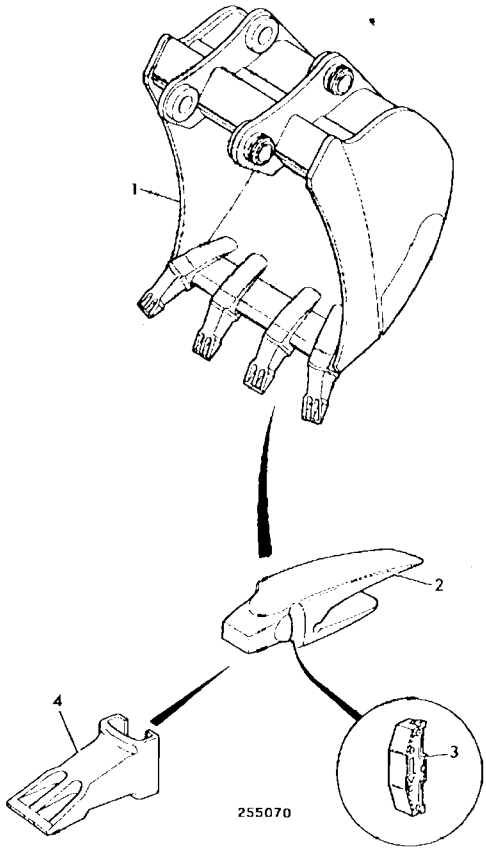

A2-1-5 BUCKET, HEAVY DUTY, 1300 WIDE

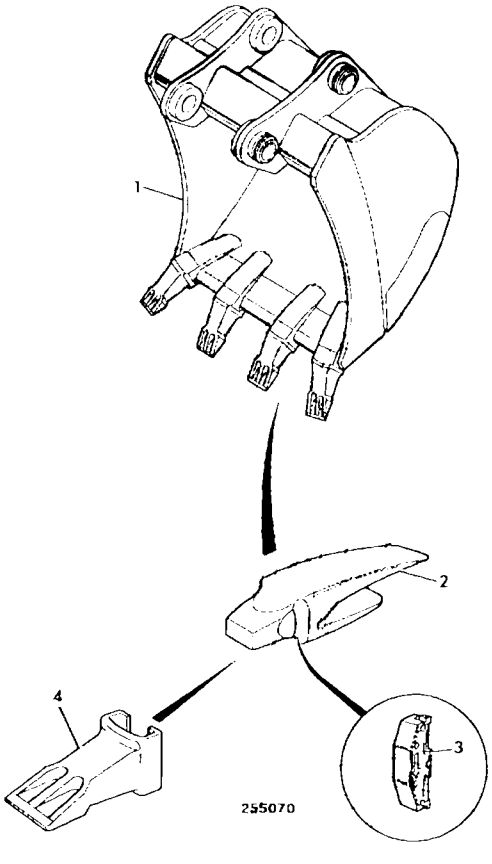

A2-1-6 BUCKET, GENERAL PURPOSE, 1350 WIDE

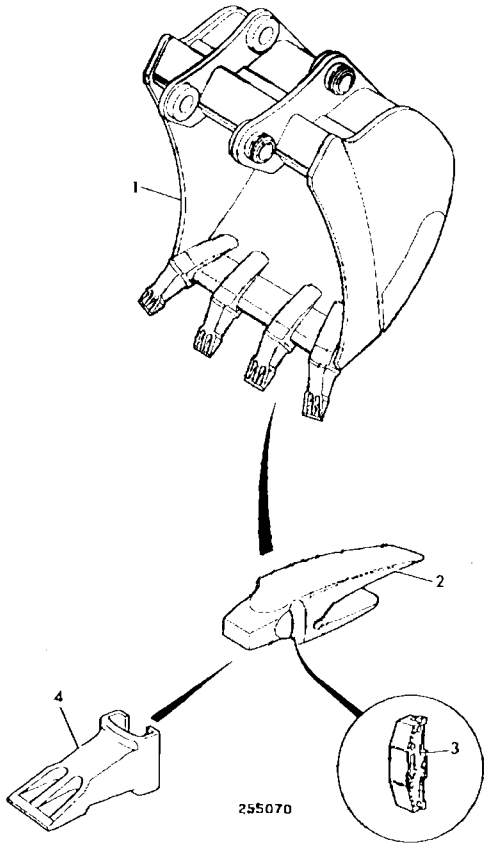

A2-1-7 BUCKET, HEAVY DUTY, 1450 WIDE

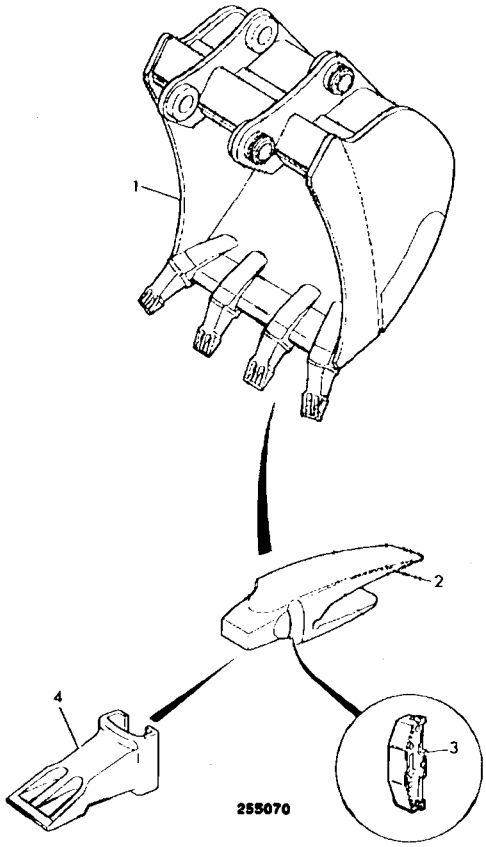

A2-1-8 BUCKET, GENERAL PURPOSE, 1450 WIDE

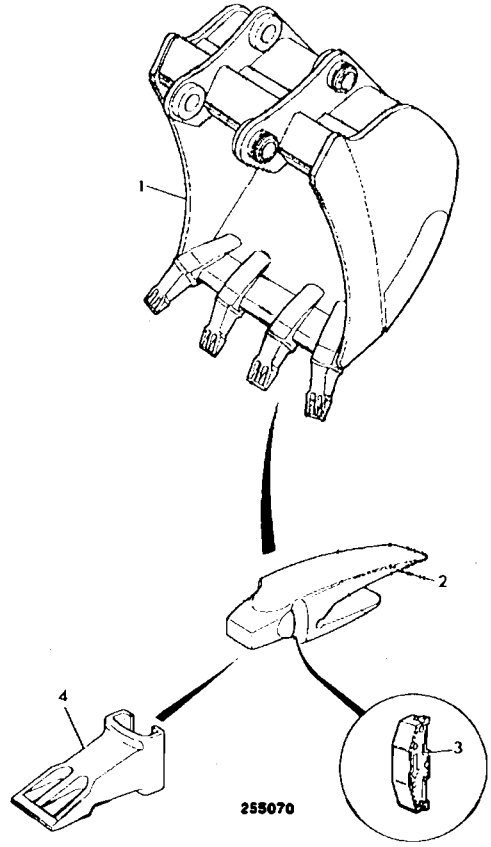

A2-1-9 BUCKET, HEAVY DUTY, 1550 WIDE

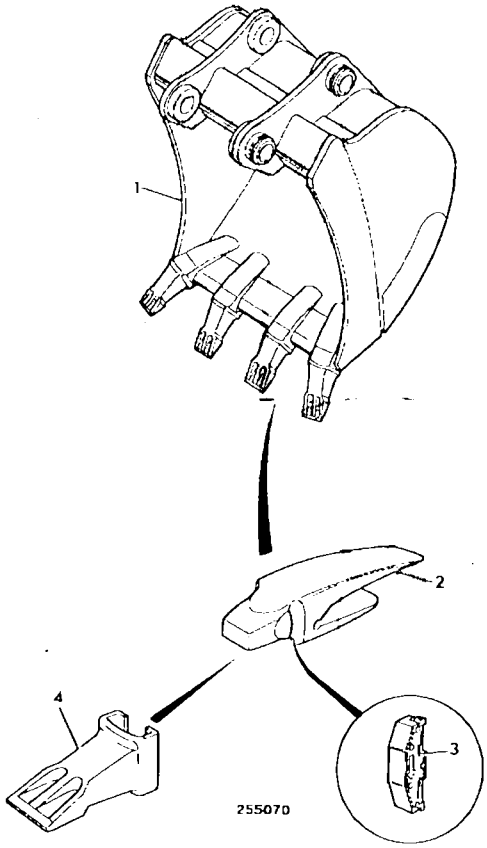

A2-1-10 BUCKET, GENERAL PURPOSE, 1550 WIDE

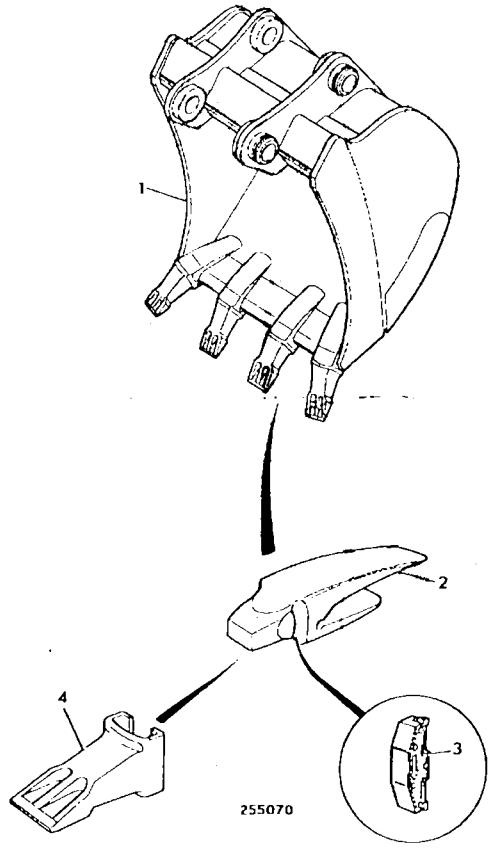

A2-1-11 BUCKET, HEAVY DUTY, 1750 WIDE

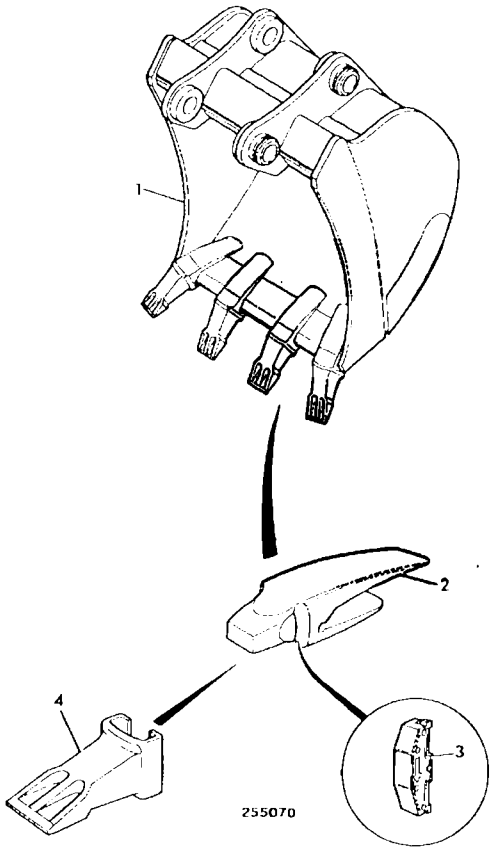

A2-1-12 BUCKET, GENERAL PURPOSE, 1750 WIDE

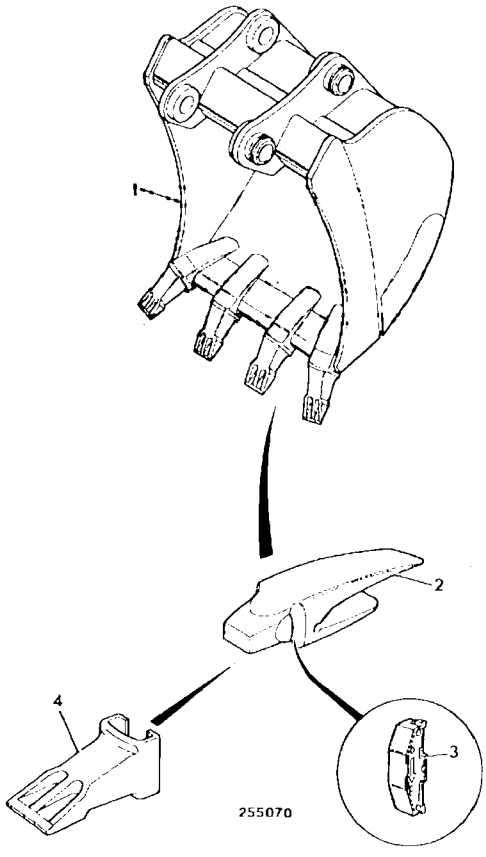

B

B1 BODYWORK/FRAME
B2 CAB
B3 LOADER FRONT END
B5 REFURBISHMENTS

B1-1-1 MAINFRAME

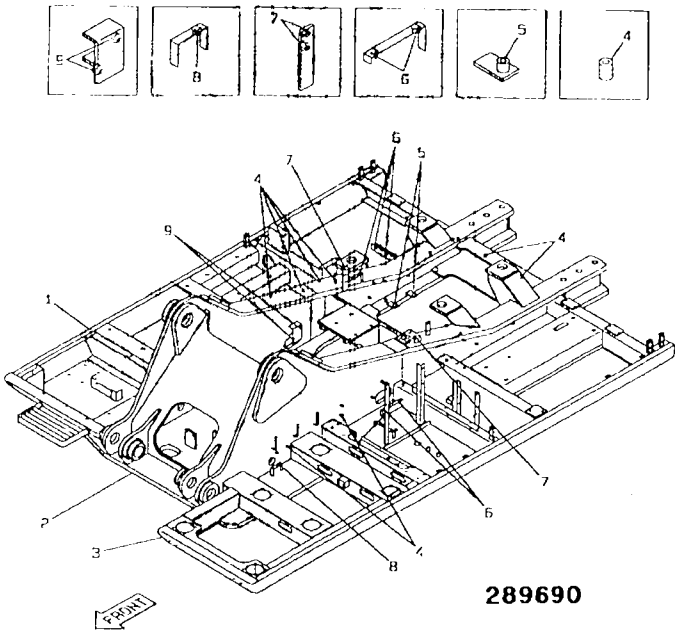

289690

B1-2-1 COVER, LOWER, MAINFRAME

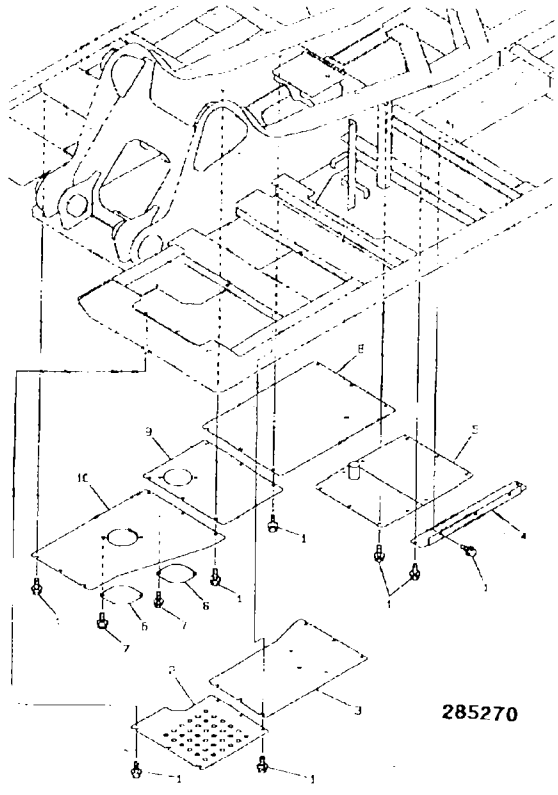

285270

B1-3-1 TANK, HYDRAULIC

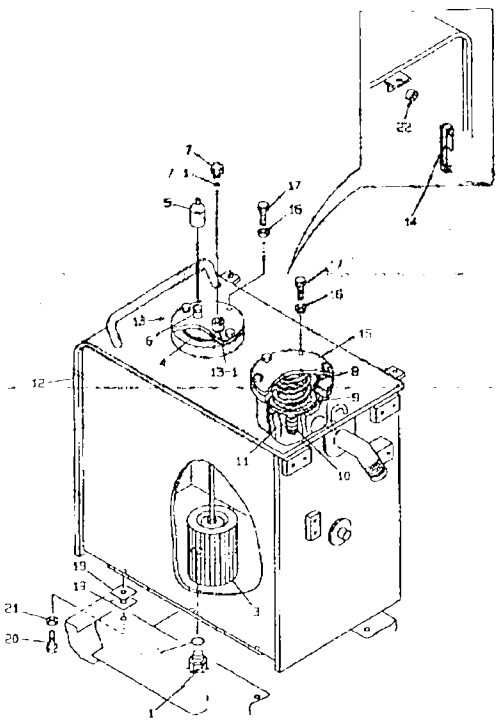

285250

B1-4-1 TANK, DIESEL FUEL

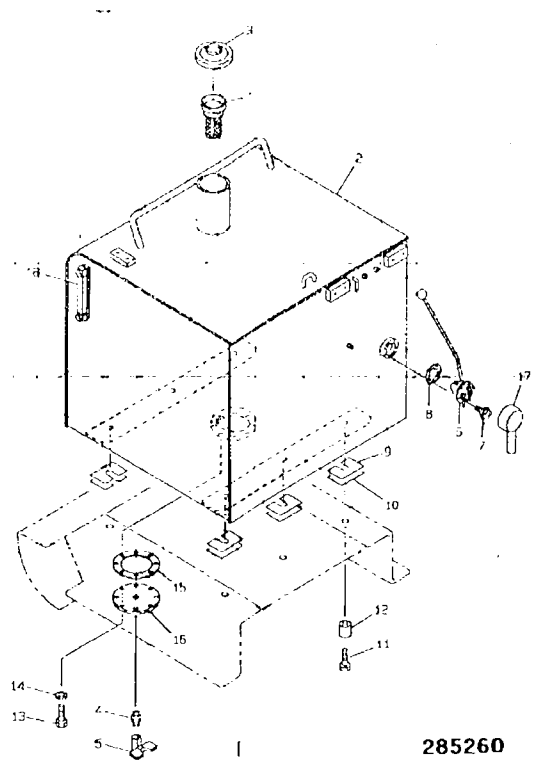

285260

B1-5-1 COWLINGS, ENGINE COVER

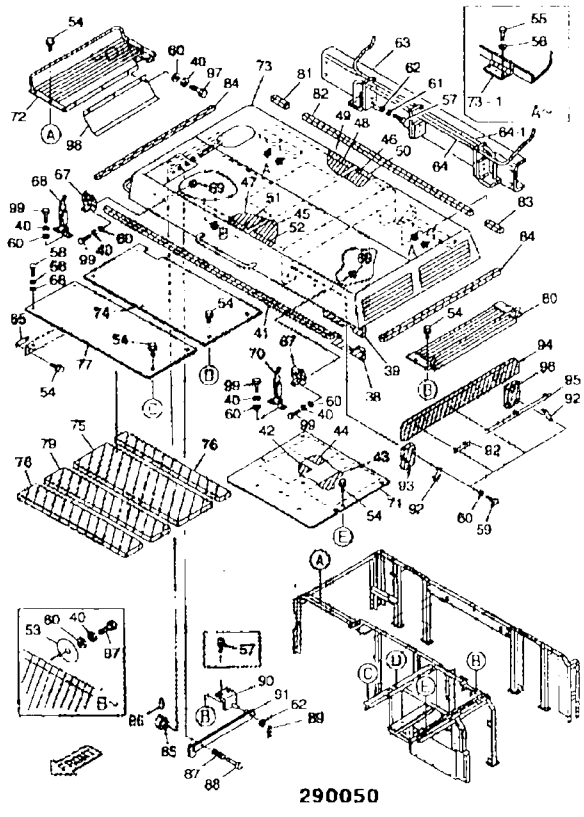

B1-5-10 COWLINGS, FIG 1

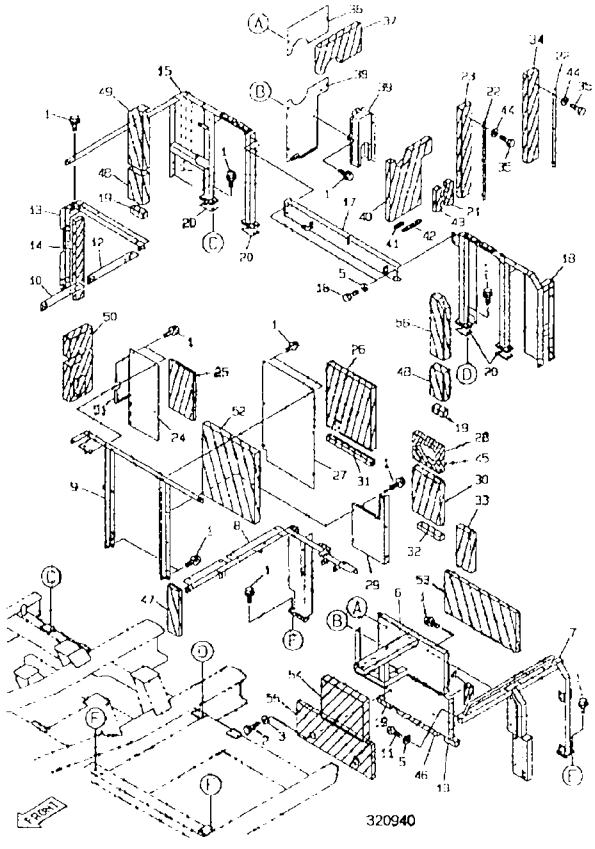

B1-5-20 COWLINGS, FIG 2

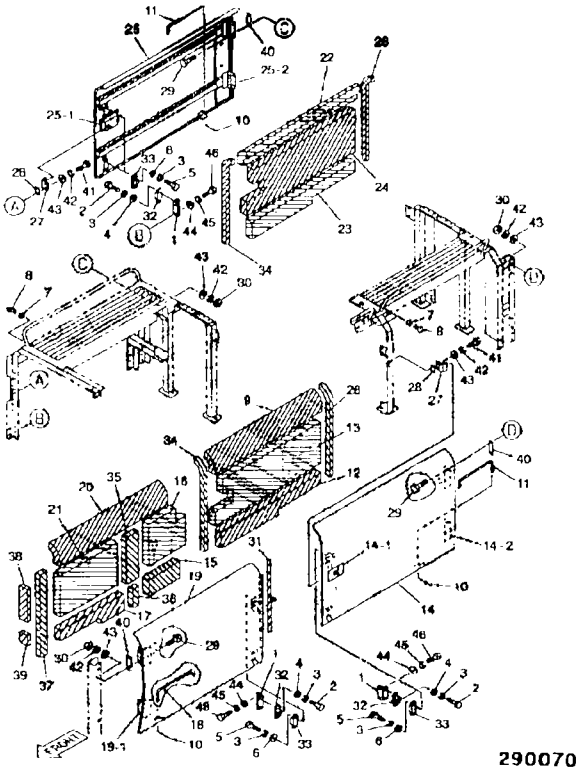

B1-5-30 COWLINGS, FIG 3

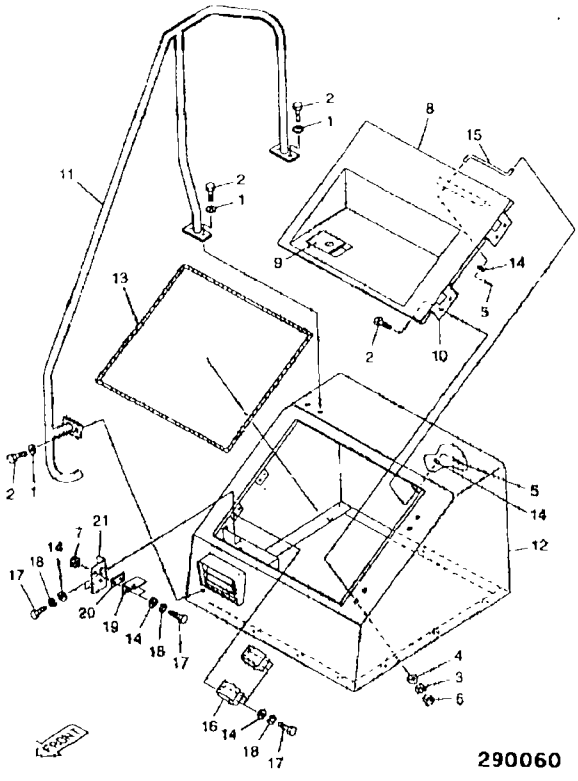

B1-6-1 COUNTERWEIGHT, REAR

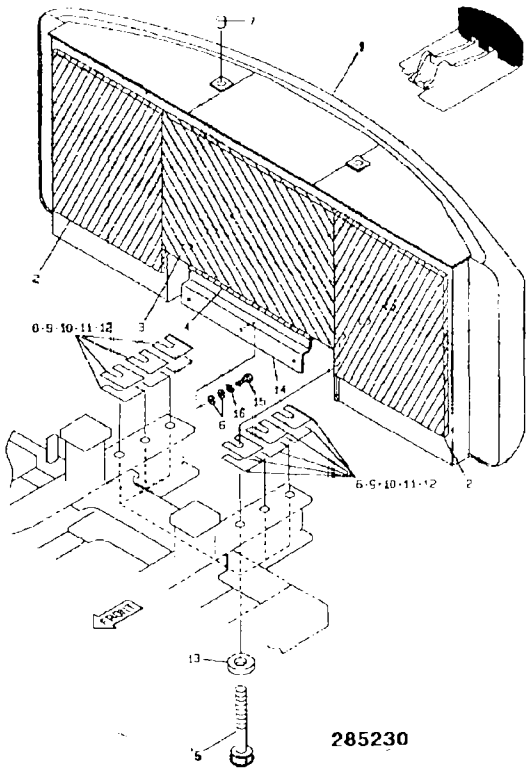

B1-6-2 REAR MIRROR., COUNTERWEIGHT

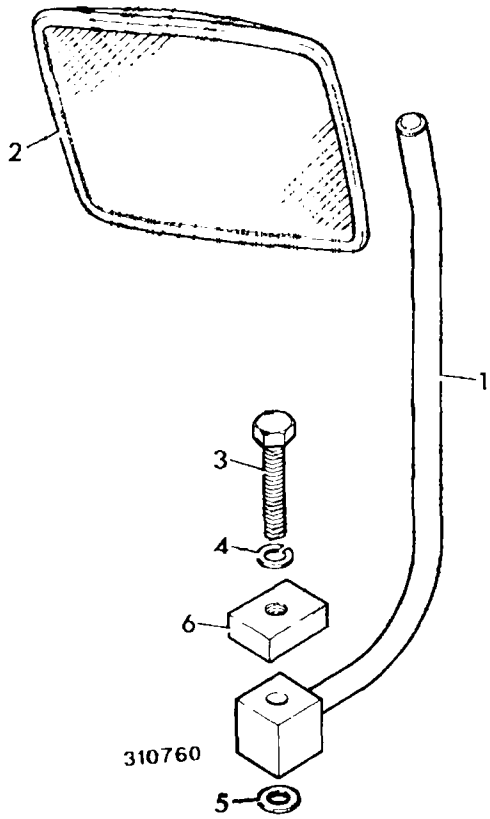

B1-7-1 LIFTING LUG

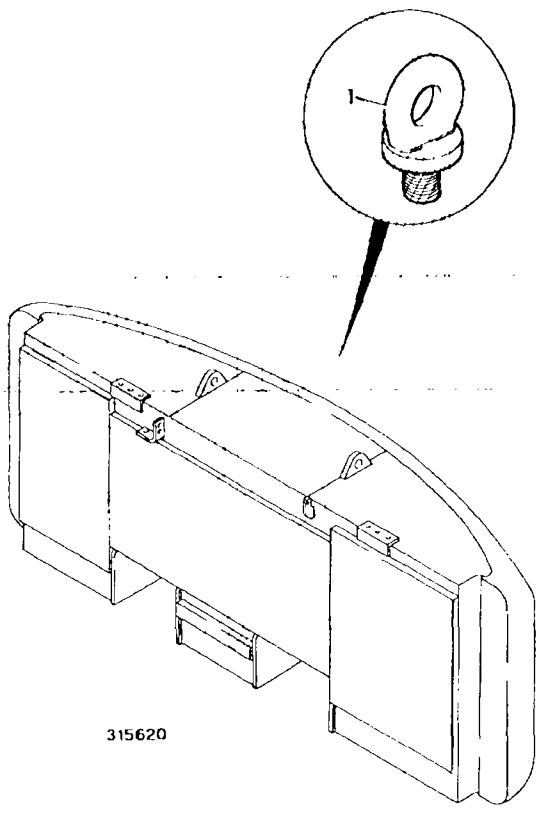

B2-1-1 CAB, FIG 1, EURO CAB

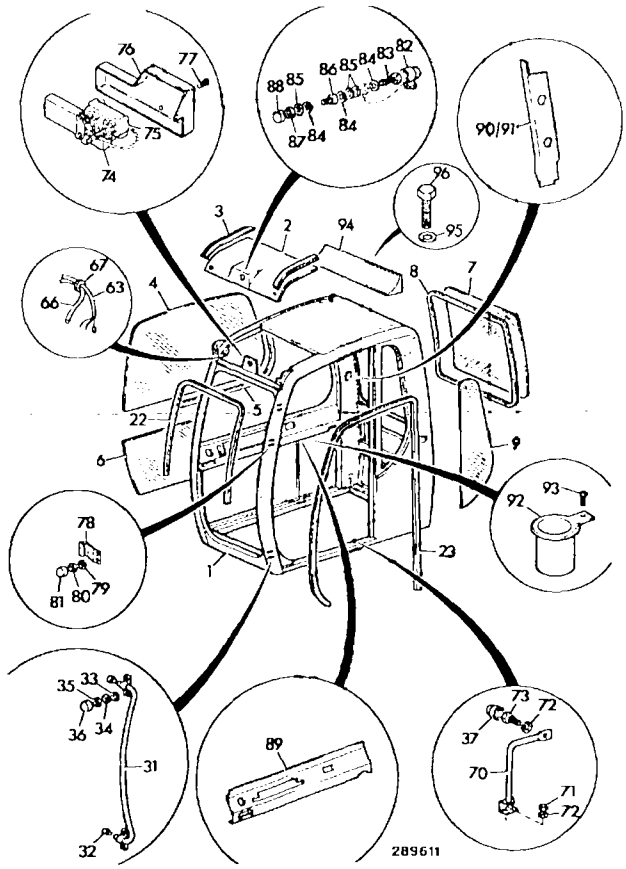

B2-1-2 CAB, FIG 1, EURO CAB

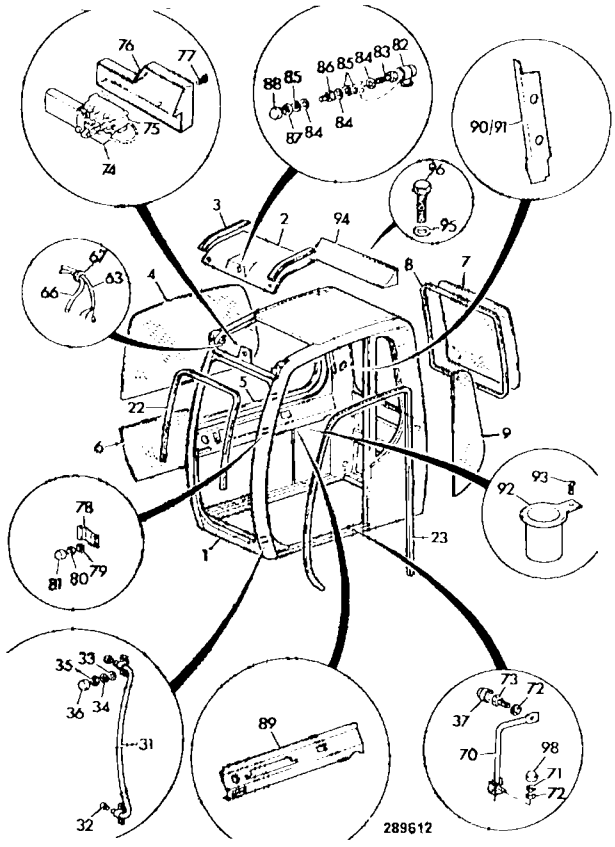

B2-1-10 CAB, FIG 2, EURO CAB

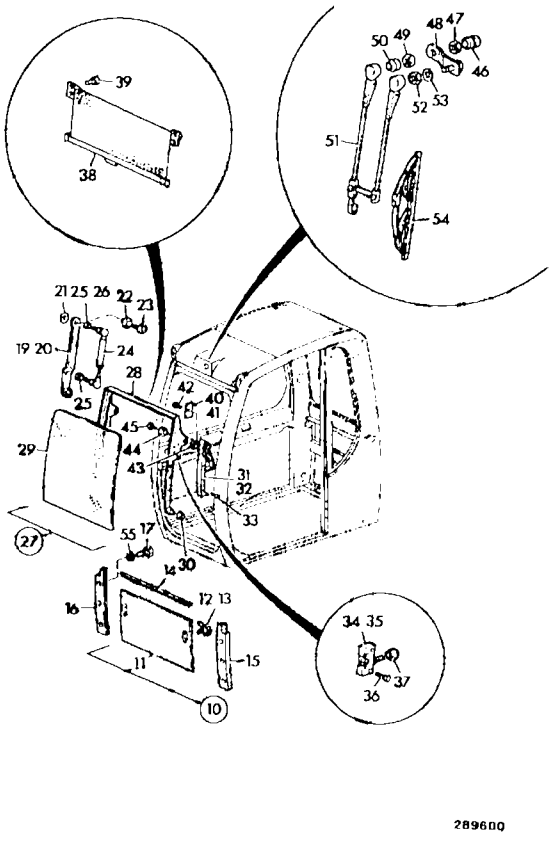

B2-1-11 CAB, FIG 2, EURO CAB

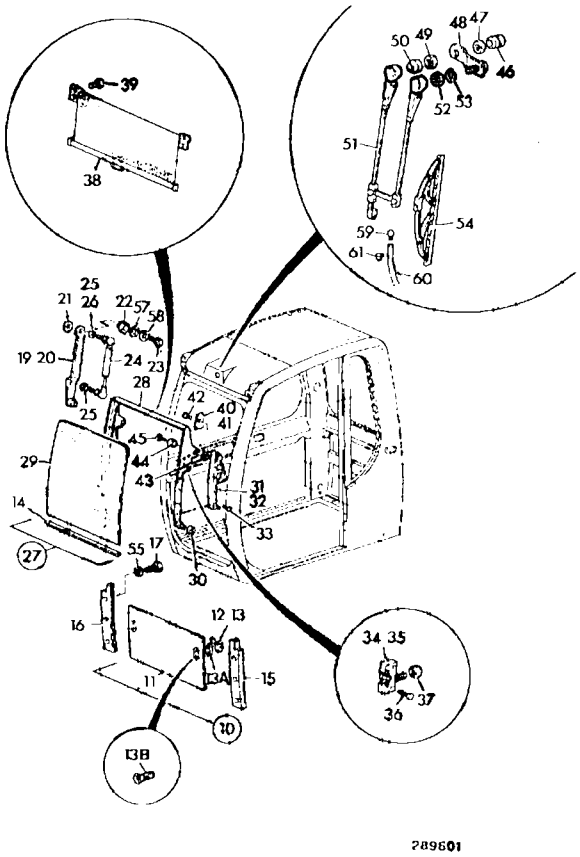

B2-1-20 CAB, FIG 3, EURO CAB

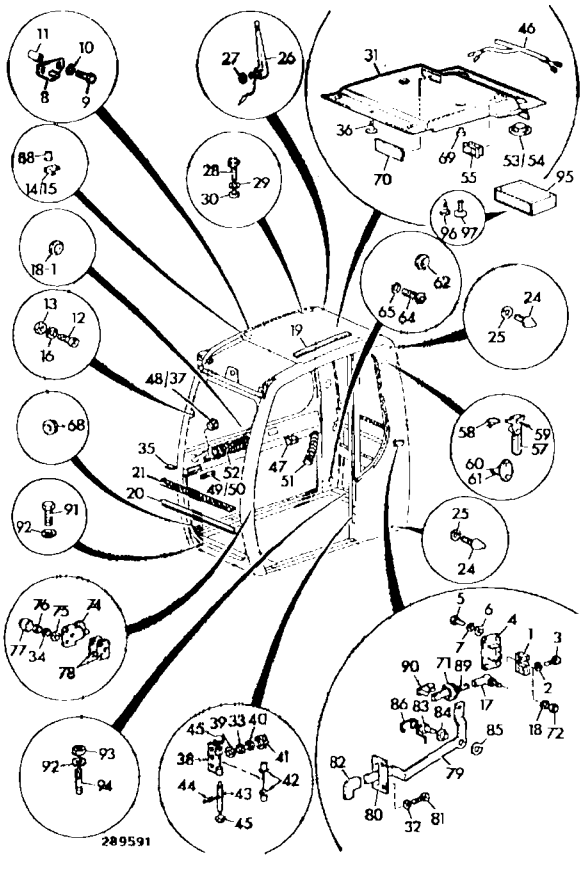

B2-1-21 CAB, FIG 3, EURO CAB

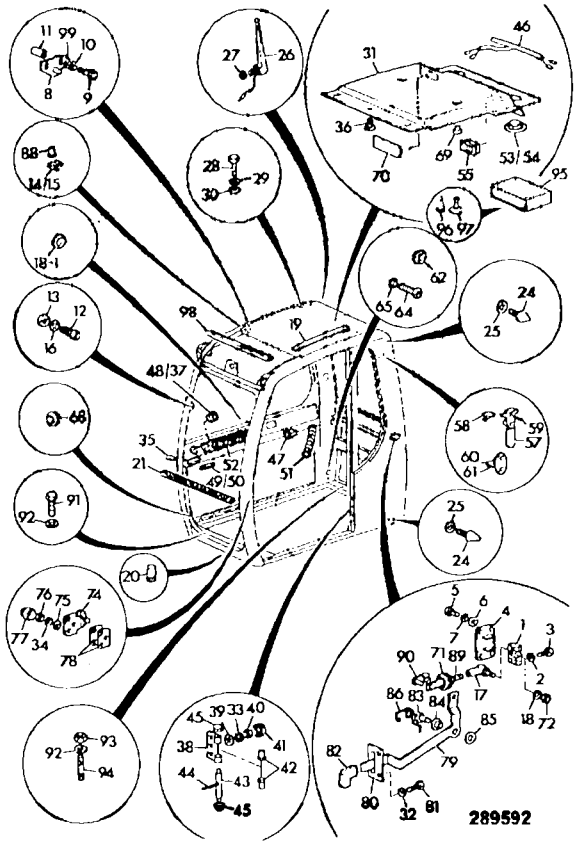

B2-2-1 DOOR & COMPONENTS, EURO CAB

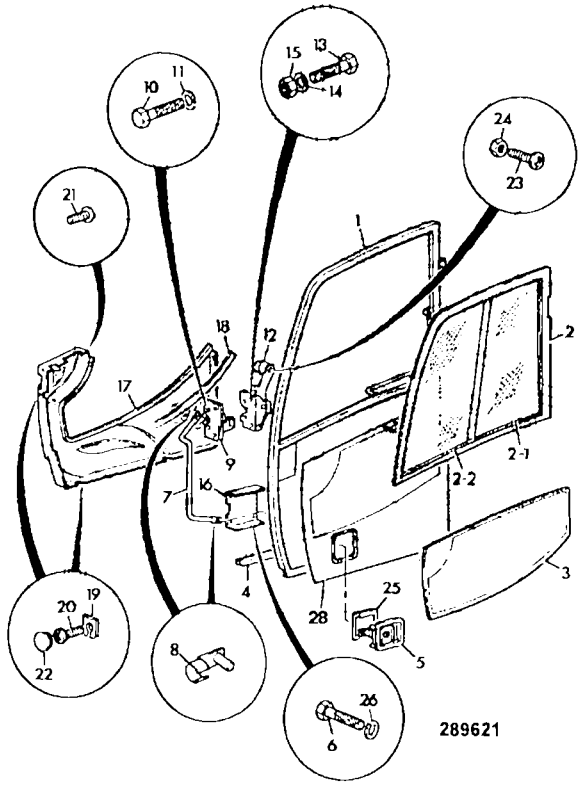

B2-2-2 DOOR & COMPONENTS, EURO CAB

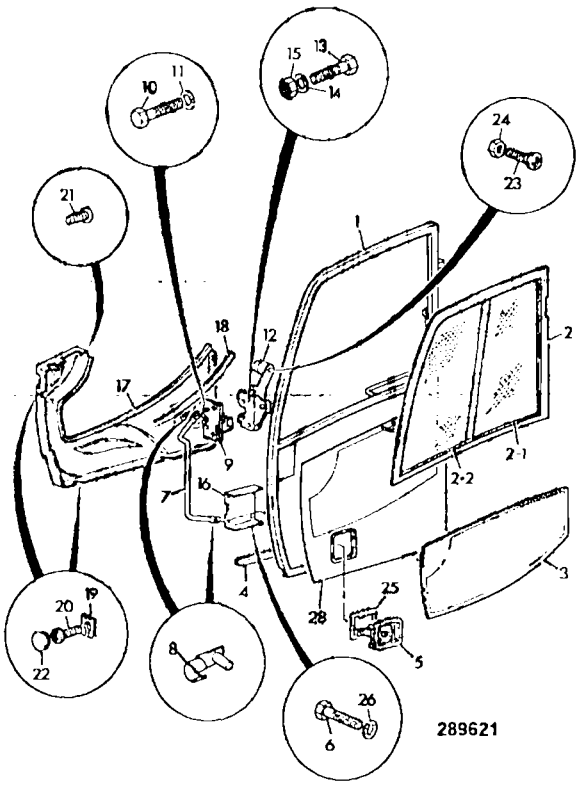

B2-3-1 SEAT

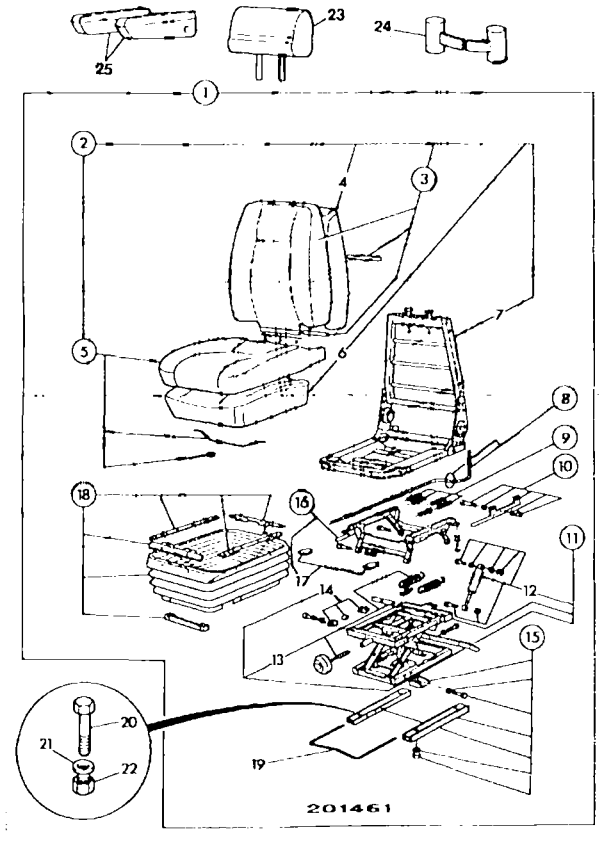

B2-4-10 CONSOLE, CAB SERVO CONTROL, LEFT HAND

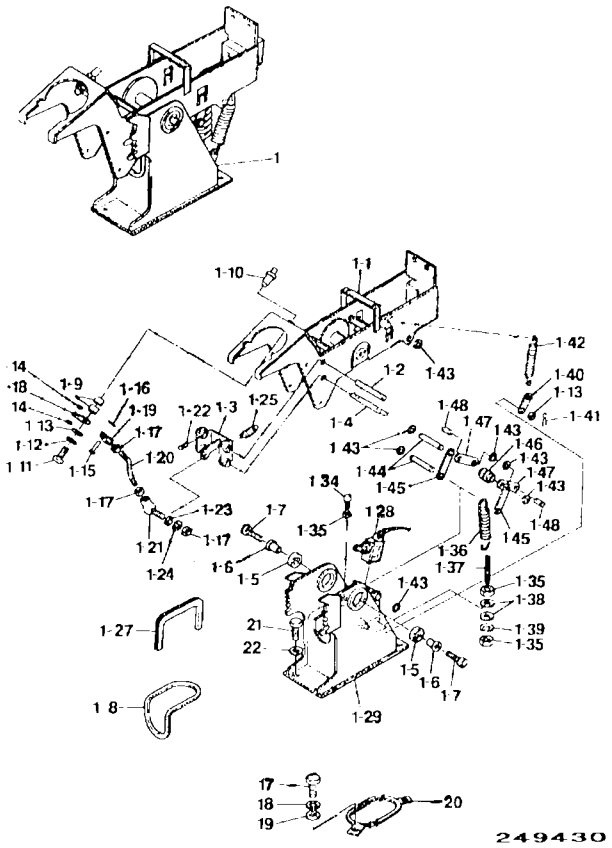

B2-4-11 CONSOLE, CAB SERVO CONTROL, LEFT HAND FIXED CONSOLE

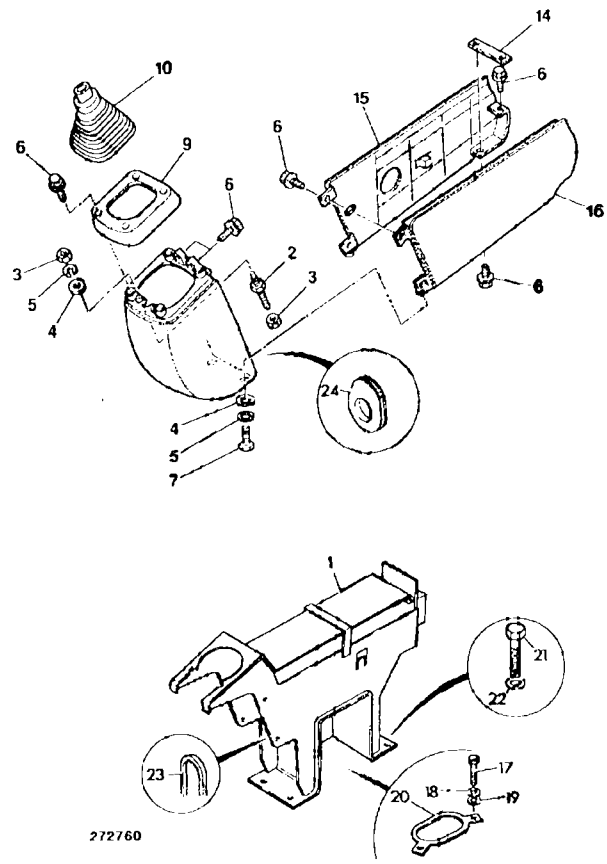

B2-5-1 CONSOLE, CAB SERVO CONTROL, RIGHT HAND FIXED

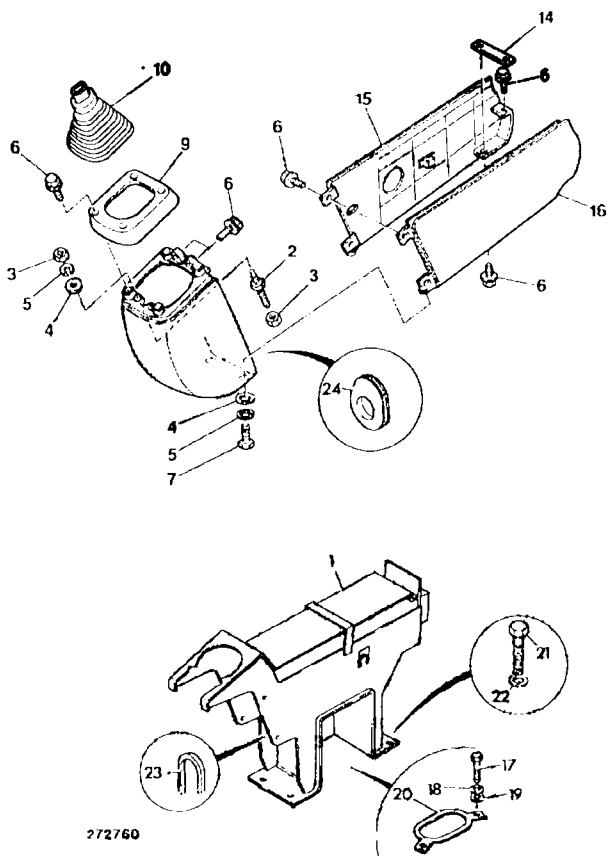

B2-6-1 WASH/WIPE, WINDSCREEN

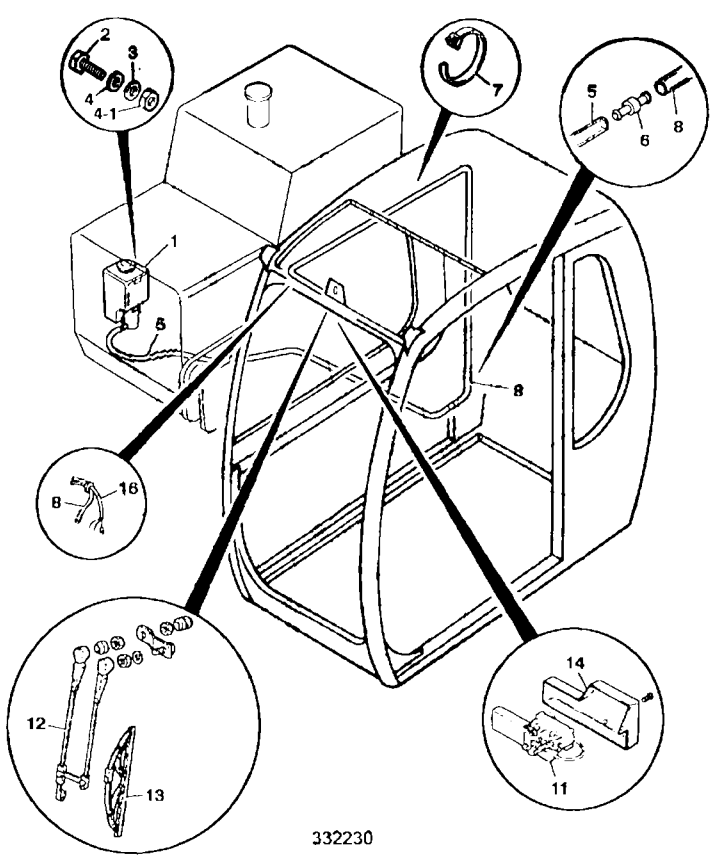

B2-7-1 MIRRORS, EXTERNAL

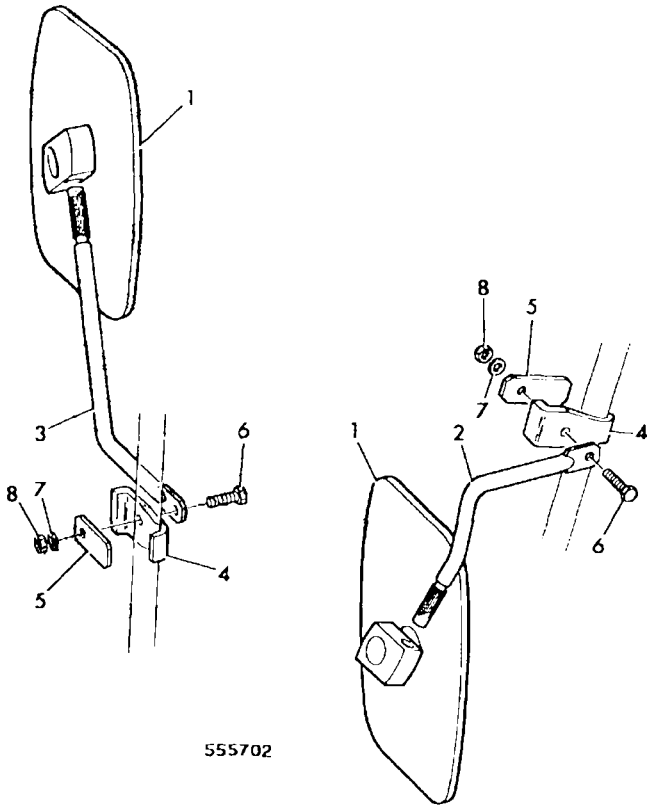

B2-9-1 GUARD, FOPS CAGE, EURO CAB

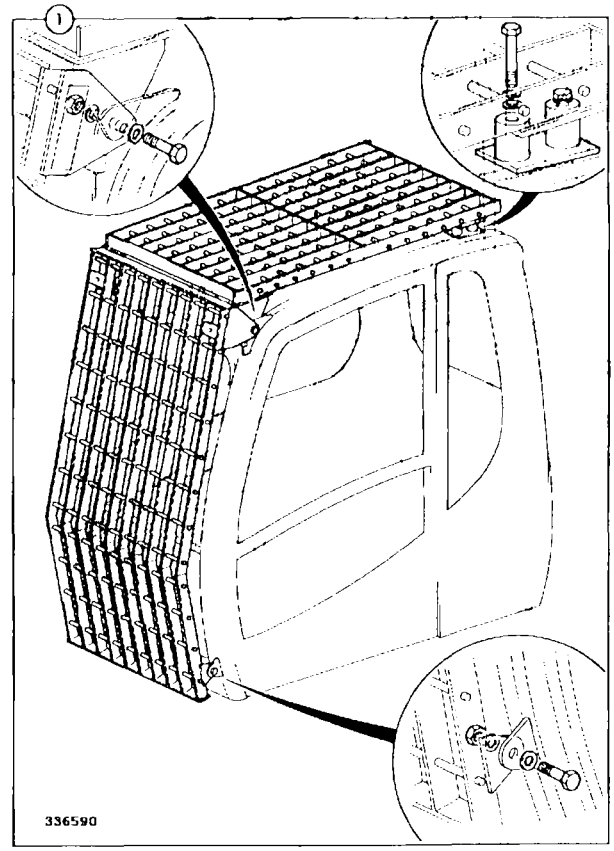

B2-10-1 FLOOR COMPONENTS, FIG 1

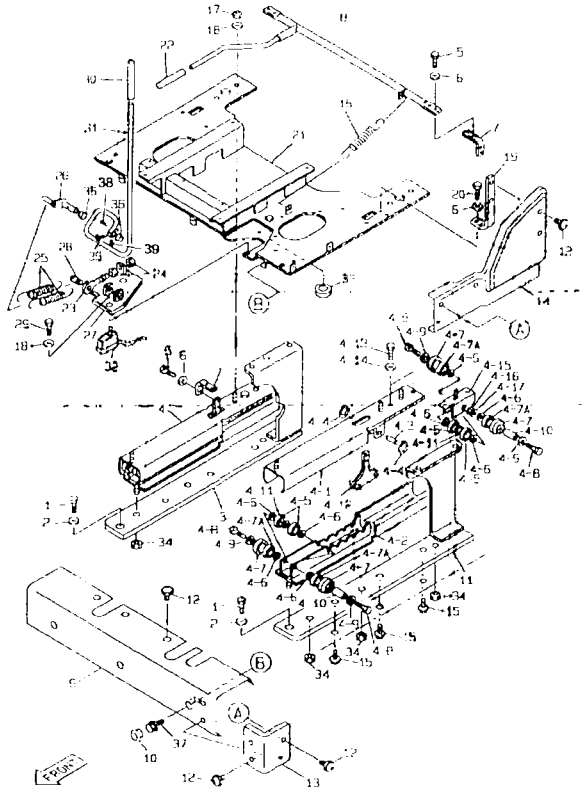

B2-10-2 FLOOR COMPONENTS, FIG 1

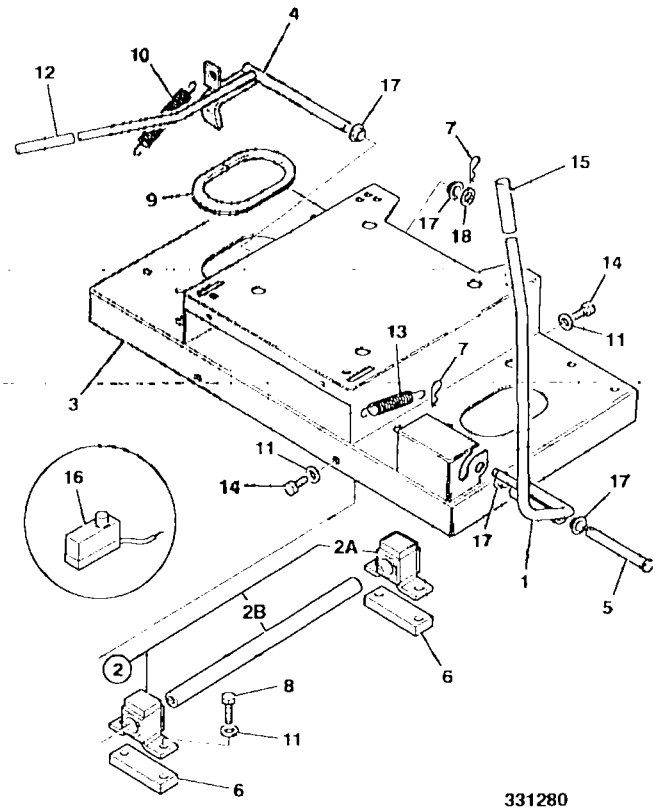

B2-10-10 FLOOR COMPONENTS, FIG 2

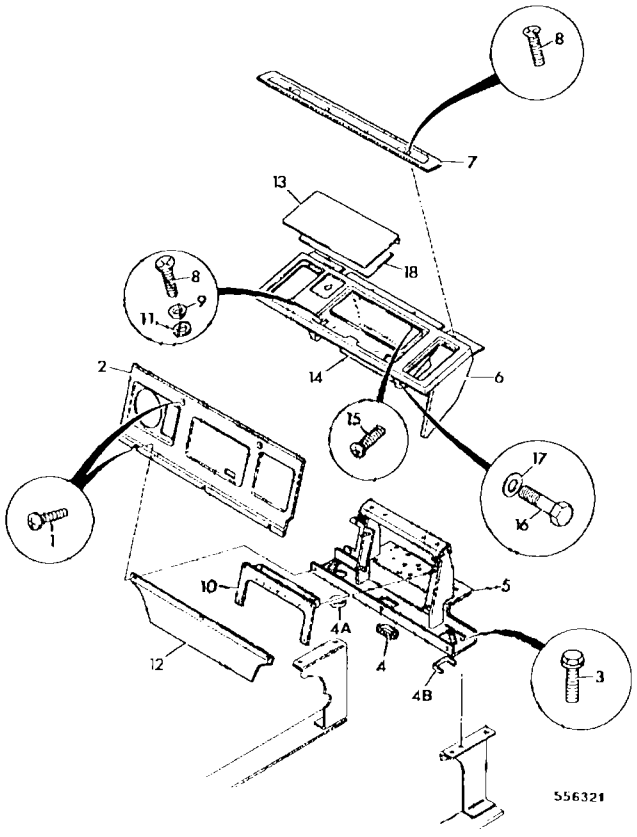

B2-10-20 FLOOR COMPONENTS, FIG 2, EURO CAB

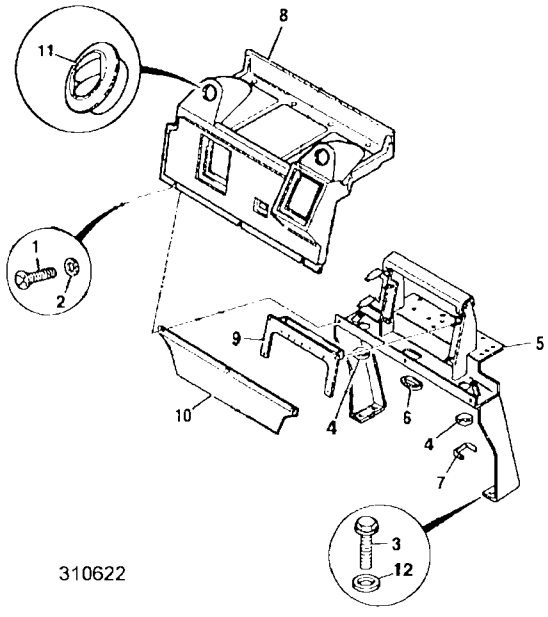

B2-10-30 FLOOR COMPONENTS, FIG 2, EURO CAB

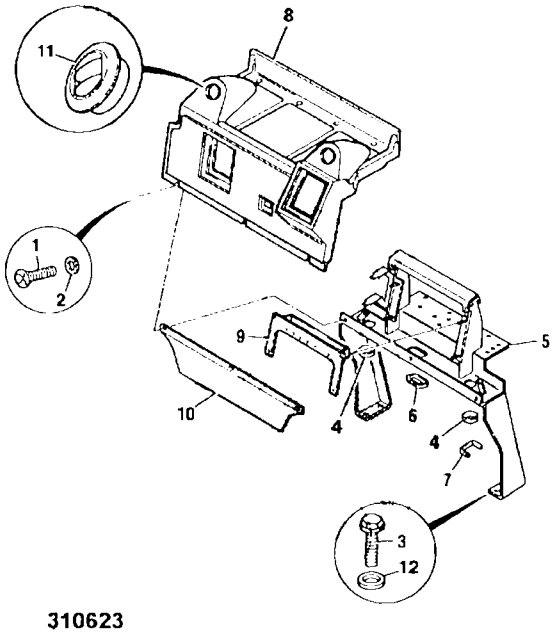

B2-12-1 VISOR, SUN

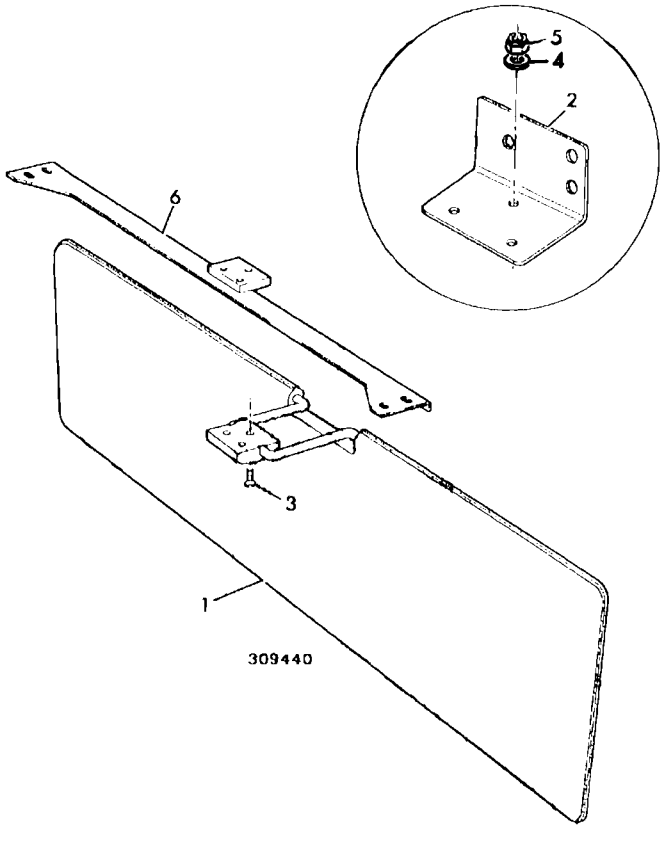

B2-12-3 RAIN VISOR, EURO CAB

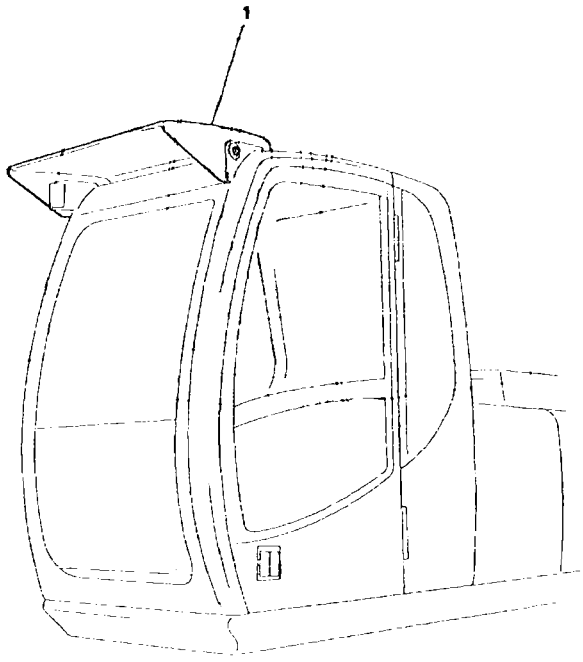

333260

B2-13-1 COVER, CAB, OVERNIGHT

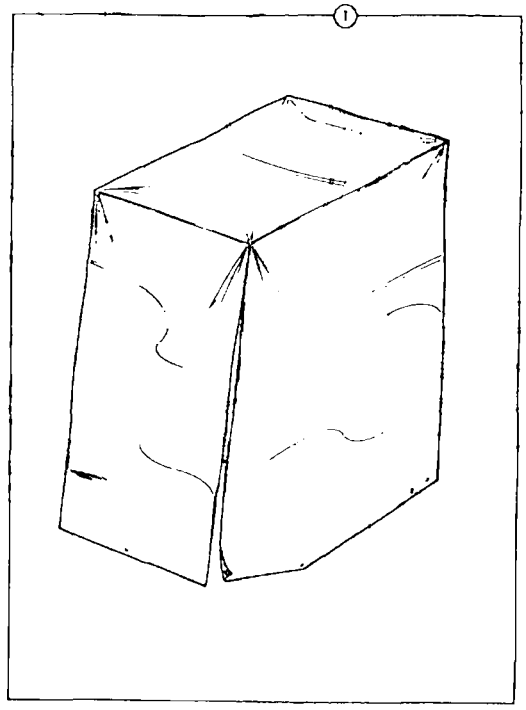

147550

B2-13-4 VANDAL GUARD, EURO CAB

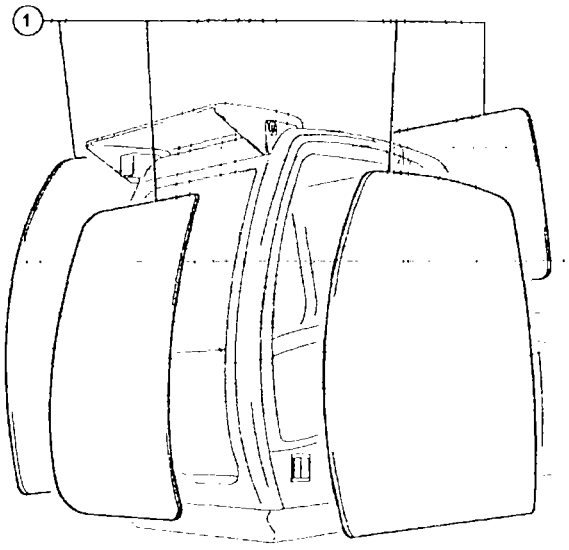

333270

B2-18-1 DIRECT GLAZING, REPLACEMENT MATERIAL, EURO CAB

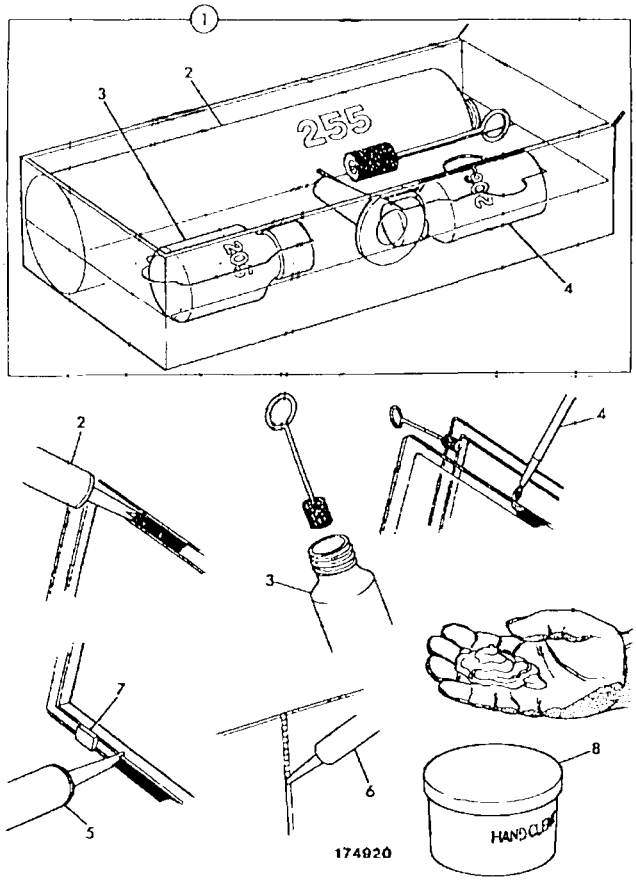

174920

B3-1-1 BOOM

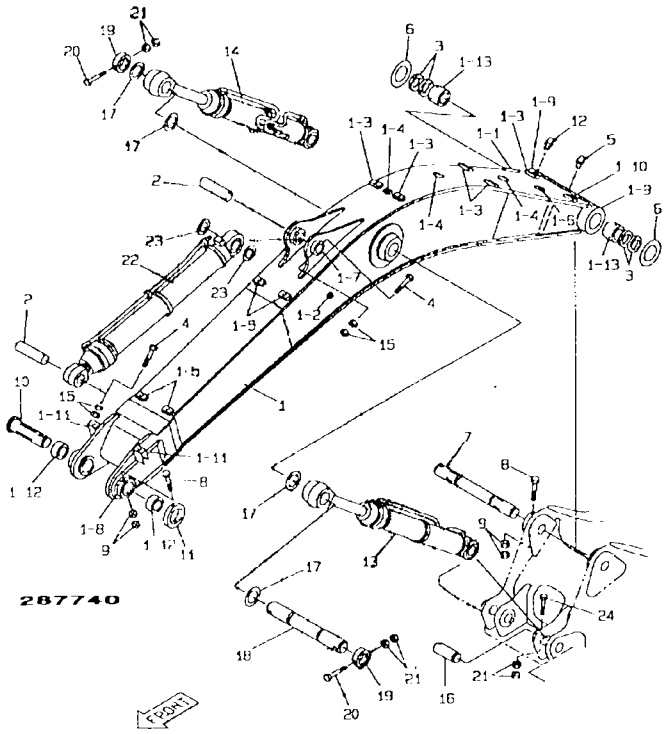

B3-2-1 DIPPER, 2.21M

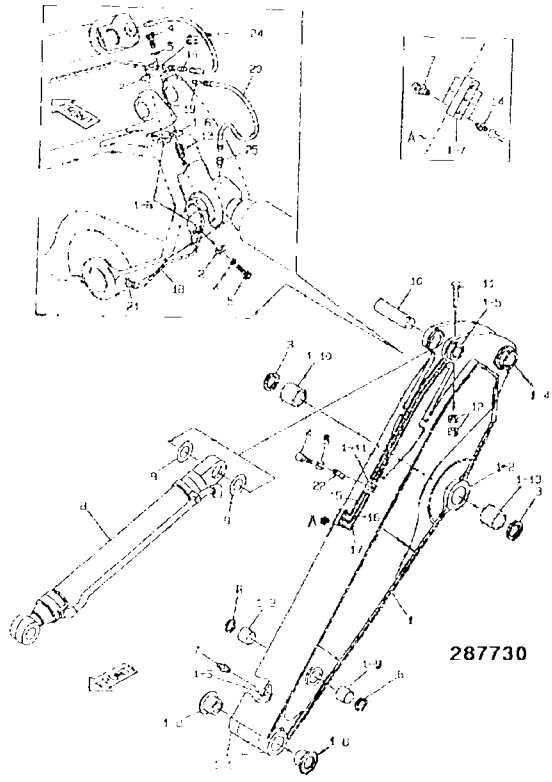

B3-2-10 DIPPER, 2.63M

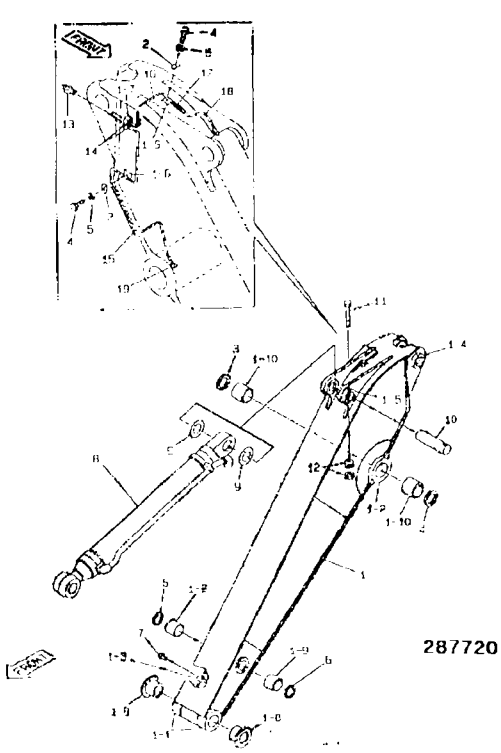

B3-2-20 DIPPER, 3.23M

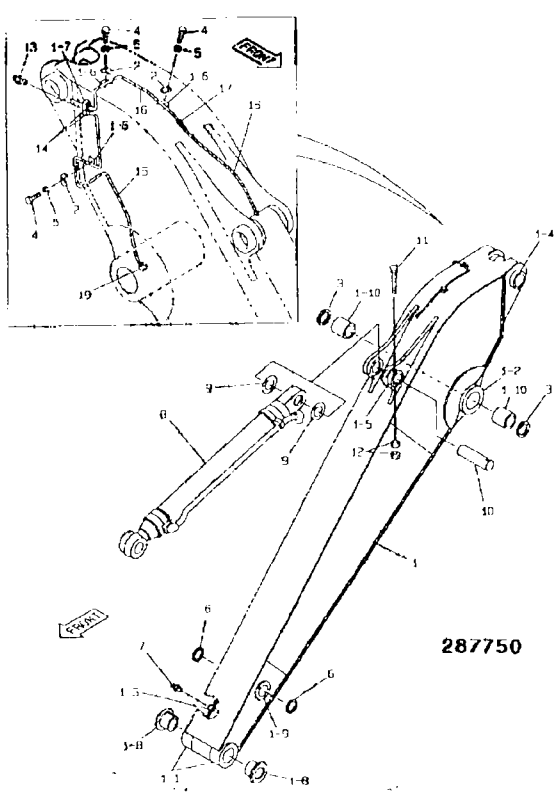

B3-2-30 DIPPER, 4.03M

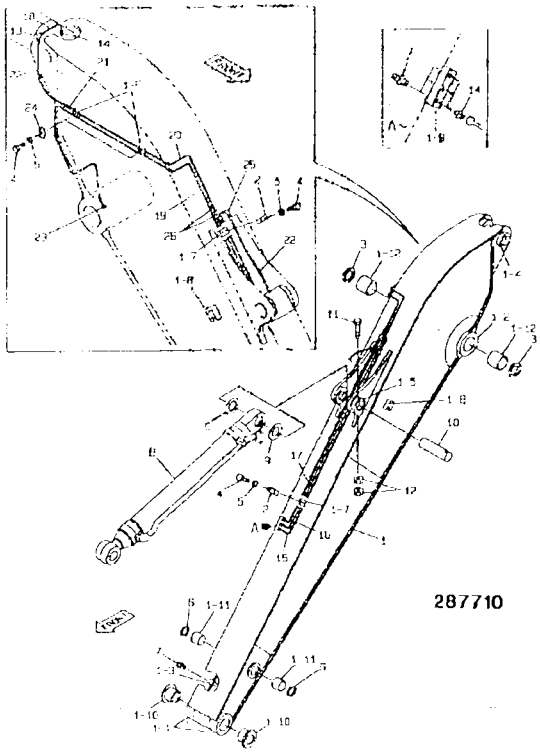

287710

B3-4-1 BOOM GREASING

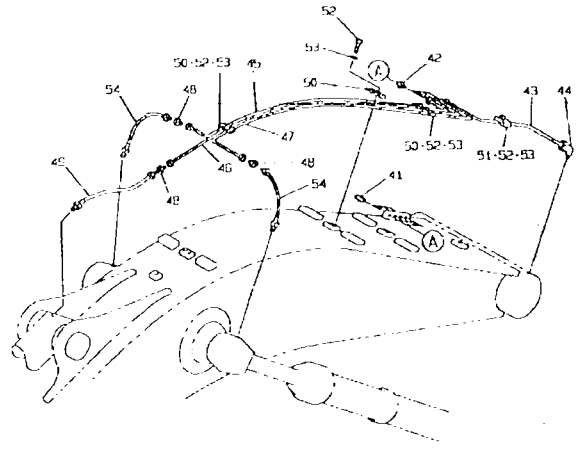

285300

B3-5-1 TIPPING LINK, & LINKAGE

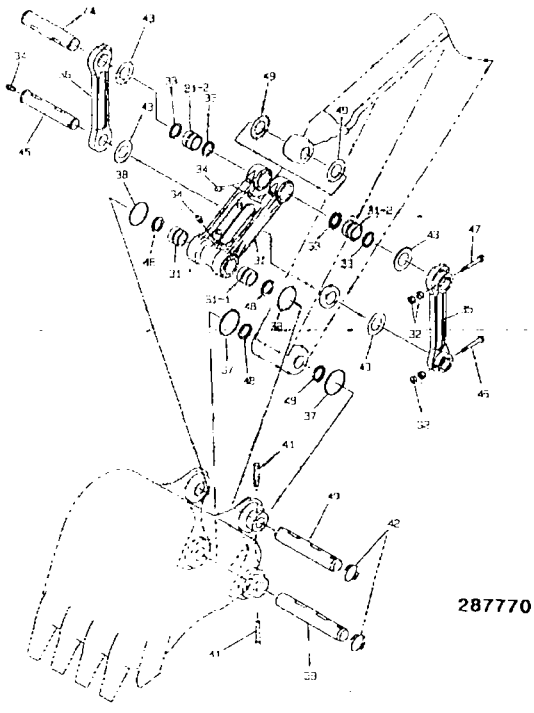

287770

B3-10-1 EXCAVATOR, SHIMS

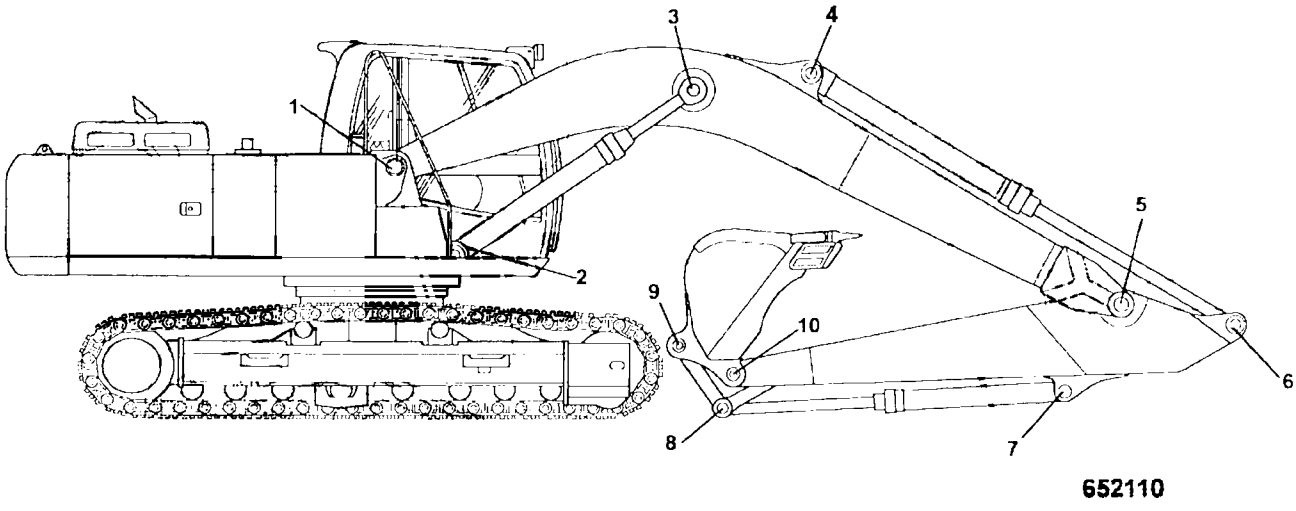

B5-1-10 DECALS, MACHINE

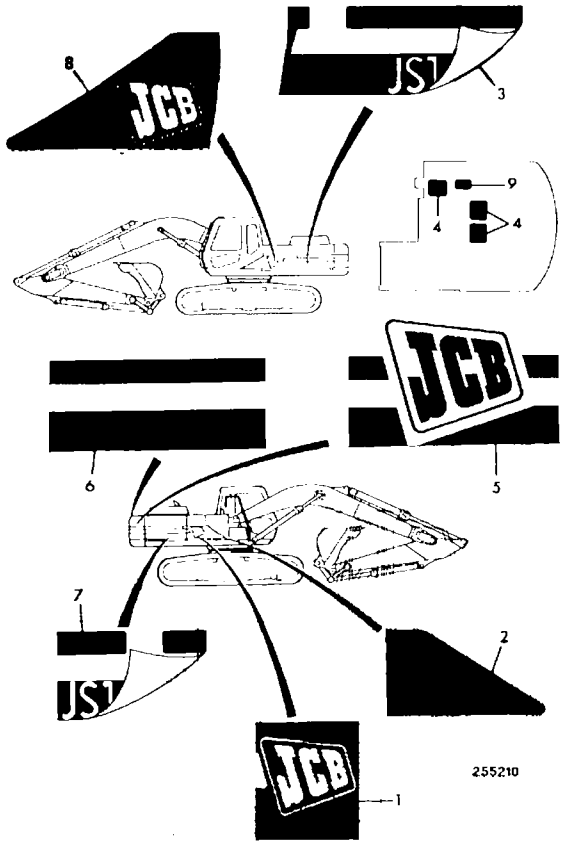

B5-1-11 DECALS, MACHINE

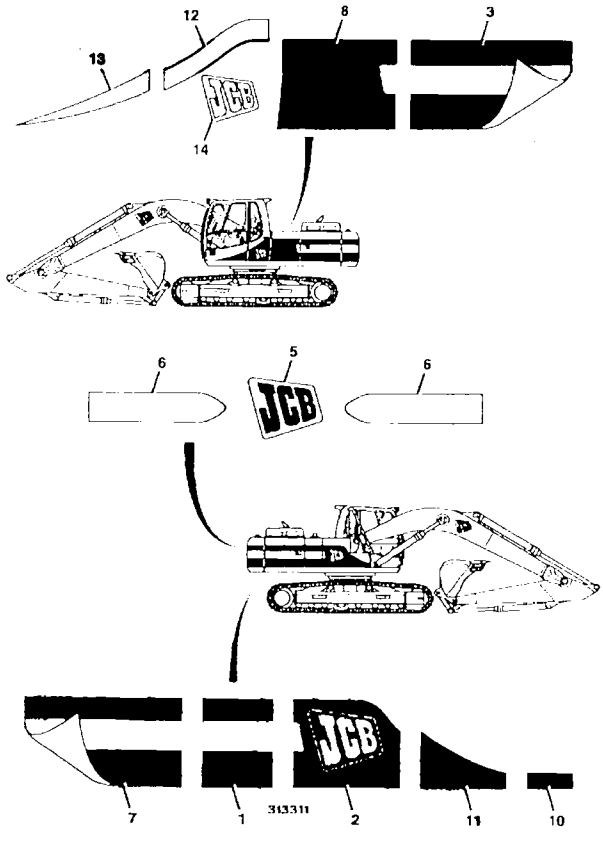

B5-2-1 DECALS

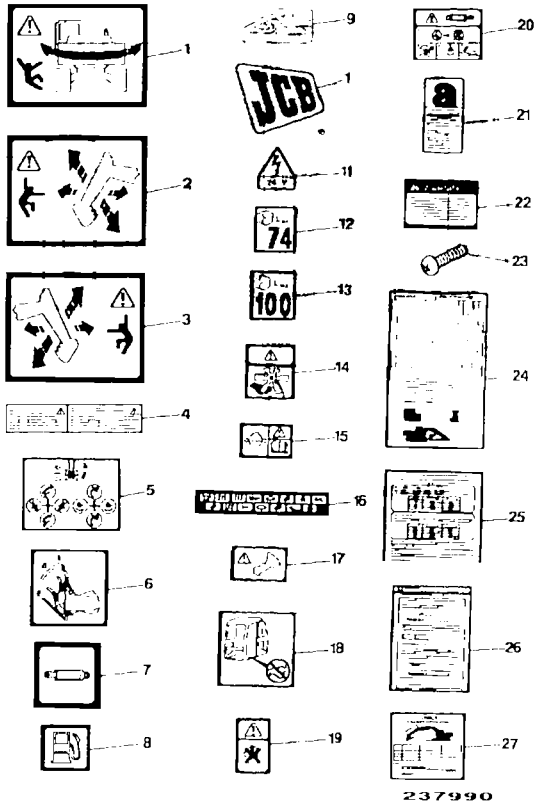

237990

B5-3-1 TOOLS

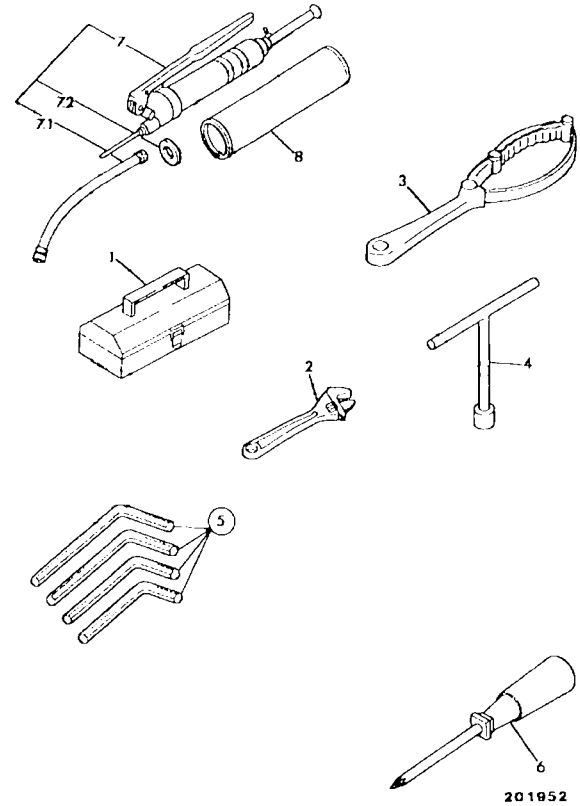

201952

B5-5-1 PAINT

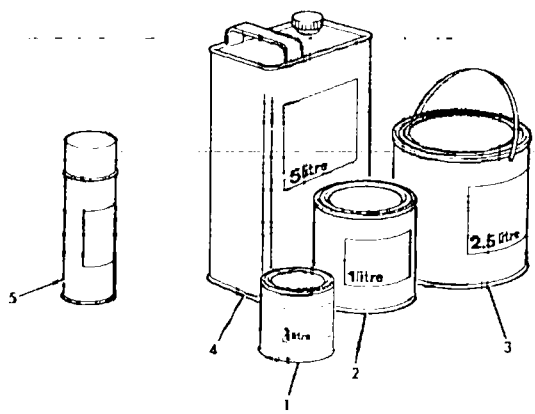

154940

B5-7-1 FIRE EXTINGUISHER

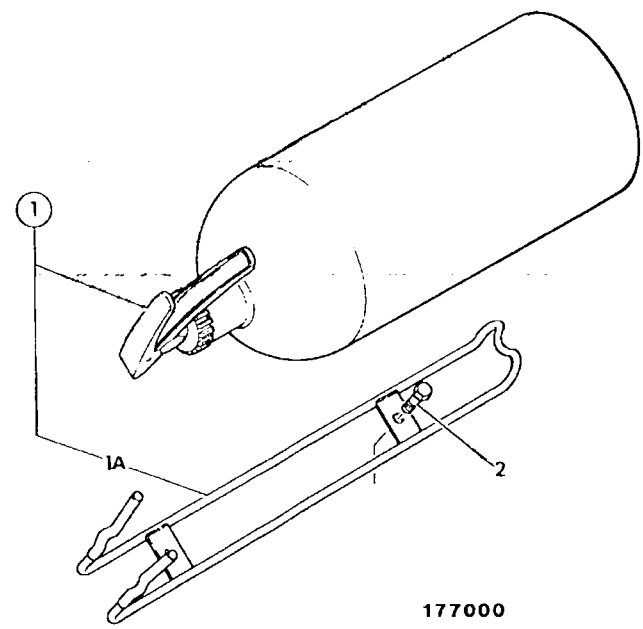

177000

C

C1 ELECTRICS, MAIN MACHINE
C2 ELECTRICS, ENGINE
C3 ELECTRICS, CAB

C1-1-1 ELECTRICS, MACHINE

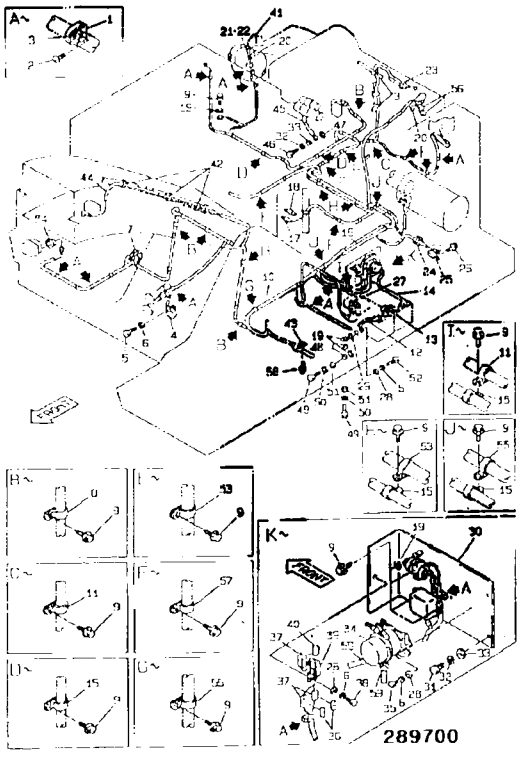

C1-1-2 ELECTRICS, MACHINE

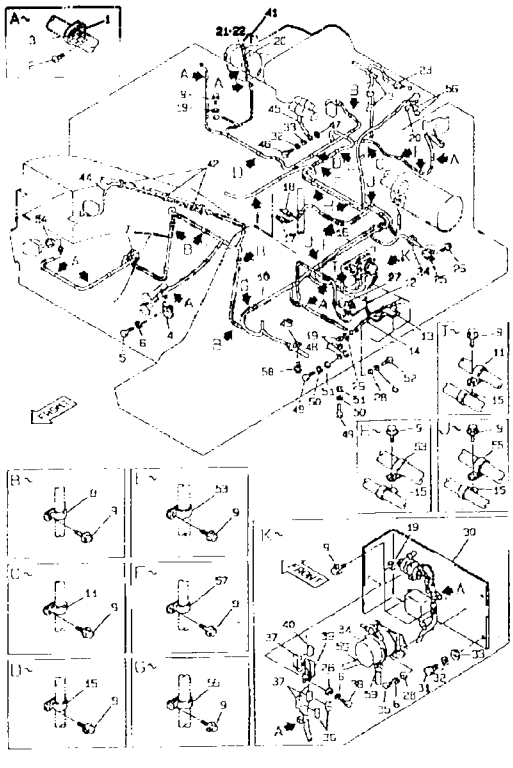

C1-2-1 ELECTRICS, CAB

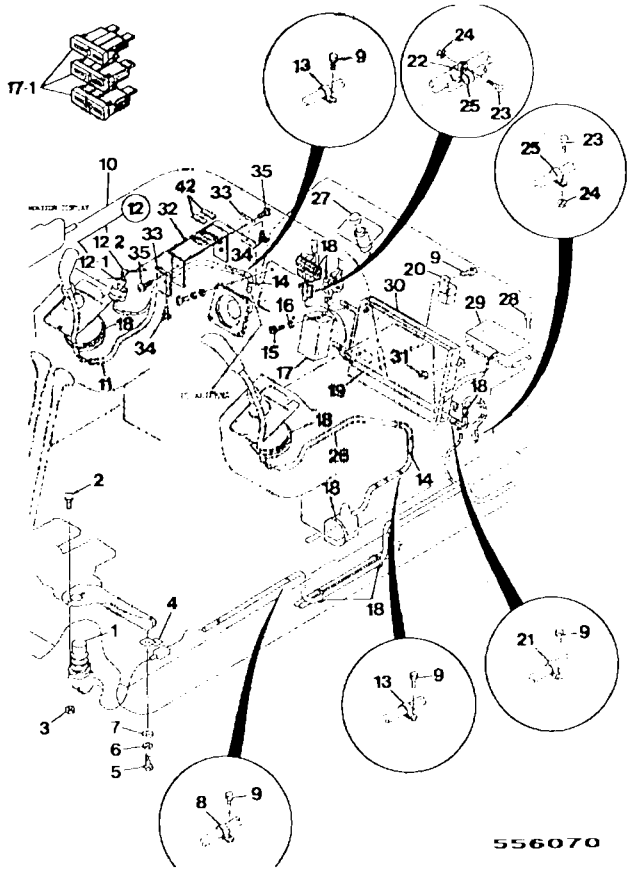

C1-3-1 BATTERY INSTALLATION, 24 VOLT

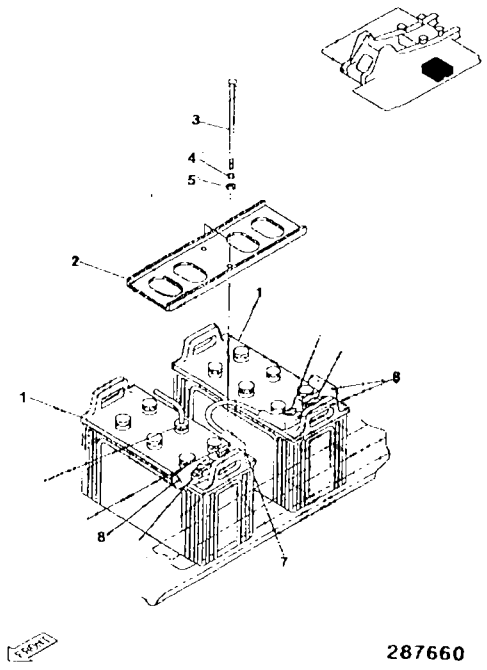

C1-3-3 BATTERY INSTALLATION, 24 VOLT

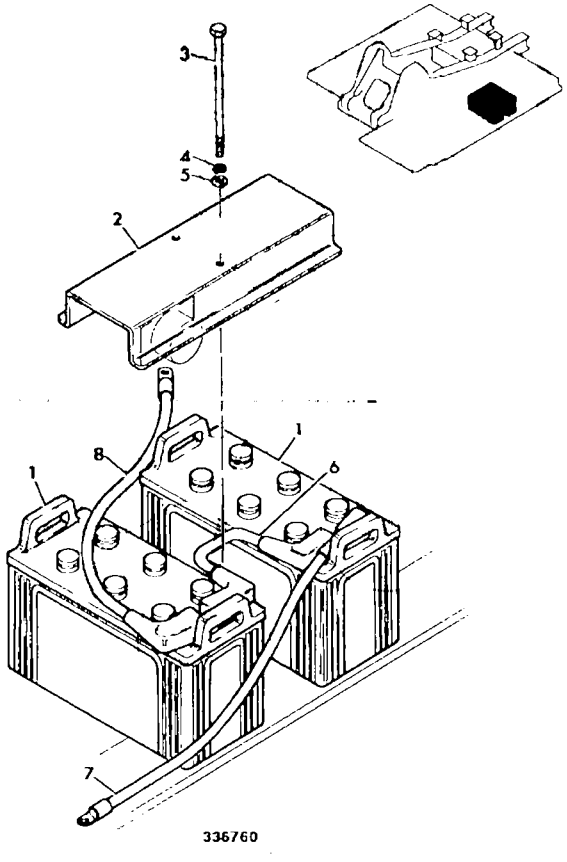

C1-4-1 LIGHT, WORKING, BOOM AND TOOLBOX

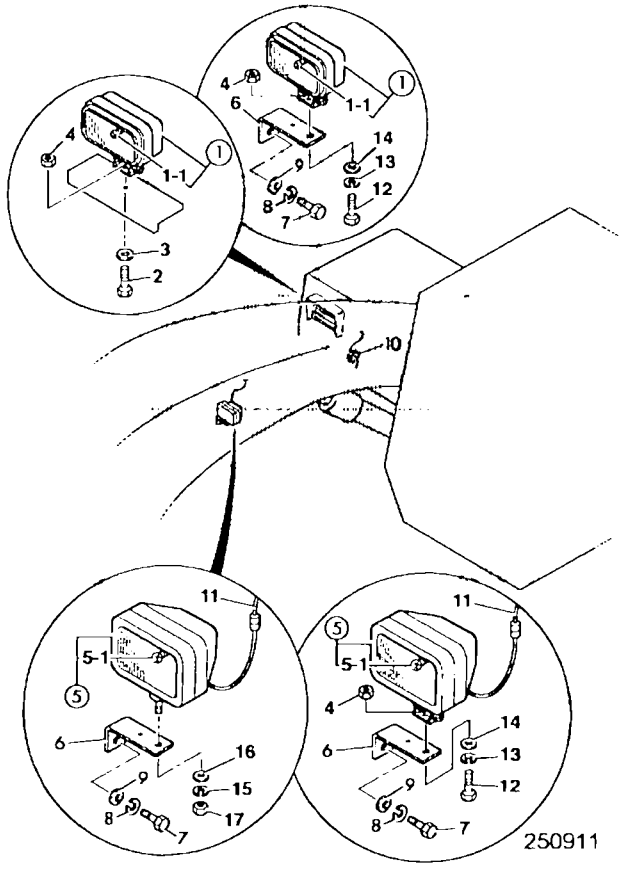

C1-4-2 LIGHT, WORKING, ADDITIONAL, EURO CAB

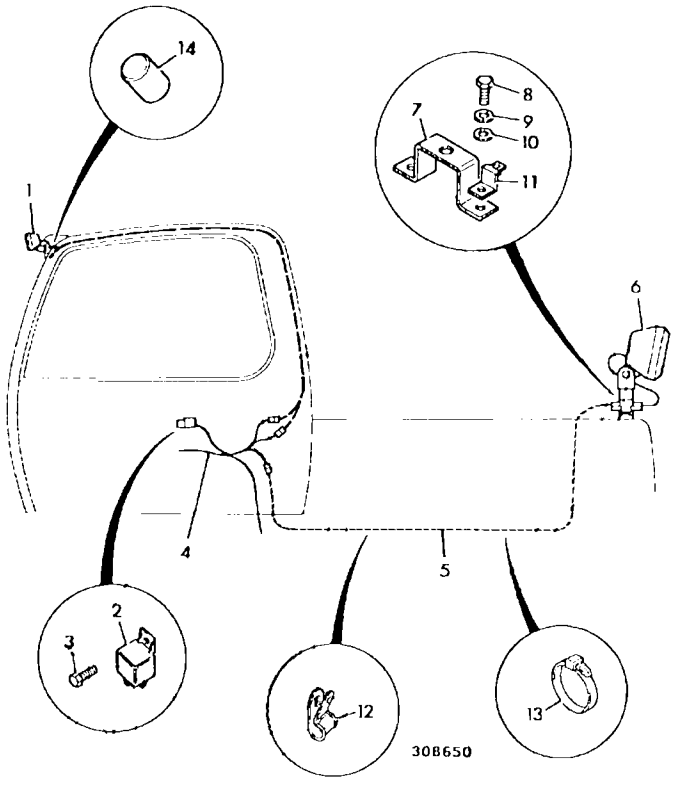

C1-5-1 PUMP, DIESEL, REFUELLING

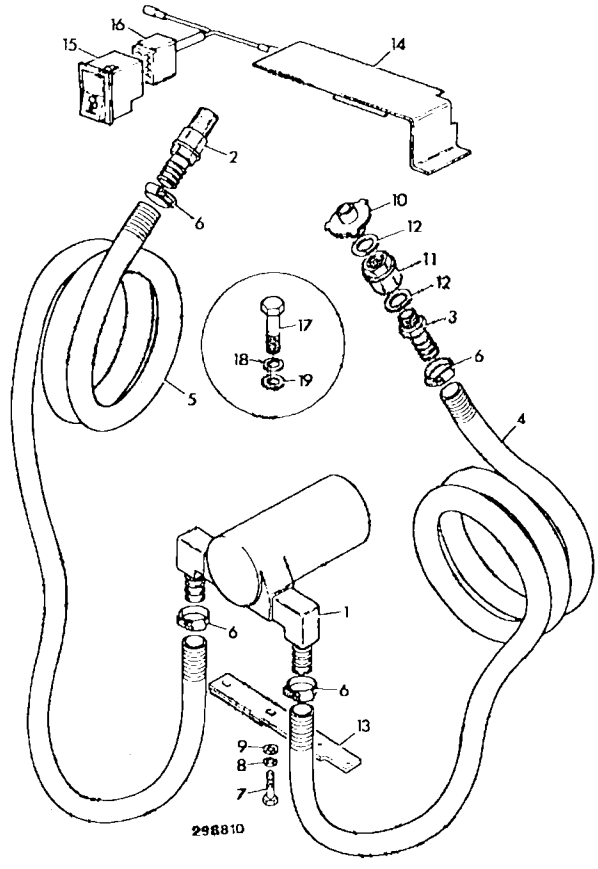

C1-10-1 ALARM, TRAVEL, OPTIONAL

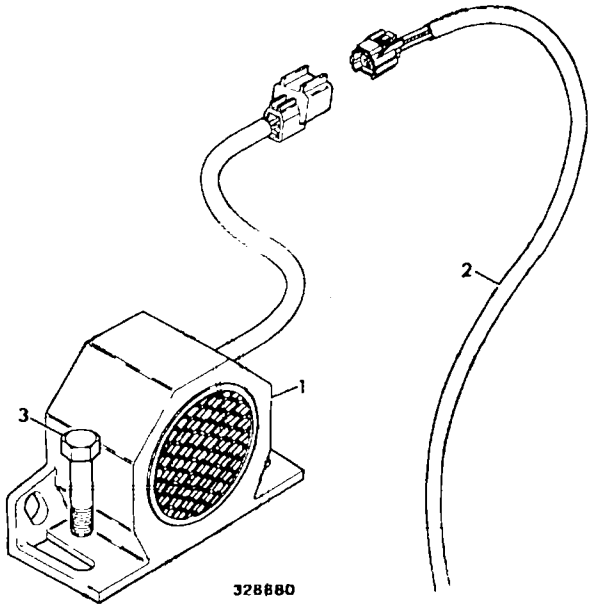

C2-1-1 ELECTRICAL EQUIPMENT

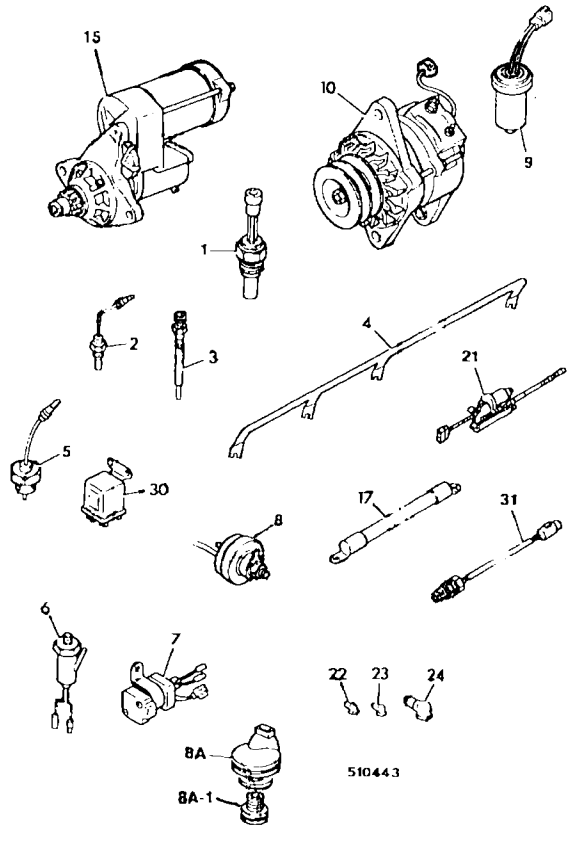

C2-3-1 ALTERNATOR

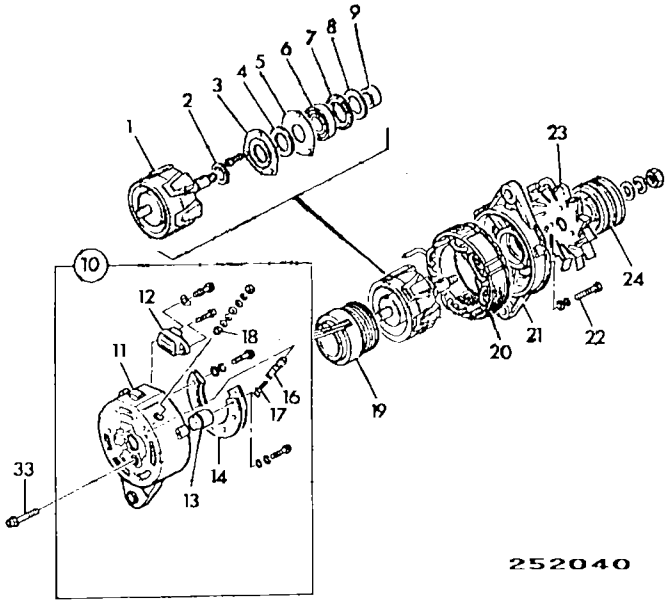

C2-3-2 ALTERNATOR

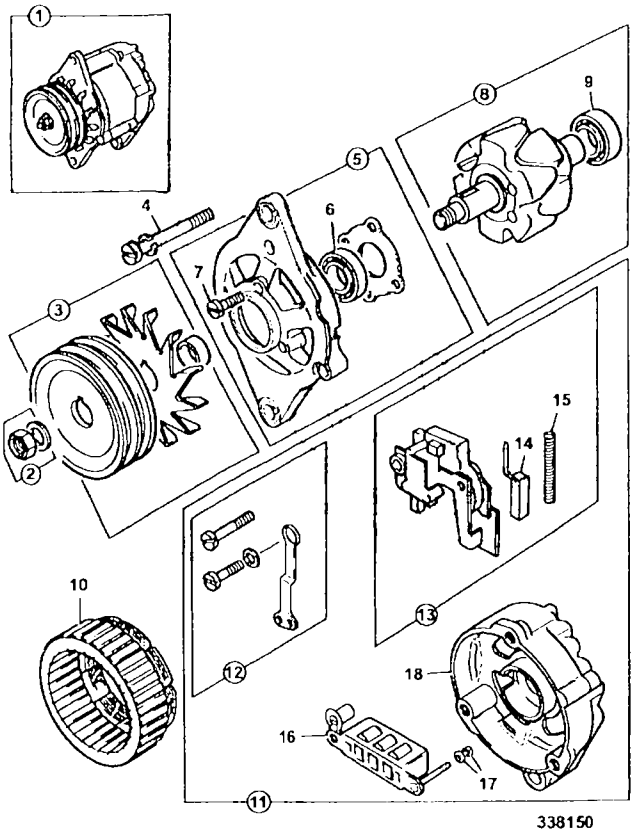

C2-5-1 MOTOR, STARTER

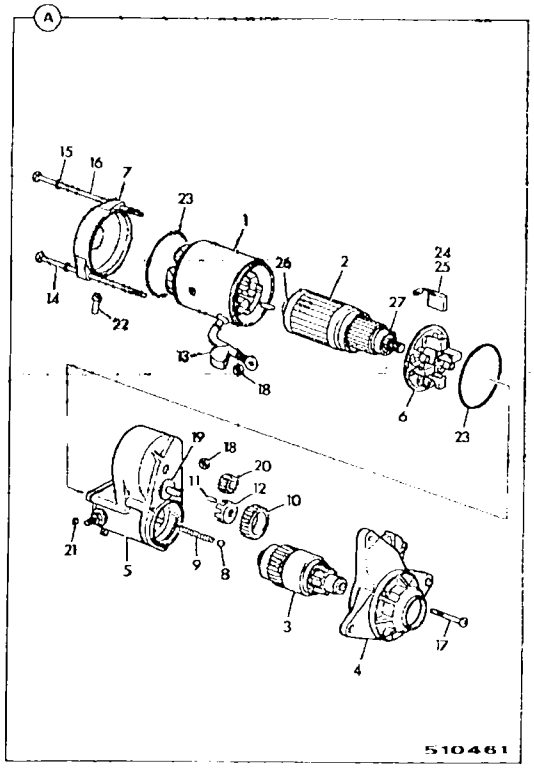

C2-6-1 MOUNTINGS & FITTINGS, ALTERNATOR & STARTER

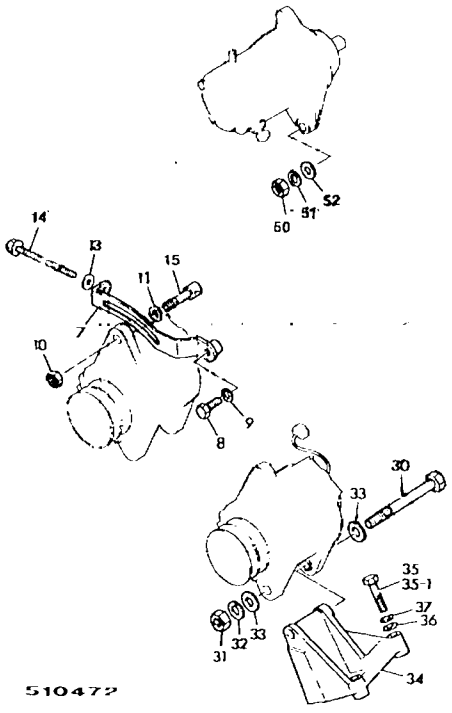

C3-1-1 GAUGE, SYSTEM, CONTROL MONITOR

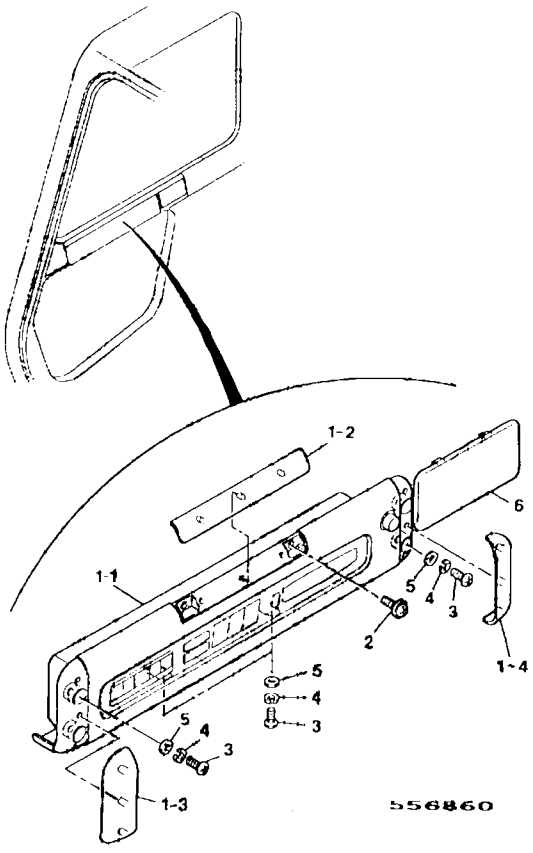

C3-2-1 SWITCH PANEL, CONSOLE BOX

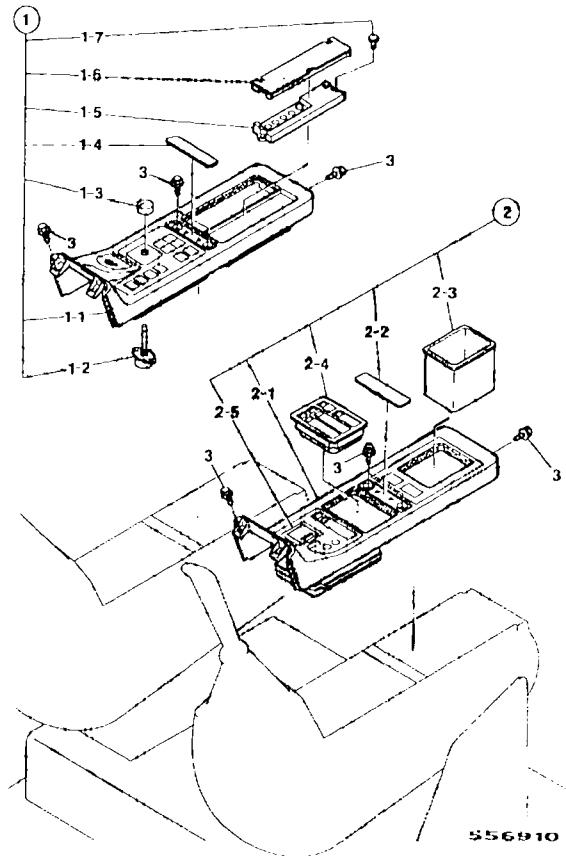

C3-5-1 AIR CONDITIONING, INSTALLATION

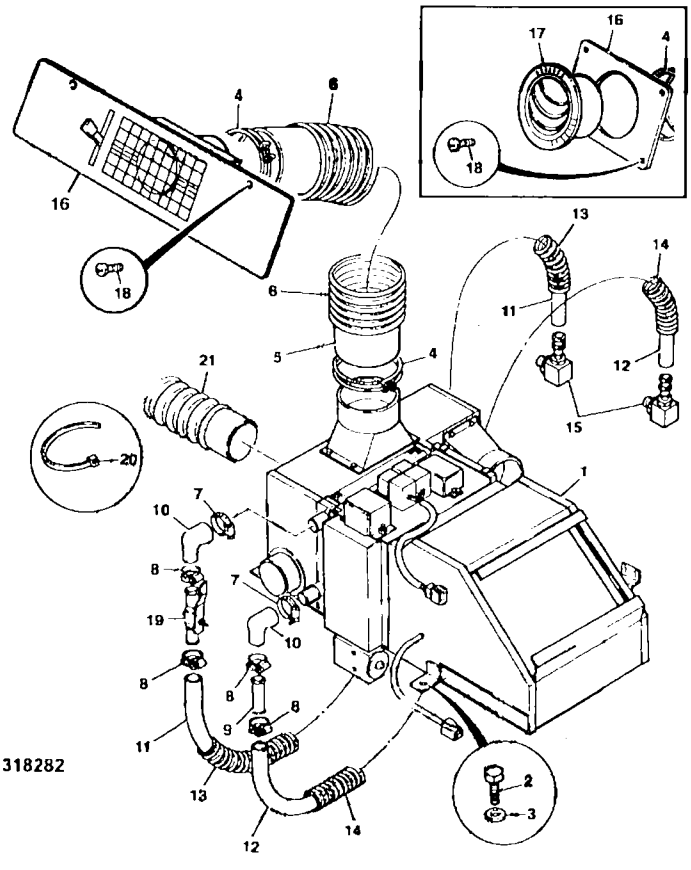

C3-5-2 AIR CONDITIONING, INSTALLATION

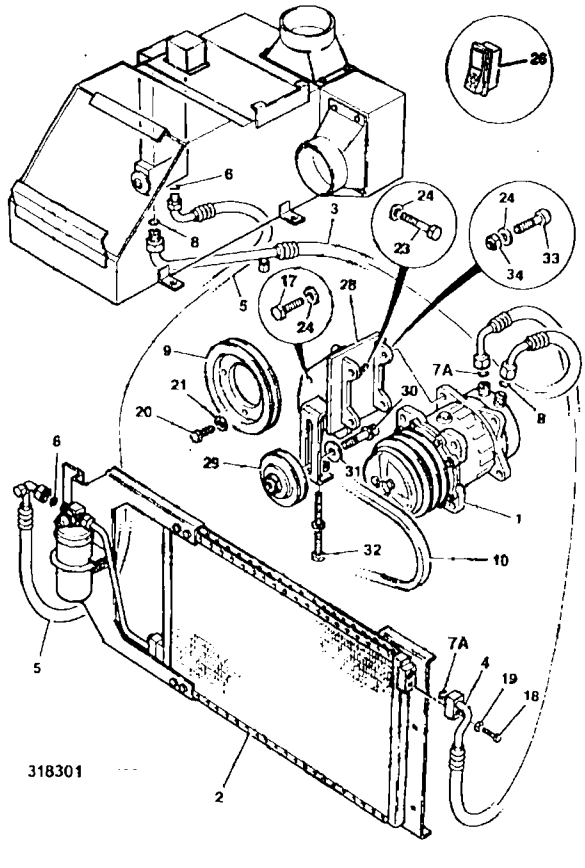

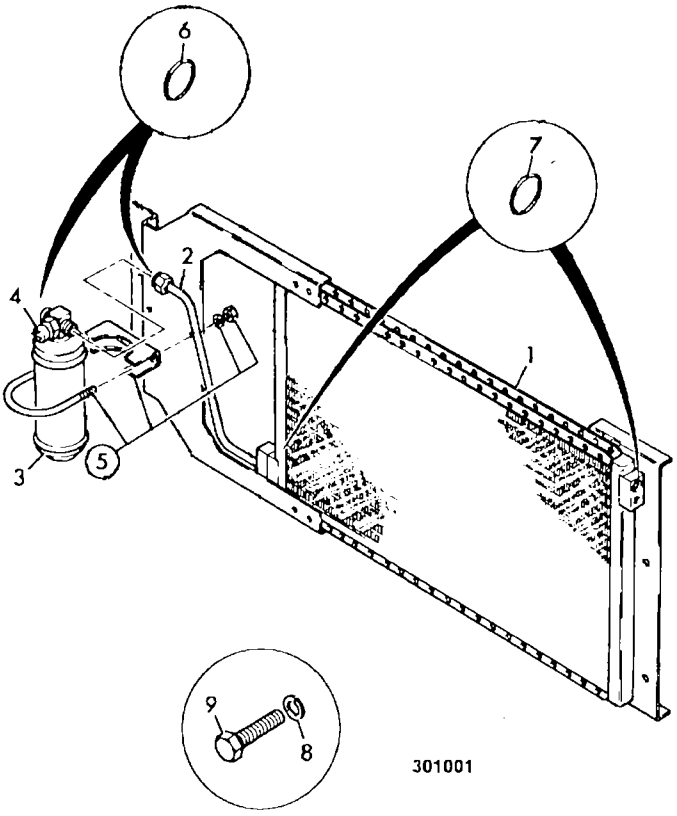

301001

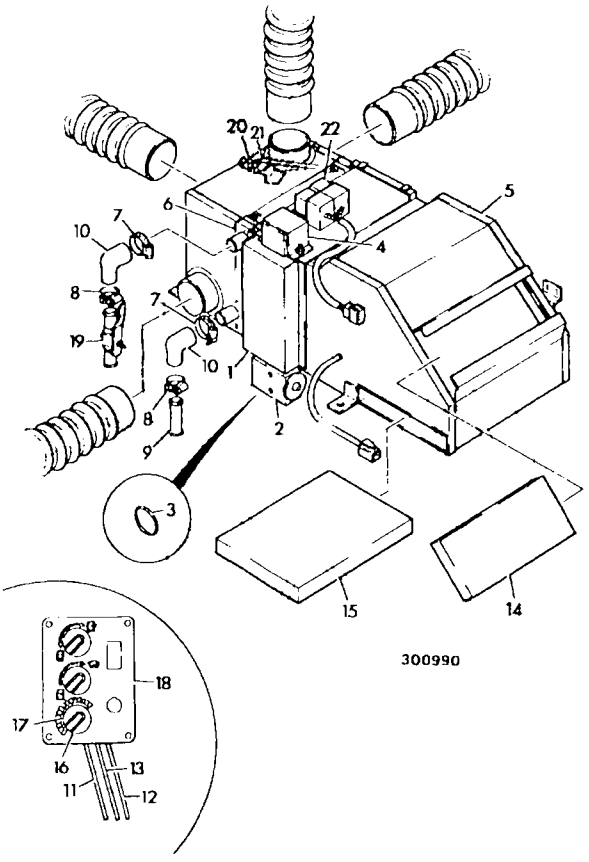

300990

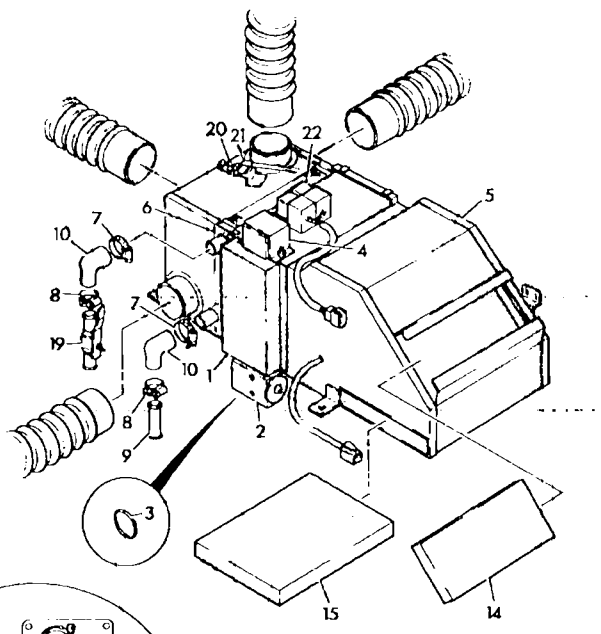

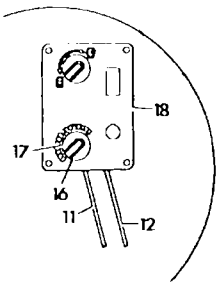

300992

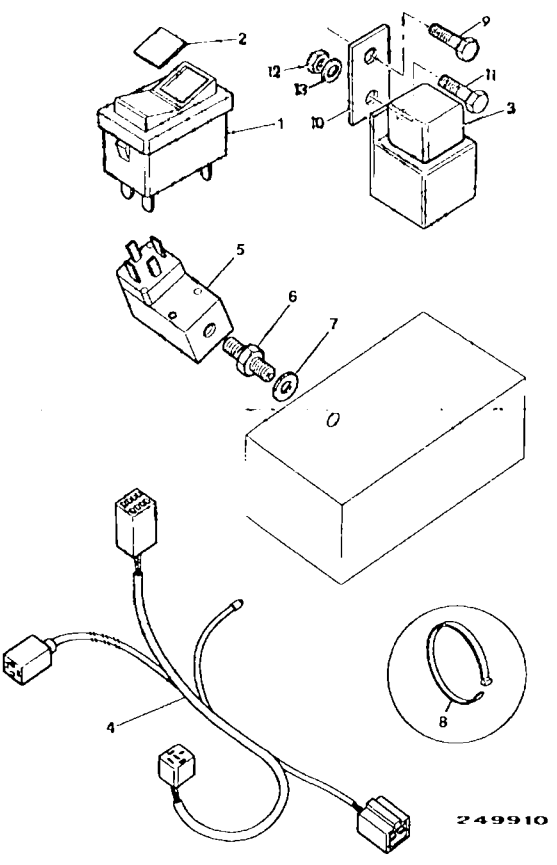

249910

C3-9-1 LIGHT, BEACON, HAZARD WARNING, AMBER

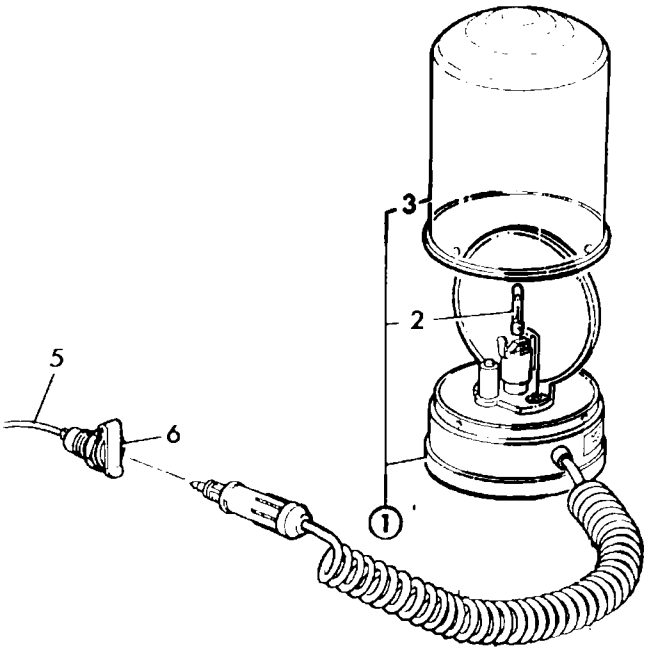

141593

C3-11-1 RADIO

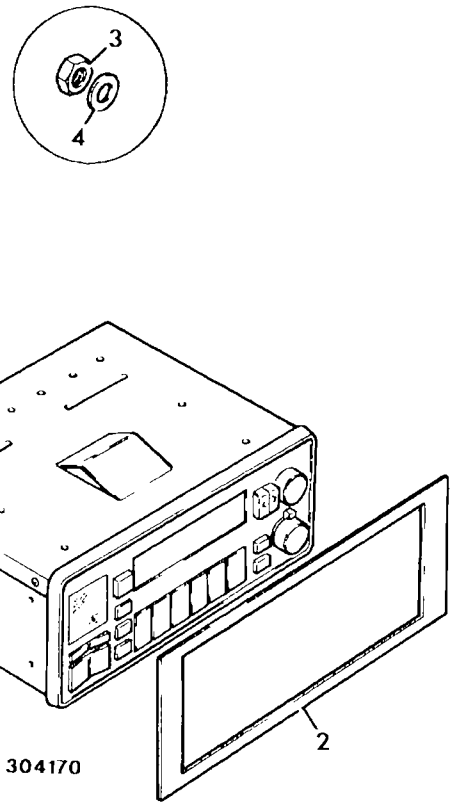

304170

D

D1 CONTROLS, MACHINE
D2 CONTROLS, ENGINE

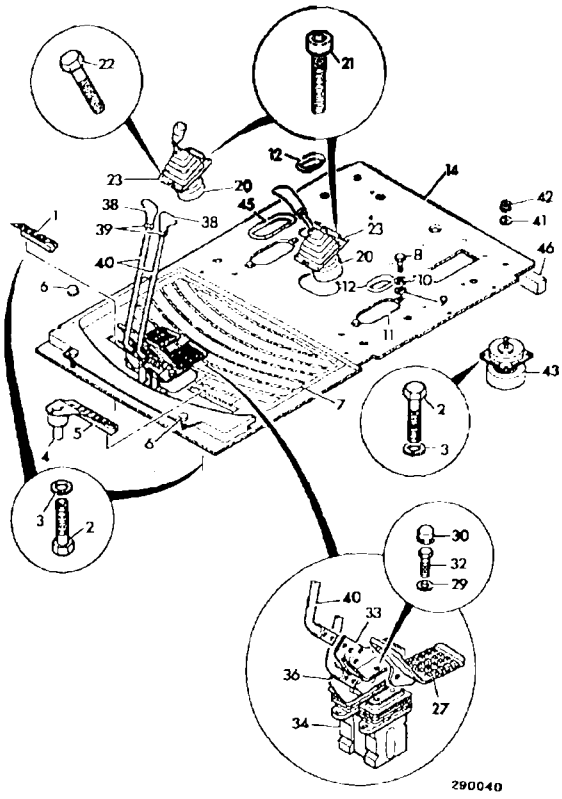

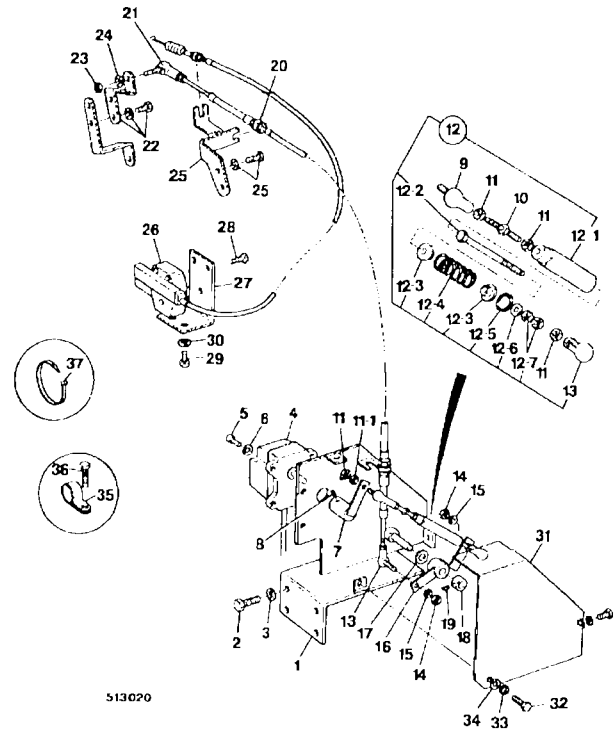

E

E1 HOSE & PIPEWORK
E2 PUMP/MOTOR & PUMP DRIVE
E3 VALVES & HYDRAULIC FILTERS
E4 RAMS

E1-1-1 CIRCUIT, PUMP SUCTION

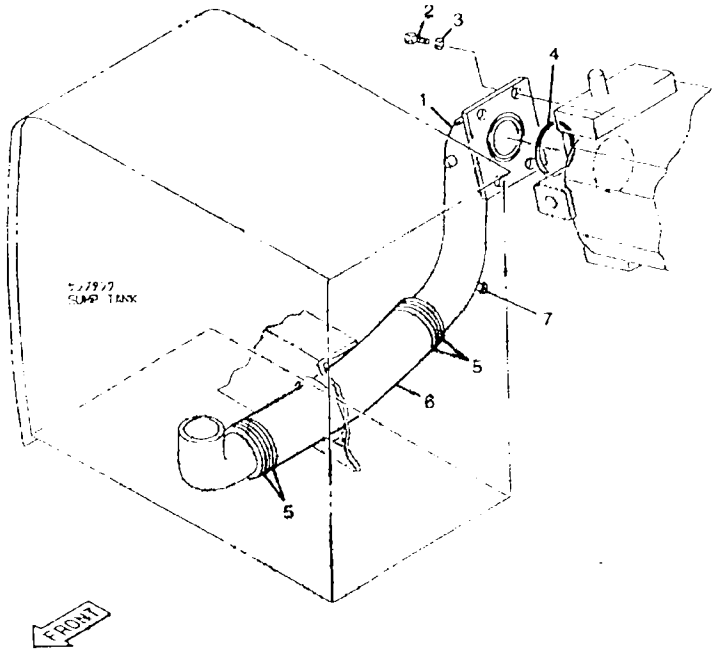

288210

E1-2-1 CIRCUIT, NEUTRAL PRESSURE

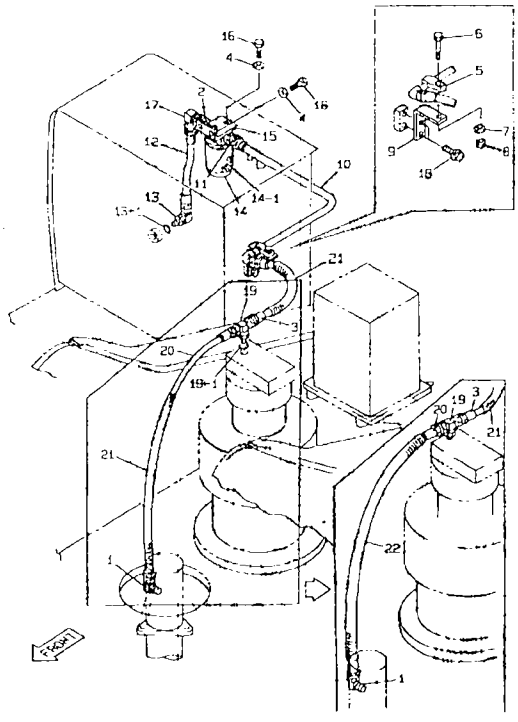

287410

E1-2-5 CIRCUIT, NEUTRAL PRESSURE

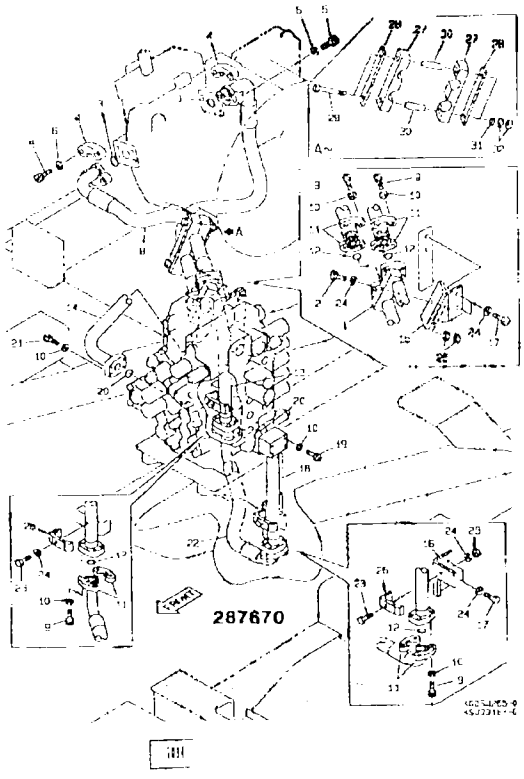

287670

E1-3-5 CIRCUIT, NEUTRAL, RETURN & OIL COOLER

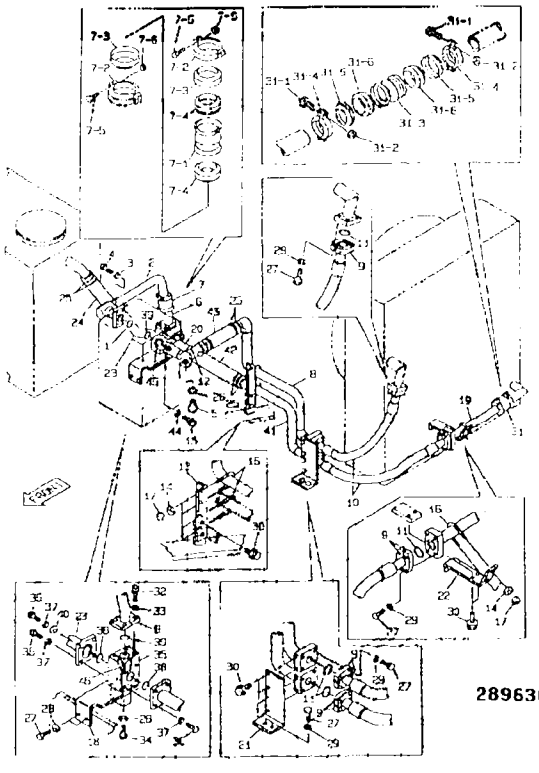

289630

E1-4-5 CIRCUIT, TRACK, MAINFRAME

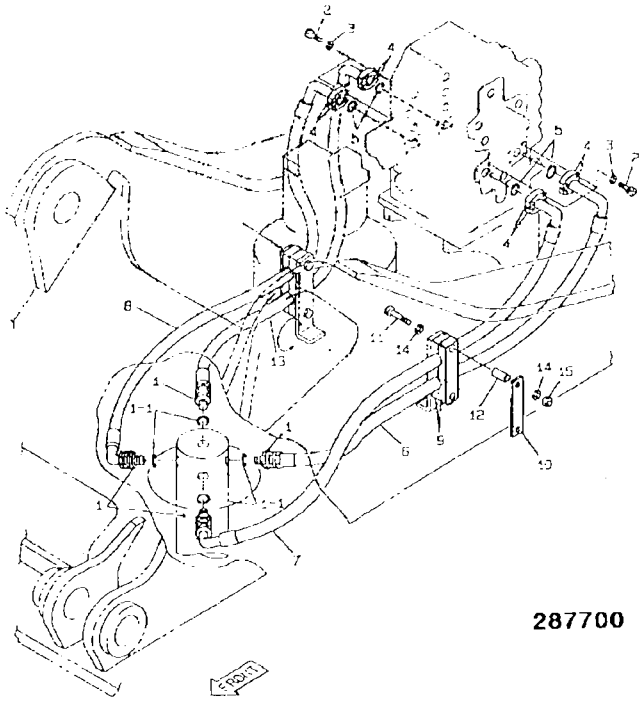

E1-5-1 CIRCUIT, TRACK, UNDERCARRIAGE

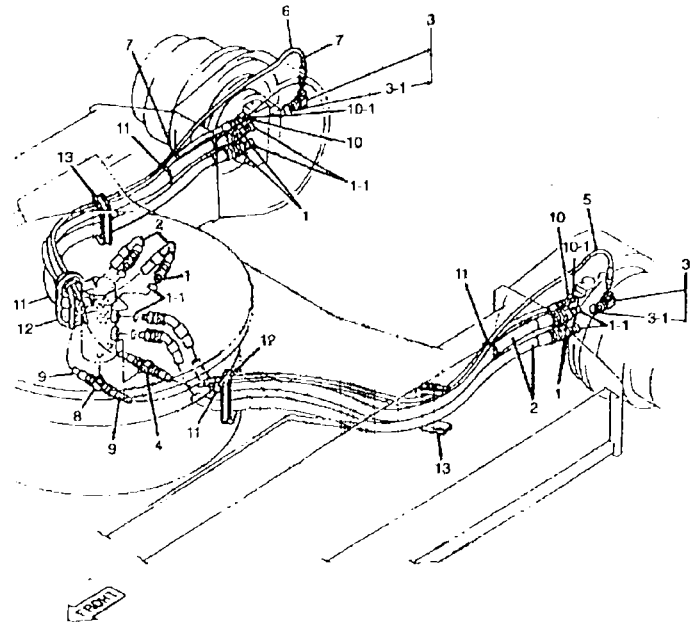

E1-6-5 CIRCUIT, SWING

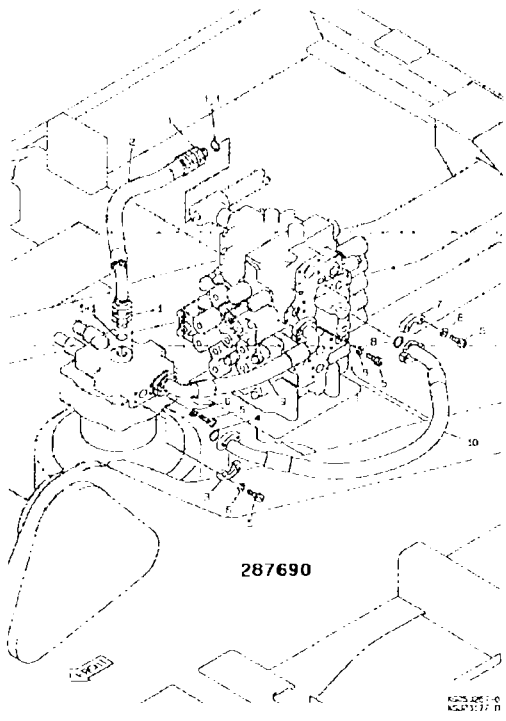

E1-8-1 CIRCUIT, BYPASS, HYDRAULIC FILTER

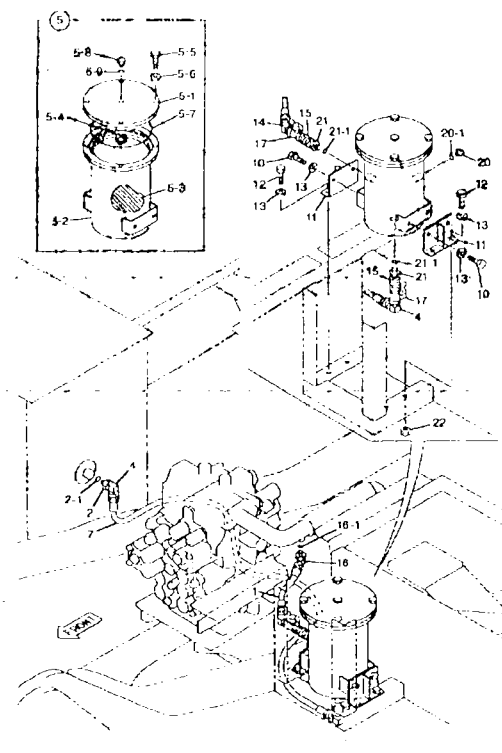

E1-8-2 CIRCUIT, BYPASS, HYDRAULIC FILTER

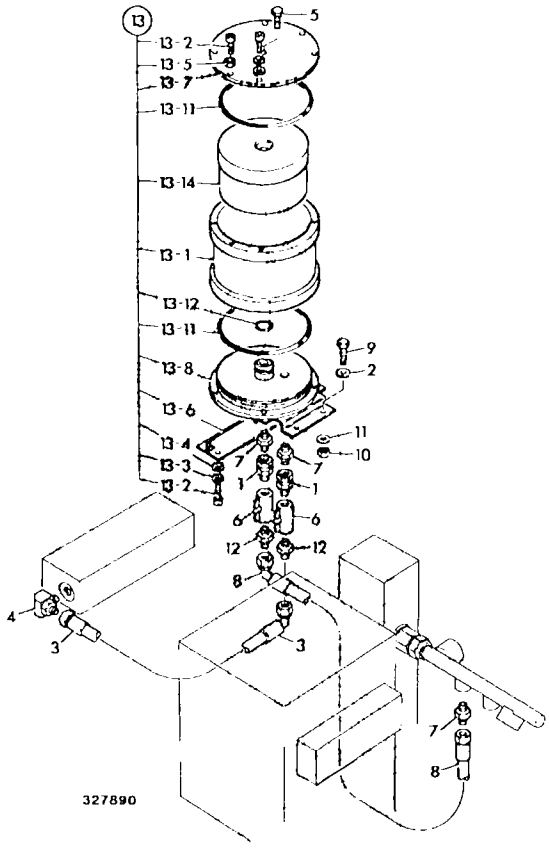

E1-11-1 CIRCUIT, SERVO, NEUTRAL FIG 1

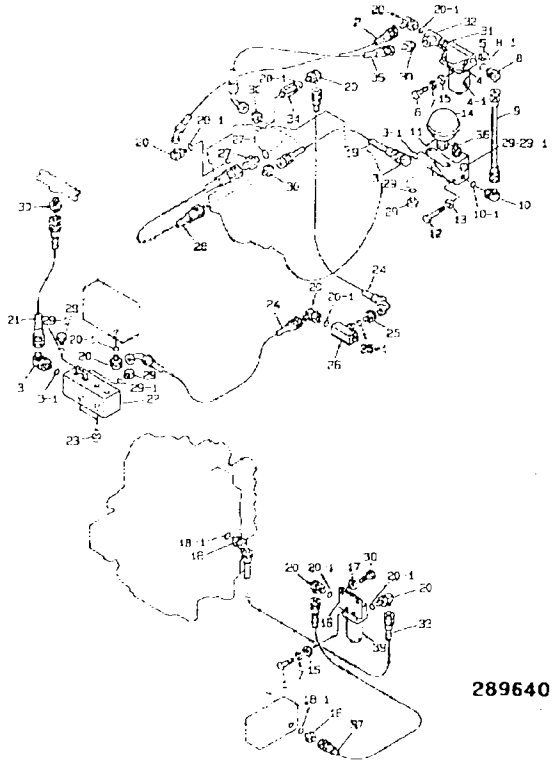

E1-11-10 CIRCUIT, SERVO, NEUTRAL FIG 2

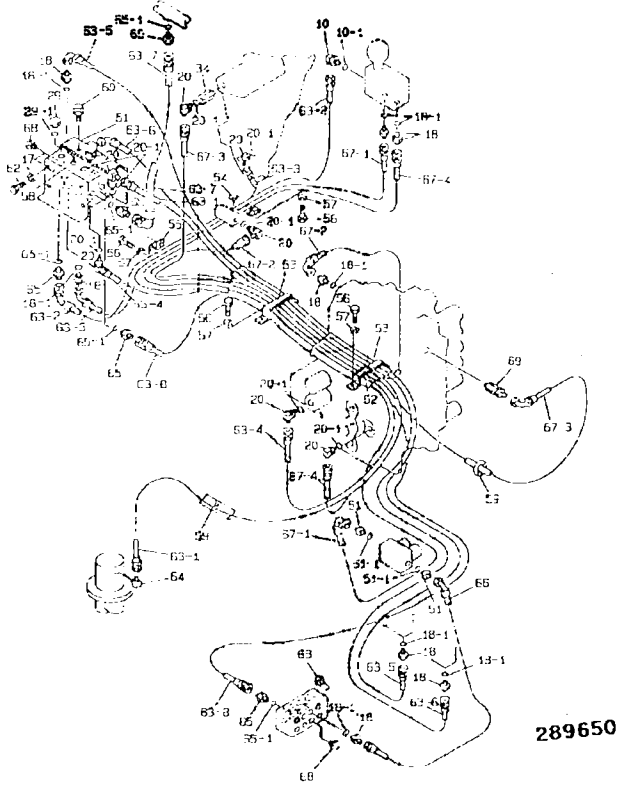

E1-11-20 CIRCUIT, SERVO, NEUTRAL FIG 3

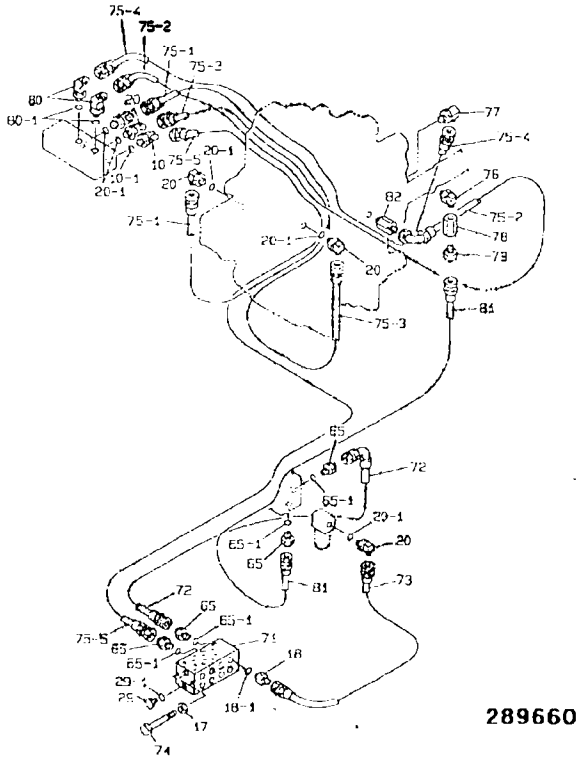

E1-13-10 CIRCUIT, SERVO, CONTROLS SIDE FIG 2

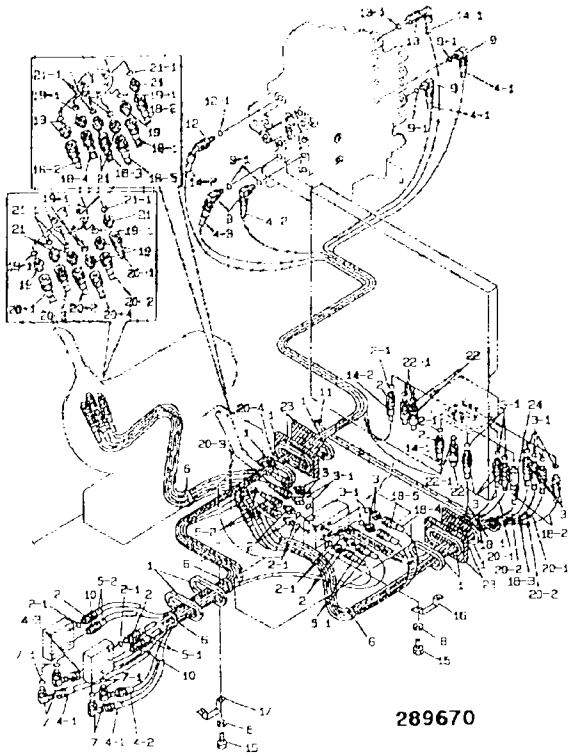

E1-13-20 CIRCUIT, SERVO, CONTROLS SIDE FIG 3

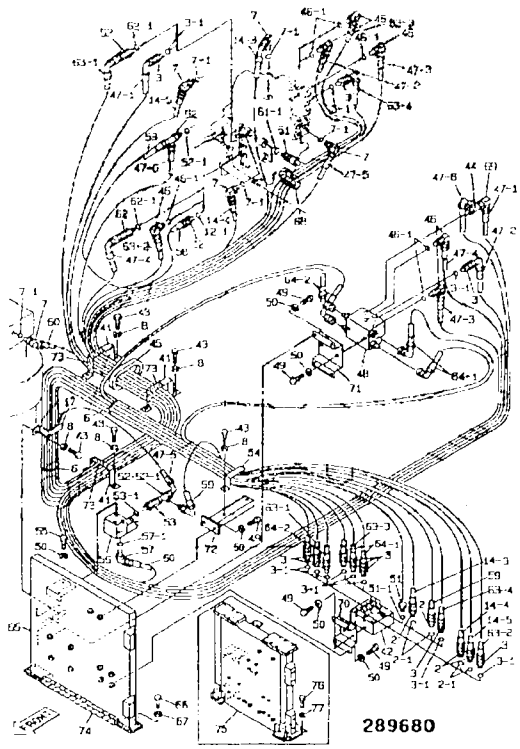

E1-20-5 CIRCUIT, BOOM RAM, MAINFRAME

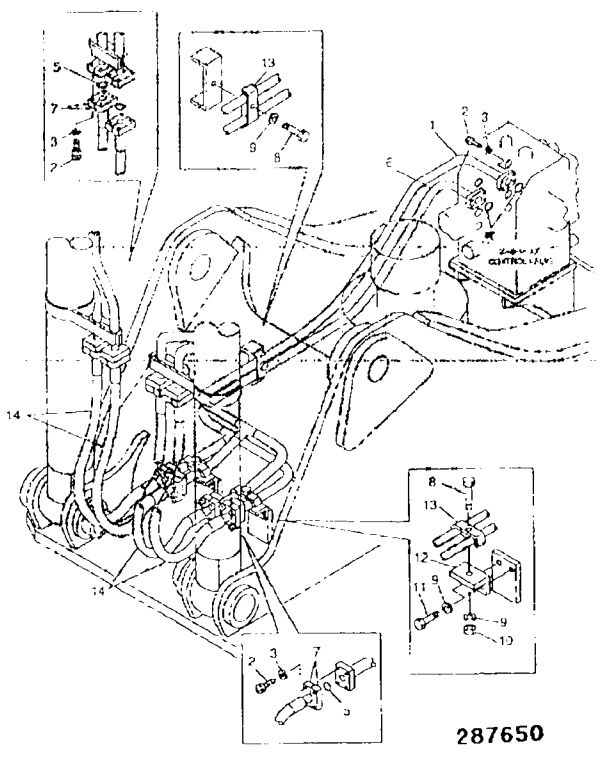

E1-21-5 CIRCUIT, DIPPER & BUCKET

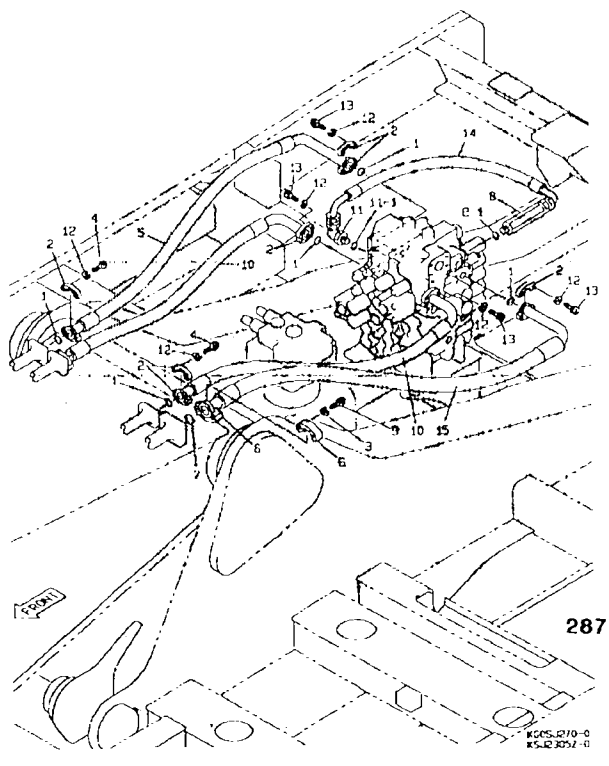

E1-22-1 CIRCUIT, DIPPER RAM, MONOBOOM

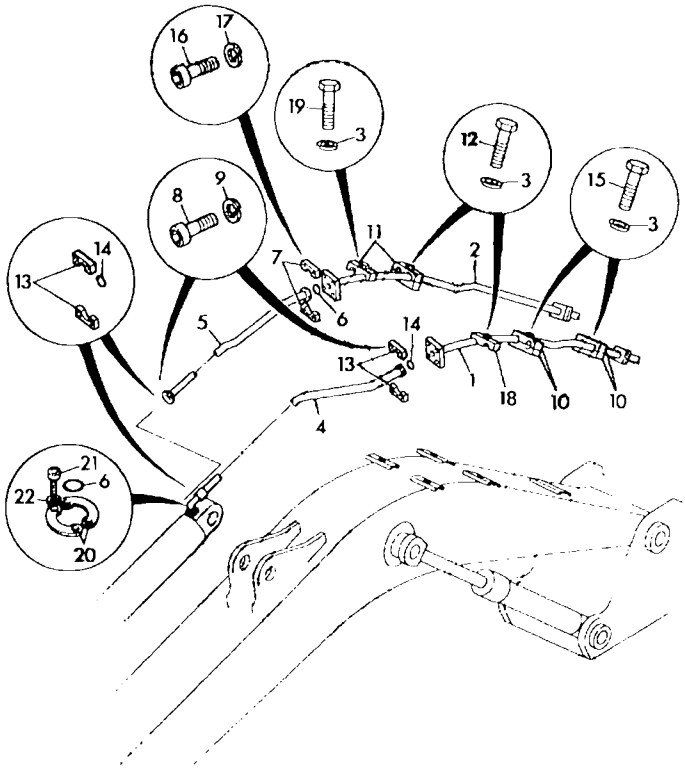

287420

E1-23-1 CIRCUIT, BUCKET RAM

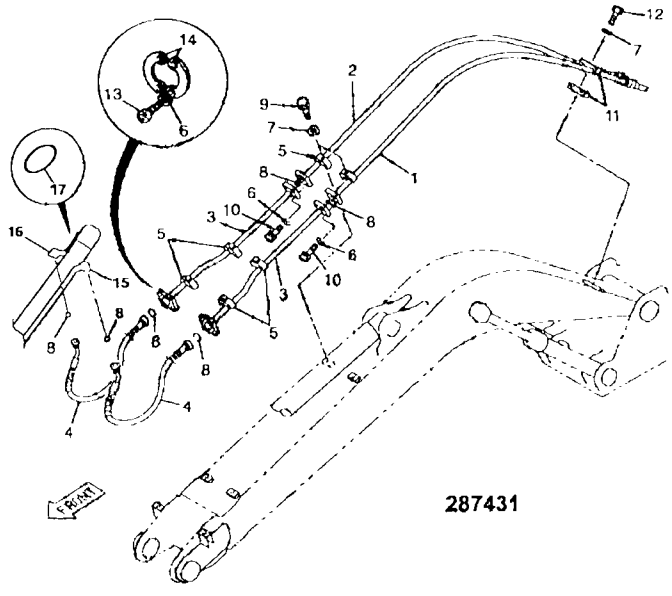

287431

E1-24-1 CIRCUIT, BOOM RAM, NONE HBCV

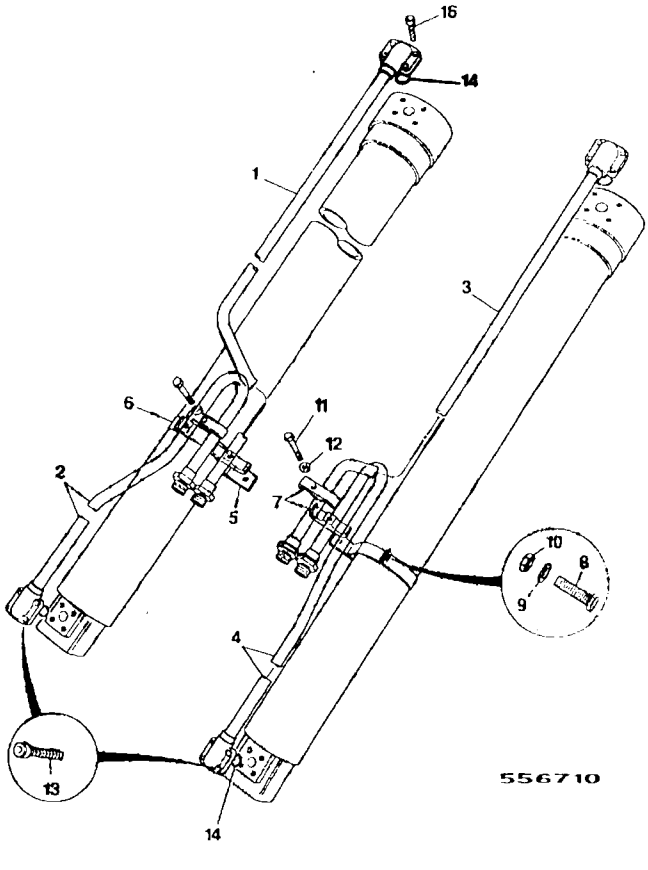

556710

E1-24-10 CIRCUIT, BOOM RAM, WITH HBCV

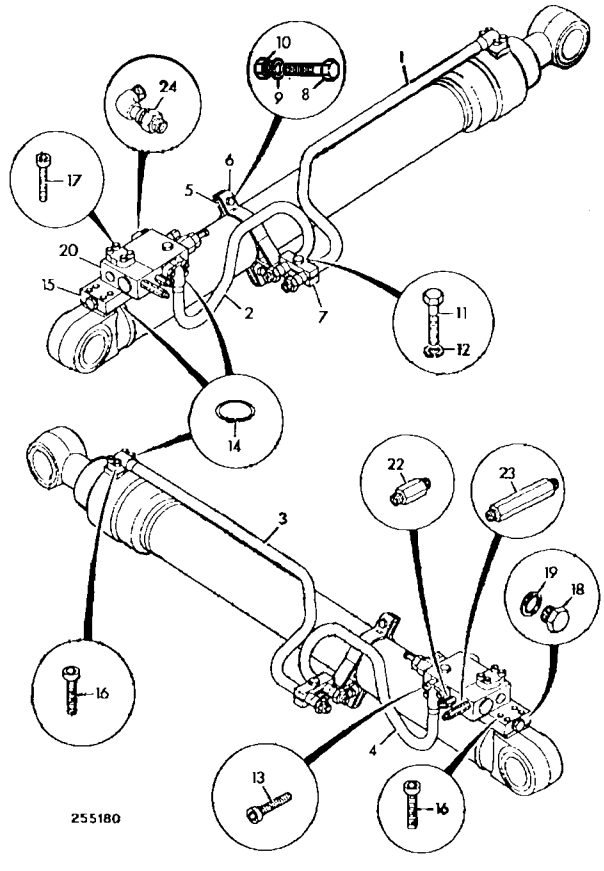

255180

E1-25-1 CIRCUIT, BOOM & DIPPER O/LOAD, HBCV SUPPLEMENT

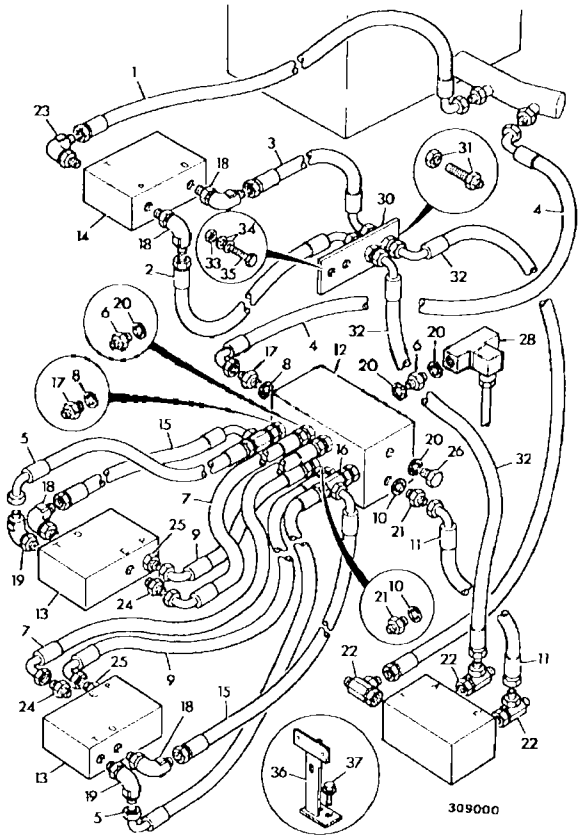

E1-30-1 CIRCUIT, AUXILIARY/HAMMER, MAINFRAME LOW FLOW

Illustration Not Available at Time of Publication

E1-32-1 CIRCUIT, BREAKER LINE, MONOBOOM

Illustration Not Available at Time of Publication

E1-32-5 CIRCUIT, HAMMER, LOWFLOW, MONO BOOM

Illustration Not Available at Time of Publication

E1-33-1 AUXILIARY/BREAKER, COMBINED FLOW

Illustration Not Available at Time of Publication

E1-35-1 AUXILIARY CIRCUIT, FULL FLOW, 2.63M DIPPER

Illustration Not Available at Time of Publication

E1-35-2 AUXILIARY CIRCUIT, FULL FLOW, 3.23M DIPPER

Illustration Not Available at Time of Publication

E1-40-1 CIRCUIT, AIR

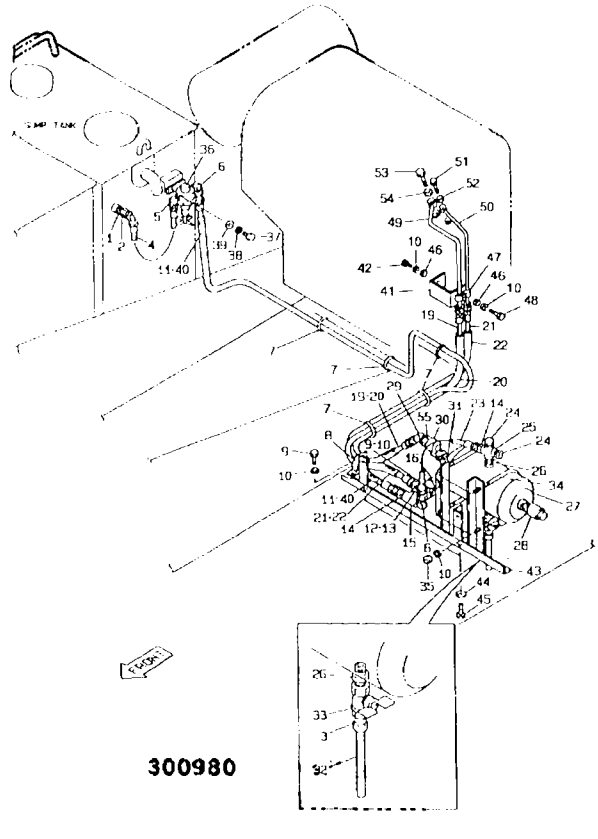

E1-40-2 CIRCUIT, AIR, PRESSURIZED, HYDRAULIC TANK

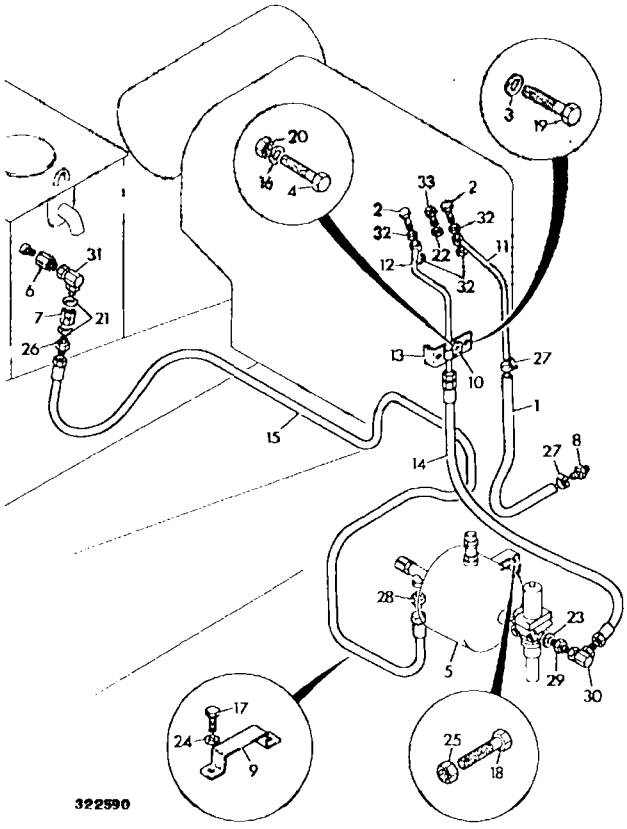

E2-1-1 PUMP, PISTON, MAIN HYDRAULIC PUMP, DRIVE GROUPS

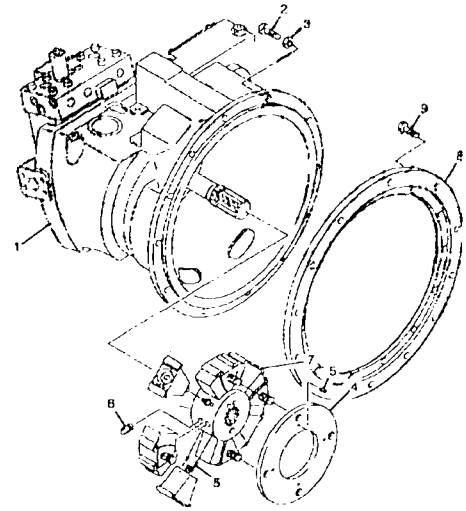

E2-1-3 PUMP, PISTON, MAIN HYDRAULIC PUMP, DRIVE GROUPS

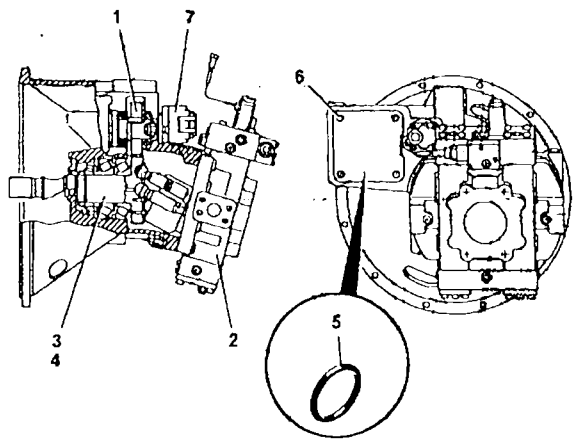

E2-1-4 REGULATOR ASSEMBLY, MAIN HYDRAULIC PUMP, FIG 1

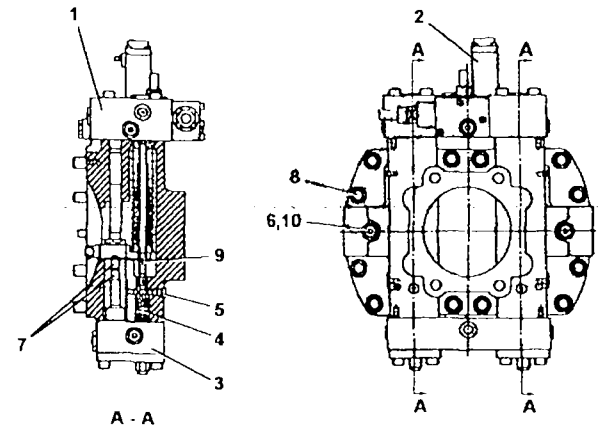

E2-1-5 REGULATOR ASSEMBLY, MAIN HYDRAULIC PUMP, FIG 2

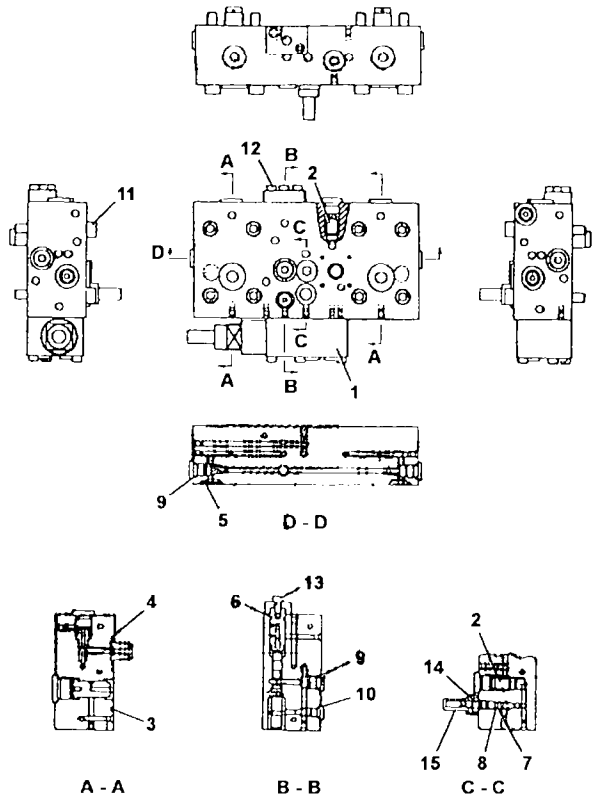

333310

E2-1-6 COVER ASSEMBLY, MAIN HYDRAULIC PUMP

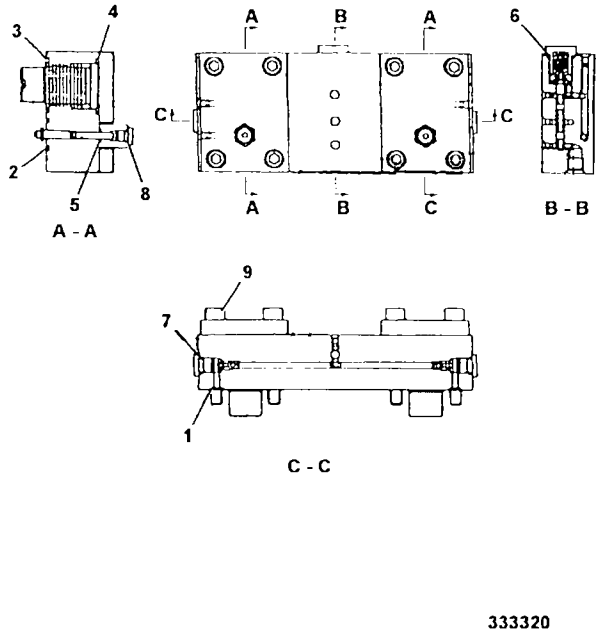

333320

E2-1-7 THROTTLE, VALVE ASSEMBLY

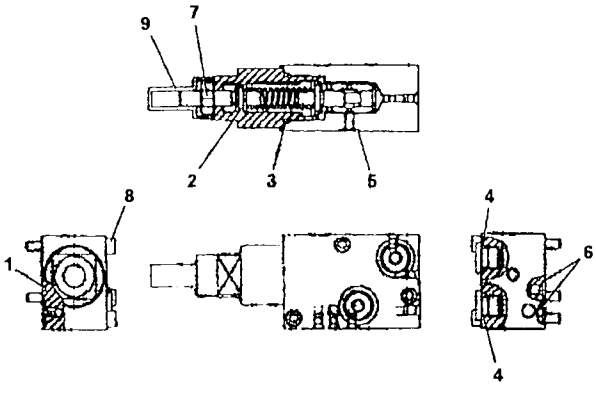

333340

E2-1-8 PROPORTIONAL, CONTROL VALVE

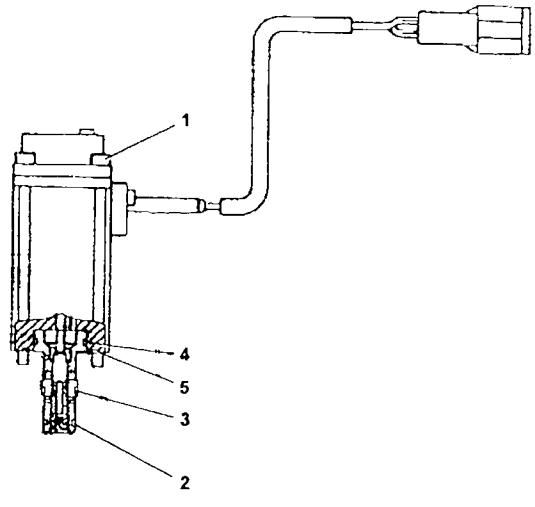

333330

E2-1-9 ROTARY GROUP, DRIVE AND IDLE GROUP

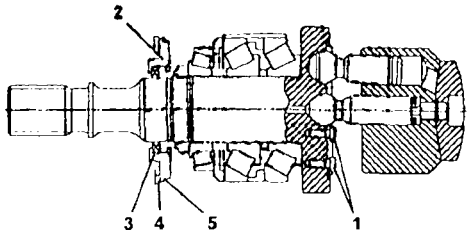

DRIVE

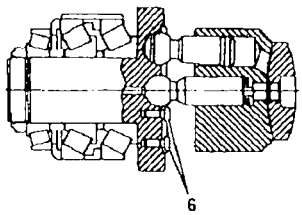

IDLE

333350

E2-1-10 GEAR ASSEMBLY

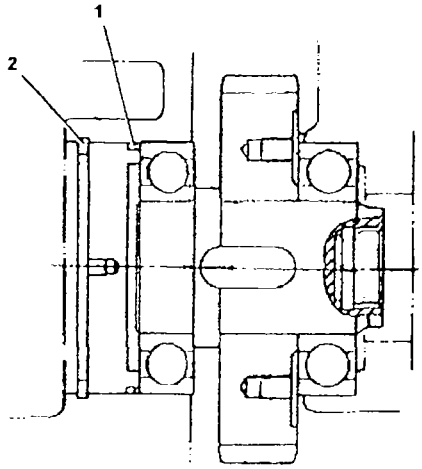

333360

E2-1-11 GEAR PUMP, SERVO

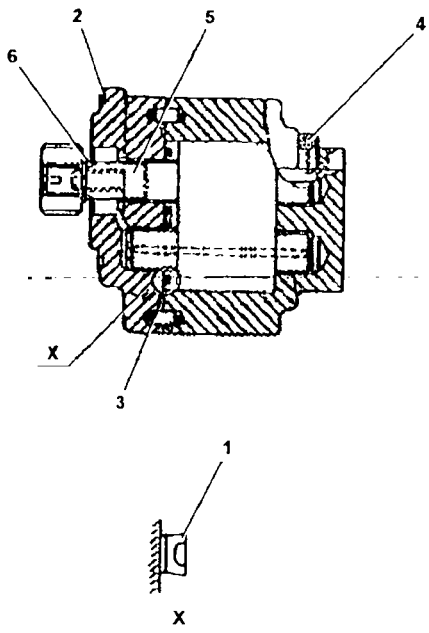

333370

E3-1-1 VALVE, ASSEMBLY, & MOUNTING

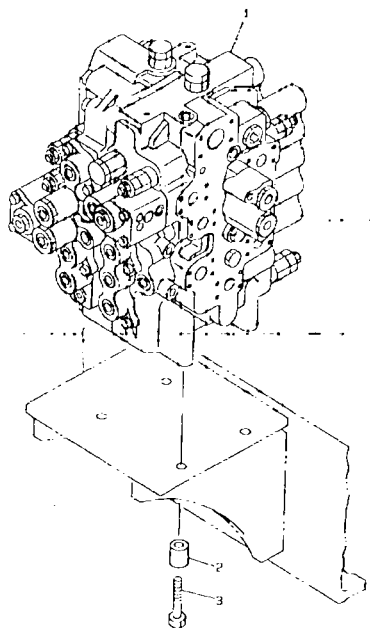

285290

E3-2-1 VALVE, CONTROL, COMPONENTS FIG 1

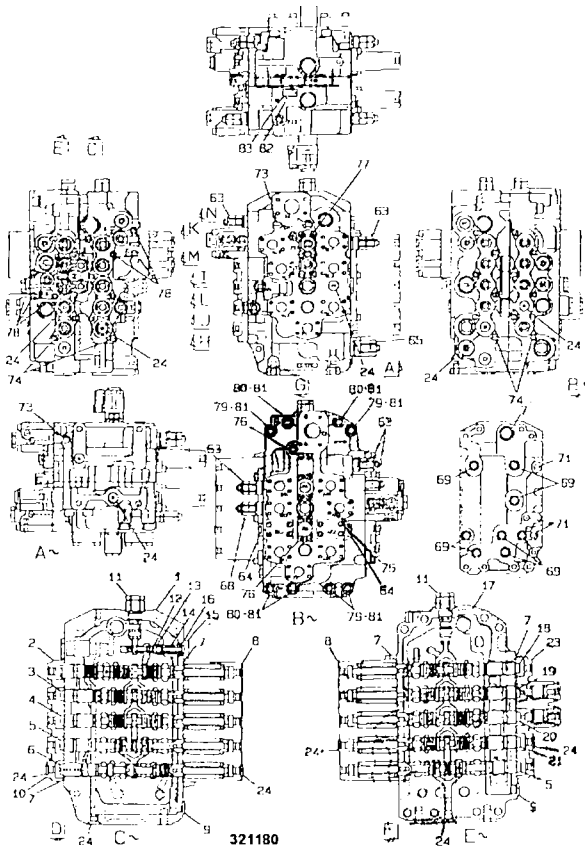

E3-2-2 VALVE, CONTROL, COMPONENTS FIG 2

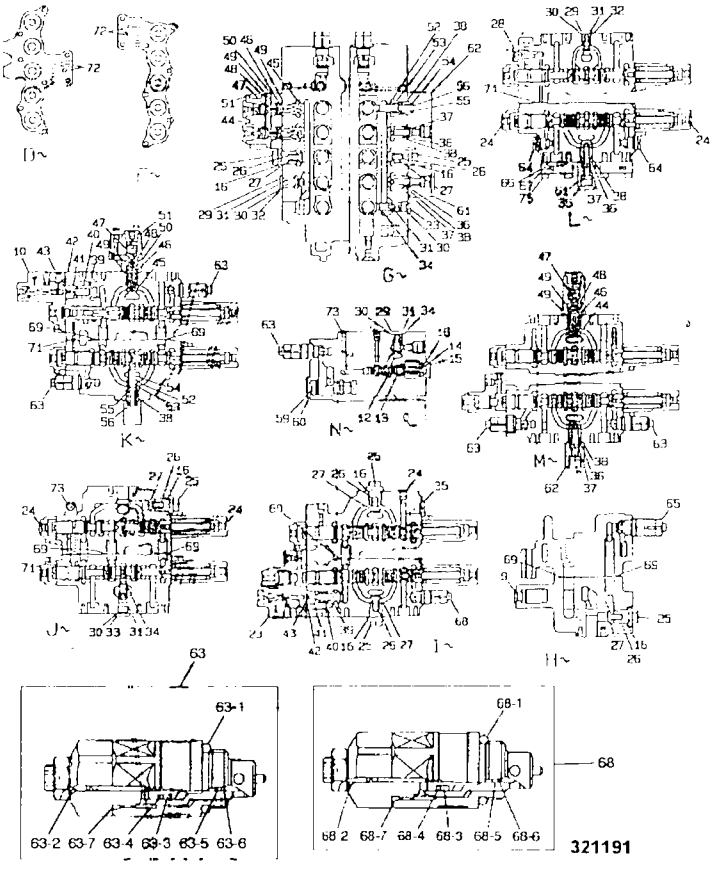

E3-2-45 VALVE, RELIEF, SERVICE PORT

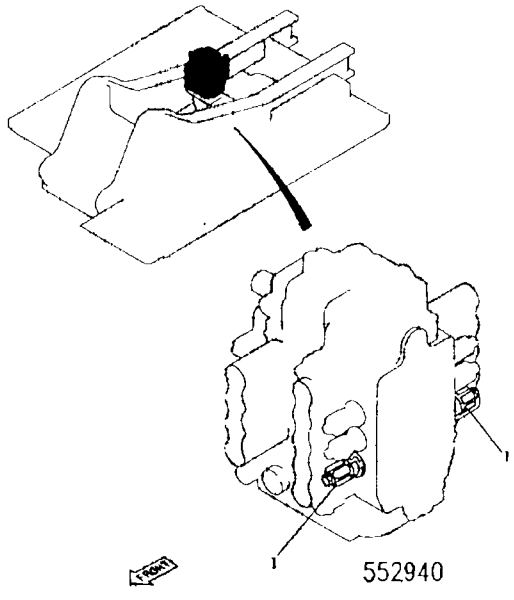

E3-6-1 VALVE, HAND CONTROL, SERVO

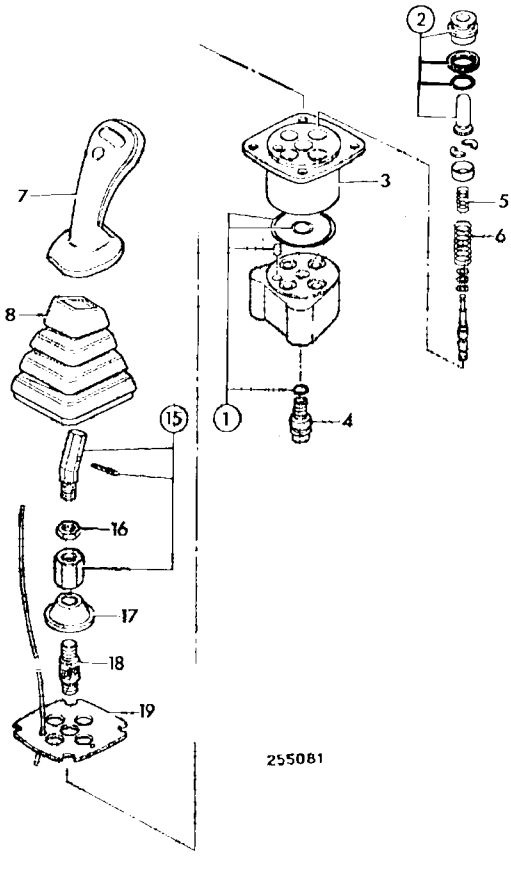

E3-6-3 VALVE, HAND CONTROL, SERVO

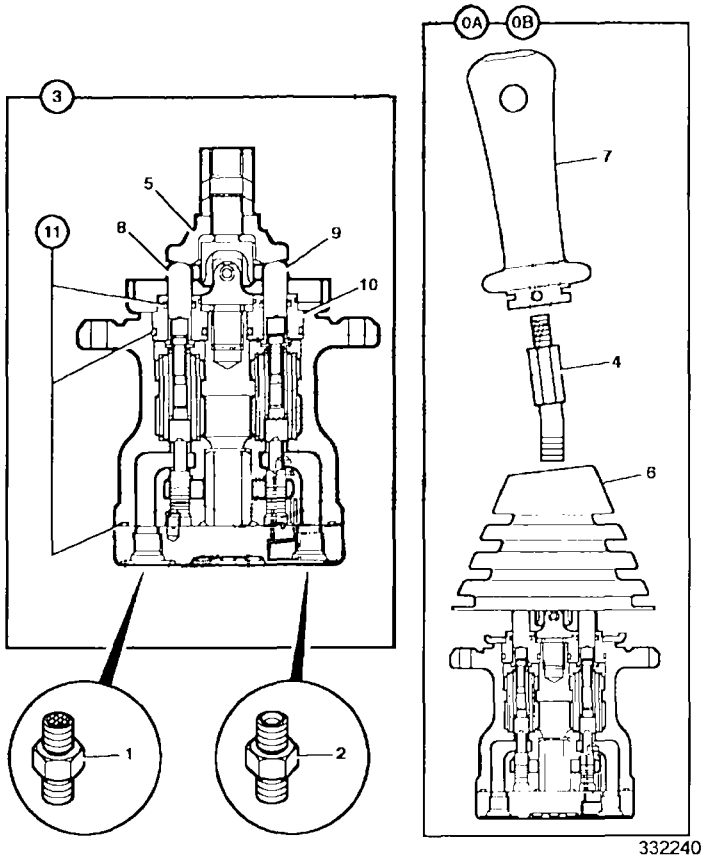

E3-7-2 VALVE, FOOT CONTROL, SERVO

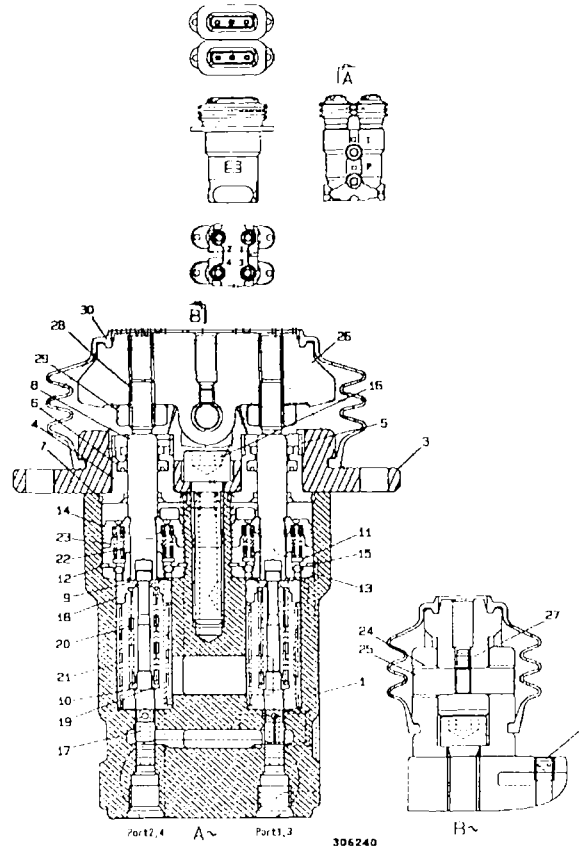

E3-8-1 VALVE SOLENOID

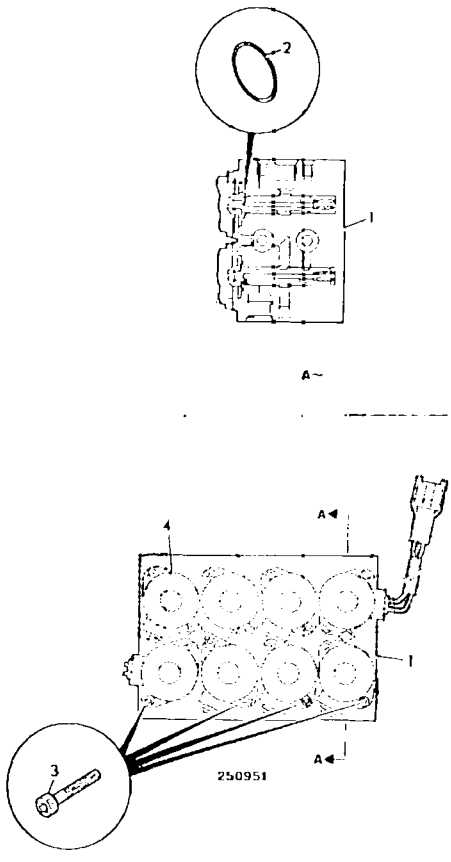

E3-9-1 VALVE, SOLENOID

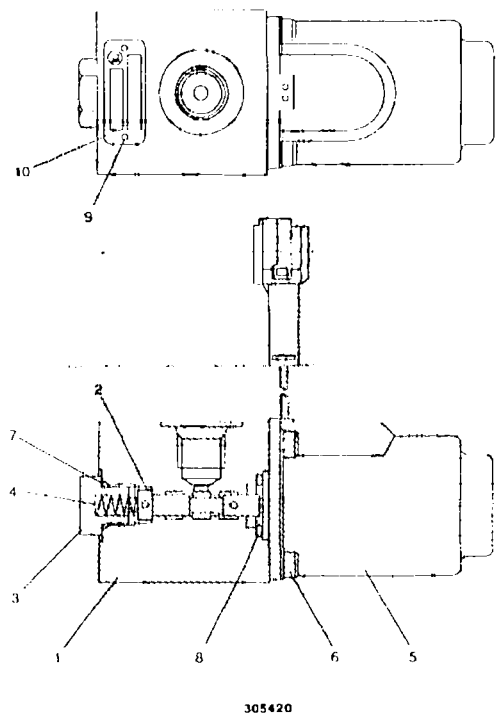

E3-9-2 VALVE, SOLENOID

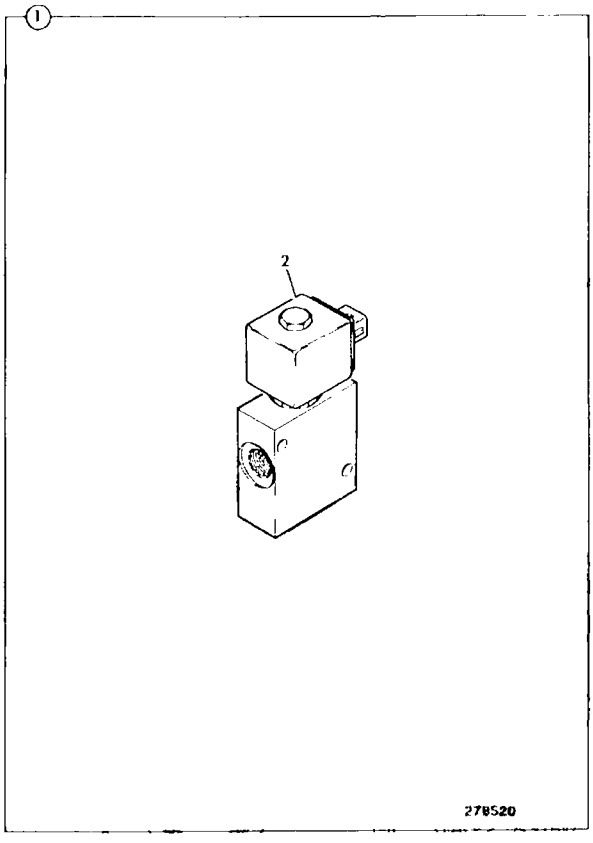

E3-13-1 VALVE, CUSHION

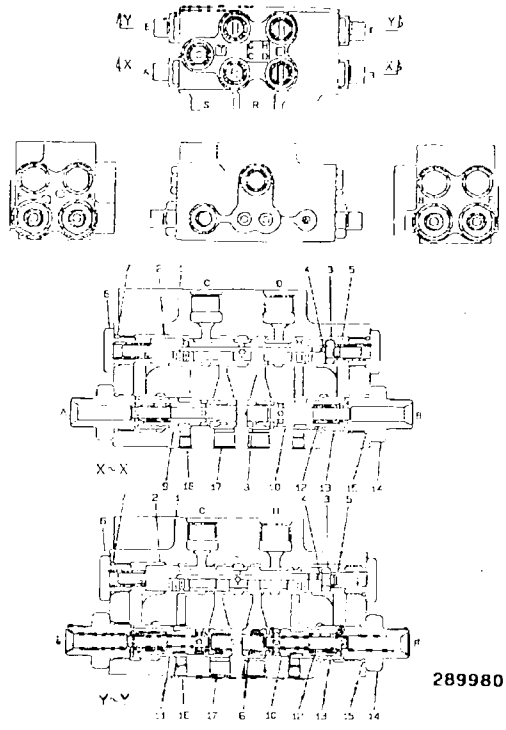

E3-14-1 COUPLING, ROTARY

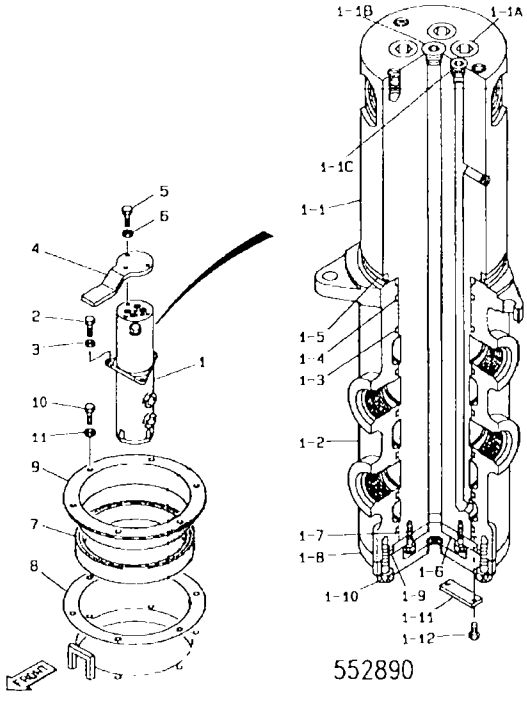

E3-14-2 COUPLING, ROTARY

Illustration Not Available at Time of Publication

E3-15-1 LUBRICANTS & FILTER$

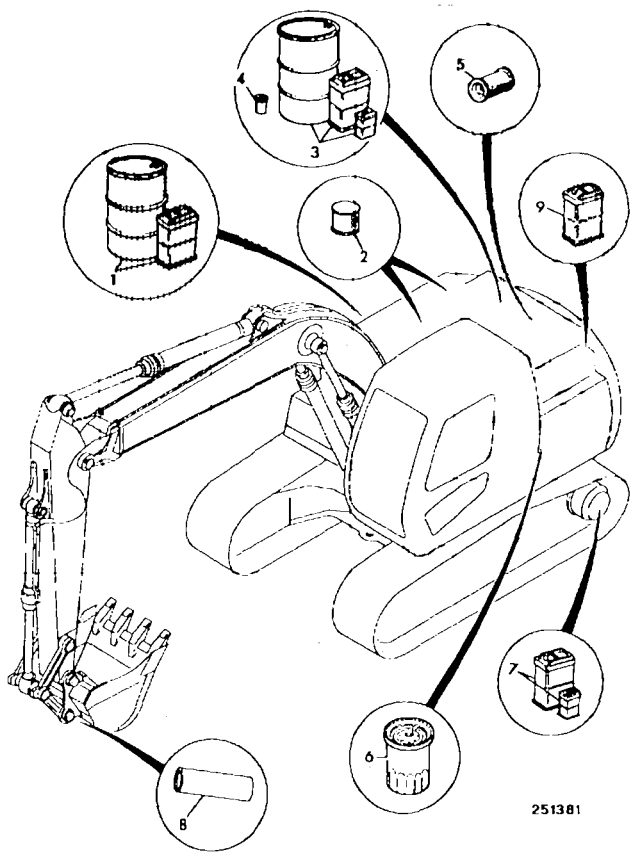

E3-15-2 OILS, BIODEGRADABLE, HYDRAULIC

Illustration Not Available at Time of Publication

E3-16-1 FILTER, HYDRAULIC, AUXILIARY CIRCUIT

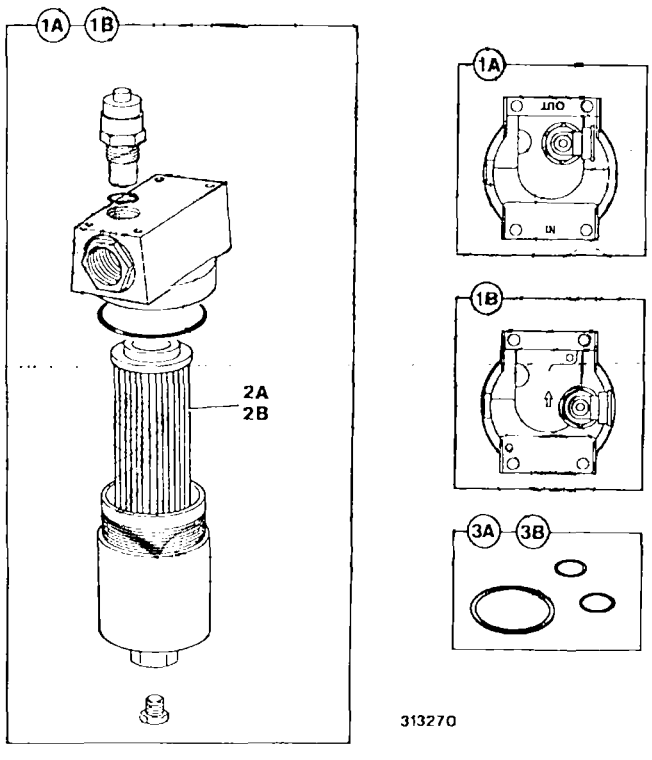

E3-18-1 VALVE, SWING BRAKE

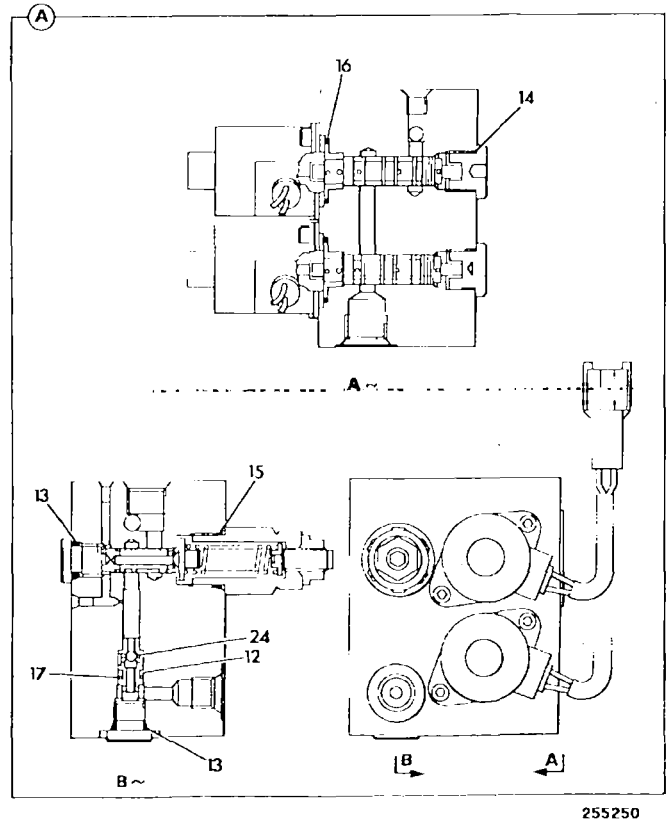

E4-1-6 RAM, BOOM

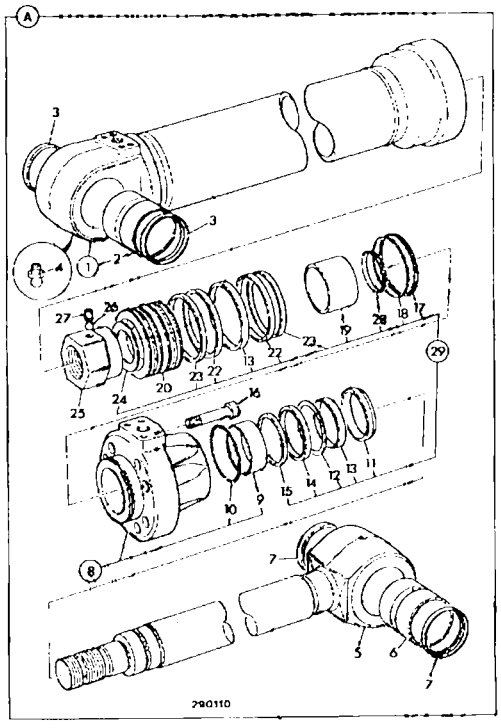

E4-2-6 RAM, DIPPER

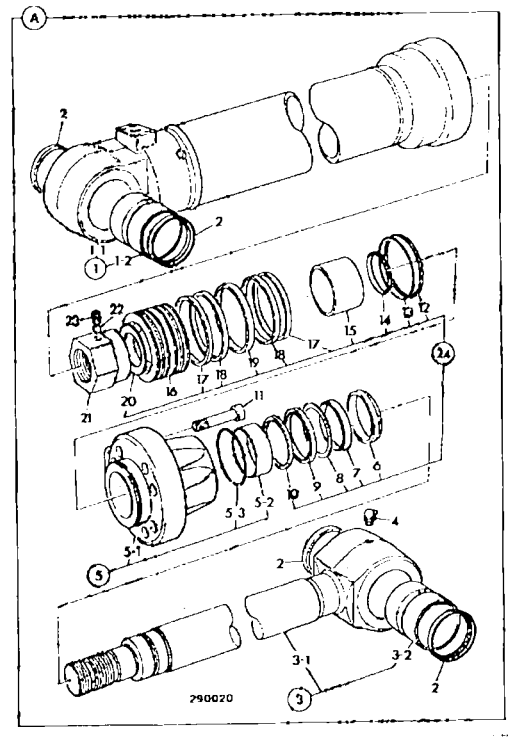

E4-2-10 RAM, DIPPER, STANDARD, ASSEMBLY

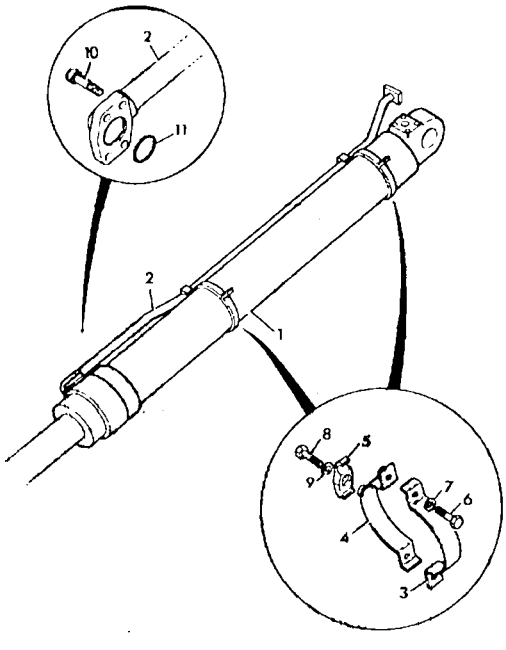

E4-2-20 RAM, DIPPER, H.B.C.V., ASSEMBLY

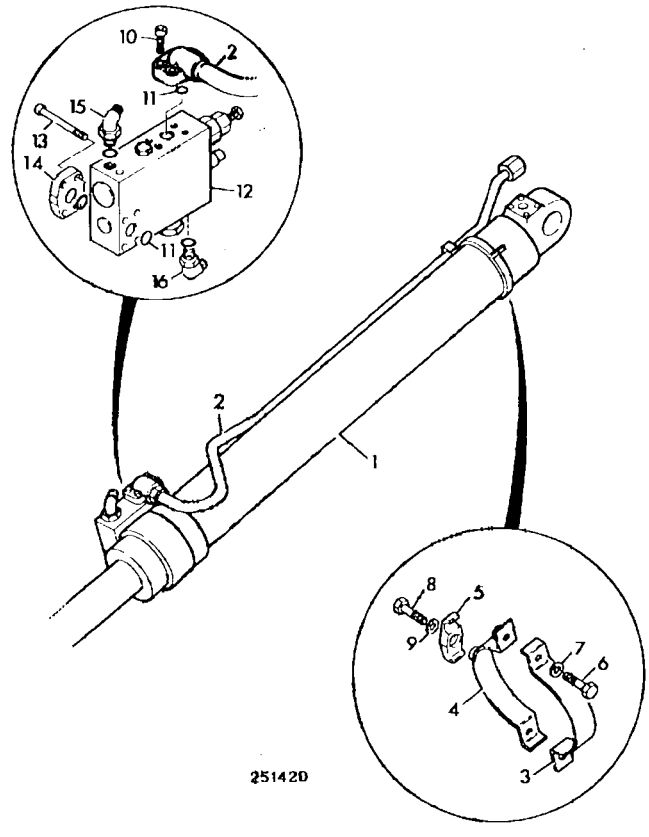

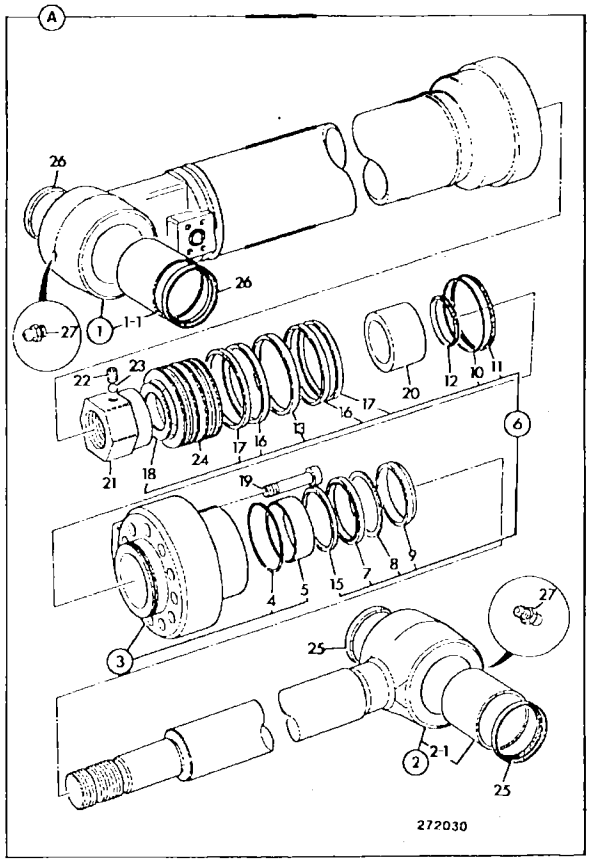

F

F4 SLEW/TRACK GEARBOXES

F4-1-1 GEARBOX, ASSEMBLY & SPROCKET

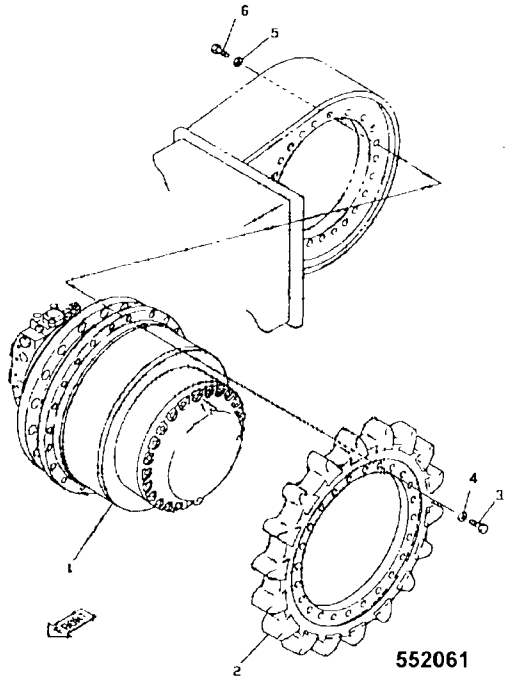

552061

F4-2-1 GEARBOX, TRACK

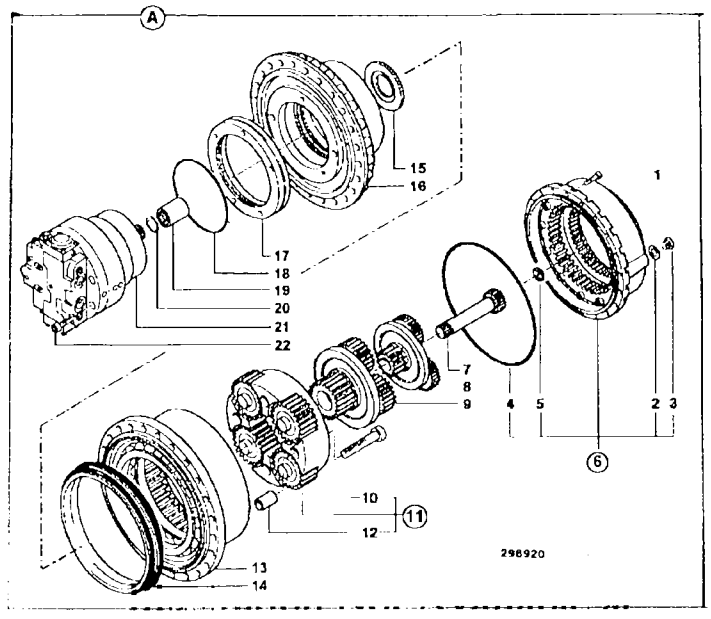

F4-3-1 MOTOR, SWING

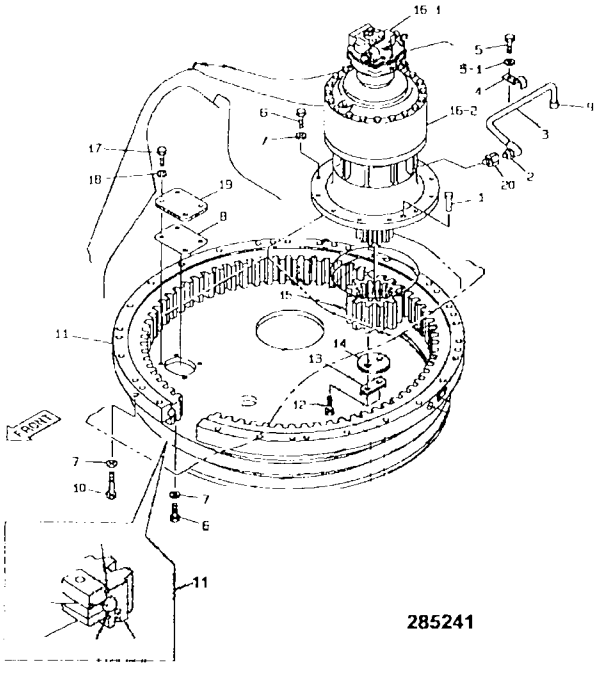

285241

F4-3-2 MOTOR, SWING

Illustration Not Available at Time of Publication

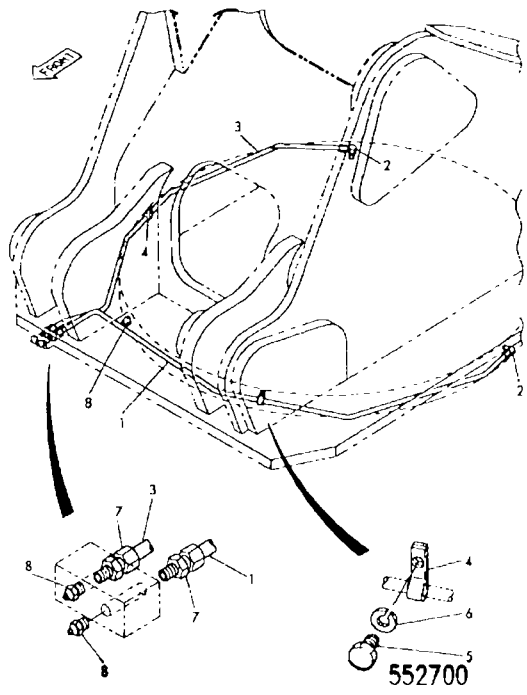

J

J1 TRACK, GEAR/ UNDERCARRIAGE

J1-1-1 UNDERCARRIAGE

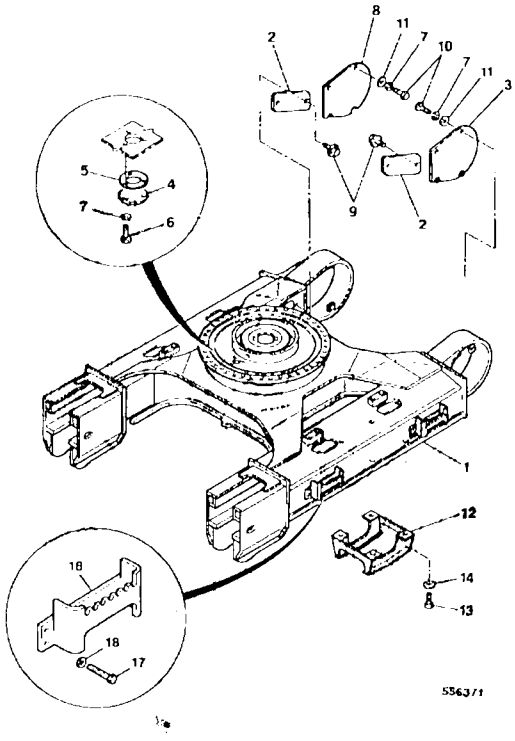

J1-1-2 UNDERCARRIAGE

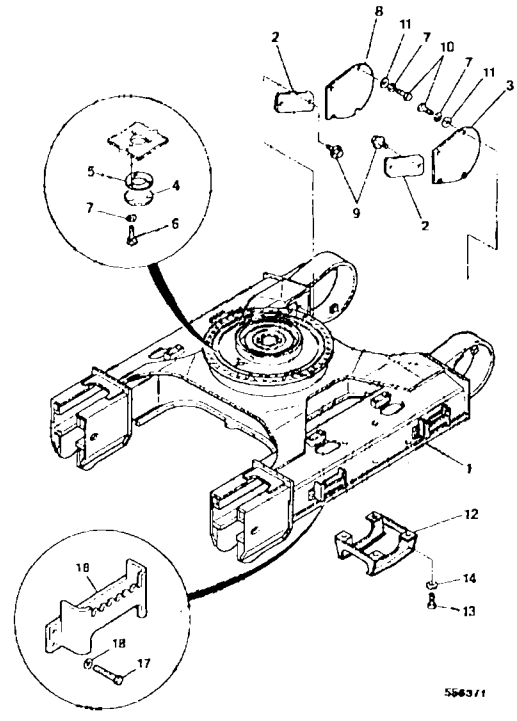

J1-2-1 IDLER WHEEL

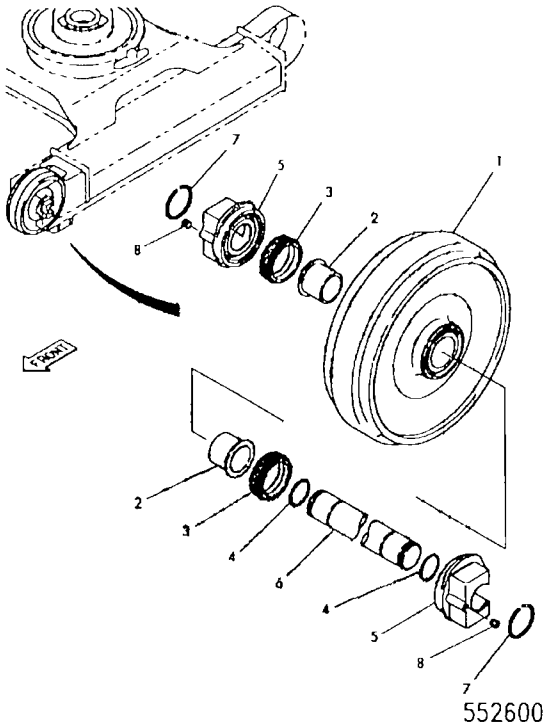

J1-2-2 IDLER WHEEL

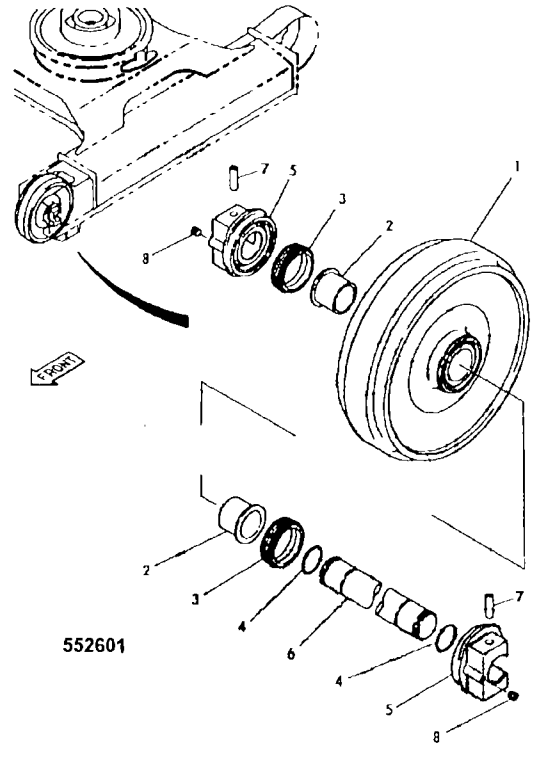

J1-3-1 ROLLER, TRACK BOTTOM

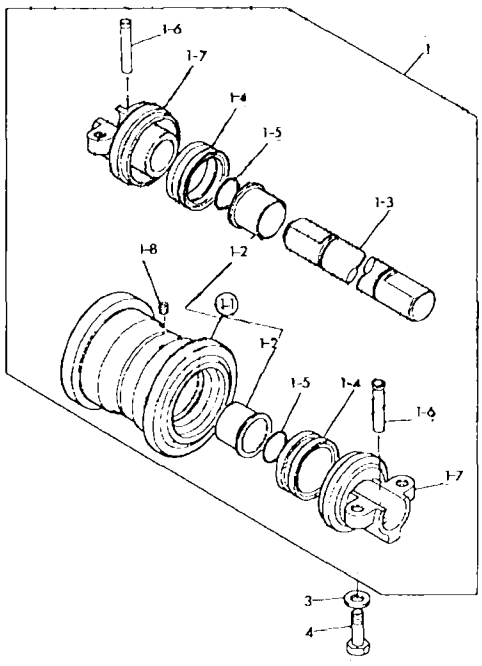

208801

J1-3-2 ROLLER, TRACK BOTTOM

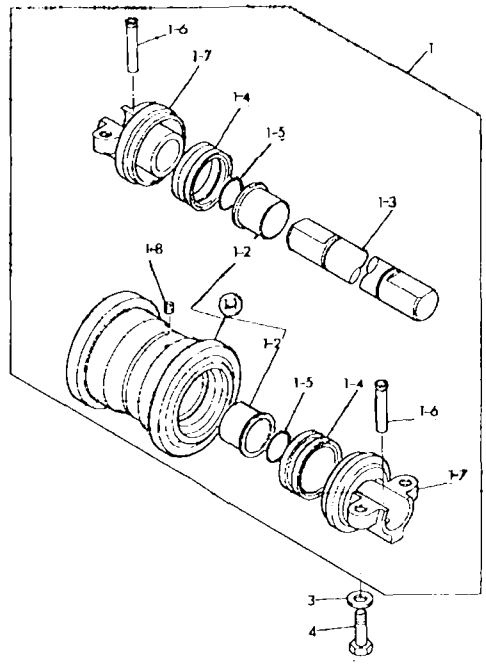

208801

J1-4-1 ROLLER, TRACK TOP

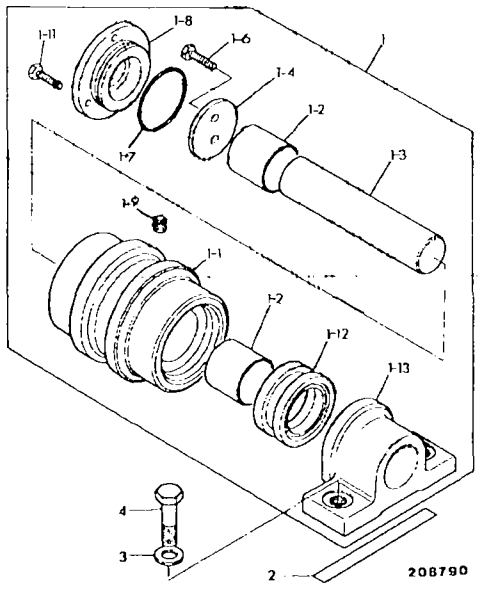

208790

J1-5-1 CHAIN, TRACK, GROUSER

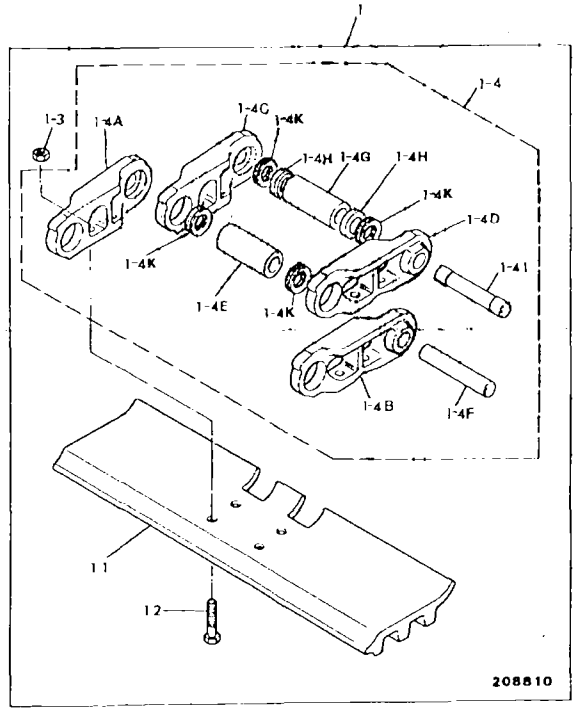

208810

J1-6-1 RECOIL UNIT

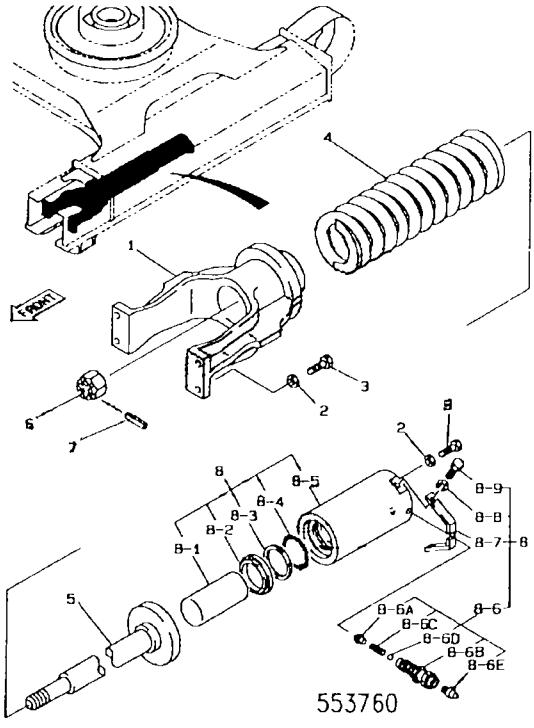

J1-6-2 RECOIL UNIT

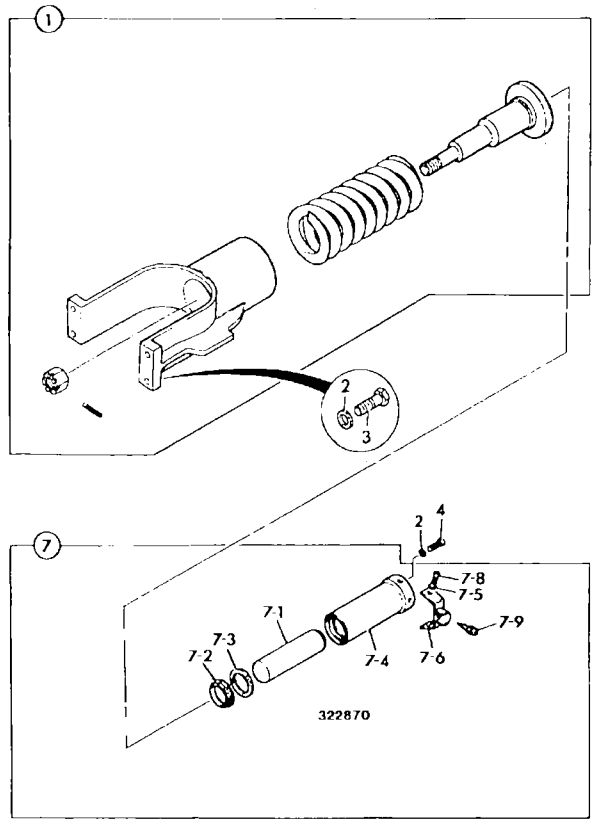

J1-7-1 COVER, LOWER, UNDERCARRIAGE

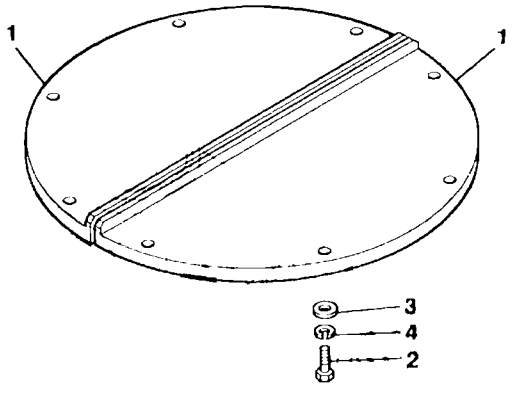

K

K1 ENGINE BLOCK & SUB-ASSEMBLIES
K2 CYLINDER HEAD & SUB-ASSEMBLIES
K3 INDUCTION & EXHAUST SYSTEMS
K4 SYSTEM, COOLING
K5 SYSTEM, LUBRICATION
K6 SYSTEM, FUEL
K7 EQUIPMENT, AUXILIARY
K8 GASKET SETS

K1-1-1 ENGINE, COMPLETE

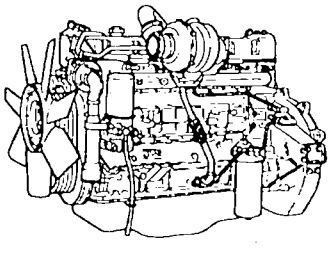

512491

K1-3-1 BLOCK ASSEMBLY

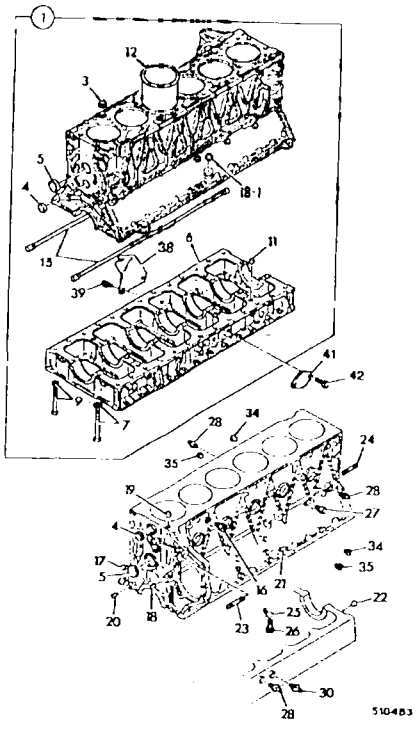

K1-4-1 CRANKSHAFT, BEARINGS, PISTONS & CON-RODS

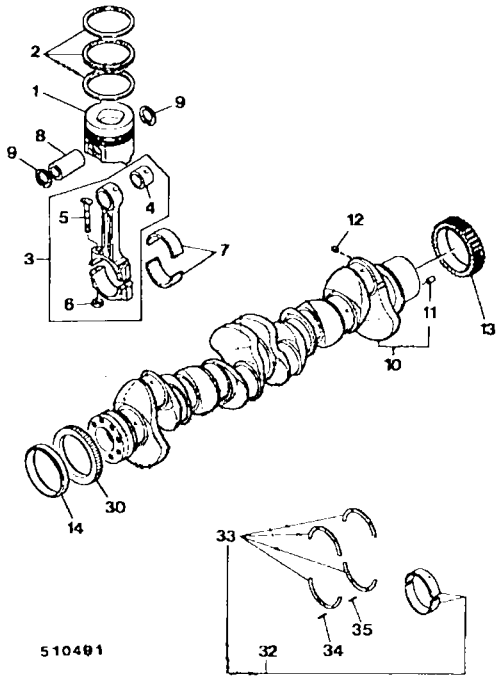

K1-5-1 FANS, PULLEYS, & FAN BELT

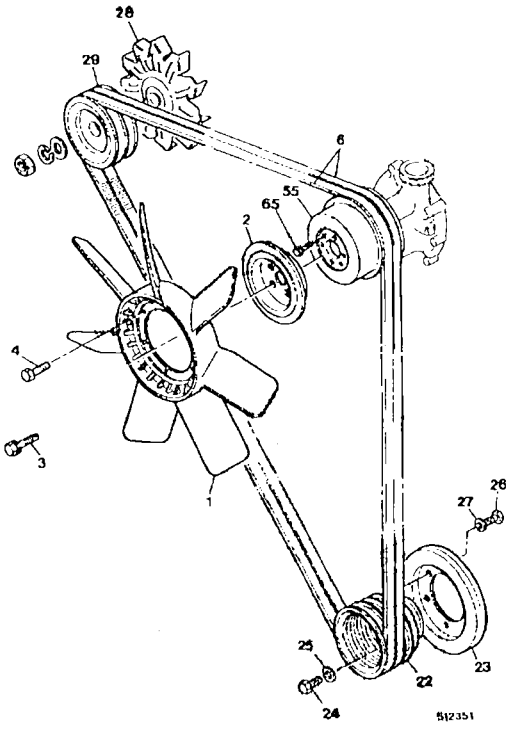

K1-6-1 TIMING CASE, & FRONT COVER

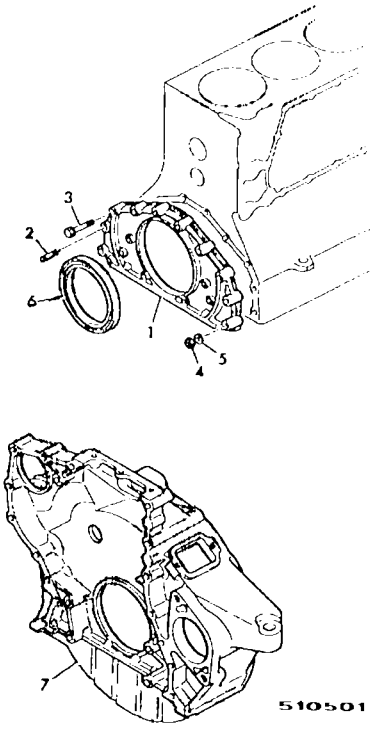

K1-6-2 CAMSHAFT, & TIMING GEARS

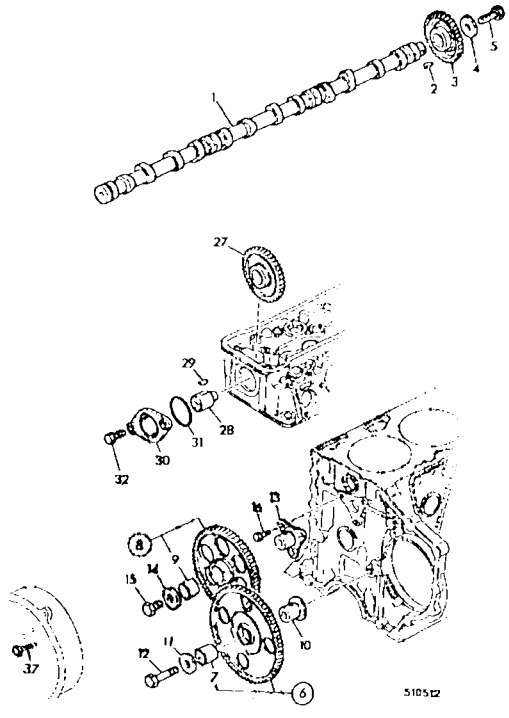

K1-7-1 FLYWHEEL & HOUSING

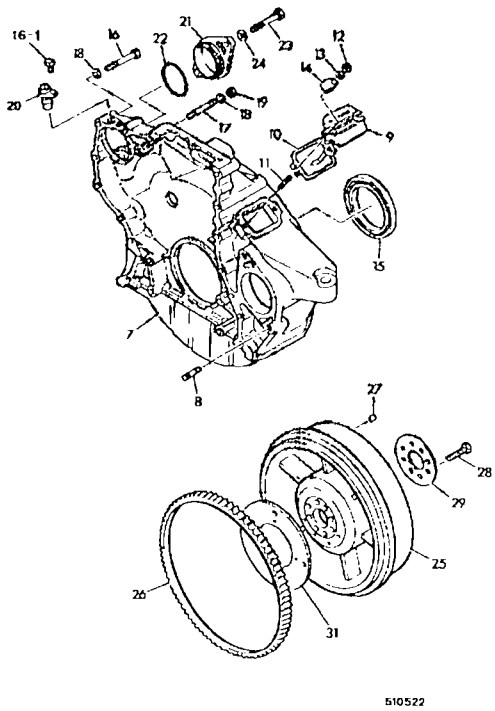

K1-8-1 ENGINE MOUNTINGS

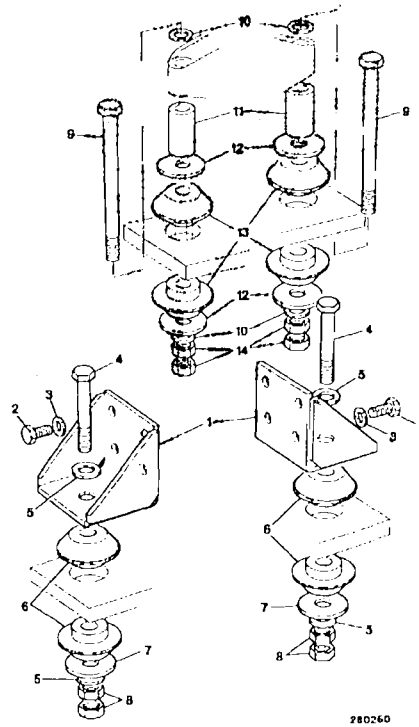

K2-1-1 CYLINDER HEAD

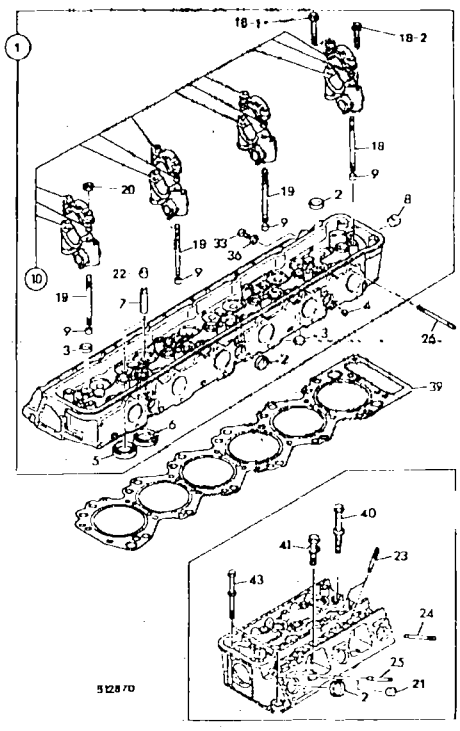

K2-2-1 ROCKER ASSEMBLY, INLET/EXHAUST VALVES, PUSH RODS & TAPPETS

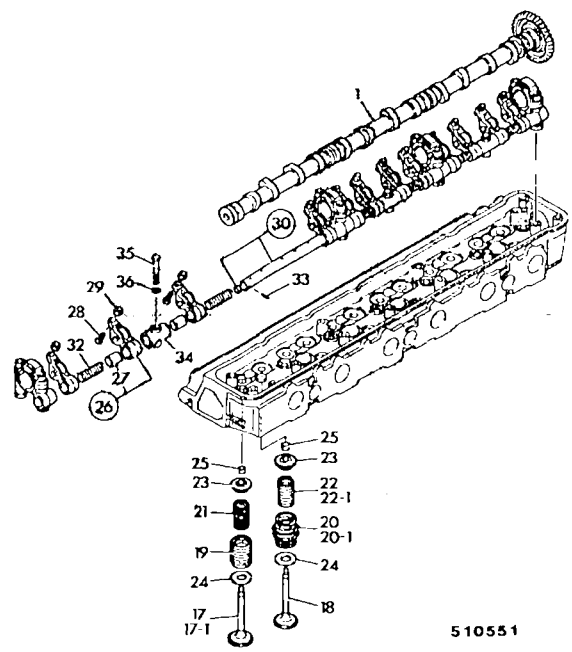

K2-3-1 ROCKER COVER

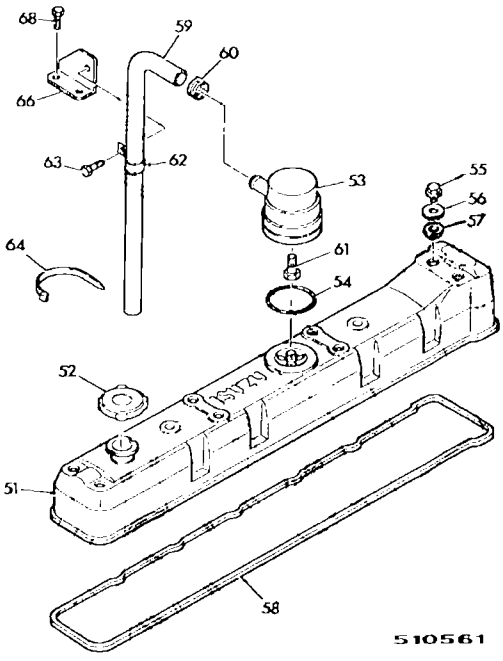

K2-4-1 LIFTING PLATES, ENGINE

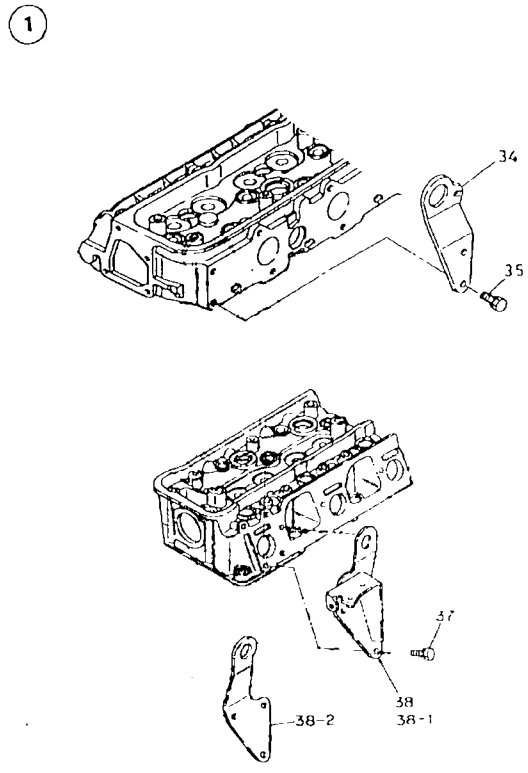

K3-1-1 MANIFOLD, INDUCTION

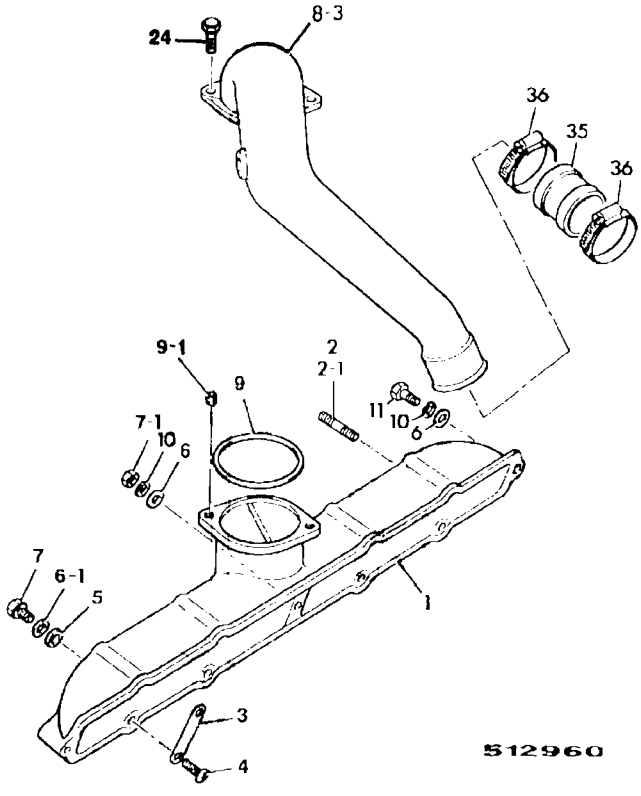

K3-2-1 MANIFOLD, EXHAUST

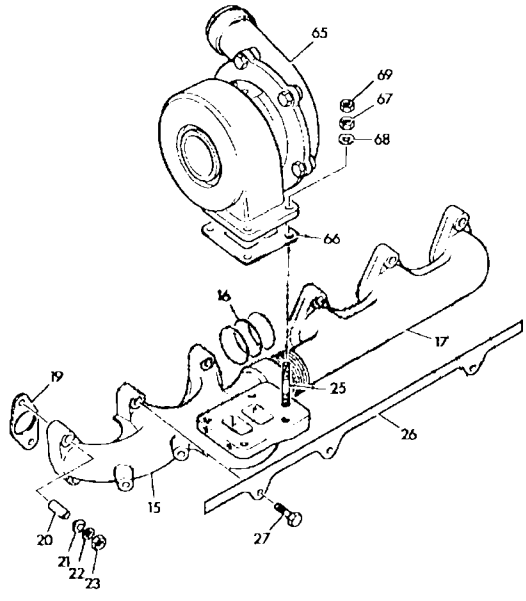

K3-3-1 FILTER, AIR

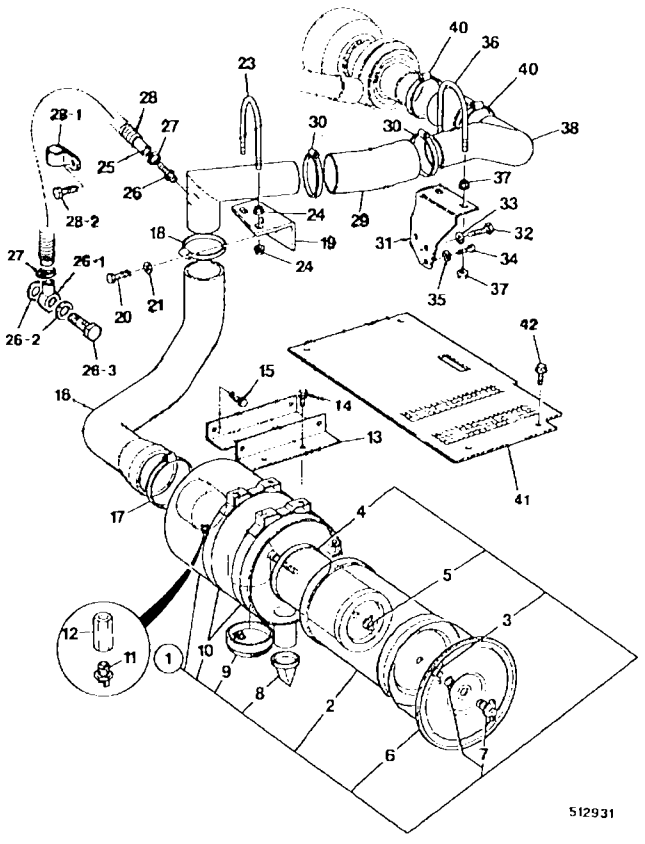

K3-3-2 FILTER, AIR

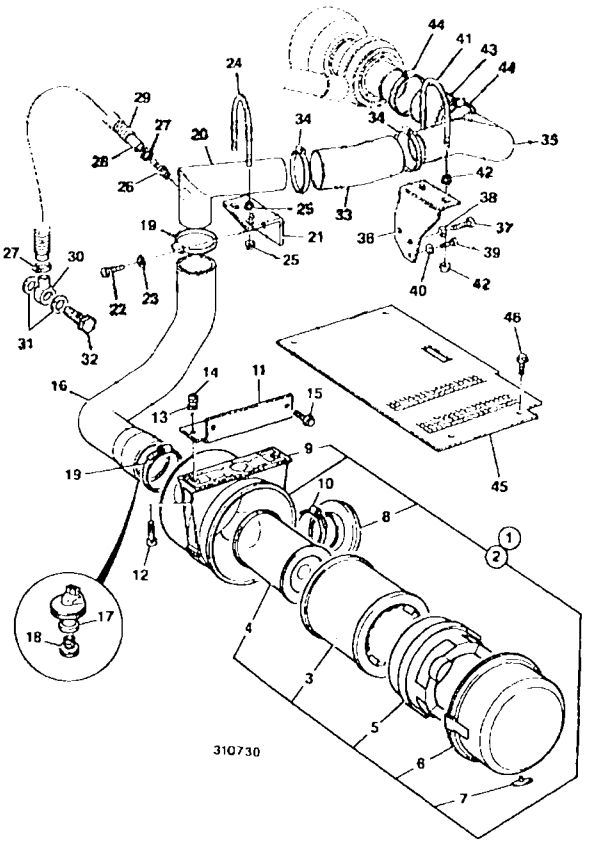

K3-4-1 EXHAUST SYSTEM

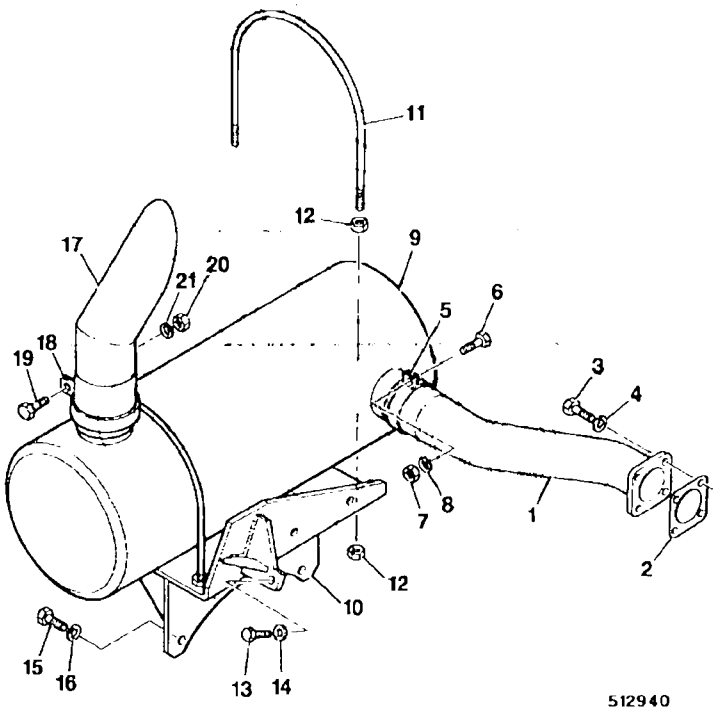

K4-1-1 PUMP, WATER

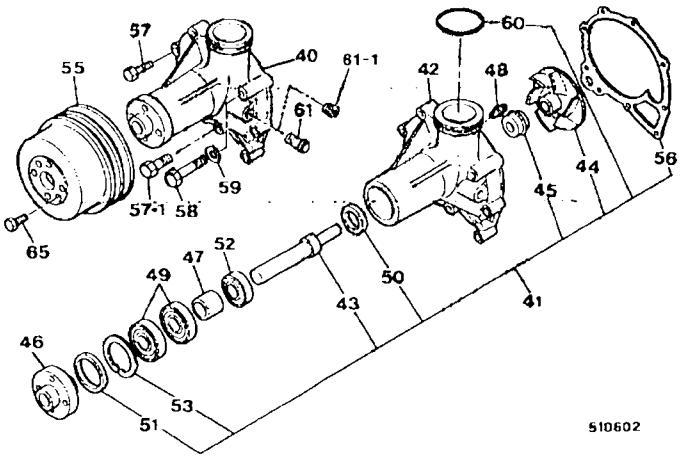

K4-2-1 THERMOSTAT, HOUSING, INLET & OUTLET

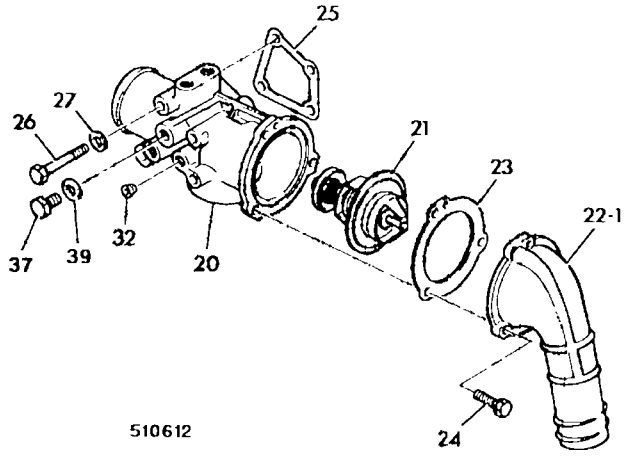

K4-3-1 RADIATOR, FITTINGS & MOUNTINGS

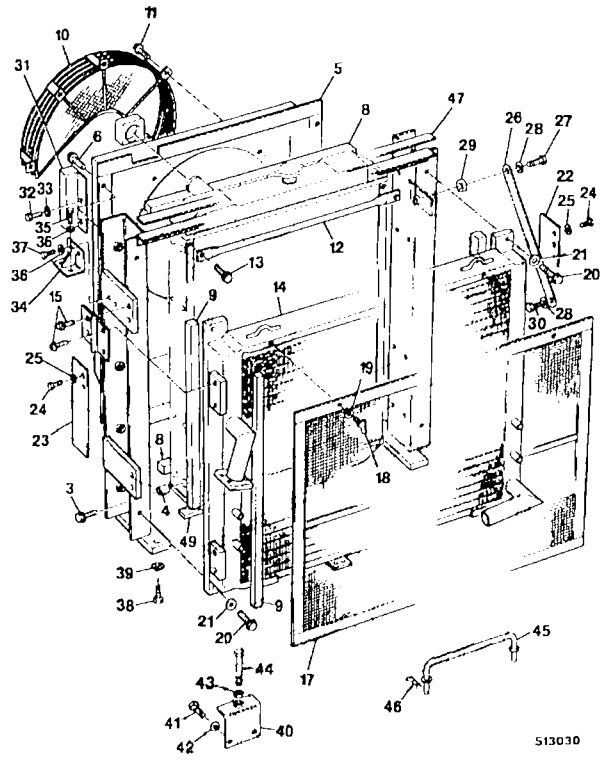

K4-4-1 RADIATOR, HOSES & FITTINGS

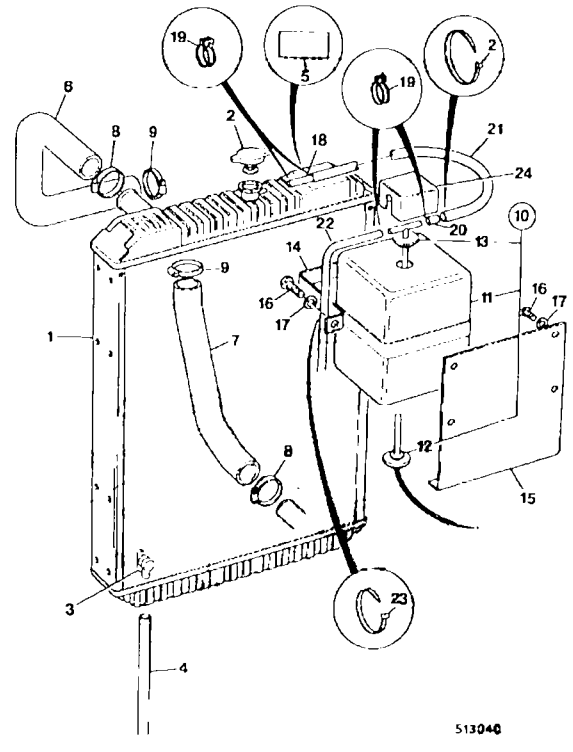

K5-1-1 SUMP, OIL, & FITTINGS

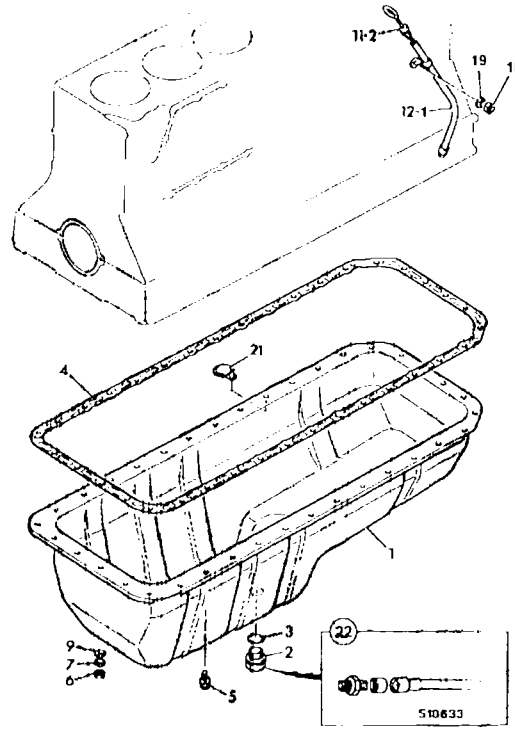

K5-2-1 PUMP, OIL

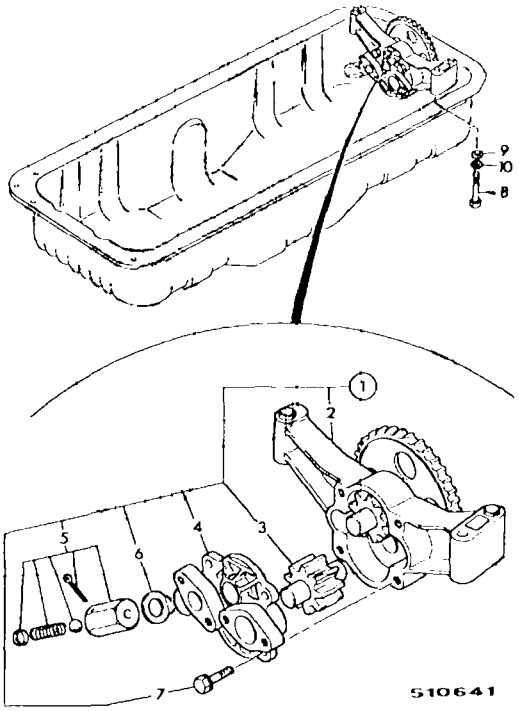

K5-3-1 PISTON COOLING JETS

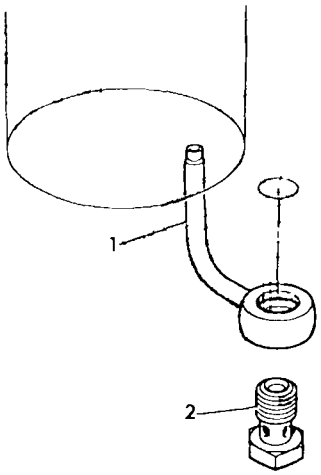

188620

K5-4-1 FILTER, OIL

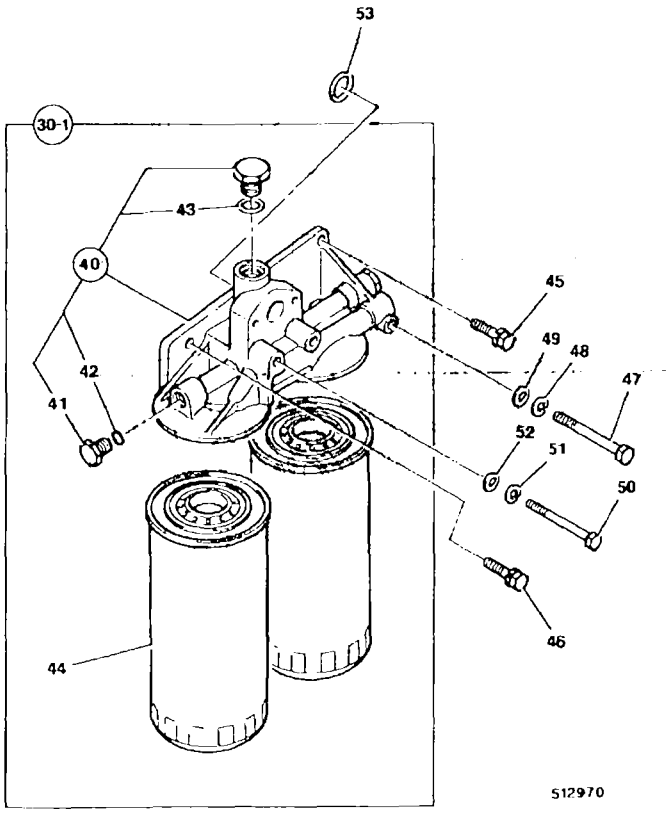

K5-5-1 COOLER, OIL

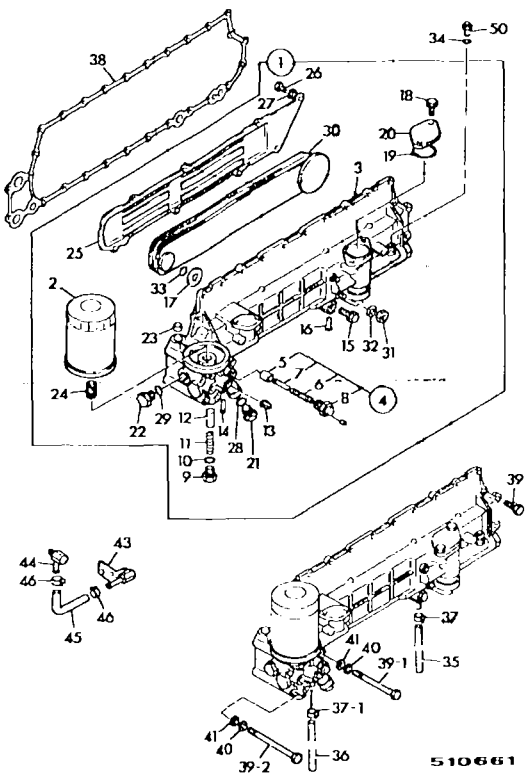

K5-6-1 PIPES, OIL

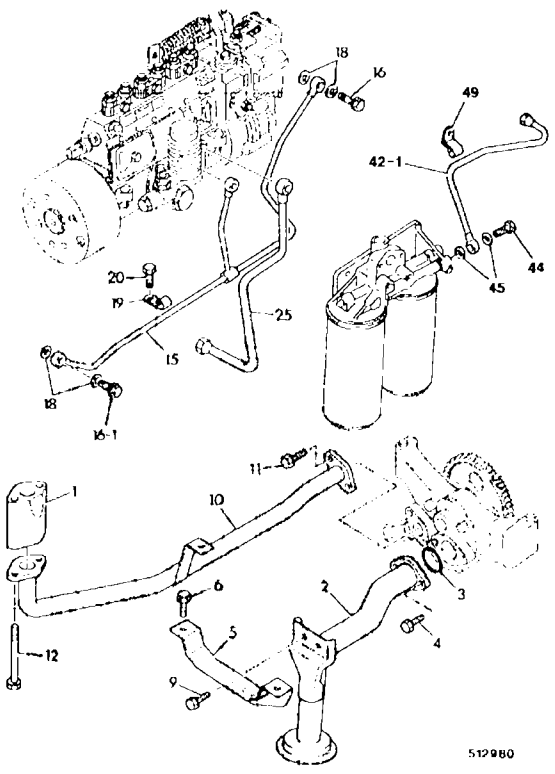

K6-1-1 PUMP, FUEL INJECTION, INSTALLATION

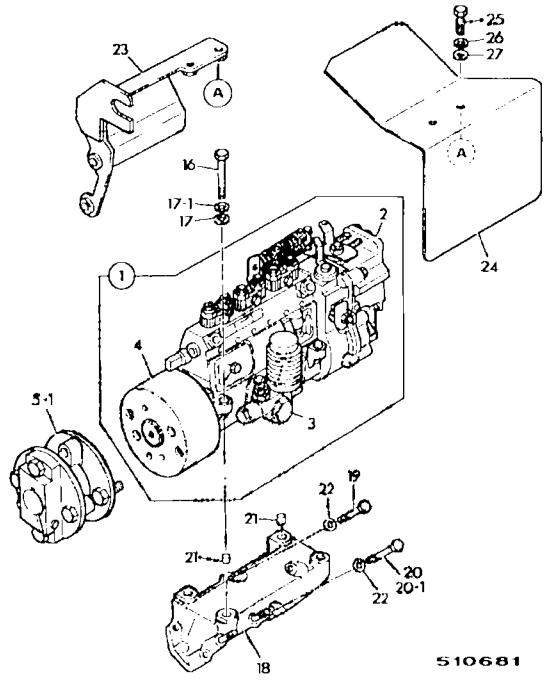

K6-1-10 PUMP, FUEL INJECTION

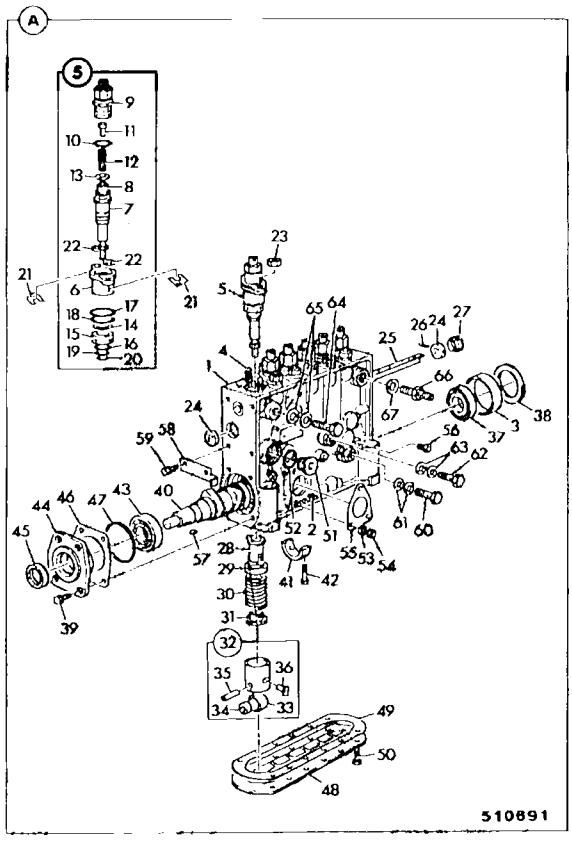

K6-1-20 GOVERNOR ASSEMBLY, FUEL INJECTION PUMP

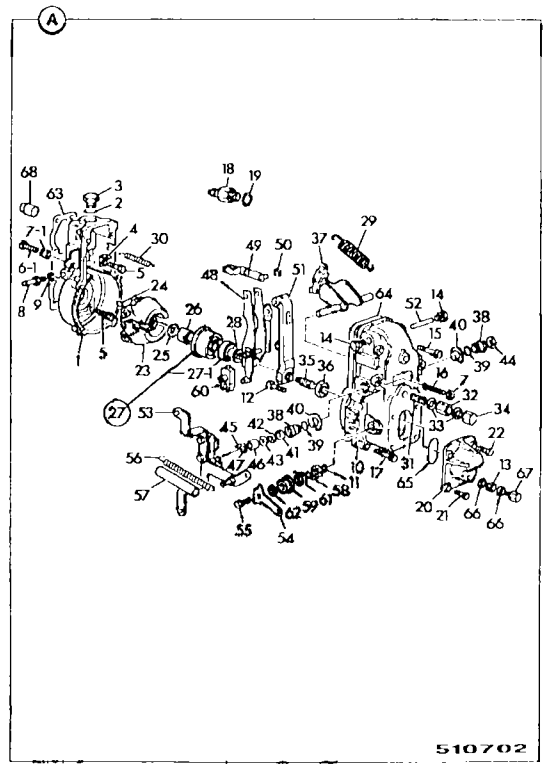

K6-1-30 DRIVE COUPLING, FUEL INJECTION PUMP

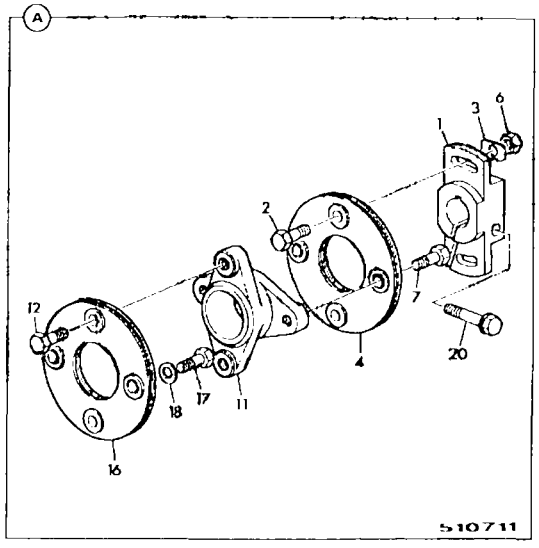

K6-1-40 AUTOMATIC TIMER, FUEL INJECTION PUMP

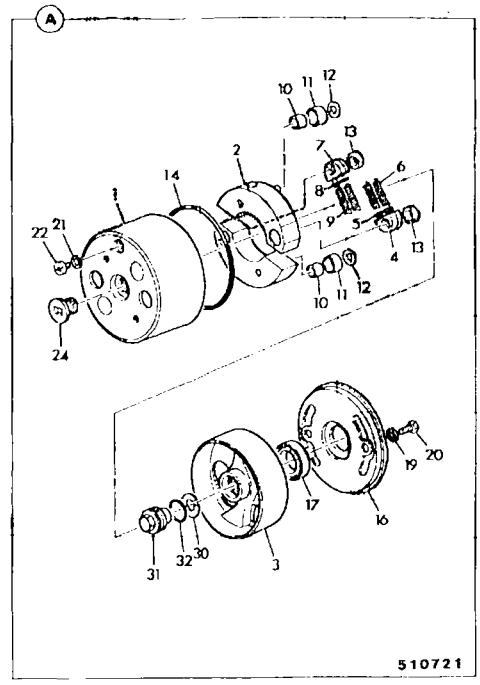

K6-2-1 FUEL SYSTEM

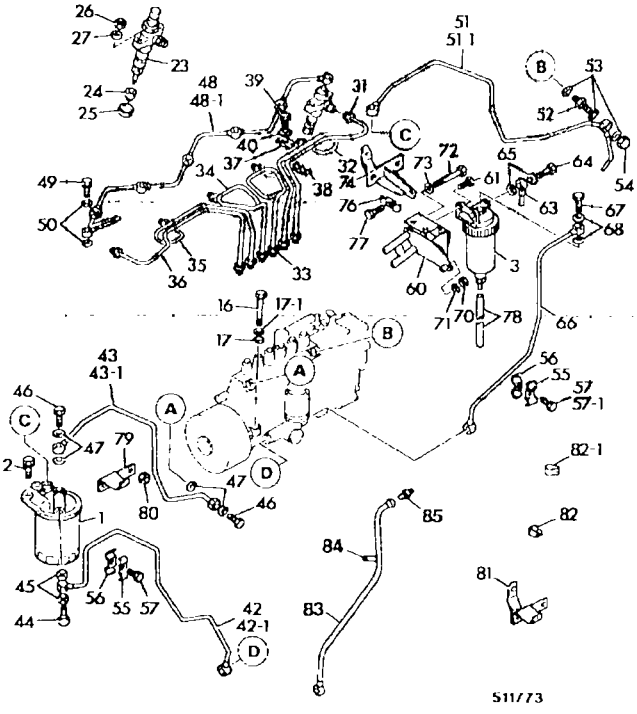

K6-2-10 INJECTORS, FUEL

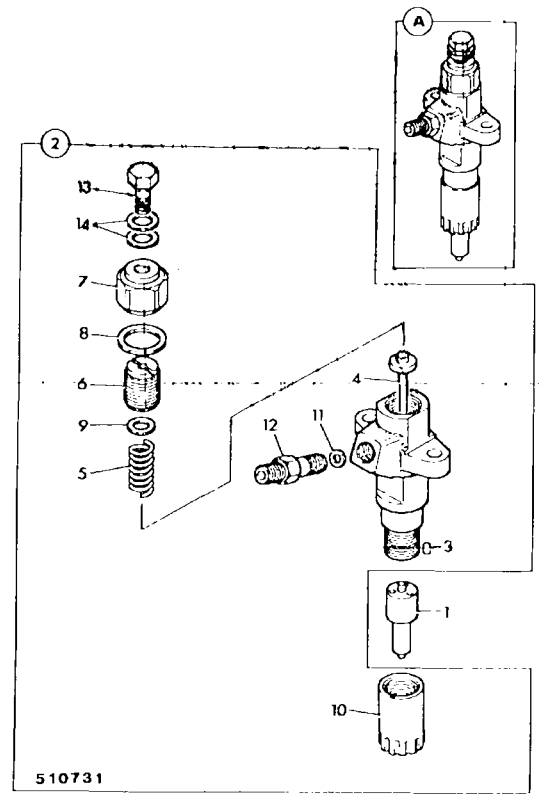

K6-4-1 FUEL PIPES, FUEL TANK TO FILTER

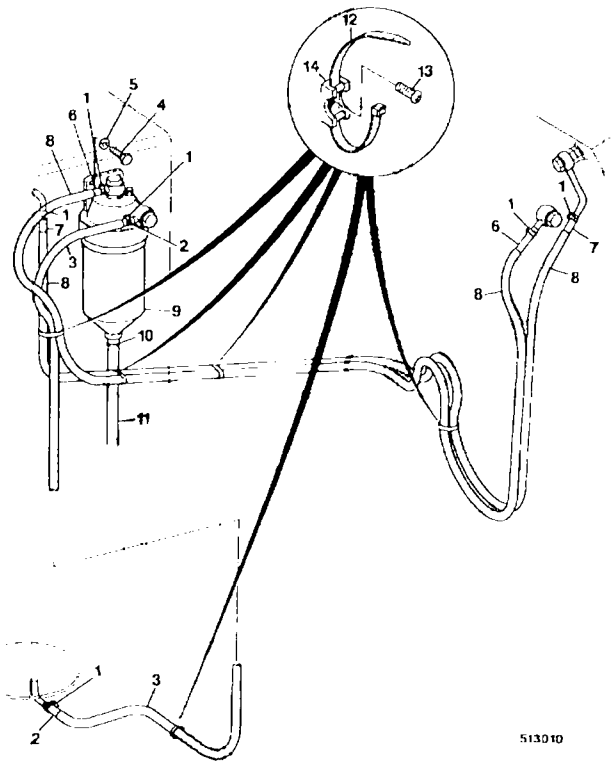

K6-4-2 FUEL PIPES, FUEL TANK TO FILTER

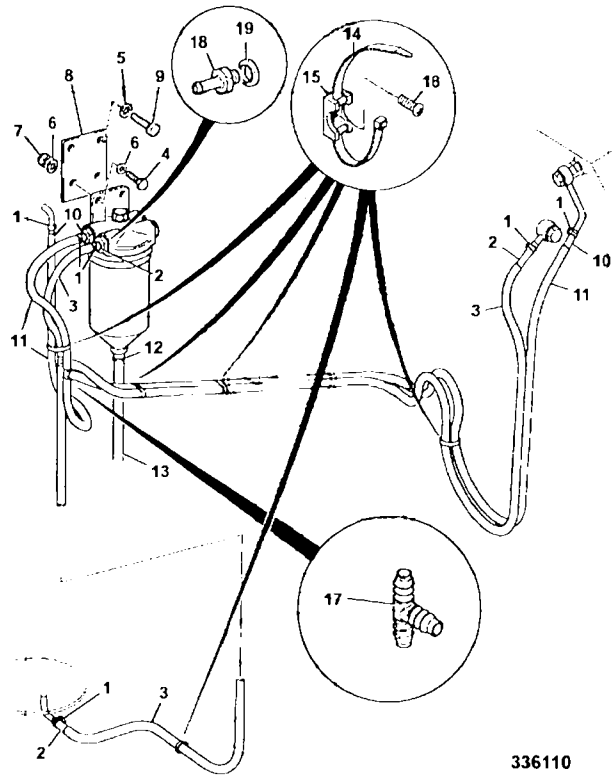

K6-6-1 FILTER, FUEL SEDIMENT

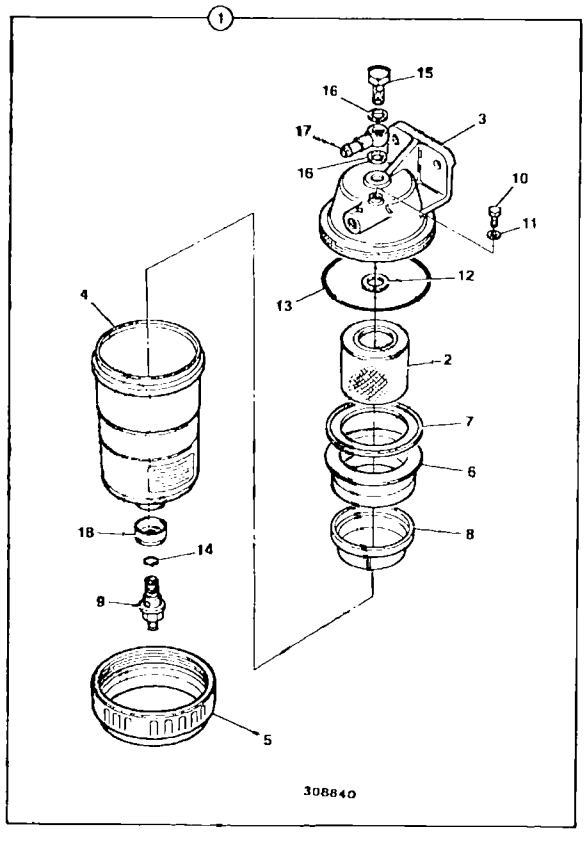

K6-6-2 FILTER, FUEL SEDIMENT

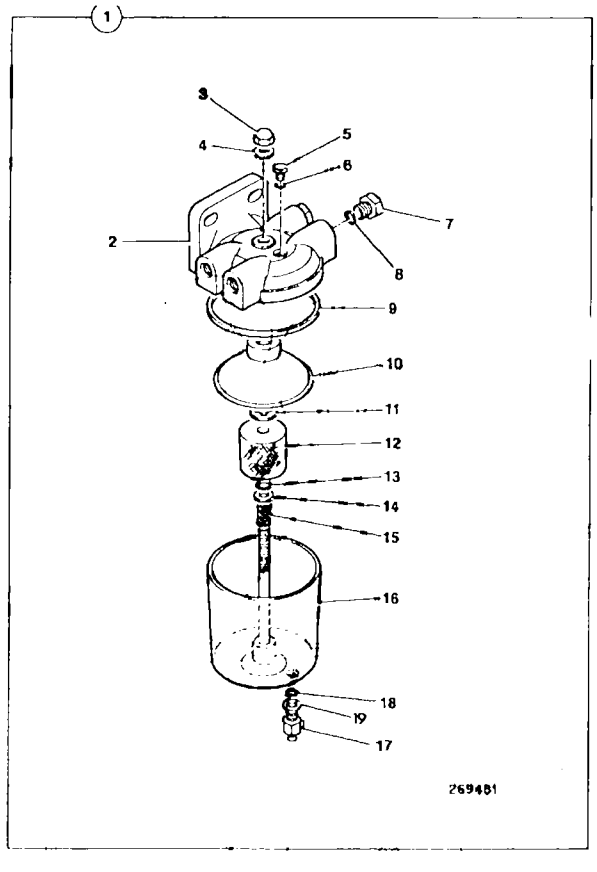

K6-7-1 FILTER, FUEL

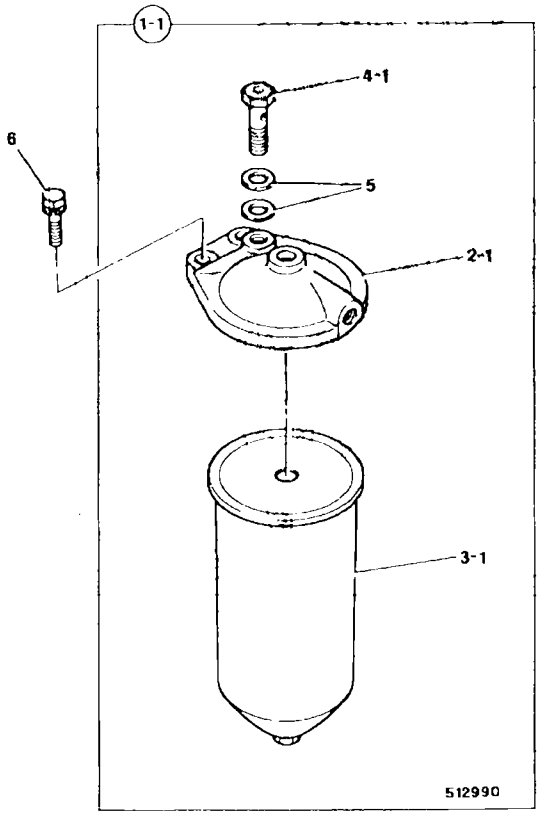

K6-8-1 PUMP, FUEL LIFT

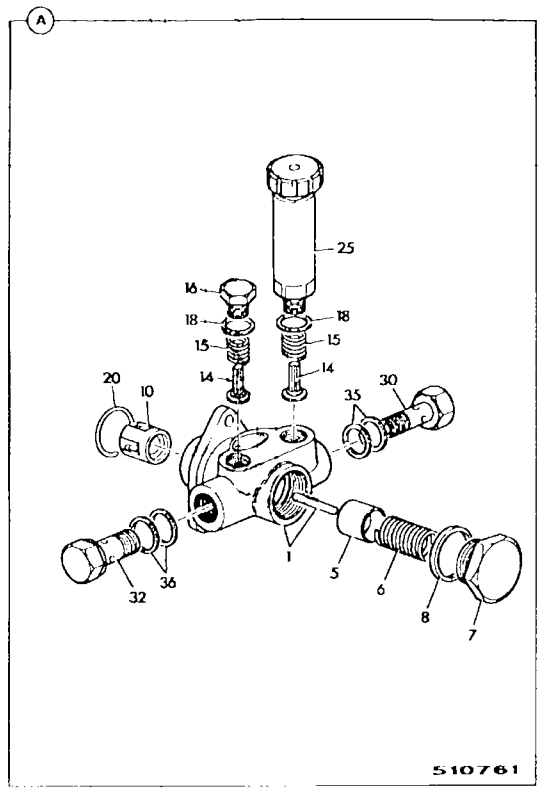

K7-1-1 TURBOCHARGER

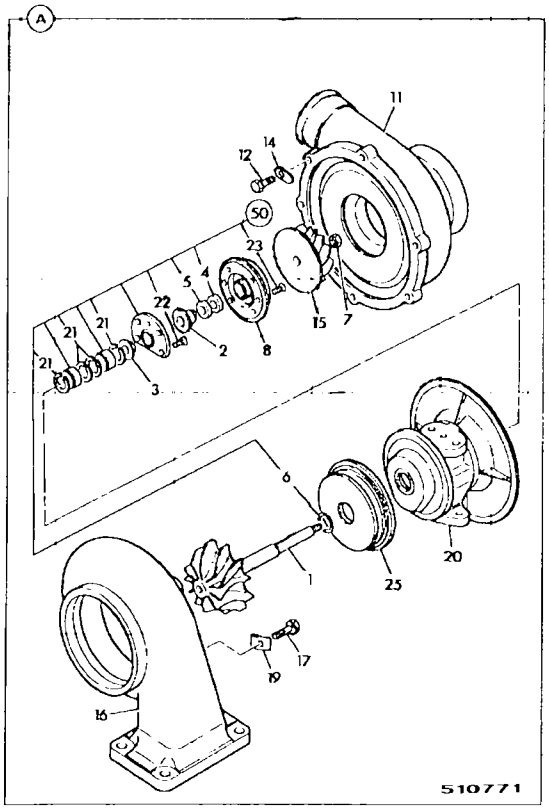

K7-2-1 TURBO, PIPEWORK

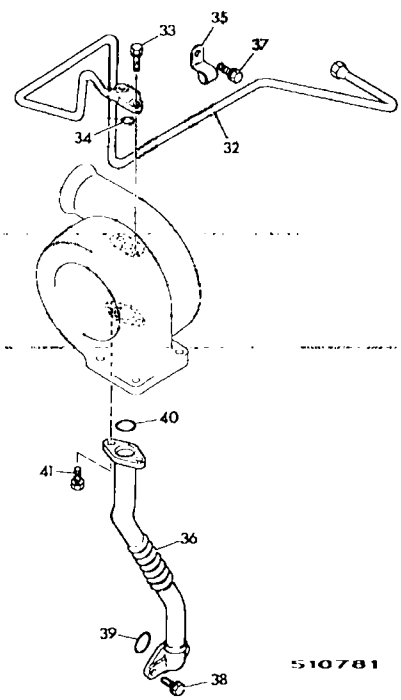

K7-3-1 COMPRESSOR, AIR, INSTALLATION

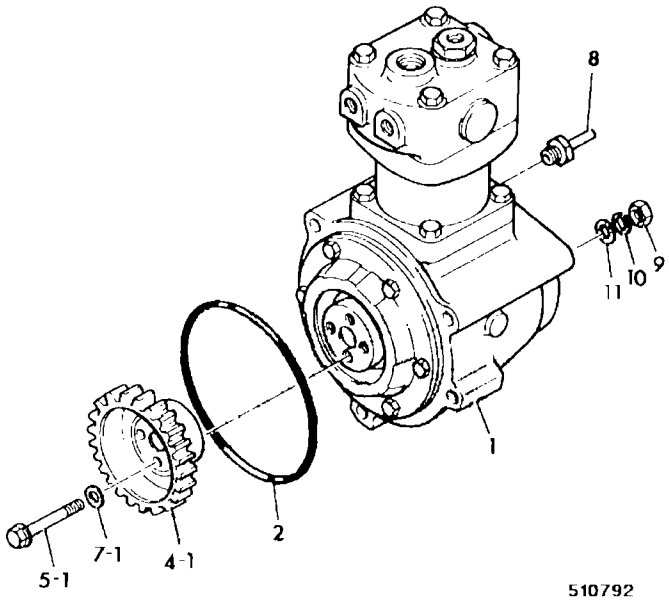

K7-4-1 COMPRESSOR, AIR

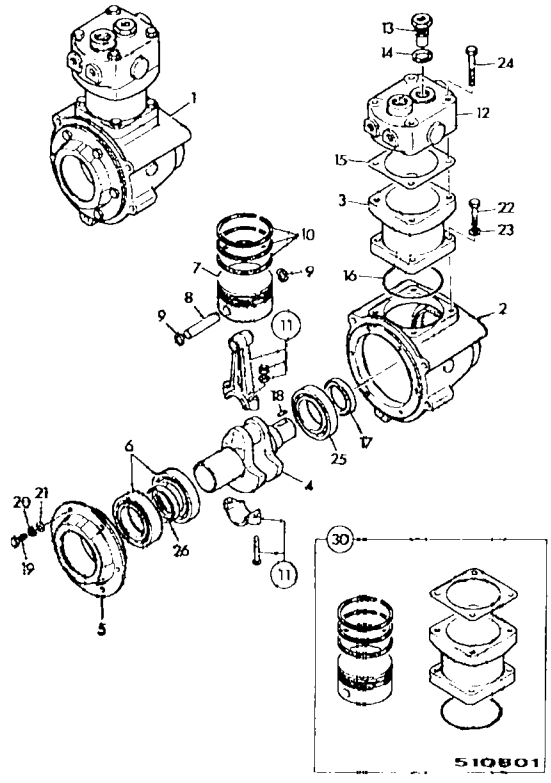

K7-5-1 COOLING PIPES, WATER, AIR COMPRESSOR

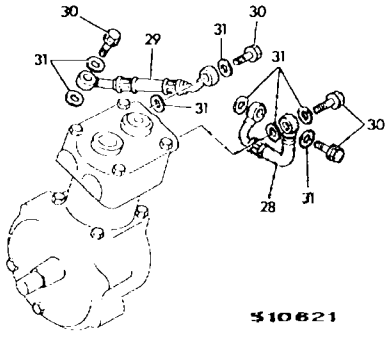

K8-1-1 GASKET SET, OVERHAUL, TOP

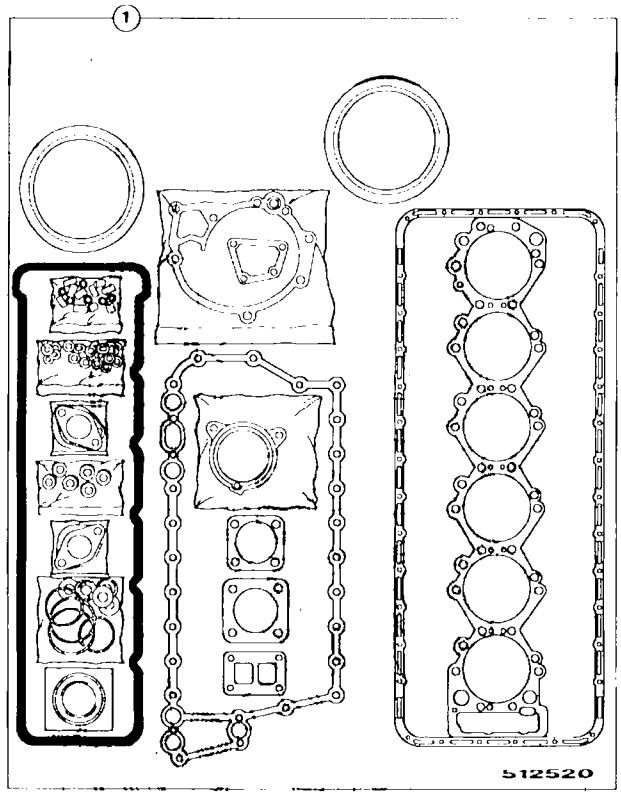

K8-1-2 GASKET SET, OVERHAUL

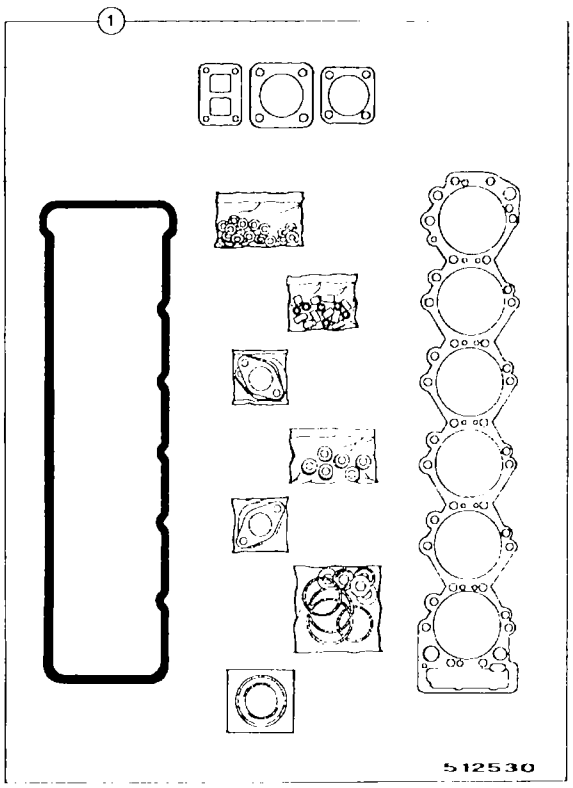

K8-2-1 KIT, PISTON & LINER

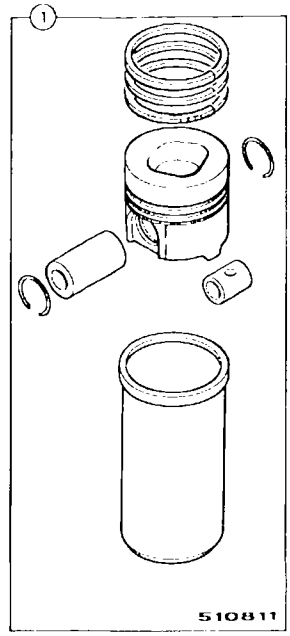

DESCRIPTION	PAGE NUMBER	ITEM NUMBER
A		
Adapter, fan pulley	K1-5-1	2
Alternator, assembly	C2-1-1	10
Alternator, assembly	C2-3-1	0
Alternator, assembly	C2-3-2	1
Arm, rocker, assembly	K2-2-1	26
B		
Bar, lock	E3-14-2	4
Base, filter	E1-8-2	13
Battery, dry	C1-3-1	1
Battery, wet	C1-3-1	1
Battery, wet	C1-3-3	1
Belt, fan	K1-5-1	6
Block, cylinder, assembly	K1-3-1	1
Bolt	F4-3-2	16
Bolt	J1-6-2	7
Bowl, filter	K6-6-2	16
Bracket	B1-5-1	63
Bracket	B1-5-10	17
Bracket	B2-10-1	27
Bracket	C1-4-1	6
Bracket	C1-4-2	7
Bracket	E1-33-1	7
Bracket	J1-6-2	7
Bracket, cam kit	K2-1-1	10
Bracket, engine mounting	K1-8-1	2
Bracket, engine mounting	K1-8-1	1
Bracket, exhaust mounting	K3-4-1	10
Bracket, lifting, front	K2-4-1	34
Bracket, lifting, rear	K2-4-1	38
Bracket, manifold, left hand	E1-33-1	8
Bracket, manifold, right hand	E1-33-1	9
Bracket, mounting	E1-8-2	13
Bracket, mounting, throttle motor	D2-1-1	1
Bracket, pipe	E1-30-1	10
Bracket, rocker arm shaft	K2-2-1	34
Bush	E4-3-1	2
Bush	E4-3-1	1
Bush, small end	K1-4-1	4
C		
Cable, battery	C1-1-2	14
Cable, battery	C1-1-2	12
Cable, battery	C1-3-3	7
Cable, battery	C1-3-3	8
Cable, battery lead, clamp and cover	C1-1-1	16
Cable, battery lead, clamp and cover	C1-1-1	14
Cable, battery lead, clamp and cover	C1-1-1	13
Cable, battery lead, clamp and cover	C1-1-1	12
Cable, hot/cold	C3-5-21	11
Cable, recirculate/fresh	C3-5-21	12
Cable, starter earth	C2-1-1	17
Cable, throttle control	D2-1-1	20
Camshaft	K1-6-2	1
Cap, assembly	K4-4-1	13
Cap, battery cable, 16x13.5	C2-1-1	24
Cap, filler with lock	B1-4-1	3
Cap, insulating 8.9x5.3	C2-1-1	23
Cap, insulator, ID=3.8	C2-1-1	22
Cap, oil filler	K2-3-1	52
Cap, radiator filler	K4-4-1	2
Capscrew, M8 st.steel	E1-8-2	13
Case, filter	E1-8-2	13
Catch, assembly	B1-5-1	68
Catch, assembly	B1-5-1	70
Catch, plate	B1-5-1	67
Clamp, pipe	E1-30-1	6
Connector	C2-1-1	4
Connector, straight	E1-30-1	14
Connector, 45 degree	E1-30-1	15
Console, fixed, left hand	B2-4-11	1
Console, fixed, right hand	B2-5-1	1
Cooler, hydraulic	E1-3-5	0
Cooler, hydraulic	K4-3-1	14
Cooler, oil	K5-5-1	1
Coupling, injection pump drive	K6-1-1	5
Coupling, injection pump drive	K6-1-30	0
Coupling, rotary	E3-14-2	1
Cover	B2-4-11	8
Cover	B2-5-1	8
Cover	B2-10-1	14
Cover	B2-10-1	13
Cover, end	K3-3-2	6
Cover, engine	B1-5-1	73
Cover, front oil seal	K1-6-1	1
Cover, left hand	B2-4-11	15
Cover, left hand	B2-5-1	15
Cover, right hand	B2-4-11	16
Cover, right hand	B2-5-1	16
Cover, rocker	K2-3-1	51
Cover, timing	K1-7-1	9

DESCRIPTION	PAGE NUMBER	ITEM NUMBER
Cover, tool box	B1-5-30	8
Cover, top	E1-8-2	13
Cover, under, no inspection cover	B1-2-1	10
Cover, under, no inspection cover	B1-2-1	9
Cover, with air outlet	C3-5-1	16
Cowling, fan	K4-3-1	5
Crankshaft	K1-4-1	10
Cylinder, adjusting, assembly	J1-6-2	7
D		
Damper, crankshaft	K1-5-1	23
Decal, control panel	C3-5-21	18
Decal, fuse box	B5-2-1	35
Decal, JCB Insignia	B5-1-11	5
Diode	C1-1-1	10
Diode	C1-2-1	19
Dipstick, oil level	K5-1-1	11
Door, front side, left hand	B1-5-20	19
Door, side rear, left hand	B1-5-20	14
Door, side, right hand	B1-5-20	25
E		
Element, air filter, main	E3-15-1	5
Element, air filter, main	K3-3-2	3
Element, air filter, safety	E3-15-1	5
Element, air filter, safety	K3-3-2	4
Element, filter bypass, nephron	E1-8-2	13
Element, fuel filter, spin-on	K6-7-1	3
Element, oil cooler	K5-5-1	30
Element, oil filter cartridge, main, 27mm-I/D	K5-5-1	2
Element, oil filter, spin-on	E3-15-1	4
Element, oil filter, spin-on	K5-4-1	44
Engine, complete, 6SD1, turbocharged	K1-1-1	1
F		
Fan, alternator	C2-3-1	23
Fan, cooling	K1-5-1	1
Filter, assembly, air	K3-3-2	2
Filter, bypass	E1-8-2	13
Filter, fuel sedimentor	K6-6-1	1
Filter, fuel sedimentor	K6-6-2	1
Filter, fuel, assembly	K6-7-1	1
Filter, heater	C3-5-21	14
Filter, hydraulic	E1-33-1	1
Filter, oil, assembly	K5-4-1	30
Filter, return	E3-15-1	2
Flange, boot	B2-4-11	9
Flange, boot	B2-5-1	9
Flange, split	E1-30-1	16
Floor	D1-1-1	14
Flywheel, assembly	K1-7-1	25
Frame	B1-5-1	72
Frame, house, left hand	B1-5-10	18
Frame, house, left hand	B1-5-10	6
Frame, house, left hand	B1-5-10	6
Frame, house, right hand	B1-5-10	8
Frame, tilt	B2-4-10	1
G		
Gasket, cylinder head	K2-1-1	39
Gasket, exhaust	K3-2-1	75
Gasket, oil sump	K5-1-1	4
Gasket, rocker cover	K2-3-1	58
Gear, camshaft	K1-6-2	3
Gear, compressor drive	K7-3-1	4
Gear, crankshaft	K1-4-1	13
Gear, idler	K1-6-2	27
Gear, idler "A"	K1-6-2	6
Gear, idler "B"	K1-6-2	8
Gear, idler gear "B"	K1-6-2	13
Gear, oil pump drive	K1-4-1	30
Gear, ring	K1-7-1	26
Gear, starter pinion	C2-5-1	20
Gear, starter pinion	C2-5-1	10
Gearbox, assembly	F4-3-2	16
Gearbox, assembly, with swing motor	F4-3-2	16
Guard, fan	K4-3-1	10
Guide, valve, inlet/outlet	K2-1-1	7
H		
Handle, bonnet, locking	B1-5-1	70
Handle, bonnet, locking	B1-5-1	68
Handle, sliding window	B2-2-1	2
Handle, sliding window	B2-2-2	2
Harness, cab	C1-2-1	19
Harness, extension, rear	C1-4-2	5
Harness, low flow	E1-30-1	17
Harness, mainframe	C1-1-1	10
Harness, mainframe	C1-1-1	10
Harness, mainframe	C1-1-2	10
Harness, mainframe	C1-1-2	10
Harness, radio	C1-1-1	60
Harness, radio	C1-1-2	60

DESCRIPTION	PAGE NUMBER	ITEM NUMBER
Harness, travel alarm	C1-10-1	2
Harness, wire	C1-2-1	19
Harness, wire	C1-4-1	11
Head, cylinder	K2-1-1	1
Head, oil filter	K5-4-1	40
Heater, c/w air con	C3-5-1	1
Heater, c/w air con	C3-5-21	0
Holder, assembly	K6-2-10	2
Horn, low 24 volt	C1-1-1	4
Hose	E1-5-1	6
Hose	E1-5-1	5
Hose	E1-5-1	2
Hose	K3-3-2	28
Hose, air induction	K3-3-2	43
Hose, air induction	K3-3-2	35
Hose, air induction	K3-3-2	33
Hose, air induction	K3-3-2	16
Hose, bottom	K4-4-1	7
Hose, drain	K5-5-1	35
Hose, fuel drain	K6-2-1	78
Hose, hydraulic	E1-6-5	10
Hose, hydraulic	E1-6-5	9
Hose, hydraulic	E1-30-1	13
Hose, induction inlet	K3-1-1	35
Hose, suction	E1-30-1	8
Hose, top	K4-4-1	6
Housing	J1-6-2	7
Housing, flywheel	K1-7-1	7
Housing, pump	K6-1-10	1
Housing, thermostat	K4-2-1	20
Hub, pulley, water pump	K4-1-1	46

I

DESCRIPTION	PAGE NUMBER	ITEM NUMBER
Injector, assembly	K6-2-10	0
Insert, inlet valve	K2-1-1	5

J

DESCRIPTION	PAGE NUMBER	ITEM NUMBER
Jet, piston cooling	K5-3-1	1

K

DESCRIPTION	PAGE NUMBER	ITEM NUMBER
Key, engine cover catch	B1-5-1	70
Key, engine cover catch	B1-5-1	68
Key, engine cover lock	B1-5-1	68
Key, engine cover lock	B1-5-1	70
Kit-bearing, big-end, standard	K1-4-1	7
Kit-brush	C2-3-2	14
Kit-brush	C2-5-1	24
Kit-brush	C2-5-1	25
Kit-drive end	C2-5-1	3
Kit-engine oil drain	K5-1-1	22
Kit-fan & pulley, Kit-fan & pulley	C2-3-2	3
Kit-filter	K3-3-1	1
Kit-gasket, overhaul	K8-1-2	1
Kit-gasket, top	K8-1-1	1
Kit-main bearing, standard	K1-4-1	32
Kit-piston & liner	K8-2-1	1
Kit-piston ring, standard	K1-4-1	2
Kit-repair, water pump	K4-1-1	41
Kit-rotor, Kit-rotor	C2-3-2	8
Kit-seal	E1-40-2	5
Kit-seal	F4-3-1	11
Kit-seal	F4-3-2	11
Kit, cab guard F.O.P.S, euro cab	B2-9-1	1
Kit, recoil assembly	J1-6-2	1
Kit, seals	E3-14-2	1

L

DESCRIPTION	PAGE NUMBER	ITEM NUMBER
Label, CAUTION	K2-3-1	69
Lead, compressor	C3-5-2	39
Lever	B2-10-1	31
Light, assembly	C1-4-1	1
Light, assembly	C1-4-1	5
Light, assembly	C1-4-2	6
Lighter, cigarette, 24 volt	C1-2-1	27
Liner, cylinder	K1-3-1	12
Link	B2-10-1	26
Lock, side doors, and tool box	B1-5-20	14
Lock, side doors, and tool box	B1-5-20	14
Lock, side doors, and tool box	B1-5-20	25
Lock, side doors, and tool box	B1-5-20	25
Lock, side doors, and tool box	B1-5-30	8
Lock, side doors, and tool box	B1-5-30	9

M

DESCRIPTION	PAGE NUMBER	ITEM NUMBER
Manifold, exhaust front	K3-2-1	15
Manifold, exhaust rear	K3-2-1	17
Manifold, inlet	K3-1-1	1
Motor, starter, 24v-5.5kw	C2-1-1	15
Motor, starter, 24v-5.5kw	C2-5-1	0
Motor, throttle	D2-1-1	4

N

DESCRIPTION	PAGE NUMBER	ITEM NUMBER
Nozzle, fuel	C1-5-1	10
Nozzle, injector	K6-2-10	1
Nut, M8 plain st.steel	E1-8-2	13

O

DESCRIPTION	PAGE NUMBER	ITEM NUMBER
O Ring	E1-8-2	13
O Ring	E1-8-2	13
O Ring	E4-2-20	12

P

DESCRIPTION	PAGE NUMBER	ITEM NUMBER
Paint, undercoat, 0.5 litre, two pack yellow	B5-5-1	1
Panel, monitor	C3-1-1	1
Pedal, left hand	D1-1-1	27
Pedal, right hand	D1-1-1	27
Pipe, assembly, compressor cooling	K7-5-1	29
Pipe, assembly, compressor cooling	K7-5-1	28
Pipe, elbow	K4-2-1	22
Pipe, exhaust	K3-4-1	1
Pipe, exhaust tail	K3-4-1	17
Pipe, f/tank to sedimentor	K6-2-1	63
Pipe, fuel	K6-2-1	51
Pipe, fuel boost control	K6-2-1	83
Pipe, fuel inj/pmp to filt	K6-2-1	43
Pipe, fuel spill rail	K6-2-1	48
Pipe, fuel/filt to l/pump	K6-2-1	42
Pipe, induction inlet	K3-1-1	8
Pipe, injector No.1	K6-2-1	31
Pipe, injector No.2	K6-2-1	32
Pipe, injector No.3	K6-2-1	33
Pipe, injector No.4	K6-2-1	34
Pipe, injector No.5	K6-2-1	35
Pipe, injector No.6	K6-2-1	36
Pipe, oil drain	K5-5-1	36
Pipe, oil drain	K5-5-1	14
Pipe, oil feed to block	K5-6-1	10
Pipe, oil filter feed	K5-6-1	42
Pipe, oil suction	K5-6-1	2
Pipe, oil, block-comp	K5-6-1	15
Pipe, sedimentor to l/pump	K6-2-1	66
Pipe, turbo oil drain	K7-2-1	36
Pipe, turbo oil feed	K7-2-1	32
Pipe, water drain	K5-5-1	16
Pipe, water heater	K5-5-1	43
Piston, standard	K1-4-1	1
Plate	E1-11-1	16
Plate, bulkhead	E1-30-1	9
Plate, catch	B1-5-1	67
Plate, clamp	B2-7-1	5
Platform, left hand	B1-1-1	3
Plug	E1-1-1	7
Plug, drain	K4-4-1	3
Plug, oil drain	K5-5-1	15
Plug, single diode	C1-1-1	10
Plug, single diode	C1-2-1	19
Pointer, timing	K1-7-1	10
Pulley, alternator	C2-3-1	24
Pulley, crankshaft	K1-5-1	22
Pulley, water pump	K1-5-1	55
Pump, fuel feed, assembly	K6-8-1	0
Pump, gear assembly, auxiliary	E1-30-1	21
Pump, hand primer	K6-8-1	25
Pump, oil assembly	K5-2-1	1
Pump, water	K4-1-1	40

R

DESCRIPTION	PAGE NUMBER	ITEM NUMBER
Radiator, assembly	K4-4-1	1
Radio, cassette unit, 12 volt	C3-11-1	1
Rectifier, assembly	C2-3-1	14
Rectifier, Rectifier, assembly	C2-3-2	16
Regulator, & brush box, assembly	C2-3-2	13
Regulator, assembly	C2-3-1	12
Regulator, timing, auotomatic injection	K6-1-40	0
Relay, starter safety	C2-1-1	7
Relay, thermostat	C2-1-1	30
Relay, 24 volt	C1-2-1	20
Ring, anti-extrusion	E4-2-20	12
Ring, guide, axial	E3-14-2	1
Rod	J1-6-2	7
Rod, connecting, assembly	K1-4-1	3

S

DESCRIPTION	PAGE NUMBER	ITEM NUMBER
Screen, guaze	K4-3-1	17
Screw, ST	C3-5-1	28
Seal	J1-6-2	7
Seal, dust	J1-6-2	7
Seal, front oil	K1-6-1	6
Seal, rear oil	K1-7-1	15
Seal, valve guide	K2-1-1	22
Seal, wiper	E4-3-1	25
Seal, wiper	E4-3-1	26
Sender, temperature	C2-1-1	2
Sender, temperature, water/ hydraulic oil	C2-1-1	1
Sender, temperature,, water/ hydraulic oil	C1-1-1	20
Sensor, diesel fuel level, c/w sealing gasket	B1-4-1	6
Sensor, engine speed	C2-1-1	31
Sensor, low water level	C2-1-1	9

DESCRIPTION	PAGE NUMBER	ITEM NUMBER
Sensor, low water level	K4-4-1	12
Shaft, idler gear	K1-6-2	28
Shaft, idler gear "A"	K1-6-2	10
Shaft, rocker, assembly	K2-2-1	30
Shield, heat	K3-2-1	26
Silencer	K3-4-1	9
Solenoid	C2-5-1	6
Solenoid, E.S.O.S	C2-1-1	21
Solenoid, E.S.O.S	D2-1-1	26
Spring, inner, exhaust valve	K2-2-1	22
Spring, inner, inlet valve	K2-2-1	21
Spring, outer, exhaust valve	K2-2-1	20
Spring, outer, inlet valve	K2-2-1	19
Stator, Stator	C2-3-2	10
Sump, oil assembly	K5-1-1	1
Switch, limit	B2-10-1	32
Switch, oil pressure warning	C2-1-1	6
Switch, oil pressure warning	C2-1-1	5
Switch, oil pressure warning	K5-5-1	8
Switch, pressure	B1-3-1	22
Switch, pressure	C1-1-1	27
Switch, pressure, lever pressure	C1-1-1	18
Switch, pressure, track pressure	C1-1-1	17
Switch, rotary control	C3-5-21	16
Switch, thermo	C1-1-1	21
Switch, vacuum sensor	C2-1-1	8
Switch, vacuum sensor	C2-1-1	8
Switch, vacuum sensor	K3-3-1	11
Switch, vacuum sensor	K3-3-2	17

T

Tank, expansion	K4-4-1	10
Tank, sump	B1-3-1	12
Tap, drain	K6-6-2	17
Thermostart, (24v)	C2-1-1	3
Thermostat	K4-2-1	21
Tube, assembly, low flow	E1-30-1	12
Tube, assembly, low flow	E1-30-1	11
Tube, dipstick	K5-1-1	12
Tube, lowflow	E1-32-5	3
Tube, lowflow	E1-32-5	4
Tube, lowflow	E1-32-5	5
Turbocharger	K7-1-1	0

V

Valve, assembly	K5-5-1	4
Valve, assembly	K5-6-1	1
Valve, check	J1-6-2	7
Valve, cushion	E1-13-20	48
Valve, diaphragm, red	K3-3-2	7
Valve, exhaust	K2-2-1	18
Valve, hand control, left hand	E3-6-1	0
Valve, hand control, right hand	E3-6-1	0
Valve, low flow	E1-30-1	1
Valve, oil breather	K2-3-1	53
Valve, oil relief assembly	K5-2-1	5
Valve, overflow	K6-2-1	52
Valve, relief	B1-3-1	6
Valve, relief assembly	K5-5-1	50
Valve, solenoid	E1-11-1	39
Valve, switch	E3-16-1	4

W

Washer	J1-6-2	7
Washer, spring, st. steel	E1-8-2	13
Washer, M8 PLAIN ST.S	E1-8-2	13