VOLVO
Construction Equipment

L120E

PROSIS Part Information

Date: **24/08/2018**	Image id: **1001211**	Catalogue: **20086**	Model: **L120E**
Brand: **Volvo**	Serial: **19804-, 66001-, 71401-**	Group/Section: **030/100**	Title: **Product identification plate**

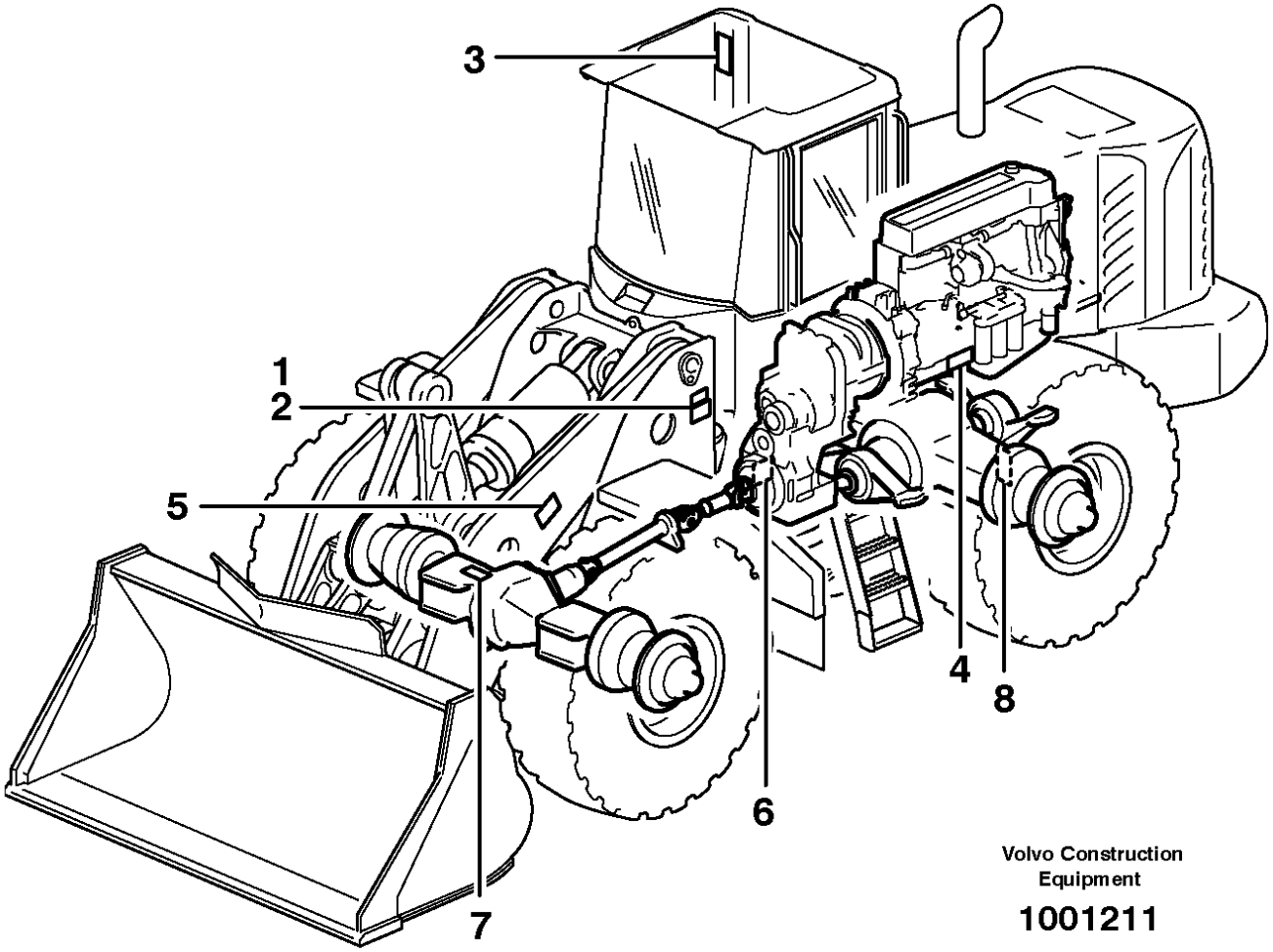

Pos	Part	Q1	Q2	Q3	Q4	Q5	PS	Kit	Description	Option(s)	Remark
1									Product sign plate		
2									Assembly Sign Plate		
3									Driver's cab		
4									Engine sign plate		
5									Lifting Unit		
6									Power Transmission		
7									Drive axle front sign plate		
8									Drive axle rear sign plate		

VOLVO

Construction Equipment

PROSIS Part Information

Date:	Image id:	Catalogue:	Model:
24/08/2018	**1000126**	**20086**	**L120E**
Brand:	Serial:	Group/Section:	Title:
Volvo	**19804-, 66001-, 71401-**	**210/100**	**Repair kits for engine**

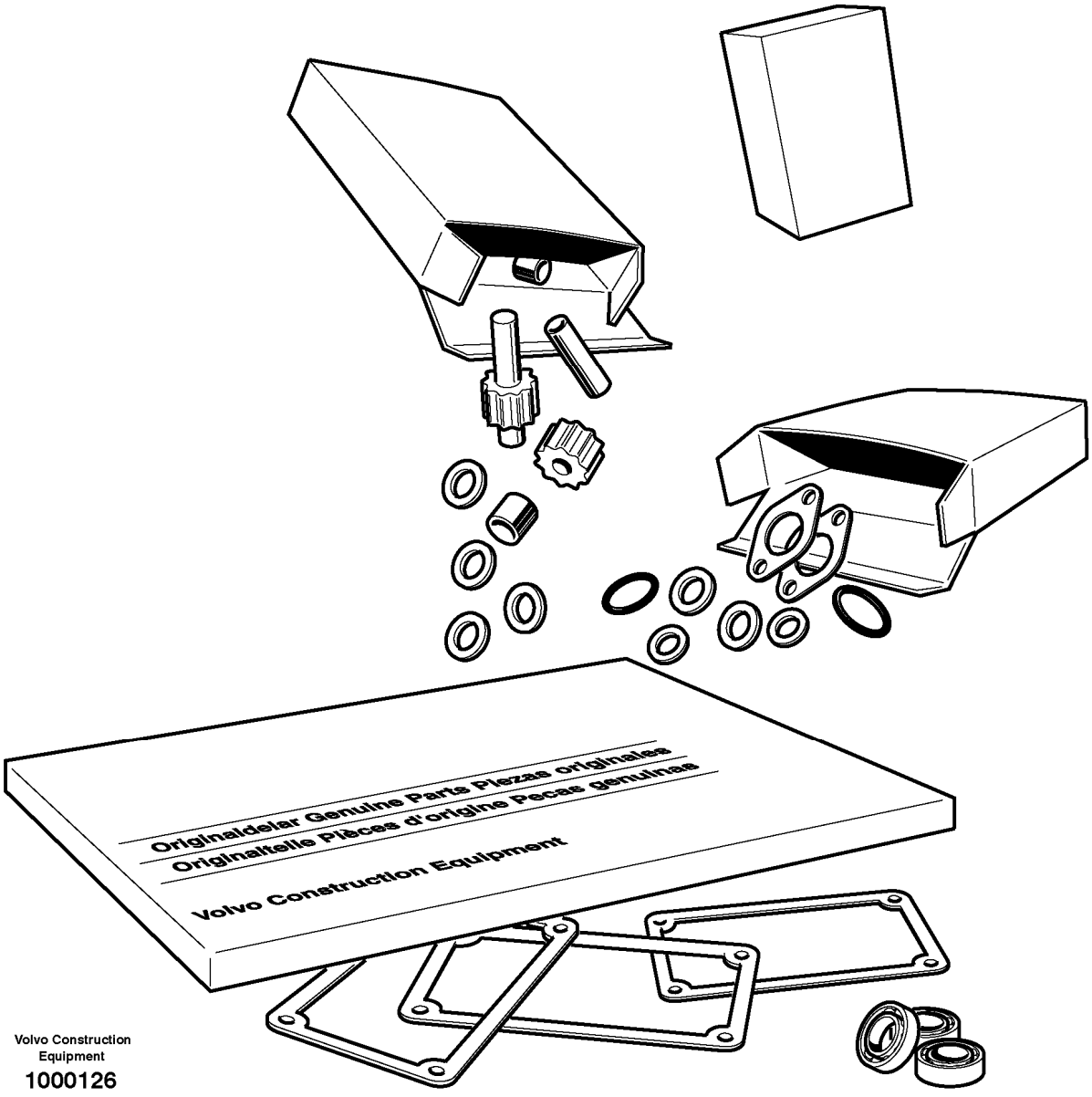

Pos	Part	Q1	Q2	Q3	Q4	Q5	PS	Kit	Description	Option(s)	Remark
	VOE15011490	1							Overhaul kit		
	VOE15011483	1							•Cylinder head kit		
	VOE20865990	6							•Cyl Liner Kit		

VOLVO

Construction Equipment

PROSIS Part Information

Date:	Image id:	Catalogue:	Model:
24/08/2018	**1019897**	**20086**	**L120E**
Brand:	Serial:	Group/Section:	Title:
Volvo	**19804-, 66001-, 71401-**	**210/150**	**Engine**

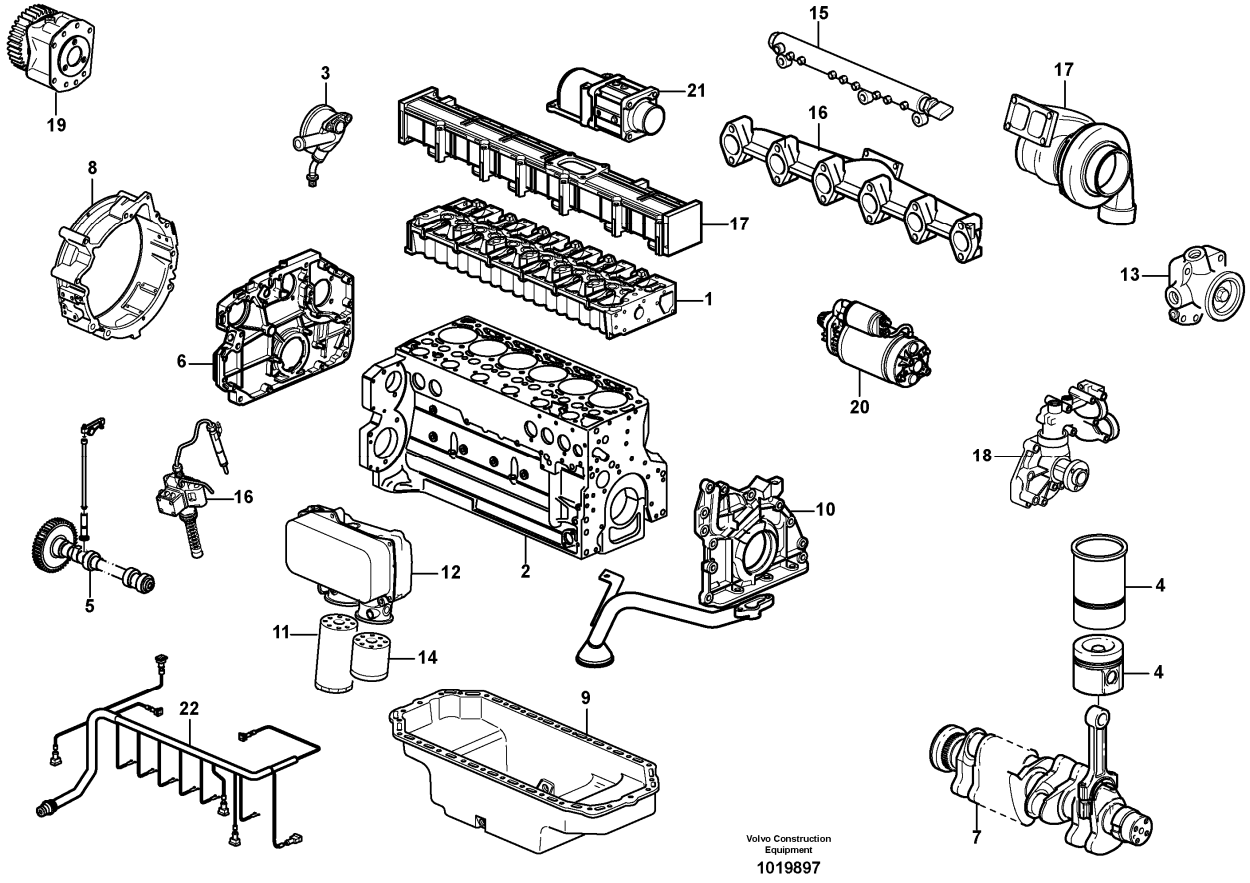

Section option	Kit	Option description
VOE11410957		Engine VOLVO D7ELAE3

Pos	Part	Q1	Q2	Q3	Q4	Q5	PS	Kit	Description	Option(s)	Remark
	VOE11410957	1							Engine		D7ELAE3, REMAN VOE9011410957
1		1							•Cylinder head		See ref 211/100
2		1							•Crankcase		See ref 212/100
3		1							•Crankcase Venti		See ref 212/150
4		1							•Cylinder Liner		See ref 213/100
5		1							•Camshaft		See ref 214/100
6		1							•Gear Housing		See ref 215/100
7		1							•Crankshaft		See ref 216/100
8		1							•Flywheel Hsg		See ref 216/150
9		1							•Oil Pan		See ref 217/100

10		1							•Oil Pump		See ref 221/100
11		1							•Oil Filter		See ref 222/100
12		1							•Oil Cooler		See ref 223/100
13		1							•Fuel pump		See ref 233/100
14		1							•Fuel Filter		See ref 233/150
15		1							•Rail		See ref 237/100
16		1							•Exhaust Pipe		See ref 251/100
17		1							•Turbo Charger		See ref 255/100
18		1							•Coolant Pump		See ref 262/100
19		1							•Flange		See ref 263/300
20		1							•Starter		See ref 331/100
21		1							•Heater		See ref 333/150
22		1							•Cable harness		See ref 371/150

VOLVO

Construction Equipment

PROSIS Part Information

Date:	Image id:	Catalogue:	Model:
24/08/2018	**1027634**	**20086**	**L120E**
Brand:	Serial:	Group/Section:	Title:
Volvo	**19804-, 66001-, 71401-**	**211/100**	**Cylinder head**

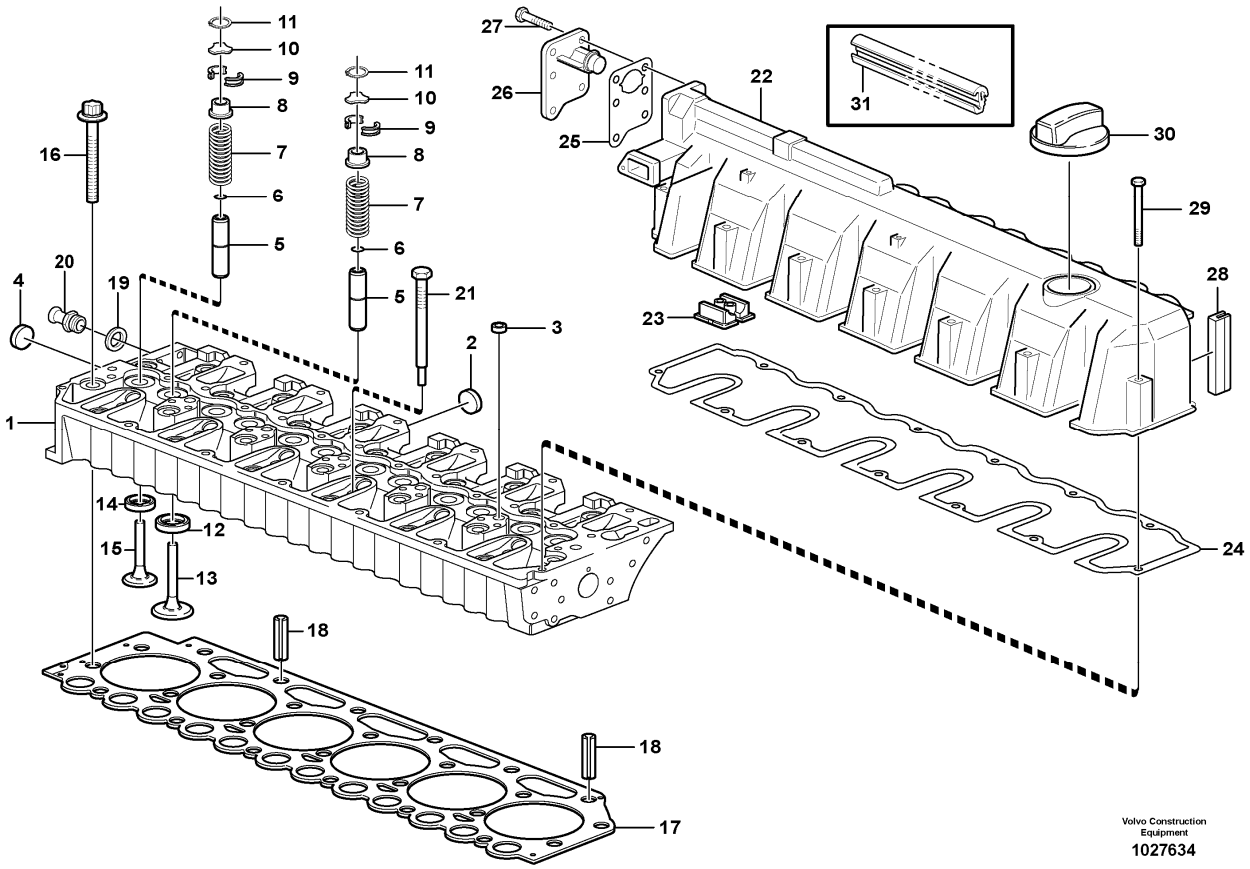

Section option	Kit	Option description
VOE11410957		Engine VOLVO D7ELAE3

Pos	Part	Q1	Q2	Q3	Q4	Q5	PS	Kit	Description	Option(s)	Remark
1	VOE20799762	1							Cylinder head		REMAN VOE9020799762
2	VOE20799722	5							•Plug		
3	VOE20412733	5							•Core plug		
4	VOE20914266	2							•Core Plug		
5	VOE20405897	12							•Valve guide		
6	VOE11700348	12							•O-ring		
7	VOE11700347	12							•Valve spring		
8	VOE20847155	12							•Retainer		
9	VOE11700345	24							•Valve sleeve		
10	VOE20840807	12							•Thrust washer		

11	VOE20840772	12							•Lock ring		
12	VOE20459962	6							•Valve seat		
13	VOE20758481	6							•Inlet valve		
14	VOE20845144	6							•Valve seat		
15	VOE21739130	6							•Exhaust valve		(VOE20755883)
16	VOE11700334	26							Screw		
17	VOE20943385	1							Cylinder head gasket		THICK=1,4MM, 1 HOLE
	VOE20949868	1							Cylinder head gasket		THICK=1,5MM, 2 HOLE
	VOE20943389	1							Cylinder head gasket		THICK=1,6MM, 3 HOLE
18	VOE20405521	2							Guide pin		
19	VOE993358	1							Gasket		
20	VOE20483764	1							Nipple		
21	VOE20405895	6							Plug		
22	VOE21455720	1							Valve cover		(VOE21036771)
23	VOE20412600	1							•Cap		
24	VOE20792871	1							•Gasket		
25	VOE20840801	1							•Gasket		
26	VOE20933359	1							•Oil Separator		
27	VOE20797542	6							•Hexagon screw		
28	VOE20847667	1							•Sealing		
29	VOE20412601	13							Screw		(VOE21145471)
30	VOE20412589	1							Filler cap		
31	VOE20996748	1							Sealing strip		

VOLVO

Construction Equipment

PROSIS Part Information

Date:	Image id:	Catalogue:	Model:
24/08/2018	**1056314**	**20086**	**L120E**
Brand:	Serial:	Group/Section:	Title:
Volvo	**19804-, 66001-, 71401-**	**212/100**	**Cylinder block**

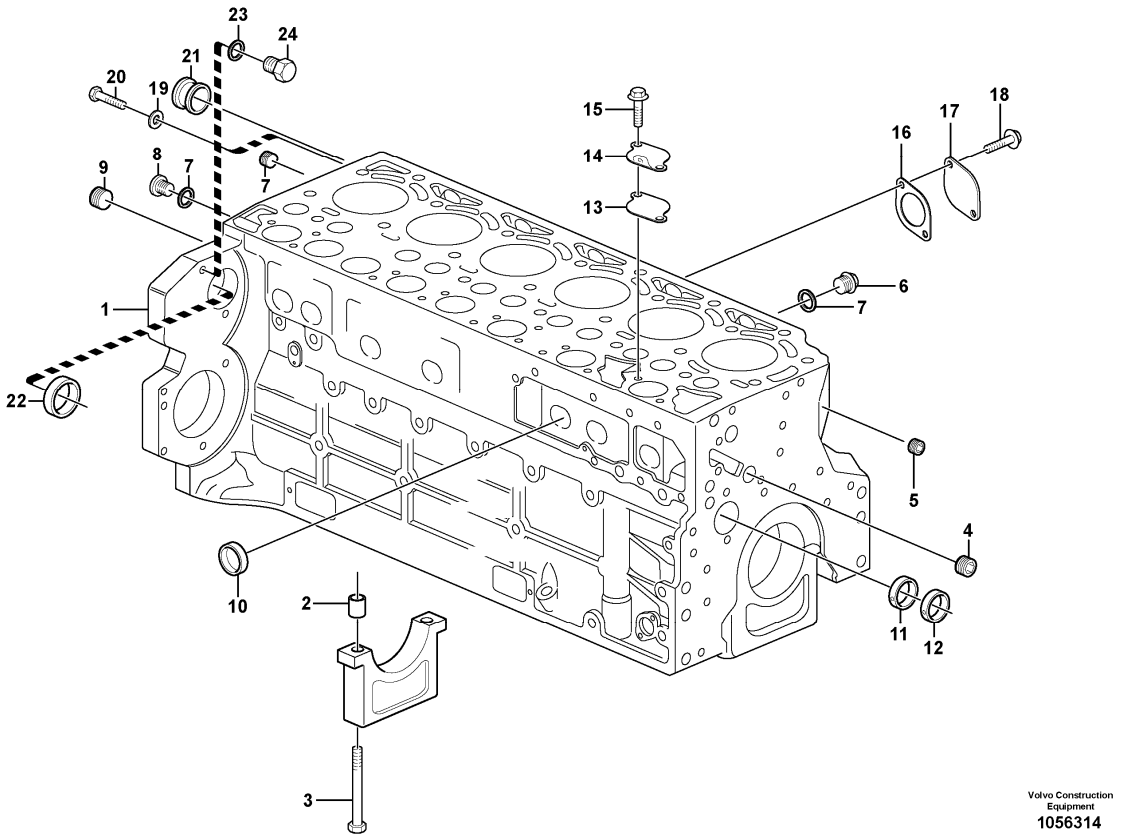

Section option	Kit	Option description
VOE11410957		Engine VOLVO D7ELAE3

Pos	Part	Q1	Q2	Q3	Q4	Q5	PS	Kit	Description	Option(s)	Remark
1	VOE20851922	1							Crankcase		
2	VOE11700278	14							•Bushing		
3	VOE20405583	14							•Bolt		
4	VOE20405719	1							•Plug		
5	VOE20508600	2							•Plug		
6	VOE20405716	2							•Plug		
7	VOE13969011	3							•Gasket		
8	VOE945065	1							•Plug		
9	VOE20785813	1							•Plug		(VOE20508605)
10	VOE20405721	10							•Core plug		
11	VOE11700285	1							•Bearing bushing		

12	VOE11700284	6							•Bearing bushing		
13	VOE20933203	1							Gasket		
14	VOE20840812	1							Cover		
15	VOE20405792	2							Screw		
16	VOE20412341	1							Gasket		
17	VOE21180405	1							Flange		
18	VOE20405885	2							Screw		
19	VOE20460087	1							Washer		
20	VOE20460101	1							Screw		
21	VOE20794126	1							Bushing		
22	VOE20450778	1							Core plug		
23	VOE13947281	2							Gasket		
24	VOE20441859	2							Plug		

VOLVO

Construction Equipment

PROSIS Part Information

Date:	Image id:	Catalogue:	Model:
24/08/2018	**1032663**	**20086**	**L120E**
Brand:	Serial:	Group/Section:	Title:
Volvo	**19804-, 66001-, 71401-**	**212/150**	**Crankcase ventilation**

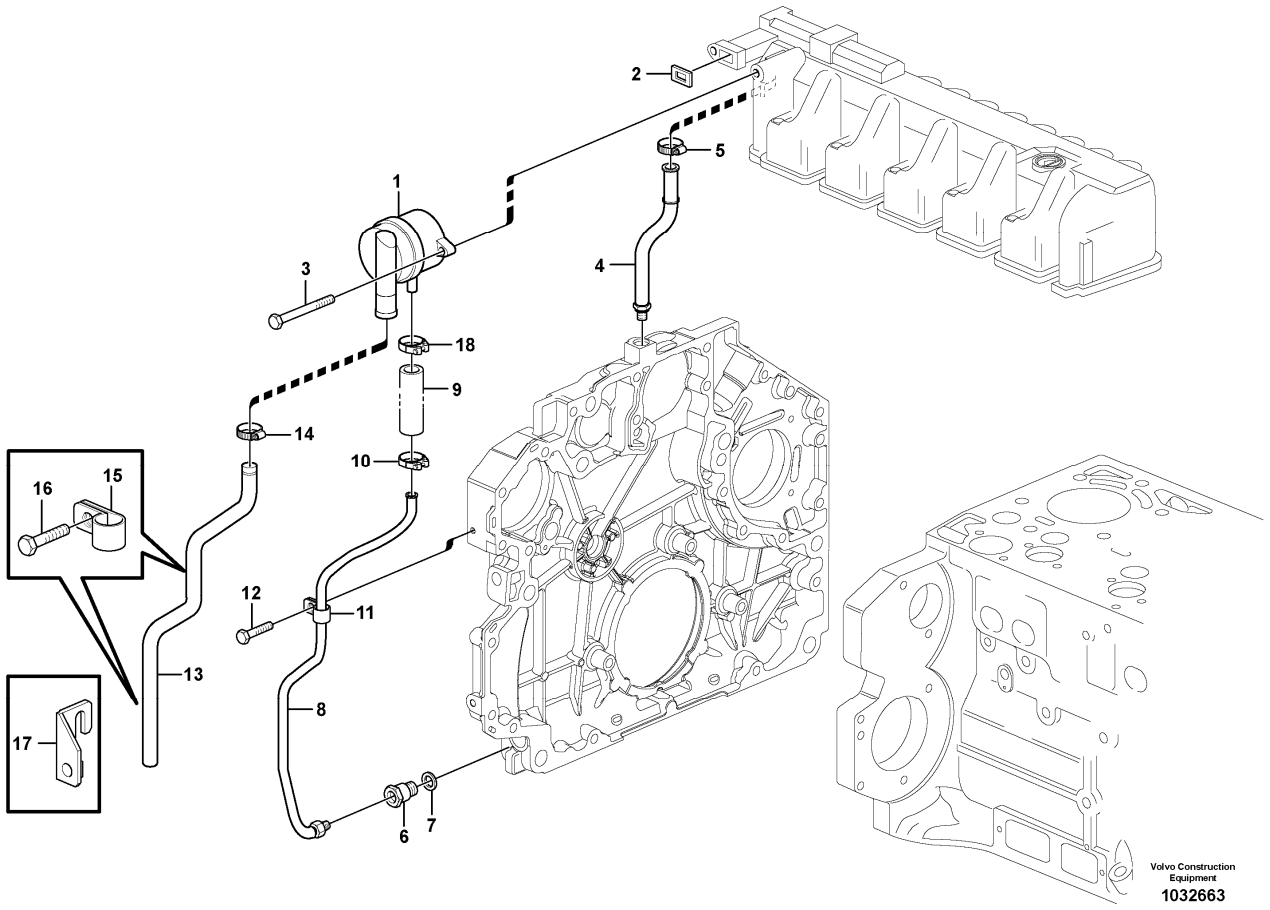

Section option	Kit	Option description
VOE11410957		Engine VOLVO D7ELAE3

Pos	Part	Q1	Q2	Q3	Q4	Q5	PS	Kit	Description	Option(s)	Remark
1	VOE20930510	1							Oil separator		
2	VOE21038626	1							•Gasket		
3	VOE20405504	2							Screw		
4	VOE20820967	1							Oil Line		
5	VOE20799673	1							Hose clamp		
6	VOE21496705	1							Drain valve		(VOE20841133)
7	VOE20460026	1							Sealing ring		
8	VOE20904725	1							Oil Line		
9	VOE20849878	1							•Hose		
10	VOE20971607	1							•Hose clamp		
11	VOE20798831	1							•Attaching clamp		

12	VOE20405729	1							Screw		
13	VOE20799590	1							Tube		
14	VOE20405755	1							Clamping band		
15	VOE20798837	2							Clamp		
16	VOE20405885	2							Screw		
17		1					NS		Retaining Plate		
18	VOE20971607	1							Hose clamp		

VOLVO

Construction Equipment

PROSIS Part Information

Date:	Image id:	Catalogue:	Model:
24/08/2018	**1024555**	**20086**	**L120E**
Brand:	Serial:	Group/Section:	Title:
Volvo	**19804-, 66001-, 71401-**	**212/200**	**Crankcase ventilation**

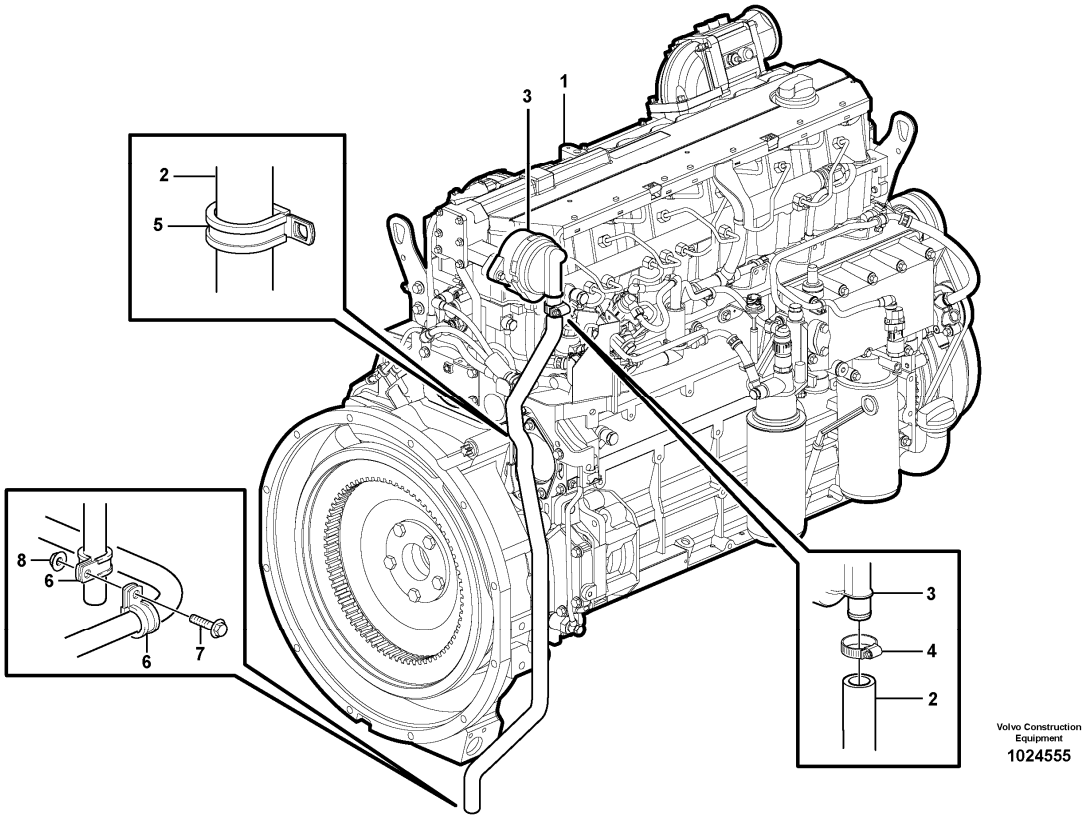

Section option	Kit	Option description
VOE33380		Volvo Wheel Loader L120E S/N 19801-, S/N 66001- USA, S/N 71401- BRA

Pos	Part	Q1	Q2	Q3	Q4	Q5	PS	Kit	Description	Option(s)	Remark
1		1							Motor		See ref 210/150
2	VOE11445236	1							Hose		
3		1							Pressure Regulator		See ref 212/150
4	VOE13943474	1							Hose clamp		
5	VOE13949997	1							Clamp		
6	VOE13949997	2							Clamp		
7	VOE13946173	1							Screw		
8	VOE13945408	1							Nut		

VOLVO

Construction Equipment

PROSIS Part Information

Date:	Image id:	Catalogue:	Model:
24/08/2018	**1026946**	**20086**	**L120E**
Brand:	Serial:	Group/Section:	Title:
Volvo	**19804-, 66001-, 71401-**	**213/100**	**Cylinder liner and piston**

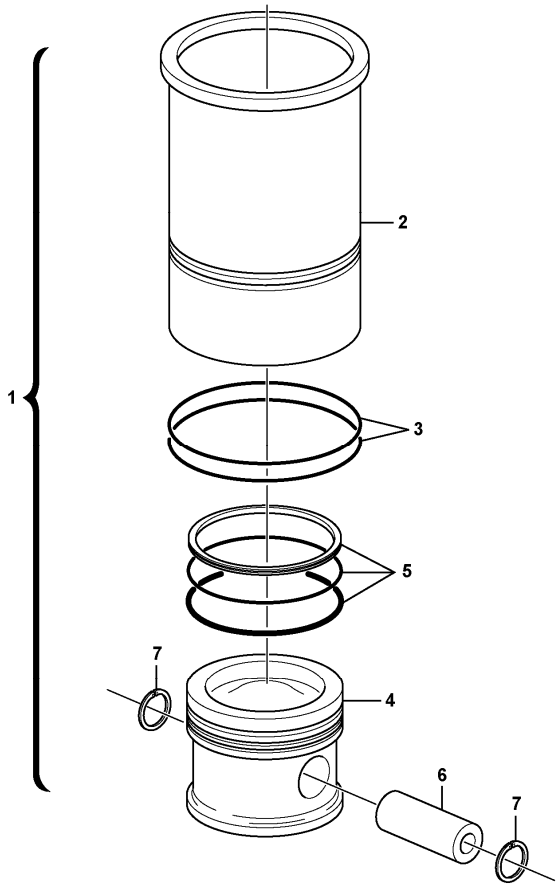

Section option	Kit	Option description
VOE11410957		Engine VOLVO D7ELAE3

Pos	Part	Q1	Q2	Q3	Q4	Q5	PS	Kit	Description	Option(s)	Remark
1	VOE20865990	6							Cyl Liner Kit		
2		6					NS		•Cylinder Liner		
3	VOE20412762	12							•O-ring		
4		6					NS		•Piston		
5	VOE21299547	6							•Piston ring kit		(VOE20450775)
6	VOE20405577	6							•Gudgeon pin		
7	VOE20405576	12							•Snap ring		

VOLVO

Construction Equipment

PROSIS Part Information

Date:	Image id:	Catalogue:	Model:
24/08/2018	**1030265**	**20086**	**L120E**
Brand:	Serial:	Group/Section:	Title:
Volvo	**19804-, 66001-, 71401-**	**214/100**	**Valve mechanism**

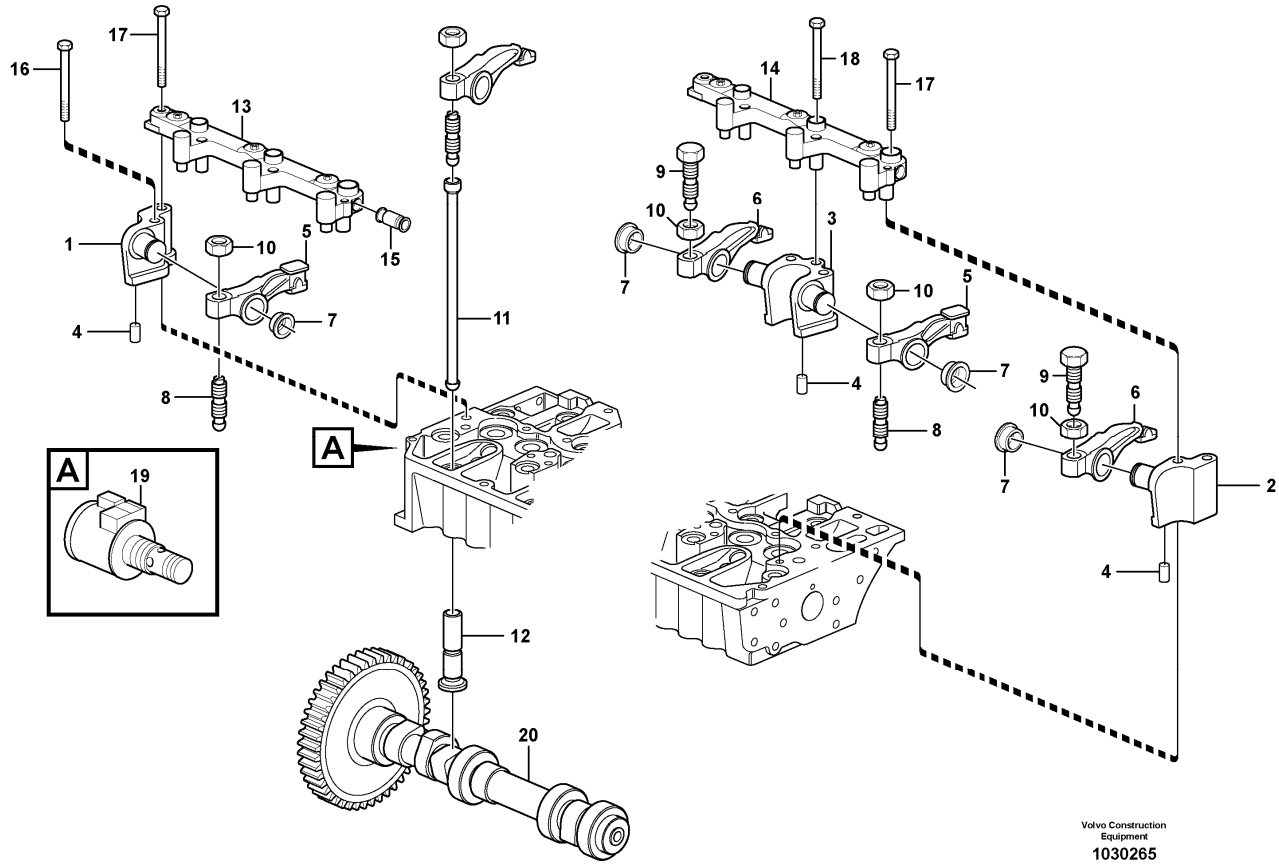

Section option	Kit	Option description
VOE11410957		Engine VOLVO D7ELAE3

Pos	Part	Q1	Q2	Q3	Q4	Q5	PS	Kit	Description	Option(s)	Remark
1	VOE20794124	1							Bracket		(VOE21066484)
2	VOE20826696	1							Bracket		(VOE21066474)
3	VOE20793045	5							Bracket		(VOE21066482)
4	VOE20790837	7							Pin		
5	VOE21448082	6							Rocker arm		(VOE20792878)
6	VOE21448926	6							Rocker arm		(VOE20792876)
7	VOE20794115	12							Retaining ring		
8	VOE20913851	6							Adjusting Screw		
9	VOE20816389	6							Adjusting screw		
10	VOE11700373	12							Nut		
11	VOE20405534	12							Push rod		

12	VOE20792475	12							Tappet		
13	VOE20802124	1							Actuator		
14	VOE20802121	1							Actuator		
15	VOE20798864	1							Plug		
		2					NS		•Rubber Seal		
16	VOE20405723	7							Screw		
17	VOE60110410	7							Flange screw		(VOE20799653)
18	VOE20450802	3							Flange screw		
19	VOE20795296	1							Solenoid valve		
20	VOE21597192	1							Camshaft		(VOE20795775)ENG - 10301020
20	VOE22216525	1							Camshaft		(VOE21012455)ENG 10301021 -

VOLVO

Construction Equipment

PROSIS Part Information

Date:	Image id:	Catalogue:	Model:
24/08/2018	**1019841**	**20086**	**L120E**
Brand:	Serial:	Group/Section:	Title:
Volvo	**19804-, 66001-, 71401-**	**215/100**	**Timing gear casing**

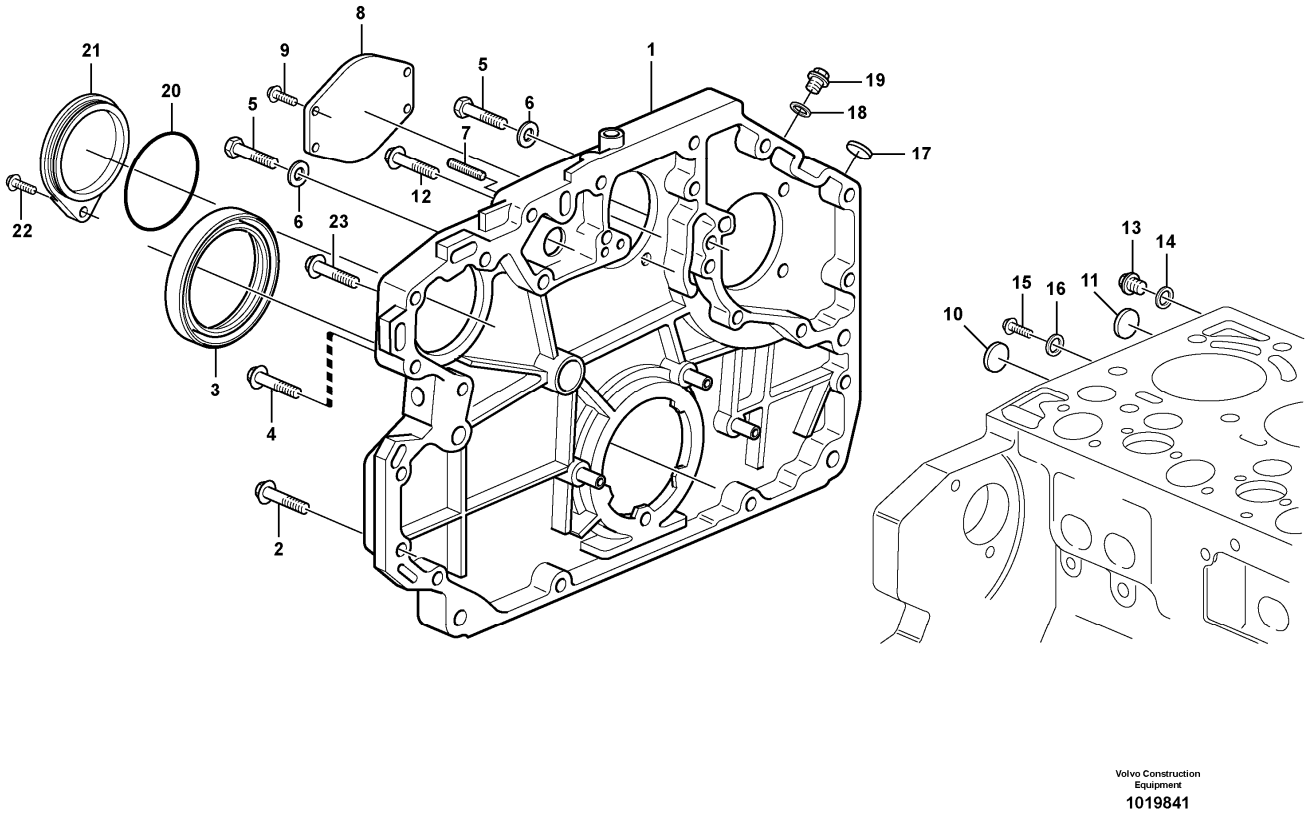

Section option	Kit	Option description
VOE11410957		Engine VOLVO D7ELAE3

Pos	Part	Q1	Q2	Q3	Q4	Q5	PS	Kit	Description	Option(s)	Remark
1	VOE22039480	1							Timing gear casing		(VOE20972356)
2	VOE20412324	12							Screw		
3	VOE21486084	1							Lip seal		(VOE20412286)
4	VOE20405709	4							Screw		
5	VOE20534597	2							Screw		
6	VOE13955900	2							Washer		
7	VOE20450795	1							Set screw		
8	VOE20450799	1							Cover		
9	VOE20405709	4							Screw		
10	VOE20412745	1							Core plug		
11	VOE20490808	1							Cover		

12	VOE20450801	1							Screw		
13	VOE945065	1							Plug		(VOE20792132)
14	VOE13947621	1							Plane gasket		
15	VOE20405898	1							Screw		
16	VOE20460087	1							Washer		
17	VOE20405605	1							Cover		
18	VOE13947621	1							Plane gasket		
19	VOE20451012	1							Screw		
20	VOE20405652	1							Sealing ring		
21	VOE20950063	1							Cover		
22	VOE20450802	1							Flange screw		
23	VOE20405709	1							Screw		

VOLVO

Construction Equipment

PROSIS Part Information

Date:	Image id:	Catalogue:	Model:
24/08/2018	**1019893**	**20086**	**L120E**
Brand:	Serial:	Group/Section:	Title:
Volvo	**19804-, 66001-, 71401-**	**216/100**	**Crankshaft and related parts**

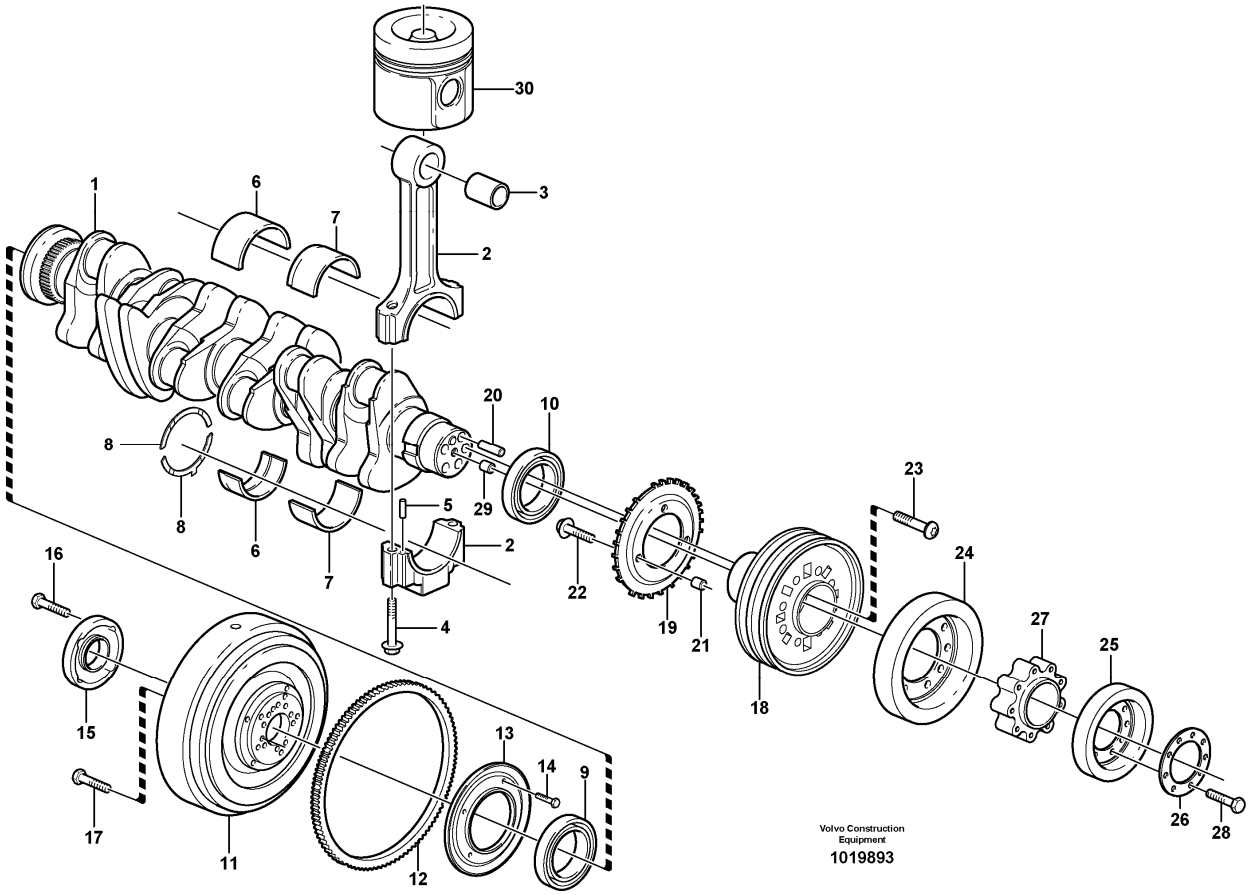

Section option	Kit	Option description
VOE11410957		Engine VOLVO D7ELAE3

Pos	Part	Q1	Q2	Q3	Q4	Q5	PS	Kit	Description	Option(s)	Remark
1	VOE21245957	1							Crankshaft		(VOE20875042), REMAN VOE9021245957, VOE9020875042
2	VOE20585982	6							Connecting rod		(VOE11700324)
3	VOE11700325	6							•Bushing		
4	VOE11700326	12							•Bolt		
5	VOE20459134	12							•Pin		
6	VOE21141948	7							Main bearing		(VOE11700311)STD = 85,00 MM
	VOE21234191	REQ							Main bearing		(VOE20405529)U SZ = 84,75 MM

	VOE20405541	REQ							Main bearing		U SZ = 84,50 MM
7	VOE20766790	6							Big-end Bearing		STD = 68,00 MM
	VOE20790423	REQ							Big-end Bearing		U SZ = 67,75 MM
	VOE20790428	REQ							Big-end Bearing		U SZ = 67,50 MM
8	VOE20405899	1					SS		Thrust Washer		STD = 2,9 MM
	VOE21141963	REQ							Thrust washer		(VOE11700315)O SZ = 3,1 MM
9		1							Sealing ring		See ref 215/100
10		1							Sealing ring		See ref 221/100
11	VOE20917910	1							Flywheel		
12	VOE20450830	1							•Gear		
13	VOE20918003	1							•Ring		
14	VOE20933839	4							•Screw		
15	VOE20460793	1							Flange		
16	VOE21000755	5							Hexagon screw		
17	VOE20450835	10							Screw		
18	VOE20483448	1							Pulley		
19	VOE20792423	1							Lock Washer		
20	VOE20450838	1							Pin		
21	VOE20450628	1							Pin		
22	VOE975108	3							Flange screw		(VOE888289)
23	VOE20405724	4							Screw		
24	VOE20585446	1							Vibration damper		
25	VOE21083252	1							Vibration damper		(VOE20460794)
26	VOE20460800	1							Washer		
27	VOE20460799	1							Spacer		
28	VOE20460205	9							Screw		
29	VOE20405634	1							Spring pin		
30		1							Piston		See ref 213/100

VOLVO

Construction Equipment

PROSIS Part Information

Date:	Image id:	Catalogue:	Model:
24/08/2018	**1033647**	**20086**	**L120E**
Brand:	Serial:	Group/Section:	Title:
Volvo	**19804-, 66001-, 71401-**	**216/150**	**Flywheel housing**

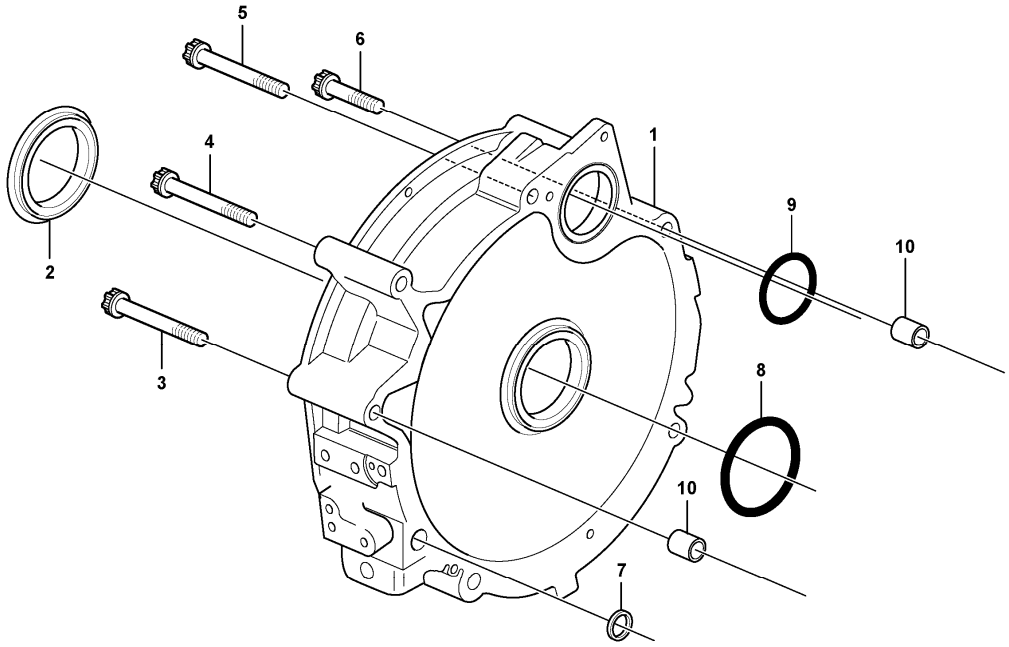

Section option	Kit	Option description
VOE11410957		Engine VOLVO D7ELAE3

Pos	Part	Q1	Q2	Q3	Q4	Q5	PS	Kit	Description	Option(s)	Remark
1	VOE20459988	1							Flywheel housing		
2	VOE20450784	1							•Labyrinth ring		(VOE11700592)
3	VOE20460792	1							Screw		
4	VOE20405715	1							Screw		
5	VOE20405710	3							Screw		
6	VOE20460792	1							Screw		
7	VOE20459993	4							O-ring		
8	VOE20450786	1							Sealing ring		
9	VOE20459994	1							Sealing ring		
10	VOE20585971	2							Bushing		

VOLVO

Construction Equipment

PROSIS Part Information

Date:	Image id:	Catalogue:	Model:
24/08/2018	**1031067**	**20086**	**L120E**
Brand:	Serial:	Group/Section:	Title:
Volvo	**19804-, 66001-, 71401-**	**217/100**	**Oil sump**

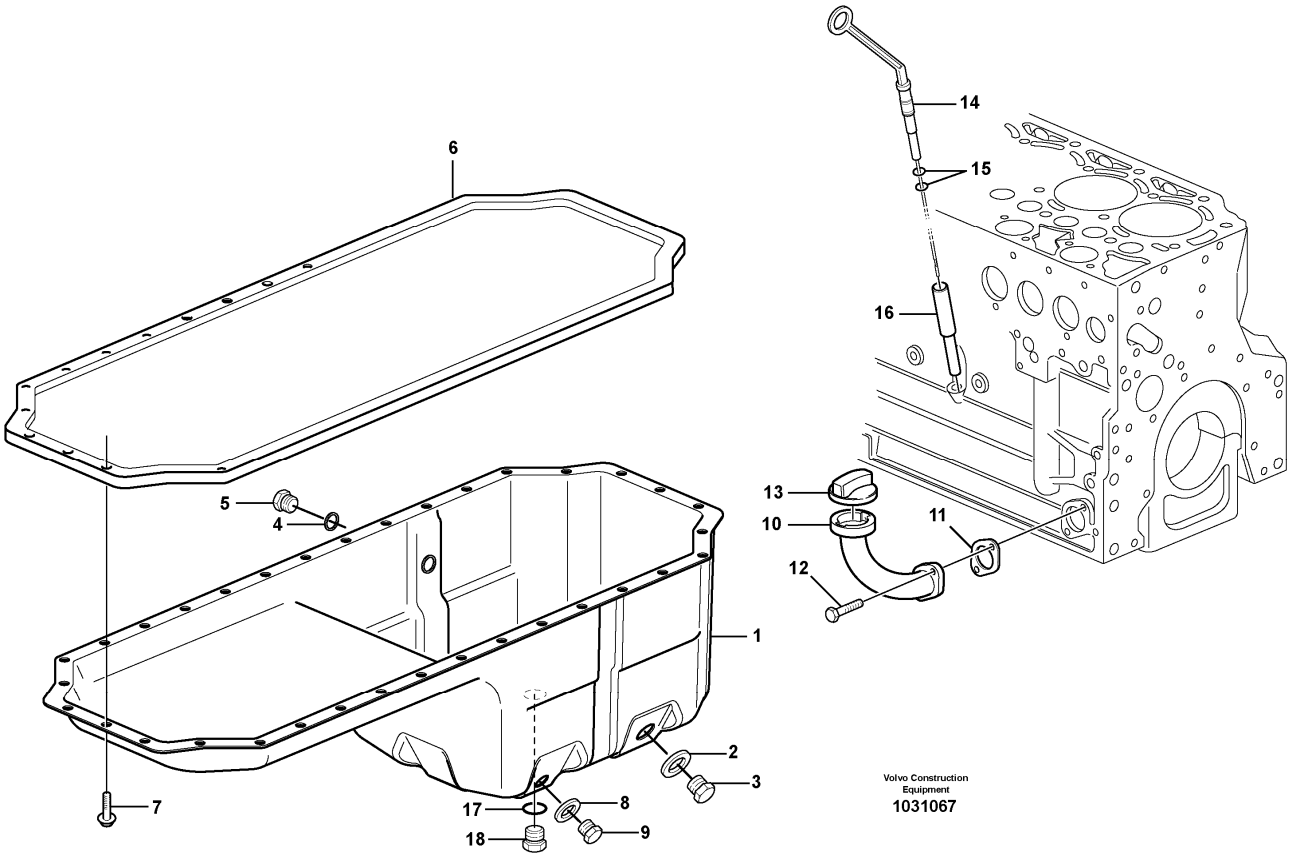

Section option	Kit	Option description
VOE11410957		Engine VOLVO D7ELAE3

Pos	Part	Q1	Q2	Q3	Q4	Q5	PS	Kit	Description	Option(s)	Remark
1	VOE20814391	1							Oil Pan		(VOE21099578)
2	VOE20496256	1							•Gasket		
3	VOE20496257	1							•Plug		
4	VOE20460026	1							•Sealing ring		
5	VOE20460024	1							•Plug		
6	VOE20405915	1							Gasket		
7	VOE20405792	34							Screw		
8	VOE13947624	1							Plane gasket		
9	VOE20405506	1							Plug		
10	VOE20412347	1							Filler neck		
11	VOE20405825	1							Gasket		

12	VOE20405885	2							Screw		
13	VOE20412589	1							Filler cap		(VOE20405835)
14	VOE20912376	1							Dipstick		
15	VOE20412343	2							•Sealing ring		
16	VOE20405644	1							Guide tube		
17	VOE20515173	1							Gasket		
18	VOE20515171	1							Plug		

VOLVO

Construction Equipment

PROSIS Part Information

Date:	Image id:	Catalogue:	Model:
24/08/2018	**1022019**	**20086**	**L120E**
Brand:	Serial:	Group/Section:	Title:
Volvo	**19804-, 66001-, 71401-**	**217/150**	**Drain line, oil sump**

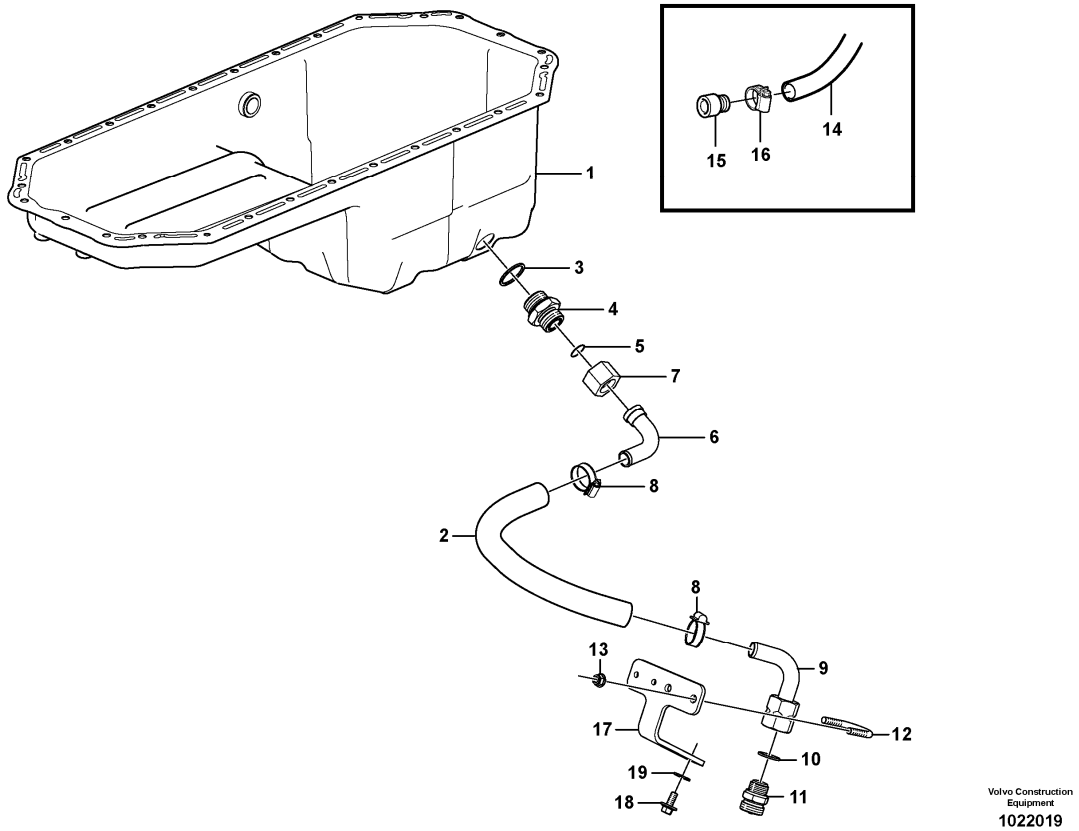

Section option	Kit	Option description
VOE33380		Volvo Wheel Loader L120E S/N 19801-, S/N 66001- USA, S/N 71401- BRA
VOE33395		Wheel Loader L120E3 IRAN

Pos	Part	Q1	Q2	Q3	Q4	Q5	PS	Kit	Description	Option(s)	Remark
1		1							Oil Pan		See ref 217/100
2	VOE11000285	REQ							Rubber hose		L = 430 MM
3	VOE13947630	1							Gasket		
4	VOE11163064	1							Nipple		
5	VOE990740	1							O-ring		
6	VOE11410190	1							Drain tube		
7	VOE13933877	1							Nut		
8	VOE13943474	2							Hose clamp		(VOE943473)
9	VOE11410017	1							Drain tube		
10	VOE949329	1							Gasket		

11	VOE11054692	1							Valve		
12	VOE11130269	1							Clamp		
13	VOE948645	2							Flange lock nut		
14	VOE11154125	1							Hose		
15	VOE11054659	1							Connector		
16	VOE13943474	1							Hose clamp		(VOE943473)
17	VOE11445058	1							Anchorage		
18	VOE13946173	2							Screw		
19	VOE11117464	2							Plain washer		(VOE13960141)

VOLVO

Construction Equipment

PROSIS Part Information

Date:	Image id:	Catalogue:	Model:
24/08/2018	**1000397**	**20086**	**L120E**
Brand:	Serial:	Group/Section:	Title:
Volvo	**19804-, 66001-, 71401-**	**218/100**	**Engine mounting**

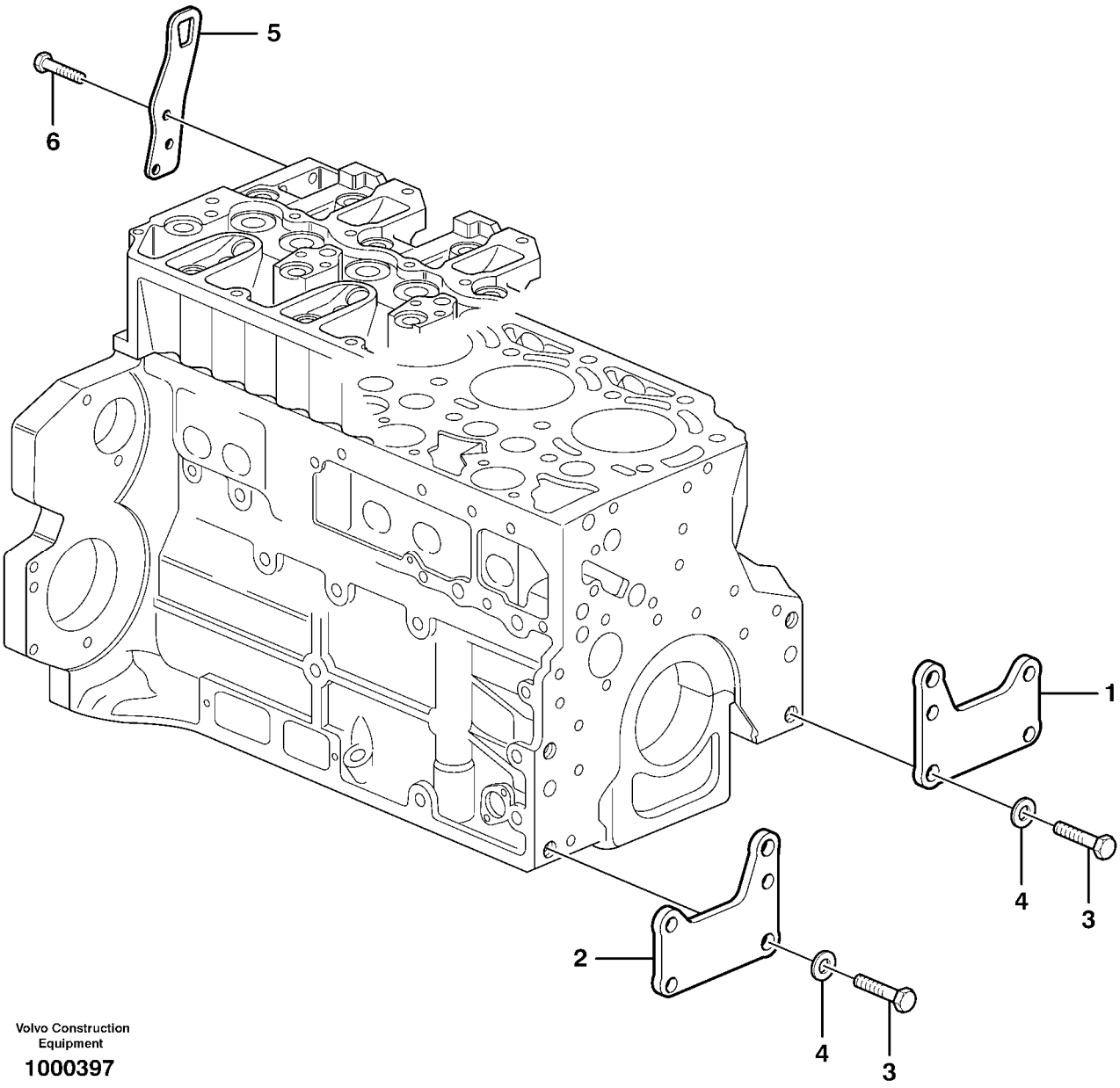

Section option	Kit	Option description
VOE11410957		Engine VOLVO D7ELAE3

Pos	Part	Q1	Q2	Q3	Q4	Q5	PS	Kit	Description	Option(s)	Remark
1	VOE20723978	1							Bracket		See footnote 2280)
2	VOE20723984	1							Bracket		See footnote 2280)
3	VOE20535027	4							Screw		

4	VOE20405606	4							Washer		
5	VOE20450854	2							Lifting eye		
6	VOE20450756	6							Screw		

2280) To be used as transport bracket

VOLVO

Construction Equipment

PROSIS Part Information

Date:	Image id:	Catalogue:	Model:
24/08/2018	**1000397**	**20086**	**L120E**
Brand:	Serial:	Group/Section:	Title:
Volvo	**19804-, 66001-, 71401-**	**218/150**	**Engine mounting 33380, 33395**

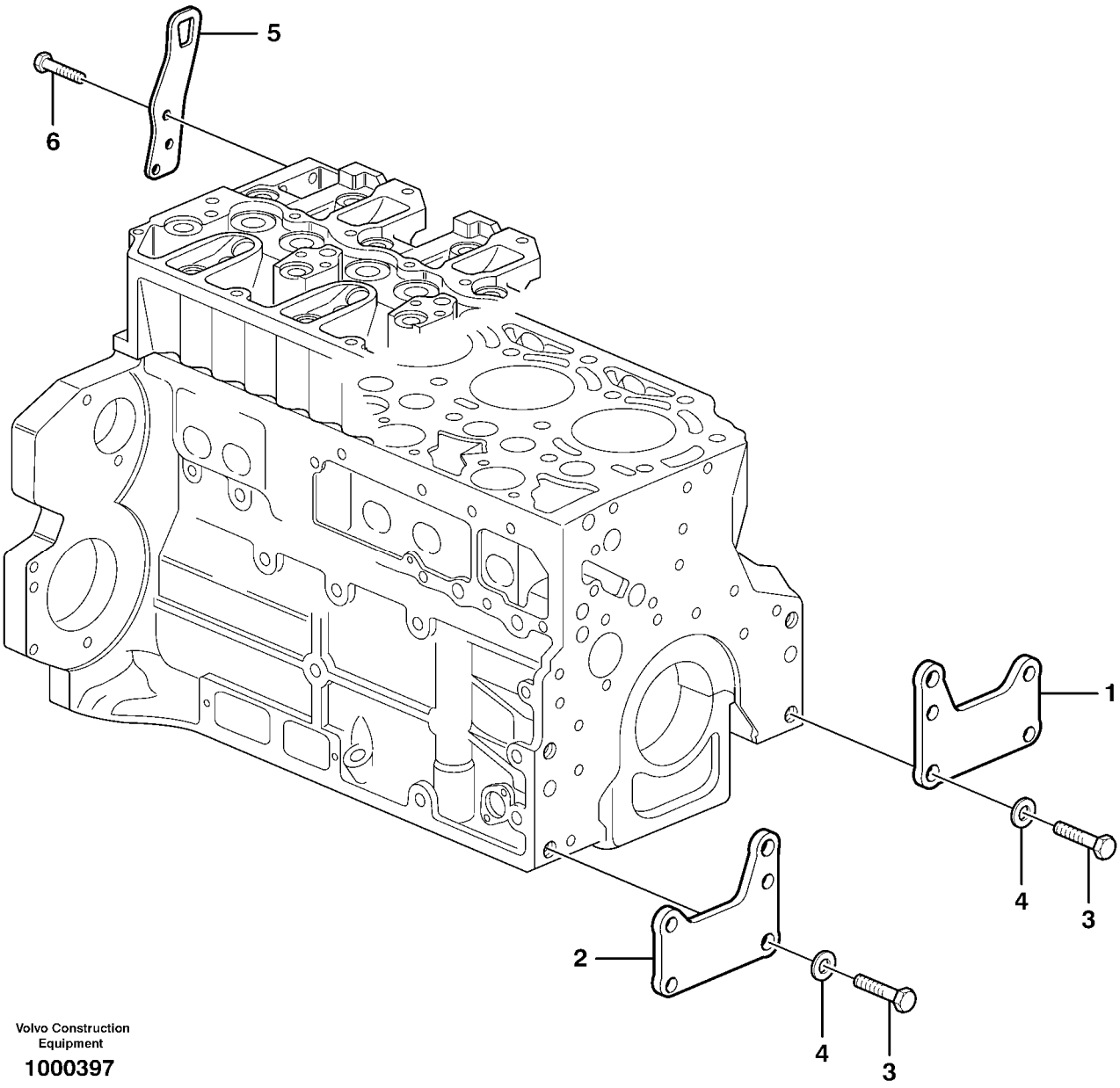

Section option	Kit	Option description
VOE33380		Volvo Wheel Loader L120E S/N 19801-, S/N 66001- USA, S/N 71401- BRA
VOE33395		Wheel Loader L120E3 IRAN

Pos	Part	Q1	Q2	Q3	Q4	Q5	PS	Kit	Description	Option(s)	Remark
1		1							Engine		
2	VOE11172117	1							Engine anchorage		

3	VOE963320	4							Hexagon screw		
4	VOE20503551	1							Rubber cushion		
5	VOE13966362	2							Flange screw		
6	VOE930844	2							Plain washer		
7	VOE11025923	4							Spacer		
8	VOE13965193	4							Screw		

VOLVO

Construction Equipment

PROSIS Part Information

Date:	Image id:	Catalogue:	Model:
24/08/2018	**1019860**	**20086**	**L120E**
Brand:	Serial:	Group/Section:	Title:
Volvo	**19804-, 66001-, 71401-**	**221/100**	**Lubricating oil system**

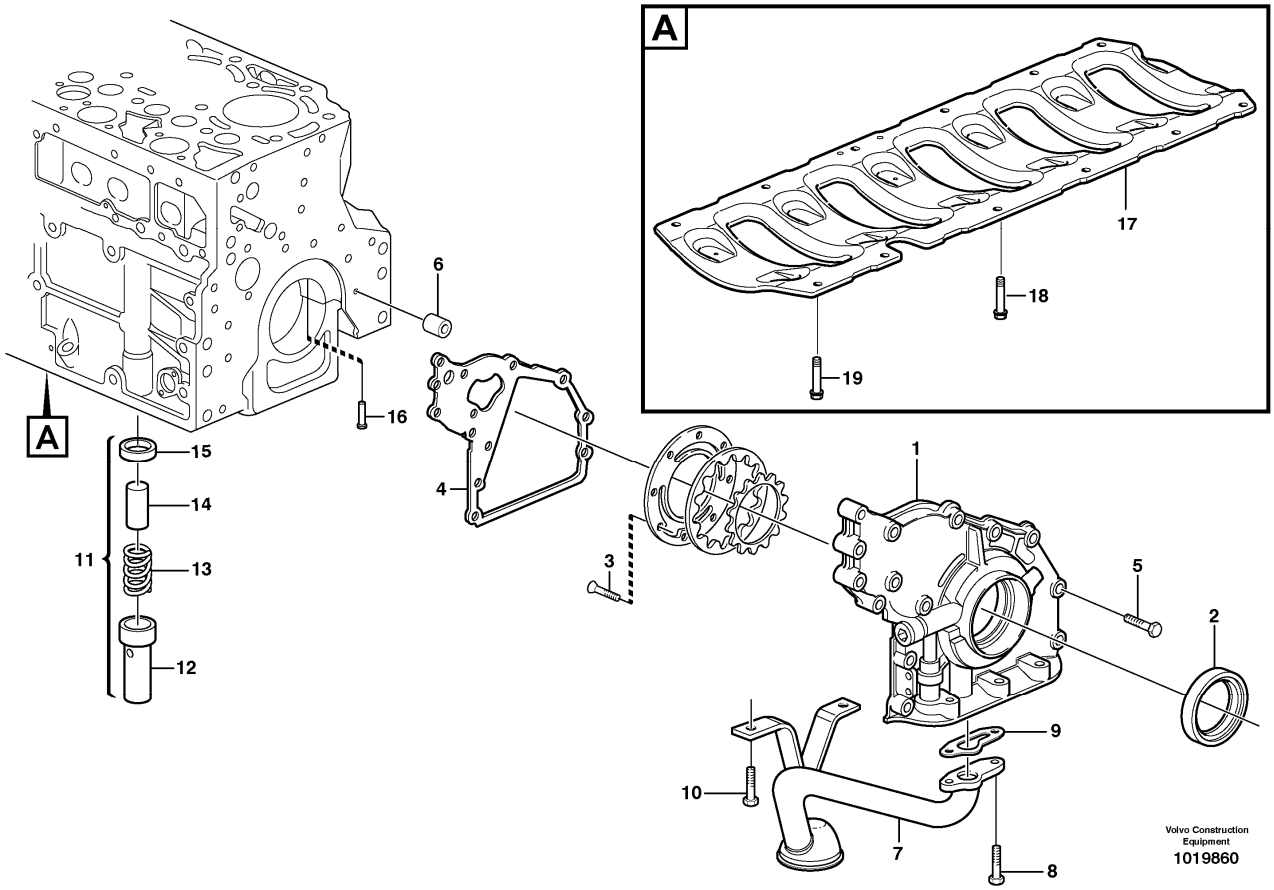

Section option	Kit	Option description
VOE11410957		Engine VOLVO D7ELAE3

Pos	Part	Q1	Q2	Q3	Q4	Q5	PS	Kit	Description	Option(s)	Remark
1	VOE20875082	1							Service cover		
2	VOE21486081	1							•Lip seal		(VOE20412568)
3	VOE20451738	1							•Screw		
4	VOE21679835	1							Gasket		(VOE20742661)
5	VOE20412324	14							Screw		
6	VOE20405603	1							Spring pin		
7	VOE20570070	1							Suction pipe		
8	VOE13949578	2							Screw		
9	VOE20405888	1							Gasket		
10	VOE13949578	2							Screw		
11	VOE11700271	1							Delivery valve		

12	VOE20405937	1							•Sleeve		
13	VOE20405896	1							•Compression spring		
14	VOE20405936	1					OP		•Valve		
15	VOE20405904	1							•Ring		
16	VOE20405561	6							Piston		
17		1					NS		Plate		
18	VOE20405885	8							Screw		
19	VOE20570025	4							Screw		

VOLVO

Construction Equipment

PROSIS Part Information

Date:	Image id:	Catalogue:	Model:
24/08/2018	**1001223**	**20086**	**L120E**
Brand:	Serial:	Group/Section:	Title:
Volvo	**19804-, 66001-, 71401-**	**222/100**	**Oil filter**

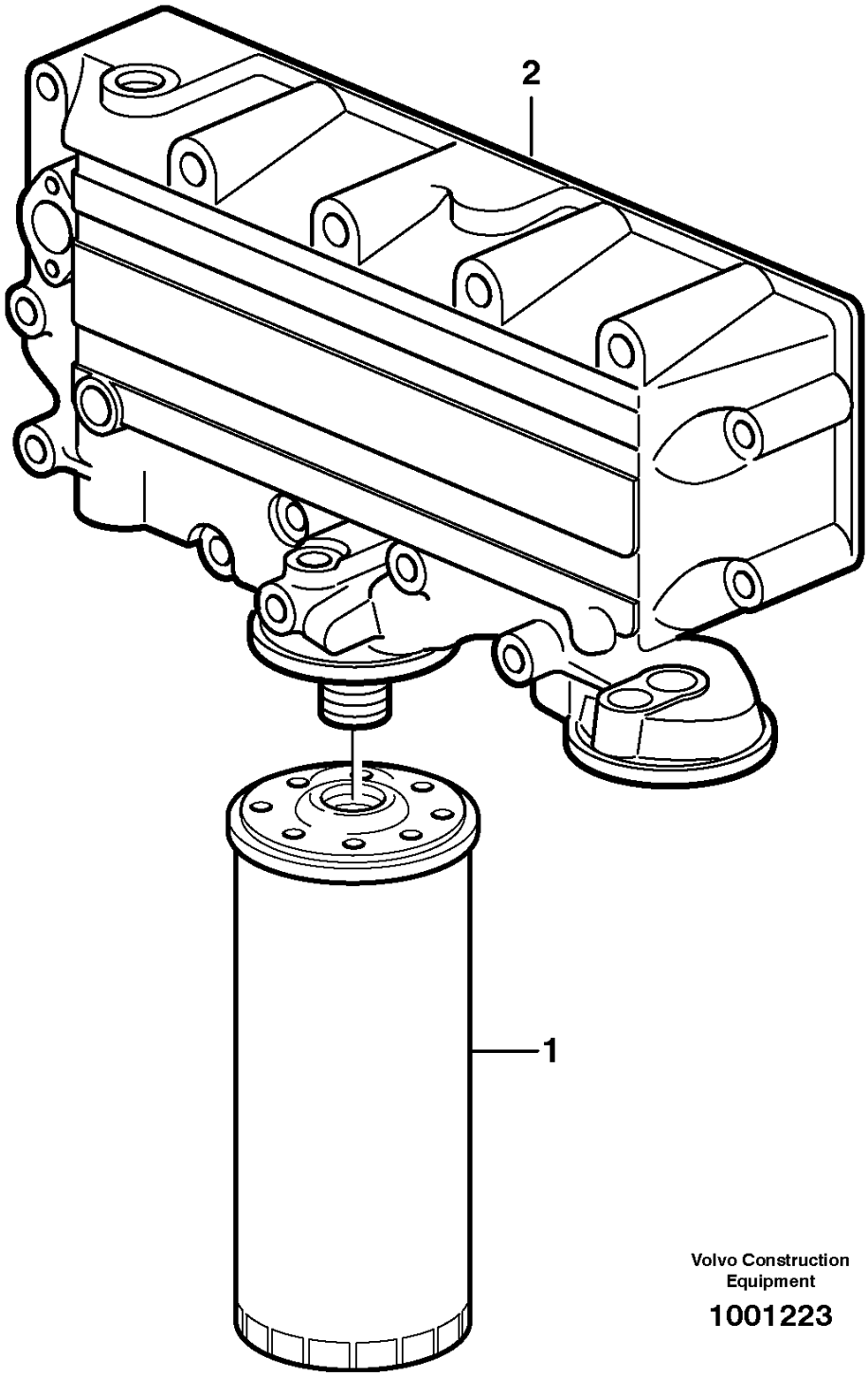

Section option	Kit	Option description

VOE11410957		Engine VOLVO D7ELAE3

Pos	Part	Q1	Q2	Q3	Q4	Q5	PS	Kit	Description	Option(s)	Remark
1	VOE17457469	1							Oil filter		
2		1							Housing		See ref 223/100

VOLVO

Construction Equipment

PROSIS Part Information

Date:	Image id:	Catalogue:	Model:
24/08/2018	**1019517**	**20086**	**L120E**
Brand:	Serial:	Group/Section:	Title:
Volvo	**19804-, 66001-, 71401-**	**223/100**	**Oil cooler**

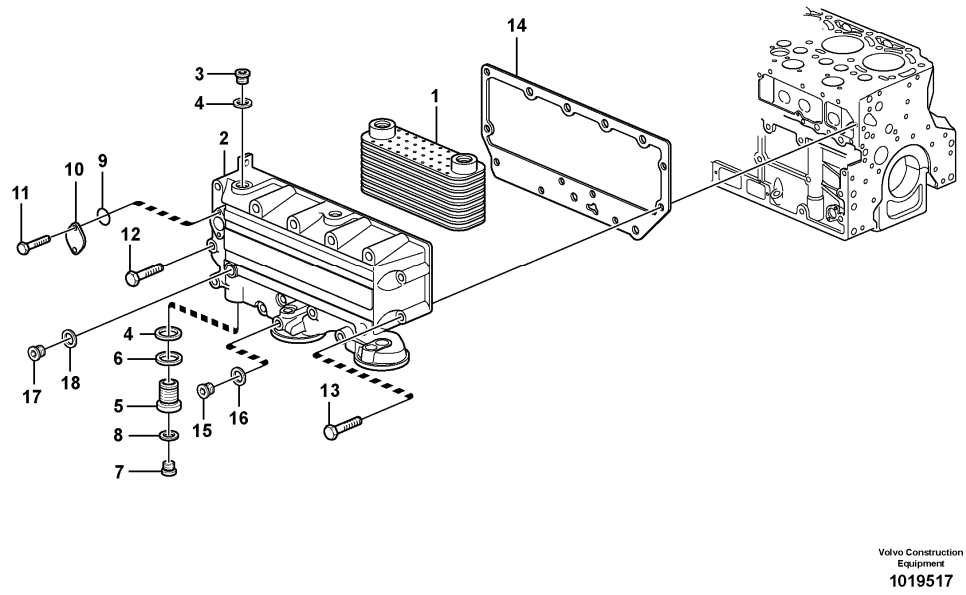

Section option	Kit	Option description
VOE11410957		Engine VOLVO D7ELAE3

Pos	Part	Q1	Q2	Q3	Q4	Q5	PS	Kit	Description	Option(s)	Remark
1	VOE20715681	1							Oil Cooler		
2	VOE21590865	1							Oil cooler		(VOE20819716)
3	VOE20459195	1							Plug		
4	VOE13947628	3							Plane gasket		
5	VOE20405752	2							Screw		
6	VOE20405569	2							•Seal		
7	VOE20549897	2							Plug		
8	VOE20405578	2							Sealing ring		
9	VOE20405599	1							Sealing ring		
10	VOE21072778	1							Flange		
11	VOE20405885	2							Screw		

12	VOE20405917	10							Screw		
13	VOE20405672	3							Screw		
14	VOE20405747	1							Gasket		
15	VOE20450895	1							Plug		E PROD
15	VOE21011809	1							Plug		L PROD
16	VOE13947281	1							Gasket		E PROD
17	VOE20450890	1							Sealing ring		
18	VOE20450890	1							Sealing ring		

VOLVO

Construction Equipment

PROSIS Part Information

Date:	Image id:	Catalogue:	Model:
24/08/2018	**1019562**	**20086**	**L120E**
Brand:	Serial:	Group/Section:	Title:
Volvo	**19804-, 66001-, 71401-**	**233/100**	**Fuel pump**

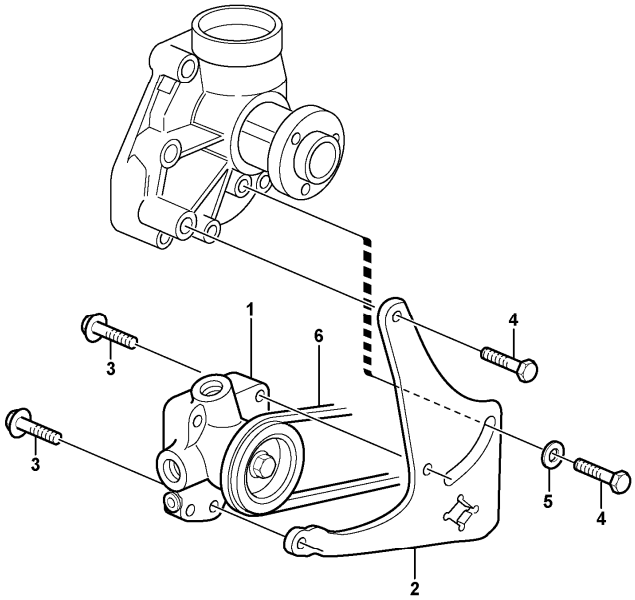

Volvo Construction Equipment
1019562

Section option	Kit	Option description
VOE11410957		Engine VOLVO D7ELAE3

Pos	Part	Q1	Q2	Q3	Q4	Q5	PS	Kit	Description	Option(s)	Remark
1	VOE22802475	1							Fuel pump		ENG - 10438708
	VOE21801399	1							•Pulley		
1	VOE22803123	1							Fuel pump		ENG 10438709 -
	VOE22806116	1							•Pulley		
2	VOE20405708	1							Bracket		
3	VOE13949578	2							Screw		
4	VOE20412357	2							Screw		(VOE20441860)
5	VOE20405734	1							Washer		
6		1							V-belt		See ref 263/250

VOLVO

Construction Equipment

PROSIS Part Information

Date:	Image id:	Catalogue:	Model:
24/08/2018	**1019504**	**20086**	**L120E**
Brand:	Serial:	Group/Section:	Title:
Volvo	**19804-, 66001-, 71401-**	**233/150**	**Fuel filter**

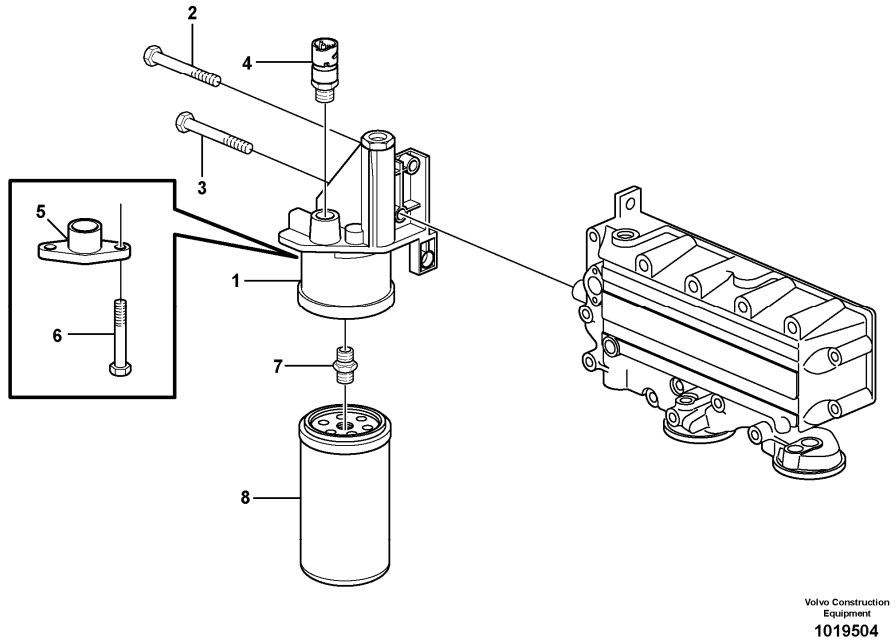

Section option	Kit	Option description
VOE11410957		Engine VOLVO D7ELAE3

Pos	Part	Q1	Q2	Q3	Q4	Q5	PS	Kit	Description	Option(s)	Remark
1	VOE20816379	1							Fuel filter housing		N.B. Pos 5
2	VOE20450801	2							Screw		
3	VOE11700269	1							Screw		
4		1							Sensor		See ref 371/150
5	VOE20798139	1							Cover		
6	VOE20799087	2							Six point screw		
7	VOE20818370	1							Bushing		
8	VOE20805349	1							Fuel filter		

VOLVO

Construction Equipment

PROSIS Part Information

Date:	Image id:	Catalogue:	Model:
24/08/2018	**1023950**	**20086**	**L120E**
Brand:	Serial:	Group/Section:	Title:
Volvo	**19804-, 66001-, 71401-**	**233/200**	**Water separator.**

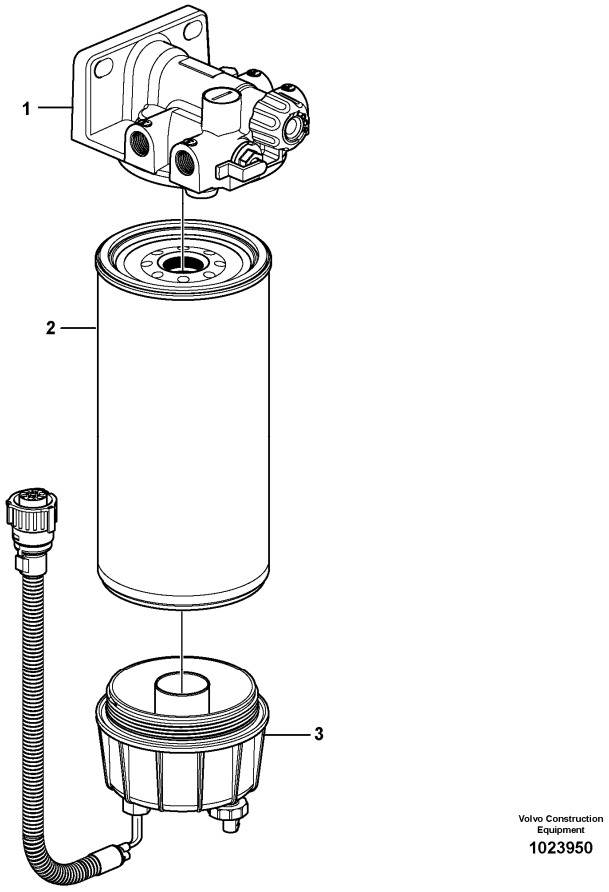

Section option	Kit	Option description
VOE33380		Volvo Wheel Loader L120E S/N 19801-, S/N 66001- USA, S/N 71401- BRA
VOE83057		Fuel filter
VOE33395		Wheel Loader L120E3 IRAN

Q1-Q5	Option	Option description	
Q1 33380	VOE33380	Volvo Wheel Loader L120E S/N 19801-, S/N 66001- USA, S/N 71401- BRA	
Q2 33380 33395	VOE33380	Volvo Wheel Loader L120E S/N 19801-, S/N 66001- USA, S/N 71401- BRA	
Q3 83057	VOE83057	Fuel filter	

Pos	Part	Q1	Q2	Q3	Q4	Q5	PS	Kit	Description	Option(s)	Remark
	VOE11110709	1							Water separator		(VOE11110703)S/N - 20331 USA S/N - 71429

	VOE11110709		1						Water separator		S/N 20332 - IRAN S/N 71430 -
	VOE11110791			1					Water separator		
1	VOE11110702	1		1					•Filter housing		
	VOE11110708		1						•Filter retainer		
2	VOE11110683	1	1	1					•Primary filter		
3	VOE11110737	1	1						•Bowl		
	VOE11110738			1					•Bowl		
	VOE15195930	1	1	1					••Kit		See footnote 2624)
	VOE15195958	1	1	1					••Gasket kit		See footnote 2624)

2624) Not Shown

VOLVO

Construction Equipment

PROSIS Part Information

Date:	Image id:	Catalogue:	Model:
24/08/2018	**1048904**	**20086**	**L120E**
Brand:	Serial:	Group/Section:	Title:
Volvo	**19804-, 66001-, 71401-**	**234/100**	**Fuel tank with fitting parts 33380, 33395**

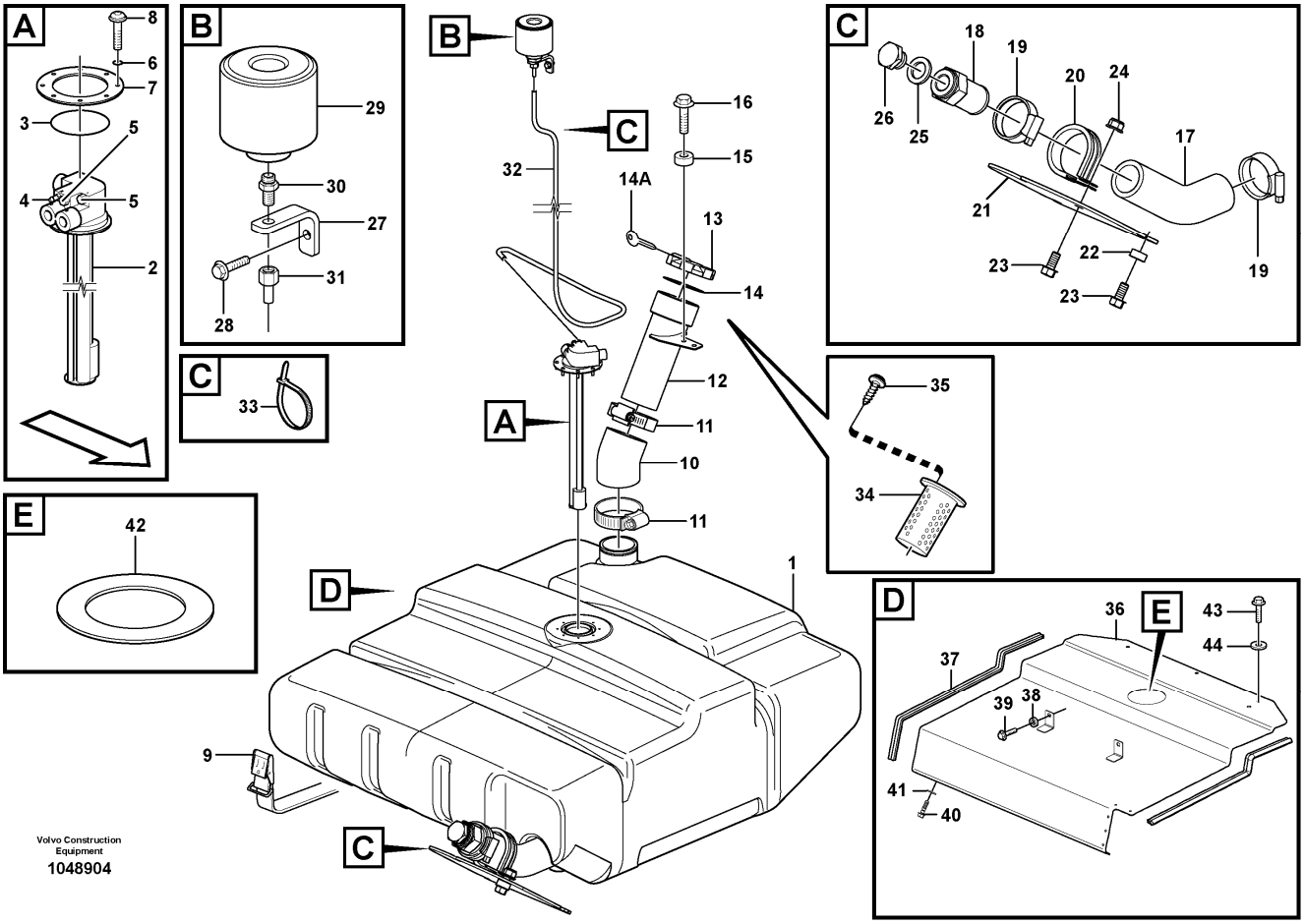

Section option	Kit	Option description
VOE33380		Volvo Wheel Loader L120E S/N 19801-, S/N 66001- USA, S/N 71401- BRA
VOE33395		Wheel Loader L120E3 IRAN

Pos	Part	Q1	Q2	Q3	Q4	Q5	PS	Kit	Description	Option(s)	Remark
1	VOE11410999	1							Fuel tank		
2	VOE11170365	1							Tank unit		(VOE11170093)SE207 See ref 235/100
3		1					NS		•O-ring		
4		1					NS		•Nipple		
5		2					NS		•Nipple		
6	VOE925075	1							O-ring		
7	VOE9518442	1							Plate		
8	VOE975378	8							Six point socket screw		
9	VOE11132499	2							Retaining strap		

10	VOE11411043	1							Hose		
11	VOE943483	2							Hose clamp		
12	VOE11411044	1							Filler pipe		
13	VOE20392751	1							Filler cap		
14	VOE1698164	1							•Gasket		
14A		2					NS		•Key		See footnote 3)
15	VOE13948871	2							Spacer washer		
16	VOE13945444	2							Screw		
17	VOE11411073	1							Hose		
18	VOE11411219	1							Nipple		
19	VOE11059294	2							Hose clamp		
20	VOE973944	1							Clamp		
21	VOE11411077	1							Shield		
22	VOE13949873	3							Spacer washer		
23	VOE946440	4							Flange screw		
24	VOE948645	1							Flange lock nut		
25	VOE948884	1							Gasket		
26	VOE13960632	1							Plug		
27		1					NS		Anchorage		
28	VOE13946173	1							Screw		
29	VOE11172907	1							Air filter		
30	VOE4854955	1							Nipple		
31	VOE949221	1							Hose nipple		
32	VOE11024720	REQ							Plastic hose		L = 1700 MM
33	VOE14016673	2							Strip clamp		
34	VOE11173801	1							Strainer	VOE91472	
35	VOE955127	2							Cross recessed screw	VOE91472	
36	VOE11445359	1							Cover plate		See footnote 2412)
36	VOE15060428	1							Cover plate		See footnote 3606)
37	VOE4881656	REQ							Framework moulding		See footnote 2412)
38	VOE13948871	2							Spacer washer		See footnote 2412)
39	VOE946671	2							Flange screw		See footnote 2412)
40	VOE11117464	4							Plain washer		(VOE13960141)See footnote 2412)
41	VOE946671	4							Flange screw		See footnote 2412)
42	VOE15066986	1							Insulation		See footnote 3606)
43	VOE13946173	3							Screw		See footnote 3606)
44	VOE11117464	3							Plain washer		(VOE13960141)See footnote 3606)

3) When ordering, the key No. should be stated.

2412) Ser No 20565 - Ser No 66151 - Usa Ser No 71439 - Bra

3606) S/n 24680 - Swe, S/n 66648 - Usa, S/n 71879 - Bra.

VOLVO

Construction Equipment

PROSIS Part Information

Date:	Image id:	Catalogue:	Model:
24/08/2018	**1022024**	**20086**	**L120E**
Brand:	Serial:	Group/Section:	Title:
Volvo	**19804-, 66001-, 71401-**	**235/100**	**Fuel pipes, fuel tank - injection pump S/N - 20331, USA EPROD, S/N - 71429**

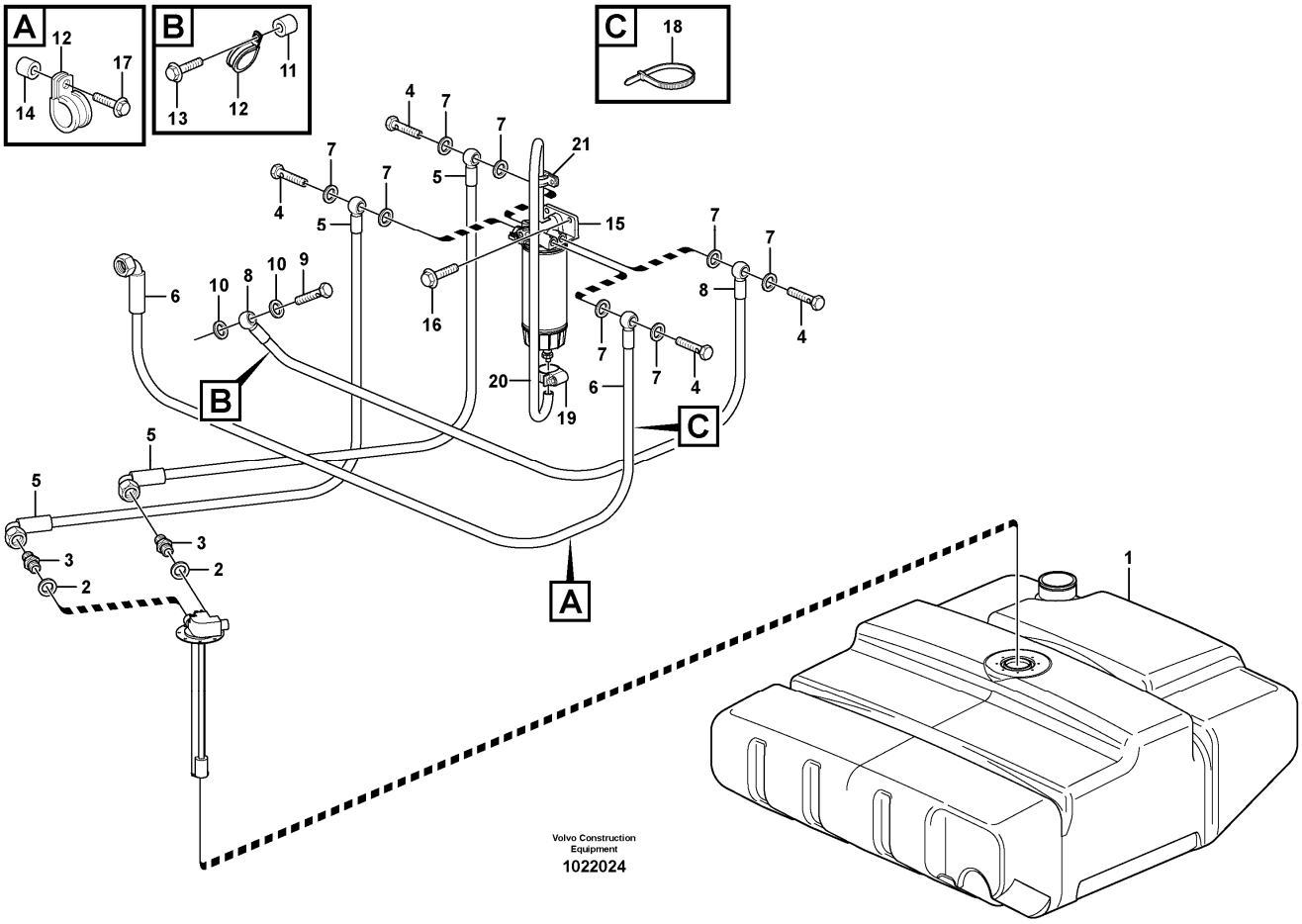

Section option	Kit	Option description
VOE33380		Volvo Wheel Loader L120E S/N 19801-, S/N 66001- USA, S/N 71401- BRA
VOE33395		Wheel Loader L120E3 IRAN

Pos	Part	Q1	Q2	Q3	Q4	Q5	PS	Kit	Description	Option(s)	Remark
1		1							Fuel tank		See ref 234/100
2	VOE976930	2							Gasket		
3	VOE14213266	2							Fitting		
4	VOE941686	4							Hollow screw		
5	VOE11411897	2							Fuel pipe		L = 1280 MM
6	VOE11411899	1							Fuel pipe		L = 1400 MM
7	VOE976930	8							Gasket		
8	VOE11411898	1							Fuel pipe		L = 400 MM
9	VOE941686	1							Hollow screw		
10	VOE976930	2							Gasket		

11	VOE930438	2							Spacer ring		
12	VOE13949747	3							Clamp		
13	VOE13947760	2							Screw		
14	VOE930428	1							Spacer ring		
15		1							Water Separator		See ref 233/200
16	VOE946329	2							Flange screw		
17	VOE13946173	1							Screw		
18	VOE4881440	REQ							Cable tie		
19	VOE13975269	1							Clamp		
20	VOE949908	REQ							Hose		L = 730 MM
21	VOE980614	1							Clamp		

VOLVO

Construction Equipment

PROSIS Part Information

Date:	Image id:	Catalogue:	Model:
24/08/2018	**1030121**	**20086**	**L120E**
Brand:	Serial:	Group/Section:	Title:
Volvo	**19804-, 66001-, 71401-**	**235/125**	**Fuel pipes, fuel tank - injection pump S/N 20332- , USA L PROD, S/N 71430-**

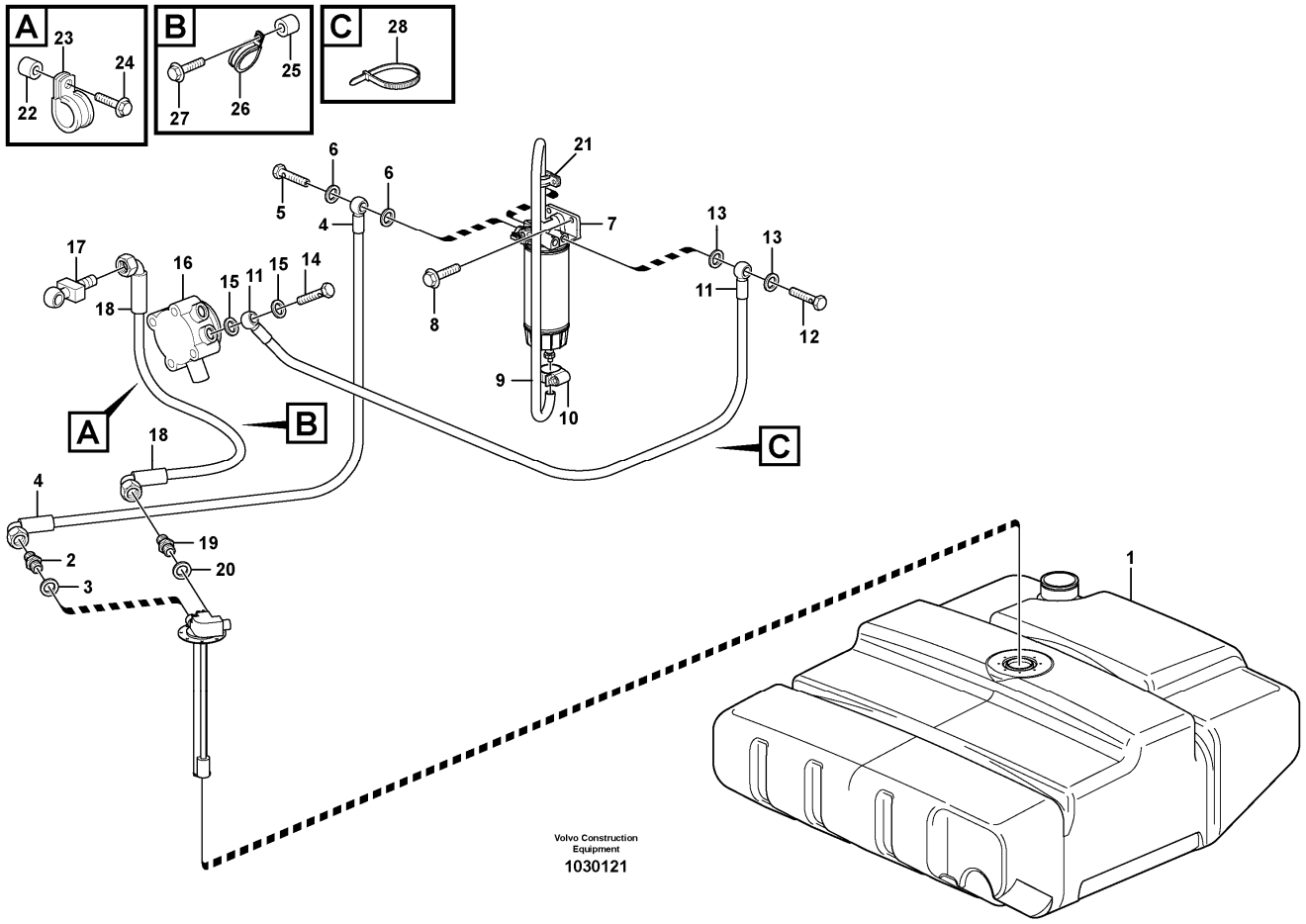

Section option	Kit	Option description
VOE33380		Volvo Wheel Loader L120E S/N 19801-, S/N 66001- USA, S/N 71401- BRA
VOE33395		Wheel Loader L120E3 IRAN

Pos	Part	Q1	Q2	Q3	Q4	Q5	PS	Kit	Description	Option(s)	Remark
1		1							Fuel tank		See ref 234/100
2	VOE14213266	1							Fitting		
3	VOE976930	1							Gasket		
4	VOE11411897	1							Fuel pipe		L = 1280 MM
5	VOE941686	1							Hollow screw		
6	VOE976930	2							Gasket		
7		1							Water Separator		See ref 233/200
8	VOE946329	2							Flange screw		
9	VOE949908	REQ							Hose		L = 730 MM
10	VOE13975269	1							Clamp		

11	VOE11411898	1							Fuel pipe		L = 400 MM
12	VOE941686	1							Hollow screw		
13	VOE976930	2							Gasket		
14	VOE941686	1							Hollow screw		
15	VOE976930	2							Gasket		
16		1							Fuel pump		See ref 235/150
17		1							Banjo Fitting		See ref 235/150
18	VOE15021122	1							Fuel pipe		L = 2080 MM
19	VOE14213266	1							Fitting		
20	VOE976930	1							Gasket		
21	VOE980614	1							Clamp		
22	VOE930438	1							Spacer ring		
23	VOE13949747	1							Clamp		
24	VOE13947760	1							Screw		
25	VOE930438	1							Spacer ring		
26	VOE13949747	1							Clamp		
27	VOE13948217	1							Screw		
28	VOE4881440	REQ							Cable tie		

VOLVO

Construction Equipment

PROSIS Part Information

Date:	Image id:	Catalogue:	Model:
24/08/2018	**1024549**	**20086**	**L120E**
Brand:	Serial:	Group/Section:	Title:
Volvo	**19804-, 66001-, 71401-**	**235/135**	**Fuel pipes 83057**

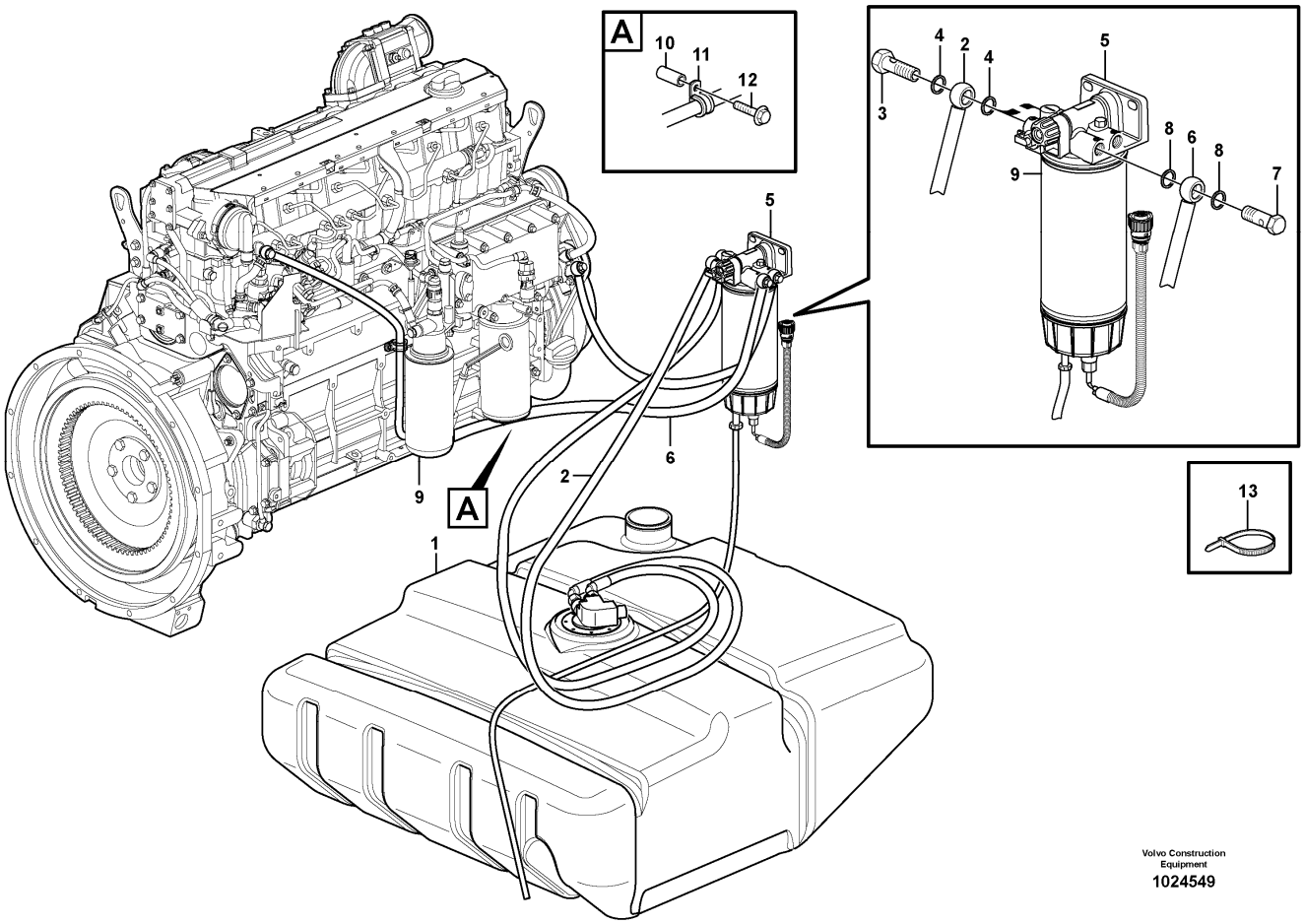

Section option	Kit	Option description
VOE83057		Fuel filter

Pos	Part	Q1	Q2	Q3	Q4	Q5	PS	Kit	Description	Option(s)	Remark
1		1							Fuel tank		See ref 234/100
2	VOE11411897	1							Fuel pipe		
3	VOE941686	1							Hollow screw		
4	VOE976930	2							Gasket		
5		1							Water Separator		See ref 233/200
6	VOE15057708	1							Fuel pipe		
7	VOE941686	1							Hollow screw		
8	VOE976930	2							Gasket		
9		1							Fuel filter		See ref 233/150
10	VOE930438	1							Spacer ring		
11	VOE13949747	1							Clamp		

12	VOE13947760	1							Screw		
13	VOE4881440	1							Cable tie		

VOLVO

Construction Equipment

PROSIS Part Information

Date:	Image id:	Catalogue:	Model:
24/08/2018	**1054334**	**20086**	**L120E**
Brand:	Serial:	Group/Section:	Title:
Volvo	**19804-, 66001-, 71401-**	**235/150**	**Fuel pipes, fuel pump**

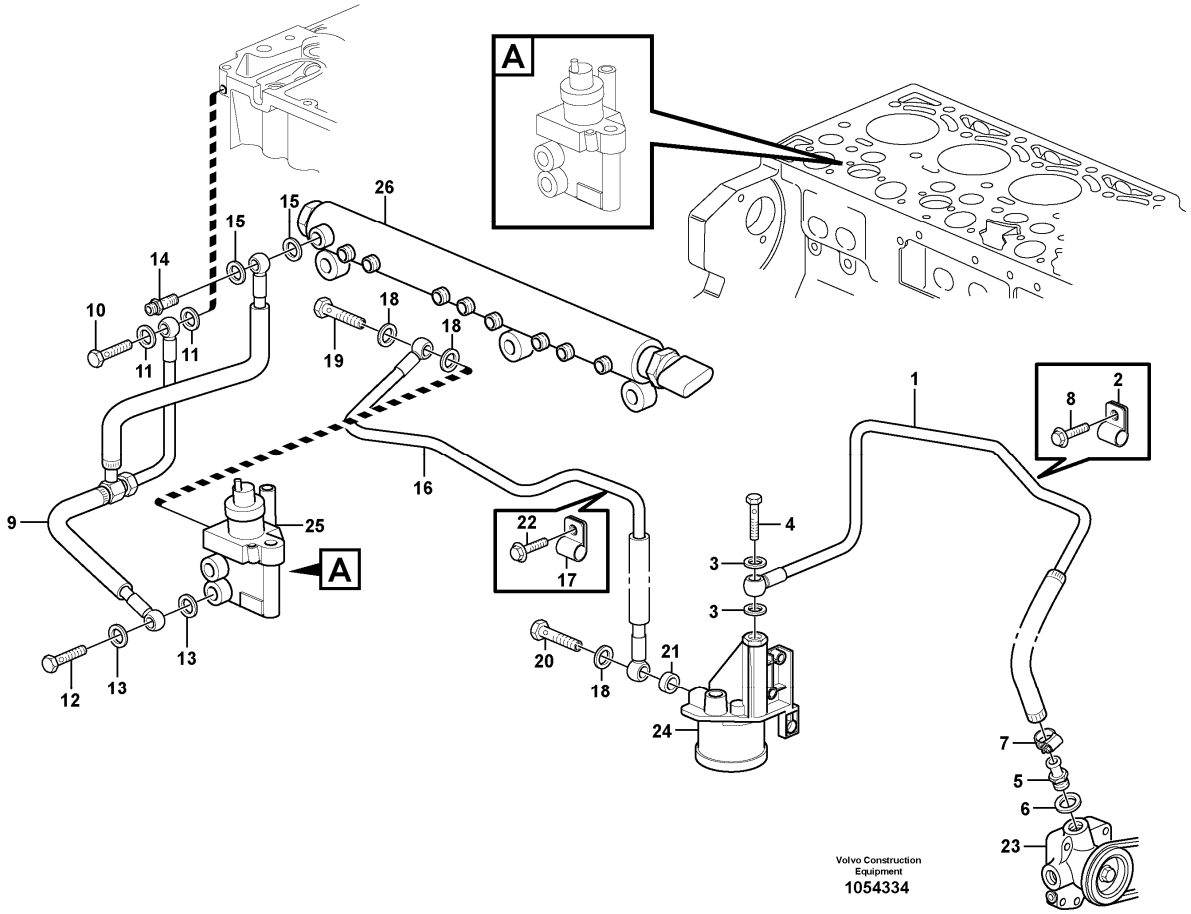

Section option	Kit	Option description
VOE11410957		Engine VOLVO D7ELAE3

Pos	Part	Q1	Q2	Q3	Q4	Q5	PS	Kit	Description	Option(s)	Remark
1	VOE20829077	1							Fuel pipe		
2	VOE20460045	1							•Clamp		
3	VOE13969011	2							•Gasket		
4	VOE7025167	1							•Hollow screw		(VOE20460231)
5	VOE20405767	1							Hose nipple		
6	VOE13969011	1							Gasket		
7	VOE20405568	1							Clip		
8	VOE20460055	1							Screw		
9	VOE20972320	1							Return line		
10	VOE20781218	1							•Hollow screw		
11	VOE21022796	2							•Sealing ring		

12	VOE20460400	1							•Hollow screw		
13	VOE21022842	2							•Sealing ring		
14	VOE21023622	1							•Hollow screw		
15	VOE21022795	2							•Sealing ring		
16	VOE20797400	1							Fuel line		ENG - 10/2007 W REGULATOR 20993071
16	VOE21137527	1							Pipe		ENG 11/2007 -
17	VOE20450987	1							•Clamp		
18	VOE21108673	3							•Sealing ring		
19	VOE7025167	1							•Hollow screw		(VOE20460231)
20	VOE20405562	1							•Hollow screw		
21	VOE20405769	1							•Sealing ring		
22	VOE20405792	1							Screw		
23		1							Fuel pump		See ref 233/100
24		1							Fuel Filter Housing		See ref 233/150
25		1							Regulator		See ref 237/100
26		1							Rail		See ref 237/100

VOLVO

Construction Equipment

PROSIS Part Information

Date:	Image id:	Catalogue:	Model:
24/08/2018	**1026102**	**20086**	**L120E**
Brand:	Serial:	Group/Section:	Title:
Volvo	**19804-, 66001-, 71401-**	**237/100**	**Injector**

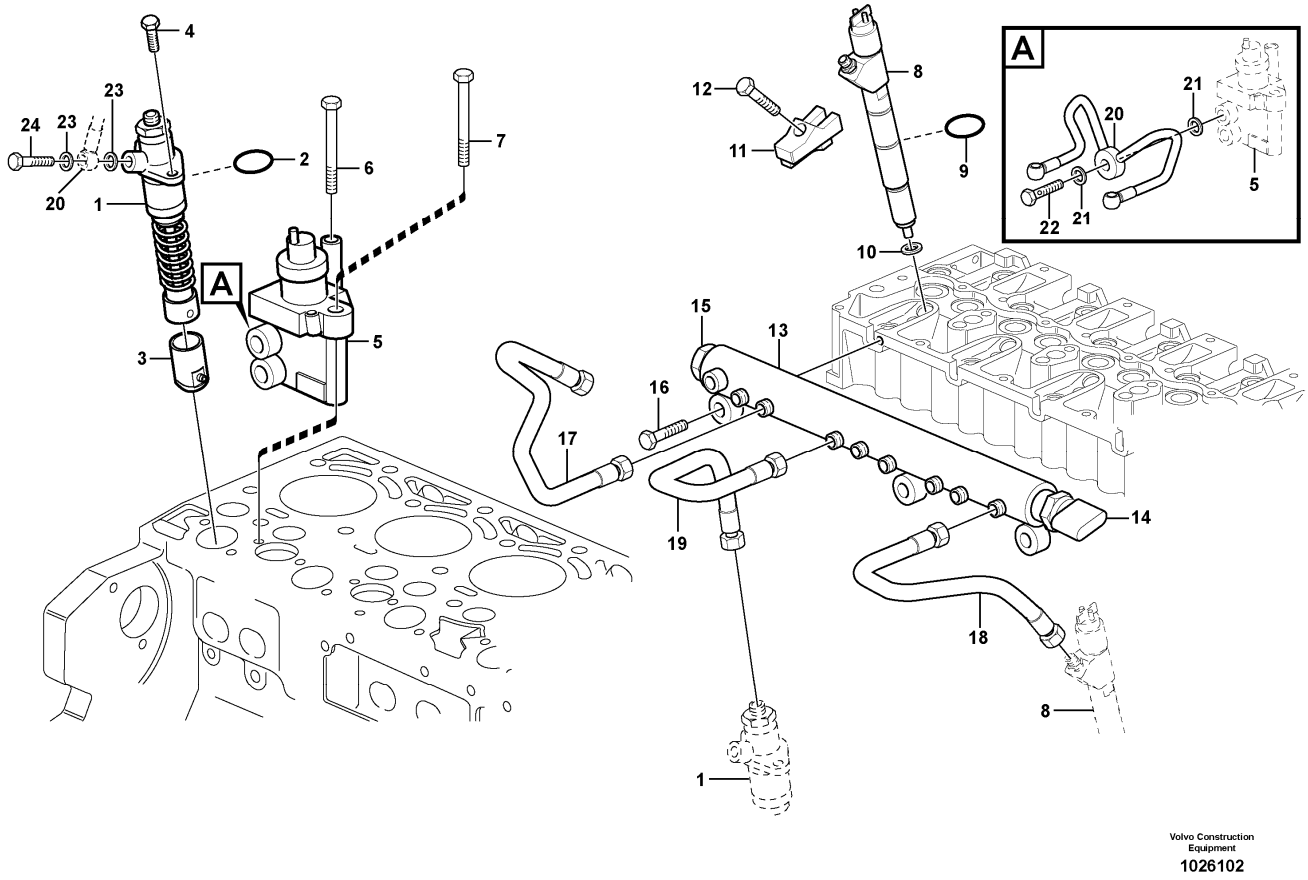

Section option	Kit	Option description
VOE11410957		Engine VOLVO D7ELAE3

Pos	Part	Q1	Q2	Q3	Q4	Q5	PS	Kit	Description	Option(s)	Remark
1	VOE21147445	2							High-pressure pump		(VOE20795413), REMAN VOE9020795413, VOE9021147445
2	VOE20792162	2							•O-ring		
3	VOE21558299	2							Tappet		(VOE20795661)
4	VOE20793558	4							Screw		
5	VOE21638691	1							Fuel regulator		(VOE21060258)
6	VOE20405723	1							Screw		
7	VOE20792140	1							Hexagon screw		S/N - 11038330
7	VOE20405723	1							Screw		S/N 11038330 -
8	VOE20798114	6							Injector		MA2301-MA2306,

											REMAN VOE9020798114
9	VOE20798827	6							•O-ring		
10	VOE20799064	6							•Sealing ring		
11	VOE20827892	6							Claw		
12	VOE20799719	6							Bolt		
13	VOE20795719	1					SS		Rail		SE2309
	VOE20973777	1							•Service kit		
14		1					NS		••Pressure Sensor		
15		1					NS		••Valve		
16	VOE20405504	3							Screw		
17	VOE21364297	3							Pressure pipe		(VOE20795392)
18	VOE21364330	3							Pressure pipe		(VOE20795405)
19	VOE21364335	2							Pressure pipe		(VOE21022833)
20	VOE21147486	1							Fuel pipe		
21	VOE13947621	2							•Plane gasket		
22	VOE20405562	1							•Hollow screw		
23	VOE20460061	4							•Sealing ring		
24	VOE20460936	2							•Hollow screw		

VOLVO

Construction Equipment

PROSIS Part Information

Date:	Image id:	Catalogue:	Model:
24/08/2018	**1052203**	**20086**	**L120E**
Brand:	Serial:	Group/Section:	Title:
Volvo	**19804-, 66001-, 71401-**	**251/100**	**Inlet manifold and exhaust manifold**

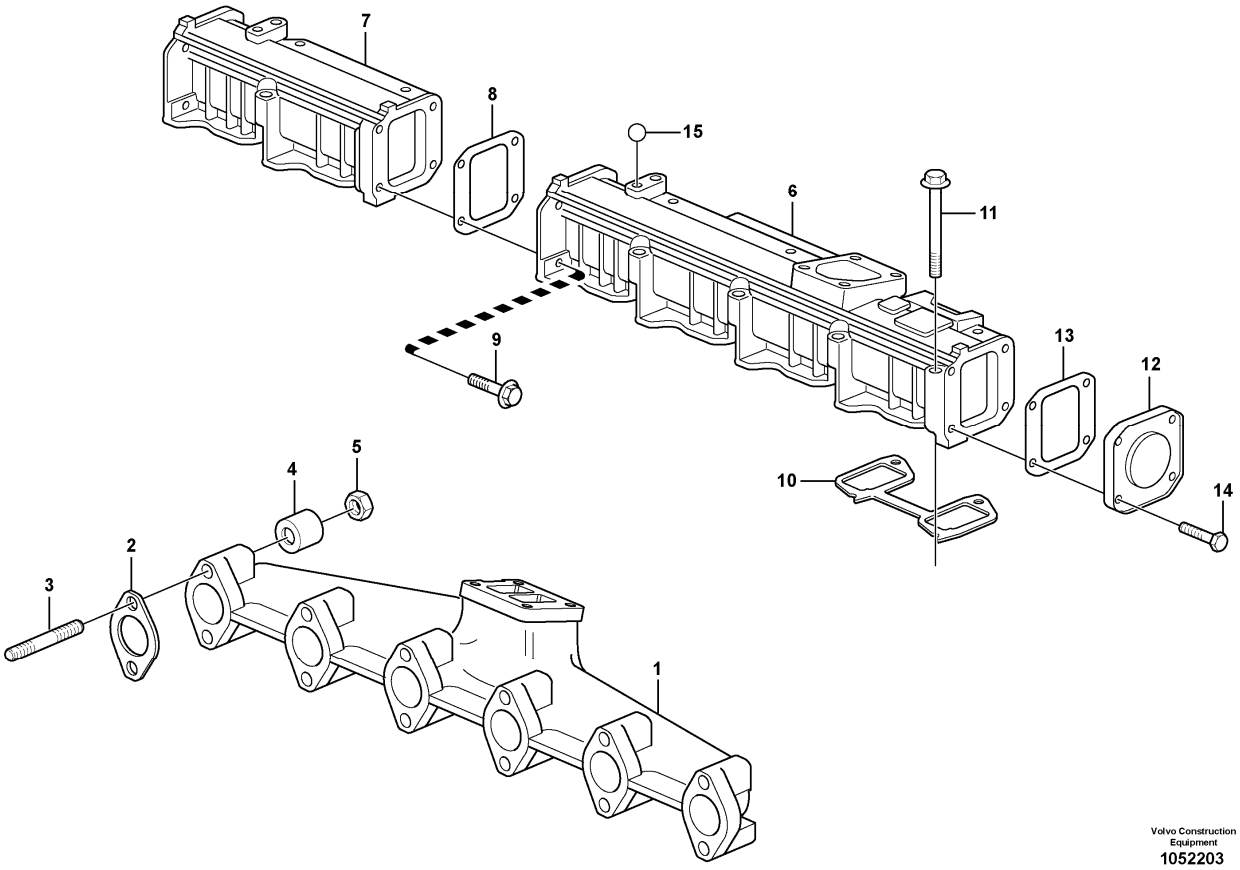

Section option	Kit	Option description
VOE11410957		Engine VOLVO D7ELAE3

Pos	Part	Q1	Q2	Q3	Q4	Q5	PS	Kit	Description	Option(s)	Remark
1	VOE22603484	1							Exhaust Pipe		(VOE20580033)
2	VOE20933261	6							Gasket		
3	VOE21456567	12							Stud		(VOE20575919)
4	VOE20847865	12							Spacer Sleeve		
5	VOE20505959	12							Hexagon nut		
6	VOE21011717	1							Charge air pipe		
7	VOE20792899	1							Charge Air Pipe		
8	VOE21333188	1							Gasket		(VOE20999790)
9	VOE20459228	4							Bolt		
10	VOE20591706	3							Gasket		
11	VOE20412601	12							Screw		

12	VOE20405614	1							Cover		
13	VOE20405613	1							Gasket		
14	VOE20405792	4							Screw		
15	VOE20793483	1							Ball		

VOLVO

Construction Equipment

PROSIS Part Information

Date:	Image id:	Catalogue:	Model:
24/08/2018	**1027876**	**20086**	**L120E**
Brand:	Serial:	Group/Section:	Title:
Volvo	**19804-, 66001-, 71401-**	**252/100**	**Exhaust system, silencer**

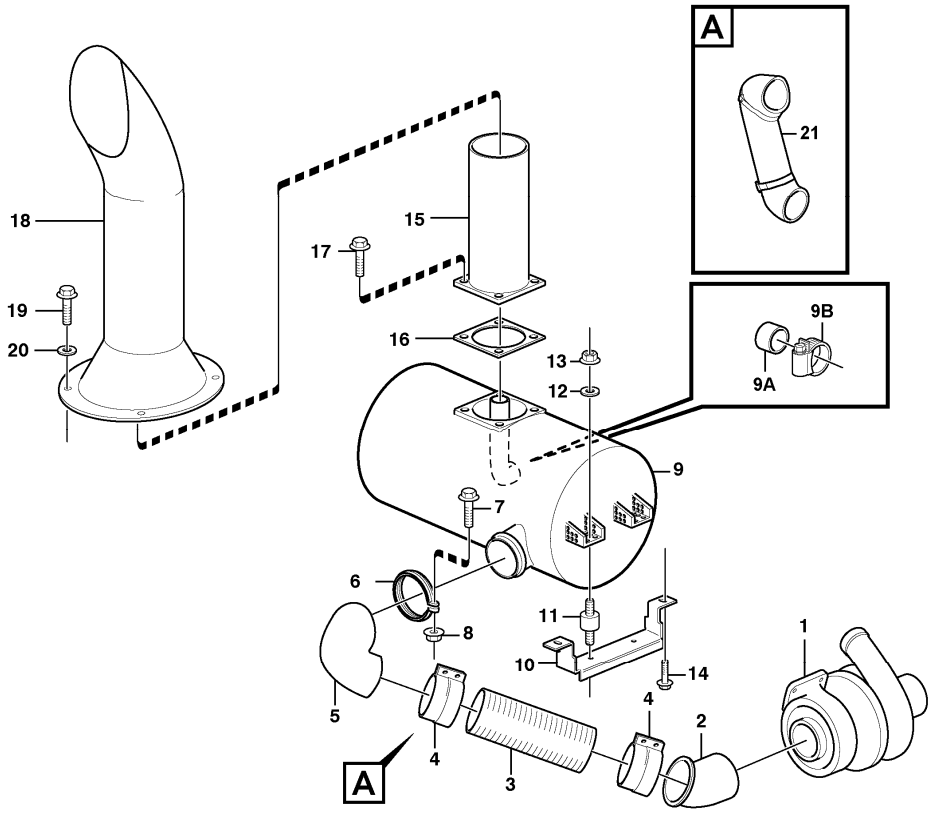

Volvo Construction Equipment
1027876

Section option	Kit	Option description
VOE33380		Volvo Wheel Loader L120E S/N 19801-, S/N 66001- USA, S/N 71401- BRA
VOE33395		Wheel Loader L120E3 IRAN

Pos	Part	Q1	Q2	Q3	Q4	Q5	PS	Kit	Description	Option(s)	Remark
1		1							Turbo		See ref 255/100
2	VOE11172243	1							Exhaust pipe		
3	VOE11110350	1							Exhaust hose		
4	VOE11110355	2							Clamp		
5	VOE11172244	1							Exhaust pipe		
6	VOE1624613	1							Clamp		
7	VOE13965179	1							Screw		
8	VOE13945408	1							Nut		
9	VOE11110269	1							Silencer		
9A	VOE4932563	1							Rubber bushing		S/N 20668 - S/N 54021

											- IRAN
9B	VOE943476	1							Hose clamp		S/N 20668 - S/N 54021 - IRAN
10	VOE11174246	2							Attaching plate		
11	VOE11110276	4							Rubber cushion		
12	VOE13960145	4							Washer		
13	VOE13971096	8							Flange nut		
14	VOE13946752	4							Screw		
15	VOE11110273	1							Exhaust pipe		
16	VOE4773684	1							Gasket		
17	VOE13971019	4							Screw		
18	VOE11148403	1							Ejector pipe		
19	VOE946472	4							Flange screw		
20	VOE13960143	4							Washer		
21		1							Insulating Cove		(VOE11445085) See ref 252/200

VOLVO

Construction Equipment

PROSIS Part Information

Date:	Image id:	Catalogue:	Model:
24/08/2018	**1056108**	**20086**	**L120E**
Brand:	Serial:	Group/Section:	Title:
Volvo	**19804-, 66001-, 71401-**	**252/200**	**Heat Shield Installation**

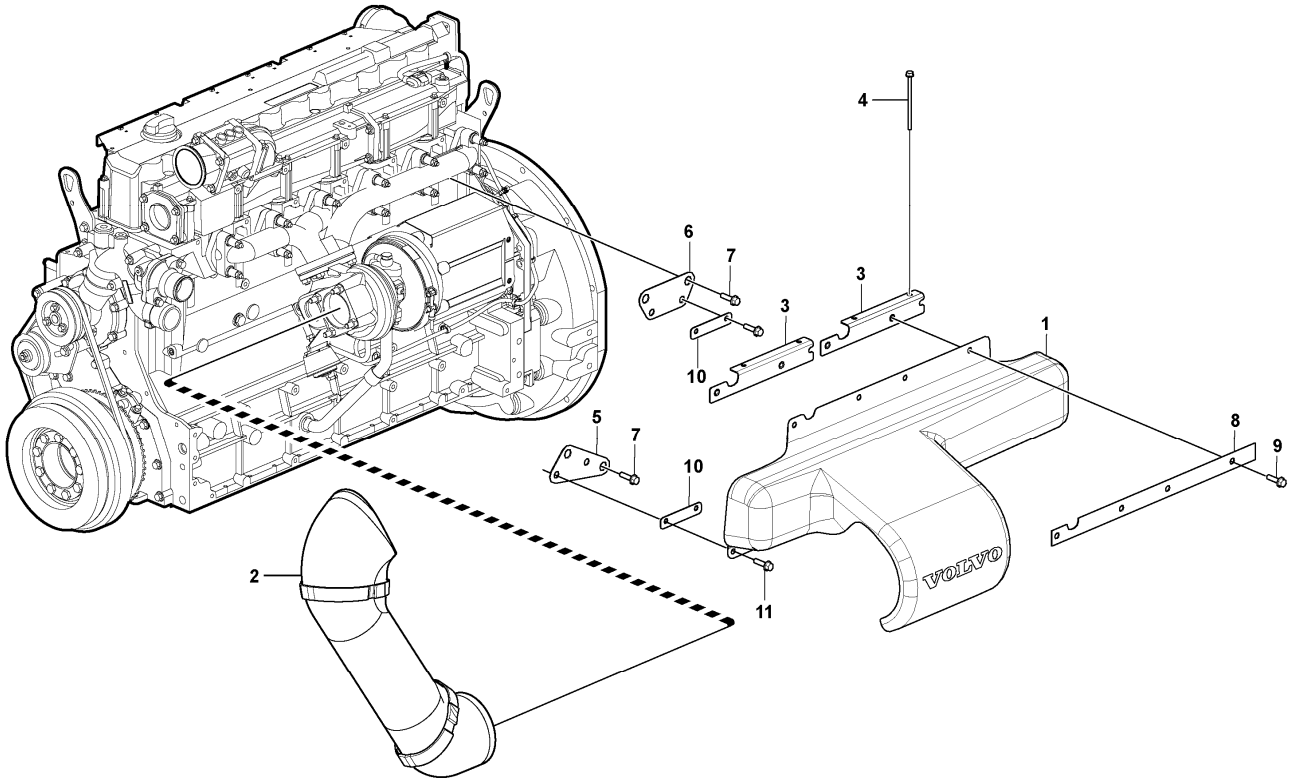

Section option	Kit	Option description
VOE33380		Volvo Wheel Loader L120E S/N 19801-, S/N 66001- USA, S/N 71401- BRA
VOE33395		Wheel Loader L120E3 IRAN

Pos	Part	Q1	Q2	Q3	Q4	Q5	PS	Kit	Description	Option(s)	Remark
1	VOE15131108	1							Insulating cover		
2	VOE15131114	1							Insulating cover		
3	VOE15128146	2							Bracket		
4	VOE969983	4							Flange screw		
5	VOE15128023	1							Bracket		
6	VOE15127929	1							Bracket		
7	VOE946671	4							Flange screw		
8	VOE15128155	1							Plate		
9	VOE946440	4							Flange screw		
10	VOE15112896	2							Plate		

11	VOE946440	4							Flange screw		

VOLVO

Construction Equipment

PROSIS Part Information

Date:	Image id:	Catalogue:	Model:
24/08/2018	**1055830**	**20086**	**L120E**
Brand:	Serial:	Group/Section:	Title:
Volvo	**19804-, 66001-, 71401-**	**255/100**	**Turbocharger with fitting parts**

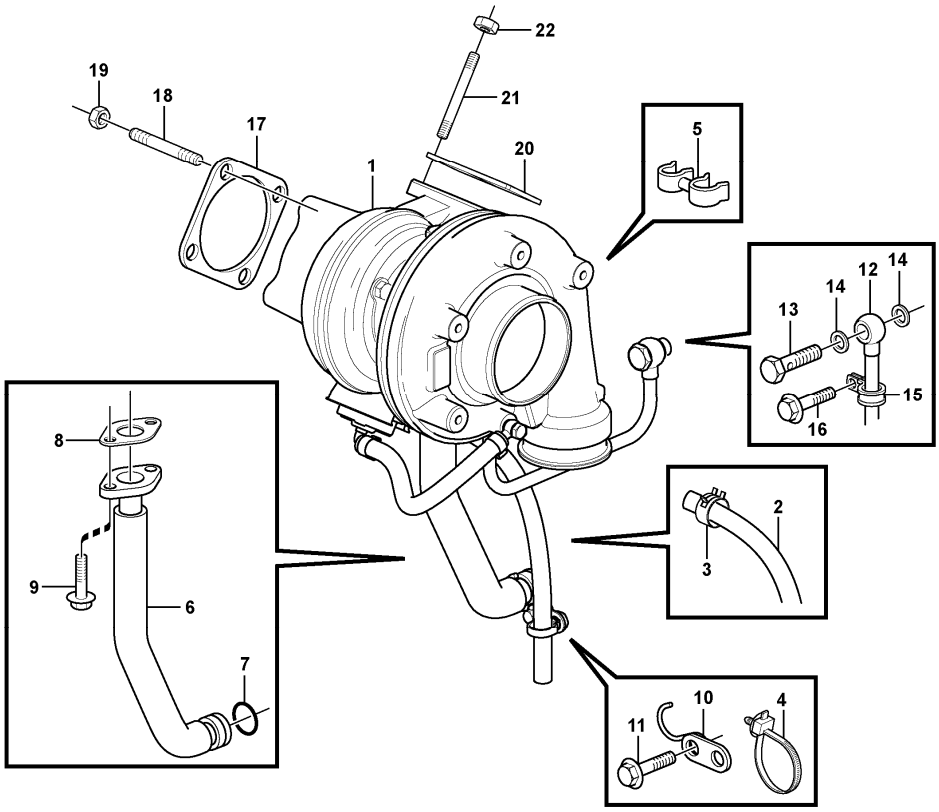

Section option	Kit	Option description
VOE11410957		Engine VOLVO D7ELAE3

Q1-Q5	Option	Option description	
Q1 ENG - 10858815			
Q2 ENG 10858816 -			

Pos	Part	Q1	Q2	Q3	Q4	Q5	PS	Kit	Description	Option(s)	Remark
1	VOE20896351	1					SS		Turbocharger		REMAN VOE9020896351, VOE9021496615
1	VOE21496615		1				SS		Turbocharger		REMAN VOE9021496615, VOE9022067460
2	VOE21511627		1						•Breather pipe		

3	VOE20405568		1						•Clip		
4	VOE20834570		1						Retainer		
5	VOE21619223		1						Hose retainer		
6	VOE21593670	1	1						Return line		(VOE21077414)
7	VOE20405822	1	1						Sealing ring		
8	VOE21242584	1	1						Gasket		(VOE20405790)
9	VOE20405885	2	2						Screw		
10	VOE21524802	1							Hook		(VOE20405789)
10	VOE21511617		1						Bracket		
11	VOE20405792	1	1						Screw		
12	VOE21552542	1							Oil line		(VOE21077419)
12	VOE21553115		1						Oil line		(VOE21088621)
13	VOE7025167	2	2						Hollow screw		
14	VOE13947621	4	4						Plane gasket		
15	VOE20450987		1						Clamp		
16	VOE20405792		1						Screw		
17	VOE20792408	1	1						Gasket		
18	VOE20412314	4	4						Stud		
19	VOE20412308	4	4						Hexagon nut		
20	VOE20559835	1	1						Gasket		
21	VOE20412314	4	4						Stud		(VOE20799733)
22	VOE20412308	4	4						Hexagon nut		

VOLVO

Construction Equipment

PROSIS Part Information

Date:	Image id:	Catalogue:	Model:
24/08/2018	**1018885**	**20086**	**L120E**
Brand:	Serial:	Group/Section:	Title:
Volvo	**19804-, 66001-, 71401-**	**256/100**	**Air filter with fitting parts**

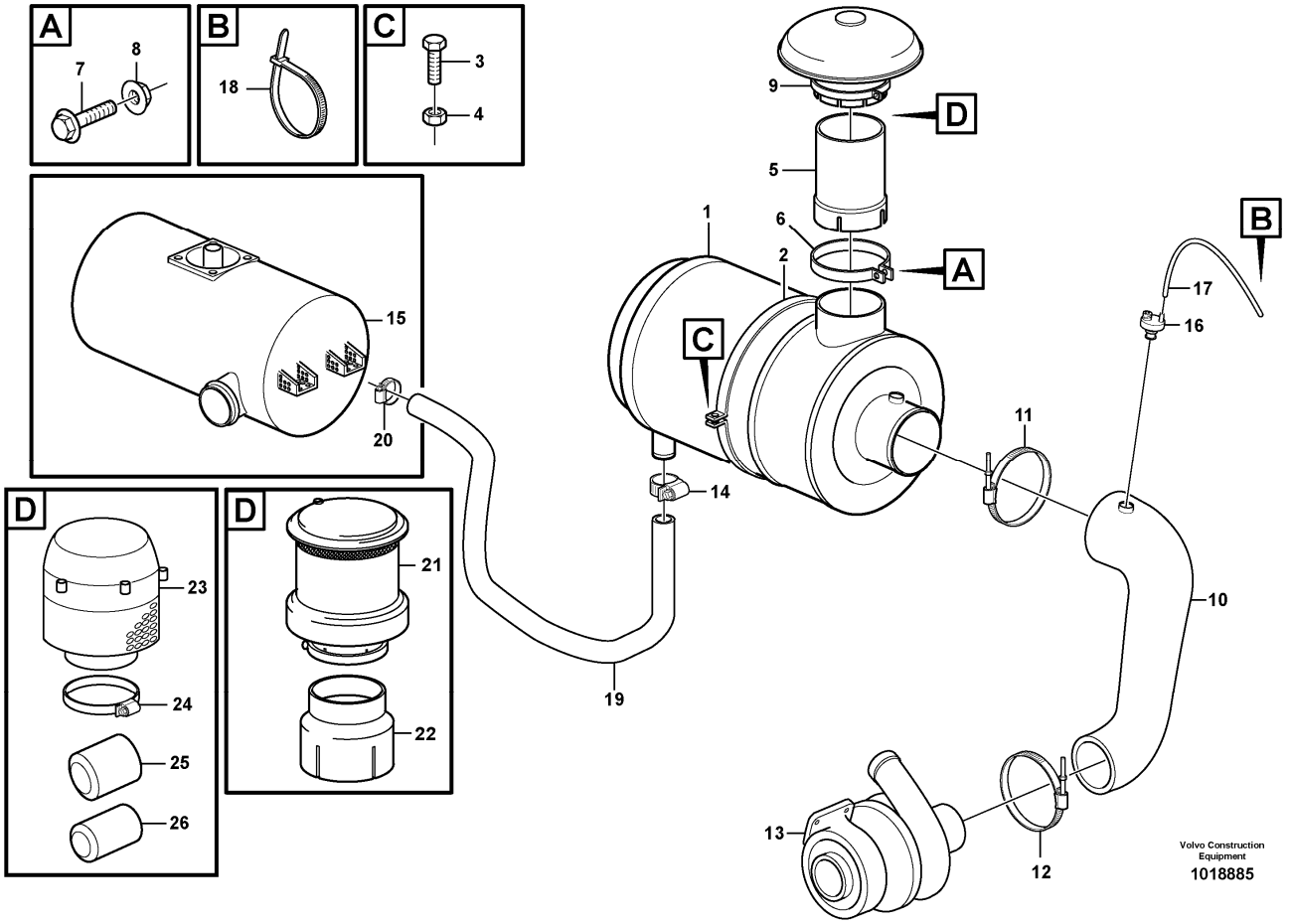

Section option	Kit	Option description
VOE33380		Volvo Wheel Loader L120E S/N 19801-, S/N 66001- USA, S/N 71401- BRA
VOE82290		Pre-cleaner
VOE80802		Pre cleaner type Turbo
VOE33395		Wheel Loader L120E3 IRAN

Q1-Q5	Option	Option description	
Q1 33380 33395	VOE33380	Volvo Wheel Loader L120E S/N 19801-, S/N 66001- USA, S/N 71401- BRA	
Q2 80802	VOE80802	Pre cleaner type Turbo	
Q3 82290	VOE82290	Pre-cleaner	

Pos	Part	Q1	Q2	Q3	Q4	Q5	PS	Kit	Description	Option(s)	Remark
1		1							Air Cleaner		S/N - 20667 S/N - 66792 USA S/N - 71475 BRA S/N -

											54020 IRAN See ref 256/150
		1							Air Cleaner		S/N 20668 - S/N 66793 - USA S/N 71476 - BRA S/N 54021 - IRAN See ref 256/175
2	VOE14340767	2							Clamp		
3	VOE946671	2							Flange screw		
4	VOE13945408	2							Nut		
5	VOE11172245	1							Tube		
6	VOE11133717	1							Clamp		
7	VOE946671	1							Flange screw		
8	VOE13945408	1							Nut		
9	VOE11110260	1							Cover		
10	VOE11411950	1							Inlet hose		
11	VOE11110380	1							Hose clamp		
12	VOE1544732	1							Hose clamp		
13		1							Turbo		See ref 255/100
14	VOE943479	1							Hose clamp		S/N - 20667 S/N - 54020 IRAN S/N - 66192 USA S/N - 71475 BRA
	VOE943480	1							Hose clamp		S/N 20668 - S/N 54021 - IRAN S/N 66193 - USA S/N 71476 - BRA
	VOE943480		1						Hose clamp		S/N - 20667 S/N - 54020 IRAN S/N - 66192 USA S/N - 711475 BRA
15		1							Muffler		See ref 252/100
16	VOE20560843	1							Vacuum switch		SE2501, SE2502
	VOE20565673	1	1	1					Vacuum switch	VOE83059	SE2501, SE2502
17	VOE969021	1							Hose		
18	VOE4881440	1							Cable tie		
19	VOE11410083	1							Hose		S/N - 20667 S/N - 54020 IRAN S/N - 66192 USA S/N - 71475 BRA
20	VOE943476	1							Hose clamp		S/N - 20667 S/N - 54020 IRAN S/N - 66192 USA S/N - 71475 BRA
21	VOE11043074		1						Pre-cleaner		
22	VOE11410199		1						Adapter		
23	VOE11180658			1					Pre-cleaner		
24	VOE1544736			1					•Hose clamp		
25	VOE14342769		1	1					Rubber sleeve		S/N - 20667 S/N - 66192 USA S/N - 71475 BRA S/N - 54020 IRAN
	VOE14342769	1							Rubber sleeve		S/N 20668 - S/N 54021 - IRAN S/N 66193 -

											USA S/N 71476 - BRA
26	VOE4932563		1	1					Rubber bushing		S/N - 20667 S/N - 54020 IRAN S/N - 66192 USA S/N - 71475 BRA

VOLVO

Construction Equipment

PROSIS Part Information

Date:	Image id:	Catalogue:	Model:
24/08/2018	**1001093**	**20086**	**L120E**
Brand:	Serial:	Group/Section:	Title:
Volvo	**19804-, 66001-, 71401-**	**256/150**	**Air filter**

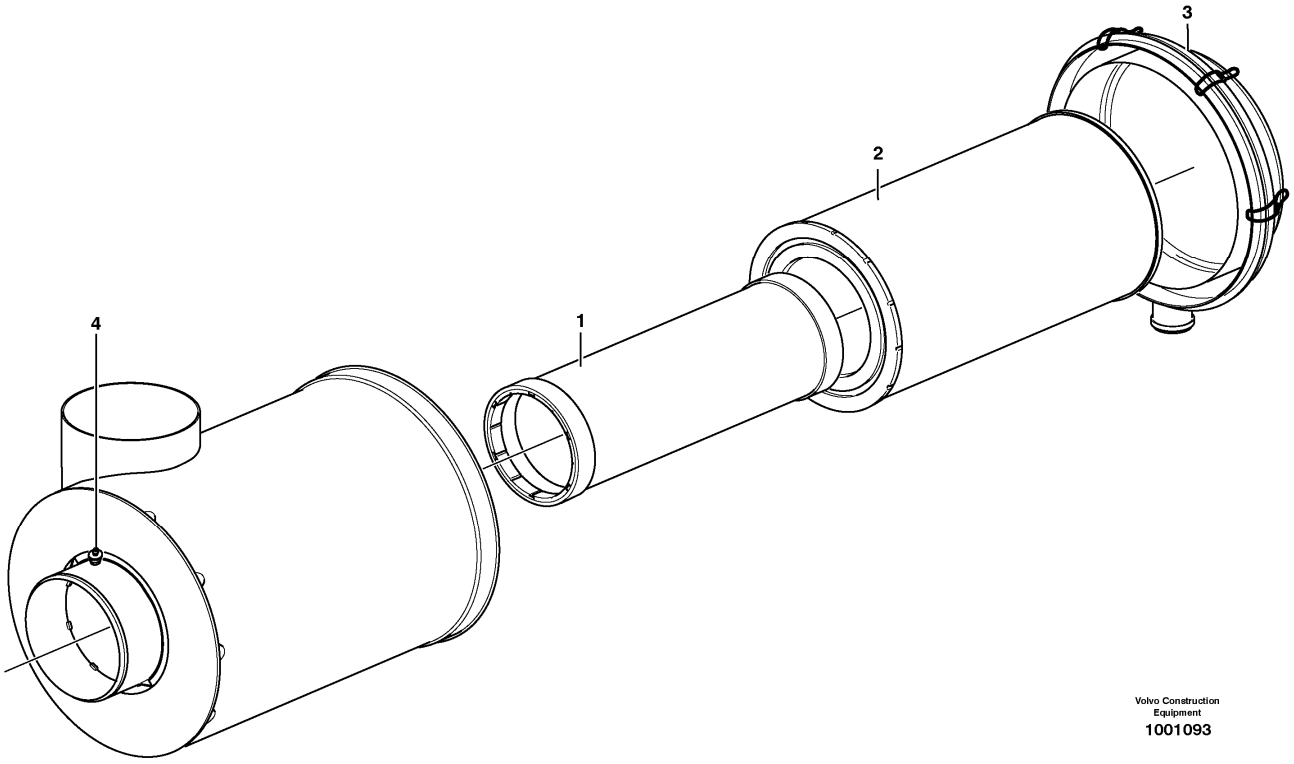

Section option	Kit	Option description
VOE33380		Volvo Wheel Loader L120E S/N 19801-, S/N 66001- USA, S/N 71401- BRA
VOE33395		Wheel Loader L120E3 IRAN

Pos	Part	Q1	Q2	Q3	Q4	Q5	PS	Kit	Description	Option(s)	Remark
	VOE11110280	1							Air cleaner		S/N - 20667 S/N - 66792 USA S/N - 71475 BRA S/N - 54020 IRAN
1	VOE11110023	1							•Safety filter		
2	VOE11110022	1							•Air filter		
3	VOE14513672	1							•Cover		(VOE11709011)
4	VOE11110027	1							•Nipple		

VOLVO

Construction Equipment

PROSIS Part Information

Date:	Image id:	Catalogue:	Model:
24/08/2018	**1001093**	**20086**	**L120E**
Brand:	Serial:	Group/Section:	Title:
Volvo	**19804-, 66001-, 71401-**	**256/175**	**Air filter**

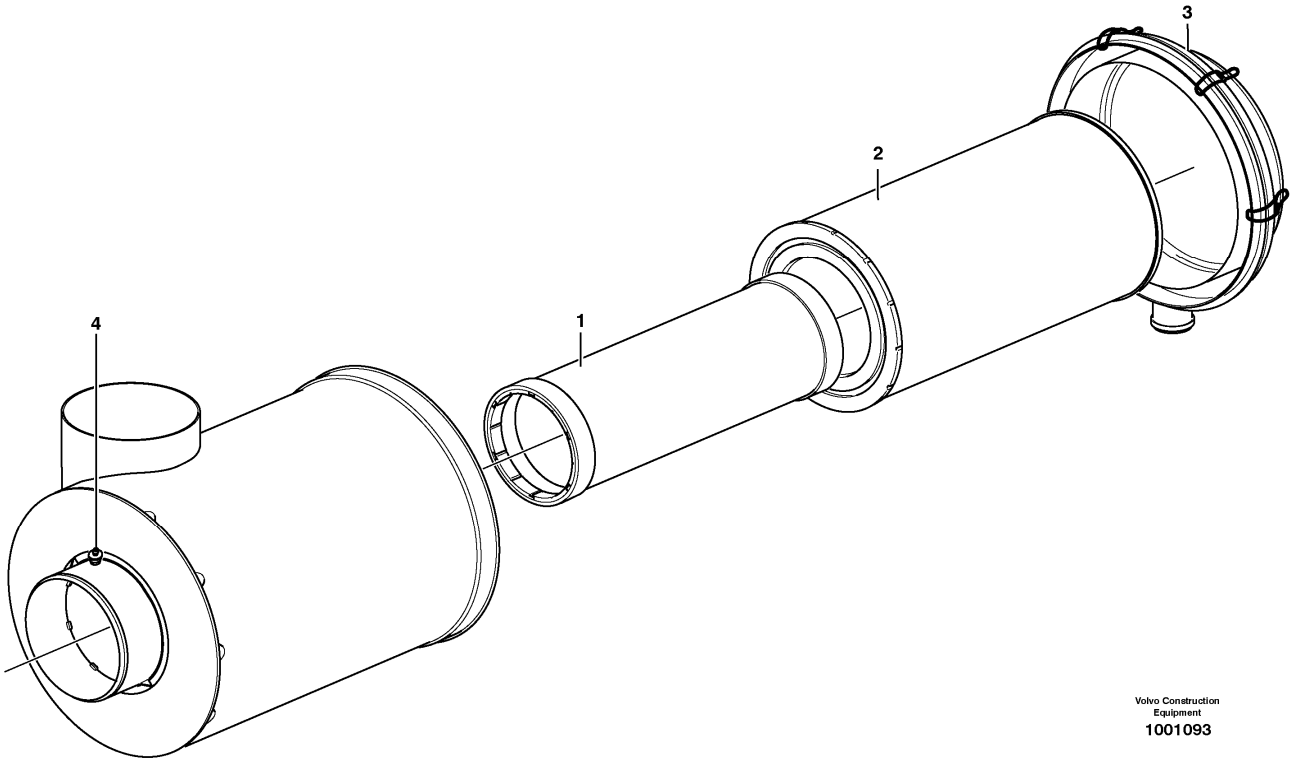

Section option	Kit	Option description
VOE33380		Volvo Wheel Loader L120E S/N 19801-, S/N 66001- USA, S/N 71401- BRA
VOE33395		Wheel Loader L120E3 IRAN

Pos	Part	Q1	Q2	Q3	Q4	Q5	PS	Kit	Description	Option(s)	Remark
	VOE11110604	1							Air cleaner		S/N 20668 - S/N 66793 - USA S/N 71476 - BRA S/N 54021 - IRAN
1		1					NS		•Housing		
2	VOE11110022	1							•Air filter		
3	VOE11110023	1							•Safety filter		
4	VOE14513672	1							•Cover		(VOE11709011)
5	VOE11701952	1							•Valve		

VOLVO

Construction Equipment

PROSIS Part Information

Date:	Image id:	Catalogue:	Model:
24/08/2018	**1022044**	**20086**	**L120E**
Brand:	Serial:	Group/Section:	Title:
Volvo	**19804-, 66001-, 71401-**	**256/200**	**Oil-bath precleaner.**

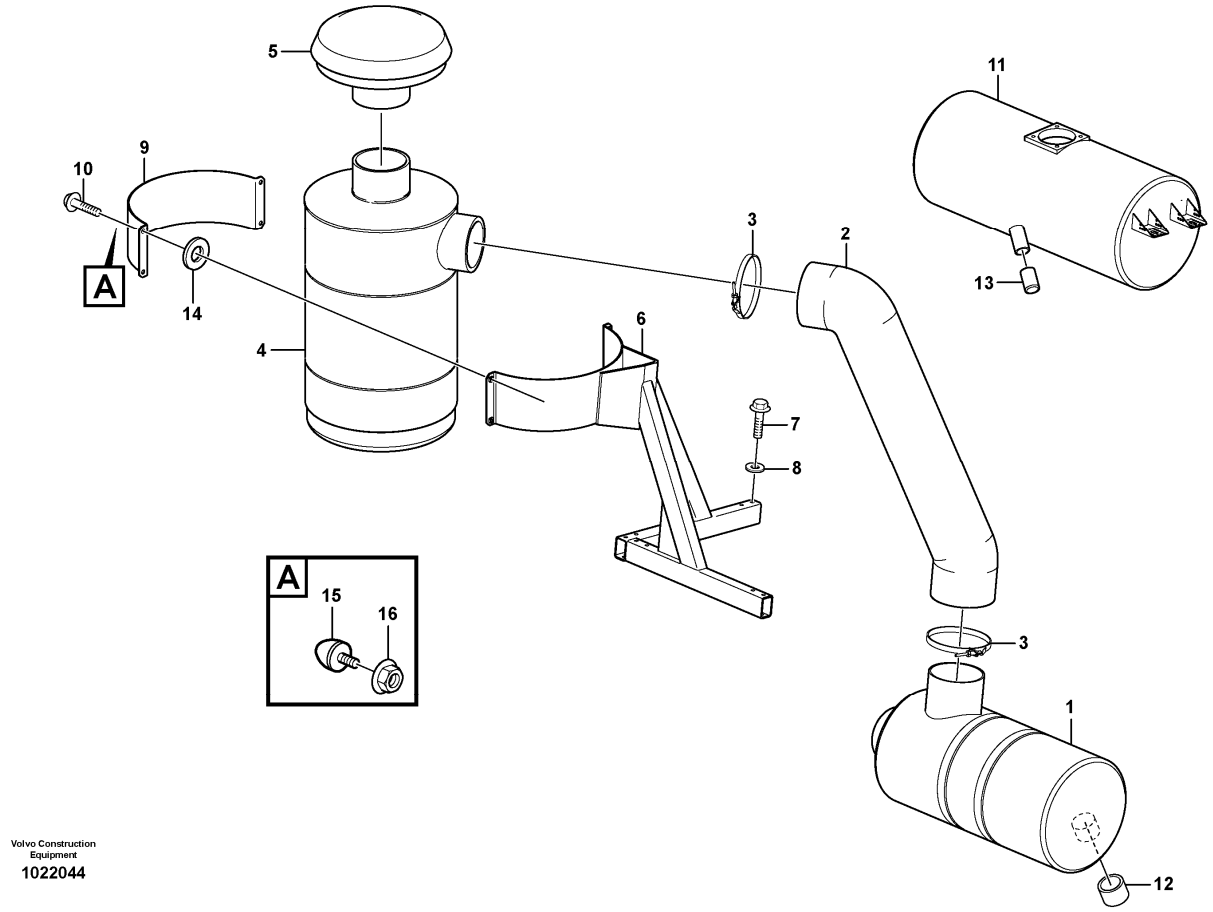

Section option	Kit	Option description
VOE83059	VOE11715683	Pre-cleaner, oil bath type
VOE33395		Wheel Loader L120E3 IRAN

Q1-Q5	Option	Option description	
Q1 83059	VOE83059	Pre-cleaner, oil bath type	
Q2 33395 IRAN	VOE33395	Wheel Loader L120E3 IRAN	

Pos	Part	Q1	Q2	Q3	Q4	Q5	PS	Kit	Description	Option(s)	Remark
	VOE11110604	1							Air cleaner		S/N 20668 - S/N 66793 - USA S/N 71476 - BRA S/N 54021 - IRAN
1		1					NS		•Housing		
2	VOE11110022	1							•Air filter		
3	VOE11110023	1							•Safety filter		
4	VOE14513672	1							•Cover		(VOE11709011)

5	VOE11701952	1							•Valve		

VOLVO

Construction Equipment

PROSIS Part Information

Date:	Image id:	Catalogue:	Model:
24/08/2018	**1020218**	**20086**	**L120E**
Brand:	Serial:	Group/Section:	Title:
Volvo	**19804-, 66001-, 71401-**	**256/250**	**Air filter. 83059**

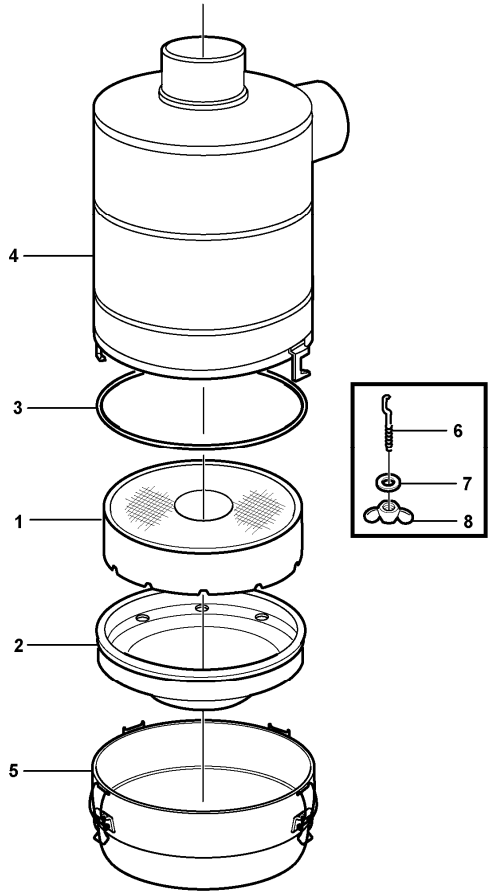

Section option	Kit	Option description
VOE83059	VOE11715683	Pre-cleaner, oil bath type

Pos	Part	Q1	Q2	Q3	Q4	Q5	PS	Kit	Description	Option(s)	Remark
	VOE11033550	1					SS		Oil bath air cleaner	VOE33395	IRAN
1	VOE11712792	1							•Filter insert		
2	VOE11999931	1							•Reservoir		
3	VOE11712791	1							•O-ring		
4	VOE11712790	1							•Reservoir		
5	VOE11712793	1							•Reservoir		
6	VOE11708591	2							•Screw eye		
7	VOE976943	3							•Washer		
8	VOE956903	3							•Wing nut		

VOLVO

Construction Equipment

PROSIS Part Information

Date:	Image id:	Catalogue:	Model:
24/08/2018	**1027112**	**20086**	**L120E**
Brand:	Serial:	Group/Section:	Title:
Volvo	**19804-, 66001-, 71401-**	**256/300**	**Pre-cleaner 83357**

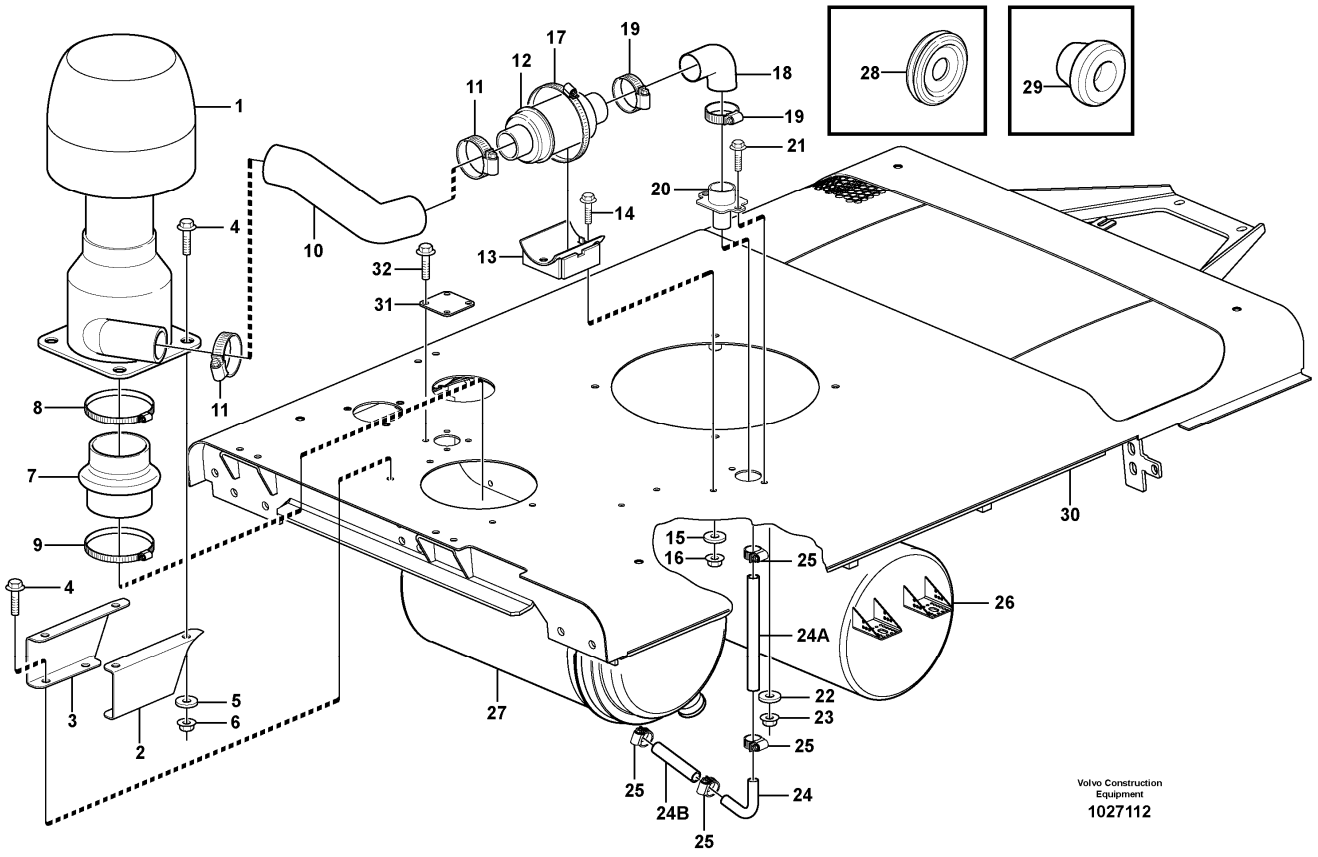

Section option	Kit	Option description
VOE83357		Pre-cleaner

Pos	Part	Q1	Q2	Q3	Q4	Q5	PS	Kit	Description	Option(s)	Remark
1	VOE11417477	1							Primary filter		
	VOE11715353	1							•Air cleaner		
2	VOE11436087	1							Bracket		LH
3	VOE11436088	1							Bracket		RH
4	VOE13945444	8							Screw		
5	VOE13955894	8							Washer		
6	VOE948645	8							Flange lock nut		
7	VOE11417480	1							Adapter		
8	VOE943485	1							Hose clamp		
9	VOE943485	1							Hose clamp		
10	VOE11417478	1							Hose		

11	VOE993974	2							Hose clamp		
12	VOE11417482	1							Non-return valve		
13	VOE11417493	1							Bracket		
14	VOE13945444	2							Screw		
15	VOE13955894	2							Washer		
16	VOE948645	2							Flange lock nut		
17	VOE943483	1							Hose clamp		
18	VOE11417478	1							Hose		
19	VOE993974	2							Hose clamp		
20	VOE11417489	1							Adapter		
21	VOE13945444	2							Screw		
22	VOE13955894	2							Washer		
23	VOE948645	2							Flange lock nut		
24	VOE11417497	1							Pipe		
24A	VOE952972	REQ							Hose		L = 300 MM
24B	VOE952972	REQ							Hose		L = 150 MM
25	VOE943475	4							Hose clamp		
26		1							Muffler		See ref 252/100
27		1							Air Cleaner		See ref 256/100
28	VOE14342769	1							Rubber sleeve		
29	VOE13974682	6							Plug		OD = 10 MM SER NO - 20461
	VOE13974682	2							Plug		OD = 10 MM SER NO 20462 -
	VOE941268	1							Plug		OD = 20 MM
	VOE943920	1							Plug		OD = 40 MM SER NO - 20461
30	VOE11435438	1							Top plate		SER NO - 20461
	VOE15032695	1							Top plate		(VOE11436080)SER NO 20462 -
31	VOE11436086	1							Cover plate		SER NO 20462 -
32	VOE13945444	4							Screw		SER NO 20462 -

VOLVO

Construction Equipment

PROSIS Part Information

Date:	Image id:	Catalogue:	Model:
24/08/2018	**1051259**	**20086**	**L120E**
Brand:	Serial:	Group/Section:	Title:
Volvo	**19804-, 66001-, 71401-**	**258/100**	**Intercooler**

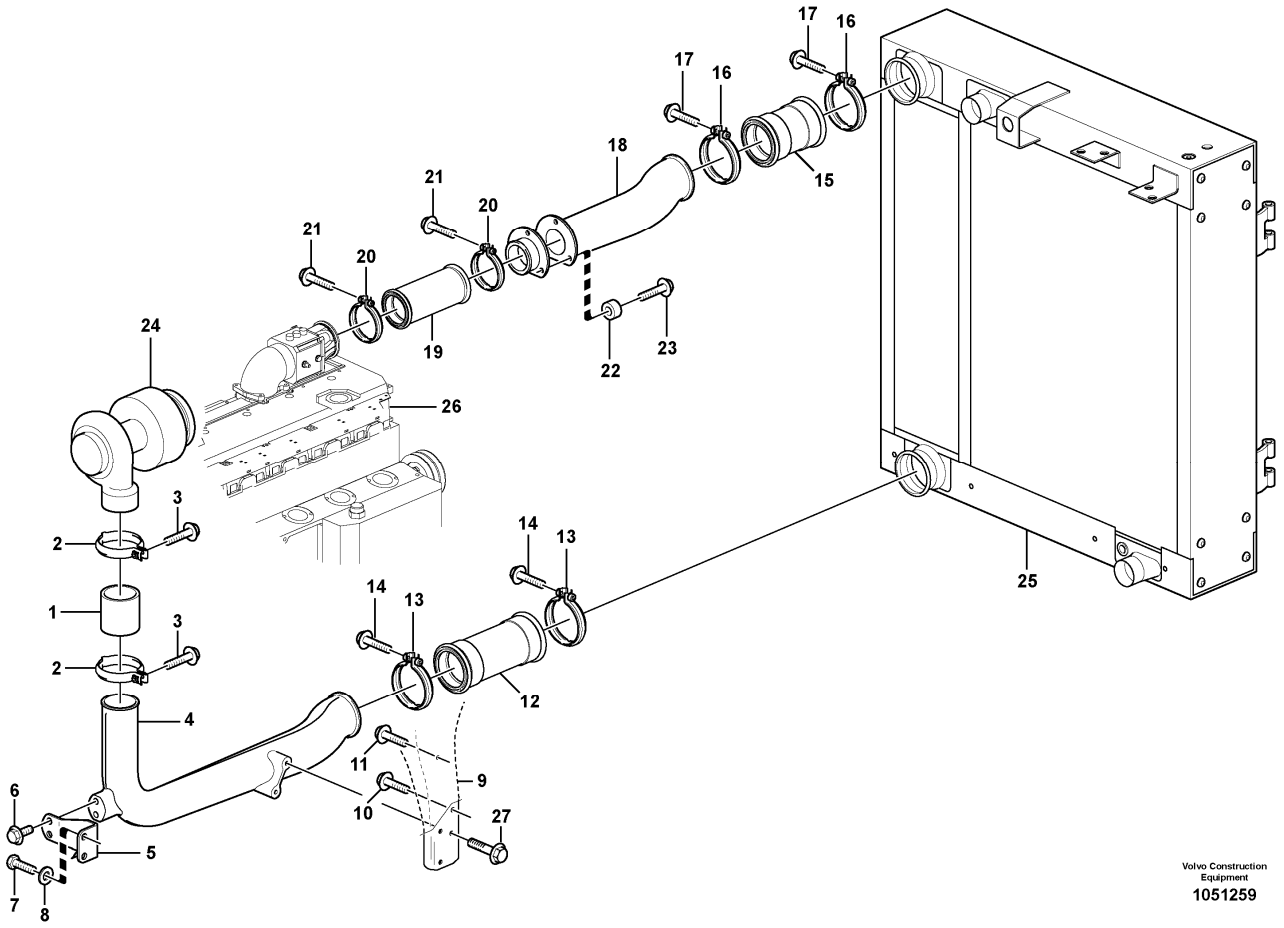

Pos	Part	Q1	Q2	Q3	Q4	Q5	PS	Kit	Description	Option(s)	Remark
1	VOE3183620	1							Charge air hose		
2	VOE1542778	2							V-clamp		
3	VOE13965176	2							Screw		
4	VOE11411266	1							Charge air pipe		
5	VOE11411625	1							Bracket		
6	VOE13945444	2							Screw		
7	VOE983242	2							Hexagon screw		
8	VOE930840	4							Plain washer		S/N - 20317
8	VOE930840	3							Plain washer		S/N 20318 - S/N 71401 - BRA
9	VOE11411160	1							Alternator anchorage		
10	VOE13947760	2							Screw		
11	VOE13965181	1							Screw		

12	VOE15084140	1							Charge air hose		(VOE11110495)
13	VOE1676424	2							Clamp		
14	VOE13948356	2							Flange screw		
15	VOE11110594	1					SS		Charge air hose		
16	VOE1676424	2							Clamp		
17	VOE13948356	2							Flange screw		
18	VOE11411638	1							Charge air pipe		
19	VOE11110598	1							Charge air hose		
20	VOE8149651	2							V-clamp		
21	VOE13948356	2							Flange screw		
22	VOE930431	3							Spacer ring		S/N - 19806 SWE
22	VOE13949873	3							Spacer washer		S/N 19807 - SWE
23	VOE946671	3							Flange screw		
24		1							Turbo		See ref 255/100
25		1							Radiator		See ref 261/100
26		1							Cylinder head		See ref 211/100
27	VOE946470	2							Flange screw		

VOLVO

Construction Equipment

PROSIS Part Information

Date:	Image id:	Catalogue:	Model:
24/08/2018	**1034350**	**20086**	**L120E**
Brand:	Serial:	Group/Section:	Title:
Volvo	**19804-, 66001-, 71401-**	**261/100**	**Radiator with fitting parts**

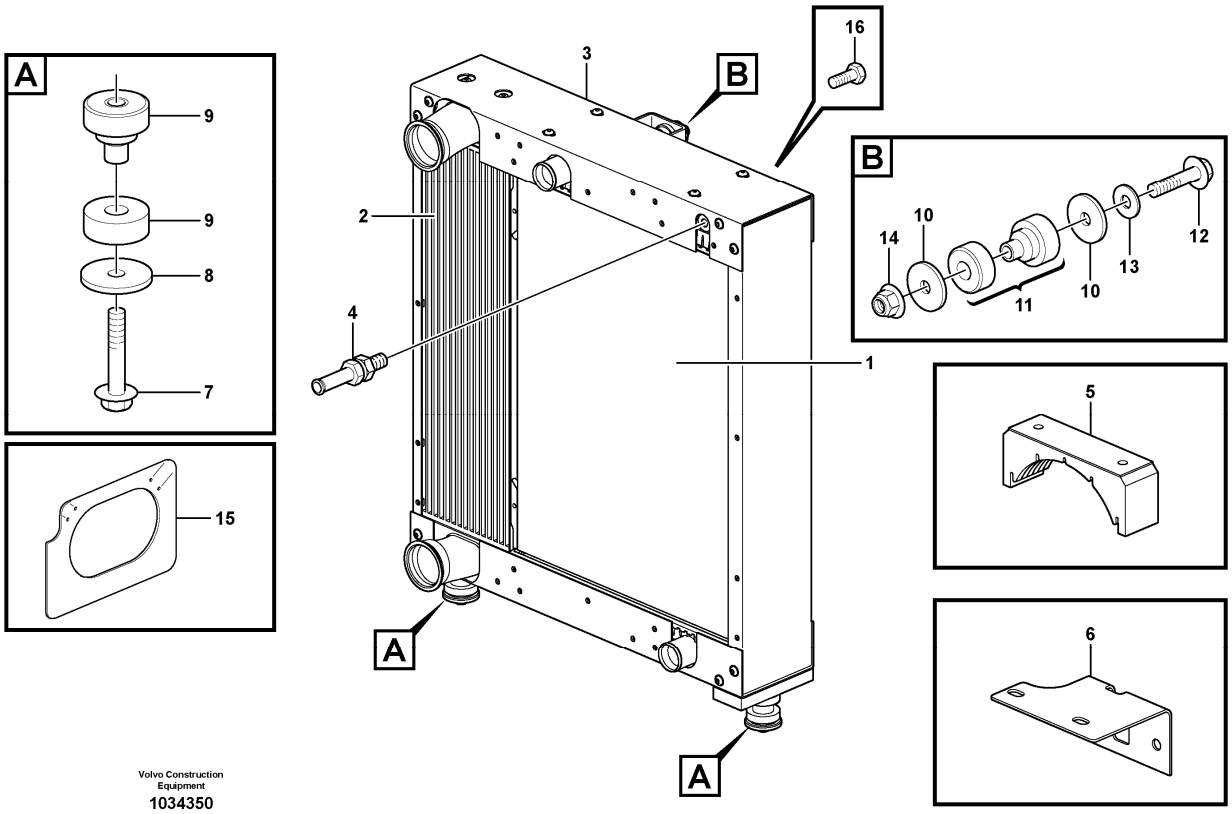

Section option	Kit	Option description
VOE33380		Volvo Wheel Loader L120E S/N 19801-, S/N 66001- USA, S/N 71401- BRA
VOE83061		Radiator, corrosion protected
VOE33395		Wheel Loader L120E3 IRAN

Q1-Q5	Option	Option description	
Q1 33380 33395	VOE33380	Volvo Wheel Loader L120E S/N 19801-, S/N 66001- USA, S/N 71401- BRA	
Q2 83061	VOE83061	Radiator, corrosion protected	

Pos	Part	Q1	Q2	Q3	Q4	Q5	PS	Kit	Description	Option(s)	Remark

VOLVO

Construction Equipment

PROSIS Part Information

Date:	Image id:	Catalogue:	Model:
24/08/2018	**1034350**	**20086**	**L120E**
Brand:	Serial:	Group/Section:	Title:
Volvo	**19804-, 66001-, 71401-**	**261/150**	**Expansion tank with fitting parts 33380, 33395**

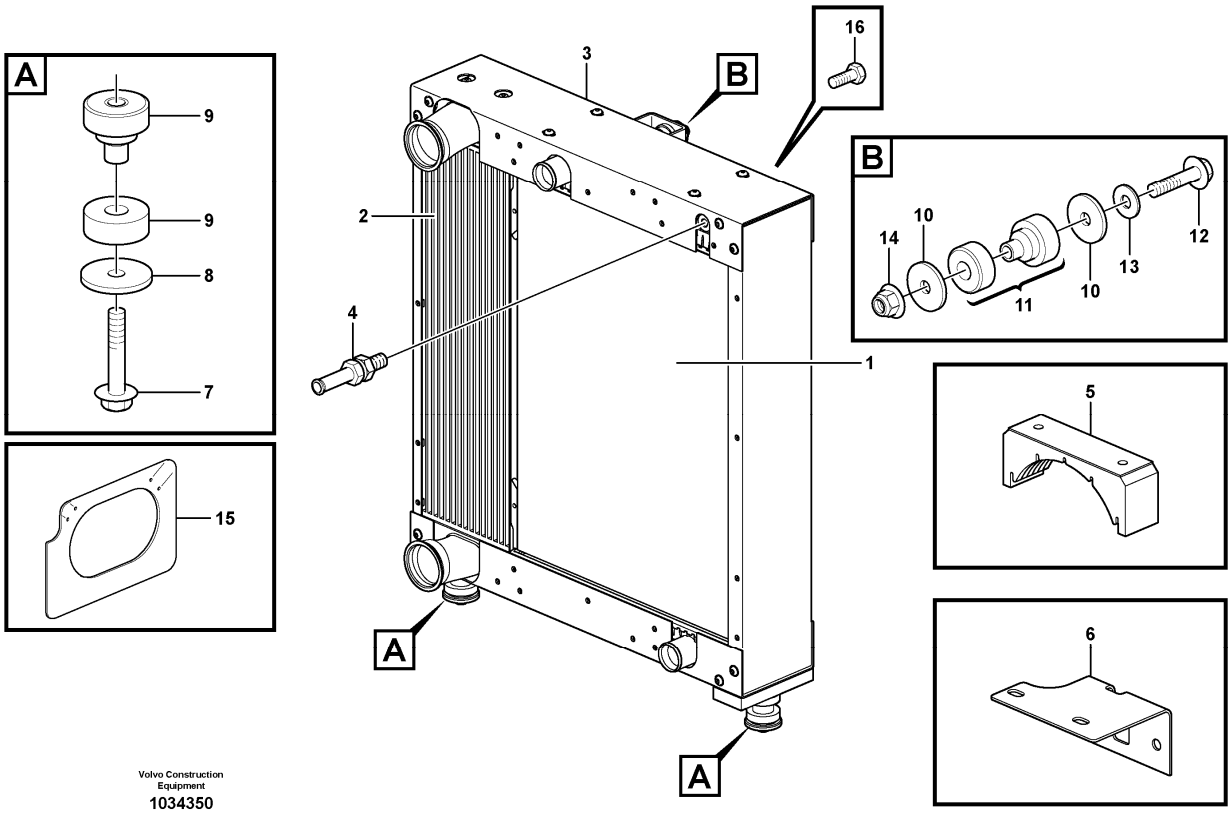

Section option	Kit	Option description
VOE33380		Volvo Wheel Loader L120E S/N 19801-, S/N 66001- USA, S/N 71401- BRA
VOE33395		Wheel Loader L120E3 IRAN

Pos	Part	Q1	Q2	Q3	Q4	Q5	PS	Kit	Description	Option(s)	Remark
1	VOE11110410	1					SS		Expansion tank		
2	VOE11110409	1							•Anchorage		
3	VOE4804563	2							Tensioning band		
4	VOE949874	2							Flange lock nut		(VOE13949874)
5	VOE4804410	1							Sealing ring		
6	VOE11431708	1							Collar		(VOE4804414)
7	VOE1542591	1							Cap		
7	VOE20879322	1							Pressure cap		YELLOW CAP
8	VOE11170064	1							Level guard		SE2603

VOLVO

Construction Equipment

PROSIS Part Information

Date:	Image id:	Catalogue:	Model:
24/08/2018	**1033630**	**20086**	**L120E**
Brand:	Serial:	Group/Section:	Title:
Volvo	**19804-, 66001-, 71401-**	**261/200**	**Cooling system 33380, 33395**

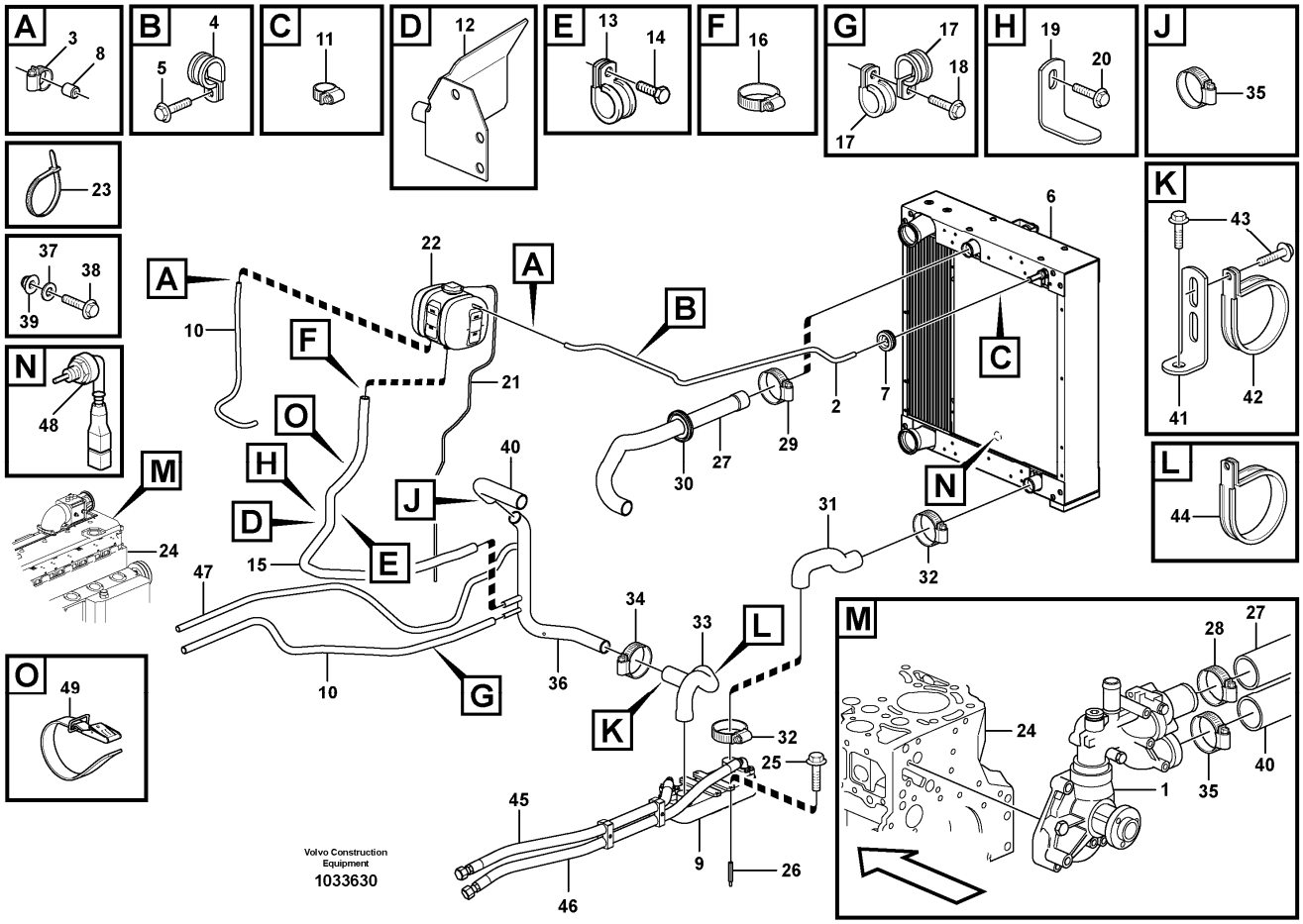

Section option	Kit	Option description
VOE33380		Volvo Wheel Loader L120E S/N 19801-, S/N 66001- USA, S/N 71401- BRA
VOE33395		Wheel Loader L120E3 IRAN

Pos	Part	Q1	Q2	Q3	Q4	Q5	PS	Kit	Description	Option(s)	Remark
1		1							Coolant Pump		See ref 262/100
2	VOE943367	REQ							Hose		L = 1700 mm
3	VOE943470	2							Hose clamp		
4	VOE977742	2							Clamp		
5	VOE946440	2							Flange screw		
6		1							Radiator		See ref 261/100
7	VOE961960	1							Grommet		
8	VOE11033572	2							Restrictor		
9		1							Oil Cooler		See ref 491/100
10	VOE943367	1							Hose		L = 850 MM

11	VOE943470	2							Hose clamp		
12	VOE11411628	1							Heat shield		
13	VOE942810	1							Clamp		
14	VOE13946173	1							Screw		
15	VOE4856263	REQ							Radiator hose		
16	VOE943475	2							Hose clamp		
17	VOE949850	4							Clamp		S/N - 19806 SWE
17	VOE949850	3							Clamp		S/N 19807 - SWE
18	VOE946440	3							Flange screw		
19	VOE11024650	1							Angle plate		
20	VOE13946173	1							Screw		
21	VOE941363	1							Hose		
22		1							Expansion Tank		See ref 261/150
23	VOE4881440	3							Cable tie		
24		1							Cylinder block		See ref 212/100
25	VOE946440	1							Flange screw		
26	VOE13945408	1							Nut		
27	VOE11411993	1							Radiator hose		(VOE11411655)
28	VOE943479	1							Hose clamp		
29	VOE943480	1							Hose clamp		
30	VOE11094574	1							Grommet		
31	VOE11410996	1							Radiator hose		
32	VOE943480	2							Hose clamp		
33	VOE11410994	1							Radiator hose		
34	VOE943480	1							Hose clamp		
35	VOE943479	3							Hose clamp		
36	VOE11410998	1							Tube		See ref 261/250
37	VOE11117464	2							Plain washer		(VOE13960141)
38	VOE13946934	1							Screw		
39	VOE13949867	1							Spring nut		
40	VOE11410997	1					SS		Radiator hose		
41	VOE13965540	1							Bracket		
42	VOE13945734	1							Clamp		
43	VOE946440	3							Flange screw		
44	VOE13980476	1							Clamp		
45	VOE11410991	1							Hose		See ref 491/100
46	VOE11410990	1							Hose		See ref 491/100
47		1							Hose assembly		See ref 873/100
48	VOE11419485	1							Temperature sensor		SE 210
49	VOE11104606	1							Retaining strap		

VOLVO

Construction Equipment

PROSIS Part Information

Date:	Image id:	Catalogue:	Model:
24/08/2018	**1018968**	**20086**	**L120E**
Brand:	Serial:	Group/Section:	Title:
Volvo	**19804-, 66001-, 71401-**	**261/250**	**Coolant drainage 33380,33395**

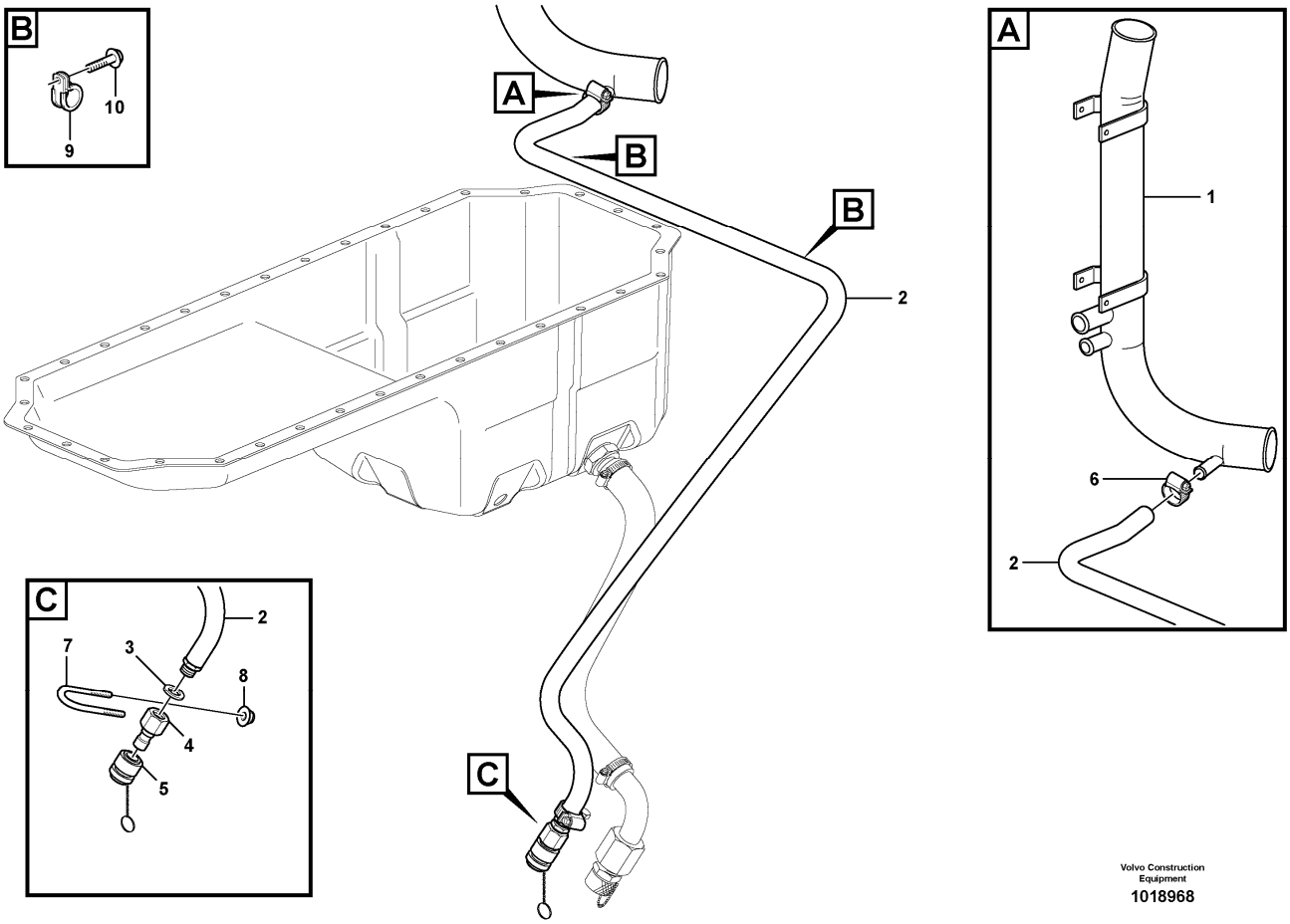

Section option	Kit	Option description
VOE33380		Volvo Wheel Loader L120E S/N 19801-, S/N 66001- USA, S/N 71401- BRA
VOE33395		Wheel Loader L120E3 IRAN

Pos	Part	Q1	Q2	Q3	Q4	Q5	PS	Kit	Description	Option(s)	Remark
1		1							Pipe		See ref 261/200
	VOE11445063	1							Drain hose		L = 1150 MM
2		1					NS		•Drain hose		
3	VOE14042936	1							•Sealing washer		
4	VOE4786585	1							•Insert nipple		
5	VOE11194108	1							•Protecting sleeve		
6	VOE13943472	1							Hose clamp		
7	VOE11130271	1							Clamp		
8	VOE13949278	2							Flange lock nut		
9	VOE977599	1							Clamp		(VOE13977599)

10	VOE13946173	1							Screw		

VOLVO

Construction Equipment

PROSIS Part Information

Date:	Image id:	Catalogue:	Model:
24/08/2018	**1020224**	**20086**	**L120E**
Brand:	Serial:	Group/Section:	Title:
Volvo	**19804-, 66001-, 71401-**	**261/300**	**Coolant filter 82914**

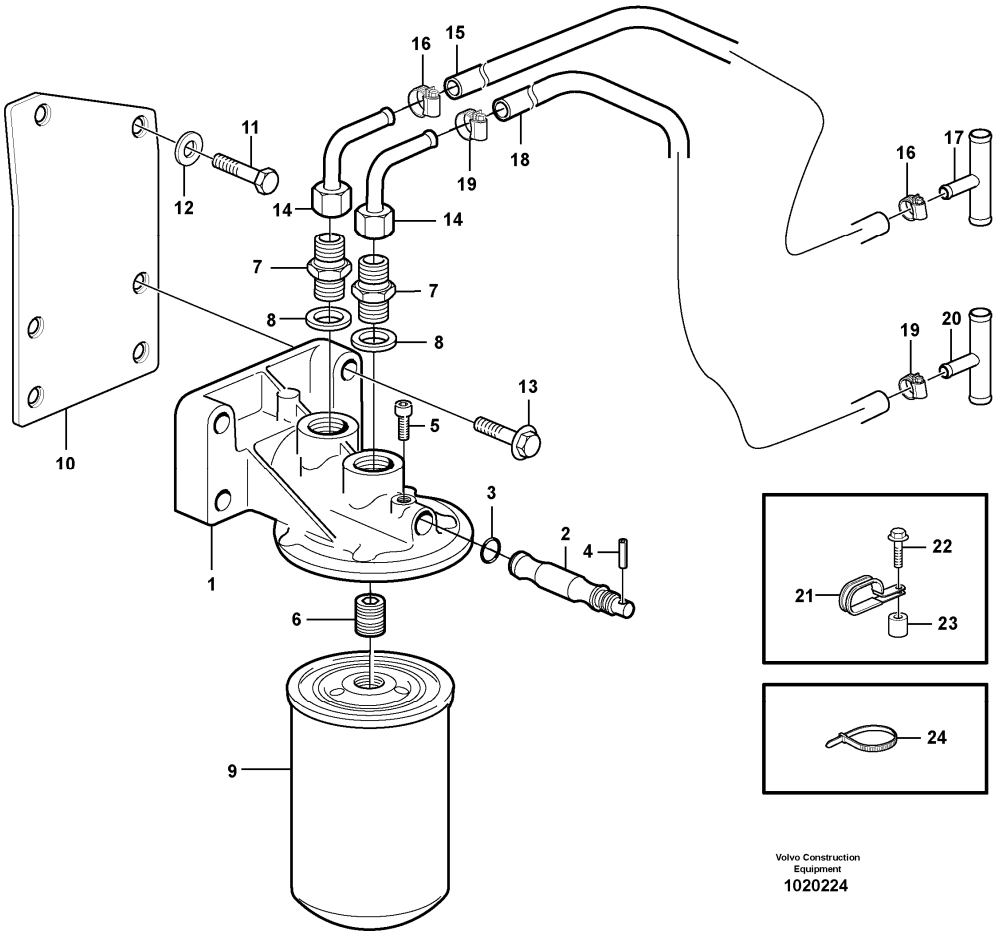

Section option	Kit	Option description
VOE82914		Coolant filter, engine

Pos	Part	Q1	Q2	Q3	Q4	Q5	PS	Kit	Description	Option(s)	Remark
1	VOE1661683	1							Bracket		
2	VOE1661686	1							Spindle		
3	VOE968725	1							O-ring		
4	VOE990820	1							Spring pin		
5	VOE961236	1							Hex. socket screw		
6	VOE1676554	1							Nipple		
7	VOE941754	2							Nipple		
8	VOE976929	2							Gasket		
9	VOE20532237	1							Coolant filter		(VOE1699830)
10		1					NS		Bracket		
11	VOE13946173	2							Screw		

12	VOE11117464	2							Plain washer		(VOE13960141)
13	VOE946671	4							Flange screw		
14	VOE11033093	2							Pipe elbow		
15	VOE943367	REQ							Hose		L = 2250 MM
16	VOE943470	2							Hose clamp		
17	VOE11173737	1							T-pipe		OD = 20 MM
18	VOE943367	REQ							Hose		L = 2250 MM
19	VOE943470	2							Hose clamp		
20	VOE11173736	1							T-pipe		OD = 16 MM
21	VOE13949386	1							Clamp		
22	VOE13947760	1							Screw		
23	VOE930434	1							Spacer ring		
24	VOE4881440	REQ							Cable tie		

VOLVO

Construction Equipment

PROSIS Part Information

Date:	Image id:	Catalogue:	Model:
24/08/2018	**1019887**	**20086**	**L120E**
Brand:	Serial:	Group/Section:	Title:
Volvo	**19804-, 66001-, 71401-**	**262/100**	**Water pump and thermostat housing**

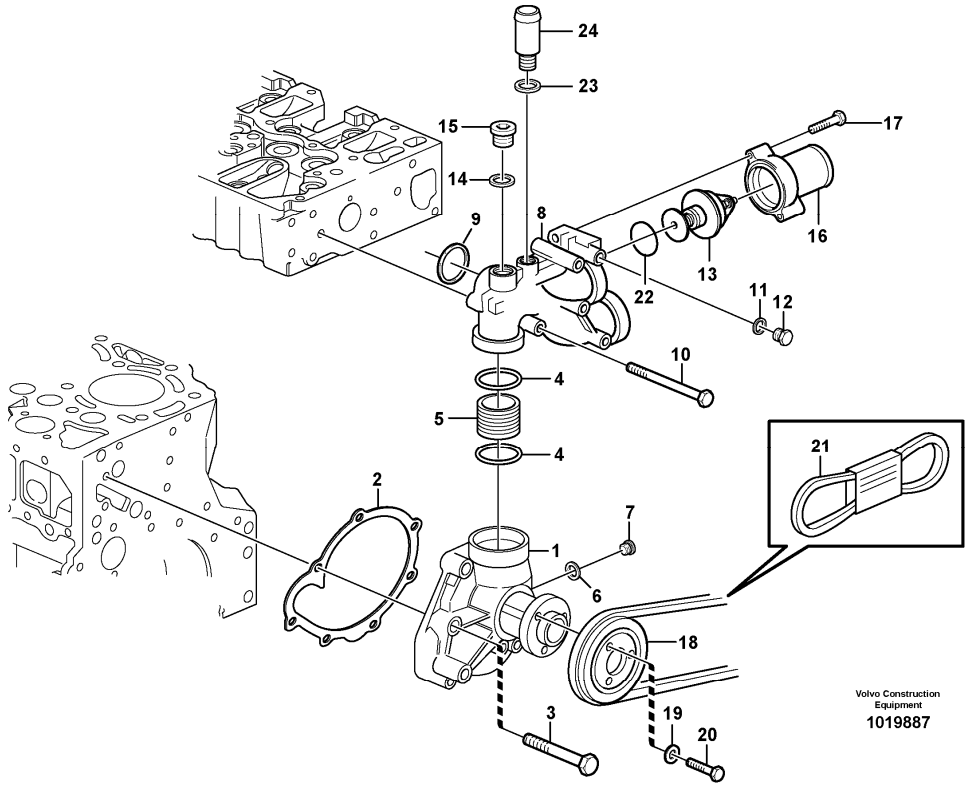

Section option	Kit	Option description
VOE11410957		Engine VOLVO D7ELAE3

Pos	Part	Q1	Q2	Q3	Q4	Q5	PS	Kit	Description	Option(s)	Remark
1	VOE20726083	1					SS	K	Coolant Pump		REMAN VOE9020726083, VOE9021404504
2	VOE20405691	1						K	Gasket		
3	VOE20412324	8							Screw		
4	VOE20412325	2						K	Sealing ring		
5	VOE20405693	1						K	Plug		
6	VOE13947622	1						K	Plane gasket		
7	VOE20502245	1						K	Plug		
8	VOE21260062	1							Thermostat housing		
9	VOE20798076	1							•O-ring		
10	VOE20792140	3							•Hexagon screw		

11	VOE13947281	1							•Gasket		
12	VOE20459941	1							•Plug		
13	VOE20450736	1							•Thermostat		
14	VOE13947628	1							Plane gasket		
15	VOE20459195	1							Plug		
16	VOE20817900	1							Connection pipe		
17	VOE20412324	2							Screw		
18	VOE20483478	1							Pulley		
19	VOE20450745	3							Washer		
20	VOE20405792	3							Screw		
21		1							V-belt		See ref 263/250
22	VOE20459961	1							Sealing ring		
23	VOE13947622	1							Plane gasket		
24	VOE20412313	1							Hose connection		
	VOE21727935	1							Water Pump Kit		(VOE21404504), REMAN VOE9021404504, VOE9021727935, VOE9021727941

VOLVO

Construction Equipment

PROSIS Part Information

Date:	Image id:	Catalogue:	Model:
24/08/2018	**1019014**	**20086**	**L120E**
Brand:	Serial:	Group/Section:	Title:
Volvo	**19804-, 66001-, 71401-**	**263/100**	**Fan and fan shroud 33380, 33395**

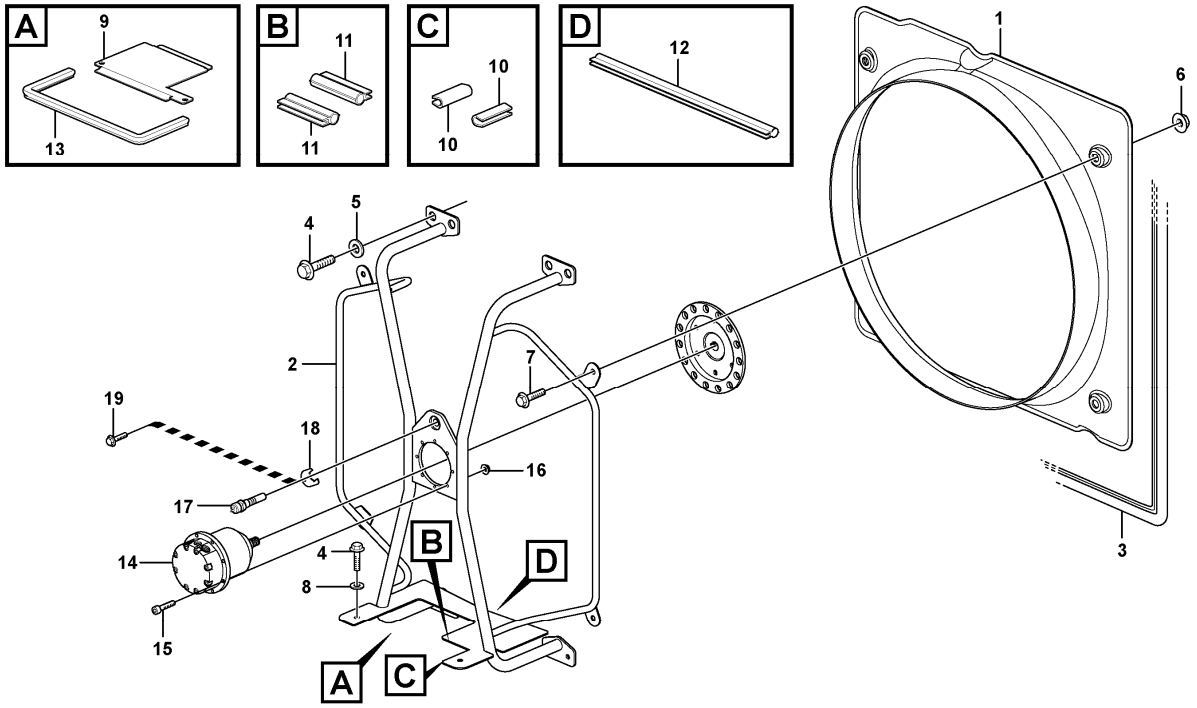

Section option	Kit	Option description
VOE33380		Volvo Wheel Loader L120E S/N 19801-, S/N 66001- USA, S/N 71401- BRA
VOE33395		Wheel Loader L120E3 IRAN

Pos	Part	Q1	Q2	Q3	Q4	Q5	PS	Kit	Description	Option(s)	Remark
1	VOE11435592	1							Fan shroud		
2	VOE11435593	1							Pipe cross		
3	VOE11400637	REQ							Sealing strip		L = 3340 MM
4	VOE13946173	8							Screw		SER NO - 2539
	VOE13946173	4							Screw		L = 20 MM SER NO 2540 -
	VOE13945444	4							Screw		L = 25 MM SER NO 2540 -
5	VOE13960145	4							Washer		
6	VOE982235	4							Expanding nut		
7	VOE13947760	4							Screw		

8	VOE11117464	4							Plain washer		(VOE13960141)SER NO - 2539
	VOE11117464	8							Plain washer		(VOE13960141)SER NO 2540 -
9	VOE11435600	1							Hatch		
10	VOE4786031	REQ							Framework moulding		L = 40 MM
11	VOE4881656	REQ							Framework moulding		L = 76 MM
12	VOE4881656	REQ							Framework moulding		L = 364 MM
13	VOE11400637	REQ							Sealing strip		L = 935 MM
14		1							Hydraulic motor		See ref 263/200
15	VOE959207	8							Hex. socket screw		
16	VOE949278	8					SS		Flange lock nut		
17	VOE11039557	1							Induction sensor		SE211
18	VOE11108557	1							Lock plate		
19	VOE13946173	1							Screw		
20		1							Fan Hub		See ref 263/150

VOLVO

Construction Equipment

PROSIS Part Information

Date:	Image id:	Catalogue:	Model:
24/08/2018	**1022021**	**20086**	**L120E**
Brand:	Serial:	Group/Section:	Title:
Volvo	**19804-, 66001-, 71401-**	**263/125**	**Hoses to fan drive 33380, 33395**

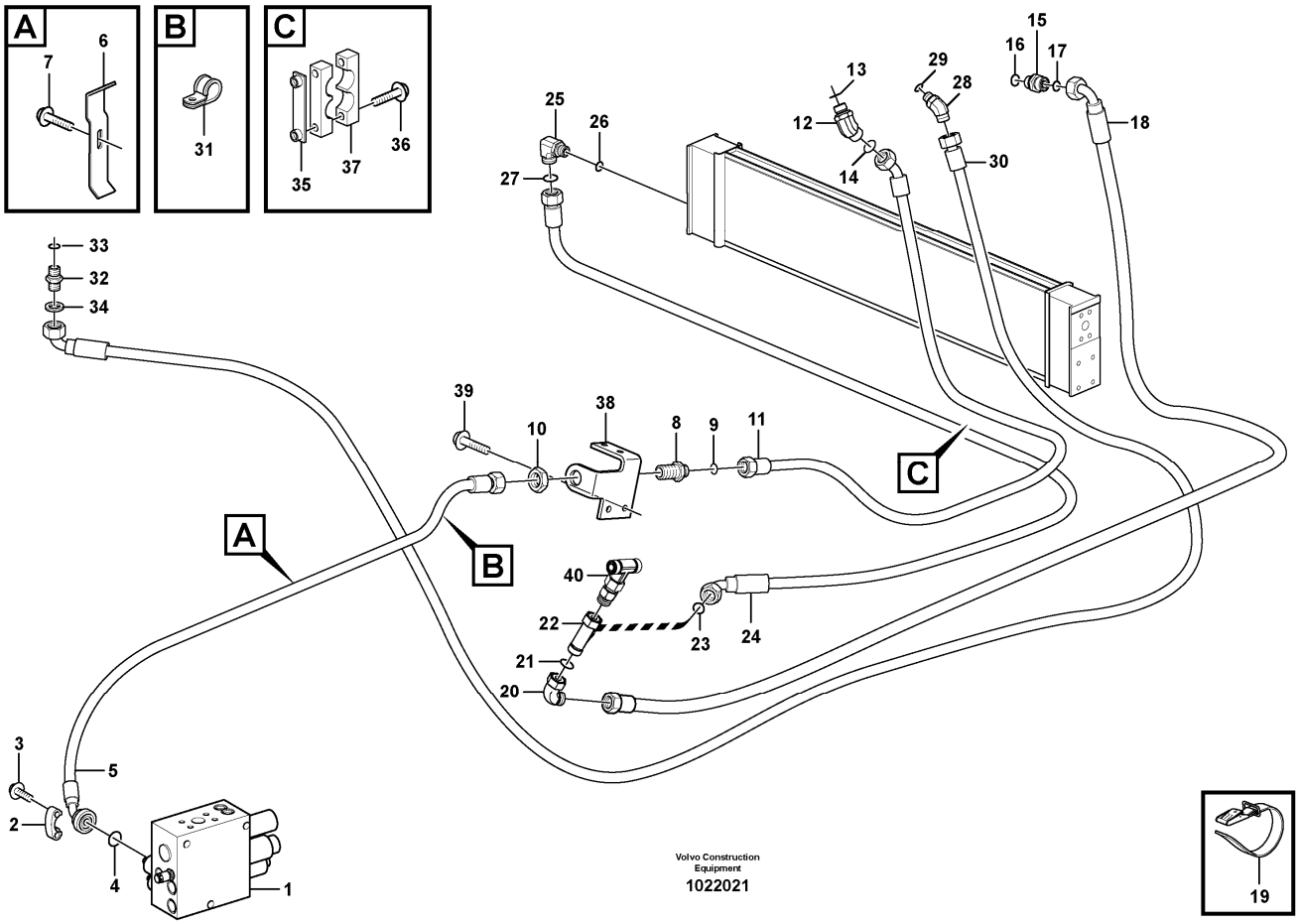

Section option	Kit	Option description
VOE33380		Volvo Wheel Loader L120E S/N 19801-, S/N 66001- USA, S/N 71401- BRA
VOE33395		Wheel Loader L120E3 IRAN

Pos	Part	Q1	Q2	Q3	Q4	Q5	PS	Kit	Description	Option(s)	Remark
1		1							Valve block		See ref 912/300
2	VOE11015454	2							Flange half		
3	VOE946472	4							Flange screw		
4	VOE990742	1							O-ring		
5	VOE11411142	1							Hose assembly		L = 1750 MM
6	VOE4974285	1							Clamp		
7	VOE13946173	1							Screw		
8	VOE13933922	1							Nipple		
9	VOE990738	2							•O-ring		
10	VOE13933867	1							Lock nut		

11	VOE11147945	1							Hose assembly		
12	VOE13933903	1							Elbow nipple		
13	VOE990738	1							•O-ring		
14	VOE967750	1							•O-ring		
15	VOE13933853	1							Nipple		
16	VOE990738	1							•O-ring		
17	VOE14211863	1							•Sealing ring		
18	VOE11172856	1							Hose assembly		L = 1500 MM
19	VOE11104606	REQ							Retaining strap		
20	VOE13933872	1							Elbow nipple		
21	VOE990738	1							•O-ring		
22	VOE13933878	1							T-nipple		
23	VOE990738	1							•O-ring		
24	VOE11411735	1							Hose assembly		L = 2200 MM
25	VOE14345423	1							Nipple		
26	VOE990738	1							•O-ring		
27	VOE13960164	1							•O-ring		
28	VOE936352	1							Nipple		
29	VOE990737	1							•O-ring		
30	VOE11173662	1							Hose assembly		L = 3100 MM
31	VOE977599	1							Clamp		
32	VOE13933855	1							Nipple		
33	VOE990737	1							•O-ring		
34	VOE14213676	1							•Sealing ring		
35	VOE11445139	1					OP		Attaching plate		
36	VOE13948217	1							Screw		
37	VOE11411413	1							Clamp		
38		1					NS		Anchorage		
39	VOE13946173	2							Screw		
40		1							T-nipple		See ref 263/130

VOLVO

Construction Equipment

PROSIS Part Information

Date:	Image id:	Catalogue:	Model:
24/08/2018	**1022021**	**20086**	**L120E**
Brand:	Serial:	Group/Section:	Title:
Volvo	**19804-, 66001-, 71401-**	**263/130**	**Hoses to fan drive 33380 33395**

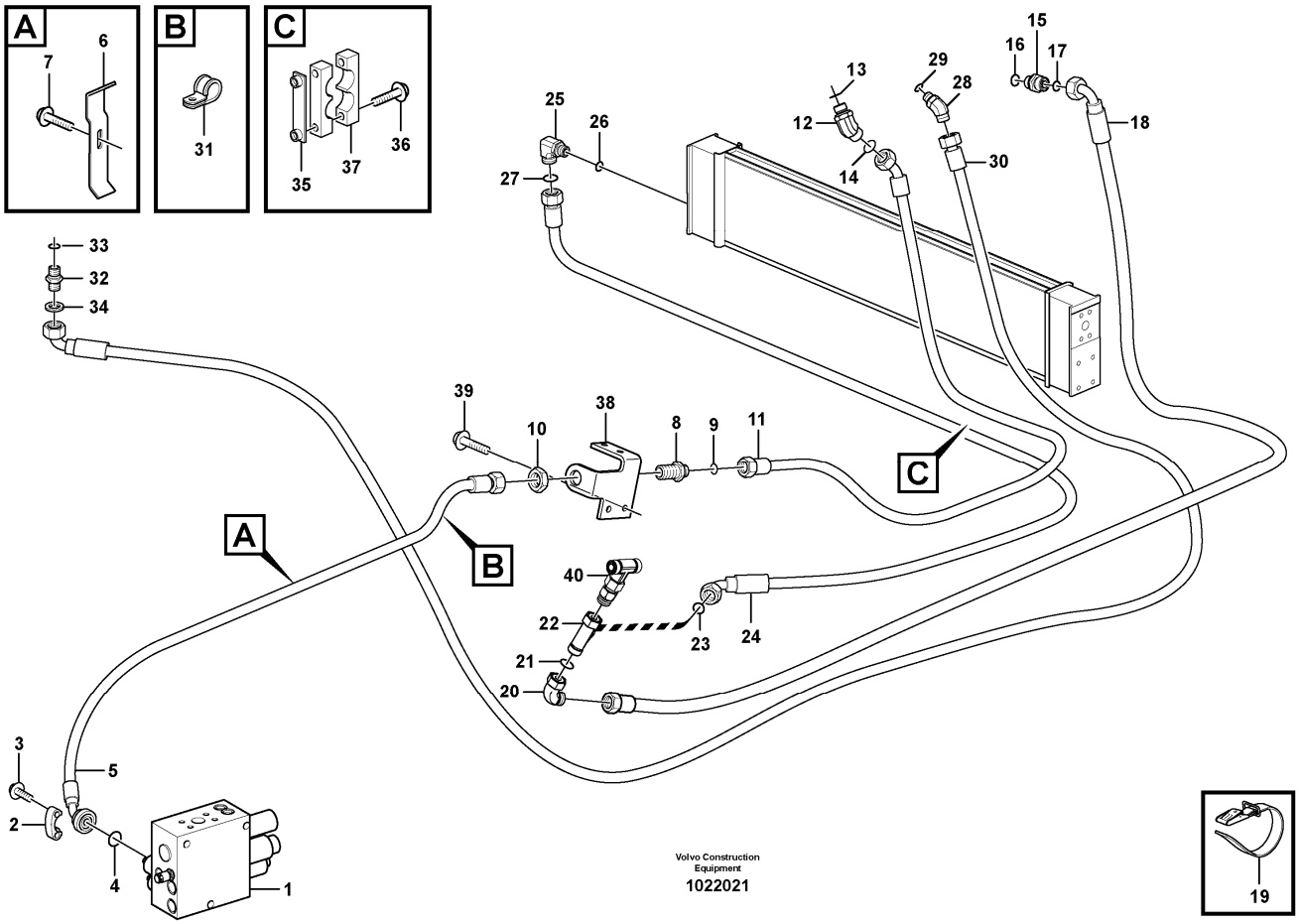

Section option	Kit	Option description
VOE33380		Volvo Wheel Loader L120E S/N 19801-, S/N 66001- USA, S/N 71401- BRA
VOE33395		Wheel Loader L120E3 IRAN

Pos	Part	Q1	Q2	Q3	Q4	Q5	PS	Kit	Description	Option(s)	Remark
1	VOE15175837	1							Hydraulic oil cooler		(VOE11110371)
	VOE15177897	1							Hydraulic oil cooler	VOE83061	(VOE11110389)
2	VOE11414386	1					SS		Plate		
3	VOE946671	2							Flange screw		
4	VOE11117464	2							Plain washer		(VOE13960141)
5	VOE11024753	8							Rubber damper		
6	VOE4951048	4							Tube		
7	VOE925739	4							Washer		
8	VOE946671	4							Flange screw		
9	VOE935710	1							Elbow nipple		

10	VOE990738	1							•O-ring		
11	VOE13960164	1							•O-ring		
12	VOE11411736	1							Hose assembly		L = 2200 MM
13	VOE13977600	2							Clamp		
14	VOE13946173	1							Screw		
15	VOE948645	1							Flange lock nut		
16	VOE13933935	1							T-nipple		
17	VOE990738	1							•O-ring		
18	VOE11172946	1							Non-return valve		
19	VOE982962	2							•O-ring		
20	VOE11411343	1							Clamp		
21	VOE11003048	1							Cover plate		
22	VOE13965176	2							Screw		
23	VOE11173212	1							Hose assembly		L = 1525 MM
24	VOE13933853	1							Nipple		
25	VOE14211863	1							•Sealing ring		
26	VOE990738	1							•O-ring		

VOLVO

Construction Equipment

PROSIS Part Information

Date:	Image id:	Catalogue:	Model:
24/08/2018	**1022022**	**20086**	**L120E**
Brand:	Serial:	Group/Section:	Title:
Volvo	**19804-, 66001-, 71401-**	**263/150**	**Fan and fan housing 33380 33395**

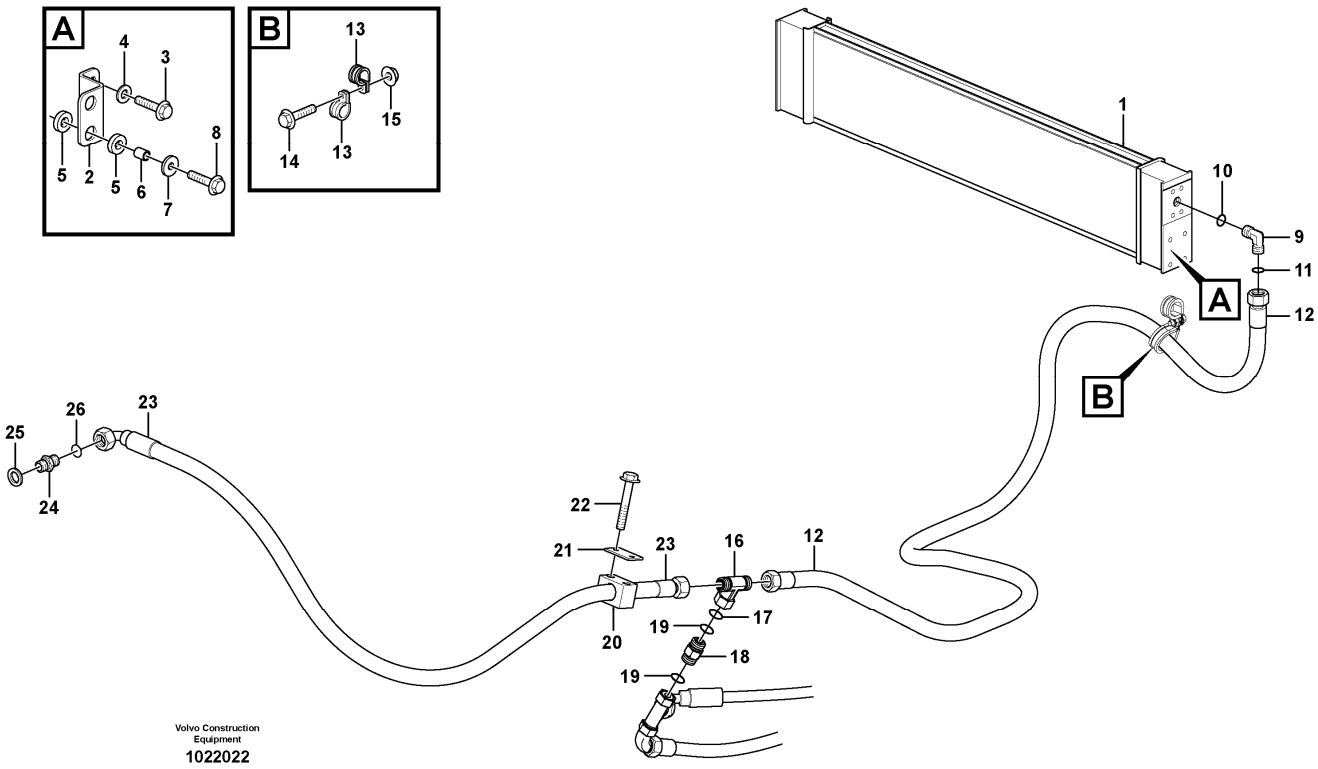

Section option	Kit	Option description
VOE33380		Volvo Wheel Loader L120E S/N 19801-, S/N 66001- USA, S/N 71401- BRA
VOE33395		Wheel Loader L120E3 IRAN

Pos	Part	Q1	Q2	Q3	Q4	Q5	PS	Kit	Description	Option(s)	Remark
1		1							Hydraulic motor		See ref 263/200
2	VOE11175764	1							Fan hub		
3	VOE3827491	1							Fan		
4	VOE13955900	1							Washer		
5	VOE11174158	1							Castle nut		
6	VOE13907851	1							Cotter Pin		
7	VOE13946329	6							Castle Nut		
8	VOE13971098	6							Flange nut		

VOLVO

Construction Equipment

PROSIS Part Information

Date:	Image id:	Catalogue:	Model:
24/08/2018	**1000251**	**20086**	**L120E**
Brand:	Serial:	Group/Section:	Title:
Volvo	**19804-, 66001-, 71401-**	**263/200**	**Hydraulic motor 33380 33395**

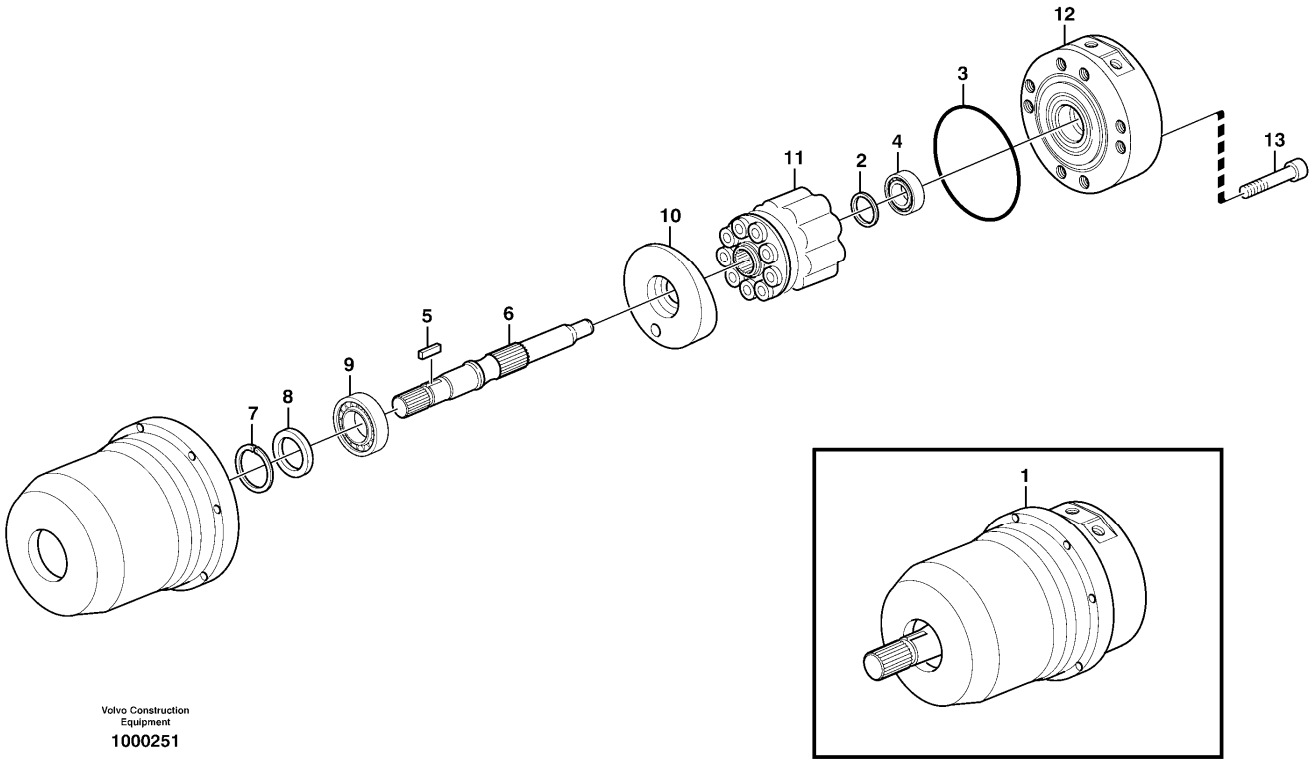

Section option	Kit	Option description
VOE33380		Volvo Wheel Loader L120E S/N 19801-, S/N 66001- USA, S/N 71401- BRA
VOE33395		Wheel Loader L120E3 IRAN

Pos	Part	Q1	Q2	Q3	Q4	Q5	PS	Kit	Description	Option(s)	Remark
1	VOE11147935	1							Hydraulic motor		REMAN VOE9011147935
2	VOE11707893	1							•Shim		
3	VOE11707896	1							•O-ring		
4	VOE11707578	1							•Roller bearing		
5	VOE11707892	1							•Key		
6	VOE11707891	1							•Shaft		
7	VOE11708755	1							•Lock ring		(VOE11707897)
8	VOE11707895	1							•Sealing ring		
9	VOE11992817	1							•Roller bearing		
10	VOE11707890	1							•Control plate		
11	VOE11707888	1					OP		•Pump element		
12	VOE11707889	1							•End plate		
13	VOE974081	8							•Hex. socket screw		

VOLVO

Construction Equipment

PROSIS Part Information

Date:	Image id:	Catalogue:	Model:
24/08/2018	**1067699**	**20086**	**L120E**
Brand:	Serial:	Group/Section:	Title:
Volvo	**19804-, 66001-, 71401-**	**263/250**	**Belt transmission**

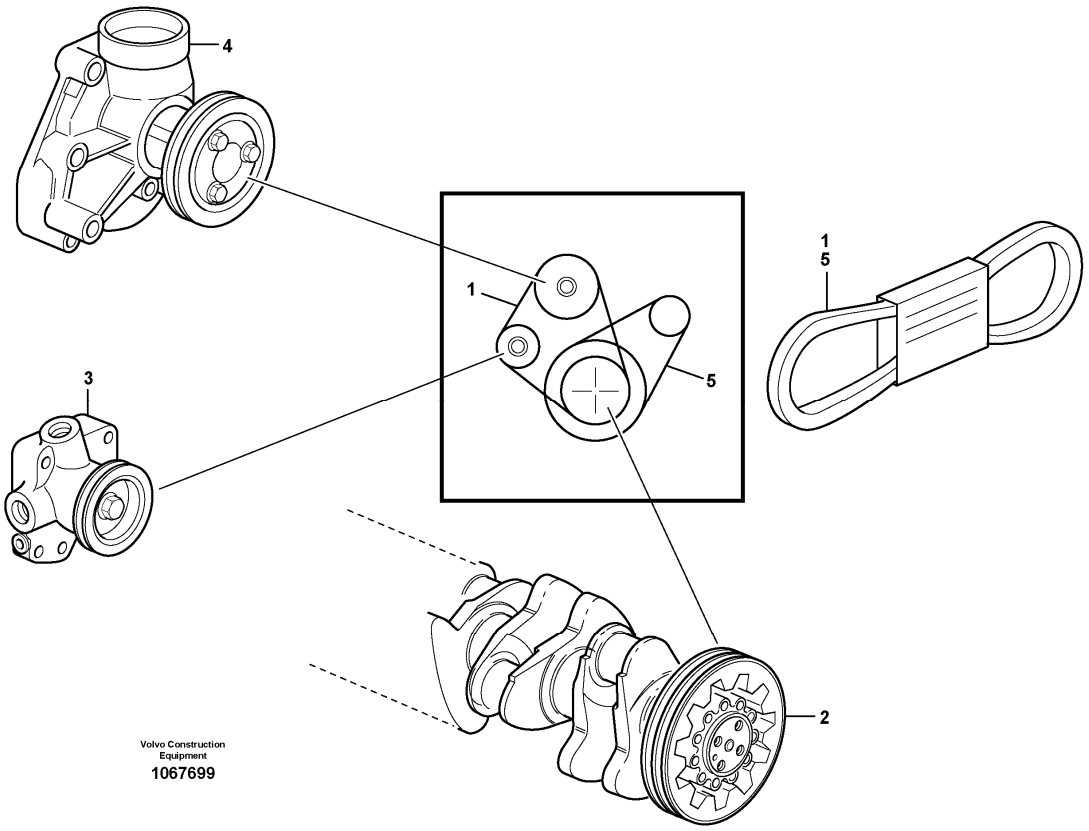

Pos	Part	Q1	Q2	Q3	Q4	Q5	PS	Kit	Description	Option(s)	Remark
1	VOE15078709	1					SS		Belt		
2		1							Crankshaft		See ref 216/100
3		1							Fuel pump		See ref 233/100
4		1							Coolant Pump		See ref 262/100
5		1							Belt		See ref 874/150

VOLVO

Construction Equipment

PROSIS Part Information

Date:	Image id:	Catalogue:	Model:
24/08/2018	**1019890**	**20086**	**L120E**
Brand:	Serial:	Group/Section:	Title:
Volvo	**19804-, 66001-, 71401-**	**263/300**	**Pump drive power take-off**

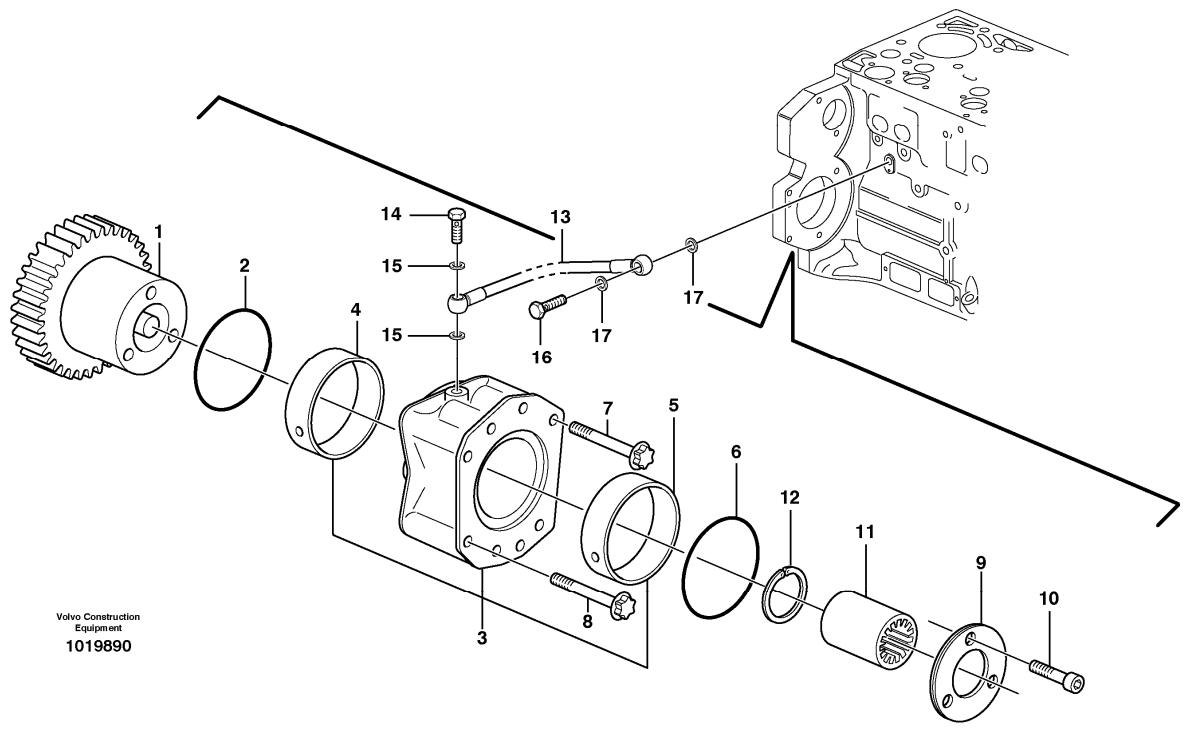

Pos	Part	Q1	Q2	Q3	Q4	Q5	PS	Kit	Description	Option(s)	Remark
1	VOE20900806	1							Gear		(VOE20512957)
2	VOE20450818	1							O-ring		
3	VOE20450805	1							Bearing flange		
4	VOE20450807	1							•Bushing		
5	VOE20450809	1							•Bushing		
6	VOE20450819	1							O-ring		
7	VOE22316512	2							Six point screw		(VOE20450821)
8	VOE20450820	2							Screw		E PROD ENG - 2007/02
8	VOE21077470	2							Hex. socket screw		L PROD ENG 2007/03 -
9	VOE20450811	1							Thrust washer		
10	VOE20450822	3							Screw		
11	VOE20459123	1							Sleeve		
12	VOE20450815	1							•Snap ring		
13	VOE20450980	1							Oil line		

14	VOE7025167	1							Hollow screw		(VOE20460231)
15	VOE13947281	2							Gasket		
16	VOE980973	1							Hollow screw		(VOE20460289)
17	VOE13947621	2							Plane gasket		

VOLVO

Construction Equipment

PROSIS Part Information

Date:	Image id:	Catalogue:	Model:
24/08/2018	**1023389**	**20086**	**L120E**
Brand:	Serial:	Group/Section:	Title:
Volvo	**19804-, 66001-, 71401-**	**263/350**	**Reversible fan 83046**

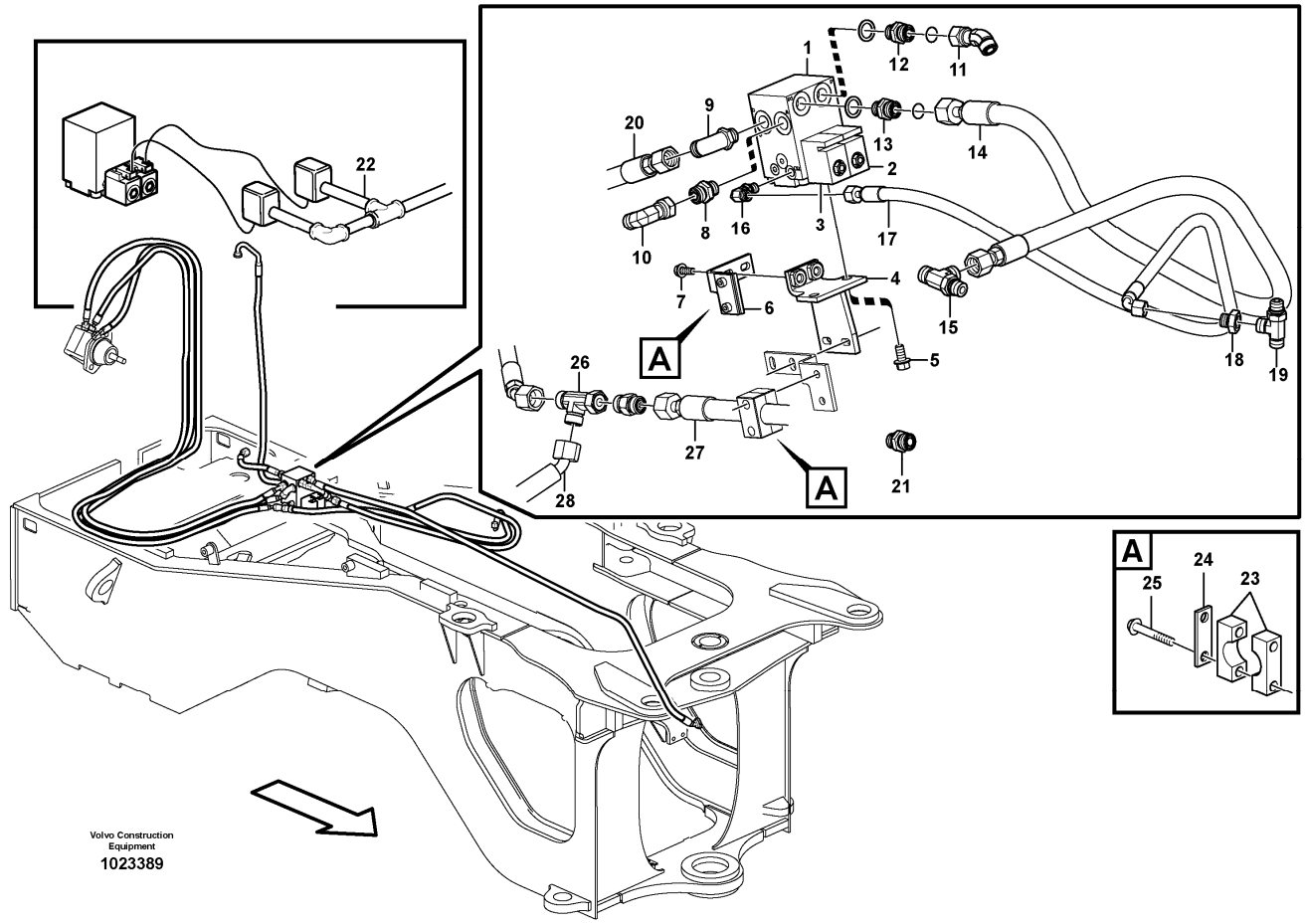

Section option	Kit	Option description
VOE83046		Reversible fan for oil cooler

Pos	Part	Q1	Q2	Q3	Q4	Q5	PS	Kit	Description	Option(s)	Remark
1	VOE11411727	1							Hydraulic valve		
	VOE11714323	1							•Sealing kit		
	VOE11709806	2							•Coil		
2	VOE11709804	1							•Solenoid valve		MA204
	VOE11709807	1							••Sealing kit		(VOE11713401)
3	VOE11709805	1							•Solenoid valve		MA205
	VOE11709808	1							••Sealing kit		
	VOE17428521	1							•Sealing plug		
	VOE17428535	1							•Sealing plug		
	VOE17428537	1							•Sealing plug		
4	VOE11445148	1							Anchorage		

5	VOE946441	2							Flange screw		
6	VOE11411756	1							Attachment		
7	VOE13946173	2							Screw		
8	VOE13933853	3							Nipple		
	VOE990738	3							•O-ring		
	VOE14211863	3							•Sealing ring		
9	VOE13933869	1							Elbow nipple		
	VOE990738	1							•O-ring		
	VOE967750	1							•O-ring		
10	VOE13933872	1							Elbow nipple		
	VOE990738	1							•O-ring		
11	VOE936081	1							Elbow nipple		
12	VOE13933853	1							Nipple		
	VOE990738	1							•O-ring		
	VOE14211863	1							•Sealing ring		
13	VOE13933853	1							Nipple		
	VOE990738	1							•O-ring		
	VOE14211863	1							•Sealing ring		
14	VOE11411141	1							Hose assembly		L = 3300 MM
15	VOE936984	1							T-nipple		
	VOE990738	2							•O-ring		
	VOE967750	1							•O-ring		
16	VOE935066	1							Elbow nipple		
17	VOE11445150	1							Hose assembly		L = 1400 MM
18	VOE935282	1							Reduction nipple		
	VOE990736	1							•O-ring		
19	VOE935041	1							T-nipple		
	VOE990737	2							•O-ring		
	VOE948883	1							•Gasket		
20	VOE11173213	1							Hose assembly		L = 1600 MM
21	VOE935664	1							Nipple		
22		1							Cable harness		See ref 371/1700
23	VOE11411343	1							Clamp		
24	VOE11003048	1							Cover plate		
25	VOE13965176	1							Screw		
26	VOE13933878	1							T-nipple		
	VOE990738	2							•O-ring		
27	VOE11148988	1							Hose assembly		L = 1435 MM
28	VOE11147944	1							Hose assembly		See ref 523/200

VOLVO

Construction Equipment

PROSIS Part Information

Date:	Image id:	Catalogue:	Model:
24/08/2018	**1020206**	**20086**	**L120E**
Brand:	Serial:	Group/Section:	Title:
Volvo	**19804-, 66001-, 71401-**	**269/100**	**Engine heater. 83494**

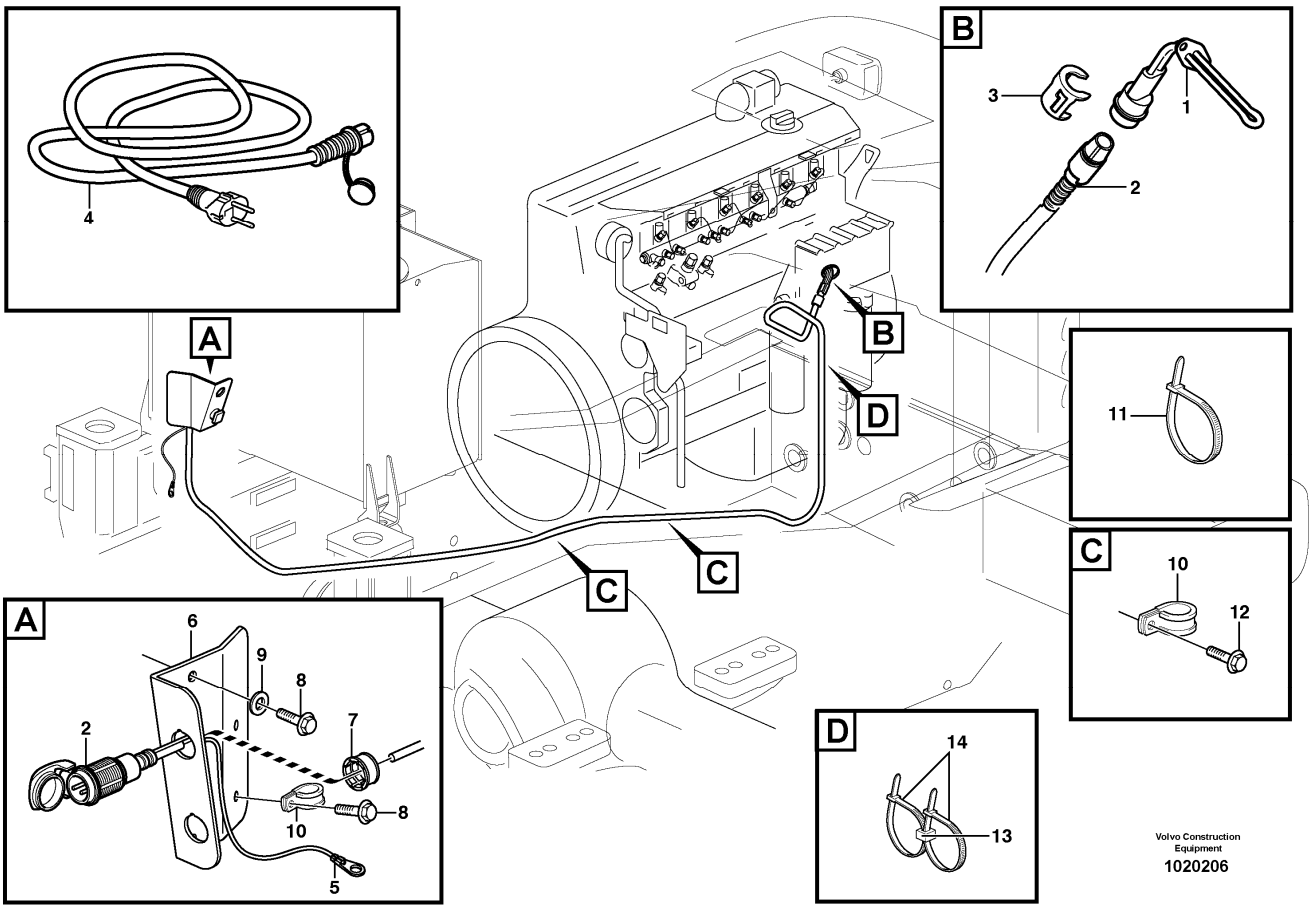

Section option	Kit	Option description
VOE83494		Engine block heater 230 V/750 W

Pos	Part	Q1	Q2	Q3	Q4	Q5	PS	Kit	Description	Option(s)	Remark
1	VOE11171534	1							Heater		230V/750W
	VOE11099238	1							Gasket		
2	VOE11152168	1							Cable		L = 2500 MM
3	VOE11004943	1							Locking device		
4	VOE3986351	1							Cable		
5	VOE970791	1							Cable terminal		
6	VOE11152160	1							Attachment		
7	VOE11115555	1							Sleeve		
8	VOE946440	3							Flange screw		
9	VOE11117464	2							Plain washer		(VOE13960141)
10	VOE980614	7							Clamp		14.3 MM

11	VOE4881440	2							Cable tie		
12	VOE13946173	3							Screw		
13	VOE11003221	1							Mounting ring		
14	VOE4881440	2							Cable tie		

VOLVO

Construction Equipment

PROSIS Part Information

Date:	Image id:	Catalogue:	Model:
24/08/2018	**1020211**	**20086**	**L120E**
Brand:	Serial:	Group/Section:	Title:
Volvo	**19804-, 66001-, 71401-**	**269/200**	**Engine heater 83536**

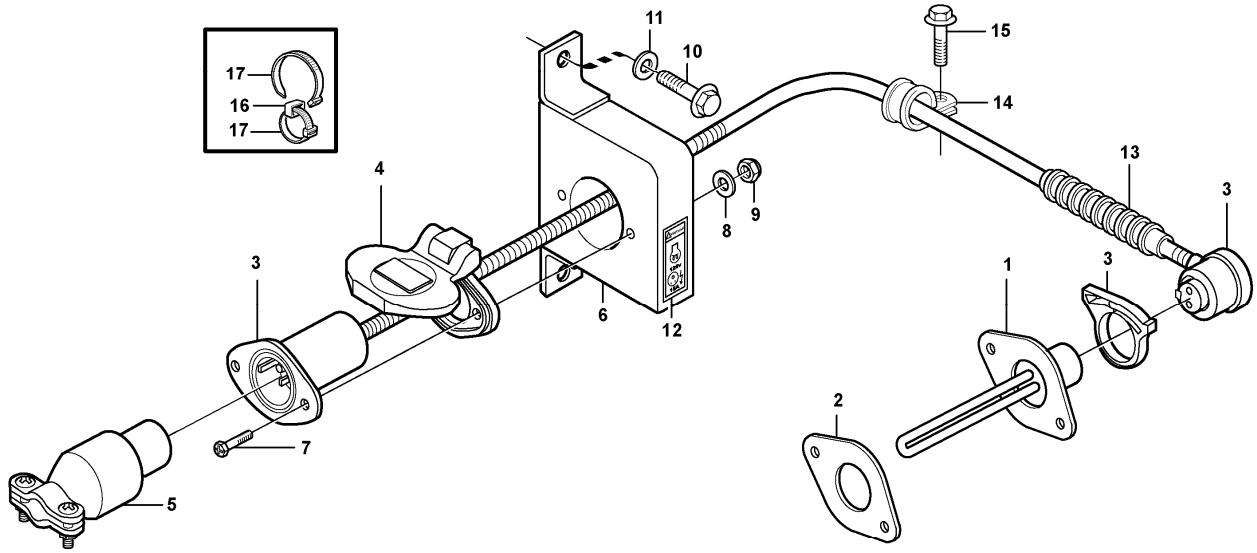

Volvo Construction Equipment
1020211

Section option	Kit	Option description
VOE83536	VOE11715687	Engine block heater 120 V, USA

Pos	Part	Q1	Q2	Q3	Q4	Q5	PS	Kit	Description	Option(s)	Remark
1	VOE11170745	1							Heater		120V/1250W
2	VOE11099238	1							Gasket		
3	VOE11141656	1							Cable		L = 2500 MM
4	VOE11109685	1							Cover		
5	VOE11046803	1							Receptacle housing		
6	VOE11109591	1							Bracket		
7	VOE969556	2							Six point socket screw		
8	VOE955891	2							Plain washer		
9	VOE955779	2							Hexagon nut		
10	VOE946440	2							Flange screw		

11	VOE11117464	2							Plain washer		(VOE13960141)
12	VOE11302220	1					SS		Decal		
13	VOE979236	REQ							Hose		L = 2500 MM
14	VOE980614	3							Clamp		
15	VOE13946173	2							Screw		
	VOE946440	1							Flange screw		
16	VOE11003221	1							Mounting ring		
17	VOE4881440	2							Cable tie		

VOLVO

Construction Equipment

PROSIS Part Information

Date:	Image id:	Catalogue:	Model:
24/08/2018	**1087209**	**20086**	**L120E**
Brand:	Serial:	Group/Section:	Title:
Volvo	**19804-, 66001-, 71401-**	**271/100**	**Accelerator pedal**

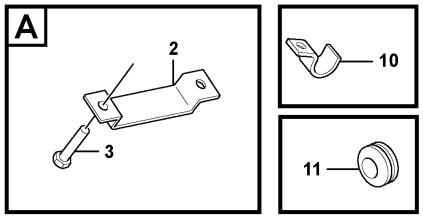

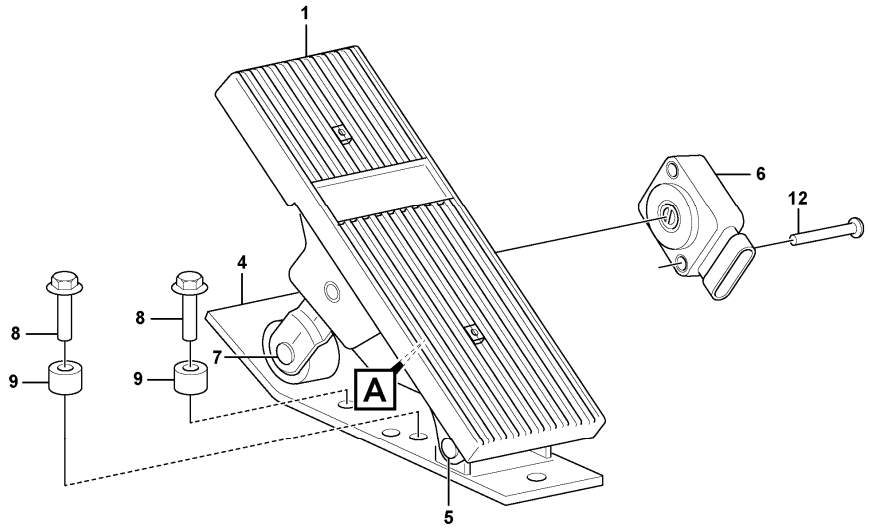

Volvo Construction Equipment
1087209

Section option	Kit	Option description
VOE33357		Cab L120E
VOE33366		Cab L120E USA

Q1-Q5	Option	Option description	
Q1 11170224			

Pos	Part	Q1	Q2	Q3	Q4	Q5	PS	Kit	Description	Option(s)	Remark
	VOE11170224	1					SS		Accelerator pedal		
1	VOE11708268	1							•Pedal rubber		
2	VOE11709585	1							•Clamp		
3	VOE11709584	1							•Screw		
4	VOE11170224	1					SS		•Accelerator pedal		(VOE11709583)
5	VOE11714172	1							•Kit		

6	VOE15038313	1							•Sensor		(VOE11708270)SE214, SEE SB WLO 17
7	VOE11708271	1							•Roller kit		
8	VOE13945444	2							Screw		
9	VOE930428	2							Spacer ring		
10	VOE951191	1							Clamp		
11	VOE13961965	1							Protecting plug		
12	VOE17436814	2							Screw		

VOLVO

Construction Equipment

PROSIS Part Information

Date:	Image id:	Catalogue:	Model:
24/08/2018	**EL188**	**20086**	**L120E**
Brand:	Serial:	Group/Section:	Title:
Volvo	**19804-, 66001-, 71401-**	**272/100**	**Hand throttle control 80520**

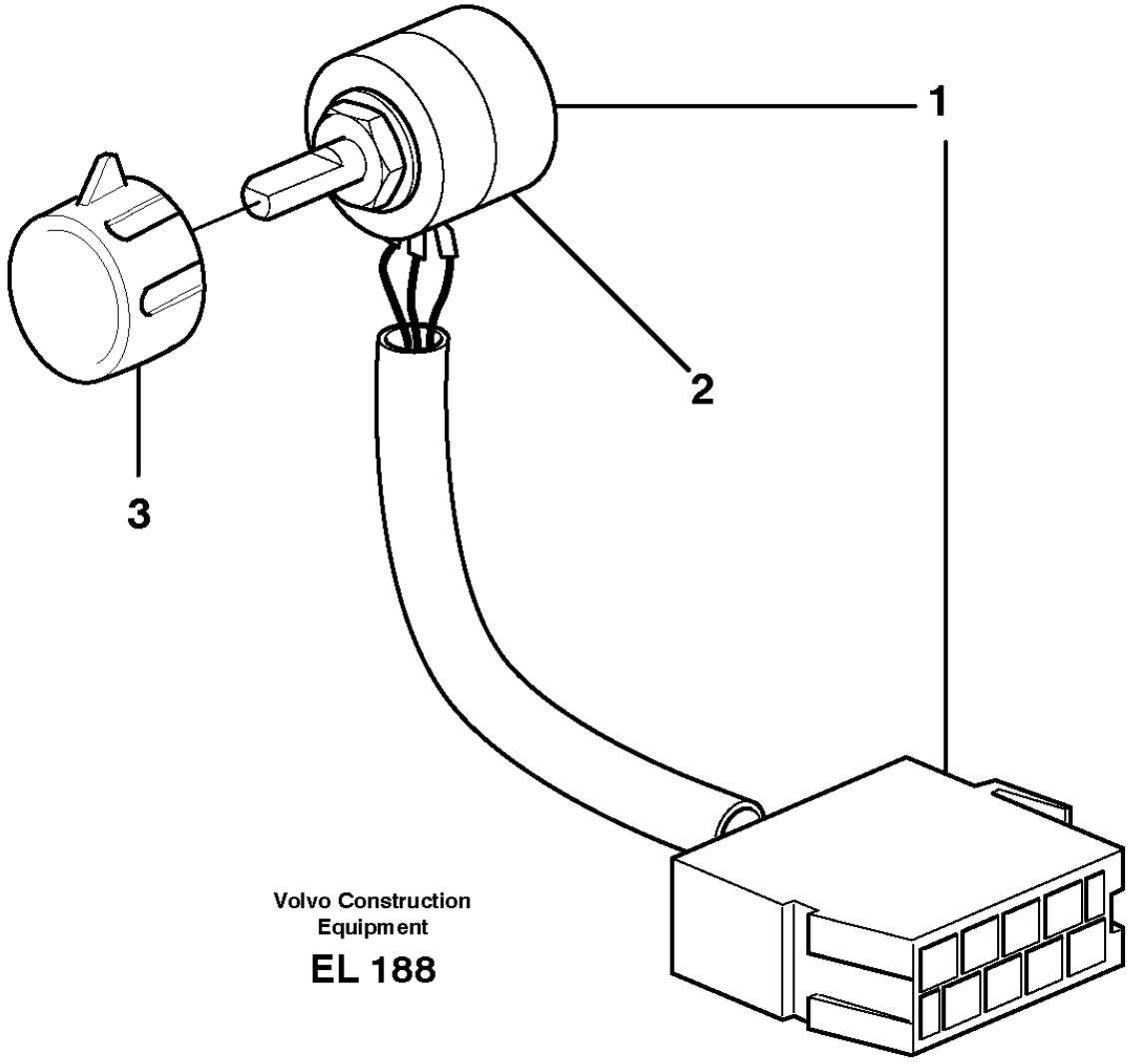

Section option	Kit	Option description
VOE80520	VOE11709506	Hand throttle lockable

Pos	Part	Q1	Q2	Q3	Q4	Q5	PS	Kit	Description	Option(s)	Remark
1	VOE11039727	1							Hand Throt Cont		
2	VOE11709506	1							•Throttle control kit		(VOE11039850)
3	VOE11039800	1							Knob		

VOLVO

Construction Equipment

PROSIS Part Information

Date:	Image id:	Catalogue:	Model:
24/08/2018	**1020209**	**20086**	**L120E**
Brand:	Serial:	Group/Section:	Title:
Volvo	**19804-, 66001-, 71401-**	**313/100**	**Battery box with fitting parts**

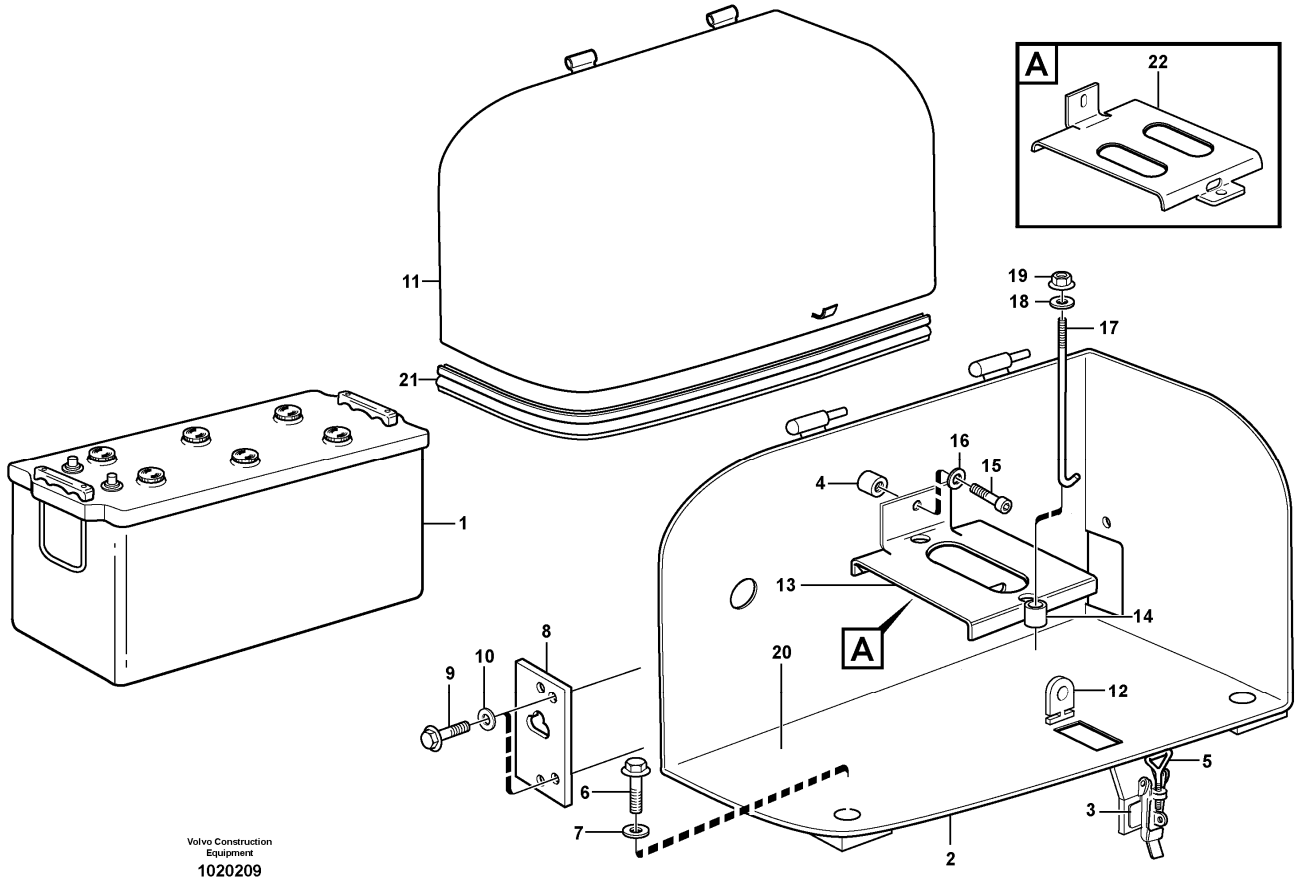

Section option	Kit	Option description
VOE33380		Volvo Wheel Loader L120E S/N 19801-, S/N 66001- USA, S/N 71401- BRA
VOE82561		Battery BRAZIL
VOE82149		Battery USA
VOE33395		Wheel Loader L120E3 IRAN

Q1-Q5	Option	Option description	
Q1 RH 33380 33395			
Q2 LH 33380 33395			
Q3 82149	VOE82149	Battery USA	
Q4 82561	VOE82561	Battery BRAZIL	

Pos	Part	Q1	Q2	Q3	Q4	Q5	PS	Kit	Description	Option(s)	Remark
1	VOE8158062	1	1						Battery		

	VOE15402411			2					Battery		
	VOE11170097				2				Battery		
2	VOE11413744	1							Battery box		(VOE11400936)
	VOE11413745		1						Battery box		(VOE11400937)
3	VOE11015641	1	1						•Eccentric lock		
4	VOE4753600	1	1						•Set ring		
5	VOE11015640	2	2						Eye bolt		
6	VOE13965193	8	8						Screw		
7	VOE13945544	8	8						Washer		
8	VOE11400916	2	2						Rubber cloth		
9	VOE13946173	2	2						Screw		
10	VOE11117464	2	2						Plain washer		(VOE13960141)
11	VOE11413172	1							Battery cover		
	VOE11413173		1						Battery cover		
12	VOE11413159	2	2						Anchorage		
13	VOE11400647	2	2						Battery retainer		
14	VOE930093	1	1						•Spacer ring		
15	VOE13946173	1	1						Screw		
16	VOE11117464	1	1						Plain washer		(VOE13960141)
17	VOE11024826	2	2						Bolt		
18	VOE11117464	2	2						Plain washer		(VOE13960141)
19	VOE948645	2	2						Flange lock nut		
20	VOE11413161	1	1				OP		Base		
21	VOE14211217	REQ	REQ				SS		Clamping strip		L = 4290 MM
22	VOE11301425			2					Battery retainer		

VOLVO

Construction Equipment

PROSIS Part Information

Date:	Image id:	Catalogue:	Model:
24/08/2018	**1015820**	**20086**	**L120E**
Brand:	Serial:	Group/Section:	Title:
Volvo	**19804-, 66001-, 71401-**	**313/150**	**Battery box with fitting parts 82227**

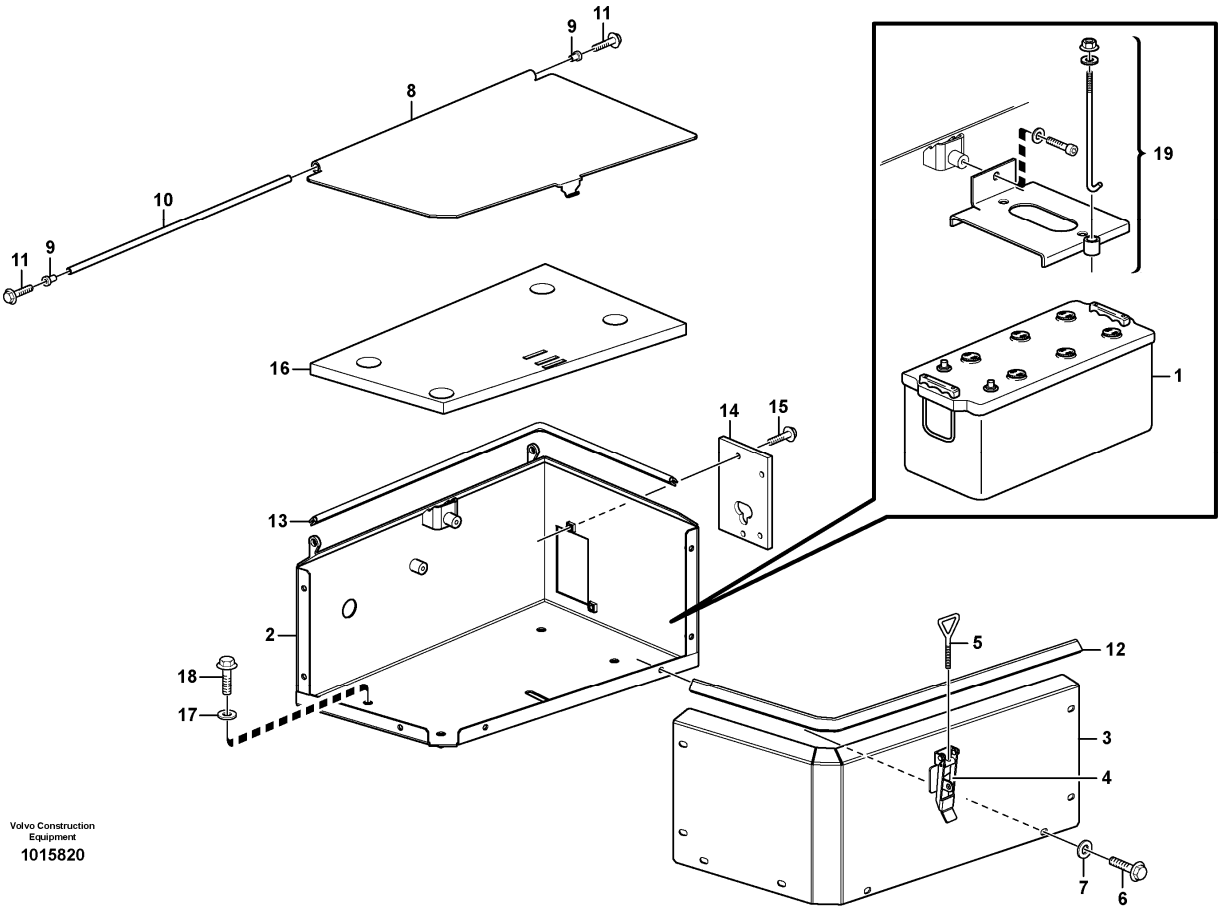

Section option	Kit	Option description
VOE82227		battery box

Q1-Q5	Option	Option description	
Q1 RH			
Q2 LH			

Pos	Part	Q1	Q2	Q3	Q4	Q5	PS	Kit	Description	Option(s)	Remark
1		1	1						Battery		See ref 313/100
	VOE11400960	1							Battery box		
	VOE11400959		1						Battery box		
2	VOE11400900	1					OP		•Battery box		(VOE11400936)
	VOE11400899		1						•Battery box		(VOE11400937)
3	VOE11400904	1					OP		•Front plate		
	VOE11400903		1						•Front plate		

4	VOE11015641	1	1						••Eccentric lock		
5	VOE11015640	1	1						•Eye bolt		
6	VOE13946173	8	8						•Screw		
7	VOE11117464	8	8						•Plain washer		(VOE13960141)
8	VOE11400908	1							•Battery cover		
	VOE11400907		1						•Battery cover		
9	VOE1588548	2	2						••Bushing		
10	VOE11400443	1	1						•Shaft		
11	VOE946440	2	2						•Flange screw		
12	VOE4786044	REQ	REQ						•Sealing strip		L = 760 MM
13	VOE4786044	REQ	REQ						•Sealing strip		L = 830 MM
14	VOE11400916	1	1						•Rubber cloth		
15	VOE13946173	2	2						•Screw		
16	VOE11400912	1	1						Rubber cloth		
17	VOE13960145	4	4						Washer		
18	VOE13965193	4	4						Screw		
19		1	1						Btry Retainer		See ref 313/100

VOLVO

Construction Equipment

PROSIS Part Information

Date:	Image id:	Catalogue:	Model:
24/08/2018	**1026883**	**20086**	**L120E**
Brand:	Serial:	Group/Section:	Title:
Volvo	**19804-, 66001-, 71401-**	**321/100**	**Alternator with assembling details 33380, 33395**

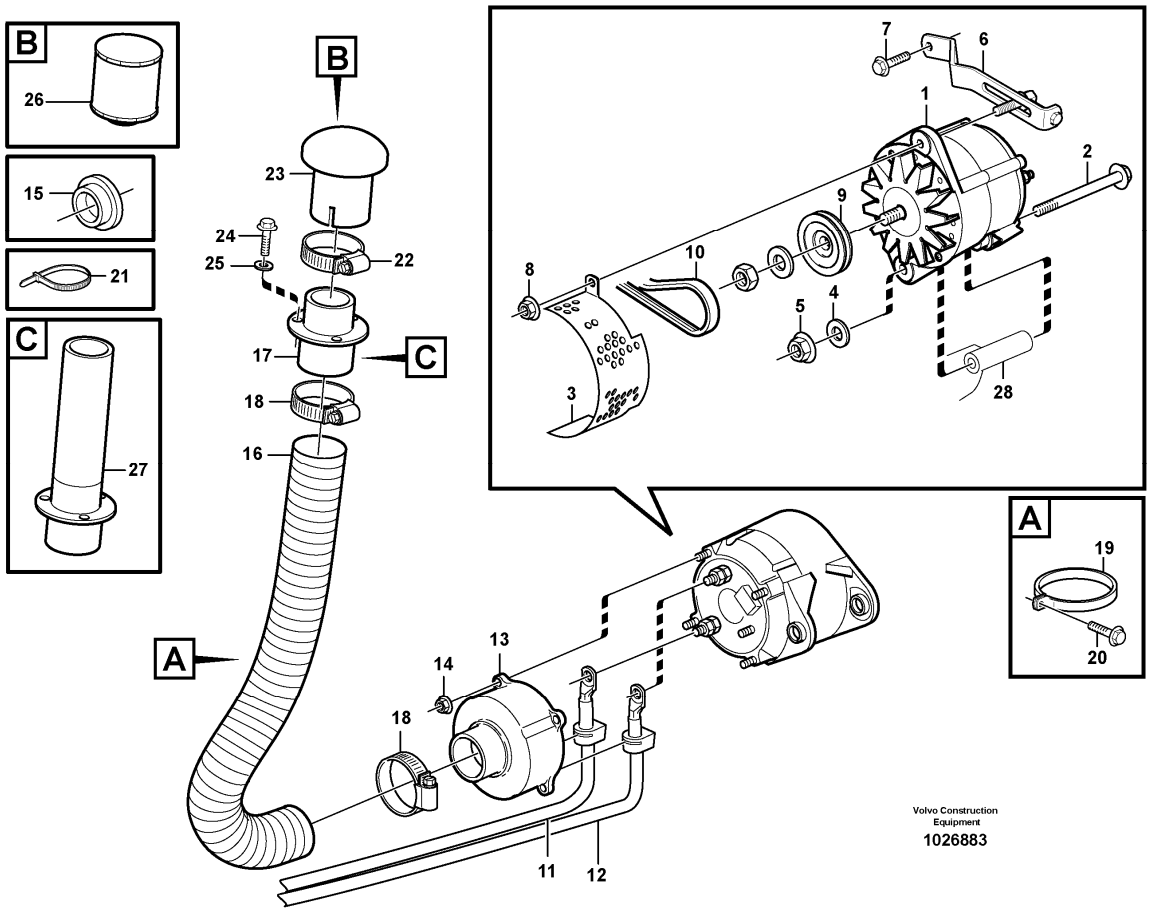

Section option	Kit	Option description
VOE33380		Volvo Wheel Loader L120E S/N 19801-, S/N 66001- USA, S/N 71401- BRA
VOE33395		Wheel Loader L120E3 IRAN

Pos	Part	Q1	Q2	Q3	Q4	Q5	PS	Kit	Description	Option(s)	Remark
1		1							Alternator		55A See ref 321/150
		1							Alternator		80A See ref 321/200
2	VOE970988	1							Hexagon screw		(VOE13970988)
3	VOE11170091	1							Belt protector		
4	VOE13960145	1							Washer		
5	VOE971099	1							Flange lock nut		(VOE13971099)
6	VOE11411235	1							Tensioner		
	VOE977820	1							•Hexagon screw		M8 x 100 MM
	VOE1675830	1							•Flange screw		
7	VOE13946173	1							Screw		

8	VOE13971098	1							Flange nut		
9	VOE11170026	1							Pulley		
10	VOE978710	1							V-belt		
11		1							Wire Assembly		B + See ref 371/200
12		1							Wire Assembly		B - See ref 371/200
13	VOE9957941	1							Cover		
14	VOE13965483	4							Nut		
15	VOE948665	3							Plug		
16	VOE9518555	REQ							Hose		L = 1850 MM
17	VOE11414560	1							Hose connection		
18	VOE943480	2							Hose clamp		
19	VOE11170546	2							Clamp		
20	VOE13946173	2							Screw		
21	VOE949902	2							Cable tie		(VOE14215726)
22	VOE14346256	1							Hose clamp		
23	VOE11170587	1							Air inlet		
24	VOE946440	3							Flange screw		
25	VOE11117464	3							Plain washer		(VOE13960141)
26	VOE11033214	1							Air filter	VOE82034	
27	VOE11435346	1							Hose connection	VOE83059	
28		1							Bracket		See ref 258/100

VOLVO

Construction Equipment

PROSIS Part Information

Date:	Image id:	Catalogue:	Model:
24/08/2018	**1011455**	**20086**	**L120E**
Brand:	Serial:	Group/Section:	Title:
Volvo	**19804-, 66001-, 71401-**	**321/150**	**Alternator, 55A 33380, 33395**

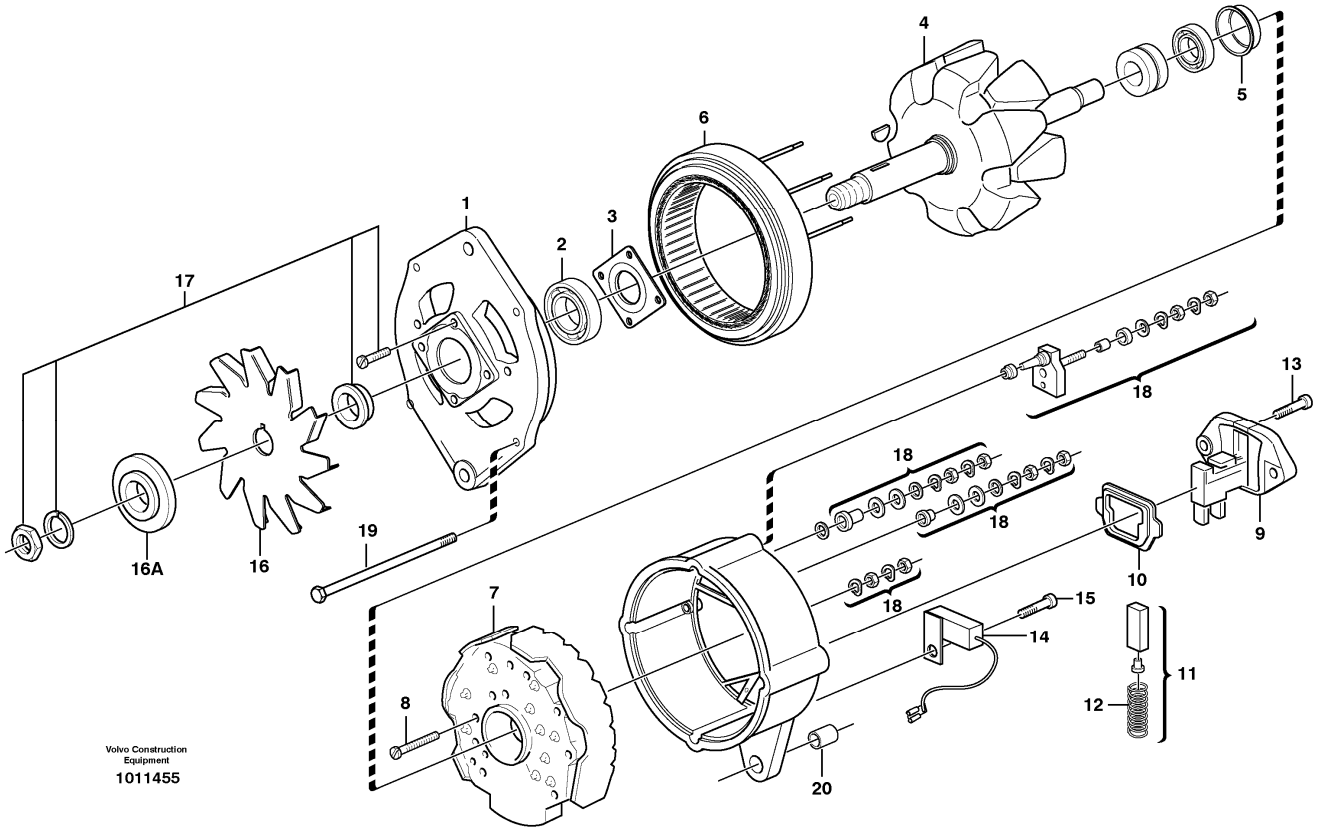

Section option	Kit	Option description
VOE33380		Volvo Wheel Loader L120E S/N 19801-, S/N 66001- USA, S/N 71401- BRA
VOE33395		Wheel Loader L120E3 IRAN

Pos	Part	Q1	Q2	Q3	Q4	Q5	PS	Kit	Description	Option(s)	Remark
	VOE11170011	1							Alternator		REMAN VOE9011170011, VOE9009521761
1		1					NS		•Bearing shield		
2	VOE3091567	1							•Ball bearing		
3	VOE3091568	1							•Retainer		
4		1					NS		•Rotor		
5	VOE1698183	1							•Bushing		
6	VOE1697032	1							•Stator		
7	VOE3090431	1							•Rectifier		
8	VOE1698188	2							•Screw		
9	VOE1625880	1							•Regulator		
10	VOE3090261	1							••Gasket		

11	VOE1362710	1							••Carbon Brush Set		
12	VOE1323485	2							•••Spring		
13	VOE3523050	2							•Screw		
14	VOE244347	1							•Capacitor		
15	VOE1697033	1							•Screw		
16	VOE1613241	1							•Fan wheel		
16A	VOE3987785	1							•Washer		(VOE11713024)
17	VOE11000286	1							•Small parts kit		
18	VOE244611	1							•Small parts kit		
19	VOE11708889	4							•Screw		
20	VOE85100100	1					OP		•Bushing		

VOLVO

Construction Equipment

PROSIS Part Information

Date:	Image id:	Catalogue:	Model:
24/08/2018	**EL163**	**20086**	**L120E**
Brand:	Serial:	Group/Section:	Title:
Volvo	**19804-, 66001-, 71401-**	**321/200**	**Alternator, 80A. 80317**

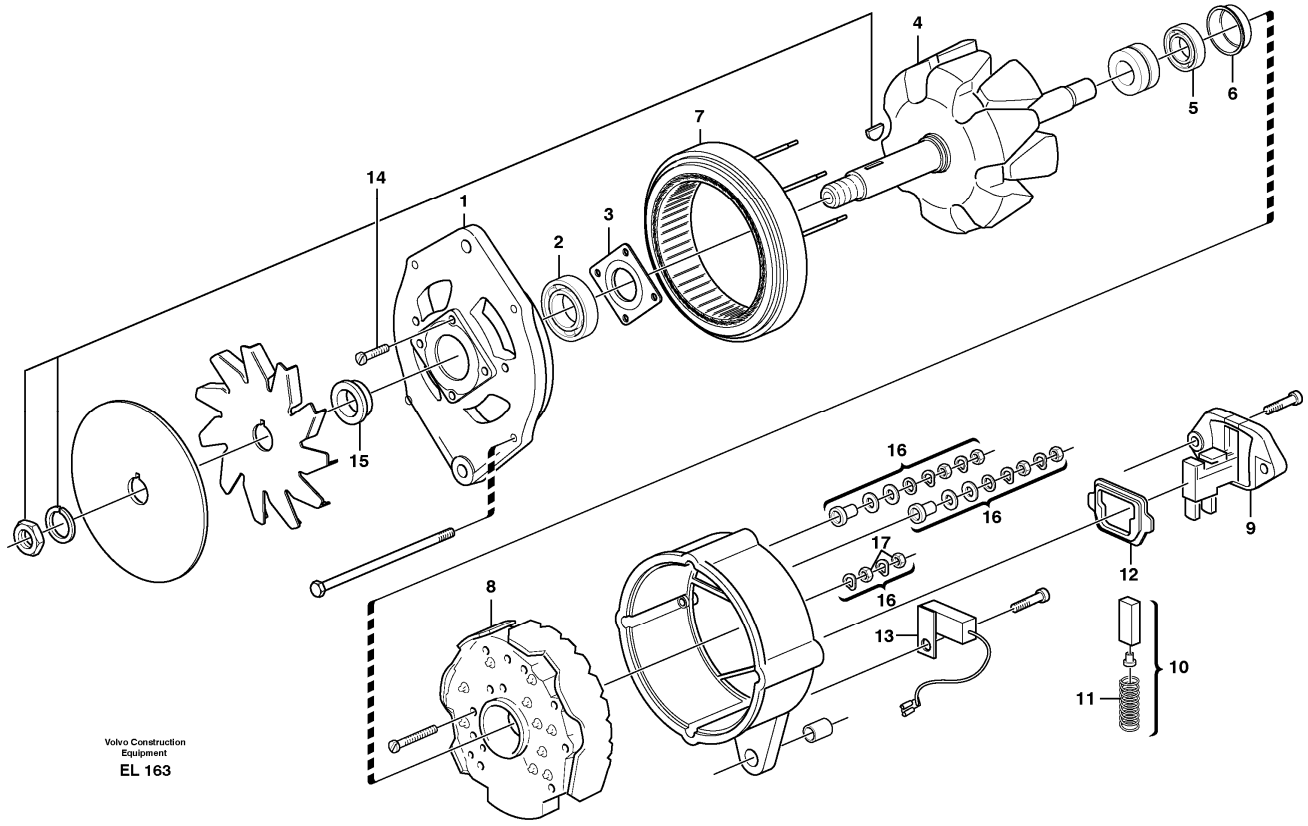

Section option	Kit	Option description
VOE80317		Alternator 80A

Pos	Part	Q1	Q2	Q3	Q4	Q5	PS	Kit	Description	Option(s)	Remark
	VOE15067533	1							Alternator		(VOE9521761), REMAN VOE9009521761, VOE9015067533
1		1					NS		•Bearing shield		
2	VOE3091567	1							•Ball bearing		
3	VOE3091568	1							•Retainer		
4	VOE3091569	1							•Rotor		
5	VOE85100098	1							•Ball Bearing		
6	VOE1698183	1							•Bushing		
7	VOE3090432	1							•Stator		
8	VOE3090431	1							•Rectifier		
9	VOE1625880	1							•Regulator		
10	VOE1362710	1							••Carbon Brush Set		
11	VOE1323485	2							••Spring		

12	VOE3090261	1							••Gasket		
13	VOE244347	1							•Capacitor		
14		1					NS		•Small parts kit		
15	VOE3090426	1							•Bushing		
16	VOE244611	1							•Small parts kit		
17	VOE940197	2							••Hexagon nut		

VOLVO

Construction Equipment

PROSIS Part Information

Date:	Image id:	Catalogue:	Model:
24/08/2018	**1055583**	**20086**	**L120E**
Brand:	Serial:	Group/Section:	Title:
Volvo	**19804-, 66001-, 71401-**	**331/100**	**Starter motor with assembling details**

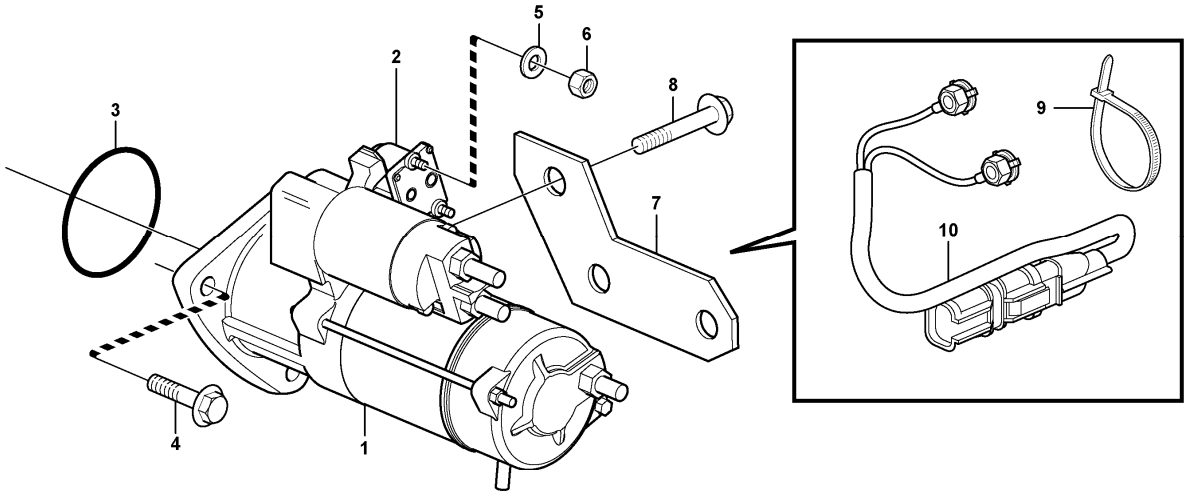

Volvo Construction Equipment
1055583

Section option	Kit	Option description
VOE11410957		Engine VOLVO D7ELAE3

Pos	Part	Q1	Q2	Q3	Q4	Q5	PS	Kit	Description	Option(s)	Remark
1	VOE21314102	1							Starter motor		(VOE20900793), REMAN VOE9021314102, VOE9020900793
2	VOE20796066	1							•Relay		
3	VOE20981752	1							•O-ring		
4	VOE20593357	3							Flange screw		
5	VOE13940090	2							Washer		
6	VOE20459037	2							Nut		
7		1					NS		Retaining plate		
8	VOE20460055	1							Screw		
9	VOE4881440	2							Cable tie		

10	VOE21312943	1							Cable		

VOLVO

Construction Equipment

PROSIS Part Information

Date:	Image id:	Catalogue:	Model:
24/08/2018	**1019075**	**20086**	**L120E**
Brand:	Serial:	Group/Section:	Title:
Volvo	**19804-, 66001-, 71401-**	**333/100**	**Pre-heater with fitting parts**

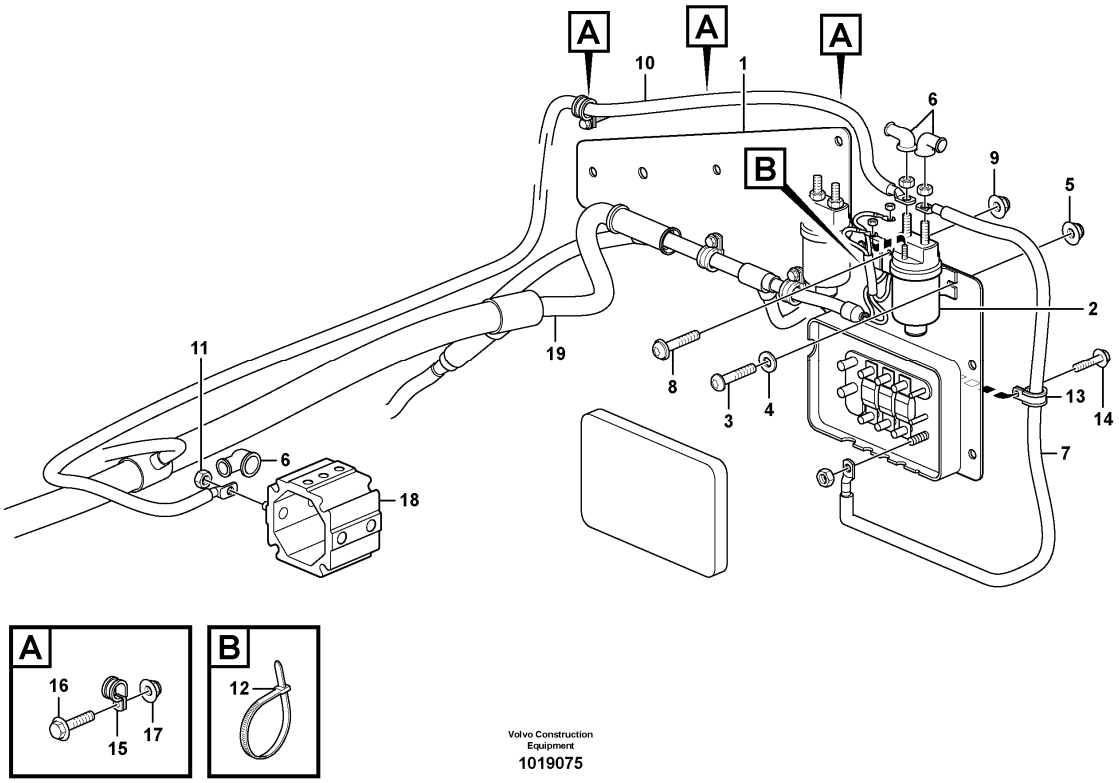

Pos	Part	Q1	Q2	Q3	Q4	Q5	PS	Kit	Description	Option(s)	Remark
1		1							Plate		See ref 371/100
2	VOE20367490	1							Relay		RE2501
3	VOE969407	2							Six point socket screw		
4	VOE13960138	2							Washer		
5	VOE949874	2							Flange lock nut		(VOE13949874)
6	VOE241308	3							Protecting cap		
7	VOE11170527	1							Wire		See footnote 1245)
8	VOE969407	1							Six point socket screw		
9	VOE949874	1							Flange lock nut		(VOE13949874)
10	VOE11160769	1							Cable		See footnote 1245)
11	VOE7017624	1							Hexagon nut		
12	VOE4881440	1							Cable tie		

13	VOE980614	1							Clamp		
14	VOE13946173	1							Screw		
15	VOE13949746	3							Clamp		
16	VOE13946173	3							Screw		
17	VOE948645	3							Flange lock nut		
18		1							Heater		See ref 333/150
19		1							Cable harness		See ref 371/150
20	VOE241308	2							Protecting cap		

1245) Including parts: Wire assembly, hose, manifold, cable terminal and insulator See Group 379.

VOLVO

Construction Equipment

PROSIS Part Information

Date:	Image id:	Catalogue:	Model:
24/08/2018	**1019508**	**20086**	**L120E**
Brand:	Serial:	Group/Section:	Title:
Volvo	**19804-, 66001-, 71401-**	**333/150**	**Pre-heater**

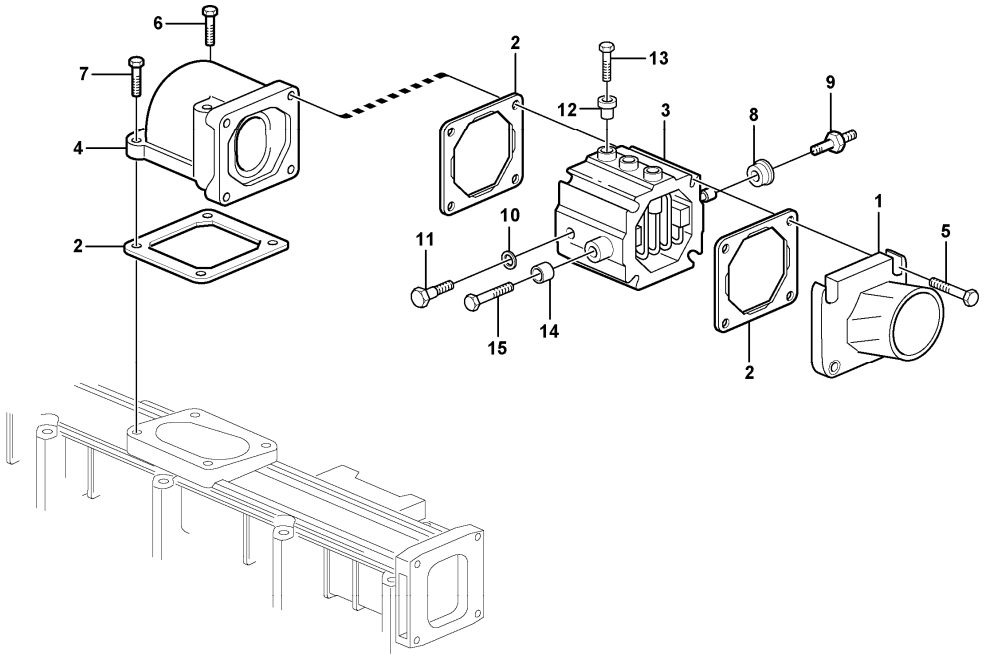

Section option	Kit	Option description
VOE11410957		Engine VOLVO D7ELAE3

Pos	Part	Q1	Q2	Q3	Q4	Q5	PS	Kit	Description	Option(s)	Remark
1	VOE21511601	1							Hose Nipple		(VOE20498528)
2	VOE20531832	3							Gasket		
3	VOE20758403	1							Heater		
4	VOE20459938	1							Elbow		
5	VOE20460123	4							Screw		
6	VOE20460124	2							Screw		
7	VOE20405504	2							Screw		
8	VOE20521558	3							Insulator		
9	VOE20726089	1							Connector		
10	VOE20498524	1							Sealing ring		
11	VOE20498498	1							Connector		

12	VOE20550336	3							Insulator		
13	VOE20550356	3							Bolt		
14	VOE20758437	2							Insulator		
15	VOE13949578	2							Screw		

VOLVO

Construction Equipment

PROSIS Part Information

Date:	Image id:	Catalogue:	Model:
24/08/2018	**1019508**	**20086**	**L120E**
Brand:	Serial:	Group/Section:	Title:
Volvo	**19804-, 66001-, 71401-**	**352/100**	**Lighting, front**

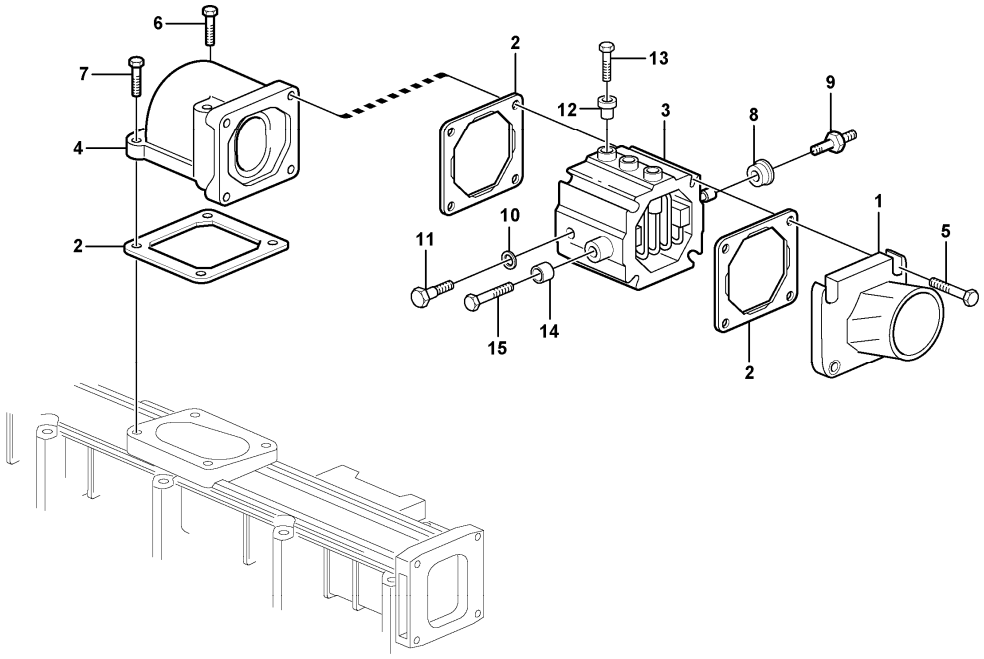

Section option	Kit	Option description
VOE33380		Volvo Wheel Loader L120E S/N 19801-, S/N 66001- USA, S/N 71401- BRA
VOE82174		Side marker lamps
VOE82175		Asymmetrical headlights left hand drive
VOE82233		Relocated headlights
VOE33395		Wheel Loader L120E3 IRAN

Q1-Q5	Option	Option description	
Q1 33380 33395	VOE33380	Volvo Wheel Loader L120E S/N 19801-, S/N 66001- USA, S/N 71401- BRA	
Q2 82175	VOE82175	Asymmetrical headlights left hand drive	
Q3 82174	VOE82174	Side marker lamps	
Q4 82233	VOE82233	Relocated headlights	

Pos	Part	Q1	Q2	Q3	Q4	Q5	PS	Kit	Description	Option(s)	Remark

VOLVO

Construction Equipment

PROSIS Part Information

Date:	Image id:	Catalogue:	Model:
24/08/2018	**1017056**	**20086**	**L120E**
Brand:	Serial:	Group/Section:	Title:
Volvo	**19804-, 66001-, 71401-**	**352/150**	**Work lights, front.**

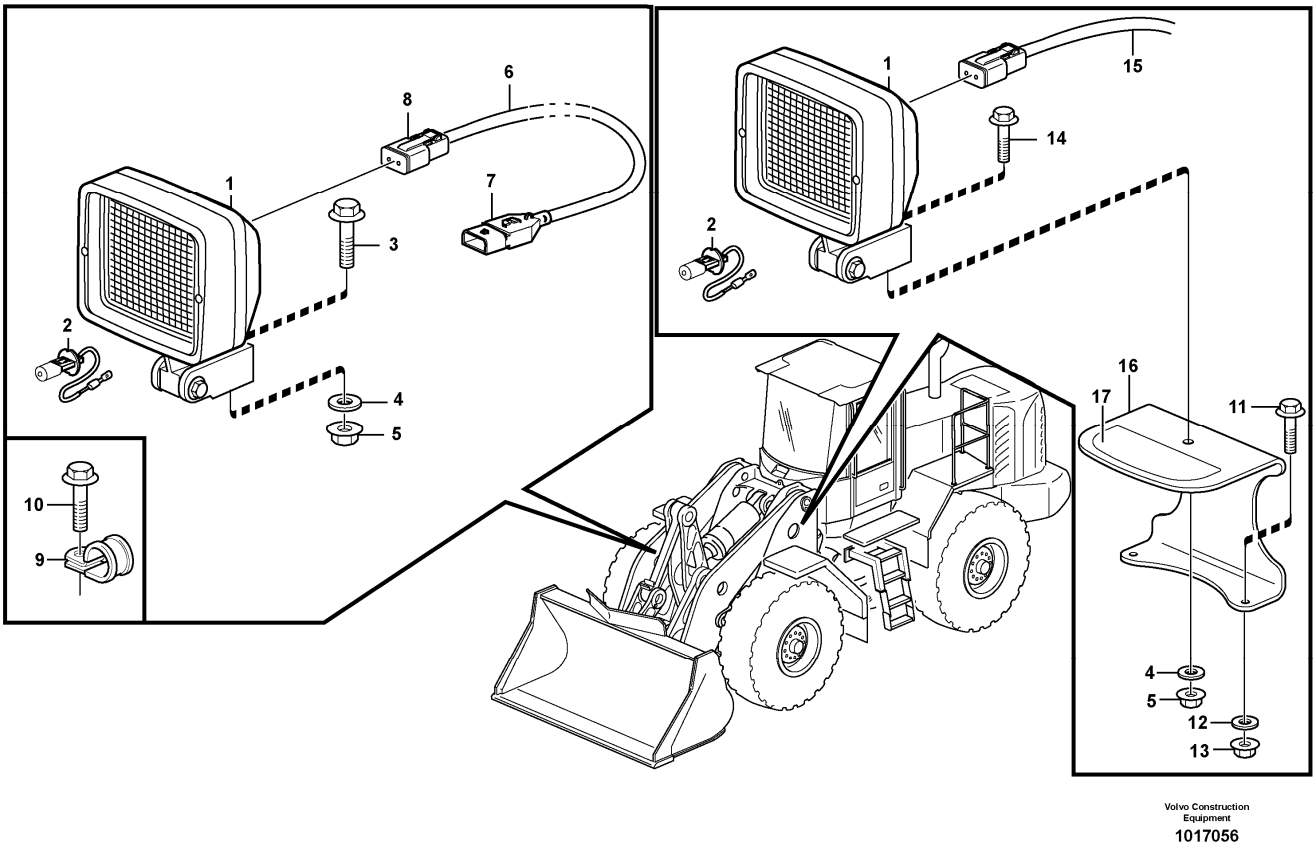

Section option	Kit	Option description
VOE33380		Volvo Wheel Loader L120E S/N 19801-, S/N 66001- USA, S/N 71401- BRA
VOE82342	VOE11988279	Work lights front, extra
VOE80886	VOE11708782	Attachment lights
VOE33395		Wheel Loader L120E3 IRAN

Q1-Q5	Option	Option description	
Q1 82342	VOE82342	Work lights front, extra	
Q2 80886	VOE80886	Attachment lights	
Q3 33380 33395	VOE33380	Volvo Wheel Loader L120E S/N 19801-, S/N 66001- USA, S/N 71401- BRA	

Pos	Part	Q1	Q2	Q3	Q4	Q5	PS	Kit	Description	Option(s)	Remark
1	VOE11170009	2	1						Work lamp		
2	VOE992517	2	1						•Bulb		(VOE943903)24V/70W

3	VOE946472		1						Flange screw		
4	VOE13960143	2	1						Washer		
5	VOE13971095	2	1						Flange nut		
6	VOE11170528		1						Cable harness		See footnote 1245)
7	VOE8143240		1						•Housing		
8	VOE14370760		1						•Socket		
9	VOE13949746		1						Clamp		
10	VOE13946173		1						Screw		
11	VOE13946173	4							Screw		
12	VOE11117464	4							Plain washer		(VOE13960141)
13	VOE13945408	4							Nut		
14	VOE946329	2							Flange screw		
15				1					Wire harness		See ref 371/300
16	VOE11400768	2					SS		Protecting plate		
17	VOE11414308	2							Decal		

1245) Including parts: Wire assembly, hose, manifold, cable terminal and insulator See Group 379.

VOLVO

Construction Equipment

PROSIS Part Information

Date:	Image id:	Catalogue:	Model:
24/08/2018	**EL185**	**20086**	**L120E**
Brand:	Serial:	Group/Section:	Title:
Volvo	**19804-, 66001-, 71401-**	**352/200**	**Lighting, cab**

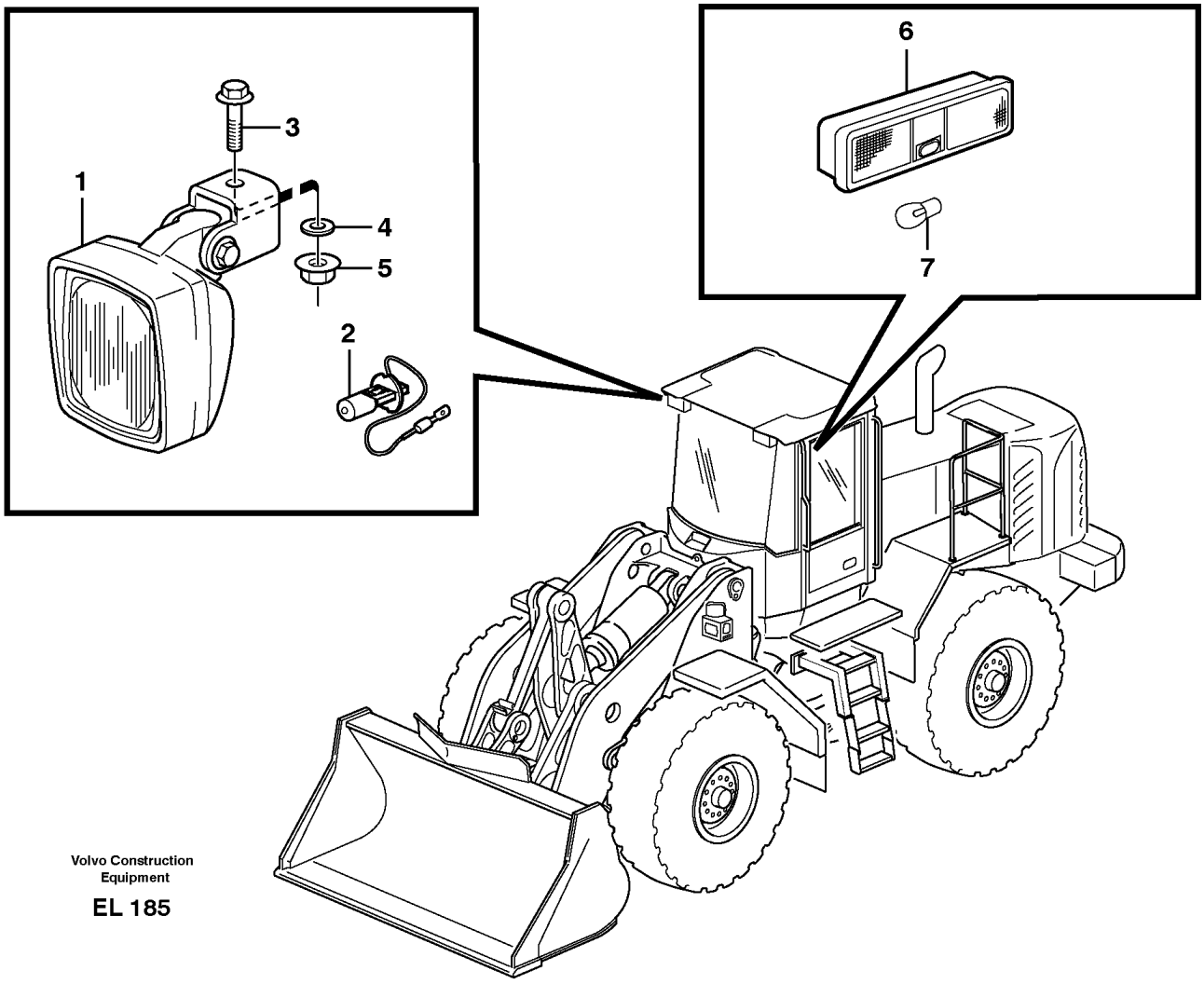

Section option	Kit	Option description
VOE33357		Cab L120E
VOE33366		Cab L120E USA

Pos	Part	Q1	Q2	Q3	Q4	Q5	PS	Kit	Description	Option(s)	Remark
1	VOE11170010	2							Work lamp		
2	VOE992517	2							•Bulb		(VOE943903)24V/70W
3	VOE946329	2							Flange screw		
4	VOE13960143	2							Washer		
5	VOE13971095	2							Flange nut		
6	VOE20438083	1							Interior Lamp		

7	VOE992520	1							•Bulb		(VOE967710)24V/10W
	VOE992521	1							•Bulb		(VOE967708)24V/21W

VOLVO

Construction Equipment

PROSIS Part Information

Date:	Image id:	Catalogue:	Model:
24/08/2018	**1016680**	**20086**	**L120E**
Brand:	Serial:	Group/Section:	Title:
Volvo	**19804-, 66001-, 71401-**	**352/250**	**Lighting, cab**

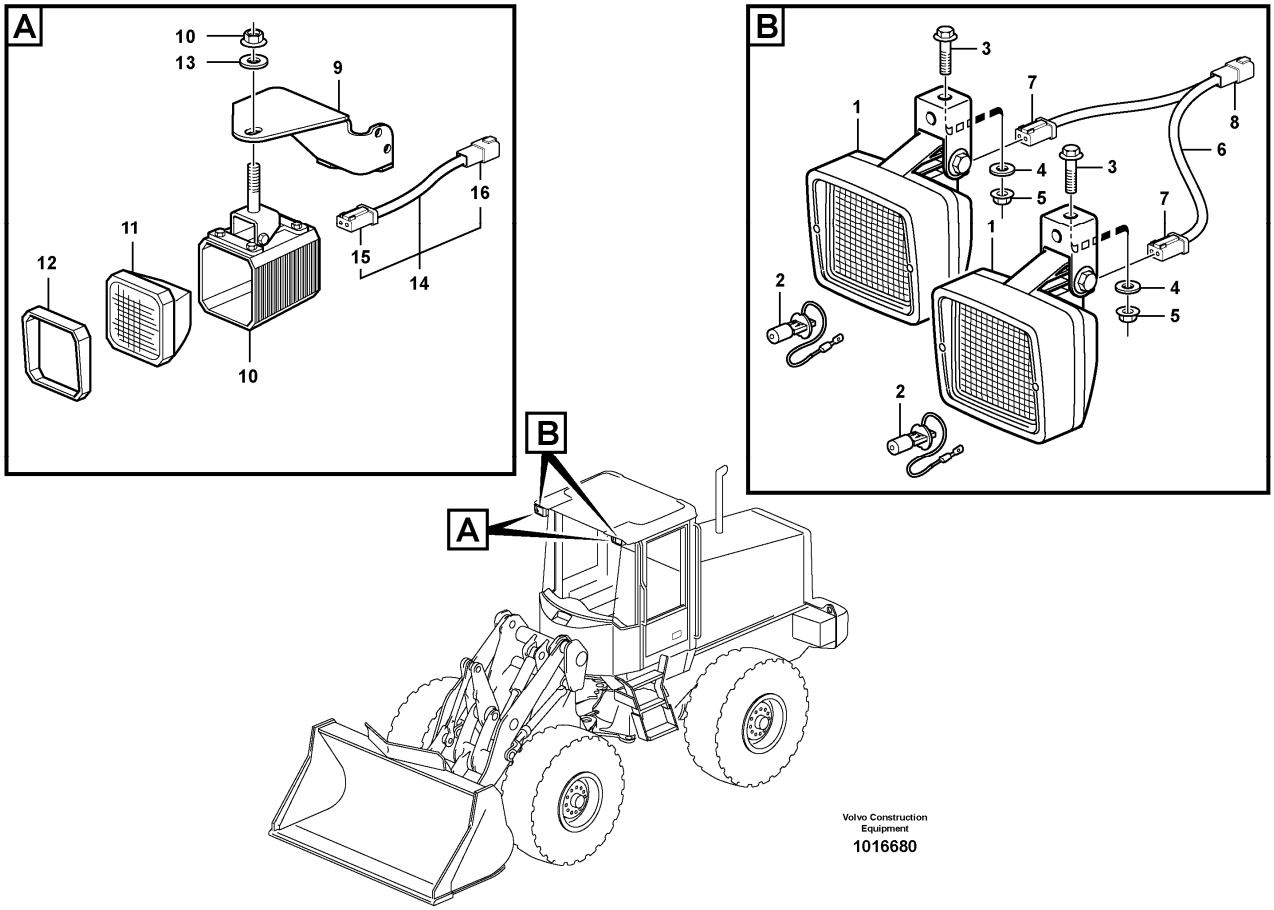

Section option	Kit	Option description
VOE82344		Work lights front, cab, double
VOE82414		Discharge light, work lights front cab

Q1-Q5	Option	Option description	
Q1 82344	VOE82344	Work lights front, cab, double	
Q2 82414	VOE82414	Discharge light, work lights front cab	

Pos	Part	Q1	Q2	Q3	Q4	Q5	PS	Kit	Description	Option(s)	Remark
1	VOE11170010	2							Work lamp		
2	VOE992517	2							•Bulb		(VOE943903)24V/70W
3	VOE946329	2							Flange screw		
4	VOE13960143	2							Washer		
5	VOE13971095	2							Flange nut		
6	VOE11170736	2							Cable harness		

7	VOE14370760	4							•Socket		
8	VOE14370761	2							•Connector		
9	VOE11164420		1						Bulb socket		LH
	VOE11164421		1						Bulb socket		RH
10	VOE11170061		2						Work Light		
11	VOE11988414		2				SS		•Insert		
12	VOE11988413		2						•Rim		
13	VOE13960145		2						Washer		
14	VOE11170854		2						Cable harness		
15	VOE14370760		2						•Socket		
16	VOE14370761		2						•Connector		

VOLVO

Construction Equipment

PROSIS Part Information

Date:	Image id:	Catalogue:	Model:
24/08/2018	**1003465**	**20086**	**L120E**
Brand:	Serial:	Group/Section:	Title:
Volvo	**19804-, 66001-, 71401-**	**353/100**	**Lighting, rear 33380 33395**

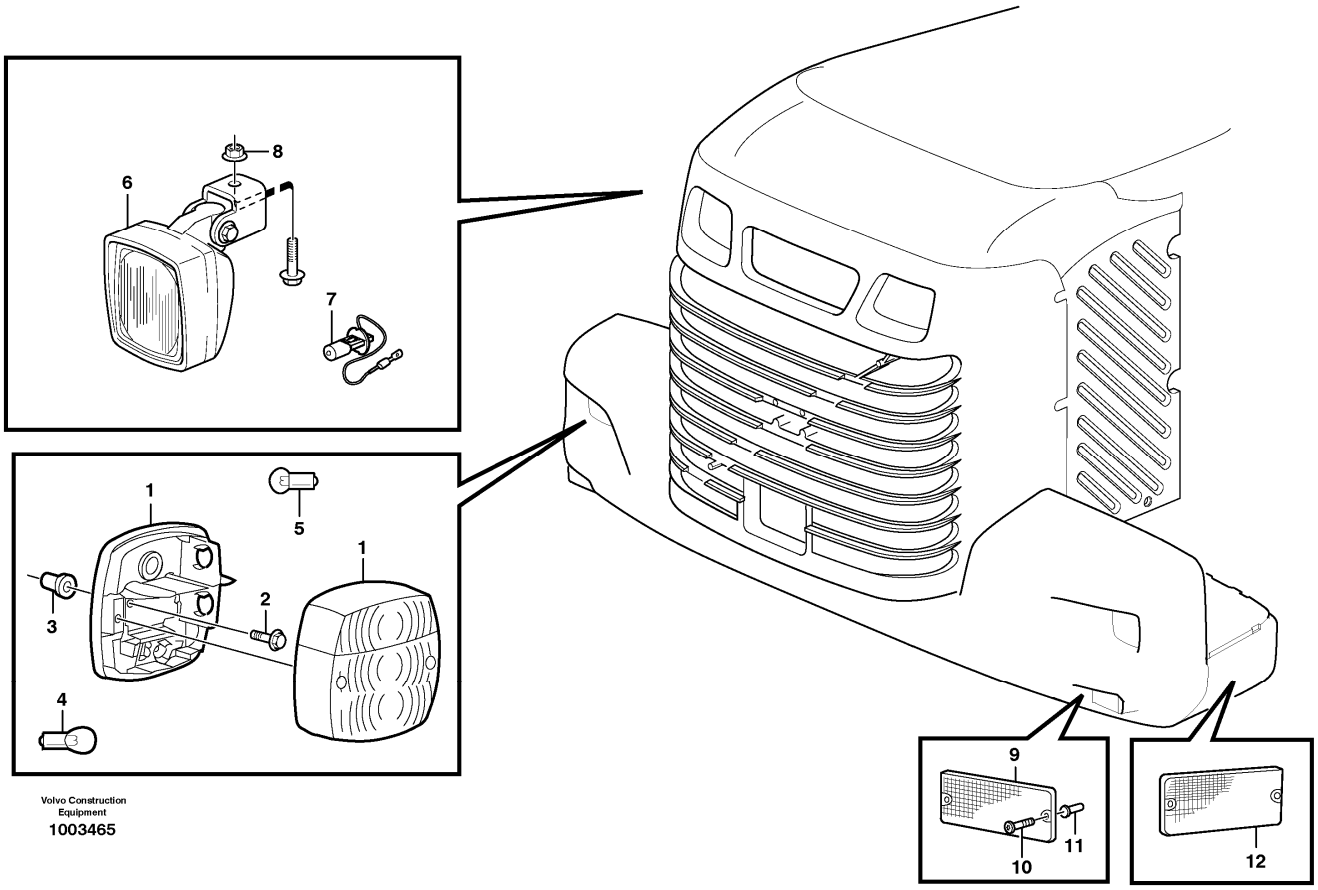

Section option	Kit	Option description
VOE33380		Volvo Wheel Loader L120E S/N 19801-, S/N 66001- USA, S/N 71401- BRA
VOE33395		Wheel Loader L120E3 IRAN

Pos	Part	Q1	Q2	Q3	Q4	Q5	PS	Kit	Description	Option(s)	Remark
1	VOE11039553	2							Tail lamp		
2	VOE969587	4							Six point socket screw		
3	VOE930761	4							Expanding nut		
4	VOE992521	4							Bulb		(VOE967708)21W
5	VOE992520	2							Bulb		(VOE967710)10W
6	VOE11039846	2							Work lamp		See ref 823/300
7	VOE992517	2							•Bulb		(VOE943903)70W
8	VOE948645	2							Flange lock nut		
9	VOE11039276	4							Reflector		RED
10	VOE13969516	4							Six point socket		

									screw		
11	VOE930757	4							Expanding nut		
12	VOE1578835	6							Reflector		YELL

VOLVO

Construction Equipment

PROSIS Part Information

Date:	Image id:	Catalogue:	Model:
24/08/2018	**1017380**	**20086**	**L120E**
Brand:	Serial:	Group/Section:	Title:
Volvo	**19804-, 66001-, 71401-**	**353/150**	**Work lights, rear.**

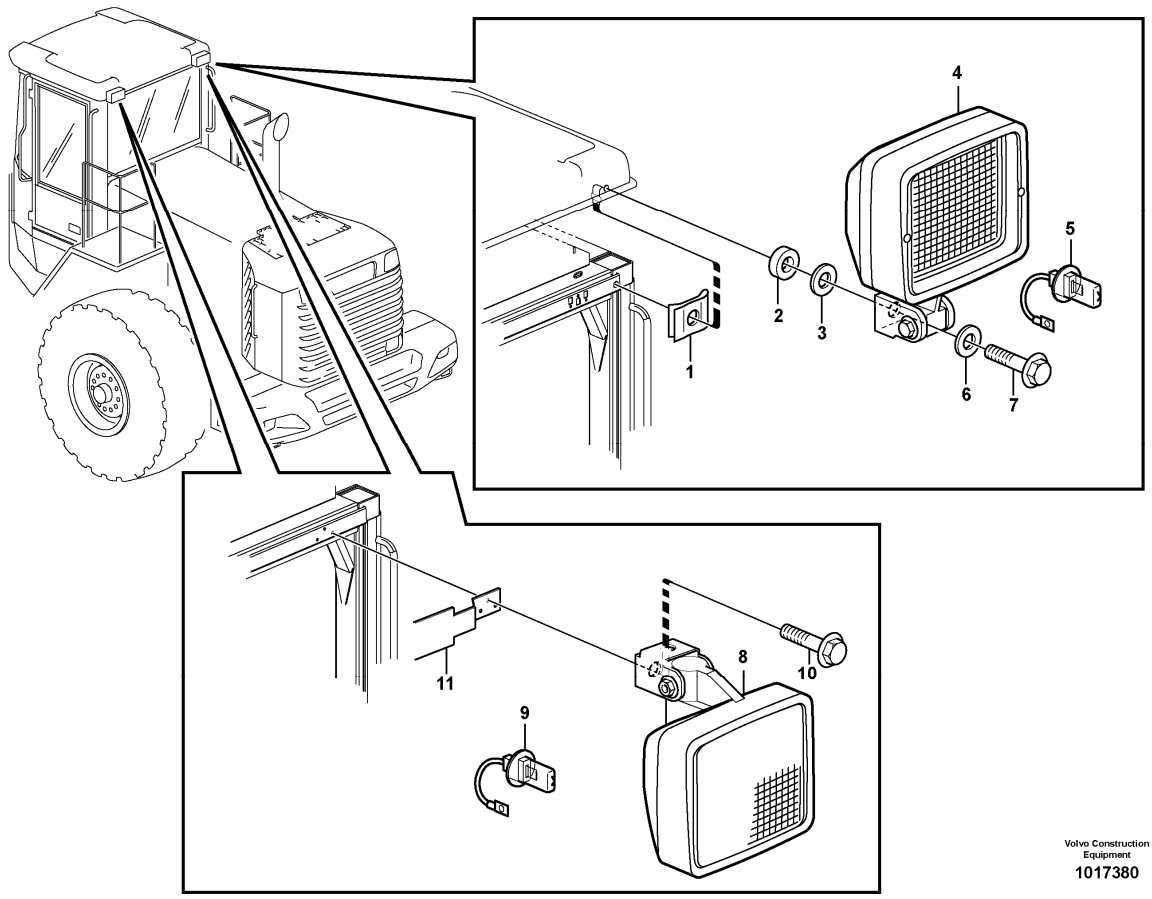

Section option	Kit	Option description
VOE33357		Cab L120E
VOE33366		Cab L120E USA
VOE80943	VOE11039846	Work lights, cab, rear, extra ORDER 2 PCS OF KIT NO 11170009
VOE83085		Air filter, cyclone USA

Q1-Q5	Option	Option description	
Q1 33357 33366	VOE33357	Cab L120E	
Q2 80943	VOE80943	Work lights, cab, rear, extra ORDER 2 PCS OF KIT NO 11170009	
Q3 83085	VOE83085	Air filter, cyclone USA	

Pos	Part	Q1	Q2	Q3	Q4	Q5	PS	Kit	Description	Option(s)	Remark
1	VOE13949867	2							Spring nut		
2	VOE930428	2							Spacer ring		

3	VOE11104399	2							Rubber washer		
4	VOE11170009		2						Work lamp		
5	VOE992517		2						•Bulb		(VOE943903)24V/70W
6	VOE11117464	2							Plain washer		(VOE13960141)
7	VOE13945444	2							Screw		
8	VOE11170010			2					Work lamp		
9	VOE992517			2					Bulb		(VOE943903)
10	VOE946671			2					Flange screw		
11				1					Plate		See ref 872/350

VOLVO

Construction Equipment

PROSIS Part Information

Date:	Image id:	Catalogue:	Model:
24/08/2018	**1015800**	**20086**	**L120E**
Brand:	Serial:	Group/Section:	Title:
Volvo	**19804-, 66001-, 71401-**	**353/200**	**License plate lamp**

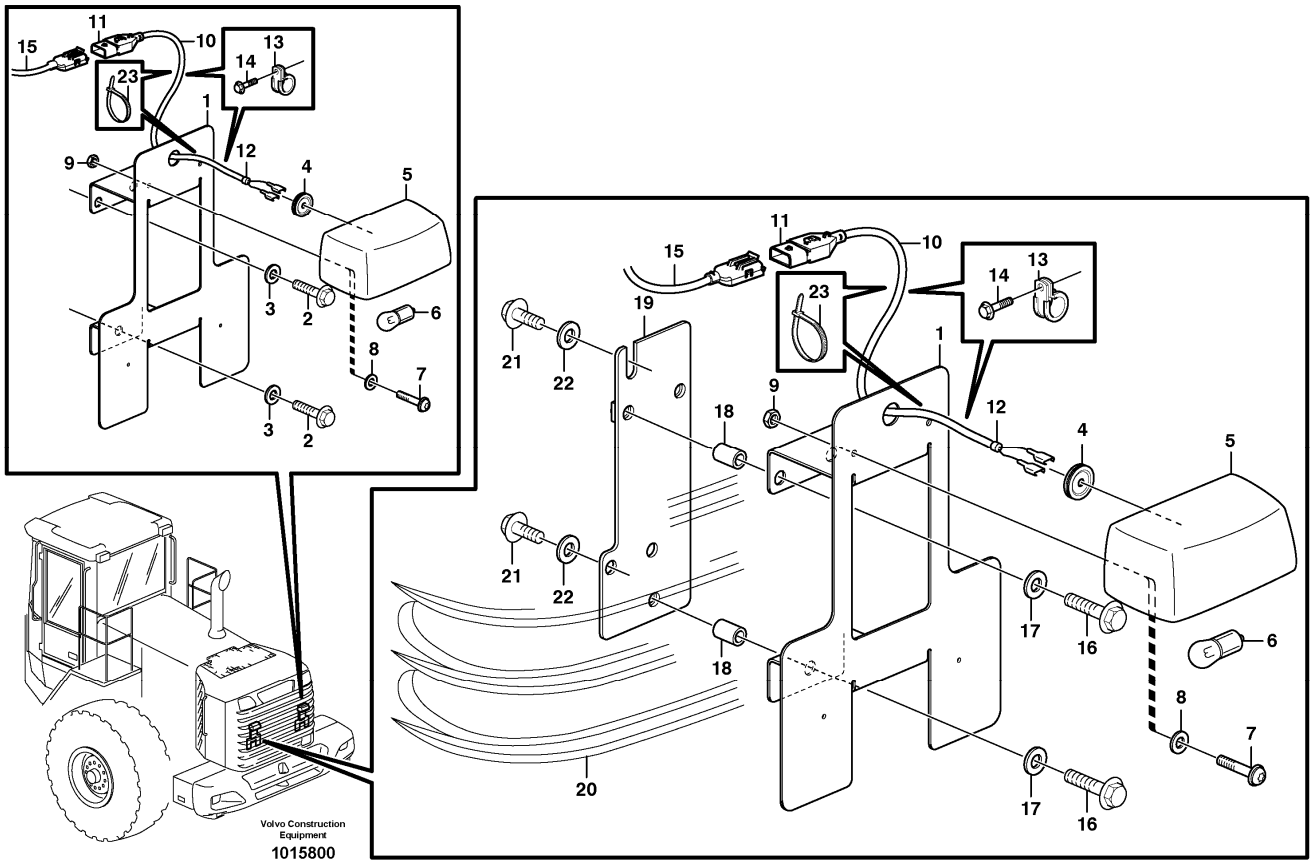

Section option	Kit	Option description
VOE80884		Light, licence plate
VOE83039		Light, license Plate (Italy only)

Q1-Q5	Option	Option description	
Q1 80884	VOE80884	Light, licence plate	
Q2 83039	VOE83039	Light, license Plate (Italy only)	

Pos	Part	Q1	Q2	Q3	Q4	Q5	PS	Kit	Description	Option(s)	Remark
1	VOE11400621	1	1						Number plate retainer		
2	VOE947107	3							Flange screw		
3	VOE11117464	2							Plain washer		(VOE13960141)
4	VOE941267	1	1						Plug		
5	VOE11147756	1	1						Sign lamp		

6	VOE992520	1	1						•Bulb		(VOE967710)
7	VOE13969516	2	2						Six point socket screw		
8	VOE960137	2	2						Washer		
9	VOE13963103	2	2						Lock nut		
10	VOE11170698	1	1						Cable harness		
									•CONNECTED TO:		
									••Cable harness		RE
									••Sign Lamp		LA307
11	VOE8143240	1	1						•Housing		
12	VOE11039397	1	1						•End sleeve		
13	VOE980614	2							Clamp		
14	VOE13946173	1							Screw		
15		1	1						Cable harness		
16	VOE13965179		3						Screw		
17	VOE11117464		3						Plain washer		(VOE13960141)
18	VOE930438		3						Spacer ring		
19	VOE11180880		1						Attaching plate		
20			1						Radiator Casing		
21	VOE947107		3						Flange screw		
22	VOE11117464		3						Plain washer		(VOE13960141)
23	4881440		3								

VOLVO

Construction Equipment

PROSIS Part Information

Date:	Image id:	Catalogue:	Model:
24/08/2018	**1001128**	**20086**	**L120E**
Brand:	Serial:	Group/Section:	Title:
Volvo	**19804-, 66001-, 71401-**	**362/100**	**Back-up warning unit 80883**

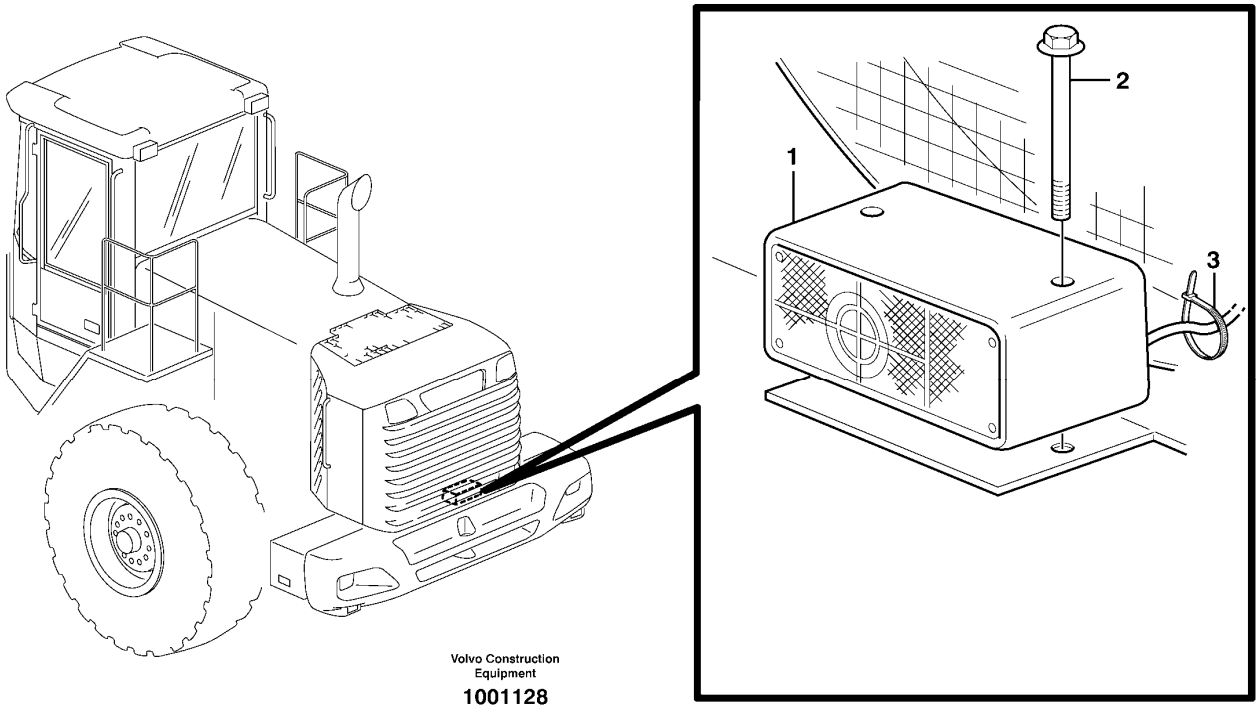

Section option	Kit	Option description
VOE80883		Back-up alarm

Pos	Part	Q1	Q2	Q3	Q4	Q5	PS	Kit	Description	Option(s)	Remark
1	VOE15187356	1					SS		Reversing warning unit		(VOE11039728)
2	VOE13965184	2							Flange screw		
3	VOE4881438	1							Cable tie		

VOLVO

Construction Equipment

PROSIS Part Information

Date:	Image id:	Catalogue:	Model:
24/08/2018	**1005325**	**20086**	**L120E**
Brand:	Serial:	Group/Section:	Title:
Volvo	**19804-, 66001-, 71401-**	**362/150**	**Revolving warning light. 93799**

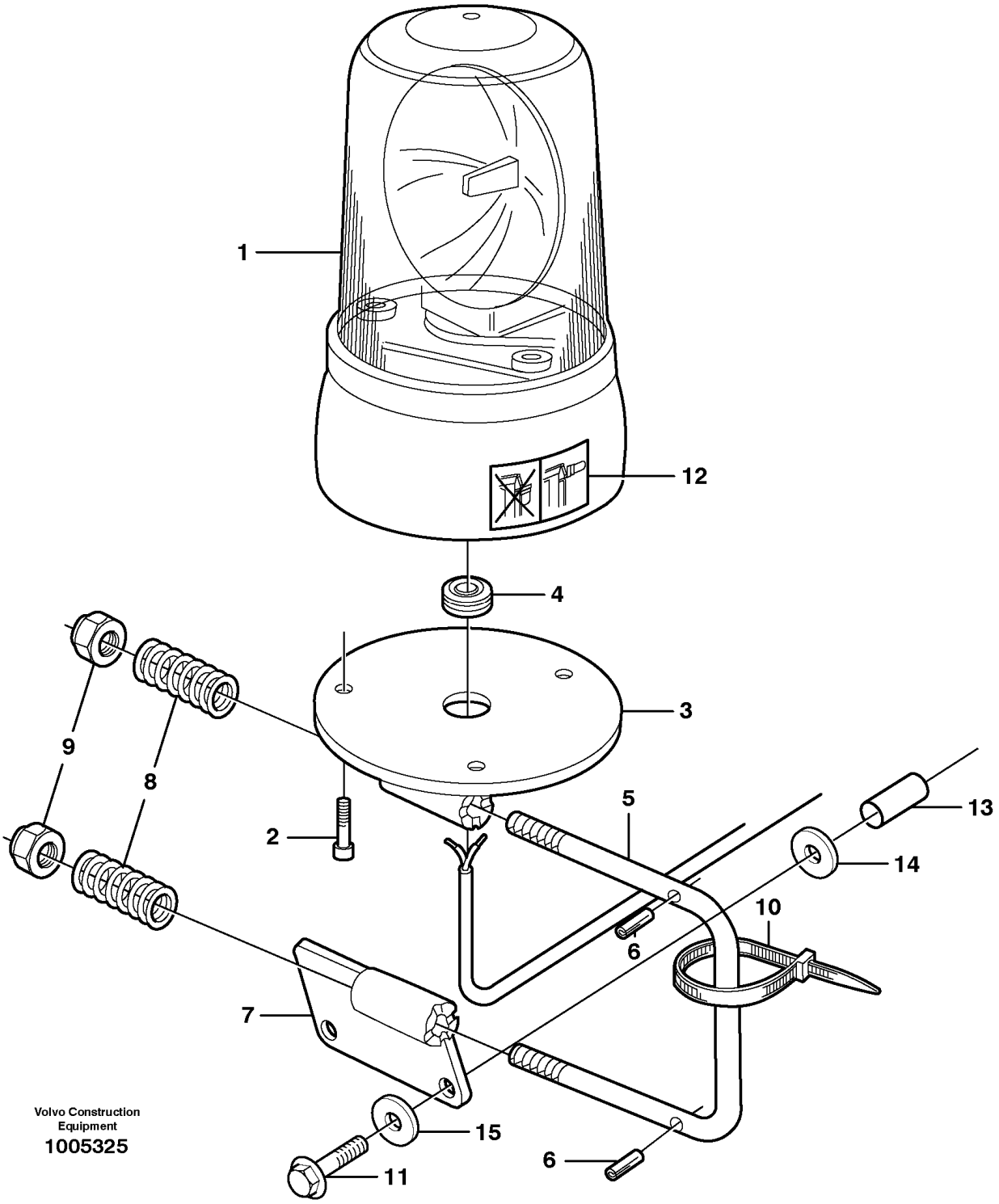

Section option	Kit	Option description

VOE93799	VOE11705492	Rotating beacon with col-lapsible mounting

Pos	Part	Q1	Q2	Q3	Q4	Q5	PS	Kit	Description	Option(s)	Remark
1		1							Lamp		See ref 362/200
2	VOE976155	3							Six point socket screw		
	VOE11104607	1					SS		Release mechanism		SER NO - 1827
	VOE11164585	1							Release mechanism		SER NO 1828 -
3		1					NS		•Attachment		SER NO - 1827
	VOE11164581	1					OP		•Attachment		SER NO 1828 -
4	VOE941267	1							•Plug		
5		1					NS		•Stay		
6	VOE13961647	2							•Pin		
7		1					NS		•Attachment		
8	VOE4935756	2							•Spring		
9	VOE13963110	2							•Lock nut		
10	VOE4881440	2							Cable tie		
11	VOE946671	3							Flange screw		M8 x 30 MM
12	VOE11104111	1							Decal		
13	VOE930428	2							Spacer ring		
14	VOE11104399	2							Rubber washer		
15	VOE11117464	2							Plain washer		(VOE13960141)

VOLVO

Construction Equipment

PROSIS Part Information

Date:	Image id:	Catalogue:	Model:
24/08/2018	**EL189**	**20086**	**L120E**
Brand:	Serial:	Group/Section:	Title:
Volvo	**19804-, 66001-, 71401-**	**362/200**	**Rotating beacon. 93799**

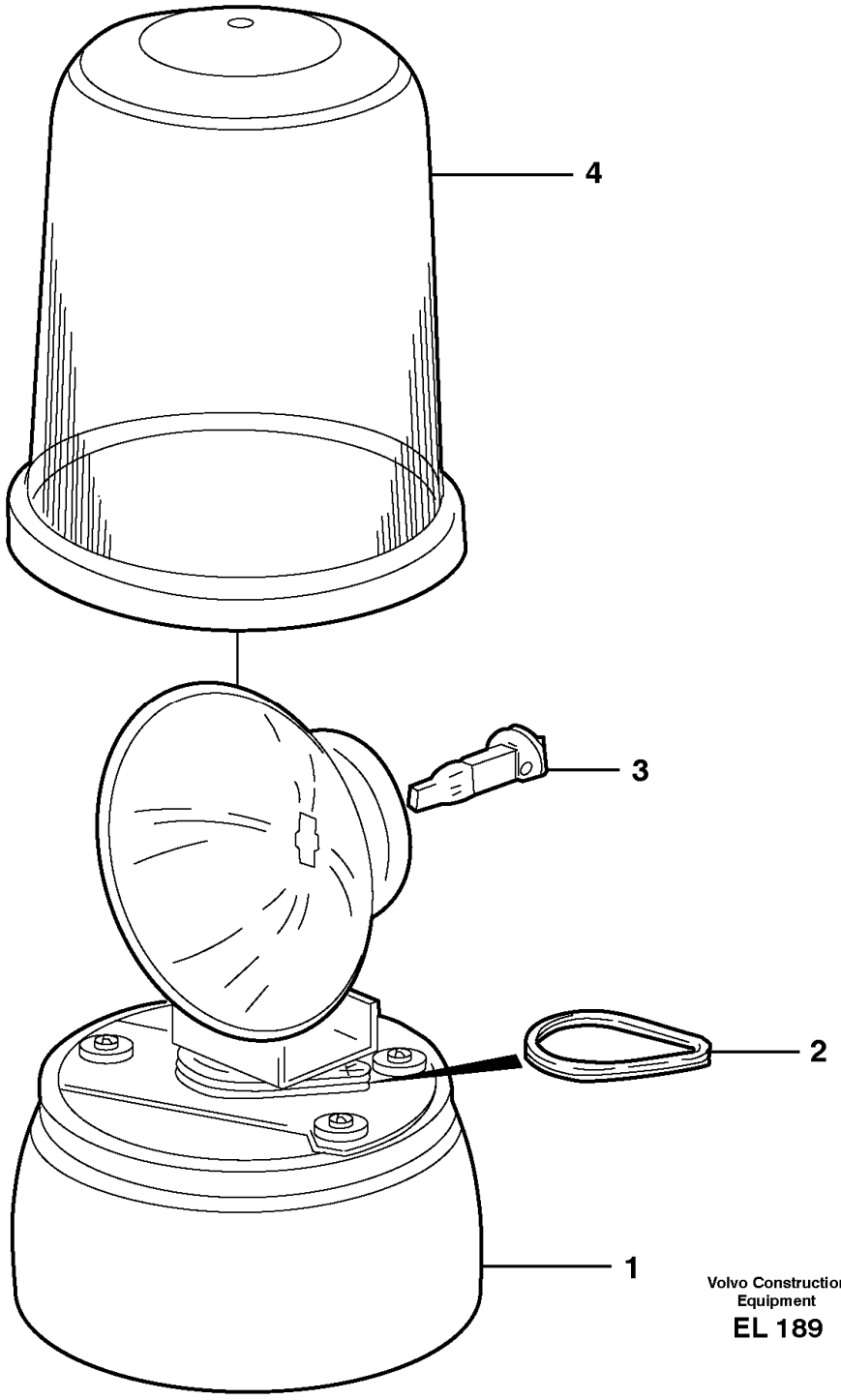

Section option	Kit	Option description

VOE93799	VOE11705492	Rotating beacon with col-lapsible mounting

Pos	Part	Q1	Q2	Q3	Q4	Q5	PS	Kit	Description	Option(s)	Remark
	VOE11039291	1					SS		Rotating beacon		SER NO - 1827
	VOE11170098		1						Rotating beacon		SER NO 1828 -
1		1	1				NS		•Housing		
2	VOE11994484	1	1						•Drive belt		2 PCS
3	VOE992516	1	1						•Bulb		(VOE943904)24V/70W
4	VOE11994483	1	1						•Lens		
	VOE11713980		1						•Lens		(VOE11713095)

VOLVO

Construction Equipment

PROSIS Part Information

Date:	Image id:	Catalogue:	Model:
24/08/2018	**1016469**	**20086**	**L120E**
Brand:	Serial:	Group/Section:	Title:
Volvo	**19804-, 66001-, 71401-**	**362/225**	**Revolving warning light. 82199**

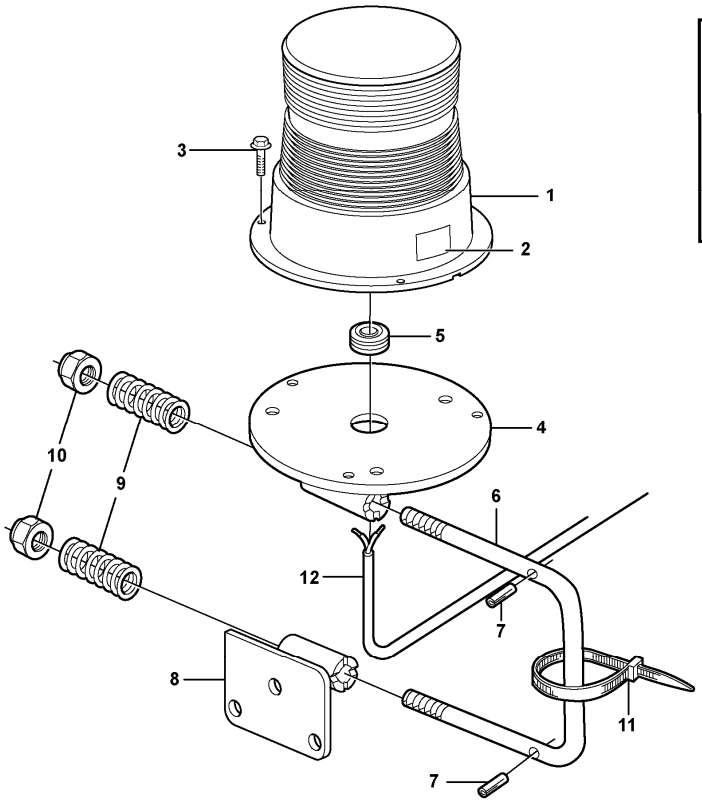

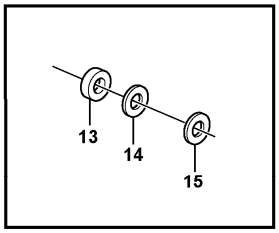

Volvo Construction Equipment
1016469

Section option	Kit	Option description
VOE82199		Rotating beacon with col-lapsible mounting

Pos	Part	Q1	Q2	Q3	Q4	Q5	PS	Kit	Description	Option(s)	Remark
1	VOE11170087	1							Rotating beacon		
2	VOE11104111	1							Decal		
3	VOE946671	3							Flange screw		
	VOE11164585	1							Release mechanism		
4		1					NS		•Attachment		
5	VOE941267	1							•Plug		
6		1					NS		•Stay		
7	VOE13961647	2							•Pin		
8	VOE11164581	1					OP		•Attachment		
9	VOE4935756	2							•Spring		
10	VOE13963110	2							•Lock nut		

11	VOE4881440	3							Cable tie		
12	VOE11170891	1							Cable harness		
13	VOE930428	2							Spacer ring		
14	VOE11104399	2							Rubber washer		
15	VOE11117464	2							Plain washer		(VOE13960141)

VOLVO

Construction Equipment

PROSIS Part Information

Date:	Image id:	Catalogue:	Model:
24/08/2018	**1017365**	**20086**	**L120E**
Brand:	Serial:	Group/Section:	Title:
Volvo	**19804-, 66001-, 71401-**	**363/100**	**Windshield wiper, front**

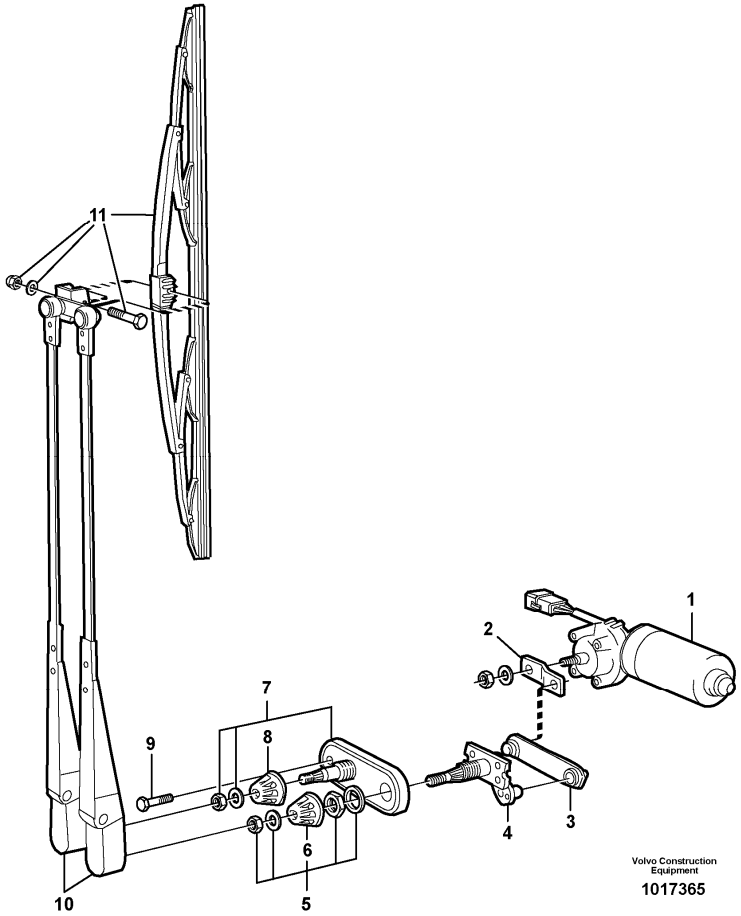

Section option	Kit	Option description
VOE33357		Cab L120E
VOE33366		Cab L120E USA

Pos	Part	Q1	Q2	Q3	Q4	Q5	PS	Kit	Description	Option(s)	Remark
	VOE11170239	1							Wiper motor		
1	VOE11039529	1							•Wiper motor		
2	VOE14341053	1							•Arm		
3	VOE11998208	1							•Link rod		
4	VOE11701903	1							•Wiper shaft		
5	VOE2554250	1							•Mounting kit		
6	VOE12003786	1							••Cover		
7	VOE11170240	1							Set		
8	VOE12003786	1							•Cover		
9	VOE955640	1							Hexagon screw		

10	VOE15095429	1							Wiper arm		(VOE11039233)
11	VOE11039234	1					SS		Wiper blade		

VOLVO

Construction Equipment

PROSIS Part Information

Date:	Image id:	Catalogue:	Model:
24/08/2018	**EL117**	**20086**	**L120E**
Brand:	Serial:	Group/Section:	Title:
Volvo	**19804-, 66001-, 71401-**	**363/150**	**Windshield wiper, rear**

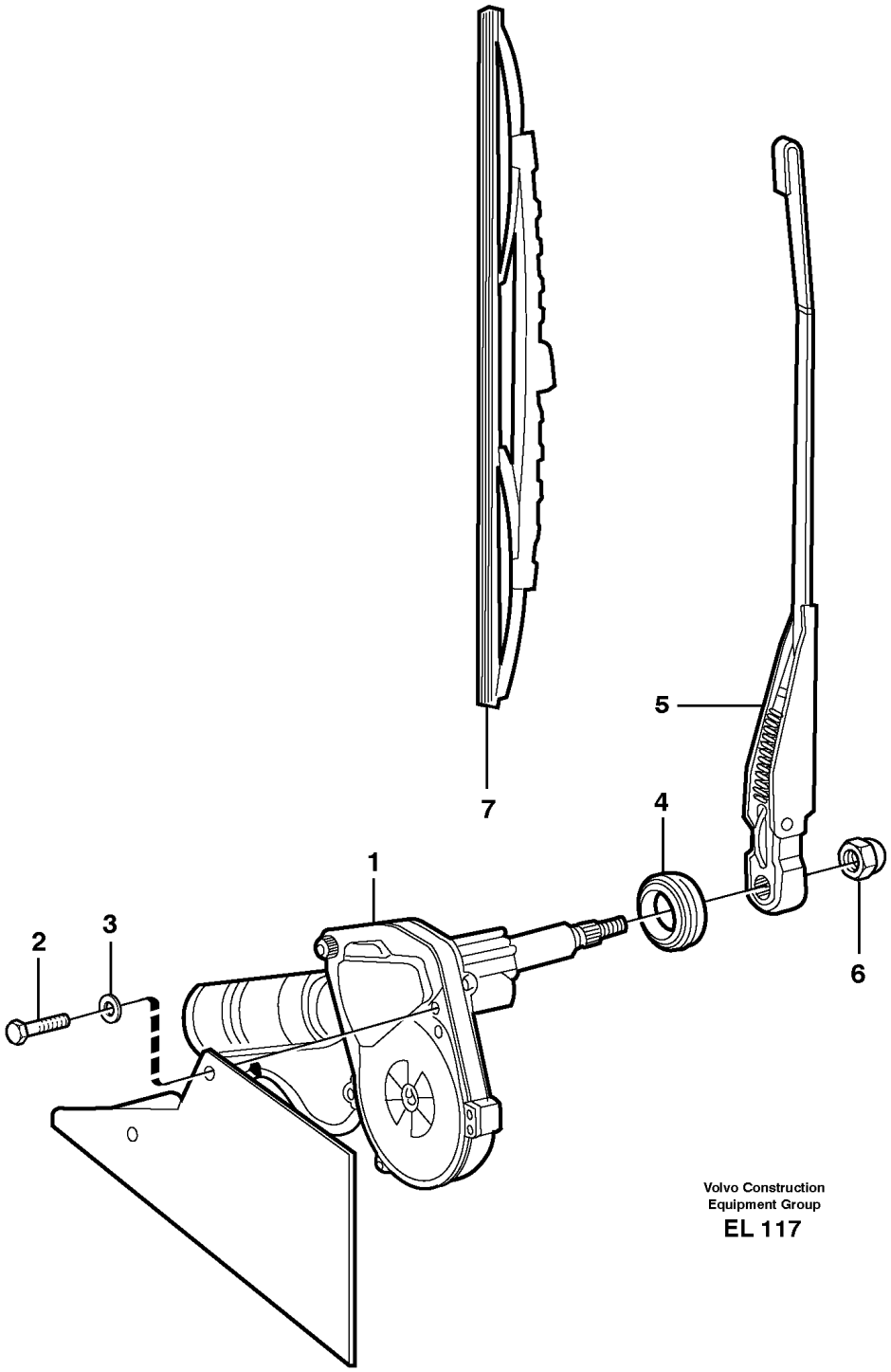

Section option	Kit	Option description

VOE33357		Cab L120E

Pos	Part	Q1	Q2	Q3	Q4	Q5	PS	Kit	Description	Option(s)	Remark
1	VOE11039288	1							Wiper motor		
2	VOE969738	2							Six point socket screw		(VOE13969738)
3	VOE960139	4							Plain washer		
4	VOE11006074	1							Grommet		
5	VOE11039289	1							Wiper arm		
6	VOE948645	1							Flange lock nut		
7	VOE11039290	1							Wiper blade		

VOLVO

Construction Equipment

PROSIS Part Information

Date:	Image id:	Catalogue:	Model:
24/08/2018	**1057210**	**20086**	**L120E**
Brand:	Serial:	Group/Section:	Title:
Volvo	**19804-, 66001-, 71401-**	**363/200**	**Windshield washer**

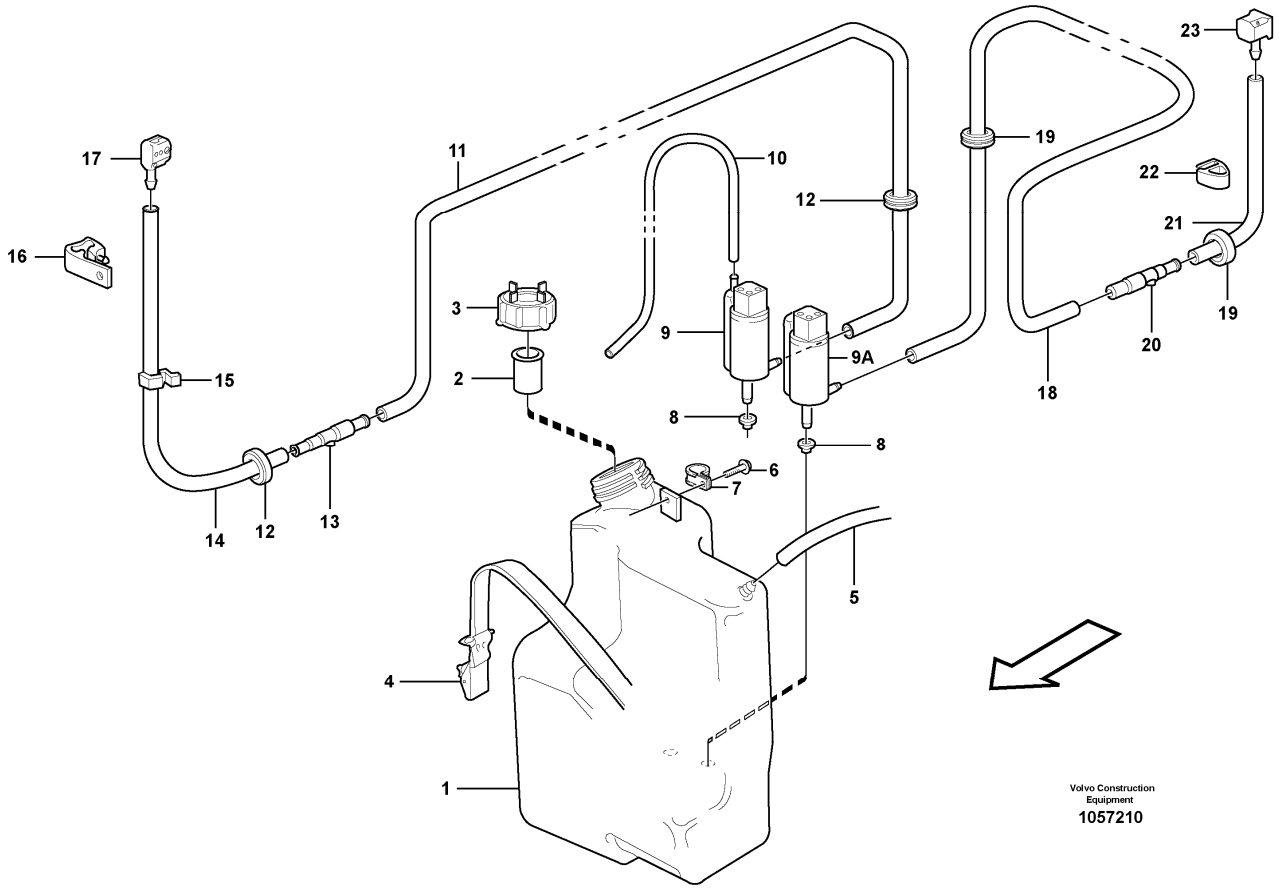

Section option	Kit	Option description
VOE33357		Cab L120E

Pos	Part	Q1	Q2	Q3	Q4	Q5	PS	Kit	Description	Option(s)	Remark
1	VOE11104443	1							Reservoir		
2	VOE1577712	1							Strainer		
3	VOE4965040	1							Cover		
4	VOE11104606	1							Retaining strap		
5	VOE1304841	REQ							Hose		L = 500 MM
6	VOE13965354	1							Screw		
7	VOE952627	1							Clamp		
8	VOE1258140	2							Sealing sleeve		
9	VOE21189159	1							Washer pump		(VOE11707609)MO802, FORW
		1					NS		•Level Indicator		

9A	VOE8189171	1							Washer pump		MO804, REAR
10	VOE192618	REQ							Hose		L = 500 MM
11	VOE1304841	REQ							Hose		L = 2600 MM
12	VOE941262	2							Grommet		
13	VOE667352	1							Non-return valve		
14	VOE943727	REQ							Hose		L = 700 MM
15	VOE192248	2							Retainer		
16	VOE4803208	1							Clamp		
17	VOE4803206	1							Nozzle		
18	VOE1304841	REQ							Hose		L = 3400 MM
19	VOE941262	2							Grommet		
20	VOE667352	1							Non-return valve		
21	VOE943727	REQ							Hose		L = 450 MM
22	VOE1580822	1							Clamp		
23	VOE1580247	1							Washer nozzle		

VOLVO

Construction Equipment

PROSIS Part Information

Date:	Image id:	Catalogue:	Model:
24/08/2018	**1017369**	**20086**	**L120E**
Brand:	Serial:	Group/Section:	Title:
Volvo	**19804-, 66001-, 71401-**	**363/250**	**Windshield washer with air cleaner. 83085**

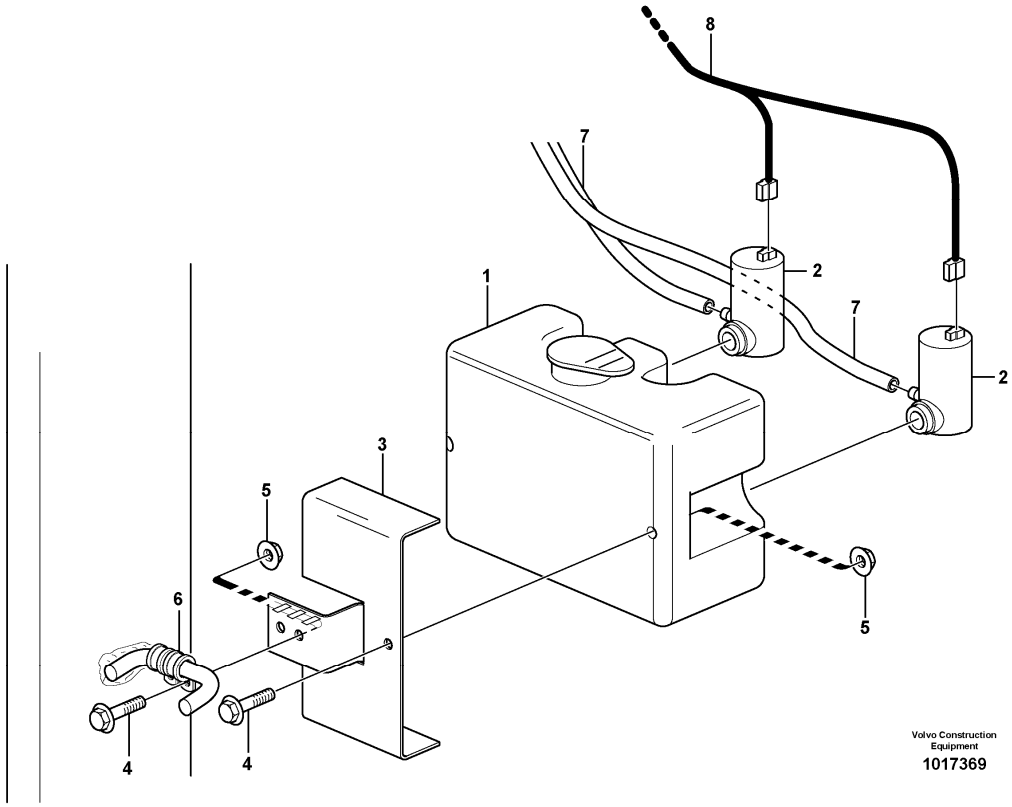

Section option	Kit	Option description
VOE83085		Air filter, cyclone USA

Pos	Part	Q1	Q2	Q3	Q4	Q5	PS	Kit	Description	Option(s)	Remark
	VOE11417613	1							Washer kit		
1	VOE11714687	1							•Reservoir		
2	VOE11707985	2							•Washer pump		(VOE11714686)
3	VOE11417599	1							Plate		
4	VOE13946544	3							Screw		
5	VOE13949278	3							Flange lock nut		
6	VOE952625	2							Clamp		
7		2							Hose		See ref 363/200
8		1							Cable harness		See ref 371/1950

VOLVO

Construction Equipment

PROSIS Part Information

Date:	Image id:	Catalogue:	Model:
24/08/2018	**1032856**	**20086**	**L120E**
Brand:	Serial:	Group/Section:	Title:
Volvo	**19804-, 66001-, 71401-**	**371/100**	**Battery cable and main switch 33380 33395**

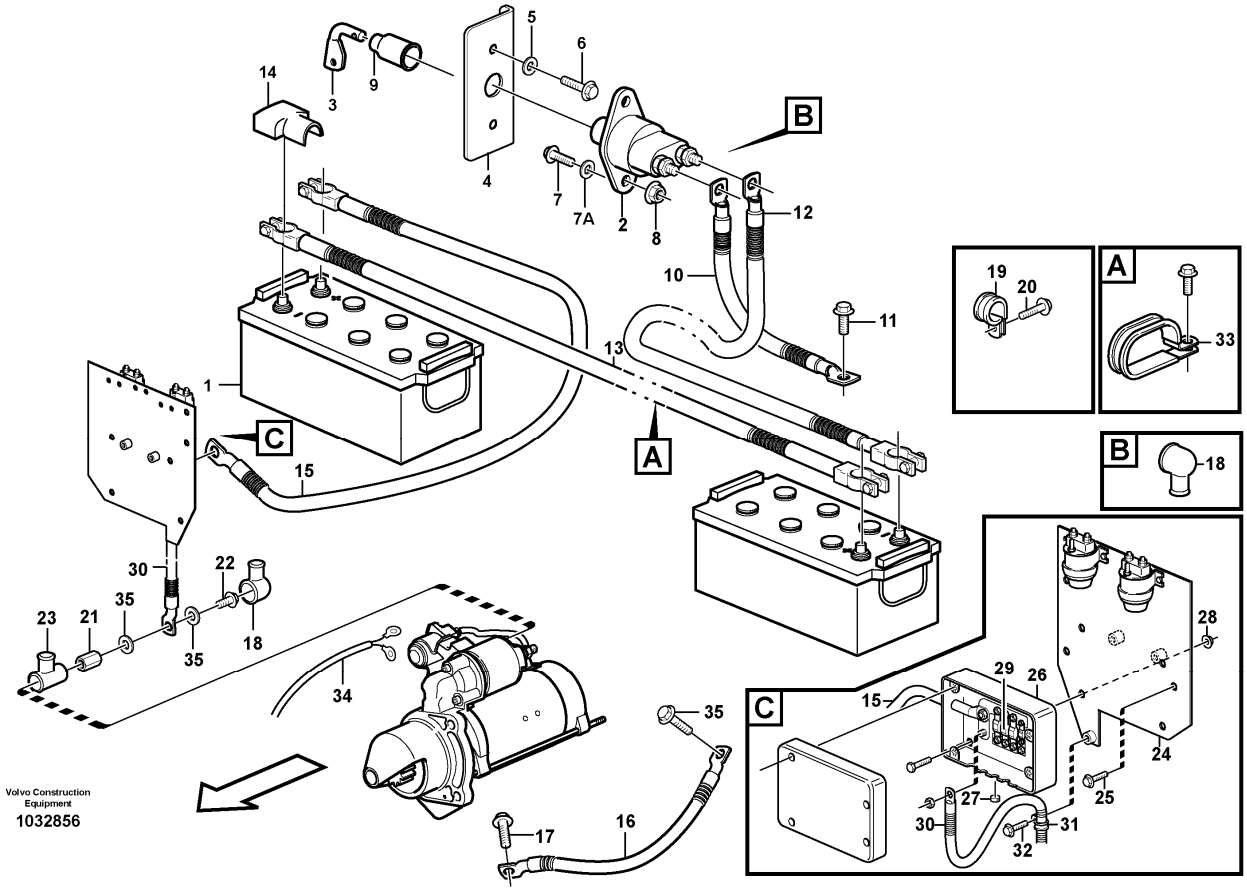

Section option	Kit	Option description
VOE33380		Volvo Wheel Loader L120E S/N 19801-, S/N 66001- USA, S/N 71401- BRA
VOE33395		Wheel Loader L120E3 IRAN

Pos	Part	Q1	Q2	Q3	Q4	Q5	PS	Kit	Description	Option(s)	Remark
1	VOE8158063	2							Battery		See ref 313/100
2	VOE3987034	1							Main switch		
3	VOE8157766	1							•Knob		
4	VOE11414562	1							Bracket		
5	VOE13960143	2							Washer		
6	VOE946441	2							Flange screw		
7	VOE13946934	2							Screw		
7A	VOE960139	2							Plain washer		
8	VOE13949278	2							Flange lock nut		
9	VOE1582293	1							Protecting moulding		

10	VOE11170934	1							Battery cable		See footnote 1245)
11	VOE13949888	1							Screw		
12	VOE11171106	1							Battery cable		See footnote 1245)
	VOE977781	1							•Cable terminal		
13	VOE11171499	1							Battery cable		See footnote 1245)
14	VOE1259727	3							Cover		
15	VOE11171500	1							Battery cable		See footnote 1245)
16	VOE11024707	1							Battery cable		See footnote 1245)
17	VOE13949888	1							Screw		
18	VOE7025971	2							Protection		
19	VOE977599	1							Clamp		(VOE13977599)
	VOE13949997	2							Clamp		
20	VOE13946173	1							Screw		
	VOE946440	1							Flange screw		
21	VOE11171091	1							Nut		
22	VOE11170368	1							Flange screw		
23	VOE855798	1							Protecting sleeve		
24	VOE11171451	1							Plate		
25	VOE13946173	3							Screw		
26	VOE11170016	1							Fuse box		
27	VOE11170020	1							Plug		
28	VOE948645	4							Flange lock nut		
29	VOE982617	3							Fuse		125A
30	VOE11171488	1					SS		Battery cable		See footnote 1245) S/N - 19806 SWE
30	VOE11171745	1							Battery cable		S/N 19807 - SWE S/N 66001 - USA
31	VOE977599	1							Clamp		(VOE13977599)
32	VOE13946173	1							Screw		
33	VOE11025709	4							Clamp		
34		1							Cable harness		See ref 371/150
	VOE4881440	REQ							Cable tie		
35	VOE11170338	2							Washer		

1245) Including parts: Wire assembly, hose, manifold, cable terminal and insulator See Group 379.

VOLVO

Construction Equipment

PROSIS Part Information

Date:	Image id:	Catalogue:	Model:
24/08/2018	**1055574**	**20086**	**L120E**
Brand:	Serial:	Group/Section:	Title:
Volvo	**19804-, 66001-, 71401-**	**371/150**	**Cable harness, engine**

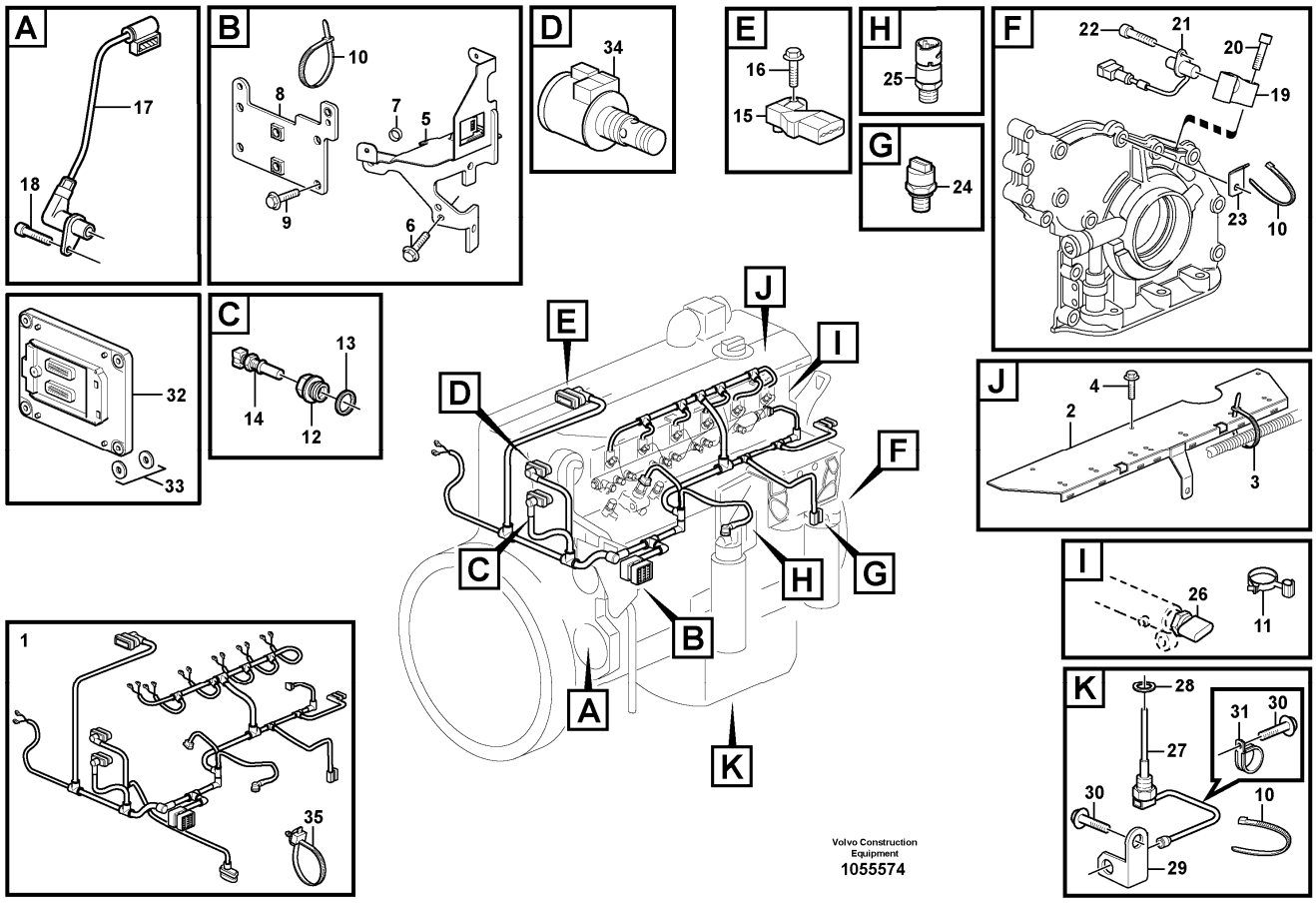

Section option	Kit	Option description
VOE11410957		Engine VOLVO D7ELAE3

Pos	Part	Q1	Q2	Q3	Q4	Q5	PS	Kit	Description	Option(s)	Remark
1	VOE20893636	1							Main Cable Harness		ENG - 10785521
1	VOE21814758	1							Wiring harness		(VOE21319785)ENG 10785522 -
									•CONNECTED TO:		
									••Connector		ED
									••Engine speed,camshaft		SE2703
									••Solenoid valve		
									••Coolant temperature		SE2606
									••Charge-air temperature		SE2507, SE2508

									••Fuel Regulator		
									••Fuel Nozzle		MA2301 - MA2306
									••Fuel pressure		SE2301
									••Oil pressure sensor		SE2203
									••Engine speed		SE2701
									••Pressure Sensor		SE2309
									••Level Sensor		SE2202, SE2205
									••Starter Motor		
2	VOE20864600	1							•Bracket		
3	VOE20460347	7							•Clamping band		
4	VOE20460055	3							Screw		
5	VOE21377120	1							Bracket		
6	VOE20450802	2							Flange screw		
7	VOE20450730	1							Bushing		
8	VOE21896711	1							Retaining plate		(VOE20890175)
9	VOE20405672	4							Screw		
10	VOE4881440	REQ							Cable tie		
11	VOE21063356	2							Retainer		
12	VOE20450683	1							Adapter		
13	VOE13947628	1							Plane gasket		
14	VOE21531072	1							Temperature sensor		(VOE20513340)SE2606
15	VOE20524936	1							Pressure sensor		(VOE20556500)SE2507, SE2508
16	VOE20450728	1							Bolt		
17	VOE20820494	1							Sensor		SE2703
18	VOE20450694	1							Screw		
19	VOE20700252	1							Bracket		
20	VOE20799862	2							Bolt		
21	VOE20450707	1							Tachometer		SE2701
22	VOE20450694	1							Screw		
23	VOE20450997	2							Bracket		
24	VOE21291011	1							Pressure sensor		SE2203
25	VOE21634021	1							Pressure sensor		(VOE21302639)SE2301
26		1							Pressure Sensor		SE2309 See ref 237/100
27	VOE22383368	1							Level sensor		(VOE20829076)SE2202, SE2205
28	VOE20828295	1							Sealing ring		
29	VOE20852241	1							Bracket		
30	VOE20405792	3							Screw		
31	VOE20450867	2							Clamp		
32	VOE60100000	1							Electronic unit		E-ECU, REMAN VOE9060100000
33	VOE21071773	4							Rubber element		
34		1							Solenoid valve		See ref 214/100
35	VOE20834570	8							Retainer		
35	VOE20792329	1							Clamping Band		

VOLVO

Construction Equipment

PROSIS Part Information

Date:	Image id:	Catalogue:	Model:
24/08/2018	**1019487**	**20086**	**L120E**
Brand:	Serial:	Group/Section:	Title:
Volvo	**19804-, 66001-, 71401-**	**371/200**	**Cable harness, alternator 33380, 33395**

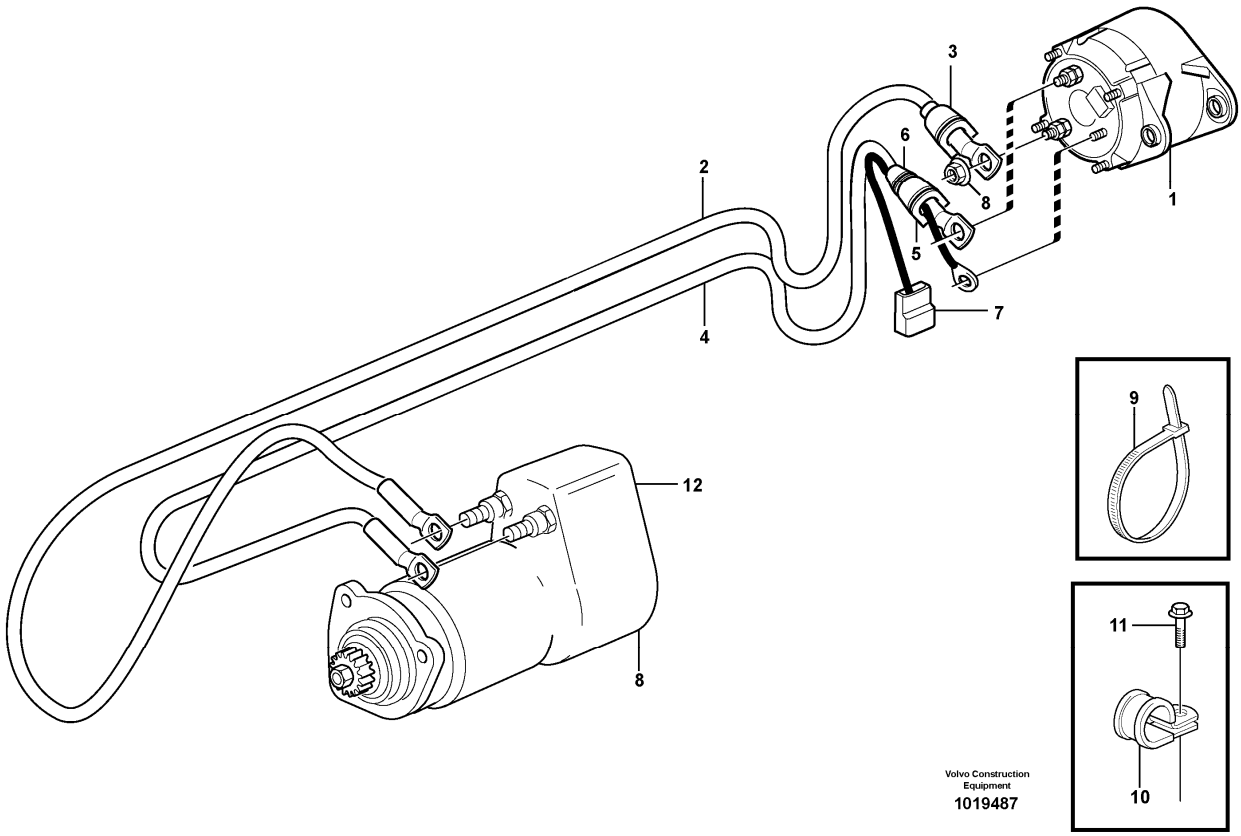

Section option	Kit	Option description
VOE33380		Volvo Wheel Loader L120E S/N 19801-, S/N 66001- USA, S/N 71401- BRA
VOE33395		Wheel Loader L120E3 IRAN

Pos	Part	Q1	Q2	Q3	Q4	Q5	PS	Kit	Description	Option(s)	Remark
1		1							Alternator		See ref 321/100
2	VOE11171582	1							Wire		See footnote 1245) B+
3	VOE11039154	1							•Grommet		
4	VOE11170657	1							Wire		See footnote 1245) 31/ RD, S/N - 19806 SWE
4	VOE11171607	1							Wire		RD INCLUDED S/N 19807 - SWE S/N 66001 - USA
5	VOE11039154	1							•Grommet		
6	VOE11039397	1							•End sleeve		
7	VOE1307049	1							•Tab housing		

8	VOE13945408	1							Nut		
9	VOE4881440	REQ							Cable tie		
10	VOE977599	1							Clamp		(VOE13977599)ID = 22,2 MM
	VOE942810	1							Clamp		ID = 17,5 MM
11	VOE946440	6							Flange screw		M8 X 16 MM
	VOE13946173	1							Screw		M8 X 20 MM
	VOE948645	1							Flange lock nut		
12		1							Starter motor		See ref 331/100

1245) Including parts: Wire assembly, hose, manifold, cable terminal and insulator See Group 379.

VOLVO

Construction Equipment

PROSIS Part Information

Date:	Image id:	Catalogue:	Model:
24/08/2018	**1019513**	**20086**	**L120E**
Brand:	Serial:	Group/Section:	Title:
Volvo	**19804-, 66001-, 71401-**	**371/250**	**Cable harness, electricaldistrib. unit - engine E-ECU 33380, 33395**

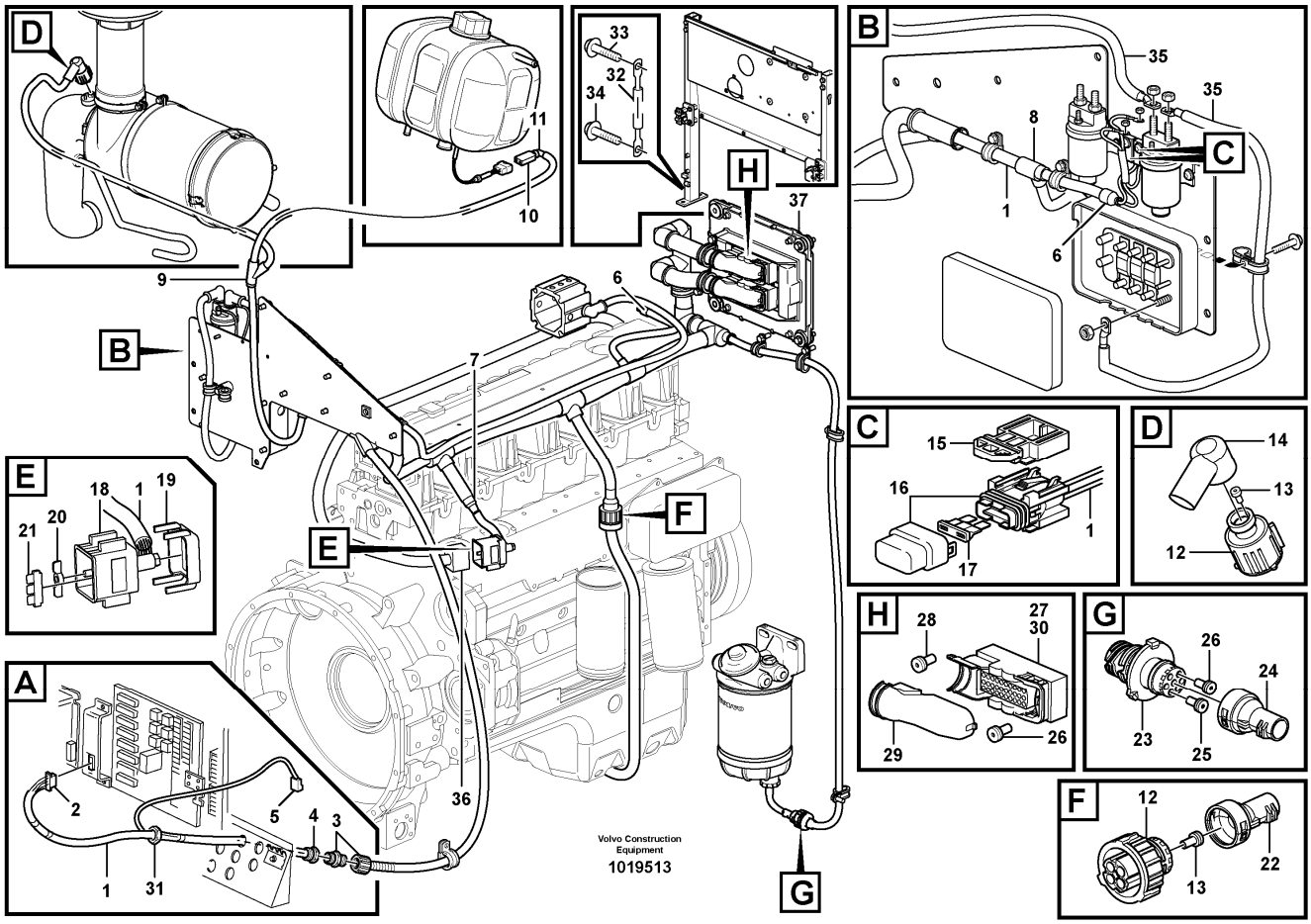

Section option	Kit	Option description
VOE33380		Volvo Wheel Loader L120E S/N 19801-, S/N 66001- USA, S/N 71401- BRA
VOE33395		Wheel Loader L120E3 IRAN

Pos	Part	Q1	Q2	Q3	Q4	Q5	PS	Kit	Description	Option(s)	Remark
1	VOE11171167	1					SS		Cable harness		See footnote 1245) S/N - 20468 SWE, - 66158 USA, - 71447 BRA
1	VOE11171714	1							Cable harness		See footnote 1245) S/N 20469 -SWE, 66159 - USA, 71448 - BRA.
									•CONNECTED TO:		
									••El Distr Unit		ES, 31E
									••Cable harness		ED
									••Pre-heater		HE2501

									••Control Unit		EECU. EA, EB
									••Relay		RE2501
									••Fuse		FH1
									••Air filter		SE2502, SE2501
									••Level sensor		SE2603
									••Oil Lvl Sensor		SE2202
									••Oil temperature		SE2205
									••Water Separator		SE2302
2	VOE1096619	1							•Housing		
3	VOE4803768	1							•Hose coupling		
4	VOE4803795	1							•Reduction		
5	VOE13949597	1							•Protecting sleeve		
6	VOE11039397	2							•End sleeve		
7	VOE4803714	1							•End sleeve		
8	VOE14346331	1							•Manifold		
9	VOE11039665	1							•Manifold		
10	VOE1624477	1							•Receptacle housing		
11	VOE1095059	1							•Joint nipple		
12	VOE8159013	2							•Housing		
13	VOE8155900	8							•Cable seal		
14	VOE3987768	1							•Adapter		
15	VOE11039713	1							•Bracket		
16	VOE11039714	1							•Fuse holder		
17	VOE13969160	1							•Fuse		5A
18	VOE11170298	1							•Housing		
19	VOE11170299	1							•Cover		
20	VOE11170315	2					OP		•Spacer plate		
21	VOE11170314	1					OP		•Spacer plate		
22	VOE3987767	1							•Adapter		
23	VOE984944	1							•Housing		
24	VOE3985597	1							•Adapter		
25	VOE970772	2							•Cable seal		
26	VOE970771	9							•Cable seal		
27	VOE20429842	1							•Housing		
28	VOE20429843	1							•Housing		
29	VOE20429844	2							•Adapter		
30	VOE970773	8							•Cable seal		
31	VOE11147868	1							Plastic nut		
32	VOE11171596	1							Battery cable		SE B-48375
33	VOE13949846	1							Screw		
34	VOE13949888	1							Screw		
35		1							Cable harness		See ref 333/100
36		1							Cable harness		See ref 371/150
37		1							ECU		See ref 371/150

1245) Including parts: Wire assembly, hose, manifold, cable terminal and insulator See Group 379.

VOLVO

Construction Equipment

PROSIS Part Information

Date:	Image id:	Catalogue:	Model:
24/08/2018	**1026264**	**20086**	**L120E**
Brand:	Serial:	Group/Section:	Title:
Volvo	**19804-, 66001-, 71401-**	**371/275**	**Cable harness, electrical distrib. unit - engine 33380, 33395**

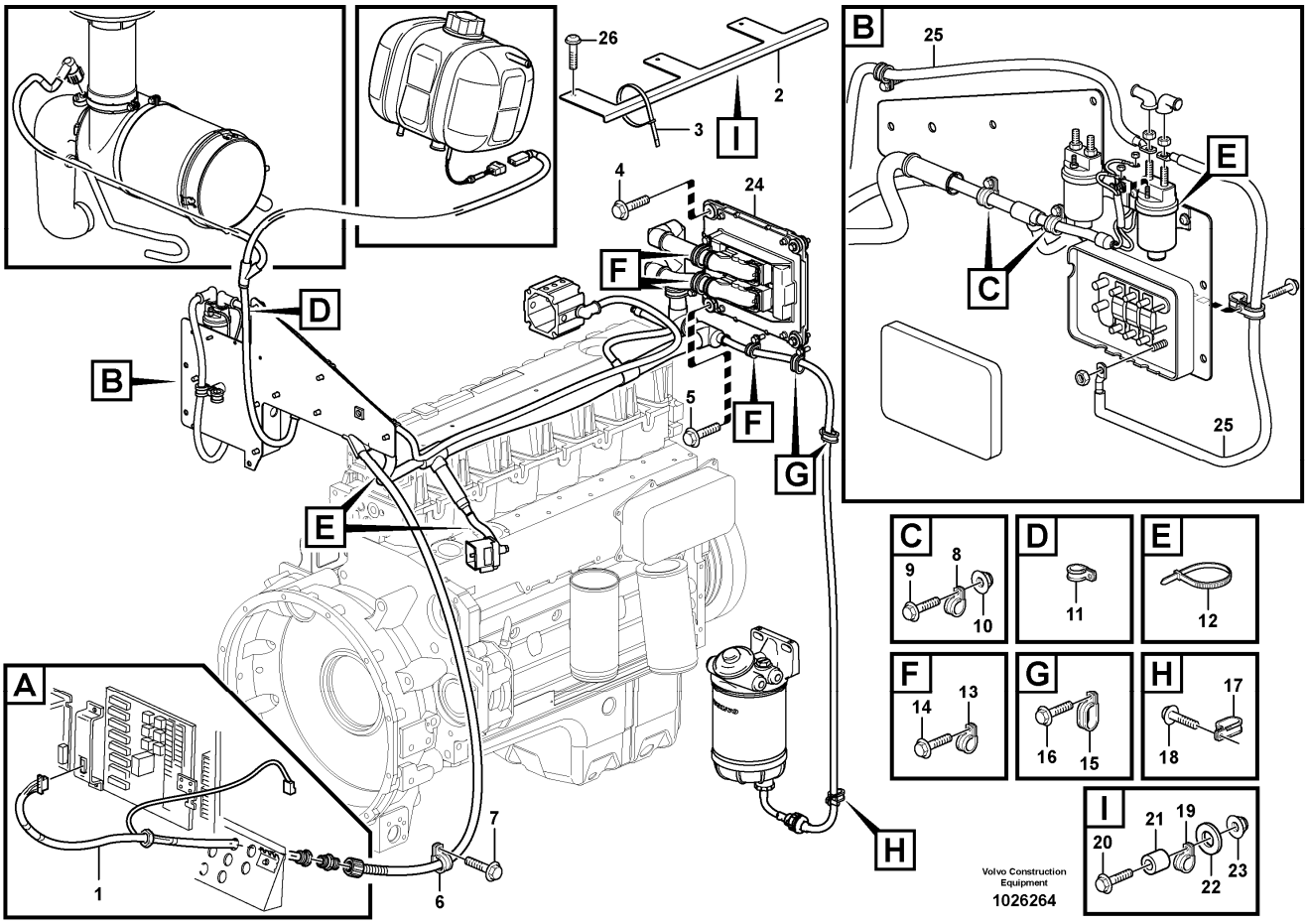

Section option	Kit	Option description
VOE33380		Volvo Wheel Loader L120E S/N 19801-, S/N 66001- USA, S/N 71401- BRA
VOE33395		Wheel Loader L120E3 IRAN

Pos	Part	Q1	Q2	Q3	Q4	Q5	PS	Kit	Description	Option(s)	Remark
1									Wire harness		See ref 371/250
2	VOE11171279	1							Bracket		
3	VOE4881440	6							Cable tie		
4	VOE13947760	3							Screw		
5	VOE967730	1							Flange screw		
6	VOE13949747	1							Clamp		
7	VOE13946173	1							Screw		
8	VOE13949746	2							Clamp		
9	VOE13946173	2							Screw		
10	VOE948645	2							Flange lock nut		

11	VOE13949746	1							Clamp		
12	VOE4881440	2							Cable tie		
13	VOE13949997	4							Clamp		
14	VOE13946173	4							Screw		
15	VOE11132105	2							Clamp		
16	VOE13946173	2							Screw		
17	VOE11132105	1							Clamp		
18	VOE946671	1							Flange screw		
19	VOE13949747	1							Clamp		
20	VOE946671	1							Flange screw		
21	VOE13948871	1							Spacer washer		
22	VOE11117464	1							Plain washer		(VOE13960141)
23	VOE948645	1							Flange lock nut		
24									ECU		See ref 371/150
25									Cable harness		See ref 333/100
26	VOE946934	3							Flange screw		S/N 20318 - S/N 71401 - BRA

VOLVO

Construction Equipment

PROSIS Part Information

Date:	Image id:	Catalogue:	Model:
24/08/2018	**1014930**	**20086**	**L120E**
Brand:	Serial:	Group/Section:	Title:
Volvo	**19804-, 66001-, 71401-**	**371/300**	**Front cable harness with assembly parts**

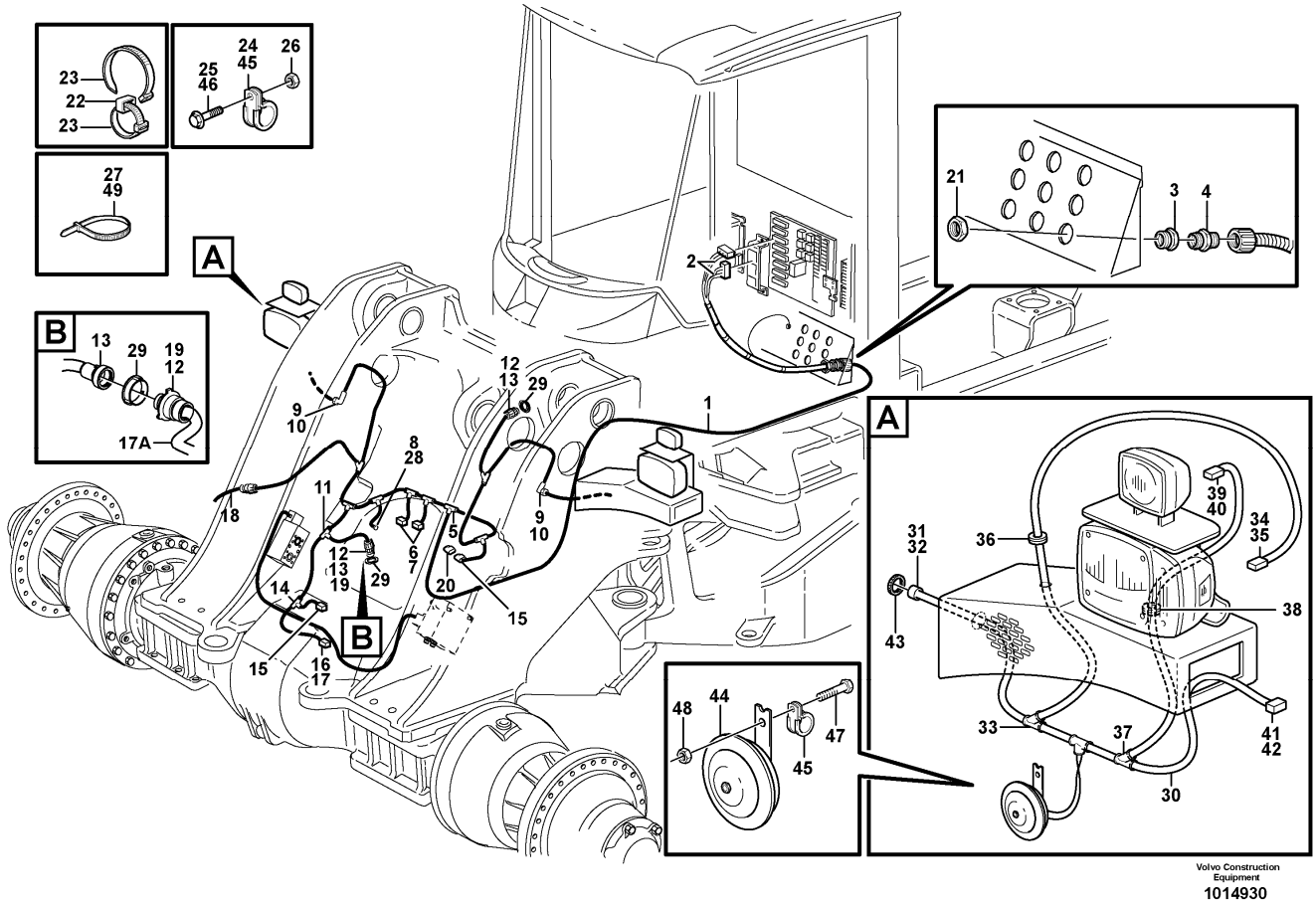

Section option	Kit	Option description
VOE33380		Volvo Wheel Loader L120E S/N 19801-, S/N 66001- USA, S/N 71401- BRA
VOE33395		Wheel Loader L120E3 IRAN

Q1-Q5	Option	Option description	
Q1 11171103			

Pos	Part	Q1	Q2	Q3	Q4	Q5	PS	Kit	Description	Option(s)	Remark
1	VOE11171103	1							Cable harness		
									•CONNECTED TO:		
									••El Distr Unit		F, FA, 31F
									••Earth		31F1
									••Atch Lock		11170895, MA905
									••Atch Lock		11170944, MA946, MA947

									••Differential lock		MA407, SE408
									••Boom suspension syst.		FD
									••Front axle, temp.		SE410
									••Tilt automatic		SE901
									••Attachment light		FF
									••Boom kickout		SE902
									••Cable harness		FE, FM
2	VOE1096619	2							•Housing		
3	VOE11039398	1							•Reduction		
4	VOE4803769	1							•Hose coupling		
5	VOE11039663	1							•Manifold		
6	VOE8142100	1							•Adapter		
7	VOE976256	4							•Housing		
8	VOE4803711	1							•End sleeve		
9	VOE3985598	2							•Adapter		
10	VOE3963412	2							•Housing		
11	VOE14346331	1							•Manifold		
12	VOE3944972	3							•Housing		
13	VOE3985597	3							•Adapter		
14	VOE11039665	1							•Manifold		
15	VOE1624477	2							•Receptacle housing		
16	VOE1307048	1							•Housing		
17	VOE1620582	1							•Bellows		
17A		1							Cable harness	VOE80782	See ref 371/1200
18		1							Cable harness		See ref 945/450
19	VOE8159013	1							Housing		
	VOE8155899	4							Sealing plug		
20	VOE1307049	1							Tab housing		
		2					NS		Plug		
21	VOE11147868	1							Plastic nut		
22	VOE11003221	10							Mounting ring		
23	VOE4881440	REQ							Cable tie		
24	VOE13977600	2							Clamp		ID = 25,4 MM
	VOE977599	3							Clamp		(VOE13977599)ID = 22,2 MM
	VOE13949746	6							Clamp		ID = 12,7 MM
	VOE13949747	2							Clamp		ID = 15,9 MM
25	VOE13945444	1							Screw		M8 X 25
	VOE13946173	12							Screw		M8 X 20
26	VOE948645	1							Flange lock nut		M8 - 9,4
27	VOE4881440	REQ							Cable tie		
28	VOE13966807	1							Flange screw		
29	VOE3963413	3							Ring		
30	VOE11170887	2							Cable harness		See footnote 1245)
									•CONNECTED TO:		
									••Cable harness		FE, FM

									••Headlamp		LA301, 304, 310-313, 328 LA330
									••Horn		SA801, 805
									••Working light		LA317, 319
									••Side marking lamp		LA302, 305
31	VOE984944	2							•Housing		(VOE3963411)
32	VOE3985597	2							•Adapter		
33	VOE11039709	2							•Manifold		
34	VOE14340957	2							•Socket housing		
35	VOE1620582	2							•Bellows		
36	VOE961970	2							•Plug		
37	VOE11039665	2							•Manifold		
38	VOE941269	2							•Plug		
39	VOE14370760	2							•Socket		
40	VOE11170005	2							•Adapter		
41	VOE976256	2							•Housing		
42	VOE8142100	2							•Adapter		
43	VOE3963413	2							Ring		
44	VOE11306643	2							Horn		
45	VOE13949746	4							Clamp		
46	VOE13946173	2							Screw		
47	VOE13945444	2							Screw		
48	VOE13945408	2							Nut		
49	VOE4881440	4							Cable tie		

1245) Including parts: Wire assembly, hose, manifold, cable terminal and insulator See Group 379.

VOLVO

Construction Equipment

PROSIS Part Information

Date:	Image id:	Catalogue:	Model:
24/08/2018	**1005239**	**20086**	**L120E**
Brand:	Serial:	Group/Section:	Title:
Volvo	**19804-, 66001-, 71401-**	**371/400**	**Cable harness, under cab 33380, 33395**

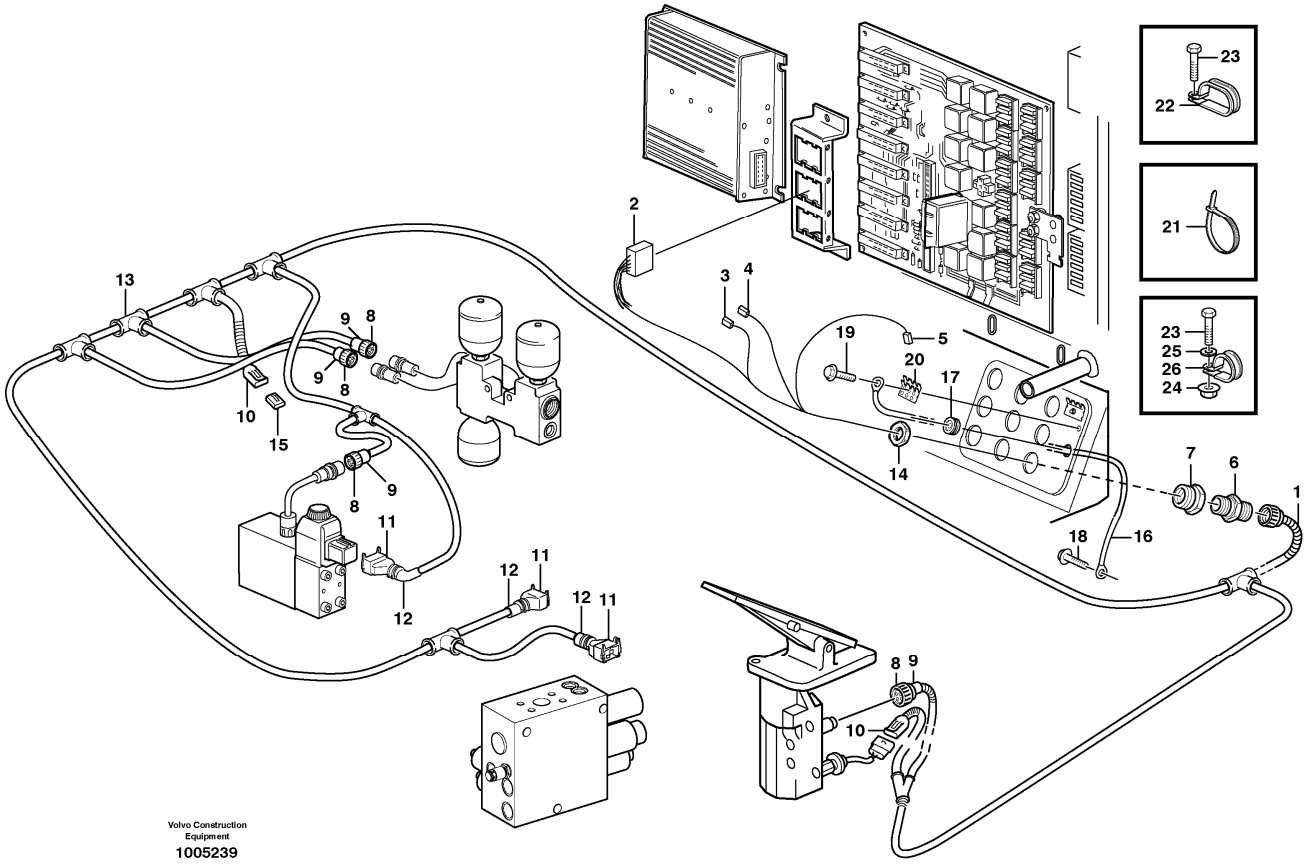

Section option	Kit	Option description
VOE33380		Volvo Wheel Loader L120E S/N 19801-, S/N 66001- USA, S/N 71401- BRA
VOE33395		Wheel Loader L120E3 IRAN

Pos	Part	Q1	Q2	Q3	Q4	Q5	PS	Kit	Description	Option(s)	Remark
1	VOE11170884	1							Cable harness		See footnote 1245) S/N - 19806 SWE See ref 371/450
									•CONNECTED TO:		
									••Control unit, V-ECU		UA
									••Earth		31U
									••Parking brake alarm		UB (UBA, UBB) See ref 371/1050
									••Accumulator block		SE502, SE504
									••Parking brake block		SE503, MA501
									••Attachm. chang.,		UC

									Ahc		
									••Central block		MA202, MA502
									••Footbrake Valve		SE301, SE501
2	VOE1096619	1							•Housing		
3	VOE968388	1							•Housing		
4	VOE968389	1							•Housing		
5	VOE13949597	1							•Protecting sleeve		
6	VOE4803769	1							•Hose coupling		
7	VOE11039398	1							•Reduction		
8	VOE8159013	4							•Housing		
9	VOE3987767	4							•Adapter		
10	VOE1624477	2							•Receptacle housing		
11	VOE976256	3							•Housing		
12	VOE8142100	3							•Adapter		
13	VOE11039710	1							•Manifold		
14	VOE11147868	1							Plastic nut		
15	VOE1307049	1							Tab housing		
		2					NS		Sealing plug		
16	VOE11108113	1							Wire		See footnote 1245)
									•CONNECTED TO:		
									••Earth		CAB
17	VOE941264	1							Grommet		
18	VOE13949888	1							Screw		
19	VOE13948746	1							Screw		
20	VOE9148415	2							Terminal block		
21	VOE4881440	9							Cable tie		
22	VOE11019169	4							Clamp		
23	VOE13946173	7							Screw		M8 X 20
	VOE946671	1							Flange screw		M8 X 30
24	VOE13945408	1							Nut		M8 - 8
	VOE948645	1							Flange lock nut		M8 - 9,4
25	VOE11117464	1							Plain washer		(VOE13960141)
26	VOE13949747	4							Clamp		ID = 15,9 MM

1245) Including parts: Wire assembly, hose, manifold, cable terminal and insulator See Group 379.

VOLVO

Construction Equipment

PROSIS Part Information

Date:	Image id:	Catalogue:	Model:
24/08/2018	**1023836**	**20086**	**L120E**
Brand:	Serial:	Group/Section:	Title:
Volvo	**19804-, 66001-, 71401-**	**371/450**	**Cable harness, under cab 33380, 33395**

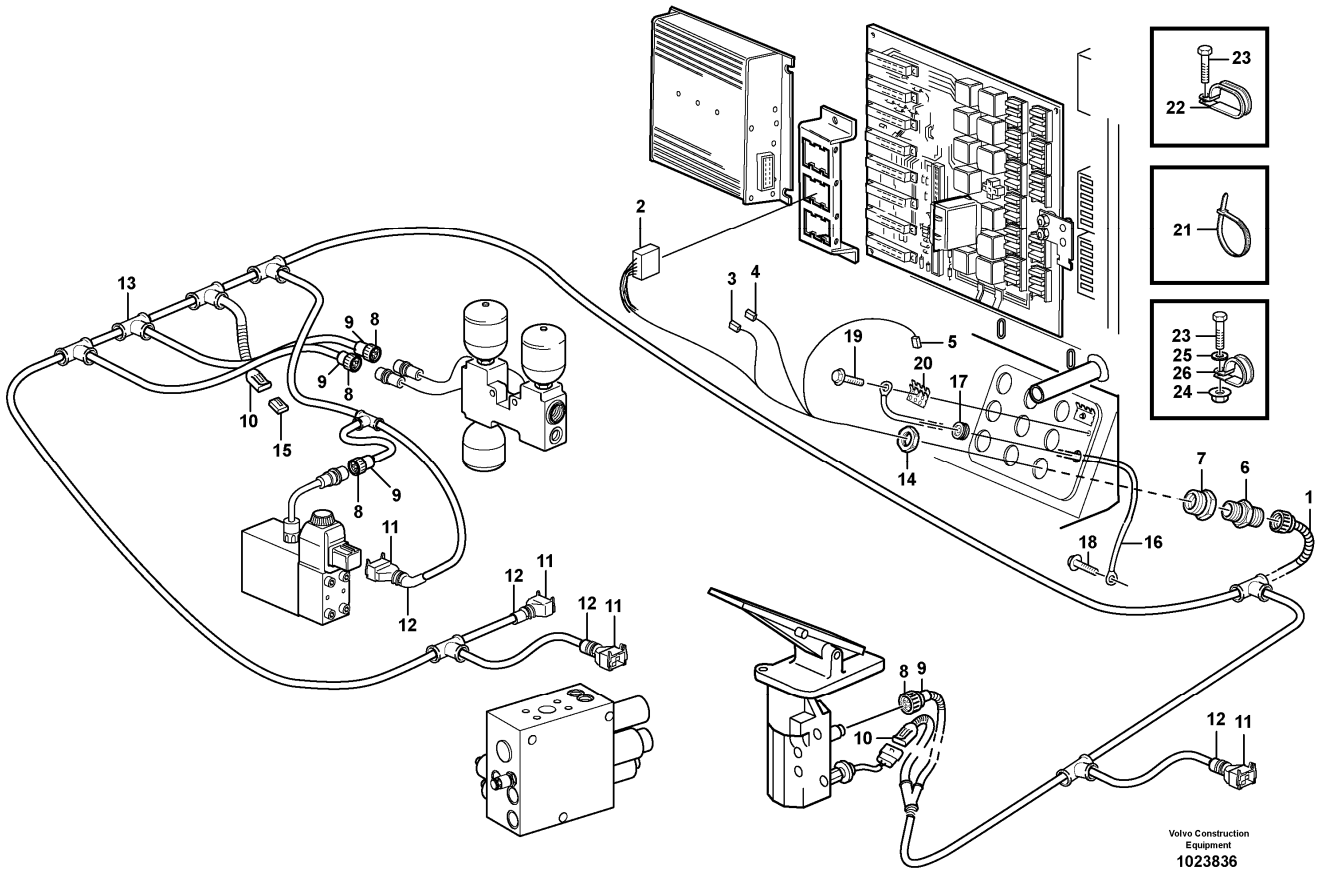

Section option	Kit	Option description
VOE33380		Volvo Wheel Loader L120E S/N 19801-, S/N 66001- USA, S/N 71401- BRA
VOE33395		Wheel Loader L120E3 IRAN

Pos	Part	Q1	Q2	Q3	Q4	Q5	PS	Kit	Description	Option(s)	Remark
1	VOE11171548	1							Cable harness		See footnote 1245) S/N 19807 - SWE
									•CONNECTED TO:		
									••Control unit, V-ECU		UA
									••Earth		31U
									••Parking brake alarm		UB (UBA, UBB)
									••Accumulator block		SE502, SE504
									••Parking brake block		SE503, MA501

									••Attachm. chang., Ahc		UC
									••Central block		MA202, MA502
									••Footbrake Valve		SE301, SE501
									••Load Sensor		MA958
2	VOE1096619	1							•Housing		
3	VOE968388	1							•Housing		
4	VOE968389	1							•Housing		
5	VOE13949597	1							•Protecting sleeve		
6	VOE4803769	1							•Hose coupling		
7	VOE11039398	1							•Reduction		
8	VOE8159013	4							•Housing		
9	VOE3987767	4							•Adapter		
10	VOE1624477	2							•Receptacle housing		
11	VOE976256	3							•Housing		
12	VOE8142100	3							•Adapter		
13	VOE11039710	1							•Manifold		
14	VOE11147868	1							Plastic nut		
15	VOE1307049	1							Tab housing		
		2					NS		Sealing plug		
16	VOE11108113	1							Wire		See footnote 1245)
									•CONNECTED TO:		
									••Earth		CAB
17	VOE941264	1							Grommet		
18	VOE13949888	1							Screw		
19	VOE13948746	1							Screw		
20	VOE9148415	2							Terminal block		
21	VOE4881440	10							Cable tie		
22	VOE11019169	4							Clamp		
23	VOE13946173	7							Screw		M8 X 20
	VOE946671	1							Flange screw		M8 X 30
24	VOE13945408	1							Nut		M8 - 8
	VOE948645	1							Flange lock nut		M8 - 9,4
25	VOE11117464	1							Plain washer		(VOE13960141)
26	VOE13949747	4							Clamp		ID = 15,9 MM

1245) Including parts: Wire assembly, hose, manifold, cable terminal and insulator See Group 379.

VOLVO

Construction Equipment

PROSIS Part Information

Date:	Image id:	Catalogue:	Model:
24/08/2018	**1019726**	**20086**	**L120E**
Brand:	Serial:	Group/Section:	Title:
Volvo	**19804-, 66001-, 71401-**	**371/500**	**Cable harness, ceiling**

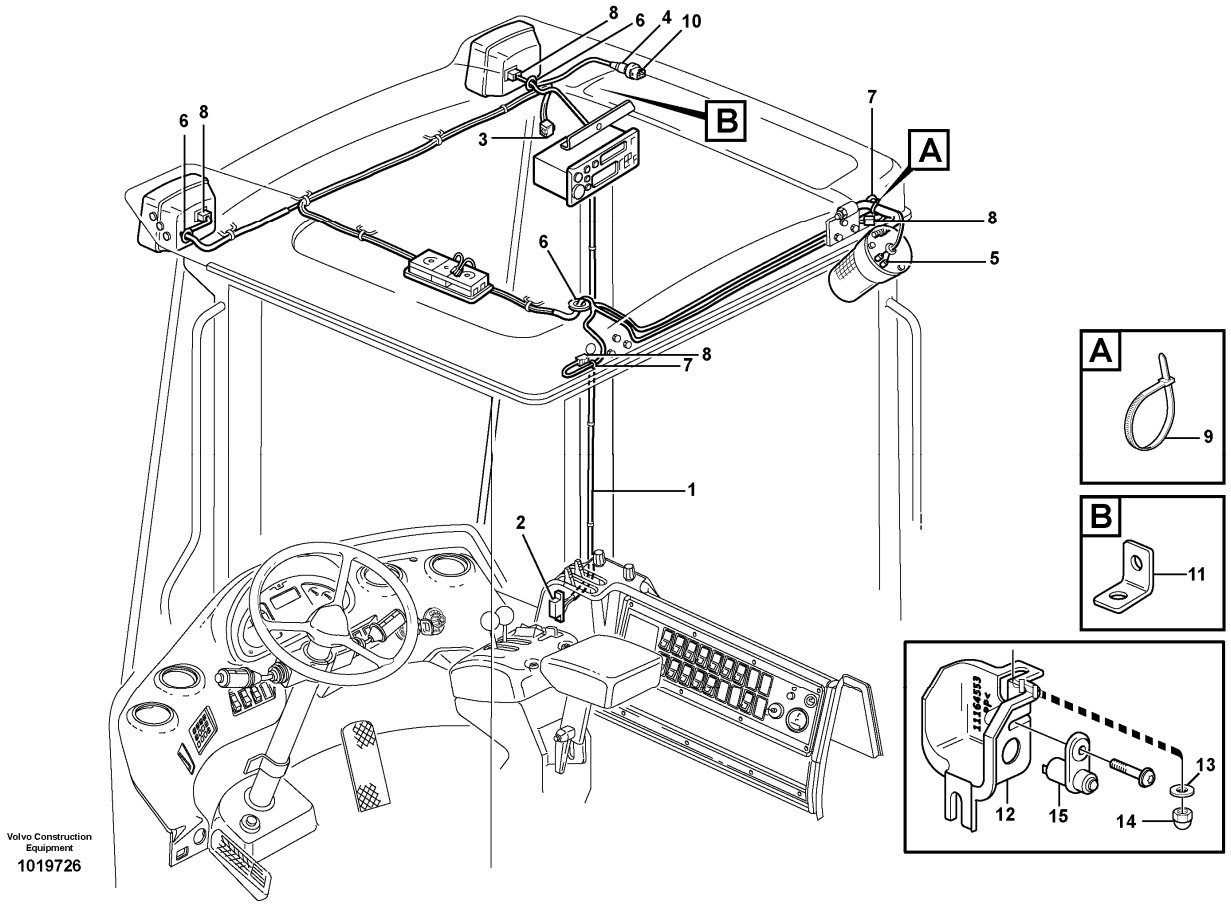

Section option	Kit	Option description
VOE33357		Cab L120E
VOE33366		Cab L120E USA

Pos	Part	Q1	Q2	Q3	Q4	Q5	PS	Kit	Description	Option(s)	Remark
1	VOE11170986	1							Cable harness		See footnote 1245)
									•CONNECTED TO:		
									••Wire harness		ST
									••Work light, front		LA315, LA316
									••Temp sensor		SE807
									••Radio		CR
									••Interior light		LA314
									••Work light, rear		LA322, LA323
									••Rotating Beacon		LA325
2	VOE1096615	1							•Housing		ST

3	VOE968388	1							•Housing		CR
4	VOE1307048	1							•Housing		
5	VOE13949597	4							•Protecting sleeve		
6	VOE1259854	3							•Grommet		
7	VOE941269	3							•Plug		
8	VOE14370760	4							•Socket		
	VOE14370880	4							•Wedge		
9	VOE4881440	10							Cable tie		
10	VOE1347010	1							Temperature sensor		SE807
11	VOE11006229	1							Anchorage		
12	VOE11164553	1							Cover		
13	VOE960139	1							Plain washer		
14	VOE11005777	1							Cap nut		
15	VOE3987417	1							Switch		SE302

1245) Including parts: Wire assembly, hose, manifold, cable terminal and insulator See Group 379.

VOLVO

Construction Equipment

PROSIS Part Information

Date:	Image id:	Catalogue:	Model:
24/08/2018	**1019857**	**20086**	**L120E**
Brand:	Serial:	Group/Section:	Title:
Volvo	**19804-, 66001-, 71401-**	**371/550**	**Cable harness for transmission with assembly parts.**

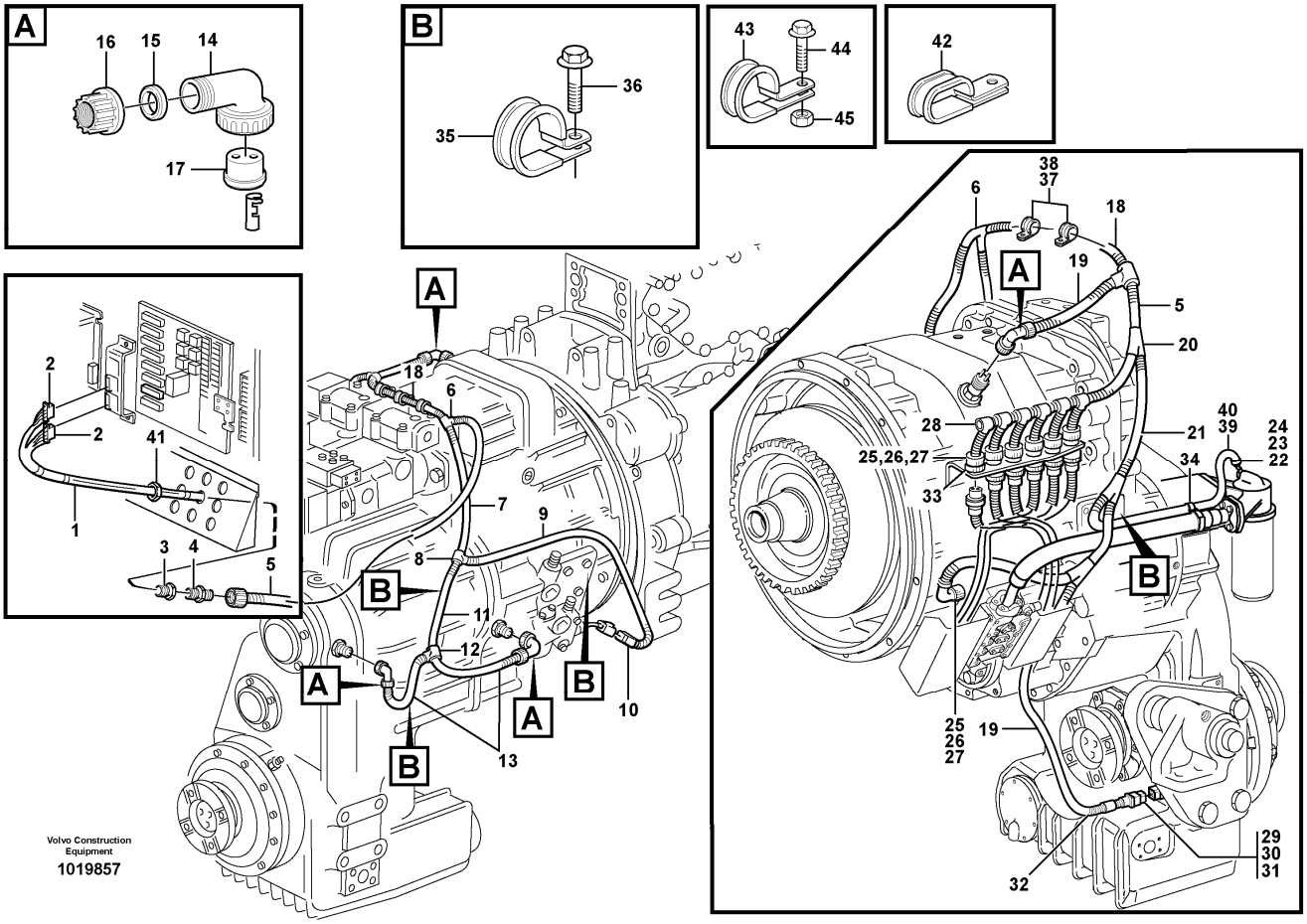

Section option	Kit	Option description
VOE33380		Volvo Wheel Loader L120E S/N 19801-, S/N 66001- USA, S/N 71401- BRA
VOE22521		Hytraulic transmission HTE205
VOE33395		Wheel Loader L120E3 IRAN

Q1-Q5	Option	Option description	
Q1 22521	VOE22521	Hytraulic transmission HTE205	
Q2 33380 33395	VOE33380	Volvo Wheel Loader L120E S/N 19801-, S/N 66001- USA, S/N 71401- BRA	

Pos	Part	Q1	Q2	Q3	Q4	Q5	PS	Kit	Description	Option(s)	Remark
1	VOE11145528	1							Cable harness		
									•Connected to:		
		1							••Circuit Board		TA, TB
		1							••Speed sensor		SE201, SE402

		1							••Gear selector valve		SA, SC, SE, SF, SD, SB
		1							••Temp.sensor		SE406
		1							••Pressure sensor		SE405, SE401
		1							••Speed sensor		SE403
		1							••Oil lvl sensor		SE413
2	VOE1096619	2							•Housing		
3	VOE4803795	1							•Reduction		
4	VOE4803768	1							•Hose coupling		
5	VOE4803751	REQ							•Hose		
6	VOE3943201	1							•Manifold		
7	VOE4803748	REQ							•Hose		
8	VOE3943091	1							•Manifold		
9	VOE4803748	REQ							•Hose		
10	VOE1624477	1							•Receptacle housing		
11	VOE4803746	REQ							•Hose		
12	VOE3943089	1							•Manifold		
13	VOE4803746	REQ							•Hose		
14	VOE4803791	3							•Elbow union		
15	VOE11039262	3							•Sealing ring		
16	VOE4803794	3							•Nut		
17	VOE4803790	3							•Rubber plug		
18	VOE4803751	REQ							•Hose		
19	VOE4803746	REQ							•Hose		
20	VOE14340330	1							•Manifold		
21	VOE4803748	REQ							•Hose		
22	VOE11039397	1							•End sleeve		
23	VOE4821292	REQ							•Cable tie		L = 140 MM
	VOE4881440	1							•Cable tie		L = 365 MM
24	VOE4821294	1							•Heat-shrinkable tubing		
25	VOE8159013	7							•Housing		
26	VOE8159012	15							•Seal		
27	VOE8155899	13							•Sealing plug		
28	VOE11039843	2							•Elbow		
29	VOE14371536	1							•Socket		
30	VOE11144097	1							•Spacer		
31	VOE2514894	1							•Sealing plug		
32	VOE1620582	1							•Bellows		
33	VOE3963413	6	6						Ring		
34	VOE4881440	REQ	REQ						Cable tie		
35	VOE13949746		3						Clamp		
	VOE980614		1						Clamp		
36	VOE13965175		3						Screw		
37	VOE977599		2						Clamp		(VOE13977599)
38	VOE946440		5						Flange screw		
39	VOE13965175		1						Screw		

40	VOE952627		1						Clamp		
41	VOE11147868		1						Plastic nut		
42	VOE11145346	1							Clamp		
43	VOE11019169	1							Clamp		
	VOE13949746	1							Clamp		
44	VOE946440	3							Flange screw		
45	VOE13945408	1							Nut		

VOLVO

Construction Equipment

PROSIS Part Information

Date:	Image id:	Catalogue:	Model:
24/08/2018	**EN132**	**20086**	**L120E**
Brand:	Serial:	Group/Section:	Title:
Volvo	**19804-, 66001-, 71401-**	**371/600**	**Cable harnesses, instrument panel**

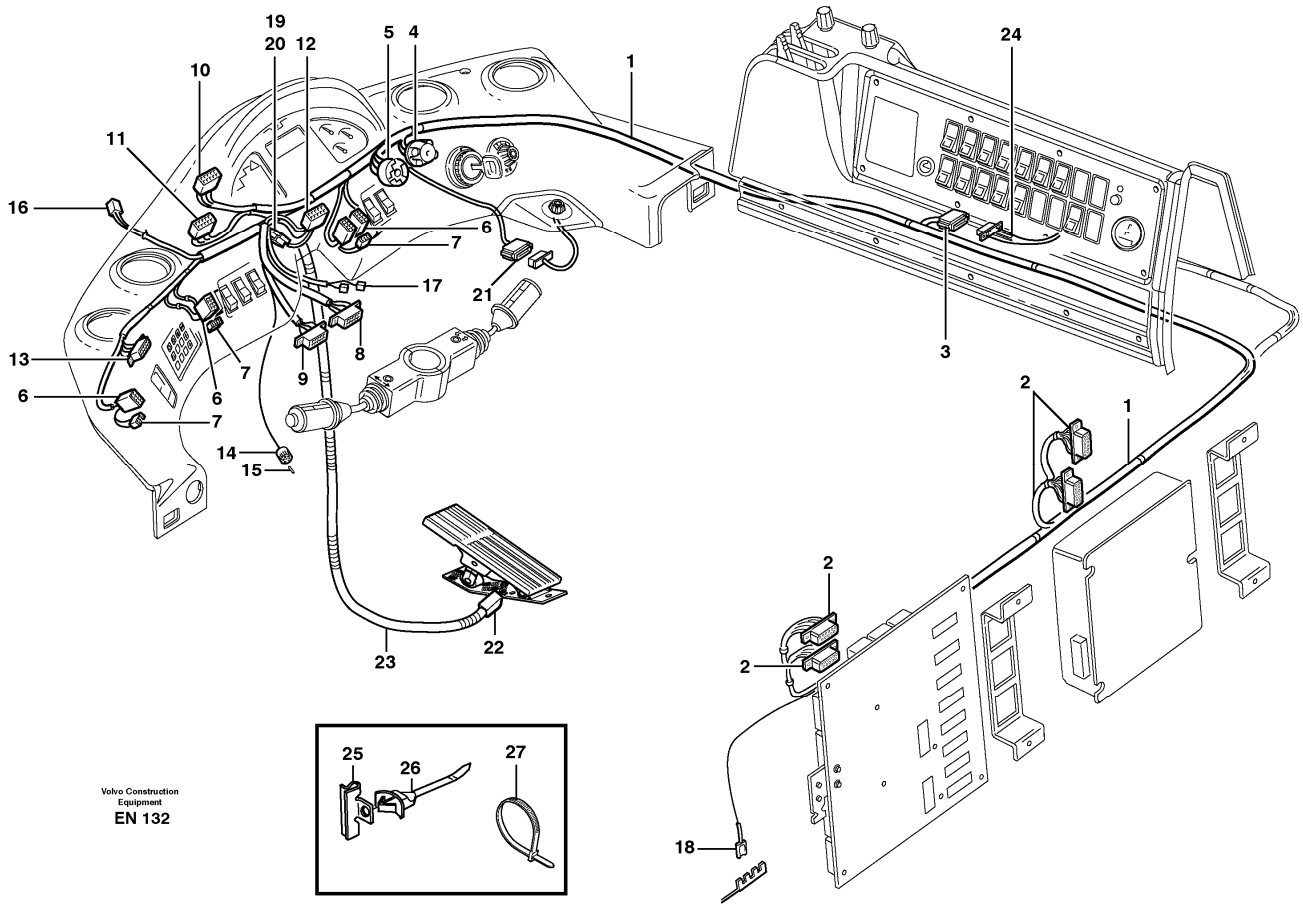

Section option	Kit	Option description
VOE33357		Cab L120E
VOE33366		Cab L120E USA

Pos	Part	Q1	Q2	Q3	Q4	Q5	PS	Kit	Description	Option(s)	Remark
1	VOE11170682	1							Cable harness		See footnote 1245)
									•CONNECTED TO:		
									••Ptd Circuit Bd		DA, DB
									••Control unit, V-ECU		D
									••Service outlett		SH
									••Wire harness		SD
									••Earth		31D
									••Mode selector		SW412, APS II
									••Starter switch		SW101

									••Hand throttle control		R205
									••Transmission diseng		SW411
									••Throttle control		SE214
									••Pre heater		SW201
									••Display panel		IECU, P1, P2, P3
									••Flasher		WA
									••Gear selector		GA
									••Buzzer		SA802
									••Diff. lock		SW414
									••Windshield Wiper		MO801
									••Hazard		SW306
									••Attachm. chang., Ahc		SW910
									••Attachment locking		SW904
									••Keybord		SW807
									••Parking brake		SW501
2	VOE1096619	4							•Housing		
3	VOE1096615	1							•Housing		
4	VOE1307600	1							•Housing		
5	VOE1605668	1							•Receptacle housing		
6	VOE4803454	6							•Receptacle housing		
7	VOE4803532	6							•Socket housing		
8		1					NS		•Timerhousing		
9	VOE968408	1							•Housing		
10		1					NS		•Receptacle housing		
11		1					NS		•Receptacle housing		
12	VOE978310	1					OP		•Housing		
13	VOE11039685	1							•Housing		
14	VOE949005	1							•Receptacle housing		
15	VOE11000257	2							•Plug		
16	VOE948294	1							•Insulator		
17	VOE13947848	2							•Housing		
18	VOE13949597	2							•Protecting sleeve		
19	VOE13948996	1							•Insulator		
20	VOE11041349	1							•Resistor Unit		
21	VOE1096618	1							•Housing		
22	VOE11115697	1							•Housing		
23	VOE11039491	REQ							•Hose		
24		1							Wire harness		See ref 371/650
25	VOE11039688	7							Clip		
26	VOE11039689	7							Strip clamp		
27	VOE4881440	REQ							Cable tie		

1245) Including parts: Wire assembly, hose, manifold, cable terminal and insulator See Group 379.

VOLVO

Construction Equipment

PROSIS Part Information

Date:	Image id:	Catalogue:	Model:
24/08/2018	**EL204**	**20086**	**L120E**
Brand:	Serial:	Group/Section:	Title:
Volvo	**19804-, 66001-, 71401-**	**371/650**	**Cable harnesses, cab**

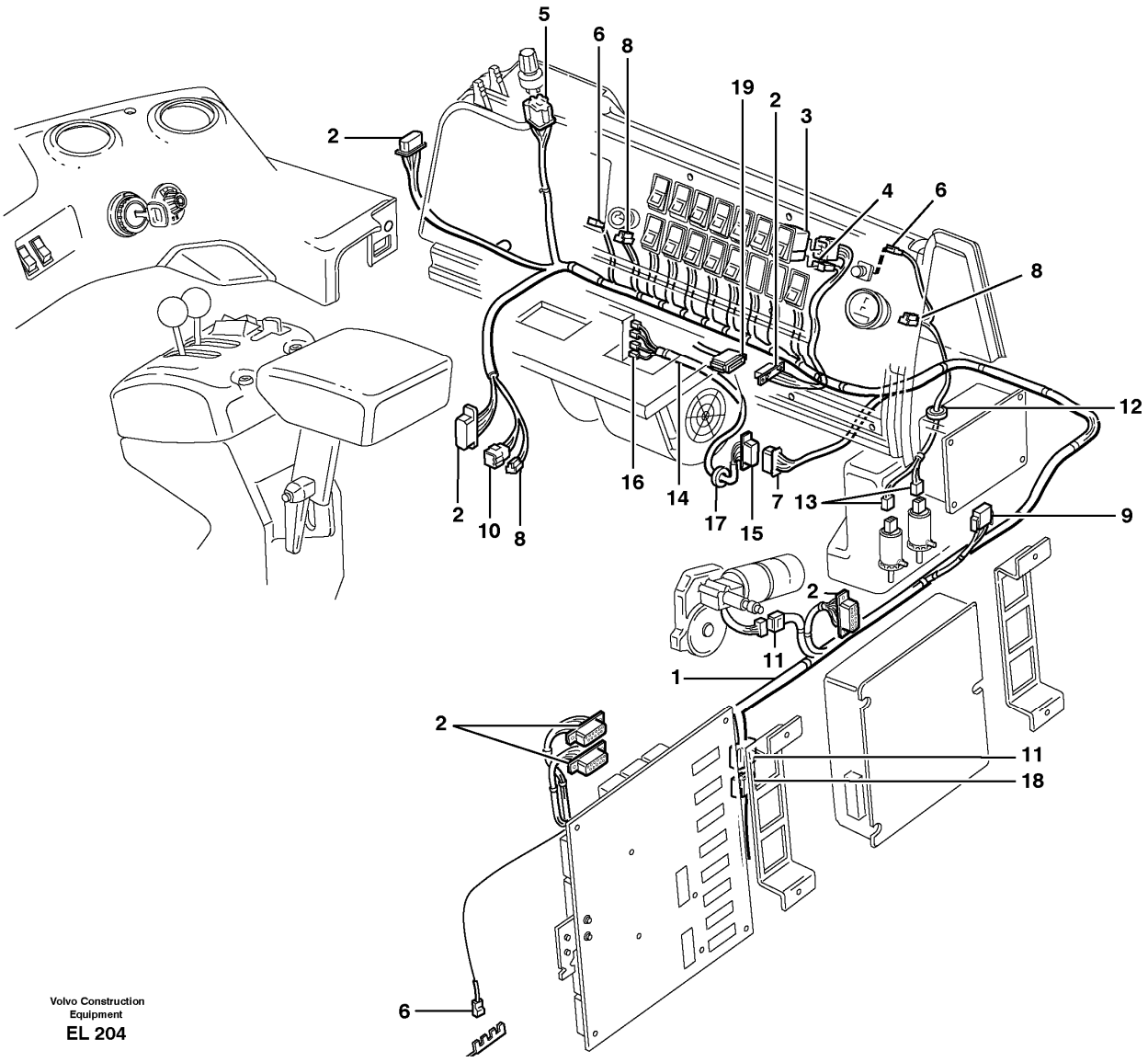

Section option	Kit	Option description
VOE33357		Cab L120E
VOE33366		Cab L120E USA

Pos	Part	Q1	Q2	Q3	Q4	Q5	PS	Kit	Description	Option(s)	Remark
1	VOE11171081	1							Cable harness		See footnote 1245)
									•CONNECTED TO:		
									••Ptd Circuit Bd		SA, SB
									••Control unit, V-ECU		SC

									••Earth		31S
									••Rear window viper		MO803
									••Voltage converter		CU801
									••Hour counter		IM201
									••Rheostat		R301
									••Washer motor		MO802, MO804
									••Fan, cab		SG
									••Control panel		SW301 - SW909
									••Fan switch		SW805
									••Servo panel		SE, SF, SJ
									••Air-conditioning		AC
									••Lift single act./ Bss		SW925
									••Switch		SW301 - SW909
									••Roof		ST
									••Thermostat		SE803
									••Cig lighter		HE801
									••Instr Panel		SD
2	VOE1096619	6							•Housing		
3	VOE4803454	13							•Receptacle housing		
4	VOE4803532	13							•Socket housing		
5	VOE1307600	1							•Housing		
6	VOE13949597	5							•Protecting sleeve		
7	VOE1096618	1							•Housing		
8	VOE13958210	4							•Receptacle housing		
9	VOE8159086	1							•Housing		
10	VOE948295	1							•Insulator		
11	VOE968388	2							•Housing		
12	VOE961970	1							•Plug		
13	VOE1259830	2							•Housing		
14	VOE11041350	1							Cable harness		See footnote 1245)
									•CONNECTED TO:		
									••Wire harness		SG
									••Fan, cab		
15	VOE1096614	1							•Housing		
16	VOE13949597	5							•Protecting sleeve		
17	VOE13961962	1							•Protecting bushing		
18		1							Wire harness		Air conditioning
19		1							Wire harness		See ref 371/600

1245) Including parts: Wire assembly, hose, manifold, cable terminal and insulator See Group 379.

VOLVO

Construction Equipment

PROSIS Part Information

Date:	Image id:	Catalogue:	Model:
24/08/2018	**1019868**	**20086**	**L120E**
Brand:	Serial:	Group/Section:	Title:
Volvo	**19804-, 66001-, 71401-**	**371/700**	**Cable harness, rear**

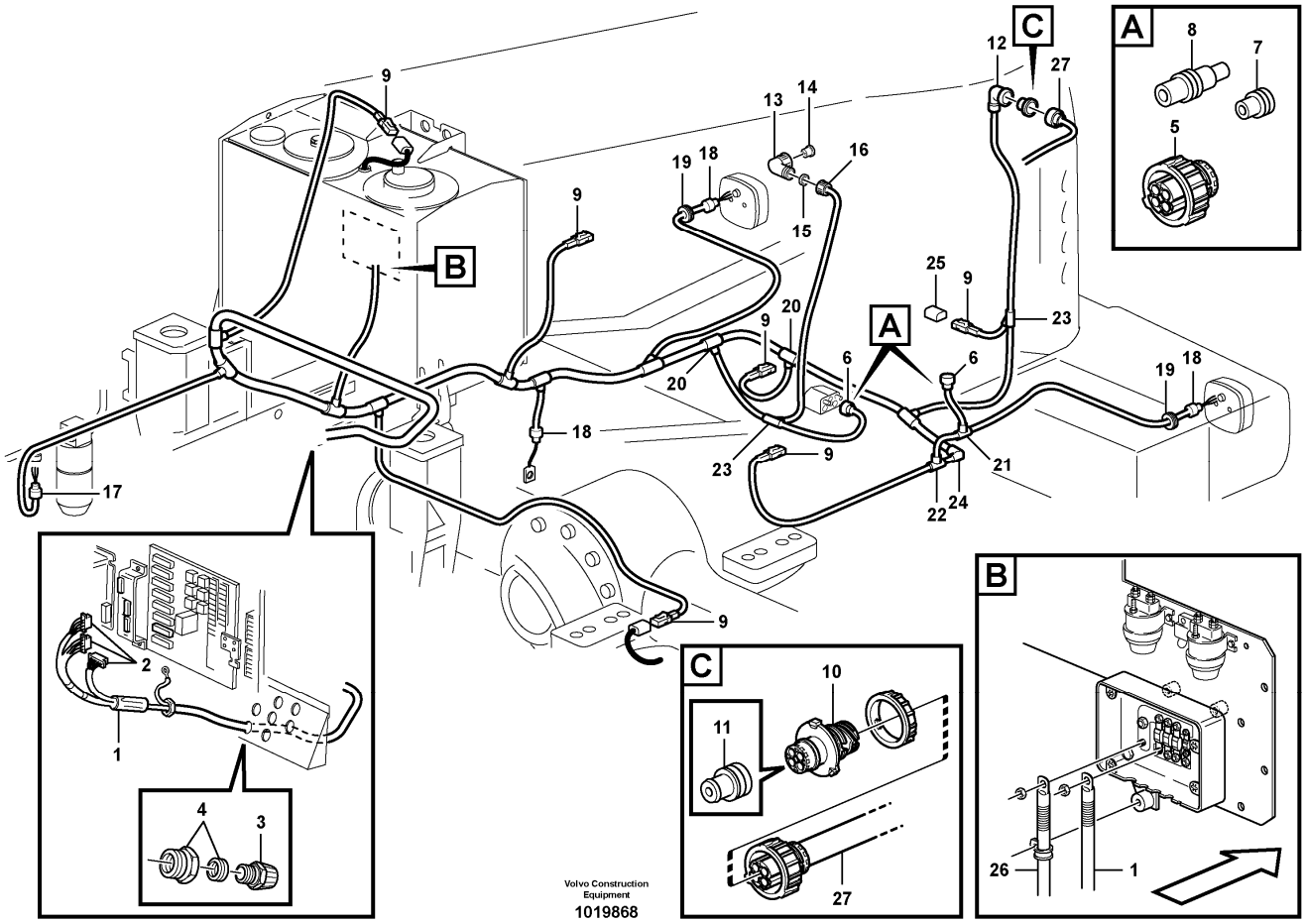

Pos	Part	Q1	Q2	Q3	Q4	Q5	PS	Kit	Description	Option(s)	Remark
1	VOE11171495	1							Cable harness		See footnote 1245)
									•CONNECTED TO:		
									••El Distr Unit		R, RB, RA, +30
									••Level sensor,hyd flui		SE906
									••Fuse		FU70
									••Temp. sensor, shaft		SE411
									••Compressor		AC, MA801
									••Pressure switch		AC, SE804
									••Alternator		RD
									••Earth		31 R2
									••Tail light, RH		LA303, LA327, LA331
									••Insulator		RR, Radio fuse

									••Fan		RP
									••Fan		SE211
									••Tail lamp, LH		LA306, LA326, LA329
									••Level sensor, fuel		SE207
									••Temp sensor,coolant		SE210
									••Radiator casing		RZ
2	VOE1096619	3							•Housing		
3	VOE14343156	1							•Fitting		
4	VOE11039398	1							•Reduction		29/21M
4	VOE11039669	1							•Adapter		13 - 10
5	VOE8159013	2							•Housing		
6	VOE3987767	2							•Adapter		
7	VOE8159012	5							•Seal		
8	VOE8155899	2							•Sealing plug		
9	VOE1624477	6							•Receptacle housing		
10	VOE3944972	1							•Housing		
11	VOE3963410	4							•Cable seal		
12	VOE3985598	1							•Adapter		
13	VOE4803791	1							•Elbow union		
14	VOE4803790	1							•Rubber plug		
15	VOE11039262	1							•Sealing ring		
16	VOE4803794	1							•Nut		
17	VOE11039397	1							•End sleeve		
18	VOE4803711	3							•End sleeve		
19	VOE961970	2							•Plug		
20	VOE11039710	2							•Manifold		
21	VOE14340330	1							•Manifold		
22	VOE14267351	1							•Manifold		
23	VOE11039665	2							•Manifold		
24	VOE11039843	1							•Elbow		
25	VOE1307049	1							Tab housing		RR
26		1							Battery Cable		See ref 371/100
27		1							Cable harness		See ref 371/800

1245) Including parts: Wire assembly, hose, manifold, cable terminal and insulator See Group 379.

VOLVO

Construction Equipment

PROSIS Part Information

Date:	Image id:	Catalogue:	Model:
24/08/2018	**1033274**	**20086**	**L120E**
Brand:	Serial:	Group/Section:	Title:
Volvo	**19804-, 66001-, 71401-**	**371/750**	**Rear cable harness with assembly parts**

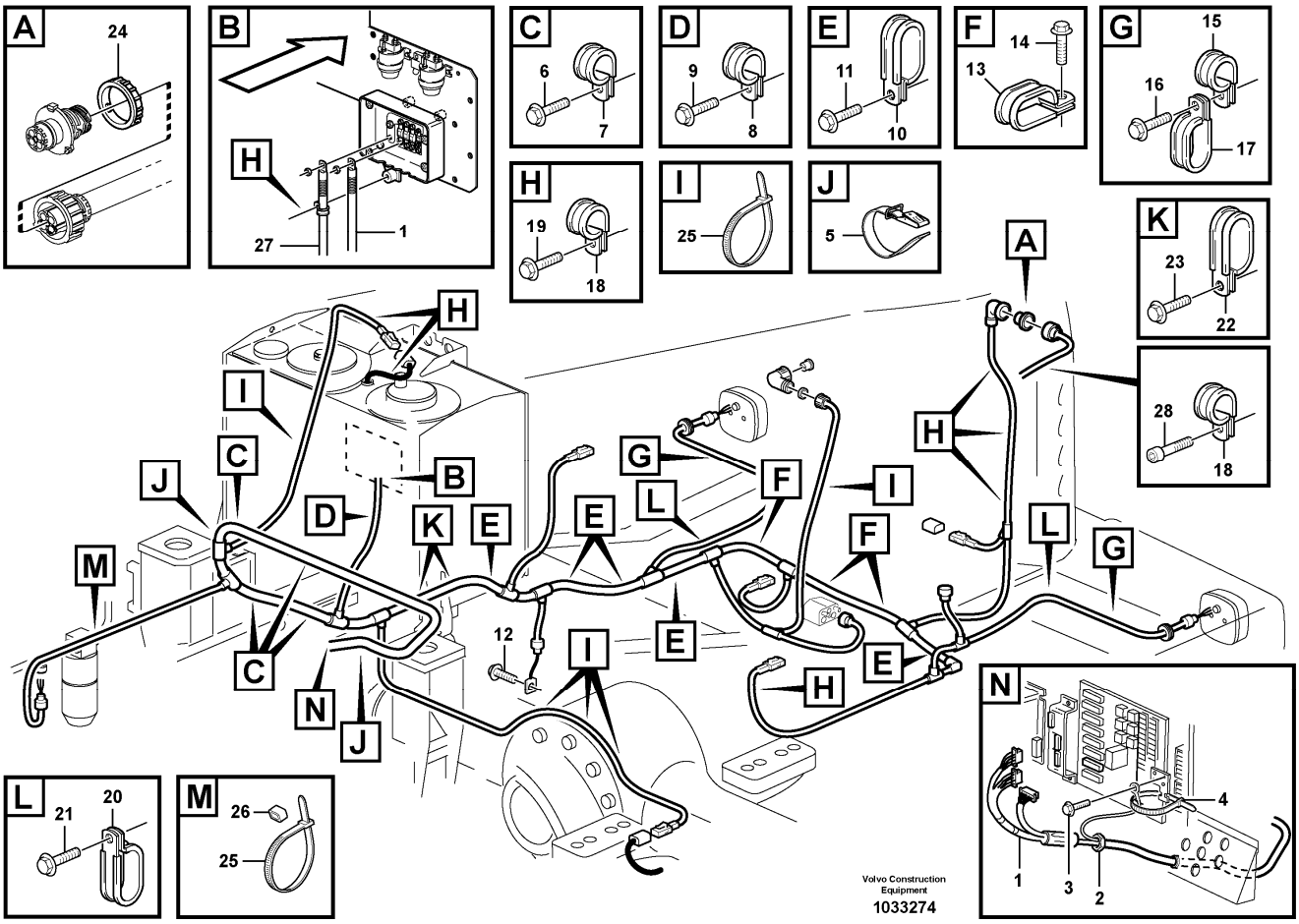

Pos	Part	Q1	Q2	Q3	Q4	Q5	PS	Kit	Description	Option(s)	Remark
1		1							Wire harness		See ref 371/700
2	VOE11147868	1							Plastic nut		
3	VOE947107	1							Flange screw		
4	VOE4881438	1							Cable tie		
5	VOE11104606	3							Retaining strap		
6	VOE13949997	4							Clamp		
7	VOE13946173	4							Screw		
8	VOE13949746	1							Clamp		
9	VOE13946173	1							Screw		
10	VOE11025709	5							Clamp		
11	VOE13946173	5							Screw		
12	VOE13949888	1							Screw		
13	VOE977599	3							Clamp		(VOE13977599)
14	VOE13946173	3							Screw		

15	VOE942810	2							Clamp		
16	VOE13946173	2							Screw		
17		2							Clamp		See ref 371/100
18	VOE13949746	8							Clamp		
19	VOE13946173	7							Screw		
20	VOE968136	1							Clamp		
	VOE11025709	1							Clamp		
	VOE13949747	1							Clamp		
21	VOE13946173	2							Screw		
22	VOE11019169	2							Clamp		
23	VOE13946173	2							Screw		
24	VOE3963413	1							Ring		
25	VOE4881440	8							Cable tie		
26	VOE11003221	1							Mounting ring		
27		1							Battery Cable		See ref 371/100
28	VOE4870448	1							Screw		

VOLVO

Construction Equipment

PROSIS Part Information

Date:	Image id:	Catalogue:	Model:
24/08/2018	**1019837**	**20086**	**L120E**
Brand:	Serial:	Group/Section:	Title:
Volvo	**19804-, 66001-, 71401-**	**371/800**	**Cable harness, radiator 33380, 33395**

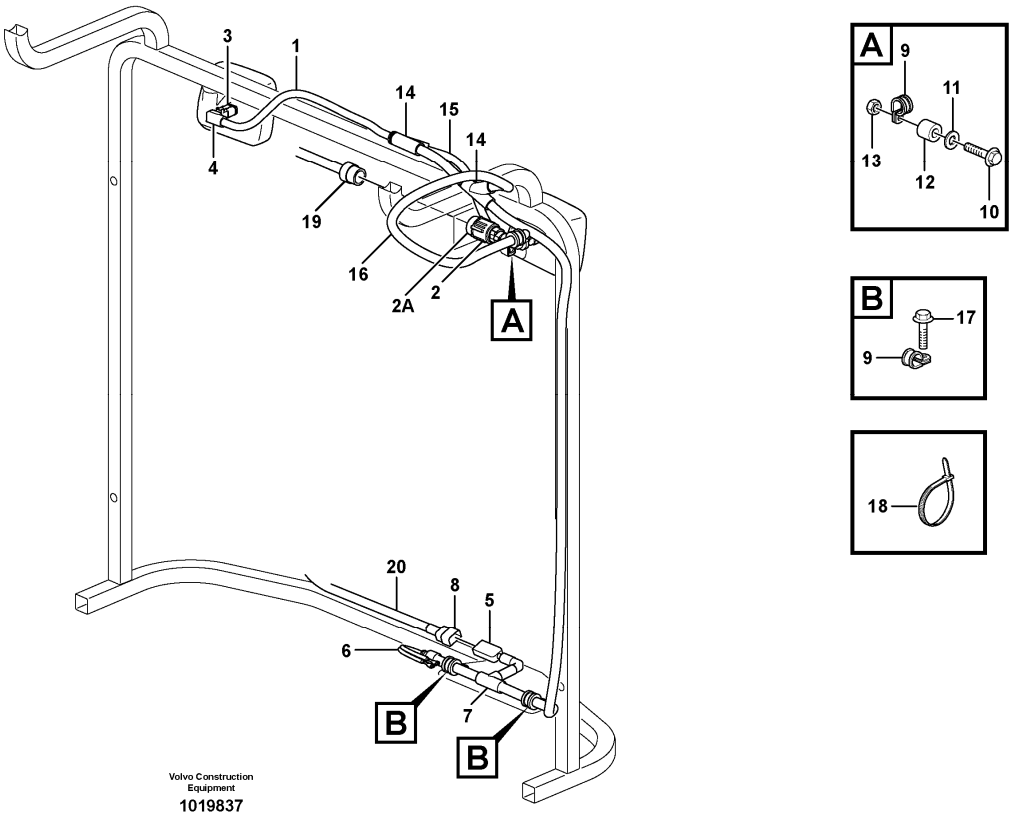

Section option	Kit	Option description
VOE33380		Volvo Wheel Loader L120E S/N 19801-, S/N 66001- USA, S/N 71401- BRA
VOE33395		Wheel Loader L120E3 IRAN

Pos	Part	Q1	Q2	Q3	Q4	Q5	PS	Kit	Description	Option(s)	Remark
		1							Radiator Casing		See footnote 1245) See ref 823/350
1	VOE11171478	1							•Cable harness		See footnote 1245)
									••CONNECTED TO:		
									•••Radiator casing		RZ
									•••B-up Wrn Unit		SA 803
									•••Work Lamp		LA320, LA321
									•••Sign Lamp		RE
2	VOE8159013	1							••Housing		
2A	VOE3987767	1							••Adapter		

3	VOE14370760	2							••Socket		
4	VOE11170005	2							••Adapter		
5	VOE1624477	1							••Receptacle housing		
	VOE1095059	1							••Joint nipple		
6	VOE11039397	1							••End sleeve		
7	VOE11039709	1							••Manifold		
8	VOE1307049	1							•Tab housing		
9	VOE13949746	3							•Clamp		
10	VOE13965179	2							•Screw		
11	VOE11117464	2							•Plain washer		(VOE13960141)
12	VOE11174533	2							•Spacer		
13	VOE13945408	2							•Nut		
14	VOE11039665	2							•Manifold		
15	VOE11039491	REQ							•Hose		
16	VOE11170006	REQ							•Hose		
17	VOE13946173	2							•Screw		
18	VOE4881440	1							Cable tie		
19		1							Cable harness		See ref 371/700
20		1							Cable harness		NUMBER PLATE

1245) Including parts: Wire assembly, hose, manifold, cable terminal and insulator See Group 379.

VOLVO

Construction Equipment

PROSIS Part Information

Date:	Image id:	Catalogue:	Model:
24/08/2018	**1019706**	**20086**	**L120E**
Brand:	Serial:	Group/Section:	Title:
Volvo	**19804-, 66001-, 71401-**	**371/850**	**Cable harness, air-suspension seat 80506, 80572, 83070**

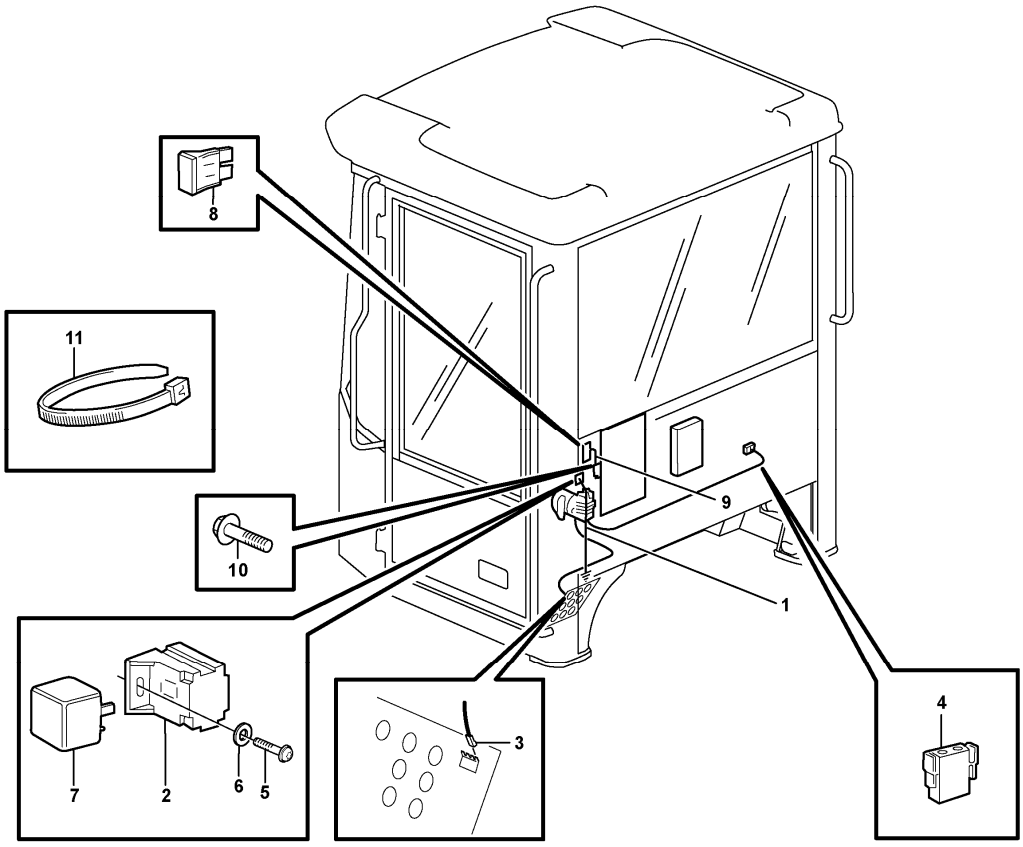

Section option	Kit	Option description
VOE80506		Operator seat, heated, airsuspended ISRI, Kit No: VOE 11104274 + VOE 11707994
VOE80572		Operator's seat, airsuspended, heated Kit No: VOE 11104016 + VOE 11708097
VOE83070	VOE11714942	Operator seat, heated, air suspended

Pos	Part	Q1	Q2	Q3	Q4	Q5	PS	Kit	Description	Option(s)	Remark
		1							Radiator Casing		See footnote 1245) See ref 823/350
1	VOE11171478	1							•Cable harness		See footnote 1245)
									••CONNECTED TO:		
									•••Radiator casing		RZ
									•••B-up Wrn Unit		SA 803
									•••Work Lamp		LA320, LA321
									•••Sign Lamp		RE
2	VOE8159013	1							••Housing		

2A	VOE3987767	1							••Adapter		
3	VOE14370760	2							••Socket		
4	VOE11170005	2							••Adapter		
5	VOE1624477	1							••Receptacle housing		
	VOE1095059	1							••Joint nipple		
6	VOE11039397	1							••End sleeve		
7	VOE11039709	1							••Manifold		
8	VOE1307049	1							•Tab housing		
9	VOE13949746	3							•Clamp		
10	VOE13965179	2							•Screw		
11	VOE11117464	2							•Plain washer		(VOE13960141)
12	VOE11174533	2							•Spacer		
13	VOE13945408	2							•Nut		
14	VOE11039665	2							•Manifold		
15	VOE11039491	REQ							•Hose		
16	VOE11170006	REQ							•Hose		
17	VOE13946173	2							•Screw		
18	VOE4881440	1							Cable tie		
19		1							Cable harness		See ref 371/700
20		1							Cable harness		NUMBER PLATE

1245) Including parts: Wire assembly, hose, manifold, cable terminal and insulator See Group 379.

VOLVO

Construction Equipment

PROSIS Part Information

Date:	Image id:	Catalogue:	Model:
24/08/2018	**EK199**	**20086**	**L120E**
Brand:	Serial:	Group/Section:	Title:
Volvo	**19804-, 66001-, 71401-**	**371/900**	**Cable harnesses, servo valve.**

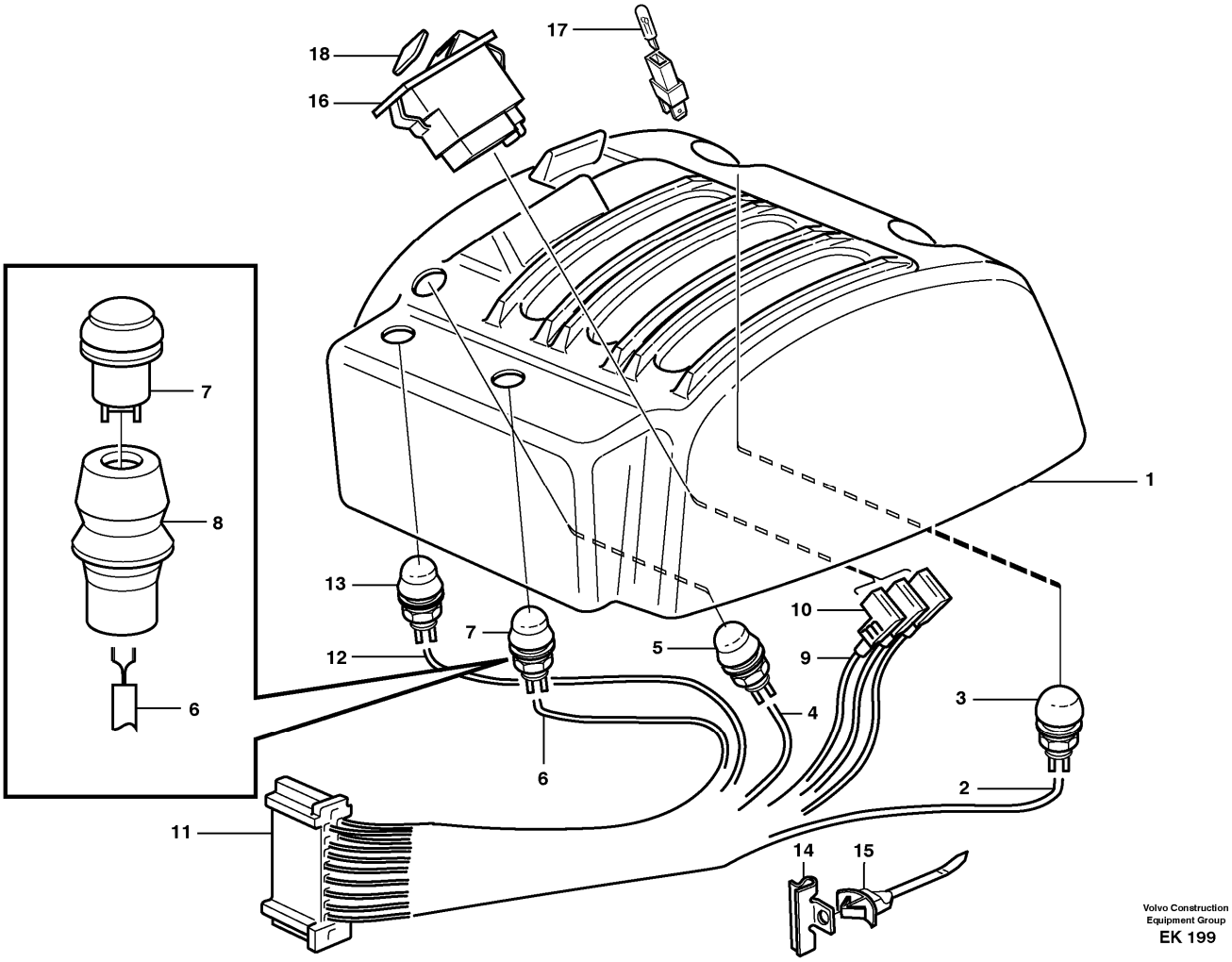

Section option	Kit	Option description
VOE33380		Volvo Wheel Loader L120E S/N 19801-, S/N 66001- USA, S/N 71401- BRA
VOE82046	VOE11709264	Detent, 3rd function
VOE82049		Detent, 3rd function
VOE33395		Wheel Loader L120E3 IRAN

Q1-Q5	Option	Option description	
Q1 33380 33395	VOE33380	Volvo Wheel Loader L120E S/N 19801-, S/N 66001- USA, S/N 71401- BRA	
Q2 82046 82049	VOE82046	Detent, 3rd function	

Pos	Part	Q1	Q2	Q3	Q4	Q5	PS	Kit	Description	Option(s)	Remark
		1					NS		Casing		

			1				NS		Casing		
1	VOE11006225	1							•Cover		
	VOE11006226		1						•Cover		
2	VOE11170674	1	1						•Cable harness		SW403
3	VOE11039681	1	1						••Switch		
4	VOE11170677	1	1						•Cable harness		SW406
5	VOE11039681	1	1						••Switch		
6	VOE11170676	1	1						•Cable harness		SW405
7	VOE11039681	1	1						••Switch		
8	VOE11104727	1	1						••Anchorage		
9	VOE11041399	1	1						•Cable harness		SW404
10	VOE13944221	3	3						••Housing		
11	VOE1096615	1	1						••Housing		
12	VOE11170678	1	1						•Cable harness		SW802
13	VOE11039681	1	1						••Switch		
14	VOE11039688	3	3						•Clip		
15	VOE11039689	3	3						•Strip clamp		
16	VOE11039439	1	1						•Switch		SW404
17	VOE11997242	1	1						••Bulb		
18	VOE4803548	1	1						•Lens		

VOLVO

Construction Equipment

PROSIS Part Information

Date:	Image id:	Catalogue:	Model:
24/08/2018	**1009084**	**20086**	**L120E**
Brand:	Serial:	Group/Section:	Title:
Volvo	**19804-, 66001-, 71401-**	**371/950**	**Cable harness, detent, 3rd hydraulic function 80098**

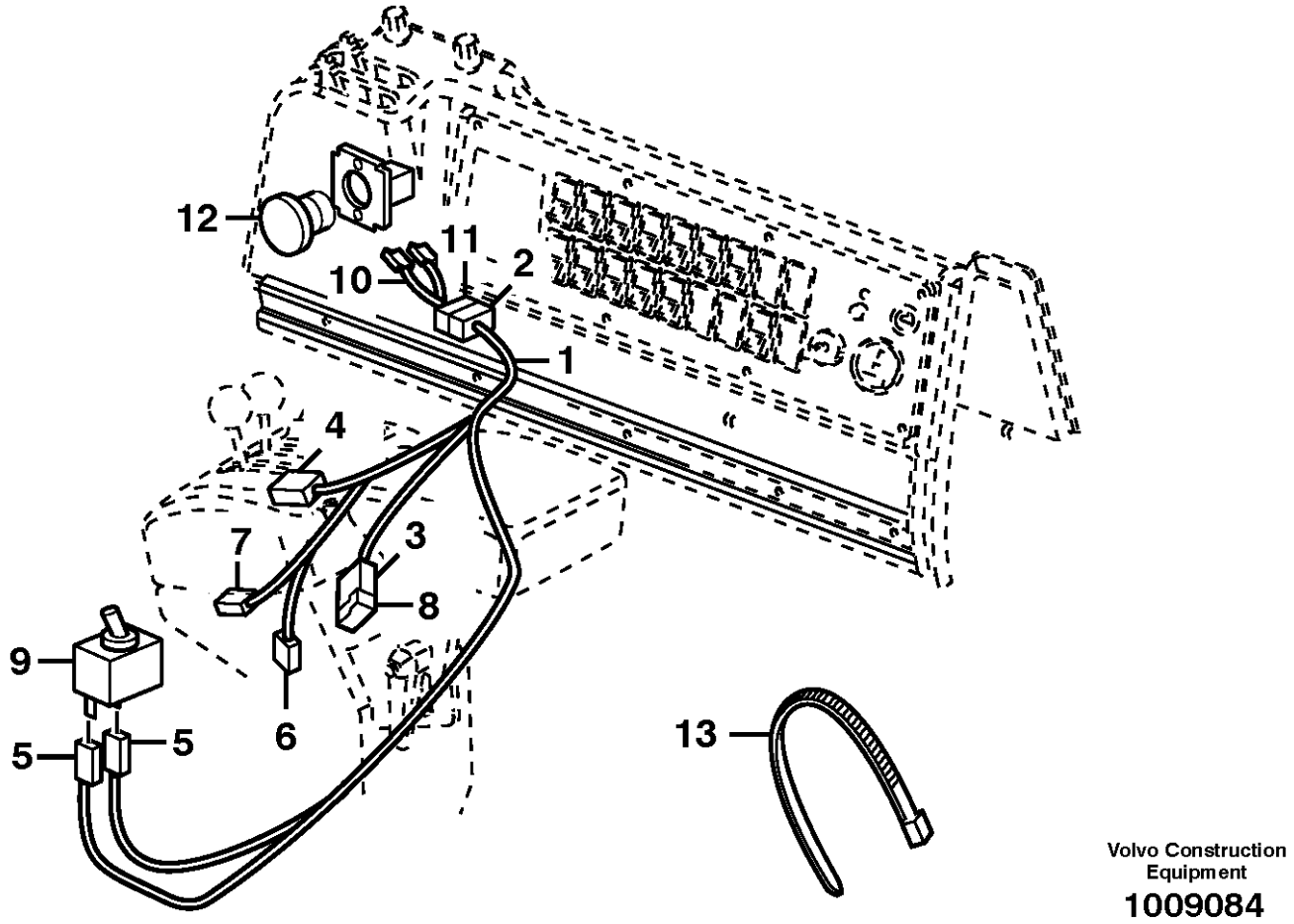

Section option	Kit	Option description
VOE80098	VOE11707329	Detent, 3rd function

Pos	Part	Q1	Q2	Q3	Q4	Q5	PS	Kit	Description	Option(s)	Remark
1	VOE11040682	1							Cable harness		
									•CONNECTED TO:		
									••Magnet		MA906
									••Switch		SW918
									••Diode		DI906
									••Receptacle housing		
2	VOE13948996	1							•Insulator		
3	VOE13958210	1							•Receptacle housing		
4	VOE13948995	1							•Pin housing		

5	VOE13949597	2							•Protecting sleeve		
6	VOE958209	1							•Housing		
7	VOE13958210	1							•Receptacle housing		
8	VOE4940327	1							Diode		DI906
	VOE4803274	1							•Diode		
9	VOE4786696	1							Switch		SW918
10	VOE11100854	1							Cable harness		
									•CONNECTED TO:		
									••Emergency switch		SW913
									••Coupling Piece		
11	VOE13948995	1							•Pin housing		
	VOE969830	2							•Cable terminal		
12	VOE11009043	1							Pressure switch		
	VOE11039341	1							Switch		SW913
13	VOE4881440	REQ							Cable tie		

VOLVO

Construction Equipment

PROSIS Part Information

Date:	Image id:	Catalogue:	Model:
24/08/2018	**1020099**	**20086**	**L120E**
Brand:	Serial:	Group/Section:	Title:
Volvo	**19804-, 66001-, 71401-**	**371/1000**	**Cable harness, CDC - steering. 80780**

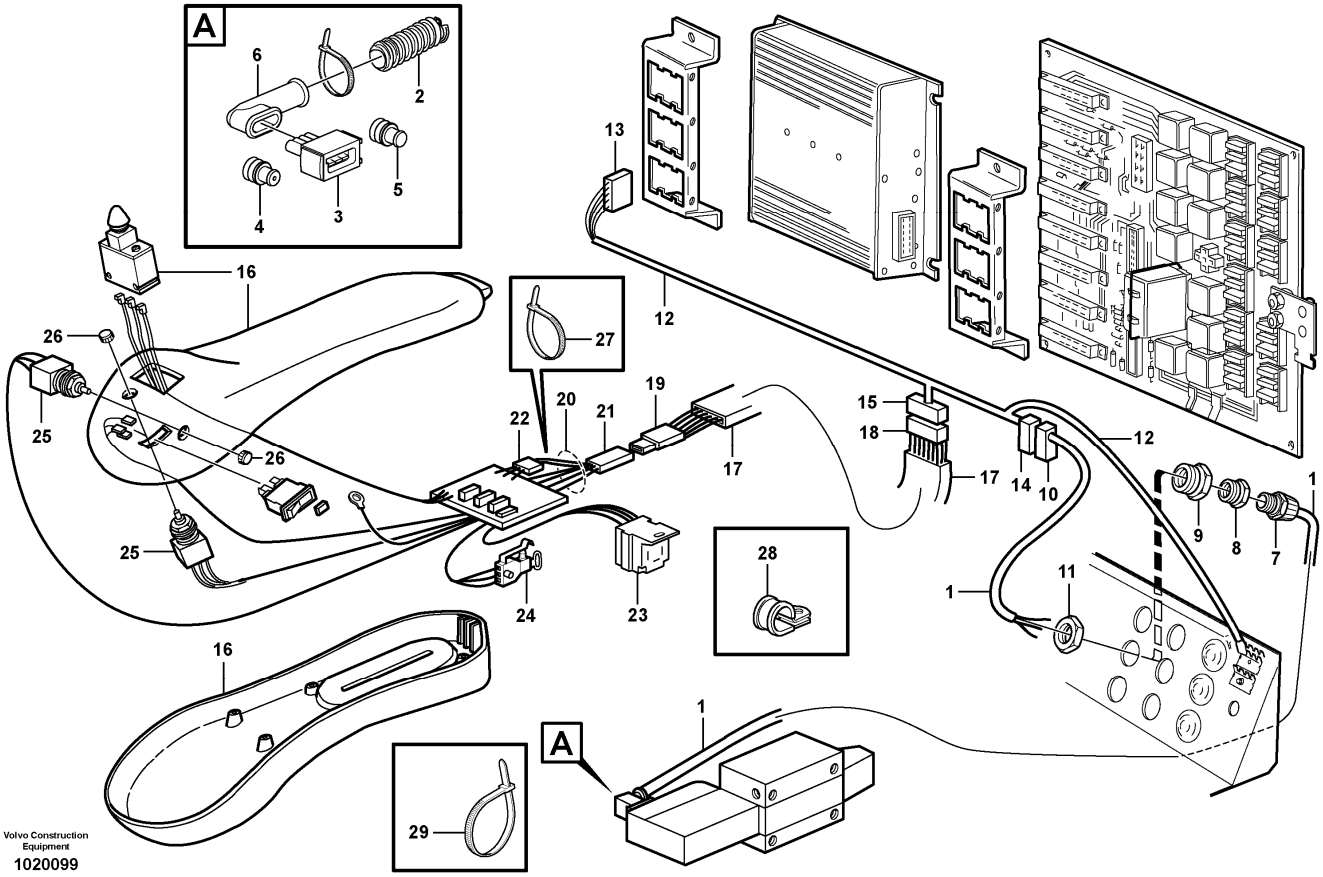

Section option	Kit	Option description
VOE80780	VOE11708984	Comfort Drive Control, CDC

Pos	Part	Q1	Q2	Q3	Q4	Q5	PS	Kit	Description	Option(s)	Remark
1	VOE11170940	1							Cable harness		See footnote 1245)
									•CONNECTED TO:		
									••Solenoid valve		MA601
									••Circuit Board		OD
2	VOE11039491	REQ							•Hose		
3	VOE11170109	1							•Housing		
4	VOE970773	3							•Cable seal		
5	VOE970771	1							•Cable seal		
6	VOE241308	1							•Protecting cap		
7	VOE4803765	1							•Hose coupling		
8	VOE11039099	1							•Reduction		

9	VOE4803795	1							•Reduction		
10	VOE968389	1							•Housing		
11	VOE11147868	1							Plastic nut		
12	VOE11040513	1							Cable harness		See footnote 1245)
									•CONNECTED TO:		
									••Coupling Piece		OD
									••Coupling Piece		OB
									••El Distr Unit		CDC
13	VOE1096619	1							•Housing		CDC
14	VOE968388	1							•Housing		OD
15	VOE968408	1							•Housing		OB
16		1							Arm Rest		See ref 882/550
17	VOE11041397	1							•Cable harness		See footnote 1245)
									••CONNECTED TO:		
									•••Coupling Piece		OC
									•••Coupling Piece		OB
18	VOE13968409	1							••Housing		OB
19	VOE968408	1							••Housing		OC
20	VOE15110544	1							•Wiring harness		(VOE11040512)See footnote 1245)
									••CONNECTED TO:		
									•••Switch		SW407, 408, 409, 410
									•••Relay		RE602
									•••Contact		OE
									•••Coupling Piece		OC
21	VOE13968409	1							••Housing		OC
22	VOE968388	1							••Housing		
23	VOE977184	1							••Housing		
24	VOE8150651	1							••Contact		
25	VOE11997560	2							••Switch		
26	VOE11992216	2							••Knob		
27	VOE4821292	8							••Cable tie		
28	VOE980614	1							Clamp		
29	VOE4881440	REQ							Cable tie		

1245) Including parts: Wire assembly, hose, manifold, cable terminal and insulator See Group 379.

VOLVO

Construction Equipment

PROSIS Part Information

Date:	Image id:	Catalogue:	Model:
24/08/2018	**1020222**	**20086**	**L120E**
Brand:	Serial:	Group/Section:	Title:
Volvo	**19804-, 66001-, 71401-**	**371/1050**	**Cable harness, pre-cleaner. 83059**

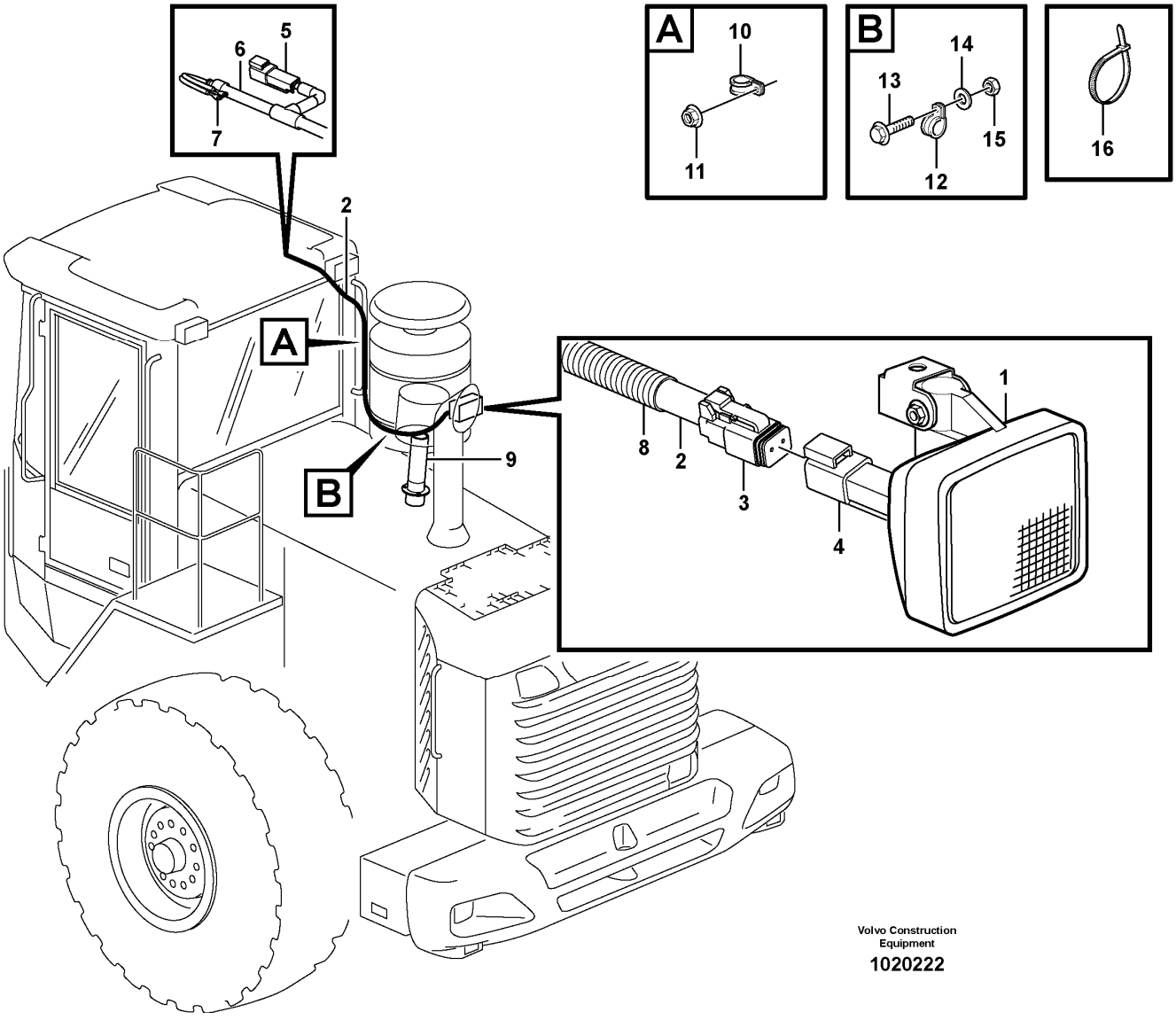

Section option	Kit	Option description
VOE83059	VOE11715683	Pre-cleaner, oil bath type

Pos	Part	Q1	Q2	Q3	Q4	Q5	PS	Kit	Description	Option(s)	Remark
1		1							Work Lamp		See ref 353/150
2	VOE11171479	1							Cable harness		
									•CONNECTED TO:		
									••Work light, rear		LA323
3	VOE14370760	1							•Socket		
4	VOE874849	2							•Cable terminal		

5	VOE14370761	1							•Connector		
6	VOE14370881	1							•Spacer		
7	VOE874033	2							•Cable terminal		
8	VOE11170006	1							•Hose		
9		1							Hose Connection		See ref 321/100
10	VOE13946834	1							Clamp		
11	VOE13945408	1							Nut		
12	VOE13946834	1							Clamp		
13	VOE13946173	1							Screw		
14	VOE11117464	1							Plain washer		(VOE13960141)
15	VOE13945408	1							Nut		
16	VOE4881440	REQ							Cable tie		

VOLVO

Construction Equipment

PROSIS Part Information

Date:	Image id:	Catalogue:	Model:
24/08/2018	**1032368**	**20086**	**L120E**
Brand:	Serial:	Group/Section:	Title:
Volvo	**19804-, 66001-, 71401-**	**371/1150**	**Cable harness, central lubrication.**

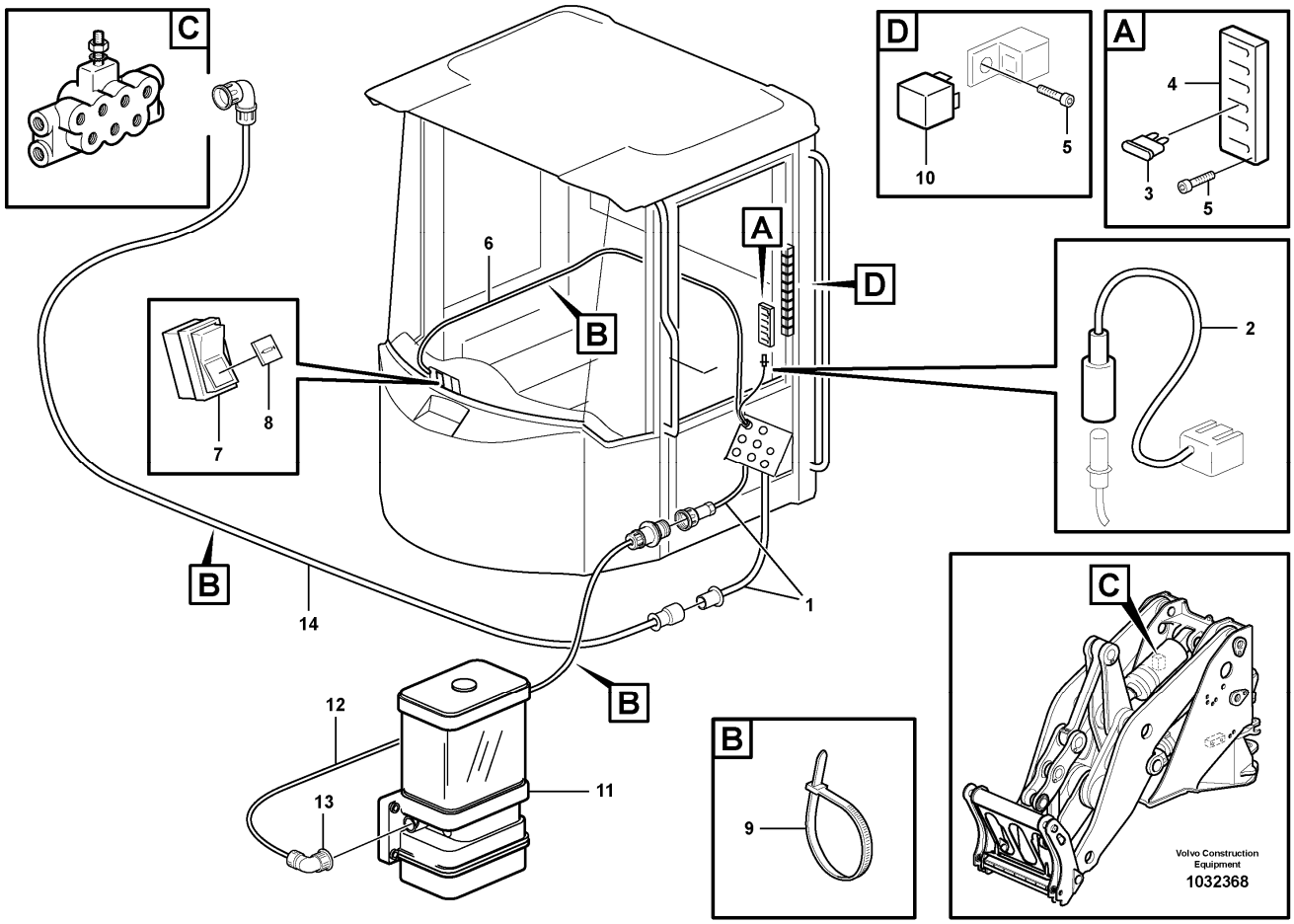

Section option	Kit	Option description
VOE80928		Automatic greasing system IF WELDED ATTACHMENT BRACKET 80009 COMB WITH 94811IF CASTED ATTACHMENT BRACKET 93643 COMB WITH 80334
VOE82600		Automatic greasing system
VOE82601		Automatic greasing system
VOE82143		Automatic greasing system IF WELDED ATTACHMENT BRACKET 80847 COMB WITH 94811IF CASTED ATTACHMENT BRACKET 80846 COMB WITH 82355
VOE82925		Loading unit
VOE82920		Loading unit

Q1-Q5	Option	Option description	
Q1 80928	VOE80928	Automatic greasing system IF WELDED ATTACHMENT BRACKET 80009 COMB WITH 94811IF CASTED ATTACHMENT BRACKET 93643 COMB WITH 80334	
Q2 82143 82601	VOE82143	Automatic greasing system IF WELDED ATTACHMENT BRACKET 80847 COMB WITH 94811IF CASTED ATTACHMENT BRACKET 80846 COMB WITH 82355	

Q3 82600 82920 82925	VOE82600	Automatic greasing system	

Pos	Part	Q1	Q2	Q3	Q4	Q5	PS	Kit	Description	Option(s)	Remark
	VOE11177068	1	1	1					Electrical equipment		
1	VOE11716355	1	1	1					•Cable harness		
2	VOE11716354	1	1	1					•Cable harness		
3	VOE969161	1	1	1					•Fuse		10 A
4	VOE11039302	1	1	1					•Fuse holder		
5	VOE959186	3	3	3					•Hex. socket screw		
6	VOE11701821	1	1	1					•Cable harness		
7	VOE11705936	1	1	1					•Switch		See footnote 88)
8	VOE11997279	1	1	1					•Lens		
9	VOE4881440	REQ	REQ	REQ					•Cable tie		
10	VOE20374662	1	1	1					•Relay		
11	VOE11707439	1	1				SS		Pump		See ref 993/700
12	VOE11706041	1	1						Cable harness		
13	VOE11714196	1	1						•Connector kit		
14	VOE11707861		2						Cable harness		

88) The switch includes the bulb.

VOLVO

Construction Equipment

PROSIS Part Information

Date:	Image id:	Catalogue:	Model:
24/08/2018	**EL272**	**20086**	**L120E**
Brand:	Serial:	Group/Section:	Title:
Volvo	**19804-, 66001-, 71401-**	**371/1200**	**Cable harness, boom suspension system. 80782**

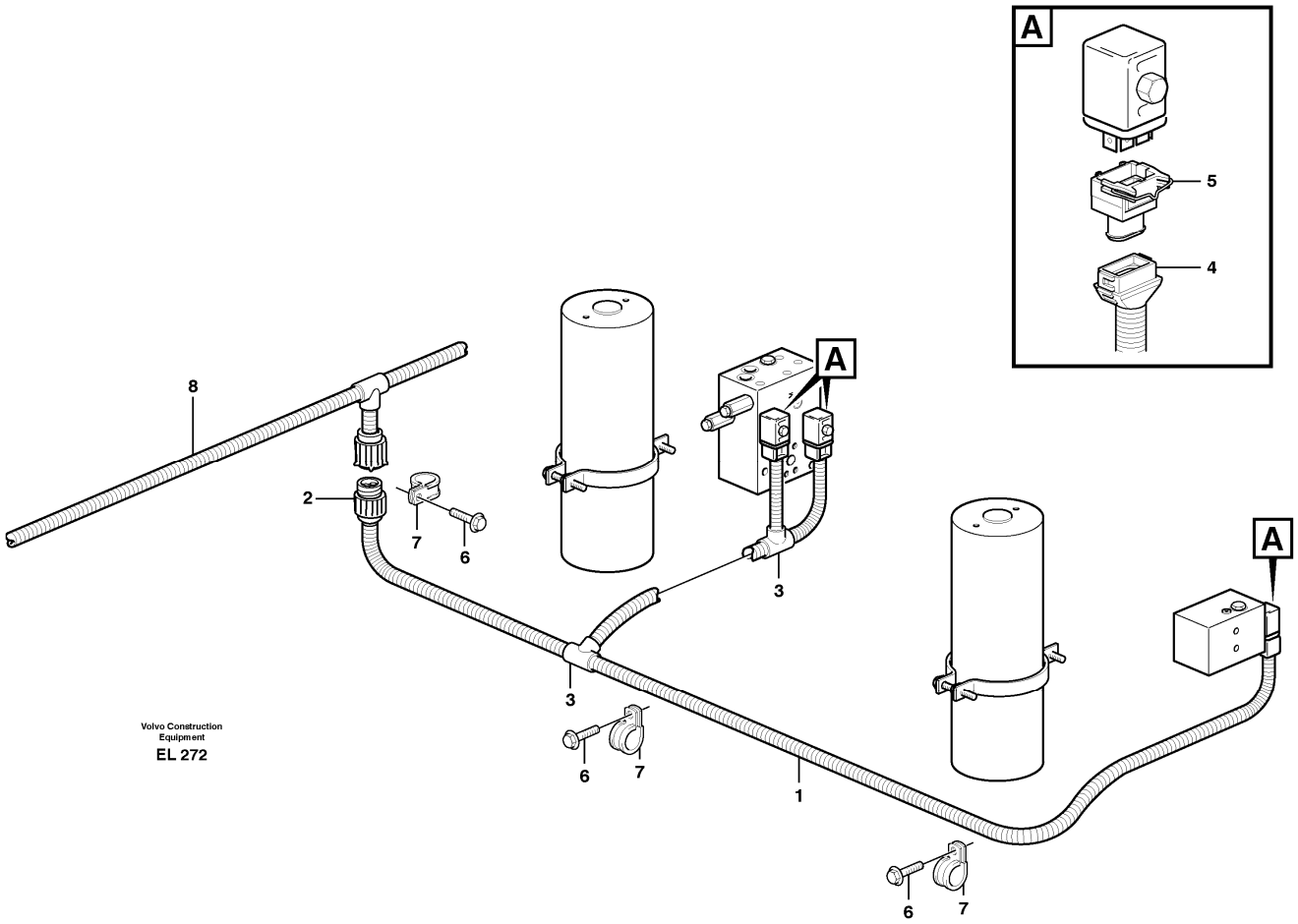

Section option	Kit	Option description
VOE80782	VOE11709032	Boom suspension BSS

Pos	Part	Q1	Q2	Q3	Q4	Q5	PS	Kit	Description	Option(s)	Remark
1	VOE11040819	1							Cable harness		See footnote 1245)
									•CONNECTED TO:		
									••Solenoid valve		MA908, MA910, MA911
									••Wire harness		FD
2	VOE1079282	1							•Housing		
3	VOE11039709	2							•Manifold		
4	VOE8142100	3							•Adapter		
5	VOE976256	3							•Housing		
6	VOE13946173	3							Screw		
7	VOE13949746	3							Clamp		

8		1							Wire harness		See ref 371/300

1245) Including parts: Wire assembly, hose, manifold, cable terminal and insulator See Group 379.

VOLVO

Construction Equipment

PROSIS Part Information

Date:	Image id:	Catalogue:	Model:
24/08/2018	**1020037**	**20086**	**L120E**
Brand:	Serial:	Group/Section:	Title:
Volvo	**19804-, 66001-, 71401-**	**371/1250**	**Cable harness, secondary steering system. 83178**

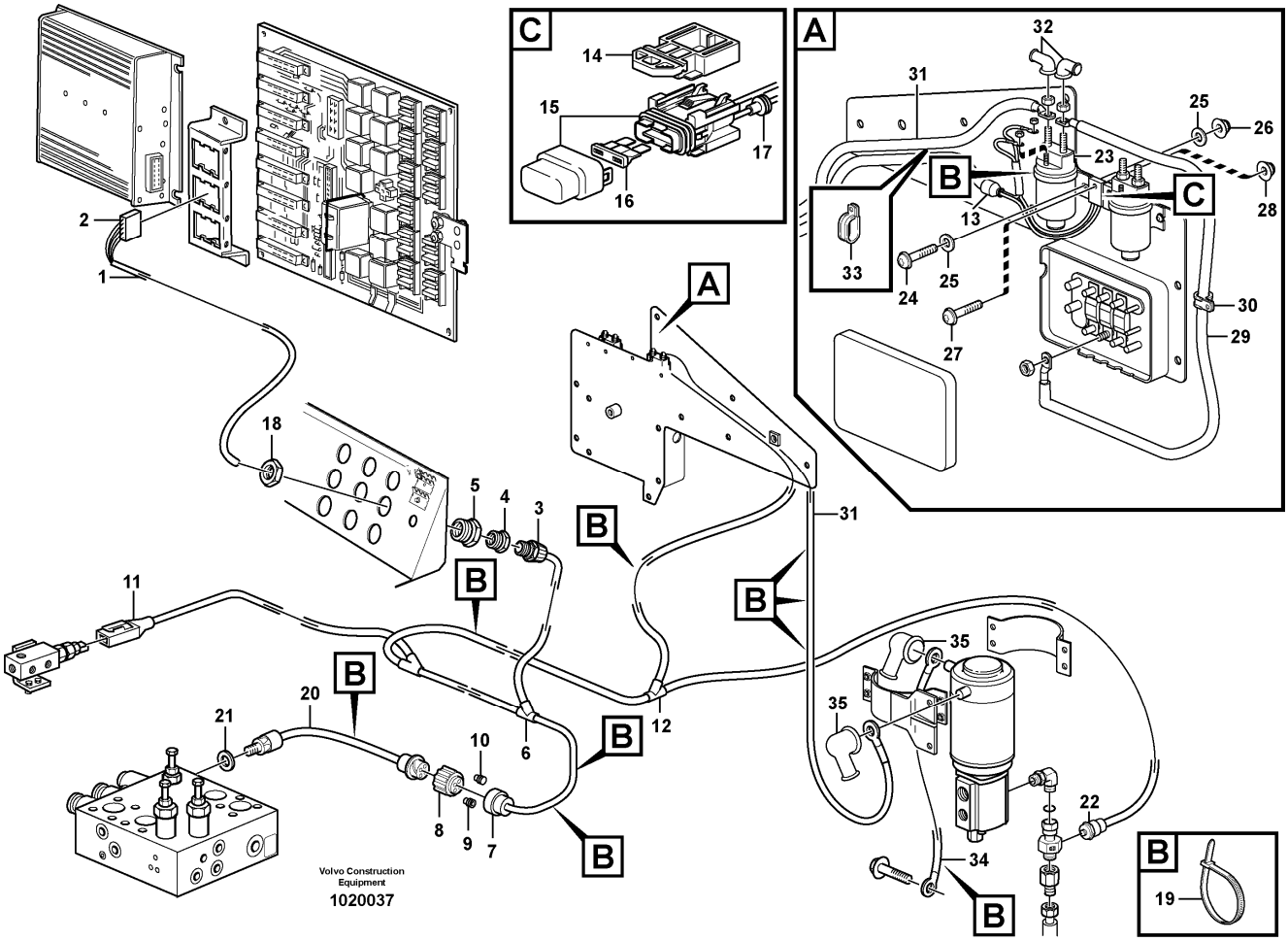

Section option	Kit	Option description
VOE83178		Secondary steering

Pos	Part	Q1	Q2	Q3	Q4	Q5	PS	Kit	Description	Option(s)	Remark
1	VOE11171597	1							Cable harness		See footnote 1245)
									•CONNECTED TO:		
									••El Distr Unit		OA
									••Press monitor		SE 601, SE 602
									••Pressure Sensor		SE606
									••Relay		RE 601
									••Fuse holder		FH3
2	VOE1096619	1							•Housing		
3	VOE4803766	1							•Hose coupling		
4	VOE11039050	1							•Reduction		

5	VOE4803795	1							•Reduction		
6	VOE14340330	1							•Manifold		
7	VOE3987767	1							•Adapter		
8	VOE8159013	1							•Housing		
9	VOE8159012	5							•Seal		
10	VOE8155899	3							•Sealing plug		
11	VOE1624477	1							•Receptacle housing		
12	VOE11039665	2							•Manifold		
13	VOE11039397	2							•End sleeve		
14	VOE11039713	1							•Bracket		
15	VOE11039714	1							•Fuse holder		
16	VOE13969160	1							•Fuse		5A
17	VOE873854	2							•Sealing sleeve		
18	VOE11147868	1							Plastic nut		
19	VOE4881440	REQ							Cable tie		
20	VOE11170079	1							Pressure monitor		SE 602
21	VOE13945653	1							Plane gasket		
22	VOE11170123	1							Pressure sensor		SE606
23	VOE20367490	1							Relay		RE601
24	VOE969407	2							Six point socket screw		
25	VOE13960138	4							Washer		
26	VOE949874	2							Flange lock nut		(VOE13949874)
27	VOE969407	2							Six point socket screw		
28	VOE949874	1							Flange lock nut		(VOE13949874)
29	VOE11170527	1							Wire		FU71 - RE601
30	VOE980614	1							Clamp		
31	VOE11108116	1							Wire		
32	VOE241308	2							Protecting cap		
33	VOE11132105	2							Clamp		
34	VOE11108119	1							Wire		EARTH - JORD
35	VOE241308	2							Protecting cap		

1245) Including parts: Wire assembly, hose, manifold, cable terminal and insulator See Group 379.

VOLVO

Construction Equipment

PROSIS Part Information

Date:	Image id:	Catalogue:	Model:
24/08/2018	**1031942**	**20086**	**L120E**
Brand:	Serial:	Group/Section:	Title:
Volvo	**19804-, 66001-, 71401-**	**371/1300**	**Cable harness, time delay relay starter motor**

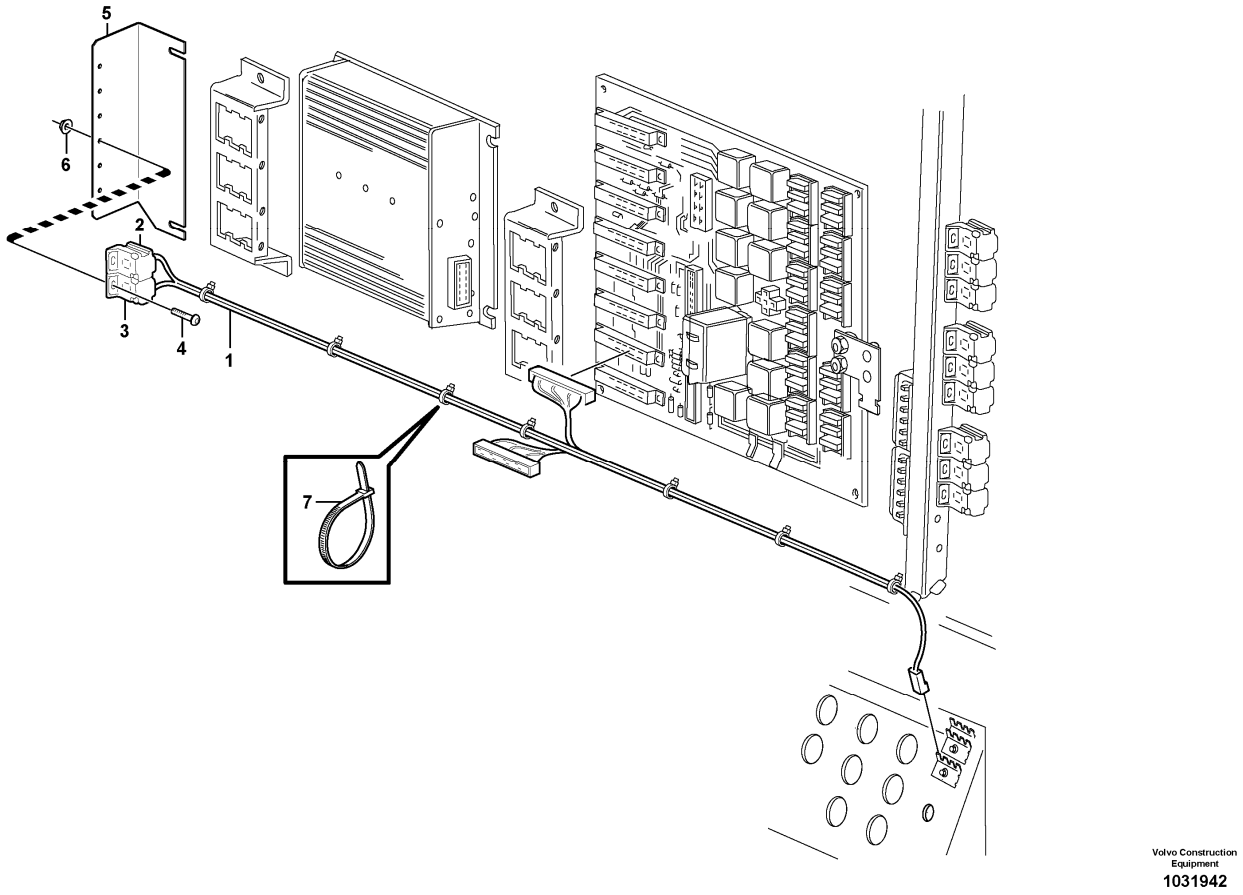

Pos	Part	Q1	Q2	Q3	Q4	Q5	PS	Kit	Description	Option(s)	Remark
1	VOE11171756	1							Wiring harness		
2	VOE20374662	1							Relay		RE204
3	VOE4803319	1							Delay relay		RT201
4	VOE969278	2							Six point socket screw		12VDC, CDR
5	VOE11104892	1							Attachment		
6	VOE13949278	2							Flange lock nut		
7	VOE4786031	60							Framework moulding		10A, FU66

VOLVO

Construction Equipment

PROSIS Part Information

Date:	Image id:	Catalogue:	Model:
24/08/2018	**1013094**	**20086**	**L120E**
Brand:	Serial:	Group/Section:	Title:
Volvo	**19804-, 66001-, 71401-**	**371/1350**	**Cable harness Double Work light 82344**

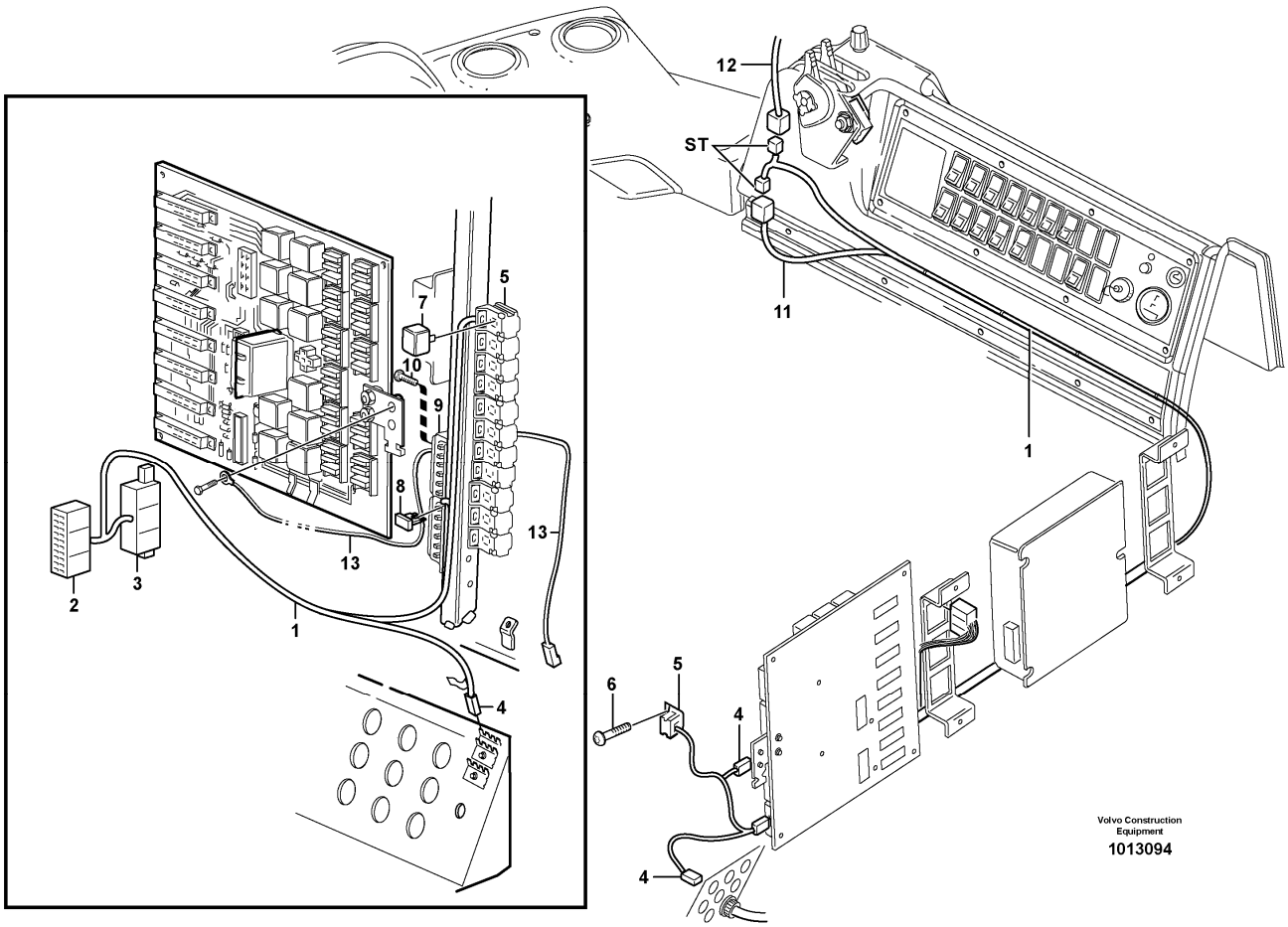

Section option	Kit	Option description
VOE82344		Work lights front, cab, double

Pos	Part	Q1	Q2	Q3	Q4	Q5	PS	Kit	Description	Option(s)	Remark
1	VOE11170715	1							Cable harness		
									•CONNECTED TO:		
									••Roof		ST
									••Relay		RE304
2	VOE1096615	1							•Housing		(ST)
3	VOE1096619	1							•Housing		(ST)
4	VOE13949597	2							•Protecting sleeve		
5	VOE977184	1							•Housing		
6	VOE969278	1							Six point socket screw		(VOE13969278)
7	VOE20374662	1							Relay		RE304

8	VOE978999	1							Fuse		
9	VOE11039302	1							Fuse holder		
10	VOE969278	2							Six point socket screw		(VOE13969278)
11		1							Cable harness		See ref 371/650
12		1							Cable harness		See ref 371/500
13	VOE11041913	1							Wire		

VOLVO

Construction Equipment

PROSIS Part Information

Date:	Image id:	Catalogue:	Model:
24/08/2018	**EK374**	**20086**	**L120E**
Brand:	Serial:	Group/Section:	Title:
Volvo	**19804-, 66001-, 71401-**	**371/1400**	**Cable harnesses, single lever control. 82325, 82326, 83316, 83317**

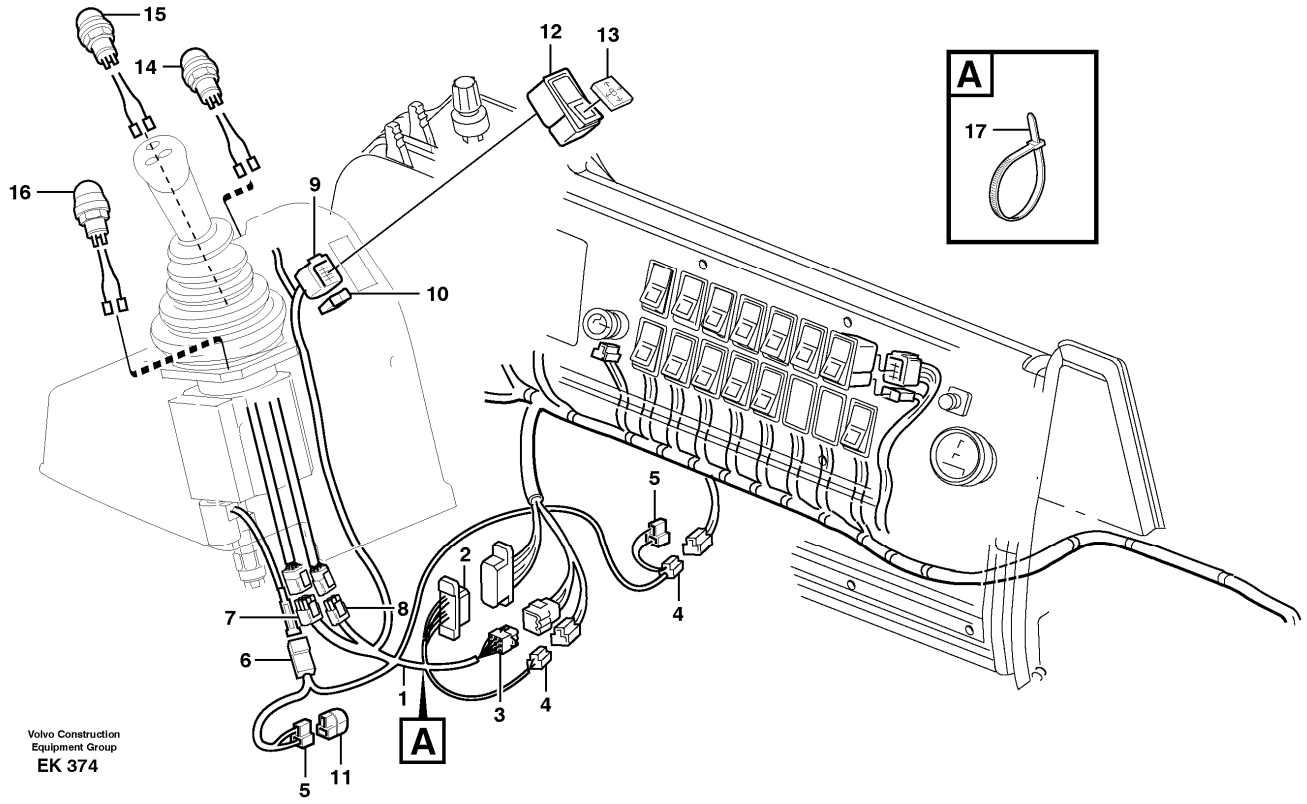

Section option	Kit	Option description
VOE82325	VOE11988198	Single lever hydraulic control, three functions
VOE82326	VOE11988197	Single lever hydraulic control, two functions
VOE83316	VOE11714603	Single lever hydraulic control, two functions
VOE83317	VOE11714604	Single lever hydraulic control, three functions

Pos	Part	Q1	Q2	Q3	Q4	Q5	PS	Kit	Description	Option(s)	Remark
1	VOE11040695	1							Cable harness		See footnote 1245)
									•CONNECTED TO:		
									••Wire harness		SE, SF, SJ, SL
									••Solenoid valve		MA916
									••Single Lever Control		EP, SH
									••Switch		SW920
2	VOE1096615	1							•Housing		
3	VOE948294	1							•Insulator		
4	VOE958209	2							•Housing		
5	VOE13958210	2							•Receptacle housing		

6	VOE11039696	1					OP		•Housing		
7		1					NS		•Housing		
8		1					NS		•Housing		
9	VOE4803454	1							•Receptacle housing		
10	VOE4803532	1							•Socket housing		
11	VOE4940327	1							•Diode		
12	VOE11039380	1							Switch		
	VOE11997242	1							•Bulb		
13	VOE11039700	1							Lens		
14	VOE11170678	1							Cable harness		SW802
									•CONNECTED TO:		
									••Housing		SE
15	VOE11170677	1							Cable harness		SW406
									•CONNECTED TO:		
									••Housing		SE
16	VOE11170674	1							Cable harness		SW403
									•CONNECTED TO:		
									••Housing		SE
17	VOE4881440	5							Cable tie		

1245) Including parts: Wire assembly, hose, manifold, cable terminal and insulator See Group 379.

VOLVO

Construction Equipment

PROSIS Part Information

Date:	Image id:	Catalogue:	Model:
24/08/2018	**1005273**	**20086**	**L120E**
Brand:	Serial:	Group/Section:	Title:
Volvo	**19804-, 66001-, 71401-**	**371/1450**	**Electrical system, parking brake alarm 80348**

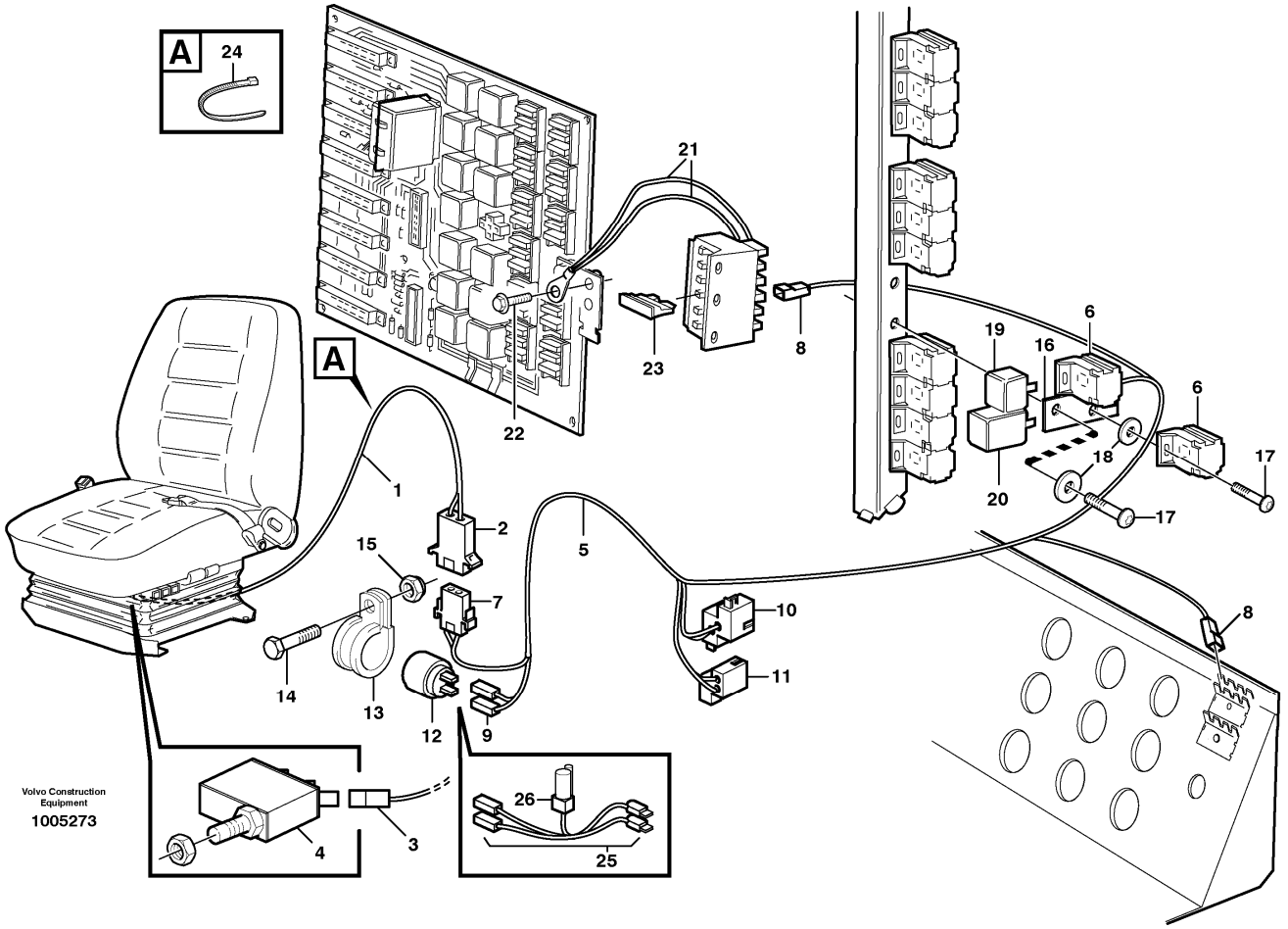

Section option	Kit	Option description
VOE80348		Parking brake alarm USE KIT IN COMBINAT. OF 80380 + 80348 = 1170767680103 + 80348 = 11707677. 80256 + 80348 = 11707722

Pos	Part	Q1	Q2	Q3	Q4	Q5	PS	Kit	Description	Option(s)	Remark
1	VOE11040639	1							Cable harness		See footnote 1245)
									•CONNECTED TO:		
									••Operator seat		SE806
									••Oca		
2	VOE13948995	1							•Pin housing		
3	VOE13949597	2							•Protecting sleeve		
4	VOE4787427	1							Microswitch		SE806
5	VOE11040638	1							Cable harness		See footnote 1245)
									•CONNECTED TO:		

									••Relais à L'action		RT802
									••Relay		RE804
									••Parking Brake		
									••Buzzer		SA804
6	VOE977184	2							•Housing		
7	VOE13948996	1							•Insulator		
8	VOE13949597	2							•Protecting sleeve		
9	VOE13947848	2							•Housing		
10		1					NS		•Pin housing		
11		1					NS		•Housing		
12	VOE828587	1							Buzzer		SA804
13	VOE13949997	1							Clamp		
14	VOE13946544	1							Screw		
15	VOE13949278	1							Flange lock nut		
16		1					NS		Attaching plate		
17	VOE969278	3							Six point socket screw		
18	VOE13940090	3							Washer		
19	VOE20374662	1							Relay		RE804
20	VOE4803319	1							Delay relay		RT802
21	VOE11041913	1							Wire		See footnote 1245)
22	VOE947107	1							Flange screw		
23	VOE13969160	1							Fuse		FU53, 5A
24	VOE4881438	REQ							Cable tie		
25	VOE11170927	1							Cable harness		See footnote 1245)
									•CONNECTED TO:		
									••Cable harness		(SA804)
									••Diode		(DI805)
									••Buzzer		(SA804)
26	VOE4940327	1							•Diode		

1245) Including parts: Wire assembly, hose, manifold, cable terminal and insulator See Group 379.

VOLVO

Construction Equipment

PROSIS Part Information

Date:	Image id:	Catalogue:	Model:
24/08/2018	**1020210**	**20086**	**L120E**
Brand:	Serial:	Group/Section:	Title:
Volvo	**19804-, 66001-, 71401-**	**371/1500**	**Cable harness, automatic back-up light 82307**

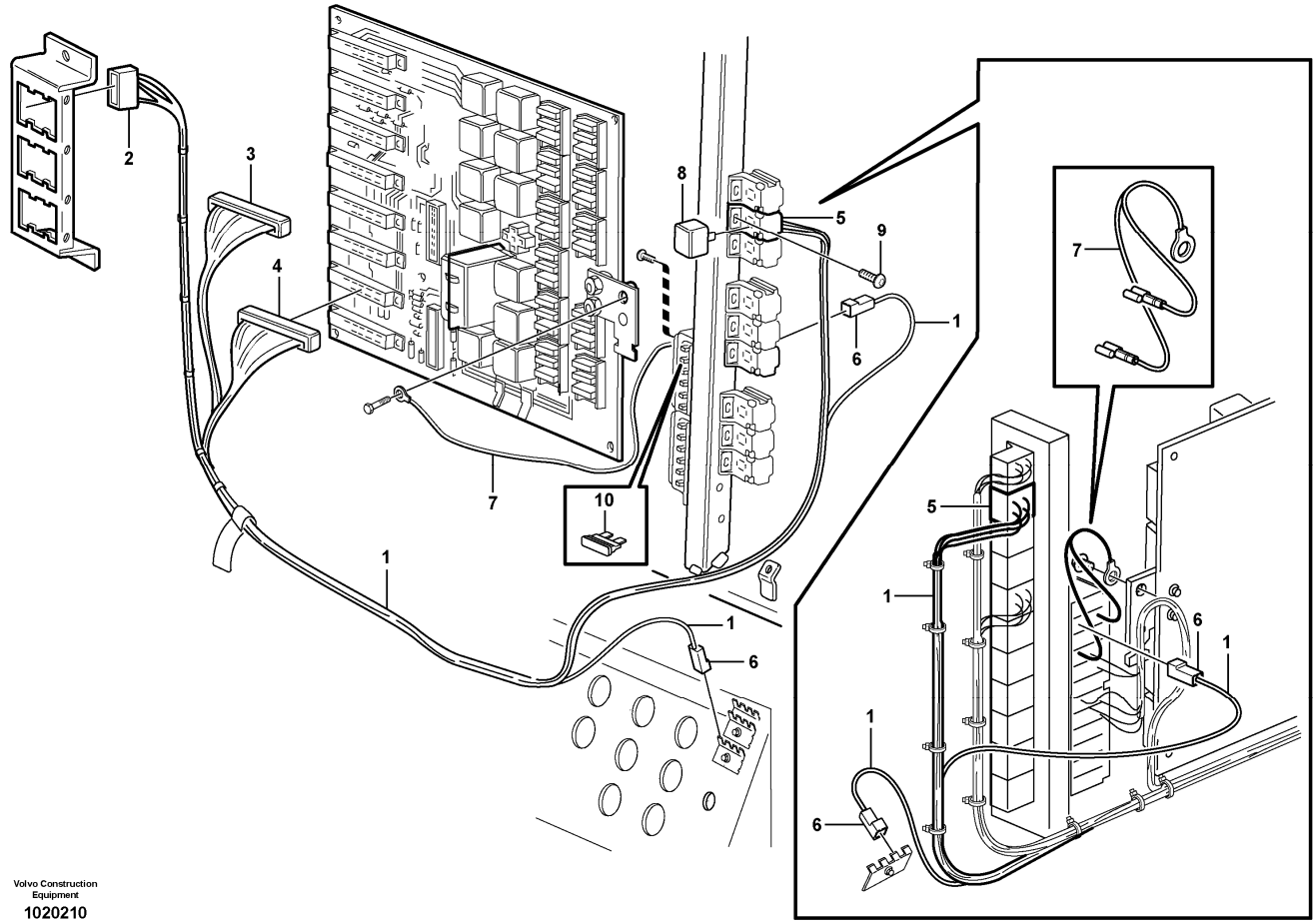

Volvo Construction Equipment
1020210

Section option	Kit	Option description
VOE82307		Automatic back-up light

Pos	Part	Q1	Q2	Q3	Q4	Q5	PS	Kit	Description	Option(s)	Remark
1	VOE11170841	1							Cable harness		See footnote 1245)
									•CONNECTED TO:		
									••El Distr Unit		MR
									••Circuit Board		R
									••Relay		RE303
									••Cable harness		R
2	VOE1096619	1							•Housing		
3	VOE1096615	1							•Housing		
4	VOE1096619	1							•Housing		
5	VOE977184	1							•Housing		(RE303)
6	VOE13949597	2							•Protecting sleeve		

7	VOE11041913	1							Wire		See footnote 1245)
8	VOE20374662	1							Relay		RE303
9	VOE969278	1							Six point socket screw		(VOE13969278)
10	VOE978999	1							Fuse		FU51, 20A

1245) Including parts: Wire assembly, hose, manifold, cable terminal and insulator See Group 379.

VOLVO

Construction Equipment

PROSIS Part Information

Date:	Image id:	Catalogue:	Model:
24/08/2018	**1002282**	**20086**	**L120E**
Brand:	Serial:	Group/Section:	Title:
Volvo	**19804-, 66001-, 71401-**	**371/1550**	**Cable harness, electr. heated rear-view mirror 80830**

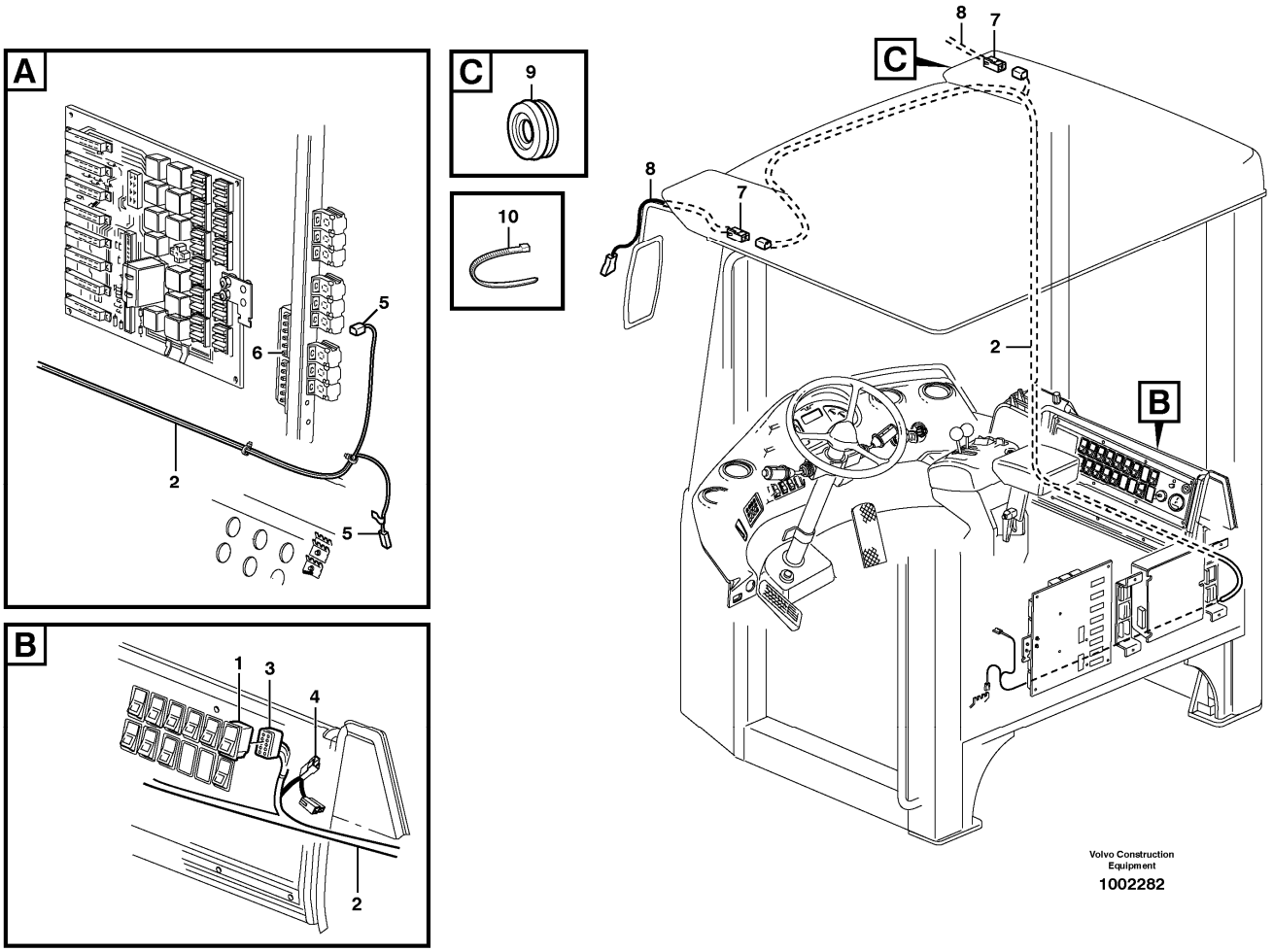

Section option	Kit	Option description
VOE80830	VOE11988158	Mirror

Pos	Part	Q1	Q2	Q3	Q4	Q5	PS	Kit	Description	Option(s)	Remark
1		1							Switch		SW811
2	VOE11040827	1							Cable harness		See footnote 1245)
									•CONNECTED TO:		
									••Cable		HE803, HE804
									••Switch		SW811
									••Cable harness		SL
									••Fuse		FU55:B
3	VOE4803454	1							•Receptacle housing		(SW811)
4	VOE958209	1							•Housing		(SL)

5	VOE13949597	2							•Protecting sleeve		(31C, FU55:B)
6	VOE13969160	1							•Fuse		(VOE969160)
7	VOE968381	2							•Housing		
8	VOE11170075	2							Cable		
9	VOE941262	2							Grommet		
10	VOE4881438	12							Cable tie		

1245) Including parts: Wire assembly, hose, manifold, cable terminal and insulator See Group 379.

VOLVO

Construction Equipment

PROSIS Part Information

Date:	Image id:	Catalogue:	Model:
24/08/2018	**1020247**	**20086**	**L120E**
Brand:	Serial:	Group/Section:	Title:
Volvo	**19804-, 66001-, 71401-**	**371/1600**	**Cable harness, automatic temperature control.**

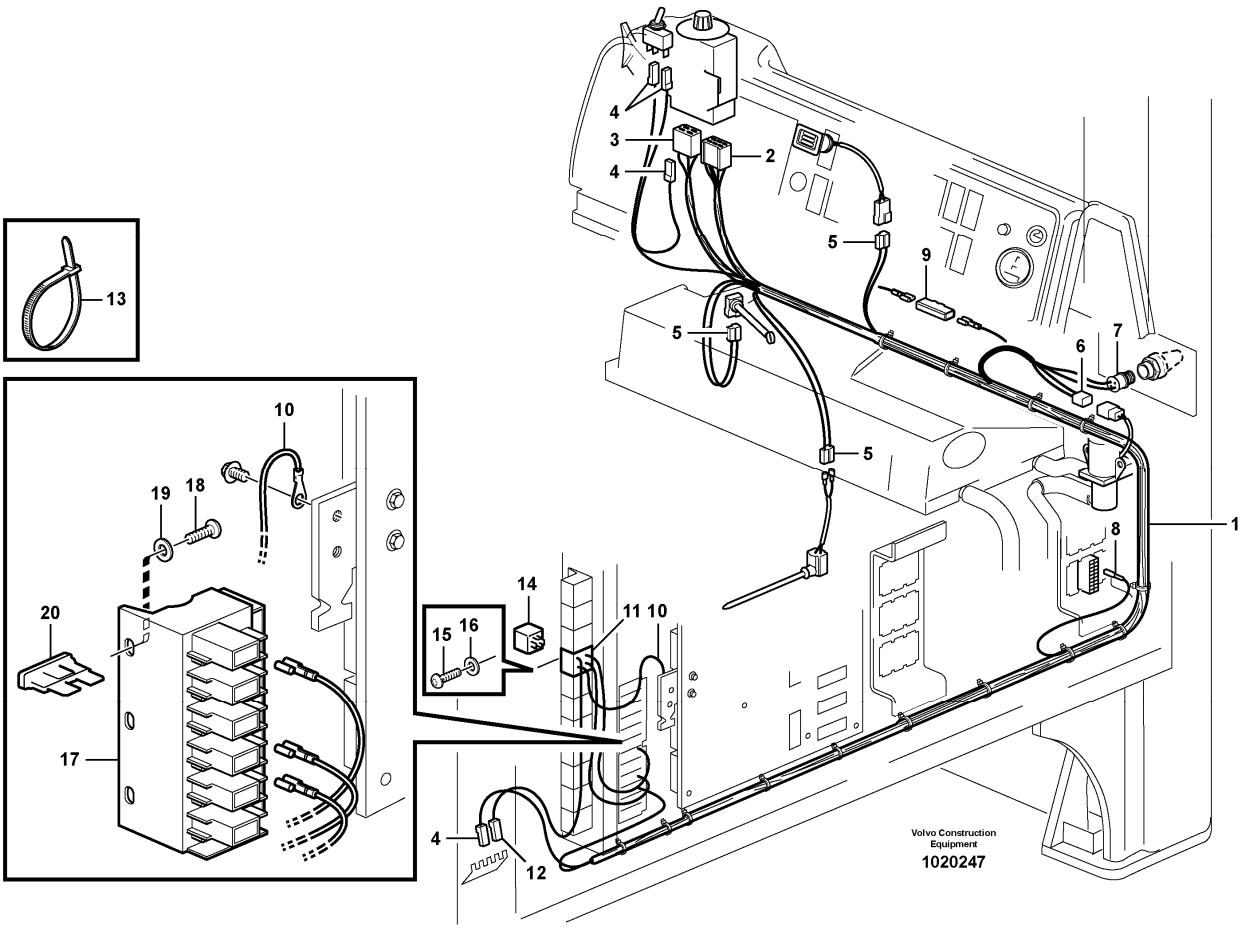

Section option	Kit	Option description
VOE82547		Automatic Temperature Control ATC
VOE82980		Air Conditioning, corrosion prot. condenser, Atc
VOE82983		Air Conditioning, corrosion prot. condenser, Atc
VOE83057		Fuel filter

Q1-Q5	Option	Option description	
Q1 82547 82983 82980	VOE82547	Automatic Temperature Control ATC	
Q2 83057	VOE83057	Fuel filter	

Pos	Part	Q1	Q2	Q3	Q4	Q5	PS	Kit	Description	Option(s)	Remark
1	VOE11170889	1							Cable harness		
									•CONNECTED TO:		
									••Fuse		FU59C

									••Earth		31AC
									••Cable harness		SC7
									••Thermo Monitor		SE809
									••Temp Sensor		SE808, SE810, SE811
									••Switch		SW810
									••Valve		MA802
									••Control Unit		CU803
2		1					NS		•Insulator		(CU803-B)
3	VOE958213	1							•Housing		(CU803-A)
4	VOE13949597	4							•Protecting sleeve		(SW810, CU803-C, 31AC)
5	VOE13958210	3							•Receptacle housing		(SE808, 810, 811, DI801)
6	VOE1307048	1							•Housing		(MA802)
7	VOE949005	1							•Receptacle housing		(SE809)
8	VOE970776	1							•Cable terminal		
9	VOE191910	1							Connector		(SE803)
10	VOE11040641	1	1						Cable harness		
									•CONNECTED TO:		
									••Relay		RE101
									••Fuse		FU55:6, FU58:3
									••Feeding		30
11	VOE977184	1	1						•Housing		(RE101)
12	VOE13949597	1	1						•Protecting sleeve		(31C)
13	VOE4881440	10	10						Cable tie		
14	VOE20374662	1	1						Relay		
15	VOE969278	1	1						Six point socket screw		
16	VOE13940090	1							Washer		
17	VOE11039302	1	1						Fuse holder		
18	VOE969278	2	2						Six point socket screw		
19	VOE13940090	2							Washer		
20	VOE969161	1							Fuse		10A, FU59
20	VOE13969162		1						Fuse		15A, FU58

VOLVO

Construction Equipment

PROSIS Part Information

Date:	Image id:	Catalogue:	Model:
24/08/2018	**1020229**	**20086**	**L120E**
Brand:	Serial:	Group/Section:	Title:
Volvo	**19804-, 66001-, 71401-**	**371/1650**	**Cable harness, compressor 82982, 82979, 82983, 82980**

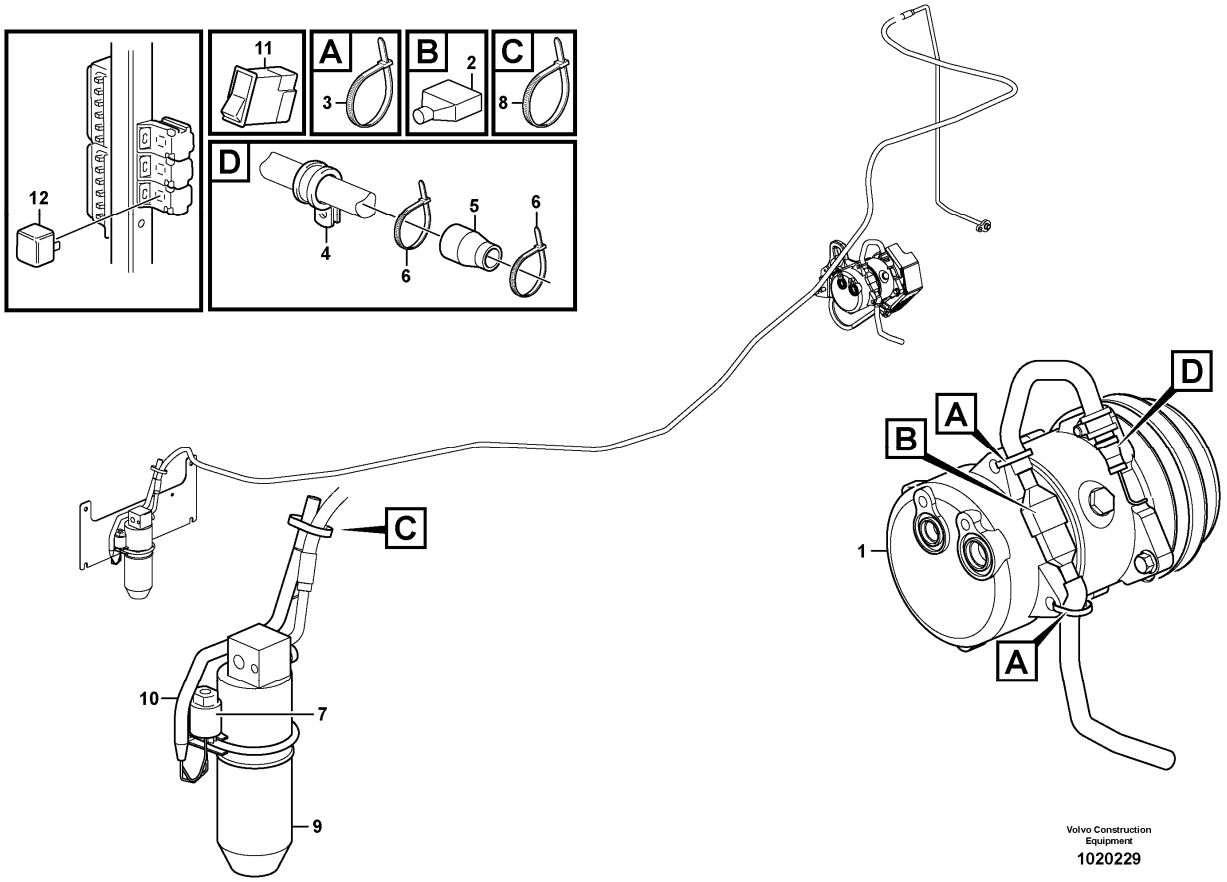

Section option	Kit	Option description
VOE82979		Air Conditioning with corrosion prot. condenser FOR REFRIGERANT R134A
VOE82980		Air Conditioning, corrosion prot. condenser, Atc
VOE82982	VOE11715685	Air conditioning FOR REFRIGERANT R134A
VOE82983		Air Conditioning, corrosion prot. condenser, Atc

Pos	Part	Q1	Q2	Q3	Q4	Q5	PS	Kit	Description	Option(s)	Remark
1									Compressor		See ref 874/150
2	VOE8143240	1							Housing		
3	VOE4881440	2							Cable tie		
4	VOE13949746	1							Clamp		
5	VOE11039397	1							End sleeve		
6	VOE4881440	2							Cable tie		
7	VOE11005913	1							Pressure switch		SE804
8	VOE4881440	1							Cable tie		

9		1							Receiver Drier		See ref 874/300
10		1							Cable harness		See ref 371/700
11		1							Switch		(SW806) See ref 380/200
12		1							Relay		(RE806) See ref 372/100

VOLVO

Construction Equipment

PROSIS Part Information

Date:	Image id:	Catalogue:	Model:
24/08/2018	**1020227**	**20086**	**L120E**
Brand:	Serial:	Group/Section:	Title:
Volvo	**19804-, 66001-, 71401-**	**371/1700**	**Reversible fan 83045, 83046**

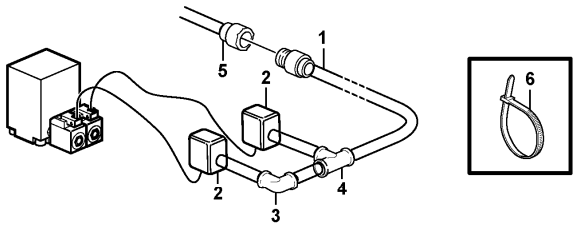

Volvo Construction Equipment
1020227

Section option	Kit	Option description
VOE83045	VOE11715717	Reversible fan
VOE83046		Reversible fan for oil cooler

Pos	Part	Q1	Q2	Q3	Q4	Q5	PS	Kit	Description	Option(s)	Remark
1	VOE11170852	1							Cable harness		
									•CONNECTED TO:		
									••Cable harness		RP
									••Solenoid valve		MA204, MA205
2	VOE976256	2							•Housing		
	VOE8142100	2							•Adapter		
3	VOE11039843	1							•Elbow		
4	VOE11039709	1							•Manifold		
5		1							Cable harness		See ref 371/700
6	VOE4881440	REQ							Cable tie		

VOLVO

Construction Equipment

PROSIS Part Information

Date:	Image id:	Catalogue:	Model:
24/08/2018	**EK394**	**20086**	**L120E**
Brand:	Serial:	Group/Section:	Title:
Volvo	**19804-, 66001-, 71401-**	**371/1750**	**Cable harness for monitor. 82178, 82781**

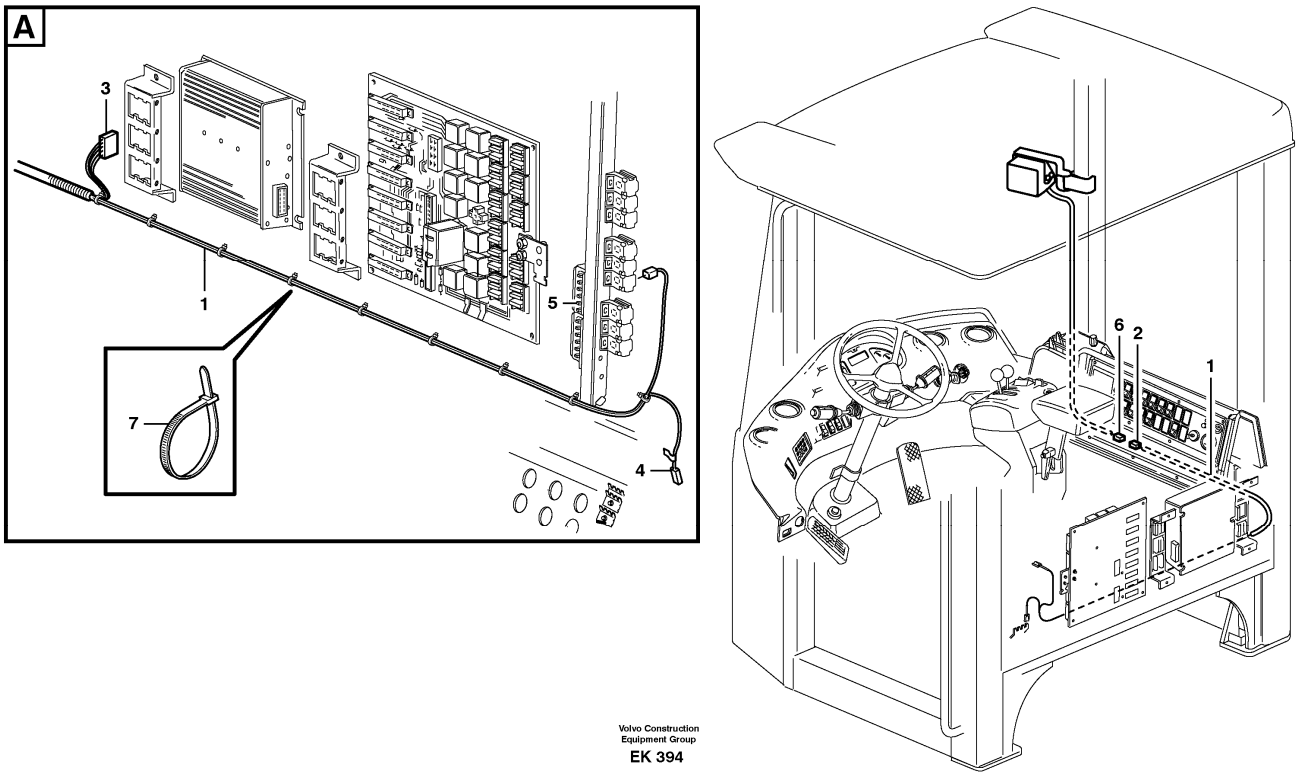

Section option	Kit	Option description
VOE82781		Rear view camera, colour, Lcd monitor
VOE82178	VOE11708916	Back-up camera incl. monitor

Pos	Part	Q1	Q2	Q3	Q4	Q5	PS	Kit	Description	Option(s)	Remark
1	VOE11170517	1							Cable harness		
									•CONNECTED TO:		
									••Wire harness		TV701, MR:10
									••Fuse		FU 54B
									••Earth		101B
2	VOE968389	1							•Housing		
3	VOE1096619	1							•Housing		
4	VOE13949597	1							•Protecting sleeve		
5	VOE13969160	1							Fuse		
6	VOE968388	1							Housing		TV701
7	VOE4881440	REQ							Cable tie		

VOLVO

Construction Equipment

PROSIS Part Information

Date:	Image id:	Catalogue:	Model:
24/08/2018	**1032017**	**20086**	**L120E**
Brand:	Serial:	Group/Section:	Title:
Volvo	**19804-, 66001-, 71401-**	**371/1850**	**Cable harness, fire extinguishing system, cab 83411**

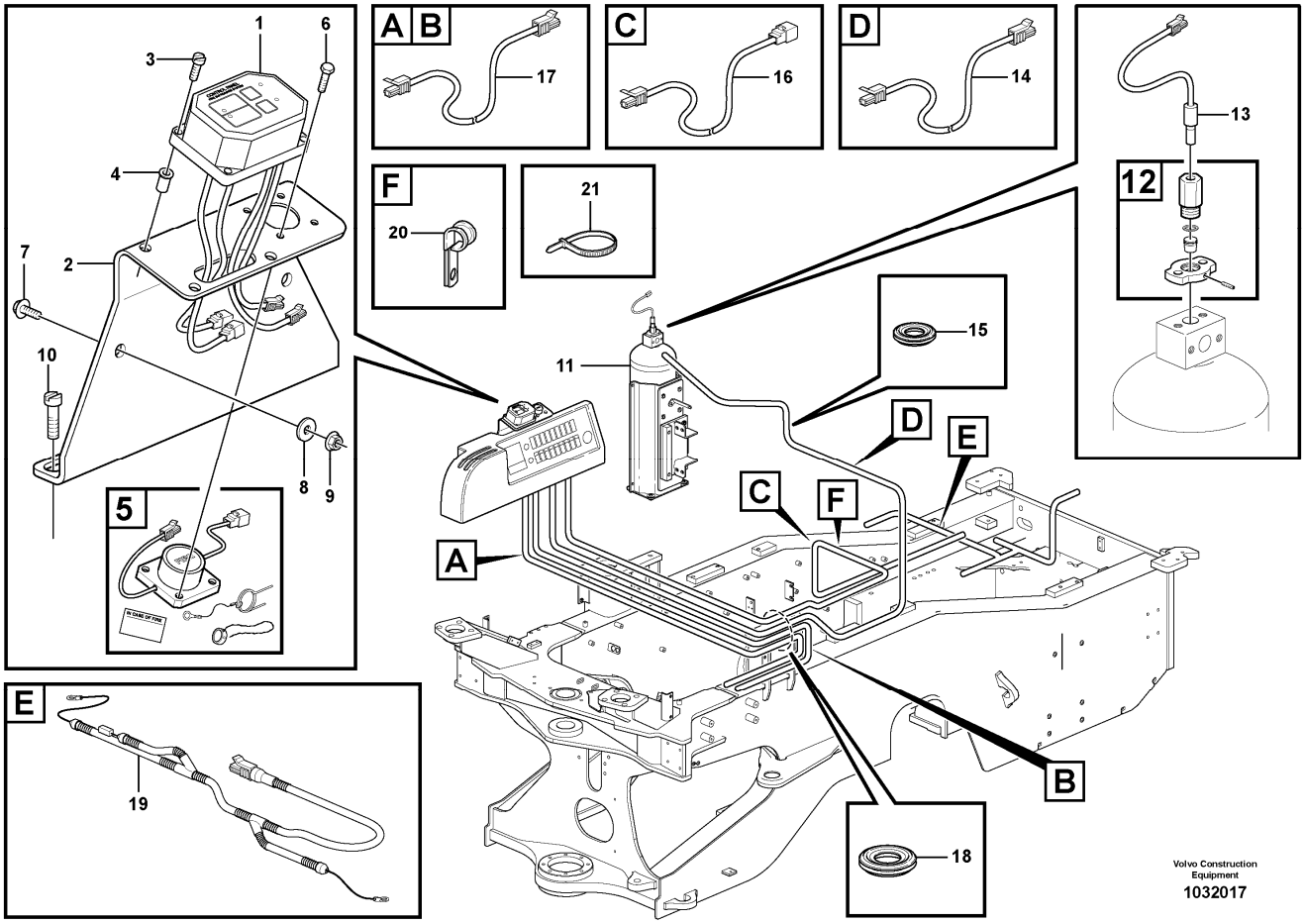

Section option	Kit	Option description
VOE83411		Fire suppression system USA

Pos	Part	Q1	Q2	Q3	Q4	Q5	PS	Kit	Description	Option(s)	Remark
1	VOE11301796	1							Control panel		
2	VOE11301805	1							Bracket		
3	VOE13969516	4							Six point socket screw		
4	VOE930757	4							Expanding nut		
5	VOE11301793	1							Switch		
6	VOE955513	4							Hexagon screw		
7	VOE13946544	2							Screw		
8	VOE13949817	2							Washer		
9	VOE13949278	2							Flange lock nut		
10	VOE969278	3							Six point socket screw		(VOE13969278)

11		1							Tank		See ref 992/125
12	VOE11301768	1							Contact		
13	VOE11301770	1							Actuator		
14	VOE11301791	1							Cable harness		YEL, 20' Activation wire
15	VOE941264	1							Grommet		
16	VOE11301792	1							Cable harness		RED, 20' Power lead
17	VOE11301842	1							Cable harness		GREEN, 20' Sensor cable
	VOE11301790	1							Cable harness		GREEN, 15' Sensor cable
18	VOE13961962	1							Protecting bushing		
19	VOE11301764	1							Cable harness		Fire suppression
									•CONNECTED TO:		
									•Coupling Piece		POS
									•Coupling Piece		NEG
	VOE11039714	1							•Fuse holder		
	VOE873854	2							•Sealing sleeve		
	VOE969161	1							•Fuse		
20	VOE13949746	7							Clamp		
21	VOE4881440	REQ							Cable tie		

VOLVO

Construction Equipment

PROSIS Part Information

Date:	Image id:	Catalogue:	Model:
24/08/2018	**1020205**	**20086**	**L120E**
Brand:	Serial:	Group/Section:	Title:
Volvo	**19804-, 66001-, 71401-**	**371/1950**	**Cable harness air cleaner, cab 83085**

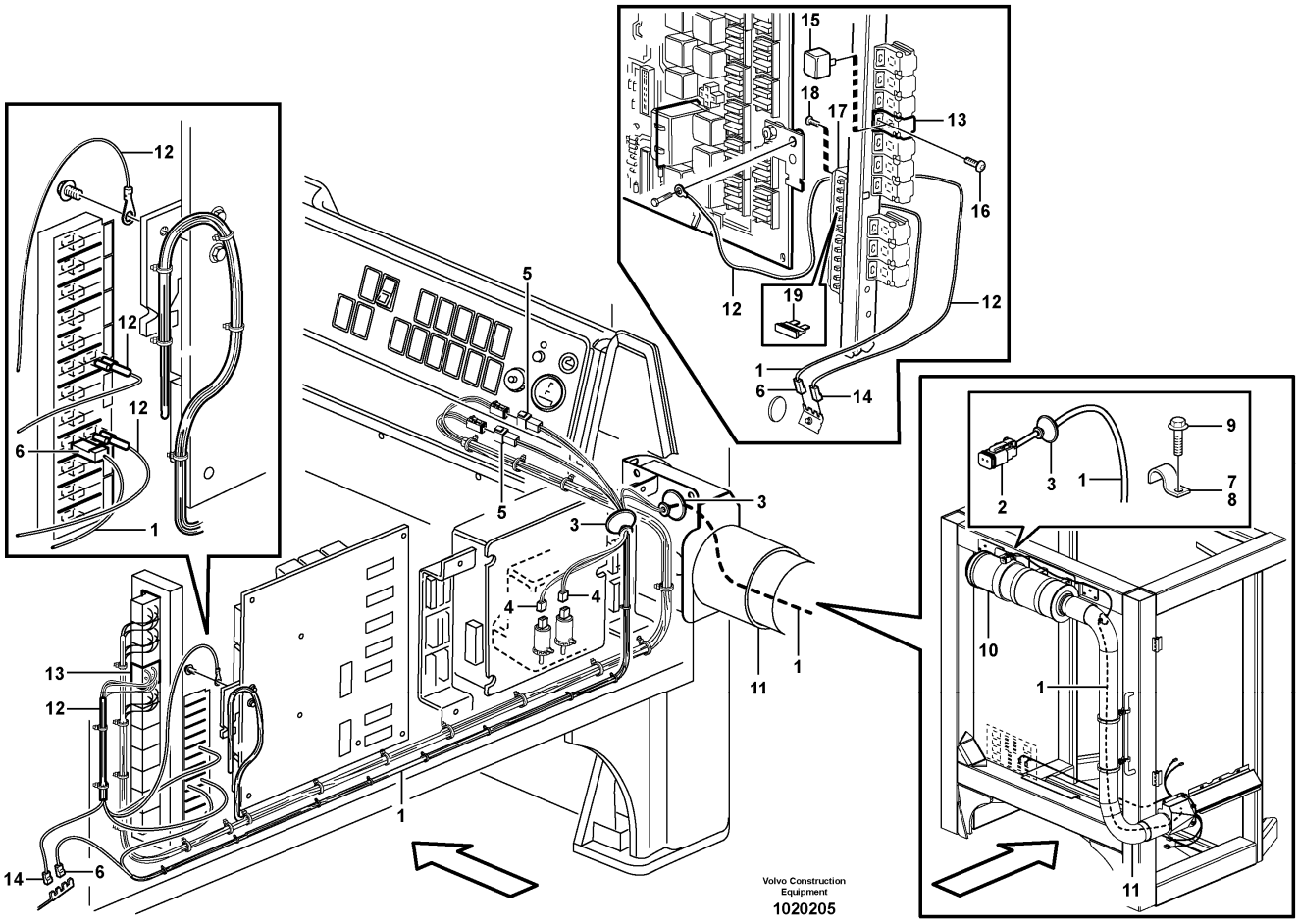

Section option	Kit	Option description
VOE83085		Air filter, cyclone USA

Pos	Part	Q1	Q2	Q3	Q4	Q5	PS	Kit	Description	Option(s)	Remark
1	VOE11171257	1							Cable harness		See footnote 1245)
									•CONNECTED TO:		
									••Fuse box		FU58C
									••Earth		31
									••Switch Panel		MO802, MO804
									••Washer pumps		MO802, MO804
									••Cyclone		MO811
2	VOE14370760	1							•Socket		
3	VOE1259854	3							•Grommet		
4	VOE13958210	2							•Receptacle housing		
5	VOE1259831	2							•Tab housing		

6	VOE13949597	2							•Protecting sleeve		
7	VOE990732	2							Clamp		
8	VOE951190	1							Clamp		
9	VOE13946544	1							Screw		
10		1							Primary Filter		See ref 872/350
11		1							Pipe		See ref 872/350
12	VOE11040641	1							Cable harness		See footnote 1245)
									•CONNECTED TO:		
									••Relay		RE101
									••Fuse		FU55:6, FU58:3
									••Feeding		30
13	VOE977184	1							•Housing		(RE101)
14	VOE13949597	1							•Protecting sleeve		(31C)
15	VOE20374662	1							Relay		RE101
16	VOE969278	1							Six point socket screw		(VOE13969278)
17	VOE11039302	1							Fuse holder		
18	VOE969278	2							Six point socket screw		(VOE13969278)
19	VOE969161	1							Fuse		10A

1245) Including parts: Wire assembly, hose, manifold, cable terminal and insulator See Group 379.

VOLVO

Construction Equipment

PROSIS Part Information

Date:	Image id:	Catalogue:	Model:
24/08/2018	**1006238**	**20086**	**L120E**
Brand:	Serial:	Group/Section:	Title:
Volvo	**19804-, 66001-, 71401-**	**371/2000**	**Cable harness for 3rd and 4th function. 80781, 82408**

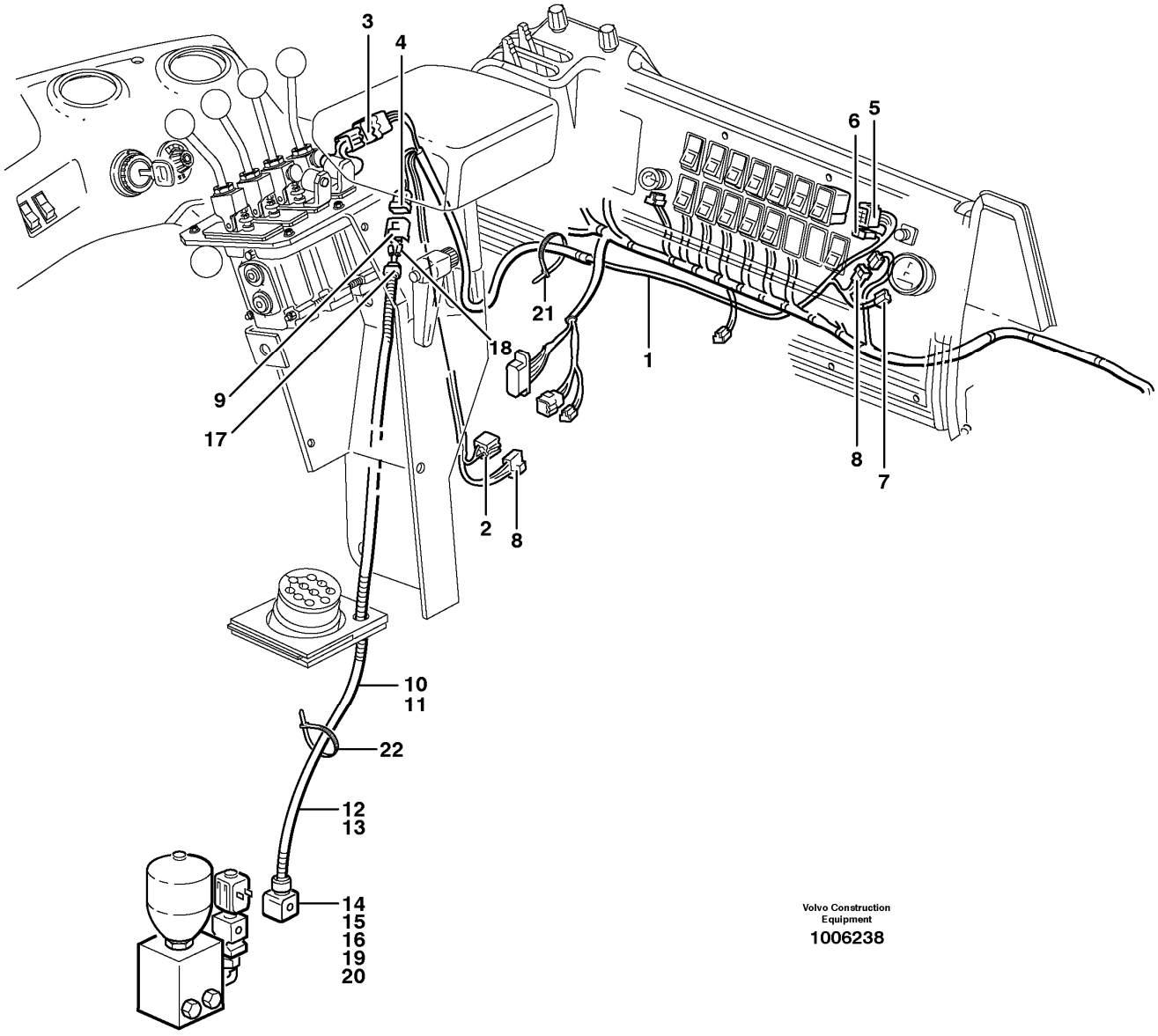

Section option	Kit	Option description
VOE80781	VOE11709027	Hydraulic system, 3rd and 4th function
VOE82408		Hydraulic system, 3rd and 4th function LONG BOOM

Pos	Part	Q1	Q2	Q3	Q4	Q5	PS	Kit	Description	Option(s)	Remark
1	VOE11040524	1							Cable harness		
									•CONNECTED TO:		
									••Wire harness		SF, SH, SJ, SL, SK
									••Control panel		SW911

	VOE970550	REQ							•El Cable		SH1,SH3,SH5,SW911:8, SJ2 SW911:10,SL1,SW911:6 ,SH5
	VOE970579	REQ							•Electric cable		SF2,SH2
	VOE970558	REQ							•Electric cable		SF4,SH4
	VOE970553	REQ							•El Cable		SF6,SH6
	VOE970554	REQ							•El Cable		SW911:5,SJ1
	VOE970559	REQ							•El Cable		SW911:9,SL2
	VOE969830	4							•Cable terminal		SH1,2,4,6
	VOE969836	3							•Cable terminal		SF2,4,6
	VOE969832	2							•Cable terminal		SH3,5
	VOE970745	4							•Cable terminal		SW911-5,6,7,8
	VOE973149	4							•Cable terminal		SW911-23,26.SL28,29
	VOE973117	1							•Cable terminal		SJ3,7
	VOE13949003	2							•Cable terminal		SK1,2
2	VOE948294	1							•Insulator		
3	VOE948295	1							•Insulator		
4	VOE1307048	1							•Housing		
5	VOE4803454	1							•Receptacle housing		
6	VOE4803532	1							•Socket housing		
7	VOE13958210	1							•Receptacle housing		
8	VOE958209	2							•Housing		
9	VOE1307049	1							Tab housing		
10	VOE11170822	1							Cable harness		
									•CONNECTED TO:		
									••Wire harness		SK
									••Solenoid valve		MA 912
11	VOE4803746	REQ							•Hose		
12	VOE970630	REQ							•Electric cable		
13	VOE970624	REQ							•El Cable		
14	VOE976256	1							•Housing		
15	VOE970773	2							•Cable seal		
16	VOE8142100	1							•Adapter		
17	VOE11039397	1							•End sleeve		
18	VOE949625	2							•Cable terminal		
19	VOE970779	2							•Cable terminal		
20	VOE1095059	1							•Joint nipple		
21	VOE4881440	2							Cable tie		
22	VOE4821292	2							Cable tie		

VOLVO

Construction Equipment

PROSIS Part Information

Date:	Image id:	Catalogue:	Model:
24/08/2018	**1032049**	**20086**	**L120E**
Brand:	Serial:	Group/Section:	Title:
Volvo	**19804-, 66001-, 71401-**	**371/2025**	**Cable harness, fire extinguishing system, cab 83411**

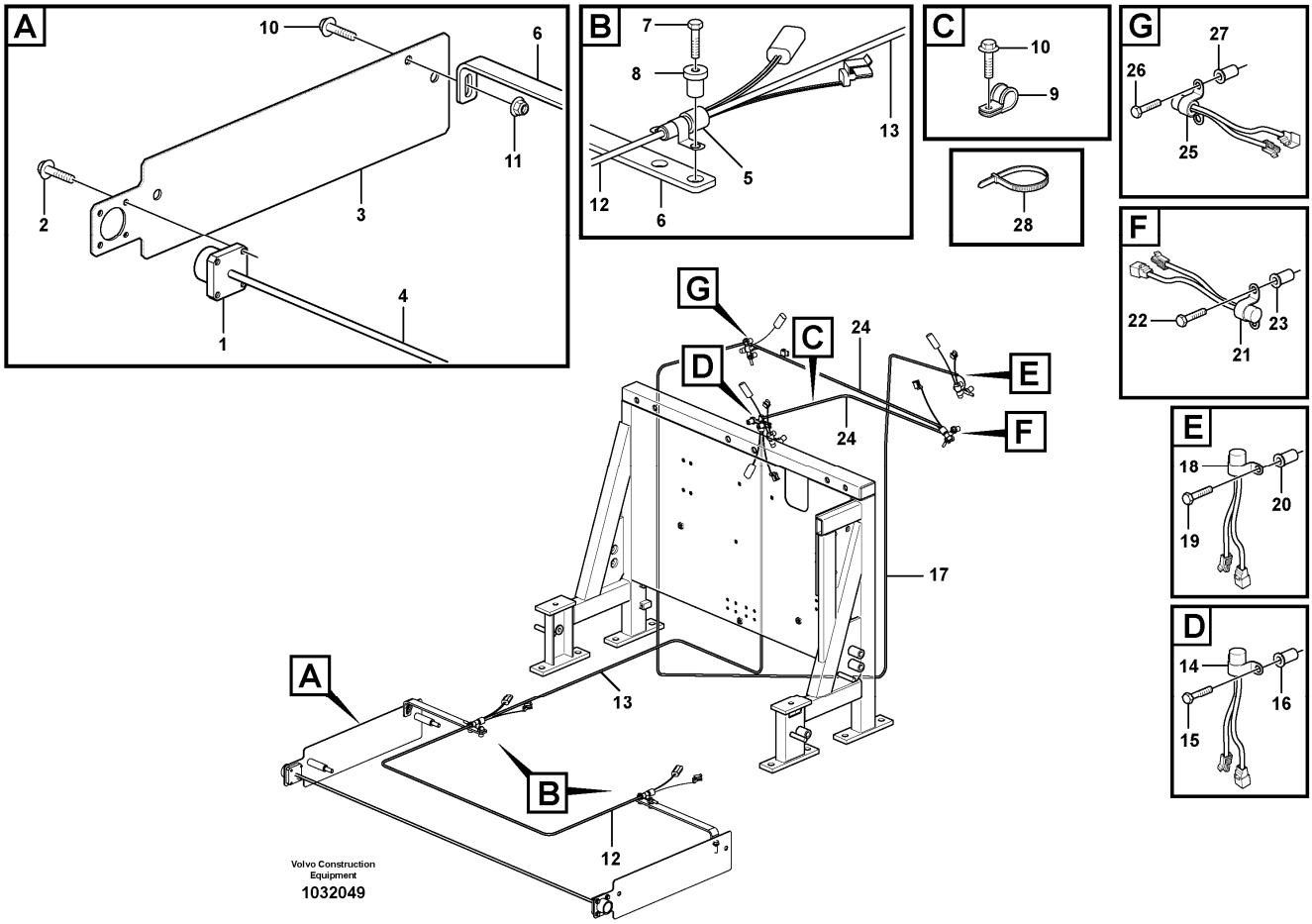

Section option	Kit	Option description
VOE83411		Fire suppression system USA

Pos	Part	Q1	Q2	Q3	Q4	Q5	PS	Kit	Description	Option(s)	Remark
1	VOE11301793	2							Switch		
2	VOE955513	8							Hexagon screw		
3	VOE11301894	2							Plate		
4	VOE11301788	1							Cable harness		
5	VOE11301795	2							Sensor		280 DEG
6	VOE11301965	2							Bracket		
7	VOE13947542	4							Screw		
8	VOE930760	4							Expanding nut		
9	VOE13949746	2							Clamp		
10	VOE13945444	2							Screw		
11	VOE948645	2							Flange lock nut		

12	VOE11301788	1							Cable harness		
13	VOE11301787	1							Cable harness		
14	VOE11301794	1							Sensor		350 DEG
15	VOE13947542	2							Screw		
16	VOE930760	2							Expanding nut		
17	VOE11301790	1							Cable harness		
18	VOE11301794	1							Sensor		350 DEG
19	VOE13947542	2							Screw		
20	VOE930760	2							Expanding nut		
21	VOE11301794	1							Sensor		350 DEG
22	VOE13947542	2							Screw		
23	VOE930760	2							Expanding nut		
24	VOE11301789	2							Cable harness		
25	VOE11301794	1							Sensor		350 DEG
26	VOE13947542	2							Screw		
27	VOE930760	2							Expanding nut		
28	VOE4821292	REQ							Cable tie		

VOLVO

Construction Equipment

PROSIS Part Information

Date:	Image id:	Catalogue:	Model:
24/08/2018	**1020383**	**20086**	**L120E**
Brand:	Serial:	Group/Section:	Title:
Volvo	**19804-, 66001-, 71401-**	**371/2050**	**Cable Harness, return to dig 82890**

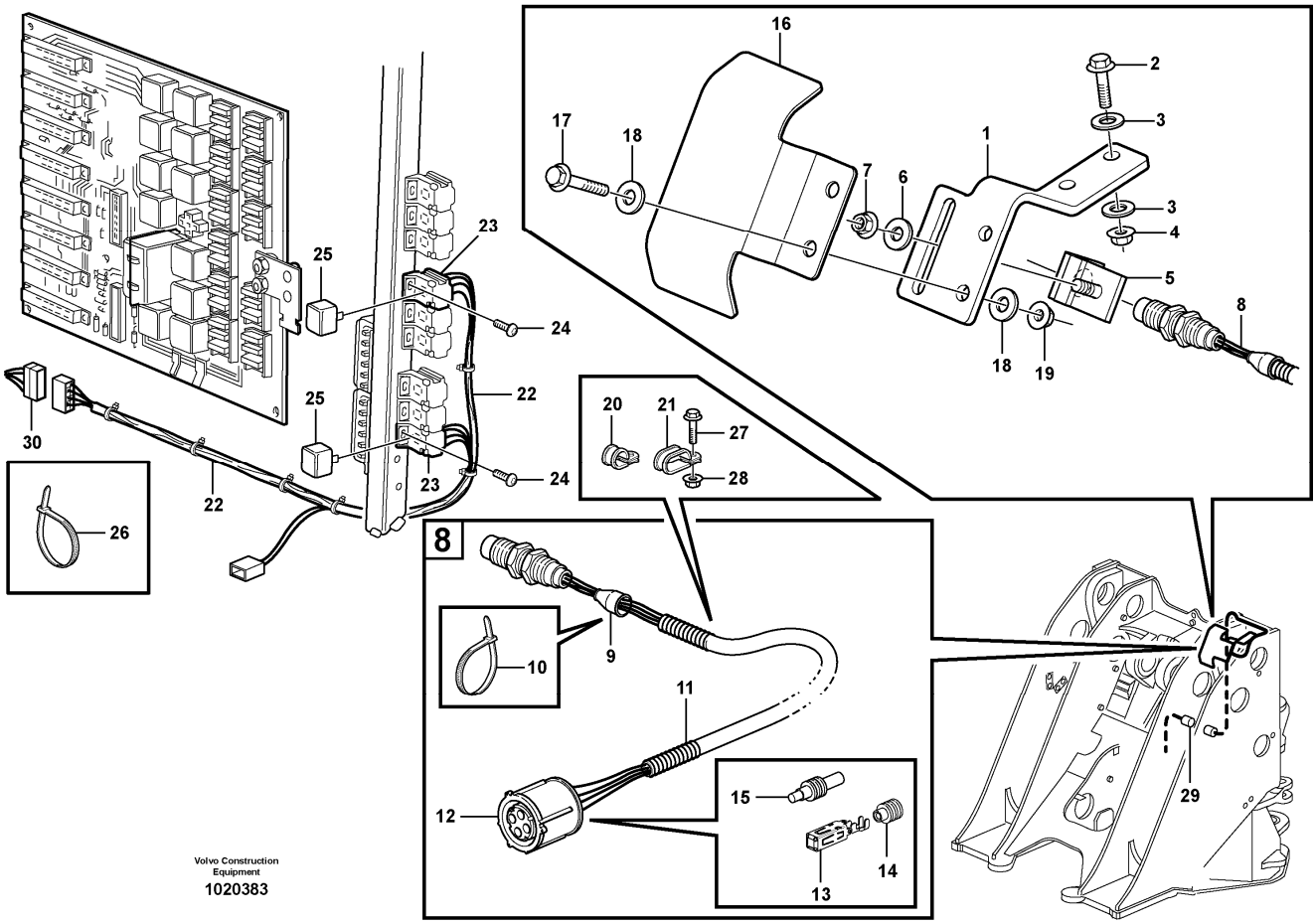

Section option	Kit	Option description
VOE82890		Valve, "return to dig"

Pos	Part	Q1	Q2	Q3	Q4	Q5	PS	Kit	Description	Option(s)	Remark
1	VOE11410880	1							Attachment		
2	VOE13945444	2							Screw		
3	VOE11117464	4							Plain washer		(VOE13960141)
4	VOE948645	2							Flange lock nut		
5	VOE11024585	1							Retainer		
6	VOE11117464	1							Plain washer		(VOE13960141)
7	VOE948645	1							Flange lock nut		
8	VOE16812875	1							Induction sensor		(VOE11170241)SE922
									•CONNECTED TO:		
									••Wire harness		SE922
9	VOE11039397	1							•End sleeve		

10	VOE4821292	1							•Cable tie		
11	VOE4803746	1							•Hose		
12	VOE8159013	1							•Housing		
13	VOE8155901	3							•Cable terminal		
14	VOE8159012	3							•Seal		
15	VOE8155899	1							•Sealing plug		
16	VOE11410867	1							Cover		
17	VOE13945444	2							Screw		
18	VOE11117464	4							Plain washer		(VOE13960141)
19	VOE948645	2							Flange lock nut		
20	VOE13949746	2							Clamp		
21	VOE11132105	2							Clamp		
22	VOE11171093	1							Cable harness		
									•CONNECTED TO:		
									••Relay		RE912
									••Relay		RE913
									••Coupling Piece		SR
									••Coupling Piece		HR
23	VOE977184	2							•Housing		
24	VOE969278	2							Six point socket screw		(VOE13969278)
25	VOE20374662	2							Relay		RE912, RE913
26	VOE4881440	2							Cable tie		
27	VOE13946173	1							Screw		
28	VOE948645	1							Flange lock nut		
29									Wire harness		See ref 371/300
30									Wire harness		SR See ref 371/650

VOLVO

Construction Equipment

PROSIS Part Information

Date:	Image id:	Catalogue:	Model:
24/08/2018	**1023104**	**20086**	**L120E**
Brand:	Serial:	Group/Section:	Title:
Volvo	**19804-, 66001-, 71401-**	**371/2100**	**Cable harness, fuel filter 83057**

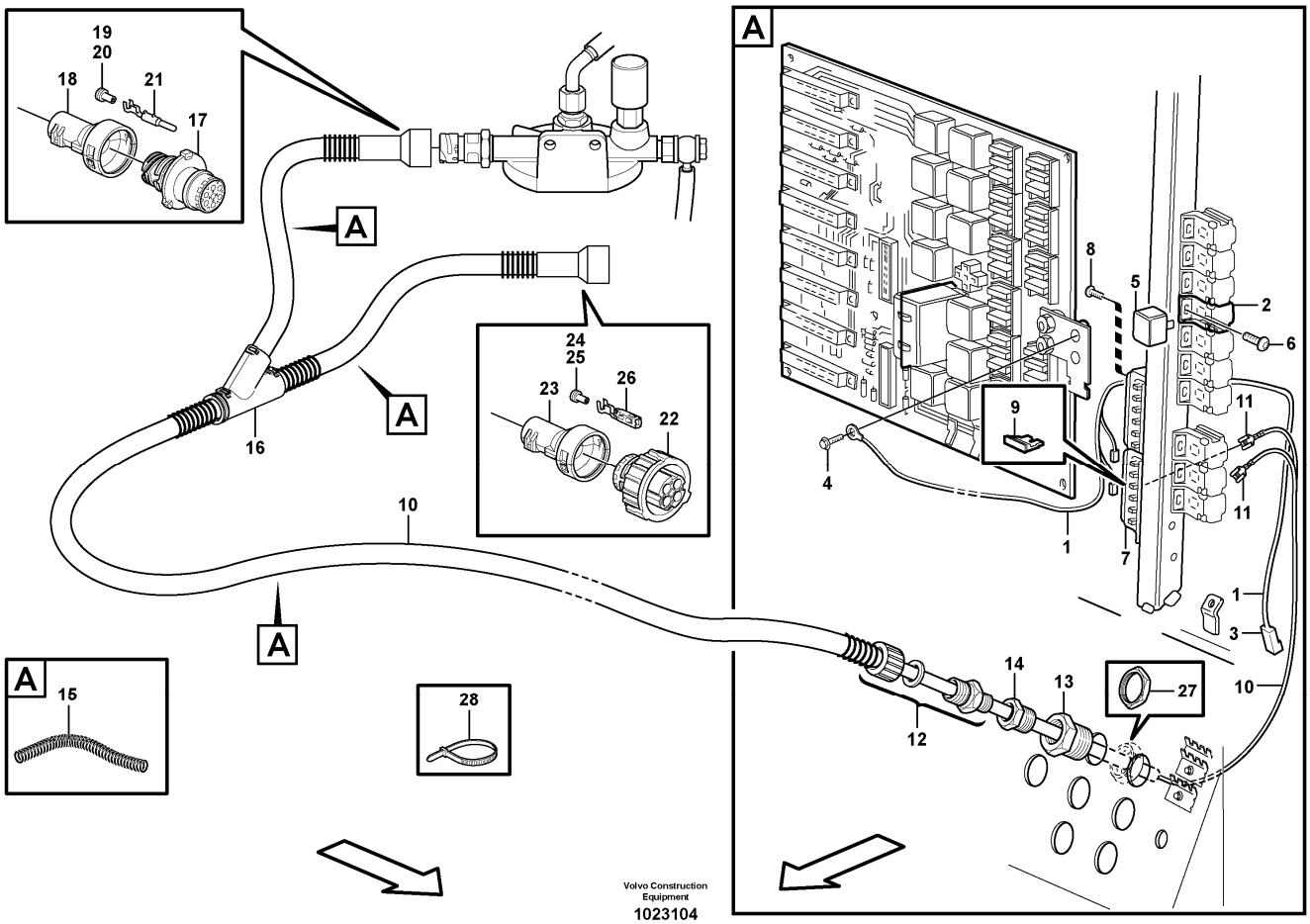

Section option	Kit	Option description
VOE83057		Fuel filter

Pos	Part	Q1	Q2	Q3	Q4	Q5	PS	Kit	Description	Option(s)	Remark
1	VOE11040641	1							Cable harness		See footnote 1245)
									•CONNECTED TO:		
									••Relay		RE101
									••Fuse		FU55:6, FU58:3
									••Feeding		30
2	VOE977184	1							•Housing		(RE101)
3	VOE13949597	1							•Protecting sleeve		(31C)
	VOE4821294	3							•Heat-shrinkable tubing		
4	VOE947107	1							Flange screw		

5	VOE20374662	1							Relay		RE101
6	VOE969278	1							Six point socket screw		
7	VOE11039302	1							Fuse holder		
8	VOE969278	2							Six point socket screw		
9	VOE13969162	1							Fuse		10A
10	VOE11171185	1							Cable harness		See footnote 1245)
									•CONNECTED TO:		
									••Cab		
									••Filter Housing		HE2301 / SE2302
									••Cable harness		
11	VOE973122	2							•Cable terminal		
12	VOE4803765	1							•Hose coupling		
13	VOE4803795	1							•Reduction		
14	VOE11039099	1							•Reduction		
15	VOE4803746	REQ							•Hose		
16	VOE11039665	1							•Manifold		
17	VOE984944	1							•Housing		
18	VOE3985597	1							•Adapter		
19	VOE970773	4							•Cable seal		
20	VOE970771	3							•Cable seal		
21	VOE984946	4							•Cable terminal		
22	VOE3963412	1							•Housing		
23	VOE3985597	1							•Adapter		
24	VOE970773	2							•Cable seal		
25	VOE970771	5							•Cable seal		
26	VOE11039671	2							•Cable terminal		
27	VOE11147868	1							Plastic nut		
28	VOE4881440	REQ							Cable tie		

1245) Including parts: Wire assembly, hose, manifold, cable terminal and insulator See Group 379.

VOLVO

Construction Equipment

PROSIS Part Information

Date:	Image id:	Catalogue:	Model:
24/08/2018	**1015315**	**20086**	**L120E**
Brand:	Serial:	Group/Section:	Title:
Volvo	**19804-, 66001-, 71401-**	**371/2150**	**Wire harness, single-acting lift function 82065**

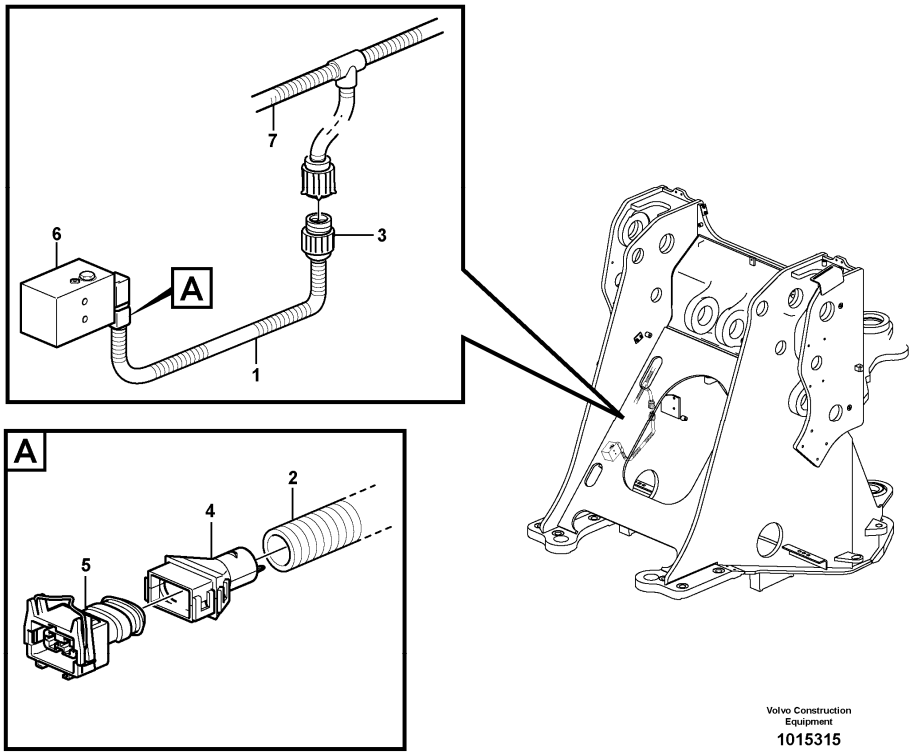

Section option	Kit	Option description
VOE82065		Singel acting lift system

Pos	Part	Q1	Q2	Q3	Q4	Q5	PS	Kit	Description	Option(s)	Remark
1	VOE11170727	1							Cable harness		See footnote 1245)
									•CONNECTED TO:		
									••Solenoid valve		MA908
									••Wire harness		FD
2	VOE4803746	REQ							•Hose		
3	VOE8159013	1							•Housing		
4	VOE8142100	1							•Adapter		
5	VOE976256	1							•Housing		MA908, MA910, MA911
6	VOE11101827	1							•Valve		FD
7		1							Wire harness		See ref 371/300

1245) Including parts: Wire assembly, hose, manifold, cable terminal and insulator See Group 379.

VOLVO

Construction Equipment

PROSIS Part Information

Date:	Image id:	Catalogue:	Model:
24/08/2018	**1019877**	**20086**	**L120E**
Brand:	Serial:	Group/Section:	Title:
Volvo	**19804-, 66001-, 71401-**	**372/100**	**Electrical distribution box**

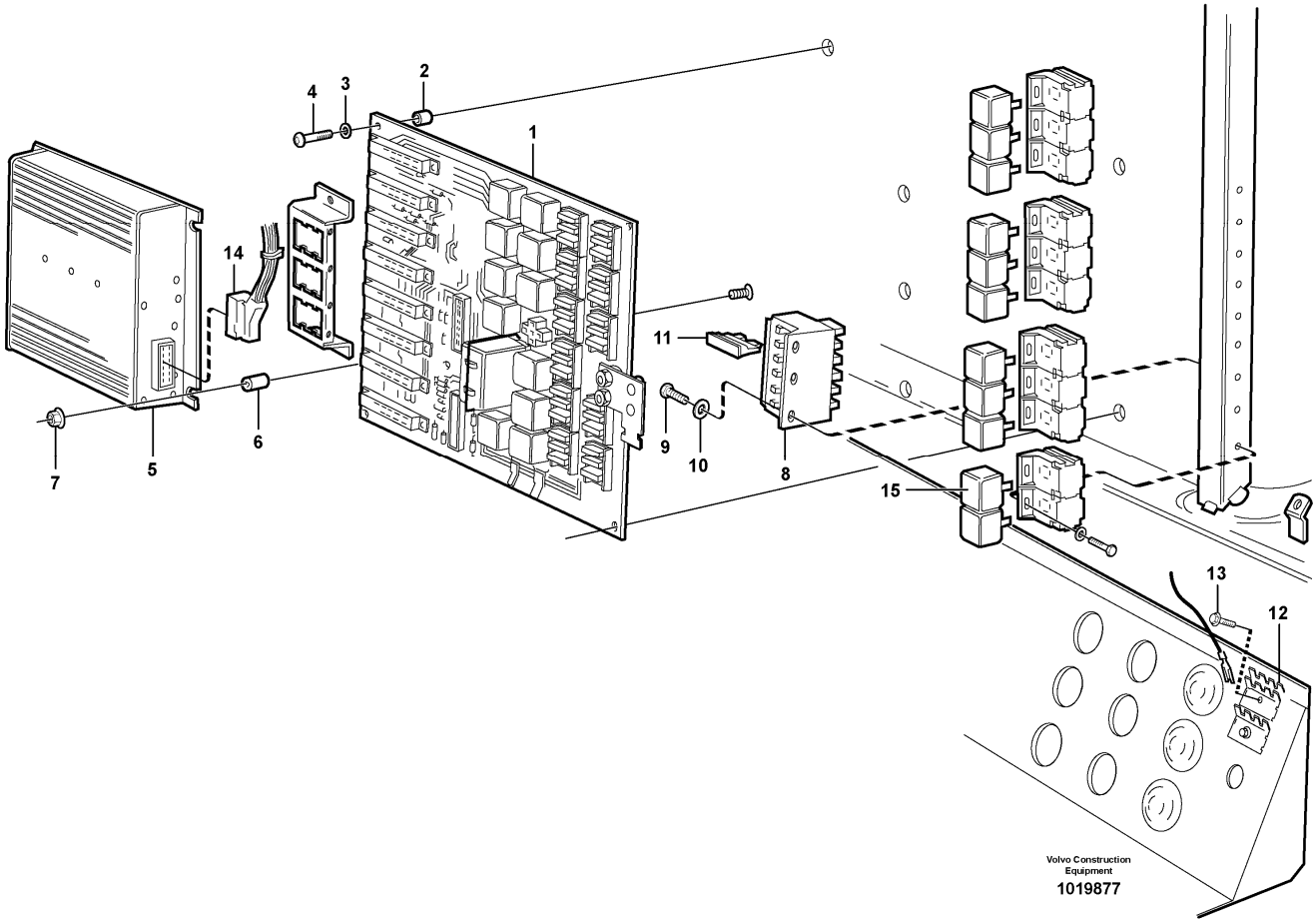

Section option	Kit	Option description
VOE33357		Cab L120E
VOE33366		Cab L120E USA

Pos	Part	Q1	Q2	Q3	Q4	Q5	PS	Kit	Description	Option(s)	Remark
1		1					NS		Circuit Board		See ref 372/150
2	VOE11006880	8							Spacer sleeve		
3	VOE13962653	8							Washer		
4	VOE13980220	8							Six point socket screw		
5	VOE11185050	1							Electronic unit		V-ECU, REMAN VOE9011185050
6	VOE930418	3							Spacer ring		
7	VOE981447	3							Flange lock nut		
8	VOE11039302	1							Fuse holder		
9	VOE969278	2							Six point socket		

									screw		
10	VOE13940090	2							Washer		
11	VOE13969160	2							Fuse		FU62, FU63
12	VOE9148415	2							Terminal block		
13	VOE13948746	1							Screw		
14		1							Wire harness		See ref 372/200
15	VOE20374662	1							Relay		RE806

VOLVO

Construction Equipment

PROSIS Part Information

Date:	Image id:	Catalogue:	Model:
24/08/2018	**EL153**	**20086**	**L120E**
Brand:	Serial:	Group/Section:	Title:
Volvo	**19804-, 66001-, 71401-**	**372/150**	**Circuit board**

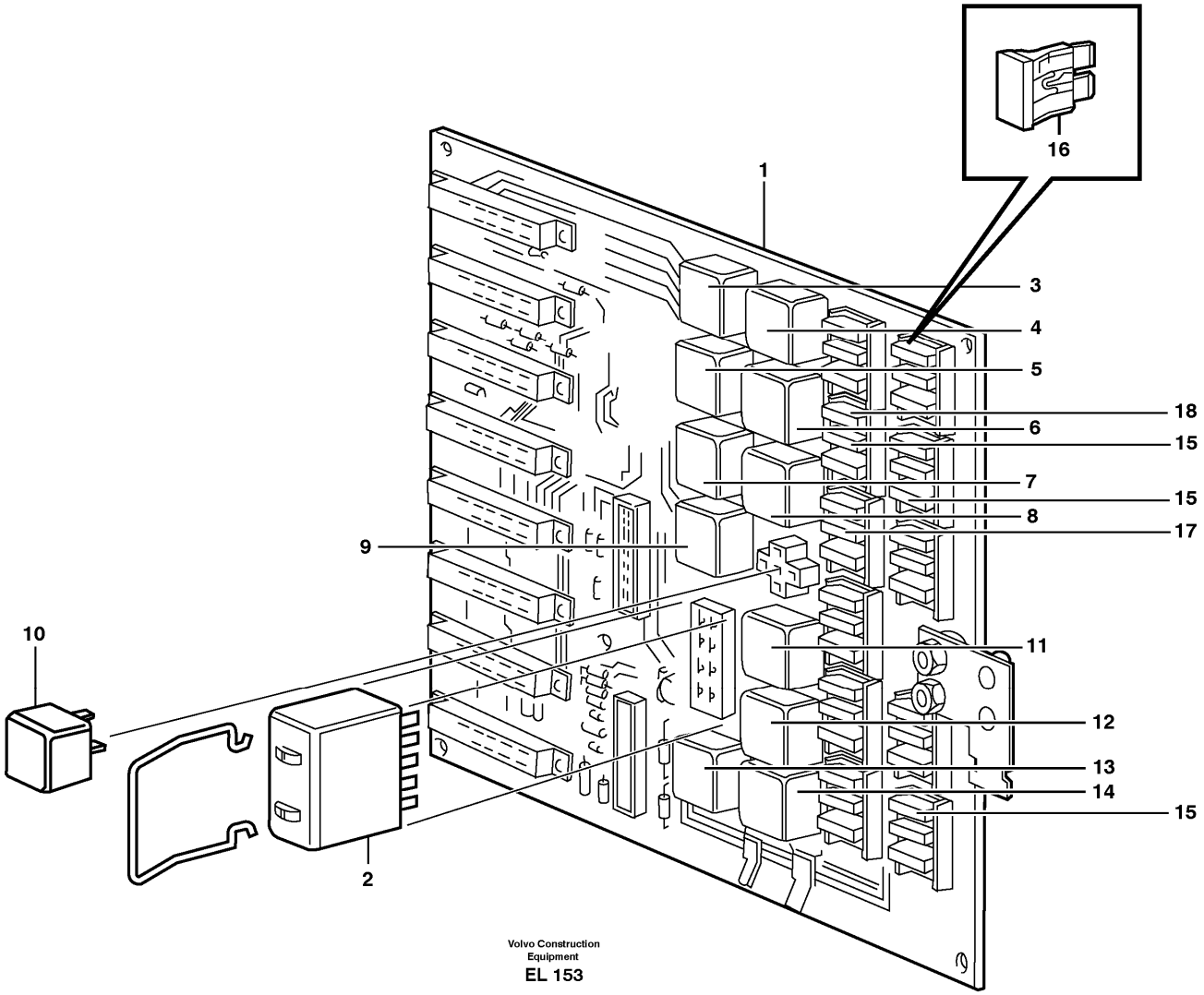

Section option	Kit	Option description
VOE33357		Cab L120E
VOE33366		Cab L120E USA

Pos	Part	Q1	Q2	Q3	Q4	Q5	PS	Kit	Description	Option(s)	Remark
		1					NS		Ptd Circuit Bd		
1	VOE11170013	1							•Ptd Circuit Bd		
									•Relay:		
2	VOE15048941	1							Flasher unit		(VOE11170048)RF1

3	VOE20374662	1							•Relay		RE1
									••Tilt automatic		
4	VOE20374662	1							•Relay		RE2
									••15A-feed		
5	VOE20374662	1							•Relay		RE3
									••Boom kickout		
6	VOE20374662	1							•Relay		RE4
									••15B-feed		
7	VOE20374662	1							•Relay		RE5
									••Interval wiper, rear		
8	VOE20374662	1							•Relay		RE6
									••Interm.wiper,front		
9	VOE20374662	1							•Relay		RE7
									••Boom suspension		
10	VOE20374662	1							•Relay		RE8
									••Start inhibitor		
11	VOE20374662	1							•Relay		RE9
									••Start inhibitor		
12	VOE20374662	1							•Relay		RE10
									••Work lights	VOE80886, VOE82342	
13	VOE20374662	1							•Relay		RE11
									••30-feed		
14	VOE20374662	1							•Relay		RE12
									••15EA-feed		
									•Fuse:		
15	VOE13969160	15							•Fuse		5A
16	VOE969161	13							•Fuse		10A
17	VOE13969162	2							•Fuse		15A
18	VOE978999	3							•Fuse		20A

VOLVO

Construction Equipment

PROSIS Part Information

Date:	Image id:	Catalogue:	Model:
24/08/2018	**1016426**	**20086**	**L120E**
Brand:	Serial:	Group/Section:	Title:
Volvo	**19804-, 66001-, 71401-**	**372/200**	**Electrical distribut.unit and cable harness**

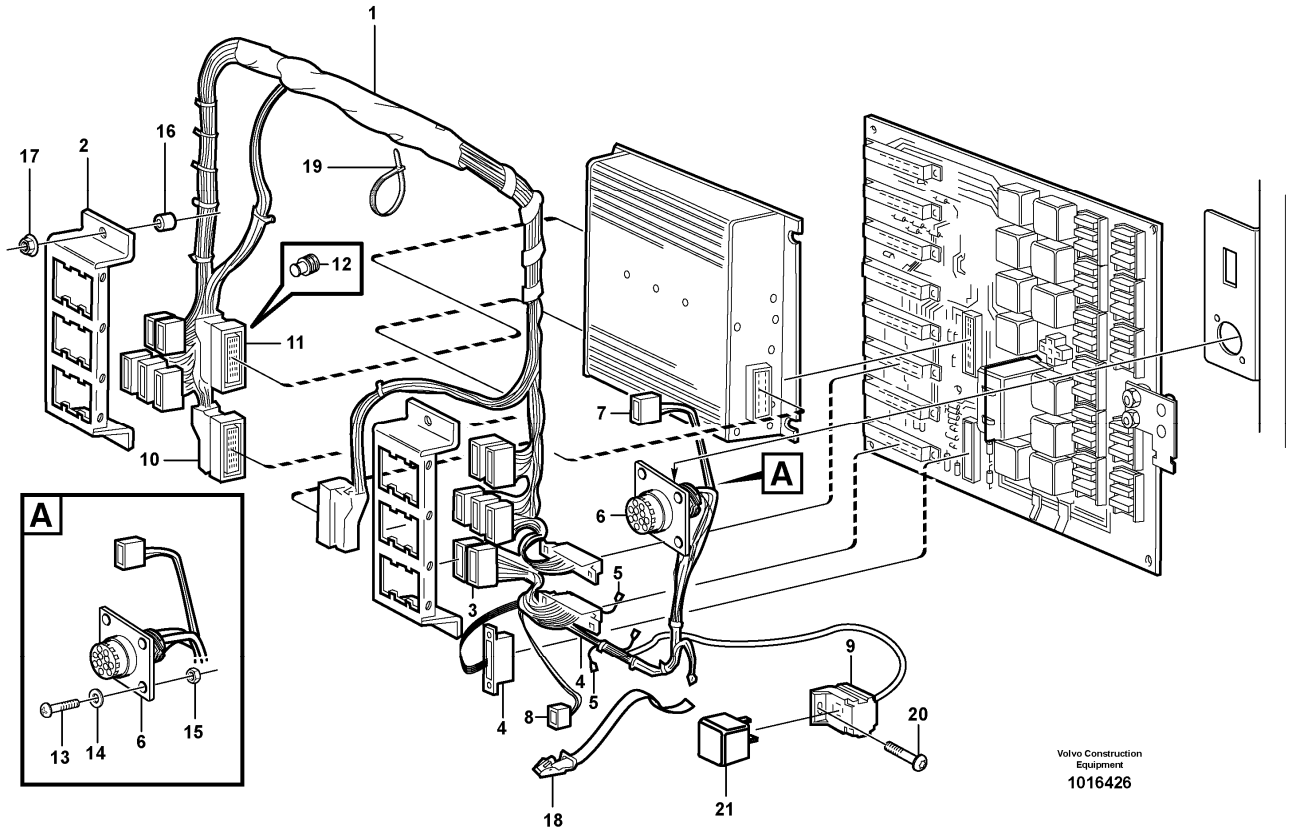

Section option	Kit	Option description
VOE33357		Cab L120E
VOE33366		Cab L120E USA

Pos	Part	Q1	Q2	Q3	Q4	Q5	PS	Kit	Description	Option(s)	Remark
1	VOE11171600	1							Cable harness		See footnote 1245)
									•CONNECTED TO:		
									••Electronic unit		EA, EB, EC
									••Circuit Board		E, C, RD
									••Wire harness		SH, MR, D, SC, CDC, TB, TA, OA, UA, FA, RB, ES, RA, HE802, CL, AC, PA, HR
									••Service display		IA, IB
									••Relay		RE806
									••Fuse		FU54, FU62, FU63

									••Earth		31M
2	VOE11164351	2					OP		•Retainer		
3	VOE1096615	13							•Housing		
4	VOE1096619	3							•Housing		
5	VOE13949597	2							•Protecting sleeve		
6	VOE14340067	1							•Socket housing		
7	VOE1096614	1							•Housing		
8	VOE13958210	1							•Receptacle housing		
9	VOE977184	1							•Housing		
10	VOE11039660	1							•Housing		
11	VOE9148263	2							•Housing		
12	VOE970771	7							•Cable seal		
13	VOE956047	2							Cross recessed screw		
14	VOE955890	2							Plain washer		
15	VOE13966650	2							Lock nut		
16	VOE930418	4							Spacer ring		
17	VOE981447	4							Flange lock nut		
18	VOE11104606	3							Retaining strap		
19	VOE4881440	7							Cable tie		
20	VOE969278	1							Six point socket screw		(VOE13969278)RE801
21		1							Relay		See ref 372/100

1245) Including parts: Wire assembly, hose, manifold, cable terminal and insulator See Group 379.

VOLVO

Construction Equipment

PROSIS Part Information

Date:	Image id:	Catalogue:	Model:
24/08/2018	**ST101**	**20086**	**L120E**
Brand:	Serial:	Group/Section:	Title:
Volvo	**19804-, 66001-, 71401-**	**379/100**	**Wires**

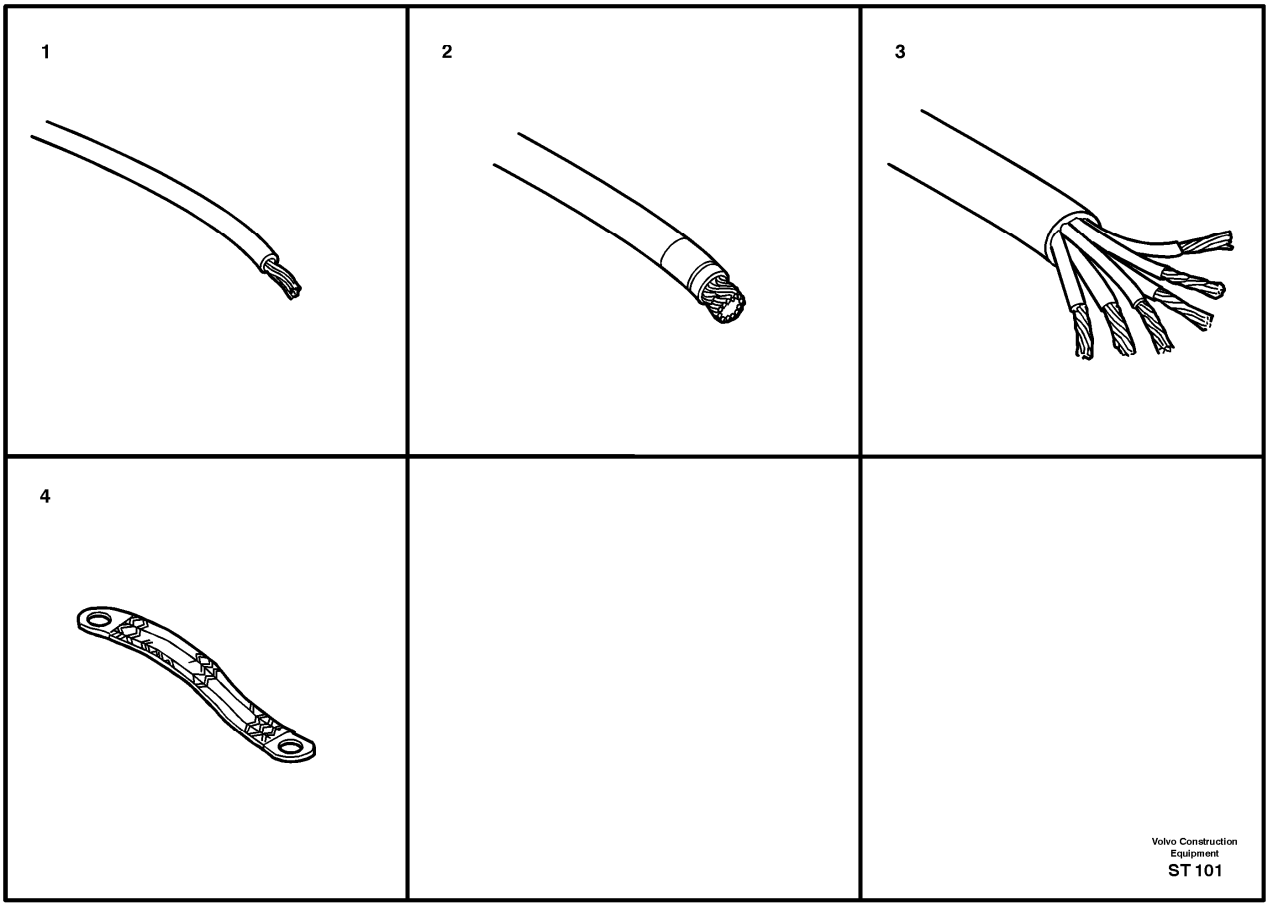

Pos	Part	Q1	Q2	Q3	Q4	Q5	PS	Kit	Description	Option(s)	Remark
									El Cable. Rk		
1	VOE970552	REQ							El Cable		(VOE14023716)RED. RK 0.75 SQ MM
	VOE970555	REQ							El Cable		(VOE14023718)GREEN. RK 0.75 SQ MM
	VOE970556	REQ							Electric cable		(VOE954432)BLUE. RK 0.75 SQ MM
	VOE970572	REQ							Electric cable		(VOE14023722)GREEN/ RED. RK 0.75 SQ MM
	VOE970624	REQ							El Cable		(VOE954443)BLUE. RK 1.5 SQ MM
	VOE970625	REQ							El Cable		(VOE954444)BR. RK 1.5 SQ MM

	VOE970628	REQ							El Cable		(VOE954446)YELL. RK 1.5 SQ MM
	VOE13954447	REQ							Wire		GREEN. RK 1.5 SQ MM
	VOE970630	REQ							Electric cable		(VOE954448)BLUE. RK 1.5 SQ MM
	VOE970633	REQ							El Cable		(VOE954450)WHITE. RK 1.5 SQ MM
	VOE970661	REQ							El Cable		(VOE954451)BLUE. RK 2.5 SQ MM
	VOE14023934	REQ							Cable		BR. RK 2.5 SQ MM
	VOE14023608	REQ							Cable		BLUE. RK 2.5 SQ MM
	VOE970670	REQ							Electric cable		(VOE14103197)WHITE. RK 2.5 SQ MM
	VOE970698	REQ							El Cable		(VOE954459)BLUE. RK 4.0 SQ MM
	VOE954461	REQ					OP		Wire		RED. RK 4.0 SQ MM
									El Cable. R2		
1	VOE970550	REQ							El Cable		BL. R2 0.75 SQ MM
	VOE970551	REQ							Electric cable		BR. R2 0.75 SQ MM
	VOE970552	REQ							El Cable		RED. R2 0.75 SQ MM
	VOE970553	REQ							El Cable		OR. R2 0.75 SQ MM
	VOE970554	REQ							El Cable		YELL. R2 0.75 SQ MM
	VOE970555	REQ							El Cable		GREEN. R2 0.75 SQ MM
	VOE970556	REQ							Electric cable		BLUE. R2 0.75 SQ MM
	VOE970557	REQ							El Cable		VIOL. R2 0.75 SQ MM
	VOE970558	REQ							Electric cable		GREY. R2 0.75 SQ MM
	VOE970559	REQ							El Cable		WHITE. R2 0.75 SQ MM
	VOE970560	REQ							Electric cable		PINK. R2 0.75 SQ MM
	VOE970562	REQ							El Cable		BR/WHITE. R2 0.75 SQ MM
	VOE970563	REQ							El Cable		RED/BLACK.R2 0.75 SQ MM
	VOE970564	REQ							Electric cable		RED/WHITE. R2 0.75 SQ MM
	VOE970565	REQ							Electric cable		YELL/BR. R2 0.75 SQ MM
	VOE970566	REQ							Electric cable		YELL/GREY. R2 0.75 SQ MM
	VOE970567	REQ							Electric cable		YELL/RED. R2 0.75 SQ MM
	VOE970568	REQ							El Cable		YELL/BLUE. R2 0.75 SQ MM
	VOE970569	REQ							Electric cable		YELL/WHITE. R2 0.75 SQ MM
	VOE970571	REQ							El Cable		GREEN/GREY. R2 0.75 SQ MM

	VOE970572	REQ							Electric cable		GREEN/RED. R2 0.75 SQ MM
	VOE970574	REQ							El Cable		GREEN/WHITE R2 0.75 SQ MM
	VOE970575	REQ							El Cable		GREEN/YELL R2 0.75 SQ MM
	VOE970576	REQ							El Cable		BLUE/GREEN. R2 0,75 SQ MM
	VOE970577	REQ							Electric cable		BLUE/RED. R2 0.75 SQ MM
	VOE970578	REQ							El Cable		BLUE/BLACK R2 0.75 SQ MM
	VOE970579	REQ							Electric cable		BLUE/WHITE. R2 0.75 SQ MM
	VOE970580	REQ							Electric cable		BLUE/YELL. R2 0.75 SQ MM
		REQ					NS		Electrical cable		GREY/RED. R2 0.75 SQ MM
	VOE970585	REQ							El Cable		WHITE/BLUE. R2 0.75 SQ MM
		REQ					NS		Electrical cable		OR/BLUE. R2 0.75 SQ MM
		REQ					NS		Electrical cable		OR/WHITE. R2 0.75 SQ MM
	VOE970587	REQ							El Cable		BLUE. R2 1.0 SQ MM
	VOE970593	REQ							Electric cable		BLUE. R2 1.0 SQ MM
	VOE970596	REQ							El Cable		WHITE. R2 1.0 SQ MM
	VOE970624	REQ							El Cable		BLUE. R2 1.5 SQ MM
	VOE970625	REQ							El Cable		BR. R2 1,5 SQ MM
	VOE970626	REQ							Electric cable		RED. R2 1.5 SQ MM
	VOE970627	REQ							El Cable		OR. R2 1.5 SQ MM
	VOE970628	REQ							El Cable		YELL. R2 1.5 SQ MM
	VOE970629	REQ							El Cable		GREEN. R2 1.5 SQ MM
	VOE970630	REQ							Electric cable		BLUE. R2 1.5 SQ MM
	VOE970631	REQ							El Cable		VIOL. R2 1,5 SQ MM
	VOE970632	REQ							El Cable		GREY. R2 1.5 SQ MM
	VOE970633	REQ							El Cable		WHITE. R2 1.5 SQ MM
	VOE970634	REQ							Electric cable		PINK. R2 1,5 SQ MM
	VOE970636	REQ							El Cable		BR/WHITE. R2 1,5 SQ MM
	VOE970637	REQ							Electric cable		RED/BLACK R2 1,5 SQ MM
	VOE970638	REQ							El Cable		RED/WHITE. R2 1,5 SQ MM
	VOE970640	REQ							Electric cable		YELLOW/GREY R2 1,5 SQ MM
	VOE970642	REQ							Electric cable		YELLOW/BLACK R2 1,5 SQ MM
	VOE970643	REQ							Electric cable		YELL/WHITE. R2 1,5 SQ

											MM
	VOE970646	REQ							El Cable		GREEN/RED. R2 1,5 SQ MM
	VOE970648	REQ							El Cable		GREEN/WHITE. R2 1,5 SQ MM
	VOE970649	REQ							Electric cable		GREEN/YELLOW R2 1,5 SQ MM
	VOE970651	REQ							El Cable		BLUE/RED R2 1,5 SQ MM
	VOE970652	REQ							El Cable		BLUE/BL R2 1,5 SQ MM
	VOE970653	REQ							El Cable		BLUE/WHITE. R2 1,5 SQ MM
	VOE970654	REQ							El Cable		BLUE/YELL. R2 1,5 SQ MM
	VOE970659	REQ							El Cable		WHITE/BL. R2 1,5 SQ MM
	VOE970661	REQ							El Cable		BLUE. R2 2.5 SQ MM
	VOE970663	REQ							Electric cable		RED. R2 2.5 SQ MM
	VOE970665	REQ							El Cable		YELLOW R2 2,5 SQ MM
	VOE970670	REQ							Electric cable		WHITE. R2 2.5 SQ MM
	VOE970675	REQ							Electric cable		RED/WHITE R2 2.5 SQ MM
	VOE970686	REQ							Electric cable		GREEN/YELLOW R2 2,5 SQ MM
	VOE970696	REQ							Electric cable		WHITE/BL R2 2,5 SQ MM
2	VOE970733	REQ							El Cable		RED. R2 16.0 SQ MM
	VOE954491	REQ							El Cable		BL. RK 50.0 SQ MM
	VOE954493	REQ					OP		Wire		BLUE. RK 70.0 SQ MM
3	VOE191859	REQ							El Cable		RKKB 6 x 1.5 SQ MM
4	VOE7190339	REQ					SS		Cable		L=200MM. ID 2 x 11,5MM
	VOE944623	REQ							Ground cable		L=350MM. ID 11 + 13MM
	VOE6626273	REQ					OP		Cable		L=695MM. ID 2 x 11MM

VOLVO

Construction Equipment

PROSIS Part Information

Date:	Image id:	Catalogue:	Model:
24/08/2018	**1009676**	**20086**	**L120E**
Brand:	Serial:	Group/Section:	Title:
Volvo	**19804-, 66001-, 71401-**	**379/150**	**Hose and manifold**

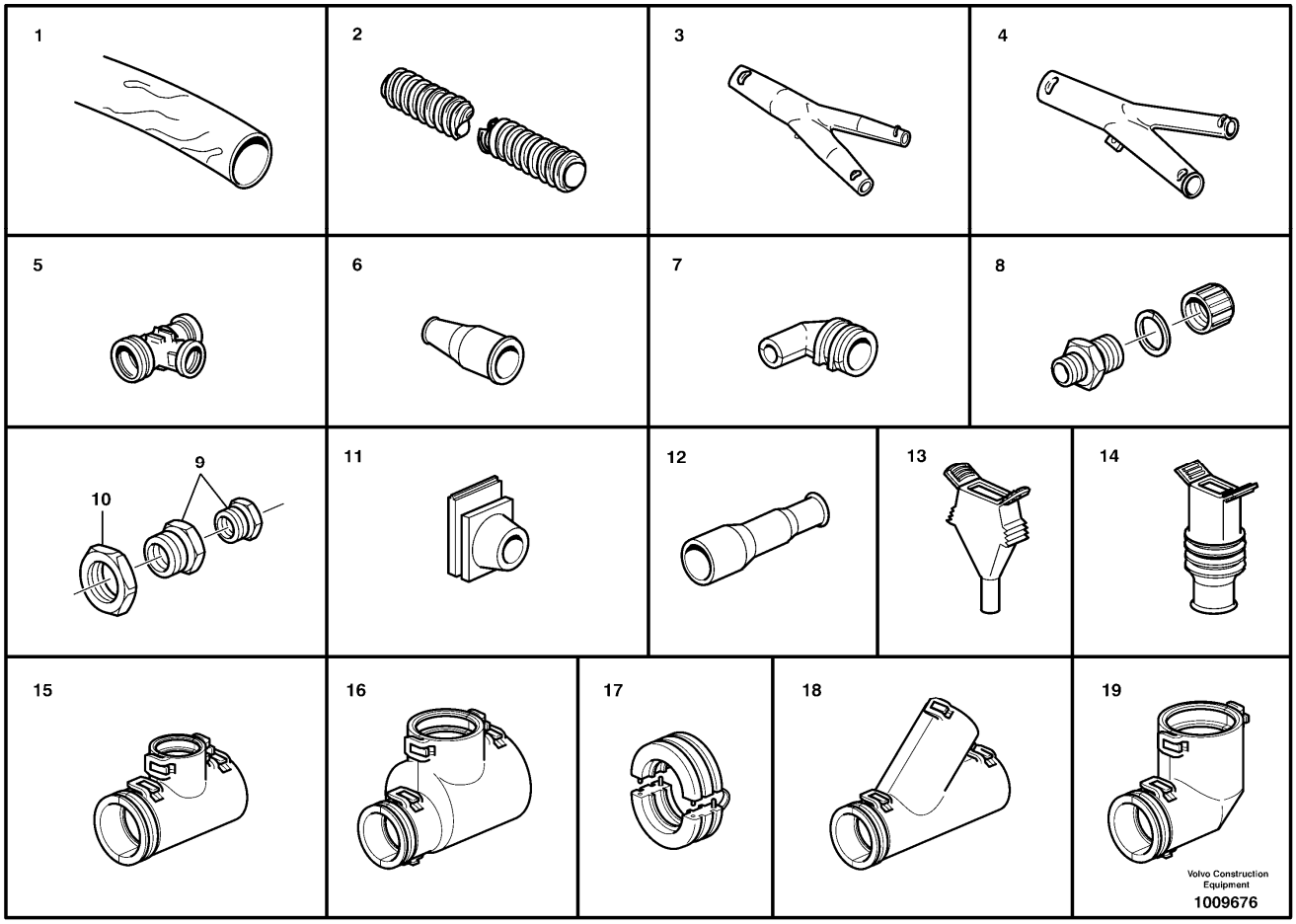

Pos	Part	Q1	Q2	Q3	Q4	Q5	PS	Kit	Description	Option(s)	Remark
1	VOE185506	REQ							Hose		PVC. ID=5MM. OD=6MM
	VOE185501	REQ							Hose		PVC. ID=8MM. OD=9MM
2	VOE4803745	REQ							Hose		ID 8.5MM
	VOE4803746	REQ							Hose		ID 10MM
	VOE11039491	REQ							Hose		ID 10MM
	VOE4803747	REQ							Hose		ID 12MM
	VOE4803748	REQ							Hose		ID 13MM
	VOE4803751	REQ							Hose		ID 17MM
	VOE4803752	REQ							Hose		ID 22MM
	VOE4803754	REQ							Hose		ID 26MM
	VOE4803755	REQ							Hose		ID 29MM

									Manifold		Type N
3	VOE4803730	REQ							Manifold		Tube 17.0-10.0-10.0MM
	VOE4803728	REQ							Manifold		Tube 13.0-10.0-10.0MM
	VOE4803729	REQ							Manifold		Tube 13.0-13.0-10.0MM
	VOE4803731	REQ							Manifold		Tube 17.0-13.0-10.0MM
	VOE4803732	REQ							Manifold		Tube 17.0-13.0-13.0MM
	VOE4803733	REQ							Manifold		Tube 17.0-17.0-10.0MM
	VOE4803736	REQ							Manifold		Tube 22.0-22.0-10.0MM
	VOE4803738	REQ							Manifold		Tube 22.0-22.0-17.0MM
	VOE4803740	REQ							Manifold		Tube 29.0-22.0-22.0MM
	VOE4803739	REQ							Manifold		Tube 22.0-22.0-22.0MM
									Manifold		Type O
4	VOE4803727	REQ							Manifold		Tube 10.0-10.0-10.0MM
	VOE11039109	REQ							Manifold		Tube 17.0-17.0-13.0MM
	VOE11039110	REQ							Manifold		Tube 17.0-17.0-8.5MM
	VOE4803734	REQ							Manifold		Tube 22.0-17.0-13.0MM
	VOE11039117	REQ							Manifold		Tube 22.0-17.0-17.0MM
5	VOE3943086	REQ							Manifold		Tube 7.5-7.5-7.5MM
	VOE3943089	REQ							Manifold		Tube 10-10-10MM
	VOE3943091	REQ							Manifold		Tube 13-10-10MM
									End sleeve		
6	VOE11039397	REQ							End sleeve		ID 10 x 5MM
	VOE4803711	REQ							End sleeve		ID 12-13 x 4-9MM
	VOE4803713	REQ							End sleeve		ID 16-17 x 6-14MM
	VOE4803714	REQ							End sleeve		ID 22 x 7-17MM
7	VOE1095059	REQ							Joint nipple		
									Hose coupling		
8	VOE4803765	REQ							Hose coupling		PG 9 ID A = 10.5MM
	VOE4803766	REQ							Hose coupling		PG 11 ID A = 14MM
	VOE4803768	REQ							Hose coupling		PG 16 ID A = 17MM

	VOE4803769	REQ							Hose coupling		PG 21 ID A = 22MM
	VOE14343156	REQ							Fitting		PG 21 ID = 32MM
	VOE4803771	REQ							Hose coupling		PG 29 ID A = 29.5MM
									Reduction		
9	VOE11039099	REQ							Reduction		RED 16-9MM
	VOE11039050	REQ							Reduction		RED 16-11MM
	VOE4803795	REQ							Reduction		RED 29-16MM
	VOE11039378	REQ							Reduction		RED 21-16MM
	VOE11039398	REQ							Reduction		RED 29-21MM
10	VOE11147868	REQ							Plastic nut		(VOE4803793)PG 29
11	VOE11039005	REQ							Bushing		
	VOE11039275	REQ							Bushing		
12	VOE1573077	REQ							Bellows		
13	VOE945783	REQ							Housing Cover		3-POLE
14	VOE1620582	REQ							Bellows		
15	VOE14346331	REQ							Manifold		Tube 10-10-13MM
	VOE14267351	REQ							Manifold		Tube 13-10-13MM
	VOE14340330	REQ							Manifold		Tube 13-13-10MM
16	VOE11039663	REQ							Manifold		Tube 22-22-17MM
	VOE11039664	REQ							Manifold		Tube 13-13-13MM
	VOE11039709	REQ							Manifold		Tube 10-10-10MM
	VOE11039710	REQ							Manifold		Tube 17-10-17MM
17	VOE14346386	REQ							Fitting		RED 22/17 MM
		REQ					NS		Reduction		RED 13/10 MM
18	VOE11039665	REQ							Manifold		Tube 10-10-10MM
19	VOE11170084	REQ							Elbow		Nw10
	VOE11039843	REQ							Elbow		Nw13

VOLVO

Construction Equipment

PROSIS Part Information

Date:	Image id:	Catalogue:	Model:
24/08/2018	**ST103**	**20086**	**L120E**
Brand:	Serial:	Group/Section:	Title:
Volvo	**19804-, 66001-, 71401-**	**379/200**	**Cable terminal**

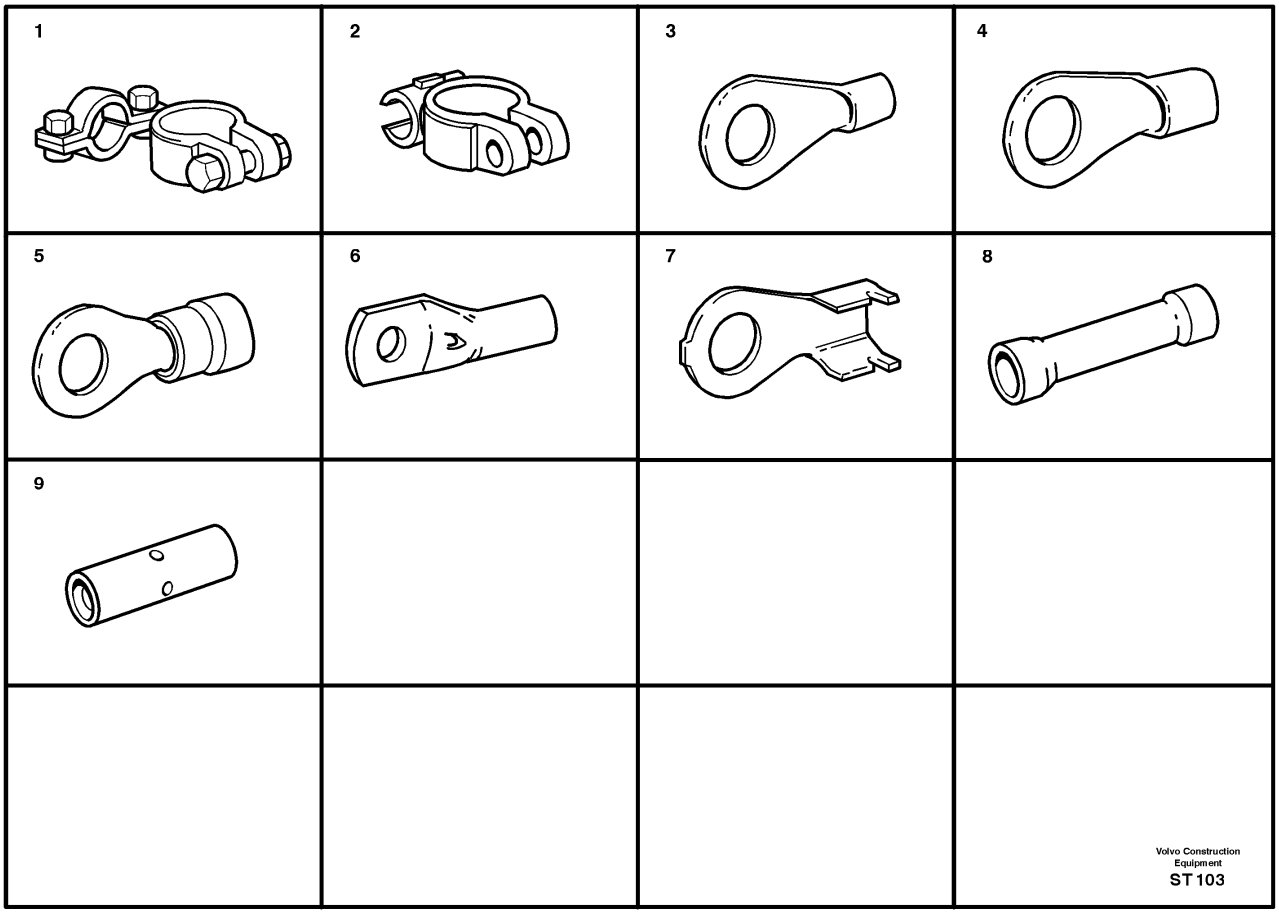

Pos	Part	Q1	Q2	Q3	Q4	Q5	PS	Kit	Description	Option(s)	Remark
1	VOE6600001	REQ							Cable terminal		(-)
	VOE6600002	REQ							Cable terminal		(+)
2	VOE954505	REQ							Cable terminal		70 - 95 SQ MM(-)
	VOE954506	REQ							Cable terminal		70 - 95 SQ MM(+)
3	VOE940333	REQ							Cable terminal		6.5 - 10.5 SQ MM. M8
4	VOE940335	REQ							Cable terminal		16 SQ MM. M6
	VOE940337	REQ							Cable terminal		16 SQ MM. M10
	VOE965792	REQ							Cable terminal		25 SQ MM. M10
	VOE941339	REQ							Cable terminal		50 SQ MM. M10
	VOE954510	REQ							Cable terminal		70 SQ MM. M10

	VOE13965805	REQ							Cable terminal		70.1 - 95 SQ MM. M10
	VOE13965893	REQ							Cable terminal		70.1 - 95 SQ MM. M10
5	VOE956925	REQ							Cable terminal		0.5 - 1.0 SQ MM. M4 RED
	VOE956926	REQ							Cable terminal		0.5 - 1.0 SQ MM. M5 RED
	VOE958220	REQ							Cable terminal		0.5 - 1.0 SQ MM. M6 RED
	VOE956928	REQ							Cable terminal		1.5 - 2.5 SQ MM. M4 BLUE
	VOE956929	REQ							Cable terminal		1.5 - 2.5 SQ MM. M5 BLUE
	VOE956930	REQ							Cable terminal		1.5 - 2.5 SQ MM. M6 BLUE
	VOE956931	REQ							Cable terminal		1.5 - 2.5 SQ MM, M8 BLUE
	VOE956965	REQ							Cable terminal		1.5 - 2.5 SQ MM. M10 BLUE
	VOE956933	REQ							Cable terminal		4 - 6 SQ MM. M5 YELL
	VOE956934	REQ							Cable terminal		4 - 6 SQ MM. M6 YELL
	VOE956936	REQ							Cable terminal		4 - 6 SQ MM. M10 YELL
6	VOE13947459	REQ							Cable terminal		25 SQ MM. M6
	VOE11715595	REQ							Cable terminal		(VOE13967812)35 SQ MM. M6
	VOE11715939	REQ							Cable terminal		(VOE13941935)35 SQ MM. M8
	VOE13968137	REQ							Cable terminal		50 SQ MM. M6
	VOE13965890	REQ							Cable terminal		50 SQ MM. M8
7	VOE958220	REQ							Cable terminal		(VOE970783)0.5 - 1.0 SQ MM. M6
	VOE970795	REQ							Cable terminal		2.6 - 6.0 SQ MM. M8
8	VOE956956	REQ							Splice		0.5 - 1.0 SQ MM. RED
	VOE956958	REQ							Splice		1.5 - 2.5 SQ MM. BLUE
	VOE956960	REQ							Splice		3 - 6 SQ MM. YELL
9	VOE946165	REQ							Splice		0.25 - 1.6 SQ MM

VOLVO

Construction Equipment

PROSIS Part Information

Date:	Image id:	Catalogue:	Model:
24/08/2018	**ST104A**	**20086**	**L120E**
Brand:	Serial:	Group/Section:	Title:
Volvo	**19804-, 66001-, 71401-**	**379/300**	**Insulator for spade terminal**

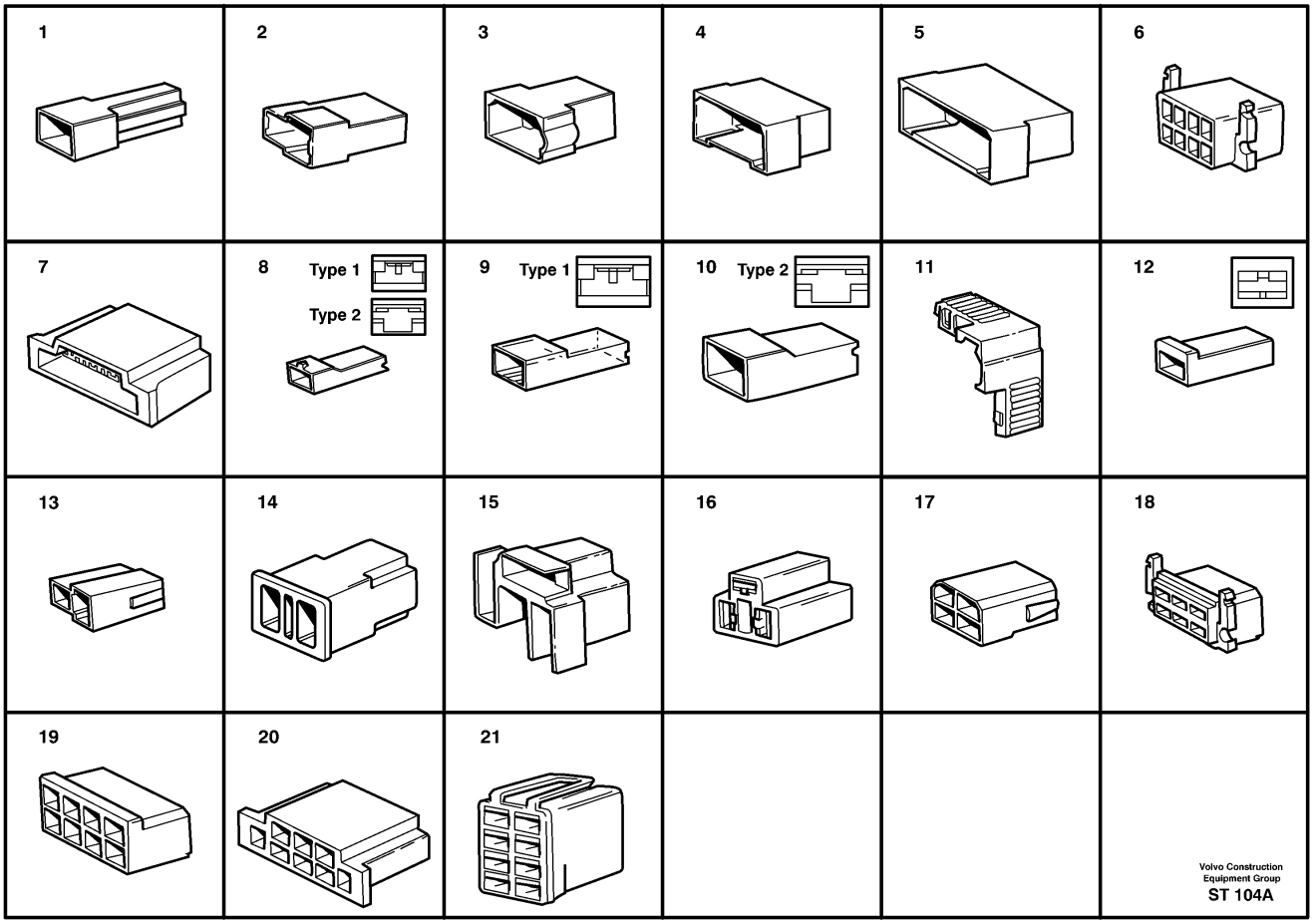

Pos	Part	Q1	Q2	Q3	Q4	Q5	PS	Kit	Description	Option(s)	Remark
									Tab housing		
									•For Cable terminal		6,3 MM
1	VOE958207	REQ							Housing		6.3 x 1-POLE
2	VOE958209	REQ							Housing		6.3 x 2-POLE
3	VOE13958212	REQ							Tab housing		6.3 x 4-POLE
	VOE948855	REQ							Housing		6.3 x 4-POLE
4	VOE13964197	REQ							Housing		6.3 x 6-POLE
5	VOE13965756	REQ							Housing		6,3 x 8-POLE GREY
	VOE1234417	REQ							Housing		6,3 x 8-POLE BL
6	VOE944077	REQ							Tab housing		6.3 x 8-POLE
7	VOE941105	REQ							Housing		6.3 x 8-POLE
									Receptacle Housing		
									•For Cable terminal		4,8/6,3 MM
8	VOE13947848	REQ							Housing		4.8 x 1-POLE Cable

											area max. 2,5 SQ MM
9	VOE13949597	REQ							Protecting sleeve		6.3 x 1-POLE Cable area max. 2,5 SQ MM
10	VOE943511	REQ							Housing		6.3 x 1-POLE Cable area max. 6,0 SQ MM
11	VOE13944221	REQ							Housing		6.3 x 1-POLE
12	VOE958208	REQ							Housing		6.3 x 1-POLE
13	VOE13964167	REQ							Housing		6.3 x 2-POLE
	VOE13958210	REQ							Receptacle housing		6.3 x 2-POLE
14	VOE4803532	REQ							Socket housing		6.3 x 2-POLE
15	VOE784593	REQ							Housing		6.3x3-POLE. Base P43t-38
16	VOE945469	REQ							Receptacle housing		6.3 x 3-POLE
17	VOE13948856	REQ							Housing		6.3 x 4-POLE
	VOE958213	REQ							Housing		6.3 x 4-POLE
18	VOE958215	REQ							Housing		6.3 x 6-POLE
19	VOE944076	REQ							Housing		6.3 x 8-POLE
	VOE13965757	REQ							Housing		6.3 x 8-POLE
20	VOE941104	REQ							Housing		6.3 x 8-POLE
21	VOE4803454	REQ							Receptacle housing		6.3 x 8-POLE

VOLVO

Construction Equipment

PROSIS Part Information

Date:	Image id:	Catalogue:	Model:
24/08/2018	**1009667**	**20086**	**L120E**
Brand:	Serial:	Group/Section:	Title:
Volvo	**19804-, 66001-, 71401-**	**379/400**	**Spade terminal**

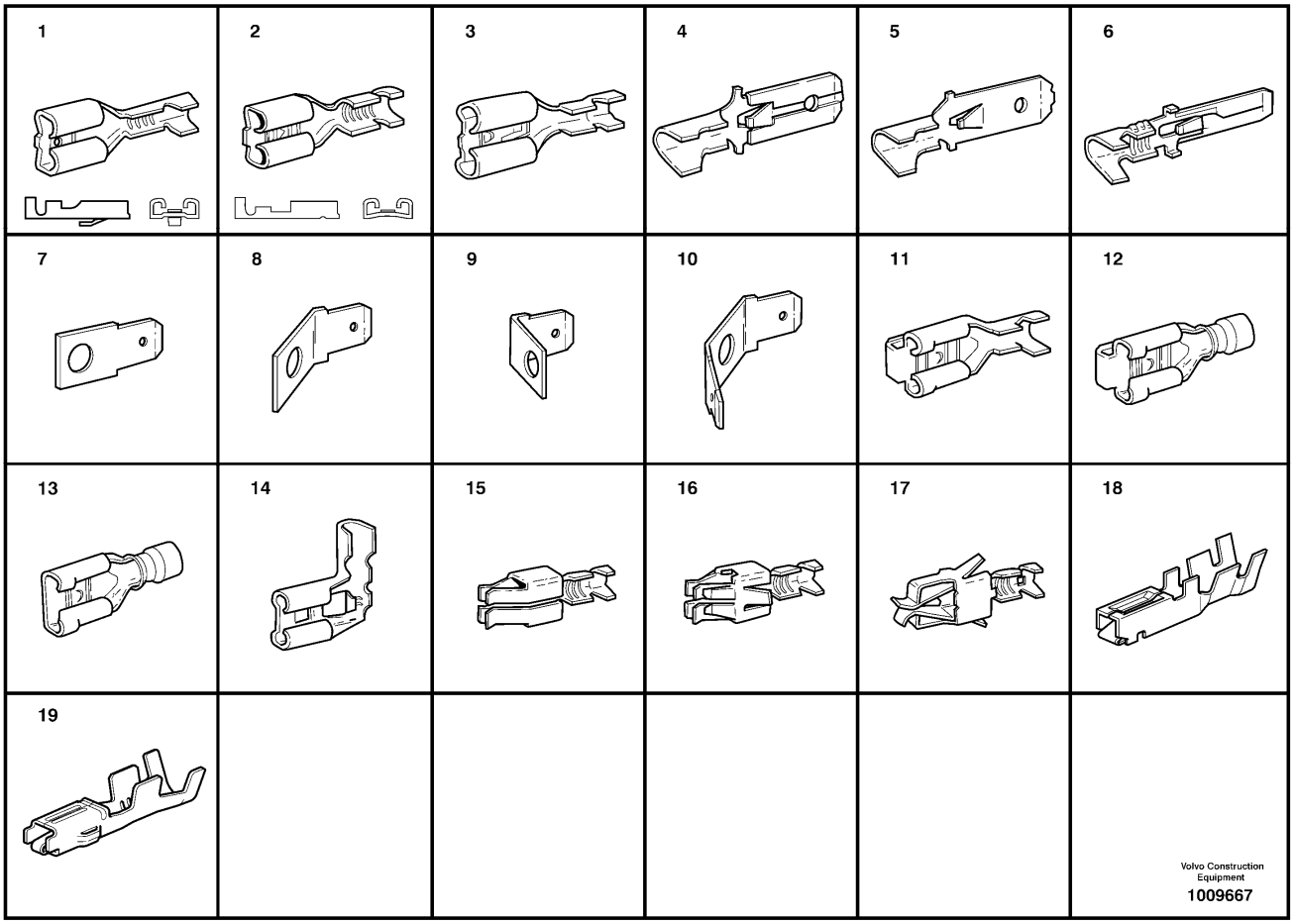

Q1-Q5	Option	Option description	
Q1 .			See footnote 1230)

Pos	Part	Q1	Q2	Q3	Q4	Q5	PS	Kit	Description	Option(s)	Remark
									Cable terminal		See footnote 1251)
1	VOE970745	REQ							Cable terminal		6.3x0.5 - 1.0 SQ MM (FB)
	VOE949400	REQ							Cable terminal		6.3x0.5 - 1.0 SQ MM (FB)
	VOE973149	REQ							Cable terminal		6.3x0,5 - 1,0 SQ MM (FB)
	VOE949201	REQ							Cable terminal		6.3x1.0 - 2.5 SQ MM (FB)
	VOE973150	REQ							Cable terminal		6.3x1.0 - 2.5 SQ MM (FB)
	VOE970746	REQ							Cable terminal		6.3x1.1 - 2.5 SQ MM

											(FB)
	VOE949489	REQ							Cable terminal		6,3x1.1 - 2.5 SQ MM (FB)
	VOE949401	REQ							Cable terminal		6.3x4.0 - 6.0 SQ MM (FB)
									Cable terminal		See footnote 1250)
2	VOE949404	REQ							Cable terminal		4.8x1.0 - 2.5 SQ MM (FB)
	VOE973119	REQ							Cable terminal		6.3x0,5 - 1,0 SQ MM (M)
	VOE973121	REQ							Cable terminal		6.3x0,5 - 1,0 SQ MM (FB)
	VOE949210	REQ							Cable terminal		6.3x0.75 - 1.0 SQ MM (FB)
	VOE973120	REQ							Cable terminal		6.3x1,1 - 2,5 SQ MM (M)
	VOE973122	REQ							Cable terminal		6,3x1,1 - 2,5 SQ MM (FB)
	VOE973123	REQ							Cable terminal		6.3x0,5 - 1,0 SQ MM (FB)
	VOE973124	REQ							Cable terminal		6.3x1.1 - 2.5 SQ MM (FB)
	VOE949211	REQ							Cable terminal		6.3x1.5 - 2.5 SQ MM (FB)
	VOE881484	REQ							Cable terminal		6.3x4 - 6 SQ MM(FB)
3		REQ					NS		Cable terminal		8.0x1.3 - 3.3 SQ MM (FB)
	VOE949604	REQ							Cable terminal		8.0x1.3 - 3.3 SQ MM (FB)
4	VOE973117	REQ							Cable terminal		6.3x0,5 - 1,0 SQ MM (FB)
	VOE949490	REQ							Cable terminal		6.3x0.75 - 2.5 SQ MM (FB)
	VOE13949473	REQ							Cable terminal		6.3x4.0 - 6.0 SQ MM (FB)
5	VOE949490	REQ							Cable terminal		(VOE13949474) 6.3x0.75 - 2.5 SQ MM (FB)
6	VOE969780	REQ							Cable terminal		2.8x0.2 - 0.5 SQ MM (M)
	VOE969781	REQ							Cable terminal		2.8x1.1 - 2.5 SQ MM (M)
7	VOE944485	REQ							Cable terminal		6,3x. M5
8	VOE13946118	REQ							Tab terminal		6,3x. M3
	VOE941881	REQ							Cable terminal		6,3x. M4
9	VOE941957	REQ							Cable terminal		6,3x. M4
10	VOE1269755	REQ							Tab terminal		6,3x. M6
11	VOE13949606	REQ							Cable terminal		6.3x0.75 - 2.1 SQ MM (FB)
12	VOE941730	REQ							Cable terminal		6.3x1.5 - 2.5 SQ MM (M)
13	VOE940340	REQ							Cable terminal		6.3x0.5-1 SQ MM RED

	VOE940341	REQ							Cable terminal		6.3x1.1-2.5 SQ MM BLUE
	VOE958201	REQ							Cable terminal		6.3x4 - 6 SQ MM YELL
14	VOE965101	REQ							Cable terminal		(VOE13949598)8.0x1.0 - 2.5 SQ MM(FB)
	VOE973132	REQ							Cable terminal		8.0x1.0 - 2.5 SQ MM (FB)
15	VOE13946640	REQ							Cable terminal		4.8x0.5 - 1.0 SQ MM (FB)
	VOE965107	REQ							Cable terminal		4.8x1.0 - 2.5 SQ MM (FB)
16	VOE979001	REQ							Cable terminal		6.3x0.5 - 1.0 SQ MM (FB)
	VOE979002	REQ							Cable terminal		6.3/4.8x1.1-2.5 SQ MM (FB)
17	VOE970776	REQ							Cable terminal		4.8/2.8x0.5-1.0 SQ MM (FB)
	VOE976749	REQ							Cable terminal		4.8/2.8x0.5-1.0 SQ MM (FB)
	VOE13970778	REQ							Cable terminal		4.8/2.8x0.5-1.0 SQ MM (FB)
	VOE970779	REQ							Cable terminal		4.8/2.8x1.1-2.5 SQ MM (FB)
	VOE970777	REQ							Cable terminal		4.8/2.8x1.1-2.5 SQ MM (FB)
	VOE13976750	REQ							Cable terminal		4.8/2.8x1.1-2.5 SQ MM (FB)
18	VOE11704652	REQ							Cable terminal		Type SDL 0,3-0,85 SQ MM (9130228)
	VOE9130230	REQ							Cable terminal		Type SDL 1,25-2,00 SQ MM
19	VOE977539	REQ							Cable terminal		Cu/Ni/Au 0,5 - 2,0 SQ MM

1230) Notes: Cable terminal size Ex.: 3.5 x Area (area - SQ MM). Material-(M) = Brass, material-(FB) = Bronze.

1250) Without locking lance.

1251) With locking lance for receptacle housing.

VOLVO

Construction Equipment

PROSIS Part Information

Date:	Image id:	Catalogue:	Model:
24/08/2018	**ST106**	**20086**	**L120E**
Brand:	Serial:	Group/Section:	Title:
Volvo	**19804-, 66001-, 71401-**	**379/500**	**Pin insulator**

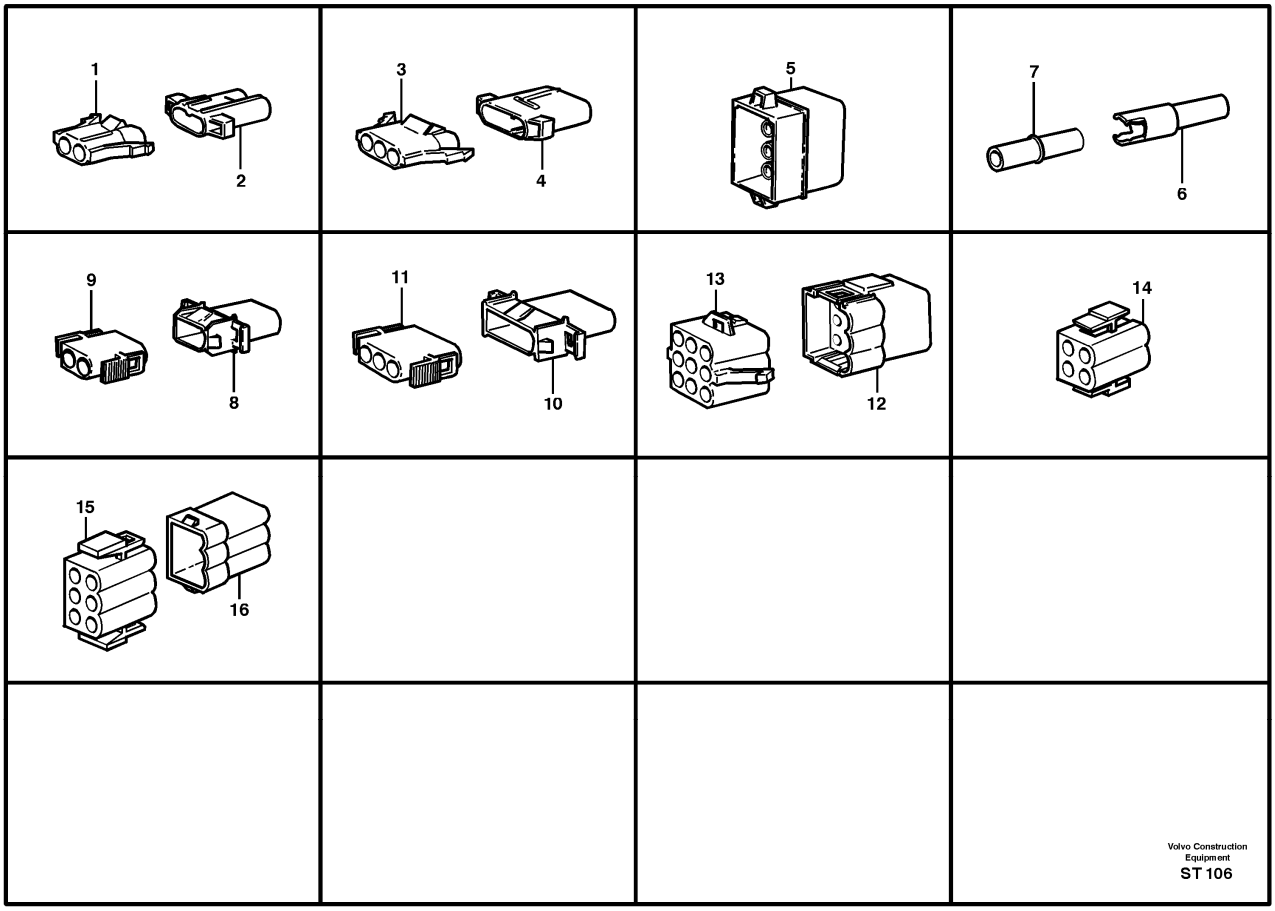

Pos	Part	Q1	Q2	Q3	Q4	Q5	PS	Kit	Description	Option(s)	Remark
									Pin, socket housing		
									•For Cable terminal		2,1 MM
1	VOE944223	REQ							Housing		2-POLE
2	VOE944224	REQ							Housing		2-POLE
3	VOE944225	REQ							Housing		3-POLE
4	VOE13944226	REQ							Housing		3-POLE
5	VOE944229	REQ							Housing		12-POLE
									Pin, socket housing		
									•For Cable terminal		3,5 MM
6	VOE949583	REQ							Housing		
7	VOE13949584	REQ							Housing		
8	VOE13948995	REQ							Pin housing		2-POLE

9	VOE13948996	REQ							Insulator		2-POLE
10	VOE13948297	REQ							Tab housing		3-POLE
11	VOE948296	REQ							Housing		3-POLE
12	VOE948295	REQ							Insulator		9-POLE
13	VOE948294	REQ							Insulator		9-POLE
14	VOE1307052	REQ							Receptacle housing		4-POLE
15		REQ					NS		Receptacle housing		6-POLE
16		REQ					NS		Pin housing		6-POLE

VOLVO

Construction Equipment

PROSIS Part Information

Date:	Image id:	Catalogue:	Model:
24/08/2018	**ST107D**	**20086**	**L120E**
Brand:	Serial:	Group/Section:	Title:
Volvo	**19804-, 66001-, 71401-**	**379/600**	**Pin**

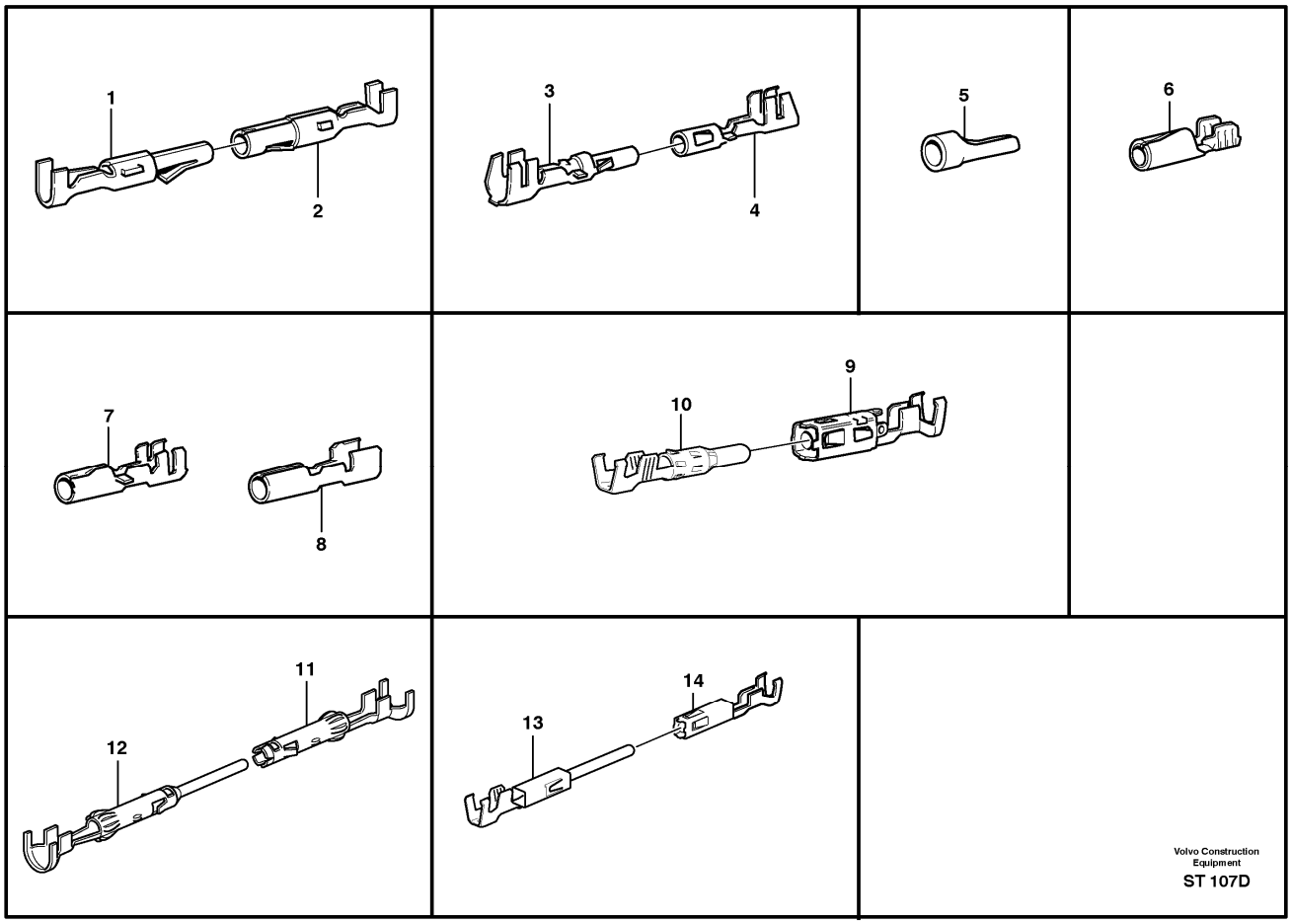

Q1-Q5	Option	Option description	
Q1 .			

Pos	Part	Q1	Q2	Q3	Q4	Q5	PS	Kit	Description	Option(s)	Remark
1	VOE946040	REQ							Cable terminal		RS 2.1x0.5 - 1.0 SQ MM
	VOE946041	REQ							Cable terminal		RS 2.1x1.0 - 2.5 SQ MM
2	VOE946038	REQ							Cable terminal		2.1x0.5 - 1.0 SQ MM (FB)
3	VOE969830	REQ							Cable terminal		(VOE969828)3.5x0.5 - 1.0 SQ MM(M)
	VOE969830	REQ							Cable terminal		3.5x0.5 - 1.0 SQ MM (FB)
	VOE965824	REQ							Cable terminal		(VOE969831)3.5x0.5-

											1.0 SQ MM(FB)
	VOE965824	REQ							Cable terminal		(VOE13968015)3.5x0.5 - 1.0 SQ MM(FB)
	VOE965824	REQ							Cable terminal		(VOE968016)3.5x0.5 - 1.0SQ MM(FB)
	VOE969832	REQ							Cable terminal		3.5x1.1 - 2.5 SQ MM (FB)
	VOE965824	REQ							Cable terminal		3.5x1.0 - 2.5 SQ MM (FB)
	VOE965825	REQ							Cable terminal		3.5x2.5 - 4.0 SQ MM (FB)
4	VOE969836	REQ							Cable terminal		(VOE969834)3.5x0.5 - 1.0 SQ MM(M)
	VOE969836	REQ							Cable terminal		3.5x0.5 - 1.0 SQ MM (FB)
	VOE965824	REQ							Cable terminal		(VOE13968015)3,5x0,5 - 1,0 SQ MM(FB)
	VOE13968018	REQ							Cable terminal		3.5x0.5 - 1.0 SQ MM (FB)
	VOE969838	REQ							Cable terminal		3.5x1.1 - 2.5 SQ MM (FB)
	VOE965822	REQ							Cable terminal		3.5x1.0 - 2.5 SQ MM (FB)
	VOE965823	REQ							Cable terminal		3.5x2.5 - 4.0 SQ MM (FB)
5	VOE970749	REQ							Cable terminal		0.5 - 1.0 SQ MM
	VOE942429	REQ							Cable terminal		1.1 - 2.5 SQ MM
6	VOE13949003	REQ							Cable terminal		3.5x0.75 - 1.5 SQ MM
7	VOE13949371	REQ							Cable terminal		3.5x0.5 - 2.0 SQ MM (FB)
8	VOE4803799	REQ							Cable terminal		
9	VOE8155901	REQ							Cable terminal		0,5 - 1,5 SQ MM
	VOE8155903	REQ							Cable terminal		RS 1,5 - 2,5 SQ MM
10	VOE3963047	REQ							Cable terminal		RS 2,5x1,5 - 2,5 SQ MM
11	VOE11039671	REQ							Cable terminal		1,0 - 2,5 SQ MM CuNiSi
12	VOE984946	REQ							Cable terminal		(VOE11039670)1,0 - 2,5 SQ MM CuNiSi
13	VOE3986768	REQ							Cable terminal		1,5 - 2,5 SQ MM (FB)
	VOE3986251	REQ							Cable terminal		0,5 - 1,0 SQ MM (FB)
14	VOE3986767	REQ							Cable terminal		1,5 - 2,5 SQ MM (FB)
	VOE3986252	REQ							Cable terminal		0,5 - 1,0 SQ MM (FB)

VOLVO

Construction Equipment

PROSIS Part Information

Date:	Image id:	Catalogue:	Model:
24/08/2018	**ST108A**	**20086**	**L120E**
Brand:	Serial:	Group/Section:	Title:
Volvo	**19804-, 66001-, 71401-**	**379/700**	**Humidity-proof connections**

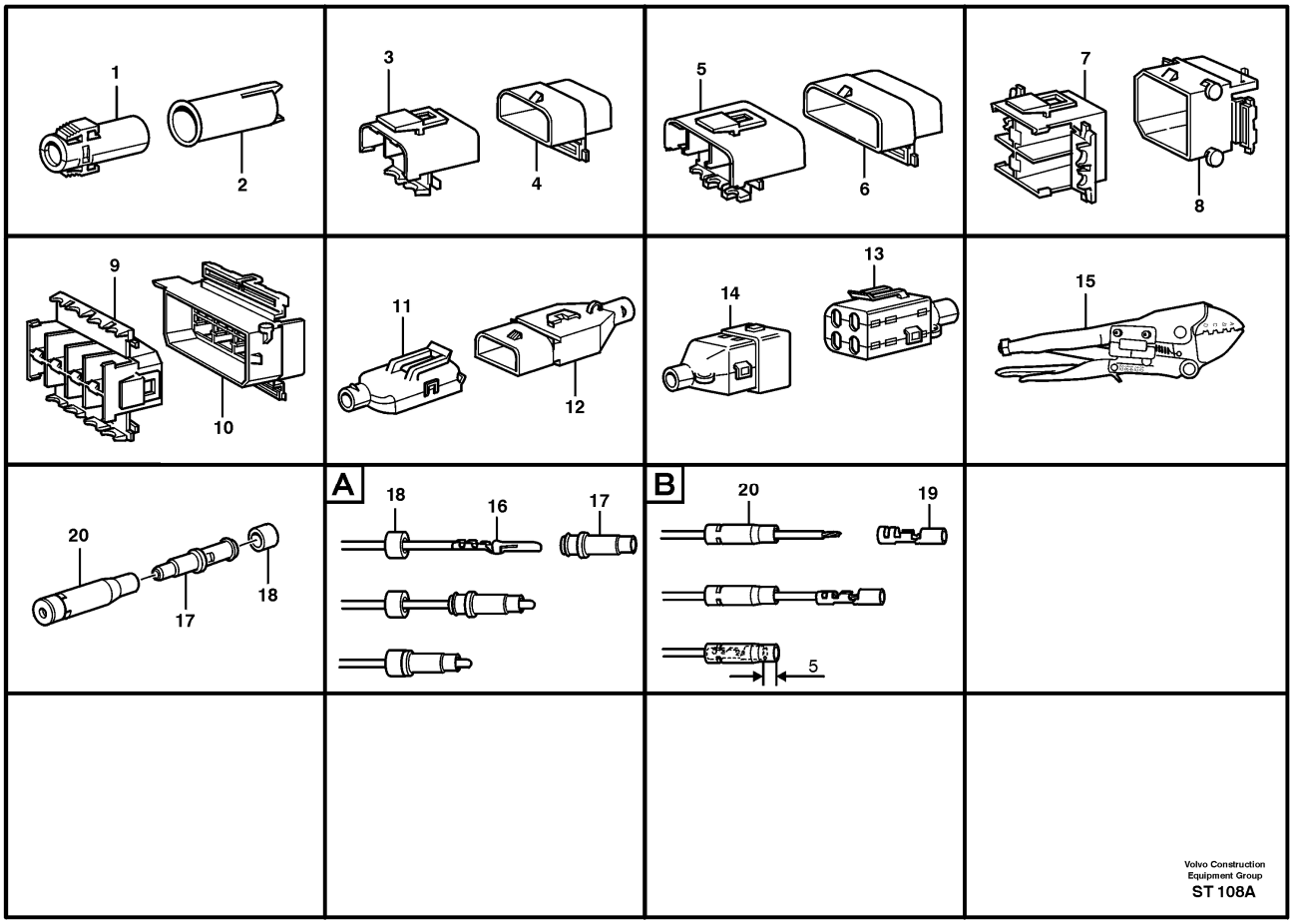

Pos	Part	Q1	Q2	Q3	Q4	Q5	PS	Kit	Description	Option(s)	Remark
1	VOE1307035	REQ							Receptacle housing		1-POLE
2	VOE1308436	REQ							Tab housing		1-POLE
3	VOE1307048	REQ							Housing		2-POLE
4	VOE1307049	REQ							Tab housing		2-POLE
5	VOE1259828	REQ							Socket housing		3-POLE
6	VOE1259829	REQ							Pin housing		3-POLE
7	VOE1259830	REQ							Housing		4-POLE
8	VOE1259831	REQ							Tab housing		4-POLE
9	VOE966812	REQ							Housing		8-POLE

10	VOE966813	REQ					SS		Housing		8-POLE
11	VOE1624477	REQ							Receptacle housing		2-POLE
12	VOE8143240	REQ							Housing		2-POLE
13	VOE8142001	REQ							Receptacle housing		4-POLE
14		REQ					NS		Pin housing		4-POLE
15	VOE9999323	1							Pliers		SERVICE TOOL
A									Pin housing		
16	VOE965824	REQ							Cable terminal		(VOE968016)3.5x0.5 - 1.0 SQ MM(FB)
	VOE965824	REQ							Cable terminal		3.5x1.1 - 2.5 SQ MM (FB)
	VOE965825	REQ							Cable terminal		3.5x2.5 - 4.0 SQ MM (FB)
17	VOE1608765	REQ							Tab housing		
18	VOE1608766	REQ							Seal		
B									Receptacle Housing		
19	VOE13968018	REQ							Cable terminal		3.5x0.5 - 1.0 SQ MM (FB)
	VOE965822	REQ							Cable terminal		3.5x1.1 - 2.5 SQ MM (FB)
	VOE965823	REQ							Cable terminal		3.5x2.5 - 4.0 SQ MM (FB)
20	VOE1598753	REQ							Insulator		

VOLVO

Construction Equipment

PROSIS Part Information

Date:	Image id:	Catalogue:	Model:
24/08/2018	**1009678**	**20086**	**L120E**
Brand:	Serial:	Group/Section:	Title:
Volvo	**19804-, 66001-, 71401-**	**379/800**	**Connectors**

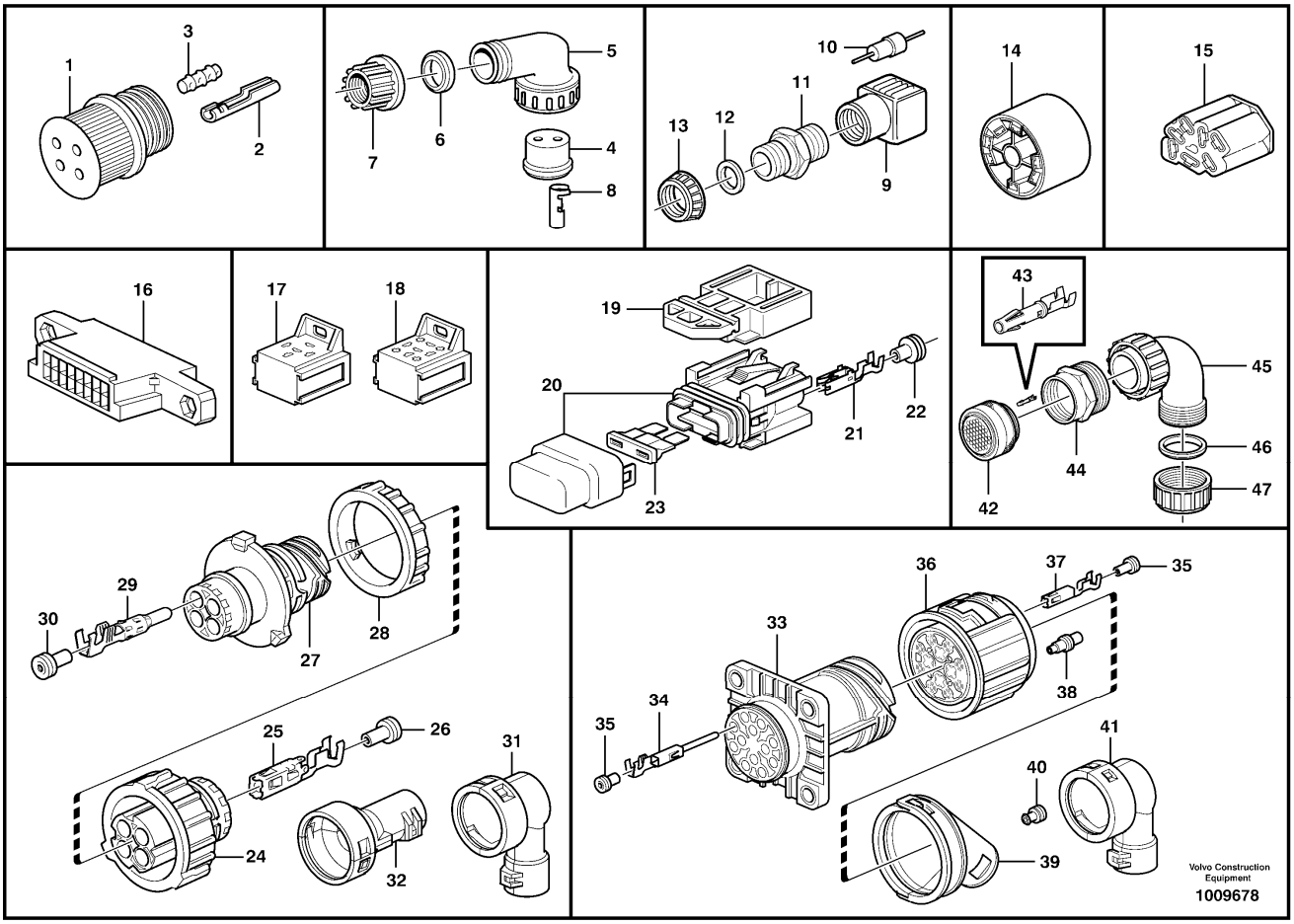

Pos	Part	Q1	Q2	Q3	Q4	Q5	PS	Kit	Description	Option(s)	Remark
1	VOE949005	REQ							Receptacle housing		
2	VOE13949371	REQ							Cable terminal		3.5x0.5 - 2.0 SQ MM (FB)
3	VOE11000257	REQ							Plug		
4	VOE4803790	REQ							Rubber plug		
5	VOE4803791	REQ							Elbow union		
6	VOE4803792	REQ							Sealing ring		
	VOE11039262	REQ							Sealing ring		ALT.
7	VOE4803794	REQ							Nut		
8	VOE4803799	REQ							Cable terminal		4MM (FB)
9	VOE6646637	REQ							Contact housing		
10	VOE4803274	REQ							Diode		

11	VOE11039287	REQ							Hose coupling		
12	VOE11039262	REQ							Sealing ring		
13	VOE4803794	REQ							Nut		
14	VOE1605668	REQ							Receptacle housing		7-POLE
15	VOE1307600	REQ							Housing		7-POLE
16	VOE11039685	REQ							Housing		16-POLE
17	VOE13946556	REQ							Relay socket		6,3x5
18	VOE977184	REQ							Housing		6,3x5 + 4,8/2,8x4
19	VOE11039713	REQ							Bracket		
20	VOE11039714	REQ							Fuse holder		
21	VOE11039715	REQ							Cable terminal		
22	VOE873854	REQ							Sealing sleeve		ID 2,3MM (AMP)
23	VOE13969160	REQ							Fuse		(VOE967851)5A
24	VOE8159013	REQ							Housing		4-POLE
	VOE3963412	REQ							Housing		7-POLE
25	VOE8155903	REQ							Cable terminal		4-POLE ID 1,5-2,5 SQ MM
	VOE11039671	REQ							Cable terminal		7-POLE ID 1,0-2,5 SQ MM
26	VOE8159012	REQ							Seal		ID 1,9 - 3,0MM (GHW)
27	VOE3944972	REQ							Housing		4-POLE
	VOE984944	REQ							Housing		(VOE3963411)7-POLE
28	VOE3963413	REQ							Ring		
29	VOE3963047	REQ							Cable terminal		4-POLE ID 1,0-2,5 SQ MM
	VOE984946	REQ							Cable terminal		(VOE11039670)7-POLE ID 1,1-2,5 SQ MM
30	VOE3986691	REQ							Cable seal		ID 1,1 - 2,5 SQ MM (AMP)
	VOE970771	REQ							Cable seal		DUMMY SEAL
31	VOE8159019	REQ							Adapter		UPPER
	VOE8159020	REQ							Adapter		LOW
32	VOE3985597	REQ							Adapter		NW10
33	VOE3944541								Housing		12-POLE
34	VOE3986768								Cable terminal		
	VOE3986251								Cable terminal		
35	VOE3944654								Seal		ID 1,2 - 2,1 SQ MM
	VOE3944655								Seal		ID 1,9 - 3,0 SQ MM
36	VOE3944540								Housing		12-POLE
37	VOE3986767								Cable terminal		
	VOE3986252								Cable terminal		
38	VOE8155899								Sealing plug		
39	VOE3944543								Adapter		
40	VOE3963410								Cable seal		ID 0,75 SQ MM

41	VOE3985598								Adapter		
42		1					NS		Receptacle housing		48 -POLE
43		REQ					NS		Cable terminal		
44		1					NS		Adapter		M42x2 SIZE 24
45	VOE11039025	1							L-connection		
46	VOE8142515	1					OP		Sealing ring		
47		1					NS		Nut		NW22 M35x1,75

VOLVO

Construction Equipment

PROSIS Part Information

Date:	Image id:	Catalogue:	Model:
24/08/2018	**1015318**	**20086**	**L120E**
Brand:	Serial:	Group/Section:	Title:
Volvo	**19804-, 66001-, 71401-**	**379/900**	**Housings for timers and tabs**

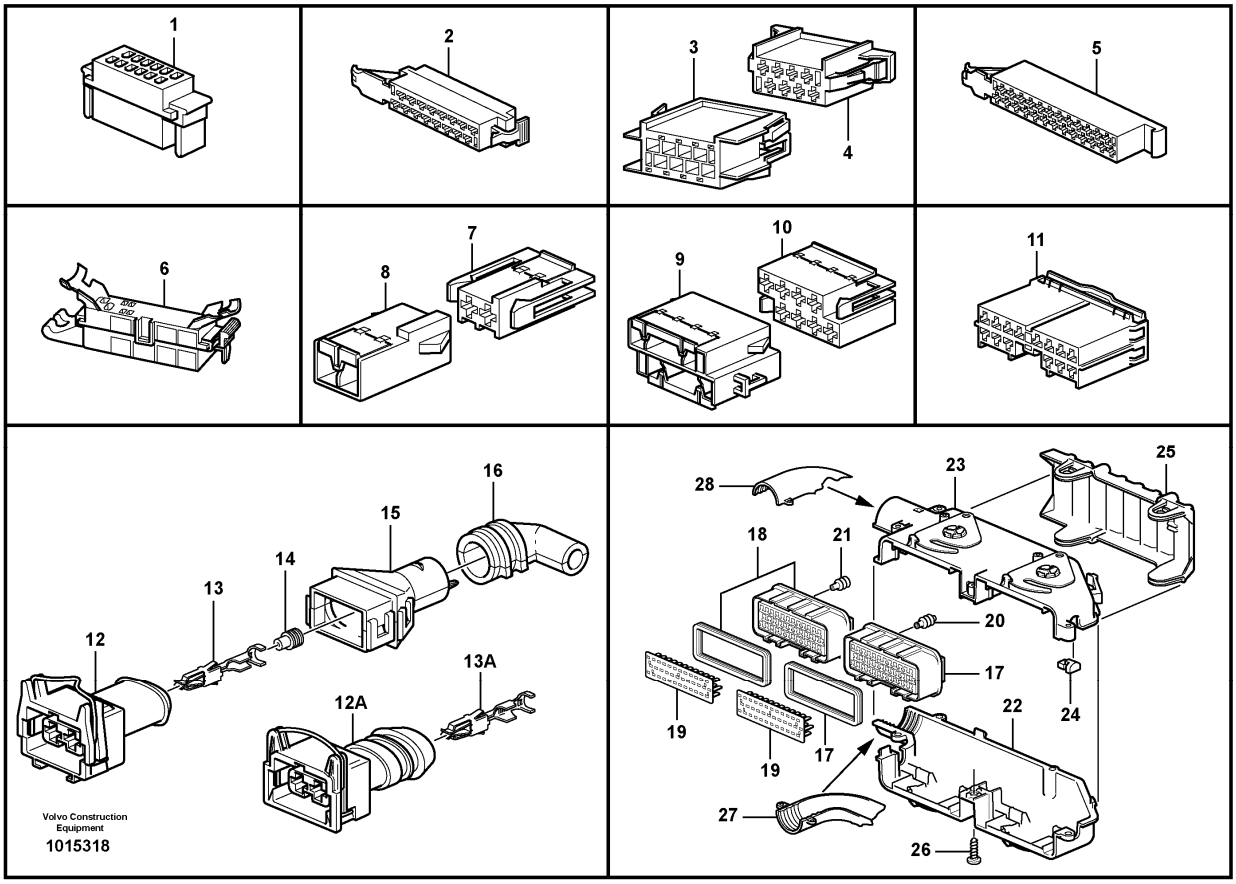

Pos	Part	Q1	Q2	Q3	Q4	Q5	PS	Kit	Description	Option(s)	Remark
									Housing		Type "Timer"
1	VOE11039330	REQ							Receptacle housing		12-POLE
2	VOE969138	REQ							Housing		16-POLE
3	VOE1096614	REQ							Housing		8-POLE
	VOE1096615	REQ							Housing		16-POLE
4	VOE1096618	REQ							Housing		8-POLE
	VOE1096619	REQ							Housing		16-POLE
5	VOE1598662	REQ							Receptacle housing		25-POLE
6	VOE11039443	REQ							Housing		39-POLE
7	VOE968380	REQ							Housing		2-POLE Timer 4,8/2,8
8	VOE968381	REQ							Housing		2-POLE Timer 2,8
9	VOE968389	REQ							Housing		4-POLE Timer 2,8
	VOE968405	REQ							Housing		8-POLE Timer 2,8
10	VOE968388	REQ							Housing		4-POLE Timer 4,8/2,8

	VOE968404	REQ							Housing		8-POLE Timer 4,8/2,8
	VOE968408	REQ							Housing		10-POLE Timer 4,8/2,8
11	VOE9130224	REQ							Housing		SDL Type. 14-POLE
	VOE9130220	REQ							Receptacle housing		SDL Type. 10-POLE
12	VOE979040	REQ							Housing		2-POLE Timer 4,8/2,8 BL
12A	VOE976256	REQ							Housing		2-POLE Timer 4,8/2,8 BL
13	VOE13970778	REQ							Cable terminal		
13A	VOE970779	REQ							Cable terminal		
14	VOE970772	REQ							Cable seal		1,2 - 2,1 x BLUE
15	VOE8142100	REQ							Adapter		
16	VOE1095059	REQ							Joint nipple		
17	VOE977532	1							Housing		
		1					NS		•Seal		
18	VOE977897	1							Housing		
		1					NS		•Seal		
19	VOE977533	2							Housing		
20	VOE977540	37							Cable seal		
21		35					NS		Cable Seal		
22	VOE3173909	1							Cover		
23	VOE3173910	1							Cover		
24	VOE3173913	4							Shock absorber		
25	VOE3199185	1							Handle		
26	VOE975367	5							Six point socket screw		
27	VOE3173907	1							Cover		
28	VOE3173908	1							Cover		

VOLVO

Construction Equipment

PROSIS Part Information

Date:	Image id:	Catalogue:	Model:
24/08/2018	**1019839**	**20086**	**L120E**
Brand:	Serial:	Group/Section:	Title:
Volvo	**19804-, 66001-, 71401-**	**380/100**	**Instrument panel**

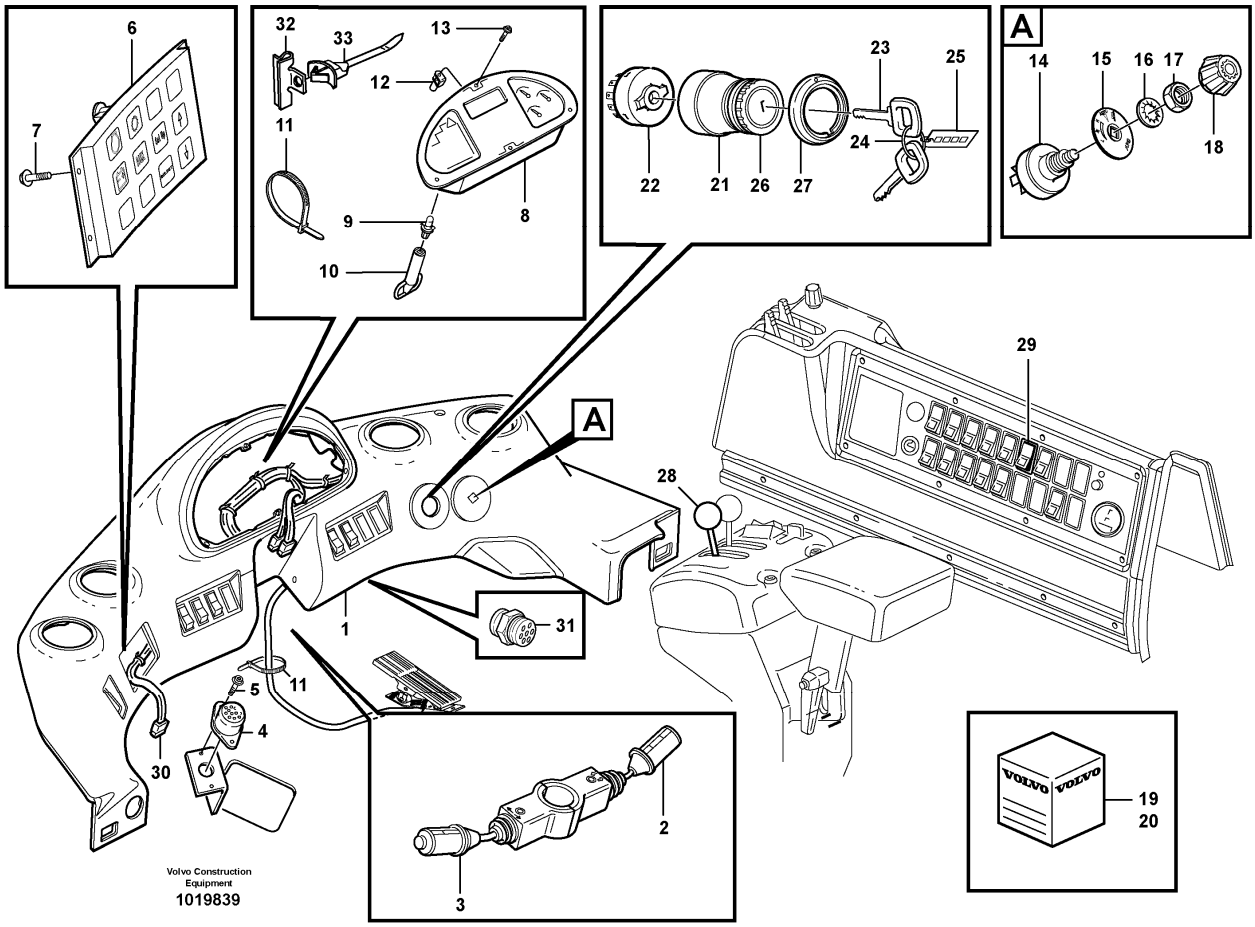

Section option	Kit	Option description
VOE33357		Cab L120E
VOE33366		Cab L120E USA
VOE94638		One Combination lock kit only for USA

Q1-Q5	Option	Option description	
Q1 33357 33366	VOE33357	Cab L120E	
Q2 94638	VOE94638	One Combination lock kit only for USA	

Pos	Part	Q1	Q2	Q3	Q4	Q5	PS	Kit	Description	Option(s)	Remark
1		1							Instr panel		See ref 881/100
2	VOE11039248	1							Switch		S/N - 8053 SWE
	VOE11171772	1							Switch		S/N 8054 - SWE
3	VOE11171771	1							Switch		(VOE11039409)S/N - 8053 SWE

	VOE11171771	1							Switch		S/N 8054 - SWE
4	VOE1589502	1							Foot operated switch		EXCL 33366
5	VOE969278	2							Six point socket screw		(VOE13969278)EXCL 33366
6	VOE11170210	1							Control unit		(VOE11039601)
	VOE11170208	1							•Control Unit		
7	VOE975358	4							Six point socket screw		
8	VOE11443911	1							Electronic unit		I-ECU, REMAN VOE9011443911
9	VOE966327	25							•Bulb		(VOE13966327)
10	VOE1089953	1							Tool		
11	VOE4881440	1							Cable tie		
12	VOE977980	4							Spring nut		
13	VOE975371	4							Six point socket screw		
14	VOE11039224	1							Fan switch		APS II
15	VOE11444280	1							Symbol washer		(VOE11164817)APS II
16	VOE13940097	1							Washer		
17	VOE1212859	1							Nut		
18	VOE11039535	1							Knob		
19	VOE11006988	1					SS		Lock kit		EXCL 33366
			1				NS		Lock Kit		INCL 33366
20		1	1						•Door Lock		See ref 831/150
21	VOE11039211	1					SS		•Starter switch		
	VOE15082295		1						•Starter switch		(VOE11039220)
22	VOE15082297	1	1						••Starter switch		(VOE1626372)
23	VOE11039226	2							••Pass key		See footnote 3) , BLACK
	VOE11039228		2						••Pass key		GREEN
24		2	2				NS		••Key strip		
25		1	1				NS		••Key badge		
26		1	1				NS		••Nut		
27	VOE11104514	1							Symbol strip		
28		1							Gear lever carrier		See ref 371/900
29		1							Switch		See ref 380/200
30		1							Wire harness		See ref 371/600
31	VOE828587	1							Buzzer		SA804
32	VOE4881440	1							Cable tie		
33		1					NS		Strip Clamp		

3) When ordering, the key No. should be stated.

VOLVO

Construction Equipment

PROSIS Part Information

Date:	Image id:	Catalogue:	Model:
24/08/2018	**1001236**	**20086**	**L120E**
Brand:	Serial:	Group/Section:	Title:
Volvo	**19804-, 66001-, 71401-**	**380/150**	**Side panel**

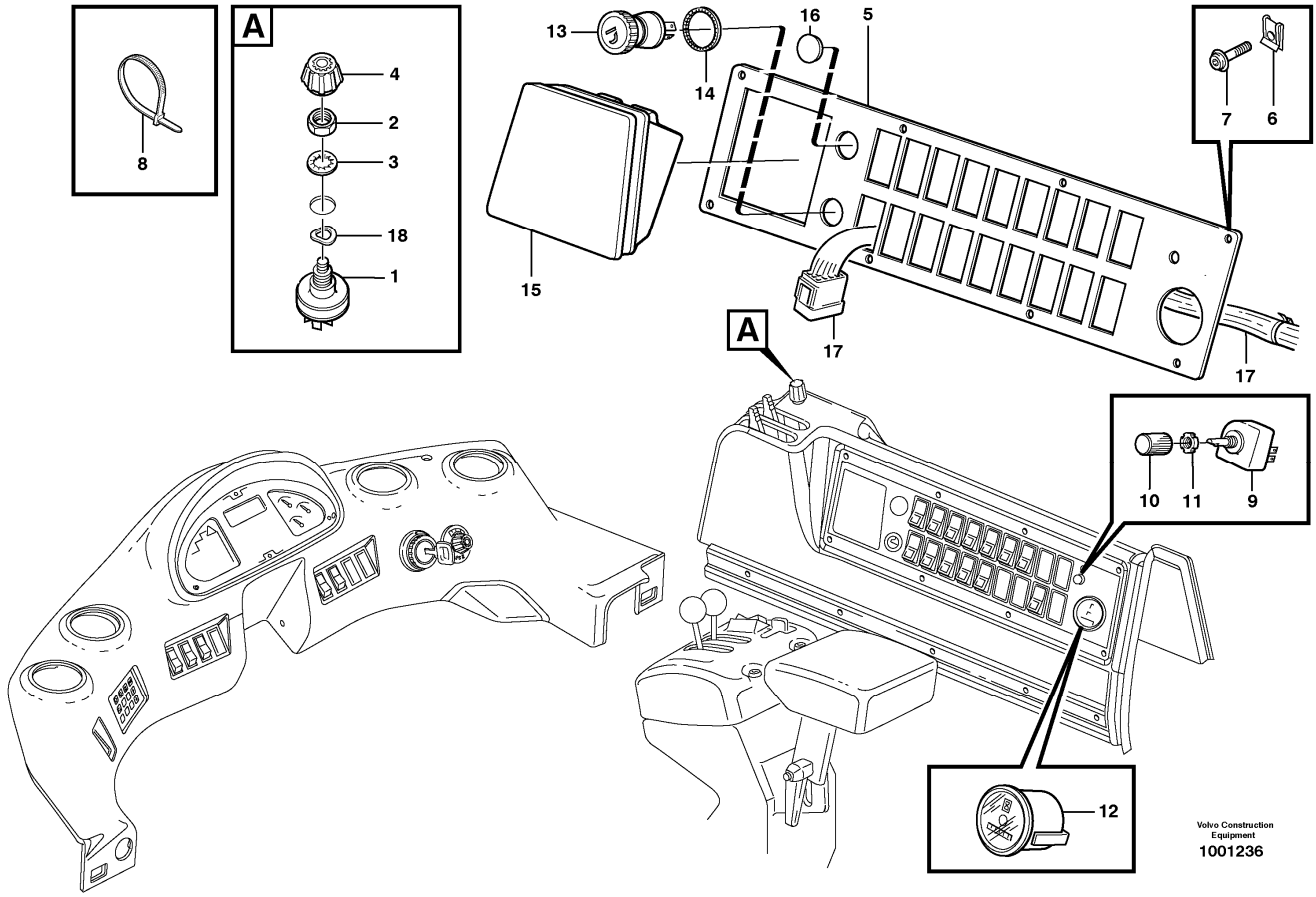

Section option	Kit	Option description
VOE33357		Cab L120E
VOE33366		Cab L120E USA

Pos	Part	Q1	Q2	Q3	Q4	Q5	PS	Kit	Description	Option(s)	Remark
1	VOE11039224	1							Fan switch		
2	VOE1212859	1							Nut		
3	VOE13940109	1							Lock washer		
4	VOE11007040	1							Knob		
5	VOE11006145	1							Panel plate		
6	VOE11006973	8							Clip		
7	VOE969278	8							Six point socket screw		(VOE13969278)
8	VOE4881440	4							Cable tie		
9	VOE1578846	1							Rheostat		

10	VOE1258492	1							Knob		
11	VOE1212770	1							Nut washer		
12	VOE4803561	1					SS		Hour counter		
13	VOE1586917	1							Cigarette lighter		
14	VOE13946222	1							Retainer		
15	VOE1224102	1							Ashtray		
16	VOE11104995	1							Plug		
17		1							Wire harness		See ref 371/650
18	VOE941908	1							Spring washer		

VOLVO

Construction Equipment

PROSIS Part Information

Date:	Image id:	Catalogue:	Model:
24/08/2018	**1013310**	**20086**	**L120E**
Brand:	Serial:	Group/Section:	Title:
Volvo	**19804-, 66001-, 71401-**	**380/200**	**Switch**

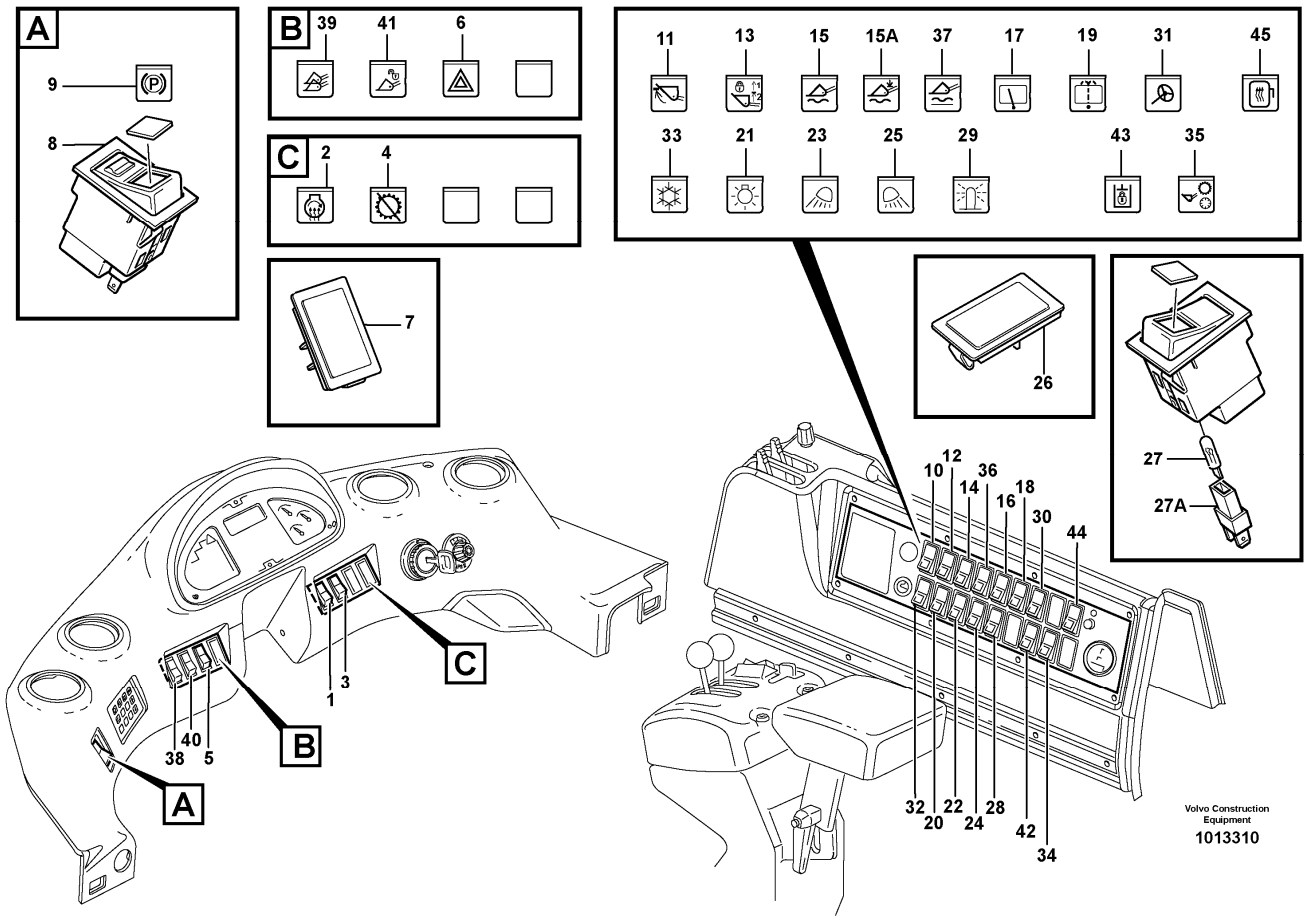

Section option	Kit	Option description
VOE33357		Cab L120E
VOE33366		Cab L120E USA

Q1-Q5	Option	Option description	
Q1 33357 33366	VOE33357	Cab L120E	
Q2 .			

Pos	Part	Q1	Q2	Q3	Q4	Q5	PS	Kit	Description	Option(s)	Remark
1	VOE4803456	1							Switch		See footnote 88)
2	VOE11039450	1							Lens		
3	VOE4803455	1							Switch		See footnote 88)
4	VOE11170154	1							Lens		
5	VOE4803464	1							Switch		See footnote 88)
6	VOE11039565	1							Lens		

7	VOE4803467	5							Protecting cover		
8	VOE11039390	1							Switch		See footnote 88)
9	VOE11039564	1							Lens		
10	VOE4803455	1							Switch		See footnote 88)
11	VOE11039477	1							Lens		
12	VOE4803534	1							Switch		See footnote 88)
13	VOE11039480	1							Lens		
14	VOE4803455	1							Switch		See footnote 88)
15	VOE11039481	1							Lens		
15A	VOE11170153	1							Lens	VOE82890	
16	VOE4803534	1							Switch		See footnote 88)
17	VOE11039694	1							Lens		
18	VOE4803456	1							Switch		See footnote 88)
19	VOE11039695	1							Lens		
20	VOE4803521	1							Switch		See footnote 88)
21	VOE4803472	1							Lens		
22	VOE4803521	1							Switch		See footnote 88)
23	VOE4803694	1							Lens		
24	VOE4803521	1							Switch		See footnote 88)
25	VOE4803693	1							Lens		
26	VOE4803467	10							Protecting cover		
27	VOE11997242	REQ							Bulb		See footnote 88) , 28V/40mA
27A	VOE14214082	REQ							Lamp retainer		See footnote 88)
28	VOE4803455		1						Switch	VOE93799	See footnote 88)
29	VOE11039140		1						Lens	VOE93799	
30	VOE4803530		1						Switch		See footnote 88)
31	VOE11039505		1						Lens		
32	VOE4803455		1						Switch	VOE82979, VOE82980, VOE82982, VOE82983	See footnote 88)
33	VOE11039205		1						Lens	VOE82979, VOE82980, VOE82982, VOE82983	
34	VOE4803521		1						Switch	VOE80782	See footnote 88)
35	VOE11039816		1						Lens	VOE80782	
36	VOE4803455		1						Switch	VOE80782	See footnote 88)
37	VOE11039482		1						Lens	VOE80782	
38	VOE4803806		1						Switch		See footnote 88)
39	VOE11039585		1						Lens		
40	VOE11039151		1						Switch	VOE82582, VOE82583	See footnote 88)
41	VOE11039566		1						Lens	VOE82582, VOE82583	
42	VOE11039380		1						Switch	VOE80781, VOE82408	See footnote 88)

43	VOE11039706		1						Lens	VOE80781, VOE82408	
44	VOE4803455		1						Switch	VOE80830	
45	VOE11039141		1						Lens	VOE80830	

88) The switch includes the bulb.

VOLVO

Construction Equipment

PROSIS Part Information

Date:	Image id:	Catalogue:	Model:
24/08/2018	**1020425**	**20086**	**L120E**
Brand:	Serial:	Group/Section:	Title:
Volvo	**19804-, 66001-, 71401-**	**386/100**	**Relays, sensors and solenoid valves, reference list**

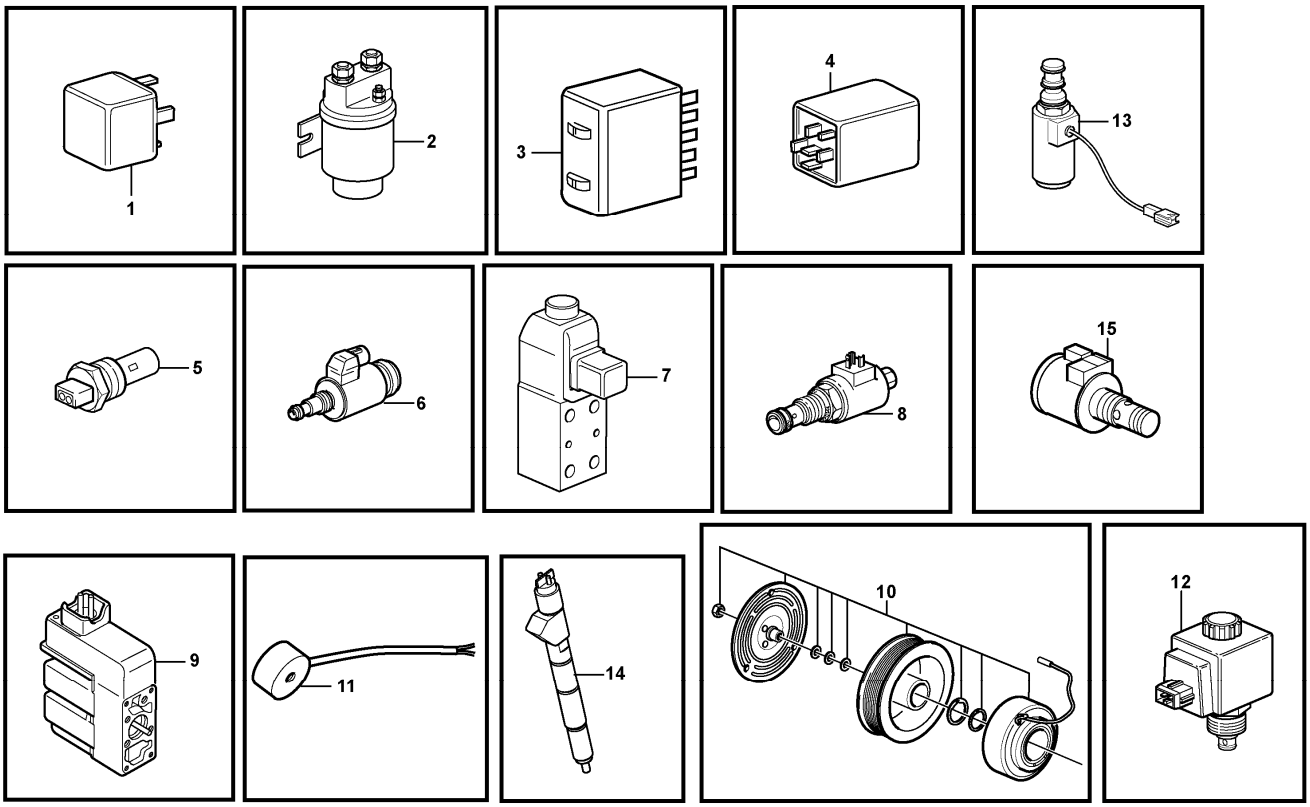

Pos	Part	Q1	Q2	Q3	Q4	Q5	PS	Kit	Description	Option(s)	Remark
1	VOE20374662	1							Relay		RE1
									•Tilt automatic		See ref 372/150
	VOE20374662	1							Relay		RE2
									•15A-feed		See ref 372/150
	VOE20374662	1							Relay		RE3
									•Boom kickout		See ref 372/150
	VOE20374662	1							Relay		RE4
									•15B-feed		See ref 372/150
	VOE20374662	1							Relay		RE5
									•Interval wiper, rear		See ref 372/150
	VOE20374662	1							Relay		RE6
									•Interm.wiper,front		See ref 372/150
	VOE20374662	1							Relay		RE7
									•Boom suspension		See ref 372/150

	VOE20374662	1							Relay		RE8
									•Start inhibitor		See ref 372/150
	VOE20374662	1							Relay		RE9
									•Start inhibitor		See ref 372/150
	VOE20374662	1							Relay		RE10
									•Work lights		See ref 372/150
	VOE20374662	1							Relay		RE11
									•30-feed		See ref 372/150
	VOE20374662	1							Relay		RE12
									•15EA-feed		See ref 372/150
	VOE4786690	1							Relay		RE101
									•Ctl Lubrication		See ref 371/1150
	VOE20374662	1							Relay		RE101
									•Automatic Temp Control		See ref 371/1600
	VOE20374662								Relay		RE204
		1							•Time delay, starter motor		See ref 371/1300
	VOE20374662	1							Relay		RE303
									•Back-up Lamp		See ref 371/1500
	VOE20374662	1							Relay		RE304
									•Work lights		See ref 371/1350
	VOE20374662	1							Relay		RE602
									•CDC-steering		See ref 371/1250
	VOE20374662	1							Relay		RE803
									•Operator seat		See ref 371/850
	VOE20374662	1							Relay		RE804
									•Park Brk Alarm		See ref 371/1450
	VOE20374662	1							Relay		RE806
									•Climate Unit		See ref 372/100
	VOE20374662	1							Relay		RE912
									•Auto Float Posn		See ref 371/2050
	VOE20374662	1							Relay		RE913
									•Auto Float Posn		See ref 371/2050
2	VOE20367490	1							Relay		RE601
									•Flasher relay		See ref 372/150
	VOE20367490	1							Relay		RE2501
									•Pre-heating		See ref 333/100
3	VOE15048941	1							Flasher unit		(VOE11170048)RF1
									•Auxiliary steering		See ref 371/1250
4	VOE4803319	1							Delay relay		RT201
									•Starter Motor		See ref 371/1300
	VOE4803319	1							Delay relay		RT802
									•Time delay, starter motor		See ref 371/1450
5									Sensor		See ref 386/150
6	VOE11709879	1							Pressure regulator		MA202

									•Central block		See ref 912/300
7	VOE11173166	1							Solenoid valve		MA407
									•Diff. lock		See ref 468/150
	VOE11173166	1							Solenoid valve		MA946
									•Attachment locking		See ref 924/300
	VOE11712870	1							Solenoid valve		MA947
									•Attachment locking		See ref 924/300
	VOE11173169	1					SS		Solenoid valve		MA501
									•Parking Brake		See ref 551/100
8	VOE11709633	1					SS		Solenoid valve		MA502
									•Central block		See ref 912/300
9	VOE11713285	1							Electronic unit		MA601
									•CDC-steering		See ref 660/150
10	VOE11707768	1							Solenoid clutch		MA801
									•Compressor, AC		See ref 874/350
11	VOE15100027	1							Magnet		(VOE11003153)MA901
									•Tilt automatic		See ref 914/300
	VOE15100027	1							Magnet		(VOE11003153)MA902
									•Boom kickout		See ref 914/300
	VOE15100027	1							Magnet		(VOE11003153)MA904
									•Float position		See ref 914/300
	VOE15100027	1							Magnet		(VOE11003153)MA906
									•Holding Func. 3rd		See ref 914/350
12	VOE11705917	1							Solenoid valve kit		MA908
									•Boom suspension		See ref 916/200
	VOE11705917	1							Solenoid valve kit		MA910
									•Boom suspension		See ref 916/150
	VOE11705918	1							Solenoid valve kit		MA911
									•Boom suspension		See ref 916/150
13	VOE11988146	1							Solenoid valve		MA916
									•Sgl Lvr Cont		See ref 914/425
14	VOE20798114	6							Injector		MA2301-MA2306 See ref 237/100, REMAN VOE9020798114
15	VOE20795296	1							Solenoid valve		IAGR, MA2504 See ref 214/100
									•Valve mechanism		See ref 214/100

VOLVO

Construction Equipment

PROSIS Part Information

Date:	Image id:	Catalogue:	Model:
24/08/2018	**1020086**	**20086**	**L120E**
Brand:	Serial:	Group/Section:	Title:
Volvo	**19804-, 66001-, 71401-**	**386/150**	**Sensors, reference list**

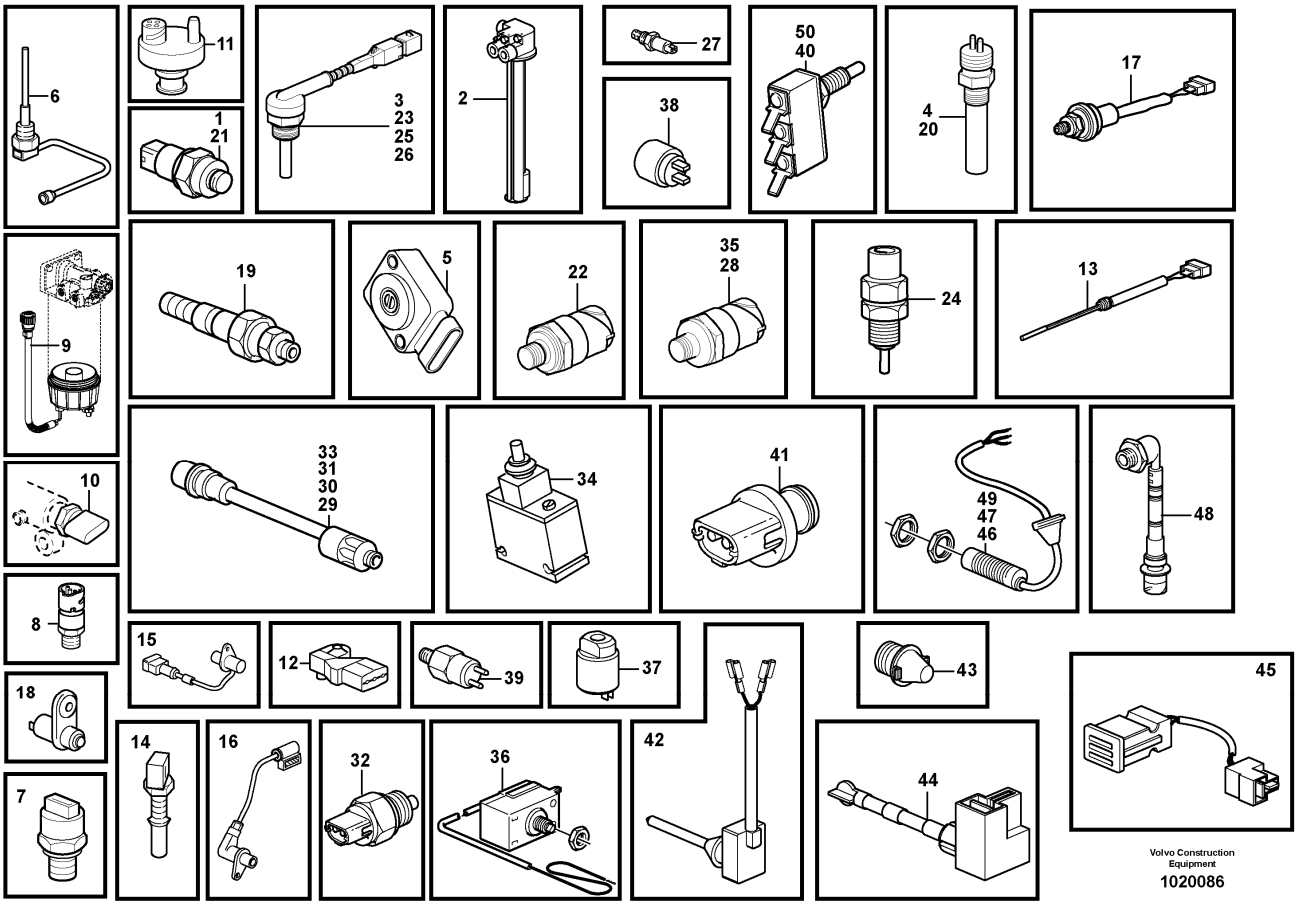

Pos	Part	Q1	Q2	Q3	Q4	Q5	PS	Kit	Description	Option(s)	Remark
1	VOE4780941	1							Induction sensor		SE201
									•Tachometer sensor		See ref 421/100
2	VOE11170365	1							Tank unit		(VOE11170093)SE207
									•Fuel level		See ref 234/100
3	VOE11419485	1							Temperature sensor		SE210
									•Coolant temperature		See ref 261/200
4	VOE11039557	1							Induction sensor		SE211
									•Fan		See ref 263/100
5	VOE15038313	1							Sensor		(VOE11708270)SE214, SEE SB WLO 17
									•Accel pedal		See ref 271/100
6	VOE22383368	1							Level sensor		(VOE20829076)SE2202, SE2205
									•Temp Sensor		See ref 371/150

7	VOE21291011	1							Pressure sensor		(VOE20585158)SE2203
									•Engine oil pressure		See ref 371/150
8	VOE20886108	1							Sensor		(VOE20484678)SE2301
									•Low pressure ind.		See ref 371/150
9		1					NS		Sensor		SE2302
									•Water Separator		See ref 233/200
10		1					NS		Sensor		SE2309
									•Fuel pressure		See ref 237/100
11	VOE20560843	1							Vacuum switch		SE2501, SE2502
									•Temperature gauge		
									•Pressure monitor		See ref 256/100
12	VOE20524936	1							Pressure sensor		(VOE20556500)SE2507, SE2508
									•Charge-air temperature		
									•Boost pressure		See ref 371/150
13	VOE11170064	1							Level guard		SE2603
									•Coolant level		See ref 261/150
14	VOE21531072	1							Temperature sensor		(VOE20513340)SE2606
									•Temperature sensor		See ref 371/150
15	VOE20450707	1							Tachometer		SE2701
									•Engine speed		See ref 371/150
16	VOE20820494	1							Sensor		SE2703
									•Camshaft speed		See ref 371/150
17	VOE11039617	1							Pressure monitor		SE301
									•Brake light		See ref 522/150
18	VOE3987417	1							Switch		SE302
									•Wire harness		See ref 371/500
19	VOE11705881	1							Sensor		SE401
									•Filter indicator		See ref 421/150
20	VOE11039557	1							Induction sensor		SE402
									•Turbine speed		See ref 421/100
21	VOE4780941	1							Induction sensor		SE403
									•Tachometer sensor		See ref 434/200
22	VOE15047336	1							Pressure sensor		SE405
									•Oil pressure sensor		See ref 421/500
23	VOE11419485	1							Temperature sensor		SE406
									•Hydraulic oil temp		See ref 421/450
24	VOE11039219	1							Switch		SE408
									•Differential lock		See ref 468/100
25	VOE11419485	1							Temperature sensor		SE410
									•Front axle, temp.		See ref 461/100
26	VOE11419485	1							Temperature sensor		SE411
									•Rear axle		See ref 463/100
27	VOE15048183	1							Oil level sensor		(VOE11144494)SE413
									•Oil lvl sensor		See ref 434/200

28	VOE11170123	1							Pressure sensor		SE501
									•Brake pressure		See ref 522/150
29	VOE11170072	1							Pressure monitor		SE502
									•Brake pressure		See ref 527/100
30	VOE11170071	1							Pressure monitor		SE503
									•Parking brake		See ref 551/100
31	VOE11170090	1							Pressure monitor		SE504
									•Brake press charge		See ref 527/100
32	VOE1594043	1							Switch		SE601
									•Aux Steering		See ref 647/200
33	VOE11170079	1							Pressure monitor		SE602
									•Aux Steering		See ref 371/1250
34	VOE11007955	1							Control lever		SE603
									•CDC-steering		See ref 882/550
35	VOE11170123	1							Pressure sensor		SE606
									•Aux Steering		See ref 371/1250
36	VOE11196477	1							Thermostat		SE803
									•Air conditioning		See ref 874/250
37	VOE11005913	1							Pressure switch		SE804
									•Air conditioning		See ref 371/1650
38	VOE828587	1							Buzzer		SA804
									•Park Brk Alarm		See ref 380/100
39	VOE11702174	1							Pressure switch		SE805
									•Central lubrication		See ref 993/300
40	VOE4787427	1							Microswitch		SE806
									•Operator seat		See ref 371/1450
41	VOE1347010	1							Temperature sensor		SE807
									•Cab		See ref 371/500
42	VOE1089049	1							Thermo monitor		SE808
									•Evaporator		See ref 873/200
43	VOE1609046	1							Thermo monitor		SE809
									•outside temperature		See ref 873/200
44	VOE3090917	1							Temperature sensor		SE810
									•Heater		See ref 873/200
45	VOE8140938	1							Temperature sensor		SE811
									•Cab		See ref 873/200
46	VOE16812875	1							Induction sensor		(VOE11170241)SE901
									•Tilt automatic		See ref 945/450
47	VOE16812875	1							Induction sensor		(VOE11170241)SE902
									•Boom kickout		See ref 945/450
48	VOE11039581	1							Level indicator		SE906
									•Hydraulic oil level		See ref 911/150
49	VOE16812875	1							Induction sensor		(VOE11170241)SE922
									•Loader arm		See ref 371/2050
50	VOE4787427	1							Microswitch		SE932
									•Auto Float Posn		See ref 914/500

VOLVO

Construction Equipment

PROSIS Part Information

Date:	Image id:	Catalogue:	Model:
24/08/2018	**1020431**	**20086**	**L120E**
Brand:	Serial:	Group/Section:	Title:
Volvo	**19804-, 66001-, 71401-**	**386/200**	**Fuses, reference list**

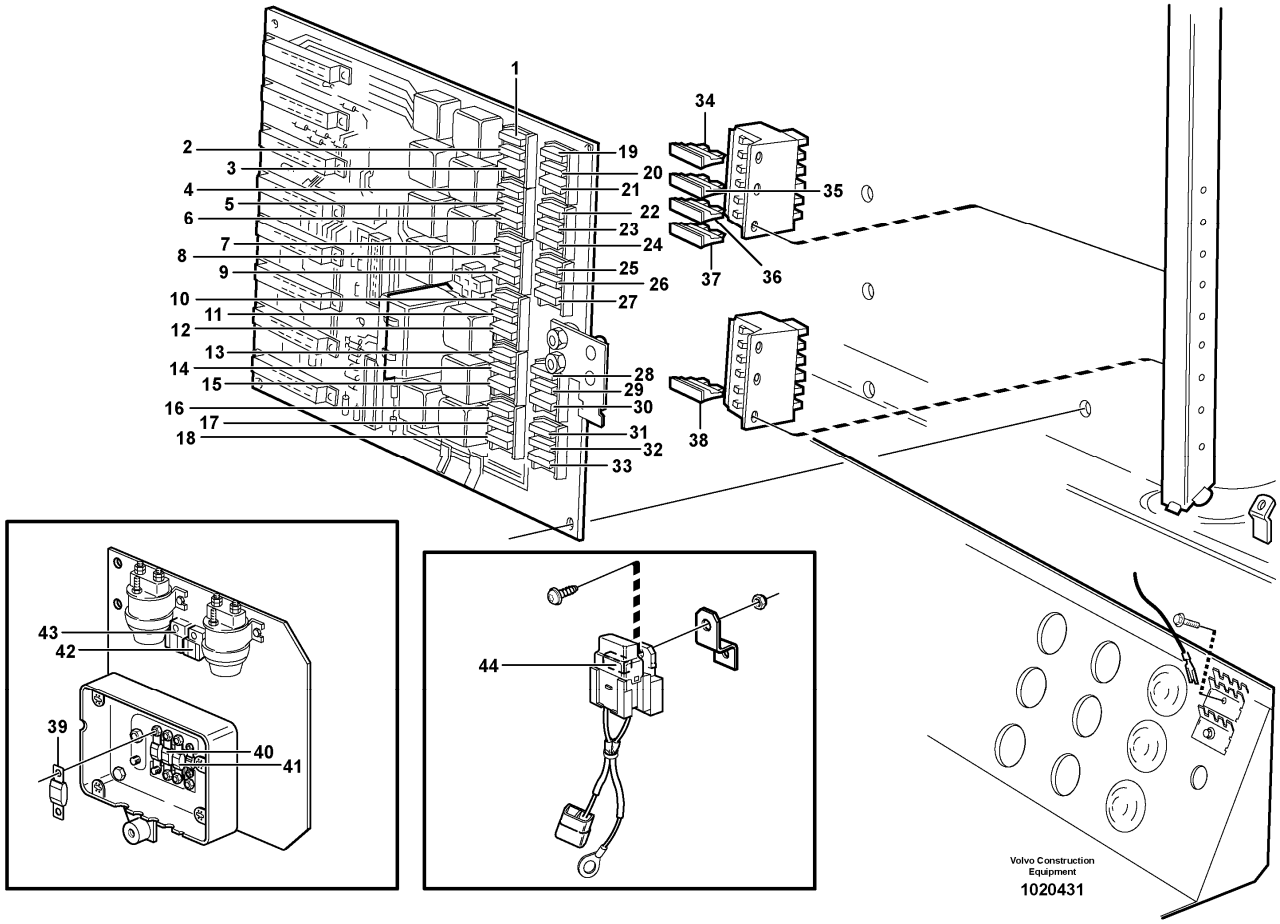

Pos	Part	Q1	Q2	Q3	Q4	Q5	PS	Kit	Description	Option(s)	Remark
1	VOE969161	1							Fuse		FU1, 10A
									•Tilt automatic		
									••Boom Kickout		
									•Holding Func. 3rd		
2	VOE969161	1							Fuse		FU2, 10A
									•Boom suspension		
3	VOE969161	1							Fuse		FU3, 10A
									•Windshield Wiper		
4	VOE978999	1							Fuse		FU4, 20A
									•Fan, cab		
5	VOE13969160	1							Fuse		FU5, 5A
									•Heated seat		
									•Ctl Lubrication		
									•Climate Unit		

6	VOE13969160	1							Fuse		FU6, 5A
									•Parking Light		RH - FORW, LH - REAR
7	VOE13969160	1							Fuse		FU7, 5A
									•Parking Light		LH - FORW, RH - REAR
									•Service outlett		
8	VOE13969162	1							Fuse		FU8, 15A
									•Starter Motor		
9	VOE13969160	1							Fuse		FU9, 5A
									•Hazard		
10	VOE13969160	1							Fuse		FU10, 5A
									•V Converter		
11	VOE13969160	1							Fuse		FU11, 5A
									•Dipped beam		RH
12	VOE13969160	1							Fuse		FU12, 5A
									•Dipped beam		LH
13	VOE969161	1							Fuse		FU13, 10A
									•Work lights		
									••Front fender		
14	VOE13969160	1							Fuse		FU14, 5A
									•Pre-heater		
									•Gear Selector		
									•Transmis. releasing		
									•Mode selector		
									•Service outlett		1A, 1B
15	VOE969161	1							Fuse		FU15, 10A
									•Starter switch		
									••dependence		
									••voltage feed		
									•Parking Brake		
16	VOE969161	1							Fuse		FU16, 10A
									•Climate Unit		(ATC)
17	VOE969161	1							Fuse		FU17, 10A
									•voltage feed		I-ECU, V-ECU
18	VOE978999	1							Fuse		FU18, 20A
									•voltage feed		E-ECU
19	VOE969161	1							Fuse		FU19, 10A
									•Cig Lighter		
20	VOE13969160	1							Fuse		F20, 5A
									•Stop light		
21	VOE13969160	1							Fuse		FU21, 5A
									•Hour counter		
									•Wiper, rear		
									•Instrument lighting		
22	VOE969161	1							Fuse		FU22, 10A
									•Work lights		
									••Radiator Casing		
23	VOE969161	1							Fuse		FU23, 10A

									•Voltage converter		
24	VOE13969160	1							Fuse		FU24, 5A
									•Headlight, right		
25	VOE13969160	1							Fuse		FU25, 5A
									•Headlight, left		
26	VOE969161	1							Fuse		FU26, 10A
									•Interior light		
									•Work lights		
27	VOE13969162	1							Fuse		FU27, 15A
									•Main Fuse		
									••Lighting		
28	VOE969161	1							Fuse		FU28, 10A
									•Work light		
									••Cab		
									•Rotating Beacon		
29	VOE969161	1							Fuse		FU29, 10A
									•Starter switch		
									••voltage feed		
30	VOE13969160	1							Fuse		FU30, 5A
									•Gr Lvr Carrier		
									•Brake press charge		
									•Aux Steering		
									•Cdc		
									•Boom suspension		
									•Parking Brake		
31	VOE13969160	1							Fuse		FU31, 5A
									•Feeding		
									••Frame,rear		
									•Press Monitor		
									••raised		
									••Fan speed		
32	VOE13969160	1							Fuse		FU32, 5A
									•Feeding		
									••Frame,forward		
									•Differential lock		
33	VOE978999	1							Fuse		FU33, 20A
									•Not used on		
34	VOE13969160	1							Fuse		FU50, 5A
									•Climate Unit		(AC), (ATC)
35	VOE969161	1							Fuse		FU52, 10A
									•Air-suspended Seat		
36	VOE13969160	1							Fuse		FU53, 5A
									•Parking Brake		
37	VOE13969160	1							Fuse		FU54, 5A
									•Air-suspended Seat		
38	VOE969161	1							Fuse		FU59, 10A
									•Ctl Lubrication		

									•Climate Unit		(ATC)
39	VOE982617	1							Fuse		FU70, 125A
									•Main Fuse		
									••El Distr Unit		See ref 371/100
40	VOE982617	1							Fuse		FU71, 125A
									•Auxiliary steering		See ref 371/100
41	VOE982617	1							Fuse		FU72, 125A
									•Pre heater		See ref 371/100
42	VOE13969160	1							Fuse		FH1, 5A
									•Control Lamp		
									••Pre heater		See ref 371/250
43	VOE13969160	1							Fuse		FH3, 5A
									•Control Lamp		
									••Auxiliary steering		See ref 371/1250
44	VOE13969160	1							Fuse		FH4, 5A
									•Voltage conve. earth		See ref 393/100

VOLVO

Construction Equipment

PROSIS Part Information

Date:	Image id:	Catalogue:	Model:
24/08/2018	**1008477**	**20086**	**L120E**
Brand:	Serial:	Group/Section:	Title:
Volvo	**19804-, 66001-, 71401-**	**390/100**	**Camera inclusive monitor. 82178**

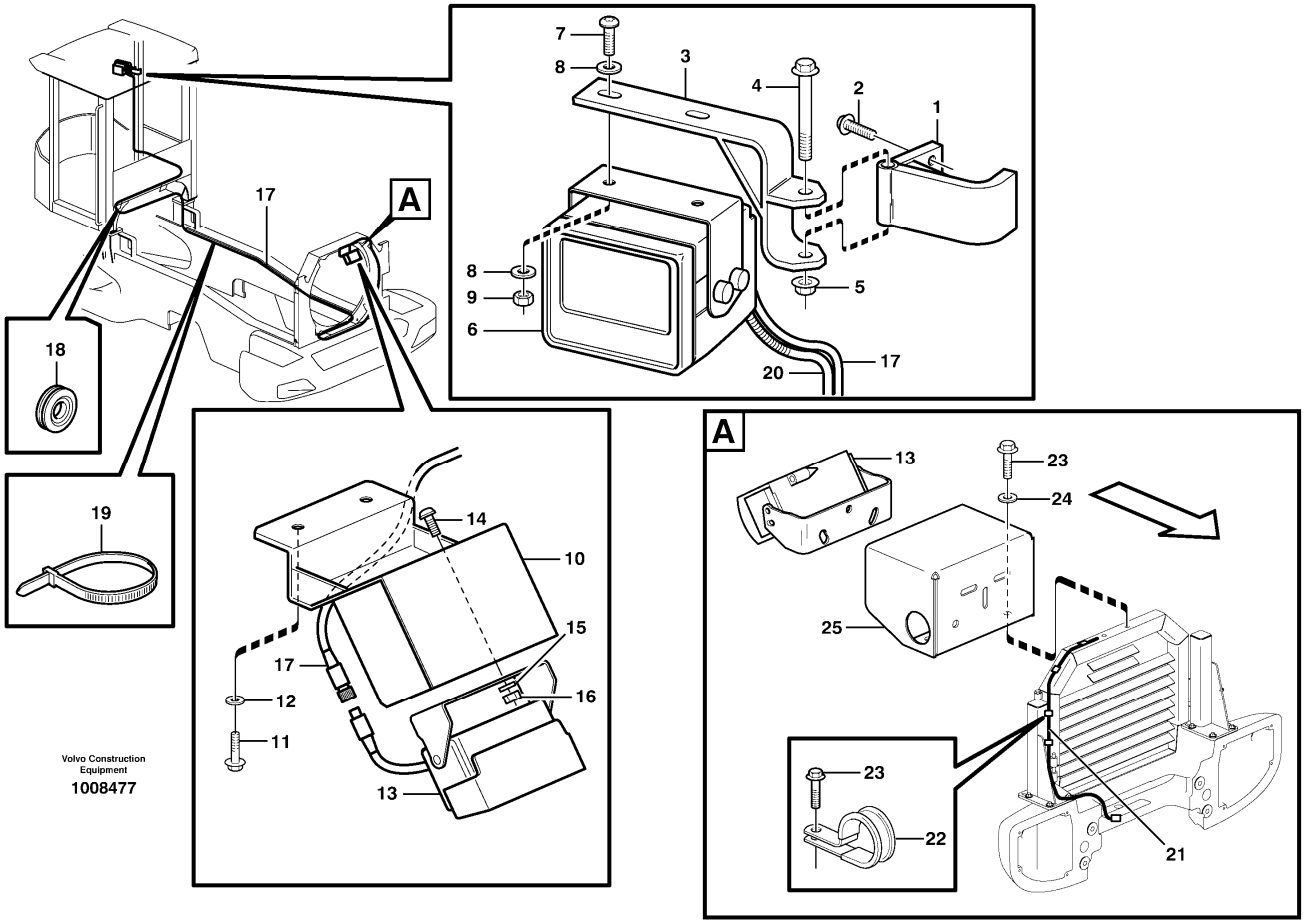

Section option	Kit	Option description
VOE82178	VOE11708916	Back-up camera incl. monitor

Pos	Part	Q1	Q2	Q3	Q4	Q5	PS	Kit	Description	Option(s)	Remark
1	VOE11174720	1							Anchorage		
2	VOE13945444	2							Screw		
3	VOE11174716	1							Bracket		
4	VOE13965181	1							Screw		
5	VOE948645	1							Flange lock nut		
6	VOE11195905	1					SS		Monitor		(VOE11113951)
7	VOE969407	2							Six point socket screw		
8	VOE13960138	4							Washer		
9	VOE13965483	2							Nut		
10	VOE11400584	1							Anchorage		

11	VOE13945444	2							Screw		
12	VOE11117464	2							Plain washer		(VOE13960141)
13	VOE11114903	1					SS		Camera		
14	VOE969407	2							Six point socket screw		
15	VOE13960138	2							Washer		
16	VOE13965483	2							Nut		
17	VOE11170023	1							Cable		
18	VOE961970	1							Plug		OD = 32 MM
	VOE943920	1							Plug		OD = 40 MM
19	VOE4881440	REQ							Cable tie		
20		1							Wire harness		See ref 371/1750
21	VOE190993	REQ							Hose		See footnote 2065) L = 1780 MM
22	VOE952637	5							Clamp		See footnote 2065)
23	VOE13946544	7							Screw		See footnote 2065)
24	VOE960139	2							Plain washer		See footnote 2065)
25	VOE11180688	1							Protecting plate		See footnote 2065)

2065) With radiator guard

VOLVO

Construction Equipment

PROSIS Part Information

Date:	Image id:	Catalogue:	Model:
24/08/2018	**1008481**	**20086**	**L120E**
Brand:	Serial:	Group/Section:	Title:
Volvo	**19804-, 66001-, 71401-**	**390/150**	**Camera inclusive monitor. 82781**

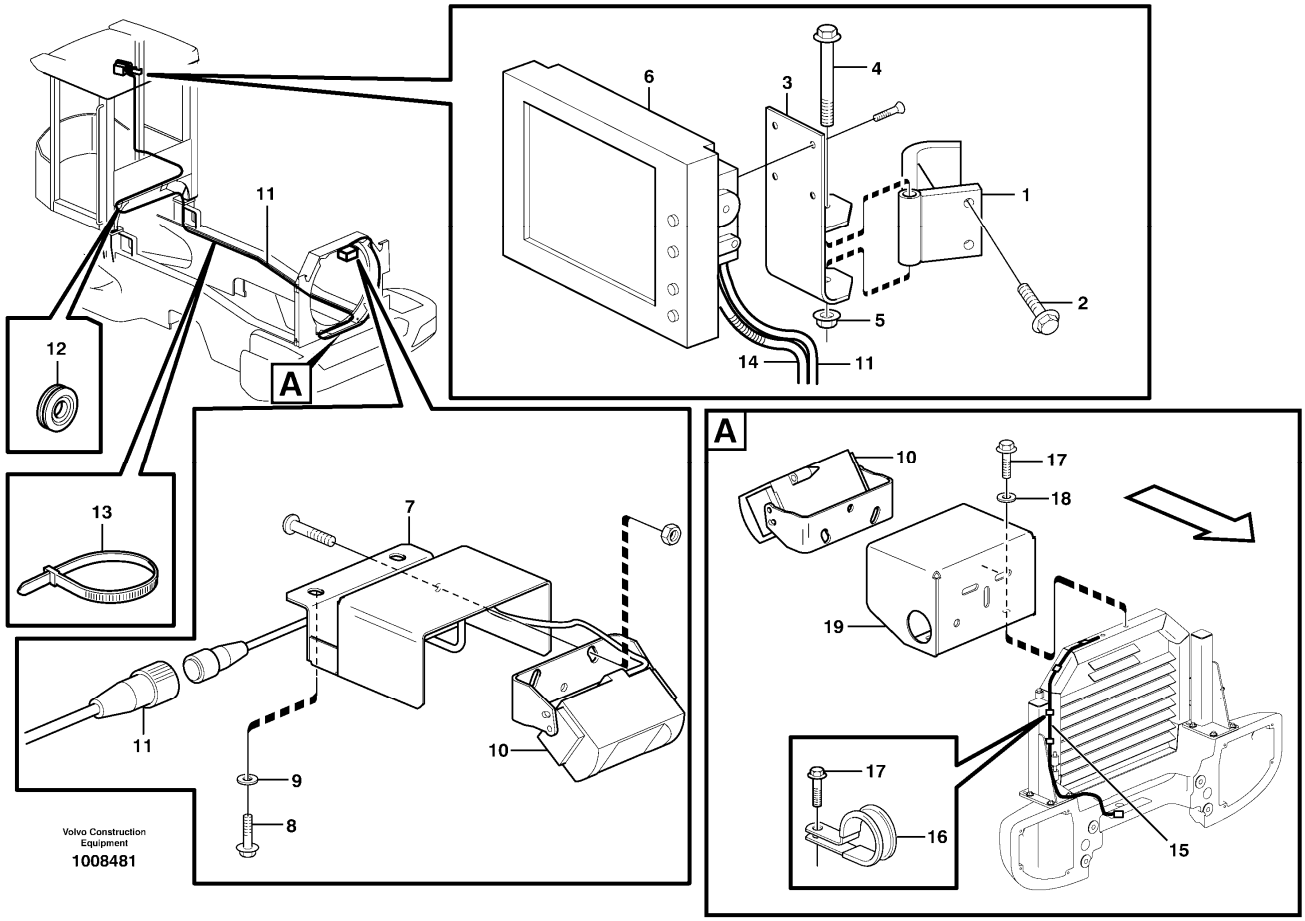

Section option	Kit	Option description
VOE82781		Rear view camera, colour, Lcd monitor

Pos	Part	Q1	Q2	Q3	Q4	Q5	PS	Kit	Description	Option(s)	Remark
1	VOE11174720	1							Anchorage		
2	VOE13945444	2							Screw		
3	VOE11171040	1							Bracket		
4	VOE13965181	1							Screw		
5	VOE948645	1							Flange lock nut		
6	VOE11195905	1					SS		Monitor		
7	VOE11171038	1							Anchorage		
8	VOE13945444	2							Screw		
9	VOE11117464	2							Plain washer		(VOE13960141)
10	VOE11190734	1							Camera		
11	VOE11170023	1							Cable		

12	VOE961970	1							Plug		OD = 32 MM
	VOE943920	1							Plug		OD = 40 MM
13	VOE4881440	REQ							Cable tie		
14		1							Wire harness		See ref 371/1750
15	VOE190993	REQ							Hose		See footnote 2065) L = 1780 MM
16	VOE952637	5							Clamp		See footnote 2065)
17	VOE13946544	7							Screw		See footnote 2065)
18	VOE960139	2							Plain washer		See footnote 2065)
19	VOE11171055	1							Protecting plate		See footnote 2065)

2065) With radiator guard

VOLVO

Construction Equipment

PROSIS Part Information

Date:	Image id:	Catalogue:	Model:
24/08/2018	**1015864**	**20086**	**L120E**
Brand:	Serial:	Group/Section:	Title:
Volvo	**19804-, 66001-, 71401-**	**393/100**	**Voltage converter and cable harness for radio. 82975, 82976, 33395 IRAN**

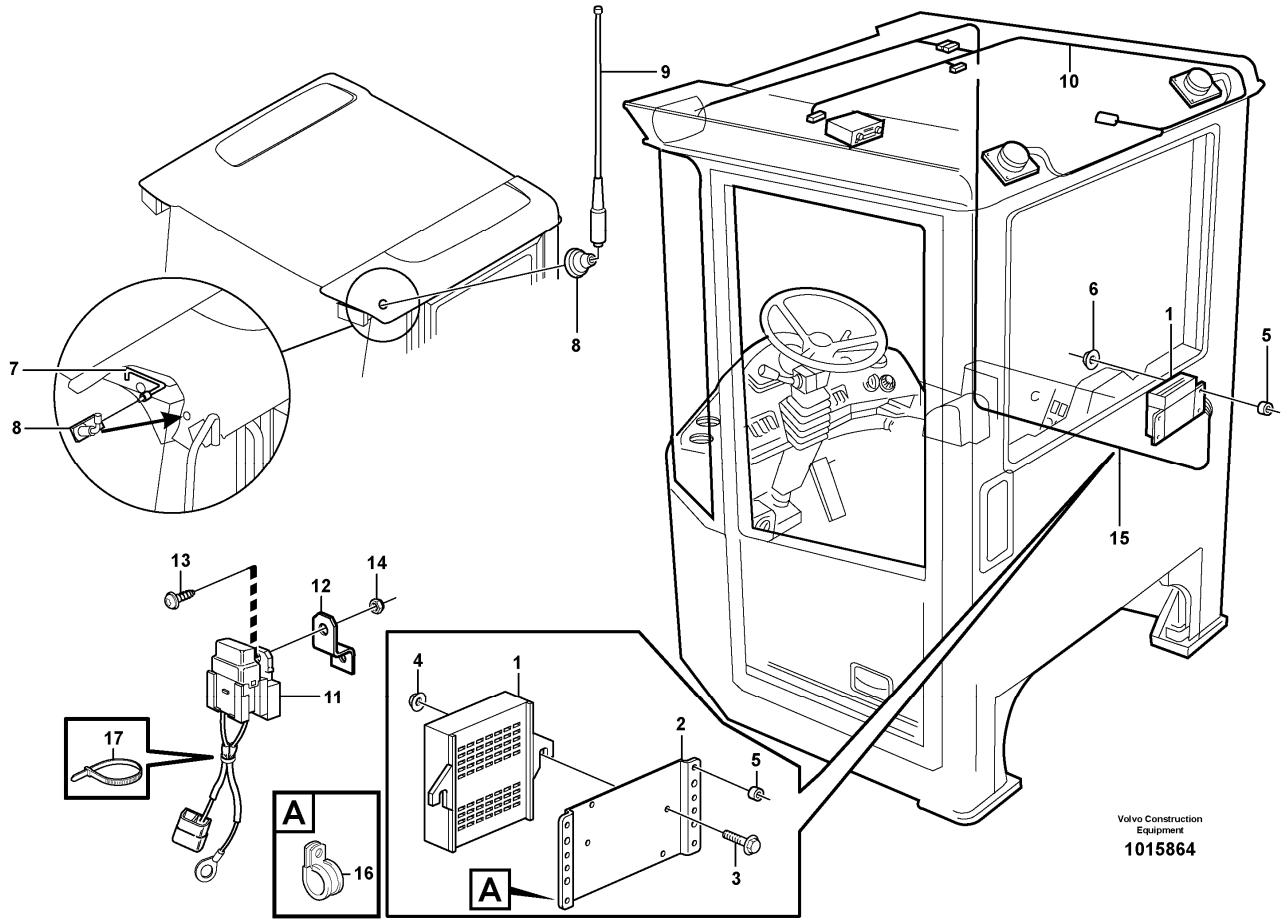

Section option	Kit	Option description
VOE82975	VOE11714470	Installation kit for radio, right mounting RH, EXCL RADIO
VOE82976	VOE11714470	Installation kit for radio, left mounting LH, EXCL RADIO
VOE33395		Wheel Loader L120E3 IRAN

Pos	Part	Q1	Q2	Q3	Q4	Q5	PS	Kit	Description	Option(s)	Remark
1	VOE20724977	1							Converter		(VOE20555710)
1	VOE20724977	1							Converter	VOE33395	IRAN
2	VOE24425174	1							Anchorage		
3	VOE971304	2							Six point socket screw		
4	VOE13965483	2							Nut		
5	VOE11006880	4							Spacer sleeve		
6	VOE13945407	4							Nut		
7	VOE941262	1							Grommet		

	VOE941266	1							Plug		
8	VOE11006079	1					SS		Antenna base		
	VOE15157567	1							•Antenna base		
	VOE15157572	1							•Antenna cable		
9	VOE1083597	1							Antenna		
10	VOE11170724	1							Cable harness		See footnote 1245)
									•CONNECTED TO:		
									••Radio		
									••Feeding		CR
									••Communikation radio		CRC
									••Power outlet		CRD
									••Speaker		LH, RH
11	VOE11148477	1							Cable harness		See footnote 1245)
									•CONNECTED TO:		
									••Fuse		FH4
									••Earth		
									••Coupling Piece		RR
12	VOE11006104	1							Anchorage		
13	VOE969407	1							Six point socket screw		
14	VOE949874	1							Flange lock nut		(VOE13949874)
15		1							Wire harness		
16	VOE977599	1							Clamp		(VOE13977599)
17	VOE4881440	1							Cable tie		

1245) Including parts: Wire assembly, hose, manifold, cable terminal and insulator See Group 379.

VOLVO

Construction Equipment

PROSIS Part Information

Date:	Image id:	Catalogue:	Model:
24/08/2018	**1022027**	**20086**	**L120E**
Brand:	Serial:	Group/Section:	Title:
Volvo	**19804-, 66001-, 71401-**	**393/150**	**Voltage converter and cable harness for radio. 83089**

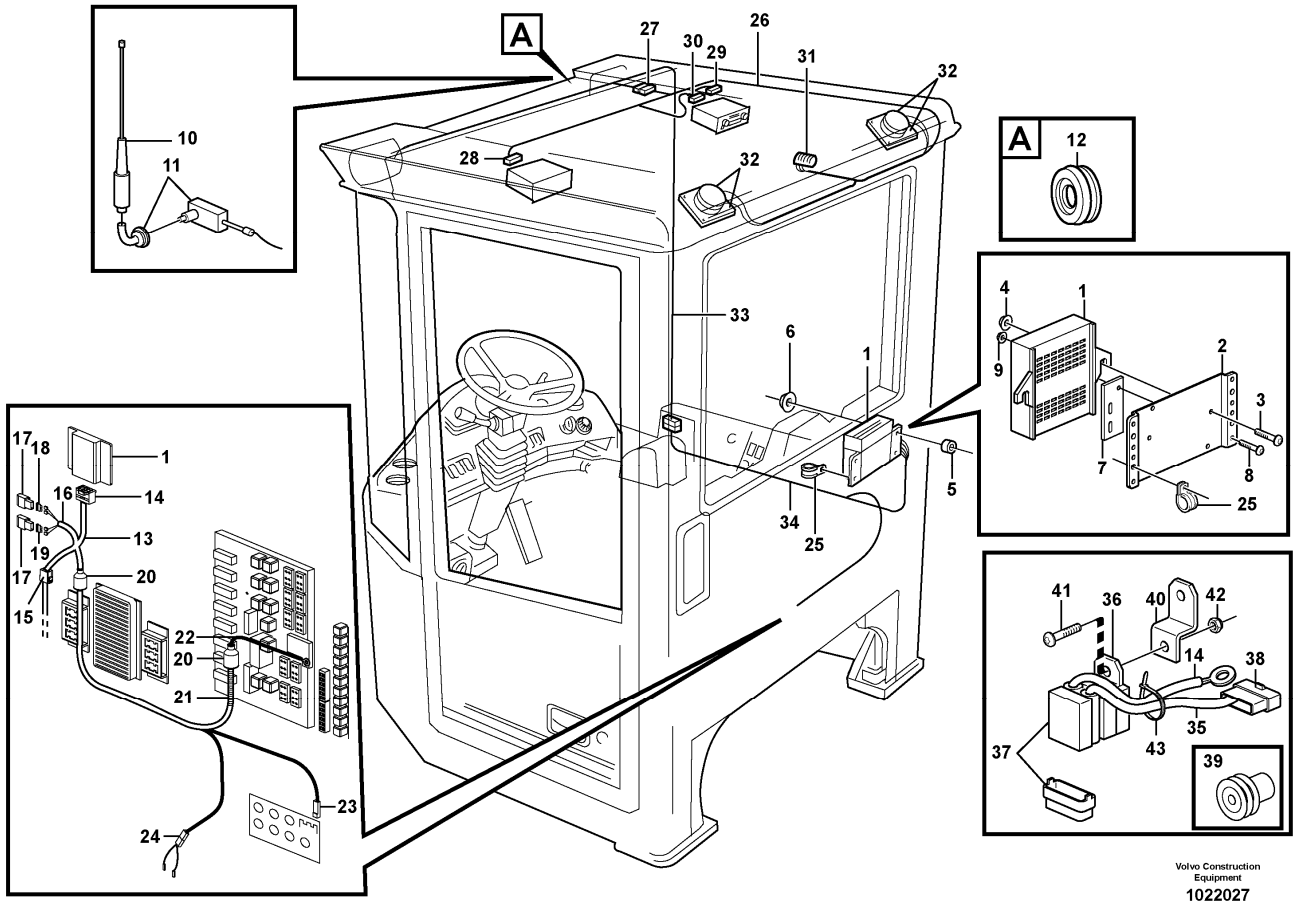

Section option	Kit	Option description
VOE83089		Radio installation kit incl. loudspeakers etc. EXKL RADIO, USA

Q1-Q5	Option	Option description	
Q1 .			
Q2 .			

Pos	Part	Q1	Q2	Q3	Q4	Q5	PS	Kit	Description	Option(s)	Remark
1	VOE20724975	1							Voltage converter		
2	VOE24425174	1							Anchorage		
3	VOE971304	2							Six point socket screw		
4	VOE13965483	2							Nut		
5	VOE11006880	4							Spacer sleeve		
6	VOE13945407	4							Nut		

7	VOE11417626	1					OP		Plate		
8	VOE971304	1							Six point socket screw		
9	VOE13965483	1							Nut		
10	VOE1083597	1							Antenna		
11	VOE11006079	1					SS		Antenna base		
	VOE15157567	1							•Antenna base		
	VOE15157572	1							•Antenna cable		
12	VOE941262	1							Grommet		
13	VOE11171248	1							Cable harness		See footnote 1245)
									•CONNECTED TO:		
									••Converter		CU801, CU804
									••Fuse		FU66, FU67
									••Earth		30A, 31
									••Coupling Piece		12VDC
14	VOE20367824	1							•Housing		
15	VOE11193753	1							•Housing		
16	VOE4821294	4							•Heat-shrinkable tubing		
17	VOE11039490	2							•Fuse holder		
18	VOE969161	1							•Fuse		
19	VOE13969162	1							•Fuse		
20	VOE11039397	2							•End sleeve		
21	VOE11170006	REQ							•Hose		
22	VOE4821294	1							•Heat-shrinkable tubing		
23	VOE949597	1					SS		•Housing		
24	VOE968381	1							•Housing		
25	VOE977599	1							Clamp		(VOE13977599)
26	VOE11170724	1							Cable harness		See footnote 1245)
									•CONNECTED TO:		
									••Feeding		CR
									••Radio		A, B
									••Communikation radio		CRC, 14V
									••Speaker		RH
									••Speaker		LH
									••Power outlet		CRD
27	VOE968389	1							•Housing		
28	VOE13948996	1							•Insulator		14 POL
29	VOE20429801	1							•Housing		
30	VOE20429800	1							•Housing		10 POL
31	VOE13948996	1							•Insulator		
32	VOE4821294	4							•Heat-shrinkable tubing		
33		1							Wire harness		See ref 371/500
34		1							Wire harness		See ref 371/650
35	VOE11148477	1							Cable harness		See footnote 1245)

									•CONNECTED TO:		
									••Fuse		FH4
									••Earth		31VC
									••Coupling Piece		RR
36	VOE11039713	1							•Bracket		
37	VOE11039714	1							•Fuse holder		
38	VOE1307049	1							•Tab housing		
39	VOE873854	2							•Sealing sleeve		
40	VOE11006104	1							Anchorage		
41	VOE969407	1							Six point socket screw		
42	VOE949874	1							Flange lock nut		(VOE13949874)
43	VOE4881440	REQ							Cable tie		

1245) Including parts: Wire assembly, hose, manifold, cable terminal and insulator See Group 379.

VOLVO

Construction Equipment

PROSIS Part Information

Date:	Image id:	Catalogue:	Model:
24/08/2018	**EM107**	**20086**	**L120E**
Brand:	Serial:	Group/Section:	Title:
Volvo	**19804-, 66001-, 71401-**	**414/100**	**Torque converter**

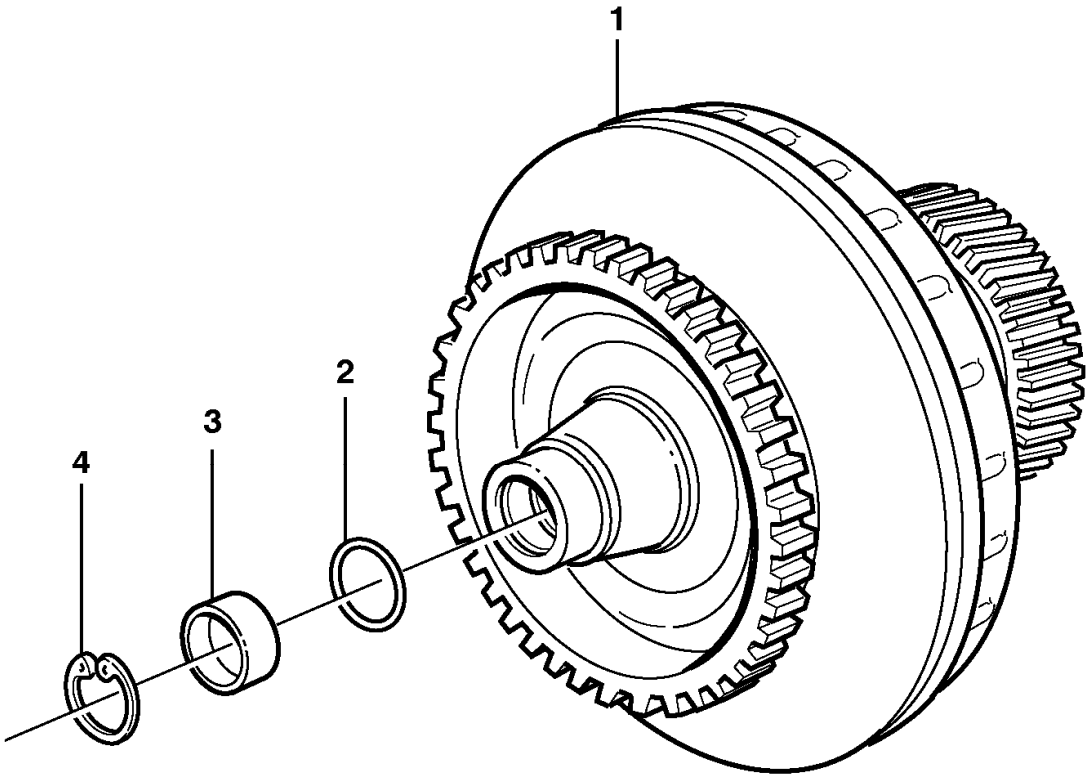

Section option	Kit	Option description
VOE22521		Hytraulic transmission HTE205

Pos	Part	Q1	Q2	Q3	Q4	Q5	PS	Kit	Description	Option(s)	Remark
1	VOE11038460	1							Torque converter		REMAN VOE9011038460
2	VOE11997187	1							•O-ring		
3	VOE11997186	1							•Cap		
4	VOE914529	1							•Retaining ring		

VOLVO

Construction Equipment

PROSIS Part Information

Date:	Image id:	Catalogue:	Model:
24/08/2018	**EL238**	**20086**	**L120E**
Brand:	Serial:	Group/Section:	Title:
Volvo	**19804-, 66001-, 71401-**	**420/50**	**Repair kit for transmission**

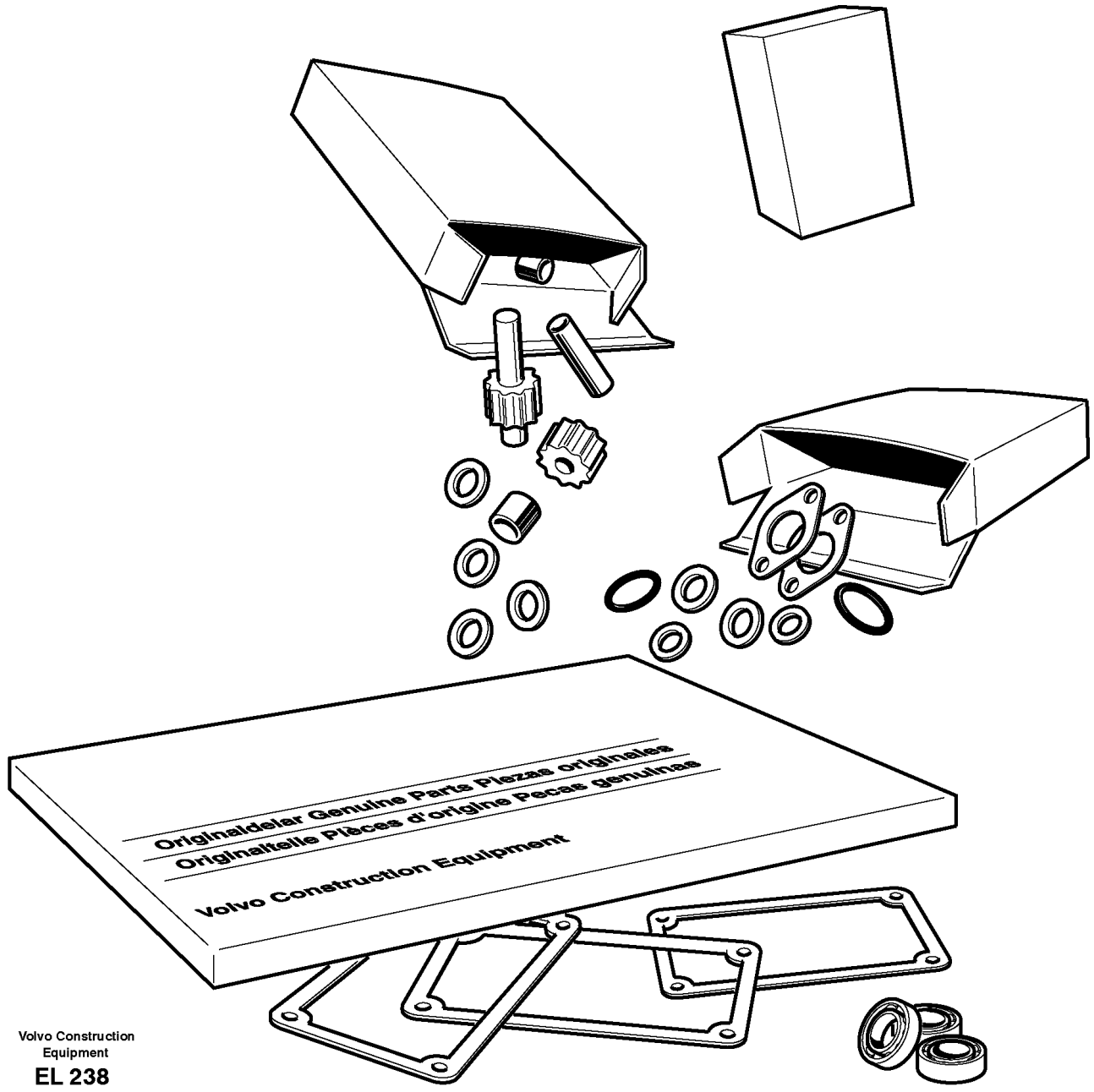

Pos	Part	Q1	Q2	Q3	Q4	Q5	PS	Kit	Description	Option(s)	Remark
	VOE11708284	1							Gasket kit		
	VOE421158	1							•Sealing ring		
	VOE973936	2							•Sealing ring		HT S/N - 17462
	VOE11103132	2							•Seal		HT S/N 17463 -

	VOE931216	2							•Back-up ring		
	VOE948883	4							•Gasket		
	VOE4881251	4							•Plane gasket		
	VOE4881255	3							•Plane gasket		
	VOE11037012	1							•Gasket		
	VOE11038369	1							•Gasket		
	VOE11144070	1							•Gasket		
	VOE17429156	1							•Gasket		(VOE11144620)
	VOE11145410	1							•Gasket		(VOE11144930)
	VOE11145110	1							•Gasket		
	VOE13947281	3							•Gasket		
	VOE13947282	1							•Gasket		
	VOE13947627	1							•Plane gasket		
	VOE925071	2							•O-ring		
	VOE925093	1							•O-ring		
	VOE925096	1							•O-ring		
	VOE925256	1							•O-ring		
	VOE925257	1							•O-ring		
	VOE925261	1							•O-ring		
	VOE925263	1							•O-ring		
	VOE925265	1							•O-ring		
	VOE926254	2							•O-ring		
	VOE931209	2							•O-ring		
	VOE942978	1							•O-ring		
	VOE944126	4							•O-ring		
	VOE944458	1							•O-ring		
	VOE949659	2							•O-ring		
	VOE958226	4							•O-ring		
	VOE958228	2							•O-ring		
	VOE964117	1							•O-ring		
	VOE967750	2							•O-ring		
	VOE968007	11							•O-ring		
	VOE968203	1							•O-ring		
	VOE968207	1							•O-ring		
	VOE976041	1							•O-ring		
	VOE990737	2							•O-ring		(VOE4880492)
	VOE11130091	2							•O-ring		
	VOE11706833	1							•O-ring		
	VOE11708246	1							•O-ring		
	VOE11997187	1							•O-ring		
	VOE14215715	4							•Sealing ring		
	VOE13949410	1							•O-ring		
	VOE13949574	35							•O-ring		
	VOE13949656	2							•O-ring		
	VOE13968561	2							•O-ring		
	VOE4720798	1							•Piston ring		
	VOE4720864	4							•Piston ring		

	VOE4720865	2							•Piston ring		
	VOE4720869	2							•Piston ring		
	VOE4871048	2							•Piston ring		
	VOE4871223	2							•Piston ring		
	VOE4871428	2							•Piston ring		
	VOE11037019	1							•Piston ring		
	VOE11038746	1							•Piston seal		
	VOE11038747	1							•Piston seal		
	VOE11037814	9							•Piston ring		
	VOE11038835	9							•Piston ring		
	VOE931211	1							•O-ring		
	VOE931218	1							•Back-up ring		
	VOE990736	2							•O-ring		
	VOE990737	3							•O-ring		
	VOE983502	8							•O-ring		
	VOE7011998	1							•Gasket		
	VOE15172281	1							•O-ring		

VOLVO

Construction Equipment

PROSIS Part Information

Date:	Image id:	Catalogue:	Model:
24/08/2018	**EM243**	**20086**	**L120E**
Brand:	Serial:	Group/Section:	Title:
Volvo	**19804-, 66001-, 71401-**	**420/100**	**Hydraulic transmission with fitting parts**

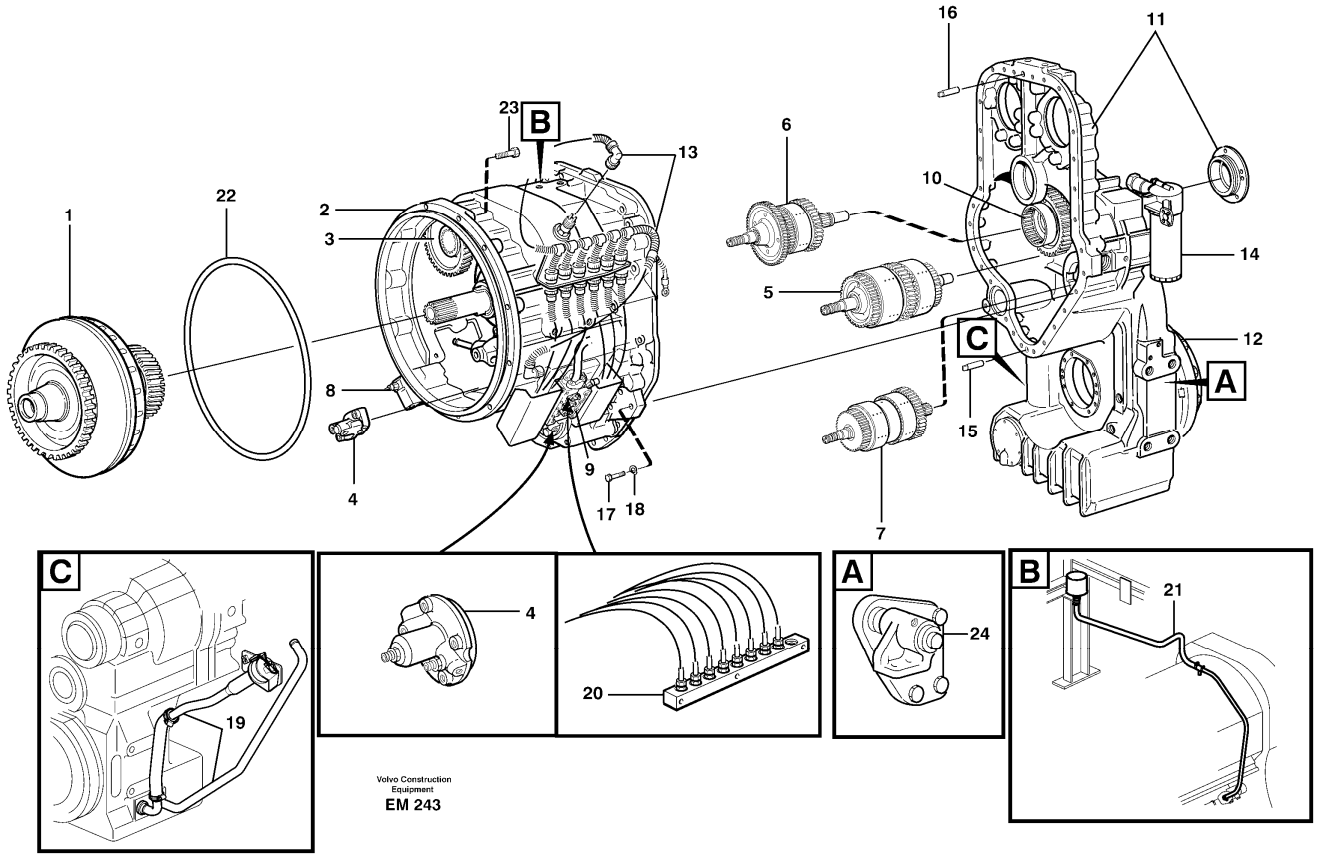

Section option	Kit	Option description
VOE33380		Volvo Wheel Loader L120E S/N 19801-, S/N 66001- USA, S/N 71401- BRA
VOE22521		Hytraulic transmission HTE205
VOE33395		Wheel Loader L120E3 IRAN

Q1-Q5	Option	Option description	
Q1 22521	VOE22521	Hytraulic transmission HTE205	
Q2 33380 33395	VOE33380	Volvo Wheel Loader L120E S/N 19801-, S/N 66001- USA, S/N 71401- BRA	

Pos	Part	Q1	Q2	Q3	Q4	Q5	PS	Kit	Description	Option(s)	Remark
	VOE22521	1							Hydraulic transmission		HTE 205, REMAN VOE9000022521
1									•Torque converter		See ref 414/100
2									•Conv. hous, gears		See ref 421/100
3									•Pump drive		See ref 421/100

4									•Oildistributor, tubes		See ref 421/200
5									•Clutch, forward,1:st		See ref 421/250
6									•Clutch, reverse, 2nd		See ref 421/300
7									•Clutch, 3rd and 4th		See ref 421/350
8									•Lubricating oil valve		See ref 421/400
9									•Gear selector valve		See ref 421/500
10									•Transfer case, gears		See ref 434/100
11									•Transfer case, housin		See ref 434/200
12									•Parking brake		See ref 434/150
13									•Wire harness		See ref 371/550
14									•Filter Retainer		See ref 421/150
15	VOE950711	1							•Pin		
16	VOE4718167	1							•Pin		
17	VOE970978	23							•Hexagon screw		L = 70 MM
	VOE970988	5							•Hexagon screw		(VOE13970988)L = 160 MM
	VOE13970989	3							•Hexagon screw		L = 180 MM
18	VOE13949608	31							•Washer		
19			1						Oil filler		See ref 420/150
20			1						Measuring block		See ref 420/200
21			1						Ventilation for hydr.		See ref 420/300
22	VOE968203		1						O-ring		
23	VOE13965193		12						Screw		
24			1						Gearbox mounting		See ref 436/100

VOLVO

Construction Equipment

PROSIS Part Information

Date:	Image id:	Catalogue:	Model:
24/08/2018	**1004469**	**20086**	**L120E**
Brand:	Serial:	Group/Section:	Title:
Volvo	**19804-, 66001-, 71401-**	**420/150**	**Oilfiller**

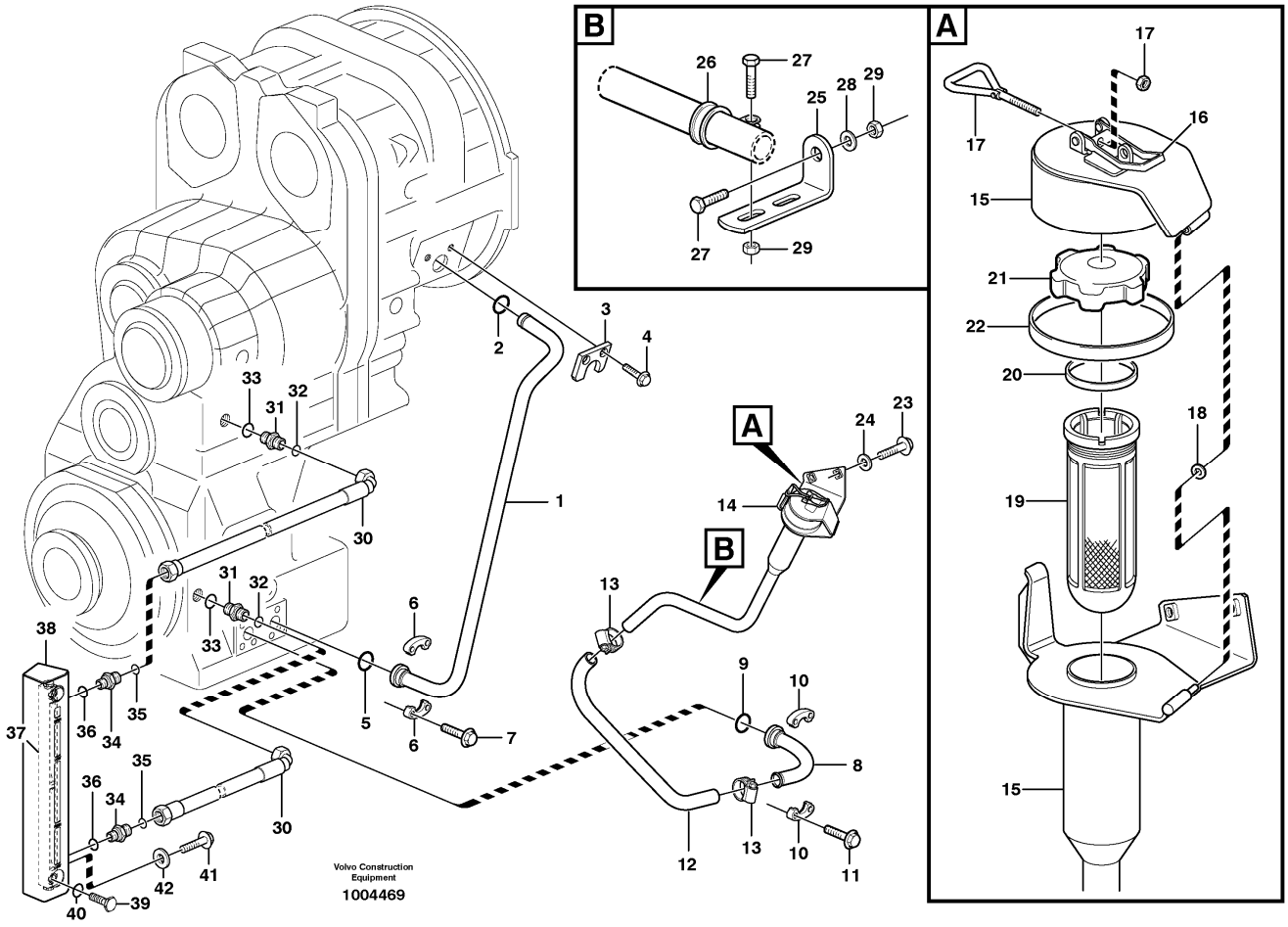

Section option	Kit	Option description
VOE33380		Volvo Wheel Loader L120E S/N 19801-, S/N 66001- USA, S/N 71401- BRA
VOE82207		Cover plates rear frame, right and left side
VOE33395		Wheel Loader L120E3 IRAN

Q1-Q5	Option	Option description	
Q1 33380 33395	VOE33380	Volvo Wheel Loader L120E S/N 19801-, S/N 66001- USA, S/N 71401- BRA	
Q2 82207	VOE82207	Cover plates rear frame, right and left side	

Pos	Part	Q1	Q2	Q3	Q4	Q5	PS	Kit	Description	Option(s)	Remark
1	VOE11410041	1							Return pipe		
2	VOE421158	1							Sealing ring		
3	VOE11031769	1							Lock washer		
4	VOE946440	2							Flange screw		

5	VOE990756	1							Sealing ring		
6	VOE11015455	2							Flange half		
7	VOE984080	4							Hex. socket screw		
8	VOE11173586	1							Connecting pipe		
9	VOE990756	1							Sealing ring		
10	VOE11015455	2							Flange half		
11	VOE984080	4							Hex. socket screw		
12	VOE941799	1							Hose		L = 650 MM
13	VOE943476	2							Hose clamp		
14		1					NS		Filler cap		
	VOE11438029		1						Filler cap		
15	VOE11173376	1							•Cap retainer		
			1				NS		•Cap Retainer		
16	VOE11015639	1							••Eccentric lock		
17	VOE11015638	1	1						•Eye bolt		
18	VOE4936343	1	1						•Washer		
19	VOE11018236	1	1						•Strainer		
20	VOE1275379	1	1						•Gasket		
21	VOE421753	1	1						•Filler cap		
22	VOE4786044	REQ	REQ						•Sealing strip		L = 320 MM
23	VOE946329	2							Flange screw		
	VOE13947760		2						Screw		
24	VOE960148	2					SS		Plain washer		
25	VOE13965558	1							Bracket		
26	VOE943717	1							Clamp		
27	VOE13946173	2							Screw		
28	VOE11117464	1							Plain washer		(VOE13960141)
29	VOE13945408	2							Nut		
30	VOE11148957	2							Hose assembly		L = 450 MM
31	VOE13933855	2							Nipple		
32	VOE990737	2							•O-ring		(VOE4880492)
33	VOE14213676	2							•Sealing ring		
	VOE11173956	1							Level indicator		
34	VOE14345423	2							•Nipple		
35	VOE990737	2							••O-ring		(VOE4880492)
36	VOE14211856	2							••Sealing ring		
37	VOE11145327	1							•Level sight glass		
38	VOE11173957	1					OP		•Bracket		
39	VOE11145321	2							•Hollow screw		
40	VOE3537521	4							•O-ring		
41	VOE946329	2							Flange screw		
42	VOE960148	2					SS		Plain washer		

VOLVO

Construction Equipment

PROSIS Part Information

Date:	Image id:	Catalogue:	Model:
24/08/2018	**1015869**	**20086**	**L120E**
Brand:	Serial:	Group/Section:	Title:
Volvo	**19804-, 66001-, 71401-**	**420/200**	**Testing block 33380, 33395**

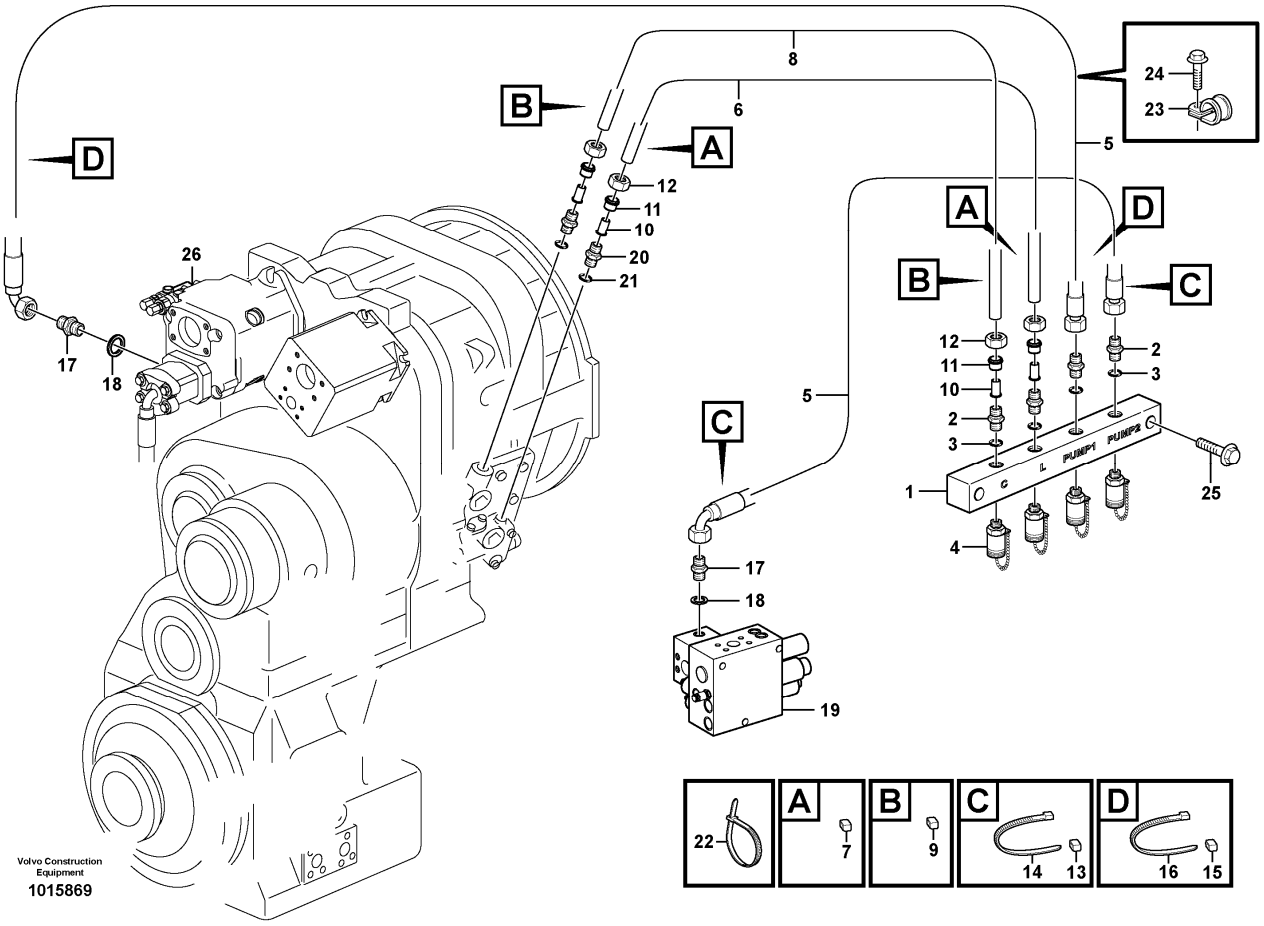

Section option	Kit	Option description
VOE33380		Volvo Wheel Loader L120E S/N 19801-, S/N 66001- USA, S/N 71401- BRA
VOE33395		Wheel Loader L120E3 IRAN

Pos	Part	Q1	Q2	Q3	Q4	Q5	PS	Kit	Description	Option(s)	Remark
	VOE11445176	1							Testing block		
1	VOE11410758	1							•Testing block		
2	VOE11410833	4							•Nipple		
3	VOE993320	4							•O-ring		(VOE932039)
4	VOE936446	4							•Testing nipple		
5	VOE11173463	2							•Hose assembly		L = 2 x 1200 MM
6	VOE944963	1							•Plastic pipe		L, L = 1400 MM
7	VOE4881452	2							•Marking sleeve		WHITE
8	VOE944963	1							•Plastic pipe		C, L = 1500 MM
9	VOE4881453	2							•Marking sleeve		VIOL

10	VOE13949361	4							•Sleeve		
11	VOE13956967	4							•Ferrule		
12	VOE941521	4							•Fitting nut		
13	VOE4881457	2							Marking sleeve		GREEN
14	VOE4881440	2							Cable tie		
15	VOE4881455	2							Marking sleeve		RED
16	VOE4881440	2							Cable tie		
17	VOE11410833	1							Nipple		
18	VOE993320	1							O-ring		(VOE932039)
19		1							Connection block		See ref 911/250
20	VOE13945355	2							Nipple		(VOE13963968)
21	VOE13949574	2							O-ring		
22	VOE4881440	7							Cable tie		
23	VOE13949747	1							Clamp		
24	VOE946440	1							Flange screw		
25	VOE13965187	2							Screw		
26		1							Hydraulic Pump		See ref 911/250

VOLVO

Construction Equipment

PROSIS Part Information

Date:	Image id:	Catalogue:	Model:
24/08/2018	**1007856**	**20086**	**L120E**
Brand:	Serial:	Group/Section:	Title:
Volvo	**19804-, 66001-, 71401-**	**420/300**	**Ventilation for transmission 33380, 33395**

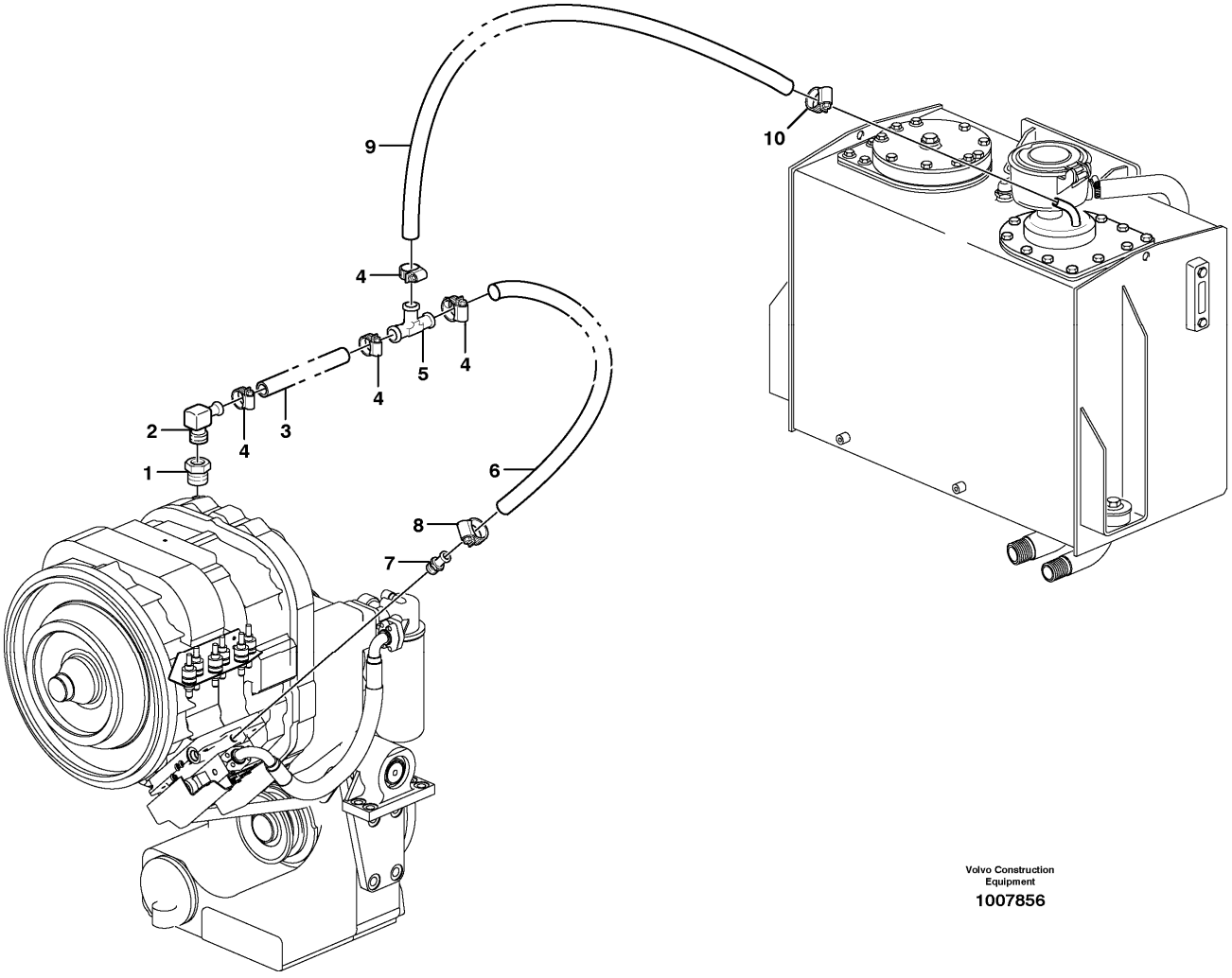

Section option	Kit	Option description
VOE33380		Volvo Wheel Loader L120E S/N 19801-, S/N 66001- USA, S/N 71401- BRA
VOE33395		Wheel Loader L120E3 IRAN

Pos	Part	Q1	Q2	Q3	Q4	Q5	PS	Kit	Description	Option(s)	Remark
1	VOE479954	1							Nipple		
2	VOE942758	1							Nipple		
3	VOE13944075	REQ							Rubber hose		L=60 MM
4	VOE943470	4							Hose clamp		18
5	VOE419446	1							Tube		
6	VOE13944075	REQ							Rubber hose		L=570 MM
7		1							Nipple		See ref 421/500
8	VOE943470	1							Hose clamp		18

9	VOE13944075	REQ							Rubber hose		L=1210 MM
10	VOE943470	1							Hose clamp		18

VOLVO

Construction Equipment

PROSIS Part Information

Date:	Image id:	Catalogue:	Model:
24/08/2018	**1083615**	**20086**	**L120E**
Brand:	Serial:	Group/Section:	Title:
Volvo	**19804-, 66001-, 71401-**	**421/100**	**Converter housing, gears and shafts**

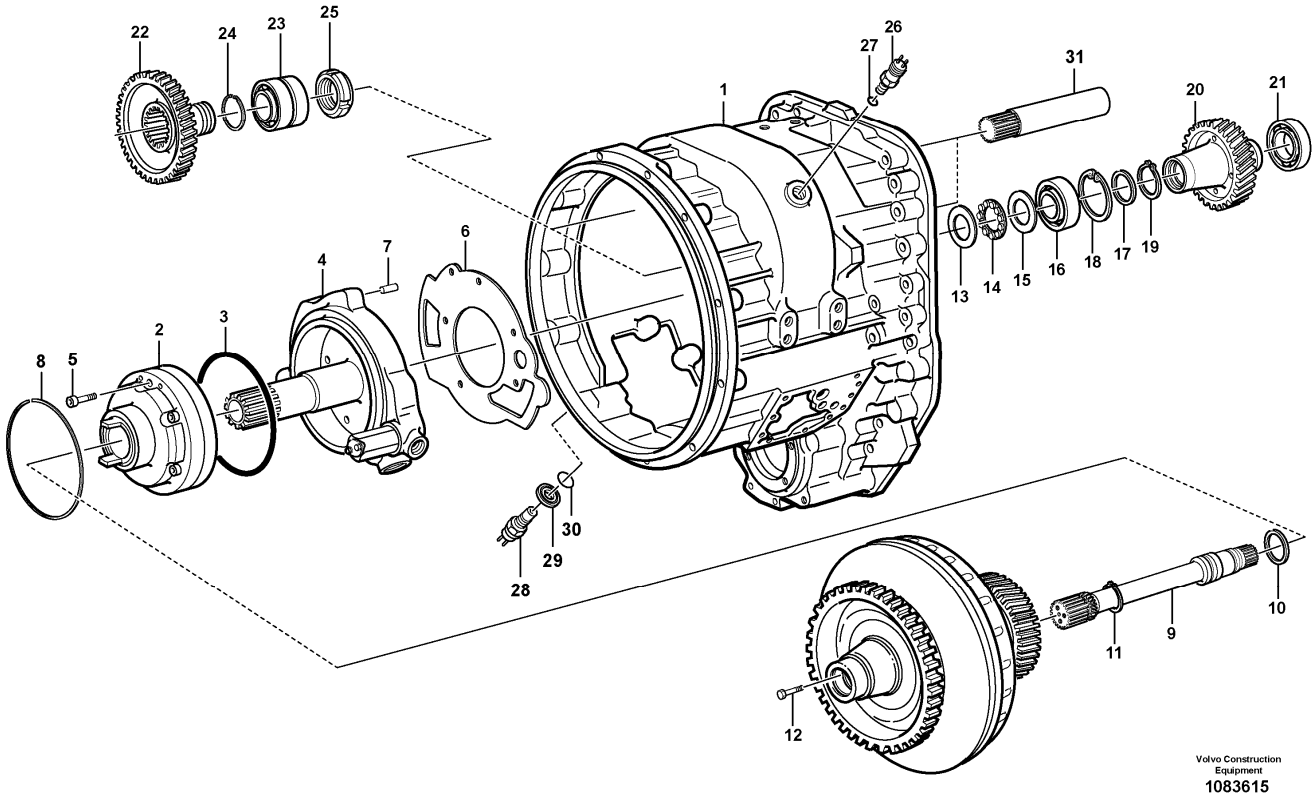

Section option	Kit	Option description
VOE22521		Hytraulic transmission HTE205

Pos	Part	Q1	Q2	Q3	Q4	Q5	PS	Kit	Description	Option(s)	Remark
1	VOE15112296	1							Converter housing		(VOE11145178)
2	VOE15093008	1							Pump		(VOE11038720)
2	VOE15093008	1							Pump		
3	VOE11706833	1							•O-ring		
4	VOE11038738	1							Converter base		(VOE11144404)
5	VOE959250	6							Hex. socket screw		
6	VOE11145410	1							Gasket		
7	VOE11036468	1							Locating pin		
8	VOE11419318	1							Piston ring		
9	VOE11037660	1							Shaft		
10	VOE11037019	1							Piston ring		

11	VOE13947902	1							Lock ring		
12	VOE959241	3							Hex. socket screw		
13	VOE184230	1							Housing washer		
14	VOE184336	1							Roller and cage assembly		
15	VOE184212	1							Shaft washer		
16	VOE183124	1							Roller bearing		
17	VOE11037682	1							Washer		
18	VOE13949905	1							Snap ring		
19	VOE11038728	1							Snap ring		
20	VOE11144940	1							Gear		
21	VOE184853	1							Roller bearing		
22	VOE11037273	2					SS		Gear		
22	VOE15034972	2							Gear		See footnote 2419)
23	VOE11037809	2							Roller bearing		
24	VOE11037479	2							Snap ring		
25	VOE11037807	2							Lock nut		
26	VOE4780941	1							Induction sensor		SE201
27	VOE13976109	1							O-ring		
28	VOE11039557	1							Induction sensor		SE402
29	VOE11038735	1							Spacer washer		
30	VOE944458	1							O-ring		
31		2							Shaft		See ref 913/100

2419) Vid montering av kugghjul 15034972 ska alltid axel pos 31 bytas till långa varianten (11038380).

VOLVO

Construction Equipment

PROSIS Part Information

Date:	Image id:	Catalogue:	Model:
24/08/2018	**1055573**	**20086**	**L120E**
Brand:	Serial:	Group/Section:	Title:
Volvo	**19804-, 66001-, 71401-**	**421/150**	**Oil filter**

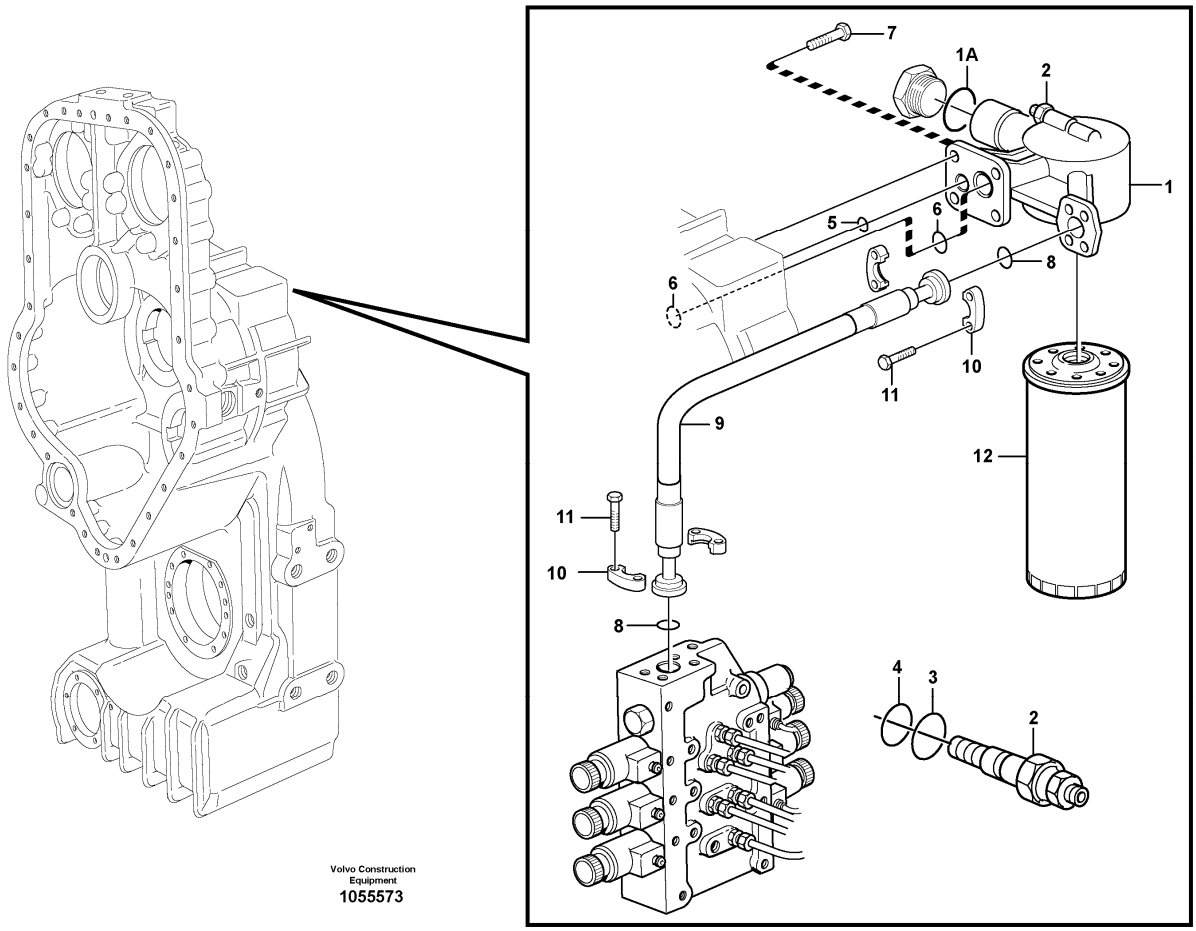

Section option	Kit	Option description
VOE22521		Hytraulic transmission HTE205

Q1-Q5	Option	Option description	
Q1 11145105			
Q2 11038833			

Pos	Part	Q1	Q2	Q3	Q4	Q5	PS	Kit	Description	Option(s)	Remark
1	VOE11145105	1					SS		Filter retainer		
1	VOE11038833		1						Filter retainer		
1A	VOE15172281		1						•O-ring		
2	VOE11705881	1	1						•Sensor		SE401
3	VOE11708246	1							•O-ring		
4	VOE942978	1							•O-ring		(VOE11708247)
5	VOE13949410	1	1						O-ring		

6	VOE976041	2	2						O-ring		
7	VOE946472	4	4						Flange screw		
8	VOE990756	2	2						Sealing ring		(VOE13948700)
9	VOE11145192	1	1						Hose assembly		L = 710 MM
10	VOE11015455	4	4						Flange half		
11	VOE13946752	8	8						Screw		
12	VOE11037868	1	1						Filter cartridge		

VOLVO

Construction Equipment

PROSIS Part Information

Date:	Image id:	Catalogue:	Model:
24/08/2018	**1016214**	**20086**	**L120E**
Brand:	Serial:	Group/Section:	Title:
Volvo	**19804-, 66001-, 71401-**	**421/200**	**Oil distributor and tube**

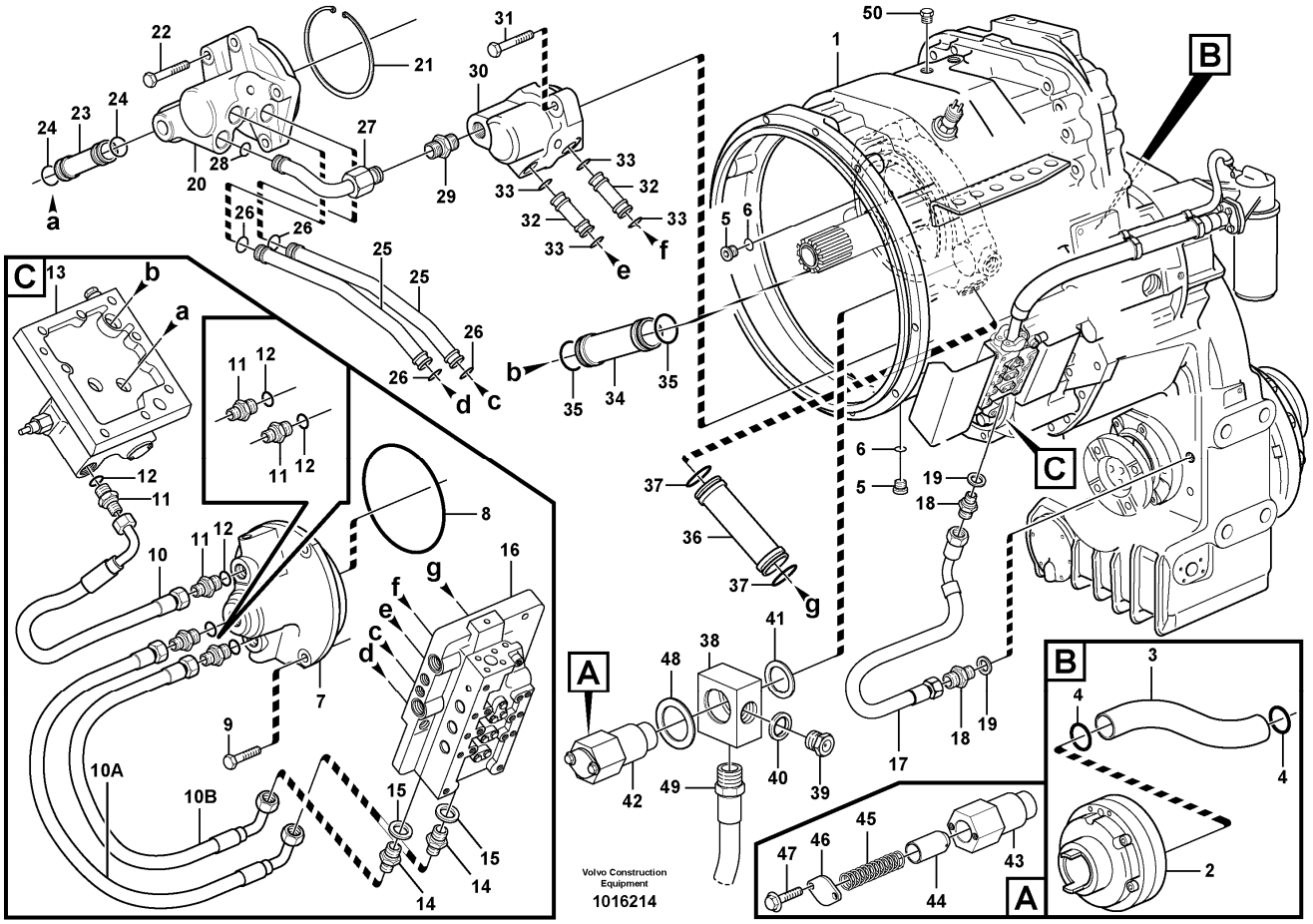

Section option	Kit	Option description
VOE22521		Hytraulic transmission HTE205

Pos	Part	Q1	Q2	Q3	Q4	Q5	PS	Kit	Description	Option(s)	Remark
1		1							Housing		See ref 421/100
2		1							Pump		See ref 421/100
3	VOE11144497	1							Tube		
4	VOE976041	2							O-ring		
5	VOE13968614	2							Plug		
6	VOE13968561	2							O-ring		
7	VOE11038395	1							Oil distributor		
8	VOE925263	1							O-ring		
9	VOE13947760	4							Screw		
10	VOE11418052	1							Hose assembly		L = 300 MM
	VOE990737	2							•O-ring		(VOE4880492)

10A	VOE11418052	1							Hose assembly		L = 300 MM
	VOE990737	2							•O-ring		(VOE4880492)
10B	VOE11145413	1							Hose assembly		L = 350 MM
	VOE990737	2							•O-ring		(VOE4880492)
11	VOE957031	4							Nipple		
12	VOE958226	4							O-ring		
13		1							Lub oil valve		See ref 421/400
14	VOE981018	2							Nipple		
15	VOE4881251	2							Plane gasket		
16		1							Gear sel valve		See ref 421/500
17	VOE11145414	1							Hose assembly		(VOE13933748)L = 450 MM
18	VOE13943987	2							Nipple		
19	VOE4881251	2							Plane gasket		
20	VOE11038393	1							Oil distributor		
21	VOE11037186	1							Snap ring		
22	VOE13947760	4							Screw		
23	VOE11144081	1							Tube		
24	VOE13949656	2							O-ring		
25	VOE11144407	2							Pipe		
26	VOE968007	4							O-ring		
27	VOE11144406	1							Pipe		
28	VOE968007	1							O-ring		
29	VOE931227	1							Nipple		
	VOE931211	1							•O-ring		
	VOE931218	1							•Back-up ring		
30	VOE11144617	1							Oil distributor		
31	VOE13947760	2							Screw		
32	VOE11144077	2							Tube		
33	VOE968007	4							O-ring		
34	VOE11144086	1							Tube		
35	VOE944126	2							O-ring		
36	VOE11144087	1							Tube		
37	VOE944126	2							O-ring		
38	VOE11144858	1							Block		
39	VOE11144859	1							Plug		
40	VOE13947627	1							Plane gasket		
41	VOE13960150	1							Washer		
42	VOE11144910	1							Safety valve		
43	VOE11419149	1					OP		•Valve housing		
44	VOE11036776	1							•Piston		
45	VOE11036777	1							•Spring		
46	VOE4718062	1							•Cover		
47	VOE13946544	2							•Screw		
48	VOE120291	1							Washer		
49	VOE11144952	1							Hose assembly		
50	VOE479956	1							Plug		

VOLVO

Construction Equipment

PROSIS Part Information

Date:	Image id:	Catalogue:	Model:
24/08/2018	**EM225**	**20086**	**L120E**
Brand:	Serial:	Group/Section:	Title:
Volvo	**19804-, 66001-, 71401-**	**421/250**	**Hydraulic clutch, forward / 1 st speed**

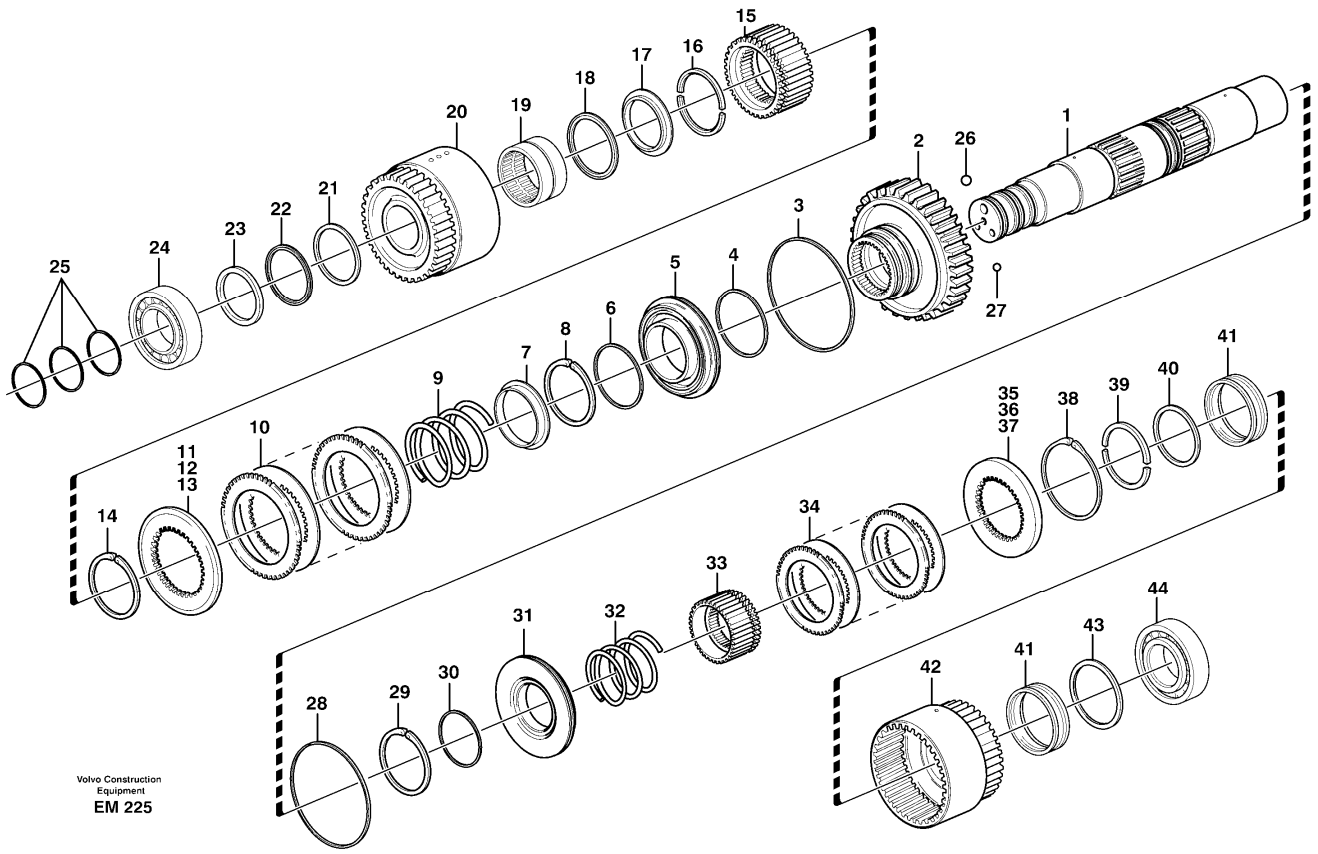

Section option	Kit	Option description
VOE22521		Hytraulic transmission HTE205

Pos	Part	Q1	Q2	Q3	Q4	Q5	PS	Kit	Description	Option(s)	Remark
	VOE11145393	1							Hydraulic clutch		(VOE11145258)
1	VOE11144024	1							•Clutch shaft		
2	VOE11144026	1							•Gear		
3	VOE4720864	1							•Piston ring		
4	VOE4720865	1							•Piston ring		
5	VOE11144458	1							•Piston		
6	VOE4871223	1							•Piston ring		
7	VOE4720854	1							•Spring retainer		
8	VOE11037189	1							•Snap ring		
9	VOE11037195	1							•Spring		
10	VOE11144415	1							•Disc kit		
11	VOE11144441	REQ							•Pressure plate		THICK = 9,1 MM

12	VOE11144442	REQ							•Pressure plate		THICK = 9,8 MM
13	VOE11144443	REQ							•Pressure plate		THICK = 10,6 MM
14	VOE13949928	1							•Snap ring		
15	VOE11448506	1							•Clutch hub		(VOE11144023)
16	VOE4871337	1							•Retainer		
17	VOE11145104	1							•Thrust washer		
18	VOE184347	1							•Thrust needle roller assy		
19	VOE11145265	1							•Needle bearing		
20	VOE11144031	1							•Gear		
21	VOE4871338	1							•Thrust washer		
22	VOE4785772	1							•Needle bearing		
23	VOE4871208	1							•Washer		
24	VOE181006	1							•Roller bearing		
25	VOE11037814	3							•Piston ring		
26	VOE11037637	1							•Ball		OD = 10,5 MM
27	VOE184645	1							•Ball		OD = 8,5 MM
28	VOE4720864	1							•Piston ring		
29	VOE11037183	1							•Snap ring		
30	VOE4871428	1							•Piston ring		
31	VOE11144634	1							•Piston		
32	VOE4871532	1							•Spring		
33	VOE11144459	1							•Clutch hub		
34	VOE11145206	1							•Disc kit		
35	VOE11144444	REQ							•Pressure plate		THICK = 9,5 MM
36	VOE11144445	REQ							•Pressure plate		THICK = 10,25 MM
37	VOE11144446	REQ							•Pressure plate		THICK = 11,05 MM
38	VOE11037827	1							•Lock ring		
39	VOE4871337	1							•Retainer		
40	VOE11037622	1					SS		•Wear ring		
41	VOE11145404	2							•Roller cage		(VOE11037078)
42	VOE11145204	1							•Gear		
43	VOE15139489	1							•Wear ring		(VOE11038834)
44	VOE11145390	1							•Bearing		

VOLVO

Construction Equipment

PROSIS Part Information

Date:	Image id:	Catalogue:	Model:
24/08/2018	**EM226**	**20086**	**L120E**
Brand:	Serial:	Group/Section:	Title:
Volvo	**19804-, 66001-, 71401-**	**421/300**	**Hydraulic clutch, reverse / 2nd speed**

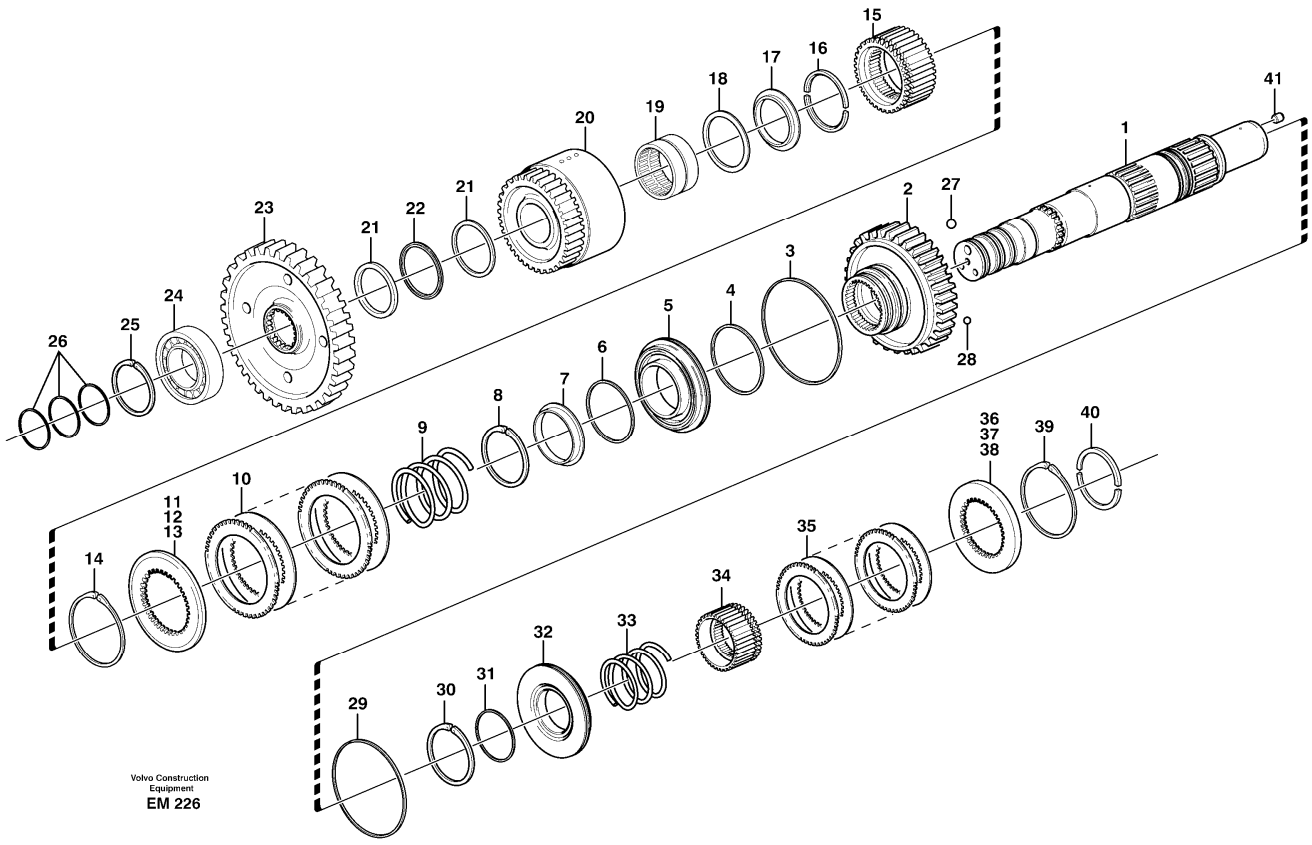

Section option	Kit	Option description
VOE22521		Hytraulic transmission HTE205

Pos	Part	Q1	Q2	Q3	Q4	Q5	PS	Kit	Description	Option(s)	Remark
	VOE11145259	1							Hydraulic clutch		
1	VOE11038737								•Clutch shaft		
2	VOE11144027	1							•Gear		
3	VOE4720864	1							•Piston ring		
4	VOE4720865	1							•Piston ring		
5	VOE11144458	1							•Piston		
6	VOE4871223	1							•Piston ring		
7	VOE4720854	1							•Spring retainer		
8	VOE11037189	1							•Snap ring		
9	VOE11037195	1							•Spring		
10	VOE11144415	1							•Disc kit		
11	VOE11144441	REQ							•Pressure plate		THICK = 9,1 MM
12	VOE11144442	REQ							•Pressure plate		THICK = 9,8 MM

13	VOE11144443	REQ							•Pressure plate		THICK = 10,6 MM
14	VOE13949928	1							•Snap ring		
15	VOE11448506	1							•Clutch hub		(VOE11144023)
16	VOE4871337	1							•Retainer		
17	VOE11145104	1							•Thrust washer		
18	VOE184347	1							•Thrust needle roller assy		
19	VOE11145265	1							•Needle bearing		
20	VOE11144031	1							•Gear		
21	VOE4871338	2							•Thrust washer		
22	VOE4785772	1							•Needle bearing		
23	VOE11037272	1							•Gear		
24	VOE11144999	1							•Roller bearing		
25	VOE11037179	1							•Snap ring		
26	VOE11037814	3							•Piston ring		
27	VOE11037637	1							•Ball		OD = 10,5 MM
28	VOE184645	1							•Ball		OD = 8,5 MM
29	VOE4720864	1							•Piston ring		
30	VOE11037183	1							•Snap ring		
31	VOE4871428	1							•Piston ring		
32	VOE11144634	1							•Piston		
33	VOE4871532	1							•Spring		
34	VOE11144459	1							•Clutch hub		
35	VOE11145206	1							•Disc kit		
36	VOE11144444	1							•Pressure plate		THICK = 9,5 MM
37	VOE11144445	1							•Pressure plate		THICK = 10,25 MM
38	VOE11144446	1							•Pressure plate		THICK = 11,05 MM
39	VOE11037827	1							•Lock ring		
40	VOE4871337	1							•Retainer		
41	VOE11145146	1							•Sealing plug		

VOLVO

Construction Equipment

PROSIS Part Information

Date:	Image id:	Catalogue:	Model:
24/08/2018	**EM227**	**20086**	**L120E**
Brand:	Serial:	Group/Section:	Title:
Volvo	**19804-, 66001-, 71401-**	**421/350**	**Hydraulic clutch, 3rd / 4th speed**

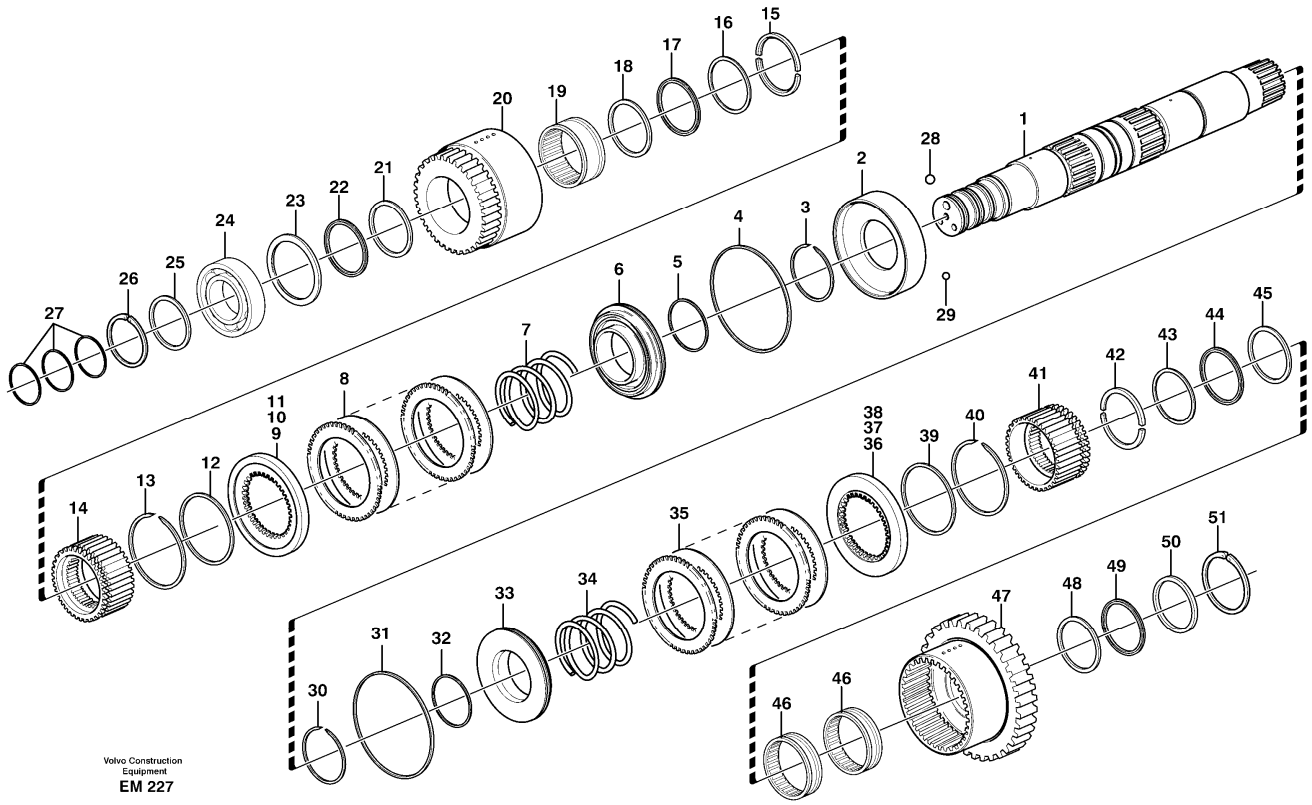

Section option	Kit	Option description
VOE22521		Hytraulic transmission HTE205

Pos	Part	Q1	Q2	Q3	Q4	Q5	PS	Kit	Description	Option(s)	Remark
	VOE11144440	1							Hydraulic clutch		
1	VOE11144450	1							•Clutch shaft		
2	VOE11144002	1							•Partition wall		
3	VOE4786535	1							•Lock ring		
4	VOE4720869	1							•Piston ring		
5	VOE4871048	1							•Piston ring		
6	VOE11144403	1							•Piston		
7	VOE4871533	1							•Spring		
8	VOE11144487	1							•Disc kit		
9	VOE11144447	REQ							•Pressure plate		THICK = 9,366 MM
10	VOE11144448	REQ							•Pressure plate		THICK = 9,966 MM
11	VOE11144449	REQ							•Pressure plate		THICK = 10,516 MM
12	VOE4786536	1							•Lock ring		

13	VOE11037147	1							•Lock ring		
14	VOE11145103	1							•Clutch hub		
15	VOE4871337	1							•Retainer		
16	VOE4880972	1							•Thrust washer		
17	VOE4785772	1							•Needle bearing		
18	VOE4871338	1							•Thrust washer		
19	VOE11144006	1							•Needle bearing		
20	VOE11144463	1							•Gear		
21	VOE4871338	1							•Thrust washer		
22	VOE4785772	1							•Needle bearing		
23	VOE4718008	1							•Washer		
24	VOE183592	1							•Ball bearing		
25	VOE13949851	1							•Washer		
26	VOE11037179	1							•Snap ring		
27	VOE11037814	3							•Piston ring		
28	VOE11037637	1							•Ball		OD = 10,5 MM
29	VOE184645	1							•Ball		OD = 8,5 MM
30	VOE4786535	1							•Lock ring		
31	VOE4720869	1							•Piston ring		
32	VOE4871048	1							•Piston ring		
33	VOE11144403	1							•Piston		
34	VOE4871532	1							•Spring		
35	VOE11144486	1							•Disc kit		
36	VOE11144447	REQ							•Pressure plate		THICK = 9,366 MM
37	VOE11144448	REQ							•Pressure plate		THICK = 9,966 MM
38	VOE11144449	REQ							•Pressure plate		THICK = 10,516 MM
39	VOE4786536	1							•Lock ring		
40	VOE11037147	1							•Lock ring		
41	VOE11144459	1							•Clutch hub		
42	VOE4871337	1							•Retainer		
43	VOE4880972	1							•Thrust washer		
44	VOE4785772	1							•Needle bearing		
45	VOE4871338	1							•Thrust washer		
46	VOE11145380	1							•Needle holder		
47	VOE11144464	1							•Gear		
48	VOE4871338	1							•Thrust washer		
49	VOE4785772	1							•Needle bearing		
50	VOE15175558	1							•Thrust washer		(VOE4718930)
51	VOE11037181	1							•Snap ring		

VOLVO

Construction Equipment

PROSIS Part Information

Date:	Image id:	Catalogue:	Model:
24/08/2018	**1019950**	**20086**	**L120E**
Brand:	Serial:	Group/Section:	Title:
Volvo	**19804-, 66001-, 71401-**	**421/400**	**Lubricating oil valve with fitting parts**

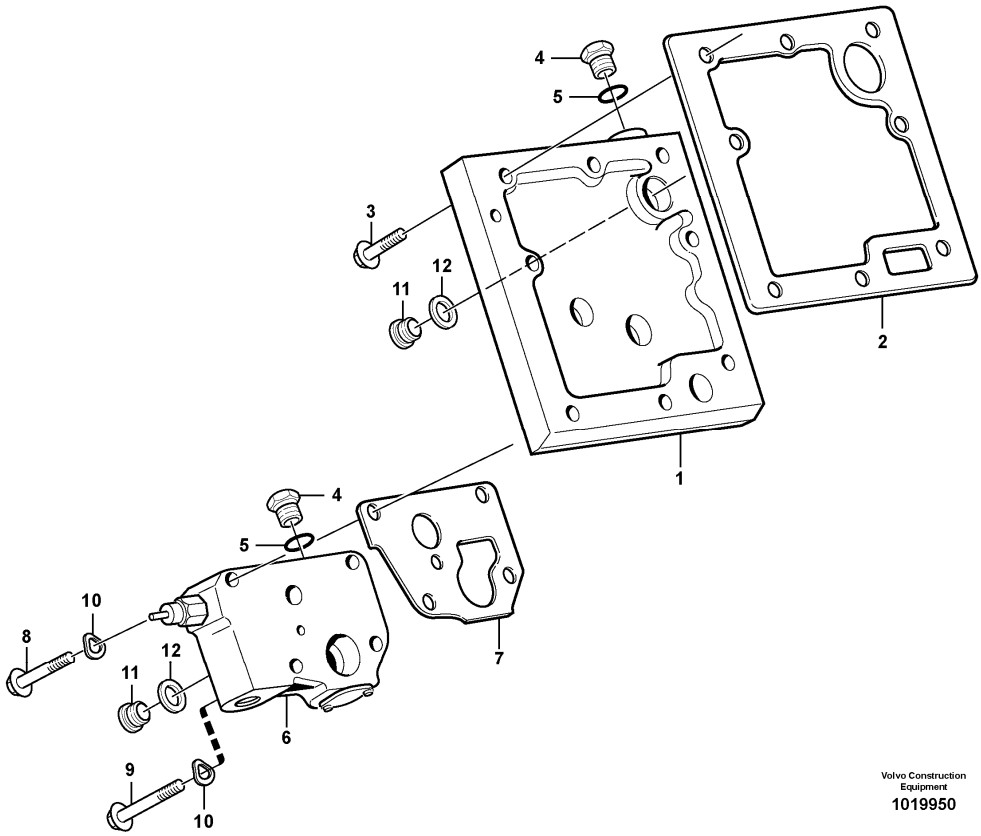

Section option	Kit	Option description
VOE22521		Hytraulic transmission HTE205

Pos	Part	Q1	Q2	Q3	Q4	Q5	PS	Kit	Description	Option(s)	Remark
1	VOE11144069	1							Connection plate		
2	VOE11144070	1							Gasket		
3	VOE13947760	6							Screw		
4	VOE926370	2							Plug		
5	VOE13949574	2							O-ring		
6		1							Lub oil valve		See ref 421/450
7	VOE11037012	1							Gasket		
8	VOE13965181	2							Screw		
9	VOE13965184	2							Flange screw		
10	VOE13941907	4							Washer		DELETED
11	VOE11034156	2							Plug		

12	VOE4881255	2							Plane gasket		

VOLVO

Construction Equipment

PROSIS Part Information

Date:	Image id:	Catalogue:	Model:
24/08/2018	**1000201**	**20086**	**L120E**
Brand:	Serial:	Group/Section:	Title:
Volvo	**19804-, 66001-, 71401-**	**421/450**	**Lubricating oil valve**

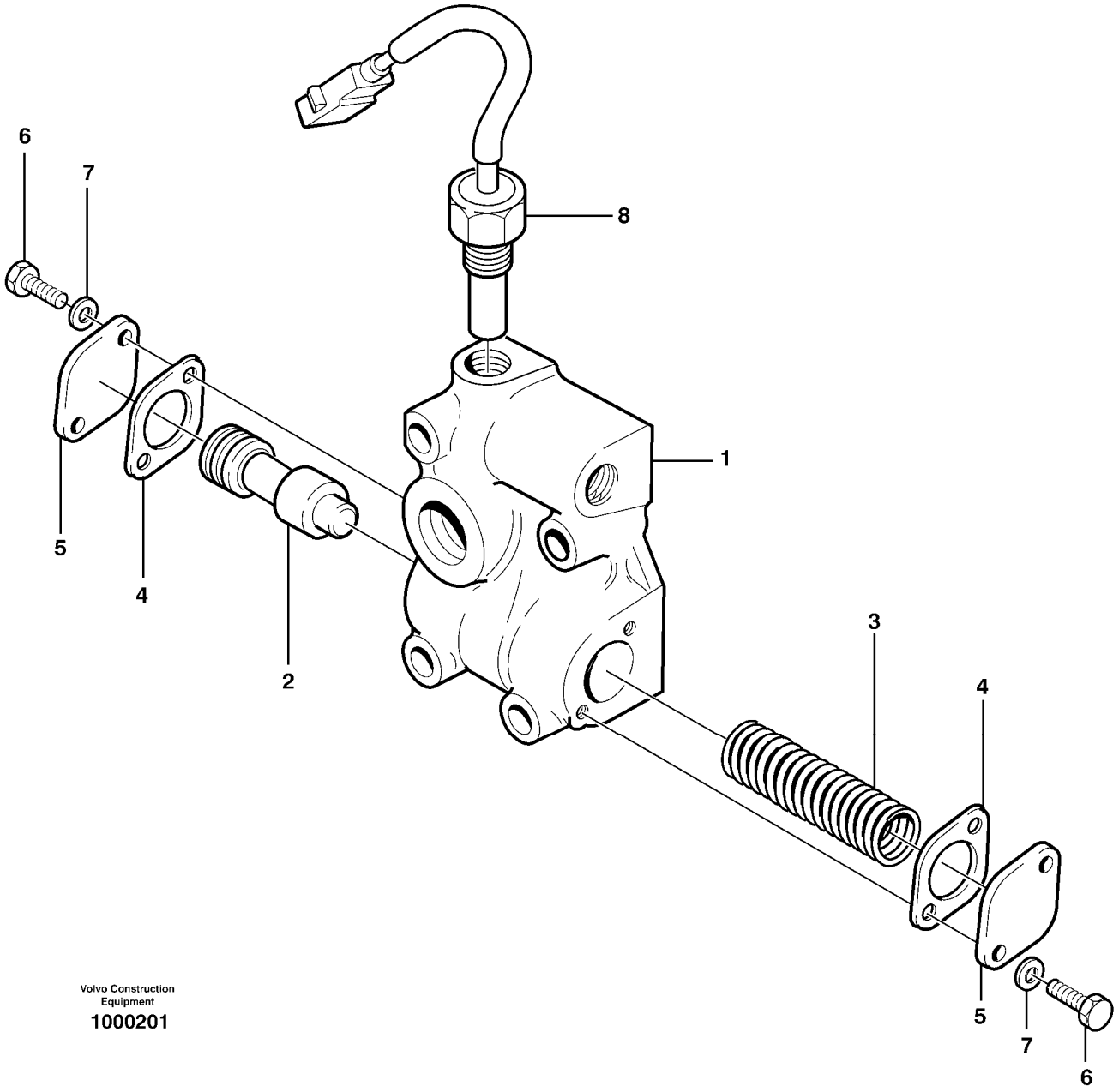

Section option	Kit	Option description
VOE22521		Hytraulic transmission HTE205

Pos	Part	Q1	Q2	Q3	Q4	Q5	PS	Kit	Description	Option(s)	Remark
	VOE11037252	1							Lub Oil Valve		
1		1					NS		•Valve housing		
2	VOE4720787	1							•Control plunger		

3	VOE11038807	1							•Compression spring		(VOE11037251)
4	VOE11036049	2							•Gasket		
5	VOE4718062	2							•Cover		
6	VOE13947542	4							•Screw		
7	VOE984306	4							•Spacer sleeve		
8	VOE11419485	1							Temperature sensor		SE406

VOLVO

Construction Equipment

PROSIS Part Information

Date:	Image id:	Catalogue:	Model:
24/08/2018	**1019121**	**20086**	**L120E**
Brand:	Serial:	Group/Section:	Title:
Volvo	**19804-, 66001-, 71401-**	**421/500**	**Range selector valve with fitting parts**

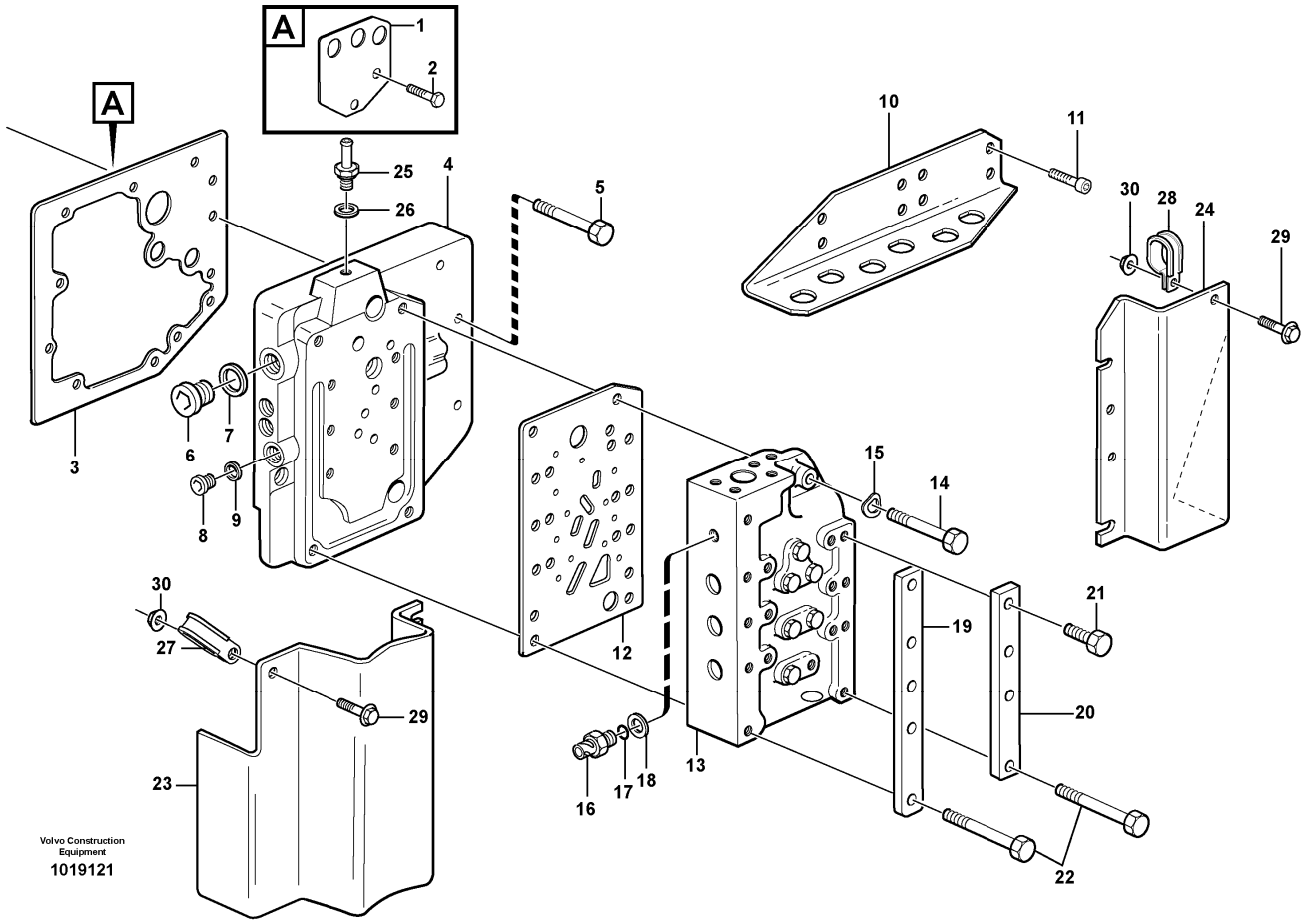

Section option	Kit	Option description
VOE22521		Hytraulic transmission HTE205

Pos	Part	Q1	Q2	Q3	Q4	Q5	PS	Kit	Description	Option(s)	Remark
1	VOE11037689	1							Plate		
2	VOE946440	2							Flange screw		
3	VOE17429156	1							Gasket		(VOE11144620)
4	VOE11418085	1							Connection plate		
5	VOE13965179	9							Screw		
6	VOE11034156	1							Plug		
7	VOE958228	1							O-ring		
8	VOE13963925	2							Plug		
9	VOE11038702	2							Gasket		
10	VOE15012292	1							Attaching bracket		(VOE11038736)
11	VOE959223	4							Hex. socket screw		

12	VOE11145170	1							Gasket		
13		1							Gear sel valve		See ref 421/550
14	VOE955304	7							Hexagon screw		
15	VOE13941907	8							Washer		
16	VOE15047336	1							Pressure sensor		SE405
17	VOE931209	1							O-ring		
18	VOE931216	1							Back-up ring		
19	VOE11037677	1							Plate		
20	VOE11037678	1							Plate		
21	VOE13945444	6							Screw		
22	VOE13965182	3							Screw		
23	VOE11145345	1							Protecting plate		(VOE11144921)
24	VOE11144965	1							Protecting plate		
25	VOE947502	1							Nipple		
26	VOE13947282	1							Gasket		
27	VOE11145346	1							Clamp		
28	VOE13949997	1							Clamp		
29	VOE946440	2							Flange screw		
30	VOE13945408	2							Nut		

VOLVO

Construction Equipment

PROSIS Part Information

Date:	Image id:	Catalogue:	Model:
24/08/2018	**1053841**	**20086**	**L120E**
Brand:	Serial:	Group/Section:	Title:
Volvo	**19804-, 66001-, 71401-**	**421/550**	**Range selector valve**

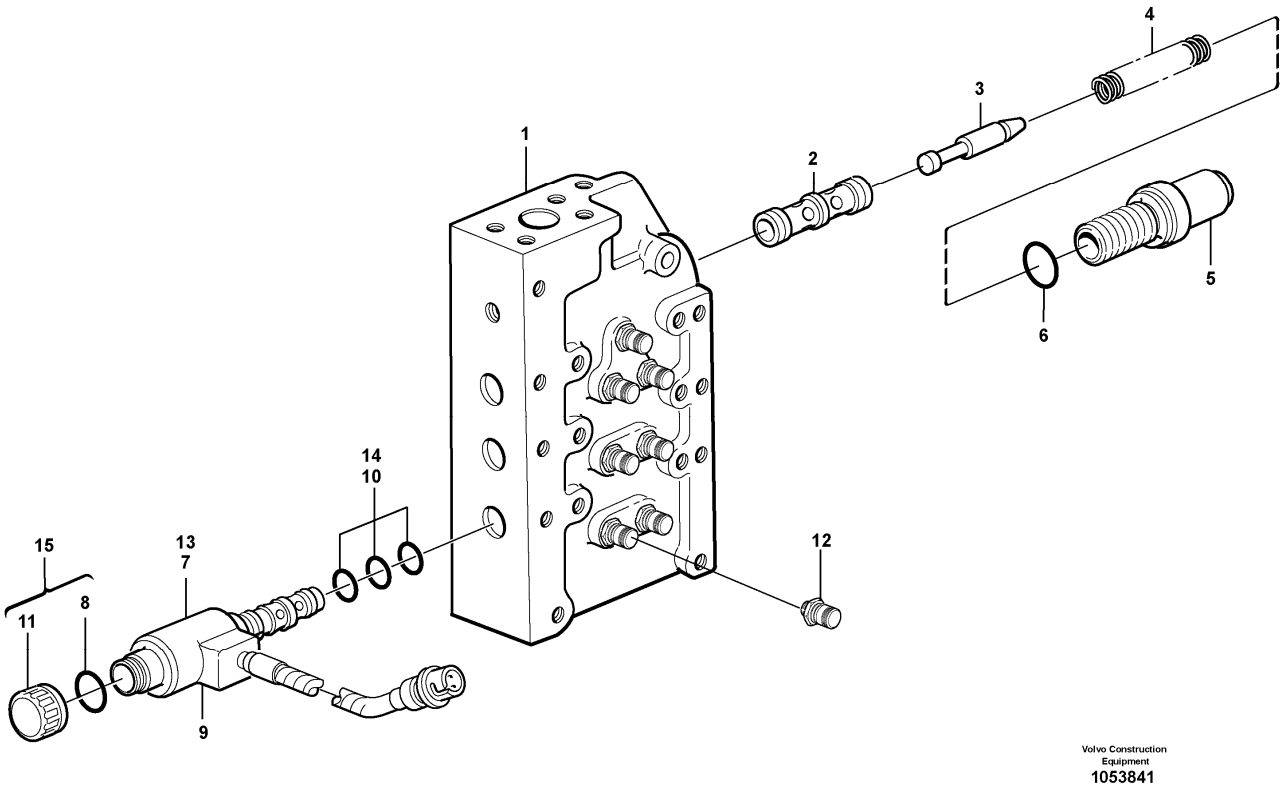

Section option	Kit	Option description
VOE22521		Hytraulic transmission HTE205

Pos	Part	Q1	Q2	Q3	Q4	Q5	PS	Kit	Description	Option(s)	Remark
	VOE11144058	1							Gear selector valve		
1	VOE11144467	1					OP		•Valve housing		
2	VOE11037894	1							•Sleeve		
3	VOE11144020	1							•Control plunger		
4	VOE11036947	1							•Spring		
5	VOE11037443	1							•Spring housing		
6	VOE964117	1							•O-ring		
7	VOE15066984	6							•Solenoid valve		(VOE11144019)SA, SB, SC, SD, SE, SF
8	VOE11704525	6							••O-ring		
9	VOE15066984	6							••Solenoid valve		(VOE11705493)

10	VOE11707049	6							••Sealing kit		
11	VOE11708162	6							••Plastic nut		
12	VOE936441	7							•Testing nipple		
	VOE983502	7							••O-ring		
13	VOE15066984	6							Solenoid valve		
14	VOE15159873	6							••O-ring kit		
15	VOE15159904	6							••Plastic nut		

VOLVO

Construction Equipment

PROSIS Part Information

Date:	Image id:	Catalogue:	Model:
24/08/2018	**EM233**	**20086**	**L120E**
Brand:	Serial:	Group/Section:	Title:
Volvo	**19804-, 66001-, 71401-**	**434/100**	**Transfer case, gears and shafts**

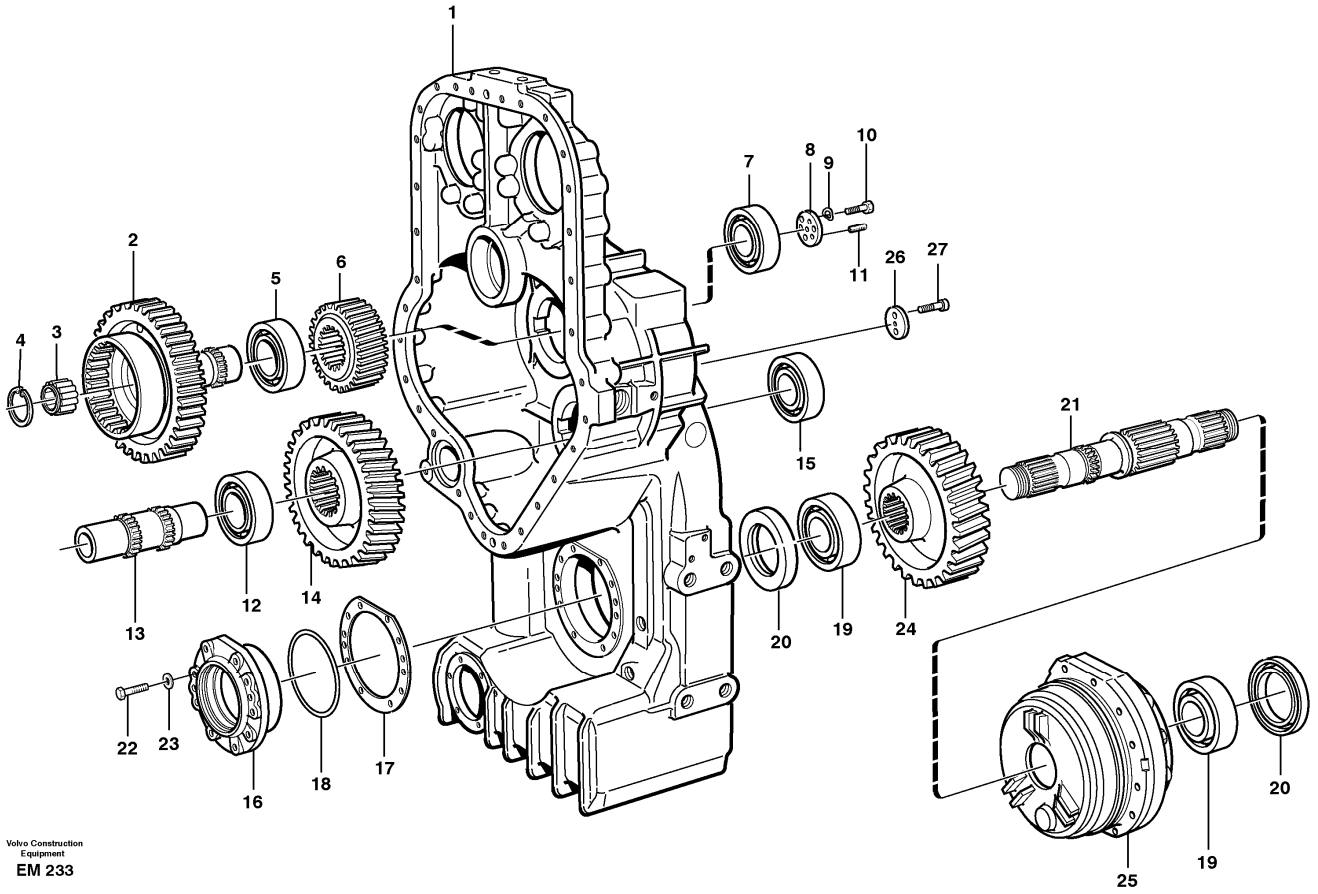

Section option	Kit	Option description
VOE22521		Hytraulic transmission HTE205

Pos	Part	Q1	Q2	Q3	Q4	Q5	PS	Kit	Description	Option(s)	Remark
1		1							Housing		See ref 434/200
2	VOE11145272	1							Gear		
3	VOE4787288	1							Needle bearing		
4	VOE914528	1							Retaining ring		
5	VOE184698	1							Roller bearing		
6	VOE4720881	1							Gear		
7	VOE184697	1							Roller bearing		
8	VOE4720947	1							Washer		
9	VOE13949608	3							Washer		
10	VOE970976	3							Hexagon screw		
11	VOE13963077	3							Set screw		
12	VOE184810	1							Roller bearing		

13	VOE11037038	1							Shaft		
14	VOE4720882	1							Gear		
15	VOE183665	1							Roller bearing		
16	VOE4720913	1							Bearing housing		
17	VOE4720915	REQ							Shim		THICK = 0,10 MM
	VOE4720916	REQ							Shim		THICK = 0,35 MM
	VOE4720917	REQ							Shim		THICK = 1,0 MM
18	VOE925265	1							O-ring		
19	VOE7011076	2							Roller bearing		
20	VOE973936	2							Sealing ring		HT - 17462
20	VOE11103132	2							Seal		HT 17463 -
21	VOE11037022	1							Shaft		
	VOE11028725	1					OP		•Shaft		
22	VOE13970948	6							Hexagon screw		
23	VOE941908	6							Spring washer		
24	VOE4720883	1							Gear		
25		1							Parking brake		See ref 434/150
26	VOE11037606	1							Washer		
27	VOE959261	2							Hex. socket screw		

VOLVO

Construction Equipment

PROSIS Part Information

Date:	Image id:	Catalogue:	Model:
24/08/2018	**EM234**	**20086**	**L120E**
Brand:	Serial:	Group/Section:	Title:
Volvo	**19804-, 66001-, 71401-**	**434/150**	**Parking brake**

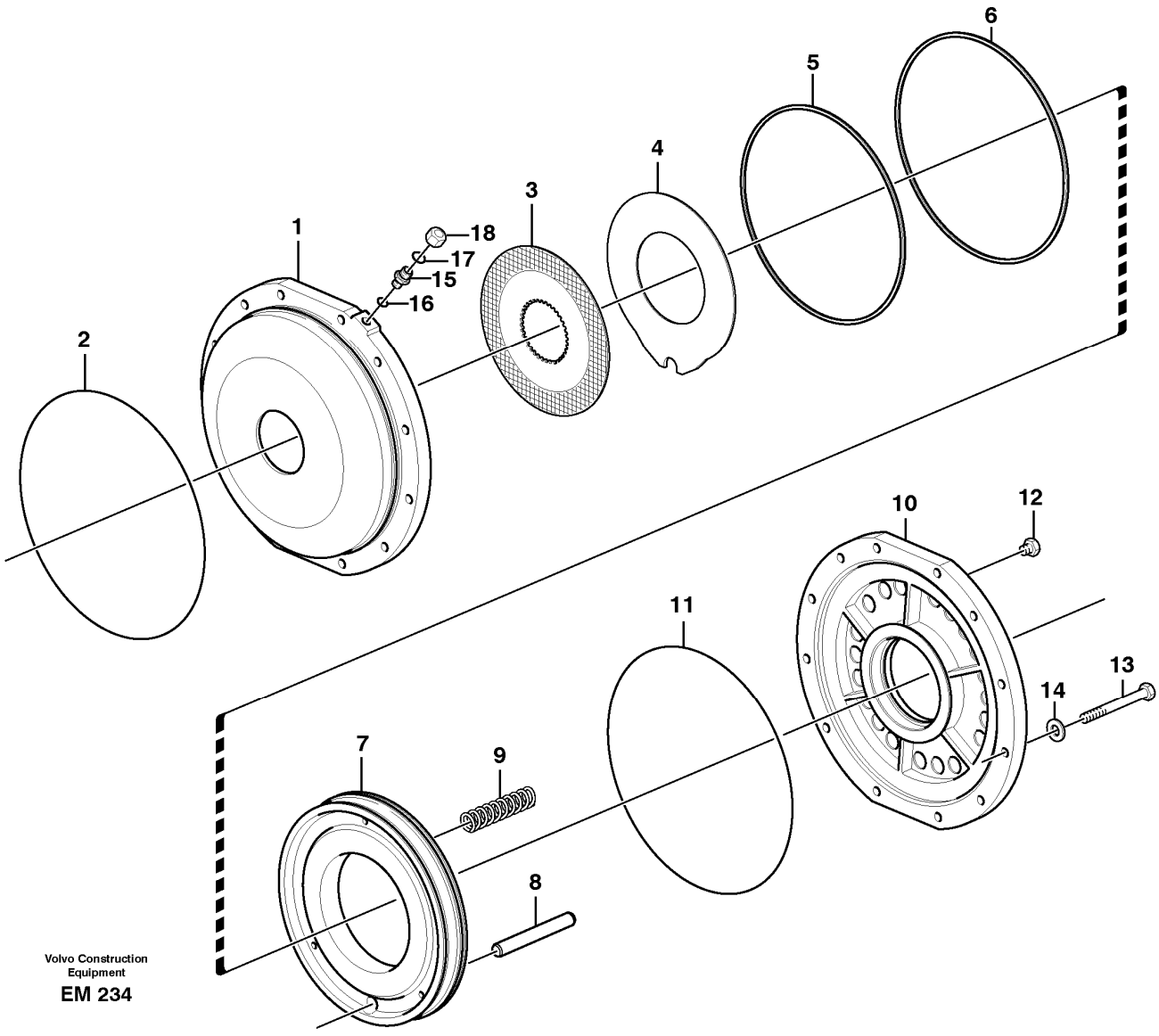

Section option	Kit	Option description
VOE22521		Hytraulic transmission HTE205

Pos	Part	Q1	Q2	Q3	Q4	Q5	PS	Kit	Description	Option(s)	Remark
1	VOE11038785	1							Brake housing		(VOE11037861)
2	VOE926254	1							O-ring		
3	VOE11037030	7							Friction disc		
4	VOE11037031	6							Steel disc		
5	VOE17458353	1							Piston seal		

6	VOE17458350	1							Piston seal		
7	VOE11144812	1							Piston		
8	VOE11037581	1							Shaft		
9	VOE4720905	22							Spring		
10	VOE11037862	1							Cover		
11	VOE926254	1							O-ring		
12	VOE479955	3							Plug		
13	VOE13970957	12							Hexagon screw		
14	VOE941908	12							Spring washer		
15	VOE11108728	1							Nipple		
16	VOE968207	1							O-ring		
17	VOE990737	1							O-ring		(VOE4880492)
18	VOE935100	1							Plug		

VOLVO

Construction Equipment

PROSIS Part Information

Date:	Image id:	Catalogue:	Model:
24/08/2018	**1004466**	**20086**	**L120E**
Brand:	Serial:	Group/Section:	Title:
Volvo	**19804-, 66001-, 71401-**	**434/200**	**Transfer case, housing and covers**

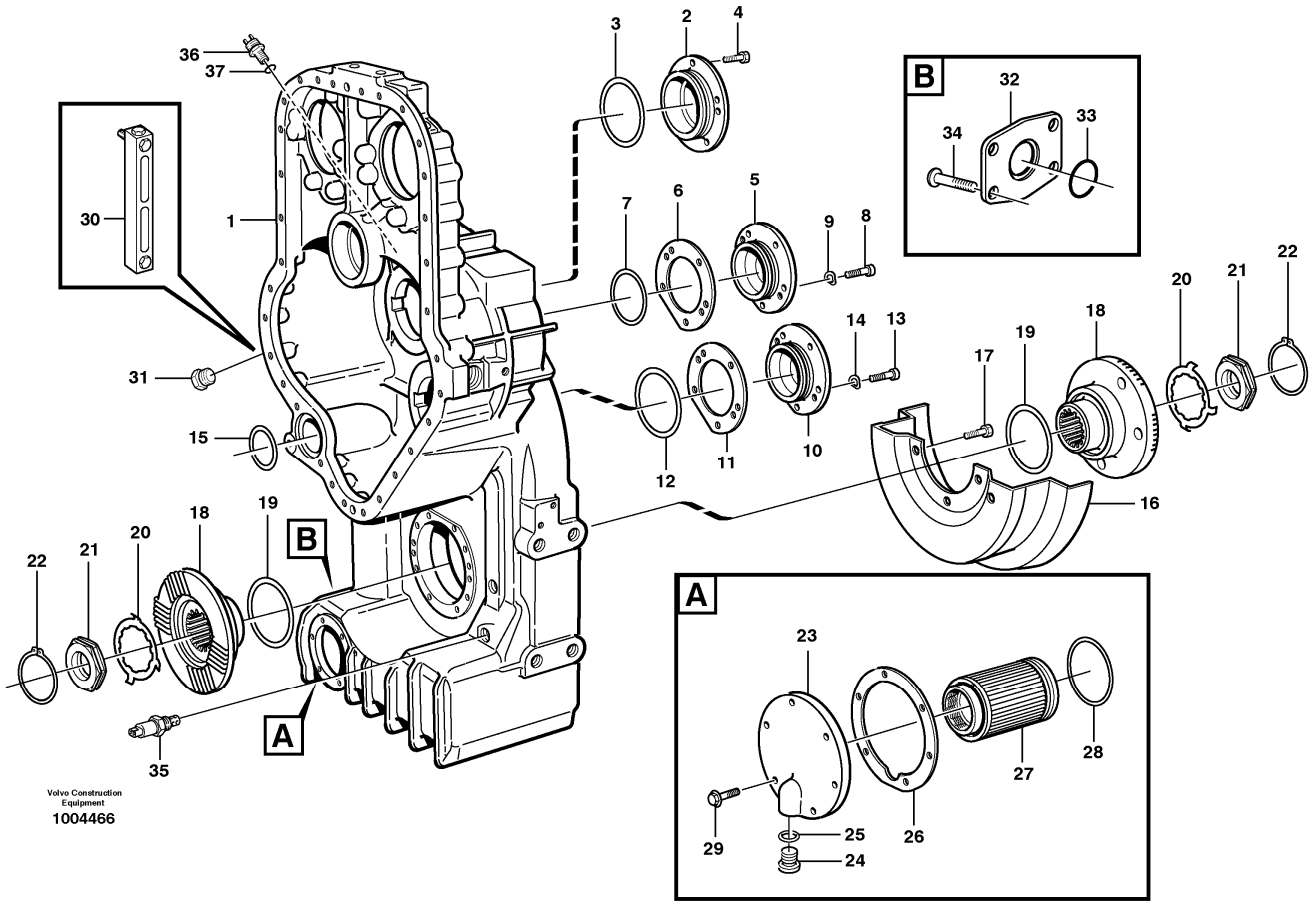

Section option	Kit	Option description
VOE33380		Volvo Wheel Loader L120E S/N 19801-, S/N 66001- USA, S/N 71401- BRA
VOE22521		Hytraulic transmission HTE205
VOE33395		Wheel Loader L120E3 IRAN

Q1-Q5	Option	Option description	
Q1 22521	VOE22521	Hytraulic transmission HTE205	
Q2 33380 33395	VOE33380	Volvo Wheel Loader L120E S/N 19801-, S/N 66001- USA, S/N 71401- BRA	

Pos	Part	Q1	Q2	Q3	Q4	Q5	PS	Kit	Description	Option(s)	Remark
1	VOE15104354	1							Drop box housing		(VOE11145179)
2	VOE11037586	1							Cover		
3	VOE976047	1							O-ring		
4	VOE13970948	5							Hexagon screw		L = 30 MM
5	VOE11144424	1							Cover		

6	VOE11144470	REQ							Shim		THICK = 0,10 MM
	VOE11144469	REQ							Shim		THICK = 0,35 MM
	VOE11144468	REQ							Shim		THICK = 1,0 MM
7	VOE925258	1							O-ring		
8	VOE13970948	5							Hexagon screw		
9	VOE941908	5							Spring washer		
10	VOE11145366	1							Bearing housing		
11	VOE11037246	REQ							Shim		THICK = 0,10 MM
	VOE11037244	REQ							Shim		THICK = 0,35 MM
	VOE11037243	REQ							Shim		THICK = 1,0 MM
12	VOE925096	1							O-ring		
13	VOE13970948	5							Hexagon screw		
14	VOE941908	5							Spring washer		
15	VOE925256	1							O-ring		
16	VOE4837016	1							Oil plate		
17	VOE946441	3							Flange screw		
18	VOE11144491	2					SS		Companion flange		HT - 17462
18	VOE11038809	2							Companion flange		HT 17463 -
19	VOE925071	2							O-ring		
20	VOE382779	REQ							Lock washer		0 DEG
	VOE383992	REQ							Lock washer		7,5 DEG
21	VOE4716226	2							Nut		
22	VOE914480	2							Snap ring		
23	VOE11038368	1							Cover		
24	VOE11102187	1							Magnetic plug		
25	VOE958228	1							O-ring		
26	VOE11038369	1							Gasket		
27	VOE11144432	1							Strainer		
28	VOE977016	1							O-ring		(VOE925254)
29	VOE946671	6							Flange screw		
30			1						Level Inspection Glass		See ref 420/150
	VOE976930	2							Gasket		
31	VOE13966143	2							Plug		
32	VOE11037816	2							Cover		
33	VOE949659	2							O-ring		
34	VOE946441	8							Flange screw		
35	VOE15048183	1							Oil level sensor		(VOE11144494)SE413
	VOE11713718	1							•O-ring		
36	VOE4780941	1							Induction sensor		SE403
37	VOE13976109	1							O-ring		

VOLVO

Construction Equipment

PROSIS Part Information

Date:	Image id:	Catalogue:	Model:
24/08/2018	**1001255**	**20086**	**L120E**
Brand:	Serial:	Group/Section:	Title:
Volvo	**19804-, 66001-, 71401-**	**436/100**	**Gear box housing with fitting parts 33380, 33395**

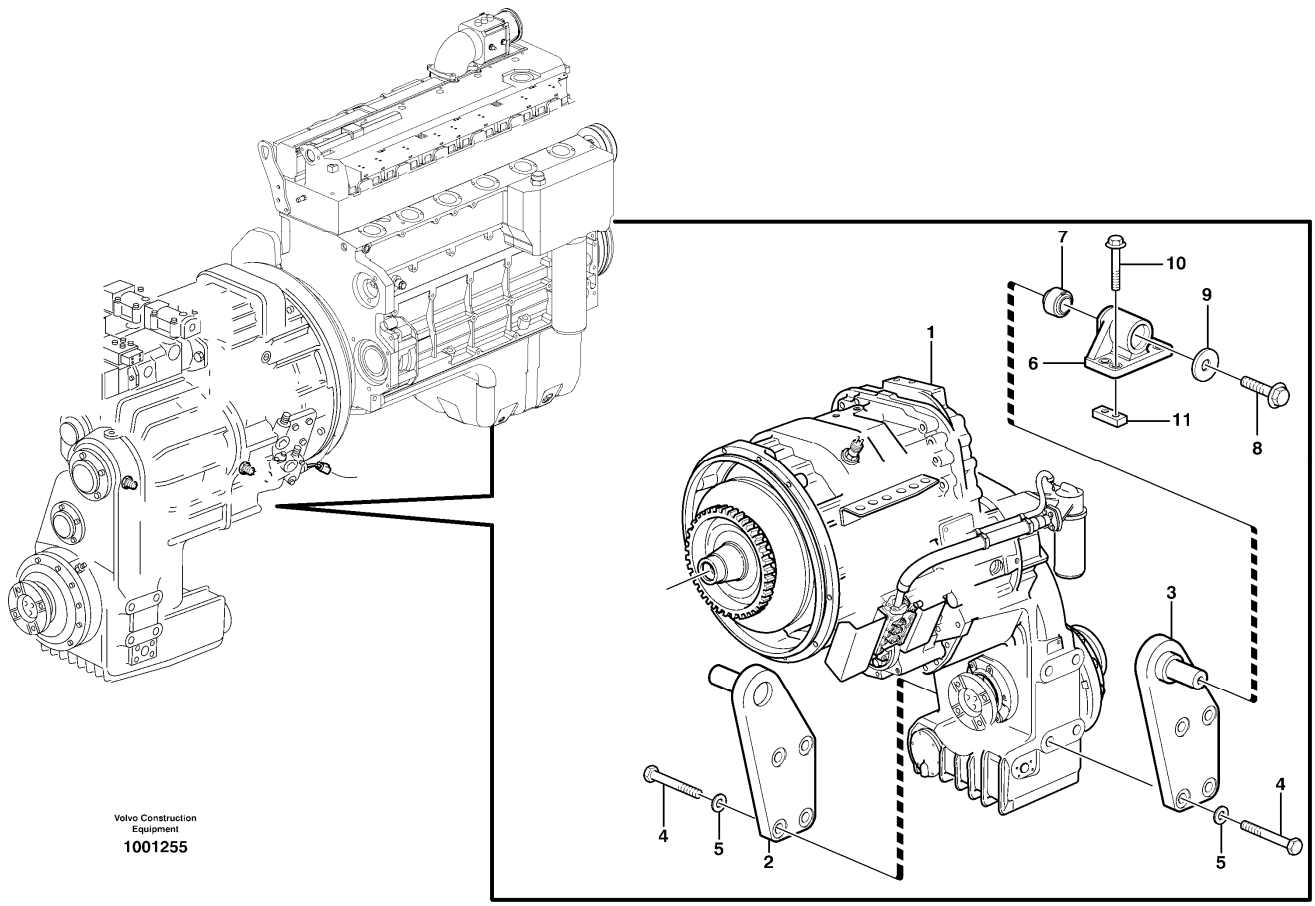

Section option	Kit	Option description
VOE33380		Volvo Wheel Loader L120E S/N 19801-, S/N 66001- USA, S/N 71401- BRA
VOE33395		Wheel Loader L120E3 IRAN

Pos	Part	Q1	Q2	Q3	Q4	Q5	PS	Kit	Description	Option(s)	Remark
1		1							Hydr xmsn		See ref 420/100
2	VOE11173148	1							Attachment		LH
3	VOE11173147	1							Attachment		RH
4	VOE978950	8							Hexagon screw		
5	VOE11055609	8							Plain washer		(VOE930850)
6	VOE11154068	2							Attachment		
7	VOE11130778	2							•Rubber element		
8	VOE968435	2							Flange screw		
9	VOE11024597	2							Washer		
10	VOE13968302	8							Flange screw		

11	VOE4898544	4							Nut plate		

VOLVO

Construction Equipment

PROSIS Part Information

Date:	Image id:	Catalogue:	Model:
24/08/2018	**1000263**	**20086**	**L120E**
Brand:	Serial:	Group/Section:	Title:
Volvo	**19804-, 66001-, 71401-**	**451/100**	**Propeller shafts with fitting parts 33380, 33395**

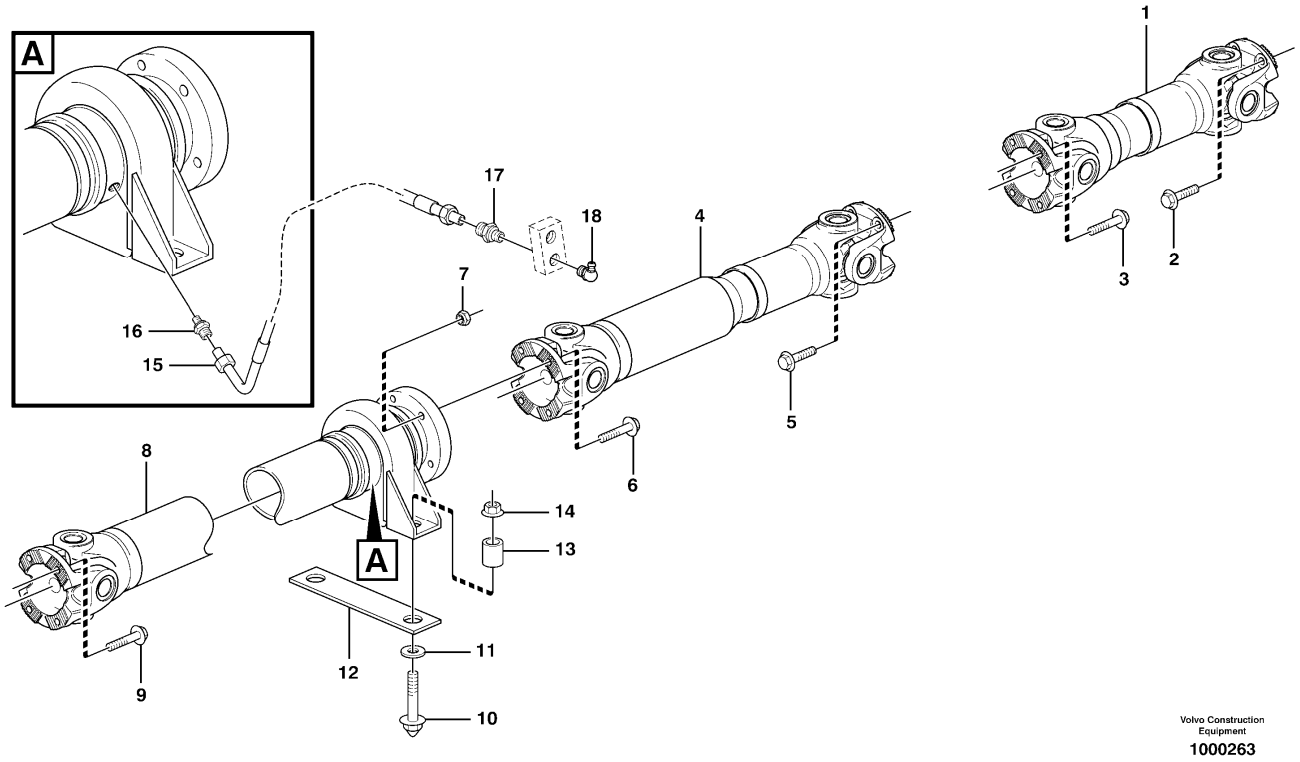

Section option	Kit	Option description
VOE33380		Volvo Wheel Loader L120E S/N 19801-, S/N 66001- USA, S/N 71401- BRA
VOE33395		Wheel Loader L120E3 IRAN

Pos	Part	Q1	Q2	Q3	Q4	Q5	PS	Kit	Description	Option(s)	Remark
1	VOE11410847	1					SS		Propeller shaft		See ref 451/150
2	VOE975110	4							Flange screw		
3	VOE975111	4							Flange screw		
4	VOE11172545	1					SS		Propeller shaft		See ref 451/200
5	VOE975111	4							Flange screw		
	VOE930872	4							Plain washer		
6	VOE975111	4							Flange screw		
7	VOE981315	4							Lock nut		
8	VOE15085419	1							Propeller shaft		(VOE11172546) See ref 451/250
9	VOE975111	4							Flange screw		
10	VOE13966366	2							Flange screw		
11	VOE930844	2							Plain washer		
12	VOE4935504	2							Shim		S/N - 1570 S/N -

											60000 USA S/N - 9999998 BRA
13	VOE4854494	2							Spacer		
14	VOE971100	2							Flange lock nut		
15	VOE11130675	2							Hose		L = 460 MM
16	VOE11027540	2							Nipple		
17	VOE946089	2							Nipple		
18	VOE914169	2							Lubricating nipple		

VOLVO

Construction Equipment

PROSIS Part Information

Date:	Image id:	Catalogue:	Model:
24/08/2018	**1017530**	**20086**	**L120E**
Brand:	Serial:	Group/Section:	Title:
Volvo	**19804-, 66001-, 71401-**	**451/150**	**Propeller shaft 33380, 33395**

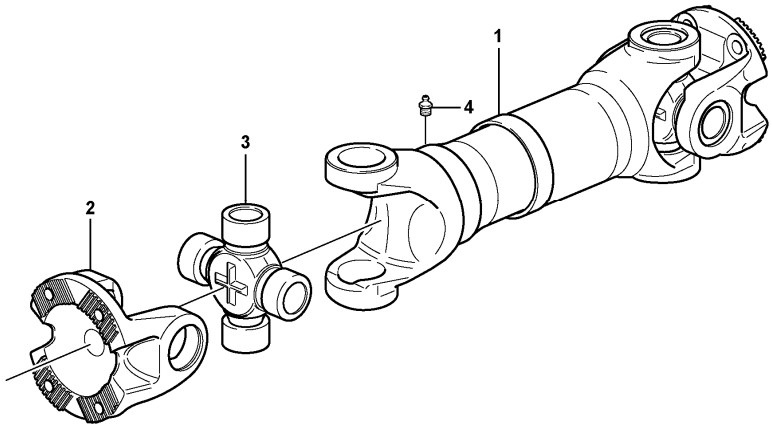

Volvo Construction Equipment
1017530

Section option	Kit	Option description
VOE33380		Volvo Wheel Loader L120E S/N 19801-, S/N 66001- USA, S/N 71401- BRA
VOE33395		Wheel Loader L120E3 IRAN

Pos	Part	Q1	Q2	Q3	Q4	Q5	PS	Kit	Description	Option(s)	Remark
	VOE11410847	1					SS		Propeller shaft		BAKRE/REAR
1		1					NS		•Propeller shaft		
2	VOE1069507	2							•Flange yoke		
3	VOE11708996	2							•Spider kit		
	VOE11712222	2							••Lubricating nipple		
4	VOE11060851	1							•Lubricating nipple		

VOLVO

Construction Equipment

PROSIS Part Information

Date:	Image id:	Catalogue:	Model:
24/08/2018	**1017530**	**20086**	**L120E**
Brand:	Serial:	Group/Section:	Title:
Volvo	**19804-, 66001-, 71401-**	**451/200**	**Propeller shaft 33380,33395**

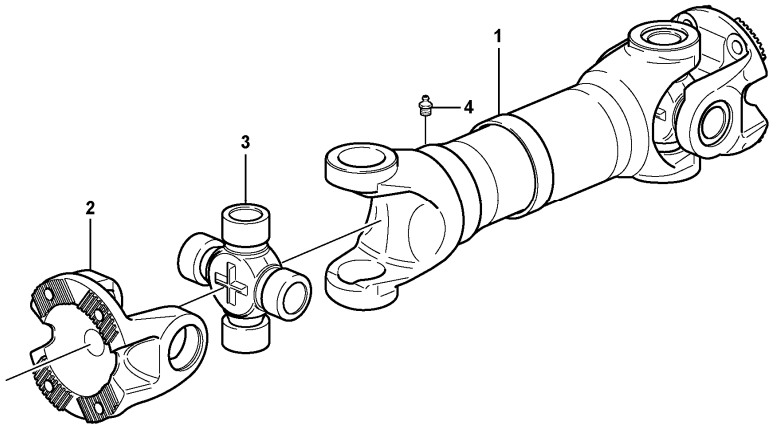

Volvo Construction Equipment
1017530

Section option	Kit	Option description
VOE33380		Volvo Wheel Loader L120E S/N 19801-, S/N 66001- USA, S/N 71401- BRA
VOE33395		Wheel Loader L120E3 IRAN

Pos	Part	Q1	Q2	Q3	Q4	Q5	PS	Kit	Description	Option(s)	Remark
	VOE11172545	1					SS		Propeller shaft		MITTRE/MIDDLE
1		1					NS		•Propeller shaft		
2	VOE1069507	2							•Flange yoke		
3	VOE11708996	2							•Spider kit		
	VOE11712222	2							••Lubricating nipple		
4	VOE11060851	1							•Lubricating nipple		

VOLVO

Construction Equipment

PROSIS Part Information

Date:	Image id:	Catalogue:	Model:
24/08/2018	**1014664**	**20086**	**L120E**
Brand:	Serial:	Group/Section:	Title:
Volvo	**19804-, 66001-, 71401-**	**451/250**	**Propeller shaft 33380, 33395**

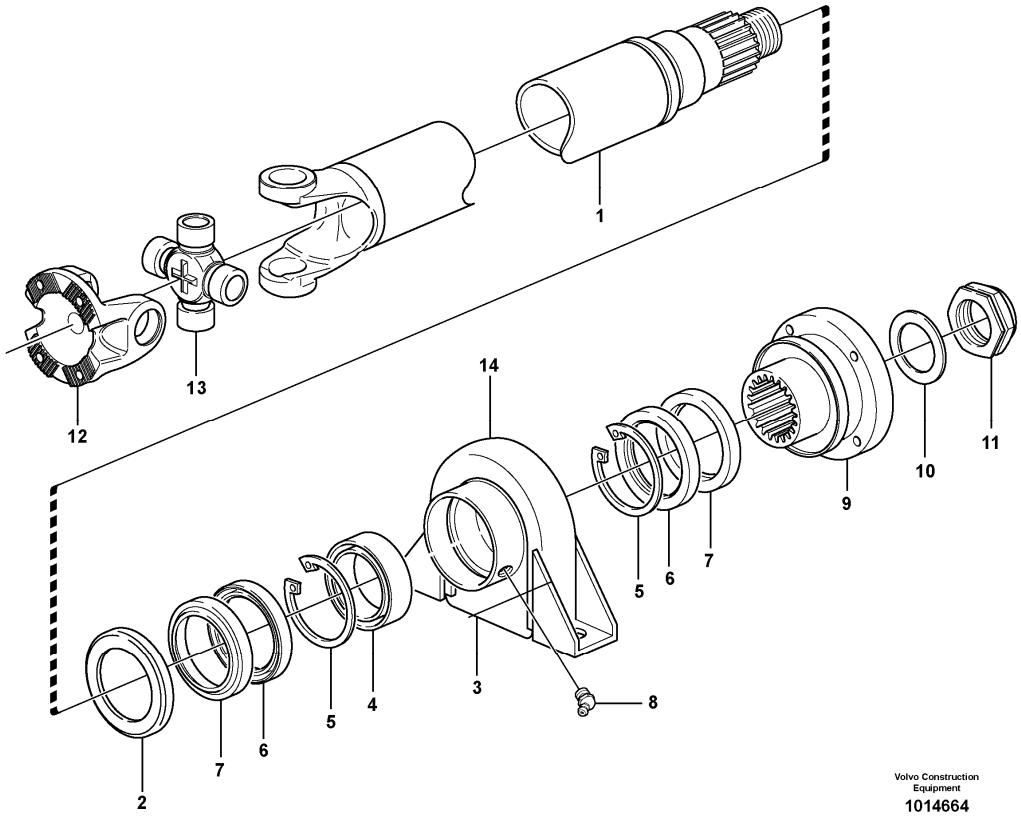

Section option	Kit	Option description
VOE33380		Volvo Wheel Loader L120E S/N 19801-, S/N 66001- USA, S/N 71401- BRA
VOE33395		Wheel Loader L120E3 IRAN

Pos	Part	Q1	Q2	Q3	Q4	Q5	PS	Kit	Description	Option(s)	Remark
	VOE15085419	1							Propeller shaft		(VOE11172546) FRÄMRE/FRONT
1		1					NS		•Propeller shaft		
2	VOE263012	1							•Dust cover		
3	VOE6212888	1							•Support bearing		
4		1					NS		••Ball Bearing		
5	VOE914548	2							••Retaining ring		
6	VOE959042	2							••Sealing ring		
7	VOE263005	2							••Protecting ring		
8	VOE13951740	2							••Nipple		

9	VOE11709012	1							•Connection flange		
10	VOE13948269	1							•Washer		
11	VOE13948320	1							•Nut		
12	VOE1069507	1							•Flange yoke		
13	VOE11708996	1							•Spider kit		
	VOE11712222	2							••Lubricating nipple		
14	VOE263006	1							•Clamp		

VOLVO

Construction Equipment

PROSIS Part Information

Date:	Image id:	Catalogue:	Model:
25/08/2018	**1000282**	**20086**	**L120E**
Brand:	Serial:	Group/Section:	Title:
Volvo	**19804-, 66001-, 71401-**	**460/100**	**Planet axles with fitting parts**

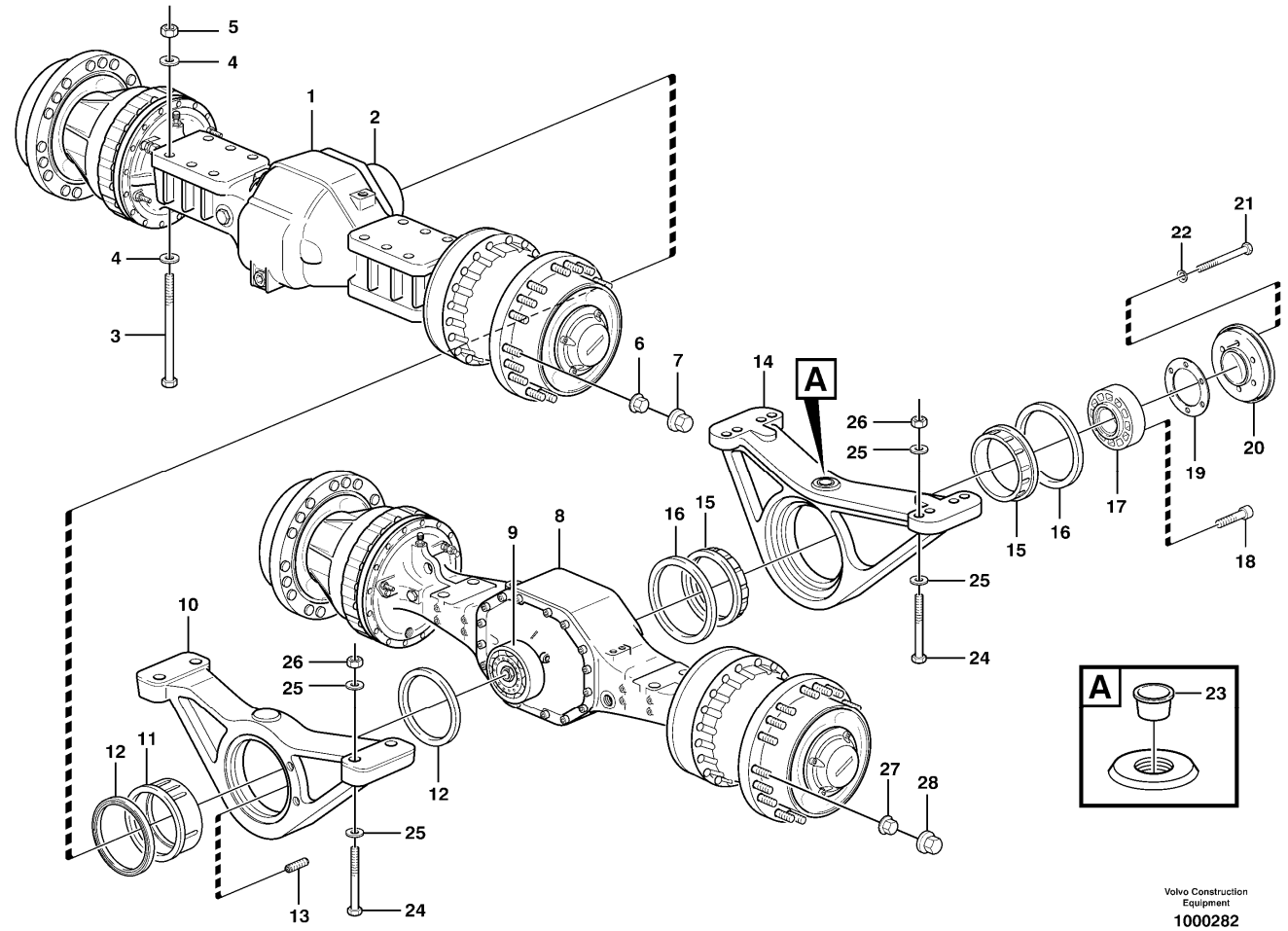

Section option	Kit	Option description
VOE23897		Planetary axle, front AWB 31
VOE23943		Planetary axle, rear AWB 30
VOE33380		Volvo Wheel Loader L120E S/N 19801-, S/N 66001- USA, S/N 71401- BRA
VOE33395		Wheel Loader L120E3 IRAN

Q1-Q5	Option	Option description	
Q1 FRONT			
Q2 REAR			

Pos	Part	Q1	Q2	Q3	Q4	Q5	PS	Kit	Description	Option(s)	Remark
1		1							Planetary Axle		AWB 31 See ref 460/100
2		1							•Diff Carrier		See ref 461/150

3	VOE13980100	12							Hexagon screw		
4	VOE930853	24							Plain washer		
5	VOE961997	12							Hexagon nut		
6	VOE947972	36							Wheel nut		
7	VOE11100354	36							Nut cap		
8			1						Planetary Axle		AWB 30 See ref 463/100
9			1						•Diff Carrier		See ref 463/150
10	VOE11020688		1						•R Axle Mounting		
			1				NS		••R Axle Mounting		
11	VOE11019123		1						••Bearing race		
12	VOE11014557		2						••Sealing ring		
13	VOE13963059		2						••Set screw		
	VOE11019207		1						•R Axle Mounting		
14			1				NS		••R Axle Mounting		
15	VOE11019120		2						••Bearing race		
16	VOE11019376		2						•Seal		
17	VOE11035200		1						•Pivot pin		
18	VOE13974133		2						•Allen Hd Screw		
19	VOE11035207		REQ						•Spacer		THICK = 0,35 MM
	VOE11035208		REQ						•Spacer		THICK = 0,75 MM
20	VOE11102787		1						•Cover		
21	VOE13963298		6						•Hexagon screw		
22	VOE941911		6						•Spring washer		
23	VOE943889		2						•Plug		
24	VOE963342		12						Hexagon screw		
25	VOE13946304		24						Washer		
26	VOE13961996		12						Nut		
27	VOE947972		36						Wheel nut		
28	VOE11100354		36						Nut cap		

VOLVO

Construction Equipment

PROSIS Part Information

Date:	Image id:	Catalogue:	Model:
25/08/2018	**1019614**	**20086**	**L120E**
Brand:	Serial:	Group/Section:	Title:
Volvo	**19804-, 66001-, 71401-**	**460/150**	**Venting, planetary gear 33380, 33395**

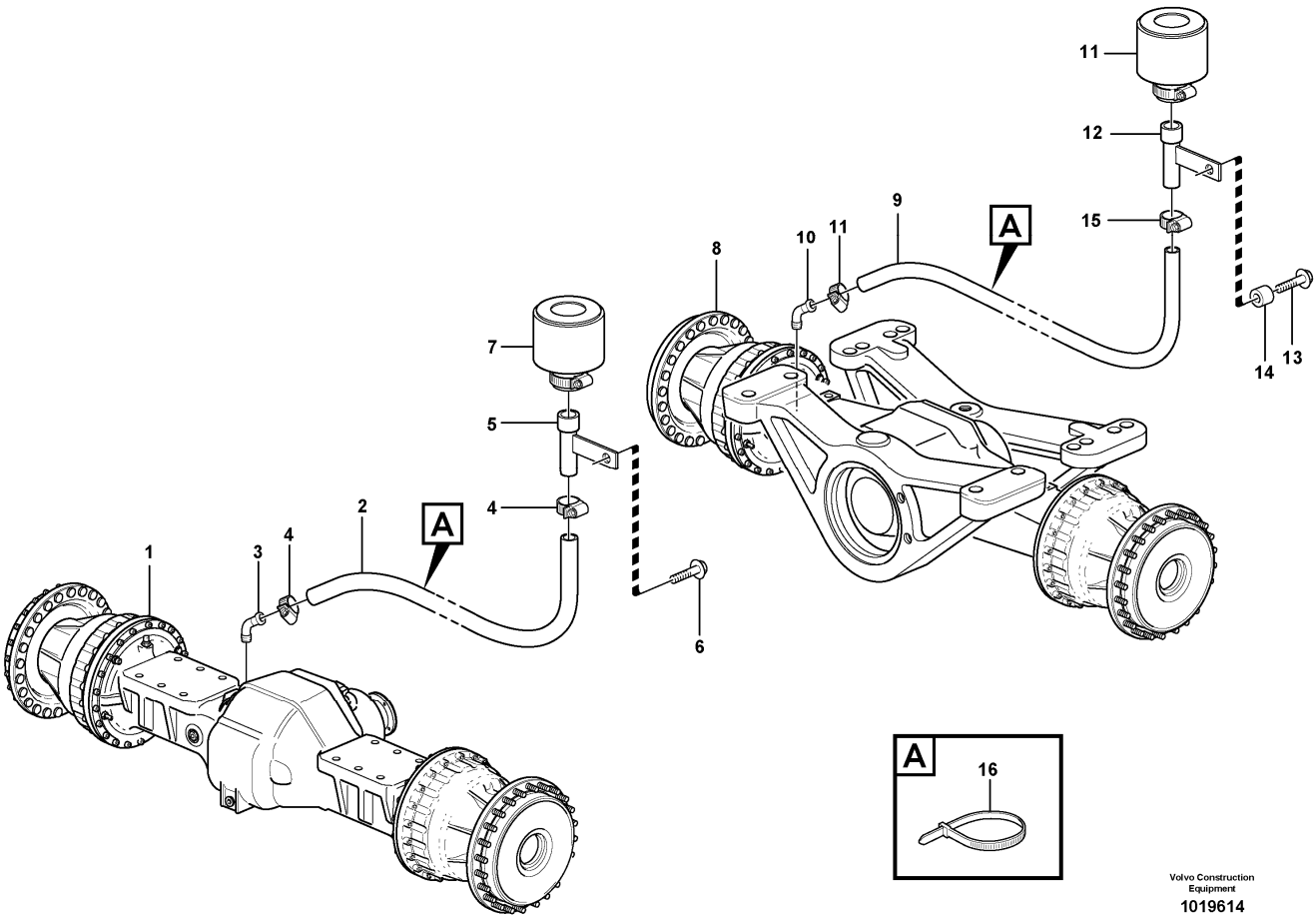

Section option	Kit	Option description
VOE33380		Volvo Wheel Loader L120E S/N 19801-, S/N 66001- USA, S/N 71401- BRA
VOE33395		Wheel Loader L120E3 IRAN

Pos	Part	Q1	Q2	Q3	Q4	Q5	PS	Kit	Description	Option(s)	Remark
1		1							Planetary axle		See ref 460/100
2	VOE982551	REQ							Hose		L = 1000 MM
3		1							Nipple		See ref 461/100
4	VOE13943472	2							Hose clamp		
5	VOE11132263	1							Attachment bracket		
6	VOE946329	1							Flange screw		
7	VOE11172907	1							Air filter		
8		1							Planetary axle		See ref 460/100
9	VOE941522	REQ							Hose		L = 1050 MM
9	VOE13961192	REQ							Hydraulic hose		L = 750 MM S/N 2480

											- SWE, 61173 - USA, 70409 - BRA
9	VOE991997	REQ							Hose	VOE33395, VOE33396	S/N 54151 -
10		1							Nipple		See ref 463/100
11	VOE11172907	1							Air filter		
12	VOE11132263	1							Attachment bracket		
13	VOE13965193	1							Screw		
14	VOE11026256	1							Spacer ring		
15	VOE13943472	2							Hose clamp		
16	4881440	REQ									

VOLVO

Construction Equipment

PROSIS Part Information

Date:	Image id:	Catalogue:	Model:
25/08/2018	**1000283**	**20086**	**L120E**
Brand:	Serial:	Group/Section:	Title:
Volvo	**19804-, 66001-, 71401-**	**460/200**	**Lubricant lines for planet shaft 33380, 33395**

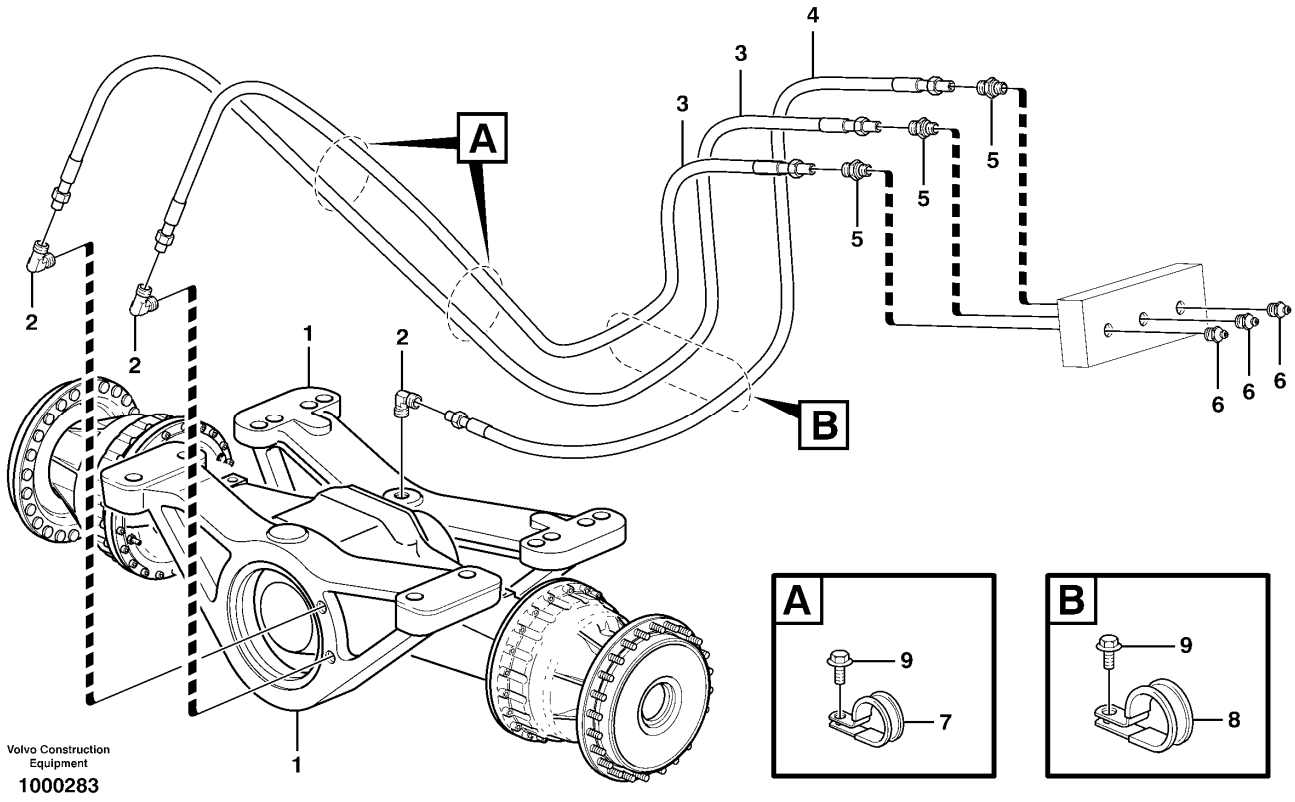

Section option	Kit	Option description
VOE33380		Volvo Wheel Loader L120E S/N 19801-, S/N 66001- USA, S/N 71401- BRA
VOE33395		Wheel Loader L120E3 IRAN

Pos	Part	Q1	Q2	Q3	Q4	Q5	PS	Kit	Description	Option(s)	Remark
1		2							R Axle Mounting		See ref 460/100
2	VOE942376	3							Elbow nipple		
3	VOE11172919	2							Lubricating hose		L = 1350 MM
4	VOE11172918	1							Lubricating hose		L = 750 MM
5	VOE946089	3							Nipple		
6	VOE914169	3							Lubricating nipple		
7	VOE13949746	2							Clamp		
8	VOE13949747	1							Clamp		
9	VOE946440	3							Flange screw		

VOLVO

Construction Equipment

PROSIS Part Information

Date:	Image id:	Catalogue:	Model:
25/08/2018	**1083820**	**20086**	**L120E**
Brand:	Serial:	Group/Section:	Title:
Volvo	**19804-, 66001-, 71401-**	**461/100**	**Planetary axle, front**

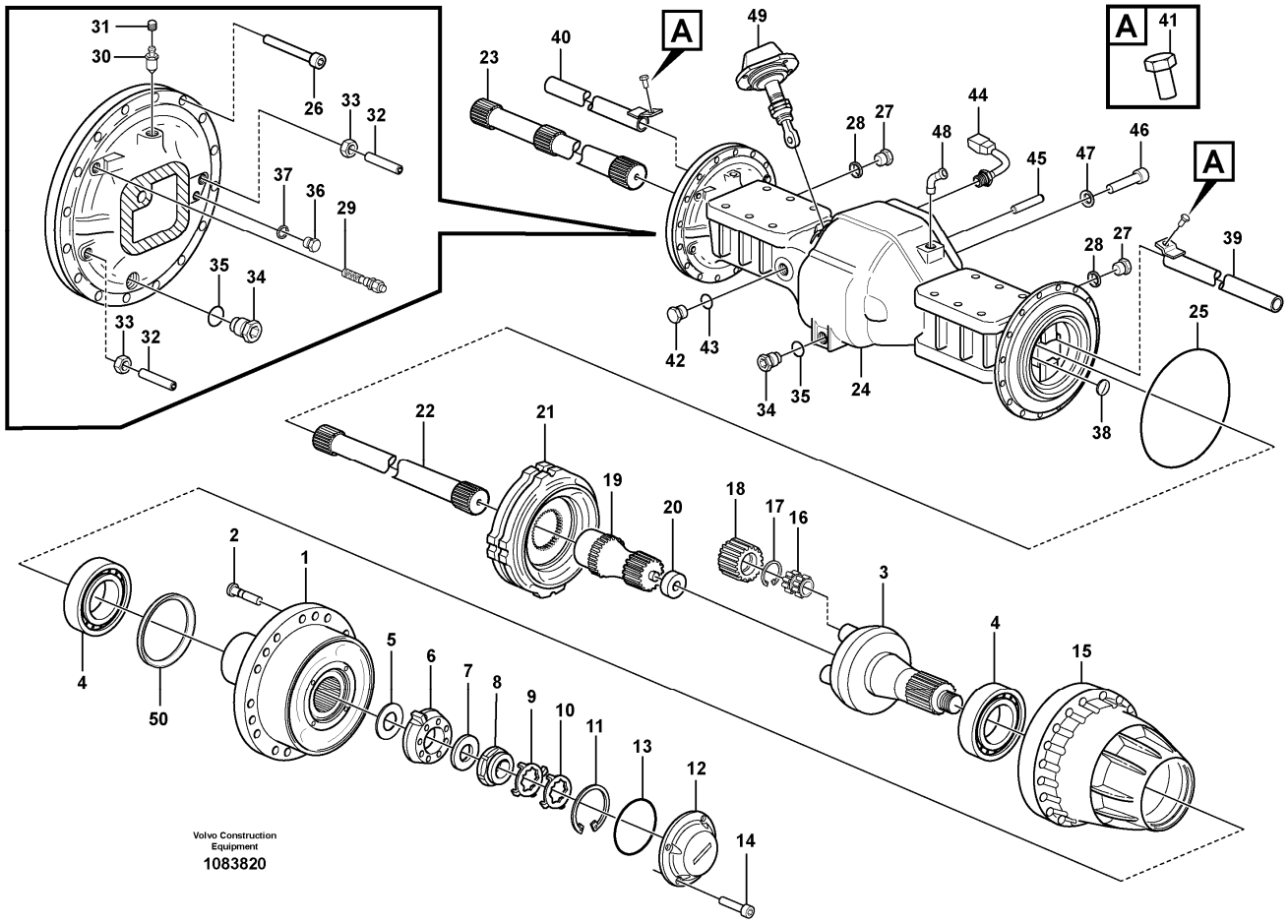

Section option	Kit	Option description
VOE23897		Planetary axle, front AWB 31

Pos	Part	Q1	Q2	Q3	Q4	Q5	PS	Kit	Description	Option(s)	Remark
	VOE56005	1							Planet shaft		(VOE23897)
1	VOE15122323	2							•Hub		
2	VOE15107881	36							••Wheel stud		(VOE11102585)
3	VOE17421171	2							•Planet carrier		(VOE11102912)
4	VOE184836	4							•Roller bearing		
5	VOE11034514	REQ							•Shim		THICK = 0,20 MM
	VOE11034513	REQ							•Shim		THICK = 0,25 MM
	VOE11034512	REQ							•Shim		THICK = 0,35 MM
	VOE11102823	REQ							•Shim		THICK = 1,00 MM
6	VOE11034507	2							•Washer		
7	VOE1523317	2							•Washer		

8	VOE1522293	2							•Nut		
9	VOE1523318	REQ							•Lock washer		0 DEG
10	VOE1523319	REQ							•Lock washer		7,5 DEG
11	VOE914484	2							•Snap ring		
12	VOE11102336	2							•Cover		
13	VOE13946442	2							•O-ring		
14	VOE967634	8							•Hex. socket screw		
15	VOE11168129	2							•Hub retainer		
16	VOE11035001	8							•Bearing		
17	VOE914474	8							•Snap ring		
18	VOE11035819	8							•Planet gear		
19	VOE11168079	2							•Sun gear		
20	VOE11035554	2							•Washer		
21		2							•Brake plate		See ref 516/100
22	VOE11102806	1							•Drive shaft		LH
23	VOE11102622	1							•Drive shaft		RH
24	VOE11102777	1							•Axle casing		
25	VOE11103303	2							•O-ring		
26	VOE949544	32							•Hex. socket screw		
27	VOE13960632	2							•Plug		
28	VOE13947624	2							•Plane gasket		
29	VOE11102446	2							•Wear Indicator		
30	VOE4871469	2							•Air vent valve		
31	VOE11034256	2							••Protecting cap		
32	VOE11035450	4							•Screw		
33	VOE955793	4							•Hexagon nut		
34	VOE11102187	3							•Magnetic plug		
35	VOE958228	3							•O-ring		
36	VOE960630	2							•Plug		
37	VOE976929	2							•Gasket		
38	VOE955102	2							•Expansion plug		
39	VOE11035404	1							•Pipe		LH
40	VOE11035407	1							•Pipe		RH
41	VOE946440	2							•Flange screw		
42	VOE11034156	1							•Plug		
43	VOE958228	1							•O-ring		
44	VOE11419485	1							•Temperature sensor		SE410
45	VOE950711	1							•Pin		
46	VOE4782860	18							•Hex. socket screw		
47	VOE941912	18							•Spring washer		
48	VOE942337	1							•Nipple		
49		1							•Differential lock		See ref 468/100
50	VOE11168122	2							•Sealing ring		

VOLVO

Construction Equipment

PROSIS Part Information

Date:	Image id:	Catalogue:	Model:
25/08/2018	**1000274**	**20086**	**L120E**
Brand:	Serial:	Group/Section:	Title:
Volvo	**19804-, 66001-, 71401-**	**461/150**	**Final drive**

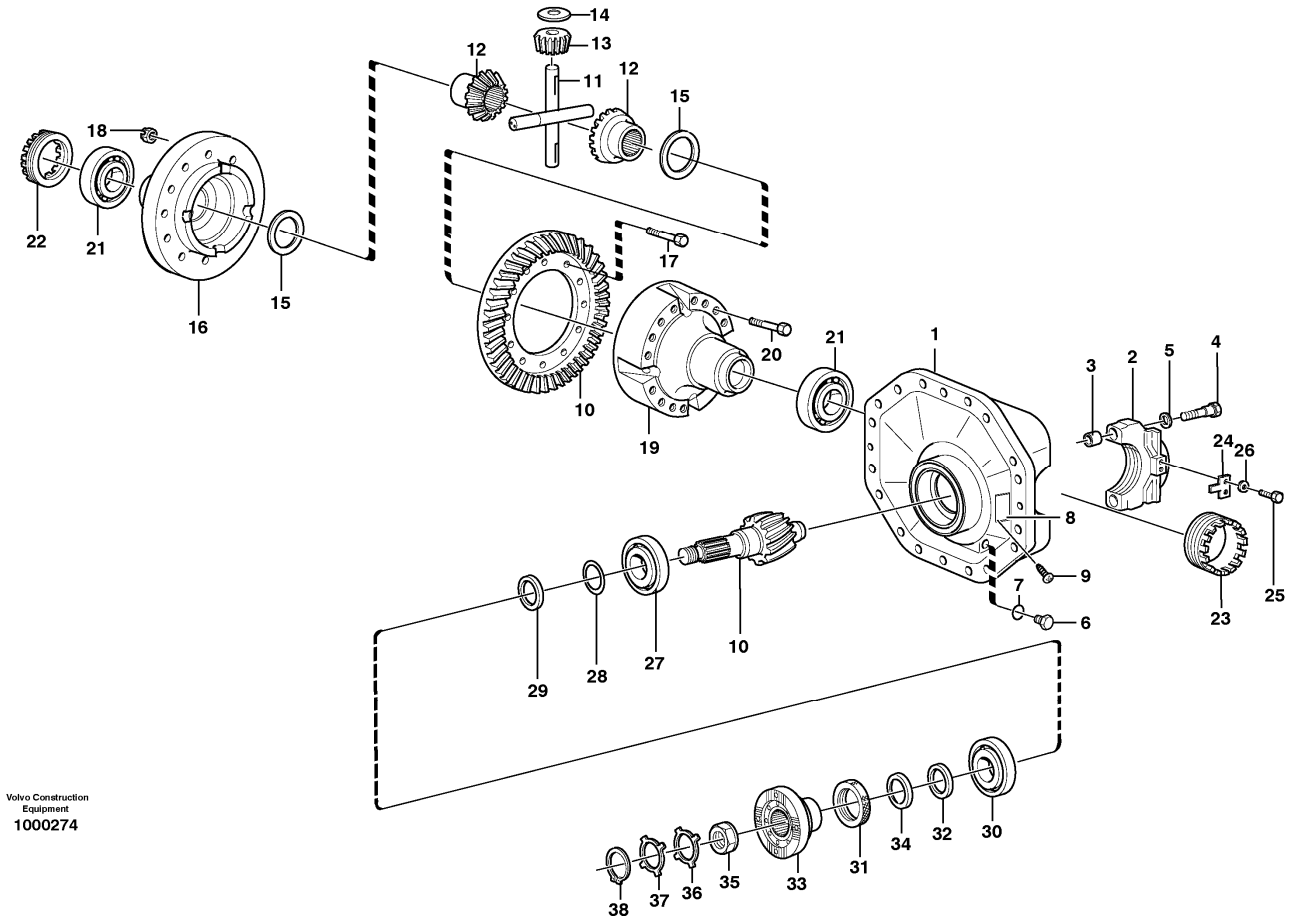

Section option	Kit	Option description
VOE23897		Planetary axle, front AWB 31

Pos	Part	Q1	Q2	Q3	Q4	Q5	PS	Kit	Description	Option(s)	Remark
	VOE11168089	1							Differential carrier		REMAN VOE9011168089
1	VOE11102785	1					SS		•Centre housing		
2	VOE1523562	2					OP		••Cap		
3	VOE310719	4							••Bushing		
4	VOE1524242	4							••Screw		
5	VOE13946304	4							••Washer		
6	VOE11034156	1							•Plug		
7	VOE958228	1							•O-ring		
8		1					NS		•Sign		
9	VOE950891	2							•Drive screw		

10	VOE15194310	1							•Drive gear set		(VOE11035999)
		1					NS		••Crown wheel		
		1					NS		••Drive pinion		
11	VOE11102623	1							•Spider		
	VOE11103110	1					SS		•Diff Gear Kit		
12	VOE1069849	2							••Differential side gear		
13	VOE1524587	4							••Differential side gear		
14	VOE11102049	4							•Thrust washer		
15	VOE11102146	2							•Thrust washer		
16	VOE11102046	1							•Differential housing		
17	VOE11102062	14							•Hexagon screw		
18	VOE13946008	14							•Lock nut		
19	VOE11102145	1							•Differential housing		
20	VOE13979275	16							•Hexagon screw		
21	VOE183704	2							•Roller bearing		
22	VOE1522136	1							•Setting nut		
23	VOE1522136	1							•Setting nut		
24	VOE1522426	2							•Lock washer		
25	VOE996328	4							•Flange screw		
26	VOE13941907	4							•Washer		
27	VOE11035994	1							•Roller bearing		
28	VOE11034695	REQ							•Shim		THICK = 1,0 MM
	VOE11034696	REQ							•Shim		THICK = 0,35 MM
	VOE11034697	REQ							•Shim		THICK = 0,10 MM
29	VOE11034828	REQ							•Spacer ring		THICK = 2,82 MM
	VOE11034829	REQ							•Spacer ring		THICK = 2,85 MM
	VOE11034830	REQ							•Spacer ring		THICK = 2,91 MM
	VOE11034831	REQ							•Spacer ring		THICK = 3,06 MM
	VOE4870245	REQ							•Spacer ring		THICK = 3,12 MM
	VOE4870246	REQ							•Spacer ring		THICK = 3,15 MM
	VOE4870247	REQ							•Spacer ring		THICK = 3,21 MM
	VOE4870248	REQ							•Spacer ring		THICK = 3,36 MM
	VOE4870249	REQ							•Spacer ring		THICK = 3,39 MM
	VOE4870250	REQ							•Spacer ring		THICK = 3,42 MM
30	VOE17221241	1							•Roller bearing		(VOE184660)
31	VOE4717576	1							•Sealing ring		
32	VOE943142	1							•Sealing ring		
33	VOE11168056	1							•Companion flange		
34	VOE11168081	1							••Dust cover		
35	VOE4717504	1							•Nut		
36	VOE382779	REQ							•Lock washer		0 DEG
37	VOE383992	REQ							•Lock washer		7,5 DEG
38	VOE914480	1							•Snap ring		

VOLVO

Construction Equipment

PROSIS Part Information

Date:	Image id:	Catalogue:	Model:
25/08/2018	**1030504**	**20086**	**L120E**
Brand:	Serial:	Group/Section:	Title:
Volvo	**19804-, 66001-, 71401-**	**463/100**	**Planetary axle, rear**

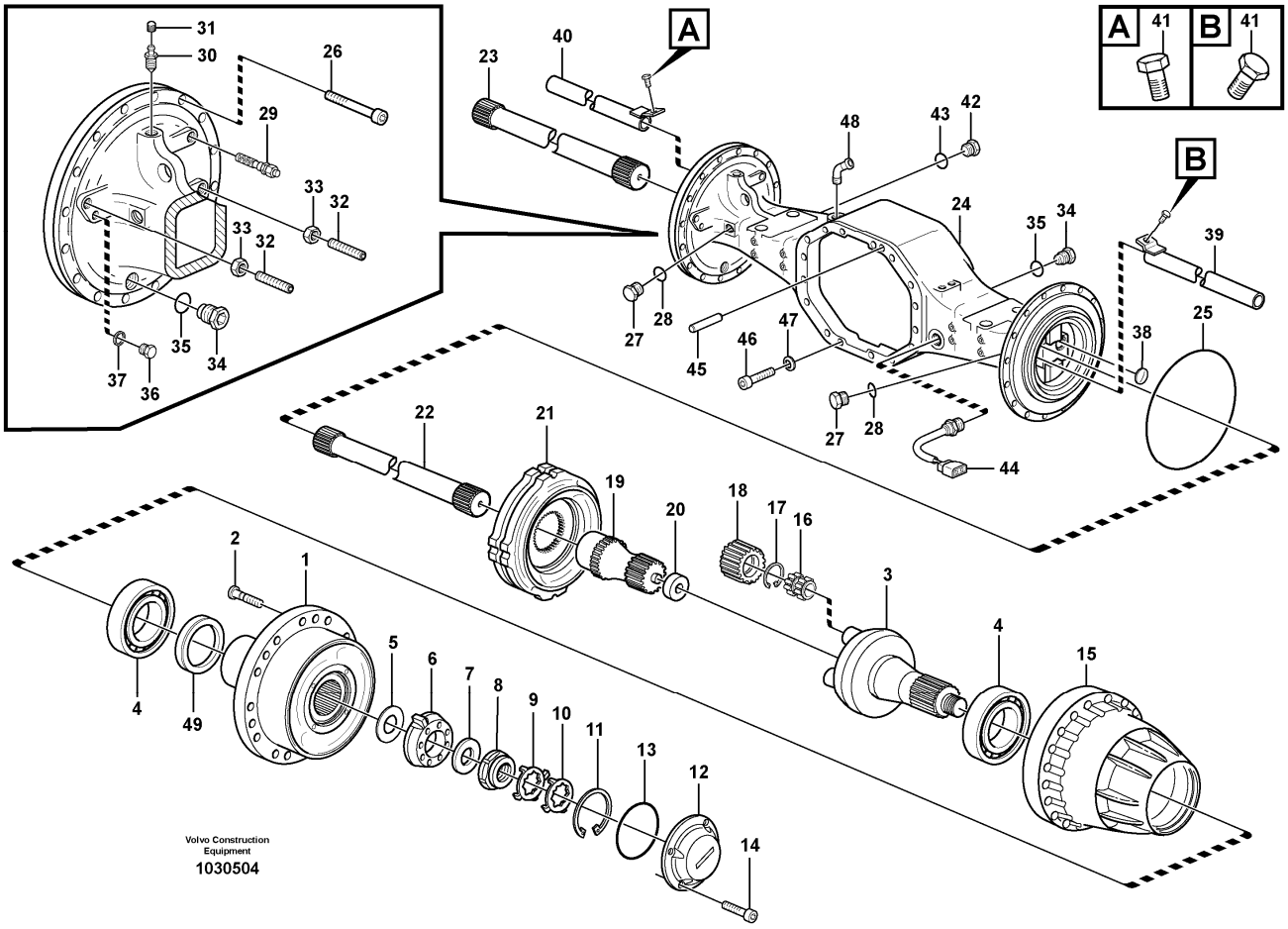

Section option	Kit	Option description
VOE23899		Grab pip.bucket cyl.+X1+ cocks arm 3,1M
VOE23943		Planetary axle, rear AWB 30
VOE80855		Planetary axle rear, Limited slip.

Q1-Q5	Option	Option description	
Q1 23943	VOE23943	Planetary axle, rear AWB 30	
Q2 80855	VOE80855	Planetary axle rear, Limited slip.	

Pos	Part	Q1	Q2	Q3	Q4	Q5	PS	Kit	Description	Option(s)	Remark
	VOE23943	1							Planet shaft		
	VOE23899		1				SS		Planetary Axle		
	VOE15122305	2							•Hub		
1	VOE15122323		2						•Hub		
1	VOE11103169	2					OP		••Hub		

2	VOE15107881	36	36						••Wheel stud		(VOE11102585)
3	VOE11168007	2							•Planet carrier		
	VOE17421171		2						•Planet carrier		(VOE11102912)
4	VOE184838	4							•Roller bearing		
	VOE184836		4						•Roller bearing		
5	VOE11034514	REQ	REQ						•Shim		THICK = 0,20 MM
	VOE11034513	REQ	REQ						•Shim		THICK = 0,25 MM
	VOE11034512	REQ	REQ						•Shim		THICK = 0,35 MM
	VOE11102823	REQ	REQ						•Shim		THICK = 1,00 MM
6	VOE11034507	2	2						•Washer		
7	VOE1523317	2	2						•Washer		
8	VOE1522293	2	2						•Nut		
9	VOE1523318	REQ	REQ						•Lock washer		0 DEG
10	VOE1523319	REQ	REQ						•Lock washer		7,5 DEG
11	VOE914484	2	2						•Snap ring		
12	VOE11102336	2	2						•Cover		
13	VOE13946442	2	2						•O-ring		
14	VOE967634	8	8						•Hex. socket screw		
15	VOE11168041	2							•Hub retainer		
	VOE11168129		2						•Hub retainer		
16	VOE11035001	6	8						•Bearing		
17	VOE914474	6	8						•Snap ring		
18	VOE11035819	6	8						•Planet gear		
19	VOE11168079	2	2						•Sun gear		
20	VOE11035554	2	2						•Washer		
21		2							•Brake plate		See ref 517/100
22	VOE11102807	1	1						•Drive shaft		LH
23	VOE11102806	1	1						•Drive shaft		RH
24	VOE11102778	1	1						•Axle casing		
25	VOE11103303	2	2						•O-ring		
26	VOE949544	32	32						•Hex. socket screw		
27	VOE13960632	2	2						•Plug		
28	VOE13947624	2	2						•Plane gasket		
29	VOE11102446	2	2						•Wear Indicator		
30	VOE4871469	2	2						•Air vent valve		
31	VOE11034256	2	2						••Protecting cap		
32	VOE11035450	4	4						•Screw		
33	VOE955793	4	4						•Hexagon nut		
34	VOE11102187	3	3						•Magnetic plug		
35	VOE958228	3	3						•O-ring		
36	VOE960630	3	3						•Plug		
37	VOE976929	3	3						•Gasket		
38	VOE955102	2	2						•Expansion plug		
39	VOE11035404	1	1						•Pipe		LH
40	VOE11035407	1	1						•Pipe		RH
41	VOE946440	2	2						•Flange screw		
42	VOE11034156	1	1						•Plug		

43	VOE958228	1	1						•O-ring		
44	VOE11419485	1	1						•Temperature sensor		SE411
45	VOE950711	1	1						•Pin		
46	VOE4782860	16	16						•Hex. socket screw		
47	VOE941912	16	16						•Spring washer		
48	VOE942337	1	1						•Nipple		
49	VOE11168122		2						•Sealing ring		
49	VOE11102861	2							•Sealing ring		

VOLVO

Construction Equipment

PROSIS Part Information

Date:	Image id:	Catalogue:	Model:
25/08/2018	**1016740**	**20086**	**L120E**
Brand:	Serial:	Group/Section:	Title:
Volvo	**19804-, 66001-, 71401-**	**463/150**	**Final drive**

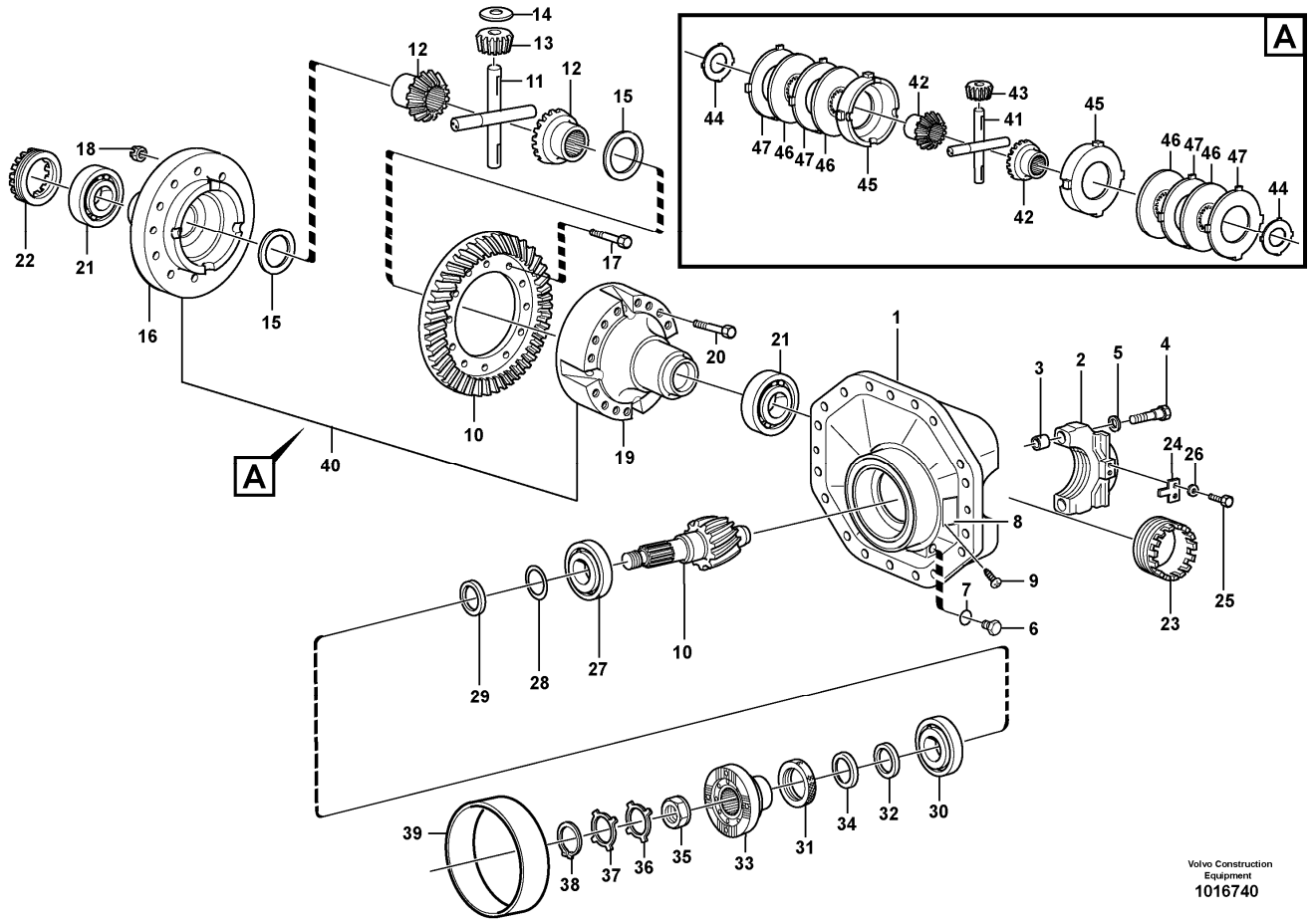

Section option	Kit	Option description
VOE23899		Grab pip.bucket cyl.+X1+ cocks arm 3,1M
VOE23943		Planetary axle, rear AWB 30
VOE80855		Planetary axle rear, Limited slip.

Q1-Q5	Option	Option description	
Q1 23943	VOE23943	Planetary axle, rear AWB 30	
Q2 80855	VOE80855	Planetary axle rear, Limited slip.	

Pos	Part	Q1	Q2	Q3	Q4	Q5	PS	Kit	Description	Option(s)	Remark
	VOE11168090	1							Differential carrier		REMAN VOE9011168090
	VOE11168091		1						Differential carrier		REMAN VOE9011168091
1	VOE11102783	1	1				SS		•Centre housing		
2	VOE1523562	2	2				OP		••Cap		

3	VOE310719	4	4						••Bushing		
4	VOE1524242	4	4						••Screw		
5	VOE13946304	4	4						••Washer		
6	VOE11034156	1	1						•Plug		
7	VOE958228	1	1						•O-ring		
8		1	1				NS		•Sign		
9	VOE950891	2	2						•Drive screw		
10	VOE11035832	1	1				SS		•Drive gear set		
11	VOE11102623	1							•Spider		
12	VOE1069849	2							•Differential side gear		
13	VOE1524587	4							•Differential side gear		
14	VOE11102049	4							•Thrust washer		
15	VOE11102146	2							•Thrust washer		
16	VOE11102045	1							•Differential housing		
17	VOE11102062	14							•Hexagon screw		
18	VOE13946008	14							•Lock nut		
19	VOE11102145	1							•Differential housing		
20	VOE13979275	16							•Hexagon screw		
21	VOE183704	2	2						•Roller bearing		
22	VOE1522136	1	1						•Setting nut		
23	VOE1522136	1	1						•Setting nut		
24	VOE1522426	2	2						•Lock washer		
25	VOE946440		4						•Flange screw		
25	VOE996328	4							•Flange screw		
26	VOE13941907	4	4						•Washer		
27	VOE11102019	1	1						•Roller bearing		
28	VOE11034695	REQ	REQ						•Shim		THICK = 1,0 MM
	VOE11034696	REQ	REQ						•Shim		THICK = 0,35 MM
	VOE11034697	REQ	REQ						•Shim		THICK = 0,10 MM
29	VOE11034828	REQ	REQ						•Spacer ring		THICK = 2,82 MM
	VOE11034829	REQ	REQ						•Spacer ring		THICK = 2,85 MM
	VOE11034830	REQ	REQ						•Spacer ring		THICK = 2,91 MM
	VOE11034831	REQ	REQ						•Spacer ring		THICK = 3,06 MM
	VOE4870245	REQ	REQ						•Spacer ring		THICK = 3,12 MM
	VOE4870246	REQ	REQ						•Spacer ring		THICK = 3,15 MM
	VOE4870247	REQ	REQ						•Spacer ring		THICK = 3,21 MM
	VOE4870248	REQ	REQ						•Spacer ring		THICK = 3,36 MM
	VOE4870249	REQ	REQ						•Spacer ring		THICK = 3,39 MM
	VOE4870250	REQ	REQ						•Spacer ring		THICK = 3,42 MM
30	VOE17221241	1	1						•Roller bearing		(VOE184660)
31	VOE4717576	1	1						•Sealing ring		
32	VOE943142	1	1						•Sealing ring		
33	VOE11168030	1	1						•Companion flange		
34	VOE11168081	1	1						••Dust cover		
35	VOE4717504	1	1						•Nut		

36	VOE382779	REQ	REQ						•Lock washer		0 DEG
37	VOE383992	REQ	REQ						•Lock washer		7,5 DEG
38	VOE914480	1	1						•Snap ring		
39	VOE11035257	1	1						•Bearing bushing		
40	VOE11035989		1						•Limited slip differential		
41	VOE11701918		1						••Spider		
42	VOE11701920		2						••Differential side gear		
43	VOE11701919		4						••Differential side gear		
44	VOE11701921		2						••Thrust washer		
45	VOE11703536		2						••Pressure Plate		
46	VOE11701922		4						••Friction disc		THICK = 3,22 - 3,29 MM
47	VOE11701923		REQ						••Friction plate		THICK = 2,97 - 3,02 MM
	VOE11701924		REQ						••Friction plate		THICK = 3,05 - 3,10 MM
	VOE11701925		REQ						••Friction plate		THICK = 3,12 - 3,17 MM

VOLVO

Construction Equipment

PROSIS Part Information

Date:	Image id:	Catalogue:	Model:
25/08/2018	**1019816**	**20086**	**L120E**
Brand:	Serial:	Group/Section:	Title:
Volvo	**19804-, 66001-, 71401-**	**468/100**	**Differential lock 23897**

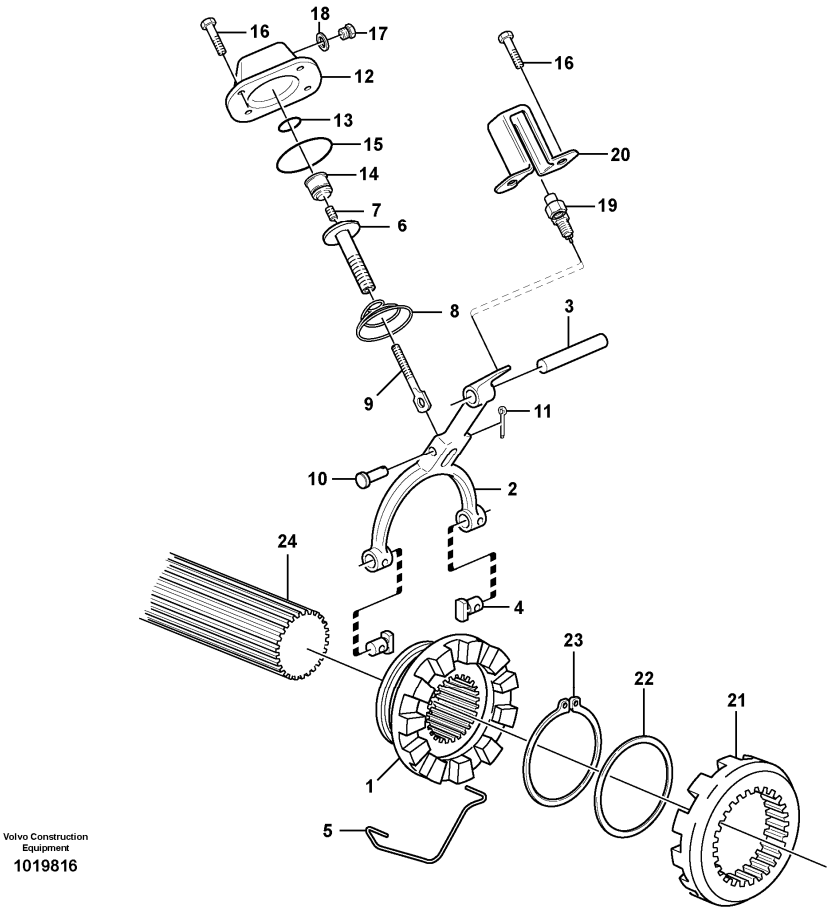

Section option	Kit	Option description
VOE23897		Planetary axle, front AWB 31

Pos	Part	Q1	Q2	Q3	Q4	Q5	PS	Kit	Description	Option(s)	Remark
1	VOE1522135	1							Companion flange		
2	VOE1523080	1							Selector fork		
3	VOE11035561	1							Selector rail		
4	VOE1523087	2							Pin		
5	VOE1523084	1							Lock brace		
6	VOE383971	1							Diaphragm sleeve		
7	VOE13962985	1							Set screw		
8	VOE1523094	1							Return spring		
9	VOE11102880	1							Selector bar		
10	VOE13964845	1							Clevis pin		
11	VOE907822	1							Split pin		

12	VOE11102798	1							Cover		
13	VOE925059	1							O-ring		
14	VOE11102799	1							Piston		
15	VOE925074	1							O-ring		
16	VOE946440	6							Flange screw		
17	VOE960630	1							Plug		
18	VOE976929	1							Gasket		
19	VOE11039219	1							Switch		SE408
20	VOE1522445	1							Protecting casing		
21	VOE1522134	1							Companion flange		
22	VOE1522102	1							Washer		
23	VOE945506	1							Snap ring		
24		1							Shaft		See ref 461/100

VOLVO

Construction Equipment

PROSIS Part Information

Date:	Image id:	Catalogue:	Model:
25/08/2018	**1015880**	**20086**	**L120E**
Brand:	Serial:	Group/Section:	Title:
Volvo	**19804-, 66001-, 71401-**	**468/150**	**Differential lock, hydraulic line**

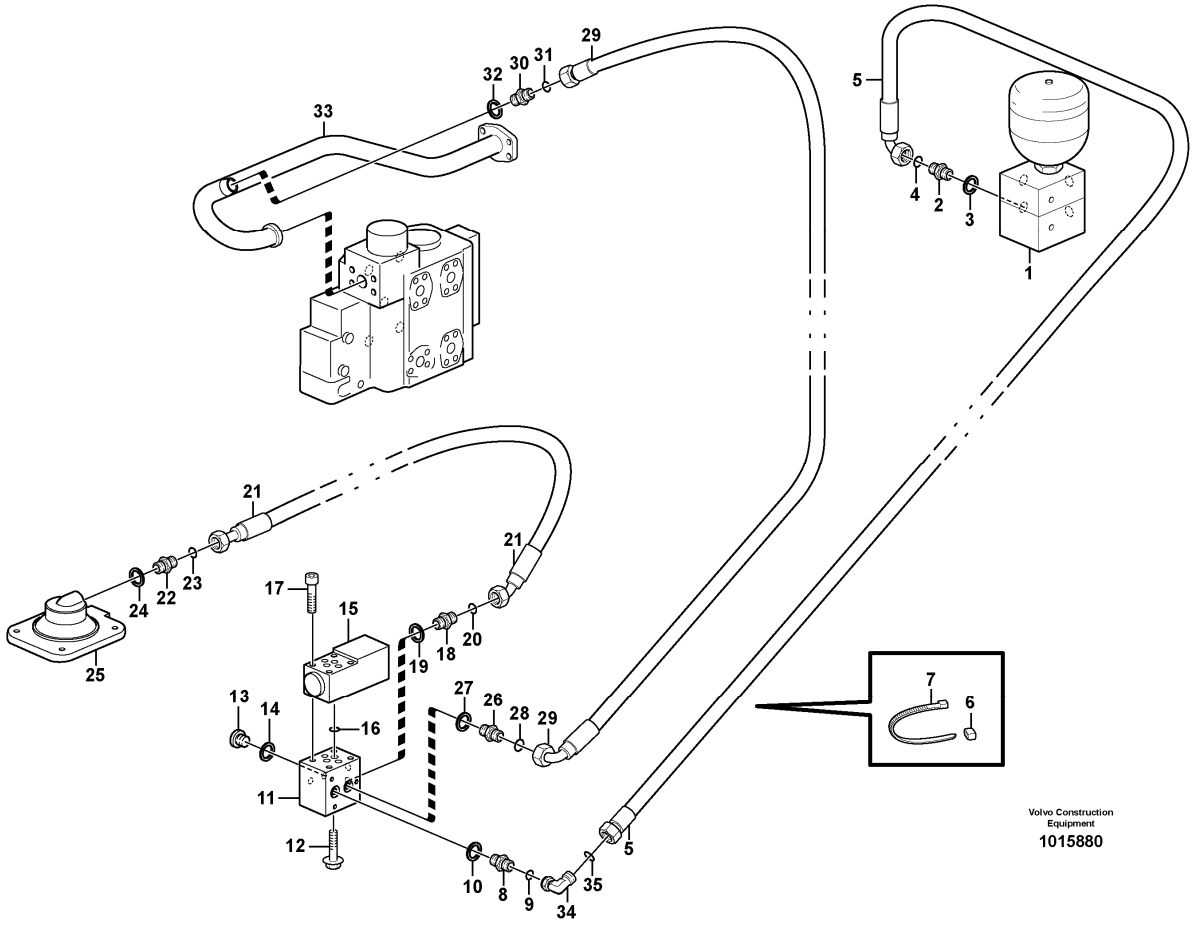

Section option	Kit	Option description
VOE33380		Volvo Wheel Loader L120E S/N 19801-, S/N 66001- USA, S/N 71401- BRA
VOE82066		Arctic kit; accumulators, brake and pilot hoses
VOE33395		Wheel Loader L120E3 IRAN

Q1-Q5	Option	Option description	
Q1 33380 33395	VOE33380	Volvo Wheel Loader L120E S/N 19801-, S/N 66001- USA, S/N 71401- BRA	
Q2 82066	VOE82066	Arctic kit; accumulators, brake and pilot hoses	

Pos	Part	Q1	Q2	Q3	Q4	Q5	PS	Kit	Description	Option(s)	Remark
1		1							Connection block		See ref 914/100
2	VOE14345423	1							Nipple		
3	VOE14211856	1							•Sealing ring		
4	VOE990737	1							•O-ring		(VOE4880492)

5	VOE936655	1							Hose assembly		L = 1800 MM
	VOE11173822		1						Hose assembly		L = 2050 MM
6	VOE4881457	2							Marking sleeve		
7	VOE13949747	2							Clamp		
8	VOE13933897	1							Nipple		P
9	VOE990737	1							•O-ring		(VOE4880492)
10	VOE14211856	1							•Sealing ring		
11	VOE4974291	1							Connection block		
12	VOE13946173	1							Screw		
13	VOE914390	3							Plug		
14	VOE14013067	3							Sealing washer		
	VOE11173166	1							Solenoid valve		MA407
15	VOE11708930	1							•Magnet		
16	VOE11993637	1							•Sealing kit		
17	VOE959193	4							Hex. socket screw		
18	VOE13933897	1							Nipple		A
19	VOE14211856	1							•Sealing ring		
20	VOE990737	1							•O-ring		(VOE4880492)
21	VOE11163103	1							Hose assembly		L = 1050 MM
	VOE11172988		1						Hose assembly		L = 1050 MM
22	VOE14345423	1							Nipple		
23	VOE990737	1							•O-ring		(VOE4880492)
24	VOE14211856	1							•Sealing ring		
25		1							Cap		See ref 468/100
26	VOE13933897	1							Nipple		T
27	VOE14211856	1							•Sealing ring		
28	VOE990737	1							•O-ring		(VOE4880492)
29	VOE936701	1							Hose assembly		L = 500 MM
	VOE11173986		1						Hose assembly		(VOE11173823)L = 500 MM
30	VOE13933855	1							Nipple		
31	VOE990737	1							•O-ring		(VOE4880492)
32	VOE14213676	1							•Sealing ring		
33		1							Return Line		See ref 911/400
34	VOE13933900	1							Elbow nipple		
35	VOE990737	1							•O-ring		(VOE4880492)

VOLVO

Construction Equipment

PROSIS Part Information

Date:	Image id:	Catalogue:	Model:
25/08/2018	**1019621**	**20086**	**L120E**
Brand:	Serial:	Group/Section:	Title:
Volvo	**19804-, 66001-, 71401-**	**491/100**	**Oil cooler 33380, 33395**

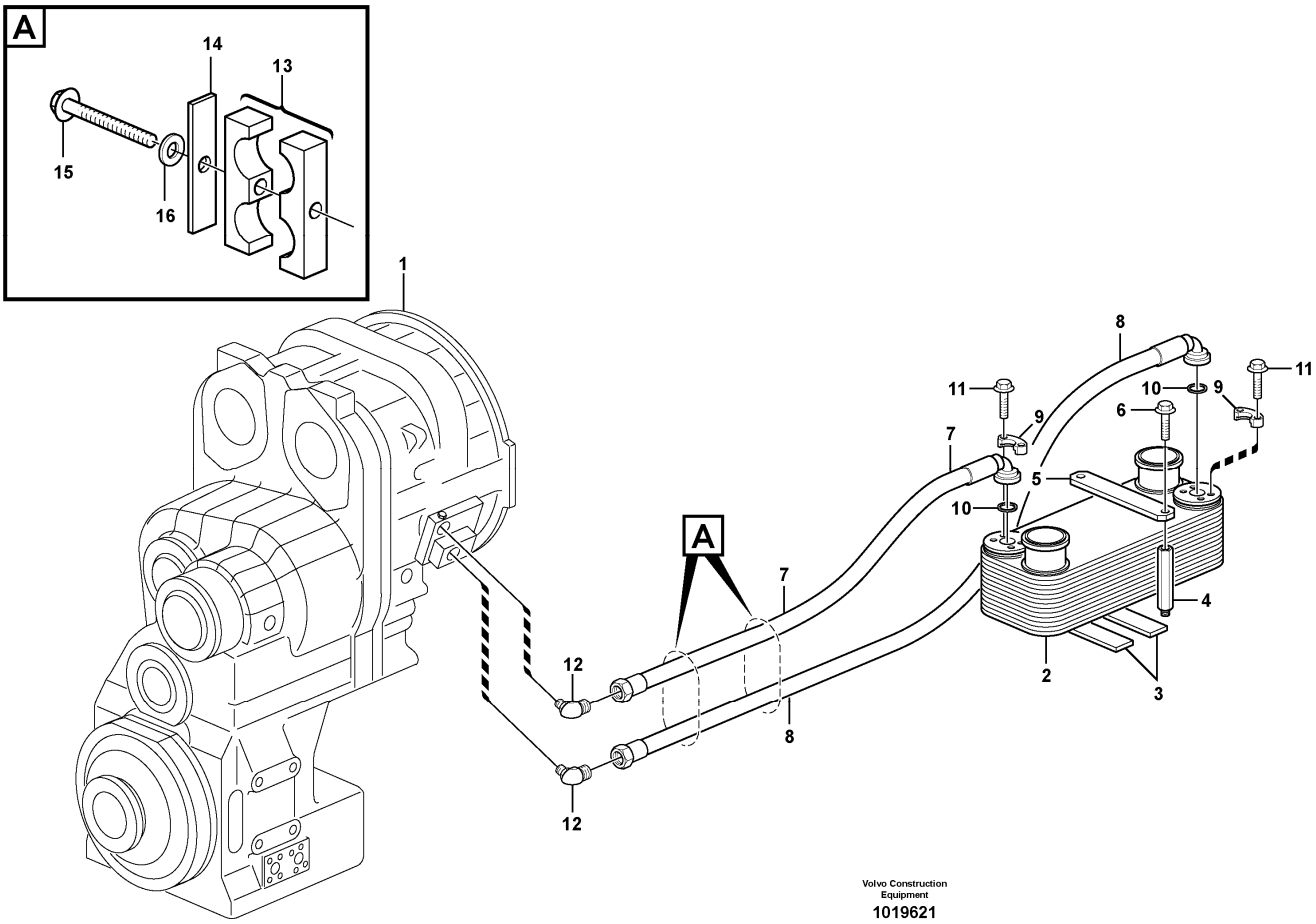

Section option	Kit	Option description
VOE33380		Volvo Wheel Loader L120E S/N 19801-, S/N 66001- USA, S/N 71401- BRA
VOE33395		Wheel Loader L120E3 IRAN

Pos	Part	Q1	Q2	Q3	Q4	Q5	PS	Kit	Description	Option(s)	Remark
1		1							Housing		See ref 421/100
2	VOE11110049	1							Oil cooler		
3	VOE11130496	2							Rubber mat		
4	VOE11411090	4					OP		Spacer		
5	VOE11410637	2							Tensioning plate		
	VOE11130496	2							•Rubber mat		
6	VOE13945444	4							Screw		
7	VOE11410990	1							Hose		L = 1550MM
8	VOE11410991	1							Hose		L = 1265 MM
9	VOE11015455	4							Flange half		

10	VOE990756	2							Sealing ring		
11	VOE946472	8							Flange screw		
12	VOE11172168	2							Nipple		
	VOE968565	2							•O-ring		
	VOE982963	2							•O-ring		
13	VOE11411424	2							Clamp		
14	VOE4880586	2							Cover plate		
15	VOE13965181	2							Screw		
16	VOE11117464	2							Plain washer		(VOE13960141)

VOLVO

Construction Equipment

PROSIS Part Information

Date:	Image id:	Catalogue:	Model:
25/08/2018	**1000273**	**20086**	**L120E**
Brand:	Serial:	Group/Section:	Title:
Volvo	**19804-, 66001-, 71401-**	**516/100**	**Multi-disc brake, front**

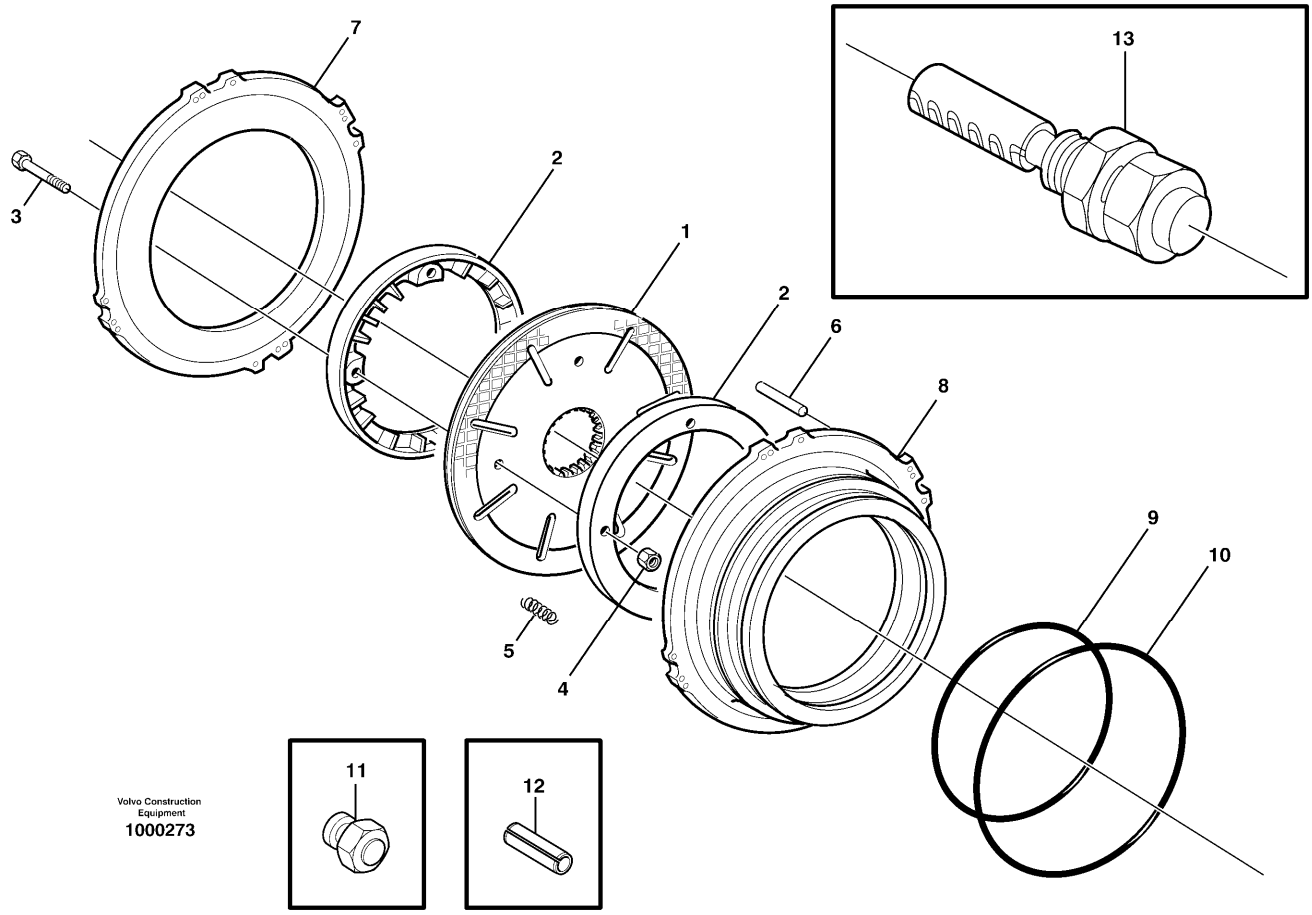

Section option	Kit	Option description
VOE23897		Planetary axle, front AWB 31

Q1-Q5	Option	Option description	
Q1 23897	VOE23897	Planetary axle, front AWB 31	
Q2 11703985			See footnote 1233)
Q3 11703544			See footnote 1232)

Pos	Part	Q1	Q2	Q3	Q4	Q5	PS	Kit	Description	Option(s)	Remark
	VOE56005	1							Planet shaft		(VOE23897)
	VOE11703985		1						•Brake disc kit		See footnote 2285) KIT
	VOE11703544			1					•Brake disc kit		See footnote 3623) KIT
1	VOE11103171	2							•Brake disc		
1	VOE11103171		2	1					••Brake disc		
2	VOE11103226	4							•Impeller		

3	VOE13947542	8							•Screw		
3	VOE13947542		8	4					••Screw		
4	VOE13949278	8							•Flange lock nut		
4	VOE13949278		8	4					••Flange lock nut		
5	VOE11103402	32							•Compression spring		(VOE11035366)
6	VOE950629	8							•Pin		
7	VOE11103425	2							•Brake plate		
8	VOE11103422	2							•Brake piston		
9	VOE11103371	2							•Piston seal		
9	VOE11035347		2						••Sealing ring		AX - 17130 SWE, 23897 AX - 80648 BRA, 23897
9	VOE11103371		2						••Piston seal		AX 17131 - SWE, 23897 AX 80649 - BRA, 23897
10	VOE11103372	2							•Piston seal		
10	VOE11035348		2						••Sealing ring		AX - 17130 SWE, 23897 AX - 80648 BRA, 23897
10	VOE11103372		2						••Piston seal		AX 17131 - SWE, 23897 AX 80649 - BRA, 23897
11	VOE9993875			1					••Gauge		See footnote 1270)
12	VOE11999976		2	2					••Spring pin		See footnote 1270)
13			2						••Wear indicator		See ref 461/100

1232) Without wear indicator.
1233) With wear indicator.
1270) Assembly tool
2285) 1 kit / axle
3623) 2 kit / axle

VOLVO

Construction Equipment

PROSIS Part Information

Date:	Image id:	Catalogue:	Model:
25/08/2018	**1000273**	**20086**	**L120E**
Brand:	Serial:	Group/Section:	Title:
Volvo	**19804-, 66001-, 71401-**	**517/100**	**Multi-disc brake, rear**

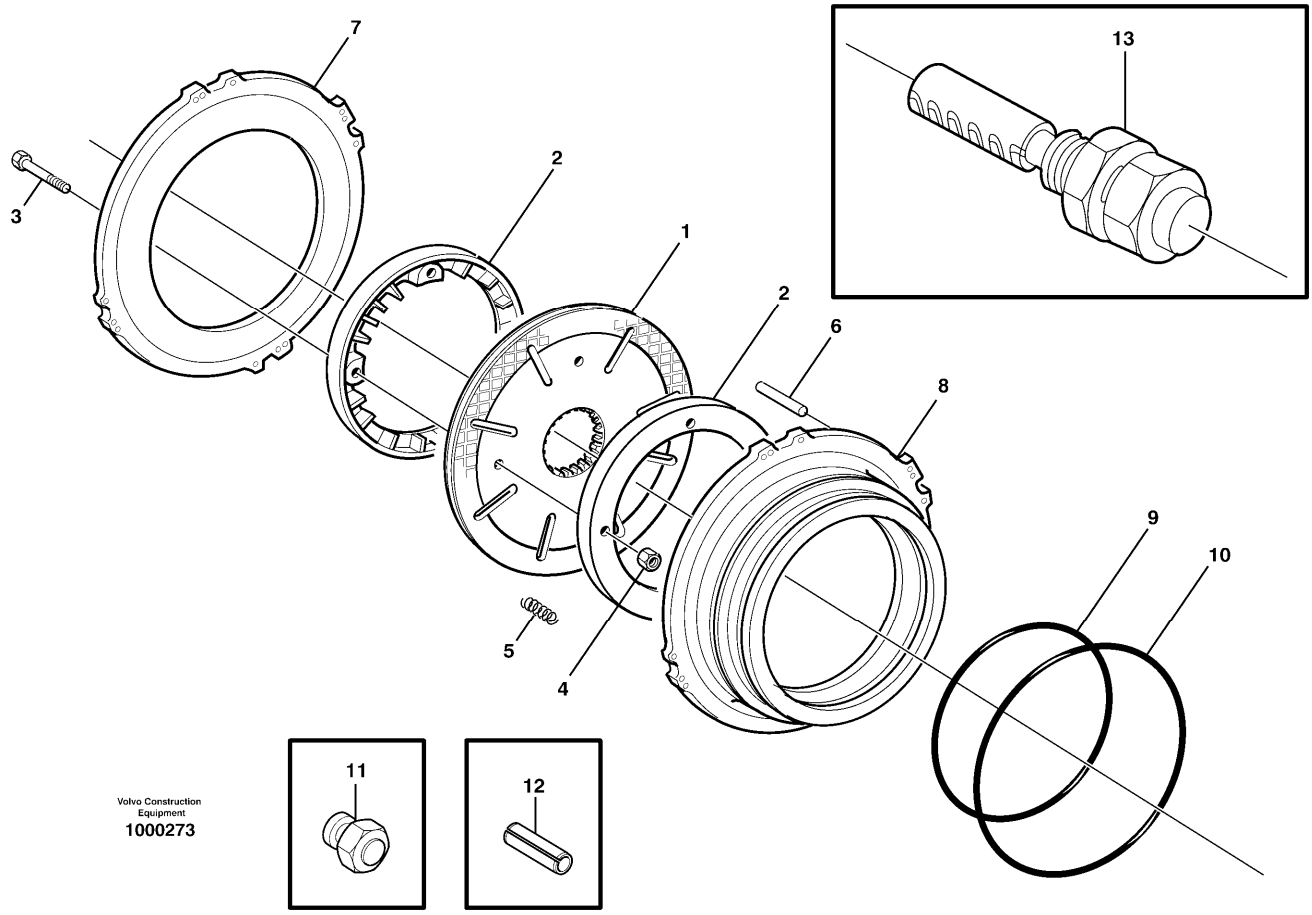

Section option	Kit	Option description
VOE23899		Grab pip.bucket cyl.+X1+ cocks arm 3,1M
VOE23943		Planetary axle, rear AWB 30
VOE80855		Planetary axle rear, Limited slip.

Q1-Q5	Option	Option description	
Q1 23943	VOE23943	Planetary axle, rear AWB 30	
Q2 11703985			See footnote 1233)
Q3 11703544			See footnote 1232)
Q4 23899 80855	VOE23899	Grab pip.bucket cyl.+X1+ cocks arm 3,1M	

Pos	Part	Q1	Q2	Q3	Q4	Q5	PS	Kit	Description	Option(s)	Remark
		1			1				Planetary axle		See ref 463/100
	VOE11703985		1						•Brake disc kit		See footnote 2285) KIT
	VOE11703544			1					•Brake disc kit		See footnote 3623) KIT

1	VOE11103171	2			2				•Brake disc		
1	VOE11103171		2	1					••Brake disc		
2	VOE11103226	4			4				•Impeller		
3	VOE13947542	8			8				•Screw		
3	VOE13947542		8	4					••Screw		
4	VOE13949278	8			8				•Flange lock nut		
4	VOE13949278		8	4					••Flange lock nut		
5	VOE11103402	32			32				•Compression spring		(VOE11035366)
6	VOE950629	8			8				•Pin		
7	VOE11103425	2			2				•Brake plate		
8	VOE11103422	2			2				•Brake piston		
9	VOE11103371	2			2				•Piston seal		
9	VOE11035347		2						••Sealing ring		AX - 10174 SWE, 23943 AX - 80595 BRA, 23943 AX - 10317 SWE, 23899
9	VOE11103371		2						••Piston seal		AX 10175 - SWE, 23943 AX 80596 - BRA, 23943 AX 10318 - SWE, 23899
10	VOE11103372	2			2				••Piston seal		
10	VOE11035348		2						••Sealing ring		AX - 10174 SWE, 23943 AX - 80595 BRA, 23943 AX - 10317 SWE, 23899
10	VOE11103372		2						••Piston seal		AX 10175 - SWE, 23943 AX 80596 - BRA, 23943 AX 10318 - SWE, 23899
11	VOE9993875		1	1					••Gauge		See footnote 1270)
12	VOE11999976		2	2					••Spring pin		See footnote 1270)
13			2						••Wear indicator		See ref 463/100

1232) Without wear indicator.
1233) With wear indicator.
1270) Assembly tool
2285) 1 kit / axle
3623) 2 kit / axle

VOLVO

Construction Equipment

PROSIS Part Information

Date:	Image id:	Catalogue:	Model:
25/08/2018	**1019673**	**20086**	**L120E**
Brand:	Serial:	Group/Section:	Title:
Volvo	**19804-, 66001-, 71401-**	**522/100**	**Brake line, valve body - accumulators - accumulator - footbrake valve**

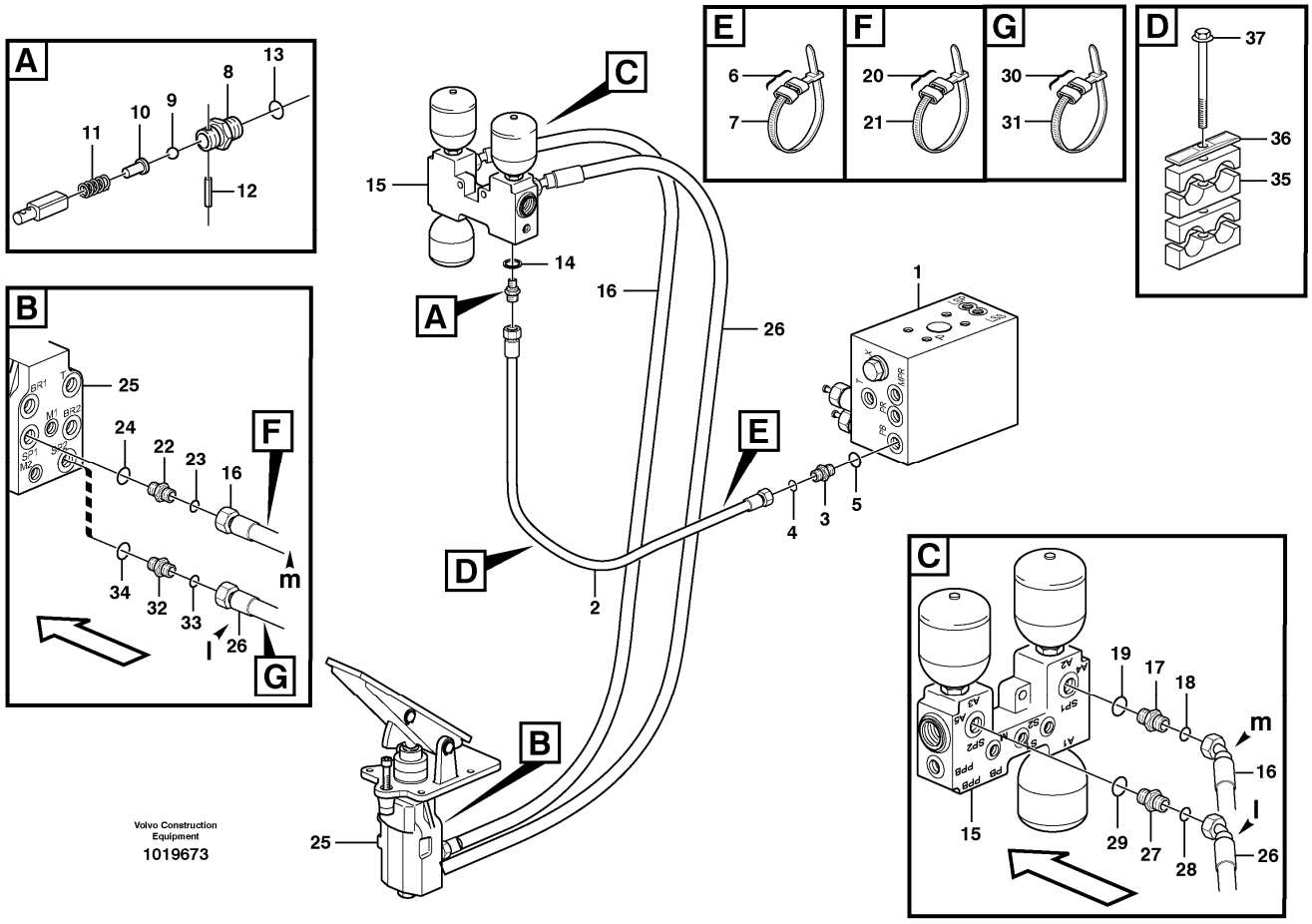

Section option	Kit	Option description
VOE33380		Volvo Wheel Loader L120E S/N 19801-, S/N 66001- USA, S/N 71401- BRA
VOE82066		Arctic kit; accumulators, brake and pilot hoses
VOE33395		Wheel Loader L120E3 IRAN

Q1-Q5	Option	Option description	
Q1 33380	VOE33380	Volvo Wheel Loader L120E S/N 19801-, S/N 66001- USA, S/N 71401- BRA	
Q2 82066	VOE82066	Arctic kit; accumulators, brake and pilot hoses	
Q3 33395	VOE33395	Wheel Loader L120E3 IRAN	

Pos	Part	Q1	Q2	Q3	Q4	Q5	PS	Kit	Description	Option(s)	Remark
1		1		1					Valve block		See ref 912/300
2	VOE11147990	1		1					Hose assembly		PB, L = 1350 MM
	VOE11173814		1						Hose assembly		PB, L = 1350 MM

3	VOE13933855	1		1					Nipple		
4	VOE990737	1		1					•O-ring		
5	VOE14213676	1		1					•Sealing ring		
6	VOE4881454	2		2					Marking sleeve		PINK
	VOE4881455	2		2					Marking sleeve		RED
7	VOE4881438	2		2					Cable tie		
	VOE11411982	1		1					Non-return valve		
8	VOE11715517	1		1			OP		•Nipple		
9	VOE11715635	1		1			OP		•Ball		
10	VOE11715636	1		1			OP		•Guide		
11	VOE11715637	1		1			OP		•Spring		
12	VOE11715634	1		1			OP		•Spring pin		
13	VOE11715638	1		1			OP		•O-ring		
14	VOE13945653	1		1					Plane gasket		
15		1		1					Valve housing		See ref 527/100
16	VOE11147989	1		1					Hose assembly		SP1, L = 1800 MM
	VOE11173815		1						Hose assembly		SP1, L = 1800 MM
17	VOE13933853	1		1					Nipple		
18	VOE990738	1		1					•O-ring		
19	VOE14211863	1		1					•Sealing ring		
20	VOE4881451	2							Marking sleeve		YELL
	VOE4881454	2		2					Marking sleeve		PINK
21	VOE4881438	2		2					Cable tie		
22	VOE11108730	1		1					Nipple		
23	VOE990738	1		1					O-ring		
24	VOE967749	1		1					O-ring		
25		1		1					Footbrake Valve		See ref 525/100
26	VOE11147945	1		1					Hose assembly		SP2, L = 1700 MM
	VOE11173816		1						Hose assembly		SP2, L = 1700 MM
27	VOE13933853	1							Nipple		
28	VOE990738	1							•O-ring		
29	VOE14211863	1							•Sealing ring		
30	VOE4881454	2		2					Marking sleeve		PINK
	VOE4881459	2		2					Marking sleeve		BLUE
31	VOE4881438	2		2					Cable tie		
32	VOE11108730	1		1					Nipple		
33	VOE990738	1		1					O-ring		
34	VOE967749	1		1					O-ring		
35	VOE11411417	4							Clamp		
36	VOE4880578	2		2					Cover plate		
37	VOE13965182	2		2					Screw		

VOLVO

Construction Equipment

PROSIS Part Information

Date:	Image id:	Catalogue:	Model:
25/08/2018	**1019663**	**20086**	**L120E**
Brand:	Serial:	Group/Section:	Title:
Volvo	**19804-, 66001-, 71401-**	**522/150**	**Brake lines, footbrake valve - axles**

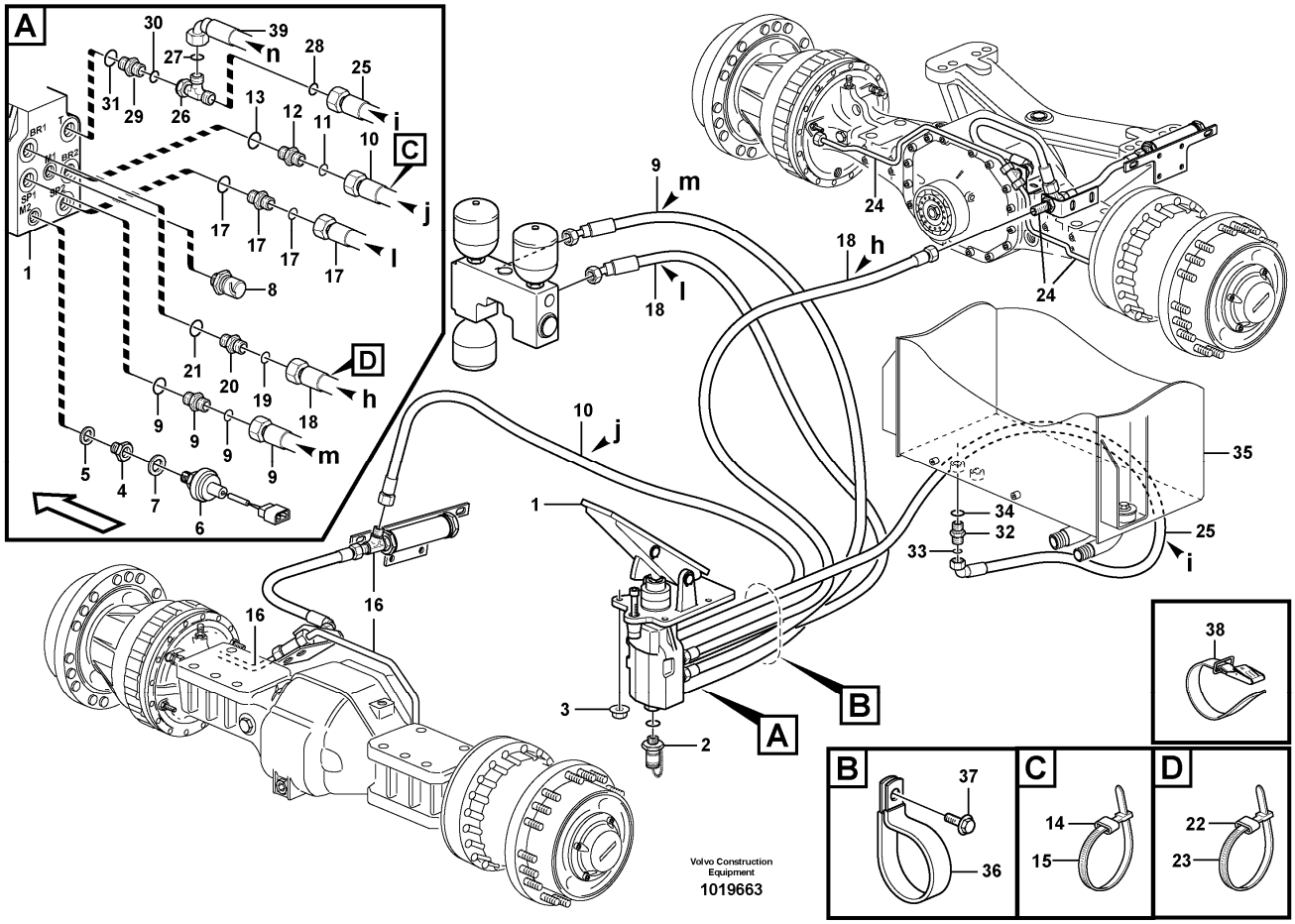

Section option	Kit	Option description
VOE33380		Volvo Wheel Loader L120E S/N 19801-, S/N 66001- USA, S/N 71401- BRA
VOE82066		Arctic kit; accumulators, brake and pilot hoses
VOE33395		Wheel Loader L120E3 IRAN

Q1-Q5	Option	Option description	
Q1 33380 33395	VOE33380	Volvo Wheel Loader L120E S/N 19801-, S/N 66001- USA, S/N 71401- BRA	
Q2 82066	VOE82066	Arctic kit; accumulators, brake and pilot hoses	

Pos	Part	Q1	Q2	Q3	Q4	Q5	PS	Kit	Description	Option(s)	Remark
1		1							Footbrake Valve		See ref 522/150
2	VOE936443	1							Testing nipple		
3	VOE948645	4							Flange lock nut		
4	VOE11039658	1							Reduction nipple		

5	VOE947083	1							Gasket		
6	VOE11039617	1							Pressure monitor		SE301
7	VOE13945653	1							Plane gasket		
8	VOE11170123	1							Pressure sensor		SE501
9		1							Hose assembly		SP1 See ref 522/100
10	VOE15115084	1							Hose assembly		(VOE11172905)BR2, L = 3200 MM
	VOE11173817		1						Hose assembly		BR2, L = 3200 MM
11	VOE990737	1							O-ring		
12	VOE11172920	1							Restrictor		
13	VOE967749	1							O-ring		
14	VOE4881454	2							Marking sleeve		PINK
	VOE4881452	2							Marking sleeve		WHITE
15	VOE4881438	2							Cable tie		
16		2							Brake pipe		See ref 522/200
17		1							Hose assembly		SP2 See ref 522/100
18	VOE11182000	1							Hose assembly		BR1, L = 2200 MM
	VOE11172996		1						Hose assembly		BR1, L = 2200 MM
19	VOE990737	1							O-ring		
20	VOE11172920	1							Restrictor		
21	VOE967749	1							O-ring		
22	VOE4881454	2							Marking sleeve		PINK
	VOE4881457	2							Marking sleeve		GREEN
23	VOE4881438	2							Cable tie		
24		2							Brake pipe		See ref 522/200
25	VOE936706	1							Hose assembly		T, L = 1650 MM
26	VOE935041	1							T-nipple		
27	VOE990737	1							•O-ring		
28	VOE948883	1							•Gasket		
29	VOE13933856	1							Nipple		
30	VOE990737	1							•O-ring		
31	VOE967749	1							•O-ring		
32	VOE13933855	1							Nipple		
33	VOE9907372	1							•O-ring		
34	VOE14213676	1							•Sealing ring		
35		1							Hydr fluid tank		See ref 911/100
36	VOE13980476	1							Clamp		
37	VOE13946173	1							Screw		
38	VOE11104606	1							Retaining strap		
39		1							Hose assembly		See ref 911/100

VOLVO

Construction Equipment

PROSIS Part Information

Date:	Image id:	Catalogue:	Model:
25/08/2018	**1020362**	**20086**	**L120E**
Brand:	Serial:	Group/Section:	Title:
Volvo	**19804-, 66001-, 71401-**	**522/200**	**Brake pipes, front axle and rear axle 33380, 33395**

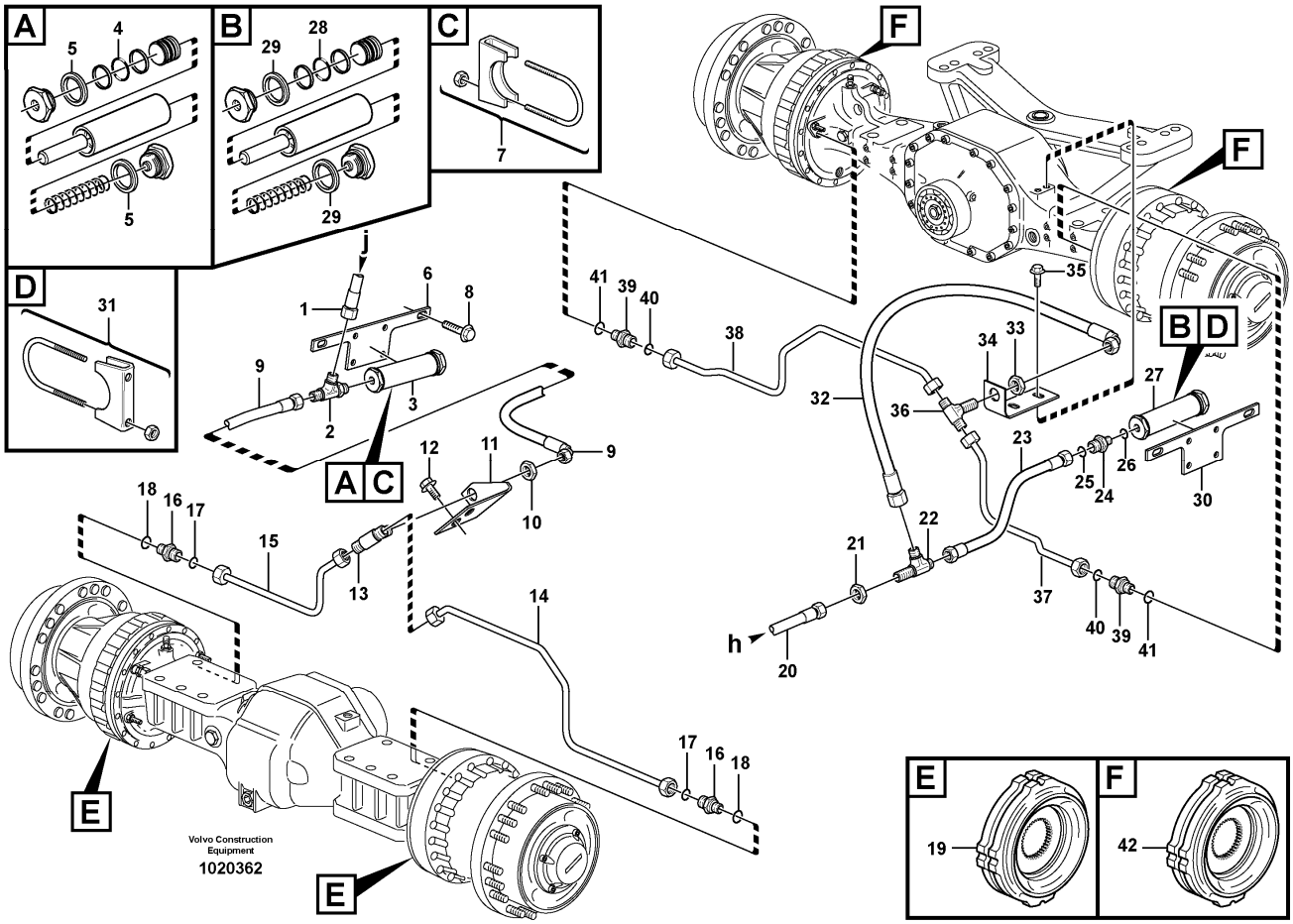

Section option	Kit	Option description
VOE33380		Volvo Wheel Loader L120E S/N 19801-, S/N 66001- USA, S/N 71401- BRA
VOE33395		Wheel Loader L120E3 IRAN

Pos	Part	Q1	Q2	Q3	Q4	Q5	PS	Kit	Description	Option(s)	Remark
1		1							Hose assembly		See ref 522/150
2	VOE935029	1							T-nipple		
3	VOE11027342	1							Accumulator		
4	VOE925064	1							•O-ring		
5	VOE14013072	2							•Sealing washer		
6	VOE11020932	1							Attaching plate		
7	VOE944026	2							Clamp		
8	VOE13945444	2							Screw		
9	VOE11172457	1							Hose assembly		L = 350 MM
10	VOE935429	1							Lock nut		

11	VOE11172474	1							Attachment	VOE82213	
12	VOE946440	2							Flange screw	VOE82213	
13	VOE935604	1							T-nipple	VOE82213	
14	VOE11172482	1							Brake pipe		LH
	VOE11417848	1							Brake pipe	VOE82213	
15	VOE11172480	1							Brake pipe		RH
	VOE11417847	1							Brake pipe	VOE82213	
16	VOE14345423	2							Nipple		
17	VOE990737	2							•O-ring		(VOE4880492)
18	VOE14211856	2							•Sealing ring		
19		2							Multidisc brake		See ref 516/100
20		1							Hose assembly		See ref 522/150
21	VOE935429	1							Lock nut		
22	VOE935939	1							T-nipple		
23	VOE11172477	1							Hose assembly		L = 300 MM
24	VOE13933915	1							Nipple		
25	VOE990737	1							•O-ring		(VOE4880492)
26	VOE14211857	1							•Sealing ring		
27	VOE11027342	1							Accumulator		
28	VOE925064	1							•O-ring		
29	VOE14013072	2							•Sealing washer		
30	VOE11020932	1							Attaching plate		
31	VOE944026	2							Clamp		
32	VOE936702	1							Hose assembly		(VOE11172904)L = 580 MM
33	VOE935429	1							Lock nut		
34	VOE11172475	1							Attachment		
35	VOE946440	2							Flange screw		
36	VOE935604	1							T-nipple		
37	VOE11172470	1							Brake pipe		LH
	VOE11417849	1							Brake pipe	VOE82213	
38	VOE11172471	1							Brake pipe		RH
	VOE11417851	1							Brake pipe	VOE82213	
39	VOE14345423	2							Nipple		
40	VOE990737	2							•O-ring		(VOE4880492)
41	VOE14211856	2							•Sealing ring		
42		2							Multidisc brake		See ref 517/100

VOLVO

Construction Equipment

PROSIS Part Information

Date:	Image id:	Catalogue:	Model:
25/08/2018	**1011889**	**20086**	**L120E**
Brand:	Serial:	Group/Section:	Title:
Volvo	**19804-, 66001-, 71401-**	**522/250**	**German version 83689**

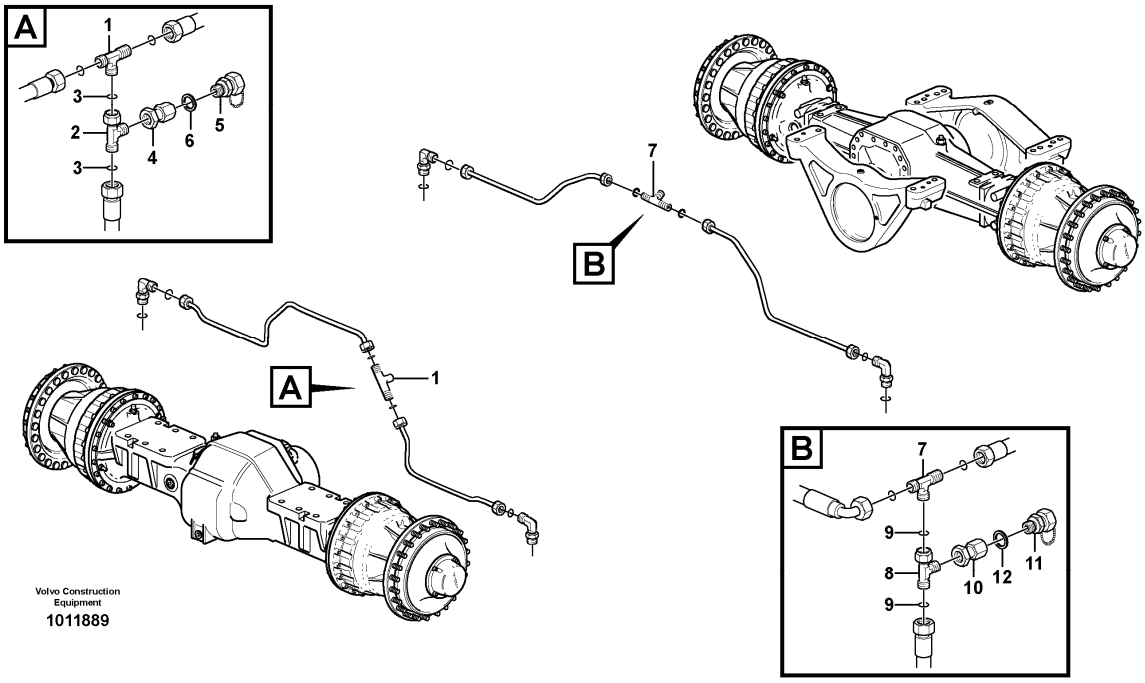

Section option	Kit	Option description
VOE83689		German version

Pos	Part	Q1	Q2	Q3	Q4	Q5	PS	Kit	Description	Option(s)	Remark
1		1							T-nipple		See ref 522/200
2	VOE13933936	1							T-nipple		
3	VOE990737	2							•O-ring		
4	VOE935040	1							Nipple		
5	VOE4928801	1							Testing nipple		
6	VOE947083	1							Gasket		
7		1							T-nipple		See ref 522/200
8	VOE13933936	1							T-nipple		
9	VOE990737	2							•O-ring		
10	VOE935040	1							Nipple		
11	VOE4928801	1							Testing nipple		

12	VOE947083	1							Gasket		

VOLVO

Construction Equipment

PROSIS Part Information

Date:	Image id:	Catalogue:	Model:
25/08/2018	**1027139**	**20086**	**L120E**
Brand:	Serial:	Group/Section:	Title:
Volvo	**19804-, 66001-, 71401-**	**523/100**	**Oil cooler, forword, motor circuit. 83046**

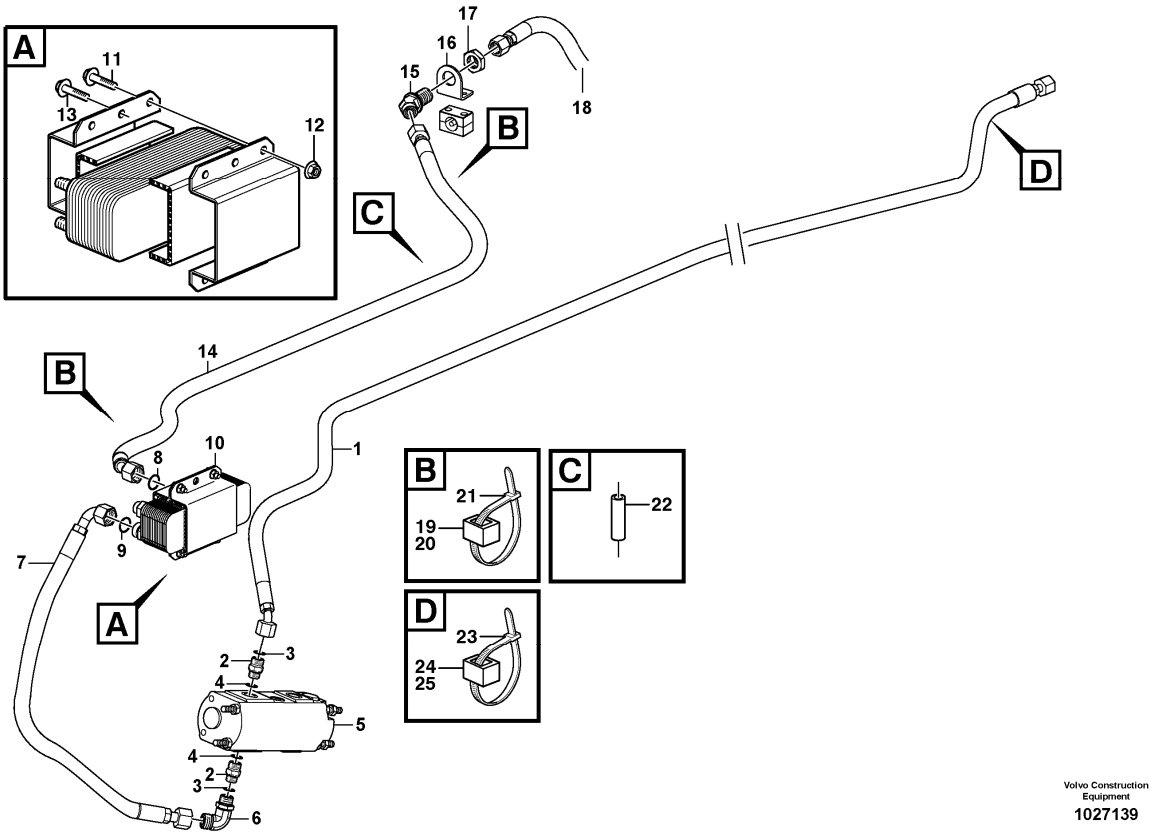

Section option	Kit	Option description
VOE83046		Reversible fan for oil cooler

Pos	Part	Q1	Q2	Q3	Q4	Q5	PS	Kit	Description	Option(s)	Remark
1	VOE11411141	1							Hose assembly		L = 3350 MM
2	VOE11108729	1							Nipple		
3	VOE990738	1							O-ring		
4	VOE948885	1							Plane gasket		
5	VOE11148530	1							Oil pump		
	VOE11706856	1							•Sealing kit		
6	VOE935038	1							Elbow nipple		
7	VOE11163024	1							Hose assembly		L = 550 MM
8	VOE990738	2							O-ring		
9	VOE990739	2							O-ring		
10	VOE11110903	1							Heat exchanger		

11	VOE13946173	4							•Screw		
12	VOE13945408	4							•Nut		
13	VOE946329	2							Flange screw		
14	VOE11445171	1							Hose assembly		L = 1700 MM
15	VOE937539	1							Elbow nipple		
16	VOE11411937	1							Plate		
17	VOE13933962	1							Lock nut		
18		1							Motor circuit, rear		
19	VOE4881455	2							Marking sleeve		
20	VOE4881457	2							Marking sleeve		
21	VOE4881440	2							Cable tie		
22	VOE11173924	4							Spacer sleeve		
23	VOE14016673	2							Strip clamp		
24	VOE4881455	2							Marking sleeve		RED
25	VOE4881451	2							Marking sleeve		YELL

VOLVO

Construction Equipment

PROSIS Part Information

Date:	Image id:	Catalogue:	Model:
25/08/2018	**1023498**	**20086**	**L120E**
Brand:	Serial:	Group/Section:	Title:
Volvo	**19804-, 66001-, 71401-**	**523/150**	**Oil cooler, forword, pump circuit. 83046**

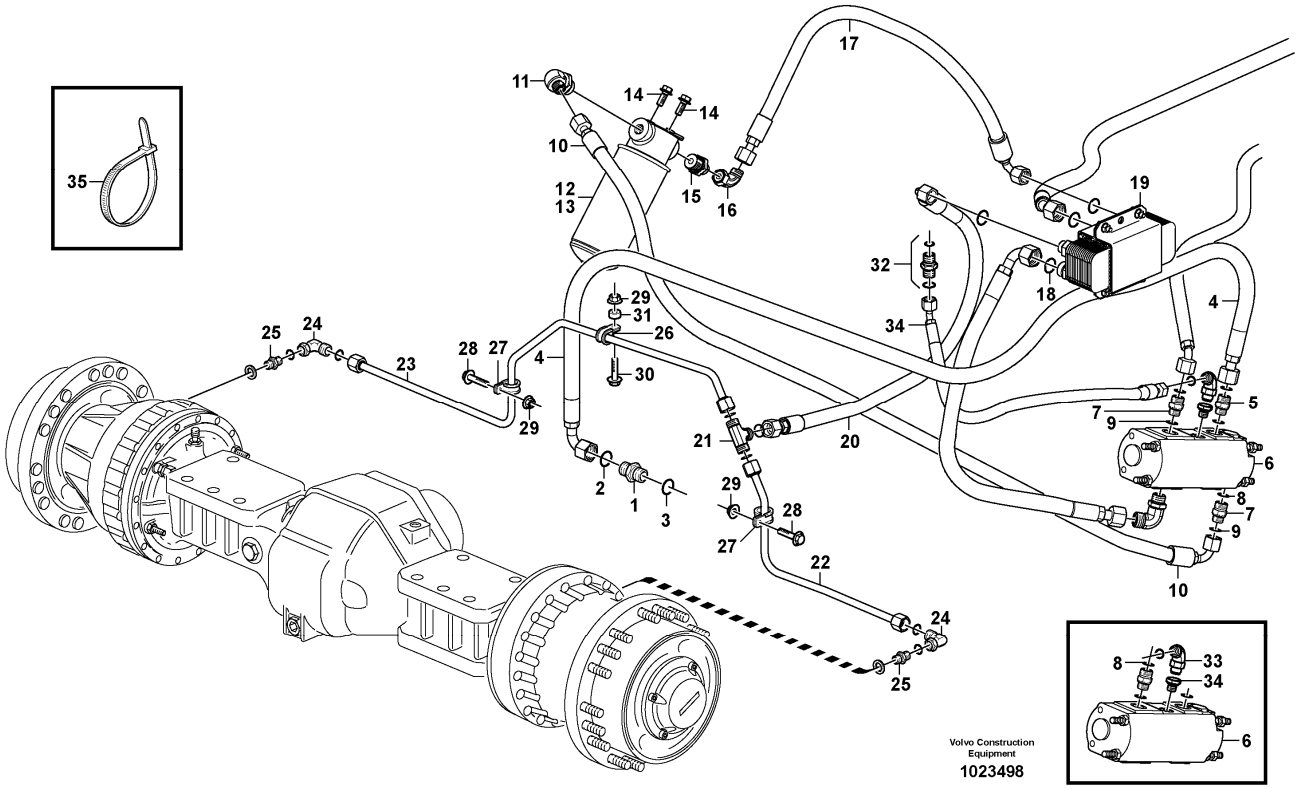

Section option	Kit	Option description
VOE83046		Reversible fan for oil cooler

Pos	Part	Q1	Q2	Q3	Q4	Q5	PS	Kit	Description	Option(s)	Remark
1	VOE11410534	1							Nipple		
2	VOE990739	1							O-ring		
3	VOE958228	1							O-ring		
4	VOE11410776	1							Hose assembly		L = 1500 MM
5	VOE935037	1							Nipple		
	VOE990739	1							•O-ring		
	VOE14211864	1							•Sealing ring		
6		1							Oil pump		See ref 523/100
7	VOE11108729	1							Nipple		
8	VOE990738	1							O-ring		
9	VOE948885	1							Plane gasket		

10	VOE11163004	1							Hose assembly		L = 900 MM
11	VOE13933901	1							Elbow nipple		
	VOE990738	1							•O-ring		
12	VOE11061436	1							Return filter		
13	VOE17457469	1							•Oil filter		
14	VOE946329	2							Flange screw		
15	VOE13933917	1							Nipple		
	VOE990738	1							•O-ring		
	VOE14211859	1							•Sealing ring		
16	VOE13933872	1							Elbow nipple		
	VOE990738	1							•O-ring		
17	VOE11163004	1							Hose assembly		L = 900 MM
18	VOE990739	2							O-ring		
19		1							Heat Exchanger		See ref 523/100
20	VOE11163004	1							Hose assembly		L = 900 MM
21	VOE935453	1							T-nipple		
	VOE990738	1							•O-ring		
22	VOE11410538	1							Oil pipe		
23	VOE11410540	1							Oil pipe		
24	VOE13933872	2							Elbow nipple		
	VOE990738	2							•O-ring		
25	VOE13933853	2							Nipple		
	VOE990738	2							•O-ring		
	VOE14211863	2							•Sealing ring		
26	VOE13949746	3							Clamp		
27	VOE990732	3							Clamp		
28	VOE13946173	2							Screw		
29	VOE948645	3							Flange lock nut		
30	VOE946671	1							Flange screw		
31	VOE13948871	1							Spacer washer		
32	VOE14345423	2							Nipple		
	VOE990737	2							•O-ring		
	VOE14211856	2							•Sealing ring		
33	VOE13933912	1							T-nipple		
	VOE990737	1							•O-ring		
34	VOE14345423	1							Nipple		
	VOE990737	1							•O-ring		
	VOE14211856	1							•Sealing ring		
35	VOE11163065	1							Hose assembly		L = 600 MM
36	VOE4881440	REQ							Cable tie		

VOLVO

Construction Equipment

PROSIS Part Information

Date:	Image id:	Catalogue:	Model:
25/08/2018	**1019560**	**20086**	**L120E**
Brand:	Serial:	Group/Section:	Title:
Volvo	**19804-, 66001-, 71401-**	**523/200**	**Oil cooler, rear, motor circuit. 83046**

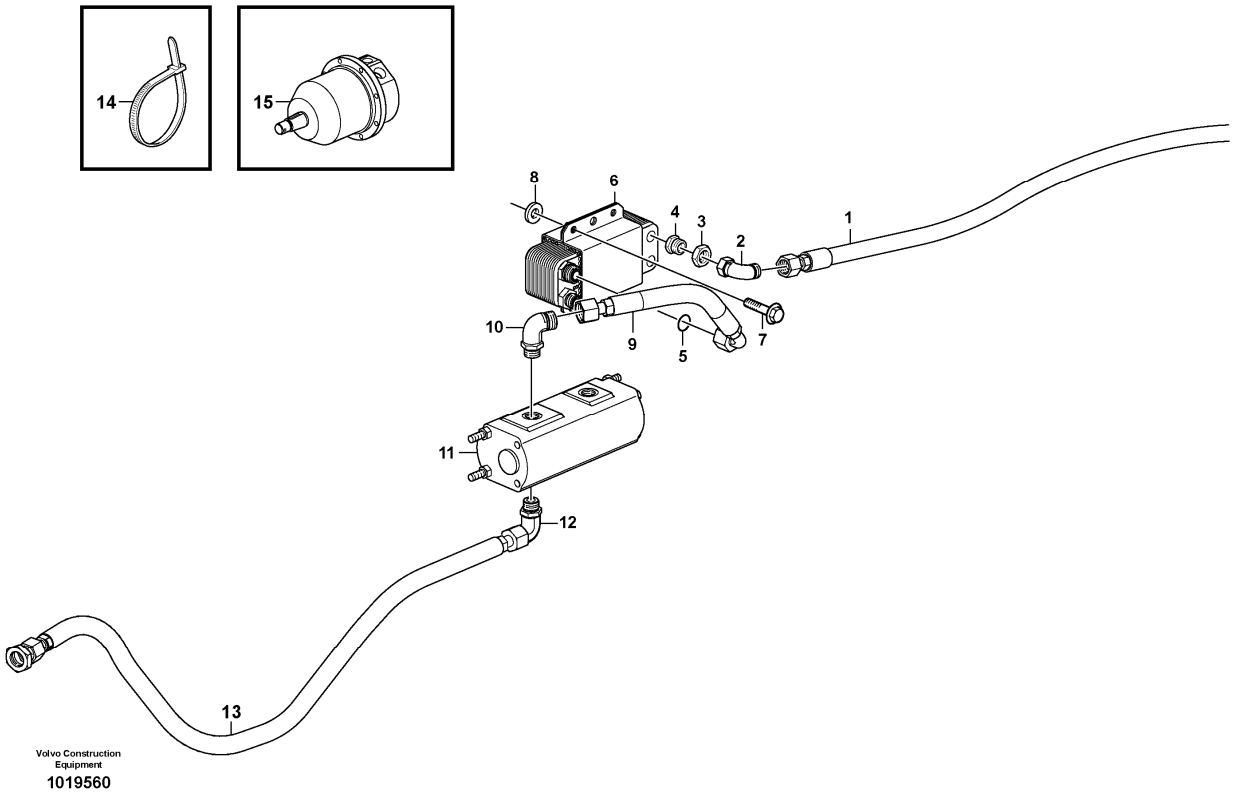

Section option	Kit	Option description
VOE83046		Reversible fan for oil cooler

Pos	Part	Q1	Q2	Q3	Q4	Q5	PS	Kit	Description	Option(s)	Remark
1	VOE11147944	1							Hose assembly		L = 1130 MM
2	VOE13933872	1							Elbow nipple		
	VOE990738	1							•O-ring		
3	VOE935332	1							Nut		
4	VOE935422	1							Reduction nipple		
	VOE990738	1							•O-ring		
5	VOE990739	2							O-ring		
6		1							Heat Exchanger		See ref 523/100
7	VOE946329	2							Flange screw		
8	VOE930842	1							Plain washer		
9	VOE11173209	1							Hose assembly		L = 320 MM

10	VOE935038	1							Elbow nipple		
11	VOE11148530	1							Oil pump		
	VOE11706856	1							•Sealing kit		
12	VOE935038	1							Elbow nipple		
13	VOE11411939	1							Hose assembly		L = 1100 MM
14	VOE4881440	REQ							Cable tie		
15		1							Hydraulic motor		See ref 263/200

VOLVO

Construction Equipment

PROSIS Part Information

Date:	Image id:	Catalogue:	Model:
25/08/2018	**1023525**	**20086**	**L120E**
Brand:	Serial:	Group/Section:	Title:
Volvo	**19804-, 66001-, 71401-**	**523/250**	**Oil cooler, rear, pump circuit. 83046**

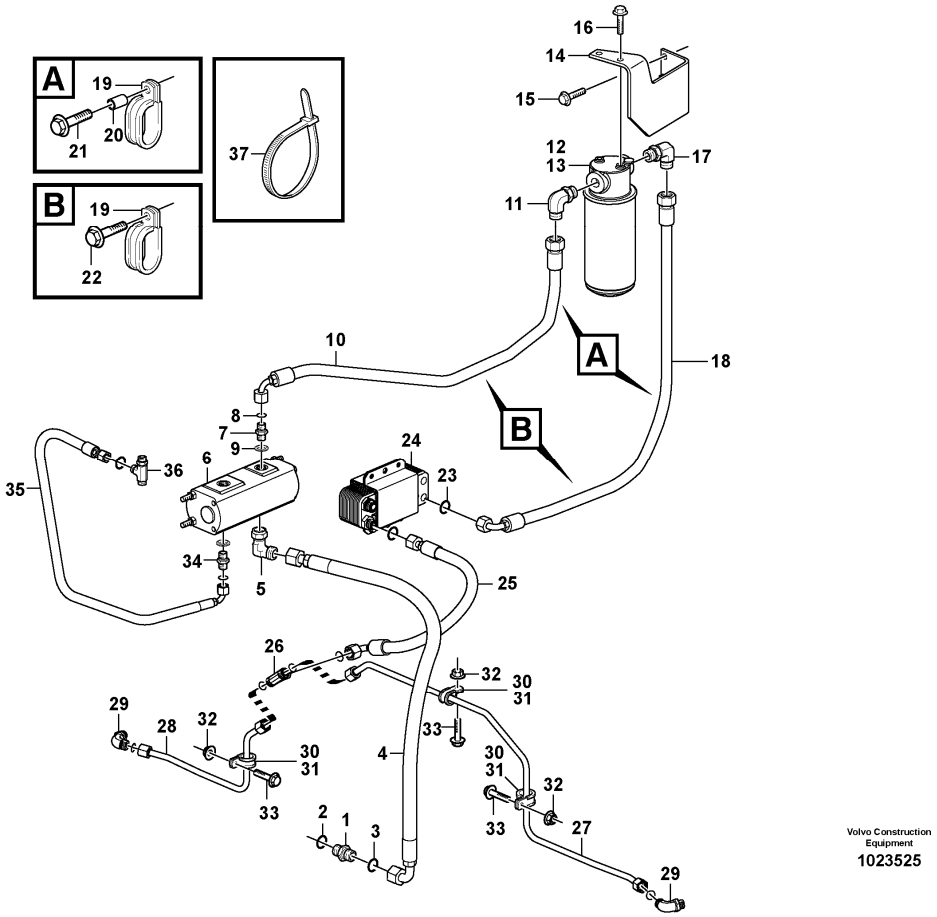

Section option	Kit	Option description
VOE83046		Reversible fan for oil cooler

Pos	Part	Q1	Q2	Q3	Q4	Q5	PS	Kit	Description	Option(s)	Remark
1	VOE11410534	1							Nipple		
2	VOE990739	1							O-ring		
3	VOE958228	1							O-ring		
4	VOE11163025	1							Hose assembly		L = 950 MM
5	VOE935038	1							Elbow nipple		
6		1							Oil pump		See ref 523/200
7	VOE11108729	1							Nipple		
8	VOE990738	1							O-ring		
9	VOE948885	1							Plane gasket		
10	VOE11163004	1							Hose assembly		L = 2000 MM
11	VOE13933901	1							Elbow nipple		

	VOE990738	1							•O-ring		
12	VOE11061436	1							Return filter		
13	VOE17457469	1							•Oil filter		
14	VOE11411911	1							Anchorage		
15	VOE13946173	2							Screw		
16	VOE946329	2							Flange screw		
17	VOE13933901	1							Elbow nipple		
	VOE990738	1							•O-ring		
18	VOE11163005	1							Hose assembly		L = 780 MM
19	VOE11025709	2							Clamp		
20	VOE930438	1							Spacer ring		
21	VOE13965179	1							Screw		
22	VOE13946173	1							Screw		
23	VOE990738	2							O-ring		
24		1							Heat Exchanger		See ref 523/100
25	VOE11148983	1							Hose assembly		L = 580 MM
26	VOE935453	1							T-nipple		
	VOE990738	3							•O-ring		
27	VOE11410542	1							Oil pipe		
28	VOE11410544	1							Oil pipe		
29	VOE13933869	2							Elbow nipple		
	VOE990738	2							•O-ring		
	VOE967750	2							•O-ring		
30	VOE13949746	3							Clamp		
31	VOE990732	3							Clamp		
32	VOE13946173	3							Screw		
33	VOE948645	3							Flange lock nut		
34	VOE14345423	1							Nipple		
	VOE990737	2							•O-ring		
	VOE14211856	2							•Sealing ring		
35	VOE11148973	1							Hose assembly		L = 1100 MM
36	VOE13933912	1							T-nipple		
	VOE990737	2							•O-ring		
37	VOE4881440	REQ							Cable tie		

VOLVO

Construction Equipment

PROSIS Part Information

Date:	Image id:	Catalogue:	Model:
25/08/2018	**1000293**	**20086**	**L120E**
Brand:	Serial:	Group/Section:	Title:
Volvo	**19804-, 66001-, 71401-**	**525/100**	**Dual brake pedals 33380, 33395 IRAN**

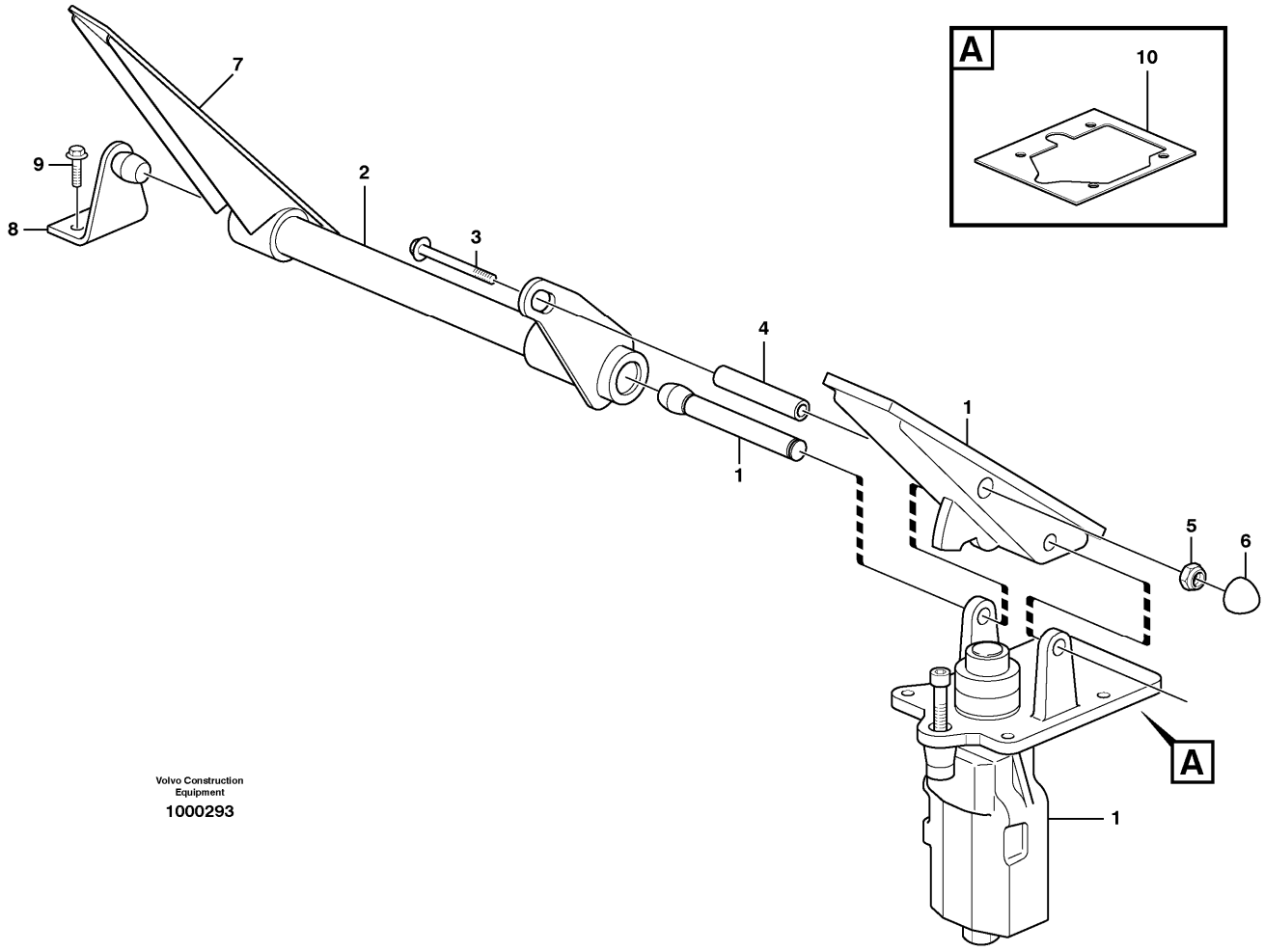

Section option	Kit	Option description
VOE33380		Volvo Wheel Loader L120E S/N 19801-, S/N 66001- USA, S/N 71401- BRA
VOE33395		Wheel Loader L120E3 IRAN

Pos	Part	Q1	Q2	Q3	Q4	Q5	PS	Kit	Description	Option(s)	Remark
1		1							Footbrake Valve		See ref 525/150
2	VOE11005990	1							Pedal		
3	VOE13965184	1							Flange screw		
4	VOE11006430	1							Spacer		
5	VOE948645	1							Flange lock nut		
6	VOE11006824	1							Protecting cap		
7	VOE11998442	1							Rubber plate		
8	VOE11006248	1							Anchorage		
9	VOE13945444	2							Screw		

10	VOE11007758	1					OP		Gasket		

VOLVO

Construction Equipment

PROSIS Part Information

Date:	Image id:	Catalogue:	Model:
25/08/2018	**1015762**	**20086**	**L120E**
Brand:	Serial:	Group/Section:	Title:
Volvo	**19804-, 66001-, 71401-**	**525/150**	**Footbrake valve 33380, 33395 IRAN**

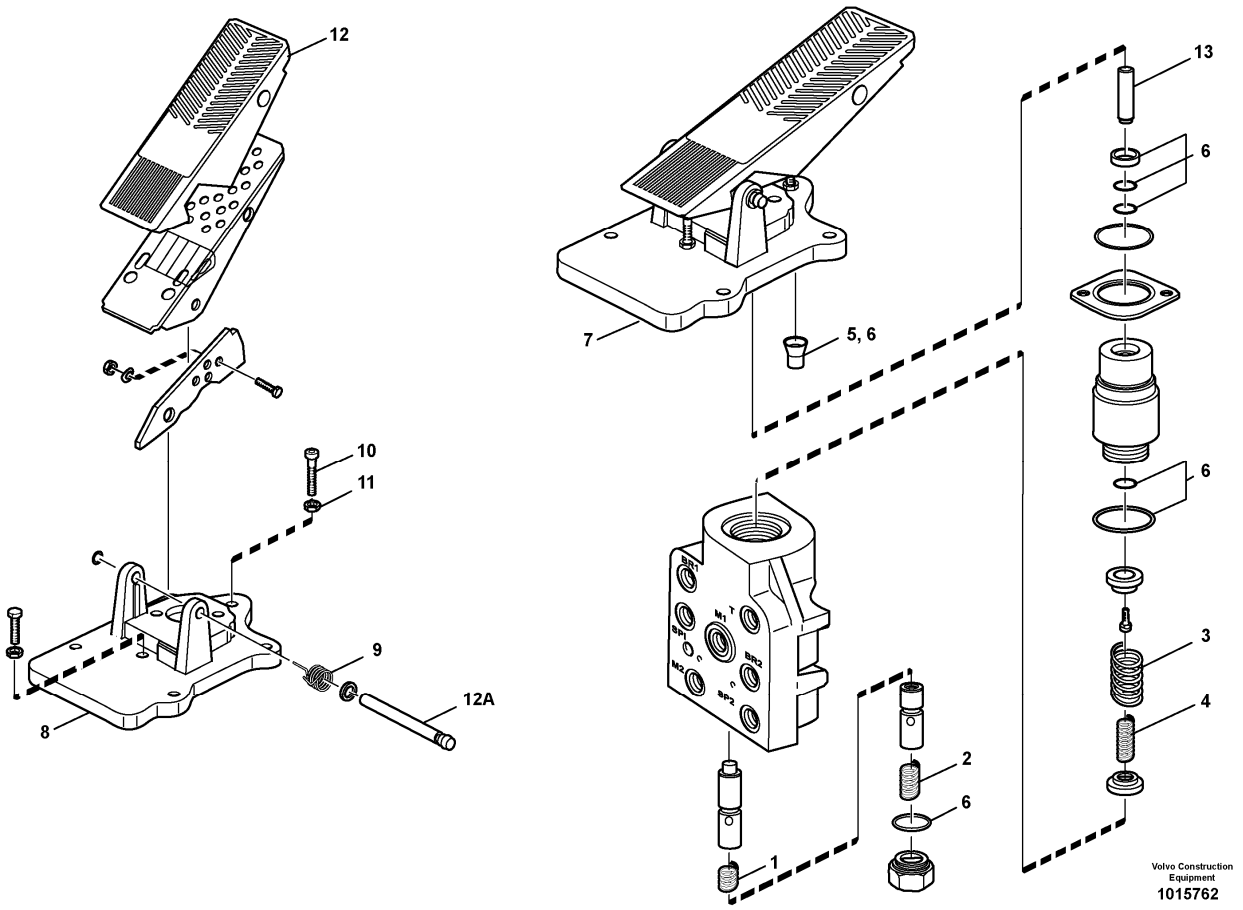

Section option	Kit	Option description
VOE33380		Volvo Wheel Loader L120E S/N 19801-, S/N 66001- USA, S/N 71401- BRA
VOE33395		Wheel Loader L120E3 IRAN

Pos	Part	Q1	Q2	Q3	Q4	Q5	PS	Kit	Description	Option(s)	Remark
	VOE11148344	1					SS		Footbrake valve		
1	VOE11703355	1							•Compression spring		(VOE11707053)
2	VOE11703356	1					OP		•Compression spring		(VOE11707052)
3	VOE11997342	1					OP		•Spring		
4	VOE11997343	1							•Spring		
5	VOE11996380	1							•Seal		
6	VOE11707055	1							•Sealing kit		
7	VOE11707078	1							•Pedal arrangement		
8		1					NS		••Attaching plate		

9	VOE11994522	1							••Torsion spring		
10	VOE11704319	1							••Adjusting screw		
11	VOE955782	1							••Hexagon nut		
12	VOE11998442	1							••Rubber plate		
12A	VOE11708511	1							••Pin		
13	VOE15140184	1					OP		•Pin		(VOE11703039)

VOLVO

Construction Equipment

PROSIS Part Information

Date:	Image id:	Catalogue:	Model:
25/08/2018	**1001283**	**20086**	**L120E**
Brand:	Serial:	Group/Section:	Title:
Volvo	**19804-, 66001-, 71401-**	**527/100**	**Valve and accumulators**

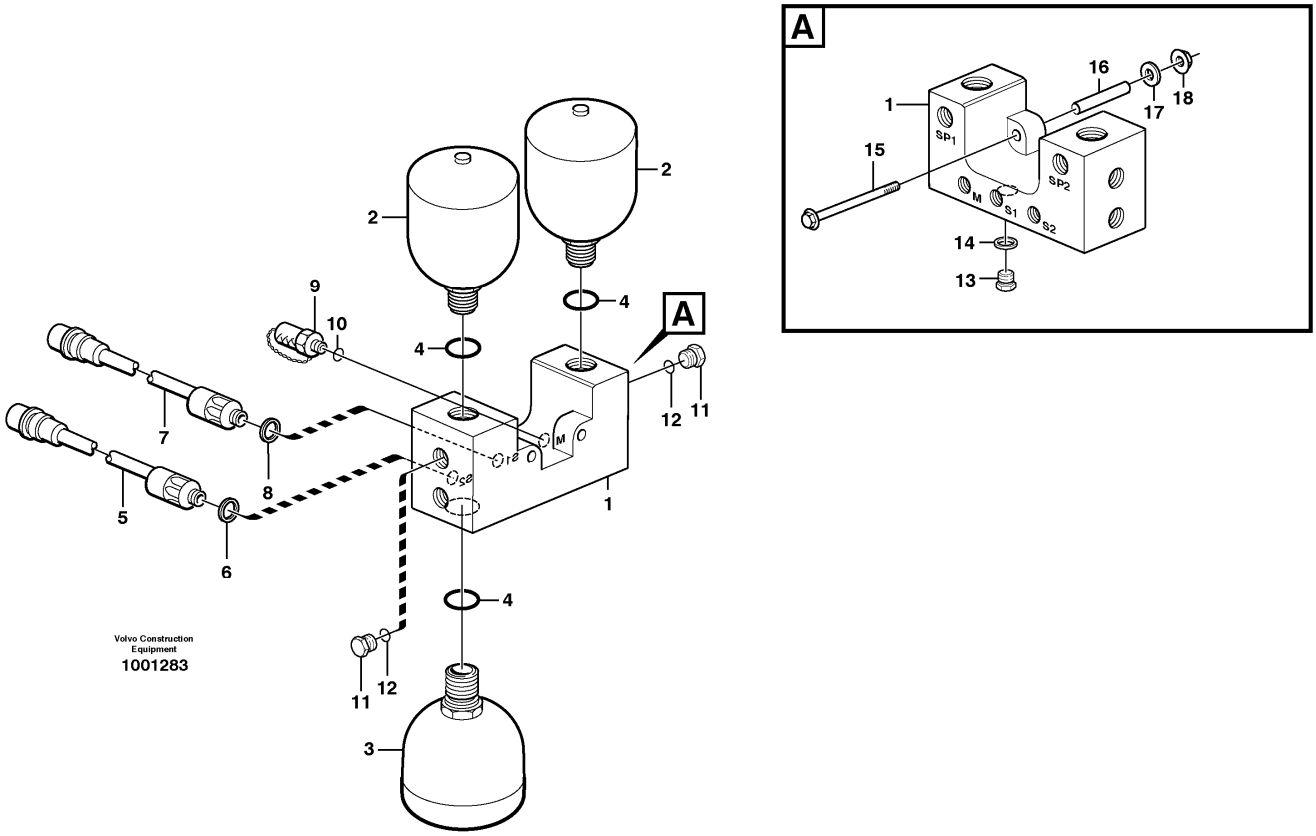

Section option	Kit	Option description
VOE33380		Volvo Wheel Loader L120E S/N 19801-, S/N 66001- USA, S/N 71401- BRA
VOE82066		Arctic kit; accumulators, brake and pilot hoses
VOE33395		Wheel Loader L120E3 IRAN

Q1-Q5	Option	Option description	
Q1 33380	VOE33380	Volvo Wheel Loader L120E S/N 19801-, S/N 66001- USA, S/N 71401- BRA	
Q2 82066	VOE82066	Arctic kit; accumulators, brake and pilot hoses	
Q3 33395 IRAN	VOE33395	Wheel Loader L120E3 IRAN	

Pos	Part	Q1	Q2	Q3	Q4	Q5	PS	Kit	Description	Option(s)	Remark
1	VOE11148622	1		1					Valve housing		
2	VOE11173693	2		2			SS		Accumulator		
	VOE15160600		2				SS		Accumulator		(VOE11173694)
3	VOE11173693	1		1			SS		Accumulator		
	VOE15160600		1				SS		Accumulator		(VOE11173694)

4	VOE13967752	3		3					O-ring		
5	VOE11170090	1							Pressure monitor		SE504
6	VOE13945653	1							Plane gasket		
7	VOE11170072	1							Pressure monitor		SE502
8	VOE13945653	1							Plane gasket		
9	VOE936444	1		1					Testing nipple		(VOE13933251)
10	VOE13960213	1							•O-ring		
11	VOE968612	2		2					Plug		
12	VOE13967752	2		2					O-ring		
13	VOE960630	1		1					Plug		
14	VOE13945653	1		1					Plane gasket		
15	VOE968237	2		2					Flange screw		
16	VOE11172458	2		2					Spacer		
17	VOE13960143	2		2					Washer		
18	VOE13971098	2		2					Flange nut		

VOLVO

Construction Equipment

PROSIS Part Information

Date:	Image id:	Catalogue:	Model:
25/08/2018	**1004484**	**20086**	**L120E**
Brand:	Serial:	Group/Section:	Title:
Volvo	**19804-, 66001-, 71401-**	**551/100**	**Parking brake**

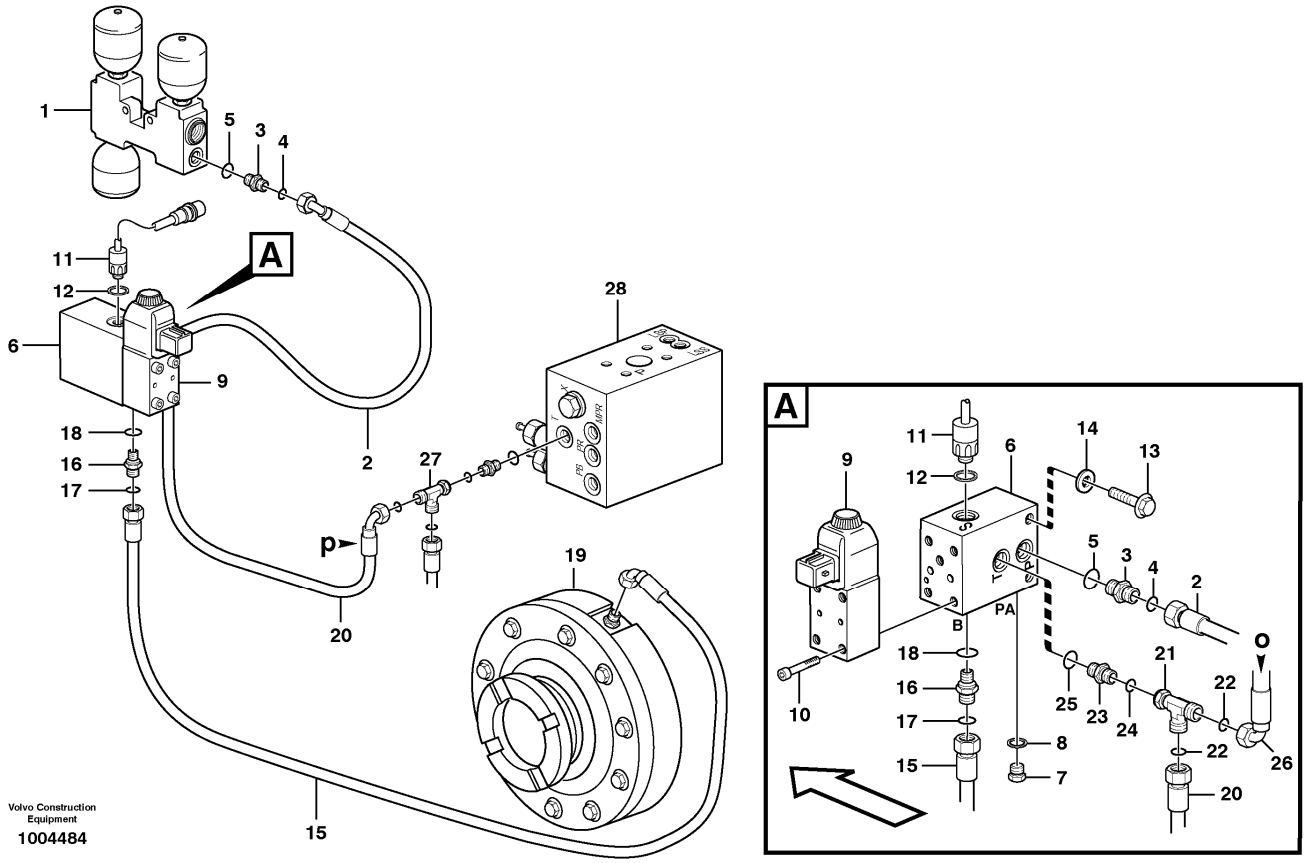

Section option	Kit	Option description
VOE33380		Volvo Wheel Loader L120E S/N 19801-, S/N 66001- USA, S/N 71401- BRA
VOE82066		Arctic kit; accumulators, brake and pilot hoses
VOE33395		Wheel Loader L120E3 IRAN

Q1-Q5	Option	Option description	
Q1 33380	VOE33380	Volvo Wheel Loader L120E S/N 19801-, S/N 66001- USA, S/N 71401- BRA	
Q2 82066	VOE82066	Arctic kit; accumulators, brake and pilot hoses	
Q3 33395 IRAN	VOE33395	Wheel Loader L120E3 IRAN	

Pos	Part	Q1	Q2	Q3	Q4	Q5	PS	Kit	Description	Option(s)	Remark
1		1							Valve housing		See ref 527/100
2	VOE936702	1		1					Hose assembly		(VOE11172904)P, L = 580 MM
	VOE11173818		1						Hose assembly		P, L = 580 MM
3	VOE14345423	1		1					Nipple		

4	VOE990737	2		2					•O-ring		
5	VOE14211856	2		2					•Sealing ring		
6	VOE11173805	1		1					Connection block		
7	VOE960630	1		1					Plug		
8	VOE13945653	1		1					Plane gasket		
9	VOE11173169	1		1			SS		Solenoid valve		MA501
	VOE11708930	1		1					•Magnet		
	VOE11993637	1		1					•Sealing kit		
10	VOE959193	4		4					Hex. socket screw		
11	VOE11170071	1							Pressure monitor		SE503
12	VOE976928	1							Gasket		
13	VOE13945444	2		2					Screw		
14	VOE11117464	2		2					Plain washer		(VOE13960141)
15	VOE11148963	1		1					Hose assembly		B, L = 1320 MM
16	VOE14345423	1		1					Nipple		
17	VOE990737	1		1					•O-ring		(VOE4880492)
18	VOE14211856	1		1					•Sealing ring		
19		1							Parking brake		See ref 434/150
20	VOE11173211	1		1					Hose assembly		T, L = 1150 MM
21	VOE13933936	1		1					T-nipple		
22	VOE990737	2		2					•O-ring		
23	VOE14345423	1		1					Nipple		
24	VOE990737	1		1					•O-ring		
25	VOE14211856	1		1					•Sealing ring		
26		1							Hose assembly		See ref 914/100
27		1							T-nipple		See ref 911/350
28		1							Valve block		See ref 912/300

VOLVO

Construction Equipment

PROSIS Part Information

Date:	Image id:	Catalogue:	Model:
25/08/2018	**EL248**	**20086**	**L120E**
Brand:	Serial:	Group/Section:	Title:
Volvo	**19804-, 66001-, 71401-**	**641/100**	**Steering column with fitting parts**

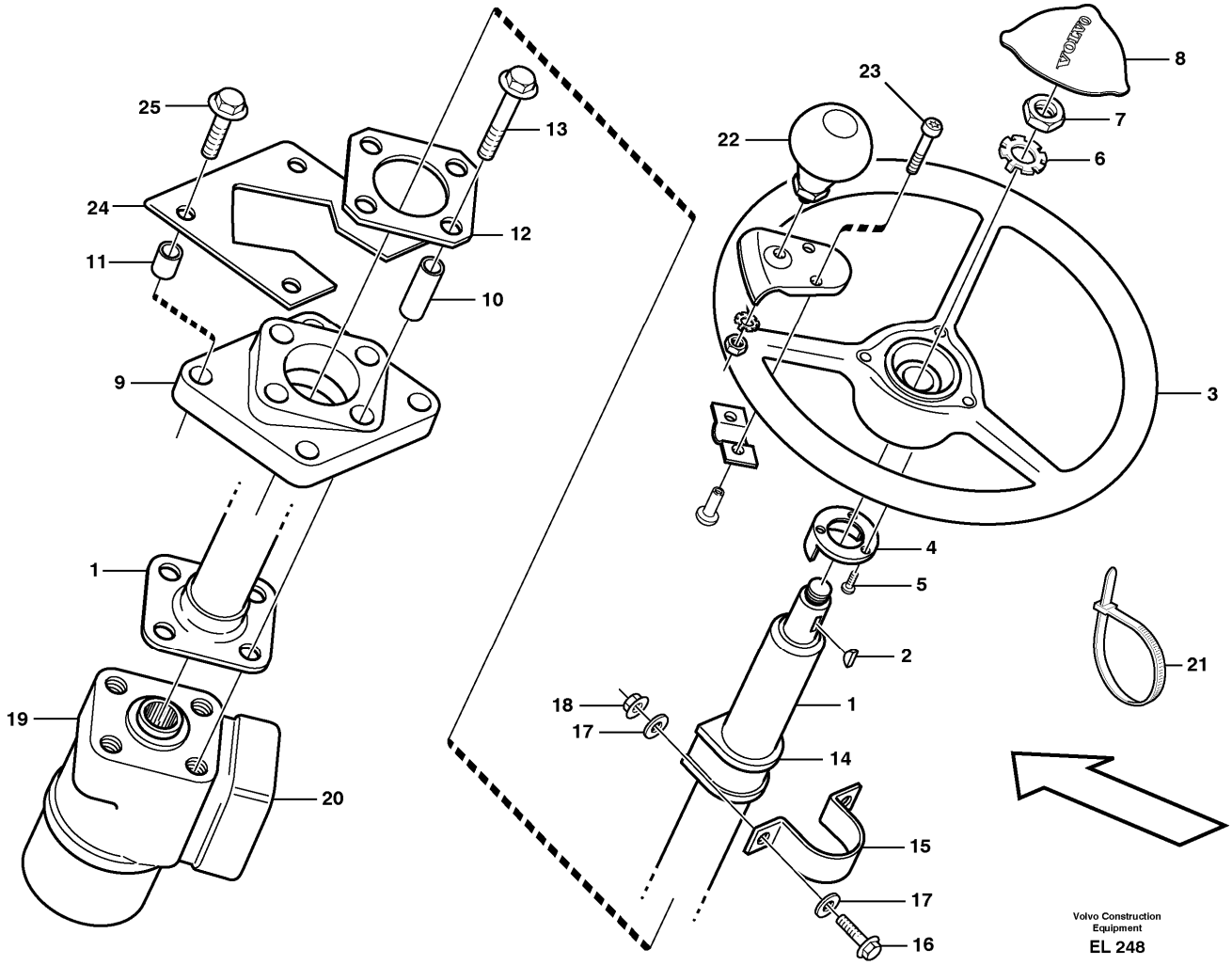

Section option	Kit	Option description
VOE33357		Cab L120E
VOE33380		Volvo Wheel Loader L120E S/N 19801-, S/N 66001- USA, S/N 71401- BRA
VOE80309		Steering knob
VOE33395		Wheel Loader L120E3 IRAN

Q1-Q5	Option	Option description	
Q1 33357	VOE33357	Cab L120E	
Q2 33380 33395 IRAN	VOE33380	Volvo Wheel Loader L120E S/N 19801-, S/N 66001- USA, S/N 71401- BRA	
Q3 80309	VOE80309	Steering knob	

Pos	Part	Q1	Q2	Q3	Q4	Q5	PS	Kit	Description	Option(s)	Remark

1		1							Steering Column	VOE33366, VOE82411	See ref 641/150
	VOE4881493	1							Steering column		
2	VOE4760805	1							•Key		
3	VOE11444189		1						Steering wheel		(VOE11104630)
4	VOE4714601		1						Ring		
5	VOE4714697		3						Screw		
6	VOE11104898		1						Lock washer		
7	VOE955822		1						Hexagon nut		
8	VOE11104690		1						Cover plate		
	VOE11104988	1							Anchorage		
9		1					NS		•Anchorage		
10	VOE930456	4							•Spacer ring		(VOE13930456)
11	VOE930449	4							•Spacer ring		(VOE13930449)
12	VOE11006554	1							Washer		
13	VOE13965185	4							Screw		
14	VOE11006711	1							Rubber bushing		
15	VOE11006712	1							Clamp		
16	VOE13946173	2							Screw		
17	VOE11117464	4							Plain washer		(VOE13960141)
18	VOE13945408	2							Nut		
19		1							Shf Cont Valve		See ref 645/400
20		1							Valve block		See ref 645/450
21	VOE4881440	REQ							Cable tie		
22	VOE11006061			1					Knob		
23	VOE969423			2					Six point socket screw		(VOE13969423)
24	VOE11006088	1							Plate		
25	VOE13965185	4							Screw		

VOLVO

Construction Equipment

PROSIS Part Information

Date:	Image id:	Catalogue:	Model:
25/08/2018	**1013082**	**20086**	**L120E**
Brand:	Serial:	Group/Section:	Title:
Volvo	**19804-, 66001-, 71401-**	**641/150**	**Adjustable steering wheel. 80322, 82411**

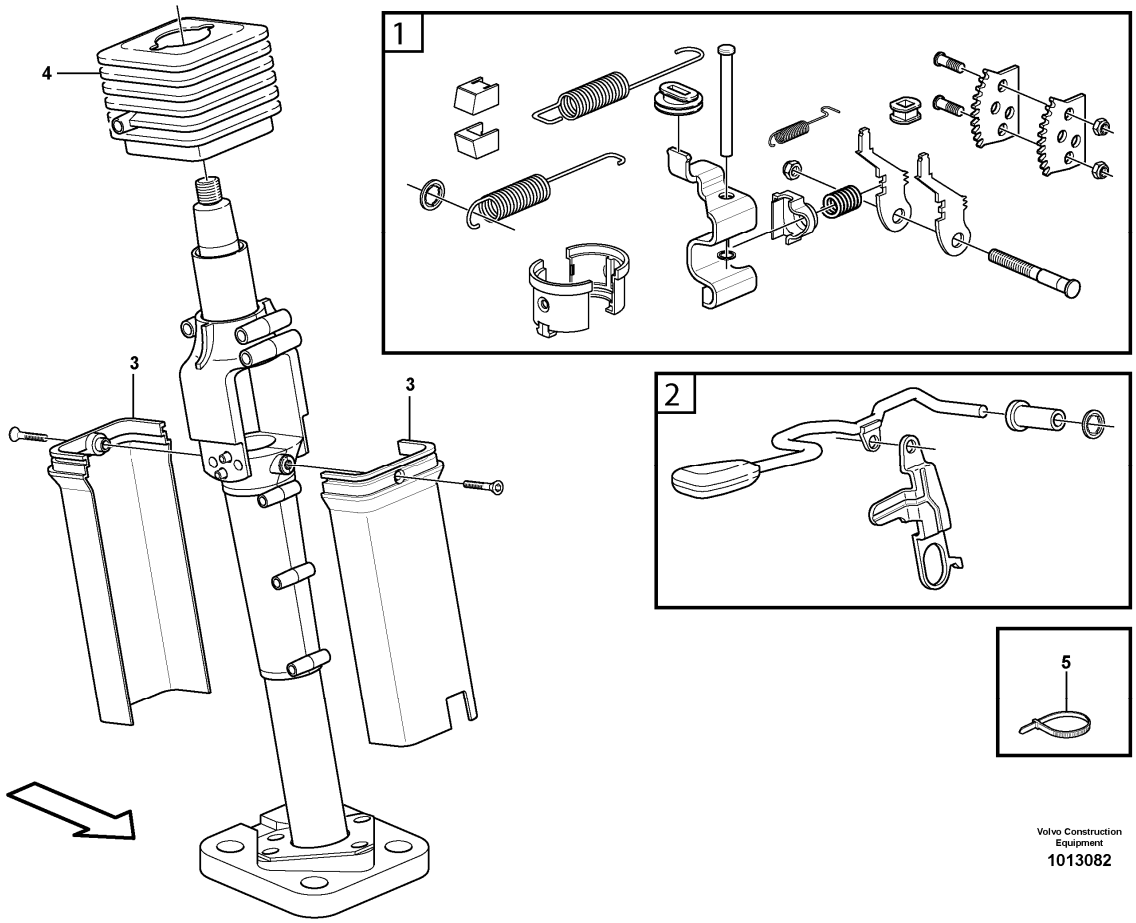

Section option	Kit	Option description
VOE33366		Cab L120E USA
VOE80322		Adjustable steering wheel
VOE82411		Cab Kit CAB L120E USA

Pos	Part	Q1	Q2	Q3	Q4	Q5	PS	Kit	Description	Option(s)	Remark
	VOE11164645	1							Steering column		
1	VOE11713580	1							•Overhaul kit		
2	VOE11713574	1							•Lever kit		
3	VOE11713571	1							•Casing		
4	VOE11713567	1							•Bellows		
5	VOE4881438	2							Cable tie		L = 120 MM
	VOE4881440	1							Cable tie		L = 365 MM

VOLVO

Construction Equipment

PROSIS Part Information

Date:	Image id:	Catalogue:	Model:
25/08/2018	**1019682**	**20086**	**L120E**
Brand:	Serial:	Group/Section:	Title:
Volvo	**19804-, 66001-, 71401-**	**645/100**	**Steering system, pressure and return lines 33380, 33395 IRAN**

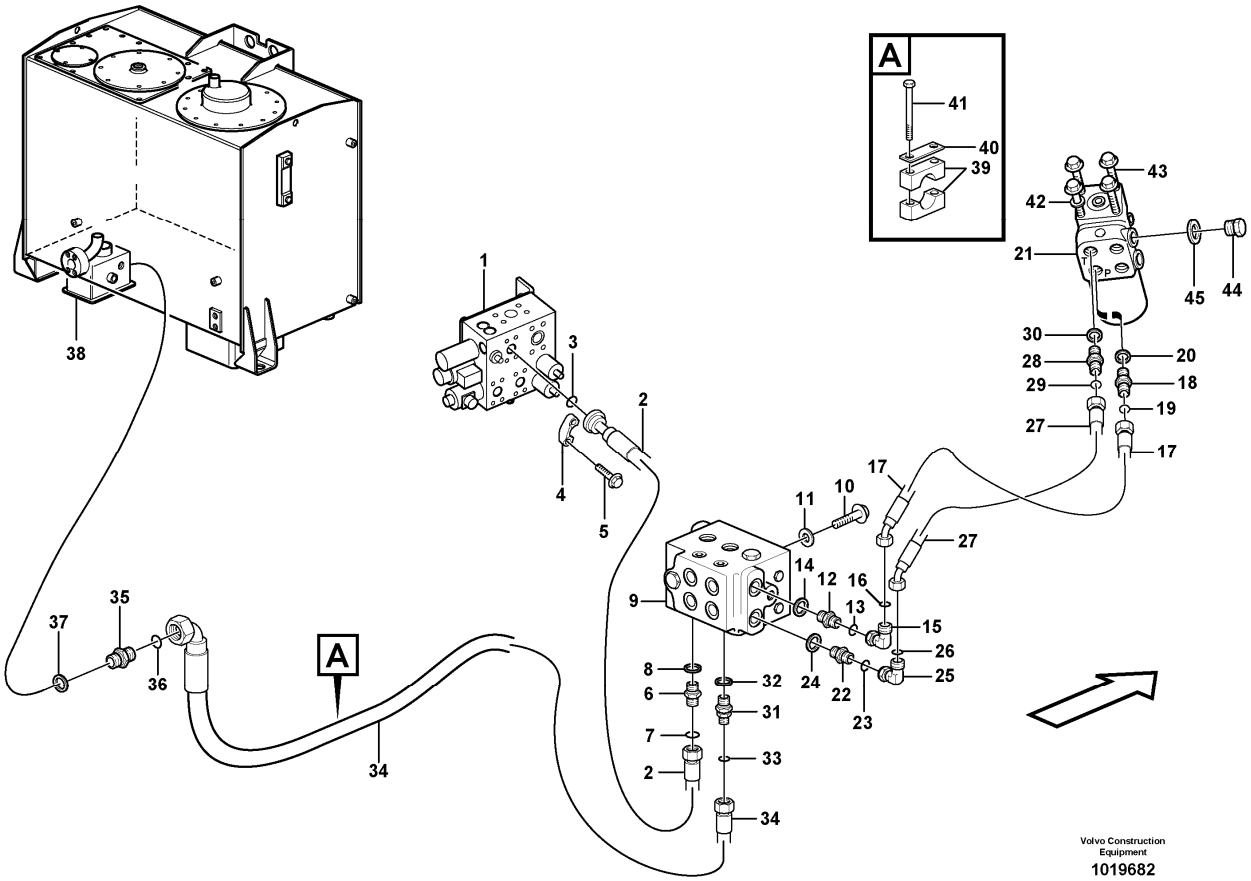

Section option	Kit	Option description
VOE33380		Volvo Wheel Loader L120E S/N 19801-, S/N 66001- USA, S/N 71401- BRA
VOE33395		Wheel Loader L120E3 IRAN

Pos	Part	Q1	Q2	Q3	Q4	Q5	PS	Kit	Description	Option(s)	Remark
1		1							Valve block		See ref 912/300
2	VOE11172903	1							Hose assembly		L = 670 MM
3	VOE990742	1							O-ring		
4	VOE11015454	2							Flange half		PS
5	VOE946472	4							Flange screw		
6	VOE13933875	1							Nipple		P
7	VOE990740	1							•O-ring		(VOE981289)
8	VOE14211859	1							•Sealing ring		
9	VOE11027552	1					SS		Valve		See ref 645/500
10	VOE946329	3							Flange screw		

11	VOE13960143	3							Washer		
12	VOE13933881	1							Nipple		P
13	VOE990739	1							•O-ring		(VOE4880663)
14	VOE14211859	1							•Sealing ring		
15	VOE935423	1							Elbow nipple		
16	VOE990739	1							•O-ring		(VOE4880663)
17	VOE11411728	1							Hose assembly		L = 650 MM
18	VOE13933914	1							Nipple		P, S/N - 20366
	VOE935094	1							Nipple		S/N 20367 -
19	VOE990739	1							•O-ring		(VOE4880663)
20	VOE14211858	1							•Sealing ring		S/N - 20366
	VOE993321	1							•O-ring		(VOE932040)
21		1							Valve block		See ref 645/450
22	VOE13933917	1							Nipple		T
23	VOE990738	1							•O-ring		(VOE4880493)
24	VOE14211859	1							•Sealing ring		
25	VOE13933872	1							Elbow nipple		
26	VOE990738	1							•O-ring		(VOE4880493)
27	VOE11411729	1							Hose assembly		L = 620 MM
28	VOE13933871	1							Nipple		T, S/N - 20366
	VOE13933923	1							Nipple		S/N 20367 -
29	VOE990738	1							•O-ring		(VOE4880493)
30	VOE14211858	1							•Sealing ring		S/N - 20366
	VOE993321	1							•O-ring		(VOE932040)S/N 20367 -
31	VOE11172800	1							Non-return valve		T
32	VOE14211859	1							•Sealing ring		
33	VOE990739	1							•O-ring		(VOE4880663)
34	VOE11147951	1							Hose assembly		L = 1700 MM
35	VOE935037	1							Nipple		
36	VOE990739	1							•O-ring		(VOE4880663)
37	VOE14211864	1							•Sealing ring		
38		1							Hydr fluid tank		See ref 911/100
39	VOE4785462	1							Clamp		
40	VOE11003048	1							Cover plate		
41	VOE13965176	2							Screw		
42	VOE13960143	4							Washer		
43	VOE984758	4							Flange screw		(VOE13965188)
44	VOE929359	2							Plug		
45	VOE14013069	2							Sealing washer		

VOLVO

Construction Equipment

PROSIS Part Information

Date:	Image id:	Catalogue:	Model:
25/08/2018	**1019695**	**20086**	**L120E**
Brand:	Serial:	Group/Section:	Title:
Volvo	**19804-, 66001-, 71401-**	**645/150**	**Steering system**

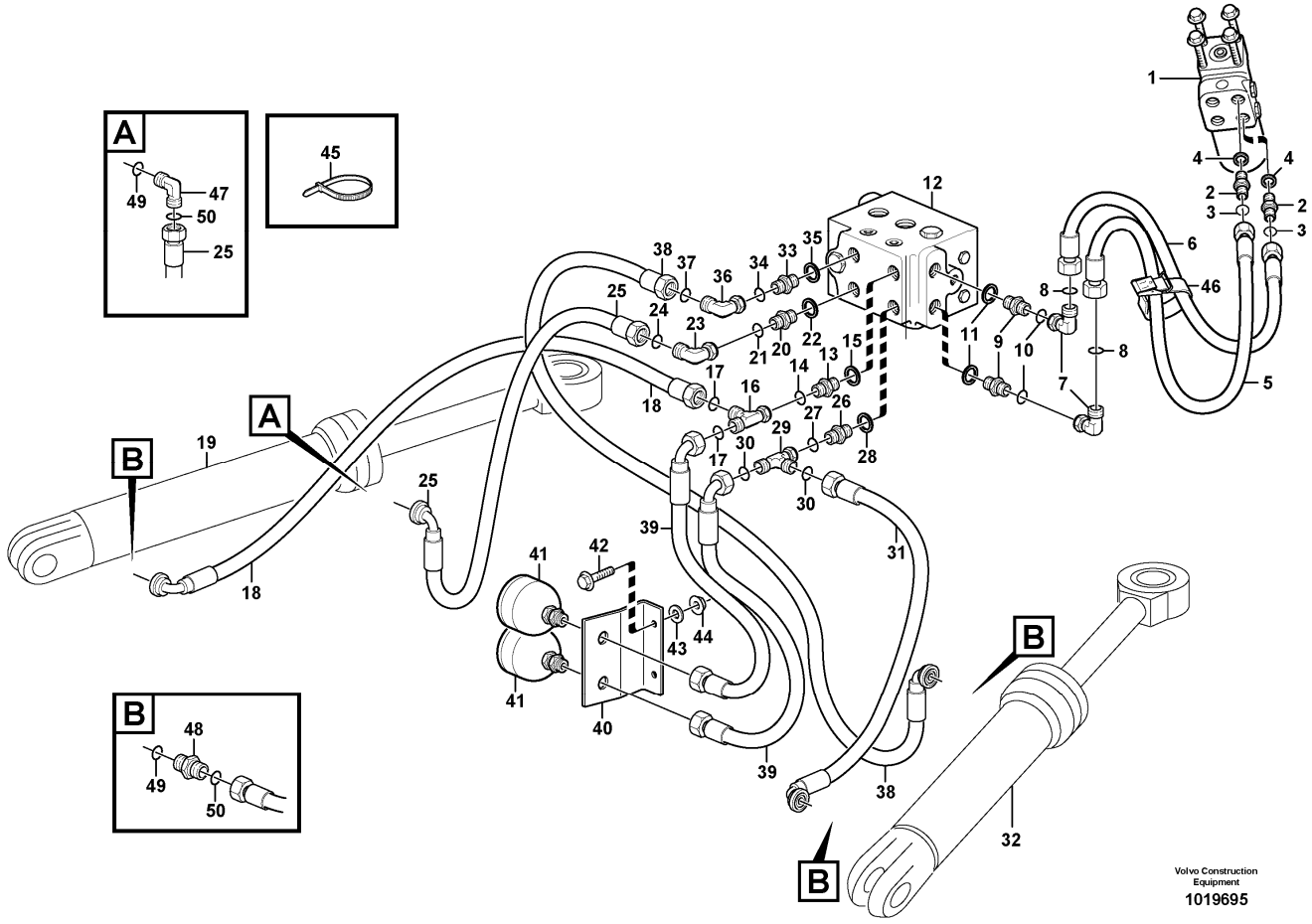

Section option	Kit	Option description
VOE33380		Volvo Wheel Loader L120E S/N 19801-, S/N 66001- USA, S/N 71401- BRA
VOE33395		Wheel Loader L120E3 IRAN

Q1-Q5	Option	Option description	
Q1 33380	VOE33380	Volvo Wheel Loader L120E S/N 19801-, S/N 66001- USA, S/N 71401- BRA	
Q2 33395 IRAN	VOE33395	Wheel Loader L120E3 IRAN	

Pos	Part	Q1	Q2	Q3	Q4	Q5	PS	Kit	Description	Option(s)	Remark
1		1							Steering valve		
2	VOE13933871	2							Nipple		R, L, S/N - 20366
	VOE13933923	2	1						Nipple		S/N 20367 -
3	VOE990738	4	1						•O-ring		(VOE4880493)
4	VOE14211858	4							•Sealing ring		S/N - 20366

	VOE993321	4	1						•O-ring		(VOE932040)S/N 20367 -
5	VOE11147953	1	1						Hose assembly		L = 840 MM
6	VOE11147952	1	1						Hose assembly		L = 770 MM
7	VOE13933872	2	2						Elbow nipple		
8	VOE990738	2	2						•O-ring		(VOE4880493)
9	VOE13933871	2	2						Nipple		R1, L1
10	VOE990738	2	2						•O-ring		(VOE4880493)
11	VOE14211858	2	2						•Sealing ring		
12		1	1						Valve		See ref 645/500
13	VOE13933871	1	1						Nipple		R2
14	VOE990738	1	1						•O-ring		(VOE4880493)
15	VOE14211858	1	1						•Sealing ring		
16	VOE13933878	1	1						T-nipple		
17	VOE990738	2	2						•O-ring		(VOE4880493)
18	VOE11410981	1							Hose assembly		L = 610
18	VOE15056797		1						Hose assembly		(VOE11410984)L = 730 MM
19		1							Hydraulic cylinder		
20	VOE13933871	1							Nipple		L3
21	VOE990738	1							•O-ring		(VOE4880493)
22	VOE14211858	1							•Sealing ring		
23	VOE13933872	1							Elbow nipple		
24	VOE990738	1							•O-ring		(VOE4880493)
25	VOE11411495	1					SS		Hose assembly		L = 510 MM
26	VOE13933871	1	1						Nipple		L2
27	VOE990738	1	1						•O-ring		(VOE4880493)
28	VOE14211858	1	1						•Sealing ring		
29	VOE13933878	1	1						T-nipple		
30	VOE990738	2	2						•O-ring		(VOE4880493)
31	VOE11173220	1							Hose assembly		L = 600 MM
31	VOE15056798		1						Hose assembly		(VOE11410986)L = 780 MM
32		1							Hydraulic cylinder		
33	VOE13933871	1	1						Nipple		R3
34	VOE990738	1	1						•O-ring		(VOE4880493)
35	VOE14211858	1	1						•Sealing ring		
36	VOE13933872	1	1						Elbow nipple		
37	VOE990738	1	1						•O-ring		(VOE4880493)
38	VOE15056799	1	1						Hose assembly		(VOE11411566)L = 510 MM
39	VOE15056800	2	2						Hose assembly		(VOE11172494)L = 560 MM
40		1	1				NS		Bracket		
41	VOE11172059	2	2						Accumulator		
42	VOE946671	2	2						Flange screw		
43	VOE11117464	2	2						Plain washer		(VOE13960141)
44	VOE948645	2	2						Flange lock nut		

45	VOE4881440	REQ	REQ						Cable tie		
46	VOE11104606	1	1						Retaining strap		
47	VOE13933868	1	1						Elbow nipple		
48	VOE13933923	3	3						Nipple		
49	VOE993321	REQ	REQ						•O-ring		(VOE932040)
50	VOE990738	REQ	REQ						•O-ring		(VOE4880493)

VOLVO

Construction Equipment

PROSIS Part Information

Date:	Image id:	Catalogue:	Model:
25/08/2018	**1007816**	**20086**	**L120E**
Brand:	Serial:	Group/Section:	Title:
Volvo	**19804-, 66001-, 71401-**	**645/200**	**Steering system 33380, 33395 IRAN**

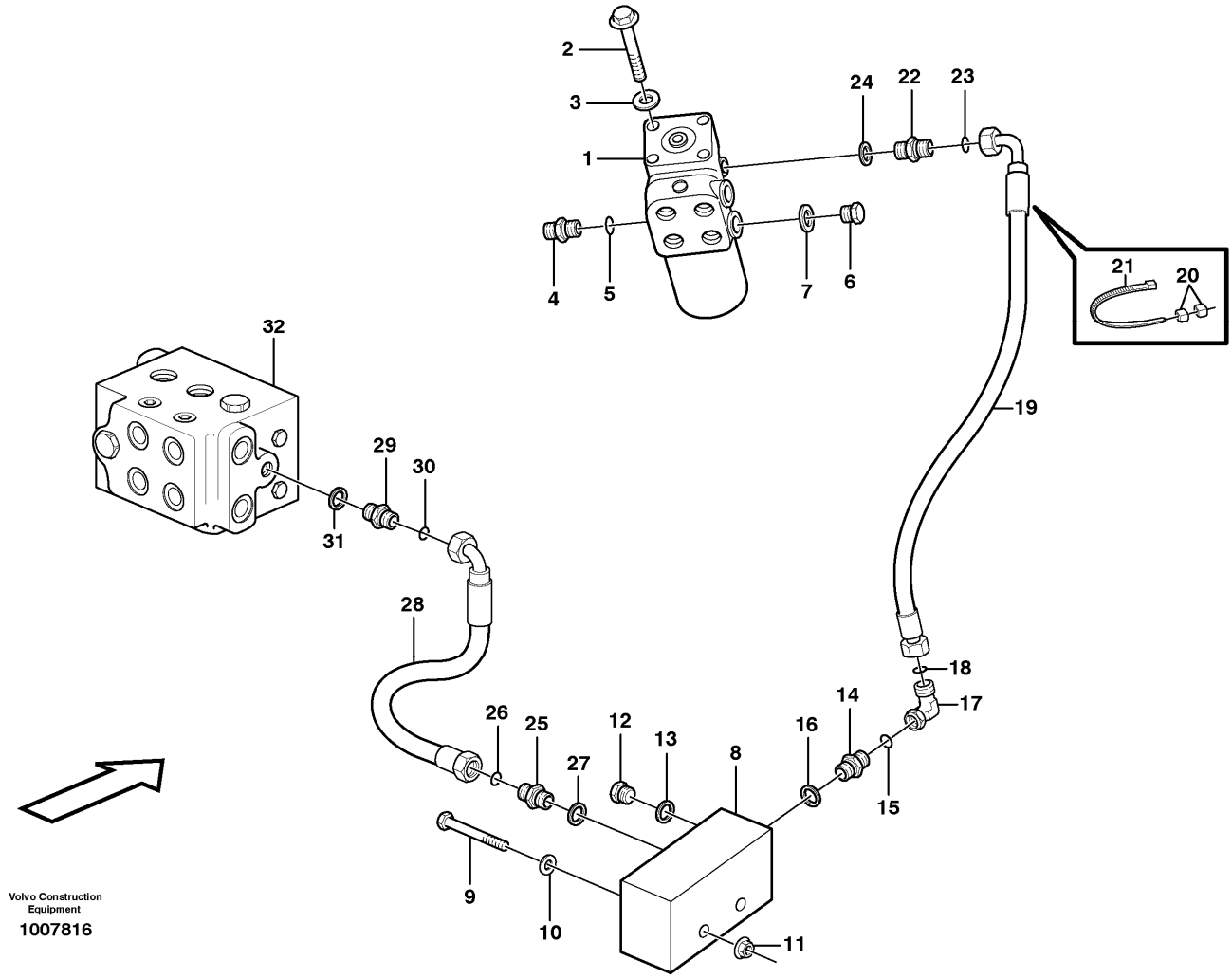

Section option	Kit	Option description
VOE33380		Volvo Wheel Loader L120E S/N 19801-, S/N 66001- USA, S/N 71401- BRA
VOE33395		Wheel Loader L120E3 IRAN

Pos	Part	Q1	Q2	Q3	Q4	Q5	PS	Kit	Description	Option(s)	Remark
1		1							Steering valve		See ref 645/400
		1							Valve block		See ref 645/450
2	VOE984758	4							Flange screw		(VOE13965188)
3	VOE13960143	4							Washer		
4	VOE936439	1							Testing nipple		S/N - 20366
	VOE936445	1							Testing nipple		S/N 20367 -
5	VOE955990	1							•O-ring		DELETED

6	VOE929359	2							Plug		S/N - 20366
	VOE984647	2							Plug		S/N 20367 -
7	VOE14013069	2							Sealing washer		S/N - 20366
8	VOE11108917	1							Connecting block		
9	VOE13965180	2							Screw		
10	VOE11117464	2							Plain washer		(VOE13960141)
11	VOE948645	2							Flange lock nut		
12	VOE960630	1							Plug		
13	VOE13945653	1							Plane gasket		
14	VOE935548	1							Nipple		LS
15	VOE990736	1							•O-ring		
16	VOE14211856	1							•Sealing ring		
17	VOE13933905	1							Elbow nipple		
18	VOE990736	1							•O-ring		
19	VOE11163086	1							Hose assembly		L = 1650 MM
20	VOE4881453	2							Marking sleeve		VIOL
	VOE4881456	2							Marking sleeve		OR
21	VOE4881438	2							Cable tie		
22	VOE13933883	1							Nipple		LS,S/N - 20366
	VOE935082	1							Nipple		S/N 20367 -
23	VOE990736	1							•O-ring		
24	VOE14211856	1							•Sealing ring		S/N - 20366
	VOE993319	1							•O-ring		(VOE932037)S/N 20367 -
25	VOE935548	1							Nipple		LS
26	VOE990736	1							•O-ring		
27	VOE14211856	1							•Sealing ring		
28	VOE11163074	1							Hose assembly		L = 850 MM
29	VOE935548	1							Nipple		
30	VOE990736	1							•O-ring		
31	VOE14211856	1							•Sealing ring		
32		1							Valve		See ref 645/100

VOLVO

Construction Equipment

PROSIS Part Information

Date:	Image id:	Catalogue:	Model:
25/08/2018	**1019618**	**20086**	**L120E**
Brand:	Serial:	Group/Section:	Title:
Volvo	**19804-, 66001-, 71401-**	**645/250**	**Hydraulic cylinder with fitting parts 33380, 33395 IRAN**

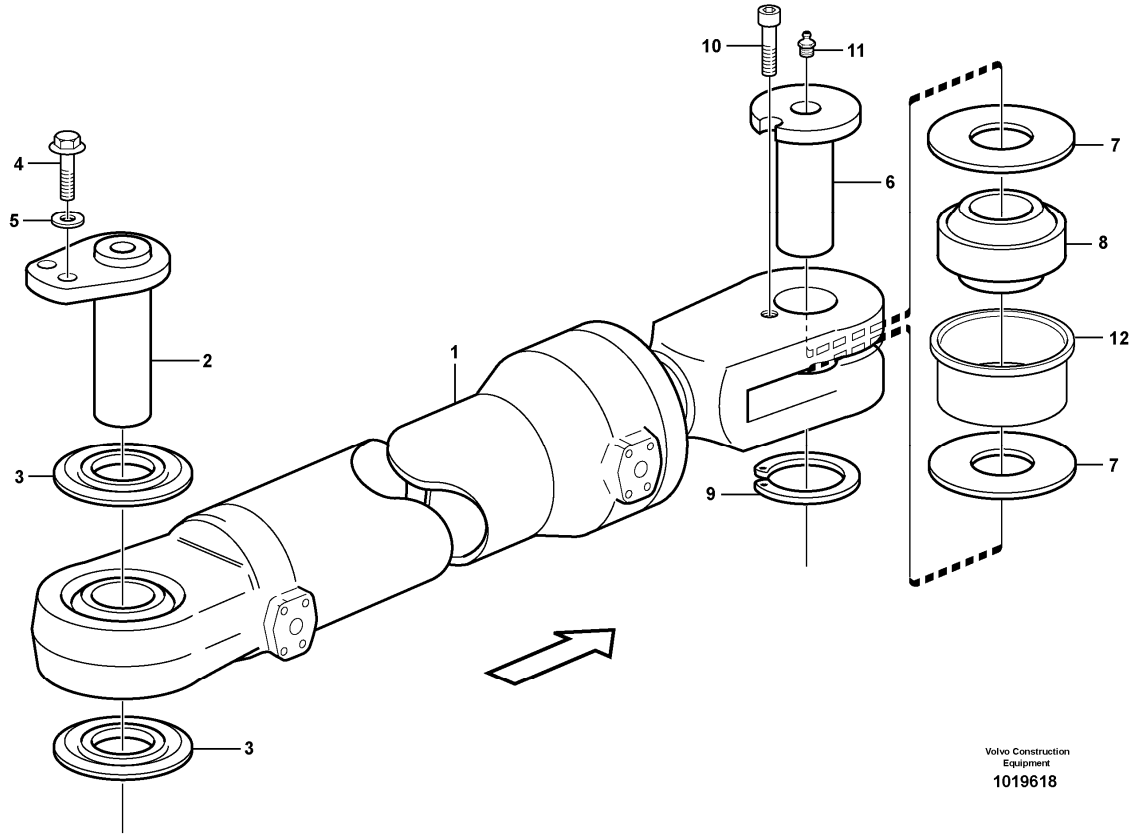

Section option	Kit	Option description
VOE33380		Volvo Wheel Loader L120E S/N 19801-, S/N 66001- USA, S/N 71401- BRA
VOE33395		Wheel Loader L120E3 IRAN

Pos	Part	Q1	Q2	Q3	Q4	Q5	PS	Kit	Description	Option(s)	Remark
1		2							Hydraulic cylinder		See ref 645/300
2	VOE11176716	2							Pin		
3	VOE4782479	4							Sealing ring		
4	VOE946671	4							Flange screw		
5	VOE11117464	4							Plain washer		(VOE13960141)
6	VOE11020094	2					SS		Pin		
7	VOE11020098	4							Washer		
8	VOE184428	2							Spherical plain bearing		
9	VOE13914468	2							Snap ring		

10	VOE13941793	2							Screw		
11	VOE914167	2							Lubricating nipple		
12	VOE11176539	2							Bushing		

VOLVO

Construction Equipment

PROSIS Part Information

Date:	Image id:	Catalogue:	Model:
25/08/2018	**1018646**	**20086**	**L120E**
Brand:	Serial:	Group/Section:	Title:
Volvo	**19804-, 66001-, 71401-**	**645/300**	**Hydraulic cylinder 33380, 33395 IRAN**

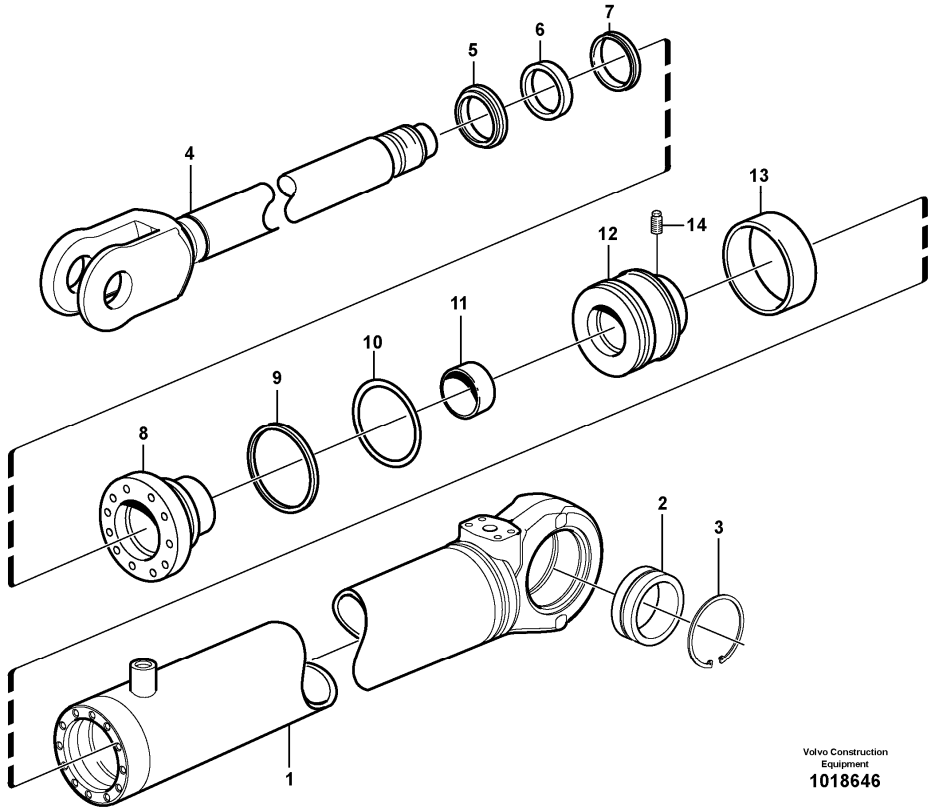

Section option	Kit	Option description
VOE33380		Volvo Wheel Loader L120E S/N 19801-, S/N 66001- USA, S/N 71401- BRA
VOE33395		Wheel Loader L120E3 IRAN

Pos	Part	Q1	Q2	Q3	Q4	Q5	PS	Kit	Description	Option(s)	Remark
	VOE17225202	1							Hydraulic cylinder		(VOE11107790), REMAN VOE9017225202, VOE9011107790
1	VOE11107832	1					OP		•Cylinder tube		
2	VOE184062	1					SS		•Spherical plain bearing		
3	VOE914538	2							•Retaining ring		
4	VOE17318286	1							•Piston rod		(VOE11107791)
5	VOE17457872	1						K	•Scraper ring		
6	VOE4784045	1						K	•Piston rod seal		

7	VOE11107348	1						K	•Piston rod seal		
8	VOE11107360	1							•Piston rod guide		
9	VOE4787062	1						K	•Back-up ring		
10	VOE925094	1						K	•O-ring		
11	VOE11088052	2							•Bushing		
12	VOE4782406	1					OP		•Piston		
13	VOE4833023	1						K	•Seal		
14	VOE4782718	1							•Spring pin		
	VOE11709817	1							Sealing kit		(VOE11709503)

VOLVO

Construction Equipment

PROSIS Part Information

Date:	Image id:	Catalogue:	Model:
25/08/2018	**1004488**	**20086**	**L120E**
Brand:	Serial:	Group/Section:	Title:
Volvo	**19804-, 66001-, 71401-**	**645/400**	**Steering unit S/N - 20366, - 54000, - 71443**

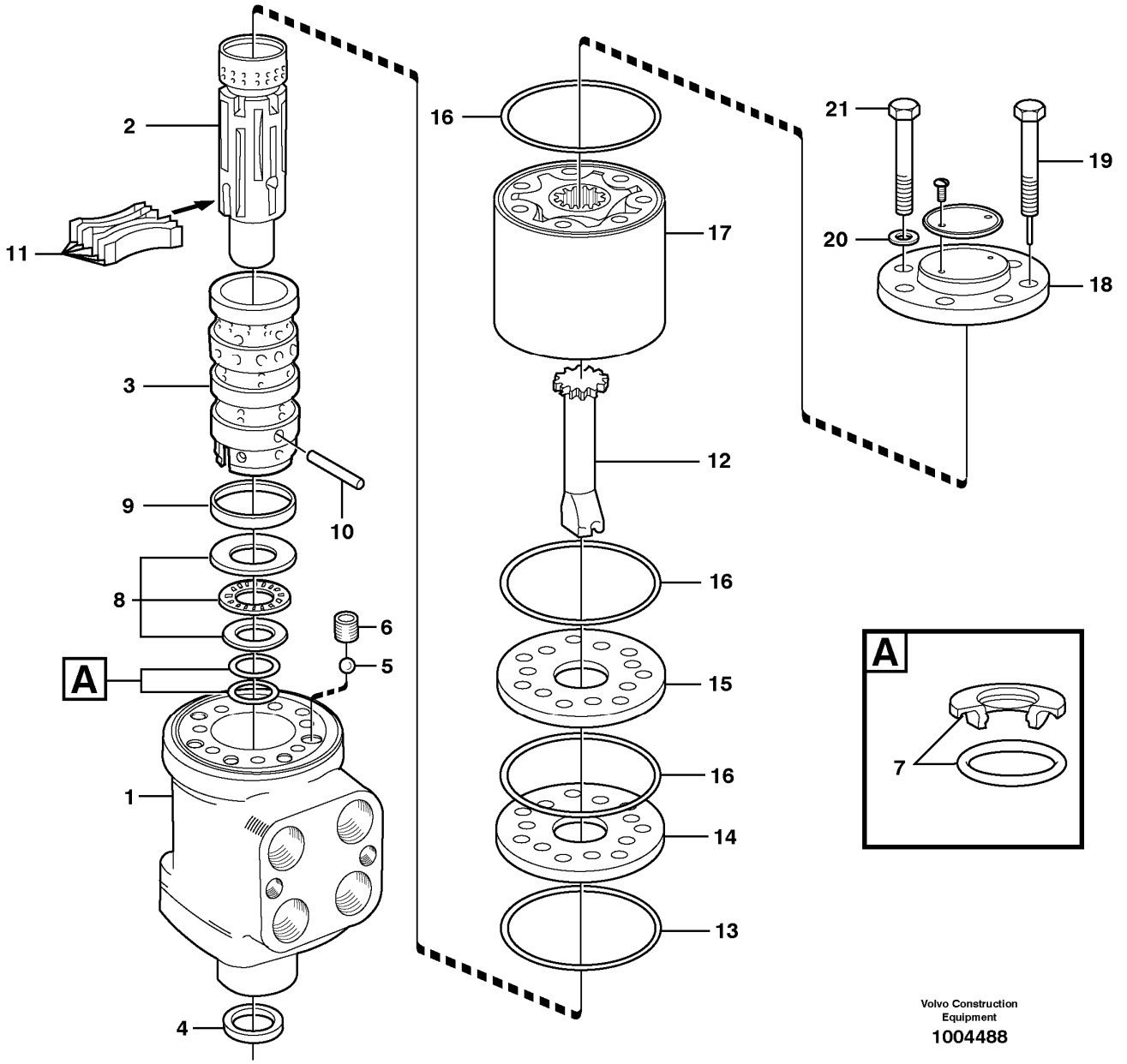

Pos	Part	Q1	Q2	Q3	Q4	Q5	PS	Kit	Description	Option(s)	Remark
	VOE11700244	1							Control valve		
1		1					NS		•Housing		
2		1					NS		•Slide		
3		1					NS		•Sleeve		
4	VOE6639845	1						K	•Seal		
5	VOE184645	1							•Ball		

6	VOE595380	1							•Bushing		
7	VOE11701273	1						K	•Sealing ring		
8	VOE6211922	1							•Thrust bearing		
9	VOE6213305	1							•Ring		
10	VOE595377	1							•Pin		
11	VOE11996362	1							•Spring kit		
12	VOE11996374	1							•Shaft		
13	VOE595381	1						K	•O-ring		
	VOE11988207	1							•Plate		
14	VOE11993454	1					SS		••Plate		
15	VOE11994423	1							••Plate		
16	VOE595382	3						K	•O-ring		
17	VOE11999242	1							•Rotor kit		
18	VOE595383	1							•Cover		
19	VOE11993451	1							•Screw		
20	VOE6625755	7						K	•Washer		
21	VOE11993452	6							•Screw		
	VOE11701270	1							•Sealing kit		

VOLVO

Construction Equipment

PROSIS Part Information

Date:	Image id:	Catalogue:	Model:
25/08/2018	**1026020**	**20086**	**L120E**
Brand:	Serial:	Group/Section:	Title:
Volvo	**19804-, 66001-, 71401-**	**645/425**	**Steering unit S/N 20367 -, 54001 -, 71444 -**

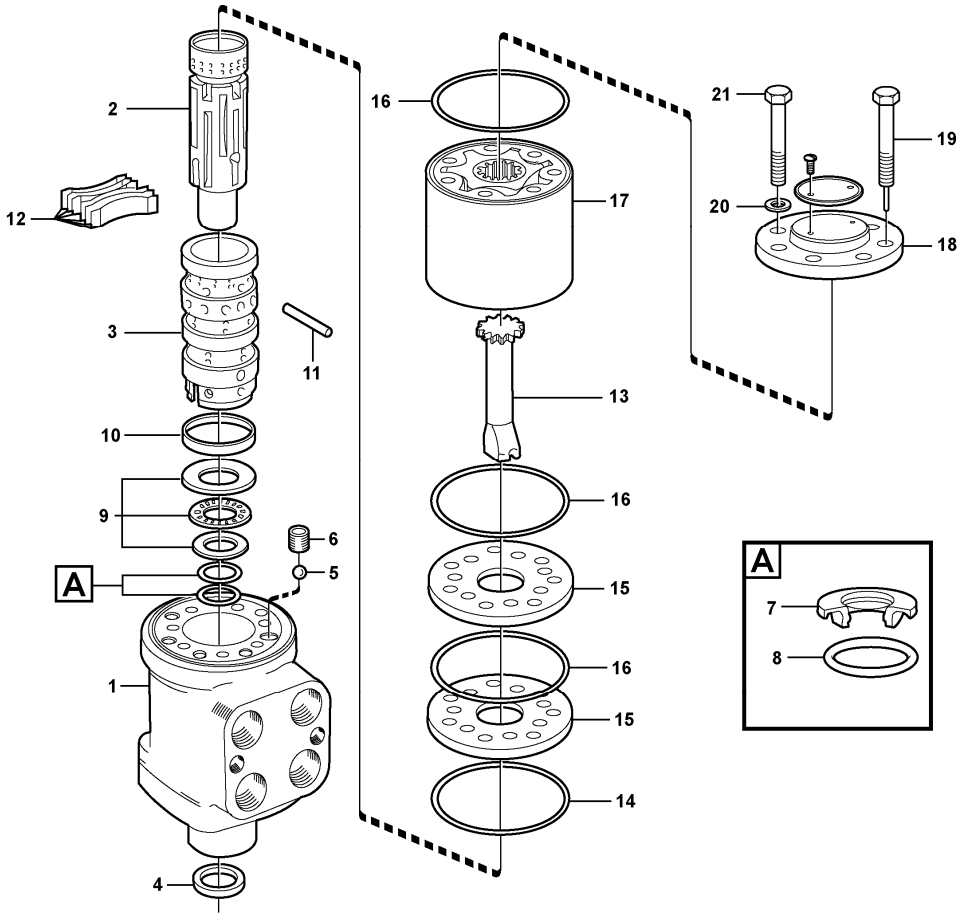

Section option	Kit	Option description
VOE33380		Volvo Wheel Loader L120E S/N 19801-, S/N 66001- USA, S/N 71401- BRA
VOE33395		Wheel Loader L120E3 IRAN

Pos	Part	Q1	Q2	Q3	Q4	Q5	PS	Kit	Description	Option(s)	Remark
	VOE11716762	1							Control valve	VOE33395	IRAN
1		1					NS		•Housing		
2		1					NS		•Slide		
3		1					NS		•Sleeve		
4	VOE6639845	1						K	•Seal		
5	VOE184645	1							•Ball		
6	VOE595380	1							•Bushing		
7	VOE11701273	1						K	•Sealing ring		
8	VOE11701272	1						K	•O-ring		
9	VOE6211922	1							•Thrust bearing		

10	VOE6213305	1							•Ring		
11	VOE595377	1							•Pin		
12	VOE11996362	1							•Spring kit		
13	VOE11996374	1							•Shaft		
14	VOE595381	1						K	•O-ring		
15	VOE11988207	1							•Plate		See footnote 2355)
16	VOE595382	3						K	•O-ring		
17	VOE11999242	1							•Rotor kit		
18	VOE595383	1							•Cover		
19	VOE11993451	1							•Screw		
20	VOE6625755	7						K	•Washer		
21	VOE11993452	6							•Screw		
	VOE11701270	1							•Sealing kit		

2355) SE- Includes upper and lower distribution plate

VOLVO

Construction Equipment

PROSIS Part Information

Date:	Image id:	Catalogue:	Model:
25/08/2018	**EF246**	**20086**	**L120E**
Brand:	Serial:	Group/Section:	Title:
Volvo	**19804-, 66001-, 71401-**	**645/450**	**Valve body**

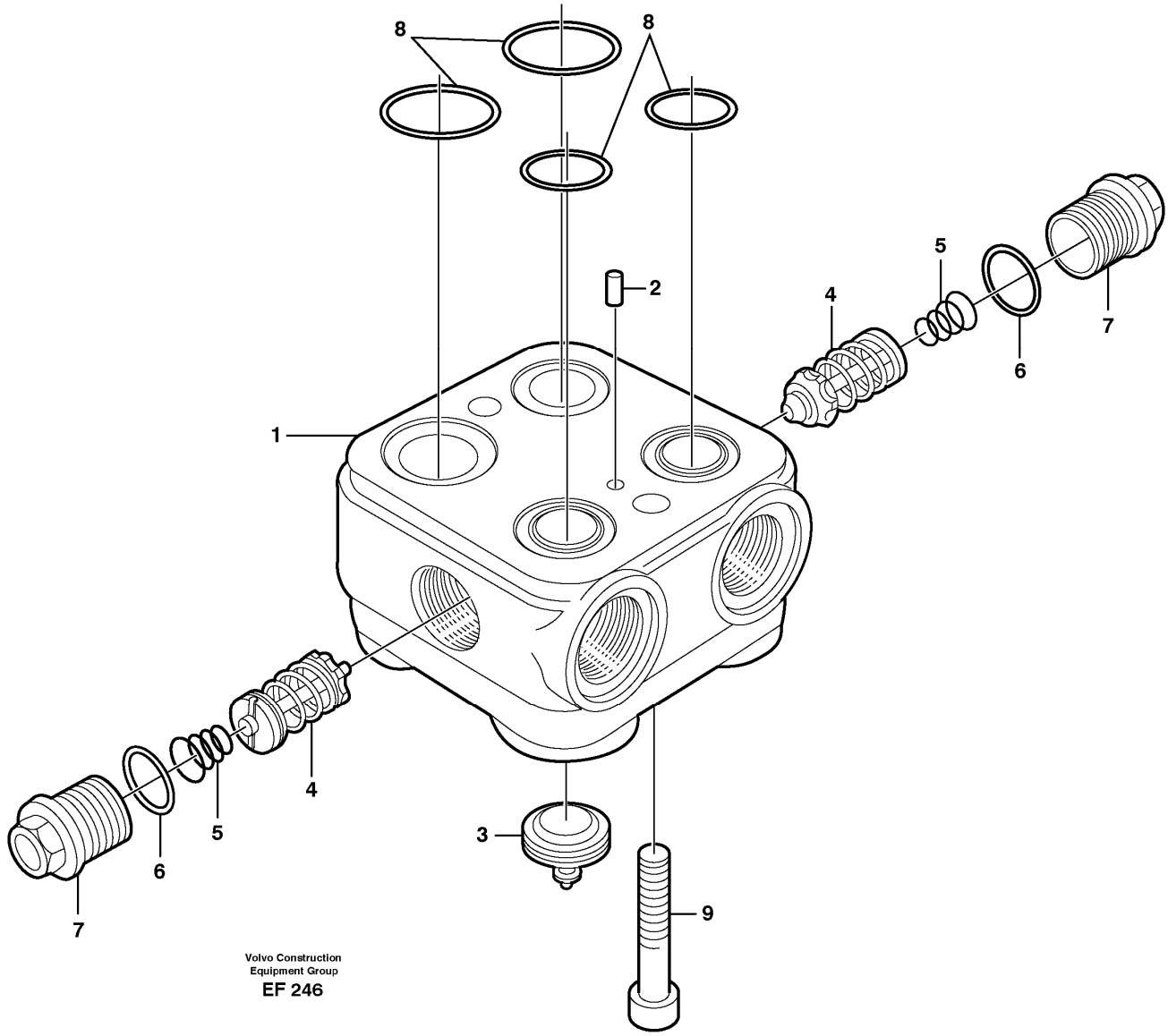

Section option	Kit	Option description
VOE33395		Wheel Loader L120E3 IRAN

Q1-Q5	Option	Option description	
Q1 S/N - 20366			
Q2 S/N 20367 -			

Pos	Part	Q1	Q2	Q3	Q4	Q5	PS	Kit	Description	Option(s)	Remark
	VOE11701278	1							Valve body		

	VOE11716763		1						Valve Body	VOE33395	IRAN
1		1					NS		•Housing		
2		1					NS		•Pin		
3		1					NS		•Valve		
4	VOE11712500	2							•Shock Valve		
5	VOE11998573	2							•Spring		
6	VOE11700195	2							•O-ring		
7	VOE11700780	2							•Plug		
8	VOE11994428	1	1						•O-ring kit		
9	VOE11994509	2							•Screw		

VOLVO

Construction Equipment

PROSIS Part Information

Date:	Image id:	Catalogue:	Model:
25/08/2018	**1012029**	**20086**	**L120E**
Brand:	Serial:	Group/Section:	Title:
Volvo	**19804-, 66001-, 71401-**	**645/500**	**Shift valve 33380, 33395**

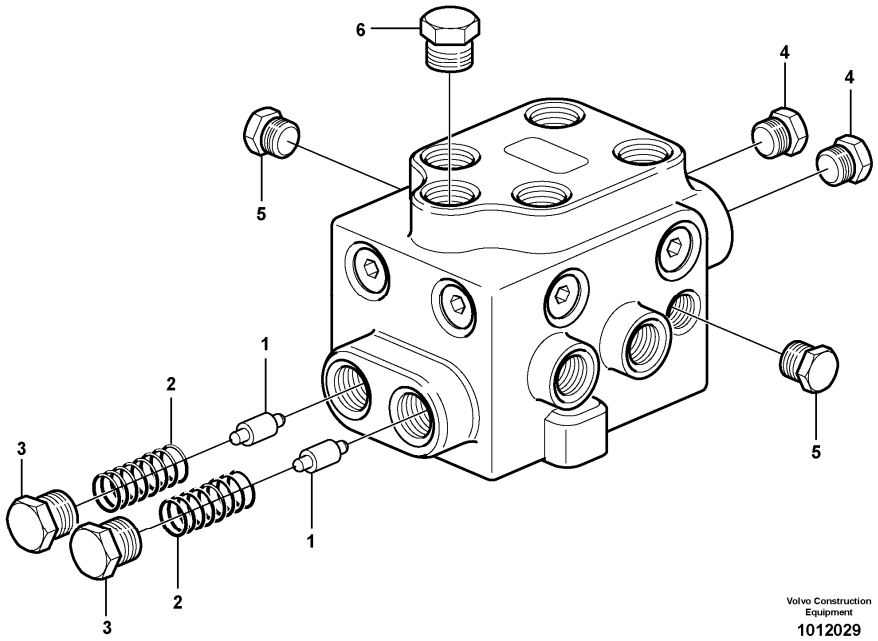

Section option	Kit	Option description
VOE33380		Volvo Wheel Loader L120E S/N 19801-, S/N 66001- USA, S/N 71401- BRA
VOE33395		Wheel Loader L120E3 IRAN

Pos	Part	Q1	Q2	Q3	Q4	Q5	PS	Kit	Description	Option(s)	Remark
	VOE11027552	1					SS		Valve		SER NO 16523 - SER NO 64186 - USA SER NO 70701 - BRAZIL
1	VOE11024922	2					SS		•Slide		
2	VOE11025648	2							•Compression spring		
3	VOE960630	2							•Plug		
	VOE976929	2							•Gasket		
4	VOE942352	2							•Plug		
5	VOE13960632	2							•Plug		
	VOE976931	2							•Gasket		

6	VOE941373	1							•Plug		
	VOE982416	1							•Gasket		

VOLVO

Construction Equipment

PROSIS Part Information

Date:	Image id:	Catalogue:	Model:
25/08/2018	**1022042**	**20086**	**L120E**
Brand:	Serial:	Group/Section:	Title:
Volvo	**19804-, 66001-, 71401-**	**647/100**	**Secondary steering system. 83178**

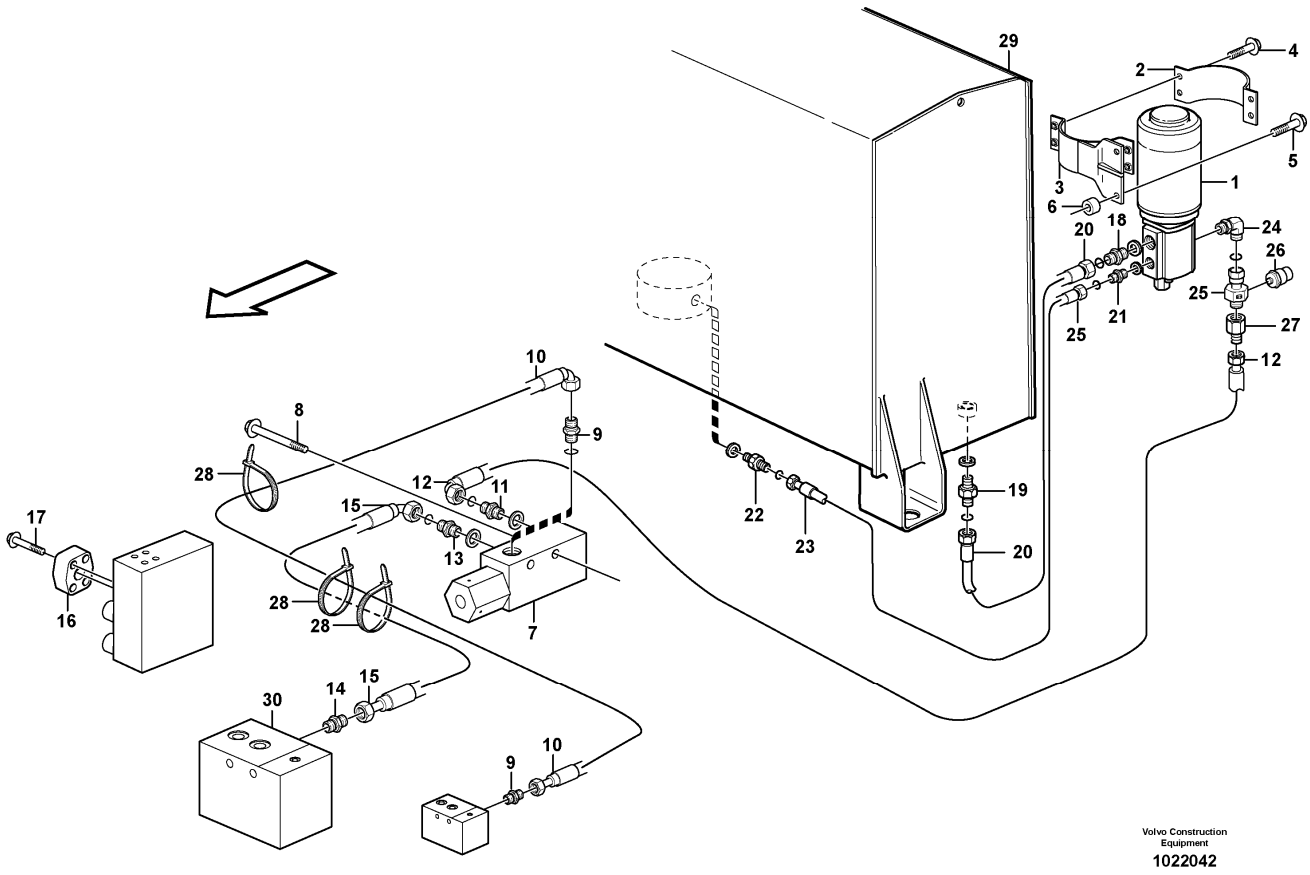

Section option	Kit	Option description
VOE83178		Secondary steering

Pos	Part	Q1	Q2	Q3	Q4	Q5	PS	Kit	Description	Option(s)	Remark
1		1							Pump unit		See ref 647/150
2	VOE11173983	1							Clamp		
3	VOE11173867	1							Attachment		
4	VOE946671	4							Flange screw		
5	VOE13965185	2							Screw		
6	VOE930444	2							Spacer ring		
7		1							Press Monitor		See ref 647/200
8	VOE13965180	2							Screw		
9	VOE935548	2							Nipple		
	VOE990736	2							•O-ring		
	VOE14211856	2							•Sealing ring		

10	VOE11172900	1							Hose assembly		
11	VOE13933853	2							Nipple		
	VOE990738	2							•O-ring		(VOE4880493)
	VOE14211863	2							•Sealing ring		
12	VOE11148985	1							Hose assembly		
13	VOE13933853	1							Nipple		
	VOE990738	1							•O-ring		(VOE4880493)
	VOE14211863	1							•Sealing ring		
14	VOE13933871	1							Nipple		
	VOE990738	1							•O-ring		(VOE4880493)
	VOE14211858	1							•Sealing ring		
15	VOE11163004	1							Hose assembly		
16	VOE11173249	1							Non-return valve		
17	VOE984758	4							Flange screw		(VOE13965188)
18	VOE13933914	1							Nipple		
	VOE990739	1							•O-ring		(VOE4880663)
	VOE14211858	1							•Sealing ring		
19	VOE935037	1							Nipple		
	VOE990739	1							•O-ring		(VOE4880663)
	VOE14211864	1							•Sealing ring		
20	VOE11147987	1							Hose assembly		
21	VOE13933897	1							Nipple		
	VOE990737	1							•O-ring		(VOE4880492)
	VOE14211856	1							•Sealing ring		
22	VOE13933855	1							Nipple		
	VOE990737	1							•O-ring		(VOE4880492)
	VOE14213676	1							•Sealing ring		
23	VOE11148959	1							Hose assembly		
24	VOE13933927	1							Elbow nipple		
	VOE990738	1							•O-ring		(VOE4880493)
25	VOE11411988	1							Union		
26		1							Pressure Sensor		SE606 See ref 371/1250
27	VOE11173386	1							Non-return valve		
28	VOE4881440	REQ							Cable tie		
29		1							Hydr fluid tank		See ref 911/100
30		1							Valve block		See ref 912/300

VOLVO

Construction Equipment

PROSIS Part Information

Date:	Image id:	Catalogue:	Model:
25/08/2018	**1002112**	**20086**	**L120E**
Brand:	Serial:	Group/Section:	Title:
Volvo	**19804-, 66001-, 71401-**	**647/150**	**Pump unit. 83178**

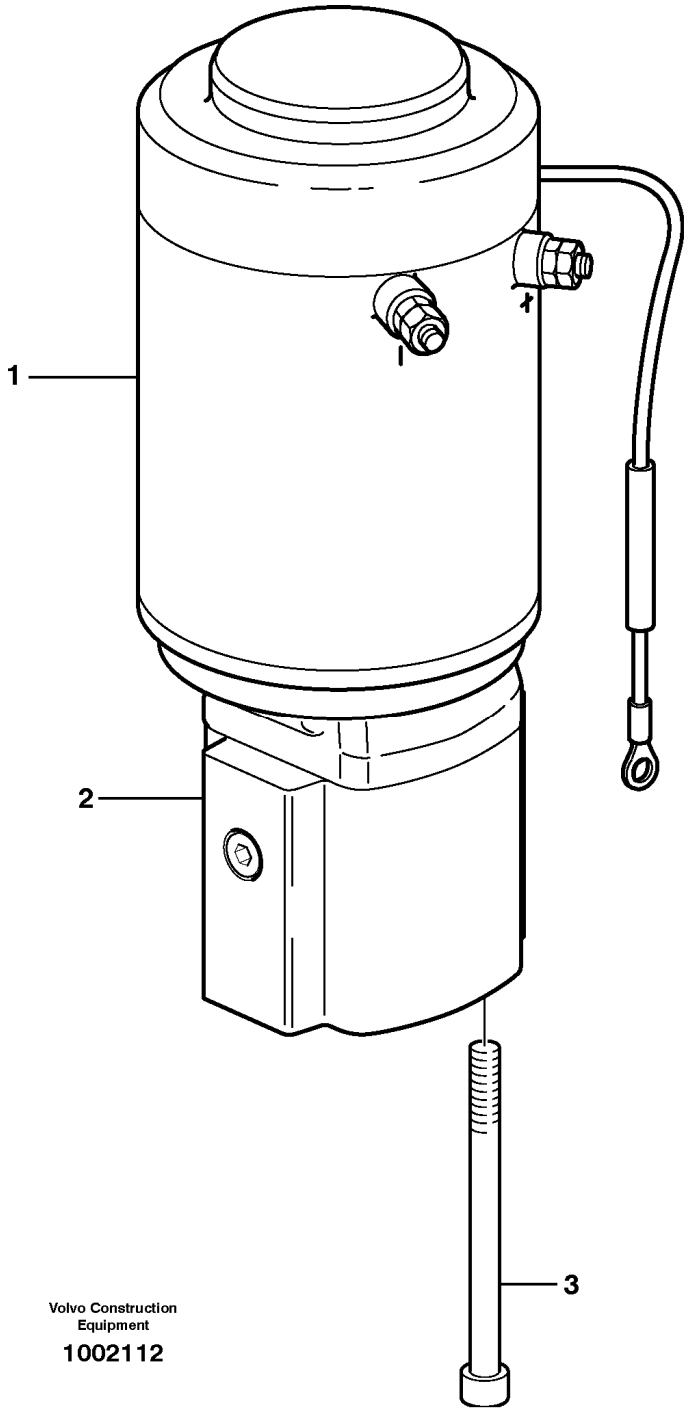

Section option	Kit	Option description

VOE83178		Secondary steering

Pos	Part	Q1	Q2	Q3	Q4	Q5	PS	Kit	Description	Option(s)	Remark
	VOE11173423	1							Pump unit		REMAN VOE9011173423
1	VOE11709637	1							•Electric motor		
2	VOE11706173	1							•Pump		
3	VOE946127	2							•Hex. socket screw		

VOLVO

Construction Equipment

PROSIS Part Information

Date:	Image id:	Catalogue:	Model:
25/08/2018	**EL267**	**20086**	**L120E**
Brand:	Serial:	Group/Section:	Title:
Volvo	**19804-, 66001-, 71401-**	**647/200**	**Pressure monitor. 83178**

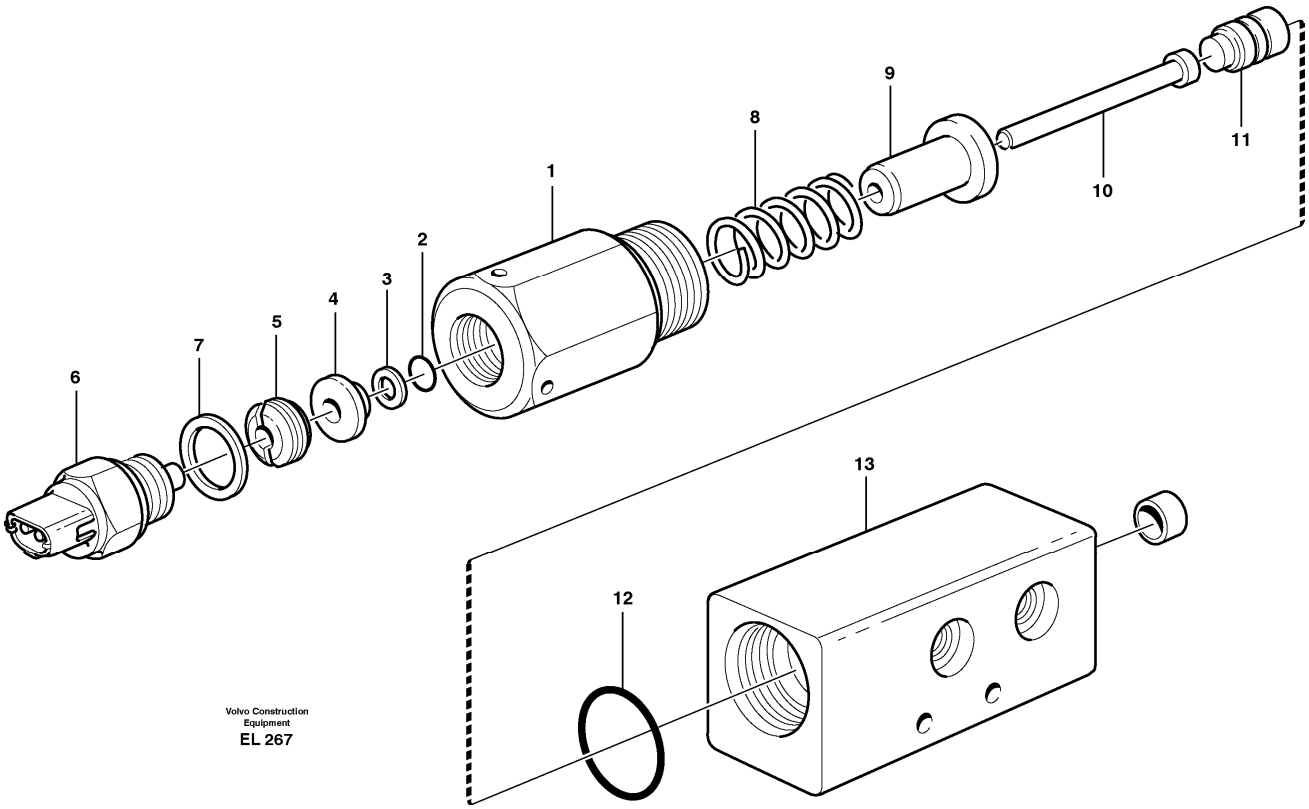

Section option	Kit	Option description
VOE83178		Secondary steering

Pos	Part	Q1	Q2	Q3	Q4	Q5	PS	Kit	Description	Option(s)	Remark
	VOE11410315	1							Pressure monitor		
1		1					NS		•Nipple		
	VOE925066	1							•O-ring		
2	VOE925051	1							•O-ring		
3	VOE962528	1							•Back-up ring		
4		1					NS		•Washer		
5		1					NS		•Nut		
6	VOE1594043	1							•Switch		SE601
7	VOE948884	1							•Gasket		
8	VOE11048063	1							•Spring		
9		1					NS		•Guide		
10		1					NS		•Piston		
11		1					NS		•Peg		
12	VOE958229	1							•O-ring		

13	VOE11410316	1					OP		•Housing		

VOLVO

Construction Equipment

PROSIS Part Information

Date:	Image id:	Catalogue:	Model:
25/08/2018	**1022025**	**20086**	**L120E**
Brand:	Serial:	Group/Section:	Title:
Volvo	**19804-, 66001-, 71401-**	**660/100**	**CDC - steering 80780**

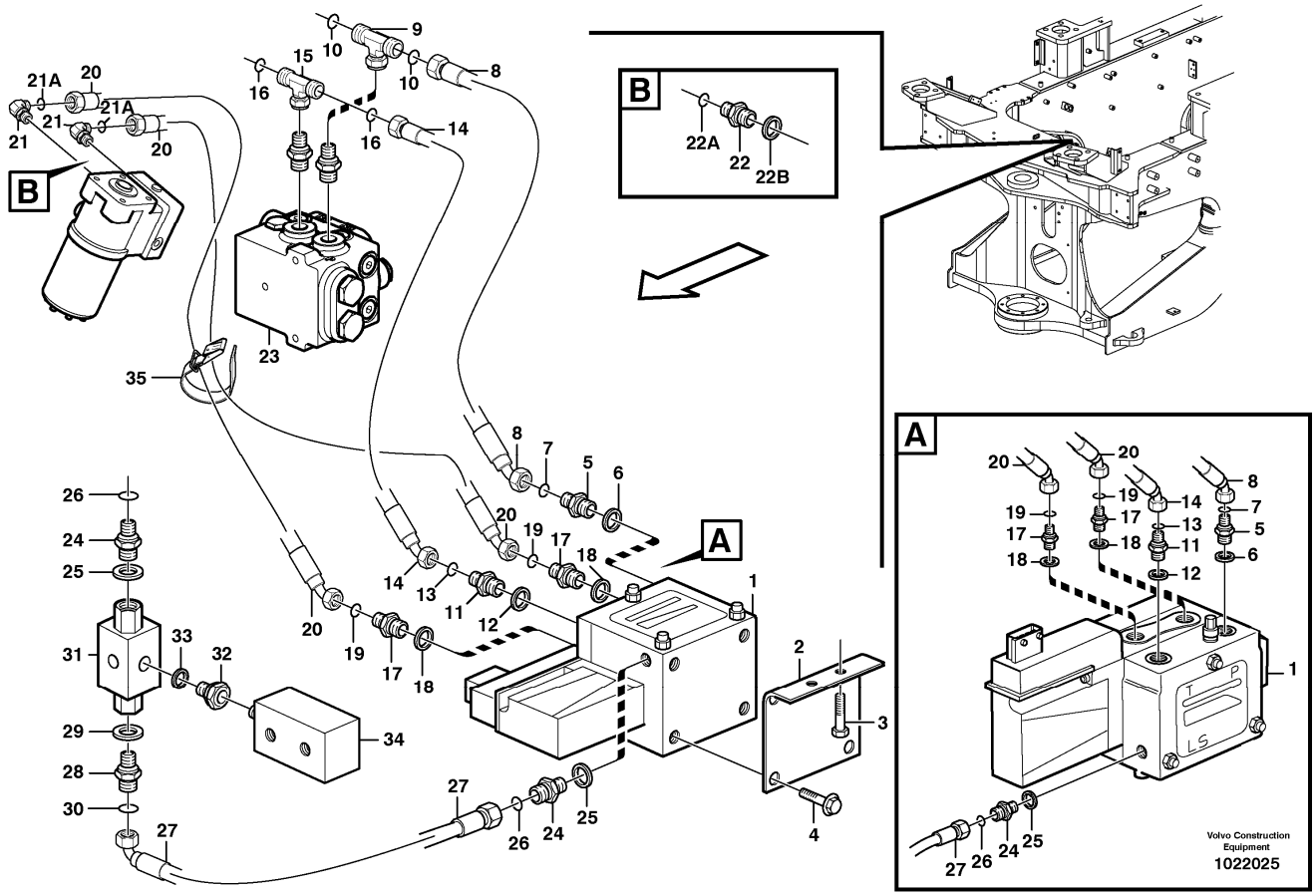

Section option	Kit	Option description
VOE80780	VOE11708984	Comfort Drive Control, CDC

Pos	Part	Q1	Q2	Q3	Q4	Q5	PS	Kit	Description	Option(s)	Remark
1	VOE11410269	1					SS		Valve		See ref 660/150
2	VOE11172183	1							Bracket		
3	VOE13946173	2							Screw		
4	VOE946440	4							Flange screw		
5	VOE13933881	1							Nipple		
6	VOE14211859	1							•Sealing ring		
7	VOE990739	1							•O-ring		(VOE4880663)
8	VOE11147941	1							Hose assembly		
9	VOE935877	1							T-nipple		
10	VOE990739	2							•O-ring		(VOE4880663)
11	VOE13933917	1							Nipple		

12	VOE14211859	1							•Sealing ring		
13	VOE990738	1							•O-ring		(VOE4880493)
14	VOE11148978	1							Hose assembly		
15	VOE13933935	1							T-nipple		
16	VOE990738	2							•O-ring		(VOE4880493)
17	VOE13933871	2							Nipple		
18	VOE14211859	2							•Sealing ring		
19	VOE990738	2							•O-ring		(VOE4880493)
20	VOE11173672	2							Hose assembly		
21	VOE13933872	2							Elbow nipple		
21A	VOE990738	2							•O-ring		(VOE4880493)
22	VOE13933871	2							Nipple		
22A	VOE990738	2							•O-ring		(VOE4880493)
22B	VOE14211858	2							•Sealing ring		
23		1							Shift valve		See ref 645/500
24	VOE13933883	2							Nipple		
25	VOE14211859	2							•Sealing ring		
26	VOE990736	2							•O-ring		
27	VOE11172003	1							Hose assembly		
28	VOE13933883	1							Nipple		
29	VOE14211859	1							•Sealing ring		
30	VOE990736	1							•O-ring		
31	VOE4880701	1							Shuttle valve		
32	VOE13933843	1							Adapter		
33	VOE14211859	1							•Sealing ring		
34		1							Connection block		See ref 645/200
35	VOE11104606	1							Retaining strap		

VOLVO

Construction Equipment

PROSIS Part Information

Date:	Image id:	Catalogue:	Model:
25/08/2018	**1020115**	**20086**	**L120E**
Brand:	Serial:	Group/Section:	Title:
Volvo	**19804-, 66001-, 71401-**	**660/150**	**Relief valve. 80780**

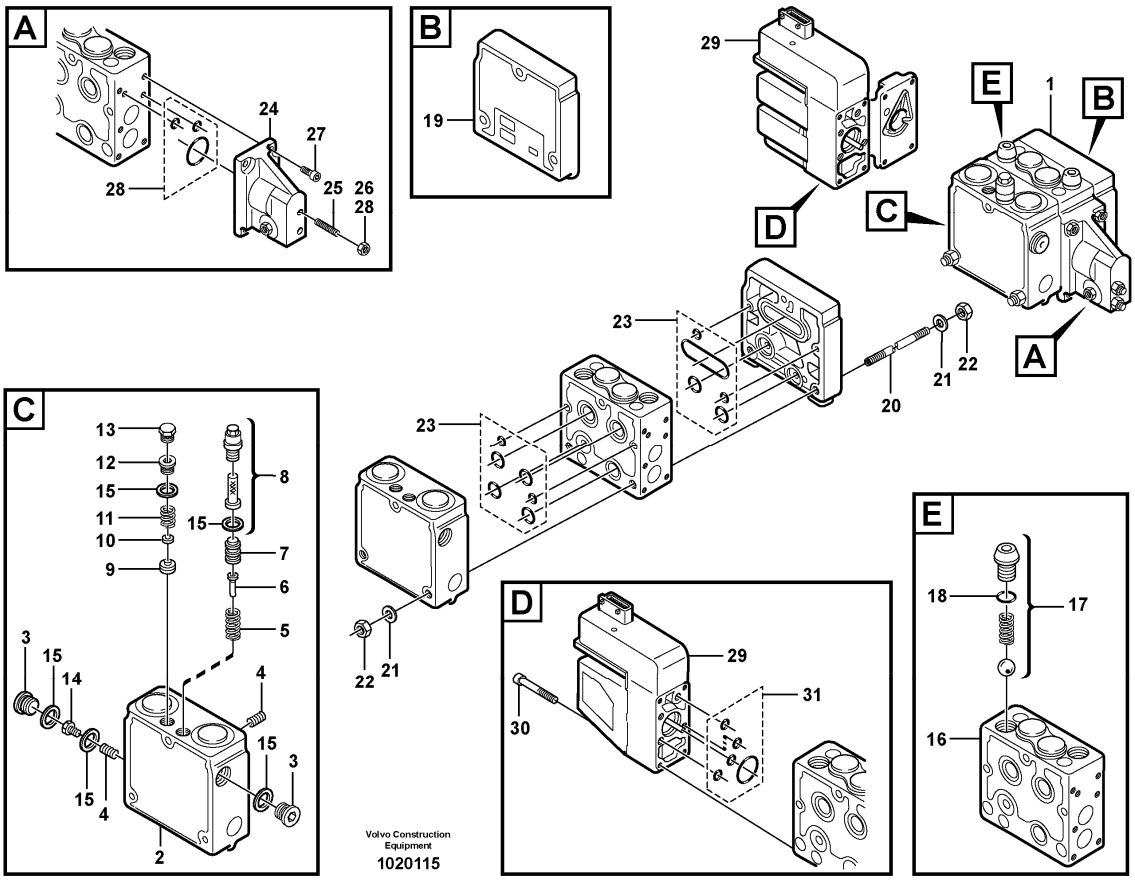

Section option	Kit	Option description
VOE80780	VOE11708984	Comfort Drive Control, CDC

Pos	Part	Q1	Q2	Q3	Q4	Q5	PS	Kit	Description	Option(s)	Remark
1	VOE11410269	1					SS		Valve		
2	VOE11996202	1							•Valve		
3	VOE11996177	2					SS		••Plug		
4	VOE11701851	2							••Restrictor		
5	VOE11714845	1							••Valve kit		(VOE11996178)
6	VOE11996179	1							••Peg		
7	VOE11996180	1							••Piston		
8	VOE11996181	1							••Plug		
9	VOE11996183	1							••Valve seat		
10	VOE11996184	1							••Spacer		
11	VOE11996185	1							••Spring		

12	VOE11996190	1							••Adjusting screw		
13	VOE11996206	1							••Plug		
14	VOE11996207	1							••Screw		
15	VOE11996191	1							••Sealing kit		
16	VOE11996203	1							•Housing		
17	VOE11996192	1							••Valve		
18	VOE11700195	1							•••O-ring		
19	VOE11996193	1							•Cover		
	VOE11996194	1							•Mounting kit		
20		1					NS		••Pull rod		
21	VOE13955894	6							••Washer		
22	VOE955782	6							••Hexagon nut		
23	VOE11996195	1					SS		••Sealing kit		
24	VOE11701803	1							•Housing		
25	VOE962931	2							••Set screw		(VOE13962931)
26	VOE13955781	2							••Nut		
27	VOE959202	4							••Hex. socket screw		
28	VOE11996198	1							••Sealing kit		
29	VOE11713285	1							•Electronic unit		MA601
30	VOE11701951	4							••Screw		
31	VOE11701853	1							••Sealing kit		

VOLVO

Construction Equipment

PROSIS Part Information

Date:	Image id:	Catalogue:	Model:
25/08/2018	**1019701**	**20086**	**L120E**
Brand:	Serial:	Group/Section:	Title:
Volvo	**19804-, 66001-, 71401-**	**711/100**	**Frame**

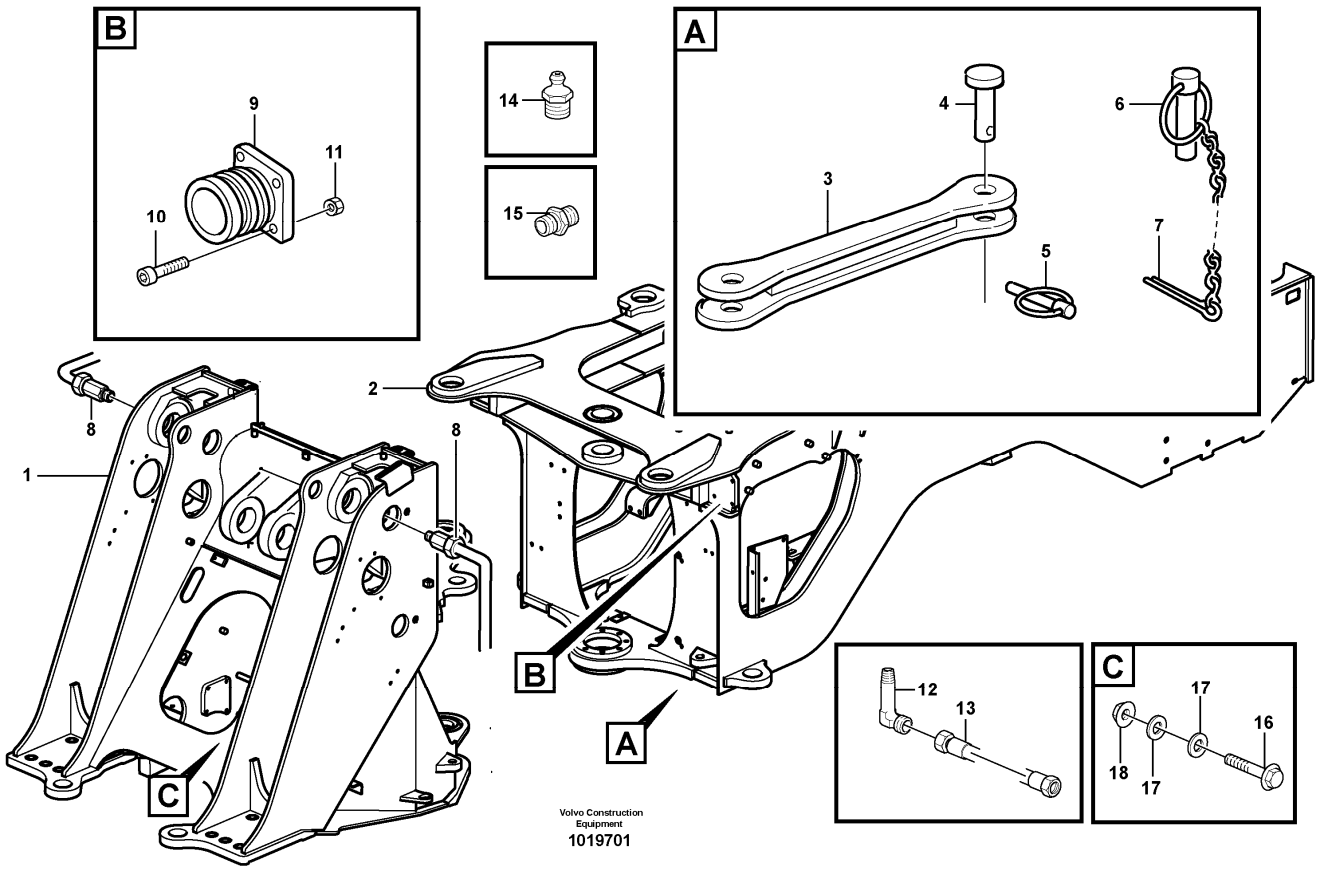

Section option	Kit	Option description
VOE33380		Volvo Wheel Loader L120E S/N 19801-, S/N 66001- USA, S/N 71401- BRA
VOE33395		Wheel Loader L120E3 IRAN

Q1-Q5	Option	Option description	
Q1 33380	VOE33380	Volvo Wheel Loader L120E S/N 19801-, S/N 66001- USA, S/N 71401- BRA	
Q2 33395 IRAN	VOE33395	Wheel Loader L120E3 IRAN	

Pos	Part	Q1	Q2	Q3	Q4	Q5	PS	Kit	Description	Option(s)	Remark
1	VOE11177610	1	1						Front frame		
2	VOE11432800	1	1						Rear frame		(VOE11177900)
3	VOE11177036	1	1				SS		Transport lock		
4	VOE11177038	1	1						Pin		
5	VOE907884	1	1						Split pin		

6	VOE11177038	1							Pin		
	VOE11019676		1						Pivot pin		
7	VOE11019682	1	1						Lock Pin		
8		3	1						Tube assembly		See ref 945/400
9	VOE11026989	2							Steering damper		
10	VOE13965185	8							Screw		
11	VOE13971098	8							Flange nut		
12	VOE4930797	2							Nipple		
13	VOE11172411	2	2						Lubricating hose		
14	VOE914167	2	2						Lubricating nipple		
15	VOE946089	2	2						Nipple		
16	VOE13945444	1							Screw		
17	VOE11117464	2							Plain washer		(VOE13960141)
18	VOE13945408	1							Nut		

VOLVO

Construction Equipment

PROSIS Part Information

Date:	Image id:	Catalogue:	Model:
25/08/2018	**1020089**	**20086**	**L120E**
Brand:	Serial:	Group/Section:	Title:
Volvo	**19804-, 66001-, 71401-**	**715/100**	**Protecting plates 82202**

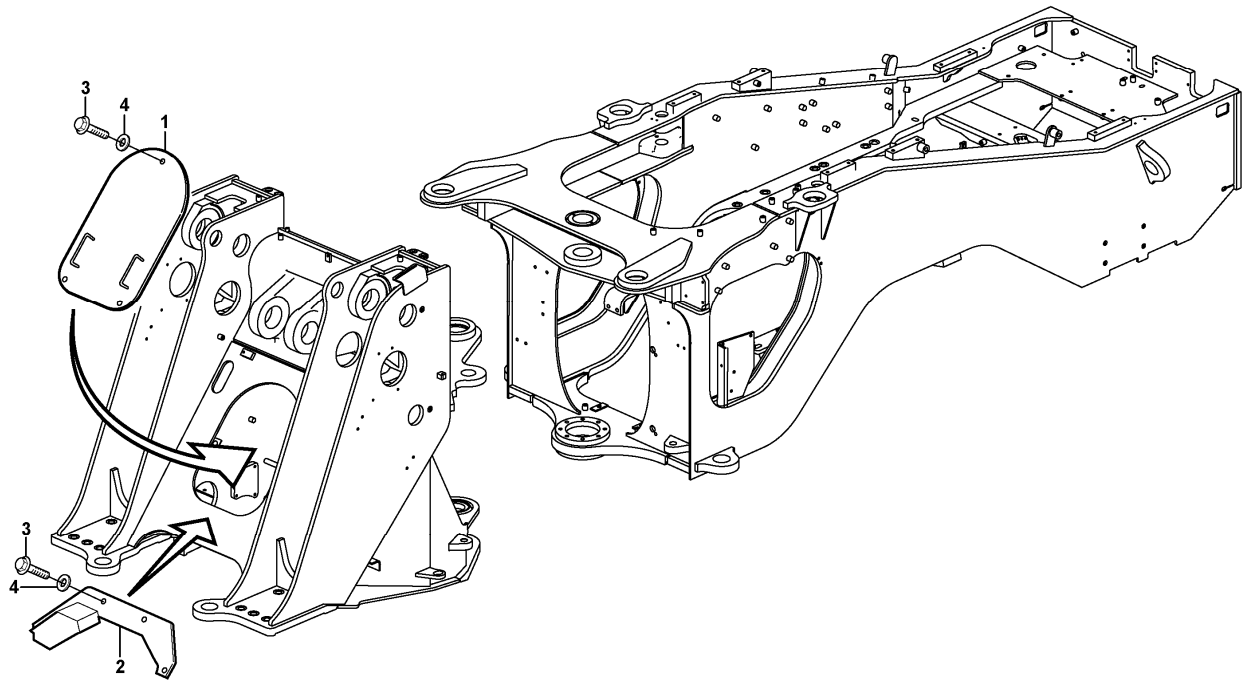

Section option	Kit	Option description
VOE82202		Cover plate, heavy-duty, front frame

Pos	Part	Q1	Q2	Q3	Q4	Q5	PS	Kit	Description	Option(s)	Remark
1	VOE11176935	1							Hatch		
1	VOE11410859	1							Hatch	VOE33395	IRAN
2	VOE11109254	1							Guard		
3	VOE946329	7							Flange screw		
4	VOE13960143	7							Washer		

VOLVO

Construction Equipment

PROSIS Part Information

Date:	Image id:	Catalogue:	Model:
25/08/2018	**1001186**	**20086**	**L120E**
Brand:	Serial:	Group/Section:	Title:
Volvo	**19804-, 66001-, 71401-**	**715/150**	**Belly guard, front. 82005**

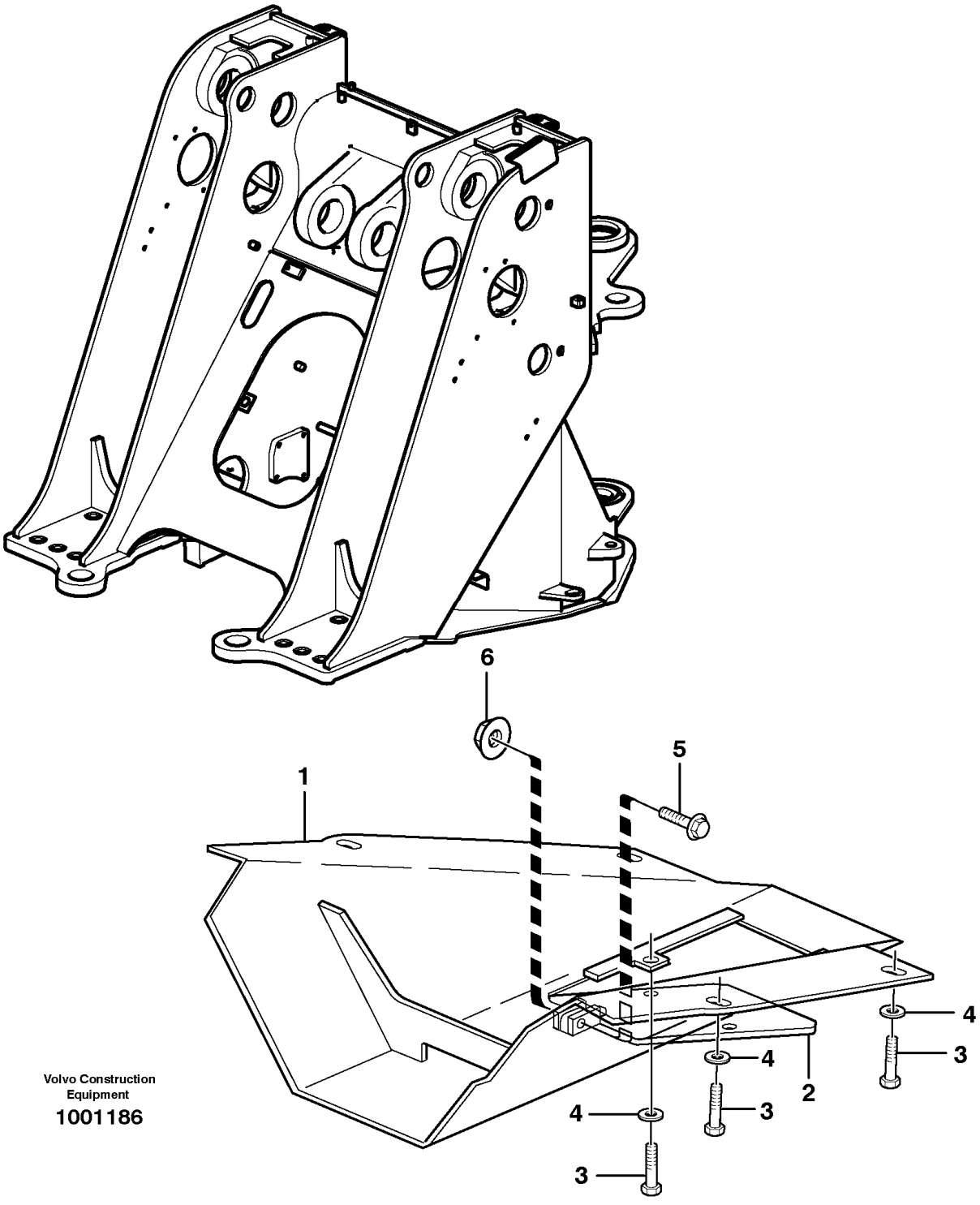

Section option	Kit	Option description

VOE82005		Belly guard, front

Pos	Part	Q1	Q2	Q3	Q4	Q5	PS	Kit	Description	Option(s)	Remark
1	VOE11176669	1							Cover plate		
1	VOE11176669	1							Cover plate		
2	VOE11130393	1							Hatch		
2	VOE11130393	1							Hatch		
3	VOE13965191	6							Screw		
3	VOE13965191	6							Screw		
4	VOE13960145	6							Washer		
4	VOE13960145	6							Washer		
5	VOE965195	1							Flange screw		
5	VOE965195	1							Flange screw		
6	VOE971099	1							Flange lock nut		(VOE13971099)
6	VOE971099	1							Flange lock nut		(VOE13971099)

VOLVO

Construction Equipment

PROSIS Part Information

Date:	Image id:	Catalogue:	Model:
25/08/2018	**1001187**	**20086**	**L120E**
Brand:	Serial:	Group/Section:	Title:
Volvo	**19804-, 66001-, 71401-**	**715/200**	**Belly guard, rear. 82006**

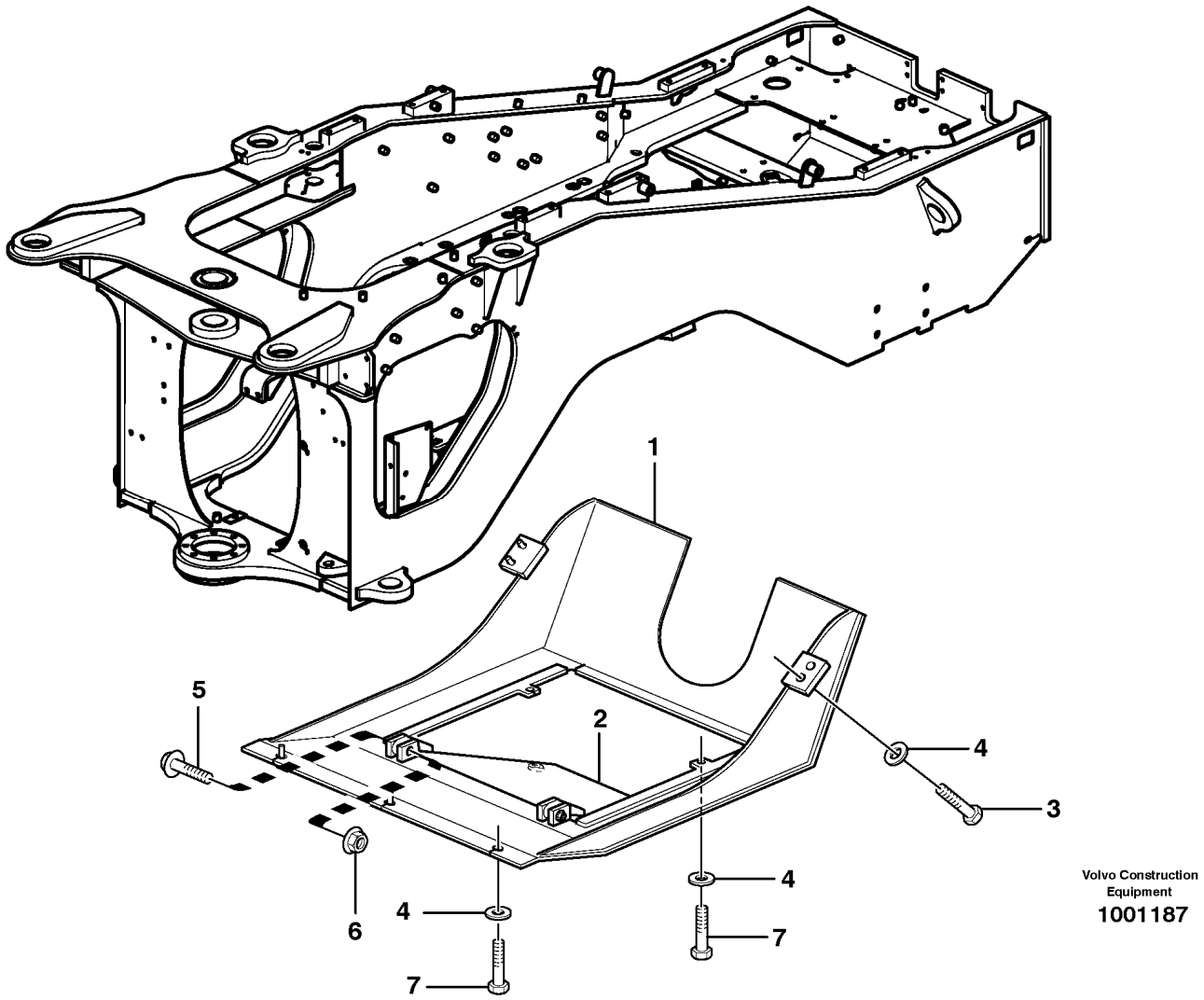

Section option	Kit	Option description
VOE82006		Belly guard, rear

Pos	Part	Q1	Q2	Q3	Q4	Q5	PS	Kit	Description	Option(s)	Remark
1	VOE11176674	1							Cover plate		
2	VOE11148924	1							Hatch		
3	VOE13965192	4							Screw		
4	VOE13960145	9							Washer		
5	VOE965195	2							Flange screw		
6	VOE971099	2							Flange lock nut		(VOE13971099)
7	VOE13965191	5							Screw		

VOLVO

Construction Equipment

PROSIS Part Information

Date:	Image id:	Catalogue:	Model:
25/08/2018	**1000297**	**20086**	**L120E**
Brand:	Serial:	Group/Section:	Title:
Volvo	**19804-, 66001-, 71401-**	**715/250**	**Protection, brake pipes 33380, 33395 IRAN**

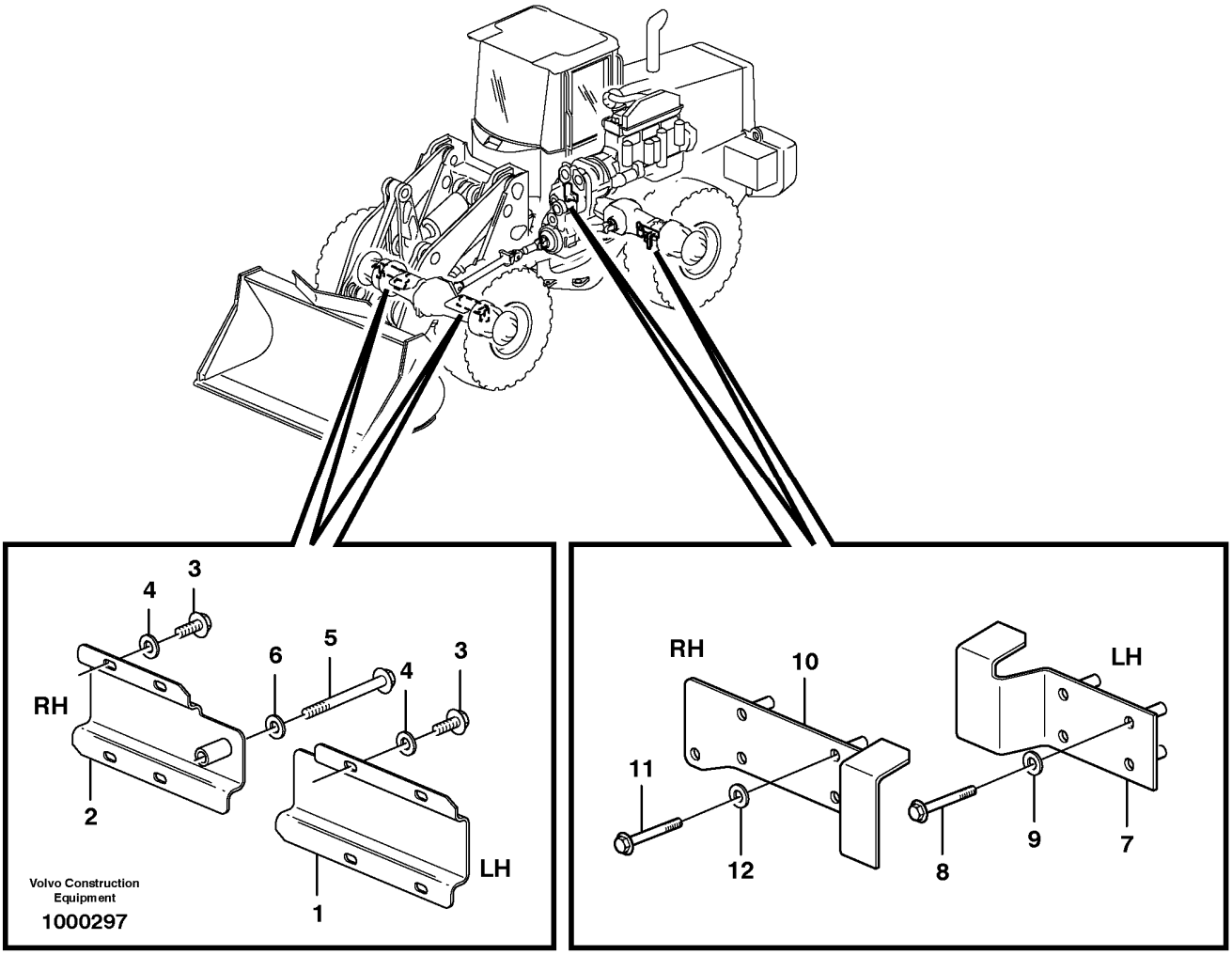

Section option	Kit	Option description
VOE33380		Volvo Wheel Loader L120E S/N 19801-, S/N 66001- USA, S/N 71401- BRA
VOE33395		Wheel Loader L120E3 IRAN

Pos	Part	Q1	Q2	Q3	Q4	Q5	PS	Kit	Description	Option(s)	Remark
1	VOE11015550	1							Protecting plate		LH
2	VOE11015551	1							Protecting plate		RH
3	VOE946440	8							Flange screw		
4	VOE11117464	8							Plain washer		(VOE13960141)
5	VOE13965180	1							Screw		
6	VOE11117464	1							Plain washer		(VOE13960141)
7	VOE11020378	1							Protecting plate		LH
8	VOE13965180	4							Screw		

9	VOE120001	4							Plain washer		
10	VOE11020376	1							Protecting plate		RH
11	VOE13965180	4							Screw		
12	VOE120001	4							Plain washer		

VOLVO

Construction Equipment

PROSIS Part Information

Date:	Image id:	Catalogue:	Model:
25/08/2018	**1019714**	**20086**	**L120E**
Brand:	Serial:	Group/Section:	Title:
Volvo	**19804-, 66001-, 71401-**	**715/300**	**Bottom-guard plates**

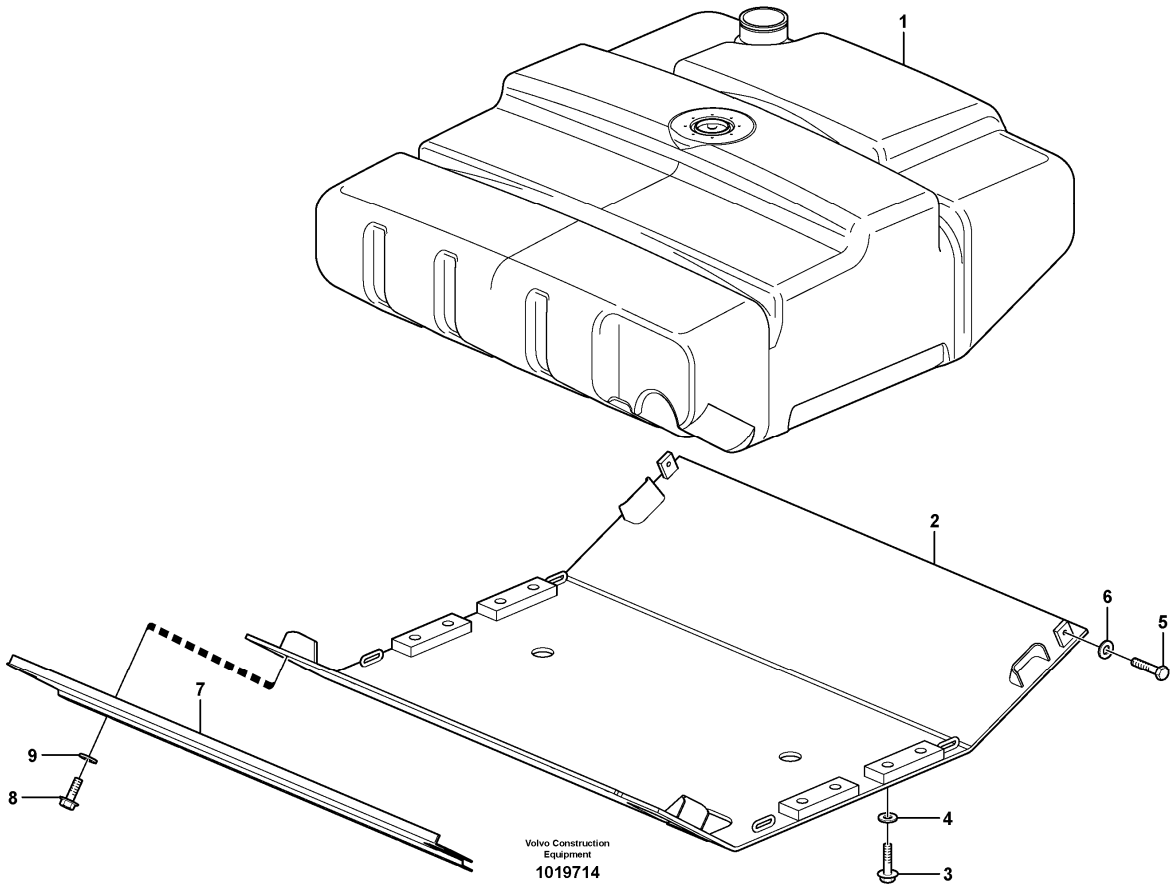

Section option	Kit	Option description
VOE33380		Volvo Wheel Loader L120E S/N 19801-, S/N 66001- USA, S/N 71401- BRA
VOE33395		Wheel Loader L120E3 IRAN

Pos	Part	Q1	Q2	Q3	Q4	Q5	PS	Kit	Description	Option(s)	Remark
1		1							Fuel tank		See ref 234/100
2	VOE11432515	1							Belly Guard		(VOE11177765)
3	VOE13965192	8							Screw		
4	VOE13960145	8							Washer		
5	VOE13946817	2							Screw		
6	VOE13960145	2							Washer		
7		1					NS		Protecting plate		
8	VOE946329	6							Flange screw		
8		2					NS		Flange screw		S/N 20565 - SWE S/N 66151 - USA S/N 71439 - BRA

9	VOE13960143	6							Washer		
9		2					NS		Washer		S/N 20565 - SWE S/N 66151 - USA S/N 71439 - BRA

VOLVO

Construction Equipment

PROSIS Part Information

Date:	Image id:	Catalogue:	Model:
25/08/2018	**1067174**	**20086**	**L120E**
Brand:	Serial:	Group/Section:	Title:
Volvo	**19804-, 66001-, 71401-**	**715/350**	**Protection for lighting**

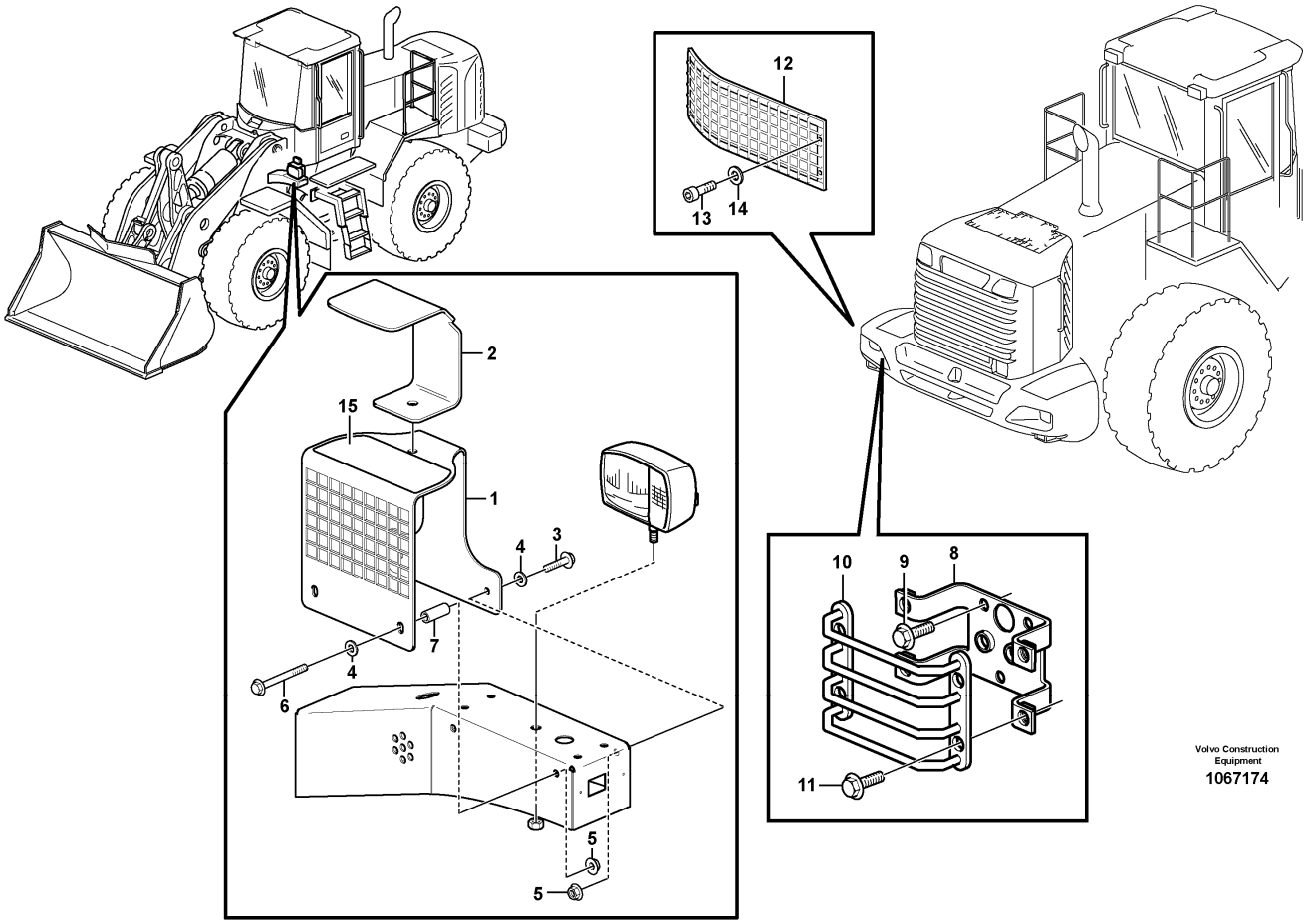

Section option	Kit	Option description
VOE82176	VOE11988663	Protective grating headlights front
VOE82177	VOE11709552	Protection Guards for Tail Lights
VOE82228		Protection Guards for Tail Lights

Q1-Q5	Option	Option description	
Q1 82176	VOE82176	Protective grating headlights front	
Q2 82177	VOE82177	Protection Guards for Tail Lights	
Q3 82228	VOE82228	Protection Guards for Tail Lights	

Pos	Part	Q1	Q2	Q3	Q4	Q5	PS	Kit	Description	Option(s)	Remark
1	VOE11400957	2							Protecting grating		
2	VOE16840105	2							Protecting plate		
3	VOE13946173	4							Screw		
4	VOE11117464	8							Plain washer		(VOE13960141)

5	VOE13945408	8							Nut		
6	VOE13965181	4							Screw		
7	VOE11130673	4							Spacer		
8	VOE11176804		2						Bracket		
9	VOE13946173		6						Screw		
10	VOE11130600		2						Protecting grating		
11	VOE13946173		8						Screw		
12	VOE11438718			1					Protecting grating		RIGHT
	VOE11438719			1					Protecting grating		LEFT
13	VOE959236			8					Hex. socket screw		
14	VOE930842			8					Plain washer		
15	VOE11414387	2							Decal		

VOLVO

Construction Equipment

PROSIS Part Information

Date:	Image id:	Catalogue:	Model:
25/08/2018	**1024472**	**20086**	**L120E**
Brand:	Serial:	Group/Section:	Title:
Volvo	**19804-, 66001-, 71401-**	**715/375**	**Protecting plates 83922**

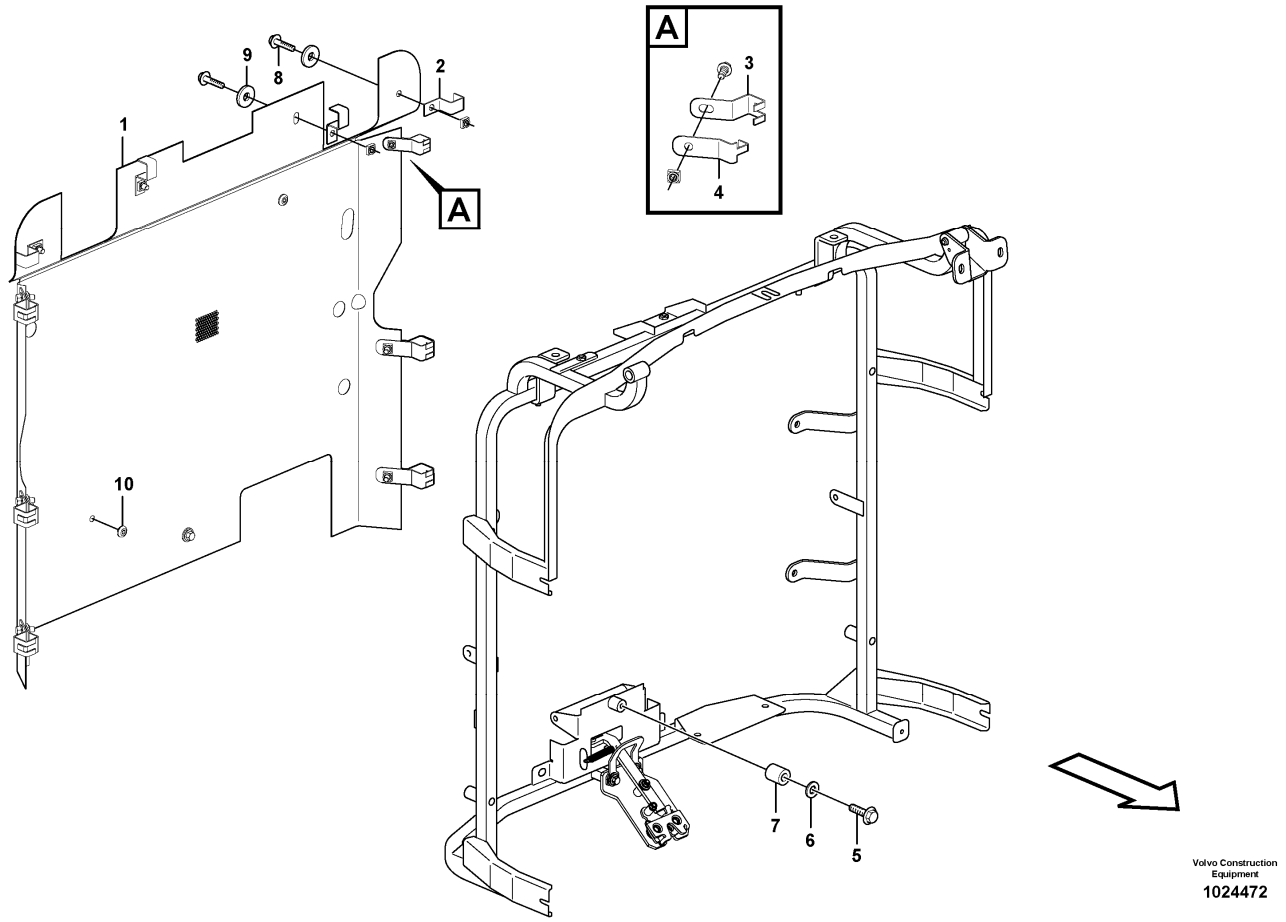

Section option	Kit	Option description
VOE83922		Fan air intake protection

Pos	Part	Q1	Q2	Q3	Q4	Q5	PS	Kit	Description	Option(s)	Remark
1	VOE11435922	1							Protecting grating		
2	VOE11436167	4							Clamp		
3	VOE11436104	6							Clamp		
4	VOE11436166	6							Clamp		
5	VOE13965180	1							Screw		
6	VOE11117464	1							Plain washer		(VOE13960141)
7	VOE11436106	1							Spacer		
8	VOE13946173	10							Screw		
9	VOE11117464	4							Plain washer		(VOE13960141)
10	VOE13974682	2							Plug		

VOLVO

Construction Equipment

PROSIS Part Information

Date:	Image id:	Catalogue:	Model:
25/08/2018	**1007168**	**20086**	**L120E**
Brand:	Serial:	Group/Section:	Title:
Volvo	**19804-, 66001-, 71401-**	**715/400**	**Protecting plates. 82367, 33395 IRAN**

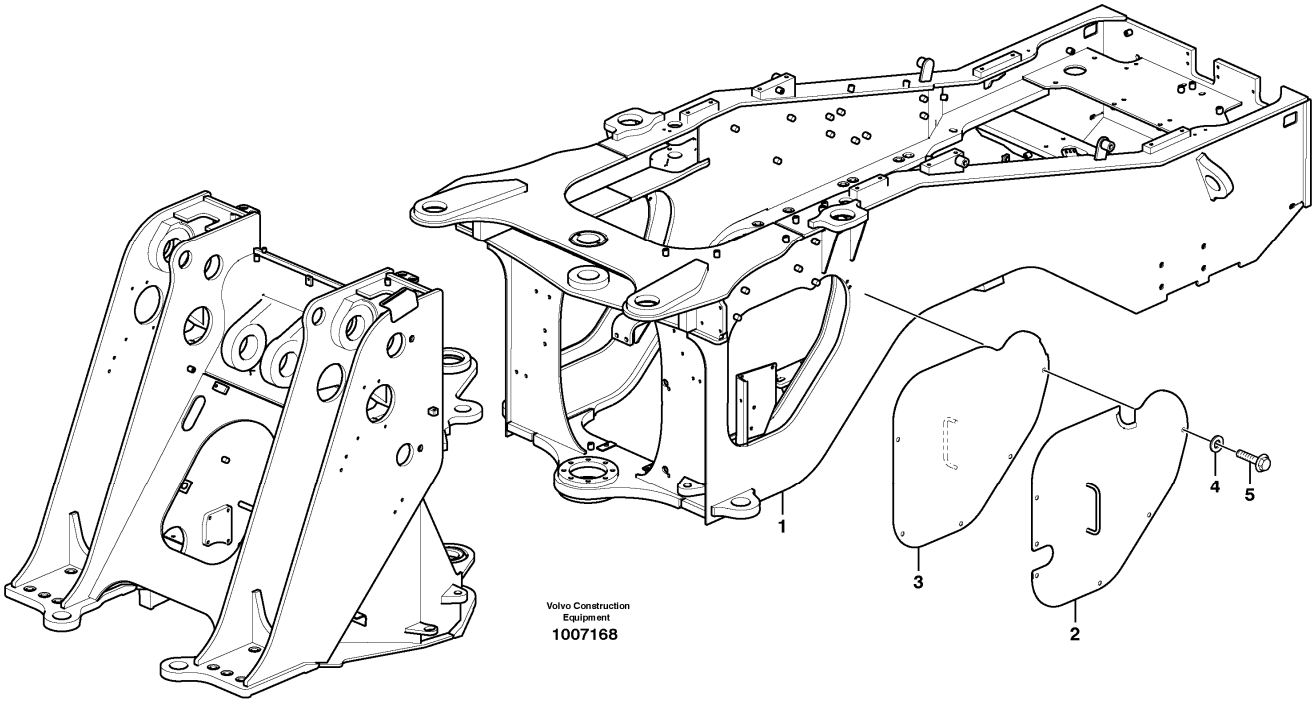

Section option	Kit	Option description
VOE82367		Cover plates rear frame, right and left side
VOE33395		Wheel Loader L120E3 IRAN

Pos	Part	Q1	Q2	Q3	Q4	Q5	PS	Kit	Description	Option(s)	Remark
1		1							Rear frame		See ref 711/100
2	VOE11177245	1							Protecting plate		LH
3	VOE11177249	1							Protecting plate		RH
4	VOE13960143	11							Washer		
5	VOE946329	11							Flange screw		

VOLVO

Construction Equipment

PROSIS Part Information

Date:	Image id:	Catalogue:	Model:
25/08/2018	**1016634**	**20086**	**L120E**
Brand:	Serial:	Group/Section:	Title:
Volvo	**19804-, 66001-, 71401-**	**715/450**	**Protecting plates. 82207**

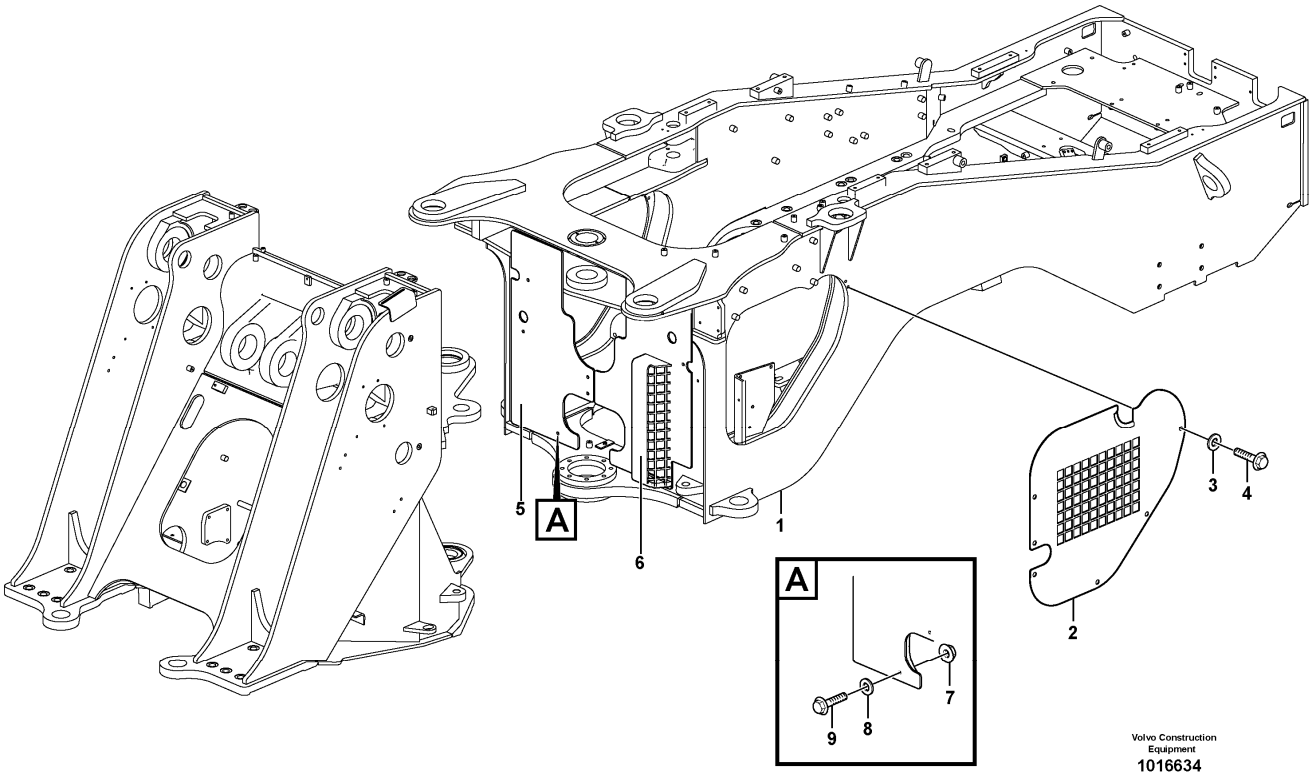

Section option	Kit	Option description
VOE82207		Cover plates rear frame, right and left side

Pos	Part	Q1	Q2	Q3	Q4	Q5	PS	Kit	Description	Option(s)	Remark
1		1							Rear frame		See ref 715/450
2	VOE11414370	1							Plate		LH
	VOE11438036	1							Protecting plate		RH
3	VOE13960143	11							Washer		
4	VOE946329	11							Flange screw		
5	VOE11180395	1							Protecting plate		
6	VOE11413785	1							Protecting plate		
7	VOE13971095	2							Flange nut		
8	VOE13960143	4							Washer		
9	VOE13965185	4							Screw		

VOLVO

Construction Equipment

PROSIS Part Information

Date:	Image id:	Catalogue:	Model:
25/08/2018	**1008514**	**20086**	**L120E**
Brand:	Serial:	Group/Section:	Title:
Volvo	**19804-, 66001-, 71401-**	**715/500**	**Protecting plates 82304**

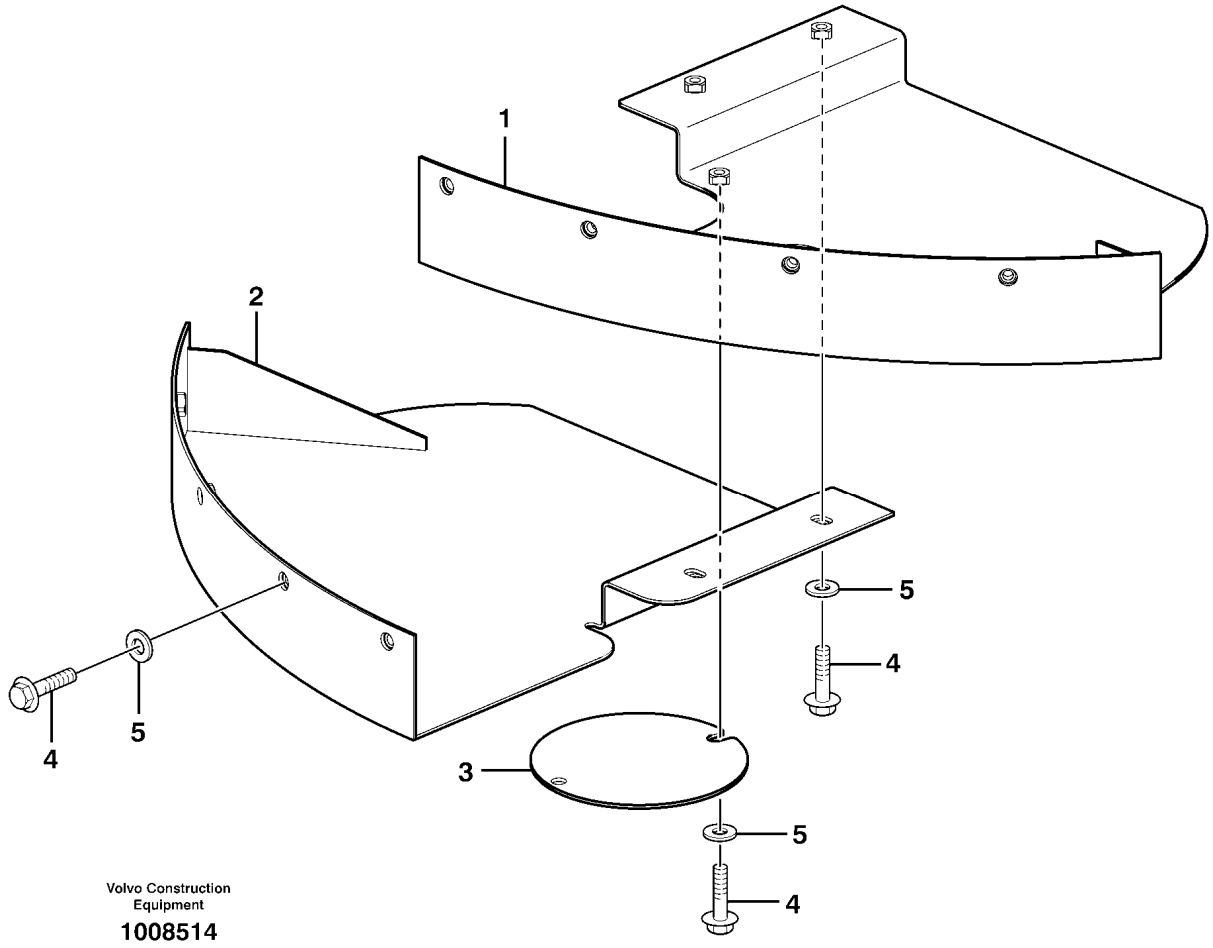

Section option	Kit	Option description
VOE82304		Protective plate under cab

Pos	Part	Q1	Q2	Q3	Q4	Q5	PS	Kit	Description	Option(s)	Remark
1	VOE11180407	1							Protecting plate		
2	VOE11180412	1							Protecting plate		
3	VOE11180416	1							Cover		
4	VOE946441	12							Flange screw		
5	VOE13960143	12							Washer		

VOLVO

Construction Equipment

PROSIS Part Information

Date:	Image id:	Catalogue:	Model:
25/08/2018	**1031911**	**20086**	**L120E**
Brand:	Serial:	Group/Section:	Title:
Volvo	**19804-, 66001-, 71401-**	**715/550**	**Radiator, kylare. 83693**

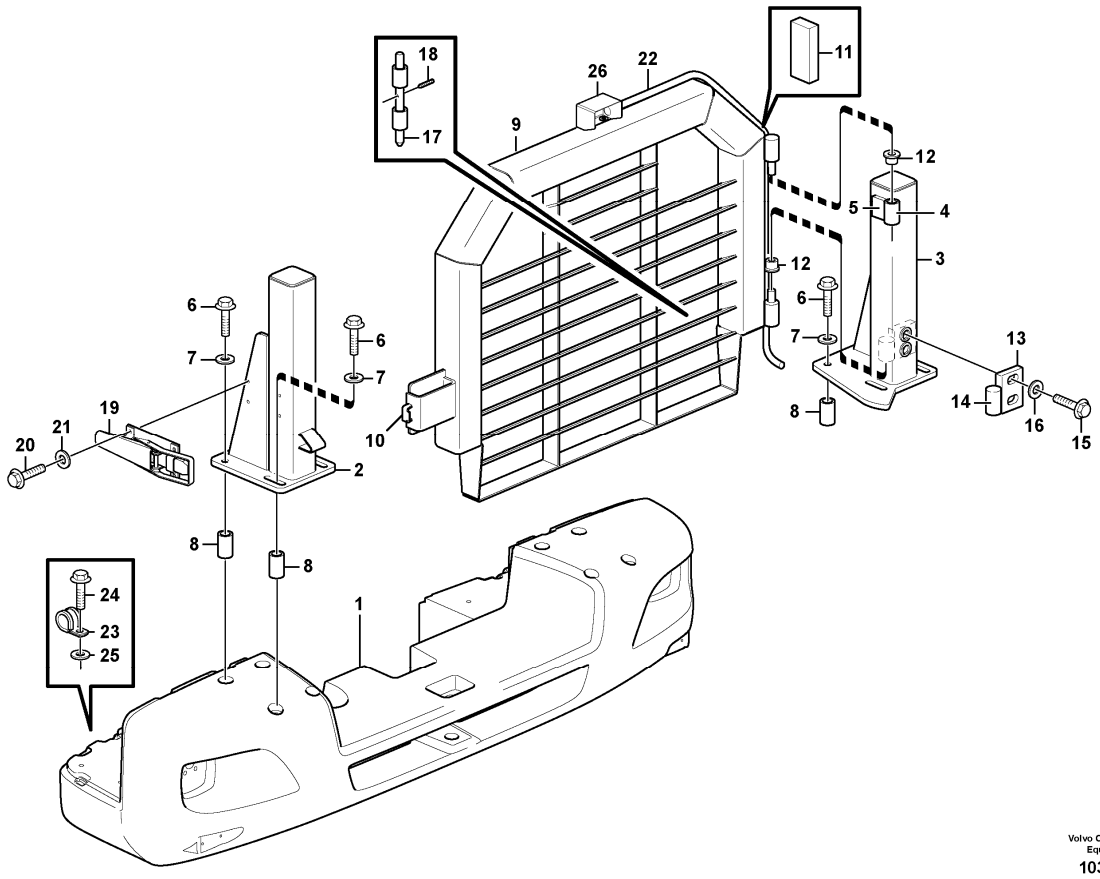

Section option	Kit	Option description
VOE83693	VOE15149873	Radiator, guard

Pos	Part	Q1	Q2	Q3	Q4	Q5	PS	Kit	Description	Option(s)	Remark
1									Counterweight		See ref 716/100
2	VOE11413677	1							Pillar		
3	VOE11198228	1							Pillar		
4	VOE11413842	1							•Hub		
5	VOE11413700	1							•Plate		
6	VOE968591	8							Flange screw		
7	VOE983338	8							Plain washer		
8	VOE11400890	8							Spacer		
9	VOE11198227	1							Protecting grating		
10	VOE11013712	1							•Brace		
11	VOE11413700	2							•Plate		

12	VOE11026547	2							Slide bearing		
13	VOE11413699	1							Hinge		
14	VOE11413842	1							•Hub		
15	VOE13946474	2							Flange screw		
16	VOE13960145	2							Washer		
17	VOE11400568	1							Pin		
18	VOE951985	1							Spring pin		
19	VOE11018588	1							Platform catch		
20	VOE13946173	4							Screw		
21	VOE11117464	4							Plain washer		(VOE13960141)
22	VOE190993	REQ							Hose		1780mm
23	VOE952637	5							Clamp		
24	VOE13946544	7							Screw		
25	VOE960139	2							Plain washer		
26	VOE11171055	1							Protecting plate		

VOLVO

Construction Equipment

PROSIS Part Information

Date:	Image id:	Catalogue:	Model:
25/08/2018	**1000761**	**20086**	**L120E**
Brand:	Serial:	Group/Section:	Title:
Volvo	**19804-, 66001-, 71401-**	**716/100**	**Rear hitch and counterweight**

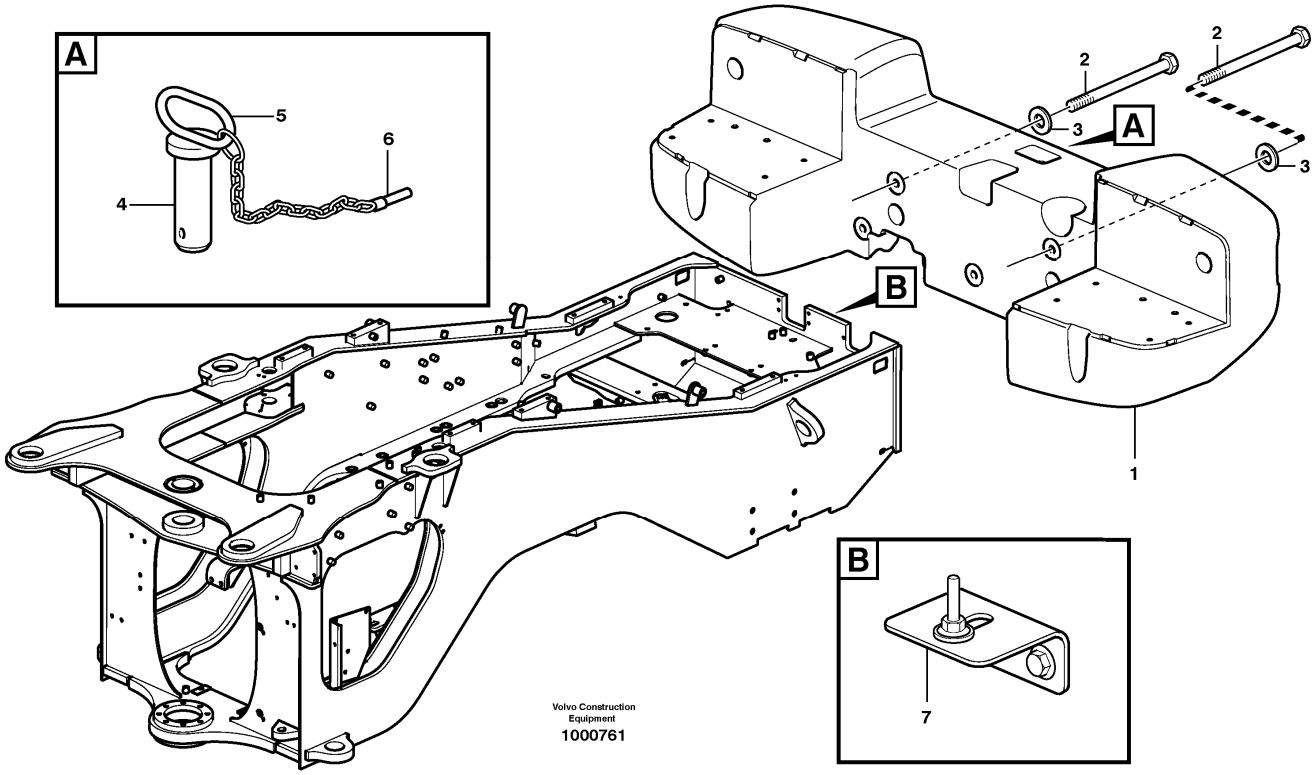

Section option	Kit	Option description
VOE33380		Volvo Wheel Loader L120E S/N 19801-, S/N 66001- USA, S/N 71401- BRA
VOE83679		Counterweight
VOE33395		Wheel Loader L120E3 IRAN

Q1-Q5	Option	Option description	
Q1 33380	VOE33380	Volvo Wheel Loader L120E S/N 19801-, S/N 66001- USA, S/N 71401- BRA	
Q2 33395	VOE33395	Wheel Loader L120E3 IRAN	
Q3 83679	VOE83679	Counterweight	

Pos	Part	Q1	Q2	Q3	Q4	Q5	PS	Kit	Description	Option(s)	Remark
1	VOE11177707	1	1						Counterweight		2780Kg
	VOE11432304	1							Counterweight	VOE83481	
	VOE11432364	1							Counterweight	VOE83693	2780Kg
	VOE11438403			1					Counterweight		
2	VOE955396	4	4						Hexagon screw		L = 120 MM
	VOE13974302	2	2						Hexagon screw		L = 240 MM
3	VOE955903	5	5						Plain washer		

	VOE11176778	1	1						Towing pin		
4		1	1				NS		•Towing Pin		
5		1	1				NS		•Eye		
6	VOE11093429	1	1						•Lock Pin		
7		1							Hood Lock		See ref 823/200

VOLVO

Construction Equipment

PROSIS Part Information

Date:	Image id:	Catalogue:	Model:
25/08/2018	**1001307**	**20086**	**L120E**
Brand:	Serial:	Group/Section:	Title:
Volvo	**19804-, 66001-, 71401-**	**716/150**	**Counterweight 80944**

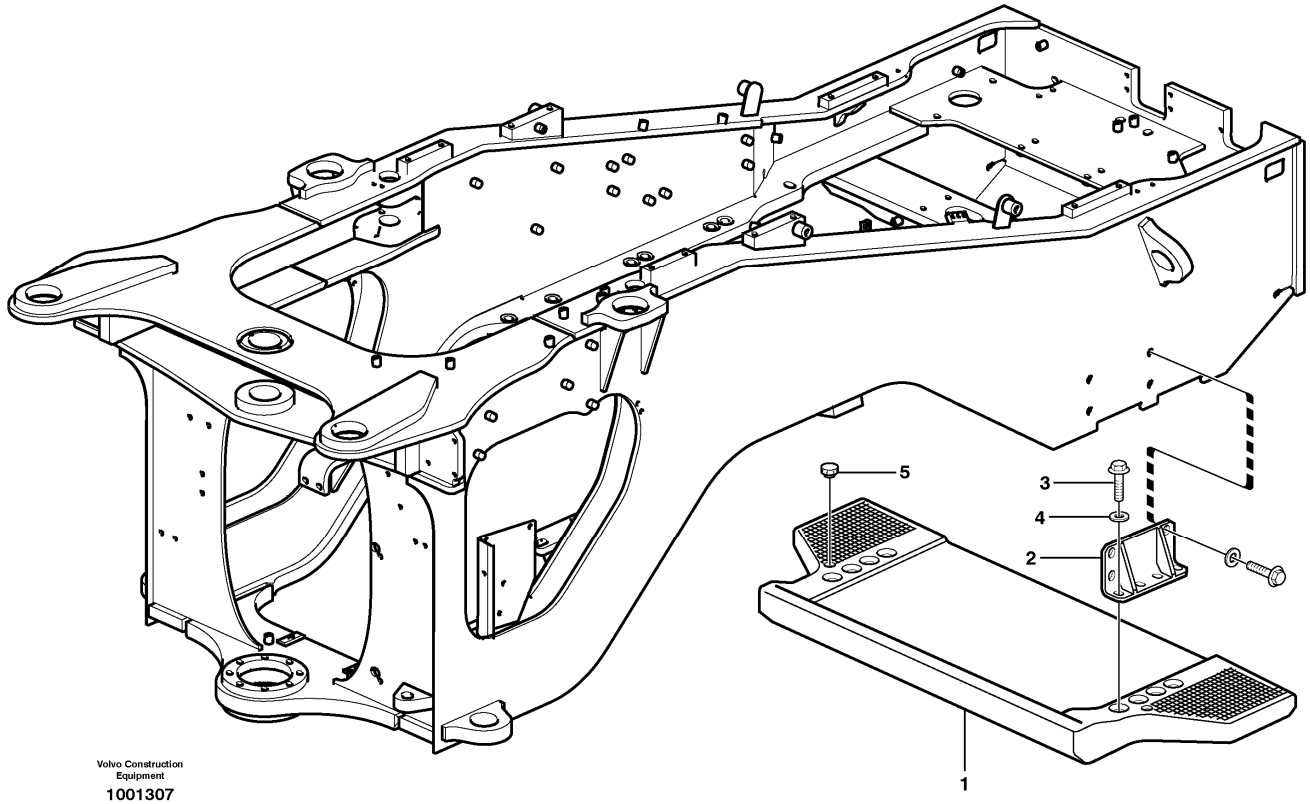

Section option	Kit	Option description
VOE80944		Counterweight, logging 680 kg

Pos	Part	Q1	Q2	Q3	Q4	Q5	PS	Kit	Description	Option(s)	Remark
1	VOE11176215	1							Counterweight		
2	VOE11163179	2							Anchorage		
3	VOE968437	8							Flange screw		
4	VOE191940	8							Washer		
5	VOE13931675	2							Protecting plug		

VOLVO

Construction Equipment

PROSIS Part Information

Date:	Image id:	Catalogue:	Model:
25/08/2018	**1000752**	**20086**	**L120E**
Brand:	Serial:	Group/Section:	Title:
Volvo	**19804-, 66001-, 71401-**	**741/100**	**Frame link 33380,33395 IRAN**

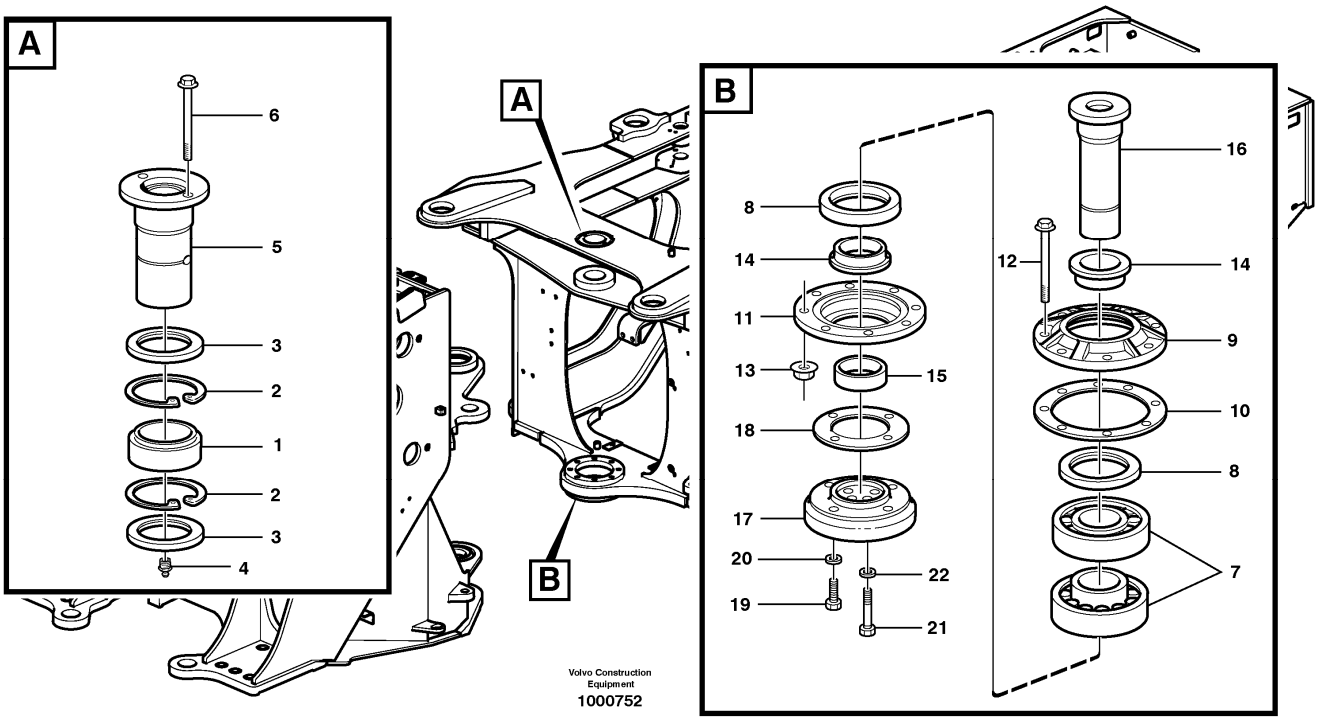

Section option	Kit	Option description
VOE33380		Volvo Wheel Loader L120E S/N 19801-, S/N 66001- USA, S/N 71401- BRA
VOE33395		Wheel Loader L120E3 IRAN

Pos	Part	Q1	Q2	Q3	Q4	Q5	PS	Kit	Description	Option(s)	Remark
1	VOE6624649	1							Spherical plain bearing		
2	VOE914552	2							Retaining ring		
3	VOE967941	2							Sealing ring		
4	VOE914169	1							Lubricating nipple		
	VOE914170	1							Lubricating nipple		
5	VOE11177995	1							Pin		
6	VOE946472	2							Flange screw		
7	VOE184707	2							Roller bearing		
8	VOE11018690	2							Sealing ring		
9	VOE4856770	1							Cover		
10	VOE4856773	2							Shim		THICK = 0,10 MM
	VOE4856772	2							Shim		THICK = 0,15 MM
	VOE4856771	3							Shim		THICK = 0,50 MM
11	VOE4856769	1							Cover		

12	VOE13946474	8							Flange screw		
13	VOE13971096	8							Flange nut		
14	VOE4856768	2							Spacer ring		
15	VOE4850208	1							Bushing		
16	VOE11020203	1							Pin		
17	VOE4930994	1							Attaching washer		
18	VOE4850222	2							Shim		THICK = 0,1 MM
	VOE4850223	2							Shim		THICK = 0,15 MM
	VOE4850224	2							Shim		THICK = 0,50 MM
	VOE4850225	2							Shim		THICK = 1,20 MM
19	VOE978941	4							Hexagon screw		
20	VOE13955900	4							Washer		
21	VOE978938	4							Hexagon screw		
22	VOE13955900	4							Washer		

VOLVO

Construction Equipment

PROSIS Part Information

Date:	Image id:	Catalogue:	Model:
25/08/2018	**EE208**	**20086**	**L120E**
Brand:	Serial:	Group/Section:	Title:
Volvo	**19804-, 66001-, 71401-**	**771/100**	**Wheel 23.5R25**

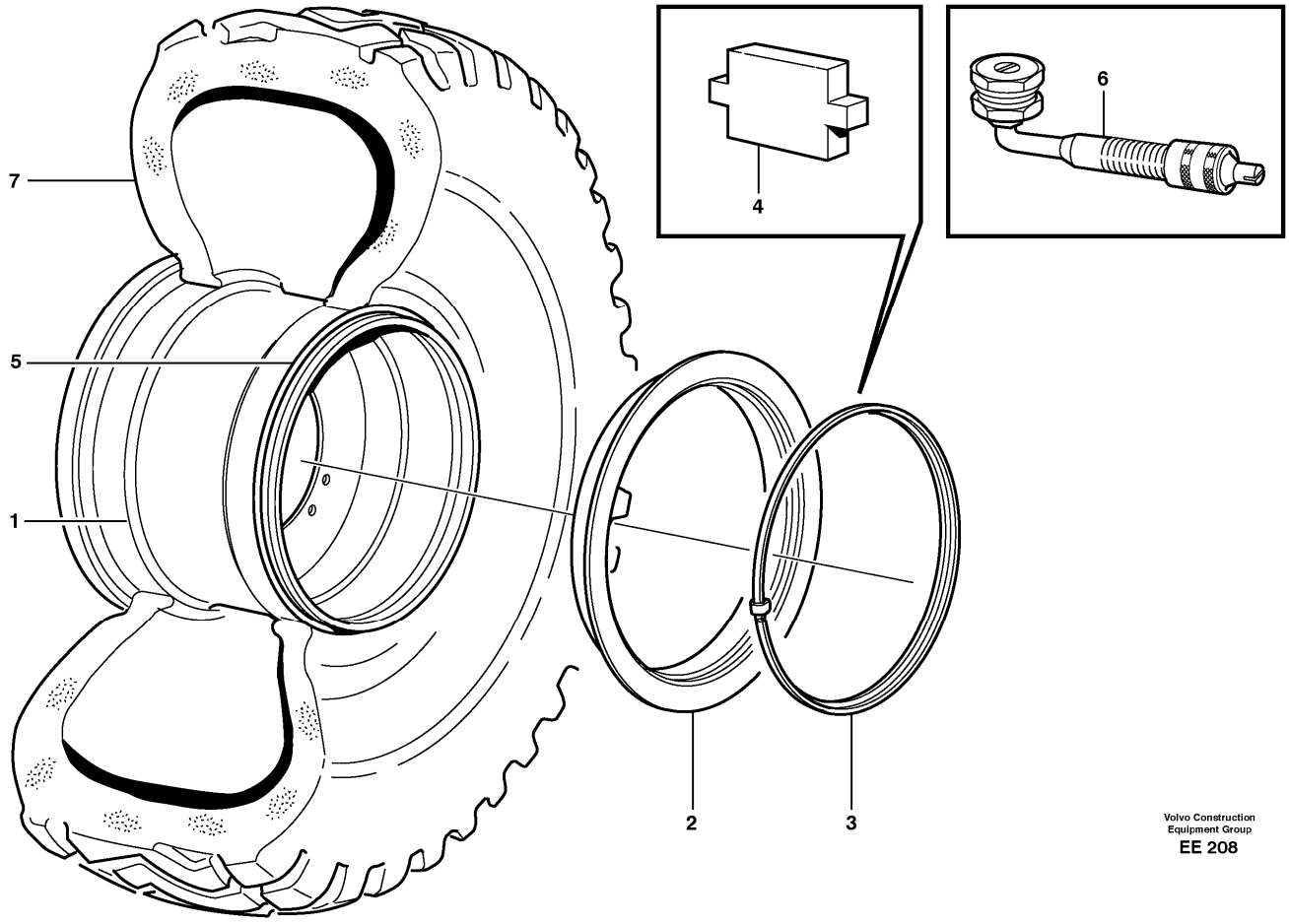

Section option	Kit	Option description
VOE82445		Rims 19,2 - 25
VOE92491		Rims 19,2 - 25
VOE92492		Three piece rims for 23.5 tires
VOE33395		Wheel Loader L120E3 IRAN

Q1-Q5	Option	Option description	
Q1 92491	VOE92491	Rims 19,2 - 25	
Q2 92492	VOE92492	Three piece rims for 23.5 tires	See footnote 1316)
Q3 82445 BRA	VOE82445	Rims 19,2 - 25	
Q4 33395 IRAN	VOE33395	Wheel Loader L120E3 IRAN	

Pos	Part	Q1	Q2	Q3	Q4	Q5	PS	Kit	Description	Option(s)	Remark
1	VOE11180817	4	4		4		SS		Wheel		(VOE11020575)19,50 X 25

	VOE11180257			4					Wheel		
					4		NS		Wheel		
2	VOE11020635	4	4		4				•Rim flange		
	VOE11180384			4					•Rim flange		
3	VOE11020636	4	4		4		OP		•Lock ring		
	VOE11180385			4			OP		•Lock ring		
4	VOE11020637	4	4		4		SS		•Lock lug		
	VOE11195190			4					•Lock lug		(VOE11180386)
5	VOE4789826	4	4	4	4				O-ring		
6	VOE11000054	4	4	4	4				Valve		
	VOE6633616	4	4	4					•Nipple		
	VOE4789869	4	4	4					•Cap		
7		4					NS		Tire	VOE82908	23,5-25/16 HRL L3 Good Year HRL E/L-3A
		4					NS		Tire	VOE83185	23,5-25/16 HRL L5 Good Year HRL D/L-5A
	VOE4781672	4					OP		Tyre	VOE91504	Good Year 23,5-R25 L2 RL2
	VOE11045022	4					OP		Tyre	VOE91511	Michelin 23,5R25 L3 XHA
		4					NS		Tire	VOE92014	Good Year 23,5R25 L2 GP2B
		4					NS		Tire	VOE83138	23.5R25TL-3A+ L3 Good Year TL-3A+**
	VOE11026676	4			4		OP		Tyre	VOE92903	Bridgestone 23.5R25 L3 VMT
		4					NS		Tire	VOE80170, VOE83961	23,5 R25 GP4B
		4					NS		Tire	VOE82317	23,5 R25 VSDL
		4					NS		Tire	VOE82318	23,5 R25 XMINED2
		4			4		NS		Tire	VOE83314	25.5R25 VJT
		4			4		NS		Tire	VOE84152	23.5R25 RL-5K

1316) With block and conveyeor bely

VOLVO

Construction Equipment

PROSIS Part Information

Date:	Image id:	Catalogue:	Model:
25/08/2018	**1001155**	**20086**	**L120E**
Brand:	Serial:	Group/Section:	Title:
Volvo	**19804-, 66001-, 71401-**	**771/150**	**Wheel 750/65R25**

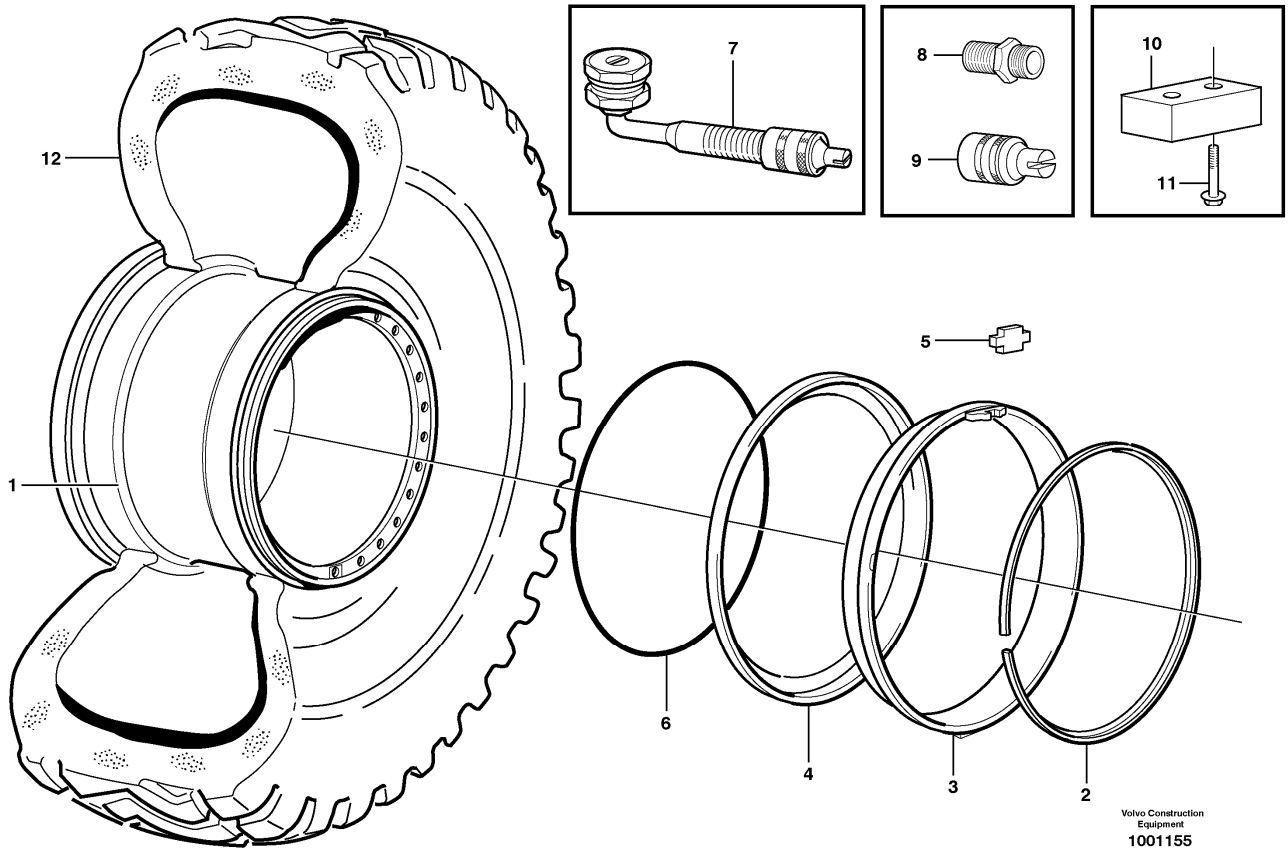

Section option	Kit	Option description
VOE80826		Five-piece rims for 65-profile tires
VOE80962		Tire 750/65R25 XLD L3 Michelin
VOE80996		Tire 750/65R25GP3D
VOE84376		Five-piece rims for 65-profile tires

Q1-Q5	Option	Option description	
Q1 80826	VOE80826	Five-piece rims for 65-profile tires	
Q2 84376	VOE84376	Five-piece rims for 65-profile tires	

Pos	Part	Q1	Q2	Q3	Q4	Q5	PS	Kit	Description	Option(s)	Remark
1	VOE11180032	4							Wheel		25 - 22,00 / 3
	15020924		4								
2	VOE4789996	4							•Lock ring		
3	VOE4789997	4							•Locating ring		
4	VOE4789760	8							•Rim flange		
5	VOE4789993	4							•Lock lug		

6	VOE4789826	4	4						O-ring		
7	VOE11000054	4	4						Valve		
	VOE6633616	4							•Nipple		
	VOE4789869	4							•Cap		
8	VOE6633616	4							Nipple		
9	VOE4789869	4							Cap		
10	VOE11130964	2							Stop lug		
	VOE11130964		2						Stop lug		
11	VOE946472	4	4						Flange screw		
12		4					NS		Tire	VOE80962	750/65 R25 XLD
		4					NS		Tire	VOE80996	750/65 R25 GP3D

VOLVO

Construction Equipment

PROSIS Part Information

Date:	Image id:	Catalogue:	Model:
25/08/2018	**EG131**	**20086**	**L120E**
Brand:	Serial:	Group/Section:	Title:
Volvo	**19804-, 66001-, 71401-**	**810/100**	**Drivers cab 33357 STD, 33366 USA**

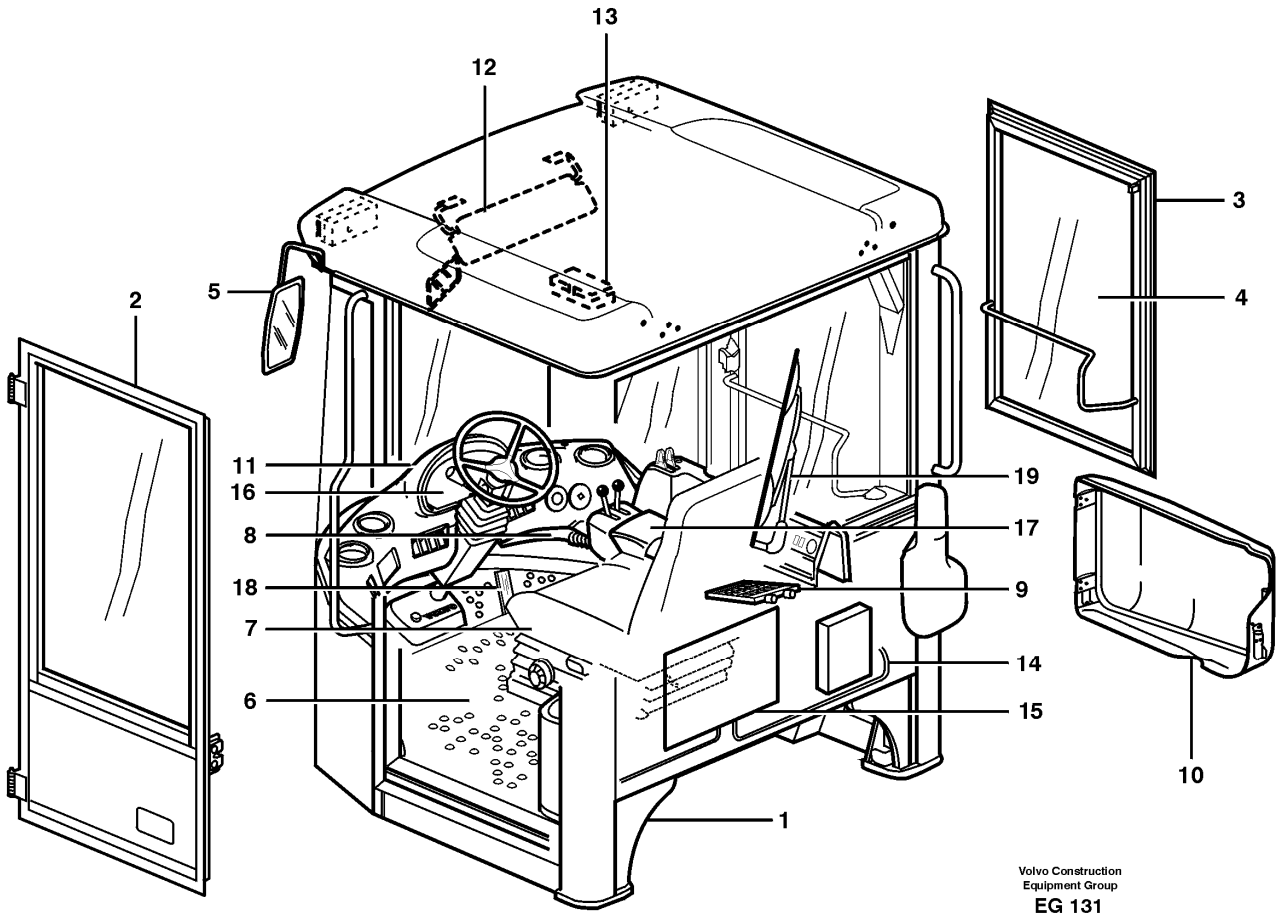

Section option	Kit	Option description
VOE33357		Cab L120E
VOE33366		Cab L120E USA

Pos	Part	Q1	Q2	Q3	Q4	Q5	PS	Kit	Description	Option(s)	Remark
	VOE33357	1							Cab		
	VOE33366	1					OP		Cab		
1		1					NS		•Cab Framework		See ref 810/150
2		1							••Door		See ref 831/100
3		1							••Window frame		See ref 843/150
4		1							•Glass panes		See ref 843/100
5		1							•Rear view mirror		See ref 841/100
6		1							•Insulating mats		See ref 851/100

7		1							•Slide Rail		See ref 852/125
8		1							•Air duct		See ref 872/250
9		1							•Heating system		See ref 872/100
10		1							•Filter cover		See ref 837/200
11		1							•Instr Panel		See ref 881/100
12		1							•Interior components		See ref 882/100
13		1							•Lighting,cab		See ref 352/200
14		1							•Cable harnesses, cab		See ref 371/400
15		1							•El Distr Unit		See ref 372/200
16		1							•Instruments		See ref 380/100
17		1							•Arm rest		See ref 882/200
18		1							•Throttle control		See ref 271/100
19		1							•Windshield Wiper		See ref 363/100
		1							Operator's Seat		See ref 852/100

VOLVO

Construction Equipment

PROSIS Part Information

Date:	Image id:	Catalogue:	Model:
25/08/2018	**1004695**	**20086**	**L120E**
Brand:	Serial:	Group/Section:	Title:
Volvo	**19804-, 66001-, 71401-**	**810/150**	**Cab body, roof and floor panel**

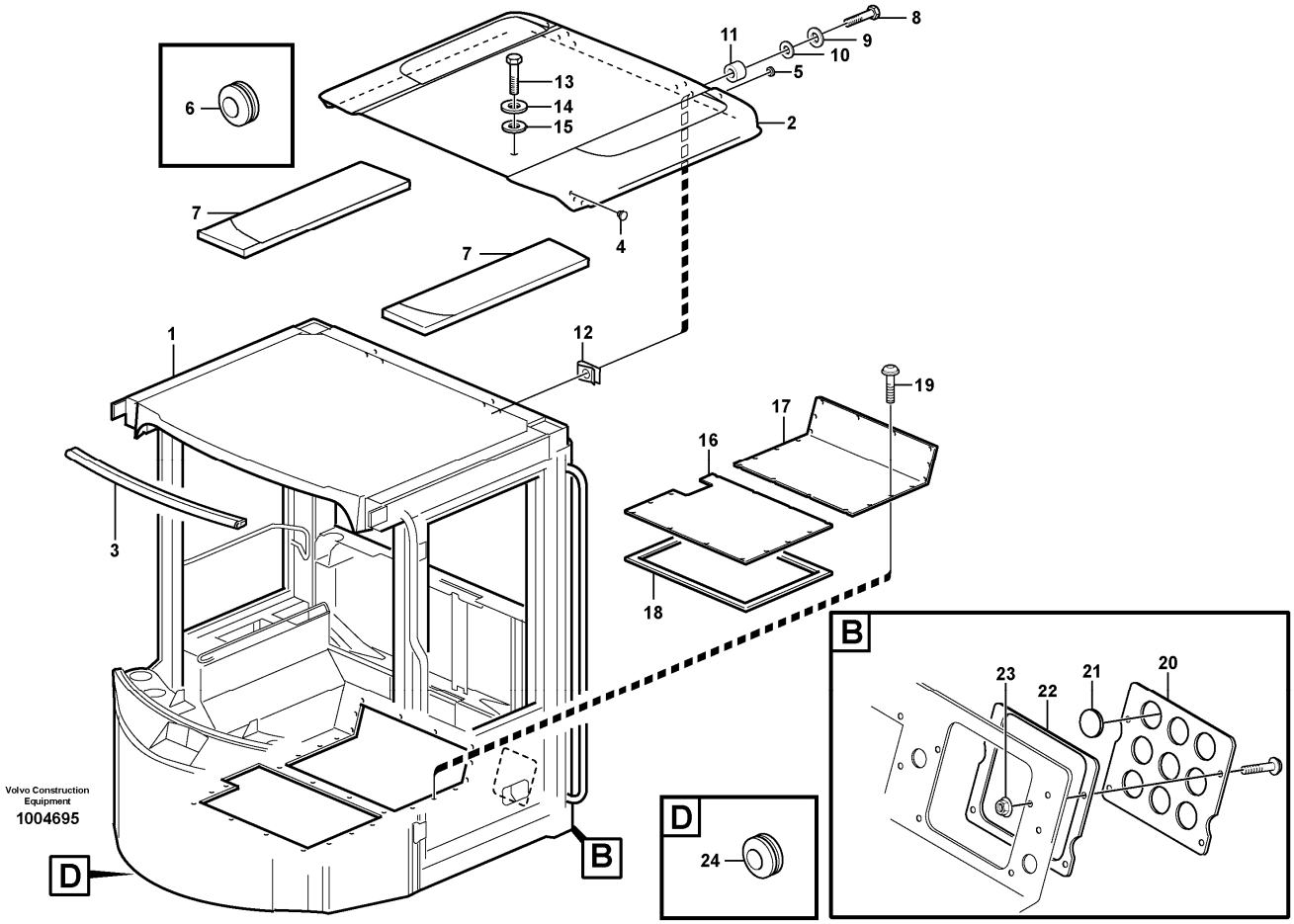

Section option	Kit	Option description
VOE33357		Cab L120E
VOE33366		Cab L120E USA

Pos	Part	Q1	Q2	Q3	Q4	Q5	PS	Kit	Description	Option(s)	Remark
1		1					NS		Cab Framework		
		1							•Window frame		
		1							•Door		
2	VOE11006293	1							Roof		See footnote 2013)
3	VOE11104469	1							Sealing strip		
4	VOE941268	2							Plug		
5	VOE11057786	2							Plug		
6	VOE941266	2							Plug		OD = 12 MM
	VOE941267	4							Plug		OD = 16 MM
7	VOE11164431	2							Insulation		

8	VOE13945444	4							Screw		L=25 MM
9	VOE11117464	4							Plain washer		(VOE13960141)
10	VOE11104399	2							Rubber washer		
11	VOE930428	4							Spacer ring		
12	VOE13949867	2							Spring nut		
13	VOE13946173	2							Screw		L=20 MM
14	VOE11117464	2							Plain washer		(VOE13960141)
15	VOE11104399	2							Rubber washer		
16	VOE11164338	1							Floor plate		
17	VOE11006473	1							Floor Panel		
18	VOE11104947	REQ							Sealing strip		L = 3100 MM
19	VOE981208	12							Six point socket screw		
19	VOE981208	3							Six point socket screw	VOE33395	IRAN
20	VOE11006159	1							Hatch		
21	VOE11006971	5							Plug		
22	VOE11006162	1							Gasket		
23	VOE948645	4							Flange lock nut		
24	VOE13961965	1							Protecting plug		

2013) Unpainted

VOLVO

Construction Equipment

PROSIS Part Information

Date:	Image id:	Catalogue:	Model:
25/08/2018	**1000661**	**20086**	**L120E**
Brand:	Serial:	Group/Section:	Title:
Volvo	**19804-, 66001-, 71401-**	**818/100**	**Cab mounting block**

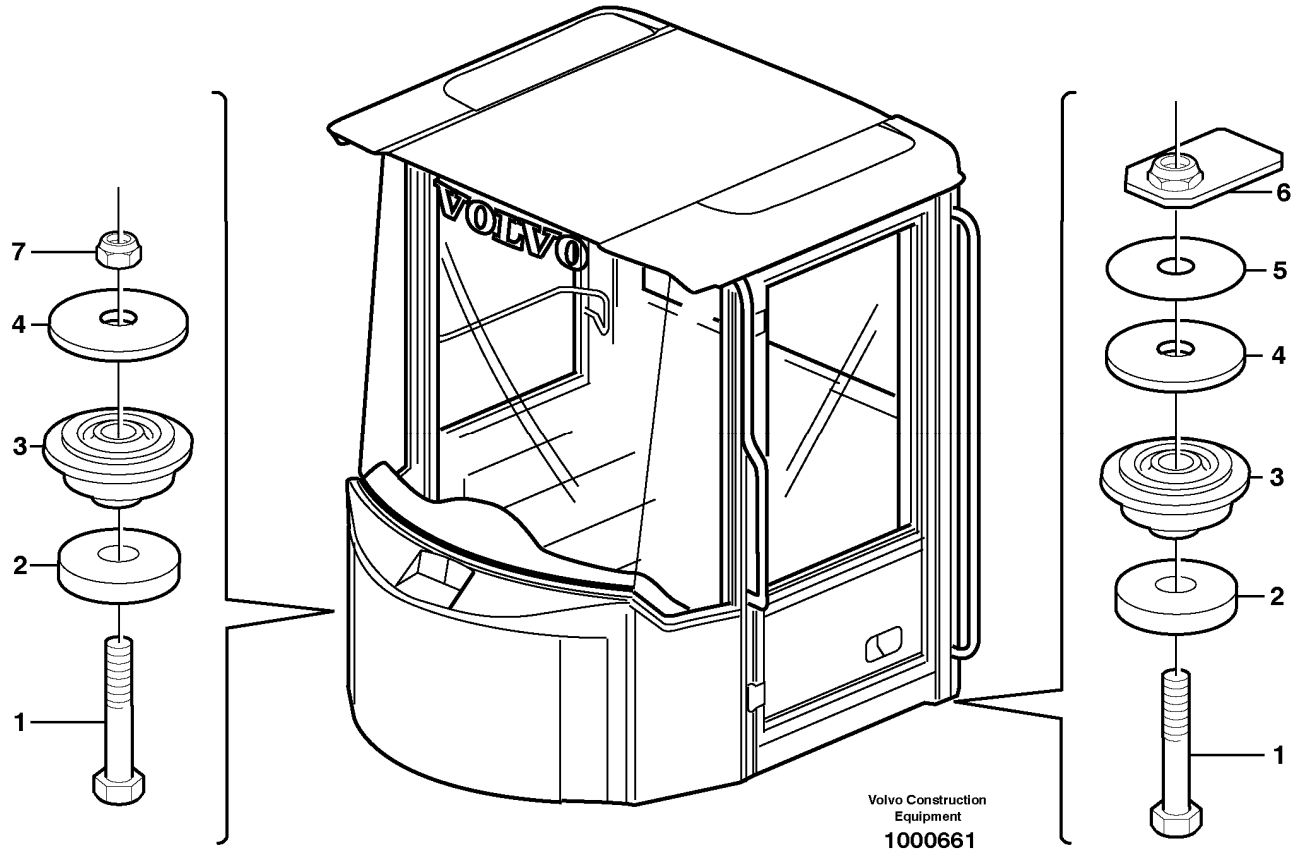

Section option	Kit	Option description
VOE33380		Volvo Wheel Loader L120E S/N 19801-, S/N 66001- USA, S/N 71401- BRA
VOE33395		Wheel Loader L120E3 IRAN

Pos	Part	Q1	Q2	Q3	Q4	Q5	PS	Kit	Description	Option(s)	Remark
1	VOE13963364	4							Hexagon screw		
2	VOE11005939	4							Washer		
3	VOE11006889	4							Rubber cushion		
4	VOE11005938	4							Washer		
5	VOE11025671	2							Shim		
6	VOE11006414	2							Nut retainer		
7	VOE948836	2							Lock nut		

VOLVO

Construction Equipment

PROSIS Part Information

Date:	Image id:	Catalogue:	Model:
25/08/2018	**1022033**	**20086**	**L120E**
Brand:	Serial:	Group/Section:	Title:
Volvo	**19804-, 66001-, 71401-**	**821/100**	**Engine cover**

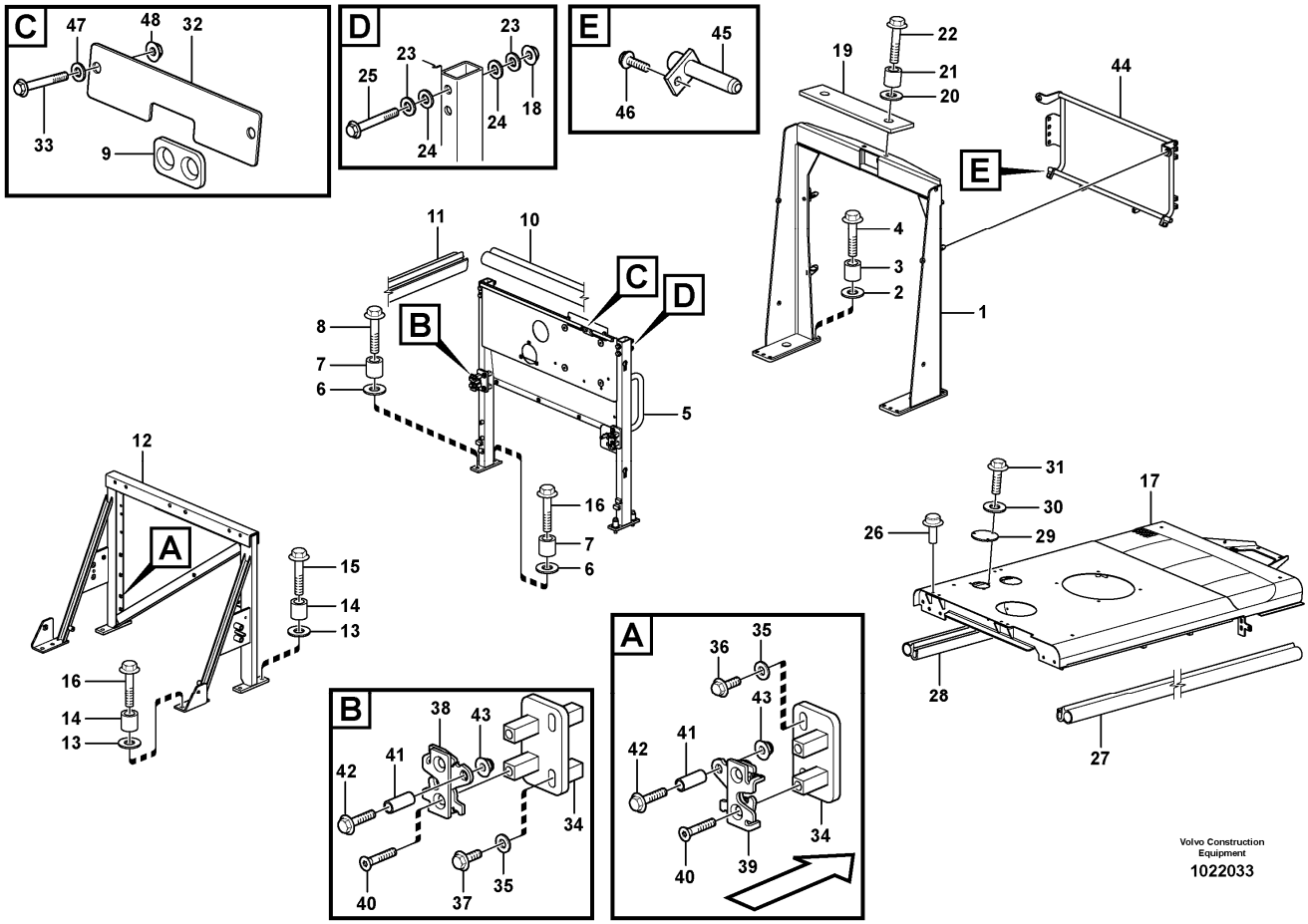

Section option	Kit	Option description
VOE33380		Volvo Wheel Loader L120E S/N 19801-, S/N 66001- USA, S/N 71401- BRA
VOE33395		Wheel Loader L120E3 IRAN

Pos	Part	Q1	Q2	Q3	Q4	Q5	PS	Kit	Description	Option(s)	Remark
1	VOE11435185	1							Support		
	VOE11014257	2							•Lock		
2	VOE13960145	8							Washer		
3	VOE4861316	8							Spacer ring		
4	VOE13965194	8							Screw		
5	VOE11435850	1							Partition wall		(VOE11435461)S/N - 20217 SWE
5	VOE11436214	1					SS		Partition wall		S/N 20218 - SWE
6	VOE13960145	4							Washer		
7	VOE4861316	4							Spacer ring		

8	VOE13965194	4							Screw		
9	VOE11414592	1							Grommet		
10	VOE4766526	REQ							Sealing strip		L = 651 MM
11	VOE4766526	REQ							Sealing strip		L = 128 MM
12	VOE11435006	1					SS		Support		
	VOE4753600	2							•Set ring		
13	VOE13960145	6							Washer		
14	VOE4861316	6							Spacer ring		
15	VOE13965194	4							Screw		
16	VOE13965193	2							Screw		
17	VOE11435477	1							Top plate		
17	VOE11436110	1							Top plate		
18	VOE971096	4							Flange nut		
19		1					NS		Plate		
20	VOE13960145	2							Washer		
21	VOE4861316	2							Spacer ring		
22	VOE13965194	2							Screw		
23	VOE13955897	4							Washer		
24	VOE13955897	4							Washer		
25	VOE946473	4							Flange screw		
26	VOE14344147	4							Plug		
27	VOE4766526	REQ							Sealing strip		L = 1090 MM
28	VOE4766526	REQ							Sealing strip		L = 1090 MM
29	VOE11414559	1							Plate		
30	VOE11117464	3							Plain washer		(VOE13960141)
31	VOE946440	3							Flange screw		
32	VOE11436101	1					OP		Plate		
33	VOE13946173	2							Screw		
34	VOE11411892	4							Plate		
35	VOE11117464	8							Plain washer		(VOE13960141)
36	VOE13947760	4							Screw		
37	VOE13945444	4							Screw		
38	VOE11175891	2							Lock		
39	VOE11175892	2							Lock		
40	VOE969846	8							Six point socket screw		
41	VOE975547	4							Spacer sleeve		
42	VOE13965176	4							Screw		
43	VOE13949278	4							Flange lock nut		
44	VOE11435501	1					SS		Frame		
45	VOE11174479	2							Pin		
46	VOE971319	2							Six point socket screw		
47	VOE11117464	2							Plain washer		(VOE13960141)
48	VOE948645	2							Flange lock nut		

VOLVO

Construction Equipment

PROSIS Part Information

Date:	Image id:	Catalogue:	Model:
25/08/2018	**1019747**	**20086**	**L120E**
Brand:	Serial:	Group/Section:	Title:
Volvo	**19804-, 66001-, 71401-**	**821/150**	**Top plate, side hatches, rear**

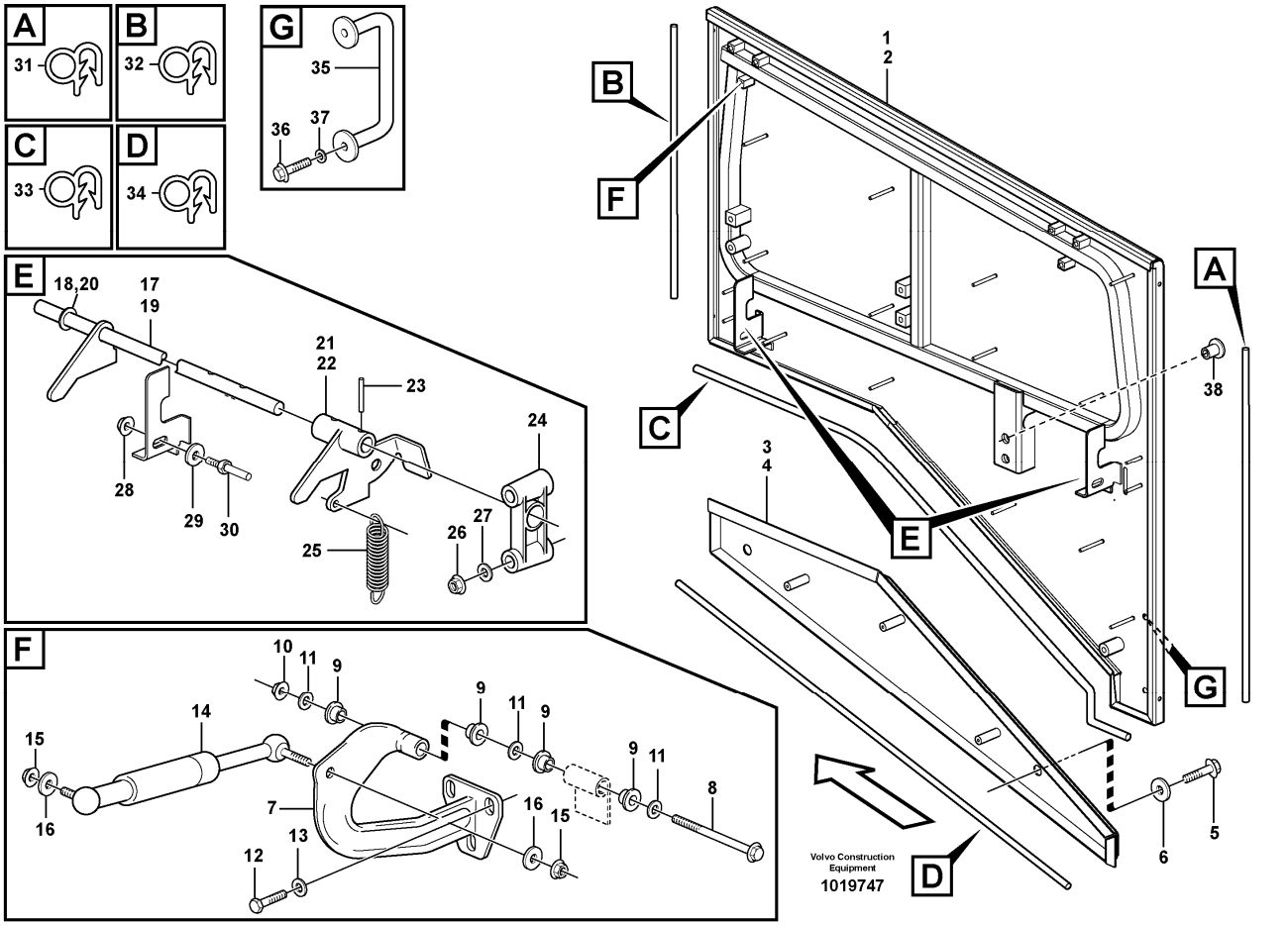

Section option	Kit	Option description
VOE33380		Volvo Wheel Loader L120E S/N 19801-, S/N 66001- USA, S/N 71401- BRA
VOE83403		Covering mudguards front/ rear for 65-series tires
VOE83407		Covering mudguards rear for standard tires
VOE33395		Wheel Loader L120E3 IRAN

Q1-Q5	Option	Option description	
Q1 33380 33395	VOE33380	Volvo Wheel Loader L120E S/N 19801-, S/N 66001- USA, S/N 71401- BRA	
Q2 83407 83403	VOE83407	Covering mudguards rear for standard tires	

Pos	Part	Q1	Q2	Q3	Q4	Q5	PS	Kit	Description	Option(s)	Remark
1	VOE11413454	1							Side hatch		RH
2	VOE11413455	1							Side hatch		LH
3	VOE11400398	1							Side plate		RH

4	VOE11400399	1							Side plate		LH
5	VOE965225	4							Flange screw		
6	VOE13960145	4							Washer		
7	VOE11400717	4							Hinge		
8	VOE13946474	4							Flange screw		
9	VOE1588548	16							Bushing		
10	VOE971099	4							Flange lock nut		(VOE13971099)
11	VOE13955897	12							Washer		
12	VOE13947760	12							Screw		
13	VOE11117464	12							Plain washer		(VOE13960141)
14	VOE11435548	4							Gas spring		(VOE11174326)
	VOE11435550		4						Gas spring		(VOE11174328)
15	VOE13971098	6							Flange nut		
16	VOE13960143	4							Washer		
17	VOE11413865	1							Lock shaft		
18	VOE13955897	1							•Washer		
19	VOE11413866	1							Lock shaft		
20	VOE13955897	1							•Washer		
21	VOE11413863	1							Handle		RH
22	VOE11413864	1							Handle		LH
23	VOE951955	4							Spring pin		
24	VOE11174317	4							Bearing bracket		
25	VOE4742010	2							Tension spring		
26	VOE981447	6							Flange lock nut		
26	VOE981447	8							Flange lock nut	VOE33395	IRAN
27	VOE960139	6							Plain washer		
27	VOE960139	8							Plain washer	VOE33395	IRAN
28	VOE971096	6							Flange nut		
28	VOE971096	8							Flange nut	VOE33395	IRAN
29	VOE13960145	6							Washer		
29	VOE13960145	8							Washer	VOE33395	IRAN
30	VOE11175472	4							Pin		
31	VOE4766526	REQ							Sealing strip		L = 2 x 990 MM
32	VOE4766526	REQ							Sealing strip		L = 2 x 635 MM
33	VOE4766526	REQ							Sealing strip		L = 2 x 1200 MM
34	VOE4766526	REQ							Sealing strip		L = 2 x 1050 MM
35	VOE11413175	2							Handle		
36	VOE946441	4							Flange screw		
	VOE13965193		6						Screw		
37	VOE13960143	4							Washer		
	VOE13960145		6						Washer		
38	VOE11413247	6							Plug		
	VOE941266		4						Plug		

VOLVO

Construction Equipment

PROSIS Part Information

Date:	Image id:	Catalogue:	Model:
25/08/2018	**1026127**	**20086**	**L120E**
Brand:	Serial:	Group/Section:	Title:
Volvo	**19804-, 66001-, 71401-**	**821/200**	**Side hatches, front**

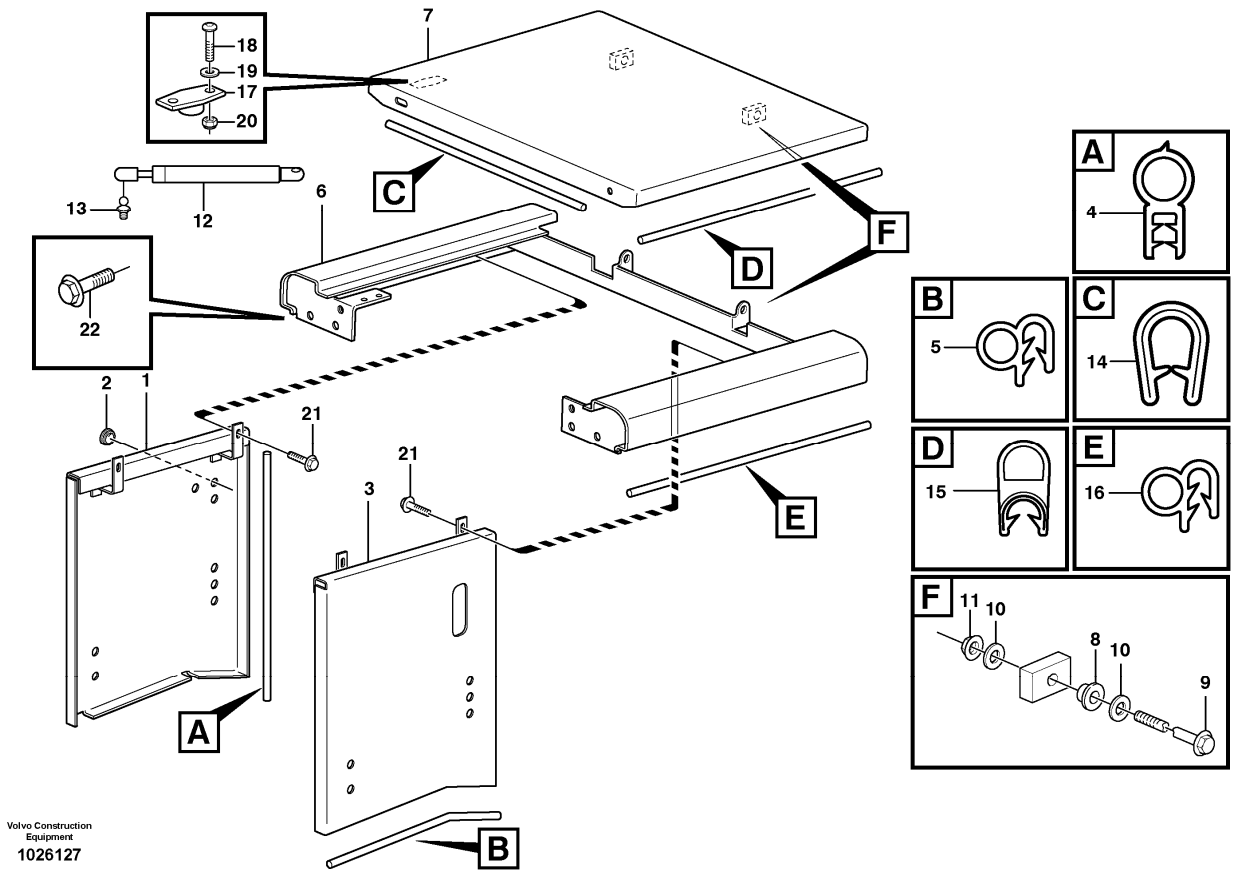

Section option	Kit	Option description
VOE33380		Volvo Wheel Loader L120E S/N 19801-, S/N 66001- USA, S/N 71401- BRA
VOE33395		Wheel Loader L120E3 IRAN

Q1-Q5	Option	Option description	
Q1 33380	VOE33380	Volvo Wheel Loader L120E S/N 19801-, S/N 66001- USA, S/N 71401- BRA	
Q2 33395 IRAN	VOE33395	Wheel Loader L120E3 IRAN	

Pos	Part	Q1	Q2	Q3	Q4	Q5	PS	Kit	Description	Option(s)	Remark
1	VOE11400817	1							Side plate		
2	VOE11057786	4							Plug		
3	VOE11400599	1	1						Side plate		
4	VOE4881656	REQ	REQ						Framework moulding		L = 2 x 750 MM
5	VOE4766526	REQ	REQ						Sealing strip		L = 2 x 485 MM

	VOE11413730	1	1						Top plate		
6	VOE11400949	1	1				OP		•Top plate		
7	VOE11400951	1	1						•Hatch		
8	VOE1588548	2	2						•Bushing		
9	VOE13965193	2	2						•Screw		
10	VOE955897	4	4						•Plain washer		
11	VOE971099	2	2						•Flange lock nut		(VOE13971099)
12	VOE11174619	1	1						•Gas spring		
13	VOE15140510	2	2						•Ball stud		(VOE11174821)
14	VOE4786031	REQ	REQ						•Framework moulding		L = 560 MM
15	VOE4786044	REQ	REQ						•Sealing strip		L = 2 x 420 MM
16	VOE4766526	REQ	REQ						•Sealing strip		L = 2 x 470 MM
17	VOE795581	1	1						•Door stop		
18	VOE969405	2	2						•Six point socket screw		
19	VOE13960138	2	2						•Washer		
20	VOE946577	4	4						•Lock nut		
21	VOE946671	4							Flange screw		
22	VOE946473	4	4						Flange screw		M12 x 90
	VOE946671	4	4						Flange screw		M8 x 30

VOLVO

Construction Equipment

PROSIS Part Information

Date:	Image id:	Catalogue:	Model:
25/08/2018	**1016120**	**20086**	**L120E**
Brand:	Serial:	Group/Section:	Title:
Volvo	**19804-, 66001-, 71401-**	**821/250**	**Noise reduction. 82172**

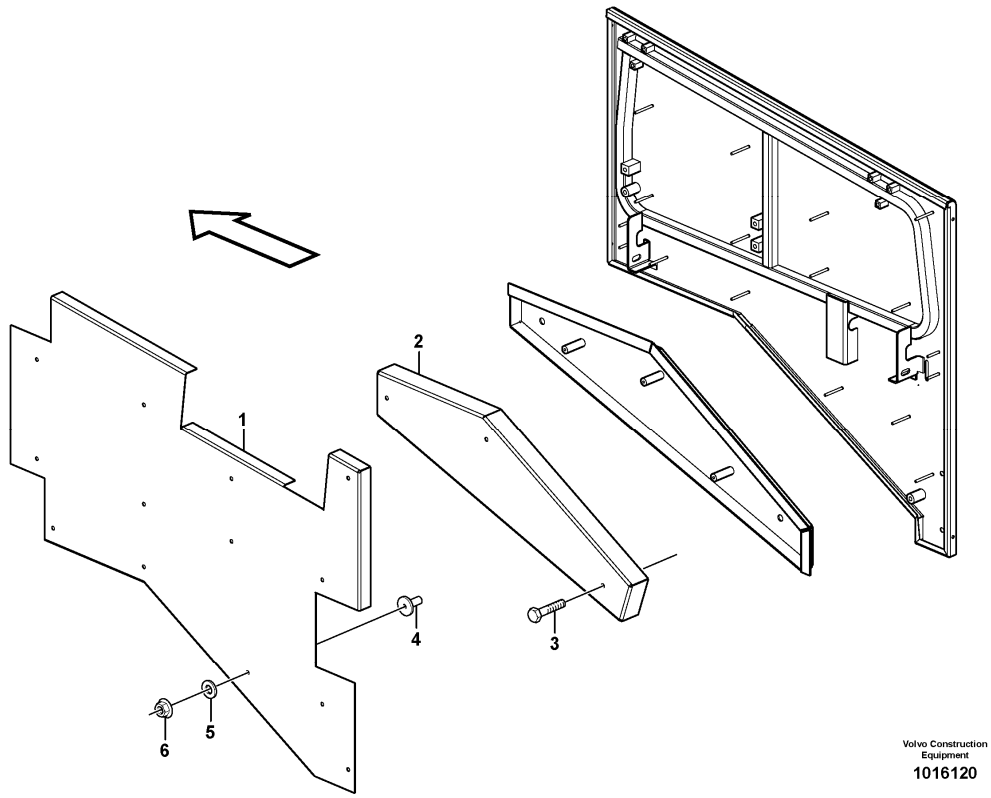

Section option	Kit	Option description
VOE82172		Noise reduction kit EU

Pos	Part	Q1	Q2	Q3	Q4	Q5	PS	Kit	Description	Option(s)	Remark
1	VOE11435917	1							Sound absorber		RH
	VOE11435918	1							Sound absorber		(VOE11414891)LH
2	VOE11175885	1							Sound absorber		RH
	VOE11175886	1							Sound absorber		LH
3	VOE971321	6							Six point socket screw		
4	VOE11413269	26							Plastic plug		
5	VOE13949817	26							Washer		
6	VOE981447	26							Flange lock nut		

VOLVO

Construction Equipment

PROSIS Part Information

Date:	Image id:	Catalogue:	Model:
25/08/2018	**1019772**	**20086**	**L120E**
Brand:	Serial:	Group/Section:	Title:
Volvo	**19804-, 66001-, 71401-**	**823/150**	**Radiator casing**

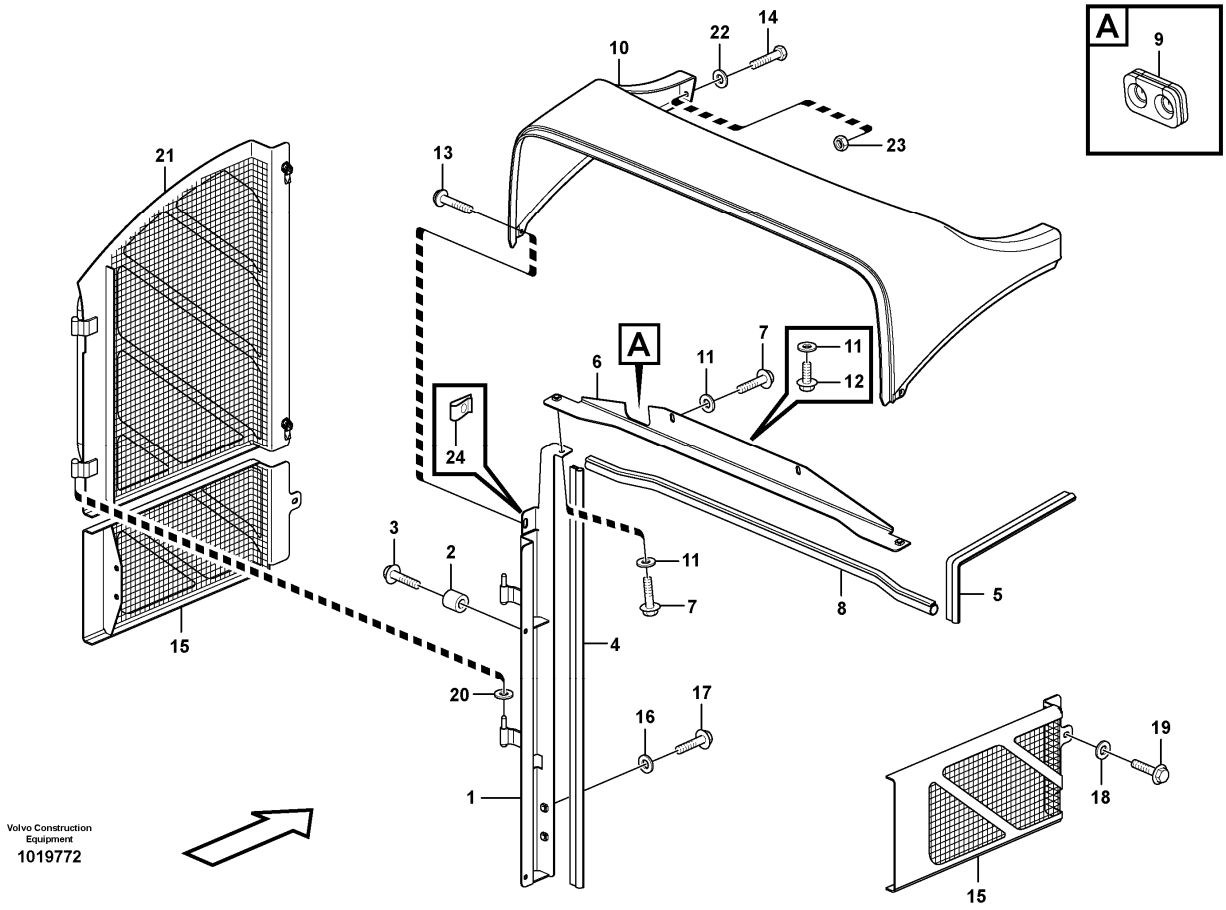

Section option	Kit	Option description
VOE33380		Volvo Wheel Loader L120E S/N 19801-, S/N 66001- USA, S/N 71401- BRA
VOE33395		Wheel Loader L120E3 IRAN

Pos	Part	Q1	Q2	Q3	Q4	Q5	PS	Kit	Description	Option(s)	Remark
1	VOE11435899	1							Angle plate		(VOE11435481)RH
	VOE11435900	1							Angle plate		(VOE11435482)LH
2	VOE4973473	4							Spacer sleeve		
3	VOE946671	4							Flange screw		
4	VOE4881656	REQ							Framework moulding		2 x 875 MM
5	VOE4881656	REQ							Framework moulding		2 x 455 MM
6	VOE11435535	1							Angle plate		
7	VOE13946173	4							Screw		
8	VOE11400637	REQ							Sealing strip		L = 935 MM

9	VOE11414592	1							Grommet		
10	VOE11414163	1					SS		Upper section		
	VOE15013381	1							Upper section		
11	VOE11117464	1							Plain washer		(VOE13960141)
12	VOE947107	1							Flange screw		
13	VOE969738	2							Six point socket screw		
14	VOE971383	2							Six point socket screw		
15	VOE11435472	1							Hatch		RH
	VOE11435473	1							Hatch		LH
16	VOE11117464	4							Plain washer		(VOE13960141)
17	VOE13946173	4							Screw		
18	VOE11117464	2							Plain washer		(VOE13960141)
19	VOE946671	2							Flange screw		
20	VOE4936344	4							Washer		
21	VOE11436054	1							Ventilation hatch		(VOE11435468)RH, S/N - 20217 SWE
	VOE11436054	1							Ventilation hatch		RH, S/N 20218 - SWE
	VOE11435896	1							Ventilation hatch		(VOE11435469)LH, S/N - 20217 SWE
	VOE11436055	1							Ventilation hatch		LH, S/N 20218 - SWE
22	VOE11117464	2							Plain washer		(VOE13960141)
23	VOE13945408	2							Nut		
24	VOE949921	2							Spring nut		

VOLVO

Construction Equipment

PROSIS Part Information

Date:	Image id:	Catalogue:	Model:
25/08/2018	**1019782**	**20086**	**L120E**
Brand:	Serial:	Group/Section:	Title:
Volvo	**19804-, 66001-, 71401-**	**823/200**	**Radiator grille**

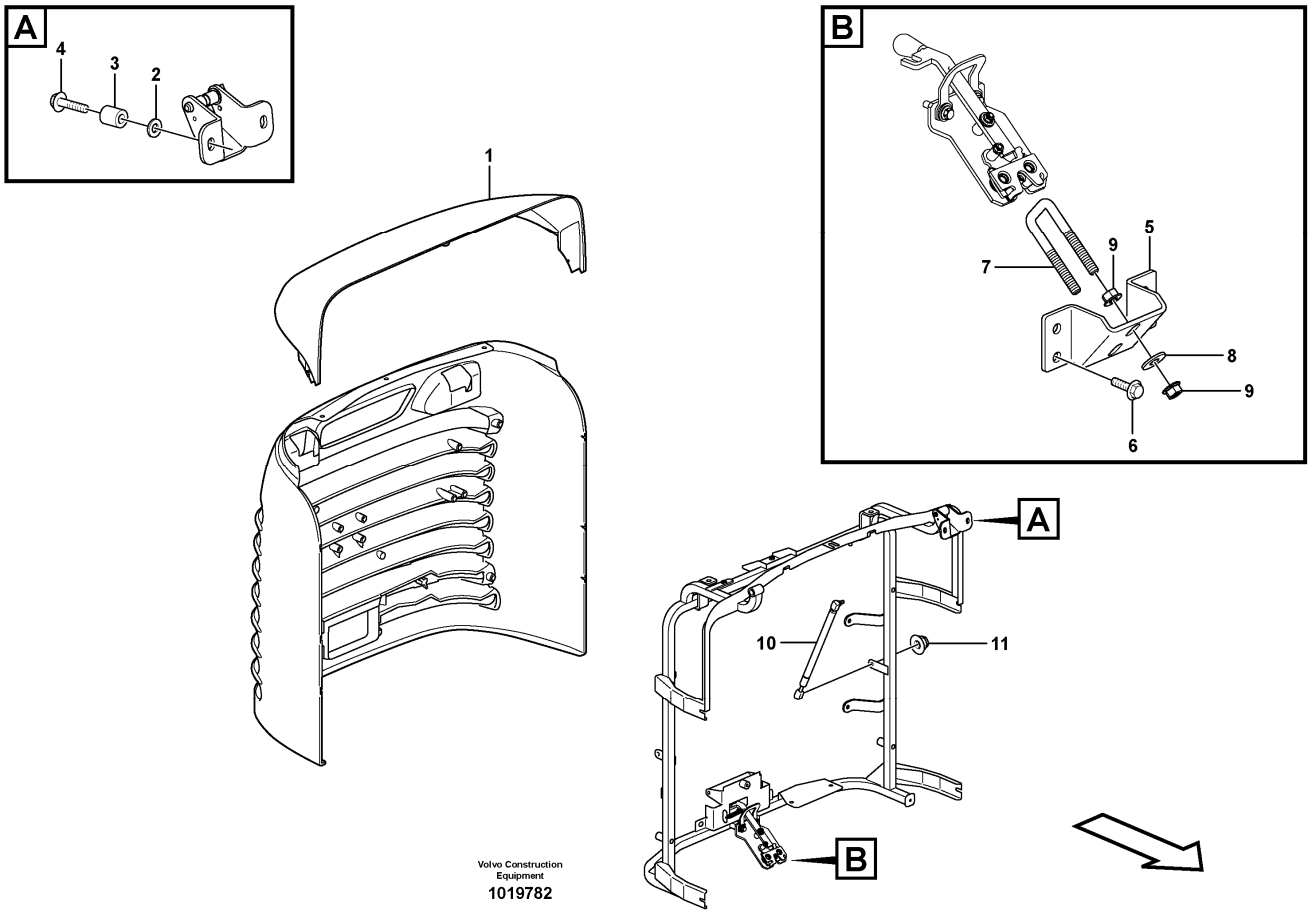

Section option	Kit	Option description
VOE33380		Volvo Wheel Loader L120E S/N 19801-, S/N 66001- USA, S/N 71401- BRA
VOE33395		Wheel Loader L120E3 IRAN

Pos	Part	Q1	Q2	Q3	Q4	Q5	PS	Kit	Description	Option(s)	Remark
1		1							Radiator grille		See ref 823/300
2	VOE11117464	4							Plain washer		(VOE13960141)
3	VOE4973473	4							Spacer sleeve		
4	VOE13947760	4							Screw		
5	VOE11400520	1							Attachment		
6	VOE946329	4							Flange screw		
7	VOE11400521	1							Lock brace		
8	VOE13960145	4							Washer		
9	VOE971096	4							Flange nut		
10	VOE11414538	2							Gas spring		

11	VOE948645	4							Flange lock nut		

VOLVO

Construction Equipment

PROSIS Part Information

Date:	Image id:	Catalogue:	Model:
25/08/2018	**1019786**	**20086**	**L120E**
Brand:	Serial:	Group/Section:	Title:
Volvo	**19804-, 66001-, 71401-**	**823/300**	**Radiator casing**

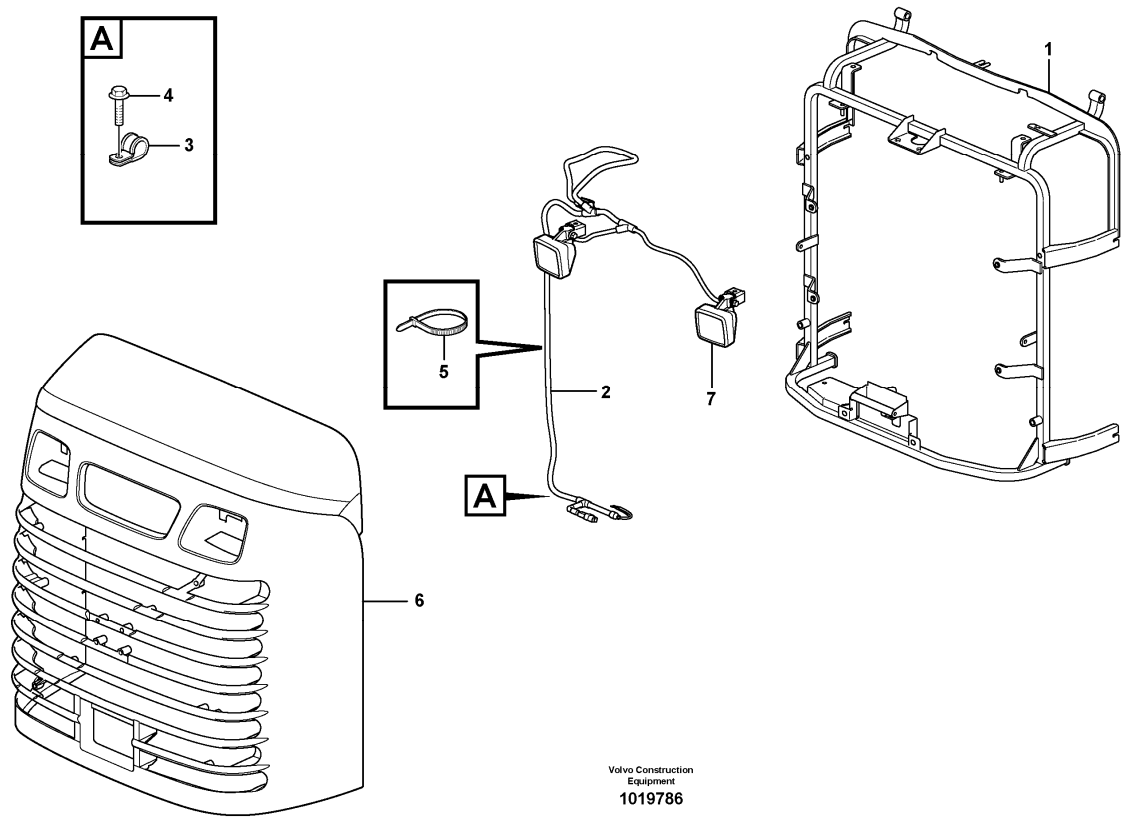

Section option	Kit	Option description
VOE33380		Volvo Wheel Loader L120E S/N 19801-, S/N 66001- USA, S/N 71401- BRA
VOE33395		Wheel Loader L120E3 IRAN

Q1-Q5	Option	Option description	
Q1 33380	VOE33380	Volvo Wheel Loader L120E S/N 19801-, S/N 66001- USA, S/N 71401- BRA	
Q2 33395	VOE33395	Wheel Loader L120E3 IRAN	

Pos	Part	Q1	Q2	Q3	Q4	Q5	PS	Kit	Description	Option(s)	Remark
1	VOE11198490	1	1						Radiator grille		
2	VOE11171478	1	1						•Cable harness		
3	VOE13949746	2	2						•Clamp		
4	VOE946440	2	2						•Flange screw		
5	VOE4881440	REQ	REQ						•Cable tie		

6		1	1						•Radiator grille		See ref 823/350
7		1							Work Lamp		See ref 353/100

VOLVO

Construction Equipment

PROSIS Part Information

Date:	Image id:	Catalogue:	Model:
25/08/2018	**1019820**	**20086**	**L120E**
Brand:	Serial:	Group/Section:	Title:
Volvo	**19804-, 66001-, 71401-**	**823/350**	**Radiator casing**

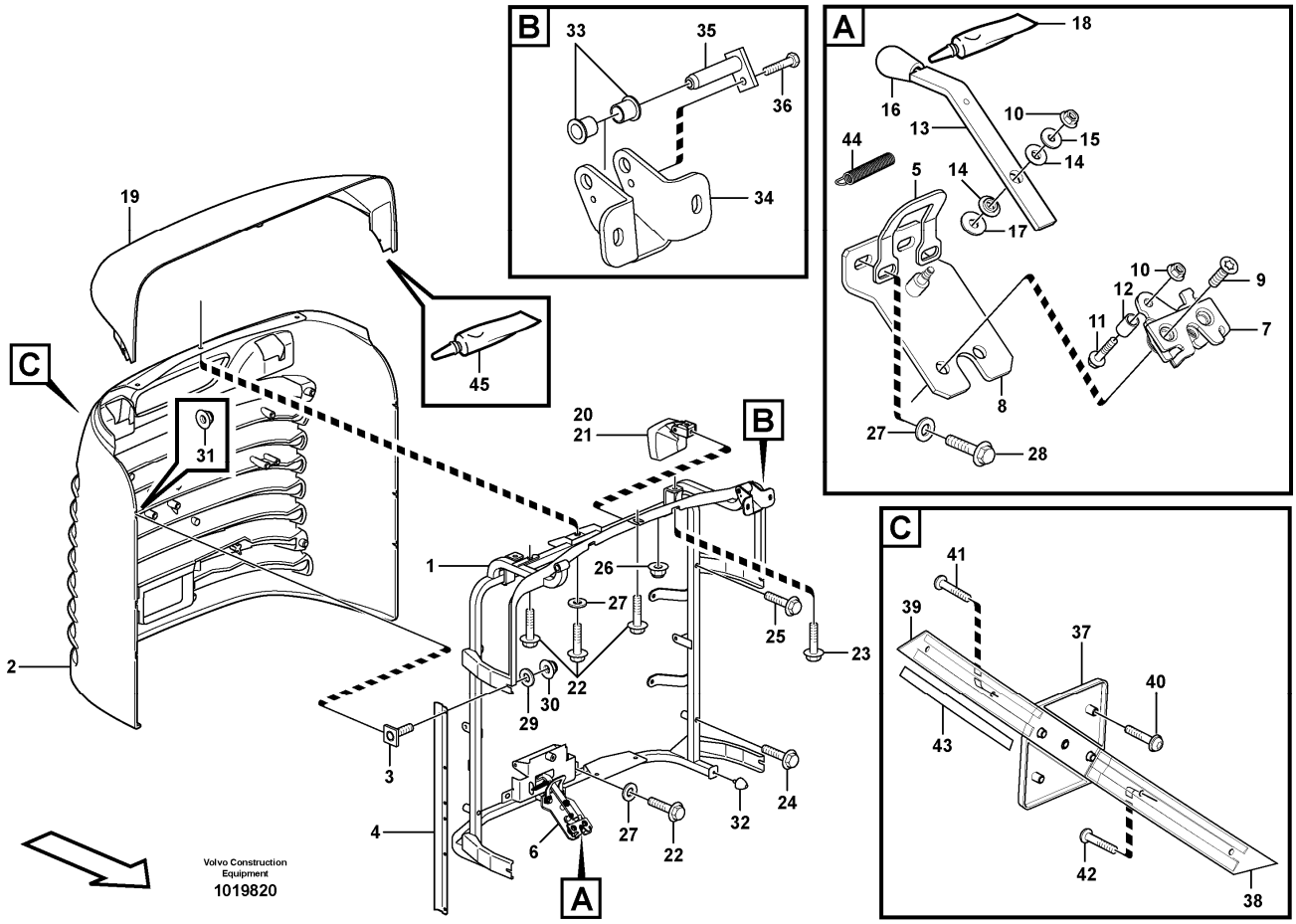

Section option	Kit	Option description
VOE33380		Volvo Wheel Loader L120E S/N 19801-, S/N 66001- USA, S/N 71401- BRA
VOE33395		Wheel Loader L120E3 IRAN

Q1-Q5	Option	Option description	
Q1 11400018			
Q2 11198422			

Pos	Part	Q1	Q2	Q3	Q4	Q5	PS	Kit	Description	Option(s)	Remark
		1					NS		Radiator grille	VOE33380	
	VOE11198489		1						Radiator grille	VOE33395	
1	VOE11414208	1	1						•Frame		
2	VOE11400018	1					SS		•Grating		
2	VOE11198422		1						•Grating		
3	VOE11175207	6	6						•Screw		

4	VOE11414217	2	2						•Support plate		
	VOE976269	2							••Press screw		
5	VOE11435180	1	1						•Attachment		
6	VOE11413926	1	1						•Locking device		
7	VOE11175891	1	1						••Lock		
8	VOE11413338	1	1						••Attachment		
9	VOE969373	2	2						••Six point socket screw		
10	VOE13949278	2	2						••Flange lock nut		
11	VOE965212	1	1						••Flange screw		
12	VOE11130641	1	1						••Pipe		
13	VOE11413925	1	1				OP		••Rod		
14	VOE11413052	2	2						••Bushing		
15	VOE960139	1	1						••Plain washer		
16	VOE11175898	1	1						••Handle		
17	VOE11117464	1	1						••Plain washer		(VOE13960141)
18	VOE11400687	REQ	REQ				OP		••Adhesive		
19	VOE11414065	1	1						•Upper section		
20	VOE11039846	2	2						•Work lamp		
21	VOE992517	1	1						••Bulb		(VOE943903)
22	VOE947107	4	4						•Flange screw		
23	VOE946440	2	2						•Flange screw		
24	VOE13965180	2	2						•Screw		
25	VOE946671	2	2						•Flange screw		
26	VOE948645	2	2						•Flange lock nut		
27	VOE11117464	5	5						•Plain washer		(VOE13960141)
28	VOE946470	2	2						•Flange screw		
29	VOE960139	4	4						•Plain washer		
30	VOE13949278	4	4						•Flange lock nut		
31	VOE13965483	6	6						•Nut		
32	VOE4881758	2	2						•Rubber stop		
33	VOE1588548	4	4						•Bushing		
34	VOE11414177	2	2						•Hinge		
35	VOE11174479	2	2						•Pin		
36	VOE971319	2	2						•Six point socket screw		
37	VOE11400025	1							•Emblem		
37	VOE11204556		1						Emblem		
38	VOE11400027	1							•Profile		
38	VOE11205061		1						•Emblem		
39	VOE11400028	1							•Profile		
39	VOE11205061		1						•Emblem		
40	VOE976172	4							•Six point socket screw		
40	VOE11436259		8						•Retainer		
40	VOE11436265		8						•Rubber element		
41	VOE969216	2							•Six point socket screw		

42	VOE976621	2							•Six point socket screw		
43	VOE11400586	2							•Plastic strip		
44	VOE11413653	1	1						•Tension spring		
45	VOE11400687	REQ	REQ				OP		•Adhesive		

VOLVO

Construction Equipment

PROSIS Part Information

Date:	Image id:	Catalogue:	Model:
25/08/2018	**1032107**	**20086**	**L120E**
Brand:	Serial:	Group/Section:	Title:
Volvo	**19804-, 66001-, 71401-**	**823/400**	**Protecting plates 83960**

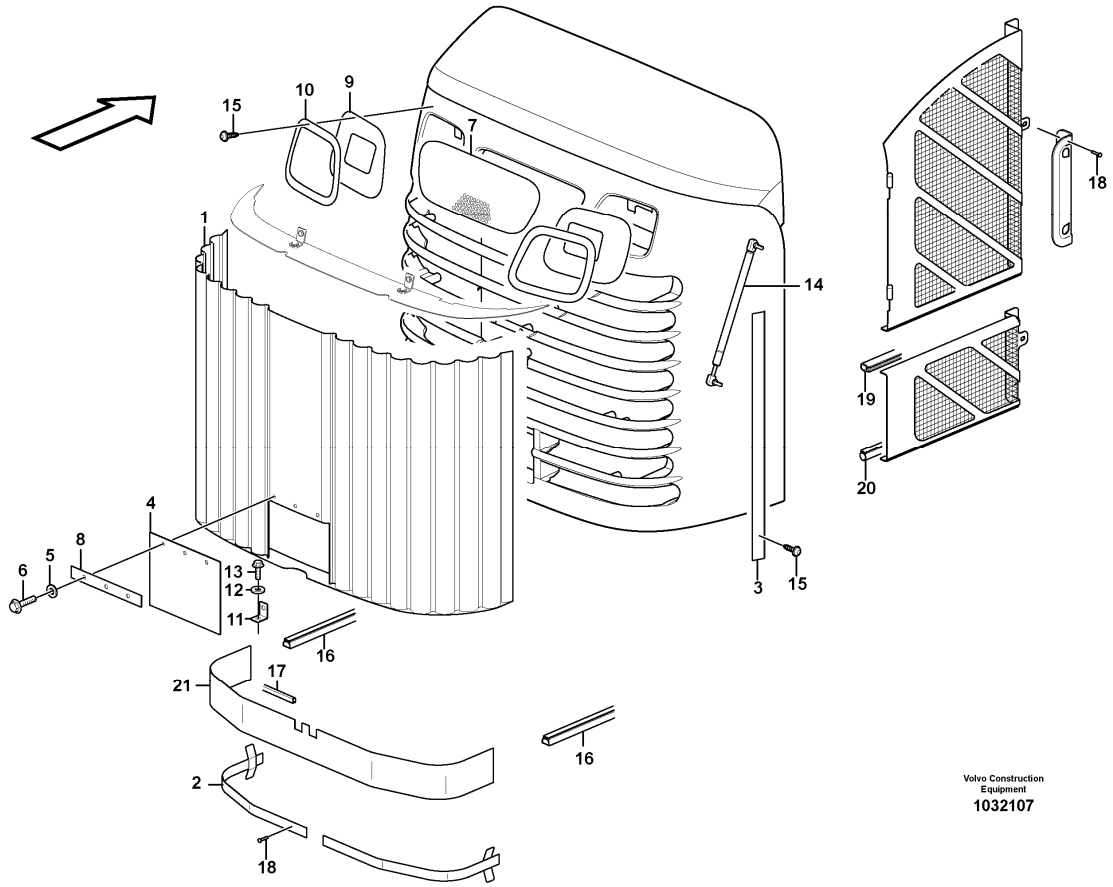

Section option	Kit	Option description
VOE83960		Air intake protection

Pos	Part	Q1	Q2	Q3	Q4	Q5	PS	Kit	Description	Option(s)	Remark
1	VOE15021956	1							Protecting plate		RH
2	VOE11439088	2							Attaching plate		
3	VOE11439006	2							Moulding		
4	VOE15021927	1							Rubber cloth		
5	VOE11117464	3							Plain washer		(VOE13960141)
6	VOE13946173	3							Screw		
7	VOE15034109	1							Hole plate		
8	VOE15021969	1							Plate		
9	VOE11439010	2							Rubber cloth		
10	VOE11439007	2							Moulding		
11	VOE11439004	2							Angle plate		

12	VOE960139	4							Plain washer		
13	VOE13946544	4							Screw		
14	VOE15102502	2							Gas spring		
15	VOE972079	36							Six point socket screw		
16	VOE11400637	REQ							Sealing strip		L = 220 MM
17	VOE4785436	REQ							Protecting moulding		L = 160 MM
18	VOE942669	32							Blind rivet		
19	VOE4786031	REQ							Framework moulding		L = 2700 MM
20	VOE4766526	REQ							Sealing strip		L = 900 MM
21	VOE11439085	1							Rubber mat		

VOLVO

Construction Equipment

PROSIS Part Information

Date:	Image id:	Catalogue:	Model:
25/08/2018	**1006362**	**20086**	**L120E**
Brand:	Serial:	Group/Section:	Title:
Volvo	**19804-, 66001-, 71401-**	**825/100**	**Fender, front**

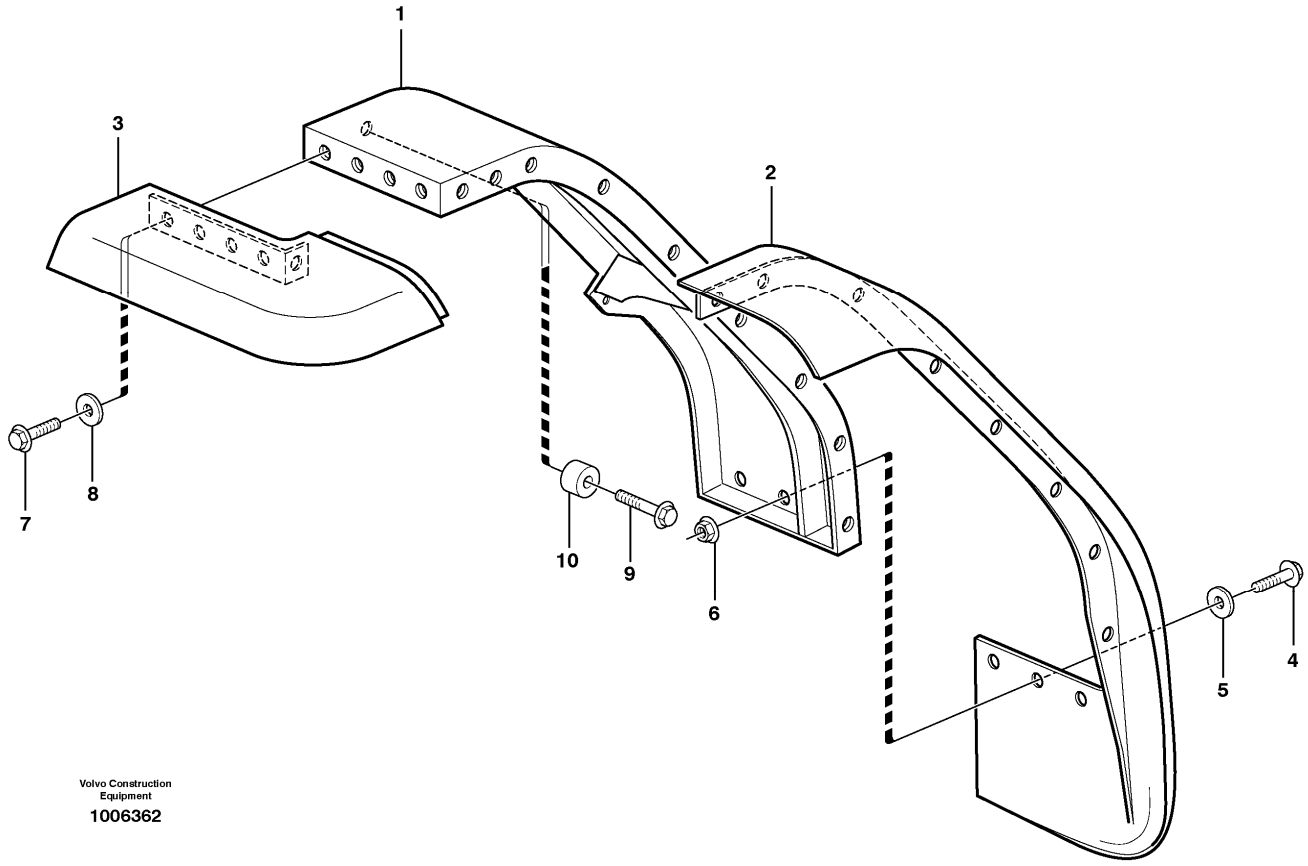

Section option	Kit	Option description
VOE33380		Volvo Wheel Loader L120E S/N 19801-, S/N 66001- USA, S/N 71401- BRA
VOE82540		Mudguards, short, rear for 65-series tires
VOE33395		Wheel Loader L120E3 IRAN

Q1-Q5	Option	Option description	
Q1 33380 RH 33395 IRAN	VOE33380	Volvo Wheel Loader L120E S/N 19801-, S/N 66001- USA, S/N 71401- BRA	
Q2 33380 LH 33395 IRAN	VOE33380	Volvo Wheel Loader L120E S/N 19801-, S/N 66001- USA, S/N 71401- BRA	
Q3 82540	VOE82540	Mudguards, short, rear for 65-series tires	

Pos	Part	Q1	Q2	Q3	Q4	Q5	PS	Kit	Description	Option(s)	Remark
1	VOE11400838	1							Front mudguard		
	VOE11400839		1						Front mudguard		
	VOE11400844			1					Front mudguard	VOE83403	RH
	VOE11400845			1					Front mudguard	VOE83403	LH

2	VOE11174770		1						•Mudguard widener		
	VOE11174769	1							•Mudguard widener		
	VOE11174765			1					•Mudguard widener		RH
	VOE11174766			1					•Mudguard widener		LH
3	VOE11174767	1							•Mudguard widener		
	VOE11174768		1						•Mudguard widener		
	VOE11174763			1					•Mudguard widener		RH
	VOE11174764			1					•Mudguard widener		LH
4	VOE946329	3	3	4					•Flange screw		
5	VOE13960145	3	3	4					•Washer		
6	VOE13971098	3	3						•Flange nut		
7	VOE946472	13	13	14					•Flange screw		
8	VOE13960145	13	13	14					•Washer		
9	VOE13965193	8	8						Screw		
10	VOE4861316	8	8						Spacer ring		

VOLVO

Construction Equipment

PROSIS Part Information

Date:	Image id:	Catalogue:	Model:
25/08/2018	**1016619**	**20086**	**L120E**
Brand:	Serial:	Group/Section:	Title:
Volvo	**19804-, 66001-, 71401-**	**825/150**	**Mudflap**

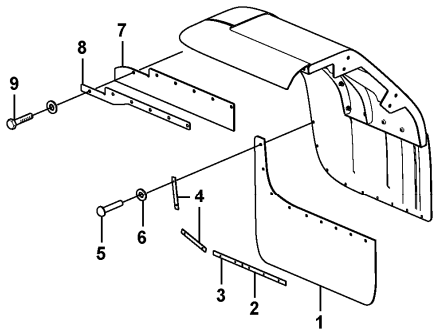

Volvo Construction Equipment
1016619

Section option	Kit	Option description
VOE82160	VOE11712154	Mud guard front and rear WIDE 65 SERIES TYRES
VOE82161	VOE11712155	Mud guard front and rear STANDARD 80 SERIES TYRES

Q1-Q5	Option	Option description	
Q1 82160	VOE82160	Mud guard front and rear WIDE 65 SERIES TYRES	
Q2 82161	VOE82161	Mud guard front and rear STANDARD 80 SERIES TYRES	

Pos	Part	Q1	Q2	Q3	Q4	Q5	PS	Kit	Description	Option(s)	Remark
1	VOE11400496	2							Mudflap		
	VOE11400498		2						Mudflap		
2	VOE11400503	2							Attaching rail		
3	VOE11400502	2	4						Attaching rail		
4	VOE11400504	4	4						Attaching rail		
5	VOE13977632	20	18						Blind rivet		

6	VOE120618	20	18						Washer		
7	VOE11413136	2							Mudflap		
	VOE11413137		2						Mudflap		
8	VOE11413139	2							Attaching plate		
	VOE11413140		2						Attaching plate		
9	VOE13965185	8	8						Screw		

VOLVO

Construction Equipment

PROSIS Part Information

Date:	Image id:	Catalogue:	Model:
25/08/2018	**1012018**	**20086**	**L120E**
Brand:	Serial:	Group/Section:	Title:
Volvo	**19804-, 66001-, 71401-**	**826/100**	**Fender, rear**

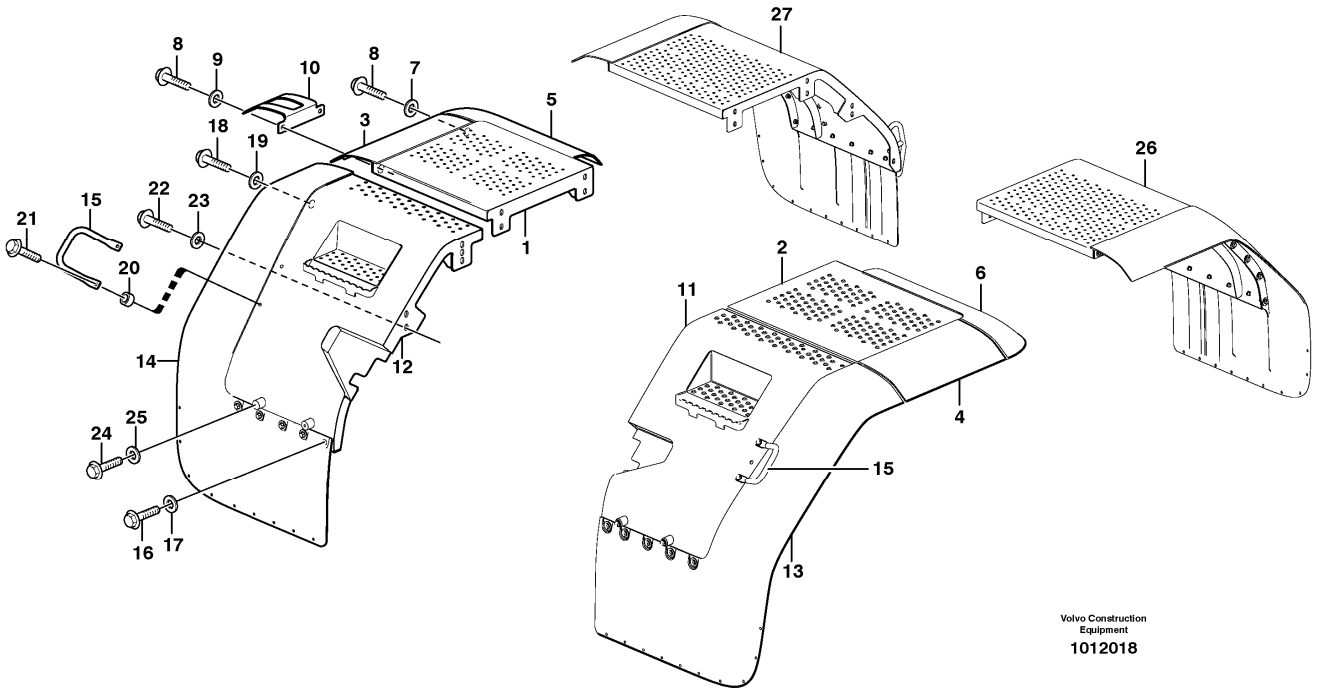

Section option	Kit	Option description
VOE33380		Volvo Wheel Loader L120E S/N 19801-, S/N 66001- USA, S/N 71401- BRA
VOE82311		Rear fender
VOE82540		Mudguards, short, rear for 65-series tires
VOE33395		Wheel Loader L120E3 IRAN

Q1-Q5	Option	Option description	
Q1 33380 LH 33395 IRAN	VOE33380	Volvo Wheel Loader L120E S/N 19801-, S/N 66001- USA, S/N 71401- BRA	
Q2 33380 RH 33395 IRAN	VOE33380	Volvo Wheel Loader L120E S/N 19801-, S/N 66001- USA, S/N 71401- BRA	
Q3 82540	VOE82540	Mudguards, short, rear for 65-series tires	
Q4 82311	VOE82311	Rear fender	

Pos	Part	Q1	Q2	Q3	Q4	Q5	PS	Kit	Description	Option(s)	Remark
	VOE11413229	1							Rear fender		
	VOE11413228		1						Rear fender		
	VOE11413230			1					Rear fender		RH
	VOE11413231			1					Rear fender		LH
1	VOE11413014		1		1				•Rear fender		
	VOE11413018			1					•Rear fender		RH

2	VOE11413015	1			1				•Rear fender		
	VOE11413019			1					•Rear fender		LH
3	VOE11413775		1	1					•Mudguard widener		
4	VOE11413776	1		1					•Mudguard widener		
5	VOE11174764		1	1					•Mudguard widener		
6	VOE11174763	1		1					•Mudguard widener		
7	VOE13960145	8	8	8					•Washer		
8	VOE946472	10	10	10					•Flange screw		
9	VOE13960143	2	2	2					•Washer		
10	VOE11400605	1	1	1					•Support plate		
	VOE11400841	1							Rear fender		
	VOE11400847			1					Rear fender	VOE83403	LH
	VOE11400840		1						Rear fender		
	VOE11400846			1					Rear fender	VOE83403	RH
11	VOE11400855	1			1		SS		•Rear fender		
	VOE11400857			1			OP		•Rear fender		
12	VOE11400854		1		1		SS		•Rear fender		
	VOE11400856			1			OP		•Rear fender		
13	VOE11174776	1							•Mudguard widener		
	VOE11174772			1					•Mudguard widener		
14	VOE11174775		1						•Mudguard widener		
	VOE11174771			1					•Mudguard widener		
15	VOE11175869	1	1	1	2				•Handle		
16	VOE946329	4	4	5					•Flange screw		
17	VOE13960145	4	4	5					•Washer		
18	VOE946472	8	8	8					•Flange screw		
19	VOE13960145	8	8	8					•Washer		
20	VOE4859489	2	2	2	4				•Spacer		
21	VOE946472	2	2	2					•Flange screw		
	VOE13965185				4				Screw		
22	VOE13965193	7	7						Screw		
23	VOE13960145	7	7						Washer		
24	VOE946329	2	2						Flange screw		
25	VOE13960143	2	2						Washer		
26				1					Rear fender	VOE83403, VOE83407	LH See ref 826/200
27				1					Rear fender	VOE83403, VOE83407	RH See ref 826/200

VOLVO

Construction Equipment

PROSIS Part Information

Date:	Image id:	Catalogue:	Model:
25/08/2018	**1016620**	**20086**	**L120E**
Brand:	Serial:	Group/Section:	Title:
Volvo	**19804-, 66001-, 71401-**	**826/150**	**Mudflap**

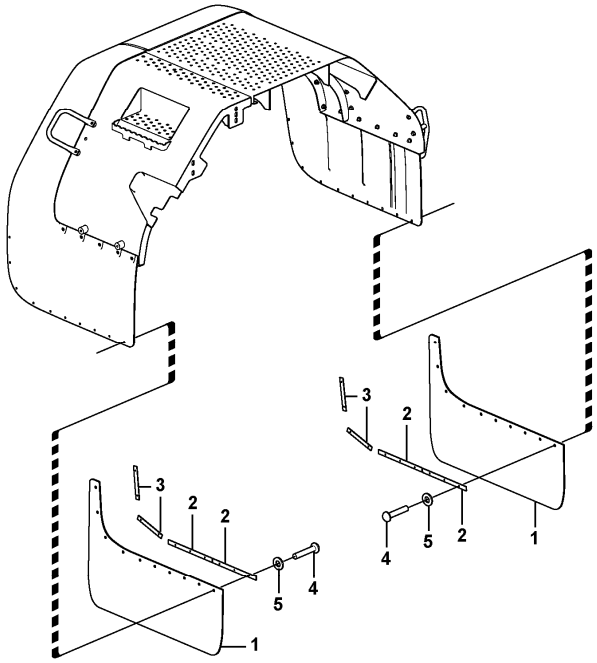

Volvo Construction Equipment
1016620

Section option	Kit	Option description
VOE82160	VOE11712154	Mud guard front and rear WIDE 65 SERIES TYRES
VOE82161	VOE11712155	Mud guard front and rear STANDARD 80 SERIES TYRES

Q1-Q5	Option	Option description	
Q1 82160	VOE82160	Mud guard front and rear WIDE 65 SERIES TYRES	
Q2 82161	VOE82161	Mud guard front and rear STANDARD 80 SERIES TYRES	

Pos	Part	Q1	Q2	Q3	Q4	Q5	PS	Kit	Description	Option(s)	Remark
1	VOE11400495	4							Mudflap		
	VOE11400496		4						Mudflap		
2	VOE11400503	8	4						Attaching rail		
	VOE11400502		4						Attaching rail		
3	VOE11400504	8	8						Attaching rail		
4	VOE13977632	40	36						Blind rivet		

5	VOE120618	40	36						Washer		

VOLVO

Construction Equipment

PROSIS Part Information

Date:	Image id:	Catalogue:	Model:
25/08/2018	**1012007**	**20086**	**L120E**
Brand:	Serial:	Group/Section:	Title:
Volvo	**19804-, 66001-, 71401-**	**826/200**	**Fender, rear**

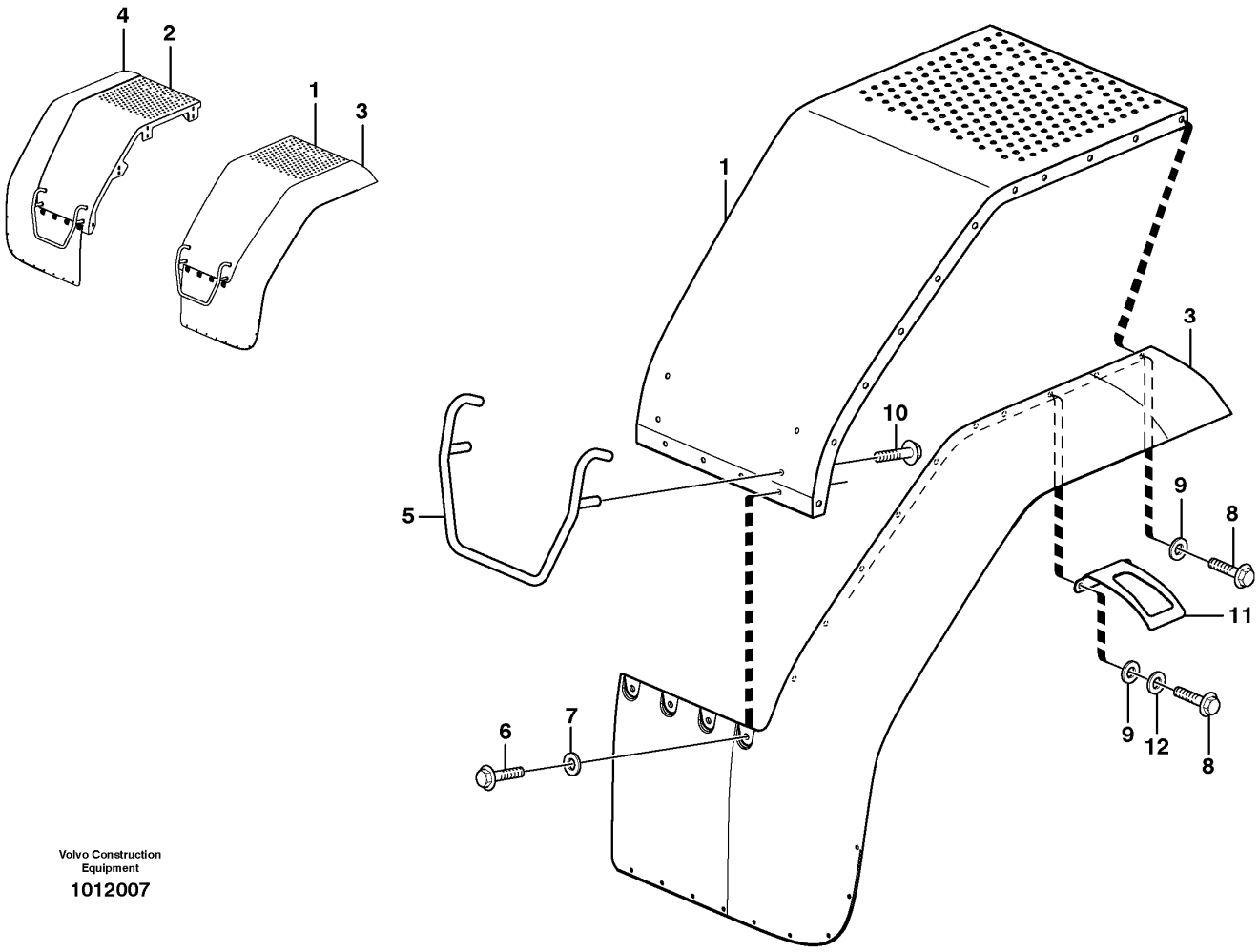

Section option	Kit	Option description
VOE83403		Covering mudguards front/ rear for 65-series tires
VOE83407		Covering mudguards rear for standard tires

Q1-Q5	Option	Option description	
Q1 83407 LH	VOE83407	Covering mudguards rear for standard tires	
Q2 83407 RH	VOE83407	Covering mudguards rear for standard tires	
Q3 83403	VOE83403	Covering mudguards front/ rear for 65-series tires	

Pos	Part	Q1	Q2	Q3	Q4	Q5	PS	Kit	Description	Option(s)	Remark
	VOE11400843	1							Rear fender		
	VOE11400849			1					Rear fender		LH
	VOE11400842		1						Rear fender		

	VOE11400848			1					Rear fender		RH
1	VOE11400850		1						•Rear fender		
	VOE11400852			1			OP		•Rear fender		
2	VOE11400851	1							•Rear fender		
	VOE11400853			1			OP		•Rear fender		
3	VOE11174777		1						•Mudguard widener		
	VOE11174773			1					•Mudguard widener		
4	VOE11174778	1							•Mudguard widener		
	VOE11174774			1					•Mudguard widener		
5	VOE11175819	1	1	1					•Handle		
6	VOE946329	4	4	5					•Flange screw		
7	VOE13960146	4	4	5					•Washer		
	VOE13960145			5					•Washer		
8	VOE946472	11	11	11					•Flange screw		
9	VOE13960145	9	9	11					•Washer		
10	VOE946329	4	4	4					•Flange screw		
11	VOE11400605	1	1	1					•Support plate		
12	VOE13960143	2	2						•Washer		

VOLVO

Construction Equipment

PROSIS Part Information

Date:	Image id:	Catalogue:	Model:
25/08/2018	**1000774**	**20086**	**L120E**
Brand:	Serial:	Group/Section:	Title:
Volvo	**19804-, 66001-, 71401-**	**827/100**	**Running board.**

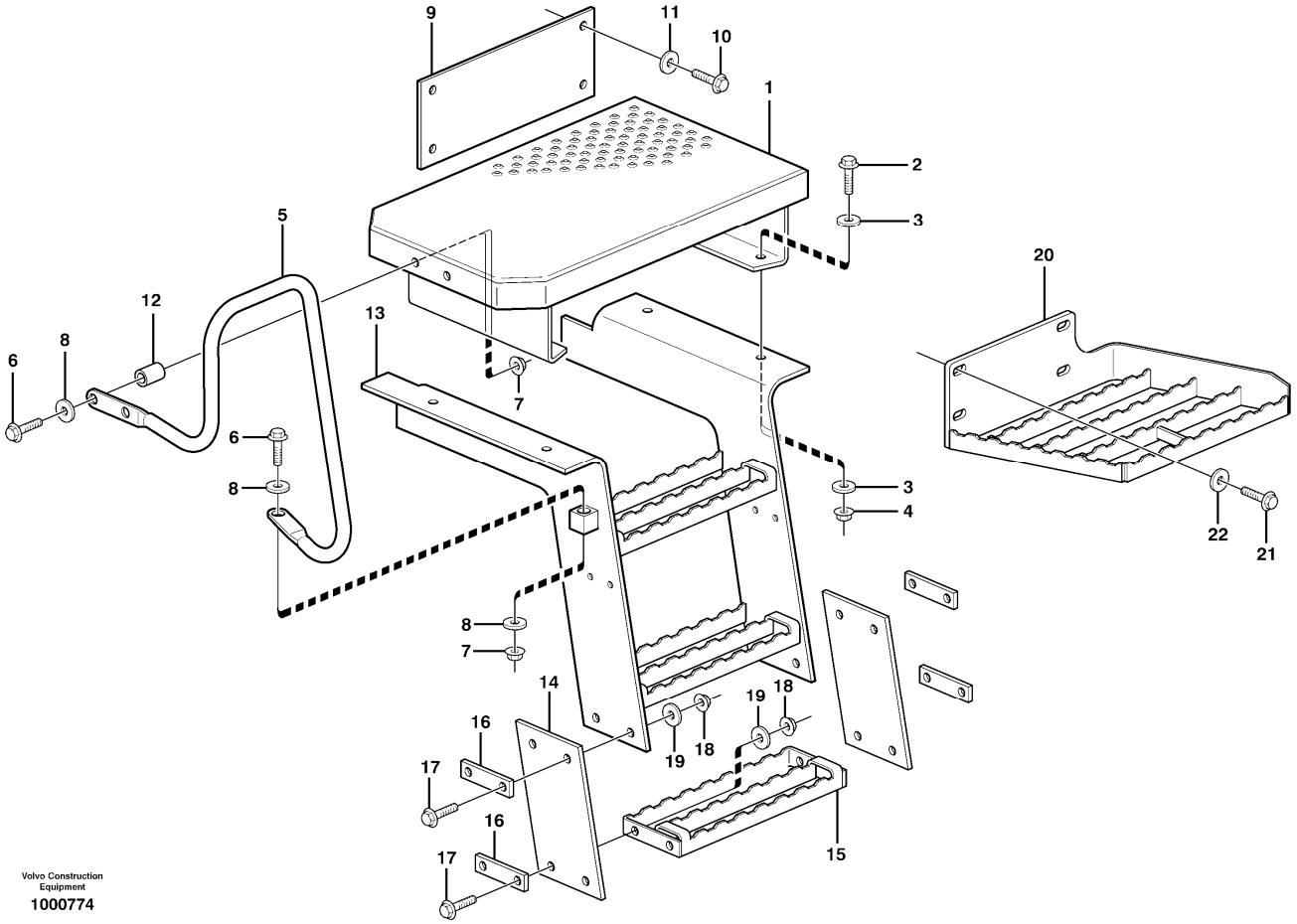

Section option	Kit	Option description
VOE33380		Volvo Wheel Loader L120E S/N 19801-, S/N 66001- USA, S/N 71401- BRA
VOE33395		Wheel Loader L120E3 IRAN

Pos	Part	Q1	Q2	Q3	Q4	Q5	PS	Kit	Description	Option(s)	Remark
1	VOE15166131	2							Platform		(VOE11175923)
2	VOE946472	8							Flange screw		
3	VOE13960143	16							Washer		
4	VOE13971098	8							Flange nut		
5	VOE11174954	1							Handle		RH
	VOE11436262	1							Handle		(VOE11174143)LH
6	VOE13965179	6							Screw		
7	VOE948645	6							Flange lock nut		
8	VOE11117464	12							Plain washer		(VOE13960141)
9	VOE11175928	1							Protecting plate		LH

10	VOE13965190	8							Screw		
11	VOE13960143	8							Washer		
12	VOE11175803	4							Spacer sleeve		
13	VOE11174000	2							Stairs		
14	VOE11147595	4							End plate		
15	VOE11414150	2					SS		Foot step		
16	VOE11148718	8							Plate		
17	VOE13947760	16							Screw		
18	VOE948645	16							Flange lock nut		
19	VOE11117464	16							Plain washer		(VOE13960141)
20	VOE11414271	1					SS		Platform		RH
	VOE11414272	1					SS		Platform		LH
21	VOE968297	8							Flange screw		
22	VOE11108672	8							Spacer		

VOLVO

Construction Equipment

PROSIS Part Information

Date:	Image id:	Catalogue:	Model:
25/08/2018	**1032011**	**20086**	**L120E**
Brand:	Serial:	Group/Section:	Title:
Volvo	**19804-, 66001-, 71401-**	**827/150**	**Running board. 82222**

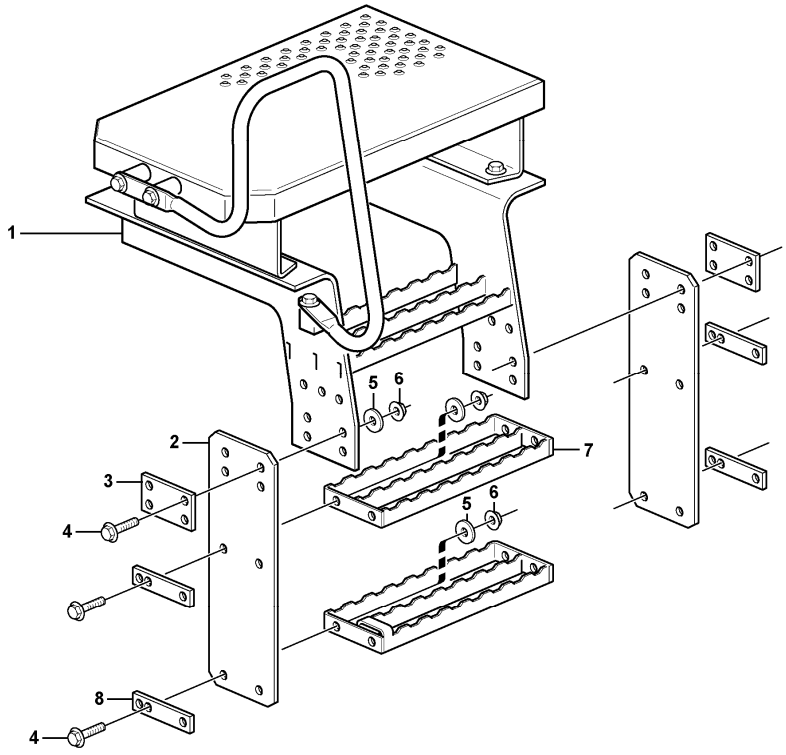

Volvo Construction Equipment
1032011

Section option	Kit	Option description
VOE82222		Step

Pos	Part	Q1	Q2	Q3	Q4	Q5	PS	Kit	Description	Option(s)	Remark
1	VOE11417925	2							Stairs		
2	VOE11180224	4							End plate		
3	VOE11180326	4							Plate		
4	VOE947760	16							Flange screw		
5	VOE960141	16					SS		Plain washer		
6	VOE948645	16							Flange lock nut		
7	VOE11414150	2					SS		Foot step		
8	VOE11148718	4							Plate		

VOLVO

Construction Equipment

PROSIS Part Information

Date:	Image id:	Catalogue:	Model:
25/08/2018	**1032019**	**20086**	**L120E**
Brand:	Serial:	Group/Section:	Title:
Volvo	**19804-, 66001-, 71401-**	**827/200**	**Handrail**

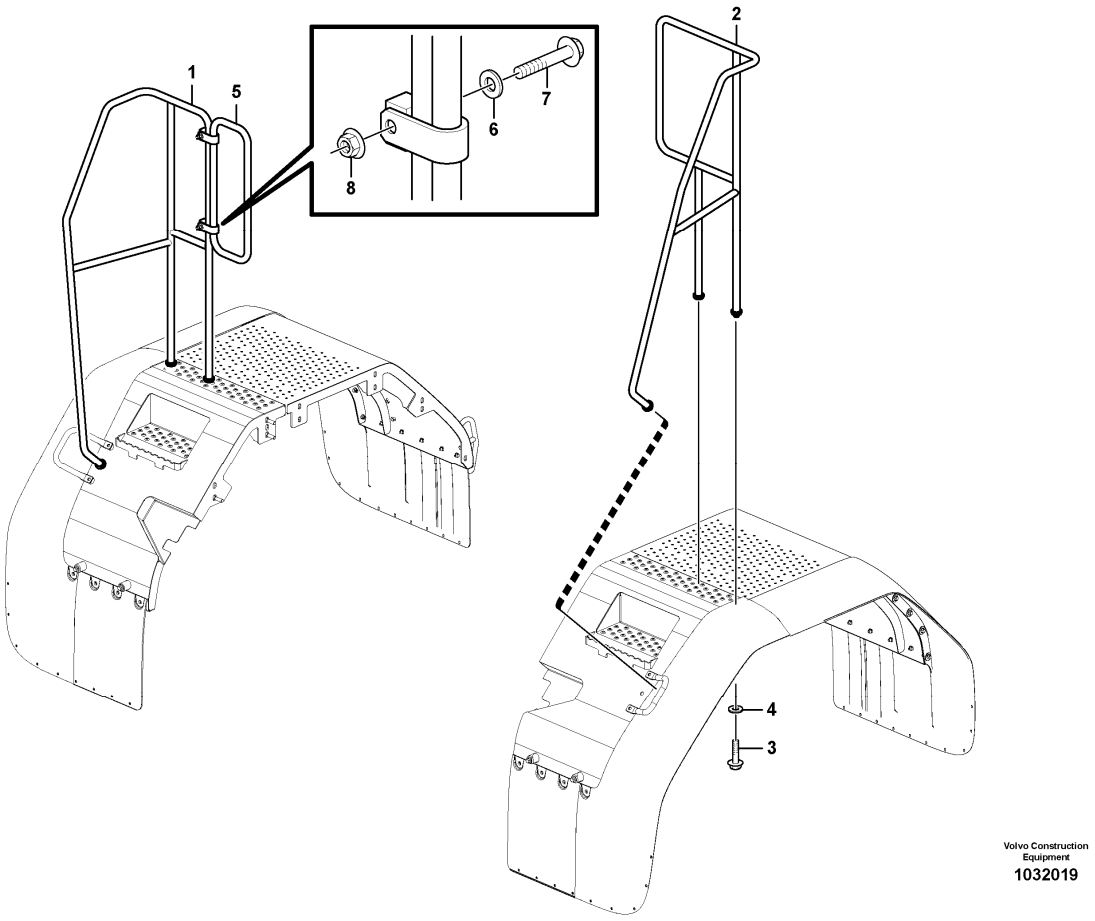

Section option	Kit	Option description
VOE82528		Handrail
VOE83819		Handrail

Q1-Q5	Option	Option description	
Q1 82528	VOE82528	Handrail	
Q2 83819	VOE83819	Handrail	

Pos	Part	Q1	Q2	Q3	Q4	Q5	PS	Kit	Description	Option(s)	Remark
1	VOE11413222	1							Handrail		RH
	VOE11436115		1						Handrail		RH
2	VOE11413243	1							Handrail		LH
	VOE11436115		1						Handrail		LH
3	VOE13965192	6	6						Screw		
4	VOE13960145	6	6						Washer		

5	VOE11435645		1						Handrail		
6	VOE13960143		4						Washer		
7	VOE13965187		2						Screw		
8	VOE13971098		2						Flange nut		

VOLVO

Construction Equipment

PROSIS Part Information

Date:	Image id:	Catalogue:	Model:
25/08/2018	**1032012**	**20086**	**L120E**
Brand:	Serial:	Group/Section:	Title:
Volvo	**19804-, 66001-, 71401-**	**827/300**	**Foot step 82261**

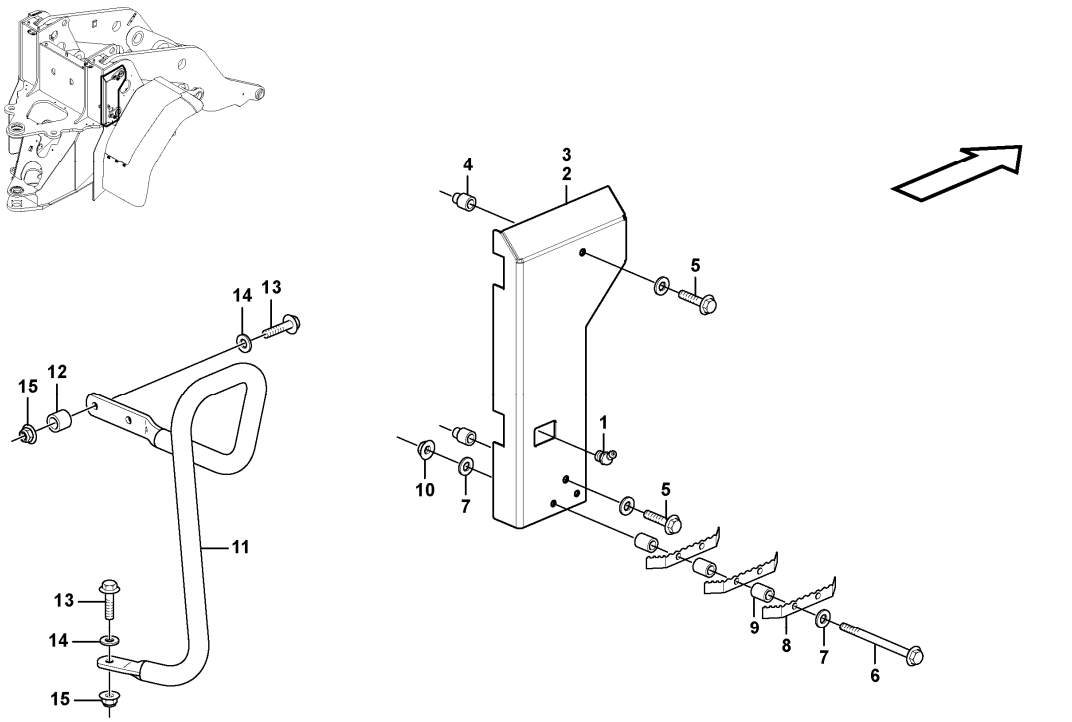

Section option	Kit	Option description
VOE82261		Step

Pos	Part	Q1	Q2	Q3	Q4	Q5	PS	Kit	Description	Option(s)	Remark
1	VOE914170	2							Lubricating nipple		
2	VOE11198386	1							Protecting plate		
3	VOE11198387	1							Protecting plate		
4	VOE11180454	4							Spacer		
5	VOE13965196	4							Screw		
6	VOE979935	4							Flange screw		
7	VOE13960145	8							Washer		
8	VOE11413359	6							Foot rest		
9	VOE11075797	12							Spacer		
10	VOE971099	4							Flange lock nut		
11	VOE11438017	1							Handle		

	VOE11438018	1							Handle		
12	VOE11175803	4							Spacer sleeve		
13	VOE13965179	6							Screw		
14	VOE11117464	12							Plain washer		
15	VOE948645	6							Flange lock nut		

VOLVO

Construction Equipment

PROSIS Part Information

Date:	Image id:	Catalogue:	Model:
25/08/2018	**EL212**	**20086**	**L120E**
Brand:	Serial:	Group/Section:	Title:
Volvo	**19804-, 66001-, 71401-**	**831/100**	**Door with fitting parts**

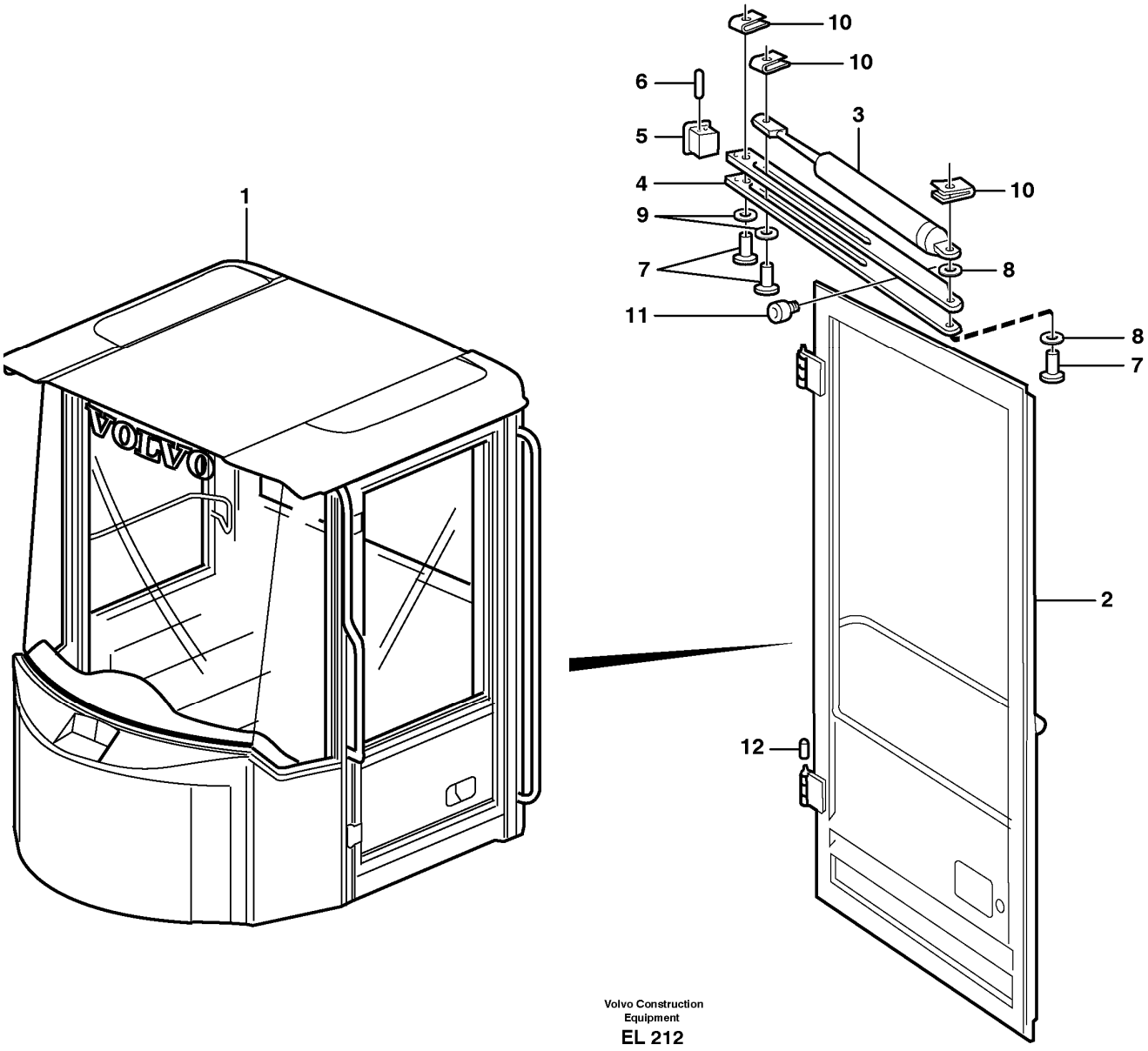

Section option	Kit	Option description
VOE33357		Cab L120E
VOE33366		Cab L120E USA

Pos	Part	Q1	Q2	Q3	Q4	Q5	PS	Kit	Description	Option(s)	Remark
1		1					NS		Cab Framework		See ref 810/150
2		1							•Door		See ref 831/150
3	VOE17208460	1							Gas Spring		(VOE11006826)

4	VOE11006706	1							Door stop		
5	VOE11005947	1							End Piece		
6	VOE13951967	2							Spring pin		
7	VOE942290	3							Retaining ring bolt		
8	VOE13947757	9							Washer		
9	VOE13962658	2							Washer		
10	VOE13969158	3							Lock brace		
11	VOE667751	1							Buffer		
12	VOE11104749	6							Protecting cover		

VOLVO

Construction Equipment

PROSIS Part Information

Date:	Image id:	Catalogue:	Model:
25/08/2018	**EL211**	**20086**	**L120E**
Brand:	Serial:	Group/Section:	Title:
Volvo	**19804-, 66001-, 71401-**	**831/150**	**Door.**

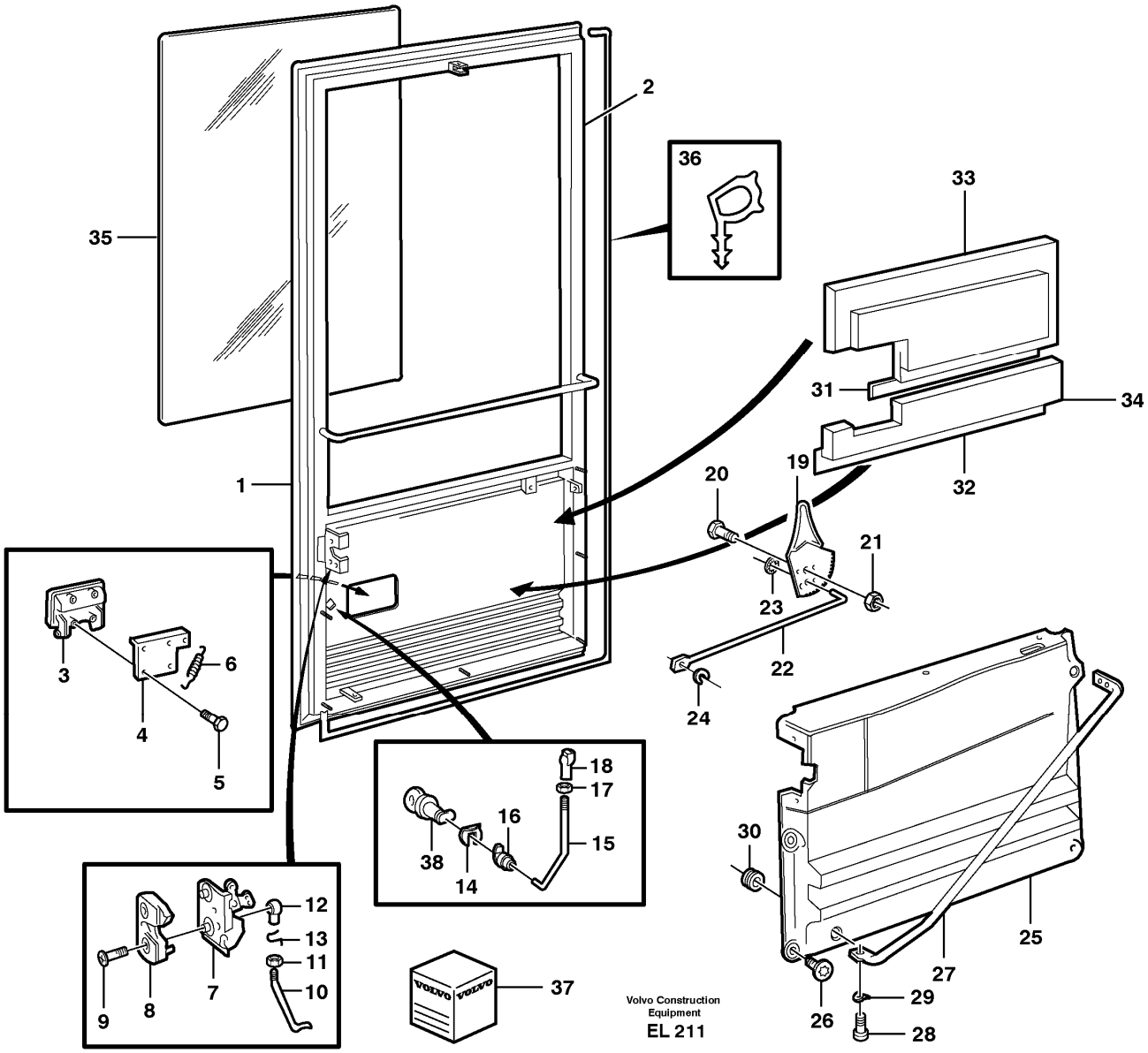

Section option	Kit	Option description
VOE33357		Cab L120E
VOE33366		Cab L120E USA
VOE94638		One Combination lock kit only for USA

Q1-Q5	Option	Option description	
Q1 33357 33366	VOE33357	Cab L120E	
Q2 94638	VOE94638	One Combination lock kit only for USA	

Pos	Part	Q1	Q2	Q3	Q4	Q5	PS	Kit	Description	Option(s)	Remark
	VOE11706864	1							Door		
1		1					NS		•Door		
2	VOE11006738	2							••Hinge		
	VOE11708215	2							•••Hinge pin		
3	VOE1614564	1							•Door handle		
4	VOE11006886	1							•Attachment		
5	VOE971321	4							•Six point socket screw		
6	VOE1614562	1							•Tension spring		
7	VOE1610882	1							•Door lock		
8	VOE11006991	1							•Lock		
9	VOE969373	2							•Six point socket screw		
	VOE11104463	1							•Link rod		
10		1					NS		••Link rod		
11	VOE955780	1							••Hexagon nut		
12	VOE959088	1							••Ball socket		
13	VOE13959093	1							•Safety brace		
14	VOE1580443	1							•Clip		
	VOE11104464	1							•Link rod		
15		1					NS		••Link rod		
16	VOE1334720	1							••Clip		
17	VOE955779	1							••Hexagon nut		
18	VOE1592290	1							••Ball socket		
19	VOE11164653	1							•Control		
20	VOE946329	1							•Flange screw		
21	VOE13971098	1							•Flange nut		
22	VOE11006888	1							•Rod		
23	VOE191695	1							•Retainer		
24	VOE968841	1							•Lock brace		
25	VOE11104740	1							•Door panel		
26	VOE972079	6							•Six point socket screw		
27	VOE11104685	1							•Handle		
28	VOE959220	3							•Hex. socket screw		
29	VOE13941907	3							•Washer		
30	VOE13961962	2							•Protecting bushing		
31	VOE11007220	REQ							•Tape		L = 342 MM
32	VOE11007220	REQ							•Tape		L = 587 MM
33	VOE11006136	1							•Insulation		
34	VOE11104462	1							•Insulation		
35		1							Dr window pane		See ref 843/100
36	VOE11007421	REQ							Sealing strip		L = 4712 MM
37	VOE11006988	1					SS		Lock kit		
			1				NS		Lock Kit		
		1					NS		•Lock Kit		

	VOE15082295		1						•Starter switch		(VOE11039220)
	VOE15082297	1	1						••Starter switch		(VOE1626372)
	VOE11039226	2							••Pass key		See footnote 3) BLACK
	VOE11039228		2						••Pass key		GREEN
38	VOE3536771	1							•Lock kit		
	VOE11007281		1						•Lock		

3) When ordering, the key No. should be stated.

VOLVO

Construction Equipment

PROSIS Part Information

Date:	Image id:	Catalogue:	Model:
25/08/2018	**1019878**	**20086**	**L120E**
Brand:	Serial:	Group/Section:	Title:
Volvo	**19804-, 66001-, 71401-**	**837/100**	**Coverplates**

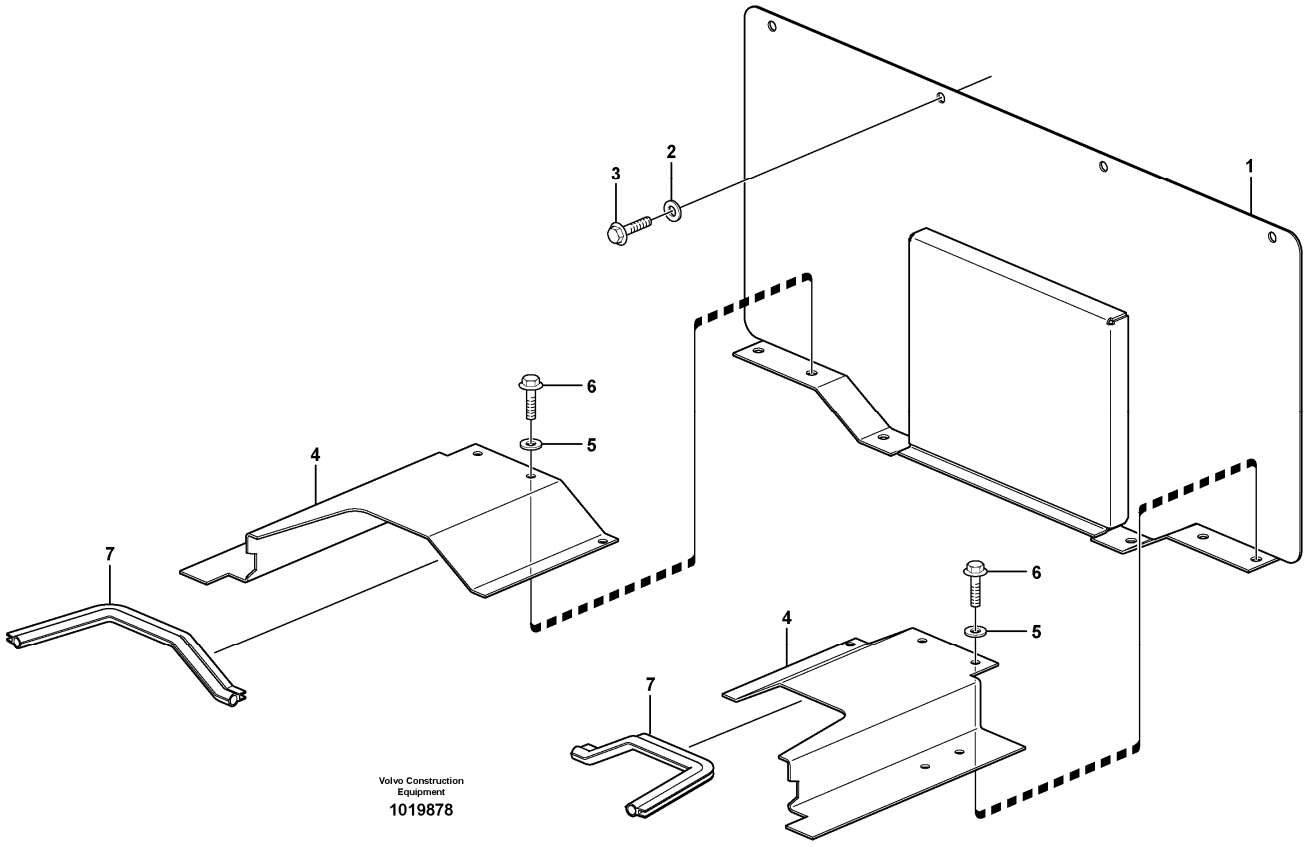

Section option	Kit	Option description
VOE33380		Volvo Wheel Loader L120E S/N 19801-, S/N 66001- USA, S/N 71401- BRA
VOE33395		Wheel Loader L120E3 IRAN

Q1-Q5	Option	Option description	
Q1 33380	VOE33380	Volvo Wheel Loader L120E S/N 19801-, S/N 66001- USA, S/N 71401- BRA	
Q2 33395 IRAN	VOE33395	Wheel Loader L120E3 IRAN	

Pos	Part	Q1	Q2	Q3	Q4	Q5	PS	Kit	Description	Option(s)	Remark
1		1	1				NS		Hatch		
2	VOE11117464	4	4						Plain washer		(VOE13960141)
3	VOE13946173	4	4						Screw		
4	VOE15010283	1	1						Plate		(VOE11435601)RH
	VOE11435602	1	1						Plate		LH

5	VOE11117464	10	10						Plain washer		(VOE13960141)
6	VOE13946173	10	10						Screw		
7	VOE11180757	1							Protecting plate		L = 2 x 315 MM
	VOE4881656		REQ						Framework moulding		2 x 315 MM

VOLVO

Construction Equipment

PROSIS Part Information

Date:	Image id:	Catalogue:	Model:
25/08/2018	**1012641**	**20086**	**L120E**
Brand:	Serial:	Group/Section:	Title:
Volvo	**19804-, 66001-, 71401-**	**837/200**	**Filter cover**

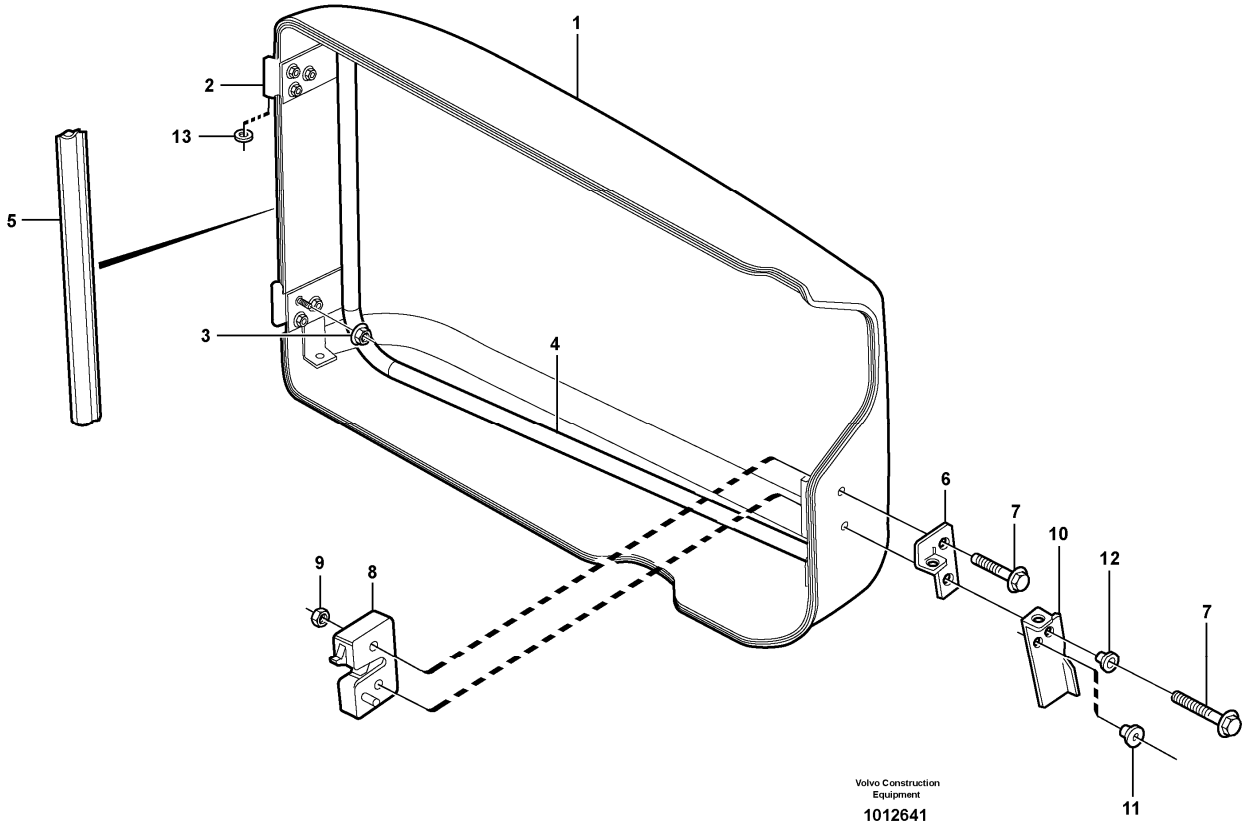

Section option	Kit	Option description
VOE33357		Cab L120E
VOE33366		Cab L120E USA

Pos	Part	Q1	Q2	Q3	Q4	Q5	PS	Kit	Description	Option(s)	Remark
	VOE11104240	1							Hatch		
1		1					NS		•Hatch		
2	VOE11104523	2							•Hinge		
3	VOE981447	6							•Flange lock nut		
4		1					NS		•Tube assembly		
5	VOE11104519	REQ							•Sealing strip		L = 2500 MM
6	VOE11104610	1							•Plate		
7	VOE13947760	1							•Screw		L = 40 MM
	VOE13965179	1							•Screw		L = 50 MM
8	VOE11006991	1							•Lock		

9	VOE948645	2							•Flange lock nut		
10	VOE11104609	1							•Handle		
11	VOE1258140	1							•Sealing sleeve		
12	VOE11006944	1							•Spacer sleeve		
13	VOE4936344	2							Washer		

VOLVO

Construction Equipment

PROSIS Part Information

Date:	Image id:	Catalogue:	Model:
25/08/2018	**1019870**	**20086**	**L120E**
Brand:	Serial:	Group/Section:	Title:
Volvo	**19804-, 66001-, 71401-**	**841/100**	**Rear view mirror 33357, 33366**

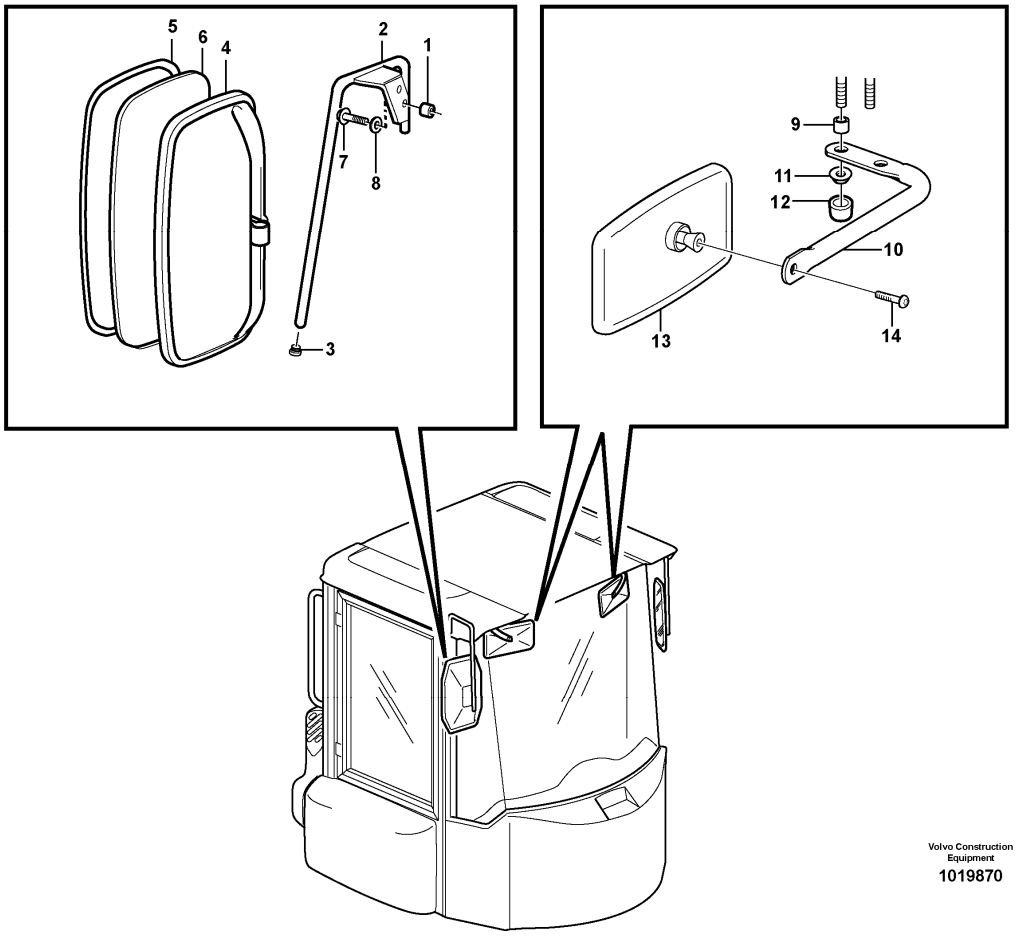

Section option	Kit	Option description
VOE33357		Cab L120E
VOE33366		Cab L120E USA

Pos	Part	Q1	Q2	Q3	Q4	Q5	PS	Kit	Description	Option(s)	Remark
1	VOE930428	4							Spacer ring		
2	VOE11006421	1							Mirror arm		RH
	VOE11006420	1							Mirror arm		LH
3	VOE11006457	4							•Plug		
4	VOE11121152	2							Rear view mirror		
5	VOE11708944	1							•Rim		
6	VOE11708945	1							•Lens		
7	VOE946472	4							Flange screw		
8	VOE13960143	4							Washer		
9	VOE930431	4							Spacer ring		

10	VOE11005984	1							Mirror arm		RH
	VOE11006029	1							Mirror arm		LH
11	VOE13945408	4							Nut		
12	VOE11006824	4							Protecting cap		
13	VOE11164488	2							Rear view mirror		
14	VOE969587	2							Six point socket screw		

VOLVO

Construction Equipment

PROSIS Part Information

Date:	Image id:	Catalogue:	Model:
25/08/2018	**1005588**	**20086**	**L120E**
Brand:	Serial:	Group/Section:	Title:
Volvo	**19804-, 66001-, 71401-**	**843/100**	**Glass panes**

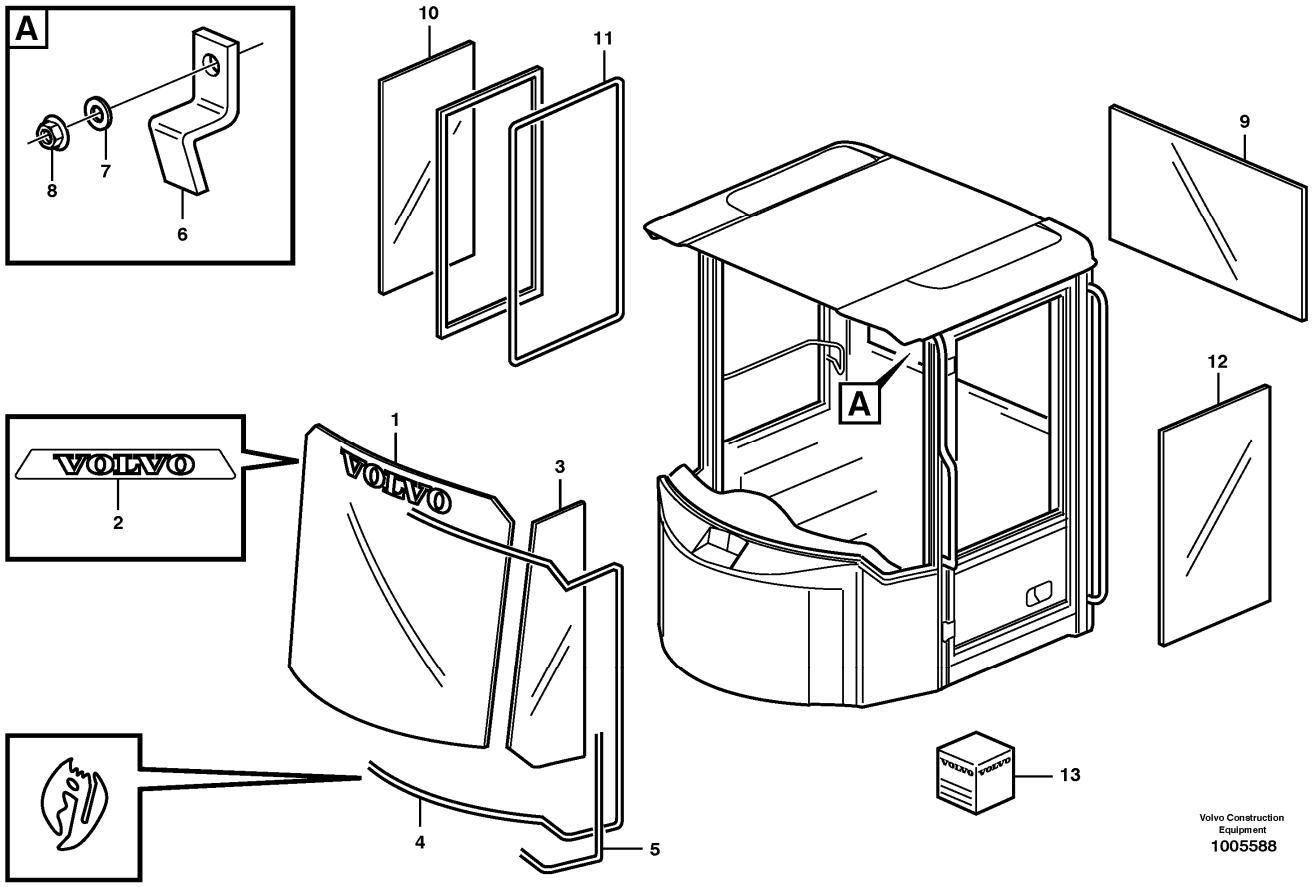

Section option	Kit	Option description
VOE33357		Cab L120E
VOE33366		Cab L120E USA
VOE82411		Cab Kit CAB L120E USA

Q1-Q5	Option	Option description	
Q1 33357 33366	VOE33357	Cab L120E	
Q2 82411	VOE82411	Cab Kit CAB L120E USA	

Pos	Part	Q1	Q2	Q3	Q4	Q5	PS	Kit	Description	Option(s)	Remark
1	VOE11104449	1							Windscreen		
2	VOE11007961	1							•Decal		VOLVO
3	VOE11429056	2							Side window		
4	VOE11007851	1							Rubber moulding		
5	VOE11104040	REQ							Butyl tape		L = 2200 MM
6	VOE11007828	4							Clip		

7	VOE960139	4							Plain washer		
8	VOE13945407	4							Nut		
9	VOE11006478	1							Rear window		
10	VOE11104343	1							Window pane	VOE33357	
		1	1						Sliding Window	VOE33366	See ref 843/200
11	VOE11007421	REQ							Sealing strip		
12	VOE11104344	1							Door Window	VOE33357	
		1	1						Sliding Window	VOE33366	See ref 843/200
13	VOE11704359	REQ							Sealant		

VOLVO

Construction Equipment

PROSIS Part Information

Date:	Image id:	Catalogue:	Model:
25/08/2018	**1017589**	**20086**	**L120E**
Brand:	Serial:	Group/Section:	Title:
Volvo	**19804-, 66001-, 71401-**	**843/150**	**Windows**

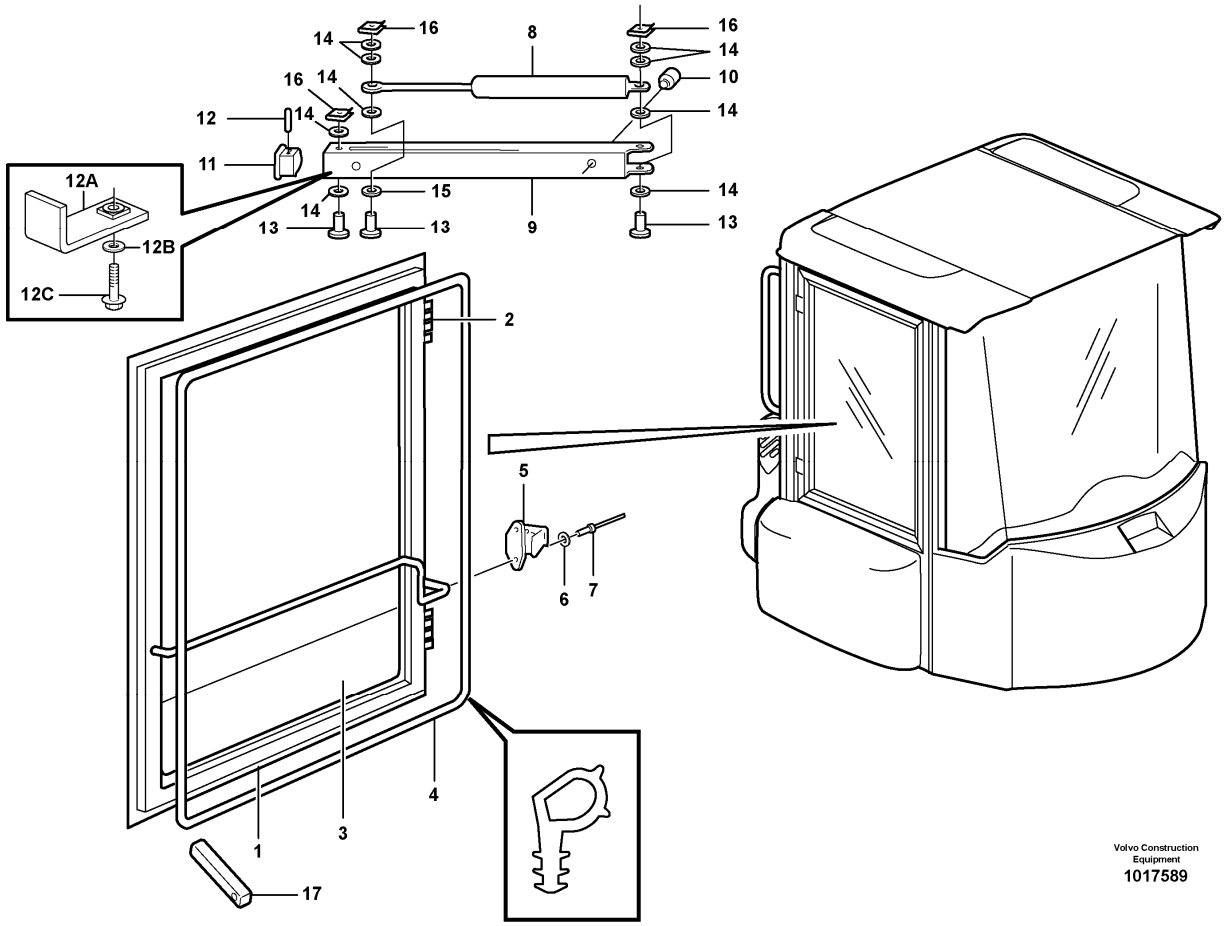

Section option	Kit	Option description
VOE33357		Cab L120E
VOE33366		Cab L120E USA
VOE82411		Cab Kit CAB L120E USA
VOE82528		Handrail
VOE82719		Window guards, side and rear windows

Q1-Q5	Option	Option description	
Q1 33357 33366	VOE33357	Cab L120E	
Q2 82411 82719	VOE82411	Cab Kit CAB L120E USA	
Q3 82528 83819	VOE82528	Handrail	

Pos	Part	Q1	Q2	Q3	Q4	Q5	PS	Kit	Description	Option(s)	Remark
		1							Cab Framework		See ref 810/150
1	VOE11104451	1							•Window frame		

2	VOE11104509	2							•Hinge		
	VOE11708215	2							••Hinge pin		
3		1							Window		See ref 843/100
4		REQ							Sealing strip		See ref 843/100
5	VOE11104075	1							Latch		
6	VOE13940090	2							Washer		
7	VOE13965596	2							Blind rivet		
8	VOE17208460	1							Gas Spring		(VOE11006826)
9	VOE11006706	1							Door stop		
10	VOE667751	1							Buffer		
11	VOE11005947	1							End Piece		
12	VOE13951967	2		1					Spring pin	VOE33357	
12A	VOE11413283	1	1	1					Elbow	VOE33366	
12B	VOE11117464	1	1	1					Plain washer	VOE33366	(VOE13960141)
12C	VOE946440	1	1	1					Flange screw	VOE33366	
13	VOE942290	3							Retaining ring bolt		
14	VOE13947757	9							Washer		
15	VOE13962658	1							Washer		
16	VOE13969158	3							Lock brace		
17	VOE11007034	1							Window catch		

VOLVO

Construction Equipment

PROSIS Part Information

Date:	Image id:	Catalogue:	Model:
25/08/2018	**1004058**	**20086**	**L120E**
Brand:	Serial:	Group/Section:	Title:
Volvo	**19804-, 66001-, 71401-**	**843/200**	**Sliding window. 93786, 93787, 33366, 82411**

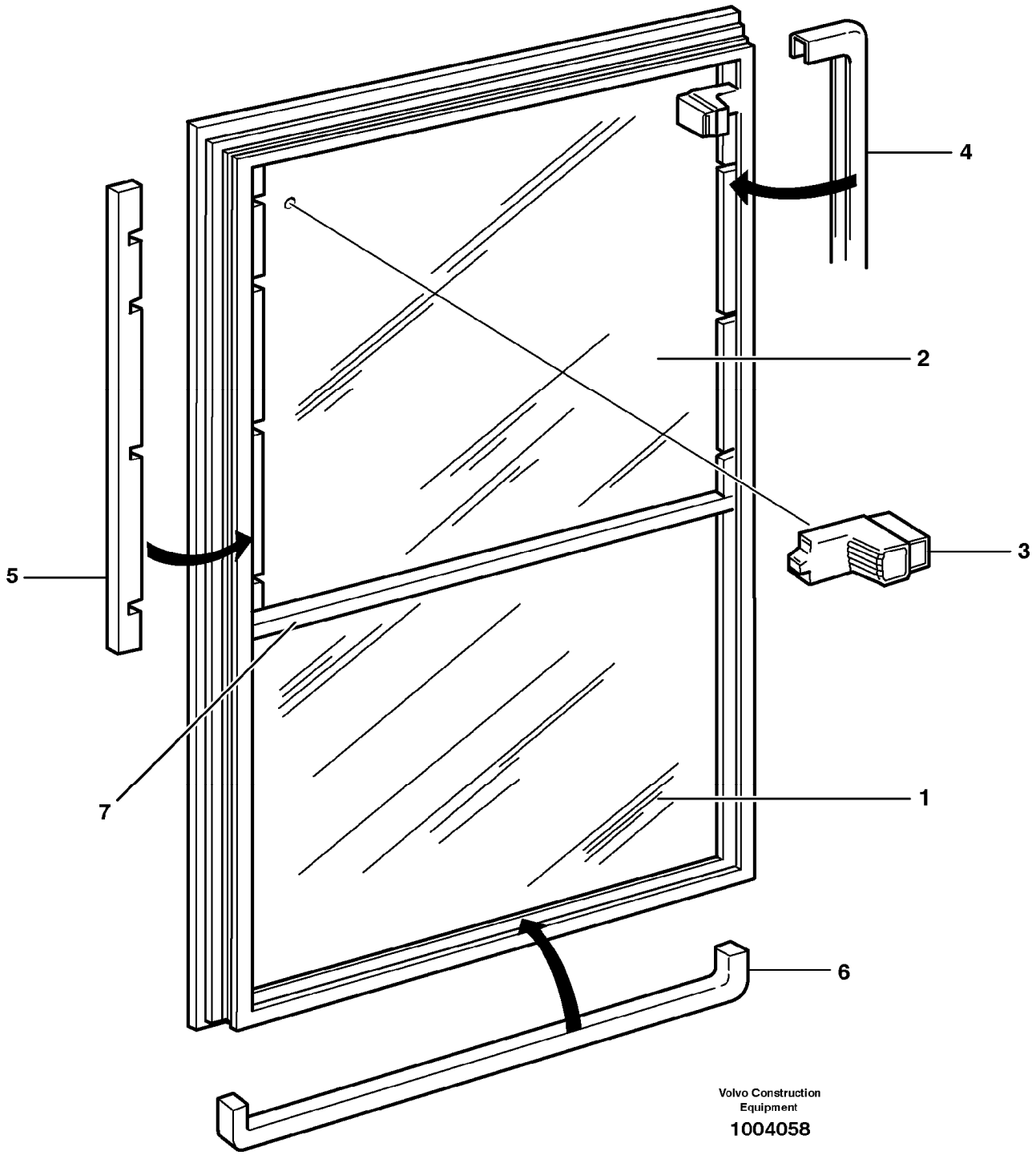

Section option	Kit	Option description
VOE33366		Cab L120E USA

VOE82411		Cab Kit CAB L120E USA
VOE93786	VOE11104593	Sliding window, tinted glass
VOE93787	VOE11104594	Sliding window, door, tinted glass

Pos	Part	Q1	Q2	Q3	Q4	Q5	PS	Kit	Description	Option(s)	Remark
	VOE11164640	1							Sliding window	VOE93786	(VOE11104593), RH
	VOE11164641		1						Sliding window	VOE93787	(VOE11104594), LH
1	VOE11704709	1							•Window		
	VOE11704707		1						•Window		
2	VOE11704706	1	1						•Window		
3	VOE11996337	1	1						•Latch		
4	VOE11704728	REQ	REQ						•Moulding		
5	VOE11704708	2							•Lock strip		(VOE11704710)
	VOE11704708		2						•Lock strip		
6	VOE11996338	1	1						•Rubber moulding		
7	VOE11988386	1	1						•Cross member		

VOLVO

Construction Equipment

PROSIS Part Information

Date:	Image id:	Catalogue:	Model:
25/08/2018	**1019730**	**20086**	**L120E**
Brand:	Serial:	Group/Section:	Title:
Volvo	**19804-, 66001-, 71401-**	**851/100**	**Insulating matting**

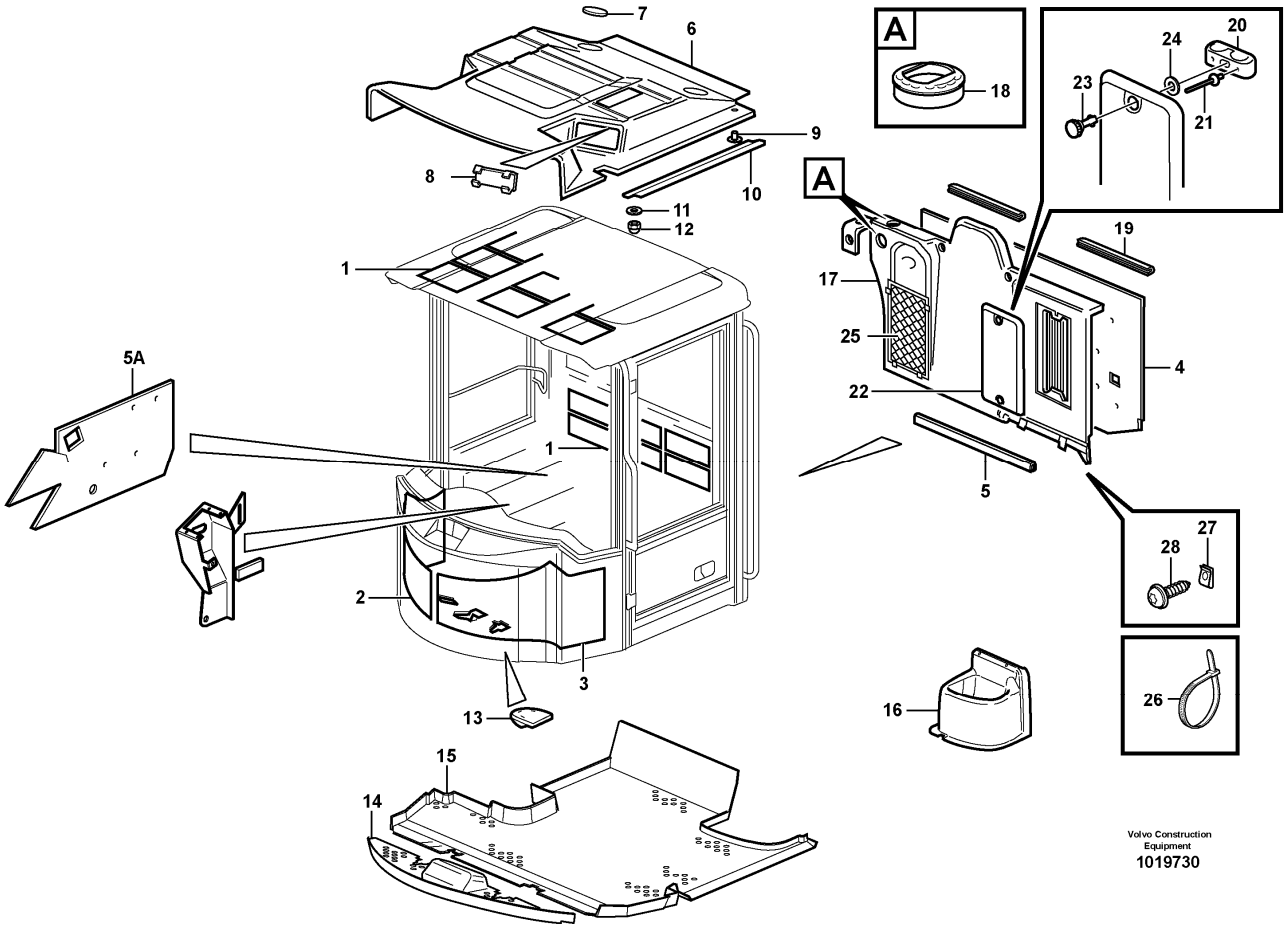

Section option	Kit	Option description
VOE33357		Cab L120E
VOE33380		Volvo Wheel Loader L120E S/N 19801-, S/N 66001- USA, S/N 71401- BRA
VOE33395		Wheel Loader L120E3 IRAN

Q1-Q5	Option	Option description	
Q1 33357	VOE33357	Cab L120E	
Q2 33380	VOE33380	Volvo Wheel Loader L120E S/N 19801-, S/N 66001- USA, S/N 71401- BRA	
Q3 33395	VOE33395	Wheel Loader L120E3 IRAN	

Pos	Part	Q1	Q2	Q3	Q4	Q5	PS	Kit	Description	Option(s)	Remark
1	VOE1321087	25					OP		Insulation		
2	VOE11429248	1							Insulation		RH
3	VOE11429249	1							Insulation		LH

4	VOE11429070	1							Insulation		
5	VOE11006785	REQ							Framework moulding		L = 715 MM
5A	VOE11104759	1							Insulation		
6	VOE11104329	1							Headlining		
7	VOE11007975	2							Cover		
8	VOE11444164	2							Lid		(VOE11007493)
9	VOE11006726	3							Push button		
10	VOE11104614	2							Moulding		
11	VOE960139	5							Plain washer		
12	VOE11005777	5							Cap nut		
13	VOE11007246		1	1					Rubber plug		
14	VOE11164307		1	1					Floor mat		
15	VOE11164308		1	1					Floor mat		
16			1	1					Casing		See ref 882/100
17	VOE11429163		1	1					Cover		
18	VOE11104371		2	2			SS		•Air outlet		
19	VOE4955075		2	2					•Moulding		
20	VOE11006795		2	2					•Lock		
21	VOE942669		4	4					•Blind rivet		
22	VOE11429164		1	1					•Lid		
23	VOE11006796		2	2					••Retainer		
24	VOE11006797		2	2					••Washer		
25	VOE11104572		1	1					•Baggage Net		
26	VOE4881438		4						•Cable tie		
27	VOE949921		5	5					Spring nut		
28	VOE971322		7	7					Six point socket screw		

VOLVO

Construction Equipment

PROSIS Part Information

Date:	Image id:	Catalogue:	Model:
25/08/2018	**1070727**	**20086**	**L120E**
Brand:	Serial:	Group/Section:	Title:
Volvo	**19804-, 66001-, 71401-**	**852/100**	**Operator seat with fitting parts**

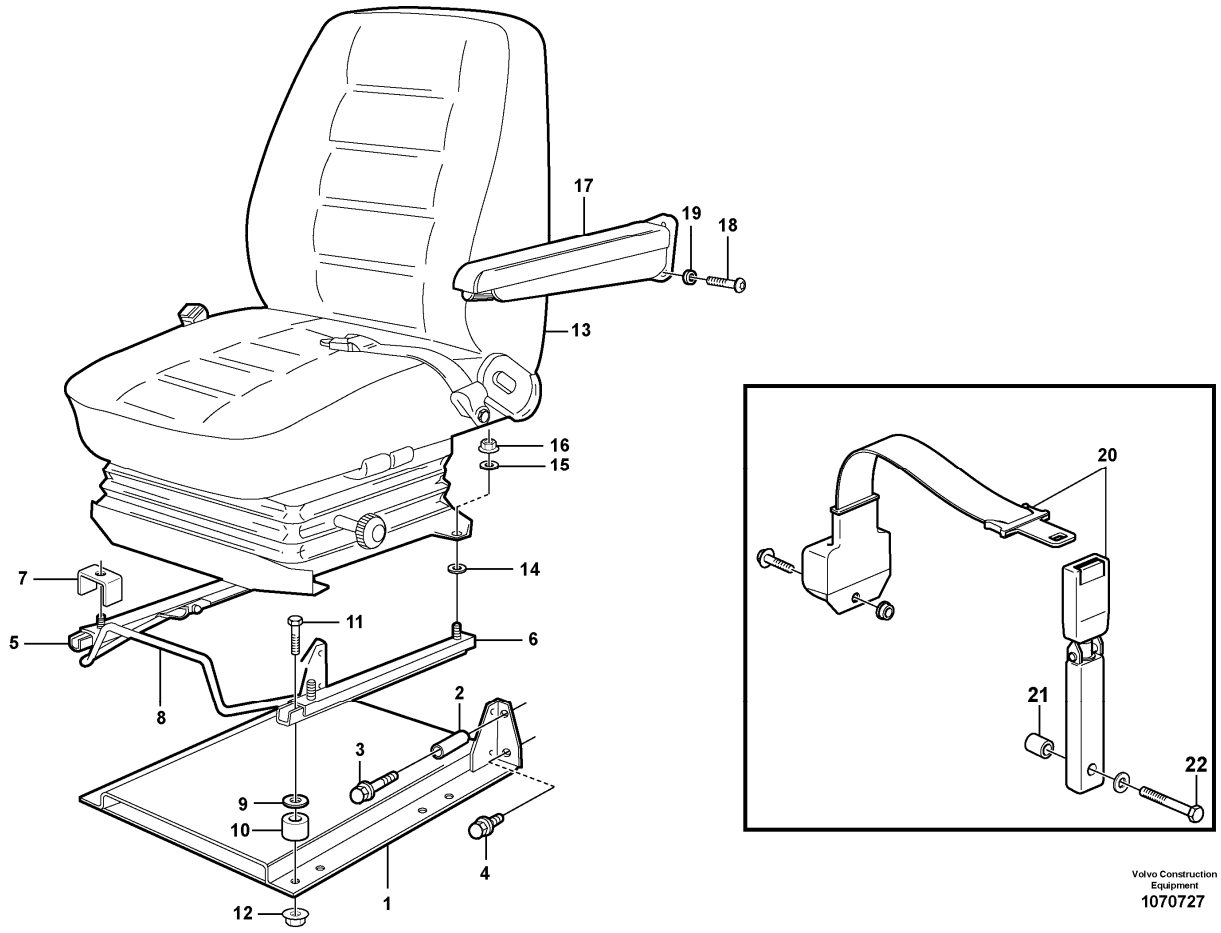

Section option	Kit	Option description
VOE33357		Cab L120E
VOE80503		Drivers seat ISRI
VOE80504		Drivers seat ISRI
VOE80505		Operator's seat, heated, high backrest ISRI
VOE80506		Operator seat, heated, airsuspended ISRI, Kit No: VOE 11104274 + VOE 11707994
VOE80572		Operator's seat, airsuspended, heated Kit No: VOE 11104016 + VOE 11708097
VOE83070	VOE11714942	Operator seat, heated, air suspended
VOE83376		Armrest
VOE94909	VOE11104015	Operator seat, heated BEGE
VOE94916		Arm rest LH, ISRI
VOE94925	VOE11104125	Seat Belt Retractable 3 in

Q1-Q5	Option	Option description	
Q1 33357	VOE33357	Cab L120E	

Q2 .			See footnote 1294)

Pos	Part	Q1	Q2	Q3	Q4	Q5	PS	Kit	Description	Option(s)	Remark
1	VOE11007410	1							Seat Bracket		
2	VOE930457	2							Spacer ring		
3	VOE13947790	2							Screw		
4	VOE946329	2							Flange screw		
5	VOE11104092	1							Slide rail		RH
6	VOE11104093	1							Slide rail		LH
7	VOE11164642	1							Brace		
8	VOE11006044	1							Handle		
9	VOE11117464	4							Plain washer		(VOE13960141)
10	VOE11104790		4						Spacer	VOE80506	
11	VOE4870448	4							Screw		
	VOE13980338		4						Allen Hd Screw	VOE80506	
12	VOE948645	4							Flange lock nut		
13	VOE11104254		1				SS		Seat	VOE33395, VOE80503	See ref 852/150
	VOE11104254		1				SS		Seat	VOE80504	See ref 852/200
	VOE15186567		1						Seat	VOE80505	(VOE11104273) See ref 852/200
	VOE11104274		1				SS		Seat	VOE80506	See ref 852/250
	VOE11104016		1						Seat	VOE80572	See ref 852/300
	VOE15186579		1				SS		Seat	VOE83070	(VOE11429033) See ref 852/125
	VOE11104015		1						Seat	VOE94909	See ref 852/400
14	VOE13960143	4							Washer		
15	VOE11117464	4							Plain washer		(VOE13960141)
16	VOE13945408	4							Nut		
17	VOE11104014		1						Arm rest	VOE94916	
	VOE11429137		1						Arm rest	VOE83376	LH
18	VOE969436		2						Six point socket screw	VOE94916	
19	VOE13955894		2						Washer	VOE94916	
20	VOE11104125		1						Seat belt	VOE94925	CPL
21	VOE17228594		1						Spacer washer	VOE94925	
22	VOE955700		1						Hexagon screw	VOE94925	

1294) Not included when cab is ordered

VOLVO

Construction Equipment

PROSIS Part Information

Date:	Image id:	Catalogue:	Model:
25/08/2018	**1019715**	**20086**	**L120E**
Brand:	Serial:	Group/Section:	Title:
Volvo	**19804-, 66001-, 71401-**	**852/125**	**Operator seat with fitting parts 83070**

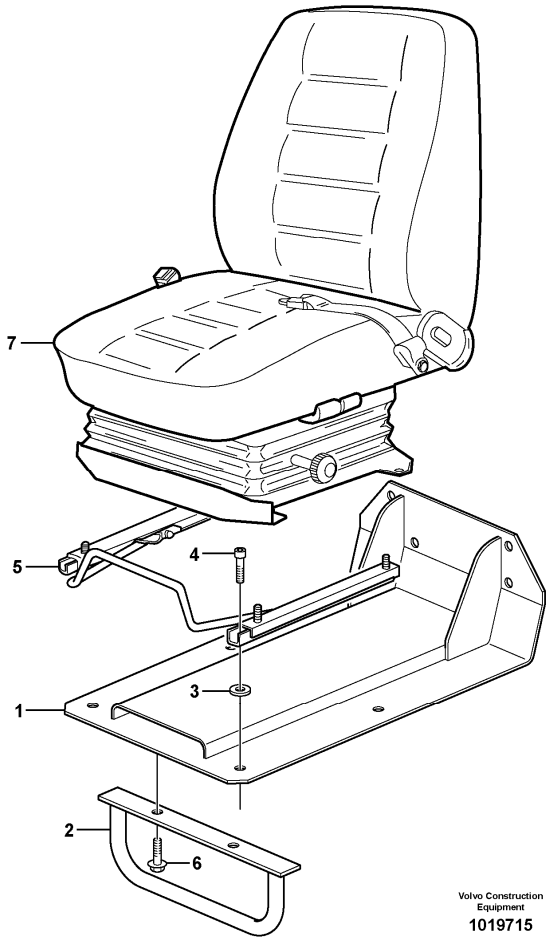

Section option	Kit	Option description
VOE83070	VOE11714942	Operator seat, heated, air suspended

Q1-Q5	Option	Option description	
Q1 83070	VOE83070	Operator seat, heated, air suspended	
Q2 .			

Pos	Part	Q1	Q2	Q3	Q4	Q5	PS	Kit	Description	Option(s)	Remark
1	VOE11164665	1							Seat Bracket		
2	VOE11164667	1							Support		
3	VOE11055612	4							Plain washer		
4	VOE959223	4							Hex. socket screw		
5			2						Slide Rail		See ref 852/100
6	VOE13946173	2							Screw		
7		1							Seat		See ref 852/350

VOLVO

Construction Equipment

PROSIS Part Information

Date:	Image id:	Catalogue:	Model:
25/08/2018	**1002262**	**20086**	**L120E**
Brand:	Serial:	Group/Section:	Title:
Volvo	**19804-, 66001-, 71401-**	**852/150**	**Operator's seat. 80503**

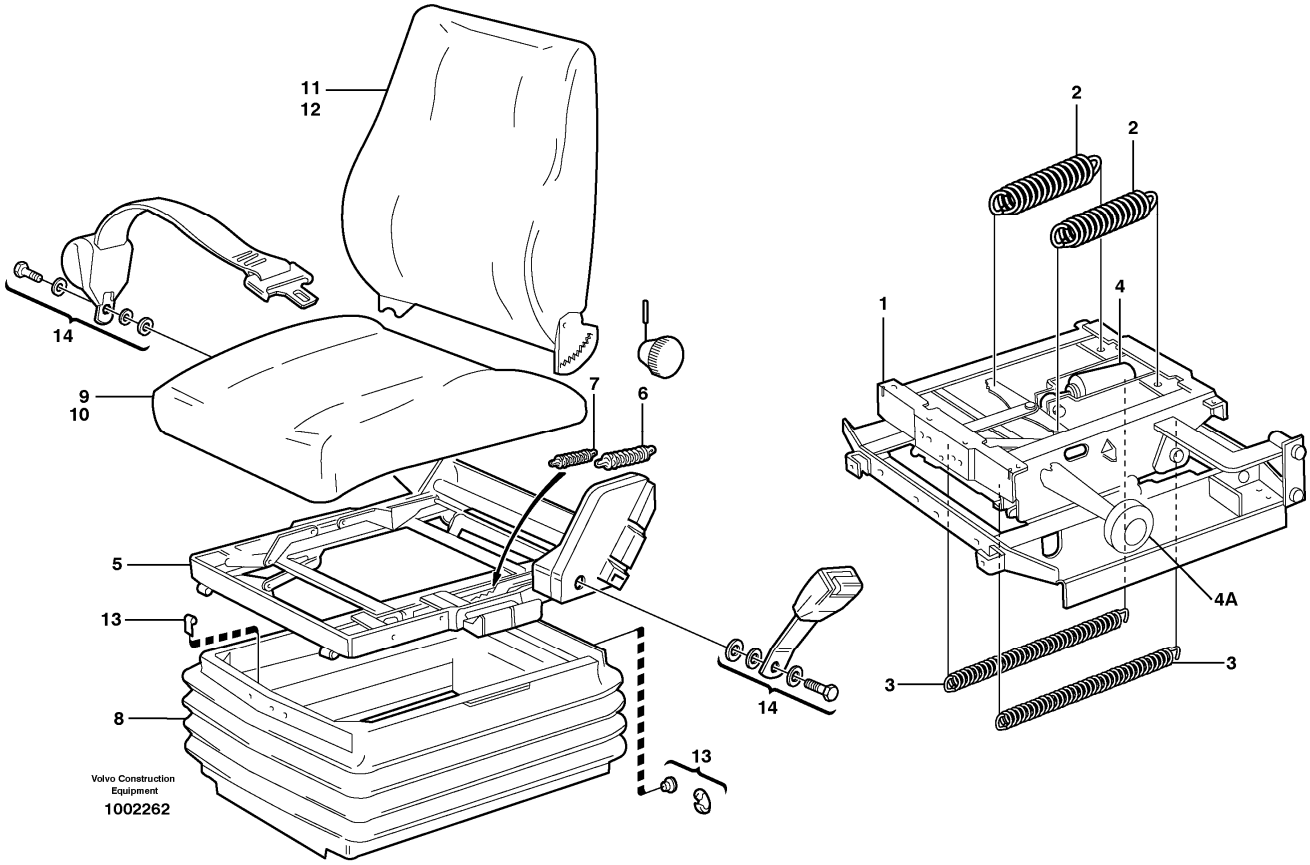

Section option	Kit	Option description
VOE80503		Drivers seat ISRI

Pos	Part	Q1	Q2	Q3	Q4	Q5	PS	Kit	Description	Option(s)	Remark
	VOE11104254	1					SS		Seat	VOE80503	
1	VOE11707355	1							•Spring suspension unit		See ref 852/225
2		2							••Spring		
3		2							••Spring		
4		1							••Shock absorber		
4A		1							••Knob		
5	VOE11707359	1							•Seat frame		
6	VOE1518748	1							••Spring		
7	VOE1696529	2							••Spring		
8	VOE11998550	1							•Bellows		
9	VOE11700708	1							•Seat		
10	VOE11996163	1							••Upholstery		

11	VOE11707357	1							•Backrest		
12	VOE11707358	1							••Upholstery		
13	VOE11998811	1							•Attachment kit		
14	VOE11707348	1							•Hip Belt		

VOLVO

Construction Equipment

PROSIS Part Information

Date:	Image id:	Catalogue:	Model:
25/08/2018	**1019980**	**20086**	**L120E**
Brand:	Serial:	Group/Section:	Title:
Volvo	**19804-, 66001-, 71401-**	**852/200**	**Operator's seat, ISRI. 80503, 80504, 80505**

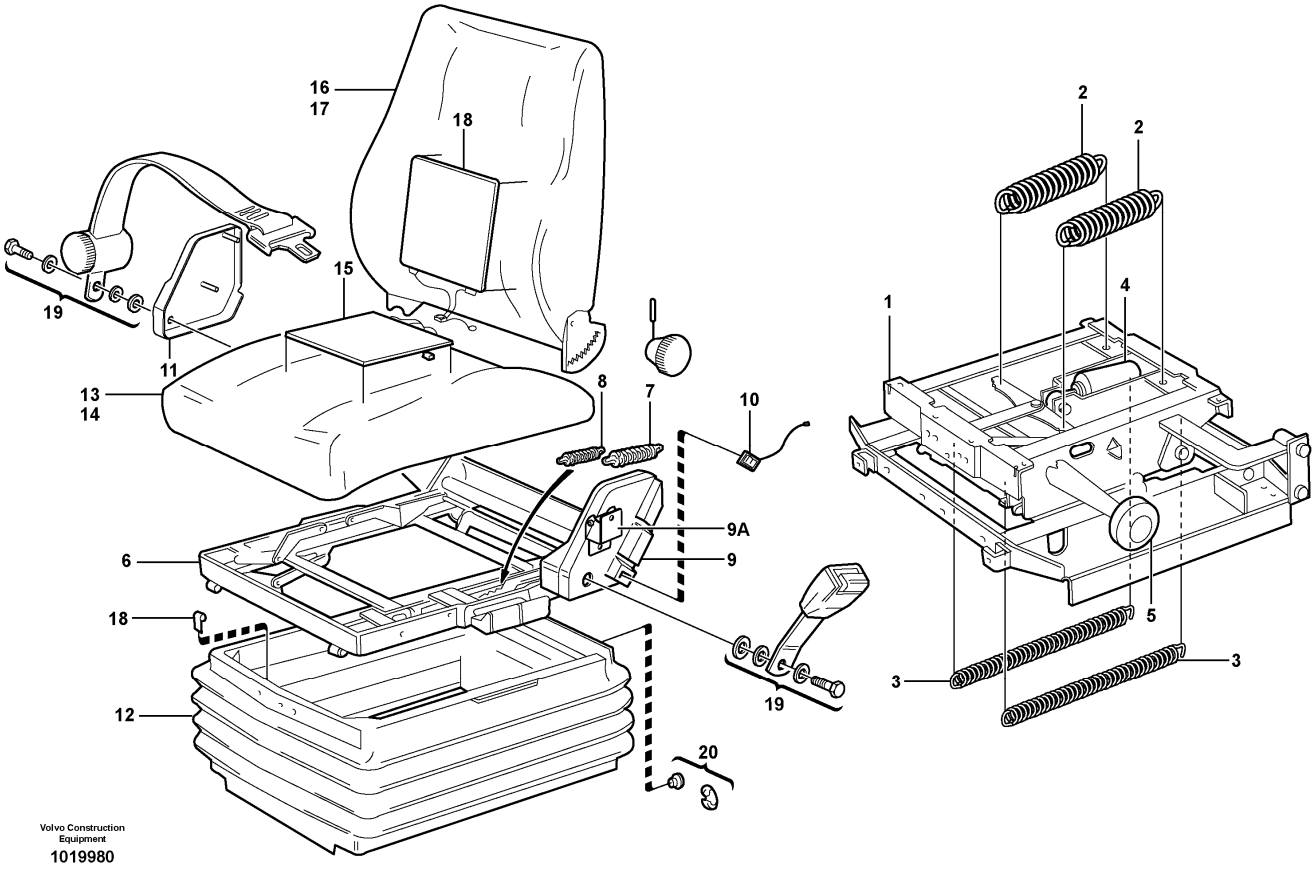

Section option	Kit	Option description
VOE80503		Drivers seat ISRI
VOE80504		Drivers seat ISRI
VOE80505		Operator's seat, heated, high backrest ISRI

Q1-Q5	Option	Option description	
Q1 11104254			
Q2 11104273			

Pos	Part	Q1	Q2	Q3	Q4	Q5	PS	Kit	Description	Option(s)	Remark
	VOE11104254	1					SS		Seat	VOE80504	
	VOE15186567		1						Seat	VOE80505	(VOE11104273)
1	VOE11707355	1	1						•Spring suspension unit		See ref 852/225
2		2	2						••Spring		

3		2	2						••Spring		
4		1	1						••Shock absorber		
5		1	1						••Knob		
6	VOE11707354	1	1						•Seat frame		
7	VOE1518748	1	1						••Spring		
8	VOE1696529	2	2						••Spring		
9	VOE15186994	1	1						••Cover		(VOE11708188)
9A	VOE11715818	2	2						••Backrest lock		
10	VOE11707346	1	1						••Switch		
11	VOE11709390	1	1						••Cover		
12	VOE11998550	1	1						•Bellows		
13	VOE11707361	1	1						•Seat cushion		
14	VOE11996163	1	1						••Upholstery		
15	VOE11706320	1	1						••Heater		
16	VOE11707360	1					SS		•Backrest		
	VOE11714580		1						•Backrest		
17	VOE11707358	1							••Upholstery		
	VOE11707344		1				SS		••Upholstery		
18	VOE11706318	1	1						••Heater		
19	VOE11707348	1	1						•Hip Belt		
20	VOE11998811	1	1						•Attachment kit		

VOLVO

Construction Equipment

PROSIS Part Information

Date:	Image id:	Catalogue:	Model:
25/08/2018	**1075965**	**20086**	**L120E**
Brand:	Serial:	Group/Section:	Title:
Volvo	**19804-, 66001-, 71401-**	**852/225**	**Operator's seat. 80503, 80504, 80505**

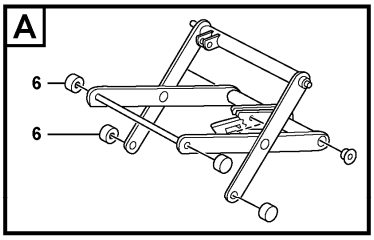

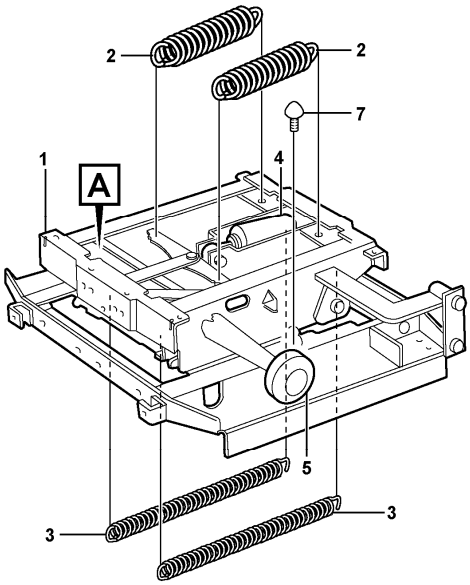

Volvo Construction Equipment
1075965

Section option	Kit	Option description
VOE80503		Drivers seat ISRI
VOE80504		Drivers seat ISRI
VOE80505		Operator's seat, heated, high backrest ISRI

Pos	Part	Q1	Q2	Q3	Q4	Q5	PS	Kit	Description	Option(s)	Remark
1	VOE11707355	1							Spring suspension unit		
2	VOE6213261	2							•Spring		
3	VOE11707356	2							•Spring		
4	VOE11707351	1							•Shock absorber		
5	VOE3090569	1							•Knob		
6	VOE17240991	4							•Roller		
7	VOE17240994	2							•Buffer		

VOLVO

Construction Equipment

PROSIS Part Information

Date:	Image id:	Catalogue:	Model:
25/08/2018	**1019981**	**20086**	**L120E**
Brand:	Serial:	Group/Section:	Title:
Volvo	**19804-, 66001-, 71401-**	**852/250**	**Operator's seat, heated, air suspensioned, ISRI. 80506**

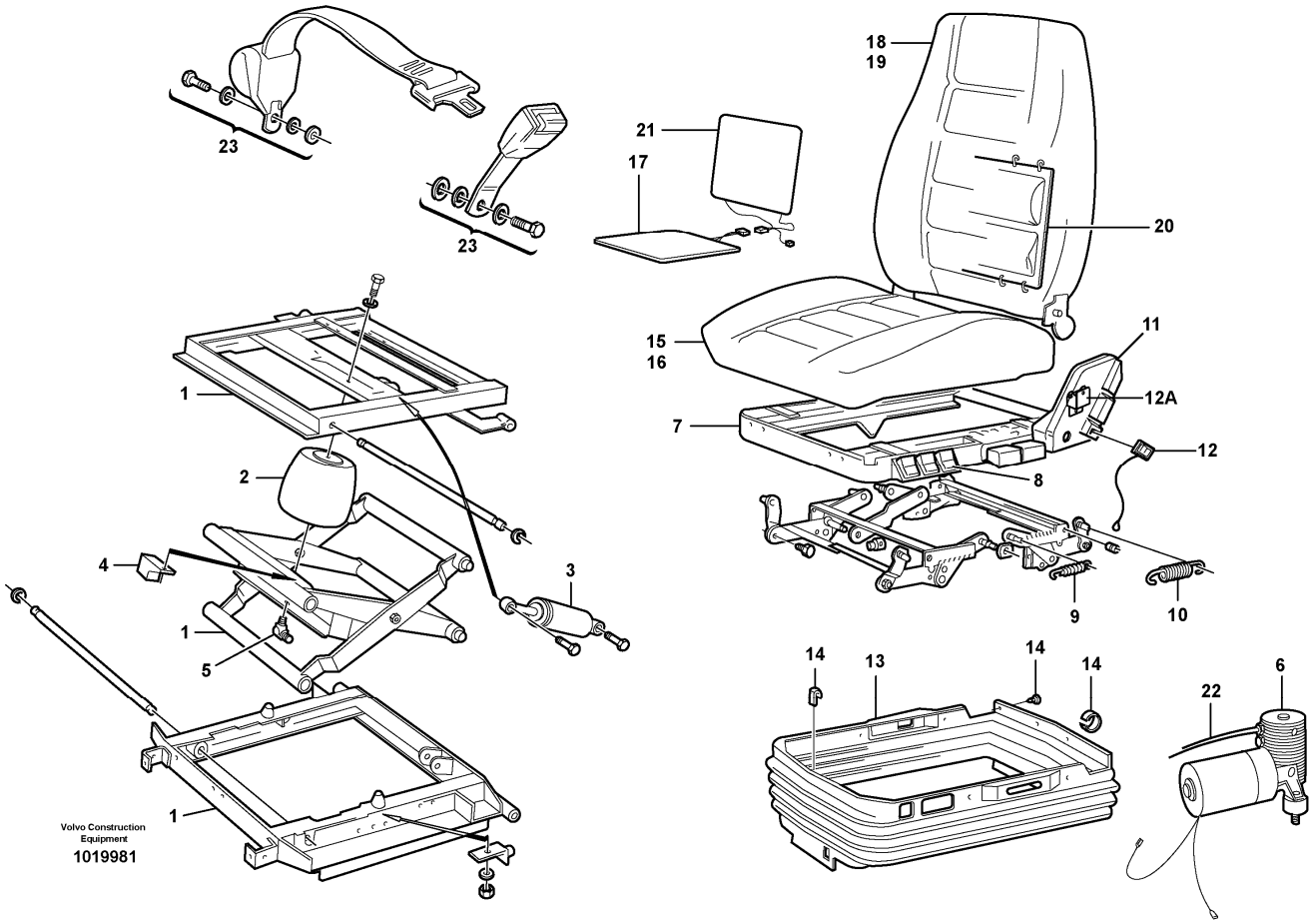

Section option	Kit	Option description
VOE80506		Operator seat, heated, airsuspended ISRI, Kit No: VOE 11104274 + VOE 11707994

Q1-Q5	Option	Option description	
Q1 CAB - 2422			
Q2 CAB 2423 -			

Pos	Part	Q1	Q2	Q3	Q4	Q5	PS	Kit	Description	Option(s)	Remark
	VOE11104274	1					SS		Seat	VOE80506	
	VOE11412638		1				SS		Seat		
1	VOE15054849	1	1						•Spring suspension unit		(VOE11707349)
2	VOE11707350	1	1						••Air bellows		
3	VOE11707351	1	1						••Shock absorber		
4	VOE11993178	1	1						••Relay		

5	VOE3091629	1	1						••Elbow nipple		
6	VOE11709423	1	1						••Compressor		
7	VOE11707345	1							•Seat frame		
	VOE11715430		1						•Seat frame		
8	VOE11707347	1							••Control		
9	VOE1518748	1							••Spring		
10	VOE1696529	2							••Spring		
11	VOE15186994	1							••Cover		(VOE11708188)
12	VOE11707346	1							••Switch		
12A	VOE11715818	2							••Backrest lock		
13	VOE11998842	1	1						•Bellows		
14	VOE11998811	1	1						•Attachment kit		
15	VOE11998831	1	1				SS		•Seat cushion		
16	VOE11998561	1	1				SS		••Upholstery		
17	VOE11706320	1	1						••Heater		
18	VOE11714579	1	1				SS		•Backrest		
19	VOE11707344	1	1				SS		••Upholstery		
20	VOE11997265	1	1						••Lumbar support		
21	VOE11706318	1	1						••Heater		
22	VOE3090544	REQ	REQ						•Plastic hose		
23	VOE11707348	1	1						•Hip Belt		

VOLVO

Construction Equipment

PROSIS Part Information

Date:	Image id:	Catalogue:	Model:
25/08/2018	**1019704**	**20086**	**L120E**
Brand:	Serial:	Group/Section:	Title:
Volvo	**19804-, 66001-, 71401-**	**852/300**	**Operator's seat, Be-ge. 80572**

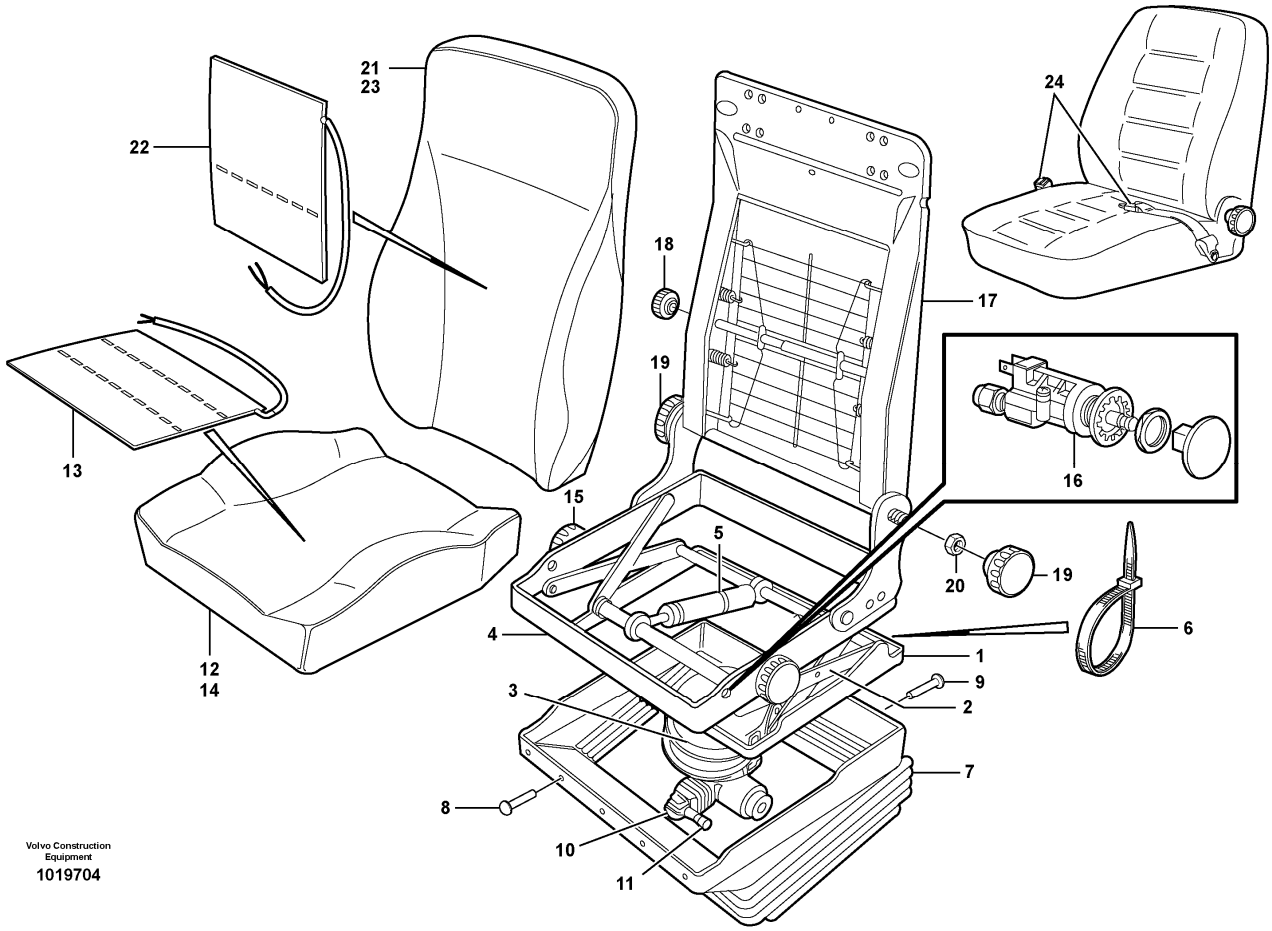

Section option	Kit	Option description
VOE80572		Operator's seat, airsuspended, heated Kit No: VOE 11104016 + VOE 11708097

Pos	Part	Q1	Q2	Q3	Q4	Q5	PS	Kit	Description	Option(s)	Remark
	VOE11104016	1							Seat	VOE80572	
1	VOE11998619	1							•Frame		
2	VOE11998620	1							•Linkage		
3	VOE11996421	1							•Air spring		
4	VOE11998621	1							•Seat frame		
5	VOE11998615	1							•Shock absorber		
6	VOE11996419	1							•Strip		
7	VOE11996418	1							•Protecting bellows		
8	VOE11708898	17							••Plastic rivet		
9	VOE11708899	5							••Plastic rivet		
10	VOE11998622	1							•Compressor		

11	VOE11701683	1							••Non-return valve		
11	VOE15101670	1							••Non-return valve		
12	VOE11996411	1							•Seat cushion		
13	VOE11996416	1							•Heater		
14	VOE11998617	1							•Upholstery		
15	VOE11708910	2							•Knob		
16	VOE11702361	1							•Switch		
17	VOE11996407	1							•Backrest frame		
18	VOE11996409	1							••Knob		
19	VOE11708910	2							••Knob		
20	VOE11708909	3							••Nut		
21	VOE11996412	1							•Backrest cushion		
22	VOE11996417	1							•Heater		
23	VOE11998618	1							•Upholstery		
24	VOE11104018	1							•Hip Belt		

VOLVO

Construction Equipment

PROSIS Part Information

Date:	Image id:	Catalogue:	Model:
25/08/2018	**1054895**	**20086**	**L120E**
Brand:	Serial:	Group/Section:	Title:
Volvo	**19804-, 66001-, 71401-**	**852/350**	**Operator's seat, heated, air suspensioned.**

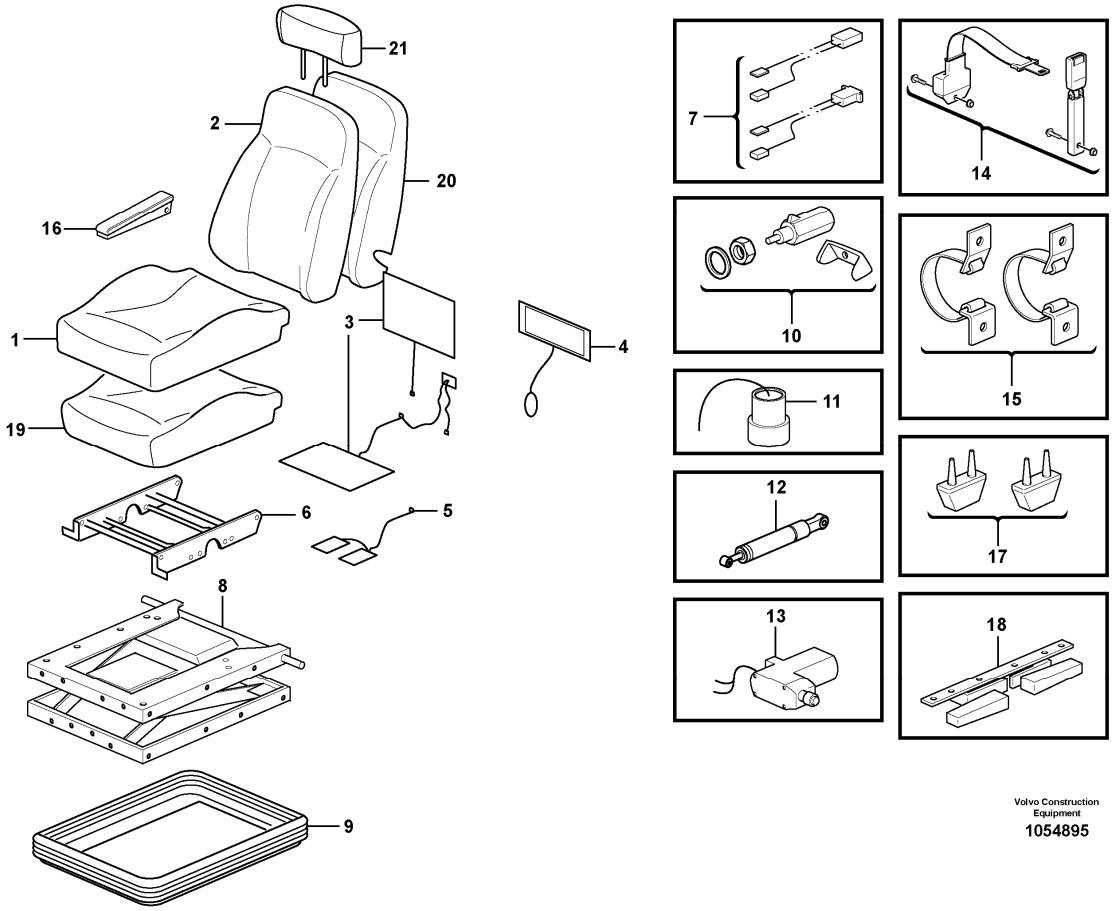

Section option	Kit	Option description
VOE81195		Head restraint
VOE83070	VOE11714942	Operator seat, heated, air suspended

Q1-Q5	Option	Option description	
Q1 83070	VOE83070	Operator seat, heated, air suspended	
Q2 81195	VOE81195	Head restraint	

Pos	Part	Q1	Q2	Q3	Q4	Q5	PS	Kit	Description	Option(s)	Remark
	VOE15186579	1					SS		Seat		(VOE11429033)
1	VOE11714962	1					SS		•Upholstery		
2	VOE11714963	1							•Upholstery		
3	VOE11714964	1							•Heater		
4	VOE11712832	1							•Lumbar support		
5	VOE11714965	1							•Sensor		

6	VOE11712834	1							•Height adjuster		
7	VOE11714966	1							•Wire		
8	VOE11714967	1							•Support		
9	VOE11714968	1							•Protecting bellows		
10	VOE11714969	1							•Valve kit		
11	VOE11712842	1							•Spring suspension unit		
	VOE11715387	1							••Coupling piece		
12	VOE11998654	1							•Shock absorber		
13	VOE11714970	1							•Compressor		
14	VOE11714971	1							•Seat belt kit		
15	VOE11714972	1							•Strap		
16	VOE11714973	1							•Arm rest		
17	VOE11998677	1							•Absorber		(VOE11714974)
18	VOE15065557	1							•Latch		
19	VOE15034479	1							•Seat cushion		
20	VOE15170269	1							•Backrest cushion		
21	VOE17401294		1						Head restraint		(VOE11191411)

VOLVO

Construction Equipment

PROSIS Part Information

Date:	Image id:	Catalogue:	Model:
25/08/2018	**1019707**	**20086**	**L120E**
Brand:	Serial:	Group/Section:	Title:
Volvo	**19804-, 66001-, 71401-**	**852/400**	**Operator's seat, Be-ge. 94909**

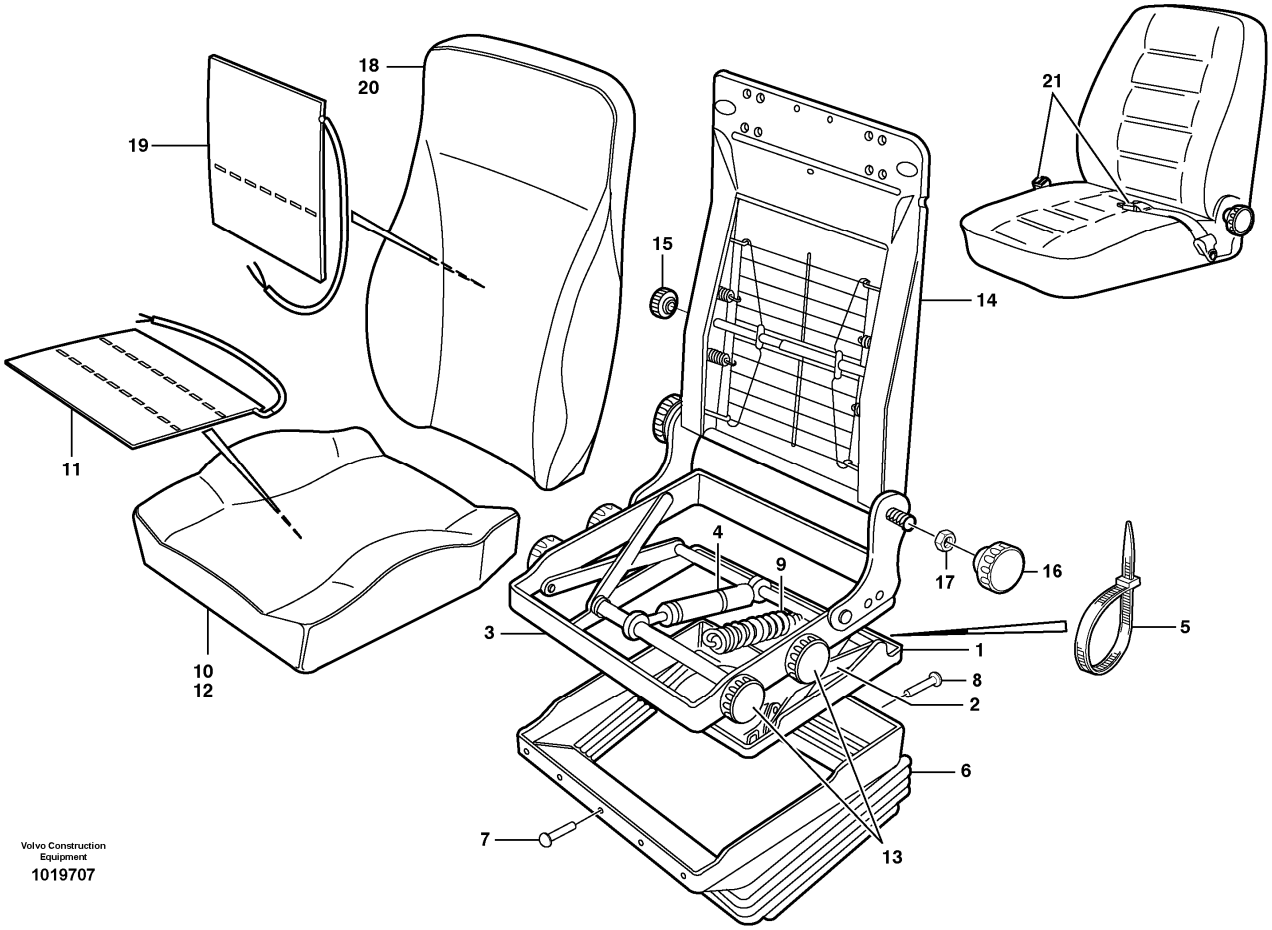

Section option	Kit	Option description
VOE94909	VOE11104015	Operator seat, heated BEGE

Pos	Part	Q1	Q2	Q3	Q4	Q5	PS	Kit	Description	Option(s)	Remark
	VOE11104015	1							Seat	VOE94909	
1	VOE11998619	1							•Frame		
2	VOE11998613	1							•Linkage		
3	VOE11998614	1							•Seat frame		
4	VOE11998615	1							•Shock absorber		
5	VOE11996419	1							•Strip		
6	VOE11996418	1							•Protecting bellows		
7	VOE11708898	17							••Plastic rivet		
8	VOE11708899	5							••Plastic rivet		
9	VOE11996410	2							•Tension spring		
10	VOE11996411	1							•Seat cushion		

11	VOE11996416	1							•Heater		
12	VOE11998617	1							•Upholstery		
13	VOE11708910	4							•Knob		
14	VOE11996407	1							•Backrest frame		
15	VOE11996409	1							••Knob		
16	VOE11708910	2							••Knob		
17	VOE11708909	3							••Nut		
18	VOE11996412	1							•Backrest cushion		
19	VOE11996417	1							•Heater		
20	VOE11998618	1							•Upholstery		
21	VOE11104018	1							•Hip Belt		

VOLVO

Construction Equipment

PROSIS Part Information

Date:	Image id:	Catalogue:	Model:
25/08/2018	**EL282**	**20086**	**L120E**
Brand:	Serial:	Group/Section:	Title:
Volvo	**19804-, 66001-, 71401-**	**852/500**	**Instructor's seat 80556**

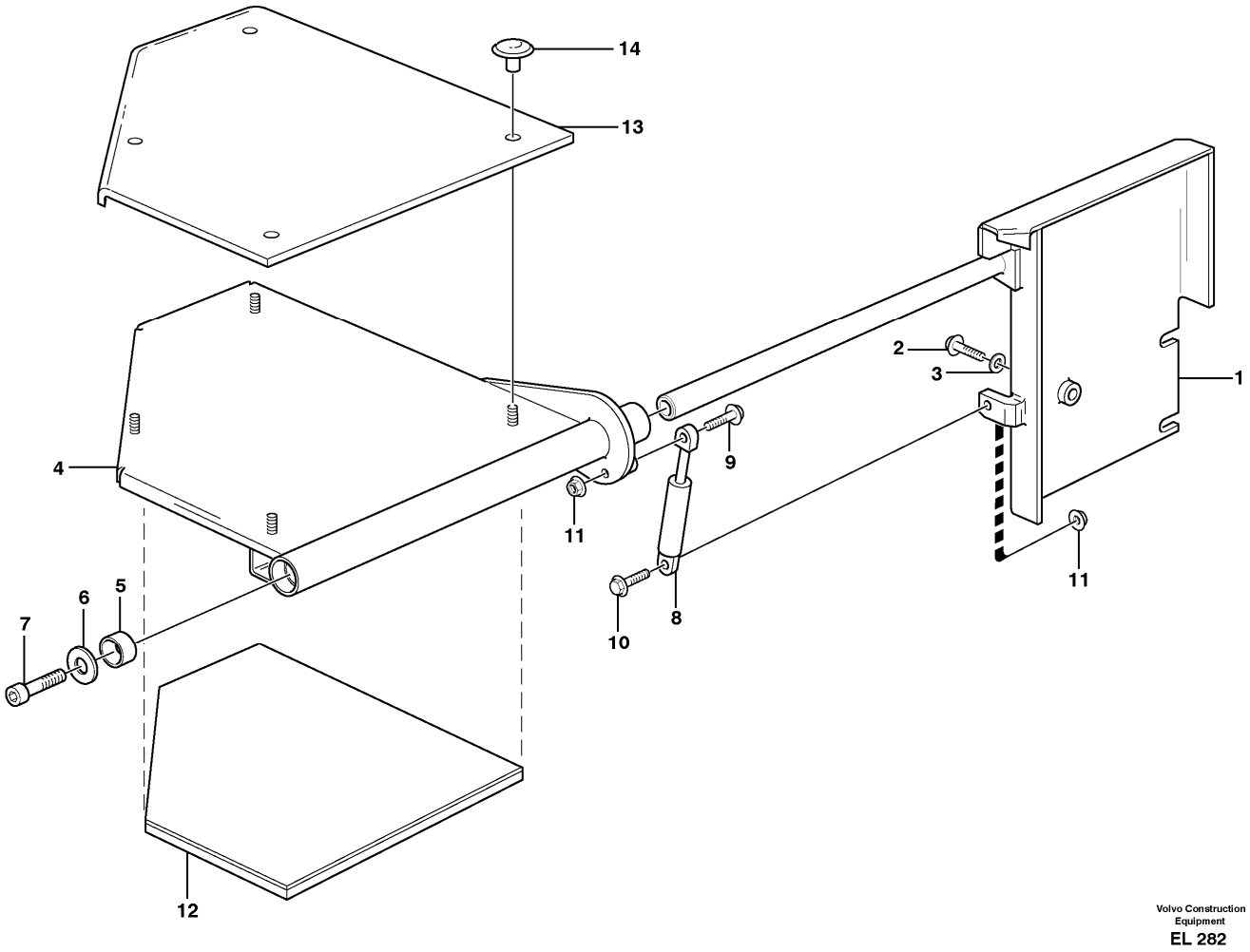

Section option	Kit	Option description
VOE80556	VOE11707315	Instructor seat

Pos	Part	Q1	Q2	Q3	Q4	Q5	PS	Kit	Description	Option(s)	Remark
1	VOE11006129	1							Bracket		
2	VOE946472	2							Flange screw		
3	VOE13960143	2							Washer		
4	VOE11006132	1							Seat		
5	VOE11007110	2							Bushing		
6	VOE4850822	1							Spacer		
7	VOE13965191	1							Screw		
8	VOE11007080	1							Gas spring		
9	VOE13965176	1							Screw		

10	VOE13947542	1							Screw		
11	VOE13949278	2							Flange lock nut		
12	VOE11006133	1							Upholstery		
13	VOE11006134	1							Cushion		
14	VOE11704348	4							Push button		

VOLVO

Construction Equipment

PROSIS Part Information

Date:	Image id:	Catalogue:	Model:
25/08/2018	**1004202**	**20086**	**L120E**
Brand:	Serial:	Group/Section:	Title:
Volvo	**19804-, 66001-, 71401-**	**860/100**	**Windshild guard for windshield. 82492**

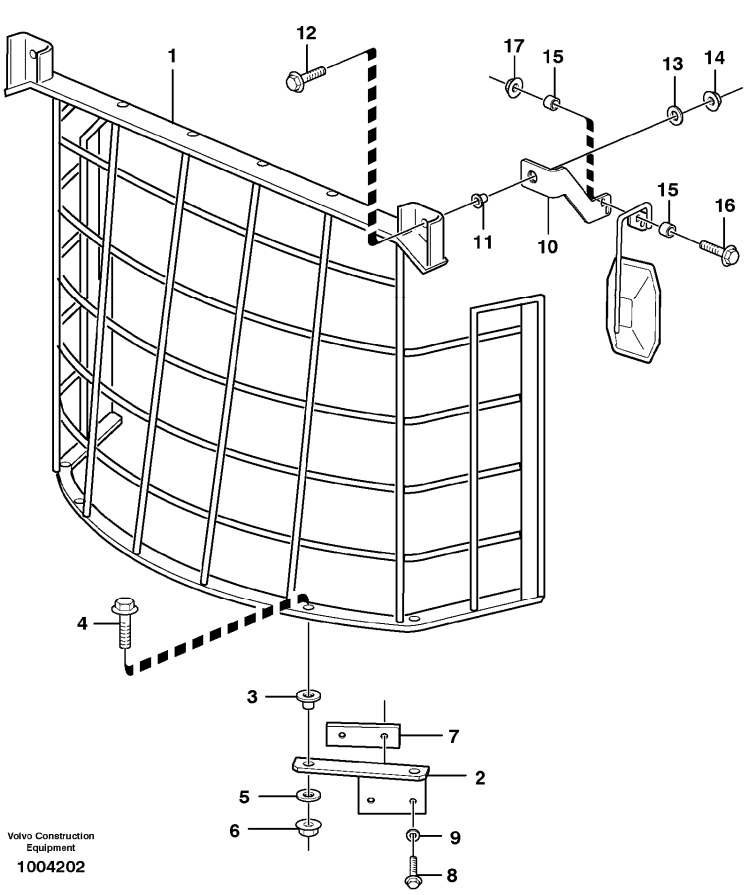

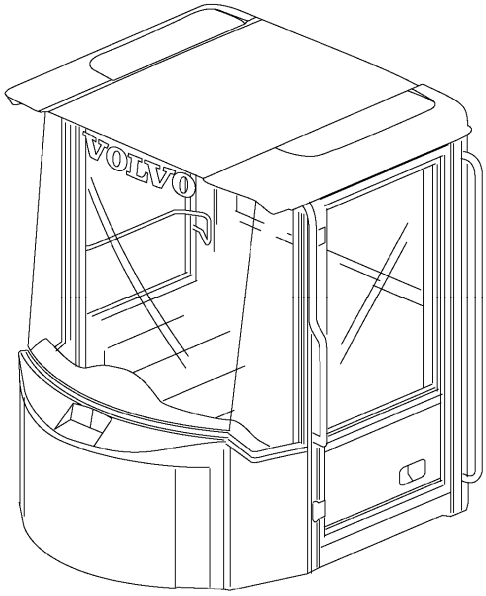

Section option	Kit	Option description
VOE82492	VOE11988664	Windscreen protection

Pos	Part	Q1	Q2	Q3	Q4	Q5	PS	Kit	Description	Option(s)	Remark
1	VOE11164402	1							Protecting grating		
2	VOE11164393	1							Anchorage		LH
	VOE11164416	1							Anchorage		RH
3	VOE6513604	4							Base		
4	VOE13965196	4							Screw		
5	VOE4746301	4							Washer		
6	VOE971099	4							Flange lock nut		
7	VOE11079238	2							Plate		
8	VOE13965192	4							Screw		
9	VOE13960145	4							Washer		
10	VOE11164410	1							Bracket		LH
	VOE11164409	1							Bracket		RH

11	VOE6513604	2							Base		
12	VOE13965196	2							Screw		
13	VOE4746301	2							Washer		
14	VOE971099	2							Flange lock nut		
15	VOE13930447	4							Spacer ring		
16	VOE13965187	4							Screw		
17	VOE13971098	4							Flange nut		

VOLVO

Construction Equipment

PROSIS Part Information

Date:	Image id:	Catalogue:	Model:
25/08/2018	**1019770**	**20086**	**L120E**
Brand:	Serial:	Group/Section:	Title:
Volvo	**19804-, 66001-, 71401-**	**860/150**	**Window guards, side and rear windows. 82719**

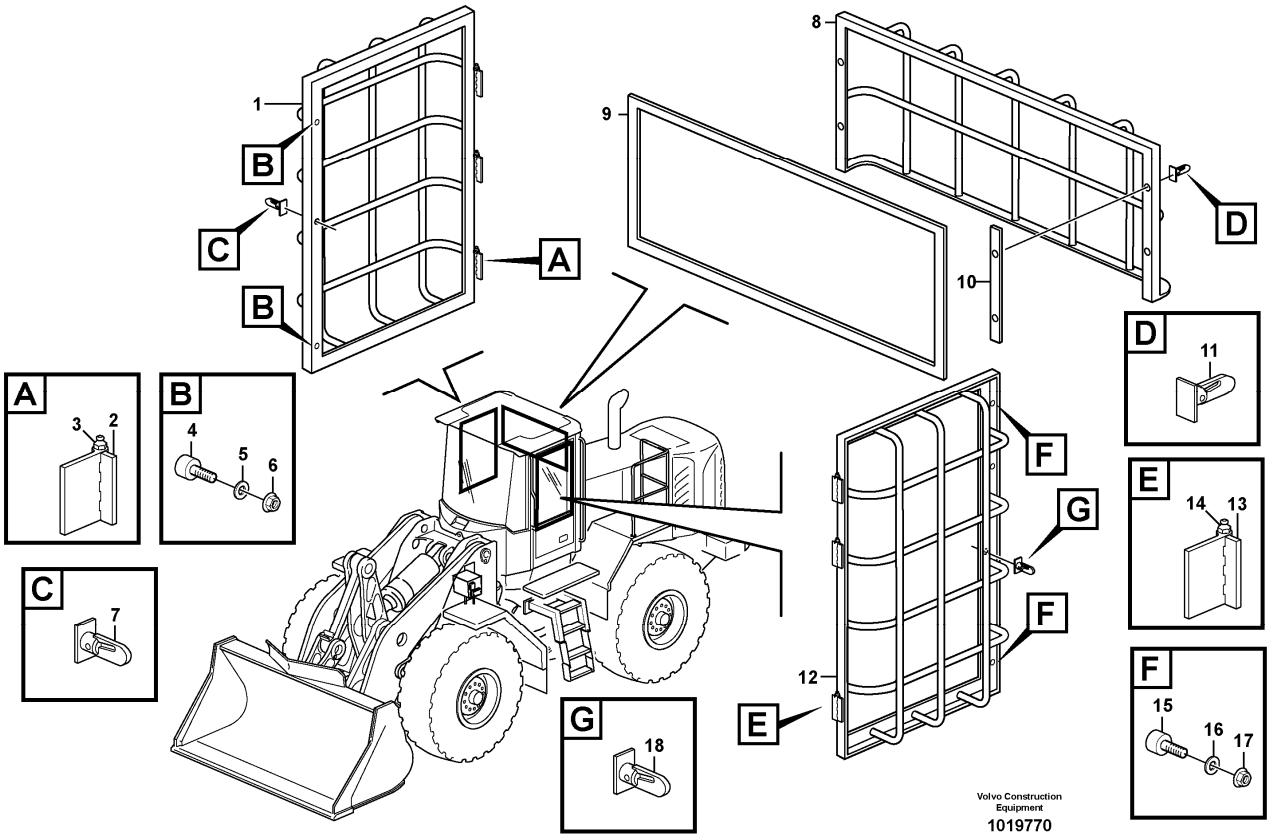

Section option	Kit	Option description
VOE82719		Window guards, side and rear windows

Pos	Part	Q1	Q2	Q3	Q4	Q5	PS	Kit	Description	Option(s)	Remark
1	VOE11302146	1							Protecting grating		
2	VOE11104509	2							•Hinge		
3	VOE11708215	2							••Hinge pin		
4	VOE11181128	2							Stop		(VOE14341605)
5	VOE960139	2							Plain washer		
6	VOE13949278	2							Flange lock nut		
7	VOE11302218	1							Lock catch		
8	VOE11141681	1							Guard		
9	VOE11079470	REQ							Sealing strip		
10	VOE11302217	2							Attachment		
11	VOE11079497	2							•Lock		

12	VOE11302148	1							Protecting grating		
13	VOE11006738	2							•Hinge		
14	VOE11708215	2							••Hinge pin		
15	VOE11181128	2							Stop		(VOE14341605)
16	VOE960139	2							Plain washer		
17	VOE13949278	2							Flange lock nut		
18	VOE11302218	1							Lock catch		

VOLVO

Construction Equipment

PROSIS Part Information

Date:	Image id:	Catalogue:	Model:
25/08/2018	**1018192**	**20086**	**L120E**
Brand:	Serial:	Group/Section:	Title:
Volvo	**19804-, 66001-, 71401-**	**860/200**	**Hub protection 82283**

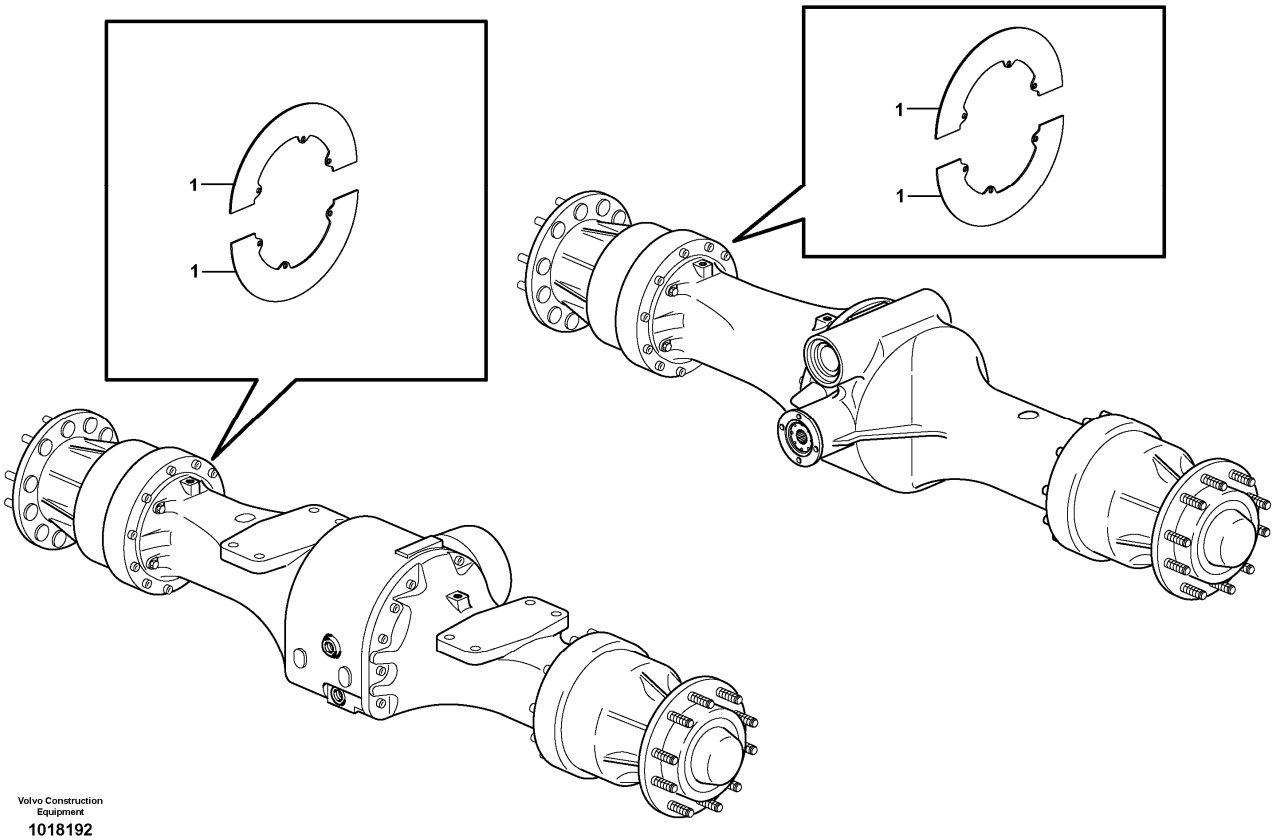

Section option	Kit	Option description
VOE82283		protective plate

Pos	Part	Q1	Q2	Q3	Q4	Q5	PS	Kit	Description	Option(s)	Remark
1	VOE11180489	8							Protection		
	VOE13955900	48							Washer		

VOLVO

Construction Equipment

PROSIS Part Information

Date:	Image id:	Catalogue:	Model:
25/08/2018	**1019788**	**20086**	**L120E**
Brand:	Serial:	Group/Section:	Title:
Volvo	**19804-, 66001-, 71401-**	**865/150**	**Noise reduction. 82553**

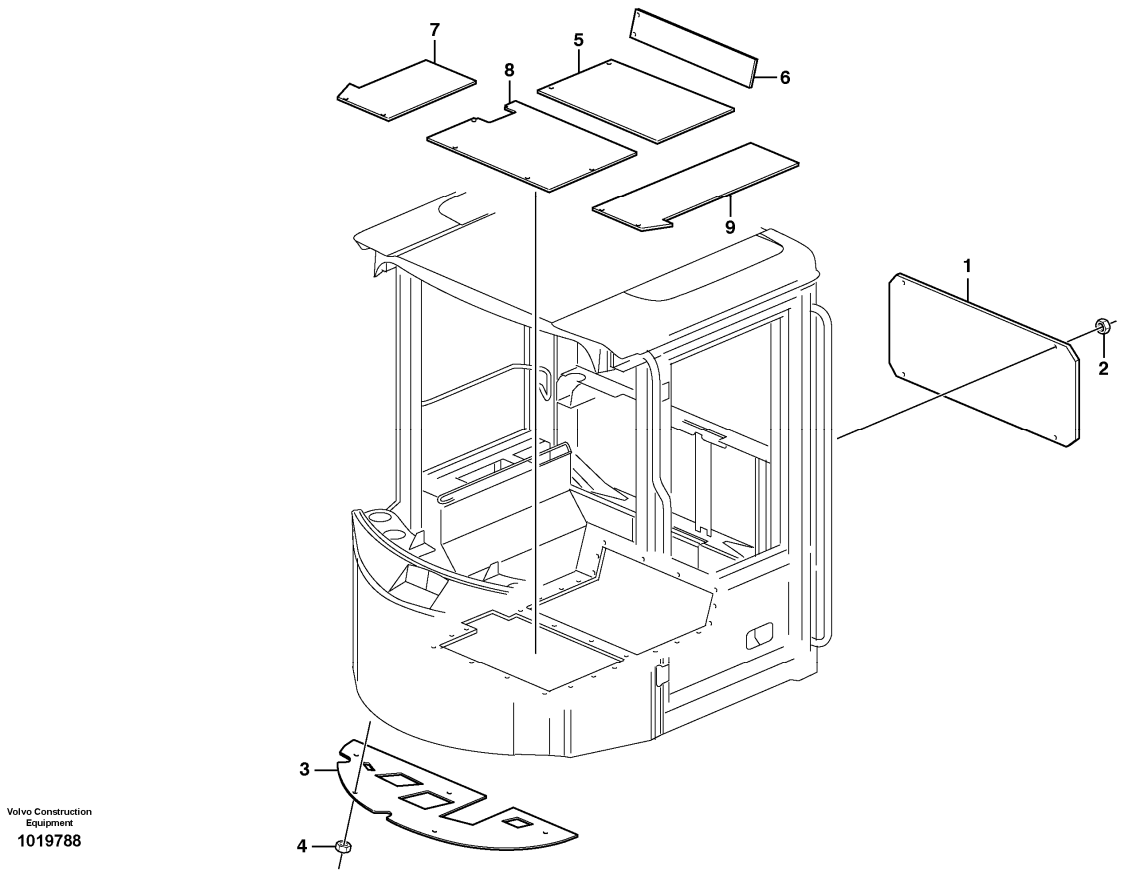

Section option	Kit	Option description
VOE82553		Noise reduction, cab

Pos	Part	Q1	Q2	Q3	Q4	Q5	PS	Kit	Description	Option(s)	Remark
1	VOE11006308	1							Rear panel		
2	VOE13945407	4							Nut		
3	VOE11006085	1							Floor Panel		
4	VOE13945407	5							Nut		
5	VOE11006082	1							Plate		
6	VOE11006081	1							Plate		
7	VOE11006084	1							Plate		
8	VOE11164499	1							Floor Panel		
9	VOE11006083	1							Plate		

VOLVO

Construction Equipment

PROSIS Part Information

Date:	Image id:	Catalogue:	Model:
25/08/2018	**EE128**	**20086**	**L120E**
Brand:	Serial:	Group/Section:	Title:
Volvo	**19804-, 66001-, 71401-**	**872/100**	**Air distribution**

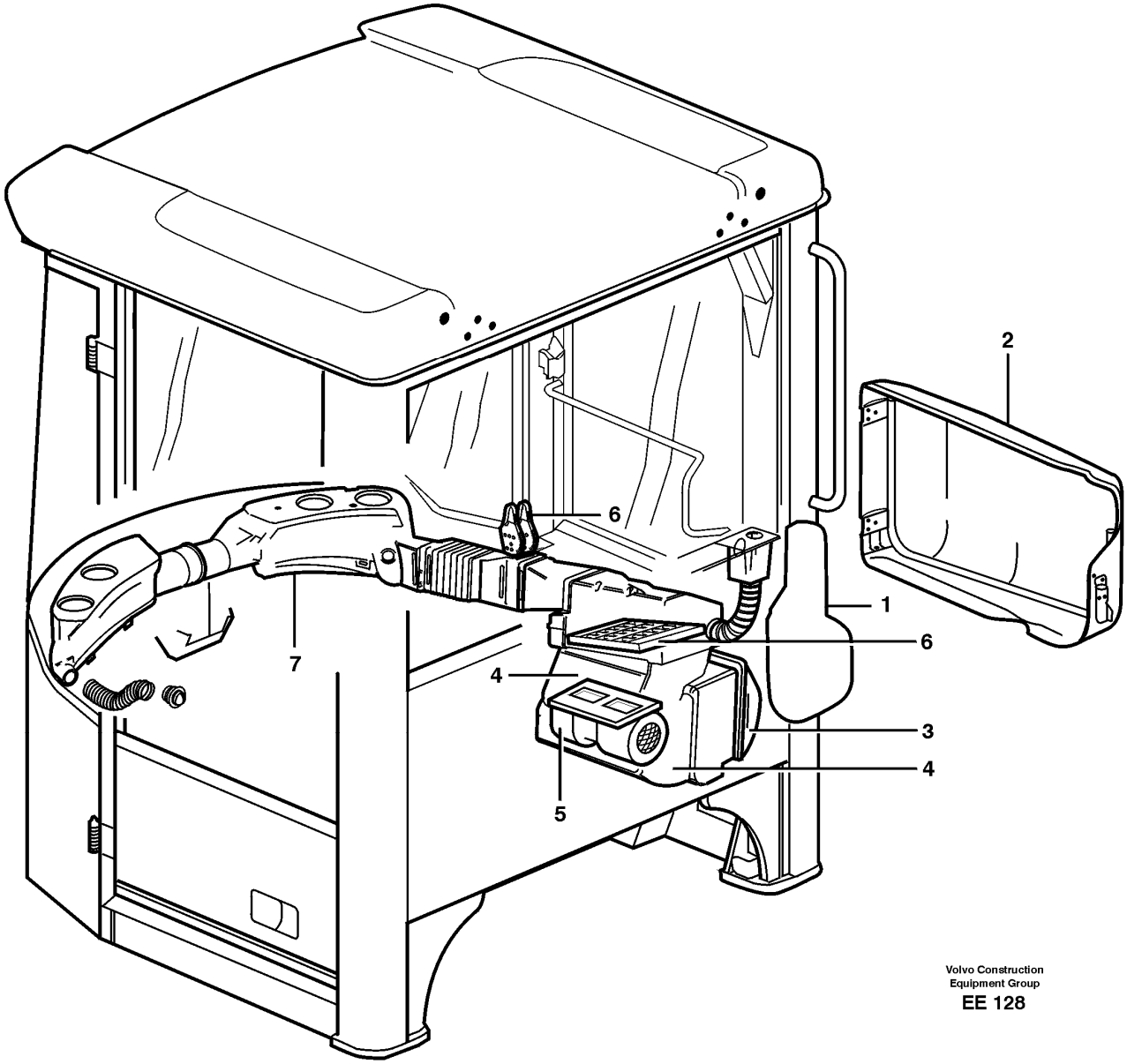

Section option	Kit	Option description
VOE33357		Cab L120E
VOE33366		Cab L120E USA

Pos	Part	Q1	Q2	Q3	Q4	Q5	PS	Kit	Description	Option(s)	Remark
1		1							Fresh air inlet		See ref 872/150
2		1							Filter cover		See ref 837/200

3		1							Air filter		See ref 872/200
4		1							Fan housing		See ref 872/150
5		1							Cab fan		See ref 872/300
6		1							Heat. unit a. control		See ref 873/150
7		1							Air ducts		See ref 872/250

VOLVO

Construction Equipment

PROSIS Part Information

Date:	Image id:	Catalogue:	Model:
25/08/2018	**1019814**	**20086**	**L120E**
Brand:	Serial:	Group/Section:	Title:
Volvo	**19804-, 66001-, 71401-**	**872/150**	**Fresh air inlet, filter and fan housing**

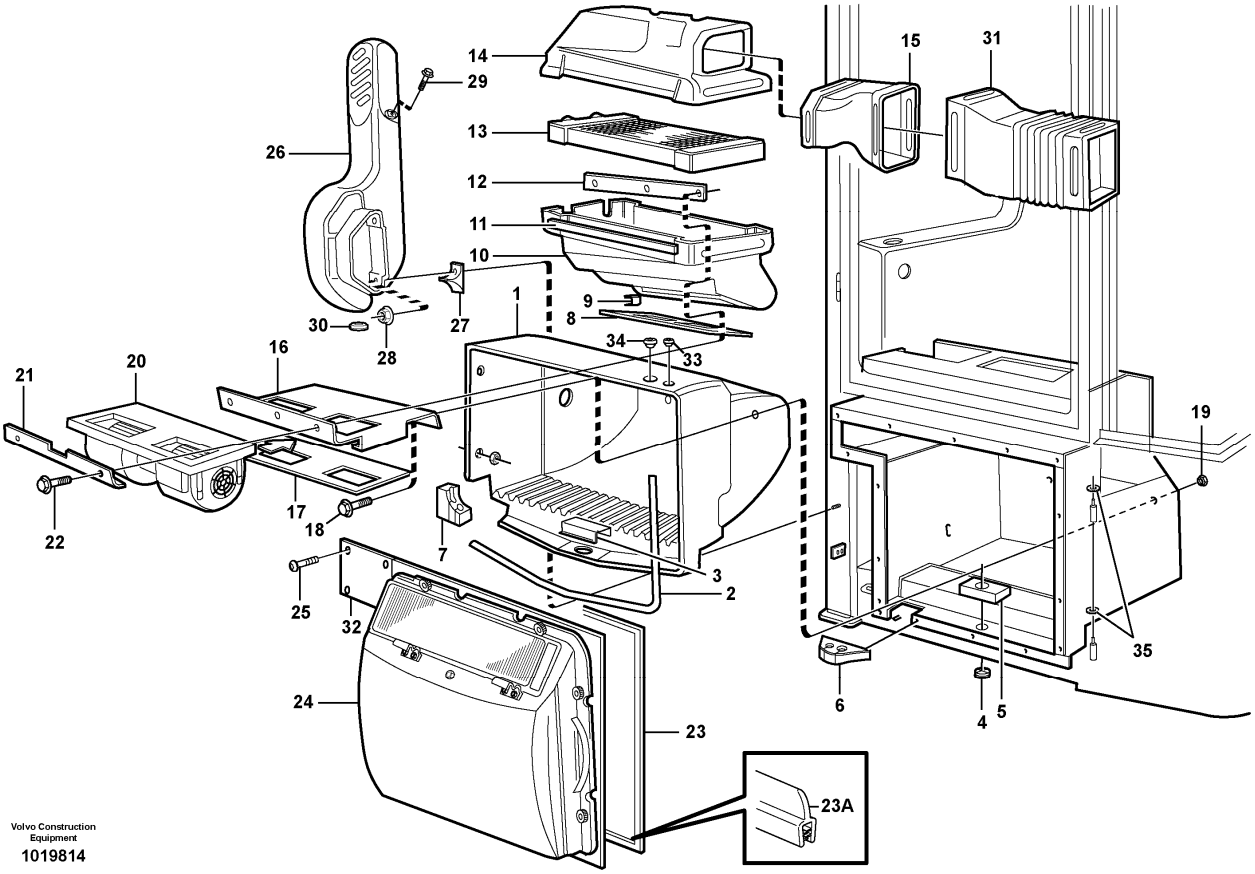

Section option	Kit	Option description
VOE33357		Cab L120E
VOE33366		Cab L120E USA

Pos	Part	Q1	Q2	Q3	Q4	Q5	PS	Kit	Description	Option(s)	Remark
1	VOE11006157	1							Fan housing		
2	VOE4881656	REQ							Framework moulding		L = 1500 MM
3	VOE11006103	1							Protection		
4	VOE11007026	1							Non-return valve		
5	VOE11104415	1							Seal		
6	VOE11104894	1							Seal		
7	VOE11104411	1							Seal		
8	VOE11006638	2							Seal		
9	VOE11006983	4							Clip		

10	VOE11104661	1							Housing		
11	VOE762681	REQ							Rubber moulding		L = 700 MM
12	VOE11006635	1							Anchorage		
13		1							Radiator		See ref 873/150
14	VOE11104439	1							Distribution housing		
15	VOE11007208	1							Pipe end		
16	VOE15002231	1							Bracket		(VOE11006952)
17	VOE11006924	1							Gasket		
18	VOE13946934	2							Screw		
19	VOE13949278	2							Flange lock nut		
20		1							Cab fan		See ref 872/250
21	VOE11006925	1							Rule		
22	VOE13946934	3							Screw		
23	VOE762681	REQ							Rubber moulding		L = 2500 MM
23A	VOE4880191	REQ							Rubber moulding		L = 465 MM
24		1							Filter		See ref 872/150
25	VOE972092	16							Six point socket screw		
26	VOE11092421	1							Fresh air duct		
27	VOE11104446	2							Seal		
28	VOE13945407	2							Nut		
29	VOE947107	1							Flange screw		
30	VOE979662	1							Plug		
31		1							Air duct		See ref 872/250
32		1							Plate		See ref 872/200
33	VOE941266	1							Plug		
34	VOE941268	1							Plug		
35	VOE4936344	2							Washer		

VOLVO

Construction Equipment

PROSIS Part Information

Date:	Image id:	Catalogue:	Model:
25/08/2018	**1019789**	**20086**	**L120E**
Brand:	Serial:	Group/Section:	Title:
Volvo	**19804-, 66001-, 71401-**	**872/200**	**Air filter**

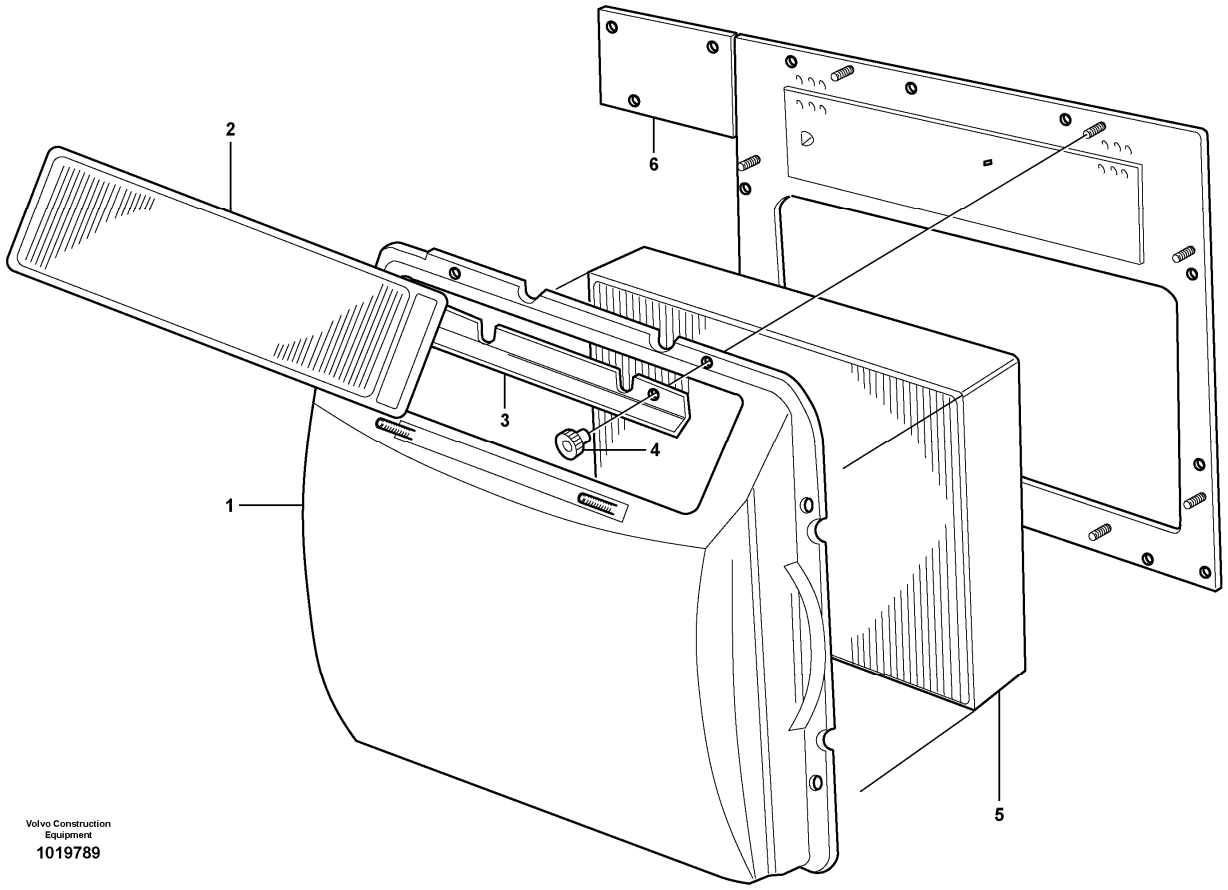

Section option	Kit	Option description
VOE33357		Cab L120E
VOE33366		Cab L120E USA
VOE80221	VOE11705485	Asbestos dust protection filter

Q1-Q5	Option	Option description	
Q1 33517	VOE33517	Cab	
Q2 80221	VOE80221	Asbestos dust protection filter	

Pos	Part	Q1	Q2	Q3	Q4	Q5	PS	Kit	Description	Option(s)	Remark
	VOE11164505	1							Filter		
			1				NS		Filter		
1		1	1				NS		•Cover		
2	VOE15052786	1	1						•Primary filter		(VOE11703979)
3	VOE11006467	1	1						•Tab		(VOE11708173)

4	VOE11058193	8	8						•Knurled nut		
5	VOE11703980	1							•Filter		
	VOE11705485		1						•Filter		
6	VOE11104723	1							Plate		

VOLVO

Construction Equipment

PROSIS Part Information

Date:	Image id:	Catalogue:	Model:
25/08/2018	**1012842**	**20086**	**L120E**
Brand:	Serial:	Group/Section:	Title:
Volvo	**19804-, 66001-, 71401-**	**872/250**	**Air ducts**

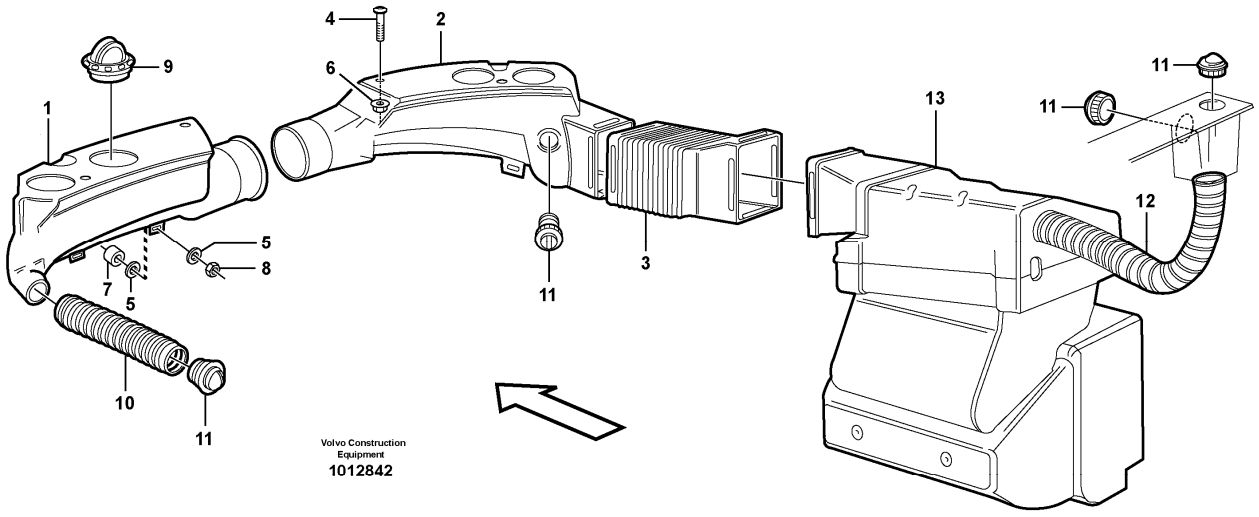

Section option	Kit	Option description
VOE33357		Cab L120E
VOE33366		Cab L120E USA

Pos	Part	Q1	Q2	Q3	Q4	Q5	PS	Kit	Description	Option(s)	Remark
1	VOE11104479	1							Air duct		RH
2	VOE11104478	1							Air duct		LH
3	VOE11007207	1							Air duct		
4	VOE969738	4							Six point socket screw		(VOE13969738)
5	VOE960139	4							Plain washer		
6	VOE13949278	4							Flange lock nut		
7	VOE13948871	4							Spacer washer		
8	VOE13945407	4							Nut		
9	VOE11104372	4							Air outlet		

10	VOE4850665	REQ							Corrugated hose		L = 300 MM
11	VOE11104371	4					SS		Air outlet		
12	VOE11007345	REQ							Hose		L = 700 MM
13		1							Fan housing		See ref 872/150

VOLVO

Construction Equipment

PROSIS Part Information

Date:	Image id:	Catalogue:	Model:
25/08/2018	**EL295**	**20086**	**L120E**
Brand:	Serial:	Group/Section:	Title:
Volvo	**19804-, 66001-, 71401-**	**872/300**	**Fan**

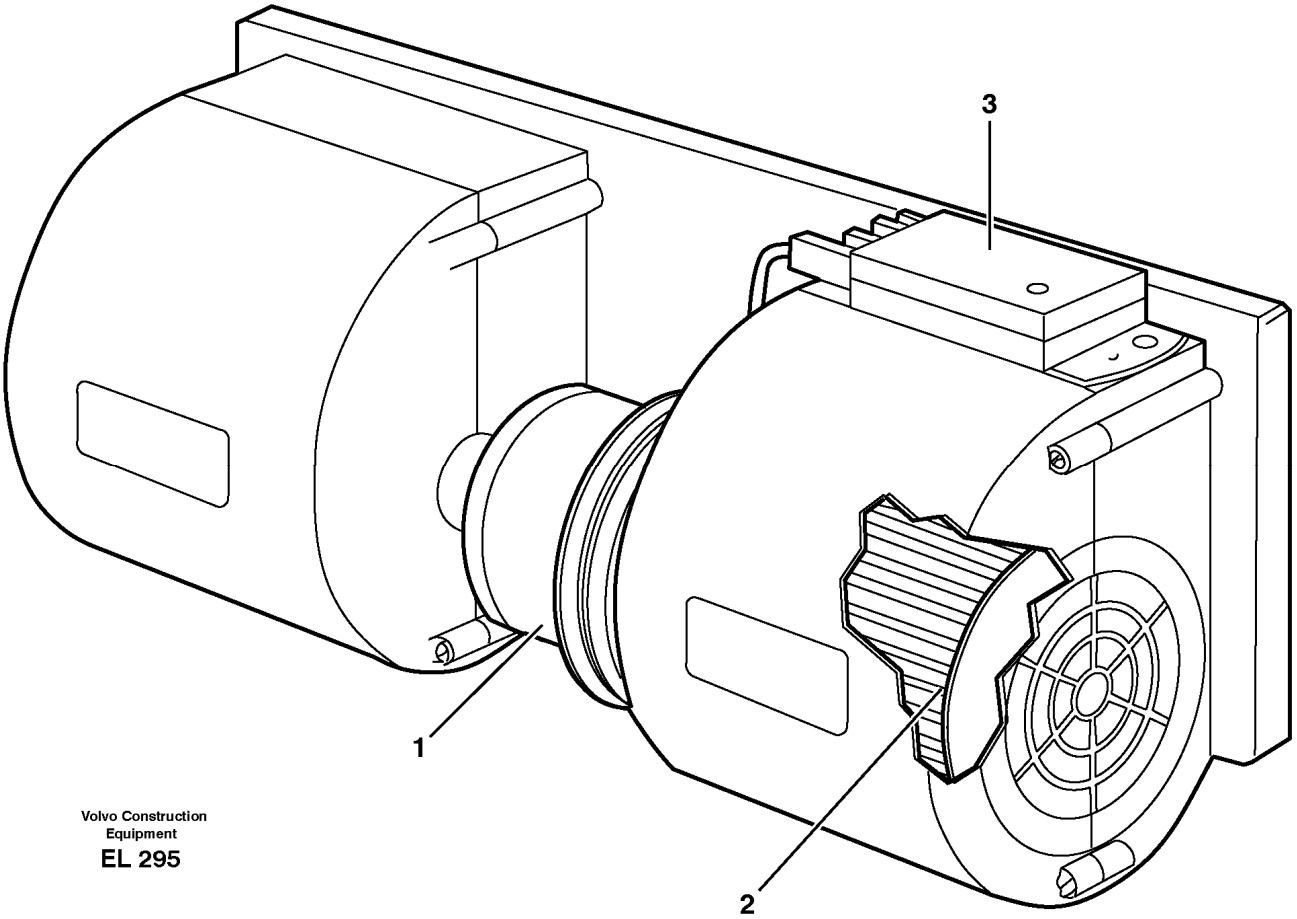

Section option	Kit	Option description
VOE33357		Cab L120E
VOE33366		Cab L120E USA

Pos	Part	Q1	Q2	Q3	Q4	Q5	PS	Kit	Description	Option(s)	Remark
	VOE11006834	1							Fan		
1	VOE11996067	1							•Fan motor		
2	VOE11994455	2							•Fan wheel		
3	VOE11994456	1							•Resistor		

VOLVO

Construction Equipment

PROSIS Part Information

Date:	Image id:	Catalogue:	Model:
25/08/2018	**1017349**	**20086**	**L120E**
Brand:	Serial:	Group/Section:	Title:
Volvo	**19804-, 66001-, 71401-**	**872/350**	**Air filter 83085**

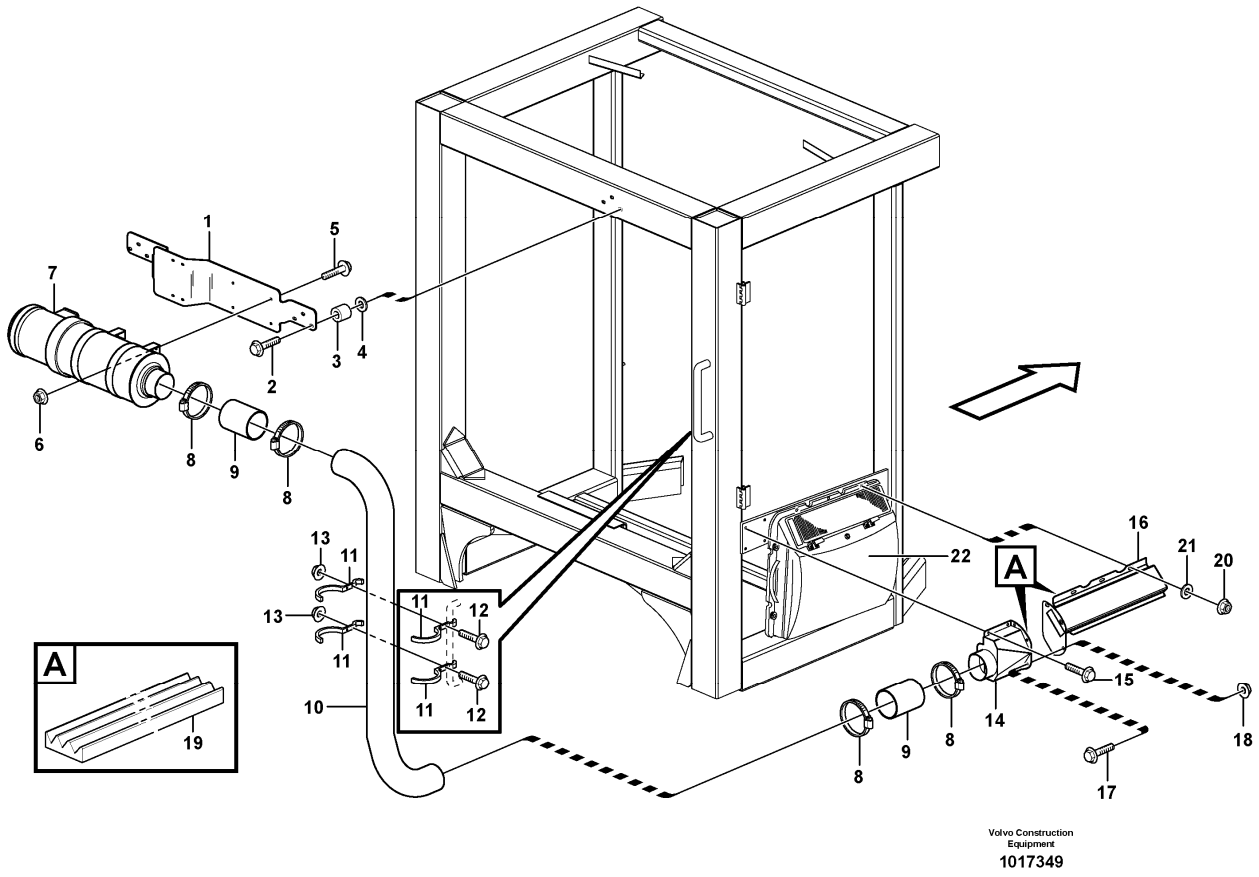

Section option	Kit	Option description
VOE83085		Air filter, cyclone USA

Pos	Part	Q1	Q2	Q3	Q4	Q5	PS	Kit	Description	Option(s)	Remark
1	VOE11417598	1							Plate		
2	VOE946671	6							Flange screw		
3	VOE930428	4							Spacer ring		
4	VOE11104399	4							Rubber washer		
5	VOE13946173	4							Screw		
6	VOE948645	4							Flange lock nut		
7	VOE11417498	1							Primary filter		
	VOE11714627	1							•Filter		
8	VOE943483	4							Hose clamp		
9	VOE11417593	2							Hose		
10	VOE11417839	1							Pipe		

11	VOE11417587	4							Attaching clamp		
12	VOE13948356	4							Flange screw		
13	VOE13949278	4							Flange lock nut		
14	VOE11417576	1							Air inlet		
15		2							Flange screw		See ref 872/150
16	VOE11417583	1							Air inlet		
17	VOE13946173	3							Screw		
18	VOE948645	3							Flange lock nut		
19	VOE11104947	REQ							Sealing strip		L = 1500 MM
20	VOE13949278	3							Flange lock nut		
21	VOE960139	3							Plain washer		
22		1							Cover		See ref 872/200

VOLVO

Construction Equipment

PROSIS Part Information

Date:	Image id:	Catalogue:	Model:
25/08/2018	**1019918**	**20086**	**L120E**
Brand:	Serial:	Group/Section:	Title:
Volvo	**19804-, 66001-, 71401-**	**873/100**	**Heating system**

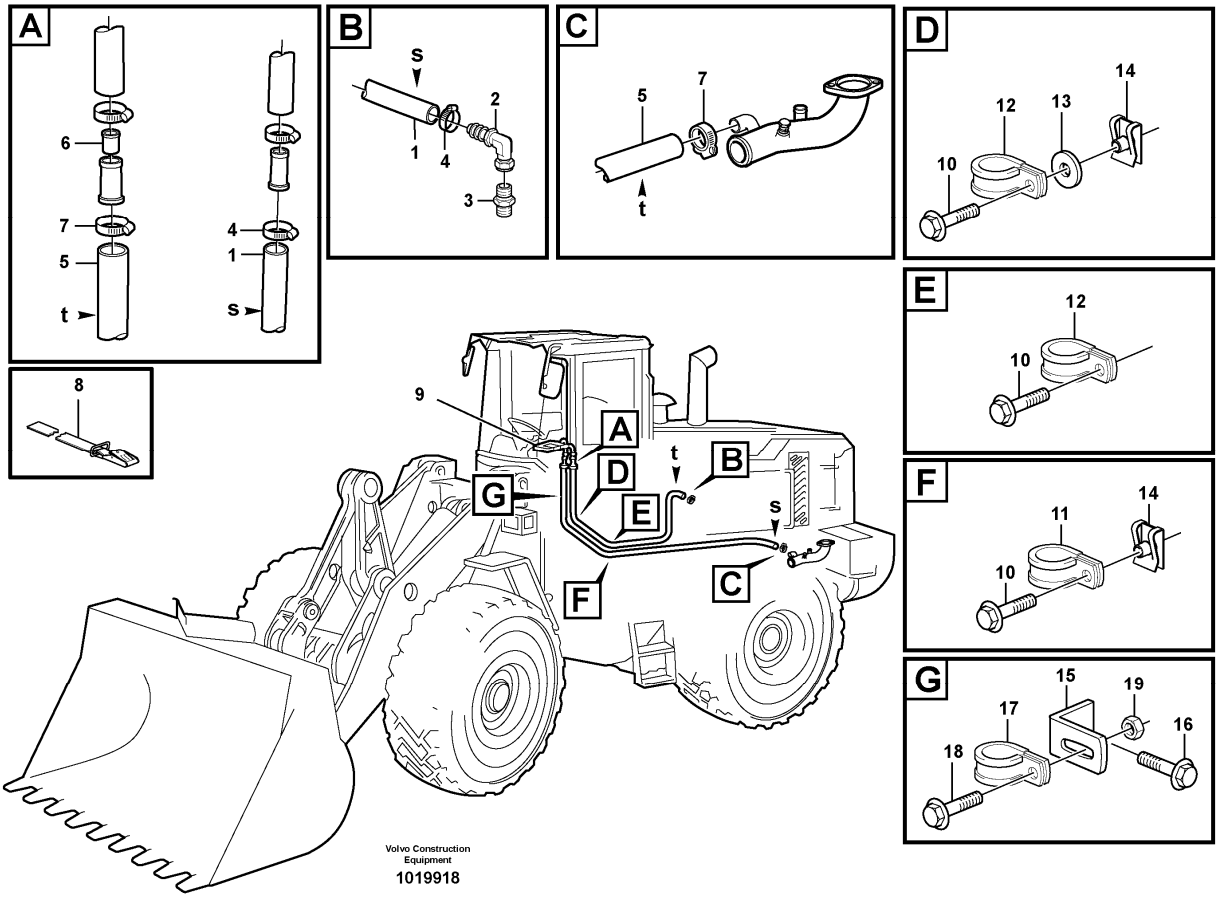

Section option	Kit	Option description
VOE33380		Volvo Wheel Loader L120E S/N 19801-, S/N 66001- USA, S/N 71401- BRA
VOE33395		Wheel Loader L120E3 IRAN

Q1-Q5	Option	Option description	
Q1 33380	VOE33380	Volvo Wheel Loader L120E S/N 19801-, S/N 66001- USA, S/N 71401- BRA	
Q2 33395 IRAN	VOE33395	Wheel Loader L120E3 IRAN	

Pos	Part	Q1	Q2	Q3	Q4	Q5	PS	Kit	Description	Option(s)	Remark
1	VOE943368	REQ							Hose		L = 1940 MM See ref 873/150
2	VOE13932771	1					OP		Nipple		
3		1					NS		Nipple		See ref 223/100
4	VOE13943472	2							Hose clamp		
5	VOE943369	REQ	REQ						Hose		L = 2140 MM

6	VOE11400610	1	1						Restrictor		
7	VOE13943474	2	2						Hose clamp		(VOE943473)
8	VOE11130770	1	1						Clamp		
9		1							Radiator		See ref 873/150
10	VOE13946173	1	1						Screw		
11	VOE13977600	2	2						Clamp		
12	VOE977599	2	2						Clamp		(VOE13977599)
13	VOE946440	1	1						Flange screw		
14	VOE13949867	1	1						Spring nut		
15	VOE965576	1	1						Bracket		
16	VOE946440	1							Flange screw		
17	VOE977599	1	1						Clamp		(VOE13977599)
18	VOE13946173	1	1						Screw		
19	VOE948645	1	1						Flange lock nut		

VOLVO

Construction Equipment

PROSIS Part Information

Date:	Image id:	Catalogue:	Model:
25/08/2018	**1020810**	**20086**	**L120E**
Brand:	Serial:	Group/Section:	Title:
Volvo	**19804-, 66001-, 71401-**	**873/150**	**Radiator and control**

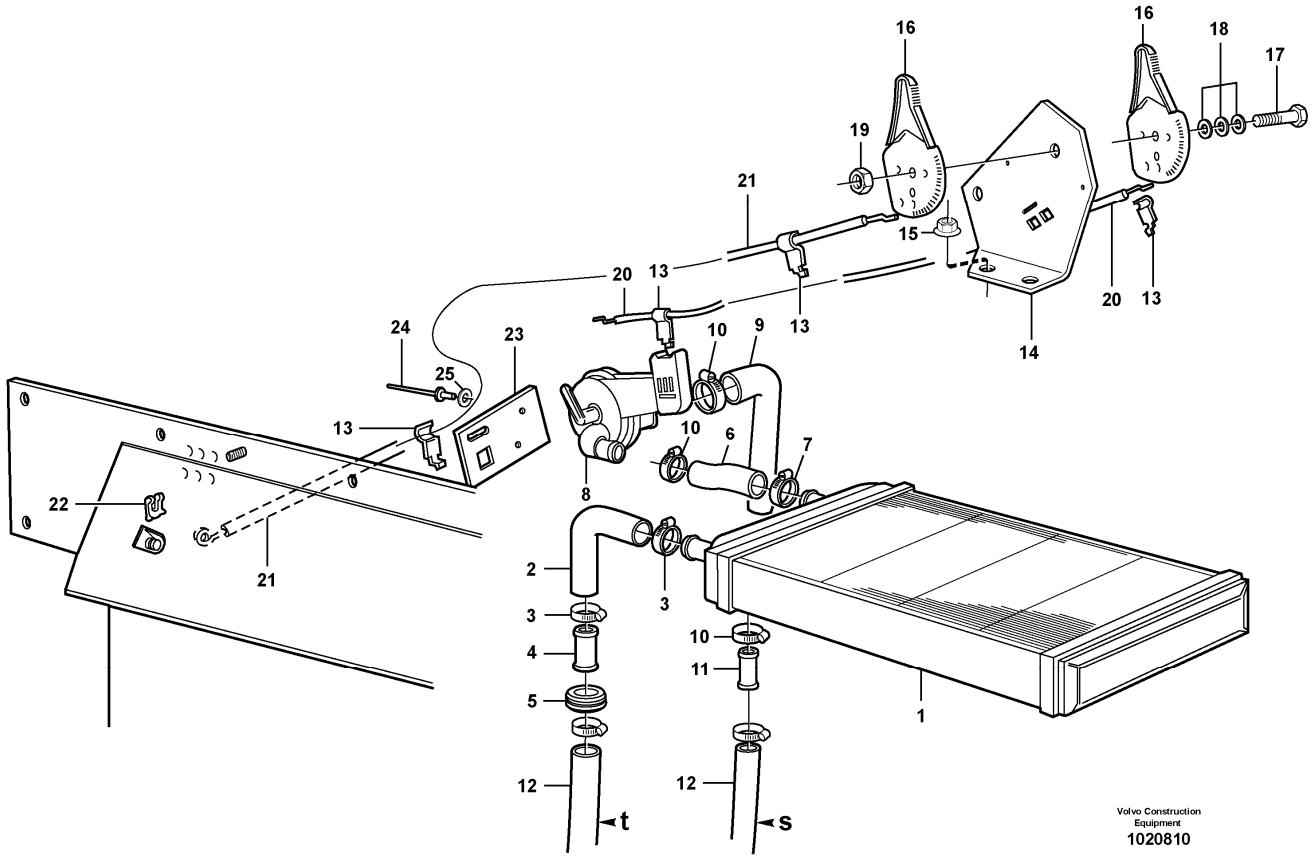

Section option	Kit	Option description
VOE33357		Cab L120E
VOE33366		Cab L120E USA

Pos	Part	Q1	Q2	Q3	Q4	Q5	PS	Kit	Description	Option(s)	Remark
1	VOE1587964	1							Radiator		
2	VOE11104655	1							Hose		
3	VOE13943474	2							Hose clamp		
4	VOE11006631	1							Tube		
5	VOE943920	1							Plug		OD = 40 MM
	VOE961970	1							Plug		OD = 32 MM
6	VOE11006633	1							Hose		
7	VOE13943474	1							Hose clamp		
8	VOE11032552	1							Valve		
9	VOE11104654	1							Hose		

10	VOE968847	3							Hose clamp		
11	VOE11006632	1							Tube		
12									Heating system		See ref 873/100
13	VOE1211599	4							Clip		
14	VOE11104993	1							Bracket		
15	VOE13949278	2							Flange lock nut		
16	VOE11164653	2							Control		
17	VOE13965185	1							Screw		
18	VOE120789	3							Disc spring		
19	VOE13971098	1							Flange nut		
20	VOE11006800	1							Control wire		
21	VOE11104555	1							Control wire		
22	VOE11992315	1							Clip		
23	VOE11104554	1							Bracket		
24	VOE13942672	2							Blind rivet		
25	VOE13940090	2							Washer		

VOLVO

Construction Equipment

PROSIS Part Information

Date:	Image id:	Catalogue:	Model:
25/08/2018	**1008186**	**20086**	**L120E**
Brand:	Serial:	Group/Section:	Title:
Volvo	**19804-, 66001-, 71401-**	**873/200**	**Automatic temperature control. 82547, 82980, 82983**

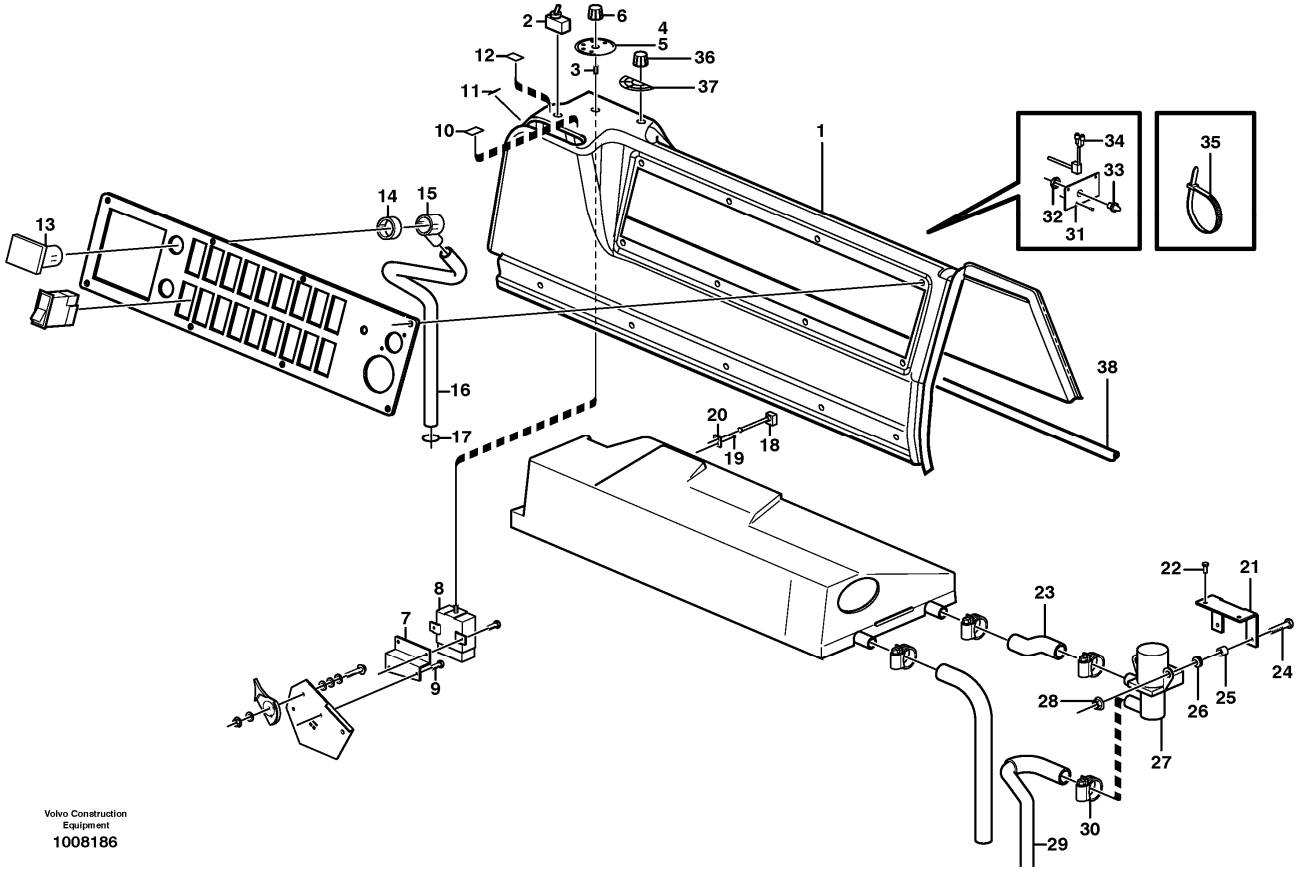

Section option	Kit	Option description
VOE82547		Automatic Temperature Control ATC
VOE82980		Air Conditioning, corrosion prot. condenser, Atc
VOE82983		Air Conditioning, corrosion prot. condenser, Atc

Pos	Part	Q1	Q2	Q3	Q4	Q5	PS	Kit	Description	Option(s)	Remark
1	VOE11104972	1							Side panel		
2	VOE4786696	1							Switch		SW810
3	VOE11104899	1							Tube		
4	VOE11006142	1							Decal		
5	VOE11006143	1							Decal		
6	VOE1259480	1							Knob		
7	VOE11164979	1							Anchorage	VOE82547	
8	VOE85107965	1							Control unit		CU803
9	VOE972079	4							Six point socket screw		
10	VOE11174080	1							Decal		

11	VOE11174079	1							Decal		
12	VOE11174081	1							Decal		
13	VOE8140938	1							Temperature sensor		SE811
14	VOE1594887	1							Ring		
15	VOE1609043	1							Hose coupling		
16	VOE1088846	REQ							Protecting hose		
17	VOE955977	1							O-ring		
18	VOE3090917	1							Temperature sensor		SE810
19	VOE976119	1							Blind rivet		
20	VOE11006123	1							Anchorage		
21	VOE11104276	1							Anchorage		
22	VOE972079	2							Six point socket screw		
23	VOE11104279	1							Hose		
24	VOE971321	2							Six point socket screw		
25	VOE1594906	2							Anchorage		
26	VOE1594907	2							Rubber Seal		
27	VOE8142797	1							Valve		MA802
28	VOE13945407	2							Nut		
29	VOE11104755	1							Hose		
30	VOE13943474	1							Hose clamp		
31	VOE11104723	1							Plate		
32	VOE4803796	1							Plastic nut		
33	VOE1609046	1							Thermo monitor		SE809
34	VOE1089049	1							Thermo monitor		SE808
35	VOE4821292	2							Cable tie		
36		1							Knob		See ref 380/150
37	VOE11104573	1							Decal		
38		1							Cable harness		ATC See ref 371/1600

VOLVO

Construction Equipment

PROSIS Part Information

Date:	Image id:	Catalogue:	Model:
25/08/2018	**1020249**	**20086**	**L120E**
Brand:	Serial:	Group/Section:	Title:
Volvo	**19804-, 66001-, 71401-**	**874/100**	**Air conditioning. 82982, 82979, 82983, 82980**

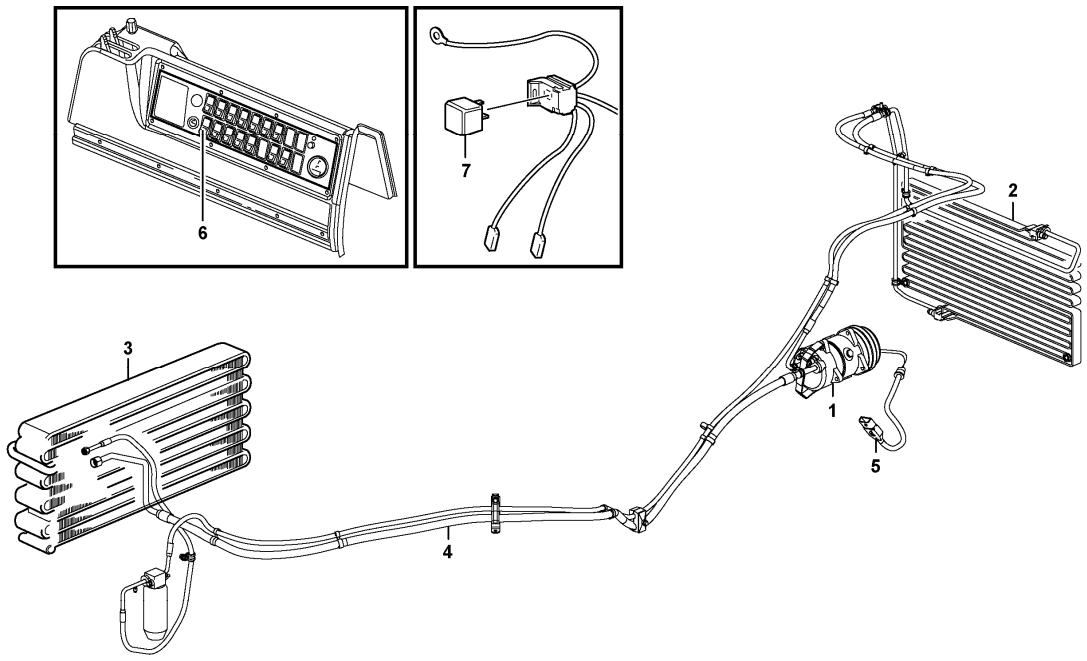

Volvo Construction Equipment
1020249

Section option	Kit	Option description
VOE82979		Air Conditioning with corrosion prot. condenser FOR REFRIGERANT R134A
VOE82980		Air Conditioning, corrosion prot. condenser, Atc
VOE82982	VOE11715685	Air conditioning FOR REFRIGERANT R134A
VOE82983		Air Conditioning, corrosion prot. condenser, Atc

Pos	Part	Q1	Q2	Q3	Q4	Q5	PS	Kit	Description	Option(s)	Remark
1									Compressor		See ref 874/150
2									Condensor		See ref 874/200
3									Evaporator		See ref 874/250
4									Assembly of hoses		See ref 874/300
5									Wire harness		See ref 371/1650
6									Switch		See ref 380/200
7									Relay		See ref 372/100

VOLVO

Construction Equipment

PROSIS Part Information

Date:	Image id:	Catalogue:	Model:
25/08/2018	**1020212**	**20086**	**L120E**
Brand:	Serial:	Group/Section:	Title:
Volvo	**19804-, 66001-, 71401-**	**874/150**	**Compressor for cooling agent R134a with fitting parts.**

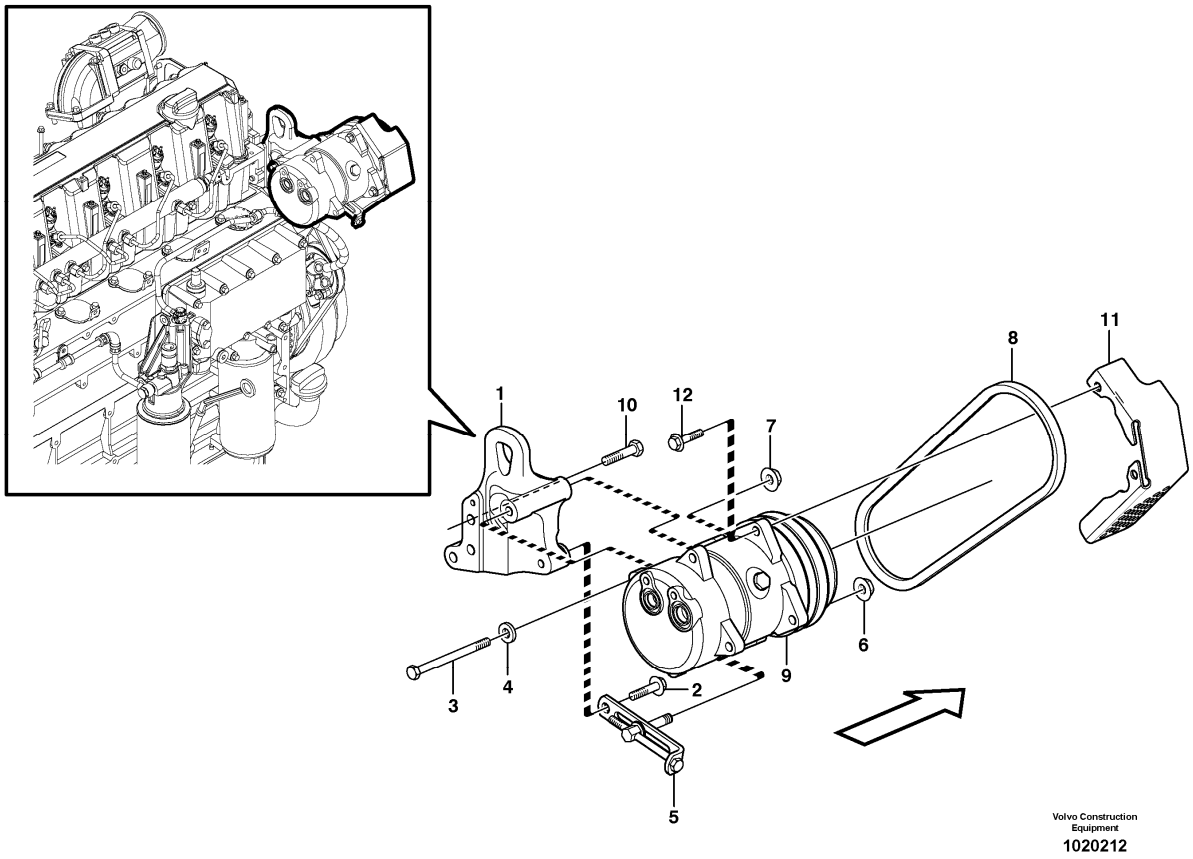

Section option	Kit	Option description
VOE82982	VOE11715685	Air conditioning FOR REFRIGERANT R134A
VOE82983		Air Conditioning, corrosion prot. condenser, Atc
VOE33395		Wheel Loader L120E3 IRAN

Pos	Part	Q1	Q2	Q3	Q4	Q5	PS	Kit	Description	Option(s)	Remark
1	VOE11410465	1							Anchorage		
2	VOE13965185	1							Screw		
3	VOE984160	1							Hexagon screw		
4	VOE930842	1							Plain washer		(VOE13930842)
5	VOE1676586	1							Tensioner		
6	VOE13971098	1							Flange nut		
7	VOE981945	1							Flange lock nut		
8	VOE977525	1							V-belt		L = 888MM
9		1							Compressor		See ref 874/350

10	VOE983253	3							Hexagon screw		
11	VOE11411791	1							Belt protector		
12	VOE13945444	2							Screw		

VOLVO

Construction Equipment

PROSIS Part Information

Date:	Image id:	Catalogue:	Model:
25/08/2018	**1020220**	**20086**	**L120E**
Brand:	Serial:	Group/Section:	Title:
Volvo	**19804-, 66001-, 71401-**	**874/200**	**Condenser for cooling agent R134a with fitting parts.**

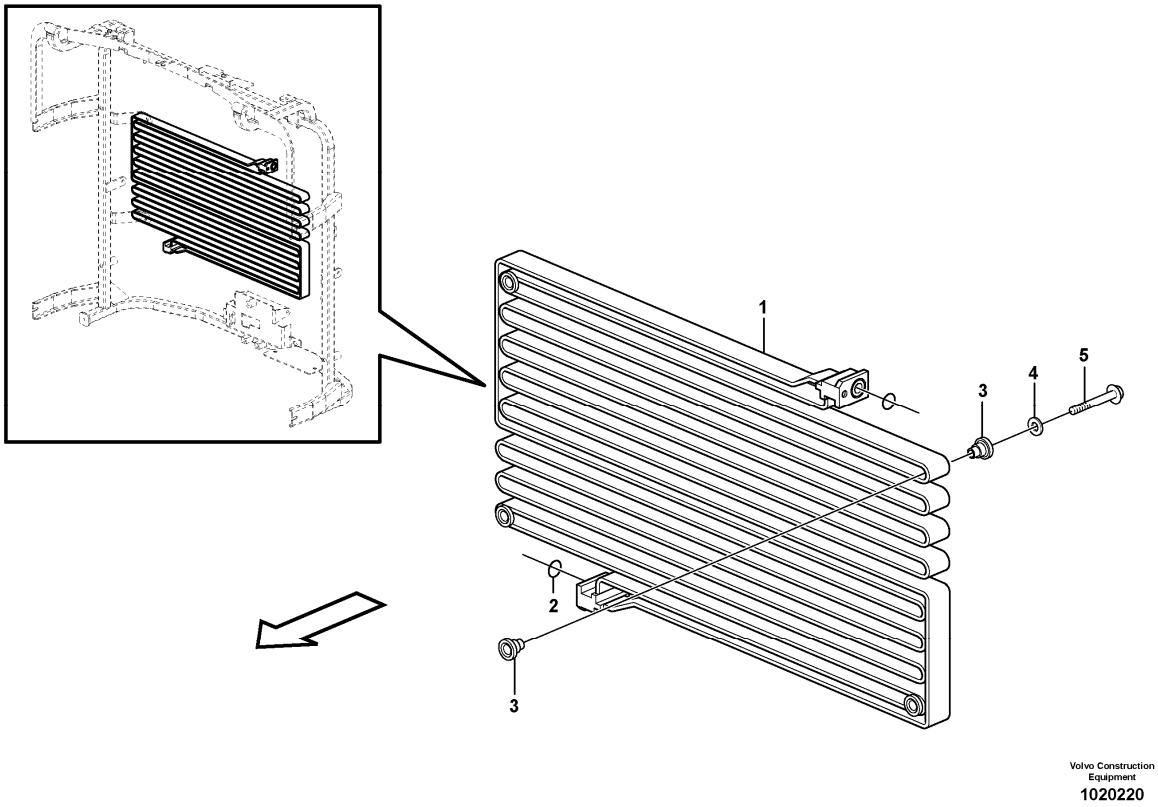

Section option	Kit	Option description
VOE82979		Air Conditioning with corrosion prot. condenser FOR REFRIGERANT R134A
VOE82980		Air Conditioning, corrosion prot. condenser, Atc
VOE82982	VOE11715685	Air conditioning FOR REFRIGERANT R134A
VOE82983		Air Conditioning, corrosion prot. condenser, Atc
VOE33395		Wheel Loader L120E3 IRAN

Q1-Q5	Option	Option description	
Q1 82982 82983 33395IR	VOE82982	Air conditioning FOR REFRIGERANT R134A	
Q2 82979 82980	VOE82979	Air Conditioning with corrosion prot. condenser FOR REFRIGERANT R134A	

Pos	Part	Q1	Q2	Q3	Q4	Q5	PS	Kit	Description	Option(s)	Remark
1	VOE11006435	1					SS		Condenser		
1	VOE11164324		1				SS		Condenser		

2	VOE6848760	1	1						•O-ring		
3	VOE11400281	8	8						Rubber element		
4	VOE925739	4	4						Washer		
5	VOE13965180	4	4						Screw		

VOLVO

Construction Equipment

PROSIS Part Information

Date:	Image id:	Catalogue:	Model:
25/08/2018	**1020228**	**20086**	**L120E**
Brand:	Serial:	Group/Section:	Title:
Volvo	**19804-, 66001-, 71401-**	**874/250**	**Evaporator for cooling agent R134a with fitting parts.**

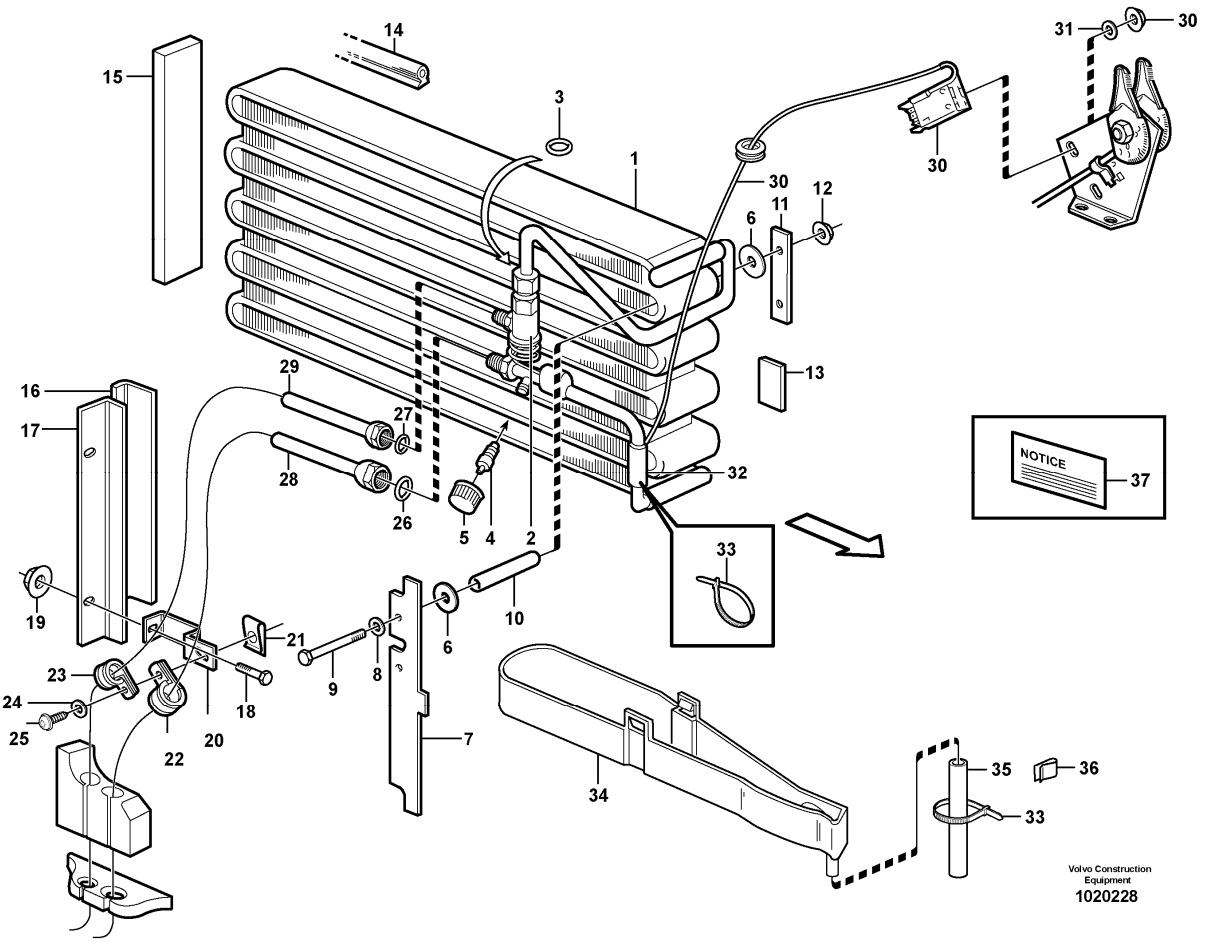

Section option	Kit	Option description
VOE82979		Air Conditioning with corrosion prot. condenser FOR REFRIGERANT R134A
VOE82980		Air Conditioning, corrosion prot. condenser, Atc
VOE82982	VOE11715685	Air conditioning FOR REFRIGERANT R134A
VOE82983		Air Conditioning, corrosion prot. condenser, Atc
VOE33395		Wheel Loader L120E3 IRAN

Q1-Q5	Option	Option description	
Q1 82982 82979 33395IR	VOE82982	Air conditioning FOR REFRIGERANT R134A	
Q2 82983 82980	VOE82983	Air Conditioning, corrosion prot. condenser, Atc	

Pos	Part	Q1	Q2	Q3	Q4	Q5	PS	Kit	Description	Option(s)	Remark
1	VOE15042557	1	1						Evaporator system		(VOE11412984)
2	VOE15058102	1	1						•Expansion valve		(VOE11711958)

3	VOE3537503	1	1						•O-ring		
4	VOE11701530	1	1						•Needle valve		
5	VOE11701529	1	1						•Cap		
6	VOE11007675	4	4						Washer		
7	VOE11007291	1	1						Anchorage		
8	VOE960139	2	2						Plain washer		
9	VOE955286	2	2						Hexagon screw		
10	VOE13945461	REQ	REQ						Plastic pipe		L = 2 x 70 MM
11	VOE11007057	1	1						Anchorage		
12	VOE13945407	2	2						Nut		
13	VOE4932353	REQ	REQ						Rubber moulding		L = 40 MM
14	VOE11007005	REQ	REQ						Sealing strip		L = 500 MM
15	VOE11007137	1	1						Gasket		
16	VOE4932353	REQ	REQ						Rubber moulding		L = 235 MM
17	VOE11104793	1	1						Anchorage		
18	VOE13947542	2	2						Screw		
19	VOE930760	2	2						Expanding nut		
20	VOE11164305	1	1						Bracket		
21	VOE949921	1	1						Spring nut		
22	VOE952630	1	1						Clamp		
23	VOE952625	1	1						Clamp		
24	VOE960139	4	4						Plain washer		
25	VOE13946544	1	1						Screw		
26	VOE3537507	1	1						O-ring		YELL
27	VOE3537499	1	1						O-ring		
28		1	1						Hose		See ref 874/300
29		1	1						Hose		See ref 874/300
30	VOE11196477	1							Thermostat		SE803
31	VOE955896	1	1						Plain washer		
32	VOE11003291	REQ	REQ						Tape		L = 150 MM
33	VOE4881440	REQ	REQ						Cable tie		
34	VOE11104788	1	1						Bowl		
35	VOE11039491	REQ	REQ						Hose		L = 500 MM
36	VOE11006249	1	1						Clip		
37	VOE11444254	1	1				SS		Decal		
37	VOE11414081	1							Decal		

VOLVO

Construction Equipment

PROSIS Part Information

Date:	Image id:	Catalogue:	Model:
25/08/2018	**1026242**	**20086**	**L120E**
Brand:	Serial:	Group/Section:	Title:
Volvo	**19804-, 66001-, 71401-**	**874/300**	**Assembly of hose: evaparator, receiver drier and condenser. 82982, 82979, 82983, 82980**

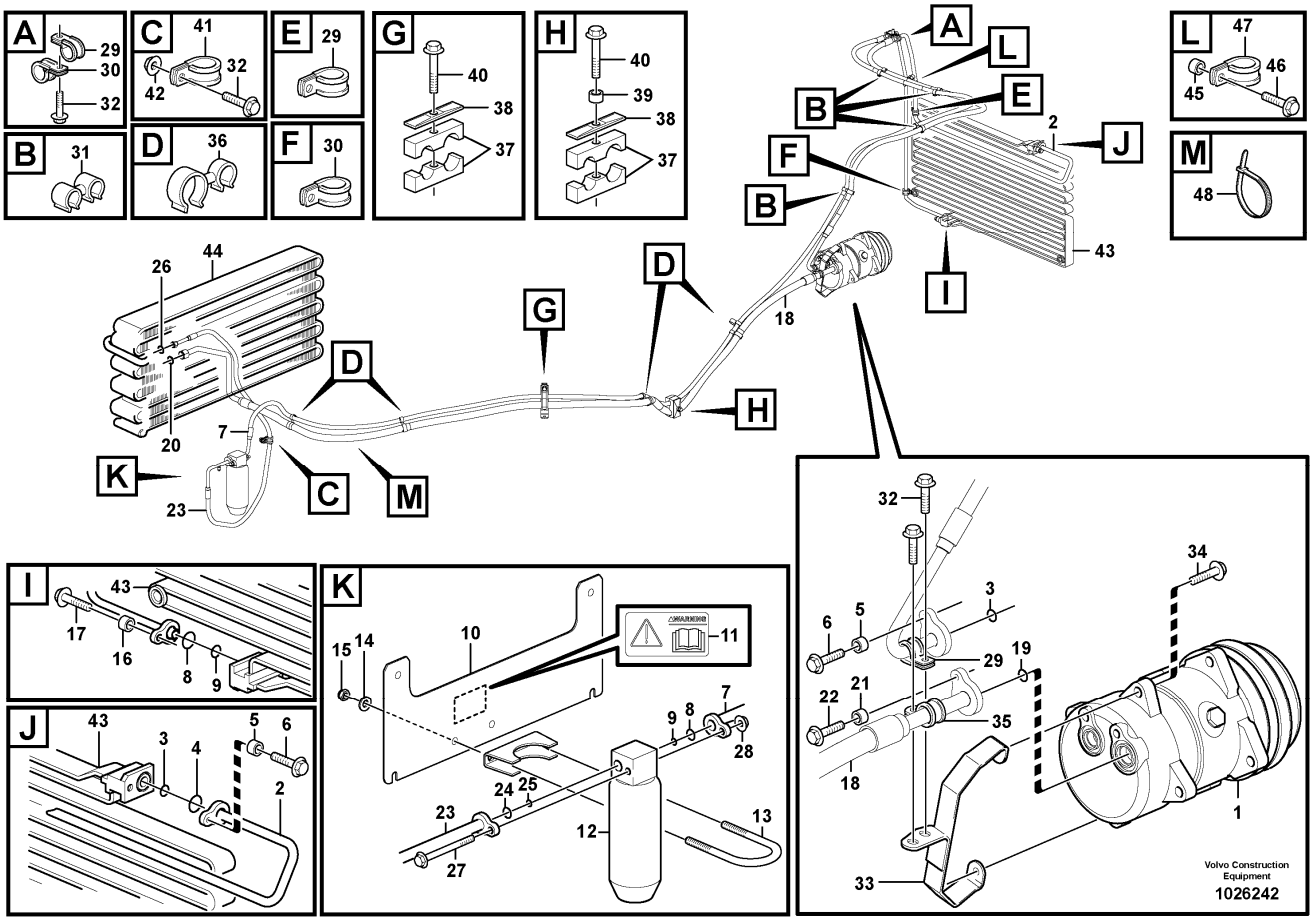

Section option	Kit	Option description
VOE82979		Air Conditioning with corrosion prot. condenser FOR REFRIGERANT R134A
VOE82980		Air Conditioning, corrosion prot. condenser, Atc
VOE82982	VOE11715685	Air conditioning FOR REFRIGERANT R134A
VOE82983		Air Conditioning, corrosion prot. condenser, Atc

Q1-Q5	Option	Option description	
Q1 .			
Q2 33395 IRAN	VOE33395	Wheel Loader L120E3 IRAN	

Pos	Part	Q1	Q2	Q3	Q4	Q5	PS	Kit	Description	Option(s)	Remark
1									Compressor		See ref 874/150
2	VOE15031730	1	1						Hose assembly		(VOE11435945)
3	VOE3537507	2	2						O-ring		
4	VOE6848760	1	1						O-ring		

5	VOE930431	2	2						Spacer ring		
6	VOE946671	2	2						Flange screw		
7	VOE11435946	1	1						Hose assembly		
8	VOE3537507	2	2						O-ring		
9	VOE6848760	2	2						O-ring		
10	VOE11436107	1	1						Plate		
11	VOE13935003	1	1						Warning decal		
12	VOE11164457	1	1						Receiver drier		
13	VOE11015720	1	1						Clamp		
14	VOE11117464	2	2						Plain washer		(VOE13960141)
15	VOE13945408	2	2						Nut		
16	VOE930431	1	1						Spacer ring		
17	VOE946671	1	1						Flange screw		
18	VOE11435962	1							Hose assembly		
19	VOE3537521	1							O-ring		
20	VOE3537507	1							O-ring		
21	VOE930431	1							Spacer ring		
22	VOE946671	1							Flange screw		
23	VOE11435963	1							Hose assembly		(VOE11414311)S/N -61131 , 82979 S/N -66110 , 82980 S/N -54000
23	VOE11435963	1							Hose assembly		S/N 61132- , 82979 S/N 66111- , 82980 S/N 54001-
24	VOE3537507	1							O-ring		
25	VOE6848760	1	1						O-ring		
26	VOE3537499	1							O-ring		
27	VOE13965182	1							Screw		
28	VOE948645	2							Flange lock nut		
29	VOE13949746	2	2						Clamp		
30	VOE990732	2							Clamp		
31	VOE982038	4	4						Retainer		
32	VOE13946173	5	6						Screw		
33	VOE11435176	1							Retainer		
34	VOE946671	2							Flange screw		
35	VOE13949747	3	2						Clamp		
36	VOE1271494	3	3						Retainer		
37	VOE11435242	2	2						Clamp		
38	VOE4880578	2	2						Cover plate		
39	VOE930428	1	1						Spacer ring		
40	VOE13965180	2	2						Screw		
41	VOE13949746	1							Clamp		
42	VOE948645	1	3						Flange lock nut		
43									Condenser		See ref 874/200
44									Evaporator		See ref 874/250
45	VOE930430	1							Spacer ring		
46	VOE13965179	1							Screw		

47	VOE13949746	1							Clamp		
48	VOE11104606	1							Retaining strap		

VOLVO

Construction Equipment

PROSIS Part Information

Date:	Image id:	Catalogue:	Model:
25/08/2018	**EE331**	**20086**	**L120E**
Brand:	Serial:	Group/Section:	Title:
Volvo	**19804-, 66001-, 71401-**	**874/350**	**Air compressor 82982, 82979, 82983, 82980, 33395 IRAN**

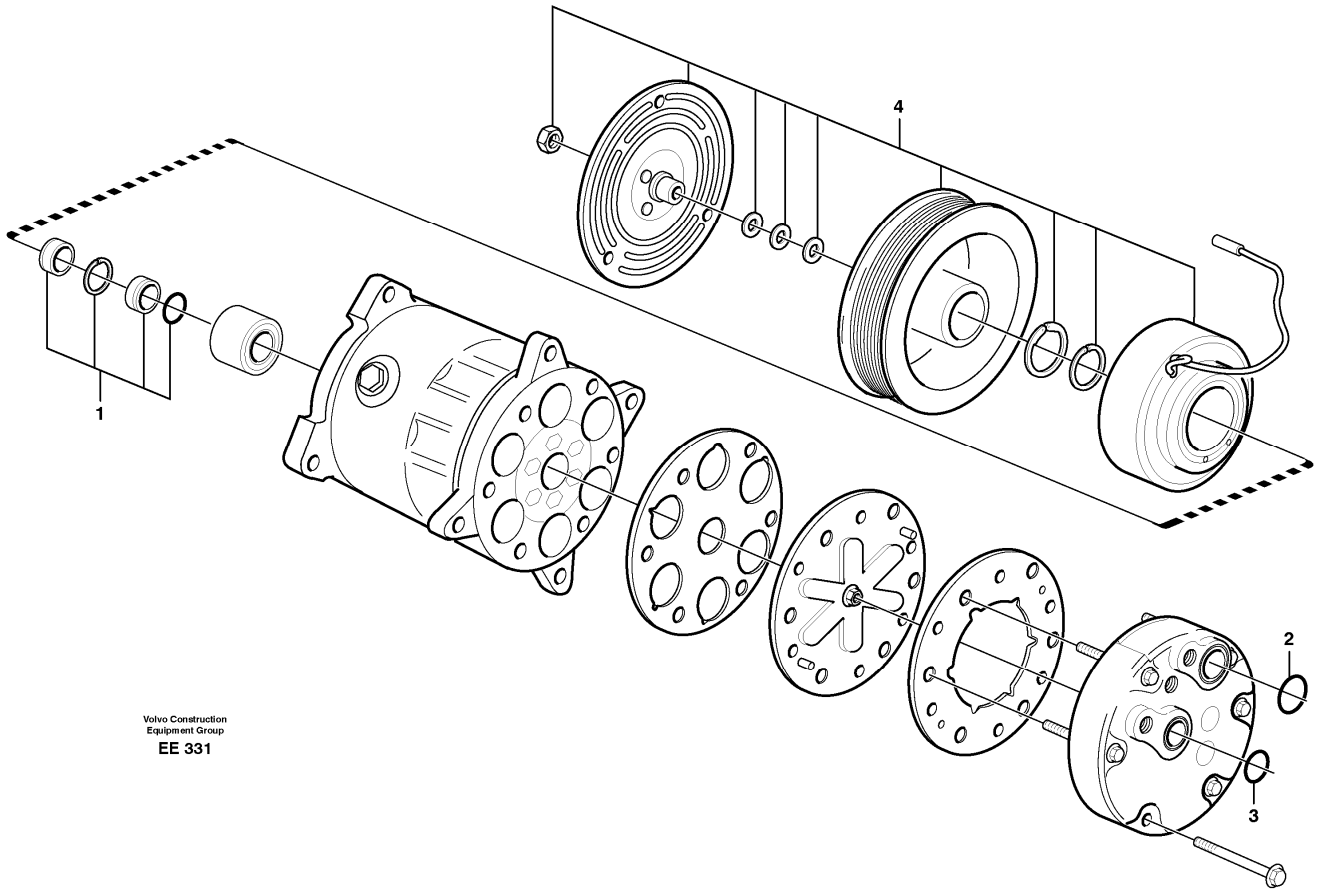

Section option	Kit	Option description
VOE82979		Air Conditioning with corrosion prot. condenser FOR REFRIGERANT R134A
VOE82980		Air Conditioning, corrosion prot. condenser, Atc
VOE82982	VOE11715685	Air conditioning FOR REFRIGERANT R134A
VOE82983		Air Conditioning, corrosion prot. condenser, Atc
VOE33395		Wheel Loader L120E3 IRAN

Pos	Part	Q1	Q2	Q3	Q4	Q5	PS	Kit	Description	Option(s)	Remark
	VOE11104419	1							Compressor		REMAN VOE9011104419
1	VOE11704565	1							•Sealing kit		
2	VOE11707766	1							•O-ring		"S"
3	VOE11707767	1							•O-ring		"D"
4	VOE11707768	1							•Solenoid clutch		MA801

VOLVO

Construction Equipment

PROSIS Part Information

Date:	Image id:	Catalogue:	Model:
25/08/2018	**EB254**	**20086**	**L120E**
Brand:	Serial:	Group/Section:	Title:
Volvo	**19804-, 66001-, 71401-**	**881/100**	**Instrument panel**

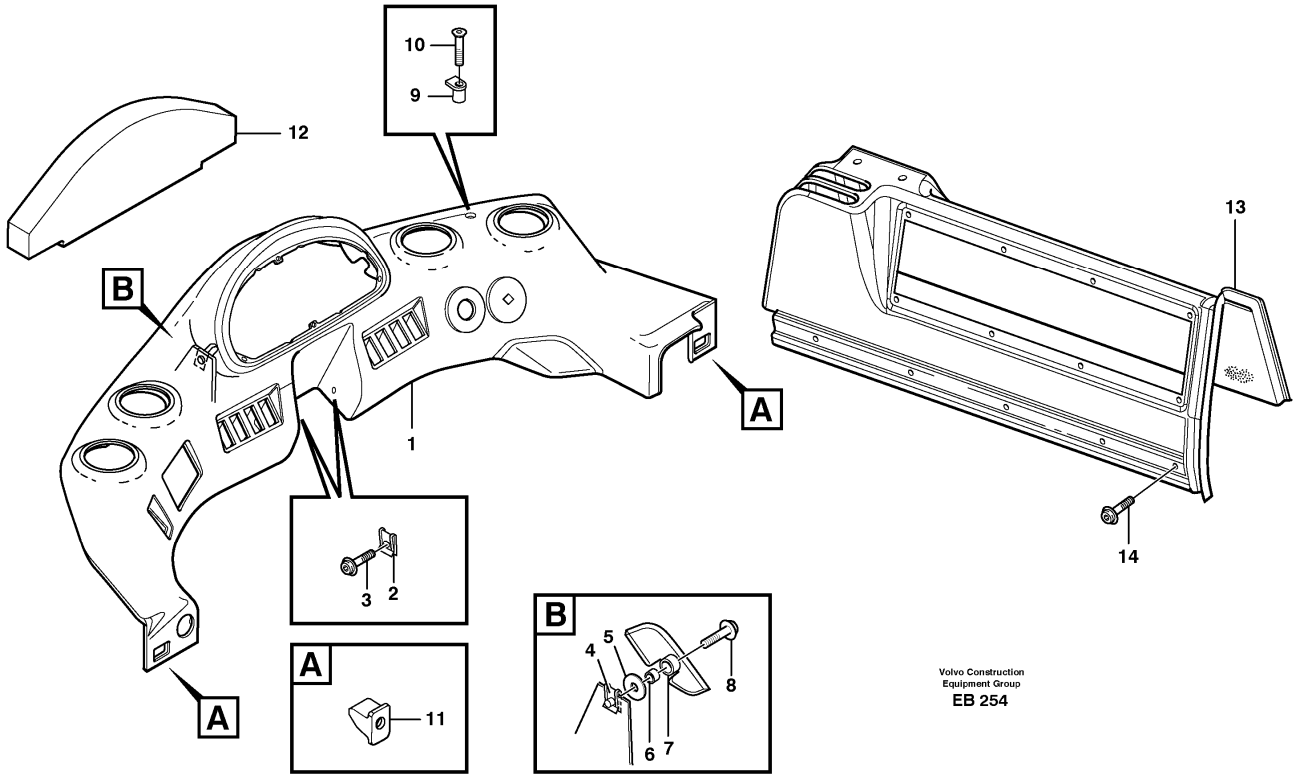

Section option	Kit	Option description
VOE33357		Cab L120E
VOE33366		Cab L120E USA

Pos	Part	Q1	Q2	Q3	Q4	Q5	PS	Kit	Description	Option(s)	Remark
1	VOE11092446	1							Instr Panel		
2	VOE13949867	2							Spring nut		
3	VOE971381	2							Six point socket screw		
4	VOE13949867	2							Spring nut		
5	VOE976944	2							Washer		
6	VOE930415	2							Spacer ring		
7	VOE11104422	2							Ring		
8	VOE946671	2							Flange screw		
9	VOE977984	2							Spring nut		
10	VOE981635	2							Six point socket screw		
11	VOE11104645	2							Support		

12	VOE11104658	1							Insulation		
13	VOE11104349	1							Side panel		
14	VOE972079	8							Six point socket screw		

VOLVO

Construction Equipment

PROSIS Part Information

Date:	Image id:	Catalogue:	Model:
25/08/2018	**1019961**	**20086**	**L120E**
Brand:	Serial:	Group/Section:	Title:
Volvo	**19804-, 66001-, 71401-**	**881/200**	**Radio bracket.**

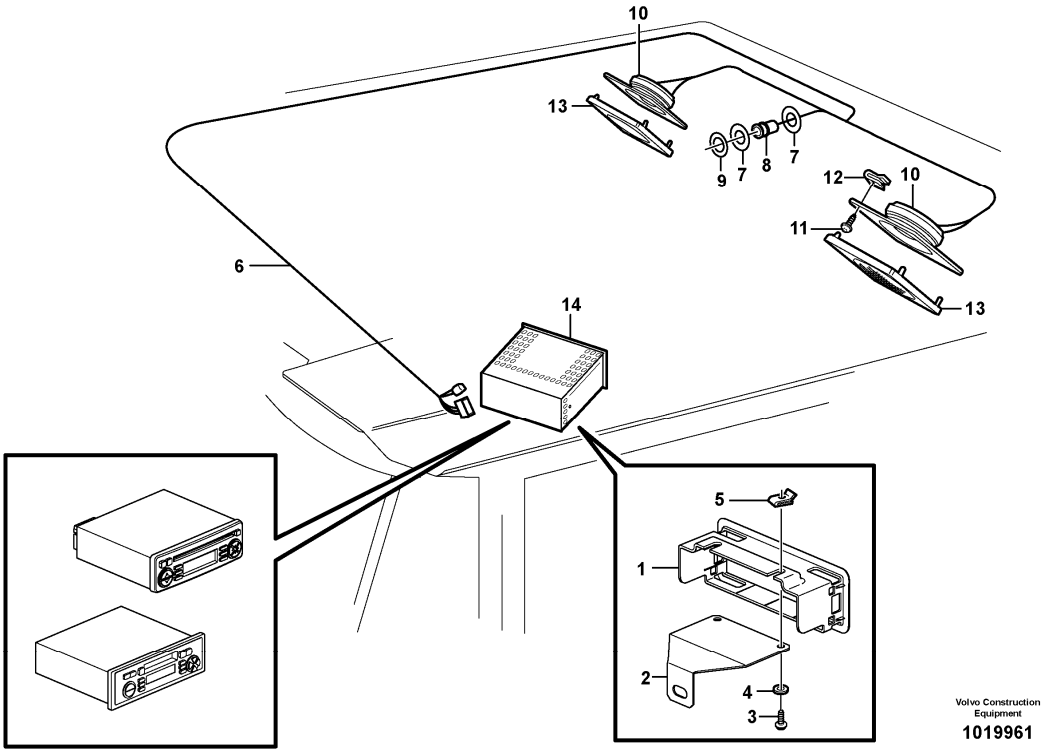

Section option	Kit	Option description
VOE82975	VOE11714470	Installation kit for radio, right mounting RH, EXCL RADIO
VOE82976	VOE11714470	Installation kit for radio, left mounting LH, EXCL RADIO
VOE82977		Radio with tape recorder CR213
VOE82978		Radio with Cd-player CD413
VOE83089		Radio installation kit incl. loudspeakers etc. EXKL RADIO, USA
VOE83229		Radio with tape recorder CR213
VOE83230		Radio with Cd-player CD413

Q1-Q5	Option	Option description	
Q1 82975 RH	VOE82975	Installation kit for radio, right mounting RH, EXCL RADIO	
Q2 82976 LH	VOE82976	Installation kit for radio, left mounting LH, EXCL RADIO	
Q3 83089 USA	VOE83089	Radio installation kit incl. loudspeakers etc. EXKL RADIO, USA	
Q4 82977 83229	VOE82977	Radio with tape recorder CR213	
Q5 82978 83230	VOE82978	Radio with Cd-player CD413	

Pos	Part	Q1	Q2	Q3	Q4	Q5	PS	Kit	Description	Option(s)	Remark
1	VOE11164554	1	1	1					Radio bracket		
2	VOE11164644	1	1	1					Anchorage		
3	VOE13946934	2	2	2					Screw		
4	VOE960139	2	2	2					Plain washer		
5	VOE949921	2	2	2					Spring nut		
6		1	1						Cable harness		
				1					Cable harness		
7	VOE11198163	1	1	1					Washer		
8	VOE11039750	1	1	1			SS		Power outlet		
9	VOE11006120	1	1	1					Decal		
10	VOE11201898	2	2	2					Loudspeaker		
11	VOE13972020	8	8	8					Six point socket screw		
12	VOE11164693	8	8	8					Spring nut		
13	VOE11201899	2	2	2					Loudspeaker grille		
14	VOE11803635				1		SS		Radio		
	VOE11886866					1			Radio		

VOLVO

Construction Equipment

PROSIS Part Information

Date:	Image id:	Catalogue:	Model:
25/08/2018	**EL286**	**20086**	**L120E**
Brand:	Serial:	Group/Section:	Title:
Volvo	**19804-, 66001-, 71401-**	**882/100**	**Interior components**

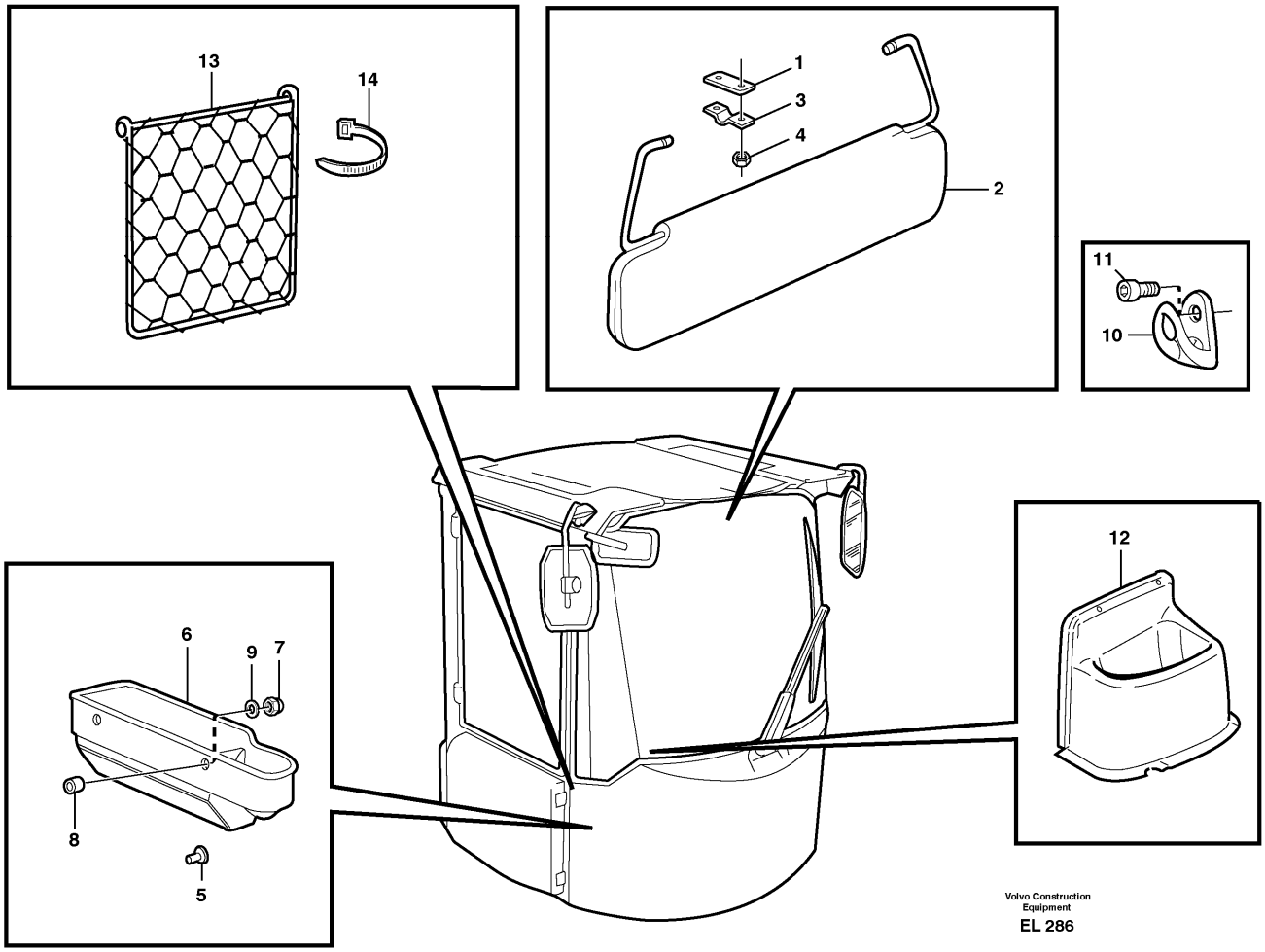

Section option	Kit	Option description
VOE33357		Cab L120E
VOE33380		Volvo Wheel Loader L120E S/N 19801-, S/N 66001- USA, S/N 71401- BRA
VOE33395		Wheel Loader L120E3 IRAN

Q1-Q5	Option	Option description	
Q1 33357	VOE33357	Cab L120E	
Q2 33380	VOE33380	Volvo Wheel Loader L120E S/N 19801-, S/N 66001- USA, S/N 71401- BRA	
Q3 33395	VOE33395	Wheel Loader L120E3 IRAN	

Pos	Part	Q1	Q2	Q3	Q4	Q5	PS	Kit	Description	Option(s)	Remark
1	VOE14343207	2							Spacer		
2	VOE11006992	1							Sun visor		

3	VOE14343206	2							Cap		
4	VOE11005777	4							Cap nut		
5	VOE11006726	1							Push button		
6	VOE11104485	1							Storage tray		
7	VOE11005777	2							Cap nut		
8	VOE930415	2							Spacer ring		
9	VOE960139	2							Plain washer		
10	VOE11078015	2							Clothes hook		
11	VOE969456	4							Six point socket screw		
12	VOE11164380		1	1					Cover		
13	VOE11104572		1	1					•Baggage Net		
14	VOE4881438		4	4					•Cable tie		

VOLVO

Construction Equipment

PROSIS Part Information

Date:	Image id:	Catalogue:	Model:
25/08/2018	**1000171**	**20086**	**L120E**
Brand:	Serial:	Group/Section:	Title:
Volvo	**19804-, 66001-, 71401-**	**882/150**	**Interior components, sun blinds.**

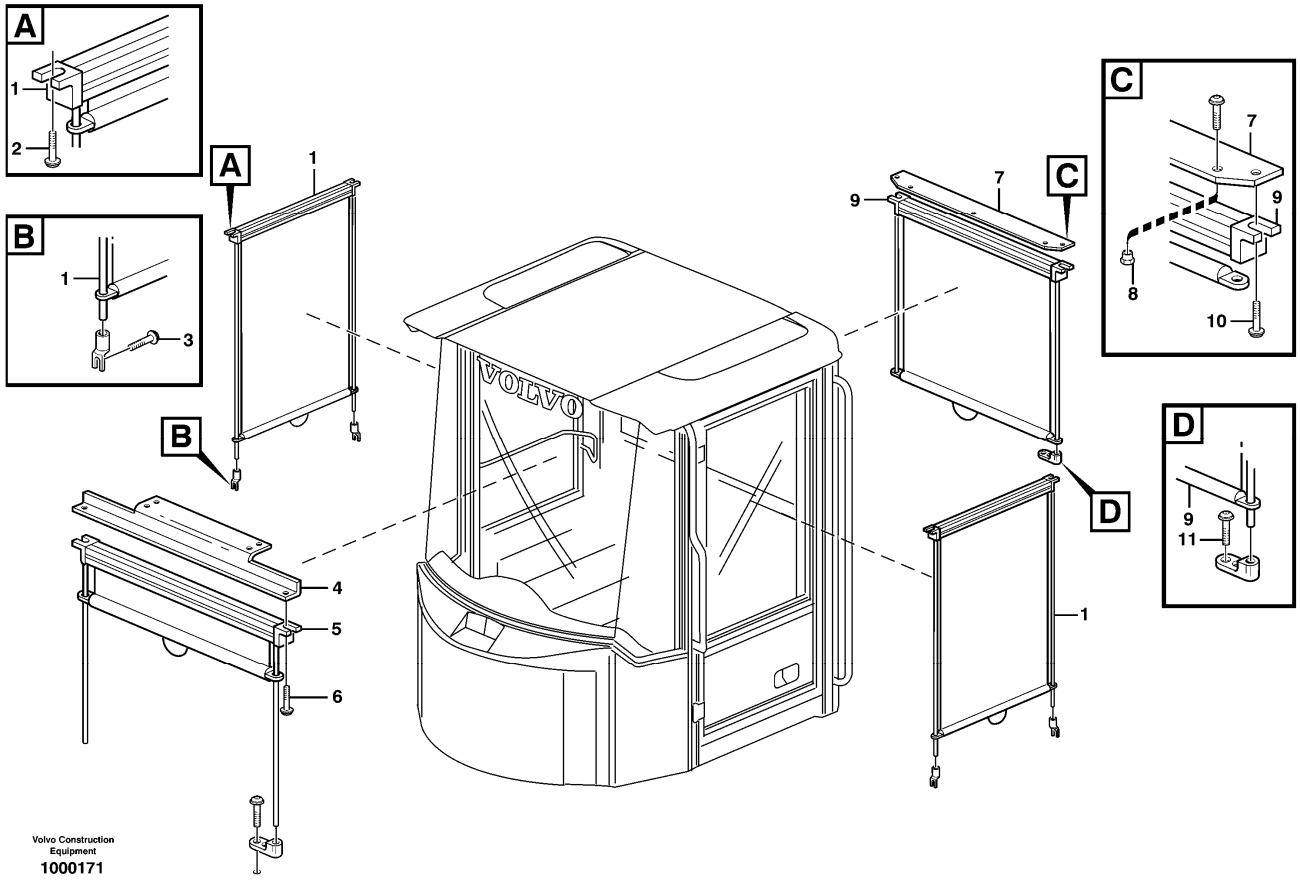

Section option	Kit	Option description
VOE80307		Sun blinds, side windows
VOE80308	VOE11707319	Sun blinds front and rearwindow

Q1-Q5	Option	Option description	
Q1 80307	VOE80307	Sun blinds, side windows	
Q2 80308	VOE80308	Sun blinds front and rearwindow	

Pos	Part	Q1	Q2	Q3	Q4	Q5	PS	Kit	Description	Option(s)	Remark
1	VOE11006035	2							Sun blind		
	VOE11712731	4							•Anchorage		
	VOE11712732	4							•Anchorage		
2	VOE972079	4							Six point socket screw		
3	VOE972071	4							Six point socket screw		

4	VOE11007425		1						Attachment		
5	VOE11006034		1						Sun blind		
	VOE11712751		2						•Anchorage		
6	VOE972079		2						Six point socket screw		
7	VOE11104180		1						Attaching plate		
8	VOE11104181		3						Nut		
9	VOE11006036		1						Sun blind		
10	VOE972079		2						Six point socket screw		
11	VOE972071		2						Six point socket screw		

VOLVO

Construction Equipment

PROSIS Part Information

Date:	Image id:	Catalogue:	Model:
25/08/2018	**EK193**	**20086**	**L120E**
Brand:	Serial:	Group/Section:	Title:
Volvo	**19804-, 66001-, 71401-**	**882/200**	**Armrest**

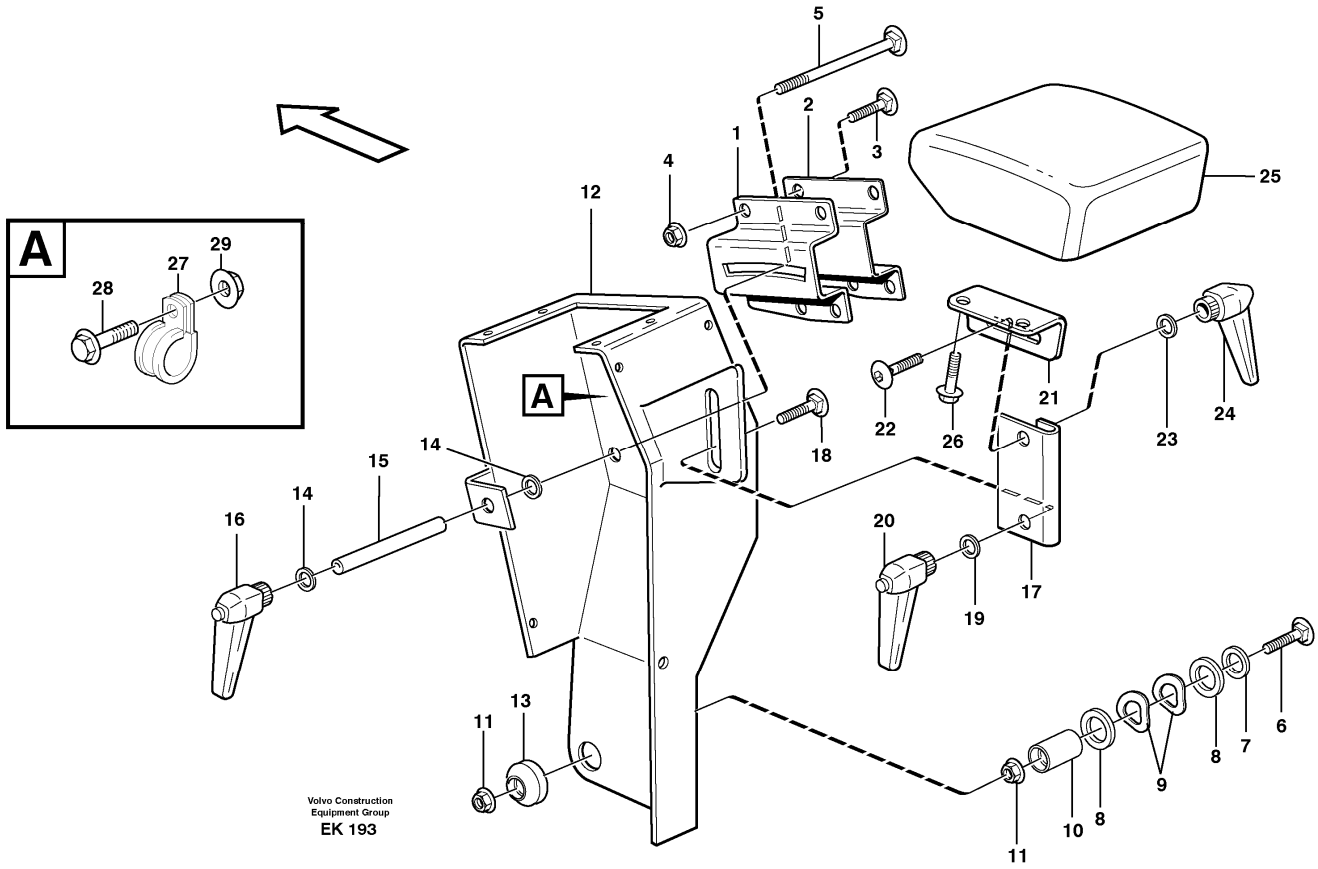

Section option	Kit	Option description
VOE33357		Cab L120E
VOE33366		Cab L120E USA

Pos	Part	Q1	Q2	Q3	Q4	Q5	PS	Kit	Description	Option(s)	Remark
1	VOE11104649	1							Anchorage		
2	VOE11104650	1							Support		
3	VOE948438	4							Square neck screw		(VOE13948438)
4	VOE13945408	4							Nut		
5	VOE981693	1							Square neck screw		
6	VOE976193	1							Square neck screw		
7	VOE13960145	1							Washer		
8	VOE955905	2							Washer		
9	VOE941916	2							Spring washer		
10	VOE11104664	1							Pin		
11	VOE13945408	2							Nut		

12	VOE11104646	1							Valve attachment		
13	VOE11104665	1							Cap		
14	VOE11117464	2							Plain washer		(VOE13960141)
15	VOE11104653	1							Tube		
16	VOE11104695	1							Lock lever		
17	VOE11164385	1							Rail		
18	VOE948438	1							Square neck screw		(VOE13948438)
19	VOE11117464	1							Plain washer		(VOE13960141)
20	VOE11104695	1							Lock lever		
21	VOE11104603	1							Attaching bracket		
22	VOE948438	1							Square neck screw		(VOE13948438)
23	VOE11117464	1							Plain washer		(VOE13960141)
24	VOE11104695	1							Lock lever		
25	VOE4937914	1							Support		
26	VOE946440	2							Flange screw		
27	VOE952627	1							Clamp		
28	VOE13946544	1							Screw		
29	VOE13945407	1							Nut		

VOLVO

Construction Equipment

PROSIS Part Information

Date:	Image id:	Catalogue:	Model:
25/08/2018	**1016741**	**20086**	**L120E**
Brand:	Serial:	Group/Section:	Title:
Volvo	**19804-, 66001-, 71401-**	**882/250**	**Armrest 83316, 83317**

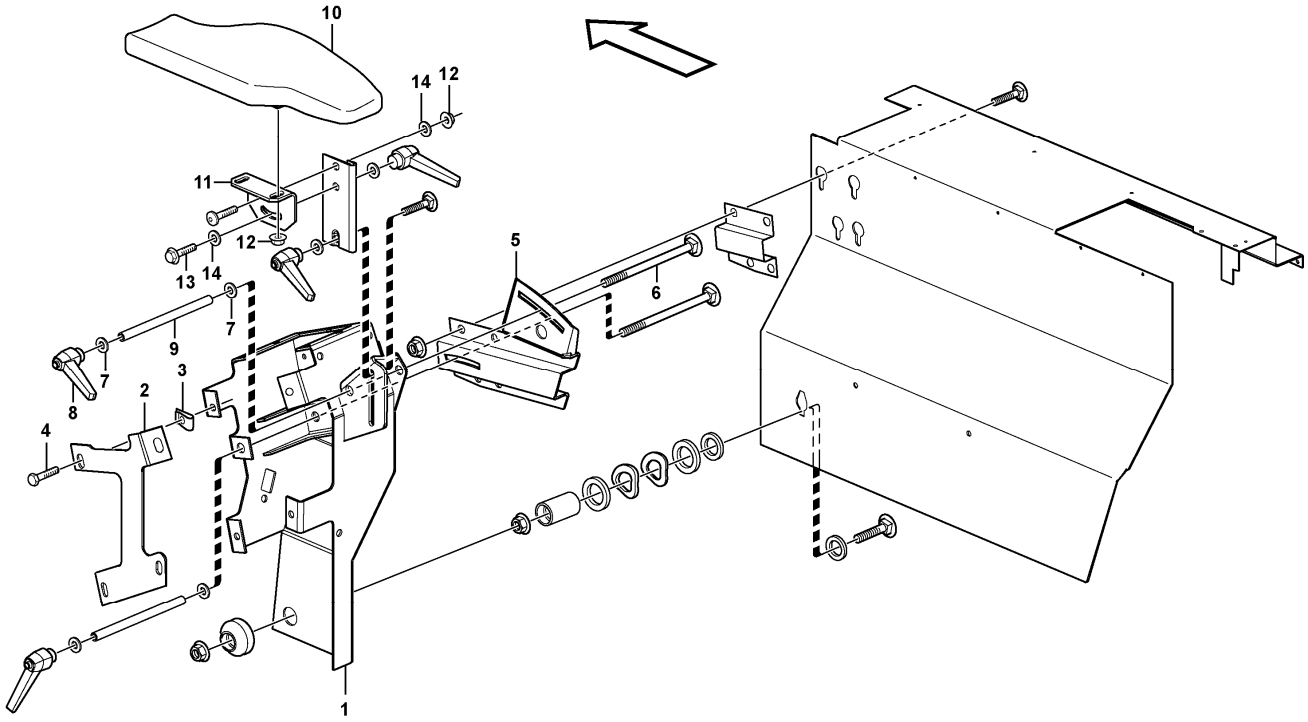

Section option	Kit	Option description
VOE83316	VOE11714603	Single lever hydraulic control, two functions
VOE83317	VOE11714604	Single lever hydraulic control, three functions

Pos	Part	Q1	Q2	Q3	Q4	Q5	PS	Kit	Description	Option(s)	Remark
1	VOE11180914	1							Valve attachment		
2	VOE11180918	1							Reinforcement		
3	VOE971322	4							Six point socket screw		
4	VOE949921	4							Spring nut		
5	VOE11180920	1							Anchorage		
6	VOE965661	1							Square neck screw		(VOE976202)
7	VOE11117464	2							Plain washer		(VOE13960141)
8	VOE11104695	1							Lock lever		
9	VOE11104429	1							Tube		

10	VOE11164348	1							Arm rest		
11	VOE11164355	1							Anchorage		
12	VOE948645	3							Flange lock nut		
13	VOE13945444	1							Screw		
14	VOE11117464	2							Plain washer		(VOE13960141)

VOLVO

Construction Equipment

PROSIS Part Information

Date:	Image id:	Catalogue:	Model:
25/08/2018	**1019921**	**20086**	**L120E**
Brand:	Serial:	Group/Section:	Title:
Volvo	**19804-, 66001-, 71401-**	**882/300**	**Cover for servo valves**

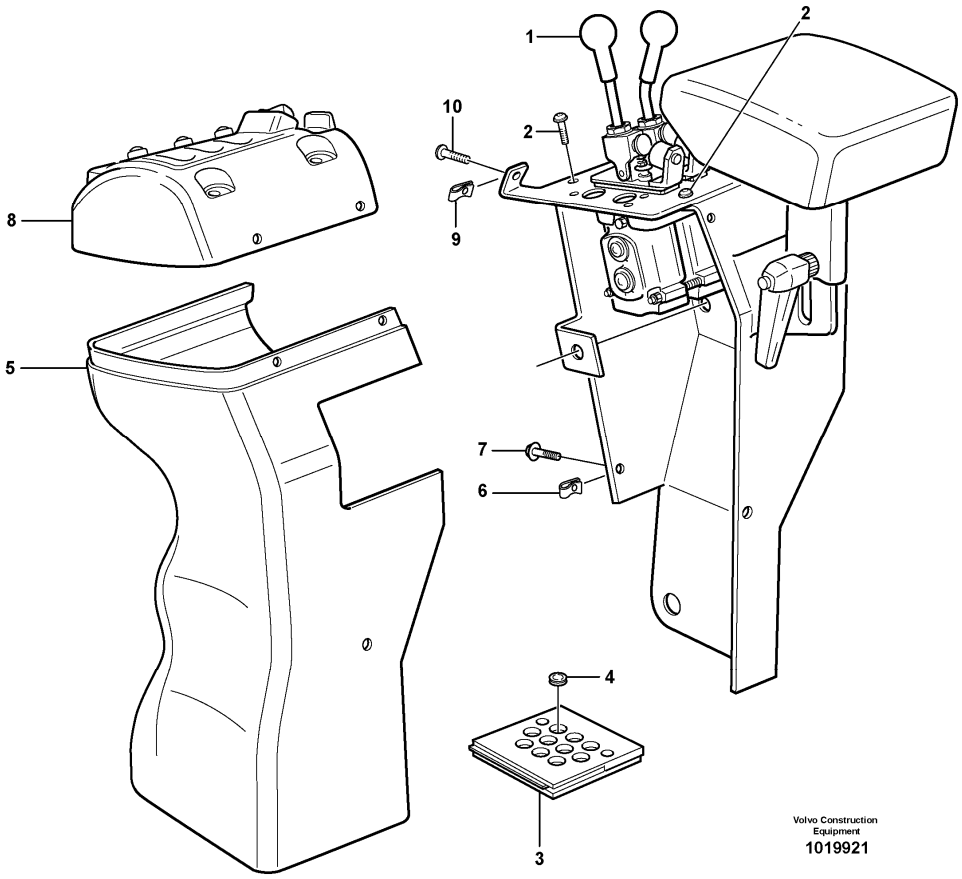

Section option	Kit	Option description
VOE33380		Volvo Wheel Loader L120E S/N 19801-, S/N 66001- USA, S/N 71401- BRA

Pos	Part	Q1	Q2	Q3	Q4	Q5	PS	Kit	Description	Option(s)	Remark
1		1							Servo valve		See ref 914/300
2	VOE13976479	4							Six point socket screw		
3	VOE11164454	1							Hose retainer		
4	VOE941266	4							•Plug		
5	VOE11104642	1							Cover		
6	VOE949921	6							Spring nut		
7	VOE971322	6							Six point socket screw		
8		1							Casing		See ref 371/900
9	VOE13949867	4							Spring nut		
10	VOE981208	4							Six point socket		

screw

VOLVO

Construction Equipment

PROSIS Part Information

Date:	Image id:	Catalogue:	Model:
25/08/2018	**1020113**	**20086**	**L120E**
Brand:	Serial:	Group/Section:	Title:
Volvo	**19804-, 66001-, 71401-**	**882/500**	**CDC - steering, sheet metal parts. 80780**

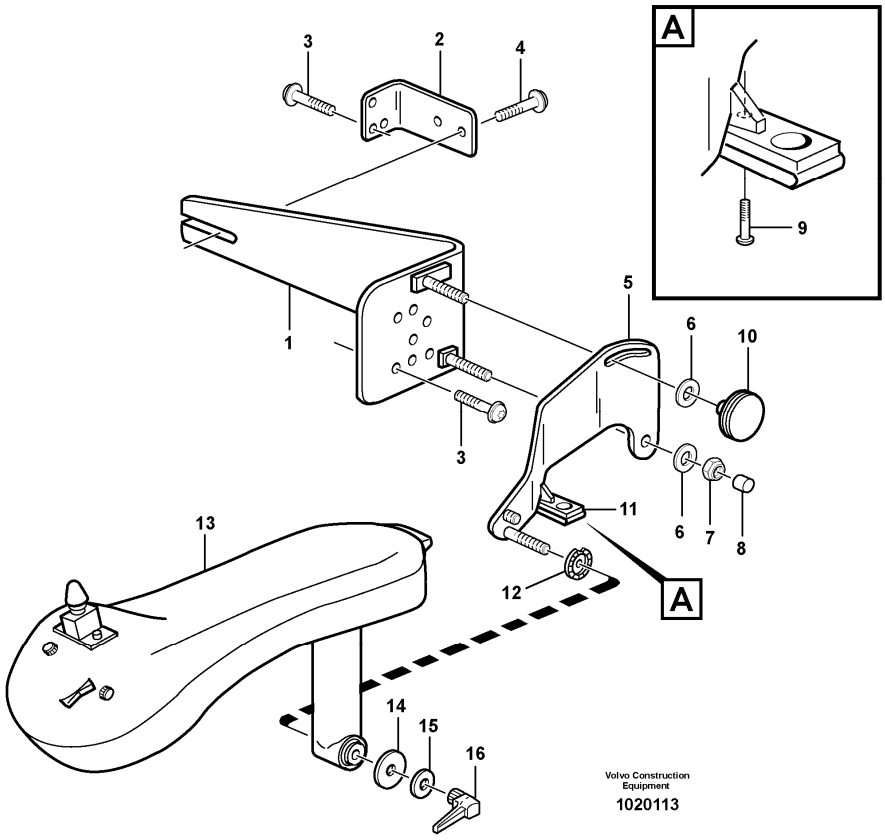

Section option	Kit	Option description
VOE80780	VOE11708984	Comfort Drive Control, CDC

Pos	Part	Q1	Q2	Q3	Q4	Q5	PS	Kit	Description	Option(s)	Remark
1	VOE11007869	1							Anchorage		
2	VOE11007385	1							Anchorage		
3	VOE969436	3							Six point socket screw		
4	VOE946440	2							Flange screw		
5	VOE11007861	1							Arm		
6	VOE11117464	2							Plain washer		(VOE13960141)
7	VOE946036	1							Lock nut		
8	VOE11006824	1							Protecting cap		
9	VOE971304	1							Six point socket screw		
10	VOE11104730	1							Knob		

11	VOE11007958	1							Base		
12	VOE11006059	1							Washer		
13		1							Arm rest		See ref 882/550
14	VOE11007864	1							Cover		
15	VOE11117464	1							Plain washer		(VOE13960141)
16	VOE11104695	1							Lock lever		

VOLVO

Construction Equipment

PROSIS Part Information

Date:	Image id:	Catalogue:	Model:
25/08/2018	**EC366**	**20086**	**L120E**
Brand:	Serial:	Group/Section:	Title:
Volvo	**19804-, 66001-, 71401-**	**882/550**	**Arm rest. 80780**

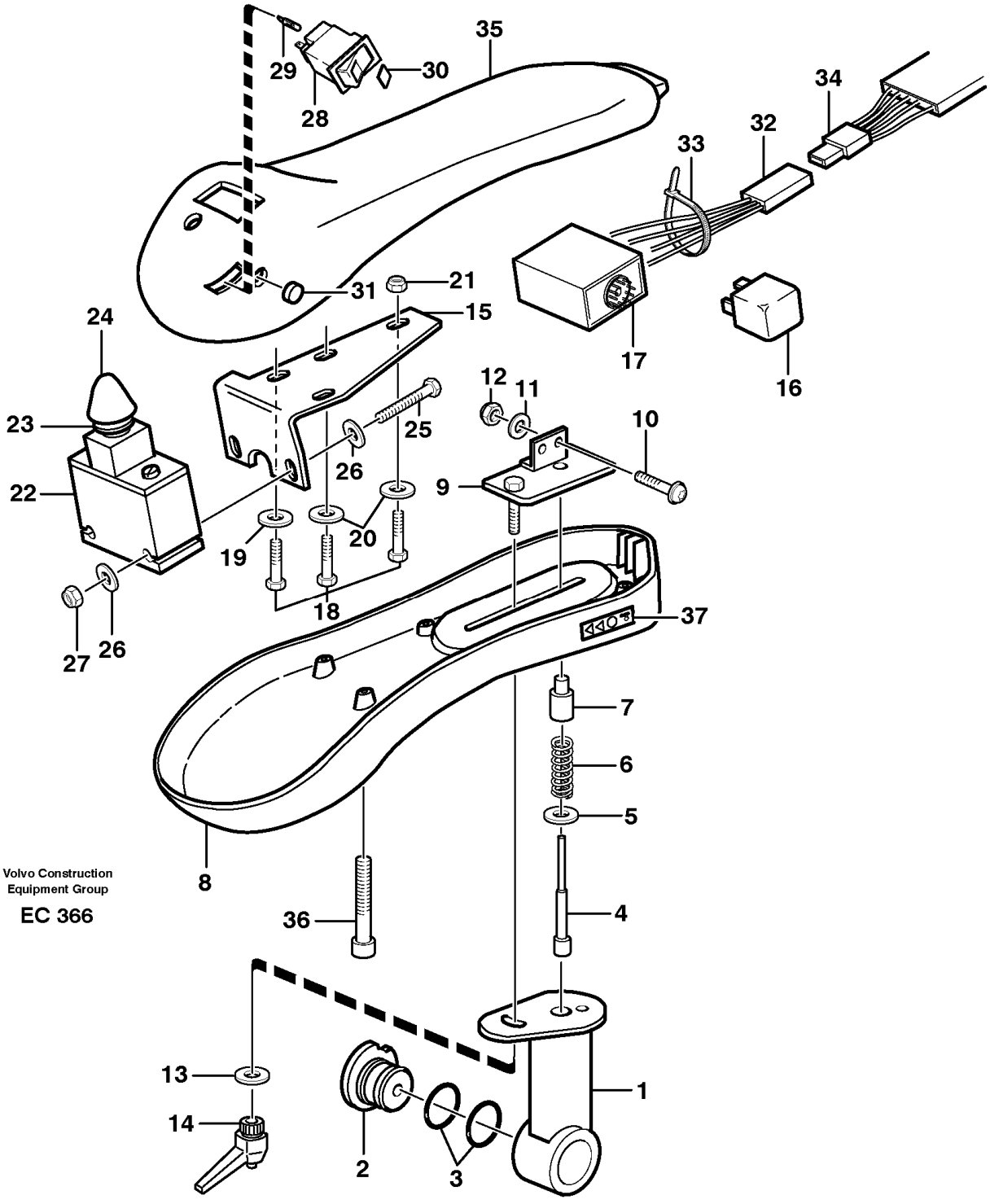

Section option	Kit	Option description

VOE80780	VOE11708984	Comfort Drive Control, CDC

Pos	Part	Q1	Q2	Q3	Q4	Q5	PS	Kit	Description	Option(s)	Remark
	VOE11444379	1					SS		Arm rest		
1	VOE11007932	1					OP		•Handle		
2	VOE11007862	1							•Shaft		
3	VOE13960171	2							•O-ring		
4	VOE11007871	1							•Pin		
5	VOE955892	1							•Plain washer		
6	VOE659603	1							•Spring		
7	VOE11004157	1							•Sleeve		
8	VOE11104146	1							•Cover		
9	VOE11007860	1							•Bridge		
10	VOE972400	1							•Six point socket screw		M4 x 12
11	VOE955891	1							•Plain washer		
12	VOE13963103	1							•Lock nut		
13	VOE11117464	1							•Plain washer		(VOE13960141)
14	VOE11104695	1							•Lock lever		
15	VOE11006039	1							•Plate		
16	VOE20374662	1							•Relay		RE602
17	VOE11039560	1							•Electronic unit		
18	VOE971304	4							•Six point socket screw		
19	VOE967599	2							•Toothed washer		
20	VOE13960138	3							•Washer		
21	VOE13963104	1							•Lock nut		
22	VOE11007955	1							•Control lever		SE603
23	VOE11997604	1							••Rubber bellows		
24	VOE11007966	1							•Knob		
25	VOE969440	2							•Six point socket screw		
26	VOE13960138	4							•Washer		
27	VOE13963104	2							•Lock nut		
28	VOE11039439	1							•Switch		
29	VOE11997242	1							••Bulb		
30	VOE4803548	1							•Lens		
31	VOE11003679	2							•Button		
32		1							•Wire harness		See ref 371/1000
33	VOE4821292	1							•Cable tie		
34		1							•Wire harness		See ref 371/1000
35	VOE11006076	1							•Cover		
36	VOE13959212	1							•Allen Hd Screw		
	VOE959213	3							•Hex. socket screw		
37	VOE11198022	1							•Decal		
37	VOE11198022	1							Decal	VOE33395	IRAN

VOLVO

Construction Equipment

PROSIS Part Information

Date:	Image id:	Catalogue:	Model:
25/08/2018	**1019506**	**20086**	**L120E**
Brand:	Serial:	Group/Section:	Title:
Volvo	**19804-, 66001-, 71401-**	**882/600**	**Cover for servo valves 80781, 82408**

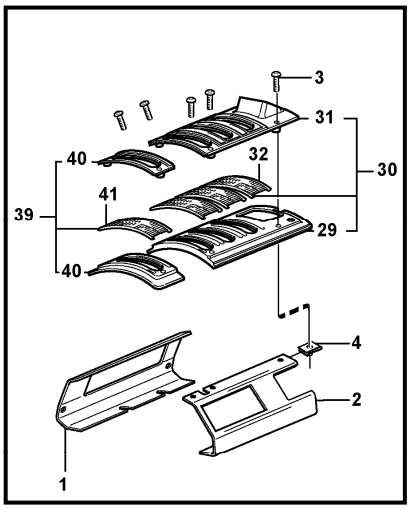

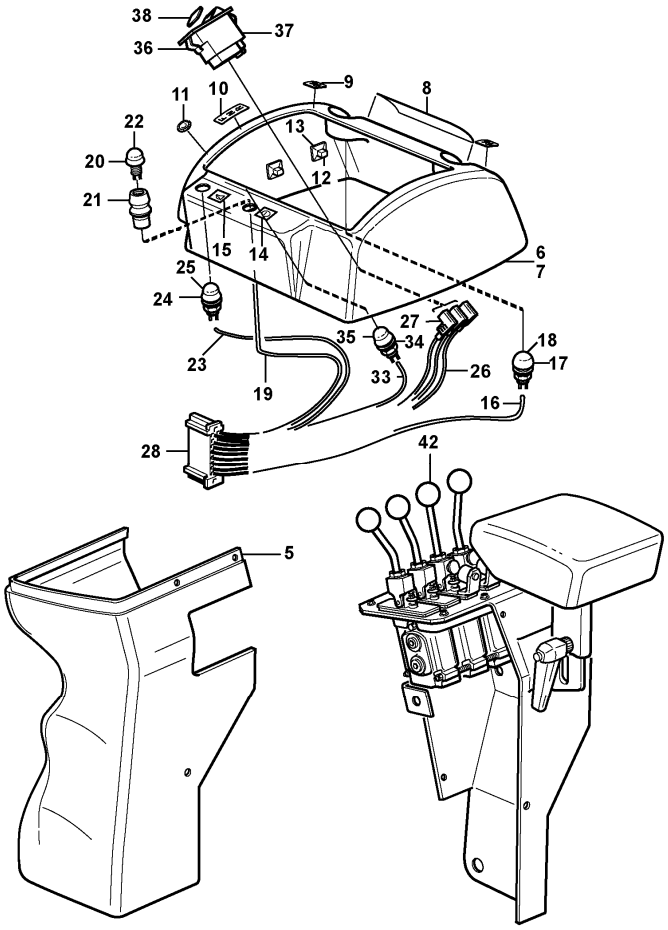

Volvo Construction Equipment
1019506

Section option	Kit	Option description
VOE80781	VOE11709027	Hydraulic system, 3rd and 4th function
VOE82408		Hydraulic system, 3rd and 4th function LONG BOOM

Pos	Part	Q1	Q2	Q3	Q4	Q5	PS	Kit	Description	Option(s)	Remark
1	VOE11175063	1							Attaching bracket		
2	VOE11104888	2							Attaching bracket		
3	VOE13975980	6							Six point socket screw		
4	VOE949921	6							Spring nut		
5	VOE11104987	1							Cover		
6	VOE11164528	1					OP		Cover		
7	VOE11164527	1							•Cover		
8	VOE11714690	1							••Decal		(VOE11104731)
9	VOE11714690	1							••Decal		(VOE11104712)

10	VOE11714690	1							••Decal		(VOE11104711)
11	VOE11705579	1							••Decal		
12	VOE11007051	8							••Retainer		
13	VOE13965593	8							••Blind rivet		
14	VOE11714690	1							••Decal		(VOE11006296)
15	VOE11714690	1							••Decal		(VOE11006297)
16	VOE11170674	1							•Cable harness		
17	VOE11039681	1							••Switch		
18	VOE11170040	1							••Protecting cap		
19	VOE11170676	1							•Cable harness		
20	VOE11039681	1							••Switch		
21	VOE11104727	1							••Anchorage		
22	VOE11170040	1							••Protecting cap		
23	VOE11170678	1							•Cable harness		
24	VOE11039681	1							••Switch		
25	VOE11170040	1							••Protecting cap		
26	VOE11041399	1							•Cable harness		
27	VOE13944221	3							••Housing		
28	VOE1096615	1							••Housing		
29	VOE11040576	1					OP		Plate		
30	VOE11104981	1							•Plate		
31	VOE11007489	1							••Plate		
32	VOE11007308	6							•••Brush		
33	VOE11170677	1							•Cable harness		
34	VOE11039681	1							••Switch		
35	VOE11170040	1							••Protecting cap		
36	VOE11039439	1							•Switch		
37	VOE11997242	1							••Bulb		
38	VOE4803548	1							•Lens		
39	VOE11104982	1							Plate		
40	VOE11007489	1							•Plate		
41	VOE11007308	2							••Brush		
42		1							Servo Valve		See ref 914/300

VOLVO

Construction Equipment

PROSIS Part Information

Date:	Image id:	Catalogue:	Model:
25/08/2018	**1020589**	**20086**	**L120E**
Brand:	Serial:	Group/Section:	Title:
Volvo	**19804-, 66001-, 71401-**	**882/700**	**Anti-theft 83315**

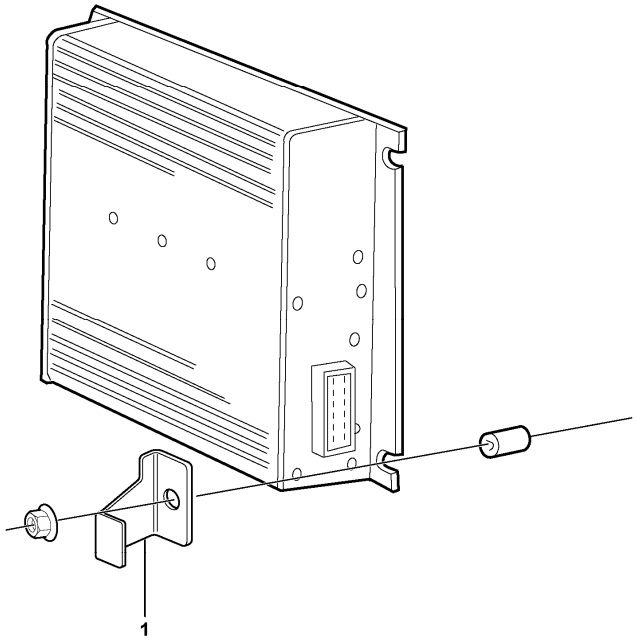

Volvo Construction Equipment
1020589

Section option	Kit	Option description
VOE83315		Anti-theft

Pos	Part	Q1	Q2	Q3	Q4	Q5	PS	Kit	Description	Option(s)	Remark
1	VOE11181001	1							Brace		

VOLVO

Construction Equipment

PROSIS Part Information

Date:	Image id:	Catalogue:	Model:
25/08/2018	**1001244**	**20086**	**L120E**
Brand:	Serial:	Group/Section:	Title:
Volvo	**19804-, 66001-, 71401-**	**896/100**	**Tool box 80800**

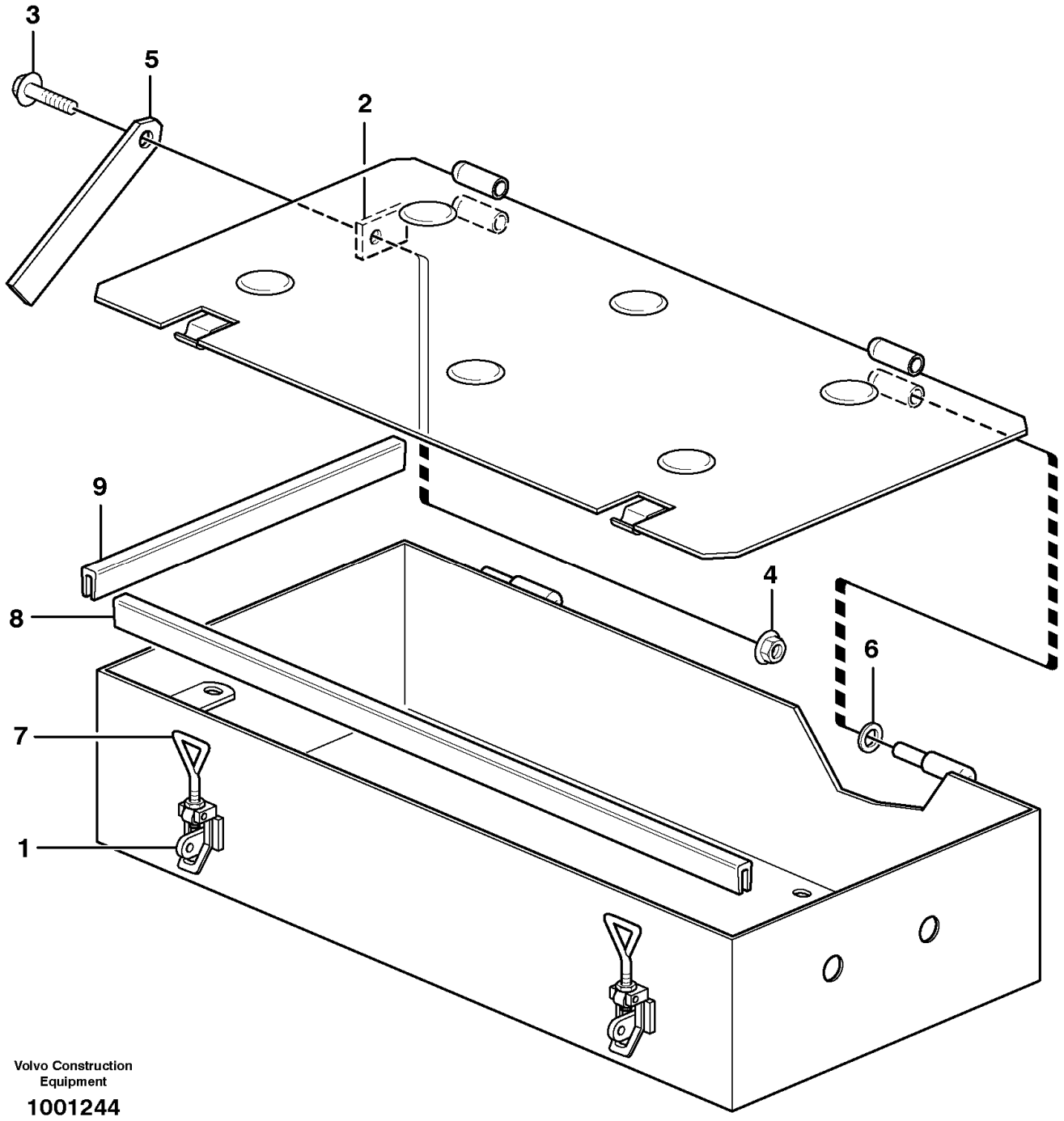

Section option	Kit	Option description
VOE80800		Tool Box

Pos	Part	Q1	Q2	Q3	Q4	Q5	PS	Kit	Description	Option(s)	Remark

	VOE11413764	1							Tool box		
1	VOE11015639	2							••Eccentric lock		
2	VOE4739976	1							••Anchorage		
3	VOE946671	1							•Flange screw		
4	VOE948645	1							•Flange lock nut		
5	VOE11025661	1							•Stay		
6	VOE4936343	4							•Washer		
7	VOE11015638	2							•Eye bolt		
8	VOE4786044	REQ							•Sealing strip		L = 1254 MM
9	VOE4786044	REQ							•Sealing strip		L = 366MM

VOLVO

Construction Equipment

PROSIS Part Information

Date:	Image id:	Catalogue:	Model:
25/08/2018	**1000113**	**20086**	**L120E**
Brand:	Serial:	Group/Section:	Title:
Volvo	**19804-, 66001-, 71401-**	**896/150**	**Tools**

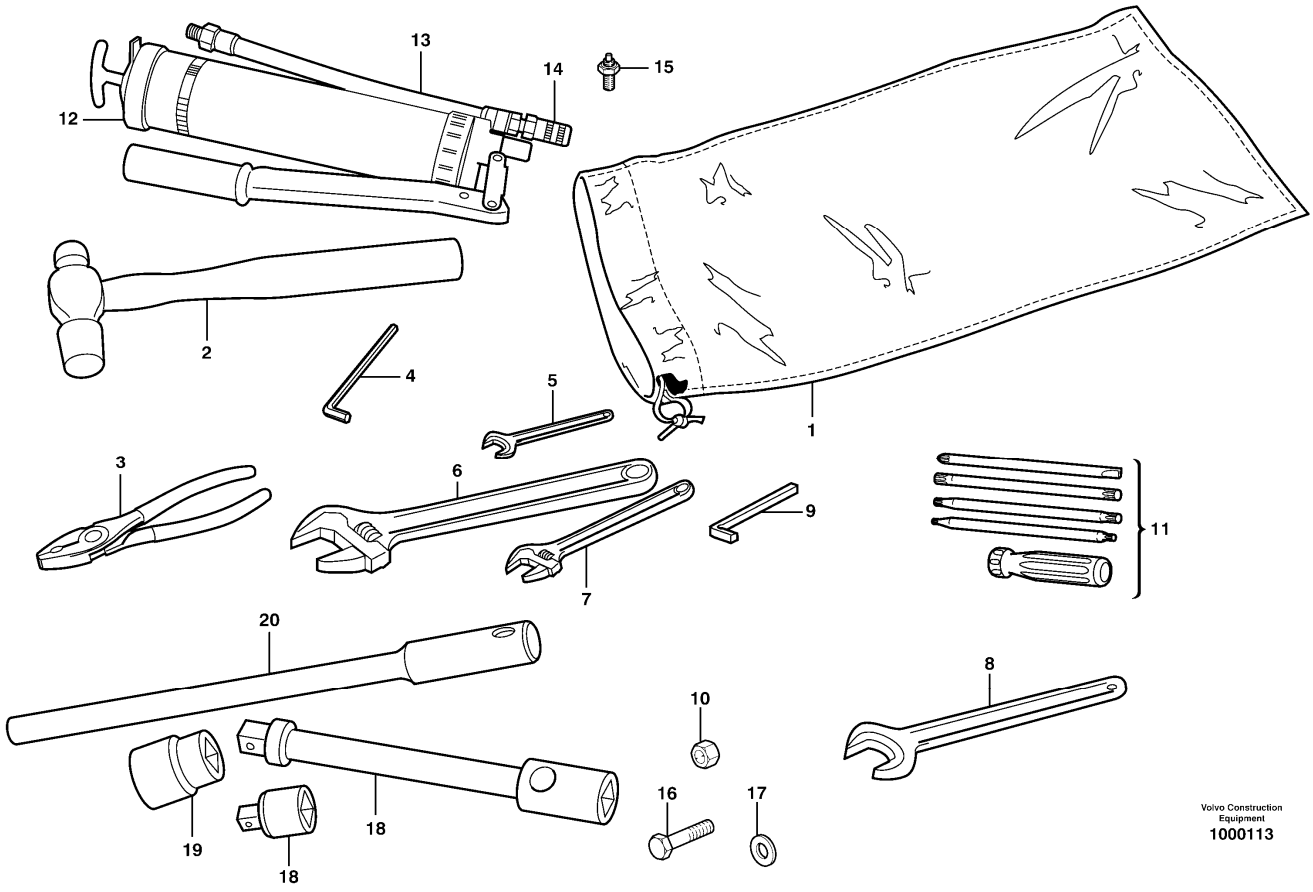

Section option	Kit	Option description
VOE90007		Wheel nut wrench
VOE99183		Tool kit
VOE33395		Wheel Loader L120E3 IRAN

Q1-Q5	Option	Option description	
Q1 99183	VOE99183	Tool kit	
Q2 90007	VOE90007	Wheel nut wrench	
Q3 33395 IRAN	VOE33395	Wheel Loader L120E3 IRAN	

Pos	Part	Q1	Q2	Q3	Q4	Q5	PS	Kit	Description	Option(s)	Remark
1	VOE11431196	1		1					Tool bag		(VOE736392)
2	VOE13962213	1		1					Ball peen hammer		
3	VOE13962033	1		1					Pliers		
4	VOE914003	1		1					Allen key		

5	VOE6611274	1		1					Key		
6	VOE11180050	1		1					Adjustable spanner		
7	VOE11180049	1		1					Adjustable spanner		
8	VOE13962075	1		1					Spanner		
9	VOE190708	1		1					Square spanner		
10	VOE4940506	1		1					Blind nut		
11	VOE11026287	1		1					Combination screwdriver		
12	VOE753546	1							Grease gun		
13	VOE926138	1							•Hose assembly		
14	VOE795074	1							•Clutch		
15	VOE6633616	1		1					•Nipple		
16	VOE13970959	3		3					Hexagon screw		
17	VOE13947281	3							Gasket		
18	VOE13962298		1						Extension		
19	VOE962305		1						Socket wrench		
20	VOE4854513		1						Handle		

VOLVO

Construction Equipment

PROSIS Part Information

Date:	Image id:	Catalogue:	Model:
25/08/2018	**1000112**	**20086**	**L120E**
Brand:	Serial:	Group/Section:	Title:
Volvo	**19804-, 66001-, 71401-**	**896/200**	**Pump 93988**

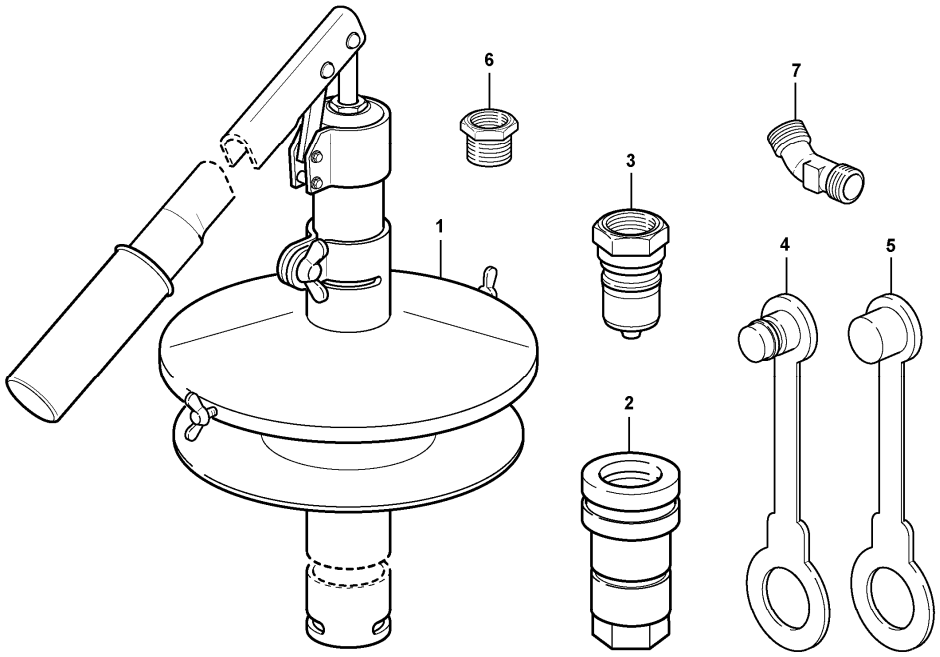

Volvo Construction Equipment
1000112

Section option	Kit	Option description
VOE93988		Refill pump for grease for automatic lube system

Pos	Part	Q1	Q2	Q3	Q4	Q5	PS	Kit	Description	Option(s)	Remark
	VOE11704511	1							Pump		
1	VOE11016075	1							•Pump		
2	VOE11016067	1							•Quick Coupling		
3	VOE11016068	1							•Quick Coupling		
4	VOE11016069	1							•Dust cover		
5	VOE11016070	1							•Dust cover		
6	VOE11016071	1							•Adapter		
7	VOE11016072	1							•Elbow nipple		

VOLVO

Construction Equipment

PROSIS Part Information

Date:	Image id:	Catalogue:	Model:
25/08/2018	**1014673**	**20086**	**L120E**
Brand:	Serial:	Group/Section:	Title:
Volvo	**19804-, 66001-, 71401-**	**896/250**	**Tools oil test 82723**

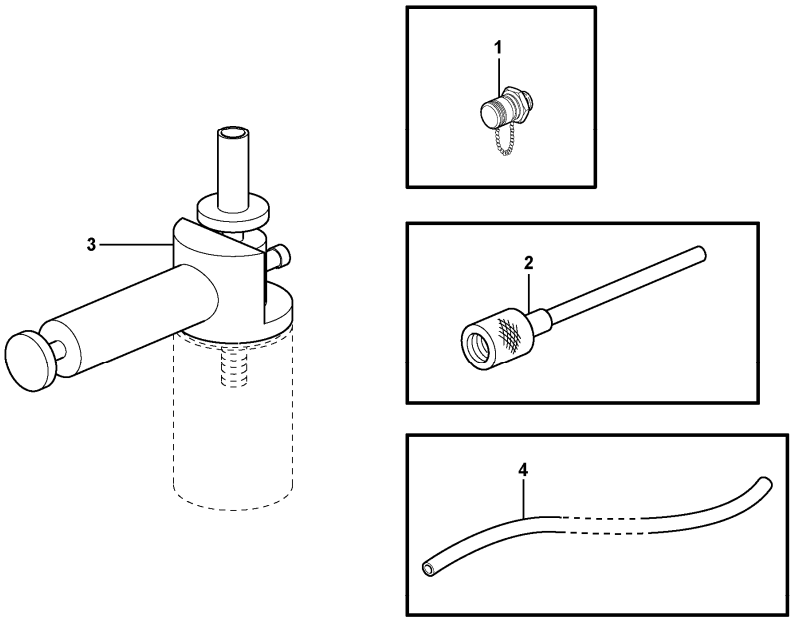

Section option	Kit	Option description
VOE82723		Tools for oil test

Pos	Part	Q1	Q2	Q3	Q4	Q5	PS	Kit	Description	Option(s)	Remark
1	VOE936442	1							Testing nipple		
2	VOE14025152	1							Hose		
3	VOE11411003	1							Vacuum pump		
4	VOE941363	REQ							Hose		L = 500MM

VOLVO

Construction Equipment

PROSIS Part Information

Date:	Image id:	Catalogue:	Model:
25/08/2018	**1022013**	**20086**	**L120E**
Brand:	Serial:	Group/Section:	Title:
Volvo	**19804-, 66001-, 71401-**	**897/100**	**Sign plates and decals**

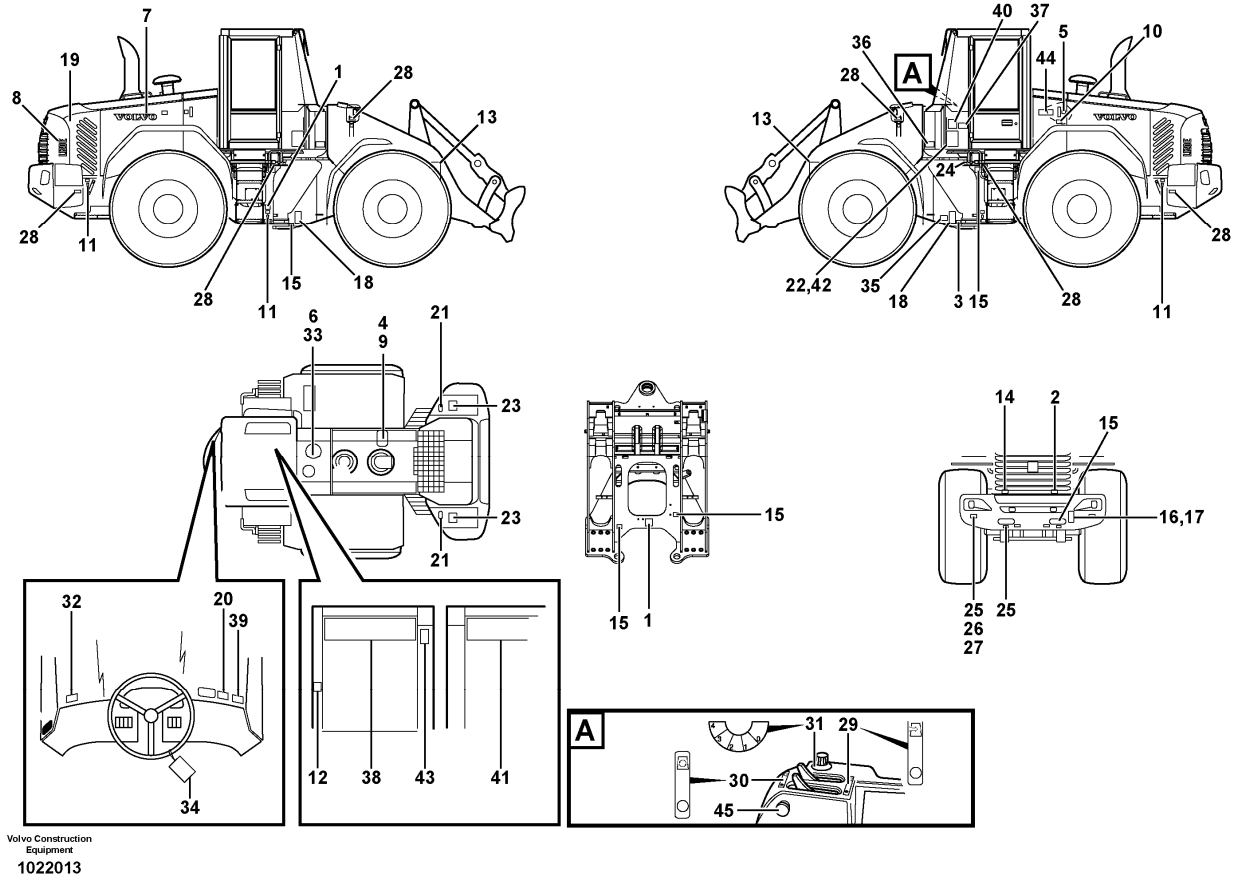

Section option	Kit	Option description
VOE33357		Cab L120E
VOE33366		Cab L120E USA
VOE33380		Volvo Wheel Loader L120E S/N 19801-, S/N 66001- USA, S/N 71401- BRA
VOE83776		Dekals, USA REPLACES 82296 FOR 33379 AND 33380
VOE83777		Dekals, USA REPLACES 82092 FOR 33379 AND 33380
VOE33395		Wheel Loader L120E3 IRAN

Q1-Q5	Option	Option description	
Q1 33380	VOE33380	Volvo Wheel Loader L120E S/N 19801-, S/N 66001- USA, S/N 71401- BRA	See footnote 1297)
Q2 33357 33366	VOE33357	Cab L120E	See footnote 1297)
Q3 83777	VOE83777	Dekals, USA REPLACES 82092 FOR 33379 AND 33380	
Q4 83776	VOE83776	Dekals, USA REPLACES 82296 FOR 33379 AND 33380	
Q5 33395 IRAN	VOE33395	Wheel Loader L120E3 IRAN	

Pos	Part	Q1	Q2	Q3	Q4	Q5	PS	Kit	Description	Option(s)	Remark
	VOE11003865	REQ				REQ			Decal		
1	VOE11003865	REQ				REQ			•Decal		PRESSURE WARN BRAKE
2	VOE11003865	REQ				REQ			•Decal		DIESEL-FUEL
3	VOE11003865	REQ				REQ			•Decal		TRANSMISSION
4	VOE11003865	REQ				REQ			•Decal		COOLING LIQUID LEVEL
5	VOE11003865	REQ				REQ			•Decal		HYDRAULIC OIL LEVEL
6	VOE11003865	REQ				REQ			•Decal		HYDRAULIC SYSTEM
7	VOE11174177	REQ				REQ			Decal		VOLVO
8	VOE11174448	REQ				REQ			Decal		L120E
9	VOE11174178	REQ							Decal		ANTIFREEZE, S/N - 20382 SWE, S/N - 66145 USA S/N - 71440 BRA
10	VOE11004094	REQ				REQ			Decal		AIR CLEANER
11	VOE11004094	REQ							Decal		LIFTING HOOK
12	VOE13935007	REQ							Decal		EMERGENCY EXIT
13	VOE11027566	REQ							Warning decal		NOT TO WALK UNDER BUCKET
	VOE11027568	REQ							Warning decal	VOE82591	
14	VOE11026729	REQ							Decal		BATTERY DISCONNECT
15	VOE11026730	REQ							Decal		TIE DOWNS
15	VOE11004094					REQ			Decal		
16	VOE11400920	REQ							Warning plate		NOT TO STAND BEHIND MACHINE
	VOE11413291	REQ							Decal	VOE82591	
17	VOE941671	4							Blind rivet		
18	VOE13935000	REQ							Warning decal		ARTICULATION
19	VOE13935001	REQ							Warning decal		FAN PROTECTION
20	VOE13935003	REQ							Warning decal		SEE INSTR. BOOK
	VOE11015581	REQ					OP		Warning decal	VOE82591	
	VOE16207444	REQ							Warning decal	VOE82582, VOE82583	(VOE11111506)
21	VOE13935004	REQ							Warning decal		BATTERY
	VOE11015582	REQ							Warning decal	VOE82591	
22	VOE11445181	REQ							Decal		LUBRICATION INTERVAL
23	VOE11026072	REQ							Decal		DO NOT STEP ON
	VOE11413290	REQ							Decal	VOE82591	
24	VOE11130942	REQ				REQ			Decal		TRANSMISSION OIL FILL AND SEE INSTR. BOOK
25	VOE11039276	4							Reflector	VOE33395	IRAN
26	VOE13969516	8							Six point socket screw		
26	VOE13969516	4							Six point socket screw	VOE33395	IRAN
27	VOE930757	8							Expanding nut		

27	VOE930757	4							Expanding nut	VOE33395	IRAN
28	VOE1578835	REQ							Reflector	VOE33395	IRAN
29	VOE11104441		REQ						Decal		
30	VOE11104442		REQ						Decal		
31	VOE11104573		REQ						Decal		
32	VOE11414391	REQ							Decal	VOE80891	
33	VOE11413640	REQ							Decal	VOE82078	
	VOE11411917	REQ							Decal	VOE82189	
	VOE11413642	REQ							Decal	VOE82079	
	VOE11411924	REQ							Decal	VOE83454	
34	VOE11180472	REQ							Sign	VOE82296, VOE83776	
	VOE4952170	REQ		REQ					Decal	VOE82092	
35	VOE11180471	REQ							Warning decal	VOE82296, VOE83776	
	VOE4952169	REQ		REQ					Decal	VOE82092	
36	VOE11180470	REQ							Warning decal	VOE82296, VOE83776	
	VOE4952166	REQ		REQ					Decal	VOE82092	
37	VOE11180484	REQ							Decal	VOE82296, VOE83776	
	VOE11176796	REQ		REQ					Decal	VOE82092	
38	VOE11181129	REQ							Decal	VOE82092, VOE82296	(VOE11414506)
38	VOE11181129			REQ					Decal	VOE83776	
38	VOE11181130				REQ				Decal		
39	VOE11180474	REQ							Decal	VOE82296, VOE83776	
	VOE4952179	REQ		REQ					Decal	VOE82092	
40	VOE11180486	REQ							Decal	VOE82296	
40	VOE11410193	REQ							Decal	VOE82092	
40	VOE11445055			REQ					Decal		
40	VOE11445077				REQ				Decal		
41	VOE11181130	REQ							Decal	VOE82296	(VOE11414509)
42	VOE11445054	REQ							Decal	VOE82296	
	VOE11445181	REQ							Decal	VOE83776	
43	VOE11164639	REQ							Decal	VOE82296, VOE83776	
44	VOE11181021	REQ							Decal	VOE83175	
	VOE11181022	REQ							Decal	VOE83310	
45	VOE11431454	REQ							Decal	VOE80098	

1297) See section: Illustration of sign plates and decals. Group 897

VOLVO

Construction Equipment

PROSIS Part Information

Date:	Image id:	Catalogue:	Model:
25/08/2018	**1001180**	**20086**	**L120E**
Brand:	Serial:	Group/Section:	Title:
Volvo	**19804-, 66001-, 71401-**	**897/150**	**Slow moving vehicle sign. 80890, 80891**

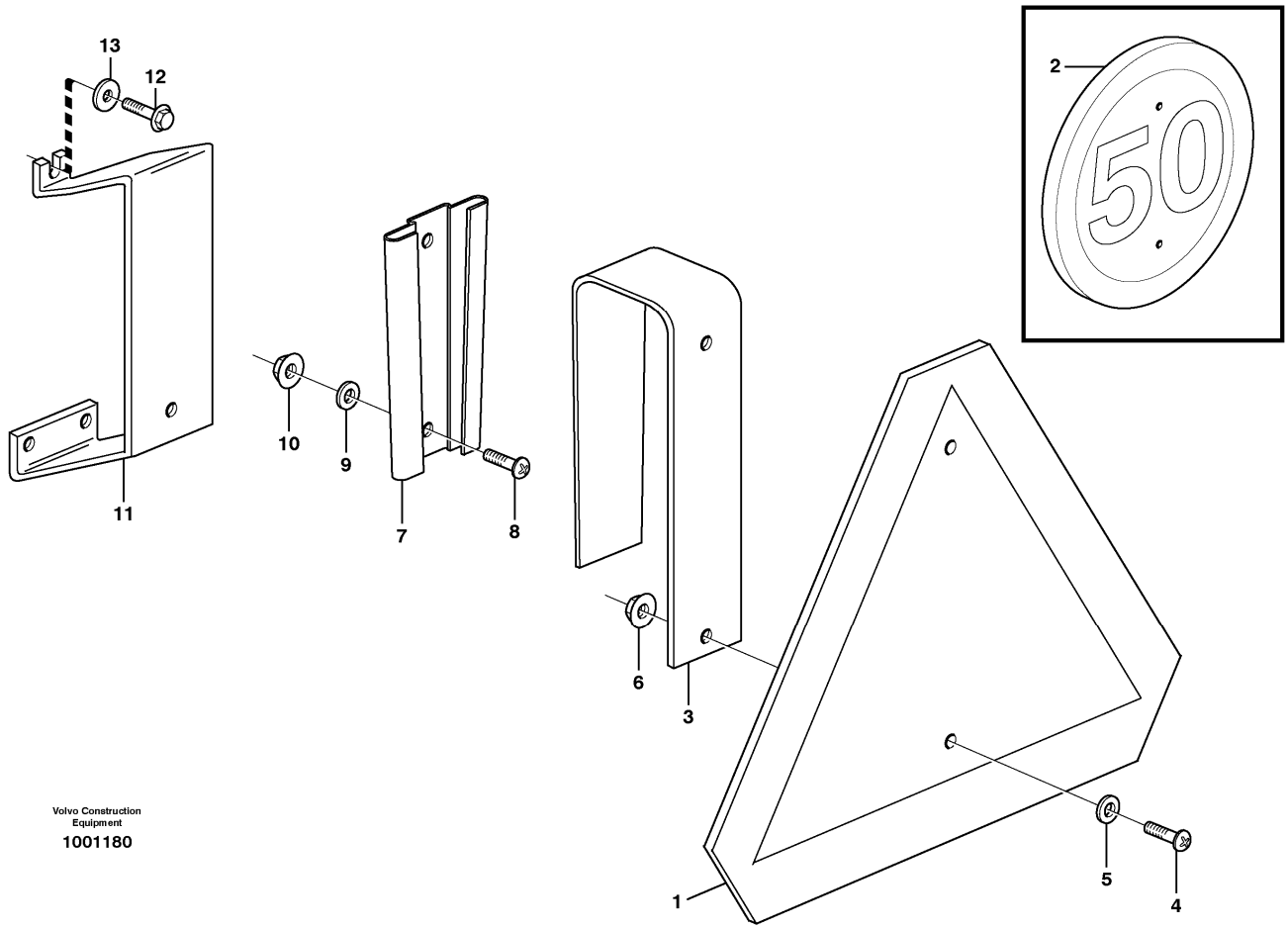

Section option	Kit	Option description
VOE80890		Smm - sign
VOE80891		Sign 50 km/h

Q1-Q5	Option	Option description	
Q1 80890	VOE80890	Smm - sign	
Q2 80891	VOE80891	Sign 50 km/h	

Pos	Part	Q1	Q2	Q3	Q4	Q5	PS	Kit	Description	Option(s)	Remark
1	VOE11715945	1							Slow moving machine plate		(VOE6627784)
	VOE82466757		1						Warning triangle		(VOE9190595)
2	VOE11050490		1						Sign		
3	VOE11153057	1	1						Attachment		
4	VOE971322	2	2						Six point socket		

									screw		
5	VOE960139	2	2						Plain washer		
6	VOE13949278	2	2						Flange lock nut		
7	VOE4832120	1	1						Retainer		
8	VOE971322	2	2						Six point socket screw		
9	VOE960139	2	2						Plain washer		
10	VOE13949278	2	2						Flange lock nut		
11	VOE11400033	1	1						Attachment		
12	VOE947107	3	3						Flange screw		
13	VOE11117464	3	3						Plain washer		(VOE13960141)

VOLVO

Construction Equipment

PROSIS Part Information

Date:	Image id:	Catalogue:	Model:
25/08/2018	**1013647**	**20086**	**L120E**
Brand:	Serial:	Group/Section:	Title:
Volvo	**19804-, 66001-, 71401-**	**897/200**	**German version 83689**

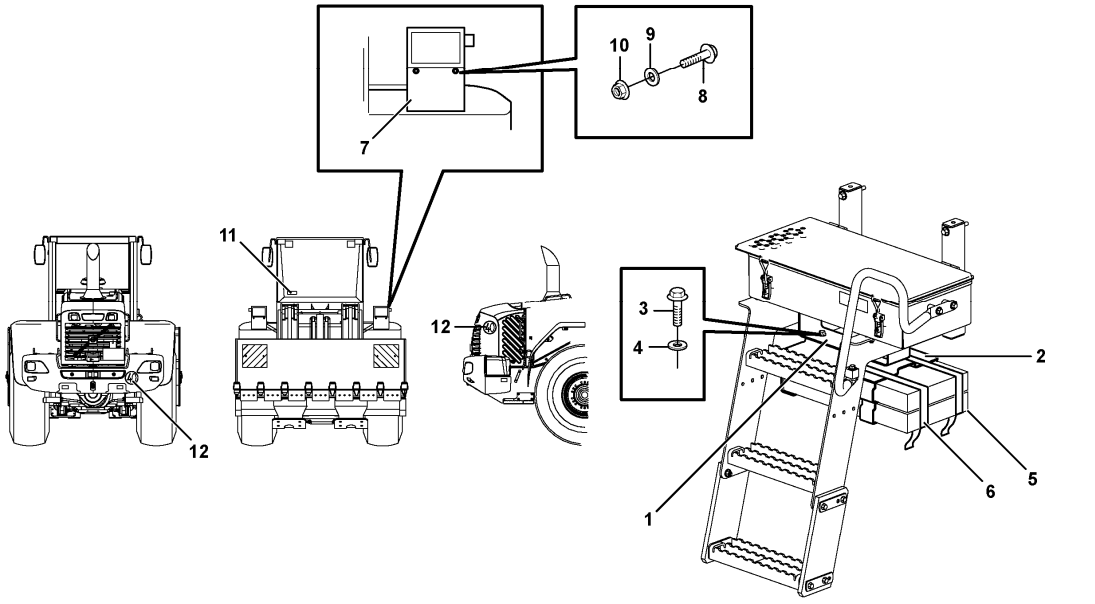

Section option	Kit	Option description
VOE83689		German version

Pos	Part	Q1	Q2	Q3	Q4	Q5	PS	Kit	Description	Option(s)	Remark
1	VOE11174791	1							Attachment		
2	VOE11027417	1							Retainer		
3	VOE946441	6							Flange screw		
4	VOE13960143	6							Washer		
5	VOE11020526	2							Wedge		
6	VOE11104606	2							Retaining strap		
7	VOE11400788	1					OP		Number plate retainer		
8	VOE13946173	4							Screw		
9	VOE13955894	4							Washer		
10	VOE948645	4							Flange lock nut		

11		1							Decal		See ref 897/250
12		3							Decal		See ref 897/250

VOLVO

Construction Equipment

PROSIS Part Information

Date:	Image id:	Catalogue:	Model:
25/08/2018	**1019611**	**20086**	**L120E**
Brand:	Serial:	Group/Section:	Title:
Volvo	**19804-, 66001-, 71401-**	**897/250**	**German version 83689**

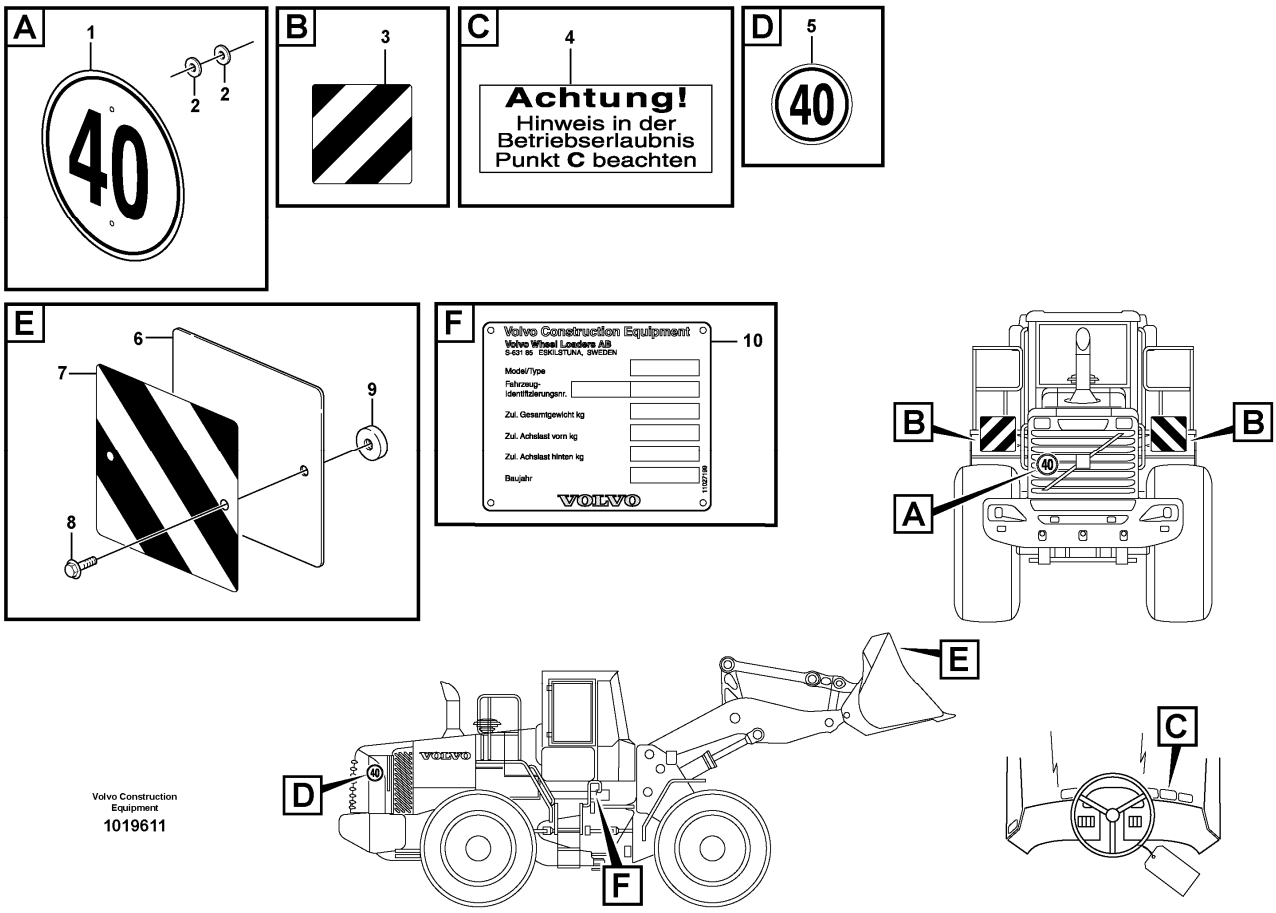

Section option	Kit	Option description
VOE83689		German version

Pos	Part	Q1	Q2	Q3	Q4	Q5	PS	Kit	Description	Option(s)	Remark
1	VOE11105304	1							Decal		
2	VOE9960139	6							Decal		
3	VOE11105303	2							Decal		
4	VOE4854049	1							Decal		
5	VOE11105304	2							Decal		
6	VOE11152230	2							Plate		
7	VOE11105303	2							Decal		
8	VOE13965175	4							Screw		
9	VOE11152229	4							Magnet		
10		1					NS		Product plate		

VOLVO

Construction Equipment

PROSIS Part Information

Date:	Image id:	Catalogue:	Model:
25/08/2018	**1026227**	**20086**	**L120E**
Brand:	Serial:	Group/Section:	Title:
Volvo	**19804-, 66001-, 71401-**	**897/300**	**Illustrations of sign plates and decals**

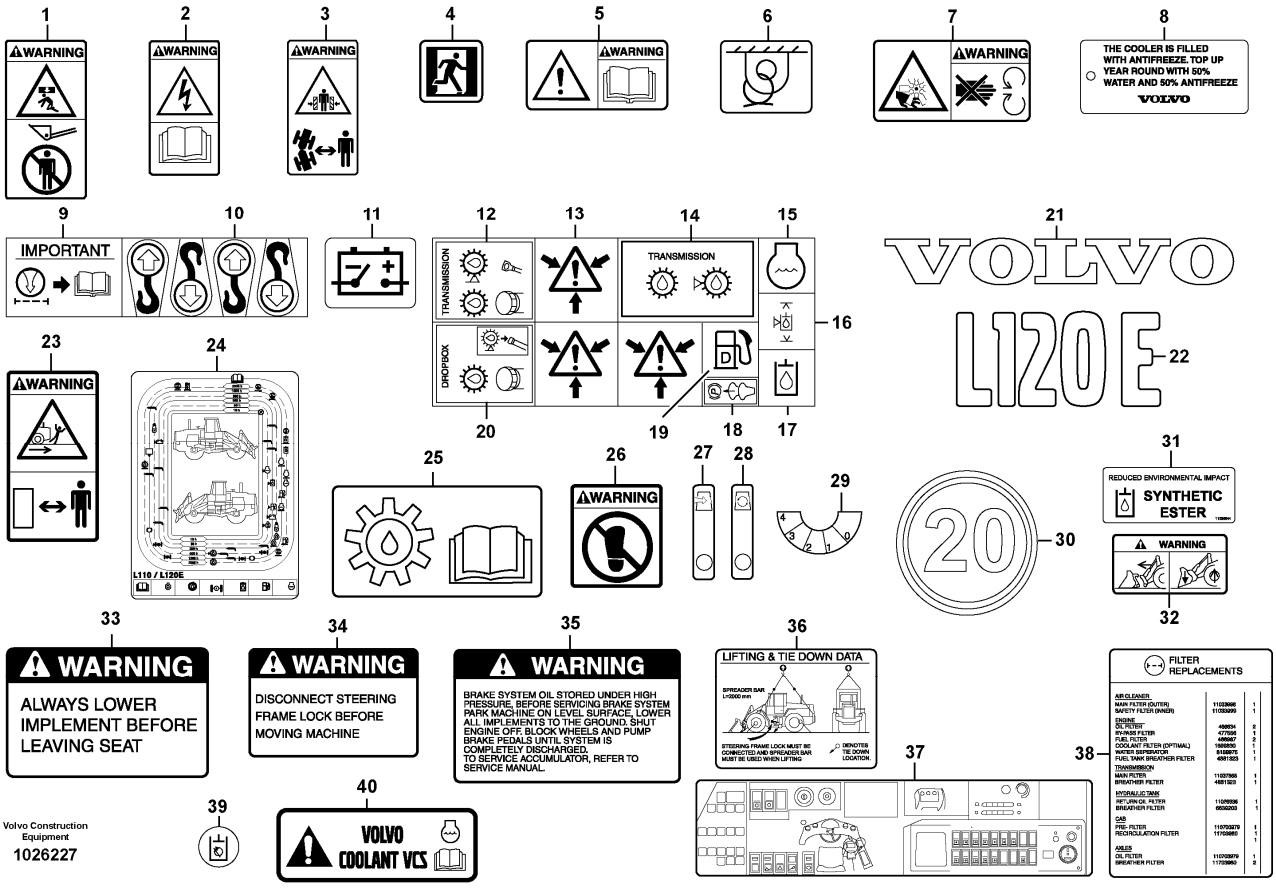

Section option	Kit	Option description
VOE33357		Cab L120E
VOE33366		Cab L120E USA
VOE33380		Volvo Wheel Loader L120E S/N 19801-, S/N 66001- USA, S/N 71401- BRA
VOE83777		Dekals, USA REPLACES 82092 FOR 33379 AND 33380
VOE33395		Wheel Loader L120E3 IRAN

Q1-Q5	Option	Option description	
Q1 33380	VOE33380	Volvo Wheel Loader L120E S/N 19801-, S/N 66001- USA, S/N 71401- BRA	
Q2 33357 33366	VOE33357	Cab L120E	
Q3 83777 USA	VOE83777	Dekals, USA REPLACES 82092 FOR 33379 AND 33380	
Q4 33395 IRAN	VOE33395	Wheel Loader L120E3 IRAN	

Pos	Part	Q1	Q2	Q3	Q4	Q5	PS	Kit	Description	Option(s)	Remark

1	VOE11027566	REQ			REQ				Warning decal		NOT TO WALK UNDER BUCKET
2	VOE13935004	REQ			REQ				Warning decal		BATTERY
3	VOE13935000	REQ			REQ				Warning decal		ARTICULATION
4	VOE13935007	REQ			REQ				Decal		EMERGENCY EXIT
5	VOE13935003	REQ			REQ				Warning decal		SEE INSTR. BOOK
6	VOE11026730	REQ			REQ				Decal		TIE DOWNS
7	VOE13935001	REQ			REQ				Warning decal		FAN PROTECTION
8	VOE11174178	REQ							Decal		ANTIFREEZE, S/N - 20382 SWE, S/N - 66145 USA S/N - 71440 BRA
9	VOE11004094	REQ							Decal		AIR CLEANER
10	VOE11004094	REQ							Decal		LIFTING HOOK
11	VOE11026729	REQ			REQ				Decal		BATTERY DISCONNECT
	VOE11003865	REQ							Decal		
12	VOE11003865	REQ							•Decal		TRANSMISSION FILL
13	VOE11003865	REQ							•Decal		PRESSURE WARN BRAKE
14	VOE11003865	REQ							•Decal		TRANSMISSION
15	VOE11003865	REQ							•Decal		COOLING LIQUID LEVEL
16	VOE11003865	REQ							•Decal		HYDRAULIC OIL LEVEL
17	VOE11003865	REQ							•Decal		HYDRAULIC SYSTEM
18	VOE11003865	REQ							•Decal		SPRING BRAKE
19	VOE11003865	REQ							•Decal		DIESEL-FUEL
20	VOE11003865	REQ							•Decal		DROP BOX
21	VOE11174177	REQ			REQ				Decal		VOLVO
22	VOE11174448	REQ			REQ				Decal		L120E
23	VOE11400920	REQ			REQ				Warning plate		NOT TO STAND BEHIND MACHINE
24	VOE11445181	REQ			REQ				Decal		LUBRICATION INTERVAL
25	VOE11130942	REQ							Decal		TRANSMISSION OIL FILL AND SEE INSTR. BOOK
26	VOE11026072	REQ			REQ				Decal		DO NOT STEP ON
27	VOE11104441		REQ						Decal		
28	VOE11104442		REQ						Decal		
29	VOE11104573		REQ						Decal		
30	VOE11105305	REQ							Decal	VOE80870	
31	VOE11413640	REQ							Decal	VOE82078	
	VOE11411917	REQ							Decal	VOE82189	
	VOE11413642	REQ							Decal	VOE82079	
	VOE11411924	REQ							Decal	VOE83454	
32	VOE16207444	REQ							Warning decal	VOE82582, VOE82583	(VOE11111506)

33	VOE4952179	REQ		REQ					Decal	VOE82092	
34	VOE4952169	REQ		REQ					Decal	VOE82092	
	VOE4952170	REQ		REQ					Decal	VOE82092	
35	VOE4952166	REQ		REQ					Decal	VOE82092	
36	VOE11176796	REQ		REQ					Decal	VOE82092	
37	VOE11181129	REQ							Decal	VOE82092	(VOE11414506)
37	VOE11181129			REQ					Decal		
38	VOE11410193	REQ							Decal	VOE82092	
38	VOE11445076			REQ					Decal		
	VOE11445055			REQ					Decal		
39	VOE11431454	REQ							Decal	VOE80098	
40	VOE11445056	REQ							Decal		
41	VOE14526798	1			1		SS		Decal		S/N 20383 - SWE S/N 66146 - USA S/N 71441 - BRA

VOLVO

Construction Equipment

PROSIS Part Information

Date:	Image id:	Catalogue:	Model:
25/08/2018	**1019992**	**20086**	**L120E**
Brand:	Serial:	Group/Section:	Title:
Volvo	**19804-, 66001-, 71401-**	**911/100**	**Hydraulic oil tank, with fitting parts 33380, 33395**

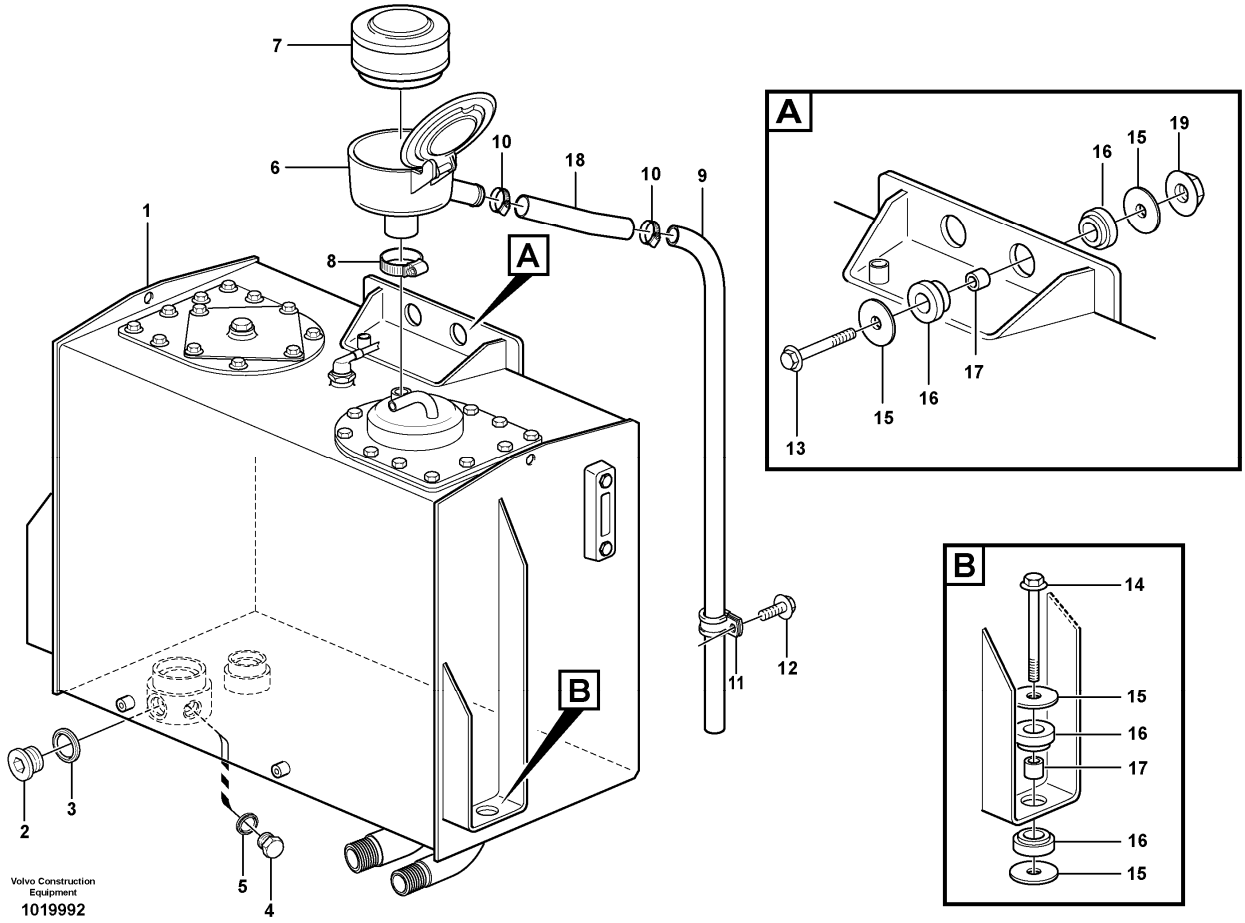

Section option	Kit	Option description
VOE33380		Volvo Wheel Loader L120E S/N 19801-, S/N 66001- USA, S/N 71401- BRA
VOE33395		Wheel Loader L120E3 IRAN

Pos	Part	Q1	Q2	Q3	Q4	Q5	PS	Kit	Description	Option(s)	Remark
1	VOE11411910	1							Hydraulic fluid tank		See ref 911/150
2	VOE13966145	1							Plug		
3	VOE948885	1							Plane gasket		
4	VOE960631	1							Plug		
5	VOE948883	1							Gasket		
6	VOE11173325	1							Air filter		
7	VOE11707077	1							•Filter insert		
8	VOE943477	1							•Hose clamp		
9	VOE190993	1							Hose		L = 1450 MM
10	VOE943476	2							Hose clamp		

11	VOE981904	1							Clamp		
12	VOE946440	1							Flange screw		
13	VOE13965194	2							Screw		
14	VOE13946474	2							Flange screw		
15	VOE11026615	8					SS		Washer		
16	VOE4746300	8							Rubber block		
17	VOE11026256	4							Spacer ring		
18	VOE13942707	1							Hose		L = 90 MM
19	VOE971099	2							Flange lock nut		

VOLVO

Construction Equipment

PROSIS Part Information

Date:	Image id:	Catalogue:	Model:
25/08/2018	**1012375**	**20086**	**L120E**
Brand:	Serial:	Group/Section:	Title:
Volvo	**19804-, 66001-, 71401-**	**911/150**	**Hydraulic oil tank 33380, 33395**

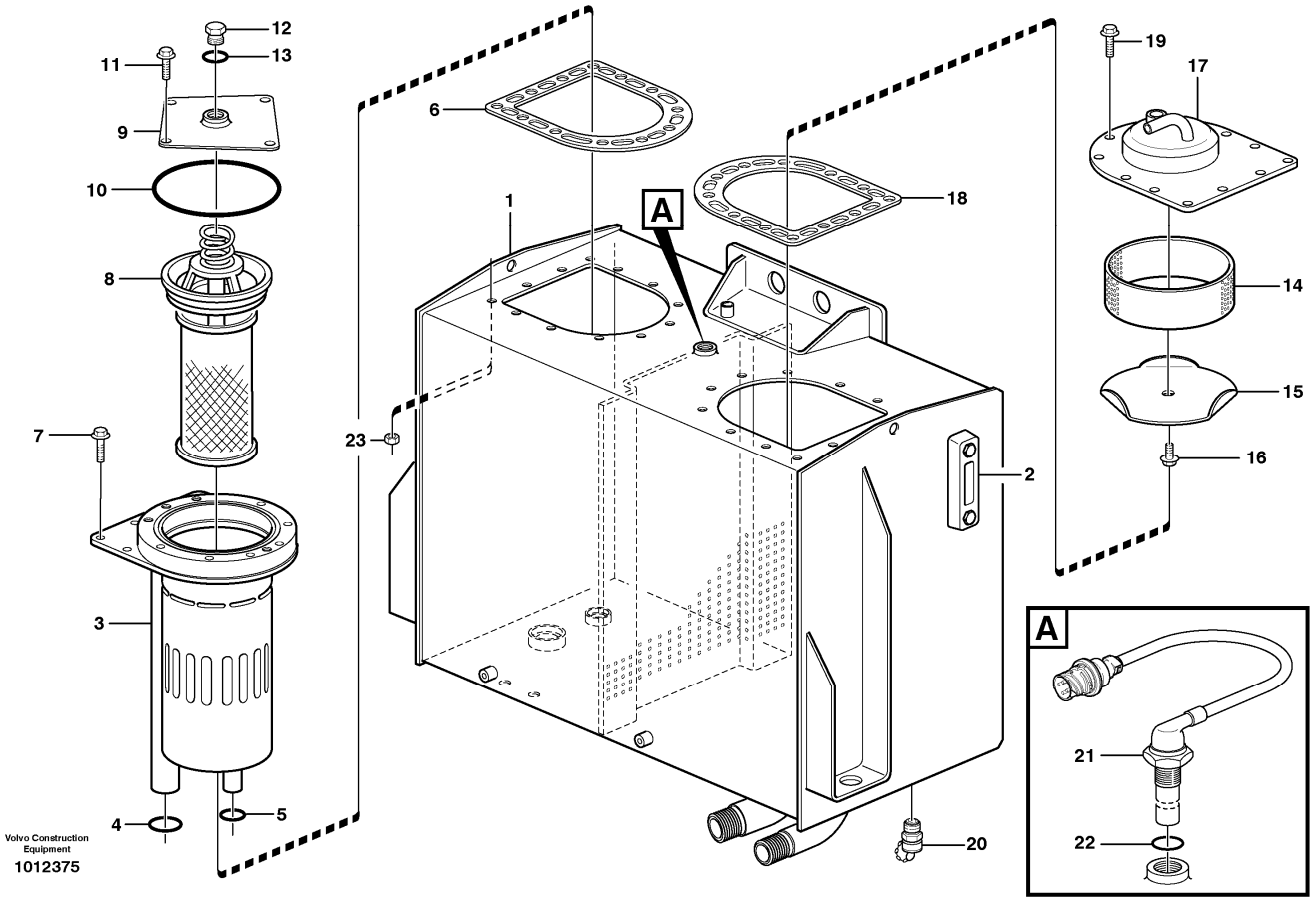

Section option	Kit	Option description
VOE33380		Volvo Wheel Loader L120E S/N 19801-, S/N 66001- USA, S/N 71401- BRA
VOE33395		Wheel Loader L120E3 IRAN

Pos	Part	Q1	Q2	Q3	Q4	Q5	PS	Kit	Description	Option(s)	Remark
1	VOE11411910	1							Hydraulic fluid tank		
1	VOE11411868	1					OP		•Hydraulic fluid tank		
2	VOE11148801	1							•Level Inspection Glass		
3	VOE11410469	1							•Filter housing		
4	VOE925072	1							•O-ring		
5	VOE930932	1							•O-ring		
6	VOE11410471	1							•Gasket		
7	VOE13945444	8							•Screw		
8		1							•Filter Insert		See ref 911/200
9	VOE11410470	1							•Cover		

10	VOE962500	1							•O-ring		
11	VOE946671	4							•Flange screw		
12	VOE941375	1							•Plug		
13	VOE958229	1							•O-ring		
14	VOE4854855	1							•Ring		
15	VOE4854856	1							•Cover		
16	VOE946440	1							•Flange screw		
17	VOE11410472	1							•Cover		
18	VOE11410471	1							•Gasket		
19	VOE13945444	11							•Screw		
20	VOE11054692	1							•Valve		
21	VOE11039581	1							•Level indicator		SE906
22	VOE958228	1							••O-ring		
23	VOE981056	22							•Rivet nut		

VOLVO

Construction Equipment

PROSIS Part Information

Date:	Image id:	Catalogue:	Model:
25/08/2018	**AW124**	**20086**	**L120E**
Brand:	Serial:	Group/Section:	Title:
Volvo	**19804-, 66001-, 71401-**	**911/200**	**Filter 33380, 33395**

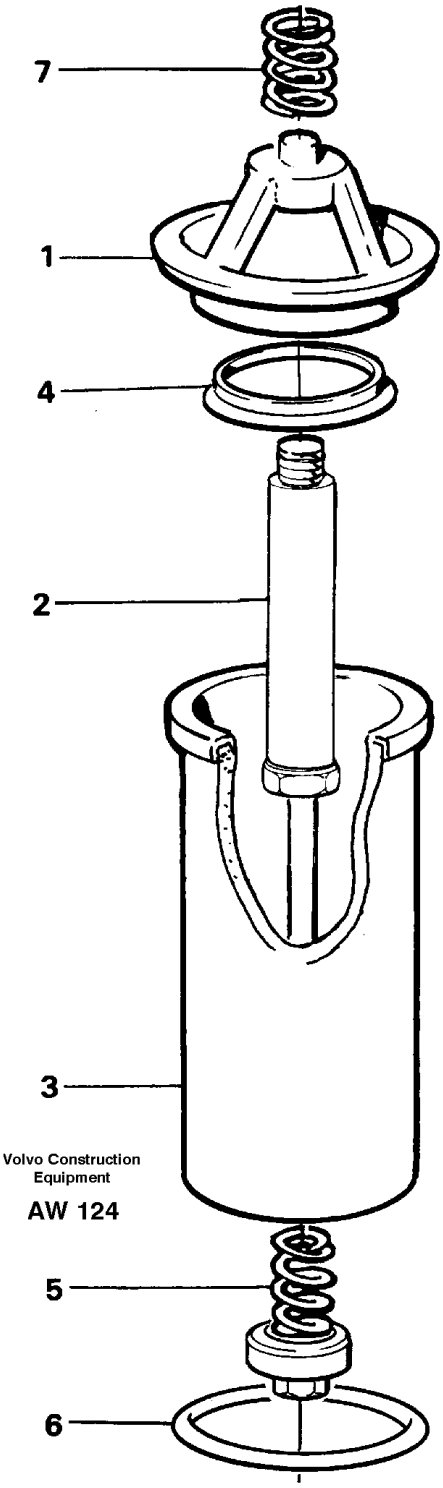

Section option	Kit	Option description

VOE33380		Volvo Wheel Loader L120E S/N 19801-, S/N 66001- USA, S/N 71401- BRA
VOE33395		Wheel Loader L120E3 IRAN

Pos	Part	Q1	Q2	Q3	Q4	Q5	PS	Kit	Description	Option(s)	Remark
	VOE11445024	1							Filter insert		
1		1					NS		•Retainer		
2		1					NS		•Shaft		
3	VOE11445025	1							•Filter cartridge		
	VOE11715947	1							•Sleeve		
4	VOE11994043	1							•Sealing ring		
5	VOE11993070	1					SS		•Spring kit		
6	VOE6210360	1							•O-ring		
7	VOE6635976	1							•Spring		

VOLVO

Construction Equipment

PROSIS Part Information

Date:	Image id:	Catalogue:	Model:
25/08/2018	**1020020**	**20086**	**L120E**
Brand:	Serial:	Group/Section:	Title:
Volvo	**19804-, 66001-, 71401-**	**911/250**	**Hydraulic system, feed line 33380, 33395**

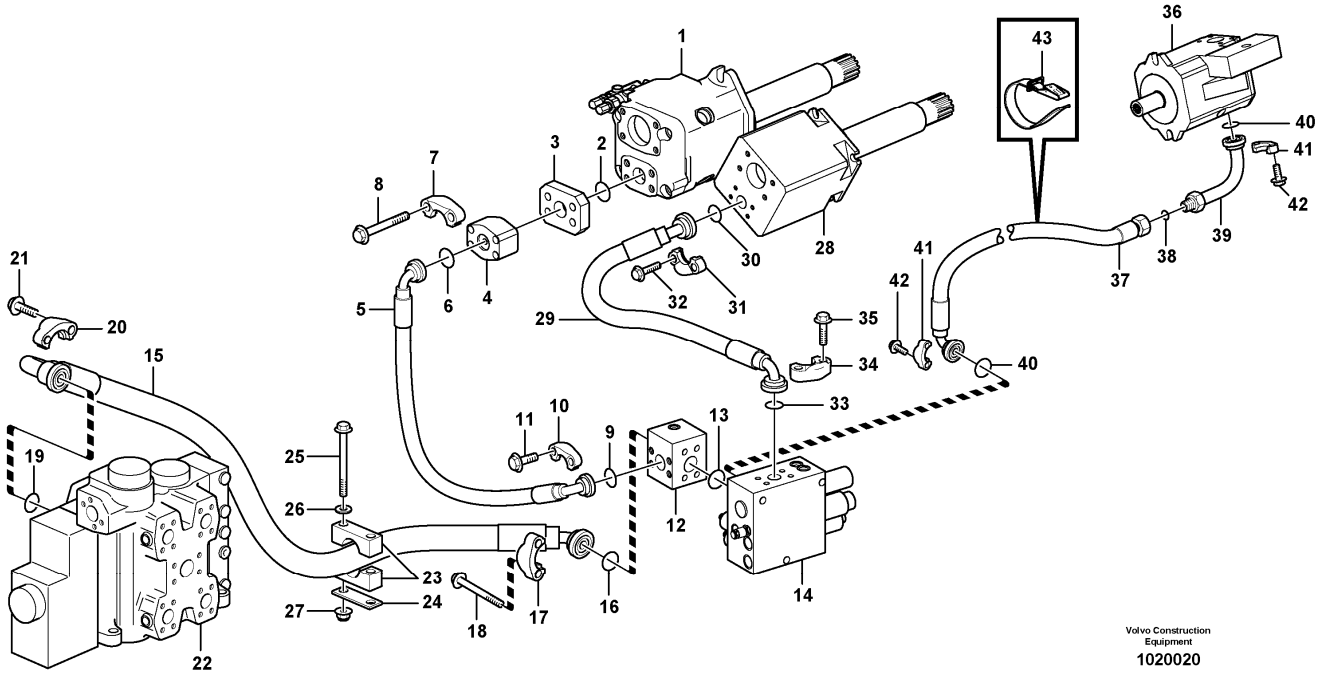

Section option	Kit	Option description
VOE33380		Volvo Wheel Loader L120E S/N 19801-, S/N 66001- USA, S/N 71401- BRA
VOE33395		Wheel Loader L120E3 IRAN

Pos	Part	Q1	Q2	Q3	Q4	Q5	PS	Kit	Description	Option(s)	Remark
1		1							Hydraulic Pump		See ref 913/100
2	VOE990757	1							Sealing ring		
3	VOE11411573	1							Connecting block		
4	VOE11173087	1							Non-return valve		
	VOE17423385	1							•Sealing kit		
5	VOE11173340	1							Hose assembly		L = 900 MM
6	VOE990757	1							Sealing ring		
7	VOE14236931	2							Flange half		
8	VOE13966369	4							Flange screw		
9	VOE990756	1							Sealing ring		

10	VOE14048189	2							Flange half		
11	VOE13965226	4							Screw		
12	VOE11173036	1							Connecting block		PW
13	VOE990756	1							Sealing ring		
14		1							Valve block		See ref 912/300
15	VOE11445120	1							Hose assembly		
16	VOE990756	1							Sealing ring		
17	VOE14048189	2							Flange half		
18	VOE13946474	4							Flange screw		
19	VOE990757	1							Sealing ring		P
20	VOE14236931	2							Flange half		
21	VOE13966360	4							Flange screw		
22		1							Control valve		See ref 912/100
23	VOE11173525	1							Clamp		
24	VOE11173526	1							Cover plate		
25	VOE13965190	2							Screw		
26	VOE13960143	2							Washer		
27	VOE13971098	2							Flange nut		(VOE13971099)
28		1							Hydraulic Pump		See ref 913/100
29	VOE11173341	1							Hose assembly		L = 760 MM
30	VOE990756	1							Sealing ring		
31	VOE11015455	2							Flange half		
32	VOE946472	4							Flange screw		
33	VOE990756	1							Sealing ring		P
34	VOE14048189	2							Flange half		
35	VOE13965226	4							Screw		
36		1							Hydraulic Pump		See ref 913/100
37	VOE11173860	1							Hose assembly		L = 1470 MM
38	VOE990740	1							O-ring		
39	VOE11148665	1							Adapter		
40	VOE990742	2							O-ring		
41	VOE11015454	4							Flange half		
42	VOE946472	4							Flange screw		
43	VOE11104606	1							Retaining strap		

VOLVO

Construction Equipment

PROSIS Part Information

Date:	Image id:	Catalogue:	Model:
25/08/2018	**1000879**	**20086**	**L120E**
Brand:	Serial:	Group/Section:	Title:
Volvo	**19804-, 66001-, 71401-**	**911/300**	**Suction line, tank - pump 33380, 33395**

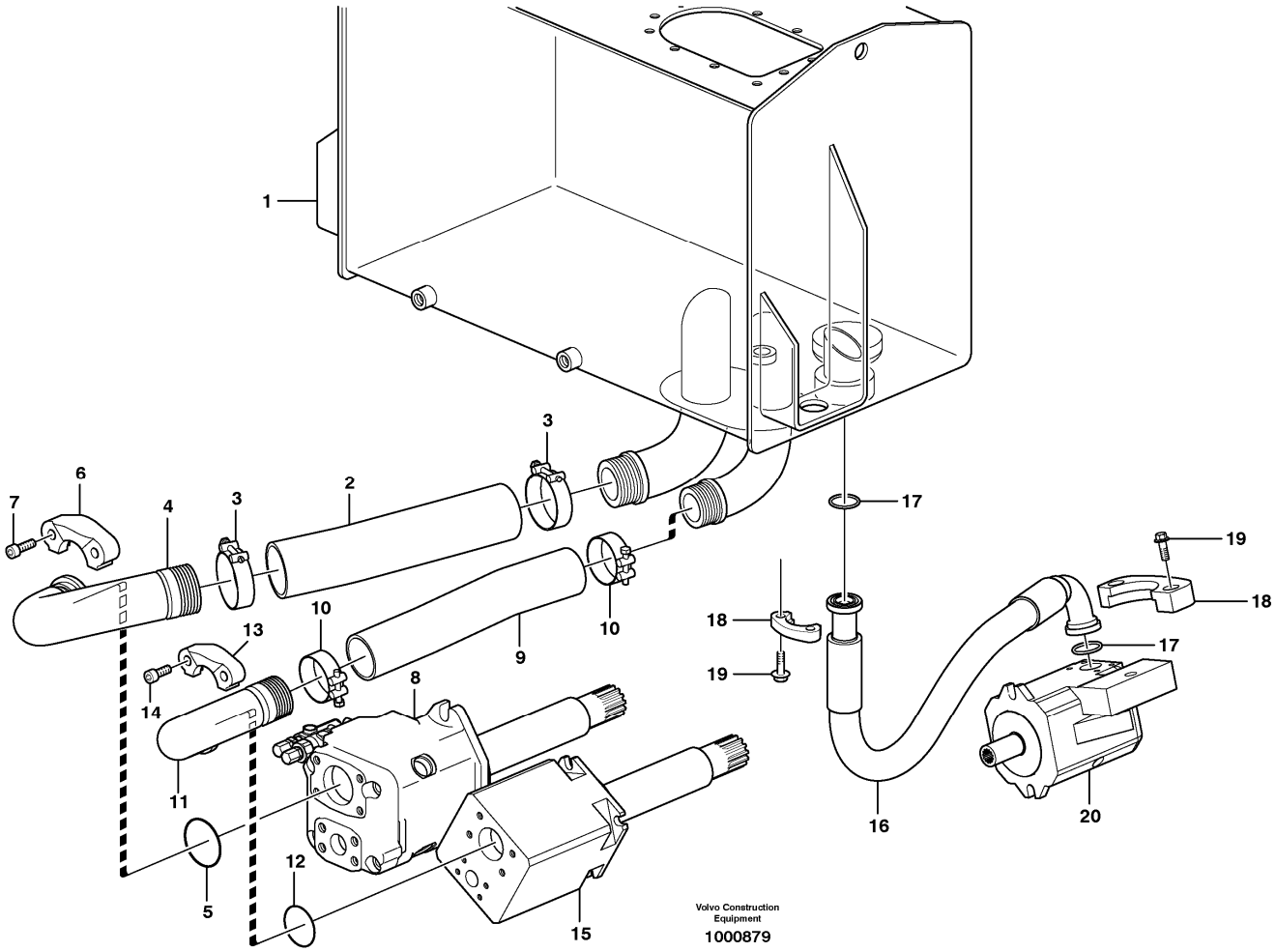

Section option	Kit	Option description
VOE33380		Volvo Wheel Loader L120E S/N 19801-, S/N 66001- USA, S/N 71401- BRA
VOE33395		Wheel Loader L120E3 IRAN

Pos	Part	Q1	Q2	Q3	Q4	Q5	PS	Kit	Description	Option(s)	Remark
1		1							Hydr fluid tank		See ref 911/100
2	VOE11173107	1							Suction hose		L = 380 MM
3	VOE11173083	2							Hose clamp		
4	VOE11410255	1							Suction line		
5	VOE980102	1							O-ring		(VOE13980102)
6	VOE13933484	2							Flange half		
7	VOE959256	4							Hex. socket screw		
8		1							Hydraulic Pump		See ref 913/100
9	VOE11173106	1							Suction hose		L = 380 MM

10	VOE11173082	2							Hose clamp		
11	VOE11173051	1							Suction line		
12	VOE993327	1							O-ring		(VOE949240)
13	VOE935310	2							Flange half		
14	VOE13965191	4							Screw		
15		1							Hydraulic Pump		See ref 913/100
16	VOE11147960	1							Hose assembly		L = 860 MM
17	VOE990757	2							Sealing ring		
18	VOE935308	4							Flange half		
19	VOE946472	4							Flange screw		
	VOE984080	4							Hex. socket screw		
20		1							Hydraulic Pump		

VOLVO

Construction Equipment

PROSIS Part Information

Date:	Image id:	Catalogue:	Model:
25/08/2018	**1000905**	**20086**	**L120E**
Brand:	Serial:	Group/Section:	Title:
Volvo	**19804-, 66001-, 71401-**	**911/350**	**Hydraulic system, return line 33380, 33395**

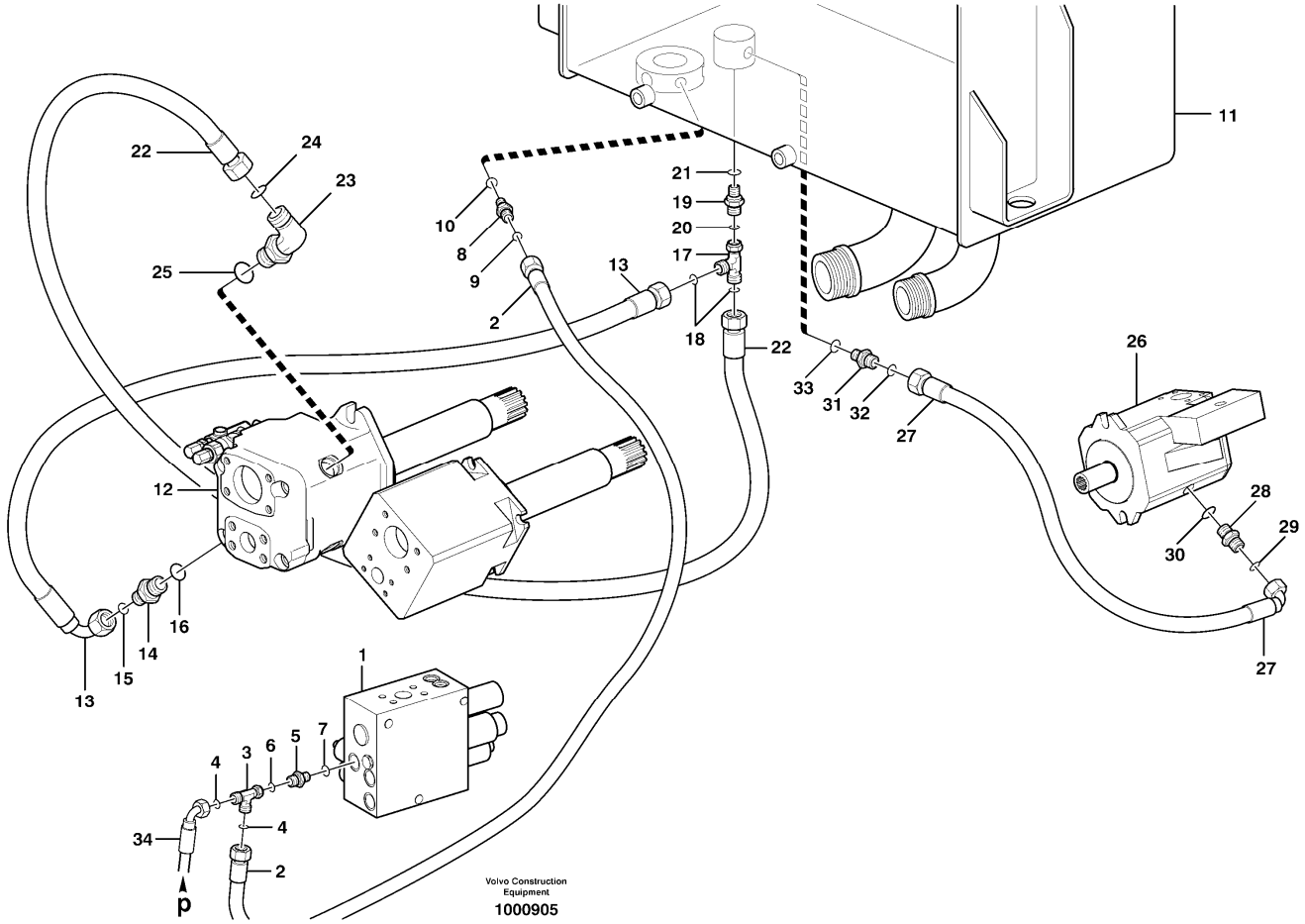

Section option	Kit	Option description
VOE33380		Volvo Wheel Loader L120E S/N 19801-, S/N 66001- USA, S/N 71401- BRA
VOE33395		Wheel Loader L120E3 IRAN

Pos	Part	Q1	Q2	Q3	Q4	Q5	PS	Kit	Description	Option(s)	Remark
1		1							Valve block		See ref 911/250
2	VOE11182000	1							Hose assembly		L = 2200 MM
3	VOE13933936	1							T-nipple		
4	VOE990737	2							•O-ring		
5	VOE14345423	1							Nipple		T
6	VOE990737	1							•O-ring		(VOE4880492)
7	VOE14211856	1							•Sealing ring		
8	VOE13933855	1							Nipple		
9	VOE990737	1							•O-ring		(VOE4880492)
10	VOE14213676	1							•Sealing ring		

11		1							Hydr fluid tank		See ref 911/100
12		1							Hydraulic Pump		See ref 913/100
13	VOE11411139	1							Hose assembly		L = 680 MM
14	VOE935032	1							Nipple		
15	VOE990739	1							•O-ring		(VOE4880663)
16	VOE993323	1							•O-ring		(VOE932042)
17	VOE935028	1							T-nipple		
18	VOE990739	2							•O-ring		(VOE4880663)
19	VOE935037	1							Nipple		
20	VOE990739	1							•O-ring		(VOE4880663)
21	VOE14211864	1							•Sealing ring		
22	VOE11411139	1							Hose assembly		L = 680 MM
23	VOE935077	1							Elbow nipple		
24	VOE990739	1							•O-ring		(VOE4880663)
25	VOE993322	1							•O-ring		(VOE932041)
26		4							Hydraulic Pump		See ref 913/100
27	VOE11172509	1							Hose assembly		L = 1120 MM
28	VOE13933923	1							Nipple		
29	VOE990738	1							•O-ring		(VOE4880493)
30	VOE993321	1							•O-ring		(VOE932040)
31	VOE13933853	1							Nipple		
32	VOE990738	1							•O-ring		(VOE4880493)
33	VOE14211863	1							•Sealing ring		
34		1							Hose assembly		See ref 551/100

VOLVO

Construction Equipment

PROSIS Part Information

Date:	Image id:	Catalogue:	Model:
25/08/2018	**1020027**	**20086**	**L120E**
Brand:	Serial:	Group/Section:	Title:
Volvo	**19804-, 66001-, 71401-**	**911/400**	**Hydraulic system, return line 33380, 33395**

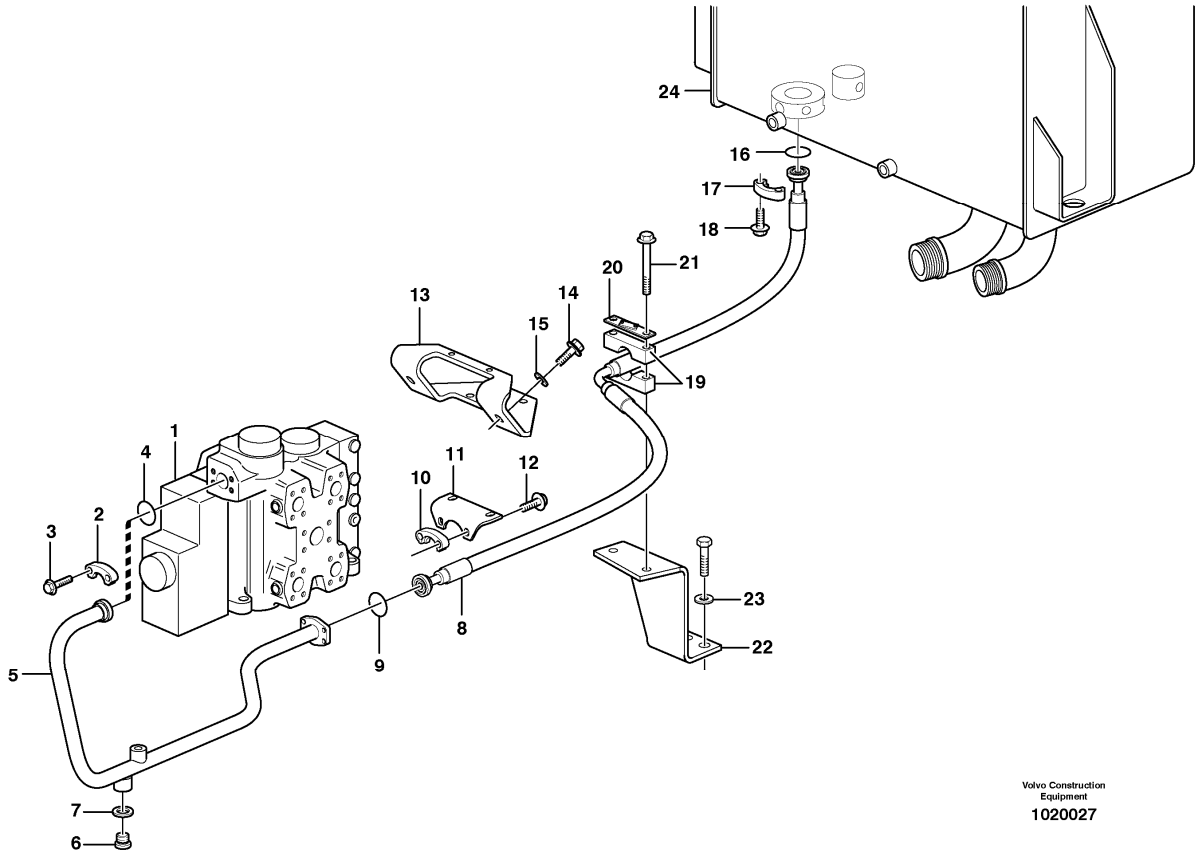

Section option	Kit	Option description
VOE33380		Volvo Wheel Loader L120E S/N 19801-, S/N 66001- USA, S/N 71401- BRA
VOE33395		Wheel Loader L120E3 IRAN

Pos	Part	Q1	Q2	Q3	Q4	Q5	PS	Kit	Description	Option(s)	Remark
1		1							Control valve		See ref 912/100
2	VOE14048189	2							•Flange half		
3	VOE13965226	4							•Screw		
4	VOE990743	1							O-ring		T
5	VOE11172208	1							Return line		
6	VOE13966146	1							Plug		
7	VOE13964110	1							Gasket		
8	VOE11147962	1							Hose assembly		L = 1100 MM
9	VOE990743	1							O-ring		
10	VOE935309	2							Flange half		

11		1					NS		Plate		
12	VOE13965192	4							Screw		
13	VOE11445134	1							Bracket		
14	VOE13965192	2							Screw		
15	VOE13960145	2							Washer		
16	VOE990743	1							O-ring		
17	VOE935309	2							Flange half		
18	VOE959256	4							Hex. socket screw		
19	VOE11172506	1							Clamp		
20	VOE11173709	1					SS		Attaching plate		
21	VOE13946474	2							Flange screw		
22	VOE11445064	1							Bracket		(VOE11172492)
23	VOE13960143	2							Washer		
24		1							Hydr fluid tank		See ref 911/100

VOLVO

Construction Equipment

PROSIS Part Information

Date:	Image id:	Catalogue:	Model:
25/08/2018	**1020065**	**20086**	**L120E**
Brand:	Serial:	Group/Section:	Title:
Volvo	**19804-, 66001-, 71401-**	**911/450**	**Drainage line, control valve S/N - 19806 SWE, S/N - 66000 USA**

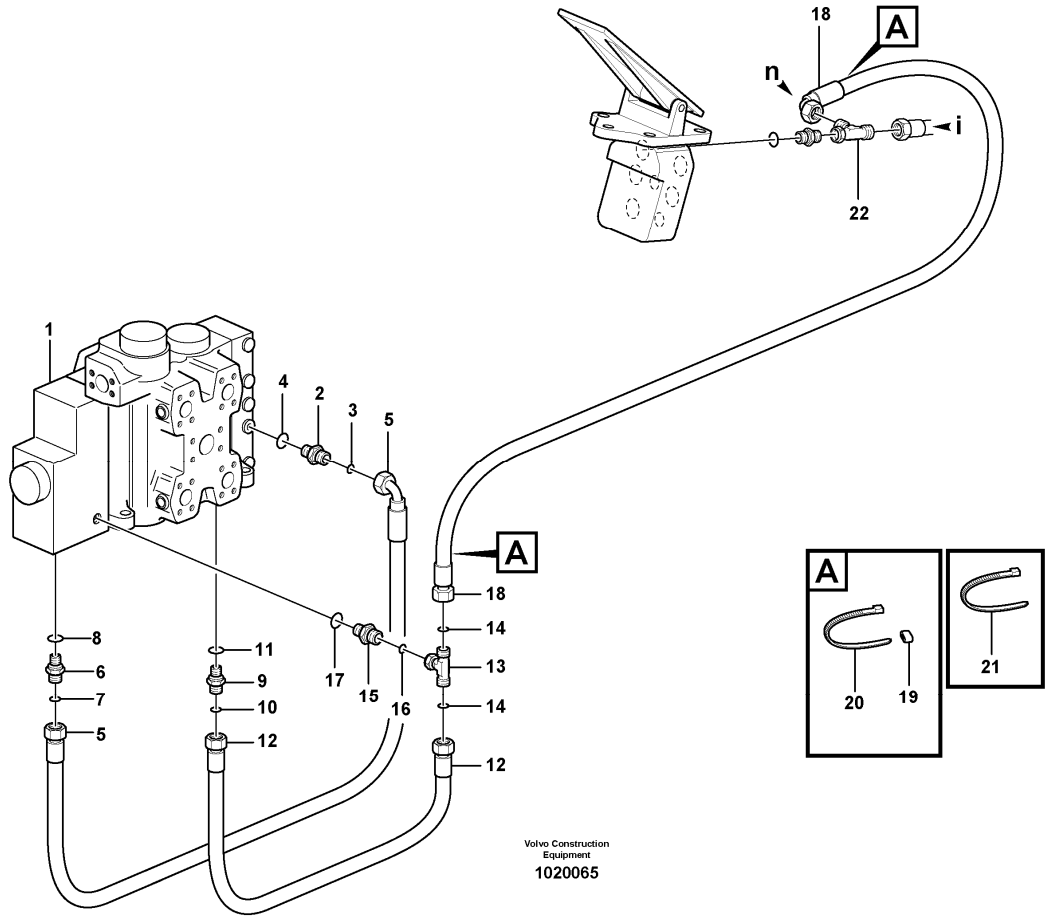

Section option	Kit	Option description
VOE33380		Volvo Wheel Loader L120E S/N 19801-, S/N 66001- USA, S/N 71401- BRA

Pos	Part	Q1	Q2	Q3	Q4	Q5	PS	Kit	Description	Option(s)	Remark
1		1							Control valve		See ref 912/100
2	VOE14345423	1							Nipple		PS
3	VOE990737	1							•O-ring		(VOE4880492)
4	VOE14211856	1							•Sealing ring		
5	VOE11148959	1							Hose assembly		L = 700 MM
6	VOE14345423	1							Nipple		PS
7	VOE990737	1							•O-ring		(VOE4880492)
8	VOE14211856	1							•Sealing ring		
9	VOE14345423	1							Nipple		D
10	VOE990737	1							•O-ring		(VOE4880492)
11	VOE14211856	1							•Sealing ring		

12	VOE11173514	1							Hose assembly		L = 600 MM
13	VOE13933912	1							T-nipple		
14	VOE990737	2							•O-ring		(VOE4880492)
15	VOE14345423	1							Nipple		D
16	VOE990737	1							•O-ring		(VOE4880492)
17	VOE14211856	1							•Sealing ring		
18	VOE937346	1							Hose assembly		L = 2700 MM
19	VOE4881451	2							Marking sleeve		YELL
	VOE4881459	2							Marking sleeve		BLUE
20	VOE4881438	2							Cable tie		
21	VOE4881440	REQ							Cable tie		
22		1							T-nipple		See ref 522/150

VOLVO

Construction Equipment

PROSIS Part Information

Date:	Image id:	Catalogue:	Model:
25/08/2018	**1023193**	**20086**	**L120E**
Brand:	Serial:	Group/Section:	Title:
Volvo	**19804-, 66001-, 71401-**	**911/475**	**Drainage line, control valve S/N 19807 - SWE, S/N 66001 - USA, 33395**

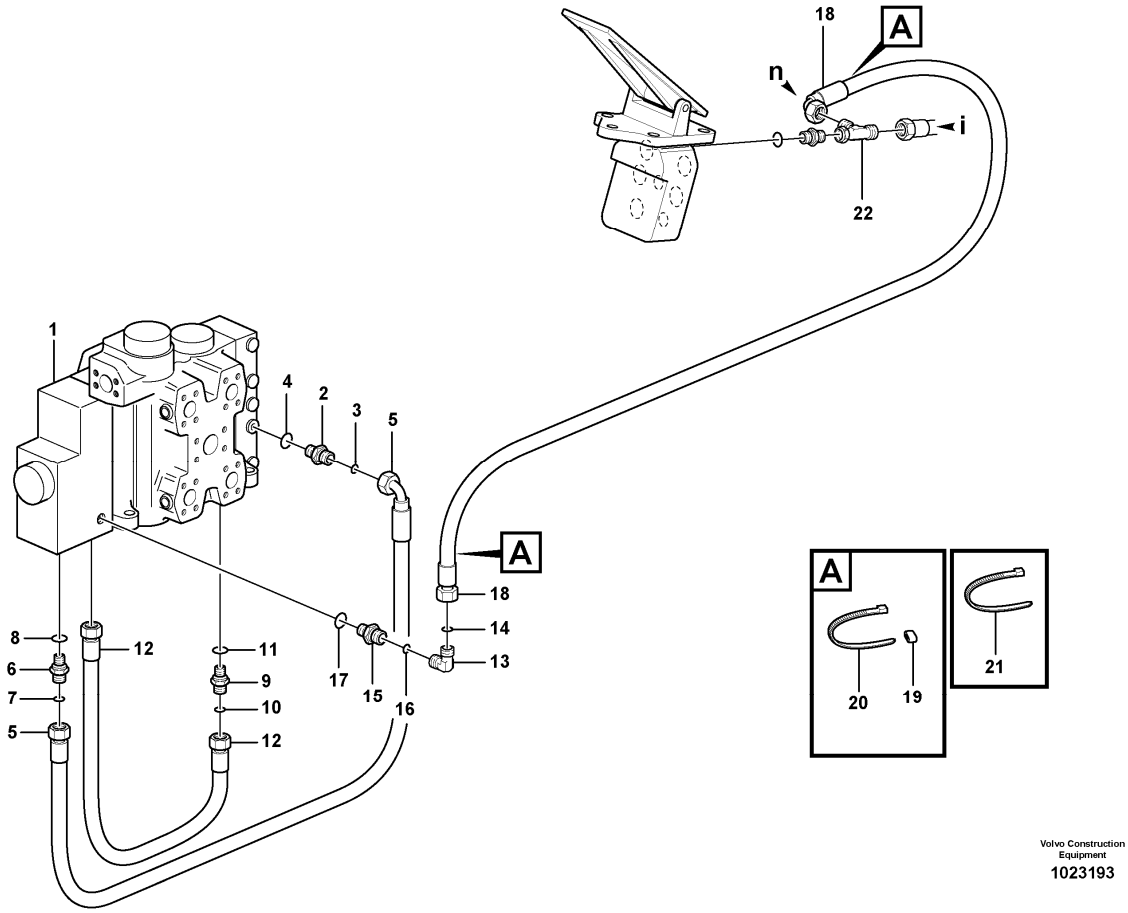

Section option	Kit	Option description
VOE33380		Volvo Wheel Loader L120E S/N 19801-, S/N 66001- USA, S/N 71401- BRA
VOE33395		Wheel Loader L120E3 IRAN

Pos	Part	Q1	Q2	Q3	Q4	Q5	PS	Kit	Description	Option(s)	Remark
1		1							Control valve		See ref 912/100
2	VOE14345423	1							Nipple		PS
3	VOE990737	1							•O-ring		(VOE4880492)
4	VOE14211856	1							•Sealing ring		
5	VOE936872	1							Hose assembly		L = 800 MM
6	VOE14345423	1							Nipple		PS
7	VOE990737	1							•O-ring		(VOE4880492)
8	VOE14211856	1							•Sealing ring		
9	VOE14345423	1							Nipple		D
10	VOE990737	1							•O-ring		(VOE4880492)

11	VOE14211856	1							•Sealing ring		
12	VOE937586	1							Hose assembly		L = 600 MM
13	VOE13933900	1							Elbow nipple		
14	VOE990737	1							•O-ring		(VOE4880492)
15	VOE14345423	1							Nipple		D
16	VOE990737	1							•O-ring		(VOE4880492)
17	VOE14211856	1							•Sealing ring		
18	VOE937346	1							Hose assembly		L = 2700 MM
19	VOE4881451	2							Marking sleeve		YELL
	VOE4881459	2							Marking sleeve		BLUE
20	VOE4881438	2							Cable tie		
21	VOE4881440	REQ							Cable tie		
22		1							T-nipple		See ref 522/150

VOLVO

Construction Equipment

PROSIS Part Information

Date:	Image id:	Catalogue:	Model:
25/08/2018	**1000915**	**20086**	**L120E**
Brand:	Serial:	Group/Section:	Title:
Volvo	**19804-, 66001-, 71401-**	**911/500**	**Hydraulic system, lift function 33380, 33395**

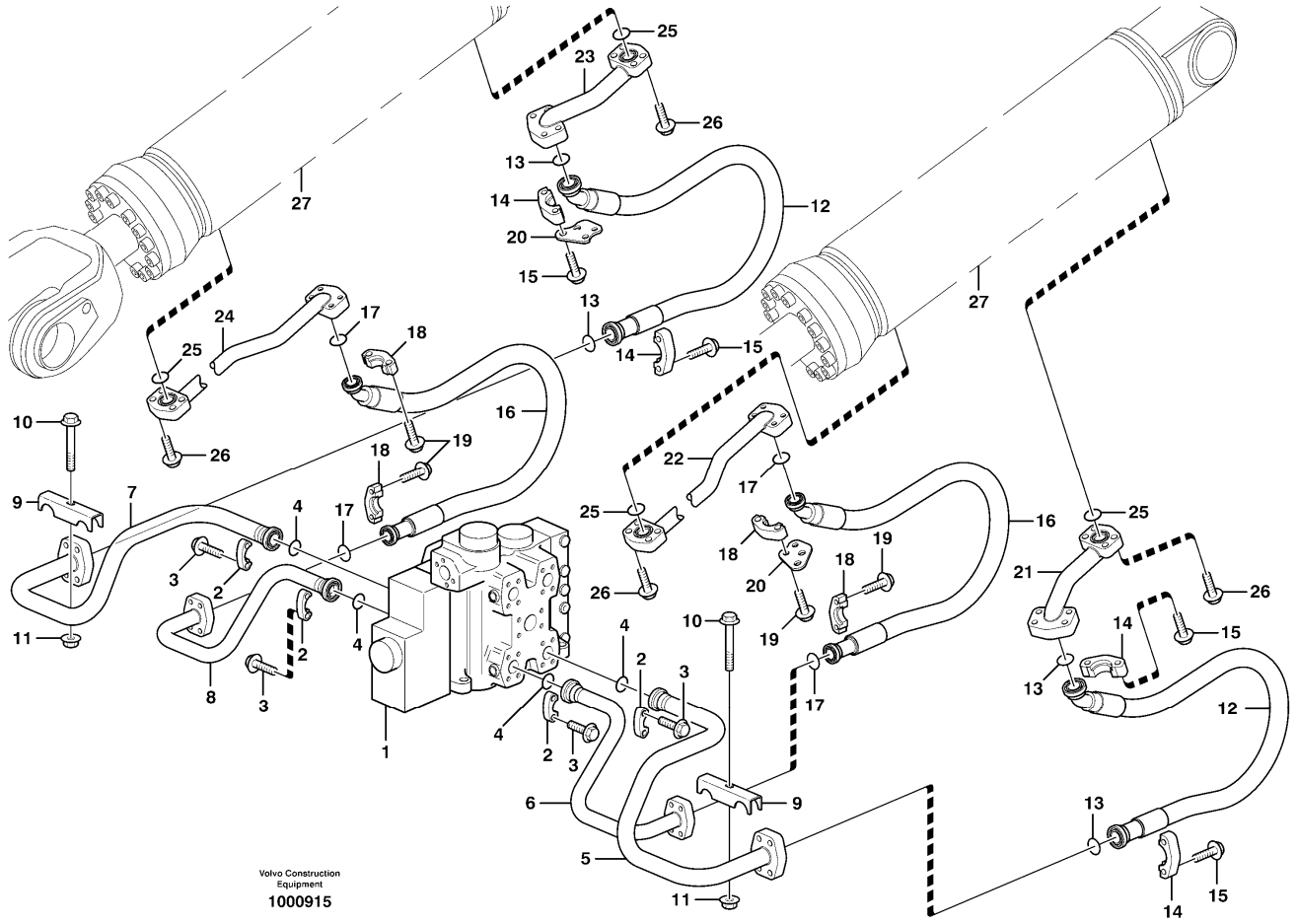

Section option	Kit	Option description
VOE33380		Volvo Wheel Loader L120E S/N 19801-, S/N 66001- USA, S/N 71401- BRA
VOE33395		Wheel Loader L120E3 IRAN

Pos	Part	Q1	Q2	Q3	Q4	Q5	PS	Kit	Description	Option(s)	Remark
1		1							Control valve		See ref 912/100
2	VOE14048189	8							•Flange half		
3	VOE13965226	16							•Screw		
4	VOE990756	4							Sealing ring		
5	VOE15037338	1							Feed line		(VOE11172204)LH (+), A2
6	VOE15037345	1							Feed line		(VOE11172205)LH (-), B2
7	VOE15037326	1							Feed line		(VOE11172203)RH (+), A2

8	VOE15037312	1							Feed line		(VOE11172202)RH (-), B2
9	VOE11148531	2							Clamp		
10	VOE984758	2							Flange screw		(VOE13965188)
11	VOE13971098	2							Flange nut		
12	VOE17238339	2							Hose assembly		(VOE11173392)L = 1280 MM
13	VOE990757	4							Sealing ring		
14	VOE14236931	8							Flange half		
15	VOE980238	16							Hex. socket screw		(VOE13980238)
16	VOE17262199	2							Hose assembly		(VOE936079)L = 1280 MM
17	VOE990756	4							Sealing ring		
18	VOE14048189	8							Flange half		
19	VOE979819	16							Hex. socket screw		
20	VOE11173345	2							Retaining clip		
21	VOE15037921	1							Feed line		(VOE11172498)LH (+)
22	VOE15037233	1							Feed Line		(VOE11172497)LH (-)
	VOE11410875	1							Pipe	VOE82007, VOE82601	LH (-)
23	VOE15036855	1							Feed line		(VOE11172344)RH (+)
24	VOE15037222	1							Feed Line		(VOE11172345)RH (-)
	VOE15037296	1							Feed line	VOE82007, VOE82601	(VOE11410873)RH (-)
25	VOE990756	4							Sealing ring		
26	VOE984090	16							Hex. socket screw		
27		2							Hydraulic cylinder		See ref 945/500

VOLVO

Construction Equipment

PROSIS Part Information

Date:	Image id:	Catalogue:	Model:
25/08/2018	**1017493**	**20086**	**L120E**
Brand:	Serial:	Group/Section:	Title:
Volvo	**19804-, 66001-, 71401-**	**911/550**	**Hydraulic system, tilt function**

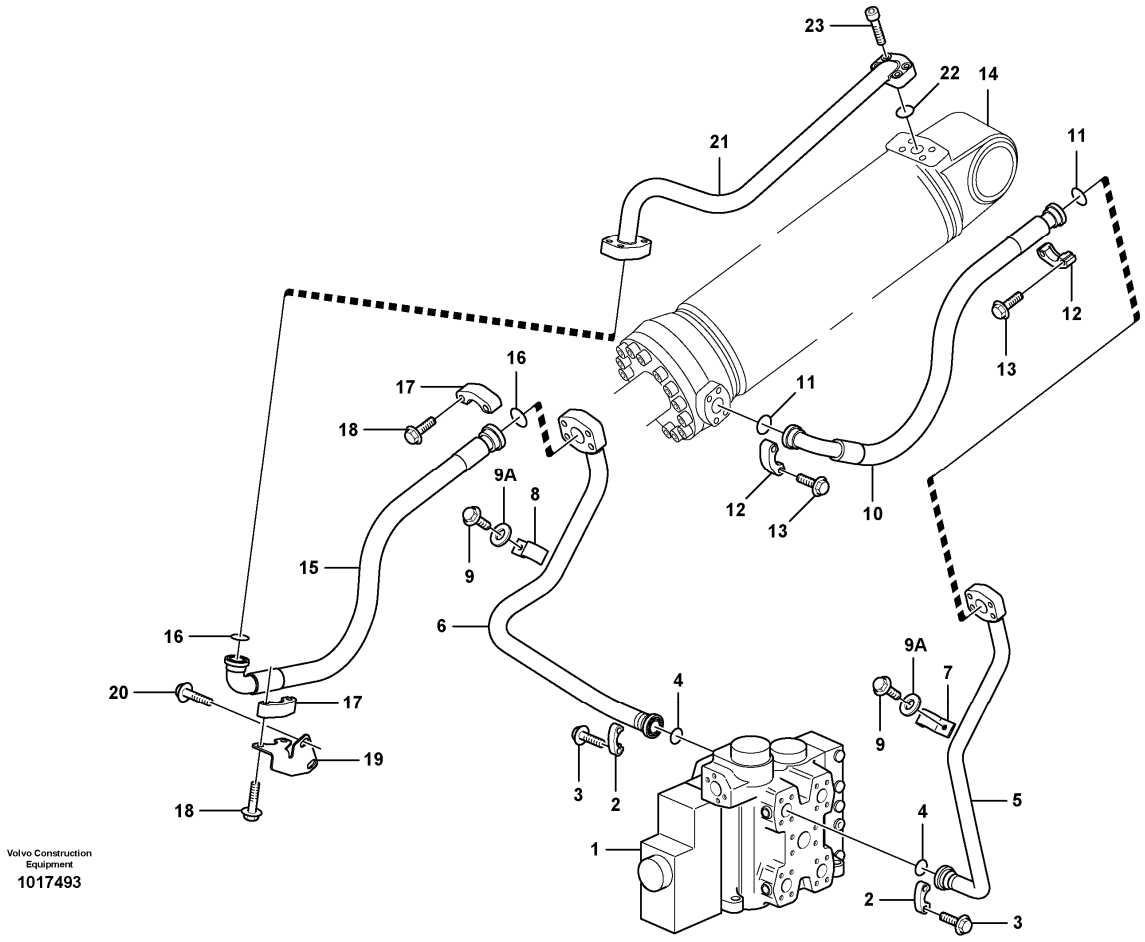

Section option	Kit	Option description
VOE33380		Volvo Wheel Loader L120E S/N 19801-, S/N 66001- USA, S/N 71401- BRA
VOE82066		Arctic kit; accumulators, brake and pilot hoses
VOE33395		Wheel Loader L120E3 IRAN

Q1-Q5	Option	Option description	
Q1 33380 33395	VOE33380	Volvo Wheel Loader L120E S/N 19801-, S/N 66001- USA, S/N 71401- BRA	
Q2 82066	VOE82066	Arctic kit; accumulators, brake and pilot hoses	

Pos	Part	Q1	Q2	Q3	Q4	Q5	PS	Kit	Description	Option(s)	Remark
1		1							Control valve		See ref 912/100
2	VOE14048189	4							•Flange half		
3	VOE13965226	8							•Screw		
4	VOE990756	2							Sealing ring		

5	VOE15037361	1							Feed line		(VOE11172206)LH (-), B1
6	VOE15037952	1							Feed line		(VOE11410078)RH, (+), A1
7	VOE11075841	1							Clamp		(-)
8	VOE11172500	1							Clamp		(+)
9	VOE946441	2							Flange screw		
9A	VOE13960143	2							Washer		
10	VOE11445113	1							Hose assembly		(VOE11173393)LH L = 880 MM
	VOE11173829		1						Hose assembly		L = 880 MM
11	VOE990756	2							Sealing ring		
12	VOE14048189	4							Flange half		
13	VOE13959258	4							Allen Hd Screw		L = 45 MM
	VOE979819	4							Hex. socket screw		L = 50 MM
14		1							Hydraulic cylinder		See ref 945/550
15	VOE11445114	1							Hose assembly		(VOE11173394)RH L = 930 MM
	VOE11173830		1						Hose assembly		L = 920 MM
16	VOE990757	2							Sealing ring		
17	VOE14236931	4							Flange half		
18	VOE980238	8							Hex. socket screw		(VOE13980238)
19	VOE11173778	1							Attachment		
20	VOE13946817	2							Screw		
21	VOE15037910	1							Feed line		(VOE11172372)
22	VOE990756	1							Sealing ring		
23	VOE13959258	4							Allen Hd Screw		

VOLVO

Construction Equipment

PROSIS Part Information

Date:	Image id:	Catalogue:	Model:
25/08/2018	**1022041**	**20086**	**L120E**
Brand:	Serial:	Group/Section:	Title:
Volvo	**19804-, 66001-, 71401-**	**911/600**	**Feed line, pump - central block**

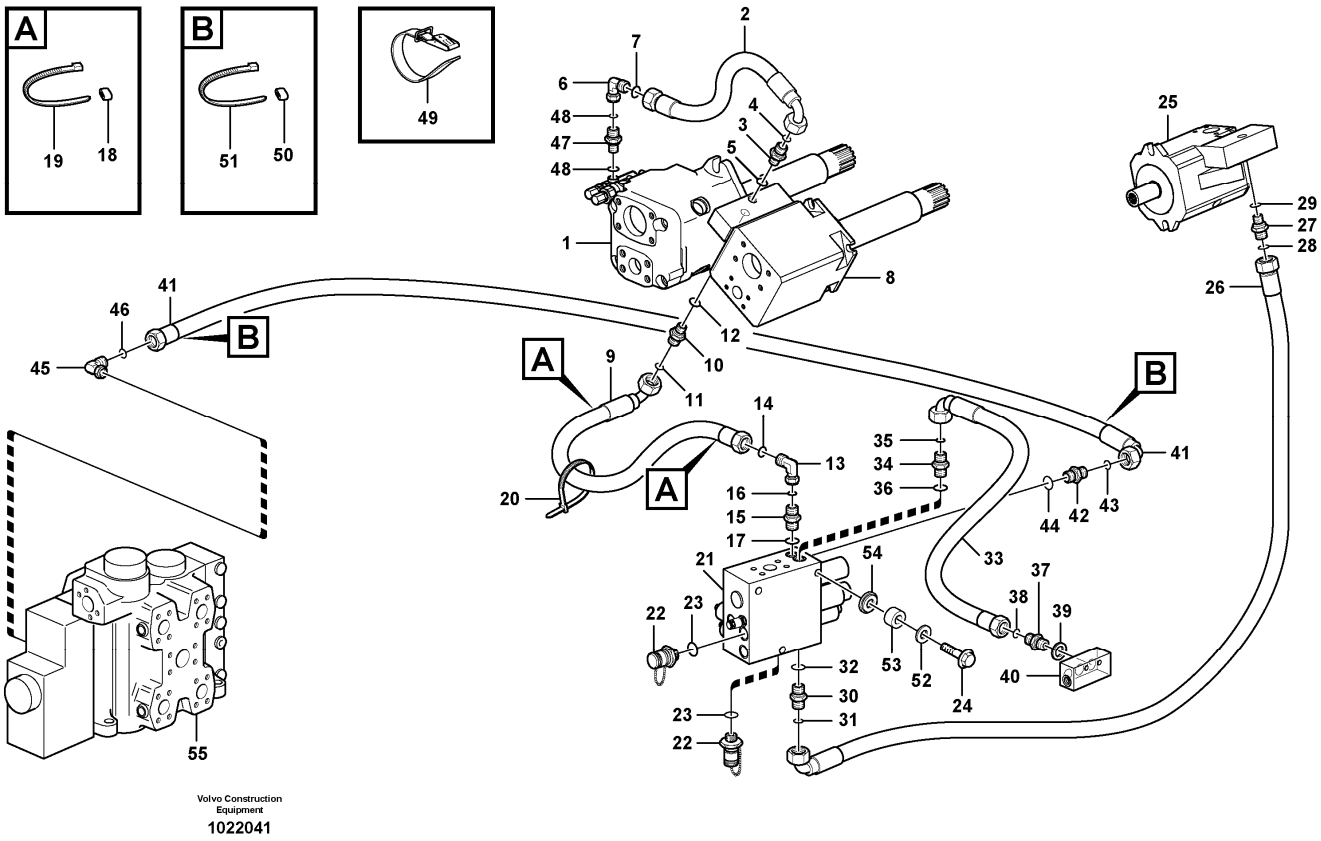

Volvo Construction Equipment
1022041

Section option	Kit	Option description
VOE33380		Volvo Wheel Loader L120E S/N 19801-, S/N 66001- USA, S/N 71401- BRA
VOE33395		Wheel Loader L120E3 IRAN

Q1-Q5	Option	Option description	
Q1 33380 33395	VOE33380	Volvo Wheel Loader L120E S/N 19801-, S/N 66001- USA, S/N 71401- BRA	

Pos	Part	Q1	Q2	Q3	Q4	Q5	PS	Kit	Description	Option(s)	Remark
1		1							Hydraulic Pump		See ref 913/150
2	VOE11148938	1							Hose assembly		L = 1200 MM S/N - 19806 SWE
3	VOE935082	1							Nipple		
4	VOE990736	1							•O-ring		
5	VOE993319	1							•O-ring		(VOE932037)
6	VOE13933905	1							Elbow nipple		

7	VOE990736	1							•O-ring		
8		1							Hydraulic Pump		See ref 913/200
9	VOE11148936	1							Hose assembly		L = 900 MM
10	VOE935082	1							Nipple		
11	VOE990736	1							•O-ring		
12	VOE993319	1							•O-ring		(VOE932037)
13	VOE13933905	1							Elbow nipple		S/N - 19806 SWE
14	VOE990736	1							•O-ring		
15	VOE935548	1							Nipple		LSP, S/N - 19806 SWE
16	VOE990736	1							•O-ring		S/N - 19806 SWE
17	VOE14211856	1							•Sealing ring		S/N - 19806 SWE
18	VOE4881453	2							Marking sleeve		VIOL
	VOE4881457	2							Marking sleeve		GREEN
19	VOE4881438	2							Cable tie		
20	VOE4881440	1							Cable tie		
21		1							Valve block		See ref 912/300
22	VOE936444	2							Testing nipple		(VOE13933251)MPR
23	VOE13960213	2							•O-ring		
24	VOE13946752	3							Screw		
25		1							Hydraulic Pump		See ref 913/250
26	VOE11163086	1							Hose assembly		L = 1650 MM
27	VOE935082	1							Nipple		
28	VOE990736	1							•O-ring		
29	VOE993319	1							•O-ring		(VOE932037)
30	VOE935548	1							Nipple		LSF
31	VOE990736	1							•O-ring		
32	VOE14211856	1							•Sealing ring		
33	VOE11163113	1							Hose assembly		L = 340 MM
34	VOE935548	1							Nipple		LSS
35	VOE990736	1							•O-ring		
36	VOE14211856	1							•Sealing ring		
37	VOE11173878	1							Restriction non-return valve		
38	VOE990736	1							O-ring		
39	VOE13945653	1							Plane gasket		
40		1							Connection block		See ref 645/200
41	VOE11148939	1							Hose assembly		L = 2200 MM
42	VOE935548	1							Nipple		LSW
43	VOE990736	1							•O-ring		
44	VOE14211856	1							•Sealing ring		
45	VOE13933905	1							Elbow nipple		
46	VOE990736	1							•O-ring		
47	VOE13933859	1							T-nipple		
48	VOE990736	2							•O-ring		
49	VOE11104606	1							Retaining strap		L = 350 MM
50	VOE4881451	2							Marking sleeve		YELL
	VOE4881452	2							Marking sleeve		WHITE

51	VOE4881438	2							Cable tie		
52	VOE925743	3							Washer		
53	VOE11411966	3							Spacer ring		
54	VOE11411143	6							Rubber damper		
55		1							Control valve		See ref 912/100

VOLVO

Construction Equipment

PROSIS Part Information

Date:	Image id:	Catalogue:	Model:
25/08/2018	**1000916**	**20086**	**L120E**
Brand:	Serial:	Group/Section:	Title:
Volvo	**19804-, 66001-, 71401-**	**912/100**	**Control valve with fitting parts. 33380, 33395**

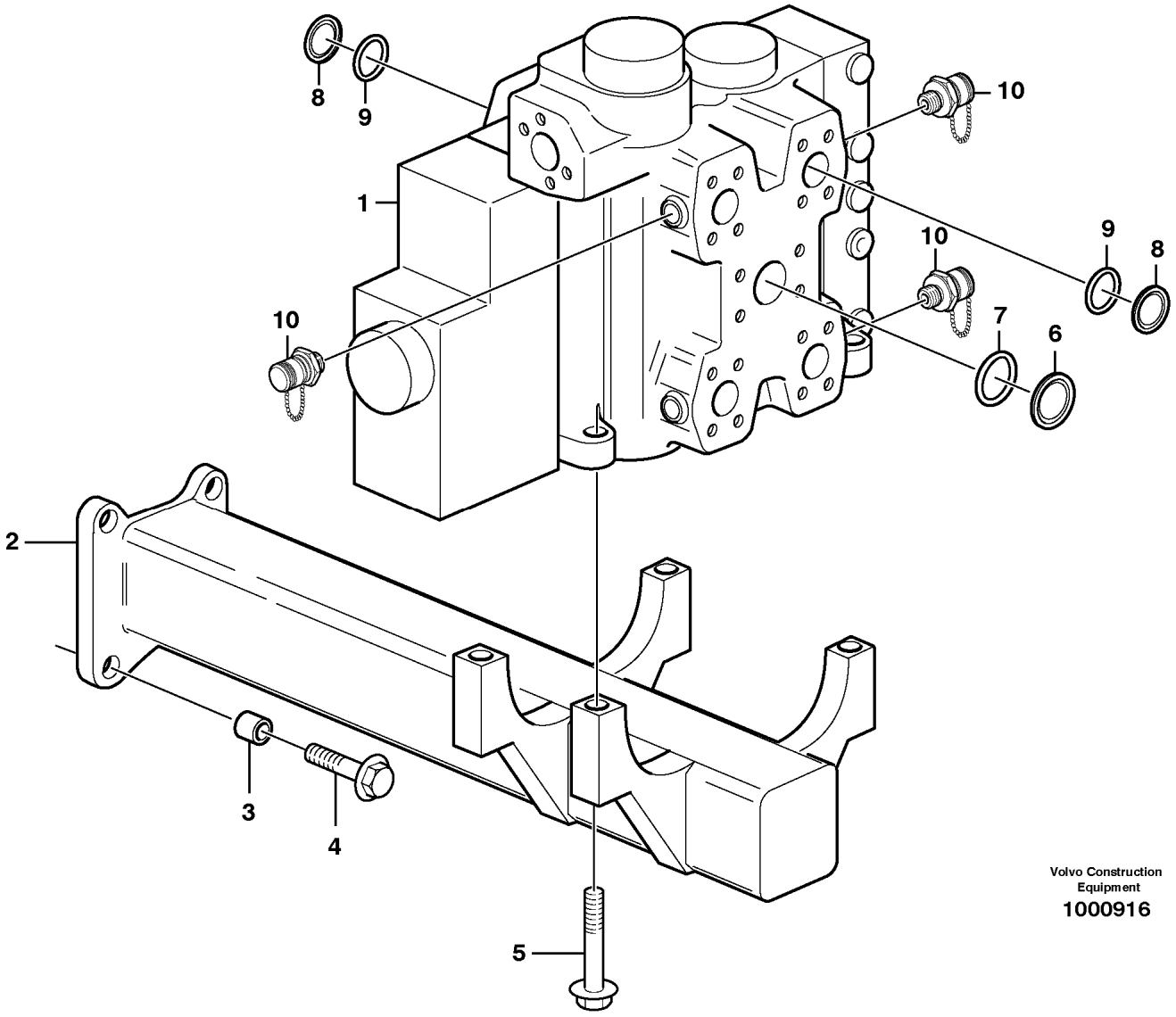

Section option	Kit	Option description
VOE33380		Volvo Wheel Loader L120E S/N 19801-, S/N 66001- USA, S/N 71401- BRA
VOE33395		Wheel Loader L120E3 IRAN

Pos	Part	Q1	Q2	Q3	Q4	Q5	PS	Kit	Description	Option(s)	Remark
1		1							Control valve		S/N - 19806,S/N - 66000 See ref 912/150
		1							Control valve		S/N 19807 -,S/N 66001 - See ref 912/200
		1							Control valve	VOE82007, VOE82601	See ref 912/200

2	VOE11108705	1							Attachment		
3	VOE11025923	4							Spacer		
4	VOE13965193	4							Screw		
5	VOE13965190	4							Screw		
6	VOE11108798	1							Plug		P
7	VOE990757	1							Sealing ring		
8	VOE11172549	2							Plug		A1, B1
9	VOE990756	2							Sealing ring		
10	VOE936444	3							Testing nipple		(VOE13933251)A1, A2, B1

VOLVO

Construction Equipment

PROSIS Part Information

Date:	Image id:	Catalogue:	Model:
25/08/2018	**1013116**	**20086**	**L120E**
Brand:	Serial:	Group/Section:	Title:
Volvo	**19804-, 66001-, 71401-**	**912/150**	**Control valve 33380, 33395**

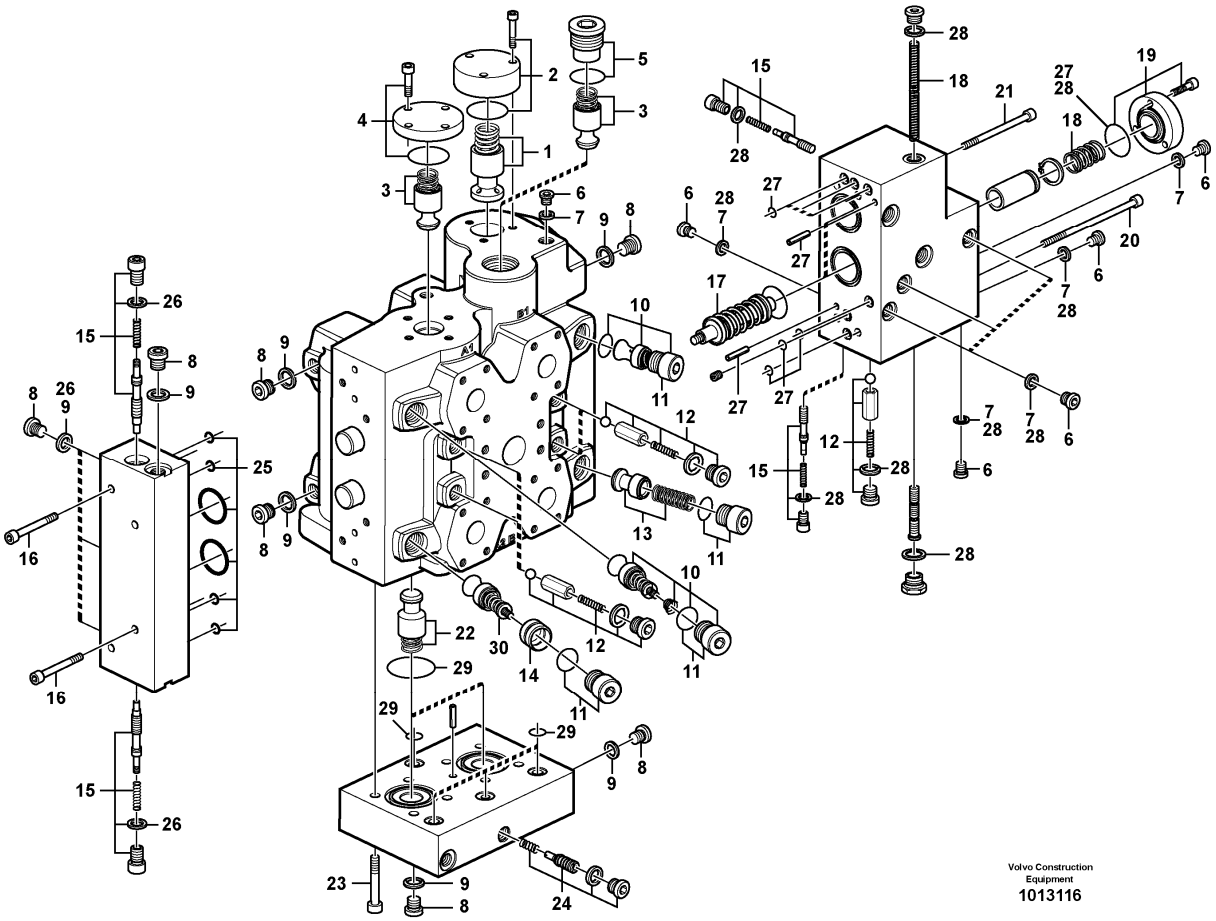

Section option	Kit	Option description
VOE33380		Volvo Wheel Loader L120E S/N 19801-, S/N 66001- USA, S/N 71401- BRA

Pos	Part	Q1	Q2	Q3	Q4	Q5	PS	Kit	Description	Option(s)	Remark
	VOE11165045	1					SS		Control valve		S/N - 19806 SWE S/N - 66000 USA
1	VOE11705091	1							•Press rdc valve		
2	VOE11705092	1							•Cover		
	VOE959229	3							••Hex. socket screw		
	VOE960226	1							••O-ring		
3	VOE11705094	2							•Non-return valve		
4	VOE11705450	1							•Cap		
5	VOE11705451	1							•Plug		
6	VOE13965768	8							•Plug		
7	VOE947083	8							•Gasket		

8	VOE945065	10							•Plug		
9	VOE13945653	10							•Plane gasket		
10	VOE11708326	2							•Relief valve		
11	VOE11705095	4							•Plug		
	VOE982707	4							••O-ring		
12	VOE11705093	5							•Non-return valve		
13	VOE11705097	1							•Non-return valve		
14	VOE11705096	1							•Sleeve		
15	VOE11705100	4							•Non-return valve		
16	VOE11705452	4					SS		•Allen Hd Screw		
17	VOE15083409	2							•Spring assembly		(VOE11705103)
18	VOE11705105	1							•Spring kit		
19	VOE11705106	1							•Cover		
20	VOE15015542	2							•Screw kit		(VOE11705453)
21	VOE959233	2							•Allen Hd Screw		
22	VOE11705094	2							•Non-return valve		
23	VOE959243	8							•Hex. socket screw		
24	VOE11705482	1							•Draining valve		
25	VOE11705101	REQ							•Sealing kit		
26	VOE11705102	REQ							•Sealing kit		
27	VOE11705107	REQ							•Sealing kit		
28	VOE11705108	REQ							•Sealing kit		
29	VOE11705109	REQ							•Sealing kit		
30	VOE11705099	1							•Relief valve		

VOLVO

Construction Equipment

PROSIS Part Information

Date:	Image id:	Catalogue:	Model:
25/08/2018	**1066291**	**20086**	**L120E**
Brand:	Serial:	Group/Section:	Title:
Volvo	**19804-, 66001-, 71401-**	**912/200**	**Control valve**

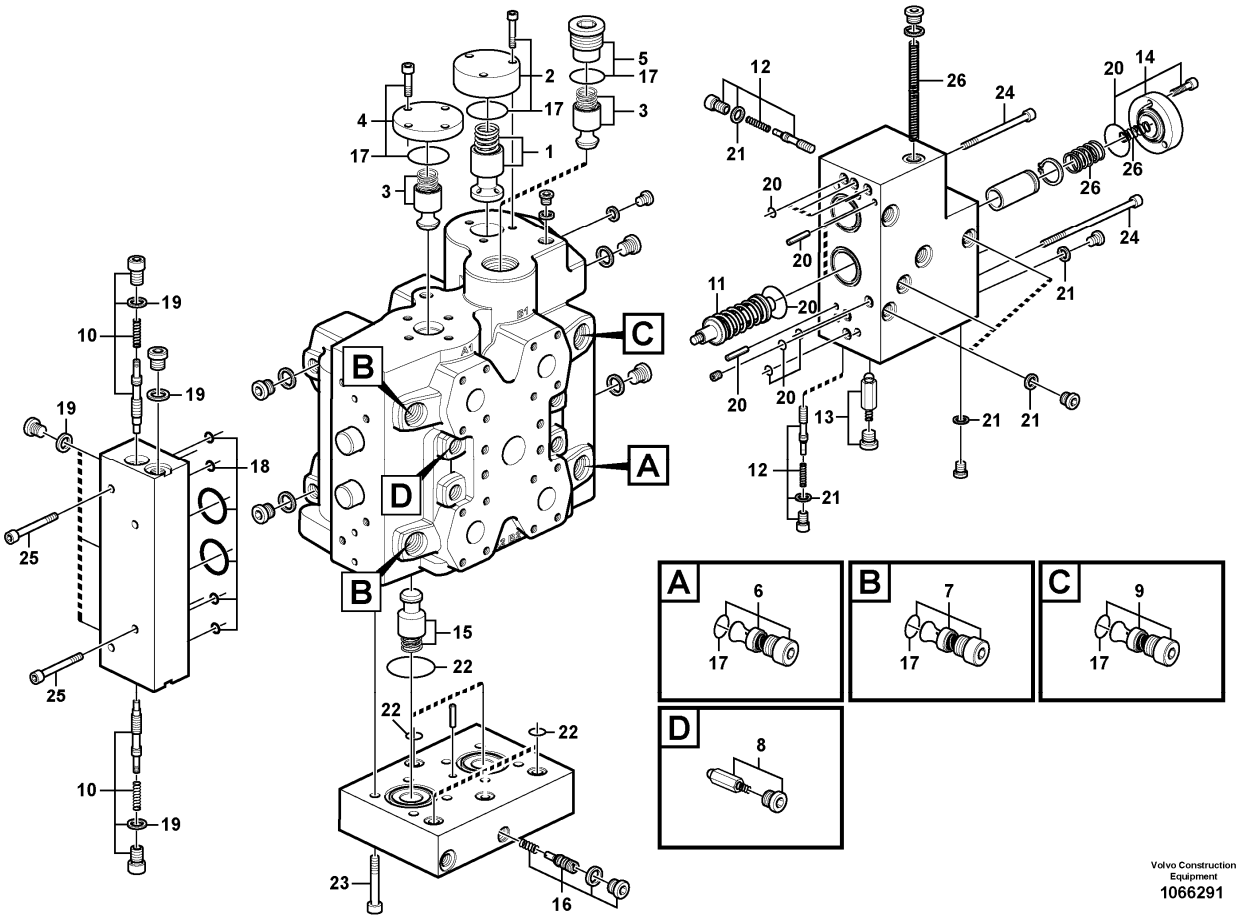

Q1-Q5	Option	Option description	
Q1 11411716			
Q2 11411683			

Pos	Part	Q1	Q2	Q3	Q4	Q5	PS	Kit	Description	Option(s)	Remark
	VOE11411716	1							Control valve	VOE82007, VOE82601	
	VOE11411683		1						Control valve		S/N 19807 -,S/N 66001 -
1	VOE11705091	1	1						•Press rdc valve		
2	VOE11705092	1	1						•Cover		
3	VOE11705094	2	2						•Non-return valve		
4	VOE11705450	1	1						•Cap		
5	VOE11705451	1	1						•Plug		
6	VOE11705097	1	1						•Non-return valve		
7	VOE11708326	2	2						•Relief valve		

8	VOE11705093	4	4						•Non-return valve		
9	VOE15016222	1							•Valve		
	VOE15016962		1						•Valve		
10	VOE11705100	2	2						•Non-return valve		
11	VOE15083409	2	2						•Spring assembly		(VOE11705103)
12	VOE11705100	2	2						•Non-return valve		
13	VOE11705093	1	1						•Non-return valve		
14	VOE11705106	1	1						•Cover		
15	VOE11705094	2	2						•Non-return valve		
16	VOE11705482	1	1						•Draining valve		
17	VOE15015381	1	1						•Sealing kit		
18	VOE11705101	1	1						•Sealing kit		
19	VOE11705102	1	1						•Sealing kit		
20	VOE11705107	1	1						•Sealing kit		
21	VOE11705108	1	1						•Sealing kit		
22	VOE11705109	1	1						•Sealing kit		
23	VOE15015551	1	1						•Screw kit		
24	VOE15015542	1	1						•Screw kit		
25	VOE15015411	1	1						•Screw kit		
26	VOE11705105	1	1						•Spring kit		

VOLVO

Construction Equipment

PROSIS Part Information

Date:	Image id:	Catalogue:	Model:
25/08/2018	**1086934**	**20086**	**L120E**
Brand:	Serial:	Group/Section:	Title:
Volvo	**19804-, 66001-, 71401-**	**912/300**	**Valve body: Central block 33380, 33395 IRAN**

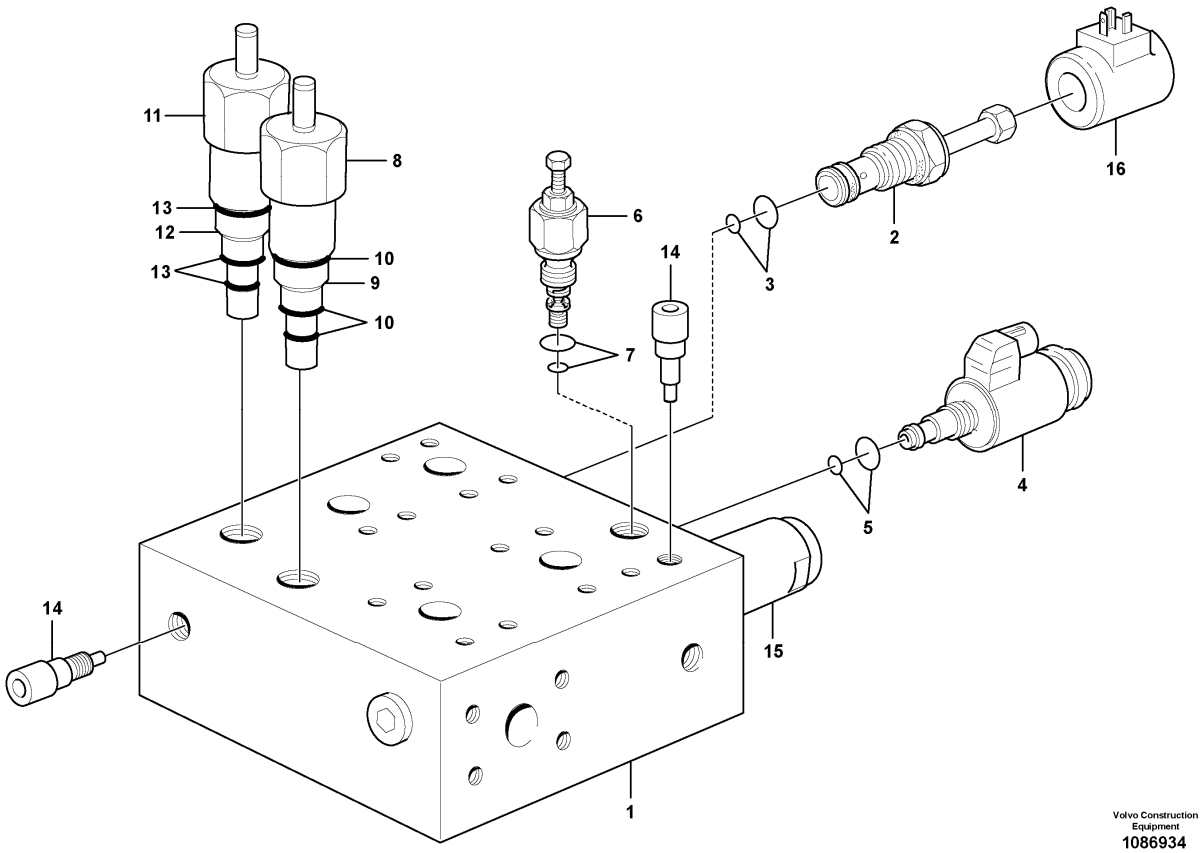

Section option	Kit	Option description
VOE33395		Wheel Loader L120E3 IRAN

Pos	Part	Q1	Q2	Q3	Q4	Q5	PS	Kit	Description	Option(s)	Remark
1	VOE15021479	1					SS		Valve body		
2	VOE17224866	1							•Solenoid valve		MA502
3	VOE11709880	1							••Sealing kit		
4	VOE11709879	1							•Pressure regulator		MA202
5	VOE11709881	1							••Sealing kit		
6	VOE11705961	1							•Pressure limiting valve		
7	VOE11704530	1							••Sealing kit		
8	VOE11709882	1							•Pressure regulator		
9	VOE11709861	1							••Reducing valve		
10	VOE11709883	1							••Sealing kit		

11	VOE11709884	1							•Pressure regulator		
12	VOE11709861	1							••Reducing valve		
13	VOE11709883	1							••Sealing kit		
14	VOE11707564	2							•Shuttle valve		
15	VOE17466350	1							•Non-return valve		
16	VOE15092682	1							•Solenoid		

VOLVO

Construction Equipment

PROSIS Part Information

Date:	Image id:	Catalogue:	Model:
25/08/2018	**1054327**	**20086**	**L120E**
Brand:	Serial:	Group/Section:	Title:
Volvo	**19804-, 66001-, 71401-**	**912/350**	**Control valve**

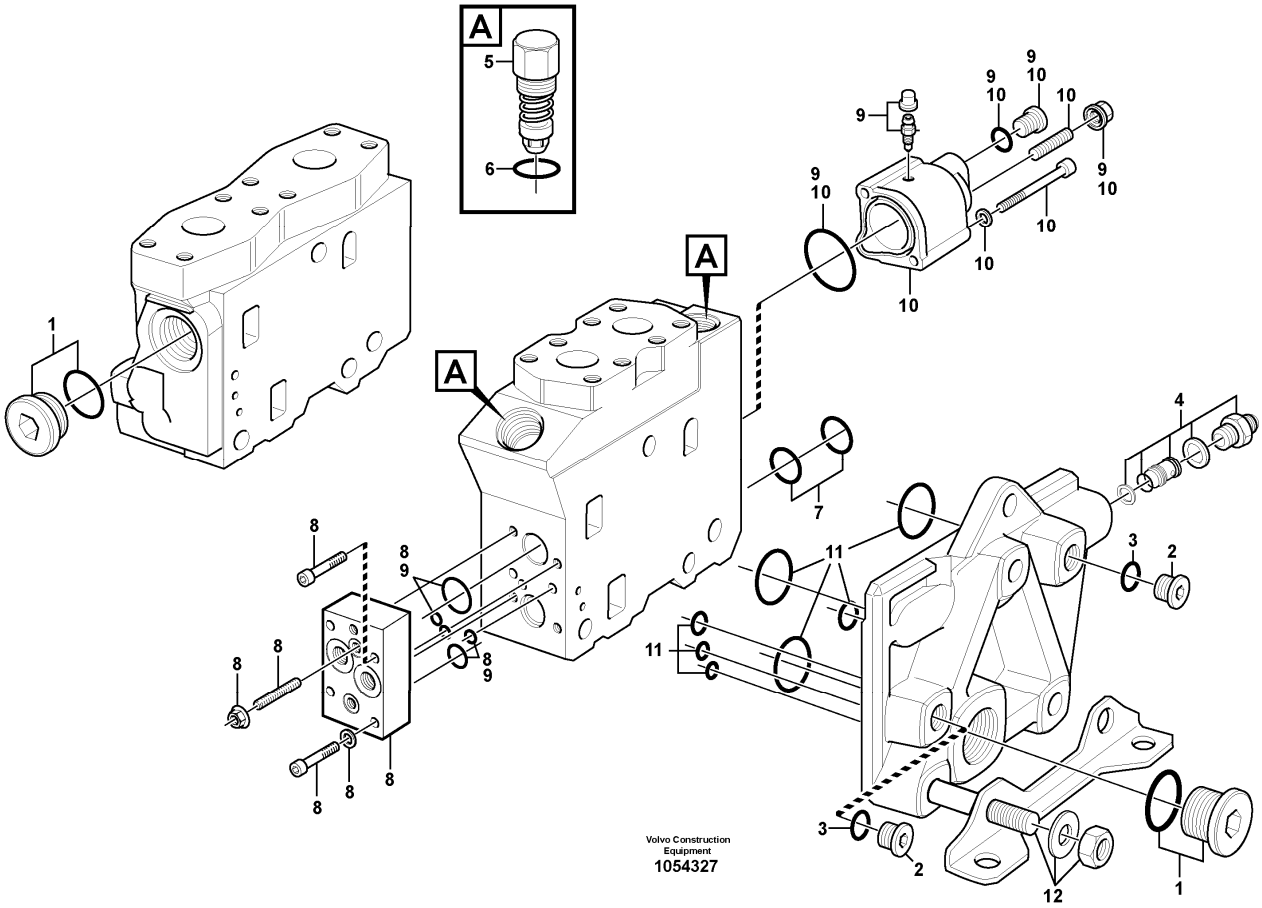

Q1-Q5	Option	Option description	
Q1 82046 82049	VOE82046	Detent, 3rd function	
Q2 80781 82408	VOE80781	Hydraulic system, 3rd and 4th function	

Pos	Part	Q1	Q2	Q3	Q4	Q5	PS	Kit	Description	Option(s)	Remark
	VOE11173316	1							Direction valve		
	VOE11173318		1						Direction valve		
1	VOE11705779	2	2						•Plug		
	VOE17226400	2	2						••O-ring		(VOE11704089)
2	VOE945065	2	2						•Plug		
3	VOE13945653	2	2						•Plane gasket		
4	VOE15161524	1	1						•Connector		
5	VOE11715658	2	4						•Relief valve		
		2	4				NS		••O-ring		
6	VOE6213010	1	2				SS		•O-ring		

7	VOE15162060	1	2						•Sealing kit		
8	VOE11712331	1	2						•Cap		(VOE15164747)
9	VOE15161174	1	2						•Sealing kit		
10	VOE11705785	1	2						•Actuator		
11	VOE11705792	2	3						•Sealing kit		
12	VOE11705789	1							•Rod		
12	VOE15191648		1						•Towing pin		(VOE15166616)

VOLVO

Construction Equipment

PROSIS Part Information

Date:	Image id:	Catalogue:	Model:
25/08/2018	**1020049**	**20086**	**L120E**
Brand:	Serial:	Group/Section:	Title:
Volvo	**19804-, 66001-, 71401-**	**913/100**	**Hydraulic pump with fitting parts 33380, 33395**

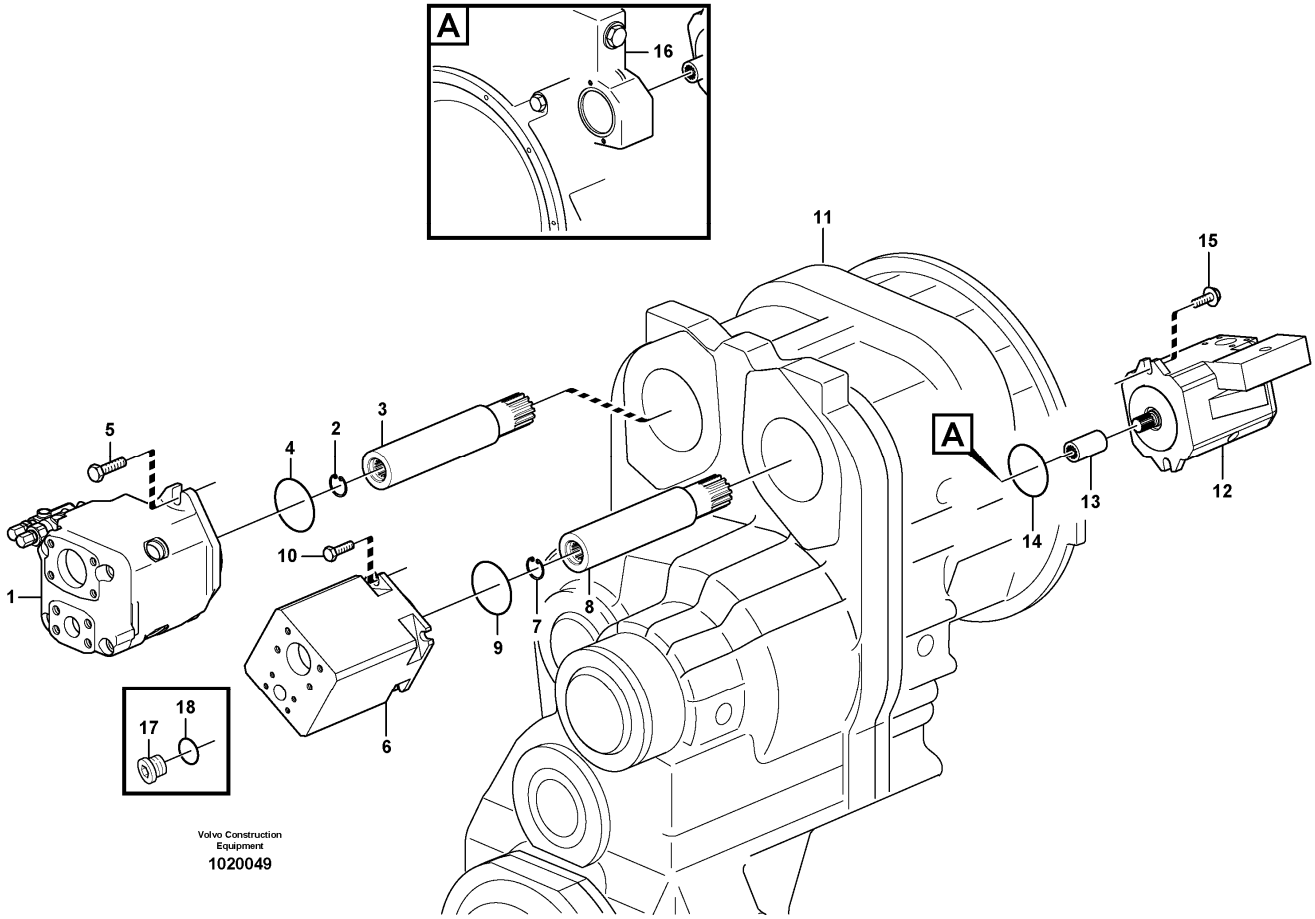

Section option	Kit	Option description
VOE33380		Volvo Wheel Loader L120E S/N 19801-, S/N 66001- USA, S/N 71401- BRA
VOE33395		Wheel Loader L120E3 IRAN

Pos	Part	Q1	Q2	Q3	Q4	Q5	PS	Kit	Description	Option(s)	Remark
1		1							Hydraulic Pump		See ref 913/150
2	VOE914515	1							Retaining ring		
3	VOE11038380	1							Shaft		
4	VOE960242	1							O-ring		
5	VOE968435	2							Flange screw		
6		1							Hydraulic Pump		See ref 913/200
7	VOE914515	1							Retaining ring		
8	VOE11038380	1							Shaft		
9	VOE960242	1							O-ring		
10	VOE13965192	4							Screw		

11		1							Housing		See ref 434/200
12		1							Hydraulic Pump		See ref 913/250
13	VOE20459123	1							Sleeve		(VOE11173159)
14	VOE20450819	1							O-ring		(VOE11173158)
15	VOE965225	2							Flange screw		
16		1							Engine		See ref 263/100
17	VOE984653	1							Plug		
18	VOE990414	1							O-ring		

VOLVO

Construction Equipment

PROSIS Part Information

Date:	Image id:	Catalogue:	Model:
25/08/2018	**1000873**	**20086**	**L120E**
Brand:	Serial:	Group/Section:	Title:
Volvo	**19804-, 66001-, 71401-**	**913/150**	**Hydraulic pump P1**

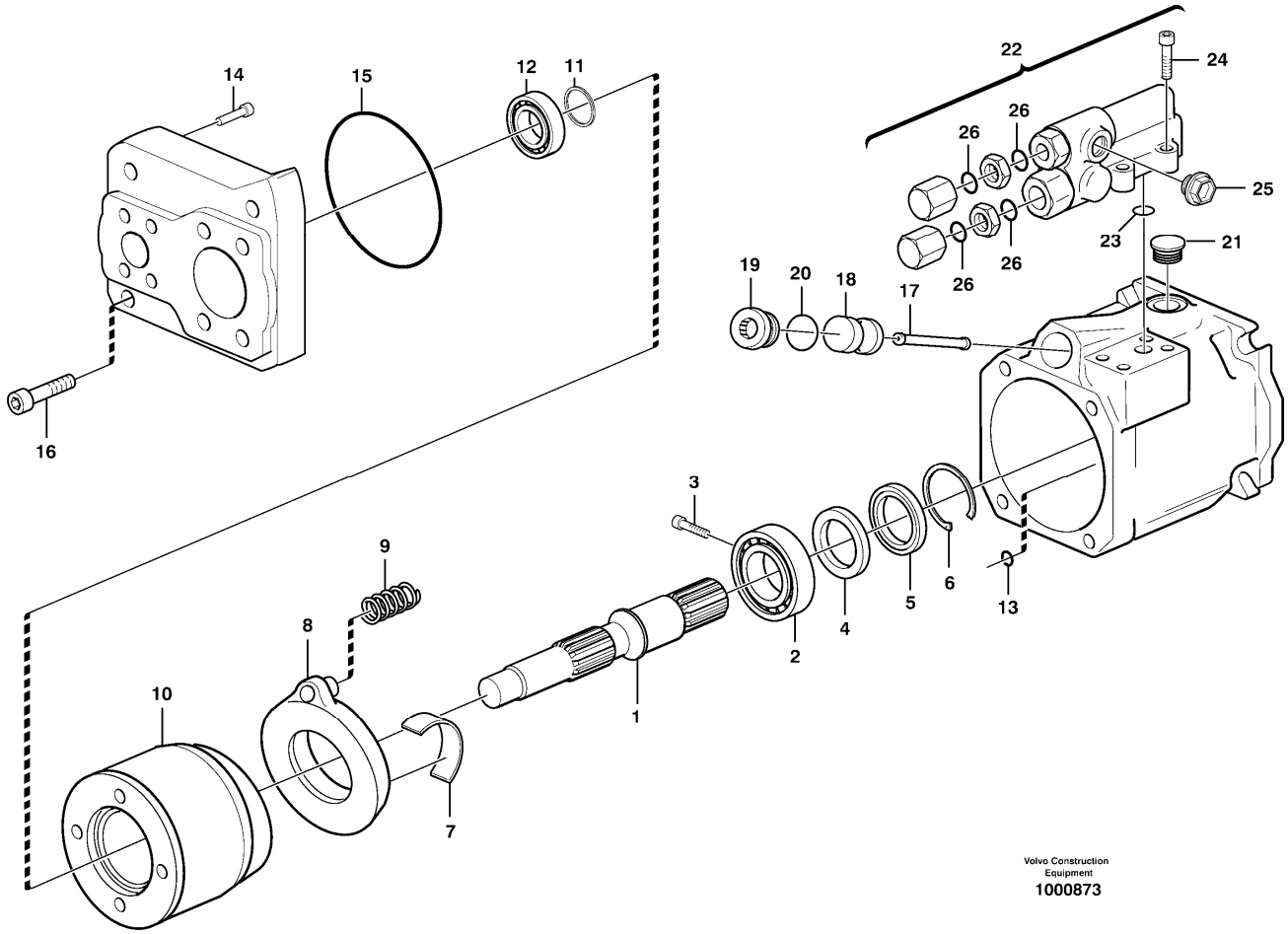

Section option	Kit	Option description
VOE33380		Volvo Wheel Loader L120E S/N 19801-, S/N 66001- USA, S/N 71401- BRA
VOE33395		Wheel Loader L120E3 IRAN

Q1-Q5	Option	Option description	
Q1 11173090			
Q2 11173952			

Pos	Part	Q1	Q2	Q3	Q4	Q5	PS	Kit	Description	Option(s)	Remark
	VOE11173090	1							Hydraulic pump		80CC, S/N - 20317, REMAN VOE9011173090
	VOE11173952		1						Hydraulic pump		80CC, S/N 20318 -, REMAN VOE9011173952

1	VOE11708739	1	1						•Shaft		
2	VOE11997155	1	1						•Bearing		
3	VOE983663	2	2						•Allen Hd Screw		(VOE11708118)
4	VOE11708743	1	1				OP		•Stop ring		
5	VOE11997157	1	1						•Sealing ring		
6	VOE11708748	1	1						•Lock ring		
7	VOE11708745	2	2						•Bearing		
8	VOE11708738	1	1				SS		•Yoke		
9	VOE11708741	1	1						•Spring		
10	VOE11708735	1	1						•Pump unit		
11	VOE11708742	1	1						•Shim		
12	VOE11708744	1	1						•Roller bearing		
13	VOE11708257	2	2						•O-ring		(VOE11703836)
14	VOE11708101	1	1						•Non-return valve		
15	VOE11709925	1	1						•O-ring		(VOE11708746)
16	VOE11708749	4	4						•Screw		
17	VOE11708737	1	1						•Piston rod		
18	VOE11708736	1							•Piston		
	VOE11709920		1				OP		•Piston		
19	VOE11708740	1	1						•Plug		
20	VOE11709926	1	1						•O-ring		(VOE11708747)
21	VOE11701341	1							•Plug		
22	VOE11998863	1	1						•Valve		
23	VOE11708087	3							••O-ring		(VOE11992834)
24	VOE13974079	4							••Allen Hd Screw		
25	VOE11992833	1							••Plug		
26	VOE7190187	4							••O-ring		

VOLVO

Construction Equipment

PROSIS Part Information

Date:	Image id:	Catalogue:	Model:
25/08/2018	**1000861**	**20086**	**L120E**
Brand:	Serial:	Group/Section:	Title:
Volvo	**19804-, 66001-, 71401-**	**913/200**	**Hydraulic pump P2**

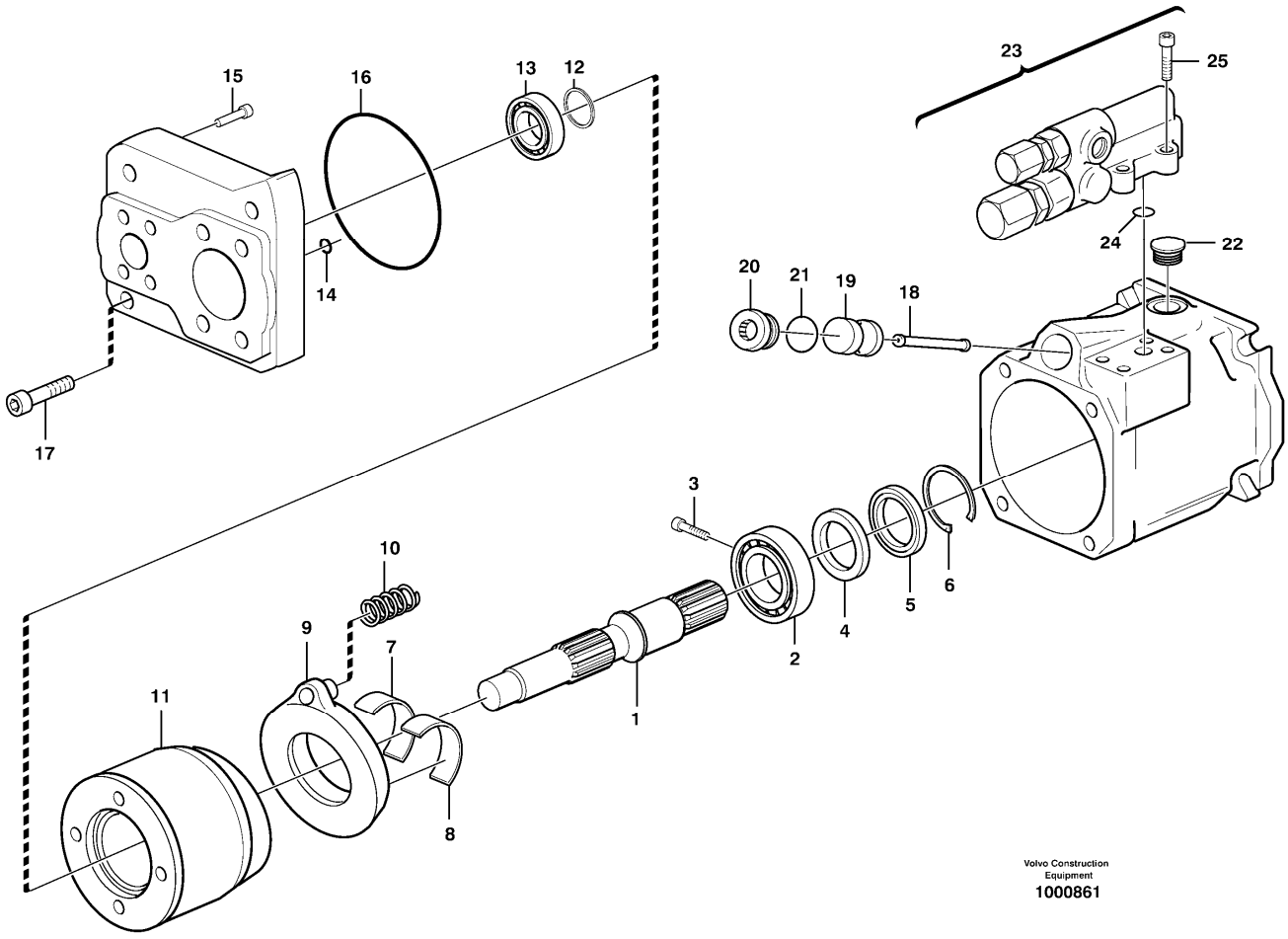

Section option	Kit	Option description
VOE33380		Volvo Wheel Loader L120E S/N 19801-, S/N 66001- USA, S/N 71401- BRA
VOE33395		Wheel Loader L120E3 IRAN

Pos	Part	Q1	Q2	Q3	Q4	Q5	PS	Kit	Description	Option(s)	Remark
	VOE11173091	1							Hydraulic pump		60CC, REMAN VOE9011173091
1	VOE11708756	1							•Drive shaft		
2	VOE11707572	1							•Roller bearing		
3	VOE983663	2							•Allen Hd Screw		(VOE11708118)
4	VOE11708116	1							•Stop ring		
5	VOE11708110	1							•Sealing ring		
6	VOE11708113	1							•Lock ring		
7	VOE11708757	1							•Bearing		
8	VOE11708758	1							•Bearing		

9	VOE11716481	1							•Yoke		(VOE11708102)
10	VOE11704542	1							•Spring		
11	VOE11704536	1					SS		•Pump element		
12	VOE11704545	1							•Shim		
13	VOE11704548	1							•Roller bearing		
14	VOE11708257	2							•O-ring		(VOE11703836)
15	VOE11708101	1							•Non-return valve		
16	VOE11708256	1							•O-ring		(VOE11704555)
17	VOE11708759	4							•Screw		
18	VOE15146225	1							•Piston rod		(VOE11998862)
19	VOE11715645	1					SS		•Piston		(VOE11708099)
20	VOE11708083	1							•Plug		
21	VOE11708231	1							•O-ring		(VOE11704554)
22	VOE11704815	1							•Plug		
23	VOE11708760	1					SS		•Control valve		
24	VOE11708087	3							••O-ring		(VOE11992834)
25	VOE13974079	4							••Allen Hd Screw		

VOLVO

Construction Equipment

PROSIS Part Information

Date:	Image id:	Catalogue:	Model:
25/08/2018	**1036053**	**20086**	**L120E**
Brand:	Serial:	Group/Section:	Title:
Volvo	**19804-, 66001-, 71401-**	**913/250**	**Hydraulic pump P3**

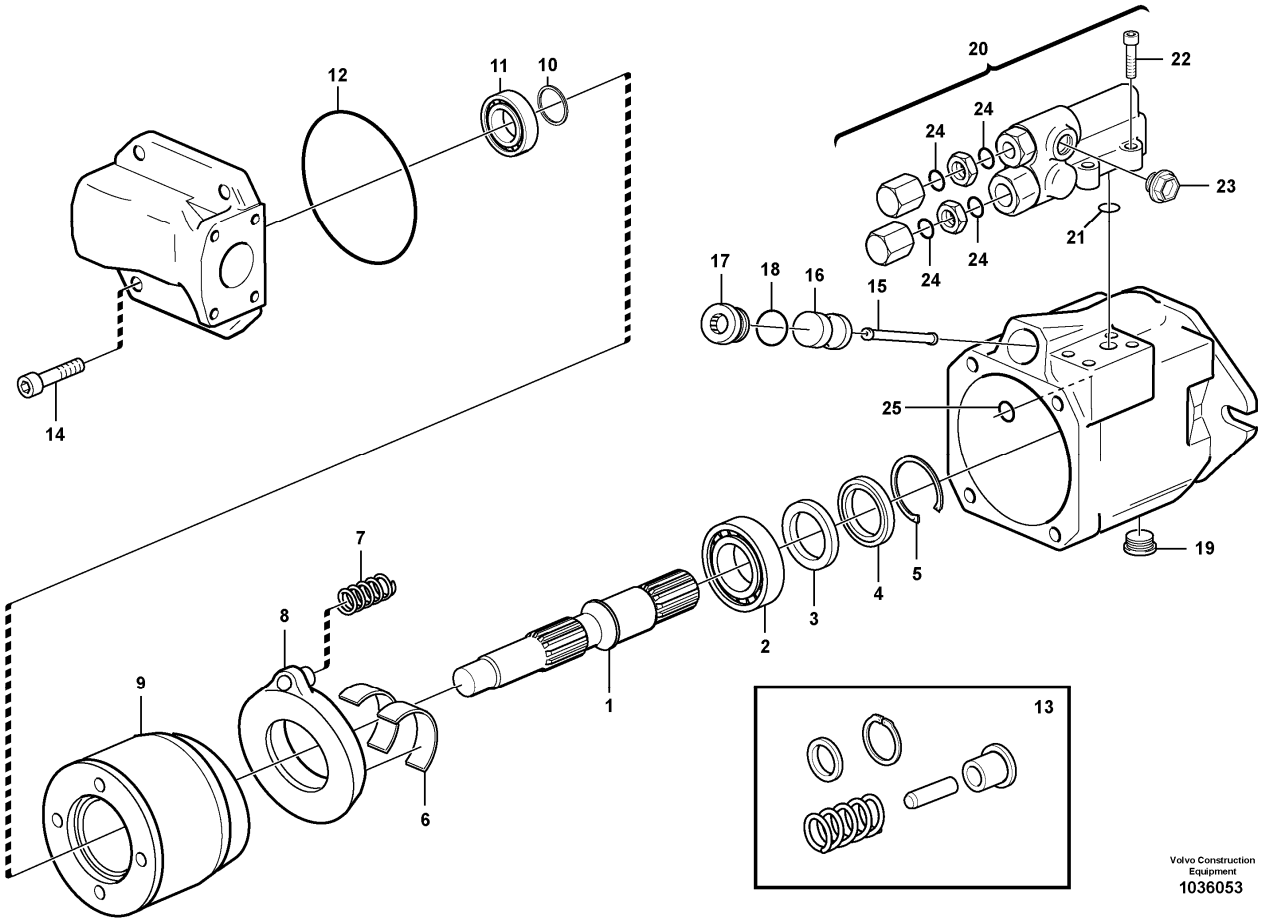

Section option	Kit	Option description
VOE33380		Volvo Wheel Loader L120E S/N 19801-, S/N 66001- USA, S/N 71401- BRA
VOE33395		Wheel Loader L120E3 IRAN

Pos	Part	Q1	Q2	Q3	Q4	Q5	PS	Kit	Description	Option(s)	Remark
	VOE11172358	1							Hydraulic pump		18CC, REMAN VOE9011172358
1	VOE11708082	1							•Drive shaft		
2	VOE11704547	1							•Roller bearing		
3	VOE11708754	1							•Stop ring		
4	VOE11704551	1							•Sealing ring		
5	VOE11708755	1							•Lock ring		
6	VOE11704549	2							•Bearing		
7	VOE11704541	1							•Spring		
8	VOE11715719	1							•Yoke		(VOE11708129)

9	VOE11704535	1							•Pump element		
10	VOE11708084	1							•Shim		
11	VOE11704546	1							•Roller bearing		(VOE11708085)
12	VOE11704553	1							•O-ring		
13	VOE11706189	1							•Non-return valve		
14	VOE11704557	4							•Allen Hd Screw		
15	VOE11704538	1							•Piston rod		
16	VOE11703833	1							•Piston		
17	VOE11708753	1							•Plug		
18	VOE11708231	1							•O-ring		(VOE11704554)
19	VOE11704559	1							•Plug		
20	VOE11998863	1							•Valve		
21	VOE11708087	3							••O-ring		(VOE11992834)
22	VOE13974079	4							••Allen Hd Screw		
23	VOE11992833	1							••Plug		
24	VOE7190187	4							••O-ring		
25	VOE11708257	1							•O-ring		(VOE11703836)

VOLVO

Construction Equipment

PROSIS Part Information

Date:	Image id:	Catalogue:	Model:
25/08/2018	**1020047**	**20086**	**L120E**
Brand:	Serial:	Group/Section:	Title:
Volvo	**19804-, 66001-, 71401-**	**914/100**	**Servo - hydraulic, feed and return lines**

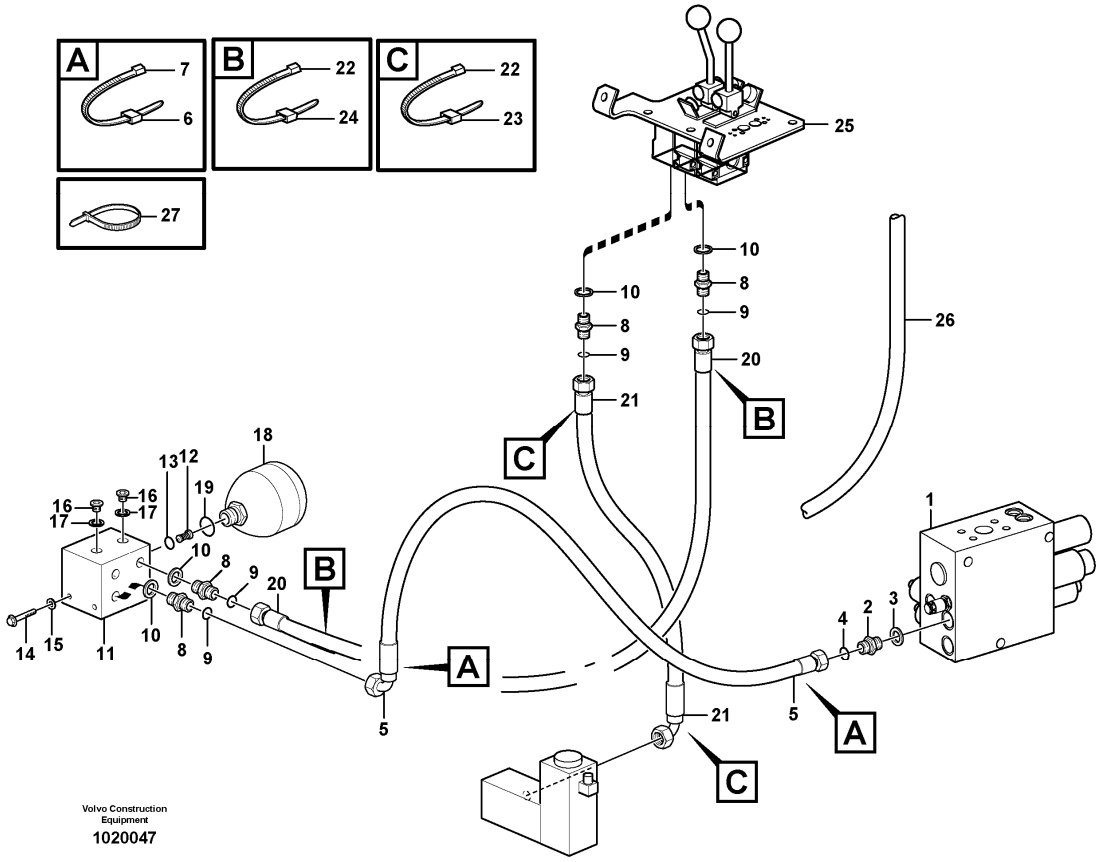

Volvo Construction Equipment
1020047

Section option	Kit	Option description
VOE33380		Volvo Wheel Loader L120E S/N 19801-, S/N 66001- USA, S/N 71401- BRA
VOE82066		Arctic kit; accumulators, brake and pilot hoses
VOE33395		Wheel Loader L120E3 IRAN

Q1-Q5	Option	Option description	
Q1 33380 33395	VOE33380	Volvo Wheel Loader L120E S/N 19801-, S/N 66001- USA, S/N 71401- BRA	
Q2 82066	VOE82066	Arctic kit; accumulators, brake and pilot hoses	

Pos	Part	Q1	Q2	Q3	Q4	Q5	PS	Kit	Description	Option(s)	Remark
1		1							Valve block		See ref 911/250
2	VOE13933855	1							Nipple		PR
3	VOE14213676	1							•Sealing ring		
4	VOE990737	1							•O-ring		(VOE4880492)

5	VOE11148953	1							Hose assembly		
	VOE11173819		1						Hose assembly		
	VOE11180991	2							Hose assembly	VOE82067	L = 1300MM
6	VOE4881455	2							Marking sleeve		RED
	VOE4881458	2							Marking sleeve		BR
7	VOE4881438	2							Cable tie		
8	VOE14345423	4							Nipple		
9	VOE990737	4							•O-ring		(VOE4880492)
10	VOE14211856	4							•Sealing ring		
11	VOE11173806	1							Connection block		
12	VOE11709718	1							•Non-return valve		
13	VOE983489	1							•O-ring		
14	VOE946671	2							Flange screw		
15	VOE11117464	2							Plain washer		(VOE13960141)
16	VOE960630	2							Plug		
17	VOE976929	2							Gasket		
18	VOE11173690	1							Accumulator		
19	VOE13967752	1							O-ring		
20	VOE936700	1							Hose assembly		L = 1650 MM
	VOE11172990		1						Hose assembly		
21	VOE936705	1							Hose assembly		L = 1500 MM
	VOE11173821		1						Hose assembly		
22	VOE4881438	4							Cable tie		
23	VOE4881456	2							Marking sleeve		OR
24	VOE4881458	2							Marking sleeve		BR
25		1							Servo valve		See ref 914/300
26	VOE4803752	REQ							Hose		L = 500 MM S/N - 20160, - 66000 USA S/N - 71400 BRA
	VOE943369	REQ							Hose		L = 500 MM S/N 20161 -, 66001 - USA S/N 71401 - BRA
27	VOE4881440	REQ							Cable tie		

VOLVO

Construction Equipment

PROSIS Part Information

Date:	Image id:	Catalogue:	Model:
25/08/2018	**1000964**	**20086**	**L120E**
Brand:	Serial:	Group/Section:	Title:
Volvo	**19804-, 66001-, 71401-**	**914/150**	**Servo - hydraulic, control lines, lift**

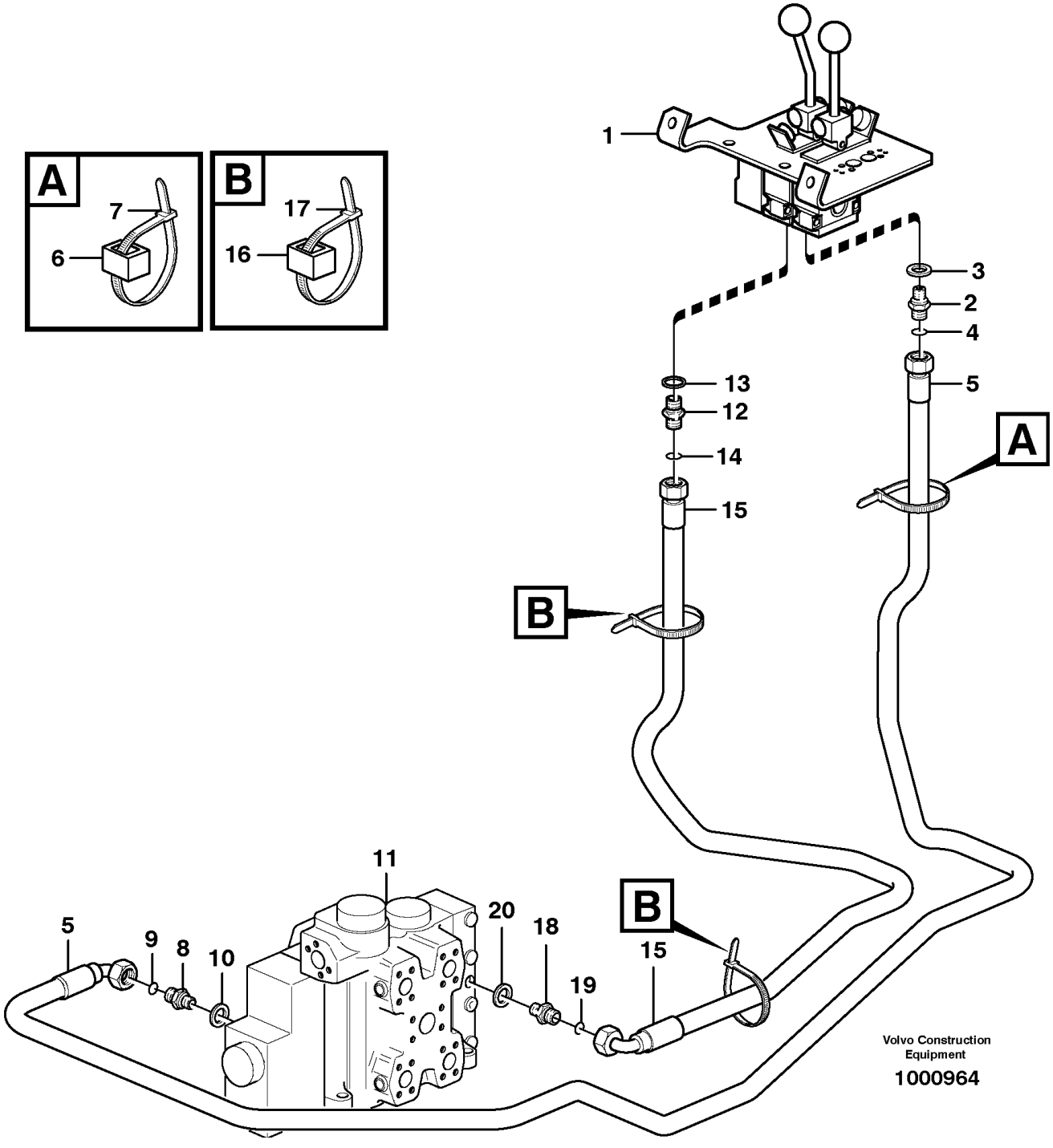

Section option	Kit	Option description
VOE33380		Volvo Wheel Loader L120E S/N 19801-, S/N 66001- USA, S/N 71401- BRA

VOE82066		Arctic kit; accumulators, brake and pilot hoses

Q1-Q5	Option	Option description	
Q1 33380	VOE33380	Volvo Wheel Loader L120E S/N 19801-, S/N 66001- USA, S/N 71401- BRA	
Q2 82066	VOE82066	Arctic kit; accumulators, brake and pilot hoses	

Pos	Part	Q1	Q2	Q3	Q4	Q5	PS	Kit	Description	Option(s)	Remark
1		1							Servo valve		See ref 914/300
2	VOE14345423	1							Nipple		
3	VOE14211856	1							•Sealing ring		
4	VOE990737	1							•O-ring		(VOE4880492)
5	VOE936713	1							Hose assembly		L = 2700 MM
	VOE11130855		1						Hose assembly		L = 2700 MM
6	VOE4881451	2							Marking sleeve		YELL
7	VOE4881438	2							Cable tie		
8	VOE14345423	1							Nipple		PL
9	VOE990737	1							•O-ring		(VOE4880492)
10	VOE14211856	1							•Sealing ring		
11		1							Control valve		See ref 912/100
12	VOE14345423	1							Nipple		
13	VOE14211856	1							•Sealing ring		
14	VOE990737	1							•O-ring		(VOE4880492)
15	VOE936711	1							Hose assembly		L = 2300 MM
	VOE11172992		1						Hose assembly		L = 2300 MM
16	VOE4881455	2							Marking sleeve		RED
17	VOE4881438	2							Cable tie		
18	VOE14345423	1							Nipple		
19	VOE990737	1							•O-ring		(VOE4880492)
20	VOE14211856	1							•Sealing ring		

VOLVO

Construction Equipment

PROSIS Part Information

Date:	Image id:	Catalogue:	Model:
25/08/2018	**1000965**	**20086**	**L120E**
Brand:	Serial:	Group/Section:	Title:
Volvo	**19804-, 66001-, 71401-**	**914/200**	**Servo - hydraulic, control lines, tilt**

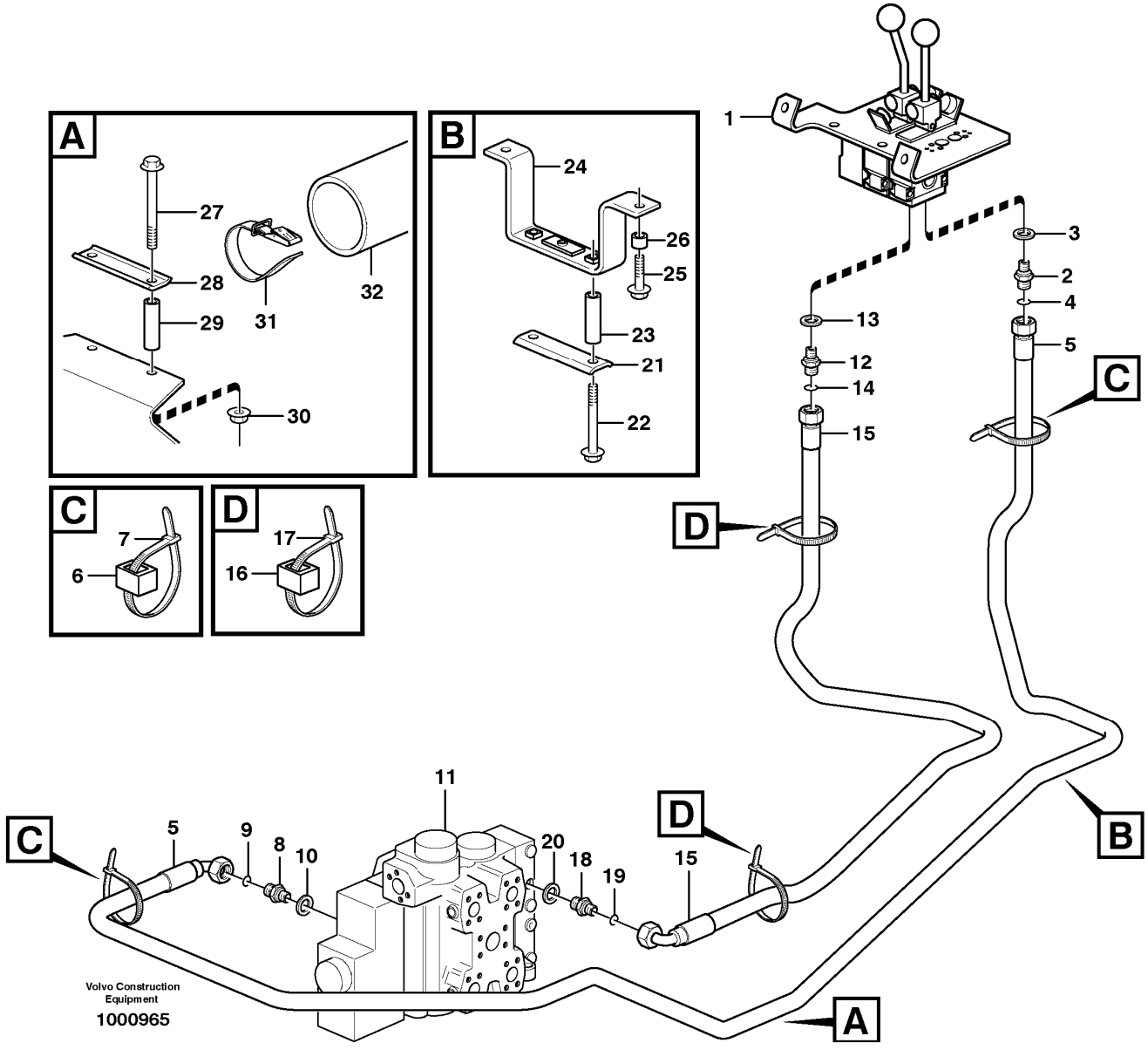

Section option	Kit	Option description
VOE33380		Volvo Wheel Loader L120E S/N 19801-, S/N 66001- USA, S/N 71401- BRA
VOE82066		Arctic kit; accumulators, brake and pilot hoses
VOE33395		Wheel Loader L120E3 IRAN

Q1-Q5	Option	Option description	
Q1 33380 33395	VOE33380	Volvo Wheel Loader L120E S/N 19801-, S/N 66001- USA, S/N 71401- BRA	

Q2 82066	VOE82066	Arctic kit; accumulators, brake and pilot hoses	

Pos	Part	Q1	Q2	Q3	Q4	Q5	PS	Kit	Description	Option(s)	Remark
1		1							Servo valve		See ref 914/300
2	VOE14345423	1							Nipple		A2
3	VOE990737	1							•O-ring		(VOE4880492)
4	VOE14211856	1							•Sealing ring		
5	VOE936713	1							Hose assembly		L = 2700 MM
	VOE11130855		1						Hose assembly		L = 2700 MM
6	VOE4881452	2							Marking sleeve		WHITE
7	VOE4881438	2							Cable tie		
8	VOE14345423	1							Nipple		
9	VOE990737	1							•O-ring		(VOE4880492)
10	VOE14211856	1							•Sealing ring		
11		1							Control valve		See ref 912/100
12	VOE14345423	1							Nipple		B2
13	VOE990737	1							•O-ring		(VOE4880492)
14	VOE14211856	1							•Sealing ring		
15	VOE936711	1							Hose assembly		L = 2300 MM
	VOE11172992		1						Hose assembly		L = 2300 MM
16	VOE4881459	2							Marking sleeve		BLUE
17	VOE4881438	2							Cable tie		
18	VOE14345423	1							Nipple		PSS
19	VOE990737	1							•O-ring		(VOE4880492)
20	VOE14211856	1							•Sealing ring		
21	VOE4954460	1							Retainer		
22	VOE13965189	2							Screw		
23	VOE11025954	2							Spacer sleeve		
24	VOE11173831	1							Attachment		
25	VOE13965185	2							Screw		
26	VOE4943026	2							Spacer sleeve		
27	VOE13965190	2							Screw		
28	VOE4954460	1							Retainer		
29	VOE11025954	2							Spacer sleeve		
30	VOE13971095	2							Flange nut		
31	VOE11104606	3							Retaining strap		
32	VOE11173522	1							Protecting hose		

VOLVO

Construction Equipment

PROSIS Part Information

Date:	Image id:	Catalogue:	Model:
25/08/2018	**1002915**	**20086**	**L120E**
Brand:	Serial:	Group/Section:	Title:
Volvo	**19804-, 66001-, 71401-**	**914/300**	**Servo valve**

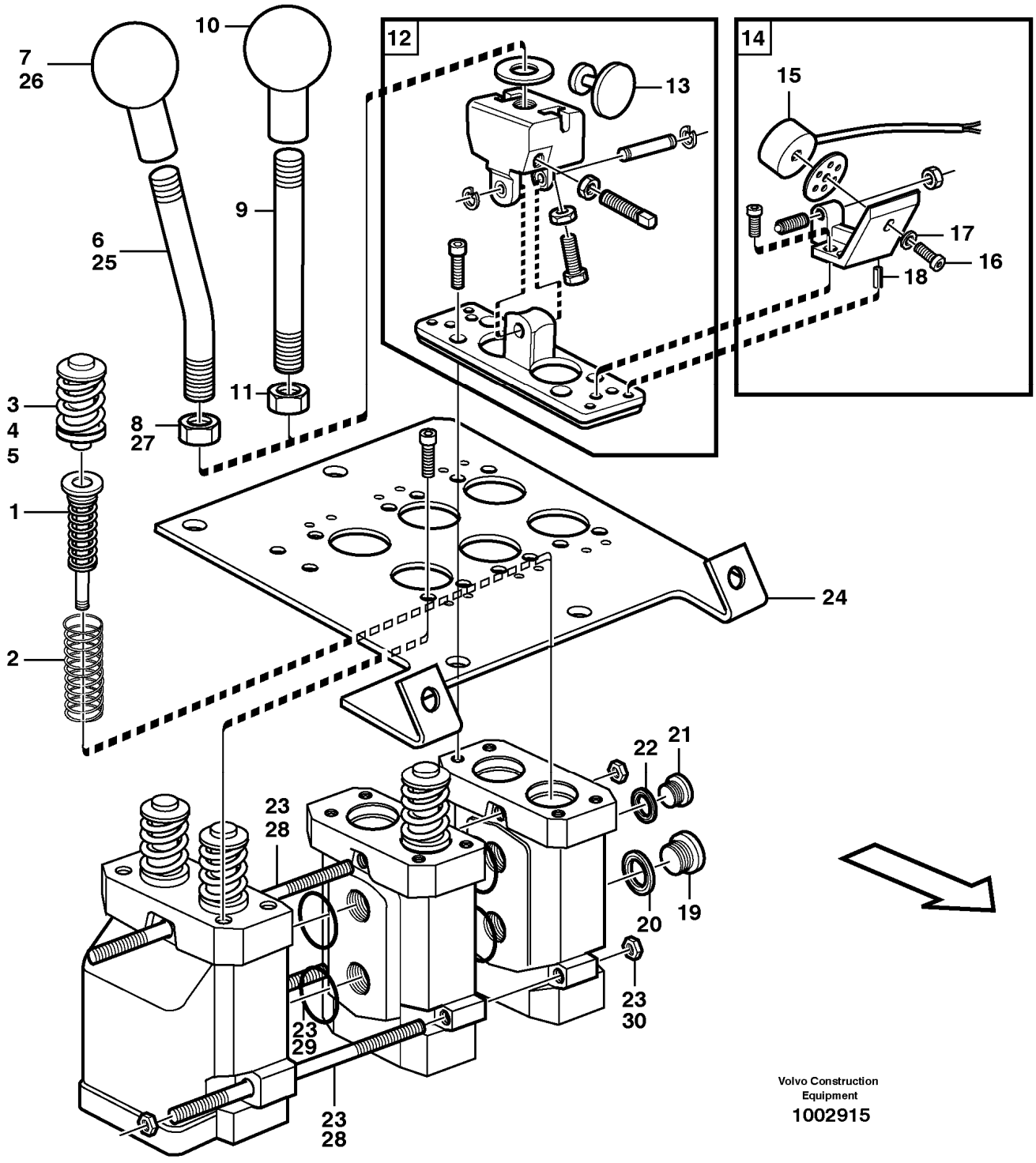

Section option	Kit	Option description
VOE33380		Volvo Wheel Loader L120E S/N 19801-, S/N 66001- USA, S/N 71401- BRA

VOE82046	VOE11709264	Detent, 3rd function
VOE33395		Wheel Loader L120E3 IRAN

Q1-Q5	Option	Option description	
Q1 33380 82046 33395	VOE33380	Volvo Wheel Loader L120E S/N 19801-, S/N 66001- USA, S/N 71401- BRA	
Q2 82046	VOE82046	Detent, 3rd function	

Pos	Part	Q1	Q2	Q3	Q4	Q5	PS	Kit	Description	Option(s)	Remark
	VOE11172599	1							Servo valve	VOE80781, VOE82049, VOE82408	
	VOE11706174		1						Servo valve	VOE80781, VOE82049, VOE82408	
1	VOE11705921	4							•Spring assembly		
	VOE11706175		2						•Spring assembly		
2	VOE11994393	4	2						•Return spring		
3	VOE11991323	4	2						•Valve		
4	VOE11991047	4	2						••Sealing kit		
5	VOE11991048	4	2						••Spacer washer		THICK = 0.2 MM
	VOE11991049	4	2						••Spacer washer		THICK = 0.3 MM
	VOE11991316	4	2						••Spacer washer		THICK = 0.5 MM
6	VOE11172595	1							•Hand lever		(VOE11708826)
7	VOE11708308	1							••Ball		
8	VOE13971080	1							••Hexagon nut		
9	VOE11708827	1							•Lever kit		
10	VOE11708308	1							••Ball		
11	VOE13971080	1							••Hexagon nut		
12	VOE11705078	2	1						•Hand lever		
13	VOE11003417	2	1						••Anchor plate		
14	VOE11705079	3							•Magnet		
15	VOE15100027	3							••Magnet		(VOE11003153)MA901, MA902, MA904
16	VOE959174	3							••Hex. socket screw		
17	VOE13960146	3							••Washer		
18	VOE951940	6							••Spring pin		
19	VOE945065	1	1						•Plug		
20	VOE13945653	1	1						•Plane gasket		
21	VOE13965768	1							•Plug		
22	VOE947083	1							•Gasket		
23	VOE11705080	1							•Track rod kit		
24	VOE11715961	1							•Valve plate		(VOE11104702)
	VOE11104986		1						Attaching plate	VOE80781	
25	VOE11998151		1						Lever kit	VOE80781, VOE82046	
	VOE11706177		1						Lever kit	VOE80781	
26	VOE11991321		1						•Ball		
27	VOE13971080		1						•Hexagon nut		

28	VOE11991319		1						Pull rod		
	VOE11706176		1						Track rod kit	VOE80781	
29	VOE955994		6						•O-ring		
30	VOE13955781		6						•Nut		

VOLVO

Construction Equipment

PROSIS Part Information

Date:	Image id:	Catalogue:	Model:
25/08/2018	**1001166**	**20086**	**L120E**
Brand:	Serial:	Group/Section:	Title:
Volvo	**19804-, 66001-, 71401-**	**914/350**	**Assembly parts for servo valve 80098**

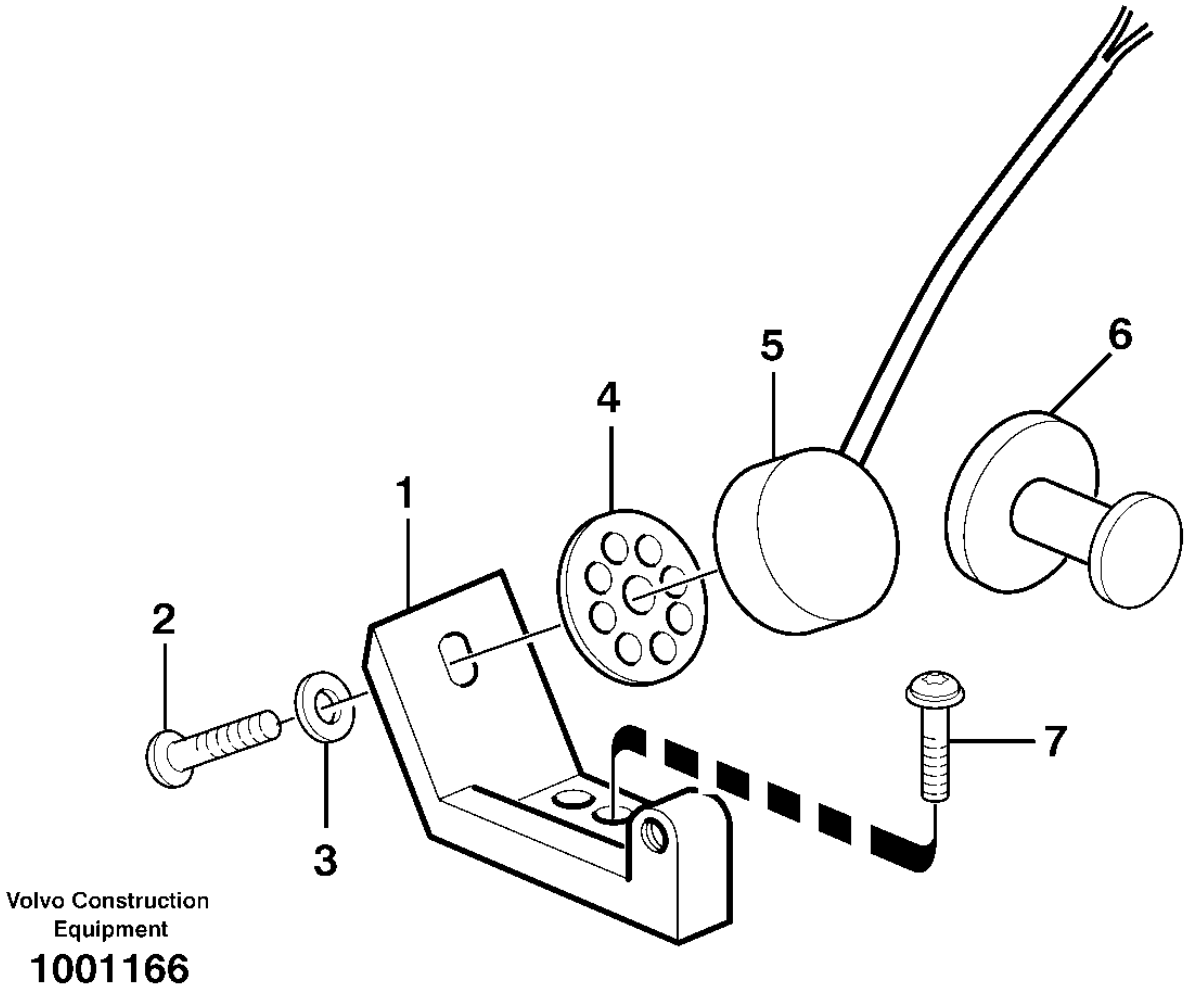

Section option	Kit	Option description
VOE80098	VOE11707329	Detent, 3rd function

Pos	Part	Q1	Q2	Q3	Q4	Q5	PS	Kit	Description	Option(s)	Remark
1	VOE11003531	1							Bracket		
2	VOE969513	1							Six point socket screw		(VOE13969513)
3	VOE960137	1							Washer		
4	VOE11003158	REQ							Spacer ring		

5	VOE15100027	1							Magnet		(VOE11003153)
6	VOE11003417	1							Anchor plate		
7	VOE969556	1							Six point socket screw		

VOLVO

Construction Equipment

PROSIS Part Information

Date:	Image id:	Catalogue:	Model:
25/08/2018	**1016737**	**20086**	**L120E**
Brand:	Serial:	Group/Section:	Title:
Volvo	**19804-, 66001-, 71401-**	**914/400**	**Servo valve with fitting parts.**

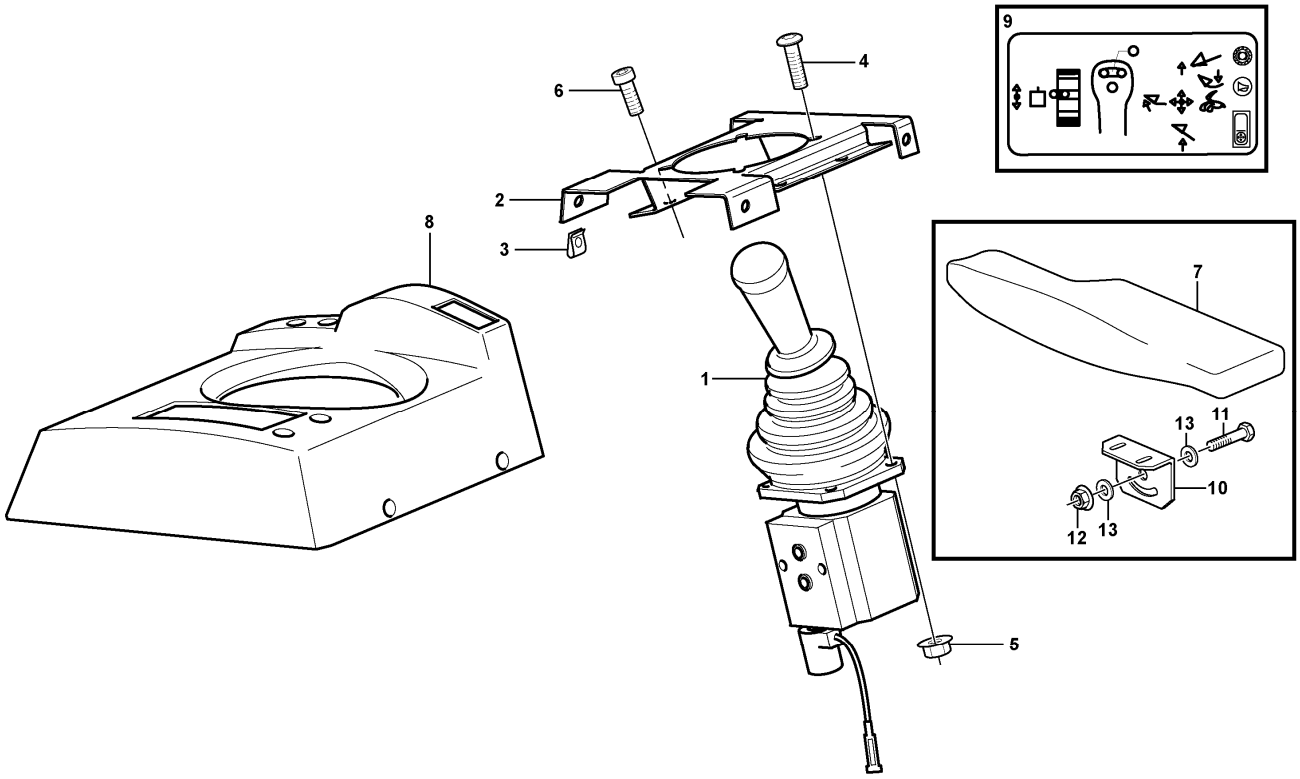

Section option	Kit	Option description
VOE82325	VOE11988198	Single lever hydraulic control, three functions
VOE82326	VOE11988197	Single lever hydraulic control, two functions
VOE83316	VOE11714603	Single lever hydraulic control, two functions
VOE83317	VOE11714604	Single lever hydraulic control, three functions

Q1-Q5	Option	Option description	
Q1 82325 82326	VOE82325	Single lever hydraulic control, three functions	
Q2 83316 83317	VOE83316	Single lever hydraulic control, two functions	

Pos	Part	Q1	Q2	Q3	Q4	Q5	PS	Kit	Description	Option(s)	Remark
1		1	1						Single Lever Control		See ref 914/425
2	VOE11104742	1	1						Attaching plate		
3	VOE949921	2	2						Spring nut		

4	VOE13975980	4	4						Six point socket screw		
5	VOE13949278	4	4						Flange lock nut		
6	VOE959223	4	4						Hex. socket screw		
7	VOE11164348	1	1						Arm rest		
8	VOE11104643	1	1						Cover		
9	VOE11006299	1	1						Decal		
10	VOE11164355	1	1						Anchorage		
11	VOE13946173	1							Screw		
11	VOE13945444		1						Screw		
12	VOE948645	1	1						Flange lock nut		
13	VOE11117464		2						Plain washer		(VOE13960141)

VOLVO

Construction Equipment

PROSIS Part Information

Date:	Image id:	Catalogue:	Model:
25/08/2018	**1017393**	**20086**	**L120E**
Brand:	Serial:	Group/Section:	Title:
Volvo	**19804-, 66001-, 71401-**	**914/425**	**Servo valve, single levercontrol**

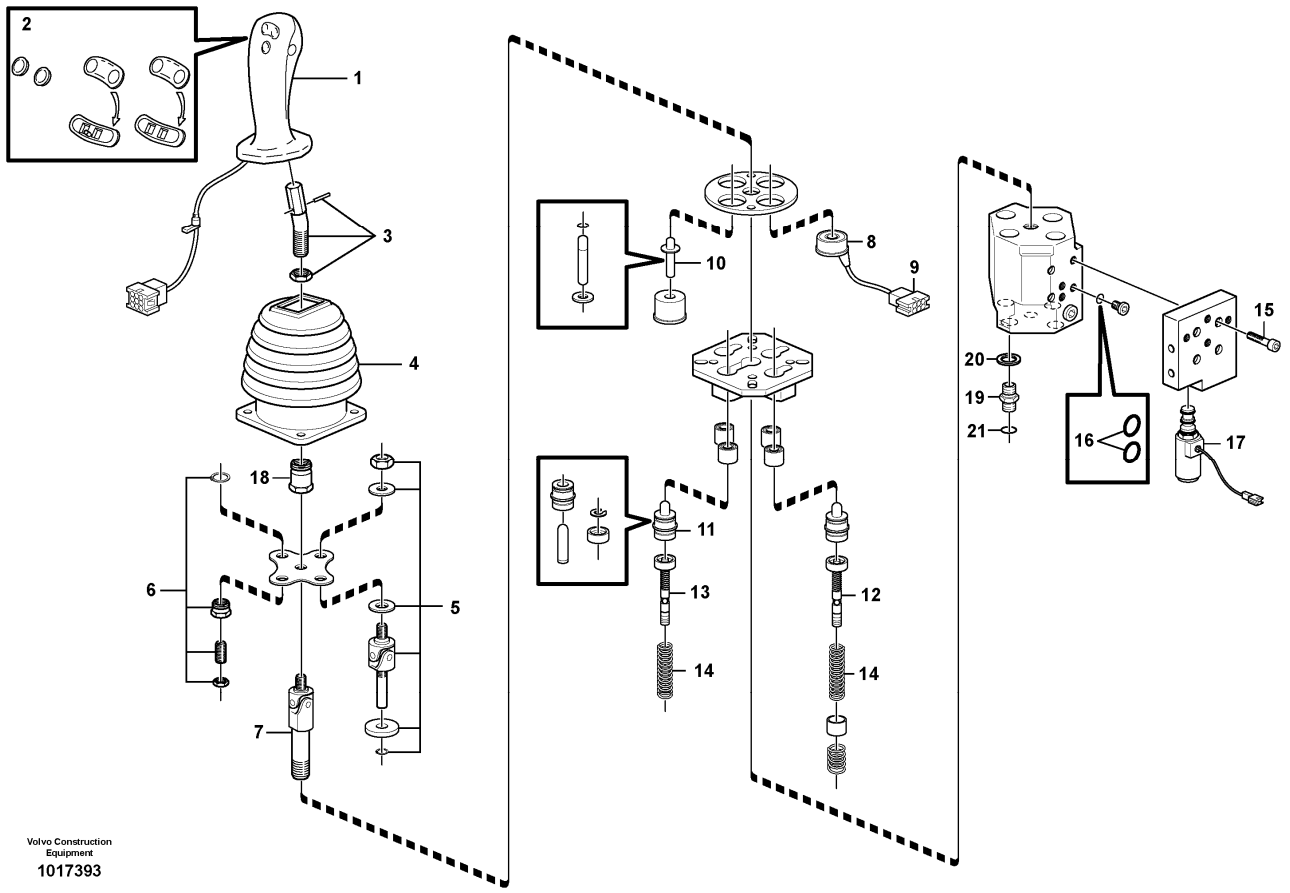

Section option	Kit	Option description
VOE82325	VOE11988198	Single lever hydraulic control, three functions
VOE82326	VOE11988197	Single lever hydraulic control, two functions
VOE83316	VOE11714603	Single lever hydraulic control, two functions
VOE83317	VOE11714604	Single lever hydraulic control, three functions

Q1-Q5	Option	Option description	
Q1 82325 82326	VOE82325	Single lever hydraulic control, three functions	
Q2 83316 83317	VOE83316	Single lever hydraulic control, two functions	

Pos	Part	Q1	Q2	Q3	Q4	Q5	PS	Kit	Description	Option(s)	Remark
	VOE11173915	1	1						Single Lever Control		
1	VOE11706972	1	1						•Handle		
2	VOE11988545	1	1				SS		••Button		
3	VOE11370672	1	1						•Adapter		

4	VOE11706973	1	1						•Bellows		
5	VOE11706974	3	3						•Repair kit		
6	VOE11706975	1	1						•Repair kit		
7	VOE11706976	1	1						•Universal joint		
8	VOE11988141	3	3						•Solenoid		MA916
9	VOE11706985	3	3						•Socket		
10	VOE11706978	1	1						•Control plunger		
11	VOE11988142	4	4						•Control plunger		
12		3	3				NS		•Control Slide		
13		1	1				NS		•Control Slide		
14	VOE11988145	1	1						•Spring kit		
15	VOE942314	4	4						•Hex. socket screw		
16	VOE13955985	2	2						•O-ring		
17	VOE11988146	1	1						•Solenoid valve		(VOE11706984)MA916
18		1	1				NS		•Lock nut		
19	VOE11411762		1						Restrictor		
20	VOE13945653		1						Plane gasket		
21	VOE990737		1						O-ring		

VOLVO

Construction Equipment

PROSIS Part Information

Date:	Image id:	Catalogue:	Model:
25/08/2018	**EK349**	**20086**	**L120E**
Brand:	Serial:	Group/Section:	Title:
Volvo	**19804-, 66001-, 71401-**	**914/450**	**Control valve. 82325**

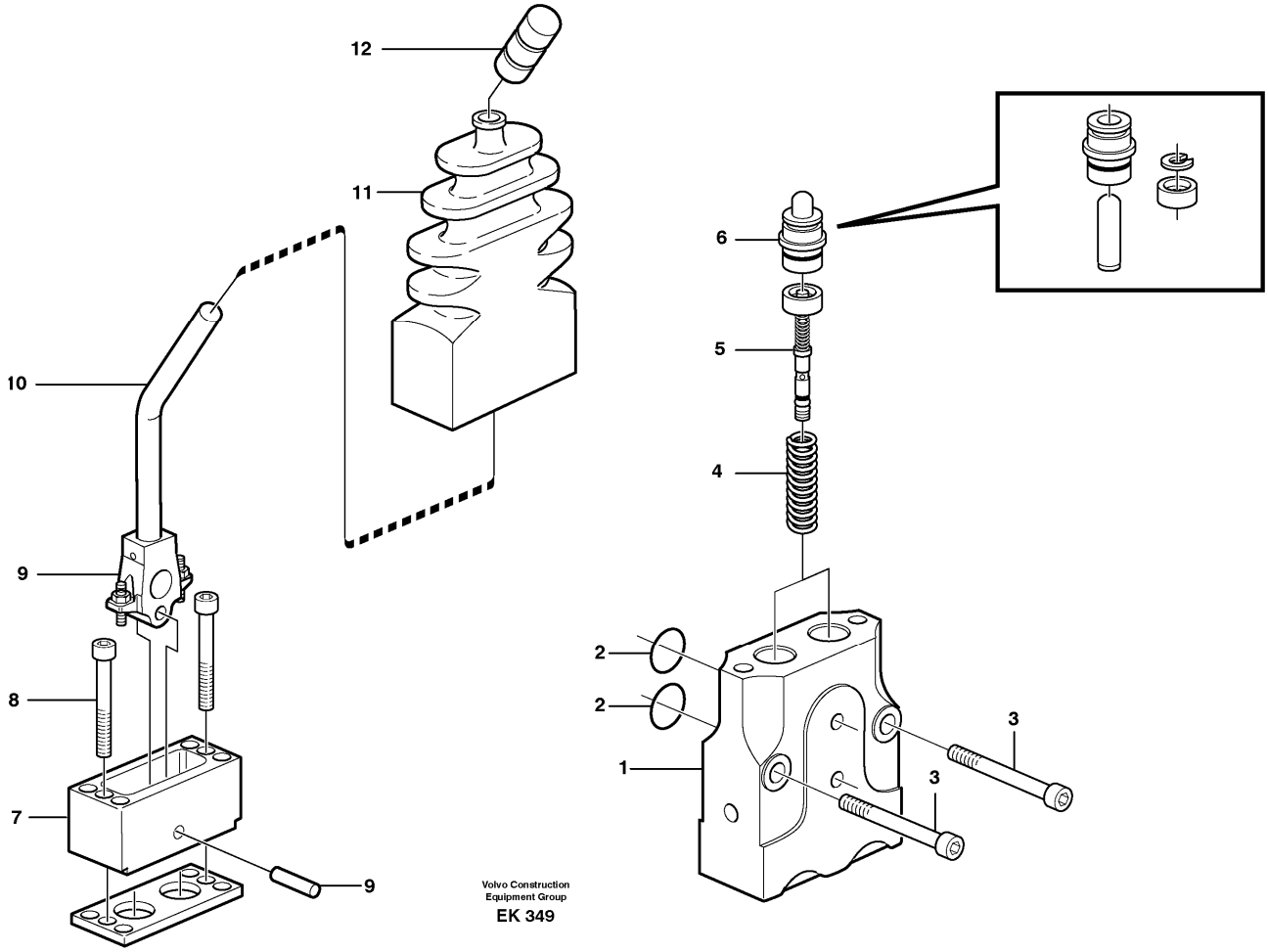

Section option	Kit	Option description
VOE82325	VOE11988198	Single lever hydraulic control, three functions

Pos	Part	Q1	Q2	Q3	Q4	Q5	PS	Kit	Description	Option(s)	Remark
	VOE11006043	1							Valve		
1		1					NS		•Housing		
2	VOE11706995	1							•Sealing kit		
	VOE955991	2							••O-ring		
3	VOE959226	2							•Allen Hd Screw		
4	VOE11706994	1							•Spring kit		
5	VOE11706997	1							•Control slide		
6	VOE11706185	1							•Control plunger		
7		1					NS		•Housing		
8	VOE13941747	2							•Screw		

9	VOE11706990	1							•Repair kit		
10	VOE11713533	1							•Lever kit		(VOE11706988)
11	VOE11706989	1							•Bellows		
12	VOE11706184	1							•Knob		

VOLVO

Construction Equipment

PROSIS Part Information

Date:	Image id:	Catalogue:	Model:
25/08/2018	**1013293**	**20086**	**L120E**
Brand:	Serial:	Group/Section:	Title:
Volvo	**19804-, 66001-, 71401-**	**914/500**	**Servo valve with fitting parts 82890**

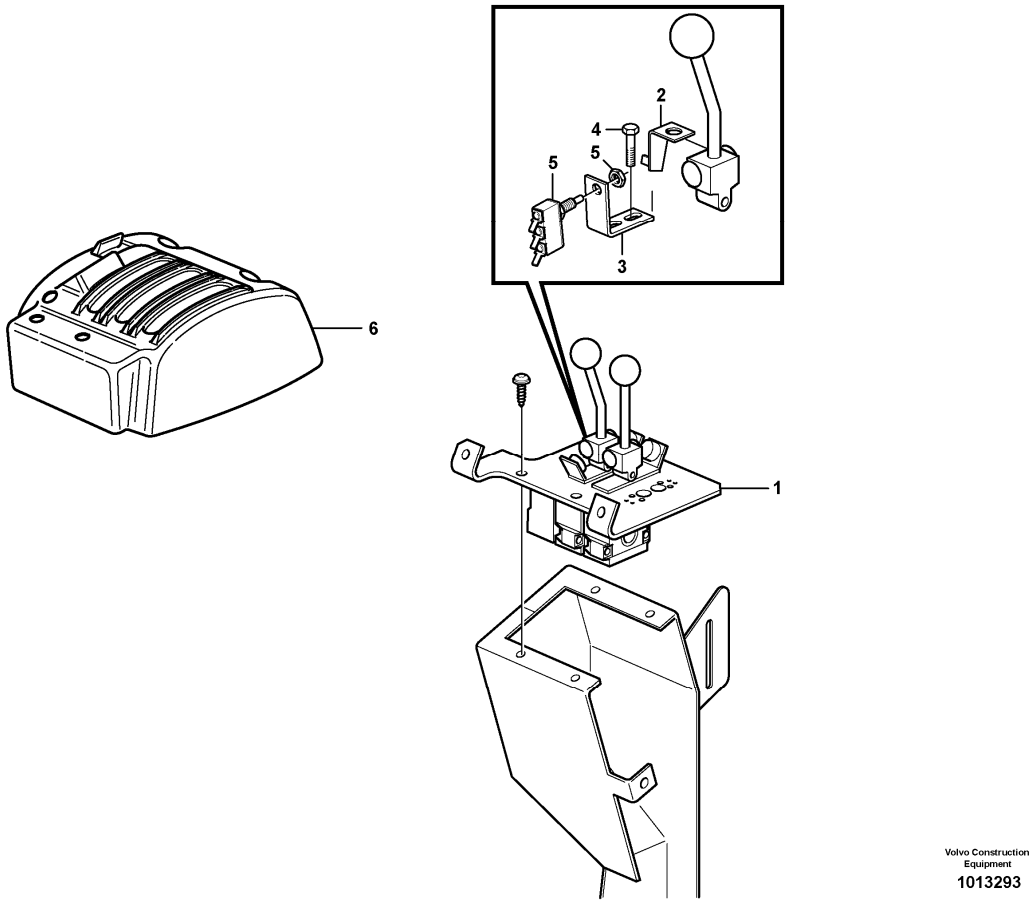

Section option	Kit	Option description
VOE82890		Valve, "return to dig"

Pos	Part	Q1	Q2	Q3	Q4	Q5	PS	Kit	Description	Option(s)	Remark
1		1							Servo Valve		See ref 914/300
2	VOE11007484	1							Attaching bracket		
3	VOE11007483	1							Attaching bracket		
4	VOE13946544	2							Screw		
5	VOE4787427	1							Microswitch		SE932
6		1							Cover		See ref 371/900

VOLVO

Construction Equipment

PROSIS Part Information

Date:	Image id:	Catalogue:	Model:
25/08/2018	**1019641**	**20086**	**L120E**
Brand:	Serial:	Group/Section:	Title:
Volvo	**19804-, 66001-, 71401-**	**914/550**	**Valve, "return to dig" 82890**

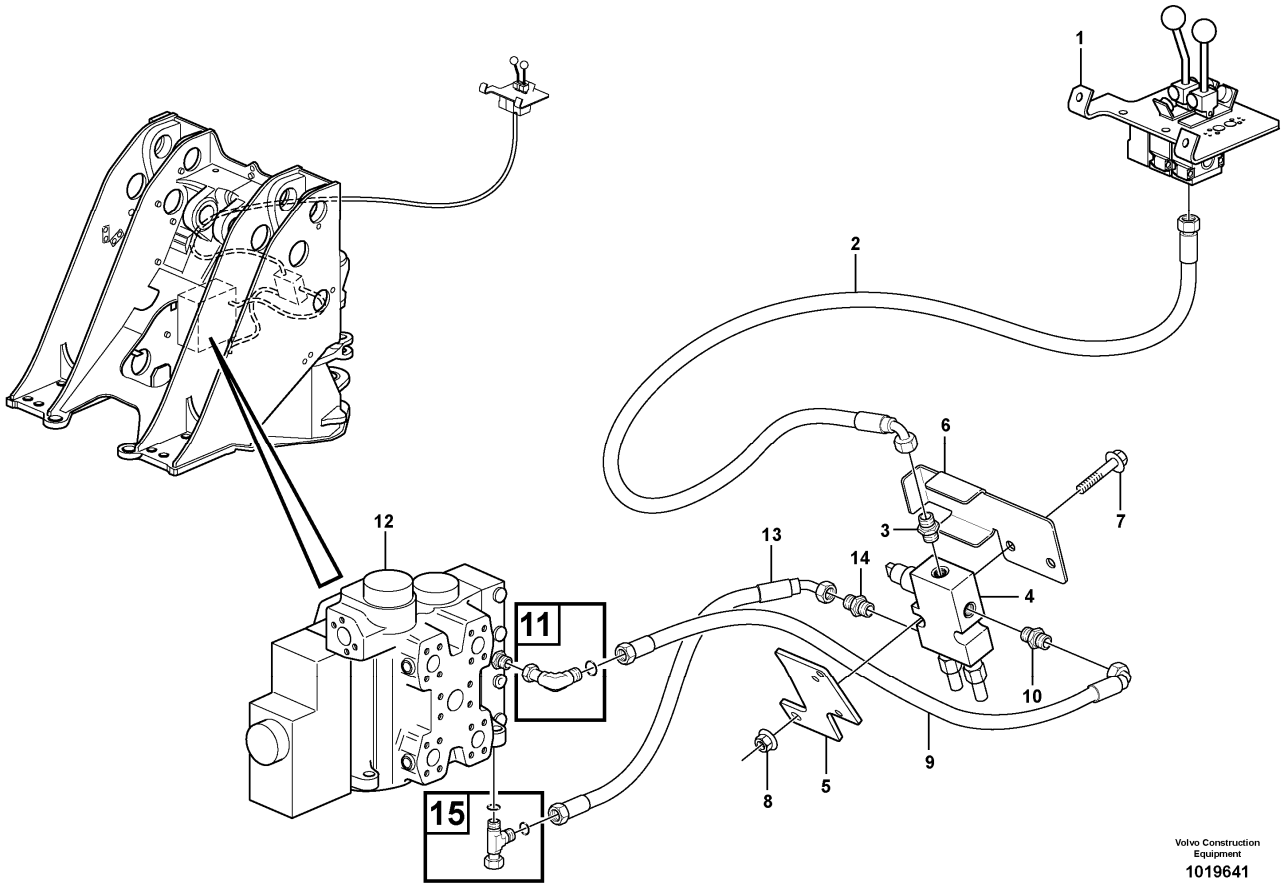

Section option	Kit	Option description
VOE82890		Valve, "return to dig"

Pos	Part	Q1	Q2	Q3	Q4	Q5	PS	Kit	Description	Option(s)	Remark
1		1							Servo Valve		See ref 914/300
2	VOE936786	1							Hose assembly		L = 2450 MM B1 - P
3	VOE935084	1							Nipple		
4	VOE11410627	1							Press rdc valve		MA959
5	VOE11410879	1							Attachment		
6	VOE11410715	1							Cover		
7	VOE13965180	2							Screw		
8	VOE948645	2							Flange lock nut		
9	VOE936787	1							Hose assembly		L = 350 MM A - PS
10	VOE935084	1							Nipple		
11	VOE13933900	1							Elbow nipple		

	VOE990737	1							•O-ring		(VOE4880492)
12		1							Control valve		
13	VOE936788	1							Hose assembly		L = 650 MM T - D
14	VOE935084	1							Nipple		
15	VOE13933936	1							T-nipple		
	VOE990737	2							•O-ring		

VOLVO

Construction Equipment

PROSIS Part Information

Date:	Image id:	Catalogue:	Model:
25/08/2018	**1088069**	**20086**	**L120E**
Brand:	Serial:	Group/Section:	Title:
Volvo	**19804-, 66001-, 71401-**	**916/100**	**Boom suspension system 80782**

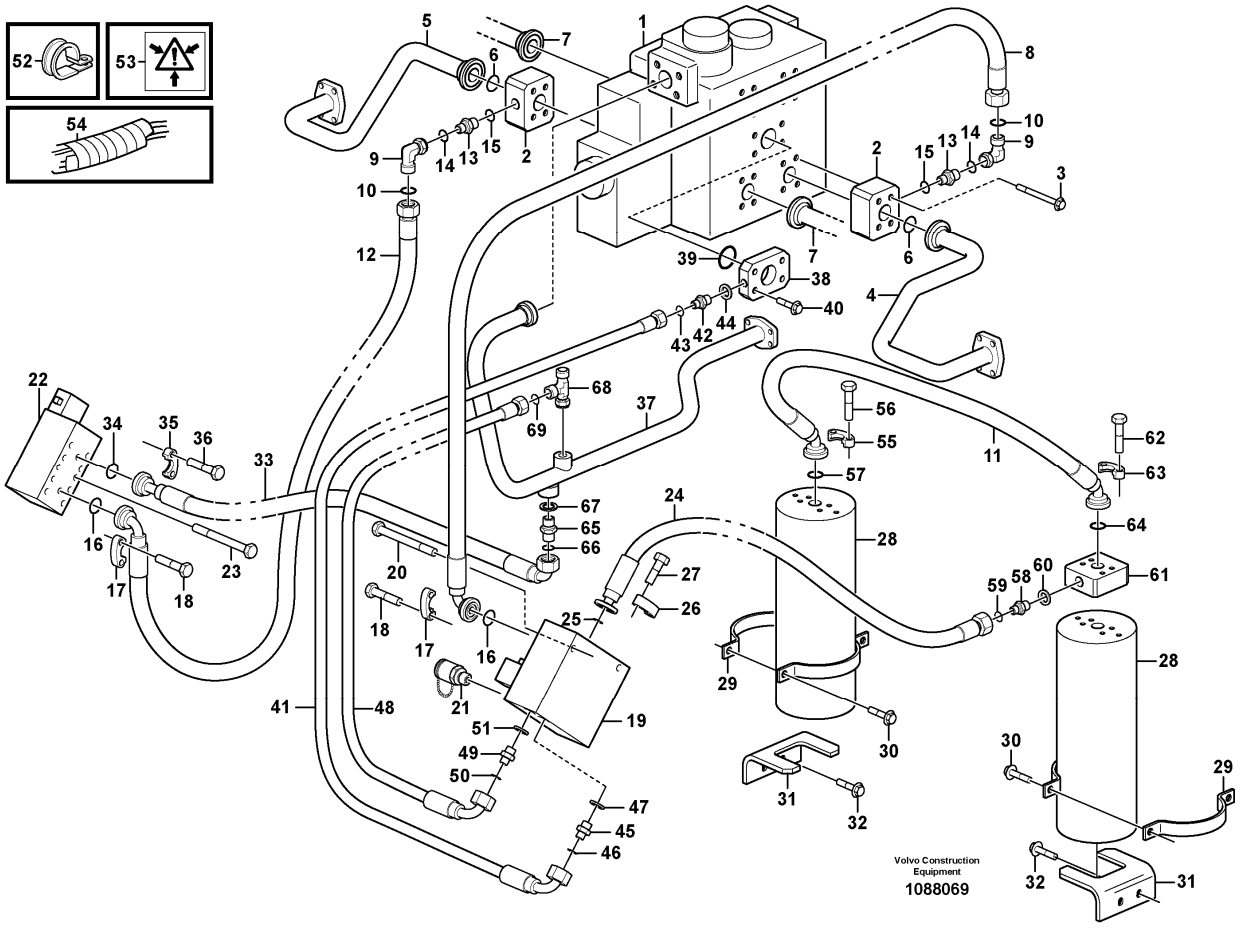

Section option	Kit	Option description
VOE80782	VOE11709032	Boom suspension BSS

Pos	Part	Q1	Q2	Q3	Q4	Q5	PS	Kit	Description	Option(s)	Remark
1		1							Control valve		See ref 911/100
2	VOE11411572	2							Connecting block		(VOE11172187)
3	VOE946473	8							Flange screw		
4	VOE15037915	1							Feed line		(VOE11172420)LH (-)
5	VOE15037405	1							Feed line		(VOE11172419)RH (+)
6	VOE990756	4							Sealing ring		1"
7		2							Feed Line		See ref 911/500
8	VOE11172555	1							Hose assembly		LH, L = 875MM
9	VOE13933910	2							Elbow nipple		LH
10	VOE990740	2							•O-ring		(VOE981289)
11	VOE11147958	1							Hose assembly		

12	VOE11172552	1							Hose assembly		RH, L = 560MM
13	VOE13933862	2							Nipple		
14	VOE990740	2							•O-ring		(VOE981289)
15	VOE993323	2							•O-ring		(VOE932042)
16	VOE13948699	2							O-ring		
17	VOE935312	4							Flange half		
18	VOE13946752	8							Screw		
19		1							Valve		See ref 916/150
20	VOE13965189	2							Screw		
21	VOE936444	1							Testing nipple		
22	VOE11101827	1							Valve		
23	VOE13965189	2							Screw		
24	VOE935901	1							Hose assembly		L = 630MM
25	VOE13948699	2							O-ring		
26	VOE935312	4							Flange half		
27	VOE13946752	8							Screw		
28	VOE11716860	2							Accumulator		
	VOE11716862	2							•Sealing Kit		See footnote 35)
	VOE11716861	2							•Sealing Kit		See footnote 38)
	VOE11702538	2							•Decal		
29	VOE11130843	8							Clamp		
30	VOE13965186	8							Screw		
31	VOE15161059	2							Attaching bracket		(VOE11148028)
32	VOE946441	4							Flange screw		
33	VOE11147972	1							Hose assembly		L = 470MM
34	VOE13948699	1							O-ring		
35	VOE11015454	2							Flange half		
36	VOE946472	4							Flange screw		
37		1							Return line		
38	VOE11108682	1							Connecting block		
39	VOE990757	1							Sealing ring		
40	VOE13966364	4							Flange screw		
41	VOE11148959	1							Hose assembly		L = 1100MM
42	VOE935085	1							Nipple		
43	VOE990737	1							•O-ring		(VOE4880492)
44	VOE993320	1							•O-ring		(VOE932039)
45	VOE13933855	1							Nipple		
46	VOE990737	1							•O-ring		(VOE4880492)
47	VOE14213676	1							•Sealing ring		
48	VOE11147978	1							Hose assembly		L = 750MM
49	VOE13933855	2							Nipple		
50	VOE990737	2							•O-ring		(VOE4880492)
51	VOE14213676	2							•Sealing ring		
52	VOE11025709	1							Clamp		
53	VOE11003865	3							Decal		
54	VOE4880647	REQ							Sheath		L = 200MM
55	VOE935312	2							Flange half		

56	VOE13946752	4							Screw		
57	VOE13948699	1							O-ring		
58	VOE13933862	1							Nipple		
59	VOE990740	1							•O-ring		(VOE981289)
60	VOE993323	1							•O-ring		(VOE932042)
61	VOE11411596	1							Connecting block		(VOE11133329)
62	VOE13947790	4							Screw		
63	VOE935312	2							Flange half		
64	VOE13948699	2							O-ring		
65	VOE13933906	1							Nipple		
66	VOE990740	1							•O-ring		(VOE981289)
67	VOE14211859	1							•Sealing ring		
89	VOE13933936	1							T-nipple		
69	VOE990737	2							•O-ring		

35) Sealing kit with piston
38) Sealing kit without piston

VOLVO

Construction Equipment

PROSIS Part Information

Date:	Image id:	Catalogue:	Model:
25/08/2018	**1057972**	**20086**	**L120E**
Brand:	Serial:	Group/Section:	Title:
Volvo	**19804-, 66001-, 71401-**	**916/150**	**Relief valve. 80782**

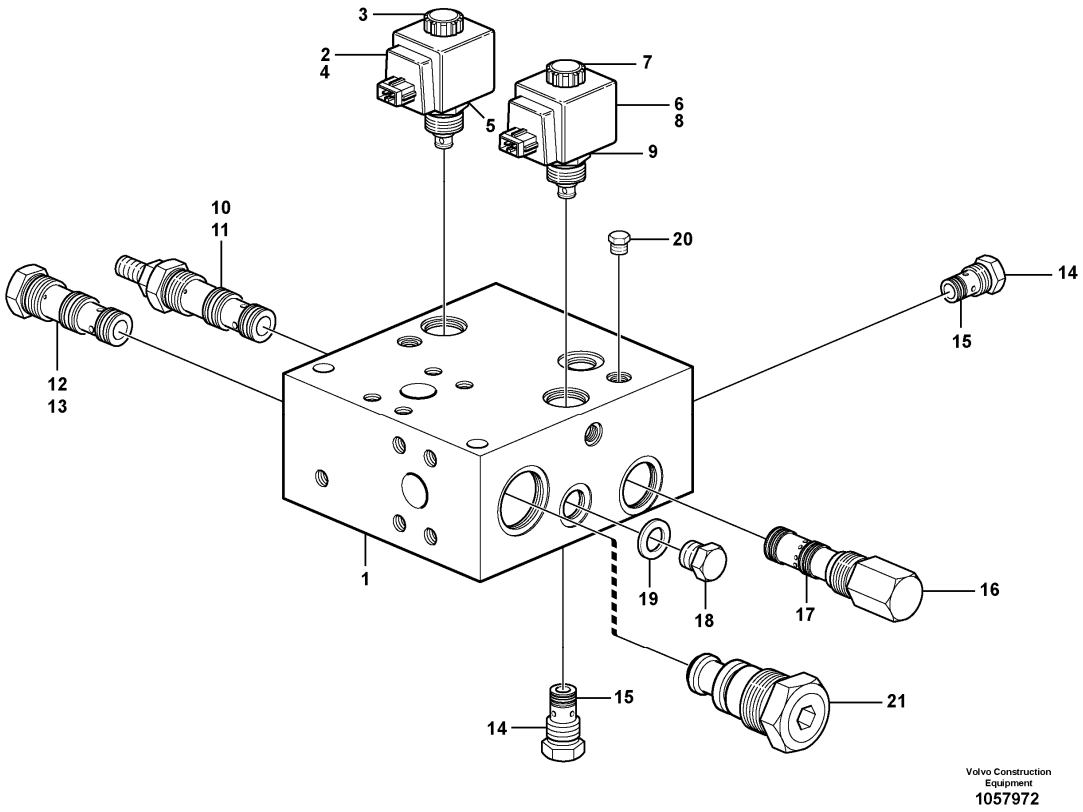

Section option	Kit	Option description
VOE80782	VOE11709032	Boom suspension BSS

Pos	Part	Q1	Q2	Q3	Q4	Q5	PS	Kit	Description	Option(s)	Remark
1	VOE11410639	1							Valve		
2	VOE11705917	1							•Solenoid valve kit		CT1
3	VOE11706062	1							••Nut set		
4	VOE11714081	1							••Coil		
5	VOE11706064	1							••Sealing kit		
6	VOE11705918	1							•Solenoid valve kit		CT4
7	VOE11706065	1							••Nut set		
8	VOE11714081	1							••Coil		
9	VOE11706064	1							••Sealing kit		
10	VOE11706070	1							•Valve		CT8
11	VOE11706071	1							••Sealing kit		

12	VOE11714082	1							•Shuttle valve		CT3
13	VOE11714083	1							••Sealing kit		
14	VOE11714080	2							•Non-return valve		CT5, CT6
15	VOE11706067	2							••Sealing kit		
16	VOE11706068	1							•Pressure regulator		CT7
17	VOE11706069	1							••Sealing kit		
18	VOE15057390	1							•Plug		
19	VOE15057393	1							•Seal		
20	VOE15093981	9							•Plug		
21	VOE15195265	1							•Valve		

VOLVO

Construction Equipment

PROSIS Part Information

Date:	Image id:	Catalogue:	Model:
25/08/2018	**1000116**	**20086**	**L120E**
Brand:	Serial:	Group/Section:	Title:
Volvo	**19804-, 66001-, 71401-**	**916/200**	**Relief valve. 80782**

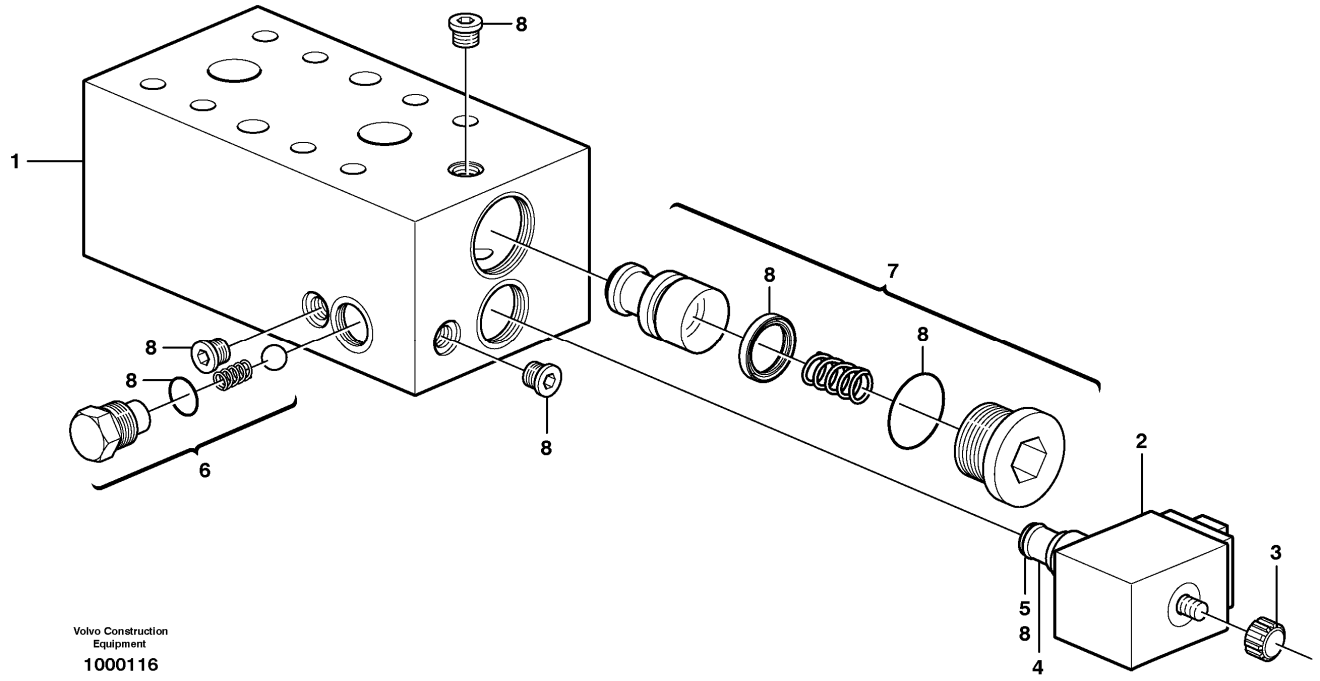

Section option	Kit	Option description
VOE80782	VOE11709032	Boom suspension BSS

Pos	Part	Q1	Q2	Q3	Q4	Q5	PS	Kit	Description	Option(s)	Remark
1	VOE11101827	1							Valve		
2	VOE11705917	1							•Solenoid valve kit		CT1, MA908
3	VOE11706062	1							••Nut set		
4	VOE11714081	1							••Coil		
5	VOE11706064	1							••Sealing kit		
6	VOE11706074	1							•Non-return valve kit		CT2
7	VOE11706075	1							•Valve		CT3
8	VOE11706789	1							Sealing kit		

VOLVO

Construction Equipment

PROSIS Part Information

Date:	Image id:	Catalogue:	Model:
25/08/2018	**1012365**	**20086**	**L120E**
Brand:	Serial:	Group/Section:	Title:
Volvo	**19804-, 66001-, 71401-**	**916/250**	**Hydraulic system, feed and return lines 3rd function. 82046, 82049**

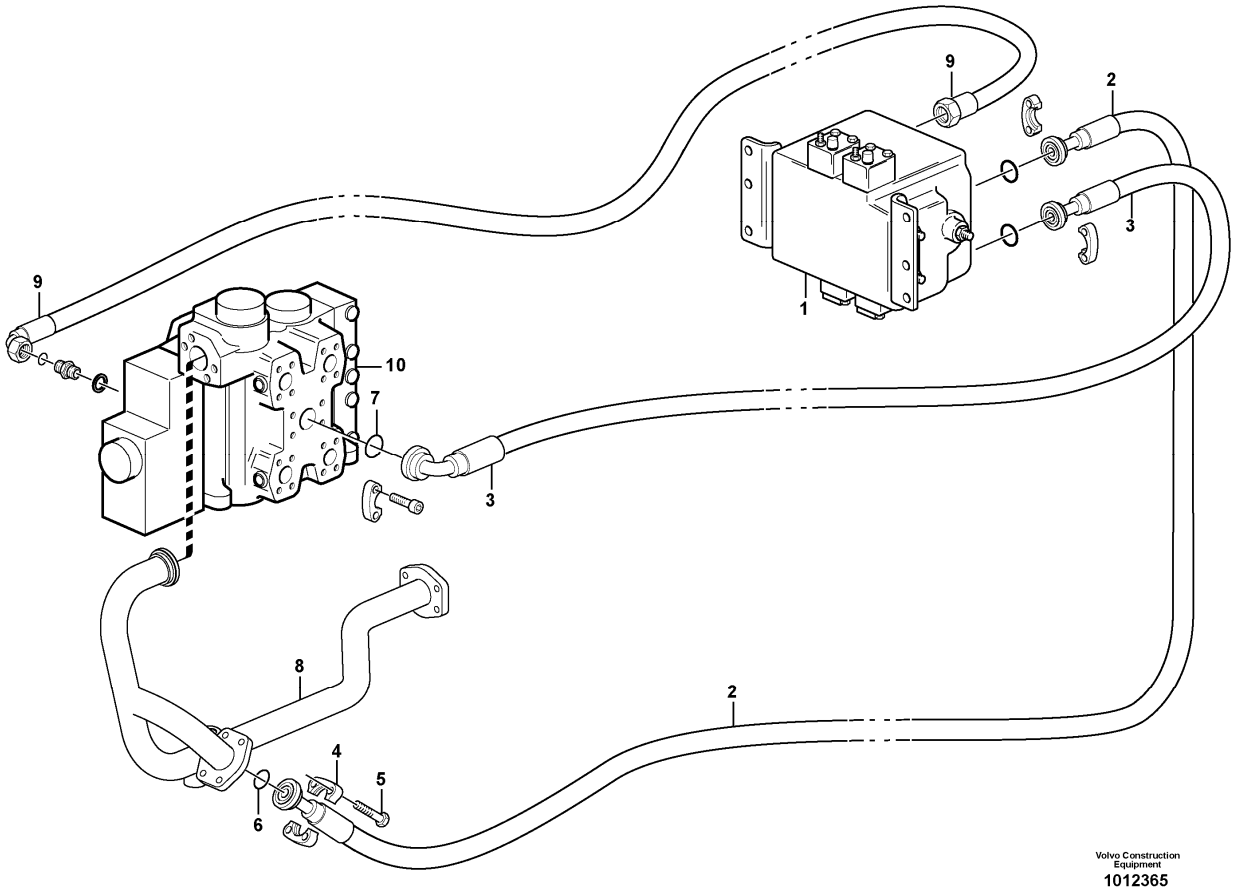

Section option	Kit	Option description
VOE82046	VOE11709264	Detent, 3rd function
VOE82049		Detent, 3rd function

Pos	Part	Q1	Q2	Q3	Q4	Q5	PS	Kit	Description	Option(s)	Remark
1		1							Direction valve		See ref 916/350
2	VOE936076	1							Hose assembly		L = 1060MM
3	VOE936075	1							Hose assembly		L = 970MM
4	VOE935309	2							Flange half		
5	VOE965225	8							Flange screw		
6	VOE13949239	2					SS		O-ring		
7	VOE990757	1							Sealing ring		
8	VOE11172580	1							Return line		
9	VOE11148936	1							Hose assembly		L = 900MM
10		1							Control valve		See ref 912/100

VOLVO

Construction Equipment

PROSIS Part Information

Date:	Image id:	Catalogue:	Model:
25/08/2018	**1021827**	**20086**	**L120E**
Brand:	Serial:	Group/Section:	Title:
Volvo	**19804-, 66001-, 71401-**	**916/300**	**Pressure lines, 3rd function. 82046, 82049**

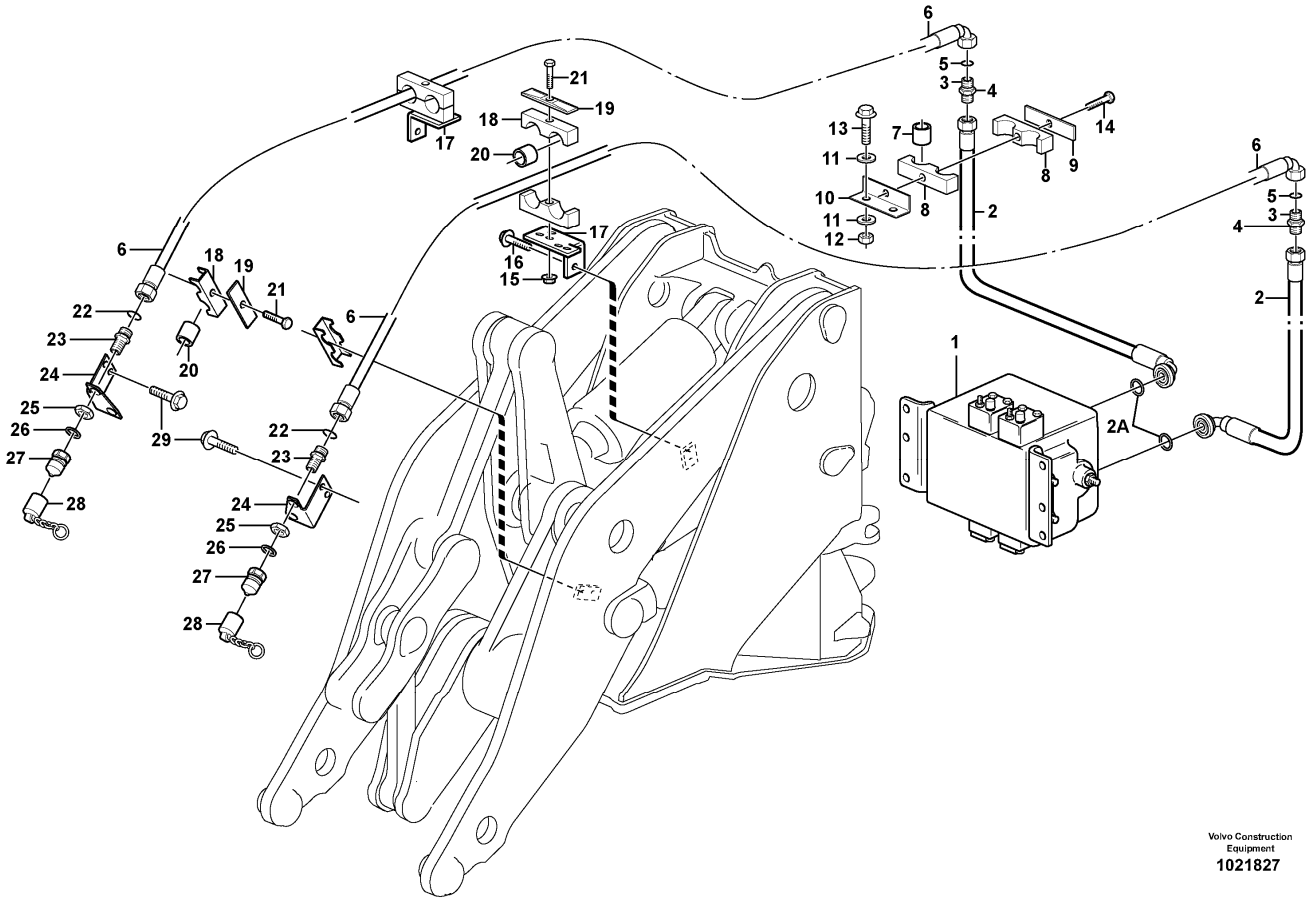

Section option	Kit	Option description
VOE82046	VOE11709264	Detent, 3rd function
VOE82049		Detent, 3rd function

Pos	Part	Q1	Q2	Q3	Q4	Q5	PS	Kit	Description	Option(s)	Remark
1		1							Direction Valve		See ref 916/350
2	VOE935900	2							Hose assembly		L = 1420MM
2A	VOE990742	2							O-ring		
3	VOE935285	2							Nipple		
4	VOE935286	2							Lock nut		
5	VOE990740	2							O-ring		(VOE981289)
6	VOE936080	2							Hose assembly	VOE82046	L = 2300MM
	VOE936107	2							Hose assembly	VOE82049	L = 2700MM
7	VOE11130978	2							Spacer		
8	VOE11411428	2							Clamp		

9	VOE4880586	2							Cover plate		
10	VOE11173176	2							Attachment		
11	VOE13960143	8							Washer		
12	VOE13971095	4							Flange nut		
13	VOE13965186	4							Screw		
14	VOE13965180	2							Screw		
15	VOE948645	2							Flange lock nut		
16	VOE946441	4							Flange screw		
17	VOE11173262	2							Bracket		
18	VOE11411428	2							Clamp		
19	VOE4880568	4							Flange screw		
20	VOE11130978	4							Spacer		
21	VOE13965182	4							Screw		
22	VOE990740	2							O-ring		(VOE981289)
23	VOE11172046	2							Nipple		
24	VOE11173602	1							Attachment	VOE82046	RH
	VOE11173600	1							Attachment	VOE82046	LH
	VOE11410089	1							Attachment	VOE82049	RH
	VOE11410088	1							Attachment	VOE82049	LH
25	VOE935286	2							Lock nut		
26	VOE14013070	2							Sealing washer		
27	VOE11043022	2							Nipple		
28	VOE11147586	2							Dust cover		
29	VOE946441	4							Flange screw		

VOLVO

Construction Equipment

PROSIS Part Information

Date:	Image id:	Catalogue:	Model:
25/08/2018	**1007619**	**20086**	**L120E**
Brand:	Serial:	Group/Section:	Title:
Volvo	**19804-, 66001-, 71401-**	**916/350**	**Servo - hydraulic 3rd function. 82046, 82049**

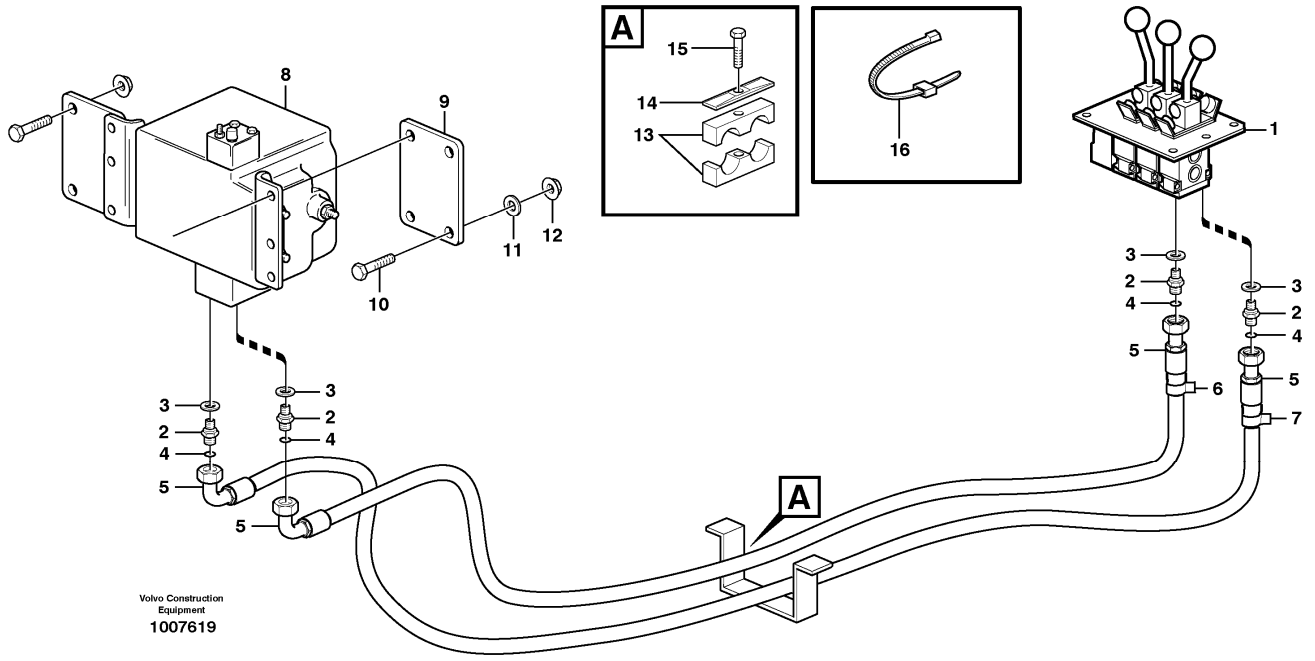

Section option	Kit	Option description
VOE82046	VOE11709264	Detent, 3rd function
VOE82049		Detent, 3rd function

Pos	Part	Q1	Q2	Q3	Q4	Q5	PS	Kit	Description	Option(s)	Remark
1		1							Servo valve		See ref 914/300
2	VOE14345423	4							Nipple		
3	VOE14211856	4							•Sealing ring		
4	VOE990737	4							•O-ring		(VOE4880492)
5	VOE936708	2							Hose assembly		(VOE935776)L = 2050 MM
6	VOE11014127	2							Marking sleeve		GREY
7	VOE4881453	2							Marking sleeve		VIOL
8	VOE11173316	1							Direction valve		See ref 912/350
9	VOE11173355	2							Attachment		
10	VOE13965194	4							Screw		
11	VOE13960145	8							Washer		
12	VOE971099	8							Flange lock nut		(VOE13971099)
13	VOE11411408	2							Clamp		
14	VOE4880579	1							Cover plate		

15	VOE13965180	2							Screw		
16	VOE4881438	REQ							Cable tie		

VOLVO

Construction Equipment

PROSIS Part Information

Date:	Image id:	Catalogue:	Model:
25/08/2018	**1019514**	**20086**	**L120E**
Brand:	Serial:	Group/Section:	Title:
Volvo	**19804-, 66001-, 71401-**	**916/500**	**Servo - hydraulic. 3rd and 4th function. 80781, 82408**

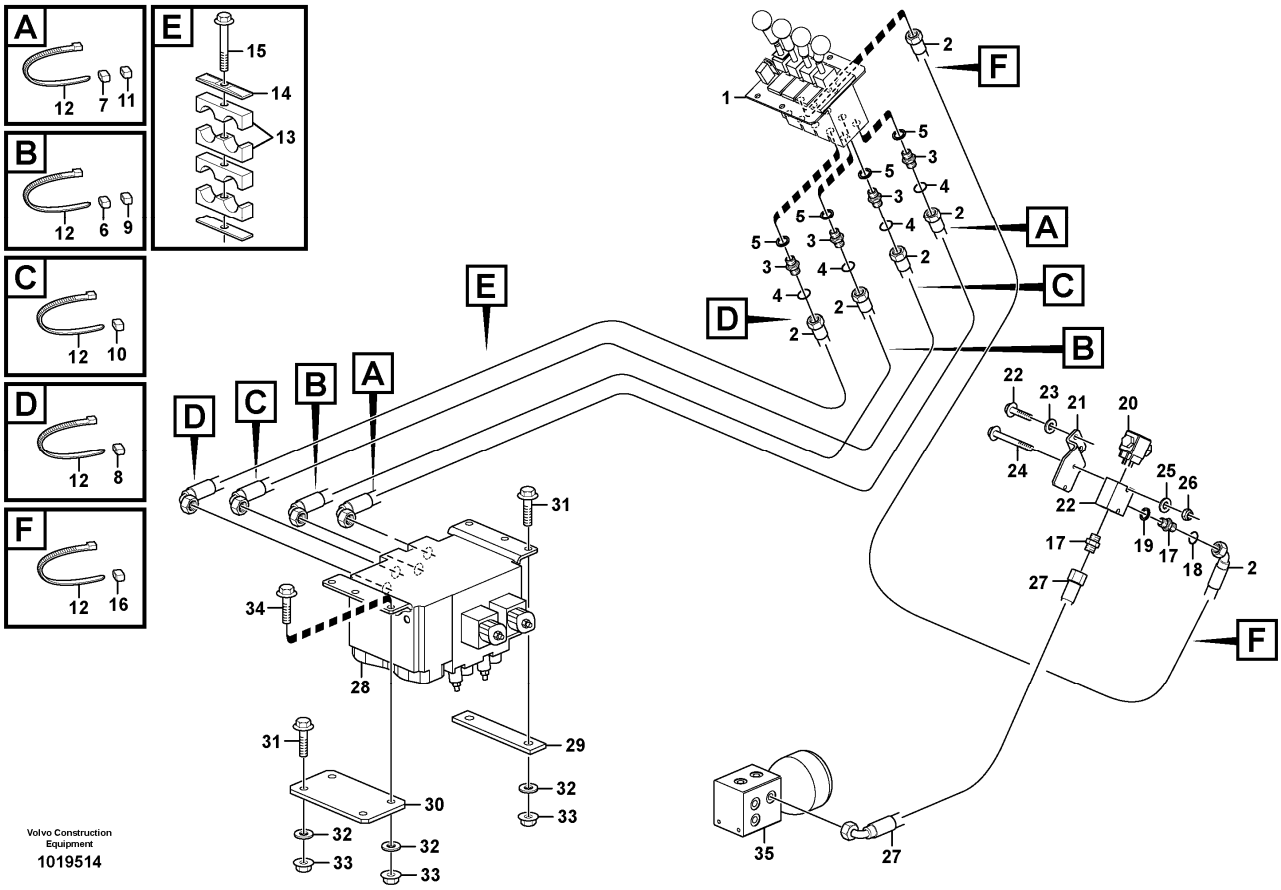

Section option	Kit	Option description
VOE80781	VOE11709027	Hydraulic system, 3rd and 4th function
VOE82408		Hydraulic system, 3rd and 4th function LONG BOOM

Pos	Part	Q1	Q2	Q3	Q4	Q5	PS	Kit	Description	Option(s)	Remark
1		1							Servo valve		See ref 914/300
2	VOE936708	5							Hose assembly		L = 2050 MM
3	VOE14345423	4							Nipple		
4	VOE990737	4							•O-ring		(VOE4880492)
5	VOE14211856	4							•Sealing ring		
6	VOE11014127	2							Marking sleeve		GREY
7	VOE4881453	2							Marking sleeve		VIOL
8	VOE11014127	2							Marking sleeve		GREY
9	VOE4881454	2							Marking sleeve		PINK
10	VOE4881453	2							Marking sleeve		VIOL

11	VOE4881457	2							Marking sleeve		GREEN
12	VOE4881438	REQ							Cable tie		
13	VOE11411408	2							Clamp		
14	VOE4880579	1							Cover plate		
15	VOE13965181	1							Screw		
16	VOE4881458	2							Marking sleeve		BROWN
17	VOE13933897	2							Nipple		
18	VOE990737	2							•O-ring		(VOE4880492)
19	VOE14211856	2							•Sealing ring		
20	VOE11173930	1							Valve		
	VOE11709837	1							•Coil		
	VOE11709838	1							•Sealing kit		
	VOE11709839	1							•Nut		
21	VOE11173569	1							Attachment		
22	VOE13945444	2							Screw		
23	VOE11117464	2							Plain washer		(VOE13960141)
24	VOE13965177	2							Screw		
25	VOE960139	2							Plain washer		
26	VOE13949278	2							Flange lock nut		
27	VOE11163049	1							Hose assembly		L = 750 MM
28		1							Direction Valve		See ref 916/600
29	VOE11173370	1							Washer		
30	VOE11173355	1							Attachment		
31	VOE13965194	4							Screw		
32	VOE13960145	6							Washer		
33	VOE971099	6							Flange lock nut		
34	VOE13965191	2							Screw		
35		1							Connection block		See ref 914/100

VOLVO

Construction Equipment

PROSIS Part Information

Date:	Image id:	Catalogue:	Model:
25/08/2018	**1019515**	**20086**	**L120E**
Brand:	Serial:	Group/Section:	Title:
Volvo	**19804-, 66001-, 71401-**	**916/600**	**Hydraulic system, 3rd and 4th function. Feed and return lines.**

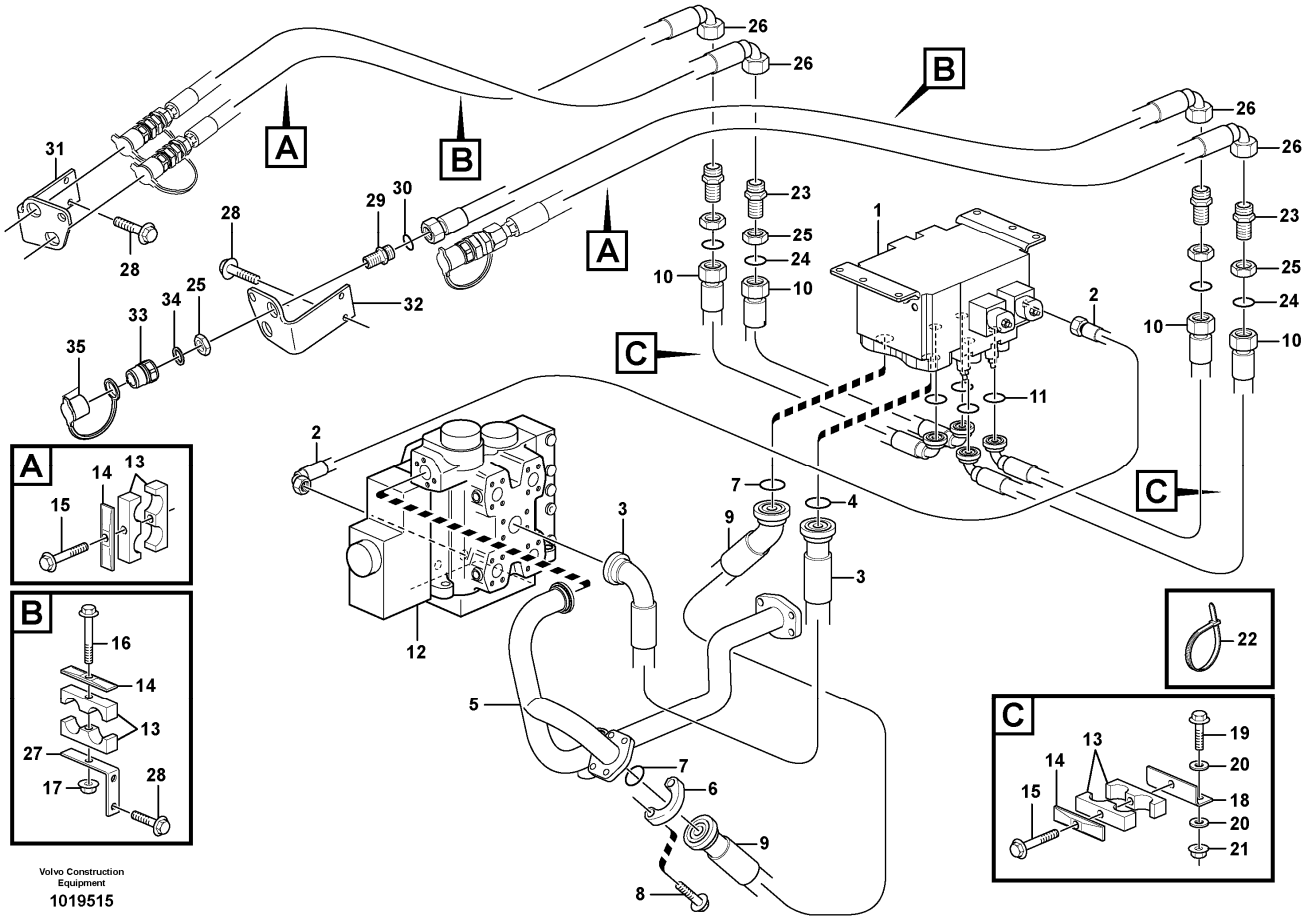

Section option	Kit	Option description
VOE80781	VOE11709027	Hydraulic system, 3rd and 4th function
VOE82408		Hydraulic system, 3rd and 4th function LONG BOOM

Q1-Q5	Option	Option description	
Q1 80781	VOE80781	Hydraulic system, 3rd and 4th function	
Q2 82408	VOE82408	Hydraulic system, 3rd and 4th function LONG BOOM	

Pos	Part	Q1	Q2	Q3	Q4	Q5	PS	Kit	Description	Option(s)	Remark
1	VOE11173318	1	1						Direction valve		See ref 912/350
2	VOE11148936	1	1						Hose assembly		L = 900 MM
3	VOE936075	1	1						Hose assembly		L = 970 MM
4	VOE990757	1	1						Sealing ring		
5	VOE11172580	1	1						Return line		
6	VOE935309	2	2						Flange half		

7	VOE990743	2	2						O-ring		
8	VOE965225	8	8						Flange screw		
9	VOE936076	1	1						Hose assembly		L = 1060 MM
10	VOE935900	4	4						Hose assembly		L = 1420 MM
11	VOE990742	4	4						O-ring		
12		1	1						Control valve		See ref 912/100
13	VOE11411427	6	6						Clamp		
14	VOE4880586	6	6						Cover plate		
15	VOE13965180	4	4						Screw		
16	VOE13965182	2	2						Screw		
17	VOE948645	2	2						Flange lock nut		
18	VOE11173176	2	2						Attachment		
19	VOE13965186	4	4						Screw		
20	VOE13960143	8	8						Washer		
21	VOE13971095	4	4						Flange nut		
22	VOE4881438	REQ	REQ						Cable tie		
23	VOE935285	4	4						Nipple		
24	VOE990740	4	4						•O-ring		
25	VOE935286	8	8						Lock nut		
26	VOE936080	4							Hose assembly		L = 2300 MM
	VOE936107		4						Hose assembly		L = 2700 MM
27	VOE11173262	2	2						Bracket		
28	VOE946441	8	8						Flange screw		
29	VOE11172046	4	4						Nipple		
30	VOE990740	4	4						O-ring		
31	VOE11173602	1							Attachment		RH
	VOE11410089		1						Attachment		RH
32	VOE11173600	1							Attachment		LH
	VOE11410088		1						Attachment		LH
33	VOE11043022	4	4						Nipple		
34	VOE14013070	4	4						Sealing washer		
35	VOE11147586	4	4						Dust cover		

VOLVO

Construction Equipment

PROSIS Part Information

Date:	Image id:	Catalogue:	Model:
25/08/2018	**1021232**	**20086**	**L120E**
Brand:	Serial:	Group/Section:	Title:
Volvo	**19804-, 66001-, 71401-**	**916/700**	**Hydraulic system, high altitude version 33380, 33395**

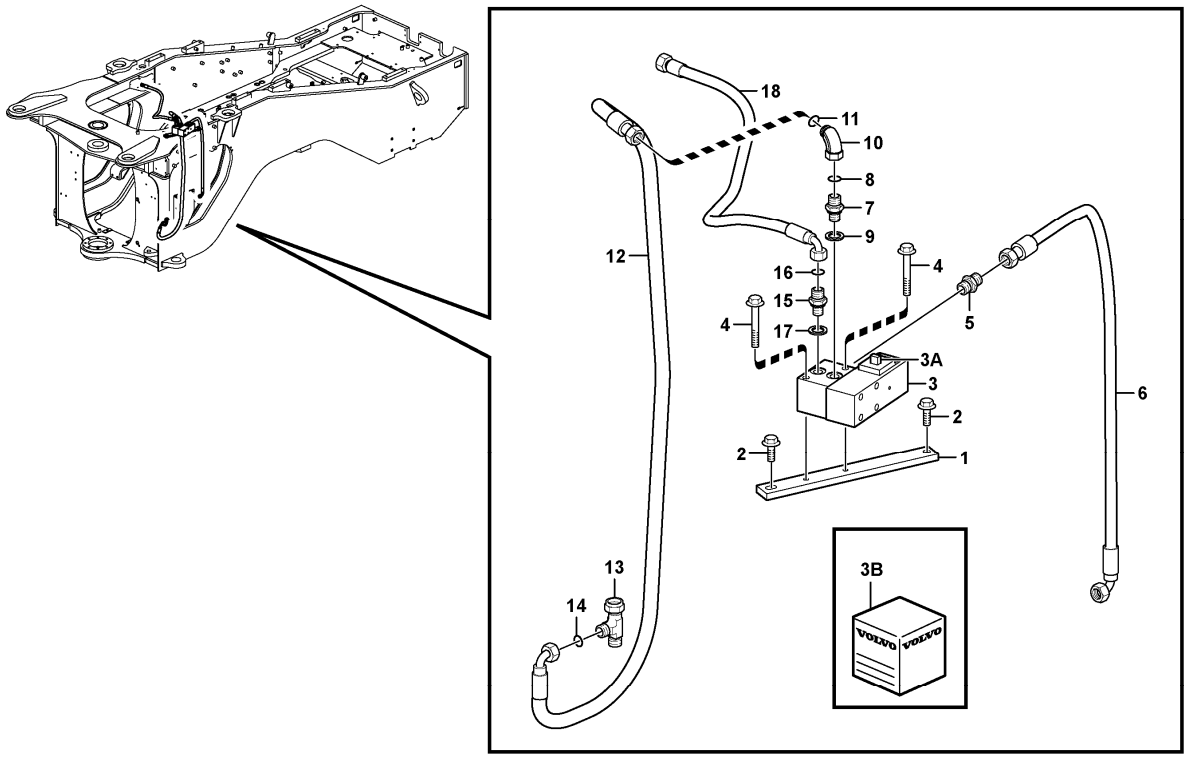

Volvo Construction Equipment
1021232

Section option	Kit	Option description
VOE33380		Volvo Wheel Loader L120E S/N 19801-, S/N 66001- USA, S/N 71401- BRA
VOE33395		Wheel Loader L120E3 IRAN

Pos	Part	Q1	Q2	Q3	Q4	Q5	PS	Kit	Description	Option(s)	Remark
1	VOE11180774	1							Attachment		
2	VOE13946173	2							Screw		
3	VOE11410732	1					SS		Control valve		S/N - 20644 SWE S/N - 66177 USA S/N - 71463 BRA S/N - 54020 IRA
3A	VOE11707038	1							•Solenoid		
3B	VOE11701047	1							•Sealing kit		
3	VOE11445269	1							Valve		S/N 20645 - SWE S/N 66178 - USA S/N 71464 - BRA S/N 54021 - IRA

	VOE15167734	1							•Solenoid valve		
	VOE11701047	1							•Sealing kit		
4	VOE13965180	2							Screw		
5	VOE11410745	1							Coupling		S/N - 20644 SWE S/N - 66177 USA S/N - 71463 BRA S/N - 54020 IRA
6	VOE11148936	1							Hose assembly		L = 900 MM
7	VOE14345423	1							Nipple		S/N - 20644 SWE S/N - 66177 USA S/N - 71463 BRA S/N - 54020 IRA
8	VOE990737	1							•O-ring		
9	VOE14211856	1							•Sealing ring		
10	VOE13933900	1							Elbow nipple		
11	VOE990737	1							•O-ring		
12	VOE11147942	1							Hose assembly		
13	VOE13933936	1							T-nipple		
14	VOE990737	2							•O-ring		
15	VOE935548	1							Nipple		S/N - 20644 SWE S/N - 66177 USA S/N - 71463 BRA S/N - 54020 IRA
16	VOE990736	1							•O-ring		
17	VOE14211856	1							•Sealing ring		
18	VOE11148936	1							Hose assembly		L = 900 MM

VOLVO

Construction Equipment

PROSIS Part Information

Date:	Image id:	Catalogue:	Model:
25/08/2018	**1044771**	**20086**	**L120E**
Brand:	Serial:	Group/Section:	Title:
Volvo	**19804-, 66001-, 71401-**	**924/100**	**Hydraulic attachment bracket. 82556**

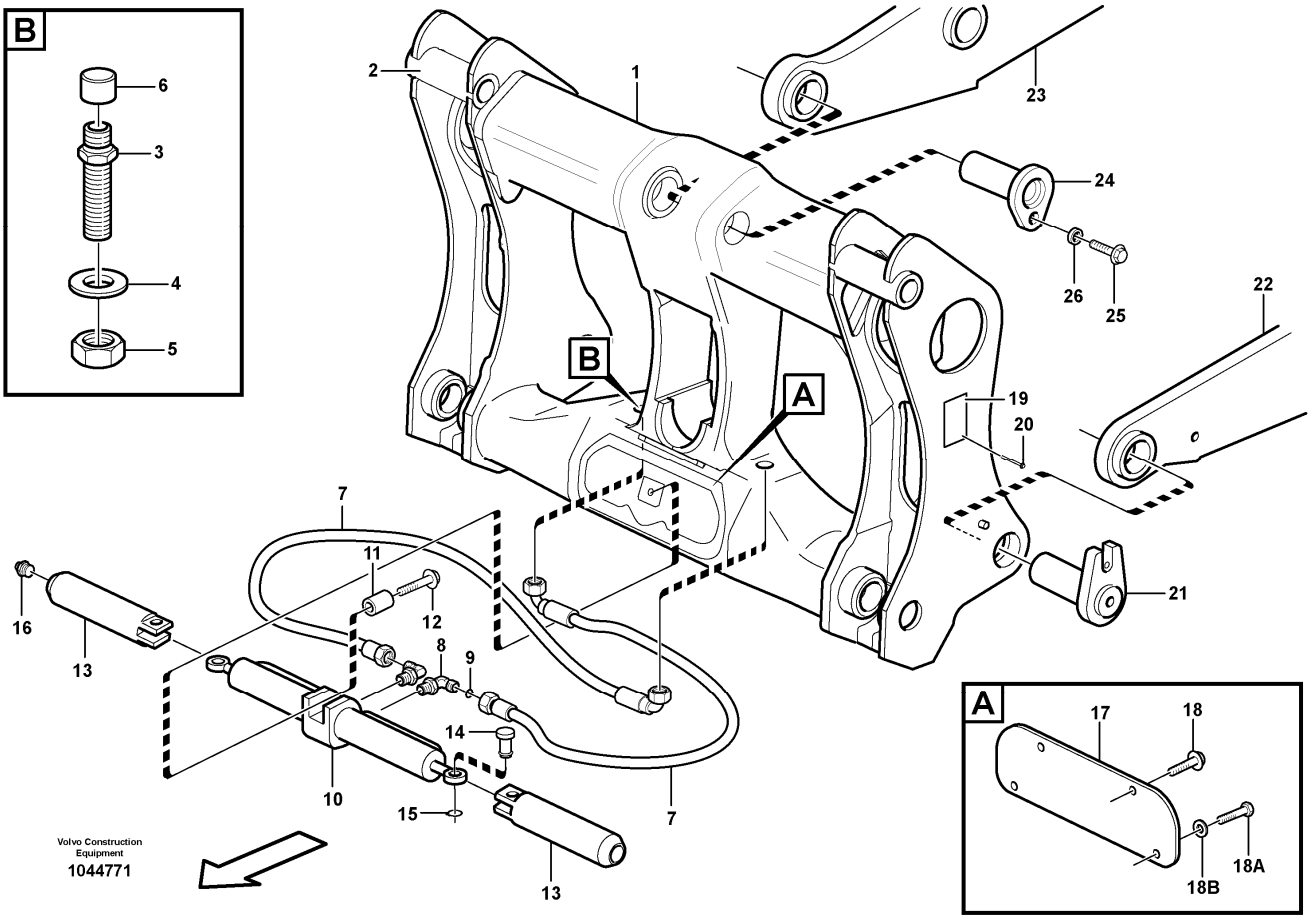

Section option	Kit	Option description
VOE82556		Hydraulic attachment bracket

Pos	Part	Q1	Q2	Q3	Q4	Q5	PS	Kit	Description	Option(s)	Remark
	VOE15157500	1					SS		Attachment bracket		(VOE11157800)
1		1					NS		•Frame		
2	VOE15157502	2							••Pin		(VOE11156114)
3	VOE935929	2							•Nipple		
4	VOE13955900	2							•Washer		
5	VOE935428	2							•Lock nut		
6		2					NS		•Ptct Cover		
7	VOE935628	2							•Hose assembly		L = 500 MM
	VOE11173848	2							•Hose assembly	VOE82067	L = 500MM
8	VOE935538	2							•Elbow nipple		
9	VOE990736	2							••O-ring		

10		1							•Cylinder		See ref 924/150
11	VOE11157678	1							•Spacer		
12	VOE13965196	1							•Screw		
13	VOE11157191	2							•Pin		
14	VOE11142687	2							•Pin		
15	VOE914450	2							•Snap ring		
16	VOE914167	2							•Lubricating nipple		
17	VOE11156757	1							•Plate		
18A	VOE13970967	4							•Hexagon screw		
18B	VOE930872	4							•Plain washer		
19		1					NS		•Sign		
20	VOE11045750	4							•Rivet		
21		2							Pin		See ref 945/350
22		1							Lft Frame Work		See ref 945/100
23		1							Link		See ref 945/350
24		1							Pin		See ref 945/350
25	VOE13965193	2							Screw		
26	VOE11091312	2							Spacer		

VOLVO

Construction Equipment

PROSIS Part Information

Date:	Image id:	Catalogue:	Model:
25/08/2018	**1001172**	**20086**	**L120E**
Brand:	Serial:	Group/Section:	Title:
Volvo	**19804-, 66001-, 71401-**	**924/150**	**Hydraulic cylinder 82556**

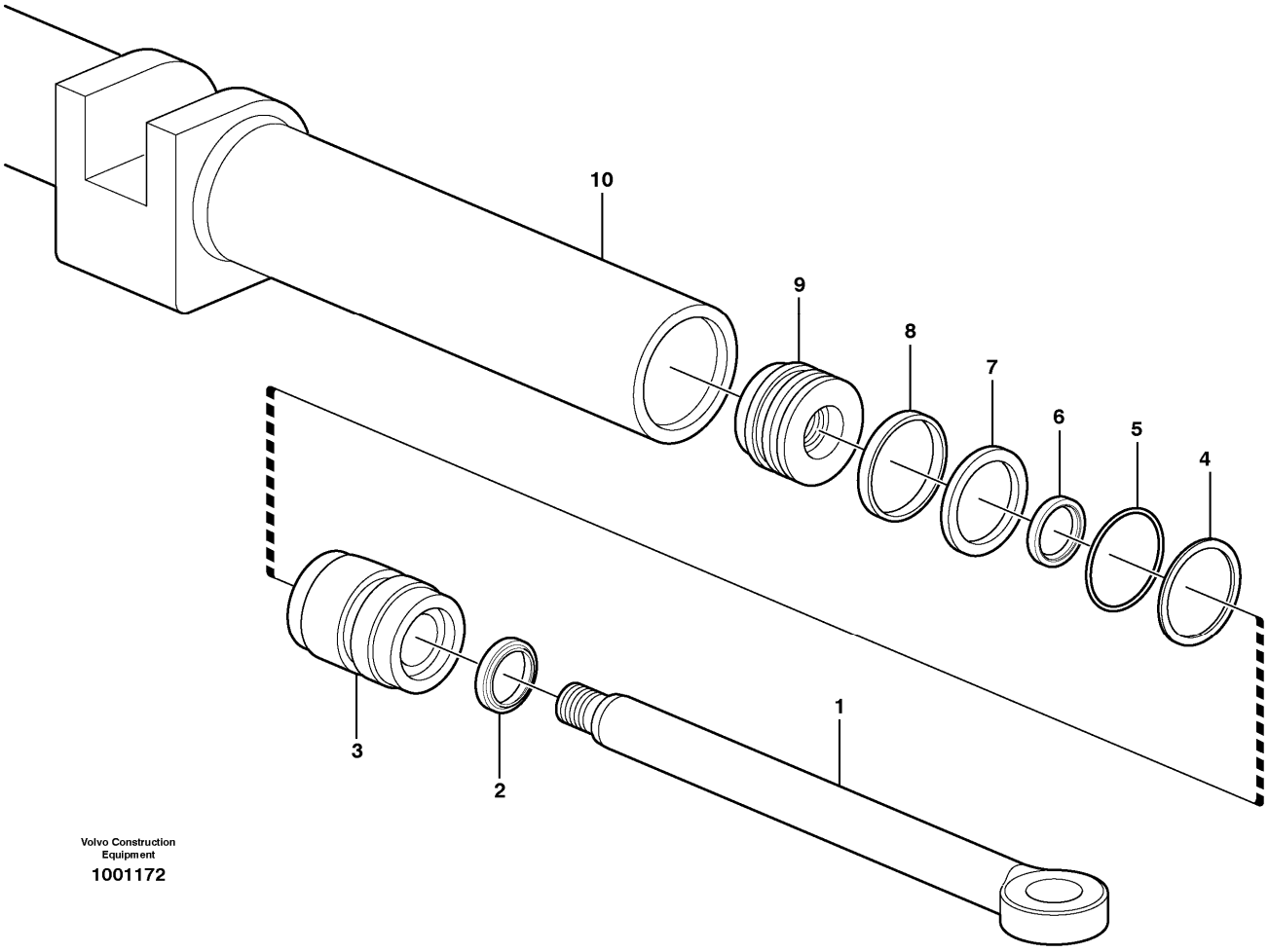

Section option	Kit	Option description
VOE82556		Hydraulic attachment bracket

Pos	Part	Q1	Q2	Q3	Q4	Q5	PS	Kit	Description	Option(s)	Remark
	VOE11157123	1					SS		Cylinder		
1	VOE11708993	2							•Piston rod		
2		2					NS	K	•Scraper		
3	VOE11709110	2							•Guide		
4		2					NS	K	•Back-up ring		
5		2					NS	K	•O-ring		
6		2					NS	K	•Piston Rod Seal		
7		2					NS	K	•Piston seal		
8		2					NS	K	•Back-up ring		
9	VOE11988543	2					OP		•Piston		

10		1					NS		•Cylinder Tube		
	VOE11709111	2							Sealing kit		

VOLVO

Construction Equipment

PROSIS Part Information

Date:	Image id:	Catalogue:	Model:
25/08/2018	**1001174**	**20086**	**L120E**
Brand:	Serial:	Group/Section:	Title:
Volvo	**19804-, 66001-, 71401-**	**924/200**	**Hydraulic attachment bracket 80847**

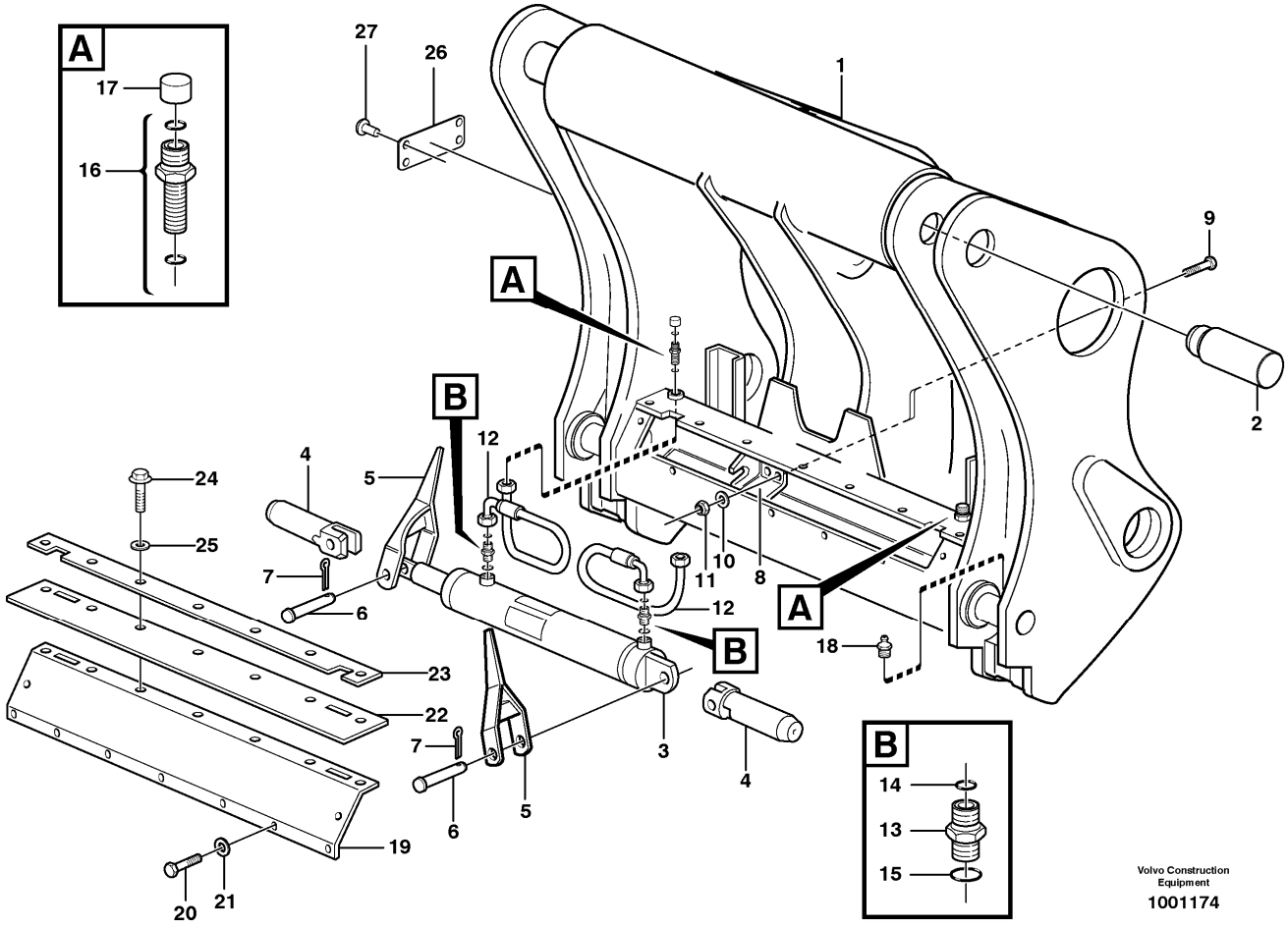

Section option	Kit	Option description
VOE80847		Attachment bracket, hydraulic, welded 11157090

Pos	Part	Q1	Q2	Q3	Q4	Q5	PS	Kit	Description	Option(s)	Remark
	VOE11157090	1					SS		Attachment bracket		
1		1					NS		•Frame		
2	VOE11142917	2							••Pin		
3		1							•Hydraulic cylinder		See ref 924/250
4	VOE4741314	2							•Pin		
5	VOE11012725	2							•Indication arm		
6	VOE13964908	2							•Clevis pin		
7	VOE13907860	2							•Cotter Pin		
8	VOE11011654	1							•Stop		
9	VOE978933	2							•Hexagon screw		
10	VOE4849069	2							•Spacer washer		

11	VOE971099	2							•Flange lock nut		(VOE13971099)
12	VOE936167	2							•Hose assembly		L = 600 MM
	VOE11410170	2							•Hose assembly	VOE82067	L = 600MM
13	VOE13933925	2							•Elbow nipple		
14	VOE990736	2							••O-ring		
15	VOE931209	2							••O-ring		
16	VOE935929	2							•Nipple		
17		2					NS		•Ptct Cover		
18	VOE914167	4							•Lubricating nipple		
19	VOE11081986	1							•Guard		
20	VOE946441	9							•Flange screw		
21	VOE13960143	9							•Washer		
22	VOE4806634	1							•Protection		
23	VOE11045483	1							•Lock plate		
24	VOE946472	6							•Flange screw		
25	VOE13960143	6							•Washer		
26		1					NS		•Sign		
27	VOE11045750	4							•Rivet		

VOLVO

Construction Equipment

PROSIS Part Information

Date:	Image id:	Catalogue:	Model:
25/08/2018	**1001176**	**20086**	**L120E**
Brand:	Serial:	Group/Section:	Title:
Volvo	**19804-, 66001-, 71401-**	**924/250**	**Hydraulic cylinder 80847**

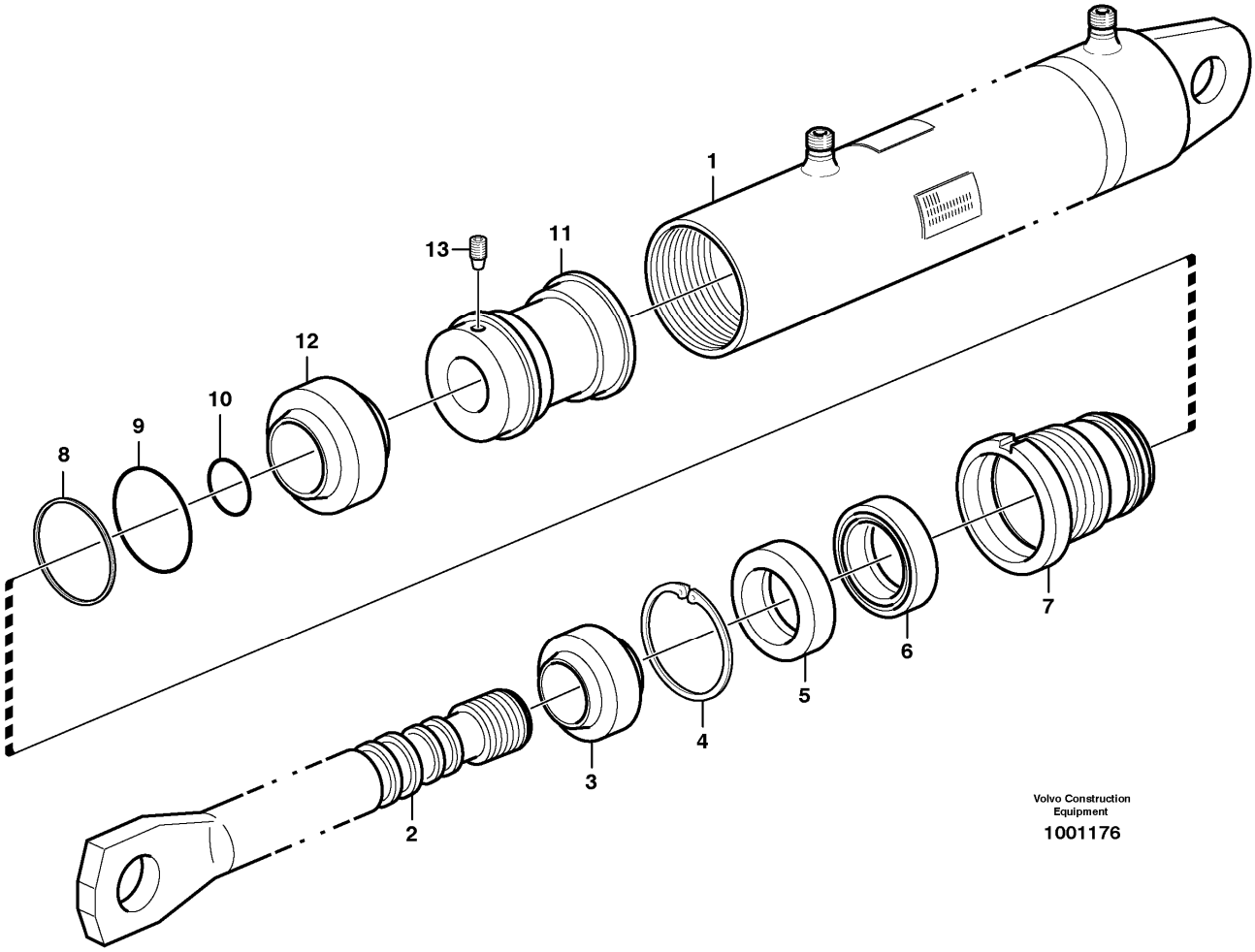

Section option	Kit	Option description
VOE80847		Attachment bracket, hydraulic, welded 11157090

Pos	Part	Q1	Q2	Q3	Q4	Q5	PS	Kit	Description	Option(s)	Remark
	VOE11157115	1					SS		Hydraulic cylinder		
1		1					NS		•Cylinder Tube		
2	VOE11999364	1							•Piston rod		
3	VOE11999360	1							•Scraper		
4	VOE914519	1							•Retaining ring		
5	VOE11708612	1							•Spacer		
6	VOE4784040	1							•Piston rod seal		
7	VOE11999363	1					OP		•Piston rod guide		
8	VOE13962550	1							•Back-up ring		

9	VOE925067	1							•O-ring		
10	VOE13960215	1							•O-ring		
11	VOE11999365	1							•Piston		
12	VOE11999361	1							•Piston seal		
13	VOE13962970	1							•Screw		
	VOE11999362	1							Sealing kit		

VOLVO

Construction Equipment

PROSIS Part Information

Date:	Image id:	Catalogue:	Model:
25/08/2018	**1022048**	**20086**	**L120E**
Brand:	Serial:	Group/Section:	Title:
Volvo	**19804-, 66001-, 71401-**	**924/300**	**Hydraulic system for attachment bracket.**

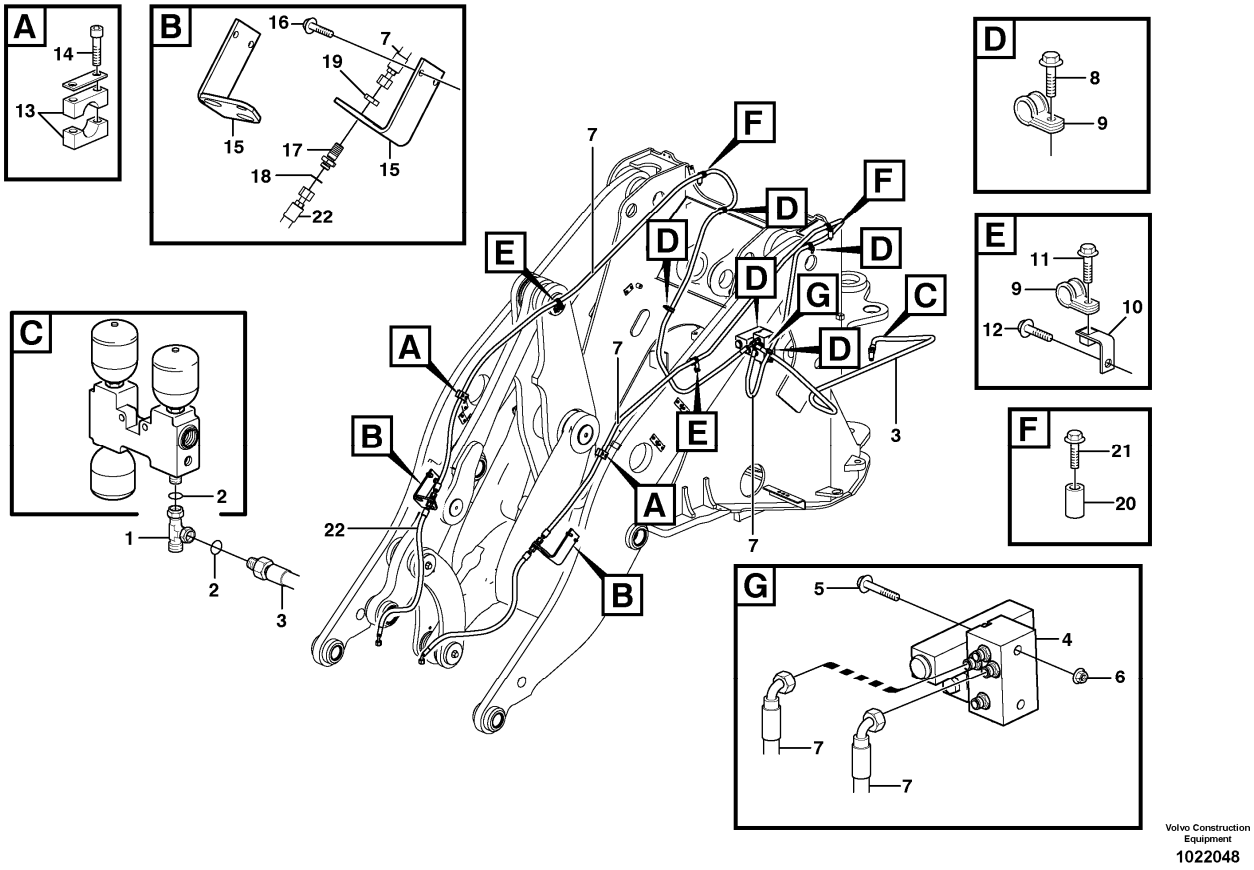

Section option	Kit	Option description
VOE82582	VOE11712820	Separate attachment locking Std Boom REPLACES 80784
VOE82583		Separate attachment locking, STD Boom REPLACES 82048

Q1-Q5	Option	Option description	
Q1 82582	VOE82582	Separate attachment locking Std Boom REPLACES 80784	
Q2 82583	VOE82583	Separate attachment locking, STD Boom REPLACES 82048	

Pos	Part	Q1	Q2	Q3	Q4	Q5	PS	Kit	Description	Option(s)	Remark
1	VOE13933936	1	1						T-nipple		
2	VOE990737	2	2						•O-ring		
3	VOE11147981	1	1						Hose assembly		
	VOE11173752	1	1						Hose assembly	VOE82067	L = 2300MM
4	VOE11411998	1	1						Hydraulic valve		
	VOE11173166	1	1						•Solenoid valve		

	VOE11708930	1	1						••Magnet		
	VOE11993637	1	1						••Sealing kit		
	VOE11712870	1	1						•Solenoid valve		EPROD
	VOE11716831	1	1						•Solenoid valve		LPROD
	VOE11708930	1	1						••Magnet		EPROD
	VOE11708930	2	2						••Magnet		LPROD
	VOE11993637	1	1						••Sealing kit		EPROD
	VOE11993637	2	2						••Sealing kit		LPROD
	VOE11712871	1	1						•Non-return valve		EPROD
	VOE11716832	1	1						•Non-return valve		LPROD
	VOE13959093	4	4						•Safety brace		EPROD
5	VOE967633	2	2						Hex. socket screw		
6	VOE13945408	2	2						Nut		
7	VOE11173668	2							Hose assembly	VOE82582	L = 4000MM
	VOE11173669		2						Hose assembly	VOE82583	
	VOE11173845	2	2						Hose assembly	VOE82067	L = 4000MM
8	VOE13946173	4	4						Screw		
9	VOE977742	6	6						Clamp		
10	VOE11024650	2	2						Angle plate		
11	VOE946440	2							Flange screw		
12	VOE946471	2							Flange screw		
13	VOE4785681	2	2						Clamp		
14	VOE942314	4	4						Hex. socket screw		
15	VOE11173600	1							Attachment		LH
	VOE11410088		1						Attachment		LH
	VOE11173602	1							Attachment		RH
	VOE11410089		1						Attachment		RH
16	VOE946441	4	4						Flange screw		
17	VOE935425	2	2						Nipple		
18	VOE990737	2	2						•O-ring		(VOE4880492)
19	VOE935429	2	2						Lock nut		
20	VOE4775189	2	2						Spacer sleeve		
21	VOE13965179	2	2						Screw		
22	VOE11180934	2	2						Hose assembly		L = 1300MM

VOLVO

Construction Equipment

PROSIS Part Information

Date:	Image id:	Catalogue:	Model:
25/08/2018	**EE139**	**20086**	**L120E**
Brand:	Serial:	Group/Section:	Title:
Volvo	**19804-, 66001-, 71401-**	**945/100**	**Loading unit**

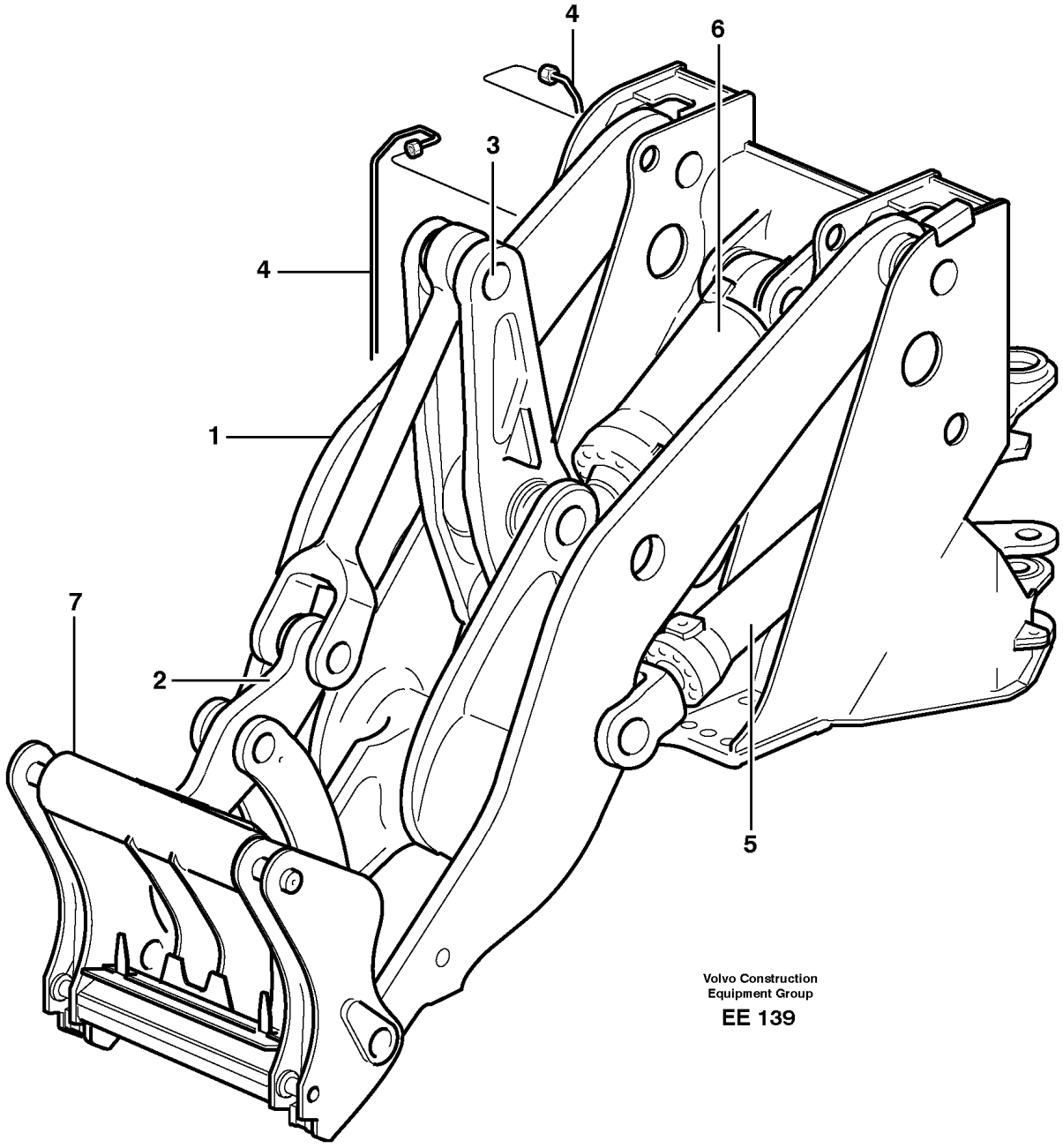

Section option	Kit	Option description
VOE33360		Loading unit

Pos	Part	Q1	Q2	Q3	Q4	Q5	PS	Kit	Description	Option(s)	Remark
1		1							Lft frame work		See ref 945/150
2		1							Link, forward		See ref 945/200
3		1							Link, rear		See ref 945/250
4		1							Lubricating pipe		See ref 945/400
5		2							Lifting cylinder		See ref 945/500
6		1							Tilt cylinder		See ref 945/550
7		1							Atch bracket	VOE82556	
		1							Atch bracket	VOE80847	See ref 924/200

VOLVO

Construction Equipment

PROSIS Part Information

Date:	Image id:	Catalogue:	Model:
25/08/2018	**1000929**	**20086**	**L120E**
Brand:	Serial:	Group/Section:	Title:
Volvo	**19804-, 66001-, 71401-**	**945/150**	**Lifting framework with assembly parts**

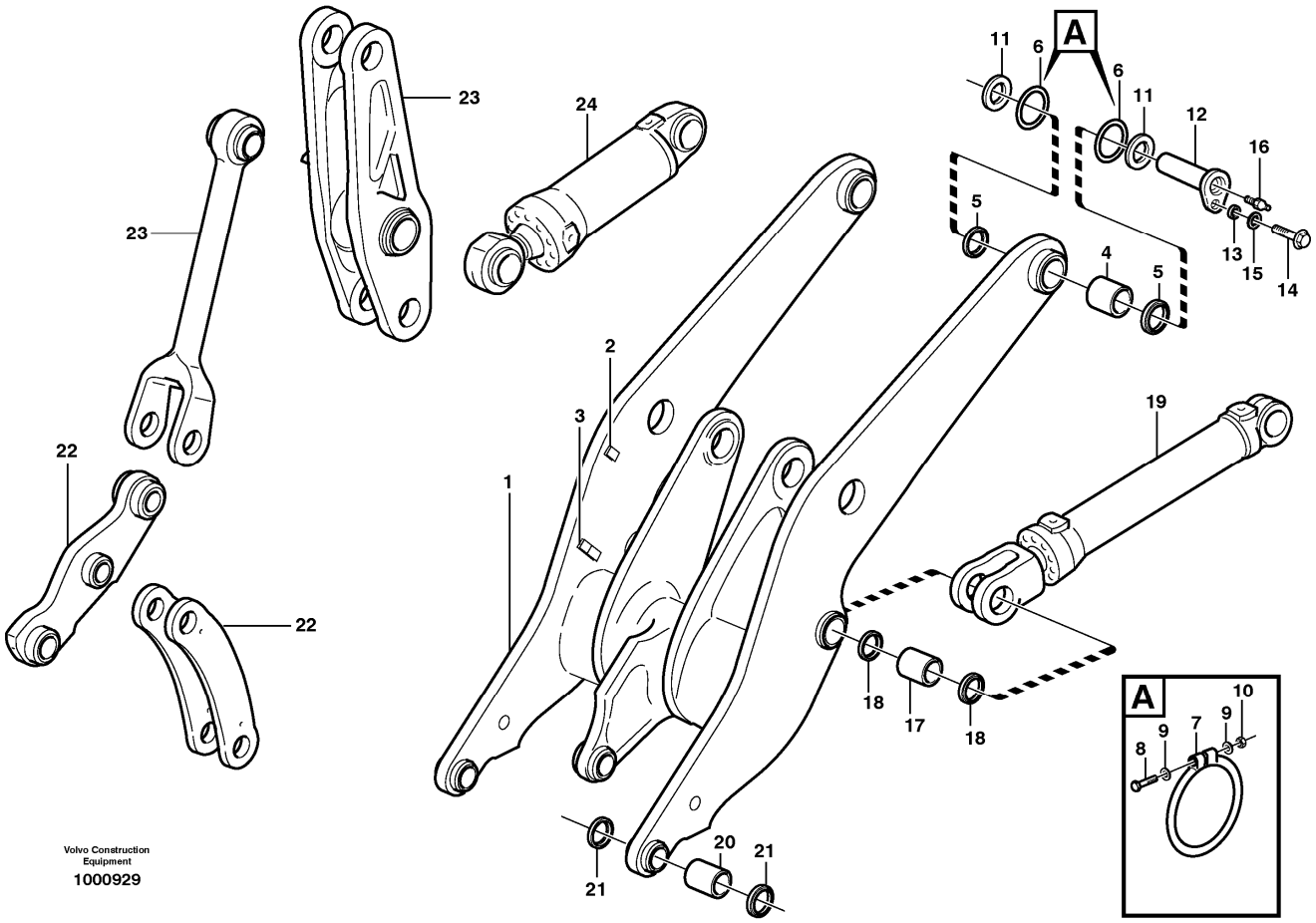

Section option	Kit	Option description
VOE33360		Loading unit
VOE33365		Loading unit 82007
VOE33372		Loading unit 82143
VOE33373		Loading unit 82601
VOE33380		Volvo Wheel Loader L120E S/N 19801-, S/N 66001- USA, S/N 71401- BRA
VOE33395		Wheel Loader L120E3 IRAN

Q1-Q5	Option	Option description	
Q1 33360	VOE33360	Loading unit	
Q2 33365	VOE33365	Loading unit 82007	
Q3 33380 33395	VOE33380	Volvo Wheel Loader L120E S/N 19801-, S/N 66001- USA, S/N 71401- BRA	
Q4 33372	VOE33372	Loading unit 82143	
Q5 33373	VOE33373	Loading unit 82601	

Pos	Part	Q1	Q2	Q3	Q4	Q5	PS	Kit	Description	Option(s)	Remark
1	VOE11177925	1			1				Lifting frame work		(VOE11176981)
	VOE11177062		1			1	SS		Lifting frame work	VOE82007	
2	VOE4785465	2	2		2	2			•Attaching plate		
3	VOE4763685	4	4		4	4			•Weld plate		
	VOE11177711				8	8			•Screw		
4	VOE11020802	2	2						Bushing		
5	VOE11005099	4	4						Scraper ring		
6	VOE11048081			4					Sealing ring		
7	VOE4824485			4					O-ring		See footnote 1)
8	VOE955260			4					Hexagon screw		
9	VOE13940090			8					Washer		
10	VOE13963104			4					Lock nut		
11	VOE11020663			6					Shim		
12	VOE11020811			2					Pin		
13	VOE11025923			2					Spacer		
14	VOE13965192			2					Screw		
15	VOE13947355			2					Washer		
16	VOE11025816			2					Lubricating nipple		
17	VOE11020803	2	2		2	2			Bushing		
18	VOE11005017	4	4		4	4			Scraper ring		
19				2					Lifting cylinder		See ref 945/300
20	VOE11015609	2	2		2	2			Bushing		
21	VOE11005014	4	4		4	4			Scraper ring		
22		1	1		1	1			Link		See ref 945/200
23		1	1		1	1			Link		See ref 945/250
24				1					Tilt cylinder		See ref 945/300

1) Replacement version

VOLVO

Construction Equipment

PROSIS Part Information

Date:	Image id:	Catalogue:	Model:
25/08/2018	**1019847**	**20086**	**L120E**
Brand:	Serial:	Group/Section:	Title:
Volvo	**19804-, 66001-, 71401-**	**945/200**	**Forward links with assembly parts**

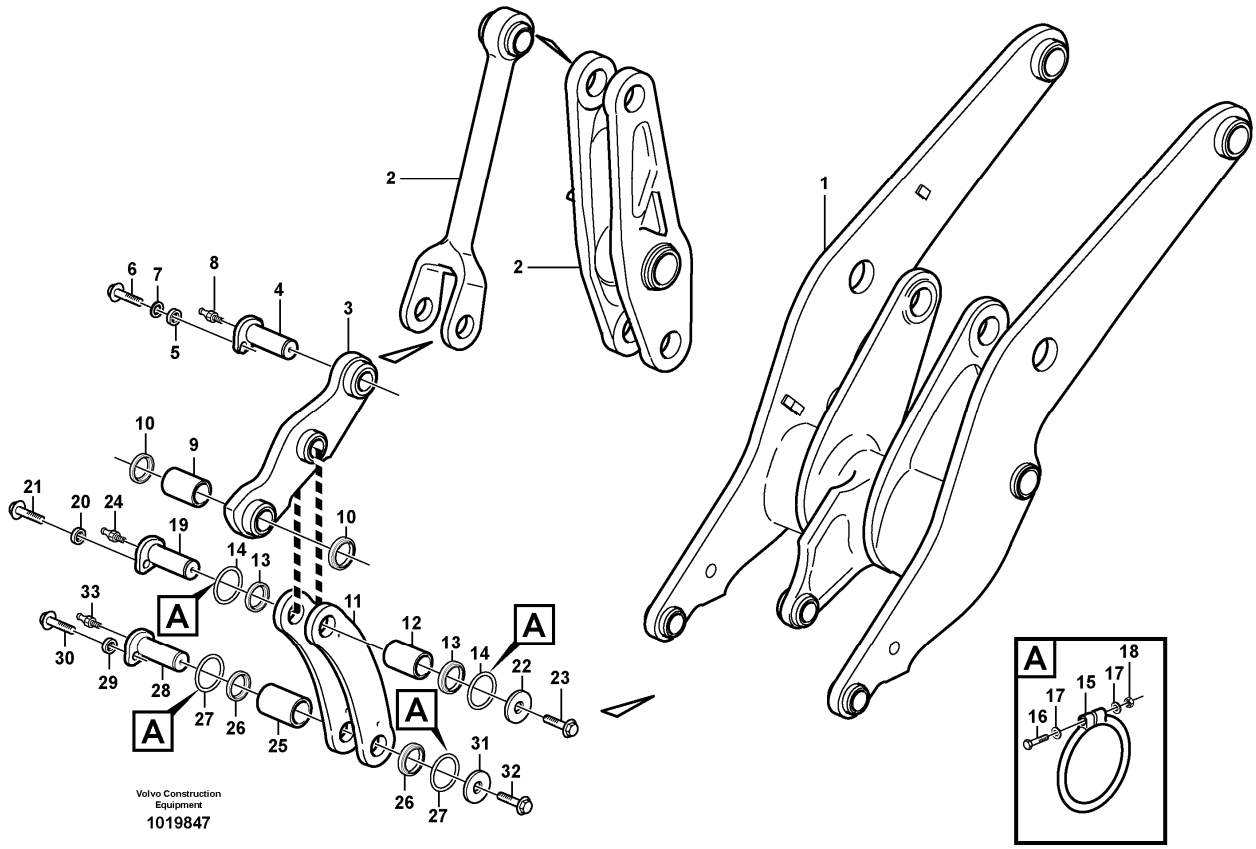

Section option	Kit	Option description
VOE33360		Loading unit
VOE33365		Loading unit 82007
VOE33372		Loading unit 82143
VOE33373		Loading unit 82601

Q1-Q5	Option	Option description	
Q1 33360	VOE33360	Loading unit	
Q2 33365	VOE33365	Loading unit 82007	
Q3 33372	VOE33372	Loading unit 82143	
Q4 33373	VOE33373	Loading unit 82601	

Pos	Part	Q1	Q2	Q3	Q4	Q5	PS	Kit	Description	Option(s)	Remark
1		1	1	1	1				Lft Frame Work		See ref 945/150
2		1	1	1	1				Link		See ref 945/250

3	VOE11177095	1		1					Link		
	VOE11177711	2		2					•Screw		
3	VOE11177085		1		1				Link		
	VOE11177711		2		2				•Screw		
4	VOE11020809	1	1	1	1				Pin		
5	VOE11025923	1	1	1	1				Spacer		
6	VOE13965192	1	1	1	1				Screw		
7	VOE13947355	1	1	1	1				Washer		
8	VOE11025816	1	1	1	1				Lubricating nipple		
9	VOE11015610	1	1	1	1				Bushing		
	VOE180759	1	1						Plug		
10	VOE11005015	2	2	2	2				Scraper ring		
	VOE11005099			2	2				Scraper ring		
11	VOE11020741	2	2	2	2				Link		
	VOE11020747	2	2	2	2				Link	VOE33365, VOE33373, VOE82007	
12	VOE11015747	1	1	1	1		SS		Bushing		
13	VOE11005014	2	2	2	2				Scraper ring		
14	VOE11048019	2	2	2	2				Sealing ring		
15	VOE4824483	2	2						O-ring		See footnote 1)
16	VOE955259	2	2						Hexagon screw		
17	VOE13940090	4	4						Washer		
18	VOE13963104	2	2						Lock nut		
19	VOE11015674	1	1	1	1				Pin		
20	VOE11025923	1	1	1	1				Spacer		
21	VOE13965192	1	1	1	1				Screw		
22	VOE11004396	1	1	1	1				Washer		
23	VOE982377	1	1						Flange screw		
24	VOE11025816	1	1	1	1				Lubricating nipple		
25	VOE11015747	1	1	1	1		SS		Bushing		
26	VOE11005014	1	1	1	1				Scraper ring		
27	VOE11048019	2	2	2	2				Sealing ring		
28	VOE11015674	1	1	1	1				Pin		
29	VOE11025923	1	1	1	1				Spacer		
30	VOE13965192	1	1	1	1				Screw		
31	VOE11004396	1	1	1	1				Washer		
32	VOE13968436	1	1	1	1				Screw		
33	VOE11025816	1	1	1	1				Lubricating nipple		

1) Replacement version

VOLVO

Construction Equipment

PROSIS Part Information

Date:	Image id:	Catalogue:	Model:
25/08/2018	**1019843**	**20086**	**L120E**
Brand:	Serial:	Group/Section:	Title:
Volvo	**19804-, 66001-, 71401-**	**945/250**	**Rear links with assembly parts**

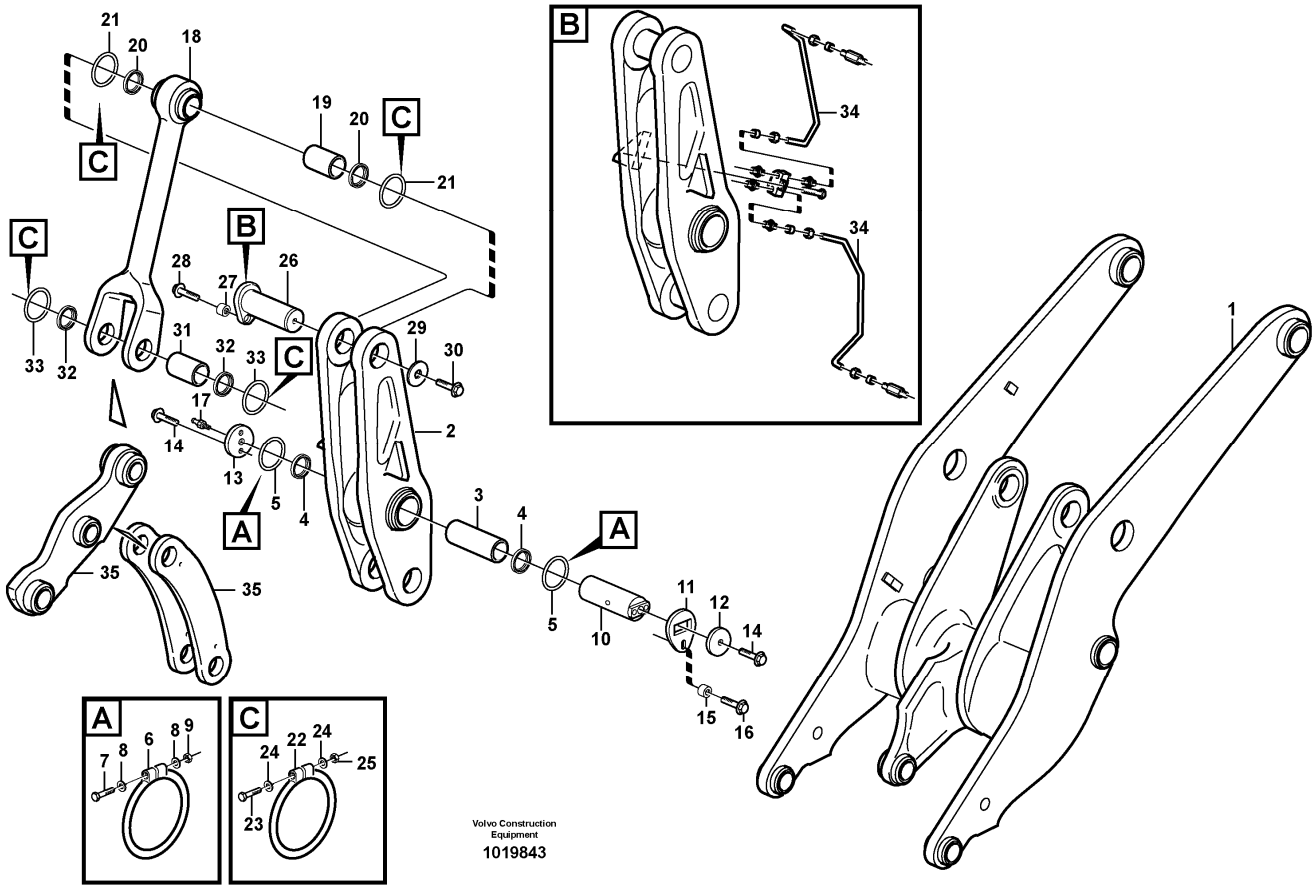

Section option	Kit	Option description
VOE33360		Loading unit
VOE33365		Loading unit 82007
VOE33372		Loading unit 82143
VOE33373		Loading unit 82601

Q1-Q5	Option	Option description	
Q1 33360 33365	VOE33360	Loading unit	
Q2 33372 33373	VOE33372	Loading unit 82143	

Pos	Part	Q1	Q2	Q3	Q4	Q5	PS	Kit	Description	Option(s)	Remark
1		1	1						Lft frame work		See ref 945/150
2	VOE11020755	1	1						Link		
3	VOE11020804	1	1						•Bushing		
4	VOE11005019	2	2						Scraper ring		

5	VOE11048081	2	2						Sealing ring		
6	VOE4824485	2							O-ring		See footnote 1)
7	VOE955260	2							Hexagon screw		
8	VOE13940090	4							Washer		
9	VOE13963104	2							Lock nut		
10	VOE11020925	1	1						Pin		
11	VOE11020923	1	1						Lock plate		
12	VOE11108607	1	1						Lock washer		
13	VOE11020924	1	1						Washer		
14	VOE982377	3							Flange screw		
	VOE968435		3						Flange screw		
15	VOE11016019	1	1						Spacer		
16	VOE13968436	1	1						Screw		
17	VOE11025816	1	1						Lubricating nipple		
18	VOE15001907	1	1						Link		(VOE11020335)
19	VOE11020802	1	1						Bushing		
20	VOE11005099	2	2						Scraper ring		
21	VOE11048081	2	2						Sealing ring		
22	VOE4824485	4							O-ring		See footnote 1)
23	VOE955260	4							Hexagon screw		
24	VOE13940090	8							Washer		
25	VOE13963104	4							Lock nut		
26	VOE11020817	1	1						Pin		
27	VOE11025923	1	1						Spacer		
28	VOE13965192	1	1						Screw		
29	VOE11015065	1	1						Washer		
30	VOE982377	1							Flange screw		
31	VOE11020802	1	1						Bushing		
32	VOE11005099	2	2						Scraper ring		
33	VOE11048081	2	2						Sealing ring		
34		1	1						Lubricating pipe		See ref 945/400
35		1	1						Link		See ref 945/200

1) Replacement version

VOLVO

Construction Equipment

PROSIS Part Information

Date:	Image id:	Catalogue:	Model:
25/08/2018	**1000932**	**20086**	**L120E**
Brand:	Serial:	Group/Section:	Title:
Volvo	**19804-, 66001-, 71401-**	**945/300**	**Lifting- and tilt cylinder with assembly parts**

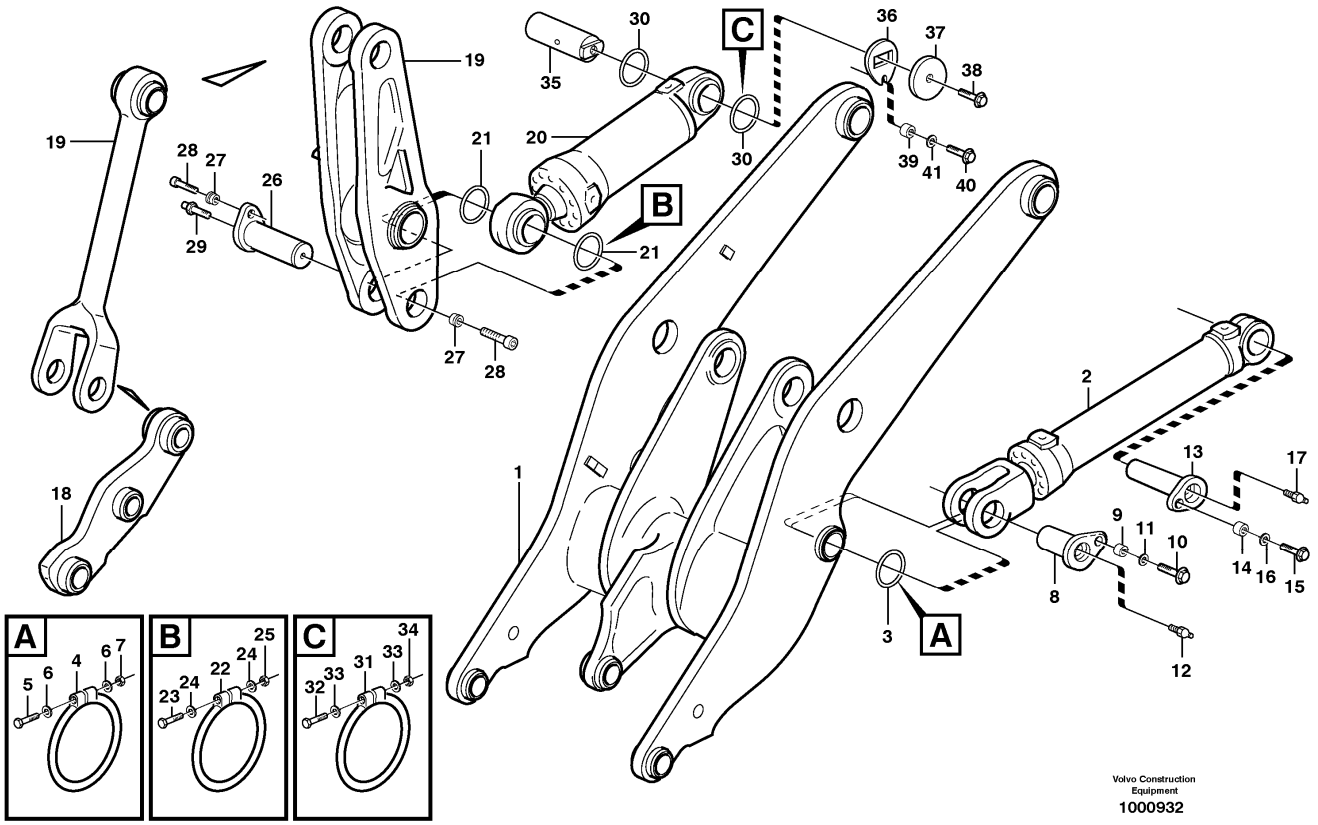

Section option	Kit	Option description
VOE33360		Loading unit
VOE33372		Loading unit 82143
VOE33373		Loading unit 82601
VOE33380		Volvo Wheel Loader L120E S/N 19801-, S/N 66001- USA, S/N 71401- BRA
VOE33395		Wheel Loader L120E3 IRAN

Q1-Q5	Option	Option description	
Q1 33380 33395	VOE33380	Volvo Wheel Loader L120E S/N 19801-, S/N 66001- USA, S/N 71401- BRA	
Q2 33360	VOE33360	Loading unit	
Q3 33372	VOE33372	Loading unit 82143	
Q4 33373	VOE33373	Loading unit 82601	

Pos	Part	Q1	Q2	Q3	Q4	Q5	PS	Kit	Description	Option(s)	Remark
1			1	1	1				Lft Frame Work		See ref 945/150
2		2							Lifting cylinder		
3	VOE11048020	4							Sealing ring		

4	VOE4824484	4							O-ring		See footnote 1)
5	VOE955260	4							Hexagon screw		
6	VOE13940090	8							Washer		
7	VOE13963104	4							Lock nut		
8	VOE11020807	2							Pin		
	VOE11020815	2							Pin	VOE82007	
	VOE11176282			2					Pin	VOE82925	
	VOE11177090				2				Pin	VOE82920	
9	VOE11025923	2							Spacer		
10	VOE13965192	2							Screw		
11	VOE13947355	2							Washer		
12	VOE11025816	2							Lubricating nipple		
13	VOE11020813	2							Pin		
14	VOE11025923	2							Spacer		
15	VOE13965192	2							Screw		
16	VOE13947355	2							Washer		
17	VOE11025816	2							Lubricating nipple		
18			1	1	1				Link		See ref 945/200
19			1	1	1				Link		See ref 945/250
20		1							Tilt cylinder		
21	VOE11048081	2							Sealing ring		
22	VOE4824485	2							O-ring		See footnote 1)
23	VOE955260	2							Hexagon screw		
24	VOE13940090	4							Washer		
25	VOE13963104	2							Lock nut		
26	VOE11020801	1							Pin		
27	VOE11091337	2							Spacer		
28	VOE959254	2							Hex. socket screw		
29	VOE11015258	1							Nipple		
30	VOE11048081	2							Sealing ring		
31	VOE4824485	2							O-ring		See footnote 1)
32	VOE955260	2							Hexagon screw		
33	VOE13940090	4							Washer		
34	VOE13963104	2							Lock nut		
35	VOE11020990	1							Pin		
36	VOE11020419	1							Lock plate		
37	VOE11020422	1							Washer		
38	VOE13965192	1							Screw		
39	VOE11025923	1							Spacer		
40	VOE13965192	1							Screw		
41	VOE13947355	1							Washer		

1) Replacement version

VOLVO

Construction Equipment

PROSIS Part Information

Date:	Image id:	Catalogue:	Model:
25/08/2018	**1000933**	**20086**	**L120E**
Brand:	Serial:	Group/Section:	Title:
Volvo	**19804-, 66001-, 71401-**	**945/350**	**Attachment bracket assembly**

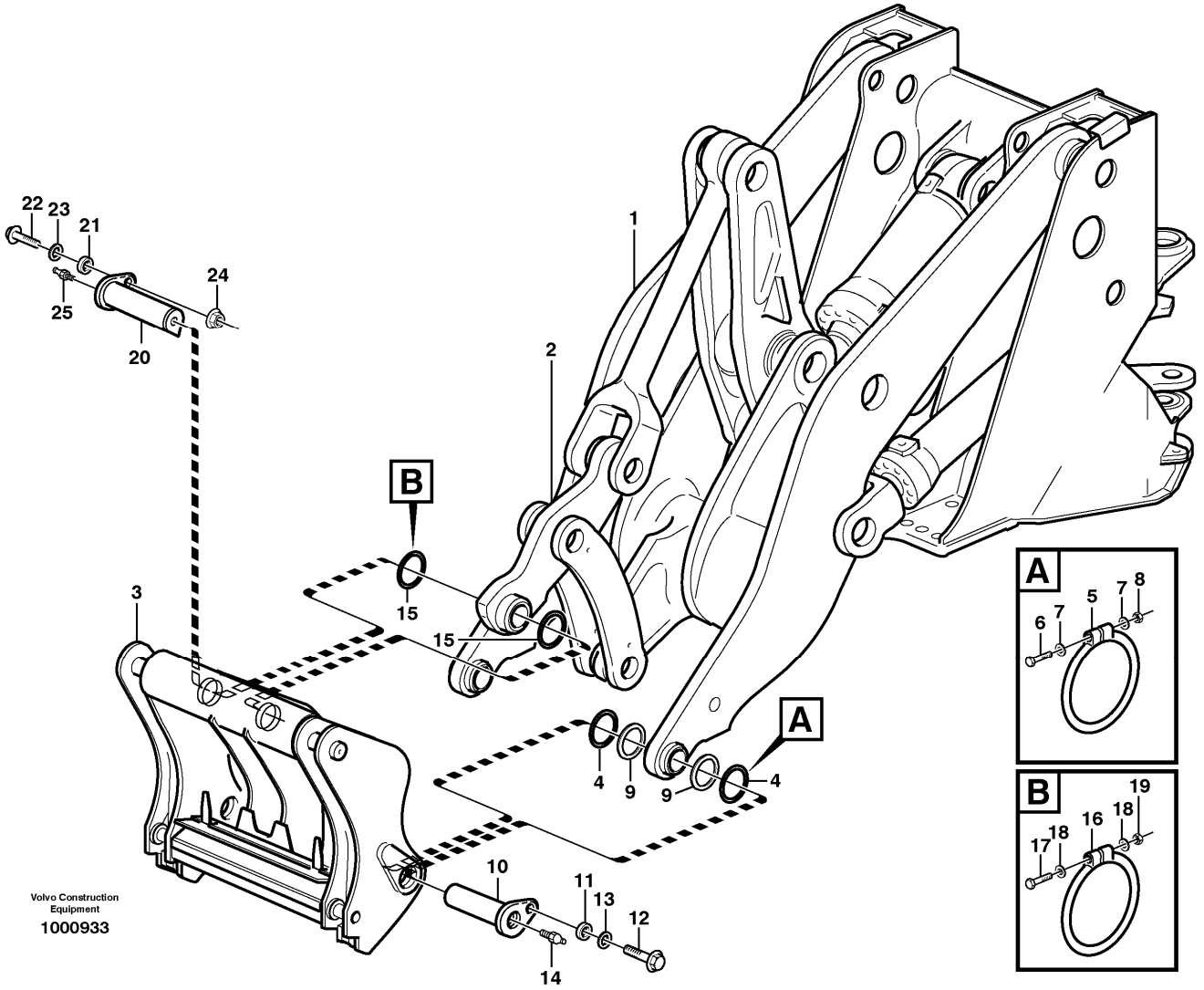

Section option	Kit	Option description
VOE33360		Loading unit
VOE33380		Volvo Wheel Loader L120E S/N 19801-, S/N 66001- USA, S/N 71401- BRA
VOE33395		Wheel Loader L120E3 IRAN

Q1-Q5	Option	Option description	
Q1 33380 33395	VOE33380	Volvo Wheel Loader L120E S/N 19801-, S/N 66001- USA, S/N 71401- BRA	
Q2 33360	VOE33360	Loading unit	

Pos	Part	Q1	Q2	Q3	Q4	Q5	PS	Kit	Description	Option(s)	Remark
1			1						Lft Frame Work		See ref 945/150

2			1						•Link		See ref 945/200
3		1							Atch bracket	VOE82556	
		1							Atch bracket	VOE80847	See ref 924/200
4	VOE11048019	4							Sealing ring		
5	VOE4824483	4							O-ring		See footnote 1)
6	VOE955259	4							Hexagon screw		
7	VOE13940090	8							Washer		
8	VOE13963104	4							Lock nut		
9	VOE11176801	4							Shim		
10	VOE11015759	2							Pin		
11	VOE11025923	2							Spacer		
12	VOE13965192	2							Screw		
13	VOE13947355	2							Washer		
14	VOE11025816	2							Lubricating nipple		
15	VOE11048020	2							Sealing ring		
16	VOE4824484	2							O-ring		See footnote 1)
17	VOE955260	2							Hexagon screw		
18	VOE13940090	4							Washer		
19	VOE13963104	2							Lock nut		
20	VOE11016121	1							Pin		
21	VOE11025923	1							Spacer		
22	VOE13965193	1							Screw		
23	VOE13947355	1							Washer		
24	VOE971099	1							Flange lock nut		(VOE13971099)
25	VOE11025816	1							Lubricating nipple		

1) Replacement version

VOLVO

Construction Equipment

PROSIS Part Information

Date:	Image id:	Catalogue:	Model:
25/08/2018	**1000935**	**20086**	**L120E**
Brand:	Serial:	Group/Section:	Title:
Volvo	**19804-, 66001-, 71401-**	**945/400**	**Extended lube points for lift arm system**

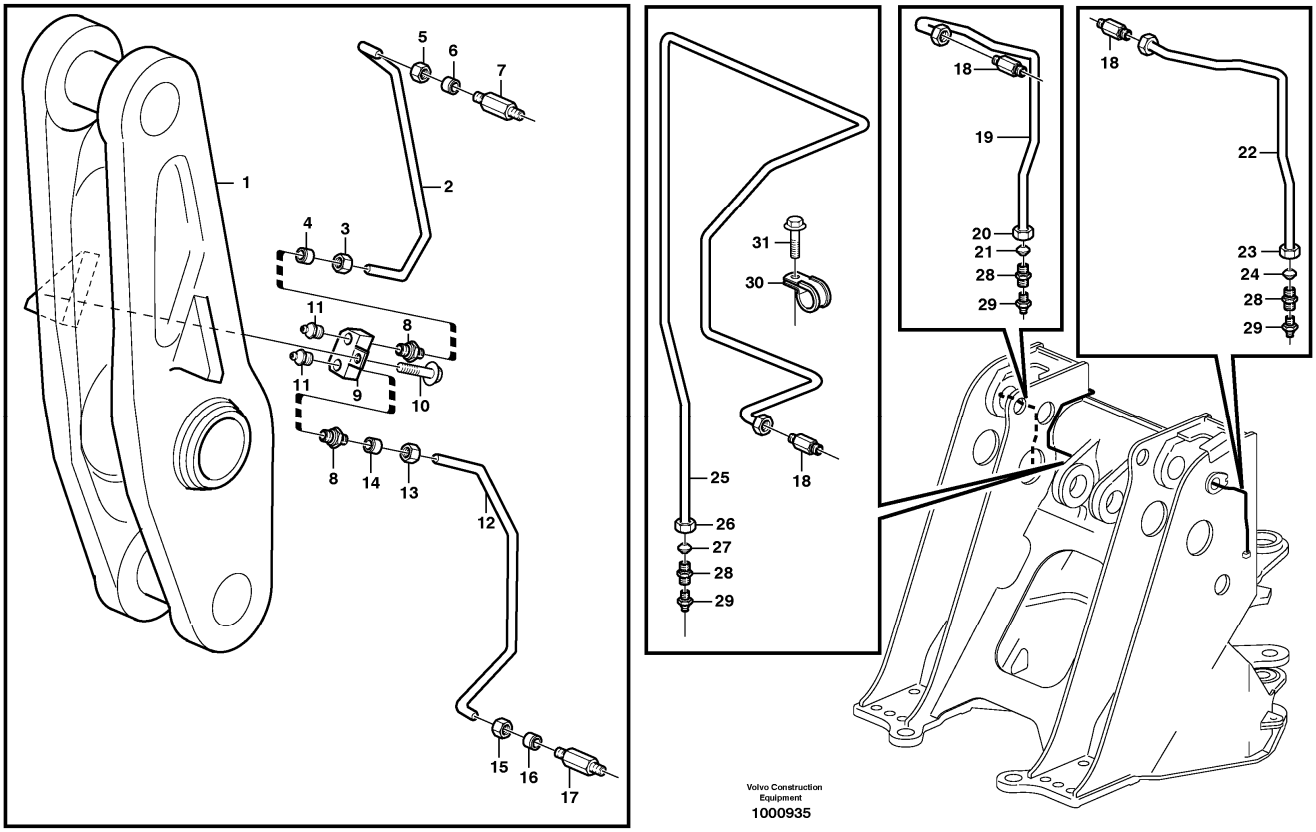

Section option	Kit	Option description
VOE33360		Loading unit
VOE33365		Loading unit 82007
VOE33372		Loading unit 82143
VOE33373		Loading unit 82601
VOE33380		Volvo Wheel Loader L120E S/N 19801-, S/N 66001- USA, S/N 71401- BRA
VOE33395		Wheel Loader L120E3 IRAN

Q1-Q5	Option	Option description	
Q1 33380 33395	VOE33380	Volvo Wheel Loader L120E S/N 19801-, S/N 66001- USA, S/N 71401- BRA	
Q2 33360 33365	VOE33360	Loading unit	
Q3 33372 33373	VOE33372	Loading unit 82143	

Pos	Part	Q1	Q2	Q3	Q4	Q5	PS	Kit	Description	Option(s)	Remark
1			1	1					Link		See ref 945/250
2	VOE11020384		1	1					Pipe		
3	VOE956981		1	1					•Fitting nut		

4	VOE13956967		1	1					•Ferrule		
5	VOE956981		1	1					Fitting nut		
6	VOE13956967		1	1					Ferrule		
7	VOE11015258		1	1					Nipple		
8	VOE946089		2	2					Nipple		
9	VOE11015245		1	1			SS		Retainer		
10	VOE13946173		1	1					Screw		
11	VOE914167		2	2					Lubricating nipple		
12	VOE11020382	1							Pipe		
13	VOE956981	1							•Fitting nut		
14	VOE13956967	1							•Ferrule		
15	VOE956981	1							Fitting nut		
16	VOE13956967	1							Ferrule		
17	VOE11015258	1							Nipple		
18	VOE11015258	3							Nipple		
19	VOE11020209	1							Pipe		RH
20	VOE956981	2							•Fitting nut		
21	VOE13956967	2							•Ferrule		
22	VOE11020211	1							Pipe		LH
23	VOE956981	2							•Fitting nut		
24	VOE13956967	2							•Ferrule		
25	VOE11020212	1							Pipe		
26	VOE956981	2							•Fitting nut		
27	VOE13956967	2							•Ferrule		
28	VOE946089	3							Nipple		
29	VOE914167	3							Lubricating nipple		
30	VOE952623	1							Clamp		
31	VOE13965175	1							Screw		

VOLVO

Construction Equipment

PROSIS Part Information

Date:	Image id:	Catalogue:	Model:
25/08/2018	**1018894**	**20086**	**L120E**
Brand:	Serial:	Group/Section:	Title:
Volvo	**19804-, 66001-, 71401-**	**945/410**	**Extended lube points for lift arm system 82267**

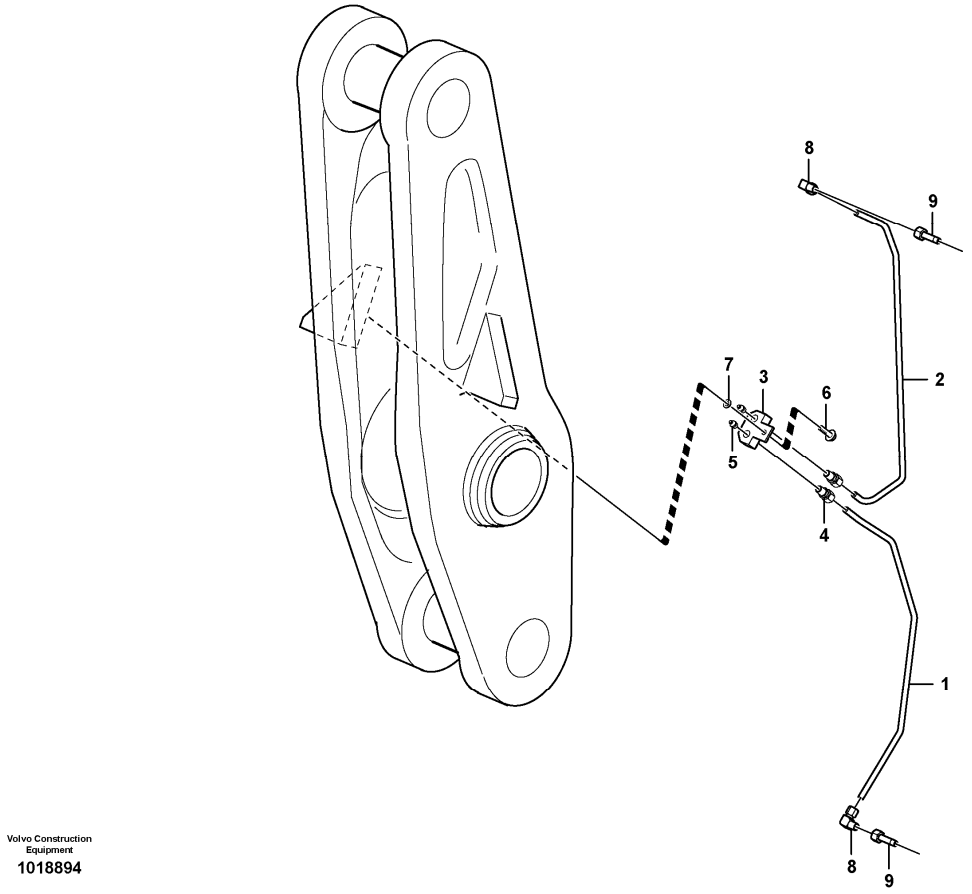

Section option	Kit	Option description
VOE82267		Valve cover, front frame

Pos	Part	Q1	Q2	Q3	Q4	Q5	PS	Kit	Description	Option(s)	Remark
1	VOE11180807	1							Tube		
2	VOE11180808	1							Tube		
3	VOE16623298	1							Coupling housing		(VOE11180809)E PROD
3	VOE16623298	1							Coupling housing		L PROD
4	VOE11702124	2							Connector		
5	VOE914169	2							Lubricating nipple		E PROD
6	VOE13946173	1							Screw		E PROD L = 20 MM
6	VOE13965183	1							Flange screw		L PROD L = 90 MM
7	VOE13955894	1							Washer		E PROD
8	VOE11997271	2							Elbow union		
9	VOE11180800	2							Adapter		

VOLVO

Construction Equipment

PROSIS Part Information

Date:	Image id:	Catalogue:	Model:
25/08/2018	**1000939**	**20086**	**L120E**
Brand:	Serial:	Group/Section:	Title:
Volvo	**19804-, 66001-, 71401-**	**945/450**	**Bucket positioner and boom kickout 33380, 33395**

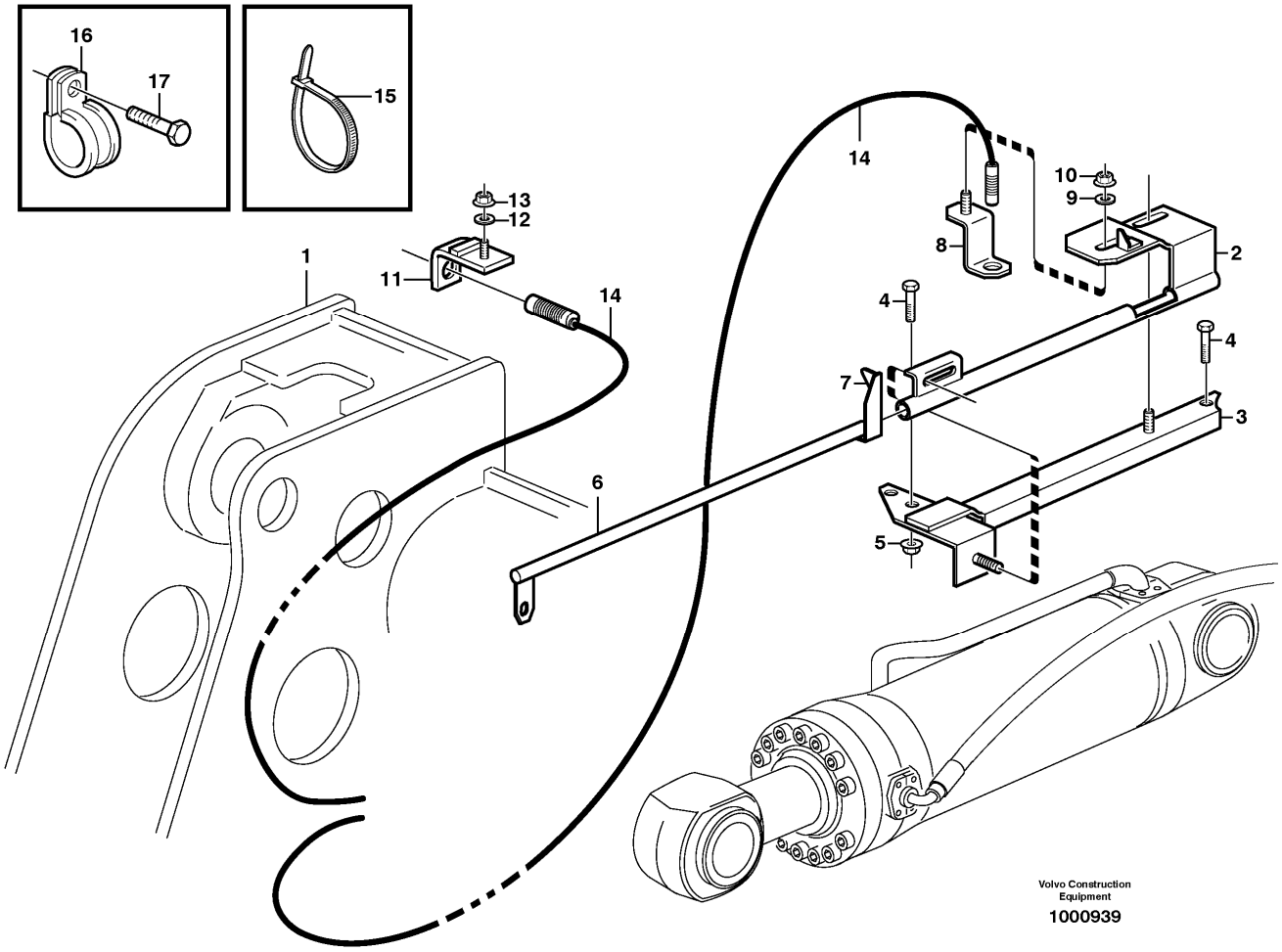

Section option	Kit	Option description
VOE33380		Volvo Wheel Loader L120E S/N 19801-, S/N 66001- USA, S/N 71401- BRA
VOE33395		Wheel Loader L120E3 IRAN

Pos	Part	Q1	Q2	Q3	Q4	Q5	PS	Kit	Description	Option(s)	Remark
1		1							Front frame		See ref 711/100
2	VOE11177750	1							Bracket		
3	VOE11176841	1							Bracket		
4	VOE13946817	3							Screw		
5	VOE13971098	2							Flange nut		
6	VOE11177025	1							Indicator		
	VOE11176809	1							Indicator	VOE82007, VOE82601	
7	VOE11027212	1							Decal		

8	VOE11177645	1							Attachment		
9	VOE11117464	1							Plain washer		(VOE13960141)
10	VOE948645	1							Flange lock nut		
11	VOE11024585	1							Retainer		
12	VOE11117464	1							Plain washer		(VOE13960141)
13	VOE948645	1							Flange lock nut		
14	VOE16812875	2							Induction sensor		(VOE11170241)SE901, SE902
15	VOE4881440	4							Cable tie		
16	VOE13949746	3							Clamp		
17	VOE13946173	3							Screw		

VOLVO

Construction Equipment

PROSIS Part Information

Date:	Image id:	Catalogue:	Model:
25/08/2018	**1000772**	**20086**	**L120E**
Brand:	Serial:	Group/Section:	Title:
Volvo	**19804-, 66001-, 71401-**	**945/500**	**Hydraulic cylinder, lifting 33380, 33395**

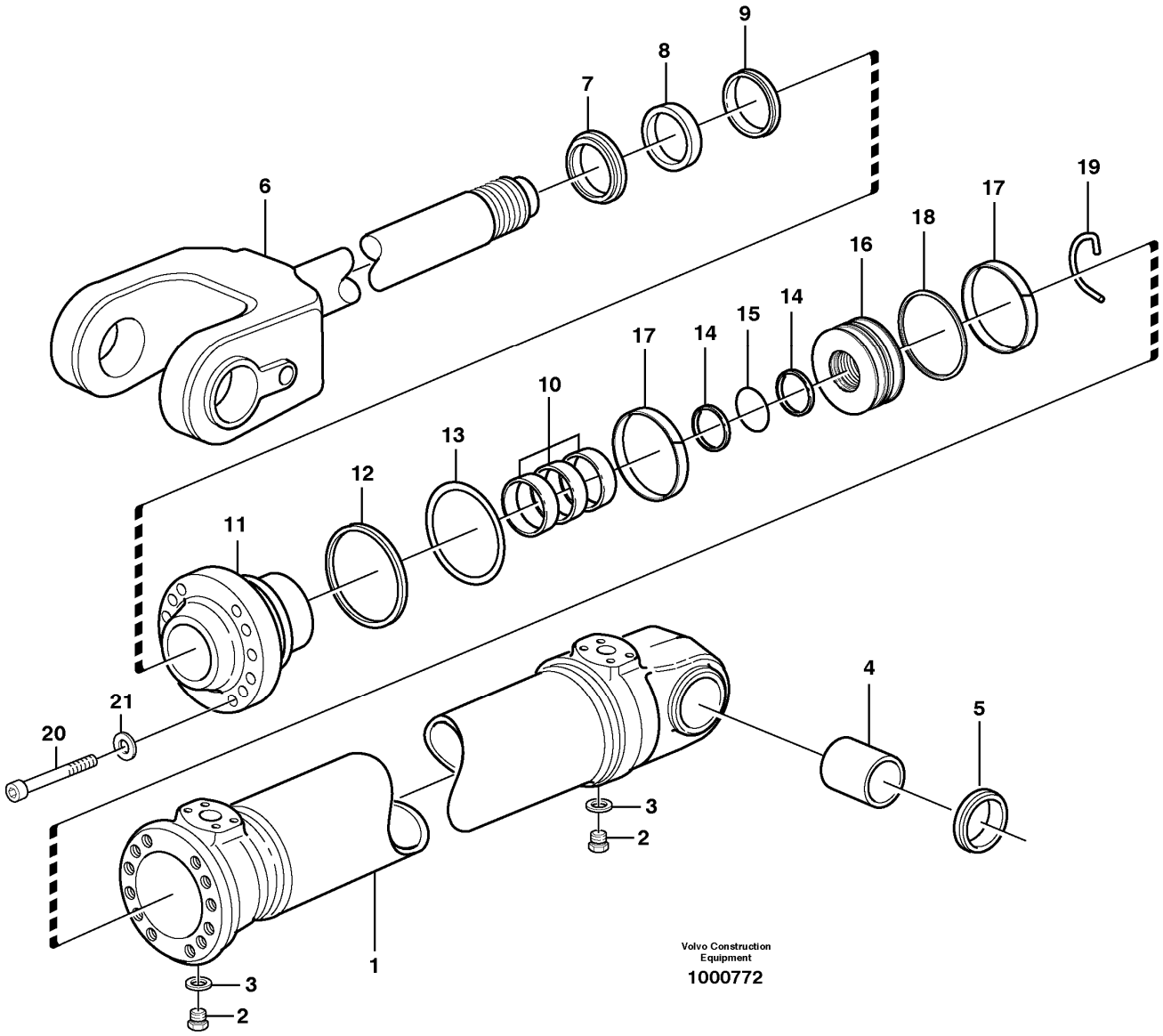

Section option	Kit	Option description
VOE33380		Volvo Wheel Loader L120E S/N 19801-, S/N 66001- USA, S/N 71401- BRA
VOE82601		Automatic greasing system
VOE82007		Long boom
VOE33395		Wheel Loader L120E3 IRAN

Q1-Q5	Option	Option description	
Q1 11107855			
Q2 11107857			

Pos	Part	Q1	Q2	Q3	Q4	Q5	PS	Kit	Description	Option(s)	Remark
	VOE11107855	1					SS		Hydraulic cylinder		REMAN VOE9015107943, VOE9011107855
	VOE17230559		1						Hydraulic cylinder	VOE82007, VOE82601	(VOE11107857), REMAN VOE9011107857, VOE9017230559
1	VOE11107717	1					OP		•Cylinder tube		
	VOE11107726		1				OP		•Cylinder tube		
2	VOE960630	1	1						•Plug		
3	VOE13945653	1	1						•Plane gasket		
4	VOE11020803	1	1						•Bushing		
5	VOE11005017	2	2						•Scraper ring		
6	VOE15180125	1					SS		•Piston rod		(VOE11107287)
	VOE11107511		1						•Piston rod		
7	VOE11005059	1						K	•Scraper ring		
	VOE11005061		1					K	•Scraper ring		
8	VOE11088173	1						K	•Piston rod seal		
	VOE11005107		1					K	•Piston rod seal		
9	VOE11088174	1						K	•Piston rod seal		
	VOE11107371		1					K	•Piston rod seal		(VOE11005430)
10	VOE11088150	3							•Bushing		
	VOE11088249		2						•Bushing		
11	VOE11107282	1							•Piston rod guide		
	VOE11107513		1						•Piston rod guide		
12	VOE4880855	1						K	•Back-up ring		
	VOE11005090		1					K	•Back-up ring		
13	VOE925032	1						K	•O-ring		
	VOE925034		1					K	•O-ring		
14	VOE11088601	2						K	•Back-up ring		
15	VOE925256	1						K	•O-ring		
	VOE11107170		1					K	•O-ring		
16	VOE11107286	1					OP		•Piston		
	VOE11107426		1				OP		•Piston		
17	VOE11107289	2							•Guide ring		
	VOE11107223		2						•Guide ring		
18	VOE11107810	1							•Piston seal		
	VOE11107811		1					K	•Piston seal		
19	VOE11107285	1							•Lock brace		
	VOE11107268		1						•Lock brace		
20	VOE980238	12							•Hex. socket screw		(VOE13980238)
	VOE4782860		8						•Hex. socket screw		
21	VOE941911	12							•Spring washer		
	VOE941912		8						•Spring washer		
	VOE11708825	1							Sealing kit		
	VOE11709384		1						Sealing kit		

VOLVO

Construction Equipment

PROSIS Part Information

Date:	Image id:	Catalogue:	Model:
25/08/2018	**1000768**	**20086**	**L120E**
Brand:	Serial:	Group/Section:	Title:
Volvo	**19804-, 66001-, 71401-**	**945/550**	**Hydraulic cylinder, tilting 33380, 33395, 82007, 82601**

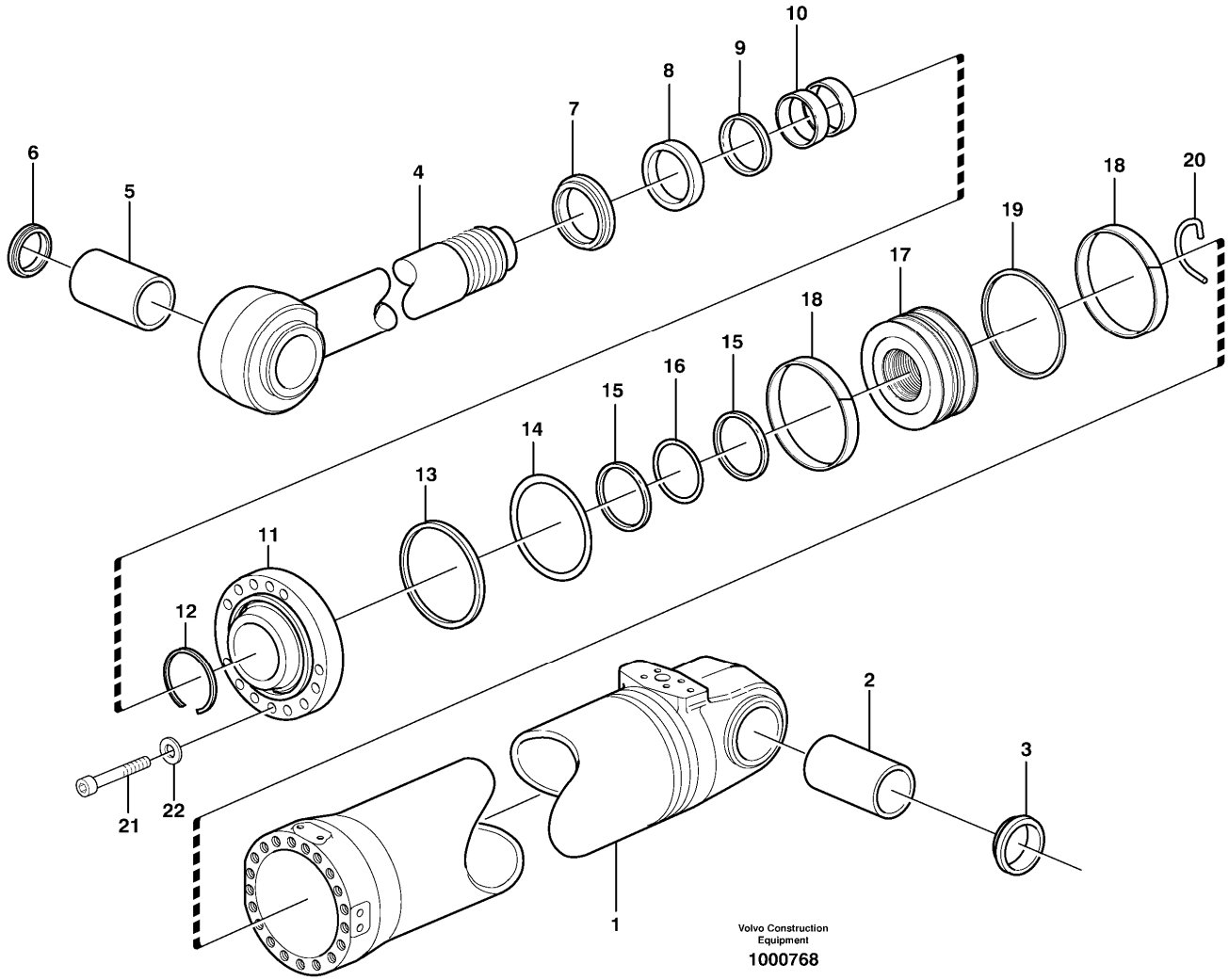

Section option	Kit	Option description
VOE33380		Volvo Wheel Loader L120E S/N 19801-, S/N 66001- USA, S/N 71401- BRA
VOE82601		Automatic greasing system
VOE82007		Long boom
VOE33395		Wheel Loader L120E3 IRAN

Q1-Q5	Option	Option description	
Q1 11107856			
Q2 11107858			

Pos	Part	Q1	Q2	Q3	Q4	Q5	PS	Kit	Description	Option(s)	Remark
	VOE11107856	1					SS		Hydraulic cylinder		REMAN VOE9011107856,

											VOE9015148701
	VOE11107858		1				SS		Hydraulic cylinder	VOE82007, VOE82601	REMAN VOE9011107858, VOE9015165423
1		1	1				NS		•Cylinder tube		
2	VOE11020802	1	1						•Bushing		
3	VOE11005099	2	2						•Scraper ring		
4	VOE15180039	1							•Piston rod		(VOE11107252)
	VOE11107514		1						•Piston rod		
5	VOE11020805	1	1						•Bushing		
6	VOE11005099	2	2						•Scraper ring		
7	VOE11107246	1	1					K	•Scraper ring		
8	VOE11088321	1	1					K	•Piston rod seal		
9	VOE11088322	1	1					K	•Piston rod seal		
10	VOE11088324	2	2						•Bushing		
11	VOE11107253	1	1						•Piston rod guide		
12	VOE943058	1	1						•Snap ring		
13	VOE11107255	1	1					K	•Back-up ring		
14	VOE962508	1	1					K	•O-ring		
15	VOE11088602	2	2					K	•Back-up ring		
16	VOE925261	1	1					K	•O-ring		
17	VOE11107247	1	1				OP		•Piston		
18	VOE11107254	2	2						•Guide ring		
19	VOE11107817	1	1					K	•Piston seal		
20	VOE11107158	1	1						•Lock brace		
21	VOE13966851	14	14						•Screw		
22	VOE941914	14	14						•Spring washer		
	VOE11708833	1	1						Sealing kit		

VOLVO

Construction Equipment

PROSIS Part Information

Date:	Image id:	Catalogue:	Model:
25/08/2018	**1007354**	**20086**	**L120E**
Brand:	Serial:	Group/Section:	Title:
Volvo	**19804-, 66001-, 71401-**	**945/600**	**Hose protection, lift cylinder 82217, 82255**

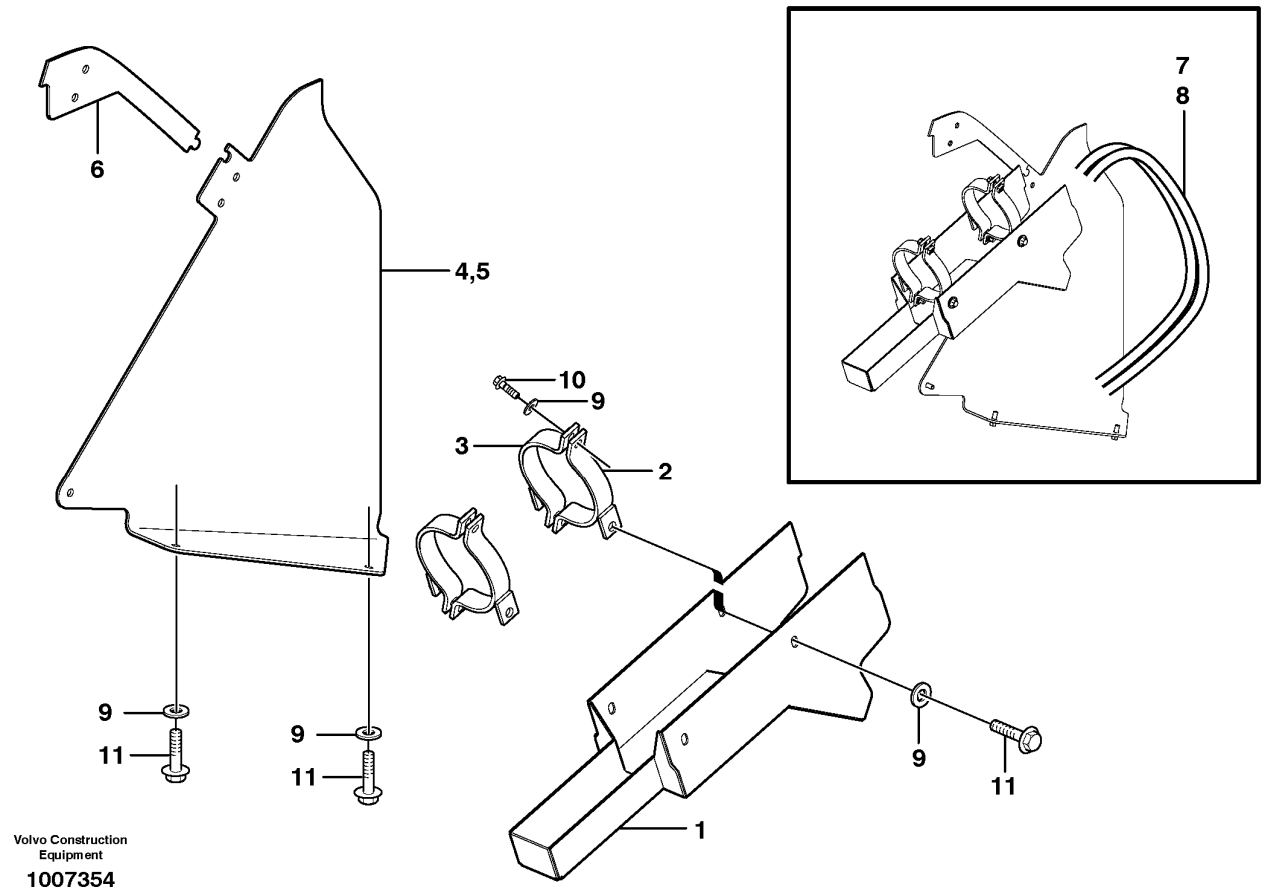

Section option	Kit	Option description
VOE82217		Guards for pipes and lift cylinder hoses
VOE82255		Guards for pipes and lift cylinder hoses

Pos	Part	Q1	Q2	Q3	Q4	Q5	PS	Kit	Description	Option(s)	Remark
1	VOE11180359	2							Guard		
2	VOE11180715	4							Bracket		
3	VOE11180716	4							Tensioning band	VOE82217	
	VOE11180717	4							Tensioning band	VOE82255	
4	VOE11180368	1					SS		Guard		RH
5	VOE11180369	1					SS		Guard		LH
6	VOE11180392	2							Plate		
7	VOE15036352	2							Hose assembly		L = 1280MM

8	VOE11180429	2							Hose assembly		
9	VOE13960145	22							Washer		
10	VOE13965192	8							Screw		
11	VOE13965191	14							Screw		

VOLVO

Construction Equipment

PROSIS Part Information

Date:	Image id:	Catalogue:	Model:
25/08/2018	**1032178**	**20086**	**L120E**
Brand:	Serial:	Group/Section:	Title:
Volvo	**19804-, 66001-, 71401-**	**992/125**	**Fire suppression system 83411**

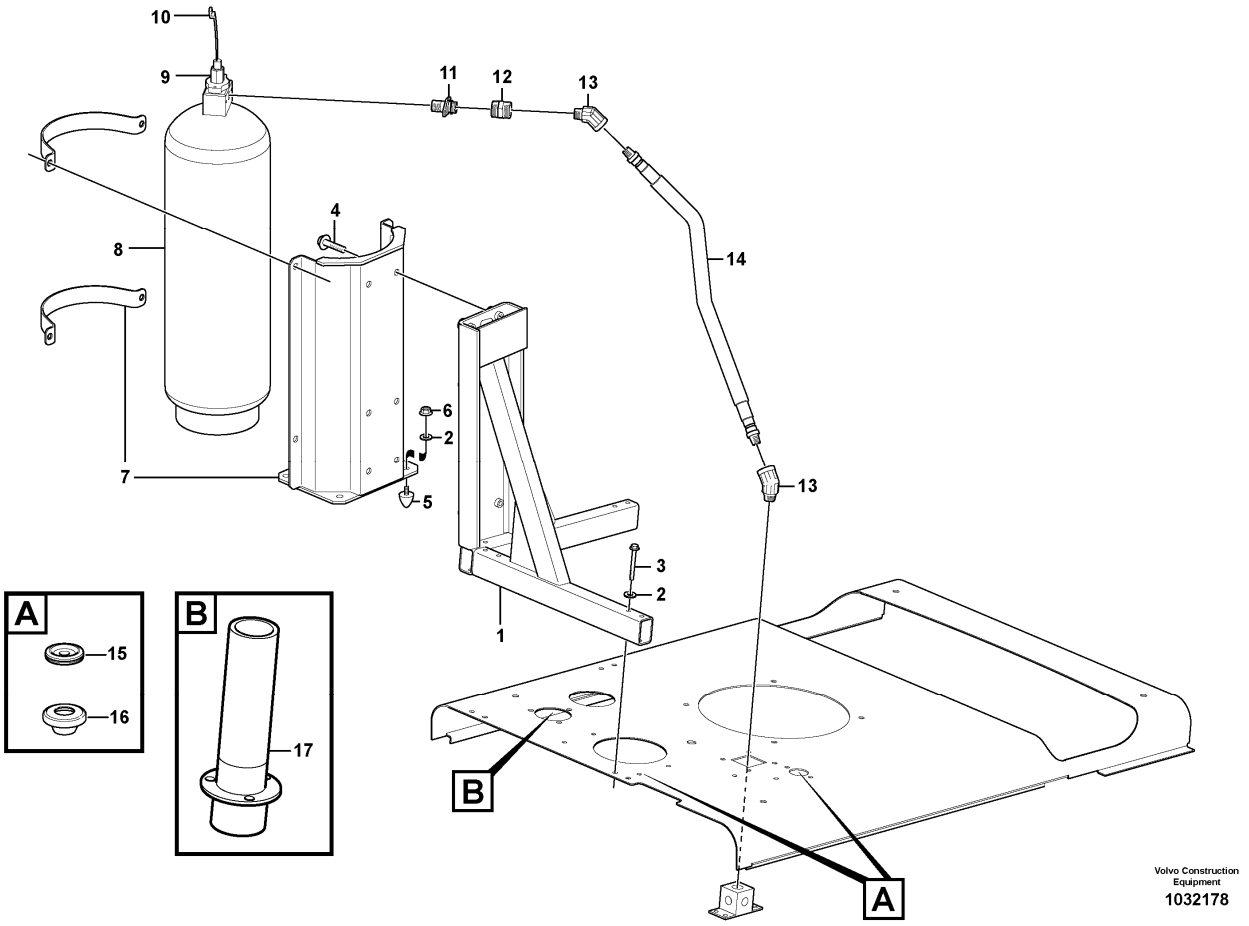

Section option	Kit	Option description
VOE83411		Fire suppression system USA

Pos	Part	Q1	Q2	Q3	Q4	Q5	PS	Kit	Description	Option(s)	Remark
1	VOE11436065	1							Frame		
2	VOE11117464	13							Plain washer		(VOE13960141)
3	VOE13965182	6							Screw		
4	VOE13965192	6							Screw		
5	VOE4881758	1							Rubber stop		
6	VOE948645	4							Flange lock nut		
7	VOE11301767	1							Bracket		
8	VOE11301765	1							Tank		
9		1							Contact		See ref 371/1850
10		1							Actuator		See ref 371/1850
11	VOE11301771	1							Fitting		

12	VOE11301772	1							Clutch		
13	VOE11301775	2							Elbow		
14	VOE11435520	1							Hose assembly		
15	VOE943920	1							Plug		
16	VOE13974682	8							Plug		
17	VOE11435346	1							Hose connection		

VOLVO

Construction Equipment

PROSIS Part Information

Date:	Image id:	Catalogue:	Model:
25/08/2018	**1032097**	**20086**	**L120E**
Brand:	Serial:	Group/Section:	Title:
Volvo	**19804-, 66001-, 71401-**	**992/150**	**Fire suppression system 83411**

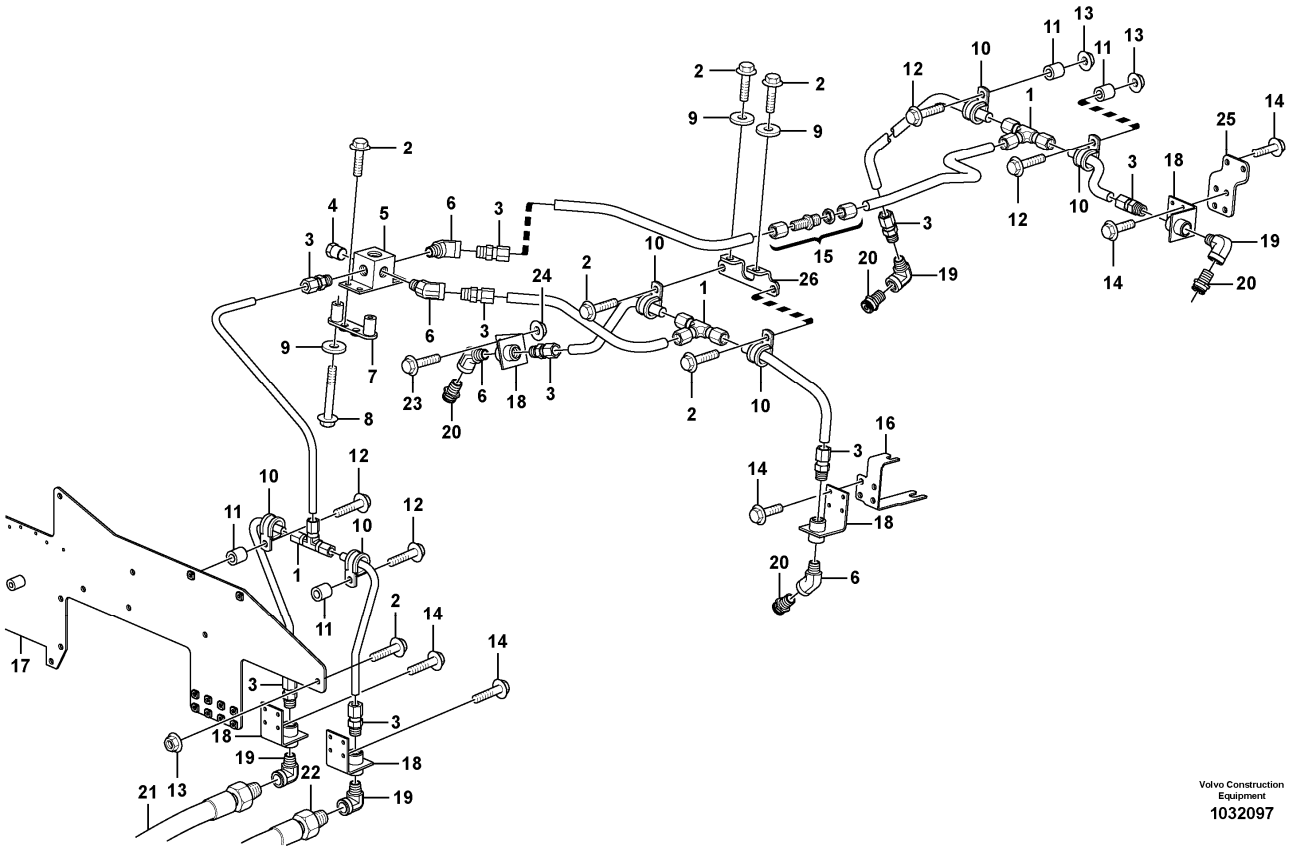

Section option	Kit	Option description
VOE83411		Fire suppression system USA

Pos	Part	Q1	Q2	Q3	Q4	Q5	PS	Kit	Description	Option(s)	Remark
1	VOE11301898	3							Fitting		
2	VOE13946173	9							Screw		
3	VOE11301813	9							Fitting		
4	VOE479956	1							Plug		
5	VOE11301784	1							Block		
6	VOE11301801	4							Elbow		
7		2					NS		Retaining Plate		
8	VOE13965180	4							Screw		
9	VOE11117464	5							Plain washer		
10	VOE13949746	6							Clamp		
11	VOE930431	4							Spacer ring		

12	VOE946671	4							Flange screw		
13	VOE948645	4							Flange lock nut		
14	VOE946544	24							Flange screw		
15	VOE11301815	1							Fitting		
16		1					NS		Attaching Plate		
17		1					NS		Plate		
18	VOE11301783	6							Bracket		
19	VOE11301799	4							Elbow		
20	VOE11301769	4							Nozzle		
21		1							Hose assembly		See ref 992/200
22		1							Hose assembly		See ref 992/200
23	VOE13946934	2							Screw		
24	VOE13949278	2							Flange lock nut		
25		1					NS		Attaching Plate		
26		1					NS		Attaching Plate		

VOLVO

Construction Equipment

PROSIS Part Information

Date:	Image id:	Catalogue:	Model:
25/08/2018	**1030609**	**20086**	**L120E**
Brand:	Serial:	Group/Section:	Title:
Volvo	**19804-, 66001-, 71401-**	**992/200**	**Fire suppression system 83411**

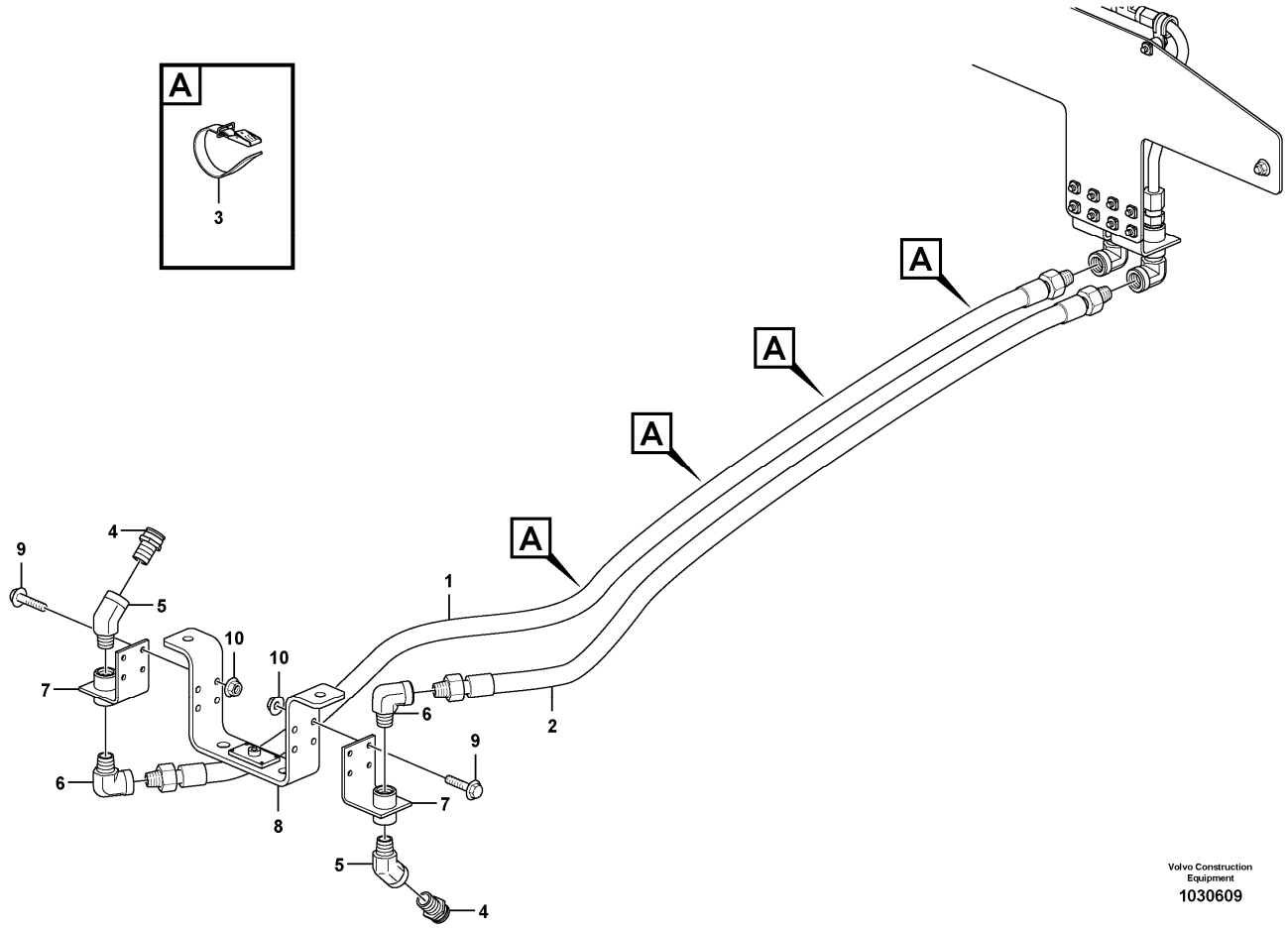

Section option	Kit	Option description
VOE83411		Fire suppression system USA

Pos	Part	Q1	Q2	Q3	Q4	Q5	PS	Kit	Description	Option(s)	Remark
1	VOE11301977	1							Hose assembly		
2	VOE11301976	1							Hose assembly		
3	VOE11104606	4							Retaining strap		
4	VOE11301769	2							Nozzle		
5	VOE11301801	2							Elbow		
6	VOE11301799	2							Elbow		
7	VOE11301783	2							Bracket		
8	VOE11301900	1							Attachment		
9	VOE13946934	8							Screw		
10	VOE13949278	8							Flange lock nut		

VOLVO

Construction Equipment

PROSIS Part Information

Date:	Image id:	Catalogue:	Model:
25/08/2018	**1018863**	**20086**	**L120E**
Brand:	Serial:	Group/Section:	Title:
Volvo	**19804-, 66001-, 71401-**	**993/100**	**Central lubrication. 82143, 80928, 82601, 82600**

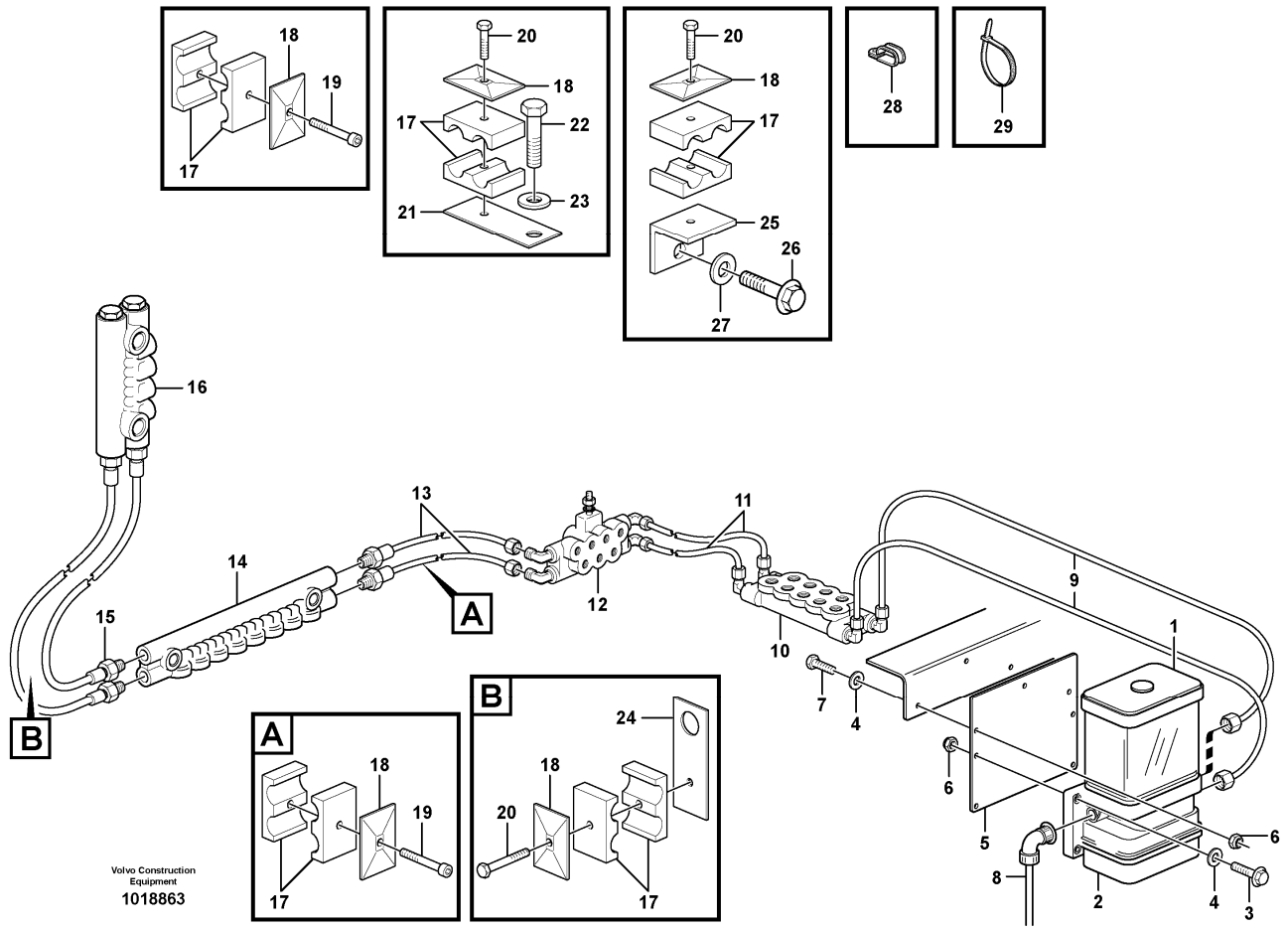

Section option	Kit	Option description
VOE80928		Automatic greasing system IF WELDED ATTACHMENT BRACKET 80009 COMB WITH 94811IF CASTED ATTACHMENT BRACKET 93643 COMB WITH 80334
VOE82600		Automatic greasing system
VOE82601		Automatic greasing system
VOE82143		Automatic greasing system IF WELDED ATTACHMENT BRACKET 80847 COMB WITH 94811IF CASTED ATTACHMENT BRACKET 80846 COMB WITH 82355

Pos	Part	Q1	Q2	Q3	Q4	Q5	PS	Kit	Description	Option(s)	Remark
1		1							Ctl Lubrication		
2		1							•Pump		See ref 993/700
3	VOE13965179	4							•Screw		
4	VOE11117464	6							•Plain washer		(VOE13960141)
5	VOE11177137	1							•Bracket		
6	VOE948645	7							•Flange lock nut		
7	VOE946671	3							•Flange screw		

8		1							•Cable harness		See ref 371/1150
9	VOE11176854	2							•Hose		H1, L = 900 MM
10		1							•Distr Block		B1 See ref 993/200
11	VOE11176855	2							•Hose		H2, L = 2000 MM
12		1							•Distr Block		B2 See ref 993/300
13	VOE11176856	2							•Hose	VOE80928, VOE82143	H3, L = 3800 MM S/N - 20317
13	VOE11432288	2							•Hose		S/N 20318 -
	VOE11177116	2							•Hose	VOE82600, VOE82601	H3, L = 4200 MM S/N - 20317
	VOE11432298	2							•Hose		S/N 20318 -
14		1							•Distr Block		B3 See ref 993/400
15	VOE11176857	2							•Hose		H4, L = 750 MM
16		1							•Distr Block		B4 See ref 993/500
17	VOE11701854	5							•Clamp		
18	VOE11707381	5							•Cover Plate		
19	VOE959208	2							•Hex. socket screw		
20	VOE13959209	3							•Screw		
21	VOE11176814	1					OP		•Bracket		
22	VOE13946173	2							•Screw		
23	VOE11117464	1							•Plain washer		(VOE13960141)
24	VOE11708540	1							•Bracket		
25	VOE11707384	1							•Washer		
26	VOE946441	1							•Flange screw		
27	VOE13960143	1							•Washer		
28	VOE977599	3							•Clamp		
29	VOE4881440	REQ							•Cable tie		

VOLVO

Construction Equipment

PROSIS Part Information

Date:	Image id:	Catalogue:	Model:
25/08/2018	**1018864**	**20086**	**L120E**
Brand:	Serial:	Group/Section:	Title:
Volvo	**19804-, 66001-, 71401-**	**993/150**	**Central lubrication with fitting parts. B1 82143, 80928, 82601, 82600**

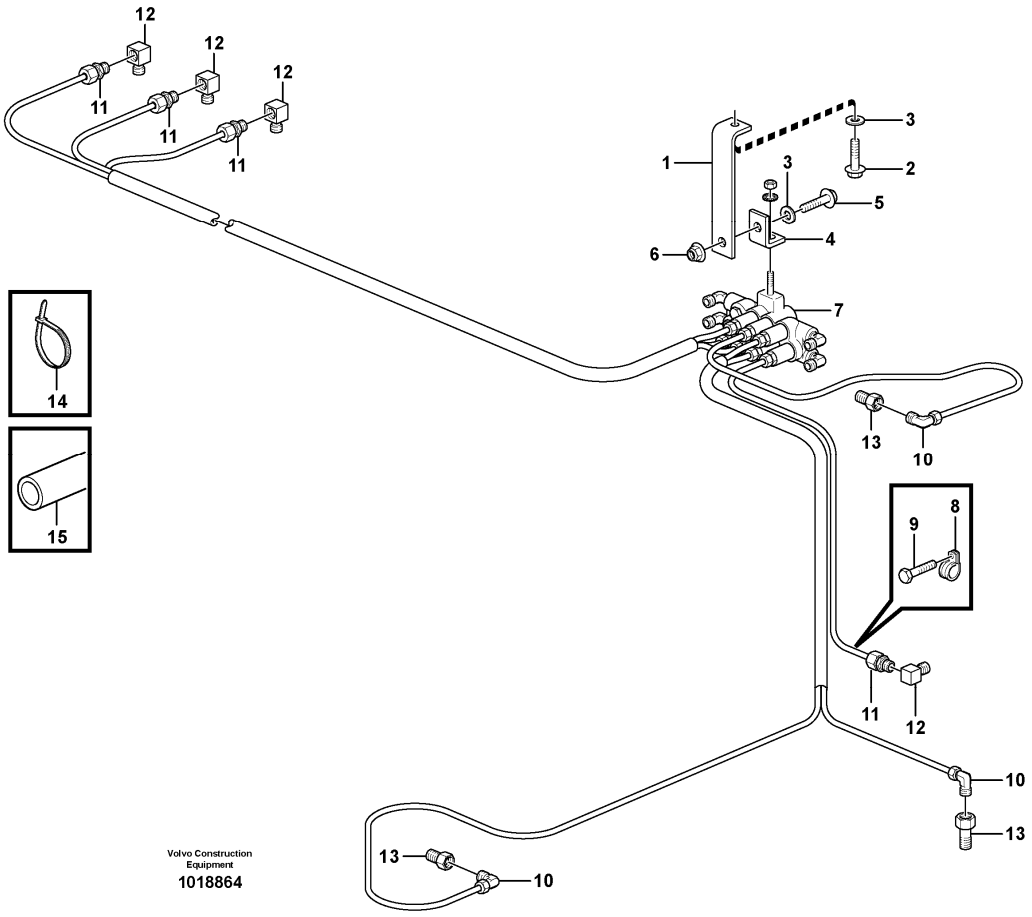

Section option	Kit	Option description
VOE80928		Automatic greasing system IF WELDED ATTACHMENT BRACKET 80009 COMB WITH 94811IF CASTED ATTACHMENT BRACKET 93643 COMB WITH 80334
VOE82600		Automatic greasing system
VOE82601		Automatic greasing system
VOE82143		Automatic greasing system IF WELDED ATTACHMENT BRACKET 80847 COMB WITH 94811IF CASTED ATTACHMENT BRACKET 80846 COMB WITH 82355

Pos	Part	Q1	Q2	Q3	Q4	Q5	PS	Kit	Description	Option(s)	Remark
1	VOE11176849	1							Bracket		
2	VOE13946173	1							Screw		
3	VOE11117464	4							Plain washer		(VOE13960141)
4	VOE11176848	1							Bracket		
5	VOE13946173	1							Screw		
6	VOE948645	1							Flange lock nut		
7		1					NS		Distr Block		B1 See ref 993/200

8	VOE952623	1							Clamp		
9	VOE11176861	1							Screw		
10	VOE11701837	3							Connector		
11	VOE11701843	4							Connector		
12	VOE11701845	4							Connector		
13	VOE11701850	2							Adapter		82600, 82601
14	VOE4881440	REQ							Cable tie		
15	VOE13941451	REQ							Hose		

VOLVO

Construction Equipment

PROSIS Part Information

Date:	Image id:	Catalogue:	Model:
25/08/2018	**1018538**	**20086**	**L120E**
Brand:	Serial:	Group/Section:	Title:
Volvo	**19804-, 66001-, 71401-**	**993/200**	**Distribution block, B1 82143, 80928, 82601, 82600**

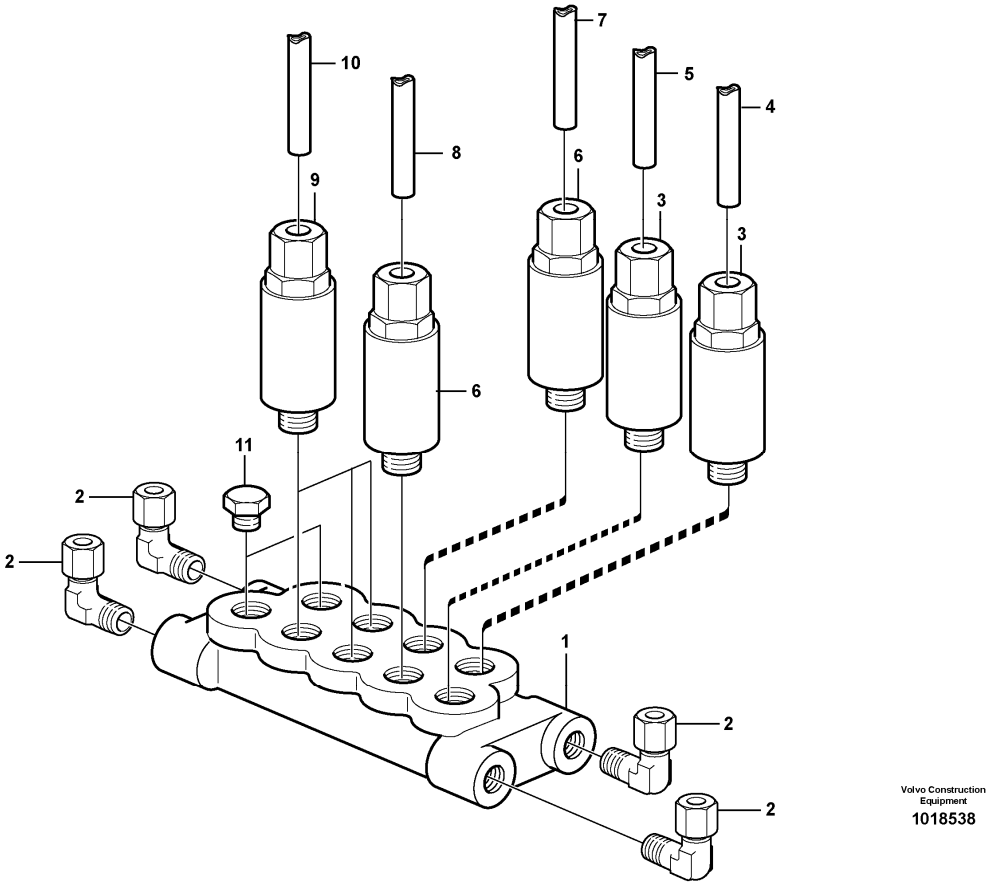

Section option	Kit	Option description
VOE80928		Automatic greasing system IF WELDED ATTACHMENT BRACKET 80009 COMB WITH 94811IF CASTED ATTACHMENT BRACKET 93643 COMB WITH 80334
VOE82600		Automatic greasing system
VOE82601		Automatic greasing system
VOE82143		Automatic greasing system IF WELDED ATTACHMENT BRACKET 80847 COMB WITH 94811IF CASTED ATTACHMENT BRACKET 80846 COMB WITH 82355

Pos	Part	Q1	Q2	Q3	Q4	Q5	PS	Kit	Description	Option(s)	Remark
	VOE11176816	1					SS		Distribution block		
1	VOE11705428	1							•Distribution block		9 PORTS / PORTAR
2		4					NS		•Elbow Union		
3	VOE11702153	2							•Dosage valve		
	VOE990740	1							••O-ring		
	VOE11705432	1							••O-ring		
	VOE11704711	1							••Ferrule		

	VOE11704712	1							••Nut		
4	VOE11701834	REQ							•Lubricant line		L = 2000 MM
5	VOE11701833	REQ							•Lubricant line		L = 1500 MM
6	VOE11702152	2							•Dosage valve		
	VOE990740	1							••O-ring		
	VOE11705432	1							••O-ring		
	VOE11704711	1							••Ferrule		
	VOE11704712	1							••Nut		
7	VOE11701833	2							•Lubricant line		L = 2000 MM
8	VOE11701834	1							•Lubricant line		L = 2000 MM
9	VOE11702154	3							•Dosage valve		
	VOE990740	1							••O-ring		(VOE981289)
	VOE11705432	1							••O-ring		
	VOE11704711	1							••Ferrule		
	VOE11704712	1							••Nut		
10	VOE11701835	1							•Lubricant line		L = 3000 MM
11	VOE11702150	2							•Plug		

VOLVO

Construction Equipment

PROSIS Part Information

Date:	Image id:	Catalogue:	Model:
25/08/2018	**1018865**	**20086**	**L120E**
Brand:	Serial:	Group/Section:	Title:
Volvo	**19804-, 66001-, 71401-**	**993/250**	**Central lubrication with fitting parts. B1 82143, 80928, 82601, 82600**

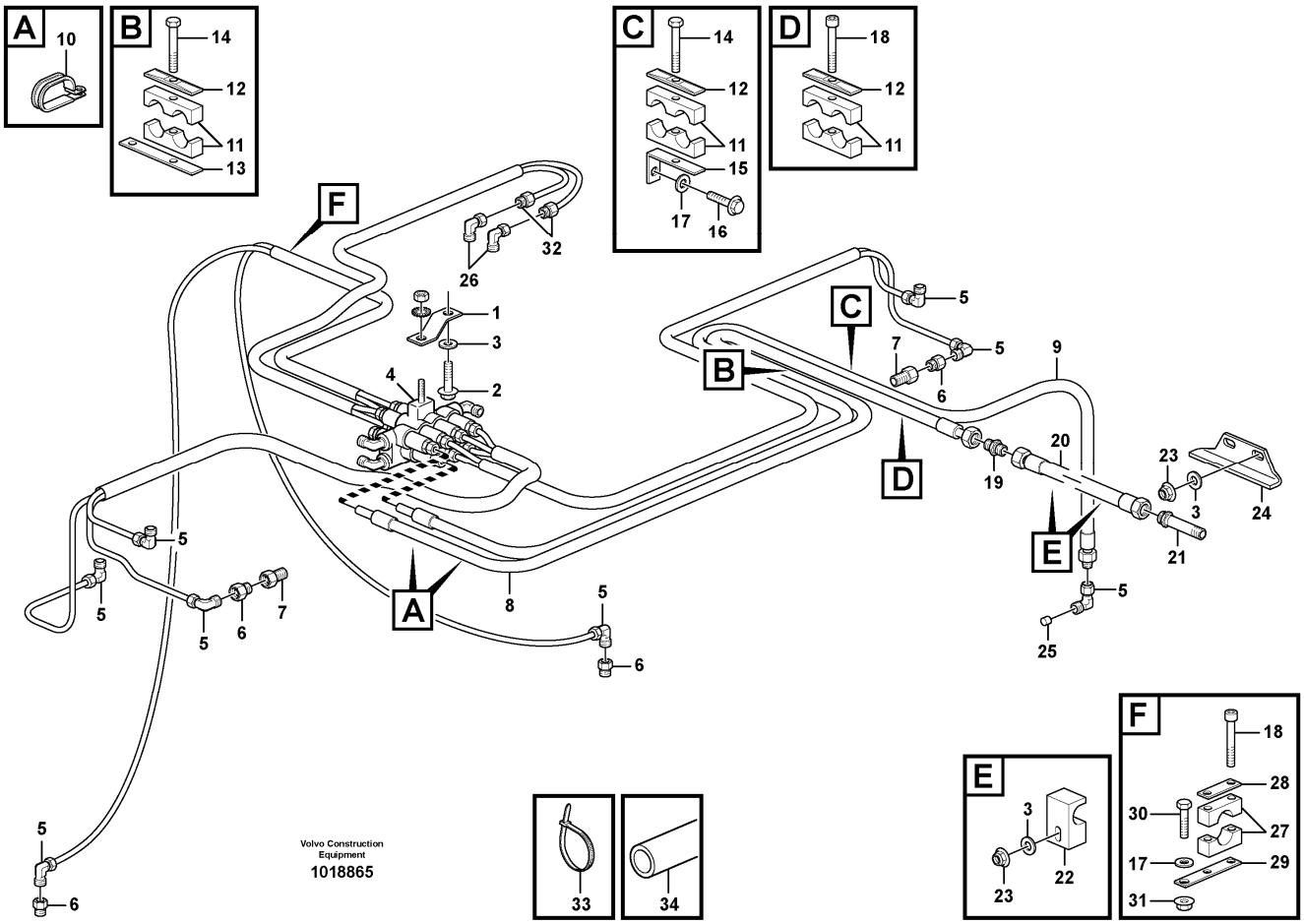

Section option	Kit	Option description
VOE80928		Automatic greasing system IF WELDED ATTACHMENT BRACKET 80009 COMB WITH 94811IF CASTED ATTACHMENT BRACKET 93643 COMB WITH 80334
VOE82600		Automatic greasing system
VOE82601		Automatic greasing system
VOE82143		Automatic greasing system IF WELDED ATTACHMENT BRACKET 80847 COMB WITH 94811IF CASTED ATTACHMENT BRACKET 80846 COMB WITH 82355

Pos	Part	Q1	Q2	Q3	Q4	Q5	PS	Kit	Description	Option(s)	Remark
1	VOE11176850	1							Bracket		
2	VOE13946173	2							Screw		
3	VOE11117464	5							Plain washer		(VOE13960141)
4		1							Distr Block		B2 See ref 993/300
5	VOE11701837	8							Connector		
6	VOE11701838	4							Adapter		
7	VOE11701850	2							Adapter		

8	VOE11177108	REQ							Hose	VOE80928, VOE82143	L = 4150 MM S/N - 20317
8	VOE11432291	REQ							Hose		S/N 20318 -
8	VOE11432548	REQ							Hose	VOE82601	S/N 20318 -
	VOE11715610	REQ							Hose	VOE82600, VOE82601	L = 4550 MM
9	VOE11177106	REQ							Hose	VOE80928, VOE82143	L = 4150 MM S/N - 20317
9	VOE11432387	REQ							Hose		S/N 20318 -
9	VOE11177107	REQ							Hose	VOE82600, VOE82601	L = 4450 MM S/N - 20317
9	VOE11432547	REQ							Hose		S/N 20318 -
10	VOE977599	2							Clamp		
11	VOE11701854	3							Clamp		
12	VOE11707381	3							Cover Plate		
13	VOE11176814	1					OP		Bracket		
14	VOE13959209	2							Screw		
15	VOE11707384	2							Washer		
16	VOE946471	1							Flange screw		
17	VOE13960143	4							Washer		
18	VOE959208	3							Hex. socket screw		
19	VOE11177105	1							Connector		
20	VOE11177104	1							Tube		
21	VOE11177103	1							Connector		
22	VOE11177023	2							Clamp		
23	VOE948645	6							Flange lock nut		
24	VOE11177006	1							Protecting moulding		
25	VOE11701827	1							Plug		
26	VOE11701845	2							Connector		
27	VOE11701117	1							Clamp	VOE80928, VOE82600	
	VOE4785459	1							Clamp	VOE82143, VOE82601	
28	VOE11707377	1							Cover plate		
29	VOE11707383	2							Bracket		
30	VOE13965194	1							Screw		
31	VOE971099	1							Flange lock nut		
32	VOE11701843	2							Connector		
33	VOE4881440	REQ							Cable tie		
34	VOE13941451	REQ							Hose		

VOLVO

Construction Equipment

PROSIS Part Information

Date:	Image id:	Catalogue:	Model:
25/08/2018	**1018566**	**20086**	**L120E**
Brand:	Serial:	Group/Section:	Title:
Volvo	**19804-, 66001-, 71401-**	**993/300**	**Distribution block, B2. 82143, 80928, 82601, 82600**

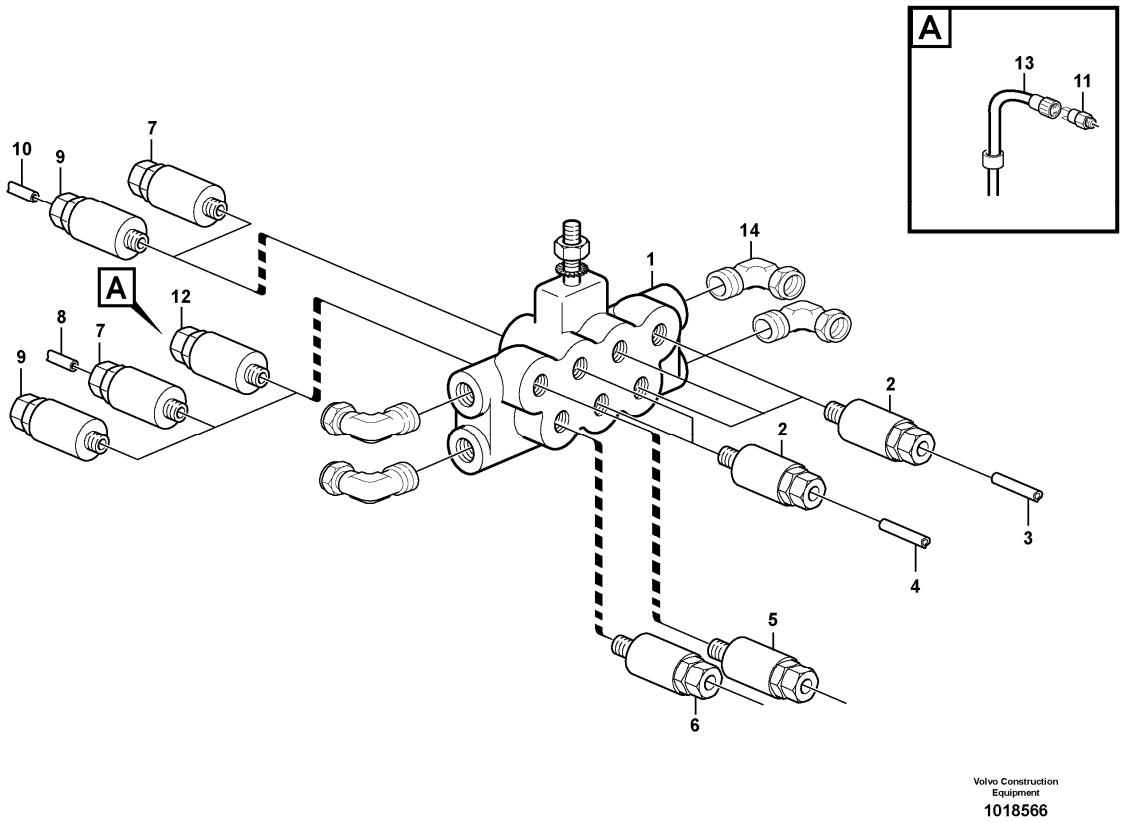

Section option	Kit	Option description
VOE80928		Automatic greasing system IF WELDED ATTACHMENT BRACKET 80009 COMB WITH 94811IF CASTED ATTACHMENT BRACKET 93643 COMB WITH 80334
VOE82600		Automatic greasing system
VOE82601		Automatic greasing system
VOE82143		Automatic greasing system IF WELDED ATTACHMENT BRACKET 80847 COMB WITH 94811IF CASTED ATTACHMENT BRACKET 80846 COMB WITH 82355

Pos	Part	Q1	Q2	Q3	Q4	Q5	PS	Kit	Description	Option(s)	Remark
	VOE11177109	1							Distribution block		S/N - 20317
	VOE11432384	1							Distribution block		S/N 20318 -
1	VOE11708191	1							•Distribution block		12 PORTAR / PORTS
2	VOE11702152	5							•Dosage valve		
3	VOE11701835	REQ							•Lubricant line		L = 2000 MM
4		REQ							•Lubricant Line		L = 3000 MM
5	VOE11702154	1							•Dosage valve		

	VOE990740	1							••O-ring		
	VOE11705432	1							••O-ring		
	VOE11704711	1							••Ferrule		
	VOE11704712	1							••Nut		
6	VOE11702370	1							•Dosage valve		
	VOE990740	1							••O-ring		(VOE981289)
	VOE11705432	1							••O-ring		
	VOE11704711	1							••Ferrule		
	VOE11704712	1							••Nut		
7	VOE11702371	2							•Dosage valve		
	VOE990740	2							••O-ring		
	VOE11705432	2							••O-ring		
	VOE11704711	2							••Ferrule		
	VOE11704712	2							••Nut		
8	VOE11701834	REQ							•Lubricant line		L = 2000 MM
9	VOE11702151	2							•Dosage valve		
	VOE990740	2							••O-ring		
	VOE11705432	2							••O-ring		
	VOE11704711	2							••Ferrule		
	VOE11704712	2							••Nut		
10	VOE11701834	REQ							•Lubricant line		L = 2000 MM
11	VOE11702174	1							•Pressure switch		SE805
12	VOE11702156	1							•Valve		
	VOE990740	1							••O-ring		
	VOE11705432	1							••O-ring		
	VOE11704711	1							••Ferrule		
	VOE11704712	1							••Nut		
13	VOE11707861	1							•Cable harness		
14		REQ					NS		•Nipple L		

VOLVO

Construction Equipment

PROSIS Part Information

Date:	Image id:	Catalogue:	Model:
25/08/2018	**1081456**	**20086**	**L120E**
Brand:	Serial:	Group/Section:	Title:
Volvo	**19804-, 66001-, 71401-**	**993/350**	**Central lubrication with fitting parts. B3 82143, 80928, 82601, 82600**

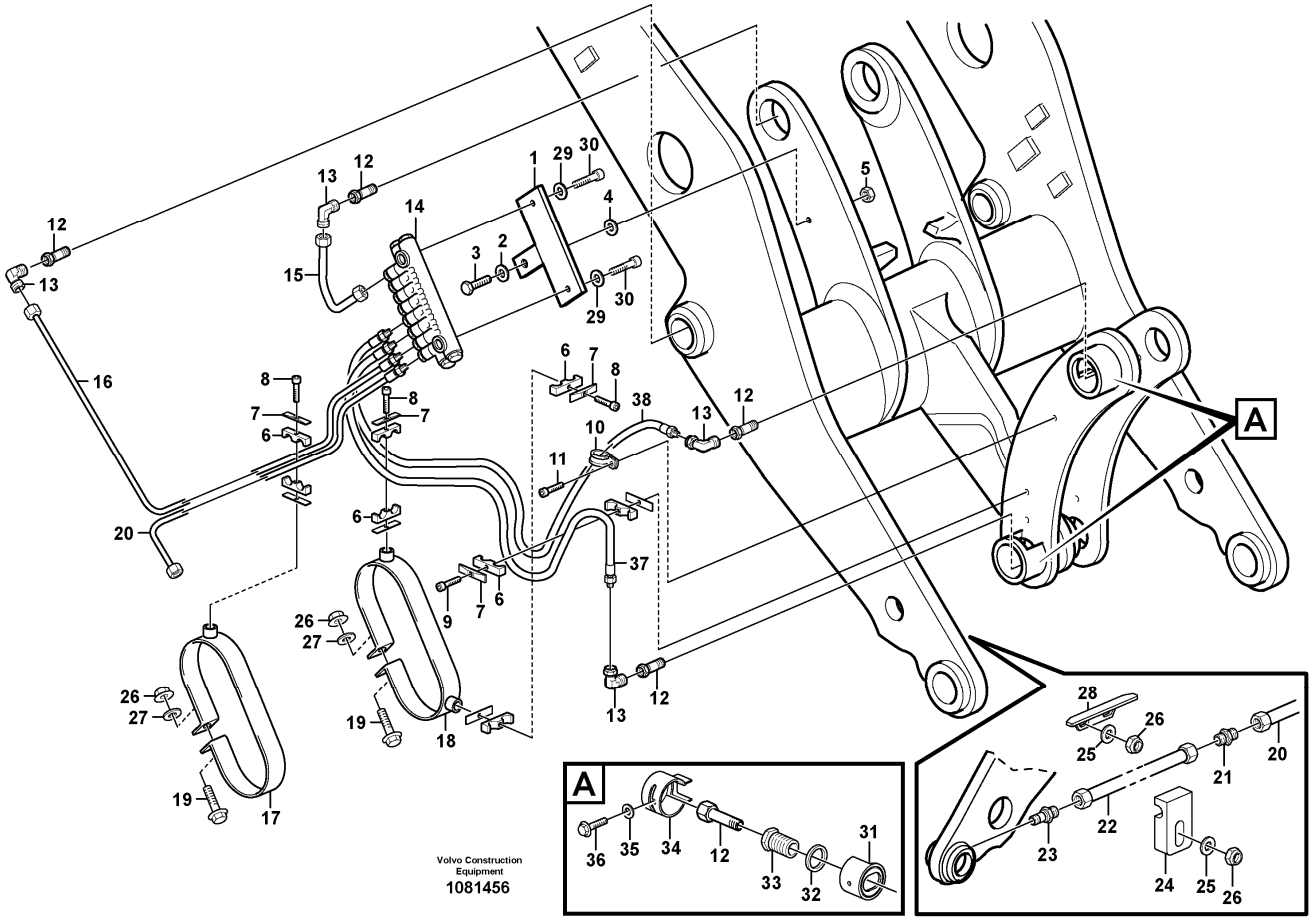

Section option	Kit	Option description
VOE80928		Automatic greasing system IF WELDED ATTACHMENT BRACKET 80009 COMB WITH 94811IF CASTED ATTACHMENT BRACKET 93643 COMB WITH 80334
VOE82600		Automatic greasing system
VOE82601		Automatic greasing system
VOE82143		Automatic greasing system IF WELDED ATTACHMENT BRACKET 80847 COMB WITH 94811IF CASTED ATTACHMENT BRACKET 80846 COMB WITH 82355

Pos	Part	Q1	Q2	Q3	Q4	Q5	PS	Kit	Description	Option(s)	Remark
1	VOE11707386	1							Attachment		
2	VOE13960143	1							Washer		
3	VOE13970951	1							Hexagon screw		
4	VOE13960143	1							Washer		
5	VOE13971098	1							Flange nut		
6	VOE11701854	4							Clamp		ID=12
7	VOE11707381	4							Cover Plate		

8	VOE959208	3							Hex. socket screw		
9	VOE11177111	1							Screw		
10	VOE952627	1							Clamp		
11	VOE13946501	1							Screw		
12	VOE11701842	3							Adapter		
13	VOE11701837	4							Connector		
14		1							Distr Block		B3 See ref 993/400
15	VOE11714219	1							Lubricating hose		L = 250 MM
16	VOE11714224	1							Lubricating hose	VOE80928, VOE82143	L = 700 MM
	VOE11714225	1							Lubricating hose	VOE82600, VOE82601	L = 1100 MM
17	VOE11708302	1							Clamp		
18	VOE11176641	1							Clamp		
19	VOE946671	2							Flange screw		
20	VOE11714183	1							Lubricating hose		L = 600 MM
21	VOE11177105	1							Connector		
22	VOE11177112	1							Tube		
23	VOE11177103	1							Connector		
24	VOE11177023	2							Clamp		
25	VOE11117464	2							Plain washer		(VOE13960141)
26	VOE13960145	1							Washer		
27	VOE11117464	2							Plain washer		(VOE13960141)
28	VOE11177006	1							Protecting moulding		
29	VOE11176859	2							Washer		
30	VOE959207	2							Hex. socket screw		
31	VOE11176963	2							Ring		
32	VOE11176961	2							Washer		
33	VOE11176956	2							Screw		
34	VOE11176959	2							Protecting ring		
35	VOE11117464	2							Plain washer		(VOE13960141)
36	VOE983241	2							Hexagon screw		
37	VOE11707428	1							Lubricating hose		L = 1900 MM
38	VOE11708033	1							Lubricating hose		L = 1700 MM

VOLVO

Construction Equipment

PROSIS Part Information

Date:	Image id:	Catalogue:	Model:
25/08/2018	**1018573**	**20086**	**L120E**
Brand:	Serial:	Group/Section:	Title:
Volvo	**19804-, 66001-, 71401-**	**993/400**	**Distribution block, B3 82143, 80928, 82601, 82600**

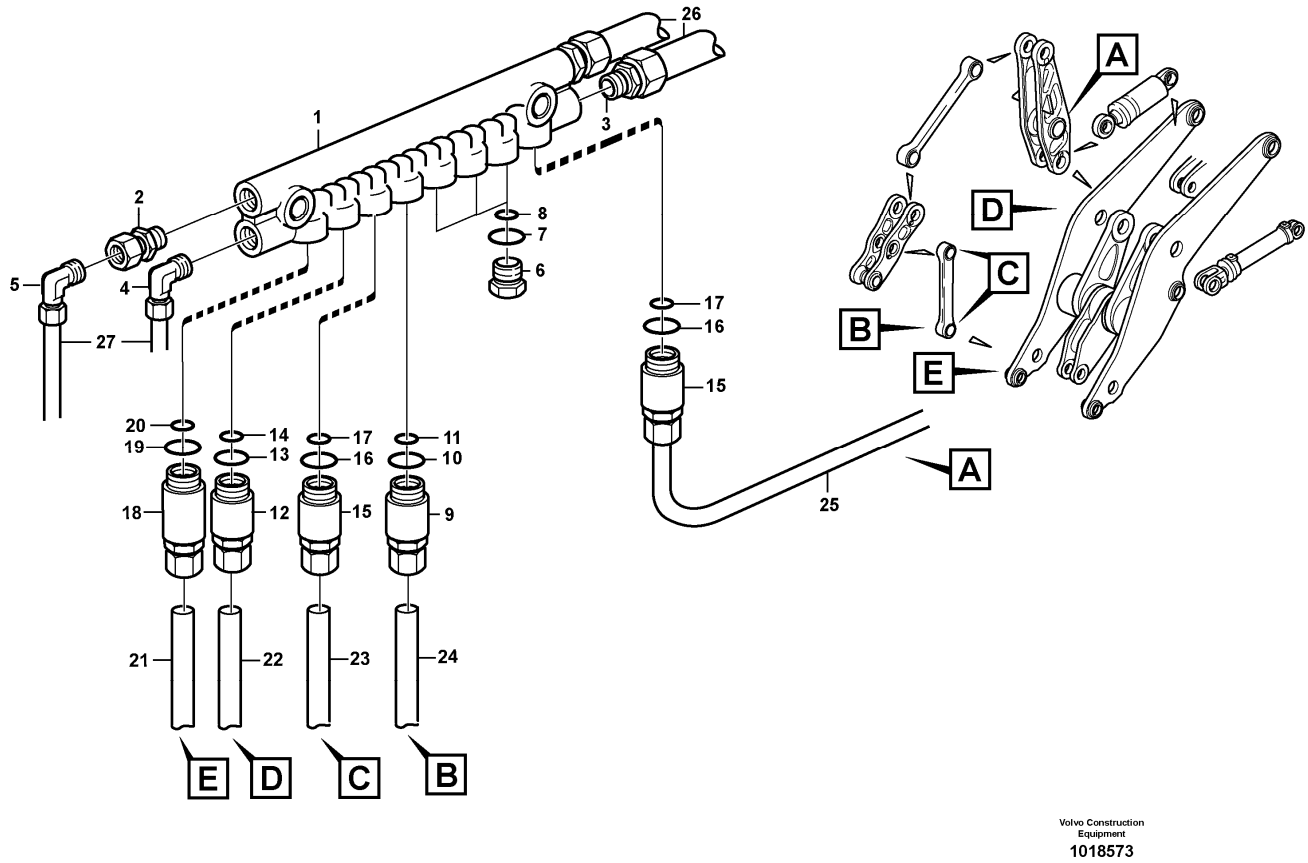

Section option	Kit	Option description
VOE80928		Automatic greasing system IF WELDED ATTACHMENT BRACKET 80009 COMB WITH 94811IF CASTED ATTACHMENT BRACKET 93643 COMB WITH 80334
VOE82600		Automatic greasing system
VOE82601		Automatic greasing system
VOE82143		Automatic greasing system IF WELDED ATTACHMENT BRACKET 80847 COMB WITH 94811IF CASTED ATTACHMENT BRACKET 80846 COMB WITH 82355

Q1-Q5	Option	Option description	
Q1 82143 80928	VOE82143	Automatic greasing system IF WELDED ATTACHMENT BRACKET 80847 COMB WITH 94811IF CASTED ATTACHMENT BRACKET 80846 COMB WITH 82355	
Q2 82601 82600	VOE82601	Automatic greasing system	

Pos	Part	Q1	Q2	Q3	Q4	Q5	PS	Kit	Description	Option(s)	Remark
	VOE11177114	1							Distribution block		

	VOE11177115		1						Distribution block		
1	VOE11702177	1	1						•Valve body		
2	VOE11713081	1	1						•Nipple		
3		2	2						•Nipple		
4		1	1						•Elbow Nipple		
5	VOE11713082	1	1						•Nipple		
6	VOE11702150	3	3						•Plug		
7	VOE990740	3	3						••O-ring		
8	VOE11705432	3	3						••O-ring		
9	VOE11702153	1	1						•Dosage valve		
10	VOE990740	1	1						••O-ring		
11	VOE11704711	1	1						••Ferrule		
12	VOE11702155	2	2						•Dosage valve		
13	VOE990740	2	2						••O-ring		
14	VOE11705432	2	2						••O-ring		
15	VOE11702370	1	1						•Dosage valve		
16	VOE990740	1	1						••O-ring		
17	VOE11705432	1	1						••O-ring		
18	VOE11702154	1	1						•Dosage valve		
19	VOE990740	1	1						••O-ring		
20	VOE11705432	1	1						••O-ring		
21	VOE11714183	REQ	REQ						•Lubricating hose		L = 600 MM
22	VOE11714224	REQ							•Lubricating hose		L = 700 MM
	VOE11714225		REQ						•Lubricating hose		L = 1100 MM
23	VOE11708033	REQ	REQ						•Lubricating hose		L = 1700 MM
24	VOE11707428	REQ	REQ						•Lubricating hose		L = 1900 MM
25	VOE11714219	REQ	REQ						•Lubricating hose		L = 300 MM
26	VOE11176857	2	2						Hose		
27	VOE11176856	2							Hose		S/N - 20317
27	VOE11432288	2							Hose		S/N 20318 -
	VOE11177116		2						Hose		

VOLVO

Construction Equipment

PROSIS Part Information

Date:	Image id:	Catalogue:	Model:
25/08/2018	**1018839**	**20086**	**L120E**
Brand:	Serial:	Group/Section:	Title:
Volvo	**19804-, 66001-, 71401-**	**993/450**	**Central lubrication with fitting parts. B4 82143, 80928, 82601, 82600**

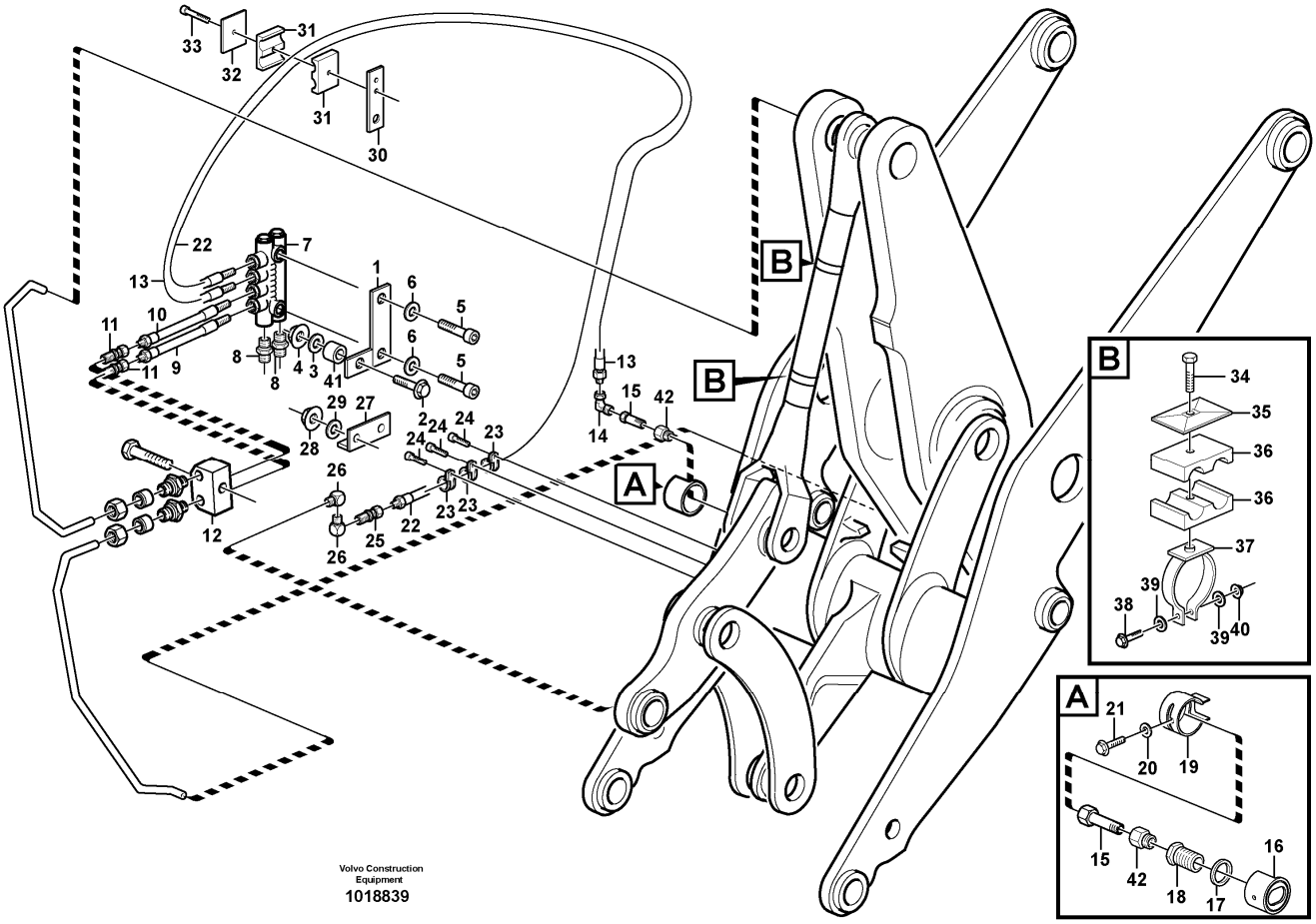

Section option	Kit	Option description
VOE80928		Automatic greasing system IF WELDED ATTACHMENT BRACKET 80009 COMB WITH 94811IF CASTED ATTACHMENT BRACKET 93643 COMB WITH 80334
VOE82600		Automatic greasing system
VOE82601		Automatic greasing system
VOE82143		Automatic greasing system IF WELDED ATTACHMENT BRACKET 80847 COMB WITH 94811IF CASTED ATTACHMENT BRACKET 80846 COMB WITH 82355

Pos	Part	Q1	Q2	Q3	Q4	Q5	PS	Kit	Description	Option(s)	Remark
1	VOE11707382	1							Bracket		
2	VOE13965186	1							Screw		
3	VOE13960143	3							Washer		
4	VOE13971098	1							Flange nut		
5	VOE959207	2							Hex. socket screw		
6	VOE11176859	2							Washer		
7		1							Distr block		B4 See ref 993/500

8		2					NS		Nipple		
9	VOE11714227	1							Lubricating hose		L = 150 MM
10	VOE11714226	1							Lubricating hose		L = 180 MM
11	VOE11701843	2							Connector		
12	VOE11015245	1					SS		Retainer		
13	VOE11716514	REQ							Lub Hose		L = 1150 MM
14	VOE11701837	1							Connector		
15	VOE11701842	1							Adapter		
16	VOE11176963	1							Ring		
17	VOE11176961	1							Washer		
18	VOE11176956	1							Screw		
19	VOE11176959	1							Protecting ring		
20	VOE11117464	1							Plain washer		(VOE13960141)
21	VOE983241	1							Hexagon screw		
22	VOE11706035	1							Lubricating hose		L = 2750 MM
23	VOE952627	2							Clamp		
24	VOE13946501	2							Screw		
25	VOE11701843	1							Connector		
26	VOE11701845	2							Connector		
27	VOE11177006	1							Protecting moulding		
28	VOE948645	2							Flange lock nut		
29	VOE11117464	2							Plain washer		(VOE13960141)
30	VOE11707383	1							Bracket		
31	VOE11701854	1							Clamp		
32	VOE11707381	1							Cover Plate		
33	VOE13959209	1							Screw		
34	VOE959208	2							Hex. socket screw		
35	VOE11707381	2							Cover Plate		
36	VOE11701854	2							Clamp		
37	VOE11176642	2							Clamp		
38	VOE946671	2							Flange screw		
39	VOE11117464	2							Plain washer		(VOE13960141)
40	VOE948645	2							Flange lock nut		
41	VOE11707389	1							Sleeve		
42	VOE11701838	1							Adapter		

VOLVO

Construction Equipment

PROSIS Part Information

Date:	Image id:	Catalogue:	Model:
25/08/2018	**1018579**	**20086**	**L120E**
Brand:	Serial:	Group/Section:	Title:
Volvo	**19804-, 66001-, 71401-**	**993/500**	**Distribution block, B4 82143, 80928, 82601, 82600**

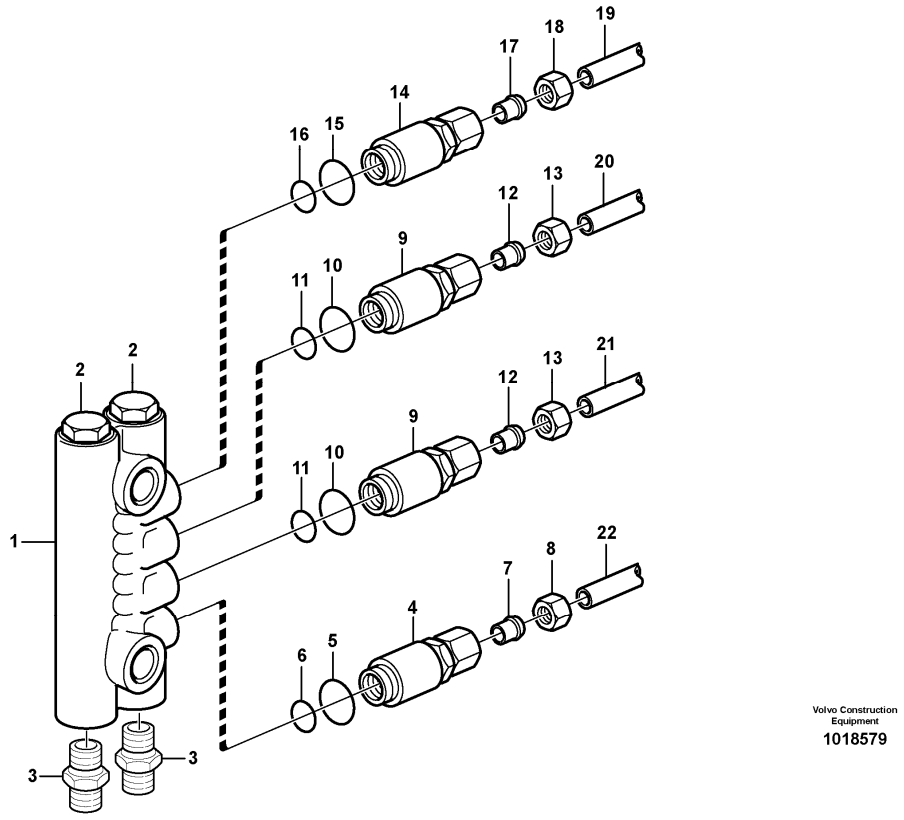

Section option	Kit	Option description
VOE80928		Automatic greasing system IF WELDED ATTACHMENT BRACKET 80009 COMB WITH 94811IF CASTED ATTACHMENT BRACKET 93643 COMB WITH 80334
VOE82600		Automatic greasing system
VOE82601		Automatic greasing system
VOE82143		Automatic greasing system IF WELDED ATTACHMENT BRACKET 80847 COMB WITH 94811IF CASTED ATTACHMENT BRACKET 80846 COMB WITH 82355

Pos	Part	Q1	Q2	Q3	Q4	Q5	PS	Kit	Description	Option(s)	Remark
	VOE11177311	1							Distribution block		
1	VOE11702178	1							•Valve body		4 PORTS / PORTAR
2	VOE11709994	2							•Sealing ring		
3		2					NS		•Nipple		
4	VOE11702151	1							•Dosage valve		
5	VOE990740	1							••O-ring		
6	VOE11704711	1							••Ferrule		

7	VOE11704711	1							••Ferrule		
8	VOE11704712	1							••Nut		
9	VOE11702152	2							•Dosage valve		
10	VOE990740	2							••O-ring		
11	VOE11705432	2							••O-ring		
12	VOE11704711	2							••Ferrule		
13	VOE11704712	2							••Nut		
14	VOE11702155	1							•Dosage valve		
15	VOE990740	1							••O-ring		
16	VOE11705432	1							••O-ring		
17	VOE11704711	1							••Ferrule		
18	VOE11704712	1							••Nut		
19	VOE11706032	REQ							•Lubricating hose		L = 2750 MM
20	VOE11716514	REQ							•Lub Hose		L = 1150 MM
21	VOE11714226	REQ							•Lubricating hose		L = 180 MM
22	VOE11714227	REQ							•Lubricating hose		L = 150 MM

VOLVO

Construction Equipment

PROSIS Part Information

Date:	Image id:	Catalogue:	Model:
25/08/2018	**1005272**	**20086**	**L120E**
Brand:	Serial:	Group/Section:	Title:
Volvo	**19804-, 66001-, 71401-**	**993/550**	**Central lubrication, tool bar 82355**

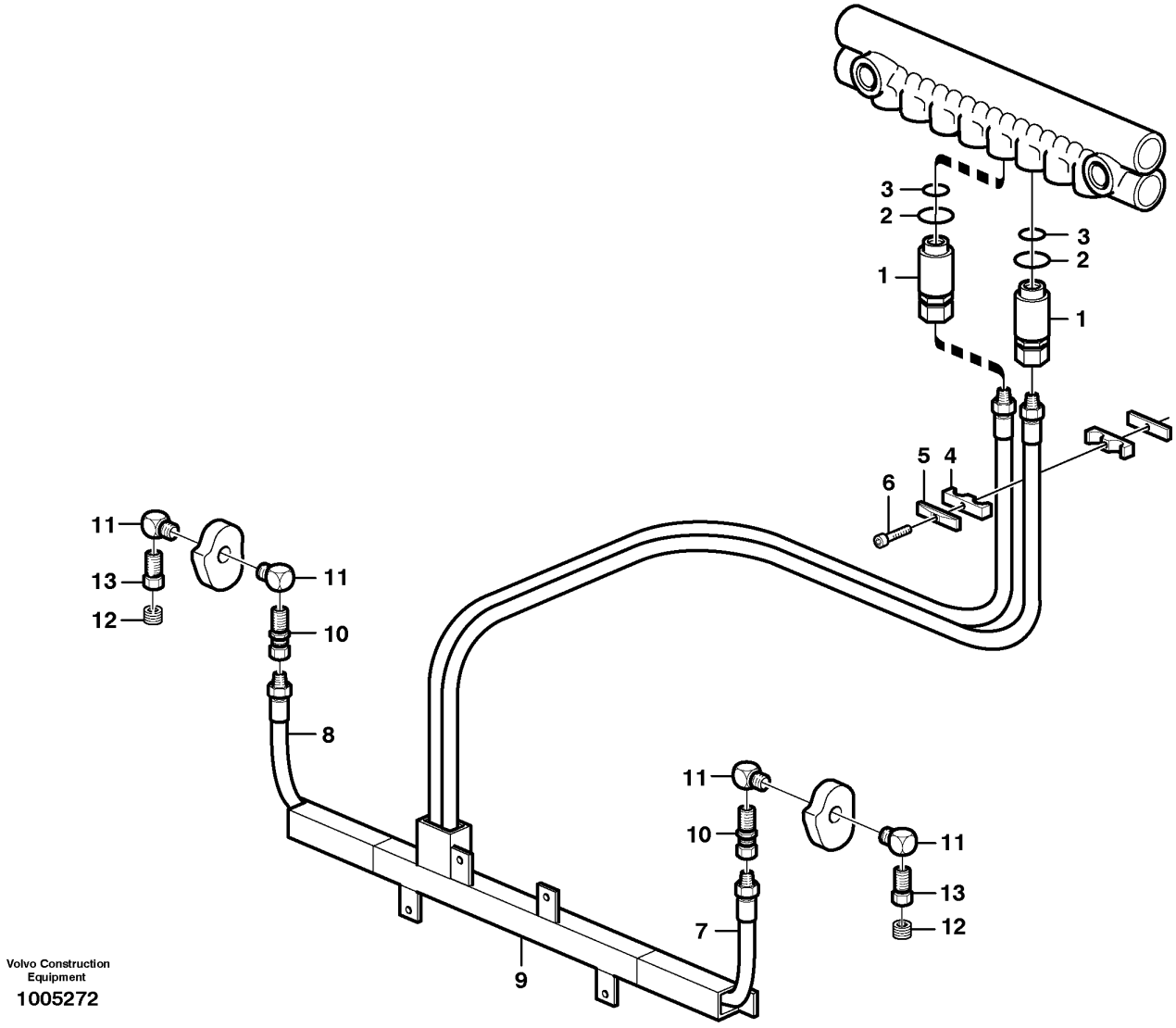

Section option	Kit	Option description
VOE82355		Autom. lubrication system for grease, NLG1 No. 2

Pos	Part	Q1	Q2	Q3	Q4	Q5	PS	Kit	Description	Option(s)	Remark
		1					NS		Central lubrication		
1	VOE11702155	2							Dosage valve		NO.8
	VOE11704711	1							•Ferrule		
	VOE11704712	1							•Nut		
2	VOE990740	2							•O-ring		(VOE981289)
3	VOE11705432	2							•O-ring		

4	VOE11701854	1							Clamp		
5	VOE11707381	1							Cover Plate		
6	VOE959208	1							Hex. socket screw		
7	VOE11176847	1							Hose		
8	VOE11707375	1							Lubricating hose		
9	VOE11709961	1					SS		Attachment bracket		
10	VOE11701843	2							Connector		
11	VOE11701845	4							Connector		
12	VOE11701827	1							Plug		
13	VOE11701838	2							Adapter		

VOLVO

Construction Equipment

PROSIS Part Information

Date:	Image id:	Catalogue:	Model:
25/08/2018	**1006803**	**20086**	**L120E**
Brand:	Serial:	Group/Section:	Title:
Volvo	**19804-, 66001-, 71401-**	**993/600**	**Central lubrication for tool bar. 94811**

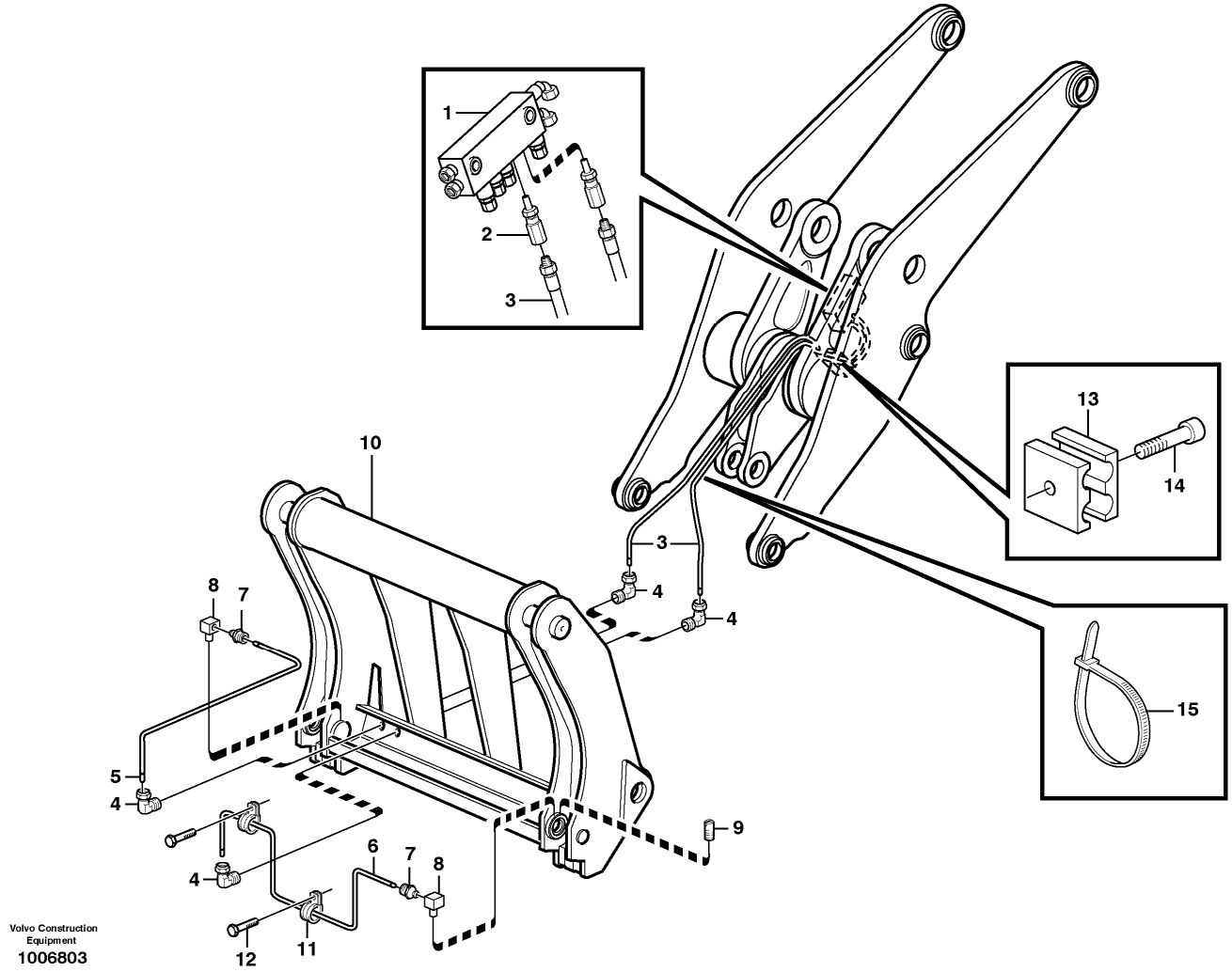

Section option	Kit	Option description
VOE94811	VOE11701771	Automatic greasing system for Att. bracket MÅSTE KOMBINERAS MED 80442(L90D) ELLER80443(L120D)GÅR EJ ATT KOMB.MED 80334.

Pos	Part	Q1	Q2	Q3	Q4	Q5	PS	Kit	Description	Option(s)	Remark
	VOE11015618						OP		Central lubrication		
1		1							Distribution block		
2	VOE11702155	2							Dosage valve		
	VOE11704712	1							•Nut		
	VOE11704711	1							•Ferrule		
3	VOE11702806	1							Hose		
4	VOE11701837	4							Connector		
5	VOE11701833	REQ							Lubricant line		L = 2000MM

6	VOE13941451	REQ							Hose		L = 1500MM
7	VOE11701843	2							Connector		
8	VOE11701845	2							Connector		
9	VOE11701827	2							Plug		
10		1							Atch bracket		
11	VOE952624	2							Clamp		
12	VOE13946501	2							Screw		
13	VOE11701854	1							Clamp		
14	VOE940326	1							Hex. socket screw		
15	VOE4881440	REQ							Cable tie		

VOLVO

Construction Equipment

PROSIS Part Information

Date:	Image id:	Catalogue:	Model:
25/08/2018	**1021991**	**20086**	**L120E**
Brand:	Serial:	Group/Section:	Title:
Volvo	**19804-, 66001-, 71401-**	**993/700**	**Pump:central lubrication 82143, 80928, 82601, 82600**

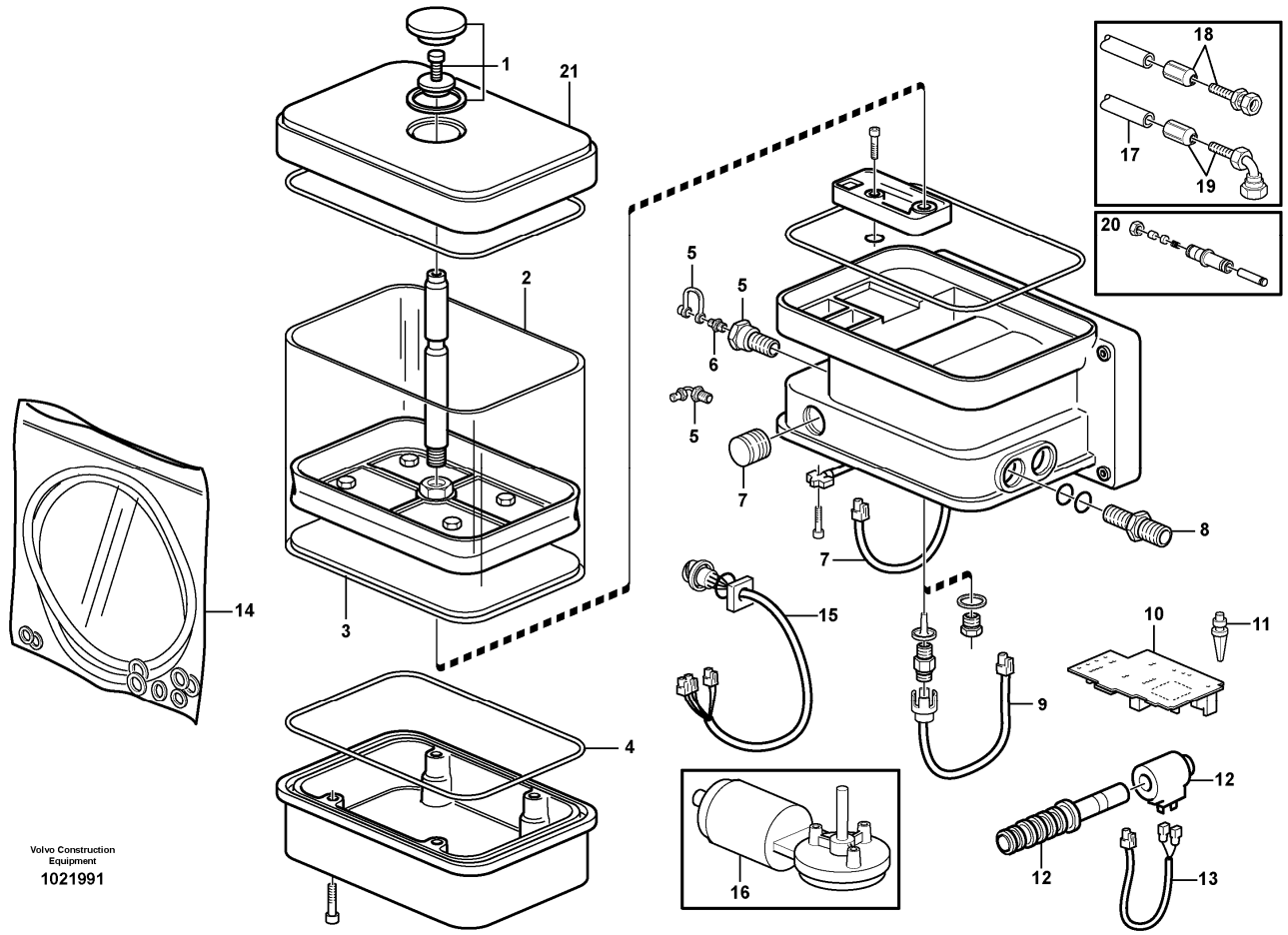

Section option	Kit	Option description
VOE80928		Automatic greasing system IF WELDED ATTACHMENT BRACKET 80009 COMB WITH 94811IF CASTED ATTACHMENT BRACKET 93643 COMB WITH 80334
VOE82600		Automatic greasing system
VOE82601		Automatic greasing system
VOE82143		Automatic greasing system IF WELDED ATTACHMENT BRACKET 80847 COMB WITH 94811IF CASTED ATTACHMENT BRACKET 80846 COMB WITH 82355

Pos	Part	Q1	Q2	Q3	Q4	Q5	PS	Kit	Description	Option(s)	Remark
	VOE11707439	1					SS		Pump		
1	VOE11702188	1							•Lock kit		
2	VOE11707569	1							•Reservoir		
3	VOE11708130	1							•Diaphragm		
4	VOE11704363	1							•Gasket		(VOE11702175)
5	VOE11707827	1							•Filler nipple		
6	VOE11707827	1							•Filler nipple		(VOE11988199)

7	VOE11710875	1							•Switch		
8	VOE11702187	1							•Connector		
9	VOE11709582	1							•Cable harness		
10	VOE11708673	1							•Ptd Circuit Bd		
11	VOE11708249	1							•Anchorage		
12	VOE11707607	1							•Solenoid valve		
	VOE11702185	1							••Solenoid coil		
13	VOE11988441	1					OP		••Cable		
14	VOE11715918	1							•Sealing kit		(VOE11702184)
15	VOE11708248	1							•Cable harness		
16	VOE11712713	1							•Electric motor		
17	VOE11701075	REQ							•Hose		
18	VOE11712925	1							•Nipple		
19	VOE11712926	1							•Nipple		
20	VOE11707567	1							•Piston kit		
21	VOE11716339	1							•Cover		

VOLVO

Construction Equipment

PROSIS Part Information

Date:	Image id:	Catalogue:	Model:
25/08/2018	**1032075**	**20086**	**L120E**
Brand:	Serial:	Group/Section:	Title:
Volvo	**19804-, 66001-, 71401-**	**993/750**	**Central lubrication, tool bar. 82932**

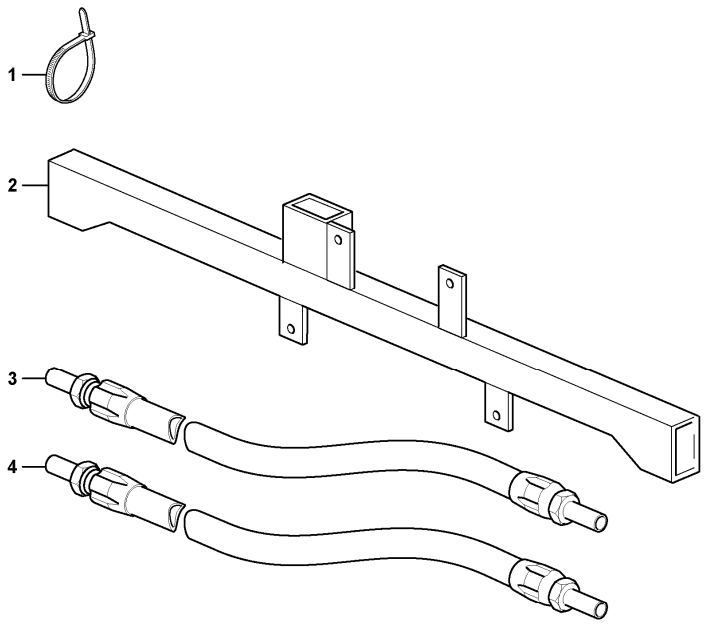

Volvo Construction Equipment
1032075

Section option	Kit	Option description
VOE82932		Automatic greasing systemfor, attachment bracket

Pos	Part	Q1	Q2	Q3	Q4	Q5	PS	Kit	Description	Option(s)	Remark
									Ctl Lubrication		
1	VOE4881440	6							•Cable tie		
2	VOE11716526	1							•Attachment		
3	VOE11716507	1							•Hose		(VOE11716524)
4	VOE11716525	1							•Hose		